CATERPILLAR®

SEBP3669
March 2003

RUTHZIL TRATOR COMERCIAL DE PEÇAS LTDA 11 97083-6812 ROLANDO CITRANGULO

Parts Manual



See "General Information" for New Parts Manual Features.

D6N XL, FTC TRACK-TYPE TRACTOR

CBJ1-Up (Machine)
BMA1100-Up (Engine)
CGD1-Up (Transmission)
3WP1-Up (Bulldozer)
B6X1-Up (Bulldozer)
S6D1-Up (Bulldozer)
S6S1-Up (Bulldozer)
TPP1-Up (Ripper)
BZA1-Up (Torque Converter)

Powered By 3126B Engine

Product and Dealer Information

Note: For product identification plate locations, see the section “Product Identification Information” in the Operation and Maintenance Manual.

Delivery Date: _____

Product Information

Model: _____

Product Identification Number: _____

Engine Serial Number: _____

Transmission Serial Number: _____

Generator Serial Number: _____

Attachment Serial Numbers: _____

Attachment Information: _____

Customer Equipment Number: _____

Dealer Equipment Number: _____

Dealer Information

Name: _____ Branch: _____

Address: _____

_____

_____

	Dealer Contact	Phone Number	Hours
Sales:	_____	_____	_____
Parts:	_____	_____	_____
Service:	_____	_____	_____

Informations produit et concessionnaire

Nota: Voir l'emplacement de la plaque signalétique du produit au chapitre "Informations produit" du guide d'utilisation et d'entretien.

Date de livraison: _____

Informations produit

Modèle: _____

Numéro d'identification produit: _____

Numéro de série du moteur: _____

Numéro de série de la boîte de vitesses: _____

Numéro de série de l'alternateur: _____

Numéros de série d'équipement: _____

Informations sur l'équipement: _____

Numéro matériel client: _____

Numéro matériel concessionnaire: _____

Informations concessionnaire

Nom: _____ Agence: _____

Adresse: _____

_____

_____

	Contact concessionnaire	Numéro de téléphone	Heures
Ventes:			
Pièces:			
Service:			

Información del Producto/Distribuidor

Nota: Para saber la ubicación de las placas de identificación del producto, ver la sección “Información sobre identificación del producto” en el Manual de Operación y Mantenimiento.

Fecha de entrega: _____

Información del producto

Modelo: _____

Número de identificación del producto: _____

Número de serie del motor: _____

Número de serie de la transmisión: _____

Número de serie del generador: _____

Números de serie de los accesorios: _____

Información sobre los accesorios: _____

Número del equipo del cliente: _____

Número del equipo del distribuidor: _____

Información del distribuidor

Nombre: _____ Sucursal: _____

Dirección: _____

_____

_____

	Comunicación con el distribuidor	Número de teléfono	Horas
Ventas:	_____	_____	_____
Piezas:	_____	_____	_____
Servicio:	_____	_____	_____

Informações Sobre Produto e Revendedor

Nota: Para localizações da placa de identificação do produto, consulte a seção, “Informações Sobre Identificação do Produto” no Manual de Operação e Manutenção.

Data de Entrega: _____

Informações Sobre o Produto

Modelo: _____

Número de Identificação do Produto: _____

Número de Série do Motor: _____

Número de Série da Transmissão: _____

Número de Série do Gerador: _____

Números de Série de Acessórios: _____

Informações Sobre Acessórios: _____

Número do Equipamento do Cliente: _____

Número do Equipamento do Revendedor: _____

Informações Sobre o Revendedor

Nome: _____ Filial: _____

Endereço: _____

_____

_____

	Contato do Revendedor	Telefone	Horas
Vendas:	_____	_____	_____
Peças:	_____	_____	_____
Serviço:	_____	_____	_____

Produkt- und Händlerinformation

Anmerkung: Für die Lage der Produkt-Identnummer und Seriennummern siehe Abschnitt "Produkt-Identinformation" im Betriebs- und Wartungshandbuch.

Lieferdatum: _____

Produkt-Identinformation

Modell: _____

Produkt-Identnummer: _____

Seriennummer des Motors: _____

Seriennummer des Getriebes: _____

Seriennummer des Generators: _____

Seriennummern der Arbeitsgeräte: _____

Arbeitsgeräteinformation: _____

Kundennummer: _____

Händlernummer: _____

Händlerinformation

Name: _____ Niederlassung: _____

Adresse: _____

_____

_____

	Kontaktperson beim Händler	Telefon	Dienststunden
Verkauf:	_____	_____	_____
Ersatzteile:	_____	_____	_____
Service:	_____	_____	_____

MEMORANDA

TABLE OF CONTENTS

Name	Page
GENERAL INFORMATION	A20
REPAIR ALTERNATIVES	A39
SUPPLEMENTAL COOLANT ADDITIVES	A44
ENGLISH-PORTUGUESE PARTS NOMENCLATURE	A49
MAINTENANCE PARTS	A57
INDEX	A87
MACHINE ARRANGEMENT	1
CHASSIS AR	1
GENERAL AR	1
MACHINE AR-HIGH AMBIENT TEMP	1
ENGINE ARRANGEMENT	2
ENGINE AR-COMPLETE	2
ENGINE AR-CORE	4
INSTALLATION AR	5
BASIC ENGINE	6
BELT GP	6
BELT TIGHTENER GP	9
CAMSHAFT GP	10
CARRIER GP-SEAL	11
COVER GP-CYLINDER BLOCK	12
COVER GP-FRONT HOUSING	13
COVER GP-VALVE MECHANISM	14
CRANKSHAFT GP	15
CYLINDER BLOCK GP	17
CYLINDER HEAD AS	20
CYLINDER HEAD GP	24
DAMPER & PULLEY GP	31
DRAIN GP-ENGINE OIL	32
DRIVE GP-FAN	35
FASTENER GP-FRONT COVER	37
FASTENER GP-FRONT HOUSING	38
FLYWHEEL GP	39
GEAR GP-FRONT	40
HOUSING GP-FLYWHEEL	41
HOUSING GP-FRONT	42
LIFTER GP-VALVE	43
LIFTING GP-ENGINE	44
MOUNTING GP-ENGINE	45
MOUNTING GP-FAN DRIVE	47
PAN GP-OIL	48
PISTON & ROD GP	49
PLUG GP-ENGINE	50
PULLEY AS-IDLER	51
PULLEY GP	52
PULLEY GP-FAN DRIVE	54
PULLEY GP-IDLER	55
SEAL GP-CRANKSHAFT	56
SEAL GP-FLYWHEEL HOUSING	57
SEAL GP-FUEL INJECTOR	58
SUPPRESSION AR-SOUND	59
SUPPRESSION GP-SOUND	60
VALVE MECHANISM GP	61
LUBRICATION SYSTEM	64
ADAPTER GP-ENGINE OIL LINE	64
BREATHER GP	65
FILLER GP-ENGINE OIL	66
FILTER GP-ENGINE OIL	67
FUMES DISPOSAL GP	68
GAUGE GP-OIL LEVEL (DIPSTICK)	70
LINES GP-ENGINE OIL	71
LINES GP-TURBOCHARGER OIL	72
PUMP GP-ENGINE OIL	74
COOLING SYSTEM	76
COOLER GP-ENGINE OIL	76
COOLING AR	77
FAN GP	78
FAN GP-BLOWER	80
FAN GP-REVERSIBLE	81
LINES GP-WATER	82
PUMP GP-WATER	84
RADIATOR GP	87
AIR INLET AND EXHAUST SYSTEM	90
AFTERCOOLER GP	90
AIR CLEANER GP	91
COVER GP-AIR INLET	92
ELBOW GP-AIR INLET	93
INDICATOR GP-AIR FILTER CHANGE	94
LINES GP-AIR	95
MANIFOLD GP-EXHAUST	97
MOUNTING GP-MUFFLER	98
MUFFLER GP	99
SHIELD GP-AIR CLEANER	100
TURBOCHARGER GP	101
FUEL SYSTEM	103
FILTER GP-WATER SEP & FUEL	103
LINES GP-FUEL	104
LINES GP-FUEL FILTER	106
PUMP & MTG GP-UNIT INJ HYD	108
PUMP GP-UNIT INJECTION	109
PUMP GP-UNIT INJECTOR HYD	111
TANK GP-FUEL	112
VALVE GP-SOLENOID	114
ELECTRICAL AND STARTING SYSTEM	115
ALARM GP	115
ALTERNATOR GP-CHARGING	116

TABLE OF CONTENTS

Name	Page
BATTERY GP	121
CONTROL & MTG GP-ENGINE ELEK	123
CONTROL GP-ENGINE ELECTRONIC	124
CONTROL GP-MACHINE	126
CONTROL GP-MONITOR	127
CONTROL GP-UNPROGRAMMED	129
ELECTRONICS AR-MACHINE	130
ELECTRONICS GP-MACHINE	130
ELECTRONICS GP-MONITOR	130
ELECTRONICS GP-POWER TRAIN	131
FASTENER GP-ENGINE WIRING	132
HEATER GP-JACKET WATER	133
HEATER GP-STARTING AID	135
INSTALLATION GP-SECURITY	136
LAMP GP-DOME	140
LAMP GP-FLOOD	141
LAMP GP-WARNING BEACON	144
LIGHTING GP-FLOOD	145
LIGHTING GP-WARNING BEACON	147
PANEL GP-CIRCUIT BREAKER	148
SENSOR GP-ENGINE	150
SENSOR GP-LIQUID LEVEL	152
SENSOR GP-POSITION	153
SENSOR GP-PRESSURE	156
SENSOR GP-SPEED	159
SENSOR GP-TEMPERATURE	163
SERVICE GP-MONITOR	166
SERVICE GP-POWER TRAIN	167
STARTING MOTOR GP-ELECTRIC	168
SWITCH AS-HORN	171
SWITCH GP-BYPASS	172
SWITCH GP-DISCONNECT	173
SWITCH GP-MAGNETIC	174
WARNING GP-BACKUP	177
WIRING GP	178
WIRING GP-CHASSIS	180
WIRING GP-ENGINE	183
WIRING GP-HEATER	186
WIRING GP-PLATFORM	187
POWER TRAIN	190
CONTROL GP-TRANSMISSION	190
FILTER GP-OIL	192
FINAL DRIVE GP	193
GEAR GP-BEVEL & TRANSFER	195
LINES GP-POWER TRAIN OIL	199
MOUNTING GP-TORQUE CONVERTER	203
MOUNTING GP-TRANSMISSION	204
PLANETARY GP-TRANSMISSION	205
POWER TRAIN AR	212
PUMP GP-GEAR	213
SEGMENT GP-SPROCKET	216
SHAFT GP-DRIVE	217
SHAFT GP-STEERING CLUTCH	218
TORQUE CONVERTER GP	219
TRANSMISSION AR	223
UNIVERSAL JOINT GP	224
VALVE GP-MODULATING	225
VALVE GP-PRIORITY	227
VALVE GP-RELIEF	229
VALVE GP-SOLENOID	232
VALVE GP-TRANSMISSION CONTROL	233
FRAME AND BODY	235
CASE & FRAME GP	235
DRAWBAR GP	238
ENCLOSURE GP	239
FENDER GP	242
GRID GP-SAND BLAST ERODING	243
GRILL GP-RADIATOR	244
GUARD GP-BOTTOM	245
GUARD GP-FUEL TANK	247
GUARD GP-POWER TRAIN FILTER	248
GUARD GP-RADIATOR	249
GUARD GP-TRACK GUIDE	251
HOOD & GUARD GP	253
HOOD GP	261
SWEEP GP	263
UNDERCARRIAGE	267
BAR GP-EQUALIZER	267
CAP GP-TRACK IDLER	269
FRAME GP-TELESCOPING RECOIL	270
GUIDING AR-UNDERCARRIAGE	272
IDLER GP-TRACK	273
LINK AS-TRACK	274
MOUNTING GP-CARRIER ROLLER	276
PIVOT BAR GP	277
ROLLER GP-TRACK CARRIER	278
ROLLER GP-TRACK-DOUBLE FLANGE	280
ROLLER GP-TRACK-SINGLE FLANGE	283
TRACK ADJUSTER & RECOIL GP	285
TRACK GP	286
UNDERCARRIAGE AR	288
UNDERCARRIAGE GP	288
STEERING AND BRAKING SYSTEM	289
ADJUSTER GP-STEER & TMSN CONT	289
BRAKE GP-STEERING	292
CLUTCH & BRAKE GP-STEERING	293
CONTROL GP-PARKING BRAKE	295
CONTROL GP-STEERING & TMSN	296
DETENT GP	300
FASTENER GP	301
GEAR GP-STEERING	302

TABLE OF CONTENTS

Name	Page
MANIFOLD & VALVE GP	306
PEDAL GP-GOVERNOR & BRAKE	308
SUPPORT GP-CONTROL	310
VALVE GP-CONTROL	311
VALVE GP-SOLENOID	313
HYDRAULIC SYSTEM	315
CONTROL GP-HYDRAULIC HAND	315
CYLINDER GP-ANGLING	321
CYLINDER GP-LIFT	323
CYLINDER GP-RIPPER LIFT	327
CYLINDER GP-TILT	329
FILTER GP-OIL	333
HYDRAULIC AR	334
HYDRAULIC AR-4 VALVE	335
LINES GP-ANGLE & TILT	336
LINES GP-FLUID SAMPLING	340
LINES GP-LIFT CYLINDER	342
LINES GP-RIPPER	348
LINES GP-TILT CYLINDER	352
MOUNTING GP-CYLINDER	356
MOUNTING GP-VALVE	358
PUMP & LINES GP-HYDRAULIC	359
PUMP GP-PISTON	362
ROTATING GP-PUMP	364
TANK & FILTER GP-HYDRAULIC	365
VALVE GP-BANK 2	368
VALVE GP-BANK 3	369
VALVE GP-BANK 4	370
VALVE GP-CONTROL	372
VALVE GP-PRESS & FLOW CMPNSTR	384
VALVE GP-RELIEF	386
IMPLEMENTS	388
BULLDOZER AR	388
BULLDOZER AR-SEMI-UNIVERSAL	388
C-FRAME GP-POWER ANGLING	390
LINK GP-PITCH	392
MOUNTING GP-RIPPER	393
PIN GP	395
PUSH ARM GP	396
RIPPER AR	398
TRUNNION GP-BULLDOZER	399
WORK TOOLS	400
BLADE GP-ANGLING	400
BLADE GP-SEMI-UNIVERSAL	402
EDGE GP-BIT & CUTTING	404
RIPPER GP	406
TOOTH GP-RIPPER	408
OPERATOR STATION	411
ADJUSTER GP-SEAT	411
AIR CONDITIONER GP	413
BLOWER GP-CAB	415
CAB AR	417
CAB GP	418
CANOPY AR	422
COMPRESSOR GP-REFRIGERANT	423
CONDENSER GP-REFRIGERANT	425
COVER GP-CONSOLE	427
DOOR GP-CAB	434
HEATER GP-CAB	438
HEATER GP-OPEN ROPS	440
HOUSING GP-SEAT SUSPENSION	444
INSTALLATION GP-LINES	447
INSTALLATION GP-RADIO	449
INSULATION GP-WEATHER	450
LATCH GP	451
LINER GP-CAB	452
LINES GP-AIR CONDITIONER	453
LINES GP-HEATER	455
MIRROR GP	458
MODULE GP-QUAD GAUGE	459
MOUNTING GP-CAB	460
MOUNTING GP-PLATFORM	461
MOUNTING GP-ROPS	463
PAN GP-BACKREST	464
PANEL GP-INSTRUMENT	466
PANEL GP-INSULATION	473
PLATFORM GP-OPERATOR	474
PLUG AS	477
PRESSURIZER GP-CAB	478
RADIO GP	480
RECLINER GP-SEAT	482
ROPS GP	483
SCREEN GP-PROTECTION	487
SCREEN GP-SUN	489
SEAT GP	490
SEAT GP-SUSPENSION	493
STEP GP	498
SUSPENSION GP-SEAT	499
TANK GP-WINDOW WASHER	506
WINDOW GP-CAB	507
WIPER GP-WINDOW	510
SERVICE EQUIPMENT AND SUPPLIES	512
FILM GP	512
PLATE & FILM GP	513
PART NUMBER INDEX	B1

TABLE DES MATIÈRES

Désignation	Page
GÉNÉRALITÉS	A23
OPTIONS DE RÉPARATION	A40
ADDITIFS POUR LIQUIDE DE REFROIDISSEMENT	A45
PIÈCES DE RECHANGE	A62
INDEX	A97
VERSION DE MACHINE	1
VERSION DE CHASSIS	1
VUE DU MODÈLE	1
VERSION DE MACHINE-TEMPÉRATURE AMBIANTE ÉLEVÉE	1
VERSION DE MOTEUR	2
MOTEUR COMPLET (VERSION)	2
MOTEUR - PARTIE CENTRALE (VERSION)	4
MONTAGE (VERSION)	5
MOTEUR STANDARD	6
COURROIE (ASS)	6
TENDEUR DE COURROIE (ASS)	9
ARBRE A CAMES (ASS)	10
CHÂSSIS-PORTEUR DE JOINT (ASS)	11
BLOC-CYLINDRES - COUVERCLE (ASS)	12
COUVERCLE DE CARTER AV (ASS)	13
CACHE-SOUPAPES (ASS)	14
VILEBREQUIN (ASS)	15
BLOC-CYLINDRES (ASS)	17
CULASSE (ENS)	20
CULASSE (ASS)	24
AMORTISSEUR DE VIBRATIONS ET POULIE (ASS)	31
VIDANGE-HUILE DE MOTEUR (ASS)	32
ENTRAÎNEMENT DE VENTILATEUR (ASS)	35
COUVERCLE DE CARTER AV - BOULONNERIE (ASS)	37
BOULONNERIE DE CARTER AV (ASS)	38
VOLANT MOTEUR (ASS)	39
PIGNONNERIE AV (ASS)	40
CARTER DE VOLANT (ASS)	41
CARTER AV (ASS)	42
POUSSOIR DE SOUPAPE (ASS)	43
OEILLETONS DE LEVAGE MOTEUR (ASS)	44
MONTAGE DE MOTEUR (ASS)	45
MONTAGE D'ENTRAÎNEMENT DE VENTILATEUR (ASS)	47
HUILE MOTEUR - CARTER (ASS)	48
PISTON ET BIELLE (ASS)	49
BOUCHON DE MOTEUR (ASS)	50
POULIE DE ROUE AV (ENS)	51
POULIE (ASS)	52
POULIE D'ENTRAÎNEMENT DE VENTILATEUR (ASS)	54
POULIE-ROUE AVANT (ASS)	55
JOINT DE VILEBREQUIN (ASS)	56
JOINT DE CARTER DE VOLANT (ASS)	57
JOINT DE L'INJECTEUR DE CARBURANT (ASS)	58
INSONORISATION (VERSION)	59
INSONORISATION (ASS)	60
CULBUTERIE (ASS)	61
CIRCUIT DE GRAISSAGE	64
ADAPTATEUR (ASS)-CANALISATION D'HUILE MOTEUR	64
RENIFLARD (ASS)	65
BOUCHON DE REMPLISSAGE D'HUILE MOTEUR (ASS)	66
FILTRE À HUILE MOTEUR (ASS)	67
DISPOSITIF D'EVACUATION DES VAPEURS DE CARTER	68
JAUGE D'HUILE MOTEUR (BAIONNETTE) (ASS)	70
CANALISATIONS D'HUILE MOTEUR (ASS)	71
CANALISATIONS D'HUILE DE TURBOCOMPRESSEUR (ASS)	72
POMPE A HUILE MOTEUR (ASS)	74
CIRCUIT DE REFROIDISSEMENT	76
REFROIDISSEUR D'HUILE MOTEUR (ASS)	76
REFROIDISSEMENT (VERSION)	77
VENTILATEUR (ASS)	78
VENTILATEUR SOUFFLANT (ASS)	80
VENTILATEUR A PALES RÉVERSIBLES (ASS)	81
CANALISATIONS D'EAU (ASS)	82
POMPE A EAU (ASS)	84
RADIATEUR (ASS)	87
CIRCUIT D'ADMISSION D'AIR ET D'ECHAPPEMENT	90
REFROIDISSEUR D'ADMISSION (ASS)	90
FILTRE A AIR (ASS)	91
COUVERCLE DE COLLECTEUR D'ADMISSION (ASS)	92
COUDE D'ADMISSION D'AIR (ASS)	93
INDICATEUR DE COLMATAGE DE FILTRE À AIR (ASS)	94

TABLE DES MATIÈRES

Désignation	Page
CANALISATIONS D'AIR (ASS)	95
COLLECTEUR D'ÉCHAPPEMENT (ASS)	97
MONTAGE DE SILENCIEUX (ASS)	98
SILENCIEUX (ASS)	99
PROTECTION DE FILTRE À AIR (ASS)	100
TURBOCOMPRESSEUR (ASS)	101
CIRCUIT DE CARBURANT	103
FILTRE DE SÉPARATEUR D'EAU ET DE CARBURANT (ASS)	103
CANALISATIONS DE CARBURANT (ASS)	104
CANALISATIONS DU FILTRE A CARBURANT (ASS)	106
POMPE D'INJECTEURS-POMPES HYDRAU. ET MONTAGE	108
POMPE D'INJECTION (ASS)	109
INJECTEURS-POMPES HYDRAULIQUES (ENS)	111
RÉSERVOIR DE CARBURANT (ASS)	112
SOUPAPE - SOLÉNOÏDE (ASS)	114
CIRCUIT DE DÉMARRAGE ET ÉLECTRIQUE	115
AVERTISSEUR (ASS)	115
ALTERNATEUR DE CHARGE (ASS)	116
BATTERIE (ASS)	121
COMMANDE ET MONTAGE - MOTEUR	123
COMMANDE ELECTRONIQUE DE MOTEUR (ASS)	124
COMMANDE DE MACHINE (ASS)	126
GROUPE DE CONTROLE	127
COMMANDE NON PROGRAMMEE (ASS)	129
COMPOSANTS ÉLECTRONIQUES DE LA MACHINE (VERSION)	130
ÉLECTRONIQUE - MACHINE (ENS)	130
ÉLECTRONIQUE-MONITEUR (ASS)	130
ÉLECTRONIQUE DE TRANSMISSION (ASS)	131
BOULONNERIE DE CABLAGE DU MOTEUR (ASS)	132
EAU DES CHEMISES - RECHAUFFEUR (ASS)	133
RÉCHAUFFEUR D'AIDE AU DÉMARRAGE (ASS)	135
MONTAGE-SÉCURITÉ (ASS)	136
PLAFONNIER (ASS)	140
LAMPE - PHARE (ASS)	141
LAMPE - GYROPHARE (ASS)	144
ÉCLAIRAGE - PROJECTEURS (ASS)	145
ÉCLAIRAGE - GYROPHARE (ASS)	147
DISJONCTEUR DU PANNEAU DE COMMANDE (ASS)	148
CAPTEUR - MOTEUR (ASS)	150
CAPTEUR DE NIVEAU DU LIQUIDE (ASS)	152
SONDE - CIRCUIT DE CARBURANT	153
CAPTEUR DE PRESSION (ASS)	156
CAPTEUR DE VITESSE (ASS)	159
CAPTEUR DE TEMPERATURE (ASS)	163
ENTRETIEN DU MONITEUR (ASS)	166
ENTRETIEN DE LA TRANSMISSION (ASS)	167
DÉMARREUR ÉLECTRIQUE (ASS)	168
INTERRUPTEUR DE KLAXON (ENS)	171
INTERRUPTEUR - DÉRIVATION (ASS)	172
ROBINET DE BATTERIE (ASS)	173
CONTACTEUR MAGNETIQUE (ASS)	174
AVERTISSEUR DE RECUL (ASS)	177
CÂBLAGE (ASS)	178
CABLAGE DE CHASSIS (ASS)	180
CABLAGE DE MOTEUR (ASS)	183
CABLAGE DU CHAUFFAGE DE CABINE (ASS)	186
CABLAGE - PLATE-FORME (ASS)	187
TRANSMISSION	190
COMMANDE DE BOITE DE VITESSES (ASS)	190
FILTRE A HUILE (ASS)	192
RÉDUCTEURS (ASS)	193
COURONNE ET ENGRENAGES DE TRANSFERT (ASS)	195
CANALISATIONS D'HUILE DE TRANSMISSION (ASS)	199
CONVERTISSEUR DE COUPLE - MONTAGE (ASS)	203
REDUCTEUR MARIN - MONTAGE (ASS)	204
BOÎTE PLANÉTAIRE (ASS)	205
TRANSMISSION (VERSION)	212
POMPE A ENGRENAGES (ASS)	213
SEGMENT DE BARBOTIN (ASS)	216
ARBRE D'ENTRAÎNEMENT (ASS)	217
ARBRE D'EMBRAYAGE DE DIRECTION (ASS)	218
CONVERTISSEUR DE COUPLE (ASS)	219
BOÎTE DE VITESSES (VERSION)	223
JOINT UNIVERSEL (ASS)	224
SOUPAPE DE MODULATION (ASS)	225
SOUPAPE DE PRIORITE (ASS)	227
CLAPET DE DECHARGE (ASS)	229
SOUPAPE - SOLÉNOÏDE (ASS)	232
DISTRIBUTEUR DE BOITE (ASS)	233

TABLE DES MATIÈRES

Désignation	Page
CHÂSSIS ET BENNE	235
CHÂSSIS ET CARTER (ASS)	235
BARRE D'ATTELAGE (ASS)	238
CARENAGE (ASS)	239
GARDE-BOUE (ASS)	242
DEFLECTEUR PARE-SABLE (ASS)	243
GRILLE DE RADIATEUR (ASS)	244
BLINDAGE INFÉRIEUR (ASS)	245
PROTECTION DU RÉSERVOIR DE CARBURANT (ASS)	247
PROTECTION - FILTRE DE TRANSMISSION (ASS)	248
PROTÈGE-RADIATEUR (ASS)	249
GUIDE PROTECTEUR DE CHAÎNE (ASS)	251
CAPOT ET PROTECTION (ASS)	253
CAPOT (ASS)	261
ARCEAUX DE DÉBARDAGE (ASS)	263
TRAIN DE ROULEMENT	267
BALANCIER DE SUSPENSION (ASS)	267
CHAPEAU DE ROUE AV (CHAINE) (ASS)	269
CARTER TELESCOPIQUE DE MECANISME AMORTISSEUR	270
VERSION DE GUIDAGE DE TRAIN DE ROULEMENT	272
ROUE AV - CHAINES (ASS)	273
MAILLON DE CHAINE (ENS)	274
MONTAGE DE GALET SUPÉRIEUR	276
TRAVERSE PIVOT (ASS)	277
GALET SUPERIEUR (ASS)	278
GALET A BOUDIN DOUBLE (ASS)	280
GALET A BOUDIN SIMPLE (ASS)	283
MECANISME AMORTISSEUR ET REGLAGE DE CHAINES (ASS)	285
CHAINES (ASS)	286
TRAIN DE ROULEMENT	288
TRAIN DE ROULEMENT (ASS)	288
CIRCUIT DE DIRECTION ET DE FREIN	289
RÉGLAGE DE COMMANDE DE DIRECT. ET DE BOÎTE	289
FREIN DE DIRECTION	292
EMBRAYAGE ET FREIN DE DIRECTION (ASS)	293
COMMANDE DE FREIN DE STATIONNEMENT (ASS)	295
COMMANDE DE DIRECTION ET BOITE DE VITESSES	296
DISPOSITIF D'ARRÊT	300
BOULONNERIE (ASS)	301
ENGRENAGE DE DIRECTION (ASS)	302
COLLECTEUR ET SOUPAPE (ASS)	306
PÉDALE DE RÉGULATEUR ET DE FREIN (ASS)	308
SUPPORT - COMMANDE (ASS)	310
DISTRIBUTEUR (ASS)	311
SOUPAPE - SOLÉNOÏDE (ASS)	313
CIRCUIT HYDRAULIQUE	315
COMMANDE HYDRAULIQUE MANUELLE (ASS)	315
VERIN D'ORIENTATION (ASS)	321
VÉRIN DE LEVAGE (ASS)	323
VERIN DE LEVAGE DE RIPPER (ASS)	327
VÉRIN D'INCLINAISON (ASS)	329
FILTRE A HUILE (ASS)	333
VERSION HYDRAULIQUE	334
DISTRIBUTEUR QUADRUPLE CORPS (VERSION)	335
CANALISATIONS D'INCLINAISON ET D'ORIENTATION	336
CANALISATIONS DE PRÉLÈVEMENT DE LIQUIDE (ASS)	340
CANALISATIONS DE VÉRIN DE LEVAGE (ASS)	342
CANALISATIONS DU RIPPER (ASS)	348
CANALISATIONS DU VÉRIN D'INCLINAISON (ASS)	352
MONTAGE DE VÉRIN (ASS)	356
MONTAGE DE SOUPAPE (ASS)	358
POMPE ET CANALISATIONS HYDRAULIQUES (ASS)	359
POMPE A PISTONS (ASS)	362
GROUPE DE ROTATION DE POMPE	364
RÉSERVOIR HYDRAULIQUE ET FILTRE (ASS)	365
DISTRIBUTEUR DOUBLE ÉLÉMENT (ASS)	368
DISTRIBUTEUR TRIPLE ÉLÉMENT (ASS)	369
DISTRIBUTEUR 4 ÉLÉMENTS (ASS)	370
DISTRIBUTEUR (ASS)	372
SOUPAPE RÉGULATRICE DE PRESSION ET DÉBIT	384
CLAPET DE DECHARGE (ASS)	386
ÉQUIPEMENTS	388
VERSION DE BULLDOZER	388
LAME DE BULLDOZER SEMI-UNIVERSELLE (VERSION)	388
BATI EN C - LAME ORIENTABLE	390
PAS DU MAILLON (ASS)	392
MONTAGE DE RIPPER (ASS)	393
AXE DE GODET (ASS)	395
BRAS DE POUSSÉE (ASS)	396
RIPPER (VERSION)	398
TOURILLON DE BULLDOZER (ASS)	399

TABLE DES MATIÈRES

Désignation	Page
OUTILS DE TRAVAIL	400
LAME À ORIENTATION (ASS)	400
LAME SEMI-UNIVERSELLE (ASS)	402
EMBOUT ET LAME DE COUPE (ASS)	404
RIPPER (ASS)	406
DENT DE RIPPER (ASS)	408
POSTE DE CONDUITE	411
REGLAGE DE SIEGE (ASS)	411
CLIMATISEUR (ASS)	413
VENTILATEUR SOUFFLANT DE CABINE (ASS)	415
CABINE (VERSION)	417
CABINE (ASS)	418
TOIT (VERSION)	422
COMPRESSEUR DE REFRIGERANT (ASS)	423
CONDENSEUR DE RÉFRIGÉRANT	425
COUVERCLE DE LA CONSOLE (ASS)	427
PORTIÈRE DE CABINE (ASS)	434
CHAUFFAGE DE CABINE (ASS)	438
RECHAUFFEUR DE CABINE ROPS OUVERTE (ASS)	440
SUSPENSION DE SIEGE - CARTER (ASS)	444
CANALISATIONS DE MONTAGE (ASS)	447
MONTAGE DE RADIO (ASS)	449
ISOLATION DE CABINE (ASS)	450
VERROU (ASS)	451
CABINE - REVÊTEMENT (ASS)	452
CANALISATIONS DE CLIMATISEUR (ASS)	453
CANALISATIONS DE CHAUFFAGE (ASS)	455
RÉTROVISEUR (ASS)	458
MODULE - QUATRE INSTRUMENTS (ASS)	459
MONTAGE DE CABINE (ASS)	460
MONTAGE DE PLATE-FORME (ASS)	461
MONTAGE DU TOIT ROPS (ASS)	463
COUVERCLE INFÉRIEUR-DOSSIER (ASS)	464
TABLEAU DE BORD (ASS)	466
PANNEAU D'ISOLATION (ASS)	473
PLATE-FORME DE CABINE	474
PRISE (ENS)	477
SURPRESSEUR (ASS)	478
RADIO (ASS)	480
SIÈGE INCLINABLE (ASS)	482
TOIT ROPS (ASS)	483
GRILLE DE PROTECTION (ASS)	487
PARE-SOLEIL (ASS)	489
SIÈGE (ASS)	490
SIÈGE AVEC SUSPENSION (ASS)	493
MARCHEPIED (ASS)	498
SIÈGE AVEC SUSPENSION (ASS)	499
RÉSERVOIR - LAVE-GLACE (ASS)	506
VITRE DE CABINE (ASS)	507
ESSUIE-GLACE (ASS)	510
MATÉRIEL ET FOURNITURES D'ENTRETIEN	512
PLAQUE SIGNALÉTIQUE (ASS)	512
PLAQUES SIGNALETIQUES ET AUTOCOLLANTS (ASS)	513
INDEX DE NUMÉROS DE PIÈCES	B1

CONTENIDO

Nombre	Página
INFORMACIÓN GENERAL	A27
ALTERNATIVAS DE REPARACIÓN	A41
ADITIVOS DE REFRIGERANTE SUPLEMENTARIOS	A46
PIEZAS DE MANTENIMIENTO	A69
INDICE	A109
CONFIGURACIÓN DE MÁQUINA	1
CHASIS (CONFIG)	1
CONFIGURACIÓN GENERAL	1
MAQUINA DE ALTA TEMP. AMBIENTE (CONFIG)	1
CONFIGURACIÓN DE MOTOR	2
MOTOR COMPLETO (CONFIG)	2
MOTOR - NÚCLEO (CONFIG)	4
INSTALACIÓN (CONFIG)	5
MOTOR BÁSICO	6
CORREA (GR)	6
AJUSTADOR DE CORREA (GR)	9
ÁRBOL DE LEVAS (GR)	10
SELLO DEL PORTADOR (GR)	11
TAPA DEL BLOQUE MOTOR (GR)	12
TAPA DE LA CAJA DELANTERA (GR)	13
TAPA DEL MECANISMO DE VÁLVULAS (GR)	14
CIGÜEÑAL (GR)	15
BLOQUE MOTOR (GR)	17
CULATA DE CILINDROS (CONJ)	20
CULATA DE CILINDROS (GR)	24
AMORTIGUADOR Y POLEA (GR)	31
DRENAJE DEL ACEITE DE MOTOR	32
IMPULSOR DE VENTILADOR (GR)	35
TORNILLERÍA DE LA TAPA DELANTERA	37
CAJA DELANTERA - TORNILLERÍA DE LA (GR)	38
VOLANTE (GR)	39
ENGRANAJE DELANTERO (GR)	40
VOLANTE - CAJA DE (GR)	41
CAJA DELANTERA (GR)	42
VÁLVULA DE LEVANTAMIENTO (GR)	43
CÁNCAMOS DE LEVANTAMIENTO DEL MOTOR (GR)	44
MONTAJE DEL MOTOR (GR)	45
MONTAJE DEL MANDO DE VENTILADOR (GR)	47
CÁRTER - COLECTOR DEL (GR)	48
PISTÓN Y BIELA (GR)	49
TAPÓN DEL MOTOR (GR)	50
RUEDA GUÍA - POLEA DE	51
POLEA (GR)	52
POLEA DEL MANDO DE VENTILADOR (GR)	54
GRUPO DE POLEA LOCA	55
SELLO DE CIGÜEÑAL (GR)	56
SELLO DE LA CAJA DE VOLANTE (GR)	57
SELLO DEL INYECTOR DEL COMBUSTIBLE (GR)	58
INSONORIZADOR (CONFIG)	59
INSONORIZADOR (GR)	60
MECANISMO DE VÁLVULAS (GR)	61
SISTEMA DE LUBRICACIÓN	64
ADAPTADOR DE TUBERIA DE ACEITE DE MOTOR (GR)	64
RESPIRADERO (GR)	65
TUBO DE LLENADO DE ACEITE (GR)	66
FILTRO DE ACEITE DEL MOTOR (GR)	67
ESCAPE DE GASES (GR)	68
INDICADOR DEL NIVEL DE ACEITE (VARILLA) (GR)	70
TUBERÍAS DE ACEITE DEL MOTOR (GR)	71
TURBOCOMPRESOR - TUBERÍAS DE ACEITE DEL (GR)	72
BOMBA DE ACEITE DEL MOTOR (GR)	74
SISTEMA DE ENFRIAMIENTO	76
ENFRIADOR DE ACEITE DEL MOTOR (GR)	76
CONFIGURACIÓN DE ENFRIAMIENTO	77
VENTILADOR (GR)	78
SOPLADOR - VENTILADOR (GR)	80
VENTILADOR REVERSIBLE (GR)	81
TUBERÍAS DEL AGUA (GR)	82
BOMBA DE AGUA (GR)	84
RADIADOR (GR)	87
SISTEMA DE ADMISIÓN Y ESCAPE DE AIRE	90
POSENFRIADOR (GR)	90
FILTRO DE AIRE (GR)	91
TAPA DE ADMISIÓN DE AIRE (GR)	92
CODO DE ADMISIÓN DE AIRE (GR)	93
INDICADOR DE CAMBIO DE FILTRO DE ACEITE (GR)	94
AIRE - TUBERÍAS DE (GR)	95
MÚLTIPLE DE ESCAPE (GR)	97
MONTAJE DEL SILENCIADOR (GR)	98
SILENCIADOR (GR)	99
GRUPO DE PROTECTOR, FILTRO	100
TURBOCOMPRESOR (GR)	101

CONTENIDO

Nombre	Página
SISTEMA DE COMBUSTIBLE	103
FILTRO DE COMBUSTIBLE Y SEPARADOR DE AGUA (GR)	103
TUBERÍAS DE COMBUSTIBLE (GR)	104
TUBERÍAS DEL FILTRO DE COMBUSTIBLE	106
BOMBA HIDRÁULICA DEL INYECTOR UNITARIO Y MONTAJE	108
BOMBA DE INYECCIÓN UNITARIA (GR)	109
BOMBA HIDRÁULICA DEL INYECTOR UNITARIO (GR)	111
COMBUSTIBLE - TANQUE DE (GR)	112
VÁLVULA DE SOLENOIDE (GR)	114
SISTEMA ELÉCTRICO Y DE ARRANQUE	115
ALARMA (GR)	115
CARGA - ALTERNADOR DE (GR)	116
BATERÍA (GR)	121
CONTROL ELECTRÓNICO DEL MOTOR Y MONTAJE	123
CONTROL ELECTRÓNICO DEL MOTOR (GR)	124
CONTROL DE MAQUINA (GR)	126
CONTROL DE MONITOR (GR)	127
CONTROL NO PROGRAMADO (GR)	129
CONFIGURACIÓN ELECTRÓNICA DE LA MÁQUINA	130
ELECTRONICA DE LA MAQUINA (GR)	130
ELECTRONICA DE MONITOR (GR)	130
TREN DE FUERZA-GRUPO ELECTRÓNICO	131
TORNILLERIA DE CABLES DEL MOTOR (GR)	132
AGUA DE LAS CAMISAS - CALENTADOR DEL (GR)	133
GRUPO DE CALENTADOR, ARRANQUE ASISTIDO	135
INSTALACION DE SEGURIDAD (GR)	136
LÁMPARA DEL TECHO (GR)	140
REFLECTOR (GR)	141
LÁMPARA DE BALIZA DE ADVERTENCIA (GR)	144
LUCES DE REFLECTOR (GR)	145
LUZ DE BALIZA (GR)	147
PANEL DE DISYUNTORES (GR)	148
SENSOR DEL MOTOR (GR)	150
SENSOR DEL NIVEL DE LÍQUIDO	152
DETECTOR DE POSICIÓN (SISTEMA DE COMBUST.) (GR)	153
SENSOR DE PRESIÓN (GR)	156
SENSOR DE VELOCIDAD (GR)	159
SENSOR DE TEMPERATURA (GR)	163
SERVICIO DE MONITOR (GR)	166
SERVICIO DE TREN DE FUERZA (GR)	167
MOTOR DE ARRANQUE ELÉCTRICO (GR)	168
INTERRUPTOR DE LA BOCINA (CONJ)	171
INTERRUPTOR DE DERIVACIÓN	172
DISYUNTOR (GR)	173
INTERRUPTOR MAGNÉTICO (GR)	174
RETROCESO - ALARMA DE (GR)	177
CABLES (GR)	178
CABLES DEL CHASIS (GR)	180
CABLES DEL MOTOR (GR)	183
CABLES DE CALEFACCIÓN (GR)	186
CABLES DE LA PLATAFORMA (GR)	187
TREN DE FUERZA	190
CONTROL DE LA TRANSMISIÓN (GR)	190
FILTRO DE ACEITE (GR)	192
MANDO FINAL (GR)	193
ENGRANAJE DE TRANSFERENCIA Y CORONA (GR)	195
TUBERÍAS DE ACEITE DEL TREN DE FUERZA (GR)	199
MONTAJE DEL CONVERTIDOR DE PAR (GR)	203
MONTAJE DE LA TRANSMISIÓN (GR)	204
TRANSMISIÓN PLANETARIA (GR)	205
TREN DE FUERZA (CONFIG)	212
BOMBA DE ENGRANAJES (GR)	213
SEGMENTO DE RUEDA MOTRIZ (GR)	216
EJE DE MANDO (GR)	217
EJE DEL EMBRAGUE DE DIRECCIÓN (GR)	218
CONVERTIDOR DE PAR (GR)	219
TRANSMISION (CONFIG)	223
JUNTA UNIVERSAL (GR)	224
VÁLVULA DE MODULACIÓN (GR)	225
PRIORIDAD - VÁLVULA DE (GR)	227
VÁLVULA DE ALIVIO (GR)	229
VÁLVULA DE SOLENOIDE (GR)	232
VÁLVULA DE CONTROL DE LA TRANSMISIÓN (GR)	233
BASTIDOR Y CAJA	235
CAJA Y BASTIDOR (GR)	235
BARRA DE TIRO (GR)	238
COMPARTIMIENTO (GR)	239
GUARDABARROS (GR)	242
PROTECTOR CONTRA ARENA (GR)	243
REJILLA DEL RADIADOR (GR)	244
PROTECTOR INFERIOR (GR)	245
PROTECTOR DEL TANQUE DE COMBUSTIBLE (GR)	247
PROTECTOR DEL FILTRO DEL TREN DE FUERZA (GR)	248

CONTENIDO

Nombre	Página
PROTECTOR DEL RADIADOR (GR)	249
PROTECTOR GUÍA DE CADENA (GR)	251
CAPO Y PROTECTOR (GR)	253
CAPÓ (GR)	261
PROTECTORES DE RAMAS (GR)	263
TREN DE RODAJE	267
BARRA COMPENSADORA (GR)	267
TAPA DE RUEDA GUÍA (GR)	269
BASTIDOR TELESCÓPICO DEL RESORTE TENSOR (GR)	270
GUIAJE DE TREN DE RODAJE (CONFIG)	272
RUEDA GUÍA DE CADENA (GR)	273
ESLABÓN DE CADENA (CONJ)	274
MONTAJE DE RODILLOS SUPERIORES (GR)	276
BARRA PIVOTE (GR)	277
RODILLO SUPERIOR DE CADENAS (GR)	278
RODILLOS DE PESTAÑA DOBLE (GR)	280
RODILLOS DE PESTAÑA SIMPLE (GR)	283
RESORTE TENSOR Y AJUSTADOR DE LA CADENA (GR)	285
CADENAS (GR)	286
TREN DE RODAJE (CONFIG)	288
TREN DE RODAJE (GR)	288
SISTEMA DE FRENOS Y DIRECCIÓN	289
AJUSTADOR DEL CONTROL DE DIRECCIÓN Y TRANSMISIÓN (GR)	289
FRENO DE DIRECCIÓN (GR)	292
FRENO Y EMBRAGUE DE DIRECCIÓN (GR)	293
CONTROL DEL FRENO DE ESTACIONAMIENTO	295
CONTROL DE DIRECCIÓN Y TRANSMISIÓN (GR)	296
TOPE (GR)	300
SUJETADOR (GR)	301
ENGRANAJE DE DIRECCIÓN (GR)	302
MÚLTIPLE Y VÁLVULA (GR)	306
REGULADOR Y PEDAL DEL FRENO (GR)	308
SOPORTE DE CONTROL (GR)	310
VÁLVULA DE CONTROL (GR)	311
VÁLVULA DE SOLENOIDE (GR)	313
SISTEMA HIDRÁULICO	315
CONTROL HIDRÁULICO MANUAL (GR)	315
CILINDRO DE ORIENTACION (GR)	321
CILINDRO DE LEVANTAMIENTO (GR)	323
CILINDRO DE LEVANTAMIENTO DEL DESGARRADOR (GR)	327
INCLINACIÓN HORIZONTAL - CILINDRO DE (GR)	329
FILTRO DE ACEITE (GR)	333
HIDRÁULICA (CONFIG)	334
VÁLVULA HIDRÁULICA DE 4 VÍAS (CONFIG)	335
TUBERIAS DE INCLINACIÓN Y ORIENTACIÓN (GR)	336
GRUPO DE TUBERIAS, MUESTRARIO DE FLUIDO	340
CILINDRO DE LEVANTAMIENTO - TUBERÍAS DEL (GR)	342
TUBERÍAS DEL DESGARRADOR (GR)	348
TUBERÍAS DEL CILINDRO DE INCLINACIÓN (GR)	352
MONTAJE DE CILINDRO (GR)	356
VÁLVULA - MONTAJE DE LA (GR)	358
GRUPO DE BOMBA Y TUBERIA HIDRULICA	359
BOMBA DE PISTONES (GR)	362
GRUPO GIRATORIO DE BOMBA	364
TANQUE Y FILTRO HIDRÁULICOS (GR)	365
VÁLVULAS HIDRÁULICAS - GRUPO DE 2	368
GRUPO DE 3 VÁLVULAS HIDRÁULICAS	369
GRUPO DE 4 VÁLVULAS HIDRÁULICAS	370
VÁLVULA DE CONTROL (GR)	372
VÁLVULA COMPENSADORA DE FLUJO Y PRESIÓN (GR)	384
VÁLVULA DE ALIVIO (GR)	386
IMPLEMENTOS	388
HOJA TOPADORA (CONFIG)	388
HOJA TOPADORA SEMIUNIVERSAL	388
BASTIDOR DE LA HOJA ORIENTABLE A POTENCIA (GR)	390
ESLABÓN - PASO (GR)	392
MONTAJE DEL DESGARRADOR (GR)	393
PASADOR	395
BRAZO DE EMPUJE (GR)	396
DESGARRADOR (CONFIG)	398
MUÑÓN DE LA HOJA TOPADORA (GR)	399
HERRAMIENTAS	400
HOJA ORIENTABLE (GR)	400
HOJA SEMIUNIVERSAL (GR)	402
GRUPO DE CANTONERA Y CUCHILLA	404

CONTENIDO

Nombre	Página
DESGARRADOR (GR)	406
DIENTE DE DESGARRADOR (GR)	408
CABINA DEL OPERADOR	411
AJUSTADOR DEL ASIENTO (GR)	411
ACONDICIONADOR DE AIRE (GR)	413
VENTILADOR SOPLADOR DE LA CABINA (GR)	415
CABINA (CONFIG)	417
CABINA (GR)	418
TECHO (CONFIG)	422
COMPRESOR DE REFRIGERANTE (GR)	423
CONDENSADOR DE REFRIGERANTE (GR)	425
TAPA DE LA CONSOLA (GR)	427
PUERTA DE CABINA	434
CALEFACCIÓN DE LA CABINA (GR)	438
CALENTADOR DE LA CABINA ROPS ABIERTA (GR)	440
CAJA DE LA SUSPENSIÓN DEL ASIENTO (GR)	444
GRUPO DE INSTALACIÓN, TUBERIAS	447
INSTALACIÓN DE RADIO (GR)	449
GRUPO DE AISLAMIENTO DE LA CABINA	450
RETÉN (GR)	451
REVESTIMIENTO DE LA CABINA (GR)	452
TUBERÍAS DE ACONDICIONADOR DE AIRE (GR)	453
TUBERÍAS DE LA CALEFACCIÓN (GR)	455
ESPEJO (GR)	458
MODULO ELECTRÓNICO DE CUATRO INDICADORES (GR)	459
GRUPO DE MONTAJE DE LA CABINA	460
MONTAJE DE LA PLATAFORMA (GR)	461
MONTAJE DE LA ESTRUCTURA ROPS (GR)	463
SOPORTE DEL RESPALDO (GR)	464
TABLERO DE INSTRUMENTOS (GR)	466
GRUPO DE PANEL, AISLANTE	473
PLATAFORMA DE LA CABINA	474
ENCHUFE (CONJ)	477
PRESURIZADOR (GR)	478
RADIO (GR)	480
RECLINACION DE ASIENTO (GR)	482
ESTRUCTURA ROPS (GR)	483
REJILLA PROTECTORA (GR)	487
PERSIANA PARA EL SOL (GR)	489
ASIENTO (GR)	490
SUSPENSIÓN - ASIENTO CON (GR)	493
ESTRIBO DEL OPERADOR (GR)	498
ASIENTO CON SUSPENSIÓN (GR)	499
TANQUE DEL LAVAPARABRISAS (GR)	506
VENTANA DE LA CABINA (GR)	507
LIMPIAPARABRISAS DE LA VENTANA (GR)	510
EQUIPOS Y SUMINISTRO DE SERVICIOS	512
ETIQUETA DE ADVERTENCIA (GR)	512
CALCOMANÍAS Y PLACAS DE IDENTIFICACIÓN (GR)	513
INDICE DE NUMEROS DE PIEZA	B1

ÍNDICE

Designação	Página
INFORMAÇÃO GERAL	A31
ALTERNATIVAS DE REPARO	A42
ADITIVOS SUPLEMENTARES DO LÍQUIDO ARREFECEDOR	A47
NOMENCLATURA DE PEÇAS INGLÊS-PORTUGUÊS	A49
PEÇAS DE MANUTENÇÃO	A76
ÍNDICE	A121
MÁQUINA - ARRANJO	1
CHASSI	1
ARRANJO GERAL	1
MÁQUINA-TEMP. AMBIENTE ALTA	1
MOTOR - ARRANJO	2
MOTOR COMPLETO	2
MOTOR - NÚCLEO	4
INSTALAÇÃO - ARRANJO	5
MOTOR BÁSICO	6
CORREIA	6
AJUSTADOR DE CORREIAS	9
EIXO-COMANDO DE VÁLVULA	10
SUPORTE DO RETENTOR	11
TAMPA - BLOCO DO MOTOR	12
TAMPA - CAIXA DIANTEIRA	13
TAMPA - MECANISMO DAS VÁLVULAS	14
VIRABREQUIM	15
BLOCO DO MOTOR	17
CABEÇOTE DO MOTOR	20
AMORTECEDOR DE VIBRAÇÕES E POLIA	31
DRENO - ÓLEO DO MOTOR	32
COMANDO DO VENTILADOR	35
FIXADORES - TAMPA DIANTEIRA	37
FIXADORES - CAIXA DIANTEIRA	38
VOLANTE DO MOTOR	39
ENGRENAGENS DE DISTRIBUIÇÃO	40
CAIXA DO VOLANTE DO MOTOR	41
CAIXA DIANTEIRA	42
TUCHO DA VÁLVULA	43
LEVANTAMENTO DO MOTOR	44
MONTAGEM - MOTOR	45
MONTAGEM - COMANDO DO VENTILADOR	47
CÁRTER DO ÓLEO DO MOTOR	48
PISTÃO E BIELA	49
BUJÃO DO MOTOR	50
POLIA DA RODA-GUIA	51
POLIA	52
POLIA - ACIONADOR DO VENTILADOR	54
POLIA DA RODA-GUIA	55
RETENTOR DO VIRABREQUIM	56
RETENTOR - CAIXA DO VOLANTE	57
RETENTOR - INJETOR DE COMBUSTÍVEL	58
RUÍDO - ARRANJO PARA SUPRESSÃO	59
REDUÇÃO DE RUÍDO	60
MECANISMO DAS VÁLVULAS	61
SISTEMA DE LUBRIFICAÇÃO	64
ADAPTADOR-TUBO DE ÓLEO DO MOTOR	64
RESPIRO	65
BOCAL DE ENCHIMENTO DE ÓLEO DO MOTOR	66
FILTRO - ÓLEO DO MOTOR	67
ELIMINAÇÃO DE VAPORES DO CÁRTER	68
INDICADOR - NÍVEL DO ÓLEO (VARETA)	70
TUBOS - ÓLEO DO MOTOR	71
TUBOS - ÓLEO DO TURBOALIMENTADOR	72
BOMBA DE ÓLEO - MOTOR	74
SISTEMA DE ARREFECIMENTO	76
ARREFECEDOR - ÓLEO DO MOTOR	76
ARREFECIMENTO	77
VENTILADOR	78
VENTILADOR DE SOPRO	80
VENTILADOR REVERSÍVEL	81
TUBOS - ÁGUA	82
BOMBA DE ÁGUA	84
RADIADOR	87
SISTEMA DA ADMISSÃO DE AR E DE ESCAPE	90
PÓS-ARREFECEDOR	90
PURIFICADOR DE AR	91
TAMPA - ADMISSÃO DE AR	92
COTOVELO DE ADMISSÃO DE AR	93
INDICADOR - TROCA DO FILTRO DE AR	94
TUBOS - AR	95
COLETOR DE ESCAPE	97
MONTAGEM - SILENCIADOR	98
SILENCIADOR	99
BLINDAGEM - PURIFICADOR DE AR	100
TURBOALIMENTADOR	101

ÍNDICE

Designação	Página
SISTEMA DE COMBUSTÍVEL	103
FILTRO DE COMBUSTÍVEL E SEPARADOR DE ÁGUA	103
TUBOS - COMBUSTÍVEL	104
TUBOS - FILTRO DO COMBUSTÍVEL	106
BOMBA HIDRÁULICA E MONTAGEM - UNIDADE INJETORA	108
BOMBA DA UNIDADE INJETORA	109
BOMBA HIDRÁULICA - UNIDADE INJETORA	111
TANQUE DE COMBUSTÍVEL	112
VÁLVULA SOLENÓIDE	114
SISTEMA ELÉTRICO E DE PARTIDA	115
ALARME	115
ALTERNADOR DE CORRENTE	116
BATERIA	121
CONTROLE ELETRÔNICO E MONTAGEM - MOTOR	123
CONTROLE ELETRÔNICO - MOTOR	124
CONTROLE DA MÁQUINA	126
CONTROLE DO PAINEL MONITOR	127
CONTROLE - NÃO PROGRAMADO	129
SISTEMA ELETRÔNICO - MÁQUINA	130
SISTEMA ELETRÔNICO - MONITOR	130
SISTEMA ELETRÔNICO - TREM DE FORÇA	131
FIXADORES - CABOS/FIOS ELÉTRICOS DO MOTOR	132
AQUECEDOR DA ÁGUA DO MOTOR	133
AQUECEDOR - AUXILIAR DE PARTIDA	135
INSTALAÇÃO-SEGURANÇA	136
LÂMPADA - TETO	140
LÂMPADA - FAROL	141
LUZ GIRATÓRIA DE ALARME	144
SISTEMA DE ILUMINAÇÃO - FARÓIS	145
SIST. DE ILUMINAÇÃO - PISCA-PISCA GIRATÓRIO DE ADVERTÊNCIA	147
PAINEL - DISJUNTOR ELÉTRICO AUTOMÁTICO	148
SENSOR DO MOTOR	150
SENSOR - NÍVEL DE LÍQUIDO	152
EMISSOR - POSIÇÃO	153
SENSOR - PRESSÃO	156
SENSOR DE VELOCIDADE	159
SENSOR - TEMPERATURA	163
MONITOR DE SERVIÇO	166
GR. DE SERVICO - TREM DE FORÇA	167
MOTOR ELÉTRICO DE PARTIDA	168
INTERRUPTOR - BUZINA	171
INTERRUPTOR DE DERIVAÇÃO	172
CHAVE GERAL	173
INTERRUPTOR - MAGNÉTICO	174
ALARME DE MARCHA À RÉ	177
CABOS/FIOS ELÉTRICOS	178
CABOS/FIOS ELÉTRICOS - CHASSI	180
CABOS/FIOS ELÉTRICOS - MOTOR	183
CABOS/FIOS ELÉTRICOS - AQUECEDOR	186
CABOS/FIOS ELÉTRICOS - PLATAFORMA	187
TREM DE FORÇA	190
CONTROLE DA TRANSMISSÃO	190
FILTRO - ÓLEO	192
COMANDO FINAL	193
COROA E ENGRENAGEM DE TRANFERÊNCIA	195
TUBOS - ÓLEO DA TRANSMISSÃO	199
MONTAGEM - CONVERSOR DE TORQUE	203
MONTAGEM - TRANSMISSÃO	204
ENGRENAGENS PLANETÁRIAS - TRANSMISSÃO	205
TREM DE FORÇA	212
BOMBA DE ENGRENAGENS	213
SEGMENTO DA RODA MOTRIZ	216
EIXO DE TRANSMISSÃO	217
EIXO DE EMBREAGEM DA DIREÇÃO	218
CONVERSOR DE TORQUE	219
TRANSMISSÃO	223
JUNTA UNIVERSAL	224
VÁLVULA DE MODULAÇÃO	225
VÁLVULA DE PRIORIDADE	227
VÁLVULA DE ALÍVIO	229
VÁLVULA SOLENÓIDE	232
VÁLVULA DE CONTROLE - TRANSMISSÃO	233
CHASSI E CARROCERIA	235
CAIXA E CHASSI	235
BARRA DE TRAÇÃO	238
COBERTURA	239
PÁRA-LAMA	242
GRADE DO RADIADOR CONTRA EROSÃO	243
GRADE DO RADIADOR	244
PROTETOR INFERIOR	245
PROTETOR - TANQUE DE COMBUSTÍVEL	247
PROTETOR - FILTRO DO TREM DE FORÇA	248
PROTETOR - RADIADOR	249
PROTETOR - GUIA DOS ROLETES DAS ESTEIRAS	251
CAPÔ E PROTETOR	253
CAPÔ	261
BARRAS DE PROTEÇÃO DO CAPÔ	263

ÍNDICE

Designação	Página
MATERIAL RODANTE	267
BARRA DE SUSPENSÃO	267
TAMPA DA RODA-GUIA	269
ARMAÇÃO TELESCÓPICA DA MOLA TENSORA	270
GUIA-MATERIAL RODANTE	272
RODA-GUIA DAS ESTEIRAS	273
ELO DA ESTEIRA	274
MONTAGEM - ROLETE SUPERIOR	276
BARRA DE ARTICULAÇÃO	277
ROLETE SUPERIOR DA ESTEIRA	278
ROLETE DE ESTEIRA DE FLANGE DUPLO	280
ROLETE DE ESTEIRA DE FLANGE SIMPLES	283
AJUSTADOR DE ESTEIRAS E MOLA TENSORA	285
ESTEIRA	286
MATERIAL RODANTE	288
MATERIAL RODANTE ; ESTRUTURA INFERIOR	288
SISTEMA DE DIREÇÃO E DE FREIO	289
AJUSTADOR DO CONTROLE DA DIREÇÃO E TRANSMISSÃO	289
FREIO - DIREÇÃO	292
EMBREAGEM DE DIREÇÃO E FREIOS	293
CONTROLE DO FREIO DE ESTACIONAMENTO	295
CONTROLE DE DIREÇÃO E TRANSMISSÃO	296
RETEM	300
FIXADORES	301
MECANISMO DE DIREÇÃO	302
COLETOR E VÁLVULA	306
PEDAL - GOVERNADOR E FREIO	308
SUPORTE - CONTROLE	310
VÁLVULA DE CONTROLE	311
VÁLVULA SOLENÓIDE	313
SISTEMA HIDRÁULICO	315
CONTROLE HIDRÁULICO MANUAL	315
CILINDRO ANGULÁVEL	321
CILINDRO DE LEVANTAMENTO	323
CILINDRO DE LEVANTAMENTO DO RIPER	327
CILINDRO DE INCLINAÇÃO	329
FILTRO - ÓLEO	333
COMANDO HIDRÁULICO	334
ARRANJO HIDRÁULICO - 4 VÁLVULAS	335
TUBOS - ANGULAGEM E INCLINAÇÃO	336
TUBULAÇÕES - AMOSTRAGEM DE FLUIDOS	340
TUBOS - CILINDRO DE LEVANTAMENTO	342
TUBOS - RIPER	348
TUBOS - CILINDRO DE INCLINAÇÃO	352
MONTAGEM - CILINDRO	356
MONTAGEM - VÁLVULA	358
BOMBA HIDRÁULICA E TUBULAÇÕES	359
BOMBA DE PISTÃO	362
GRUPO ROTATIVO DA BOMBA	364
TANQUE HIDRÁULICO E FILTRO	365
GRUPO DE VÁLVULAS DE CONTROLE - DUPLO	368
GRUPO DE VÁLVULAS DE CONTROLE - TRIPLO	369
GRUPO DE VÁLVULAS DE CONTROLE - QUÁDRUPLO	370
VÁLVULA DE CONTROLE	372
VÁLVULA DE CONTROLE - PRESSÃO E COMPENSAÇÃO DE FLUXO	384
VÁLVULA DE ALÍVIO	386
ACESSÓRIOS	388
LÂMINA	388
LÂMINA SEMI-UNIVERSAL	388
ARMAÇÃO-C - ANGULAÇÃO HIDRÁULICA	390
ELO DO PASSO	392
MONTAGEM - RIPER	393
PINO	395
BRAÇO DE EMPUXO	396
RIPER	398
MUNHÃO DA LÂMINA	399
FERRAMENTAS DE TRABALHO	400
LÂMINA ANGULÁVEL	400
LÂMINA SEMI-UNIVERSAL	402
BEIRA - PONTA CORTANTE	404
RIPER	406
DENTE DO RÍPER	408
POSTO DO OPERADOR	411
AJUSTADOR DO ASSENTO	411
CONDICIONADOR DE AR	413
VENTILADOR DA CABINE	415
CABINE	417
TOLDO	422
COMPRESSOR DE REFRIGERANTE	423
CONDENSADOR DE REFRIGERANTE	425
TAMPA - CONSOLO	427
PORTA DA CABINE	434
AQUECEDOR DA CABINE	438

ÍNDICE

Designação	Página
AQUECEDOR DA ESTRUTURA ROPS	440
CAIXA - SUSPENSÃO DO ASSENTO	444
INSTALAÇÃO - TUBULAÇÕES	447
INSTALAÇÃO DO RÁDIO	449
ISOLADOR - TEMPO	450
TRINCO	451
REVESTIMENTO DA CABINE	452
TUBOS - AR CONDICIONADO	453
TUBOS - AQUECEDOR	455
ESPELHO	458
MÓDULO ELETRÔNICO DE QUATRO INDICADORES	459
MONTAGEM - CABINE	460
MONTAGEM - PLATAFORMA	461
MONTAGEM - ESTRUTURA ROPS	463
FUNDO - ENCOSTO	464
PAINEL DE INSTRUMENTOS	466
PAINEL - ISOLAMENTO	473
PLATAFORMA DO OPERADOR	474
BUJÃO	477
PRESSURIZADOR	478
RÁDIO	480
RECLINAÇÃO - ASSENTO	482
ESTRUTURA ROPS	483
TELA DE PROTEÇÃO	487
TELA PÁRA-SOL	489
ASSENTO	490
ASSENTO COM SUSPENSÃO	493
DEGRAU	498
SUSPENSÃO - ASSENTO	499
TANQUE - LAVADOR DE JANELA	506
JANELA DA CABINE	507
LIMPADOR DO VIDRO	510
EQUIPAMENTO DE SERVIÇO E SUPRIMENTOS	512
DECALQUE	512
PLACA E DECALQUE	513
ÍNDICE DE NÚMERO DE PEÇA	B1

INHALTSVERZEICHNIS

Bezeichnung	Seite
ALLGEMEINE HINWEISE	A35
REPARATURALTERNATIVEN	A43
KÜHLMITTELZUSATZ	A48
WARTUNGSTEILE	A82
STICHWORTVERZEICHNIS	A132
MASCHINE	1
FAHRWERK	1
GRUNDAUSFÜHRUNG	1
MASCHINENAUSFÜHRUNG - HOHE AUSSENTEMPERATUR	1
MOTORAUSFÜHRUNG	2
MOTOR, KOMPLETT	2
MOTORKÜHLERBLOCK	4
EINBAUSATZ	5
MOTOR (GRUNDAUSFÜHRUNG)	6
RIEMEN	6
RIEMENSPANNER	9
NOCKENWELLE	10
DICHTUNGSTRÄGER	11
MOTORBLOCKDECKEL	12
STIRNRADGEHÄUSEDECKEL	13
VENTILDECKEL	14
KURBELWELLE	15
MOTORBLOCK	17
ZYLINDERKOPF	20
DÄMPFER UND RIEMENSCHEIBE	31
MOTORÖLABLASS	32
LÜFTERANTRIEB	35
STIRNRADGEHÄUSE-HALTETEILE	37
SCHWUNGRAD	39
STIRNRAD	40
SCHWUNGRADGEHÄUSE	41
STIRNRADGEHÄUSE	42
HUBVENTIL	43
MOTORHUBÖSE	44
MOTORAUFLAGER	45
LÜFTERANTRIEBSAUFHÄNGUNG	47
ÖLWANNE	48
PLEUELSTANGE UND KOLBEN	49
MOTORSTOPFEN	50
UMLENKRIEMENSCHEIBE	51
RIEMENSCHEIBE	52
LÜFTERRIEMENSCHEIBE	54
RIEMENSPANNER	55
KURBELWELLENDICHTUNG	56
SCHWUNGRADGEHÄUSEDICHTUNG	57
EINSPRITZDÜSENDICHTUNG	58
SCHALLDÄMPFUNG	59
VENTILSTEUERUNG	61
SCHMIERSYSTEM	64
MOTORÖLLEITUNGSADAPTER	64
ENTLÜFTER	65
MOTORÖLEINFÜLLSTUTZEN	66
ÖLFILTER	67
ENTDUNSTER	68
ÖLMESSSTAB	70
MOTORÖLLEITUNGEN	71
TURBOLADERÖLLEITUNGEN	72
SCHMIERPUMPE	74
KÜHLSYSTEM	76
MOTORÖLKÜHLER	76
KÜHLSYSTEM	77
LÜFTER	78
DRUCKLÜFTER	80
UMKEHRLÜFTER	81
KÜHLWASSERLEITUNGEN	82
KÜHLWASSERPUMPE	84
KÜHLER	87
LUFTEINLASS- UND ABGASSYSTEM	90
LADELUFTKÜHLER	90
LUFTREINIGER	91
LUFTEINLASSDECKEL	92
LUFTEINLASSBOGEN	93
LUFTFILTERWARTUNGSANZEIGE	94
DRUCKLUFTLEITUNGEN	95
AUSPUFFKRÜMMER	97
SCHALLDÄMPFERSTÜTZEN	98
SCHALLDÄMPFER	99
LUFTREINIGERSCHUTZ	100
TURBOLADER	101
KRAFTSTOFFSYSTEM	103
WASSERABSCHEIDER- U. KRAFTSTOFFILTER	103
KRAFTSTOFFLEITUNGEN	104
KRAFTSTOFFILTERLEITUNGEN	106
PUMPE UND BEFESTIGUNGSTEILE	108
EINSPRITZDÜSENPUMPE	109
PUMPENDÜSE, HYDRAULISCH	111
KRAFTSTOFFTANK	112
MAGNETVENTIL	114
ELEKTRISCHE ANLAGE UND STARTSYSTEM	115
WARNVORRICHTUNG	115
DREHSTROMGENERATOR	116
BATTERIE	121
STEUERUNGSEINHEIT, ELEKTRON. FÜR MOTOR UND BEFEST.	123

INHALTSVERZEICHNIS

Bezeichnung	Seite
MOTORSTEUERUNG, ELEKTRON.	124
MASCHINENSTEUERUNG	126
MONITORSTEUERUNG	127
STEUERUNG - NICHT PROGRAMMIERT	129
ELEKTRONIK - MASCHINE	130
ELEKTRONIK - MONITOR	130
KRAFTÜBERTRAGUNGSELEKTRONIK	131
MOTORVERDRAHTUNG - BEFESTIGUNG	132
UMLAUFKÜHLWASSERHEIZUNG	133
STARTHILFE - VORWÄRMER	135
SICHERHEITSEINBAUSATZ	136
FAHRERHAUSBELEUCHTUNG	140
ARBEITSLEUCHTEN	141
RUNDUM-KENNLEUCHTE	144
ARBEITSLEUCHTEN	145
RUNDUM-KENNLEUCHTE	147
UNTERBRECHER - INSTRUMENTENTAFEL	148
MOTORSENSOR	150
FLÜSSIGKEITSSTANDSENSOR	152
STELLUNGSSENSOR	153
DRUCKSENSOR	156
DREHZAHLSENSOR	159
TEMPERATURSENSOR	163
MONITOR - SERVICE	166
ANTRIEBSSTRANG-WARTUNGSSATZ	167
STARTERMOTOR	168
WARNHORNSCHALTER	171
UMGEHUNGSSCHALTER	172
TRENNSCHALTER	173
MAGNETSCHALTER	174
RÜCKFAHRWARNHORN	177
VERDRAHTUNG	178
FAHRGESTELLVERDRAHTUNG	180
MOTORVERDRAHTUNG	183
HEIZUNGSVERDRAHTUNG	186
FAHRERPLATTFORMVERDRAHTUNG	187
KRAFTÜBERTRAGUNG	190
GETRIEBESTEUERUNG	190
ÖLFILTER	192
SEITENANTRIEB	193
TELLERRAD- UND VORGELEGERADSATZ	195
ÖLLEITUNGEN - KRAFTÜBERTRAGUNG	199
DREHMOMENTWANDLERAUFHÄNGUNG	203
GETRIEBEAUFLAGER	204
PLANETENGETRIEBE	205
KRAFTÜBERTRAGUNG	212
ZAHNRADPUMPE	213
KETTENRADSEGMENT	216
ANTRIEBSWELLE	217
LENKKUPPLUNGSWELLE	218
DREHMOMENTWANDLER	219
GETRIEBE	223
KREUZGELENK	224
MODULATORVENTIL	225
VORRANGVENTIL	227
ÜBERDRUCKVENTIL	229
MAGNETVENTIL	232
GETRIEBESTEUERVENTIL	233
RAHMEN UND AUFBAU	235
RAHMEN UND GEHÄUSE	235
ZUGHAKEN	238
VERKLEIDUNG	239
SCHUTZBLECHE	242
SANDSTRAHLSCHUTZGITTER	243
KÜHLERGRILL	244
PANZERWANNE	245
KRAFTSTOFFTANKVERKLEIDUNG	247
KRAFTÜBERTRAGUNGSFILTERSCHUTZ	248
KÜHLERSCHUTZ	249
KETTENFÜHRUNGSSCHUTZ	251
MOTORHAUBE UND VERKLEIDUNG	253
MOTORHAUBE	261
SCHUTZBÜGEL	263
LAUFWERK	267
QUERTRAVERSE	267
LEITRADAUFSATZ	269
LAUFROLLENRAHMEN (TELESKOPRÜCKLAUF)	270
LAUFWERKFÜHRUNG	272
LEITRAD	273
KETTENGLIEDER	274
TRAGROLLENAUFHÄNGUNG	276
ACHSWELLE	277
TRAGROLLE	278
DOPPELFLANSCHROLLEN	280
EINZELFLANSCHROLLEN	283
KETTENSPANNER UND -FEDERRÜCKLAUF	285
LAUFWERKSKETTE	286
LAUFWERKSRAHMEN	288
LENK- UND BREMSSYSTEM	289
LENK- UND GETRIEBEEINSTELLER	289
LENKBREMSE	292
LENKKUPPLUNG UND BREMSE	293
FESTSTELLBREMSGESTÄNGE	295
LENK- UND GETRIEBESTEUERUNG	296

INHALTSVERZEICHNIS

Bezeichnung	Seite
SPERRE	300
HALTETEILE	301
LENKTRIEB	302
KRÜMMER UND VENTIL	306
GAS- U. BREMSPEDAL	308
STÜTZGRUPPE - STEUERUNG	310
STEUERVENTIL	311
MAGNETVENTIL	313
HYDRAULIKSYSTEM	315
HYDRAULIKHANDSTEUERUNG	315
SCHWENKSCHILDZYLINDER	321
HUBZYLINDER	323
AUFREISSERHUBZYLINDER	327
KIPPZYLINDER	329
ÖLFILTER	333
HYDRAULIKSYSTEM	334
HYDRAULIKANORDNUNG (4-VENTIL-HYDRAULIK)	335
SCHWENK- UND KIPPZYLINDERLEITUNGEN	336
PROBEENTNAHMELEITUNGEN	340
HUBZYLINDERLEITUNGEN	342
AUFREISSERLEITUNGEN	348
NEIGEZYLINDERLEITUNGEN	352
ZYLINDERAUFHÄNGUNG	356
VENTILAUFHÄNGUNG	358
HYDRAULIKPUMPE U. LEITUNGEN	359
KOLBENPUMPE	362
KOLBENPUMPENUMLAUFSATZ	364
HYDRAULIKTANK UND SCHMIERFILTER	365
VENTILSATZ (2-VENTIL)	368
VENTILSATZ (3-VENTIL)	369
VENTILSATZ (4-VENTIL)	370
STEUERVENTIL	372
DRUCK- U. STROMAUSGLEICHSVENTIL	384
ÜBERDRUCKVENTIL	386
ARBEITSGERÄTE	388
PLANIEREINRICHTUNG	388
SU-SCHILD	388
C-RAHMEN (SCHWENKSCHILD)	390
NEIGUNGSSTELLGLIED	392
AUFREISSERBEFESTIGUNG	393
BOLZENSATZ	395
SCHUBARM	396
AUFREISSER - TEILLISTE	398
MONTAGEZAPFEN (PLANIERSCHILDEINRICHTUNG)	399
ARBEITSGERÄTE	400
SCHWENKSCHILD	400
SU-SCHILD	402
SCHNEIDMESSER UND EINSATZSTÜCK	404
AUFREISSER	406
AUFREISSERZAHN	408
FAHRERHAUS	411
FAHRERSITZVERSTELLER	411
KLIMAANLAGE	413
FAHRERHAUS-DRUCKLÜFTER	415
FAHRERHAUS	417
WETTERDACH	422
KÄLTEMITTELKOMPRESSOR	423
KÄLTEMITTELKONDENSATOR	425
STEUERKONSOLENABDECKUNG	427
FAHRERHAUSTÜR	434
FAHRERHAUSHEIZUNG	438
HEIZUNG - OFFENES FAHRERHAUS MIT ÜBERROLLSCHUTZ	440
FAHRERSITZFEDERUNGSGEHÄUSE	444
LEITUNGSINSTALLATIONSSATZ	447
RADIOEINBAUSATZ	449
WÄRMEISOLIERUNG	450
VERRIEGELUNG	451
FAHRERHAUSAUSKLEIDUNG	452
KLIMAANLAGENLEITUNGEN	453
HEIZUNGSLEITUNGEN	455
SPIEGEL	458
MODUL - VIER ELEKTRON. ANZEIGEN	459
FAHRERHAUSANBAUSATZ	460
PLATTFORM-ANBAUSATZ	461
ÜBERROLLSCHUTZAUFLAGER	463
SCHALE - RÜCKENLEHNE	464
INSTRUMENTENTAFEL	466
ISOLATIONSTAFEL	473
FAHRERPLATTFORM	474
STECKERSATZ	477
FAHRERHAUSBELÜFTUNG	478
RADIO	480
VERSTELLBARER SITZ	482
ÜBERROLLSCHUTZ	483
SCHUTZGITTER	487
SONNENBLENDE	489
FAHRERSITZ	490
SCHWINGSITZ	493
STEIGLEITER	498
FAHRERSITZFEDERUNG	499
SCHEIBENWASCHMITTELBEHÄLTER	506
FAHRERHAUSFENSTER	507
SCHEIBENWISCHER	510
WARTUNGSAUSRÜSTUNG UND -ZUBEHÖR	512
AUFKLEBER	512

INHALTSVERZEICHNIS

Bezeichnung	Seite	Bezeichnung	Seite
SCHILD UND AUFKLEBER	513		
ERSATZTEILNUMMERNINDEX	B1		

GENERAL INFORMATION

1. MACHINE IDENTIFICATION

Caterpillar machines are identified by Product Identification Numbers (PIN). Some components included in a machine may be identified by Serial Numbers (S/N). Typical components that will be serialized include engines, transmissions, bulldozers, and rippers. The machine and engine are further identified by arrangement numbers and in some cases modification numbers. These numbers are shown on the product identification plate(s) and on the master plate in the operator's compartment.

Caterpillar dealers need all of these numbers to determine accurate parts identification.

SIS ***New Feature***

Effective First Quarter 2001 the Caterpillar Product Identification Number (PIN) changed from 8 to 17 characters. In an effort to provide uniform equipment identification, Caterpillar and other construction equipment manufacturers are moving to comply with the latest version of the product identification numbering standard. Non-road machine PINs are defined by ISO 10261. The new PIN format will apply to all Caterpillar machines and generator sets. The PIN plates and frame marking will display the 17 character PIN. The new format will look like the following:

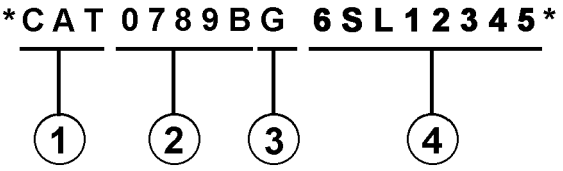

Where:

1. Caterpillar's World Manufacturing Code (characters 1-3)

2. Machine Descriptor (characters 4-8)

3. Check Character (character 9)

4. Machine Indicator Section (MIS) or Product Sequence Number (characters 10-17). These were previously referred to as the Serial Number.

Machines and generator sets produced before First Quarter 2001 will maintain their 8 character PIN format.

Components such as engines, transmissions, axles, etc. and work tools will continue to use an 8 character Serial Number (S/N).

2. ORDERING PARTS

⚠ WARNING

When replacement parts are required for this product Caterpillar recommends using Caterpillar replacement parts or parts with equivalent specifications including, but not limited to, physical dimensions, type, strength and material.

Failure to heed this warning can lead to premature failures, product damage, personal injury or death.

Quality Caterpillar replacement parts are available from Caterpillar dealers throughout the world. Their parts inventories are up to date and include all parts normally required to protect your investment in Caterpillar machines. Dealers may offer repair kits or remanufactured parts to allow selection of the most effective repair alternative for a particular situation. When ordering parts, your order should specify the quantity, part number, part name, and the serial number/product identification number of the machine for which the parts are needed.

3. PARTS MANUAL ORGANIZATION

Product information in this manual is presented as "information elements" that represent all of the components for the specific model. Engine Arrangement and Seat Group are examples of information elements. The information elements are organized alphabetically by part name and secondarily by part number within each major section of the manual.

4. TABLE OF CONTENTS

A table of contents (TOC) is found at the beginning of the manual. The TOC lists each section of the manual with a complete list of all information elements organized as they appear in the manual. Page numbers are provided for quick reference to detailed parts identification illustrations and serviceable consist lists.

5. MAINTENANCE PARTS INDEX

The Maintenance Parts Index, located near the beginning of the manual, references most frequently used maintenance part numbers, providing description, quantity, usage and page number. This information is organized alphabetically by part description.

6. INDEX

The index located near the front of the manual is an alphabetical listing of all information elements included in the manual. Page numbers are provided for quick reference to detailed parts identification illustrations and serviceable consist lists.

7. PART NUMBER INDEX

A numerical index listing all part numbers and the corresponding page number(s) appears at the back of the manual.

8. CAPTIONS

Captions located at the beginning of each information element identify the part number and part name along with additional descriptive information. PIN and S/N information found in each caption should be used to select correct information for a specific machine. Field replacement options, identification of optional attachment components, and where used ("part of") information is also provided.

The first line of a caption is shown in larger type font to indicate the beginning of an information element. Captions for additional pages that may be required to illustrate an information element will be shown in standard type font and will include the term *(contd.)* .

9. NON-SERVICED PARTS

In some instances it is necessary to display non-serviced parts that are a link to a lower level serviceable consist lists. These non-serviced part numbers are shown in *italic* type indicating that they are not available.

10. PARTS LIST REFERENCE NUMBERS

Numbers shown in the Ref No column correspond to numbers used in the associated graphic(s). An alphabetic suffix may be added to a reference number to identify lower level consist items. Numbers shown in the Graphic Ref column refer to the graphic number identifier displayed in the lower left corner of each illustration. The Graphic Ref number may be used in combination with the item Ref No to determine the correct part number. There may be intentional omission of a Ref No in a consist list as information is updated to reflect the latest serviceable part numbers.

11. INDENTED PART NAMES

When a part name is indented in a parts list, it is part of (included in) the group or assembly under which it is indented.

12. ILLUSTRATION REFERENCE LETTERS

When necessary, illustrations contain reference letters (A, B, C etc.) that are intended to track lines and harnesses from one point to another. They are also used to show where to reconnect illustrations that have been separated.

13. ABBREVIATIONS AND SYMBOLS

O.D. – Outside Diameter
I.D. – Inside Diameter
A – Not Part Of This Group
B – Use As Required
C – Change From Previous Type
D – Order By The Meter
E – Order By The Centimeter
F – Not Shown
G – Order By The Inch
I – See Hose Fabrication Guide
M – Metric Part
R – Remfg Part May Be Available
Y – Separate Illustration
Z – Not Serviced Separately

SIS *New Feature*

14.<END>

This symbol indicates the end of an information element.

NOTE:

Continuing improvement and advancement of product design may cause changes to your machine which may not be included in this publication. Whenever a question arises regarding your caterpillar product or this publication, please consult your caterpillar dealer for the latest available information.

FRAME AND BODY

8E-3299 PLATFORM GP-CAB

PIN 38K1-99999

SMCS-7283 — 100090751

NOTE	REF NO	GRAPHIC REF	PART NUMBER	QTY	PART NAME 1 2 3 4 5 6 (PRODUCT LEVEL)	SEE PAGE
	1	1	3T-3953	1	PLATE AS	
	2	1	6B-3062	25	BOLT (3/8-16X.750IN)	
	3	1	6P-1075	41	WASHER-HARD (9MM THK)	
	4	1	9F-1444	2	SUPPORT AS-FOOT	
	5	1	7P-2229	19	BOLT (1/2-13X1IN)	
		1	6P-[illegible]	19	WASHER-HARD (4MM THK)	
	6	1	8E-8134	1	COVER AS-LH	
		1	9F-2979	5	NUT-WELD (3/8-16 THD)	
		1	1P-8188	1	CLIP	
	7	1	7S-2411	4	COVER	
	8		6J-0468	19	SCREW-HEAD (3/8-16X.875IN)	
	9	1	[illegible]-4674	1	COVER	
		1	8E-8972	[illegible]	GASKET	
	10	1	8E-3248	1	[illegible]	
		1	8E-3250	1	GASKET	
	11	1	3T-3939	1	HANDHOLD	
	12	1	8E-8978	1	COVER AS	
		1	9F-2978	8	NUT-WELD (3/8-16 THD)	
		1	8E-8979	1	GASKET	
	13	1	7T-0131	1	FLOORPLATE AS	
		1	1F-0748	4	NUT-WELD (1/2-13 THD)	
	14	1	7Y-8087	1	PLUG-BUTTON	
	15	1	7T-0136	1	PLATE AS	
		1	9F-2979	5	NUT-WELD (3/8-16 THD)	
	16	1	7T-8098	1	COVER	
		1	7T-0779	1	GASKET	
	17	1	3T-3951	1	PLATE AS	
	18	1	6T-8364	4	BOLT (1/4-20X.625IN)	
M		1	9T-4205	4	WASHER-HARD (2MM THK)	
	19	1	8X-8464	1	FLOOR MAT	
	20	1	8E-8946	1	MODULE AS-OPERATOR	
	21	1	3T-3934	1	HANDHOLD	
	22	1	9P-8871	2	PLUG	
	23	2	6T-8364	4	BOLT (1/4-20X.625IN)	
M		2	9T-4205	4	WASHER-HARD (2MM THK)	
	24	2	6B-3062	17	BOLT (3/8-16X.750IN)	
	25	2	6P-1075	21	WASHER-HARD (9MM THK)	
	26	2	7T-0126	1	SEAL	
	27	2	7X-0378	2	BOLT (3/4-10X5IN)	
		2	7X-0682	2	WASHER-HARD (6MM THK)	
	28	2	3T-3482	2	PLATE	
	29	2	3T-8290	1	PLATE AS	
		2	7S-4838	6	SPACER	
	30	2	3T-8291	1	SEAL	
	31	2	7S-8817	1	GASKET	
	32	2	7S-8916	1	COVER AS	
		2	2R-2376	2	WASHER	
		2	6P-8826	2	SCREW-KNURLED	
	33	2	9W-3429	1	COVER	
	34	2	8E-8937	1	COVER	
	35	2	9D-3931	8	SCREW-SOCKET HEAD	
	36	2	9W-3142	8	MOUNTING	
	37	2	9W-9027	2	PLATE	
	38	2	7X-0360	2	BOLT (7/8-9X5IN)	
		2	7X-0672	2	WASHER-HARD	
	39	2	6L-6454	4	BOLT (3/8-16X1.0IN)	
	40	2	3T-4788	1	COVER	

12 FRAME AND BODY — 1 of 4 — SELP4570-01

FRAME AND BODY

8E-3299 PLATFORM GP-CAB (contd.)

100090751

NOTE	REF NO	GRAPHIC REF	PART NUMBER	QTY	PART NAME 1 2 3 4 5 6 (PRODUCT LEVEL)	SEE PAGE
	41	2	8E-2515	1	COVER	
	42	2	7T-0134	1	PLATE	
	43	2	7T-0138	1	GASKET	
	44	2	7S-8724	1	GASKET	
	45	2	7S-8723	1	COVER	
	46	[illegible]	6V-1958	2	PLUG-BUTTON	
M-METRIC PART						

SELP4570-01 — 2 of 4 — FRAME AND BODY 13

FRAME AND BODY

8E-3299 PLATFORM GP-CAB (contd.)

100090751

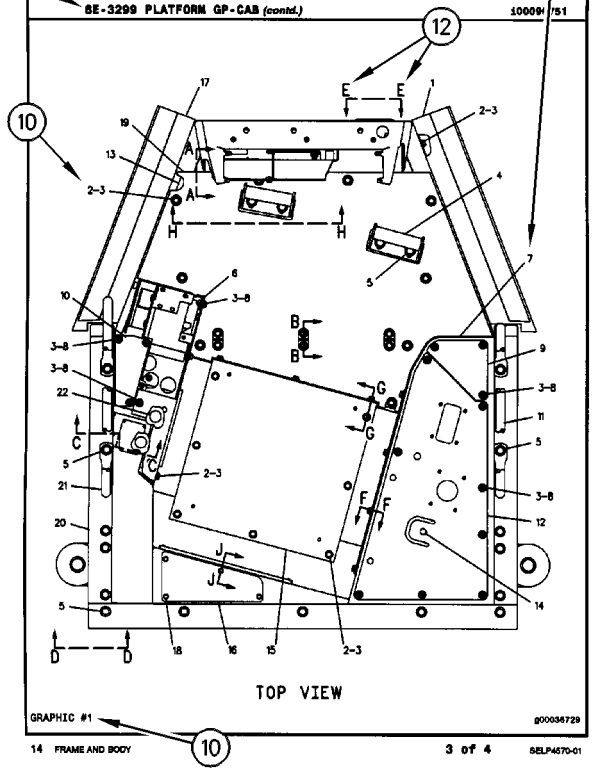

GRAPHIC #1 — g00036729

14 FRAME AND BODY — 3 of 4 — SELP4570-01

FRAME AND BODY

8E-3299 PLATFORM GP-CAB (contd.)

100090751

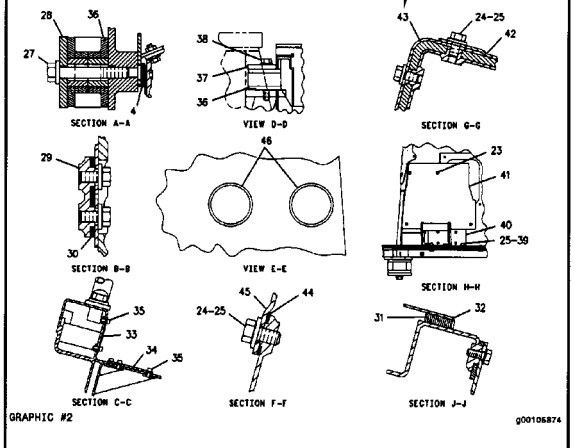

GRAPHIC #2 — g00105874

SELP4570-01 — 4 of 4 — FRAME AND BODY 16

1. IDENTIFICATION DE LA MACHINE

Toutes les machines Caterpillar portent un numéro d'identification (PIN). Certains composants des machines peuvent porter des numéros de série (S/N). En général, parmi les composants qui portent des numéros de série il y a les moteurs, les transmissions, les bulldozers et les rippers. En plus, la machine et le moteur peuvent recevoir des numéros de version, et dans certains cas, de modification. Ces numéros figurent sur les plaques de numéro de série et sur la plaque signalétique principale qui se trouve dans le poste de conduite.

Les concessionnaires Caterpillar doivent connaître tous ces numéros pour identifier correctement les pièces.

SIS *Nouvelle Caractéristique*

À partir du premier trimestre 2001, le numéro d'identification produit (PIN) Caterpillar passe de 8 à 17 caractères. Afin de permettre une identification uniforme des matériels, Caterpillar et d'autres constructeurs de machines de travaux publics s'efforcent de se conformer à la norme la plus récente portant sur les numéros d'identification des produits. Les numéros d'identification (PIN) de machines de chantier sont définis par la norme ISO 10261. Le nouveau format du numéro d'identification est valable pour toutes les machines et tous les groupes électrogènes Caterpillar. Le numéro d'identification produit (PIN) figurant sur la plaque et sur le châssis se composera de 17 caractères. Le nouveau format ressemblera à ceci:

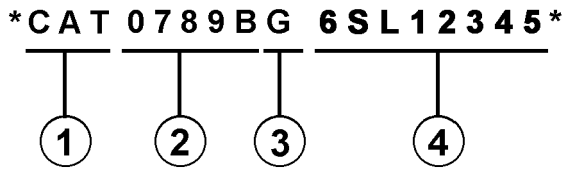

Il se décomposera de la façon suivante:

1. Code international de fabrication de Caterpillar (caractères 1 à 3)

2. Descriptif de la machine (caractères 4 à 8)

3. Contrôle (caractère 9)

4. Indicateur machine (MIS) ou numéro de séquence produit (caractères 10 à 17). Ceux-ci étaient auparavant désignés sous le terme de numéro de série.

Les machines et les groupes électrogènes construits avant le premier trimestre 2001 garderont le format à 8 caractères du numéro d'identification produit (PIN).

Les organes tels que les moteurs, les boîtes de vitesses, les essieux, etc., continueront d'être désignés par un numéro de série (S/N) à 8 caractères.

2. COMMANDE DE PIÈCES

⚠ DANGER

Lorsqu'il faut remplacer des pièces de rechange pour ce produit Caterpillar recommande d'utiliser les pièces de rechange Caterpillar ou les pièces qui ont des spécifications équivalentes dont les dimensions physiques, le type, la force et le matériau. Ces équivalences ne se limitent pas à l'énoncé précédent.

L'inobservation de cette mise en garde peut entraîner des défaillances prématurées, des dommages au produit, des blessures ou même la mort.

Les concessionnaires Caterpillar fournissent dans le monde entier des pièces de rechange de qualité Caterpillar. Leurs stocks de pièces sont constamment réapprovisionnés et comptent toutes les pièces nécessaires pour assurer la bonne marche de vos machines Caterpillar. Certains concessionnaires proposent également des kits de réparation ou des pièces rénovées, ce qui permet de choisir la solution la plus économique dans une situation donnée. Lors des commandes de pièces, mentionner la quantité, le numéro et la désignation des pièces ainsi que le numéro de série ou le numéro d'identification (PIN) de la machine pour laquelle ces pièces sont requises.

3. ORGANISATION DU CATALOGUE DE PIÈCES

Les renseignements sur les produits sont présentés sous forme de "Information element" (élément d'information) représentant tous les composants d'un modèle donné. "Engine Arrangement" (version de moteur) et "Seat Group" (assemblage de siège)" sont des exemples d'éléments d'information. Les éléments d'information sont classés par ordre alphabétique par la désignation standard des pièces et par numéros de pièces dans chaque partie importante du manuel.

4. TABLE DES MATIÈRES

Nouvelle Caractéristique

La table des matières se trouve au début du manuel. La table des matières fournit la liste de tous les chapitres du manuel avec une liste complète de tous les éléments d'information classés par ordre d'apparition dans le manuel. Les numéros de page sont fournis afin que l'utilisateur puisse trouver rapidement les illustrations détaillées concernant l'identification des pièces et les listes des pièces d'entretien.

5. INDEX DES PIÈCES D'ENTRETIEN

La rubrique "Index des pièces d'entretien" qui se trouve au début du manuel renvoie aux pièces d'entretien les plus fréquemment utilisées en précisant la désignation, la quantité, là où la pièce est utilisée et le numéro de page. Ces pièces sont classés par ordre alphabétique.

6. INDEX

L'index qui se trouve vers le début du manuel est une liste alphabétique de tous les éléments d'information du manuel. Les numéros de page sont fournis afin que l'utilisateur puisse trouver rapidement les illustrations détaillées concernant l'identification des pièces et les listes des pièces d'entretien.

7. INDEX DES NUMÉROS DE PIÈCES

Une liste numérique de tous les numéros de pièces et des pages correspondantes se trouve à la fin du manuel.

8. LÉGENDES

Les légendes qui se trouvent en haut de chaque page de chaque élément d'information fournissent le numéro de pièce, la désignation ainsi que des renseignements supplémentaires sur les pièces. Les renseignements concernant les numéros de série (S/N) qui se trouvent dans chaque légende doivent être utilisés pour sélectionner les informations correctes pour un moteur donné. Les informations concernant les options de remplacement sur le chantier, l'identification des composants des équipements offerts en option et les lieux d'application sont aussi fournies.

Nouvelle Caractéristique

Les lettres de la première ligne d'une légende sont présentées en police plus grande afin d'indiquer le début d'une unité d'information. Les légendes qui pourraient être requises pour des pages supplémentaires afin d'illustrer une unité d'information seront présentées en police standard et comprendront le terme (à suivre).

9. PIÈCES NON FOURNIES

Nouvelle Caractéristique

Dans certains cas, il est nécessaire d'indiquer les pièces non fournies qui sont en aval de la liste des pièces d'entretien. Les numéros des pièces non fournies dans la liste des pièces et les légendes seront en italique pour signaler qu'ils ne sont pas disponibles.

10. NUMÉROS DE RÉFÉRENCE DE LA LISTE DES PIÈCES

Nouvelle Caractéristique

Les numéros indiqués dans la colonne des numéros de références correspondent aux numéros utilisés dans les illustrations auxquelles ils sont associés. Un suffixe alphabétique peut être ajouté à un numéro de référence pour identifier la liste des articles en aval. Les numéros indiqués dans la colonne de référence de l'illustration renvoient à l'identification du numéro affiché dans le coin inférieur gauche de chaque illustration. Le numéro de référence de l'illustration pourrait être utilisé avec le numéro de référence de l'article pour déterminer le numéro de pièce correct. Il peut y avoir une omission intentionnelle d'un numéro de référence dans une liste de pièces suite à la mise à jour des informations en vue de refléter les numéros de pièces les plus récentes.

11. DÉSIGNATIONS DE PIÈCES EN RETRAIT

Lorsqu'une désignation de pièce est en retrait, cela veut dire que l'article en regard fait partie de l'ensemble sous lequel il figure.

12. LETTRES DE RÉFÉRENCE DES ILLUSTRATIONS

Quand cela est nécessaire, les illustrations comportent des lettres de référence (A, B, C, etc.) pour montrer le trajet des canalisations et faisceaux de câbles d'un point à l'autre. Elles sont utilisées également pour indiquer où relier les illustrations séparées auparavant.

13. ABRÉVIATIONS ET SYMBOLES

O.D. – Diamètre extérieur
I.D. – Diamètre intérieur
A – Ne fait pas partie de ce groupe
B – Utiliser selon besoin
C – Modification
D – Commander par mètre
E – Commander par centimètre
F – Non représenté
G – Commander par pouce
I – Voir "Hose Fabrication Guide"
M – Pièce métrique
R – Pièce rénovée éventuellement disponible
Y – Illustration séparée
Z – Non fourni séparément

NOTA:

En raison du progrès technique et des améliorations continuelles apportées au matériel, votre machine comporte peut-être des modifications qui n'apparaissent pas dans la présente publication. En cas de doute sur un détail de votre machine Caterpillar ou sur le texte de la présente publication, adressez-vous à votre concessionnaire Caterpillar.

FRAME AND BODY

8E-3299 PLATFORM GP-CAB

PIN 38K1-99999

SMCS-7283 — 100090751

NOTE	REF NO	GRAPHIC REF	PART NUMBER	QTY	PART NAME (1 2 3 4 5 6 PRODUCT LEVEL)	SEE PAGE
	1	1	3T-3953	1	PLATE AS	
	2	1	6B-3062	25	BOLT (3/8-16X.750IN)	
	3	1	6P-1075	41	WASHER-HARD (9MM THK)	
	4	1	9F-1444	2	SUPPORT AS-FOOT	
	5	1	7P-2229	19	BOLT (1/2-13X1IN)	
		1	6P-[illegible]	19	WASHER-HARD (4MM THK)	
	6	1	8E-8134	1	COVER AS-LH	
		1	9F-2979	5	NUT-WELD (3/8-16 THD)	
		1	1P-8188	1	CLIP	
	7	1	7S-2411	4	COVER	
	8		6J-0468	19	SCREW-HEAD (3/8-16X.875IN)	
	9	1	[illegible]-4674	1	COVER	
		1	8E-8972	1	GASKET	
	10	1	8E-3248	1	[illegible]	
		1	8E-3250	1	GASKET	
	11	1	3T-3939	1	HANDHOLD	
	12	1	8E-8978	1	COVER AS	
		1	9F-2978	8	NUT-WELD (3/8-16 THD)	
		1	8E-8979	1	GASKET	
	13	1	7T-0131	1	FLOORPLATE AS	
		1	1F-0748	4	NUT-WELD (1/2-13 THD)	
	14	1	7Y-8087	1	PLUG-BUTTON	
	15	1	7T-0136	1	PLATE AS	
		1	9F-2979	5	NUT-WELD (3/8-16 THD)	
	16	1	7T-8098	1	COVER	
		1	7T-0779	1	GASKET	
	17	1	3T-3951	1	PLATE AS	
	18	1	6T-8364	4	BOLT (1/4-20X.625IN)	
M		1	9T-4205	4	WASHER-HARD (2MM THK)	
	19	1	8X-8464	1	FLOOR MAT	
	20	1	8E-8946	1	MODULE AS-OPERATOR	
	21	1	3T-3934	1	HANDHOLD	
	22	1	9P-8871	2	PLUG	
	23	2	6T-8364	4	BOLT (1/4-20X.625IN)	
M		2	9T-4205	4	WASHER-HARD (2MM THK)	
	24	2	6B-3062	17	BOLT (3/8-16X.750IN)	
	25	2	6P-1075	21	WASHER-HARD (9MM THK)	
	26	2	7T-0136	1	SEAL	
	27	2	7X-0378	2	BOLT (3/4-10X5IN)	
		2	7X-0682	2	WASHER-HARD (6MM THK)	
	28	2	3T-3482	2	PLATE	
	29	2	3T-8290	1	PLATE AS	
		2	7S-4888	6	SPACER	
	30	2	3T-8291	1	SEAL	
	31	2	7S-8817	1	GASKET	
	32	2	7S-8916	1	COVER AS	
		2	2R-2376	2	WASHER	
		2	6P-8826	2	SCREW-KNURLED	
	33	2	9W-3429	1	COVER	
	34	2	8E-8937	1	COVER	
	35	2	9D-3931	8	SCREW-SOCKET HEAD	
	36	2	9W-3142	8	MOUNTING	
	37	2	9W-9027	2	PLATE	
	38	2	7X-0360	2	BOLT (7/8-9X6IN)	
		2	7X-0672	2	WASHER-HARD	
	39	2	6L-4454	4	BOLT (3/8-16X1.0IN)	
	40	2	3T-4788	1	COVER	

12 FRAME AND BODY — 1 of 4 — SELP4570-01

FRAME AND BODY

8E-3299 PLATFORM GP-CAB (contd.)

100090751

NOTE	REF NO	GRAPHIC REF	PART NUMBER	QTY	PART NAME (1 2 3 4 5 6 PRODUCT LEVEL)	SEE PAGE
	41	2	8E-2515	1	COVER	
	42	2	7T-0134	1	PLATE	
	43	2	7T-0138	1	GASKET	
	44	2	7S-8724	1	GASKET	
	45	2	7S-8723	1	COVER	
	46	[illegible]	6V-1958	2	PLUG-BUTTON	
M-METRIC PART						

SELP4570-01 — 2 of 4 — FRAME AND BODY 13

FRAME AND BODY

8E-3299 PLATFORM GP-CAB (contd.)

100090751

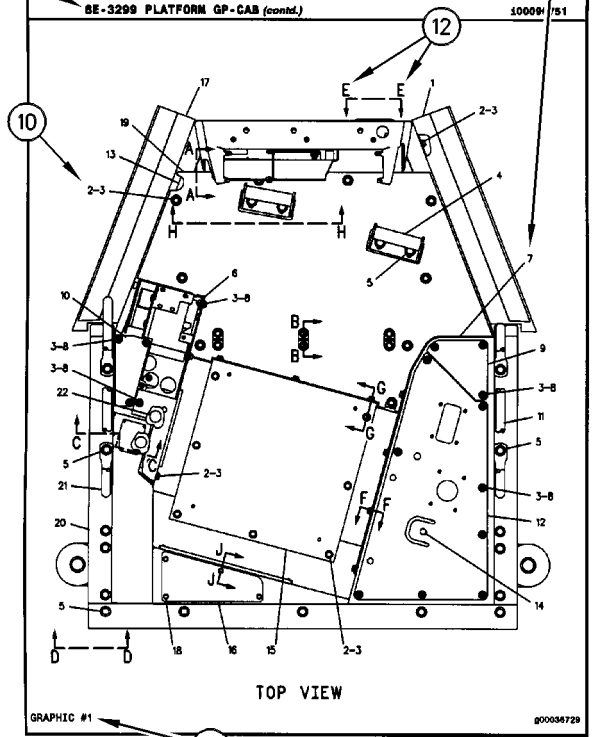

GRAPHIC #1 — g00036729

14 FRAME AND BODY — 3 of 4 — SELP4570-01

FRAME AND BODY

8E-3299 PLATFORM GP-CAB (contd.)

100090751

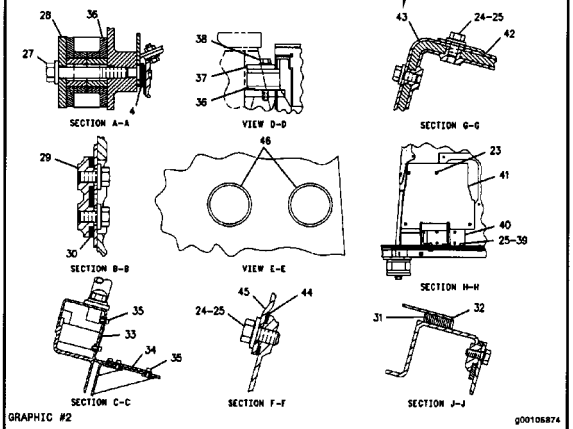

GRAPHIC #2 — g00105874

SELP4570-01 — 4 of 4 — FRAME AND BODY 16

1. MÁQUINAS

Las máquinas Caterpillar se identifican con Números de Identificación del Producto (PIN). Algunos componentes incluídos en la máquina pueden estar identificados con Números de Serie (N/S). Los componentes que tienen típicamente esta identificación incluyen motores, transmisiones, hojas topadoras y desgarradores. La máquina y el motor se identifican además con Números de Configuración y en algunos casos, Números de Modificación. Estos números están en las placas de identificación del producto o en la placa principal en la cabina del operador.

Los distribuidores Caterpillar necesitan estos números para identificar con exactitud los números de piezas de repuesto.

SIS *Nueva Característica*

A partir del primer trimestre del 2001, el Número de Identificación de Producto (PIN) de Caterpillar cambió de 8 a 17 caracteres. Para hacer más uniforme el método de identificación de equipos, Caterpillar y otros fabricantes de equipo de construcción han tomado medidas para cumplir con la versión más reciente de la norma de numeración de identificación de productos. Los Números de Identificación de Producto para máquinas que no se operan en carreteras son definidos por la norma ISO 10261. El nuevo formato PIN corresponderá a todas las máquinas y grupos electrógenos Caterpillar. Las placas y los caracteres PIN estampados en el bastidor mostrarán el PIN de 17 caracteres. El nuevo formato tendrá la apariencia siguiente:

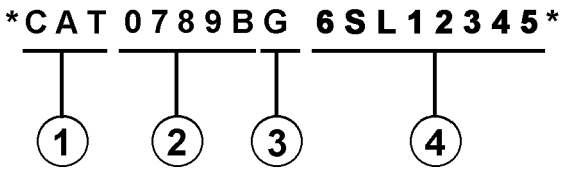

Significado de los caracteres:

1. Código de Fabricación Mundial de Caterpillar (caracteres 1-3)

2. Sección Descriptor de la Máquina (caracteres 4-8)

3. Carácter de Verificación (carácter 9)

4. Sección Indicador de la Máquina (MIS) o Número de Secuencia de Producto (caracteres 10-17). Anteriormente, estos caracteres constituían el Número de Serie.

Las máquinas y grupos electrógenos producidos antes del primer semestre del 2001 mantendrán su formato PIN de 8 caracteres.

Los componentes como motores, transmisiones, ejes, herramientas de trabajo, etc., continuarán usando un Número de Serie (S/N) de 8 caracteres.

2. COMO PEDIR REPUESTOS

⚠ ADVERTENCIA

Cuando se necesiten piezas de repuesto para este producto, Caterpillar recomienda usar piezas de repuesto Caterpillar o piezas que tengan especificaciones equivalentes incluyendo, pero sin estar limitadas a, dimensiones físicas, tipo, fortaleza y material.

El no hacer caso de esta advertencia puede llevar a fallas prematuras, daños al producto y lesiones graves o mortales.

Las piezas de repuesto Caterpillar de calidad están a la disposición de los distribuidores Caterpillar en todo el mundo. Sus existencias actualizadas incluyen todas las piezas normalmente requeridas para proteger su inversión en máquinas Caterpillar. Los distribuidores pueden tener juegos de reparación o piezas remanufacturadas para permitir la selección de la mejor alternativa de reparación en un caso en particular. Al pedir piezas de repuesto, especifique en su pedido la cantidad, el número de pieza, el nombre de la pieza y el número de serie/número de identificación del producto, de la máquina para la cual se necesitan estas piezas.

3. ORGANIZACION DEL MANUAL DE PIEZAS

La información sobre el producto, se presenta en este manual, como "elementos de información" que representan todos los componentes de un modelo específico. Las configuraciones de motores y los grupos de asientos son ejemplos de elementos de información. Los elementos de información están organizados primeramente por nombres de piezas en orden alfabético y en segundo lugar, por el número de pieza dentro de cada sección principal del manual.

4. CONTENIDO

La página de Contenido se encuentra al principio del manual. El Contenido indica cada sección del manual con una lista completa de todos los elementos de información organizados en el orden que aparecen en el manual. Los números de página proporcionan una referencia rápida a las ilustraciones detalladas de identificación de piezas y a las listas de componentes de repuesto de dichas piezas.

5. ÍNDICE DE PIEZAS DE MANTENIMIENTO

Al principio de este catálogo se encuentra un índice de los números de piezas utilizadas más frecuentemente para el mantenimiento, que incluye descripción, cantidad necesaria, lugar de utilización y número de página. Esta información está organizada alfabéticamente, por descripción de la pieza.

6. ÍNDICE

El Índice, ubicado cerca del principio del manual, es una lista en orden alfabético de todos los elementos de información incluídos en el manual. Los números de página proporcionan una referencia rápida a las ilustraciones detalladas de identificación de piezas y a las listas de componentes de repuesto de dichas piezas.

7. INDICE NUMÉRICO DE PIEZAS

Un índice numérico de piezas con el correspondiente número de página aparece al final de este catálogo.

8. TÍTULOS

Los títulos ubicados al principio de cada elemento de información identifican el número y el nombre de la pieza junto con información descriptiva. Se debe usar información sobre los Números de Identificación de Pieza (PIN) y los números de serie (S/N) para seleccionar la información que corresponda a una máquina en particular. También se suministra información sobre las opciones de reparación en el campo, la identificación de componentes de accesorios optativos y el lugar de ubicación de la pieza ("es parte de").

La primera línea del título se muestra con un tipo de letra más grande para indicar el comienzo de un elemento de información. Si se requieren páginas adicionales para ilustrar un elemento de información, los títulos se muestran con un tipo de letra normal y la continuación se indica entre paréntesis.

9. PIEZAS QUE NO SE SUMINISTRAN COMO REPUESTO

En algunos casos es necesario indicar piezas que no se suministran como repuesto pero que pueden estar conectadas a listas de componentes de otras piezas de repuesto. En tal caso, dichas piezas se muestran en cursiva para indicar que no son piezas disponibles.

10. NÚMEROS DE REFERENCIA

Los números en la columna de No. de Referencia corresponden a los números indicados en la ilustración que pertenece a ese número de pieza. Los números que tienen un sufijo alfabético identifican artículos de las listas de componentes de piezas. Los números en la columna de Referencia de la ilustración se identifican en la esquina inferior izquierda de cada ilustración. Para determinar el número de pieza correcto se puede utilizar tanto el No. de Referencia de la ilustración como el No. de Referencia del artículo. A medida que se actualiza la información para indicar los más recientes números de piezas de repuesto, puede omitirse intencionalmente un No. de Referencia en una lista de componentes de piezas.

11. NOMBRES DE PIEZA SANGRADOS

Cuando el nombre de una pieza está sangrado en una lista, significa que esta pieza forma parte del grupo o conjunto del renglón inmediatamente superior.

12. LETRAS DE REFERENCIA DE ILUSTRACIONES

Las ilustraciones contienen algunas veces letras de referencia (A, B, C etc.) cuyo propósito es seguir el trayecto de líneas y mazos de cables de un punto a otro. También se utilizan para mostrar dónde volver a unir ilustraciones que se habían separado.

13. ABREVIATURAS Y SIMBOLOS

O.D. – Diámetro exterior
I.D. – Diámetro interior
A – No es pieza de este grupo
B – Utilizado según la demanda
C – Indica cambio
D – Se pide por metro
E – Se pide por centímetro
F – No se muestra
G – Se pide por pulgada
I – Ver "Hose Fabrication Guide"
M – Pieza métrica
R – Puede estar disponible como pieza remanufacturada
Y – Ilustración separada
Z – No se suministra por separado

SIS *Nueva Característica*

14.<END>

Este símbolo indica el final de un elemento de información.

NOTA:

Las contínuas mejoras y adelantos en diseño podrían originar cambios a su máquina que no se incluyen en esta publicación. Cuando tenga alguna pregunta acerca de su producto Caterpillar o de esta publicación, consulte al distribuidor Caterpillar para obtener la información más reciente.

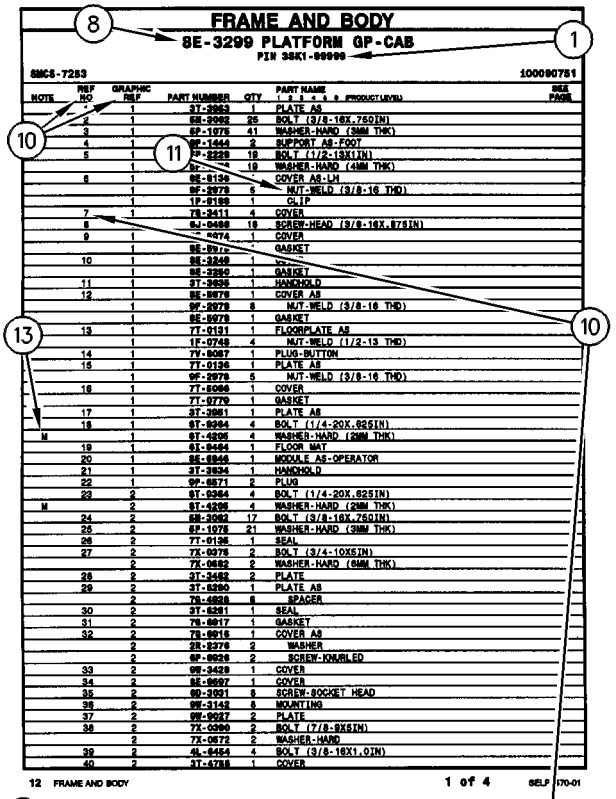

FRAME AND BODY

8E-3299 PLATFORM GP-CAB

PIN 38K1-99999

SMCS-7283 100090751

NOTE	REF NO	GRAPHIC REF	PART NUMBER	QTY	PART NAME 1 2 3 4 5 6 (PRODUCT LEVEL)	SEE PAGE
	1	1	3T-3953	1	PLATE AS	
	2	1	6B-3062	25	BOLT (3/8-16X.750IN)	
	3	1	6P-1075	41	WASHER-HARD (9MM THK)	
	4	1	9F-1444	2	SUPPORT AS-FOOT	
	5	1	7P-2229	19	BOLT (1/2-13X1IN)	
		1	6P-[illegible]	19	WASHER-HARD (4MM THK)	
	6	1	8E-8194	1	COVER AS-LH	
		1	9F-2979	5	NUT-WELD (3/8-16 THD)	
		1	1P-8199	1	CLIP	
	7	1	7S-3411	4	COVER	
	8		6J-0468	19	SCREW-HEAD (3/8-16X.875IN)	
	9	1	[illegible]-4674	1	COVER	
		1	8E-8972	1	GASKET	
	10	1	8E-3248	1	[illegible]	
		1	8E-3250	1	GASKET	
	11	1	3T-3939	1	HANDHOLD	
	12	1	8E-8978	1	COVER AS	
		1	9F-2978	8	NUT-WELD (3/8-16 THD)	
		1	8E-8978	1	GASKET	
	13	1	7T-0131	1	FLOORPLATE AS	
		1	1F-0748	4	NUT-WELD (1/2-13 THD)	
	14	1	7Y-8087	1	PLUG-BUTTON	
	15	1	7T-0136	1	PLATE AS	
		1	9F-2979	5	NUT-WELD (3/8-16 THD)	
	16	1	7T-8098	1	COVER	
		1	7T-0779	1	GASKET	
	17	1	3T-3951	1	PLATE AS	
	18	1	6T-8364	4	BOLT (1/4-20X.625IN)	
M		1	6T-4205	4	WASHER-HARD (2MM THK)	
	19	1	6X-8464	1	FLOOR MAT	
	20	1	8E-8946	1	MODULE AS-OPERATOR	
	21	1	3T-3934	1	HANDHOLD	
	22	1	9P-8871	2	PLUG	
	23	2	6T-8364	4	BOLT (1/4-20X.625IN)	
M		2	6T-4205	4	WASHER-HARD (2MM THK)	
	24	2	6B-3062	17	BOLT (3/8-16X.750IN)	
	25	2	6P-1075	21	WASHER-HARD (9MM THK)	
	26	2	7T-0136	1	SEAL	
	27	2	7X-0378	2	BOLT (3/4-10X5IN)	
		2	7X-0682	2	WASHER-HARD (6MM THK)	
	28	2	3T-3482	2	PLATE	
	29	2	3T-8290	1	PLATE AS	
		2	7S-4838	6	SPACER	
	30	2	3T-8291	1	SEAL	
	31	2	7S-8817	1	GASKET	
	32	2	7S-8916	1	COVER AS	
		2	2R-2376	2	WASHER	
		2	6P-8826	2	SCREW-KNURLED	
	33	2	9W-3429	1	COVER	
	34	2	8E-8897	1	COVER	
	35	2	9D-3931	8	SCREW-SOCKET HEAD	
	36	2	9W-3142	8	MOUNTING	
	37	2	9W-9027	2	PLATE	
	38	2	7X-0360	2	BOLT (7/8-9X5IN)	
		2	7X-0672	2	WASHER-HARD	
	39	2	6L-4454	4	BOLT (3/8-16X1.0IN)	
	40	2	3T-4788	1	COVER	

12 FRAME AND BODY 1 of 4 SELP4570-01

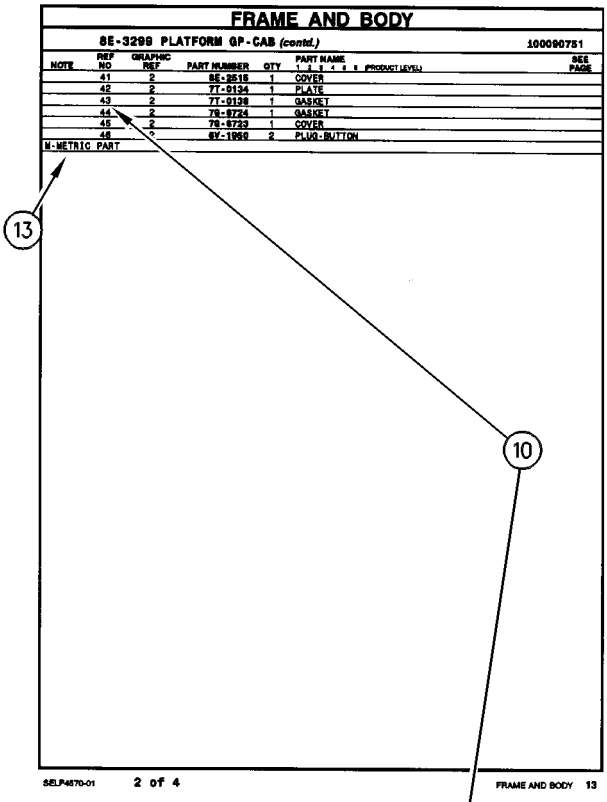

FRAME AND BODY

8E-3299 PLATFORM GP-CAB (contd.) 100090751

NOTE	REF NO	GRAPHIC REF	PART NUMBER	QTY	PART NAME 1 2 3 4 5 6 (PRODUCT LEVEL)	SEE PAGE
	41	2	8E-2515	1	COVER	
	42	2	7T-0134	1	PLATE	
	43	2	7T-0138	1	GASKET	
	44	2	7S-8724	1	GASKET	
	45	2	7S-8723	1	COVER	
	46	[illegible]	6V-1958	2	PLUG-BUTTON	
M-METRIC PART						

SELP4570-01 2 of 4 FRAME AND BODY 13

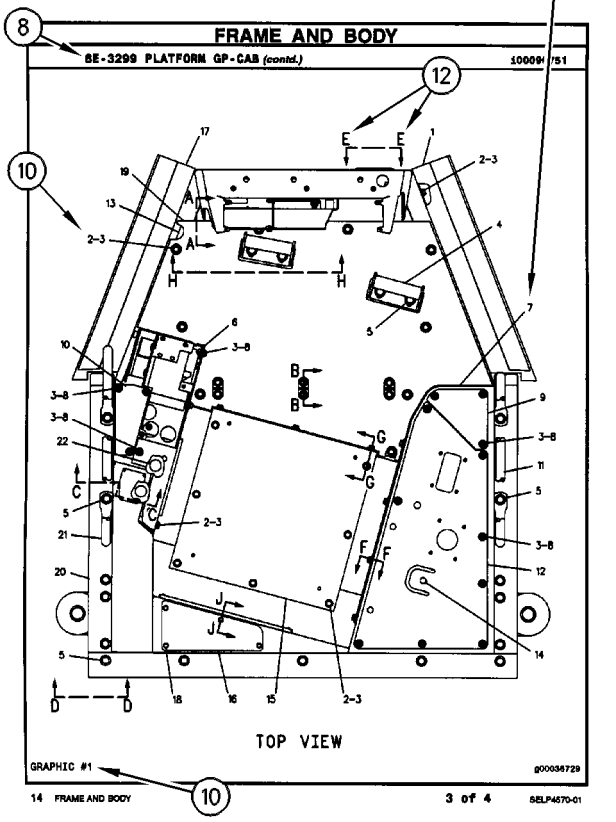

FRAME AND BODY

8E-3299 PLATFORM GP-CAB (contd.) 100090751

TOP VIEW

GRAPHIC #1 g00036729

14 FRAME AND BODY 3 of 4 SELP4570-01

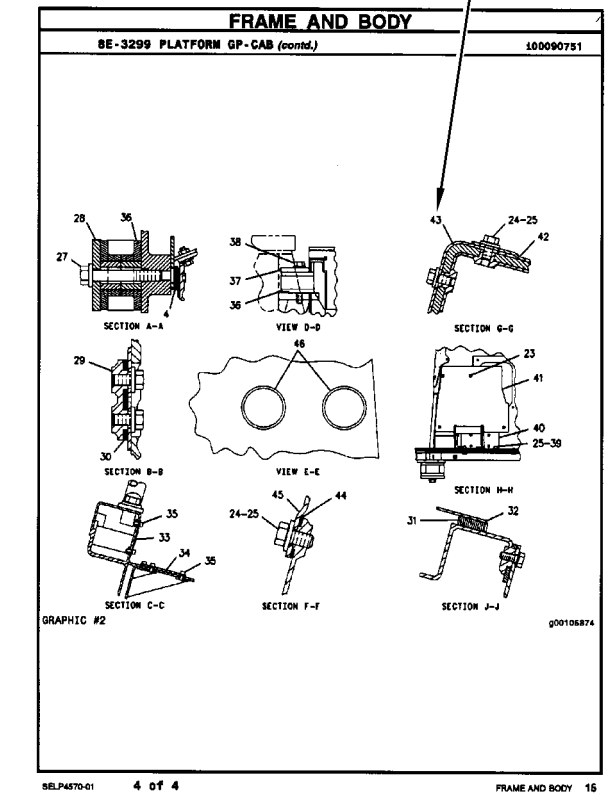

FRAME AND BODY

8E-3299 PLATFORM GP-CAB (contd.) 100090751

SECTION A-A

VIEW D-D

SECTION G-G

SECTION B-B

VIEW E-E

SECTION H-H

SECTION C-C

SECTION F-F

SECTION J-J

GRAPHIC #2 g00105874

SELP4570-01 4 of 4 FRAME AND BODY 16

INFORMAÇÃO GERAL

1. IDENTIFICAÇÃO DA MÁQUINA

As máquinas Caterpillar são identificadas pelos Números de Informação do Produto (PIN). Alguns componentes incluídos numa máquina podem ser identificados por Números de Série (S/N). Componentes típicos que serão enumerados com números de série incluem motores, transmissões, lâminas e ríperes. Além do número de série, a máquina e o motor são ainda identificados por números de arranjo e, em alguns casos, números de modificações. Tais números encontram-se na(s) placa(s) de identificação do produto e na placa mestre no compartimento do operador.

Novidades

A partir do primeiro trimestre de 2001 o Número de Identificação de Produto da Caterpillar (PIN) precisa ser mudado de 8 para 17 caracteres. Esforçando-se para fornecer uma identificação uniforme de equipamentos, a Caterpillar e outros fabricantes de equipamento de construção estão mudando para atender a versão mais atualizada do padrão de identificação de produtos. Os números de PIN para produtos de aplicações não rodoviárias são definidos pela ISO 10261. O novo formato de número PIN será adotado em todas as máquinas e grupos geradores Caterpillar. As placas e as marcações do chassi mostrarão os 17 dígitos de PIN. O novo formato terá a seguinte disposição:

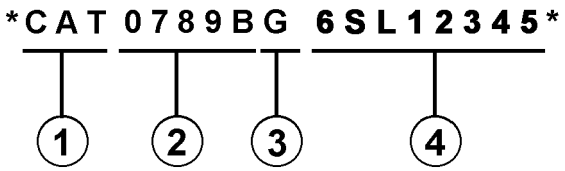

Onde:

1. Código de Fabricação Mundial da Caterpillar (dígitos 1-3)

2. Descrição da Máquina (dígitos 4-8)

3. Dígito de Verificação (dígito 9)

4. Seção de Indicador da Máquina (MIS) ou Número de Seqüência de Produto (dígitos 10-17). Estes eram anteriormente chamados de Número de Série.

Máquinas e grupos geradores produzidos antes do primeiro trimestre de 2001 manterão o formato de 8 caracteres de PIN.

Componentes como motores, transmissões, eixos, ferramentas de trabalho, etc. continuarão a usar Número de Série (S/N) com oito caracteres.

2. COMO OBTER PEÇAS

⚠ CUIDADO

Quando peças de substituição são exigidas para este produto, a Caterpillar recomenda a utilização de peças de substituição Caterpillar ou peças com as especificações equivalentes incluindo, mas não limitadas, à dimensões físicas, tipos, resistência e materiais.

A inobservância desta advertência poderá resultar em falhas prematuras, danos ao produto, ferimentos ou morte.

As Peças de Reposição de Qualidade Caterpillar encontram-se disponíveis nos revendedores Caterpillar no mundo inteiro. Seus estoques de peças são atualizados e incluem todas as peças normalmente necessárias para proteger seu investimento em máquinas Caterpillar. Alguns revendedores podem oferecer jogos de reparo ou peças de troca/remanufaturadas disponíveis como uma opção da alternativa de reparo mais eficaz para uma situação específica. Ao encomendar peças, seu pedido deve especificar a quantidade, o número e o nome da peça e o número de série/número de identificação do produto referentes à máquina para a qual as peças se destinam.

3. ORGANIZAÇÃO DO MANUAL DE PEÇAS

A informação do produto neste manual é apresentada em forma de "elementos de informação" que representam todos os componentes para o modelo específico. Arranjo de Motor e Grupo de Assento são exemplos de elementos de informação. Os elementos de informação são organizados em ordem alfabética por nome de peça ou secundariamente, por número de peça incluído em cada seção principal do manual.

4. LISTA DE CONTEÚDOS

A Lista de Conteúdos (TOC) se encontra no princípio do manual. A Lista de Conteúdos (TOC) relaciona em cada seção do manual uma lista completa com todos os elementos de informação organizados conforme aparecem no manual. Números de página são fornecidos para que se tenha referência rápida de ilustrações de peças detalhadas e listas de conteúdos que podem receber serviço de manutenção.

5. ÍNDICE DE PEÇAS DE MANUTENÇÃO

O Índice de Peças de Manutenção, localizado perto do princípio do manual, faz referência aos números de peça de manutenção usados com maior frequência, fornecendo uma descrição, a quantidade, o uso e o número de página. Esta informação é organizada com a descrição da peça em ordem alfabética.

6. ÍNDICE

O Índice localizado perto do princípio do manual, consiste de uma lista em ordem alfabética de todos os elementos de informação incluídos no manual. Números de página são fornecidos para que se tenha referência rápida de ilustrações de peças detalhadas e listas de conteúdos que podem receber serviço de manutenção.

7. ÍNDICE DE NÚMERO DE PEÇA

Um índice numérico relacionando todos os números de peça e a(s) página(s) correspondentes, aparece no final do manual.

8. LEGENDAS

As legendas localizadas no início de cada elemento de informação identificam o número e o nome de peça, juntamente com informação descritiva adicional. Informações sobre o Número de Informação do Produto (PIN) e o Número de Série (S/N) encontradas em cada legenda devem ser usadas para selecionar a informação correta sobre uma máquina específica. Opções de substituição no campo, identificação de componentes de acessórios opcionais e informações sobre onde são utilizados ("parte de") são também fornecidas.

A primeira linha de uma legenda é indicada em tipo maior para indicar o princípio de um elemento de informação. Legendas para páginas adicionais que podem ser necessárias para ilustrar um elemento de informação serão apresentadas em tipo padrão e incluirão o termo *(continua)* .

9. NÃO DISPONÍVEL SEPARADAMENTE

Em alguns casos, é necessário mostrar peças não disponíveis separadamente que têm uma ligação com listas de conteúdos de nível inferior que podem receber serviço de manutenção. Os números de peça destes componentes não disponíveis aparecerão em *itálico* , a fim de indicar que não estão disponíveis.

10. NÙMEROS DE REFERÊNCIA À LISTA DE PEÇAS

Os números indicados na coluna Ref No (No. de Referência) correspondem-se aos números usados no(s) gráfico(s) correspondente(s). Um sufixo com letras pode ser acrescentado a um número de referência para identificar itens de conteúdo de nível inferior. Os números indicados na coluna Graphic Ref (Referência de Gráfico) referem-se ao identificador de número de gráfico presente no canto esquerdo inferior de cada ilustração. O número de Referência de Gráfico pode ser usado em combinação com o item Ref No para determinar-se o número de peça correto. Poderá haver omissão intencional de um número de referência (Ref No) de uma lista de conteúdos uma vez que as informações são atualizadas para refletir os números de peça mais recentes que podem receber serviço de manutenção.

11. NOMES DE PEÇAS DESALINHADOS

Quando um nome de peça encontra-se desalinhado numa lista de peças, significa que tal item faz parte do (está incluído no) grupo ou conjunto sob o qual está relacionado.

12. LETRAS DE REFERÊNCIA NAS ILUSTRAÇÕES

Quando necessário, as ilustrações contêm letras de referência (A, B, C, etc.) que são utilizadas para seguir tubulações e cabos elétricos de um ponto a outro. Também foram utilizadas para indicar onde se pode reconectar as ilustrações que foram separadas.

13. ABREVIAÇÕES E SÍMBOLOS

O.D. – "Outside Diameter" (Diâmetro Externo)
I.D. – "Inside Diameter" (Diâmetro Interno)
A – Não faz parte deste grupo
B – Use conforme necessário
C – Indica modificação
D – Vendido por metro
E – Vendido por centímetro
F – Não ilustrado
G – Vendido por polegada
I – Consulte o seu revendedor quanto a mangueira
M – Peça métrica
R – Peça remanufaturada pode estar disponível; consulte o seu revendedor Cat
Y – Ilustração separada
Z – Não disponível separadamente

SIS *Novidades*

14. <END>

Este símbolo indica o final de um elemento de informação.

NOTA:

Os contínuos aperfeiçoamentos e avanços no projeto do produto podem ocasionar modificações em sua máquina que talvez ainda não estejam incluídas nesta publicação. Sempre que surgirem dúvidas quanto a um produto Caterpillar ou quanto à presente publicação, consulte o seu revendedor Caterpillar para obter as informações mais recentes disponíveis.

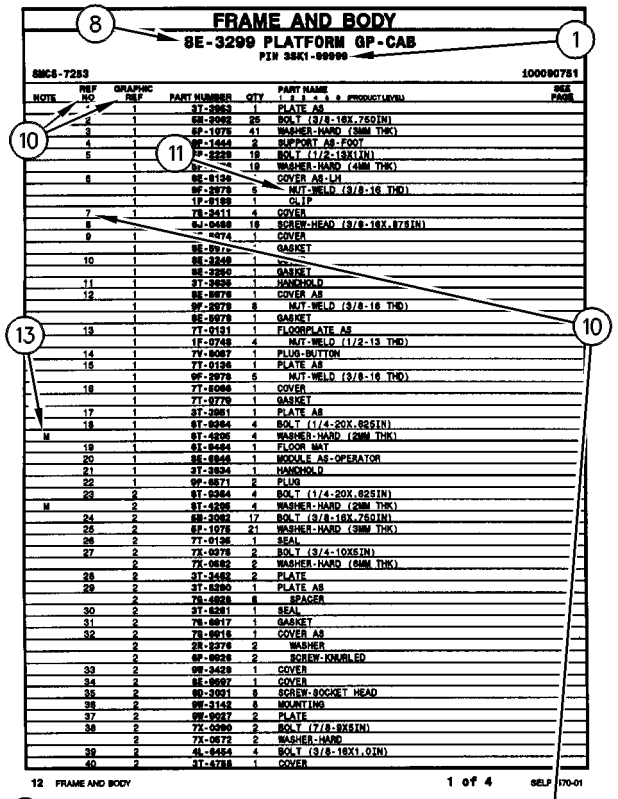

FRAME AND BODY

8E-3299 PLATFORM GP-CAB

PIN 38K1-99999

SMCS-7283 100090751

NOTE	REF NO	GRAPHIC REF	PART NUMBER	QTY	PART NAME 1 2 3 4 5 6 (PRODUCT LEVEL)	SEE PAGE
	1	1	3T-3953	1	PLATE AS	
	2	1	6B-3062	25	BOLT (3/8-16X.750IN)	
	3	1	6P-1075	41	WASHER-HARD (9MM THK)	
	4	1	9F-1444	2	SUPPORT AS-FOOT	
	5	1	6P-2329	19	BOLT (1/2-13X1IN)	
		1	6P-[illegible]	19	WASHER-HARD (4MM THK)	
	6	1	8E-8134	1	COVER AS-LH	
		1	9F-2979	5	NUT-WELD (3/8-16 THD)	
		1	1P-8199	1	CLIP	
	7	1	7S-3411	4	COVER	
	8		6J-0468	19	SCREW-HEAD (3/8-16X.875IN)	
	9	1	[illegible]-4674	1	COVER	
		1	8E-8972	1	GASKET	
	10	1	8E-3248	1	[illegible]	
		1	8E-3250	1	GASKET	
	11	1	3T-3939	1	HANDHOLD	
	12	1	8E-8978	1	COVER AS	
		1	9F-2978	8	NUT-WELD (3/8-16 THD)	
		1	8E-8979	1	GASKET	
	13	1	7T-0131	1	FLOORPLATE AS	
		1	1F-0748	4	NUT-WELD (1/2-13 THD)	
	14	1	7Y-8087	1	PLUG-BUTTON	
	15	1	7T-0136	1	PLATE AS	
		1	9F-2979	5	NUT-WELD (3/8-16 THD)	
	16	1	7T-8098	1	COVER	
		1	7T-0779	1	GASKET	
	17	1	3T-3951	1	PLATE AS	
	18	1	6T-8364	4	BOLT (1/4-20X.625IN)	
M		1	6T-4205	4	WASHER-HARD (2MM THK)	
	19	1	6X-8464	1	FLOOR MAT	
	20	1	8E-8946	1	MODULE AS-OPERATOR	
	21	1	3T-3934	1	HANDHOLD	
	22	1	9P-8871	2	PLUG	
	23	2	6T-8364	4	BOLT (1/4-20X.625IN)	
M		2	6T-4205	4	WASHER-HARD (2MM THK)	
	24	2	6B-3062	17	BOLT (3/8-16X.750IN)	
	25	2	6P-1075	21	WASHER-HARD (9MM THK)	
	26	2	7T-0136	1	SEAL	
	27	2	7X-0378	2	BOLT (3/4-10X5IN)	
		2	7X-0682	2	WASHER-HARD (6MM THK)	
	28	2	3T-3482	2	PLATE	
	29	2	3T-8290	1	PLATE AS	
		2	7S-4838	6	SPACER	
	30	2	3T-8291	1	SEAL	
	31	2	7S-8817	1	GASKET	
	32	2	7S-8916	1	COVER AS	
		2	2R-2376	2	WASHER	
		2	6P-8826	2	SCREW-KNURLED	
	33	2	9W-3429	1	COVER	
	34	2	8E-8937	1	COVER	
	35	2	9D-3931	8	SCREW-SOCKET HEAD	
	36	2	9W-3142	8	MOUNTING	
	37	2	9W-9027	2	PLATE	
	38	2	7X-0360	2	BOLT (7/8-9X5IN)	
		2	7X-0672	2	WASHER-HARD	
	39	2	4L-4454	4	BOLT (3/8-16X1.0IN)	
	40	2	3T-4788	1	COVER	

12 FRAME AND BODY 1 of 4 SELP4570-01

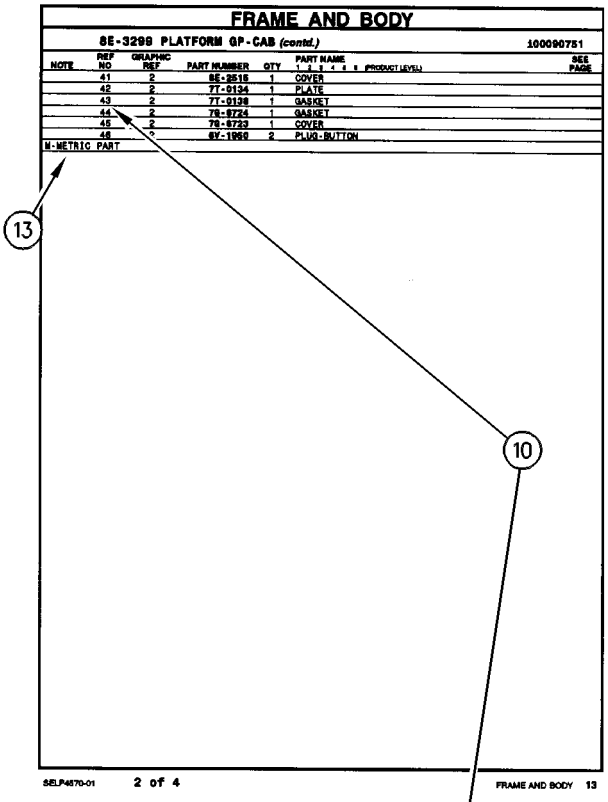

FRAME AND BODY

8E-3299 PLATFORM GP-CAB (contd.) 100090751

NOTE	REF NO	GRAPHIC REF	PART NUMBER	QTY	PART NAME 1 2 3 4 5 6 (PRODUCT LEVEL)	SEE PAGE
	41	2	8E-2515	1	COVER	
	42	2	7T-0134	1	PLATE	
	43	2	7T-0138	1	GASKET	
	44	2	7S-8724	1	GASKET	
	45	2	7S-8723	1	COVER	
	46	[illegible]	6V-1958	2	PLUG-BUTTON	
M-METRIC PART						

SELP4570-01 2 of 4 FRAME AND BODY 13

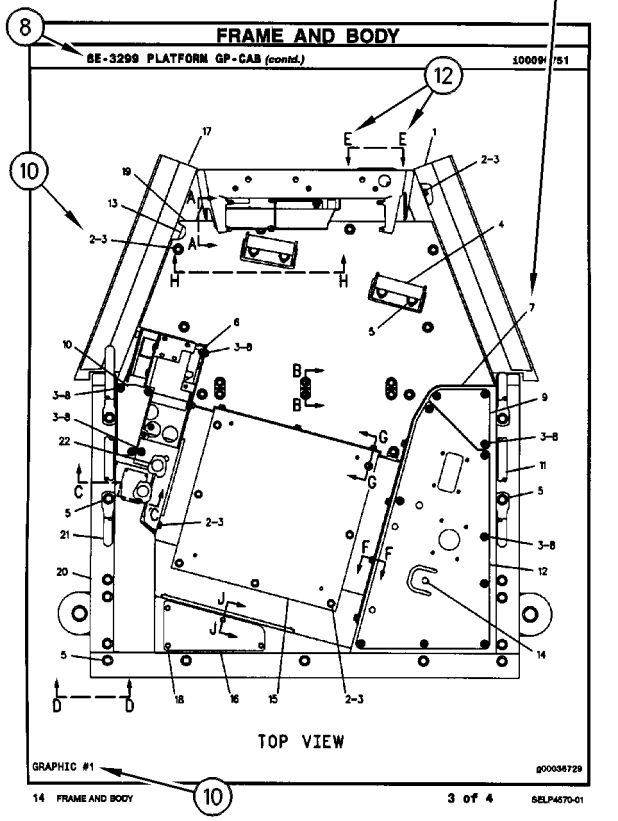

FRAME AND BODY

8E-3299 PLATFORM GP-CAB (contd.) 100090751

TOP VIEW

GRAPHIC #1 g00036729

14 FRAME AND BODY 3 of 4 SELP4570-01

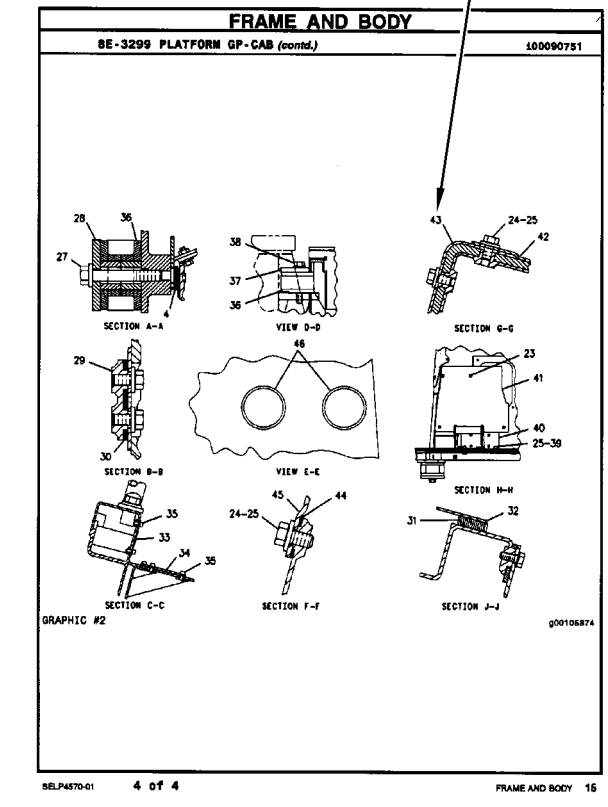

FRAME AND BODY

8E-3299 PLATFORM GP-CAB (contd.) 100090751

SECTION A-A

VIEW D-D

SECTION G-G

SECTION B-B

VIEW E-E

SECTION H-H

SECTION C-C

SECTION F-F

SECTION J-J

GRAPHIC #2 g00105874

SELP4570-01 4 of 4 FRAME AND BODY 16

ALLGEMEINE HINWEISE

1. MASCHINENKENNZEICHNUNG

Caterpillar-Maschinen sind mit PRODUCT IDENTIFICATION NUMBERS (PIN) (Produkt-Identnummern) gekennzeichnet. Einige Baugruppen, z.B. Motoren, Getriebe, Planierschilde und Aufreißer, sind mit SERIAL NUMBERS (S/N) (Seriennummern) gekennzeichnet. An der Maschine und am Motor befinden sich außerdem ARRANGEMENT NUMBERS (Ausrüstungsnummern) sowie in einigen Fällen MODIFICATION NUMBERS (Änderungsnummern). Sie befinden sich auf den PIN-Schildern und auf dem Typenschild im Fahrerhaus.

Bei Ersatzteilbestellungen müssen dem Händler alle diese Nummern zur Verfügung gestellt werden.

SIS ***Neu im Parts Manual***

Vom ersten Quartal 2001 ab wurde die Caterpillar Produkt-Identnummer (PIN) von 8 auf 17 Zeichen geändert. Um zur Standardisierung der Produkt-Identnummer beizutragen, sind Caterpillar und andere Baumaschinenhersteller bestrebt, die aktuellste Norm zur Produkt-Identnummerierung einzuführen. Produkt-Identnummern für Baumaschinen sind durch ISO 10261 definiert. Das neue Format der Produkt-Identnummern gilt für alle Caterpillar-Maschinen und -Stromaggregate. Die Produkt-Identschilder und -Identrahmenmarkierung enthalten die aus 17 Zeichen bestehende Identnummer. Das neue Format hat folgende Abschnitte:

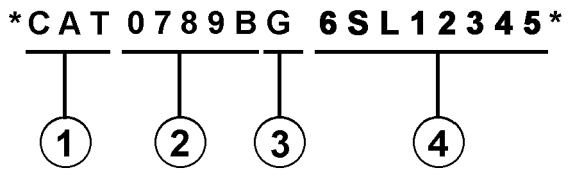

Abschnitte:

1. Caterpillars weltweiter Herstellungscode (Zeichen 1-3)

2. Modell (Zeichen 4-8)

3. Kontrollzeichen (Zeichen 9)

4. Maschinenspezifische Kennung (MIS) oder Produktsequenznummer (Zeichen 10-17). Diese wurde früher als Seriennummer bezeichnet.

Für vor dem ersten Quartal 2001 hergestellte Maschinen und Stromaggregate wird das aus 8 Zeichen bestehende PIN-Format beibehalten.

Bauteile wie z.B. Motoren, Getriebe, Achsen sowie Arbeitsgeräte werden weiterhin eine aus 8 Zeichen bestehende Seriennummer (S/N) aufweisen.

2. BESTELLEN VON ERSATZTEILEN

⚠ WARNUNG

Wenn für diese Maschine Ersatzteile benötigt werden, empfiehlt Caterpillar, ausschließlich Caterpillar-Ersatzteile oder solche zu verwenden, die die gleichen technischen Merkmale hinsichtlich Typ, Festigkeit, Werkzeugeigenschaften und die gleichen Maße aufweisen.

Bei Nichtbeachtung dieser Warnung besteht Verletzungs- oder sogar Lebensgefahr! Ferner kann Nichtbeachtung vorzeitige Ausfälle der Teile und Beschädigung der Maschine zur Folge haben.

Original Caterpillar-Ersatzteile können weltweit bei jedem Caterpillar-Händlern bestellt werden. Die umfangreichen Händlerlager enthalten normalerweise alle Teile, die Sie für Ihre Caterpillar-Maschine benötigen. Einige Händler bieten Reparatursätze, Austausch- oder werküberholte Teile an, so daß Sie eine Auswahl unter verschiedenen Reparaturmöglichkeiten treffen können. Ihre Bestellung muß folgende Angaben enthalten: Anzahl der benötigten Teile, Bestellnummer, Bezeichnung des Teils, Serien-Nr./Produkt-Ident-Nr., Ausrüstungs-Nr. und Änderungs-Nr. der Maschine, für die diese Teile benötigt werden.

3. AUFBAU DES PARTS MANUAL

Die Produktinformationen für alle Komponenten eines bestimmten Modells sind in INFORMATION ELEMENTS (Informationseinheiten) gegliedert. ENGINE ARRANGEMENT (Motorausführung) und SEAT GROUP (Fahrersitz) sind Beispiele für solche Informationseinheiten. Sie sind innerhalb jeder Gruppe alphabetisch, entsprechend der Ersatzteilbezeichnung, und zusätzlich numerisch, entsprechend der Ersatzteilnummer, geordnet.

4. INHALTSVERZEICHNIS

Das Inhaltsverzeichnis befindet sich am Anfang des Buches. Im Inhaltsverzeichnis werden die einzelnen Abschnitte des Buches aufgeführt. Die Abschnitte enthalten eine vollständige Aufstellung aller Informationseinheiten. Diese sind entsprechend ihrem Erscheinen im Buch geordnet. Das Inhaltsverzeichnis enthält Seitenangaben für Schnellverweise auf detaillierte Abbildungen und Teillisten.

ALLGEMEINE HINWEISE

5. INDEX FÜR WARTUNGSTEILE

Der Index für Wartungsteile vorn im Buch enthält die Bestellnummern, Seitenangaben, Mengenangaben und Informationen über den Einsatzbereich für die am häufigsten benötigten Ersatzteile. Die Angaben sind alphabetisch entsprechend der Teilebezeichnung geordnet.

6. INDEX

Der Index vorn im Buch enthält eine alphabetische Liste aller Informationseinheiten. Er enthält Seitenangaben für Schnellverweise auf detaillierte Abbildungen und Teillisten.

7. INDEX FÜR BESTELLNUMMERN

Hinten im Buch befindet sich ein numerischer Index, mit allen Bestellnummern und dem Hinweis auf die Seite, auf der sich die betreffende Abbildung befindet.

8. ÜBERSCHRIFTEN

Die Überschriften, die sich am Anfang jeder der Informationseinheiten befinden, enthalten Bestellnummern, Ersatzteilbezeichnungen und zusätzliche beschreibende Informationen. Produkt-Ident- und Seriennummern in den Überschriften sollten zur Auswahl der richtigen Informationen für die betreffende Maschine verwendet werden. Die Überschriften enthalten außerdem Informationen über möglichen Außendienstersatz, mögliche Baugerätekomponenten und die Baugruppe, zu der das Teil gehört.

Die erste Zeile einer Überschrift erscheint in einer größeren Schriftart, um den Anfang einer Informationseinheit zu kennzeichnen. Überschriften für zusätzliche Seiten, die zur Erläuterung einer Informationseinheit notwendig sind, erscheinen in normaler Schriftart und enthalten den Begriff "(contd.)".

9. NICHT EINZELN LIEFERBARE TEILE

In einigen Fällen ist es notwendig nicht lieferbare Teile, die selbst mit einer eigenen Teilliste im Buch vertreten sind, aufzuführen. Die Bestellnummern dieser nicht einzeln lieferbaren Teile erscheinen kursiv, wodurch angezeigt wird, daß sie nur in Verbindung mit anderen Teilen lieferbar sind.

10. REFERENZNUMMER FÜR ERSATZTEILE

Die Zahlen, die in der Spalte "Ref No" aufgeführt sind, stimmen mit den Zahlen in den beigefügten Abbildungen überein. Ein Buchstaben-Suffix kann zu einer Referenznummer hinzugefügt werden, um zu kennzeichnen, daß das Teil mit einer eigenen Teilliste im Buch aufgeführt ist. Die in der Spalte "Graphic Ref" angeführten Zahlen verweisen auf die Identifikationsnummer der Abbildung, die sich in der linken unteren Ecke der Abbildung befindet. Diese Nummer kann zusammen mit der Referenznummer des Teils angegeben werden, um die richtige Ersatzteilnummer zu ermitteln. Referenznummern können absichtlich weggelassen werden, da die Nummern der lieferbaren Ersatzteile ständig aktualisiert werden.

11. EINGERÜCKTE BEZEICHNUNGEN

Wenn eine Bezeichnung eingerückt ist, wird dadurch angezeigt, daß das Teil zu einer Baugruppe gehört, unter deren Bezeichnung es eingerückt ist.

12. REFERENZBUCHSTABEN

Falls erforderlich sind in den Abbildungen Referenzbuchstaben enthalten (z.B. A, B, C, usw.), die Leitungen und Kabelbäume von einem Punkt zum anderen verfolgen. Außerdem geben sie die Stelle an, an der getrennte Abbildungen fortgesetzt werden.

13. ABKÜRZUNGEN UND SYMBOLE

O.D. – Außendurchmesser
I.D. – Innendurchmesser
A – kein Teil dieser Gruppe
B – nach Bedarf verwenden
C – Hinweis auf eine Änderung
D – in Meter-Länge bestellen
E – in Zentimeter-Länge bestellen
F – nicht gezeigt
G – in Zoll-Länge bestellen
I – siehe "Hose Fabrication Guide"
M – metrisches Teil
R – werküberholtes Teil unter Umständen lieferbar
Y – separate Abbildung
Z – nicht einzeln lieferbar

SIS *Neu im Parts Manual*

14. <END>

Dieses Symbol zeigt das Ende eines Informationselements an.

ANMERKUNG:

Ständig vorgenommene Verbesserungen und Weiterentwicklungen an Ihrer Maschine können Änderungen verursachen, die in der vorliegenden Ausgabe noch nicht berücksichtigt sind. Fragen zu Ihrer Caterpillar-Maschine oder diesem Ersatzteilbuch beantwortet Ihr Caterpillar-Händler.

ALLGEMEINE HINWEISE

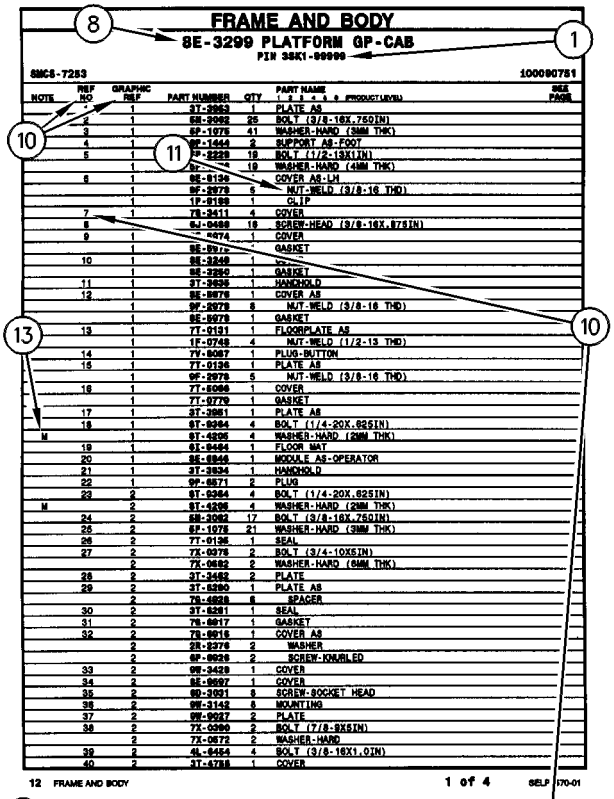

FRAME AND BODY

8E-3299 PLATFORM GP-CAB

PIN 38K1-99999

SMCS-7283 100090751

NOTE	REF NO	GRAPHIC REF	PART NUMBER	QTY	PART NAME 1 2 3 4 5 6 (PRODUCT LEVEL)	SEE PAGE
	1	1	3T-3953	1	PLATE AS	
	2	1	6B-3062	25	BOLT (3/8-16X.750IN)	
	3	1	6P-1075	41	WASHER-HARD (9MM THK)	
	4	1	9F-1444	2	SUPPORT AS-FOOT	
	5	1	7P-2229	19	BOLT (1/2-13X1IN)	
		1	6P-[illegible]	19	WASHER-HARD (4MM THK)	
	6	1	8E-8194	1	COVER AS-LH	
		1	9F-2979	5	NUT-WELD (3/8-16 THD)	
		1	1P-8199	1	CLIP	
	7	1	7S-2411	4	COVER	
	8		6J-0468	19	SCREW-HEAD (3/8-16X.875IN)	
	9	1	[illegible]-4674	1	COVER	
		1	8E-8972	1	GASKET	
	10	1	8E-3248	1	[illegible]	
		1	8E-3250	1	GASKET	
	11	1	3T-3939	1	HANDHOLD	
	12	1	8E-8978	1	COVER AS	
		1	9F-2978	8	NUT-WELD (3/8-16 THD)	
		1	8E-8978	1	GASKET	
	13	1	7T-0131	1	FLOORPLATE AS	
		1	1F-0748	4	NUT-WELD (1/2-13 THD)	
	14	1	7Y-8087	1	PLUG-BUTTON	
	15	1	7T-0136	1	PLATE AS	
		1	9F-2979	5	NUT-WELD (3/8-16 THD)	
	16	1	7T-8098	1	COVER	
		1	7T-0779	1	GASKET	
	17	1	3T-3951	1	PLATE AS	
	18	1	6T-8364	4	BOLT (1/4-20X.625IN)	
M		1	6T-4205	4	WASHER-HARD (2MM THK)	
	19	1	6I-8464	1	FLOOR MAT	
	20	1	8E-8946	1	MODULE AS-OPERATOR	
	21	1	3T-3934	1	HANDHOLD	
	22	1	9P-8871	2	PLUG	
	23	2	6T-8364	4	BOLT (1/4-20X.625IN)	
M		2	6T-4205	4	WASHER-HARD (2MM THK)	
	24	2	6B-3062	17	BOLT (3/8-16X.750IN)	
	25	2	6P-1075	21	WASHER-HARD (9MM THK)	
	26	2	7T-0136	1	SEAL	
	27	2	7X-0378	2	BOLT (3/4-10X5IN)	
		2	7X-0682	2	WASHER-HARD (6MM THK)	
	28	2	3T-3482	2	PLATE	
	29	2	3T-8290	1	PLATE AS	
		2	7S-4838	6	SPACER	
	30	2	3T-8291	1	SEAL	
	31	2	7S-8817	1	GASKET	
	32	2	7S-8916	1	COVER AS	
		2	2R-2376	2	WASHER	
		2	6P-8826	2	SCREW-KNURLED	
	33	2	9W-3429	1	COVER	
	34	2	8E-8897	1	COVER	
	35	2	6D-3091	8	SCREW-SOCKET HEAD	
	36	2	9W-3142	8	MOUNTING	
	37	2	9W-9027	2	PLATE	
	38	2	7X-0360	2	BOLT (7/8-9X6IN)	
		2	7X-0672	2	WASHER-HARD	
	39	2	6L-4454	4	BOLT (3/8-16X1.0IN)	
	40	2	3T-4788	1	COVER	

12 FRAME AND BODY 1 of 4 SELP4570-01

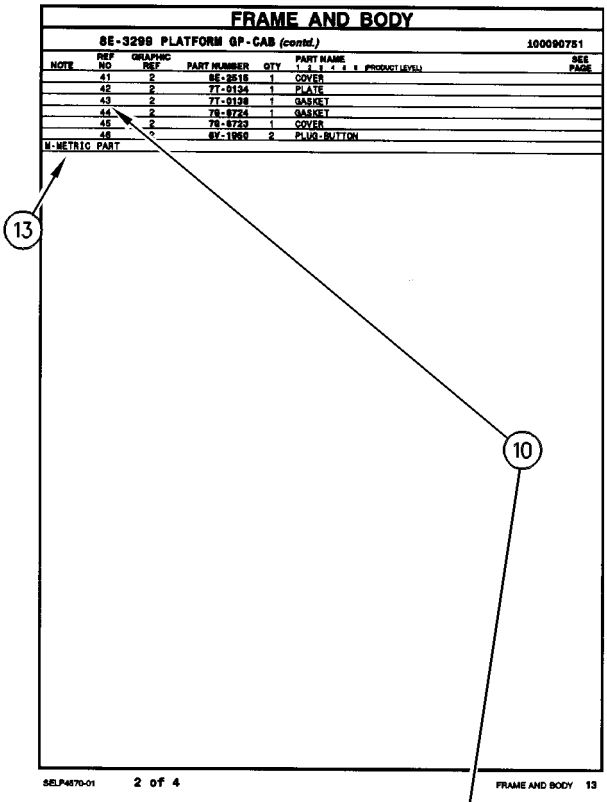

FRAME AND BODY

8E-3299 PLATFORM GP-CAB (contd.) 100090751

NOTE	REF NO	GRAPHIC REF	PART NUMBER	QTY	PART NAME 1 2 3 4 5 6 (PRODUCT LEVEL)	SEE PAGE
	41	2	8E-2515	1	COVER	
	42	2	7T-0134	1	PLATE	
	43	2	7T-0138	1	GASKET	
	44	2	7S-8724	1	GASKET	
	45	2	7S-8723	1	COVER	
	46	[illegible]	6V-1958	2	PLUG-BUTTON	
M-METRIC PART						

SELP4570-01 2 of 4 FRAME AND BODY 13

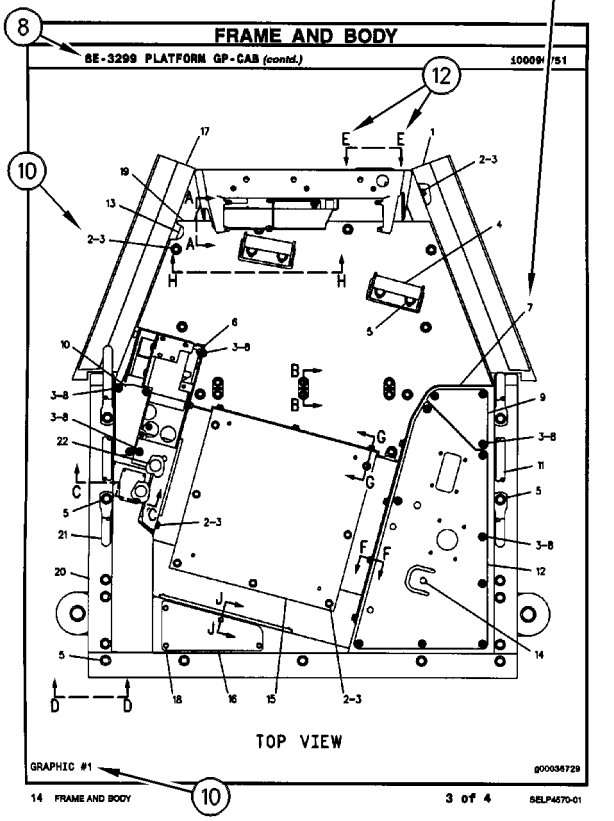

FRAME AND BODY

8E-3299 PLATFORM GP-CAB (contd.) 100090751

TOP VIEW

GRAPHIC #1 g00036729

14 FRAME AND BODY 3 of 4 SELP4570-01

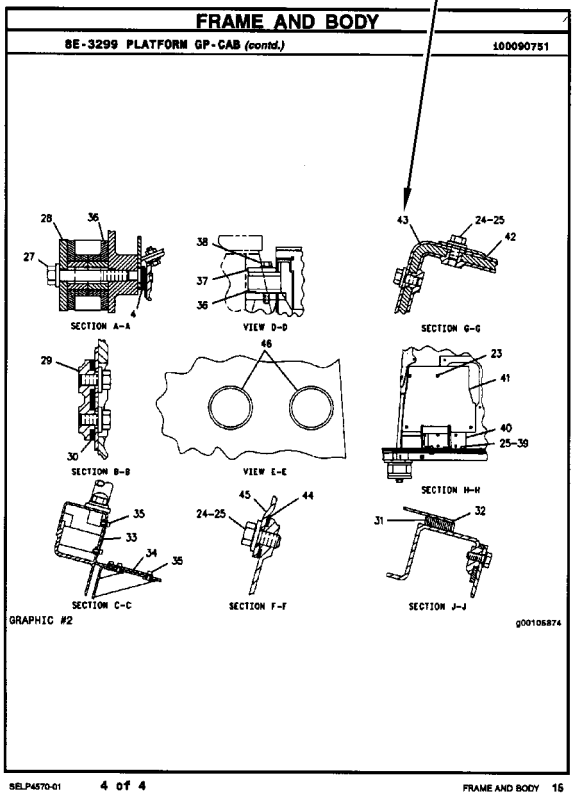

FRAME AND BODY

8E-3299 PLATFORM GP-CAB (contd.) 100090751

SECTION A-A VIEW D-D SECTION G-G

SECTION B-B VIEW E-E SECTION H-H

SECTION C-C SECTION F-F SECTION J-J

GRAPHIC #2 g00105874

SELP4570-01 4 of 4 FRAME AND BODY 16

REMANUFACTURED COMPONENTS

As an option when making repairs consider Caterpillar Remanufactured Components. Components that are available through the Caterpillar Remanufactured Program are identified three ways in the parts book:

- with the letter R in the note field of the parts list
- with an R* at the beginning of the first line of the caption
- with an *R at the end of the first line of the caption

Typical components included in the Remanufacturing Program include:

ALTERNATORS
CONNECTING RODS
CRANKSHAFTS - UNDERSIZE
CRANKSHAFTS - UPGRADE TO NEW
CYLINDER HEADS
ELECTRONIC CONTROL MODULES (ECM)
ELECTRONIC SENSORS
FUEL INJECTORS
FUEL NOZZLES
FUEL PUMPS
GOVERNORS
OIL PUMPS
PISTONS
SHORT BLOCKS
STARTERS
TURBOCHARGERS - COMPLETE
TURBOCHARGER CARTRIDGES
WATER PUMPS

Caterpillar Remanufactured engines for many engine arrangements are also available.

OPTIONS DE RÉPARATION

COMPOSANTS RÉNOVÉS

Comme option de réparation, considérer les composants rénovés Caterpillar. Les composants disponibles dans le cadre du programme Caterpillar de composants rénovés sont identifiés de trois façons dans le catalogue de pièces:

- avec la lettre "R" dans l'espace note de la liste des pièces
- avec R* au début de la première ligne des légendes
- avec *R à la fin de la première ligne des légendes

Les composants suivants figurent parmi les composants typiques du programme de rénovation:

ALTERNATEURS
BIELLES
VILEBREQUINS - SOUS-DIMENSIONNÉS
VILEBREQUINS - REMIS À NEUF
CULASSES
MODULES DE COMMANDE ÉLECTRONIQUE (ECM)
CAPTEURS ÉLECTRONIQUES
INJECTEURS
TÊTES D'INJECTEURS
POMPES À CARBURANT
RÉGULATEURS
POMPES À HUILE
PISTONS
BLOCS EMBIELLÉS
DÉMARREURS
TURBOCOMPRESSEURS - COMPLETS
CARTOUCHES DE TURBOCOMPRESSEUR
POMPES À EAU

Des moteurs rénovés sont aussi disponibles pour plusieurs versions de moteur.

ALTERNATIVAS DE REPARACIÓN

COMPONENTES REMANUFACTURADOS

Al hacer reparaciones, tenga en cuenta la opción de Componentes Remanufacturados Caterpillar. Los componentes que están disponibles por medio del programa de Productos Remanufacturados Caterpillar se identifican de tres maneras en el manual de piezas:

- con la letra R en el espacio de Nota de la lista de piezas
- con una R* al comienzo de la primera línea de la leyenda
- con una *R al final de la primera línea de la leyenda

Los componentes que se incluyen típicamente en el Programa de Productos Remanufacturados son:

ALTERNADORES
BIELAS
CIGÜEÑALES - BAJOMEDIDA
CIGÜEÑALES - REMANUFACTURADOS A NUEVO
CULATAS
MÓDULOS DE CONTROL ELECTRÓNICO (ECM)
SENSORES ELECTRONICOS
INYECTORES
BOQUILLAS
BOMBAS DE COMBUSTIBLE
REGULADORES
BOMBAS DE ACEITE
PISTONES
MONOBLOQUES
MOTORES DE ARRANQUE
TURBOCOMPRESORES - COMPLETOS
NÚCLEOS DE TURBOCOMPRESOR
BOMBAS DE AGUA

También hay disponibles motores Remanufacturados Caterpillar para muchas de las configuraciones de motores.

ALTERNATIVAS DE REPARO

COMPONENTES REMANUFATURADOS

Considere o uso de Componentes Remanufaturados Caterpillar ao efetuar reparos. Os componentes disponíveis através do Programa de Remanufatura Caterpillar são identificados de três formas no manual de peças:

- com um R na área da nota da lista de peças
- com um R* no princípio da primeira linha da legenda
- com um *R no final da primeira linha da legenda

Os componentes típicos que constam no Programa de Remanufatura incluem:

ALTERNADORES
BIELAS
VIRABREQUINS - SUBMEDIDAS
VIRABREQUINS - ATUALIZAÇÃO
CABEÇOTES
MÓDULOS DE CONTROLE ELETRÔNICO (ECM)
SENSORES ELETRÔNICOS
INJETORES DE COMBUSTÍVEL
BICOS DE ABASTECIMENTO DE COMBUSTÍVEL
BOMBAS DE COMBUSTÍVEL
GOVERNADORES
BOMBAS DE ÓLEO
PISTÕES
BLOCOS BÁSICOS DO MOTOR
MOTORES DE PARTIDA
TURBOALIMENTADORES - COMPLETOS
CARTUCHOS DE TURBOALIMENTADORES
BOMBAS D'ÁGUA

Motores Remanufaturados Caterpillar também encontram-se disponíveis para diversos arranjos de motor.

WERKÜBERHOLTE AT-PRODUKTE

Bei Reparaturen sollten werküberholte AT-Produkte von Caterpillar in Betracht gezogen werden. Die durch das AT-Programm von Caterpillar erhältlichen Teile sind im Parts Book auf drei verschiedene Arten gekennzeichnet:

- mit dem Buchstaben R in der Spalte NOTE der Ersatzteilliste
- mit einem R* am Anfang der ersten Zeile der Überschrift
- mit einem *R am Ende der ersten Zeile der Überschrift

Das AT-Programm umfaßt u.a. folgende Produkte:

DREHSTROMGENERATOREN
PLEUELSTANGEN
KURBELWELLEN - MIT UNTERMASS
KURBELWELLEN - MIT ORIGINALMASS
ZYLINDERKÖPFE
ELEKTRONISCHE STEUEREINHEITEN (EMC)
ELEKTRONISCHE SENSOREN
PUMPENDÜSEN
EINSPRITZDÜSEN
KRAFTSTOFFPUMPEN
DREHZAHLREGLER
ÖLPUMPEN
KOLBEN
TEILMOTOREN
ANLASSER
TURBOLADER - KOMPLETT
TURBOLADERLAUFZEUGE
KÜHLWASSERPUMPEN

Viele Motoren können durch werküberholte AT-Motoren von Caterpillar ersetzt werden.

SUPPLEMENTAL COOLANT ADDITIVES

CUSTOMER BENEFITS:

Protects against cavitation, foam, erosion, corrosion, and scale buildup in cooling systems.

- Provides measured coolant conditioner.

DESCRIPTION:

Additives deplete from the coolant with normal operation. For this reason, Supplemental Coolant Additives (SCA) must be added to all heavy duty coolants at regular intervals. In addition, when not using a fully formulated, pre-charged antifreeze, like Caterpillar's DEAC, an initial charge of SCA must be added to the cooling system. The amount of SCA added to the system is dependent on the capacity of the system.

The SCA for initial fill is provided as a liquid. SCA's for maintenance intervals are available in liquid form and as a spin-on element. (No Spin-on available for 3600 Family of Engines)

NOTE:

The amount of SCA added at initial fill is not the same as the amount added at maintenance intervals.

The coolant additive elements can be used with any ethylene or propylene glycol type antifreeze which meets ASTM D4985 or ASTM D5345 Specifications.

NOTE:

For use with standard heavy duty coolant only, not for use with Extended Life Coolant.

PARTS NEEDED:

Cooling System Capacity		Liquid SCA at Initial Fill	Liquid SCA at Maintenance*	Spin-on SCA Maintenance Element*
Liters	Gallons			
22-30	(6-8)	3P-2044 (1)	6V-3542 (1)	111-2370 (1)
30-38	(8-10)	3P-2044 (1) 6V-3542 (1)	111-2372 (1)	111-2369 (1)
38-49	(10-13)	3P-2044 (1) 8T-1589 (1)	111-2372 (1)	111-2369 (1)
49-64	(13-17)	3P-2044 (2)	8T-1589 (1)	9N-3368 (1)
64-83	(17-22)	3P-2044 (2) 8T-1589 (1)	111-2372 (1) 6V-3542 (1)	111-2371 (1)
83-114	(22-30)	3P-2044 (3) 8T-1589 (1)	3P-2044 (1)	9N-3718 (1)
114-163	(30-43)	3P-2044 (5)	3P-2044 (1) 6V-3542 (1)	111-2371 (2)
163-242	(43-64)	3P-2044 (8)	3P-2044 (2)	9N-3718 (2)

** Normal maintenance period is 250 hrs. See your Operation and Maintenance Manual for complete coolant maintenance instructions.*

( ) Indicates quantity required.

ADDITIFS POUR LIQUIDE DE REFROIDISSEMENT

AVANTAGES POUR LE CLIENT

L'additif protège contre la cavitation, la mousse, l'érosion, la corrosion et l'accumulation de dépôts dans le circuit de refroidissement.

- L'additif complémentaire fournit une quantité mesurée d'additif.

DESCRIPTION:

Les additifs s'épuisent pendant l'utilisation du moteur. C'est pourquoi l'on doit ajouter de l'additif au liquide de refroidissement/antigel pour moteurs diesel à intervalles réguliers. En plus, si l'on n'utilise pas de l'antigel entièrement formulé et pré-chargé comme le liquide de refroidissement/antigel Caterpillar pour moteurs diesel, une quantité initiale d'additif doit être ajoutée au circuit de refroidissement. La quantité d'additif à ajouter au circuit dépend de la contenance du circuit.

L'additif pour le remplissage initial est fourni sous forme liquide. L'additif pour l'entretien ultérieur est disponible sous forme liquide et sous forme d'élément à visser. (Il n'y a pas d'élément à visser pour les moteurs de la famille 3600).

NOTA:

La quantité d'additif à ajouter au remplissage initial diffère de la quantité à ajouter aux intervalles d'entretien.

Les éléments d'additif peuvent être utilisés avec tout antigel de type éthylène ou propylène-glycol conforme à la norme ASTM D4985 ou ASTM D5345.

NOTA:

A utiliser uniquement avec du liquide de refroidissement pour moteurs diesel et non avec le liquide de refroidissement longue durée.

PIÈCES NÉCESSAIRES:

Contenance du circuit de refroidissement		Additif liquide au remplissage initial	Additif liquide aux intervalles d'entretien*	Elément d'additif à visser aux intervalles d'entretien*
Litres	Gallons U.S.			
22-30	(6-8)	3P-2044 (1)	6V-3542 (1)	111-2370 (1)
30-38	(8-10)	3P-2044 (1) 6V-3542 (1)	111-2372 (1)	111-2369 (1)
38-49	(10-13)	3P-2044 (1) 8T-1589 (1)	111-2372 (1)	111-2369 (1)
49-64	(13-17)	3P-2044 (2)	8T-1589 (1)	9N-3368 (1)
64-83	(17-22)	3P-2044 (2) 8T-1589 (1)	111-2372 (1) 6V-3542 (1)	111-2371 (1)
83-114	(22-30)	3P-2044 (3) 8T-1589 (1)	3P-2044 (1)	9N-3718 (1)
114-163	(30-43)	3P-2044 (5)	3P-2044 (1) 6V-3542 (1)	111-2371 (2)
163-242	(43-64)	3P-2044 (8)	3P-2044 (2)	9N-3718 (2)

** L'intervalle d'entretien normal est de 250 heures-service. Voir le Guide d'utilisation et d'entretien pour de plus amples renseignements concernant l'entretien du circuit de refroidissement.*

( ) Indique la quantité exigée.

ADITIVOS DE REFRIGERANTE SUPLEMENTARIOS

VENTAJAS PARA EL USUARIO:

Protegen contra la cavitación, la formación de espuma, la corrosión y la acumulación de escamas en los sistemas de enfriamiento.

- Suministra un acondicionador dosificado de refrigerante.

DESCRIPCIÓN:

Los aditivos en el refrigerante se agotan con la operación normal. Por esta razón, se debe agregar Aditivo de refrigerante suplementario (SCA) a todos los refrigerantes para servicio pesado, a intervalos regulares. Además, cuando no se usa un anticongelante de precarga completo, tal como el DEAC de Caterpillar, es necesario agregar una cantidad de aditivo de refrigerante suplementario inicial al sistema de enfriamiento. La cantidad de aditivo que se debe agregar depende de la capacidad del sistema.

El SCA de llenado inicial es líquido. El que se usa para el mantenimiento está disponible tanto en líquido como en un elemento enroscable. (No hay elemento enroscable disponible para la Familia de Motores 3600).

NOTA:

La cantidad de aditivo de llenado inicial no es la misma que se agrega en los intervalos de mantenimiento.

Los elementos de aditivo de refrigerante se pueden usar con cualquier anticongelante de tipo glicol etilénico o propílico que esté de acuerdo con las especificaciones de las normas ASTM D4985 o ASTM D5345.

NOTA:

Se debe utilizar únicamente con refrigerante estándar para servicio pesado; no se debe usar con Refrigerante de Larga Duración.

PIEZAS NECESARIAS:

Capacidad del Sistema de Enfriamiento		SCA líquido de llenado inicial	SCA líquido de mantenimiento*	Elemento de mantenimiento enroscable*
litros	gal EE.UU.			
22-30	6-8	3P-2044 (1)	6V-3542 (1)	111-2370 (1)
30-38	8-10	3P-2044 (1) 6V-3542 (1)	111-2372 (1)	111-2369 (1)
38-49	10-13	3P-2044 (1) 8T-1589 (1)	111-2372 (1)	111-2369 (1)
49-64	13-17	3P-2044 (2)	8T-1589 (1)	9N-3368 (1)
64-83	17-22	3P-2044 (2) 8T-1589 (1)	111-2372 (1) 6V-3542 (1)	111-2371 (1)
83-114	22-30	3P-2044 (3) 8T-1589 (1)	3P-2044 (1)	9N-3718 (1)
114-163	30-43	3P-2044 (5)	3P-2044 (1) 6V-3542 (1)	111-2371 (2)
163-242	43-64	3P-2044 (8)	3P-2044 (2)	9N-3718 (2)

** El período normal de mantenimiento es de 250 horas. Para ver las instrucciones completas sobre el mantenimiento del refrigerante, consulte el Manual de Operación y Mantenimiento.*

( ) Indica la cantidad necesaria.

ADITIVOS SUPLEMENTARES DO LÍQUIDO ARREFECEDOR

BENEFÍCIOS PARA O CLIENTE:

Protege contra cavitação, espuma, erosão, corrosão e acúmulo de crostas nos sistemas de arrefecimento.

- Fornece uma quantidade pré-determinada de condicionador de arrefecimento.

DESCRIÇÃO:

Com a operação normal, os aditivos se esgotam do líquido arrefecedor. Por isso, Aditivos Suplementares do Líquido Arrefecedor (SCA) devem ser acrescentados a todos os líquidos arrefecedores para serviço pesado em intervalos regulares. Além disso, quando um anticongelante pré-carregado, totalmente formulado não for usado, como o DEAC Caterpillar, uma carga inicial de SCA deve ser acrescentada ao sistema de arrefecimento. A quantidade de SCA acrescentada ao sistema depende da capacidade do sistema.

O SCA para abastecimento inicial é fornecido em forma de líquido. Os aditivos suplementares (SCA) para intervalos de manutenção estão à disposição em forma líquida e como um elemento com roscas. (Exceto os Motores da Família 3600)

NOTA:

A quantidade de SCA adicionada no abastecimento inicial não é a mesma que a acrescentada nos intervalos de manutenção.

Os elementos do aditivo do líquido arrefecedor podem ser usados com qualquer tipo de anticongelante etileno ou propileno que satisfaz as Especificações ASTM D4985 ou ASTM D5345.

NOTA:

Para uso apenas com líquido arrefecedor para serviço pesado padrão, não deve ser usado com Líquido Arrefecedor de Vida Longa.

PEÇAS NECESSÁRIAS:

Capacidade do Sistema de Arrefecimento		Líquido SCA Durante Abastecimento Inicial	Líquido SCA Durante Manutenção*	Elemento de Manutenção de SCA com Roscas*
Litros	Galões			
22-30	6-8	3P-2044 (1)	6V-3542 (1)	111-2370 (1)
30-38	8-10	3P-2044 (1) 6V-3542 (1)	111-2372 (1)	111-2369 (1)
38-49	10-13	3P-2044 (1) 8T-1589 (1)	111-2372 (1)	111-2369 (1)
49-64	13-17	3P-2044 (2)	8T-1589 (1)	9N-3368 (1)
64-83	17-22	3P-2044 (2) 8T-1589 (1)	111-2372 (1) 6V-3542 (1)	111-2371 (1)
83-114	22-30	3P-2044 (3) 8T-1589 (1)	3P-2044 (1)	9N-3718 (1)
114-163	30-43	3P-2044 (5)	3P-2044 (1) 6V-3542 (1)	111-2371 (2)
163-242	43-64	3P-2044 (8)	3P-2044 (2)	9N-3718 (2)

** O período normal de manutenção é de 250 horas. Consulte o Manual de Operação e Manutenção para obter instruções completas quanto à manutenção do líquido arrefecedor.*

( ) Indica a quantidade exigida.

KÜHLMITTELZUSATZ

VORTEILE FÜR DEN KUNDEN:

Schutz gegen Kavitation, Schaumbildung, Erosion, Korrosion und Kesselsteinbildung in Kühlsystemen.

- Richtig dosierter Kühlmittelzusatz

BESCHREIBUNG:

Additive erschöpfen sich während des Motorbetriebs. Deshalb muß allen HD-Kühlmitteln regelmäßig Kühlmittelzusatz beigefügt werden. Wenn bei Erstfüllung kein vollwertiges Fertigkühlmittel, wie das Frostschutz- und Kühlmittel für Dieselmotoren von Caterpiller (DEAC), verwendet wird, muß bei Erstfüllung Kühlmittelzusatz beigefügt werden. Wieviel Kühlmittelzusatz beigefügt werden muß, hängt vom Inhalt des Kühlsystems ab.

Für Erstfüllung ist Kühlmittelzusatz nur in flüssiger Form erhältlich. Für Wartungsintervalle ist Kühlmittelzusatz in flüssiger Form und als Zusatzelement erhältlich. (Für die Motorbaureihe 3600 sind keine Zusatzelemente erhältlich.)

ANMERKUNG:

Die Kühlmittelmenge bei Erstfüllung ist nicht die gleiche Menge, die bei Wartungsintervallen beigefügt werden muß.

Die Kühlmittelzusatzelemente können mit allen Frostschutzmitteln auf Ethylen- oder Propylenglykolbasis verwendet werden, die den Standards nach ASTM D4985 oder ASTM D5345 entsprechen.

ANMERKUNG:

Den Kühlmittelzusatz nicht mit Langzeitkühlmittel (ELC) von Caterpillar verwenden. Der Kühlmittelzusatz ist nur für HD-Kühlmittel bestimmt.

TEILEBEZEICHNUNG:

Kühlsysteminhalt		Kühlmittelzusatz bei Erstfüllung	Flüssiger Kühlmittelzusatz bei Wartung*	Kühlmittelzusatzelement bei Wartung*
Liter	US-Gall.			
22-30	(6-8)	3P-2044 (1)	6V-3542 (1)	111-2370 (1)
30-38	(8-10)	3P-2044 (1) 6V-3542 (1)	111-2372 (1)	111-2369 (1)
38-49	(10-13)	3P-2044 (1) 8T-1589 (1)	111-2372 (1)	111-2369 (1)
49-64	(13-17)	3P-2044 (2)	8T-1589 (1)	9N-3368 (1)
64-83	(17-22)	3P-2044 (2) 8T-1589 (1)	111-2372 (1) 6V-3542 (1)	111-2371 (1)
83-114	(22-30)	3P-2044 (3) 8T-1589 (1)	3P-2044 (1)	9N-3718 (1)
114-163	(30-43)	3P-2044 (5)	3P-2044 (1) 6V-3542 (1)	111-2371 (2)
163-242	(43-64)	3P-2044 (8)	3P-2044 (2)	9N-3718 (2)

** Der normale Wartungsintervall beträgt 250 Betriebsstunden. Für vollständige Anweisungen zur Wartung des Kühlsystems, siehe Betriebs- und Wartungshandbuch.*

( ) Erforderliche Anzahl

NOMENCLATURA DE PEÇAS INGLÊS-PORTUGUÊS

INGLÊS	PORTUGUÊS
ABOVE	Acima
ABSORBER	Amortecedor
ACCESSORY	Acessório
ACTUATOR	Acionador
ADAPTER	Adaptador
ADHESIVE	Adesivo
ADJUSTER	Adjustador
AFTERCOOLER	Pós-resfriador
AIR	Ar
AIR CLEANER	Purificador de ar
AIR SYSTEM	Sistema de ar
ALARM	Alarme
ALTERNATOR	Alternador
AMMETER	Amperímetro
ANCHOR	Âncora, fixador
ANGLE	Ângulo, canto
ANVIL A.	Bigorna conj.
ARBOR	Mandril, eixo
ARM	Braço
ARMATURE	Armadura, Induzida
ARM REST	Apoio para braço
ARRESTER	Detentor
ASSEM. = ASSEMBLY	Conjunto
ATTACHMENT	Acessório
AVAILABLE	Disponível
AXLE	Eixo
AXLE SHAFT	Semi-eixo, ponta
BACK-UP ALARM	Alarme de marcha à ré
BACK-UP LIGHT	Luz da marcha à ré
BACK-UP SWITCH	Interruptor de marcha à ré
BACKBOARD	Prancha traseira
BACK CUSHION	Encosto
BACKHOE	Retroescavadeira
BAFFLE	Defletor
BAG	Saco, sacola
BAIL	Alça
BALANCER	Balanceador
BALL	Esfera
BALLCHECK ASSEMBLY	Conjunto de (válvula) de esfera de retenção
BALL JOINT	Junta esférica
BALLSTUD	Munhão esférica
BAND	Banda, cinta, tira
BAND & LINING	Banda e revestimento
BAR	Barra
BARREL	Cilindro
BARRIER	Barreira
BASE	Base
BASIN	Bacia, coletor
BATTERY	Bateria
BEAM	Barra, viga, trave
BEARING	Mancal, rolamento
BEARING BALL	Rolamento de esferas
BEARING-SLEEVE	Mancal tipo luva
BEARING-NEEDLE	Rolamento de agulha
BEARING-ROLLER	Rolamento tipo roletes
BELL	Campânula
BELLCRANK	Alavanca angular
BELLOWS	Fole
BELOW	Abaixo
BELT	Correia, cinto
BELT TIGHTENER	Ajustador de correia
BEVEL GEAR	Coroa
BIT-CUTTER	Broca, fresa
BLACK	Preto
BLADE	Lâmina
BLEEDER	Sangrador
BLOCK	Bloco, calço
BLOWER	Ventilador
BLUE	Azul
BOARD	Prancha, tábua
BODY	Corpo
BOLT	Parafuso
BONNET	Tampa
BOOM	Lança
BOOSTER	Reforçador
BOOT	Protetor contra poeira
BORE	Furo
BOSS	Ressalto
BOTH	Ambos (as)
BOTTOM	Fundo
BOWL	Caçamba
BOX	Caixa
BRACE	Tirante
BRACKET	Suporte
BRAKE	Freio
BREAKER	Interruptor
BREATHER	Respiro
BRIDGE	Braço
BROWN	Marrom
BRUSH	Escova
BUCKET	Caçamba
BULB	Bulbo
BULLDOZER	Bulldozer
BUMPER	Pára-choque
BUSHING	Bucha
BUTTON	Botão
BUZZER WARNING	Alarme sonoro
C = CHANGE	Alteração
CAB	Cabina
CABINET	Gabinete
CABLE	Cabo
CAGE	Alojamento
CALIPER	Calibrador
CAM	Excêntrico, ressalto
CAMSHAFT	Eixo-comando-de-válvulas
CANOPY	Coberta, toldo

NOMENCLATURA DE PEÇAS INGLÊS-PORTUGUÊS

INGLÊS	PORTUGUÊS
CAP	Tampa
CAPACITOR	Capacitor, condensador
CARBURETOR	Caburador
CARCASS	Carcaça
CARRIER	Suporte
CARTON	Caixa de papelão
CARTRIDGE	Cartucho
CASE	Caixa, alojamento
CASING	Invólucro, revestimento
CASTER	Rolete, roldana
CAST IRON	Ferro fundido
CATWALK	Passadiço
CENTER	Centro
CHAIN	Corrente
CHAMBER	Câmara
CHANGEOVER	Modificação
CHANNEL	Canal
CHASSIS	Chassi, armação
CHECK-VALVE	Válvula de retenção
CIRCUIT	Circuito
CIRCUIT BREAKER	Interruptor de circuito
CLAMP	Braçadeira
CLASP	Fecho, grampo
CLEANER	Purificador
CLEVIS	Forquilha, garfo
CLIP	Clipe, presilha, grampo
CLOSURE	Fecho
CLUTCH	Embreagem
COARSE	Grosso, áspero
COATING	Capa, revestimento
COCK	Torneira
COIL	Bobina, serpentina
COLLAR	Colar
COLLECTOR	Coletor
COLLET	Mandril
COLUMN	Coluna
COMPACTOR	Compactador
COMPARTMENT	Compartimento
COMPLETE	Completo
COMPOUND	Composto
COMPRESSOR	Compressor
CONCAVE	Côncavo
CONDITIONER	Condicionador
CONDUIT	Conduite, eletroduto
CONE	Cone
CONNECTING	Ligação
CONNECTED ROD	Biela
CONNECTION	Conexão
CONNECTOR	Conetor
CONSISTS OF	Consiste de
CONSOLE	Consolo
CONTACT	Contato, platinado
CONTACTOR	Contactador
CONTINUED FROM	Continuação de
CONTROL	Controle
CONVERSION	Conversão
CONVERTER	Conversor
COOLER	Arrefecedor
COOLING	Arrefecimento
CORK	Cortiça
CORE	Núcleo
CORNER	Canto
COTTER PIN	Contrapino
COUNTER	Contador, tacômetro
COUNTERWEIGHT	Contrapeso
COUPLER	Acoplador, engate
COUPLING	Acoplamento, conexão
COVER	Tampa
COWL	Capota
COWLING	Capota
CRADLE	Armação, suporte
CRANK	Manivela
CRANKCASE	Cárter
CRANKSHAFT	Virabrequim
CROSS UNION	Junta transversal
CROSSBAR	Barra transversal
CUP	Capa, anel externa
CURTAIN	Cortina
CUSHION	Almofada, amortecedor
CUTTER	Fresa, cortador
CUTTING EDGE	Borda cortante
CYLINDER	Cilindro
CYLINDER BLOCK	Bloco do motor
CYLINDER HEAD	Cabeçote
DAMPER	Amortecedor
DARK GREEN	Verde escuro
DASH	Painel
DASH PANEL	Painel de Instrumento
DECELERATOR	Desacelerador
DEFLECTOR	Defletor
DETENT	Retém, pino de trava
DIAGRAM-WIRING	Diagrama dos circuitos elétricos
DIAL	Medidor de dial
DIAPHRAGM	Diafragma
DIESEL ENGINE COMPLETE	Motor diesel completo
DIFFERENTIAL	Diferencial
DIFFUSER	Difusor
DIMMER	Redutor de luminosidade
DIODE	Diodo
DIRECTOR	Diretor
DISC	Disco
DISCONNECT	Desligar
DISPOSABLE	Disponível, substituível
DISSIPATOR	Dissipador de calor
DISTRIBUTOR	Distribuidor
DM = DECIMETER	dm = decímetro

NOMENCLATURA DE PEÇAS INGLÊS-PORTUGUÊS

INGLÊS	PORTUGUÊS
DOME LIGHT	Lâmpada do teto
DOOR	Porta
DOWEL	Pino-guia, cavilha
DOWNSHIFT	Mudança para marcha mais baixa
DOZER	Bulldozer (lâmina)
DRAIN	Dreno
DRAWBAR	Barra de tração
DRILL	Broca
DRILLED	Broqueado, perturado
DRIVE	Comando, acionamento, propulsão
DRIVER	Acionador, mecanismo propulsor
DRIVESHAFT	Eixo acionador, eixo de transmissão
DRUM	Tambor
DUCT	Conduto, canal
EACH	Cada
EDGE	Borda, canto
EFFECTIVE WITH	Efetivo a partir de
EJECTOR	Ejetor
ELBOW	Cotovelo
ELEMENT	Elemento
ENCLOSURE	Cobertura
END	Extremidade
END BIT	Canto de lâmina
END VIEW	Vista traseira
ENGINE	Motor
ENGINE ARRANGEMENT	Arranjo do motor
EXCEPT	Exceto
EXHAUST	Escape
EXHAUST PIPE	Cano de escape
EXPANDER	Expansor
EXPANSION PLUG	Bujão de expansão
EXTENSION	Extensão
EXTINGUISHER	Extintor
EXTRACTOR	Extrator
EYE	Olhal
EYEBOLT	Parafuso de olhal
FABRIC	Tecido, tela textura
FACING	Revestimento, forro
FAN	Ventilador
FASTENED	Fixo, preso
FASTENER	Fixador, prendedor
FENDER	Pára-lamas
FERRULE	Virola
FIELD COIL	Bobina indutora, ou de campo
FIELD REPLACEMENT	Reposicão ou substituicão no campo
FILLER	Bocal de enchimento
FILM	Película
FILTER	Filtro
FINAL DRIVE	Comando final
FINGER	Dedo
FIREWALL	Parede contra fogo
FITTING	Graxeira, conexão
FIXTURE	Dispositivo, Aparelho
FLANGE	Flange
FLASHER	Luz intermitente
FLOAT	Flutuar, livre
FLOOD-LAMP	Farol
FLOOR	Piso
FLOORMAT	Tapete
FLOORPLATE	Chapa do piso
FLYWEIGHT	Peso volante
FLYWHEEL	Volante
FOLLOWER	Seguidor
FOOT	Pé
FORK	Garfo
FOR USE WITH	Para usar com
FOUNDATION	Assentamento, alicerce
FRAME	Armacão, chassi
FRONT	Frente, dianteiro
FT = FOOT	Pé
FUEL INJECTION	Injecão de combustível
FUEL PUMP	Bomba de combustível
FUEL RATIO	Limitador de combustível
FUEL SYSTEM	Sistema do combustível
FUEL TANK	Tanque do combustível
FUMES DISPOSAL	Eliminação de vapores do cárter
FUSE	Fusível
G = GROUP	Grupo
GAGE	Indicador, manômetro
GAP	Folga, lacuna, intervalo
GASKET	Junta
GASKET KIT	Jogo de junta
GATE	Entrada, trava
GAUGE	Indicador, manômetro
GEAR	Engrenagem, marcha
GEAR BOX	Caixa de engrenagem
GEAR PUMP	Bomba de engrenagem
GENERATOR	Gerador
GLAND	Junta, gaxeta, vedacão sobreposta
GLASS	Vidro
GLOW PLUG	Vela incandescente
GOVERNOR	Governador
GRAB IRON	Balaústre corrimão
GRATE	Grade, grelha
GRAY	Cinza
GRID	Grade, grelha
GRILL	Grade, grelha
GRIP	Pega, garra, cabo

NOMENCLATURA DE PEÇAS INGLÊS-PORTUGUÊS

INGLÊS	PORTUGUÊS
GROMMET	Ilhós
GROUND BRUSH	Escova-terra
GROUND (ELECTRIC)	Terra (eletricidade)
GROUSER	Garra (de sapata)
GUARD	Protetor
GUIDE	Guia
GUSSET	Cantoneira
HACKSAW	Serra para metais
HALF	Metade, meio (a)
HALF LINK	Semi-elo
HAMMER	Martelo
HAND CONTROL	Controle manual
HANDLE	Cabo, alça
HANDRAIL	Corrimão, balaústre
HANGER	Suporte, dispositivo de suspensão
HARDWARE	Ferragem
HARDWARE KIT	Jogo de ferragem
HARNESS	Chicote
HEAD = HD	Cabeça
HEADER	Coletor
HEADLAMP	Farol dianteiro
HEADLIGHT	Farol dianteiro
HEAT SINK	Difusor de calor
HEATER	Aquecedor
HIGH-IDLE	Marcha acelerada em vazio
HINGE	Dobradiça, articulacão
HITCH	Engate
HOIST	Guincho, talha
HOLD	Suporte, fixador
HOLD DOWN	Fixar, reter, manter abaixado
HOLDER	Fixador, suporte
HOLE	Furo, buraco
HOOD	Capô
HOOD & DASH	Capô e painel
HOOK	Gancho
HORN	Buzina
HOSE	Mangueira
HOUSING	Alojamento
HUB	Cubo
HYDRAULIC	Hidráulico
ID = INSIDE DIAMETER	Diâmetro interno
IDLER	Roda-guia
IDLER & SHAFT	Roda-guia e eixo
IDLER GEAR	Engrenagem intermediária
IDLER PULLEY	Polia intermediária
IMPELLER	Impulsor, rotor
IN = INCH	Polegada
INCLUDES	Inclui
INDICATE	Indicam
INDICATOR	Indicador
INLAY	Incrustação
INLET	Admissão, entrada
INPUT	Entrada
INSERT	Inserção
INSTALLATION	Instalação
INSTALLED ON MODEL	Instalação no modelo
INSTRUCTION	Instrução
INSTRUMENT	Instrumento
INSULATED BRUSH	Escova isolada
INSULATION	Isolação, isolamento
INSULATOR	Isolante, isolador
INTAKE	Admissão
INTERLOCK	Trava interna
INTERMEDIATE	Intermediário
INTERNAL	Interno
INVERTER	Inversor
IRON	Ferro
JACK	Macaco
JAW	Mandíbula, garra
JET	Jato, vaporizador
JOINT	Junta, articulação
JUNCTION	Junção
KEY	Chaveta
KINGBOLT	Pino de engate
KNIFE	Faca, lâmina
KNOB	Maçaneta, botão
LADDER	Escada
LAMP	Lâmpada
LARGE	Grande
LATCH	Trinco, lingüeta
LEAD	Condutor, cabo
LEG	Perna
LENS	Lente
LEVEL	Nível
LEVER	Alavanca
L.H. = LEFT HAND	Lado esquerdo
LID	Placa, tampa
LIFT	Levantar
LIFT CYLINDER	Cilindro de levantamento
LIFTER	Tucho
LIFTING EYE	Olhal de levantamento
LIGHT GREEN	Verde claro
LIGHTING	Sistema de iluminação
LINE	Tubulação
LINER	Camisa
LINES & PUMP	Tubulação e bomba
LINES & VALVE	Tubulação e válvula
LINING	Revestimento, lona
LINK	Elo
LINKAGE	Articulação
LIP	Lábio, borda
LISTED	Relacionamento
LITERATURE	Literatura
LOCATED	Localizado

NOMENCLATURA DE PEÇAS INGLÊS-PORTUGUÊS

INGLÊS	PORTUGUÊS
LOCATOR	Localizador
LOCK	Trava
LOCKNUT	Contraporca
LOCKWASHER	Arruela de pressão
LOCKWIRE	Arame de trava
LONG	Longo
LOOM	Tubo isolador
LOW IDLE	Marcha lenta
LOUVER	Persiana
LOWER	Abaixar, inferior
LUBRICANT	Lubrificante
LUG	Ressalto, orelha
MACHINE SCREW	Parafuso de fenda
MAGNET	Imã magneto
MAIN	Principal
MAINTENANCE	Manutenção
MANIFOLD	Coletor
MARKED	Marcado (a)
MARKER	Marcador
MASTER PIN	Pino mestre
MAT	Capacho, esteira
METER	Medidor, contador
MINOR	Menor
MIRROR	Espelho
MISCELLANEOUS	Miscelânea
MODIFICATION	Modificação
MOLDBOARD	Armação da lâmina
MOTOR	Motor
MOULDING	Moldura
MOUNT	Montar
MOUNTED	Montado (a)
MOUNTING	Montagem
MUFFLER	Silenciador
NAMEPLATE	Plaqueta de identificação
N.C. (THREAD)	Rosca grossa
NEEDLE	Agulha
N.F. (THREAD)	Rosca fina
NIB	Ponta, bico
NIPPLE	Conexão
NONE	Nenhum (a)
NORMALIZING	Normalização
NOT PART OF	Não faz parte de
NOZZLE	Bocal, bico injetor
N/S = NOT SERVICED	Não vendável
NUMBER (No)	Número (No)
NUT	Porca
NUT-WING	Porca borboleta
NUT-CASTLE	Porca acastelada
NUT-WELD	Porca-soldada
NUT-CAP	Porca cega
NUT-HEX	Porca sextavada
NUT-LOCK	Contraporca
NUT-IMPERIAL	Porca imperial
NUT-JAM	Porca de trava, contraporca
NUT-LOW CROWN	Porca de meia coroa
NUT-RETAINING	Porca de retenção
NUT-SELF LOCK	Porca de autotravamento
NUT-SLOTTED	Porca fendada
NUT-SPANNER	Porca para chaves
O.D. = OUTSIDE DIAMETER	Diâmetro externo
O-RING	Anel "O"
OIL	Óleo
OILPAN	Cárter
OIL PUMP	Bomba de óleo
OIL SYSTEM	Sistema de lubrificação
OILER	Almotolia, lubrificador
ORANGE	Laranja
TO ORDER	Para pedir
ORIFICE	Orifício
OUTER	Externo
OUTER RACE	Anel externo
OUTPUT	Saída
OVERALL	Geral, total
OVERHAUL	Revisão
OVER SIZE	Sobremedida
PACKING	Embalagem, gaxeta
PAD	Coxim, calço
PADLOCK	Cadeado
PAINT	Pintura
PAN	Cárter
PANEL	Painel
PARKING BRAKE	Freio de estacionamento
PARTITION	Separacão
PARTS G	Grupo de peças
PARTS OF	Peça de
PARTS OF ALL ENGINE ARRANGEMENTS	Peças de todos os arranjos do motor exceto
PAWL	Garra
PEDAL	Pedal
PEDESTAL	Pedestal
PERFORMANCE	Desempenho
PILOT	Piloto
PIN	Pino
PIN & BUSHING	Pino e bucha
PIN-COTTER	Contrapino
PINCH BAR	Pé de cabra
PINION	Pinhão
PIPE	Tubo
PISTON	Pistão
PIVOT	Articulação, pivô
PLANETARY	Planetário
PLATE	Placa
PLATFORM	Plataforma
PLUG	Bujão
PLUNGER	Pistão, êmbolo
POINT	Ponta, ponto

NOMENCLATURA DE PEÇAS INGLÊS-PORTUGUÊS

INGLÊS	PORTUGUÊS
POINTER	Ponteiro
POLE & COIL	Polo e bobina
POLE	Polo, lança, vara
POPPET	Gatilho
POST	Poste, coluna
POTENTIOMETER	Potenciômetro
POWER TAKE OFF	Tomada de força
POWER TRAIN	Trem de força
PRE-SCREENER	Tela protetora
PRECHAMBER	Câmara de pré-combustão
PRECLEANER	Pré-purificador
PRECOMBUSTION	Pré-combustão
PRESS	Prensa
PRESS = PRESSURE	Pressão
PREVIOUS	Prévio, anterior
PRIMARY	Primário, principal
PROBE	Prova
PROJECTOR	Projeter
PROTECTION	Proteção
PROTECTOR	Proteter
PULLER	Extrator, sacador
PULLEY	Polia
PUMP	Bomba
PURPLE	Roxo
PUSHROD	Haste de empuxo
QTY = QUANTITY	Quantidade
RACE	Pista
RACE & ROLLER	Pista e rolete
RACK	Cremalheira
RADIATOR	Radiador
RAIL	Trilho, guia
RANGE TRANSM	Transmissão manual
RATCHET	Catraca
REAR	Traseiro (a)
REBORED	Escareado, alargado
REBUILD KIT	Jogo de recondicionamento
RECEPTACLE	Recipiente
RECTIFIER	Retificador
RED	Vermelho
REDUCER	Redutor
REFER	Referir
REGULATOR	Regulador
RELATED REPAIR ITEMS	Itens de reparos relacionados
RELAY	Relé
RELIEF VALVE	Válvula de alívio
REPAIR G	Grupo de reparo
REPAIR KIT	Jogo de reparo
REPAIR ITEMS	Itens de reparo
REPLACEMENT	Reposição, substituição
REQUIRED	Necessário
RESERVOIR A	Reservatôrio
RESIN	Resina
RESISTOR	Resistência
RETAINER	Fixador
RETARDER	Retardador
REVERSIBLE	Reversível
R.H. = RIGHT HAND	Lado direito
RIM	Aro
RIM & TIRE	Aro e pneu
RING	Anel
RIVET	Rebite
ROCKET	Balancim
ROD	Haste
ROD END	Extremidade da haste
ROLLER	Rolete
ROPE-STARTING	Partida à corda
ROTATOR	Girador
ROTOCHAMBER	Càmara pneumática
ROTOCOIL	Girador de válvula
ROTOR	Rotor
RUST INHIBITOR	Antioxidante
SADDLE	Sela, assento
SAFETY	Segurança
SAFETY TREAD	Tiras antiderrapante
SCRAPER	Tampa
SCREEN	Tela
SCREW	Parafuso
SCREW-HEX HD	Parafuso de cabeça hexagonal
SCREW-KIT	Jogos de parafuso
SCREW-MACHINE	Parafuso de fenda
SCREW-ROUND HD	Parafuso de cabeça redonda
SCREW-FLANGED	Parafuso com flange
SCREW-LOCKING	Parafuso de trava
SCREW-THUMB	Parafuso de orelhas
SCREWDRIVER	Chave de fenda
SEAL	Retentor
SEALED UNIT	Unidade vedada
SEALER	Vedador isolante
SEAT	Assento
SECONDARY	Secundário
SECTION	Seção
SEGMENT	Segmento
SENDER	Emissor
SENSOR	Sensor
SEPARATE	Separar, separado
SEPARATOR	Separador
SERIAL NUMBER PLATE	Placa de número de série
SERVICE	Serviço, manutenção
SERVICE KIT	Jogo de manutenção
SERVICE METER	Horômetro
SETSCREW	Parafuso de fixação
SHACKLE	Grilheto, anel, manilha
SHAFT	Eixo
SHANK	Porta-ponta do escarificador

NOMENCLATURA DE PEÇAS INGLÊS-PORTUGUÊS

INGLÊS	PORTUGUÊS
SHEAVE	Polia, roldana
SHEET	Folha, lâmina
SHELL	Invólucro, cápsula, casquilho
SHIELD	Blindagem, protetor
SHIFT	Mudança
SHIM	Calço
SHIPPING	Embarque
SHOCK ABSORBER	Amortecedor de choques
SHOCKMOUNT	Montagem a prova de choques
SHOE	Sapata
SHORT	Curto
SHOWN	Ilustrado, mostrado
SHROUD	Tampa de proteção
SHUNT	Derivação
SHUT OFF	Desligar, parada
SHUTTLE	Pistão de vaivém
SIDE	Lateral
SIDE VIEW	Vista lateral
SILICONE	Silicone
SINK	Absorvente de calor
SKIVING	Desbaste
SLACK ADJUSTER	Adjustador de folga
SLEEVE	Luva, manga, camisa
SLIDER	Cursor, deslizador
SLIDE RAIL	Trilho deslizante
SLING	Cabos, amarras, linga
SLINGER	Defletor
SLUG	Pistão de reação, pistãozinho
SMALL	Pequeno
SNAP RING	Anel de retenção, anel de pressão
SNUBBER	Amortecedor
SOCKET	Soquete, tomada
SOLENOID	Solenóide
SPACER	Espaçador
SPARE	Sobressalente
SPARK PLUG	Vela de ignição
SPECIAL	Especial
SPEEDOMETER	Velocimetro
SPIDER	Cruzeta
SPINDLE	Ponta de eixo
SPLINE	Estria
SPOOL	Carretel
SPOUT	Calha, tubo
SPRING	Mola
SPROCKET	Roda motriz, roda dentada
STABILIZER	Estabilizador
STACK	Chaminé, cano de escapamento
STAND	Suporte, cavalete
STANDPIPE	Suporte vertical de sucção
STAPLE	Grampo
STARTER	Arranque motor de partida
STATOR	Estator
STEERING	Direção
STEM	Haste
STEP	Degrau
STICK	Vareta
STOP	Parar
STORAGE	Armazenagem
STRAINER	Tela filtrante
STRAP	Tira, cinta, suporte de fixação
STREET ELL	Conexão cotovelo
STRIP	Tira, fita, listra
STROKE	Curso do pistão
STUD	Prisioneiro
SUMP	Tanque, reservatório
SUPPLY VALVE	Válvula de suprimento
SUPPORT	Suporte
SUSPENSION	Suspensão
SWITCH	Interruptor
SWIVEL	Articulação giratória
TAB	Tira, aba, lingüeta
TABLE	Mesa
TACHOGRAPH	Tacógrafo
TACHOMETER	Tacômetro
TAG	Etiqueta
TAIL LAMP	Farol traseiro
TAN	Castanho
TANG	Lingüeta
TANK	Tanque
TAP	Macho
TAPE	Fita
TAPPET	Tucho
TEE	Conexão em "T"
TEMP. = TEMPERATURE	Temperatura
TERMINAL	Terminal
TEST UNIT	Unidade de teste
TESTER	Aparelho de teste
THERMISTOR	Termistor
THERMOCOUPLE	Termopar
THERMOMETER	Termômetro
THERMOSTAT	Termostato
THERMOSWITCH	Interruptor térmico
THICK	Grosso (a) espesso (a)
TIE	Ligação, tirante
THREAD (OF NUT)	Rosca (de porca)
THROTTLE	Acelerador de
THROWER	Defletor
THRU = THROUGH	Através de
TIGHTENER	Tensor
TILT CYLINDER	Cilindro de inclinação
TIMING	Sincronização, Distribuição
TIP	Ponta

NOMENCLATURA DE PEÇAS INGLÊS-PORTUGUÊS

INGLÊS	PORTUGUÊS
TIRE	Pneu
TIRE & RIM	Pneu e aro
TONGUE	Língua, lingueta
TOOL	Ferramenta
TOOLCABINET	Armário para ferramenta
TOOTH/TEETH	Dente/dentes
TOP	Topo, parte superior
TORQUE	Torque
TORQ. CONV.	Conversor de torque
TORQ. DIVIDER	Divisor de torque
TOWER	Torre
TRACK	Esteira
TRACK PIN	Pino de esteira
TRACTOR	Trator
TRAILING UNIT	Unidade rebocada
TRANSFER	Decalcomania
TRANSFORMER	Transformador
TRANSISTOR	Transistor
TRANSMISSION	Transmissão
TRANSMISSION OVERHAUL	Revisão da transmissão
TREAD	Piso, banda de rodagem
TREADLE	Pedal
TROLLY	Carrinho
TRUCK	Caminhão
TRUNNION	Munhão
TUBE	Tubo, cano
TUBING	Tubulagem canalização
TURBINE	Turbina
TURBOCHARGER	Turboalimentador
U-BOLT	Parafuso em "U"
U-JOINT	Junta universal
UNDERSIZE	Submedida
UNION	União
UPPER	Superior
USE AS REQUIRED	Usar conforme necessitar
VALUE	Valor
VALVE	Válvula
VALVE GRINDING	Retificação das válvulas
VEE BELT	Correia "V"
VEE BELT SET	Jogo de correia em "V"
VENT	Respiro
VIEW	Vista
VISE	Morsa, torno
VISOR	Pára-sol
WALKWAY	Passadiço, corredor
WARNING G.	Grupo de alarma
WASHER	Arruela
WATER PUMP	Bomba d'água
WEARPLATE	Placa de desgaste
WEDGE	Cunha
WEIGHT	Peso
WELD	Solda
WELDNUT	Porca soldada
WHEEL	Roda
WHITE	Branco
WICK	Mecha, pavio
WINCH	Guincho
WINDOW	Janela
WINDSHIELD	Pára-brisa
WIPER	Limpador
WIRE	Fio
WIRING	Sistema elétrico
WIRING DIAGRAM	Diagrama do sistema elétrico
WITH	Com
WRAPPER	Invólucro, envoltório
WRENCH	Chave
YELLOW	Amarelo
YOKE	Garfo

MAINTENANCE PARTS

DESCRIPTION	PART NUMBER	QTY	WHERE USED	PAGE
AIR INLET AND EXHAUST SYSTEM				
FILTER ELEMENT AS-AIR (PRIMARY)	6I-2501	1	AIR CLEANER GP	91
FILTER ELEMENT AS-AIR (SECONDARY)	6I-2502	1	AIR CLEANER GP	91
BASIC ENGINE				
BELT (WITH A/C EUROPEAN MARKET)	202-3197	1	BELT GP	7
BELT (WITH A/C NORTH AMERICAN MARKET)	215-3015	1	BELT GP	8
BELT (W/O-A/C NORTH AMERICAN MARKET)	191-5215	1	BELT GP	6
PLUG (MAGNETIC OIL DRAIN)	118-3619	1	DRAIN GP-ENGINE OIL	33
COOLING SYSTEM				
CAP AS-RADIATOR (PRESSURE RELIEF)	031-1119	1	RADIATOR GP	89
CAP-DUST (COOLANT SAMPLING VALVE)	157-0670	1	LINES GP-WATER	82
FILTER-WATER (WATER PUMP)	119-3025	1	PUMP GP-WATER	85
GASKET-WATER REGULATOR (COOLANT TEMPERATURE)	136-0812	1	LINES GP-WATER	82
HOSE (LOWER RADIATOR)	198-1663	1	RADIATOR GP	87
HOSE (UPPER RADIATOR)	214-6738	1	RADIATOR GP	87
REGULATOR-WATER TEMPERATURE (94 DEG C) (COOLANT)	126-5869	1	LINES GP-WATER	82

MAINTENANCE PARTS

DESCRIPTION	PART NUMBER	QTY	WHERE USED	PAGE
ELECTRICAL AND STARTING SYSTEM				
BATTERY (MAINTENANCE FREE)(12 VOLT) (HEAVY DUTY)	153-5700	2	BATTERY GP	121
BATTERY (12 VOLT)	9X-3404	2	WIRING GP-CHASSIS	181
BRUSH AS-ALTERNATOR	3E-5459	2	ALTERNATOR GP-CHARGING	116
		2	ALTERNATOR GP-CHARGING	118
CAP AS-DUST (JACKET WATER HEATER)	133-6517	1	HEATER GP-JACKET WATER	133
		1	HEATER GP-JACKET WATER	134
CIRCUIT BREAKER AS (80 AMP) (MACHINE MAIN)	171-2210	1	PANEL GP-CIRCUIT BREAKER	148
ELEMENT AS-JACKET WATER HEATER (120 VOLT/1000 WATT)	124-0686	1	HEATER GP-JACKET WATER	134
ELEMENT AS-JACKET WATER HEATER (240 VOLT/1000 WATT)	124-0687	1	HEATER GP-JACKET WATER	133
FUSE (10 AMP)	9W-1442	9	PANEL GP-CIRCUIT BREAKER	148
FUSE (15 AMP)	9W-1441	8	PANEL GP-CIRCUIT BREAKER	148
FUSE (20 AMP)	9W-1446	3	PANEL GP-CIRCUIT BREAKER	148
HOLDER AS-BRUSH (ALTERNATOR)	3E-5460	1	ALTERNATOR GP-CHARGING	116
		1	ALTERNATOR GP-CHARGING	118
KEY (BATTERY DISCONNECT)	8H-5306	1	SWITCH GP-DISCONNECT	173
LAMP AS (12 VOLT) (RED/GREEN LED ACTION LIGHT)	165-5655	1	INSTALLATION GP-SECURITY	138
		1	INSTALLATION GP-SECURITY	139
LAMP-DIODE (LED) (WARNING BEACON)	165-5674	1	LIGHTING GP-WARNING BEACON	147
LAMP-HALOGEN (24 VOLT)(65 WATT)	9X-3463	1	LAMP GP-FLOOD	143
LAMP-HALOGEN (24 VOLT)(65 WATT) (FLOOD)	9X-3463	1	LAMP GP-FLOOD	141
		1	LAMP GP-FLOOD	142
LAMP (24 VOLT) (DOME)	7N-9943	1	LAMP GP-DOME	140
LAMP (24 VOLT) (WARNING BEACON)	3E-8825	1	LIGHTING GP-WARNING BEACON	147
LENS (AMBER WARNING BEACON)	198-0316	1	LAMP GP-WARNING BEACON	144
LENS AS (FLOOD)	202-6611	1	LAMP GP-FLOOD	143
LENS AS (FLOOD) (ROPS)	202-6611	1	LAMP GP-FLOOD	142
	202-6614	1	LAMP GP-FLOOD	141
LENS (DOME LAMP)	7T-0020	1	LAMP GP-DOME	140
PULLER-FUSE	202-4327	2	WIRING GP-CHASSIS	181
TUBE-FLASH (3 PRONG CONNECTION) (WARNING BEACON)	127-8158	1	LAMP GP-WARNING BEACON	144
TUBE-FLASH (8 PRONG CONNECTION) (WARNING BEACON)	198-0315	1	LAMP GP-WARNING BEACON	144
FRAME AND BODY				
CAP AS (DUST) (RADIATOR FILLER DOOR)	155-9321	1	GUARD GP-RADIATOR	249
FITTING-GREASE (1/8-27 THD) (CASE & FRAME)	3B-8489	2	CASE & FRAME GP	235
PLUG (CASE & FRAME DRAIN VALVE)	106-8187	1	CASE & FRAME GP	235
SEAL-O-RING (CASE & FRAME DRAIN PLUG)	6F-0711	1	CASE & FRAME GP	235

MAINTENANCE PARTS

DESCRIPTION	PART NUMBER	QTY	WHERE USED	PAGE
FUEL SYSTEM				
CAP AS-FUEL TANK (VENTED LOCKING)	7X-7700	1	TANK GP-FUEL	112
FILTER AS-FUEL (SECONDARY)	1R-0762	1	LINES GP-FUEL FILTER	106
FILTER ELEMENT-FUEL (PRIMARY)	146-6695	1	FILTER GP-WATER SEP & FUEL	103
GASKET (FUEL PRIMING PUMP)	1P-0436	2	FILTER GP-WATER SEP & FUEL	103
STRAINER-FUEL (TANK FILLER)	9P-7121	1	TANK GP-FUEL	112
VALVE-DRAIN (FUEL FILTER)	179-9348	1	LINES GP-FUEL FILTER	106
VALVE-DRAIN (FUEL) (FILTER)	141-8275	1	LINES GP-FUEL FILTER	106
HYDRAULIC SYSTEM				
CAP-DUST (CONTROL VALVE FLUID SAMPLING)	8C-3451	1	MOUNTING GP-VALVE	358
CAP-DUST (HYD. OIL FILTER SAMPLING VALVE)	6V-0852	1	FILTER GP-OIL	333
CAP-DUST (HYDRAULIC OIL SAMPLING VALVE)	6V-0852	2	PUMP & LINES GP-HYDRAULIC	359
CAP-DUST (HYDRAULIC OIL SAMPLING VALVES)	6V-0852	7	LINES GP-FLUID SAMPLING	340
CAP-FILLER (HYDRAULIC TANK)	7H-1447	1	TANK & FILTER GP-HYDRAULIC	365
FILTER (CONTROL VALVE)	4T-4520	1	VALVE GP-CONTROL	372
		1	VALVE GP-CONTROL	374
		1	VALVE GP-CONTROL	376
		1	VALVE GP-CONTROL	378
		1	VALVE GP-CONTROL	380
		1	VALVE GP-CONTROL	382
FILTER ELEMENT AS-OIL (HYDRAULIC) (CLEANOUT/HIGH EFFICIENCY)	139-1537	1	TANK & FILTER GP-HYDRAULIC	365
FILTER ELEMENT AS-OIL (HYDRAULIC) (DISPOSABLE)	144-6691	1	FILTER GP-OIL	333
FILTER ELEMENT AS-OIL (HYDRAULIC/REVERSE FLOW) (DISPOSABLE)	1R-0735	1	TANK & FILTER GP-HYDRAULIC	365
FILTER ELEMENT AS-OIL (REVERSE FLOW) (HYDRAULIC FIRE RESISTANT FLUID)	104-6931	1	TANK & FILTER GP-HYDRAULIC	365
FITTING-GREASE (1/8-27 THD) (ANGLE & TILT CYLINDERS)	3B-8489	8	LINES GP-ANGLE & TILT	336
FITTING-GREASE (1/8-27 THD) (BULLDOZER LIFT CYLINDER)	3B-8489	1	CYLINDER GP-LIFT	325
PLUG-DRAIN (HYDRAULIC TANK)	9J-7031	1	TANK & FILTER GP-HYDRAULIC	365
SCREEN AS (HYDRAULIC TANK)	3G-3267	1	TANK & FILTER GP-HYDRAULIC	365
STRAINER (HYDRAULIC TANK)	9J-3047	1	TANK & FILTER GP-HYDRAULIC	365
IMPLEMENTS				
FITTING-GREASE (1/8-27 THD) (PITCH LINK)	3B-8489	2	LINK GP-PITCH	392

MAINTENANCE PARTS

DESCRIPTION	PART NUMBER	QTY	WHERE USED	PAGE
LUBRICATION SYSTEM				
BREATHER AS (ENGINE)	2W-9162	1	BREATHER GP	65
CAP-DUST (TURBO OIL SAMPLING VALVE)	8C-3445	1	LINES GP-TURBOCHARGER OIL	72
CAP-FILLER (ENGINE OIL)	4W-3087	1	FILLER GP-ENGINE OIL	66
FILTER AS-ENGINE OIL	1R-0739	1	FILTER GP-ENGINE OIL	67
HOSE-DISPOSAL (FUMES)	4W-2181	1	FUMES DISPOSAL GP	68
SEAL-O-RING (ENGINE BREATHER)	4L-9564	1	BREATHER GP	65
OPERATOR STATION				
BLADE AS-WIPER (LH CAB DOOR)	125-8175	1	DOOR GP-CAB	436
BLADE AS-WIPER (REAR) (WINDOW)	5C-8811	1	WIPER GP-WINDOW	510
BLADE AS-WIPER (RH CAB DOOR)	125-8175	1	DOOR GP-CAB	434
BLADE AS-WIPER (WINDSHIELD)	125-8175	1	WIPER GP-WINDOW	510
CAP AS (AIR CONDITIONER)	3E-4052	1	INSTALLATION GP-LINES	447
CAP (WINDOW WASHER TANK)	209-4482	1	TANK GP-WINDOW WASHER	506
FILTER AS (CAB AIR)	3E-7904	2	PRESSURIZER GP-CAB	478
FILTER AS (CAB PRESSURIZER)	7G-8116	2	PRESSURIZER GP-CAB	478
FILTER-CHARCOAL (CAB PRESSURIZER)	141-7903	1	PRESSURIZER GP-CAB	478
FITTING-GREASE (CAB PRESSURIZER)	3B-8489	1	PRESSURIZER GP-CAB	478
FITTING-GREASE (1/8-27 THD) (OPERATOR PLATFORM)	3B-8489	1	PLATFORM GP-OPERATOR	474
KNOB (FILTER COVER)	3W-6756	2	PRESSURIZER GP-CAB	478
LAMP (24 VOLT) (ACTION LAMP)	115-1748	1	PANEL GP-INSTRUMENT	466
		1	PANEL GP-INSTRUMENT	470
LAMP (24 VOLT) (INSTRUMENT)	123-9294	2	PANEL GP-INSTRUMENT	466
LAMP (24 VOLT) (INSTRUMENT LIGHTS)	123-9294	2	PANEL GP-INSTRUMENT	470
LAMP (24 VOLT) (QUAD GAUGE)	7N-5876	2	PANEL GP-INSTRUMENT	470
LAMP (24 VOLT) (QUAD GUAGE)	7N-5876	2	PANEL GP-INSTRUMENT	466
LIGHT-DASH PANEL	159-9257	1	PANEL GP-INSTRUMENT	466
		1	PANEL GP-INSTRUMENT	470
RECEIVER-DRYER GP (REFRIGERANT)	3E-3535	1	LINES GP-AIR CONDITIONER	453
SEAL-O-RING	2M-9780	1	LINES GP-HEATER	457
SEAT BELT GP (SUSPENSION SEAT)	183-3648	1	SEAT GP	492
SEAT BELT GP (SUSPENSION SEAT LOW BACK)	8Y-4030	1	SEAT GP-SUSPENSION	497

MAINTENANCE PARTS

DESCRIPTION	PART NUMBER	QTY	WHERE USED	PAGE
POWER TRAIN				
BREATHER AS (POWER TRAIN OIL)	185-6684	1	LINES GP-POWER TRAIN OIL	199
CAP AS-OIL FILLER (POWER TRAIN)	2W-6225	1	LINES GP-POWER TRAIN OIL	199
CAP-DUST (POWER TRAIN OIL SAMPLE VALVE)	8C-3447	1	LINES GP-POWER TRAIN OIL	199
CAP-DUST (TRANSMISSION COVER FITTING)	6V-0852	6	PLANETARY GP-TRANSMISSION	206
FILTER ELEMENT AS-OIL (POWER TRAIN)	132-8876	1	FILTER GP-OIL	192
FILTER-MAGNETIC (POWER TRAIN OIL)	8S-9129	1	LINES GP-POWER TRAIN OIL	199
PLUG-DRAIN (TORQUE CONVERTER)	4B-7739	1	MOUNTING GP-TORQUE CONVERTER	203
PLUG (FINAL DRIVE DRAIN)	9S-4185	1	FINAL DRIVE GP	193
PLUG-MAGNETIC (FINAL DRIVE)	6V-0439	1	FINAL DRIVE GP	193
PLUG (TORQUE CONVERTER DRAIN)	9S-4188	1	TORQUE CONVERTER GP	221
PLUG (TRANSMISSION DRIVE)	9S-4188	1	PLANETARY GP-TRANSMISSION	206
SCREEN AS (TORQUE CONVERTER)	3T-6471	1	TORQUE CONVERTER GP	221
SCREEN-SUCTION (POWER TRAIN OIL)	8S-9130	1	LINES GP-POWER TRAIN OIL	199
SEAL-O-RING	2S-4078	1	VALVE GP-PRIORITY	227
SEAL-O-RING (FINAL DRIVE DRAIN PLUG)	3K-0360	1	FINAL DRIVE GP	193
SEAL-O-RING (FINAL DRIVE MAGNETIC PUUG)	2S-4078	1	FINAL DRIVE GP	193
SEAL-O-RING (POWER TRAIN FILTER)	5P-3620	1	FILTER GP-OIL	192
UNDERCARRIAGE				
FITTING-GREASE (EQUALIZER BAR)	3B-8489	2	BAR GP-EQUALIZER	267
WORK TOOLS				
FITTING-GREASE (ANGLING BULLDOZER BLADE)	3B-8489	2	BLADE GP-ANGLING	400
FITTING-GREASE (1/8-27 THD) (RIPPER)	3B-8489	11	RIPPER GP	406

PIÈCES DE RECHANGE

DESCRIPTION	NUMÉRO DE PIECÈS	QTÉ	DOMAINE D'APPLICATION	PAGE
CHÂSSIS ET BENNE				
BOUCHON FILETÉ (ROBINET DE VIDANGE DE BATI ET CARTER)	106-8187	1	CHÂSSIS ET CARTER (ASS)	235
CHAPEAU (ENS) (POUSSIÈRE) (PORTE DE REMPLISSAGE DE RADIATEUR)	155-9321	1	PROTÈGE-RADIATEUR (ASS)	249
GRAISSEUR (FILET 1/8-27) (CARTER ET BÂTI)	3B-8489	2	CHÂSSIS ET CARTER (ASS)	235
JOINT TORIQUE (BOUCHON DE VIDANGE DE BÂTI ET CARTER)	6F-0711	1	CHÂSSIS ET CARTER (ASS)	235
CIRCUIT D'ADMISSION D'AIR ET D'ECHAPPEMENT				
ÉLÉMENT DE FILTRE À AIR (ENS) (PRINCIPAL)	6I-2501	1	FILTRE A AIR (ASS)	91
ÉLÉMENT DE FILTRE À AIR (ENS) (SECONDAIRE)	6I-2502	1	FILTRE A AIR (ASS)	91
CIRCUIT DE CARBURANT				
BOUCHON DE RÉSERVOIR DE CARBURANT (ENS) (VERROUILLAGE AÉRÉ)	7X-7700	1	RÉSERVOIR DE CARBURANT (ASS)	112
ÉLÉMENT DE FILTRE À CARBURANT (PRINCIPAL)	146-6695	1	FILTRE DE SÉPARATEUR D'EAU ET DE CARBURANT (ASS)	103
FILTRE A CARBURANT (ENS) (AUXILIAIRE)	1R-0762	1	CANALISATIONS DU FILTRE A CARBURANT (ASS)	106
FILTRE À CARBURANT (REMPLISSAGE DU RÉSERVOIR)	9P-7121	1	RÉSERVOIR DE CARBURANT (ASS)	112
JOINT PLAT (POMPE D'AMORÇAGE DE CARBURANT)	1P-0436	2	FILTRE DE SÉPARATEUR D'EAU ET DE CARBURANT (ASS)	103
SOUPAPE DE VIDANGE (CARBURANT) (FILTRE)	141-8275	1	CANALISATIONS DU FILTRE A CARBURANT (ASS)	106
SOUPAPE DE VIDANGE (FILTRE À CARBURANT)	179-9348	1	CANALISATIONS DU FILTRE A CARBURANT (ASS)	106
CIRCUIT DE DÉMARRAGE ET ÉLECTRIQUE				
AMPOULE (24 VOLTS) (GYROPHARE)	3E-8825	1	ÉCLAIRAGE - GYROPHARE (ASS)	147
AMPOULE (24 VOLTS) (PLAFONNIER)	7N-9943	1	PLAFONNIER (ASS)	140
BATTERIE (SANS ENTRETIEN)(12 VOLTS) (GRANDE CAPACITÉ)	153-5700	2	BATTERIE (ASS)	121
BATTERIE (12 VOLTS)	9X-3404	2	CABLAGE DE CHASSIS (ASS)	181
BROSSE D'ALTERNATEUR (ENS)	3E-5459	2	ALTERNATEUR DE CHARGE (ASS)	116
		2	ALTERNATEUR DE CHARGE (ASS)	118
CHAPEAU ANTI-POUSSIERE (RÉCHAUFFEUR D'EAU)	133-6517	1	EAU DES CHEMISES - RECHAUFFEUR (ASS)	133
		1	EAU DES CHEMISES - RECHAUFFEUR (ASS)	134
CLÉ (COUPE-BATTERIE)	8H-5306	1	ROBINET DE BATTERIE (ASS)	173
DISJONCTEUR (ENS) (80 A) (DISJONCTEUR PRINCIPAL DE LA MACHINE)	171-2210	1	DISJONCTEUR DU PANNEAU DE COMMANDE (ASS)	148

* TRADUCTION NON DISPONIBLE AU MOMENT DE LA PUBLICATION

PIÈCES DE RECHANGE

DESCRIPTION	NUMÉRO DE PIECÈS	QTÉ	DOMAINE D'APPLICATION	PAGE
ÉLÉMENT DU RÉCHAUFFEUR D'EAU DES CHEMISES (ENS) (120 VOLTS/1000 WATTS)	124-0686	1	EAU DES CHEMISES - RECHAUFFEUR (ASS)	134
ÉLÉMENT DU RÉCHAUFFEUR D'EAU DES CHEMISES (ENS) (240 V/1000 WATTS)	124-0687	1	EAU DES CHEMISES - RECHAUFFEUR (ASS)	133
EXTRACTEUR DE FUSIBLE	202-4327	2	CABLAGE DE CHASSIS (ASS)	181
FUSIBLE (10A)	9W-1442	9	DISJONCTEUR DU PANNEAU DE COMMANDE (ASS)	148
FUSIBLE (15A)	9W-1441	8	DISJONCTEUR DU PANNEAU DE COMMANDE (ASS)	148
FUSIBLE (20 A)	9W-1446	3	DISJONCTEUR DU PANNEAU DE COMMANDE (ASS)	148
LAMPE-DIODE (LED) (GYROPHARE)	165-5674	1	ÉCLAIRAGE - GYROPHARE (ASS)	147
LAMPE (ENS) (12 VOLTS) (TÉMOIN LUMINEUX PRINCIPAL ROUGE/ VERT)	165-5655	1	MONTAGE-SÉCURITÉ (ASS)	138
		1	MONTAGE-SÉCURITÉ (ASS)	139
LAMPE HALOGÈNE (24 VOLTS)(65 WATTS)	9X-3463	1	LAMPE - PHARE (ASS)	143
LAMPE HALOGÈNE (24 VOLTS)(65 WATTS) (PROJECTEUR)	9X-3463	1	LAMPE - PHARE (ASS)	141
		1	LAMPE - PHARE (ASS)	142
LENTILLE (ENS) (PROJECTEUR)	202-6611	1	LAMPE - PHARE (ASS)	143
LENTILLE (ENS) (PROJECTEUR) (ROPS)	202-6611	1	LAMPE - PHARE (ASS)	142
	202-6614	1	LAMPE - PHARE (ASS)	141
LENTILLE (GYROPHARE JAUNE)	198-0316	1	LAMPE - GYROPHARE (ASS)	144
LENTILLE (PLAFONNIER)	7T-0020	1	PLAFONNIER (ASS)	140
PORTE-BALAIS (ENS) (ALTERNATEUR)	3E-5460	1	ALTERNATEUR DE CHARGE (ASS)	116
		1	ALTERNATEUR DE CHARGE (ASS)	118
TUBE-FLASH (CONNEXION À 3 BROCHES) (GYROPHARE)	127-8158	1	LAMPE - GYROPHARE (ASS)	144
TUBE-FLASH (CONNEXION À 8 BROCHES) (GYROPHARE)	198-0315	1	LAMPE - GYROPHARE (ASS)	144
CIRCUIT DE GRAISSAGE				
BOUCHON DE GOULOTTE DE REMPLISSAGE (HUILE MOTEUR)	4W-3087	1	BOUCHON DE REMPLISSAGE D'HUILE MOTEUR (ASS)	66
FILTRE A HUILE MOTEUR (ENS)	1R-0739	1	FILTRE À HUILE MOTEUR (ASS)	67
JOINT TORIQUE (RENIFLARD DE MOTEUR)	4L-9564	1	RENIFLARD (ASS)	65
PARE-POUSSIERE (ROBINET DE PRÉLÈVEMENT D'HUILE DE TURBOCOMPRESSEUR)	8C-3445	1	CANALISATIONS D'HUILE DE TURBOCOMPRESSEUR (ASS)	72
RENIFLARD (ENS) (MOTEUR)	2W-9162	1	RENIFLARD (ASS)	65
TUYAU D'ÉCHAPPEMENT (VAPEURS)	4W-2181	1	DISPOSITIF D'EVACUATION DES VAPEURS DE CARTER	68

* TRADUCTION NON DISPONIBLE AU MOMENT DE LA PUBLICATION

PIÈCES DE RECHANGE

DESCRIPTION	NUMÉRO DE PIECÈS	QTÉ	DOMAINE D'APPLICATION	PAGE
CIRCUIT DE REFROIDISSEMENT				
BOUCHON DE RADIATEUR (ENS) (DÉCHARGE DE PRESSION)	031-1119	1	RADIATEUR (ASS)	89
FILTRE -EAU (POMPE À EAU)	119-3025	1	POMPE A EAU (ASS)	85
FLEXIBLE (RADIATEUR INFÉRIEUR)	198-1663	1	RADIATEUR (ASS)	87
FLEXIBLE (RADIATEUR SUPÉRIEUR)	214-6738	1	RADIATEUR (ASS)	87
JOINT DE RÉGULATEUR D'EAU (TEMPÉRATURE DE LIQUIDE DE REFROIDISSEMENT)	136-0812	1	CANALISATIONS D'EAU (ASS)	82
PARE-POUSSIERE (ROBINET DE PRÉLÈVEMENT DE LIQUIDE DE REFROIDISSEMENT)	157-0670	1	CANALISATIONS D'EAU (ASS)	82
THERMOSTAT-TEMPÉRATURE D'EAU (94 DEG C) (LIQUIDE DE REFROIDISSEMENT)	126-5869	1	CANALISATIONS D'EAU (ASS)	82

* TRADUCTION NON DISPONIBLE AU MOMENT DE LA PUBLICATION

PIÈCES DE RECHANGE

DESCRIPTION	NUMÉRO DE PIECÈS	QTÉ	DOMAINE D'APPLICATION	PAGE
CIRCUIT HYDRAULIQUE				
BOUCHON DE GOULOTTE DE REMPLISSAGE (RÉSERVOIR HYDRAULIQUE)	7H-1447	1	RÉSERVOIR HYDRAULIQUE ET FILTRE (ASS)	365
BOUCHON DE VIDANGE (RÉSERVOIR HYDRAULIQUE)	9J-7031	1	RÉSERVOIR HYDRAULIQUE ET FILTRE (ASS)	365
CREPINE (RÉSERVOIR HYDRAULIQUE)	9J-3047	1	RÉSERVOIR HYDRAULIQUE ET FILTRE (ASS)	365
ÉCRAN (ENS) (RÉSERVOIR HYDRAULIQUE)	3G-3267	1	RÉSERVOIR HYDRAULIQUE ET FILTRE (ASS)	365
ÉLÉMENT DE FILTRE À HUILE (ENS) (DÉBIT HYDRAULIQUE/RETOUR DE DÉBIT) (JETABLE)	1R-0735	1	RÉSERVOIR HYDRAULIQUE ET FILTRE (ASS)	365
ÉLÉMENT DE FILTRE À HUILE (ENS) (HYDRAULIQUE) (JETABLE)	144-6691	1	FILTRE A HUILE (ASS)	333
ÉLÉMENT DE FILTRE À HUILE (ENS) (HYDRAULIQUE) (NETTOYAGE/GRANDE EFFICACITÉ)	139-1537	1	RÉSERVOIR HYDRAULIQUE ET FILTRE (ASS)	365
ÉLÉMENT DE FILTRE À HUILE (ENS) (RETOUR DE DÉBIT) (LIQUIDE HYDRAULIQUE RÉSISTANT AU FEU)	104-6931	1	RÉSERVOIR HYDRAULIQUE ET FILTRE (ASS)	365
FILTRE (DISTRIBUTEUR)	4T-4520	1	DISTRIBUTEUR (ASS)	372
		1	DISTRIBUTEUR (ASS)	374
		1	DISTRIBUTEUR (ASS)	376
		1	DISTRIBUTEUR (ASS)	378
		1	DISTRIBUTEUR (ASS)	380
		1	DISTRIBUTEUR (ASS)	382
GRAISSEUR (FILET 1/8-27) (VÉRIN DE LEVAGE DE BULLDOZER)	3B-8489	1	VÉRIN DE LEVAGE (ASS)	325
GRAISSEUR (FILET 1/8-27) (VÉRINS D'INCLINAISON ET D'ORIENTATION)	3B-8489	8	CANALISATIONS D'INCLINAISON ET D'ORIENTATION	336
PARE-POUSSIERE (PRÉLÈVEMENT DE LIQUIDE DE DISTRIBUTEUR)	8C-3451	1	MONTAGE DE SOUPAPE (ASS)	358
PARE-POUSSIERE (ROBINET DE PRÉLÈVEMENT DE FILTRE À HUILE HYDRAULIQUE)	6V-0852	1	FILTRE A HUILE (ASS)	333
PARE-POUSSIERE (ROBINET DE PRÉLÈVEMENT D'HUILE HYDRAULIQUE)	6V-0852	2	POMPE ET CANALISATIONS HYDRAULIQUES (ASS)	359
PARE-POUSSIERE (ROBINETS DE PRÉLÈVEMENT D'HUILE HYDRAULIQUE)	6V-0852	7	CANALISATIONS DE PRÉLÈVEMENT DE LIQUIDE (ASS)	340
ÉQUIPEMENTS				
GRAISSEUR (FILET 1/8-27) (BIELLE D'INCLINAISON)	3B-8489	2	PAS DU MAILLON (ASS)	392

* TRADUCTION NON DISPONIBLE AU MOMENT DE LA PUBLICATION

PIÈCES DE RECHANGE

DESCRIPTION	NUMÉRO DE PIECÈS	QTÉ	DOMAINE D'APPLICATION	PAGE
MOTEUR STANDARD				
BOUCHON FILETÉ (VIDANGE D'HUILE MAGNÉTIQUE)	118-3619	1	VIDANGE-HUILE DE MOTEUR (ASS)	33
COURROIE (AVEC CLIMATISEUR MARCHÉ EUROPÉEN)	202-3197	1	COURROIE (ASS)	7
COURROIE (AVEC CLIMATISEUR MARCHÉ NORD-AMÉRICAIN)	215-3015	1	COURROIE (ASS)	8
COURROIE (SANS CLIMATISEUR MARCHÉ NORD-AMÉRICAIN)	191-5215	1	COURROIE (ASS)	6
OUTILS DE TRAVAIL				
GRAISSEUR (FILET 1/8-27) (RIPPER)	3B-8489	11	RIPPER (ASS)	406
GRAISSEUR (LAME DE BULLDOZER ORIENTABLE)	3B-8489	2	LAME À ORIENTATION (ASS)	400

* TRADUCTION NON DISPONIBLE AU MOMENT DE LA PUBLICATION

PIÈCES DE RECHANGE

DESCRIPTION	NUMÉRO DE PIECÈS	QTÉ	DOMAINE D'APPLICATION	PAGE
POSTE DE CONDUITE				
AMPOULE (24 VOLTS) (ÉCLAIRAGE D'INSTRUMENTS)	123-9294	2	TABLEAU DE BORD (ASS)	470
AMPOULE (24 VOLTS) (INSTRUMENT)	123-9294	2	TABLEAU DE BORD (ASS)	466
AMPOULE (24 VOLTS) (QUATRE INSTRUMENTS)	7N-5876	2	TABLEAU DE BORD (ASS)	466
		2	TABLEAU DE BORD (ASS)	470
AMPOULE (24 VOLTS) (VOYANT PRINCIPAL)	115-1748	1	TABLEAU DE BORD (ASS)	466
		1	TABLEAU DE BORD (ASS)	470
BALAI D'ESSUIE-GLACE (ENS) (ARRIÈRE) (GLACE)	5C-8811	1	ESSUIE-GLACE (ASS)	510
BALAI D'ESSUIE-GLACE (ENS) (PARE-BRISE)	125-8175	1	ESSUIE-GLACE (ASS)	510
BALAI D'ESSUIE-GLACE (ENS) (PORTE DE CABINE DE DROITE)	125-8175	1	PORTIÈRE DE CABINE (ASS)	434
BALAI D'ESSUIE-GLACE (ENS) (PORTE DE CABINE DE GAUCHE)	125-8175	1	PORTIÈRE DE CABINE (ASS)	436
BOUTON (COUVERCLE DE FILTRE)	3W-6756	2	SURPRESSEUR (ASS)	478
CEINTURE DE SECURITE (ASS) (SIEGE A SUSPENSION)	183-3648	1	SIÈGE (ASS)	492
CEINTURE DE SECURITE (ASS) (SIÈGE À SUSPENSION À DOSSIER BAS)	8Y-4030	1	SIÈGE AVEC SUSPENSION (ASS)	497
CHAPEAU (ENS) (CLIMATISEUR)	3E-4052	1	CANALISATIONS DE MONTAGE (ASS)	447
CHAPEAU (RÉSERVOIR DE LAVE-GLACE DE VITRE)	209-4482	1	RÉSERVOIR - LAVE-GLACE (ASS)	506
ECLAIRAGE TABLEAU DE BORD	159-9257	1	TABLEAU DE BORD (ASS)	466
		1	TABLEAU DE BORD (ASS)	470
FILTRE-CHARBON (SURPRESSEUR DE CABINE)	141-7903	1	SURPRESSEUR (ASS)	478
FILTRE (ENS) (AÉRATION DE LA CABINE)	3E-7904	2	SURPRESSEUR (ASS)	478
FILTRE (ENS) (SURPRESSEUR DE CABINE)	7G-8116	2	SURPRESSEUR (ASS)	478
GRAISSEUR (FILET 1/8-27) (PLATE-FORME DE CABINE)	3B-8489	1	PLATE-FORME DE CABINE	474
GRAISSEUR (SURPRESSEUR DE CABINE)	3B-8489	1	SURPRESSEUR (ASS)	478
JOINT TORIQUE	2M-9780	1	CANALISATIONS DE CHAUFFAGE (ASS)	457
RÉCEPTEUR-DÉSHYDRATEUR (ASS) (RÉFRIGÉRANT)	3E-3535	1	CANALISATIONS DE CLIMATISEUR (ASS)	453
TRAIN DE ROULEMENT				
GRAISSEUR (BALANCIER DE SUSPENSION)	3B-8489	2	BALANCIER DE SUSPENSION (ASS)	267

* TRADUCTION NON DISPONIBLE AU MOMENT DE LA PUBLICATION

PIÈCES DE RECHANGE

DESCRIPTION	NUMÉRO DE PIECÈS	QTÉ	DOMAINE D'APPLICATION	PAGE
TRANSMISSION				
BOUCHON AIMANTÉ (RÉDUCTEUR)	6V-0439	1	RÉDUCTEURS (ASS)	193
BOUCHON DE GOULOTTE DE REMPLISSAGE D'HUILE MOTEUR (TRANSMISSION)	2W-6225	1	CANALISATIONS D'HUILE DE TRANSMISSION (ASS)	199
BOUCHON DE VIDANGE (CONVERTISSEUR DE COUPLE)	4B-7739	1	CONVERTISSEUR DE COUPLE - MONTAGE (ASS)	203
BOUCHON FILETÉ (*TRANSMISSION DRIVE)	9S-4188	1	BOÎTE PLANÉTAIRE (ASS)	206
BOUCHON FILETÉ (VIDANGE DE CONVERTISSEUR DE COUPLE)	9S-4188	1	CONVERTISSEUR DE COUPLE (ASS)	221
BOUCHON FILETÉ (VIDANGE DE RÉDUCTEUR)	9S-4185	1	RÉDUCTEURS (ASS)	193
ÉCRAN (ENS) (CONVERTISSEUR DE COUPLE)	3T-6471	1	CONVERTISSEUR DE COUPLE (ASS)	221
ÉCRAN MAGNÉTIQUE (HUILE DE TRANSMISSION)	8S-9129	1	CANALISATIONS D'HUILE DE TRANSMISSION (ASS)	199
ÉLÉMENT DE FILTRE À HUILE (ENS) (TRANSMISSION)	132-8876	1	FILTRE A HUILE (ASS)	192
JOINT TORIQUE	2S-4078	1	SOUPAPE DE PRIORITE (ASS)	227
JOINT TORIQUE (BOUCHON DE VIDANGE D'ENTRAÎNEMENT DE RÉDUCTEUR)	3K-0360	1	RÉDUCTEURS (ASS)	193
JOINT TORIQUE (BOUCHON MAGNÉTIQUE DE RÉDUCTEUR)	2S-4078	1	RÉDUCTEURS (ASS)	193
JOINT TORIQUE (FILTRE DE TRANSMISSION)	5P-3620	1	FILTRE A HUILE (ASS)	192
PARE-POUSSIERE (ROBINET DE PRÉLÈVEMENT D'HUILE DE TRANSMISSION)	8C-3447	1	CANALISATIONS D'HUILE DE TRANSMISSION (ASS)	199
PARE-POUSSIERE (*TRANSMISSION COVER FITTING)	6V-0852	6	BOÎTE PLANÉTAIRE (ASS)	206
RENIFLARD (ENS) (HUILE DE TRANSMISSION)	185-6684	1	CANALISATIONS D'HUILE DE TRANSMISSION (ASS)	199
TAMIS D'ASPIRATION (HUILE DE TRANSMISSION)	8S-9130	1	CANALISATIONS D'HUILE DE TRANSMISSION (ASS)	199

* TRADUCTION NON DISPONIBLE AU MOMENT DE LA PUBLICATION

PIEZAS DE MANTENIMIENTO

DESCRIPCION	NUMERO DE PIEZA	CANT	SE UTILIZA EN	PAGINA
BASTIDOR Y CAJA				
CONEXIÓN DE ENGRASE (ROSCA DE 1/8-27) (CAJA Y BASTIDOR)	3B-8489	2	CAJA Y BASTIDOR (GR)	235
SELLO ANULAR (CAJA Y BASTIDOR, TAPÓN Y DRENAJE)	6F-0711	1	CAJA Y BASTIDOR (GR)	235
TAPÓN (CAJA Y BASTIDOR, VÁLVULA DE DRENAJE)	106-8187	1	CAJA Y BASTIDOR (GR)	235
TAPÓN (CONJ) (POLVO) (PUERTA PARA EL LLENADO DE RADIADOR)	155-9321	1	PROTECTOR DEL RADIADOR (GR)	249

* NO HAY TRADUCCION DISPONIBLE EN EL MOMENTO DE LA IMPRESION

PIEZAS DE MANTENIMIENTO

DESCRIPCION	NUMERO DE PIEZA	CANT	SE UTILIZA EN	PAGINA
CABINA DEL OPERADOR				
CINTURÓN DE SEGURIDAD (GR) (ASIENTO DE SUSPENSION)	183-3648	1	ASIENTO (GR)	492
CINTURÓN DE SEGURIDAD (GR) (*SUSPENSION SEAT LOW BACK)	8Y-4030	1	SUSPENSIÓN - ASIENTO CON (GR)	497
CONEXIÓN DE ENGRASE (CABINA PRESURIZADA)	3B-8489	1	PRESURIZADOR (GR)	478
CONEXIÓN DE ENGRASE (ROSCA DE 1/8-27) (PLATAFORMA DEL OPERADOR)	3B-8489	1	PLATAFORMA DE LA CABINA	474
FILTRO-CARBON (CABINA PRESURIZADA)	141-7903	1	PRESURIZADOR (GR)	478
FILTRO (CONJ) (AIRE DE LA CABINA)	3E-7904	2	PRESURIZADOR (GR)	478
FILTRO (CONJ) (CABINA PRESURIZADA)	7G-8116	2	PRESURIZADOR (GR)	478
HOJA DE LIMPIAPARABRISAS (CONJ) (PARABRISAS)	125-8175	1	LIMPIAPARABRISAS DE LA VENTANA (GR)	510
HOJA DE LIMPIAPARABRISAS (CONJ) (PUERTA DE LA CABINA LADO DERECHO)	125-8175	1	PUERTA DE CABINA	434
HOJA DE LIMPIAPARABRISAS (CONJ) (PUERTA DE LA CBINA, LADO IZQUIERDO)	125-8175	1	PUERTA DE CABINA	436
HOJA DE LIMPIAPARABRISAS (CONJ) (TRASERO) (VENTANA)	5C-8811	1	LIMPIAPARABRISAS DE LA VENTANA (GR)	510
LÁMPARA (24 VOLTIOS) (DE CUATRO MEDIDORES)	7N-5876	2	TABLERO DE INSTRUMENTOS (GR)	470
LÁMPARA (24 VOLTIOS) (INSTRUMENTO)	123-9294	2	TABLERO DE INSTRUMENTOS (GR)	466
LÁMPARA (24 VOLTIOS) (LUCES DE INSTRUMENTOS)	123-9294	2	TABLERO DE INSTRUMENTOS (GR)	470
LÁMPARA (24 VOLTIOS) (LUZ DE TRABAJO)	115-1748	1	TABLERO DE INSTRUMENTOS (GR)	470
		1	TABLERO DE INSTRUMENTOS (GR)	466
LÁMPARA (24 VOLTIOS) (*QUAD GUAGE)	7N-5876	2	TABLERO DE INSTRUMENTOS (GR)	466
LUZ DE TABLERO DE INSTRUMENTOS	159-9257	1	TABLERO DE INSTRUMENTOS (GR)	466
		1	TABLERO DE INSTRUMENTOS (GR)	470
PERILLA (TAPA DEL FILTRO)	3W-6756	2	PRESURIZADOR (GR)	478
RECEPTOR-SECADOR (GR) (REFRIGERANTE)	3E-3535	1	TUBERÍAS DE ACONDICIONADOR DE AIRE (GR)	453
SELLO ANULAR	2M-9780	1	TUBERÍAS DE LA CALEFACCIÓN (GR)	457
TAPA (TANQUE DE LIMPIPARABRISA)	209-4482	1	TANQUE DEL LAVAPARABRISAS (GR)	506
TAPÓN (CONJ) (ACONDICIONADOR DE AIRE)	3E-4052	1	GRUPO DE INSTALACIÓN, TUBERIAS	447
HERRAMIENTAS				
CONEXIÓN DE ENGRASE (ANGULO, HOJA TOPADORA)	3B-8489	2	HOJA ORIENTABLE (GR)	400
CONEXIÓN DE ENGRASE (ROSCA DE 1/8-27) (DESGARRADOR)	3B-8489	11	DESGARRADOR (GR)	406

* NO HAY TRADUCCION DISPONIBLE EN EL MOMENTO DE LA IMPRESION

PIEZAS DE MANTENIMIENTO

DESCRIPCION	NUMERO DE PIEZA	CANT	SE UTILIZA EN	PAGINA
IMPLEMENTOS				
CONEXIÓN DE ENGRASE (ROSCA DE 1/8-27) (*PITCH LINK)	3B-8489	2	ESLABÓN - PASO (GR)	392
MOTOR BÁSICO				
CORREA (SIN ACONDICIONADOR DE AIRE, MERCADO DE NORTEAMERICA)	191-5215	1	CORREA (GR)	6
CORREA (*WITH A/C EUROPEAN MARKET)	202-3197	1	CORREA (GR)	7
CORREA (*WITH A/C NORTH AMERICAN MARKET)	215-3015	1	CORREA (GR)	8
TAPÓN (DRENAJE MAGNETIZADO DE ACEITE)	118-3619	1	DRENAJE DEL ACEITE DE MOTOR	33
SISTEMA DE ADMISIÓN Y ESCAPE DE AIRE				
ELEMENTO DEL FILTRO DE AIRE (CONJ) (PRIMARIO)	6I-2501	1	FILTRO DE AIRE (GR)	91
ELEMENTO DEL FILTRO DE AIRE (CONJ) (SECUNDARIO)	6I-2502	1	FILTRO DE AIRE (GR)	91
SISTEMA DE COMBUSTIBLE				
COLADOR DE COMBUSTIBLE (LLENADO DEL TANQUE)	9P-7121	1	COMBUSTIBLE - TANQUE DE (GR)	112
ELEMENTO DE FILTRO DE COMBUSTIBLE (PRIMARIO)	146-6695	1	FILTRO DE COMBUSTIBLE Y SEPARADOR DE AGUA (GR)	103
EMPAQUETADURA (BOMBA DE CEBADO DE COMBUSTIBLE)	1P-0436	2	FILTRO DE COMBUSTIBLE Y SEPARADOR DE AGUA (GR)	103
FILTRO DE COMBUSTIBLE (CONJ) (SECUNDARIO(A))	1R-0762	1	TUBERÍAS DEL FILTRO DE COMBUSTIBLE	106
TAPA DEL TANQUE DE COMBUSTIBLE (CONJ) (RESPIRADERO CON TRABA)	7X-7700	1	COMBUSTIBLE - TANQUE DE (GR)	112
VÁLVULA DE DRENAJE (COMBUSTIBLE) (FILTRO)	141-8275	1	TUBERÍAS DEL FILTRO DE COMBUSTIBLE	106
VÁLVULA DE DRENAJE (FILTRO DE COMBUSTIBLE)	179-9348	1	TUBERÍAS DEL FILTRO DE COMBUSTIBLE	106
SISTEMA DE ENFRIAMIENTO				
EMPAQUETADURA, REGULADOR DE AGUA (TEMPERATURA DEL REFRIGERANTE)	136-0812	1	TUBERÍAS DEL AGUA (GR)	82
FILTRO DE AGUA (BOMBA DE AGUA)	119-3025	1	BOMBA DE AGUA (GR)	85
MANGUERA (RADIADOR INFERIOR)	198-1663	1	RADIADOR (GR)	87
MANGUERA (RADIADOR SUPERIOR)	214-6738	1	RADIADOR (GR)	87
REGULADOR DE TEMPERATURA DEL AGUA (94 GRADOS C) (REFRIGERANTE)	126-5869	1	TUBERÍAS DEL AGUA (GR)	82
TAPA CONTRA EL POLVO (VÁVULA DE MUESTREO DE REFRIGERANTE)	157-0670	1	TUBERÍAS DEL AGUA (GR)	82
TAPA DE RADIADOR (CONJ) (ALIVIO DE PRESIÓN)	031-1119	1	RADIADOR (GR)	89

* NO HAY TRADUCCION DISPONIBLE EN EL MOMENTO DE LA IMPRESION

PIEZAS DE MANTENIMIENTO

DESCRIPCION	NUMERO DE PIEZA	CANT	SE UTILIZA EN	PAGINA
SISTEMA DE LUBRICACIÓN				
FILTRO DE ACEITE DEL MOTOR (CONJ)	1R-0739	1	FILTRO DE ACEITE DEL MOTOR (GR)	67
RESPIRADERO (CONJ) (MOTOR)	2W-9162	1	RESPIRADERO (GR)	65
SELLO ANULAR (*ENGINE BREATHER)	4L-9564	1	RESPIRADERO (GR)	65
TAPA CONTRA EL POLVO (*TURBO OIL SAMPLING VALVE)	8C-3445	1	TURBOCOMPRESOR - TUBERÍAS DE ACEITE DEL (GR)	72
TAPA DEL TUBO DE LLENADO (ACEITE DEL MOTOR)	4W-3087	1	TUBO DE LLENADO DE ACEITE (GR)	66
TUBO DE ESCAPE (VAPORES)	4W-2181	1	ESCAPE DE GASES (GR)	68
SISTEMA ELÉCTRICO Y DE ARRANQUE				
BATERÍA (LIBRE DE MANTENIMIENTO)(12 VOLTIOS) (SERVICIO PESADO)	153-5700	2	BATERÍA (GR)	121
BATERÍA (12 VOLTIOS)	9X-3404	2	CABLES DEL CHASIS (GR)	181
CRISTAL (*AMBER WARNING BEACON)	198-0316	1	LÁMPARA DE BALIZA DE ADVERTENCIA (GR)	144
CRISTAL (LUZ DE TECHO)	7T-0020	1	LÁMPARA DEL TECHO (GR)	140
DISYUNTOR (CONJ) (80 AMP) (PRINCIPAL DE MAQUINA)	171-2210	1	PANEL DE DISYUNTORES (GR)	148
ELEMENTO DEL CALENTADOR DEL AGUA DE LAS CAMISAS (120 VOLTIOS/1000 VATIOS)	124-0686	1	AGUA DE LAS CAMISAS - CALENTADOR DEL (GR)	134
ELEMENTO DEL CALENTADOR DEL AGUA DE LAS CAMISAS (240 VOLTIOS/1000 VATIOS)	124-0687	1	AGUA DE LAS CAMISAS - CALENTADOR DEL (GR)	133
ESCOBILLA DE ALTERNADOR (CONJ)	3E-5459	2	CARGA - ALTERNADOR DE (GR)	116
		2	CARGA - ALTERNADOR DE (GR)	118
EXTRACTOR DE FUSIBLES	202-4327	2	CABLES DEL CHASIS (GR)	181
FUSIBLE (10 A)	9W-1442	9	PANEL DE DISYUNTORES (GR)	148
FUSIBLE (15 A)	9W-1441	8	PANEL DE DISYUNTORES (GR)	148
FUSIBLE (20 A)	9W-1446	3	PANEL DE DISYUNTORES (GR)	148
LÁMPARA (CONJ) (12 VOLTIOS) (ROJA/VERDE LAMPARA DE DIODO)	165-5655	1	INSTALACION DE SEGURIDAD (GR)	138
		1	INSTALACION DE SEGURIDAD (GR)	139
LAMPARA DE DIODO (LED) (BALIZA GIRATORIA DE ADVERTENCIA)	165-5674	1	LUZ DE BALIZA (GR)	147
LÁMPARA (24 VOLTIOS) (BALIZA GIRATORIA DE ADVERTENCIA)	3E-8825	1	LUZ DE BALIZA (GR)	147
LÁMPARA (24 VOLTIOS) (CÚPULA)	7N-9943	1	LÁMPARA DEL TECHO (GR)	140
LLAVE (DESCONECTAR BATERIA)	8H-5306	1	DISYUNTOR (GR)	173
LUCES DE ALÓGENO (24 VOLTIOS)(65 VATIOS)	9X-3463	1	REFLECTOR (GR)	143
LUCES DE ALÓGENO (24 VOLTIOS)(65 VATIOS) (REFLECTOR)	9X-3463	1	REFLECTOR (GR)	141
		1	REFLECTOR (GR)	142
PORTAESCOBILLAS (CONJ) (ALTERNADOR)	3E-5460	1	CARGA - ALTERNADOR DE (GR)	116
		1	CARGA - ALTERNADOR DE (GR)	118

* NO HAY TRADUCCION DISPONIBLE EN EL MOMENTO DE LA IMPRESION

PIEZAS DE MANTENIMIENTO

DESCRIPCION	NUMERO DE PIEZA	CANT	SE UTILIZA EN	PAGINA
TAPA CONTRA EL POLVO (CONJ) (CALENTADOR DE AGUA DE LAS CAMISAS)	133-6517	1	AGUA DE LAS CAMISAS - CALENTADOR DEL (GR)	133
		1	AGUA DE LAS CAMISAS - CALENTADOR DEL (GR)	134
TUBO DESTELLADOR (*3 PRONG CONNECTION) (BALIZA GIRATORIA DE ADVERTENCIA)	127-8158	1	LÁMPARA DE BALIZA DE ADVERTENCIA (GR)	144
TUBO DESTELLADOR (*8 PRONG CONNECTION) (BALIZA GIRATORIA DE ADVERTENCIA)	198-0315	1	LÁMPARA DE BALIZA DE ADVERTENCIA (GR)	144
VIDRIO (CONJ) (FARO)	202-6611	1	REFLECTOR (GR)	143
VIDRIO (CONJ) (FARO) (ROPS)	202-6611	1	REFLECTOR (GR)	142
	202-6614	1	REFLECTOR (GR)	141

* NO HAY TRADUCCION DISPONIBLE EN EL MOMENTO DE LA IMPRESION

PIEZAS DE MANTENIMIENTO

DESCRIPCION	NUMERO DE PIEZA	CANT	SE UTILIZA EN	PAGINA
SISTEMA HIDRÁULICO				
COLADOR (TANQUE HIDRÁULICO)	9J-3047	1	TANQUE Y FILTRO HIDRÁULICOS (GR)	365
CONEXIÓN DE ENGRASE (ROSCA DE 1/8-27) (CILINDROS, ÁNGULO E INCLINACIÓN)	3B-8489	8	TUBERIAS DE INCLINACIÓN Y ORIENTACIÓN (GR)	336
CONEXIÓN DE ENGRASE (ROSCA DE 1/8-27) (HOJA TOPADORA, CILINDRO DE LEVANTAMIENTO)	3B-8489	1	CILINDRO DE LEVANTAMIENTO (GR)	325
ELEMENTO DE FILTRO DE ACEITE (CONJ) (FLUJO INVERSO) (FLUIDO HIDRÁULICO RESISTENTE AL FUEGO)	104-6931	1	TANQUE Y FILTRO HIDRÁULICOS (GR)	365
ELEMENTO DE FILTRO DE ACEITE (CONJ) (HIDRAULICO) (DESECHABLE)	144-6691	1	FILTRO DE ACEITE (GR)	333
ELEMENTO DE FILTRO DE ACEITE (CONJ) (HIDRAULICO) (LIMPIAR/ALTA EFICIENCIA)	139-1537	1	TANQUE Y FILTRO HIDRÁULICOS (GR)	365
ELEMENTO DE FILTRO DE ACEITE (CONJ) (HIDRAULICO/FLUJO INVERSO) (DESECHABLE)	1R-0735	1	TANQUE Y FILTRO HIDRÁULICOS (GR)	365
FILTRO (VÁLVULA DE CONTROL)	4T-4520	1	VÁLVULA DE CONTROL (GR)	372
		1	VÁLVULA DE CONTROL (GR)	374
		1	VÁLVULA DE CONTROL (GR)	376
		1	VÁLVULA DE CONTROL (GR)	378
		1	VÁLVULA DE CONTROL (GR)	380
		1	VÁLVULA DE CONTROL (GR)	382
PANTALLA (CONJ) (TANQUE HIDRÁULICO)	3G-3267	1	TANQUE Y FILTRO HIDRÁULICOS (GR)	365
TAPA CONTRA EL POLVO (VÁLVULA DE CONTROL DE MUESTREO DE FLUIDO)	8C-3451	1	VÁLVULA - MONTAJE DE LA (GR)	358
TAPA CONTRA EL POLVO (VÁLVULA DE MUESTREO DE ACEITE)	6V-0852	2	GRUPO DE BOMBA Y TUBERIA HIDRULICA	359
TAPA CONTRA EL POLVO (VÁLVULA DE MUESTREO DE FILTRO DE ACEITE HIDRÁULICO)	6V-0852	1	FILTRO DE ACEITE (GR)	333
TAPA CONTRA EL POLVO (VÁLVULAS DE MUESTREO DE ACEITE HIDRÁULICO)	6V-0852	7	GRUPO DE TUBERIAS, MUESTRARIO DE FLUIDO	340
TAPA DEL TUBO DE LLENADO (TANQUE HIDRÁULICO)	7H-1447	1	TANQUE Y FILTRO HIDRÁULICOS (GR)	365
TAPÓN DE DRENAJE (TANQUE HIDRÁULICO)	9J-7031	1	TANQUE Y FILTRO HIDRÁULICOS (GR)	365

* NO HAY TRADUCCION DISPONIBLE EN EL MOMENTO DE LA IMPRESION

PIEZAS DE MANTENIMIENTO

DESCRIPCION	NUMERO DE PIEZA	CANT	SE UTILIZA EN	PAGINA
TREN DE FUERZA				
ELEMENTO DE FILTRO DE ACEITE (CONJ) (TREN DE FUERZA)	132-8876	1	FILTRO DE ACEITE (GR)	192
FILTRO MAGNÉTICO (ACEITE DEL TREN DE FUERZA)	8S-9129	1	TUBERÍAS DE ACEITE DEL TREN DE FUERZA (GR)	199
PANTALLA (CONJ) (CONVERTIDOR DE PAR)	3T-6471	1	CONVERTIDOR DE PAR (GR)	221
REJILLA DE SUCCIÓN (ACEITE DEL TREN DE FUERZA)	8S-9130	1	TUBERÍAS DE ACEITE DEL TREN DE FUERZA (GR)	199
RESPIRADERO (CONJ) (ACEITE DEL TREN DE FUERZA)	185-6684	1	TUBERÍAS DE ACEITE DEL TREN DE FUERZA (GR)	199
SELLO ANULAR	2S-4078	1	PRIORIDAD - VÁLVULA DE (GR)	227
SELLO ANULAR (FILTRO DEL TREN DE FUERZA)	5P-3620	1	FILTRO DE ACEITE (GR)	192
SELLO ANULAR (*FINAL DRIVE MAGNETIC PUUG)	2S-4078	1	MANDO FINAL (GR)	193
SELLO ANULAR (TAPÓN DE DRENAJE DE MANDO FINAL)	3K-0360	1	MANDO FINAL (GR)	193
TAPA CONTRA EL POLVO (*TRANSMISSION COVER FITTING)	6V-0852	6	TRANSMISIÓN PLANETARIA (GR)	206
TAPA CONTRA EL POLVO (VÁLVULA DE MUESTREO DE ACEITE DEL TREN DE FUERZA)	8C-3447	1	TUBERÍAS DE ACEITE DEL TREN DE FUERZA (GR)	199
TAPA DEL TUBO DE LLENADO DE ACEITE (CONJ) (TREN DE FUERZA)	2W-6225	1	TUBERÍAS DE ACEITE DEL TREN DE FUERZA (GR)	199
TAPÓN DE DRENAJE (CONVERTIDOR DE PAR)	4B-7739	1	MONTAJE DEL CONVERTIDOR DE PAR (GR)	203
TAPÓN (DRENAJE DE MANDO FINAL)	9S-4185	1	MANDO FINAL (GR)	193
TAPÓN (DRENAJE DEL CONVERTIDOR DE PAR)	9S-4188	1	CONVERTIDOR DE PAR (GR)	221
TAPÓN MAGNÉTICO (MANDO FINAL)	6V-0439	1	MANDO FINAL (GR)	193
TAPÓN (*TRANSMISSION DRIVE)	9S-4188	1	TRANSMISIÓN PLANETARIA (GR)	206
TREN DE RODAJE				
CONEXIÓN DE ENGRASE (BARRA COMPENSADORA)	3B-8489	2	BARRA COMPENSADORA (GR)	267

* NO HAY TRADUCCION DISPONIBLE EN EL MOMENTO DE LA IMPRESION

PEÇAS DE MANUTENÇÃO

DESCRIÇÃO	NÚMERO DE PEÇA	QUANT	UTILIZADA EM	PÁGINA
ACESSÓRIOS				
GRAXEIRA (ROSCA 1/8-27 POL) (ELO DO PASSO)	3B-8489	2	ELO DO PASSO	392
CHASSI E CARROCERIA				
GRAXEIRA (ROSCA 1/8-27 POL) (CAIXA E CHASSI)	3B-8489	2	CAIXA E CHASSI	235
RETENTOR DE ANEL-O (BUJÃO DE DRENAGEM DA CAIXA E DO CHASSI)	6F-0711	1	CAIXA E CHASSI	235
TAMPA (POEIRA) (PORTA DO BOCAL DE ENCHIMENTO DO RADIADOR)	155-9321	1	PROTETOR - RADIADOR	249
TAMPÃO (VÁLVULA DE DRENAGEM DA CAIXA E DO CHASSI)	106-8187	1	CAIXA E CHASSI	235
FERRAMENTAS DE TRABALHO				
GRAXEIRA (LÂMINA INCLINÃVEL)	3B-8489	2	LÂMINA ANGULÁVEL	400
GRAXEIRA (ROSCA 1/8-27 POL) (RIPER)	3B-8489	11	RIPER	406
MATERIAL RODANTE				
GRAXEIRA (BARRA EQUALIZADORA)	3B-8489	2	BARRA DE SUSPENSÃO	267
MOTOR BÁSICO				
CORREIA (COM A/C MERCADO EUROPEU)	202-3197	1	CORREIA	7
CORREIA (COM A/C MERCADO NORTE-AMERICANO)	215-3015	1	CORREIA	8
CORREIA (SEM A/C MERCADO NORTE-AMERICANO)	191-5215	1	CORREIA	6
TAMPÃO (MAGNÉTICO-DRENO DO ÓLEO)	118-3619	1	DRENO - ÓLEO DO MOTOR	33

PEÇAS DE MANUTENÇÃO

DESCRIÇÃO	NÚMERO DE PEÇA	QUANT	UTILIZADA EM	PÁGINA
POSTO DO OPERADOR				
CINTO DE SEGURANÇA (ASSENTO COM SUSPENSÃO PARTE INFERIOR DAS COSTAS)	8Y-4030	1	ASSENTO COM SUSPENSÃO	497
CINTO DE SEGURANÇA (ASSENTO DA SUSPENSÃO)	183-3648	1	ASSENTO	492
FILTRO - CARVÃO (PRESSURIZADOR DA CABINE)	141-7903	1	PRESSURIZADOR	478
FILTRO (AR DA CABINE)	3E-7904	2	PRESSURIZADOR	478
FILTRO (PRESSURIZADOR DA CABINE)	7G-8116	2	PRESSURIZADOR	478
GRAXEIRA (PRESSURIZADOR DA CABINE)	3B-8489	1	PRESSURIZADOR	478
GRAXEIRA (ROSCA 1/8-27 POL) (PLATAFORMA DO OPERADOR)	3B-8489	1	PLATAFORMA DO OPERADOR	474
LÂMINA DO LIMPADOR DE PÁRA-BRISA (PÁRA-BRISA)	125-8175	1	LIMPADOR DO VIDRO	510
LÂMINA DO LIMPADOR DE PÁRA-BRISA (PARTE TRASEIRA) (JANELA)	5C-8811	1	LIMPADOR DO VIDRO	510
LÂMINA DO LIMPADOR DE PÁRA-BRISA (PORTA DIREITA DA CABINE)	125-8175	1	PORTA DA CABINE	434
LÂMINA DO LIMPADOR DE PÁRA-BRISA (PORTA ESQUERDA DA CABINE)	125-8175	1	PORTA DA CABINE	436
LÂMPADA (24 V) (GRUPO DE QUATRO MEDIDORES)	7N-5876	2	PAINEL DE INSTRUMENTOS	470
LÂMPADA (24 V) (INSTRUMENTO)	123-9294	2	PAINEL DE INSTRUMENTOS	466
LÂMPADA (24 V) (LÂMPADA DE AÇÃO)	115-1748	1	PAINEL DE INSTRUMENTOS	466
		1	PAINEL DE INSTRUMENTOS	470
LÂMPADA (24 V) (LUZES DOS INSTRUMENTOS)	123-9294	2	PAINEL DE INSTRUMENTOS	470
LÂMPADA (24 V) (QUATRO MEDIDORES)	7N-5876	2	PAINEL DE INSTRUMENTOS	466
LUZ DO PAINEL DE INSTRUMENTOS	159-9257	1	PAINEL DE INSTRUMENTOS	466
		1	PAINEL DE INSTRUMENTOS	470
MAÇANETA (TAMPA DO FILTRO)	3W-6756	2	PRESSURIZADOR	478
RECEPTOR - SECADOR (REFRIGERANTE)	3E-3535	1	TUBOS - AR CONDICIONADO	453
RETENTOR DE ANEL-O	2M-9780	1	TUBOS - AQUECEDOR	457
TAMPA (CONDICIONADOR DE AR)	3E-4052	1	INSTALAÇÃO - TUBULAÇÕES	447
TAMPA (TANQUE DO LAVADOR DE VIDROS)	209-4482	1	TANQUE - LAVADOR DE JANELA	506
SISTEMA DA ADMISSÃO DE AR E DE ESCAPE				
ELEMENTO DO FILTRO DE AR (PRIMÁRIO)	6I-2501	1	PURIFICADOR DE AR	91
ELEMENTO DO FILTRO DE AR (SECUNDÁRIO)	6I-2502	1	PURIFICADOR DE AR	91

PEÇAS DE MANUTENÇÃO

DESCRIÇÃO	NÚMERO DE PEÇA	QUANT	UTILIZADA EM	PÁGINA
SISTEMA DE ARREFECIMENTO				
FILTRO - ÁGUA (BOMBA D'ÁGUA)	119-3025	1	BOMBA DE ÁGUA	85
JUNTA - REGULADOR DA ÁGUA (TEMPERATURA DO LÍQUIDO ARREFECEDOR)	136-0812	1	TUBOS - ÁGUA	82
MANGUEIRA (RADIADOR INFERIOR)	198-1663	1	RADIADOR	87
MANGUEIRA (RADIADOR SUPERIOR)	214-6738	1	RADIADOR	87
REGULADOR DE TEMPERATURA DA ÁGUA (94 GRAUS C) (LÍQUIDO ARREFECEDOR)	126-5869	1	TUBOS - ÁGUA	82
TAMPA - RADIADOR (ALÍVIO DE PRESSÃO)	031-1119	1	RADIADOR	89
TAMPA CONTRA POEIRA (VÁLVULA DE COLETA DE AMOSTRAS DO LÍQUIDO ARREFECEDOR)	157-0670	1	TUBOS - ÁGUA	82
SISTEMA DE COMBUSTÍVEL				
ELEMENTO DO FILTRO DE COMBUSTÍVEL (PRIMÁRIO)	146-6695	1	FILTRO DE COMBUSTÍVEL E SEPARADOR DE ÁGUA	103
FILTRO - COMBUSTÍVEL (BOCAL DE ENCHIMENTO DO TANQUE)	9P-7121	1	TANQUE DE COMBUSTÍVEL	112
FILTRO - COMBUSTÍVEL (SECUNDÁRIO)	1R-0762	1	TUBOS - FILTRO DO COMBUSTÍVEL	106
JUNTA (BOMBA DE ESCORVA DE COMBUSTÍVEL)	1P-0436	2	FILTRO DE COMBUSTÍVEL E SEPARADOR DE ÁGUA	103
TAMPA DO TANQUE DE COMBUSTÍVEL (TRAVA COM RESPIRO)	7X-7700	1	TANQUE DE COMBUSTÍVEL	112
VÁLVULA DE DRENAGEM (COMBUSTÍVEL) (FILTRO)	141-8275	1	TUBOS - FILTRO DO COMBUSTÍVEL	106
VÁLVULA DE DRENAGEM (FILTRO DE COMBUSTÍVEL)	179-9348	1	TUBOS - FILTRO DO COMBUSTÍVEL	106
SISTEMA DE LUBRIFICAÇÃO				
FILTRO - ÓLEO DO MOTOR	1R-0739	1	FILTRO - ÓLEO DO MOTOR	67
MANGUEIRA - DESCARTE (VAPORES)	4W-2181	1	ELIMINAÇÃO DE VAPORES DO CÁRTER	68
RESPIRO (MOTOR)	2W-9162	1	RESPIRO	65
RETENTOR DE ANEL-O (RESPIRO DO MOTOR)	4L-9564	1	RESPIRO	65
TAMPA - BOCAL DE ENCHIMENTO (ÓLEO DO MOTOR)	4W-3087	1	BOCAL DE ENCHIMENTO DE ÓLEO DO MOTOR	66
TAMPA CONTRA POEIRA (VÁLVULA DE AMOSTRAGEM DE ÓLEO DO TURBO)	8C-3445	1	TUBOS - ÓLEO DO TURBOALIMENTADOR	72

PEÇAS DE MANUTENÇÃO

DESCRIÇÃO	NÚMERO DE PEÇA	QUANT	UTILIZADA EM	PÁGINA
SISTEMA ELÉTRICO E DE PARTIDA				
BATERIA (LIVRE DE MANUTENÇÃO)(12 VOLT) (REFORÇADO)	153-5700	2	BATERIA	121
BATERIA (12 V)	9X-3404	2	CABOS/FIOS ELÉTRICOS - CHASSI	181
CHAVE (DESCONECTAR A BATERIA)	8H-5306	1	CHAVE GERAL	173
DISJUNTOR AUTOMÁTICO DE CIRCUITO (80 A) (PRINCIPAL DA MÁQUINA)	171-2210	1	PAINEL - DISJUNTOR ELÉTRICO AUTOMÁTICO	148
ELEMENTO - AQUECEDOR DE ÁGUA DA CAMISA (120 VOLTS / 1.000 WATTS)	124-0686	1	AQUECEDOR DA ÁGUA DO MOTOR	134
ELEMENTO - AQUECEDOR DE ÁGUA DA CAMISA (240 VOLTS - 1.000 WATTS)	124-0687	1	AQUECEDOR DA ÁGUA DO MOTOR	133
ESCOVA DO ALTERNADOR	3E-5459	2	ALTERNADOR DE CORRENTE	116
		2	ALTERNADOR DE CORRENTE	118
FUSÍVEL (10 A)	9W-1442	9	PAINEL - DISJUNTOR ELÉTRICO AUTOMÁTICO	148
FUSÍVEL (15 A)	9W-1441	8	PAINEL - DISJUNTOR ELÉTRICO AUTOMÁTICO	148
FUSÍVEL (20 A)	9W-1446	3	PAINEL - DISJUNTOR ELÉTRICO AUTOMÁTICO	148
LÂMPADA - DIODO (VISOR LED) (PISCA-PISCA DE ADVERTÊNCIA)	165-5674	1	SIST. DE ILUMINAÇÃO - PISCA-PISCA GIRATÓRIO DE ADVERTÊNCIA	147
LÂMPADA - HALOGÊNEO (24 VOLTS)(65 WATTS)	9X-3463	1	LÂMPADA - FAROL	143
LÂMPADA - HALOGÊNEO (24 VOLTS)(65 WATTS) (FAROL)	9X-3463	1	LÂMPADA - FAROL	141
		1	LÂMPADA - FAROL	142
LÂMPADA (12 V) (LUZ DE AÇÃO LED VERMELHA/VERDE)	165-5655	1	INSTALAÇÃO-SEGURANÇA	138
		1	INSTALAÇÃO-SEGURANÇA	139
LÂMPADA (24 V) (PISCA-PISCA DE ADVERTÊNCIA)	3E-8825	1	SIST. DE ILUMINAÇÃO - PISCA-PISCA GIRATÓRIO DE ADVERTÊNCIA	147
LÂMPADA (24 V) (TETO)	7N-9943	1	LÂMPADA - TETO	140
LENTE (FAROL DIANTEIRO)	202-6611	1	LÂMPADA - FAROL	143
LENTE (FAROL DIANTEIRO) (ROPS)	202-6611	1	LÂMPADA - FAROL	142
	202-6614	1	LÂMPADA - FAROL	141
LENTE (LÂMPADA DO TETO)	7T-0020	1	LÂMPADA - TETO	140
LENTE (PISCA-ALERTA ÂMBAR)	198-0316	1	LUZ GIRATÓRIA DE ALARME	144
SACADOR - FUSÍVEL	202-4327	2	CABOS/FIOS ELÉTRICOS - CHASSI	181
SUPORTE - ESCOVA (ALTERNADOR)	3E-5460	1	ALTERNADOR DE CORRENTE	116
		1	ALTERNADOR DE CORRENTE	118
TAMPA CONTRA POEIRA (AQUECEDOR DE ÁGUA DA CAMISA)	133-6517	1	AQUECEDOR DA ÁGUA DO MOTOR	133
		1	AQUECEDOR DA ÁGUA DO MOTOR	134
TUBO DE FAÍSCA (CONEXÃO DE 3 PINOS) (PISCA-PISCA DE ADVERTÊNCIA)	127-8158	1	LUZ GIRATÓRIA DE ALARME	144
TUBO DE FAÍSCA (CONEXÃO DE 8 PINOS) (PISCA-PISCA DE ADVERTÊNCIA)	198-0315	1	LUZ GIRATÓRIA DE ALARME	144

PEÇAS DE MANUTENÇÃO

DESCRIÇÃO	NÚMERO DE PEÇA	QUANT	UTILIZADA EM	PÁGINA
SISTEMA HIDRÁULICO				
BUJÃO DO DRENO (TANQUE HIDRÁULICO)	9J-7031	1	TANQUE HIDRÁULICO E FILTRO	365
ELEMENTO FILTRANTE - ÓLEO (FLUXO HIDRÁULICO/REVERSO) (DESCARTÁVEL)	1R-0735	1	TANQUE HIDRÁULICO E FILTRO	365
ELEMENTO FILTRANTE - ÓLEO (FLUXO INVERSO) (FLUIDO HIDRÁULICO RESISTENTE A INCÊNDIO)	104-6931	1	TANQUE HIDRÁULICO E FILTRO	365
ELEMENTO FILTRANTE - ÓLEO (HIDRÁULICO) (DESCARTÁVEL)	144-6691	1	FILTRO - ÓLEO	333
ELEMENTO FILTRANTE - ÓLEO (HIDRÁULICO) (LIMPAR/ALTA EFICIÊNCIA)	139-1537	1	TANQUE HIDRÁULICO E FILTRO	365
FILTRO (VÁLVULA DE CONTROLE)	4T-4520	1	VÁLVULA DE CONTROLE	372
		1	VÁLVULA DE CONTROLE	374
		1	VÁLVULA DE CONTROLE	376
		1	VÁLVULA DE CONTROLE	378
		1	VÁLVULA DE CONTROLE	380
		1	VÁLVULA DE CONTROLE	382
GRAXEIRA (ROSCA 1/8-27 POL) (CILINDRO DE LEVANTAMENTO DA LÂMINA)	3B-8489	1	CILINDRO DE LEVANTAMENTO	325
GRAXEIRA (ROSCA 1/8-27 POL) (CILINDROS DE ANGULAGEM E INCLINAÇÂO)	3B-8489	8	TUBOS - ANGULAGEM E INCLINAÇÃO	336
TAMPA - BOCAL DE ENCHIMENTO (TANQUE HIDRÁULICO)	7H-1447	1	TANQUE HIDRÁULICO E FILTRO	365
TAMPA CONTRA POEIRA (AMOSTRA DE FLUIDO DA VÁLVULA DE CONTROLE)	8C-3451	1	MONTAGEM - VÁLVULA	358
TAMPA CONTRA POEIRA (VÁLVULA DE AMOSTRAGEM DO FILTRO DE ÓLEO HIDRÁULICO)	6V-0852	1	FILTRO - ÓLEO	333
TAMPA CONTRA POEIRA (VÁLVULA DE AMOSTRAGEM DO ÓLEO HIDRÁULICO)	6V-0852	2	BOMBA HIDRÁULICA E TUBULAÇÕES	359
TAMPA CONTRA POEIRA (VÁLVULAS DE AMOSTRAGEM DO ÓLEO HIDRÁULICO)	6V-0852	7	TUBULAÇÕES - AMOSTRAGEM DE FLUIDOS	340
TELA FILTRANTE (TANQUE HIDRÁULICO)	3G-3267	1	TANQUE HIDRÁULICO E FILTRO	365
	9J-3047	1	TANQUE HIDRÁULICO E FILTRO	365

PEÇAS DE MANUTENÇÃO

DESCRIÇÃO	NÚMERO DE PEÇA	QUANT	UTILIZADA EM	PÁGINA
TREM DE FORÇA				
BUJÃO DO DRENO (CONVERSOR DE TORQUE)	4B-7739	1	MONTAGEM - CONVERSOR DE TORQUE	203
BUJÃO MAGNÉTICO (COMANDO FINAL)	6V-0439	1	COMANDO FINAL	193
ELEMENTO FILTRANTE - ÓLEO (TREM DE FORÇA)	132-8876	1	FILTRO - ÓLEO	192
FILTRO - MAGNÉTICO (ÓLEO DO TREM DE FORÇA)	8S-9129	1	TUBOS - ÓLEO DA TRANSMISSÃO	199
RESPIRO (ÓLEO DO TREM DE FORÇA)	185-6684	1	TUBOS - ÓLEO DA TRANSMISSÃO	199
RETENTOR DE ANEL-O	2S-4078	1	VÁLVULA DE PRIORIDADE	227
RETENTOR DE ANEL-O (BUJÃO DE DRENAGME DO COMANDO FINAL)	3K-0360	1	COMANDO FINAL	193
RETENTOR DE ANEL-O (FILTRO DO TREM DE FORÇA)	5P-3620	1	FILTRO - ÓLEO	192
RETENTOR DE ANEL-O (PLUGUE MAGNÉTICO DO COMANDO FINAL)	2S-4078	1	COMANDO FINAL	193
TAMPA - BOCAL DE ENCHIMENTO DE ÓLEO (TREM DE FORÇA)	2W-6225	1	TUBOS - ÓLEO DA TRANSMISSÃO	199
TAMPA CONTRA POEIRA (GRAXEIRA DA TAMPA DA TRANSMISSÃO)	6V-0852	6	ENGRENAGENS PLANETÁRIAS - TRANSMISSÃO	206
TAMPA CONTRA POEIRA (VÁLVULA DE AMOSTRAGEM DO ÓLEO DO TREM DE FORÇA)	8C-3447	1	TUBOS - ÓLEO DA TRANSMISSÃO	199
TAMPÃO (COMANDO DA TRANSMISSÃO)	9S-4188	1	ENGRENAGENS PLANETÁRIAS - TRANSMISSÃO	206
TAMPÃO (DRENO DO COMANDO FINAL)	9S-4185	1	COMANDO FINAL	193
TAMPÃO (DRENO DO CONVERSOR DE TORQUE)	9S-4188	1	CONVERSOR DE TORQUE	221
TELA DE SUCÇÃO (ÓLEO DO TREM DE FORÇA)	8S-9130	1	TUBOS - ÓLEO DA TRANSMISSÃO	199
TELA FILTRANTE (CONVERSOR DE TORQUE)	3T-6471	1	CONVERSOR DE TORQUE	221

WARTUNGSTEILE

BESCHREIBUNG	ERSATZTEIL-NUMMER	MENGE	VERWENDET IN	SEITE
ARBEITSGERÄTE				
SCHMIERNIPPEL (SCHWENKSCHILD)	3B-8489	2	SCHWENKSCHILD	400
SCHMIERNIPPEL (1/8-27-GEWINDE) (AUFREISSER)	3B-8489	11	AUFREISSER	406
SCHMIERNIPPEL (1/8-27-GEWINDE) (KIPPGESTÄNGE)	3B-8489	2	NEIGUNGSSTELLGLIED	392
ELEKTRISCHE ANLAGE UND STARTSYSTEM				
ABDECKGLAS (ARBEITSSCHEIN-WERFER)	202-6611	1	ARBEITSLEUCHTEN	143
ABDECKGLAS (ARBEITSSCHEINWER-FER) (ÜBERROLLSCHUTZ)	202-6611	1	ARBEITSLEUCHTEN	142
	202-6614	1	ARBEITSLEUCHTEN	141
ABDECKGLAS (FAHRERHAUS-IN-NENLEUCHTE)	7T-0020	1	FAHRERHAUSBELEUCHTUNG	140
ABDECKGLAS (GELBE WARNLEUCHTE)	198-0316	1	RUNDUM-KENNLEUCHTE	144
BATTERIE (WARTUNGSFREI)(12 V) (SCHWEREINSATZ)	153-5700	2	BATTERIE	121
BATTERIE (12 V)	9X-3404	2	FAHRGESTELLVERDRAHTUNG	181
BELEUCHTUNGSANLAGE (12 V) (KONTROLLLEUCHTE ROT/GRÜN)	165-5655	1	SICHERHEITSEINBAUSATZ	138
		1	SICHERHEITSEINBAUSATZ	139
BLITZRÖHRE (*3 PRONG CONNECTION) (RUNDUM-KENNLEUCHTE)	127-8158	1	RUNDUM-KENNLEUCHTE	144
BLITZRÖHRE (8 ZACKEN VERBIN-DUNG) (RUNDUM-KENNLEUCHTE)	198-0315	1	RUNDUM-KENNLEUCHTE	144
BÜRSTENHALTER (DREHSTROMGENERATOR)	3E-5460	1	DREHSTROMGENERATOR	116
		1	DREHSTROMGENERATOR	118
DIODENLEUCHTE (LED) (RUNDUM-KENNLEUCHTE)	165-5674	1	RUNDUM-KENNLEUCHTE	147
DREHSTROMGENERATOR-BÜRSTE	3E-5459	2	DREHSTROMGENERATOR	116
		2	DREHSTROMGENERATOR	118
HALOGENSCHINWERFER (24 V)(65 W)	9X-3463	1	ARBEITSLEUCHTEN	143
HALOGENSCHINWERFER (24 V)(65 W) (ARBEITSSCHEINWERFER)	9X-3463	1	ARBEITSLEUCHTEN	141
		1	ARBEITSLEUCHTEN	142
LEUCHTE (24 V) (FAHRERHAUSDACH)	7N-9943	1	FAHRERHAUSBELEUCHTUNG	140
LEUCHTE (24 V) (RUNDUM-KENNLEUCHTE)	3E-8825	1	RUNDUM-KENNLEUCHTE	147
SCHLÜSSEL (HAUPTSCHALTER)	8H-5306	1	TRENNSCHALTER	173
SICHERUNG (10 A)	9W-1442	9	UNTERBRECHER - INSTRUMENTENTAFEL	148
SICHERUNG (15 A)	9W-1441	8	UNTERBRECHER - INSTRUMENTENTAFEL	148
SICHERUNG (20 A)	9W-1446	3	UNTERBRECHER - INSTRUMENTENTAFEL	148
SICHERUNGSZIEHER	202-4327	2	FAHRGESTELLVERDRAHTUNG	181
STAUBKAPPE (UMLAUFKÜHLWAS-SERHEIZUNG)	133-6517	1	UMLAUFKÜHLWASSERHEIZUNG	133

* ÜBERSETZUNG ZUM ZEITPUNKT DER DRUCKLEGUNG NICHT VORHANDEN

WARTUNGSTEILE

BESCHREIBUNG	ERSATZTEIL-NUMMER	MENGE	VERWENDET IN	SEITE
		1	UMLAUFKÜHLWASSERHEIZUNG	134
UMLAUFKÜHLWASSERHEIZUNGS-ELEMENT (*120 VOLT/1000 WATT)	124-0686	1	UMLAUFKÜHLWASSERHEIZUNG	134
UMLAUFKÜHLWASSERHEIZUNGS-ELEMENT (240 V/1000 W)	124-0687	1	UMLAUFKÜHLWASSERHEIZUNG	133
UNTERBRECHER (80 A) (HAUPTMASCHINE)	171-2210	1	UNTERBRECHER - INSTRUMENTENTAFEL	148
FAHRERHAUS				
FILTERSATZ (FAHRERHAUS - DRUCKBEAUFSCHLAGUNG)	7G-8116	2	FAHRERHAUSBELÜFTUNG	478
FILTERSATZ (FAHRERHAUSLUFT)	3E-7904	2	FAHRERHAUSBELÜFTUNG	478
INSTRUMENTENTAFELBELEUCHTUNG	159-9257	1	INSTRUMENTENTAFEL	466
		1	INSTRUMENTENTAFEL	470
KÄLTEMITTELTROCKNER (KÜHLMITTEL)	3E-3535	1	KLIMAANLAGENLEITUNGEN	453
KAPPE (KLIMAANLAGE)	3E-4052	1	LEITUNGSINSTALLATIONSSATZ	447
KAPPE (SCHEIBENWASCHMITTELBEHÄLTER)	209-4482	1	SCHEIBENWASCHMITTELBEHÄLTER	506
KNOPF (FILTERDECKEL)	3W-6756	2	FAHRERHAUSBELÜFTUNG	478
KOHLEFILTER (FAHRERHAUS - DRUCKBEAUFSCHLAGUNG)	141-7903	1	FAHRERHAUSBELÜFTUNG	478
LEUCHTE (24 V) (ANZEIGE)	123-9294	2	INSTRUMENTENTAFEL	466
LEUCHTE (24 V) (INSTRUMENTENBELEUCHTUNG)	123-9294	2	INSTRUMENTENTAFEL	470
LEUCHTE (24 V) (INSTRUMENTENGRUPPE)	7N-5876	2	INSTRUMENTENTAFEL	466
LEUCHTE (24 V) (VIERFACHANZEIGE)	7N-5876	2	INSTRUMENTENTAFEL	470
LEUCHTE (24 V) (WARNLEUCHTE)	115-1748	1	INSTRUMENTENTAFEL	466
		1	INSTRUMENTENTAFEL	470
O-RING-DICHTUNG	2M-9780	1	HEIZUNGSLEITUNGEN	457
SCHEIBENWISCHERBLATT (FRONTSCHEIBE)	125-8175	1	SCHEIBENWISCHER	510
SCHEIBENWISCHERBLATT (HINTEN) (FENSTER)	5C-8811	1	SCHEIBENWISCHER	510
SCHEIBENWISCHERBLATT (LINKE FAHRERHAUSTÜR)	125-8175	1	FAHRERHAUSTÜR	436
SCHEIBENWISCHERBLATT (RECHTE FAHRERHAUSTÜR)	125-8175	1	FAHRERHAUSTÜR	434
SCHMIERNIPPEL (FAHRERHAUS - DRUCKBEAUFSCHLAGUNG)	3B-8489	1	FAHRERHAUSBELÜFTUNG	478
SCHMIERNIPPEL (1/8-27-GEWINDE) (FAHRERPLATTFORM)	3B-8489	1	FAHRERPLATTFORM	474
SICHERHEITSGURT (SCHWINGSITZ)	183-3648	1	FAHRERSITZ	492
SICHERHEITSGURT (SCHWINGSITZ, UNTERE RÜCKENLEHNE)	8Y-4030	1	SCHWINGSITZ	497

* ÜBERSETZUNG ZUM ZEITPUNKT DER DRUCKLEGUNG NICHT VORHANDEN

WARTUNGSTEILE

BESCHREIBUNG	ERSATZTEIL-NUMMER	MENGE	VERWENDET IN	SEITE
HYDRAULIKSYSTEM				
ABLASSSTOPFEN (HYDRAULIKTANK)	9J-7031	1	HYDRAULIKTANK UND SCHMIERFILTER	365
EINFÜLLSTUTZENKAPPE (HYDRAULIKTANK)	7H-1447	1	HYDRAULIKTANK UND SCHMIERFILTER	365
FILTER (STEUERVENTIL)	4T-4520	1	STEUERVENTIL	372
		1	STEUERVENTIL	374
		1	STEUERVENTIL	376
		1	STEUERVENTIL	378
		1	STEUERVENTIL	380
		1	STEUERVENTIL	382
ÖLFILTERELEMENT (HYDRAULIK/STROMUMKEHRUNG) (NICHT WIEDERVERWENDBAR)	1R-0735	1	HYDRAULIKTANK UND SCHMIERFILTER	365
ÖLFILTERELEMENT (HYDRAULISCH) (NICHT WIEDERVERWENDBAR)	144-6691	1	ÖLFILTER	333
ÖLFILTERELEMENT (HYDRAULISCH) (REINIGUNG/HOCHLEISTUNG)	139-1537	1	HYDRAULIKTANK UND SCHMIERFILTER	365
ÖLFILTERELEMENT (RÜCKFLUSS) (FEUERFESTE HYDRAULIKFLÜSSIGKEIT)	104-6931	1	HYDRAULIKTANK UND SCHMIERFILTER	365
SCHMIERNIPPEL (1/8-27-GEWINDE) (SCHENK- U. KIPPZYLINDER)	3B-8489	8	SCHWENK- UND KIPPZYLINDERLEITUNGEN	336
SCHMIERNIPPEL (1/8-27-GEWINDE) (SCHILDHUBZYLINDER)	3B-8489	1	HUBZYLINDER	325
SIEB (HYDRAULIKTANK)	3G-3267	1	HYDRAULIKTANK UND SCHMIERFILTER	365
	9J-3047	1	HYDRAULIKTANK UND SCHMIERFILTER	365
STAUBKAPPE (HYDRAULIKÖL - PROBEENTNAHMEVENTILE)	6V-0852	7	PROBEENTNAHMELEITUNGEN	340
STAUBKAPPE (HYDRAULIKÖLFILTER - PROBEENTNAHMEVENTIL)	6V-0852	1	ÖLFILTER	333
STAUBKAPPE (PROBEENTNAHME-STEUERVENTIL)	8C-3451	1	VENTILAUFHÄNGUNG	358
STAUBKAPPE (PROBEENTNAHMEVENTIL - HYDRAULIKÖL)	6V-0852	2	HYDRAULIKPUMPE U. LEITUNGEN	359
KRAFTSTOFFSYSTEM				
ABLASSVENTIL (KRAFTSTOFF) (FILTER)	141-8275	1	KRAFTSTOFFILTERLEITUNGEN	106
ABLASSVENTIL (KRAFTSTOFFILTER)	179-9348	1	KRAFTSTOFFILTERLEITUNGEN	106
DICHTUNG (KRAFTSTOFFENTLÜFTUNGSPUMPE)	1P-0436	2	WASSERABSCHEIDER- U. KRAFTSTOFFILTER	103
KRAFTSTOFFILTER (AUSFALLSCHUTZ)	1R-0762	1	KRAFTSTOFFILTERLEITUNGEN	106
KRAFTSTOFFILTERELEMENT (HAUPTELEMENT)	146-6695	1	WASSERABSCHEIDER- U. KRAFTSTOFFILTER	103
KRAFTSTOFFSIEB (TANKFÜLLER)	9P-7121	1	KRAFTSTOFFTANK	112
KRAFTSTOFFTANKKAPPE (ENTLÜFTUNGSSPERRE)	7X-7700	1	KRAFTSTOFFTANK	112

* ÜBERSETZUNG ZUM ZEITPUNKT DER DRUCKLEGUNG NICHT VORHANDEN

WARTUNGSTEILE

BESCHREIBUNG	ERSATZTEIL-NUMMER	MENGE	VERWENDET IN	SEITE
KRAFTÜBERTRAGUNG				
ABLASSSTOPFEN (DREHMOMENTWANDLER)	4B-7739	1	DREHMOMENTWANDLERAUFHÄNGUNG	203
ANSAUGSIEB (KRAFTÜBERTRAGUNGSÖL)	8S-9130	1	ÖLLEITUNGEN - KRAFTÜBERTRAGUNG	199
ENTLÜFTER (KRAFTÜBERTRAGUNGSÖL)	185-6684	1	ÖLLEITUNGEN - KRAFTÜBERTRAGUNG	199
MAGNETFILTER (KRAFTÜBERTRAGUNGSÖL)	8S-9129	1	ÖLLEITUNGEN - KRAFTÜBERTRAGUNG	199
MAGNETSTOPFEN (SEITENANTRIEB)	6V-0439	1	SEITENANTRIEB	193
O-RING-DICHTUNG	2S-4078	1	VORRANGVENTIL	227
O-RING-DICHTUNG (KRAFTÜBERTRAGUNGSFILTER)	5P-3620	1	ÖLFILTER	192
O-RING-DICHTUNG (MAGNETSCHRAUBE - SEITENANTRIEB)	2S-4078	1	SEITENANTRIEB	193
O-RING-DICHTUNG (SEITENANTRIEB-ABLASSSCHRAUBE)	3K-0360	1	SEITENANTRIEB	193
ÖLEINFÜLLSTUTZEN (KRAFTÜBERTRAGUNG)	2W-6225	1	ÖLLEITUNGEN - KRAFTÜBERTRAGUNG	199
ÖLFILTERELEMENT (KRAFTÜBERTRAGUNG)	132-8876	1	ÖLFILTER	192
SCHRAUBE (DREHMOMENTWANDLERBLASS)	9S-4188	1	DREHMOMENTWANDLER	221
SCHRAUBE (SEITENANTRIEBABLASS)	9S-4185	1	SEITENANTRIEB	193
SCHRAUBE (*TRANSMISSION DRIVE)	9S-4188	1	PLANETENGETRIEBE	206
SIEB (DREHMOMENTWANDLER)	3T-6471	1	DREHMOMENTWANDLER	221
STAUBKAPPE (KRAFTÜBERTRAGUNGSÖL - PROBEENTNAHMEVENTIL)	8C-3447	1	ÖLLEITUNGEN - KRAFTÜBERTRAGUNG	199
STAUBKAPPE (*TRANSMISSION COVER FITTING)	6V-0852	6	PLANETENGETRIEBE	206
KÜHLSYSTEM				
KÜHLERKAPPE (DRUCKBEGRENZUNG)	031-1119	1	KÜHLER	89
KÜHLWASSERTHERMOSTATDICHTUNG (KÜHLMITTELTEMPERATUR)	136-0812	1	KÜHLWASSERLEITUNGEN	82
SCHLAUCHLEITUNG (OBERER KÜHLER)	214-6738	1	KÜHLER	87
SCHLAUCHLEITUNG (UNTERER KÜHLER)	198-1663	1	KÜHLER	87
STAUBKAPPE (KÜHLMITTELPROBEENTNAHMEVENTIL)	157-0670	1	KÜHLWASSERLEITUNGEN	82
WASSERFILTER (WASSERPUMPE)	119-3025	1	KÜHLWASSERPUMPE	85
WASSERTEMPERATURREGLER (94 GRAD C) (KÜHLMITTEL)	126-5869	1	KÜHLWASSERLEITUNGEN	82
LAUFWERK				
SCHMIERNIPPEL (QUERTRAVERSE)	3B-8489	2	QUERTRAVERSE	267

* ÜBERSETZUNG ZUM ZEITPUNKT DER DRUCKLEGUNG NICHT VORHANDEN

WARTUNGSTEILE

BESCHREIBUNG	ERSATZTEIL-NUMMER	MENGE	VERWENDET IN	SEITE
LUFTEINLASS- UND ABGASSYSTEM				
LUFTFILTER (HAUPTFILTER)	6I-2501	1	LUFTREINIGER	91
LUFTFILTER (SICHERHEITSFILTER)	6I-2502	1	LUFTREINIGER	91
MOTOR (GRUNDAUSFÜHRUNG)				
KEILRIEMEN (MIT KLIMAANLAGE - EUROPÄISCHER MARKT)	202-3197	1	RIEMEN	7
KEILRIEMEN (MIT KLIMAANLAGE - NORDAMERIKANISCHER MARKT)	215-3015	1	RIEMEN	8
KEILRIEMEN (OHNE KLIMAANALAGE - NORDAMERIKANISCHER MARKT)	191-5215	1	RIEMEN	6
SCHRAUBE (MAGNETISCH -ÖLABLASS)	118-3619	1	MOTORÖLABLASS	33
RAHMEN UND AUFBAU				
KAPPE (STAUB) (KÜHLERFÜLLKLAPPE)	155-9321	1	KÜHLERSCHUTZ	249
O-RING-DICHTUNG (GEHÄUSE U. RAHMN - ABLASSSCHRAUBE)	6F-0711	1	RAHMEN UND GEHÄUSE	235
SCHMIERNIPPEL (1/8-27-GEWINDE) (GEHÄUSE U. RAHMEN)	3B-8489	2	RAHMEN UND GEHÄUSE	235
SCHRAUBE (GEHÄUSE U. RAHMEN - ABLASSVENTIL)	106-8187	1	RAHMEN UND GEHÄUSE	235
SCHMIERSYSTEM				
EINFÜLLSTUTZENKAPPE (MOTORÖL)	4W-3087	1	MOTORÖLEINFÜLLSTUTZEN	66
ENTDUNSTERLEITUNG (ENTDUNSTER)	4W-2181	1	ENTDUNSTER	68
ENTLÜFTER (MOTOR)	2W-9162	1	ENTLÜFTER	65
O-RING-DICHTUNG (MOTOR - ENTLÜFTER)	4L-9564	1	ENTLÜFTER	65
ÖLFILTER	1R-0739	1	ÖLFILTER	67
STAUBKAPPE (PROBEENTNAHME-VENTIL - TURBOLADER)	8C-3445	1	TURBOLADERÖLLEITUNGEN	72

* ÜBERSETZUNG ZUM ZEITPUNKT DER DRUCKLEGUNG NICHT VORHANDEN

INDEX

Name	Page
A	
ACCUMULATOR-REFRIGERANT	453
ADAPTER GP-ENGINE OIL LINE	64
ADJUSTER GP-SEAT	411
	412
ADJUSTER GP-STEER & TMSN CONT	289
AFTERCOOLER GP	90
AIR CLEANER GP	91
AIR CONDITIONER GP	413
	414
ALARM GP–ACTION	115
ALTERNATOR GP-CHARGING	116
	118
	120
B	
BAR GP-EQUALIZER	267
BATTERY GP–HEAVY DUTY	121
BATTERY (MAINTENANCE FREE)(12 VOLT) (HEAVY DUTY)	121
BATTERY (12 VOLT)	181
BEARING-SLEEVE (CAMSHAFT)	18
BEARING (SPECIAL C-FRAME)	388
BELT GP–WITH A/C, EUROPEAN MARKET	7
BELT GP– WITH A/C, NORTH AMERICAN MARKET	8
BELT GP–WITHOUT A/C, NORTH AMERICAN MARKET	6
BELT TIGHTENER GP	9
BELT (WITH A/C EUROPEAN MARKET)	7
BELT (WITH A/C NORTH AMERICAN MARKET)	8
BELT (W/O-A/C NORTH AMERICAN MARKET)	6
BLADE AS-WIPER (LH CAB DOOR)	436
BLADE AS-WIPER (REAR) (WINDOW)	510
BLADE AS-WIPER (RH CAB DOOR)	434
BLADE AS-WIPER (WINDSHIELD)	510
BLADE GP-ANGLING	400
BLADE GP-SEMI-UNIVERSAL	402
BLOWER GP-CAB	415
BRAKE GP-STEERING	292
BREATHER AS (ENGINE)	65
BREATHER AS (POWER TRAIN OIL)	199
BREATHER GP–ENGINE	65
BRUSH AS-ALTERNATOR	116
	118
BULLDOZER AR–POWER ANGLE & TILT WITH ADJUSTABLE PITCH	388
BULLDOZER AR-SEMI-UNIVERSAL	388
BULLDOZER AR-SEMI-UNIVERSAL– SOUND SUPPRESSION	389
C	
C-FRAME GP-POWER ANGLING	390
CAB AR	417
CAB GP	418
	422
CABLE AS (HEATER TEMPERATURE CONTROL)	442
CAMSHAFT GP	10
CANOPY AR	422
CAP AS (AIR CONDITIONER)	447
CAP AS-DUST (JACKET WATER HEATER)	133
	134
CAP AS (DUST) (RADIATOR FILLER DOOR)	249
CAP AS-FUEL TANK (VENTED LOCKING)	112
CAP AS-OIL FILLER (POWER TRAIN)	199
CAP AS-RADIATOR (PRESSURE RELIEF)	89
CAP-DUST (CONTROL VALVE FLUID SAMPLING)	358
CAP-DUST (COOLANT SAMPLING VALVE)	82
CAP-DUST (HYD. OIL FILTER SAMPLING VALVE)	333
CAP-DUST (HYDRAULIC OIL SAMPLING VALVE)	359
CAP-DUST (HYDRAULIC OIL SAMPLING VALVES)	340
CAP-DUST (POWER TRAIN OIL SAMPLE VALVE)	199
CAP-DUST (TRANSMISSION COVER FITTING)	206
CAP-DUST (TURBO OIL SAMPLING VALVE)	72
CAP-FILLER (ENGINE OIL)	66
CAP-FILLER (HYDRAULIC TANK)	365
CAP GP-TRACK IDLER	269
CAP (WINDOW WASHER TANK)	506
CARRIER GP-SEAL	11
CASE & FRAME GP	235
	236
CHASSIS AR	1
CIRCUIT BREAKER AS (80 AMP) (MACHINE MAIN)	148
CLUTCH & BRAKE GP-STEERING	293
COMPRESSOR GP-REFRIGERANT	423
	424
CONDENSER GP-REFRIGERANT	425
CONTROL & MTG GP-ENGINE ELEK	123
CONTROL GP-COMMUNICATION (PRODUCT LINK)	128
CONTROL GP-ENGINE ELECTRONIC	124
	125
CONTROL GP-HYDRAULIC HAND– BULLDOZER LIFT/TILT	315
	319
CONTROL GP-HYDRAULIC HAND–RIPPER	317
CONTROL GP-HYDRAULIC HAND (RIPPER)	335

INDEX

Name	Page
CONTROL GP-MACHINE	126
CONTROL GP-MACHINE (SECURITY) (INCLUDES SOFTWARE)	130
CONTROL GP-MONITOR	128
CONTROL GP-MONITOR–CATERPILLAR MONITERING SYSTEM	127
CONTROL GP-PARKING BRAKE	295
CONTROL GP-STEERING & TMSN	296 297 299
CONTROL GP-TRANSMISSION	190
CONTROL GP-UNPROGRAMMED–POWER TRAIN	129
CONTROL GP-UNPROGRAMMED (MACHINE)	126
CONTROL GP-UNPROGRAMMED (SECURITY)	136
COOLER GP-ENGINE OIL	76
COOLING AR	77
CORE AS-OIL COOLER	89
COVER GP-AIR INLET	92
COVER GP-CONSOLE	433
COVER GP-CONSOLE–CAB	429 431
COVER GP-CONSOLE–IMPLEMENT	427
COVER GP-CONSOLE–WINCH	428
COVER GP-CYLINDER BLOCK	12
COVER GP-FRONT HOUSING	13
COVER GP-VALVE MECHANISM	14
CRANKSHAFT GP	15
CYLINDER BLOCK GP	17 18 19
CYLINDER GP-ANGLING–BULLDOZER	321
CYLINDER GP-LIFT–BULLDOZER	323 325
CYLINDER GP-RIPPER LIFT	327
CYLINDER GP-TILT–BULLDOZER	331
CYLINDER GP-TILT–SEMI UNIVERSAL BULLDOZER	329
CYLINDER HEAD AS	20 22
CYLINDER HEAD GP	24 25 27 29

D

Name	Page
DAMPER & PULLEY GP	31
DETENT GP	300
DOOR GP-CAB–LH	436
DOOR GP-CAB–RH	434
DOOR GP-CAB (LH)	418
DOOR GP-CAB (RH)	418
DRAIN GP-ENGINE OIL–EXTENSION	34
DRAIN GP-ENGINE OIL–MAGNETIC PLUG	33
DRAIN GP-ENGINE OIL–SHUTOFF VALVE	32
DRAWBAR GP	238
DRIVE GP-FAN	35
DRIVE GP-FAN–BELT	36

E

Name	Page
EDGE GP-BIT & CUTTING	404
EDGE GP-BIT & CUTTING–WIDE GAGE	405
ELBOW GP-AIR INLET	93
ELECTRONICS AR-MACHINE	130
ELECTRONICS GP-MACHINE	130
ELECTRONICS GP-MACHINE (SECURITY)	136
ELECTRONICS GP-MONITOR	130
ELECTRONICS GP-POWER TRAIN	131
ELEMENT AS-JACKET WATER HEATER (120 VOLT/1000 WATT)	134
ELEMENT AS-JACKET WATER HEATER (240 VOLT/1000 WATT)	133
ENCLOSURE GP	239
ENGINE AR-COMPLETE	2 3
ENGINE AR-CORE	4
EXTENSION GP-BACKREST (FABRIC)	492

F

Name	Page
FAN GP	78
FAN GP-BLOWER	80
FAN GP-REVERSIBLE	81
FASTENER GP–STEERING/BRAKE VALVE	301
FASTENER GP-ENGINE WIRING	132
FASTENER GP-FRONT COVER	37
FASTENER GP-FRONT HOUSING	38
FENDER GP	242
FILLER GP-ENGINE OIL	66
FILM (ACTION LIGHT) (MALFUNCTION)	466
FILM (ACTION LIGHT) (MALFUNCTION)	470
FILM (DASH PANEL)	442
FILM (EXTERIOR) (SOUND)	59
FILM GP	512
FILM (HYD. OIL SAMPLING VALVE PANEL)	340
FILM-IDENTIFICATION (ACTION LIGHT)	139
FILM-IDENTIFICATION (ACTION LIGHT)	138
FILM-IDENTIFICATION (ALTERNATOR)	148
FILM-IDENTIFICATION (GROUP & SEQUENCE NO.) (AIR CONDITIONER CONDENSER)	425
FILM-IDENTIFICATION (GROUP & SEQUENCE NO.) (CAB BLOWER)	415
FILM-IDENTIFICATION (SERVICE CONNECTOR)	148

INDEX

Name	Page
FILM-IDENTIFICATION (12 VOLT)	187, 431
FILM (IGNITION SWITCH)	138, 139
FILM-INSTRUCTION (BULLDOZER CONTROL)	315, 319
FILM-INSTRUCTION (NO STEP)	336
FILM-INSTRUCTION (RIPPER CONTROL)	317
FILM-INSTRUCTION (SEAT ADJUSTMENT)	502, 504
FILM (LUBE POINT)	419
FILM (LUBE POINT) (PLATFORM)	474
FILM (MACHINE SECURITY SYSTEM)	138, 139
FILM (MONITOR CLUTCH & BRAKE)	296
FILM-NOTICE (RADIO)	449
FILM-PANEL (DASH)	466, 470
FILM (PARKING BRAKE)	295
FILM (SECURITY NOTICE)	139
FILM-STRIPE (D6N)(FUEL TANK GUARD)	247
FILM-STRIPE (D6N)(LH COWL)	422
FILM-STRIPE (D6N)(LH REAR FUEL TANK GUARD)	247
FILM-STRIPE (D6N)(RH COWL)	422
FILM-STRIPE (D6N)(RH REAR FUEL TANK GUARD)	247
FILM-WARNING (DO NOT LIFT)	463
FILM-WARNING (PARKING BRAKE CYLINDER)	270
FILM-WARNING (PRODUCT LINK RADIO)	128
FILM (WINDSHIELD WASHER/WIPER)	510
FILTER AS (CAB AIR)	478
FILTER AS (CAB PRESSURIZER)	478
FILTER AS-ENGINE OIL	67
FILTER AS-FUEL (SECONDARY)	106
FILTER-CHARCOAL (CAB PRESSURIZER)	478
FILTER (CONTROL VALVE)	372, 374, 376, 378, 380, 382
FILTER ELEMENT AS-AIR (PRIMARY)	91
FILTER ELEMENT AS-AIR (SECONDARY)	91
FILTER ELEMENT AS-OIL (HYDRAULIC) (CLEANOUT/HIGH EFFICIENCY)	365
FILTER ELEMENT AS-OIL (HYDRAULIC) (DISPOSABLE)	333
FILTER ELEMENT AS-OIL (HYDRAULIC/REVERSE FLOW) (DISPOSABLE)	365
FILTER ELEMENT AS-OIL (POWER TRAIN)	192
FILTER ELEMENT AS-OIL (REVERSE FLOW) (HYDRAULIC FIRE RESISTANT FLUID)	365
FILTER ELEMENT-FUEL (PRIMARY)	103
FILTER GP-ENGINE OIL	67
FILTER GP-OIL–HYDRAULIC	333
FILTER GP-OIL–POWER TRAIN	192
FILTER GP-WATER SEP & FUEL	103
FILTER-MAGNETIC (POWER TRAIN OIL)	199
FILTER-WATER (WATER PUMP)	85
FINAL DRIVE GP	193
FITTING-GREASE (ANGLING BULLDOZER BLADE)	400
FITTING-GREASE (CAB PRESSURIZER)	478
FITTING-GREASE (EQUALIZER BAR)	267
FITTING-GREASE (1/8-27 THD) (ANGLE & TILT CYLINDERS)	336
FITTING-GREASE (1/8-27 THD) (BULLDOZER LIFT CYLINDER)	325
FITTING-GREASE (1/8-27 THD) (CASE & FRAME)	235
FITTING-GREASE (1/8-27 THD) (OPERATOR PLATFORM)	474
FITTING-GREASE (1/8-27 THD) (PITCH LINK)	392
FITTING-GREASE (1/8-27 THD) (RIPPER)	406
FLOOR MAT	431
FLOOR MAT (REAR)	429
FLYWHEEL GP	39
FRAME GP-TELESCOPING RECOIL	270
FUMES DISPOSAL GP	68
FUSE (10 AMP)	148
FUSE (15 AMP)	148
FUSE (20 AMP)	148

G

Name	Page
GASKET (FUEL PRIMING PUMP)	103
GASKET-WATER REGULATOR (COOLANT TEMPERATURE)	82
GAUGE GP-OIL LEVEL (DIPSTICK)	70
GAUGE (OIL LEVEL) (POWER TRAIN)	199
GAUGE-SIGHT (HYDRAULIC TANK)	365
GEAR GP-BEVEL & TRANSFER	195
GEAR GP-FRONT	40
GEAR GP-STEERING	302, 304
GENERAL AR	1
GRID GP-SAND BLAST ERODING	243
GRILL GP-RADIATOR–HEAVY DUTY	244
GUARD GP-BOTTOM	245
GUARD GP-BOTTOM–HEAVY DUTY	246
GUARD GP-FUEL TANK	247
GUARD GP-POWER TRAIN FILTER–HEAVY DUTY	248
GUARD GP-RADIATOR	249

INDEX

Name	Page
GUARD GP-TRACK GUIDE	251
GUARD GP-TRACK GUIDE–EXTREME SERVICE	252
GUIDING AR-UNDERCARRIAGE–EXTRA LONG, HEAVY DUTY	272
GUIDING AR-UNDERCARRIAGE–EXTRA LONG, MODERATE SERVICE	272

H

Name	Page
HARNESS AS-AIR CONDITIONER (CONDENSER FANS) (COMPRESSOR)	425
HARNESS AS (BACKUP ALARM)	484
HARNESS AS (CIRCUIT BREAKER)	148
HARNESS AS (CIRCUIT BREAKER PANEL)	148
HARNESS AS (CONTROL MONITOR)	128
HARNESS AS (CONTROL)(SECURITY)	136 139
HARNESS AS (CRANK WITHOUT INJECTION)	183
HARNESS AS (ENGINE)	180
HARNESS AS (FTC)	297
HARNESS AS (HEATER)	440
HARNESS AS (INSTRUMENT PANEL)	466 470
HARNESS AS (MAIN)(CAB)	418
HARNESS AS (PLATFORM)	180 187
HARNESS AS (POWER TRAIN)	180
HARNESS AS-RADIO (SPEAKER)	480 481
HARNESS AS-SENSOR (14 GA WIRE)	165
HARNESS AS-SENSOR (16-18 GA WIRE)	165
HARNESS AS (TRANSMISSION SHIFT SOLENOIDS)	190
HARNESS AS (TRANSMISSION SPEED SENSORS)	190
HARNESS AS-VALVE (AIR COMPRESSOR) (SEAT)	504
HARNESS AS (WINDOW WASHER)	506
HARNESS AS (WIPER)	418
HEATER AS	135
HEATER GP-CAB	438
HEATER GP-JACKET WATER	133 134
HEATER GP-OPEN ROPS	440 442
HEATER GP-STARTING AID	135
HOLDER AS-BRUSH (ALTERNATOR)	116 118
HOOD & GUARD GP–SEMI-UNIVERSAL BULLDOZER	253
HOOD & GUARD GP–SEMI-UNIVERSAL BULLDOZER W/ SOUND SUPPRESSION	255
HOOD & GUARD GP–SOUND SUPPRESSION	258
HOOD GP	261
HORN AS (24 VOLT)(LOW TONE)	180
HOSE-DISPOSAL (FUMES)	68
HOSE (LOWER RADIATOR)	87
HOSE (UPPER RADIATOR)	87
HOUSING GP (CONTROL VALVE)	372 374 376 378 380 382
HOUSING GP-FLYWHEEL	41
HOUSING GP-FRONT	42
HOUSING GP-SEAT SUSPENSION	444
HYDRAULIC AR–2 VALVE	334
HYDRAULIC AR–3 VALVE	334
HYDRAULIC AR–4 VALVE	334
HYDRAULIC AR-4 VALVE	335

I

Name	Page
IDLER GP-TRACK	273
INDICATOR AS (ACTION LAMP)	466 470
INDICATOR GP-AIR FILTER CHANGE	94 474
INJECTOR GP-FUEL	109
INSTALLATION AR	5
INSTALLATION GP-LINES–AIR CONDITIONER	447
INSTALLATION GP-RADIO	449
INSTALLATION GP-SECURITY	136 138
INSTALLATION GP-SECURITY–RETROFIT	139
INSULATION GP-WEATHER	450

K

Name	Page
KEY AS-ELECTRONIC (SECURITY)	126 136
KEY (BATTERY DISCONNECT)	173
KIT-AIR VALVE (SUSPENSION SEAT)	504
KIT-ALTERNATOR GUARD	118
KIT-ALTERNATOR TERMINAL (BATTERY)	116 118
KIT-ALTERNATOR TERMINAL (INDICATOR LIGHT) (RELAY)	116 118
KIT-ALTERNATOR TERMINAL (RELAY) (INDICATOR LIGHT)	116 118
KIT-BEARING (SUSPENSION SEAT)	445
KIT-BELT TETHER (SUPENSION SEAT)	502

INDEX

Name	Page
KIT-BOLT (CIRCUIT BREAKER HARNESS)	148
KIT-BOLT (ENGINE HARNESS RETAINING)	183
KIT-BRUSH (STARTER) (MOTOR)	169
KIT-BUMPER (WEIGHT ADJUSTMENT) (SUSPENSION SEAT)	445
KIT-BUSHING (STARTING MOTOR)	169
KIT-CAP FILTER (FUEL TANK)	112
KIT-CONNECTING PLUG (12 PIN)	466
	470
KIT-CONNECTING PLUG (12 PIN)	187
KIT-CONNECTING PLUG (12 PIN)	178
KIT-CONNECTING PLUG (2 PIN)	139
	148
	165
	178
	180
	183
	187
	190
	289
	415
	418
	425
	440
	466
	470
KIT-CONNECTING PLUG (2 PIN)	484
KIT-CONNECTING PLUG (2 PIN)	180
KIT-CONNECTING PLUG (2 PIN) (MAIN POWER RELAY SWITCH)	175
KIT-CONNECTING PLUG (3 PIN)	157
	158
	178
	180
	183
	187
	418
	466
	470
KIT-CONNECTING PLUG (4 PIN)	136
	139
	180
	187
	466
	470
KIT-CONNECTING PLUG (6 PIN)	180
	187
	418
	466
	470
KIT-CONNECTING PLUG (6 PIN)	484
KIT-CONNECTING PLUG (8 PIN)	128
	180
	187
	190
	418
	422
	466
	470
	476
KIT-FOLLOWER (SUSPENSION SEAT)	445
KIT-INDICATOR (WEIGHT ADJUSTMENT) (SUSPENSION SEAT)	445
KIT-INSULATOR (STARTING MOTOR)	169
KIT-KNOB (RADIO)	481
KIT-KNOB (RADIO)	480
KIT-LEVER (STARTING MOTOR)	169
KIT-MAIN BEARING (CRANKSHAFT)	15
KIT-RECEPTACLE (12 PIN)	295
KIT-RECEPTACLE (12 PIN)	136
	139
	148
	178
	180
	187
	418
KIT-RECEPTACLE (2 PIN)	112
	115
	136
	138
	139
	143
	144
	148
	161
	162
	164
	171
	172
	174
	176
	177
	178
	180
	183
	232
	297
	308
	415
	418
	422
	423
	425
	440
	447
	466
	470
	484
	504
KIT-RECEPTACLE (2 PIN)	289

INDEX

Name	Page
KIT-RECEPTACLE (2 PIN)	180
	187
KIT-RECEPTACLE (3 PIN)	139
	153
	154
	155
	156
	163
	178
	180
	183
	418
	425
	466
	467
	470
	471
KIT-RECEPTACLE (3 PIN)	140
KIT-RECEPTACLE (3 PIN) (COOLANT LEVEL SENSOR)	152
KIT-RECEPTACLE (4 PIN)	136
	139
	313
	436
	510
KIT-RECEPTACLE (4 PIN)	187
KIT-RECEPTACLE (6 PIN)	78
	128
	180
	415
	418
	434
	440
	459
	467
	470
	471
	477
	484
	506
KIT-RECEPTACLE (6 PIN)	187
KIT-RECEPTACLE (8 PIN)	190
	418
	466
	470
	480
	481
	484
KIT-RECEPTACLE (8 PIN)	187
KIT-RETAINING BOLT (CONTROL GP)	129
KIT-SEAL (JACKET WATER HEATER)	133
	134
KIT-SEAL (SOLENOID VALVE)	114
	232
	313
KIT-SHOCK ABSORBER (SUSPENSION SEAT)	504
KIT-SLIDER BLOCK (SUSPENSION SEAT)	495
	496
KIT-SOLENOID (STARTING MOTOR)	169
KIT-SPRING (HEIGHT ADJUSTMENT) (SUSPENSION SEAT)	444
KIT-SPRING (SUSPENSION SEAT)	444
KIT-SUSPENSION BOOT (SUPENSION SEAT)	502
KIT-SUSPENSION KNOB (HEIGHT ADJUSTMENT) (SUSPENSION SEAT)	444
KIT-SUSPENSION ROLLER (SUPENSION SEAT)	502
KIT-TETHER (SUSPENSION SEAT)	504
KNOB (ARMREST ADJUSTMENT)	289
KNOB (FILTER COVER)	478
KNOB-HORN	171
KNOB-LUMBAR	464

L

Name	Page
LAMP AS (12 VOLT) (RED/GREEN LED ACTION LIGHT)	138
	139
LAMP-DIODE (LED) (WARNING BEACON)	147
LAMP GP-DOME	140
LAMP GP-FLOOD–FRONT RADIATOR GRILL	143
LAMP GP-FLOOD–FRONT ROPS	142
LAMP GP-FLOOD–REAR ROPS	141
LAMP GP-WARNING BEACON	144
LAMP-HALOGEN (24 VOLT)(65 WATT)	143
LAMP-HALOGEN (24 VOLT)(65 WATT) (FLOOD)	141
	142
LAMP (24 VOLT) (ACTION LAMP)	466
	470
LAMP (24 VOLT) (DOME)	140
LAMP (24 VOLT) (INSTRUMENT)	466
LAMP (24 VOLT) (INSTRUMENT LIGHTS)	470
LAMP (24 VOLT) (QUAD GAUGE)	470
LAMP (24 VOLT) (QUAD GUAGE)	466
LAMP (24 VOLT) (WARNING BEACON)	147
LATCH GP–CAB DOORS	451
LATCH GP (DOOR)	434
LENS (AMBER WARNING BEACON)	144
LENS AS (FLOOD)	143
LENS AS (FLOOD) (ROPS)	141
	142
LENS (DOME LAMP)	140
LIFTER GP-VALVE	43
LIFTING GP-ENGINE	44
LIGHT-DASH PANEL	466
	470

INDEX

Name	Page
LIGHTING GP-FLOOD–ENCLOSED & OPEN ROPS	145
LIGHTING GP-WARNING BEACON	147
LINER GP-CAB	452
LINES GP-AIR	95
LINES GP-AIR CONDITIONER	453
LINES GP-ANGLE & TILT	336
	338
LINES GP-ENGINE OIL	71
LINES GP-FLUID SAMPLING–HYDRAULIC OIL	340
LINES GP-FUEL	104
LINES GP-FUEL FILTER	106
LINES GP-HEATER–CAB	457
LINES GP-HEATER–NON-CAB	455
LINES GP-LIFT CYLINDER–BULLDOZER	344
LINES GP-LIFT CYLINDER–CAB-FRAME	342
LINES GP-LIFT CYLINDER–SEMI-UNIVERSAL BULLDOZER	346
LINES GP-POWER TRAIN OIL	199
LINES GP-RIPPER–CAB	348
LINES GP-RIPPER–FRAME	350
LINES GP-TILT CYLINDER	352
	353
	354
LINES GP-TURBOCHARGER OIL	72
LINES GP-WATER	82
LINK AS-TRACK	274
	275
LINK GP-PITCH	392

M

Name	Page
MACHINE AR-HIGH AMBIENT TEMP	1
MANIFOLD & VALVE GP–STEERING/BRAKE	306
	307
MANIFOLD GP-EXHAUST	97
MIRROR GP	458
MODULE GP-DISPLAY (LAMP & GEAR) (TRANSMISSION GEAR INDICATOR)	467
	470
MODULE GP-QUAD GAUGE	459
MOTOR AS (WINDOW WIPER (RH) DOOR)	434
MOTOR GP-ELECTRIC (27 VOLT) (HEATER OPEN ROPS)	440
MOUNTING GP-CAB	460
MOUNTING GP-CARRIER ROLLER	276
MOUNTING GP-CYLINDER–BULLDOZER	356
MOUNTING GP-ENGINE	45
	46
MOUNTING GP-FAN DRIVE	47
MOUNTING GP-MUFFLER	98
MOUNTING GP-PLATFORM	461
MOUNTING GP-RIPPER	393
MOUNTING GP-ROPS	463
MOUNTING GP-TORQUE CONVERTER	203
MOUNTING GP-TRANSMISSION	204
MOUNTING GP-VALVE–IMPLEMENT CONTROL	358
MUFFLER GP	99

P

Name	Page
PAN GP-BACKREST	464
	465
PAN GP-OIL–ENGINE	48
PANEL GP-CIRCUIT BREAKER	148
PANEL GP-INSTRUMENT–CAB	466
PANEL GP-INSTRUMENT–OPEN ROPS	470
PANEL GP-INSULATION	473
PANEL GP-INSULATION (SOUND)	422
PEDAL GP-GOVERNOR & BRAKE	308
PIN GP–DOZER	395
PISTON & ROD GP	49
PIVOT BAR GP	277
PLANETARY GP-TRANSMISSION	205
PLATE & FILM GP	513
PLATE & FILM GP–BULLDOZER	513
PLATE-INSTRUCTION (AIR CONDITIONER)	447
PLATE-SERIAL NUMBER (BULLDOZER)	388
	389
PLATE-SERIAL NUMBER (ENGINE)	513
PLATE-SERIAL NUMBER (TRANSMISSION)	221
PLATE-WARNING (DO NOT OPERATE)	461
PLATE-WARNING (HIGH PRESSURE CYLINDER) (TELESCOPING RECOIL)	270
PLATE-WARNING (RECOIL SPRING)	270
PLATFORM GP-OPERATOR	474
	476
PLUG AS–POWER TRAIN	477
PLUG (CASE & FRAME DRAIN VALVE)	235
PLUG-DRAIN (HYDRAULIC TANK)	365
PLUG-DRAIN (TORQUE CONVERTER)	203
PLUG (FINAL DRIVE DRAIN)	193
PLUG GP-ENGINE	50
PLUG-MAGNETIC (FINAL DRIVE)	193
PLUG (MAGNETIC OIL DRAIN)	33
PLUG (TORQUE CONVERTER DRAIN)	221
PLUG (TRANSMISSION DRIVE)	206
POWER TRAIN AR	212
PRESSURIZER GP-CAB	478
PULLER-FUSE	181
PULLEY AS-IDLER	51
PULLEY GP–ALTERNATOR	52
PULLEY GP–FAN	53
PULLEY GP-FAN DRIVE	54
PULLEY GP-IDLER	55
PUMP & LINES GP-HYDRAULIC	359
PUMP & MTG GP-UNIT INJ HYD	108

INDEX

Name	Page
PUMP GP-ENGINE OIL	74, 75
PUMP GP-FUEL PRIMING	103
PUMP GP-FUEL TRANSFER	111
PUMP GP-GEAR–CONVERTER SCAVENGE–CONVERTER/COOLER LUBRICATION–TMSN CHARGING	214
PUMP GP-GEAR–POWER TRAIN OIL	213
PUMP GP-PISTON–HYDRAULIC	362
PUMP GP-UNIT INJECTION–FUEL	109, 110
PUMP GP-UNIT INJECTOR HYD	111
PUMP GP-WATER	84, 85
PUSH ARM GP	396

R

Name	Page
RADIATOR GP	87, 89
RADIO GP–AM/FM	480
RADIO GP–AM/FM CASSETTE	481
RECEIVER-DRYER GP (REFRIGERANT)	453
RECLINER GP-SEAT	482
REGULATOR AS (FUEL PRESSURE)	106
REGULATOR-WATER TEMPERATURE (94 DEG C) (COOLANT)	82
RETAINER GP (CAB DOOR)	436
RIPPER AR	398
RIPPER GP	406
ROCKER ARM GP (EXHAUST)	62
ROCKER ARM GP (INTAKE)	62
ROLLER GP-TRACK CARRIER	278
ROLLER GP-TRACK-DOUBLE FLANGE	280, 281, 282
ROLLER GP-TRACK-SINGLE FLANGE	283, 284
ROPS GP–ENCLOSED	483
ROPS GP–OPEN	484
ROTATING GP-PUMP–HYDRAULIC	364

S

Name	Page
SCREEN AS (HYDRAULIC TANK)	365
SCREEN AS (TORQUE CONVERTER)	221
SCREEN GP-PROTECTION–CAB	487
SCREEN GP-PROTECTION–OPEN ROPS	488
SCREEN GP-SUN	489
SCREEN-SUCTION (POWER TRAIN OIL)	199
SEAL GP-CRANKSHAFT	56
SEAL GP-FLYWHEEL HOUSING	57
SEAL GP-FUEL INJECTOR	58
SEAL-O-RING	227, 457
SEAL-O-RING (CASE & FRAME DRAIN PLUG)	235
SEAL-O-RING (ENGINE BREATHER)	65
SEAL-O-RING (FINAL DRIVE DRAIN PLUG)	193
SEAL-O-RING (FINAL DRIVE MAGNETIC PUUG)	193
SEAL-O-RING (POWER TRAIN FILTER)	192
SEAT BELT GP (SUSPENSION SEAT)	492
SEAT BELT GP (SUSPENSION SEAT LOW BACK)	497
SEAT GP	490, 492
SEAT GP-SUSPENSION	493, 495, 496
SEAT GP-SUSPENSION–CLOTH, AIR	497
SEAT GP-SUSPENSION–CLOTH, MECHANICAL	497
SEAT GP-SUSPENSION–VINYL, MECHANICAL, LOW BACK	497
SEGMENT GP-SPROCKET	216
SENDER AS-LEVEL (FUEL)	112
SENSOR GP-ENGINE	150
SENSOR GP-LIQUID LEVEL–COOLANT	152
SENSOR GP-POSITION	154
SENSOR GP-POSITION–DECELERATOR PEDAL	153
SENSOR GP-POSITION–SERVICE BRAKE PEDAL	155
SENSOR GP-PRESSURE–FUEL/ENGINE OIL	157
SENSOR GP-PRESSURE–INJECTION ACTUATION	158
SENSOR GP-PRESSURE–TURBO OUTLET	156
SENSOR GP-PRESSURE (ENGINE OIL)	150
SENSOR GP-PRESSURE (FUEL)	150
SENSOR GP-SPEED–ENGINE	161
SENSOR GP-SPEED–ENGINE TIMING	159, 160
SENSOR GP-SPEED–TRANSMISSION	162
SENSOR GP-SPEED (TIMING) (ENGINE)	150
SENSOR GP-TEMPERATURE–ENGINE OIL	165
SENSOR GP-TEMPERATURE–ENGINE OIL–HYDRAULIC OIL	164
SENSOR GP-TEMPERATURE–POWER TRAIN OIL SUMP	163
SENSOR GP-TEMPERATURE (COOLANT)	150
SENSOR GP-TEMPERATURE (INTAKE AIR)	150
SERVICE GP-MONITOR	166
SERVICE GP-POWER TRAIN	167
SERVICE GP-POWER TRAIN (INCLUDES SOFTWARE)	131
SHAFT GP-DRIVE	217
SHAFT GP-STEERING CLUTCH	218
SHIELD GP-AIR CLEANER–PRECLEANER	100

INDEX

Name	Page
SLEEVE-OIL SEAL (CRANKSHAFT)	15
SOFTWARE GP-MACHINE (SECURITY)	126
SOFTWARE GP-MACHINE (SECURITY) (SOFTWARE ONLY)	130
SOFTWARE GP-MONITOR	166
SOFTWARE GP-POWER TRAIN	131 167
STARTING MOTOR GP-ELECTRIC	168 169
STEP GP	498
STRAINER-FUEL (TANK FILLER)	112
STRAINER (HYDRAULIC TANK)	365
SUPPORT GP-CONTROL–TRANSMISSION UP/DOWN SHIFT	310
SUPPRESSION AR-SOUND–EUROPEAN MARKET	59
SUPPRESSION GP-SOUND–BOTTOM GUARD LINERS	60
SUSPENSION GP-SEAT	499 502 504
SWEEP GP–ENCLOSED ROPS	265
SWEEP GP–OPEN ROPS	263
SWITCH AS-HORN	171 431
SWITCH AS-KEY START	467 471
SWITCH AS (LAMP)	470
SWITCH AS (LIGHTS)	466
SWITCH AS-LIMIT (REVERSE)	297
SWITCH AS-MAGNETIC (AIR INLET HEAT)	176
SWITCH AS-PRESSURE (HIGH/LOW) (COMPRESSOR)	447
SWITCH AS-PUSH BUTTON (AUTO DOWN SHIFT)	467
SWITCH AS-PUSH BUTTON (AUTO KICK DOWN)	471
SWITCH AS-PUSH BUTTON (AUTO SHIFT)	470
SWITCH AS-PUSH BUTTON (AUTO-SHIFT BI DIRECTIONAL)	466
SWITCH AS-PUSH BUTTON (DOWNSHIFT)	310
SWITCH AS-PUSH BUTTON (EMS CYCLE SCROLL)	467
SWITCH AS-PUSH BUTTON (SCROLL)	471
SWITCH AS-PUSH BUTTON (UPSHIFT)	310
SWITCH AS (ROCKER) (CONSOLE RAISE/LOWER)	289
SWITCH AS-ROCKER (PARKING BRAKE)	295
SWITCH AS-ROLLER (BRAKE ON/OFF)	308
SWITCH AS-ROTARY (BLOWER A/C-HEATER-DEFROST)	466
SWITCH AS-ROTARY (FRONT WINDOW WIPER)	510
SWITCH AS-ROTARY (HEATER BLOWER)	442
SWITCH AS-ROTARY (LEFT WINDOW WIPER)	510
SWITCH AS-ROTARY (REAR WINDOW WIPER)	510
SWITCH AS-ROTARY (RIGHT WINDOW WIPER)	510
SWITCH AS-THERMOSTAT (A/C)	413
SWITCH AS (WARNING BEACON)	147
SWITCH GP-BYPASS–POWER TRAIN OIL FILTER	172
SWITCH GP-DISCONNECT–BATTERY	173
SWITCH GP-MAGNETIC	176
SWITCH GP-MAGNETIC–MAIN FUSE RELAY	175
SWITCH GP-MAGNETIC–START RELAY	174

T

TANK & FILTER GP-HYDRAULIC	365
TANK GP-FUEL	112
TANK GP (RADIATOR-UPPER)	89
TANK GP-WINDOW WASHER	506
TOOTH GP-RIPPER–CURVED SHANK	409 410
TOOTH GP-RIPPER–STRAIGHT SHANK	408
TORQUE CONVERTER GP	219 221
TRACK ADJUSTER & RECOIL GP	285
TRACK GP–2 REQUIRED	286 287 288
TRANSMISSION AR	223
TRUNNION GP-BULLDOZER	399
TUBE-FLASH (3 PRONG CONNECTION) (WARNING BEACON)	144
TUBE-FLASH (8 PRONG CONNECTION) (WARNING BEACON)	144
TURBOCHARGER GP	101 102

U

UNDERCARRIAGE AR	288
UNDERCARRIAGE GP	288
UNIVERSAL JOINT GP	224

V

VALVE AS-FLUID SAMPLING (CONTROL VALVE)	358
VALVE AS-FLUID SAMPLING (HYDRAULIC OIL FILTER)	333
VALVE AS-FLUID SAMPLING (HYDRAULIC OIL LINES)	359
VALVE AS-WATER (CAB HEATER)	438
VALVE AS-WATER (OPEN ROPS HEATER)	442

INDEX

Name	Page
VALVE-BALL (FUEL LINE SHUTOFF)	104
VALVE-DRAIN (CASE & FRAME)	235
VALVE-DRAIN (FUEL FILTER)	106
VALVE-DRAIN (FUEL) (FILTER)	106
VALVE GP-BANK 2–BULLDOZER LIFT/TILT	368
VALVE GP-BANK 3	334
VALVE GP-BANK 3– BULLDOZER ANGLE-LIFT-TILT	369
VALVE GP-BANK 4– BULLDOZER LIFT-ANGLE-TILT & RIPPER	370
VALVE GP-CHECK (CONTROL VALVE)	372 374 378 380 382
VALVE GP-CONTROL–ANGLE	376
VALVE GP-CONTROL–BLADE LIFT	378 380
VALVE GP-CONTROL–LIFT & TILT	382
VALVE GP-CONTROL–RIPPER	372
VALVE GP-CONTROL–STEERING/BRAKE	311
VALVE GP-CONTROL–TILT	374
VALVE GP-FLUID SAMPLING (COOLANT)	82
VALVE GP-FLUID SAMPLING (POWER TRAIN OIL)	200
VALVE GP-FLUID SAMPLING (TURBOCHARGER OIL)	72
VALVE GP-MODULATING– TRANSMISSION CONTROL	225 226
VALVE GP-PRESS & FLOW CMPNSTR– HYDRAULIC PUMP	384
VALVE GP-PRIORITY–POWER TRAIN OIL	227
VALVE GP-RELIEF– ANGLE CONTROL VALVE	386
VALVE GP-RELIEF– IMPLEMENT CONTROL VALVE	387
VALVE GP-RELIEF–POWER TRAIN OIL	229
VALVE GP-RELIEF– TRANSMISSION CONTROL	231
VALVE GP-RELIEF (CONTROL VALVE)	374 378 382
VALVE GP-SOLENOID– POWER TRAIN OIL PRIORITY VALVE	232
VALVE GP-SOLENOID–PRESSURE CONTROL– FUEL	114
VALVE GP-SOLENOID–STEERING/BRAKE	313 314
VALVE GP-TRANSMISSION CONTROL	233
VALVE MECHANISM GP	61 62
VALVE-RELIEF	199

W

Name	Page
WARNING GP-BACKUP	177 418
WARNING GP-BACKUP– EUROPEAN MARKET	177
WARNING GP-BACKUP (ROPS)	484
WARNING GP-BACKUP (107DB)	422
WINDOW GP-CAB	507
WINDOW GP-CAB–LH	508
WINDOW GP-CAB–RH	509
WINDOW GP-CAB (LH SIDE)	507
WINDOW GP-CAB (RH SIDE)	507
WIPER GP-WINDOW	510
WIRING GP– ELECTRONIC CONT.-UNIT INJECTOR	178
WIRING GP-CHASSIS	180
WIRING GP-ENGINE	183
WIRING GP-HEATER	186
WIRING GP-PLATFORM	187

INDEX

Désignation	Page

A

ACCUMULATEUR - RÉFRIGÉRANT	453
ADAPTATEUR (ASS)-CANALISATION D'HUILE MOTEUR	64
ALTERNATEUR DE CHARGE (ASS)	118 120
ALTERNATEUR DE CHARGE (ASS)	116
AMORTISSEUR DE VIBRATIONS ET POULIE (ASS)	31
AMPOULE (24 VOLTS) (ÉCLAIRAGE D'INSTRUMENTS)	470
AMPOULE (24 VOLTS) (GYROPHARE)	147
AMPOULE (24 VOLTS) (INSTRUMENT)	466
AMPOULE (24 VOLTS) (PLAFONNIER)	140
AMPOULE (24 VOLTS) (QUATRE INSTRUMENTS)	466 470
AMPOULE (24 VOLTS) (VOYANT PRINCIPAL)	466 470
ARBRE A CAMES (ASS)	10
ARBRE D'EMBRAYAGE DE DIRECTION (ASS)	218
ARBRE D'ENTRAÎNEMENT (ASS)	217
ARCEAUX DE DÉBARDAGE (ASS)	263 265
AUTOCOLLANT (CONTACTEUR D'ALLUMAGE)	138
AUTOCOLLANT (CONTACTEUR D'ALLUMAGE)	139
AUTOCOLLANT DE MISE EN GARDE (CYLINDRE DE FREIN DE STATIONNEMENT)	270
AUTOCOLLANT DE MISE EN GARDE (NE PAS LEVER)	463
AUTOCOLLANT DE MISE EN GARDE (RADIO DE LIAISON DE PRODUIT)	128
AUTOCOLLANT D'IDENTIFICATION (ALTERNATEUR)	148
AUTOCOLLANT D'IDENTIFICATION (ASSEMBLAGE ET NO DE SÉQUENCE) (CONDENSEUR DE CLIMATISEUR)	425
AUTOCOLLANT D'IDENTIFICATION (ASSEMBLAGE ET NO DE SÉQUENCE) (VENTILATEUR SOUFFLANT DE CABINE)	415
AUTOCOLLANT D'IDENTIFICATION (RACCORD D'ENTRETIEN)	148
AUTOCOLLANT D'IDENTIFICATION (TÉMOIN D'ACTIONNEMENT)	138
AUTOCOLLANT D'IDENTIFICATION (TÉMOIN D'ACTIONNEMENT)	139
AUTOCOLLANT D'IDENTIFICATION (12 VOLTS)	187
AUTOCOLLANT D'IDENTIFICATION (12 VOLTS)	431
AUTOCOLLANT DU PANNEAU (TABLEAU DE BORD)	466 470
AUTOCOLLANT (EXTÉRIEUR) (BRUIT)	59
AUTOCOLLANT (FREIN DE STATIONNEMENT)	295
AUTOCOLLANT (FREIN ET EMBRAYAGE DE MONITEUR)	296
AUTOCOLLANT (LAVE-GLACE/ESSUIE-GLACE DE PARE-BRISE)	510
AUTOCOLLANT (MISE EN GARDE)	139
AUTOCOLLANT (POINT DE GRAISSAGE)	419
AUTOCOLLANT (POINT DE GRAISSAGE) (PLATE-FORME)	474
AUTOCOLLANT (SYSTÈME DE SÉCURITÉ DE LA MACHINE)	138 139
AUTOCOLLANT (TABLEAU DE BORD)	442
AUTOCOLLANT (TABLEAU DE ROBINET DE PRÉLÈVEMENT D'HUILE HYDRAULIQUE)	340
AUTOCOLLANT (TÉMOIN D'ACTIONNEMENT) (*MALFUNCTION)	466 470
AVERTISSEUR (ASS)	115
AVERTISSEUR DE RECUL (ASS)	177
AVERTISSEUR DE RECUL (ASS)	418
AVERTISSEUR DE RECUL (ASS) (ROPS)	484
AVERTISSEUR DE RECUL (ASS) (107DB)	422
AXE DE CULBUTEUR (ASS) (ADMISSION)	62
AXE DE CULBUTEUR (ASS) (ÉCHAPPEMENT)	62
AXE DE GODET (ASS)	395

B

BAGUE (ARBRE À CAMES)	18
BALAI D'ESSUIE-GLACE (ENS) (ARRIÈRE) (GLACE)	510
BALAI D'ESSUIE-GLACE (ENS) (PARE-BRISE)	510
BALAI D'ESSUIE-GLACE (ENS) (PORTE DE CABINE DE DROITE)	434
BALAI D'ESSUIE-GLACE (ENS) (PORTE DE CABINE DE GAUCHE)	436
BALANCIER DE SUSPENSION (ASS)	267
BANDE AUTOCOLLANTE (D6N)(CAPOT DROIT)	422
BANDE AUTOCOLLANTE (D6N)(CAPOT GAUCHE)	422
BANDE AUTOCOLLANTE (D6N)(PROTECTION DE RÉSERVOIR DE CARBURANT)	247

* TRADUCTION NON DISPONIBLE AU MOMENT DE LA PUBLICATION

INDEX

Désignation	Page
BANDE AUTOCOLLANTE (D6N)(PROTECTION DE RÉSERVOIR DE CARBURANT ARRIÈRE DROIT)	247
BANDE AUTOCOLLANTE (D6N)(PROTECTION DE RÉSERVOIR DE CARBURANT ARRIÈRE GAUCHE)	247
BARRE D'ATTELAGE (ASS)	238
BATI EN C - LAME ORIENTABLE	390
BATTERIE (ASS)	121
BATTERIE (SANS ENTRETIEN)(12 VOLTS) (GRANDE CAPACITÉ)	121
BATTERIE (12 VOLTS)	181
BLINDAGE INFÉRIEUR (ASS)	245 246
BLOC-CYLINDRES - COUVERCLE (ASS)	12
BLOC-CYLINDRES (ASS)	17 18 19
BOÎTE DE VITESSES (VERSION)	223
BOÎTE PLANÉTAIRE (ASS)	205
BOUCHON AIMANTÉ (RÉDUCTEUR)	193
BOUCHON DE GOULOTTE DE REMPLISSAGE D'HUILE MOTEUR (TRANSMISSION)	199
BOUCHON DE GOULOTTE DE REMPLISSAGE (HUILE MOTEUR)	66
BOUCHON DE GOULOTTE DE REMPLISSAGE (RÉSERVOIR HYDRAULIQUE)	365
BOUCHON DE MOTEUR (ASS)	50
BOUCHON DE RADIATEUR (ENS) (DÉCHARGE DE PRESSION)	89
BOUCHON DE REMPLISSAGE D'HUILE MOTEUR (ASS)	66
BOUCHON DE RÉSERVOIR DE CARBURANT (ENS) (VERROUILLAGE AÉRÉ)	112
BOUCHON DE VIDANGE (CONVERTISSEUR DE COUPLE)	203
BOUCHON DE VIDANGE (RÉSERVOIR HYDRAULIQUE)	365
BOUCHON FILETÉ (ROBINET DE VIDANGE DE BATI ET CARTER)	235
BOUCHON FILETÉ (*TRANSMISSION DRIVE)	206
BOUCHON FILETÉ (VIDANGE DE CONVERTISSEUR DE COUPLE)	221
BOUCHON FILETÉ (VIDANGE DE RÉDUCTEUR)	193
BOUCHON FILETÉ (VIDANGE D'HUILE MAGNÉTIQUE)	33
BOULONNERIE (ASS)	301
BOULONNERIE DE CABLAGE DU MOTEUR (ASS)	132
BOULONNERIE DE CARTER AV (ASS)	38
BOUTON-AVERTISSEUR	171
BOUTON (COUVERCLE DE FILTRE)	478
BOUTON-LOMBAIRE	464
BOUTON (RÉGLAGE DE L'ACCOUDOIR)	289
BRAS DE POUSSÉE (ASS)	396
BROSSE D'ALTERNATEUR (ENS)	116 118

C

Désignation	Page
CABINE - REVÊTEMENT (ASS)	452
CABINE (ASS)	418 422
CABINE (VERSION)	417
CABLAGE - PLATE-FORME (ASS)	187
CÂBLAGE (ASS)	178
CABLAGE DE CHASSIS (ASS)	180
CABLAGE DE MOTEUR (ASS)	183
CABLAGE DU CHAUFFAGE DE CABINE (ASS)	186
CABLE (ENS) (COMMANDE DE TEMPÉRATURE DU RÉCHAUFFEUR)	442
CACHE-SOUPAPES (ASS)	14
CANALISATIONS D'AIR (ASS)	95
CANALISATIONS DE CARBURANT (ASS)	104
CANALISATIONS DE CHAUFFAGE (ASS)	455 457
CANALISATIONS DE CLIMATISEUR (ASS)	453
CANALISATIONS DE MONTAGE (ASS)	447
CANALISATIONS DE PRÉLÈVEMENT DE LIQUIDE (ASS)	340
CANALISATIONS DE VÉRIN DE LEVAGE (ASS)	342 344 346
CANALISATIONS D'EAU (ASS)	82
CANALISATIONS D'HUILE DE TRANSMISSION (ASS)	199
CANALISATIONS D'HUILE DE TURBOCOMPRESSEUR (ASS)	72
CANALISATIONS D'HUILE MOTEUR (ASS)	71
CANALISATIONS D'INCLINAISON ET D'ORIENTATION	336 338
CANALISATIONS DU FILTRE A CARBURANT (ASS)	106
CANALISATIONS DU RIPPER (ASS)	348 350
CANALISATIONS DU VÉRIN D'INCLINAISON (ASS)	352 353 354
CAPOT (ASS)	261
CAPOT ET PROTECTION (ASS)	253

* TRADUCTION NON DISPONIBLE AU MOMENT DE LA PUBLICATION

INDEX

Désignation	Page
	255
	258
CAPTEUR - MOTEUR (ASS)	150
CAPTEUR DE NIVEAU DU LIQUIDE (ASS)	152
CAPTEUR DE PRESSION (ASS)	156
	157
	158
CAPTEUR DE PRESSION (ASS) (CARBURANT)	150
CAPTEUR DE PRESSION (ASS) (HUILE MOTEUR)	150
CAPTEUR DE TEMPERATURE (ASS)	163
	164
	165
CAPTEUR DE TEMPERATURE (ASS) (ADMISSION D'AIR)	150
CAPTEUR DE TEMPERATURE (ASS) (LIQUIDE DE REFROIDISSEMENT)	150
CAPTEUR DE VITESSE (ASS)	159
	160
	161
	162
CAPTEUR DE VITESSE (ASS) (CALAGE) (MOTEUR)	150
CARENAGE (ASS)	239
CARTER (ASS) (DISTRIBUTEUR)	372
	374
	376
	378
	380
	382
CARTER AV (ASS)	42
CARTER DE VOLANT (ASS)	41
CARTER TELESCOPIQUE DE MECANISME AMORTISSEUR	270
CEINTURE DE SECURITE (ASS) (SIEGE A SUSPENSION)	492
CEINTURE DE SECURITE (ASS) (SIÈGE À SUSPENSION À DOSSIER BAS)	497
CHAINES (ASS)	286
	287
	288
CHAPEAU ANTI-POUSSIERE (RÉCHAUFFEUR D'EAU)	133
	134
CHAPEAU DE ROUE AV (CHAINE) (ASS)	269
CHAPEAU (ENS) (CLIMATISEUR)	447
CHAPEAU (ENS) (POUSSIÈRE) (PORTE DE REMPLISSAGE DE RADIATEUR)	249
CHAPEAU (RÉSERVOIR DE LAVE-GLACE DE VITRE)	506
CHÂSSIS ET CARTER (ASS)	236
CHÂSSIS ET CARTER (ASS)	235
CHÂSSIS-PORTEUR DE JOINT (ASS)	11
CHAUFFAGE DE CABINE (ASS)	438
CLAPET A BILLE (COUPURE DE CANALISATION DE CARBURANT)	104
CLAPET DE DECHARGE	199
CLAPET DE DECHARGE (ASS)	229
	231
	386
	387
CLAPET DE DECHARGE (ASS) (DISTRIBUTEUR)	374
	378
	382
CLAPET DE RETENUE (ENS) (DISTRIBUTEUR)	372
	374
	378
	380
	382
CLÉ (COUPE-BATTERIE)	173
CLÉ ÉLECTRONIQUE (ENS) (SÉCURITÉ)	136
CLÉ ÉLECTRONIQUE (ENS) (SÉCURITÉ)	126
CLIMATISEUR (ASS)	413
	414
COLLECTEUR D'ÉCHAPPEMENT (ASS)	97
COLLECTEUR ET SOUPAPE (ASS)	306
	307
COMMANDE DE BOITE DE VITESSES (ASS)	190
COMMANDE DE COMMUNICATION (ASS) (LIAISON DE PRODUIT)	128
COMMANDE DE DIRECTION ET BOITE DE VITESSES	296
	297
	299
COMMANDE DE FREIN DE STATIONNEMENT (ASS)	295
COMMANDE DE MACHINE (ASS)	126
COMMANDE DE MACHINE (ASS) (SÉCURITÉ) (COMPREND LE LOGICIEL)	130
COMMANDE ELECTRONIQUE DE MOTEUR (ASS)	124
	125
COMMANDE ET MONTAGE - MOTEUR	123
COMMANDE HYDRAULIQUE MANUELLE (ASS)	315
	317
	319
COMMANDE HYDRAULIQUE MANUELLE (ASS) (RIPPER)	335
COMMANDE NON PROGRAMMEE (ASS)	129
COMMANDE NON PROGRAMMEE (ASS) (MACHINE)	126

* TRADUCTION NON DISPONIBLE AU MOMENT DE LA PUBLICATION

INDEX

Désignation	Page
COMMANDE NON PROGRAMMEE (ASS) (SÉCURITÉ)	136
COMPOSANTS ÉLECTRONIQUES DE LA MACHINE (VERSION)	130
COMPRESSEUR DE REFRIGERANT (ASS)	424
COMPRESSEUR DE REFRIGERANT (ASS)	423
CONDENSEUR DE RÉFRIGÉRANT	425
CONTACTEUR DE DÉMARRAGE À CLÉ (ENS)	467
	471
CONTACTEUR (ENS) (À BASCULE) (RELEVAGE/ABAISSEMENT DE LA CONSOLE (ASS))	289
CONTACTEUR (ENS) (ÉCLAIRAGE)	466
CONTACTEUR (ENS) (GYROPHARE)	147
CONTACTEUR (ENS) (TÉMOIN)	470
CONTACTEUR MAGNETIQUE (ASS)	174
	176
CONTACTEUR MAGNETIQUE (ASS)	175
CONTACTEUR MAGNETIQUE (ENS) (*AIR INLET HEAT)	176
CONVERTISSEUR DE COUPLE - MONTAGE (ASS)	203
CONVERTISSEUR DE COUPLE (ASS)	219
	221
COUDE D'ADMISSION D'AIR (ASS)	93
COURONNE ET ENGRENAGES DE TRANSFERT (ASS)	195
COURROIE (ASS)	6
	7
	8
COURROIE (AVEC CLIMATISEUR MARCHÉ EUROPÉEN)	7
COURROIE (AVEC CLIMATISEUR MARCHÉ NORD-AMÉRICAIN)	8
COURROIE (SANS CLIMATISEUR MARCHÉ NORD-AMÉRICAIN)	6
COUSSINET (BÂTI EN C SPÉCIAL)	388
COUVERCLE DE CARTER AV - BOULONNERIE (ASS)	37
COUVERCLE DE CARTER AV (ASS)	13
COUVERCLE DE COLLECTEUR D'ADMISSION (ASS)	92
COUVERCLE DE LA CONSOLE (ASS)	427
	428
	429
	431
	433
COUVERCLE INFÉRIEUR-DOSSIER (ASS)	464
	465
CREPINE (RÉSERVOIR HYDRAULIQUE)	365
CULASSE (ASS)	24
	25
	27
	29
CULASSE (ENS)	20
	22
CULBUTERIE (ASS)	61
	62

D

DEFLECTEUR PARE-SABLE (ASS)	243
DÉMARREUR ÉLECTRIQUE (ASS)	168
	169
DENT DE RIPPER (ASS)	408
	409
	410
DISJONCTEUR DE SECURITE (ENS) (INVERSION)	297
DISJONCTEUR DU PANNEAU DE COMMANDE (ASS)	148
DISJONCTEUR (ENS) (80 A) (DISJONCTEUR PRINCIPAL DE LA MACHINE)	148
DISPOSITIF D'ARRÊT	300
DISPOSITIF D'EVACUATION DES VAPEURS DE CARTER	68
DISTRIBUTEUR (ASS)	311
	372
DISTRIBUTEUR (ASS)	374
	376
	378
	380
	382
DISTRIBUTEUR DE BOITE (ASS)	233
DISTRIBUTEUR DOUBLE ÉLÉMENT (ASS)	368
DISTRIBUTEUR QUADRUPLE CORPS (VERSION)	335
DISTRIBUTEUR TRIPLE ÉLÉMENT (ASS)	334
	369
DISTRIBUTEUR 4 ÉLÉMENTS (ASS)	370

E

EAU DES CHEMISES - RECHAUFFEUR (ASS)	133
	134
ÉCLAIRAGE - GYROPHARE (ASS)	147
ÉCLAIRAGE - PROJECTEURS (ASS)	145
ECLAIRAGE TABLEAU DE BORD	466
	470
ÉCRAN (ENS) (CONVERTISSEUR DE COUPLE)	221
ÉCRAN (ENS) (RÉSERVOIR HYDRAULIQUE)	365
ÉCRAN MAGNÉTIQUE (HUILE DE TRANSMISSION)	199

* TRADUCTION NON DISPONIBLE AU MOMENT DE LA PUBLICATION

INDEX

Désignation	Page
ÉLECTRONIQUE - MACHINE (ENS)	130
ÉLECTRONIQUE - MACHINE (ENS) (SÉCURITÉ)	136
ÉLECTRONIQUE DE TRANSMISSION (ASS)	131
ÉLECTRONIQUE-MONITEUR (ASS)	130
ÉLÉMENT DE FILTRE À AIR (ENS) (PRINCIPAL)	91
ÉLÉMENT DE FILTRE À AIR (ENS) (SECONDAIRE)	91
ÉLÉMENT DE FILTRE À CARBURANT (PRINCIPAL)	103
ÉLÉMENT DE FILTRE À HUILE (ENS) (DÉBIT HYDRAULIQUE/RETOUR DE DÉBIT) (JETABLE)	365
ÉLÉMENT DE FILTRE À HUILE (ENS) (HYDRAULIQUE) (JETABLE)	333
ÉLÉMENT DE FILTRE À HUILE (ENS) (HYDRAULIQUE) (NETTOYAGE/GRANDE EFFICACITÉ)	365
ÉLÉMENT DE FILTRE À HUILE (ENS) (RETOUR DE DÉBIT) (LIQUIDE HYDRAULIQUE RÉSISTANT AU FEU)	365
ÉLÉMENT DE FILTRE À HUILE (ENS) (TRANSMISSION)	192
ÉLÉMENT DU RÉCHAUFFEUR D'EAU DES CHEMISES (ENS) (120 VOLTS/1000 WATTS)	134
ÉLÉMENT DU RÉCHAUFFEUR D'EAU DES CHEMISES (ENS) (240 V/1000 WATTS)	133
EMBOUT ET LAME DE COUPE (ASS)	404 405
EMBRAYAGE ET FREIN DE DIRECTION (ASS)	293
ÉMETTEUR DE NIVEAU (ENS) (CARBURANT)	112
ENGRENAGE DE DIRECTION (ASS)	302 304
ENTRAÎNEMENT DE VENTILATEUR (ASS)	35 36
ENTRETIEN DE LA TRANSMISSION (ASS)	167
ENTRETIEN DE LA TRANSMISSION (ASS) (COMPREND LE LOGICIEL)	131
ENTRETIEN DU MONITEUR (ASS)	166
ESSUIE-GLACE (ASS)	510
EXTRACTEUR DE FUSIBLE	181

F

Désignation	Page
FAISCEAU DE CABLES - CAPTEUR (ENS) (FIL DE CALIBRE 14)	165
FAISCEAU DE CABLES - CAPTEUR (ENS) (FIL DE CALIBRE 16-18)	165
FAISCEAU DE CABLES DU CLIMATISEUR (ENS) (VENTILATEURS DE CONDENSEUR) (COMPRESSEUR)	425
FAISCEAU DE CABLES (ENS) (AVERTISSEUR DE RECUL)	484
FAISCEAU DE CABLES (ENS) (CAPTEURS DE VITESSE DE BOÎTE)	190
FAISCEAU DE CABLES (ENS) (COMMANDE EXTRA-DOUCE)	297
FAISCEAU DE CABLES (ENS) (COMMANDE)(SÉCURITÉ)	136
FAISCEAU DE CABLES (ENS) (COMMANDE)(SÉCURITÉ)	139
FAISCEAU DE CABLES (ENS) (DÉMARRAGE SANS INJECTION)	183
FAISCEAU DE CABLES (ENS) (DISJONCTEUR)	148
FAISCEAU DE CABLES (ENS) (ESSUIE-GLACE)	418
FAISCEAU DE CABLES (ENS) (LAVE-VITRE)	506
FAISCEAU DE CABLES (ENS) (MODULE DE COMMANDE)	128
FAISCEAU DE CABLES (ENS) (MOTEUR)	180
FAISCEAU DE CABLES (ENS) (PLATE-FORME)	180 187
FAISCEAU DE CABLES (ENS) (PRINCIPAL)(CABINE)	418
FAISCEAU DE CABLES (ENS) (RÉCHAUFFEUR)	440
FAISCEAU DE CABLES (ENS) (SOLÉNOÏDES SÉLECTEURS DE BOÎTE DE VITESSES)	190
FAISCEAU DE CABLES (ENS) (TABLEAU DE BORD)	466 470
FAISCEAU DE CABLES (ENS) (TABLEAU DE DISJONCTEUR)	148
FAISCEAU DE CABLES (ENS) (TRANSMISSION)	180
FAISCEAU DE RADIO (ENS) (HAUT-PARLEUR)	480 481
FAISCEAU DE SOUPAPE (ENS) (COMPRESSEUR D'AIR) (SIÈGE)	504
FAISCEAU DU REFROIDISSEUR D'HUILE (ENS)	89
FILTRE -EAU (POMPE À EAU)	85
FILTRE A AIR (ASS)	91
FILTRE A CARBURANT (ENS) (AUXILIAIRE)	106
FILTRE À CARBURANT (REMPLISSAGE DU RÉSERVOIR)	112
FILTRE A HUILE (ASS)	333
FILTRE A HUILE (ASS)	192

* TRADUCTION NON DISPONIBLE AU MOMENT DE LA PUBLICATION

INDEX

Désignation	Page
FILTRE À HUILE MOTEUR (ASS)	67
FILTRE A HUILE MOTEUR (ENS)	67
FILTRE-CHARBON (SURPRESSEUR DE CABINE)	478
FILTRE DE SÉPARATEUR D'EAU ET DE CARBURANT (ASS)	103
FILTRE (DISTRIBUTEUR)	372, 374, 376, 378, 380, 382
FILTRE (ENS) (AÉRATION DE LA CABINE)	478
FILTRE (ENS) (SURPRESSEUR DE CABINE)	478
FLEXIBLE (RADIATEUR INFÉRIEUR)	87
FLEXIBLE (RADIATEUR SUPÉRIEUR)	87
FREIN DE DIRECTION	292
FUSIBLE (10A)	148
FUSIBLE (15A)	148
FUSIBLE (20 A)	148

G

Désignation	Page
GALET A BOUDIN DOUBLE (ASS)	280, 281, 282
GALET A BOUDIN SIMPLE (ASS)	283, 284
GALET SUPERIEUR (ASS)	278
GARDE-BOUE (ASS)	242
GRAISSEUR (BALANCIER DE SUSPENSION)	267
GRAISSEUR (FILET 1/8-27) (BIELLE D'INCLINAISON)	392
GRAISSEUR (FILET 1/8-27) (CARTER ET BÂTI)	235
GRAISSEUR (FILET 1/8-27) (PLATE-FORME DE CABINE)	474
GRAISSEUR (FILET 1/8-27) (RIPPER)	406
GRAISSEUR (FILET 1/8-27) (VÉRIN DE LEVAGE DE BULLDOZER)	325
GRAISSEUR (FILET 1/8-27) (VÉRINS D'INCLINAISON ET D'ORIENTATION)	336
GRAISSEUR (LAME DE BULLDOZER ORIENTABLE)	400
GRAISSEUR (SURPRESSEUR DE CABINE)	478
GRILLE DE PROTECTION (ASS)	487, 488
GRILLE DE RADIATEUR (ASS)	244
GROUPE DE CONTROLE	127, 128
GROUPE DE FIXATION (PORTE DE CABINE)	436
GROUPE DE ROTATION DE POMPE	364
GUIDE PROTECTEUR DE CHAÎNE (ASS)	251, 252

H

Désignation	Page
HUILE MOTEUR - CARTER (ASS)	48

I

Désignation	Page
INDICATEUR DE COLMATAGE DE FILTRE À AIR (ASS)	474
INDICATEUR DE COLMATAGE DE FILTRE À AIR (ASS)	94
INDICATEUR (ENS) (TÉMOIN DE MISE EN GARDE)	466, 470
INDICATEUR (NIVEAU D'HUILE) (TRANSMISSION)	199
INJECTEUR DE CARBURANT (ASS)	109
INJECTEURS-POMPES HYDRAULIQUES (ENS)	111
INSONORISATION (ASS)	60
INSONORISATION (VERSION)	59
INTERRUPTEUR - BOUTON-POUSSOIR (ENS) (CHANG. DE VITESSE)	310
INTERRUPTEUR - BOUTON-POUSSOIR (ENS) (CHANGEMENT DE VITESSE AUTOMATIQUE)	470
INTERRUPTEUR - BOUTON-POUSSOIR (ENS) (DÉFILEMENT)	471
INTERRUPTEUR - BOUTON-POUSSOIR (ENS) (DÉFILEMENT DU CYCLE EMS)	467
INTERRUPTEUR - BOUTON-POUSSOIR (ENS) (PASSAGE AUTOMATIQUE DES VITESSES BIDIRECTIONNEL)	466
INTERRUPTEUR - BOUTON-POUSSOIR (ENS) (PASSAGE DE VITESSE)	310
INTERRUPTEUR - BOUTON-POUSSOIR (ENS) (RÉTROGRADAGE AUTOMATIQUE)	471
INTERRUPTEUR - BOUTON-POUSSOIR (ENS) (RÉTROGRADAGE AUTOMATIQUE)	467
INTERRUPTEUR - DÉRIVATION (ASS)	172
INTERRUPTEUR BALANCIER (ENS) (FREIN DE STATIONNEMENT)	295
INTERRUPTEUR DE KLAXON (ENS)	171, 431
INTERRUPTEUR DE THERMOSTAT (ENS) (CLIMATISEUR)	413
INTERRUPTEUR ROTATIF (ENS) (ESSUIE-GLACE ARRIÈRE)	510
INTERRUPTEUR ROTATIF (ENS) (ESSUIE-GLACE AVANT)	510

* TRADUCTION NON DISPONIBLE AU MOMENT DE LA PUBLICATION

INDEX

Désignation	Page
INTERRUPTEUR ROTATIF (ENS) (ESSUIE-GLACE DROIT)	510
INTERRUPTEUR ROTATIF (ENS) (SOUFFLANTE CLIMATISEUR-CHAUFFAGE--DÉGIVREUR)	466
INTERRUPTEUR ROTATIF (ENS) (SOUFFLANTE DE CHAUFFAGE)	442
INTERRUPTEUR ROTATIF (FREIN SERRÉ/ DESSERRÉ)	308
ISOLATION DE CABINE (ASS)	450
J	
JAUGE D'HUILE MOTEUR (BAIONNETTE) (ASS)	70
JOINT DE CARTER DE VOLANT (ASS)	57
JOINT DE L'INJECTEUR DE CARBURANT (ASS)	58
JOINT DE RÉGULATEUR D'EAU (TEMPÉRATURE DE LIQUIDE DE REFROIDISSEMENT)	82
JOINT DE VILEBREQUIN (ASS)	56
JOINT PLAT (POMPE D'AMORÇAGE DE CARBURANT)	103
JOINT TORIQUE	227
	457
JOINT TORIQUE (BOUCHON DE VIDANGE DE BÂTI ET CARTER)	235
JOINT TORIQUE (BOUCHON DE VIDANGE D'ENTRAÎNEMENT DE RÉDUCTEUR)	193
JOINT TORIQUE (BOUCHON MAGNÉTIQUE DE RÉDUCTEUR)	193
JOINT TORIQUE (FILTRE DE TRANSMISSION)	192
JOINT TORIQUE (RENIFLARD DE MOTEUR)	65
JOINT UNIVERSEL (ASS)	224
K	
KIT D'AMORTISSEUR (SIEGE A SUSPENSION)	504
KIT D'ATTACHE DE CEINTURE DE SECURITE (SIÈGE À SUSPENSION)	502
KIT D'ATTACHE (SIEGE A SUSPENSION)	504
KIT DE BAGUE (DÉMARREUR)	169
KIT DE BALAIS (DÉMARREUR) (MOTEUR)	169
KIT DE BLOC COULISSANT (SIEGE A SUSPENSION)	495
	496
KIT DE BORNE D'ALTERNATEUR (BATTERIE)	118
KIT DE BORNE D'ALTERNATEUR (BATTERIE)	116
KIT DE BORNE D'ALTERNATEUR (RELAIS) (TÉMOIN LUMINEUX)	118
KIT DE BORNE D'ALTERNATEUR (RELAIS) (TÉMOIN LUMINEUX)	116
KIT DE BORNE D'ALTERNATEUR (TÉMOIN) (RELAIS)	118
KIT DE BORNE D'ALTERNATEUR (TÉMOIN) (RELAIS)	116
KIT DE BOUGIE (12 BROCHES)	187
	466
	470
KIT DE BOUGIE (12 BROCHES)	178
KIT DE BOUGIE (2 BROCHES)	139
	148
	165
	178
	180
	183
	187
	190
	289
	415
	418
	425
	440
	466
	470
	484
KIT DE BOUGIE (2 BROCHES)	180
	190
KIT DE BOUGIE (2 BROCHES) (CONTACTEUR DE RELAIS D'ALIMENTATION PRINCIPALE)	175
KIT DE BOUGIE (3 BROCHES)	157
	158
	178
	180
	183
	187
	418
	466
	470
KIT DE BOUGIE (4 BROCHES)	136
	139
	187
	466
	470
KIT DE BOUGIE (4 BROCHES)	180
KIT DE BOUGIE (4 BROCHES)	187
KIT DE BOUGIE (6 BROCHES)	180
	187
	418
	466

* TRADUCTION NON DISPONIBLE AU MOMENT DE LA PUBLICATION

INDEX

Désignation	Page
	470
	484
KIT DE BOUGIE (8 BROCHES)	128
	180
	187
	418
	422
	466
	470
	476
KIT DE BOUGIE (8 BROCHES)	190
KIT DE BOUTON (RADIO)	480
	481
KIT DE BOUTON (REGLAGE DE HAUTEUR) (SIEGE A SUSPENSION)	444
KIT DE CHAPEAU DE FILTRE (RÉSERVOIR DE CARBURANT)	112
KIT DE COUSSINET (SIEGE A SUSPENSION)	445
KIT DE GAINE (SIÈGE À SUSPENSION)	502
KIT DE JOINTS (ÉLECTROVANNE)	114
	232
	313
KIT DE JOINTS (RÉCHAUFFEUR D'EAU)	133
	134
KIT DE LEVIER (DÉMARREUR)	169
KIT DE PALIER PRINCIPAL (VILEBREQUIN)	15
KIT DE PARE-CHOCS (RÉGLAGE DU POIDS) (SIEGE A SUSPENSION)	445
KIT DE POUSSOIR (SIEGE A SUSPENSION)	445
KIT DE PRISE FEMELLE (12 BROCHES)	295
KIT DE PRISE FEMELLE (12 BROCHES)	136
	139
	148
	178
	180
	187
	418
KIT DE PRISE FEMELLE (2 BROCHES)	112
	115
	136
	138
	139
	143
	144
	148
	161
	162
	164
	171
	176
	177
	178
	180
	183
	187
	289
	297
	308
	415
	418
	422
	423
	425
	440
	466
	470
	484
KIT DE PRISE FEMELLE (2 BROCHES)	172
	174
KIT DE PRISE FEMELLE (2 BROCHES)	232
	447
	504
KIT DE PRISE FEMELLE (3 BROCHES)	139
	140
	153
	154
	155
	163
	178
	180
	183
	418
	425
	466
KIT DE PRISE FEMELLE (3 BROCHES)	466
	467
	470
	471
KIT DE PRISE FEMELLE (3 BROCHES)	156
KIT DE PRISE FEMELLE (3 BROCHES) (CAPTEUR DE NIVEAU DE LIQUIDE DE REFROIDISSEMENT)	152
KIT DE PRISE FEMELLE (4 BROCHES)	136
	139
	187
	436
	510
KIT DE PRISE FEMELLE (4 BROCHES)	313
KIT DE PRISE FEMELLE (6 BROCHES)	78
	128
	180
	187
	415
	418
	434

* TRADUCTION NON DISPONIBLE AU MOMENT DE LA PUBLICATION

INDEX

Désignation	Page
	440
	459
	477
	484
	506
KIT DE PRISE FEMELLE (6 BROCHES)	471
KIT DE PRISE FEMELLE (6 BROCHES)	467
	470
KIT DE PRISE FEMELLE (8 BROCHES)	187
	190
	418
	466
	470
	480
	481
	484
KIT DE PROTECTION D'ALTERNATEUR	118
KIT DE RESSORTS (REGLAGE DE HAUTEUR) (SIEGE A SUSPENSION)	444
KIT DE RESSORTS (SIEGE A SUSPENSION)	444
KIT DE ROULEAU (SIÈGE À SUSPENSION)	502
KIT DE SOLÉNOÏDE (DÉMARREUR)	169
KIT DE SOUPAPE PNEUMATIQUE (SIEGE A SUSPENSION)	504
KIT DE VIS DE RETENUE (COMMANDE (ASS))	129
KIT DE VIS (*ENGINE HARNESS RETAINING)	183
KIT DE VIS (FAISCEAU DE DISJONCTEUR)	148
KIT D'INDICATEUR (RÉGLAGE DU POIDS) (SIEGE A SUSPENSION)	445
KIT D'ISOLANT (DÉMARREUR)	169
KLAXON (ENS) (24 VOLTS)(TON FAIBLE)	180

L

LAME À ORIENTATION (ASS)	400
LAME DE BULLDOZER SEMI-UNIVERSELLE (VERSION)	388
	389
LAME SEMI-UNIVERSELLE (ASS)	402
LAMPE - GYROPHARE (ASS)	144
LAMPE - PHARE (ASS)	141
	142
	143
LAMPE-DIODE (LED) (GYROPHARE)	147
LAMPE (ENS) (12 VOLTS) (TÉMOIN LUMINEUX PRINCIPAL ROUGE/ VERT)	139
LAMPE (ENS) (12 VOLTS) (TÉMOIN LUMINEUX PRINCIPAL ROUGE/ VERT)	138
LAMPE HALOGÈNE (24 VOLTS)(65 WATTS)	143
LAMPE HALOGÈNE (24 VOLTS)(65 WATTS) (PROJECTEUR)	141
	142
LENTILLE (ENS) (PROJECTEUR)	143
LENTILLE (ENS) (PROJECTEUR) (ROPS)	141
	142
LENTILLE (GYROPHARE JAUNE)	144
LENTILLE (PLAFONNIER)	140
LOGICIEL - MACHINE (ENS) (SÉCURITÉ)	126
LOGICIEL - MACHINE (ENS) (SÉCURITÉ) (LOGICIEL SEULEMENT)	130
LOGICIEL - TRANSMISSION (ASS)	131
LOGICIEL - TRANSMISSION (ASS)	167
LOGICIEL - TRANSMISSION (ENS)	167
LOGICIEL-MONITEUR (ASS)	166

M

MAILLON DE CHAINE (ENS)	274
	275
MANCHON - JOINT (VILEBREQUIN)	15
MANOCONTACT (ENS) (HAUTE/BASSE) (COMPRESSEUR)	447
MARCHEPIED (ASS)	498
MECANISME AMORTISSEUR ET REGLAGE DE CHAINES (ASS)	285
MODULE - QUATRE INSTRUMENTS (ASS)	459
MODULE D'AFFICHAGE (ASS) (TÉMOIN ET PIGNON) (INDICATEUR DE RAPPORT DE BOÎTE)	467
	470
MONTAGE DE CABINE (ASS)	460
MONTAGE DE GALET SUPÉRIEUR	276
MONTAGE DE MOTEUR (ASS)	45
	46
MONTAGE DE PLATE-FORME (ASS)	461
MONTAGE DE RADIO (ASS)	449
MONTAGE DE RIPPER (ASS)	393
MONTAGE DE SILENCIEUX (ASS)	98
MONTAGE DE SOUPAPE (ASS)	358
MONTAGE DE VÉRIN (ASS)	356
MONTAGE D'ENTRAÎNEMENT DE VENTILATEUR (ASS)	47
MONTAGE DU TOIT ROPS (ASS)	463
MONTAGE-SÉCURITÉ (ASS)	136
	138
	139
MONTAGE (VERSION)	5
MOTEUR - PARTIE CENTRALE (VERSION)	4
MOTEUR COMPLET (VERSION)	2
	3
MOTEUR ELECTRIQUE (ASS) (27 VOLTS) (CHAUFFAGE - ROPS OUVERT)	440
MOTEUR (ENS) (ESSUIE-GLACE DE PORTE (DROITE))	434

* TRADUCTION NON DISPONIBLE AU MOMENT DE LA PUBLICATION

INDEX

Désignation	Page
O	
OEILLETONS DE LEVAGE MOTEUR (ASS)	44
P	
PANNEAU D'ISOLATION (ASS)	473
PANNEAU D'ISOLATION (ASS) (BRUIT)	422
PARE-POUSSIERE (PRÉLÈVEMENT DE LIQUIDE DE DISTRIBUTEUR)	358
PARE-POUSSIERE (ROBINET DE PRÉLÈVEMENT DE FILTRE À HUILE HYDRAULIQUE)	333
PARE-POUSSIERE (ROBINET DE PRÉLÈVEMENT DE LIQUIDE DE REFROIDISSEMENT)	82
PARE-POUSSIERE (ROBINET DE PRÉLÈVEMENT D'HUILE DE TRANSMISSION)	199
PARE-POUSSIERE (ROBINET DE PRÉLÈVEMENT D'HUILE DE TURBOCOMPRESSEUR)	72
PARE-POUSSIERE (ROBINET DE PRÉLÈVEMENT D'HUILE HYDRAULIQUE)	359
PARE-POUSSIERE (ROBINETS DE PRÉLÈVEMENT D'HUILE HYDRAULIQUE)	340
PARE-POUSSIERE (*TRANSMISSION COVER FITTING)	206
PARE-SOLEIL (ASS)	489
PAS DU MAILLON (ASS)	392
PÉDALE DE RÉGULATEUR ET DE FREIN (ASS)	308
PIGNONNERIE AV (ASS)	40
PISTON ET BIELLE (ASS)	49
PLAFONNIER (ASS)	140
PLAQUE - AVERTISSEMENT (NE PAS UTILISER)	461
PLAQUE - AVERTISSEMENT (RESSORT AMORTISSEUR)	270
PLAQUE - AVERTISSEMENT (VÉRIN HAUTE PRESSION) (AMORTISSEUR TÉLESCOPIQUE)	270
PLAQUE DE NUMÉRO DE SÉRIE (BOÎTE DE VITESSES)	221
PLAQUE DE NUMÉRO DE SÉRIE (BULLDOZER)	388, 389
PLAQUE DE NUMÉRO DE SÉRIE (MOTEUR)	513
PLAQUE D'INSTRUCTIONS (CLIMATISEUR)	447
PLAQUE SIGNALÉTIQUE (ASS)	512
PLAQUE SIGNALÉTIQUE (REMARQUE) (RADIO)	449
PLAQUES SIGNALETIQUES ET AUTOCOLLANTS (ASS)	513
PLATE-FORME DE CABINE	474, 476
POMPE A EAU (ASS)	84, 85
POMPE A ENGRENAGES (ASS)	213, 214
POMPE A HUILE MOTEUR (ASS)	74, 75
POMPE A PISTONS (ASS)	362
POMPE D'ALIMENTATION EN CARBURANT (ASS)	111
POMPE D'AMORÇAGE DE CARBURANT (ASS)	103
POMPE D'INJECTEURS-POMPES HYDRAU. ET MONTAGE	108
POMPE D'INJECTION (ASS)	109
POMPE D'INJECTION (ASS)	110
POMPE ET CANALISATIONS HYDRAULIQUES (ASS)	359
PORTE-BALAIS (ENS) (ALTERNATEUR)	116, 118
PORTIÈRE DE CABINE (ASS)	434, 436
PORTIÈRE DE CABINE (ASS) (DROITE)	418
PORTIÈRE DE CABINE (ASS) (GAUCHE)	418
POULIE (ASS)	52, 53
POULIE DE ROUE AV (ENS)	51
POULIE D'ENTRAÎNEMENT DE VENTILATEUR (ASS)	54
POULIE-ROUE AVANT (ASS)	55
POUSSOIR DE SOUPAPE (ASS)	43
PRISE (ENS)	477
PROTECTION - FILTRE DE TRANSMISSION (ASS)	248
PROTECTION DE FILTRE À AIR (ASS)	100
PROTECTION DU RÉSERVOIR DE CARBURANT (ASS)	247
PROTÈGE-RADIATEUR (ASS)	249
R	
RADIATEUR (ASS)	87
RADIATEUR (ASS)	89
RADIO (ASS)	480, 481
RALLONGE DU DOSSIER DE SIEGE (TISSU)	492
RÉCEPTEUR-DÉSHYDRATEUR (ASS) (RÉFRIGÉRANT)	453
RÉCHAUFFEUR D'AIDE AU DÉMARRAGE (ASS)	135
RECHAUFFEUR DE CABINE ROPS OUVERTE (ASS)	440

* TRADUCTION NON DISPONIBLE AU MOMENT DE LA PUBLICATION

INDEX

Désignation	Page
RECHAUFFEUR DE CABINE ROPS OUVERTE (ASS)	442
RECHAUFFEUR (ENS)	135
REDUCTEUR MARIN - MONTAGE (ASS)	204
RÉDUCTEURS (ASS)	193
REFROIDISSEMENT (VERSION)	77
REFROIDISSEUR D'ADMISSION (ASS)	90
REFROIDISSEUR D'HUILE MOTEUR (ASS)	76
REGARD DE NIVEAU (RÉSERVOIR HYDRAULIQUE)	365
RÉGLAGE DE COMMANDE DE DIRECT. ET DE BOÎTE	289
REGLAGE DE SIEGE (ASS)	411 412
RÉGULATEUR (ENS) (PRESSION DE CARBURANT)	106
RENIFLARD (ASS)	65
RENIFLARD (ENS) (HUILE DE TRANSMISSION)	199
RENIFLARD (ENS) (MOTEUR)	65
RÉSERVOIR - LAVE-GLACE (ASS)	506
RESERVOIR (ASS) (RADIATEUR SUPÉRIEUR)	89
RÉSERVOIR DE CARBURANT (ASS)	112
RÉSERVOIR HYDRAULIQUE ET FILTRE (ASS)	365
RÉTROVISEUR (ASS)	458
RIPPER (ASS)	406
RIPPER (VERSION)	398
ROBINET DE BATTERIE (ASS)	173
ROBINET-ÉCHANTILLON DE LIQUIDE (ENS) (CANALISATIONS D'HUILE HYDRAULIQUE)	359
ROBINET-ÉCHANTILLON DE LIQUIDE (ENS) (DISTRIBUTEUR)	358
ROBINET-ÉCHANTILLON DE LIQUIDE (ENS) (FILTRE À HUILE HYDRAULIQUE)	333
ROBINET-PRÉLÈVEMENT D'ÉCHANTILLON DE LIQUIDE (ASS) (HUILE DE TRANSMISSION)	200
ROBINET-PRÉLÈVEMENT D'ÉCHANTILLON DE LIQUIDE (ASS) (HUILE DE TURBOCOMPRESSEUR)	72
ROBINET-PRÉLÈVEMENT D'ÉCHANTILLON DE LIQUIDE (ASS) (LIQUIDE DE REFROIDISSEMENT)	82
ROTATION DE LA ROUE DU VENTILATEUR SOUFFLANT (COMMANDE DE BULLDOZER)	315 319
ROTATION DE LA ROUE DU VENTILATEUR SOUFFLANT (COMMANDE DE RIPPER)	317
ROTATION DE LA ROUE DU VENTILATEUR SOUFFLANT (N. D'ÉTAPE)	336
ROTATION DE LA ROUE DU VENTILATEUR SOUFFLANT (RÉGLAGE DU SIÈGE)	502 504
ROUE AV - CHAINES (ASS)	273

S

Désignation	Page
SEGMENT DE BARBOTIN (ASS)	216
SIÈGE (ASS)	490 492
SIÈGE AVEC SUSPENSION (ASS)	496 497 504
SIÈGE AVEC SUSPENSION (ASS)	493 495 499 502
SIÈGE INCLINABLE (ASS)	482
SILENCIEUX (ASS)	99
SONDE - CIRCUIT DE CARBURANT	153 154 155
SOUPAPE - EAU (RÉCHAUFFEUR DE CABINE)	438
SOUPAPE - EAU (RÉCHAUFFEUR DU ROPS OUVERT)	442
SOUPAPE - SOLÉNOÏDE (ASS)	114 313 314
SOUPAPE - SOLÉNOÏDE (ASS)	232
SOUPAPE DE MODULATION (ASS)	225 226
SOUPAPE DE PRIORITE (ASS)	227
SOUPAPE DE VIDANGE (CARBURANT) (FILTRE)	106
SOUPAPE DE VIDANGE (CARTER ET BÂTI)	235
SOUPAPE DE VIDANGE (FILTRE À CARBURANT)	106
SOUPAPE RÉGULATRICE DE PRESSION ET DÉBIT	384
SUPPORT - COMMANDE (ASS)	310
SURPRESSEUR (ASS)	478
SUSPENSION DE SIEGE - CARTER (ASS)	444

T

Désignation	Page
TABLEAU DE BORD (ASS)	466 470
TAMIS D'ASPIRATION (HUILE DE TRANSMISSION)	199
TAPIS DE PLANCHER	431

* TRADUCTION NON DISPONIBLE AU MOMENT DE LA PUBLICATION

INDEX

Désignation	Page
TAPIS DE PLANCHER (ARRIÈRE)	429
TENDEUR DE COURROIE (ASS)	9
THERMOSTAT-TEMPÉRATURE D'EAU (94 DEG C) (LIQUIDE DE REFROIDISSEMENT)	82
TOIT ROPS (ASS)	483 484
TOIT (VERSION)	422
TOURILLON DE BULLDOZER (ASS)	399
TRAIN DE ROULEMENT	288
TRAIN DE ROULEMENT (ASS)	288
TRANSMISSION (VERSION)	212
TRAVERSE PIVOT (ASS)	277
TUBE-FLASH (CONNEXION À 3 BROCHES) (GYROPHARE)	144
TUBE-FLASH (CONNEXION À 8 BROCHES) (GYROPHARE)	144
TURBOCOMPRESSEUR (ASS)	101 102
TUYAU D'ÉCHAPPEMENT (VAPEURS)	68

V

Désignation	Page
VENTILATEUR A PALES RÉVERSIBLES (ASS)	81
VENTILATEUR (ASS)	78
VENTILATEUR SOUFFLANT (ASS)	80
VENTILATEUR SOUFFLANT DE CABINE (ASS)	415
VÉRIN DE LEVAGE (ASS)	323 325
VERIN DE LEVAGE DE RIPPER (ASS)	327
VÉRIN D'INCLINAISON (ASS)	329 331
VERIN D'ORIENTATION (ASS)	321
VERROU (ASS)	451
VERROU (ASS) (PORTE)	434
VERSION DE BULLDOZER	388
VERSION DE CHASSIS	1
VERSION DE GUIDAGE DE TRAIN DE ROULEMENT	272
VERSION DE MACHINE-TEMPÉRATURE AMBIANTE ÉLEVÉE	1
VERSION HYDRAULIQUE	334
VIDANGE-HUILE DE MOTEUR (ASS)	32 33 34
VILEBREQUIN (ASS)	15
VITRE DE CABINE (ASS)	507 508 509
VITRE DE CABINE (ASS) (CÔTÉ DROIT)	507
VITRE DE CABINE (ASS) (CÔTÉ GAUCHE)	507
VOLANT MOTEUR (ASS)	39
VUE DU MODÈLE	1

* TRADUCTION NON DISPONIBLE AU MOMENT DE LA PUBLICATION

INDICE

Nombre	Página

A

ACONDICIONADOR DE AIRE (GR) 414
ACONDICIONADOR DE AIRE (GR) 413
ACUMULADOR DE REFRIGERANTE 453
ADAPTADOR DE TUBERIA DE ACEITE DE MOTOR (GR) 64
AGUA DE LAS CAMISAS - CALENTADOR DEL (GR) 134
AGUA DE LAS CAMISAS - CALENTADOR DEL (GR) 133
AIRE - TUBERÍAS DE (GR) 95
AJUSTADOR DE CORREA (GR) 9
AJUSTADOR DEL ASIENTO (GR) 411
412
AJUSTADOR DEL CONTROL DE DIRECCIÓN Y TRANSMISIÓN (GR) 289
ALARMA (GR) 115
ALFOMBRILLA DEL PISO 431
ALFOMBRILLA DEL PISO (PARTE TRASERA) . . . 429
AMORTIGUADOR Y POLEA (GR) 31
ÁRBOL DE LEVAS (GR) 10
ASIENTO CON SUSPENSIÓN (GR) 504
ASIENTO CON SUSPENSIÓN (GR) 499
502
ASIENTO (GR) 490
492

B

BALANCÍN (GR) (ADMISION) 62
BALANCÍN (GR) (ESCAPE) 62
BARRA COMPENSADORA (GR) 267
BARRA DE TIRO (GR) 238
BARRA PIVOTE (GR) 277
BASTIDOR DE LA HOJA ORIENTABLE A POTENCIA (GR) 390
BASTIDOR TELESCÓPICO DEL RESORTE TENSOR (GR) 270
BATERÍA (GR) 121
BATERÍA (LIBRE DE MANTENIMIENTO)(12 VOLTIOS) (SERVICIO PESADO) 121
BATERÍA (12 VOLTIOS) 181
BLOQUE DESLIZANTE-JUEGO (ASIENTO DE SUSPENSION) 495
496
BLOQUE MOTOR (GR) 17
18
19
BOCINA (CONJ) (24 VOLTIOS)(TONO BAJO) . . . 180
BOMBA DE ACEITE DEL MOTOR (GR) 74
75
BOMBA DE AGUA (GR) 84
85
BOMBA DE CEBADO DE COMBUSTIBLE (GR) 103
BOMBA DE ENGRANAJES (GR) 213
214
BOMBA DE INYECCIÓN UNITARIA (GR) 109
110
BOMBA DE PISTONES (GR) 362
BOMBA DE TRANSFERENCIA DE COMBUSTIBLE (GR) 111
BOMBA HIDRÁULICA DEL INYECTOR UNITARIO (GR) 111
BOMBA HIDRÁULICA DEL INYECTOR UNITARIO Y MONTAJE 108
BRAZO DE EMPUJE (GR) 396

C

CABINA (CONFIG) 417
CABINA (GR) 418
422
CABLE (CONJ) (CONTROL DE TEMPERATURA DE CALENTADOR) 442
CABLES DE CALEFACCIÓN (GR) 186
CABLES DE LA PLATAFORMA (GR) 187
CABLES DEL CHASIS (GR) 180
CABLES DEL MOTOR (GR) 183
CABLES (GR) 178
CADENAS (GR) 286
287
288
CAJA DE LA SUSPENSIÓN DEL ASIENTO (GR) 444
CAJA DELANTERA - TORNILLERÍA DE LA (GR) 38
CAJA DELANTERA (GR) 42
CAJA (GR) (VÁLVULA DE CONTROL) 372
374
376
378
380
382
CAJA Y BASTIDOR (GR) 235
236
CALCOMANÍA (AVISO DE SEGURIDAD) 139
CALCOMANÍA DE ADVERTENCIA (ASIENTO AJUSTABLE) 502
504
CALCOMANÍA DE ADVERTENCIA (CILINDRO DE FRENO DE ESTACIONAMIENTO) 270
CALCOMANÍA DE ADVERTENCIA (CONTROL DE DESGARRADOR) 317

* NO HAY TRADUCCION DISPONIBLE EN EL MOMENTO DE LA IMPRESION

INDICE

Nombre	Página
CALCOMANÍA DE ADVERTENCIA (CONTROL DE HOJA TOPADORA)	315, 319
CALCOMANÍA DE ADVERTENCIA (NO LEVANTE)	463
CALCOMANÍA DE ADVERTENCIA (NO PISAR)	336
CALCOMANÍA DE ADVERTENCIA (RADIO)	449
CALCOMANÍA DE ADVERTENCIA (RADIO PRODUCT LINK)	128
CALCOMANÍA DE IDENTIFICACIÓN (ALTERNADOR)	148
CALCOMANÍA DE IDENTIFICACIÓN (CONECTOR DE SERVICIO)	148
CALCOMANÍA DE IDENTIFICACIÓN (LUZ DE ACCION)	139
CALCOMANÍA DE IDENTIFICACIÓN (LUZ DE ACCION)	138
CALCOMANÍA DE IDENTIFICACIÓN (NUMERO DE GRUPO Y SECUENCIA) (ABANICO DE CABINA)	415
CALCOMANÍA DE IDENTIFICACIÓN (NUMERO DE GRUPO Y SECUENCIA) (CONDENSADOR DE ACONDICIONADOR DE AIRE)	425
CALCOMANÍA DE IDENTIFICACIÓN (12 VOLTIOS)	431
CALCOMANÍA DE IDENTIFICACIÓN (12 VOLTIOS)	187
CALCOMANÍA DE RAYAS (D6N, CUBRETABLERO LADO DERECHO)	422
CALCOMANÍA DE RAYAS (D6N, CUBRETABLERO LADO IZQUIERDO)	422
CALCOMANÍA DE RAYAS (PROTECTOR DE TANQUE DE COMBUSTIBLE DE PARTE DERECHA, D6N)	247
CALCOMANÍA DE RAYAS (PROTECTOR DE TANQUE DE COMBUSTIBLE, D6N)	247
CALCOMANÍA DE RAYAS (PROTECTOR TRASERO PARTE DERECHA DE TANQUE DE COMBUSTIBLE DN6)	247
CALCOMANÍA (EMBRAGUE MONITOR Y FRENO)	296
CALCOMANÍA (EXTERIOR) (SONIDO)	59
CALCOMANÍA (FRENO DE ESTACIONAMIENTO)	295
CALCOMANÍA (*HYD. OIL SAMPLING VALVE PANEL)	340
CALCOMANÍA (INTERRUPTOR DE ENCENDIDO)	138, 139
CALCOMANÍA (LIMPIA/LAVAPARABRISAS)	510
CALCOMANÍA (LUZ DE ACCION) (*MALFUNCTION)	466, 470
CALCOMANÍA (PUNTO DE LUBRICACIÓN)	419
CALCOMANÍA (PUNTO DE LUBRICACIÓN) (PLATAFORMA)	474
CALCOMANÍA (SISTEMA DE SEGURIDAD DE LA MÁQUINA)	138, 139
CALCOMANÍA (TABLERO DE INSTRUMENTOS)	442
CALCOMANÍAS Y PLACAS DE IDENTIFICACIÓN (GR)	513
CALEFACCIÓN DE LA CABINA (GR)	438
CALENTADOR DE LA CABINA ROPS ABIERTA (GR)	440, 442
CÁNCAMOS DE LEVANTAMIENTO DEL MOTOR (GR)	44
CAPÓ (GR)	261
CAPO Y PROTECTOR (GR)	253, 255, 258
CARGA - ALTERNADOR DE (GR)	118, 120
CARGA - ALTERNADOR DE (GR)	116
CÁRTER - COLECTOR DEL (GR)	48
CHASIS (CONFIG)	1
CIGÜEÑAL (GR)	15
CILINDRO DE LEVANTAMIENTO - TUBERÍAS DEL (GR)	342, 344, 346
CILINDRO DE LEVANTAMIENTO DEL DESGARRADOR (GR)	327
CILINDRO DE LEVANTAMIENTO (GR)	323, 325
CILINDRO DE ORIENTACION (GR)	321
CINTURÓN DE SEGURIDAD (GR) (ASIENTO DE SUSPENSION)	492
CINTURÓN DE SEGURIDAD (GR) (*SUSPENSION SEAT LOW BACK)	497
CODO DE ADMISIÓN DE AIRE (GR)	93
COJINETE (BASTIDOR ESPECIAL C)	388
COJINETE (LEVA)	18
COLADOR DE COMBUSTIBLE (LLENADO DEL TANQUE)	112
COLADOR (TANQUE HIDRÁULICO)	365
COMBUSTIBLE - TANQUE DE (GR)	112
COMPARTIMIENTO (GR)	239
COMPRESOR DE REFRIGERANTE (GR)	424
COMPRESOR DE REFRIGERANTE (GR)	423
CONDENSADOR DE REFRIGERANTE (GR)	425

* NO HAY TRADUCCION DISPONIBLE EN EL MOMENTO DE LA IMPRESION

INDICE

Nombre	Página
CONEXIÓN DE ENGRASE (ANGULO, HOJA TOPADORA)	400
CONEXIÓN DE ENGRASE (BARRA COMPENSADORA)	267
CONEXIÓN DE ENGRASE (CABINA PRESURIZADA)	478
CONEXIÓN DE ENGRASE (ROSCA DE 1/8-27) (CAJA Y BASTIDOR)	235
CONEXIÓN DE ENGRASE (ROSCA DE 1/8-27) (CILINDROS, ÁNGULO E INCLINACIÓN)	336
CONEXIÓN DE ENGRASE (ROSCA DE 1/8-27) (DESGARRADOR)	406
CONEXIÓN DE ENGRASE (ROSCA DE 1/8-27) (HOJA TOPADORA, CILINDRO DE LEVANTAMIENTO)	325
CONEXIÓN DE ENGRASE (ROSCA DE 1/8-27) (*PITCH LINK)	392
CONEXIÓN DE ENGRASE (ROSCA DE 1/8-27) (PLATAFORMA DEL OPERADOR)	474
CONFIGURACIÓN DE ENFRIAMIENTO	77
CONFIGURACIÓN ELECTRÓNICA DE LA MÁQUINA	130
CONFIGURACIÓN GENERAL	1
CONJUNTO DE CABLERIA, RADIO (*SPEAKER)	480 481
CONJUNTO DE CABLES, ACONDICIONADOR DE AIRE (VENTILADORES DEL CONDENSADOR) (COMPRESOR)	425
CONJUNTO DE CABLES, VÁLVULA (COMPRESOR DE AIRE) (ASIENTO)	504
CONJUNTO DE LLAVE, ELECTRONICA (SEGURIDAD)	126 136
CONTROL DE COMUNICACION (GR) (ESLABON DE PRODUCTO)	128
CONTROL DE DIRECCIÓN Y TRANSMISIÓN (GR)	297 299
CONTROL DE DIRECCIÓN Y TRANSMISIÓN (GR)	296
CONTROL DE LA TRANSMISIÓN (GR)	190
CONTROL DE MAQUINA (GR)	126
CONTROL DE MAQUINA (GR) (SEGURIDAD) (INCLUYE SOFTWARE)	130
CONTROL DE MONITOR (GR)	127 128
CONTROL DEL FRENO DE ESTACIONAMIENTO	295
CONTROL ELECTRÓNICO DEL MOTOR (GR)	124 125
CONTROL ELECTRÓNICO DEL MOTOR Y MONTAJE	123
CONTROL HIDRÁULICO MANUAL (GR)	315 317 319
CONTROL HIDRÁULICO MANUAL (GR) (DESGARRADOR)	335
CONTROL NO PROGRAMADO (GR)	129
CONTROL NO PROGRAMADO (GR) (MAQUINA)	126
CONTROL NO PROGRAMADO (GR) (SEGURIDAD)	136
CONVERTIDOR DE PAR (GR)	219 221
CORREA (GR)	6 7 8
CORREA (SIN ACONDICIONADOR DE AIRE, MERCADO DE NORTEAMERICA)	6
CORREA (*WITH A/C EUROPEAN MARKET)	7
CORREA (*WITH A/C NORTH AMERICAN MARKET)	8
CRISTAL (*AMBER WARNING BEACON)	144
CRISTAL (LUZ DE TECHO)	140
CULATA DE CILINDROS (CONJ)	20 22
CULATA DE CILINDROS (GR)	24 25 27 29

D

DESGARRADOR (CONFIG)	398
DESGARRADOR (GR)	406
DETECTOR DE NIVEL DE COMBUSTIBLE (CONJ) (COMBUSTIBLE)	112
DETECTOR DE POSICIÓN (SISTEMA DE COMBUST.) (GR)	153 154 155
DIENTE DE DESGARRADOR (GR)	408 409 410
DISYUNTOR (CONJ) (80 AMP) (PRINCIPAL DE MAQUINA)	148
DISYUNTOR (GR)	173
DRENAJE DEL ACEITE DE MOTOR	32 33 34

* NO HAY TRADUCCION DISPONIBLE EN EL MOMENTO DE LA IMPRESION

INDICE

Nombre	Página

E

EJE DE MANDO (GR)	217
EJE DEL EMBRAGUE DE DIRECCIÓN (GR)	218
ELECTRONICA DE LA MAQUINA (GR)	130
ELECTRONICA DE LA MAQUINA (GR) (SEGURIDAD)	136
ELECTRONICA DE MONITOR (GR)	130
ELEMENTO DE FILTRO DE ACEITE (CONJ) (FLUJO INVERSO) (FLUIDO HIDRÁULICO RESISTENTE AL FUEGO)	365
ELEMENTO DE FILTRO DE ACEITE (CONJ) (HIDRAULICO) (DESECHABLE)	333
ELEMENTO DE FILTRO DE ACEITE (CONJ) (HIDRAULICO) (LIMPIAR/ALTA EFICIENCIA)	365
ELEMENTO DE FILTRO DE ACEITE (CONJ) (HIDRAULICO/FLUJO INVERSO) (DESECHABLE)	365
ELEMENTO DE FILTRO DE ACEITE (CONJ) (TREN DE FUERZA)	192
ELEMENTO DE FILTRO DE COMBUSTIBLE (PRIMARIO)	103
ELEMENTO DEL CALENTADOR DEL AGUA DE LAS CAMISAS (120 VOLTIOS/1000 VATIOS)	134
ELEMENTO DEL CALENTADOR DEL AGUA DE LAS CAMISAS (240 VOLTIOS/1000 VATIOS)	133
ELEMENTO DEL FILTRO DE AIRE (CONJ) (PRIMARIO)	91
ELEMENTO DEL FILTRO DE AIRE (CONJ) (SECUNDARIO)	91
EMPAQUETADURA (BOMBA DE CEBADO DE COMBUSTIBLE)	103
EMPAQUETADURA, REGULADOR DE AGUA (TEMPERATURA DEL REFRIGERANTE)	82
ENCHUFE (CONJ)	477
ENFRIADOR DE ACEITE DEL MOTOR (GR)	76
ENGRANAJE DE DIRECCIÓN (GR)	302 304
ENGRANAJE DE TRANSFERENCIA Y CORONA (GR)	195
ENGRANAJE DELANTERO (GR)	40
ESCAPE DE GASES (GR)	68
ESCOBILLA DE ALTERNADOR (CONJ)	116 118
ESLABÓN - PASO (GR)	392
ESLABÓN DE CADENA (CONJ)	274 275
ESPEJO (GR)	458
ESTRIBO DEL OPERADOR (GR)	498
ESTRUCTURA ROPS (GR)	483 484
ETIQUETA DE ADVERTENCIA (GR)	512
EXTENSIÓN DEL RESPALDO (GR) (TELA)	492
EXTRACTOR DE FUSIBLES	181

F

FILTRO-CARBON (CABINA PRESURIZADA)	478
FILTRO (CONJ) (AIRE DE LA CABINA)	478
FILTRO (CONJ) (CABINA PRESURIZADA)	478
FILTRO DE ACEITE DEL MOTOR (CONJ)	67
FILTRO DE ACEITE DEL MOTOR (GR)	67
FILTRO DE ACEITE (GR)	192 333
FILTRO DE AGUA (BOMBA DE AGUA)	85
FILTRO DE AIRE (GR)	91
FILTRO DE COMBUSTIBLE (CONJ) (SECUNDARIO(A))	106
FILTRO DE COMBUSTIBLE Y SEPARADOR DE AGUA (GR)	103
FILTRO MAGNÉTICO (ACEITE DEL TREN DE FUERZA)	199
FILTRO (VÁLVULA DE CONTROL)	372 374 376 378 380 382
FRENO DE DIRECCIÓN (GR)	292
FRENO Y EMBRAGUE DE DIRECCIÓN (GR)	293
FUSIBLE (10 A)	148
FUSIBLE (15 A)	148
FUSIBLE (20 A)	148

G

GRUPO DE AISLAMIENTO DE LA CABINA	450
GRUPO DE BOMBA Y TUBERIA HIDRULICA	359
GRUPO DE CALENTADOR, ARRANQUE ASISTIDO	135
GRUPO DE CANTONERA Y CUCHILLA	404 405
GRUPO DE INSTALACIÓN, TUBERIAS	447
GRUPO DE MONTAJE DE LA CABINA	460
GRUPO DE PANEL, AISLANTE	473
GRUPO DE PANEL, AISLANTE (SONIDO)	422
GRUPO DE POLEA LOCA	55
GRUPO DE PROTECTOR, FILTRO	100
GRUPO DE TUBERIAS, MUESTRARIO DE FLUIDO	340
GRUPO DE 3 VÁLVULAS HIDRÁULICAS	334 369
GRUPO DE 4 VÁLVULAS HIDRÁULICAS	370
GRUPO GIRATORIO DE BOMBA	364

* NO HAY TRADUCCION DISPONIBLE EN EL MOMENTO DE LA IMPRESION

INDICE

Nombre	Página
GUARDABARROS (GR)	242
GUIAJE DE TREN DE RODAJE (CONFIG)	272

H

*HEATER AS	135
HIDRÁULICA (CONFIG)	334
HOJA DE LIMPIAPARABRISAS (CONJ) (PARABRISAS)	510
HOJA DE LIMPIAPARABRISAS (CONJ) (PUERTA DE LA CABINA LADO DERECHO)	434
HOJA DE LIMPIAPARABRISAS (CONJ) (PUERTA DE LA CBINA, LADO IZQUIERDO)	436
HOJA DE LIMPIAPARABRISAS (CONJ) (TRASERO) (VENTANA)	510
HOJA ORIENTABLE (GR)	400
HOJA SEMIUNIVERSAL (GR)	402
HOJA TOPADORA (CONFIG)	388
HOJA TOPADORA SEMIUNIVERSAL	388 389

I

IMPULSOR DE VENTILADOR (GR)	35 36
INCLINACIÓN HORIZONTAL - CILINDRO DE (GR)	329 331
INDICADOR (CONJ) (LUZ DE ACCIÓN)	466 470
INDICADOR DE CAMBIO DE FILTRO DE ACEITE (GR)	94 474
INDICADOR DEL NIVEL DE ACEITE (VARILLA) (GR)	70
INSONORIZADOR (CONFIG)	59
INSONORIZADOR (GR)	60
INSTALACIÓN (CONFIG)	5
INSTALACIÓN DE RADIO (GR)	449
INSTALACION DE SEGURIDAD (GR)	136 138 139
INTERRUPTOR (CONJ) (BALIZA GIRATORIA DE ADVERTENCIA)	147
INTERRUPTOR (CONJ) (BASCULANTE) (CONSOLA LEVANTAR/BAJAR)	289
INTERRUPTOR (CONJ) (LÁMPARA)	470
INTERRUPTOR (CONJ) (LUCES)	466
INTERRUPTOR DE ARRANQUE CON LLAVE (CONJ)	467 471
INTERRUPTOR DE DERIVACIÓN	172
INTERRUPTOR DE LA BOCINA (CONJ)	171

Nombre	Página
	431
INTERRUPTOR DE LÍMITE (CONJ) (REVERSA)	297
INTERRUPTOR DE PRESIÓN (CONJ) (ALTO/BAJO) (COMPRESOR)	447
INTERRUPTOR DE RODILLO (CONJ) (FRENOS ACTIVO/INACTIVO)	308
INTERRUPTOR DE VOLQUETE (CONJ) (FRENO DE ESTACIONAMIENTO)	295
INTERRUPTOR DEL TERMOSTATO (CONJ) (A/A)	413
INTERRUPTOR MAGNÉTICO (CONJ) (*AIR INLET HEAT)	176
INTERRUPTOR MAGNÉTICO (GR)	174 176
INTERRUPTOR MAGNÉTICO (GR)	175
INTERRUPTOR PULSADOR (CONJ) (AVANZAR)	471
INTERRUPTOR PULSADOR (CONJ) (CAMBIAR A UNA MARCHA SUPERIOR)	310
INTERRUPTOR PULSADOR (CONJ) (CAMBIO AUTOMÁTICO DE VELOCIDADES)	470
INTERRUPTOR PULSADOR (CONJ) (CAMBIO AUTOMÁTICO EN AMBOS SENTIDOS)	466
INTERRUPTOR PULSADOR (CONJ) (CAMBIO DESCENDENTE)	310
INTERRUPTOR PULSADOR (CONJ) (DESCONECCIÓN AUTOMÁTICA)	471
INTERRUPTOR PULSADOR (CONJ) (DESPLAZAMIENTO DE CICLO EMS)	467
INTERRUPTOR PULSADOR (CONJ) (PALANCA DE AUTO DESCONEXIÓN)	467
INTERRUPTOR ROTATIVO (CONJ) (*FRONT WINDOW WIPER)	510
INTERRUPTOR ROTATIVO (CONJ) (*LEFT WINDOW WIPER)	510
INTERRUPTOR ROTATIVO (CONJ) (LIMPIAPARABRISA TRASERO)	510
INTERRUPTOR ROTATIVO (CONJ) (*RIGHT WINDOW WIPER)	510
INTERRUPTOR ROTATIVO (CONJ) (SOPLADOR CALENTADOR)	442
INTERRUPTOR ROTATIVO (CONJ) (VENTILADOR, ACONDICIONADOR DE AIRE, CALENTADOR Y DESCONGELACIÓN)	466
INYECTOR DE COMBUSTIBLE (GR)	109

J

JUEGO (AISLADOR) (MOTOR DE ARRANQUE)	169
JUEGO DE AMORTIGUADOR (ASIENTO DE SUSPENSION)	504

* NO HAY TRADUCCION DISPONIBLE EN EL MOMENTO DE LA IMPRESION

INDICE

Nombre	Página
JUEGO DE ATADURA (ASIENTO DE SUSPENSION)	504
JUEGO DE BOTÓN (AJUSTE DE ALTURA) (ASIENTO DE SUSPENSION)	444
JUEGO DE BOTÓN (RADIO)	481
JUEGO DE BOTÓN (RADIO)	480
JUEGO DE BUJES (MOTOR DE ARRANQUE)	169
JUEGO DE COJINETE PRINCIPAL (CIGÜEÑAL)	15
JUEGO DE COJINETES (ASIENTO DE SUSPENSION)	445
JUEGO DE ENCHUFE (12 CLAVIJAS)	178
	187
	466
	470
JUEGO DE ENCHUFE (2 CLAVIJAS)	139
	148
	165
	178
	180
	187
	190
	289
	415
	418
	425
	440
	466
	470
	484
JUEGO DE ENCHUFE (2 CLAVIJAS)	183
JUEGO DE ENCHUFE (2 CLAVIJAS)	180
JUEGO DE ENCHUFE (2 CLAVIJAS) (INTERRUPTOR DE RELE DE POTENCIA PRINCIPAL)	175
JUEGO DE ENCHUFE (3 CLAVIJAS)	157
	158
	178
	180
	183
	187
	418
	466
	470
JUEGO DE ENCHUFE (4 CLAVIJAS)	136
	139
	180
	187
	466
	470
JUEGO DE ENCHUFE (4 CLAVIJAS)	187
JUEGO DE ENCHUFE (6 CLAVIJAS)	180
	187
	418
	466
	470
	484
JUEGO DE ENCHUFE (8 CLAVIJAS)	128
	180
	187
	190
	418
	422
	466
	470
	476
JUEGO DE ESCOBILLAS (MOTOR DE ARRANQUE) (MOTOR)	169
JUEGO DE FILTRO DE TAPA (TANQUE DE COMBUSTIBLE)	112
JUEGO DE FUNDA DE LA SUSPENSIÓN DEL ASIENTO (*SUPENSION SEAT)	502
JUEGO DE INDICADOR (AJUSTE DE PESO) (ASIENTO DE SUSPENSION)	445
JUEGO DE PALANCA (MOTOR DE ARRANQUE)	169
JUEGO DE PARAGOLPES (AJUSTE DE PESO) (ASIENTO DE SUSPENSION)	445
JUEGO DE PERNO RETENEDOR (GRUPO DE CONTROL)	129
JUEGO DE PERNOS (CABLERIA DE CIRCUITO DEL DISYUNTOR)	148
JUEGO DE PERNOS (RETENEDOR, CABLERIA DE MOTOR)	183
JUEGO DE RECEPTÁCULO (12 CLAVIJAS)	295
JUEGO DE RECEPTÁCULO (12 CLAVIJAS)	136
	139
	148
	178
	180
	187
	418
JUEGO DE RECEPTÁCULO (2 CLAVIJAS)	112
	115
	136
	138
	139
	143
	144
	148
	164
	171
	172
	174
	176
	177

* NO HAY TRADUCCION DISPONIBLE EN EL MOMENTO DE LA IMPRESION

INDICE

Nombre	Página
	178
	180
	183
	187
	232
	289
	415
	418
	422
	423
	425
	466
	470
	484
	504
JUEGO DE RECEPTÁCULO (2 CLAVIJAS)	308
	447
JUEGO DE RECEPTÁCULO (2 CLAVIJAS)	161
	162
JUEGO DE RECEPTÁCULO (2 CLAVIJAS)	297
	440
JUEGO DE RECEPTÁCULO (3 CLAVIJAS)	139
	153
	154
	155
	156
	163
	178
	180
	183
	418
	425
	466
	467
	471
JUEGO DE RECEPTÁCULO (3 CLAVIJAS)	140
	466
	470
JUEGO DE RECEPTÁCULO (3 CLAVIJAS) (SENSOR DE NIVEL DE REFRIGERANTE)	152
JUEGO DE RECEPTÁCULO (4 CLAVIJAS)	136
	139
	187
	313
	436
	510
JUEGO DE RECEPTÁCULO (6 CLAVIJAS)	78
	128
	180
	187
	415
	418
	434
	440
	459
	467
	470
	471
	477
	484
	506
JUEGO DE RECEPTÁCULO (8 CLAVIJAS)	187
	190
	418
	466
	470
	480
	481
	484
JUEGO DE RECEPTÁCULO (8 CLAVIJAS)	480
JUEGO DE RESORTES (AJUSTE DE ALTURA) (ASIENTO DE SUSPENSION)	444
JUEGO DE RESORTES (ASIENTO DE SUSPENSION)	444
JUEGO DE RESTRICCIÓN DEL CINTURÓN (*SUPENSION SEAT)	502
JUEGO DE RODILLO (*SUPENSION SEAT)	502
JUEGO DE SEGUIDOR (ASIENTO DE SUSPENSION)	445
JUEGO DE SELLOS (CALENTADOR DE AGUA DE LAS CAMISAS)	133
	134
JUEGO DE SELLOS (VALVULA DE SOLENOIDE)	114
	232
	313
JUEGO DE SOLENOIDE (MOTOR DE ARRANQUE)	169
JUEGO DE TERMINAL DE ALTERNADOR (BATERÍA)	116
	118
JUEGO DE TERMINAL DE ALTERNADOR (LUZ DEL INDICADOR) (RELE)	116
	118
JUEGO DE TERMINAL DE ALTERNADOR (RELE) (LUZ INDICADORA)	116
JUEGO DE TERMINAL DE ALTERNADOR (RELE) (LUZ INDICADORA)	118
JUEGO DE VALVULA DE AIRE (ASIENTO DE SUSPENSION)	504
JUEGO DEL PROTECTOR DE ALTERNADOR	118
JUNTA UNIVERSAL (GR)	224

* NO HAY TRADUCCION DISPONIBLE EN EL MOMENTO DE LA IMPRESION

INDICE

Nombre	Página

L

LÁMPARA (CONJ) (12 VOLTIOS) (ROJA/VERDE LAMPARA DE DIODO) 138
LÁMPARA (CONJ) (12 VOLTIOS) (ROJA/VERDE LAMPARA DE DIODO) 139
LÁMPARA DE BALIZA DE ADVERTENCIA (GR) 144
LAMPARA DE DIODO (LED) (BALIZA GIRATORIA DE ADVERTENCIA) 147
LÁMPARA DEL TECHO (GR) 140
LÁMPARA (24 VOLTIOS) (BALIZA GIRATORIA DE ADVERTENCIA) 147
LÁMPARA (24 VOLTIOS) (CÚPULA) 140
LÁMPARA (24 VOLTIOS) (DE CUATRO MEDIDORES) 470
LÁMPARA (24 VOLTIOS) (INSTRUMENTO) 466
LÁMPARA (24 VOLTIOS) (LUCES DE INSTRUMENTOS) 470
LÁMPARA (24 VOLTIOS) (LUZ DE TRABAJO) . . . 466, 470
LÁMPARA (24 VOLTIOS) (*QUAD GUAGE) 466
LIMPIAPARABRISAS DE LA VENTANA (GR) 510
LLAVE (DESCONECTAR BATERIA) 173
LUCES DE ALÓGENO (24 VOLTIOS)(65 VATIOS) 143
LUCES DE ALÓGENO (24 VOLTIOS)(65 VATIOS) (REFLECTOR) 141
LUCES DE ALÓGENO (24 VOLTIOS)(65 VATIOS) (REFLECTOR) 142
LUCES DE REFLECTOR (GR) 145
LUZ DE BALIZA (GR) 147
LUZ DE TABLERO DE INSTRUMENTOS 466, 470

M

MANDO FINAL (GR) 193
MANGUERA (RADIADOR INFERIOR) 87
MANGUERA (RADIADOR SUPERIOR) 87
MANGUITO-SELLO DE ACEITE (CIGÜEÑAL) . . . 15
MAQUINA DE ALTA TEMP. AMBIENTE (CONFIG) 1
MAZO DE CABLES (ALARMA DE RETROCESO) 484
MAZO DE CABLES (CALEFACTOR) 440
MAZO DE CABLES (CARTER SIN INYECCIÓN) 183
MAZO DE CABLES (CONTROL, SEGURIDAD) 136, 139
MAZO DE CABLES DE SENSOR (CONJ) (CABLE CALIBRE 14) 165
MAZO DE CABLES DE SENSOR (CONJ) (CABLE CALIBRE 16-18) 165
MAZO DE CABLES (DISYUNTOR) 148
MAZO DE CABLES (FTC) 297
MAZO DE CABLES (LAVAPARABRISAS) 506
MAZO DE CABLES (LIMPIADOR) 418
MAZO DE CABLES (*MAIN)(CAB) 418
MAZO DE CABLES (MONITOR DE CONTROL) 128
MAZO DE CABLES (MOTOR) 180
MAZO DE CABLES (PLATAFORMA) 180, 187
MAZO DE CABLES (SENSOR DE VELOCIDAD DE TRANSMISION) 190
MAZO DE CABLES (SOLENOIDES DE CAMBIO DE TRANSMISION) 190
MAZO DE CABLES (TABLERO DE INSTRUMENTOS) 466, 470
MAZO DE CABLES (TABLERO DEL CIRCUITO DEL DISYUNTOR) 148
MAZO DE CABLES (TREN DE FUERZA) 180
MECANISMO DE VÁLVULAS (GR) 61, 62
MEDIDOR (NIVEL DE ACEITE) (TREN DE FUERZA) 199
MIRILLA (TANQUE HIDRÁULICO) 365
MODULO DE LA PANTALLA (GR) (LUZ Y ENGRANAJE) (INDICADOR DE ENGRANAJE DE TRANSMISION) 467, 470
MODULO ELECTRÓNICO DE CUATRO INDICADORES (GR) 459
MONTAJE DE CILINDRO (GR) 356
MONTAJE DE LA ESTRUCTURA ROPS (GR) . . . 463
MONTAJE DE LA PLATAFORMA (GR) 461
MONTAJE DE LA TRANSMISIÓN (GR) 204
MONTAJE DE RODILLOS SUPERIORES (GR) 276
MONTAJE DEL CONVERTIDOR DE PAR (GR) . . . 203
MONTAJE DEL DESGARRADOR (GR) 393
MONTAJE DEL MANDO DE VENTILADOR (GR) 47
MONTAJE DEL MOTOR (GR) 45, 46
MONTAJE DEL SILENCIADOR (GR) 98
MOTOR - NÚCLEO (CONFIG) 4
MOTOR COMPLETO (CONFIG) 2, 3
MOTOR (CONJ) (*WINDOW WIPER (RH) DOOR) 434
MOTOR DE ARRANQUE ELÉCTRICO (GR) 168, 169

* NO HAY TRADUCCION DISPONIBLE EN EL MOMENTO DE LA IMPRESION

INDICE

Nombre	Página
MOTOR ELÉCTRICO (GR) (27 VOLTIOS) (*HEATER OPEN ROPS)	440
MÚLTIPLE DE ESCAPE (GR)	97
MÚLTIPLE Y VÁLVULA (GR)	306 307
MUÑÓN DE LA HOJA TOPADORA (GR)	399

N

NÚCLEO DEL ENFRIADOR DE ACEITE (CONJ)	89

P

PANEL DE DISYUNTORES (GR)	148
PANTALLA (CONJ) (CONVERTIDOR DE PAR)	221
PANTALLA (CONJ) (TANQUE HIDRÁULICO)	365
PASADOR	395
PERILLA (AJUSTE DEL POSABRAZOS)	289
PERILLA DE BOCINA	171
PERILLA LUMBAR	464
PERILLA (TAPA DEL FILTRO)	478
PERSIANA PARA EL SOL (GR)	489
PISTÓN Y BIELA (GR)	49
PLACA DE ADVERTENCIA (CILINDRO PARA ALTA PRESION) (*TELESCOPING RECOIL)	270
PLACA DE ADVERTENCIA (NO OPERE)	461
PLACA DE ADVERTENCIA (RESORTE DE AMORTIGUACION)	270
PLACA DE INSTRUCCIONES (ACONDICIONADOR DE AIRE)	447
PLACA DEL NÚMERO DE SERIE (HOJA TOPADORA)	388 389
PLACA DEL NÚMERO DE SERIE (MOTOR)	513
PLACA DEL NÚMERO DE SERIE (TRANSMISION)	221
PLACA DEL TABLERO (TABLERO)	466 470
PLATAFORMA DE LA CABINA	474 476
POLEA DEL MANDO DE VENTILADOR (GR)	54
POLEA (GR)	52 53
PORTAESCOBILLAS (CONJ) (ALTERNADOR)	118
PORTAESCOBILLAS (CONJ) (ALTERNADOR)	116
POSENFRIADOR (GR)	90
PRESURIZADOR (GR)	478
PRIORIDAD - VÁLVULA DE (GR)	227
PROTECTOR CONTRA ARENA (GR)	243
PROTECTOR DEL FILTRO DEL TREN DE FUERZA (GR)	248
PROTECTOR DEL RADIADOR (GR)	249
PROTECTOR DEL TANQUE DE COMBUSTIBLE (GR)	247
PROTECTOR GUÍA DE CADENA (GR)	251 252
PROTECTOR INFERIOR (GR)	245 246
PROTECTORES DE RAMAS (GR)	263 265
PUERTA DE CABINA	434 436
PUERTA DE CABINA (IZQUIERDO)	418
PUERTA DE CABINA (LADO DERECHO)	418

R

RADIADOR (GR)	87 89
RADIO (GR)	480 481
RECEPTOR-SECADOR (GR) (REFRIGERANTE)	453
RECLINACION DE ASIENTO (GR)	482
REFLECTOR (GR)	141
REFLECTOR (GR)	142 143
REGULADOR (CONJ) (PRESIÓN DE COMBUSTIBLE)	106
REGULADOR DE TEMPERATURA DEL AGUA (94 GRADOS C) (REFRIGERANTE)	82
REGULADOR Y PEDAL DEL FRENO (GR)	308
REJILLA DE SUCCIÓN (ACEITE DEL TREN DE FUERZA)	199
REJILLA DEL RADIADOR (GR)	244
REJILLA PROTECTORA (GR)	487 488
RESORTE TENSOR Y AJUSTADOR DE LA CADENA (GR)	285
RESPIRADERO (CONJ) (ACEITE DEL TREN DE FUERZA)	199
RESPIRADERO (CONJ) (MOTOR)	65
RESPIRADERO (GR)	65
RETÉN (GR)	451
RETÉN (GR) (PUERTA)	434
RETENEDOR (GR) (PUERTA, CABINA)	436
RETROCESO - ALARMA DE (GR)	418
RETROCESO - ALARMA DE (GR)	177
RETROCESO - ALARMA DE (GR) (ROPS)	484
RETROCESO - ALARMA DE (GR) (107DB)	422
REVESTIMIENTO DE LA CABINA (GR)	452
RODILLO SUPERIOR DE CADENAS (GR)	278

* NO HAY TRADUCCION DISPONIBLE EN EL MOMENTO DE LA IMPRESION

INDICE

Nombre	Página
RODILLOS DE PESTAÑA DOBLE (GR)	280, 281, 282
RODILLOS DE PESTAÑA SIMPLE (GR)	283, 284
RUEDA GUÍA - POLEA DE	51
RUEDA GUÍA DE CADENA (GR)	273

S

Nombre	Página
SEGMENTO DE RUEDA MOTRIZ (GR)	216
SELLO ANULAR	227, 457
SELLO ANULAR (CAJA Y BASTIDOR, TAPÓN Y DRENAJE)	235
SELLO ANULAR (*ENGINE BREATHER)	65
SELLO ANULAR (FILTRO DEL TREN DE FUERZA)	192
SELLO ANULAR (*FINAL DRIVE MAGNETIC PUUG)	193
SELLO ANULAR (TAPÓN DE DRENAJE DE MANDO FINAL)	193
SELLO DE CIGÜEÑAL (GR)	56
SELLO DE LA CAJA DE VOLANTE (GR)	57
SELLO DEL INYECTOR DEL COMBUSTIBLE (GR)	58
SELLO DEL PORTADOR (GR)	11
SENSOR DE PRESIÓN (GR)	156, 157
SENSOR DE PRESIÓN (GR)	158
SENSOR DE PRESIÓN (GR) (ACEITE DEL MOTOR)	150
SENSOR DE PRESIÓN (GR) (COMBUSTIBLE)	150
SENSOR DE TEMPERATURA (GR)	163, 164, 165
SENSOR DE TEMPERATURA (GR) (AIRE DE ADMISION)	150
SENSOR DE TEMPERATURA (GR) (REFRIGERANTE)	150
SENSOR DE VELOCIDAD (GR)	159, 160, 161, 162
SENSOR DE VELOCIDAD (GR) (SINCRONIZACION) (MOTOR)	150
SENSOR DEL MOTOR (GR)	150
SENSOR DEL NIVEL DE LÍQUIDO	152
SERVICIO DE MONITOR (GR)	166
SERVICIO DE TREN DE FUERZA (GR)	167
SERVICIO DE TREN DE FUERZA (GR) (INCLUYE SOFTWARE)	131
SILENCIADOR (GR)	99
SOFTWARE DE MONITOR (GR)	166
SOFTWARE DEL TREN DE FUERZA (GR)	131
SOFTWARE DEL TREN DE FUERZA (GR)	167
SOFTWARE PARA LA MAQUINA (GR) (SEGURIDAD)	126
SOFTWARE PARA LA MAQUINA (GR) (SEGURIDAD) (SOLAMENTE SOFTWARE)	130
SOPLADOR - VENTILADOR (GR)	80
SOPORTE DE CONTROL (GR)	310
SOPORTE DEL RESPALDO (GR)	464, 465
SUJETADOR (GR)	301
SUSPENSIÓN - ASIENTO CON (GR)	493, 495
SUSPENSIÓN - ASIENTO CON (GR)	496, 497

T

Nombre	Página
TABLERO DE INSTRUMENTOS (GR)	466, 470
TANQUE DEL LAVAPARABRISAS (GR)	506
TANQUE (GR) (*RADIATOR-UPPER)	89
TANQUE Y FILTRO HIDRÁULICOS (GR)	365
TAPA CONTRA EL POLVO (CONJ) (CALENTADOR DE AGUA DE LAS CAMISAS)	133, 134
TAPA CONTRA EL POLVO (*TRANSMISSION COVER FITTING)	206
TAPA CONTRA EL POLVO (*TURBO OIL SAMPLING VALVE)	72
TAPA CONTRA EL POLVO (VÁLVULA DE CONTROL DE MUESTREO DE FLUIDO)	358
TAPA CONTRA EL POLVO (VÁLVULA DE MUESTREO DE ACEITE)	359
TAPA CONTRA EL POLVO (VÁLVULA DE MUESTREO DE ACEITE DEL TREN DE FUERZA)	199
TAPA CONTRA EL POLVO (VÁLVULA DE MUESTREO DE FILTRO DE ACEITE HIDRÁULICO)	333
TAPA CONTRA EL POLVO (VÁLVULAS DE MUESTREO DE ACEITE HIDRÁULICO)	340
TAPA CONTRA EL POLVO (VÁVULA DE MUESTREO DE REFRIGERANTE)	82
TAPA DE ADMISIÓN DE AIRE (GR)	92
TAPA DE LA CAJA DELANTERA (GR)	13
TAPA DE LA CONSOLA (GR)	427, 428, 429

* NO HAY TRADUCCION DISPONIBLE EN EL MOMENTO DE LA IMPRESION

INDICE

Nombre	Página
	431
	433
TAPA DE RADIADOR (CONJ) (ALIVIO DE PRESIÓN)	89
TAPA DE RUEDA GUÍA (GR)	269
TAPA DEL BLOQUE MOTOR (GR)	12
TAPA DEL MECANISMO DE VÁLVULAS (GR)	14
TAPA DEL TANQUE DE COMBUSTIBLE (CONJ) (RESPIRADERO CON TRABA)	112
TAPA DEL TUBO DE LLENADO (ACEITE DEL MOTOR)	66
TAPA DEL TUBO DE LLENADO DE ACEITE (CONJ) (TREN DE FUERZA)	199
TAPA DEL TUBO DE LLENADO (TANQUE HIDRÁULICO)	365
TAPA (TANQUE DE LIMPIPARABRISA)	506
TAPÓN (CAJA Y BASTIDOR, VÁLVULA DE DRENAJE)	235
TAPÓN (CONJ) (ACONDICIONADOR DE AIRE)	447
TAPÓN (CONJ) (POLVO) (PUERTA PARA EL LLENADO DE RADIADOR)	249
TAPÓN DE DRENAJE (CONVERTIDOR DE PAR)	203
TAPÓN DE DRENAJE (TANQUE HIDRÁULICO)	365
TAPÓN DEL MOTOR (GR)	50
TAPÓN (DRENAJE DE MANDO FINAL)	193
TAPÓN (DRENAJE DEL CONVERTIDOR DE PAR)	221
TAPÓN (DRENAJE MAGNETIZADO DE ACEITE)	33
TAPÓN MAGNÉTICO (MANDO FINAL)	193
TAPÓN (*TRANSMISSION DRIVE)	206
TECHO (CONFIG)	422
TOPE (GR)	300
TORNILLERIA DE CABLES DEL MOTOR (GR)	132
TORNILLERÍA DE LA TAPA DELANTERA	37
TRANSMISION (CONFIG)	223
TRANSMISIÓN PLANETARIA (GR)	205
TREN DE FUERZA (CONFIG)	212
TREN DE FUERZA-GRUPO ELECTRÓNICO	131
TREN DE RODAJE (CONFIG)	288
TREN DE RODAJE (GR)	288
TUBERÍAS DE ACEITE DEL MOTOR (GR)	71
TUBERÍAS DE ACEITE DEL TREN DE FUERZA (GR)	199
TUBERÍAS DE ACONDICIONADOR DE AIRE (GR)	453
TUBERÍAS DE COMBUSTIBLE (GR)	104
TUBERIAS DE INCLINACIÓN Y ORIENTACIÓN (GR)	336
TUBERIAS DE INCLINACIÓN Y ORIENTACIÓN (GR)	338
TUBERÍAS DE LA CALEFACCIÓN (GR)	455
	457
TUBERÍAS DEL AGUA (GR)	82
TUBERÍAS DEL CILINDRO DE INCLINACIÓN (GR)	352
	353
	354
TUBERÍAS DEL DESGARRADOR (GR)	348
	350
TUBERÍAS DEL FILTRO DE COMBUSTIBLE	106
TUBO DE ESCAPE (VAPORES)	68
TUBO DE LLENADO DE ACEITE (GR)	66
TUBO DESTELLADOR (*3 PRONG CONNECTION) (BALIZA GIRATORIA DE ADVERTENCIA)	144
TUBO DESTELLADOR (*8 PRONG CONNECTION) (BALIZA GIRATORIA DE ADVERTENCIA)	144
TURBOCOMPRESOR - TUBERÍAS DE ACEITE DEL (GR)	72
TURBOCOMPRESOR (GR)	101
	102

V

VÁLVULA - ESFERA (TUBERIA DE COMBUSTIBLE, CORTE)	104
VÁLVULA - MONTAJE DE LA (GR)	358
VÁLVULA COMPENSADORA DE FLUJO Y PRESIÓN (GR)	384
VÁLVULA DE AGUA (CONJ) (CALENTADOR DE CABINA)	438
VÁLVULA DE AGUA (CONJ) (CALENTADOR DE ESTRUCTURA ROPS ABIERTA)	442
VALVULA DE ALIVIO	199
VÁLVULA DE ALIVIO (GR)	229
	231
	386
	387
VÁLVULA DE ALIVIO (GR) (VÁLVULA DE CONTROL)	374
	378
	382
VÁLVULA DE CONTROL DE LA TRANSMISIÓN (GR)	233
VÁLVULA DE CONTROL (GR)	311
	372
	374
	376
	378
	380

* NO HAY TRADUCCION DISPONIBLE EN EL MOMENTO DE LA IMPRESION

INDICE

Nombre	Página
	382
VÁLVULA DE DRENAJE (CAJA Y BASTIDOR)	235
VÁLVULA DE DRENAJE (COMBUSTIBLE) (FILTRO)	106
VÁLVULA DE DRENAJE (FILTRO DE COMBUSTIBLE)	106
VÁLVULA DE LEVANTAMIENTO (GR)	43
VÁLVULA DE MODULACIÓN (GR)	225
	226
VALVULA DE MUESTRA DE FLUIDO (CONJ) (FILTRO DE ACEITE HIDRAULICO)	333
VALVULA DE MUESTRA DE FLUIDO (CONJ) (TUBERIAS DE ACEITE HIDRÁULICO)	359
VALVULA DE MUESTRA DE FLUIDO (CONJ) (VÁLVULA DE CONTROL)	358
VÁLVULA DE MUESTREO (GR) (ACEITE DEL TREN DE FUERZA)	200
VÁLVULA DE MUESTREO (GR) (REFRIGERANTE)	82
VÁLVULA DE MUESTREO (GR) (TURBOCARGADOR DE ACEITE)	72
VÁLVULA DE RETENCIÓN (GR) (VÁLVULA DE CONTROL)	372
	374
	378
	380
	382
VÁLVULA DE SOLENOIDE (GR)	114
	232
	313
	314
VÁLVULA HIDRÁULICA DE 4 VÍAS (CONFIG)	335
VÁLVULAS HIDRÁULICAS - GRUPO DE 2	368
VENTANA DE LA CABINA (GR)	507
	508
	509
VENTANA DE LA CABINA (GR) (LADO DERECHO)	507
VENTANA DE LA CABINA (GR) (LADO IZQUIERDO)	507
VENTILADOR (GR)	78
VENTILADOR REVERSIBLE (GR)	81
VENTILADOR SOPLADOR DE LA CABINA (GR)	415
VIDRIO (CONJ) (FARO)	143
VIDRIO (CONJ) (FARO) (ROPS)	141
	142
VOLANTE - CAJA DE (GR)	41
VOLANTE (GR)	39

* NO HAY TRADUCCION DISPONIBLE EN EL MOMENTO DE LA IMPRESION

ÍNDICE

Designação	Página

A

ACUMULADOR - REFRIGERANTE 453
ADAPTADOR-TUBO DE ÓLEO DO MOTOR 64
AJUSTADOR DE CORREIAS 9
AJUSTADOR DE ESTEIRAS E MOLA TENSORA 285
AJUSTADOR DO ASSENTO 411 412
AJUSTADOR DO CONTROLE DA DIREÇÃO E TRANSMISSÃO 289
ALARME 115
ALARME DE MARCHA À RÉ 177 418
ALARME DE MARCHA À RÉ (ROPS) 484
ALARME DE MARCHA À RÉ (107DB) 422
ALOJAMENTO (VÁLVULA DE CONTROLE) 372 374 376 378 380 382
ALTERNADOR DE CORRENTE 116 118 120
AMORTECEDOR DE VIBRAÇÕES E POLIA 31
ANEL DE PRESSAO (PORTA DA CABINE) 436
AQUECEDOR - AUXILIAR DE PARTIDA 135
AQUECEDOR DA ÁGUA DO MOTOR 133 134
AQUECEDOR DA CABINE 438
AQUECEDOR DA ESTRUTURA ROPS 440 442
ARMAÇÃO-C - ANGULAÇÃO HIDRÁULICA 390
ARMAÇÃO TELESCÓPICA DA MOLA TENSORA 270
ARRANJO GERAL 1
ARRANJO HIDRÁULICO - 4 VÁLVULAS 335
ARREFECEDOR - ÓLEO DO MOTOR 76
ARREFECIMENTO 77
ASSENTO 490 492
ASSENTO COM SUSPENSÃO 493 495 496 497

B

BALANCIM (ADMISSÃO) 62
BALANCIM (ESCAPE) 62
BARRA DE ARTICULAÇÃO 277
BARRA DE SUSPENSÃO 267
BARRA DE TRAÇÃO 238
BARRAS DE PROTEÇÃO DO CAPÔ 263 265
BATERIA 121
BATERIA (LIVRE DE MANUTENÇÃO)(12 VOLT) (REFORÇADO) 121
BATERIA (12 V) 181
BEIRA - PONTA CORTANTE 404 405
BLINDAGEM - PURIFICADOR DE AR 100
BLOCO DO MOTOR 17 18 19
BOCAL DE ENCHIMENTO DE ÓLEO DO MOTOR 66
BOMBA DA UNIDADE INJETORA 109 110
BOMBA DE ÁGUA 84 85
BOMBA DE ENGRENAGENS 213 214
BOMBA DE ESCORVA DO COMBUSTÍVEL 103
BOMBA DE ÓLEO - MOTOR 74 75
BOMBA DE PISTÃO 362
BOMBA DE TRANSFERÊNCIA DO COMBUSTÍVEL 111
BOMBA HIDRÁULICA - UNIDADE INJETORA . . . 111
BOMBA HIDRÁULICA E MONTAGEM - UNIDADE INJETORA 108
BOMBA HIDRÁULICA E TUBULAÇÕES 359
BOTÃO - CHICOTE 171
BOTÃO - LOMBAR 464
BOTÃO (AJUSTE DO BRAÇO DO ASSENTO) . . . 289
BRAÇO DE EMPUXO 396
BRONZINA TIPO LUVA (EIXO-COMANDO DE VÁLVULAS) 18
BUJÃO 477
BUJÃO DO DRENO (CONVERSOR DE TORQUE) 203
BUJÃO DO DRENO (TANQUE HIDRÁULICO) . . . 365
BUJÃO DO MOTOR 50
BUJÃO MAGNÉTICO (COMANDO FINAL) 193
BUZINA (24 VOLTS)(TONALIDADE BAIXA) 180

C

CABEÇOTE DO MOTOR 20 22 24 25 27 29
CABINE 417

* TRADUÇÃO NÃO DISPONÍVEL NO MOMENTO DA IMPRESSÃO

ÍNDICE

Designação	Página
	418
	422
CABO (CONTROLE DE TEMPERATURA DO AQUECEDOR)	442
CABOS/FIOS ELÉTRICOS	178
CABOS/FIOS ELÉTRICOS - AQUECEDOR	186
CABOS/FIOS ELÉTRICOS - CHASSI	180
CABOS/FIOS ELÉTRICOS - MOTOR	183
CABOS/FIOS ELÉTRICOS - PLATAFORMA	187
CAIXA - SUSPENSÃO DO ASSENTO	444
CAIXA DIANTEIRA	42
CAIXA DO VOLANTE DO MOTOR	41
CAIXA E CHASSI	235
	236
CAPÔ	261
CAPÔ E PROTETOR	253
	255
	258
CÁRTER DO ÓLEO DO MOTOR	48
CHASSI	1
CHAVE - ELETRÔNICO (SEGURANÇA)	126
CHAVE - ELETRÔNICO (SEGURANÇA)	136
CHAVE (DESCONECTAR A BATERIA)	173
CHAVE GERAL	173
CHAVE INTERRUPTORA DE PARTIDA	467
	471
CHICOTE - CONDICIONADOR DE AR DA CABINE (VENTILADORES DO CONDENSADOR) (COMPRESSOR)	425
CHICOTE - SENSOR (FIO 14 GA)	165
CHICOTE - SENSOR (FIO 16-18 GA)	165
CHICOTE - VÁLVULA (COMPRESSOR DE AR) (ASSENTO)	504
CHICOTE (ALARME DE MARCHA-À-RÉ)	484
CHICOTE (AQUECEDOR)	440
CHICOTE (CONTROLE)(SEGURANÇA)	136
	139
CHICOTE (DISJUNTOR)	148
CHICOTE (FTC)	297
CHICOTE (LAVADOR DE VIDROS)	506
CHICOTE (LIMPADOR)	418
CHICOTE (MONITOR DE CONTROLE)	128
CHICOTE (MOTOR)	180
CHICOTE (PAINEL DE DISJUNTORES)	148
CHICOTE (PAINEL DE INSTRUMENTOS)	466
	470
CHICOTE (PARTIDA SEM INJEÇÃO)	183
CHICOTE (PLATAFORMA)	180
	187
CHICOTE (PRINCIPAL)(CABINE)	418
CHICOTE (SENSORES DE VELOCIDADE DA TRANSMISSÃO)	190
CHICOTE (SOLENOIDES DE MUDANÇA DE TRANSMISSÃO)	190
CHICOTE (TREM DE FORÇA)	180
CILINDRO ANGULÁVEL	321
CILINDRO DE INCLINAÇÃO	329
	331
CILINDRO DE LEVANTAMENTO	323
	325
CILINDRO DE LEVANTAMENTO DO RIPER	327
CINTO DE SEGURANÇA (ASSENTO COM SUSPENSÃO PARTE INFERIOR DAS COSTAS)	497
CINTO DE SEGURANÇA (ASSENTO DA SUSPENSÃO)	492
COBERTURA	239
COLETOR DE ESCAPE	97
COLETOR E VÁLVULA	306
	307
COLMÉIA - ARREFECEDOR DE ÓLEO	89
COMANDO DO VENTILADOR	35
	36
COMANDO FINAL	193
COMANDO HIDRÁULICO	334
COMPRESSOR DE REFRIGERANTE	423
	424
CONDENSADOR DE REFRIGERANTE	425
CONDICIONADOR DE AR	413
	414
CONTROLE - NÃO PROGRAMADO	129
CONTROLE - NÃO PROGRAMADO (MÁQUINA)	126
CONTROLE - NÃO PROGRAMADO (SEGURANÇA)	136
CONTROLE-COMUNICAÇÃO (PRODUCT LINK)	128
CONTROLE DA MÁQUINA	126
CONTROLE DA MÁQUINA (SEGURANÇA) (INCLUI SOFTWARE)	130
CONTROLE DA TRANSMISSÃO	190
CONTROLE DE DIREÇÃO E TRANSMISSÃO	296
	297
	299
CONTROLE DO FREIO DE ESTACIONAMENTO	295
CONTROLE DO PAINEL MONITOR	127
	128
CONTROLE ELETRÔNICO - MOTOR	124
	125
CONTROLE ELETRÔNICO E MONTAGEM - MOTOR	123
CONTROLE HIDRÁULICO MANUAL	315
	317
	319

* TRADUÇÃO NÃO DISPONÍVEL NO MOMENTO DA IMPRESSÃO

ÍNDICE

Designação	Página
CONTROLE HIDRÁULICO MANUAL (RÍPER)	335
CONVERSOR DE TORQUE	219 221
COROA E ENGRENAGEM DE TRANFERÊNCIA	195
CORREIA	6 7 8
CORREIA (COM A/C MERCADO EUROPEU)	7
CORREIA (COM A/C MERCADO NORTE-AMERICANO)	8
CORREIA (SEM A/C MERCADO NORTE-AMERICANO)	6
COTOVELO DE ADMISSÃO DE AR	93

D

Designação	Página
DECALQUE	512
DECALQUE - ADVERTÊNCIA (CILINDRO DE FREIO DE ESTACIONAMENTO)	270
DECALQUE - ADVERTÊNCIA (NÃO LEVANTAR)	463
DECALQUE - ADVERTÊNCIA (RAIO DE ARTICULAÇÃO DO PRODUTO)	128
DECALQUE - AVISO (RÁDIO)	449
DECALQUE - IDENTIFICAÇÃO (ALTERNADOR)	148
DECALQUE - IDENTIFICAÇÃO (CONECTOR DE SERVIÇO)	148
DECALQUE - IDENTIFICAÇÃO (LUZ DE AÇÃO)	138 139
DECALQUE - IDENTIFICAÇÃO (NO. DE SEQÜÊNCIA E GRUPO) (CONDENSADOR DO AR CONDICIONADO)	425
DECALQUE - IDENTIFICAÇÃO (NO. DE SEQÜÊNCIA E GRUPO) (VENTILADOR DA CABINE)	415
DECALQUE - IDENTIFICAÇÃO (12 V)	187 431
DECALQUE - INSTRUÇÃO (AJUSTE DO ASSENTO)	502 504
DECALQUE - INSTRUÇÃO (CONTROLE DA LÂMINA)	315
DECALQUE - INSTRUÇÃO (CONTROLE DA LÂMINA)	319
DECALQUE - INSTRUÇÃO (CONTROLE DE RÍPER)	317
DECALQUE - INSTRUÇÃO (SEM DEGRAUS)	336
DECALQUE - PAINEL (PAINEL)	466 470
DECALQUE - TIRA (D6N)(CAPOTA DO LADO DIREITO)	422
DECALQUE - TIRA (D6N)(CAPOTA DO LADO ESQUERDO)	422
DECALQUE - TIRA (D6N)(PROTETOR DO TANQUE DE COMBUSTÍVEL)	247
DECALQUE - TIRA (D6N0)(PROTETOR DO TANQUE DE COMBUSTÍVEL TRASEIRO DIREITO)	247
DECALQUE - TIRA (D6N09PROTETOR DO TANQUE DE COMBUSTÍVEL TRASEIRO ESQUERDO)	247
DECALQUE (AVISO DE SEGURANÇA)	139
DECALQUE (EMBREAGEM E FREIO DO MONITOR)	296
DECALQUE (EXTERIOR) (RUÍDO)	59
DECALQUE (FREIO DE ESTACIONAMENTO)	295
DECALQUE (IGNIÇÃO)	138
DECALQUE (IGNIÇÃO)	139
DECALQUE (LAVADOR - LIMPADOR DE PÁRA-BRISA)	510
DECALQUE (LUZ DE AÇÃO) (DEFEITO)	466 470
DECALQUE (PAINEL DA VÁLVULA DE AMOSTRAGEM DO ÓLEO HIDRÁULICO)	340
DECALQUE (PAINEL DE INSTRUMENTOS)	442
DECALQUE (PONTO DE LUBRIFICAÇÃO)	419
DECALQUE (PONTO DE LUBRIFICAÇÃO) (PLATAFORMA)	474
DECALQUE (SISTEMA DE SEGURANÇA DA MÁQUINA)	138 139
DEGRAU	498
DENTE DO RÍPER	408 409 410
DISJUNTOR AUTOMÁTICO DE CIRCUITO (80 A) (PRINCIPAL DA MÁQUINA)	148
DRENO - ÓLEO DO MOTOR	32 33 34

E

Designação	Página
EIXO-COMANDO DE VÁLVULA	10
EIXO DE EMBREAGEM DA DIREÇÃO	218
EIXO DE TRANSMISSÃO	217
ELEMENTO - AQUECEDOR DE ÁGUA DA CAMISA (120 VOLTS / 1.000 WATTS)	134
ELEMENTO - AQUECEDOR DE ÁGUA DA CAMISA (240 VOLTS - 1.000 WATTS)	133
ELEMENTO DO FILTRO DE AR (PRIMÁRIO)	91

* TRADUÇÃO NÃO DISPONÍVEL NO MOMENTO DA IMPRESSÃO

ÍNDICE

Designação	Página
ELEMENTO DO FILTRO DE AR (SECUNDÁRIO)	91
ELEMENTO DO FILTRO DE COMBUSTÍVEL (PRIMÁRIO)	103
ELEMENTO FILTRANTE - ÓLEO (FLUXO HIDRÁULICO/REVERSO) (DESCARTÁVEL)	365
ELEMENTO FILTRANTE - ÓLEO (FLUXO INVERSO) (FLUIDO HIDRÁULICO RESISTENTE A INCÊNDIO)	365
ELEMENTO FILTRANTE - ÓLEO (HIDRÁULICO) (DESCARTÁVEL)	333
ELEMENTO FILTRANTE - ÓLEO (HIDRÁULICO) (LIMPAR/ALTA EFICIÊNCIA)	365
ELEMENTO FILTRANTE - ÓLEO (TREM DE FORÇA)	192
ELIMINAÇÃO DE VAPORES DO CÁRTER	68
ELO DA ESTEIRA	274 275
ELO DO PASSO	392
EMBREAGEM DE DIREÇÃO E FREIOS	293
EMISSOR - NÍVEL DO COMBUSTÍVEL (COMBUSTÍVEL)	112
EMISSOR - POSIÇÃO	153 154 155
ENGRENAGENS DE DISTRIBUIÇÃO	40
ENGRENAGENS PLANETÁRIAS - TRANSMISSÃO	205
ESCOVA DO ALTERNADOR	116 118
ESPELHO	458
ESTEIRA	286 287 288
ESTRUTURA ROPS	483 484
EXTENSÃO - ENCOSTO (TECIDO)	492

F

Designação	Página
FIAÇÃO-RÁDIO (ALTO-FALANTE)	480 481
FILTRO - ÁGUA (BOMBA D'ÁGUA)	85
FILTRO - CARVÃO (PRESSURIZADOR DA CABINE)	478
FILTRO - COMBUSTÍVEL (BOCAL DE ENCHIMENTO DO TANQUE)	112
FILTRO - COMBUSTÍVEL (SECUNDÁRIO)	106
FILTRO - MAGNÉTICO (ÓLEO DO TREM DE FORÇA)	199
FILTRO - ÓLEO	192 333
FILTRO - ÓLEO DO MOTOR	67
FILTRO (AR DA CABINE)	478
FILTRO DE COMBUSTÍVEL E SEPARADOR DE ÁGUA	103
FILTRO (PRESSURIZADOR DA CABINE)	478
FILTRO (VÁLVULA DE CONTROLE)	372 374 376 378 380 382
FIXADORES	301
FIXADORES - CABOS/FIOS ELÉTRICOS DO MOTOR	132
FIXADORES - CAIXA DIANTEIRA	38
FIXADORES - TAMPA DIANTEIRA	37
FREIO - DIREÇÃO	292
FUNDO - ENCOSTO	464 465
FUSÍVEL (10 A)	148
FUSÍVEL (15 A)	148
FUSÍVEL (20 A)	148

G

Designação	Página
GR. DE SERVICO - TREM DE FORÇA	167
GR. DE SERVICO - TREM DE FORÇA (INCLUI SOFTWARE)	131
GRADE DO RADIADOR	244
GRADE DO RADIADOR CONTRA EROSÃO	243
GRAXEIRA (BARRA EQUALIZADORA)	267
GRAXEIRA (LÂMINA INCLINÃVEL)	400
GRAXEIRA (PRESSURIZADOR DA CABINE)	478
GRAXEIRA (ROSCA 1/8-27 POL) (CAIXA E CHASSI)	235
GRAXEIRA (ROSCA 1/8-27 POL) (CILINDRO DE LEVANTAMENTO DA LÂMINA)	325
GRAXEIRA (ROSCA 1/8-27 POL) (CILINDROS DE ANGULAGEM E INCLINAÇÂO)	336
GRAXEIRA (ROSCA 1/8-27 POL) (ELO DO PASSO)	392
GRAXEIRA (ROSCA 1/8-27 POL) (PLATAFORMA DO OPERADOR)	474
GRAXEIRA (ROSCA 1/8-27 POL) (RIPER)	406
GRUPO DE VÁLVULAS DE CONTROLE - DUPLO	368
GRUPO DE VÁLVULAS DE CONTROLE - QUÁDRUPLO	370
GRUPO DE VÁLVULAS DE CONTROLE - TRIPLO	334 369
GRUPO ROTATIVO DA BOMBA	364
GUIA-MATERIAL RODANTE	272

* TRADUÇÃO NÃO DISPONÍVEL NO MOMENTO DA IMPRESSÃO

ÍNDICE

Designação	Página
H	
*HEATER AS	135
I	
INDICADOR - NÍVEL DO ÓLEO (VARETA)	70
INDICADOR - TROCA DO FILTRO DE AR	94, 474
INDICADOR (LÂMPADA DE AÇÃO)	466, 470
INJETOR DE COMBUSTÍVEL	109
INSTALAÇÃO - ARRANJO	5
INSTALAÇÃO - TUBULAÇÕES	447
INSTALAÇÃO DO RÁDIO	449
INSTALAÇÃO-SEGURANÇA	136, 138, 139
INTERRUPTOR - BALANCIM (FREIO DE ESTACIONAMENTO)	295
INTERRUPTOR - BOTÃO (DESLIGAMENTO AUTOMÁTICO)	471
INTERRUPTOR - BOTÃO (MUDANÇA AUTOMÁTICA BIDIRECIONAL)	466
INTERRUPTOR - BOTÃO (MUDANÇA AUTOMÁTICA DE MARCHAS)	470
INTERRUPTOR - BOTÃO (MUDANÇA AUTOMÁTICA PARA MARCHA MAIS BAIXA)	467
INTERRUPTOR - BOTÃO (MUDANÇA MARCHAS ACIMA)	310
INTERRUPTOR - BOTÃO (REDUÇÃO DE MARCHA)	310
INTERRUPTOR - BOTÃO (ROLAR CICLO DE EMS)	467
INTERRUPTOR - BOTÃO (SELEÇÃO)	471
INTERRUPTOR - BUZINA	171, 431
INTERRUPTOR - LIMITADOR (MARCHA À RÉ)	297
INTERRUPTOR - MAGNÉTICO	174, 175, 176
INTERRUPTOR - MAGNÉTICO (*AIR INLET HEAT)	176
INTERRUPTOR - PRESSÃO (ALTO/BAIXO) (COMPRESSOR)	447
INTERRUPTOR - ROLETAS (FREIOS - LIGAR - DESLIGAR)	308
INTERRUPTOR - ROTATIVO (LIMPADOR DE JANELA TRASEIRA)	510
INTERRUPTOR - ROTATIVO (LIMPADOR DO VIDRO DIANTEIRO)	510
INTERRUPTOR - ROTATIVO (LIMPADOR DO VIDRO DIREITO)	510
INTERRUPTOR - ROTATIVO (LIMPADOR DO VIDRO ESQUERDO)	510
INTERRUPTOR - ROTATIVO (SOPRADOR DO AQUECEDOR)	442
INTERRUPTOR - ROTATIVO (VENTILADOR - AR CONDICIONADO - AQUECEDOR - DESCONGELADOR)	466
INTERRUPTOR - TERMOSTATO (AR CONDICIONADO)	413
INTERRUPTOR (BALANCIM) (CONSOLE - LEVANTAR/ABAIXAR)	289
INTERRUPTOR DE DERIVAÇÃO	172
INTERRUPTOR (LÂMPADA)	470
INTERRUPTOR (LUZES)	466
INTERRUPTOR (PISCA-PISCA DE ADVERTÊNCIA)	147
ISOLADOR - TEMPO	450
J	
JANELA DA CABINE	507, 508, 509
JANELA DA CABINE (LADO DIREITO)	507
JANELA DA CABINE (LADO ESQUERDO)	507
JOGO - MANCAL PRINCIPAL (VIRABREQUIM)	15
JOGO DE ALAVANCA (MOTOR DE PARTIDA)	169
JOGO DE AMORTECEDOR DE CHOQUES (ASSENTO DA SUSPENSÃO)	504
JOGO DE BLOCO DESLIZADOR (ASSENTO DA SUSPENSÃO)	495, 496
JOGO DE BOTÃO DE SUSPENSÃO (AJUSTE DE ALTURA) (ASSENTO DA SUSPENSÃO)	444
JOGO DE BUCHA (MOTOR DE PARTIDA)	169
JOGO DE COIFA DE SUSPENSÃO (ASSENTO COM SUSPENSÃO)	502
JOGO DE CORDÃO (ASSENTO DA SUSPENSÃO)	504
JOGO DE ESCOVA (MOTOR DE PARTIDA) (MOTOR)	169
JOGO DE FILTRO DA TAMPA (TANQUE DE COMBUSTÍVEL)	112
JOGO DE FIXADOR DE CORREIA (ASSENTO COM SUSPENSÃO)	502
JOGO DE INDICADOR (AJUSTAGEM DO PESO) (ASSENTO DA SUSPENSÃO)	445
JOGO DE ISOLADOR (MOTOR DE PARTIDA)	169
JOGO DE MAÇANETA (RADIO)	480

* TRADUÇÃO NÃO DISPONÍVEL NO MOMENTO DA IMPRESSÃO

ÍNDICE

Designação	Página
	481
JOGO DE MANCAL (ASSENTO DA SUSPENSÃO)	445
JOGO DE MOLA (AJUSTE DE ALTURA) (ASSENTO DA SUSPENSÃO)	444
JOGO DE MOLA (ASSENTO DA SUSPENSÃO)	444
JOGO DE PÁRA-CHOQUE (AJUSTAGEM DO PESO) (ASSENTO DA SUSPENSÃO)	445
JOGO DE PARAFUSO DE RETENÇÃO (CONTROLE)	129
JOGO DE PARAFUSO (FIAÇÃO DO DISJUNTOR)	148
JOGO DE PARAFUSO (RETÉM DA FIAÇÃO DO MOTOR)	183
JOGO DE PROTETOR DO ALTERNADOR	118
JOGO DE RECEPTÁCULO (12 PINOS)	295
JOGO DE RECEPTÁCULO (12 PINOS)	136
	139
	178
	180
	187
JOGO DE RECEPTÁCULO (12 PINOS)	148
	418
JOGO DE RECEPTÁCULO (2 PINOS)	112
	115
	136
	138
	139
	143
	144
	161
	162
	164
	171
	172
	174
	176
	177
	178
	180
	183
	187
	232
	289
	297
	308
	415
	418
	422
	423
	425
	440
	466
	470
	484
	504
JOGO DE RECEPTÁCULO (2 PINOS)	484
JOGO DE RECEPTÁCULO (2 PINOS)	447
JOGO DE RECEPTÁCULO (2 PINOS)	148
	418
JOGO DE RECEPTÁCULO (3 PINOS)	139
	140
	153
	154
	155
	156
	163
	178
	180
	183
	425
	466
	467
	470
	471
JOGO DE RECEPTÁCULO (3 PINOS)	418
JOGO DE RECEPTÁCULO (3 PINOS) (SENSOR DE NÍVEL DE LÍQUIDO ARREFECEDOR)	152
JOGO DE RECEPTÁCULO (4 PINOS)	136
	139
	187
	313
	436
	510
JOGO DE RECEPTÁCULO (6 PINOS)	78
	128
	180
	187
	415
	418
	459
	467
	470
	471
	477
	484
	506
JOGO DE RECEPTÁCULO (6 PINOS)	434
JOGO DE RECEPTÁCULO (6 PINOS)	418
	440
JOGO DE RECEPTÁCULO (8 PINOS)	187
	190
	466
	470

* TRADUÇÃO NÃO DISPONÍVEL NO MOMENTO DA IMPRESSÃO

ÍNDICE

Designação	Página
	480
	481
	484
JOGO DE RECEPTÁCULO (8 PINOS)	418
	466
JOGO DE RETENTOR (AQUECEDOR DE ÁGUA DA CAMISA)	133
	134
JOGO DE RETENTOR (VÁLVULA SOLENÓIDE)	114
	232
	313
JOGO DE ROLETE DE SUSPENSÃO (ASSENTO COM SUSPENSÃO)	502
JOGO DE SEGUIDOR (ASSENTO DA SUSPENSÃO)	445
JOGO DE SOLENÓIDE (MOTOR DE PARTIDA)	169
JOGO DE TERMINAL ALTERNADOR (BATERIA)	118
JOGO DE TERMINAL ALTERNADOR (BATERIA)	116
JOGO DE TERMINAL ALTERNADOR (LUZ INDICADORA) (RELÉ)	116
	118
JOGO DE TERMINAL ALTERNADOR (RELÉ) (LUZ INDICADORA)	116
	118
JOGO DE TOMADA DE CONEXÃO (12 PINOS)	178
	466
	470
JOGO DE TOMADA DE CONEXÃO (12 PINOS)	187
JOGO DE TOMADA DE CONEXÃO (2 PINOS)	139
	148
	165
	178
	180
	183
	187
	190
	289
	415
	418
	425
	440
	466
	470
	484
JOGO DE TOMADA DE CONEXÃO (2 PINOS) (INTERRUPTOR DE RELÉ DE FORÇA PRINCIPAL)	175
JOGO DE TOMADA DE CONEXÃO (3 PINOS)	157
	158
	178
	180
	183
	187
	418
	466
	470
JOGO DE TOMADA DE CONEXÃO (4 PINOS)	136
	139
	180
	187
	466
	470
JOGO DE TOMADA DE CONEXÃO (4 PINOS)	187
JOGO DE TOMADA DE CONEXÃO (6 PINOS)	180
	187
	418
	466
	470
	484
JOGO DE TOMADA DE CONEXÃO (8 PINOS)	128
	180
	187
	190
	418
	422
	466
	470
	476
JOGO DE VÁLVULA DE AR (ASSENTO DA SUSPENSÃO)	504
JUNTA - REGULADOR DA ÁGUA (TEMPERATURA DO LÍQUIDO ARREFECEDOR)	82
JUNTA (BOMBA DE ESCORVA DE COMBUSTÍVEL)	103
JUNTA UNIVERSAL	224

L

LÂMINA	388
LÂMINA ANGULÁVEL	400
LÂMINA DO LIMPADOR DE PÁRA-BRISA (PÁRA-BRISA)	510
LÂMINA DO LIMPADOR DE PÁRA-BRISA (PARTE TRASEIRA) (JANELA)	510
LÂMINA DO LIMPADOR DE PÁRA-BRISA (PORTA DIREITA DA CABINE)	434
LÂMINA DO LIMPADOR DE PÁRA-BRISA (PORTA ESQUERDA DA CABINE)	436
LÂMINA SEMI-UNIVERSAL	388

* TRADUÇÃO NÃO DISPONÍVEL NO MOMENTO DA IMPRESSÃO

ÍNDICE

Designação	Página
	389
	402
LÂMPADA - DIODO (VISOR LED) (PISCA-PISCA DE ADVERTÊNCIA)	147
LÂMPADA - FAROL	141
	142
	143
LÂMPADA - HALOGÊNEO (24 VOLTS)(65 WATTS)	143
LÂMPADA - HALOGÊNEO (24 VOLTS)(65 WATTS) (FAROL)	142
LÂMPADA - HALOGÊNEO (24 VOLTS)(65 WATTS) (FAROL)	141
LÂMPADA - TETO	140
LÂMPADA (12 V) (LUZ DE AÇÃO LED VERMELHA/VERDE)	138
LÂMPADA (12 V) (LUZ DE AÇÃO LED VERMELHA/VERDE)	139
LÂMPADA (24 V) (GRUPO DE QUATRO MEDIDORES)	470
LÂMPADA (24 V) (INSTRUMENTO)	466
LÂMPADA (24 V) (LÂMPADA DE AÇÃO)	466
	470
LÂMPADA (24 V) (LUZES DOS INSTRUMENTOS)	470
LÂMPADA (24 V) (PISCA-PISCA DE ADVERTÊNCIA)	147
LÂMPADA (24 V) (QUATRO MEDIDORES)	466
LÂMPADA (24 V) (TETO)	140
LENTE (FAROL DIANTEIRO)	143
LENTE (FAROL DIANTEIRO) (ROPS)	141
	142
LENTE (LÂMPADA DO TETO)	140
LENTE (PISCA-ALERTA ÂMBAR)	144
LEVANTAMENTO DO MOTOR	44
LIMPADOR DO VIDRO	510
LUZ DO PAINEL DE INSTRUMENTOS	466
	470
LUZ GIRATÓRIA DE ALARME	144

M

MAÇANETA (TAMPA DO FILTRO)	478
MANCAL (ESPECIAL - ARMAÇÃO)	388
MANGUEIRA - DESCARTE (VAPORES)	68
MANGUEIRA (RADIADOR INFERIOR)	87
MANGUEIRA (RADIADOR SUPERIOR)	87
MÁQUINA-TEMP. AMBIENTE ALTA	1
MATERIAL RODANTE	288
MATERIAL RODANTE ; ESTRUTURA INFERIOR	288
MECANISMO DAS VÁLVULAS	61
	62
MECANISMO DE DIREÇÃO	302
	304
MEDIDOR (NÍVEL DO ÓLEO) (TREM DE FORÇA)	199
MÓDULO DO VISOR (LÂMAPADA E TRANSMISSÃO) (INDICADOR DE MARCHA DA TRANSMISSÃO)	467
	470
MÓDULO ELETRÔNICO DE QUATRO INDICADORES	459
MONITOR - SOFTWARE	166
MONITOR DE SERVIÇO	166
MONTAGEM - CABINE	460
MONTAGEM - CILINDRO	356
MONTAGEM - COMANDO DO VENTILADOR	47
MONTAGEM - CONVERSOR DE TORQUE	203
MONTAGEM - ESTRUTURA ROPS	463
MONTAGEM - MOTOR	45
	46
MONTAGEM - PLATAFORMA	461
MONTAGEM - RIPER	393
MONTAGEM - ROLETE SUPERIOR	276
MONTAGEM - SILENCIADOR	98
MONTAGEM - TRANSMISSÃO	204
MONTAGEM - VÁLVULA	358
MOTOR - NÚCLEO	4
MOTOR COMPLETO	2
	3
MOTOR ELÉTRICO DE PARTIDA	168
	169
MOTOR ELÉTRICO (27 VOLT) (ROPS ABERTA DO AQUECEDOR)	440
MOTOR (PORTA (LADO DIREITO) DO LIMPADOR DE VIDROS)	434
MUNHÃO DA LÂMINA	399

P

PAINEL - DISJUNTOR ELÉTRICO AUTOMÁTICO	148
PAINEL - ISOLAMENTO	473
PAINEL - ISOLAMENTO (RUÍDO)	422
PAINEL DE INSTRUMENTOS	466
	470
PÁRA-LAMA	242
PEDAL - GOVERNADOR E FREIO	308
PINO	395
PISTÃO E BIELA	49
PLACA - NÚMERO DE SÉRIE (LÂMINA)	388
	389
PLACA - NÚMERO DE SÉRIE (MOTOR)	513
PLACA - NÚMERO DE SÉRIE (TRANSMISSÃO)	221

* TRADUÇÃO NÃO DISPONÍVEL NO MOMENTO DA IMPRESSÃO

ÍNDICE

Designação	Página
PLACA DE ADVERTÊNCIA (CILINDRO DE ALTA PRESSÃO) (MOLA TENSORA RELESCÓPICA)	270
PLACA DE ADVERTÊNCIA (MOLA TENSORA)	270
PLACA DE ADVERTÊNCIA (NÃO OPERE)	461
PLACA DE INSTRUÇÃO (CONDICIONADOR DE AR)	447
PLACA E DECALQUE	513
PLATAFORMA DO OPERADOR	474 476
POLIA	52 53
POLIA - ACIONADOR DO VENTILADOR	54
POLIA DA RODA-GUIA	51 55
PORTA DA CABINE	434 436
PORTA DA CABINE (LADO DIREITO)	418
PORTA DA CABINE (LADO ESQUERDO)	418
PÓS-ARREFECEDOR	90
PRESSURIZADOR	478
PROTETOR - FILTRO DO TREM DE FORÇA	248
PROTETOR - GUIA DOS ROLETES DAS ESTEIRAS	251 252
PROTETOR - RADIADOR	249
PROTETOR - TANQUE DE COMBUSTÍVEL	247
PROTETOR INFERIOR	245 246
PURIFICADOR DE AR	91

R

RADIADOR	87 89
RÁDIO	480 481
RECEPTOR - SECADOR (REFRIGERANTE)	453
RECLINAÇÃO - ASSENTO	482
REDUÇÃO DE RUÍDO	60
REGULADOR DE TEMPERATURA DA ÁGUA (94 GRAUS C) (LÍQUIDO ARREFECEDOR)	82
REGULADOR (PRESSÃO DO COMBUSTÍVEL)	106
RESPIRO	65
RESPIRO (MOTOR)	65
RESPIRO (ÓLEO DO TREM DE FORÇA)	199
RETEM	300
RETENTOR - CAIXA DO VOLANTE	57
RETENTOR - INJETOR DE COMBUSTÍVEL	58
RETENTOR - ÓLEO DA CAMISA (VIRABREQUIM)	15
RETENTOR DE ANEL-O	227 457
RETENTOR DE ANEL-O (BUJÃO DE DRENAGEM DA CAIXA E DO CHASSI)	235
RETENTOR DE ANEL-O (BUJÃO DE DRENAGME DO COMANDO FINAL)	193
RETENTOR DE ANEL-O (FILTRO DO TREM DE FORÇA)	192
RETENTOR DE ANEL-O (PLUGUE MAGNÉTICO DO COMANDO FINAL)	193
RETENTOR DE ANEL-O (RESPIRO DO MOTOR)	65
RETENTOR DO VIRABREQUIM	56
REVESTIMENTO DA CABINE	452
RIPER	398 406
RODA-GUIA DAS ESTEIRAS	273
ROLETE DE ESTEIRA DE FLANGE DUPLO	280 281 282
ROLETE DE ESTEIRA DE FLANGE SIMPLES	283 284
ROLETE SUPERIOR DA ESTEIRA	278
RUÍDO - ARRANJO PARA SUPRESSÃO	59

S

SACADOR - FUSÍVEL	181
SEGMENTO DA RODA MOTRIZ	216
SENSOR - NÍVEL DE LÍQUIDO	152
SENSOR - PRESSÃO	156 157 158
SENSOR - PRESSÃO (COMBUSTÍVEL)	150
SENSOR - PRESSÃO (ÓLEO DO MOTOR)	150
SENSOR - TEMPERATURA	163 164 165
SENSOR - TEMPERATURA (AR DE ADMISSÃO)	150
SENSOR - TEMPERATURA (LÍQUIDO ARREFECEDOR)	150
SENSOR DE VELOCIDADE	159 160 161 162
SENSOR DE VELOCIDADE (REGULAGEM) (MOTOR)	150
SENSOR DO MOTOR	150
SILENCIADOR	99
SIST. DE ILUMINAÇÃO - PISCA-PISCA GIRATÓRIO DE ADVERTÊNCIA	147
SISTEMA DE ILUMINAÇÃO - FARÓIS	145

* TRADUÇÃO NÃO DISPONÍVEL NO MOMENTO DA IMPRESSÃO

ÍNDICE

Designação	Página
SISTEMA ELETRÔNICO - MÁQUINA	130
SISTEMA ELETRÔNICO - MÁQUINA (SEGURANÇA)	136
SISTEMA ELETRÔNICO - MONITOR	130
SISTEMA ELETRÔNICO - TREM DE FORÇA	131
SOFTWARE - MÁQUINA (SEGURANÇA)	126
SOFTWARE - MÁQUINA (SEGURANÇA) (APENAS SOFTWARE)	130
SOFTWARE - TREM DE FORÇA	131 167
SUPORTE - CONTROLE	310
SUPORTE - ESCOVA (ALTERNADOR)	116
SUPORTE - ESCOVA (ALTERNADOR)	118
SUPORTE DO RETENTOR	11
SUSPENSÃO - ASSENTO	499 502 504

T

Designação	Página
TAMPA - ADMISSÃO DE AR	92
TAMPA - BLOCO DO MOTOR	12
TAMPA - BOCAL DE ENCHIMENTO DE ÓLEO (TREM DE FORÇA)	199
TAMPA - BOCAL DE ENCHIMENTO (ÓLEO DO MOTOR)	66
TAMPA - BOCAL DE ENCHIMENTO (TANQUE HIDRÁULICO)	365
TAMPA - CAIXA DIANTEIRA	13
TAMPA - CONSOLO	427 428 429 431 433
TAMPA - MECANISMO DAS VÁLVULAS	14
TAMPA - RADIADOR (ALÍVIO DE PRESSÃO)	89
TAMPA (CONDICIONADOR DE AR)	447
TAMPA CONTRA POEIRA (AMOSTRA DE FLUIDO DA VÁLVULA DE CONTROLE)	358
TAMPA CONTRA POEIRA (AQUECEDOR DE ÁGUA DA CAMISA)	133 134
TAMPA CONTRA POEIRA (GRAXEIRA DA TAMPA DA TRANSMISSÃO)	206
TAMPA CONTRA POEIRA (VÁLVULA DE AMOSTRAGEM DE ÓLEO DO TURBO)	72
TAMPA CONTRA POEIRA (VÁLVULA DE AMOSTRAGEM DO FILTRO DE ÓLEO HIDRÁULICO)	333
TAMPA CONTRA POEIRA (VÁLVULA DE AMOSTRAGEM DO ÓLEO DO TREM DE FORÇA)	199
TAMPA CONTRA POEIRA (VÁLVULA DE AMOSTRAGEM DO ÓLEO HIDRÁULICO)	359
TAMPA CONTRA POEIRA (VÁLVULA DE COLETA DE AMOSTRAS DO LÍQUIDO ARREFECEDOR)	82
TAMPA CONTRA POEIRA (VÁLVULAS DE AMOSTRAGEM DO ÓLEO HIDRÁULICO)	340
TAMPA DA RODA-GUIA	269
TAMPA DO TANQUE DE COMBUSTÍVEL (TRAVA COM RESPIRO)	112
TAMPA (POEIRA) (PORTA DO BOCAL DE ENCHIMENTO DO RADIADOR)	249
TAMPA (TANQUE DO LAVADOR DE VIDROS)	506
TAMPÃO (COMANDO DA TRANSMISSÃO)	206
TAMPÃO (DRENO DO COMANDO FINAL)	193
TAMPÃO (DRENO DO CONVERSOR DE TORQUE)	221
TAMPÃO (MAGNÉTICO-DRENO DO ÓLEO)	33
TAMPÃO (VÁLVULA DE DRENAGEM DA CAIXA E DO CHASSI)	235
TANQUE - LAVADOR DE JANELA	506
TANQUE DE COMBUSTÍVEL	112
TANQUE HIDRÁULICO E FILTRO	365
TANQUE (RADIADOR - SUPERIOR)	89
TAPETE	431
TAPETE (TRASEIRO)	429
TELA DE PROTEÇÃO	487 488
TELA DE SUCÇÃO (ÓLEO DO TREM DE FORÇA)	199
TELA FILTRANTE (CONVERSOR DE TORQUE)	221
TELA FILTRANTE (TANQUE HIDRÁULICO)	365
TELA PÁRA-SOL	489
TOLDO	422
TRANSMISSÃO	223
TREM DE FORÇA	212
TRINCO	451
TRINCO (PORTA)	434
TUBO DE FAÍSCA (CONEXÃO DE 3 PINOS) (PISCA-PISCA DE ADVERTÊNCIA)	144
TUBO DE FAÍSCA (CONEXÃO DE 8 PINOS) (PISCA-PISCA DE ADVERTÊNCIA)	144
TUBOS - ÁGUA	82
TUBOS - ANGULAGEM E INCLINAÇÃO	336 338
TUBOS - AQUECEDOR	455 457
TUBOS - AR	95
TUBOS - AR CONDICIONADO	453
TUBOS - CILINDRO DE INCLINAÇÃO	352 353 354

* TRADUÇÃO NÃO DISPONÍVEL NO MOMENTO DA IMPRESSÃO

ÍNDICE

Designação	Página
TUBOS - CILINDRO DE LEVANTAMENTO	342, 344, 346
TUBOS - COMBUSTÍVEL	104
TUBOS - FILTRO DO COMBUSTÍVEL	106
TUBOS - ÓLEO DA TRANSMISSÃO	199
TUBOS - ÓLEO DO MOTOR	71
TUBOS - ÓLEO DO TURBOALIMENTADOR	72
TUBOS - RIPER	348, 350
TUBULAÇÕES - AMOSTRAGEM DE FLUIDOS	340
TUCHO DA VÁLVULA	43
TURBOALIMENTADOR	101, 102
V	
VÁLVULA - AMOSTRA DE FLUIDOS (FILTRO DE ÓLEO HIDRÁULICO)	333
VÁLVULA - AMOSTRA DE FLUIDOS (TUBULAÇÕES DE ÓLEO HIDRÁULICO)	359
VÁLVULA - AMOSTRA DE FLUIDOS (VÁLVULA DE CONTROLE)	358
VÁLVULA - ESFERA (CORTE DA TUBULAÇÃO DE COMBUSTÍVEL)	104
VÁLVULA DE ÁGUA (AQUECEDOR DA CABINE)	438
VÁLVULA DE ÁGUA (AQUECEDOR DE ROPS ABERTA)	442
VÁLVULA DE ALÍVIO	199, 229, 231, 386, 387
VÁLVULA DE ALÍVIO (VÁLVULA DE CONTROLE)	374, 378, 382
VÁLVULA DE CONTROLE	311, 372, 374, 376, 378, 380, 382
VÁLVULA DE CONTROLE - PRESSÃO E COMPENSAÇÃO DE FLUXO	384
VÁLVULA DE CONTROLE - TRANSMISSÃO	233
VÁLVULA DE DRENAGEM (CAIXA E CHASSI)	235
VÁLVULA DE DRENAGEM (COMBUSTÍVEL) (FILTRO)	106
VÁLVULA DE DRENAGEM (FILTRO DE COMBUSTÍVEL)	106
VÁLVULA DE MODULAÇÃO	225, 226
VÁLVULA DE PRIORIDADE	227
VÁLVULA DE RETENÇÃO (VÁLVULA DE CONTROLE)	372, 374, 378, 380, 382
VÁLVULA PARA TIRAR AMOSTRAS DE FLUIDOS (LÍQUIDO ARREFECEDOR)	82
VÁLVULA PARA TIRAR AMOSTRAS DE FLUIDOS (ÓLEO DO TREM DE FORÇA)	200
VÁLVULA PARA TIRAR AMOSTRAS DE FLUIDOS (ÓLEO DO TURBOALIMENTADOR)	72
VÁLVULA SOLENÓIDE	114, 232, 313, 314
VENTILADOR	78
VENTILADOR DA CABINE	415
VENTILADOR DE SOPRO	80
VENTILADOR REVERSÍVEL	81
VIGIA (TANQUE HIDRÁULICO)	365
VIRABREQUIM	15
VOLANTE DO MOTOR	39

* TRADUÇÃO NÃO DISPONÍVEL NO MOMENTO DA IMPRESSÃO

STICHWORTVERZEICHNIS

Bezeichnung	Seite

A

ABDECKGLAS (ARBEITSSCHEINWERFER) . . . 143
ABDECKGLAS (ARBEITSSCHEINWERFER) (ÜBERROLLSCHUTZ) 141, 142
ABDECKGLAS (FAHRERHAUS-INNENLEUCHTE) 140
ABDECKGLAS (GELBE WARNLEUCHTE) 144
ABLASSSTOPFEN (DREHMOMENTWANDLER) 203
ABLASSSTOPFEN (HYDRAULIKTANK) 365
ABLASSVENTIL (GEHÄUSE U. RAHMEN) 235
ABLASSVENTIL (KRAFTSTOFF) (FILTER) 106
ABLASSVENTIL (KRAFTSTOFFILTER) 106
ACHSWELLE 277
ANSAUGSIEB (KRAFTÜBERTRAGUNGSÖL) . . . 199
ANTRIEBSSTRANG-WARTUNGSSATZ 167
ANTRIEBSSTRANG-WARTUNGSSATZ (EINSCHL. SOFTWARE) 131
ANTRIEBSWELLE 217
ANZEIGE (ÖLSTAND) (KRAFTÜBERTRAGUNG) 199
ANZEIGE (WARNLEUCHTE) 466, 470
ANZEIGEMODUL (LAMPE U. GANG) (GETRIEBEGANGANZEIGE) 467, 470
ANZEIGEN-EINBAUSATZ (GEWICHTSEINSTELLUNG) (SCHWINGSITZ) 445
ANZUGSLEINE (SCHWINGSITZ) 504
ARBEITSLEUCHTEN 141, 142, 143, 145
AUFKLEBER 512
AUFKLEBER (AUSSEN) (LÄRM) 59
AUFKLEBER (D6N)(KRAFTSTOFFTANKSCHUTZ) 247
AUFKLEBER (D6N)(LINKE VERKLEIDUNG) 422
AUFKLEBER (D6N)(LINKER KRAFTSTOFFTANKSCHUTZ) 247
AUFKLEBER (D6N)(RECHTE VERKLEIDUNG) 422
AUFKLEBER (D6N)(RECHTER KRAFTSTOFFTANKSCHUTZ) 247
AUFKLEBER (FESTSTELLBREMSE) 295
AUFKLEBER (HYDRAULIKÖL - PROBEENTNAHMEVENTILTAFEL) 340
AUFKLEBER (INSTRUMENTENTAFEL) 442
AUFKLEBER (MASCHINENSICHERHEITSSYSTEM) 138, 139
AUFKLEBER (MONITOR (KUPPLUNG U. BREMSE) 296
AUFKLEBER (RADIO) 449
AUFKLEBER (SCHEIBENWASCHER/-WISCHER) 510
AUFKLEBER (SCHMIERPUNKT) 419
AUFKLEBER (SCHMIERPUNKT) (PLATTFORM) 474
AUFKLEBER (SICHERHEITSHINWEIS) 139
AUFKLEBER (STARTSCHLÜSSELSCHALTER) 138, 139
AUFKLEBER (WARNLEUCHTE) (*MALFUNCTION) 466, 470
AUFREISSER 406
AUFREISSER - TEILLISTE 398
AUFREISSERBEFESTIGUNG 393
AUFREISSERHUBZYLINDER 327
AUFREISSERLEITUNGEN 348, 350
AUFREISSERZAHN 408, 409, 410
AUSPUFFKRÜMMER 97

B

BATTERIE 121
BATTERIE (WARTUNGSFREI)(12 V) (SCHWEREINSATZ) 121
BATTERIE (12 V) 181
BEFESTIGUNGSSCHRAUBENSATZ (STEUERUNG) 129
BELEUCHTUNGSANLAGE (12 V) (KONTROLLLEUCHTE ROT/GRÜN) 138
BELEUCHTUNGSANLAGE (12 V) (KONTROLLLEUCHTE ROT/GRÜN) 139
BLITZRÖHRE (*3 PRONG CONNECTION) (RUNDUM-KENNLEUCHTE) 144
BLITZRÖHRE (8 ZACKEN VERBINDUNG) (RUNDUM-KENNLEUCHTE) 144
BOLZENSATZ 395
BUCHSEN-EINBAUSATZ (STARTERMOTOR) . . . 169
BÜRSTEN-EINBAUSATZ (STARTER) (MOTOR) 169
BÜRSTENHALTER (DREHSTROMGENERATOR) 118
BÜRSTENHALTER (DREHSTROMGENERATOR) 116

* ÜBERSETZUNG ZUM ZEITPUNKT DER DRUCKLEGUNG NICHT VORHANDEN

STICHWORTVERZEICHNIS

Bezeichnung	Seite
C	
C-RAHMEN (SCHWENKSCHILD)	390
D	
DÄMPFER UND RIEMENSCHEIBE	31
DICHTUNG (KRAFTSTOFFENTLÜFTUNGS-PUMPE)	103
DICHTUNGSBUCHSE (KURBELWELLE)	15
DICHTUNGSSATZ (SOLENOIDVENTIL)	114, 232, 313
DICHTUNGSSATZ (UMLAUFKÜHLWASSERHEIZUNG)	133, 134
DICHTUNGSTRÄGER	11
DIODENLEUCHTE (LED) (RUNDUM-KENNLEUCHTE)	147
DOPPELFLANSCHROLLEN	280, 281, 282
DREHKNOPFSCHALTER (FRONTSCHEIBENWISCHER)	510
DREHKNOPFSCHALTER (GEBLÄSE KLIMAANLAGE-HEIZUNG-ENTFROSTER)	466
DREHKNOPFSCHALTER (HEIZUNGSGEBLÄSE)	442
DREHKNOPFSCHALTER (HINTERER SCHEIBENWISCHER)	510
DREHKNOPFSCHALTER (LINKER SCHEIBENWISCHER)	510
DREHKNOPFSCHALTER (RECHTER SCHEIBENWISCHER)	510
DREHMOMENTWANDLER	219, 221
DREHMOMENTWANDLERAUFHÄNGUNG	203
DREHSTROMGENERATOR	116, 118, 120
DREHSTROMGENERATOR - ANSCHLUSSKLEMMENSATZ (BATTERIE)	116, 118
DREHSTROMGENERATOR - ANSCHLUSSKLEMMENSATZ (KONTROLLLEUCHTE) (RELAIS)	118
DREHSTROMGENERATOR - ANSCHLUSSKLEMMENSATZ (KONTROLLLEUCHTE) (RELAIS)	116
DREHSTROMGENERATOR - ANSCHLUSSKLEMMENSATZ (RELAIS) (KONTROLLEUCHTE)	116, 118
DREHSTROMGENERATOR-BÜRSTE	116, 118
DREHSTROMGENERATOR-SCHUTZVORRICHTUNGSSATZ	118
DREHZAHLSENSOR	159, 160, 161, 162
DREHZAHLSENSOR (TIMING) (MOTOR)	150
DRUCK- U. STROMAUSGLEICHSVENTIL	384
DRUCKBEGRENZUNGSVENTIL	199
DRUCKKNOPFSCHALTER (AUTOM. HERUNTERSCHALTEN)	467
DRUCKKNOPFSCHALTER (AUTOM. SCHALTUNG - BIDIREKTIONAL)	466
DRUCKKNOPFSCHALTER (AUTOMATIKSCHALTUNG)	470
DRUCKKNOPFSCHALTER (EMS SCROLLEN)	467
DRUCKKNOPFSCHALTER (HERUNTERSCHALTEN)	310
DRUCKKNOPFSCHALTER (HOCHSCHALTEN)	310
DRUCKKNOPFSCHALTER (KICKDOWN-AUTOMATIK)	471
DRUCKKNOPFSCHALTER (ROLLEN)	471
DRUCKLÜFTER	80
DRUCKLUFTLEITUNGEN	95
DRUCKLUFTVENTILSATZ (SCHWINGSITZ)	504
DRUCKSCHALTER (HOCH/NIEDRIG) (KOMPRESSOR)	447
DRUCKSENSOR	156, 157, 158
DRUCKSENSOR (KRAFTSTOFF)	150
DRUCKSENSOR (MOTORÖL)	150
E	
EINBAUSATZ	5
EINFÜLLSTUTZENKAPPE (HYDRAULIK-TANK)	365
EINFÜLLSTUTZENKAPPE (MOTORÖL)	66
EINSPRITZDÜSENDICHTUNG	58
EINSPRITZDÜSENPUMPE	109, 110
EINZELFLANSCHROLLEN	283, 284
ELEKTRONIK - MASCHINE	130
ELEKTRONIK - MASCHINE (SICHERHEIT)	136
ELEKTRONIK - MONITOR	130
ELEKTRONISCHER SCHLÜSSEL (SICHERHEIT)	126, 136

* ÜBERSETZUNG ZUM ZEITPUNKT DER DRUCKLEGUNG NICHT VORHANDEN

STICHWORTVERZEICHNIS

Bezeichnung	Seite
ENDSCHALTER (RÜCKWÄRTS)	297
ENTDUNSTER	68
ENTDUNSTERLEITUNG (ENTDUNSTER)	68
ENTLÜFTER	65
ENTLÜFTER (KRAFTÜBERTRAGUNGSÖL)	199
ENTLÜFTER (MOTOR)	65

F

FAHRERHAUS	417
	418
	422
FAHRERHAUS-DRUCKLÜFTER	415
FAHRERHAUSANBAUSATZ	460
FAHRERHAUSAUSKLEIDUNG	452
FAHRERHAUSBELEUCHTUNG	140
FAHRERHAUSBELÜFTUNG	478
FAHRERHAUSFENSTER	507
	508
	509
FAHRERHAUSFENSTER (LINKS)	507
FAHRERHAUSFENSTER (RECHTE SEITE)	507
FAHRERHAUSHEIZUNG	438
FAHRERHAUSTÜR	434
	436
FAHRERHAUSTÜR (LINKS)	418
FAHRERHAUSTÜR (RECHTS)	418
FAHRERPLATTFORM	474
	476
FAHRERPLATTFORMVERDRAHTUNG	187
FAHRERSITZ	490
	492
FAHRERSITZFEDERUNG	499
	502
	504
FAHRERSITZFEDERUNGSGEHÄUSE	444
FAHRERSITZVERSTELLER	411
	412
FAHRGESTELLVERDRAHTUNG	180
FAHRWERK	1
FEDER-EINBAUSATZ (HÖHENEINSTELLUNG) (SCHWINGSITZ)	444
FEDER-EINBAUSATZ (SCHWINGSITZ)	444
FEDERUNGS-EINBAUSATZ (EINSTELLKNOPF) (HÖHENEINSTELLUNG) (SCHWINGSITZ)	444
FEDERUNGS-EINBAUSATZ (MANSCHETTE) (SCHWINGSITZ)	502
FEDERUNGS-EINBAUSATZ (ROLLE) (SCHWINGSITZ)	502
FESTSTELLBREMSGESTÄNGE	295
FILTER (STEUERVENTIL)	372
	374
	376
	378
	380
	382
FILTERSATZ (FAHRERHAUS - DRUCKBEAUFSCHLAGUNG)	478
FILTERSATZ (FAHRERHAUSLUFT)	478
FLÜSSIGKEITSSTANDSENSOR	152
FUSSMATTE	431
FUSSMATTE (HINTEN)	429

G

GAS- U. BREMSPEDAL	308
GEHÄUSE (STEUERVENTIL)	372
	374
	376
	378
	380
	382
GETRIEBE	223
GETRIEBEAUFLAGER	204
GETRIEBESTEUERUNG	190
GETRIEBESTEUERVENTIL	233
GLEITLAGER (NOCKENWELLE)	18
GLEITSCHIENENBLOCK-EINBAUSATZ (SCHWINGSITZ)	495
	496
GRUNDAUSFÜHRUNG	1

H

HALOGENSCHINWERFER (24 V)(65 W)	143
HALOGENSCHINWERFER (24 V)(65 W) (ARBEITSSCHEINWERFER)	141
HALOGENSCHINWERFER (24 V)(65 W) (ARBEITSSCHEINWERFER)	142
HALTEBUEGEL (FAHRERHAUSTÜR)	436
HALTETEILE	301
HAUPTLAGERSATZ (KURBELWELLE)	15
HEBEL-EINBAUSATZ (STARTERMOTOR)	169
HEIZUNG	135
HEIZUNG - OFFENES FAHRERHAUS MIT ÜBERROLLSCHUTZ	440
	442
HEIZUNGSLEITUNGEN	455
	457
HEIZUNGSVERDRAHTUNG	186
HUBVENTIL	43
HUBZYLINDER	323
	325
HUBZYLINDERLEITUNGEN	342
	344
	346

* ÜBERSETZUNG ZUM ZEITPUNKT DER DRUCKLEGUNG NICHT VORHANDEN

STICHWORTVERZEICHNIS

Bezeichnung	Seite
HYDRAULIKANORDNUNG (4-VENTIL-HYDRAULIK)	335
HYDRAULIKHANDSTEUERUNG	315, 317, 319
HYDRAULIKHANDSTEUERUNG (AUFREISSER)	335
HYDRAULIKPUMPE U. LEITUNGEN	359
HYDRAULIKSYSTEM	334
HYDRAULIKTANK UND SCHMIERFILTER	365

I

Bezeichnung	Seite
IDENTIFIZIERUNGS-AUFKLEBER (DREHSTROMGENERATOR)	148
IDENTIFIZIERUNGS-AUFKLEBER (GRUPPEN- U. SEQUENZNR.) (KLIMAANLAGENKONDENSATOR)	425
IDENTIFIZIERUNGS-AUFKLEBER (GRUPPEN- U. SEQUENZNR.) (VENTILATOR)	415
IDENTIFIZIERUNGS-AUFKLEBER (SERVICEVERBINDER)	148
IDENTIFIZIERUNGS-AUFKLEBER (WARNLEUCHTE)	138, 139
IDENTIFIZIERUNGS-AUFKLEBER (12 V)	187
IDENTIFIZIERUNGS-AUFKLEBER (12 V)	431
INSTRUKTIONS-AUFKLEBER (AUFREISSER-STEUERUNG)	317
INSTRUKTIONS-AUFKLEBER (FÜR SITZVERSTELLUNG)	502, 504
INSTRUKTIONS-AUFKLEBER (NICHT BETRETEN)	336
INSTRUKTIONS-AUFKLEBER (PLANIER-SCHILDSTEUERUNG)	315
INSTRUKTIONS-AUFKLEBER (SCHILDSTEUERUNG)	319
INSTRUKTONSSCHILD (KLIMAANLAGE)	447
INSTRUMENTENBRETT-AUFKLEBER (INSTRUMENTENBRETT)	466, 470
INSTRUMENTENTAFEL	466, 470
INSTRUMENTENTAFELBELEUCHTUNG	466, 470
ISOLATIONSTAFEL	473
ISOLATIONSTAFEL (LÄRM)	422
ISOLATOR-EINBAUSATZ (STARTERMOTOR)	169

K

Bezeichnung	Seite
KABELSATZ (TEMPERATURREGELUNG)	442
KABELSTRANG (DURCHDREHEN OHNE EINSPRITZUNG)	183
KABELSTRANG (FÜR UNTERBRECHER)	148
KABELSTRANG (GETRIEBEDREHZAHLSENSOREN)	190
KABELSTRANG (GETRIEBESCHALTSOLENOIDE)	190
KABELSTRANG (HAUPT)(FAHRERHAUS)	418
KABELSTRANG (HEIZUNG)	440
KABELSTRANG (INSTRUMENTENTAFEL)	466, 470
KABELSTRANG (KRAFTÜBERTRAGUNG)	180
KABELSTRANG (MOTOR)	180
KABELSTRANG (PLATTFORM)	180, 187
KABELSTRANG (RÜCKFAHRALARM)	484
KABELSTRANG (SCHEIBENWASCHER)	506
KABELSTRANG (SCHEIBENWISCHER)	418
KABELSTRANG (SCHUTZSCHALTERTAFEL)	148
KABELSTRANG (STEUERUNG) (SICHERHEIT)	136
KABELSTRANG (STEUERUNG) (SICHERHEIT)	139
KABELSTRANG (TIPPTASTENSTEUERUNG)	297
KABELSTRANG (ÜBERWACHUNGSMONITOR)	128
KÄLTEMITTEL-DRUCKSPEICHER	453
KÄLTEMITTELKOMPRESSOR	423, 424
KÄLTEMITTELKONDENSATOR	425
KÄLTEMITTELTROCKNER (KÜHLMITTEL)	453
KAPPE (KLIMAANLAGE)	447
KAPPE (SCHEIBENWASCHMITTELBEHÄLTER)	506
KAPPE (STAUB) (KÜHLERFÜLLKLAPPE)	249
KAPPENFILTERSATZ (KRAFTSTOFFTANK)	112
KEILRIEMEN (MIT KLIMAANLAGE - EUROPÄISCHER MARKT)	7
KEILRIEMEN (MIT KLIMAANLAGE - NORDAMERIKANISCHER MARKT)	8
KEILRIEMEN (OHNE KLIMAANALAGE - NORDAMERIKANISCHER MARKT)	6
KETTENFÜHRUNGSSCHUTZ	251, 252
KETTENGLIEDER	274, 275
KETTENRADSEGMENT	216
KETTENSPANNER UND -FEDERRÜCKLAUF	285
KIPPSCHALTER (FESTSTELLBREMSE)	295
KIPPZYLINDER	329, 331
KLIMAANLAGE	413, 414

* ÜBERSETZUNG ZUM ZEITPUNKT DER DRUCKLEGUNG NICHT VORHANDEN

STICHWORTVERZEICHNIS

Bezeichnung	Seite
KLIMAANLAGE - KABELSTRANG (KONDESATORGEBLÄSE) (KOMPRESSOR)	425
KLIMAANLAGENLEITUNGEN	453
KNOPF (ARMLEHNENEINSTELLUNG)	289
KNOPF (FILTERDECKEL)	478
KOHLEFILTER (FAHRERHAUS - DRUCKBEAUFSCHLAGUNG)	478
KOLBENPUMPE	362
KOLBENPUMPENUMLAUFSATZ	364
KRAFTSTOFF-ENTLÜFTUNGSPUMPE	103
KRAFTSTOFFEINSPRITZDÜSE	109
KRAFTSTOFFILTER (AUSFALLSCHUTZ)	106
KRAFTSTOFFILTERELEMENT (HAUPTELEMENT)	103
KRAFTSTOFFILTERLEITUNGEN	106
KRAFTSTOFFLEITUNGEN	104
KRAFTSTOFFÖRDERPUMPE	111
KRAFTSTOFFSIEB (TANKFÜLLER)	112
KRAFTSTOFFSTANDGEBER (KRAFTSTOFF)	112
KRAFTSTOFFTANK	112
KRAFTSTOFFTANK (OBERER KÜHLER)	89
KRAFTSTOFFTANKKAPPE (ENTLÜFTUNGSSPERRE)	112
KRAFTSTOFFTANKVERKLEIDUNG	247
KRAFTÜBERTRAGUNG	212
KRAFTÜBERTRAGUNGSELEKTRONIK	131
KRAFTÜBERTRAGUNGSFILTERSCHUTZ	248
KREUZGELENK	224
KRÜMMER UND VENTIL	306 307
KUGELVENTIL (KRAFTSTOGGABSPERRUNG)	104
KÜHLER	87 89
KÜHLERGRILL	244
KÜHLERKAPPE (DRUCKBEGRENZUNG)	89
KÜHLERSCHUTZ	249
KÜHLSYSTEM	77
KÜHLWASSERLEITUNGEN	82
KÜHLWASSERPUMPE	84 85
KÜHLWASSERTHERMOSTATDICHTUNG (KÜHLMITTELTEMPERATUR)	82
KURBELWELLE	15
KURBELWELLENDICHTUNG	56

L

Bezeichnung	Seite
LADELUFTKÜHLER	90
LAGER (SPEZIAL C-RAHMEN)	388
LAGERSATZ (SCHWINGSITZ)	445
LAUFROLLENRAHMEN (TELESKOPRÜCKLAUF)	270
LAUFROLLENSCHALTER (BREMSE EIN/AUS)	308
LAUFWERKFÜHRUNG	272
LAUFWERKSKETTE	286 287 288
LAUFWERKSRAHMEN	288
LEITRAD	273
LEITRADAUFSATZ	269
LEITUNGSINSTALLATIONSSATZ	447
LENK- UND GETRIEBEEINSTELLER	289
LENK- UND GETRIEBESTEUERUNG	296 297 299
LENKBREMSE	292
LENKKUPPLUNG UND BREMSE	293
LENKKUPPLUNGSWELLE	218
LENKTRIEB	302 304
LEUCHTE (24 V) (ANZEIGE)	466
LEUCHTE (24 V) (FAHRERHAUSDACH)	140
LEUCHTE (24 V) (INSTRUMENTENBELEUCHTUNG)	470
LEUCHTE (24 V) (INSTRUMENTENGRUPPE)	466
LEUCHTE (24 V) (RUNDUM-KENNLEUCHTE)	147
LEUCHTE (24 V) (VIERFACHANZEIGE)	470
LEUCHTE (24 V) (WARNLEUCHTE)	466 470
LUFTEINLASSBOGEN	93
LUFTEINLASSDECKEL	92
LÜFTER	78
LÜFTERANTRIEB	35 36
LÜFTERANTRIEBSAUFHÄNGUNG	47
LÜFTERRIEMENSCHEIBE	54
LUFTFILTER (HAUPTFILTER)	91
LUFTFILTER (SICHERHEITSFILTER)	91
LUFTFILTERWARTUNGSANZEIGE	94 474
LUFTREINIGER	91
LUFTREINIGERSCHUTZ	100

M

Bezeichnung	Seite
MAGNETFILTER (KRAFTÜBERTRAGUNGSÖL)	199
MAGNETSCHALTER	174 175 176
MAGNETSCHALTER (*AIR INLET HEAT)	176
MAGNETSTOPFEN (SEITENANTRIEB)	193

* ÜBERSETZUNG ZUM ZEITPUNKT DER DRUCKLEGUNG NICHT VORHANDEN

STICHWORTVERZEICHNIS

Bezeichnung	Seite
MAGNETVENTIL	114, 232, 313, 314
MASCHINENAUSFÜHRUNG - HOHE AUSSENTEMPERATUR	1
MASCHINENSTEUERUNG	126
MASCHINENSTEUERUNG (SICHERHEIT) (EINSCHL. SOFTWARE)	130
MODUL - VIER ELEKTRON. ANZEIGEN	459
MODULATORVENTIL	225, 226
MONITOR - SERVICE	166
MONITOR-SOFTWARE	166
MONITORSTEUERUNG	127, 128
MONTAGEZAPFEN (PLANIERSCHILDEINRICHTUNG)	399
MOTOR, ELEKTR. (27 V) (HEIZUNG - OFFENER ÜBERROLLSCHUTZ)	440
MOTOR, KOMPLETT	2, 3
MOTOR (SCHEIBENWISCHER (RECHTS) TÜR)	434
MOTORAUFLAGER	45, 46
MOTORBLOCK	17, 18, 19
MOTORBLOCKDECKEL	12
MOTORHAUBE	261
MOTORHAUBE UND VERKLEIDUNG	253, 255, 258
MOTORHUBÖSE	44
MOTORKÜHLERBLOCK	4
MOTORÖLABLASS	32, 33, 34
MOTORÖLEINFÜLLSTUTZEN	66
MOTORÖLKÜHLER	76
MOTORÖLLEITUNGEN	71
MOTORÖLLEITUNGSADAPTER	64
MOTORSENSOR	150
MOTORSTEUERUNG, ELEKTRON.	124, 125
MOTORSTOPFEN	50
MOTORVERDRAHTUNG	183
MOTORVERDRAHTUNG - BEFESTIGUNG	132

N

Bezeichnung	Seite
NEIGEZYLINDERLEITUNGEN	352, 353, 354
NEIGUNGSSTELLGLIED	392
NOCKENWELLE	10

O

Bezeichnung	Seite
O-RING-DICHTUNG	227, 457
O-RING-DICHTUNG (GEHÄUSE U. RAHMN - ABLASSSCHRAUBE)	235
O-RING-DICHTUNG (KRAFTÜBERTRAGUNGS-FILTER)	192
O-RING-DICHTUNG (MAGNETSCHRAUBE - SEITENANTRIEB)	193
O-RING-DICHTUNG (MOTOR - ENTLÜFTER)	65
O-RING-DICHTUNG (SEITENANTRIEB-ABLASSSCHRAUBE)	193
ÖLEINFÜLLSTUTZEN (KRAFTÜBERTRAGUNG)	199
ÖLFILTER	67, 192, 333
ÖLFILTERELEMENT (HYDRAULIK/ STROMUMKEHRUNG) (NICHT WIEDERVERWENDBAR)	365
ÖLFILTERELEMENT (HYDRAULISCH) (NICHT WIEDERVERWENDBAR)	333
ÖLFILTERELEMENT (HYDRAULISCH) (REINIGUNG/HOCHLEISTUNG)	365
ÖLFILTERELEMENT (KRAFTÜBERTRAGUNG)	192
ÖLFILTERELEMENT (RÜCKFLUSS) (FEUERFESTE HYDRAULIKFLÜSSIGKEIT)	365
ÖLKÜHLERBLOCK	89
ÖLLEITUNGEN - KRAFTÜBERTRAGUNG	199
ÖLMESSSTAB	70
ÖLWANNE	48

P

Bezeichnung	Seite
PANZERWANNE	245, 246
PLANETENGETRIEBE	205
PLANIEREINRICHTUNG	388
PLATTFORM-ANBAUSATZ	461
PLEUELSTANGE UND KOLBEN	49
PROBEENTNAHMELEITUNGEN	340
PROBEENTNAHMEVENTIL F. WARTUNGSFL. (HYDRAULIKÖLFILTER)	333
PROBEENTNAHMEVENTIL F. WARTUNGSFL. (HYDRAULIKÖLLEITUNGEN)	359

* ÜBERSETZUNG ZUM ZEITPUNKT DER DRUCKLEGUNG NICHT VORHANDEN

STICHWORTVERZEICHNIS

Bezeichnung	Seite
PROBEENTNAHMEVENTIL F. WARTUNGSFL. (STEUERVENTIL)	358
PROBEENTNAHMEVENTIL (KRAFTÜBERTRAGUNGSÖL)	200
PROBEENTNAHMEVENTIL (KÜHLMITTEL)	82
PROBEENTNAHMEVENTIL (TURBOLADER-ÖL)	72
PUMPE UND BEFESTIGUNGSTEILE	108
PUMPENDÜSE, HYDRAULISCH	111

Q

QUERTRAVERSE	267

R

RADIO	480 481
RADIO - KABELSTRANG (LAUTSPRECHER)	480 481
RADIOEINBAUSATZ	449
RAHMEN UND GEHÄUSE	235 236
REGLER (KRAFTSTOFFDRUCK)	106
RIEMEN	6 7 8
RIEMENSCHEIBE	52 53
RIEMENSPANNER	9 55
RÜCKENSTÜTZEN-EINSTELLKNOPF	464
RÜCKFAHRWARNHORN	177 418
RÜCKFAHRWARNHORN (ÜBERROLLSCHUTZ)	484
RÜCKFAHRWARNHORN (107DB)	422
RÜCKLEHNENVERLÄNGERUNG (STOFF)	492
RUNDUM-KENNLEUCHTE	144 147

S

SANDSTRAHLSCHUTZGITTER	243
SCHALE - RÜCKENLEHNE	464 465
SCHALLDÄMPFER	99
SCHALLDÄMPFERSTÜTZEN	98
SCHALLDÄMPFUNG	59 60
SCHALTER (KIPPSCHALTER) (KONSOLE ANHEBEN/ABSENKEN)	289
SCHALTER (LEUCHTE)	470
SCHALTER (LEUCHTEN)	466
SCHALTER (RUNDUM-KENNLEUCHTE)	147
SCHALTKNOPFEINBAUSATZ (RADIO)	480 481
SCHAUGLAS (HYDRAULIKTANK)	365
SCHEIBENWASCHMITTELBEHÄLTER	506
SCHEIBENWISCHER	510
SCHEIBENWISCHERBLATT (FRONTSCHEIBE)	510
SCHEIBENWISCHERBLATT (HINTEN) (FENSTER)	510
SCHEIBENWISCHERBLATT (LINKE FAHRERHAUSTÜR)	436
SCHEIBENWISCHERBLATT (RECHTE FAHRERHAUSTÜR)	434
SCHILD UND AUFKLEBER	513
SCHLAUCHLEITUNG (OBERER KÜHLER)	87
SCHLAUCHLEITUNG (UNTERER KÜHLER)	87
SCHLÜSSEL (HAUPTSCHALTER)	173
SCHMIERNIPPEL (FAHRERHAUS - DRUCKBEAUFSCHLAGUNG)	478
SCHMIERNIPPEL (QUERTRAVERSE)	267
SCHMIERNIPPEL (SCHWENKSCHILD)	400
SCHMIERNIPPEL (1/8-27-GEWINDE) (AUFREISSER)	406
SCHMIERNIPPEL (1/8-27-GEWINDE) (FAHRERPLATTFORM)	474
SCHMIERNIPPEL (1/8-27-GEWINDE) (GEHÄUSE U. RAHMEN)	235
SCHMIERNIPPEL (1/8-27-GEWINDE) (KIPPGESTÄNGE)	392
SCHMIERNIPPEL (1/8-27-GEWINDE) (SCHENK- U. KIPPZYLINDER)	336
SCHMIERNIPPEL (1/8-27-GEWINDE) (SCHILDHUBZYLINDER)	325
SCHMIERPUMPE	74 75
SCHNEIDMESSER UND EINSATZSTÜCK	404 405
SCHRAUBE (DREHMOMENTWANDLERBLASS)	221
SCHRAUBE (GEHÄUSE U. RAHMEN - ABLASSVENTIL)	235
SCHRAUBE (MAGNETISCH -ÖLABLASS)	33
SCHRAUBE (SEITENANTRIEBABLASS)	193
SCHRAUBE (*TRANSMISSION DRIVE)	206
SCHRAUBENSATZ (*ENGINE HARNESS RETAINING)	183
SCHRAUBENSATZ (SCHUTZSCHALTERKABELSTRANG)	148
SCHUBARM	396
SCHUTZBLECHE	242
SCHUTZBÜGEL	263

* ÜBERSETZUNG ZUM ZEITPUNKT DER DRUCKLEGUNG NICHT VORHANDEN

STICHWORTVERZEICHNIS

Bezeichnung	Seite
	265
SCHUTZGITTER	487
	488
SCHWENK- UND KIPPZYLINDERLEITUNGEN	336
	338
SCHWENKSCHILD	400
SCHWENKSCHILDZYLINDER	321
SCHWINGSITZ	493
	495
	496
	497
SCHWUNGRAD	39
SCHWUNGRADGEHÄUSE	41
SCHWUNGRADGEHÄUSEDICHTUNG	57
SEITENANTRIEB	193
SENSOR, KABELSTRANG (DRAHTSTÄRKE 14)	165
SENSOR, KABELSTRANG (DRAHTSTÄRKE 16-18)	165
SENSORANSCHLUSSSATZ (12POLIG)	178
	187
	466
	470
SENSORANSCHLUSSSATZ (2POLIG)	139
	148
	165
	178
	180
	183
	187
	190
	289
	415
	418
	425
	440
	466
	470
	484
SENSORANSCHLUSSSATZ (2POLIG)	180
SENSORANSCHLUSSSATZ (2POLIG) (HAUPTSTROMRELAISSCHALTER)	175
SENSORANSCHLUSSSATZ (3POLIG)	157
	158
	178
	180
	183
	187
	418
	466
	470
SENSORANSCHLUSSSATZ (4 POLIG)	136
	187
SENSORANSCHLUSSSATZ (4 POLIG)	139
	180
	187
	466
	470
SENSORANSCHLUSSSATZ (6POLIG)	180
	187
	418
	466
	470
	484
SENSORANSCHLUSSSATZ (8POLIG)	128
	180
	187
	190
	418
	422
	466
	470
SENSORANSCHLUSSSATZ (8POLIG)	476
SERIENNUMMERNSCHILD (GETRIEBE)	221
SERIENNUMMERNSCHILD (MOTOR)	513
SERIENNUMMERNSCHILD (PLANIERSCHILD)	388
	389
SICHERHEITSEINBAUSATZ	136
	138
	139
SICHERHEITSGURT (SCHWINGSITZ)	492
SICHERHEITSGURT (SCHWINGSITZ, UNTERE RÜCKENLEHNE)	497
SICHERUNG (10 A)	148
SICHERUNG (15 A)	148
SICHERUNG (20 A)	148
SICHERUNGSZIEHER	181
SIEB (DREHMOMENTWANDLER)	221
SIEB (HYDRAULIKTANK)	365
SITZGURT-HALTESEIL (SCHWINGSITZ)	502
SOFTWARE - KRAFTÜBERTRAGUNG	131
	167
SOFTWARE - MASCHINE (SICHERHEIT)	126
SOFTWARE - MASCHINE (SICHERHEIT) (NUR SOFTWARE)	130
SOLENOID-EINBAUSATZ (STARTERMOTOR)	169
SONNENBLENDE	489
SPERRE	300
SPERRVENTIL (STEUERVENTIL)	374
	378
	380
	382
SPERRVENTIL (STEUERVENTIL)	372

* ÜBERSETZUNG ZUM ZEITPUNKT DER DRUCKLEGUNG NICHT VORHANDEN

STICHWORTVERZEICHNIS

Bezeichnung	Seite
SPIEGEL	458
STARTERMOTOR	168
	169
STARTHILFE - VORWÄRMER	135
STARTSCHLÜSSELSCHALTER	467
	471
STAUBKAPPE (HYDRAULIKÖL - PROBEENTNAHMEVENTILE)	340
STAUBKAPPE (HYDRAULIKÖLFILTER - PROBEENTNAHMEVENTIL)	333
STAUBKAPPE (KRAFTÜBERTRAGUNGSÖL - PROBEENTNAHMEVENTIL)	199
STAUBKAPPE (KÜHLMITTELPROBEENTNAHMEVENTIL)	82
STAUBKAPPE (PROBEENTNAHME-STEUERVENTIL)	358
STAUBKAPPE (PROBEENTNAHMEVENTIL - HYDRAULIKÖL)	359
STAUBKAPPE (PROBEENTNAHMEVENTIL - TURBOLADER)	72
STAUBKAPPE (*TRANSMISSION COVER FITTING)	206
STAUBKAPPE (UMLAUFKÜHLWASSERHEIZUNG)	133
	134
STECKDOSEN - EINBAUSATZ (12POLIG)	148
	178
	180
	295
	418
STECKDOSEN - EINBAUSATZ (12POLIG)	136
	139
STECKDOSEN - EINBAUSATZ (12POLIG)	187
STECKDOSEN - EINBAUSATZ (2POLIG)	112
	115
	136
	138
	139
	143
	144
	148
	161
	162
	164
	171
	172
	174
	180
	183
	232
	297
	415
	418
	422
	423
	425
	484
	504
STECKDOSEN - EINBAUSATZ (2POLIG)	176
	177
	178
	447
	466
	470
STECKDOSEN - EINBAUSATZ (2POLIG)	308
STECKDOSEN - EINBAUSATZ (2POLIG)	180
	187
	289
	440
STECKDOSEN - EINBAUSATZ (3POLIG)	139
	140
	163
	180
	183
	418
	425
	466
	467
	470
	471
STECKDOSEN - EINBAUSATZ (3POLIG)	178
	466
STECKDOSEN - EINBAUSATZ (3POLIG)	153
	154
	155
	156
STECKDOSEN - EINBAUSATZ (3POLIG) (KÜHLMITTELSTANDSENSOR)	152
STECKDOSEN - EINBAUSATZ (4 POLIG)	313
	436
	510
STECKDOSEN - EINBAUSATZ (4 POLIG)	136
	139
STECKDOSEN - EINBAUSATZ (4 POLIG)	187
STECKDOSEN - EINBAUSATZ (6POLIG)	78
	128
	180
	415
	418
	434
	440
	467
	470
	471
	477
	484

* ÜBERSETZUNG ZUM ZEITPUNKT DER DRUCKLEGUNG NICHT VORHANDEN

STICHWORTVERZEICHNIS

Bezeichnung	Seite
	506
STECKDOSEN - EINBAUSATZ (6POLIG)	459
STECKDOSEN - EINBAUSATZ (6POLIG)	187
STECKDOSEN - EINBAUSATZ (8POLIG)	190
	418
	480
	481
	484
STECKDOSEN - EINBAUSATZ (8POLIG)	466
	470
STECKDOSEN - EINBAUSATZ (8POLIG)	187
	466
	470
STECKERSATZ	477
STEIGLEITER	498
STELLUNGSSENSOR	153
	154
	155
STEUERKONSOLENABDECKUNG	427
	428
	429
	431
	433
STEUERUNG - NICHT PROGRAMMIERT	129
STEUERUNG - NICHT PROGRAMMIERT (MASCHINE)	126
STEUERUNG - NICHT PROGRAMMIERT (SICHERHEIT)	136
STEUERUNGSEINHEIT, ELEKTRON. FÜR MOTOR UND BEFEST.	123
STEUERVENTIL	311
	372
	374
	376
	378
	380
	382
STIRNRAD	40
STIRNRADGEHÄUSE	42
STIRNRADGEHÄUSE-HALTETEILE	37
	38
STIRNRADGEHÄUSEDECKEL	13
STOSSDÄMPFER-REPARATURSATZ (SCHWINGSITZ)	504
STOSSSTANGEN-EINBAUSATZ (GEWICHT-SEINSTELLUNG) (SCHWINGSITZ)	445
STÜTZGRUPPE - STEUERUNG	310
SU-SCHILD	388
	389
	402

T

Bezeichnung	Seite
TELLERRAD- UND VORGELEGERADSATZ	195
TEMPERATURSENSOR	163
	164
	165
TEMPERATURSENSOR (KÜHLMITTEL)	150
TEMPERATURSENSOR (LUFTEINLASS)	150
THERMOSTATSCHALTER (A/C)	413
TRAGROLLE	278
TRAGROLLENAUFHÄNGUNG	276
TRENNSCHALTER	173
TURBOLADER	101
	102
TURBOLADERÖLLEITUNGEN	72

U

Bezeichnung	Seite
ÜBERDRUCKVENTIL	229
	231
	386
	387
ÜBERDRUCKVENTIL (STEUERVENTIL)	374
	378
	382
ÜBERROLLSCHUTZ	483
	484
ÜBERROLLSCHUTZAUFLAGER	463
ÜBERTRAGUNGSSTEURUNG (PRODUCT LINK RADIO)	128
UMGEHUNGSSCHALTER	172
UMKEHRLÜFTER	81
UMLAUFKÜHLWASSERHEIZUNG	133
	134
UMLAUFKÜHLWASSERHEIZUNGS-ELEMENT (*120 VOLT/1000 WATT)	134
UMLAUFKÜHLWASSERHEIZUNGS-ELEMENT (240 V/1000 W)	133
UMLENKRIEMENSCHEIBE	51
UNTERBRECHER - INSTRUMENTENTAFEL	148
UNTERBRECHER (80 A) (HAUPTMASCHINE)	148

V

Bezeichnung	Seite
VENTILAUFHÄNGUNG	358
VENTILDECKEL	14
VENTILKABELSTRANG (LUFTKOMPRESSOR) (SITZ)	504
VENTILKIPPHEBEL (AUSLASS)	62
VENTILKIPPHEBEL (EINLASS)	62
VENTILSATZ (2-VENTIL)	368
VENTILSATZ (3-VENTIL)	334
VENTILSATZ (3-VENTIL)	369

* ÜBERSETZUNG ZUM ZEITPUNKT DER DRUCKLEGUNG NICHT VORHANDEN

STICHWORTVERZEICHNIS

Bezeichnung	Seite
VENTILSATZ (4-VENTIL)	370
VENTILSTEUERUNG	61
	62
VENTILSTÖSSELSATZ (SCHWINGSITZ)	445
VERDRAHTUNG	178
VERKLEIDUNG	239
VERRIEGELUNG	451
VERRIEGELUNG (TÜR)	434
VERSTELLBARER SITZ	482
VORRANGVENTIL	227

W

WÄRMEISOLIERUNG	450
WARNAUFKLEBER (FESTSTELLBREMSZYLINDER)	270
WARNAUFKLEBER (NICHT HEBEN)	463
WARNAUFKLEBER (PRODUCT LINK RADIO)	128
WARNHORN (24V)(NIEDERTON)	180
WARNHORNKNOPF	171
WARNHORNSCHALTER	171
	431
WARNSCHILD (HOCHDRUCKZYLINDER) (*TELESCOPING RECOIL)	270
WARNSCHILD (KETTENSPANNFEDER)	270
WARNSCHILD (NICHT IN BETRIEB NEHMEN)	461
WARNVORRICHTUNG	115
WASSERABSCHEIDER- U. KRAFTSTOFFILTER	103
WASSERFILTER (WASSERPUMPE)	85
WASSERTEMPERATURREGLER (94 GRAD C) (KÜHLMITTEL)	82
WASSERVENTIL (FAHRERHAUSHEIZUNG)	438
WASSERVENTIL (HEIZUNG - OFFENER ÜBERROLLSCHUTZ)	442
WETTERDACH	422

Z

ZAHNRADPUMPE	213
	214
ZUGHAKEN	238
ZYLINDERAUFHÄNGUNG	356
ZYLINDERKOPF	20
	22
	24
	25
	27
	29

* ÜBERSETZUNG ZUM ZEITPUNKT DER DRUCKLEGUNG NICHT VORHANDEN

MACHINE ARRANGEMENT

156-9497 CHASSIS AR

S/N: CBJ1-UP

PART OF 156-9493 GENERAL AR

SMCS-7000 **i01828433**

NOTE	PART NUMBER	QTY	PART NAME 1 2 3 4 5 6 (PRODUCT LEVEL)	SEE PAGE
Y	*156-7278*	1	CASE & FRAME GP	235
Y	*107-4068*	1	DRAWBAR GP	238
Y	*155-7706*	1	ENCLOSURE GP	239
Y	*155-7705*	1	FENDER GP	242
Y	*107-4062*	1	GUARD GP-BOTTOM	245
Y	*155-7703*	1	GUARD GP-RADIATOR	249
Y	*155-9323*	1	HOOD GP	261
Y	*191-9529*	1	LINES GP-FUEL	104
Y	*157-4819*	1	MOUNTING GP-ROPS	463
Y	*155-7707*	1	TANK GP-FUEL	112

Y-SEPARATE ILLUSTRATION

<END>

156-9493 GENERAL AR

S/N: CBJ1-UP

SMCS-7000 **i01828424**

NOTE	PART NUMBER	QTY	PART NAME 1 2 3 4 5 6 (PRODUCT LEVEL)	SEE PAGE
Y	*156-9516*	1	CAB AR	417
Y	*156-9497*	1	CHASSIS AR	1
Y	*156-9514*	1	ELECTRONICS AR-MACHINE	130
Y	**191-4479**	1	ENGINE AR-COMPLETE	2
Y	*156-9503*	1	HYDRAULIC AR	334
Y	*195-1046*	1	INSTALLATION AR-ENGINE	5
Y	*175-1157*	1	POWER TRAIN AR	212
Y	*173-8651*	1	UNDERCARRIAGE AR	288

Y-SEPARATE ILLUSTRATION

<END>

199-6965 MACHINE AR-HIGH AMBIENT TEMP

S/N: CBJ1-UP

AN ATTACHMENT

SMCS-7000 **i01830844**

NOTE	PART NUMBER	QTY	PART NAME 1 2 3 4 5 6 (PRODUCT LEVEL)	SEE PAGE
	201-2670	5	RADIATOR AS	

<END>

ENGINE ARRANGEMENT

191-4479 ENGINE AR-COMPLETE

S/N: BMA1100-UP
104 BRAKE KW (140 BHP) AT 2000 RPM
PART OF 156-9493 GENERAL AR

SMCS-1000 **i01798257**

NOTE	PART NUMBER	QTY	PART NAME 1 2 3 4 5 6 (PRODUCT LEVEL)	SEE PAGE
Y	*189-2221*	1	BELT TIGHTENER GP	9
Y	*132-3844*	1	CARRIER GP-SEAL	11
Y	*188-7726*	1	CONTROL & MTG GP-ENGINE ELEK	123
Y	*153-1794*	1	COVER GP-AIR INLET	92
Y	*143-4926*	1	COVER GP-CYLINDER BLOCK	12
Y	*136-8888*	1	COVER GP-FRONT HOUSING	13
Y	*153-1832*	1	COVER GP-VALVE MECHANISM	14
Y	*189-2227*	1	DAMPER & PULLEY GP	31
Y	*7C-4532*	1	DRAIN GP-ENGINE OIL	32
Y	*7C-4566*	1	DRAIN GP-ENGINE OIL	33
Y	*189-2223*	1	DRIVE GP-FAN	36
Y	*170-3273*	1	ELBOW GP-AIR INLET	93
Y	*191-4482*	1	ENGINE AR-CORE	4
Y	*224-1296*	1	FASTENER GP-ENGINE WIRING	132
Y	*228-5288*	1	FASTENER GP-FRONT COVER	37
Y	*116-4556*	1	FASTENER GP-FRONT HOUSING	38
Y	*199-3164*	1	FILLER GP-ENGINE OIL	66
Y	*117-4074*	1	FILTER GP-ENGINE OIL	67
Y	*224-2637*	1	FLYWHEEL GP	39
Y	*211-1835*	1	FUMES DISPOSAL GP	68
Y	*159-1810*	1	GAUGE GP-OIL LEVEL (DIPSTICK)	70
Y	*118-7284*	1	HEATER GP-AIR INLET	135
Y	*4W-1103*	1	HOUSING GP-FLYWHEEL	41
Y	*189-2220*	1	PULLEY GP-IDLER	55
Y	*219-5853*	1	LINES GP-ENGINE OIL	71
Y	*215-9260*	1	LINES GP-FUEL FILTER	106
Y	*202-3262*	1	LINES GP-TURBOCHARGER OIL	72
Y	*159-1814*	1	LINES GP-WATER	82
Y	*159-2572*	1	MANIFOLD GP-EXHAUST	97
Y	*203-5866*	1	MOUNTING GP-ENGINE	46
Y	*189-2222*	1	MOUNTING GP-FAN DRIVE	47
Y	*201-5381*	1	MOUNTING GP-MUFFLER	98
Y	*196-0077*	1	PAN GP-OIL	48
Y	*162-8068*	1	PLUG GP-ENGINE	50
Y	*224-5123*	1	PULLEY GP	53
Y	*193-9237*	1	PUMP GP-WATER	84
Y	*115-4210*	1	SEAL GP-CRANKSHAFT	56
Y	*7C-1770*	1	SEAL GP-FLYWHEEL HOUSING	57
Y	*199-7734*	1	SENSOR GP-ENGINE	150
Y	*145-5157*	1	STARTING MOTOR GP-ELECTRIC	168
Y	*228-5786*	1	WIRING GP	178
Y	*191-0083*	1	WIRING GP-HEATER	186
			GASKET KITS WILL BE PROVIDED WHEN AVAILABLE	

Y-SEPARATE ILLUSTRATION

ENGINE ARRANGEMENT

191-4481 ENGINE AR-COMPLETE

S/N: BMA1100-UP
104 BRAKE KW (140 BHP) AT 2000 RPM
PART OF 226-3406 COOLING AR, 169-4912 SUPPRESSION AR-SOUND
AN ATTACHMENT

SMCS-1000 **i01801664**

NOTE	PART NUMBER	QTY	PART NAME 1 2 3 4 5 6 (PRODUCT LEVEL)	SEE PAGE
Y	*189-2221*	1	BELT TIGHTENER GP	9
Y	*132-3844*	1	CARRIER GP-SEAL	11
Y	*188-7726*	1	CONTROL & MTG GP-ENGINE ELEK	123
Y	*153-1794*	1	COVER GP-AIR INLET	92
Y	*143-4926*	1	COVER GP-CYLINDER BLOCK	12
Y	*136-8888*	1	COVER GP-FRONT HOUSING	13
Y	*153-1832*	1	COVER GP-VALVE MECHANISM	14
Y	*189-2227*	1	DAMPER & PULLEY GP	31
Y	*7C-4532*	1	DRAIN GP-ENGINE OIL	32
Y	*7C-4566*	1	DRAIN GP-ENGINE OIL	33
Y	*189-2223*	1	DRIVE GP-FAN	36
Y	*170-3273*	1	ELBOW GP-AIR INLET	93
Y	*191-4482*	1	ENGINE AR-CORE	4
Y	*224-1296*	1	FASTENER GP-ENGINE WIRING	132
Y	*228-5288*	1	FASTENER GP-FRONT COVER	37
Y	*116-4556*	1	FASTENER GP-FRONT HOUSING	38
Y	*199-3164*	1	FILLER GP-ENGINE OIL	66
Y	*117-4074*	1	FILTER GP-ENGINE OIL	67
Y	*224-2637*	1	FLYWHEEL GP	39
Y	*211-1835*	1	FUMES DISPOSAL GP	68
Y	*159-1810*	1	GAUGE GP-OIL LEVEL (DIPSTICK)	70
Y	*118-7284*	1	HEATER GP-AIR INLET	135
Y	*4W-1103*	1	HOUSING GP-FLYWHEEL	41
Y	*189-2220*	1	PULLEY GP-IDLER	55
Y	*159-2565*	1	LIFTING GP-ENGINE	44
Y	*219-5853*	1	LINES GP-ENGINE OIL	71
Y	*215-9260*	1	LINES GP-FUEL FILTER	106
Y	*202-3262*	1	LINES GP-TURBOCHARGER OIL	72
Y	*159-1814*	1	LINES GP-WATER	82
Y	*159-2572*	1	MANIFOLD GP-EXHAUST	97
Y	*203-5866*	1	MOUNTING GP-ENGINE	46
Y	*189-2222*	1	MOUNTING GP-FAN DRIVE	47
Y	*201-5381*	1	MOUNTING GP-MUFFLER	98
Y	*196-0077*	1	PAN GP-OIL	48
Y	*162-8068*	1	PLUG GP-ENGINE	50
Y	*201-9063*	1	PULLEY GP-FAN DRIVE	54
Y	*193-9237*	1	PUMP GP-WATER	84
Y	*115-4210*	1	SEAL GP-CRANKSHAFT	56
Y	*7C-1770*	1	SEAL GP-FLYWHEEL HOUSING	57
Y	*199-7734*	1	SENSOR GP-ENGINE	150
Y	*145-5157*	1	STARTING MOTOR GP-ELECTRIC	168
Y	*228-5786*	1	WIRING GP	178
Y	*191-0083*	1	WIRING GP-HEATER	186
			GASKET KITS WILL BE PROVIDED WHEN AVAILABLE	

Y-SEPARATE ILLUSTRATION

ENGINE ARRANGEMENT

191-4482 ENGINE AR-CORE

S/N: BMA1100-UP
PART OF 191-4479, 191-4481 ENGINE AR-COMPLETE
ALSO AN ATTACHMENT

SMCS-1000 **i01831327**

NOTE	PART NUMBER	QTY	PART NAME 1 2 3 4 5 6 (PRODUCT LEVEL)	SEE PAGE
Y	*120-8971*	1	BREATHER GP	65
Y	*216-7922*	1	CAMSHAFT GP	10
Y	*117-3643*	1	COOLER GP-ENGINE OIL	76
Y	*113-6087*	1	CRANKSHAFT GP	15
YR	*129-1165*	1	CYLINDER BLOCK GP	19
Y	*133-3742*	1	CYLINDER HEAD GP	24
	161-4459	1	ELECTRONICS GP-ENGINE RATINGS	
Y	*205-1321*	1	GEAR GP-FRONT	40
Y	*133-5055*	1	HOUSING GP-FRONT	42
YR	*161-8420*	6	PISTON & ROD GP	49
Y	*170-3304*	1	PUMP & MTG GP-UNIT INJ HYD	108
Y	*212-2270*	1	PUMP GP-ENGINE OIL	75
Y	*178-6343*	6	PUMP GP-UNIT INJECTION	110
Y	*187-1602*	1	TURBOCHARGER GP	101
Y	*135-2969*	1	VALVE MECHANISM GP	61

R-REMFG PART MAY BE AVAILABLE
Y-SEPARATE ILLUSTRATION

ENGINE ARRANGEMENT

195-1046 INSTALLATION AR

S/N: CBJ1-UP

PART OF 156-9493 GENERAL AR

SMCS-1000 **i01801866**

NOTE	PART NUMBER	QTY	PART NAME 1 2 3 4 5 6 (PRODUCT LEVEL)	SEE PAGE
Y	*195-1042*	1	AFTERCOOLER GP	90
Y	*195-1049*	1	AIR CLEANER GP	91
Y	*189-2224*	1	ALTERNATOR GP-CHARGING	120
Y	*195-0681*	1	BELT GP	8
Y	*189-2229*	1	COMPRESSOR GP-REFRIGERANT	424
Y	*219-6339*	1	DRAIN GP-ENGINE OIL	34
Y	*195-1041*	1	FAN GP-BLOWER	80
Y	*195-1047*	1	LINES GP-AIR	95
Y	*201-5515*	1	MOUNTING GP-ENGINE	45
Y	*195-1048*	1	MUFFLER GP	99
Y	*196-1791*	1	PULLEY GP	52
Y	*195-1040*	1	RADIATOR GP	87

Y-SEPARATE ILLUSTRATION

193-1033 BELT GP—WITHOUT A/C, NORTH AMERICAN MARKET

S/N: CBJ1-UP
PART OF 156-9509 CANOPY AR
AN ATTACHMENT

SMCS-1357 **i01830193**

NOTE	REF NO	GRAPHIC REF	PART NUMBER	QTY	PART NAME 1 2 3 4 5 6 (PRODUCT LEVEL)	SEE PAGE
	1	1	**191-5215**	1	BELT (W/O-A/C NORTH AMERICAN MARKET)	

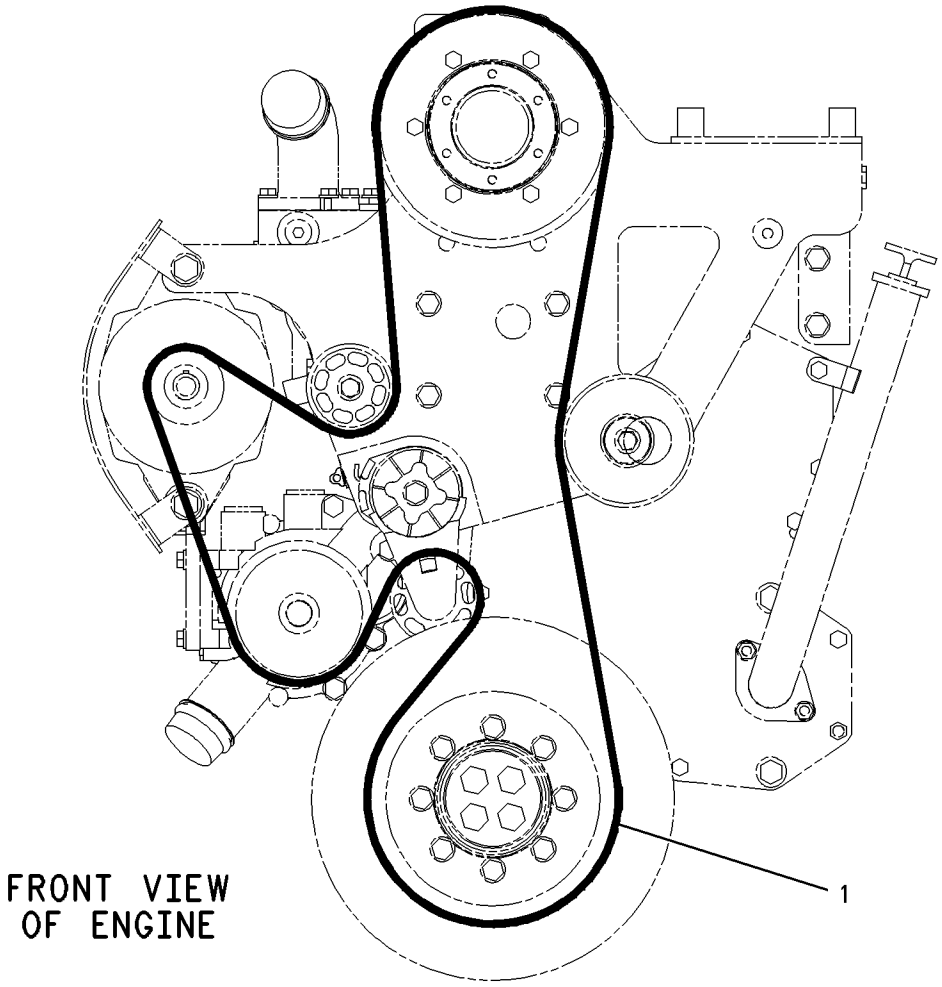

GRAPHIC #1 **<END>** g00773971

193-1038 BELT GP—WITH A/C, EUROPEAN MARKET

S/N: CBJ1-UP

PART OF 226-3406 COOLING AR, 169-4912 SUPPRESSION AR-SOUND AN ATTACHMENT

SMCS-1357 **i01830913**

NOTE	REF NO	GRAPHIC REF	PART NUMBER	QTY	PART NAME 1 2 3 4 5 6 (PRODUCT LEVEL)	SEE PAGE
	1	1	**202-3197**	1	BELT (WITH A/C EUROPEAN MARKET)	

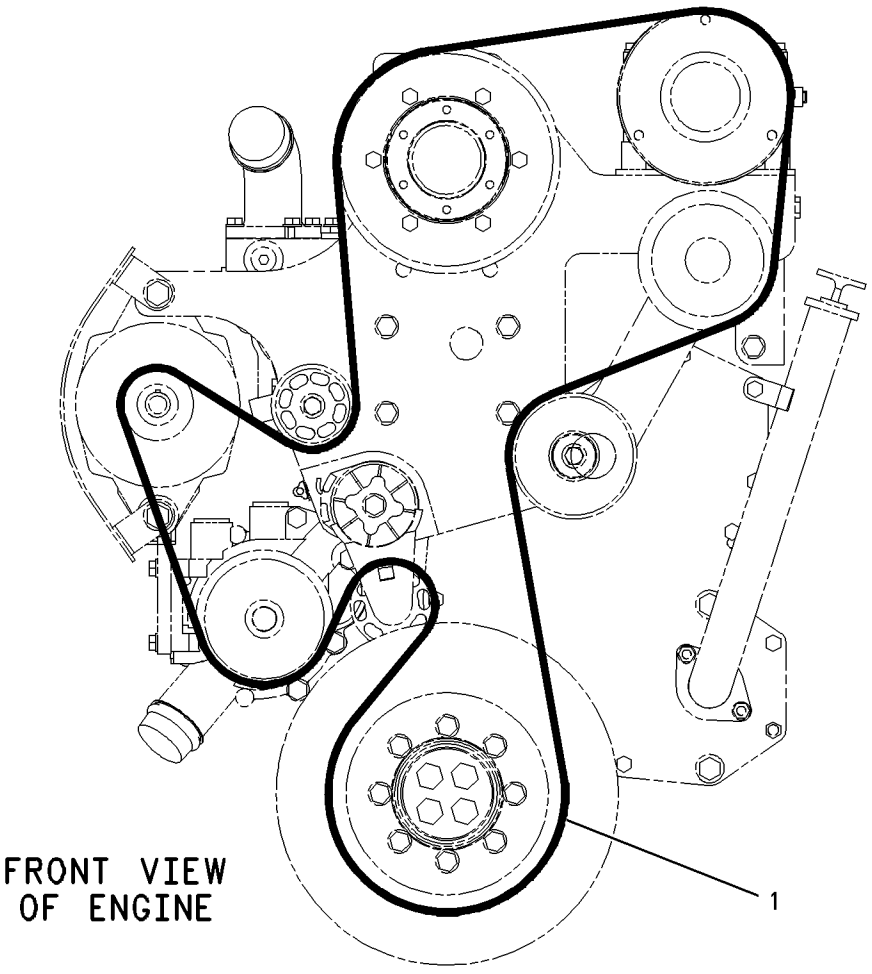

GRAPHIC #1 **<END>** g00773974

195-0681 BELT GP—WITH A/C, NORTH AMERICAN MARKET

S/N: CBJ1-UP

PART OF 195-1046 INSTALLATION AR-ENGINE

SMCS-1357 **i01882520**

NOTE	REF NO	GRAPHIC REF	PART NUMBER	QTY	PART NAME 1 2 3 4 5 6 (PRODUCT LEVEL)	SEE PAGE
	1	1	**215-3015**	1	BELT (WITH A/C NORTH AMERICAN MARKET)	

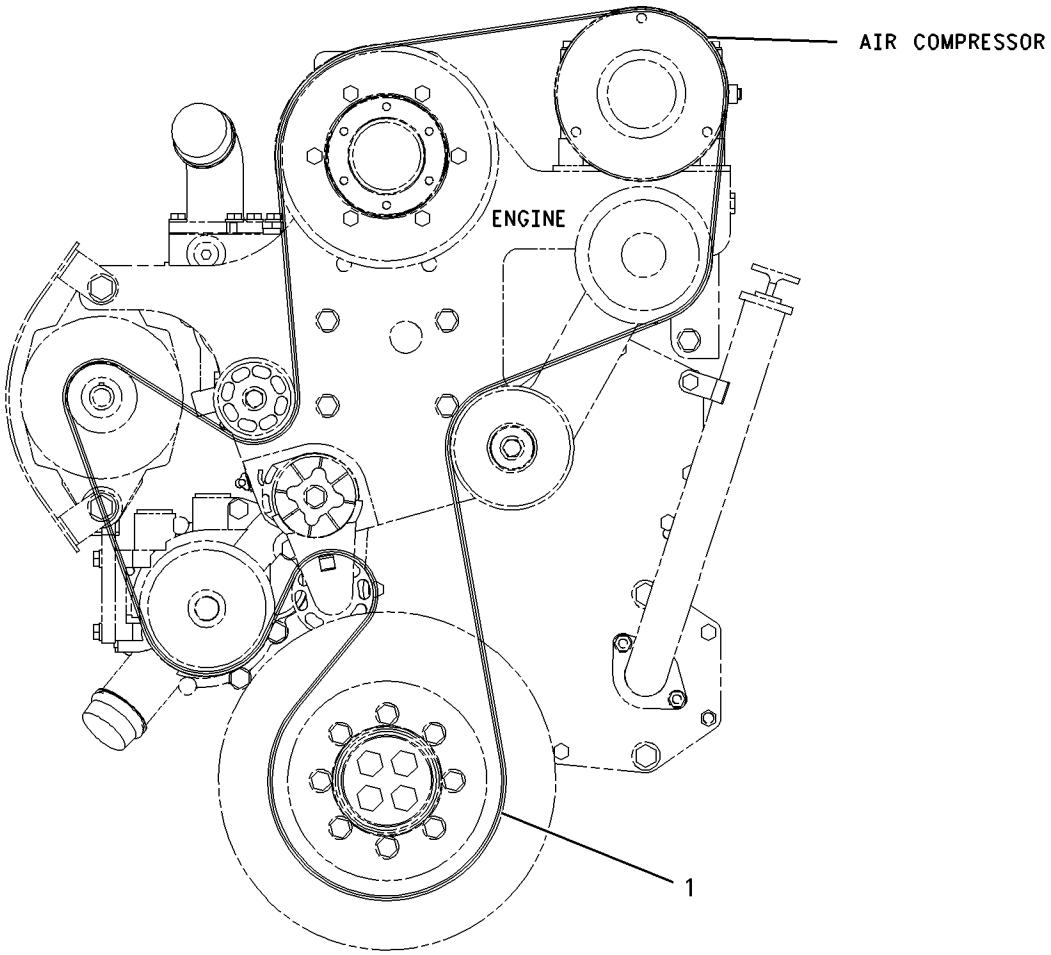

FRONT VIEW

GRAPHIC #1 **<END>** g00942253

BASIC ENGINE

189-2221 BELT TIGHTENER GP

S/N: BMA1100-UP
PART OF 191-4479, 191-4481 ENGINE AR-COMPLETE
ALSO AN ATTACHMENT

SMCS-1358 **i01802412**

NOTE	REF NO	GRAPHIC REF	PART NUMBER	QTY	PART NAME 1 2 3 4 5 6 (PRODUCT LEVEL)	SEE PAGE
	1	1	**144-1102**	1	BELT TIGHTENER	
	2	1	**6V-5839**	1	WASHER (11X21X2.5MM THK)	
M	3	1	**8T-0644**	1	BOLT (M10X1.50X90MM)	

M-METRIC PART

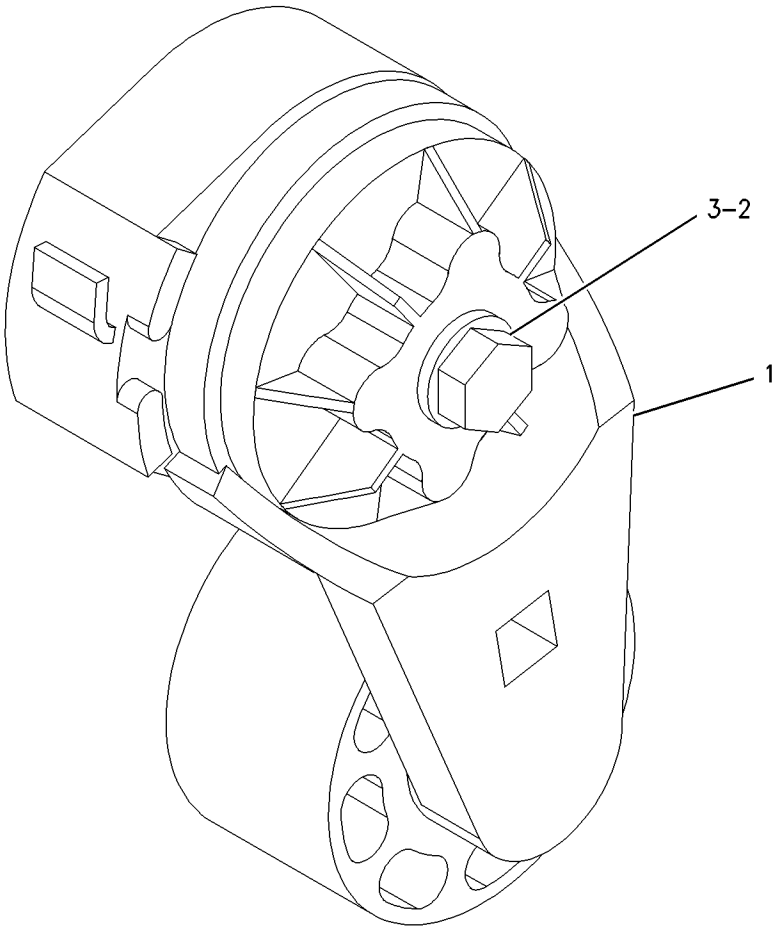

GRAPHIC #1 **<END>** g00714783

BASIC ENGINE

216-7922 CAMSHAFT GP

S/N: BMA1100-UP
PART OF 191-4482 ENGINE AR-CORE
ALSO AN ATTACHMENT

SMCS-1210, 1211, 1212 **i01743088**

NOTE	REF NO	GRAPHIC REF	PART NUMBER	QTY	PART NAME 1 2 3 4 5 6 (PRODUCT LEVEL)	SEE PAGE
	1	1	**107-7694**	1	PLATE-THRUST	
	2	1	**216-7921**	1	CAMSHAFT AS	
	2A	1	**1B-8705**	1	KEY-WOODRUFF	
	2B	1	**205-1322**	1	GEAR (100 TEETH)	
M	3	1	**6V-3940**	2	BOLT (M8X1.25X25MM)	

M-METRIC PART

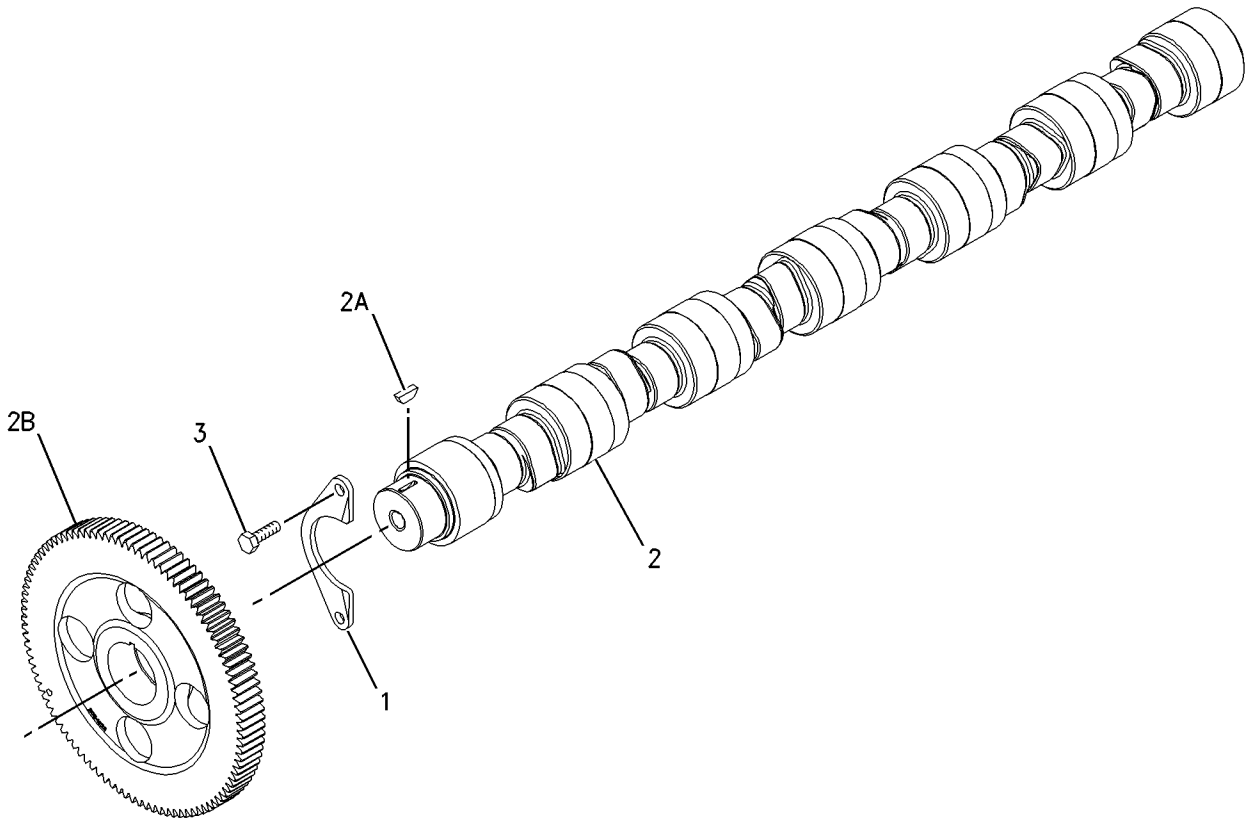

GRAPHIC #1 **<END>** g00869530

132-3844 CARRIER GP-SEAL

S/N: BMA1100-UP
PART OF 191-4479, 191-4481 ENGINE AR-COMPLETE
ALSO AN ATTACHMENT

SMCS-1161 **i01487432**

NOTE	REF NO	GRAPHIC REF	PART NUMBER	QTY	PART NAME 1 2 3 4 5 6 (PRODUCT LEVEL)	SEE PAGE
M	1	1	**6V-3940**	8	BOLT (M8X1.25X25MM)	
	2	1	**9M-1974**	8	WASHER-HARD (8.8X16X2MM THK)	
	3	1	**2W-6546**	1	COVER	
B	4	1	**1U-8846**		SEALANT-GASKET	
	5	1	**6V-3538**	2	DOWEL	
	6	1	**8C-3091**	1	SEAL-O-RING	

B-USE AS REQUIRED
M-METRIC PART

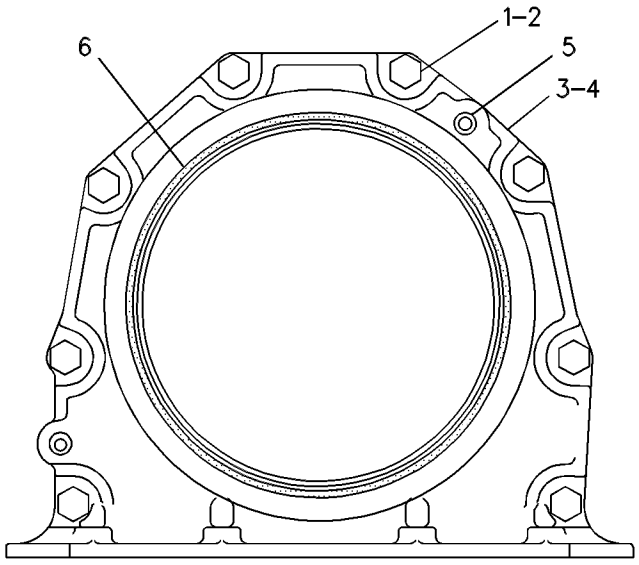

MOUNTED ON REAR OF CYLINDER BLOCK

GRAPHIC #1 **<END>** g00108845

143-4926 COVER GP-CYLINDER BLOCK

S/N: BMA1100-UP
PART OF 191-4479, 191-4481 ENGINE AR-COMPLETE
ALSO AN ATTACHMENT

SMCS-1201 **i01801851**

NOTE	REF NO	GRAPHIC REF	PART NUMBER	QTY	PART NAME 1 2 3 4 5 6 (PRODUCT LEVEL)	SEE PAGE
	1	1	**2W-6544**	1	COVER	
	2	1	**4P-5918**	3	CLIP	
	3	1	**4Y-9652**	3	GASKET	
	4	1	**7W-3871**	3	COVER-SIDE	
	5	1	**7W-3872**	6	SLEEVE	
	7	1	**110-7618**	4	BOLT AS	
	8	1	**152-3414**	1	TEE AS	
		1	**3K-0360**	1	SEAL-O-RING	
	9	1	**175-1367**	12	SPACER (8.8X16X10MM THK)	
	10	1	**210-3321**	1	STUD	
M	11	1	**5C-7261**	1	NUT (M8X1.25 THD)	
M	12	1	**6V-2317**	23	BOLT (M8X1.25X30MM)	
	13	1	**9M-1974**	10	WASHER-HARD (8.8X16X2MM THK)	
B	14	1	**1U-8846**		SEALANT-GASKET	

B-USE AS REQUIRED
M-METRIC PART

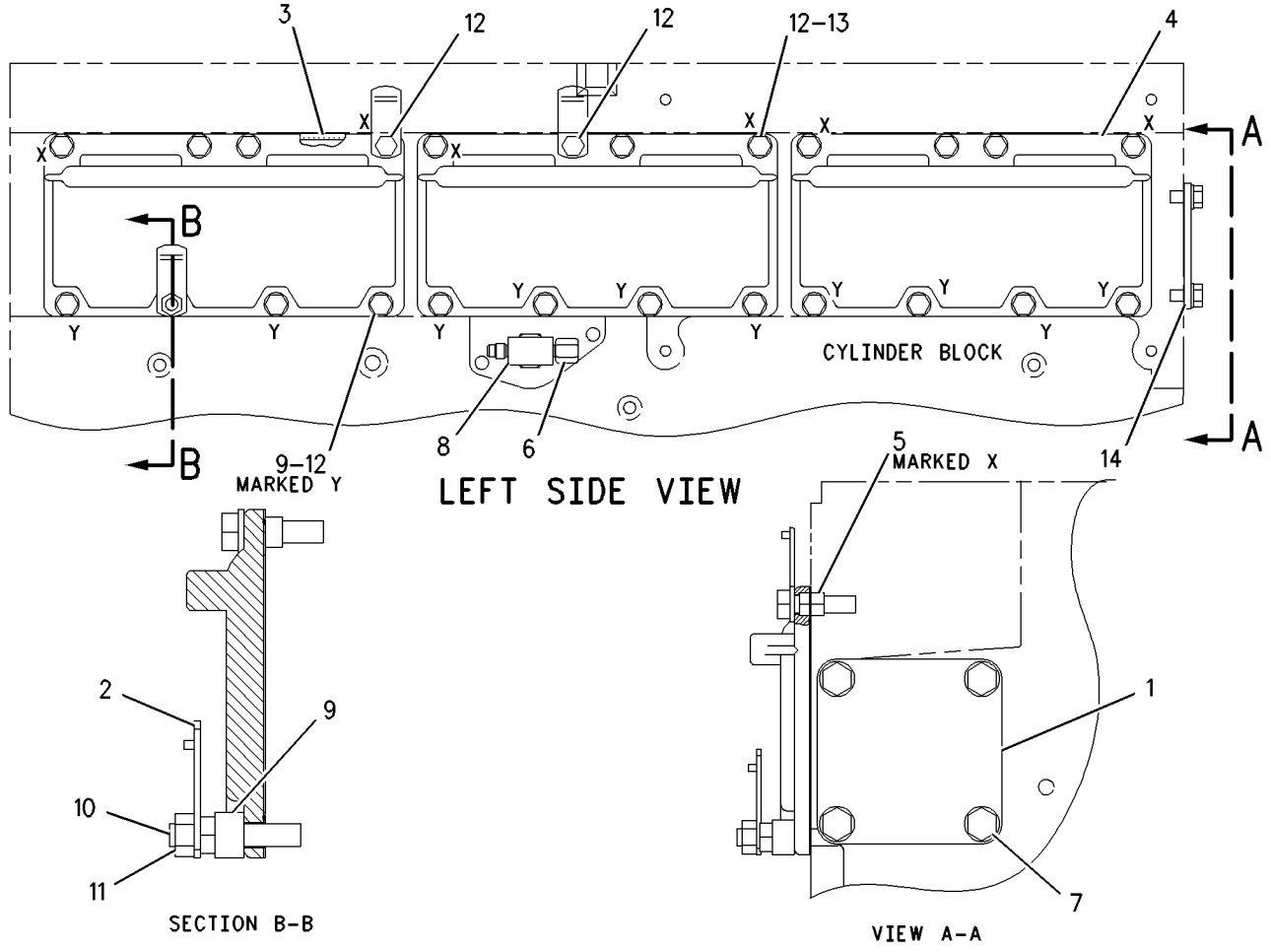

GRAPHIC #1 **<END>** g00922574

BASIC ENGINE

136-8888 COVER GP-FRONT HOUSING

S/N: BMA1100-UP
PART OF 191-4479, 191-4481 ENGINE AR-COMPLETE
ALSO AN ATTACHMENT

SMCS-1151, 1162, 1166 **i01802408**

NOTE	REF NO	GRAPHIC REF	PART NUMBER	QTY	PART NAME 1 2 3 4 5 6 (PRODUCT LEVEL)	SEE PAGE
M	1	1	**6V-2317**	7	BOLT (M8X1.25X30MM)	
	2	1	**136-0823**	1	COVER AS-FRONT	
M	3	1	**8T-0100**	1	BOLT (M8X1.25X60MM)	
	4	1	**139-3526**	1	GASKET	
	5	1	**7C-1445**	1	COVER	
	6	1	**061-9455**	1	SEAL-O-RING	
	7	1	**8T-4224**	2	WASHER-HARD (8.8X16X2MM THK)	
M	8	1	**5C-7261**	2	NUT (M8X1.25 THD)	

M-METRIC PART

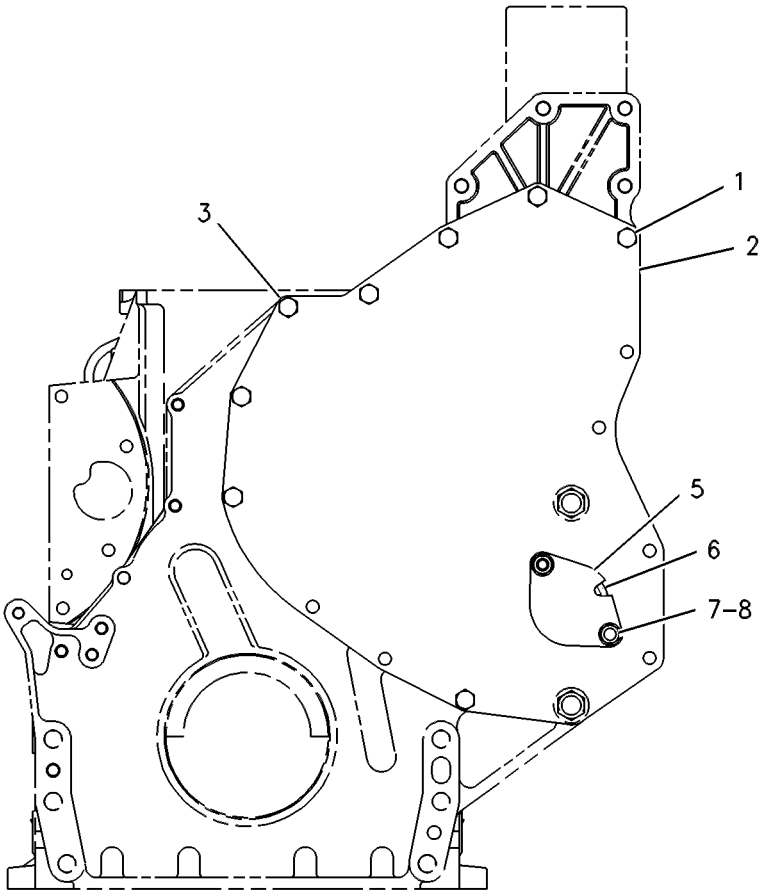

FRONT VIEW

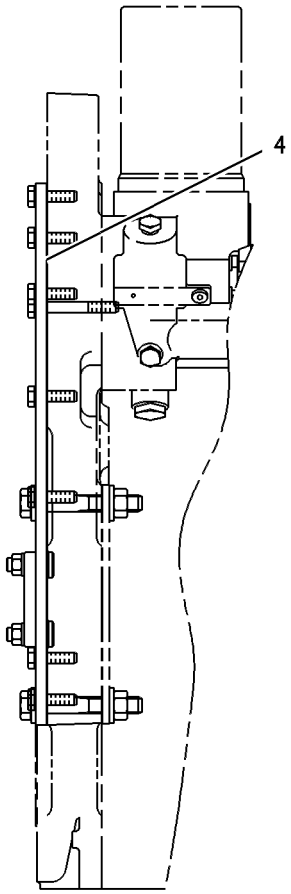

LEFT SIDE VIEW

GRAPHIC #1 **<END>** g00286201

BASIC ENGINE

153-1832 COVER GP-VALVE MECHANISM

S/N: BMA1100-UP
PART OF 191-4479, 191-4481 ENGINE AR-COMPLETE
ALSO AN ATTACHMENT

SMCS-1107, 1120 **i01873065**

NOTE	REF NO	GRAPHIC REF	PART NUMBER	QTY	PART NAME 1 2 3 4 5 6 (PRODUCT LEVEL)	SEE PAGE
	1	1	**167-8361**	1	COVER AS-BASE	
D	1A	1	**5P-5678**		SEAL (2M)	
M	2	1	**2W-9499**	14	BOLT (M6X1.0X40MM)	
	3	1	**172-6280**	1	COVER AS-TOP	
D	3A	1	**5P-5678**		SEAL (2M)	
	4	1	**5P-0537**	28	WASHER-HARD (7.2X14.5X2MM THK)	
M	5	1	**6V-7728**	14	BOLT (M6X1.0X45MM)	

D-ORDER BY THE METER
M-METRIC PART

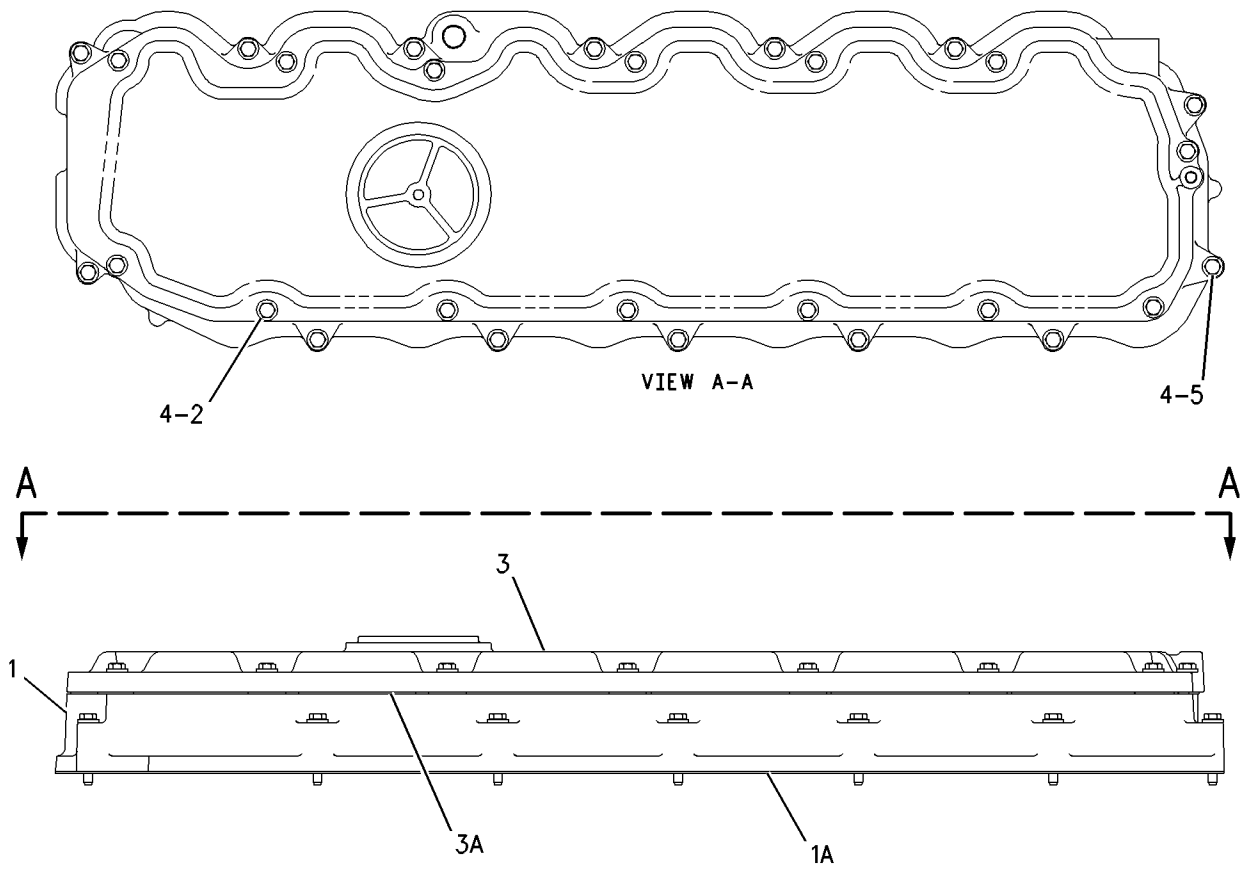

GRAPHIC #1 **<END>** g00676906

113-6087 CRANKSHAFT GP

S/N: BMA1100-UP
PART OF 191-4482 ENGINE AR-CORE
ALSO AN ATTACHMENT

SMCS-1202, 1203, 1204, 1230, 1231, 1232 **i01882522**

NOTE	REF NO	GRAPHIC REF	PART NUMBER	QTY	PART NAME 1 2 3 4 5 6 (PRODUCT LEVEL)	SEE PAGE
R	1	1	**105-1725**	1	CRANKSHAFT AS	
	2	1	**1B-8705**	1	KEY-WOODRUFF	
	3	1	**2W-8147**	1	GEAR (50 TEETH)	
J	4	1	**212-4893**	1	BEARING-THRUST	
J	5	1	**107-7708**	6	BEARING-MAIN	
AB		1	**145-0168**		BEARING-MAIN (0.5MM OS)	
AB		1	**145-0170**		BEARING-MAIN (0.5MM US - 0.5MM OS)	
AB		1	**145-0162**		BEARING-MAIN (0.25MM US)	
AB		1	**145-0164**		BEARING-MAIN (0.5MM US)	
ABF		1	**7C-7980**	1	SLEEVE-OIL SEAL (CRANKSHAFT)	
					(THIS WEAR SLEEVE IS USED ONLY TO SALVAGE (REPAIR) THE REAR SEAL SURFACE OF THE CRANKSHAFT)	
					AVAILABLE REPAIR KIT(S):	
J			**196-9519**		KIT-MAIN BEARING (CRANKSHAFT)	

A-NOT PART OF THIS GROUP
B-USE AS REQUIRED
F-NOT SHOWN
J-KIT MARKED J SERVICES PARTS MARKED J
R-REMFG PART MAY BE AVAILABLE

113-6087 **CRANKSHAFT GP** *(contd.)* **i01882522**

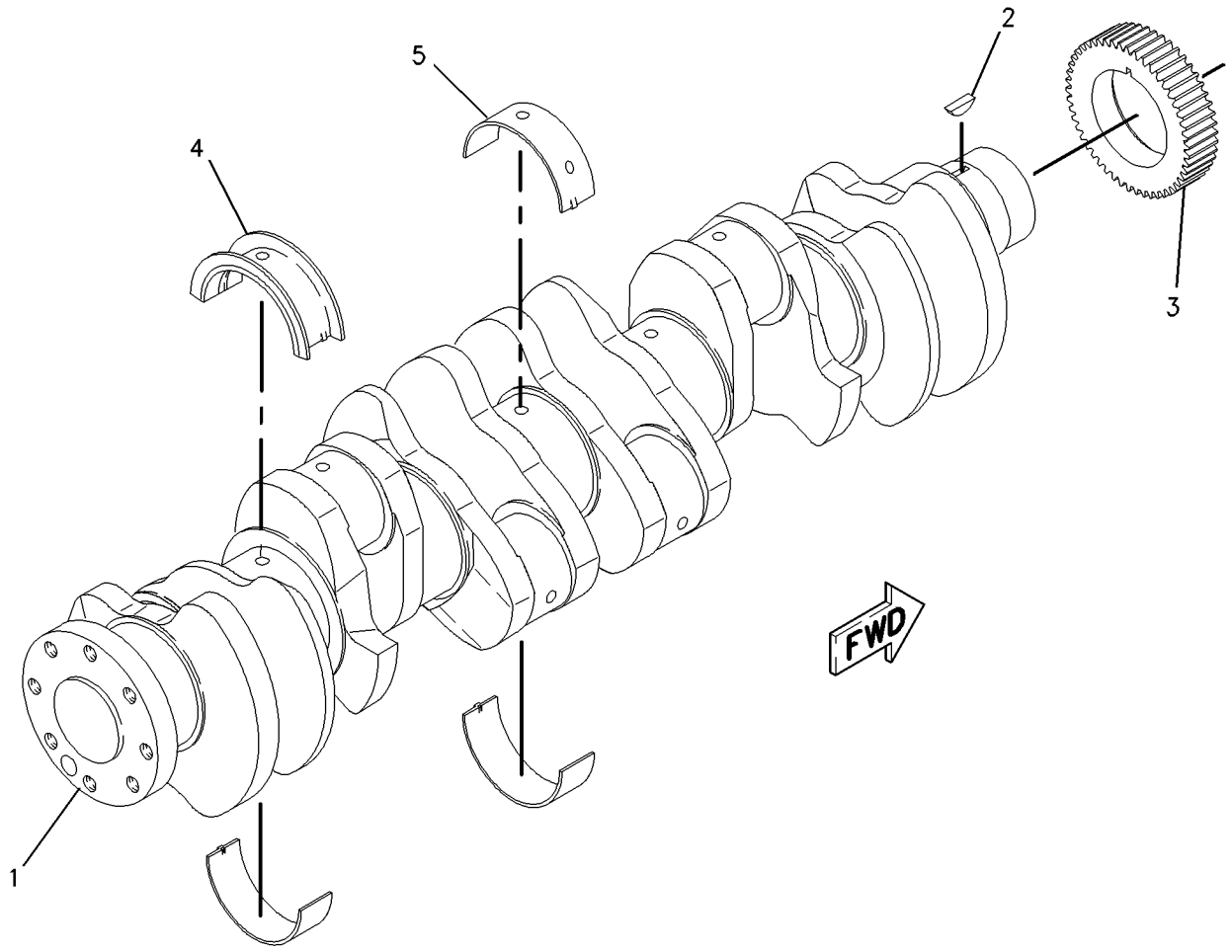

GRAPHIC #1 **<END>** g00785631

BASIC ENGINE

129-1163 CYLINDER BLOCK GP

S/N: BMA1100-UP
PART OF 129-1164 CYLINDER BLOCK GP
ALSO AN ATTACHMENT

SMCS-1201 **i01889624**

NOTE	REF NO	GRAPHIC REF	PART NUMBER	QTY	PART NAME 1 2 3 4 5 6 (PRODUCT LEVEL)	SEE PAGE
	1	1	**5P-8247**	14	WASHER-HARD (17X32X3.5MM THK)	
	2	1	**7E-2968**	7	CAP-CRANKSHAFT BEARING	
M	3	1	**9X-8916**	14	BOLT (M16X2.0X140MM)	

M-METRIC PART

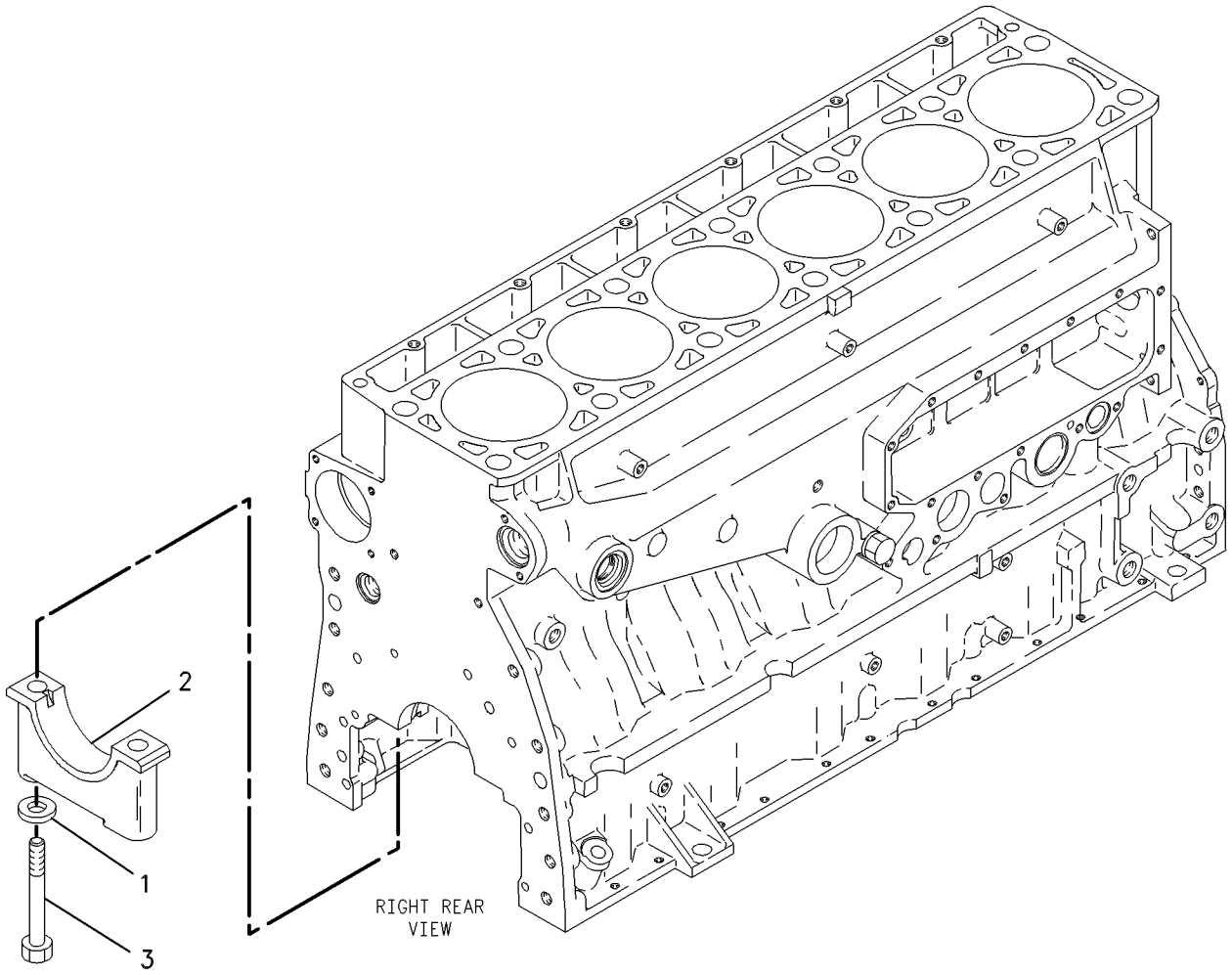

GRAPHIC #1 **<END>** g00284455

129-1164 CYLINDER BLOCK GP*R

S/N: BMA1100-UP
PART OF 129-1165 CYLINDER BLOCK GP
ALSO AN ATTACHMENT

SMCS-1201 **i01818558**

NOTE	REF NO	GRAPHIC REF	PART NUMBER	QTY	PART NAME 1 2 3 4 5 6 (PRODUCT LEVEL)	SEE PAGE
Y	1	1	*129-1163*	1	CYLINDER BLOCK GP	17
	2	1	**2M-6471**	2	PLUG-CUP	
	3	1	**3H-5552**	1	PLUG-CUP	
	4	1	**9S-8006**	1	PLUG	
	5	1	**2M-9780**	1	SEAL-O-RING	
	6	1	**216-5586**	1	BEARING-SLEEVE (CAMSHAFT)	
	7	1	**2W-7213**	6	BEARING-SLEEVE (CAMSHAFT)	

Y-SEPARATE ILLUSTRATION

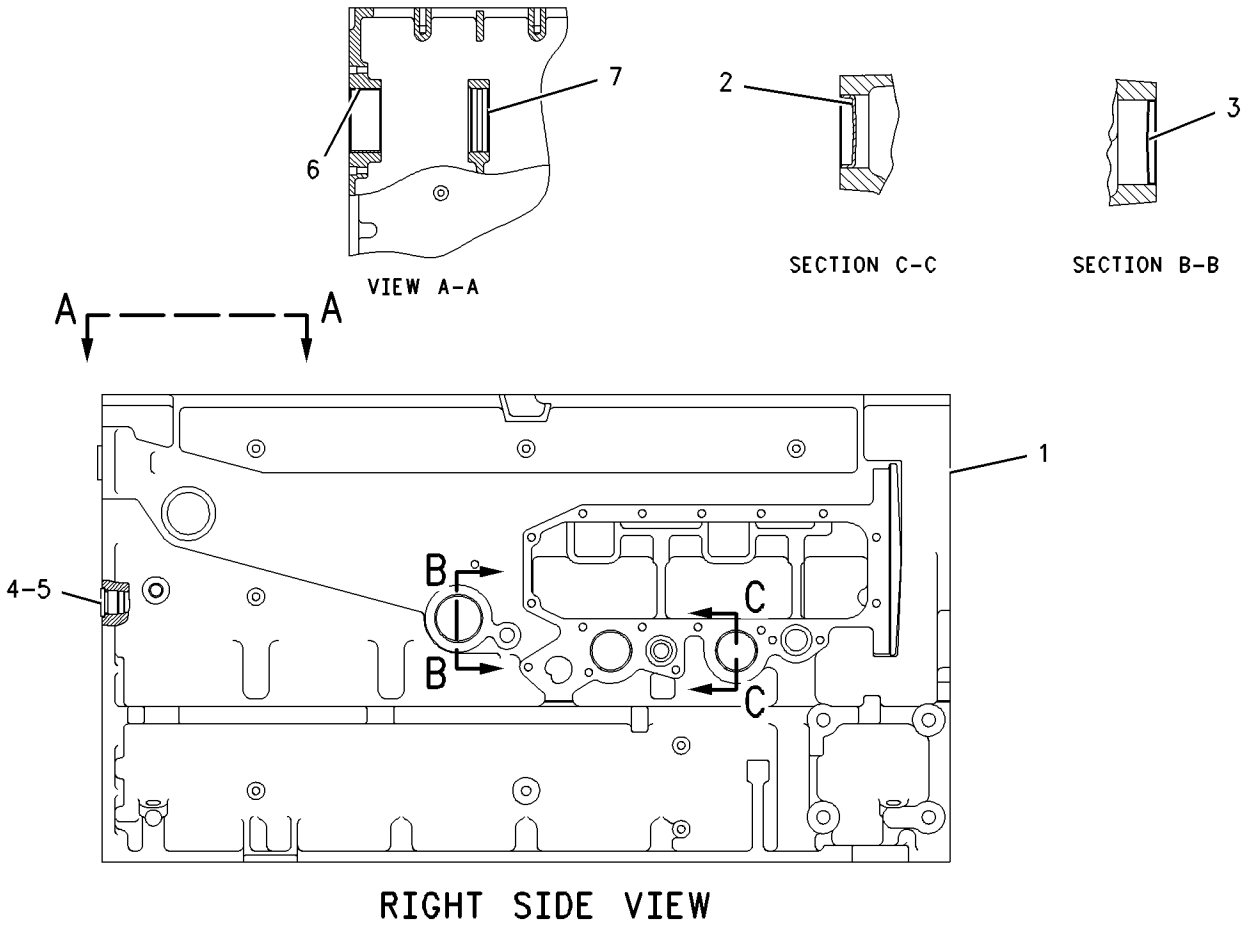

RIGHT SIDE VIEW

GRAPHIC #1 **<END>** g00892412

BASIC ENGINE

129-1165 CYLINDER BLOCK GP

S/N: BMA1100-UP
PART OF 191-4482 ENGINE AR-CORE
ALSO AN ATTACHMENT

SMCS-1201 **i01298139**

NOTE	REF NO	GRAPHIC REF	PART NUMBER	QTY	PART NAME 1 2 3 4 5 6 (PRODUCT LEVEL)	SEE PAGE
YR	1	1	**129-1164**	1	CYLINDER BLOCK GP	18
	3	1	**1W-8407**	2	SLEEVE	
	4	1	**6V-3538**	2	DOWEL (20MM OAL)	
	6	1	**7N-5683**	2	DOWEL (20MM OAL)	

R-REMFG PART MAY BE AVAILABLE
Y-SEPARATE ILLUSTRATION

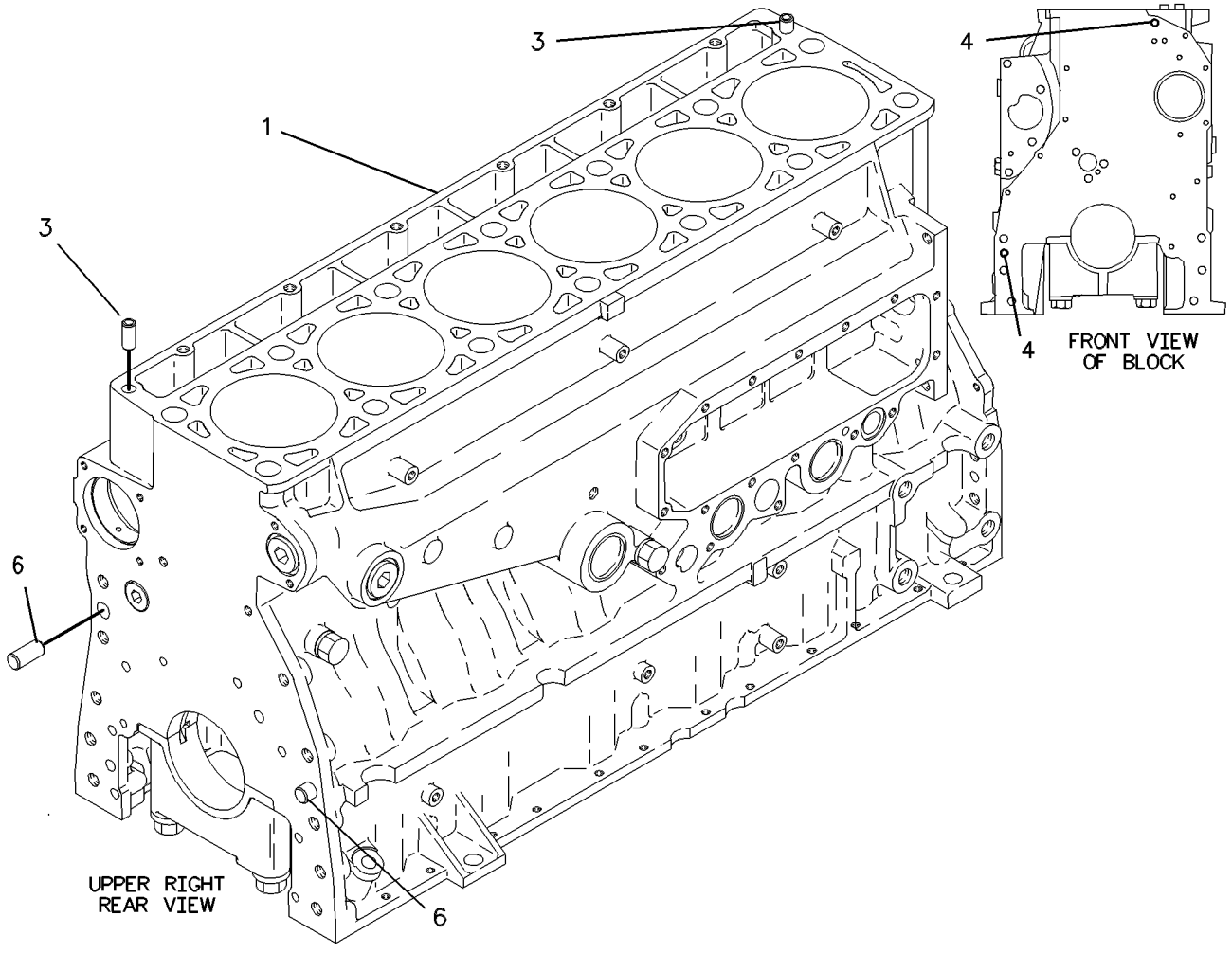

GRAPHIC #1 **<END>** g00588544

205-1271 CYLINDER HEAD AS

S/N: BMA1100-UP
PART OF 205-1272 CYLINDER HEAD AS, 205-1273 CYLINDER HEAD GP
FIELD REPLACEMENT ORDER 205-1272—PAGE 22
ALSO AN ATTACHMENT

SMCS-1100, 1101, 1103, 1104, 1105, 1106, 1108, 1109, 1115, 1117, 1121, 1124, 1125

i01693167

NOTE	REF NO	GRAPHIC REF	PART NUMBER	QTY	PART NAME 1 2 3 4 5 6 (PRODUCT LEVEL)	SEE PAGE
	2	1	**8M-5860**	12	PLUG-CUP	
	3	1	**4F-5695**	2	PLUG-CUP	
	4	1	**159-0300**	6	SLEEVE-INJECTOR	
	5	1	**155-9504**	12	INSERT-VALVE SEAT (INLET)	
	6	1	**147-8218**	6	INSERT-VALVE SEAT (EXHAUST)	
	7	1	**8C-0563**	12	SEAL-O-RING	
	8	1	**154-8025**	6	SETSCREW-SOCKET	
	9	1	**9S-9334**	1	PLUG	
	10	1	**9X-7712**	1	SEAL-O-RING	

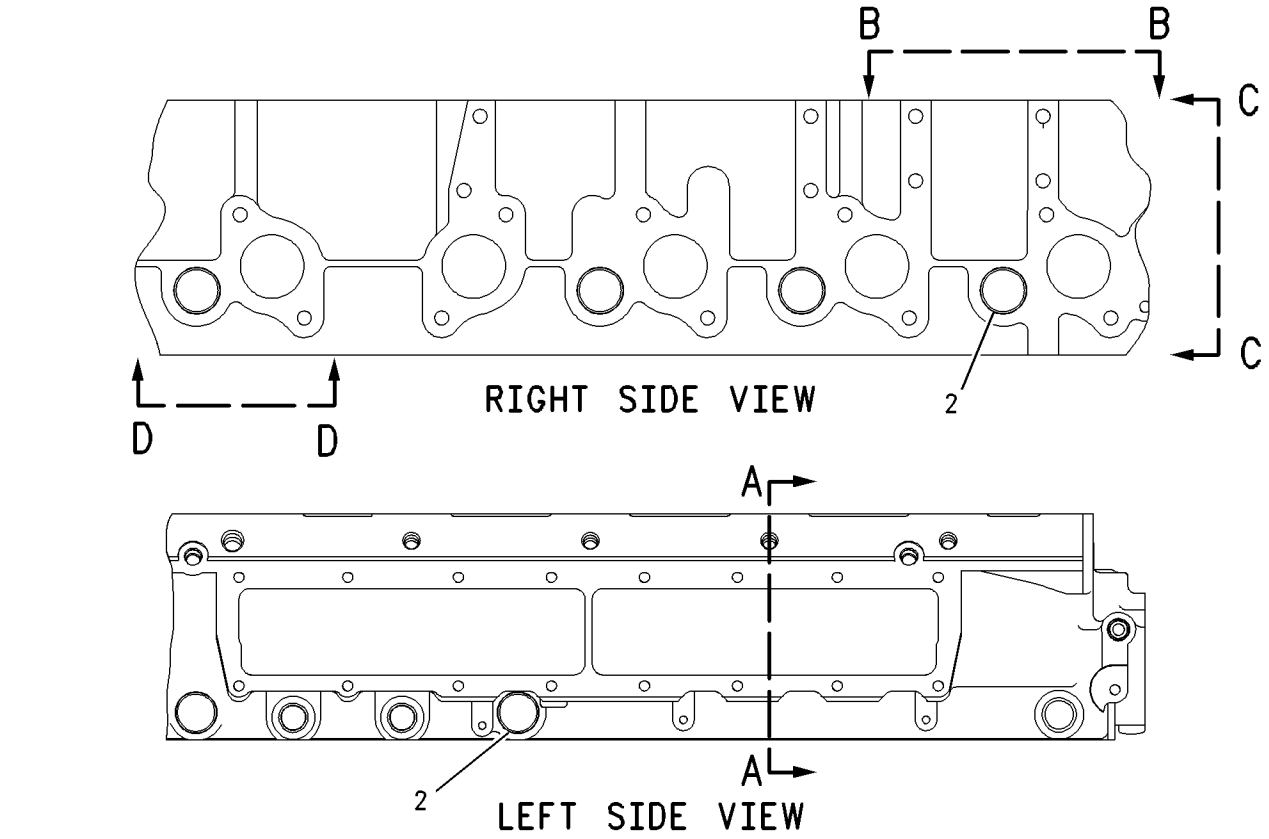

GRAPHIC #1 **<END>** g00826091

BASIC ENGINE

205-1272 CYLINDER HEAD AS

S/N: BMA1100-UP

FIELD REPLACEMENT FOR 205-1271—PAGE 20

SMCS-1100, 1101, 1103, 1104, 1105, 1106, 1108, 1109, 1115, 1117, 1121, 1124, 1125 **i01693212**

NOTE	REF NO	GRAPHIC REF	PART NUMBER	QTY	PART NAME 1 2 3 4 5 6 (PRODUCT LEVEL)	SEE PAGE
Y	1	1	*205-1271*	1	CYLINDER HEAD AS	20
	2	1	**9S-8002**	6	PLUG-O-RING	
	3	1	**6V-5048**	6	SEAL-O-RING	
	4	1	**9S-8004**	4	PLUG	
	5	1	**3J-1907**	4	SEAL-O-RING	
	6	1	**147-8214**	12	SEAL-VALVE STEM	
	7	1	**140-9670**	12	GUIDE-VALVE	
	8	1	**9S-8006**	1	PLUG	
	9	1	**2M-9780**	1	SEAL-O-RING	
	10	1	**9S-9334**	1	PLUG	
	11	1	**9X-7712**	1	SEAL-O-RING	
	12	1	**147-8220**	6	GUIDE-VALVE	
	13	1	**102-6229**	6	SEAL-VALVE STEM	
	14	1	**137-6715**	6	SEAT-VALVE SPRING	
	15	1	**9S-8005**	1	PLUG-O-RING	
	16	1	**3K-0360**	1	SEAL-O-RING	
	17	1	**1N-5999**	2	PLUG	
	18	1	**7J-0204**	2	SEAL-O-RING	
	19	1	**9S-8003**	1	PLUG-O-RING	
	20	1	**1J-9671**	1	SEAL-O-RING	

Y-SEPARATE ILLUSTRATION

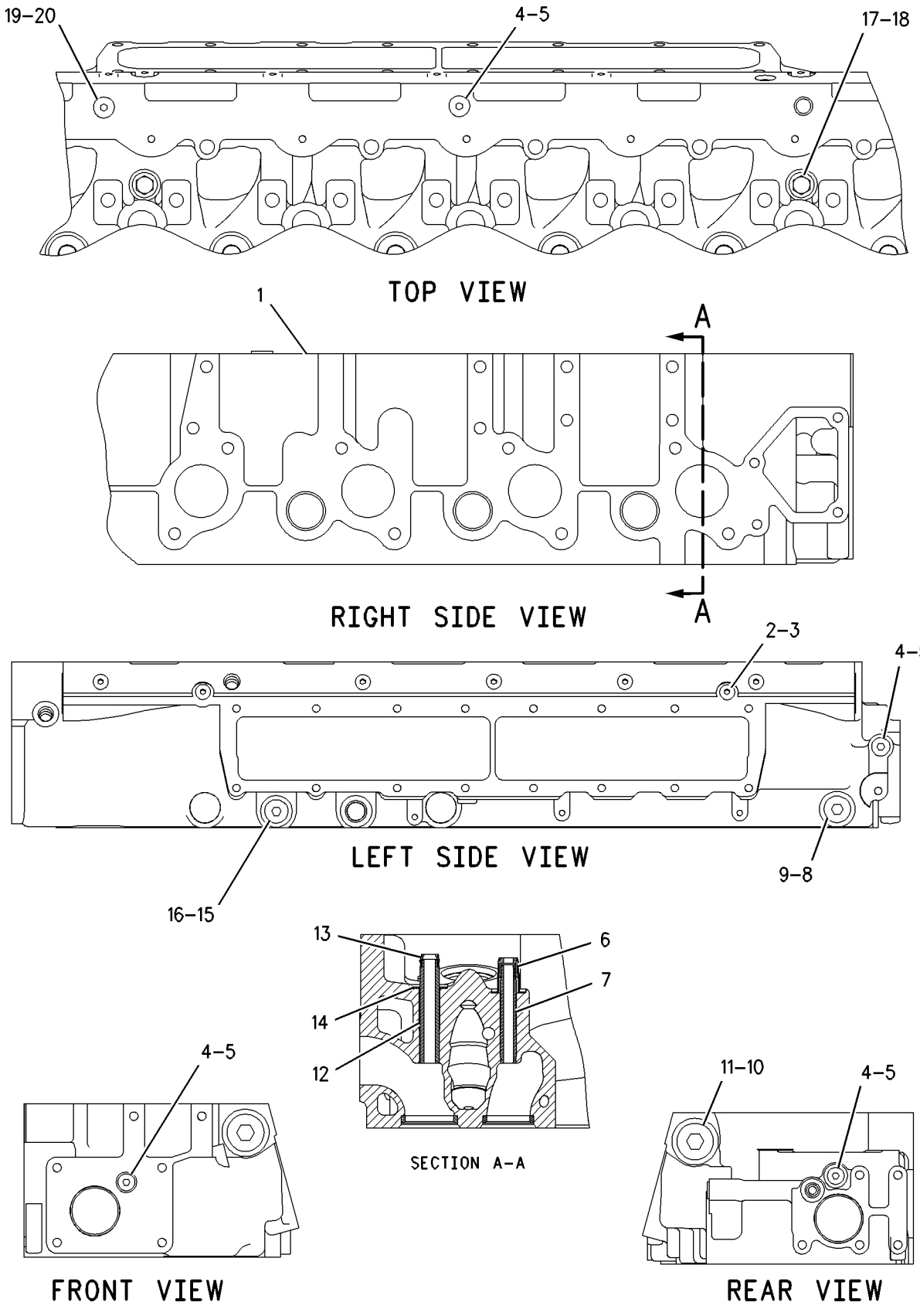

GRAPHIC #1 **<END>** g00847258

133-3742 CYLINDER HEAD GP

S/N: BMA1100-UP
PART OF 191-4482 ENGINE AR-CORE
ALSO AN ATTACHMENT

SMCS-1100, 1103, 1104, 1105, 1106, 1108, 1109, 1115, 1117, 1121, 1124, 1125

i01696098

NOTE	REF NO	GRAPHIC REF	PART NUMBER	QTY	PART NAME 1 2 3 4 5 6 (PRODUCT LEVEL)	SEE PAGE
Y	1	1	*205-1274*	1	CYLINDER HEAD GP	27
	2	1	**133-4995**	1	GASKET-CYLINDER HEAD	
	3	1	**8T-3282**	14	WASHER-HARD (22X35X3.5MM THK)	
		1	**138-3252**	14	BOLT-12 POINT HEAD	
M	4	1	**8T-7950**	6	BOLT (M10X1.5X180MM)	
	5	1	**6V-5839**	6	WASHER (11X21X2.5MM THK)	

M-METRIC PART
Y-SEPARATE ILLUSTRATION

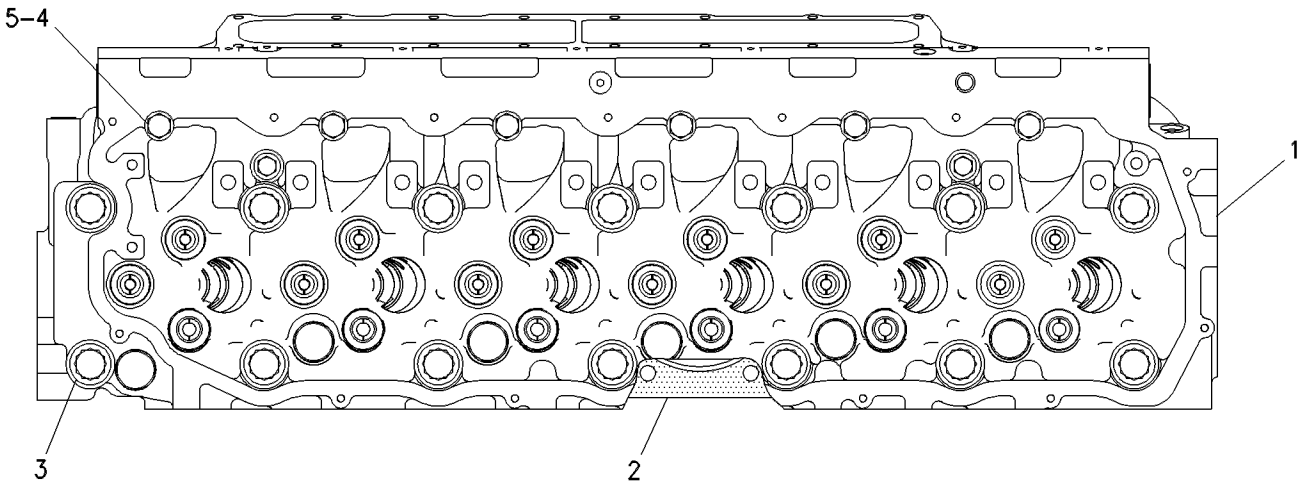

TOP VIEW

GRAPHIC #1

<END>

g00334554

205-1273 CYLINDER HEAD GP

S/N: BMA1100-UP

PART OF 205-1274, 205-1275 CYLINDER HEAD GP

ALSO AN ATTACHMENT

SMCS-1100, 1103, 1104, 1105, 1106, 1108, 1109, 1115, 1117, 1121, 1124, 1125

i01696313

NOTE	REF NO	GRAPHIC REF	PART NUMBER	QTY	PART NAME 1 2 3 4 5 6 (PRODUCT LEVEL)	SEE PAGE
Y	1	1	*205-1271*	1	CYLINDER HEAD AS	20
	2	1	**145-7390**	12	VALVE-INLET	
	3	1	**147-8211**	6	VALVE-EXHAUST	
	4	1	**1W-2715**	24	LOCK-RETAINER	
	5	1	**7E-7779**	12	RETAINER-SPRING	
	6	1	**147-8214**	12	SEAL-VALVE STEM	
	7	1	**140-9670**	12	GUIDE-VALVE	
	8	1	**137-6718**	6	SPRING-VALVE	
	9	1	**140-6188**	12	SPRING-VALVE	
	10	1	**2A-4429**	12	LOCK-RETAINER	
	11	1	**134-4483**	6	RETAINER-SPRING	
	12	1	**147-8220**	6	GUIDE-VALVE	
	13	1	**102-6229**	6	SEAL-VALVE STEM	
	14	1	**137-6715**	6	SEAT-VALVE SPRING	

Y-SEPARATE ILLUSTRATION

205-1273 **CYLINDER HEAD GP** ***(contd.)*** **i01696313**

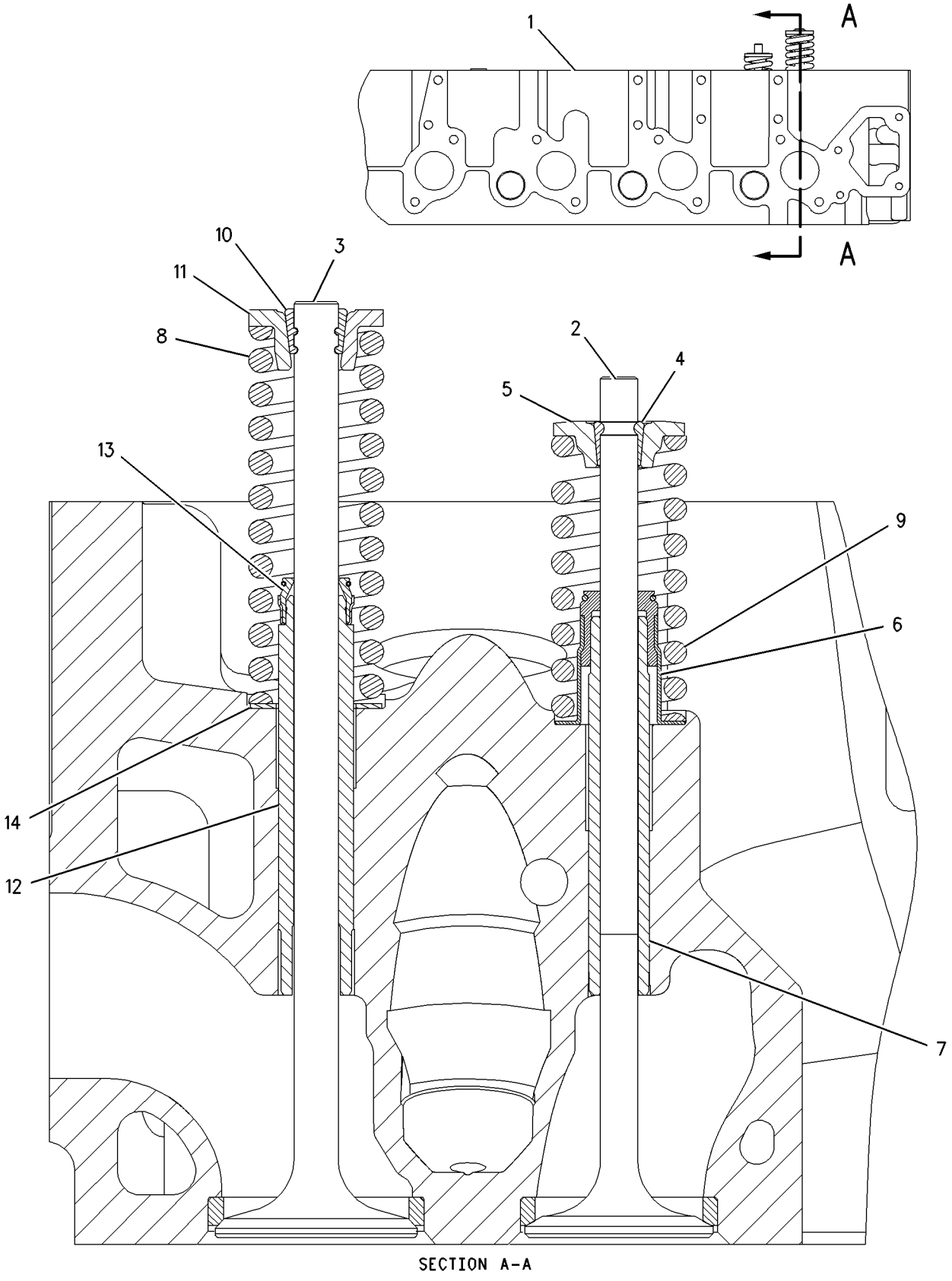

SECTION A-A

GRAPHIC #1 **<END>** g00808330

205-1274 CYLINDER HEAD GP

S/N: BMA1100-UP
PART OF 133-3742 CYLINDER HEAD GP
FIELD REPLACEMENT ORDER 205-1275—PAGE 29
ALSO AN ATTACHMENT

SMCS-1100, 1103, 1104, 1105, 1106, 1108, 1109, 1115, 1117, 1121, 1124, 1125

i01696325

NOTE	REF NO	GRAPHIC REF	PART NUMBER	QTY	PART NAME 1 2 3 4 5 6 (PRODUCT LEVEL)	SEE PAGE
Y	1	1	*205-1273*	1	CYLINDER HEAD GP	25
	2	1	**1N-5999**	2	PLUG	
	3	1	**7J-0204**	2	SEAL-O-RING	
	4	1	**9S-8002**	6	PLUG-O-RING	
	5	1	**6V-5048**	6	SEAL-O-RING	
	6	1	**9S-8004**	3	PLUG	
	7	1	**3J-1907**	3	SEAL-O-RING	
	8	1	**9S-8006**	1	PLUG	
	9	1	**2M-9780**	1	SEAL-O-RING	
	10	1	**9S-9334**	1	PLUG	
	11	1	**9X-7712**	1	SEAL-O-RING	

Y-SEPARATE ILLUSTRATION

205-1274 **CYLINDER HEAD GP** ***(contd.)*** **i01696325**

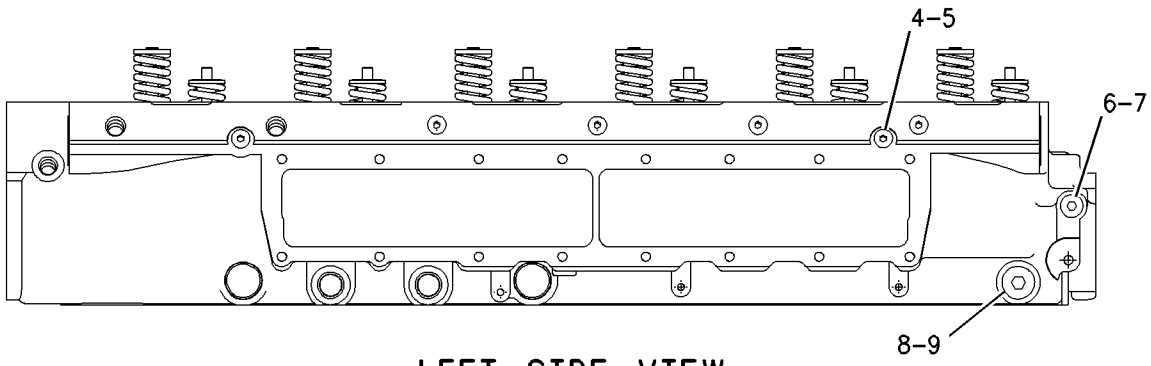

LEFT SIDE VIEW

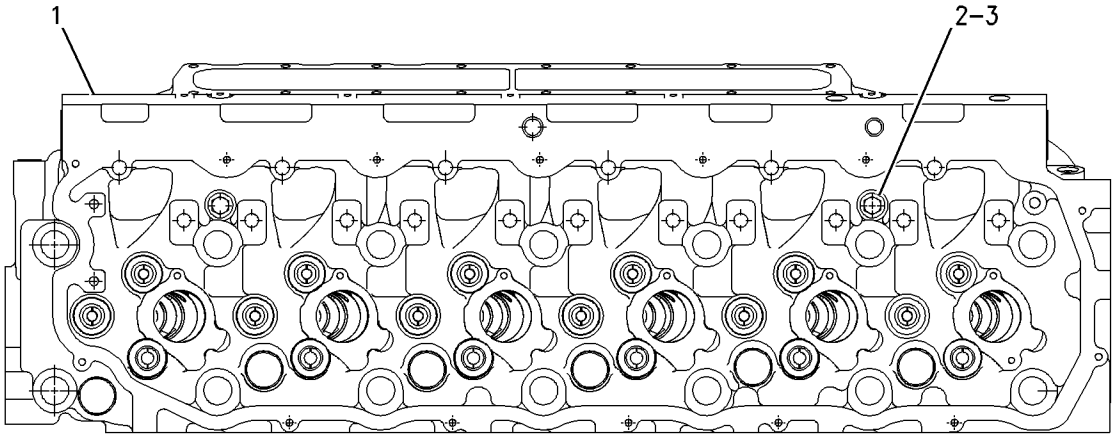

TOP VIEW

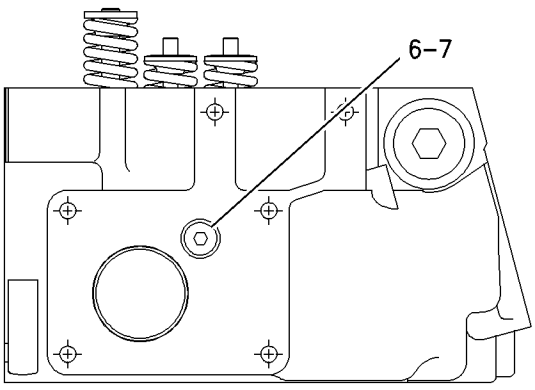

FRONT VIEW

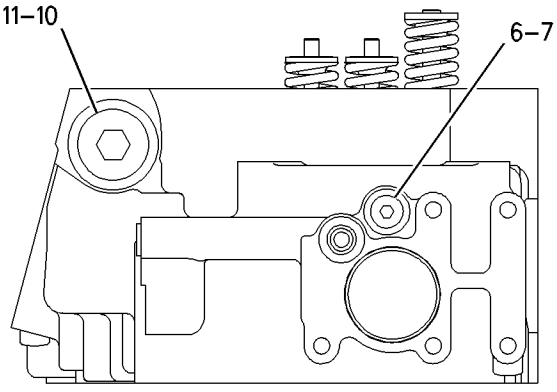

REAR VIEW

GRAPHIC #1 **<END>** g00808348

205-1275 CYLINDER HEAD GP

S/N: BMA1100-UP

FIELD REPLACEMENT FOR 205-1274—PAGE 27

SMCS-1100, 1103, 1104, 1105, 1106, 1108, 1109, 1115, 1117, 1121, 1124, 1125

i01698531

NOTE	REF NO	GRAPHIC REF	PART NUMBER	QTY	PART NAME 1 2 3 4 5 6 (PRODUCT LEVEL)	SEE PAGE
Y	1	1	*205-1273*	1	CYLINDER HEAD GP	25
	2	1	**1N-5999**	2	PLUG	
	3	1	**7J-0204**	2	SEAL-O-RING	
	4	1	**9S-8002**	6	PLUG	
	5	1	**6V-5048**	6	SEAL-O-RING	
	6	1	**9S-8004**	4	PLUG	
	7	1	**3J-1907**	4	SEAL-O-RING	
	8	1	**9S-8006**	1	PLUG	
	9	1	**2M-9780**	1	SEAL-O-RING	
	10	1	**9S-9334**	1	PLUG	
	11	1	**9X-7712**	1	SEAL-O-RING	
	12	1	**9S-8005**	1	PLUG	
	13	1	**3K-0360**	1	SEAL-O-RING	
	14	1	**9S-8003**	1	PLUG (1/2-20 THD)	
	15	1	**1J-9671**	1	SEAL-O-RING	
	16	1	**9S-4191**	1	PLUG	
		1	**3J-1907**	1	SEAL-O-RING	

Y-SEPARATE ILLUSTRATION

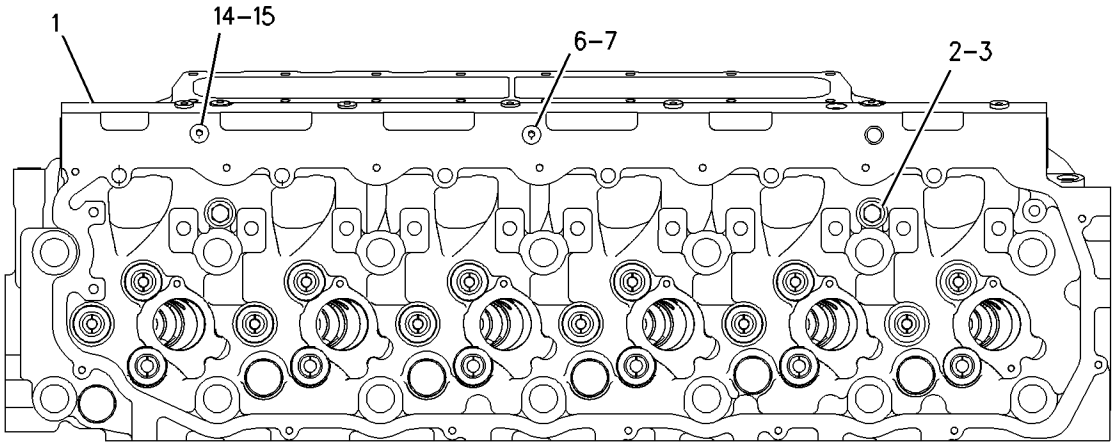

TOP VIEW

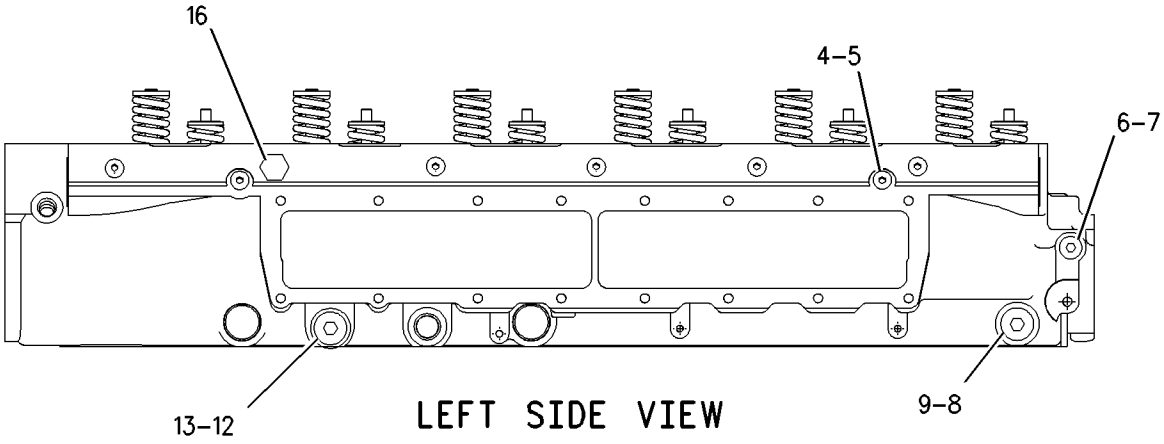

LEFT SIDE VIEW

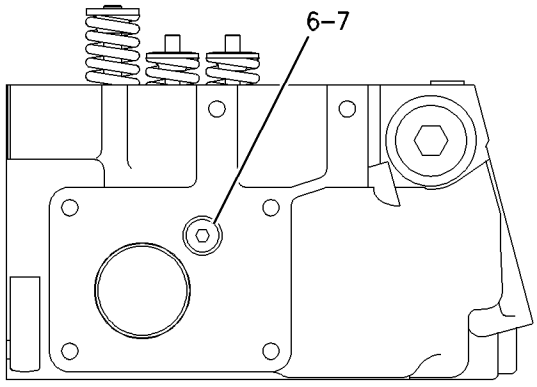

FRONT VIEW

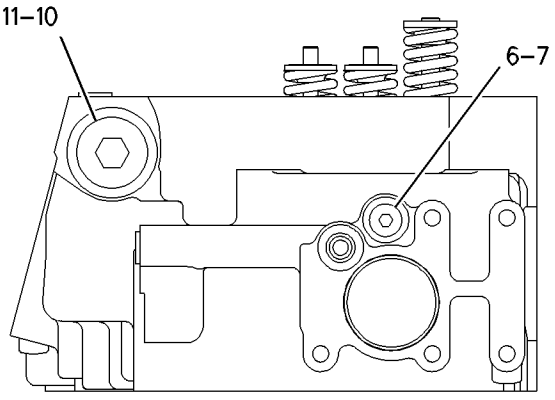

REAR VIEW

GRAPHIC #1 **<END>** g00867459

189-2227 DAMPER & PULLEY GP

S/N: BMA1100-UP
PART OF 191-4479, 191-4481 ENGINE AR-COMPLETE
ALSO AN ATTACHMENT

SMCS-1205 **i01802473**

NOTE	REF NO	GRAPHIC REF	PART NUMBER	QTY	PART NAME 1 2 3 4 5 6 (PRODUCT LEVEL)	SEE PAGE
	1	1	**2W-7381**	1	WASHER	
	2	1	**167-8121**	1	DAMPER AS	
	3	1	**189-2233**	1	PULLEY-CRANKSHAFT	
M	4	1	**8T-3666**	4	BOLT (M14X60MM)	
	5	1	**8T-4121**	8	WASHER-HARD (11X21X2.5MM THK)	
M	6	1	**8T-4182**	8	BOLT (M10X1.5X45MM)	

M-METRIC PART

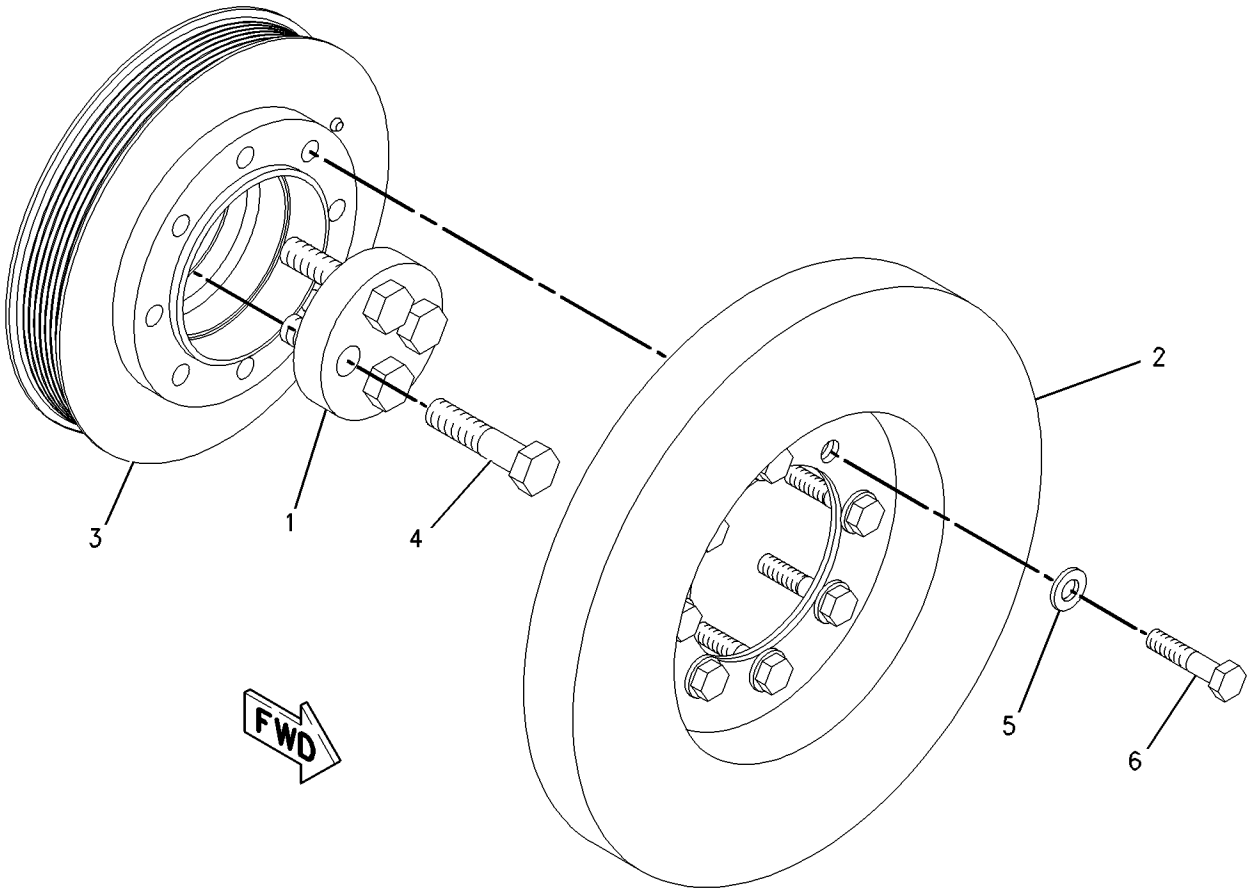

GRAPHIC #1 **<END>** g00729620

7C-4532 DRAIN GP-ENGINE OIL—SHUTOFF VALVE

S/N: BMA1100-UP
PROVIDES A DRAIN VALVE FOR OIL PAN DRAIN
PART OF 191-4479, 191-4481 ENGINE AR-COMPLETE
FOR USE WITH OIL PAN & DRAIN LINE
ALSO AN ATTACHMENT

SMCS-1302 **i01889819**

NOTE	REF NO	GRAPHIC REF	PART NUMBER	QTY	PART NAME 1 2 3 4 5 6 (PRODUCT LEVEL)	SEE PAGE
	1	1	**3K-0360**	1	SEAL-O-RING (SUMP DRAIN)	
	2	1	**6V-7238**	1	VALVE-SHUTOFF (SUMP DRAIN)	

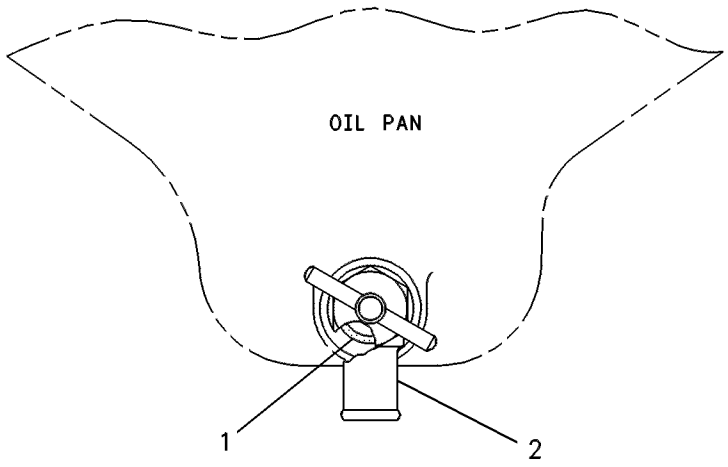

GRAPHIC #1 **<END>** g00117513

7C-4566 DRAIN GP-ENGINE OIL—MAGNETIC PLUG

S/N: BMA1100-UP
PART OF 191-4479, 191-4481 ENGINE AR-COMPLETE
ALSO AN ATTACHMENT

SMCS-1302 **i01802928**

NOTE	REF NO	GRAPHIC REF	PART NUMBER	QTY	PART NAME 1 2 3 4 5 6 (PRODUCT LEVEL)	SEE PAGE
	1	1	**118-3619**	1	PLUG (MAGNETIC OIL DRAIN)	
	2	1	**3K-0360**	1	SEAL-O-RING	

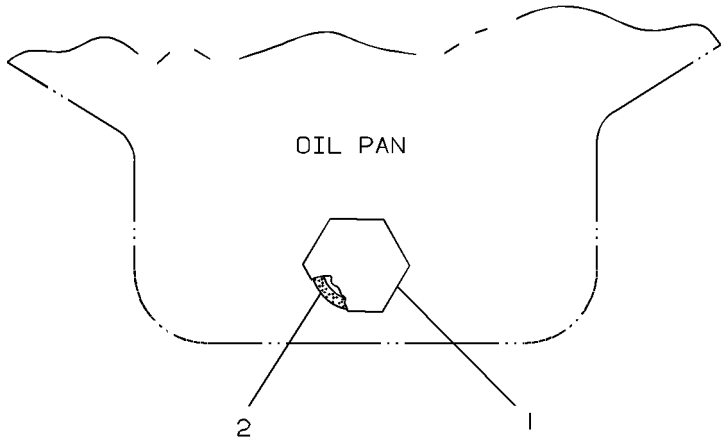

GRAPHIC #1 **<END>** g00125672

219-6339 DRAIN GP-ENGINE OIL–EXTENSION

S/N: CBJ1-UP

PART OF 195-1046 INSTALLATION AR-ENGINE

SMCS-1302 **i01775493**

NOTE	REF NO	GRAPHIC REF	PART NUMBER	QTY	PART NAME 1 2 3 4 5 6 (PRODUCT LEVEL)	SEE PAGE
	1	1	**8T-0154**	1	CLAMP-HOSE	
E	2	1	**136-1953**		HOSE (30CM)	

E-ORDER BY THE CENTIMETER

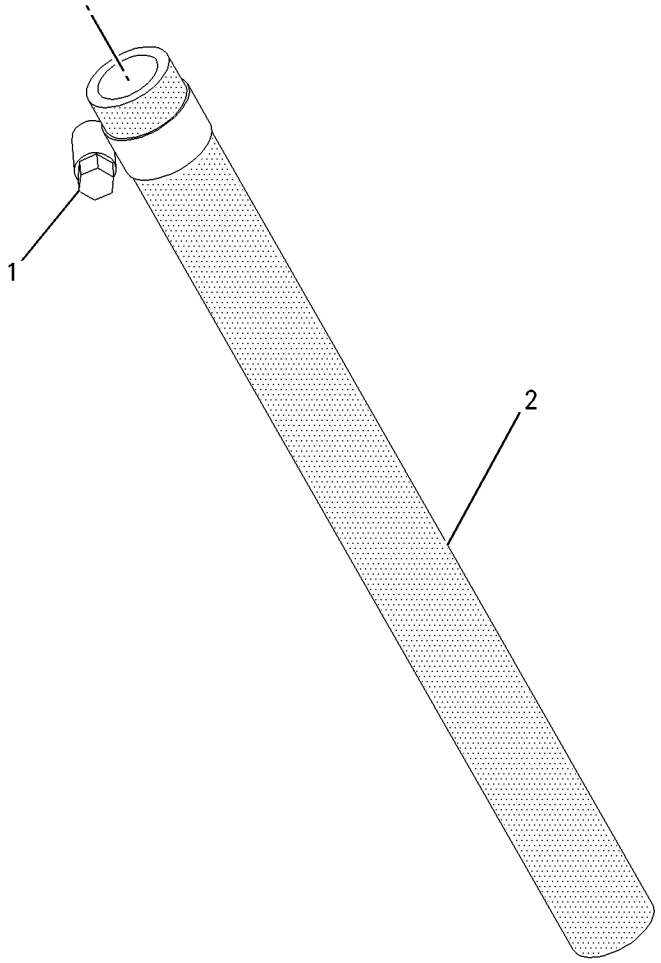

GRAPHIC #1 **<END>** g00911098

BASIC ENGINE

189-2203 DRIVE GP-FAN

S/N: BMA1100-UP
PART OF 189-2223 DRIVE GP-FAN
ALSO AN ATTACHMENT

SMCS-1357, 1358, 1359, 1390 **i01889675**

NOTE	REF NO	GRAPHIC REF	PART NUMBER	QTY	PART NAME 1 2 3 4 5 6 (PRODUCT LEVEL)	SEE PAGE
	1	1	**4W-2042**	1	SPACER (35.3X45.5X38.331MM THK)	
	2	1	**5S-9062**	1	SPACER (35.032X50.8X15.88MM THK)	
	3	1	**7C-8369**	1	HUB	
	4	1	**7C-8634**	1	PLATE	
	5	1	**128-9571**	2	CONE	
	6	1	**128-9572**	2	CUP	
	7	1	**189-2205**	1	BRACKET AS-FAN	
M	8	1	**6V-8004**	1	BOLT (M12X1.75X120MM)	
	9	1	**6V-9748**	1	SEAL-LIP	
	10	1	**7C-8370**	1	CAP-DUST	

M-METRIC PART

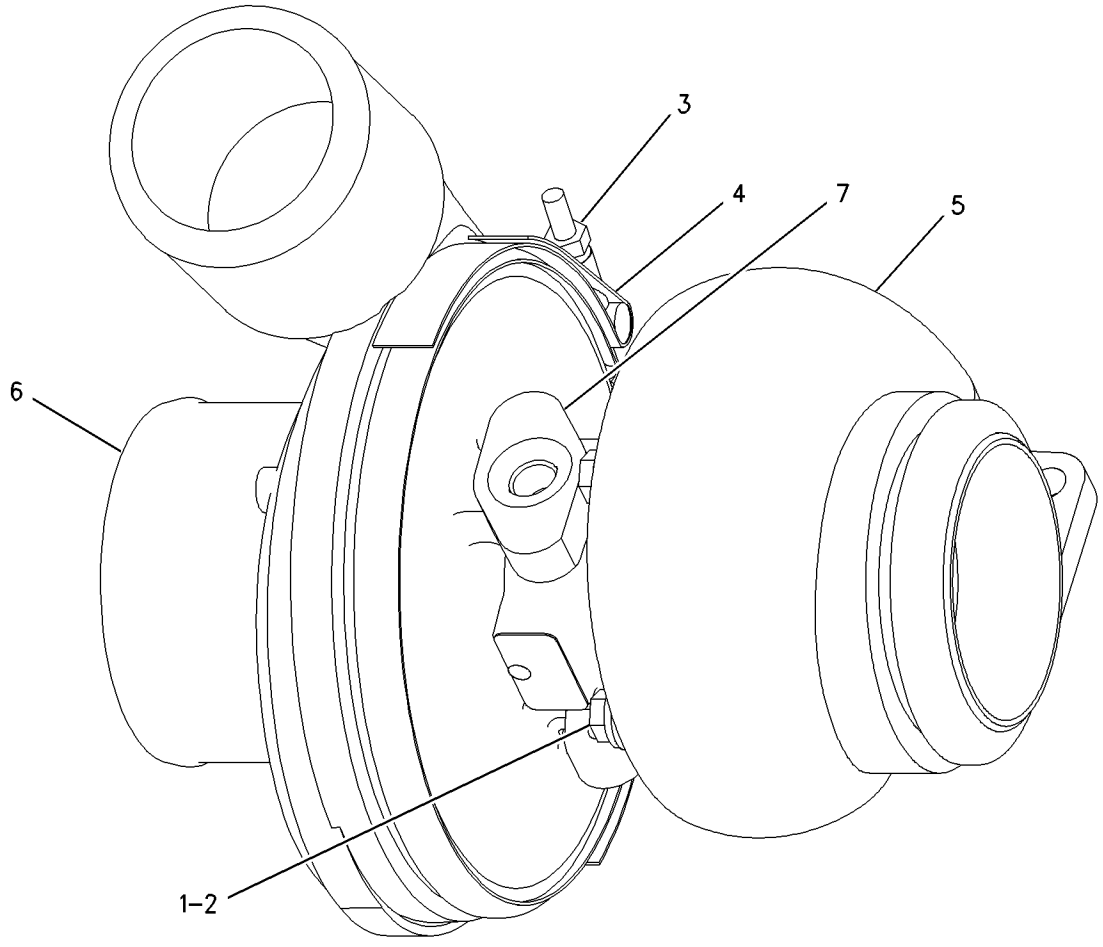

GRAPHIC #1 **<END>** g00759808

189-2223 DRIVE GP-FAN–BELT

S/N: BMA1100-UP
PART OF 191-4479, 191-4481 ENGINE AR-COMPLETE
ALSO AN ATTACHMENT

SMCS-1357, 1358, 1359, 1390 **i01802471**

NOTE	REF NO	GRAPHIC REF	PART NUMBER	QTY	PART NAME 1 2 3 4 5 6 (PRODUCT LEVEL)	SEE PAGE
Y	1	1	**189-2203**	1	DRIVE GP-FAN	35
M	2	1	**6V-4249**	2	BOLT (M10X1.5X50 MM)	
M	3	1	**6V-5843**	2	BOLT (M10X1.50X45MM)	

M-METRIC PART
Y-SEPARATE ILLUSTRATION

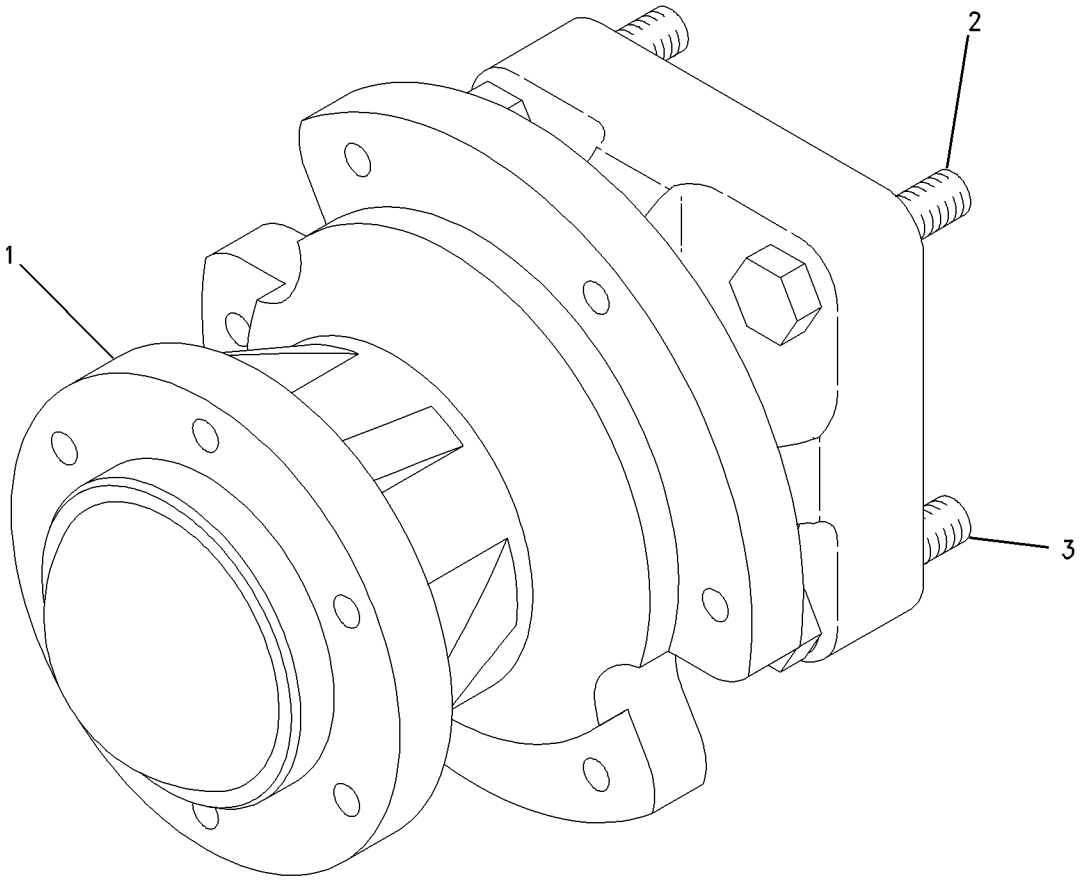

GRAPHIC #1 **<END>** g00824850

BASIC ENGINE

228-5288 FASTENER GP-FRONT COVER

S/N: BMA1100-UP

PART OF 191-4479, 191-4481 ENGINE AR-COMPLETE

ALSO AN ATTACHMENT

SMCS-1151, 1166 **i01802323**

NOTE	REF NO	GRAPHIC REF	PART NUMBER	QTY	PART NAME 1 2 3 4 5 6 (PRODUCT LEVEL)	SEE PAGE
M	1	1	**9X-2098**	1	STUDBOLT (M8X1.25X67.75MM OAL)	
	3	1	**210-3321**	2	STUD	
M	4	1	**6V-2317**	3	BOLT (M8X1.25X30MM)	
M	5	1	**8T-0100**	1	BOLT (M8X1.25X60MM)	
	6	1	**8T-4224**	1	WASHER-HARD (8.8X16X2MM THK)	

M-METRIC PART

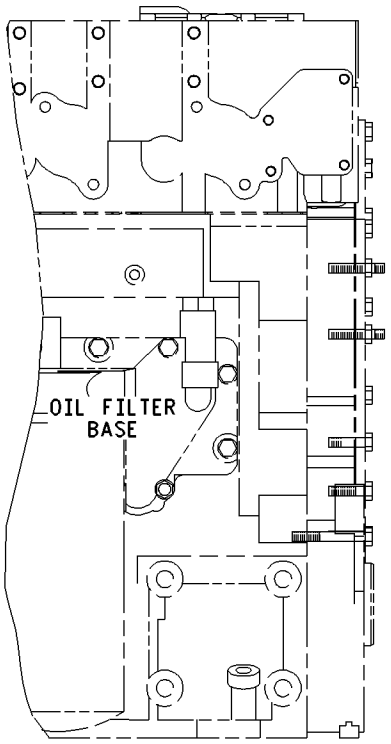

RIGHT SIDE VIEW

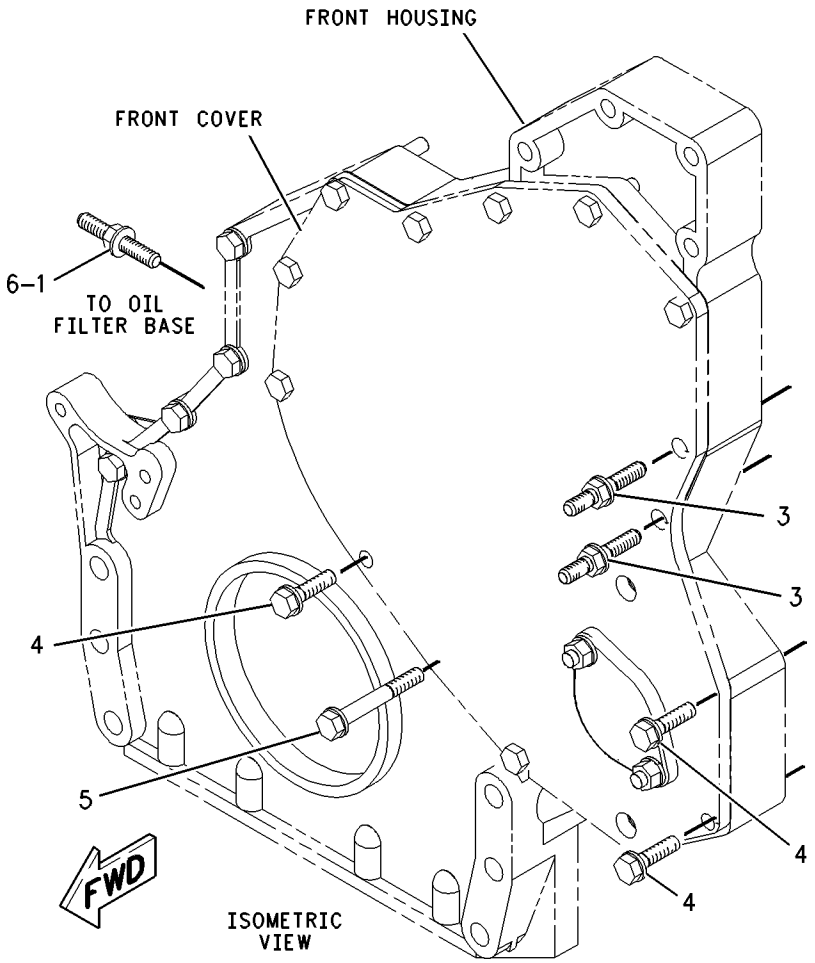

GRAPHIC #1 **<END>** g00925514

116-4556 FASTENER GP-FRONT HOUSING

S/N: BMA1100-UP
PART OF 191-4479, 191-4481 ENGINE AR-COMPLETE
ALSO AN ATTACHMENT

SMCS-1151 **i01487429**

NOTE	REF NO	GRAPHIC REF	PART NUMBER	QTY	PART NAME 1 2 3 4 5 6 (PRODUCT LEVEL)	SEE PAGE
M	1	1	**6V-8336**	6	BOLT (M12X1.75X70MM)	
		1	**5P-8245**	6	WASHER-HARD (13.5X25.5X3MM THK)	

M-METRIC PART

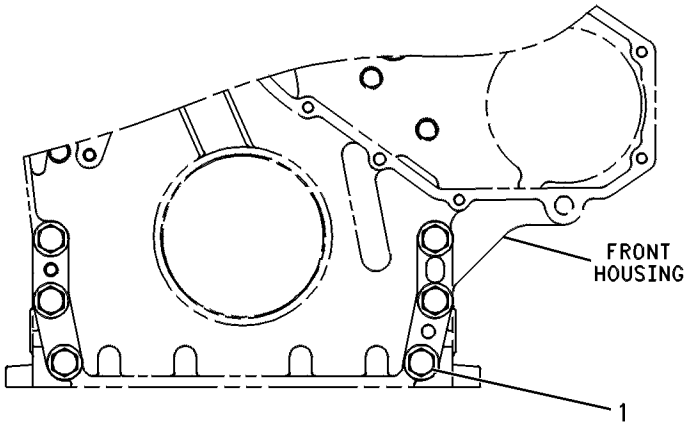

FRONT VIEW

GRAPHIC #1 **<END>** g00244671

BASIC ENGINE

224-2637 FLYWHEEL GP

S/N: BMA1100-UP

PART OF 191-4479, 191-4481 ENGINE AR-COMPLETE

ALSO AN ATTACHMENT

SMCS-1156, 1158 **i01804599**

NOTE	REF NO	GRAPHIC REF	PART NUMBER	QTY	PART NAME 1 2 3 4 5 6 (PRODUCT LEVEL)	SEE PAGE
	1	1	**219-4457**	1	FLYWHEEL AS	
	1A	1	**163-1387**	1	GEAR-FLYWHEEL (134 TEETH)	
	2	1	**3E-3213**	1	PIN-SPRING	
	3	1	**5P-8245**	8	WASHER-HARD (13.5X25.5X3MM THK)	
M	4	1	**6V-8197**	8	BOLT (M12X1.75X40MM)	

M-METRIC PART

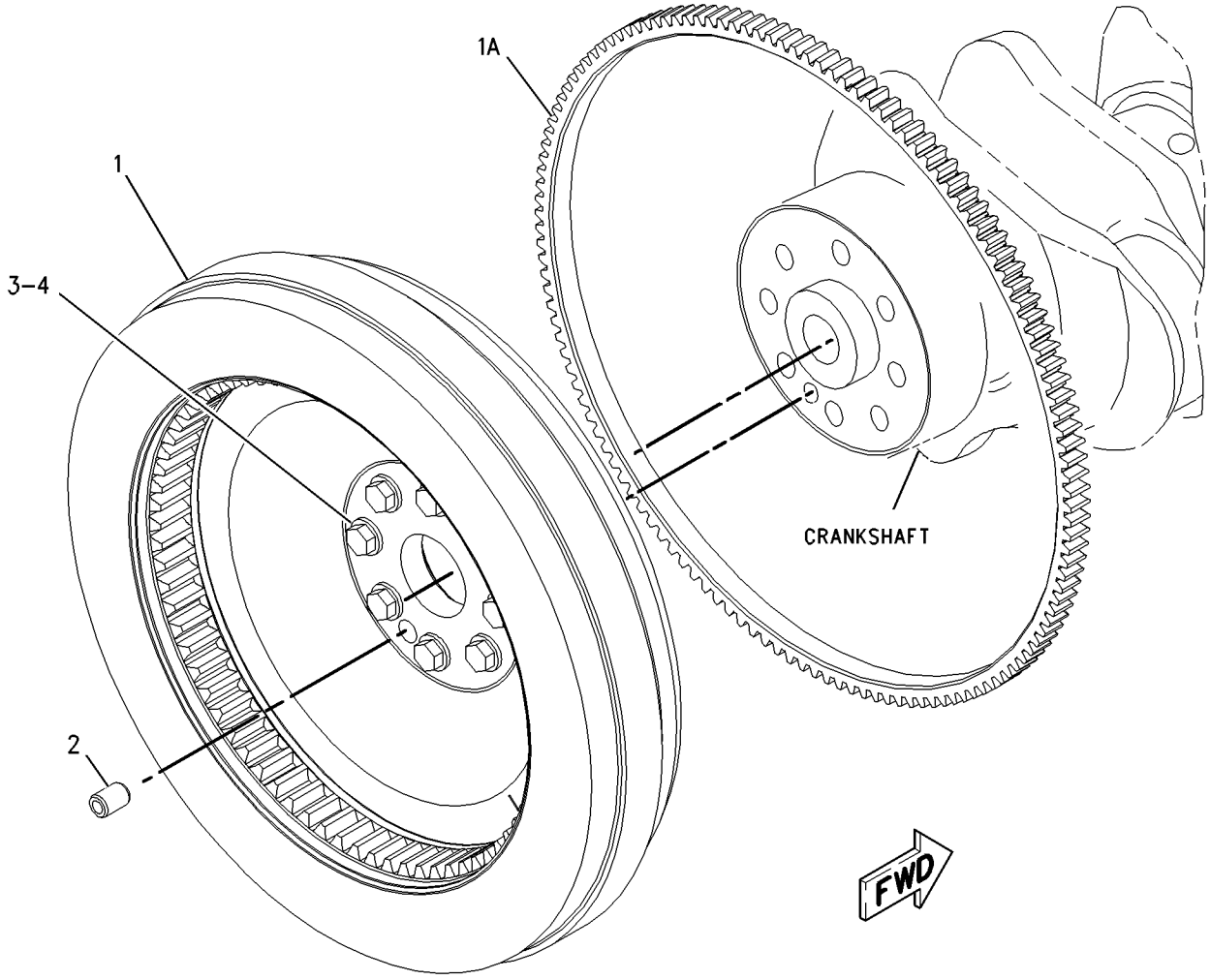

GRAPHIC #1 **<END>** g00901192

205-1321 GEAR GP-FRONT

S/N: BMA1100-UP
PART OF 191-4482 ENGINE AR-CORE
ALSO AN ATTACHMENT

SMCS-1206 **i01696307**

NOTE	REF NO	GRAPHIC REF	PART NUMBER	QTY	PART NAME 1 2 3 4 5 6 (PRODUCT LEVEL)	SEE PAGE
	1	1	**113-6069**	1	PLATE-THRUST	
	2	1	**115-4219**	1	PLATE-RETAINING	
	3	1	**200-4495**	1	SHAFT-IDLER	
	4	1	**205-1320**	1	GEAR AS-IDLER (50 TEETH)	
	4A	1	**115-4072**	1	BEARING	
M	5	1	**136-4183**	1	BOLT-12 POINT HEAD (M10X1.5X30MM)	
M	6	1	**6V-5843**	2	BOLT (M10X1.50X45MM)	

M-METRIC PART

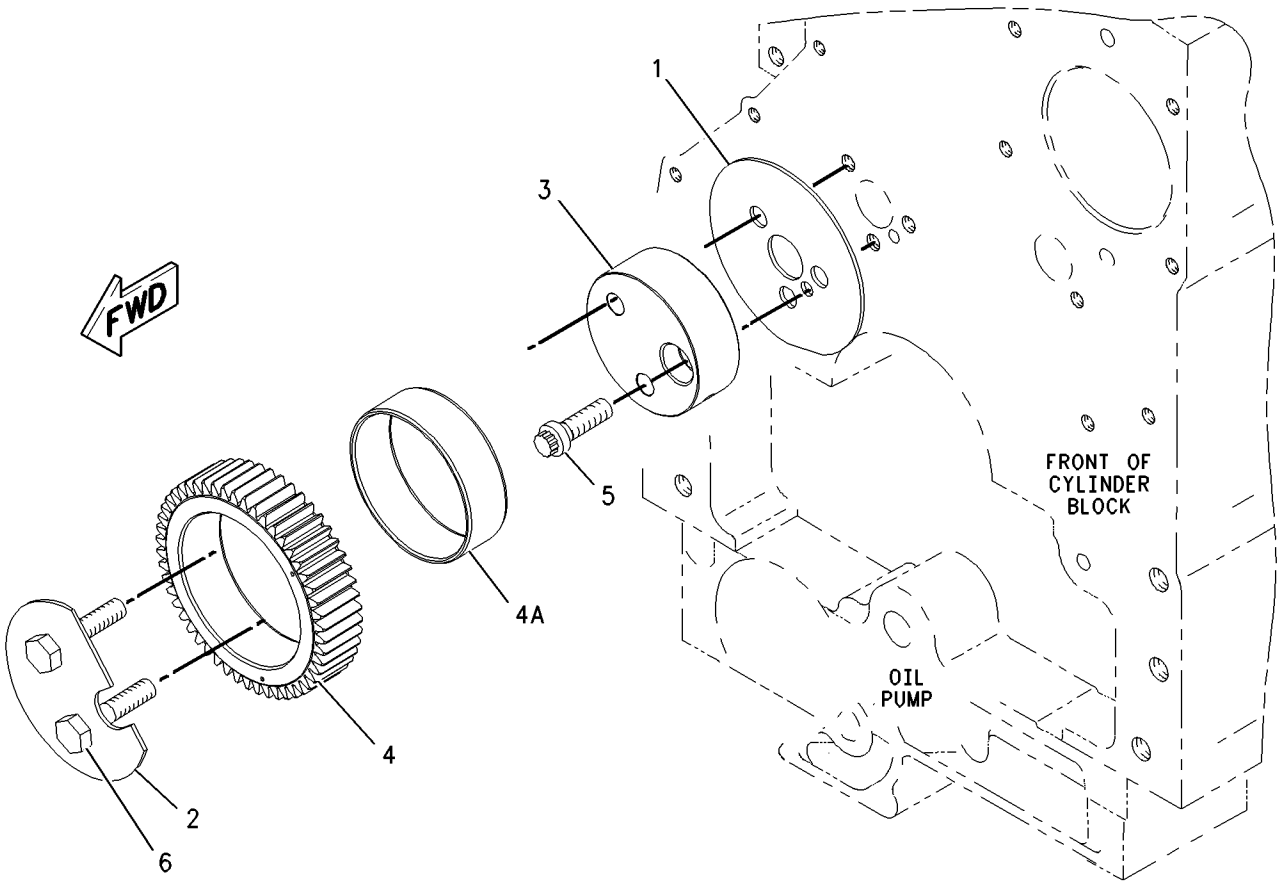

GRAPHIC #1 **<END>** g00873940

4W-1103 HOUSING GP-FLYWHEEL

S/N: BMA1100-UP
SAE NO.2. PROVIDES STARTING MOTOR MOUNTING FLANGE ON RH SIDE
PART OF 191-4479, 191-4481 ENGINE AR-COMPLETE
ALSO AN ATTACHMENT

SMCS-1157 **i00350052**

NOTE	REF NO	GRAPHIC REF	PART NUMBER	QTY	PART NAME 1 2 3 4 5 6 (PRODUCT LEVEL)	SEE PAGE
	1	1	**100-6551**	1	HOUSING-FLYWHEEL	
	2	1	**2P-1294**	1	PLUG-SEAL	
M	3	1	**6V-5842**	2	BOLT (M10X1.50X40MM)	
M	4	1	**7X-3347**	10	BOLT-LOCKING (M14X2X45MM)	
	5	1	**9S-4182**	1	PLUG (7/16-20 THD)	
	6	1	**9S-4183**	1	PLUG (1 1/16-12 THD)	

M-METRIC PART

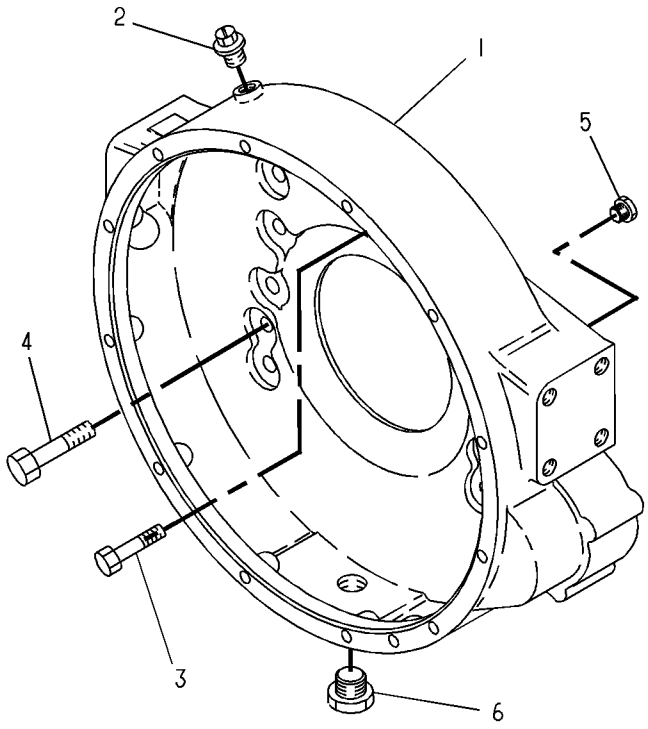

GRAPHIC #1 **<END>** g00108334

133-5055 HOUSING GP-FRONT

S/N: BMA1100-UP
PART OF 191-4482 ENGINE AR-CORE
ALSO AN ATTACHMENT

SMCS-1151, 1162, 1166 **i01615429**

NOTE	REF NO	GRAPHIC REF	PART NUMBER	QTY	PART NAME 1 2 3 4 5 6 (PRODUCT LEVEL)	SEE PAGE
	1	1	**128-3883**	1	HOUSING-FRONT	
M	2	1	**6V-5217**	8	BOLT (M8X1.25X20MM)	
	3	1	**9M-1974**	12	WASHER-HARD (8.8X16X2MM THK)	
M	4	1	**6V-3918**	4	BOLT (M8X1.25X50MM)	
B	5	1	**1U-8846**		SEALANT-GASKET	

B-USE AS REQUIRED
M-METRIC PART

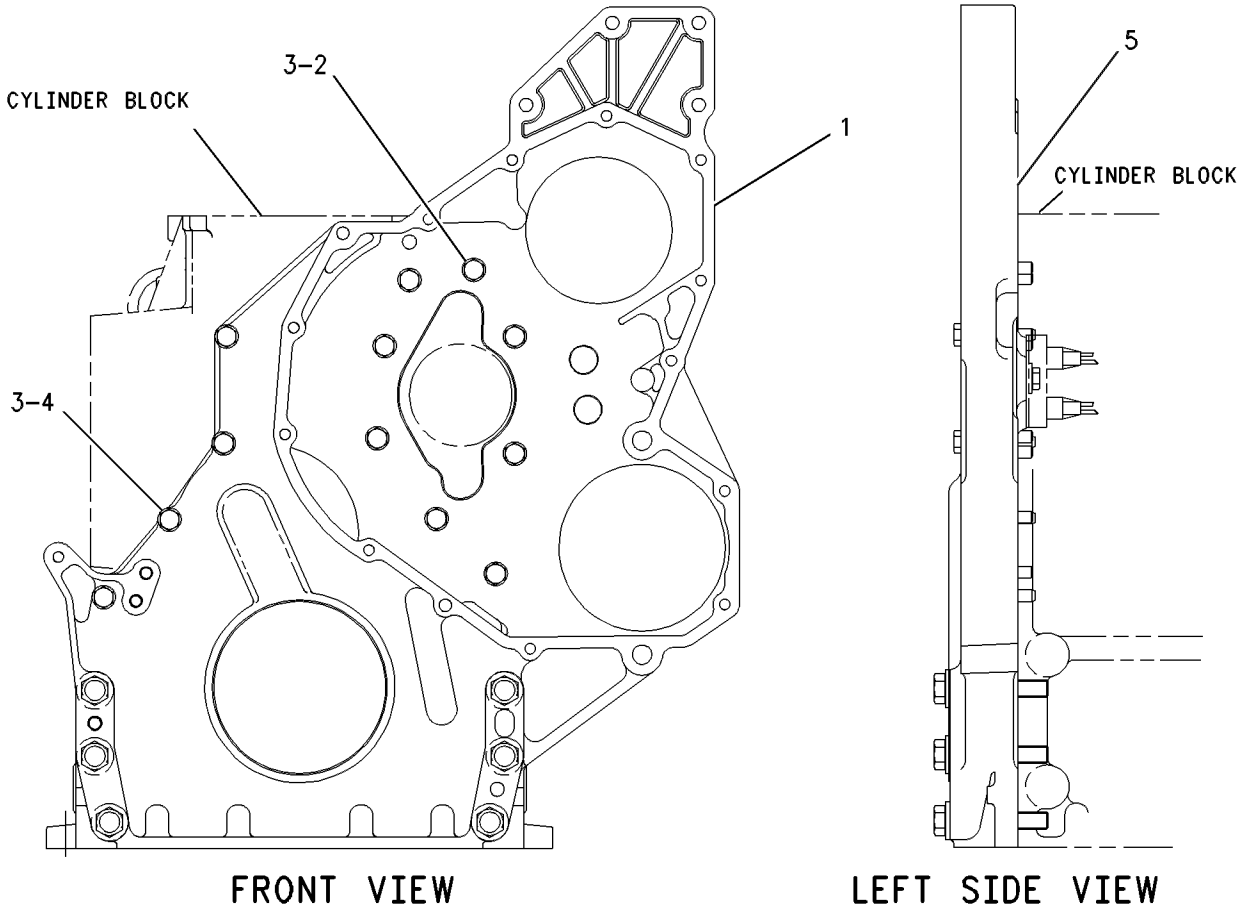

GRAPHIC #1 **<END>** g00285827

139-4081 LIFTER GP-VALVE

S/N: BMA1100-UP
PART OF 135-2969 VALVE MECHANISM GP
ALSO AN ATTACHMENT

SMCS-1112 **i01615435**

NOTE	REF NO	GRAPHIC REF	PART NUMBER	QTY	PART NAME 1 2 3 4 5 6 (PRODUCT LEVEL)	SEE PAGE
	1	1	**139-9476**	1	SHAFT AS-LIFTER	
		1	**2D-6642**	2	BALL	
	2	1	**7E-6794**	4	ARM AS-INJECTOR	
	3	1	**139-4084**	2	SPACER-FOLLOWER	

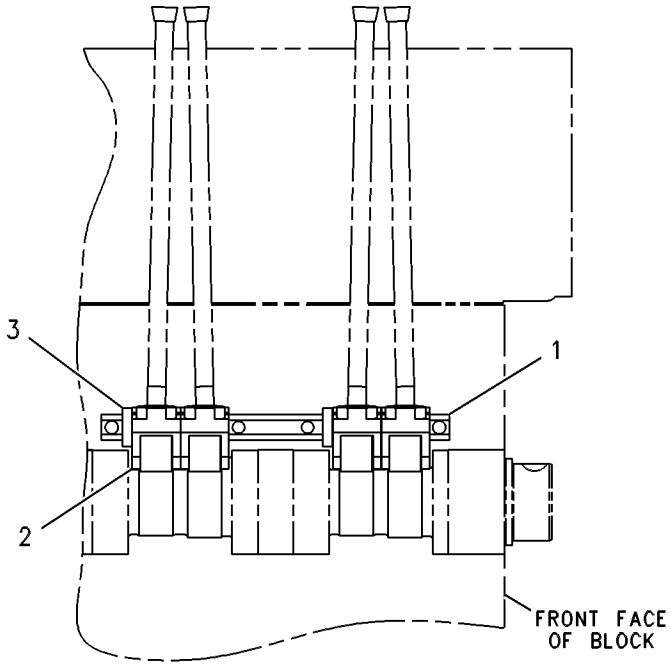

RIGHT SIDE VIEW

GRAPHIC #1 **<END>** g00288708

159-2565 LIFTING GP-ENGINE

S/N: BMA1100-UP
PART OF 191-4481 ENGINE AR-COMPLETE
AN ATTACHMENT

SMCS-1122 **i01804583**

NOTE	REF NO	GRAPHIC REF	PART NUMBER	QTY	PART NAME 1 2 3 4 5 6 (PRODUCT LEVEL)	SEE PAGE
	1	1	**187-7706**	1	PLATE-LIFTING	
	2	1	**201-0438**	1	LIFTING AS	
M	3	1	**6V-1820**	4	BOLT (M10X1.50X30MM)	
	4	1	**8T-4121**	4	WASHER-HARD (11X21X2.5MM THK)	

M-METRIC PART

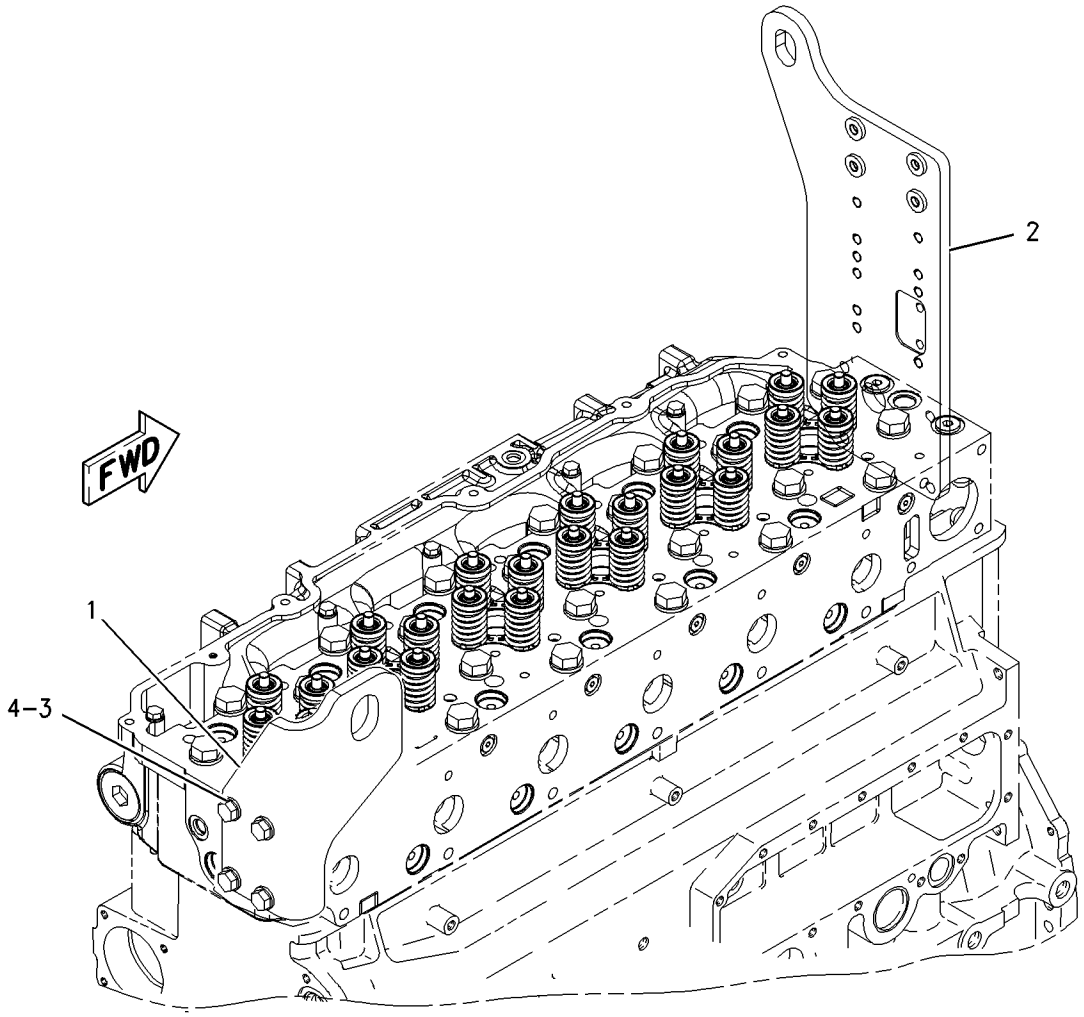

GRAPHIC #1 **<END>** g00782800

201-5515 MOUNTING GP-ENGINE

S/N: CBJ1-UP

PART OF 195-1046 INSTALLATION AR-ENGINE

SMCS-1152, 1153, 1154 **i01843271**

NOTE	REF NO	GRAPHIC REF	PART NUMBER	QTY	PART NAME 1 2 3 4 5 6 (PRODUCT LEVEL)	SEE PAGE
	1	1	**9W-6582**	4	SLEEVE	
	2	1	**9W-9930**	4	MOUNT AS	
	3	1	**8T-4123**	4	WASHER-PLATED (22X35X3.5MM THK)	
M	4	1	**8T-6381**	4	BOLT (M20X2.5X120MM)	
	5	1	**9W-6584**	4	WASHER (20.5X114X10MM THK)	

M-METRIC PART

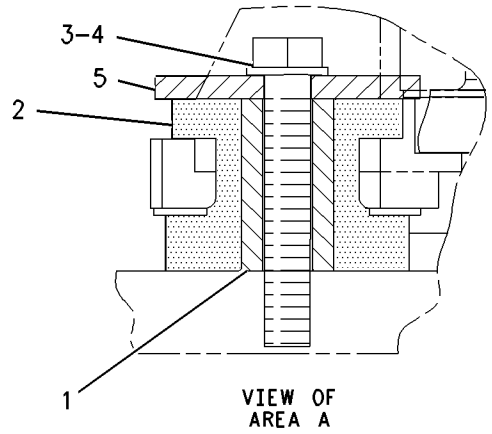

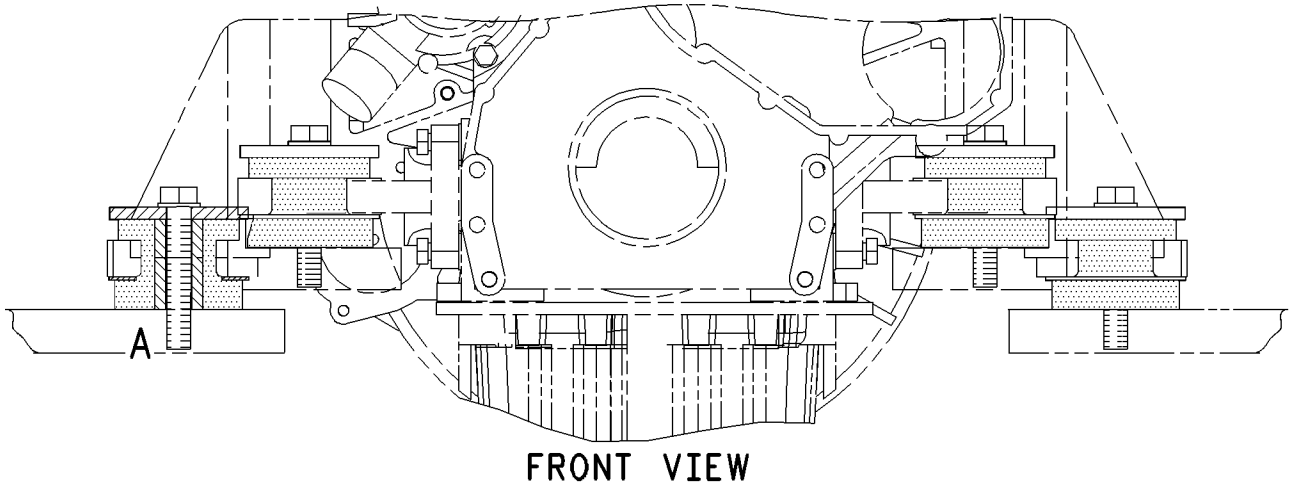

GRAPHIC #1 **<END>** g00769036

203-5866 MOUNTING GP-ENGINE

S/N: BMA1100-UP
PART OF 191-4479, 191-4481 ENGINE AR-COMPLETE
ALSO AN ATTACHMENT

SMCS-1152, 1153, 1154 **i01804594**

NOTE	REF NO	GRAPHIC REF	PART NUMBER	QTY	PART NAME 1 2 3 4 5 6 (PRODUCT LEVEL)	SEE PAGE
	1	1	**7C-1675**	2	SUPPORT	
	2	1	**203-5856**	2	SUPPORT AS	
	3	1	**5P-8246**	8	WASHER-HARD (15.5X29X3MM THK)	
	4	1	**5P-8247**	8	WASHER-HARD (17X32X3.5MM THK)	
M	5	1	**8T-0226**	8	BOLT (M14X2X45 MM)	
M	6	1	**8T-0358**	8	BOLT (M16X2.0X90MM)	

M-METRIC PART

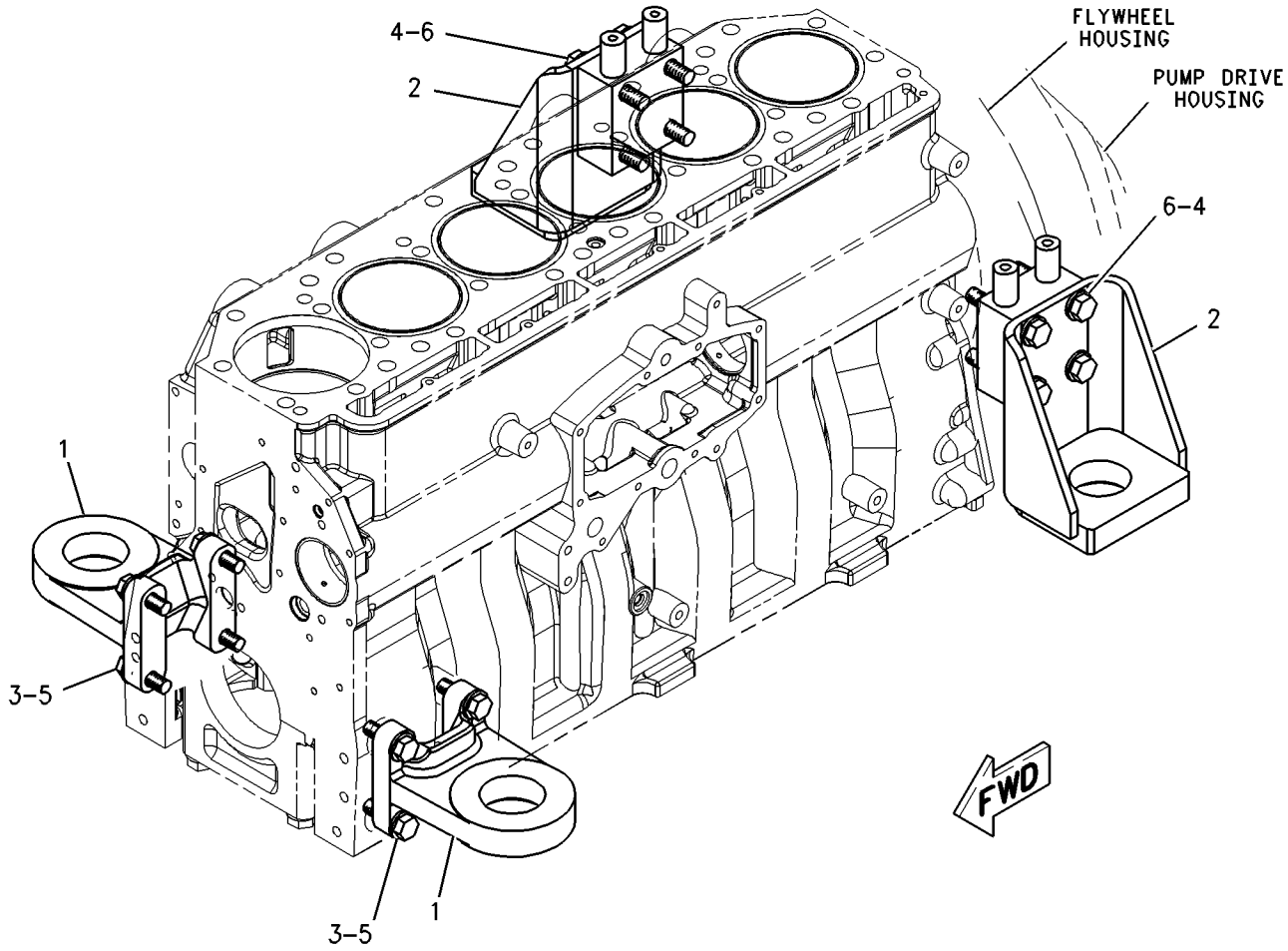

GRAPHIC #1 **<END>** g00923423

BASIC ENGINE

189-2222 MOUNTING GP-FAN DRIVE

S/N: BMA1100-UP
PART OF 191-4479, 191-4481 ENGINE AR-COMPLETE
ALSO AN ATTACHMENT

SMCS-1359 **i01802556**

NOTE	REF NO	GRAPHIC REF	PART NUMBER	QTY	PART NAME 1 2 3 4 5 6 (PRODUCT LEVEL)	SEE PAGE
M	1	1	**142-3953**	2	STUD	
	2	1	**206-9265**	1	SUPPORT AS-FAN	
M		1	**8T-3490**	1	NUT-WELD (M10X1.5 THD)	
	3	1	**189-2194**	1	BRACKET AS	
M		1	**8T-3490**	2	NUT-WELD (M10X1.5 THD)	
M	4	1	**6V-4248**	2	BOLT (M10X1.50X25MM)	
	5	1	**6V-5839**	8	WASHER (11X21X2.5MM THK)	
M	6	1	**6V-5842**	4	BOLT (M10X1.50X40MM)	
M	7	1	**8T-4133**	2	NUT (M10X1.5 THD)	
	8	1	**6E-6549**	2	PLATE	

M-METRIC PART

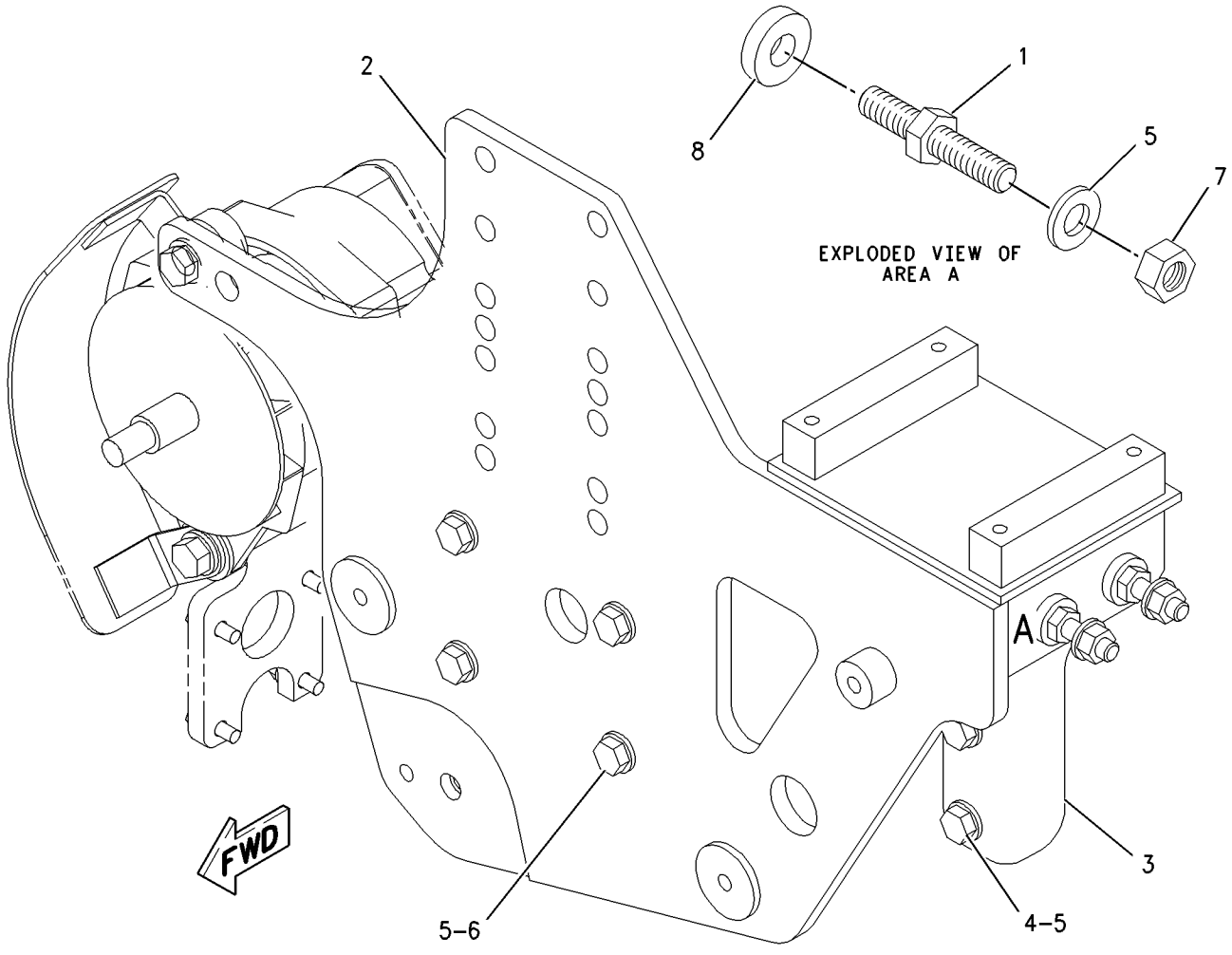

GRAPHIC #1 **<END>** g00923284

196-0077 PAN GP-OIL—ENGINE

S/N: BMA1100-UP
PART OF 191-4479, 191-4481 ENGINE AR-COMPLETE
ALSO AN ATTACHMENT

SMCS-1302 **i01802475**

NOTE	REF NO	GRAPHIC REF	PART NUMBER	QTY	PART NAME 1 2 3 4 5 6 (PRODUCT LEVEL)	SEE PAGE
	1	1	**9S-8006**	1	PLUG (OIL)	
	3	1	**166-2905**	1	SEAL-INTEGRAL	
	4	1	**157-8371**	1	PAN-OIL	
	5	1	**2M-9780**	1	SEAL-O-RING	
M	6	1	**6V-3918**	36	BOLT (M8X1.25X50MM)	
	7	1	**9M-1974**	36	WASHER-HARD (8.8X16X2MM THK)	
B	8	1	**1U-8846**		SEALANT-GASKET	

B-USE AS REQUIRED
M-METRIC PART

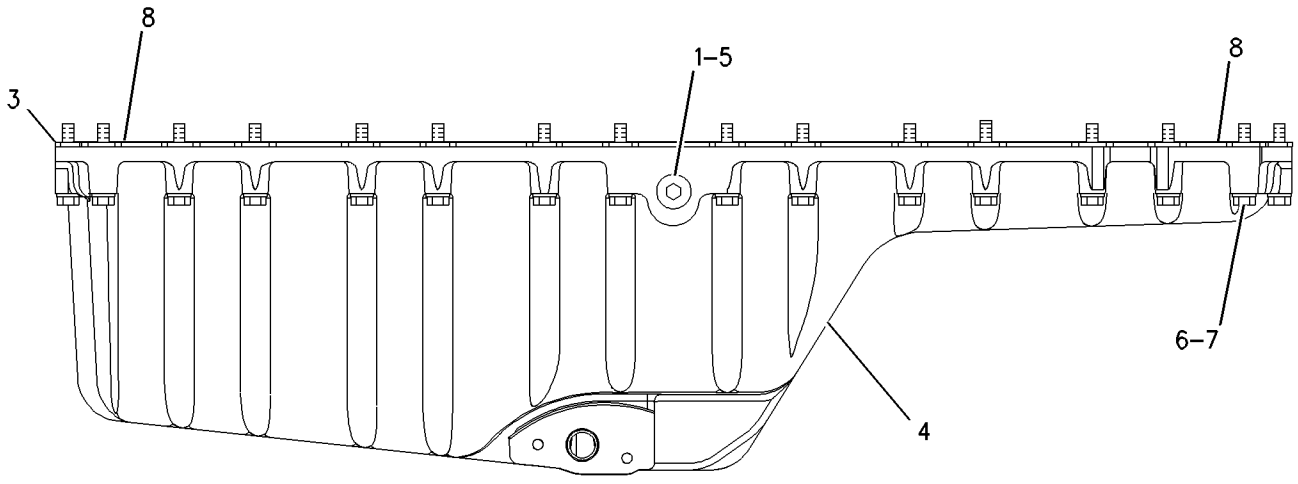

LEFT SIDE VIEW

GRAPHIC #1 **<END>** g00923679

161-8420 PISTON & ROD GP*R

S/N: BMA1100-UP
16:1 RATIO
PART OF 191-4482 ENGINE AR-CORE
ALSO AN ATTACHMENT

SMCS-1213, 1214, 1215, 1218, 1219, 1225, 1239 **i01746930**

NOTE	REF NO	GRAPHIC REF	PART NUMBER	QTY	PART NAME 1 2 3 4 5 6 (PRODUCT LEVEL)	SEE PAGE
	1	1	**150-4621**	1	CROWN AS-PISTON	
	2	1	**132-5246**	1	RING-PISTON (TOP)	
	3	1	**197-9277**	1	RING-PISTON (INTERMEDIATE)	
	4	1	**107-7566**	1	RING-PISTON (OIL CONTROL)	
	5	1	**7C-0111**	2	RETAINER-PIN	
	6	1	**168-7226**	1	PIN-PISTON	
	7	1	**213-3193**	1	ROD AS-CONNECTING (NON-DRILLED)	
	7A	1	**2W-0027**	1	BEARING (EYE END)	
	7B	1	**195-0321**	2	BOLT	
	8	1	**7W-9415**	1	BEARING-CONNECTING ROD (STANDARD)	
A		1	**7C-6976**	1	BEARING (.25MM US)	
A		1	**7C-6977**	1	BEARING (.5MM US)	
	9	1	**187-1513**	1	SKIRT-PISTON	
	10	1	**135-5970**	1	TUBE AS-PISTON COOLING JET	
M	11	1	**6V-3940**	1	BOLT (M8X1.25X25MM)	

A-NOT PART OF THIS GROUP
M-METRIC PART

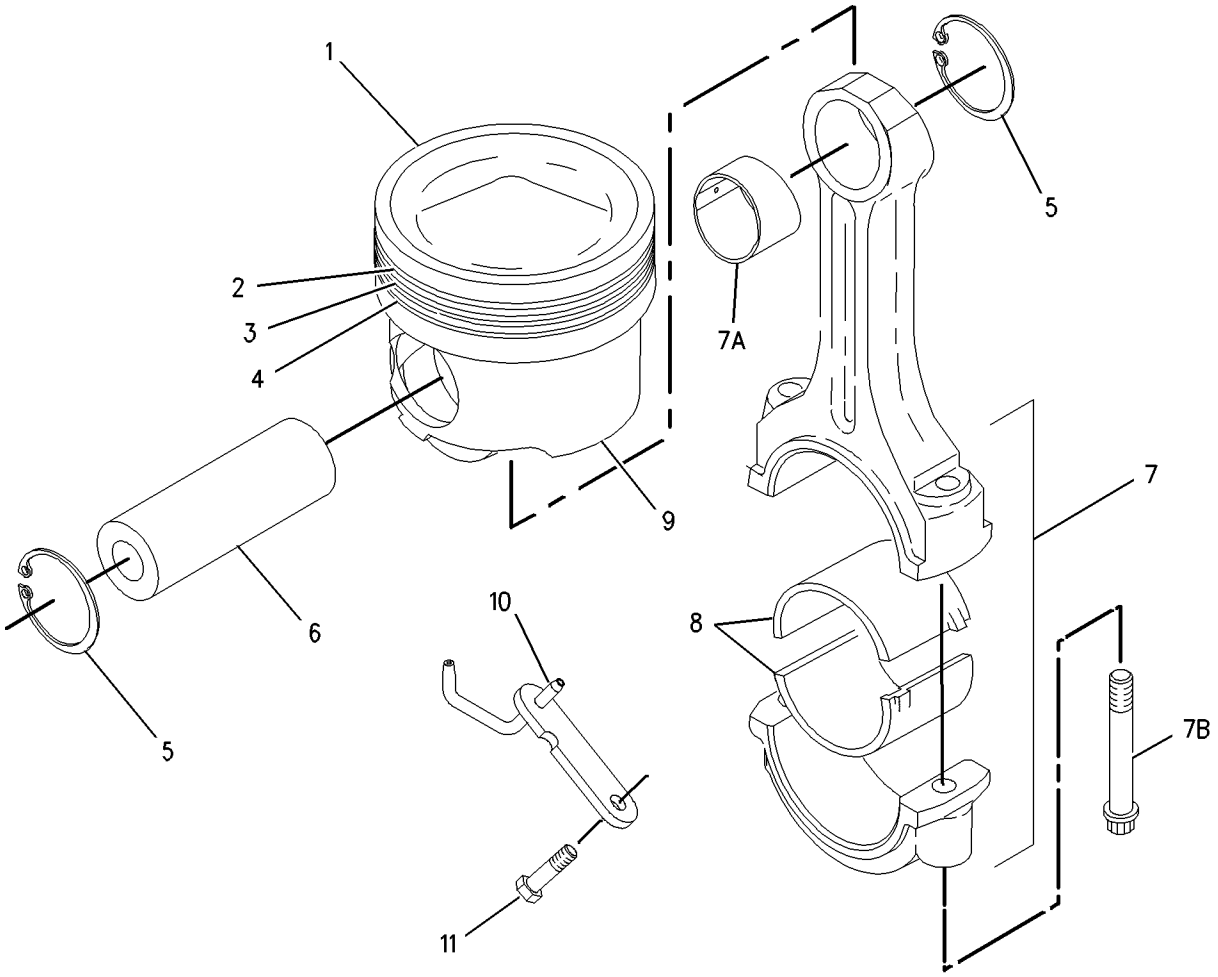

GRAPHIC #1 **<END>** g00878306

162-8068 PLUG GP-ENGINE

S/N: BMA1100-UP
PART OF 191-4479, 191-4481 ENGINE AR-COMPLETE
ALSO AN ATTACHMENT

SMCS-1000 **i01743134**

NOTE	REF NO	GRAPHIC REF	PART NUMBER	QTY	PART NAME 1 2 3 4 5 6 (PRODUCT LEVEL)	SEE PAGE
	1	1	**9S-8005**	1	PLUG	
	2	1	**3K-0360**	1	SEAL-O-RING	

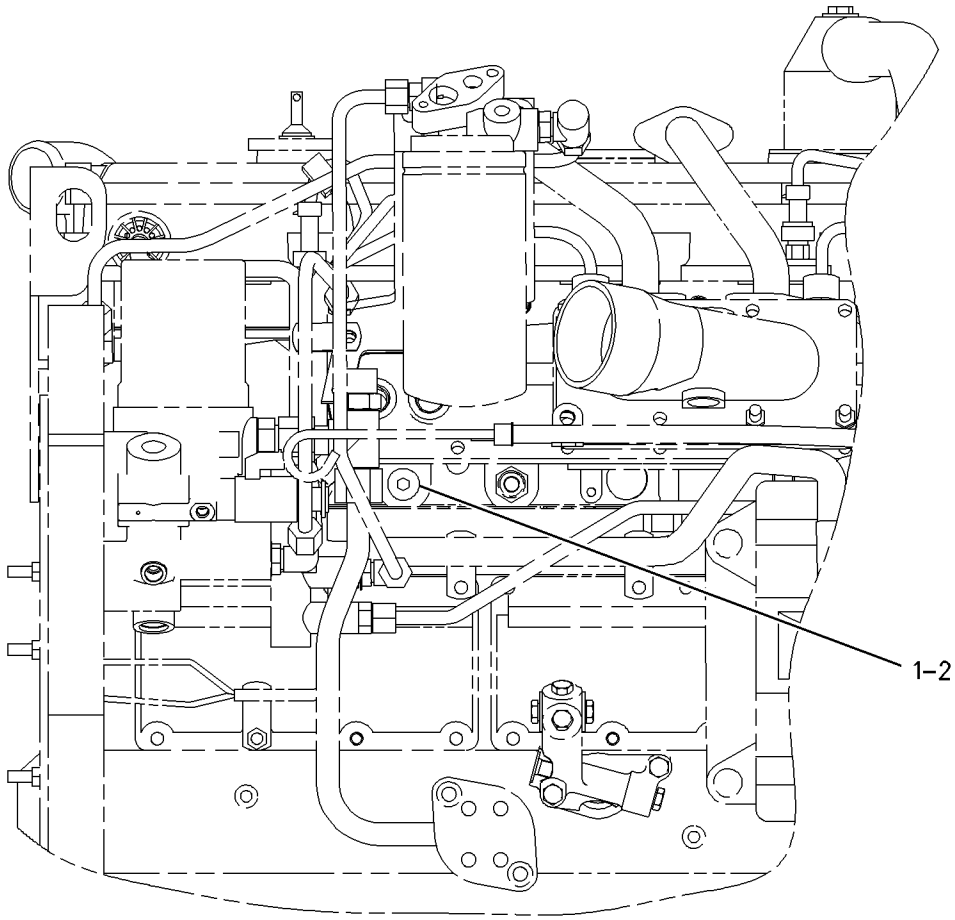

LEFT SIDE VIEW

GRAPHIC #1 **<END>** g00892422

123-8395 PULLEY AS-IDLER

S/N: CBJ1-UP

PART OF 189-2229 COMPRESSOR GP-REFRIGERANT

FOR USE WITH 3126 POSITIVE BUILD. CANNOT BE USED WITH CUSTOMER SUPPLIED REFRIGERANT COMPRESSOR. PERIPHERAL IRON

SMCS-1358 **i01849526**

NOTE	REF NO	GRAPHIC REF	PART NUMBER	QTY	PART NAME 1 2 3 4 5 6 (PRODUCT LEVEL)	SEE PAGE
	1	1	**124-7792**	1	PULLEY AS-IDLER	
	2	1	**124-7791**	1	COVER-DUST	
M	3	1	**124-7790**	1	BOLT-SPECIAL (M10X1.5X40MM)	

M-METRIC PART

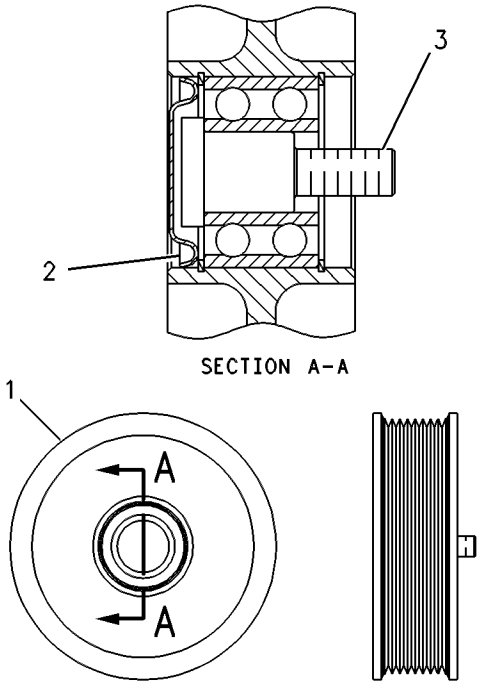

GRAPHIC #1 **<END>** g00288090

BASIC ENGINE

196-1791 PULLEY GP–ALTERNATOR

S/N: CBJ1-UP

PART OF 195-1046 INSTALLATION AR-ENGINE

SMCS-1425 **i01843144**

NOTE	REF NO	GRAPHIC REF	PART NUMBER	QTY	PART NAME 1 2 3 4 5 6 (PRODUCT LEVEL)	SEE PAGE
	1	1	**123-0858**	1	PULLEY-ALTERNATOR (8 GROOVE)	

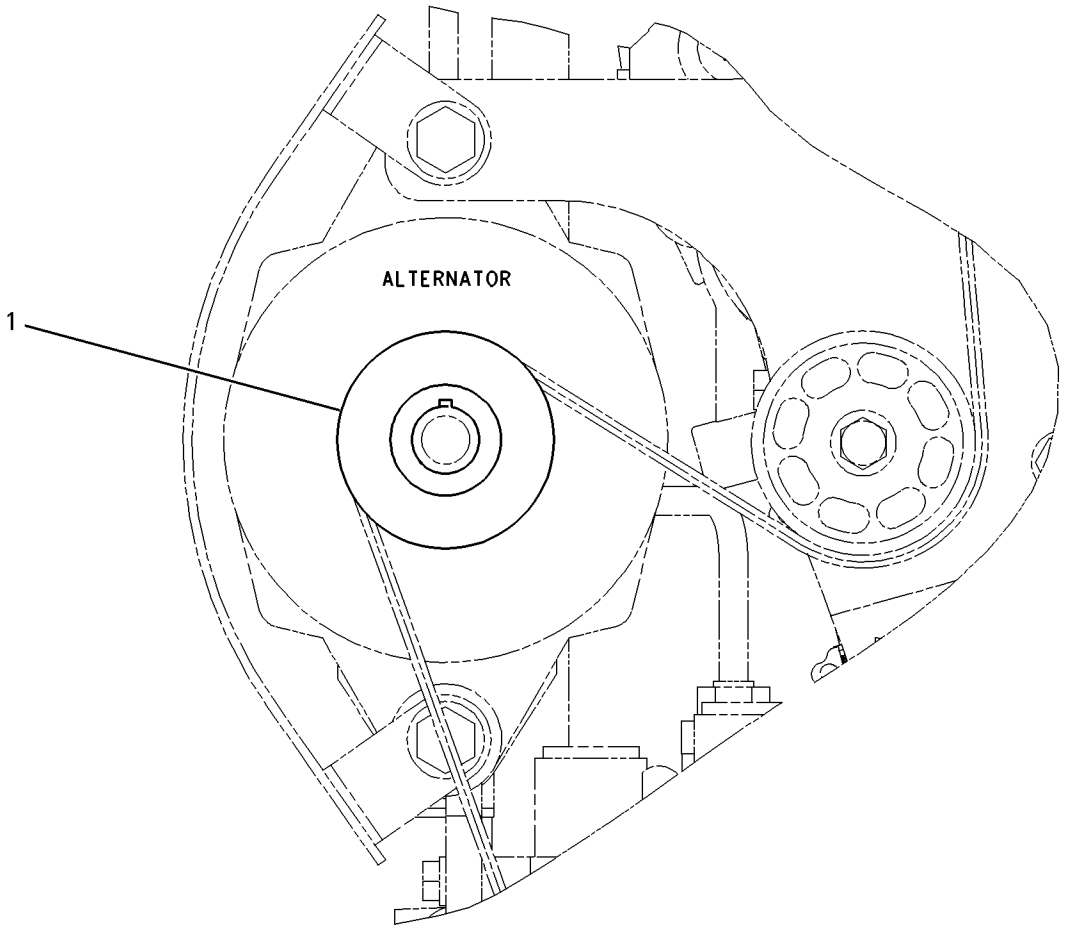

FRONT VIEW

GRAPHIC #1 **<END>** g00942304

224-5123 PULLEY GP–FAN

S/N: BMA1100-UP

PART OF 191-4479 ENGINE AR-COMPLETE

SMCS-1425 **i01809751**

NOTE	REF NO	GRAPHIC REF	PART NUMBER	QTY	PART NAME 1 2 3 4 5 6 (PRODUCT LEVEL)	SEE PAGE
	1	1	**224-5121**	1	PULLEY-FAN (8 GROOVE)	
M	2	1	**8T-4908**	6	BOLT (M8X1.25X25MM)	

M-METRIC PART

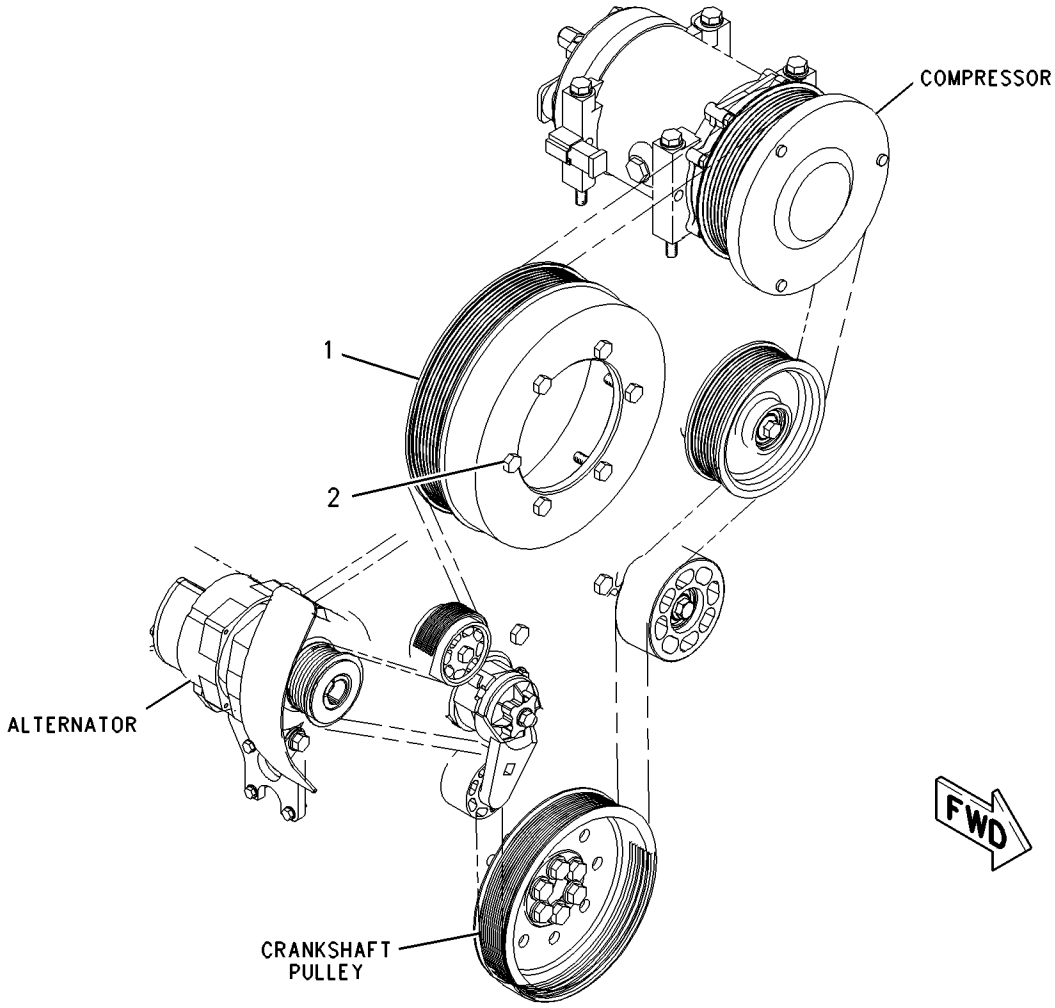

GRAPHIC #1 **<END>** g00926195

BASIC ENGINE

201-9063 PULLEY GP-FAN DRIVE

S/N: BMA1100-UP
PART OF 191-4481 ENGINE AR-COMPLETE
AN ATTACHMENT

SMCS-1356, 1357, 1359 **i01804592**

NOTE	REF NO	GRAPHIC REF	PART NUMBER	QTY	PART NAME 1 2 3 4 5 6 (PRODUCT LEVEL)	SEE PAGE
	1	1	**201-8590**	1	PULLEY-FAN (8 GROOVE)	
M	2	1	**8T-4908**	6	BOLT (M8X1.25X25MM)	

M-METRIC PART

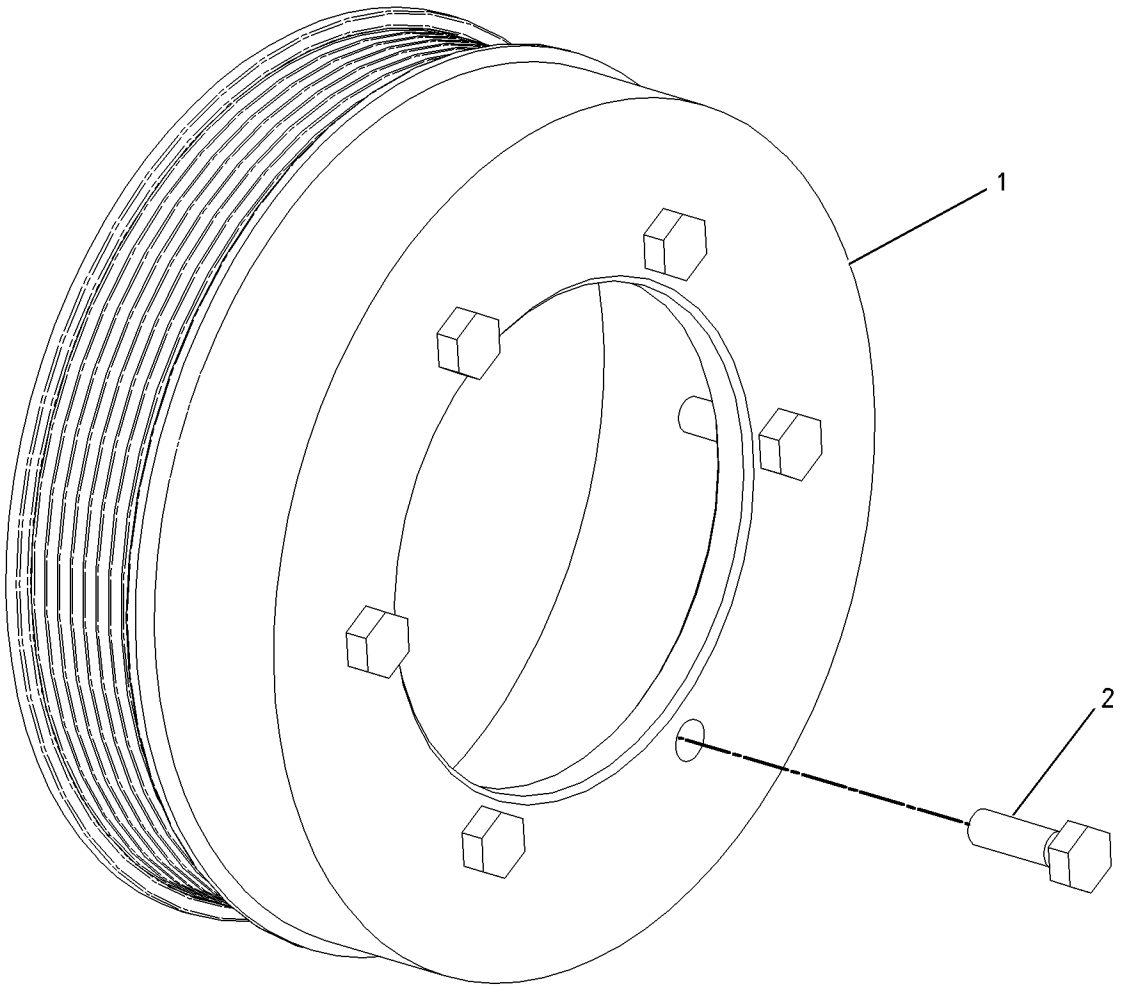

GRAPHIC #1 **<END>** g00771719

189-2220 PULLEY GP-IDLER

S/N: BMA1100-UP
PART OF 191-4479, 191-4481 ENGINE AR-COMPLETE
ALSO AN ATTACHMENT

SMCS-1358 **i01884401**

NOTE	REF NO	GRAPHIC REF	PART NUMBER	QTY	PART NAME 1 2 3 4 5 6 (PRODUCT LEVEL)	SEE PAGE
	1	1	**133-7023**	1	PULLEY AS-IDLER	
	1A	1	**151-2898**	1	SPACER	
	1B	1	**151-2900**	1	BOLT (M10X1.5X54.25MM)	
	1C	1	**166-6358**	1	COVER-DUST	
	2	1	**189-2207**	1	PULLEY AS-IDLER	
	2A	1	**145-2901**	1	COVER-DUST	
	2B	1	**151-2898**	1	SPACER	
	2C	1	**151-2900**	1	BOLT (M10X1.5X54.25MM)	

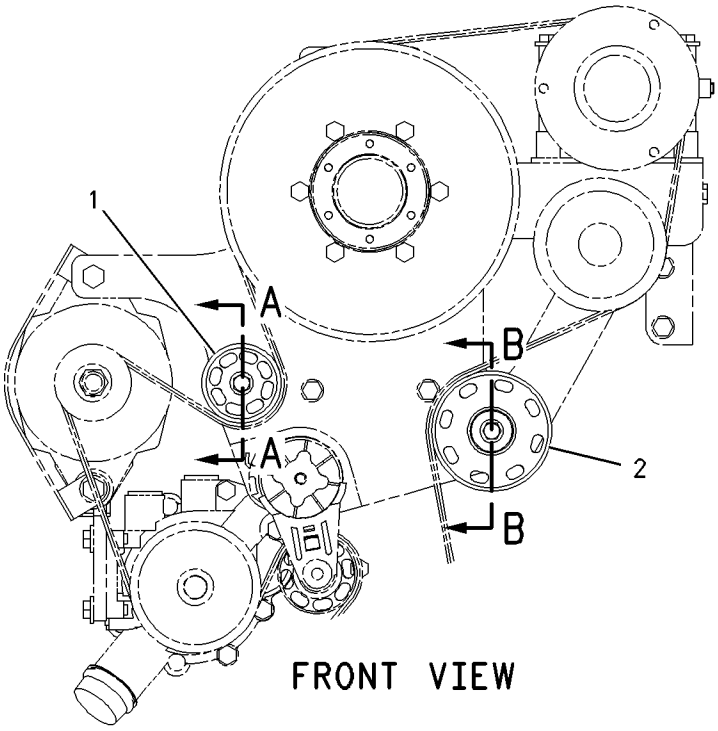

FRONT VIEW

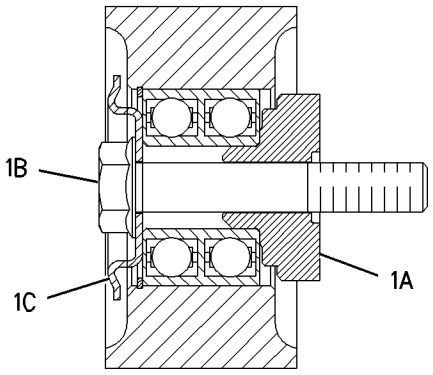

SECTION A-A

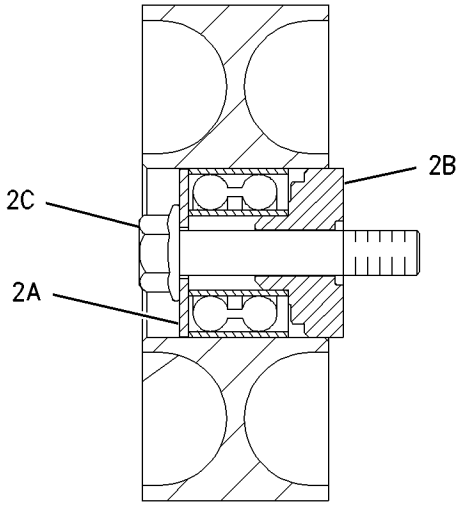

SECTION B-B

GRAPHIC #1 **<END>** g00730246

115-4210 SEAL GP-CRANKSHAFT

S/N: BMA1100-UP
PART OF 191-4479, 191-4481 ENGINE AR-COMPLETE
ALSO AN ATTACHMENT

SMCS-1160, 1161 **i01146413**

NOTE	REF NO	GRAPHIC REF	PART NUMBER	QTY	PART NAME 1 2 3 4 5 6 (PRODUCT LEVEL)	SEE PAGE
	1	1	**7E-7589**	1	SEAL GP-CRANKSHAFT	
	2	1	**119-2921**	1	SEAL GP-CRANKSHAFT	
	3	1	**4R-9999**	1	EXCLUDER-CRANKSHAFT SEAL	

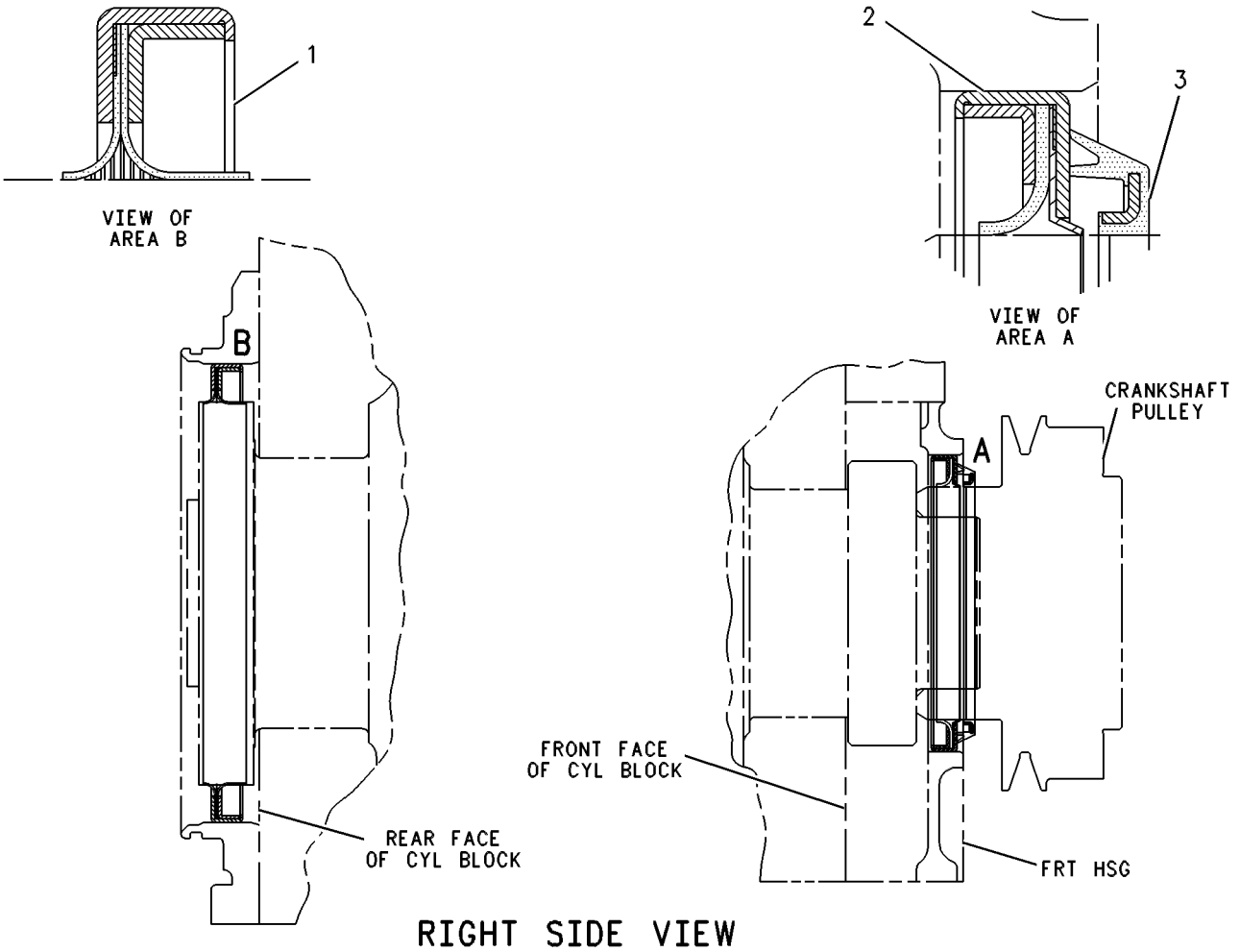

GRAPHIC #1 **<END>** g00109240

7C-1770 SEAL GP-FLYWHEEL HOUSING

S/N: BMA1100-UP

PART OF 191-4479, 191-4481 ENGINE AR-COMPLETE

ALSO AN ATTACHMENT

SMCS-1157, 1161 **i01746891**

NOTE	REF NO	GRAPHIC REF	PART NUMBER	QTY	PART NAME 1 2 3 4 5 6 (PRODUCT LEVEL)	SEE PAGE
B	1	1	**1U-8846**		SEALANT-GASKET	
	2	1	**3J-7354**	1	SEAL-O-RING (8.92MM ID)	
B	3	1	**3D-2824**	1	SEAL-O-RING (23.47MM ID)	

B-USE AS REQUIRED

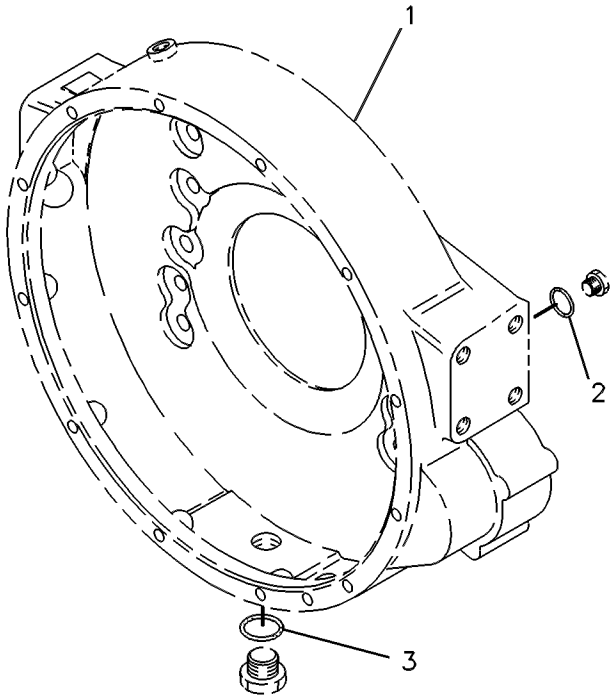

GRAPHIC #1 **<END>** g00108872

154-8016 SEAL GP-FUEL INJECTOR

S/N: BMA1100-UP
PART OF 178-6342 PUMP GP-UNIT INJECTION
ALSO AN ATTACHMENT

SMCS-1290 **i01615418**

NOTE	REF NO	GRAPHIC REF	PART NUMBER	QTY	PART NAME 1 2 3 4 5 6 (PRODUCT LEVEL)	SEE PAGE
	1	1	**150-4105**	1	RING-BACKUP	
	2	1	**9X-7557**	1	SEAL-O-RING (32.92MM ID)	
	3	1	**148-2903**	1	SEAL-O-RING (31.34MM ID)	
	4	1	**149-5240**	1	RING-BACKUP	
	5	1	**109-3207**	1	SEAL-O-RING (23.39MM ID)	
	6	1	**133-3715**	1	RING-BACKUP	

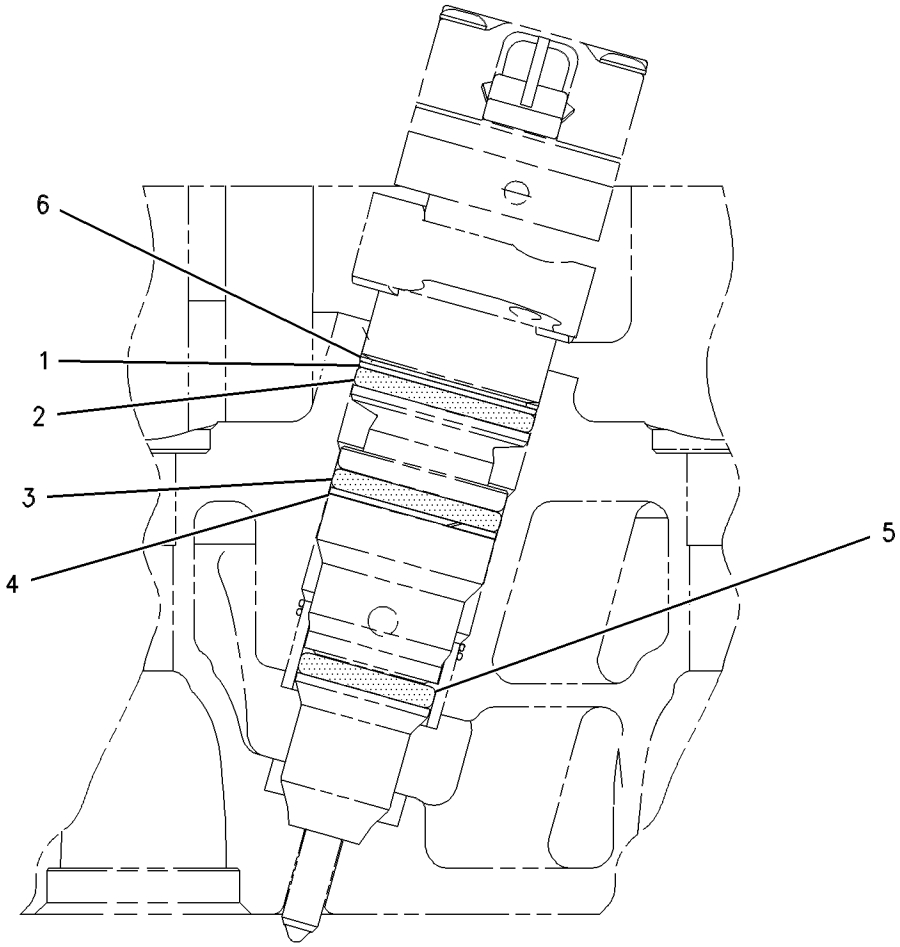

GRAPHIC #1 **<END>** g00433901

169-4912 SUPPRESSION AR-SOUND—EUROPEAN MARKET

S/N: CBJ1-UP
AN ATTACHMENT

SMCS-1801 **i01888761**

NOTE	PART NUMBER	QTY	PART NAME 1 2 3 4 5 6 (PRODUCT LEVEL)	SEE PAGE
Y	*191-4481*	1	ENGINE AR-COMPLETE	3
Y	*193-1038*	1	BELT GP	7
Y	*196-1814*	1	FAN GP	78
Y	*200-6248*	1	HOOD & GUARD GP	258
Y	*127-0901*	1	SUPPRESSION GP-SOUND	60
Y	*203-2062*	1	SHIELD GP-AIR CLEANER (PRECLEANER)	100
Y	*231-0530*	1	WARNING GP-BACKUP	177
	201-2670	5	RADIATOR AS	
	205-3237	1	FILM (EXTERIOR) (SOUND)	
			ON FRONT FACE OF RIGHT HAND SIDE CONSOLE VISIBLE THROUGH CAB DOOR.	

Y-SEPARATE ILLUSTRATION

<END>

BASIC ENGINE

127-0901 SUPPRESSION GP-SOUND—BOTTOM GUARD LINERS

S/N: CBJ1-UP
PART OF 169-4912 SUPPRESSION AR-SOUND
AN ATTACHMENT

SMCS-1801 **i01877495**

NOTE	REF NO	GRAPHIC REF	PART NUMBER	QTY	PART NAME 1 2 3 4 5 6 (PRODUCT LEVEL)	SEE PAGE
	1	1	**124-0364**	4	LINER	
	2	1	**125-1993**	4	LINER	
	3	1	**128-2906**	1	LINER	
	4	1	**128-2907**	1	LINER	
	5	1	**128-2908**	1	LINER	
	6	1	**128-2909**	1	LINER	

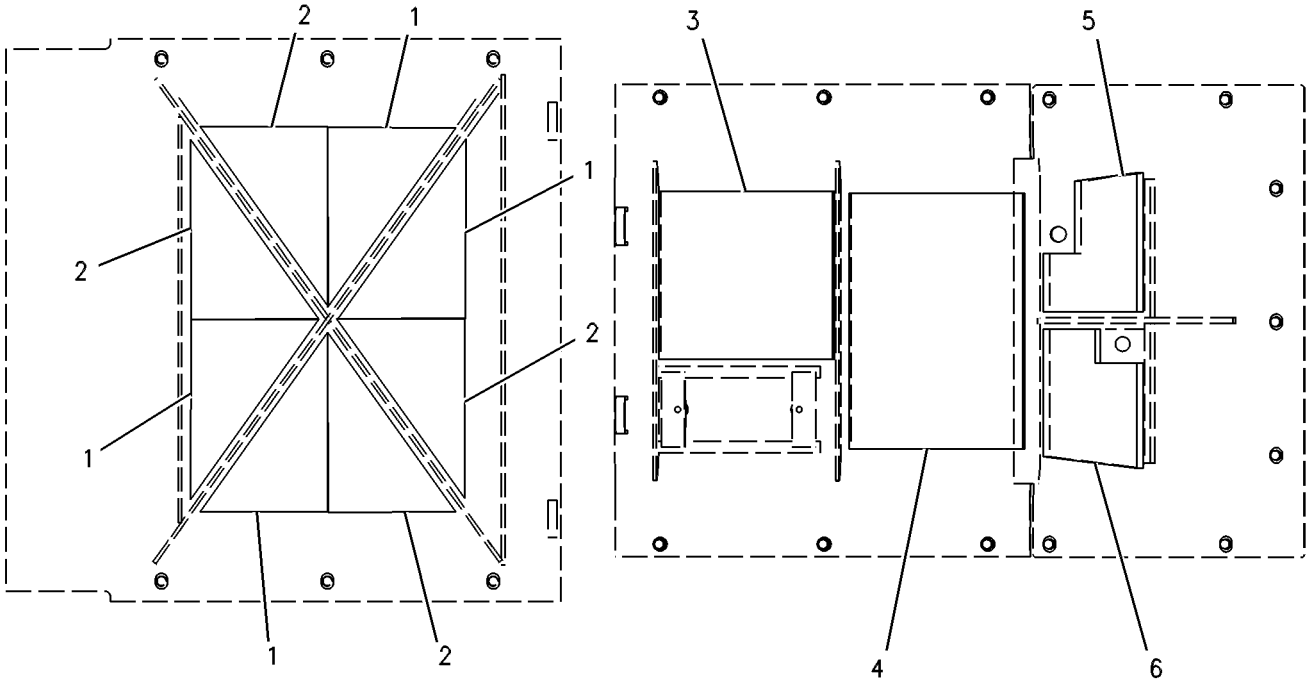

GRAPHIC #1 **<END>** g00279295

135-2969 VALVE MECHANISM GP

S/N: BMA1100-UP
PART OF 191-4482 ENGINE AR-CORE
ALSO AN ATTACHMENT

SMCS-1102, 1112, 1121, 1123, 1208, 1209 **i01875926**

NOTE	REF NO	GRAPHIC REF	PART NUMBER	QTY	PART NAME 1 2 3 4 5 6 (PRODUCT LEVEL)	SEE PAGE
	1	1	**133-6379**	12	ROD	
	2	1	**220-6366**	6	BRIDGE-VALVE	
Y	3	1	*139-4081*	3	LIFTER GP-VALVE	43
M	4	1	**8T-8442**	12	BOLT-SOCKET HEAD (M6X1X30MM)	
	5	1	**3E-9412**	6	DOWEL-BUSHING	
Y	6	1	*155-4773*	1	VALVE MECHANISM GP	62
M	7	1	**6V-5696**	11	BOLT (M12X1.75X80MM)	
	8	1	**9M-1974**	2	WASHER-HARD (8.8X16X2MM THK)	
	9	1	**5P-8245**	11	WASHER-HARD (13.5X25.5X3MM THK)	
M	10	1	**8T-0100**	2	BOLT (M8X1.25X60MM)	

M-METRIC PART
Y-SEPARATE ILLUSTRATION

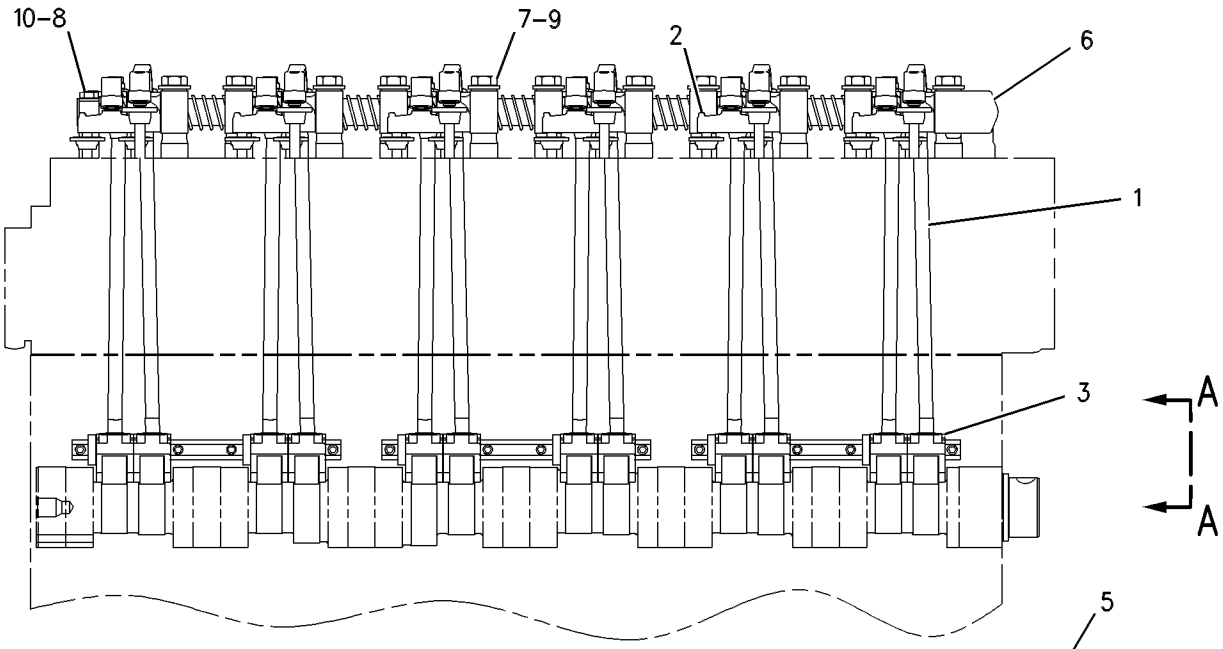

RIGHT SIDE VIEW

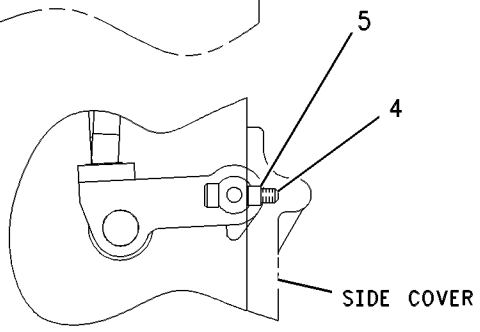

VIEW A–A

GRAPHIC #1 **<END>** g00286874

BASIC ENGINE

155-4773 VALVE MECHANISM GP

S/N: BMA1100-UP

PART OF 135-2969 VALVE MECHANISM GP

ALSO AN ATTACHMENT

SMCS-1102, 1112, 1121, 1123, 1208, 1209 **i01882767**

NOTE	REF NO	GRAPHIC REF	PART NUMBER	QTY	PART NAME 1 2 3 4 5 6 (PRODUCT LEVEL)	SEE PAGE
	1	1	**137-6717**	5	SPRING	
	2	1	*222-1185*	6	ROCKER ARM GP (INTAKE)	
					(EACH INCLUDES)	
M	2A	1	**2Y-5829**	1	NUT (M10X1.5 THD)	
M		1	**183-4365**	1	SCREW-ADJUSTING (M10X1.5 THD)	
	2B	1	**153-8467**	1	ROCKER ARM AS	
	2C	1	**173-5549**	1	SEAL-O-RING	
	2D	1	**145-7376**	1	BUTTON-ROCKER ARM	
	2E	1	**145-7385**	1	SOCKET-ROCKER ARM	
	3	1	**138-8403**	1	STAND	
	4	1	*222-1186*	6	ROCKER ARM GP (EXHAUST)	
					(EACH INCLUDES)	
M	4A	1	**2Y-5829**	1	NUT (M10X1.5 THD)	
M		1	**183-4365**	1	SCREW-ADJUSTING (M10X1.5 THD)	
	4B	1	**153-8470**	1	ROCKER ARM AS	
	4C	1	**173-5549**	1	SEAL-O-RING	
	4D	1	**145-7376**	1	BUTTON-ROCKER ARM	
	4E	1	**145-7385**	1	SOCKET-ROCKER ARM	
	5	1	**138-8401**	10	STAND	
	6	1	**138-8402**	1	STAND	
	7	1	**138-9868**	1	RING-RETAINING	
	8	1	**8H-5244**	1	DOWEL	
	9	1	**138-7198**	1	SHAFT AS	
		1	**5B-1866**	1	PLUG-CUP	

M-METRIC PART

155-4773 **VALVE MECHANISM GP** ***(contd.)*** **i01882767**

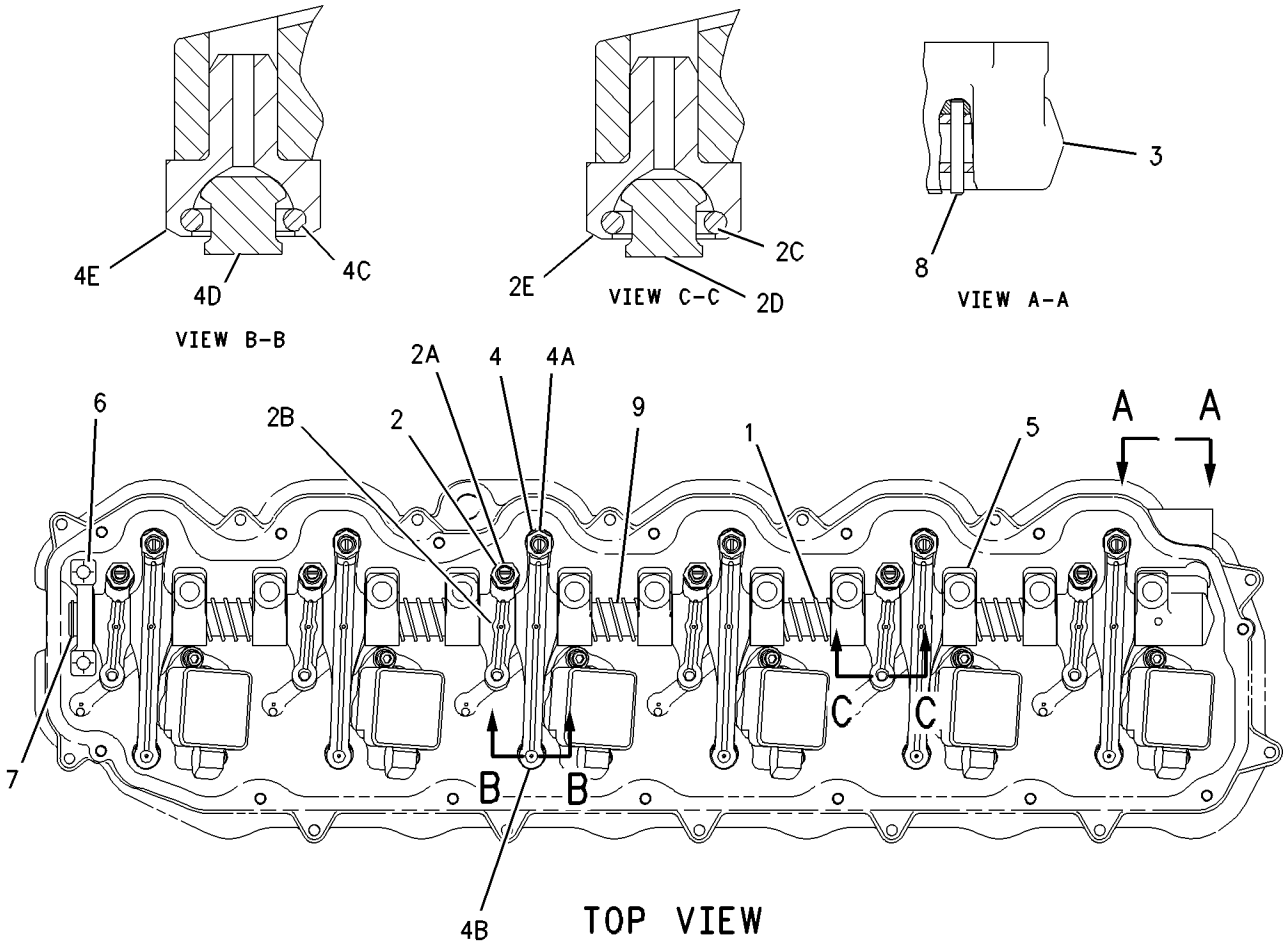

GRAPHIC #1 **<END>** g00901133

LUBRICATION SYSTEM

179-7001 ADAPTER GP-ENGINE OIL LINE

S/N: BMA1100-UP
PART OF 170-3304 PUMP & MTG GP-UNIT INJ HYD
ALSO AN ATTACHMENT

SMCS-1307 **i01836714**

NOTE	REF NO	GRAPHIC REF	PART NUMBER	QTY	PART NAME 1 2 3 4 5 6 (PRODUCT LEVEL)	SEE PAGE
	1	1	**179-7002**	1	ADAPTER AS	
	2	1	**214-7568**	1	SEAL-O-RING (11.89MM ID)	

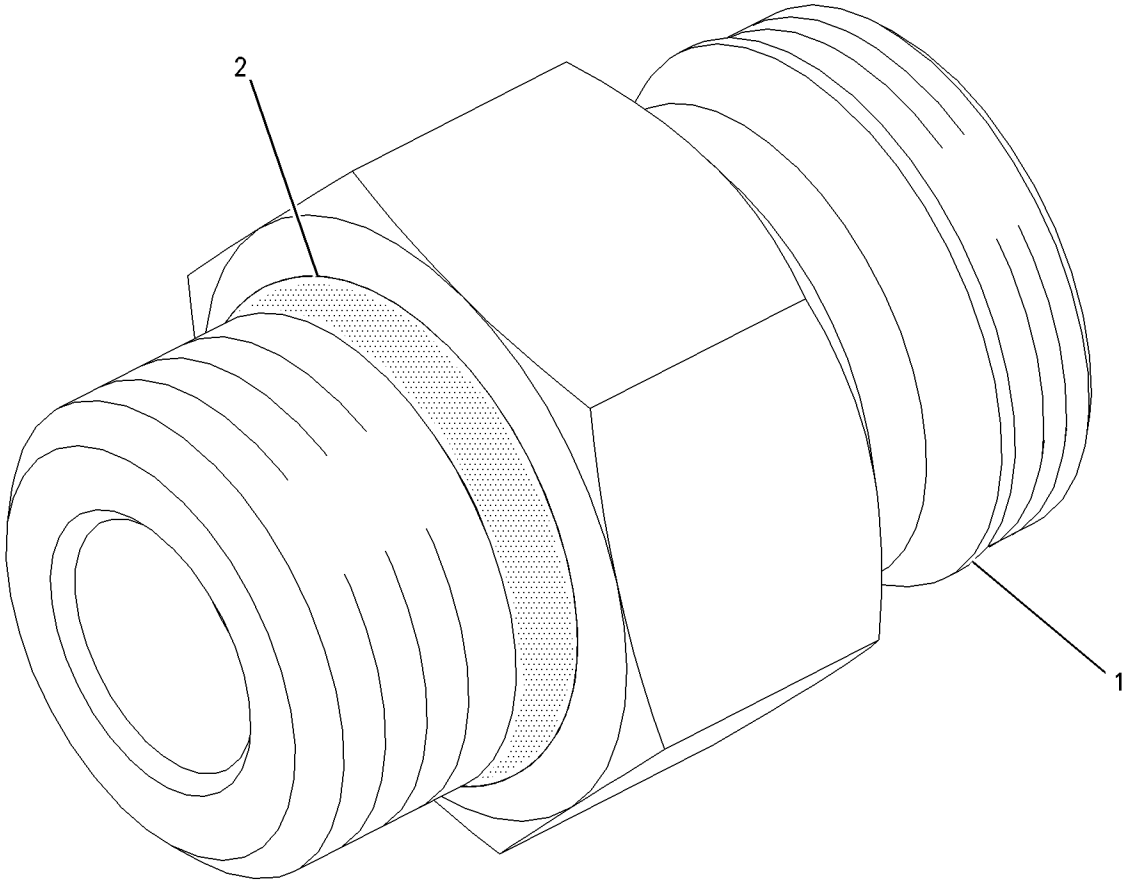

GRAPHIC #1 **<END>** g00938522

120-8971 BREATHER GP–ENGINE

S/N: BMA1100-UP
PART OF 191-4482 ENGINE AR-CORE
ALSO AN ATTACHMENT

SMCS-1317 **i01882544**

NOTE	REF NO	GRAPHIC REF	PART NUMBER	QTY	PART NAME 1 2 3 4 5 6 (PRODUCT LEVEL)	SEE PAGE
	1	1	**2W-9162**	1	BREATHER AS (ENGINE)	
	2	1	**4L-9564**	1	SEAL-O-RING (ENGINE BREATHER)	
M	3	1	**6V-3821**	1	BOLT (M8X1.25X110MM)	
	4	1	**9N-0869**	1	WASHER-HARD (8.8X25.5X2.0MM THK)	

M-METRIC PART

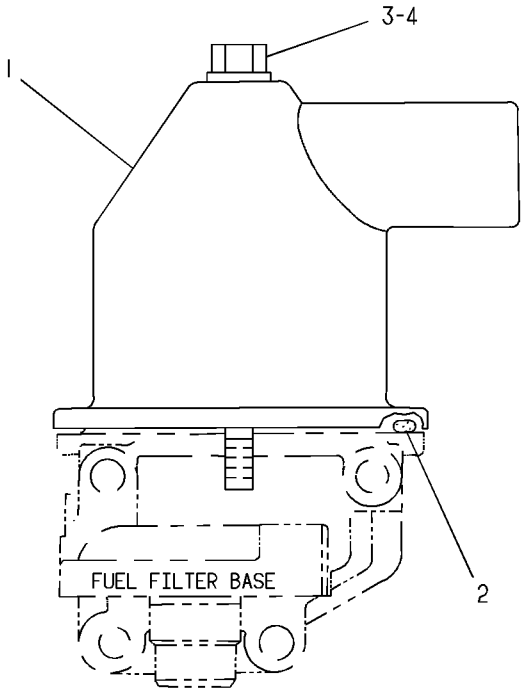

GRAPHIC #1 **<END>** g00108310

199-3164 FILLER GP-ENGINE OIL

S/N: BMA1100-UP
PART OF 191-4479, 191-4481 ENGINE AR-COMPLETE
ALSO AN ATTACHMENT

SMCS-1316 **i01882548**

NOTE	REF NO	GRAPHIC REF	PART NUMBER	QTY	PART NAME 1 2 3 4 5 6 (PRODUCT LEVEL)	SEE PAGE
	1	1	**4W-3087**	1	CAP-FILLER (ENGINE OIL)	
	2	1	**135-9819**	1	SEAL (INTEGRAL)	
	3	1	**224-9041**	1	TUBE AS	
	4	1	**5P-8245**	4	WASHER-HARD (13.5X25.5X3MM THK)	
M	5	1	**6V-5696**	2	BOLT (M12X1.75X80MM)	
M	6	1	**6V-8149**	2	NUT (M12X1.75 THD)	
	7	1	**184-7773**	1	SPACER (9.14MM THK)	

M-METRIC PART

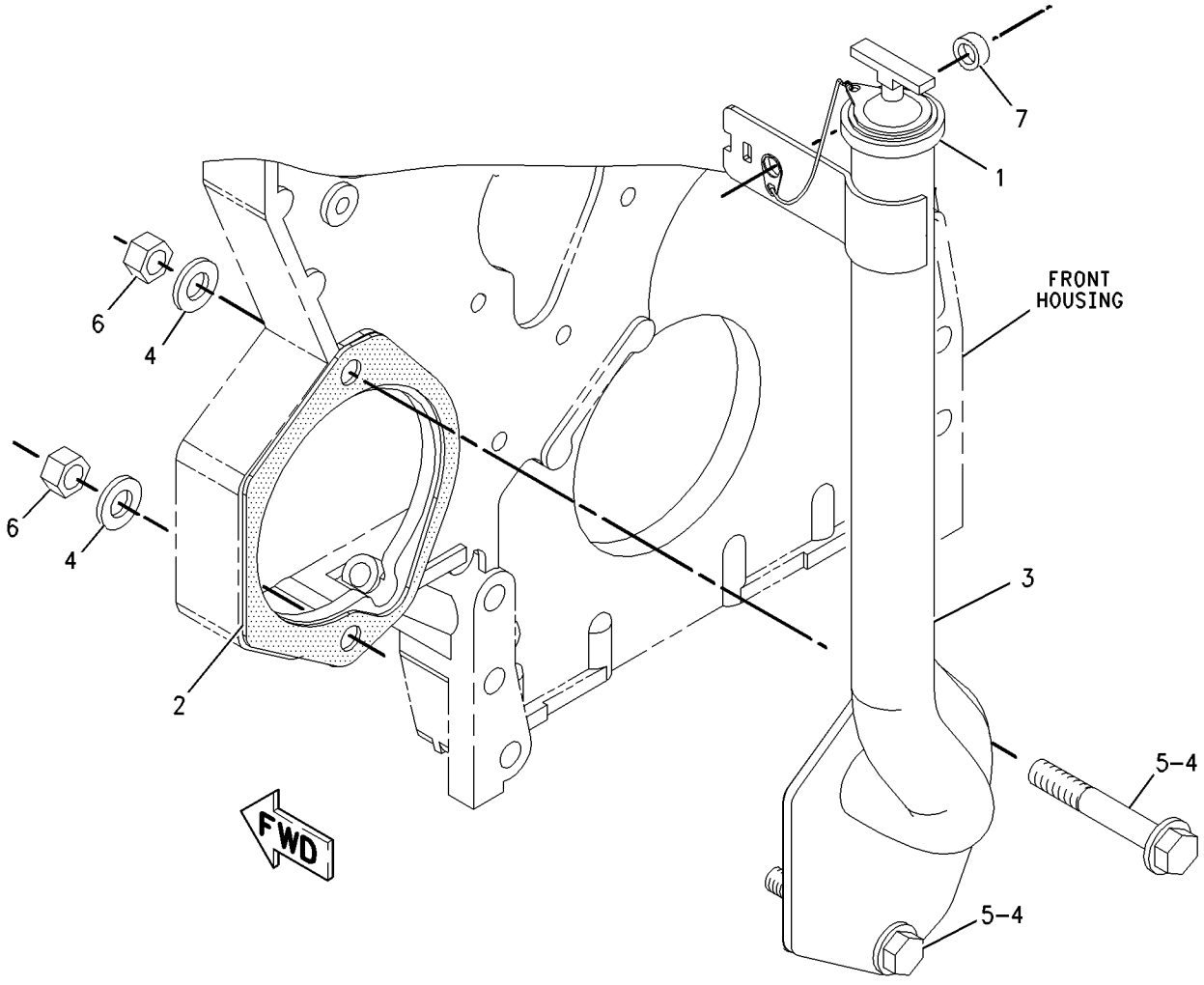

GRAPHIC #1 **<END>** g00923970

117-4074 FILTER GP-ENGINE OIL

S/N: BMA1100-UP
PART OF 191-4479, 191-4481 ENGINE AR-COMPLETE
ALSO AN ATTACHMENT

SMCS-1306, 1308, 1318 **i01803469**

NOTE	REF NO	GRAPHIC REF	PART NUMBER	QTY	PART NAME 1 2 3 4 5 6 (PRODUCT LEVEL)	SEE PAGE
	1	1	**1R-0739**	1	FILTER AS-ENGINE OIL	
M	2	1	**8T-0276**	4	BOLT (M8X1.25X45MM) (MARKED X)	
	3	1	**9M-1974**	14	WASHER-HARD (8.8X16X2MM THK)	
M	4	1	**6V-2317**	10	BOLT (M8X1.25X30MM)	
	5	1	**7C-1493**	2	VALVE AS-BYPASS	
	6	1	**9L-9188**	2	SPRING-VALVE	
	7	1	**2M-9780**	2	SEAL-O-RING	
M	8	1	**5P-8196**	2	PLUG	
	9	1	**4P-8182**	1	BASE AS-OIL FILTER	
		1	**2P-2537**	1	STUD-HOLLOW	
	10	1	**7E-9817**	1	GASKET	

M-METRIC PART

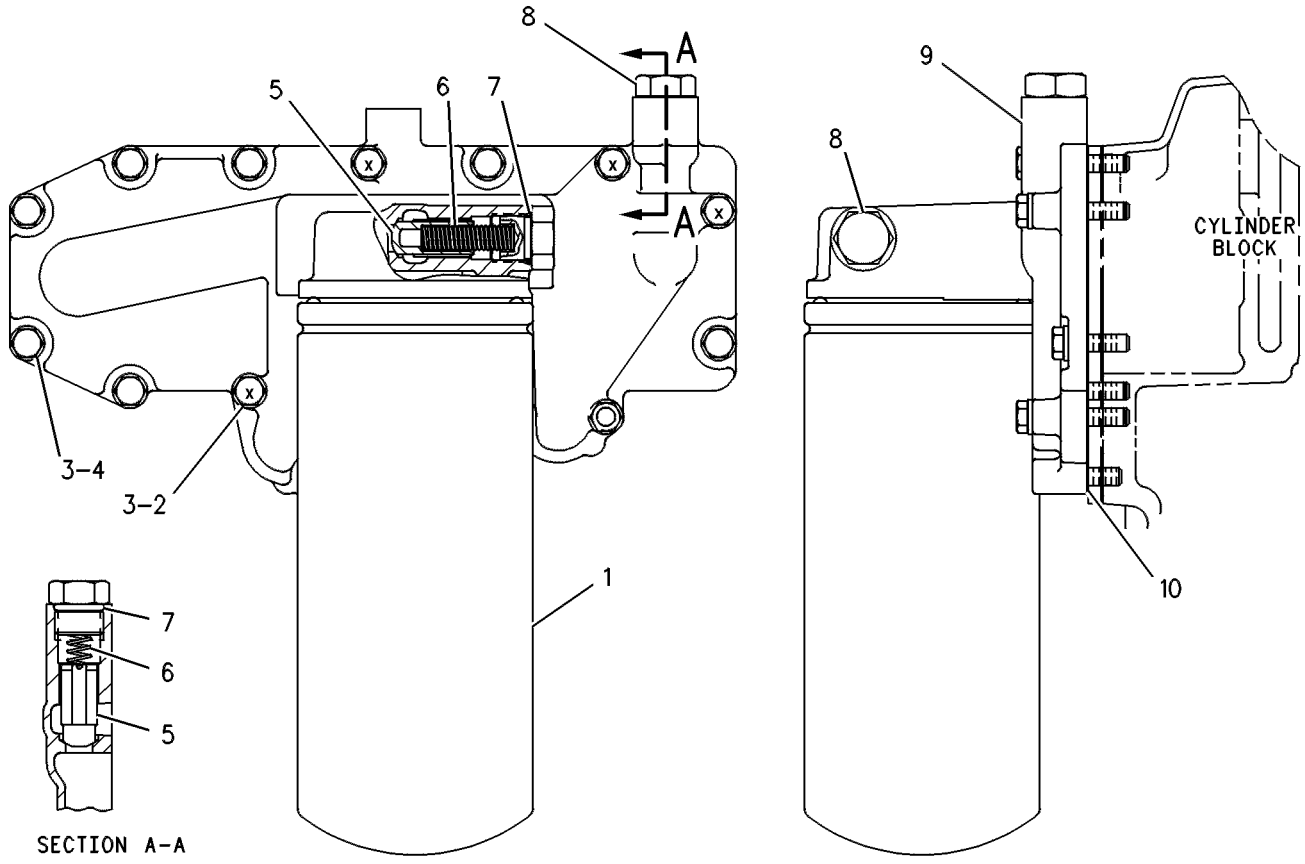

GRAPHIC #1 **<END>** g00243739

LUBRICATION SYSTEM

211-1835 FUMES DISPOSAL GP

S/N: BMA1100-UP
PART OF 191-4479, 191-4481 ENGINE AR-COMPLETE
ALSO AN ATTACHMENT

SMCS-1317 **i01882549**

NOTE	REF NO	GRAPHIC REF	PART NUMBER	QTY	PART NAME 1 2 3 4 5 6 (PRODUCT LEVEL)	SEE PAGE
	1	1	**3V-0778**	1	BRACKET	
	2	1	**4W-2181**	1	HOSE-DISPOSAL (FUMES)	
	3	1	**9M-2904**	1	CLAMP-HOSE	
M	4	1	**175-3168**	1	BOLT	
	5	1	**2S-2053**	1	CLIP	
	6	1	**3E-4352**	1	WASHER-HARD (8.8X20.5X2.5MM THK)	
	7	1	**8T-4121**	2	WASHER-HARD (11X21X2.5MM THK)	
M	8	1	**8T-4133**	1	NUT (M10X1.5 THD)	
M	9	1	**8T-4136**	1	BOLT (M10X1.5X25MM)	
	10	1	**9F-8218**	1	SPACER	

M-METRIC PART

211-1835 **FUMES DISPOSAL GP** ***(contd.)*** **i01882549**

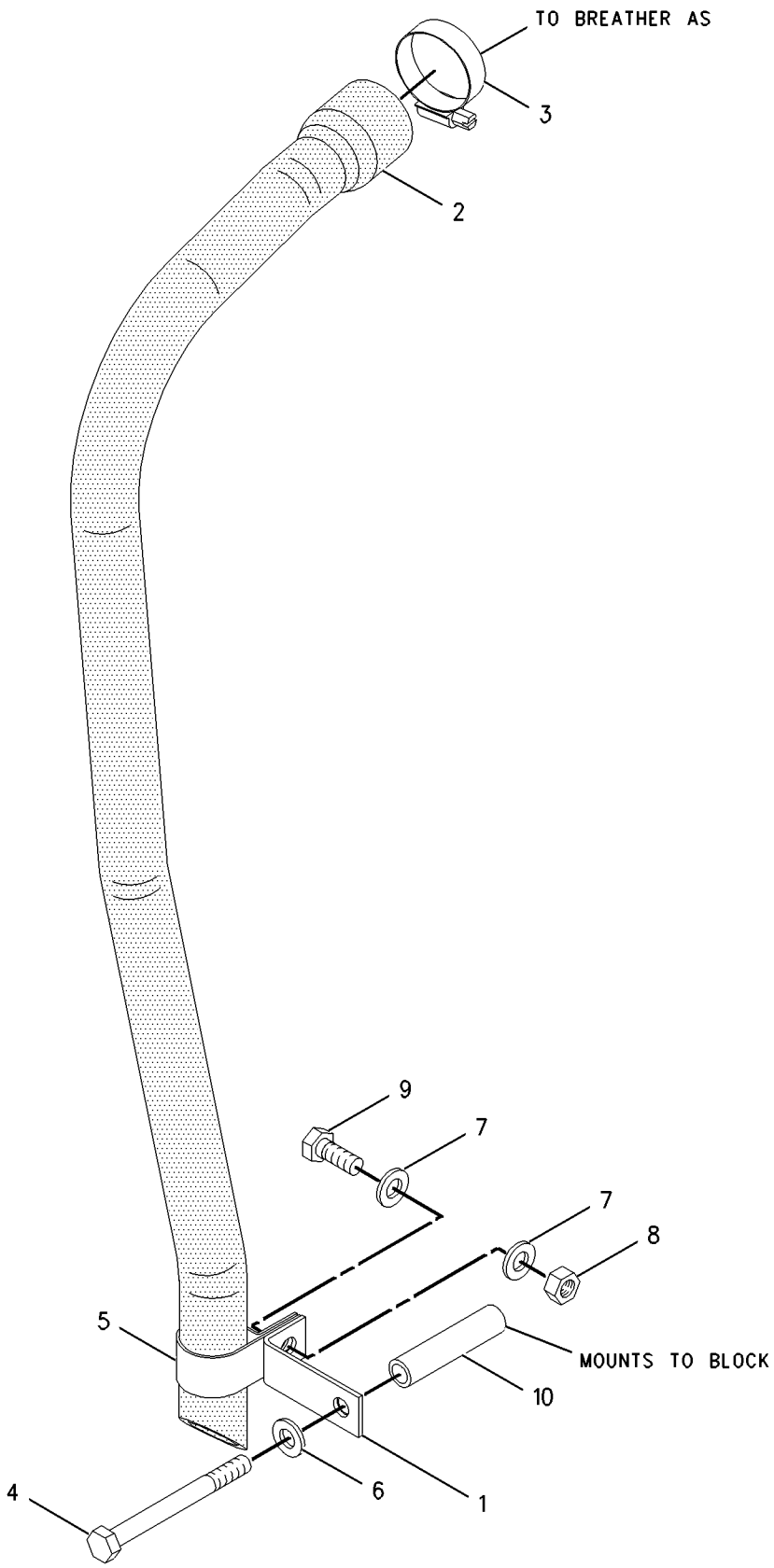

GRAPHIC #1 **<END>** g00923042

159-1810 GAUGE GP-OIL LEVEL (DIPSTICK)

S/N: BMA1100-UP
PART OF 191-4479, 191-4481 ENGINE AR-COMPLETE
ALSO AN ATTACHMENT

SMCS-1326 **i01803590**

NOTE	REF NO	GRAPHIC REF	PART NUMBER	QTY	PART NAME 1 2 3 4 5 6 (PRODUCT LEVEL)	SEE PAGE
J	1	1	**1S-2563**	3	PLUG	
	2	1	**201-2403**	1	GAUGE-OIL LEVEL	
	3	1	**224-9337**	1	TUBE AS	
	4	1	**1F-7567**	1	CLIP	

J-USE TO PLUG OPTIONAL DIPSTICK LOCATIONS IN CYLINDER BLOCK

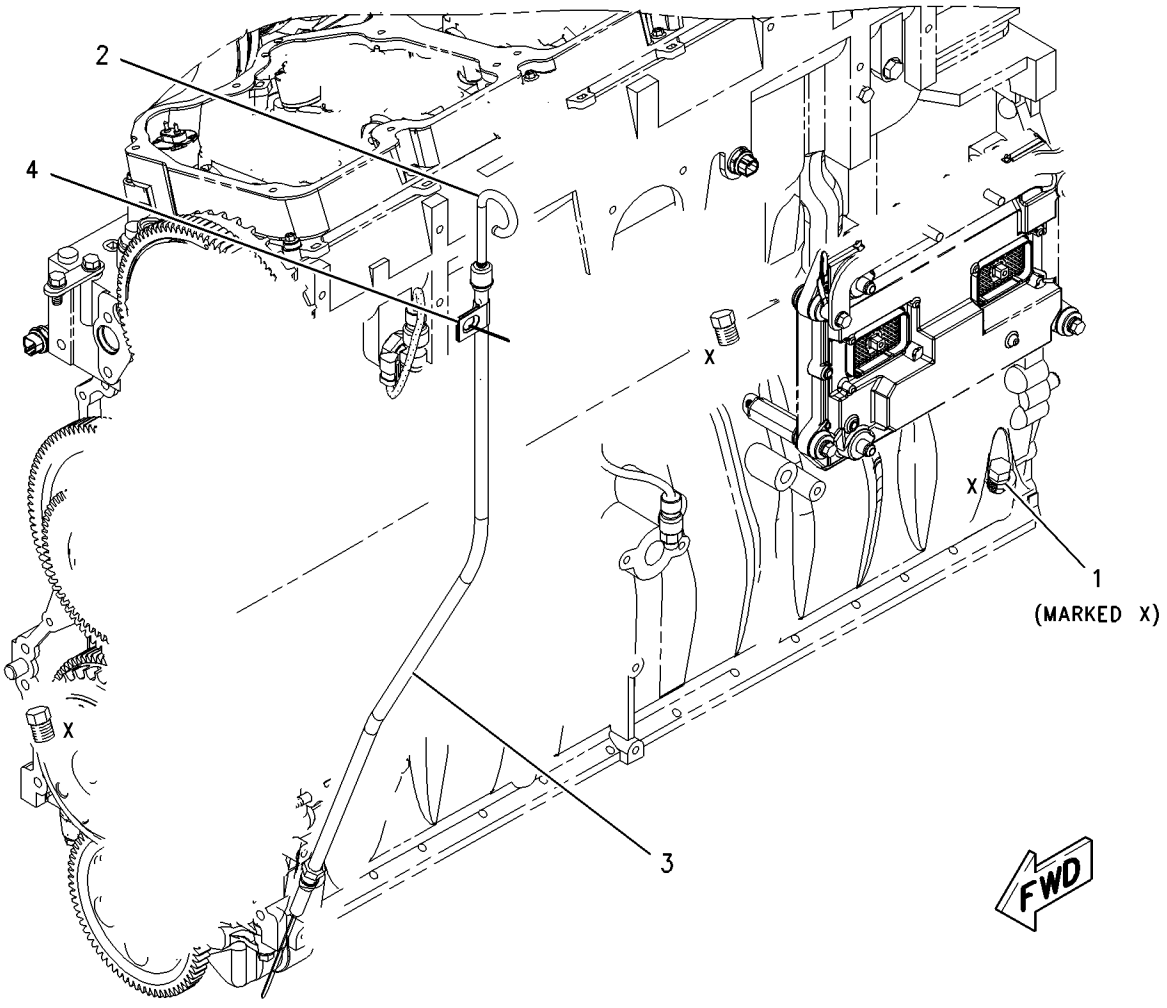

GRAPHIC #1 **<END>** g00923688

219-5853 LINES GP-ENGINE OIL

S/N: BMA1100-UP

PART OF 191-4479, 191-4481 ENGINE AR-COMPLETE

ALSO AN ATTACHMENT

SMCS-1307 **i01804597**

NOTE	REF NO	GRAPHIC REF	PART NUMBER	QTY	PART NAME 1 2 3 4 5 6 (PRODUCT LEVEL)	SEE PAGE
	1	1	**7W-5340**	1	GASKET	
	2	1	**219-5852**	1	TUBE AS	
	3	1	**3P-1156**	2	SEAL-O-RING	
	4	1	**4W-2232**	1	ELBOW-OUTLET	
M	5	1	**6V-3940**	4	BOLT (M8X1.25X25MM)	
M	6	1	**6V-4248**	1	BOLT (M10X1.50X25MM)	
	7	1	**6V-5839**	1	WASHER (11X21X2.5MM THK)	
	8	1	**9M-1974**	2	WASHER-HARD (8.8X16X2MM THK)	

M-METRIC PART

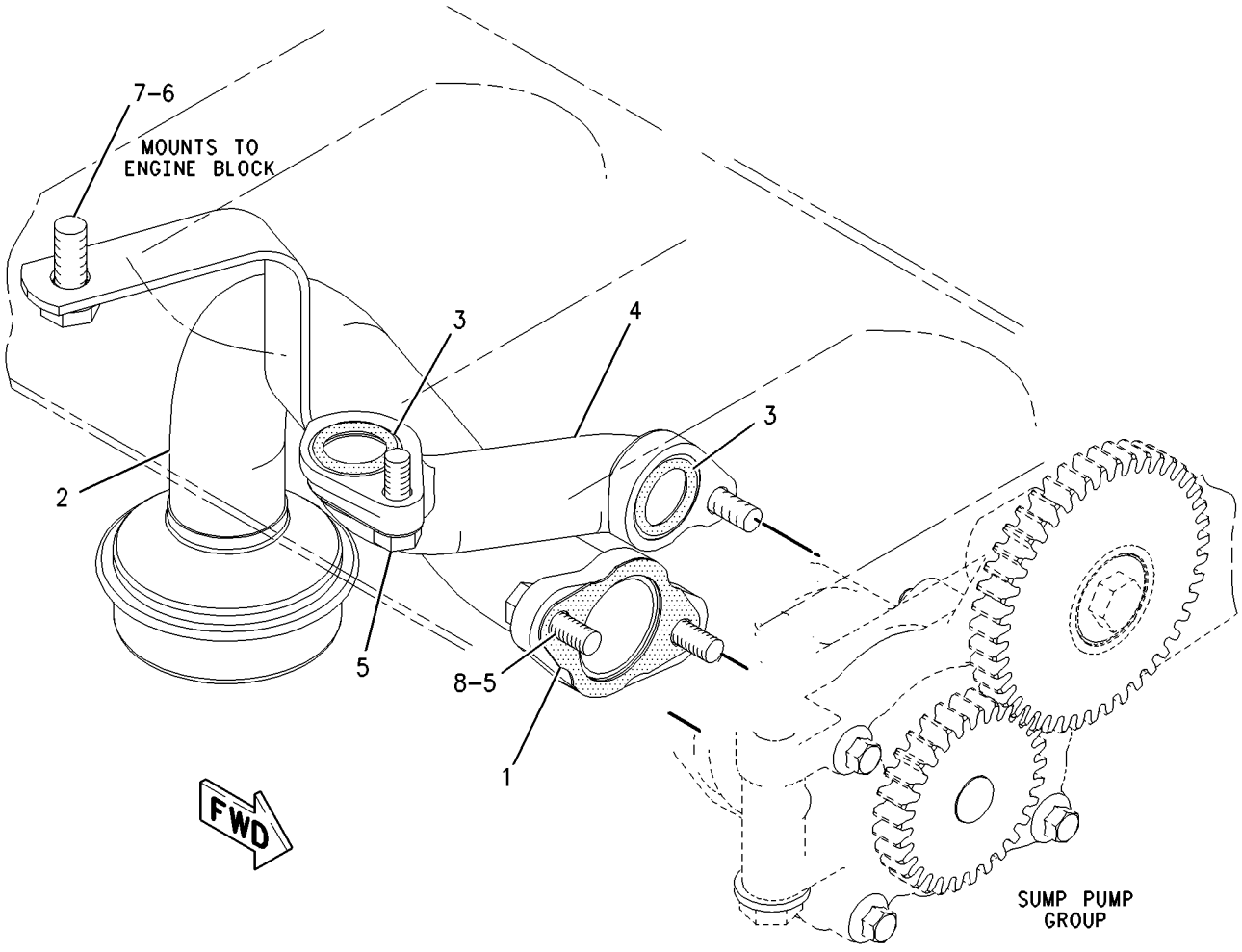

GRAPHIC #1 **<END>** g00901042

LUBRICATION SYSTEM

202-3262 LINES GP-TURBOCHARGER OIL

S/N: BMA1100-UP

PART OF 191-4479, 191-4481 ENGINE AR-COMPLETE

ALSO AN ATTACHMENT

SMCS-1052, 1307 **i01882551**

NOTE	REF NO	GRAPHIC REF	PART NUMBER	QTY	PART NAME 1 2 3 4 5 6 (PRODUCT LEVEL)	SEE PAGE
	1	1	**8A-8563**	2	SPACER	
	2	1	**8C-3445**	1	CAP-DUST (TURBO OIL SAMPLING VALVE)	
	3	1	**119-2942**	1	ADAPTER	
	4	1	**188-6126**	1	GASKET	
	5	1	**202-3261**	1	TUBE AS	
	6	1	**225-5219**	1	TUBE AS	
	7	1	**225-5220**	1	TUBE AS	
	8	1	**114-2687**	1	SEAL-O-RING	
	9	1	**154-9024**	1	VALVE GP-FLUID SAMPLING (TURBOCHARGER OIL)	
	10	1	**1F-7567**	2	CLIP	
M	11	1	**2Y-5829**	2	NUT (M10X1.5 THD)	
	12	1	**4L-3641**	2	CLIP	
	13	1	**5P-8066**	1	SEAL-O-RING	
M	14	1	**6V-4248**	2	BOLT (M10X1.50X25MM)	
	15	1	**6V-5049**	2	SEAL-O-RING	
M	16	1	**6V-5218**	2	BOLT (M8X1.25X35MM)	
	17	1	**6V-5839**	4	WASHER (11X21X2.5MM THK)	
	18	1	**6V-8397**	5	SEAL-O-RING	
	19	1	**6V-8636**	2	CONNECTOR	
	20	1	**6V-9843**	1	TEE-SWIVEL	
	21	1	**7X-2441**	1	ADAPTER	
M	22	1	**8T-0276**	2	BOLT (M8X1.25X45MM)	
	23	1	**9M-1974**	2	WASHER-HARD (8.8X16X2MM THK)	

M-METRIC PART

202-3262 **LINES GP-TURBOCHARGER OIL** ***(contd.)*** **i01882551**

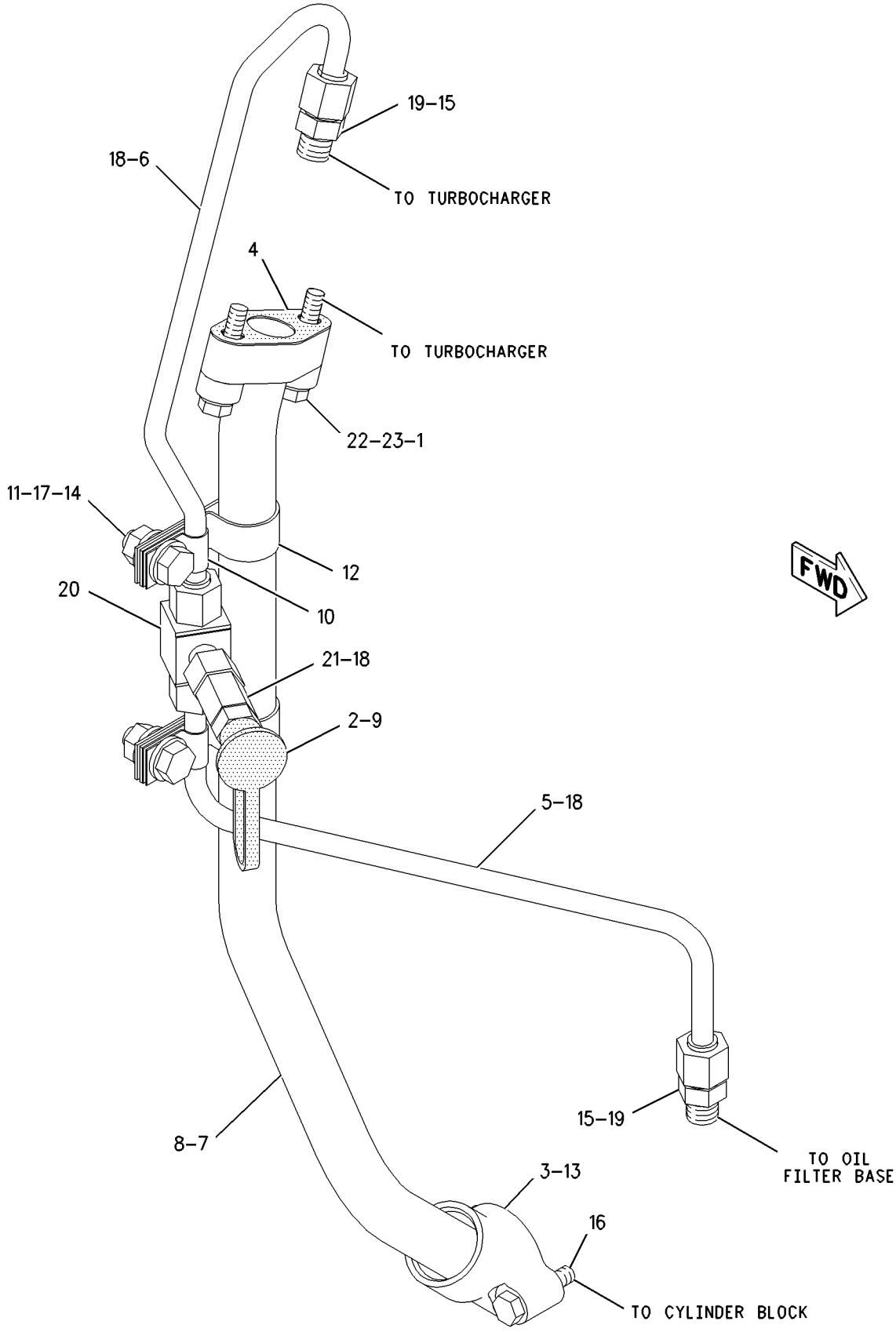

GRAPHIC #1 **<END>** g00924635

LUBRICATION SYSTEM

212-2269 PUMP GP-ENGINE OIL

S/N: BMA1100-UP
PART OF 212-2270 PUMP GP-ENGINE OIL
ALSO AN ATTACHMENT

SMCS-1304, 1315 **i01697514**

NOTE	REF NO	GRAPHIC REF	PART NUMBER	QTY	PART NAME 1 2 3 4 5 6 (PRODUCT LEVEL)	SEE PAGE
	1	1	**7W-9737**	1	SHAFT-OIL PUMP	
	2	1	**7W-9738**	1	WASHER (10.5X38X1.6MM THK)	
	3	1	**7W-9740**	1	GEAR AS-IDLER (43 TEETH)	
		1	**7W-9930**	1	BEARING-SLEEVE	
M	4	1	**9X-2305**	1	BOLT-LOCKING (M10X1.5 THD)	
	5	1	**210-5559**	1	PUMP AS-GEROTOR	

M-METRIC PART

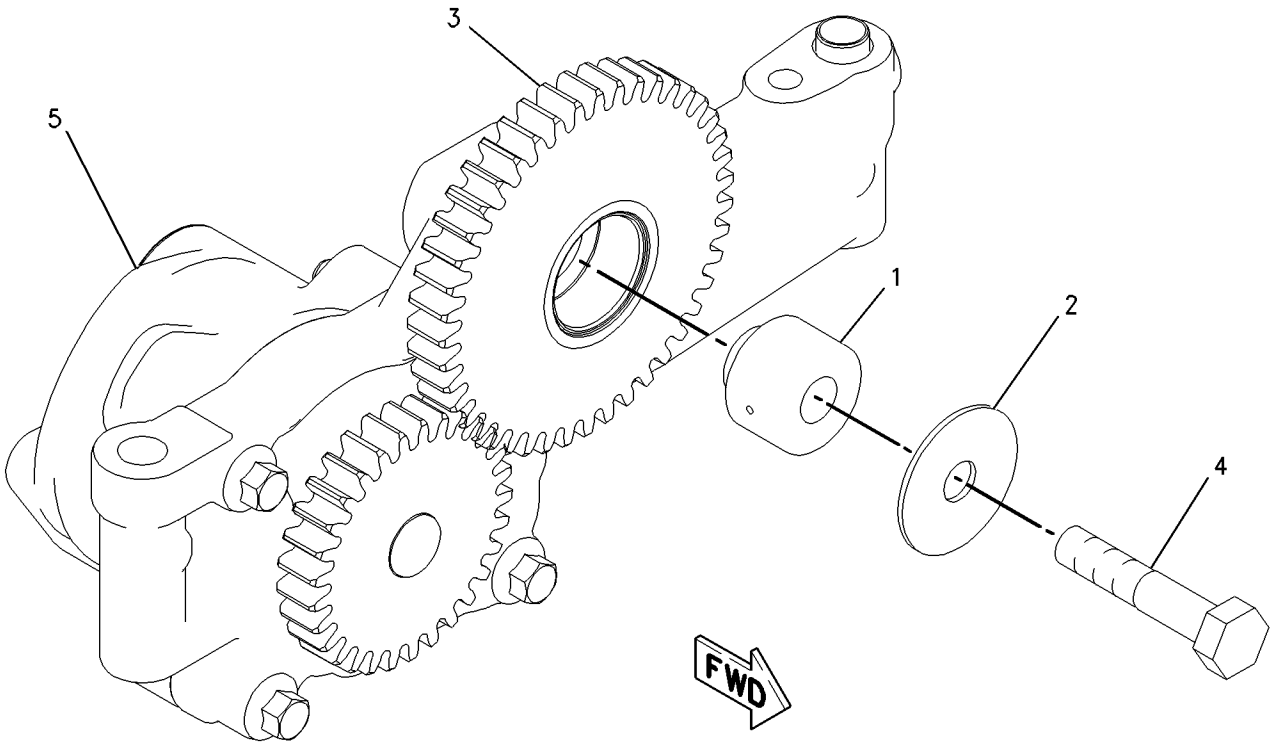

GRAPHIC #1 **<END>** g00849418

212-2270 PUMP GP-ENGINE OIL

S/N: BMA1100-UP
PART OF 191-4482 ENGINE AR-CORE
ALSO AN ATTACHMENT

SMCS-1304, 1315 **i01697510**

NOTE	REF NO	GRAPHIC REF	PART NUMBER	QTY	PART NAME 1 2 3 4 5 6 (PRODUCT LEVEL)	SEE PAGE
Y	1	1	**212-2269**	1	PUMP GP-ENGINE OIL	74
M	2	1	**6V-5815**	2	BOLT (M10X1.5X75MM)	
	3	1	**6V-5839**	2	WASHER (11X21X2.5MM THK)	

M-METRIC PART
Y-SEPARATE ILLUSTRATION

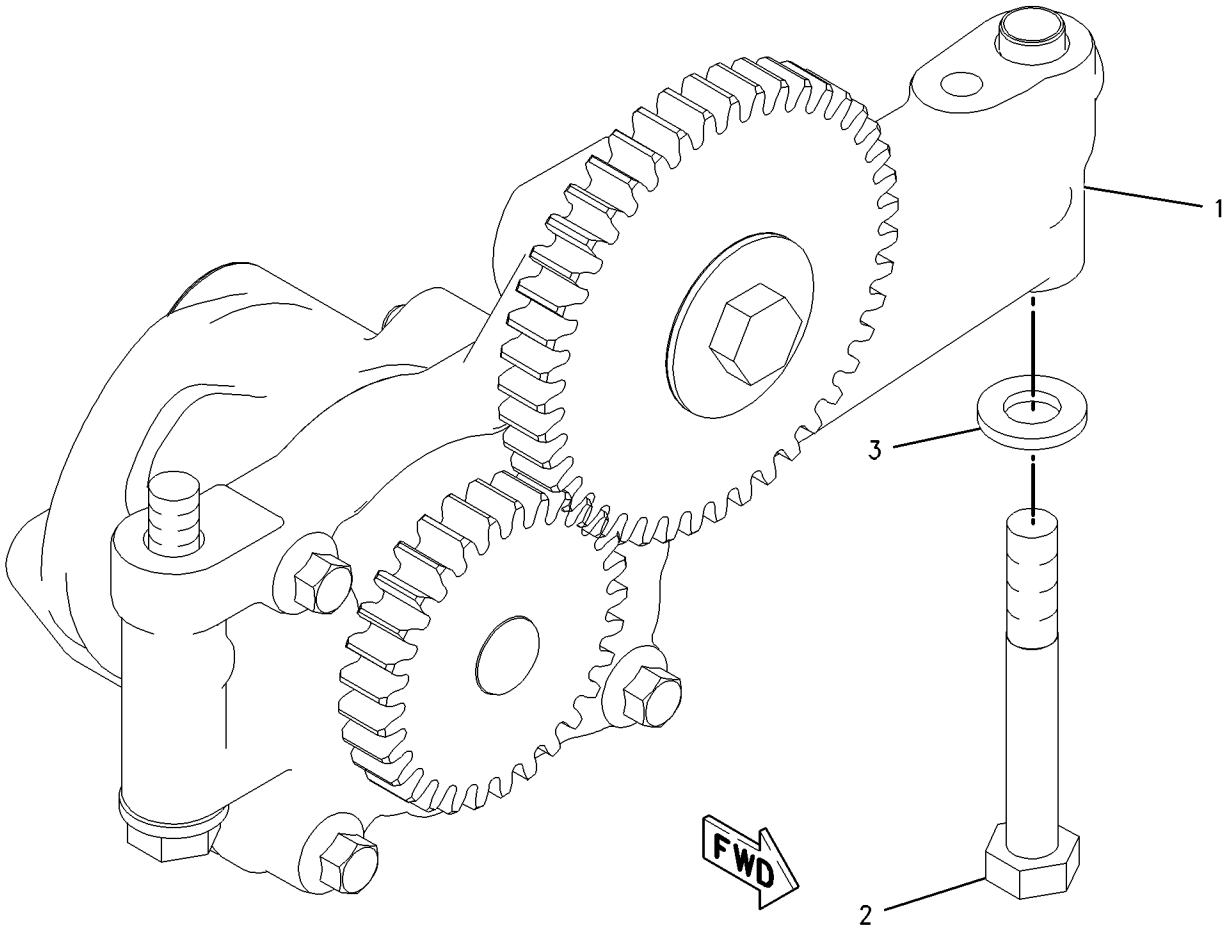

GRAPHIC #1 **<END>** g00849437

117-3643 COOLER GP-ENGINE OIL

S/N: BMA1100-UP
PART OF 191-4482 ENGINE AR-CORE
ALSO AN ATTACHMENT

SMCS-1378 **i01858175**

NOTE	REF NO	GRAPHIC REF	PART NUMBER	QTY	PART NAME 1 2 3 4 5 6 (PRODUCT LEVEL)	SEE PAGE
R	1	1	**187-8595**	1	CORE AS-ENGINE OIL COOLER	
	2	1	**7C-1160**	1	GASKET	
M	3	1	**8M-4445**	2	SEAL-O-RING	

M-METRIC PART
R-REMFG PART MAY BE AVAILABLE

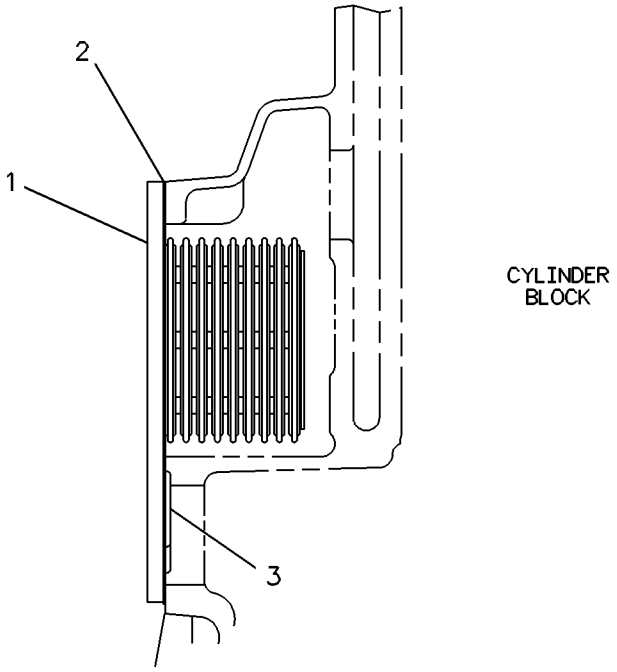

GRAPHIC #1 **<END>** g00117316

COOLING SYSTEM

226-3406 COOLING AR

S/N: CBJ1-UP

CANNOT BE USED WITH 156-9509—PAGE 422, , 195-1043—PAGE 81

AN ATTACHMENT

SMCS-1353 **i01877560**

NOTE	PART NUMBER	QTY	PART NAME 1 2 3 4 5 6 (PRODUCT LEVEL)	SEE PAGE
Y	*193-1038*	1	BELT GP	7
Y	*191-4481*	1	ENGINE AR-COMPLETE	3
Y	*196-1814*	1	FAN GP	78

Y-SEPARATE ILLUSTRATION

<END>

COOLING SYSTEM

196-1814 FAN GP

S/N: CBJ1-UP

PART OF 226-3406 COOLING AR, 169-4912 SUPPRESSION AR-SOUND AN ATTACHMENT

SMCS-1356 **i01877797**

NOTE	REF NO	GRAPHIC REF	PART NUMBER	QTY	PART NAME 1 2 3 4 5 6 (PRODUCT LEVEL)	SEE PAGE
	1	1	**189-8904**	1	SPIDER AS-FAN (BLOWER)(6 BLADES)	
	2	1	**195-6814**	1	GUARD AS-FAN	
	3	1	**218-1964**	1	DRIVE AS-FAN	
		1	**102-8805**	1	KIT-RECEPTACLE (6 PIN)	
					(INCLUDES RECEPTACLE AS & WEDGE)	
		1	**186-3735**	1	PIN-CONNECTOR	
	4	1	**200-3736**	1	GUARD AS-FAN	
M		1	**8T-3490**	4	NUT-WELD (M10X1.5 THD)	
	5	1	**4D-7794**	1	CLIP	
	6	1	**218-0589**	2	BRACKET	
M	7	1	**7X-0818**	6	BOLT (M8X1.25X45MM)	
M	8	1	**8T-4191**	2	BOLT (M10X1.5X16MM)	
	9	1	**7X-7729**	4	WASHER (11X25X3MM THK)	
	10	1	**8T-4121**	10	WASHER-HARD (11X21X2.5MM THK)	
M	11	1	**8T-4136**	4	BOLT (M10X1.5X25MM)	
M	12	1	**8T-4195**	8	BOLT (M10X1.5X30MM)	
	13	1	**8T-4224**	12	WASHER-HARD (8.8X16X2MM THK)	
	14	1	**5F-9757**	1	GROMMET	
M	15	1	**8T-4908**	6	BOLT (M8X1.25X25MM)	
	16	1	**3S-2093**	5	STRAP-CABLE	

M-METRIC PART

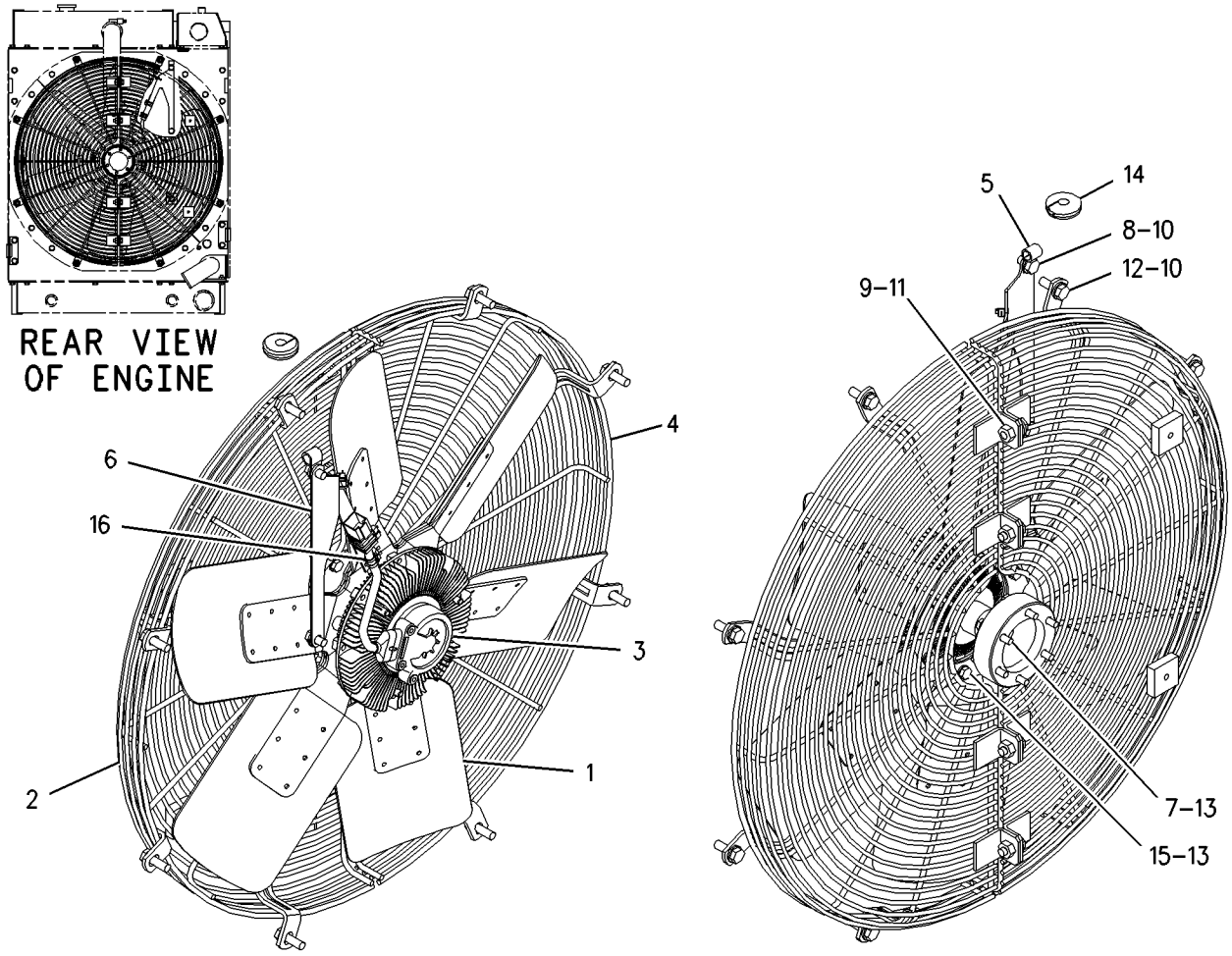

GRAPHIC #1 **<END>** g00937647

COOLING SYSTEM

195-1041 FAN GP-BLOWER

S/N: CBJ1-UP

PART OF 195-1046 INSTALLATION AR-ENGINE

SMCS-1356, 1360 **i01842757**

NOTE	REF NO	GRAPHIC REF	PART NUMBER	QTY	PART NAME 1 2 3 4 5 6 (PRODUCT LEVEL)	SEE PAGE
	1	1	**226-2261**	1	SPIDER AS-FAN	
	2	1	**195-6814**	1	GUARD AS-FAN (RIGHT)	
	3	1	**200-0928**	1	ADAPTER	
	4	1	**200-3736**	1	GUARD AS-FAN (LEFT)	
M		1	**8T-3490**	4	NUT-WELD (M10X1.5 THD)	
M	5	1	**099-3649**	6	BOLT (M8X1.25X40MM)	
	6	1	**7X-7729**	4	WASHER (11X25X3MM THK)	
	7	1	**8T-4121**	14	WASHER-HARD (11X21X2.5MM THK)	
M	8	1	**8T-4136**	4	BOLT (M10X1.5X25MM)	
M	9	1	**8T-4195**	14	BOLT (M10X1.5X30MM)	

M-METRIC PART

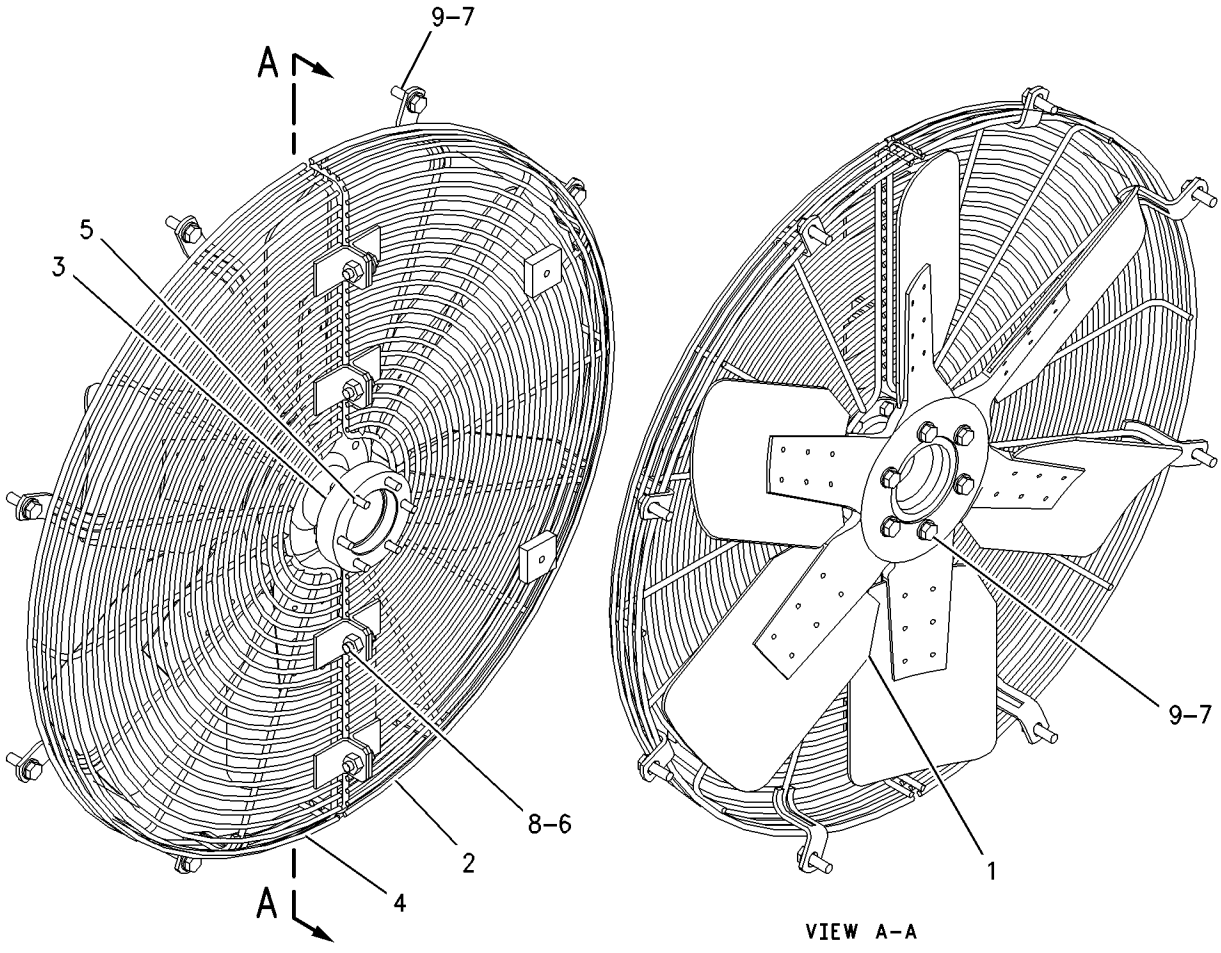

GRAPHIC #1 **<END>** g00771054

195-1043 FAN GP-REVERSIBLE

S/N: CBJ1-UP

CANNOT BE USED WITH 196-1814—PAGE 78, 195-1045—PAGE 243, , 195-1041—PAGE 80 AN ATTACHMENT

SMCS-1356, 1360 **i01830826**

NOTE	REF NO	GRAPHIC REF	PART NUMBER	QTY	PART NAME 1 2 3 4 5 6 (PRODUCT LEVEL)	SEE PAGE
	1	1	**6P-5560**	1	GROMMET	
	2	1	**188-8954**	1	SPIDER AS-FAN	
	3	1	**195-6815**	1	GUARD AS-FAN (REV)	
	4	1	**200-0928**	1	ADAPTER	
	5	1	**200-3736**	1	GUARD AS-FAN (LEFT)	
M		1	**8T-3490**	4	NUT-WELD (M10X1.5 THD)	
M	6	1	**099-3649**	6	BOLT (M8X1.25X40MM)	
	7	1	**7X-7729**	4	WASHER (11X25X3MM THK)	
	8	1	**8T-4121**	14	WASHER-HARD (11X21X2.5MM THK)	
M	9	1	**8T-4136**	4	BOLT (M10X1.5X25MM)	
M	10	1	**8T-4195**	8	BOLT (M10X1.5X30MM)	
M	11	1	**8T-4186**	6	BOLT (M10X1.5X40MM)	

M-METRIC PART

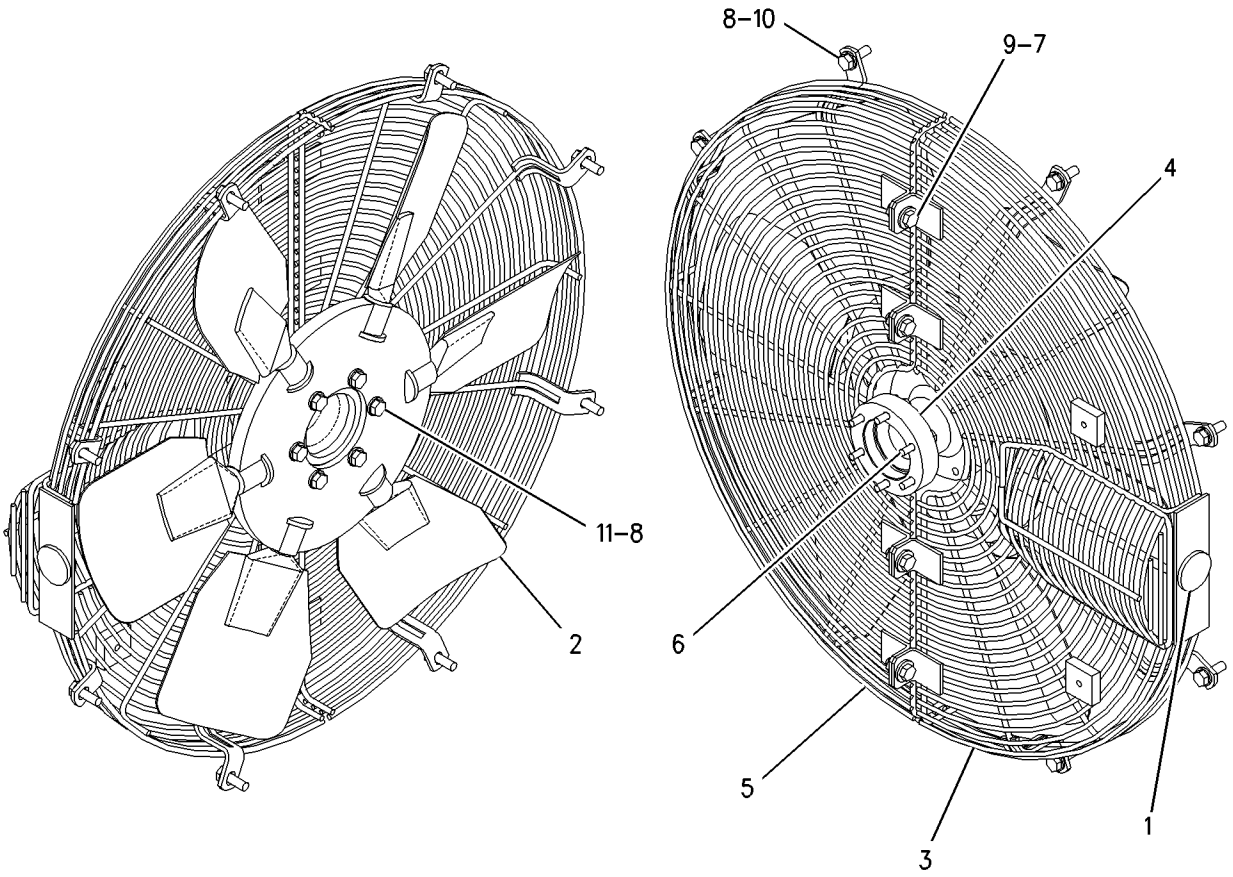

GRAPHIC #1 **<END>** g00772264

COOLING SYSTEM

159-1814 LINES GP-WATER

S/N: BMA1100-UP
PART OF 191-4479, 191-4481 ENGINE AR-COMPLETE
ALSO AN ATTACHMENT

SMCS-1355, 1380, 1393 **i01882556**

NOTE	REF NO	GRAPHIC REF	PART NUMBER	QTY	PART NAME 1 2 3 4 5 6 (PRODUCT LEVEL)	SEE PAGE
	1	1	**7E-0759**	1	HOSE	
	3	1	**157-0670**	1	CAP-DUST (COOLANT SAMPLING VALVE)	
	4	1	**126-5466**	1	GASKET	
	5	1	**126-5869**	1	REGULATOR-WATER TEMPERATURE (94 DEG C) (COOLANT)	
	6	1	**206-1540**	1	HOUSING	
	7	1	**136-0812**	1	GASKET-WATER REGULATOR (COOLANT TEMPERATURE)	
	8	1	**150-1999**	2	CLAMP	
	9	1	**191-2111**	1	ELBOW	
	10	1	**011-5224**	1	BUSHING-TERMINAL	
	11	1	**9S-8005**	1	PLUG	
	11A	1	**3K-0360**	1	SEAL-O-RING	
	12	1	**154-9024**	1	VALVE GP-FLUID SAMPLING (COOLANT)	
M	13	1	**5P-8347**	2	BOLT (M8X1.25X70MM)	
M	14	1	**6V-3940**	6	BOLT (M8X1.25X25MM)	
M	15	1	**6V-5223**	1	BOLT (M8X1.25X100MM)	
	16	1	**7W-6492**	3	PLUG-PIPE	
	17	1	**8T-6767**	1	PLUG-PIPE	
	18	1	**9M-1974**	6	WASHER-HARD (8.8X16X2MM THK)	

M-METRIC PART

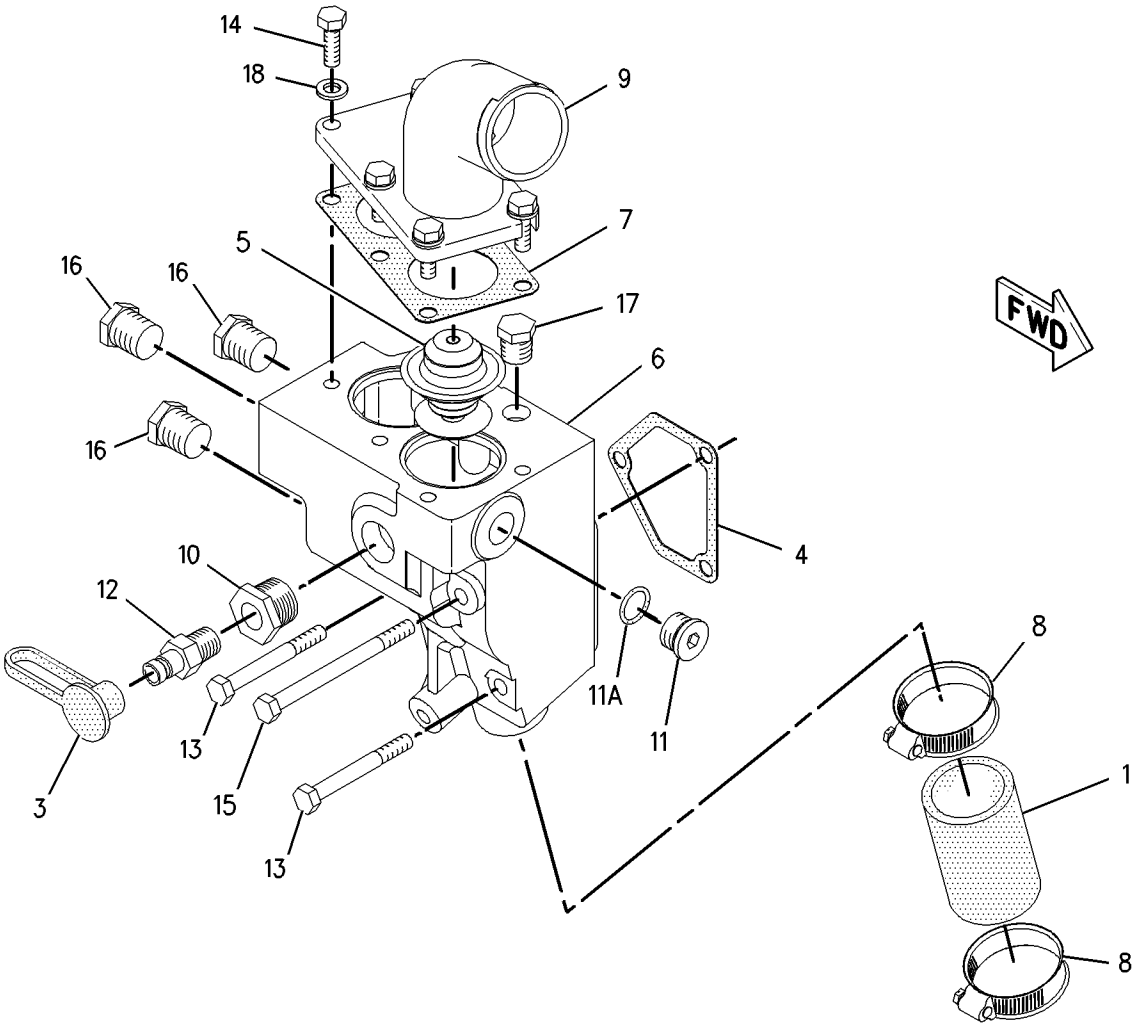

GRAPHIC #1 **<END>** g00781109

193-9237 PUMP GP-WATER

S/N: BMA1100-UP
PART OF 191-4479, 191-4481 ENGINE AR-COMPLETE
ALSO AN ATTACHMENT

SMCS-1361, 1363, 1364, 1373, 1384, 1389, 1394 **i01483815**

NOTE	REF NO	GRAPHIC REF	PART NUMBER	QTY	PART NAME 1 2 3 4 5 6 (PRODUCT LEVEL)	SEE PAGE
Y	1	1	*193-9238*	1	PUMP GP-WATER	85
M	2	1	**8T-0644**	4	BOLT (M10X1.50X90MM)	
	3	1	**2M-4453**	1	SEAL-O-RING	
	4	1	**7F-8267**	1	SEAL-O-RING	

M-METRIC PART
Y-SEPARATE ILLUSTRATION

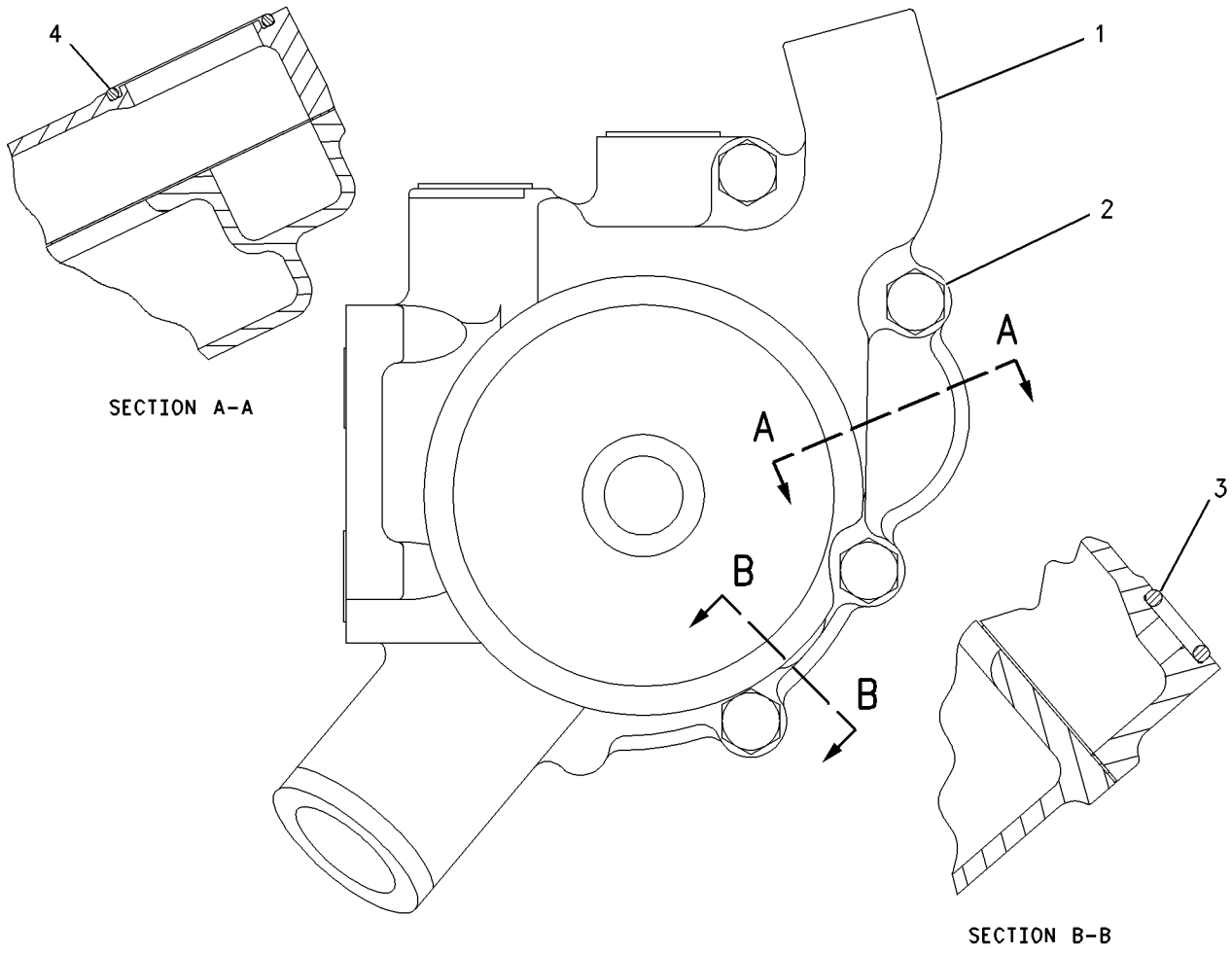

GRAPHIC #1 **<END>** g00772077

COOLING SYSTEM

193-9238 PUMP GP-WATER

S/N: BMA1100-UP
PART OF 193-9237 PUMP GP-WATER
ALSO AN ATTACHMENT

SMCS-1361, 1363, 1364, 1373, 1384, 1389, 1394 **i01884402**

NOTE	REF NO	GRAPHIC REF	PART NUMBER	QTY	PART NAME 1 2 3 4 5 6 (PRODUCT LEVEL)	SEE PAGE
	1	1	**193-9239**	1	PUMP AS-WATER	
	1A	1	**117-3437**	1	PULLEY (8 GROOVE)	
	1B	1	**119-3025**	1	FILTER-WATER (WATER PUMP)	
	1C	1	**129-1170**	1	SHAFT AS	
	1D	1	**147-5088**	1	SEAL AS-WATER PUMP	
	1E	1	**152-3952**	1	IMPELLER-PUMP	
	1F	1	**193-9240**	1	HOUSING-PUMP	
	2	1	**4W-7592**	1	GASKET	
	3	1	**4W-0253**	1	COVER	
M	4	1	**6V-3918**	4	BOLT (M8X1.25X50MM)	
	5	1	**9M-1974**	4	WASHER-HARD (8.8X16X2MM THK)	
	6	1	**9S-8003**	1	PLUG	
	7	1	**1J-9671**	1	SEAL-O-RING	
	8	1	**9S-8005**	2	PLUG	
	9	1	**3K-0360**	2	SEAL-O-RING	
	10	1	**9S-8008**	2	PLUG	
	11	1	**3D-2824**	2	SEAL-O-RING	
	12	1	**9S-8006**	1	PLUG	
	13	1	**2M-9780**	1	SEAL-O-RING	

M-METRIC PART

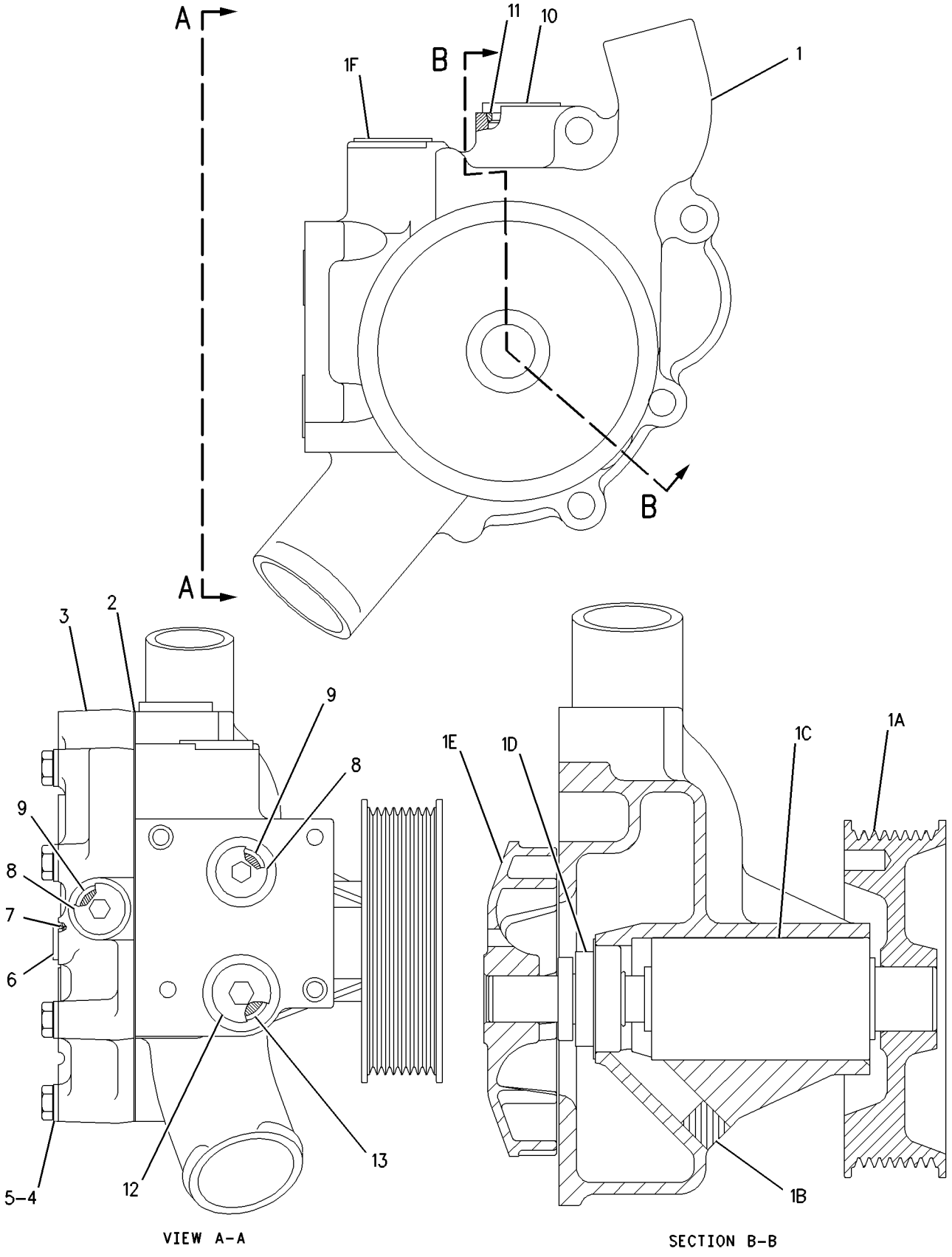

GRAPHIC #1 **<END>** g00772119

COOLING SYSTEM

195-1040 RADIATOR GP

S/N: CBJ1-UP

PART OF 195-1046 INSTALLATION AR-ENGINE

SMCS-1351 **i01884404**

NOTE	REF NO	GRAPHIC REF	PART NUMBER	QTY	PART NAME 1 2 3 4 5 6 (PRODUCT LEVEL)	SEE PAGE
	2	1	**5D-1026**	1	CLAMP-HOSE	
	3	1	**5V-9221**	2	SPACER (13.8X25X25MM THK)	
	4	1	**6V-7238**	1	VALVE-SHUTOFF	
	5	1	**7K-1181**	3	STRAP-CABLE	
	6	1	**7X-0458**	1	CLIP	
	7	1	**8T-4984**	1	CLAMP-HOSE	
	8	1	**8T-6703**	3	CLAMP-HOSE	
Y	9	1	**165-6634**	1	SENSOR GP-LIQUID LEVEL (COOLANT)	152
	10	1	**192-4428**	1	BRACKET	
	11	1	**192-4429**	1	BRACKET	
Y	12	1	**195-1809**	1	RADIATOR GP	89
	13	1	**195-7898**	2	STRIP	
	14	1	**195-7899**	2	BAFFLE AS	
					(EACH INCLUDES)	
		1	**7G-5186**	8	SPACER (13X19X4.5MM THK)	
	15	1	**198-1663**	1	HOSE (LOWER RADIATOR)	
	16	1	**201-8316**	4	BRACKET AS	
	17	1	**214-6735**	1	PLATE AS	
M		1	**8T-3490**	8	NUT-WELD (M10X1.5 THD)	
	18	1	**214-6736**	1	SHROUD AS	
M		1	**8T-3490**	10	NUT-WELD (M10X1.5 THD)	
	19	1	**214-6738**	1	HOSE (UPPER RADIATOR)	
	22	1	**190-5360**	1	SHROUD AS	
M		1	**8T-3490**	12	NUT-WELD (M10X1.5 THD)	
	23	1	**3K-0360**	1	SEAL-O-RING	
	24	1	**7X-7729**	7	WASHER (11X25X3MM THK)	
	25	1	**8T-4121**	27	WASHER-HARD (11X21X2.5MM THK)	
M	26	1	**8T-4136**	26	BOLT (M10X1.5X25MM)	
M	27	1	**8T-4137**	8	BOLT (M10X1.5X20MM)	
M	28	1	**8T-4194**	2	BOLT (M12X1.75X50MM)	
E	29	1	**5P-0767**		HOSE (70 CM)	
E	30	1	**8C-3681**		HOSE (129CM)	
D	31	1	**6V-5191**		SEAL (1M)	
D	32	1	**5P-9909**		SEAL (.55M)	
D	32A	1	**5P-9909**		SEAL (.07M)	
D	33	1	**5P-5931**		SEAL (.9M)	
D	34	1	**6V-5163**		SEAL (.9M)	

D-ORDER BY THE METER
E-ORDER BY THE CENTIMETER
M-METRIC PART
Y-SEPARATE ILLUSTRATION

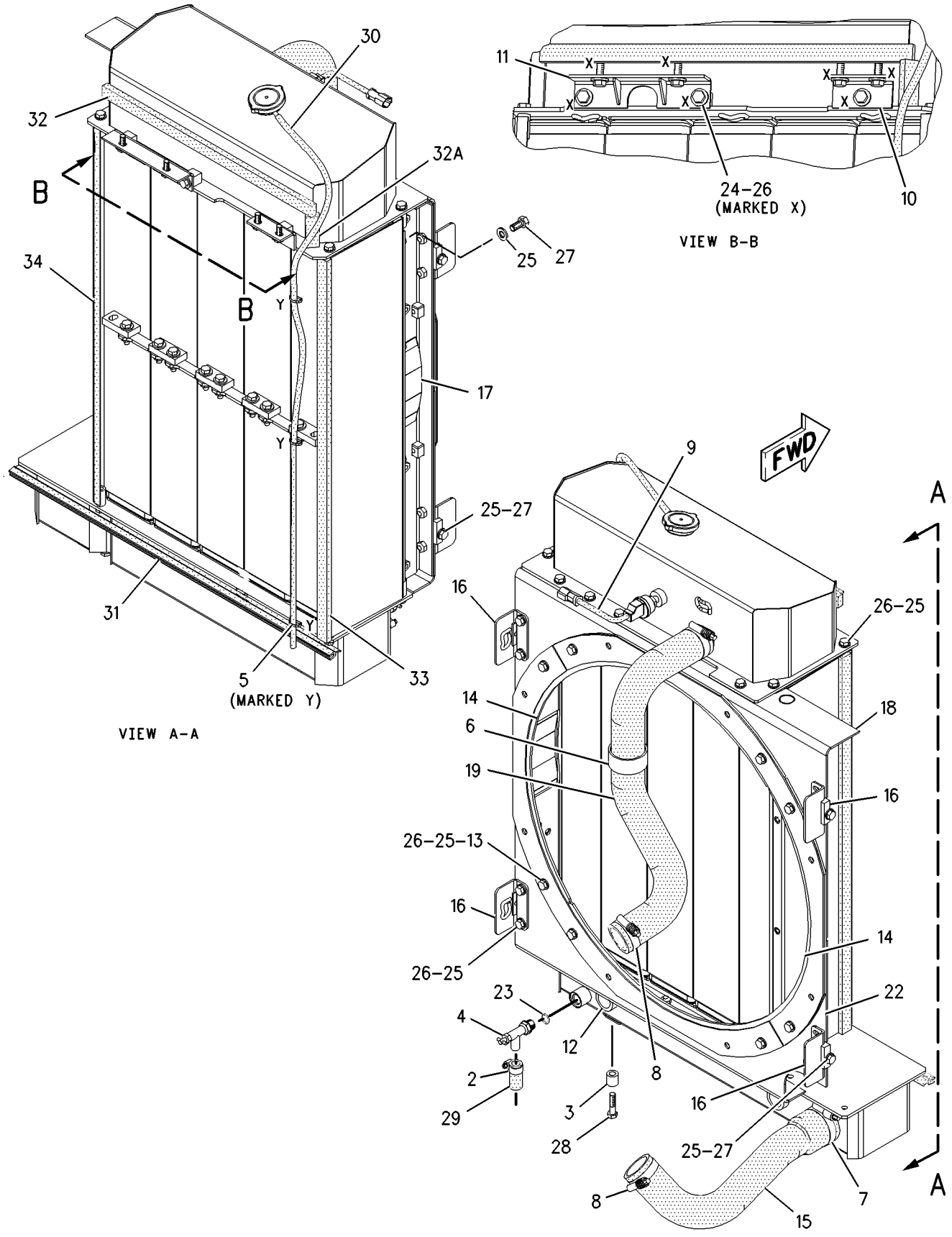

GRAPHIC #1 **<END>** g00975028

COOLING SYSTEM

195-1809 RADIATOR GP

S/N: CBJ1-UP

PART OF 195-1040 RADIATOR GP

SMCS-1351 **i01881063**

NOTE	REF NO	GRAPHIC REF	PART NUMBER	QTY	PART NAME 1 2 3 4 5 6 (PRODUCT LEVEL)	SEE PAGE
	1	1	**4P-9942**	5	SEAL-END TANK	
	2	1	**4P-9943**	5	SEAL-END TANK	
	3	1	**7E-7754**	4	STRAP AS	
	4	1	**109-6967**	2	PLATE AS	
					(EACH INCLUDES)	
M		1	**8T-3490**	4	NUT-WELD (M10X1.5 THD)	
	5	1	**199-2387**	1	TANK AS (RADIATOR)	
M		1	**8T-3597**	2	NUT-WELD (M12X1.75 THD)	
		1	**106-7124**	1	CORE AS-OIL COOLER	
	6	1	**209-1990**	1	TANK GP (RADIATOR-UPPER)	
		1	**031-1119**	1	CAP AS-RADIATOR (PRESSURE RELIEF)	
	7	1	**188-3126**	5	RADIATOR AS	
	8	1	**7X-7729**	8	WASHER (11X25X3MM THK)	
	9	1	**8T-4121**	8	WASHER-HARD (11X21X2.5MM THK)	
M	10	1	**8T-4186**	8	BOLT (M10X1.5X40MM)	
M	11	1	**8T-4195**	8	BOLT (M10X1.5X30MM)	

M-METRIC PART

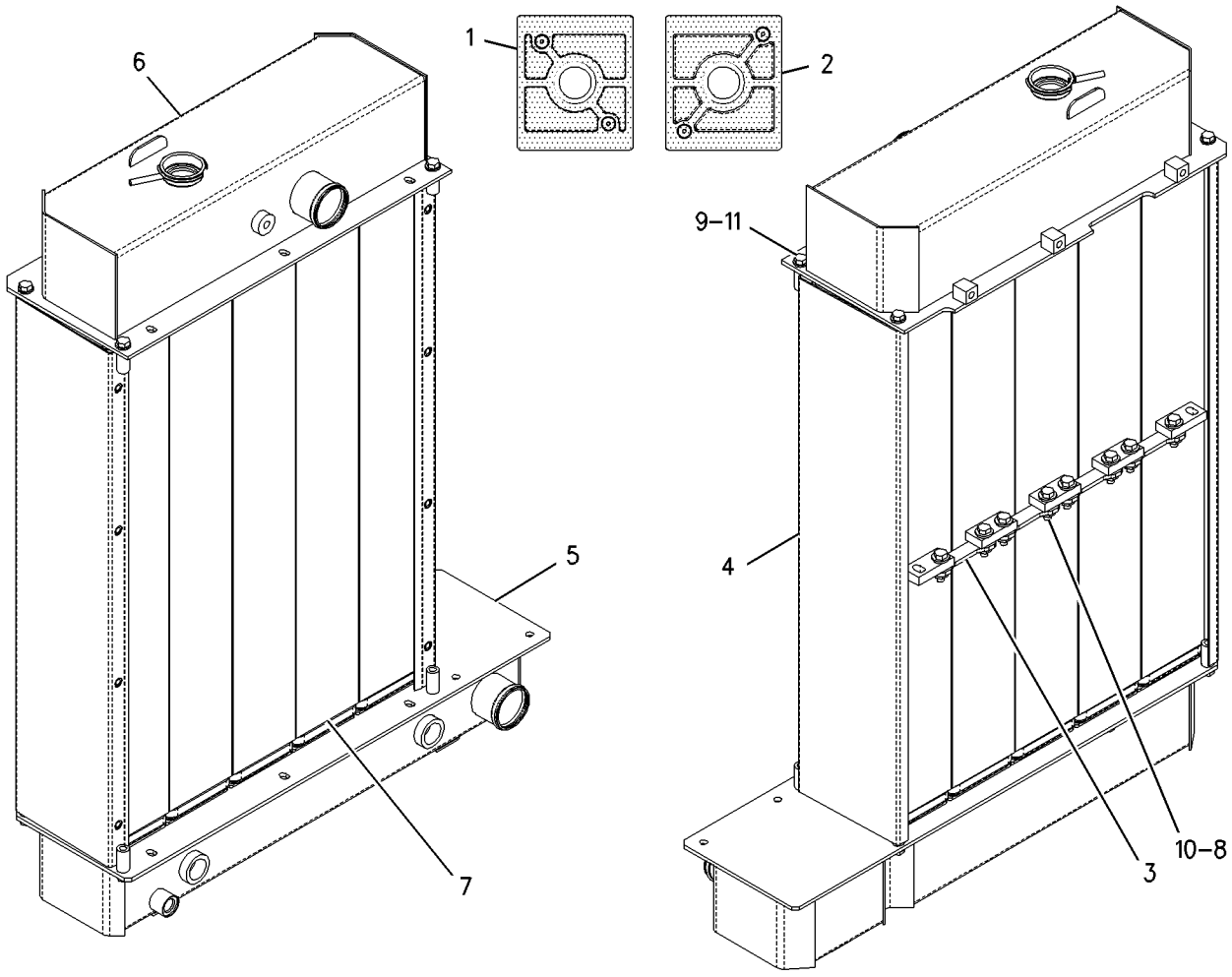

GRAPHIC #1 **<END>** g00773959

AIR INLET AND EXHAUST SYSTEM

195-1042 AFTERCOOLER GP

S/N: CBJ1-UP

PART OF 195-1046 INSTALLATION AR-ENGINE

SMCS-1063, 1064, 1079 **i01842783**

NOTE	REF NO	GRAPHIC REF	PART NUMBER	QTY	PART NAME 1 2 3 4 5 6 (PRODUCT LEVEL)	SEE PAGE
	1	1	**197-4848**	1	BRACKET	
	2	1	**200-8616**	1	AFTERCOOLER AS	
	3	1	**7X-7729**	4	WASHER (11X25X3MM THK)	
	4	1	**8T-4121**	6	WASHER-HARD (11X21X2.5MM THK)	
M	5	1	**8T-4136**	8	BOLT (M10X1.5X25MM)	
M	6	1	**8T-4195**	2	BOLT (M10X1.5X30MM)	
E	7	1	**5P-5649**		SEAL (10 CM)	
E	8	1	**6V-6604**		SEAL (40 CM)	
E	9	1	**5P-5931**		SEAL (90 CM)	

E-ORDER BY THE CENTIMETER
M-METRIC PART

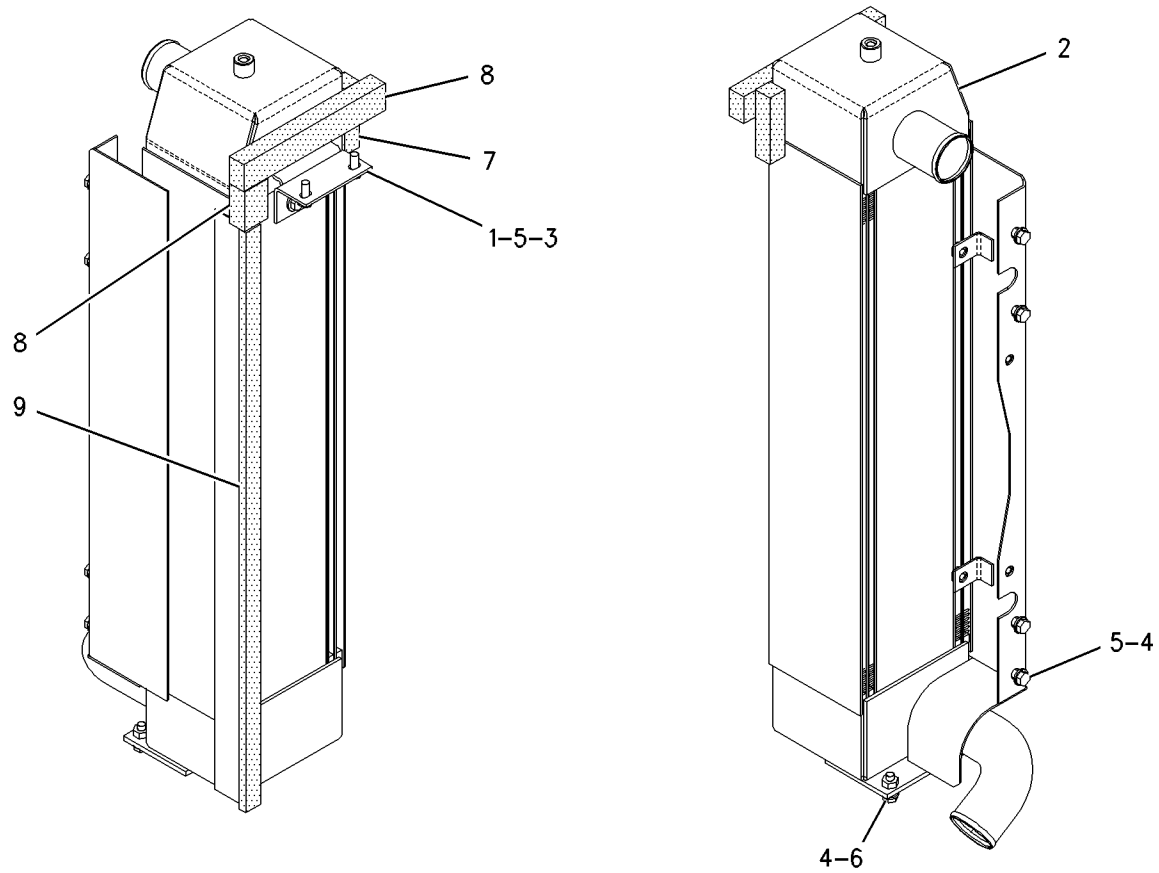

GRAPHIC #1 **<END>** g00772048

AIR INLET AND EXHAUST SYSTEM

195-1049 AIR CLEANER GP

S/N: CBJ1-UP

PART OF 195-1046 INSTALLATION AR-ENGINE

SMCS-1051, 1054 **i01843128**

NOTE	REF NO	GRAPHIC REF	PART NUMBER	QTY	PART NAME 1 2 3 4 5 6 (PRODUCT LEVEL)	SEE PAGE
	1	1	**5P-2948**	1	CONNECTOR GP	
	2	1	**186-2695**	1	PLATE	
	3	1	**186-2696**	1	BRACKET AS	
	4	1	**187-4807**	1	BRACKET AS	
	5	1	**199-1416**	1	AIR CLEANER AS	
		1	**6I-2501**	1	FILTER ELEMENT AS-AIR (PRIMARY)	
		1	**6I-2502**	1	FILTER ELEMENT AS-AIR (SECONDARY)	
		1	**6I-4464**	1	COVER AS-AIR CLEANER	
M	6	1	**5C-7261**	3	NUT (M8X1.25 THD)	
	8	1	**8T-4121**	11	WASHER-HARD (11X21X2.5MM THK)	
M	9	1	**8T-4136**	7	BOLT (M10X1.5X25MM)	
M	11	1	**8T-4195**	4	BOLT (M10X1.5X30MM)	
	12	1	**8T-4224**	3	WASHER-HARD (8.8X16X2MM THK)	

M-METRIC PART

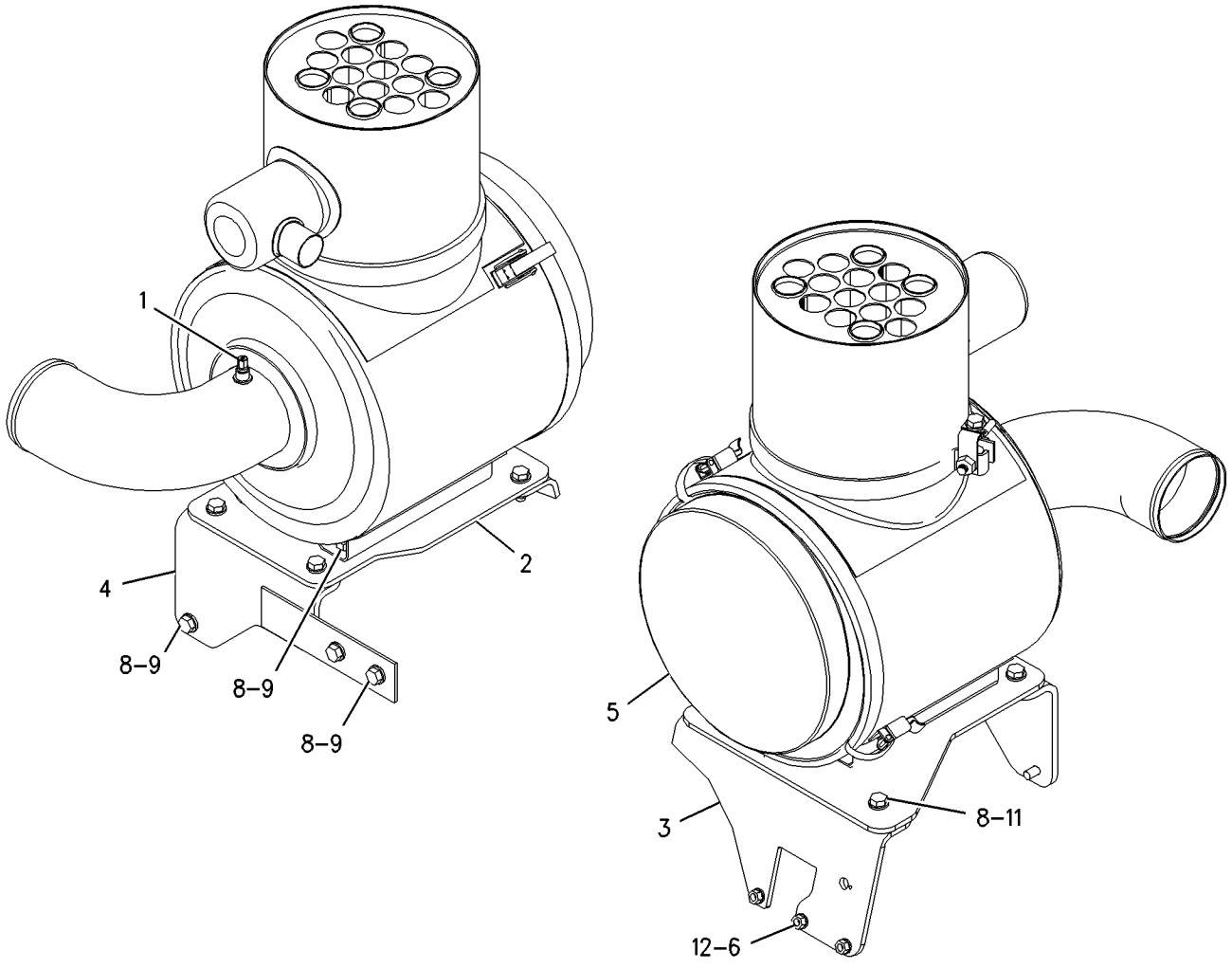

GRAPHIC #1 **<END>** g00941932

AIR INLET AND EXHAUST SYSTEM

153-1794 COVER GP-AIR INLET

S/N: BMA1100-UP
PART OF 191-4479, 191-4481 ENGINE AR-COMPLETE
ALSO AN ATTACHMENT

SMCS-1087 **i01802450**

NOTE	REF NO	GRAPHIC REF	PART NUMBER	QTY	PART NAME 1 2 3 4 5 6 (PRODUCT LEVEL)	SEE PAGE
	1	1	**203-3769**	1	COVER-AIR INLET	
	2	1	**144-3472**	1	GASKET	
	3	1	**9S-8005**	2	PLUG	
	4	1	**3K-0360**	2	SEAL-O-RING	

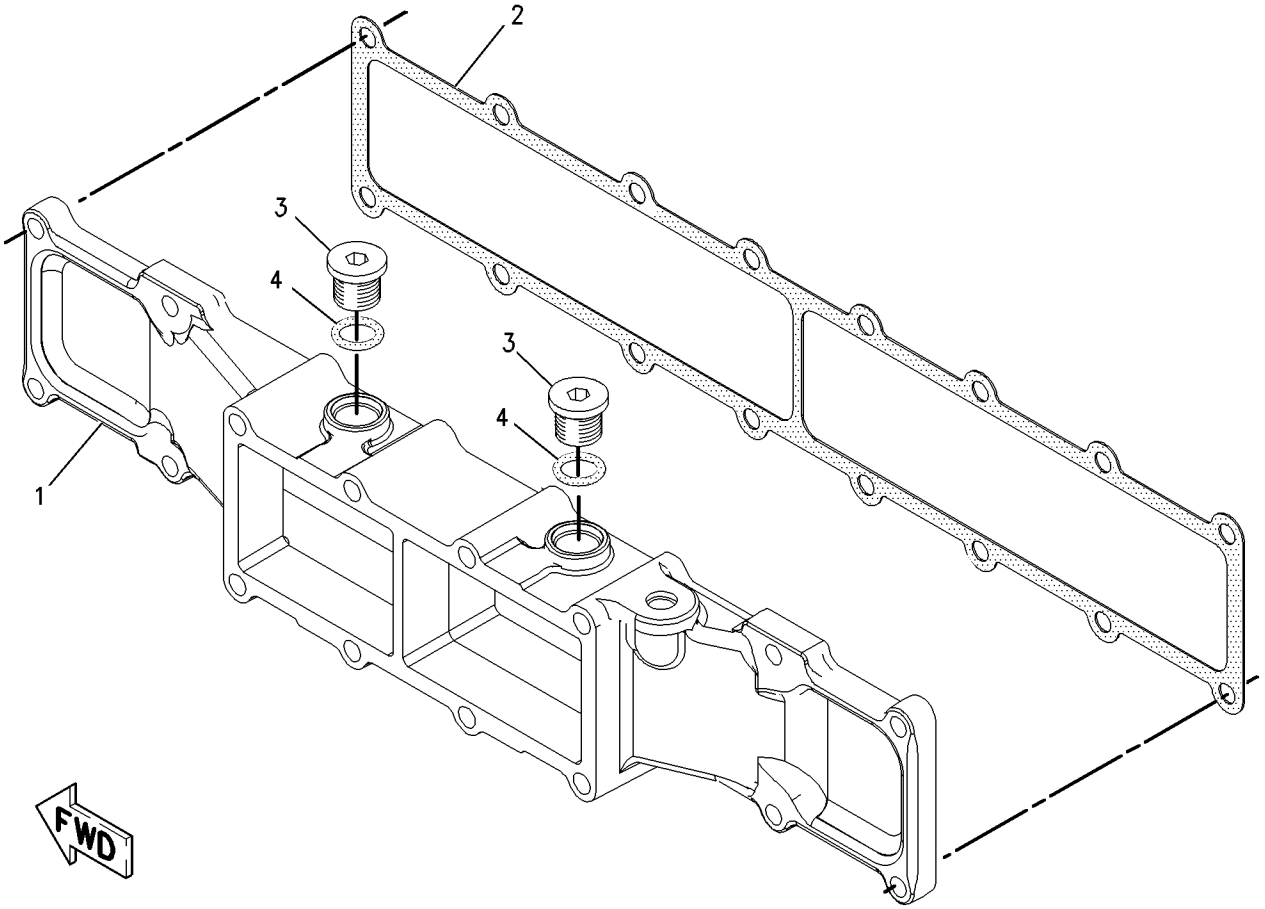

GRAPHIC #1 **<END>** g00826727

AIR INLET AND EXHAUST SYSTEM

170-3273 ELBOW GP-AIR INLET

S/N: BMA1100-UP
PART OF 191-4479, 191-4481 ENGINE AR-COMPLETE
ALSO AN ATTACHMENT

SMCS-1087 **i01859783**

NOTE	REF NO	GRAPHIC REF	PART NUMBER	QTY	PART NAME 1 2 3 4 5 6 (PRODUCT LEVEL)	SEE PAGE
B	1	1	**1U-8846**		SEALANT-GASKET	
	3	1	**170-3274**	1	ELBOW	
M	4	1	**175-4166**	4	STUD	
	5	1	**3K-0360**	1	SEAL-O-RING	
M	6	1	**6V-3821**	4	BOLT (M8X1.25X110MM)	
	7	1	**9M-1974**	8	WASHER-HARD (8.8X16X2MM THK)	
	8	1	**9S-8005**	1	PLUG	

B-USE AS REQUIRED
M-METRIC PART

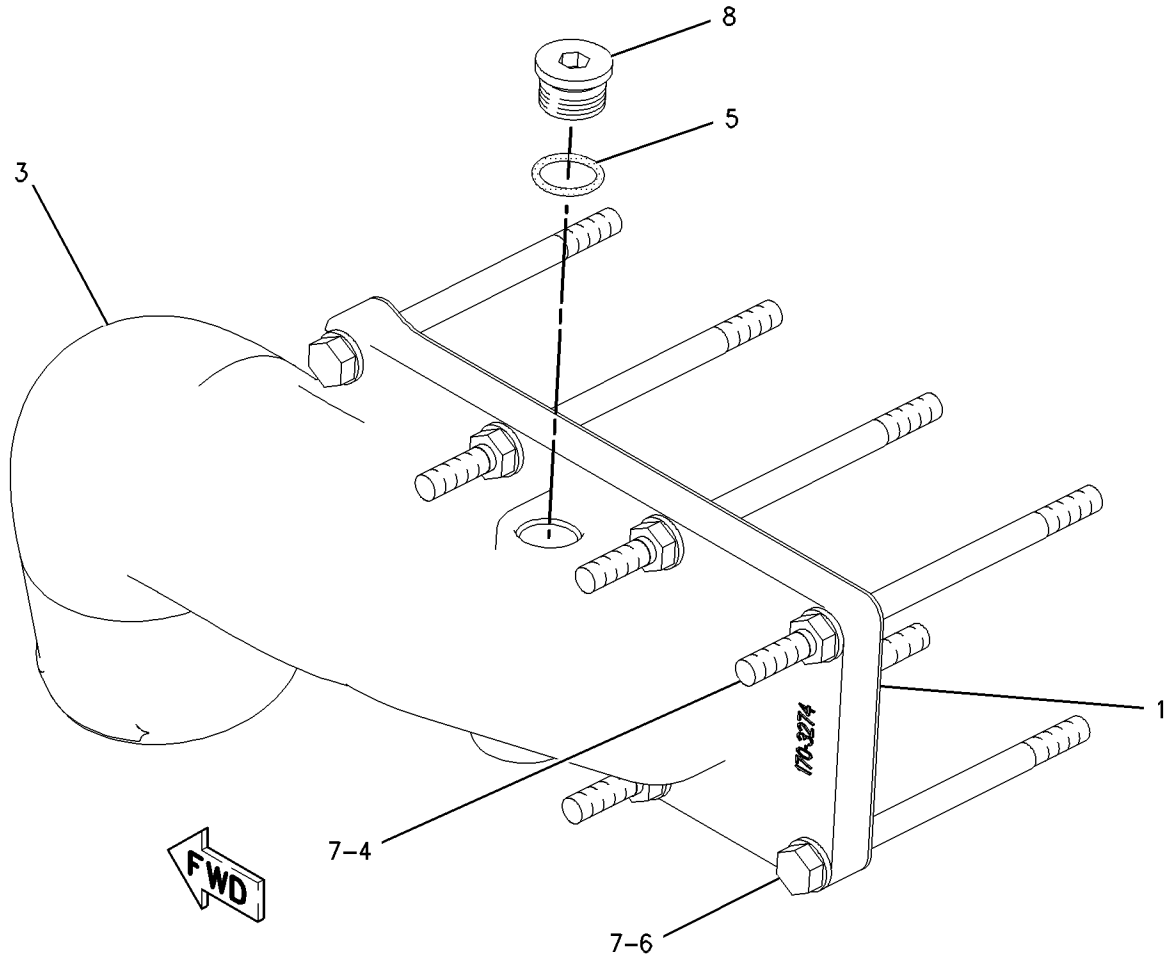

GRAPHIC #1 **<END>** g00948042

AIR INLET AND EXHAUST SYSTEM

178-9018 INDICATOR GP-AIR FILTER CHANGE

S/N: CBJ1-UP

PART OF 156-8911 CAB GP

SMCS-7452 **i01882566**

NOTE	REF NO	GRAPHIC REF	PART NUMBER	QTY	PART NAME 1 2 3 4 5 6 (PRODUCT LEVEL)	SEE PAGE
	1	1	**3S-2093**	1	STRAP-CABLE	
BD	2	1	**5P-5630**		TUBE	
	3	1	**5P-2948**	1	CONNECTOR GP	
		1	**4K-9821**	1	SLEEVE	
		1	**4K-9822**	1	NUT (5/16-24 THD)	
	4	1	**8N-2694**	1	INDICATOR GP-AIR FILTER CHANGE	
	5	1	**2V-1937**	1	GROMMET	
	6	1	**5K-5068**	1	FITTING	

B-USE AS REQUIRED
D-ORDER BY THE METER

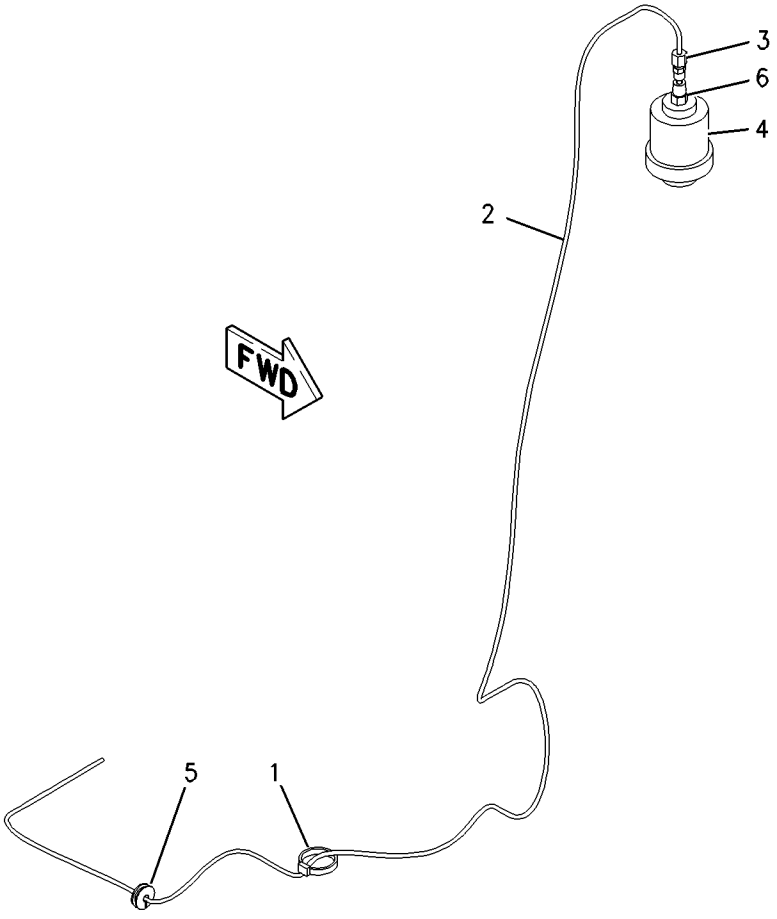

GRAPHIC #1 **<END>** g00940007

AIR INLET AND EXHAUST SYSTEM

195-1047 LINES GP-AIR

S/N: CBJ1-UP

PART OF 195-1046 INSTALLATION AR-ENGINE

SMCS-1071 **i01881429**

NOTE	REF NO	GRAPHIC REF	PART NUMBER	QTY	PART NAME 1 2 3 4 5 6 (PRODUCT LEVEL)	SEE PAGE
M	1	1	**8T-4195**	1	BOLT (M10X1.5X30MM)	
	2	1	**7E-3870**	1	CLAMP	
	3	1	**8T-4984**	6	CLAMP-HOSE	
	4	1	**8T-4986**	4	CLAMP-HOSE	
	5	1	**144-0367**	10	CLAMP-HOSE	
	6	1	**193-0205**	1	HOSE-REDUCER	
	7	1	**199-2565**	1	HOSE	
	8	1	**199-2569**	1	TUBE	
	9	1	**199-2579**	1	BRACKET AS	
M		1	**8T-3490**	1	NUT-WELD (M10X1.5 THD)	
	10	1	**199-2580**	1	HOSE	
	11	1	**200-3745**	1	HOSE	
	12	1	**200-3746**	1	BRACKET AS	
M		1	**8T-3490**	1	NUT-WELD (M10X1.5 THD)	
	13	1	**200-3747**	1	TUBE	
	14	1	**203-3158**	1	ADAPTER-EXHAUST	
	15	1	**203-7607**	1	HOSE	
	16	1	**206-7738**	1	ELBOW	
E	17	1	**206-7740**	1	HOSE	
	18	1	**109-1633**	2	CLIP (SLOT)	
	19	1	**109-1634**	2	CLIP (TAB)	
	20	1	**7C-0752**	1	CLAMP (TURBINE)	
	21	1	**8L-5832**	1	NUT-HEX (10-32 THD)	
	22	1	**8T-4121**	6	WASHER-HARD (11X21X2.5MM THK)	
M	23	1	**8T-4136**	5	BOLT (M10X1.5X25MM)	
	24	1	**9X-2646**	1	CLIP (SLOT)	
	25	1	**9X-2647**	1	CLIP (TAB)	
	26	1	**5P-2230**	2	CLAMP-HOSE	

E-ORDER BY THE CENTIMETER
M-METRIC PART

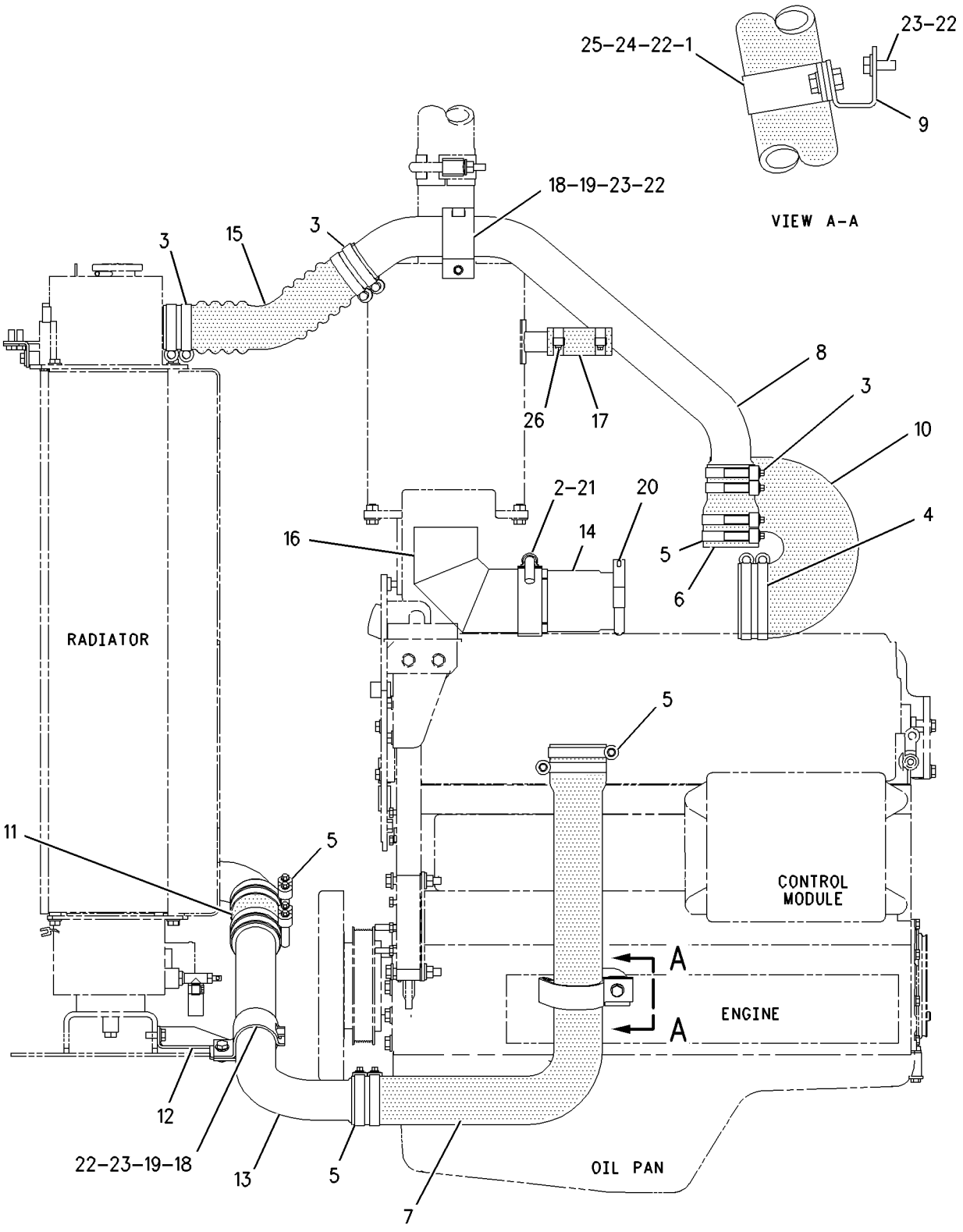

LEFT SIDE VIEW

GRAPHIC #1 **<END>** g00970493

AIR INLET AND EXHAUST SYSTEM

159-2572 MANIFOLD GP-EXHAUST

S/N: BMA1100-UP
FORWARD EXHAUST, HIGH-MOUNT TURBO
PART OF 191-4479, 191-4481 ENGINE AR-COMPLETE
ALSO AN ATTACHMENT

SMCS-1059 **i01804584**

NOTE	REF NO	GRAPHIC REF	PART NUMBER	QTY	PART NAME 1 2 3 4 5 6 (PRODUCT LEVEL)	SEE PAGE
	1	1	**172-6284**	3	GASKET	
M	2	1	**172-6298**	10	BOLT-FLANGE HEAD (M10)	
	3	1	**183-6854**	1	MANIFOLD-EXHAUST	
	4	1	**183-6856**	2	MANIFOLD-EXHAUST	
	5	1	**186-3525**	1	ELBOW	
	6	1	**189-8772**	10	SPACER	
	7	1	**203-3768**	2	SPACER	
	8	1	**210-7722**	2	BOLT-FLANGE HEAD (M10)	
M	9	1	**3E-8017**	4	LOCKNUT	
	10	1	**6V-5839**	4	WASHER (11X21X2.5MM THK)	
	11	1	**7C-7431**	1	GASKET-TURBOCHARGER	
M	12	1	**8T-7044**	8	STUD-TAPERLOCK	

M-METRIC PART

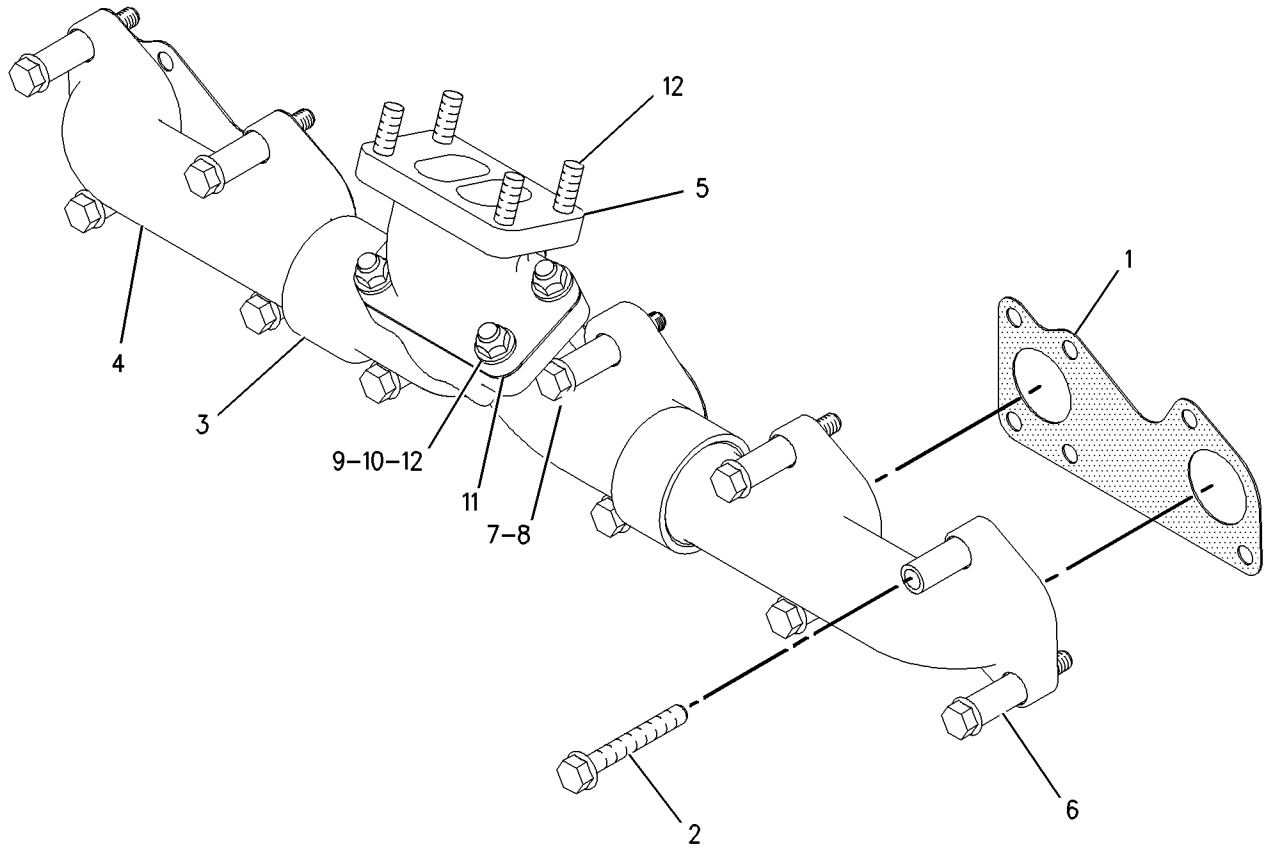

GRAPHIC #1 **<END>** g00923244

AIR INLET AND EXHAUST SYSTEM

201-5381 MOUNTING GP-MUFFLER

S/N: BMA1100-UP
PART OF 191-4479, 191-4481 ENGINE AR-COMPLETE
ALSO AN ATTACHMENT

SMCS-1062 **i01804591**

NOTE	REF NO	GRAPHIC REF	PART NUMBER	QTY	PART NAME 1 2 3 4 5 6 (PRODUCT LEVEL)	SEE PAGE
	1	1	**214-6740**	1	BRACKET AS	
	2	1	**8T-4121**	6	WASHER-HARD (11X21X2.5MM THK)	
M	3	1	**8T-4136**	6	BOLT (M10X1.5X25MM)	

M-METRIC PART

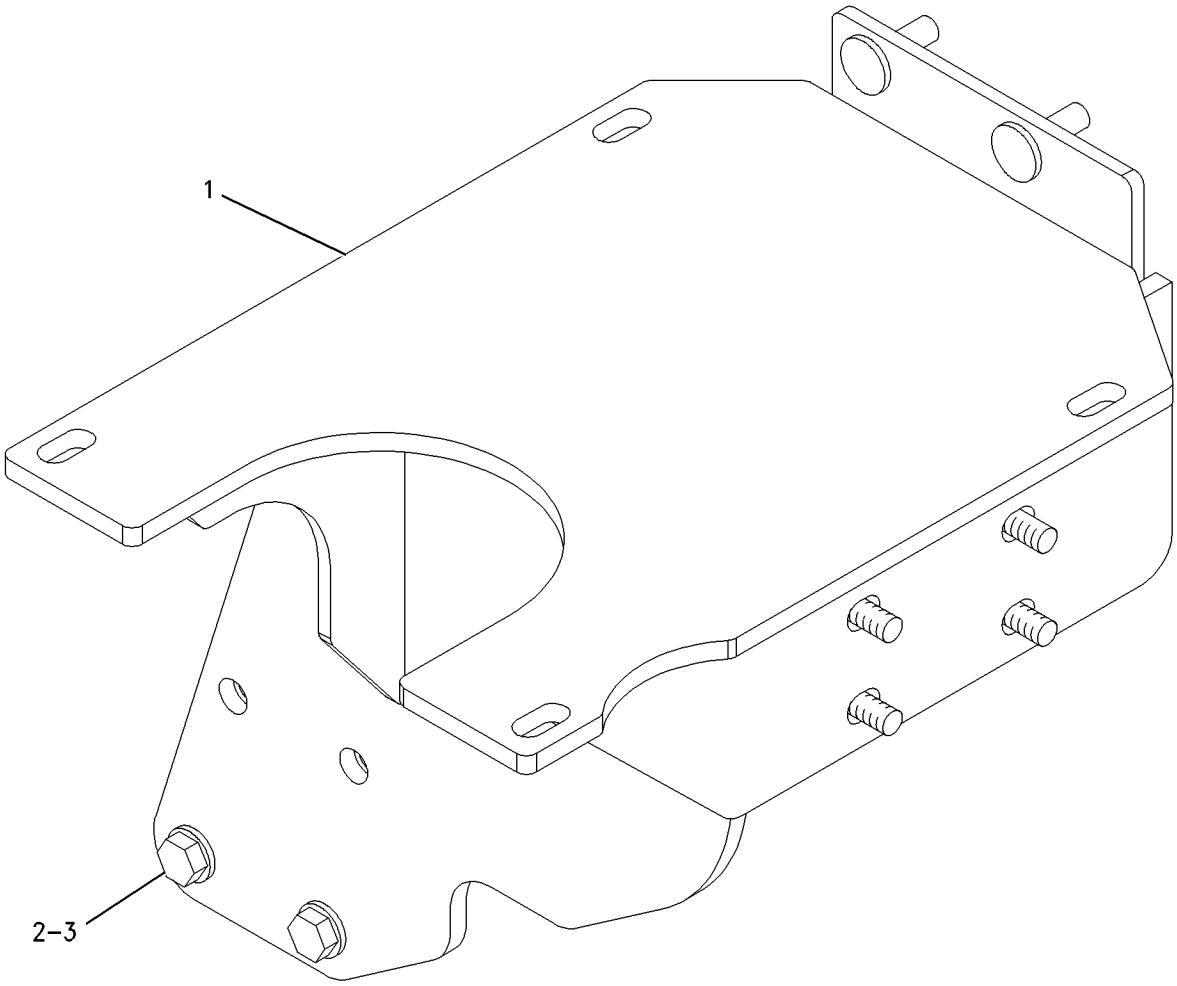

GRAPHIC #1 **<END>** g00769558

AIR INLET AND EXHAUST SYSTEM

195-1048 MUFFLER GP

S/N: CBJ1-UP

PART OF 195-1046 INSTALLATION AR-ENGINE

SMCS-1062 **i01882420**

NOTE	REF NO	GRAPHIC REF	PART NUMBER	QTY	PART NAME 1 2 3 4 5 6 (PRODUCT LEVEL)	SEE PAGE
	1	1	**199-3003**	1	MUFFLER AS	
	2	1	**199-5977**	1	PIPE AS-EXHAUST	
	2A	1	**9Y-8315**	1	CLAMP-BENT BOLT	
	3	1	**7X-7729**	4	WASHER (11X25X3MM THK)	
M	4	1	**8T-4136**	4	BOLT (M10X1.5X25MM)	

M-METRIC PART

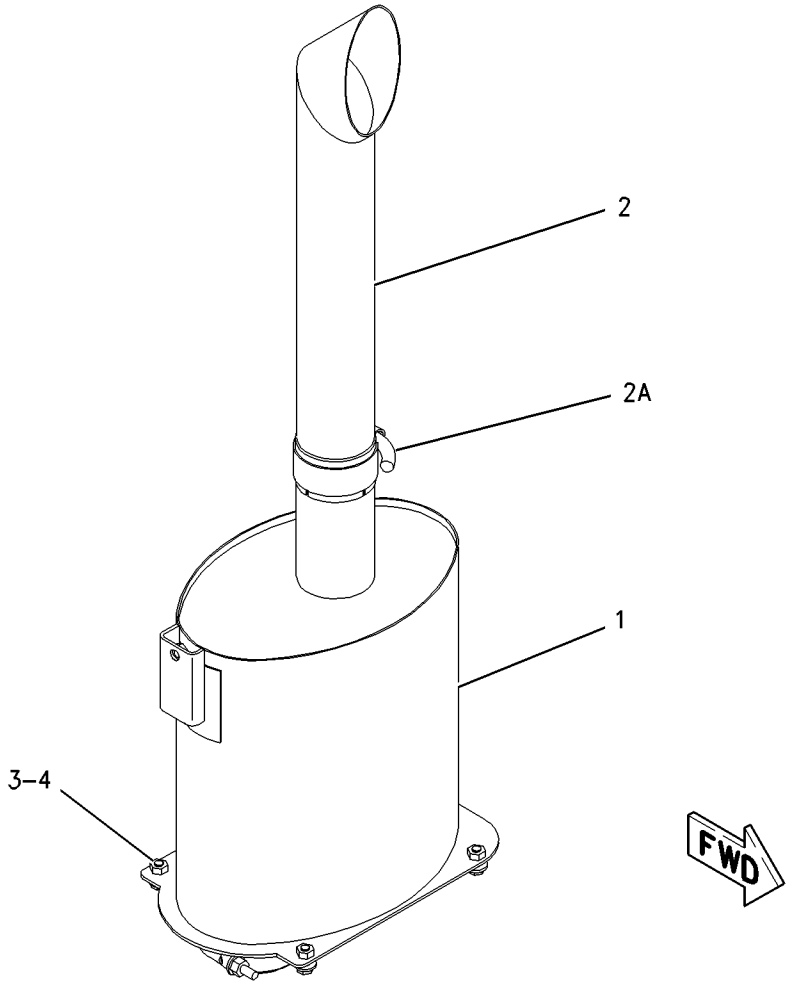

GRAPHIC #1 **<END>** g00941845

AIR INLET AND EXHAUST SYSTEM

203-2062 SHIELD GP-AIR CLEANER–PRECLEANER

S/N: CBJ1-UP
PART OF 169-4912 SUPPRESSION AR-SOUND
AN ATTACHMENT

SMCS-1051 **i01877499**

NOTE	REF NO	GRAPHIC REF	PART NUMBER	QTY	PART NAME 1 2 3 4 5 6 (PRODUCT LEVEL)	SEE PAGE
	1	1	**199-5180**	1	SHIELD AS	
	2	1	**204-7427**	1	CLAMP	
M	3	1	**8T-4133**	1	NUT (M10X1.5 THD)	
M	4	1	**8T-4185**	1	BOLT (M10X1.5X50MM)	

M-METRIC PART

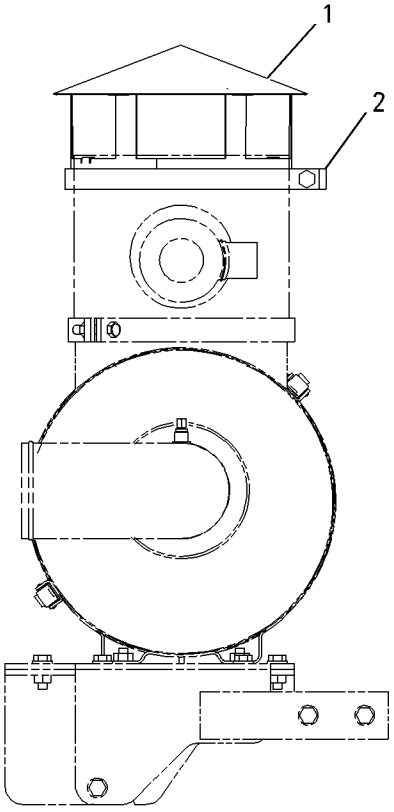

LEFT SIDE OF ENGINE

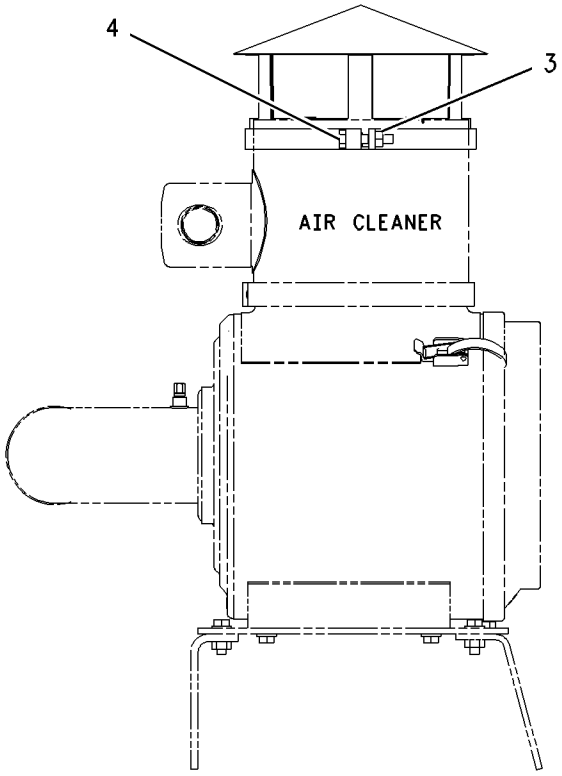

FRONT VIEW

GRAPHIC #1 **<END>** g00829142

AIR INLET AND EXHAUST SYSTEM

187-1602 TURBOCHARGER GP

S/N: BMA1100-UP
PART OF 191-4482 ENGINE AR-CORE
ALSO AN ATTACHMENT

SMCS-1052, 1060, 1065, 1077 **i01807197**

NOTE	REF NO	GRAPHIC REF	PART NUMBER	QTY	PART NAME 1 2 3 4 5 6 (PRODUCT LEVEL)	SEE PAGE
M	1	1	**3E-8017**	4	LOCKNUT (M10X1.5)	
	2	1	**7C-7431**	1	GASKET-TURBOCHARGER	
Y	3	1	**187-1603**	1	TURBOCHARGER GP	102

M-METRIC PART
Y-SEPARATE ILLUSTRATION

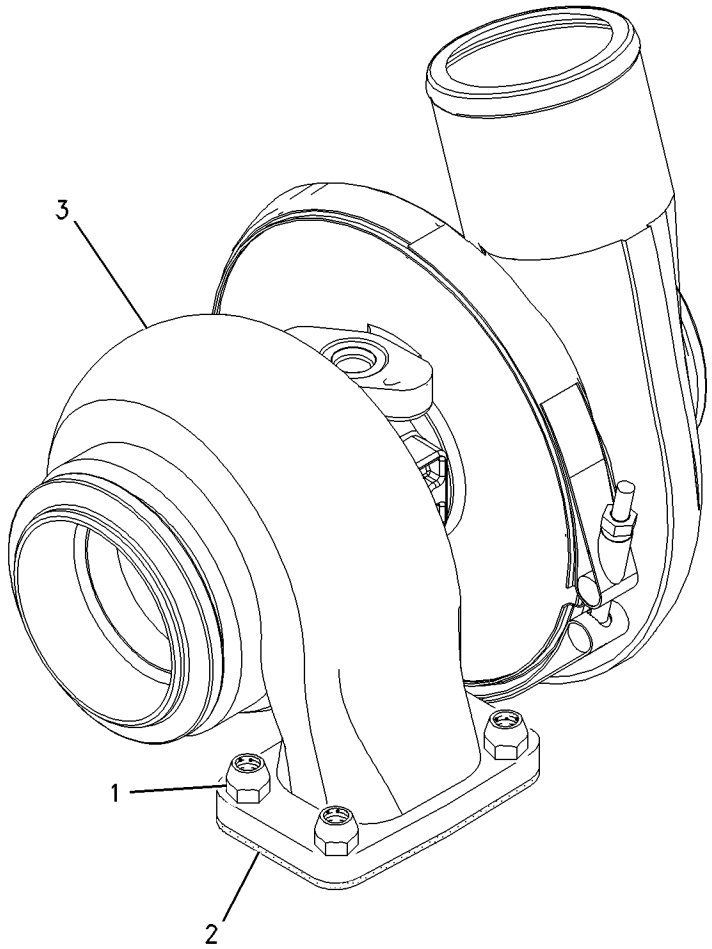

GRAPHIC #1 **<END>** g00771138

AIR INLET AND EXHAUST SYSTEM

187-1603 TURBOCHARGER GP

S/N: BMA1100-UP
PART OF 187-1602 TURBOCHARGER GP
ALSO AN ATTACHMENT

SMCS-1052, 1060, 1065, 1077 **i01696296**

NOTE	REF NO	GRAPHIC REF	PART NUMBER	QTY	PART NAME 1 2 3 4 5 6 (PRODUCT LEVEL)	SEE PAGE
M	1	1	**7C-6670**	4	BOLT (M8X12.5MM)	
	2	1	**7C-6672**	2	PLATE-CLAMP	
	3	1	**7M-9918**	1	LOCKNUT (1/4-28 THD)	
	4	1	**158-6072**	1	CLAMP AS	
	5	1	**196-0265**	1	HOUSING-TURBINE	
	6	1	**196-0267**	1	COVER-COMPRESSOR	
	7	1	**196-0268**	1	CARTRIDGE GP-TURBOCHARGER	

M-METRIC PART

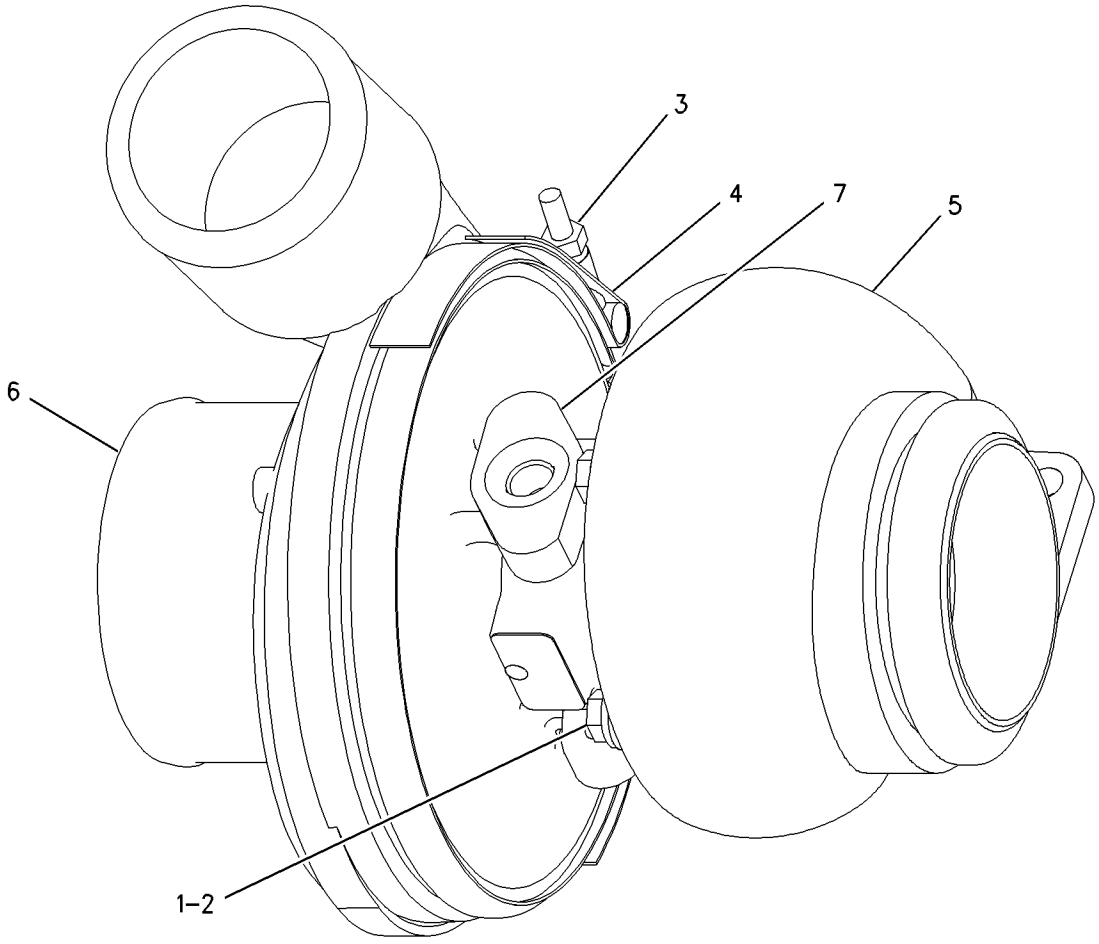

GRAPHIC #1 **<END>** g00759808

186-5814 FILTER GP-WATER SEP & FUEL

S/N: CBJ1-UP

PART OF 191-9529 LINES GP-FUEL

SMCS-1261, 1263 **i01884440**

NOTE	REF NO	GRAPHIC REF	PART NUMBER	QTY	PART NAME 1 2 3 4 5 6 (PRODUCT LEVEL)	SEE PAGE
	1	1	**1P-0436**	2	GASKET (FUEL PRIMING PUMP)	
	2	1	**9L-6378**	1	ADAPTER-PRIMING PUMP	
	3	1	**128-8557**	1	BASE AS-FILTER	
		1	**9S-4167**	1	STUD-HOLLOW	
		1	**7E-5346**	1	VALVE AS	
	4	1	**146-6695**	1	FILTER ELEMENT-FUEL (PRIMARY)	
	5	1	**137-5541**	1	PUMP GP-FUEL PRIMING	
		1	**1H-8171**	1	SEAL-O-RING	
		1	**6V-1903**	1	SEAL-O-RING	
		1	**7E-2985**	2	VALVE AS	
	6	1	**5P-0537**	2	WASHER-HARD (7.2X14.5X2MM THK)	
	7	1	**5P-2675**	1	BOLT (1/4-20X1.75 IN)	
	8	1	**6V-5048**	4	SEAL-O-RING	
	9	1	**7B-2742**	1	BOLT (1/4-20X1.25 IN)	
	10	1	**8C-6561**	1	BOLT (5/16-18X1.375 IN)	
	11	1	**8T-8911**	1	BOLT (5/16-18X2 IN)	
	12	1	**9M-1974**	2	WASHER-HARD (8.8X16X2MM THK)	
	13	1	**9S-8002**	4	PLUG	
	14	1	**146-6696**	1	BOWL	

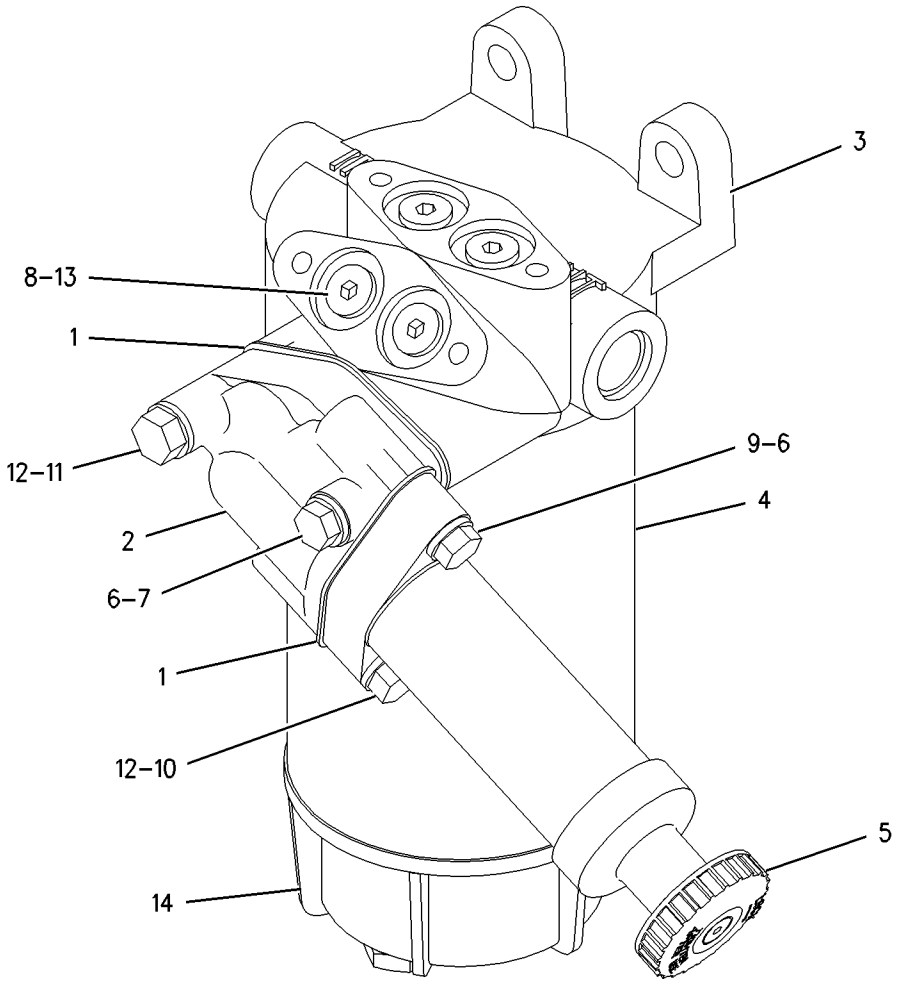

GRAPHIC #1 **<END>** g00909667

FUEL SYSTEM

191-9529 LINES GP-FUEL

S/N: CBJ1-UP

PART OF 156-9497 CHASSIS AR

SMCS-1274 **i01828549**

NOTE	REF NO	GRAPHIC REF	PART NUMBER	QTY	PART NAME 1 2 3 4 5 6 (PRODUCT LEVEL)	SEE PAGE
	1	1	**4H-1225**	1	WASHER (11X22X6MM THK)	
	2	1	**5P-4961**	12	CLAMP-HOSE	
	3	1	**6V-1230**	1	ELBOW	
	4	1	**6V-8076**	2	ELBOW	
	5	1	**8T-6724**	1	VALVE-BALL (FUEL LINE SHUTOFF)	
	6	1	**8T-6907**	2	VALVE-BALL (FUEL LINE SHUTOFF)	
	7	1	**009-3215**	1	INSERT	
	8	1	*150-3024*	4	ELBOW GP	
					(EACH INCLUDES)	
		1	**3J-1907**	1	SEAL-O-RING	
		1	**5P-4924**	1	ELBOW	
	9	1	**184-2202**	1	BRACKET AS	
Y	10	1	**186-5814**	1	FILTER GP-WATER SEP & FUEL	103
	11	1	**196-9838**	1	TUBE AS	
	12	1	**199-9612**	1	TUBE AS	
	13	1	**201-4596**	1	TUBE AS	
	14	1	**148-8313**	1	ADAPTER GP	
	15	1	*150-4046*	1	ADAPTER GP	
		1	**2M-9780**	1	SEAL-O-RING	
		1	**5P-1404**	1	ADAPTER-O-RING (STRAIGHT THREAD)	
	16	1	*150-4047*	1	ADAPTER GP	
		1	**3J-7354**	1	SEAL-O-RING	
		1	**8T-2353**	1	ADAPTER-STRAIGHT THREAD	
	17	1	**1F-7567**	1	CLIP	
	18	1	**3J-1907**	4	SEAL-O-RING	
	19	1	**3K-0360**	2	SEAL-O-RING	
	20	1	**4D-7733**	1	CLIP	
	21	1	**4K-8302**	1	CLIP	
	22	1	**5K-8451**	2	CLIP	
	23	1	**5P-4295**	1	CLIP	
	24	1	**7S-4244**	3	CLIP	
	25	1	**7X-7729**	3	WASHER (11X25X3MM THK)	
	26	1	**8T-4121**	11	WASHER-HARD (11X21X2.5MM THK)	
M	27	1	**8T-4133**	2	NUT (M10X1.5 THD)	
M	28	1	**8T-4136**	3	BOLT (M10X1.5X25MM)	
M	29	1	**8T-4137**	4	BOLT (M10X1.5X20MM)	
M	30	1	**8T-4186**	2	BOLT (M10X1.5X40MM)	
	31	1	**8T-4223**	1	WASHER-HARD (13.5X25.5X3MM THK)	
	32	1	**8T-4224**	1	WASHER-HARD (8.8X16X2MM THK)	
M	33	1	**8T-4908**	1	BOLT (M8X1.25X25MM)	
	34	1	**9M-8406**	1	CLIP	
E	35	1	**5P-1505**		HOSE (58CM)	
E	36	1	**5P-1442**		HOSE (42CM)	
E	37	1	**5P-1442**		HOSE (64CM)	
E	38	1	**5P-1442**		HOSE (40CM)	
E	39	1	**5P-1442**		HOSE (92CM)	
E	40	1	**5P-1442**		HOSE (119CM)	
E	41	1	**5P-1442**		HOSE (15CM)	

E-ORDER BY THE CENTIMETER
M-METRIC PART
Y-SEPARATE ILLUSTRATION

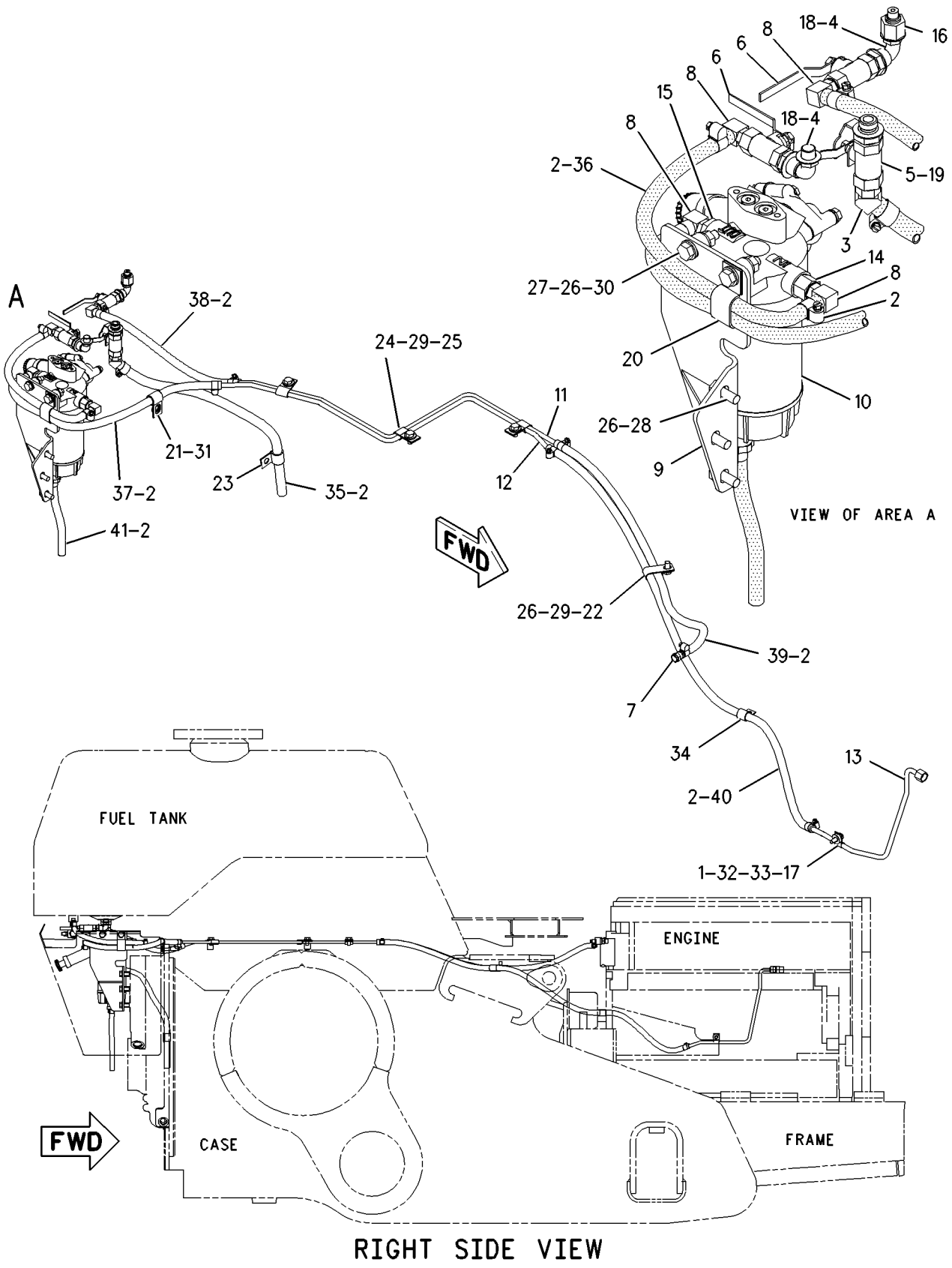

RIGHT SIDE VIEW

GRAPHIC #1 **<END>** g00955284

215-9260 LINES GP-FUEL FILTER

S/N: BMA1100-UP
PART OF 191-4479, 191-4481 ENGINE AR-COMPLETE
ALSO AN ATTACHMENT

SMCS-1261, 1274 **i01885431**

NOTE	REF NO	GRAPHIC REF	PART NUMBER	QTY	PART NAME 1 2 3 4 5 6 (PRODUCT LEVEL)	SEE PAGE
	1	1	**3E-2310**	1	TEE	
	2	1	**5P-4961**	2	CLAMP-HOSE	
	4	1	**174-7599**	1	BASE AS-FUEL FILTER	
		1	**9S-4167**	1	STUD-HOLLOW	
	5	1	**179-9348**	1	VALVE-DRAIN (FUEL FILTER)	
	6	1	**196-6840**	1	REGULATOR AS (FUEL PRESSURE)	
	7	1	**199-4856**	1	TUBE AS	
	8	1	**199-4858**	1	TUBE AS	
	9	1	**085-7356**	1	FITTING	
	10	1	**141-8275**	1	VALVE-DRAIN (FUEL) (FILTER)	
	11	1	*148-8318*	1	CONNECTOR GP	
		1	**3K-0360**	1	SEAL-O-RING	
		1	**6V-8397**	1	SEAL-O-RING	
		1	**6V-8634**	1	CONNECTOR	
	12	1	**1R-0762**	1	FILTER AS-FUEL (SECONDARY)	
	13	1	**6V-0484**	1	ADAPTER-O-RING	
	14	1	**6V-5049**	14	SEAL-O-RING	
	15	1	**6V-8397**	4	SEAL-O-RING	
	16	1	**6V-8636**	2	CONNECTOR	
	17	1	**6V-8724**	1	ELBOW	
	19	1	**8T-4121**	4	WASHER-HARD (11X21X2.5MM THK)	
M	20	1	**8T-4133**	4	NUT (M10X1.5 THD)	
	21	1	**9S-4191**	3	PLUG	
	22	1	**9X-0261**	1	ADAPTER	
E	23	1	**5P-1442**		HOSE (34CM)	
E	23A	1	**5P-1442**		HOSE (39CM)	

E-ORDER BY THE CENTIMETER
M-METRIC PART

215-9260 **LINES GP-FUEL FILTER** *(contd.)* **i01885431**

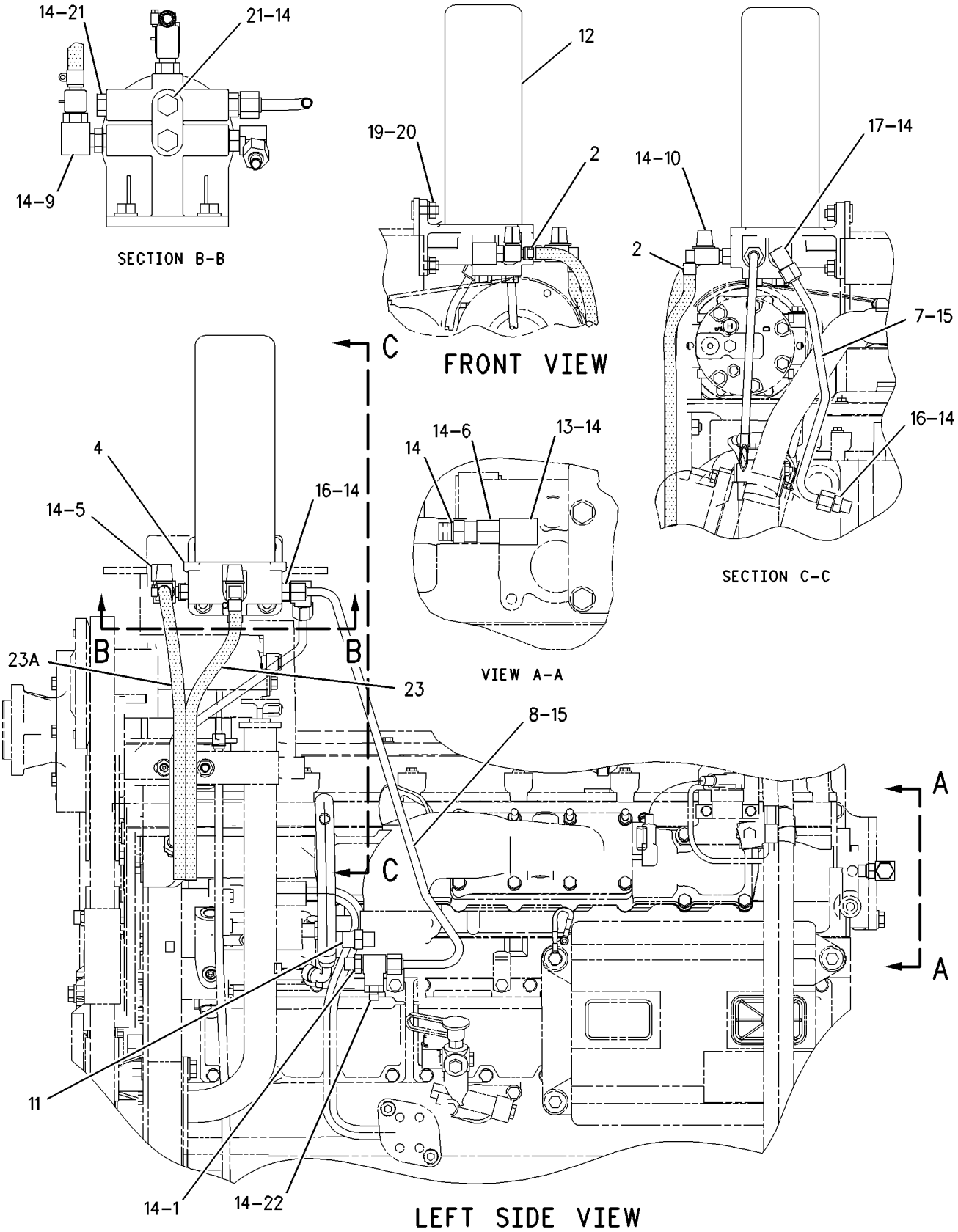

GRAPHIC #1 **<END>** g00902129

170-3304 PUMP & MTG GP-UNIT INJ HYD

S/N: BMA1100-UP
PART OF 191-4482 ENGINE AR-CORE
ALSO AN ATTACHMENT

SMCS-1714 **i01836476**

NOTE	REF NO	GRAPHIC REF	PART NUMBER	QTY	PART NAME 1 2 3 4 5 6 (PRODUCT LEVEL)	SEE PAGE
	1	1	**164-5591**	1	TUBE AS	
Y	2	1	**180-7341**	1	PUMP GP-UNIT INJECTOR HYD	111
	3	1	**185-3241**	1	SEAL-O-RING (92.41MM ID)	
	4	1	**175-3236**	1	HOSE AS	
Y	5	1	*179-7001*	1	ADAPTER GP-ENGINE OIL LINE	64
	6	1	**3V-2431**	2	WASHER (10.2X16.0X2.0MM THK)	
	7	1	**4F-9653**	1	SEAL-O-RING (46.99MM ID)	
	8	1	**6V-4589**	1	SEAL-O-RING (19.18MM ID)	
M	9	1	**6V-5219**	1	BOLT (M8X1.25X40MM)	
	10	1	**6V-8642**	1	CONNECTOR	
M	11	1	**6V-9804**	2	BOLT (M8X75MM)	
	12	1	**7J-9108**	1	SEAL-O-RING	
M	13	1	**8T-1159**	2	BOLT-SOCKET HEAD (M10X1.5X25MM)	
	14	1	**9M-1974**	3	WASHER-HARD (8.8X16X2MM THK)	
	15	1	**6V-5049**	1	SEAL-O-RING	
	16	1	**9S-8004**	1	PLUG (9/16-18 THD)	

M-METRIC PART
Y-SEPARATE ILLUSTRATION

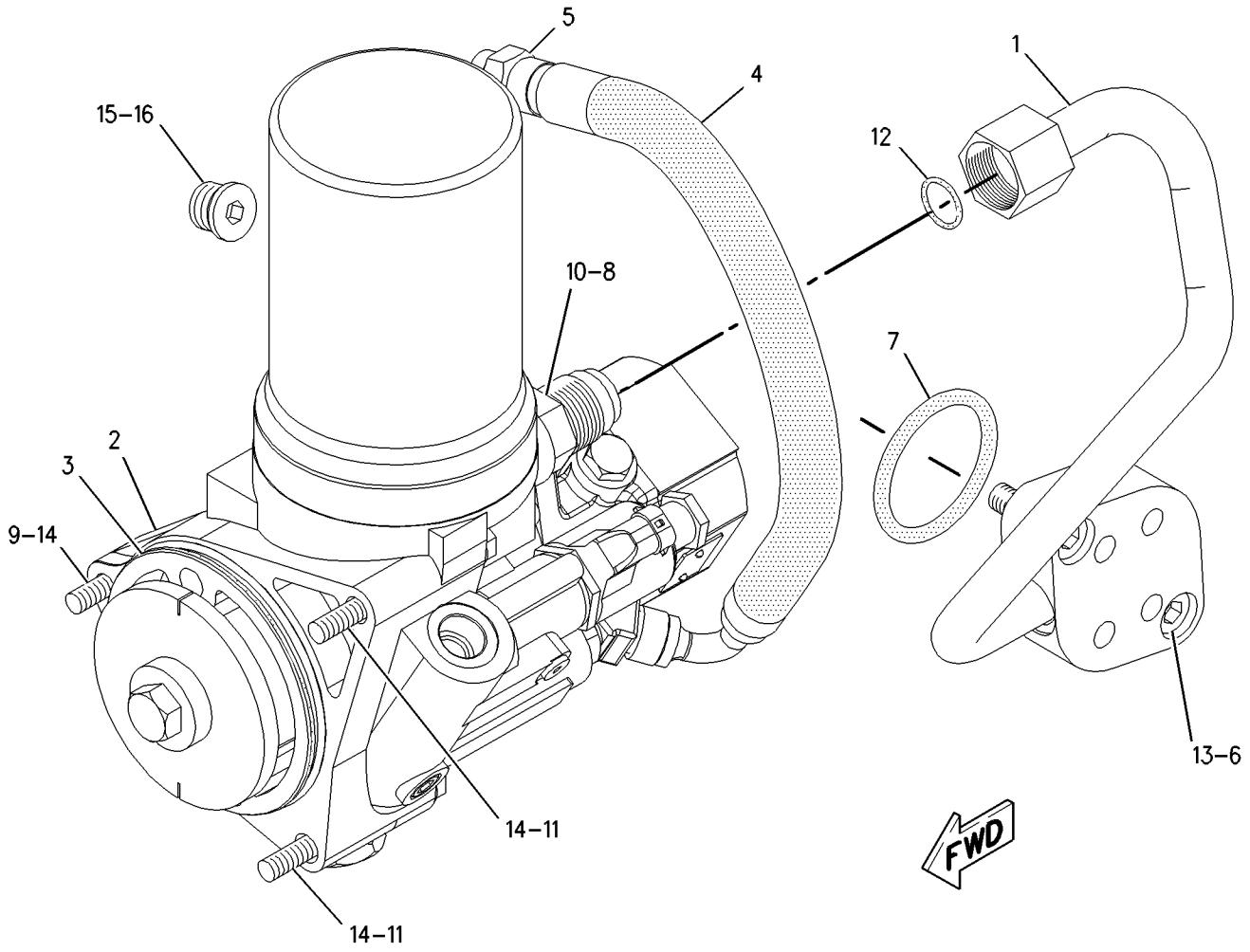

GRAPHIC #1 **<END>** g00905882

178-6342 PUMP GP-UNIT INJECTION–FUEL

S/N: BMA1100-UP
PART OF 178-6343 PUMP GP-UNIT INJECTION
ALSO AN ATTACHMENT

SMCS-1251, 1290, 1714 **i01882780**

NOTE	REF NO	GRAPHIC REF	PART NUMBER	QTY	PART NAME 1 2 3 4 5 6 (PRODUCT LEVEL)	SEE PAGE
	1	1	**177-4752**	1	INJECTOR GP-FUEL	
Y	2	1	*154-8016*	1	SEAL GP-FUEL INJECTOR	58

Y-SEPARATE ILLUSTRATION

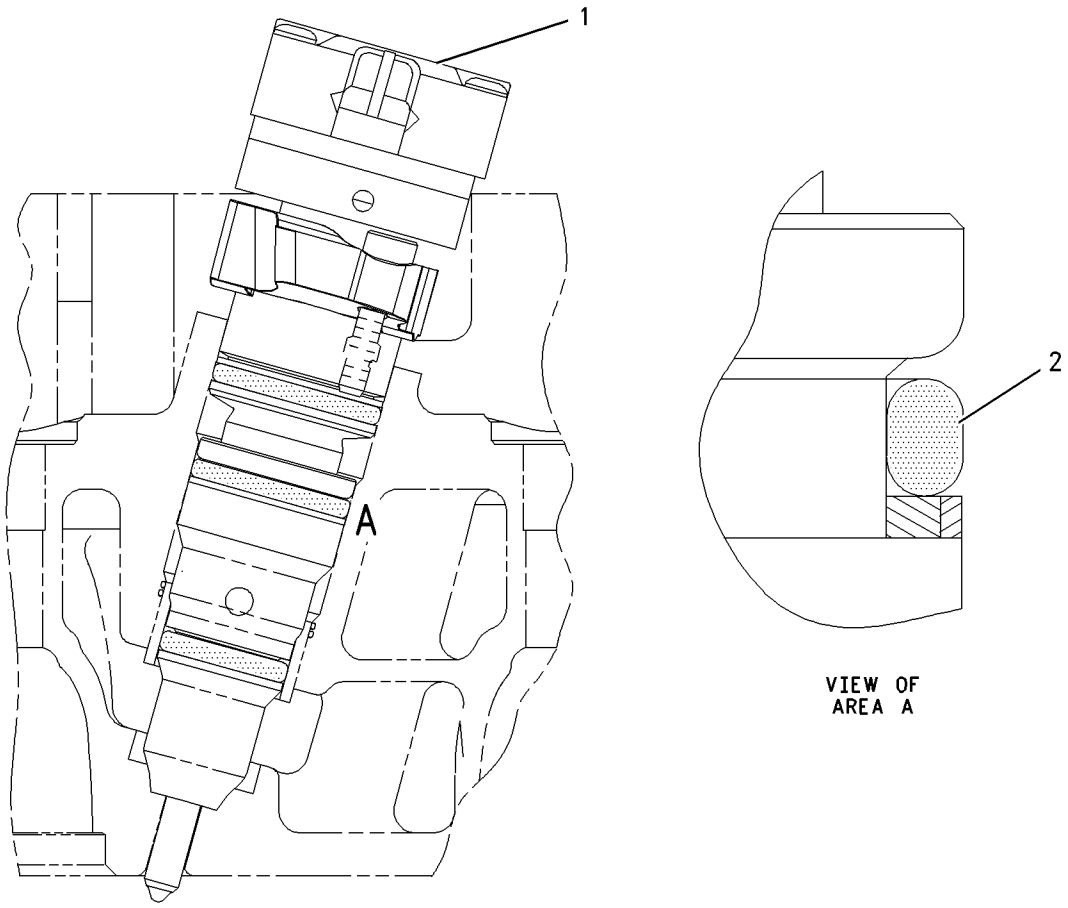

GRAPHIC #1 **<END>** g00717469

178-6343 PUMP GP-UNIT INJECTION–FUEL

S/N: BMA1100-UP
PART OF 191-4482 ENGINE AR-CORE
ALSO AN ATTACHMENT

SMCS-1251, 1290, 1714 **i01696289**

NOTE	REF NO	GRAPHIC REF	PART NUMBER	QTY	PART NAME 1 2 3 4 5 6 (PRODUCT LEVEL)	SEE PAGE
Y	1	1	*178-6342*	1	PUMP GP-UNIT INJECTION	109
	2	1	**199-6103**	1	BOLT-SHOULDER	
	3	1	**159-0288**	1	DEFLECTOR	
M	4	1	**8T-2396**	1	BOLT (M6X1.0X60MM)	

M-METRIC PART
Y-SEPARATE ILLUSTRATION

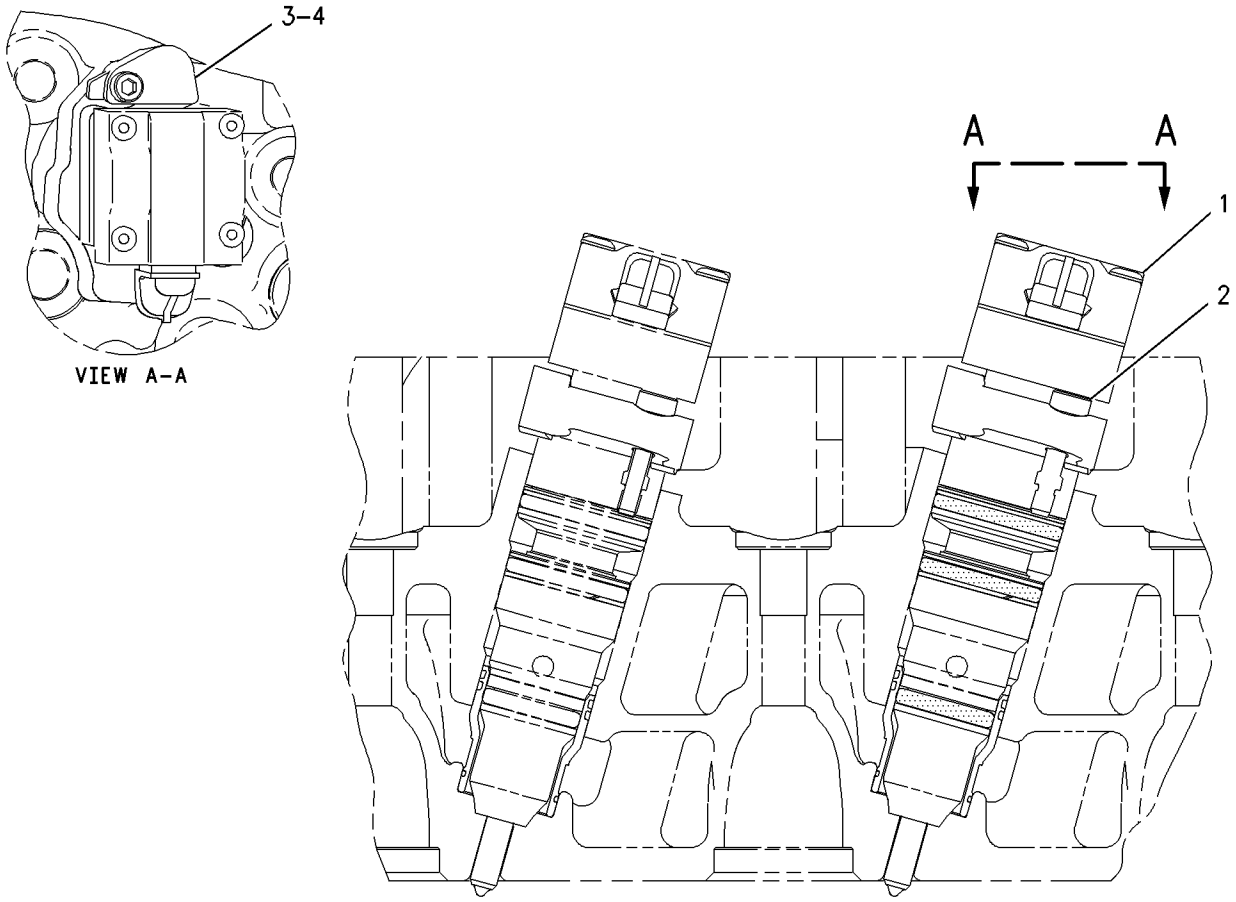

GRAPHIC #1 **<END>** g00718221

180-7341 PUMP GP-UNIT INJECTOR HYD

S/N: BMA1100-UP
PART OF 170-3304 PUMP & MTG GP-UNIT INJ HYD
ALSO AN ATTACHMENT

SMCS-1714 **i01883997**

NOTE	REF NO	GRAPHIC REF	PART NUMBER	QTY	PART NAME 1 2 3 4 5 6 (PRODUCT LEVEL)	SEE PAGE
Y	1	1	**122-5053**	1	VALVE GP-SOLENOID (INJECTION ACTUATION)	114
	2	1	**128-3473**	1	GEAR-PUMP DRIVE (36 TEETH)	
	4	1	**162-9612**	1	PUMP GP-FUEL TRANSFER	
	5	1	**179-7004**	1	ADAPTER AS	
		1	**153-4906**	1	SEAL-O-RING	
	6	1	**4P-5918**	1	CLIP	
	7	1	**8T-4224**	1	WASHER-HARD (8.8X16X2MM THK)	
M	8	1	**8T-7547**	2	BOLT (M8X1.25X30MM)	
	9	1	**118-0275**	1	WASHER	
	10	1	**131-1845**	1	PLUG-HEX SOCKET	
	11	1	**144-7339**	1	SEAL-O-RING	
M	12	1	**8T-4139**	1	BOLT (M12X1.75X30MM)	

M-METRIC PART
Y-SEPARATE ILLUSTRATION

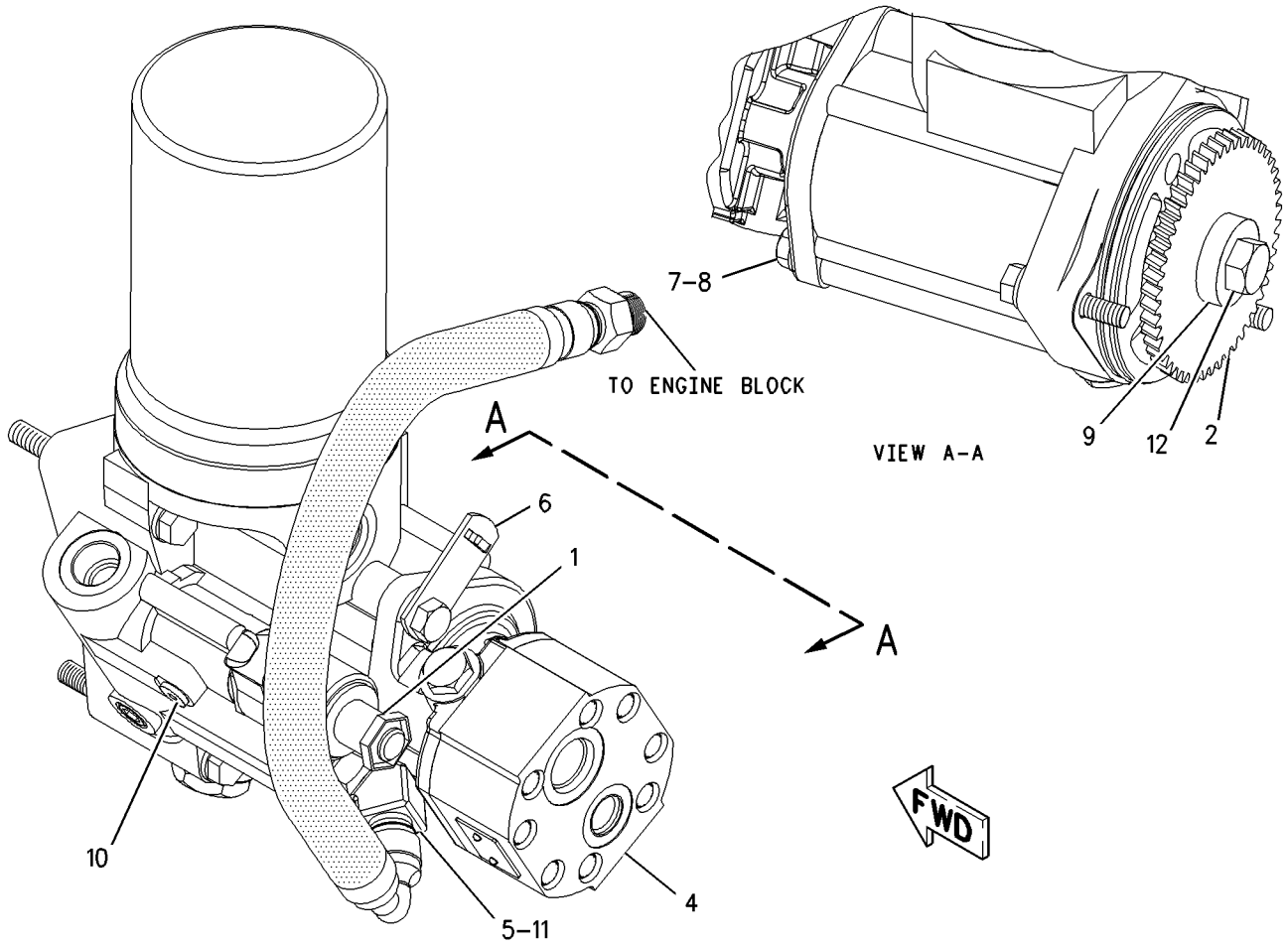

GRAPHIC #1 **<END>** g00875168

FUEL SYSTEM

155-7707 TANK GP-FUEL

S/N: CBJ1-UP

PART OF 156-9497 CHASSIS AR

SMCS-1273 **i01882600**

NOTE	REF NO	GRAPHIC REF	PART NUMBER	QTY	PART NAME 1 2 3 4 5 6 (PRODUCT LEVEL)	SEE PAGE
	1	1	**7P-9131**	1	HANDHOLD	
	2	1	**9P-3066**	8	MOUNTING	
	3	1	**9P-7121**	1	STRAINER-FUEL (TANK FILLER)	
	4	1	**7X-7700**	1	CAP AS-FUEL TANK (VENTED LOCKING)	
		1	**9X-2205**	1	KIT-CAP FILTER (FUEL TANK)	
		1	**9X-8600**	1	SEAL-O-RING	
	5	1	**155-7713**	1	TANK AS-FUEL	
	6	1	**155-7714**	2	HANDHOLD	
	7	1	**175-7564**	1	SENDER AS-LEVEL (FUEL)	
		1	**3E-3365**	1	WEDGE-RECEPTACLE LOCK (2 PIN)	
		1	**186-3735**	2	PIN-CONNECTOR	
		1	**102-8802**	1	KIT-RECEPTACLE (2 PIN)	
					(INCLUDES RECEPTACLE AS AND WEDGE)	
		1	**3E-3365**	1	WEDGE-RECEPTACLE LOCK (2 PIN)	
M	8	1	**5C-9553**	5	BOLT (M6X1X16MM)	
	9	1	**6P-8269**	4	WASHER (20.5X88X6MM THK)	
M	10	1	**7X-2555**	4	BOLT (M16X2X80MM)	
M	11	1	**8T-4139**	6	BOLT (M12X1.75X30MM)	
	12	1	**8T-4205**	5	WASHER-HARD (7.2X14.5X2MM THK)	
	13	1	**8T-4223**	6	WASHER-HARD (13.5X25.5X3MM THK)	
	14	1	**9X-8257**	4	WASHER (17.5X30X3.5MM THK)	
B	15	1	**1U-8846**		SEALANT-GASKET	

B-USE AS REQUIRED
M-METRIC PART

155-7707 **TANK GP-FUEL** ***(contd.)*** **i01882600**

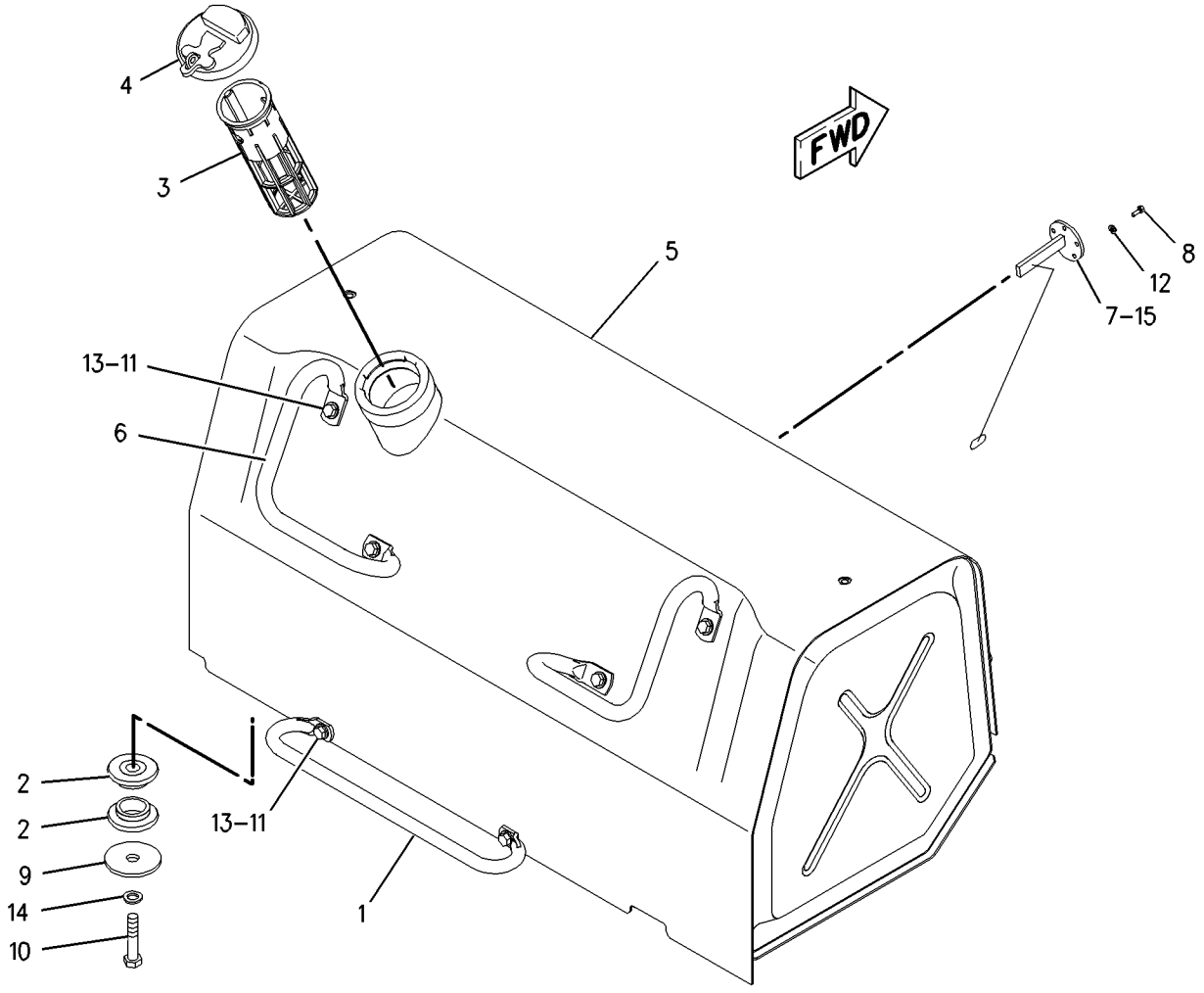

GRAPHIC #1 **<END>** g00923526

122-5053 VALVE GP-SOLENOID—PRESSURE CONTROL—FUEL

S/N: BMA1100-UP
PART OF 180-7341 PUMP GP-UNIT INJECTOR HYD
ALSO AN ATTACHMENT

SMCS-1259 **i01882605**

NOTE	REF NO	GRAPHIC REF	PART NUMBER	QTY	PART NAME 1 2 3 4 5 6 (PRODUCT LEVEL)	SEE PAGE
JZ	1	1		1	SEAL-O-RING	
JZ	2	1		1	RING-BACKUP	
JZ	3	1		1	SPACER	
JZ	4	1		1	NUT-RETAINER (1/2-20 THD)	
JZ	5	1		1	SEAL-O-RING	
					AVAILABLE REPAIR KIT(S):	
J			**9X-1484**	1	KIT-SEAL (SOLENOID VALVE)	

J-KIT MARKED J INCLUDES PARTS MARKED J
Z-NOT SERVICED SEPARATELY

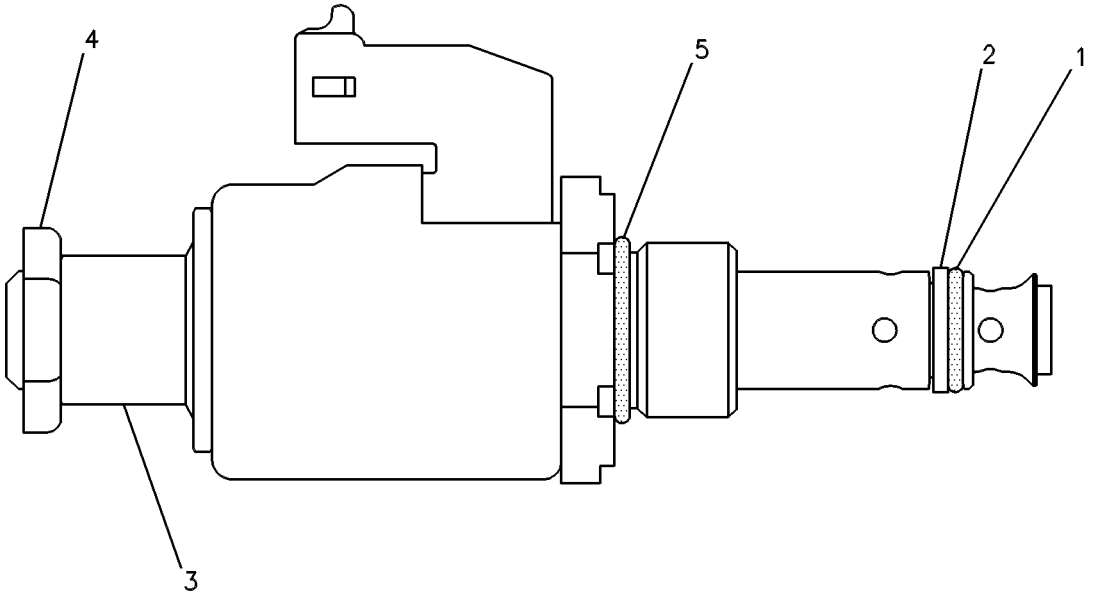

GRAPHIC #1 **<END>** g00085024

3E-6328 ALARM GP–ACTION

S/N: CBJ1-UP
24 VOLT
PART OF 156-7378 WIRING GP-PLATFORM
ALSO AN ATTACHMENT

SMCS-7402 **i01487980**

NOTE	REF NO	GRAPHIC REF	PART NUMBER	QTY	PART NAME 1 2 3 4 5 6 (PRODUCT LEVEL)	SEE PAGE
	1	1	**102-8802**	1	KIT-RECEPTACLE (2 PIN)	
					(INCLUDES RECEPTACLE AS & WEDGE)	
	2	1	**186-3735**	2	PIN-CONNECTOR	

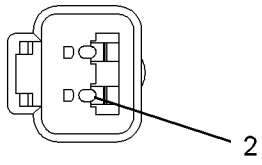

VIEW A–A

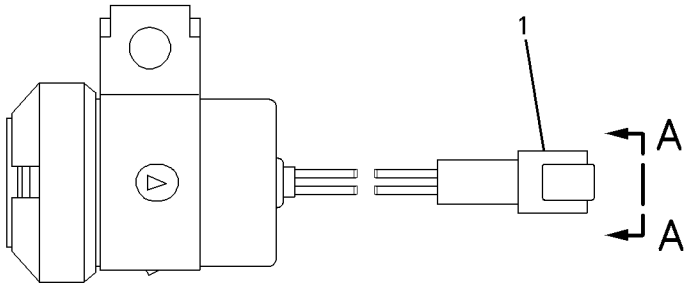

GRAPHIC #1 **<END>** g00697818

ELECTRICAL AND STARTING SYSTEM

107-7977 ALTERNATOR GP-CHARGING*R

S/N: CBJ1-UP
24 VOLT, 70 AMPERE
FIELD REPLACEMENT FOR 132-2156—PAGE 118

SMCS-1405, 1410, 1425 **i01884408**

NOTE	REF NO	GRAPHIC REF	PART NUMBER	QTY	PART NAME 1 2 3 4 5 6 (PRODUCT LEVEL)	SEE PAGE
	1	1	**1H-3244**	2	LOCKWASHER	
	2	1	**6V-8187**	1	NUT (1/4-28 THD)	
	3	1	**8T-4205**	2	WASHER-HARD (7.2X14.5X2MM THK)	
	4	1	**3T-6354**	1	REGULATOR AS (24 VOLT)	
	5	1	**9L-6770**	1	CAP	
	6	1	**2K-4821**	1	LOCKNUT (5/8-18 THD)	
	7	1	**7F-7621**	1	WASHER (0.635X1.25X0.09 IN THK)	
	8	1	**4B-2047**	1	NUT (10-24 THD)	
	9	1	**8T-0328**	1	WASHER-HARD (5.5X10X1MM THK)	
	10	1	**8F-1434**	1	LOCKWASHER	
	11	1	**3E-5450**	1	COVER	
	12	1	**4B-2043**	4	NUT (8-32 THD)	
	13	1	**9B-7233**	4	LOCKWASHER	
	14	1	**3E-5448**	1	CONNECTOR	
	15	1	**3E-5446**	1	CONNECTOR	
	16	1	**3E-5457**	1	DIODE AS	
	17	1	**132-1225**	1	RECTIFIER AS-ALTERNATOR	
	18	1	**7N-9023**	3	SCREW AS (8-32 X 26.9MM)	
	19	1	**3E-5460**	1	HOLDER AS-BRUSH (ALTERNATOR)	
	20	1	**3E-5459**	2	BRUSH AS-ALTERNATOR	
	21	1	**3N-3718**	2	SCREW AS	
	22	1	**3E-5458**	1	CAPACITOR AS-ALTERNATOR	
	23	1	**4M-5281**	1	BOLT (1/4-20X.750 IN)	
	24	1	**3E-5454**	1	FAN-ALTERNATOR	
	25	1	**3E-5455**	1	HOUSING	
	26	1	**5P-7807**	1	BALL BEARING	
	27	1	**3E-5447**	1	PLATE	
	28	1	**030-9612**	3	SCREW-FORMING (10-24X.5 IN)	
	29	1	**132-1222**	1	ROTOR AS-ALTERNATOR (24 VOLT)	
	30	1	**132-1223**	1	STATOR AS-ALTERNATOR (24 VOLT)	
	31	1	**132-1224**	1	FRAME AS-ALTERNATOR	
	32	1	**5P-6920**	1	BEARING-ROLLER	
	33	1	**132-1228**	1	KIT-ALTERNATOR TERMINAL (BATTERY)	
					(INCLUDES NUTS, TERMINAL, LOCKWASHER, INSULATOR & ADAPTER)	
	34	1	**132-1229**	1	KIT-ALTERNATOR TERMINAL (INDICATOR LIGHT) (RELAY)	
					(INCLUDES NUTS, LOCKWASHER, INSULATOR, BUSHING, WASHERS, CONNECTOR, TERMINAL & RECTIFIER)	
	35	1	**132-1230**	1	KIT-ALTERNATOR TERMINAL (RELAY) (INDICATOR LIGHT)	
					(INCLUDES INSULATOR, WASHER, NUT & TERMINAL)	

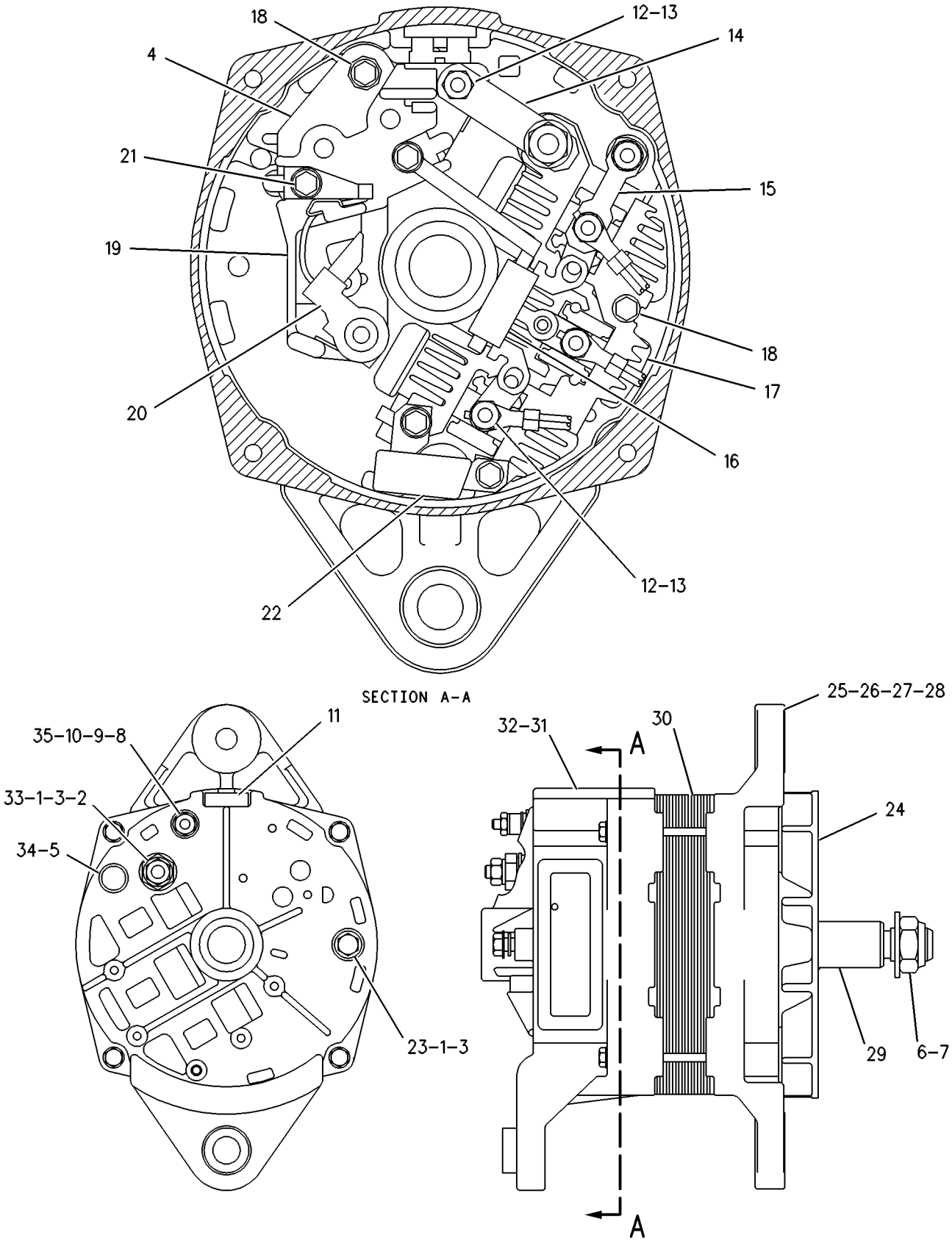

GRAPHIC #1 **<END>** g00122232

ELECTRICAL AND STARTING SYSTEM

132-2156 ALTERNATOR GP-CHARGING*R

S/N: CBJ1-UP
24 VOLT, 70 AMPERE
PART OF 189-2224 ALTERNATOR GP-CHARGING
FIELD REPLACEMENT ORDER 107-7977–PAGE 116

SMCS-1405, 1410, 1425 **i01882613**

NOTE	REF NO	GRAPHIC REF	PART NUMBER	QTY	PART NAME 1 2 3 4 5 6 (PRODUCT LEVEL)	SEE PAGE
	1	1	**1H-3244**	2	LOCKWASHER	
	2	1	**6V-8187**	1	NUT (1/4-28 THD)	
	3	1	**8T-4205**	2	WASHER-HARD (7.2X14.5X2MM THK)	
	4	1	**3T-6354**	1	REGULATOR AS (24 VOLT)	
	5	1	**9L-6770**	1	CAP	
	6	1	**2K-4821**	1	LOCKNUT (5/8-18 THD)	
	7	1	**7F-7621**	1	WASHER (0.635X1.25X0.09 IN THK)	
	8	1	**4B-2047**	1	NUT (10-24 THD)	
	9	1	**8T-0328**	1	WASHER-HARD (5.5X10X1MM THK)	
	10	1	**8F-1434**	1	LOCKWASHER	
	11	1	**3E-5450**	1	COVER	
	12	1	**4B-2043**	4	NUT (8-32 THD)	
	13	1	**9B-7233**	4	LOCKWASHER	
	14	1	**3E-5448**	1	CONNECTOR	
	15	1	**3E-5446**	1	CONNECTOR	
	16	1	**3E-5457**	1	DIODE AS (ALTERNATOR)	
	17	1	**132-1225**	1	RECTIFIER AS-ALTERNATOR	
	18	1	**7N-9023**	3	SCREW AS (8-32 X 26.9MM)	
	19	1	**3E-5460**	1	HOLDER AS-BRUSH (ALTERNATOR)	
	20	1	**3E-5459**	2	BRUSH AS-ALTERNATOR	
	21	1	**3N-3718**	2	SCREW AS	
	22	1	**3E-5458**	1	CAPACITOR AS-ALTERNATOR	
	23	1	**8T-9367**	1	BOLT (1/4-20X2 IN)	
	24	1	**3E-5454**	1	FAN-ALTERNATOR	
	25	1	**3E-5455**	1	HOUSING	
	26	1	**5P-7807**	1	BALL BEARING	
	27	1	**3E-5447**	1	PLATE	
	28	1	**030-9612**	3	SCREW-FORMING (10-24X.5 IN)	
	29	1	**132-1222**	1	ROTOR AS-ALTERNATOR (24 VOLT)	
	30	1	**132-1223**	1	STATOR AS-ALTERNATOR (24 VOLT)	
	31	1	**132-1224**	1	FRAME AS-ALTERNATOR	
	32	1	**5P-6920**	1	BEARING-ROLLER	
	33	1	**126-2368**	1	KIT-ALTERNATOR GUARD	
					(INCLUDES BOLT,SCREW & LOCKWASHER)	
	34	1	**132-1230**	1	KIT-ALTERNATOR TERMINAL (RELAY) (INDICATOR LIGHT)	
					(INCLUDES WASHER, NUT, TERMINAL & INSULATOR)	
	35	1	**132-1229**	1	KIT-ALTERNATOR TERMINAL (INDICATOR LIGHT) (RELAY)	
					(INCLUDES BUSHINGS, NUTS, CONNECTOR, LOCKWASHER, WASHER, RECTIFIER & TERMINAL)	
	36	1	**132-1228**	1	KIT-ALTERNATOR TERMINAL (BATTERY)	
					(INCLUDES TERMINAL, NUTS, ADAPTER, LOCKWASHER & INSULATOR)	

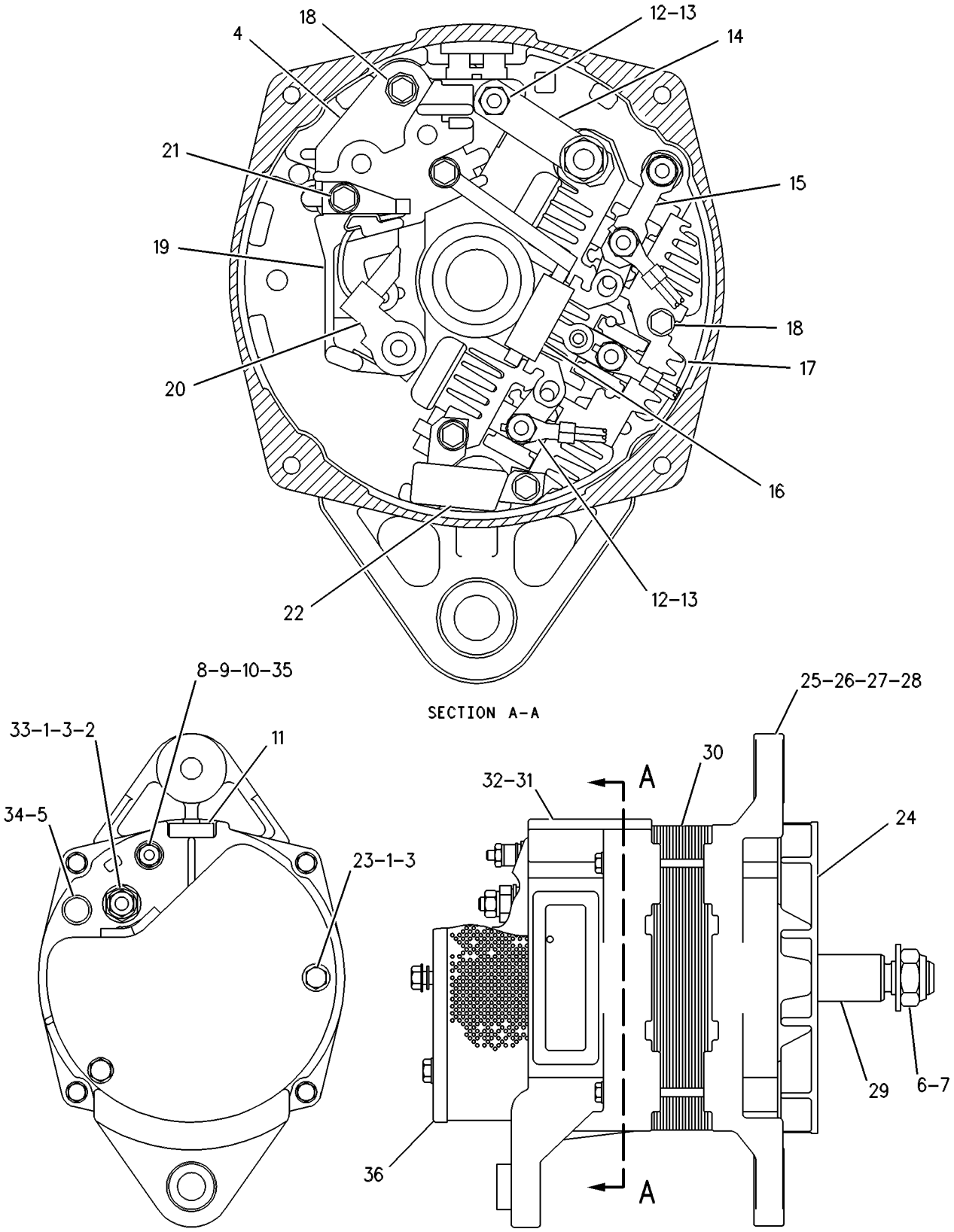

GRAPHIC #1 **<END>** g00265036

189-2224 ALTERNATOR GP-CHARGING

S/N: CBJ1-UP
24 VOLT, 70 AMPERE
PART OF 195-1046 INSTALLATION AR-ENGINE

SMCS-1405, 1410, 1425 **i01881592**

NOTE	REF NO	GRAPHIC REF	PART NUMBER	QTY	PART NAME 1 2 3 4 5 6 (PRODUCT LEVEL)	SEE PAGE
	1	1	**7W-3872**	2	SLEEVE	
	2	1	**9S-1240**	1	NUT AS	
YR	3	1	*132-2156*	1	ALTERNATOR GP-CHARGING	118
	4	1	**190-0801**	1	BRACKET AS-ALTERNATOR	
	5	1	**205-2344**	1	SPACER	
	6	1	**216-7613**	1	GUARD AS	
		1	**1F-0748**	1	NUT-WELD (1/2-13 THD)	
	7	1	**5P-2424**	1	BOLT (1/2-13X2.25 IN)	
	8	1	**7X-0338**	1	BOLT (1/2-13X6 IN)	
	9	1	**8T-4223**	4	WASHER-HARD (13.5X25.5X3MM THK)	
	10	1	**8T-4224**	4	WASHER-HARD (8.8X16X2MM THK)	
M	11	1	**8T-4908**	4	BOLT (M8X1.25X25MM)	
	12	1	**8T-8917**	1	BOLT (1/2-13X1.25 IN)	
	13	1	**8T-8919**	1	BOLT (1/2-13X1.75 IN)	

M-METRIC PART
R-REMFG PART MAY BE AVAILABLE
Y-SEPARATE ILLUSTRATION

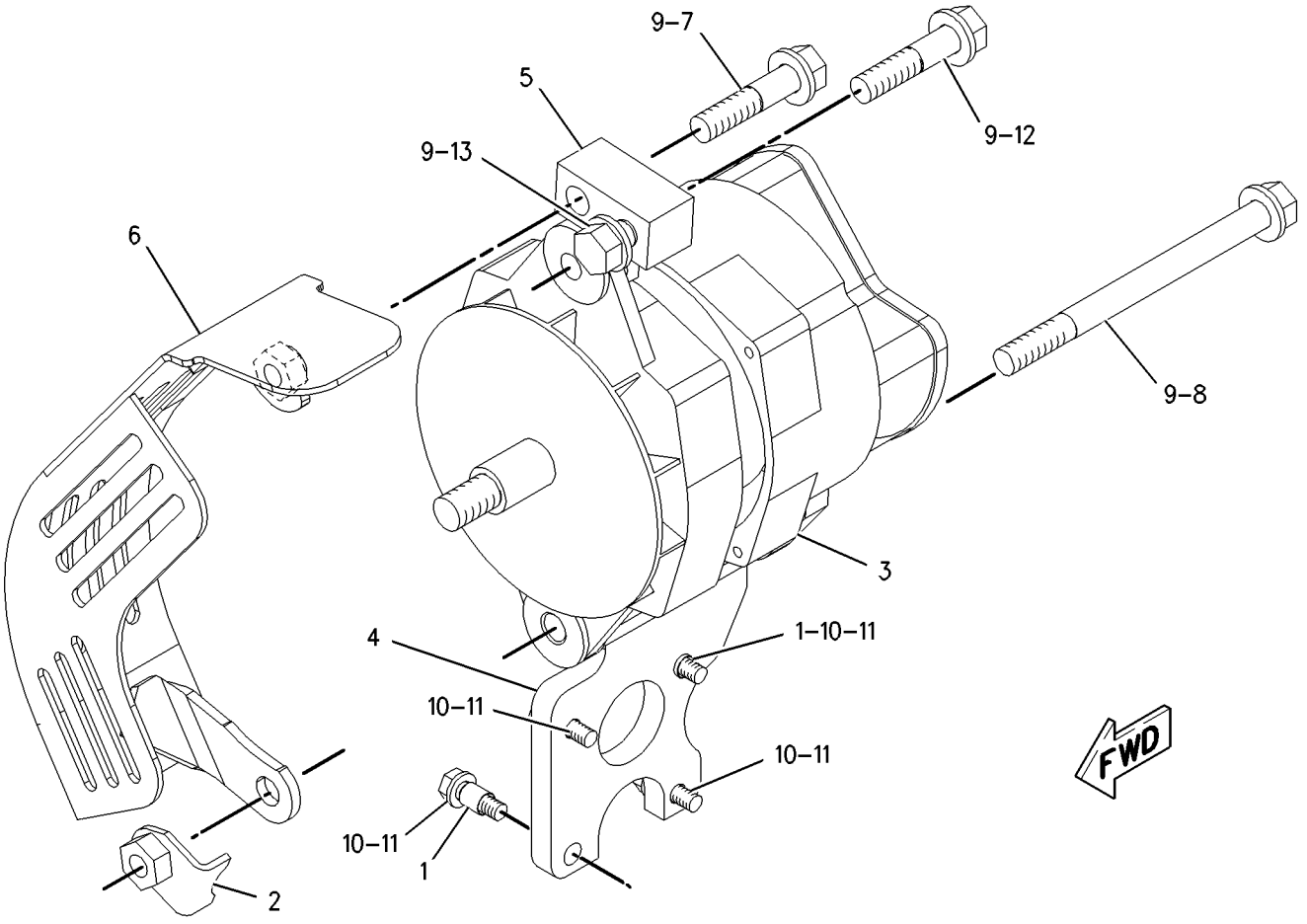

GRAPHIC #1 **<END>** g00939990

157-3460 BATTERY GP–HEAVY DUTY

S/N: CBJ1-UP
AN ATTACHMENT

SMCS-1401 **i01892437**

NOTE	REF NO	GRAPHIC REF	PART NUMBER	QTY	PART NAME 1 2 3 4 5 6 (PRODUCT LEVEL)	SEE PAGE
	1	1	**5I-8304**	1	ROD	
	2	1	**223-7899**	1	CABLE AS	
E		1	**5P-0747**		CABLE (00GA)(BLACK) (114CM)	
		1	**7N-5274**	1	COVER-TERMINAL (BLACK)	
		1	**8S-3020**	1	TERMINAL-CABLE	
		1	**3S-6050**	1	TERMINAL AS-BATTERY (NEGATIVE)	
		1	**1M-6119**	1	BOLT (5/16-18X1.375 IN)	
		1	**1M-6120**	1	NUT (5/16-18 THD)	
		1	**9X-5699**	1	BOOT	
	3	1	**7K-1181**	2	STRAP-CABLE	
	4	1	**124-0378**	1	CABLE AS	
E		1	**5P-0761**		CABLE (00GA)(RED) (12CM)	
	4A	1	**8C-5917**	1	TERMINAL AS-BATTERY (POSITIVE)	
	4B	1	**8T-9757**	1	TERMINAL AS-BATTERY (NEGATIVE)	
					(EACH TERMINAL AS INCLUDES)	
		1	**1M-6119**	1	BOLT (5/16-18X1.375 IN)	
		1	**1M-6120**	1	NUT (5/16-18 THD)	
	4C	1	**9G-0003**	1	COVER-TERMINAL (BLACK)	
	4D	1	**9G-0004**	1	COVER-TERMINAL (RED)	
	5	1	**153-5700**	2	BATTERY (MAINTENANCE FREE)(12 VOLT) (HEAVY DUTY)	
	6	1	**200-8600**	1	HOLD-DOWN AS	
M		1	**8T-3490**	1	NUT-WELD (M10X1.5 THD)	
M	7	1	**8T-4133**	1	NUT (M10X1.5 THD)	
M	8	1	**5C-7261**	1	NUT (M8X1.25 THD)	
M	9	1	**8T-0389**	1	LOCKNUT (M10X1.5 THD)	
	10	1	**8T-4121**	3	WASHER-HARD (11X21X2.5MM THK)	
M	11	1	**8T-4137**	1	BOLT (M10X1.5X20MM)	
	12	1	**7X-0575**	1	WASHER-HARD (10.2X22.5X5MM THK)	
	13	1	**4P-8134**	2	CLIP	
	14	1	**4K-8864**	1	CLIP	

E-ORDER BY THE CENTIMETER
M-METRIC PART

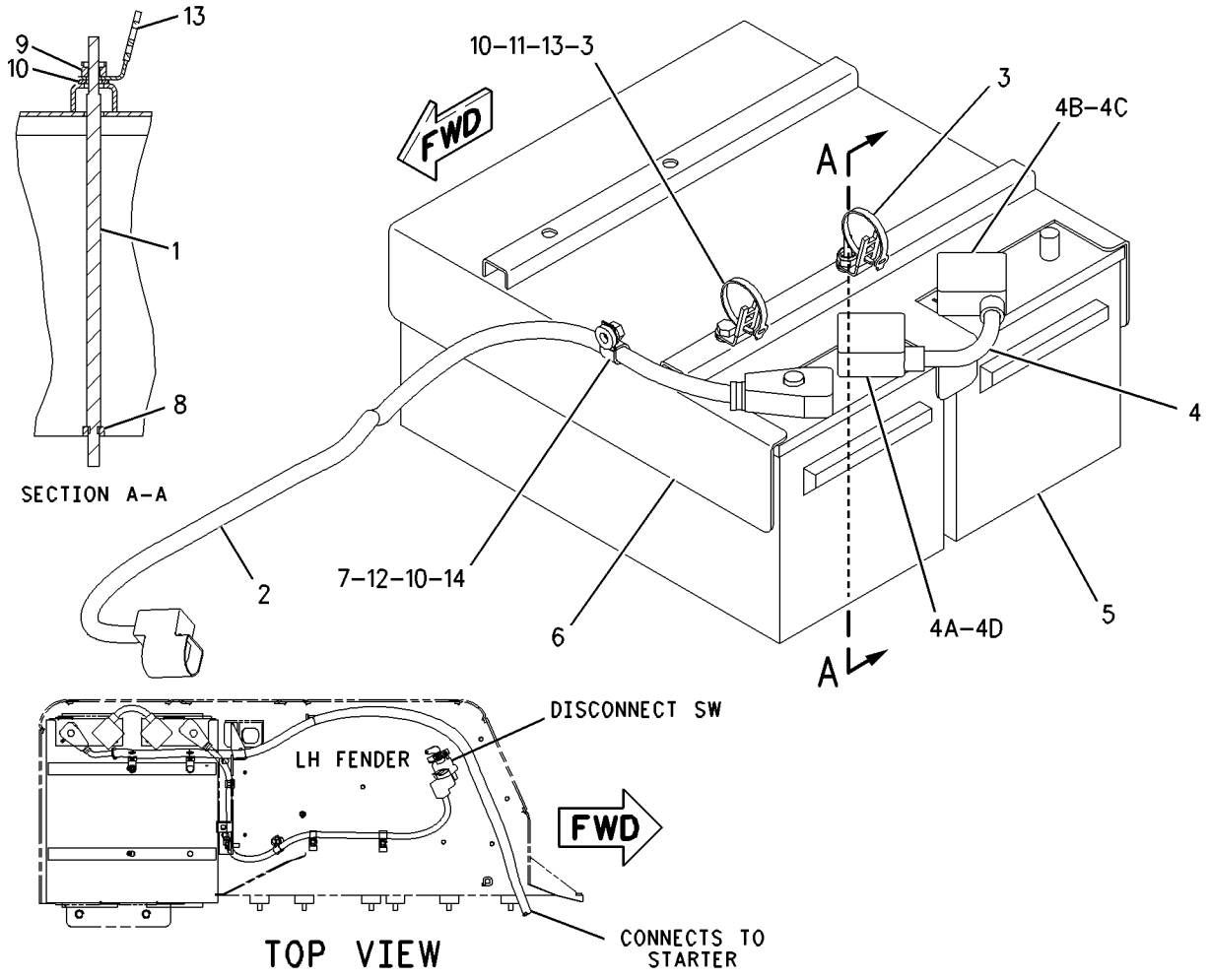

GRAPHIC #1 **<END>** g00915175

188-7726 CONTROL & MTG GP-ENGINE ELEK

S/N: BMA1100-UP
PART OF 191-4479, 191-4481 ENGINE AR-COMPLETE
ALSO AN ATTACHMENT

SMCS-1901 **i01802410**

NOTE	REF NO	GRAPHIC REF	PART NUMBER	QTY	PART NAME 1 2 3 4 5 6 (PRODUCT LEVEL)	SEE PAGE
	2	1	**8T-9655**	8	MOUNT (ISOLATION)	
	3	1	**101-3128**	4	SPACER	
M	4	1	**6V-9804**	1	BOLT (M8X75MM)	
Y	6	1	**209-9588**	1	CONTROL GP-ENGINE ELECTRONIC	125
M	7	1	**5P-8347**	3	BOLT (M8X1.25X70MM)	
	8	1	**9M-1974**	1	WASHER-HARD (8.8X16X2MM THK)	
	9	1	**9N-0869**	4	WASHER-HARD (8.8X25.5X2MM THK)	

M-METRIC PART
Y-SEPARATE ILLUSTRATION

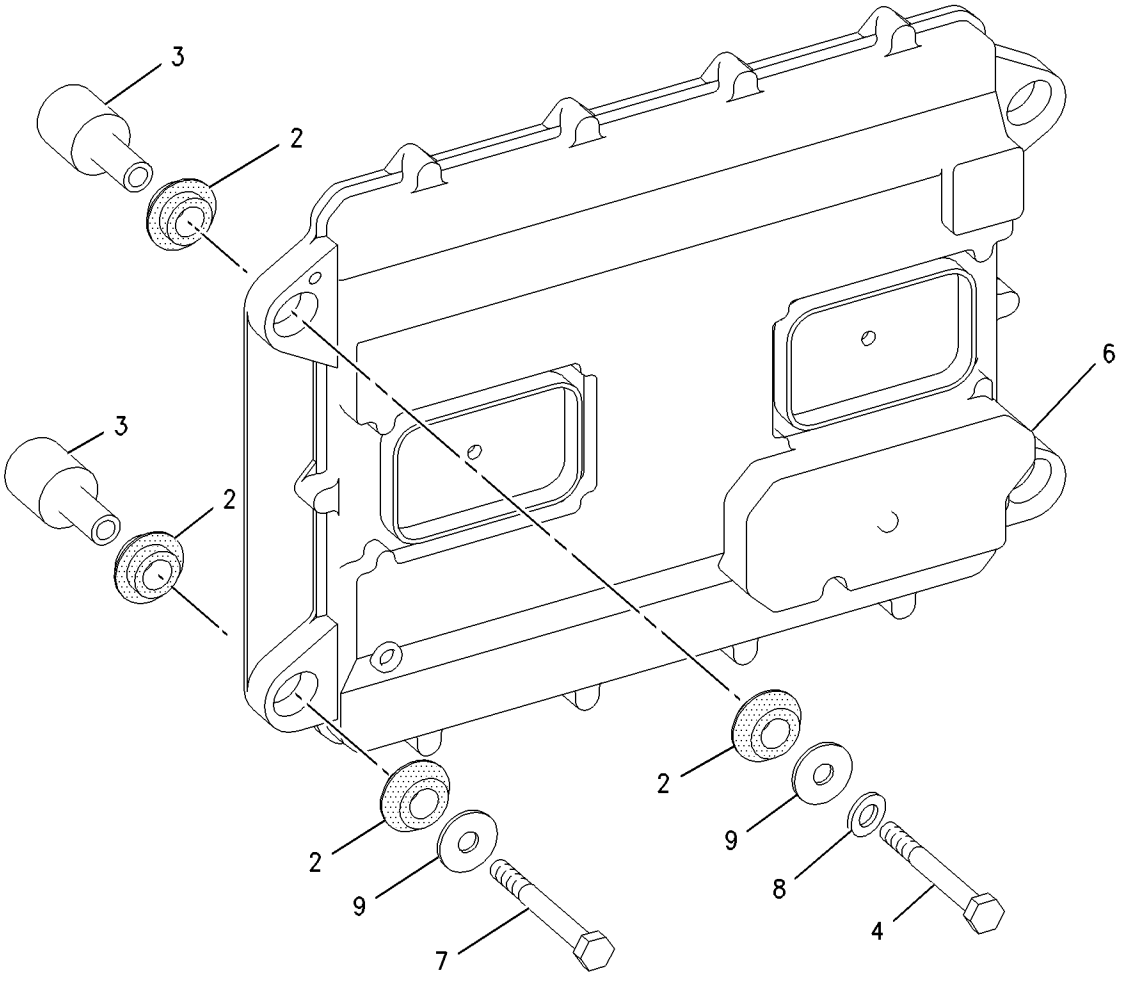

GRAPHIC #1 **<END>** g00922695

209-9587 CONTROL GP-ENGINE ELECTRONIC

S/N: BMA1100-UP
PART OF 209-9588 CONTROL GP-ENGINE ELECTRONIC
FIELD REPLACEMENT FOR 209-9588—PAGE 125
ALSO AN ATTACHMENT

SMCS-1901 **i01802523**

NOTE	REF NO	GRAPHIC REF	PART NUMBER	QTY	PART NAME 1 2 3 4 5 6 (PRODUCT LEVEL)	SEE PAGE
	1	1	**184-2472**	1	SCREW-PAN HEAD (LUBRICATED)	
	2	1	**7X-6315**	1	STRAP AS-GROUND	

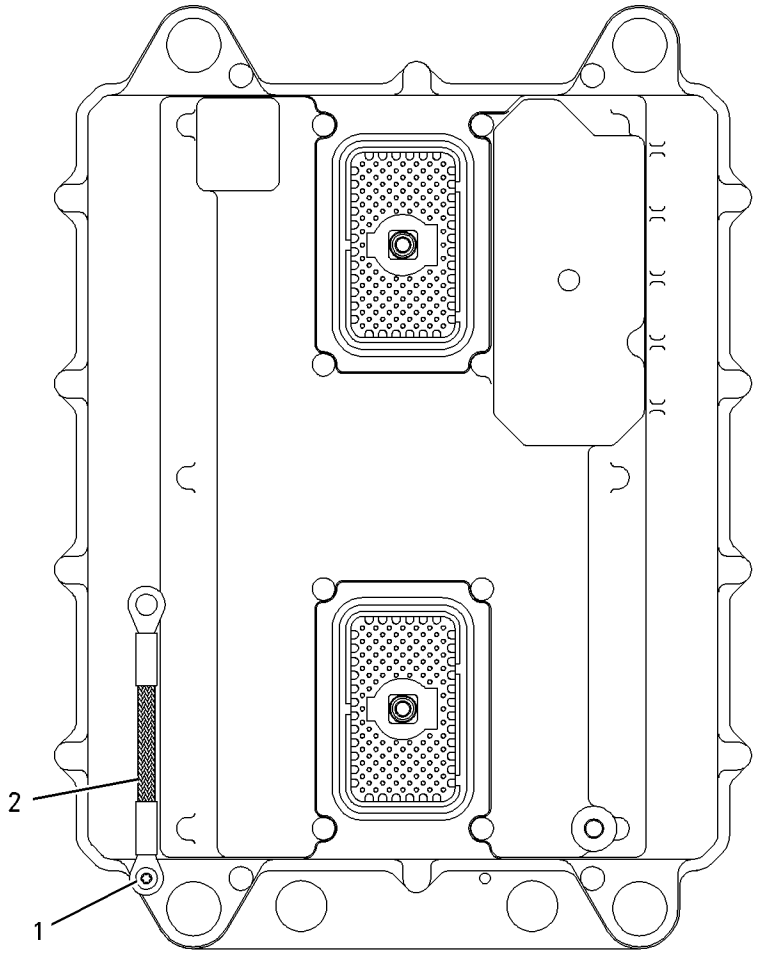

GRAPHIC #1 **<END>** g00912273

209-9588 CONTROL GP-ENGINE ELECTRONIC

S/N: BMA1100-UP
PART OF 188-7726 CONTROL & MTG GP-ENGINE ELEK
FIELD REPLACEMENT ORDER 209-9587—PAGE 124
ALSO AN ATTACHMENT

SMCS-1901 **i01809422**

NOTE	REF NO	GRAPHIC REF	PART NUMBER	QTY	PART NAME 1 2 3 4 5 6 (PRODUCT LEVEL)	SEE PAGE
Y	1	1	**209-9587**	1	CONTROL GP-ENGINE ELECTRONIC	124

Y-SEPARATE ILLUSTRATION

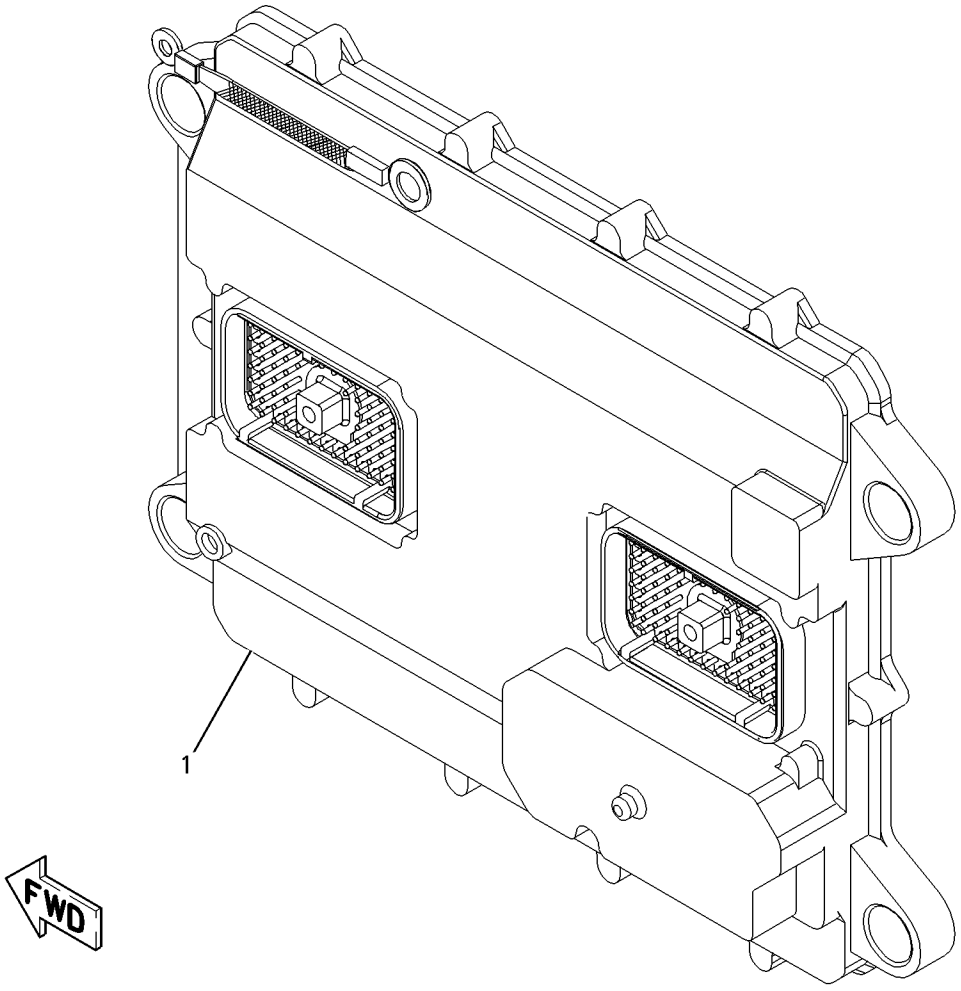

GRAPHIC #1 **<END>** g00913420

207-5262 CONTROL GP-MACHINE

S/N: CBJ1-UP

PART OF 199-5995 ELECTRONICS GP-MACHINE, 228-8540 INSTALLATION GP-SECURITY

AN ATTACHMENT

i01882670

NOTE	REF NO	GRAPHIC REF	PART NUMBER	QTY	PART NAME 1 2 3 4 5 6 (PRODUCT LEVEL)	SEE PAGE
	1	1	**156-6155**	1	CONTROL GP-UNPROGRAMMED (MACHINE)	
	2	1	**206-5162**	2	KEY AS-ELECTRONIC (SECURITY)	
F		1	**220-6355**	1	SOFTWARE GP-MACHINE (SECURITY)	

F-NOT SHOWN

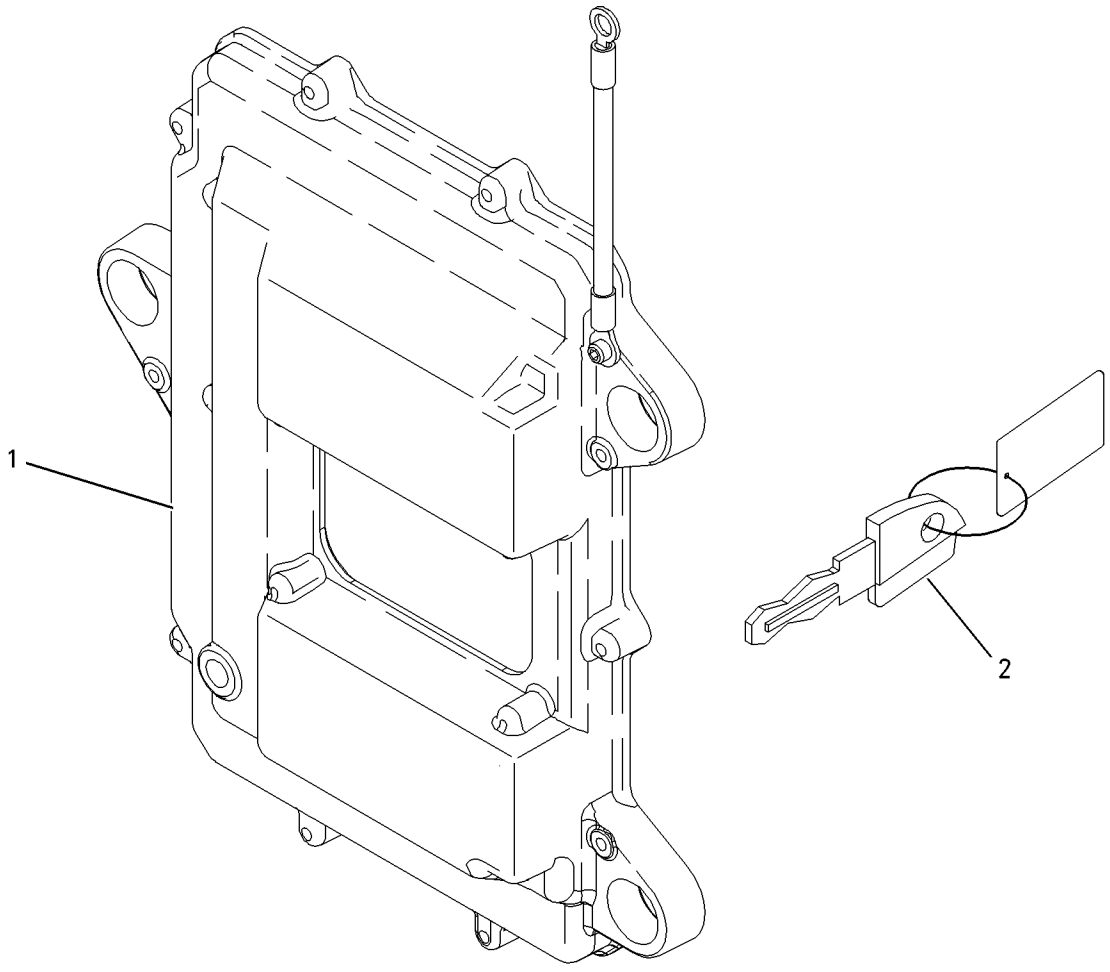

GRAPHIC #1

<END>

g00913550

ELECTRICAL AND STARTING SYSTEM

154-7443 CONTROL GP-MONITOR—CATERPILLAR MONITERING SYSTEM

S/N: CBJ1-UP

PART OF 156-8951, 165-2790 PANEL GP-INSTRUMENT, 231-6531 SERVICE GP-MONITOR

ALSO AN ATTACHMENT

SMCS-7490 **i01829251**

NOTE	PART NUMBER	QTY	PART NAME 1 2 3 4 5 6 (PRODUCT LEVEL)	SEE PAGE
			(NO SERVICED PARTS)	

<END>

ELECTRICAL AND STARTING SYSTEM

160-9146 CONTROL GP-MONITOR

S/N: CBJ1-UP
AN ATTACHMENT

SMCS-7490 **i01830476**

NOTE	REF NO	GRAPHIC REF	PART NUMBER	QTY	PART NAME 1 2 3 4 5 6 (PRODUCT LEVEL)	SEE PAGE
	1	1	**209-6417**	1	CONTROL GP-COMMUNICATION (PRODUCT LINK)	
	2	1	**178-6172**	1	HARNESS AS (CONTROL MONITOR)	
		1	**102-8805**	1	KIT-RECEPTACLE (6 PIN)	
					(INCLUDES RECEPTACLE AS & WEDGE)	
		1	**7X-6222**	1	PLUG AS-CONNECTOR (24 PIN)	
					(INCLUDES PLUG AS & WEDGE)	
		1	**8T-8730**	13	SOCKET-CONNECTOR	
		1	**8T-8737**	12	PLUG-SEAL	
		1	**155-2265**	1	KIT-CONNECTING PLUG (8 PIN)	
					(INCLUDES PLUG AS & WEDGE)	
B	3	1	**185-7141**	1	FILM-WARNING (PRODUCT LINK RADIO)	
M	4	1	**8T-0639**	4	BOLT (M6X1.00X12MM)	
M	5	1	**8T-4137**	2	BOLT (M10X1.5X20MM)	
	6	1	**207-6796**	1	ANTENNA AS	
	7	1	**223-8945**	1	BRACKET	
	8	1	**8T-4121**	2	WASHER-HARD (11X21X2.5MM THK)	
	9	1	**7K-1181**	10	STRAP-CABLE	

B-USE AS REQUIRED
M-METRIC PART

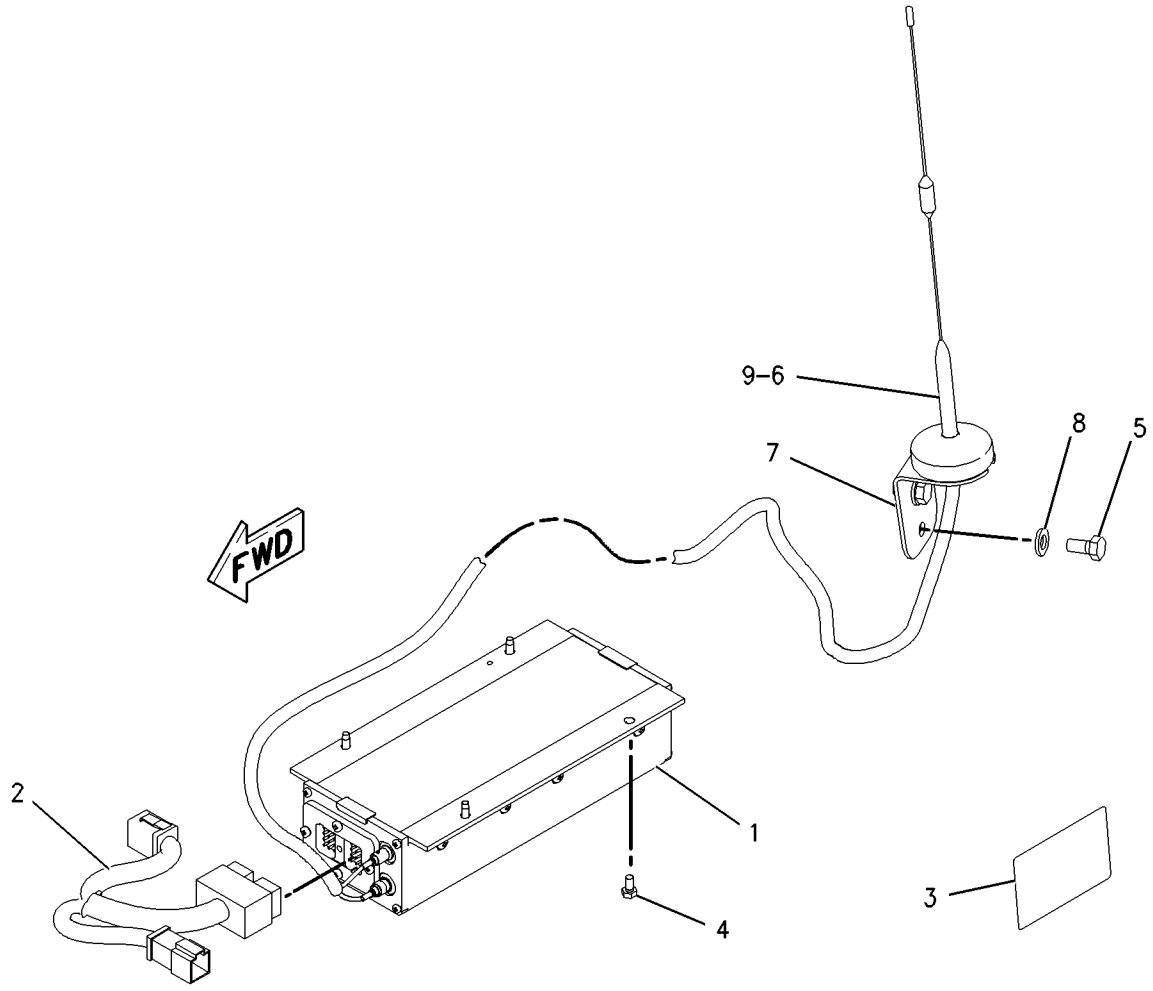

GRAPHIC #1 **<END>** g00913776

172-9389 CONTROL GP-UNPROGRAMMED–POWER TRAIN

S/N: CBJ1-UP

PART OF 156-8955 CONTROL GP-STEERING & TMSN, 226-6114 SERVICE GP-POWER TRAIN

ALSO AN ATTACHMENT

SMCS-3030 **i01885436**

NOTE	REF NO	GRAPHIC REF	PART NUMBER	QTY	PART NAME 1 2 3 4 5 6 (PRODUCT LEVEL)	SEE PAGE
	1	1	**7X-6315**	1	STRAP AS-GROUND	
	2	1	**101-0852**	1	SCREW-PAN HEAD (NO 8 X 3/8 IN)	
M	3	1	**6V-6703**	2	KIT-RETAINING BOLT (CONTROL GP)	
					(EACH INCLUDES BOLT, RING, AND SEALS)	
	4	1	**134-4126**	1	WASHER (4.52X8.28X.76MM THK)	
					FOR SOFTWARE, SEE ELECTRONICS GP	

M-METRIC PART

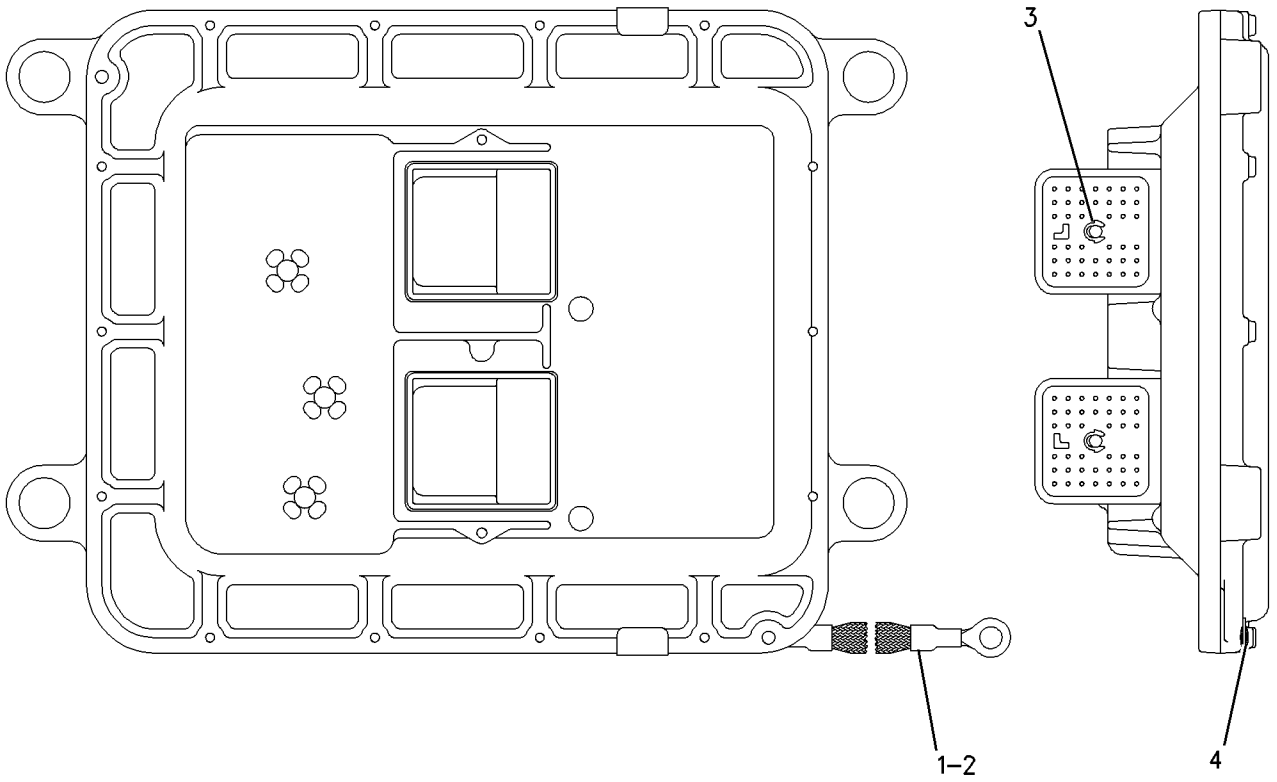

GRAPHIC #1 **<END>** g00951290

156-9514 ELECTRONICS AR-MACHINE

S/N: CBJ1-UP

PART OF 156-9493 GENERAL AR

SMCS-7000 **i01828625**

NOTE	PART NUMBER	QTY	PART NAME 1 2 3 4 5 6 (PRODUCT LEVEL)	SEE PAGE
Y	*169-3234*	1	ELECTRONICS GP-MONITOR	130
Y	*166-6269*	1	ELECTRONICS GP-POWER TRAIN	131
Y	*160-4069*	1	WIRING GP-CHASSIS	180
Y	*157-3458*	1	WIRING GP-ENGINE	183

Y-SEPARATE ILLUSTRATION

<END>

199-5995 ELECTRONICS GP-MACHINE

S/N: CBJ1-UP

PART OF 172-6031 INSTALLATION GP-SECURITY

AN ATTACHMENT

SMCS-7000 **i01889622**

NOTE	PART NUMBER	QTY	PART NAME 1 2 3 4 5 6 (PRODUCT LEVEL)	SEE PAGE
	220-6355	1	SOFTWARE GP-MACHINE (SECURITY) (SOFTWARE ONLY)	
			—OR—	
Y	**207-5262**	1	CONTROL GP-MACHINE (SECURITY) (INCLUDES SOFTWARE)	126
			(OPTIONAL SERVICE REPLACEMENT)	

Y-SEPARATE ILLUSTRATION

<END>

169-3234 ELECTRONICS GP-MONITOR

S/N: CBJ1-UP

PART OF 156-9514 ELECTRONICS AR-MACHINE

SMCS-7490, 7601, 7603, 7620 **i01881581**

NOTE	PART NUMBER	QTY	PART NAME 1 2 3 4 5 6 (PRODUCT LEVEL)	SEE PAGE
Y	**231-6531**	1	SERVICE GP-MONITOR	166
			(OPTIONAL SERVICE REPLACEMENT)(INCLUDES MONITOR AND SOFTWARE)	
			—OR—	
	231-6530	1	SOFTWARE GP-MONITOR	
			(SOFTWARE ONLY)	

Y-SEPARATE ILLUSTRATION

<END>

ELECTRICAL AND STARTING SYSTEM

166-6269 ELECTRONICS GP-POWER TRAIN

S/N: CBJ1-UP

PART OF 156-9514 ELECTRONICS AR-MACHINE

SMCS-1400, 4808, 4812, 4820 **i01828673**

NOTE	PART NUMBER	QTY	PART NAME 1 2 3 4 5 6 (PRODUCT LEVEL)	SEE PAGE
	226-6113	1	SOFTWARE GP-POWER TRAIN (SOFTWARE ONLY)	
			—OR—	
Y	**226-6114**	1	SERVICE GP-POWER TRAIN (INCLUDES SOFTWARE)	167
			(OPTIONAL SERVICE REPLACEMENT)	

Y-SEPARATE ILLUSTRATION

<END>

224-1296 FASTENER GP-ENGINE WIRING

S/N: BMA1100-UP
PART OF 191-4479, 191-4481 ENGINE AR-COMPLETE
ALSO AN ATTACHMENT

SMCS-1408 **i01804598**

NOTE	REF NO	GRAPHIC REF	PART NUMBER	QTY	PART NAME 1 2 3 4 5 6 (PRODUCT LEVEL)	SEE PAGE
	1	1	**4P-7581**	2	CLIP	
	2	1	**4P-8134**	1	CLIP	

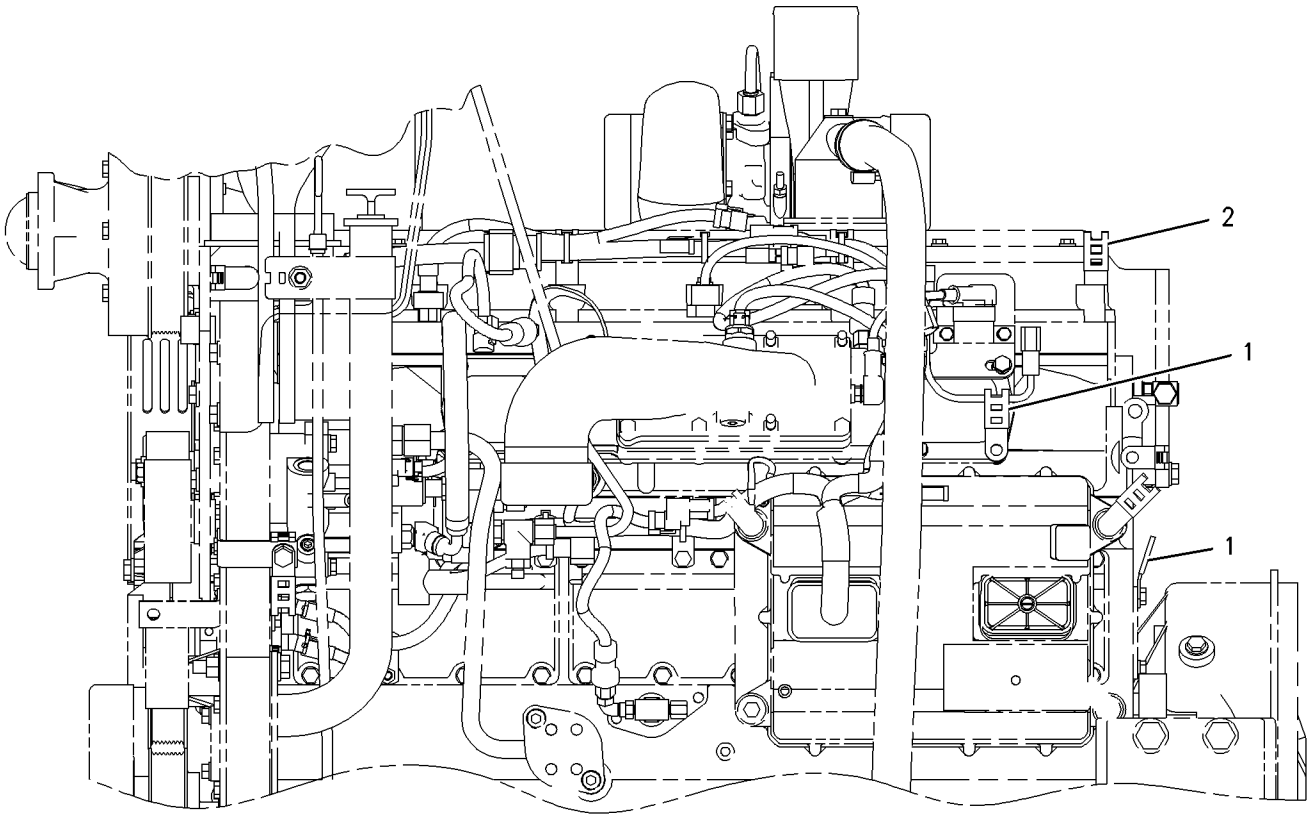

LEFT SIDE VIEW

GRAPHIC #1 **<END>** g00923462

3T-8724 HEATER GP-JACKET WATER

S/N: CBJ1-UP
240 VOLT/1000 WATT
CANNOT BE USED WITH 9X-3294—PAGE 134
AN ATTACHMENT

SMCS-1383 **i01887606**

NOTE	REF NO	GRAPHIC REF	PART NUMBER	QTY	PART NAME 1 2 3 4 5 6 (PRODUCT LEVEL)	SEE PAGE
	1	1	**4N-8227**	1	CORD AS-HEATER	
C	2	1	**124-0687**	1	ELEMENT AS-JACKET WATER HEATER (240 VOLT/1000 WATT)	
	3	1	**133-6517**	1	CAP AS-DUST (JACKET WATER HEATER)	
					AVAILABLE REPAIR KIT(S):	
			132-1448	1	KIT-SEAL (JACKET WATER HEATER)	
					(INCLUDES SEAL, RINGS, SPACER & EXT. SNAP RING)	

C-CHANGE FROM PREVIOUS TYPE

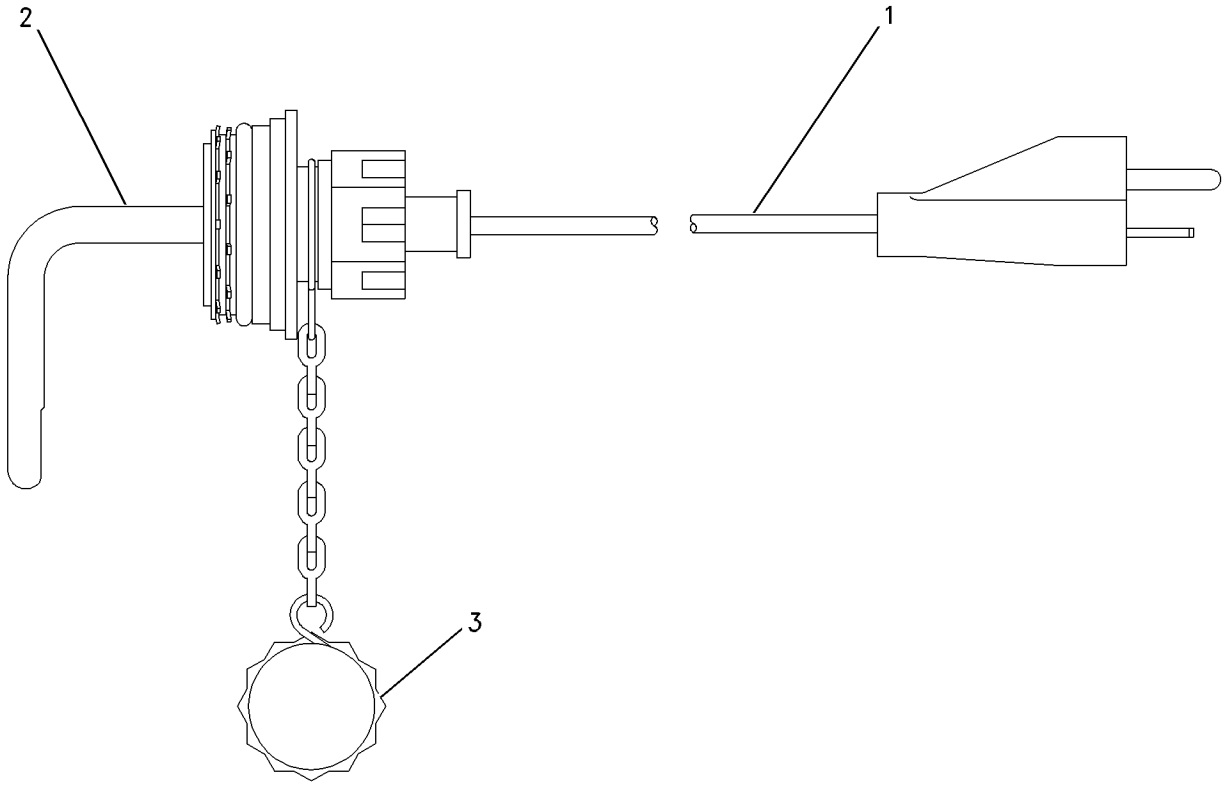

GRAPHIC #1 **<END>** g00892783

9X-3294 HEATER GP-JACKET WATER

S/N: CBJ1-UP
120 VOLT/1000 WATT
CANNOT BE USED WITH 3T-8724—PAGE 133
AN ATTACHMENT

SMCS-1383 **i01882674**

NOTE	REF NO	GRAPHIC REF	PART NUMBER	QTY	PART NAME 1 2 3 4 5 6 (PRODUCT LEVEL)	SEE PAGE
	1	1	**9N-5253**	1	CORD AS-JACKET WATER HEATER	
C	2	1	**124-0686**	1	ELEMENT AS-JACKET WATER HEATER (120 VOLT/1000 WATT)	
	3	1	**133-6517**	1	CAP AS-DUST (JACKET WATER HEATER)	
					AVAILABLE REPAIR KIT(S):	
			132-1448	1	KIT-SEAL (JACKET WATER HEATER)	
					(INCLUDES SEAL, RINGS, SPACER & EXT. SNAP RING)	

C-CHANGE FROM PREVIOUS TYPE

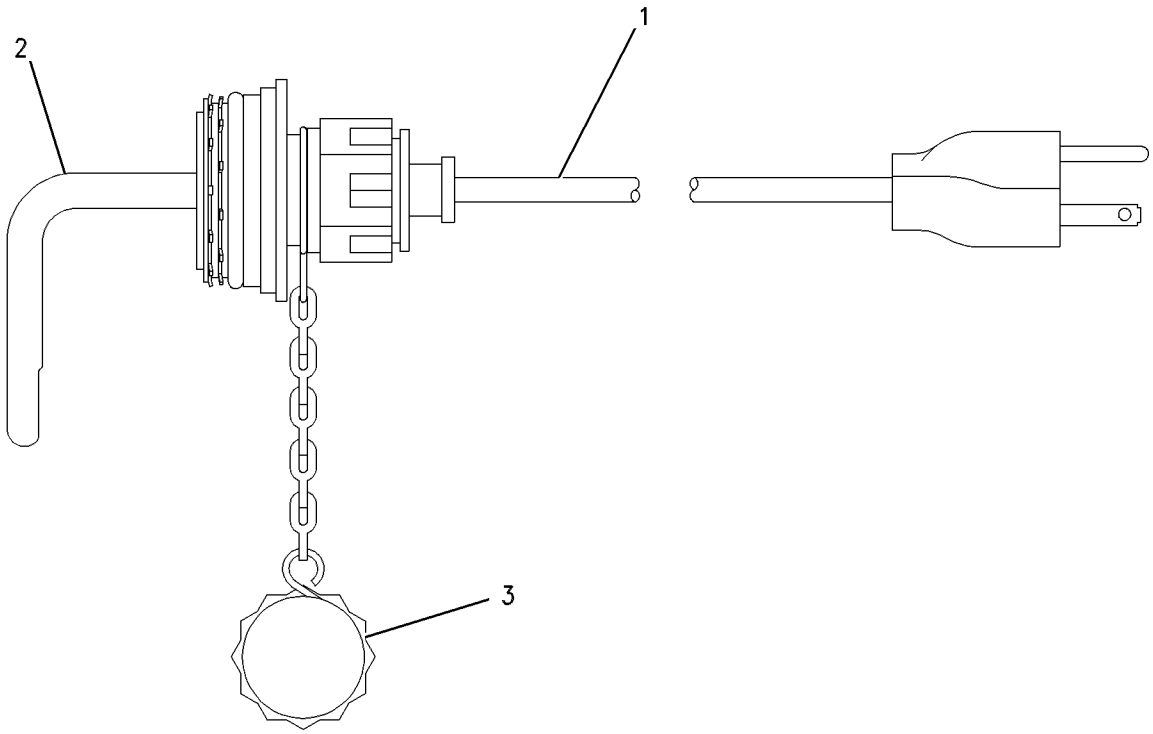

GRAPHIC #1 **<END>** g00467191

118-7284 HEATER GP-STARTING AID

S/N: BMA1100-UP
PART OF 191-4479, 191-4481 ENGINE AR-COMPLETE
ALSO AN ATTACHMENT

SMCS-1090 **i01895544**

NOTE	REF NO	GRAPHIC REF	PART NUMBER	QTY	PART NAME 1 2 3 4 5 6 (PRODUCT LEVEL)	SEE PAGE
B	1	1	**1U-8846**		SEALANT-GASKET	
	2	1	**159-3537**	1	HEATER AS	
M	3	1	**5C-2890**	2	NUT (M6X1 THD)	

B-USE AS REQUIRED
M-METRIC PART

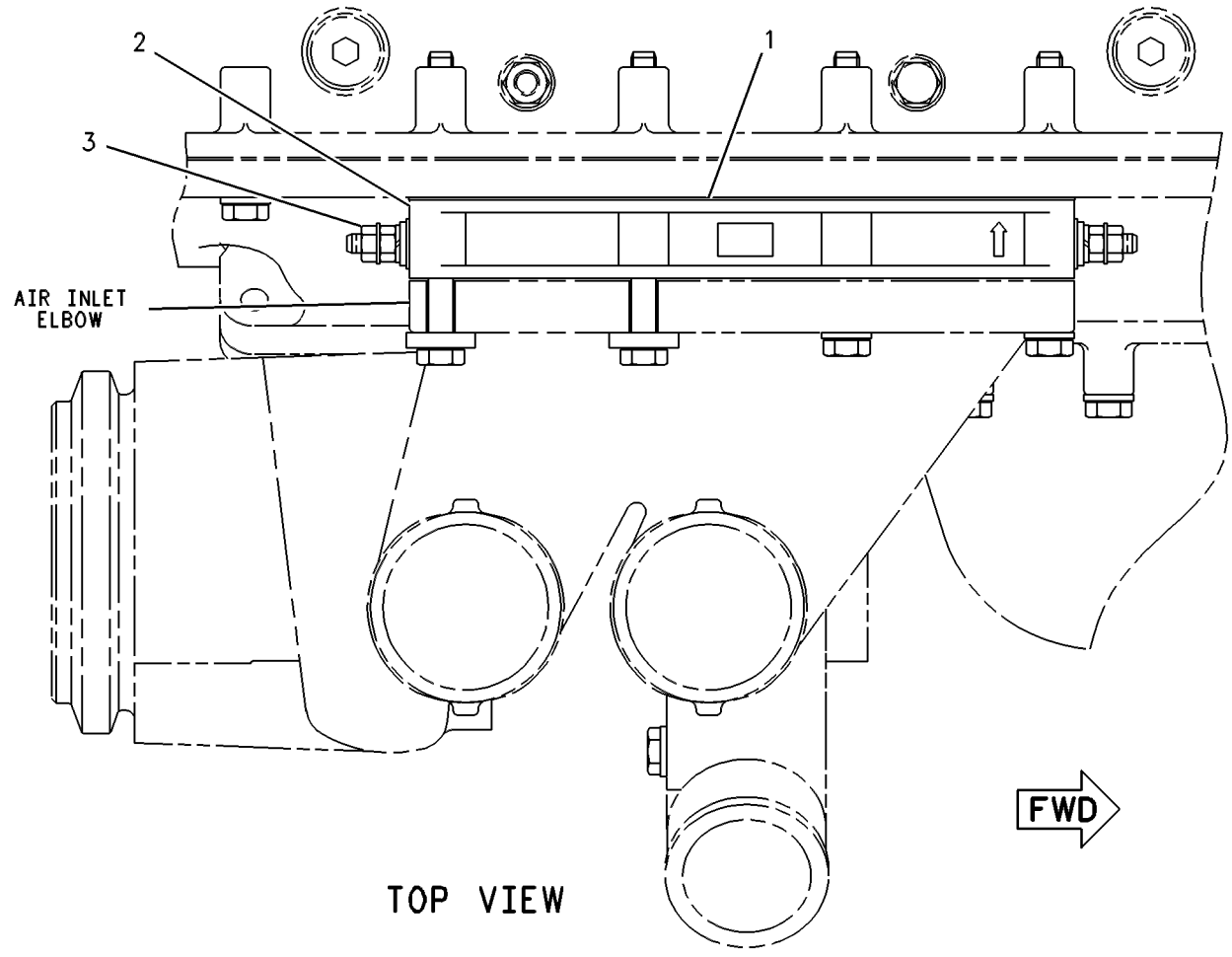

GRAPHIC #1 **<END>** g00250922

172-6031 INSTALLATION GP-SECURITY

S/N: CBJ1-UP
AN ATTACHMENT

SMCS-7631 **i01895697**

NOTE	REF NO	GRAPHIC REF	PART NUMBER	QTY	PART NAME 1 2 3 4 5 6 (PRODUCT LEVEL)	SEE PAGE
	1	1	**6I-1418**	3	SPACER (8.2X12.7X28.7MM THK)	
	2	1	**7K-1181**	3	STRAP-CABLE	
	3	1	**156-6155**	1	CONTROL GP-UNPROGRAMMED (SECURITY)	
	4	1	**216-3854**	1	HARNESS AS (CONTROL)(SECURITY)	
		1	**102-8804**	1	KIT-RECEPTACLE (4 PIN)	
		1	**102-8801**	1	KIT-RECEPTACLE (12 PIN)	
					(EACH INCLUDES RECEPTACLE AS & WEDGE)	
		1	**155-2271**	1	KIT-CONNECTING PLUG (4 PIN)	
					(INCLUDES PLUG AS & WEDGE)	
Y	5	1	**222-0297**	1	INSTALLATION GP-SECURITY	138
	6	1	**222-3870**	1	COIL AS	
		1	**102-8802**	2	KIT-RECEPTACLE (2 PIN)	
					(EACH INCLUDES RECEPTACLE AS & WEDGE)	
		1	**3E-3365**	1	WEDGE-RECEPTACLE LOCK (2 PIN)	
		1	**186-3735**	4	PIN-CONNECTOR	
BE		1	**9X-1813**		SLEEVE	
BD		1	**5P-5677**		WIRE-ELECTRICAL (18 GA) (BLACK)	
	7	1	**155-0576**	6	MOUNT-ISOLATION	
	8	1	**4P-7581**	2	CLIP	
	9	1	**8T-4224**	1	WASHER-HARD (8.8X16X2MM THK)	
M	10	1	**8T-6912**	3	BOLT (M8X1.25X50MM)	
	11	1	**9N-0869**	3	WASHER-HARD (8.8X25.5X2.0MM THK)	
Y	12	1	**199-5995**	1	ELECTRONICS GP-MACHINE (SECURITY)	130
	13	1	**206-5162**	2	KEY AS-ELECTRONIC (SECURITY)	

B-USE AS REQUIRED
D-ORDER BY THE METER
E-ORDER BY THE CENTIMETER
M-METRIC PART
Y-SEPARATE ILLUSTRATION

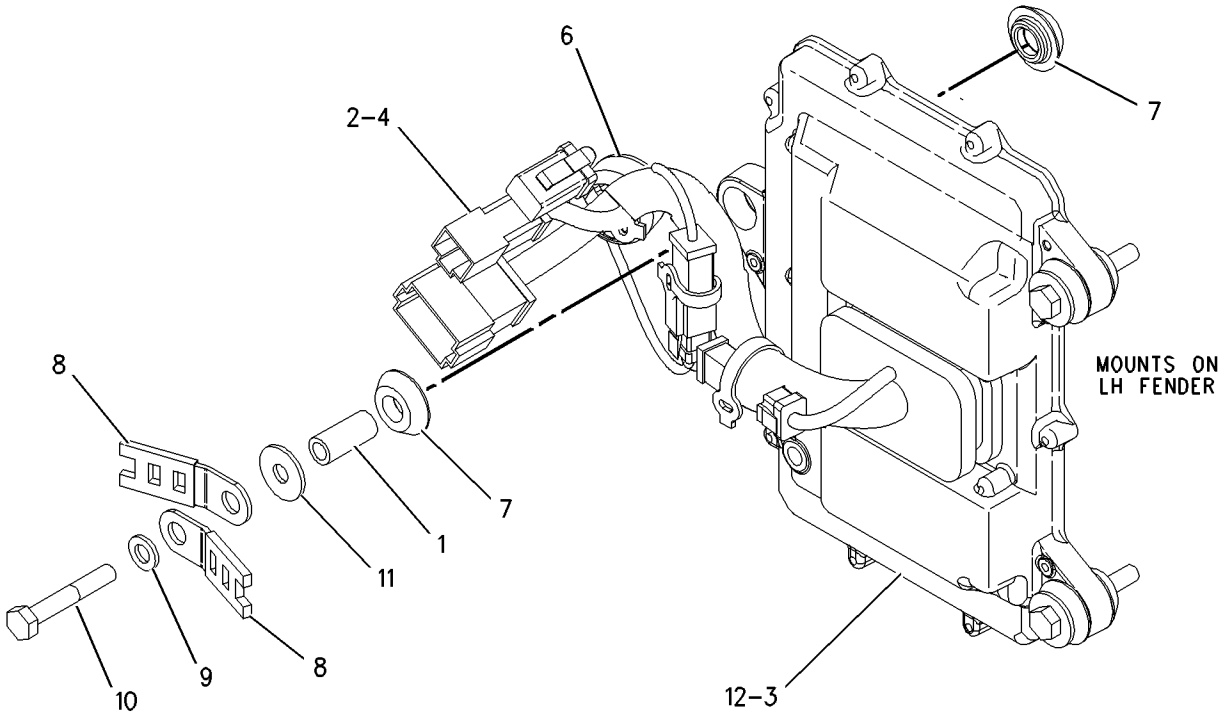

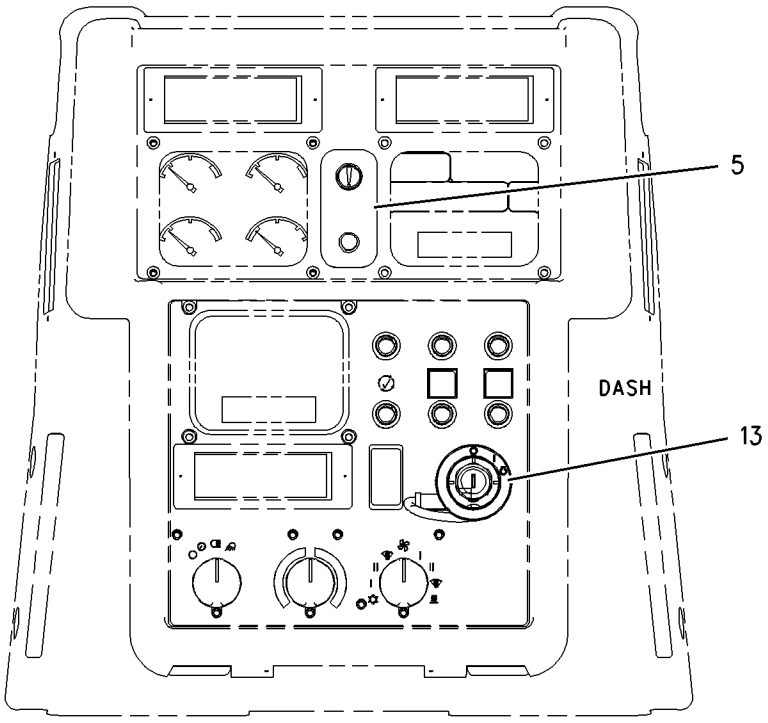

GRAPHIC #1 **<END>** g00913543

222-0297 INSTALLATION GP-SECURITY

S/N: CBJ1-UP
PART OF 172-6031 INSTALLATION GP-SECURITY
AN ATTACHMENT

SMCS-7631 **i01882681**

NOTE	REF NO	GRAPHIC REF	PART NUMBER	QTY	PART NAME 1 2 3 4 5 6 (PRODUCT LEVEL)	SEE PAGE
	1	1	**173-1201**	1	FILM-IDENTIFICATION (ACTION LIGHT)	
	2	1	**165-5655**	1	LAMP AS (12 VOLT) (RED/GREEN LED ACTION LIGHT)	
		1	**186-3735**	3	PIN-CONNECTOR	
	3	1	**205-0826**	1	FILM (MACHINE SECURITY SYSTEM)	
	4	1	**206-5203**	1	COIL AS	
		1	**102-8802**	1	KIT-RECEPTACLE (2 PIN)	
					(INCLUDES RECEPTACLE AS & WEDGE)	
		1	**198-5389**	1	FILM (IGNITION SWITCH)	

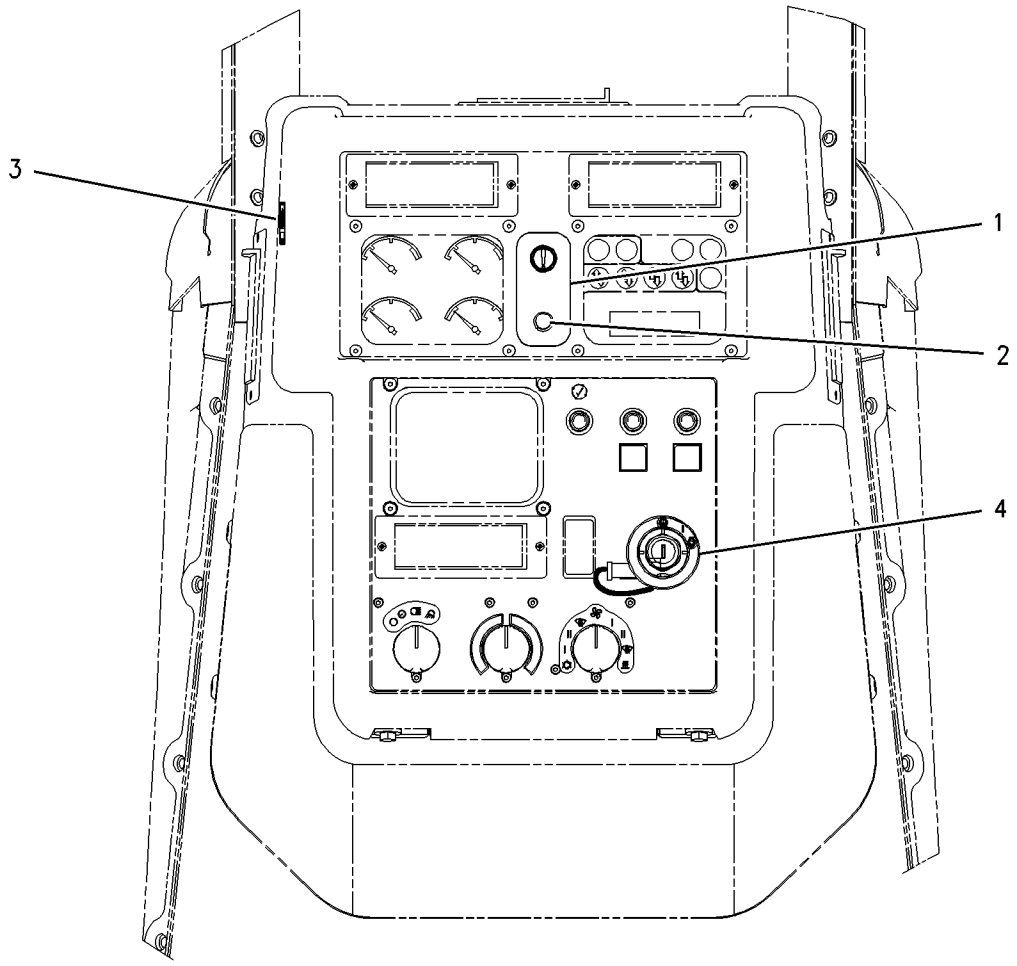

GRAPHIC #1 **<END>** g00912260

228-8540 INSTALLATION GP-SECURITY–RETROFIT

S/N: CBJ1-UP
FIELD INSTALLATION

SMCS-7631 **i01882683**

NOTE	PART NUMBER	QTY	PART NAME 1 2 3 4 5 6 (PRODUCT LEVEL)	SEE PAGE
Y	**207-5262**	1	CONTROL GP-MACHINE (SECURITY)	126
	205-8257	1	COIL AS	
BD	**5P-5677**		WIRE-ELECTRICAL (18 GA)	
	186-3735	1	PIN-CONNECTOR	
	207-5271	1	WASHER	
	222-3870	1	COIL AS	
	102-8802	1	KIT-RECEPTACLE (2 PIN)	
			(INCLUDES RECEPTACLE AS & WEDGE)	
BD	**5P-5677**		WIRE-ELECTRICAL (18 GA)	
	186-3735	1	PIN-CONNECTOR	
	9X-1813	15	SLEEVE	
	216-3854	1	HARNESS AS (CONTROL)(SECURITY)	
	102-8804	1	KIT-RECEPTACLE (4 PIN)	
	102-8801	1	KIT-RECEPTACLE (12 PIN)	
			(EACH INCLUDES RECEPTACLE AS & WEDGE)	
	8T-8737	55	PLUG-SEAL	
	150-6766	1	PLUG AS-CONNECTOR	
	159-9322	1	SEAL-O-RING	
	155-2270	1	KIT-CONNECTING PLUG (2 PIN)	
	155-2271	1	KIT-CONNECTING PLUG (4 PIN)	
			(EACH INCLUDES PLUG AS & WEDGE)	
	102-8802	1	KIT-RECEPTACLE (2 PIN)	
	102-8803	1	KIT-RECEPTACLE (3 PIN)	
			(EACH INCLUDES RECEPTACLE AS & WEDGE)	
	165-5655	1	LAMP AS (12 VOLT) (RED/GREEN LED ACTION LIGHT)	
	186-3735	3	PIN-CONNECTOR	
M	**6V-3918**	3	BOLT (M8X1.25X50MM)	
	4P-7581	2	CLIP	
	8T-9655	6	MOUNT (ISOLATION)	
	6I-1418	3	SPACER (8.2X12.7X28.7MM THK)	
	7K-1181	5	STRAP-CABLE	
	9N-0869	4	WASHER-HARD (8.8X25.5X2.0MM THK)	
	198-5389	1	FILM (IGNITION SWITCH)	
	205-0826	1	FILM (MACHINE SECURITY SYSTEM)	
	225-5927	1	FILM (SECURITY NOTICE)	
	173-1201	1	FILM-IDENTIFICATION (ACTION LIGHT)	

B-USE AS REQUIRED
D-ORDER BY THE METER
M-METRIC PART
Y-SEPARATE ILLUSTRATION

<END>

3E-6389 LAMP GP-DOME

S/N: CBJ1-UP
24 VOLT. WITH SWITCH
PART OF 170-2084 LINER GP-CAB

SMCS-1429 **i01855896**

NOTE	REF NO	GRAPHIC REF	PART NUMBER	QTY	PART NAME 1 2 3 4 5 6 (PRODUCT LEVEL)	SEE PAGE
	1	1	**7N-9943**	1	LAMP (24 VOLT) (DOME)	
	2	1	**102-8803**	1	KIT-RECEPTACLE (3 PIN)	
					(INCLUDES RECEPTACLE AS & WEDGE)	
		1	**3E-3371**	1	WEDGE-RECEPTACLE LOCK (3 PIN)	
		1	**8T-8729**	3	PIN-CONNECTOR	
	3	1	**7T-0020**	1	LENS (DOME LAMP)	

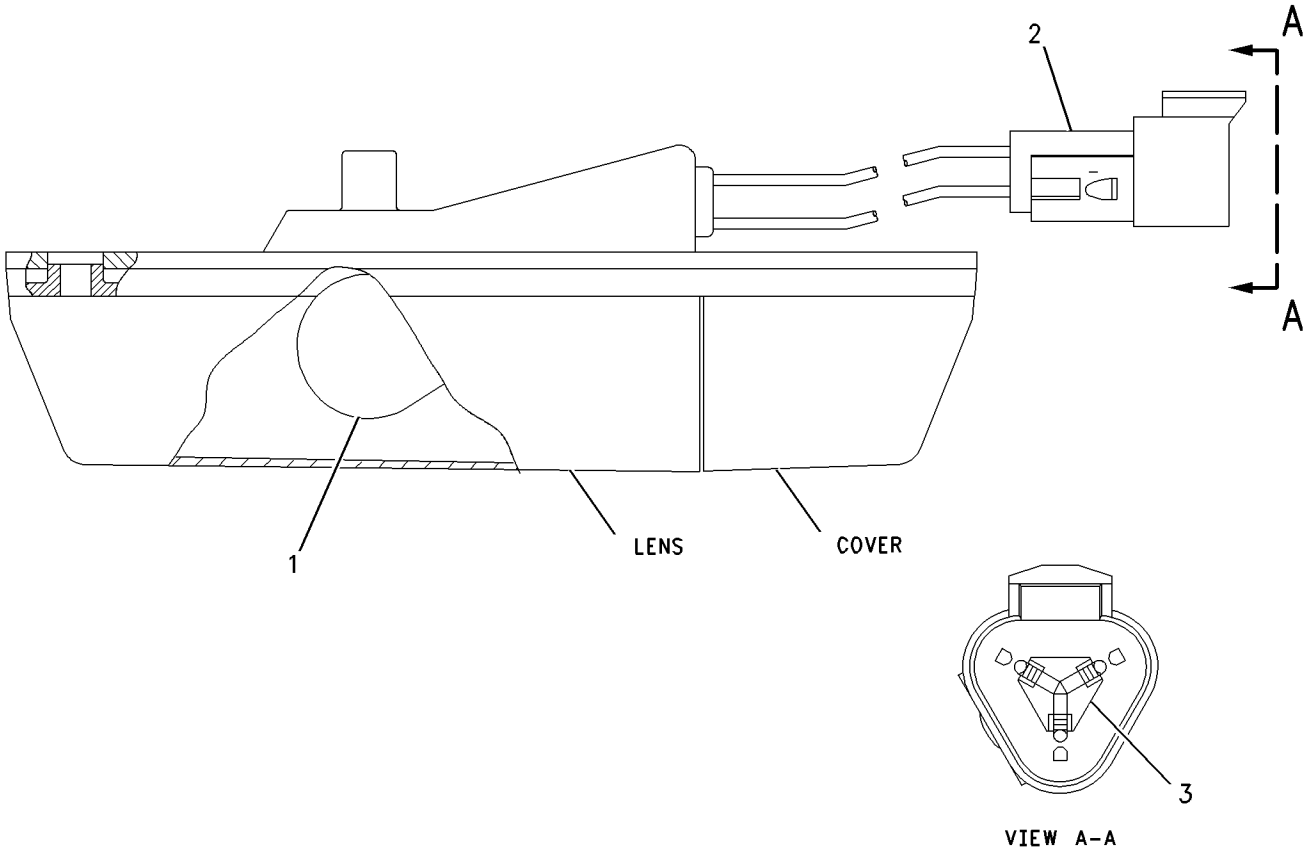

GRAPHIC #1 **<END>** g00892785

219-6487 LAMP GP-FLOOD–REAR ROPS

S/N: CBJ1-UP
PART OF 157-3463 LIGHTING GP-FLOOD
AN ATTACHMENT

SMCS-1434 **i01892535**

NOTE	REF NO	GRAPHIC REF	PART NUMBER	QTY	PART NAME 1 2 3 4 5 6 (PRODUCT LEVEL)	SEE PAGE
	1	1	**9X-3463**	1	LAMP-HALOGEN (24 VOLT)(65 WATT) (FLOOD)	
M	2	1	**8T-6912**	1	BOLT (M8X1.25X50MM)	
M	3	1	**5C-7261**	1	NUT (M8X1.25 THD)	
	4	1	**8T-4224**	2	WASHER-HARD (8.8X16X2MM THK)	
	5	1	**9X-4244**	2	SCREW	
	6	1	**202-6612**	1	SEAL	
	7	1	**202-6614**	1	LENS AS (FLOOD) (ROPS)	
	8	1	**175-4292**	1	BODY AS	
	9	1	**164-7556**	1	CLIP	
	10	1	**175-4291**	1	BRACKET AS	

M-METRIC PART

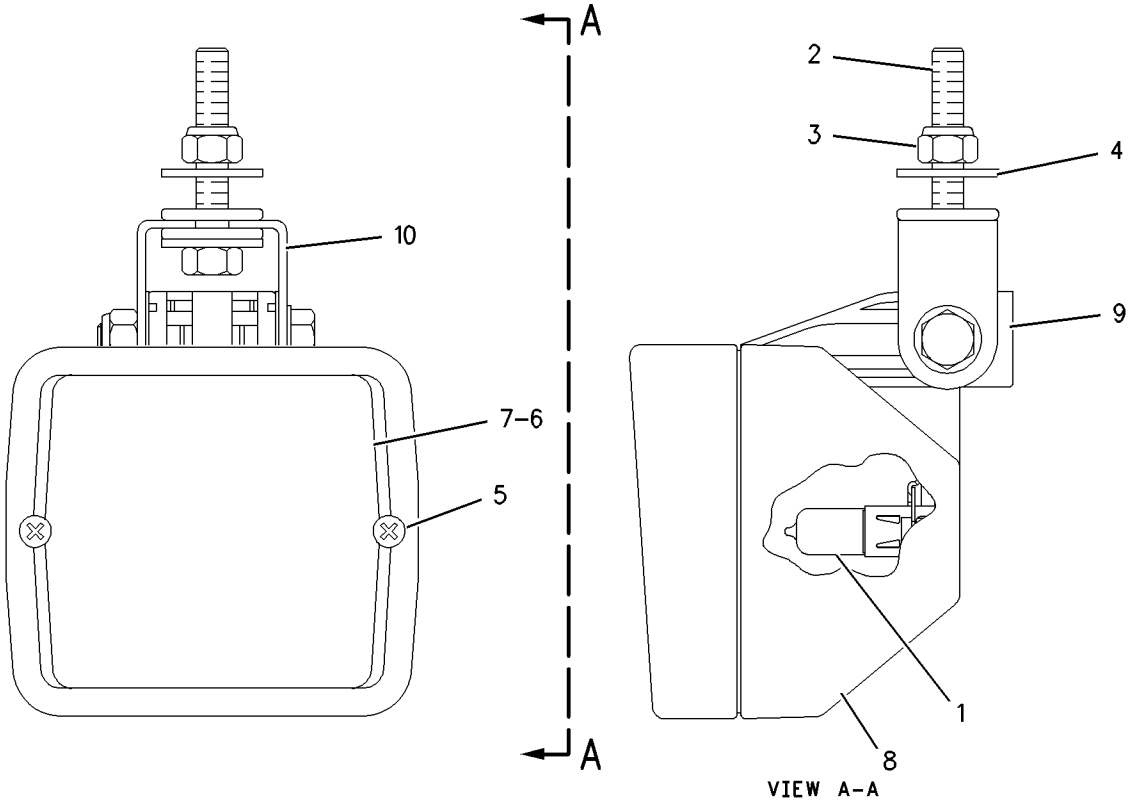

GRAPHIC #1 **<END>** g00912360

219-6488 LAMP GP-FLOOD–FRONT ROPS

S/N: CBJ1-UP
24 VOLT
PART OF 157-3463 LIGHTING GP-FLOOD
AN ATTACHMENT

SMCS-1434 **i01892538**

NOTE	REF NO	GRAPHIC REF	PART NUMBER	QTY	PART NAME 1 2 3 4 5 6 (PRODUCT LEVEL)	SEE PAGE
	1	1	**9X-3463**	1	LAMP-HALOGEN (24 VOLT)(65 WATT) (FLOOD)	
M	2	1	**8T-6912**	1	BOLT (M8X1.25X50MM)	
M	3	1	**5C-7261**	1	NUT (M8X1.25 THD)	
	4	1	**8T-4224**	2	WASHER-HARD (8.8X16X2MM THK)	
	5	1	**9X-4244**	2	SCREW	
	6	1	**202-6612**	1	SEAL	
	7	1	**202-6611**	1	LENS AS (FLOOD) (ROPS)	
	8	1	**175-4292**	1	BODY AS	
	9	1	**164-7556**	1	CLIP	
	10	1	**175-4291**	1	BRACKET AS	

M-METRIC PART

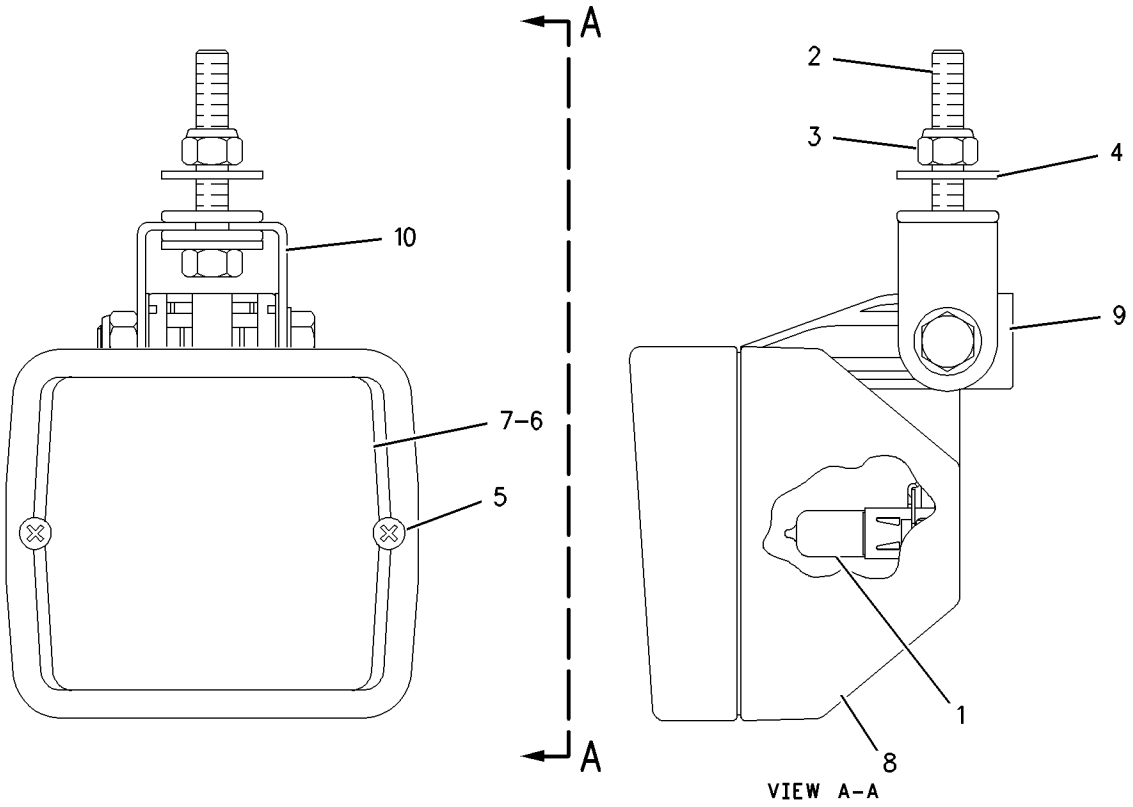

GRAPHIC #1 **<END>** g00912360

225-5075 LAMP GP-FLOOD–FRONT RADIATOR GRILL

S/N: CBJ1-UP
24 VOLT, SHOCK RESISTANT
PART OF 160-4069 WIRING GP-CHASSIS

SMCS-1434 **i01892539**

NOTE	REF NO	GRAPHIC REF	PART NUMBER	QTY	PART NAME 1 2 3 4 5 6 (PRODUCT LEVEL)	SEE PAGE
	1	1	**9X-3463**	1	LAMP-HALOGEN (24 VOLT)(65 WATT)	
M	2	1	**8T-6912**	1	BOLT (M8X1.25X50MM)	
M	3	1	**5C-7261**	1	NUT (M8X1.25 THD)	
	4	1	**8T-4224**	2	WASHER-HARD (8.8X16X2MM THK)	
	5	1	**9X-4244**	2	SCREW	
	6	1	**202-6611**	1	LENS AS (FLOOD)	
	7	1	**227-0169**	1	BODY AS	
	8	1	**164-7556**	1	CLIP	
	9	1	**175-4291**	1	BRACKET AS	
	10	1	**102-8802**	1	KIT-RECEPTACLE (2 PIN)	
					(INCLUDES RECEPTACLE AS & WEDGE)	
	11	1	**186-3735**	2	PIN-CONNECTOR	
	12	1	**3E-3365**	1	WEDGE-RECEPTACLE LOCK (2 PIN)	

M-METRIC PART

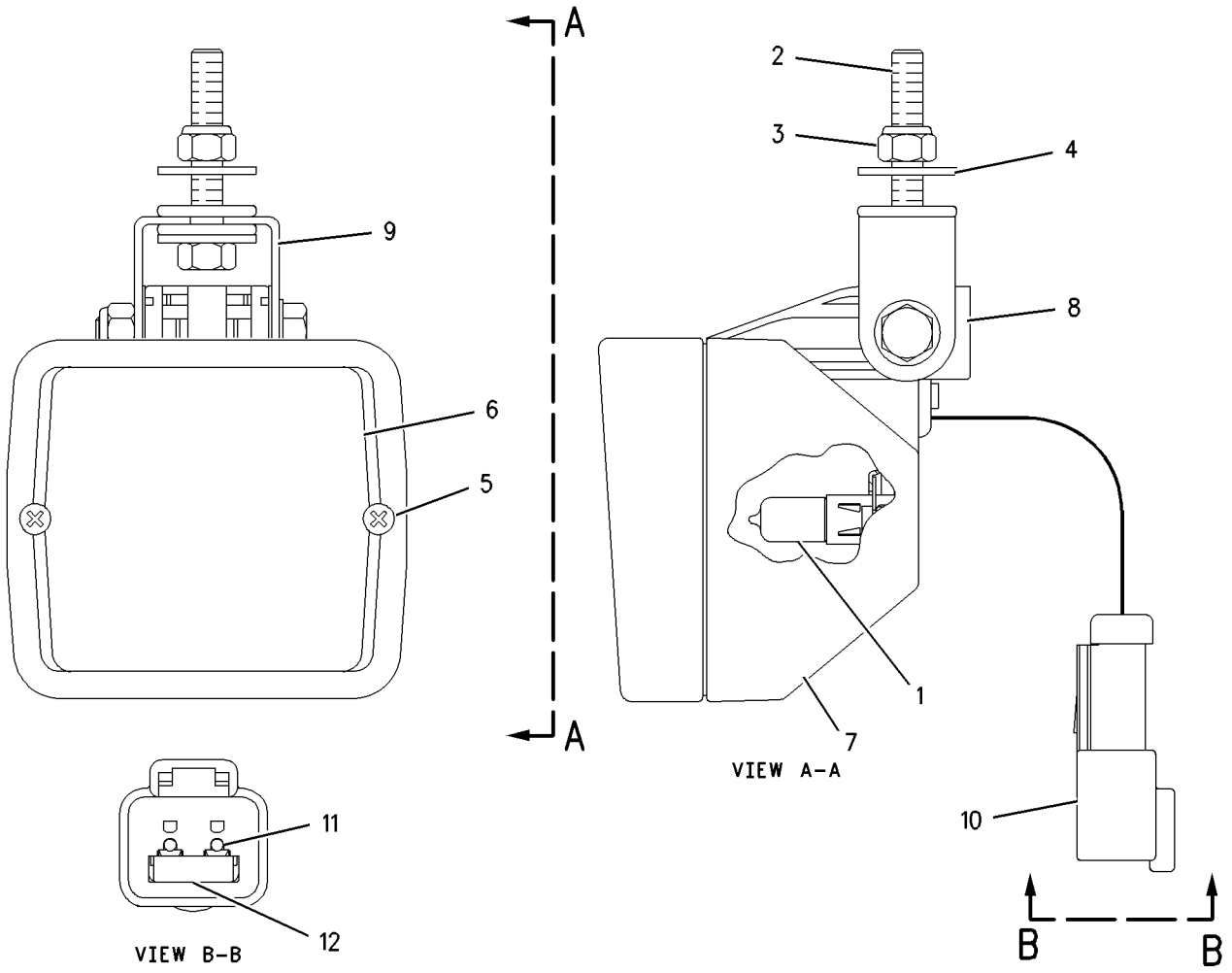

GRAPHIC #1 **<END>** g00912419

110-7563 LAMP GP-WARNING BEACON

S/N: CBJ1-UP
PART OF 157-3459 LIGHTING GP-WARNING BEACON
AN ATTACHMENT

SMCS-1431 **i01882697**

NOTE	REF NO	GRAPHIC REF	PART NUMBER	QTY	PART NAME 1 2 3 4 5 6 (PRODUCT LEVEL)	SEE PAGE
	1	1	**102-8802**	1	KIT-RECEPTACLE (2 PIN)	
					(INCLUDES RECEPTACLE AS & WEDGE)	
	2	1	**8T-8729**	2	PIN-CONNECTOR	
	3	1	**198-0316**	1	LENS (AMBER WARNING BEACON)	
F		1	**198-0315**	1	TUBE-FLASH (8 PRONG CONNECTION) (WARNING BEACON)	
F		1	**127-8158**	1	TUBE-FLASH (3 PRONG CONNECTION) (WARNING BEACON)	

F-NOT SHOWN

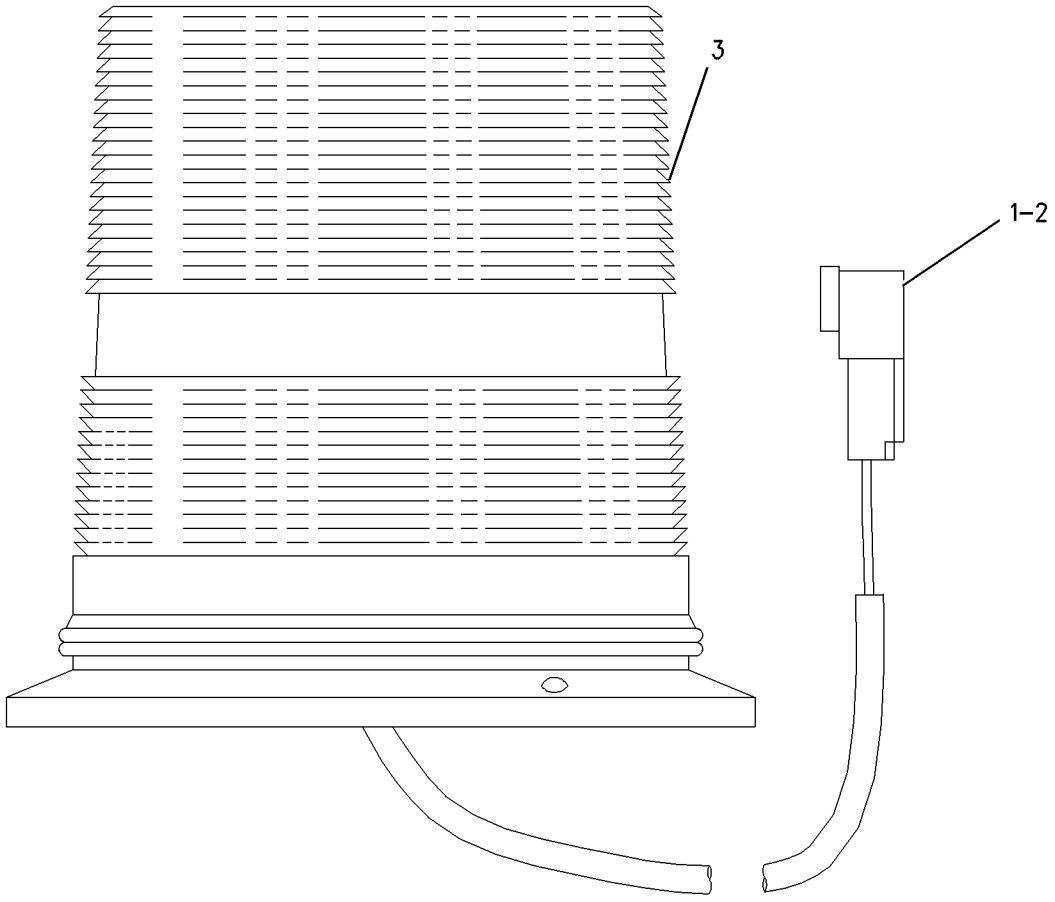

GRAPHIC #1 **<END>** g00748973

157-3463 LIGHTING GP-FLOOD—ENCLOSED & OPEN ROPS

S/N: CBJ1-UP

AN ATTACHMENT

SMCS-1429 **i01890733**

NOTE	REF NO	GRAPHIC REF	PART NUMBER	QTY	PART NAME 1 2 3 4 5 6 (PRODUCT LEVEL)	SEE PAGE
	1	1	**7K-1181**	4	STRAP-CABLE	
	2	1	**197-4816**	4	PLATE	
	3	1	**197-6587**	4	BRACKET AS	
					(EACH INCLUDES)	
M		1	**8T-3490**	2	NUT-WELD (M10X1.5 THD)	
Y	4	1	**219-6487**	2	LAMP GP-FLOOD (24 VOLT, SUSPENDED MOUNT) (REAR ROPS)	141
Y	5	1	**219-6488**	2	LAMP GP-FLOOD (SUSPENDED MOUNT) (FRONT ROPS)	142
	6	1	**223-8934**	4	GUARD AS	
					(EACH INCLUDES)	
M		1	**8T-3612**	4	NUT-WELD (M8X1.25 THD)	
	7	1	**223-8935**	1	SCREEN AS (RH)	
	8	1	**223-8936**	1	SCREEN AS (LH)	
					(EACH SCREEN AS INCLUDES)	
		1	**8T-2561**	1	WASHER-HARD (10.5X28.5X5MM THK)	
	9	1	**4P-7581**	4	CLIP	
	10	1	**5P-4116**	4	WASHER-HARD (8.8X20.5X2MM THK)	
	11	1	**8T-4121**	28	WASHER-HARD (11X21X2.5MM THK)	
M	12	1	**8T-4182**	4	BOLT (M10X1.5X45MM)	
M	13	1	**8T-4195**	24	BOLT (M10X1.5X30MM)	
	14	1	**8T-4224**	6	WASHER-HARD (8.8X16X2MM THK)	
M	15	1	**8T-4908**	6	BOLT (M8X1.25X25MM)	

M-METRIC PART
Y-SEPARATE ILLUSTRATION

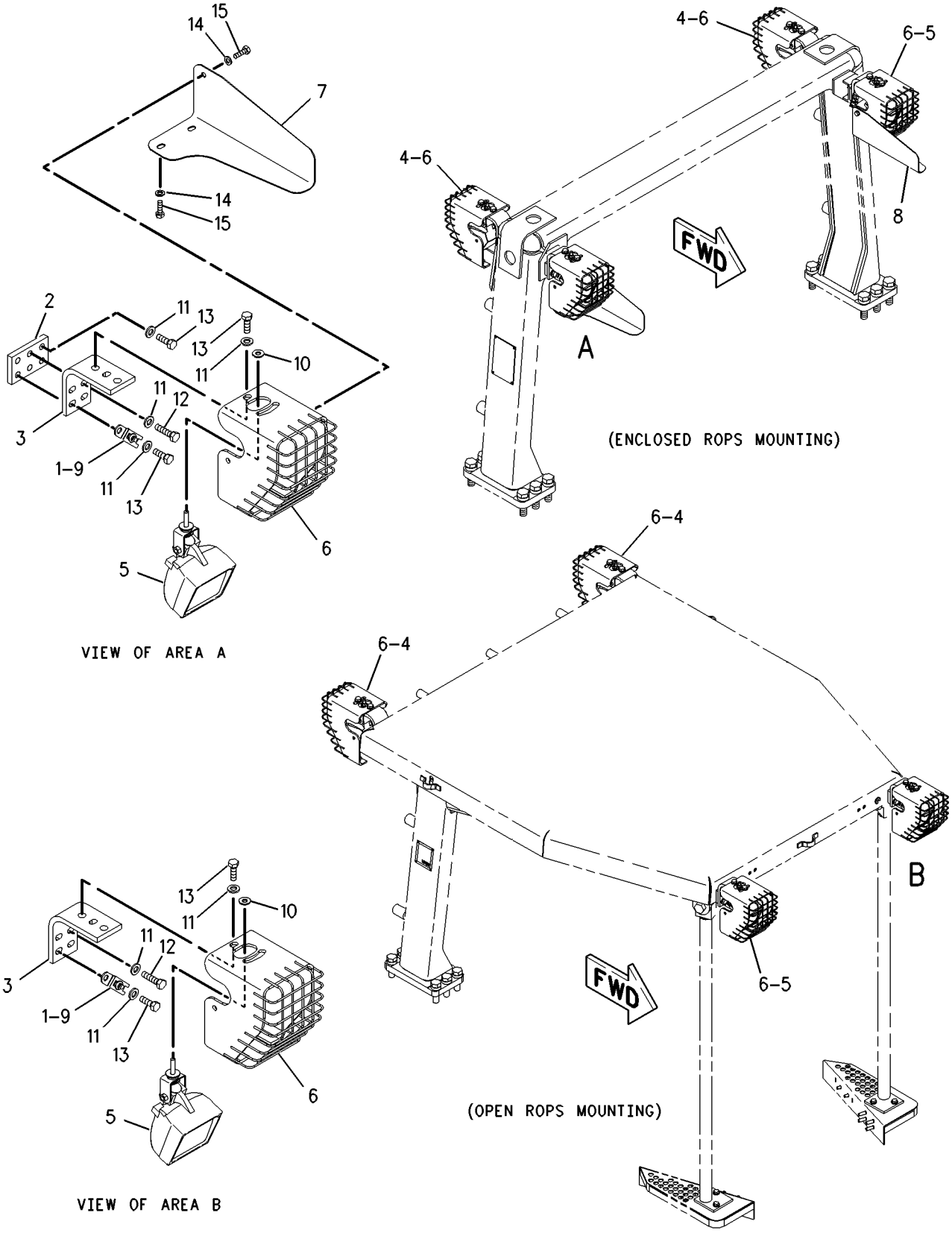

GRAPHIC #1 **<END>** g00970392

157-3459 LIGHTING GP-WARNING BEACON

S/N: CBJ1-UP
AN ATTACHMENT

SMCS-1431 **i01884410**

NOTE	REF NO	GRAPHIC REF	PART NUMBER	QTY	PART NAME 1 2 3 4 5 6 (PRODUCT LEVEL)	SEE PAGE
	1	1	**3S-2093**	1	STRAP-CABLE	
M	2	1	**125-3299**	3	BOLT-SOCKET HEAD (M5X0.8X25MM)	
	3	1	**203-4261**	1	BRACKET AS	
M		1	**8T-3490**	1	NUT-WELD (M10X1.5 THD)	
M		1	**8T-8874**	3	NUT-WELD (M5X0.8 THD)	
	4	1	**102-9862**	1	SWITCH AS (WARNING BEACON)	
		1	**3E-8822**	1	ACTUATOR-ROCKER	
		1	**3E-8825**	1	LAMP (24 VOLT) (WARNING BEACON)	
					—OR—	
		1	**165-5674**	1	LAMP-DIODE (LED) (WARNING BEACON)	
	5	1	**233-0792**	1	PLATE	
Y	6	1	**110-7563**	1	LAMP GP-WARNING BEACON	144
	7	1	**6K-8178**	1	CLIP	
	8	1	**8T-4121**	7	WASHER-HARD (11X21X2.5MM THK)	
M	9	1	**8T-4137**	3	BOLT (M10X1.5X20MM)	
M	10	1	**8T-4182**	1	BOLT (M10X1.5X45MM)	
M	11	1	**8T-4195**	3	BOLT (M10X1.5X30MM)	

M-METRIC PART
Y-SEPARATE ILLUSTRATION

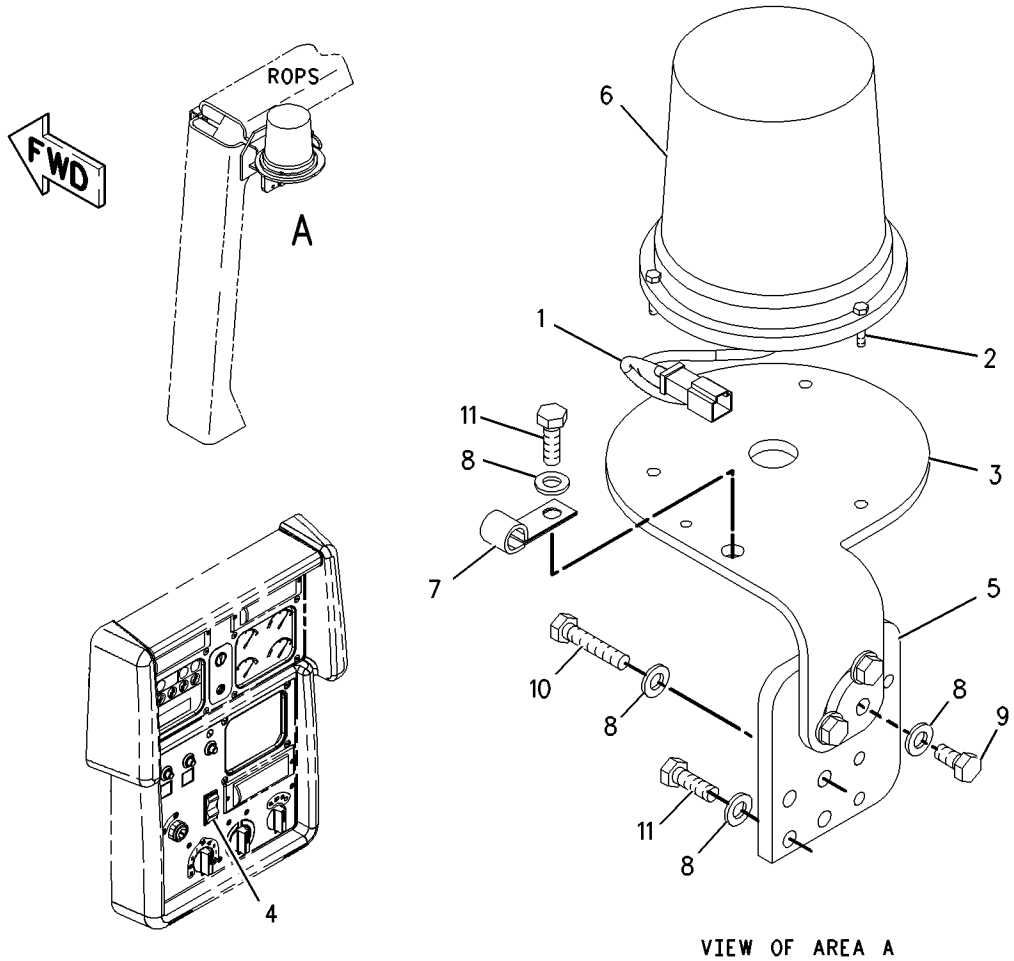

GRAPHIC #1 **<END>** g00976190

156-8378 PANEL GP-CIRCUIT BREAKER

S/N: CBJ1-UP
PART OF 156-7378 WIRING GP-PLATFORM
ALSO AN ATTACHMENT

SMCS-1417, 1420 **i01885438**

NOTE	REF NO	GRAPHIC REF	PART NUMBER	QTY	PART NAME 1 2 3 4 5 6 (PRODUCT LEVEL)	SEE PAGE
	1	1	**189-3158**	1	SUPPRESSOR-ARC	
	2	1	**7K-1181**	8	STRAP-CABLE	
	3	1	**9W-1441**	8	FUSE (15 AMP)	
	4	1	**9W-1442**	9	FUSE (10 AMP)	
	5	1	**9W-1446**	3	FUSE (20 AMP)	
	6	1	**114-0931**	1	FILM-IDENTIFICATION (SERVICE CONNECTOR)	
Y	7	1	**125-1302**	1	SWITCH GP-MAGNETIC (START RELAY)	174
	8	1	**213-2985**	1	HARNESS AS (CIRCUIT BREAKER)	
		1	**102-8802**	1	KIT-RECEPTACLE (2 PIN)	
		1	**103-8133**	1	KIT-RECEPTACLE (12 PIN)	
					(EACH RECEPTACLE KIT INCLUDES RECEPTACLE AS & WEDGE)	
		1	**155-2270**	1	KIT-CONNECTING PLUG (2 PIN)	
					(INCLUDES PLUG AS, WEDGE AND INTERFACE SEAL)	
		1	**106-4155**	1	KIT-BOLT (CIRCUIT BREAKER HARNESS)	
					(INCLUDES BOLT,RING AND SEAL)	
		1	**186-3735**	42	PIN-CONNECTOR	
		1	**3S-2093**	4	STRAP-CABLE	
		1	**8T-8737**	23	PLUG-SEAL	
		1	**175-7058**	1	BLOCK AS-FUSE	
	9	1	**165-3503**	1	STRIP	
	10	1	**165-3504**	1	WIRE AS	
	11	1	**165-3505**	1	WIRE AS	
	12	1	**213-2986**	1	PANEL AS	
		1	**7T-1099**	3	LINK	
	13	1	**165-4157**	1	STRIP	
Y	14	1	**167-0138**	1	SWITCH GP-MAGNETIC (MAIN FUSE RELAY)	175
	15	1	**171-2210**	1	CIRCUIT BREAKER AS (80 AMP) (MACHINE MAIN)	
		1	**1H-3244**	2	LOCKWASHER	
		1	**6V-8187**	2	NUT (1/4-28 THD)	
		1	**8T-4205**	2	WASHER-HARD (7.2X14.5X2MM THK)	
	16	1	**172-9999**	1	HARNESS AS (CIRCUIT BREAKER PANEL)	
		1	**127-5483**	2	PLUG AS-CONNECTOR (1 PIN)	
		1	**127-5484**	1	RECEPTACLE AS (1 PIN)	
		1	**127-5485**	1	PLUG AS-CONNECTOR (1 PIN)	
	17	1	**173-1614**	1	FILM-IDENTIFICATION (ALTERNATOR)	
	18	1	**5P-7162**	4	SCREW-MACHINE (10-32 THD)	
M	19	1	**5C-2890**	4	NUT (M6X1 THD)	
M	20	1	**5C-9553**	4	BOLT (M6X1X16MM)	
	21	1	**6V-7978**	2	SCREW-MACHINE (10-32X0.375 IN)	
M	22	1	**8T-4171**	2	BOLT (M6X1X12MM)	
	23	1	**8T-4205**	10	WASHER-HARD (7.2X14.5X2MM THK)	

M-METRIC PART
Y-SEPARATE ILLUSTRATION

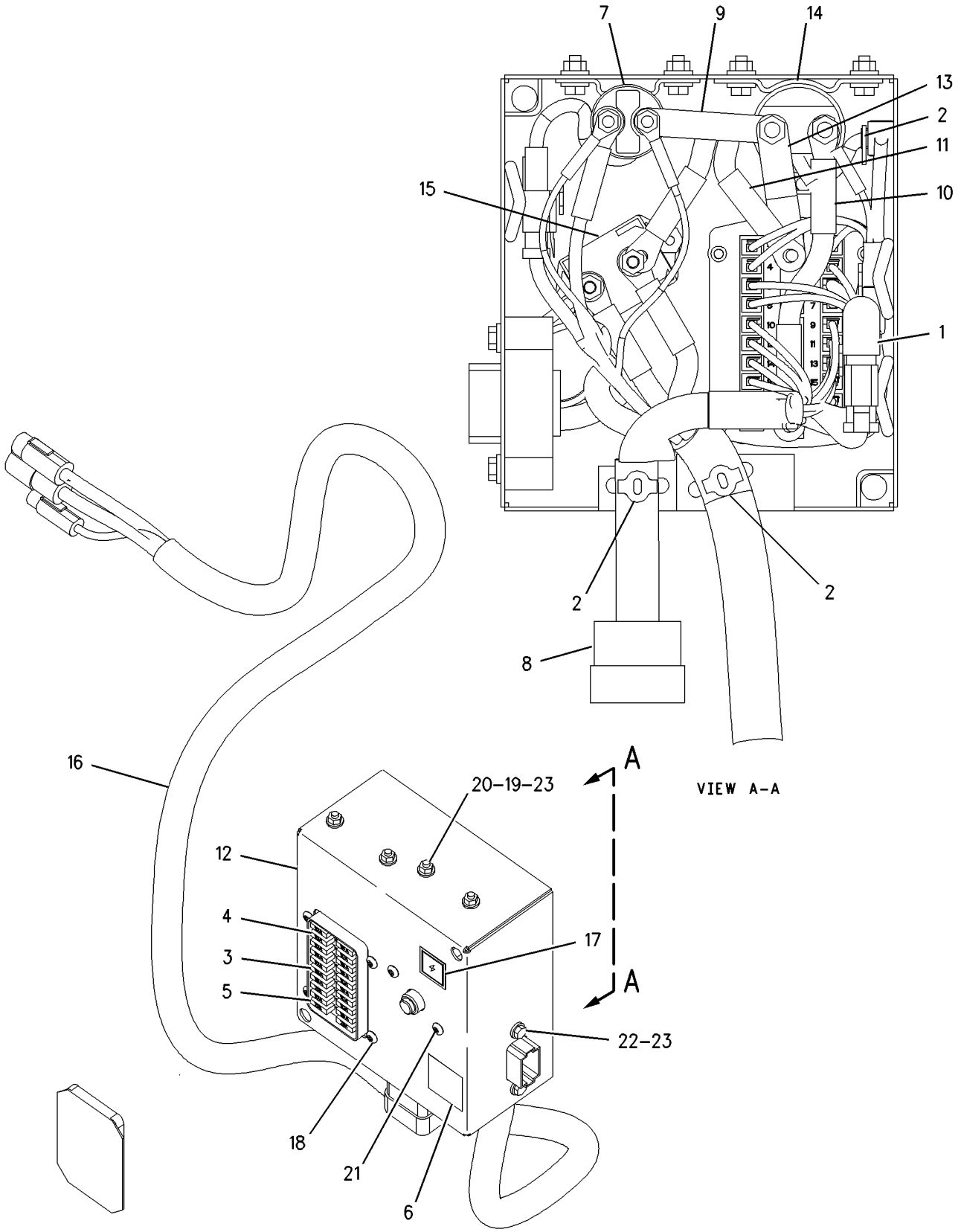

GRAPHIC #1 **<END>** g00912248

199-7734 SENSOR GP-ENGINE

S/N: BMA1100-UP
PART OF 191-4479, 191-4481 ENGINE AR-COMPLETE
ALSO AN ATTACHMENT

SMCS-1718, 1906, 1912, 1924, 1929 **i01892542**

NOTE	REF NO	GRAPHIC REF	PART NUMBER	QTY	PART NAME 1 2 3 4 5 6 (PRODUCT LEVEL)	SEE PAGE
	1	1	**9X-0262**	1	ADAPTER	
	2	1	**031-2716**	1	ELBOW	
	3	1	**130-9811**	1	SENSOR GP-TEMPERATURE (COOLANT)	
	3A	1	**130-9811**	1	SENSOR GP-TEMPERATURE (INTAKE AIR)	
	4	1	**160-8123**	1	PLUG AS	
		1	**3E-3368**	1	WEDGE-PLUG LOCK	
		1	**8T-8737**	3	PLUG-SEAL	
Y	5	1	**191-6587**	1	SENSOR GP-TEMPERATURE (ENGINE OIL)	165
Y	6	1	**194-6723**	1	SENSOR GP-PRESSURE (TURBO OUTLET)	156
Y	7	1	**194-6725**	1	SENSOR GP-PRESSURE (FUEL)	157
Y	7A	1	**194-6725**	1	SENSOR GP-PRESSURE (ENGINE OIL)	157
Y	8	1	**194-6726**	1	SENSOR GP-PRESSURE (INJECTION ACTUATION)	158
	9	1	**117-1385**	2	SEAL-O-RING	
Y	10	1	*169-3300*	1	SENSOR GP-SPEED (TIMING) (ENGINE)	160
	11	1	**3K-8460**	1	PLUG (1/2-20 THD)	
		1	**5P-7814**	1	SEAL-O-RING	
	12	1	**6V-5049**	1	SEAL-O-RING	
		1	**9S-4191**	1	PLUG	
	13	1	**3E-4352**	1	WASHER-HARD (8.8X20.5X2.5MM THK)	
	14	1	**3J-7354**	2	SEAL-O-RING	
	15	1	**5P-7814**	1	SEAL-O-RING	
M	16	1	**6V-3940**	1	BOLT (M8X1.25X25MM)	
	17	1	**6V-5048**	2	SEAL-O-RING	
	18	1	**6V-5049**	1	SEAL-O-RING	
	19	1	**6V-6609**	2	SEAL-O-RING	

M-METRIC PART
Y-SEPARATE ILLUSTRATION

199-7734 **SENSOR GP-ENGINE** ***(contd.)*** **i01892542**

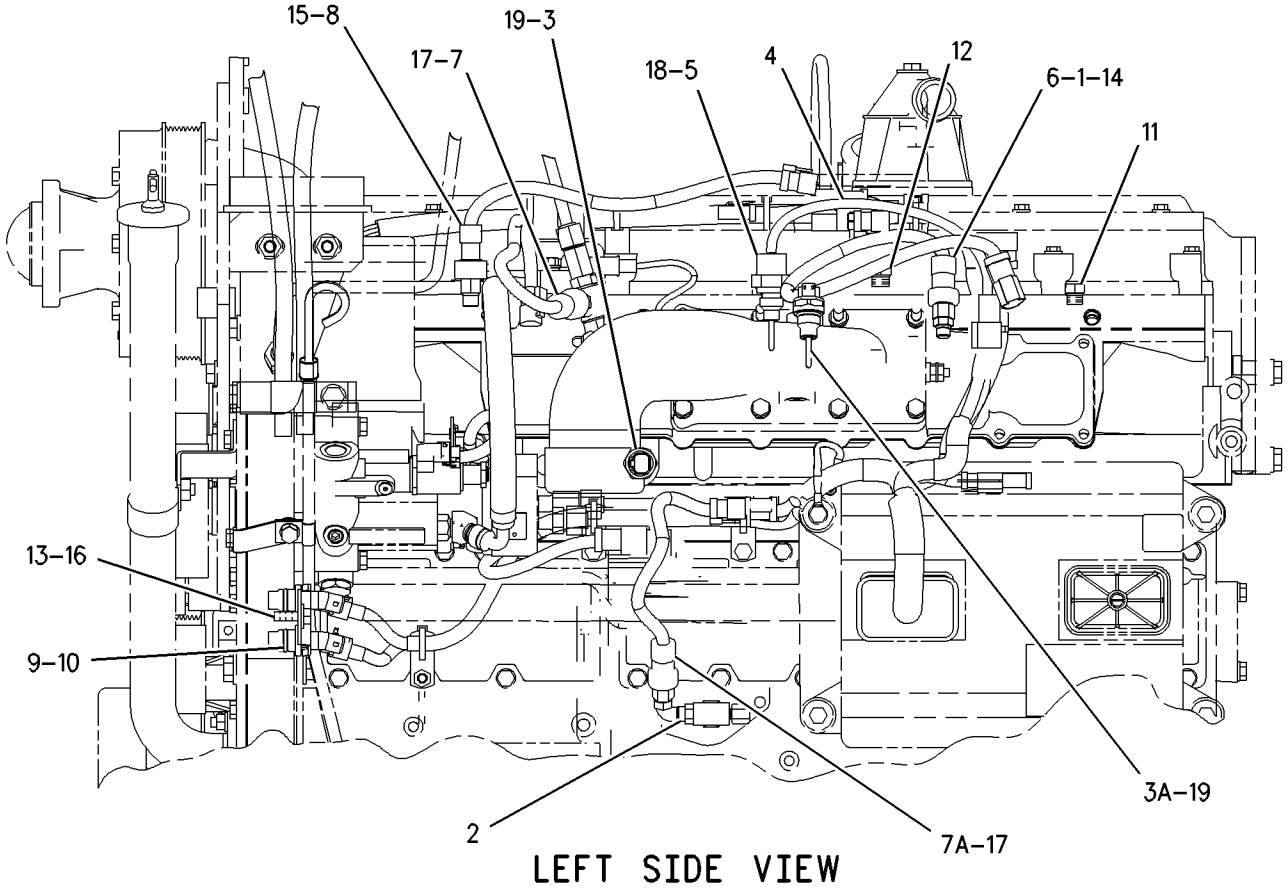

LEFT SIDE VIEW

GRAPHIC #1 **<END>** g00896956

165-6634 SENSOR GP-LIQUID LEVEL–COOLANT

S/N: CBJ1-UP

PART OF 195-1040 RADIATOR GP

SMCS-7422 **i01849533**

NOTE	REF NO	GRAPHIC REF	PART NUMBER	QTY	PART NAME 1 2 3 4 5 6 (PRODUCT LEVEL)	SEE PAGE
J	1	1	**102-8803**	1	KIT-RECEPTACLE (3 PIN) (COOLANT LEVEL SENSOR)	
					(INCLUDES RECEPTACLE AS & PART MARKED J)	
J	2	1	**3E-3371**	1	WEDGE-RECEPTACLE LOCK (3 PIN)	
	3	1	**186-3735**	3	PIN-CONNECTOR	
J-KIT MARKED J INCLUDES PART MARKED J						

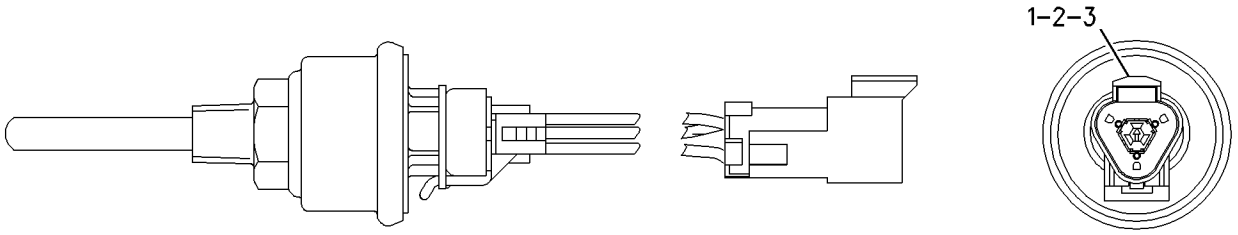

GRAPHIC #1 **<END>** g00785629

160-2443 SENSOR GP-POSITION–DECELERATOR PEDAL

S/N: CBJ1-UP
ROTARY
PART OF 199-4801 PEDAL GP-GOVERNOR & BRAKE
ALSO AN ATTACHMENT

SMCS-1408 **i01431988**

NOTE	REF NO	GRAPHIC REF	PART NUMBER	QTY	PART NAME 1 2 3 4 5 6 (PRODUCT LEVEL)	SEE PAGE
	1	1	**102-8803**	1	KIT-RECEPTACLE (3 PIN)	
					(INCLUDES RECEPTACLE AS & WEDGE)	
	2	1	**8T-8729**	3	PIN-CONNECTOR	
	3	1	**3E-3371**	1	WEDGE-RECEPTACLE LOCK (3 PIN)	

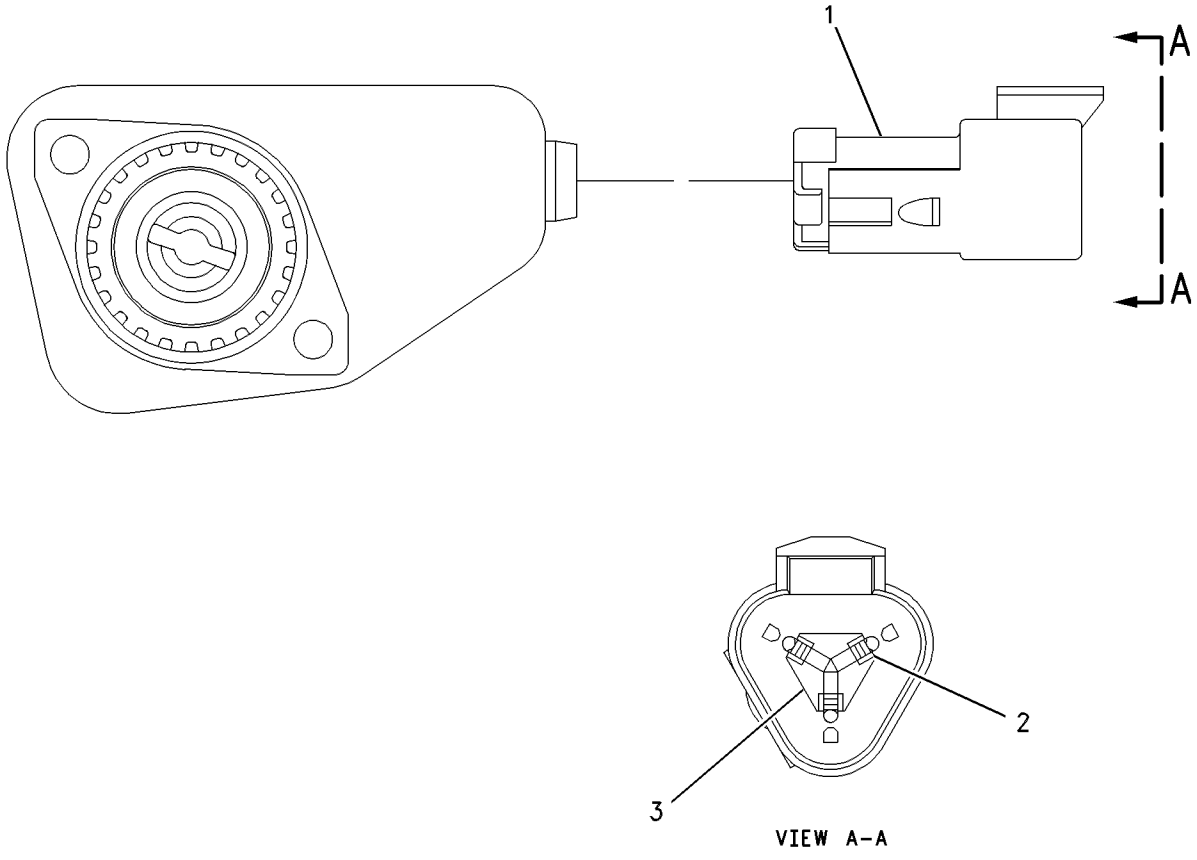

GRAPHIC #1 **<END>** g00637818

214-4862 SENSOR GP-POSITION

S/N: CBJ1-UP
PART OF 200-3166 CONTROL GP-STEERING & TMSN
ALSO AN ATTACHMENT

SMCS-1408 **i01874618**

NOTE	REF NO	GRAPHIC REF	PART NUMBER	QTY	PART NAME 1 2 3 4 5 6 (PRODUCT LEVEL)	SEE PAGE
	1	1	**102-8803**	1	KIT-RECEPTACLE (3 PIN)	
					(INCLUDES RECEPTACLE AS & WEDGE)	
	2	1	**186-3735**	3	PIN-CONNECTOR	
	3	1	**3E-3371**	1	WEDGE-RECEPTACLE LOCK (3 PIN)	

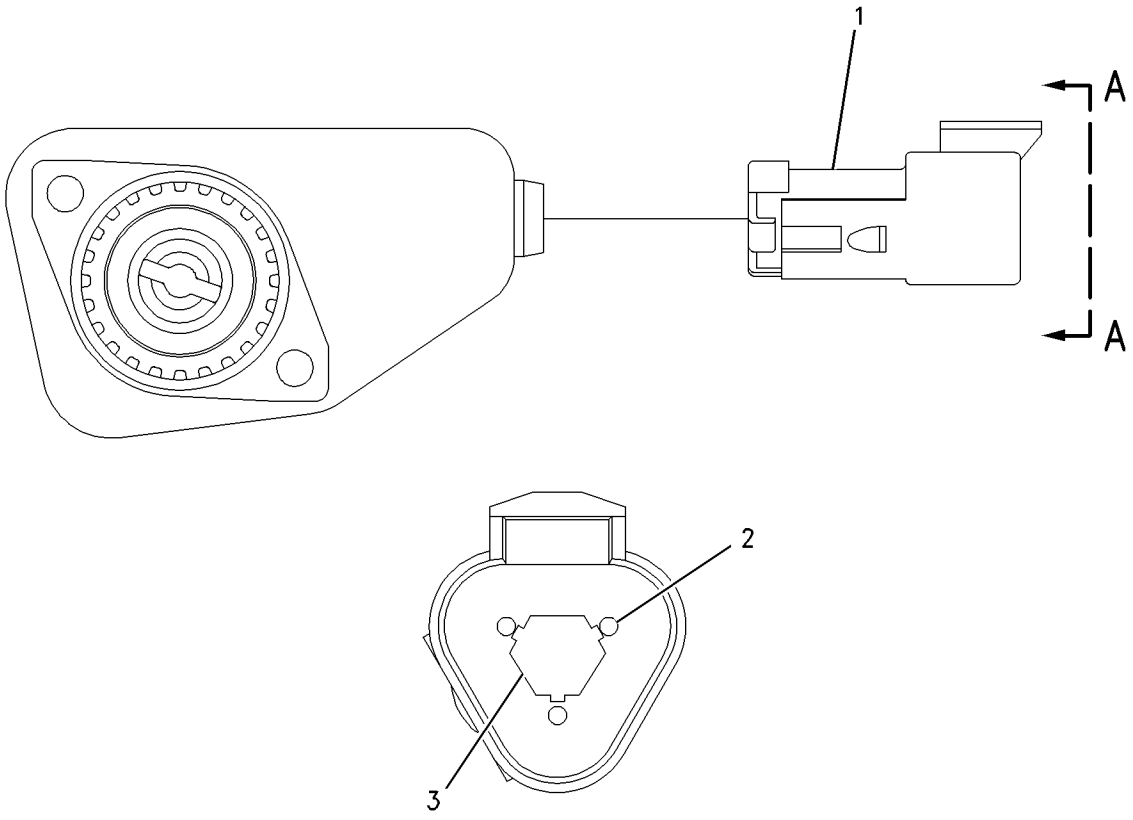

VIEW A-A

GRAPHIC #1 **<END>** g00893828

214-4863 SENSOR GP-POSITION–SERVICE BRAKE PEDAL

S/N: CBJ1-UP

PART OF 200-3166 CONTROL GP-STEERING & TMSN, 199-4801 PEDAL GP-GOVERNOR & BRAKE ALSO AN ATTACHMENT

SMCS-1408 **i01789997**

NOTE	REF NO	GRAPHIC REF	PART NUMBER	QTY	PART NAME 1 2 3 4 5 6 (PRODUCT LEVEL)	SEE PAGE
	1	1	*147-1681*	1	SENSOR AS-POSITION	
		1	**8C-7584**	19	WIRE-ELECTRICAL	
		1	**8T-8886**	1	SEAL-LIP	
	2	1	**102-8803**	1	KIT-RECEPTACLE (3 PIN)	
					(INCLUDES RECEPTACLE AS & WEDGE)	
	3	1	**186-3735**	1	PIN-CONNECTOR	
	4	1	**3E-3371**	1	WEDGE-RECEPTACLE LOCK (3 PIN)	

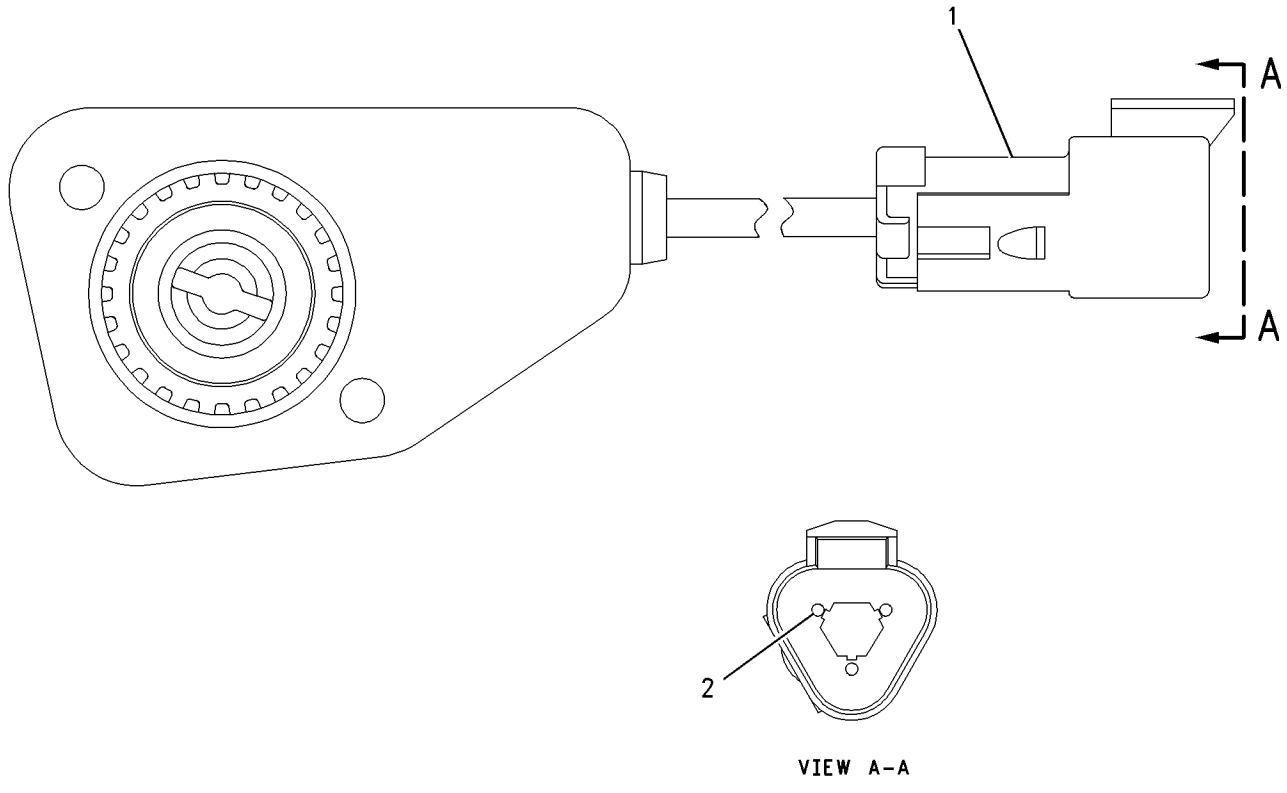

VIEW A-A

GRAPHIC #1 **<END>** g00711081

194-6723 SENSOR GP-PRESSURE–TURBO OUTLET

S/N: BMA1100-UP
PART OF 199-7734 SENSOR GP-ENGINE
ALSO AN ATTACHMENT

SMCS-1408 **i01682010**

NOTE	REF NO	GRAPHIC REF	PART NUMBER	QTY	PART NAME 1 2 3 4 5 6 (PRODUCT LEVEL)	SEE PAGE
BE	1	1	**9X-1813**		SLEEVE (34 CM)	
	2	1	**102-8803**	1	KIT-RECEPTACLE (3 PIN)	
					(INCLUDES RECEPTACLE AS & WEDGE)	
	3	1	**180-9339**	3	PIN-CONNECTOR (FOR 14 GAUGE WIRE)	
	4	1	**3E-3371**	1	WEDGE-RECEPTACLE LOCK (3 PIN)	

B-USE AS REQUIRED
E-ORDER BY THE CENTIMETER

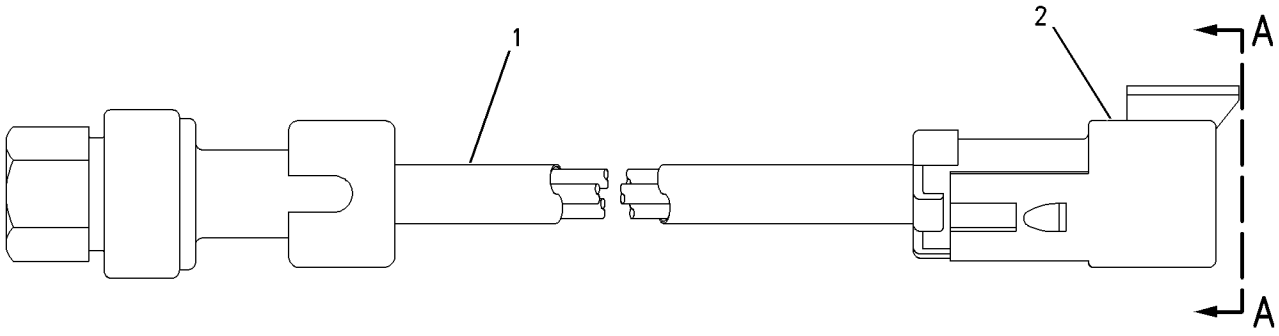

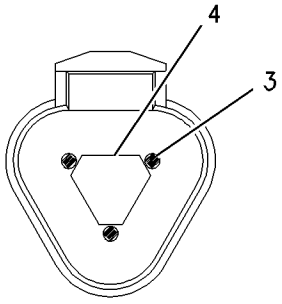

VIEW A-A

GRAPHIC #1 **<END>** g00865974

194-6725 SENSOR GP-PRESSURE–FUEL/ENGINE OIL

S/N: BMA1100-UP
PART OF 199-7734 SENSOR GP-ENGINE
ALSO AN ATTACHMENT

SMCS-1408 **i01681907**

NOTE	REF NO	GRAPHIC REF	PART NUMBER	QTY	PART NAME 1 2 3 4 5 6 (PRODUCT LEVEL)	SEE PAGE
BE	1	1	**9X-1813**		SLEEVE (34 CM)	
	2	1	**155-2260**	1	KIT-CONNECTING PLUG (3 PIN)	
					(INCLUDES PLUG AS AND WEDGE)	
	3	1	**180-9340**	3	SOCKET-CONNECTOR	
	4	1	**3E-3368**	1	WEDGE-PLUG LOCK	

B-USE AS REQUIRED
E-ORDER BY THE CENTIMETER

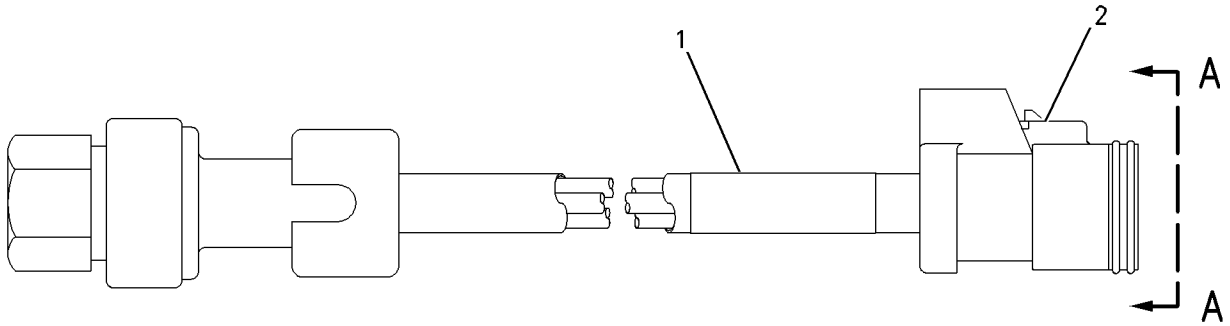

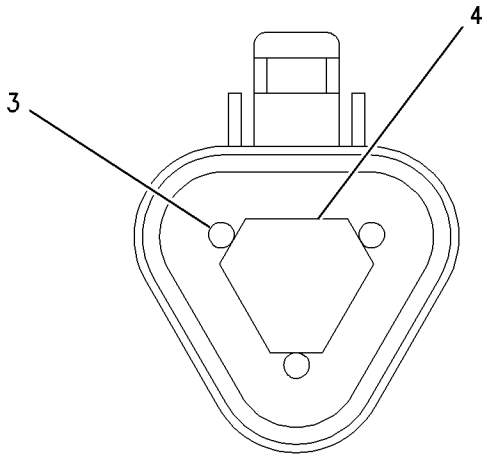

VIEW A-A

GRAPHIC #1 **<END>** g00851220

194-6726 SENSOR GP-PRESSURE—INJECTION ACTUATION

S/N: BMA1100-UP
PART OF 199-7734 SENSOR GP-ENGINE
ALSO AN ATTACHMENT

SMCS-1408 **i01694644**

NOTE	REF NO	GRAPHIC REF	PART NUMBER	QTY	PART NAME 1 2 3 4 5 6 (PRODUCT LEVEL)	SEE PAGE
E	1	1	**9X-1813**		SLEEVE (34 CM)	
	2	1	**155-2260**	1	KIT-CONNECTING PLUG (3 PIN)	
					(INCLUDES PLUG AS & WEDGE)	
	3	1	**180-9340**	3	SOCKET-CONNECTOR (FOR 16-18 GA WIRE)	
	4	1	**3E-3368**	1	WEDGE-PLUG LOCK	

E-ORDER BY THE CENTIMETER

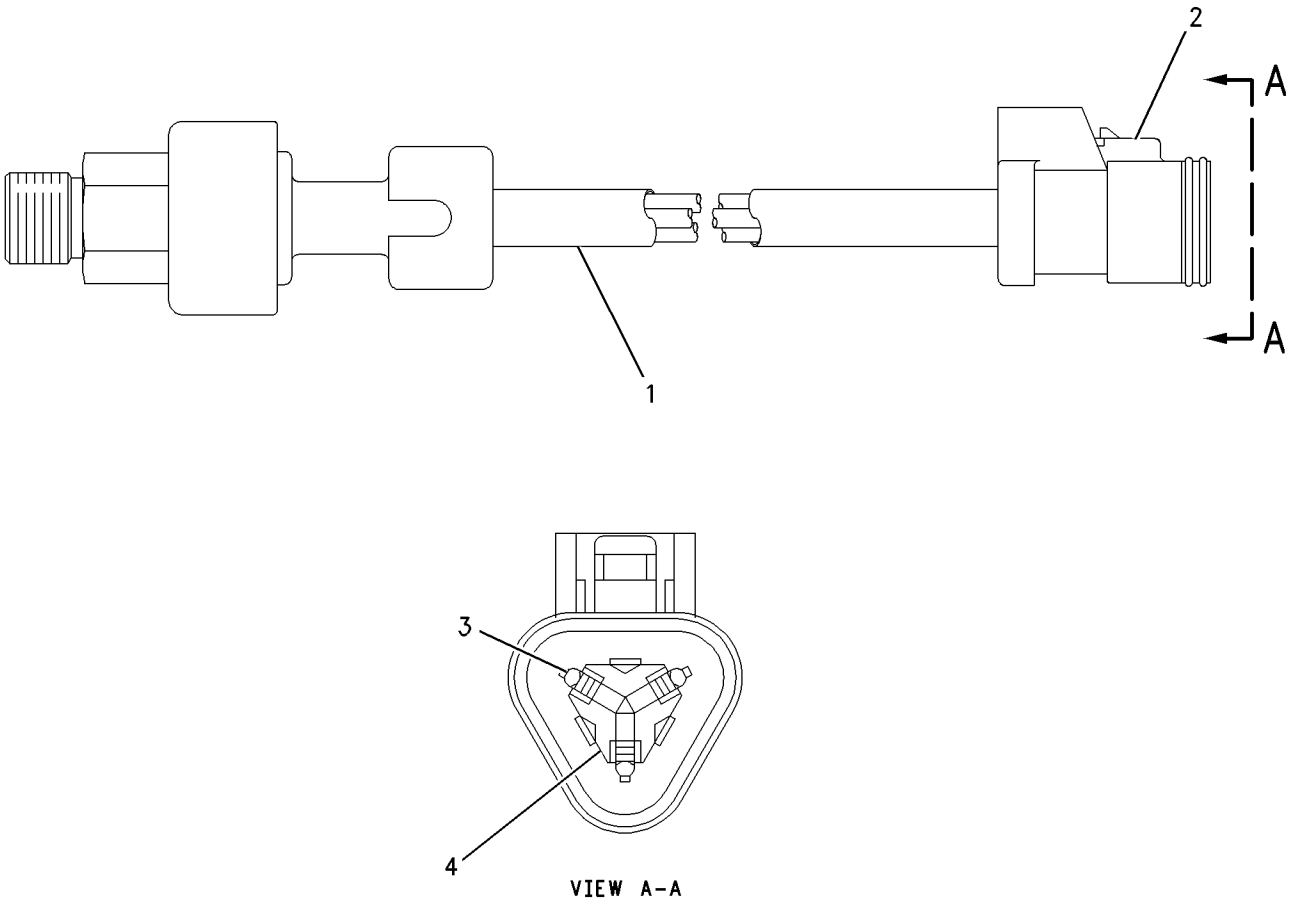

GRAPHIC #1 **<END>** g00851235

119-4142 SENSOR GP-SPEED—ENGINE TIMING

S/N: BMA1100-UP

FIELD REPLACEMENT FOR 169-3300—PAGE 160

SMCS-1408 **i01633524**

NOTE	REF NO	GRAPHIC REF	PART NUMBER	QTY	PART NAME 1 2 3 4 5 6 (PRODUCT LEVEL)	SEE PAGE
	1	1	**117-1385**	2	SEAL-O-RING	

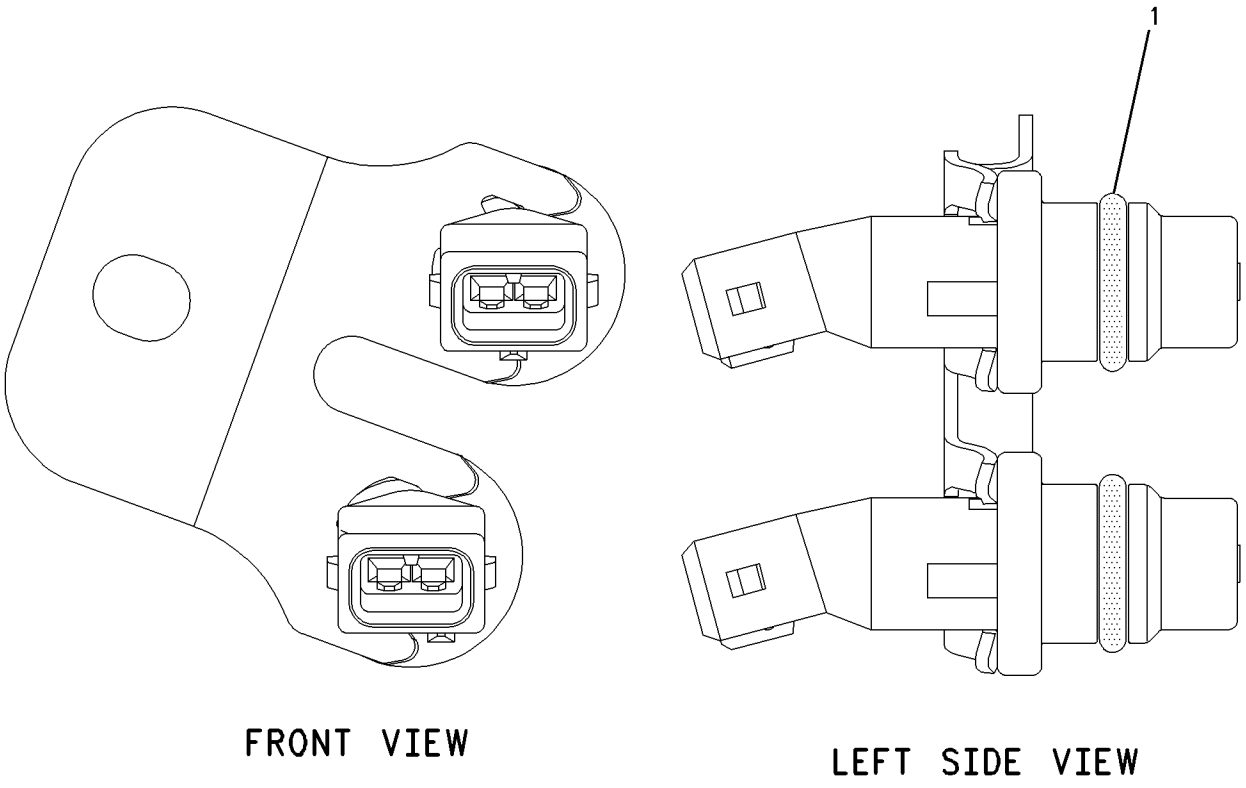

FRONT VIEW

LEFT SIDE VIEW

GRAPHIC #1 **<END>** g00825060

169-3300 SENSOR GP-SPEED—ENGINE TIMING

S/N: BMA1100-UP
PART OF 199-7734 SENSOR GP-ENGINE
FIELD REPLACEMENT ORDER 119-4142—PAGE 159
ALSO AN ATTACHMENT

SMCS-1408 **i01850940**

NOTE	REF NO	GRAPHIC REF	PART NUMBER	QTY	PART NAME 1 2 3 4 5 6 (PRODUCT LEVEL)	SEE PAGE
	1	1	**109-7194**	1	PICKUP AS-MAGNETIC (LOW SPEED/TIMING)	
	2	1	**109-7195**	1	PICKUP AS-MAGNETIC (HIGH SPEED/TIMING)	
	3	1	**137-8752**	1	BRACKET	

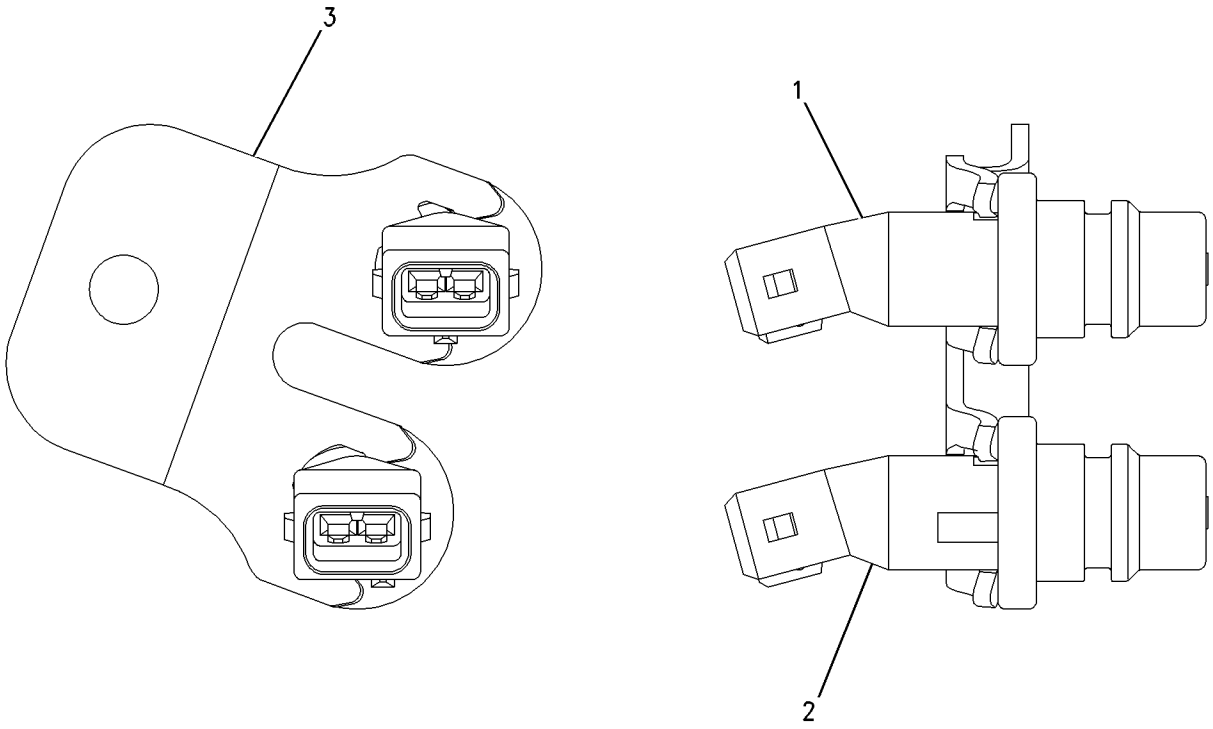

GRAPHIC #1 **<END>** g00673510

189-5746 SENSOR GP-SPEED–ENGINE

S/N: CBJ1-UP

PART OF 157-3458 WIRING GP-ENGINE

SMCS-1408 **i01616672**

NOTE	REF NO	GRAPHIC REF	PART NUMBER	QTY	PART NAME 1 2 3 4 5 6 (PRODUCT LEVEL)	SEE PAGE
	1	1	**171-5349**	1	STRAP-MARKER	
	2	1	**102-8802**	1	KIT-RECEPTACLE (2 PIN)	
					INCLUDES WEDGE AND RECEPTACLE ASSEMBLY	
	3	1	**186-3735**	2	PIN-CONNECTOR	
	4	1	**3E-3365**	1	WEDGE-RECEPTACLE LOCK (2 PIN)	
E	5	1	**9X-1386**		SLEEVE (14CM)	

E-ORDER BY THE CENTIMETER

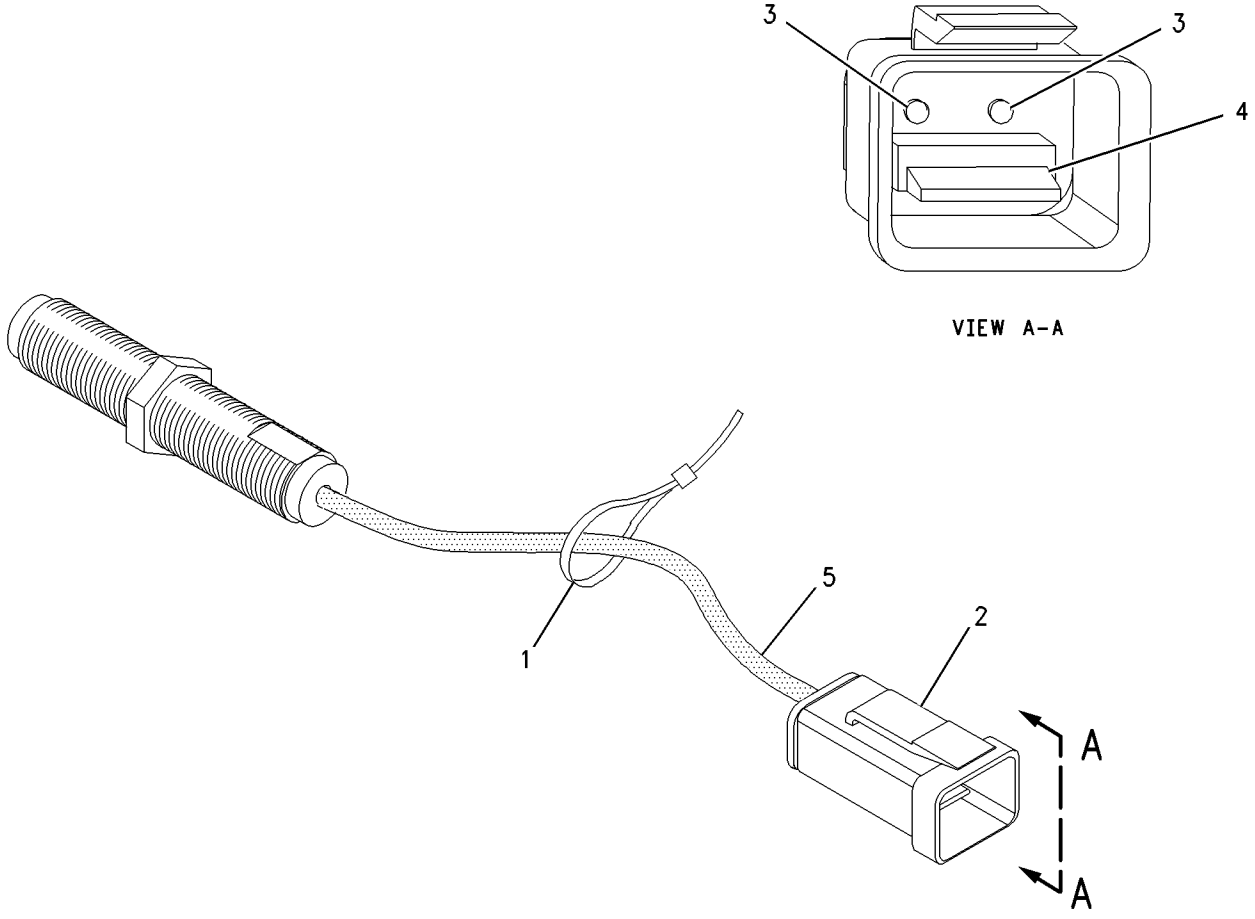

GRAPHIC #1 **<END>** g00837278

193-2550 SENSOR GP-SPEED–TRANSMISSION

S/N: CGD1-UP; CBJ1-UP

PART OF 178-3681 GEAR GP-BEVEL & TRANSFER, 209-7222 PLANETARY GP-TRANSMISSION, 157-3458 WIRING GP-ENGINE

SMCS-1408 **i01479454**

NOTE	REF NO	GRAPHIC REF	PART NUMBER	QTY	PART NAME 1 2 3 4 5 6 (PRODUCT LEVEL)	SEE PAGE
	1	1	**171-5349**	1	STRAP-MARKER	
	2	1	**102-8802**	1	KIT-RECEPTACLE (2 PIN)	
					(INCLUDES RECEPTACLE AS & WEDGE)	
	3	1	**8T-8729**	2	PIN-CONNECTOR	
	4	1	**3E-3365**	1	WEDGE-RECEPTACLE LOCK (2 PIN)	
E	5	1	**9X-1813**		SLEEVE (14CM)	

E-ORDER BY THE CENTIMETER

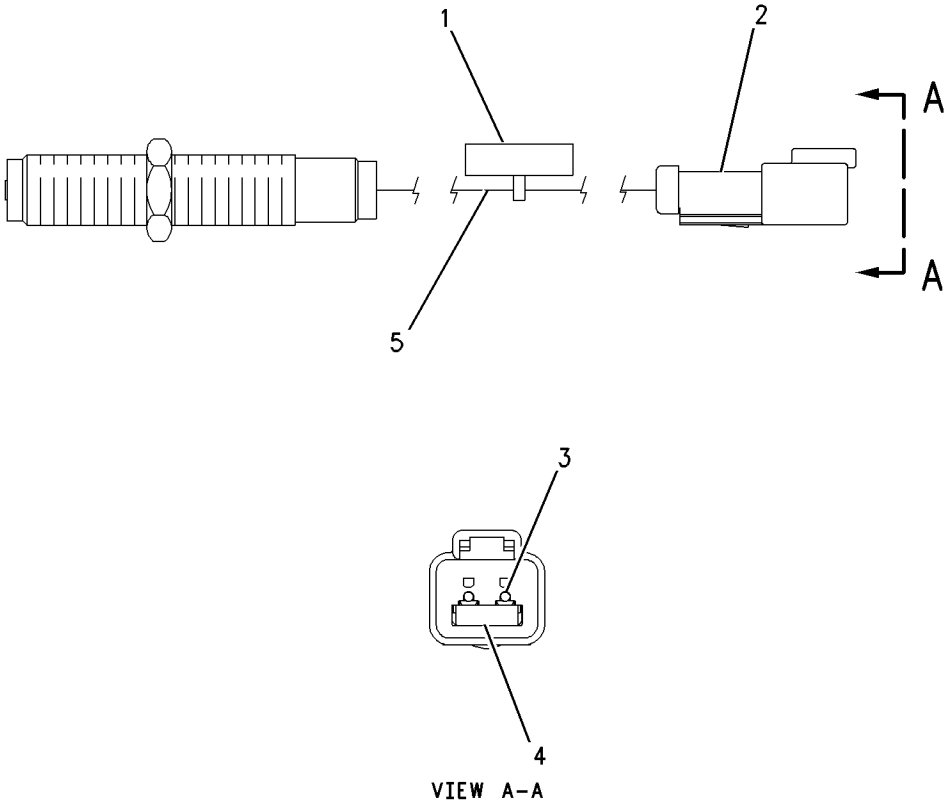

GRAPHIC #1 **<END>** g00690327

118-7226 SENSOR GP-TEMPERATURE–POWER TRAIN OIL SUMP

S/N: CBJ1-UP
8 VOLT. PULSE WIDTH MODULATION
PART OF 160-4069 WIRING GP-CHASSIS

SMCS-1408, 1906, 1921, 1922, 7400 **i01147923**

NOTE	REF NO	GRAPHIC REF	PART NUMBER	QTY	PART NAME 1 2 3 4 5 6 (PRODUCT LEVEL)	SEE PAGE
BE	1	1	**9X-1813**		SLEEVE	
	2	1	**102-8803**	1	KIT-RECEPTACLE (3 PIN)	
					(INCLUDES WEDGE & RECEPTACLE AS)	
	3	1	**8T-8729**	3	PIN-CONNECTOR	
	4	1	**3E-3371**	1	WEDGE-RECEPTACLE LOCK	

B-USE AS REQUIRED
E-ORDER BY THE CENTIMETER

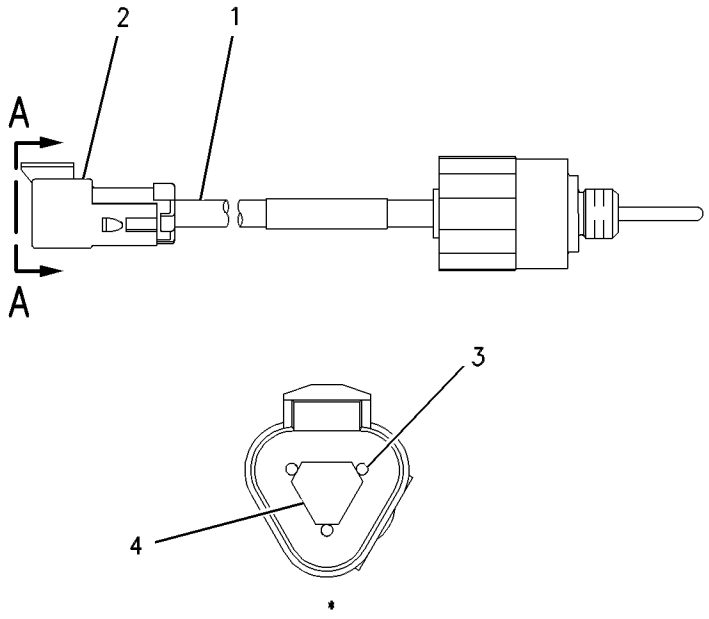

GRAPHIC #1 **<END>** g00609258

145-7028 SENSOR GP-TEMPERATURE–ENGINE OIL–HYDRAULIC OIL

S/N: CBJ1-UP

PART OF 174-4485 TANK & FILTER GP-HYDRAULIC, 157-3458 WIRING GP-ENGINE

SMCS-1408, 1906, 1921, 1922, 7400 **i01828633**

NOTE	REF NO	GRAPHIC REF	PART NUMBER	QTY	PART NAME 1 2 3 4 5 6 (PRODUCT LEVEL)	SEE PAGE
	1	1	**102-8802**	1	KIT-RECEPTACLE (2 PIN)	
					(INCLUDES RECEPTACLE AS & WEDGE)	
BJ	2	1	**153-5043**		SLEEVE	
	3	1	**8T-8729**	2	PIN-CONNECTOR	
	4	1	**3E-3365**	1	WEDGE-RECEPTACLE LOCK (2 PIN)	

B-USE AS REQUIRED
J-ORDER BY THE DECIMETER

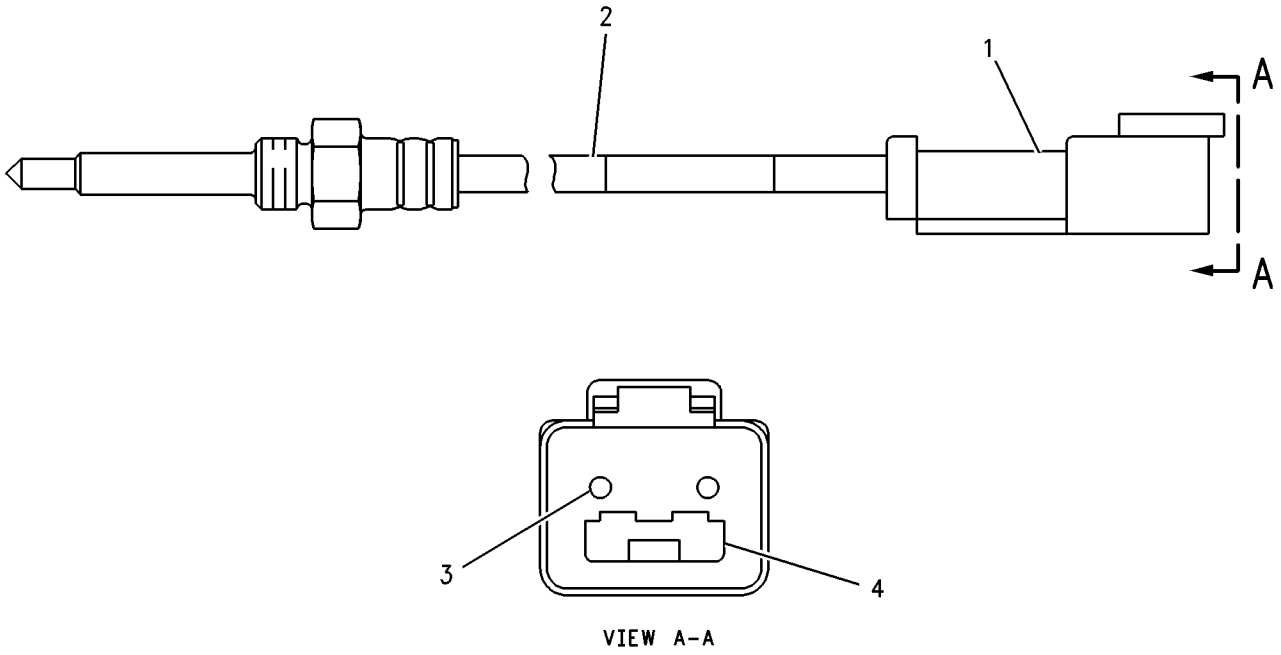

VIEW A-A

GRAPHIC #1 **<END>** g00917620

191-6587 SENSOR GP-TEMPERATURE–ENGINE OIL

S/N: BMA1100-UP
PART OF 199-7734 SENSOR GP-ENGINE
ALSO AN ATTACHMENT

SMCS-1408, 1906, 1921, 1922, 7400 **i01872179**

NOTE	REF NO	GRAPHIC REF	PART NUMBER	QTY	PART NAME 1 2 3 4 5 6 (PRODUCT LEVEL)	SEE PAGE
J	1	1	**153-5043**		SLEEVE (1.3DM)	
	2	1	**155-2270**	1	KIT-CONNECTING PLUG (2 PIN)	
					(INCLUDES PLUG AS & WEDGE)	
	3	1	**194-5226**	2	HARNESS AS-SENSOR (16-18 GA WIRE)	
					–OR–	
		1	**194-5227**	2	HARNESS AS-SENSOR (14 GA WIRE)	
	4	1	**155-2261**	1	WEDGE-PLUG LOCK (2 PIN)	

J-ORDER BY THE DECIMETER

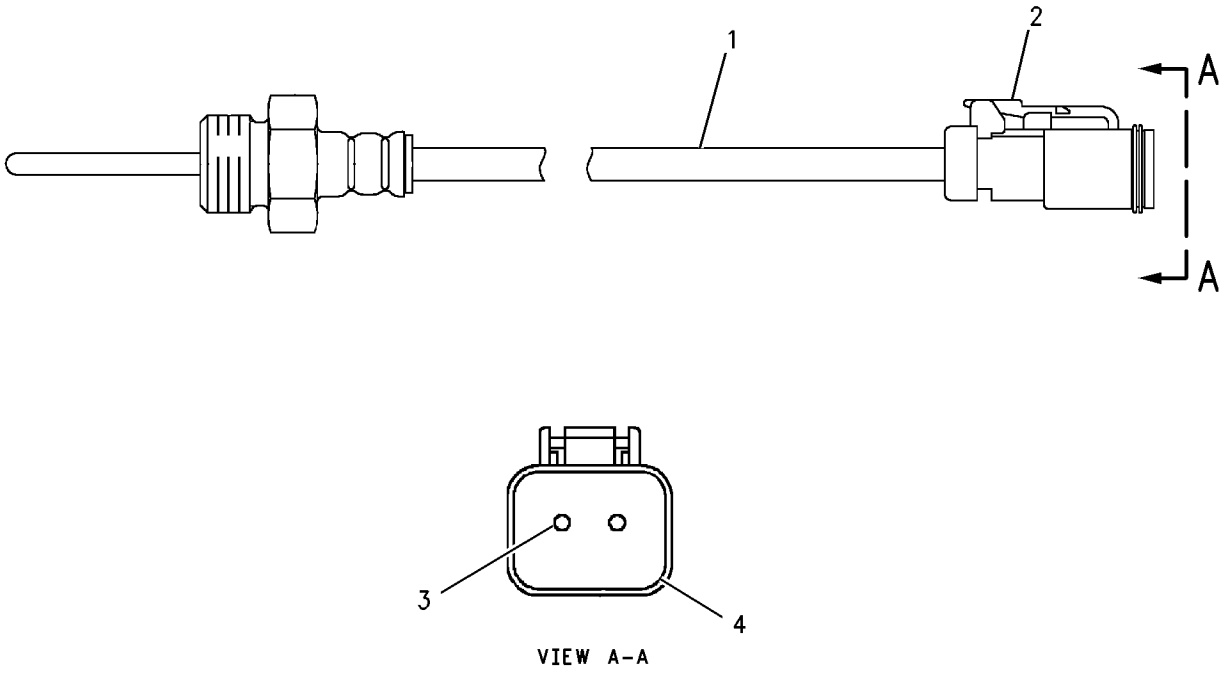

GRAPHIC #1 **<END>** g00865978

231-6531 SERVICE GP-MONITOR

S/N: CBJ1-UP

PART OF 169-3234 ELECTRONICS GP-MONITOR

SMCS-7610 **i01882062**

NOTE	REF NO	GRAPHIC REF	PART NUMBER	QTY	PART NAME 1 2 3 4 5 6 (PRODUCT LEVEL)	SEE PAGE
Y	1	1	**154-7443**	1	CONTROL GP-MONITOR (CATERPILLAR MONITORING SYSTEM)	127
F			**231-6530**	1	SOFTWARE GP-MONITOR	

F-NOT SHOWN
Y-SEPARATE ILLUSTRATION

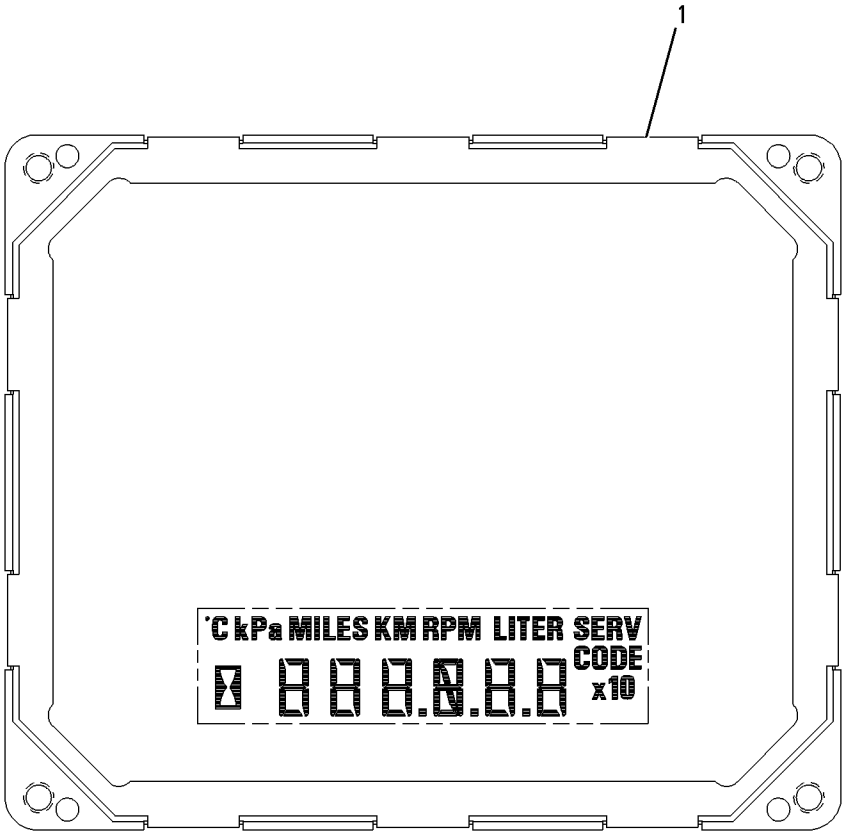

GRAPHIC #1 **<END>** g00942882

226-6114 SERVICE GP-POWER TRAIN

S/N: CBJ1-UP

PART OF 166-6269 ELECTRONICS GP-POWER TRAIN

SMCS-7610 **i01834862**

NOTE	REF NO	GRAPHIC REF	PART NUMBER	QTY	PART NAME 1 2 3 4 5 6 (PRODUCT LEVEL)	SEE PAGE
Y	1	1	*172-9389*	1	CONTROL GP-UNPROGRAMMED	129
F		1	*226-6113*	1	SOFTWARE GP-POWER TRAIN	

F-NOT SHOWN
Y-SEPARATE ILLUSTRATION

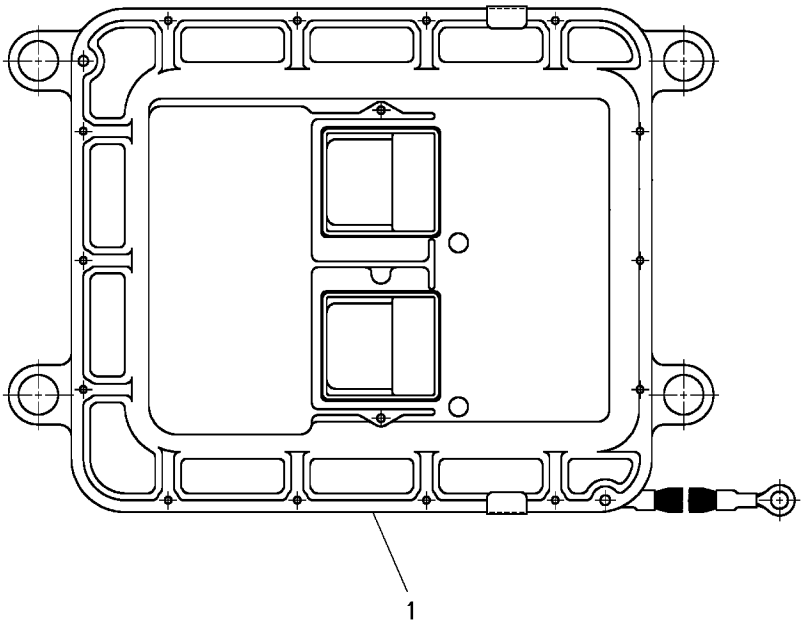

GRAPHIC #1 **<END>** g00925946

145-5157 STARTING MOTOR GP-ELECTRIC

S/N: BMA1100-UP
PART OF 191-4479, 191-4481 ENGINE AR-COMPLETE
ALSO AN ATTACHMENT

SMCS-1453, 1454, 1465 **i01664436**

NOTE	REF NO	GRAPHIC REF	PART NUMBER	QTY	PART NAME 1 2 3 4 5 6 (PRODUCT LEVEL)	SEE PAGE
M	1	1	**108-7808**	3	BOLT (M10X1.5X35MM)	
	2	1	**6V-5839**	3	WASHER (11X21X2.5MM THK)	
	3	1	**3K-3257**	1	GASKET	
M	4	1	**8T-4191**	1	BOLT (M10X1.5X16MM)	
	5	1	**8Y-9603**	1	CABLE AS-STARTING	
		1	**1S-7251**	1	TERMINAL-RING (FOR 1/2 IN BOLT)	
		1	**1S-7252**	1	TERMINAL-RING (FOR 3/8 IN BOLT)	
E		1	**5P-0747**		CABLE (00GA)(BLACK) (27.5CM)	
	6	1	**8T-4121**	1	WASHER-HARD (11X21X2.5MM THK)	
Y	7	1	**207-1519**	1	STARTING MOTOR GP-ELECTRIC	169

E-ORDER BY THE CENTIMETER
M-METRIC PART
Y-SEPARATE ILLUSTRATION

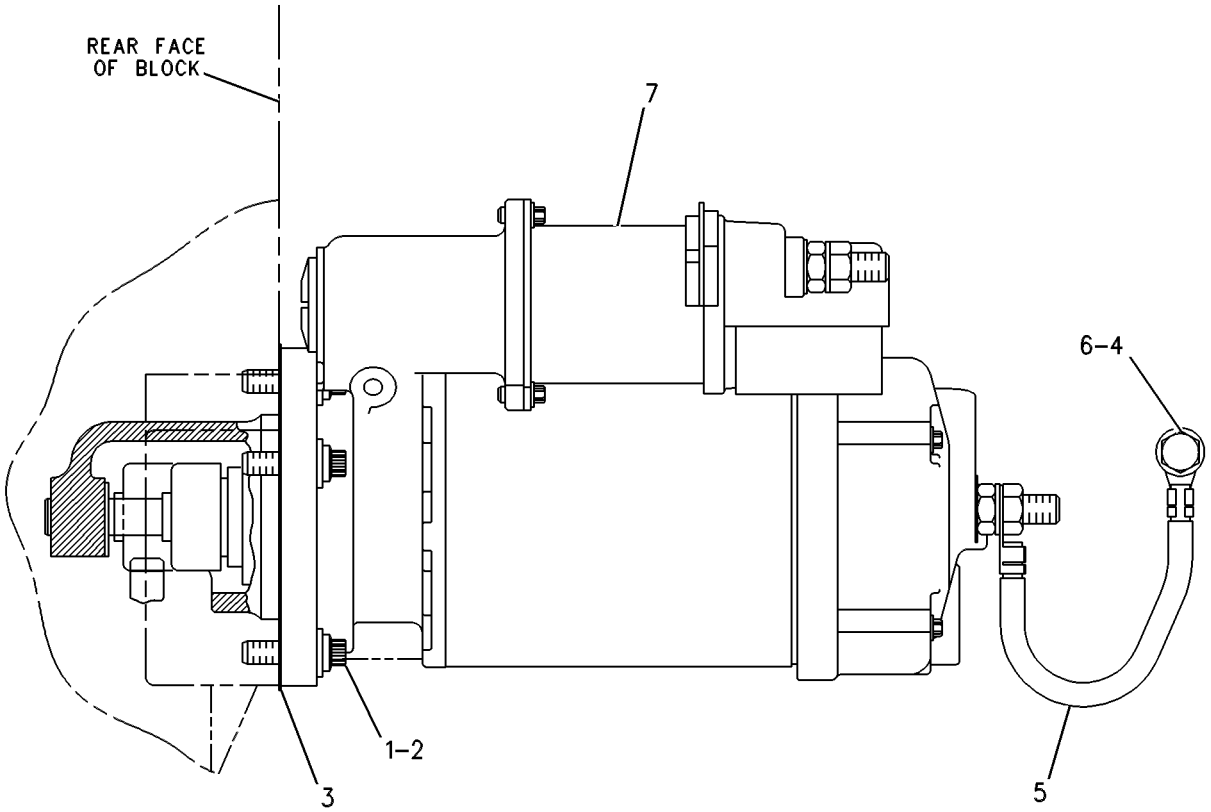

RIGHT SIDE VIEW

GRAPHIC #1 **<END>** g00329692

207-1519 STARTING MOTOR GP-ELECTRIC

S/N: BMA1100-UP
24 VOLT
PART OF 145-5157 STARTING MOTOR GP-ELECTRIC
ALSO AN ATTACHMENT

SMCS-1453, 1454, 1465 **i01883300**

NOTE	REF NO	GRAPHIC REF	PART NUMBER	QTY	PART NAME 1 2 3 4 5 6 (PRODUCT LEVEL)	SEE PAGE
	1	1	**8T-9884**	1	KIT-INSULATOR (STARTING MOTOR)	
	2	1	**106-7149**	1	HOUSING AS-STARTER	
	3	1	**102-9863**	1	TERMINAL AS-STARTER	
	4	1	**6V-8188**	4	NUT (1/2-13 THD)	
	5	1	**7X-0562**	4	WASHER-HARD (13.5X19X0.8MM THK)	
	6	1	**3E-7853**	1	TERMINAL-STARTING MOTOR	
	7	1	**9X-4821**	1	PLATE AS	
	8	1	**3E-7852**	1	COIL-STARTING MOTOR	
	9	1	**7T-3454**	1	INSULATOR	
	10	1	**9X-4271**	1	CONNECTOR	
	11	1	**7T-3451**	1	INSULATOR-TERMINAL	
	12	1	**8T-8569**	1	INSULATOR-TERMINAL	
	13	1	**5S-7349**	4	BOLT (1/4-20X0.5 IN)	
	14	1	**8T-4205**	4	WASHER-HARD (7.2X14.5X2MM THK)	
	15	1	**7X-1950**	4	SHOE-POLE	
	16	1	**3E-7861**	1	KIT-LEVER (STARTING MOTOR)	
					(INCLUDES LEVER AS, GASKET, SHAFT AS, NUT, RING & O-RINGS)	
	17	1	**3F-0379**	8	SCREW-POLE SHOE (3/8-24 THD)	
	18	1	**3E-7855**	1	ARMATURE AS-STARTER (24 VOLT)	
	19	1	**145-2415**	1	HOUSING AS-LEVER	
	20	1	**4M-1831**	1	PLUG-LEVER HOUSING	
	21	1	**7L-2894**	1	GASKET	
	22	1	**036-9823**	5	BOLT	
	23	1	**3E-7857**	1	DRIVE AS-STARTING MOTOR	
	24	1	**3E-7858**	1	HOUSING AS-STARTER	
	25	1	**7X-3373**	6	BOLT (5/16-18X0.88 IN)	
	26	1	**206-8784**	1	KIT-SOLENOID (STARTING MOTOR)	
	27	1	**6V-8378**	2	NUT (10-32 THD)	
	28	1	**8F-1434**	1	LOCKWASHER	
	29	1	**8T-0328**	2	WASHER-HARD (5.5X10X1MM THK)	
	30	1	**9X-4824**	1	COVER-STARTING MOTOR	
	31	1	**9X-4825**	1	KIT-BRUSH (STARTER) (MOTOR)	
					(INCLUDES SCREW AS, O-RING, SCREWS, BRUSHES & SPRINGS)	
					AVAILABLE REPAIR KIT(S):	
			3E-7860	1	KIT-BUSHING (STARTING MOTOR)	
					(INCLUDES SEAL, NUT, GASKET, SPACER, SCREW AS, CUPS, BUSHINGS, WASHERS, O-RINGS & PLUGS)	

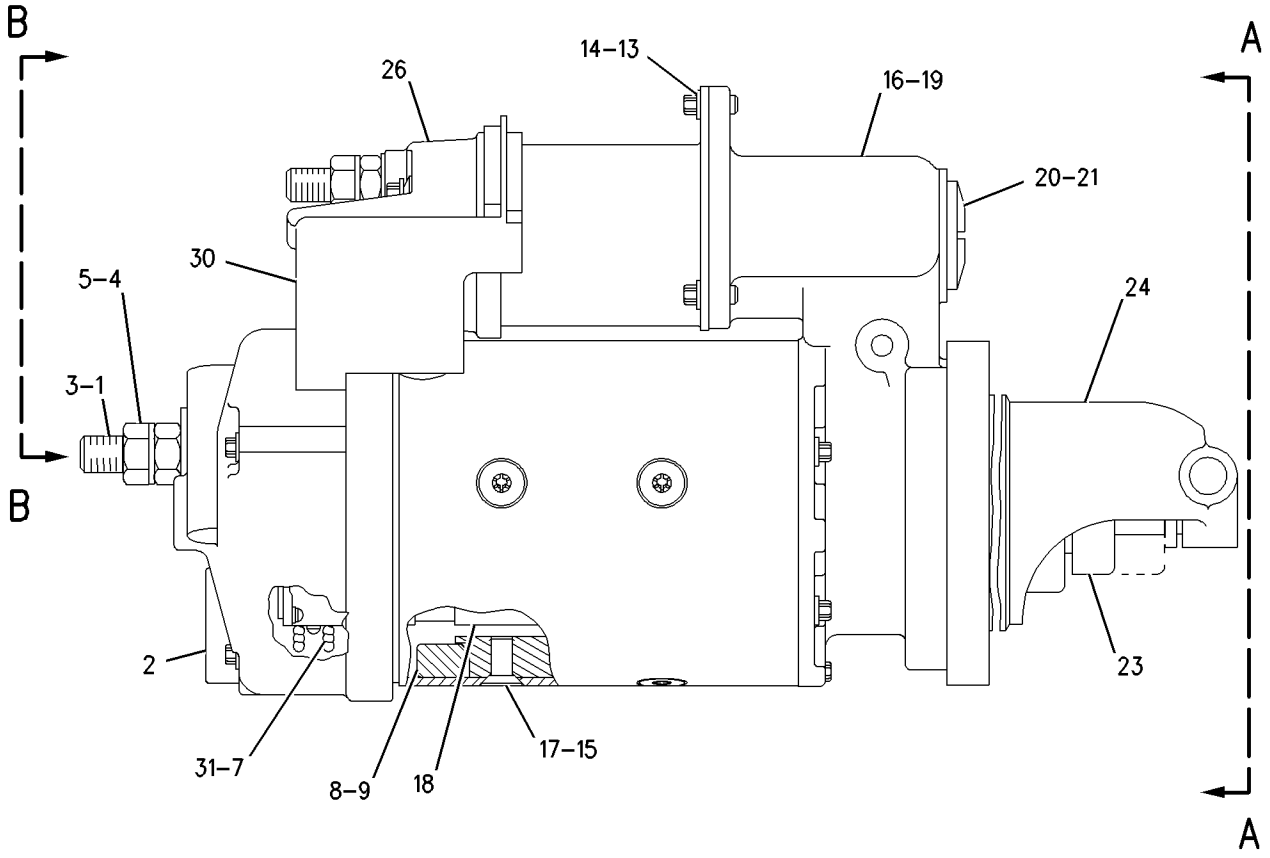

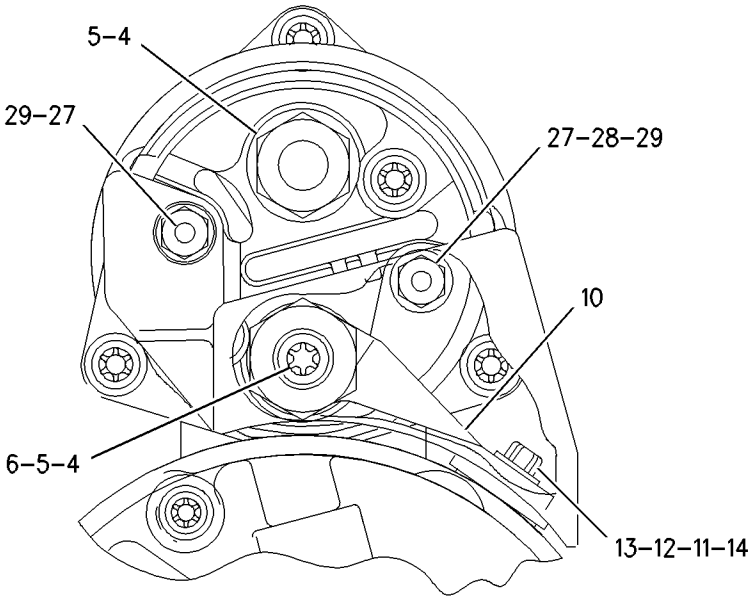

VIEW B–B

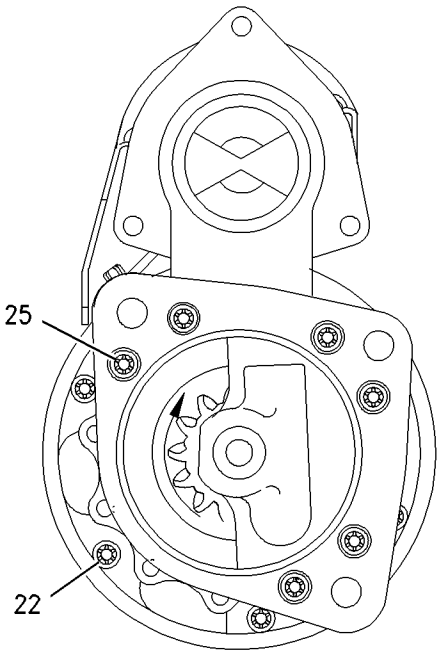

VIEW A–A

GRAPHIC #1 **<END>** g00847040

158-6632 SWITCH AS-HORN

S/N: CBJ1-UP

PART OF 177-3860 COVER GP-CONSOLE, 218-3137 MOUNTING GP-PLATFORM

ALSO AN ATTACHMENT

SMCS-7402 **i01837970**

NOTE	REF NO	GRAPHIC REF	PART NUMBER	QTY	PART NAME 1 2 3 4 5 6 (PRODUCT LEVEL)	SEE PAGE
	1	1	**9X-0199**	1	BOOT-SWITCH	
	2	1	**7T-9515**	1	KNOB-HORN	
	3	1	**5L-7200**	1	SCREW (8-32X0.375 IN)	
	4	1	**3B-4501**	1	LOCKWASHER	
	5	1	**6V-8370**	1	NUT-HEX (3/4-32 THD)	
	6	1	**2H-3922**	1	LOCKWASHER	
	7	1	**102-8802**	1	KIT-RECEPTACLE (2 PIN)	
					(INCLUDES RECEPTACLE AS & WEDGE)	
	8	1	**9X-3401**	2	PIN-CONNECTOR	
	9	1	**3E-3365**	1	WEDGE-RECEPTACLE LOCK (2 PIN)	

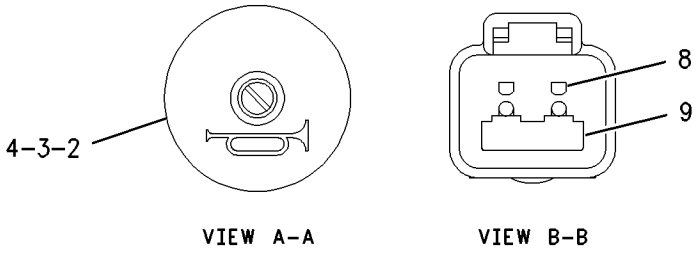

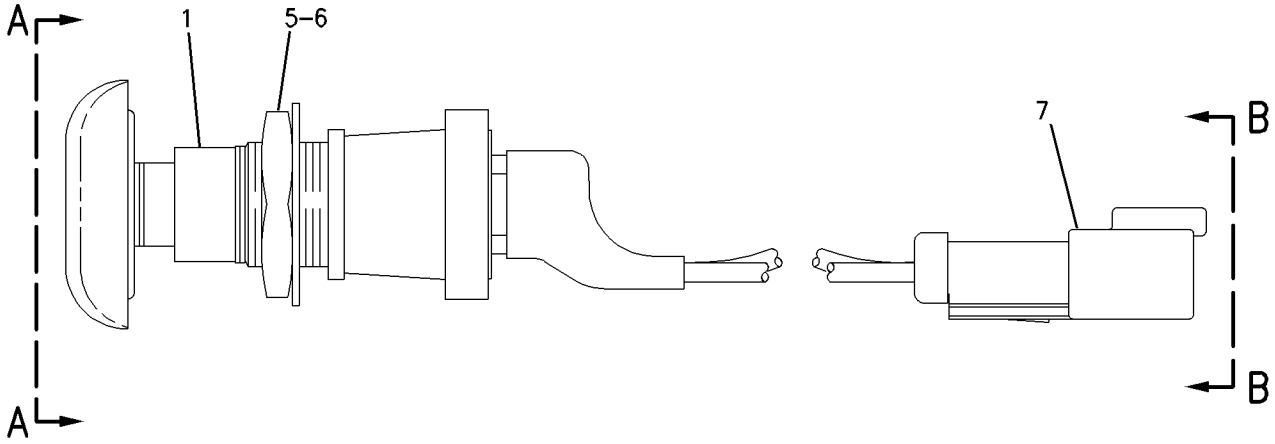

GRAPHIC #1 **<END>** g00942674

164-7577 SWITCH GP-BYPASS–POWER TRAIN OIL FILTER

S/N: CBJ1-UP

PART OF 160-4069 WIRING GP-CHASSIS

SMCS-1408 **i01431493**

NOTE	REF NO	GRAPHIC REF	PART NUMBER	QTY	PART NAME 1 2 3 4 5 6 (PRODUCT LEVEL)	SEE PAGE
BE	1	1	**9X-1813**		SLEEVE	
	2	1	**102-8802**	1	KIT-RECEPTACLE (2 PIN)	
					(INCLUDES RECEPTACLE AS & WEDGE)	
	3	1	**186-3735**	2	PIN-CONNECTOR	
	4	1	**3E-3365**	1	WEDGE-RECEPTACLE LOCK (2 PIN)	
	5	1	**3D-2824**	1	SEAL-O-RING (23.47MM ID)	
Z	6	1		1	SWITCH AS	

B-USE AS REQUIRED
E-ORDER BY THE CENTIMETER
Z-NOT SERVICED SEPARATELY

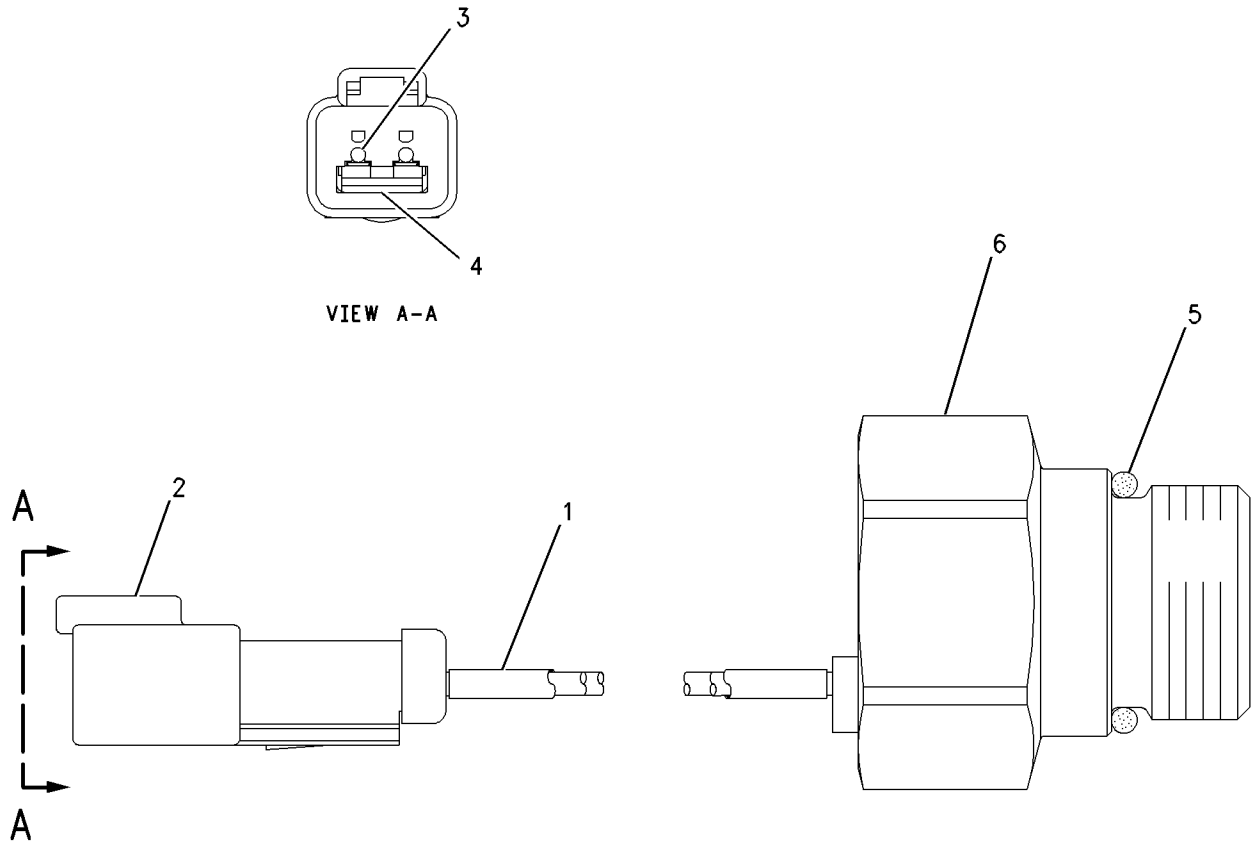

GRAPHIC #1 **<END>** g00750019

7N-0718 SWITCH GP-DISCONNECT–BATTERY

S/N: CBJ1-UP

PART OF 160-4069 WIRING GP-CHASSIS

SMCS-1411 **i01810002**

NOTE	REF NO	GRAPHIC REF	PART NUMBER	QTY	PART NAME 1 2 3 4 5 6 (PRODUCT LEVEL)	SEE PAGE
	1	1	**8H-5306**	1	KEY (BATTERY DISCONNECT)	
	2	1	**8H-5303**	1	NUT (3/4-16 THD)	
	3	1	**2H-3922**	2	LOCKWASHER	
	4	1	**9F-5644**	2	LOCKWASHER	
	5	1	**6F-7045**	2	NUT-FULL (3/8X24 THD)	

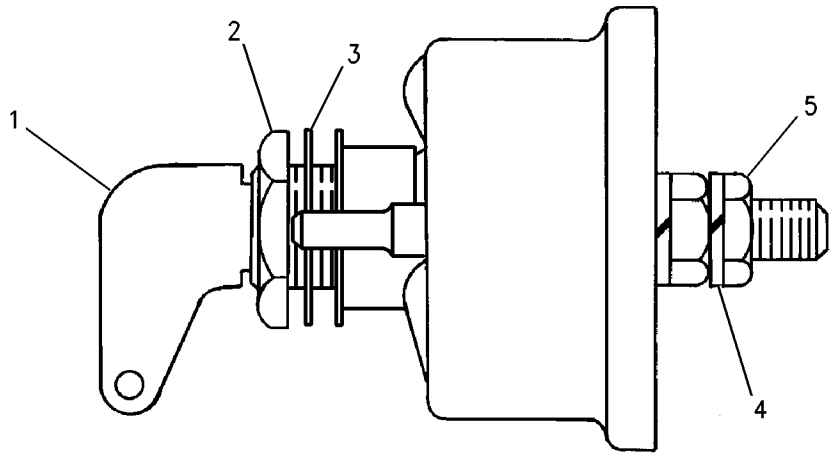

GRAPHIC #1 **<END>** g00715584

125-1302 SWITCH GP-MAGNETIC–START RELAY

S/N: CBJ1-UP
PART OF 156-8378 PANEL GP-CIRCUIT BREAKER
ALSO AN ATTACHMENT

SMCS-7499 **i01808067**

NOTE	REF NO	GRAPHIC REF	PART NUMBER	QTY	PART NAME 1 2 3 4 5 6 (PRODUCT LEVEL)	SEE PAGE
BE	1	1	**9X-1813**		SLEEVE	
	2	1	**102-8802**	1	KIT-RECEPTACLE (2 PIN)	
					(INCLUDES RECEPTACLE AS & WEDGE)	
	3	1	**3E-3365**	1	WEDGE-RECEPTACLE LOCK (2 PIN)	
M	4	1	**5C-2890**	2	NUT (M6X1 THD)	
	5	1	**186-3735**	2	PIN-CONNECTOR	

B-USE AS REQUIRED
E-ORDER BY THE CENTIMETER
M-METRIC PART

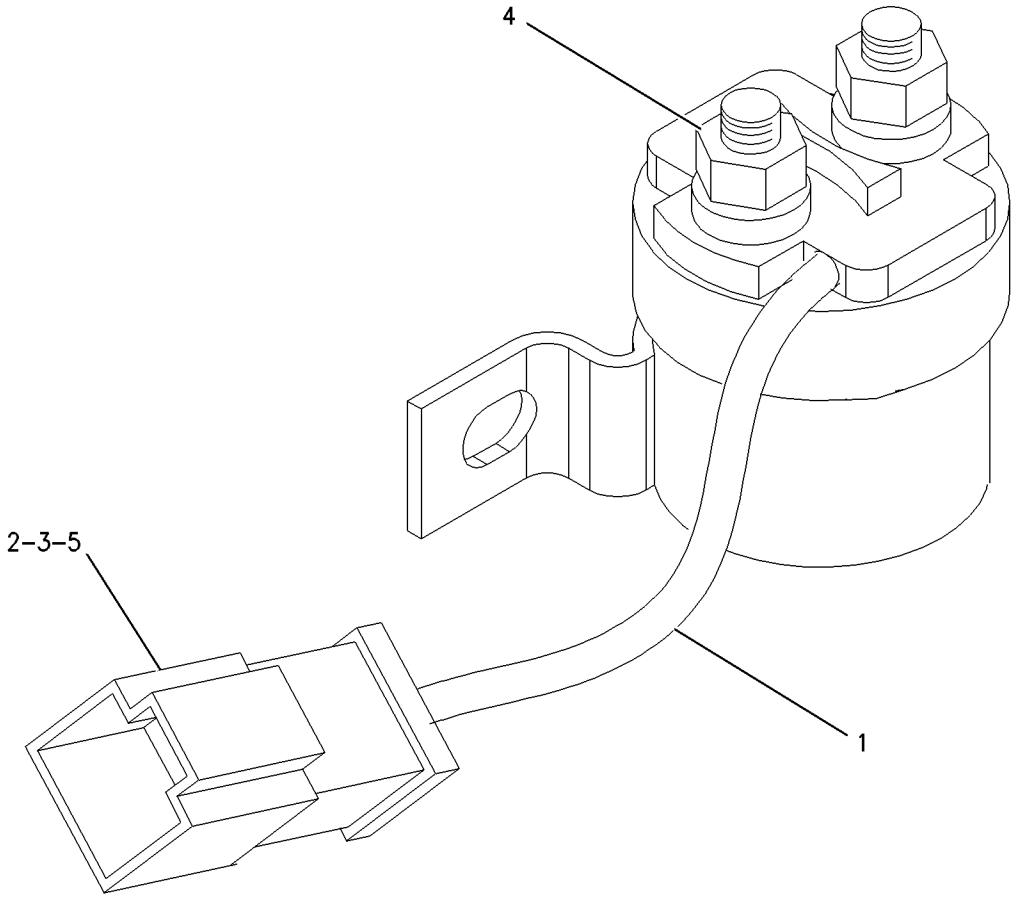

GRAPHIC #1 **<END>** g00893913

167-0138 SWITCH GP-MAGNETIC–MAIN FUSE RELAY

S/N: CBJ1-UP
24V
PART OF 156-8378 PANEL GP-CIRCUIT BREAKER
ALSO AN ATTACHMENT

SMCS-7499 **i01589032**

NOTE	REF NO	GRAPHIC REF	PART NUMBER	QTY	PART NAME 1 2 3 4 5 6 (PRODUCT LEVEL)	SEE PAGE
	1	1	**4F-2294**	2	NUT-JAM (5/16-24 THD)	
	2	1	**6V-8186**	2	NUT-FULL (5/16-24 THD)	
	3	1	**155-2270**	1	KIT-CONNECTING PLUG (2 PIN) (MAIN POWER RELAY SWITCH)	
	4	1	**8T-8730**	2	SOCKET-CONNECTOR	
	5	1	**155-2261**	1	WEDGE-PLUG LOCK (2 PIN)	

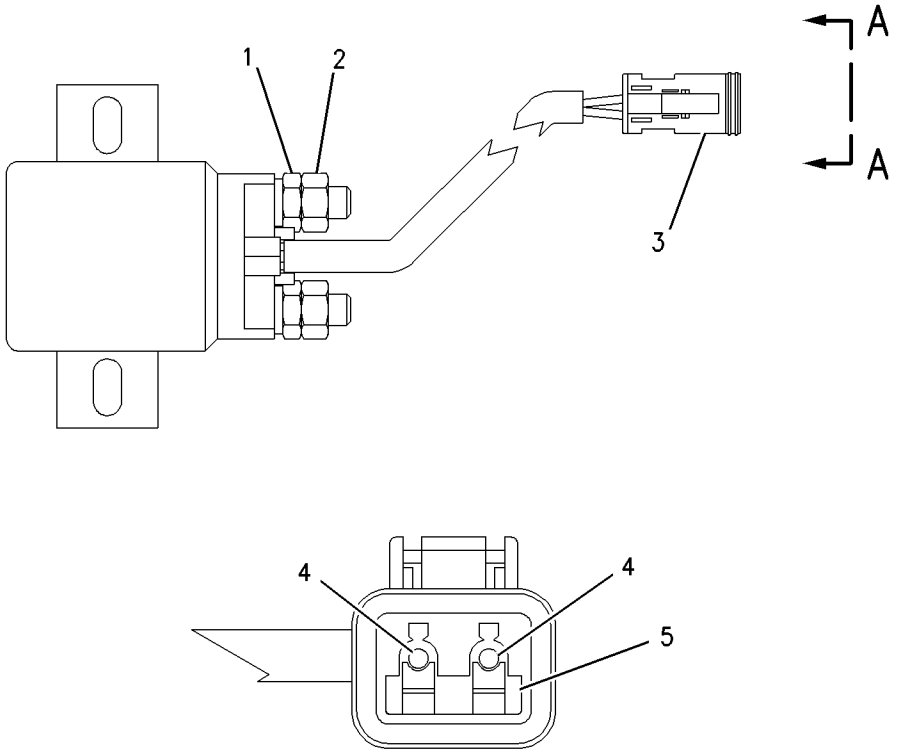

VIEW A-A

GRAPHIC #1 **<END>** g00823979

175-2324 SWITCH GP-MAGNETIC

S/N: BMA1100-UP
PART OF 191-0083 WIRING GP-HEATER
ALSO AN ATTACHMENT

SMCS-7499 **i01891520**

NOTE	REF NO	GRAPHIC REF	PART NUMBER	QTY	PART NAME 1 2 3 4 5 6 (PRODUCT LEVEL)	SEE PAGE
	1	1	**3E-7277**	1	SWITCH AS-MAGNETIC (AIR INLET HEAT)	
	2	1	**102-8802**	1	KIT-RECEPTACLE (2 PIN)	
					(INCLUDES RECEPTACLE AS AND WEDGE)	
	3	1	**186-3735**	2	PIN-CONNECTOR	
	4	1	**1H-3338**	2	LOCKWASHER	
	5	1	**012-0380**	2	LOCKWASHER	
M	6	1	**5C-2890**	2	NUT (M6X1 THD)	
E	7	1	**9X-1813**		SLEEVE (16CM)	

E-ORDER BY THE CENTIMETER
M-METRIC PART

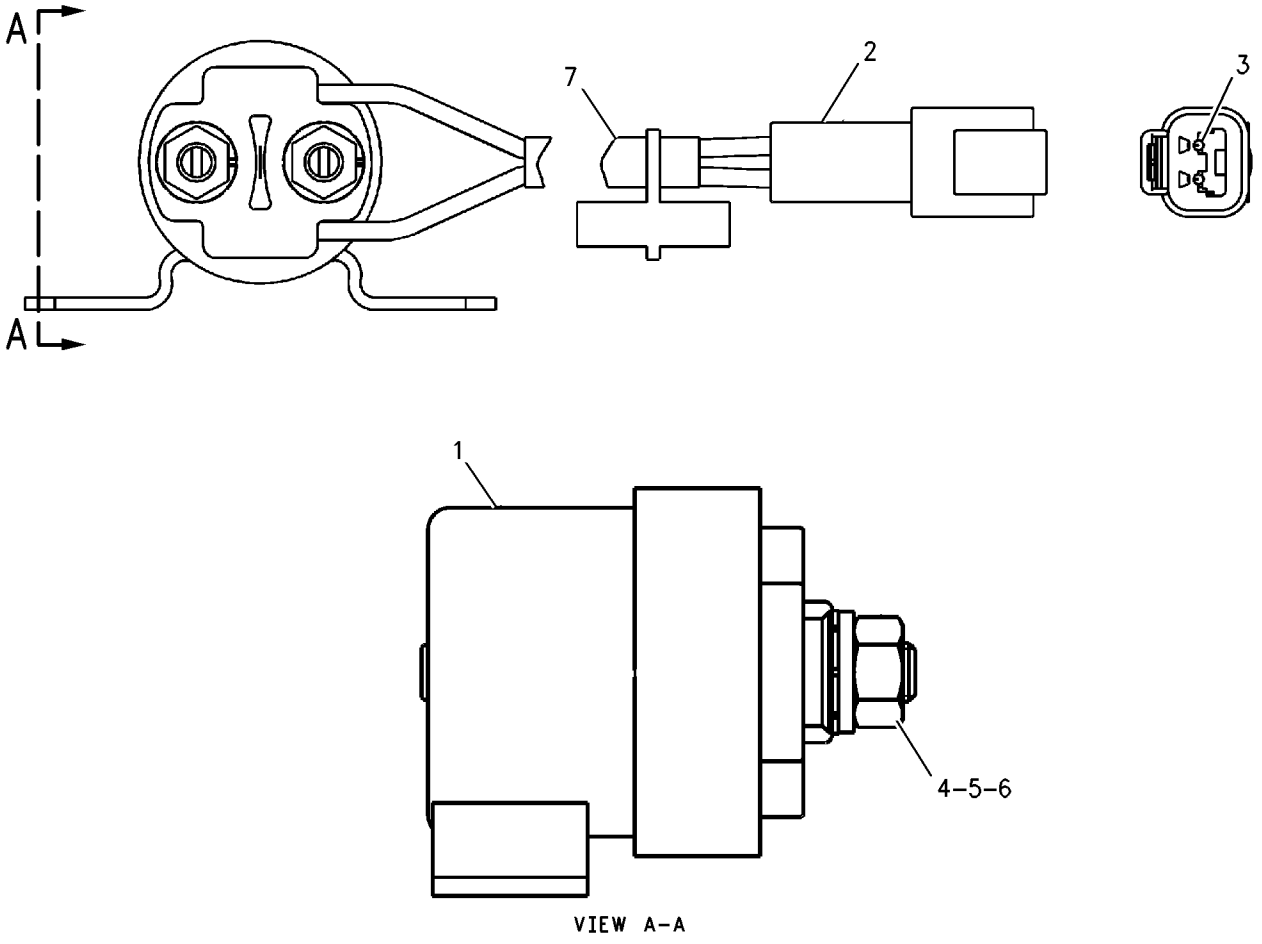

GRAPHIC #1 **<END>** g00985960

231-0530 WARNING GP-BACKUP—EUROPEAN MARKET

S/N: CBJ1-UP

PART OF 169-4912 SUPPRESSION AR-SOUND

AN ATTACHMENT

SMCS-7406 **i01877418**

NOTE	PART NUMBER	QTY	PART NAME 1 2 3 4 5 6 (PRODUCT LEVEL)	SEE PAGE
	220-0230	1	WARNING GP-BACKUP	
	102-8802	1	KIT-RECEPTACLE (2 PIN)	
	3E-3365	1	WEDGE-RECEPTACLE LOCK (2 PIN)	
	6A-3361	4	WIRE-ELECTRICAL (16 GA)	
	8T-8729	2	PIN-CONNECTOR	
	9X-1813	31	SLEEVE	

<END>

228-5786 WIRING GP—ELECTRONIC CONT.-UNIT INJECTOR

S/N: BMA1100-UP

PART OF 191-4479, 191-4481 ENGINE AR-COMPLETE

ALSO AN ATTACHMENT

SMCS-1408 **i01802322**

NOTE	REF NO	GRAPHIC REF	PART NUMBER	QTY	PART NAME 1 2 3 4 5 6 (PRODUCT LEVEL)	SEE PAGE
	1	1	**3S-2093**	20	STRAP-CABLE	
	2	1	**105-1797**	6	MOUNT	
	3	1	**153-8920**	1	HARNESS AS-ENGINE (UNIT INJECTOR)	
		1	**155-2255**	1	KIT-CONNECTING PLUG (12 PIN)	
					(INCLUDES PLUG AS AND WEDGE)	
	4	1	**195-7336**	1	HARNESS AS-ENGINE (ELECTRONIC CONTROL)	
		1	**102-8802**	1	KIT-RECEPTACLE (2 PIN)	
					(INCLUDES RECEPTACLE AS AND WEDGE)	
		1	**102-8802**	2	KIT-RECEPTACLE (2 PIN)	
					(INCLUDES RECEPTACLE AS AND WEDGE)	
		1	**102-8803**	4	KIT-RECEPTACLE (3 PIN)	
					(INCLUDES RECEPTACLE AS AND WEDGE)	
		1	**102-8801**	1	KIT-RECEPTACLE (12 PIN)	
					(INCLUDES RECEPTACLE AS AND WEDGE)	
		1	**100-3320**	1	PLUG AS-CONNECTOR (2 PIN)	
		1	**111-2416**	1	PLUG AS-CONNECTOR (2 PIN)	
		1	**155-2260**	1	KIT-CONNECTING PLUG (3 PIN)	
					(INCLUDES PLUG AS AND WEDGE)	
		1	**155-2270**	4	KIT-CONNECTING PLUG (2 PIN)	
					(INCLUDES PLUG AS AND WEDGE)	
		1	**160-7690**	1	PLUG AS-CONNECTOR (70 PIN)	
	5	1	**227-1216**	1	BRACKET	
	6	1	**156-6175**	1	CLIP	
	7	1	**4P-8134**	1	CLIP	

228-5786 **WIRING GP** ***(contd.)*** **i01802322**

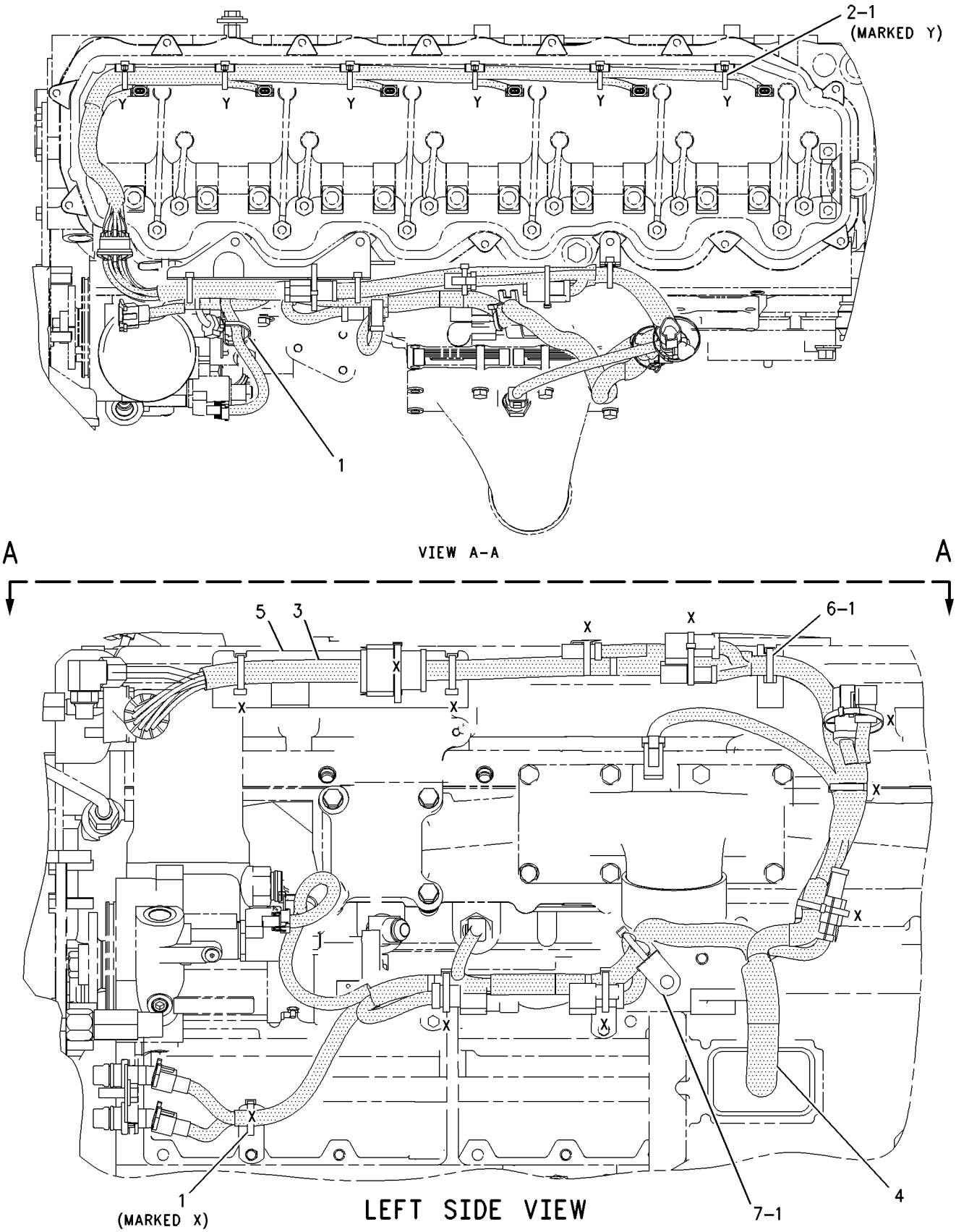

GRAPHIC #1 **<END>** g00924331

160-4069 WIRING GP-CHASSIS

S/N: CBJ1-UP

PART OF 156-9514 ELECTRONICS AR-MACHINE

SMCS-1408 **i01895703**

NOTE	REF NO	GRAPHIC REF	PART NUMBER	QTY	PART NAME 1 2 3 4 5 6 (PRODUCT LEVEL)	SEE PAGE
	1	1	**5I-8270**	1	COVER-BATTERY	
	2	1	**5I-8304**	1	ROD	
	3	1	**6W-6005**	1	HOLD-DOWN-BATTERY	
	4	1	**7K-1181**	49	STRAP-CABLE	
Y	5	1	**7N-0718**	1	SWITCH GP-DISCONNECT (BATTERY)	173
	6	1	**7P-6682**	1	CABLE AS	
		1	**1S-7251**	2	TERMINAL-RING	
E		1	**5P-0747**		CABLE (00GA)(BLACK) (40CM)	
	7	1	**7W-3447**	1	SPACER (10.2X19.05X10.2MM THK)	
Y	8	1	**118-7226**	1	SENSOR GP-TEMPERATURE (POWERTRAIN OIL SUMP)	163
	9	1	**160-2179**	1	CABLE AS	
		1	**1S-7252**	1	TERMINAL-RING	
E		1	**5P-0747**		CABLE (00GA)(BLACK) (69CM)	
		1	**8S-3020**	1	TERMINAL-CABLE	
	10	1	**160-2182**	1	CABLE AS	
E		1	**5P-0761**		CABLE (00GA)(RED) (33CM)	
		1	**9G-0002**	1	COVER-TERMINAL	
		1	**8L-8413**	1	STRAP-CABLE	
		1	**9G-0005**	1	COVER-TERMINAL (BLACK)	
		1	**8L-8413**	1	STRAP-CABLE	
		1	**8C-5917**	1	TERMINAL AS-BATTERY (POSITIVE)	
		1	**8T-9757**	1	TERMINAL AS-BATTERY (NEGATIVE)	
					(EACH TERMINAL AS INCLUDES)	
		1	**1M-6119**	1	BOLT (5/16-18X1.375 IN)	
		1	**1M-6120**	1	NUT (5/16-18 THD)	
	11	1	**160-2183**	1	HARNESS AS (ENGINE)	
		1	**102-8802**	1	KIT-RECEPTACLE (2 PIN)	
		1	**102-8803**	1	KIT-RECEPTACLE (3 PIN)	
		1	**102-8805**	1	KIT-RECEPTACLE (6 PIN)	
		1	**102-8801**	1	KIT-RECEPTACLE (12 PIN)	
					(EACH INCLUDES RECEPTACLE AS & WEDGE)	
		1	**8T-8737**	11	PLUG-SEAL	
		1	**155-2260**	1	KIT-CONNECTING PLUG (3 PIN)	
		1	**155-2270**	1	KIT-CONNECTING PLUG (2 PIN)	
		1	**155-2274**	1	KIT-CONNECTING PLUG (6 PIN)	
					(EACH INCLUDES PLUG AS & WEDGE)	
	12	1	**160-2184**	1	HARNESS AS (POWER TRAIN)	
		1	**155-2270**	1	KIT-CONNECTING PLUG (2 PIN)	
		1	**155-2271**	1	KIT-CONNECTING PLUG (4 PIN)	
					(EACH INCLUDES PLUG AS & WEDGE)	
	13	1	**160-2185**	1	HARNESS AS (PLATFORM)	
		1	**102-8802**	1	KIT-RECEPTACLE (2 PIN)	
					(INCLUDES RECEPTACLE AS & WEDGE)	
		1	**8T-8737**	5	PLUG-SEAL	
		1	**155-2265**	1	KIT-CONNECTING PLUG (8 PIN)	
		1	**155-2260**	1	KIT-CONNECTING PLUG (3 PIN)	
		1	**155-2270**	1	KIT-CONNECTING PLUG (2 PIN)	
					EACH INCLUDES PLUG AS & WEDGE)	
Y	14	1	**164-7577**	1	SWITCH GP-BYPASS (FILTER) (POWER TRAIN FILTER)	172
	15	1	**174-7876**	1	HORN AS (24 VOLT)(LOW TONE)	
		1	**155-2270**	1	KIT-CONNECTING PLUG (2 PIN)	
					(INCLUDES PLUG AS & WEDGE)	
	16	1	**193-5710**	1	CABLE AS	
E		1	**5P-0747**		CABLE (00GA)(BLACK) (105CM)	
		1	**7N-5274**	1	COVER-TERMINAL (BLACK)	
		1	**8L-8413**	1	STRAP-CABLE	

160-4069 **WIRING GP-CHASSIS** ***(contd.)*** **i01895703**

NOTE	REF NO	GRAPHIC REF	PART NUMBER	QTY	PART NAME 1 2 3 4 5 6 (PRODUCT LEVEL)	SEE PAGE
		1	**8S-3020**	1	TERMINAL-CABLE	
		1	**3S-6050**	1	TERMINAL AS-BATTERY (NEGATIVE)	
		1	**1M-6119**	1	BOLT (5/16-18X1.375 IN)	
		1	**1M-6120**	1	NUT (5/16-18 THD)	
		1	**9X-5699**	1	BOOT	
	17	1	**193-5712**	1	CABLE AS	
		1	**1S-4915**	2	LINER (CONDUIT)	
		1	**1S-7251**	1	TERMINAL-RING	
BE		1	**5P-0695**		CONDUIT	
E		1	**5P-0761**		CABLE (00GA)(RED) (333CM)	
		1	**8N-0869**	1	COVER-TERMINAL (RED)	
		1	**8N-1725**	1	COVER-TERMINAL (RED)	
		1	**8L-8413**	1	STRAP-CABLE	
BE		1	**8T-2225**		TUBE-HEAT SHRINK	
		1	**3S-6049**	1	TERMINAL AS-BATTERY (POSITIVE)	
		1	**1M-6119**	1	BOLT (5/16-18X1.375 IN)	
		1	**1M-6120**	1	NUT (5/16-18 THD)	
	18	1	**195-1117**	2	BRACKET	
	19	1	**200-8155**	1	BRACKET AS	
	20	1	**202-4327**	2	PULLER-FUSE	
Y	21	1	**225-5075**	2	LAMP GP-FLOOD	143
	22	1	**095-0913**	2	CLIP	
	23	1	**124-0174**	1	CLIP	
	24	1	**1S-0994**	1	CLIP	
	25	1	**3J-1907**	1	SEAL-O-RING	
	26	1	**3K-0360**	1	SEAL-O-RING	
	27	1	**4K-8864**	5	CLIP	
	28	1	**4P-7429**	1	CLIP	
	29	1	**4P-7581**	5	CLIP	
	30	1	**4P-8134**	8	CLIP	
M	31	1	**5C-7261**	1	NUT (M8X1.25 THD)	
	32	1	**5P-4116**	2	WASHER-HARD (8.8X20.5X2MM THK)	
	33	1	**5P-6944**	1	ADAPTER-STRAIGHT THREAD	
	34	1	**5P-9085**	2	CLIP	
	35	1	**6D-4246**	4	CLIP	
	36	1	**6V-4369**	1	CLIP	
	37	1	**7X-0575**	2	WASHER-HARD (10.2X22.5X5MM THK)	
M	38	1	**8T-0389**	1	LOCKNUT (M10X1.5 THD)	
	39	1	**8T-4121**	17	WASHER-HARD (11X21X2.5MM THK)	
M	40	1	**8T-4133**	7	NUT (M10X1.5 THD)	
M	41	1	**8T-4137**	4	BOLT (M10X1.5X20MM)	
M	42	1	**8T-4138**	1	BOLT (M6X1X20MM)	
M	43	1	**8T-4179**	2	BOLT (M12X1.75X20MM)	
M	44	1	**8T-4189**	2	BOLT (M8X1.25X20MM)	
M	45	1	**8T-4191**	1	BOLT (M10X1.5X16MM)	
M	46	1	**8T-4195**	5	BOLT (M10X1.5X30MM)	
	47	1	**8T-4223**	2	WASHER-HARD (13.5X25.5X3MM THK)	
	48	1	**8T-4226**	1	WASHER-PLATED (10.5X45X3MM THK)	
	49	1	**9X-3404**	2	BATTERY (12 VOLT)	
	50	1	**9X-8256**	1	WASHER (6.6X12X2MM THK)	

B-USE AS REQUIRED
E-ORDER BY THE CENTIMETER
M-METRIC PART
Y-SEPARATE ILLUSTRATION

160-4069 **WIRING GP-CHASSIS** *(contd.)* **i01895703**

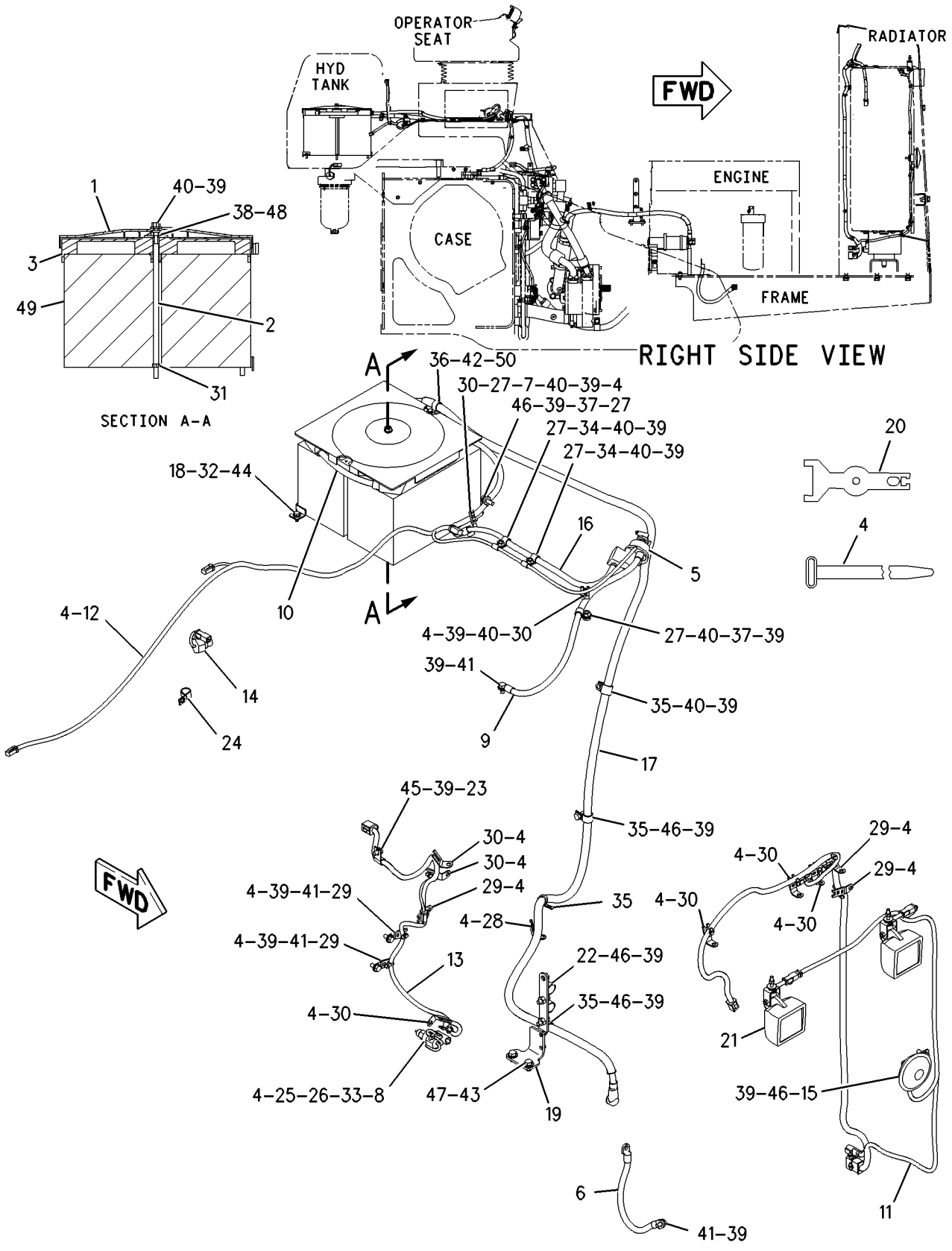

GRAPHIC #1 **<END>** g00943057

157-3458 WIRING GP-ENGINE

S/N: CBJ1-UP

PART OF 156-9514 ELECTRONICS AR-MACHINE

SMCS-1403, 1408 **i01885452**

NOTE	REF NO	GRAPHIC REF	PART NUMBER	QTY	PART NAME 1 2 3 4 5 6 (PRODUCT LEVEL)	SEE PAGE
	1	1	**3V-0778**	1	BRACKET	
	2	1	**7K-1181**	28	STRAP-CABLE	
	3	1	**116-0118**	1	CLIP	
	4	1	**121-2844**	1	HARNESS AS (CRANK WITHOUT INJECTION)	
		1	**102-8803**	2	KIT-RECEPTACLE (3 PIN)	
					(INCLUDES RECEPTACLE AS & WEDGE)	
		1	**155-2260**	1	KIT-CONNECTING PLUG (3 PIN)	
					(INCLUDES PLUG AS, WEDGE AND INTERFACE SEAL)	
		1	**8T-8737**	5	PLUG-SEAL	
	5	1	**141-3983**	1	SPACER (11X19X48MM THK)	
Y	6	1	**145-7028**	1	SENSOR GP-TEMPERATURE (POWER TRAIN OIL)	164
	7	1	**164-3651**	1	ADAPTER	
M	8	1	**176-9237**	1	STUD	
Y	9	1	**193-2550**	1	SENSOR GP-SPEED (TRANSMISSION)	162
	10	1	**195-3783**	1	PLATE AS	
		1	**6V-6716**	8	RIVET-TRUSS HEAD	
		1	**7C-2642**	3	CLIP	
M		1	**8T-3612**	1	NUT-WELD (M8X1.25 THD)	
		1	**109-1645**	1	CLIP	
	11	1	**195-7900**	1	WIRE AS	
	12	1	**230-2204**	1	SPACER	
	13	1	**231-5849**	1	HARNESS AS (ENGINE)	
		1	**102-8802**	3	KIT-RECEPTACLE (2 PIN)	
					(INCLUDES RECEPTACLE AS AND WEDGE)	
		1	**102-8803**	1	KIT-RECEPTACLE (3 PIN)	
					(INLUDES RECEPTACLE AS AND WEDGE	
		1	**8T-8737**	70	PLUG-SEAL	
		1	**113-0580**	1	RECEPTACLE AS (40 PIN)	
		1	**106-4155**	1	KIT-BOLT (ENGINE HARNESS RETAINING)	
					(INCLUDES BOLT, RING, AND SEAL)	
		1	**3S-2093**	2	STRAP-CABLE	
		1	**8T-8827**	1	BOOT	
		1	**9X-6932**	1	BOOT-TERMINAL	
		1	**126-1774**	1	COVER	
		1	**127-5483**	1	PLUG AS-CONNECTOR (1 PIN)	
		1	**127-5484**	1	RECEPTACLE AS (1 PIN)	
		1	**127-5486**	1	RECEPTACLE AS (1 PIN)	
		1	**155-2269**	7	PLUG AS-CONNECTOR (2 PIN)	
		1	**155-2270**	1	KIT-CONNECTING PLUG (2 PIN)	
					(INCLUDES PLUG AS AND WEDGE)	
		1	**160-7689**	1	PLUG AS-CONNECTOR (70 PIN)	
		1	**159-9322**	1	SEAL-O-RING	
M	14	1	**096-5866**	2	BOLT (M8X1.25X75MM)	
Y	15	1	**189-5746**	1	SENSOR GP-SPEED (ENGINE)	161
	16	1	**1S-0994**	2	CLIP	
	17	1	**2Y-7337**	1	SPACER	
	18	1	**3E-7842**	1	RESISTOR AS	
		1	**3E-3365**	1	WEDGE-RECEPTACLE LOCK (2 PIN)	
		1	**8T-8729**	2	PIN-CONNECTOR	
	19	1	**3J-1907**	1	SEAL-O-RING	
	20	1	**3S-8664**	1	CLIP	
	21	1	**4D-9517**	1	CLIP	
	22	1	**4P-7428**	2	CLIP	
	23	1	**4P-7581**	10	CLIP	
	24	1	**4P-8134**	7	CLIP	
M	25	1	**5C-7261**	2	NUT (M8X1.25 THD)	

157-3458 **WIRING GP-ENGINE** ***(contd.)*** **i01885452**

NOTE	REF NO	GRAPHIC REF	PART NUMBER	QTY	PART NAME 1 2 3 4 5 6 (PRODUCT LEVEL)	SEE PAGE
	26	1	**5P-9085**	1	CLIP	
	27	1	**7J-0204**	1	SEAL-O-RING	
M	28	1	**7X-2540**	1	BOLT (M8X1.25X120MM)	
	29	1	**8M-2770**	1	CLIP	
	30	1	**8T-4121**	7	WASHER-HARD (11X21X2.5MM THK)	
M	31	1	**8T-4133**	3	NUT (M10X1.5 THD)	
M	32	1	**8T-4136**	1	BOLT (M10X1.5X25MM)	
M	33	1	**8T-4137**	2	BOLT (M10X1.5X20MM)	
M	34	1	**8T-4177**	1	BOLT (M8X1.25X90MM)	
M	35	1	**8T-4189**	2	BOLT (M8X1.25X20MM)	
M	36	1	**8T-4192**	1	BOLT (M12X1.75X25MM)	
M	37	1	**8T-4200**	2	BOLT (M8X1.25X16MM)	
	38	1	**8T-4223**	1	WASHER-HARD (13.5X25.5X3MM THK)	
	39	1	**8T-4224**	14	WASHER-HARD (8.8X16X2MM THK)	
M	40	1	**8T-6869**	1	BOLT (M8X1.25X60MM)	
	41	1	**8T-7934**	1	WASHER-HARD (11X21X5MM THK)	

M-METRIC PART
Y-SEPARATE ILLUSTRATION

157-3458 **WIRING GP-ENGINE** ***(contd.)*** **i01885452**

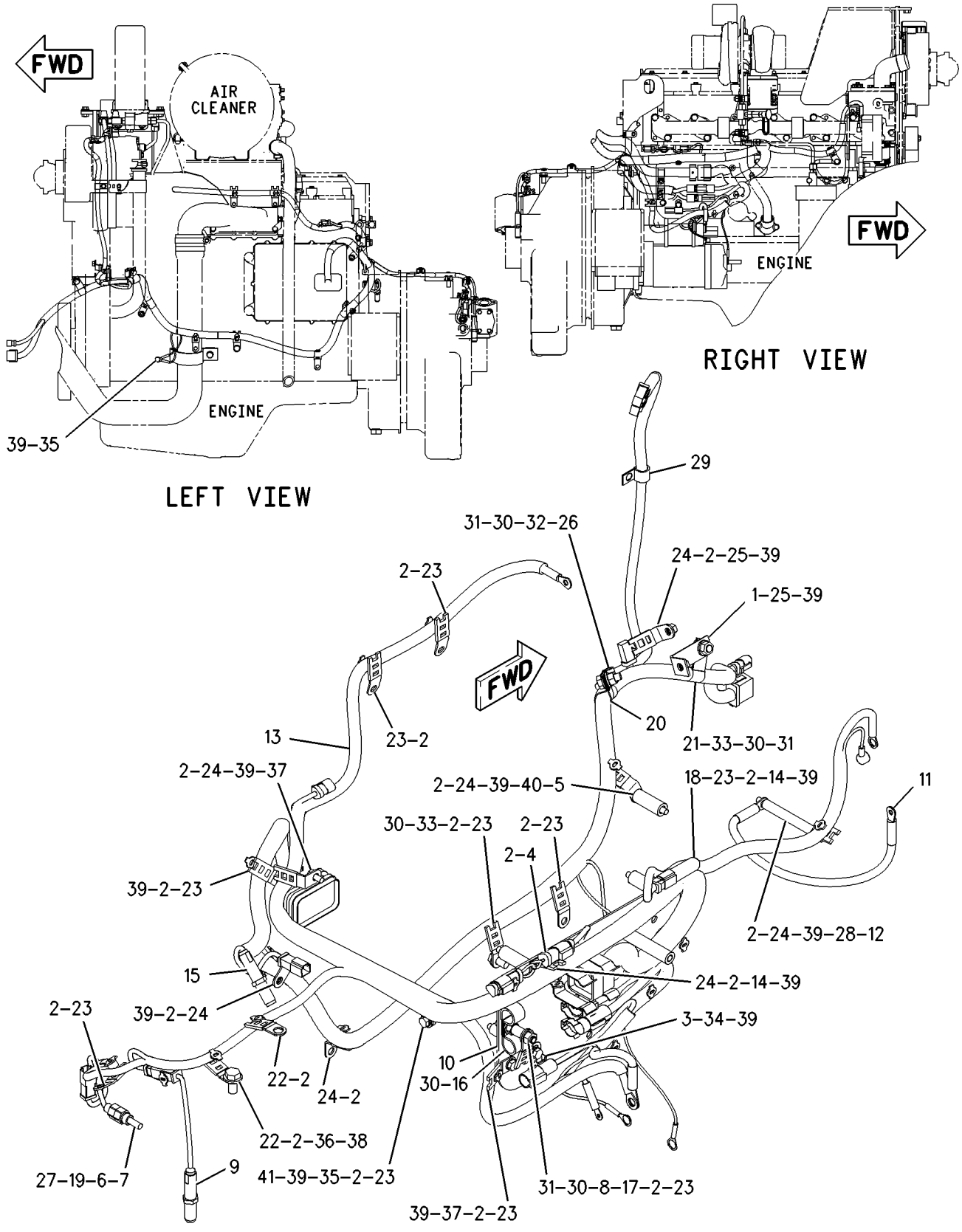

GRAPHIC #1 **<END>** g00974853

191-0083 WIRING GP-HEATER

S/N: BMA1100-UP
PART OF 191-4479, 191-4481 ENGINE AR-COMPLETE
ALSO AN ATTACHMENT

SMCS-1408 **i01891350**

NOTE	REF NO	GRAPHIC REF	PART NUMBER	QTY	PART NAME 1 2 3 4 5 6 (PRODUCT LEVEL)	SEE PAGE
	1	1	**7X-6035**	1	STRAP-GROUNDING	
	2	1	**003-9835**	2	PROTECTOR	
M	3	1	**112-6646**	2	LOCKNUT	
	4	1	**145-4926**	1	BRACKET AS	
M		1	**6V-9632**	2	NUT-WELD (M6X1 THD)	
Y	5	1	*175-2324*	1	SWITCH GP-MAGNETIC (AIR INLET HEATER)	176
	6	1	**179-9355**	1	WIRE AS	
	7	1	**4P-8134**	1	CLIP (LADDER)	
M	8	1	**6V-2317**	6	BOLT (M8X1.25X30MM)	
M	9	1	**6V-5218**	2	BOLT (M8X1.25X35MM)	
M	10	1	**6V-8837**	2	BOLT (M6X1X16 MM)	
	11	1	**9M-1974**	7	WASHER-HARD (8.8X16X2MM THK)	
	12	1	**9X-8256**	2	WASHER (6.6X12X2MM THK)	

M-METRIC PART
Y-SEPARATE ILLUSTRATION

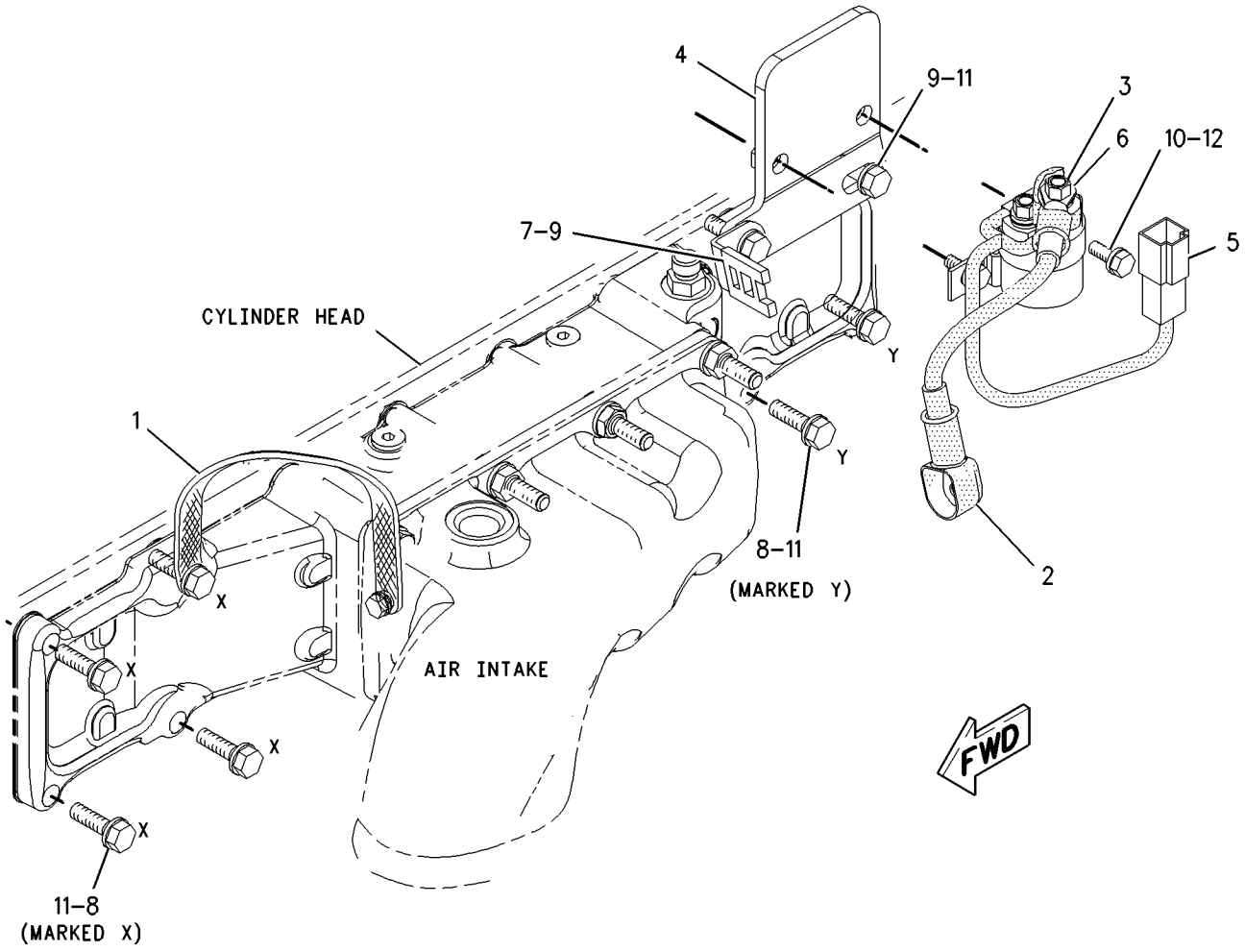

GRAPHIC #1 **<END>** g00924156

ELECTRICAL AND STARTING SYSTEM

156-7378 WIRING GP-PLATFORM

S/N: CBJ1-UP
PART OF 217-3818 CAB GP, 218-3063 PLATFORM GP-OPERATOR
ALSO AN ATTACHMENT

SMCS-1408 **i01892684**

NOTE	REF NO	GRAPHIC REF	PART NUMBER	QTY	PART NAME 1 2 3 4 5 6 (PRODUCT LEVEL)	SEE PAGE
Y	1	1	**3E-6328**	1	ALARM GP (24V) (ACTION)	115
B	2	1	**7K-1181**	54	STRAP-CABLE	
	3	1	**9M-9812**	1	WIRE AS	
	4	1	**117-2311**	1	RECEPTACLE AS-POWER (12 VOLT)	
	5	1	**135-2172**	2	PLATE	
	6	1	**149-9818**	1	PLATE	
Y	7	1	**156-8378**	1	PANEL GP-CIRCUIT BREAKER	148
	8	1	**169-2876**	1	FILM-IDENTIFICATION (12 VOLT)	
	9	1	**173-1566**	1	CAP AS	
BE		1	**125-7875**		TUBE-HEAT SHRINK	
		1	**155-2262**	1	WEDGE-PLUG LOCK (4 PIN)	
		1	**155-2271**	1	KIT-CONNECTING PLUG (4 PIN)	
					(INCLUDES PLUG AS & WEDGE)	
	10	1	**176-0238**	1	GROMMET-RUBBER	
	11	1	**209-0381**	1	CONVERTER-POWER (24 V TO 12 V)	
	12	1	**213-2983**	1	HARNESS AS (PLATFORM)	
		1	**102-8802**	4	KIT-RECEPTACLE (2 PIN)	
		1	**102-8804**	2	KIT-RECEPTACLE (4 PIN)	
		1	**102-8805**	3	KIT-RECEPTACLE (6 PIN)	
		1	**102-8806**	2	KIT-RECEPTACLE (8 PIN)	
		1	**102-8801**	3	KIT-RECEPTACLE (12 PIN)	
		1	**190-7614**	1	KIT-RECEPTACLE (12 PIN)	
					(EACH KIT INCLUDES RECEPTACLE AS & WEDGE)	
		1	**110-6845**	11	PLUG AS-CONNECTOR (40 PIN)	
		1	**110-6844**	1	SEAL	
		1	**9X-0194**	1	TERMINAL AS	
		1	**8T-9471**	1	GROMMET	
		1	**4W-4293**	1	PLUG AS	
		1	**8T-8737**	110	PLUG-SEAL	
		1	**103-0213**	1	RECEPTACLE AS (70 PIN)	
		1	**113-4630**	1	RECEPTACLE AS	
		1	**155-2255**	2	KIT-CONNECTING PLUG (12 PIN)	
		1	**155-2265**	1	KIT-CONNECTING PLUG (8 PIN)	
		1	**155-2260**	2	KIT-CONNECTING PLUG (3 PIN)	
		1	**155-2270**	2	KIT-CONNECTING PLUG (2 PIN)	
		1	**155-2271**	7	KIT-CONNECTING PLUG (4 PIN)	
		1	**155-2274**	5	KIT-CONNECTING PLUG (6 PIN)	
					(EACH KIT INCLUDES PLUG AS & WEDGE)	
	13	1	**213-2989**	1	PLATE	
	14	1	**232-7305**	2	CLIP	
	15	1	**095-0913**	2	CLIP	
	16	1	**141-4976**	8	SCREW-WASHER HEAD	
	17	1	**180-4524**	1	ACTUATOR-ROCKER (THROTTLE)	
	18	1	**1S-0994**	2	CLIP	
	19	1	**2G-1133**	1	GROMMET	
	20	1	**4P-7581**	1	CLIP (LADDER)	
	21	1	**4P-8134**	1	CLIP	
M	22	1	**6V-9672**	4	SCREW-MACHINE (M4X.7X16MM)	
M	23	1	**7I-2272**	6	BOLT (M5X0.8X12MM)	
M	24	1	**7X-2543**	2	BOLT (M10X1.5X120MM)	
	25	1	**8T-0328**	6	WASHER-HARD (5.5X10X1MM THK)	
	26	1	**8T-4121**	12	WASHER-HARD (11X21X2.5MM THK)	
M	27	1	**8T-4133**	1	NUT (M10X1.5 THD)	
M	28	1	**8T-4137**	4	BOLT (M10X1.5X20MM)	
M	29	1	**8T-4191**	5	BOLT (M10X1.5X16MM)	

156-7378 **WIRING GP-PLATFORM** ***(contd.)*** **i01892684**

NOTE	REF NO	GRAPHIC REF	PART NUMBER	QTY	PART NAME 1 2 3 4 5 6 (PRODUCT LEVEL)	SEE PAGE
M	30	1	**9X-2044**	3	SCREW-TRUSS HEAD (M6X1X16MM)	
	31	1	**9X-7345**	1	GROMMET	
	32	1	**8S-8158**	1	SEAL-WIRE	
BE	33	1	**5P-6029**		LOCKWIRE	

B-USE AS REQUIRED
E-ORDER BY THE CENTIMETER
M-METRIC PART
Y-SEPARATE ILLUSTRATION

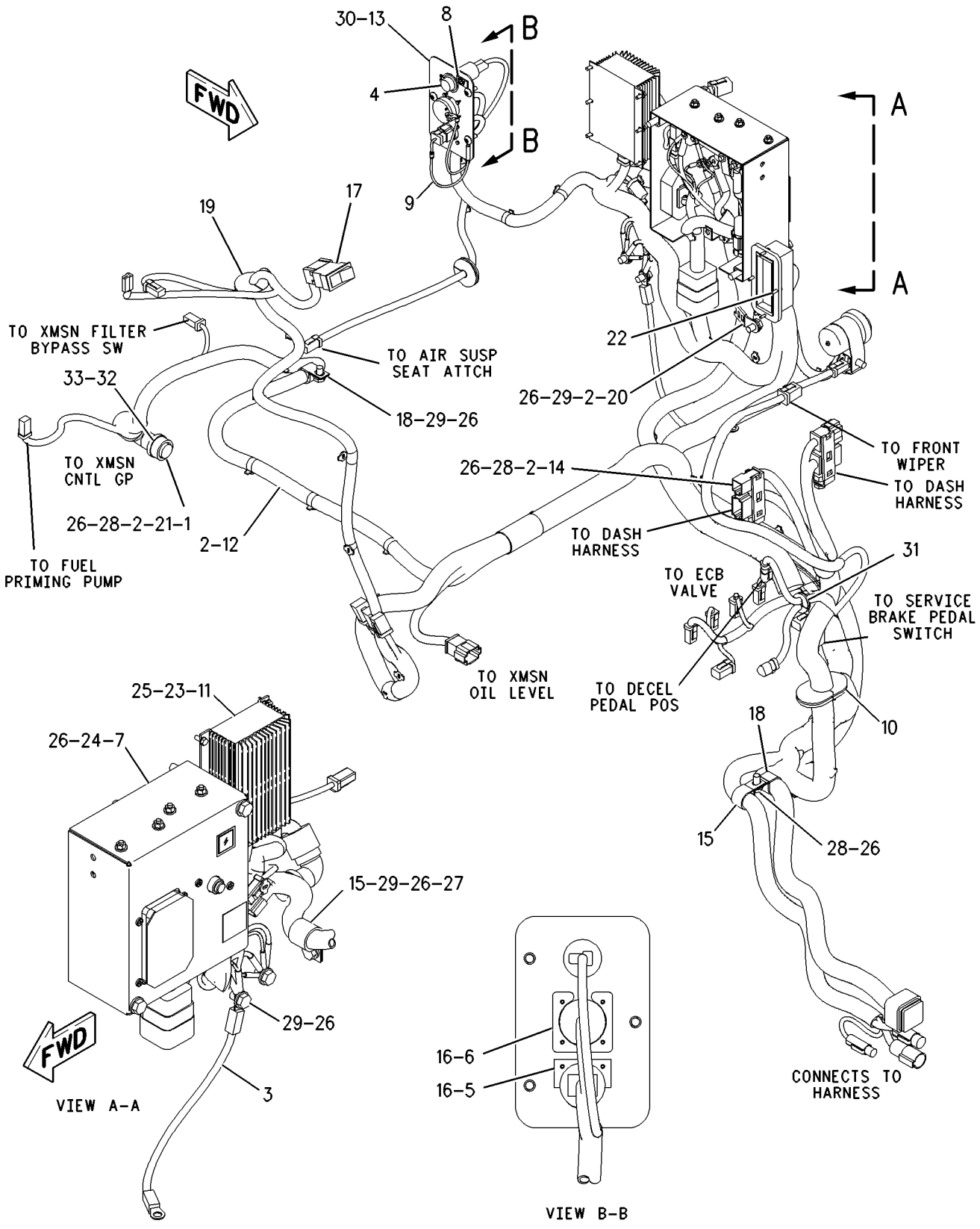

GRAPHIC #1 **<END>** g00970481

205-3603 CONTROL GP-TRANSMISSION

S/N: CGD1-UP

PART OF 175-1171 TRANSMISSION AR

SMCS-3065, 3209 **i01829863**

NOTE	REF NO	GRAPHIC REF	PART NUMBER	QTY	PART NAME 1 2 3 4 5 6 (PRODUCT LEVEL)	SEE PAGE
	1	1	**3S-2093**	2	STRAP-CABLE	
	2	1	**6Y-0775**	5	SLEEVE	
	3	1	**104-6729**	1	RETAINER	
	4	1	**104-6730**	1	GASKET	
	5	1	**108-2097**	1	PLATE	
	6	1	**110-2049**	2	SLEEVE	
	7	1	**110-2860**	1	CLIP AS-CONNECTING	
	8	1	**204-8982**	1	GROMMET	
Y	9	1	**205-3602**	1	VALVE GP-RELIEF (TRANSMISSION CONTROL)	231
	10	1	**205-4626**	1	HARNESS AS (TRANSMISSION SHIFT SOLENOIDS)	
		1	**3S-2093**	5	STRAP-CABLE	
		1	**102-8806**	1	KIT-RECEPTACLE (8 PIN)	
					(INCLUDES RECEPTACLE AS & WEDGE)	
		1	**6J-2419**	1	SEAL-O-RING	
		1	**155-2270**	1	KIT-CONNECTING PLUG (2 PIN)	
					(INCLUDES PLUG AS & WEDGE)	
Y	11	1	**220-4324**	5	VALVE GP-MODULATING (TRANSMISSION CONTROL)	226
	12	1	**222-0894**	2	CLIP	
	13	1	**223-6517**	1	HARNESS AS (TRANSMISSION SPEED SENSORS)	
		1	**3S-2093**	1	STRAP-CABLE	
		1	**155-2270**	4	KIT-CONNECTING PLUG (2 PIN)	
		1	**155-2265**	1	KIT-CONNECTING PLUG (8 PIN)	
					(EACH INCLUDES PLUG AS & WEDGE)	
	14	1	**0T-0102**	5	BOLT (3/8-16X0.625 IN)	
	15	1	**1D-4540**	10	BOLT (5/16-18X2.75 IN)	
	16	1	**5M-2894**	4	WASHER-HARD (10.2X18.5X2.5MM THK)	
	17	1	**6V-4365**	10	SEAL-O-RING	
	18	1	**8M-4432**	4	SEAL-O-RING	
	19	1	**8S-9191**	4	BOLT (3/8-16X4 IN)	
M	20	1	**8T-4136**	2	BOLT (M10X1.5X25MM)	
	21	1	**9M-1974**	10	WASHER-HARD (8.8X16X2MM THK)	

M-METRIC PART
Y-SEPARATE ILLUSTRATION

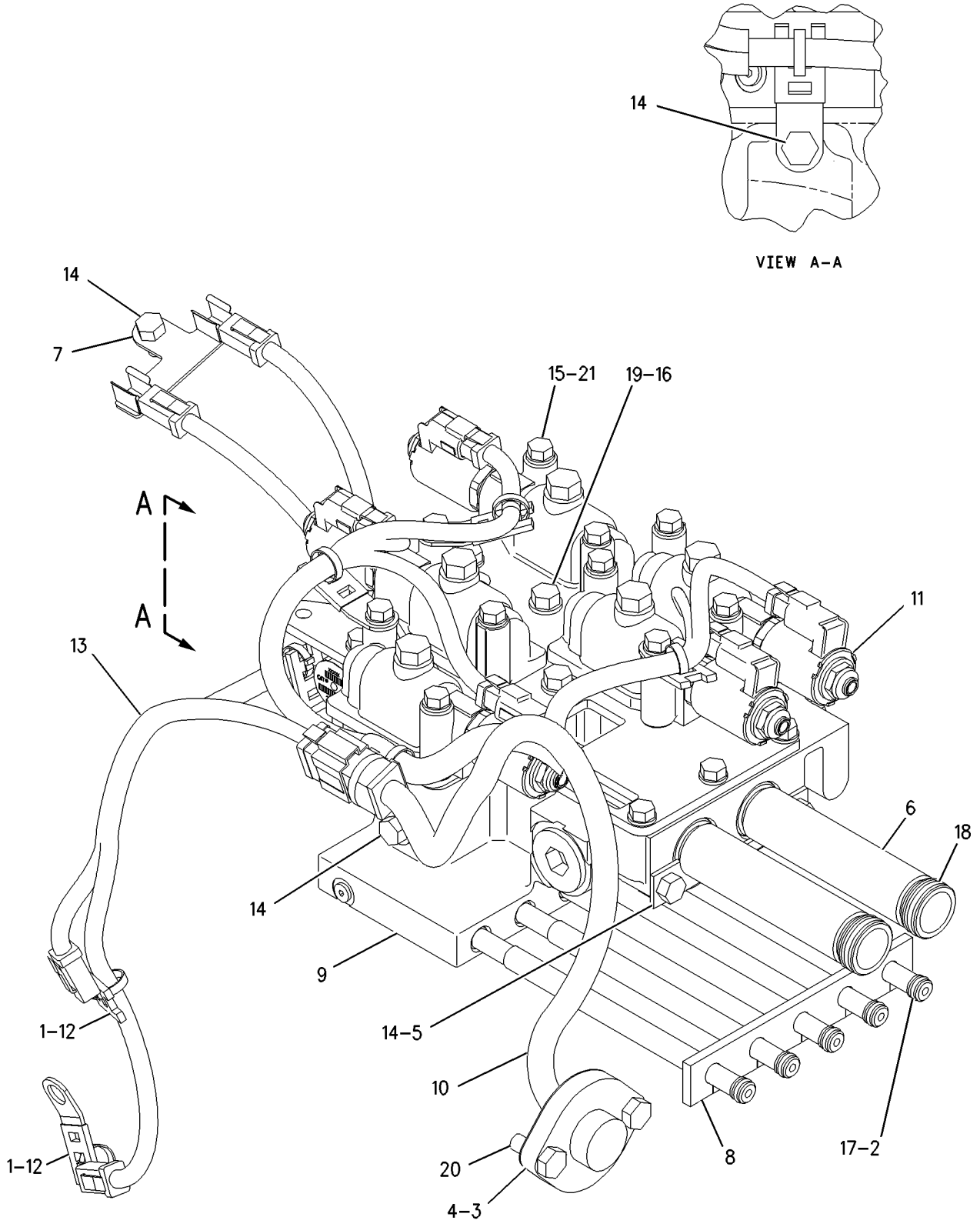

GRAPHIC #1 **<END>** g00930638

178-0568 FILTER GP-OIL—POWER TRAIN

S/N: CBJ1-UP

PART OF 163-1059 LINES GP-POWER TRAIN OIL

SMCS-3004 **i01883307**

NOTE	REF NO	GRAPHIC REF	PART NUMBER	QTY	PART NAME 1 2 3 4 5 6 (PRODUCT LEVEL)	SEE PAGE
	1	1	**3J-1907**	2	SEAL-O-RING	
	2	1	**3S-8652**	1	SPRING	
	3	1	**5P-3620**	1	SEAL-O-RING (POWER TRAIN FILTER)	
	4	1	**6T-9222**	1	SPOOL	
	5	1	**8M-6393**	1	RING-RETAINING	
	6	1	**132-8876**	1	FILTER ELEMENT AS-OIL (POWER TRAIN)	
	7	1	**133-1279**	1	HOUSING AS-OIL FILTER	
	8	1	**133-2199**	1	SPRING	
	9	1	**155-5745**	1	BASE-FILTER	
	10	1	**165-8079**	1	RETAINER	
	11	1	**9S-4191**	1	PLUG	

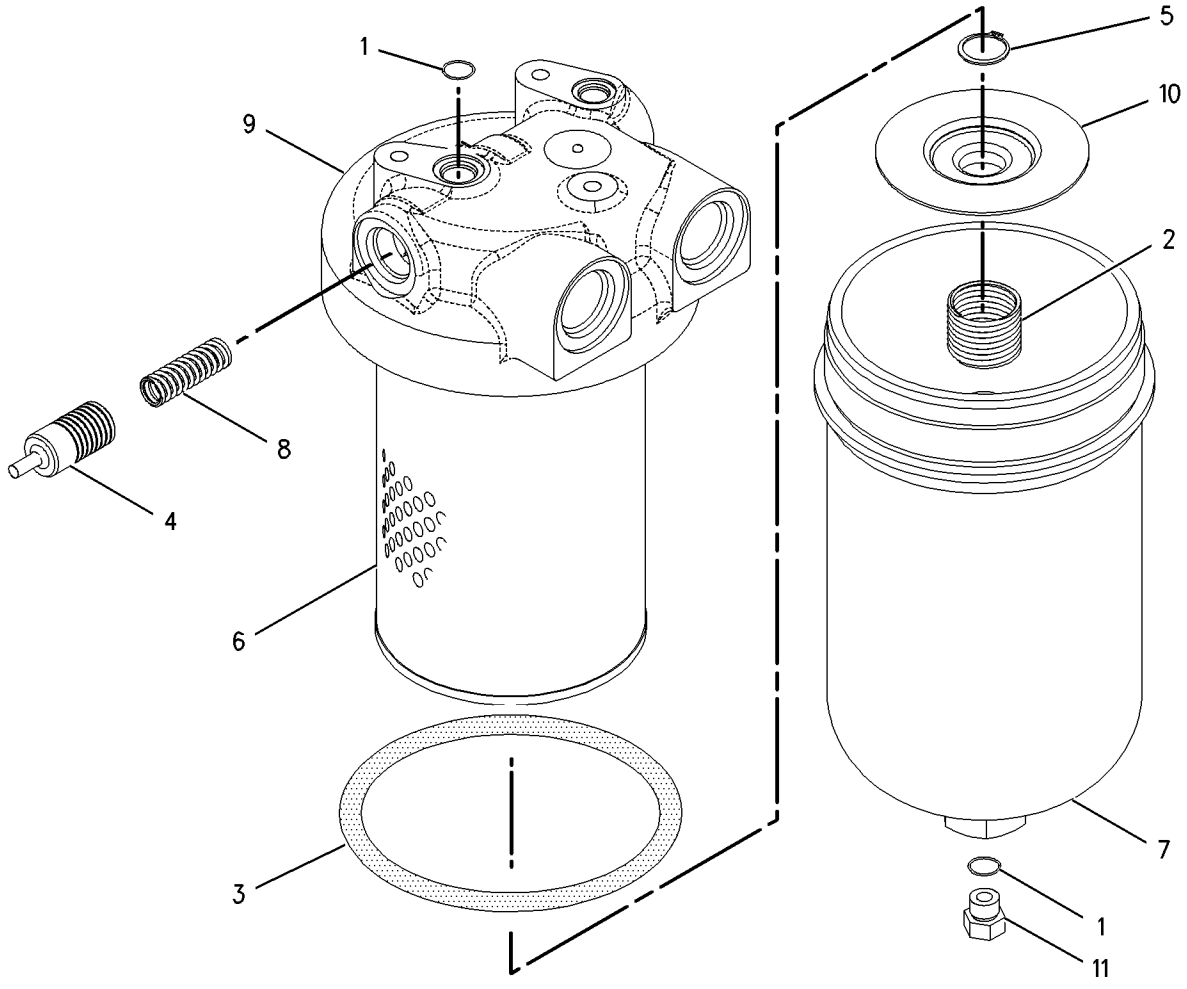

GRAPHIC #1 **<END>** g00770456

POWER TRAIN

196-1864 FINAL DRIVE GP

S/N: CBJ1-UP

PART OF 175-1157 POWER TRAIN AR

SMCS-4050 **i01830068**

NOTE	REF NO	GRAPHIC REF	PART NUMBER	QTY	PART NAME 1 2 3 4 5 6 (PRODUCT LEVEL)	SEE PAGE
	1	1	**1B-3978**	6	CUP-BEARING	
	2	1	**1B-3980**	6	CONE-BEARING	
	3	1	**6V-0327**	1	CUP-BEARING	
	4	1	**6V-0328**	1	CONE-BEARING	
	5	1	**6V-0329**	1	CONE-BEARING	
	6	1	**6V-0330**	1	CUP-BEARING	
	7	1	**6V-0439**	1	PLUG-MAGNETIC (FINAL DRIVE)	
	8	1	**6Y-0859**	1	SEAL GP-DUO-CONE	
	9	1	**8E-3075**	3	RETAINER	
	10	1	**8G-4565**	3	GEAR-PLANETARY (30 TEETH)	
	11	1	**8G-4566**	1	PLATE	
	12	1	**8G-4568**	1	GEAR (74 TEETH)	
	13	1	**8G-4569**	1	RING	
	14	1	**9G-4876**	1	RETAINER	
	15	1	**106-0713**	1	CARRIER	
	16	1	**107-1763**	1	HUB-SPROCKET	
	17	1	**178-6854**	1	HUB-RING GEAR	
	18	1	**179-6707**	3	SHAFT	
	19	1	**191-4916**	1	SHAFT-SUN GEAR	
	20	1	**191-4920**	1	SPINDLE	
	21	1	**191-4922**	1	BEARING-SLEEVE	
	22	1	**1H-8128**	1	SEAL-O-RING	
	23	1	**1H-9696**	3	SEAL-O-RING	
	24	1	**2M-3340**	1	SEAL-O-RING	
	25	1	**2S-4078**	1	SEAL-O-RING (FINAL DRIVE MAGNETIC PUUG)	
	26	1	**3K-0360**	1	SEAL-O-RING (FINAL DRIVE DRAIN PLUG)	
M	27	1	**7X-2563**	28	BOLT (M20X2.5X60MM)	
M	28	1	**8C-8729**	9	BOLT-SOCKET HEAD (M12X1.75X80MM)	
	29	1	**8T-4121**	6	WASHER-HARD (11X21X2.5MM THK)	
	30	1	**8T-4123**	58	WASHER-PLATED (22X35X3.5MM THK)	
M	31	1	**8T-4136**	3	BOLT (M10X1.5X25MM)	
M	32	1	**8T-4141**	30	BOLT (M20X2.5X70MM)	
M	33	1	**8T-4193**	3	BOLT (M16X2X50MM)	
M	34	1	**8T-4196**	3	BOLT (M10X1.5X35MM)	
	35	1	**8T-4223**	9	WASHER-HARD (13.5X25.5X3MM THK)	
	36	1	**8D-4771**	1	SEAL-O-RING	
	37	1	**9S-4185**	1	PLUG (FINAL DRIVE DRAIN)	
	38	1	**9X-7411**	1	SEAL-LIP	
	39	1	**9X-8257**	3	WASHER (17.5X30X3.5MM THK)	

M-METRIC PART

196-1864 FINAL DRIVE GP *(contd.)* i01830068

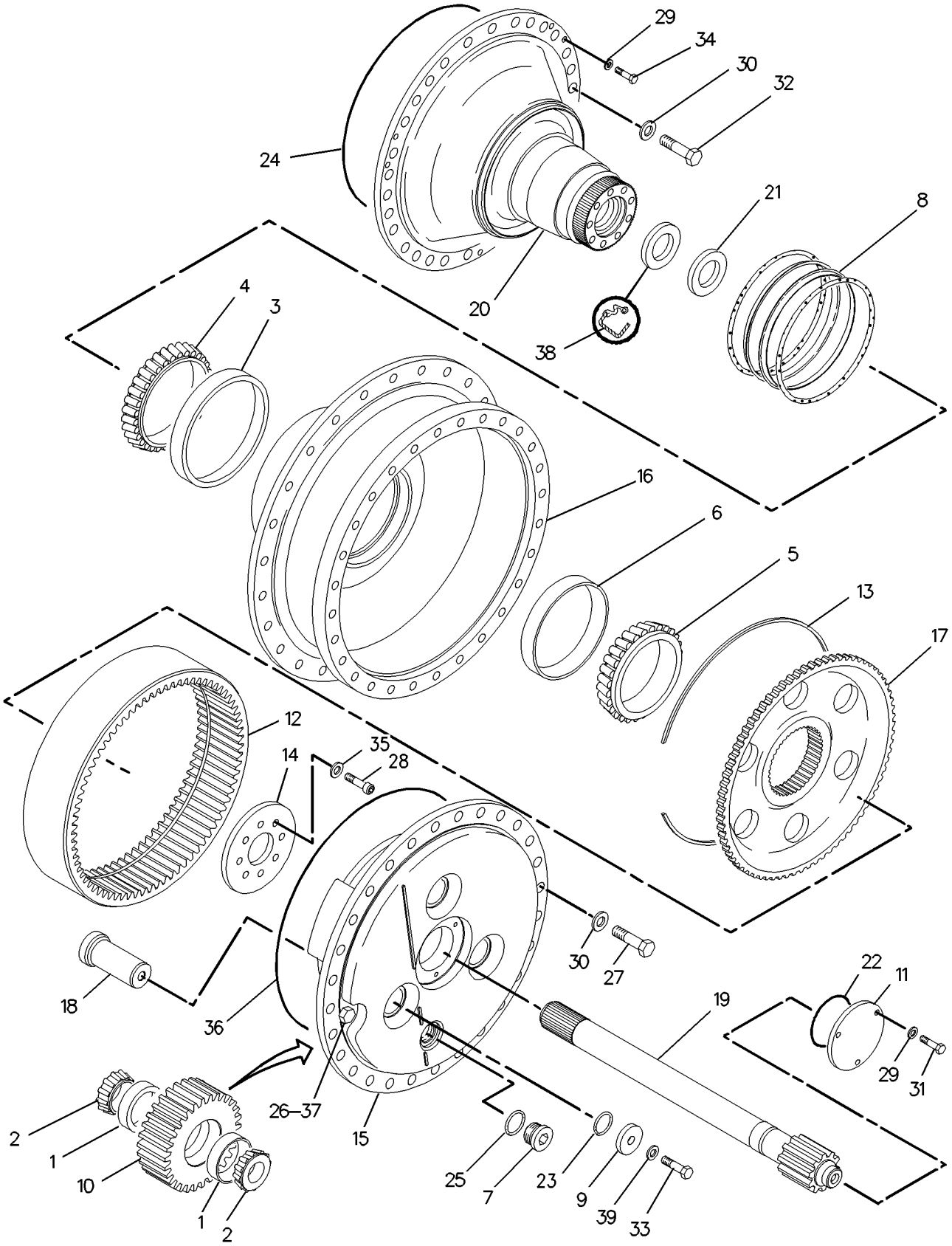

GRAPHIC #1 **<END>** g00773639

POWER TRAIN

178-3681 GEAR GP-BEVEL & TRANSFER

S/N: CGD1-UP

PART OF 175-1171 TRANSMISSION AR

SMCS-3011 **i01829856**

NOTE	REF NO	GRAPHIC REF	PART NUMBER	QTY	PART NAME 1 2 3 4 5 6 (PRODUCT LEVEL)	SEE PAGE
	1	1	**200-8648**	1	CASE AS-TRANSMISSION	
		1	**2A-3576**	1	PIN	
		1	**7T-9356**	1	PLUG-CUP	
	2	1	**7T-8859**	1	CUP-BEARING	
	3	1	**7T-8858**	1	CONE-BEARING	
	4	1	**7T-9357**	1	PINION-BEVEL (14 TEETH)	
	5	1	**9U-9523**	1	GEAR-TRANSFER (37 TEETH)	
	6	1	**3T-9819**	1	SHIM PACK (INCLUDES 19 SHIMS)	
	7	1	**201-1281**	1	COVER	
	8	1	**3B-1915**	6	BOLT (3/8-16X1.37 IN)	
	9	1	**1T-0720**	3	BOLT-12 POINT HEAD (3/8-16X1.25 IN)	
	10	1	**3T-9674**	1	RETAINER	
	11	1	**0S-1599**	1	BOLT (1/2-20X2.75 IN)	
	12	1	**9U-9522**	3	GEAR-TRANSFER (22 TEETH)	
	13	1	**205-4138**	3	CONE-BEARING	
	14	1	**2D-8009**	1	SEAL-O-RING	
M	15	1	**8T-4136**	4	BOLT (M10X1.5X25MM)	
	16	1	**2J-6362**	1	BEARING	
	17	2	**6V-2404**	1	LOCKWASHER-BEARING	
	18	1	**6V-5773**	1	SEAL (LIP)	
	19	1	**108-2471**	1	CAGE-BEARING	
	20	1	**108-8250**	1	CARRIER-SEAL	
	21	1	**0S-1595**	11	BOLT (1/2-13X1.25 IN)	
	22	1	**201-1282**	1	SHIM PACK (INCLUDES 25 SHIMS)	
	23	1	**175-3267**	1	GEAR-TRANSFER (23 TEETH)	
	24	1	**204-5341**	1	TEE	
	25	1	**198-9162**	1	TUBE AS	
	26	1	**2N-1287**	1	ELBOW-FLARED	
	27	2	**3T-0219**	1	RETAINER-BEARING	
	28	2	**3T-8518**	1	CAGE-BEARING	
	29	2	**200-8644**	2	SHIM PACK (INCLUDES 24 SHIMS)	
	30	1	**206-2963**	1	TUBE AS	
	31	2	**3T-8469**	1	GEAR-BEVEL (31 TEETH)	
	32	2	**9W-3013**	1	SHAFT-BEVEL GEAR	
	33	2	**5B-0841**	20	BOLT (5/8-18X1.75 IN)	
	34	2	**5P-4921**	1	RACE-BEARING OUTER	
	35	2	**5P-4920**	1	RACE & ROLLER AS	
	36	1	**6T-7996**	1	TUBE AS	
	37	1	**8D-0071**	1	TEE-FLARED	
	38	1	**6T-7995**	1	TUBE AS	
	39	1	**198-9163**	1	TUBE AS	
	40	2	**0S-1587**	8	BOLT (1/2-13X1.75 IN)	
	41	1	**8L-6557**	1	CONNECTOR	
	42	2	**6V-0456**	1	BEARING AS-ROLLER	
	43	1	**2B-2404**	1	CLIP	
	44	1	**0S-0509**	1	BOLT (3/8-16X0.75 IN)	
	45	1	**5M-2894**	1	WASHER-HARD (10.2X18.5X2.5MM THK)	
	46	2	**3T-8528**	1	WASHER	
	47	2	**1L-6957**	1	LOCKNUT-BEARING	
Y	48	1	**193-2550**	2	SENSOR GP-SPEED	162
	49	1	**032-1267**	1	CONNECTOR	
	50	1	**032-1268**	1	ELBOW	
	51	1	**206-2080**	1	TUBE AS	
	52	1	**052-0572**	1	TEE-SWIVEL	
	53	1	**5P-0537**	2	WASHER-HARD (7.2X14.5X2MM THK)	
	54	1	**1A-5350**	2	CLIP	

178-3681 **GEAR GP-BEVEL & TRANSFER** *(contd.)* **i01829856**

NOTE	REF NO	GRAPHIC REF	PART NUMBER	QTY	PART NAME 1 2 3 4 5 6 (PRODUCT LEVEL)	SEE PAGE
	55	1	**0S-1614**	2	BOLT (1/4-20X0.5 IN)	

M-METRIC PART
Y-SEPARATE ILLUSTRATION

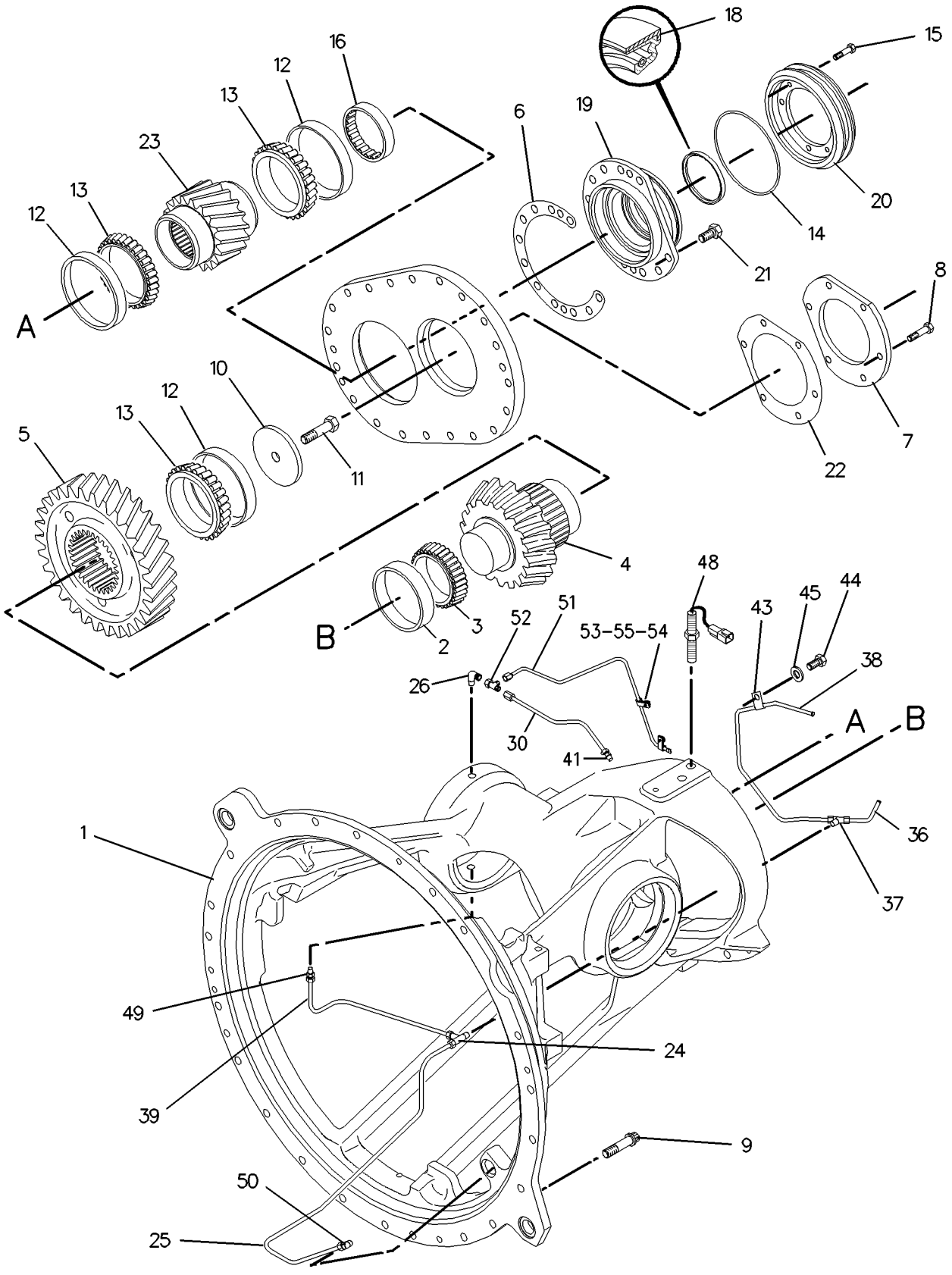

GRAPHIC #1 g00940445

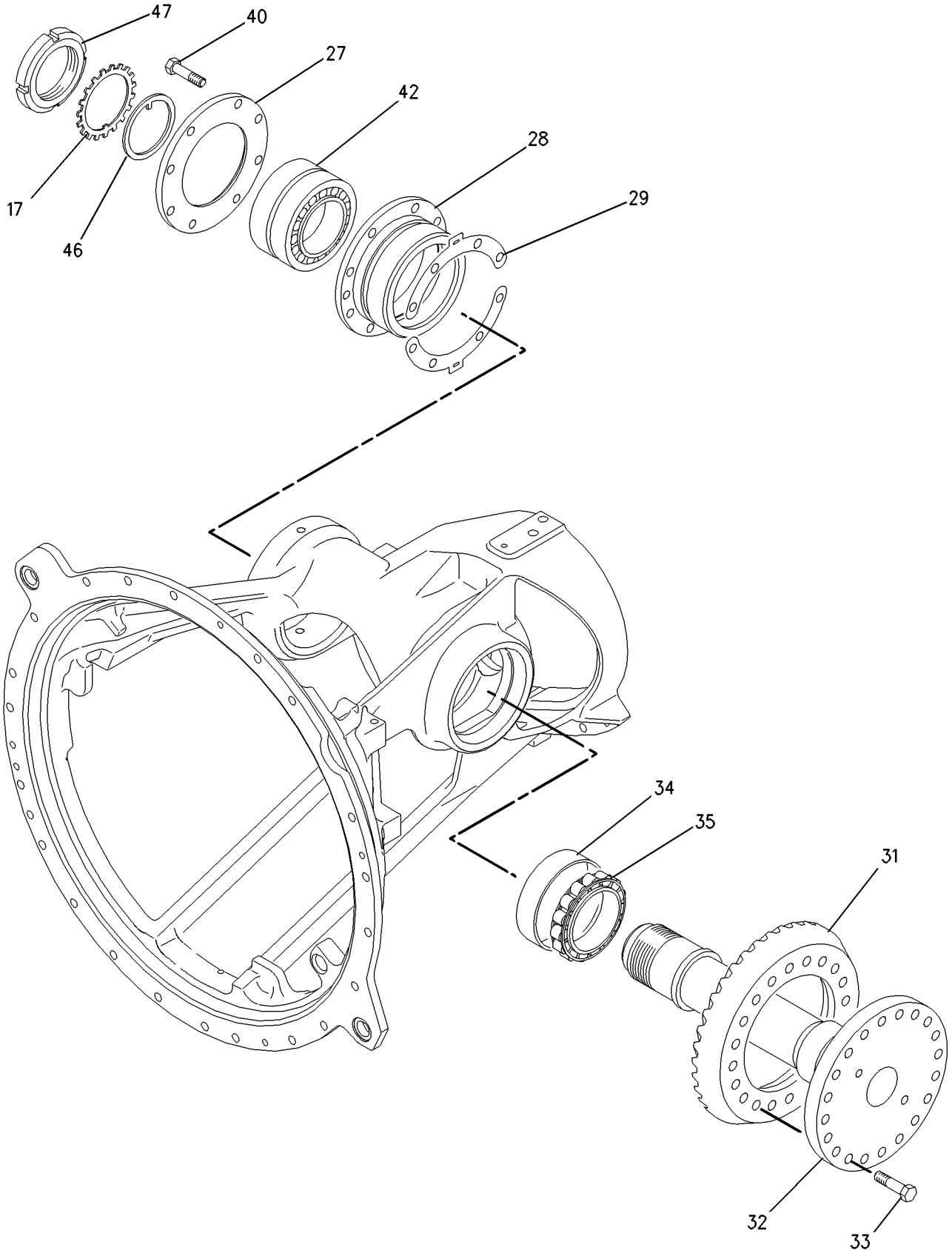

GRAPHIC #2 **<END>** g00940447

163-1059 LINES GP-POWER TRAIN OIL

S/N: CBJ1-UP

PART OF 175-1157 POWER TRAIN AR

SMCS-3016 **i01895706**

NOTE	REF NO	GRAPHIC REF	PART NUMBER	QTY	PART NAME 1 2 3 4 5 6 (PRODUCT LEVEL)	SEE PAGE
	1	1	**2W-6225**	1	CAP AS-OIL FILLER (POWER TRAIN)	
	2	1	**5D-1026**	4	CLAMP-HOSE	
	3	1	**6B-2882**	3	SPACER (.406X.75X.312 IN THK)	
Y	4	1	**6Y-8473**	1	VALVE GP-RELIEF (POWER TRAIN OIL)	229
	5	1	**8C-3447**	1	CAP-DUST (POWER TRAIN OIL SAMPLE VALVE)	
	6	1	**8G-5551**	1	FLANGE	
	7	1	**8G-5654**	1	GASKET	
	8	1	**8G-8589**	1	HOUSING-SCREEN	
	9	1	**8G-9560**	1	TUBE AS	
	10	1	**8S-9129**	1	FILTER-MAGNETIC (POWER TRAIN OIL)	
	11	1	**8S-9130**	1	SCREEN-SUCTION (POWER TRAIN OIL)	
	12	1	**8T-6703**	2	CLAMP-HOSE	
	13	1	**110-8178**	1	MANIFOLD	
	14	1	**114-2312**	1	COVER AS	
	15	1	**130-9984**	4	CLIP	
I	16	1	**135-7488**	1	HOSE AS	
	17	1	**148-1928**	1	VALVE-RELIEF	
	18	1	*150-3026*	2	ELBOW AS	
					(EACH INCLUDES)	
		1	**3K-0360**	1	SEAL-O-RING	
		1	**6V-4292**	1	ELBOW	
	19	1	**162-6966**	1	TUBE AS	
	20	1	*169-5862*	1	ELBOW AS	
		1	**3J-1907**	1	SEAL-O-RING	
		1	**8C-6712**	1	ELBOW	
	21	1	**173-1437**	2	FLANGE-HALF	
	22	1	**173-4282**	1	TUBE AS	
	23	1	**173-4283**	1	GAUGE (OIL LEVEL) (POWER TRAIN)	
Y	24	1	**175-2787**	1	PUMP GP-GEAR	213
I	25	1	**177-7185**	1	HOSE AS	
I	26	1	**177-7186**	1	HOSE AS	
Y	27	1	*178-0568*	1	FILTER GP-OIL	192
	28	1	**178-9220**	1	PLATE	
I	29	1	**178-9221**	1	HOSE AS	
I	30	1	**178-9222**	1	HOSE AS	
	31	1	**185-6684**	1	BREATHER AS (POWER TRAIN OIL)	
Y	32	1	**186-3396**	1	VALVE GP-PRIORITY	227
I	33	1	**190-2808**	1	HOSE AS	
I	34	1	**193-3873**	1	HOSE AS	
	35	1	**193-9904**	1	HOSE	
	36	1	**193-9905**	1	HOSE	
	37	1	*194-2903*	1	ELBOW AS	
		1	**3K-0360**	1	SEAL-O-RING	
		1	**8T-0119**	1	ELBOW	
	38	1	*195-2037*	2	FITTING AS	
					(EACH INCLUDES)	
		1	**3K-0360**	1	SEAL-O-RING	
		1	**034-3679**	1	FITTING	
	39	1	**216-9004**	1	TUBE	
	40	1	**220-0907**	1	HOSE	
	41	1	*148-8327*	1	CONNECTOR AS	
		1	**3D-2824**	1	SEAL-O-RING	
		1	**6V-8637**	1	CONNECTOR-SEAL	
		1	**6V-9746**	1	SEAL-O-RING	
	42	1	*148-8335*	2	CONNECTOR AS	
					(EACH INCLUDES)	

163-1059 LINES GP-POWER TRAIN OIL *(contd.)* i01895706

NOTE	REF NO	GRAPHIC REF	PART NUMBER	QTY	PART NAME 1 2 3 4 5 6 (PRODUCT LEVEL)	SEE PAGE
		1	**5K-9090**	1	SEAL-O-RING	
		1	**6V-8635**	1	CONNECTOR	
		1	**7M-8485**	1	SEAL-O-RING	
	43	1	*148-8356*	1	ELBOW AS	
		1	**2S-4078**	1	SEAL-O-RING	
		1	**6V-8400**	1	SEAL-O-RING	
		1	**6V-9009**	1	ELBOW	
	44	1	*148-8357*	2	ELBOW GP	
					(EACH INCLUDES)	
		1	**5K-9090**	1	SEAL-O-RING	
		1	**6V-9008**	1	ELBOW	
		1	**7M-8485**	1	SEAL-O-RING	
	45	1	*148-8360*	2	ELBOW AS	
					(EACH INCLUDES)	
		1	**6V-9182**	1	ELBOW	
		1	**6V-9746**	1	SEAL-O-RING	
		1	**7M-8485**	1	SEAL-O-RING	
	46	1	*150-4047*	1	ADAPTER GP	
		1	**3J-7354**	1	SEAL-O-RING	
		1	**8T-2353**	1	ADAPTER-STRAIGHT THREAD	
	47	1	*164-5590*	1	VALVE GP-FLUID SAMPLING (POWER TRAIN OIL)	
		1	**3J-7354**	1	SEAL-O-RING	
		1	**8C-3446**	1	VALVE GP-FLUID SAMPLING (POWER TRAIN OIL)	
	48	1	**1P-3708**	1	SEAL-RECTANGULAR	
	49	1	**1S-1015**	1	CLIP	
	50	1	**228-2775**	1	CLIP	
	51	1	**3J-1877**	1	SPACER (1.46IN LG)	
	52	1	**4D-7388**	1	CLIP	
	53	1	**4J-0520**	4	SEAL-O-RING	
	54	1	**4J-0522**	2	SEAL-O-RING	
	55	1	**4L-6454**	3	BOLT (3/8-16X1 IN)	
	56	1	**4P-8134**	1	CLIP	
	57	1	**5K-1770**	1	SEAL-O-RING	
	58	1	**6D-4246**	1	CLIP	
	59	1	**6H-3977**	1	SEAL-O-RING	
	60	1	**6L-1651**	1	SEAL-O-RING	
	61	1	**6L-5359**	1	SEAL-O-RING	
	62	1	**8C-3205**	2	FLANGE-HALF	
	63	1	**8C-3206**	4	FLANGE-HALF	
	64	1	**8M-4988**	1	SEAL-O-RING	
	65	1	**8M-5249**	1	SEAL-O-RING	
	66	1	**8M-5254**	4	SEAL-O-RING	
	67	1	**8T-4121**	40	WASHER-HARD (11X21X2.5MM THK)	
M	68	1	**8T-4133**	3	NUT (M10X1.5 THD)	
M	69	1	**8T-4136**	10	BOLT (M10X1.5X25MM)	
M	70	1	**8T-4137**	2	BOLT (M10X1.5X20MM)	
M	71	1	**8T-4172**	3	BOLT (M10X1.50X80MM)	
M	72	1	**8T-4183**	4	BOLT (M12X1.75X40MM)	
M	73	1	**8T-4184**	8	BOLT (M12X1.75X45MM)	
M	74	1	**8T-4195**	5	BOLT (M10X1.5X30MM)	
M	75	1	**8T-4196**	16	BOLT (M10X1.5X35MM)	
	76	1	**8T-4223**	16	WASHER-HARD (13.5X25.5X3MM THK)	
	77	1	**8T-4896**	3	WASHER-HARD (10.2X18.5X2.5MM THK)	
M	78	1	**8T-4956**	4	BOLT (M12X1.75X35MM)	
M	79	1	**8T-5005**	1	BOLT (M10X1.50X70MM)	
M	80	1	**8T-6466**	4	BOLT (M10X1.50X60MM)	
	81	1	**8T-7529**	3	CLIP	
	82	1	**9M-4218**	1	SEAL-O-RING	
	83	1	**9X-4609**	1	SEAL-O-RING	

I-SEE HOSE FABRICATION GUIDE
M-METRIC PART
Y-SEPARATE ILLUSTRATION

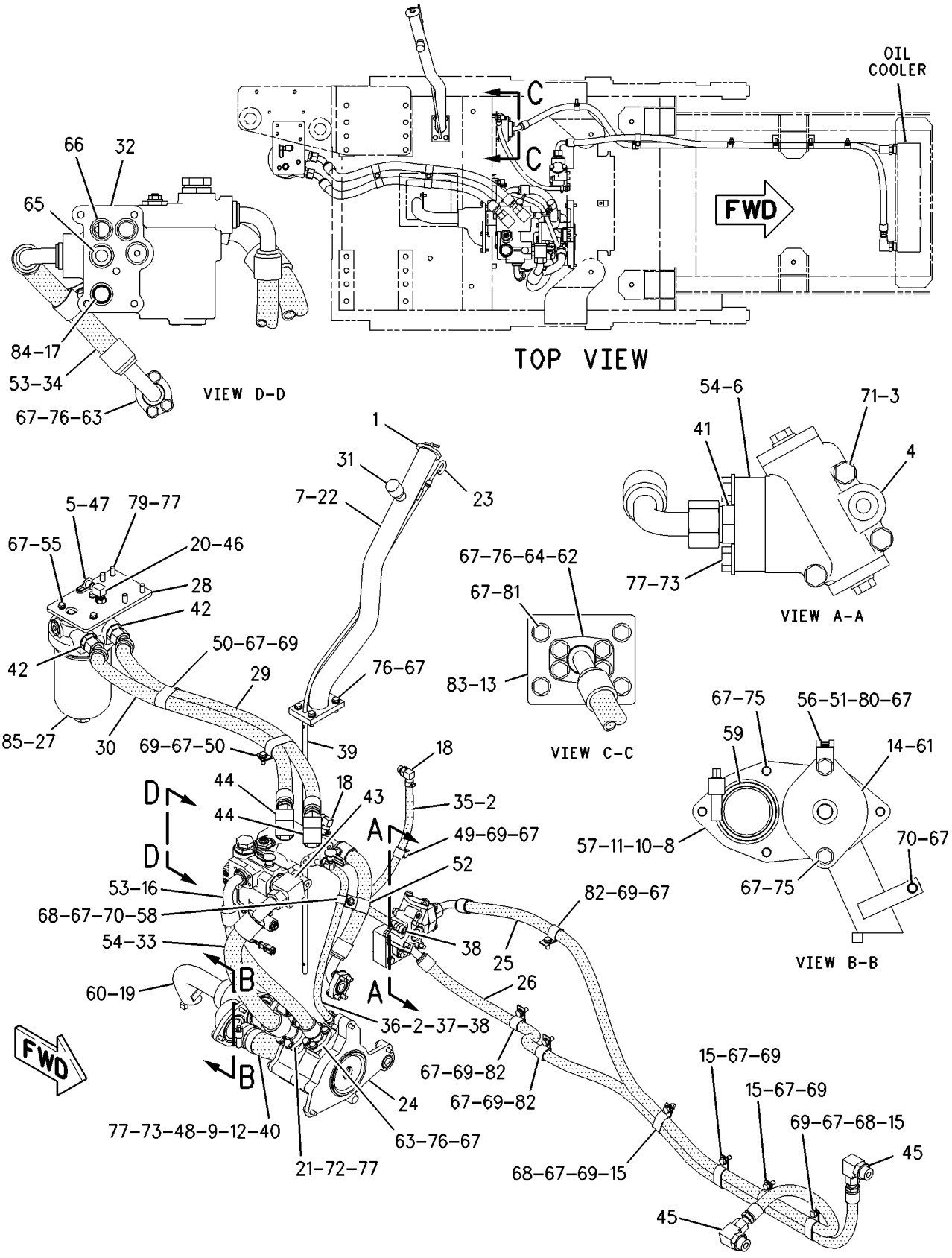

GRAPHIC #1 **<END>** g00932465

224-5367 MOUNTING GP-TORQUE CONVERTER

S/N: CBJ1-UP

PART OF 175-1157 POWER TRAIN AR

SMCS-3101 **i01830070**

NOTE	REF NO	GRAPHIC REF	PART NUMBER	QTY	PART NAME 1 2 3 4 5 6 (PRODUCT LEVEL)	SEE PAGE
	1	1	**4B-7739**	1	PLUG-DRAIN (TORQUE CONVERTER)	
	2	1	**8H-9819**	1	ADAPTER-PLUG	
	3	1	**164-1525**	5	ROD	
	4	1	**220-3257**	1	ADAPTER	
	5	1	**5P-9806**	1	SEAL-O-RING	
	6	1	**8H-9818**	1	GASKET	
M	7	1	**8T-4133**	5	NUT (M10X1.5 THD)	
M	8	1	**8T-4136**	2	BOLT (M10X1.5X25MM)	
M	9	1	**8T-4182**	1	BOLT (M10X1.5X45MM)	
M	10	1	**8T-4185**	6	BOLT (M10X1.5X50MM)	
	11	1	**8T-6762**	1	PLUG-PIPE	

M-METRIC PART

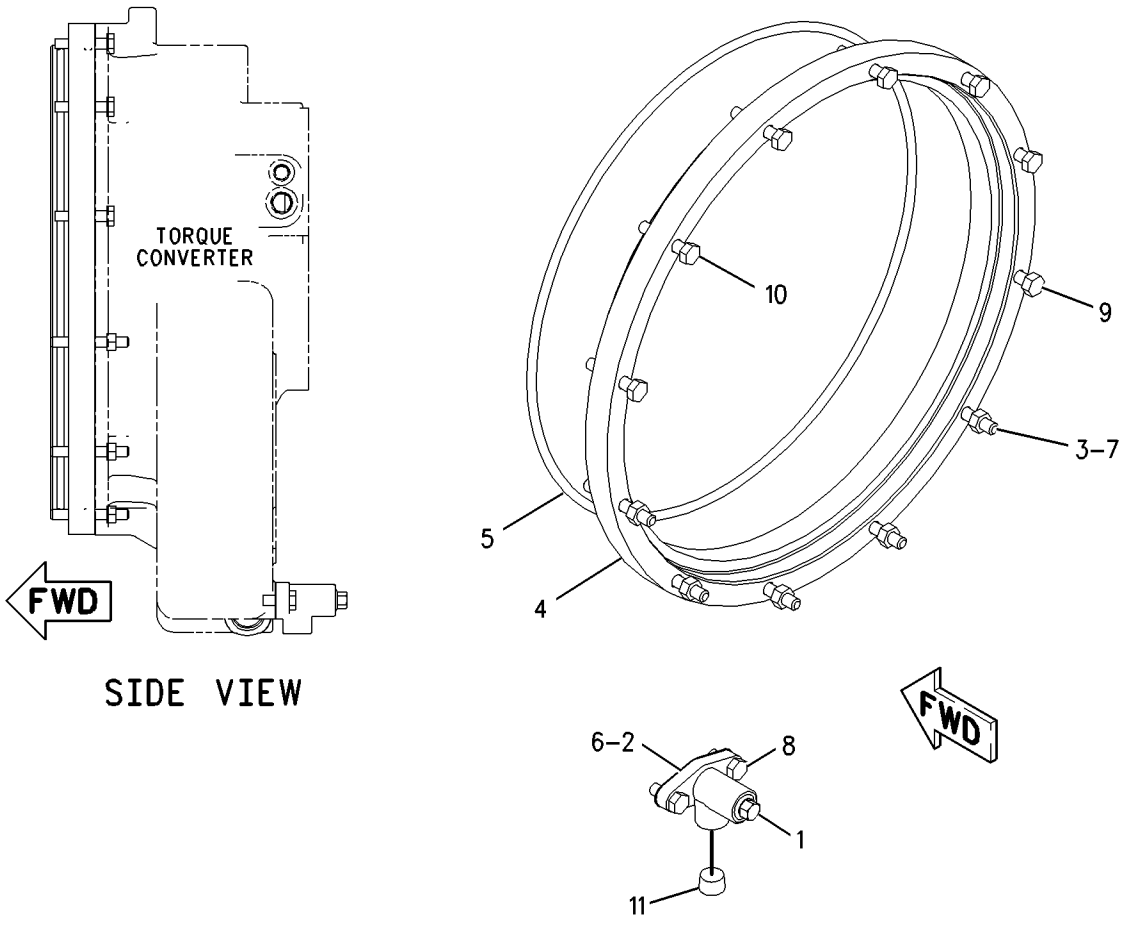

GRAPHIC #1 **<END>** g00956167

108-7039 MOUNTING GP-TRANSMISSION

S/N: CBJ1-UP

PART OF 175-1157 POWER TRAIN AR

SMCS-3030 **i00821657**

NOTE	REF NO	GRAPHIC REF	PART NUMBER	QTY	PART NAME 1 2 3 4 5 6 (PRODUCT LEVEL)	SEE PAGE
	1	1	**7M-0475**	1	RING-SEALING	
	2	1	**8T-4223**	6	WASHER-HARD (3MM THK)	
M	3	1	**8T-4244**	2	NUT (M12X1.75 THD)	
M	4	1	**8T-4184**	4	BOLT (M12X1.75X45MM)	
	5	1	**112-5057**	1	BRACKET AS	
M	6	1	**8T-4194**	23	BOLT (M12X1.75X50MM)	
	7	1	**3T-9315**	2	SPACER	
	8	1	**5V-0564**	2	SPACER	
	9	1	**5D-7523**	1	SEAL-O-RING	
	10	1	**112-5056**	1	BRACKET	
	11	1	**8M-5254**	2	SEAL-O-RING (31.34MM ID)	

M-METRIC PART

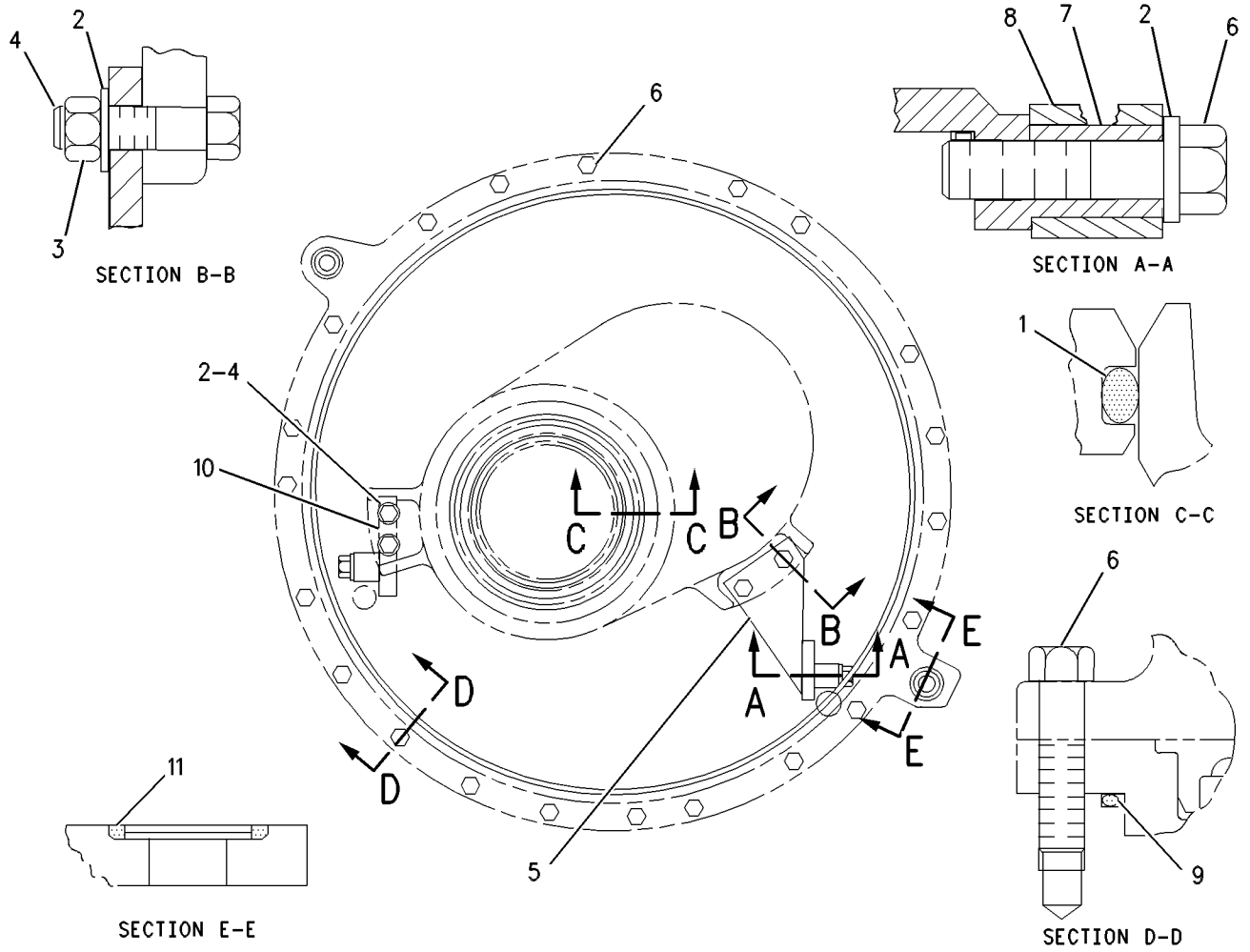

GRAPHIC #1 **<END>** g00402358

209-7222 PLANETARY GP-TRANSMISSION

S/N: CGD1-UP

PART OF 175-1171 TRANSMISSION AR

SMCS-3155, 3160, 3169, 3170, 3187, 3189, 3190, 3304 **i01895709**

NOTE	REF NO	GRAPHIC REF	PART NUMBER	QTY	PART NAME 1 2 3 4 5 6 (PRODUCT LEVEL)	SEE PAGE
	1	1,2	**9S-4182**	1	PLUG	
	2	1,2	**113-9212**	1	DISC-THRUST	
	3	1,2	**7G-9224**	1	RING-SEAL	
	4	1,2,3,4	**6P-7773**	3	RING-SEAL	
	5	1,2	**7G-3707**	1	PISTON-CLUTCH	
	6	1,2	**8E-8117**	1	GEAR-SUN (32 TEETH)	
	7	1,2	**144-0761**	1	CARRIER-PLANETARY	
	8	1,2	**3T-4629**	1	GEAR-RING (80 TEETH)	
	9	1,2,3,4	**6Y-5352**	13	DISC-FRICTION	
	10	1,2,3,4	**7G-0437**	13	PLATE-CLUTCH	
	11	1,2	**7G-4311**	1	COUPLING	
	12	1,2	**8E-8118**	1	CARRIER-RING	
	13	1,2	**7G-4306**	1	PLATE-CENTER	
	14	1,2	**9P-5558**	1	RING-RETAINING	
	15	1,2,3,4	**7G-8121**	2	RING-LOCK	
	16	1,2	**6V-1649**	2	BALL BEARING	
	17	1,2	**108-5618**	1	GEAR-SUN (33 TEETH)	
	18	1,2	**108-5622**	1	GEAR-RING (71 TEETH)	
	19	1,2	**7G-3708**	1	PISTON-CLUTCH	
	20	1,2	**7G-5674**	1	RING-SEAL	
	21	1,2	**7G-4302**	1	HOUSING-CLUTCH	
	22	1,2,3,4	**7G-5675**	3	RING-SEAL	
	23	1,2	**5K-9106**	1	RING-RETAINING	
	24	1,2	**6V-0834**	1	RING-RETAINING	
	25	1,2	**108-5619**	1	GEAR-SUN (33 TEETH)	
	26	1,2	**108-5620**	1	CARRIER-PLANETARY	
	27	3,4	**108-5623**	1	GEAR-RING (71 TEETH)	
	28	3,4	**3T-6795**	2	PISTON-CLUTCH	
	29	1,2	**6V-0835**	1	RING-RETAINING	
	30	3,4	*6T-0097*	1	HOUSING AS-CLUTCH	
		3,4	**4K-8603**	1	PLUG-CUP	
		3,4	**6B-6863**	1	PIN-SPRING	
		3,4	**9G-1488**	1	HOUSING-CLUTCH	
	31	3,4	**9M-1503**	1	RING-METAL SEAL	
	32	3,4	**108-5621**	1	CARRIER-PLANETARY	
	33	3,4	**6P-7983**	1	RING-RETAINING	
	34	3,4	**6P-7968**	3	PLATE-CLUTCH	
	35	3,4	**3T-9960**	4	DISC-FRICTION	
	36	3,4	**3T-3447**	1	GEAR AS-SUN (44 TEETH)	
		3,4	**8S-0527**	2	PLUG-CUP	
	37	3,4	**8E-1484**	1	HOUSING AS-CLUTCH	
		3,4	**3S-8109**	1	PIN-SPRING	
		3,4	**4S-8537**	1	DOWEL	
	38	3,4	**6T-3009**	1	PISTON	
	39	3,4	**108-2470**	1	HOUSING-SUPPORT	
	40	3,4	**6V-1586**	1	RING-RETAINING	
	41	3,4	**7G-5730**	1	RING-SEAL	
	42	3,4	**6P-7985**	2	RING-SEAL	
	43	3,4	**7X-7608**	1	RING-RETAINING	
	44	3,4	**6Y-3484**	1	BALL BEARING	
	45	3,4	**3P-3441**	1	RING-RETAINING	
	46	1,2	**8E-8115**	1	SHAFT AS-OUTPUT	
		1,2	**6Y-0306**	2	BEARING-SLEEVE	
		1,2	**8S-3426**	1	DOWEL	
	47	3,4	**9G-1233**	1	COUPLING	
	48	3,4	**6P-7772**	1	RING-SEAL	

209-7222 **PLANETARY GP-TRANSMISSION** *(contd.)* **i01895709**

NOTE	REF NO	GRAPHIC REF	PART NUMBER	QTY	PART NAME 1 2 3 4 5 6 (PRODUCT LEVEL)	SEE PAGE
	49	3,4	**8E-1666**	1	PLATE-RETAINER	
	50	3,4	**9G-1234**	5	SPRING-DISC	
	51	3,4	**9H-5604**	1	RING-RETAINING	
	52	3,4	**6I-8488**	1	GEAR-RING (82 TEETH)	
	53	3,4	**035-3360**	1	RING-RETAINING	
	54	3,4	**6V-7568**	6	BOLT (1/2-13X14.86 IN)	
	55	1,2,3,4	**5P-8245**	9	WASHER-HARD (13.5X25.5X3MM THK)	
	56	3,4	**213-3719**	1	PLATE-REACTION	
	57	3,4	**7G-6945**	8	SPRING	
	58	3,4	**7G-3710**	4	ROD	
	59	3,4	**7G-5614**	3	SHAFT-PLANETARY	
	60	3,4	**8E-8297**	6	DISC-THRUST	
	61	3,4	**5P-3131**	3	BEARING AS-ROLLER	
	62	3,4	**6P-2233**	3	GEAR-PLANETARY (20 TEETH)	
	63	1,2,3,4	**3S-8109**	11	PIN-SPRING	
	64	1,2	**2D-0516**	3	BOLT (1/2-13X8.75 IN)	
	65	1,2	**8E-8299**	24	DISC-THRUST	
	66	1	**8P-1916**	8	GEAR-PLANETARY (20 TEETH)	
	67	1,2	**3T-7584**	4	SPRING	
	68	1	**5P-3930**	8	BEARING AS-ROLLER	
	69	1	**6P-7743**	4	SHAFT-PLANETARY	
	70	1,2	**7S-4534**	4	BEARING-CAGED	
	71	1,2	**3T-6769**	4	GEAR-PLANETARY (24 TEETH)	
	72	1,2	**6P-7742**	4	SHAFT-PLANETARY	
	73	1,2	**5P-9186**	2	SEAL-O-RING	
	74	1,2	**3T-0810**	1	SLEEVE	
	75	1,2	**9S-4190**	2	PLUG (TRANSMISSION DRAIN)	
	76	1,2	**2M-9780**	2	SEAL-O-RING (TRANSMISSION DRAIN PLUG)	
	77	1,2	**8P-8950**	2	RING-METAL SEAL	
	78	1,2	**3K-1432**	2	RING-METAL SEAL	
	79	1,2	**3P-7019**	2	SEAL-METAL	
	80	1,2	**7B-7515**	1	BALL BEARING	
	81	1,2	**5J-3864**	1	RING-LOCK	
	82	1,2	**9G-8615**	1	COVER	
	83	1,2	**8P-0058**	1	GASKET-COVER	
	84	1,2	**202-2380**	1	SHAFT AS-INPUT	
		1,2	**156-4406**	1	PLUG-PIPE	
	85	1,2	**1M-8649**	1	RING-RETAINING	
M	86	1,2	**8T-4136**	10	BOLT (M10X1.5X25MM)	
	87	1,2	**108-2468**	1	HOUSING-CLUTCH	
	88	1,2	**108-2472**	1	COVER-TRANSMISSION	
	89	1,2	**9S-4191**	1	PLUG	
	90	1,2	**3J-1907**	7	SEAL-O-RING	
M	91	1,2	**8T-4196**	6	BOLT (M10X1.5X35MM)	
	92	1,2	**201-8124**	1	COVER	
	93	1,2	**108-3055**	1	GASKET	
	94	1,2	**138-4086**	1	GASKET	
	95	1,2	**9S-4183**	1	PLUG	
	96	1,2	**3D-2824**	1	SEAL-O-RING	
	97	1,2	**8D-5096**	1	SEAL-O-RING	
Y	98	3,4	**193-2550**	2	SENSOR GP-SPEED	162
	99	1,2	**180-4165**	1	COVER AS	
	100	1,2	**8M-5254**	4	SEAL-O-RING	
M	101	1,2	**8T-5005**	8	BOLT (M10X1.50X70MM)	
	102	1,2	**9S-4188**	1	PLUG (TRANSMISSION DRIVE)	
	103	1,2	**4K-1388**	1	SEAL-O-RING (TRANSMISSION DRAIN PLUG)	
	104	1,2	**3J-7354**	1	SEAL-O-RING	
	105	1,2	**6V-3965**	6	FITTING AS	
	106	1,2	**6V-0852**	6	CAP-DUST (TRANSMISSION COVER FITTING)	

M-METRIC PART
Y-SEPARATE ILLUSTRATION

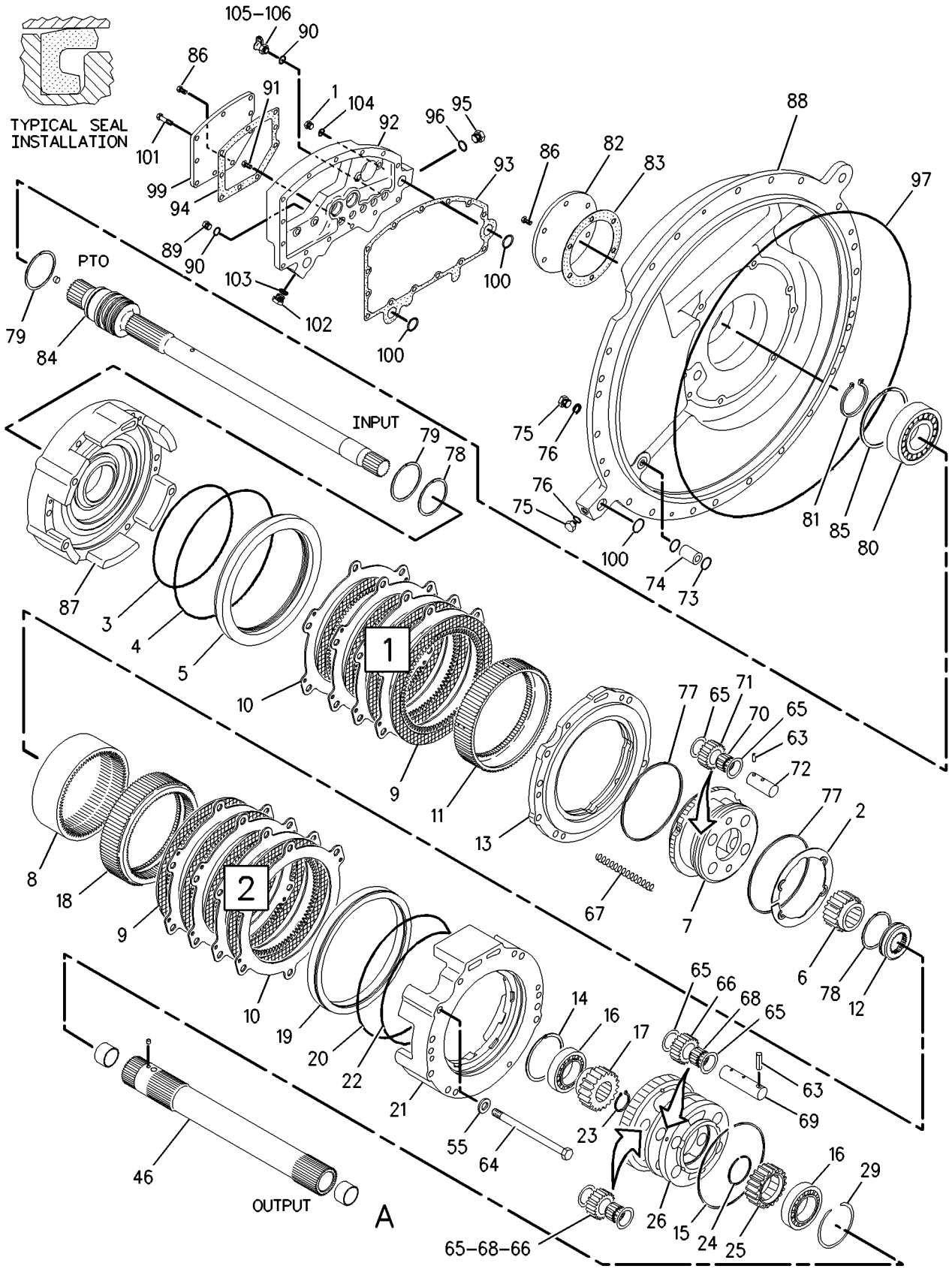

GRAPHIC #1 g00939417

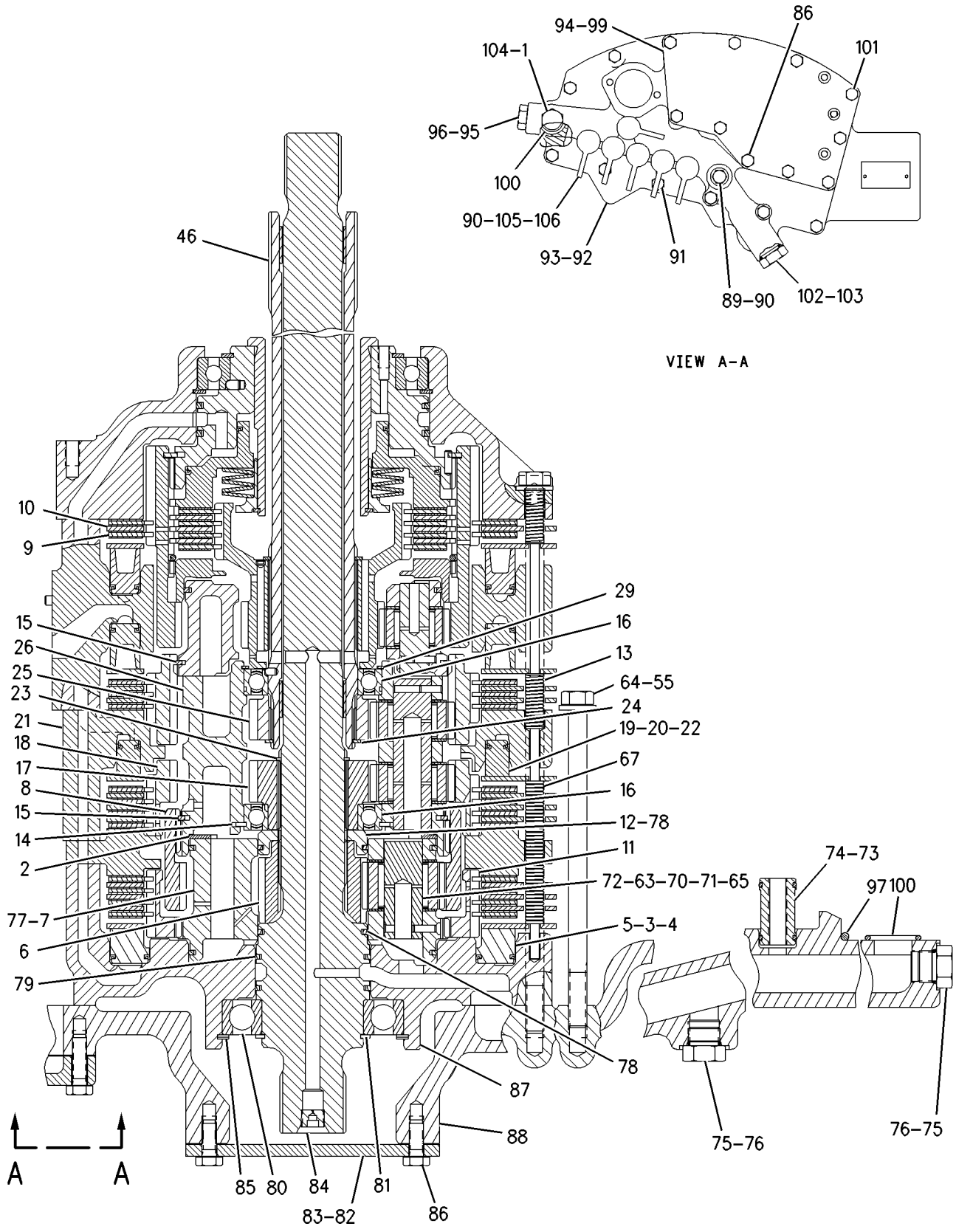

GRAPHIC #2

g00941000

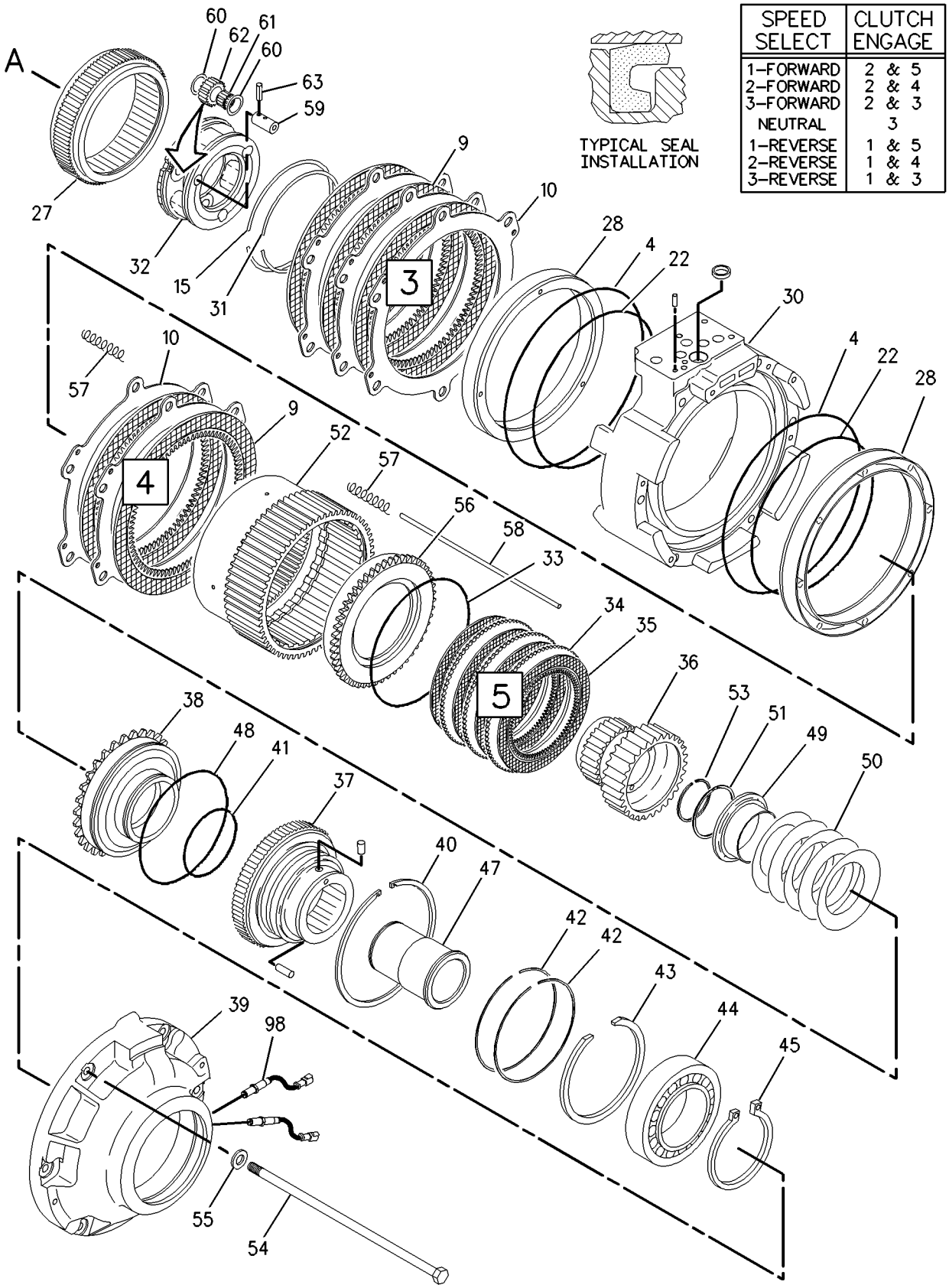

SPEED SELECT	CLUTCH ENGAGE
1–FORWARD	2 & 5
2–FORWARD	2 & 4
3–FORWARD	2 & 3
NEUTRAL	3
1–REVERSE	1 & 5
2–REVERSE	1 & 4
3–REVERSE	1 & 3

GRAPHIC #3 g00939418

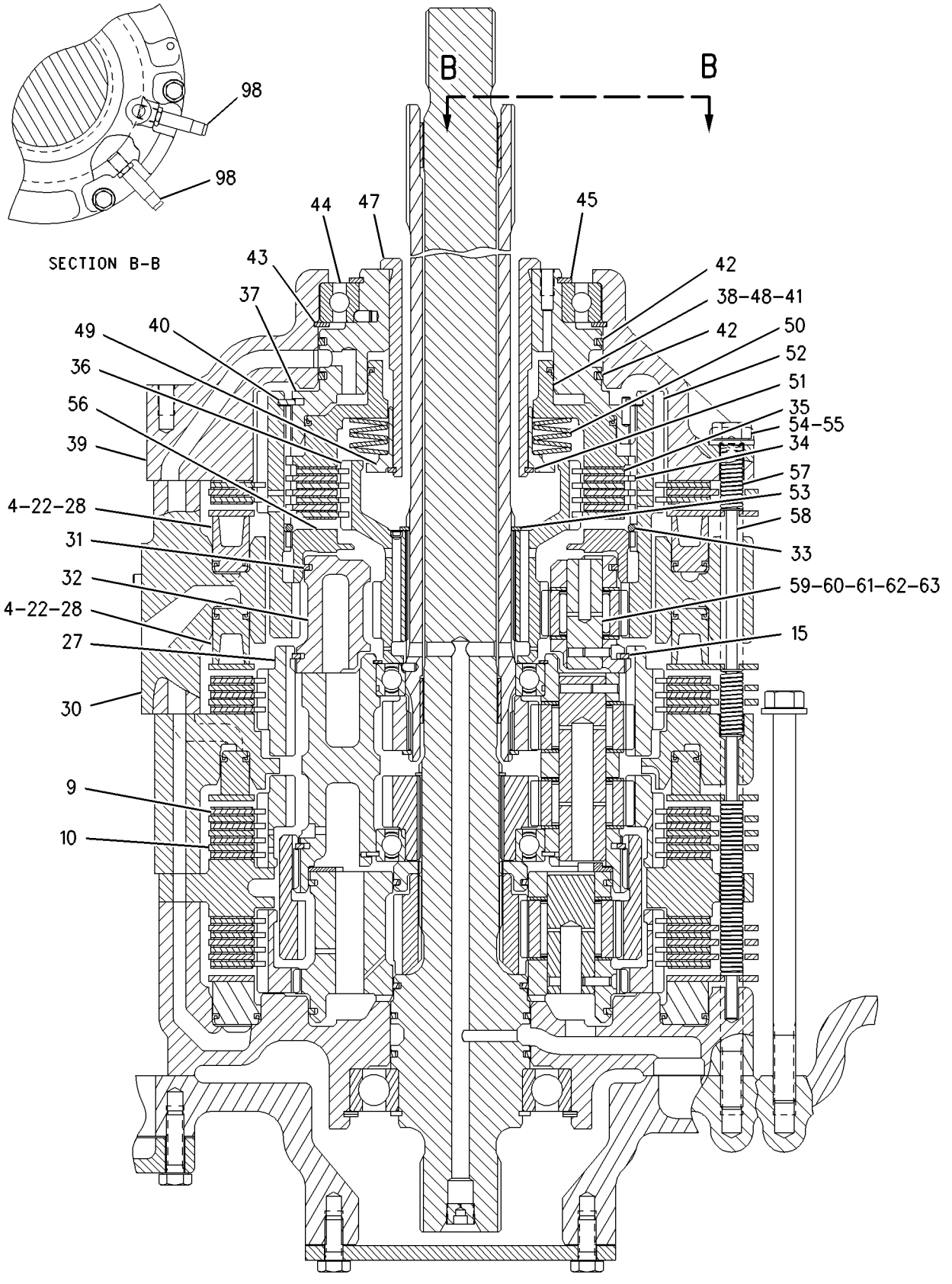

GRAPHIC #4 **<END>** g00941001

POWER TRAIN

175-1157 POWER TRAIN AR

S/N: CBJ1-UP

PART OF 156-9493 GENERAL AR

SMCS-3000 **i01829391**

NOTE	PART NUMBER	QTY	PART NAME 1 2 3 4 5 6 (PRODUCT LEVEL)	SEE PAGE
Y	*195-0645*	1	BRAKE GP-STEERING	292
Y	**196-1864**	2	FINAL DRIVE GP	193
Y	*163-1059*	1	LINES GP-POWER TRAIN OIL	199
Y	*224-5367*	1	MOUNTING GP-TORQUE CONVERTER	203
Y	*108-7039*	1	MOUNTING GP-TRANSMISSION	204
Y	*169-4548*	1	PLATE & FILM GP	513
Y	*6I-8078*	2	SEGMENT GP-SPROCKET	216
Y	*178-6690*	1	SHAFT GP-DRIVE	217
Y	*135-6161*	1	SHAFT GP-STEERING CLUTCH	218
Y	*175-2297*	1	TORQUE CONVERTER GP	221
Y	**175-1171**	1	TRANSMISSION AR	223

Y-SEPARATE ILLUSTRATION

<END>

175-2787 PUMP GP-GEAR–POWER TRAIN OIL

S/N: CBJ1-UP

PART OF 163-1059 LINES GP-POWER TRAIN OIL

SMCS-3115, 3153 **i01829432**

NOTE	REF NO	GRAPHIC REF	PART NUMBER	QTY	PART NAME 1 2 3 4 5 6 (PRODUCT LEVEL)	SEE PAGE
Y	1	1	**178-8613**	1	PUMP GP-GEAR	214
	2	1	**5F-3106**	1	SEAL-O-RING	
	3	1	**8T-4121**	3	WASHER-HARD (11X21X2.5MM THK)	
M	4	1	**8T-4182**	1	BOLT (M10X1.5X45MM)	
M	5	1	**8T-6466**	1	BOLT (M10X1.50X60MM)	
M	6	1	**8T-4195**	1	BOLT (M10X1.5X30MM)	
	7	1	**3H-1461**	1	SEAL-O-RING	

M-METRIC PART
Y-SEPARATE ILLUSTRATION

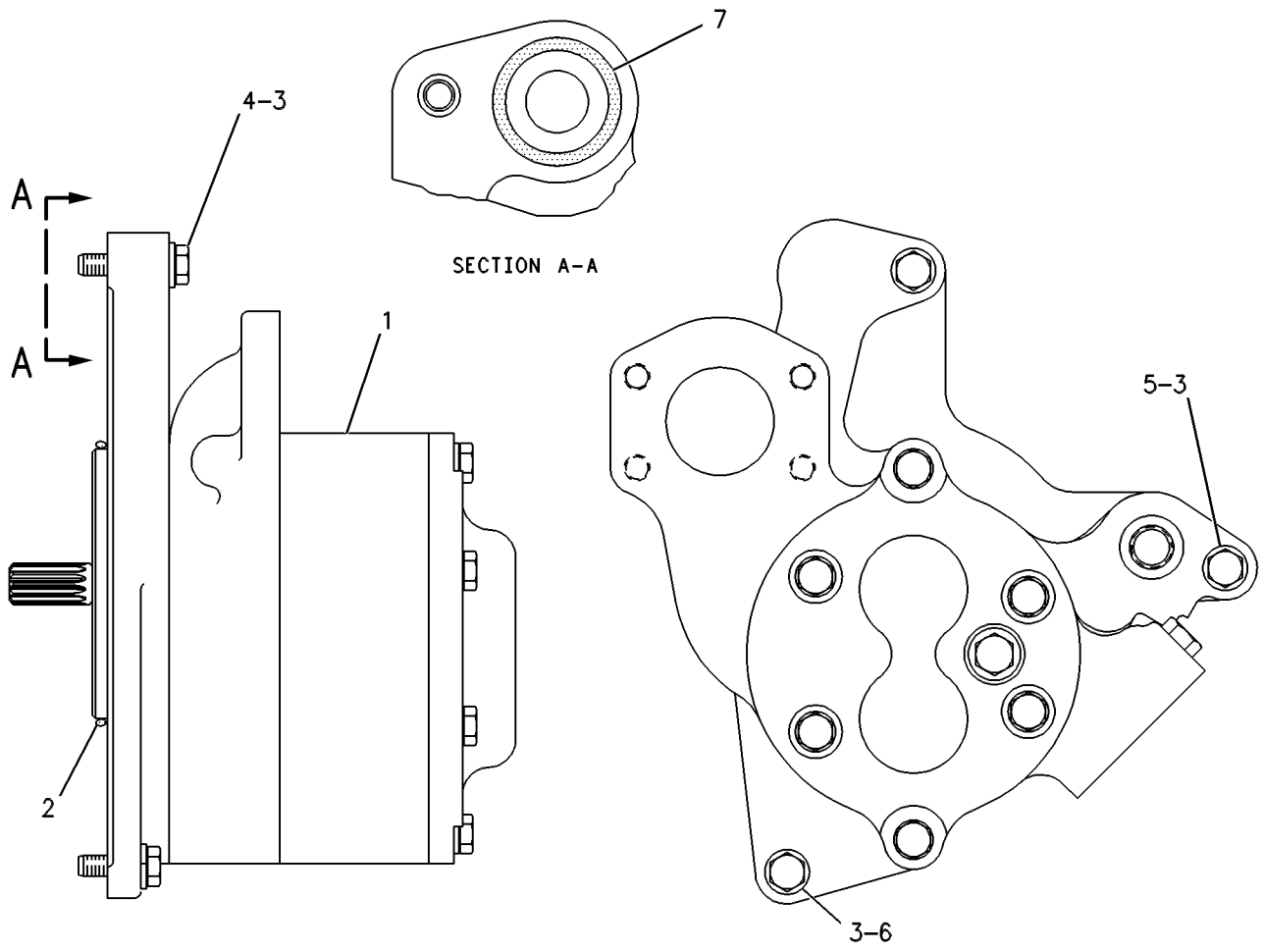

GRAPHIC #1 **<END>** g00262134

178-8613 PUMP GP-GEAR–CONVERTER SCAVENGE–CONVERTER/COOLER LUBRICATION–TMSN CHARGING

S/N: CBJ1-UP

3 SECTION

PART OF 175-2787 PUMP GP-GEAR

SMCS-3115, 3153 **i01829450**

NOTE	REF NO	GRAPHIC REF	PART NUMBER	QTY	PART NAME 1 2 3 4 5 6 (PRODUCT LEVEL)	SEE PAGE
	1	1	**202-6488**	1	BODY-OIL PUMP (CONVERTER SCAVENGE)	
	2	1	**178-9041**	1	BODY AS-OIL PUMP (TRANSMISSION CHARGING)	
		1	**5M-3320**	1	BEARING-SLEEVE	
		1	**8M-8489**	4	DOWEL	
	3	1	**133-1219**	1	BODY AS-OIL PUMP (CONVERTER/COOLER LUBRICATION)	
		1	**8M-8489**	2	DOWEL	
		1	**131-0167**	1	BEARING-SLEEVE	
M	4	1	**8T-0355**	2	BOLT (M10X1.50X110MM)	
	5	1	**3S-0004**	6	WASHER (0.406X0.728X0.09 IN THK)	
	6	1	**133-1222**	1	COVER AS-OIL PUMP	
		1	**131-0167**	1	BEARING-SLEEVE	
	7	1	**1B-8736**	1	KEY-WOODRUFF	
	8	1	**2D-8009**	3	SEAL-O-RING	
	9	1	**9W-3714**	2	GEAR (12 TEETH)	
	10	1	**178-8612**	1	GEAR (12 TEETH)	
	11	1	**3T-8757**	2	GEAR (12 TEETH)	
	12	1	**1B-8705**	1	KEY-WOODRUFF	
	13	1	**178-8611**	1	GEAR (12 TEETH)	
	14	1	**3H-1461**	1	SEAL-O-RING	
	15	1	**9S-4191**	2	PLUG	
	16	1	**3J-1907**	2	SEAL-O-RING	
M	17	1	**8T-9085**	4	BOLT (M10X1.50X150MM)	
	18	1	**6Y-5010**	8	WASHER (10.16X19X.84MM THK)	

M-METRIC PART

178-8613 **PUMP GP-GEAR** ***(contd.)*** **i01829450**

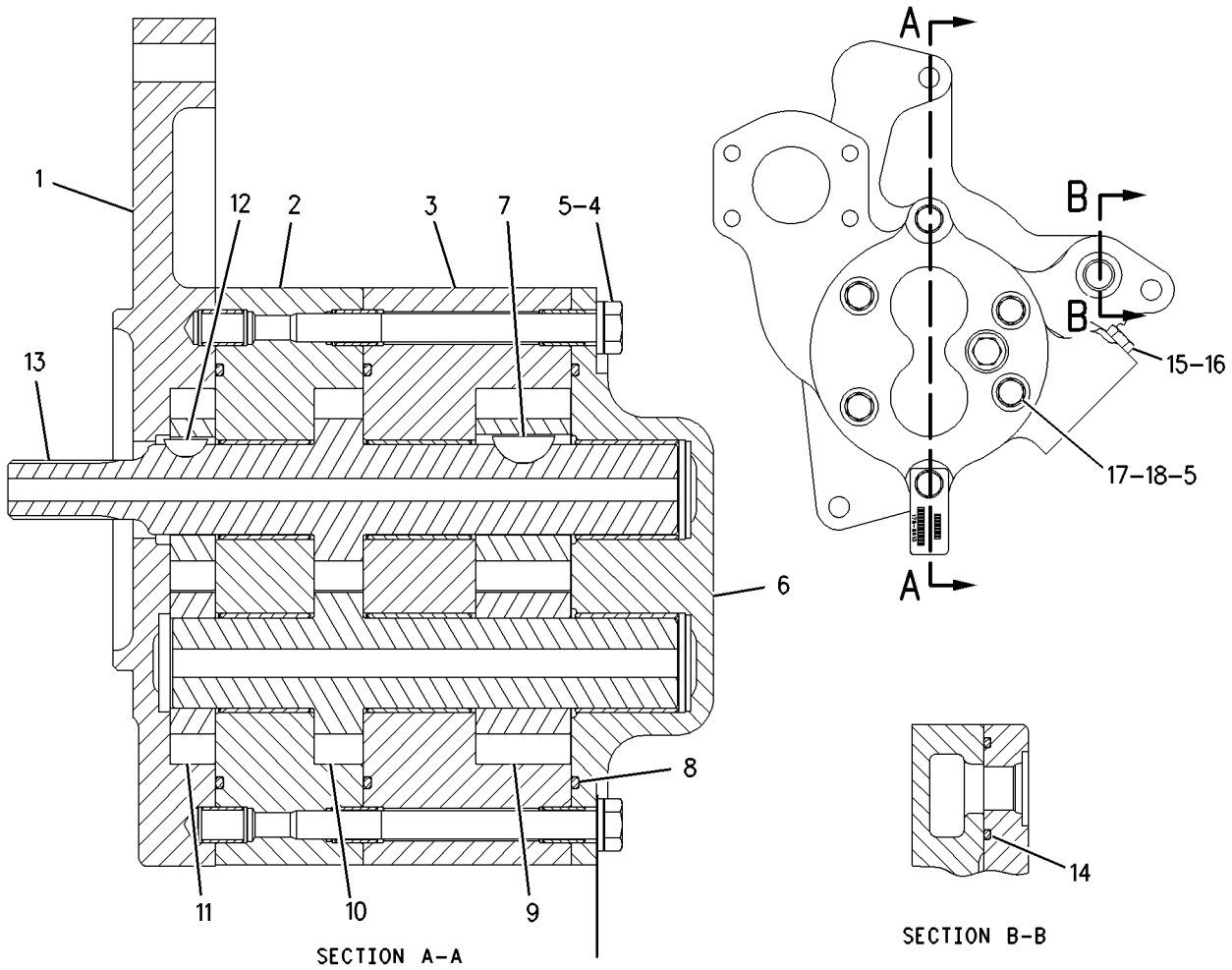

GRAPHIC #1 **<END>** g00942877

6I-8078 SEGMENT GP-SPROCKET

S/N: CBJ1-UP

PART OF 175-1157 POWER TRAIN AR

SMCS-4155 **i00599656**

NOTE	REF NO	GRAPHIC REF	PART NUMBER	QTY	PART NAME 1 2 3 4 5 6 (PRODUCT LEVEL)	SEE PAGE
	1	1	**6I-8077**	5	SEGMENT-SPROCKET	
	2	1	**2S-5658**	25	WASHER-HARD (3.0MM THK)	
	3	1	**6V-0937**	25	BOLT-SPROCKET	
	4	1	**7H-3607**	25	NUT	

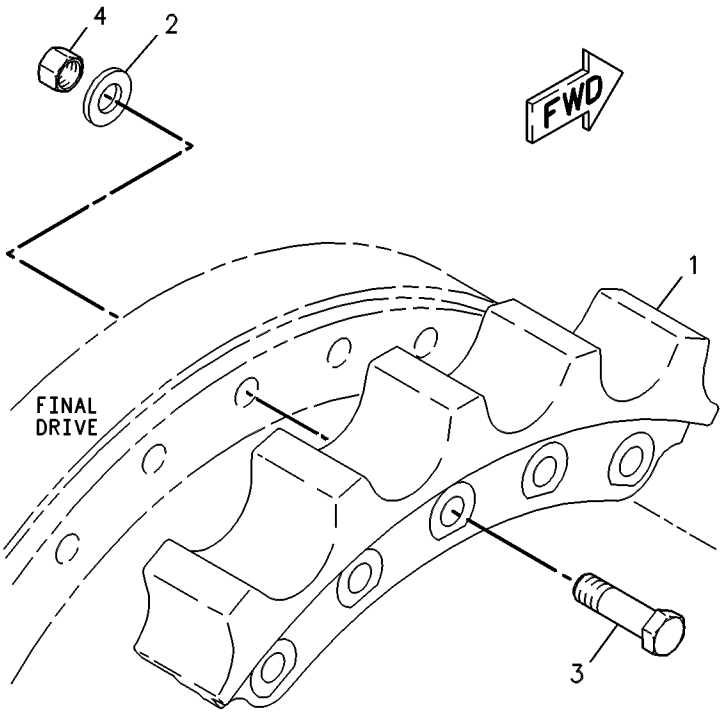

GRAPHIC #1 **<END>** g00252401

POWER TRAIN

178-6690 SHAFT GP-DRIVE

S/N: CBJ1-UP

PART OF 175-1157 POWER TRAIN AR

SMCS-3253 **i01829883**

NOTE	REF NO	GRAPHIC REF	PART NUMBER	QTY	PART NAME 1 2 3 4 5 6 (PRODUCT LEVEL)	SEE PAGE
	1	1	**108-8296**	1	YOKE AS	
		1	**4B-4098**	1	PLUG-CUP	
		1	**7F-6935**	1	RACE-BEARING INNER	
Y	2	1	**222-3351**	1	UNIVERSAL JOINT GP	224
M	3	1	**6V-5843**	8	BOLT (M10X1.50X45MM)	
	4	1	**9X-2027**	8	WASHER (11X18X2MM THK)	

M-METRIC PART
Y-SEPARATE ILLUSTRATION

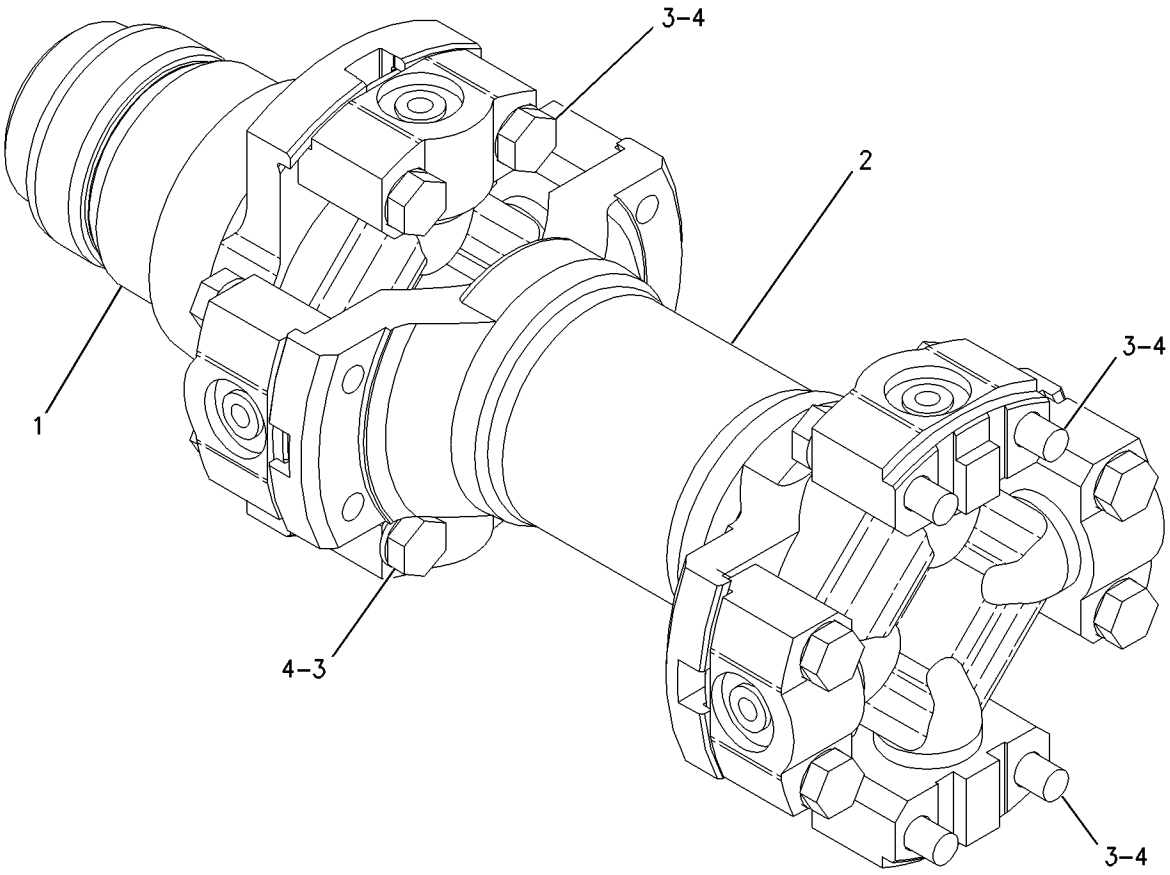

GRAPHIC #1 **<END>** g00932307

135-6161 SHAFT GP-STEERING CLUTCH

S/N: CBJ1-UP

PART OF 175-1157 POWER TRAIN AR

SMCS-4119 **i00598424**

NOTE	REF NO	GRAPHIC REF	PART NUMBER	QTY	PART NAME 1 2 3 4 5 6 (PRODUCT LEVEL)	SEE PAGE
	1	1	**135-6162**	1	SHAFT	
	2	1	**135-6163**	1	SHAFT	

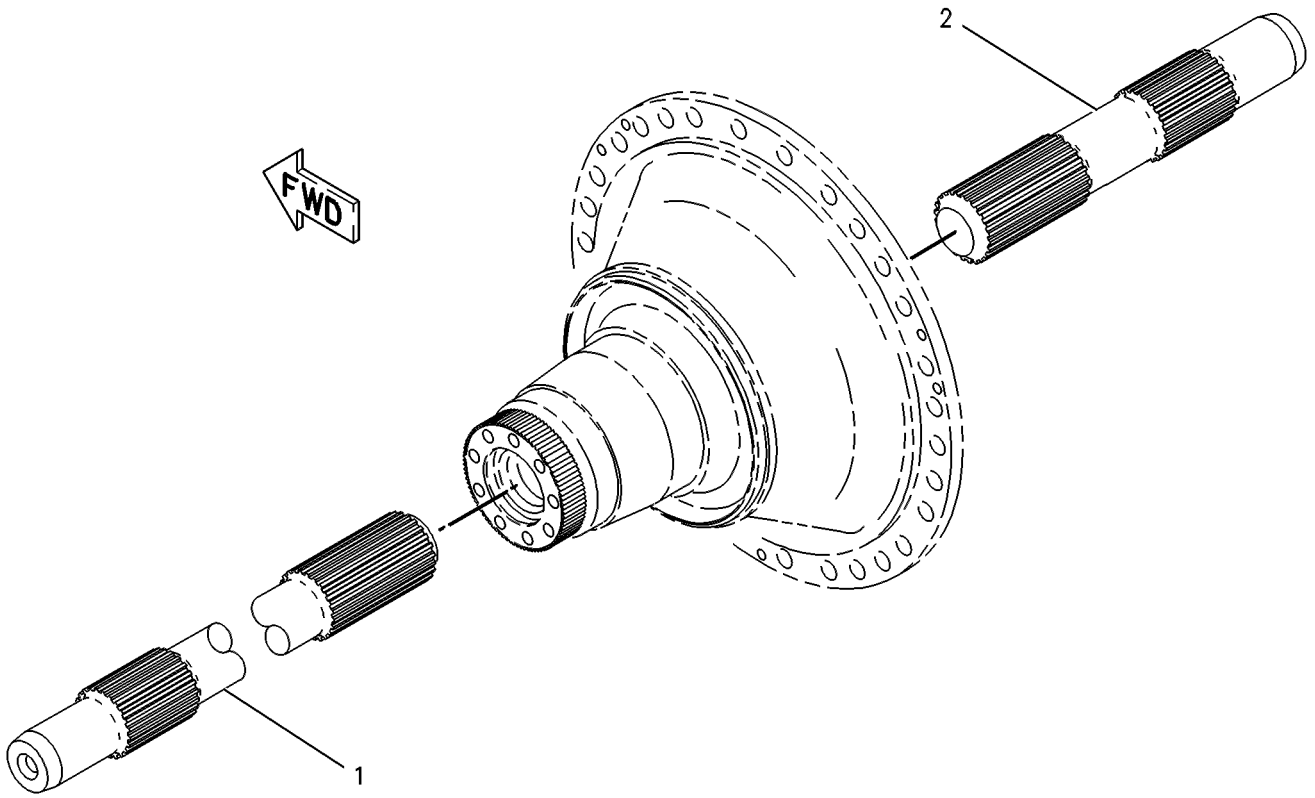

GRAPHIC #1 **<END>** g00262521

175-2296 TORQUE CONVERTER GP

S/N: BZA1-UP

PART OF 175-2297 TORQUE CONVERTER GP

SMCS-3101, 3102, 3105, 3127, 3128, 3129, 3130, 3131, 3134, 3135, 3136

i01829878

NOTE	REF NO	GRAPHIC REF	PART NUMBER	QTY	PART NAME 1 2 3 4 5 6 (PRODUCT LEVEL)	SEE PAGE
	1	1	**6Y-3159**	1	SHAFT-OUTPUT	
	2	1	**1T-0043**	1	BALL BEARING	
	3	1	**1J-6472**	1	RING-RETAINING	
	4	1	**129-1262**	1	CARRIER AS	
		1	**4S-8541**	1	DOWEL	
	5	1	**129-2380**	1	BALL BEARING	
	6	1	**6Y-3167**	1	GEAR-PUMP DRIVE (77 TEETH)	
	7	1	**8E-6647**	1	SPACER	
	8	1	**6Y-1084**	1	IMPELLER-CONVERTER	
	9	1	**6Y-3151**	1	STATOR-CONVERTER	
	10	1	**218-3598**	1	HOUSING	
	11	1	**6Y-3149**	1	TURBINE-CONVERTER	
M	12	1	**6V-1820**	34	BOLT (M10X1.50X30MM)	
	13	1	**6V-5839**	34	WASHER (11X21X2.5MM THK)	
	14	1	**8E-6539**	1	HUB AS	
		1	**4S-8541**	1	DOWEL	
	15	1	**8E-5247**	1	BALL BEARING	
	16	1	**8E-6648**	1	SPACER (60.2X80X3MM THK)	
	17	1	**064-3843**	1	RING-SNAP	
	18	1	**6Y-1087**	1	COVER-END	
	19	1	**6V-8128**	2	RING-RETAINING	
	20	1	**6Y-1093**	1	ADAPTER-SPLINED	
	21	1	**5K-9065**	1	RING-RETAINING	
	22	1	**3E-6799**	1	SEAL-O-RING	
	23	1	**5P-6414**	2	RING-RETAINING	
M	24	1	**6V-7673**	8	BOLT (M12X1.75X50MM)	
	25	1	**1T-1621**	1	RING-SEAL	
	26	1	**1T-0234**	1	RING-METAL SEAL	

M-METRIC PART

175-2296 **TORQUE CONVERTER GP** *(contd.)* **i01829878**

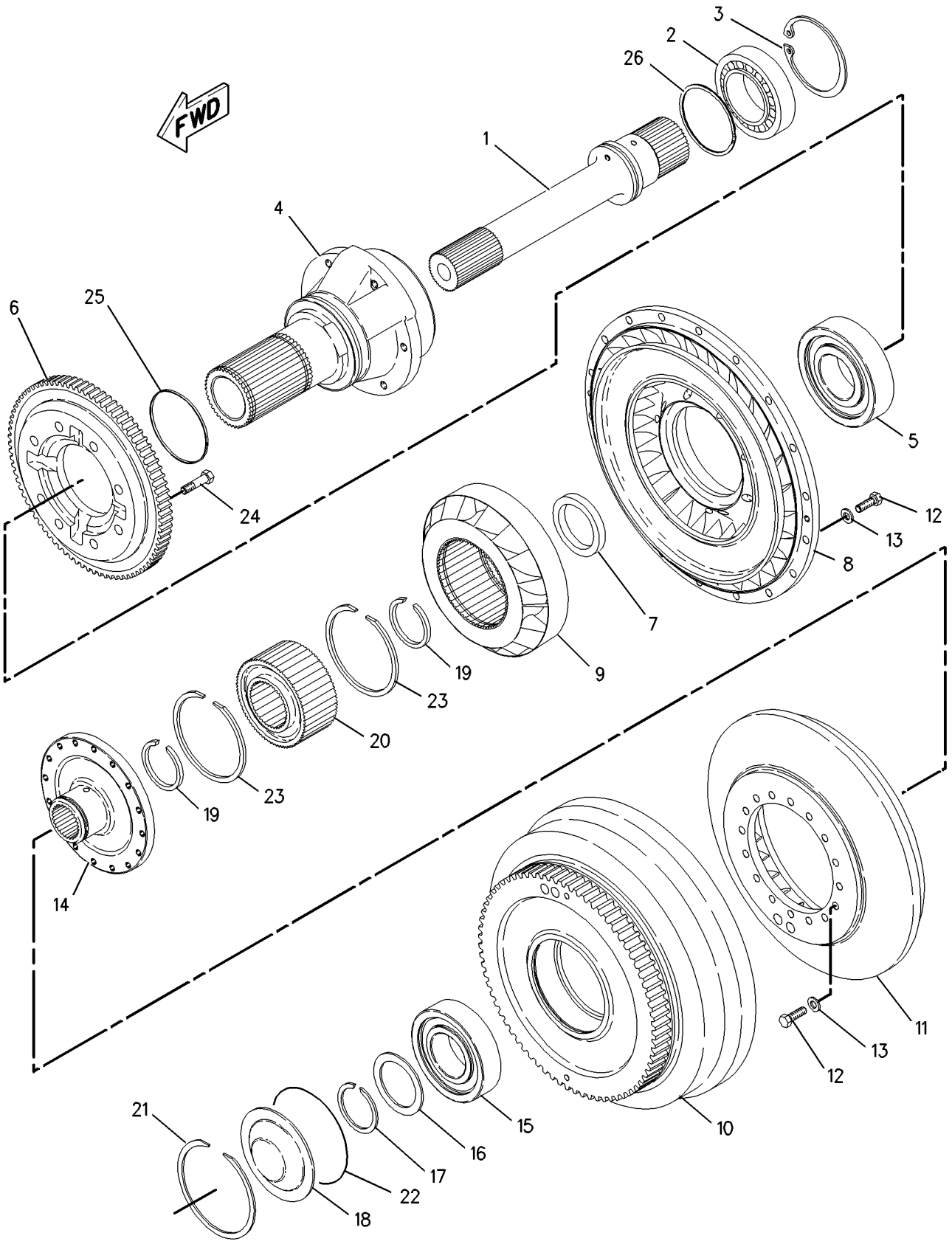

GRAPHIC #1 **<END>** g00773718

175-2297 TORQUE CONVERTER GP

S/N: CBJ1-UP

PART OF 175-1157 POWER TRAIN AR

SMCS-3101, 3102, 3105, 3127, 3128, 3129, 3130, 3131, 3134, 3135, 3136

i01892747

NOTE	REF NO	GRAPHIC REF	PART NUMBER	QTY	PART NAME 1 2 3 4 5 6 (PRODUCT LEVEL)	SEE PAGE
Y	1	1	*175-2296*	1	TORQUE CONVERTER GP	219
	2	1	**225-4264**	1	HOUSING	
	3	1	**9F-1399**	1	SEAL-O-RING	
	4	1	**9X-7719**	1	SEAL-LIP	
	5	1	**106-0721**	1	YOKE	
	6	1	**5P-5846**	1	SEAL-O-RING	
M	7	1	**8T-4910**	1	BOLT (M12X1.75X60MM)	
	8	1	**7G-3496**	1	RETAINER	
M	9	1	**8T-4195**	8	BOLT (M10X1.5X30MM)	
	10	1	**8T-4121**	8	WASHER-HARD (11X21X2.5MM THK)	
	11	1	**1T-0034**	2	RING-LOCK	
	12	1	**1T-0933**	2	RING-RETAINING	
	13	1	**4B-3665**	2	BALL BEARING	
	14	1	**3K-0360**	1	SEAL-O-RING	
	15	1	**6Y-3164**	1	GEAR-PUMP DRIVE (77 TEETH)	
	16	1	**110-1211**	1	GEAR-PUMP DRIVE (77 TEETH)	
	17	1	**5P-9806**	1	SEAL-O-RING	
	18	1	**1T-1639**	1	RING	
	19	1	**9S-4188**	1	PLUG (TORQUE CONVERTER DRAIN)	
	20	1	**4K-1388**	1	SEAL-O-RING (TORQUE CONVERTER DRAIN PLUG)	
	21	1	**9J-0461**	1	SPRING	
	22	1	**3T-6471**	1	SCREEN AS (TORQUE CONVERTER)	
		1	**3T-6469**	1	WASHER	
	23	1	**7X-7816**	1	PLATE-SERIAL NUMBER (TRANSMISSION)	
	24	1	**9S-4185**	1	PLUG	

M-METRIC PART
Y-SEPARATE ILLUSTRATION

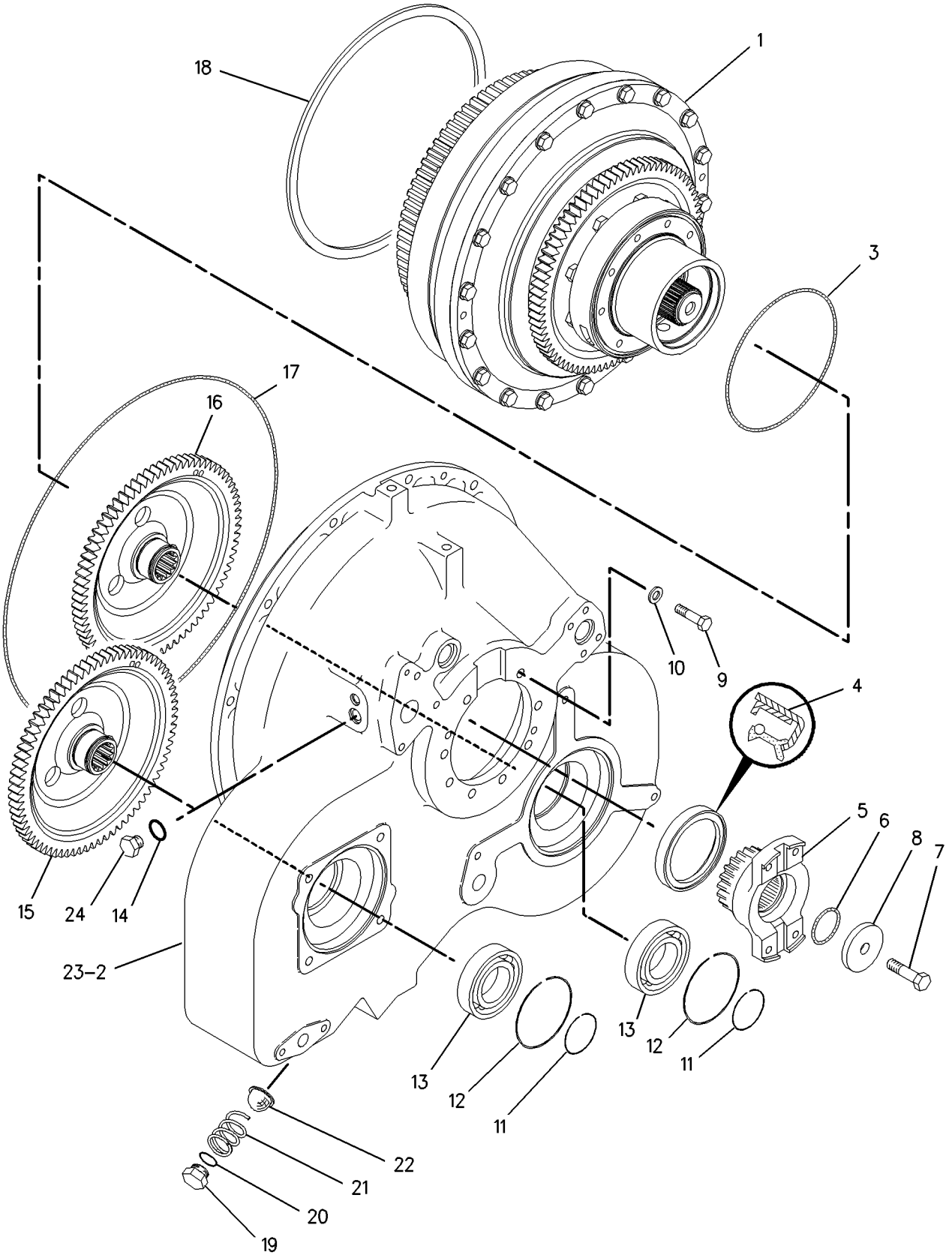

GRAPHIC #1 **<END>** g00918605

175-1171 TRANSMISSION AR

S/N: CGD1-UP

PART OF 175-1157 POWER TRAIN AR

SMCS-3030, 3060, 3160 **i01829853**

NOTE	PART NUMBER	QTY	PART NAME 1 2 3 4 5 6 (PRODUCT LEVEL)	SEE PAGE
Y	*205-3603*	1	CONTROL GP-TRANSMISSION	190
Y	*178-3681*	1	GEAR GP-BEVEL & TRANSFER	195
Y	*209-7222*	1	PLANETARY GP-TRANSMISSION	205

Y-SEPARATE ILLUSTRATION

<END>

222-3351 UNIVERSAL JOINT GP

S/N: CBJ1-UP

PART OF 178-6690 SHAFT GP-DRIVE

SMCS-3251, 3253 **i01829885**

NOTE	REF NO	GRAPHIC REF	PART NUMBER	QTY	PART NAME 1 2 3 4 5 6 (PRODUCT LEVEL)	SEE PAGE
	1	1	**108-6587**	2	BEARING	
	2	1	**222-3352**	1	TUBE	
M	3	1	**6V-5843**	8	BOLT (M10X1.50X45MM)	
	4	1	**9X-2027**	8	WASHER (11X18X2MM THK)	

M-METRIC PART

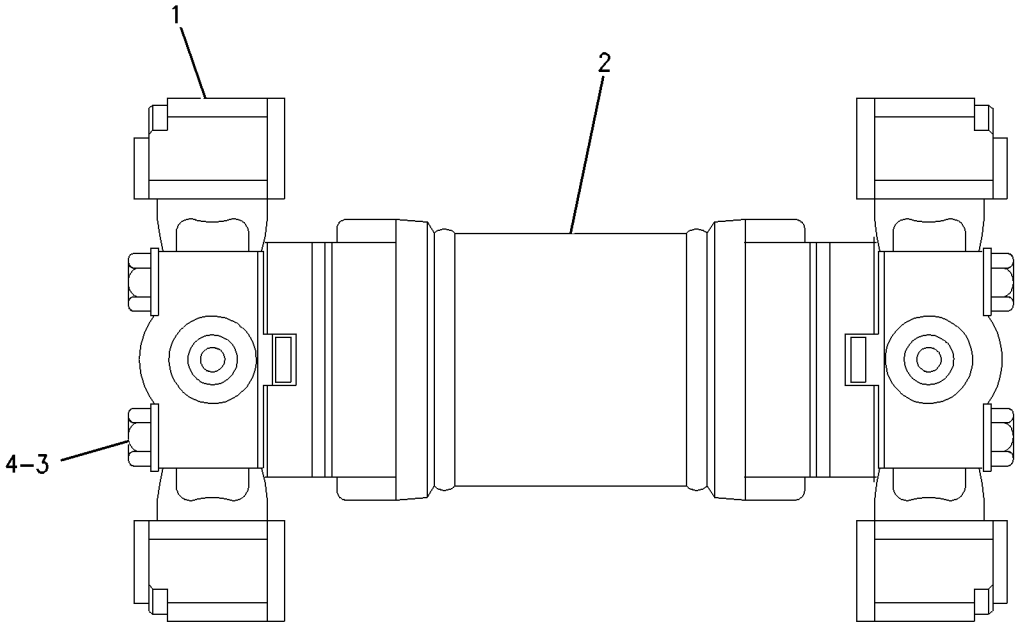

GRAPHIC #1 **<END>** g00938014

216-5338 VALVE GP-MODULATING—TRANSMISSION CONTROL

S/N: CGD1-UP

FIELD REPLACEMENT FOR 220-4324—PAGE 226

SMCS-3139 **i01890932**

NOTE	REF NO	GRAPHIC REF	PART NUMBER	QTY	PART NAME 1 2 3 4 5 6 (PRODUCT LEVEL)	SEE PAGE
	1	1	**6V-3965**	1	FITTING AS	
	2	1	**145-1144**	1	COIL AS	
	3	1	**164-2108**	1	WASHER (13.03X25.4X2.38MM THK)	
	4	1	**167-9524**	1	NUT-SELF LOCKING (1/2-28 THD)	
	5	1		1	VALVE AS	
	6	1	**3J-1907**	1	SEAL-O-RING	

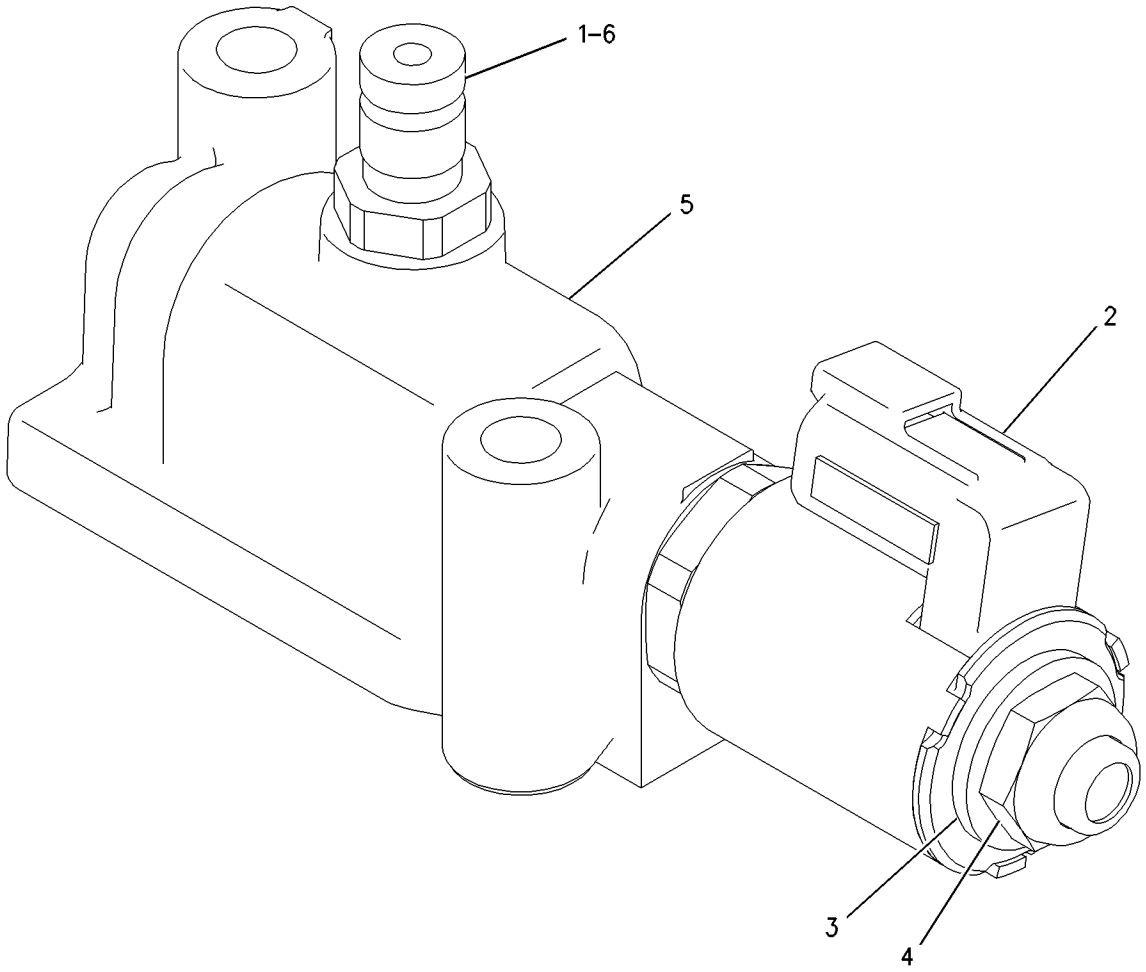

GRAPHIC #1 **<END>** g00913352

220-4324 VALVE GP-MODULATING–TRANSMISSION CONTROL

S/N: CGD1-UP

PART OF 205-3603 CONTROL GP-TRANSMISSION

FIELD REPLACEMENT ORDER 216-5338–PAGE 225

SMCS-3139 **i01892773**

NOTE	REF NO	GRAPHIC REF	PART NUMBER	QTY	PART NAME 1 2 3 4 5 6 (PRODUCT LEVEL)	SEE PAGE
	1	1	**145-1144**	1	COIL AS	
	2	1	**164-2108**	1	WASHER (13.03X25.4X2.38MM THK)	
	3	1	**167-9524**	1	NUT-SELF LOCKING (1/2-28 THD)	
	4	1	*216-5344*	1	VALVE AS	
		1	**118-3731**	1	SPRING	
		1	**112-5282**	1	SEAL-O-RING	
		1	**117-2983**	1	SEAL-O-RING	
		1	**9N-1756**	1	SEAL-O-RING	
	5	1	**3J-1907**	1	SEAL-O-RING	
	6	1	**9S-4191**	1	PLUG	

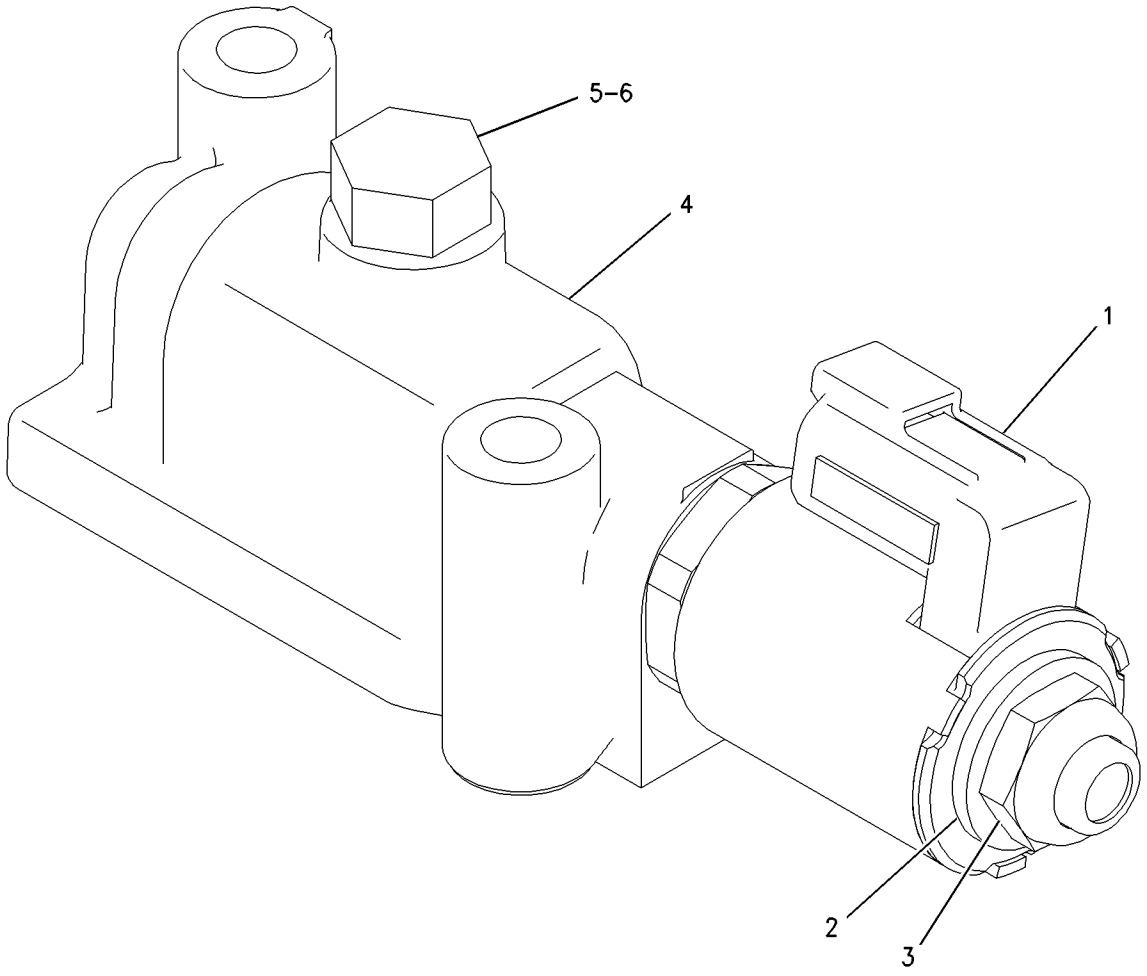

GRAPHIC #1 **<END>** g00913356

186-3396 VALVE GP-PRIORITY—POWER TRAIN OIL

S/N: CBJ1-UP

PART OF 163-1059 LINES GP-POWER TRAIN OIL

SMCS-3180, 4320 **i01895712**

NOTE	REF NO	GRAPHIC REF	PART NUMBER	QTY	PART NAME 1 2 3 4 5 6 (PRODUCT LEVEL)	SEE PAGE
	1	1	**5S-7816**	1	SLUG	
	2	1	**9S-8001**	4	PLUG	
	3	1	**108-6523**	1	ADJUSTER AS	
		1	**4K-2039**	1	SEAL-O-RING	
		1	**7M-8485**	1	SEAL-O-RING	
		1	**8T-4223**	1	WASHER-HARD (13.5X25.5X3MM THK)	
		1	**9U-8069**	1	PLUG	
M		1	**095-1207**	1	NUT (M12X1.75 THD)	
		1	**101-9754**	1	SCREW-ADJUSTMENT	
	4	1	**110-9734**	1	VALVE	
	5	1	**119-7833**	1	ORIFICE	
	6	1	**140-2964**	1	RETAINER AS	
	7	1	**173-2472**	1	SPOOL AS	
		1	**5M-9548**	1	SPRING	
		1	**8M-2537**	1	RETAINER	
		1	**9M-4313**	1	POPPET	
		1	**173-0887**	1	RING-RETAINING	
	8	1	**9S-8004**	1	PLUG	
	9	1	**186-3398**	1	SPRING	
	10	1	**186-3401**	1	PISTON	
Y	11	1	**198-4607**	1	VALVE GP-SOLENOID	232
	12	1	**9S-8007**	3	PLUG	
	13	1	**2S-4078**	1	SEAL-O-RING	
	14	1	**3J-1907**	4	SEAL-O-RING	
	15	1	**4J-7533**	4	SEAL-O-RING	
	16	1	**7J-0204**	3	SEAL-O-RING	
M	17	1	**7X-2546**	2	BOLT (M10X1.50X180MM)	
	18	1	**8C-3101**	1	SEAL-O-RING	
	19	1	**8C-3206**	4	FLANGE-HALF	
	20	1	**8T-4121**	13	WASHER-HARD (11X21X2.5MM THK)	
M	21	1	**8T-4196**	8	BOLT (M10X1.5X35MM)	
	22	1	**9S-4191**	3	PLUG	
M	23	1	**8T-6685**	3	BOLT (M10X1.50X110MM)	

M-METRIC PART
Y-SEPARATE ILLUSTRATION

186-3396 VALVE GP-PRIORITY *(contd.)* **i01895712**

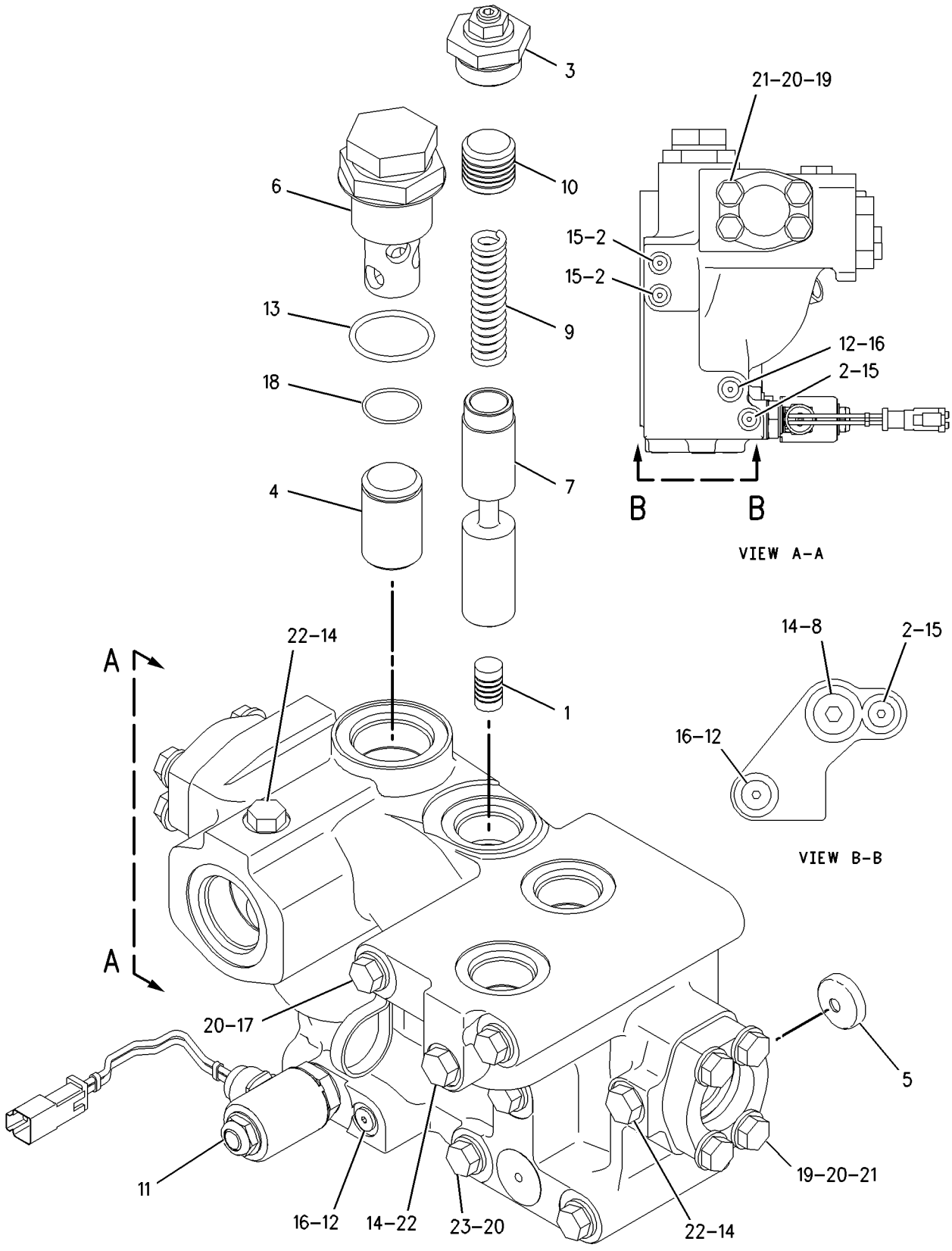

GRAPHIC #1 **<END>** g00925009

6Y-8473 VALVE GP-RELIEF–POWER TRAIN OIL

S/N: CBJ1-UP

PART OF 163-1059 LINES GP-POWER TRAIN OIL

SMCS-3133, 3182 **i01823044**

NOTE	REF NO	GRAPHIC REF	PART NUMBER	QTY	PART NAME 1 2 3 4 5 6 (PRODUCT LEVEL)	SEE PAGE
M	3	1	**8T-4136**	4	BOLT (M10X1.5X25MM)	
	4	1	**8T-4121**	4	WASHER-HARD (11X21X2.5MM THK)	
	5	1	**3J-1907**	1	SEAL-O-RING	
	6	1	**6V-3965**	1	FITTING AS	
B	7	1	**4M-1751**	3	SPACER (15.09X0.4MM THK)	
B	8	1	**5S-7001**	5	SPACER (7.54X14.15X.9MM THK)	
	9	1	**8M-4986**	3	SEAL-O-RING	
	10	1	**2S-1382**	1	SPRING (.094X.594X1.97IN)	
	11	1	**2S-1384**	1	SPOOL AS-RELIEF	
		1	**5M-9548**	1	SPRING	
		1	**7M-8592**	1	RING-RETAINING	
		1	**8M-2538**	1	POPPET	
		1	**8M-4409**	1	RETAINER	
	12	1	**6V-4365**	1	SEAL-O-RING	
	13	1	**4M-8239**	2	COVER	
	14	1	**6Y-4365**	1	FENDER AS-LH	
M	15	1	**8T-0643**	3	BOLT (M10X1.50X80MM)	
	16	1	**6V-5839**	3	WASHER (11X21X2.5MM THK)	

B-USE AS REQUIRED
M-METRIC PART

6Y-8473 VALVE GP-RELIEF *(contd.)*

i01823044

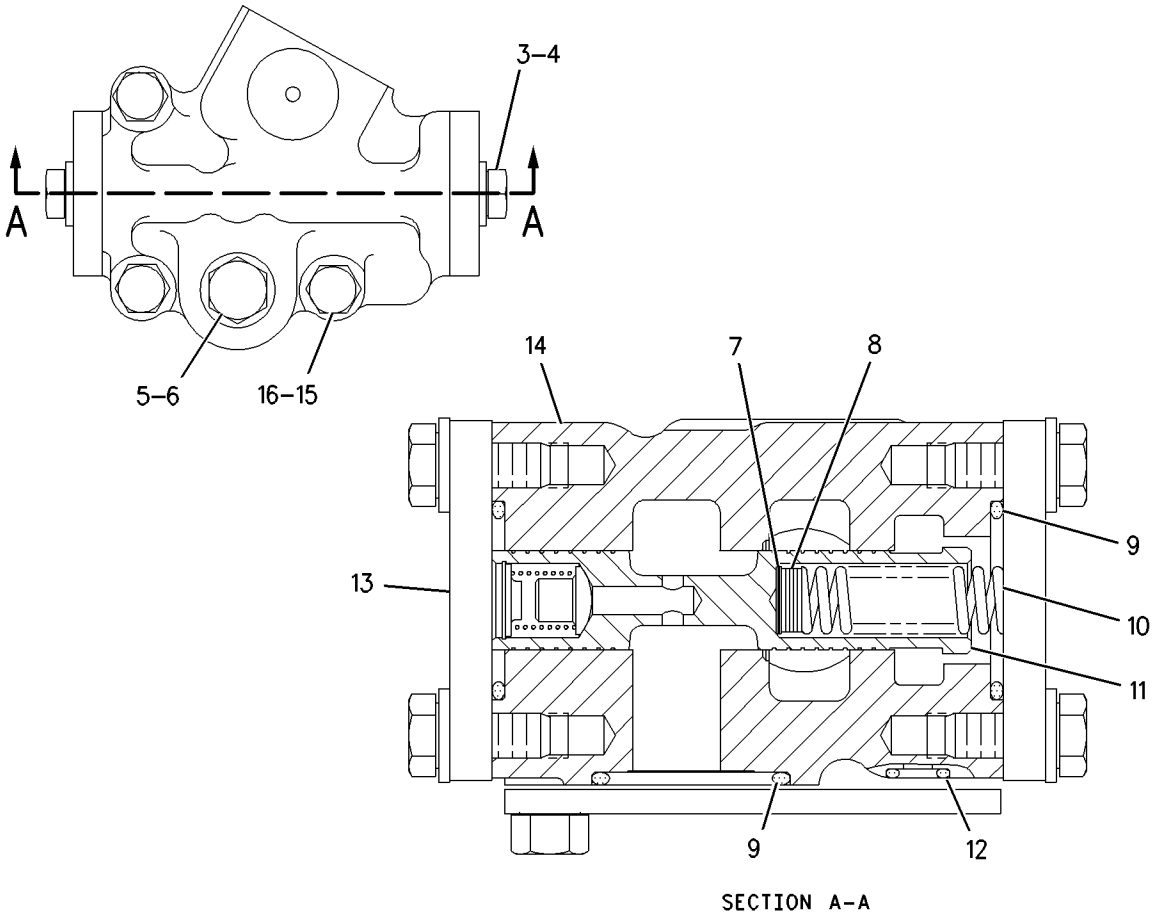

SECTION A-A

GRAPHIC #1

<END>

g00937011

205-3602 VALVE GP-RELIEF—TRANSMISSION CONTROL

S/N: CGD1-UP

PART OF 205-3603 CONTROL GP-TRANSMISSION

SMCS-3133, 3182 **i01829866**

NOTE	REF NO	GRAPHIC REF	PART NUMBER	QTY	PART NAME 1 2 3 4 5 6 (PRODUCT LEVEL)	SEE PAGE
	1	1	**200-8498**	1	MANIFOLD	
	2	1	**106-9214**	1	PLATE	
	3	1	**2B-2695**	6	BOLT (5/16-18X0.875 IN)	
	4	1	**9M-1974**	7	WASHER-HARD (8.8X16X2MM THK)	
	5	1	**109-3968**	1	SPOOL AS-RELIEF	
	6	1	**106-9212**	1	SPRING	
	7	1	**109-3969**	1	STOP	
	8	1	**4M-5905**	1	SCREW-ADJUSTMENT (5/16-18X1 IN)	
	9	1	**5B-3180**	1	NUT (5/16-18 THD)	
	10	1	**6Y-4638**	1	PLUG-HEX SOCKET	
	11	1	**7M-8485**	1	SEAL-O-RING	
	12	1	**2M-7041**	1	SLUG	
	13	1	**9S-8001**	7	PLUG	
	14	1	**4J-7533**	7	SEAL-O-RING	

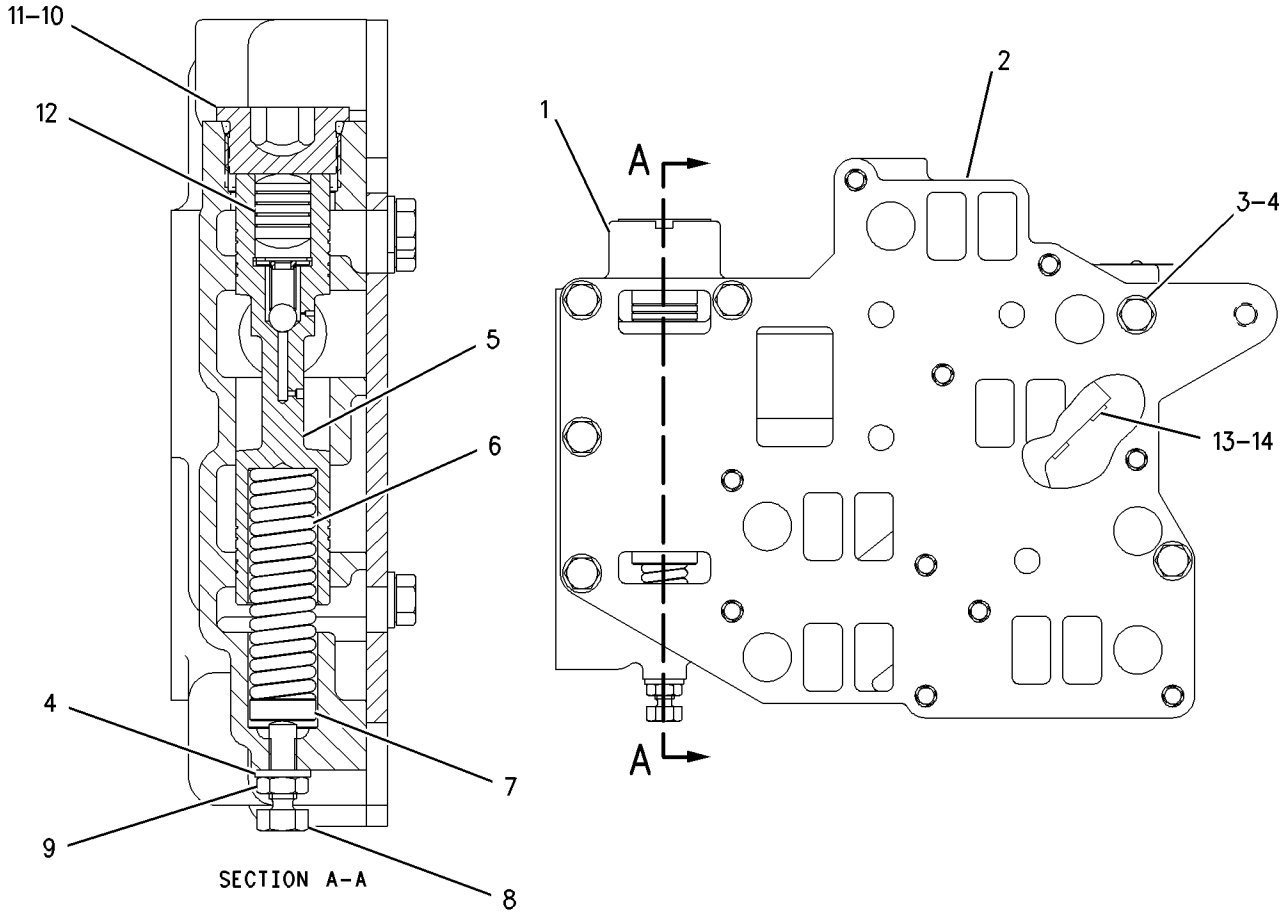

GRAPHIC #1 **<END>** g00909569

198-4607 VALVE GP-SOLENOID—POWER TRAIN OIL PRIORITY VALVE

S/N: CBJ1-UP

PART OF 186-3396 VALVE GP-PRIORITY

SMCS-4282, 5479 **i01885464**

NOTE	REF NO	GRAPHIC REF	PART NUMBER	QTY	PART NAME 1 2 3 4 5 6 (PRODUCT LEVEL)	SEE PAGE
	1	1	**9X-7202**	1	WASHER (13.59X23.88X1.02MM THK)	
	2	1	**156-5970**	1	NUT (1/2-20-2B THD)	
	3	1	**213-8760**	1	COIL AS	
		1	**1S-9593**	2	STRAP-CABLE	
		1	**102-8802**	1	KIT-RECEPTACLE (2 PIN)	
					(INCLUDES RECEPTACLE AS & WEDGE)	
		1	**186-3735**	2	PIN-CONNECTOR	
		1	**033-6032**	1	SEAL-O-RING	
	4	1	**198-4605**	1	SPOOL AS	
		1	**9X-7202**	1	WASHER (13.59X23.88X1.02MM THK)	
		1	**156-5970**	1	NUT (1/2-20-2B THD)	
					AVAILABLE REPAIR KIT(S):	
			7T-4515	1	KIT-SEAL (SOLENOID VALVE)	
					(INCLUDES SEALS)	

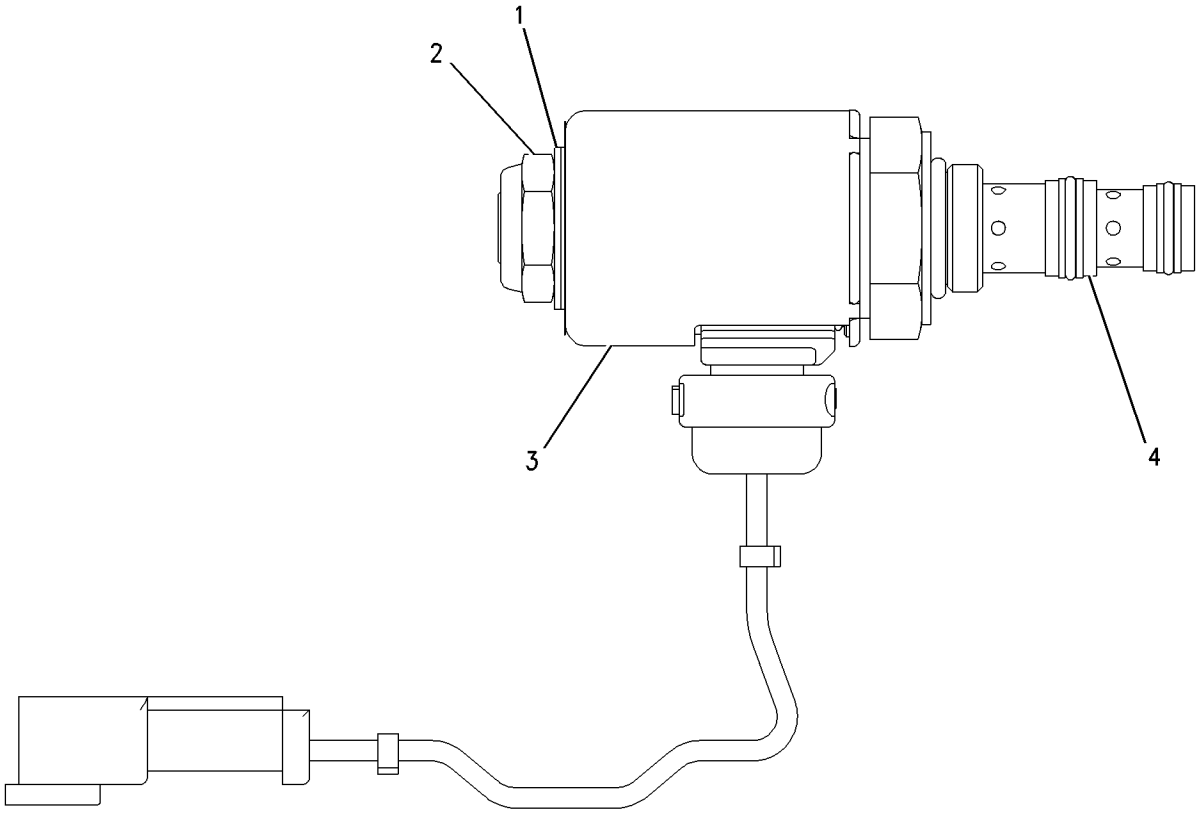

GRAPHIC #1 **<END>** g00845356

201-7270 VALVE GP-TRANSMISSION CONTROL

S/N: CBJ1-UP

PART OF 201-7272 VALVE GP-CONTROL

SMCS-3073 **i01782985**

NOTE	REF NO	GRAPHIC REF	PART NUMBER	QTY	PART NAME 1 2 3 4 5 6 (PRODUCT LEVEL)	SEE PAGE
	1	1	**188-7067**	4	SPRING	
	2	1	**188-7068**	4	RETAINER	
	3	1	**188-7069**	4	PISTON-LOAD	
	4	1	**108-4430**	4	SPRING	
	5	1	**108-4433**	1	PLATE-END	
	6	1	*148-8409*	4	PLUG AS	
					(EACH INCLUDES)	
		1	**3D-2824**	1	SEAL-O-RING (23.47MM ID)	
		1	**9S-8008**	1	PLUG	
	7	1	**137-6603**	4	SPOOL	
M	8	1	**8T-7547**	3	BOLT (M8X1.25X30MM)	
	9	1	*148-8410*	2	PLUG AS	
					(EACH INCLUDES)	
		1	**2M-9780**	1	SEAL-O-RING	
		1	**9S-4190**	1	PLUG	
	10	1	**6J-2419**	4	SEAL-O-RING	
	11	1	*148-8407*	2	PLUG GP	
					(EACH INCLUDES)	
		1	**3J-1907**	1	SEAL-O-RING	
		1	**9S-4191**	1	PLUG	
	12	1	**8T-4224**	3	WASHER-HARD (8.8X16X2MM THK)	
M	13	1	**7X-2537**	3	BOLT (M8X1.25X35MM)	

M-METRIC PART

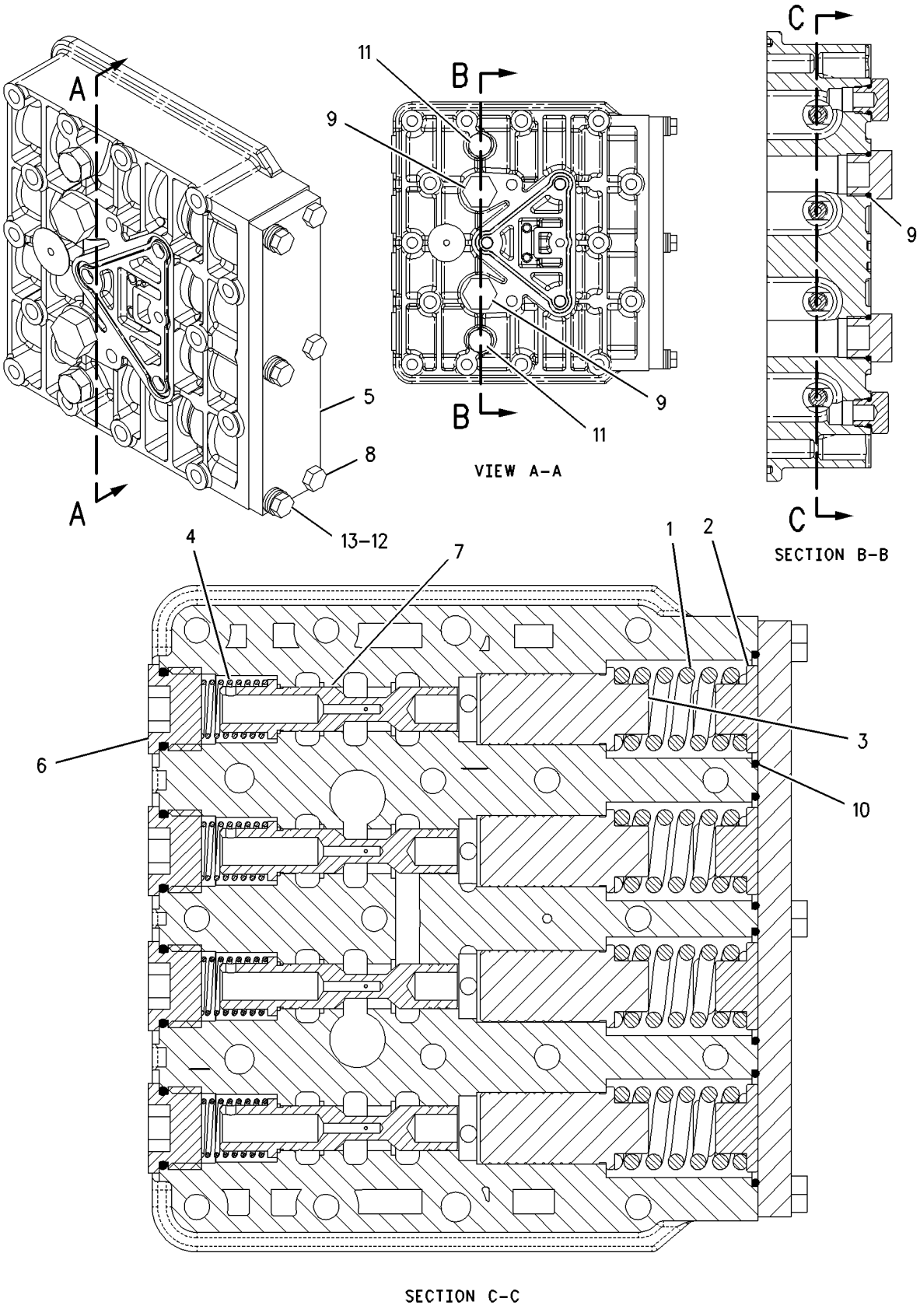

GRAPHIC #1 **<END>** g00931682

156-7278 CASE & FRAME GP

S/N: CBJ1-UP

PART OF 156-9497 CHASSIS AR

SMCS-7051 **i01892811**

NOTE	REF NO	GRAPHIC REF	PART NUMBER	QTY	PART NAME 1 2 3 4 5 6 (PRODUCT LEVEL)	SEE PAGE
	1	1	**3B-8489**	2	FITTING-GREASE (1/8-27 THD) (CASE & FRAME)	
	2	1	**8G-6683**	1	RAIL AS	
	3	1	**8G-6684**	1	RAIL AS	
	4	1	**106-8186**	1	VALVE-DRAIN (CASE & FRAME)	
	5	1	**106-8187**	1	PLUG (CASE & FRAME DRAIN VALVE)	
Y	6	1	**156-7279**	1	CASE & FRAME GP	236
	7	1	**192-4089**	1	PLATE AS	
	8	1	**195-2709**	1	PLATE AS	
	9	1	**1A-2223**	4	DOWEL	
	10	1	**6F-0711**	1	SEAL-O-RING (CASE & FRAME DRAIN PLUG)	
M	11	1	**8C-8992**	4	BOLT-LOCKING (M12X1.75X30MM)	
	12	1	**8T-4123**	8	WASHER-PLATED (22X35X3.5MM THK)	
	13	1	**8T-4223**	4	WASHER-HARD (13.5X25.5X3MM THK)	
M	14	1	**8T-6430**	8	BOLT (M20X2.5X50MM)	

M-METRIC PART
Y-SEPARATE ILLUSTRATION

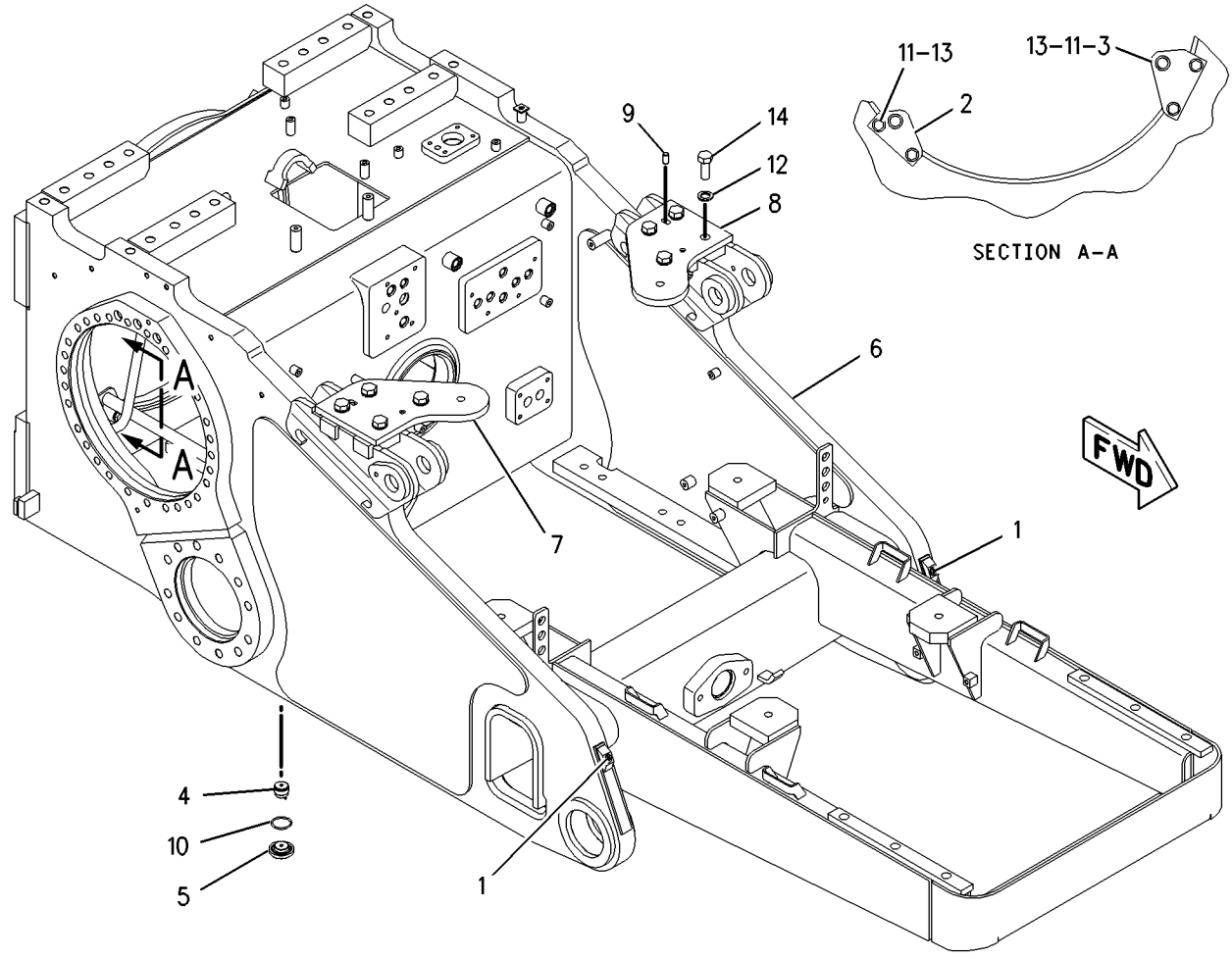

GRAPHIC #1 **<END>** g00942922

FRAME AND BODY

156-7279 CASE & FRAME GP

S/N: CBJ1-UP

PART OF 156-7278 CASE & FRAME GP

SMCS-7051 **i01828519**

NOTE	REF NO	GRAPHIC REF	PART NUMBER	QTY	PART NAME 1 2 3 4 5 6 (PRODUCT LEVEL)	SEE PAGE
	1	1	**8G-0320**	1	TUBE	
	2	1	**110-5359**	1	TUBE	
	3	1	**110-5390**	1	TUBE	
	4	1	**110-5431**	1	TUBE	
	5	1	**110-5433**	1	TUBE	
	6	1	**110-5844**	1	TUBE	
	7	1	**110-6057**	1	TUBE	
	8	1	**111-5009**	1	TUBE	
	9	1	**112-8225**	1	TUBE	
	10	1	*156-7280*	1	CASE & FRAME AS (RAIL)	
		1	**3W-9139**	1	BOSS	
		1	**5G-6973**	2	LUG	
M		1	**8T-3490**	2	NUT-WELD (M10X1.5 THD)	
		1	**9R-2672**	3	BOSS (M10X20MM)	
M		1	**9T-6001**	4	BOSS (M10X1.5X25MM)	
	11	1	**190-5312**	1	TUBE	
	12	1	**191-1732**	1	TUBE	
	13	1	**5K-9660**	4	CLIP	
	14	1	**8G-4386**	15	SLEEVE	
	15	1	**8G-5247**	4	SLEEVE	
B	16	1	**8T-4121**	8	WASHER-HARD (11X21X2.5MM THK)	
M	17	1	**8T-4136**	2	BOLT (M10X1.5X25MM)	

B-USE AS REQUIRED
M-METRIC PART

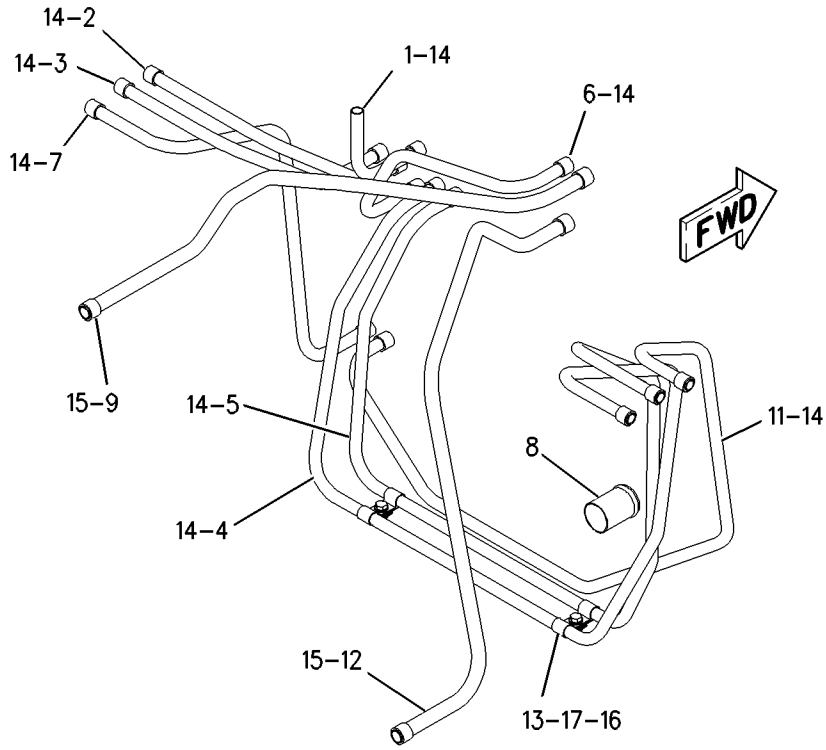

(CASE ASM REMOVED)

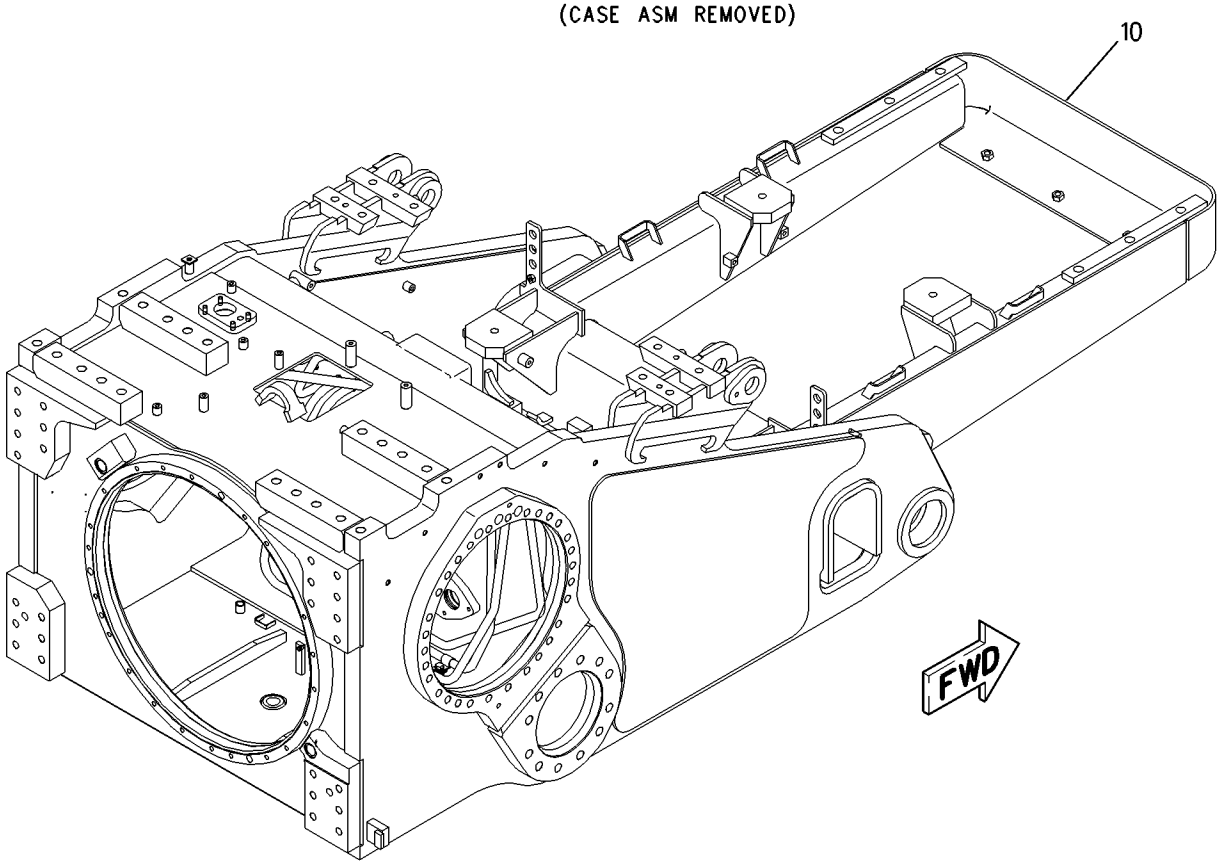

GRAPHIC #1 **<END>** g00932322

107-4068 DRAWBAR GP

S/N: CBJ1-UP

PART OF 156-9497 CHASSIS AR

SMCS-7105, 7119 **i00598296**

NOTE	REF NO	GRAPHIC REF	PART NUMBER	QTY	PART NAME 1 2 3 4 5 6 (PRODUCT LEVEL)	SEE PAGE
M	1	1	**7X-2565**	12	BOLT (M20X2.5X100MM)	
	2	1	**8T-4123**	12	WASHER-PLATED (3.5MM THK)	
	3	1	**7B-0863**	1	LATCH-PIN	
	4	1	**8G-7085**	1	PIN AS	
	5	1	**7F-9543**	1	COLLAR	
M	6	1	**8T-4140**	1	BOLT (M16X2.0X60MM)	
M	7	1	**8T-4778**	1	LOCKNUT (M16X2.00 THD)	
	8	1	**130-9764**	1	DRAWBAR AS	
	9	1	**1P-1547**	1	PLATE-LOCKING	
	10	1	**3G-7828**	1	PLATE	

M-METRIC PART

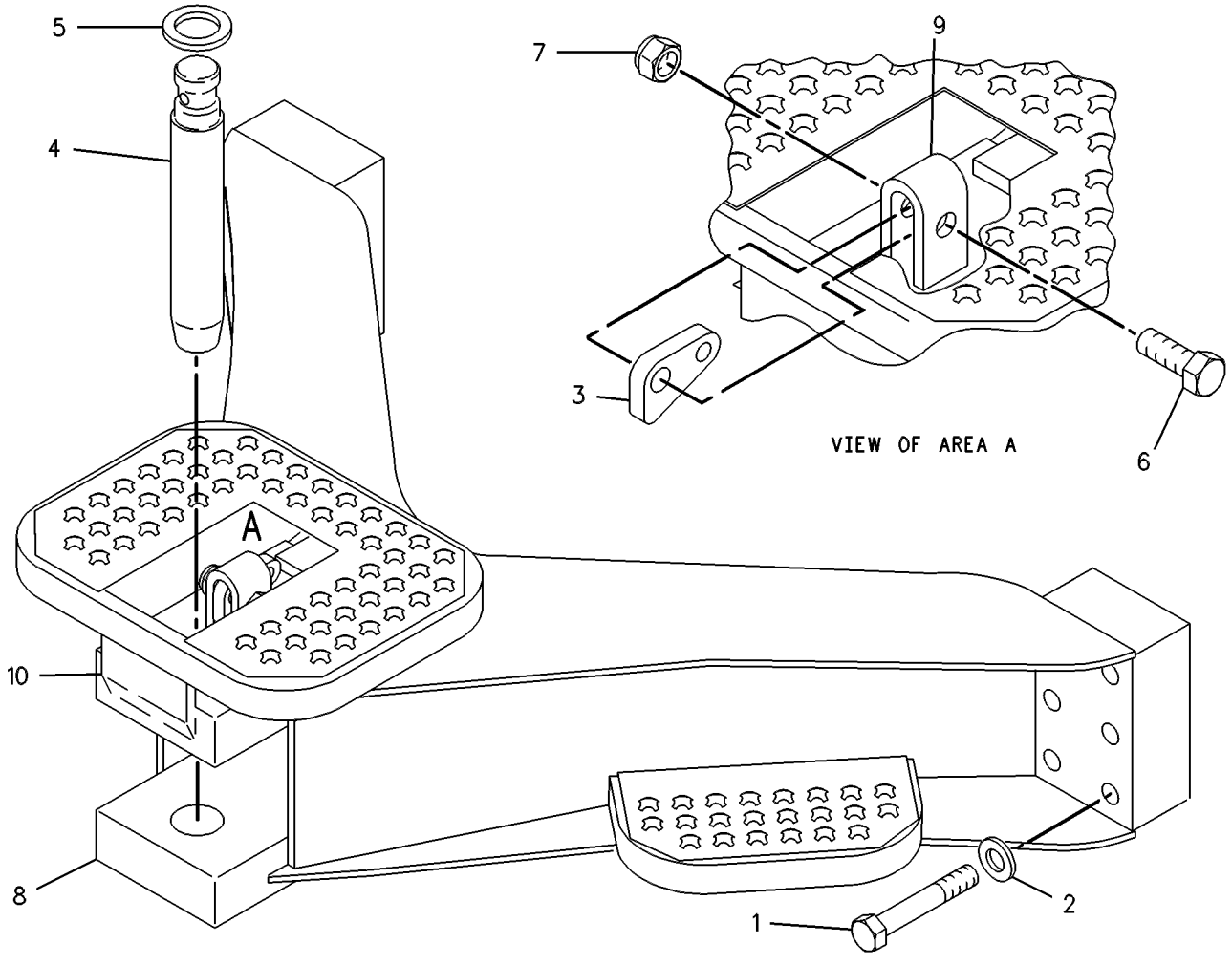

GRAPHIC #1 **<END>** g00267467

155-7706 ENCLOSURE GP

S/N: CBJ1-UP

PART OF 156-9497 CHASSIS AR

SMCS-7153 **i01874496**

NOTE	REF NO	GRAPHIC REF	PART NUMBER	QTY	PART NAME 1 2 3 4 5 6 (PRODUCT LEVEL)	SEE PAGE
	1	1	**3V-7689**	1	HANDLE AS	
M	2	1	**8T-2910**	1	NUT-WING	
	3	1	**135-5001**	1	ROD	
	4	1	**155-7725**	1	BRACKET AS	
M		1	**8T-3490**	2	NUT-WELD (M10X1.5 THD)	
	5	1	**155-7738**	1	BRACKET AS	
M		1	**8T-3490**	2	NUT-WELD (M10X1.5 THD)	
	6	1	**155-7739**	2	PLATE AS	
					(EACH INCLUDES)	
M		1	**8T-3490**	3	NUT-WELD (M10X1.5 THD)	
	7	1	**155-7785**	1	GUARD AS	
		1	**8G-5623**	1	HINGE	
	8	1	**177-1570**	3	LATCH AS	
					(EACH INCLUDES)	
J		1	**217-0733**	1	LOCK AS	
	9	1	**212-3511**	3	LATCH (CAM)	
	10	1	**213-9689**	2	BRACKET	
	11	1	**214-0997**	1	BRACKET AS (LH)	
M		1	**8T-5413**	1	STUD-WELD (M10X1.5X25MM OAL)	
M		1	**8T-3490**	4	NUT-WELD (M10X1.5 THD)	
	12	1	**214-0998**	1	BRACKET AS (RH)	
M		1	**8T-5413**	1	STUD-WELD (M10X1.5X25MM OAL)	
M		1	**8T-3490**	3	NUT-WELD (M10X1.5 THD)	
	13	1	**214-4636**	3	CABLE	
	14	1	**216-6033**	1	SCREEN AS	
M		1	**8T-3490**	4	NUT-WELD (M10X1.5 THD)	
M		1	**8T-5413**	1	STUD-WELD (M10X1.5X25MM OAL)	
	15	1	**221-6878**	1	COVER AS (BATTERY)	
M		1	**8T-5413**	1	STUD-WELD (M10X1.5X25MM OAL)	
M		1	**8T-3490**	2	NUT-WELD (M10X1.5 THD)	
	16	1	**221-6879**	1	COVER AS (LH)	
	17	1	**221-6880**	1	COVER AS (RH)	
		1	**7T-1099**	2	LINK	
	18	1	**221-6887**	2	BRACKET	
	19	1	**222-6870**	1	DOOR AS (LH)	
M		1	**8T-4130**	1	STUD (M6X1X18 MM)	
		1	**117-5604**	2	STUD	
		1	**155-7772**	1	HINGE AS (LH)	
	20	1	**222-6871**	1	DOOR AS (RH)	
		1	**117-5604**	1	STUD	
		1	**155-7769**	1	HINGE AS (RH)	
	21	1	**223-0161**	2	BRACKET	
	22	1	**223-0162**	1	BRACKET	
	23	1	**099-3600**	6	WASHER (12.7X30X4MM THK)	
	24	1	**3B-4604**	1	PIN-COTTER	
	25	1	**4V-5091**	3	GROMMET	
	26	1	**7X-7729**	34	WASHER (11X25X3MM THK)	
	27	1	**7Y-8171**	1	GROMMET	
	28	1	**8T-4121**	3	WASHER-HARD (11X21X2.5MM THK)	
M	29	1	**8T-4133**	12	NUT (M10X1.5 THD)	
M	30	1	**8T-4136**	18	BOLT (M10X1.5X25MM)	
M	31	1	**8T-4139**	8	BOLT (M12X1.75X30MM)	
M	32	1	**8T-4194**	1	BOLT (M12X1.75X50MM)	
M	33	1	**8T-4195**	4	BOLT (M10X1.5X30MM)	
	34	1	**8T-4223**	14	WASHER-HARD (13.5X25.5X3MM THK)	
M	35	1	**8T-4244**	8	NUT (M12X1.75 THD)	

155-7706 **ENCLOSURE GP** ***(contd.)*** **i01874496**

NOTE	REF NO	GRAPHIC REF	PART NUMBER	QTY	PART NAME 1 2 3 4 5 6 (PRODUCT LEVEL)	SEE PAGE
M	36	1	**8T-4956**	2	BOLT (M12X1.75X35MM)	
BD	37	1	**201-4065**		SEAL	
BD	38	1	**201-4066**		SEAL	
BD	39	1	**202-5293**		SEAL	

B-USE AS REQUIRED
D-ORDER BY THE METER
J-REQUIRES 5P8500 KEY
M-METRIC PART

155-7706 **ENCLOSURE GP** ***(contd.)*** **i01874496**

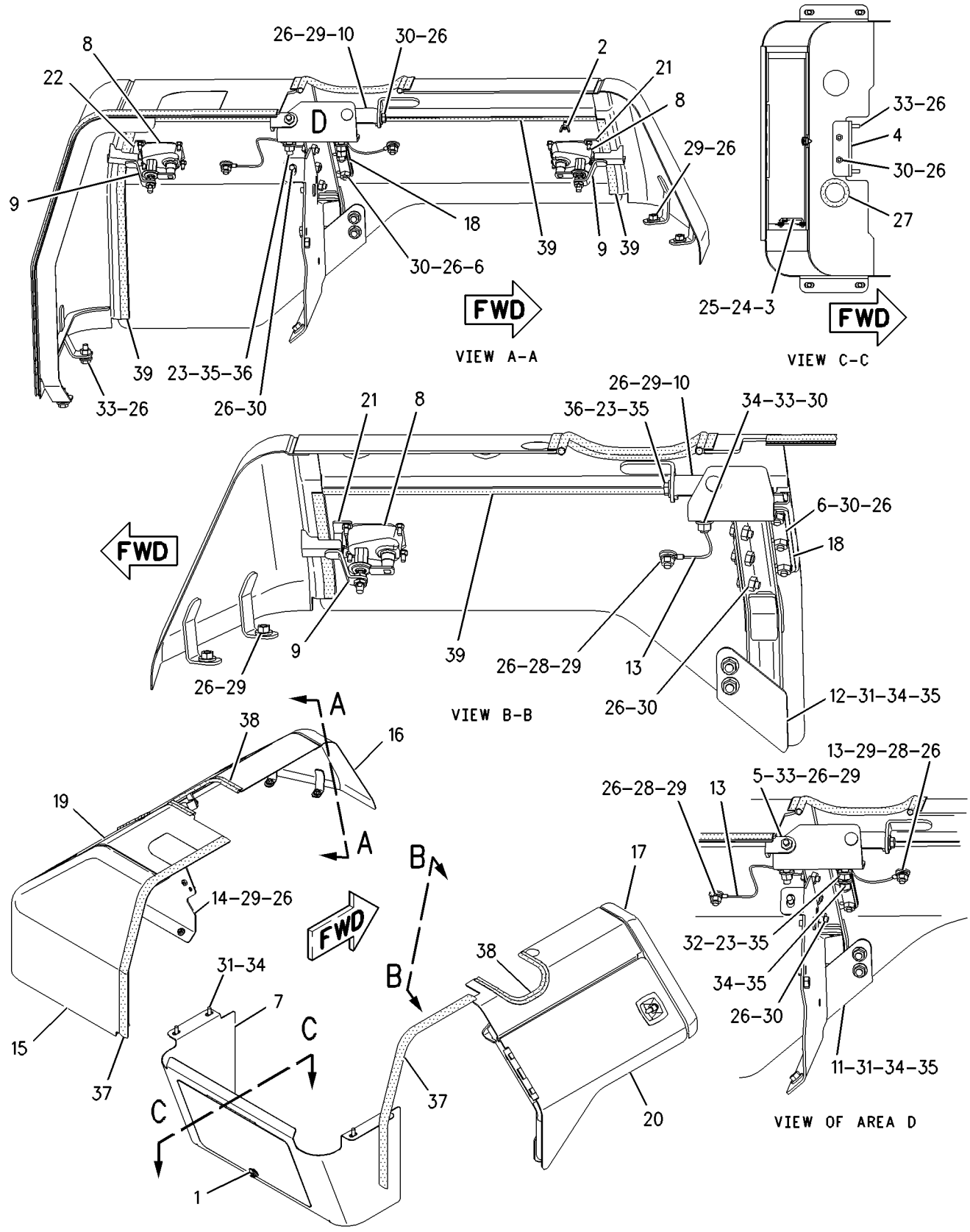

GRAPHIC #1 **<END>** g00956543

155-7705 FENDER GP

S/N: CBJ1-UP

PART OF 156-9497 CHASSIS AR

SMCS-7252 **i01828469**

NOTE	REF NO	GRAPHIC REF	PART NUMBER	QTY	PART NAME 1 2 3 4 5 6 (PRODUCT LEVEL)	SEE PAGE
	1	1	**3W-2647**	2	SPACER (13.5X30X10MM THK)	
	2	1	**155-7737**	1	FENDER AS-RH	
	3	1	**155-7742**	1	FENDER AS-LH	
	4	1	**5P-1076**	12	WASHER-HARD (13.5X30X4MM THK)	
	5	1	**7X-0513**	2	WASHER-HARD (17X30X5MM THK)	
M	6	1	**8T-4193**	2	BOLT (M16X2X50MM)	
M	7	1	**8T-4194**	12	BOLT (M12X1.75X50MM)	
	8	1	**221-2718**	6	BUMPER	
M	9	1	**8T-4956**	2	BOLT (M12X1.75X35MM)	

M-METRIC PART

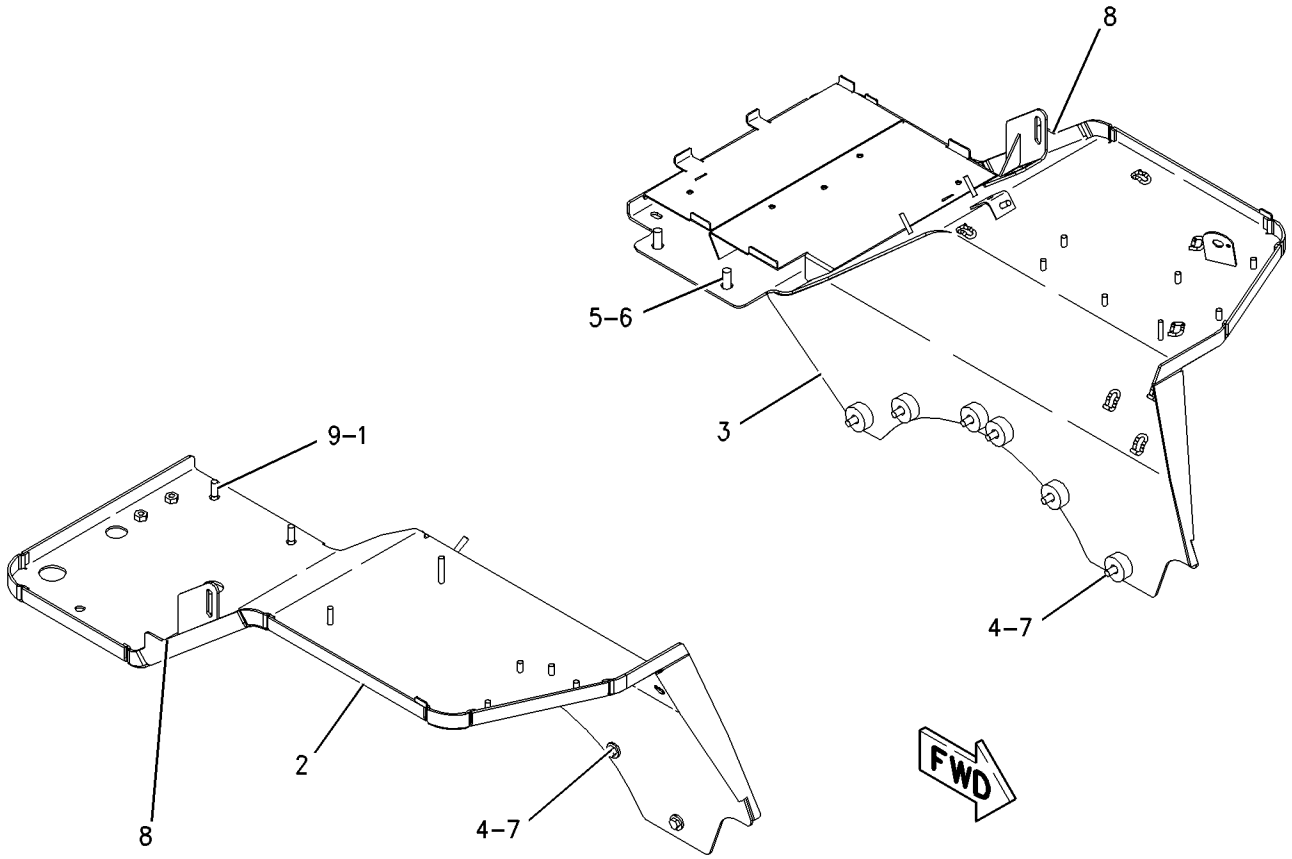

GRAPHIC #1 **<END>** g00918995

FRAME AND BODY

195-1045 GRID GP-SAND BLAST ERODING

S/N: CBJ1-UP
CANNOT BE USED WITH , 195-1043—PAGE 81
AN ATTACHMENT

SMCS-7179 **i01830836**

NOTE	REF NO	GRAPHIC REF	PART NUMBER	QTY	PART NAME 1 2 3 4 5 6 (PRODUCT LEVEL)	SEE PAGE
	1	1	**195-2804**	1	GRID GP-SAND BLAST ERODING	
	2	1	**8T-4121**	9	WASHER-HARD (11X21X2.5MM THK)	
M	3	1	**8T-4136**	4	BOLT (M10X1.5X25MM)	
M	4	1	**8T-4195**	5	BOLT (M10X1.5X30MM)	

M-METRIC PART

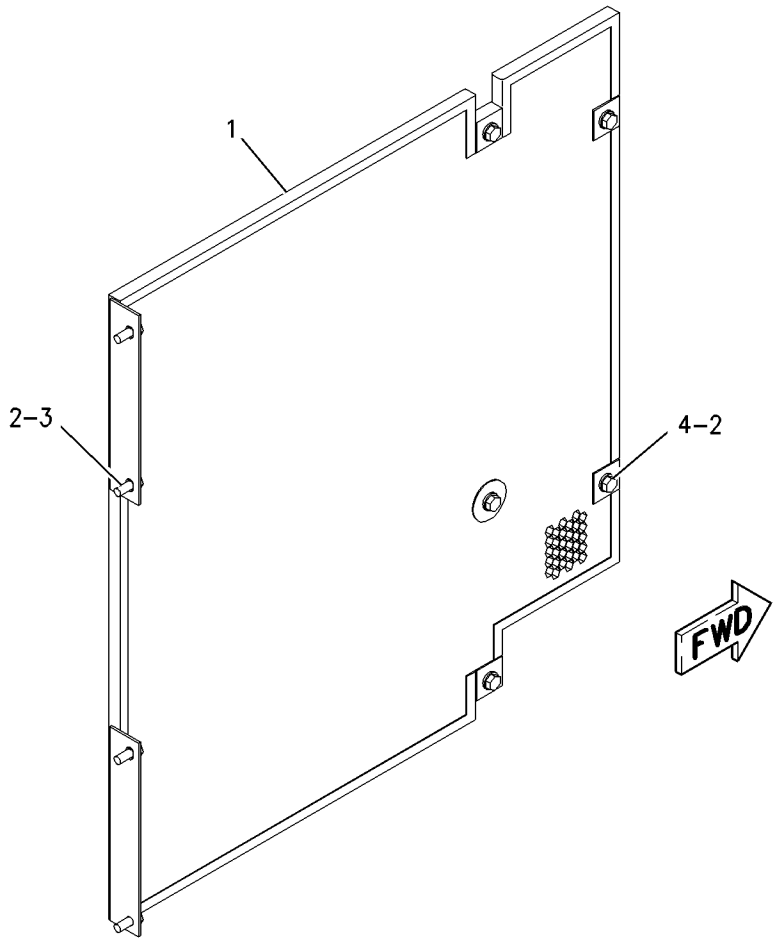

GRAPHIC #1 **<END>** g00937531

155-9366 GRILL GP-RADIATOR–HEAVY DUTY

S/N: CBJ1-UP
AN ATTACHMENT

SMCS-7170 **i01830134**

NOTE	REF NO	GRAPHIC REF	PART NUMBER	QTY	PART NAME 1 2 3 4 5 6 (PRODUCT LEVEL)	SEE PAGE
	1	1	**221-2721**	1	GRILL AS	
M	2	1	**8T-4193**	2	BOLT (M16X2X50MM)	
	3	1	**9X-8257**	2	WASHER (17.5X30X3.5MM THK)	

M-METRIC PART

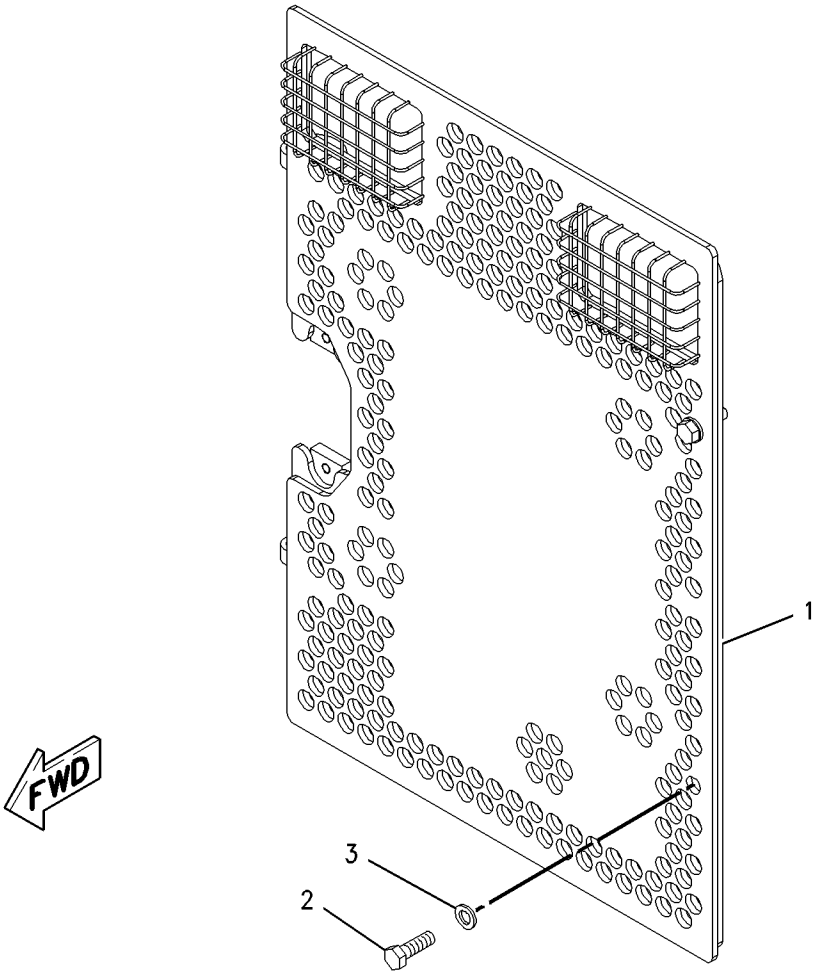

GRAPHIC #1 **<END>** g00916996

FRAME AND BODY

107-4062 GUARD GP-BOTTOM

S/N: CBJ1-UP

PART OF 156-9497 CHASSIS AR

SMCS-7153 **i01500373**

NOTE	REF NO	GRAPHIC REF	PART NUMBER	QTY	PART NAME 1 2 3 4 5 6 (PRODUCT LEVEL)	SEE PAGE
	1	1	**110-3160**	1	GUARD AS	
	2	1	**110-3162**	1	GUARD AS	
	3	1	**122-4705**	1	COVER AS	
C	4	1	**186-9980**	1	GUARD AS	
C	5	1	**6C-9149**	12	WASHER (22X50X10MM THK)	
C	6	1	**7X-0515**	13	WASHER-HARD (17X35X5MM THK)	
CM	7	1	**7X-2553**	13	BOLT (M16X2X40MM)	
	8	1	**8T-4121**	2	WASHER-HARD (11X21X2.5MM THK)	
M	9	1	**8T-4136**	2	BOLT (M10X1.5X25MM)	
CM	10	1	**8T-6430**	12	BOLT (M20X2.5X50MM)	

C-CHANGE FROM PREVIOUS TYPE
M-METRIC PART

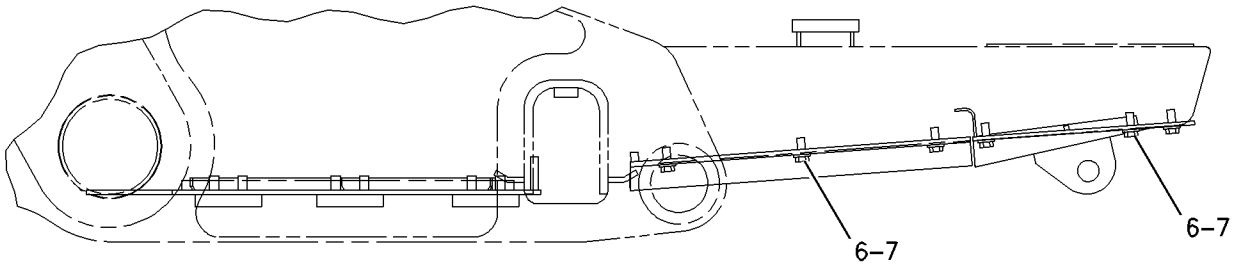

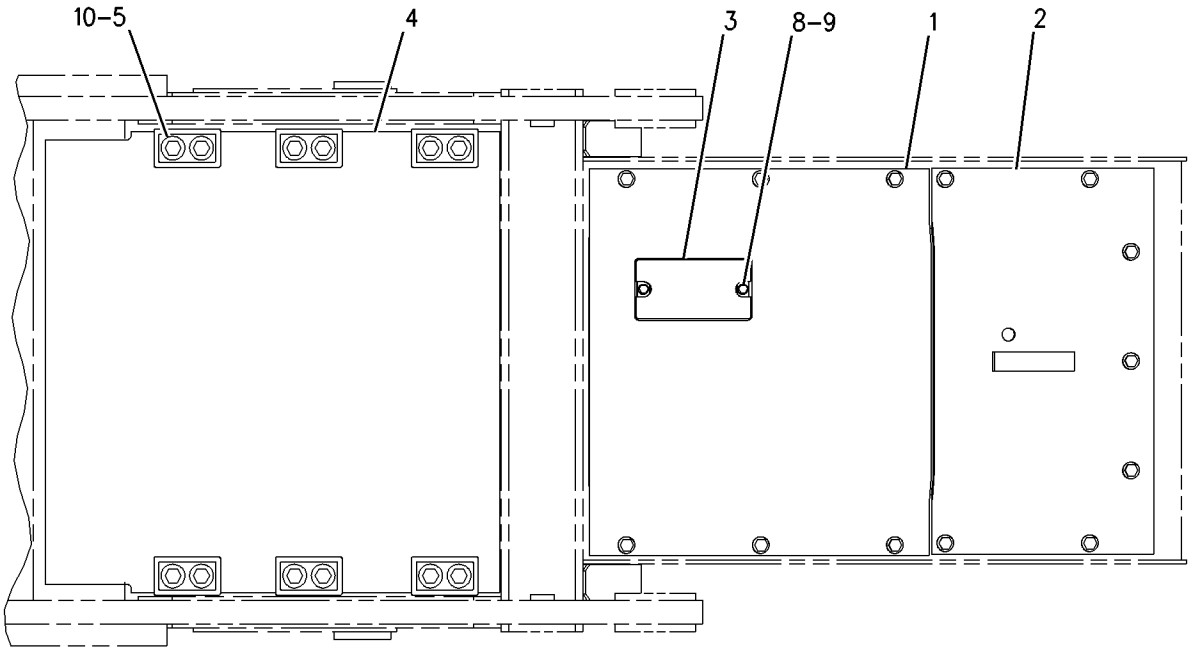

GRAPHIC #1 **<END>** g00737385

107-5601 GUARD GP-BOTTOM–HEAVY DUTY

S/N: CBJ1-UP
AN ATTACHMENT

SMCS-7153 **i01830099**

NOTE	REF NO	GRAPHIC REF	PART NUMBER	QTY	PART NAME 1 2 3 4 5 6 (PRODUCT LEVEL)	SEE PAGE
C	1	1	**186-9981**	1	GUARD AS	
	2	1	**110-3162**	1	GUARD AS	
	3	1	**110-3166**	1	GUARD AS	
	4	1	**122-4705**	1	COVER AS	
C	5	1	**7X-0515**	13	WASHER-HARD (17X35X5MM THK)	
	6	1	**8T-4121**	2	WASHER-HARD (11X21X2.5MM THK)	
M	7	1	**7X-2553**	7	BOLT (M16X2X40MM)	
M	8	1	**8T-4136**	2	BOLT (M10X1.5X25MM)	
CM	9	1	**8T-7338**	6	BOLT (M16X2.0X45MM)	
C	10	1	**6C-9149**	12	WASHER (22X50X10MM THK)	
CM	11	1	**6V-3532**	12	BOLT (M20X2.5X60MM)	

C-CHANGE FROM PREVIOUS TYPE
M-METRIC PART

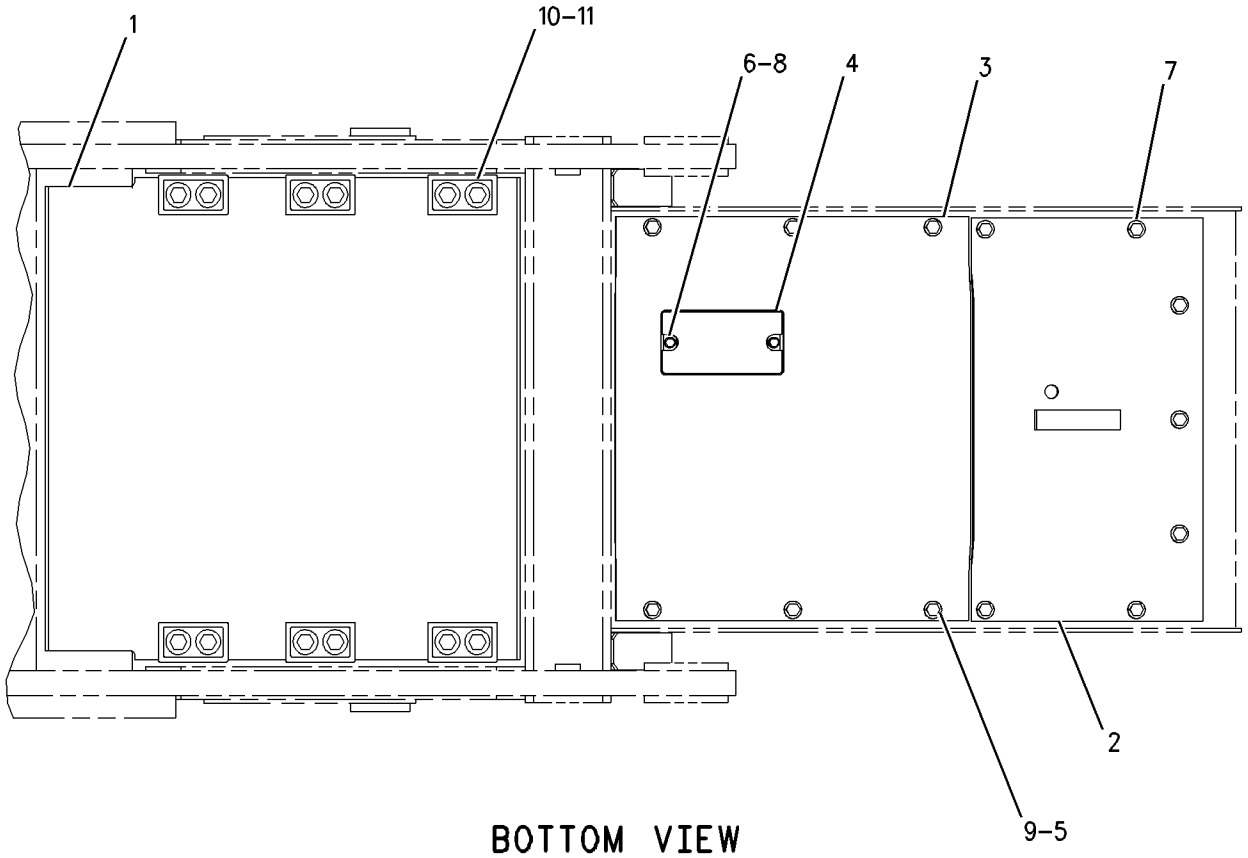

BOTTOM VIEW

GRAPHIC #1 **<END>** g00738915

FRAME AND BODY

155-7775 GUARD GP-FUEL TANK

S/N: CBJ1-UP
AN ATTACHMENT

SMCS-1273 **i01830132**

NOTE	REF NO	GRAPHIC REF	PART NUMBER	QTY	PART NAME 1 2 3 4 5 6 (PRODUCT LEVEL)	SEE PAGE
	1	1	**3W-2647**	4	SPACER (13.5X30X10MM THK)	
	2	1	**155-7776**	1	GUARD AS	
M		1	**8T-3597**	6	NUT-WELD (M12X1.75 THD)	
M	3	1	**7X-2577**	4	BOLT (M24X3X90MM)	
M	4	1	**8T-4183**	4	BOLT (M12X1.75X40MM)	
	5	1	**126-8928**	4	WASHER-HARD	
	6	1	**213-5161**	1	FILM-STRIPE (D6N)(RH REAR FUEL TANK GUARD)	
	7	1	**206-0332**	1	FILM-STRIPE (D6N)(LH REAR FUEL TANK GUARD)	
	8	1	**205-4955**	1	FILM-STRIPE (D6N)(FUEL TANK GUARD)	

M-METRIC PART

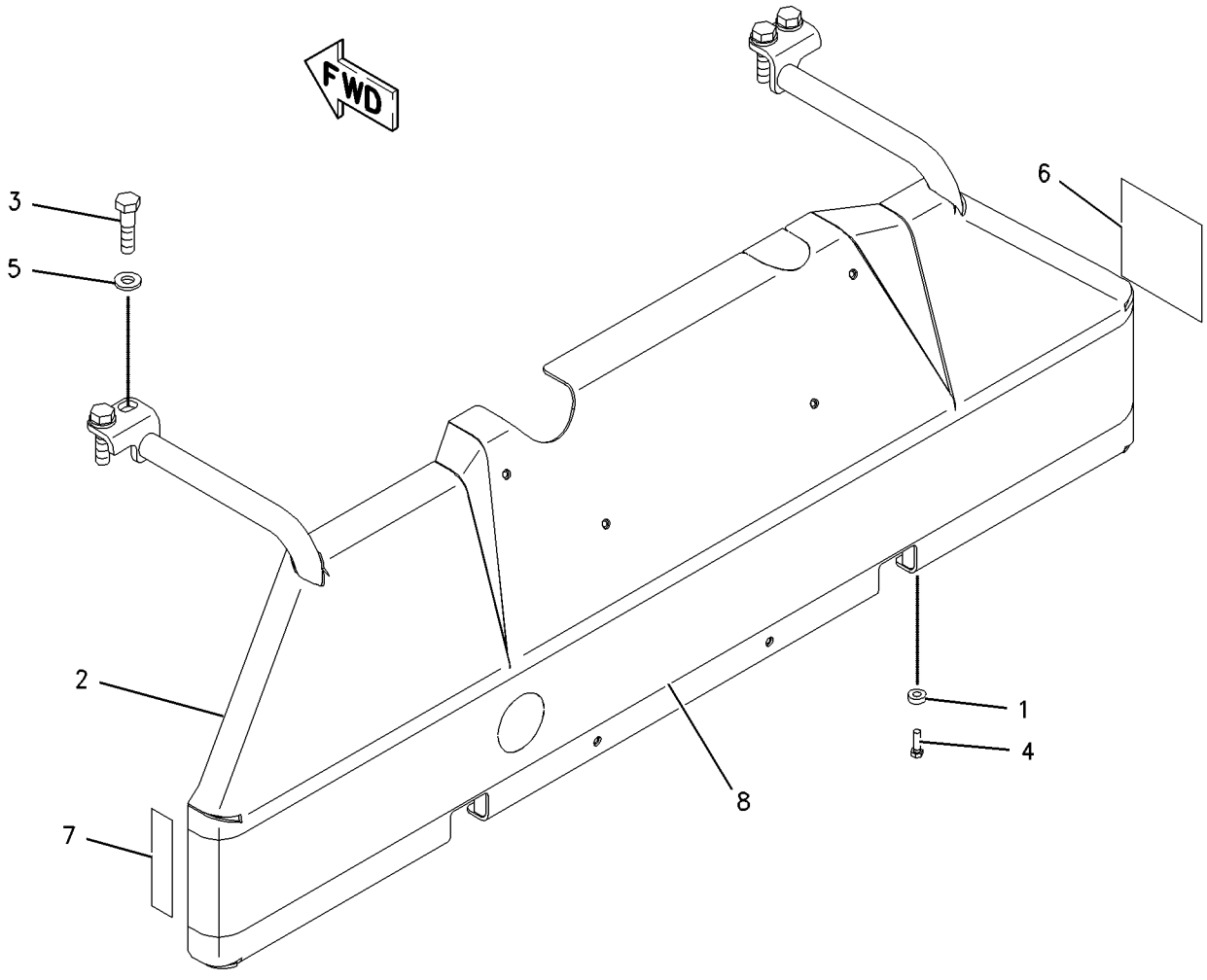

GRAPHIC #1 **<END>** g00917900

210-6039 GUARD GP-POWER TRAIN FILTER–HEAVY DUTY

S/N: CBJ1-UP
CANNOT BE USED WITH A WINCH
AN ATTACHMENT

SMCS-7150 **i01877517**

NOTE	REF NO	GRAPHIC REF	PART NUMBER	QTY	PART NAME 1 2 3 4 5 6 (PRODUCT LEVEL)	SEE PAGE
	1	1	**210-6040**	1	GUARD AS	
	1A	1	**8G-5623**	1	HINGE	

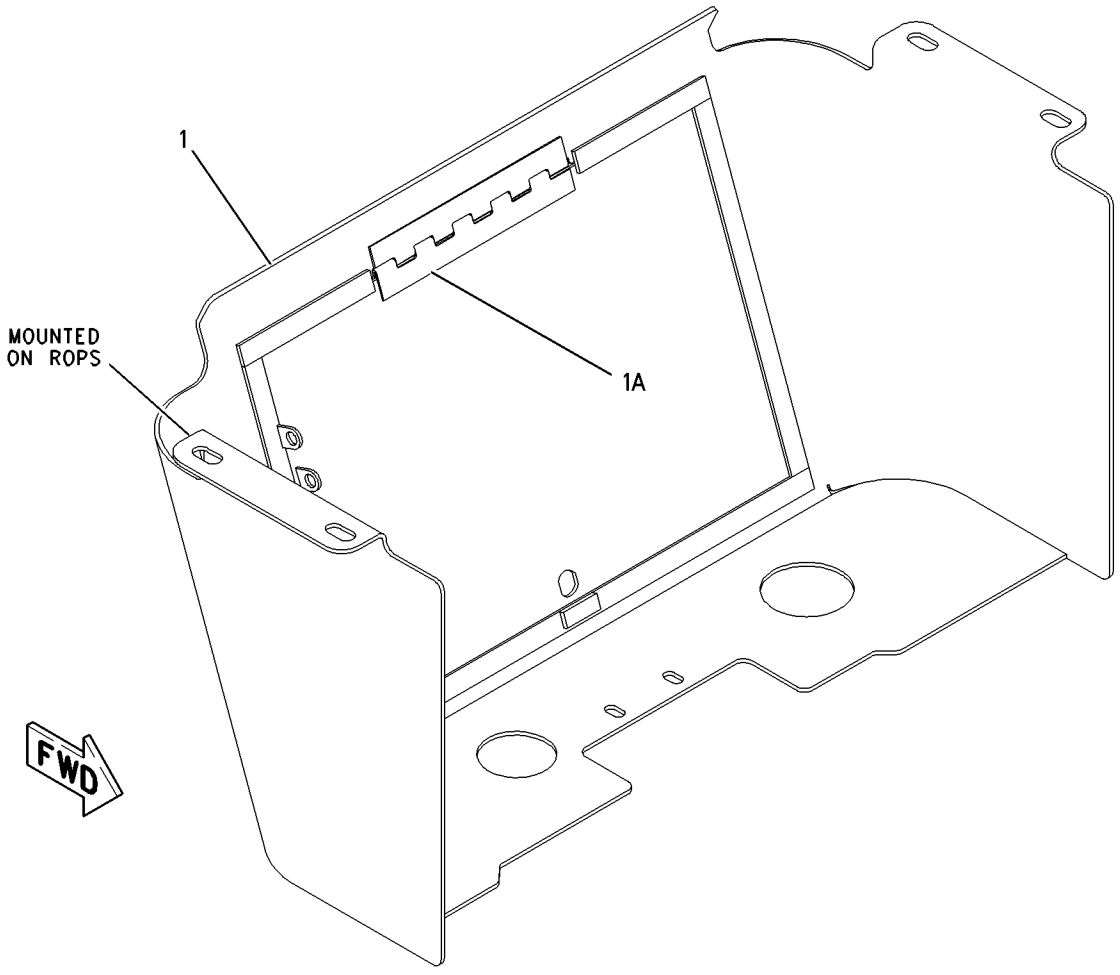

GRAPHIC #1 **<END>** g00938219

155-7703 GUARD GP-RADIATOR

S/N: CBJ1-UP

PART OF 156-9497 CHASSIS AR

SMCS-7155 **i01828457**

NOTE	REF NO	GRAPHIC REF	PART NUMBER	QTY	PART NAME 1 2 3 4 5 6 (PRODUCT LEVEL)	SEE PAGE
J	1	1	**8C-8837**	1	LOCK AS-CYLINDER	
	2	1	**155-9320**	1	CAM-LATCH	
	3	1	**155-9321**	1	CAP AS (DUST) (RADIATOR FILLER DOOR)	
	4	1	**211-8504**	1	GUARD GP-RADIATOR	
M	4A	1	**8T-3612**	2	NUT-WELD (M8X1.25 THD)	
	4B	1	**7T-1099**	6	LINK	
M	4C	1	**8T-3490**	11	NUT-WELD (M10X1.5 THD)	
M	4D	1	**8T-4132**	8	NUT (M16X2 THD)	
	4E	1	**8Y-0709**	1	CLIP	
	4F	1	**9R-2672**	1	BOSS (M10X20MM)	
	5	1	**221-2719**	4	BUMPER	
	6	1	**221-2720**	1	GRILL AS	
M	7	1	**096-4885**	2	LOCKNUT (M16X2 THD)	
M	8	1	**3E-4320**	4	SCREW (M3X0.5X10MM)	
M	9	1	**7X-2553**	2	BOLT (M16X2X40MM)	
M	10	1	**7X-2554**	2	BOLT (M16X2X70MM)	
	11	1	**6K-6361**	6	BUTTON-PLUG	
M	12	1	**8T-4140**	6	BOLT (M16X2X60MM)	
	13	1	**8Y-1387**	1	ROD	
	14	1	**9X-8257**	8	WASHER (17.5X30X3.5MM THK)	
	15	1	**221-2718**	4	BUMPER	

J-REQUIRES 5P8500 KEY
M-METRIC PART

155-7703 **GUARD GP-RADIATOR** *(contd.)* **i01828457**

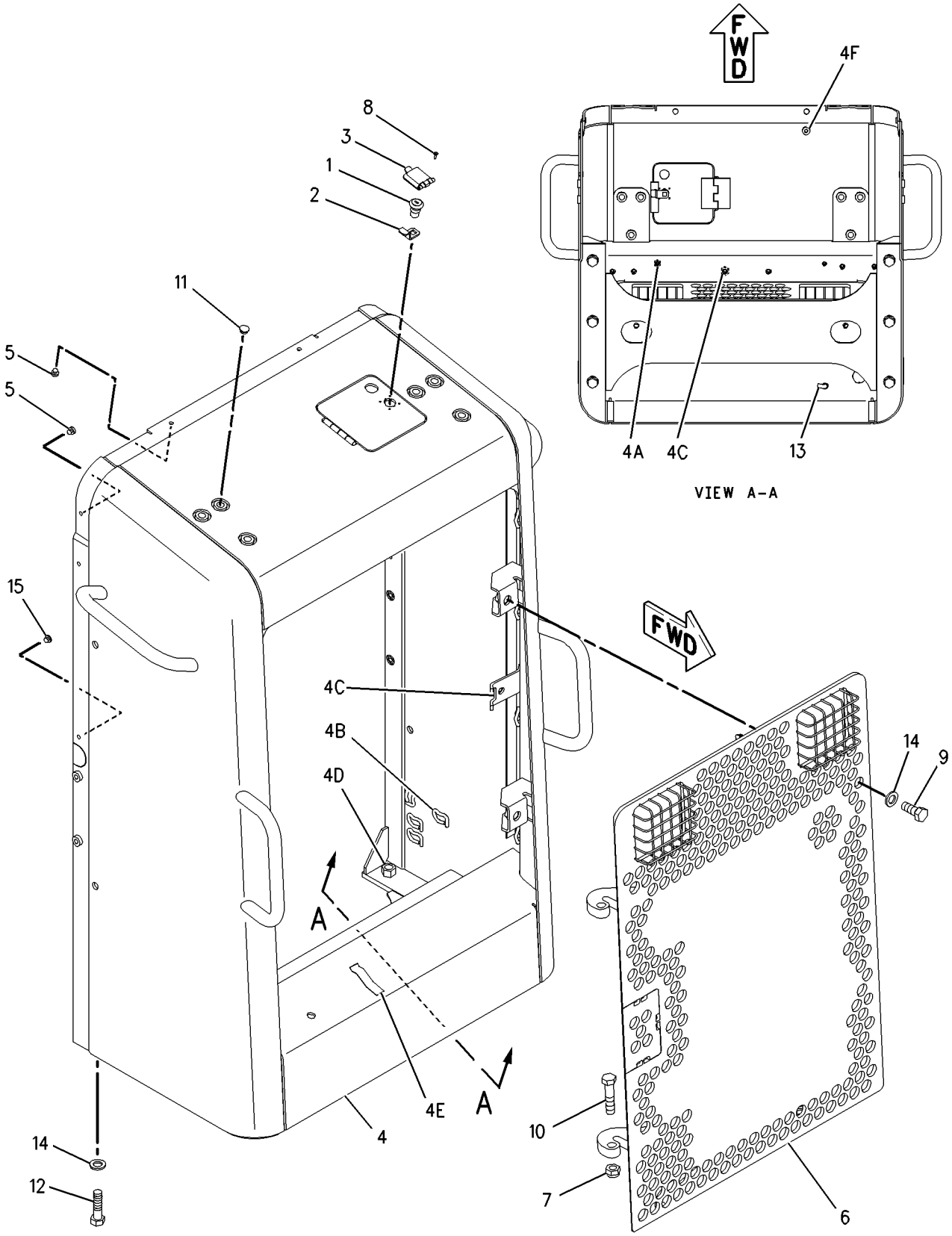

GRAPHIC #1 **<END>** g00923131

205-6127 GUARD GP-TRACK GUIDE

S/N: CBJ1-UP
PART OF 205-6136 GUIDING AR-UNDERCARRIAGE
AN ATTACHMENT

SMCS-4177 **i01830997**

NOTE	REF NO	GRAPHIC REF	PART NUMBER	QTY	PART NAME 1 2 3 4 5 6 (PRODUCT LEVEL)	SEE PAGE
	1	1	**204-6365**	16	SPACER (.8X35X15MM THK)	
	2	1	**205-6160**	4	GUIDE AS	
M	3	1	**8T-4140**	16	BOLT (M16X2X60MM)	

M-METRIC PART

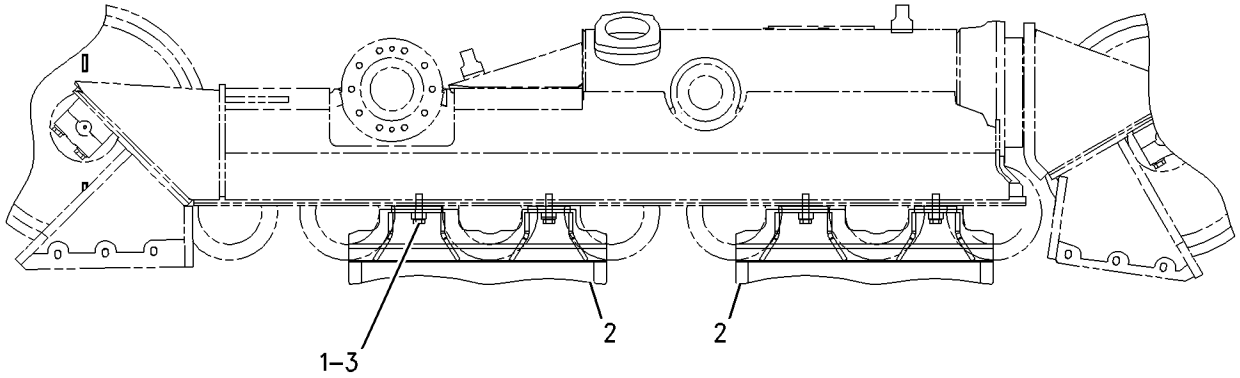

RIGHT SIDE VIEW

GRAPHIC #1 **<END>** g00899177

205-6128 GUARD GP-TRACK GUIDE–EXTREME SERVICE

S/N: CBJ1-UP
PART OF 205-6137 GUIDING AR-UNDERCARRIAGE
AN ATTACHMENT

SMCS-4177 **i01831007**

NOTE	REF NO	GRAPHIC REF	PART NUMBER	QTY	PART NAME 1 2 3 4 5 6 (PRODUCT LEVEL)	SEE PAGE
	1	1	**204-6365**	24	SPACER (.8X35X15MM THK)	
	2	1	**205-6141**	8	TUBE	
	3	1	**205-6148**	2	BRACKET AS	
	4	1	**205-6149**	2	BRACKET AS	
	5	1	**205-6162**	2	GUARD AS	
	6	1	**205-6163**	2	GUARD AS	
M	7	1	**110-6969**	8	BOLT-HEX HEAD	
	8	1	**7X-0550**	12	WASHER-HARD (13.5X32X5MM THK)	
	9	1	**7X-0605**	4	WASHER-HARD (13X28X1.6MM THK)	
M	10	1	**8T-4140**	24	BOLT (M16X2X60MM)	
M	11	1	**8T-4956**	8	BOLT (M12X1.75X35MM)	
M	12	1	**8T-4194**	4	BOLT (M12X1.75X50MM)	
M	13	1	**8T-4778**	8	LOCKNUT (M16X2 THD)	
	14	1	**9X-8257**	16	WASHER (17.5X30X3.5MM THK)	

M-METRIC PART

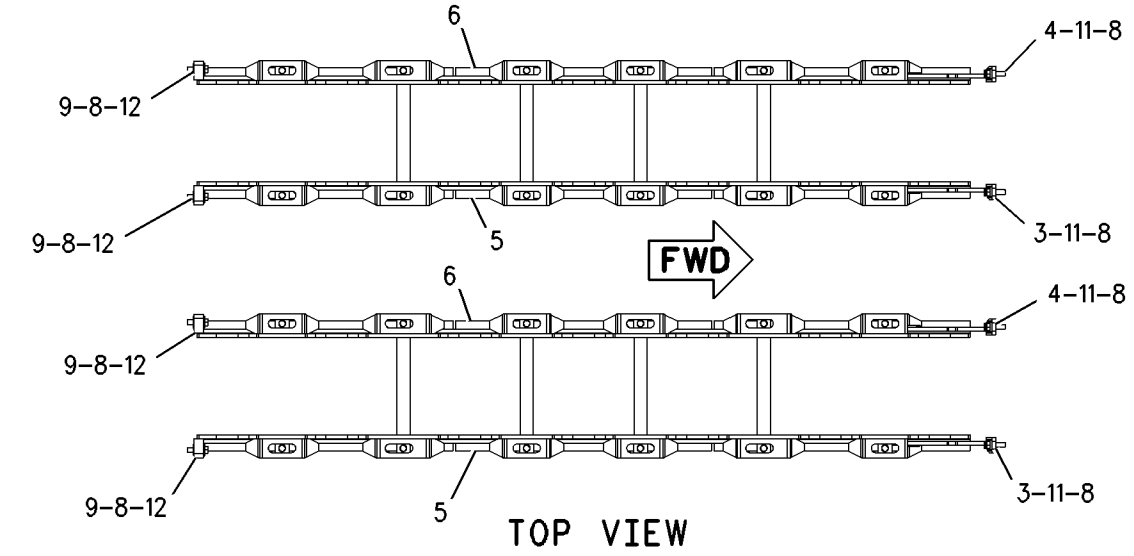

TOP VIEW

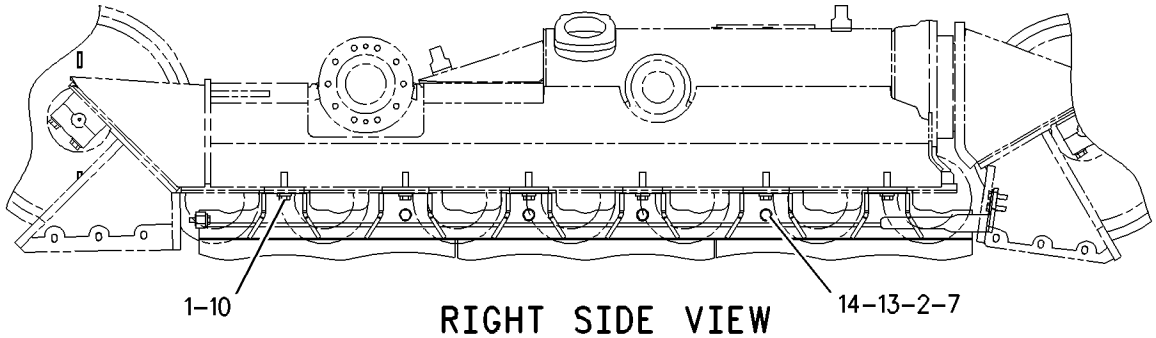

RIGHT SIDE VIEW

GRAPHIC #1

<END>

g00899167

155-7704 HOOD & GUARD GP—SEMI-UNIVERSAL BULLDOZER

S/N: S6D1-UP

PART OF 206-9537 BULLDOZER AR-SEMI-UNIVERSAL

AN ATTACHMENT

SMCS-7251 **i01876929**

NOTE	REF NO	GRAPHIC REF	PART NUMBER	QTY	PART NAME 1 2 3 4 5 6 (PRODUCT LEVEL)	SEE PAGE
	1	1	**6S-6251**	2	MOUNT	
	2	1	**6S-6646**	2	PIN-COTTER	
	3	1	**7Y-2854**	4	SPACER (24X38X3MM THK)	
	4	1	**111-4643**	2	PLATE	
	5	1	**145-0823**	4	BUMPER	
	6	1	**155-7803**	2	CAM-LATCH	
	7	1	**155-7818**	1	HOOD AS	
M		1	**8T-3490**	2	NUT-WELD (M10X1.5 THD)	
	8	1	**155-9282**	1	DOOR AS (RH)	
	9	1	**155-9284**	1	SHEET AS (RH)	
	10	1	**155-9286**	1	SUPPORT AS (RH)	
M		1	**8T-3490**	2	NUT-WELD (M10X1.5 THD)	
	11	1	**155-9287**	1	DOOR AS (LH)	
	12	1	**155-9289**	1	SHEET AS (LH)	
	13	1	**155-9291**	1	SUPPORT AS (LH)	
M		1	**8T-3490**	1	NUT-WELD (M10X1.5 THD)	
	14	1	**155-9301**	1	PLATE AS-RH	
M		1	**8T-3490**	2	NUT-WELD (M10X1.5 THD)	
	15	1	**155-9302**	1	PLATE AS-LH	
M		1	**8T-3490**	2	NUT-WELD (M10X1.5 THD)	
	16	1	**177-1570**	4	LATCH AS	
					(EACH INCLUDES)	
J		1	**217-0733**	1	LOCK AS	
	17	1	**201-4033**	2	PLATE AS	
					(EACH INCLUDES)	
		1	**3H-8726**	1	MOUNT AS	
	18	1	**201-5349**	2	SHAFT AS	
	19	1	**202-7356**	1	BRACKET AS (RH)	
	20	1	**202-7357**	1	BRACKET AS (LH)	
	21	1	**202-7358**	2	CAM (LATCH)	
	22	1	**222-6239**	1	SHEET (RH)	
	23	1	**222-6240**	1	SHEET (LH)	
	24	1	**224-0687**	1	BRACKET (LH)	
	25	1	**224-0688**	1	BRACKET (RH)	
	26	1	**6V-8513**	4	WASHER-HARD (11X35X2.5MM THK)	
	27	1	**7X-7729**	10	WASHER (11X25X3MM THK)	
	28	1	**8T-4121**	18	WASHER-HARD (11X21X2.5MM THK)	
M	29	1	**8T-4137**	8	BOLT (M10X1.5X20MM)	
M	30	1	**8T-4185**	2	BOLT (M10X1.5X50MM)	
M	31	1	**8T-4195**	20	BOLT (M10X1.5X30MM)	
BD	32	1	**202-5293**		SEAL	

B-USE AS REQUIRED
D-ORDER BY THE METER
J-REQUIRES 5P8500 KEY
M-METRIC PART

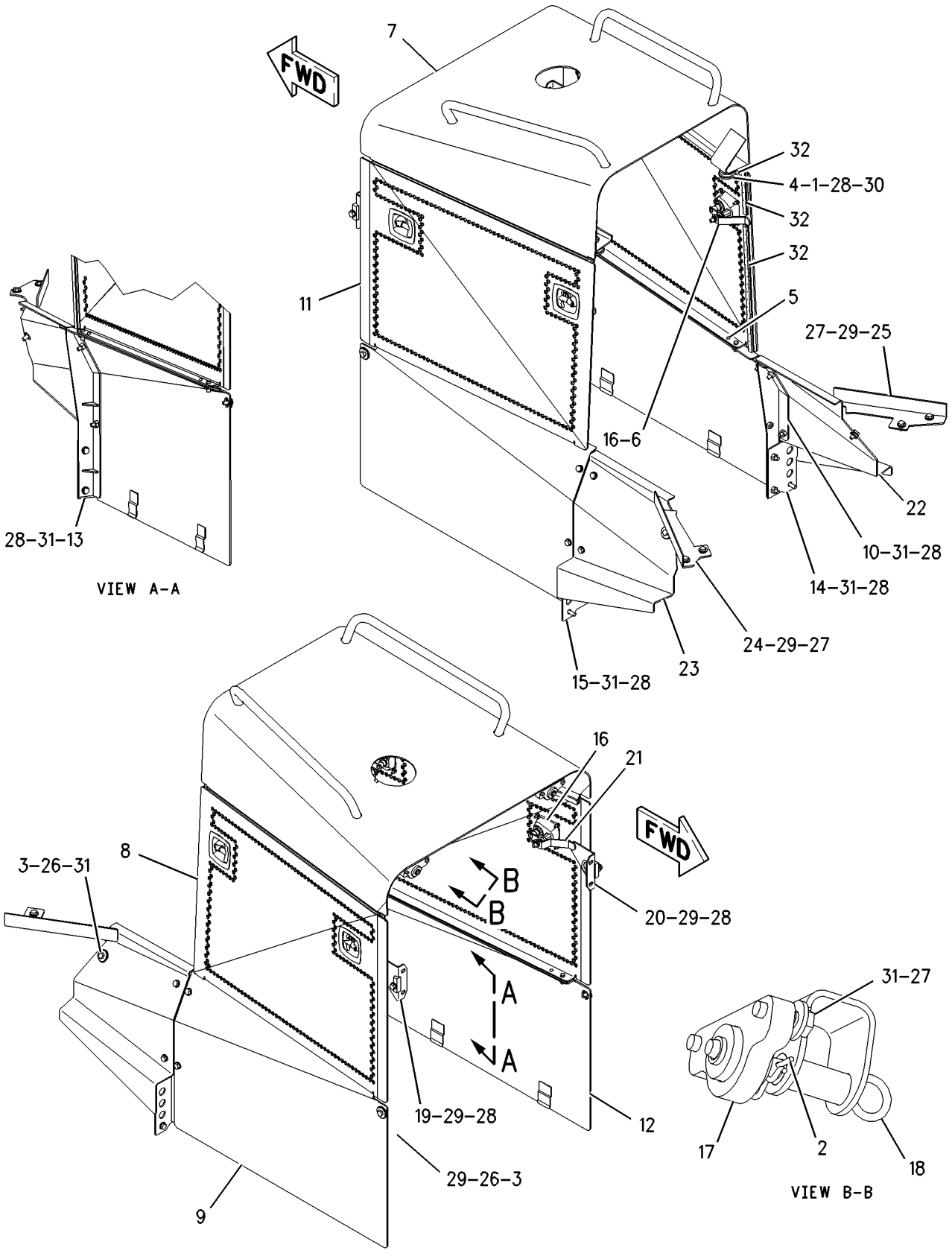

GRAPHIC #1 **<END>** g00917659

155-7804 HOOD & GUARD GP–

SEMI-UNIVERSAL BULLDOZER W/ SOUND SUPPRESSION

S/N: S6S1-UP

PART OF 206-9544 BULLDOZER AR-SEMI-UNIVERSAL

AN ATTACHMENT

SMCS-7251 **i01877311**

NOTE	REF NO	GRAPHIC REF	PART NUMBER	QTY	PART NAME 1 2 3 4 5 6 (PRODUCT LEVEL)	SEE PAGE
	1	1	**6P-2216**	60	CAP-PUSH ON	
	2	1	**6S-6251**	2	MOUNT	
	3	1	**6S-6646**	2	PIN-COTTER	
	4	1	**111-4643**	2	PLATE	
	5	1	**145-0823**	4	BUMPER	
	6	1	**155-7803**	2	CAM-LATCH	
	7	1	**155-7819**	1	HOOD AS	
M		1	**8T-3490**	2	NUT-WELD (M10X1.5 THD)	
		1	**127-8732**	6	PIN-WELD	
	8	1	**155-9283**	1	DOOR AS (RH)	
		1	**127-8732**	10	PIN-WELD	
	9	1	**155-9285**	1	SHEET AS (RH)	
		1	**127-8732**	1	PIN-WELD	
	10	1	**155-9286**	1	SUPPORT AS (RH)	
		1	**9R-2672**	1	BOSS (M10X20MM)	
M		1	**8T-3490**	2	NUT-WELD (M10X1.5 THD)	
	11	1	**155-9288**	1	DOOR AS (LH)	
		1	**127-8732**	10	PIN-WELD	
	12	1	**155-9290**	1	SHEET AS (RH)	
		1	**127-8732**	11	PIN-WELD	
	13	1	**155-9291**	1	SUPPORT AS (LH)	
M		1	**8T-3490**	1	NUT-WELD (M10X1.5 THD)	
	14	1	**155-9301**	1	PLATE AS-RH	
M		1	**8T-3490**	2	NUT-WELD (M10X1.5 THD)	
	15	1	**155-9302**	1	PLATE AS-LH	
M		1	**8T-3490**	2	NUT-WELD (M10X1.5 THD)	
	16	1	**174-0099**	1	LINER-LH	
	17	1	**174-0100**	1	LINER (RH)	
	18	1	**174-0101**	1	LINER (RH)	
	19	1	**174-0102**	1	LINER (RH)	
	20	1	**174-0103**	1	LINER (RH)	
	21	1	**174-0104**	1	LINER (RH)	
	22	1	**174-0105**	1	LINER (RH)	
	23	1	**174-0106**	1	LINER (LH)	
	24	1	**174-0107**	1	LINER (RH)	
	25	1	**174-0108**	1	LINER (LH)	
	26	1	**174-0109**	1	LINER (LH)	
	27	1	**174-0110**	1	LINER-RH	
	28	1	**177-1570**	4	LATCH AS	
					(EACH INCLUDES)	
J		1	**217-0733**	1	LOCK AS	
	29	1	**201-4033**	2	PLATE AS	
					(EACH INCLUDES)	
		1	**3H-8726**	1	MOUNT AS	
	30	1	**201-5349**	2	SHAFT AS	
	31	1	**202-7356**	1	BRACKET AS (RH)	
	32	1	**202-7357**	1	BRACKET AS (LH)	
	33	1	**202-7358**	2	CAM (LATCH)	
	34	1	**222-6246**	1	SHEET AS (RH)	
		1	**127-8732**	6	PIN-WELD	
	35	1	**222-6247**	1	SHEET AS (LH)	
		1	**127-8732**	6	PIN-WELD	
	36	1	**224-0687**	1	BRACKET (LH)	
	37	1	**224-0688**	1	BRACKET (RH)	

155-7804 **HOOD & GUARD GP** ***(contd.)*** **i01877311**

NOTE	REF NO	GRAPHIC REF	PART NUMBER	QTY	PART NAME 1 2 3 4 5 6 (PRODUCT LEVEL)	SEE PAGE
	38	1	**6V-8513**	4	WASHER-HARD (11X35X2.5MM THK)	
	39	1	**7X-7729**	8	WASHER (11X25X3MM THK)	
	40	1	**7Y-2854**	4	SPACER (24X38X3MM THK)	
	41	1	**8T-4121**	18	WASHER-HARD (11X21X2.5MM THK)	
M	42	1	**8T-4137**	8	BOLT (M10X1.5X20MM)	
M	43	1	**8T-4185**	2	BOLT (M10X1.5X50MM)	
M	44	1	**8T-4195**	20	BOLT (M10X1.5X30MM)	
BD	45	1	**202-5293**		SEAL	

B-USE AS REQUIRED
D-ORDER BY THE METER
J-REQUIRES 5P8500 KEY
M-METRIC PART

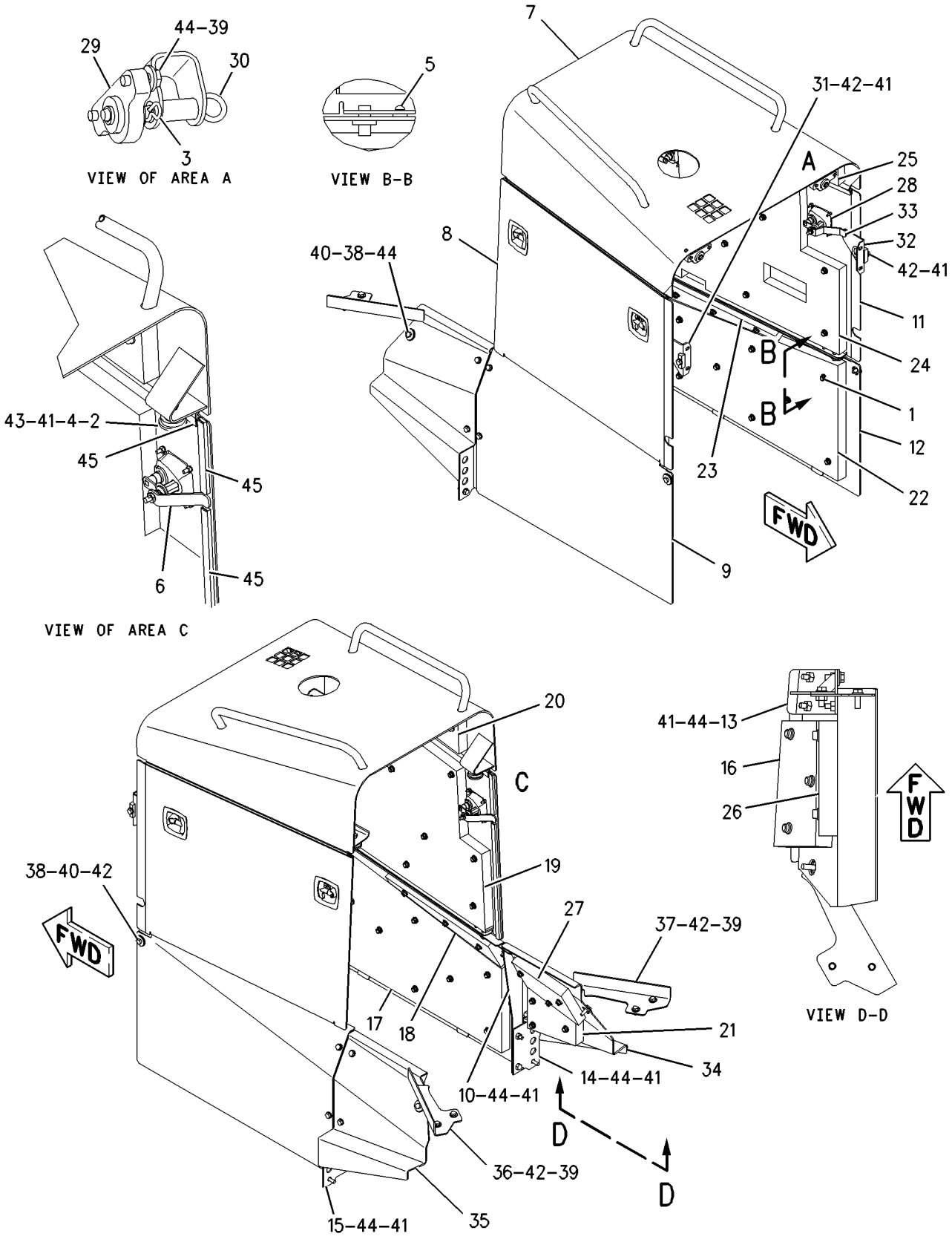

GRAPHIC #1 **<END>** g00914906

FRAME AND BODY

200-6248 HOOD & GUARD GP–SOUND SUPPRESSION

S/N: CBJ1-UP
PART OF 169-4912 SUPPRESSION AR-SOUND
AN ATTACHMENT

SMCS-7251 **i01881389**

NOTE	REF NO	GRAPHIC REF	PART NUMBER	QTY	PART NAME 1 2 3 4 5 6 (PRODUCT LEVEL)	SEE PAGE
	1	1	**6P-2216**	68	CAP-PUSH ON	
	2	1	**6S-6251**	2	MOUNT	
	3	1	**6S-6646**	2	PIN-COTTER	
	4	1	**111-4643**	2	PLATE	
	5	1	**155-9301**	1	PLATE AS-RH	
M		1	**8T-3490**	2	NUT-WELD (M10X1.5 THD)	
	6	1	**155-9302**	1	PLATE AS-LH	
M		1	**8T-3490**	2	NUT-WELD (M10X1.5 THD)	
	7	1	**155-9331**	1	SUPPORT AS	
M		1	**8T-3490**	4	NUT-WELD (M10X1.5 THD)	
	8	1	**155-9332**	1	SUPPORT AS	
M		1	**8T-3490**	3	NUT-WELD (M10X1.5 THD)	
	9	1	**174-0099**	1	LINER-LH	
	10	1	**174-0100**	1	LINER (RH)	
	11	1	**174-0103**	1	LINER (RH)	
	12	1	**174-0104**	1	LINER (RH)	
	13	1	**174-0105**	1	LINER (RH)	
	14	1	**174-0108**	1	LINER (LH)	
	15	1	**174-0109**	1	LINER (LH)	
	16	1	**174-0110**	1	LINER-RH	
	17	1	**177-1570**	2	LATCH AS	
					(EACH INCLUDES)	
J		1	**217-0733**	1	LOCK AS	
	18	1	**200-6244**	1	SHEET AS-LH	
		1	**127-8732**	8	PIN-WELD	
		1	**155-9330**	1	SHEET AS (LH)	
	19	1	**200-6245**	1	SHEET AS-RH	
		1	**127-8732**	8	PIN-WELD	
		1	**155-9329**		SHEET AS (RH)	
	20	1	**201-4033**	2	PLATE AS	
					(EACH INCLUDES)	
		1	**3H-8726**	1	MOUNT AS	
	21	1	**201-5349**	2	SHAFT AS	
	22	1	**201-9473**	1	LINER-RH	
	23	1	**201-9474**	1	LINER-RH	
	24	1	**201-9475**	1	LINER-LH	
	25	1	**201-9476**	1	LINER-RH	
	26	1	**201-9477**	1	LINER-RH	
	27	1	**201-9478**	1	LINER-RH	
	28	1	**212-3511**	2	LATCH (CAM)	
	29	1	**222-6241**	1	HOOD AS	
M		1	**8T-3490**	2	NUT-WELD (M10X1.5 THD)	
		1	**127-8732**	6	PIN-WELD	
	30	1	**222-6242**	1	DOOR AS (RH)	
M		1	**8T-5413**	4	STUD-WELD (M10X1.5X25MM OAL)	
		1	**127-8732**	11	PIN-WELD	
	31	1	**222-6243**	1	DOOR AS (LH)	
M		1	**8T-5413**	4	STUD-WELD (M10X1.5X25MM OAL)	
		1	**127-8732**	11	PIN-WELD	
	32	1	**222-6244**	1	SHEET AS (RH INT)	
		1	**127-8732**	6	PIN-WELD	
	33	1	**222-6245**	1	SHEET AS (LH)	
		1	**127-8732**	6	PIN-WELD	
	34	1	**222-6246**	1	SHEET AS (RH)	
		1	**127-8732**	6	PIN-WELD	

200-6248 **HOOD & GUARD GP** *(contd.)* **i01881389**

NOTE	REF NO	GRAPHIC REF	PART NUMBER	QTY	PART NAME 1 2 3 4 5 6 (PRODUCT LEVEL)	SEE PAGE
		1	**222-6239**	1	SHEET (RH)	
	35	1	**222-6247**	1	SHEET AS (LH)	
		1	**127-8732**	6	PIN-WELD	
		1	**222-6240**	1	SHEET (LH)	
	36	1	**224-0687**	1	BRACKET (LH)	
M		1	**8T-3612**	1	NUT-WELD (M8X1.25 THD)	
	37	1	**224-0688**	1	BRACKET (RH)	
M		1	**8T-3612**	1	NUT-WELD (M8X1.25 THD)	
	38	1	**229-1948**	1	SUPPORT AS (RH)	
	39	1	**229-1949**	1	SUPPORT AS (LH)	
	40	1	**229-2834**	1	PLATE AS (LH)	
	41	1	**229-2835**	1	PLATE AS (RH)	
	42	1	**230-8334**	1	BRACKET AS (RH)	
	43	1	**230-8335**	1	BRACKET AS (LH)	
	44	1	**6V-8513**	6	WASHER-HARD (11X35X2.5MM THK)	
	45	1	**3B-4609**	2	PIN-COTTER	
	46	1	**7X-7729**	8	WASHER (11X25X3MM THK)	
	47	1	**7Y-2854**	6	SPACER (24X38X3MM THK)	
	48	1	**8T-4121**	30	WASHER-HARD (11X21X2.5MM THK)	
M	49	1	**8T-4133**	8	NUT (M10X1.5 THD)	
M	50	1	**8T-4136**	4	BOLT (M10X1.5X25MM)	
M	51	1	**8T-4137**	8	BOLT (M10X1.5X20MM)	
M	52	1	**8T-4185**	2	BOLT (M10X1.5X50MM)	
M	53	1	**8T-4195**	20	BOLT (M10X1.5X30MM)	
BD	54	1	**202-5293**		SEAL	

B-USE AS REQUIRED
D-ORDER BY THE METER
J-REQUIRES 5P8500 KEY
M-METRIC PART

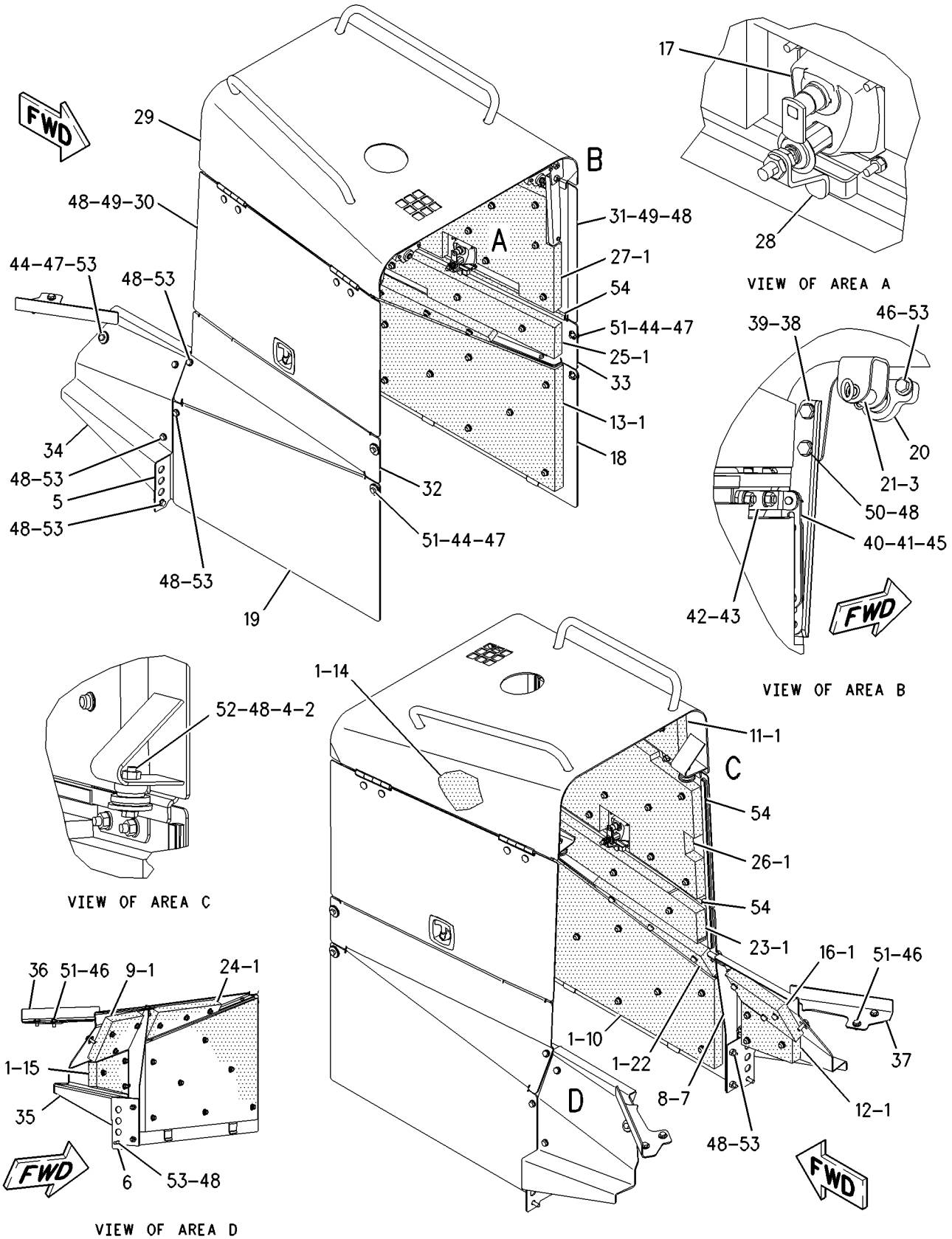

GRAPHIC #1 **<END>** g00974433

FRAME AND BODY

155-9323 HOOD GP

S/N: CBJ1-UP

PART OF 156-9497 CHASSIS AR

SMCS-7251 **i01874555**

NOTE	REF NO	GRAPHIC REF	PART NUMBER	QTY	PART NAME 1 2 3 4 5 6 (PRODUCT LEVEL)	SEE PAGE
	1	1	**6S-6251**	2	MOUNT	
	2	1	**6S-6646**	2	PIN-COTTER	
	3	1	**111-4643**	2	PLATE	
	4	1	**155-9301**	1	PLATE AS-RH	
M		1	**8T-3490**	2	NUT-WELD (M10X1.5 THD)	
	5	1	**155-9302**	1	PLATE AS-LH	
M		1	**8T-3490**	2	NUT-WELD (M10X1.5 THD)	
	6	1	**155-9329**	1	SHEET AS (RH)	
	7	1	**155-9330**	1	SHEET AS (LH)	
	8	1	**155-9331**	1	SUPPORT AS (RH)	
		1	**9R-2672**	1	BOSS (M10X20MM)	
M		1	**8T-3490**	4	NUT-WELD (M10X1.5 THD)	
	9	1	**155-9332**	1	SUPPORT AS (LH)	
M		1	**8T-3490**	4	NUT-WELD (M10X1.5 THD)	
	10	1	**177-1570**	2	LATCH AS	
					(EACH INCLUDES)	
J		1	**217-0733**	1	LOCK AS	
	11	1	**201-4033**	2	PLATE AS	
					(EACH INCLUDES)	
		1	**3H-8726**	1	MOUNT AS	
	12	1	**201-5349**	2	SHAFT AS	
	13	1	**212-3511**	2	LATCH (CAM)	
	14	1	**222-6234**	1	HOOD AS	
M		1	**8T-3490**	2	NUT-WELD (M10X1.5 THD)	
	15	1	**222-6235**	1	DOOR AS (RH)	
M		1	**8T-5413**	4	STUD-WELD (M10X1.5X25MM OAL)	
	16	1	**222-6236**	1	DOOR AS (LH)	
M		1	**8T-5413**	4	STUD-WELD (M10X1.5X25MM OAL)	
	17	1	**222-6237**	1	SHEET AS (RH)	
	18	1	**222-6238**	1	SHEET AS (LH)	
	19	1	**222-6239**	1	SHEET (RH)	
	20	1	**222-6240**	1	SHEET (LH)	
	21	1	**224-0687**	1	BRACKET (LH)	
	22	1	**224-0688**	1	BRACKET (RH)	
	23	1	**229-1948**	1	SUPPORT AS (RH)	
	24	1	**229-1949**	1	SUPPORT AS (LH)	
	25	1	**229-2834**	1	PLATE AS (LH)	
	26	1	**229-2835**	1	PLATE AS (RH)	
	27	1	**230-8334**	1	BRACKET AS (RH)	
	28	1	**230-8335**	1	BRACKET AS (LH)	
	29	1	**6V-8513**	6	WASHER-HARD (11X35X2.5MM THK)	
	30	1	**3B-4609**	4	PIN-COTTER	
	31	1	**7X-7729**	8	WASHER (11X25X3MM THK)	
	32	1	**7Y-2854**	6	SPACER (24X38X3MM THK)	
	33	1	**8T-4121**	30	WASHER-HARD (11X21X2.5MM THK)	
M	34	1	**8T-4133**	8	NUT (M10X1.5 THD)	
M	35	1	**8T-4136**	4	BOLT (M10X1.5X25MM)	
M	36	1	**8T-4137**	8	BOLT (M10X1.5X20MM)	
M	37	1	**8T-4185**	2	BOLT (M10X1.5X50MM)	
M	38	1	**8T-4195**	20	BOLT (M10X1.5X30MM)	
BD	39	1	**202-5293**		SEAL	

B-USE AS REQUIRED
D-ORDER BY THE METER
J-REQUIRES 5P8500 KEY
M-METRIC PART

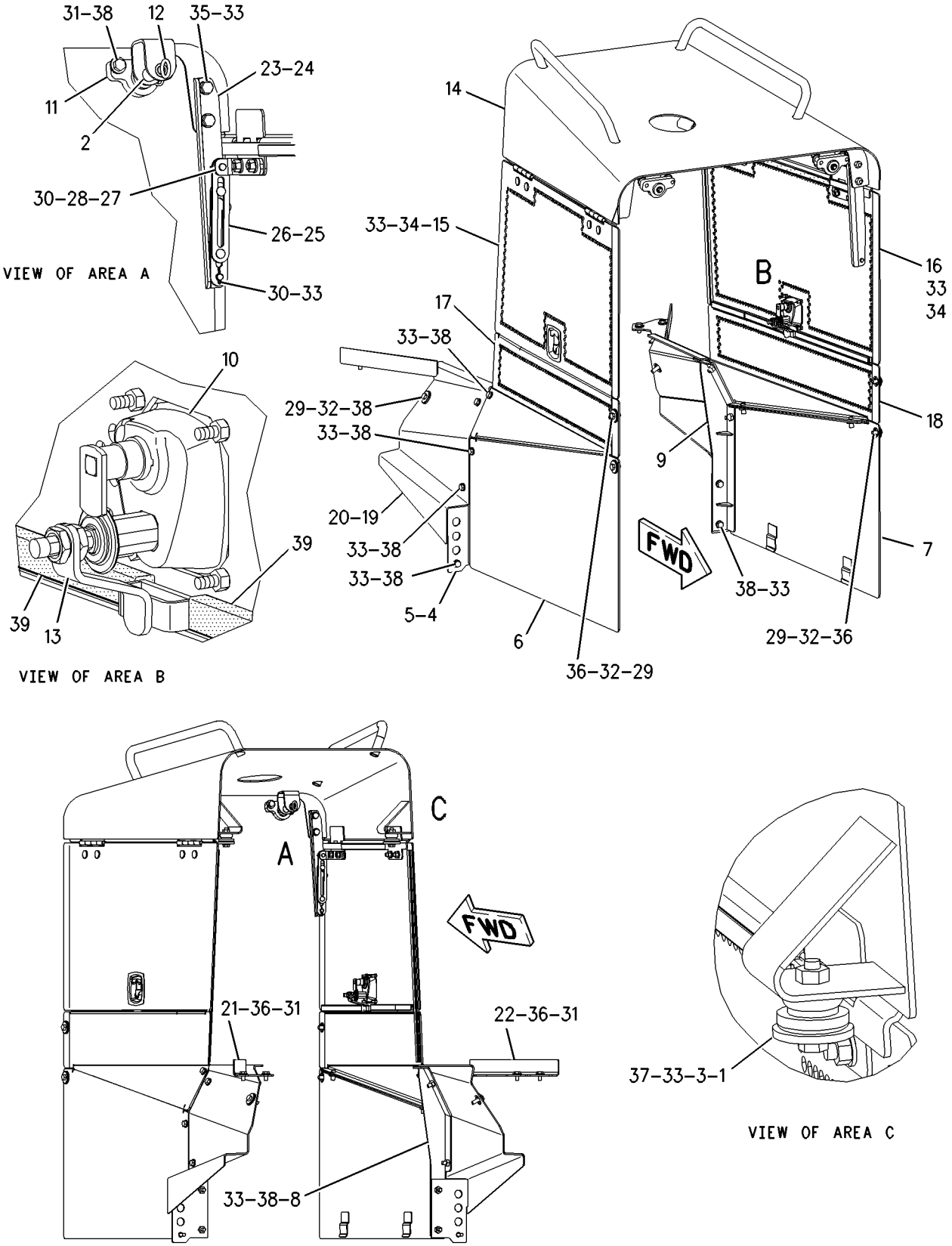

GRAPHIC #1 **<END>** g00956277

225-0435 SWEEP GP—OPEN ROPS

S/N: CBJ1-UP
CANNOT BE USED WITH CAB AR
AN ATTACHMENT

SMCS-7162 **i01831065**

NOTE	REF NO	GRAPHIC REF	PART NUMBER	QTY	PART NAME 1 2 3 4 5 6 (PRODUCT LEVEL)	SEE PAGE
	1	1	**1P-2772**	8	SPACER (26X31X19MM THK)	
	2	1	**9S-5187**	4	MOUNTING	
	3	1	**185-2666**	1	STABILIZER AS	
		1	**3T-7641**	1	PLATE	
		1	**3W-6468**	1	PLATE	
	4	1	**185-2667**	1	STABILIZER AS	
		1	**3T-7641**	1	PLATE	
		1	**3W-6468**	1	PLATE	
	5	1	**225-0437**	2	SWEEP AS	
					(EACH INCLUDES)	
		1	**3W-6468**	2	PLATE	
		1	**9S-5183**	2	BRACKET	
	6	1	**225-0439**	1	BRACKET AS (RH)	
		1	**3T-7641**	1	PLATE	
		1	**225-0440**	1	BRACKET AS (LH)	
		1	**3T-7641**	1	PLATE	
	8	1	**225-0441**	1	SUPPORT AS (RH)	
M		1	**8T-3490**	4	NUT-WELD (M10X1.5 THD)	
	9	1	**225-0442**	1	SUPPORT AS (LH)	
M		1	**8T-3490**	4	NUT-WELD (M10X1.5 THD)	
	10	1	**225-0443**	4	PLATE	
	11	1	**225-0444**	1	TUBE	
M	12	1	**129-3180**	8	LOCKNUT (M12X1.75 THD)	
	13	1	**199-5977**	1	PIPE AS-EXHAUST	
	14	1	**3E-9864**	4	LOCKNUT (1-8 THD)	
	15	1	**5P-1076**	16	WASHER-HARD (13.5X30X4MM THK)	
M	16	1	**7X-2553**	6	BOLT (M16X2X40MM)	
	17	1	**8C-8843**	4	BOLT (1-8X4.5 IN)	
	18	1	**8P-5244**	8	WASHER (33.3X69.8X6.35MM THK)	
	19	1	**8T-4122**	6	WASHER-HARD (17X32X3.5MM THK)	
	20	1	**8T-4223**	10	WASHER-HARD (13.5X25.5X3MM THK)	
M	21	1	**8T-4956**	10	BOLT (M12X1.75X35MM)	
M	22	1	**8T-5041**	8	BOLT (M12X1.75X120MM)	

M-METRIC PART

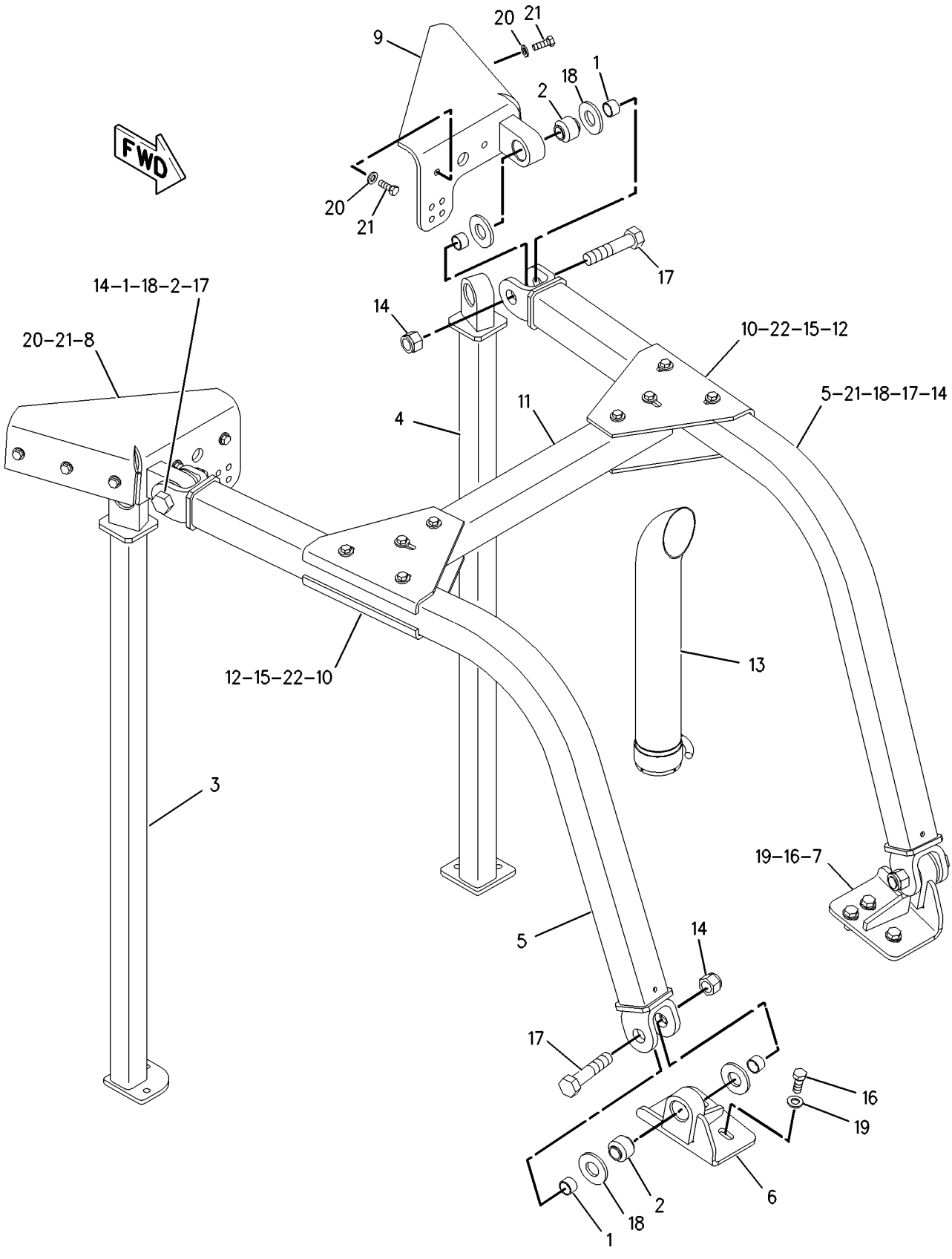

GRAPHIC #1 **<END>** g00938254

225-1271 SWEEP GP–ENCLOSED ROPS

S/N: CBJ1-UP
CANNOT BE USED WITH CANOPY AR
AN ATTACHMENT

SMCS-7162 **i01885497**

NOTE	REF NO	GRAPHIC REF	PART NUMBER	QTY	PART NAME 1 2 3 4 5 6 (PRODUCT LEVEL)	SEE PAGE
	1	1	**1P-2772**	8	SPACER (26X31X19MM THK)	
	2	1	**9S-5187**	4	MOUNTING	
	3	1	**225-0439**	1	BRACKET AS (RH)	
		1	**3T-7641**	1	PLATE	
	4	1	**225-0440**	1	BRACKET AS (LH)	
		1	**3T-7641**	1	PLATE	
	5	1	**225-0443**	4	PLATE	
	6	1	**225-3595**	2	SWEEP AS	
					(EACH INCLUDES)	
		1	**9S-5183**	2	BRACKET	
	7	1	**225-3596**	1	SUPPORT AS (RH)	
	8	1	**225-3597**	1	SUPPORT AS (LH)	
	9	1	**225-3598**	1	TUBE	
M	10	1	**129-3180**	8	LOCKNUT (M12X1.75 THD)	
	11	1	**3E-9864**	4	LOCKNUT (1-8 THD)	
	12	1	**5P-1076**	16	WASHER-HARD (13.5X30X4MM THK)	
M	13	1	**7X-2549**	8	BOLT (M12X1.75X100MM)	
M	14	1	**7X-2553**	6	BOLT (M16X2X40MM)	
	15	1	**8C-8843**	4	BOLT (1-8X4.5 IN)	
	16	1	**8P-5244**	8	WASHER (33.3X69.8X6.35MM THK)	
	17	1	**8T-4121**	8	WASHER-HARD (11X21X2.5MM THK)	
	18	1	**8T-4122**	6	WASHER-HARD (17X32X3.5MM THK)	
M	19	1	**8T-4195**	8	BOLT (M10X1.5X30MM)	

M-METRIC PART

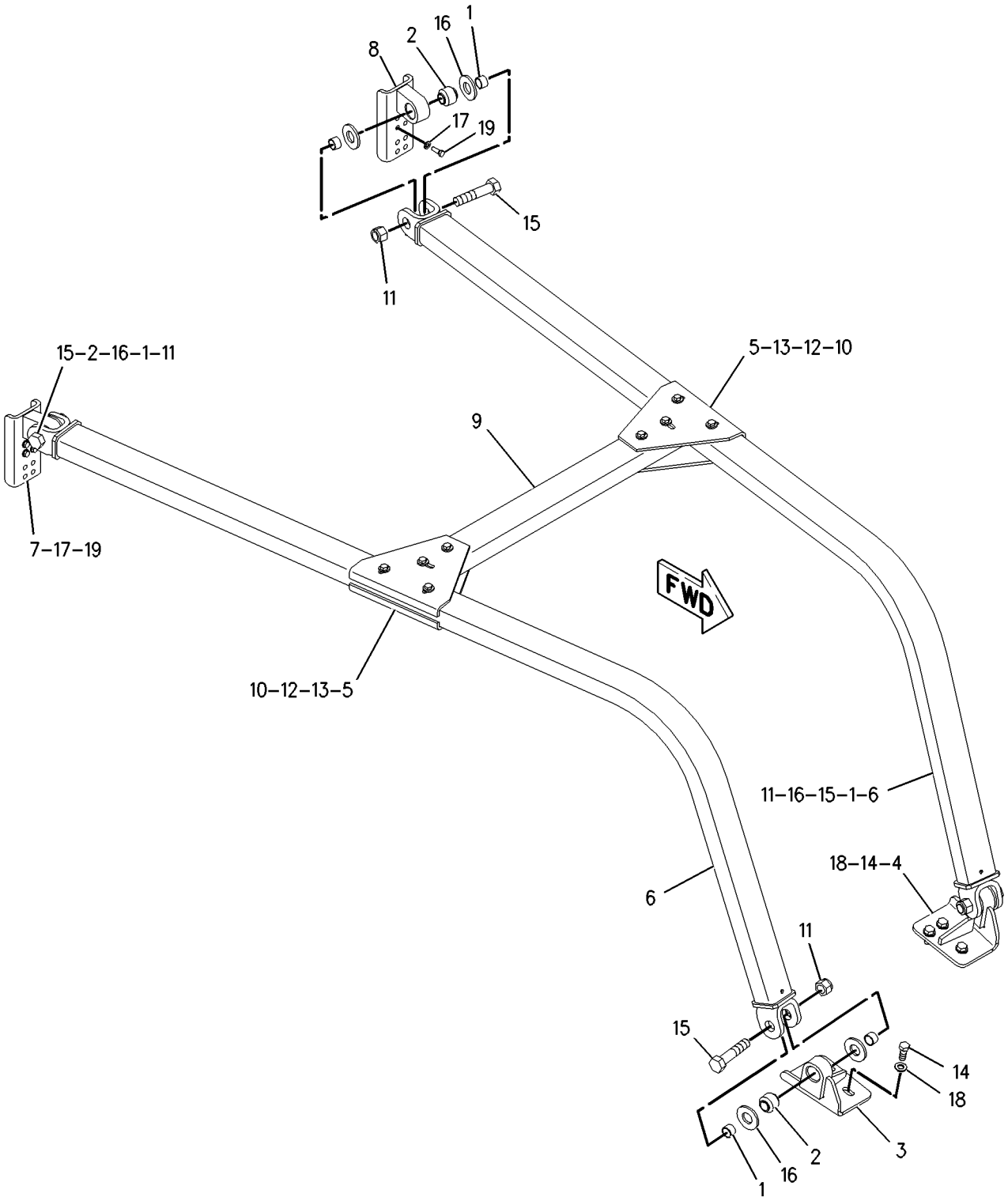

GRAPHIC #1 **<END>** g00938337

UNDERCARRIAGE

172-9872 BAR GP-EQUALIZER

S/N: CBJ1-UP

PART OF 173-8651 UNDERCARRIAGE AR

SMCS-7206 **i01829304**

NOTE	REF NO	GRAPHIC REF	PART NUMBER	QTY	PART NAME 1 2 3 4 5 6 (PRODUCT LEVEL)	SEE PAGE
	1	1	**3B-8489**	2	FITTING-GREASE (EQUALIZER BAR)	
	2	1	**7X-0587**	2	WASHER-HARD (17X54X3MM THK)	
	3	1	**8E-8789**	1	BAR AS	
	3A	1	**7P-6596**	2	BEARING-SLEEVE	
	4	1	**8G-4189**	2	BEARING-SELF-ALIGNING	
	5	1	**8G-8316**	2	SPACER (64.7X85X7MM THK)	
	6	1	**109-0367**	1	PIN	
	7	1	**109-0377**	2	PIN AS	
	8	1	**109-3478**	1	COVER	
	9	1	**118-9602**	1	COVER	
I	10	1	**173-3660**	1	HOSE AS	
	11	1	**1J-6472**	4	RING-RETAINING	
	12	1	**3J-7352**	1	CONNECTOR	
	13	1	**3J-7354**	1	SEAL-O-RING	
	14	1	**6D-3479**	2	CLIP	
	15	1	**7K-9205**	2	SEAL-LIP	
	16	1	**8G-4190**	4	SEAL	
	17	1	**9L-5125**	1	ELBOW	
	18	1	**8T-4121**	2	WASHER-HARD (11X21X2.5MM THK)	
M	19	1	**8T-4137**	2	BOLT (M10X1.5X20MM)	
M	20	1	**8T-4190**	2	BOLT (M16X2X25MM)	
M	21	1	**8T-7338**	4	BOLT (M16X2.0X45MM)	
	22	1	**9X-8257**	4	WASHER (17.5X30X3.5MM THK)	

I-SEE HOSE FABRICATION GUIDE
M-METRIC PART

172-9872 **BAR GP-EQUALIZER** ***(contd.)*** **i01829304**

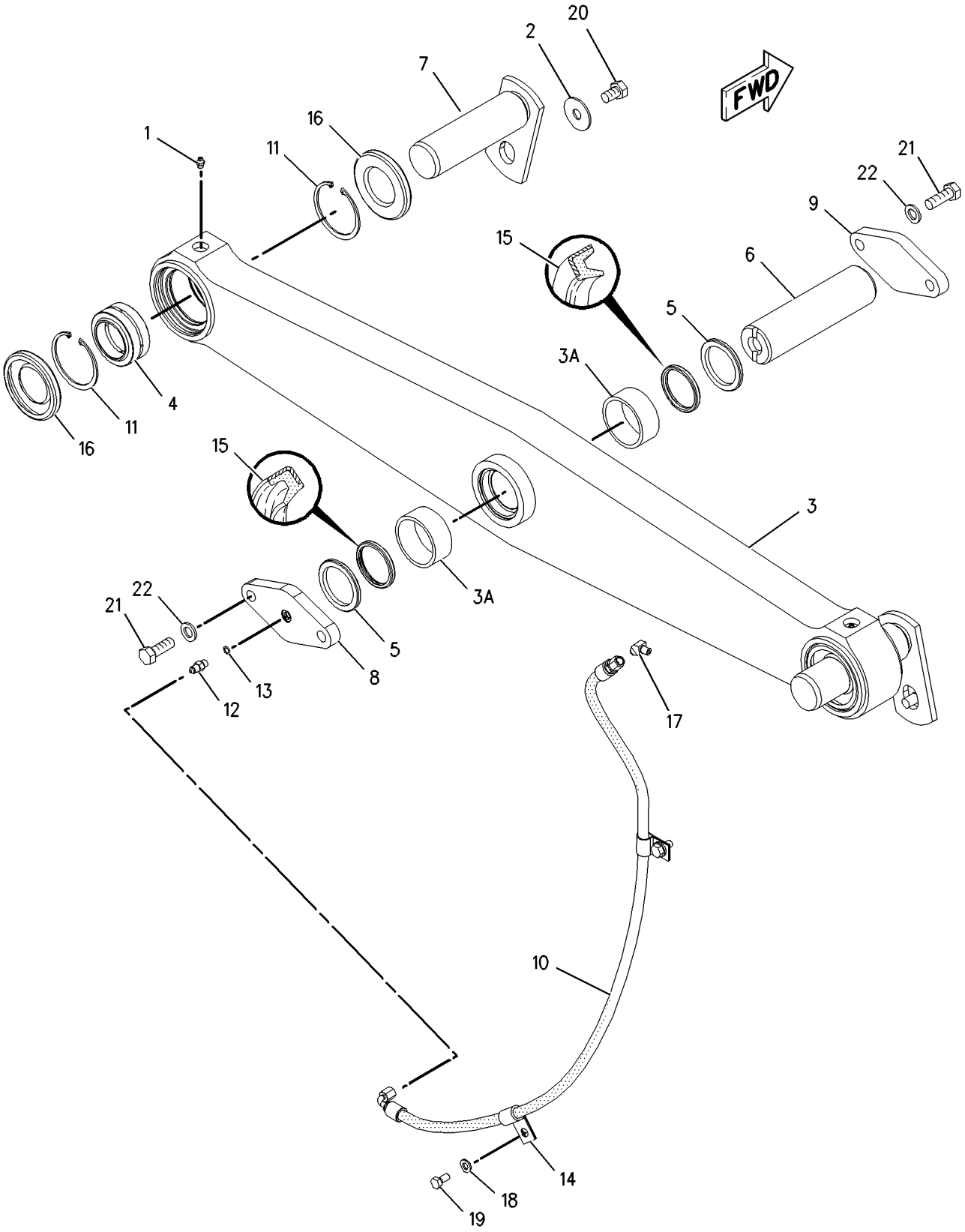

GRAPHIC #1 **<END>** g00914855

UNDERCARRIAGE

110-6122 CAP GP-TRACK IDLER

S/N: CBJ1-UP

PART OF 198-9788 UNDERCARRIAGE GP

SMCS-4159 **i01829374**

NOTE	REF NO	GRAPHIC REF	PART NUMBER	QTY	PART NAME 1 2 3 4 5 6 (PRODUCT LEVEL)	SEE PAGE
	1	1	**108-1138**	1	CAP AS-TRACK IDLER	
		1	**6B-6863**	1	PIN-SPRING	
	2	1	**110-6124**	1	BLOCK-TRACK IDLER	
M	3	1	**8T-0282**	2	BOLT (M16X2.0X120MM)	
	4	1	**5P-8247**	2	WASHER-HARD (17X32X3.5MM THK)	

M-METRIC PART

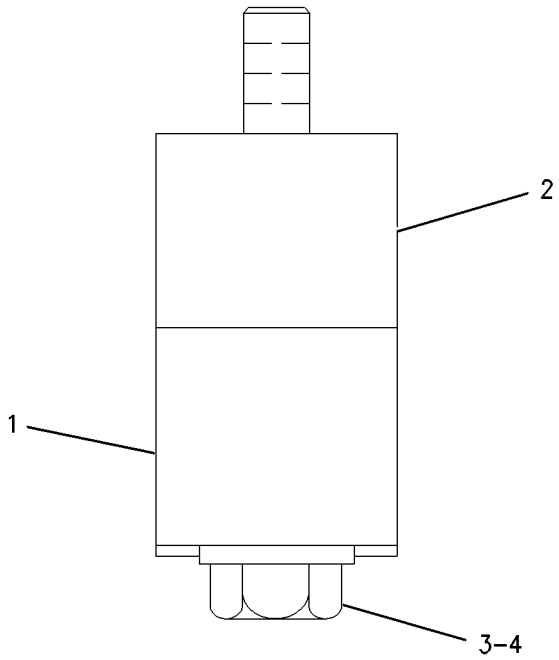

GRAPHIC #1 **<END>** g00940288

UNDERCARRIAGE

198-9789 FRAME GP-TELESCOPING RECOIL

S/N: CBJ1-UP

PART OF 198-9788 UNDERCARRIAGE GP

SMCS-4151 **i01829383**

NOTE	REF NO	GRAPHIC REF	PART NUMBER	QTY	PART NAME 1 2 3 4 5 6 (PRODUCT LEVEL)	SEE PAGE
B	1	1	**3W-4346**	8	SHIM (4MM THK)	
	2	1	**8E-1212**	2	COVER AS	
					(EACH INCLUDES)	
		1	**5P-9891**	1	PLATE-WARNING (HIGH PRESSURE CYLINDER) (TELESCOPING RECOIL)	
		1	**7B-3028**	4	SCREW-DRIVE (NO 4X3/16 IN)	
	3	1	**9X-4580**	2	SEAL AS	
		1	**8T-5071**	1	GUARD-SEAL	
Y	4	1	*108-0800*	2	TRACK ADJUSTER & RECOIL GP	285
	5	1	**110-5692**	4	RETAINER AS	
					(EACH INCLUDES)	
		1	**8T-7532**	1	FILM-WARNING (PARKING BRAKE CYLINDER)	
	6	1	**196-7074**	4	STRIP-WEAR	
	7	1	**196-7078**	4	STRIP-WEAR	
	8	1	**198-9790**	1	FRAME AS-RH	
		1	**198-9791**	1	FRAME AS-LH	
					(EACH FRAME AS INCLUDES)	
		1	**7J-1333**	1	BEARING	
	8A	1	**8K-0589**	2	DOWEL	
		1	**9J-5284**	1	BEARING-SLEEVE	
	9	1	**196-7109**	1	GUARD AS (RH)	
	10	1	**196-7110**	1	GUARD AS (LH)	
	11	1	**228-8337**	2	FRAME AS	
					(EACH INCLUDES)	
		1	**217-1597**	1	PLATE-WARNING (RECOIL SPRING)	
		1	**8T-9530**	2	TACK-FASTENER	
		1	**8G-3202**	1	BEARING-SLEEVE	
		1	**8K-0589**	2	DOWEL	
	12	1	**196-7107**	1	GUARD AS (RH)	
	13	1	**196-7108**	1	GUARD AS (LH)	
	14	1	**1B-5174**	2	PLUG-PIPE	
	15	1	**3W-2025**	2	RING-RETAINING	
	16	1	**5H-6734**	2	SEAL-O-RING	
	17	1	**8T-4121**	8	WASHER-HARD (11X21X2.5MM THK)	
M	18	1	**8T-4136**	8	BOLT (M10X1.5X25MM)	
M	19	1	**8T-4139**	24	BOLT (M12X1.75X30MM)	
M	20	1	**8T-4192**	24	BOLT (M12X1.75X25MM)	
	21	1	**8T-4223**	48	WASHER-HARD (13.5X25.5X3MM THK)	
	22	1	**9P-8899**	2	BEARING	

B-USE AS REQUIRED
M-METRIC PART
Y-SEPARATE ILLUSTRATION

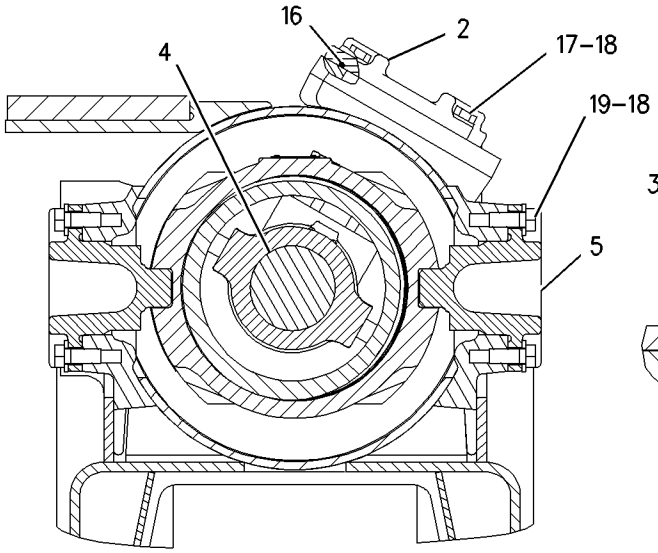

SECTION A-A

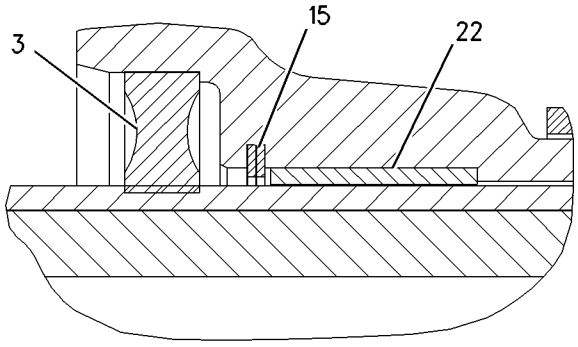

SECTION B-B

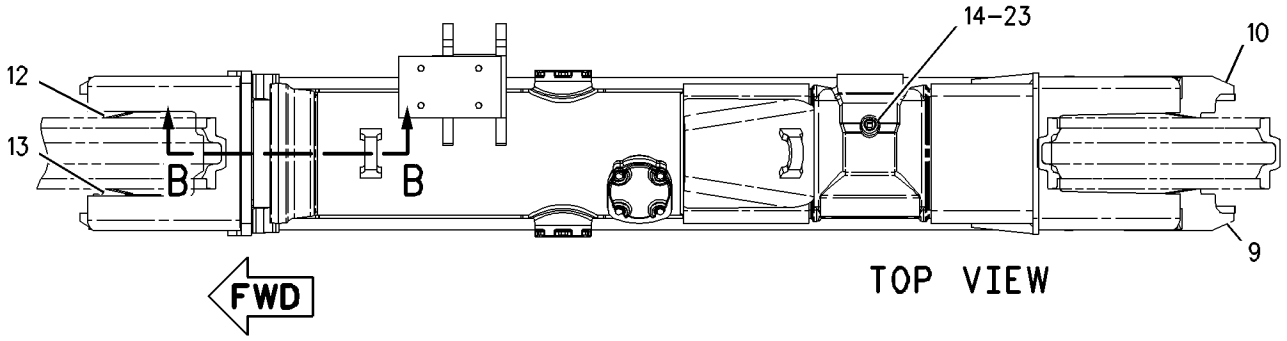

TOP VIEW

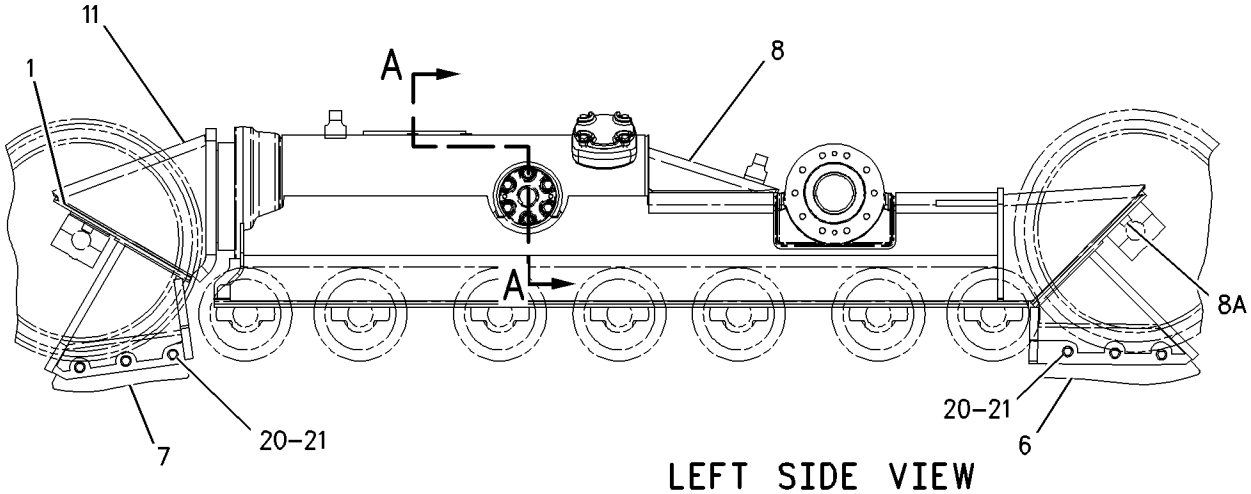

LEFT SIDE VIEW

GRAPHIC #1 **<END>** g00896975

205-6136 GUIDING AR-UNDERCARRIAGE–EXTRA LONG, MODERATE SERVICE

S/N: CBJ1-UP

AN ATTACHMENT

SMCS-4150 **i01830916**

NOTE	PART NUMBER	QTY	PART NAME 1 2 3 4 5 6 (PRODUCT LEVEL)	SEE PAGE
Y	*205-6127*	1	GUARD GP-TRACK GUIDE	251
Y	**121-0830**	10	ROLLER GP-TRACK-DOUBLE FLANGE	281

Y-SEPARATE ILLUSTRATION

<END>

205-6137 GUIDING AR-UNDERCARRIAGE–EXTRA LONG, HEAVY DUTY

S/N: CBJ1-UP

AN ATTACHMENT

SMCS-4150 **i01830999**

NOTE	PART NUMBER	QTY	PART NAME 1 2 3 4 5 6 (PRODUCT LEVEL)	SEE PAGE
Y	*205-6128*	1	GUARD GP-TRACK GUIDE	252
Y	**121-0830**	10	ROLLER GP-TRACK-DOUBLE FLANGE	281

Y-SEPARATE ILLUSTRATION

<END>

190-1546 IDLER GP-TRACK

S/N: CBJ1-UP

PART OF 198-9788 UNDERCARRIAGE GP

SMCS-4159 **i01581537**

NOTE	REF NO	GRAPHIC REF	PART NUMBER	QTY	PART NAME 1 2 3 4 5 6 (PRODUCT LEVEL)	SEE PAGE
	1	1	**1H-8128**	2	SEAL-O-RING	
	2	1	**3T-9536**	1	STOPPER-RUBBER	
	3	1	**5K-0216**	2	SEAL-O-RING	
	4	1	**6Y-0473**	1	PLUG-CLEAR	
	5	1	**110-3362**	2	WASHER-THRUST	
	6	1	**160-9756**	2	COLLAR	
	7	1	**161-7247**	2	SEAL GP-DUO-CONE	
		1	**161-7249**	2	RING-TORIC	
	8	1	**161-7350**	1	SHAFT-TRACK IDLER	
	9	1	**161-7550**	2	RETAINER	
	10	1	**190-1547**	1	IDLER & BEARING AS	
		1	**9P-1360**	2	BEARING-SLEEVE	
	11	1	**053-2294**	12	BOLT-12 POINT HEAD (3/8-16X1.75 IN)	
	12	1	**5M-2894**	12	WASHER-HARD (10.2X18.5X2.5MM THK)	

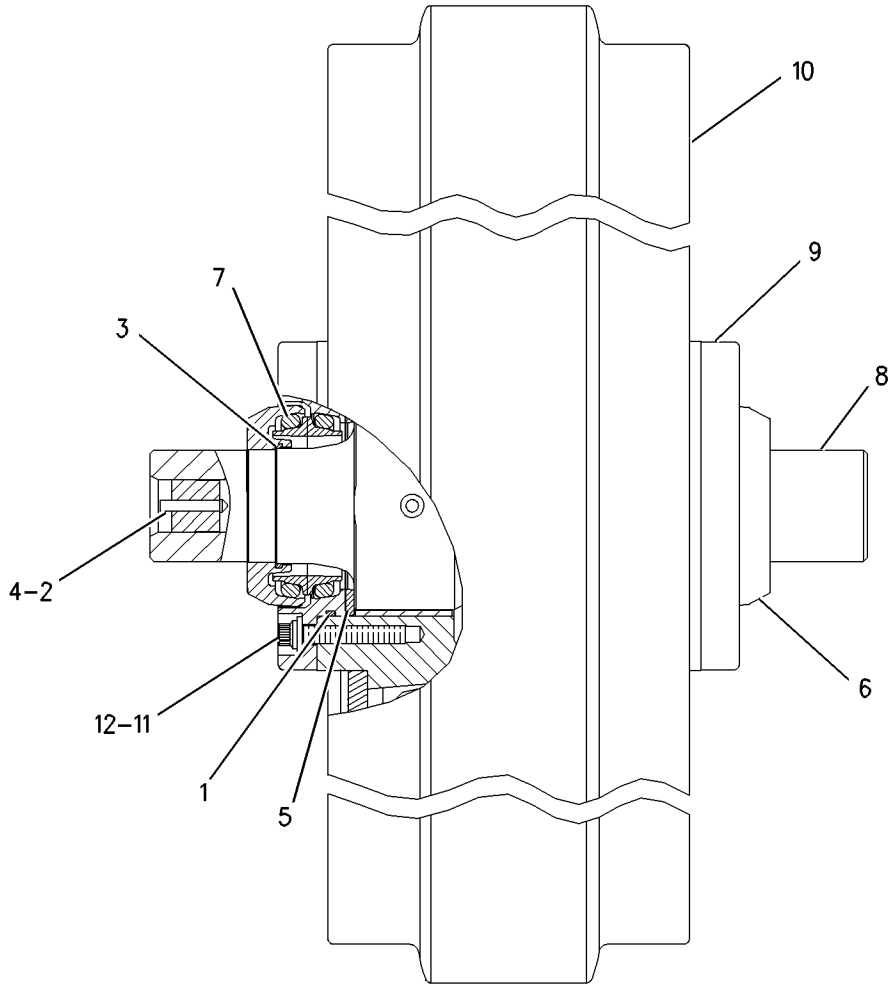

GRAPHIC #1 **<END>** g00838811

110-2976 LINK AS-TRACK

S/N: CBJ1-UP
SEALED & LUBRICATED-HEAVY DUTY
PART OF 110-2977, 110-2978, 110-2980, 132-1337 TRACK GP
ALSO AN ATTACHMENT

SMCS-4169, 4171 **i01385888**

NOTE	REF NO	GRAPHIC REF	PART NUMBER	QTY	PART NAME 1 2 3 4 5 6 (PRODUCT LEVEL)	SEE PAGE
	1	1	**6Y-0473**	40	PLUG-CLEAR	
C	2	1	**5G-2247**	40	STOPPER-RUBBER	
	3	1	**152-8070**	80	RING-THRUST	
	4	1	**8E-9642**	80	SEAL AS	
	5	1	**106-1626**	39	LINK-TRACK-LH	
	6	1	**106-1625**	39	LINK-TRACK-RH	
	7	1	**106-1628**	1	LINK-MASTER-LH (PIN END)	
	8	1	**106-1627**	1	LINK-MASTER-RH (PIN END)	
	9	1	**106-1630**	1	LINK-MASTER (BUSHING END/LH)	
	10	1	**106-1629**	1	LINK-MASTER (BUSHING END/RH)	
	11	1	**106-1618**	40	BUSHING-TRACK	
C	12	1	**179-0126**	40	PIN-TRACK	
	13	1	**106-1642**	2	BOLT-TRACK MASTER (3/4-16X2.9IN)	
	14	1	**107-0719**	2	BOLT-TRACK MASTER (3/4-16X3.9IN)	

C-CHANGE FROM PREVIOUS TYPE

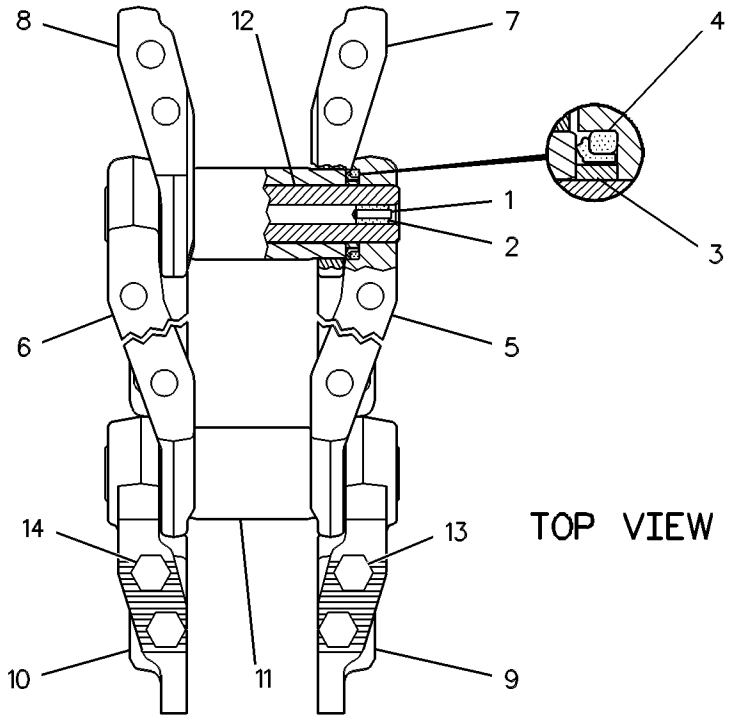

GRAPHIC #1 **<END>** g00252495

152-8043 LINK AS-TRACK

S/N: CBJ1-UP
SEALED & LUBRICATED, ROTATING BUSHING TRACK
PART OF 108-2611 TRACK GP
AN ATTACHMENT

SMCS-4169, 4171 **i01830109**

NOTE	REF NO	GRAPHIC REF	PART NUMBER	QTY	PART NAME 1 2 3 4 5 6 (PRODUCT LEVEL)	SEE PAGE
	1	1	**152-8070**	160	RING-THRUST	
	2	1	**8E-9642**	160	SEAL AS	
	3	1	**106-1627**	1	LINK-MASTER-RH (PIN END)	
	4	1	**106-1628**	1	LINK-MASTER-LH (PIN END)	
	5	1	**165-1753**	1	JOINT AS	
		1	**106-1630**	1	LINK-MASTER-LH (BUSHING END)	
	6	1	**165-1752**	1	JOINT AS	
		1	**106-1629**	1	LINK-MASTER-RH (BUSHING END)	
	7	1	**156-4701**	40	PIN-TRACK	
	8	1	**165-1768**	40	BUSHING-TRACK	
	9	1	**165-1751**	39	JOINT AS-TRACK	
					(EACH INCLUDES)	
		1	**106-1626**	1	LINK-TRACK (LH)	
	10	1	**165-1750**	39	JOINT AS-TRACK	
					(EACH INCLUDES)	
		1	**106-1625**	1	LINK-TRACK (RH)	
	11	1	**6Y-0473**	40	PLUG-CLEAR	
	12	1	**5G-2247**	40	STOPPER-RUBBER	
	13	1	**106-1642**	2	BOLT-TRACK MASTER (3/4-16X2.9 IN)	
	14	1	**107-0719**	2	BOLT-TRACK MASTER (3/4-16X3.9 IN)	

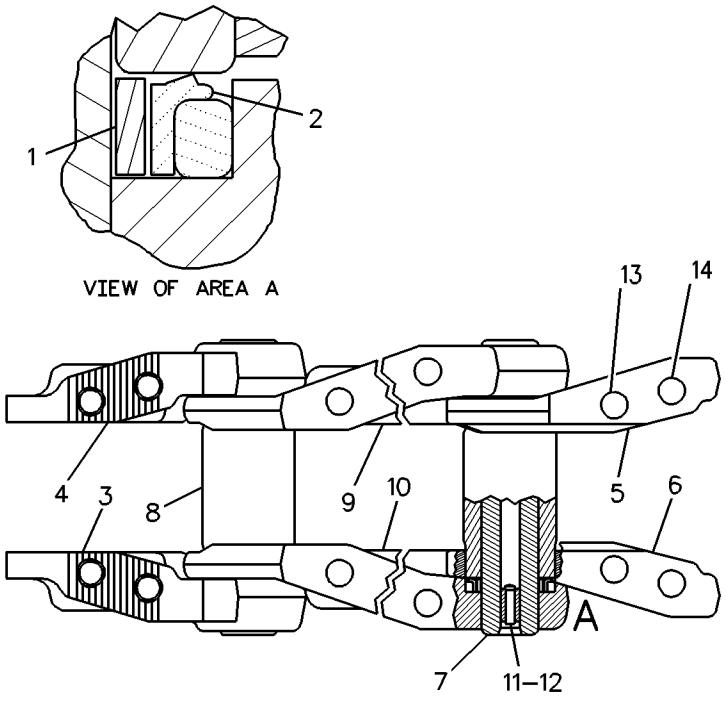

GRAPHIC #1 **<END>** g00896122

118-6345 MOUNTING GP-CARRIER ROLLER

S/N: CBJ1-UP

PART OF 173-8651 UNDERCARRIAGE AR

SMCS-4154 **i00599914**

NOTE	REF NO	GRAPHIC REF	PART NUMBER	QTY	PART NAME 1 2 3 4 5 6 (PRODUCT LEVEL)	SEE PAGE
	1	1	**6Y-3125**	2	BRACKET AS	
M	2	1	**7X-2532**	4	BOLT (M20X2.5X130MM)	
	3	1	**8T-4123**	8	WASHER-PLATED (3.5MM THK)	
M	4	1	**8T-4131**	4	NUT (M20X2.50 THD)	
M	5	1	**8T-7338**	8	BOLT (M16X2.0X45MM)	
	6	1	**9X-8257**	8	WASHER (3.50MM THK)	

M-METRIC PART

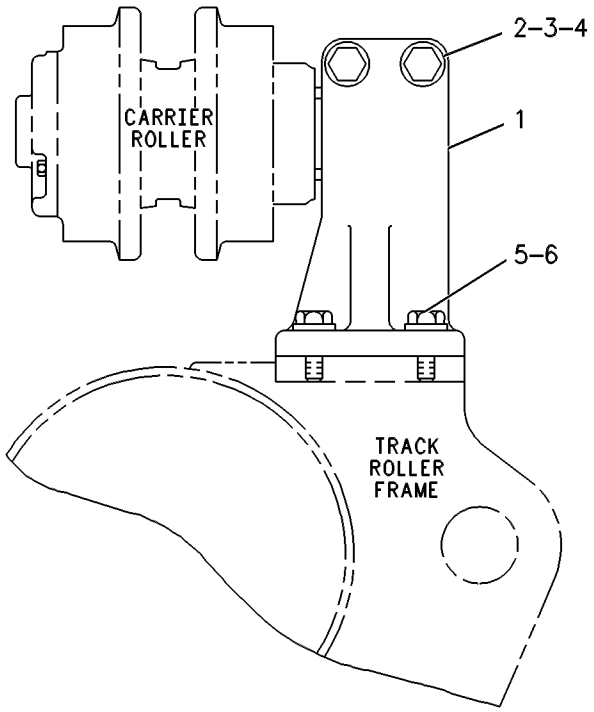

GRAPHIC #1 **<END>** g00252461

UNDERCARRIAGE

107-4098 PIVOT BAR GP

S/N: CBJ1-UP

PART OF 173-8651 UNDERCARRIAGE AR

SMCS-4153 **i01321574**

NOTE	REF NO	GRAPHIC REF	PART NUMBER	QTY	PART NAME 1 2 3 4 5 6 (PRODUCT LEVEL)	SEE PAGE
	1	1	**108-0802**	2	COVER	
M	2	1	**6V-3531**	6	BOLT (M20X2.5X50MM)	
M	3	1	**8T-4193**	20	BOLT (M16X2.0X50MM)	
	4	1	**9X-8257**	20	WASHER (3.50MM THK)	
	5	1	**5P-1979**	2	SEAL-O-RING (132.72MM ID)	
	6	1	**8G-4107**	2	PLATE	
M	7	1	**7X-2576**	24	BOLT (M24X3X70MM)	
	8	1	**108-0803**	2	SHAFT AS	
					(EACH INCLUDES)	
		1	**8G-5799**	1	RING	
	9	1	**8G-2943**	2	SEAL	

M-METRIC PART

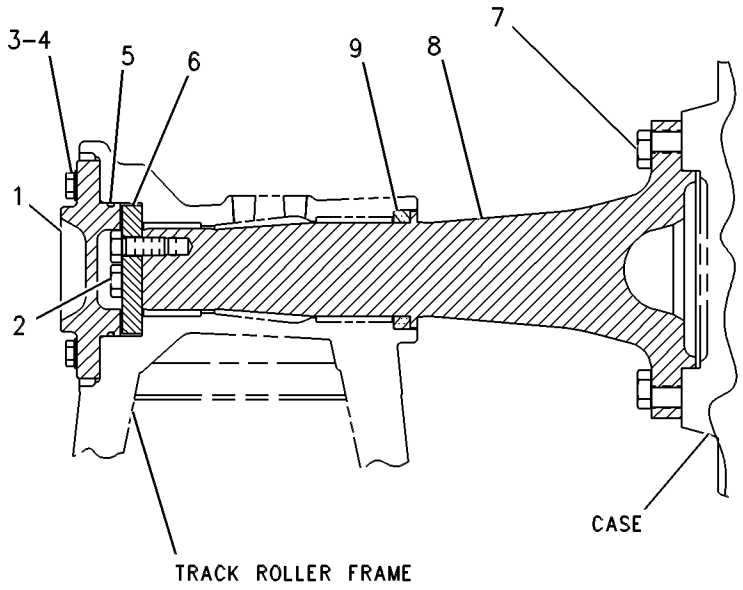

GRAPHIC #1 **<END>** g00252496

UNDERCARRIAGE

6Y-3908 ROLLER GP-TRACK CARRIER

S/N: CBJ1-UP

PART OF 173-8651 UNDERCARRIAGE AR

SMCS-4154 **i01884253**

NOTE	REF NO	GRAPHIC REF	PART NUMBER	QTY	PART NAME 1 2 3 4 5 6 (PRODUCT LEVEL)	SEE PAGE
	1	1	**7H-4574**	1	RING	
	2	1	**7H-4571**	1	COLLAR AS	
	3	1	**1M-4291**	2	DOWEL	
	4	1	**1H-8720**	1	SEAL-O-RING	
	5	1	**1M-8747**	1	SEAL GP-DUO-CONE	
	6	1	**8H-2262**	2	RING-TORIC	
	7	1	**126-1347**	2	BEARING AS-SPECIAL	
					(EACH INCLUDES)	
	8	1	**9S-3582**	1	CONE-BEARING	
	9	1	**9S-3581**	1	CUP-BEARING	
	10	1	**5A-8375**	1	ROLLER AS	
	11	1	**2P-0347**	1	PLUG	
	12	1	**1S-8947**	1	SEAL-O-RING	
	13	1	**0S-1594**	3	BOLT (3/8-16X1 IN)	
	14	1	**8P-6188**	1	PLATE-RETAINER	
	15	1	**5M-2043**	1	COVER-ROLLER	
	16	1	**2H-6338**	1	SEAL-O-RING	
	17	1	**5K-9107**	2	BOLT-LOCKING (3/8-16X0.75 IN)	
	18	1	**5M-2894**	3	WASHER-HARD (10.2X18.5X2.5MM THK)	
	19	1	**6Y-2043**	1	SHAFT-CARRIER ROLLER	

6Y-3908 **ROLLER GP-TRACK CARRIER** ***(contd.)*** **i01884253**

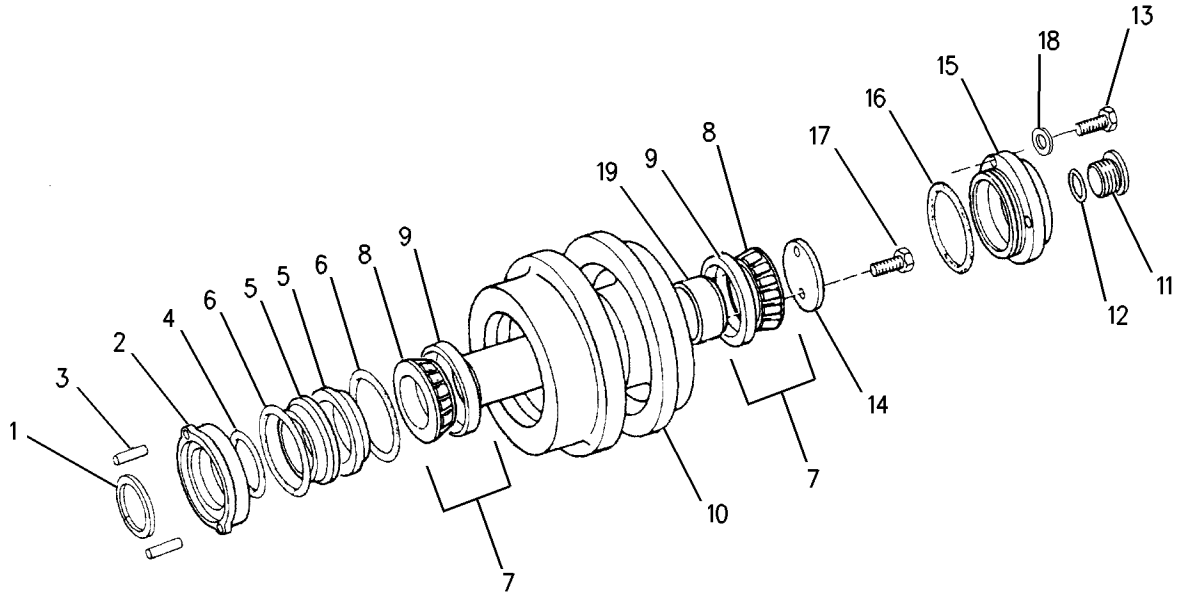

GRAPHIC #1 **<END>** g00675856

UNDERCARRIAGE

121-0827 ROLLER GP-TRACK-DOUBLE FLANGE

S/N: CBJ1-UP

PART OF 125-4173 ROLLER GP-TRACK-DOUBLE FLANGE

SMCS-4180 **i01883320**

NOTE	REF NO	GRAPHIC REF	PART NUMBER	QTY	PART NAME 1 2 3 4 5 6 (PRODUCT LEVEL)	SEE PAGE
	1	1	**121-0834**	2	BUSHING AS	
	2	1	**131-8742**	1	SHAFT-TRACK ROLLER	
	3	1	**131-9352**	2	COLLAR-TRACK ROLLER	
	4	1	**121-1257**	2	RING-RETAINING	
	5	1	**1H-6227**	2	SEAL-O-RING	
	6	1	**121-0828**	1	RIM AS-DOUBLE FLANGE	
	7	1	**6H-7382**	2	RING-LOCK	
	8	1	**7F-8267**	2	SEAL-O-RING	
R	9	1	**9W-7216**	1	SEAL GP-DUO-CONE	
		1	**1M-3097**	2	RING-SEALING	
	10	1	**6Y-0473**	1	PLUG-CLEAR	
		1	**7G-4332**	1	STOPPER	

R-REMFG PART MAY BE AVAILABLE

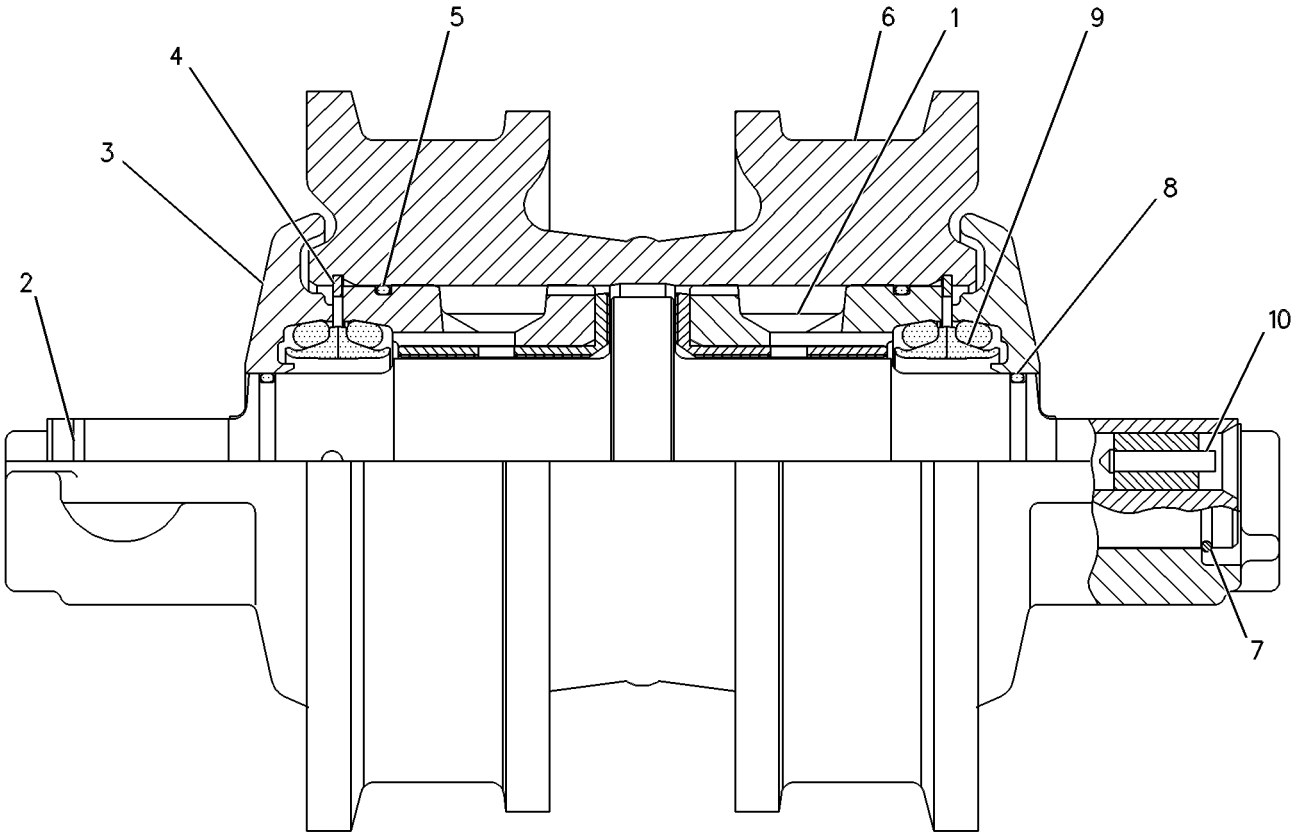

GRAPHIC #1 **<END>** g00252463

121-0830 ROLLER GP-TRACK-DOUBLE FLANGE

S/N: CBJ1-UP
PART OF 205-6136, 205-6137 GUIDING AR-UNDERCARRIAGE
AN ATTACHMENT

SMCS-4180 **i01830923**

NOTE	REF NO	GRAPHIC REF	PART NUMBER	QTY	PART NAME 1 2 3 4 5 6 (PRODUCT LEVEL)	SEE PAGE
	1	1	**131-8742**	1	SHAFT-TRACK ROLLER	
	2	1	**131-9352**	2	COLLAR-TRACK ROLLER	
	3	1	**121-1257**	2	RING-RETAINING	
	4	1	**1H-6227**	2	SEAL-O-RING	
	5	1	**121-0831**	1	RIM AS-DOUBLE FLANGE	
	6	1	**121-0834**	2	BUSHING AS	
					(EACH INCLUDES)	
		1	**9B-2289**	2	PIN	
		1	**8P-6652**	1	BEARING AS	
	7	1	**7F-8267**	2	SEAL-O-RING	
	8	1	**6H-7382**	2	RING-LOCK	
	9	1	**7G-4332**	1	STOPPER	
		1	**6Y-0473**	1	PLUG-CLEAR	
R	10	1	**9W-7216**	2	SEAL GP-DUO-CONE	
					(EACH INCLUDES)	
		1	**1M-3097**	2	RING-SEALING	

R-REMFG PART MAY BE AVAILABLE

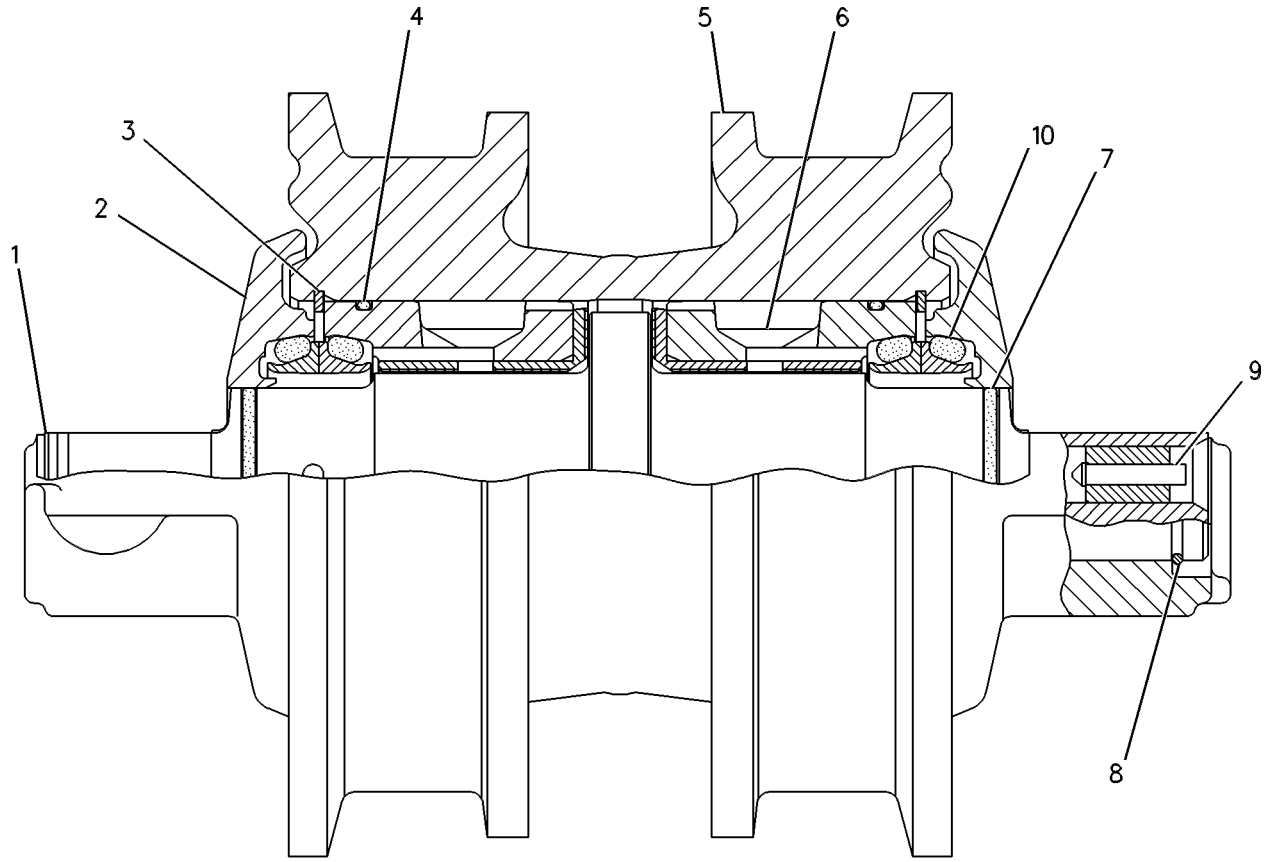

GRAPHIC #1 **<END>** g00263912

125-4173 ROLLER GP-TRACK-DOUBLE FLANGE

S/N: CBJ1-UP

PART OF 198-9788 UNDERCARRIAGE GP

SMCS-4180 **i00598528**

NOTE	PART NUMBER	QTY	PART NAME 1 2 3 4 5 6 (PRODUCT LEVEL)	SEE PAGE
M	**6V-3303**	4	BOLT (M16X2.0X60MM)	
Y	**121-0827**	1	ROLLER GP-TRACK-DOUBLE FLANGE	280
	5P-8247	4	WASHER-HARD (3.5MM THK)	

M-METRIC PART
Y-SEPARATE ILLUSTRATION

<END>

121-0824 ROLLER GP-TRACK-SINGLE FLANGE

S/N: CBJ1-UP

PART OF 125-4172 ROLLER GP-TRACK-SINGLE FLANGE

SMCS-4180 **i01884258**

NOTE	REF NO	GRAPHIC REF	PART NUMBER	QTY	PART NAME 1 2 3 4 5 6 (PRODUCT LEVEL)	SEE PAGE
	1	1	**131-9352**	2	COLLAR-TRACK ROLLER	
	2	1	**131-8742**	1	SHAFT-TRACK ROLLER	
R	3	1	**9W-7216**	2	SEAL GP-DUO-CONE	
					(EACH INCLUDES)	
		1	**1M-3097**	2	RING-SEALING	
	4	1	**121-1257**	2	RING-RETAINING	
	5	1	**1H-6227**	2	SEAL-O-RING	
	6	1	**121-0825**	1	RIM AS-SINGLE FLANGE	
	7	1	**121-0834**	2	BUSHING AS	
					(EACH INCLUDES)	
		1	**9B-2289**	2	PIN	
	8	1	**7F-8267**	2	SEAL-O-RING	
	9	1	**6Y-0473**	1	PLUG-CLEAR	
		1	**7G-4332**	1	STOPPER	
	10	1	**6H-7382**	2	RING-LOCK	

R-REMFG PART MAY BE AVAILABLE

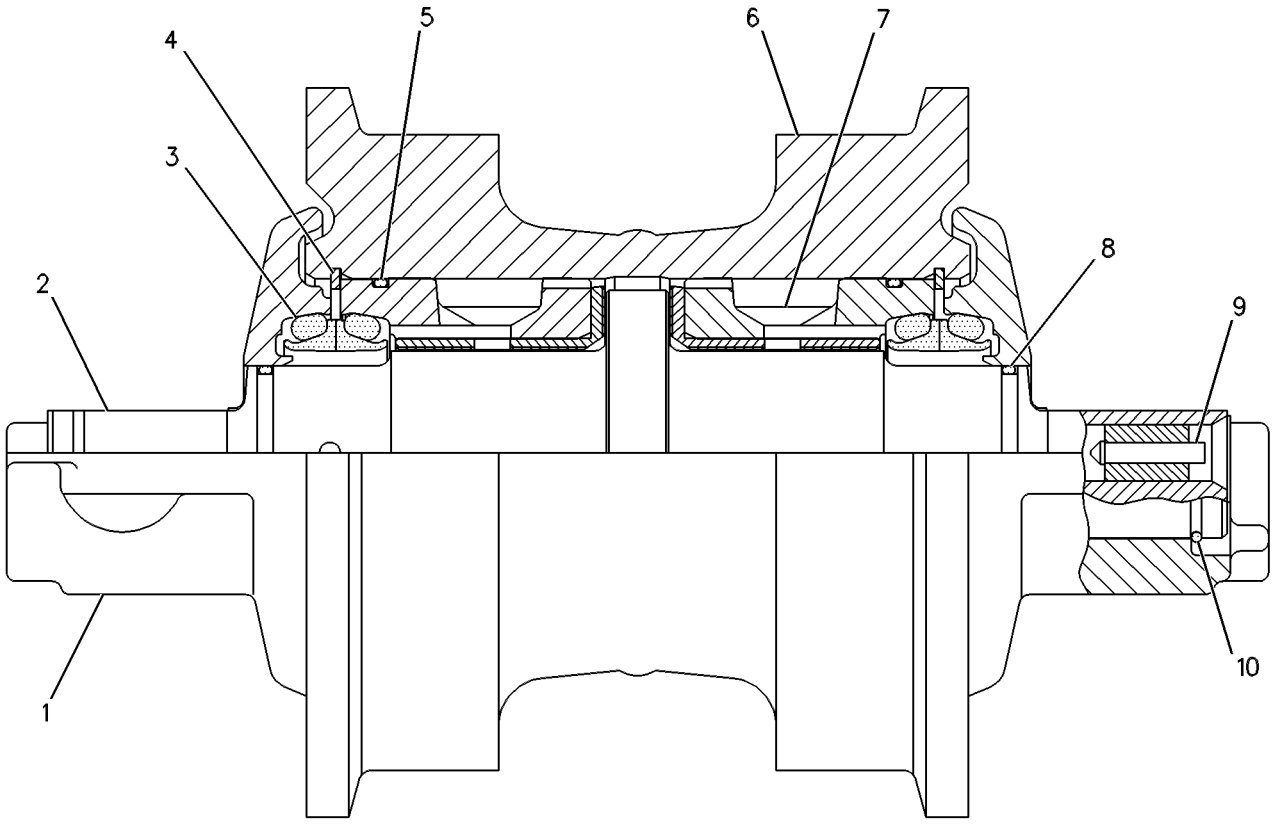

GRAPHIC #1 **<END>** g00252462

125-4172 ROLLER GP-TRACK-SINGLE FLANGE

S/N: CBJ1-UP

PART OF 198-9788 UNDERCARRIAGE GP

SMCS-4180 **i00601011**

NOTE	PART NUMBER	QTY	PART NAME 1 2 3 4 5 6 (PRODUCT LEVEL)	SEE PAGE
Y	**121-0824**	1	ROLLER GP-TRACK-SINGLE FLANGE	283
M	**6V-3303**	4	BOLT (M16X2.0X60MM)	
	5P-8247	4	WASHER-HARD (3.5MM THK)	

M-METRIC PART
Y-SEPARATE ILLUSTRATION

<END>

108-0800 TRACK ADJUSTER & RECOIL GP

S/N: CBJ1-UP

PART OF 198-9789 FRAME GP-TELESCOPING RECOIL

SMCS-4157, 4158 **i01885503**

NOTE	REF NO	GRAPHIC REF	PART NUMBER	QTY	PART NAME 1 2 3 4 5 6 (PRODUCT LEVEL)	SEE PAGE
	1	1	**190-8609**	1	VALVE-FILL (TRACK ADJUST & RECOIL CYLINDER)	
	2	1	**2S-5926**	1	VALVE (RELIEF) (TRACK ADJUST & RECOIL CYLINDER)	
	3	1	**3W-2369**	1	PLATE AS	
	4	1	**8G-3102**	1	PISTON	
	5	1	**8G-4945**	1	SEAL AS	
	6	1	**8G-4960**	1	RETAINER	
C	7	1	**215-1594**	1	TUBE AS	
	8	1	**106-0669**	1	SPRING	
	9	1	**108-0801**	1	CYLINDER	
	10	1	**2J-6274**	1	SEAL-O-RING	
	11	1	**2S-4078**	1	SEAL-O-RING	
	12	1	**8E-4092**	2	RETAINER	
M	13	1	**8T-0375**	4	BOLT (M16X2X45MM)	
	14	1	**8T-4121**	2	WASHER-HARD (11X21X2.5MM THK)	
M	15	1	**8T-4182**	2	BOLT (M10X1.5X45MM)	
	16	1	**9S-8010**	1	PLUG	
	17	1	**9X-8268**	4	WASHER (17.5X30X3.5MM THK)	

C-CHANGE FROM PREVIOUS TYPE
M-METRIC PART

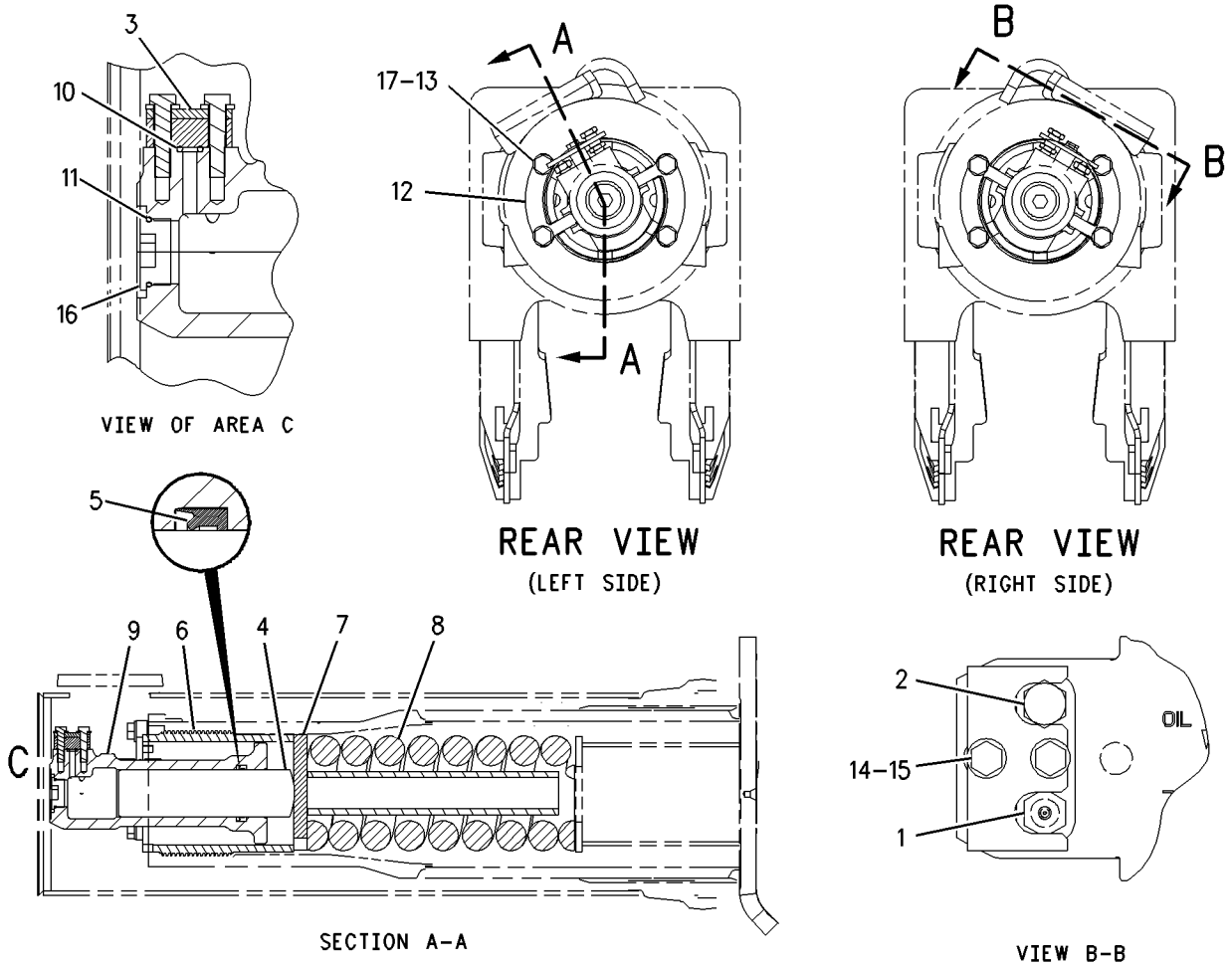

GRAPHIC #1 **<END>** g00937566

108-2611 TRACK GP–2 REQUIRED

S/N: CBJ1-UP
600MM (23.6 IN)GROUSER SHOE.
SEALED & LUBRICATED, ROTATING BUSHING TRACK-MODERATE SERVICE
AN ATTACHMENT

SMCS-4170 **i01830103**

NOTE	PART NUMBER	QTY	PART NAME 1 2 3 4 5 6 (PRODUCT LEVEL)	SEE PAGE
Y	**152-8043**	1	LINK AS-TRACK	275
	6V-1792	156	BOLT-TRACK (3/4-16X2.4 IN)	
	106-1642	2	BOLT-TRACK MASTER (3/4-16X2.9 IN)	
	107-0719	2	BOLT-TRACK MASTER (3/4-16X3.9 IN)	
	1S-1860	156	NUT-TRACK (3/4-16 THD)	
	117-0616	1	SHOE-MASTER TRACK	
	117-0615	39	SHOE-TRACK	
Y-SEPARATE ILLUSTRATION				

<END>

110-2977 TRACK GP–2 REQUIRED

S/N: CBJ1-UP
560MM (22 IN) GROUSER SHOE. SEALED & LUBRICATED-MODERATE SERVICE-HEAVY DUTY
AN ATTACHMENT

SMCS-4170 **i01321586**

NOTE	PART NUMBER	QTY	PART NAME 1 2 3 4 5 6 (PRODUCT LEVEL)	SEE PAGE
Y	**110-2976**	1	LINK AS-TRACK	274
	6V-1792	156	BOLT-TRACK (3/4-16X2.4 IN)	
	107-0719	2	BOLT-TRACK MASTER (3/4-16X3.9IN)	
	106-1642	2	BOLT-TRACK MASTER (3/4-16X2.9IN)	
	1S-1860	156	NUT-TRACK (3/4-16 THD)	
	106-1607	39	SHOE-TRACK	
	106-1613	1	SHOE-TRACK	
Y-SEPARATE ILLUSTRATION				

<END>

110-2978 TRACK GP–2 REQUIRED

S/N: CBJ1-UP

600MM (23.6 IN) GROUSER SHOE. SEALED & LUBRICATED- MODERATE SERVICE-HEAVY DUTY

PART OF 173-8651 UNDERCARRIAGE AR

SMCS-4170 **i01321595**

NOTE	PART NUMBER	QTY	PART NAME 1 2 3 4 5 6 (PRODUCT LEVEL)	SEE PAGE
Y	**110-2976**	1	LINK AS-TRACK	274
	6V-1792	156	BOLT-TRACK (3/4-16X2.4 IN)	
	107-0719	2	BOLT-TRACK MASTER (3/4-16X3.9IN)	
	106-1642	2	BOLT-TRACK MASTER (3/4-16X2.9IN)	
	1S-1860	156	NUT-TRACK (3/4-16 THD)	
	117-0616	1	SHOE-MASTER TRACK	
	117-0615	39	SHOE-TRACK	

Y-SEPARATE ILLUSTRATION

<END>

110-2980 TRACK GP–2 REQUIRED

S/N: CBJ1-UP

560MM (22 IN) GROUSER SHOE. SEALED & LUBRICATED-EXTREME SERVICE-HEAVY DUTY

AN ATTACHMENT

SMCS-4170 **i01321601**

NOTE	PART NUMBER	QTY	PART NAME 1 2 3 4 5 6 (PRODUCT LEVEL)	SEE PAGE
Y	**110-2976**	1	LINK AS-TRACK	274
	6V-1792	156	BOLT-TRACK (3/4-16X2.4 IN)	
	106-1642	2	BOLT-TRACK MASTER (3/4-16X2.9IN)	
	107-0719	2	BOLT-TRACK MASTER (3/4-16X3.9IN)	
	1S-1860	156	NUT-TRACK (3/4-16 THD)	
	107-0714	1	SHOE-MASTER TRACK	
	107-0713	39	SHOE-TRACK	

Y-SEPARATE ILLUSTRATION

<END>

UNDERCARRIAGE

132-1337 TRACK GP–2 REQUIRED

S/N: CBJ1-UP

600MM (23.6 IN)GROUSER SHOE. EXTREME SERVICE, HEAVY DUTY, SEALED & LUBRICATED

AN ATTACHMENT

SMCS-4170 **i01830129**

NOTE	PART NUMBER	QTY	PART NAME 1 2 3 4 5 6 (PRODUCT LEVEL)	SEE PAGE
Y	**110-2976**	1	LINK AS-TRACK	274
	6V-1792	156	BOLT-TRACK (3/4-16X2.4 IN)	
	106-1642	2	BOLT-TRACK MASTER (3/4-16X2.9 IN)	
	107-0719	2	BOLT-TRACK MASTER (3/4-16X3.9 IN)	
	1S-1860	156	NUT-TRACK (3/4-16 THD)	
	132-1334	39	SHOE-TRACK	
	132-1336	1	SHOE-TRACK MASTER	
Y-SEPARATE ILLUSTRATION				

<END>

173-8651 UNDERCARRIAGE AR

S/N: CBJ1-UP

PART OF 156-9493 GENERAL AR

SMCS-4150 **i01829302**

NOTE	PART NUMBER	QTY	PART NAME 1 2 3 4 5 6 (PRODUCT LEVEL)	SEE PAGE
Y	*172-9872*	1	BAR GP-EQUALIZER	267
Y	*118-6345*	1	MOUNTING GP-CARRIER ROLLER	276
Y	*107-4098*	1	PIVOT BAR GP	277
Y	**6Y-3908**	2	ROLLER GP-TRACK CARRIER	278
Y	**110-2978**	2	TRACK GP	287
Y	*198-9788*	1	UNDERCARRIAGE GP	288
Y-SEPARATE ILLUSTRATION				

<END>

198-9788 UNDERCARRIAGE GP

S/N: CBJ1-UP

PART OF 173-8651 UNDERCARRIAGE AR

SMCS-4150 **i01829359**

NOTE	PART NUMBER	QTY	PART NAME 1 2 3 4 5 6 (PRODUCT LEVEL)	SEE PAGE
Y	*110-6122*	8	CAP GP-TRACK IDLER	269
Y	*198-9789*	1	FRAME GP-TELESCOPING RECOIL	270
Y	**190-1546**	4	IDLER GP-TRACK	273
Y	*125-4173*	6	ROLLER GP-TRACK-DOUBLE FLANGE	282
Y	*125-4172*	8	ROLLER GP-TRACK-SINGLE FLANGE	284
Y-SEPARATE ILLUSTRATION				

<END>

124-2354 ADJUSTER GP-STEER & TMSN CONT

S/N: CBJ1-UP
ELECTRIC
PART OF 200-3167 CONTROL GP-STEERING & TMSN
ALSO AN ATTACHMENT

SMCS-4135 **i01829120**

NOTE	REF NO	GRAPHIC REF	PART NUMBER	QTY	PART NAME 1 2 3 4 5 6 (PRODUCT LEVEL)	SEE PAGE
	1	1	**8F-7702**	4	SEAL-LIP	
	2	1	**8T-1172**	4	SEAL-LIP	
M	3	1	**8T-2658**	1	LOCKNUT (M3X0.5 THD)	
	4	1	**8T-5410**	4	SEAL-LIP	
M	5	1	**8T-9006**	1	BOLT-SOCKET HEAD (M3X.5X20MM)	
	6	1	**9X-6772**	4	STRAP-CABLE	
	7	1	**110-7880**	1	SWITCH AS (ROCKER) (CONSOLE RAISE/LOWER)	
		1	**186-3735**	2	PIN-CONNECTOR	
		1	**186-3736**	2	SOCKET-CONNECTOR	
		1	**102-8802**	1	KIT-RECEPTACLE (2 PIN)	
					(INCLUDES WEDGE & RECEPTACLE AS)	
		1	**155-2270**	1	KIT-CONNECTING PLUG (2 PIN)	
					(INCLUDES WEDGE, PLUG AS & INTERFACE SEAL)	
	8	1	**149-4889**	1	ACTUATOR AS	
		1	**186-3736**	2	SOCKET-CONNECTOR	
		1	**155-2270**	1	KIT-CONNECTING PLUG (2 PIN)	
					(INCLUDES WEDGE, PLUG AS & INTERFACE SEAL)	
	9	1	**122-4268**	1	BRACKET AS	
M		1	**8T-3612**	1	NUT-WELD (M8X1.25 THD)	
	10	1	**122-4270**	1	BRACKET AS	
M		1	**5C-7261**	4	NUT (M8X1.25 THD)	
	10A	1	**122-6046**	1	MOUNT	
	11	1	**122-4271**	1	KNOB (ARMREST ADJUSTMENT)	
	12	1	**127-7494**	1	PLATE AS	
M		1	**8T-3490**	1	NUT-WELD (M10X1.5 THD)	
M	12A	1	**6V-9632**	2	NUT-WELD (M6X1 THD)	
	12B	1	**122-6049**	1	MOUNT	
	13	1	**122-6826**	1	PLATE AS	
M		1	**8T-3612**	2	NUT-WELD (M8X1.25 THD)	
M	13A	1	**6V-9632**	2	NUT-WELD (M6X1 THD)	
M	13B	1	**8T-3490**	1	NUT-WELD (M10X1.5 THD)	
	14	1	**122-6824**	1	PLATE	
	15	1	**122-6825**	1	SPACER	
	16	1	**8T-4205**	2	WASHER-HARD (7.2X14.5X2MM THK)	
	17	1	**124-0799**	1	SPRING	
	18	1	**7X-7729**	4	WASHER (11X25X3MM THK)	
	19	1	**130-0701**	1	SHAFT	
	20	1	**130-1985**	1	SLEEVE	
	21	1	**130-7975**	4	SLEEVE-BRASS	
	22	1	**130-9989**	4	SLEEVE	
	23	1	**130-9990**	2	SLEEVE	
	24	1	**132-3581**	2	BEARING AS	
	25	1	**133-0155**	1	SHAFT	
	26	1	**133-6595**	1	BRACKET AS	
M		1	**8T-3490**	2	NUT-WELD (M10X1.5 THD)	
	27	1	**133-6974**	1	BRACKET AS	
M		1	**8T-3490**	2	NUT-WELD (M10X1.5 THD)	
	28	1	**133-7212**	1	PLATE	
	29	1	**133-7214**	1	SHAFT	
	30	1	**133-7230**	1	SHAFT	
	31	1	**133-7231**	1	PLATE	
	32	1	**5P-4116**	1	WASHER-HARD (8.8X20.5X2MM THK)	
M	33	1	**6V-2317**	1	BOLT (M8X1.25X30MM)	
	34	1	**8T-9367**	2	BOLT (1/4-20X2 IN)	

124-2354 ADJUSTER GP-STEER & TMSN CONT *(contd.)* i01829120

NOTE	REF NO	GRAPHIC REF	PART NUMBER	QTY	PART NAME 1 2 3 4 5 6 (PRODUCT LEVEL)	SEE PAGE
	35	1	**8T-4121**	6	WASHER-HARD (11X21X2.5MM THK)	
M	36	1	**8T-4133**	8	NUT (M10X1.5 THD)	
M	37	1	**8T-4136**	6	BOLT (M10X1.5X25MM)	
M	38	1	**8T-4189**	1	BOLT (M8X1.25X20MM)	
M	39	1	**8T-4195**	4	BOLT (M10X1.5X30MM)	
	40	1	**8T-4224**	3	WASHER-HARD (8.8X16X2MM THK)	
M	41	1	**8T-4908**	1	BOLT (M8X1.25X25MM)	
	42	1	**8T-7934**	12	WASHER-HARD (11X21X5MM THK)	
	43	1	**8T-9368**	1	BOLT (1/4-20X2.25 IN)	
	44	1	**2D-6235**	2	LOCKNUT (1/4-20 THD)	

M-METRIC PART

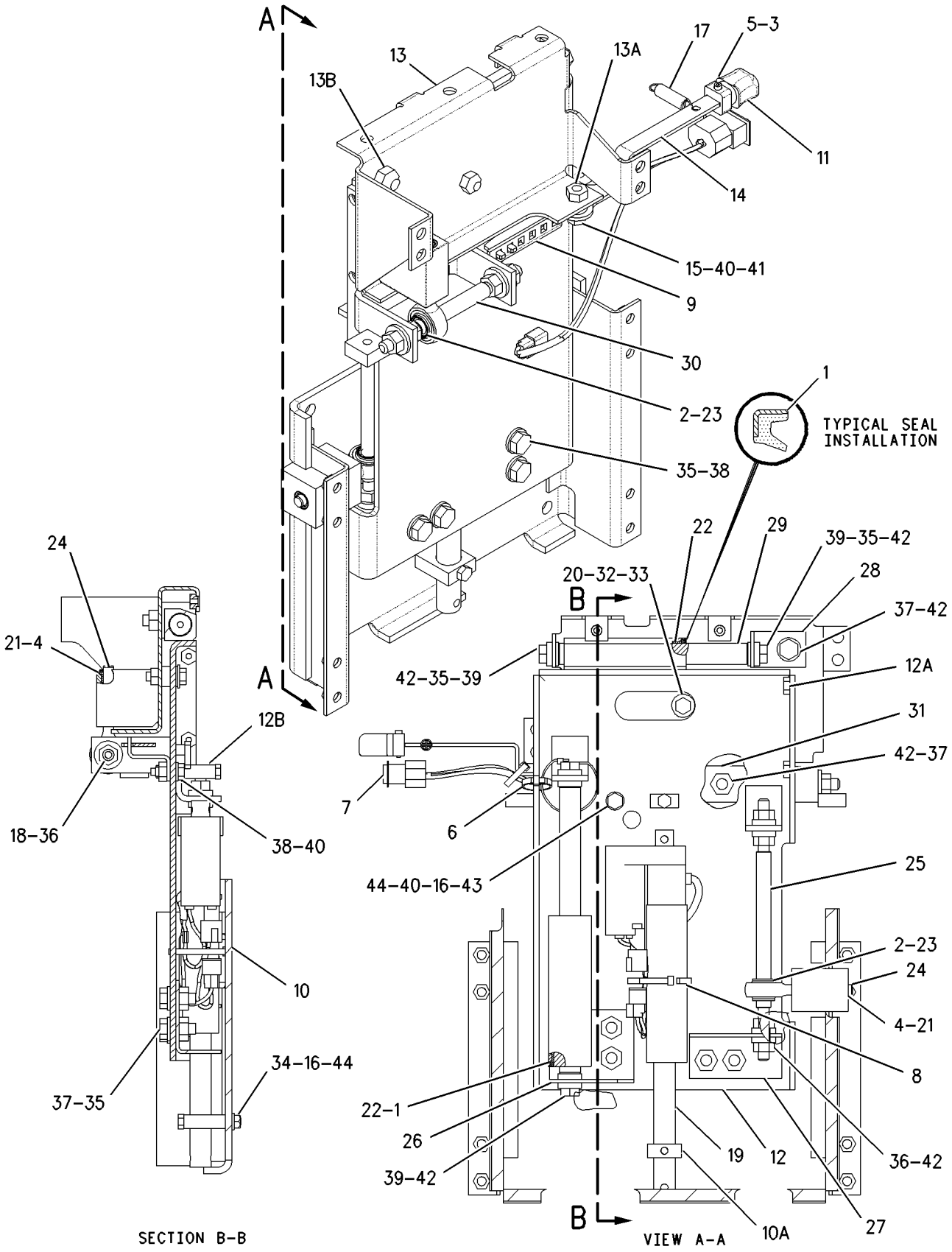

GRAPHIC #1 **<END>** g00934685

195-0645 BRAKE GP-STEERING

S/N: CBJ1-UP

PART OF 175-1157 POWER TRAIN AR

SMCS-4111 **i01892854**

NOTE	PART NUMBER	QTY	PART NAME 1 2 3 4 5 6 (PRODUCT LEVEL)	SEE PAGE
Y	*178-4434*	2	CLUTCH & BRAKE GP-STEERING	293
Y	**195-0653**	1	FASTENER GP	301
Y	**201-7272**	1	VALVE GP-CONTROL	311

Y-SEPARATE ILLUSTRATION

<END>

STEERING AND BRAKING SYSTEM

178-4434 CLUTCH & BRAKE GP-STEERING

S/N: CBJ1-UP

PART OF 195-0645 BRAKE GP-STEERING

SMCS-4101, 4109 **i01829891**

NOTE	REF NO	GRAPHIC REF	PART NUMBER	QTY	PART NAME 1 2 3 4 5 6 (PRODUCT LEVEL)	SEE PAGE
	1	1	**1S-8868**	1	RING-RETAINING	
	2	1	**3W-2412**	1	PLATE	
	3	1	**3W-4404**	1	SEAL-RING	
	4	1	**4M-5858**	1	BALL BEARING	
	5	1	**4S-8538**	1	BALL BEARING	
	6	1	**5G-8136**	1	MANIFOLD AS	
		1	**2D-6642**	1	BALL	
		1	**4B-9783**	1	BALL	
	7	1	**6T-0837**	1	RING	
	8	1	**6Y-5692**	5	PLATE-BRAKE	
	9	1	**7G-9968**	1	RING-SEAL	
	10	1	**8G-2192**	1	SEAL-RING	
	11	1	**8G-2194**	3	RING-SEAL	
	12	1	**8G-4510**	7	PLATE-CLUTCH	
	13	1	**101-5141**	6	DISC-FRICTION	
	14	1	**101-5144**	4	DISC-FRICTION	
M	15	1	**101-7397**	2	BOLT-HEX SOCKET (M12X1.75X50MM)	
	16	1	**104-5358**	1	RING-SEAL	
	17	1	**104-5360**	1	PISTON-CLUTCH	
	18	1	**104-5361**	2	BEARING-SLEEVE	
	19	1	**104-6555**	1	HOUSING	
	20	1	**107-7304**	1	PISTON-BRAKE	
	21	1	**135-4721**	1	PLATE	
	22	1	**135-6273**	1	HUB-INPUT	
	23	1	**135-6274**	1	HUB AS	
		1	**4B-9784**	2	BALL	
	24	1	**175-1834**	1	SPRING-DISC	
	25	1	**3K-0360**	3	SEAL-O-RING	
	26	1	**5P-9806**	1	SEAL-O-RING	
	27	1	**8M-4433**	3	SEAL-O-RING	
	28	1	**8M-4438**	1	SEAL-O-RING	
M	29	1	**8T-2223**	6	BOLT-SOCKET HEAD (M10X1.5X45MM)	
	30	1	**8T-4121**	8	WASHER-HARD (11X21X2.5MM THK)	
M	31	1	**8T-4195**	20	BOLT (M10X1.5X30MM)	
	32	1	**9S-8005**	3	PLUG	
	33	1	**8T-4896**	12	WASHER-HARD (10.2X18.5X2.5MM THK)	

M-METRIC PART

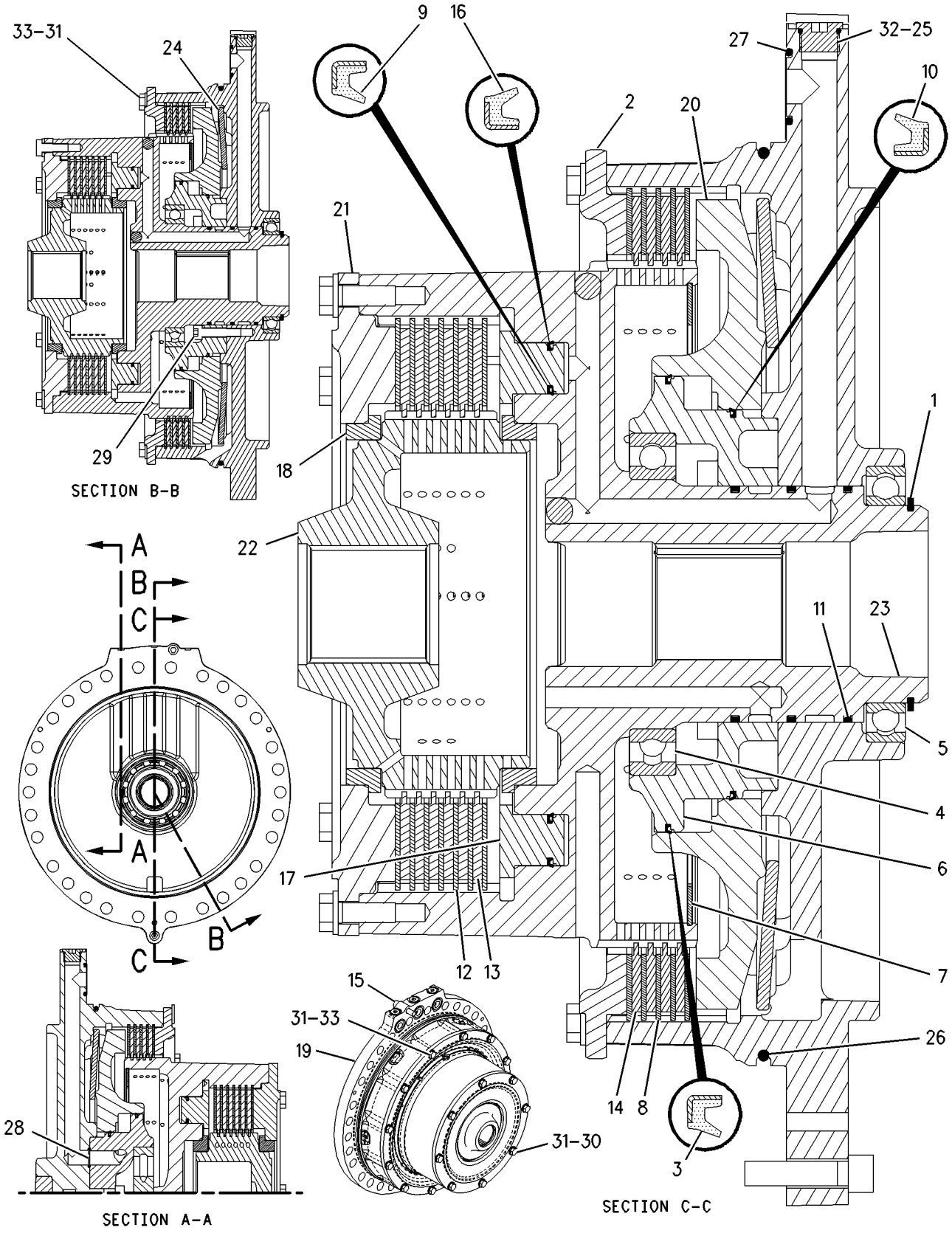

GRAPHIC #1 **<END>** g00900396

STEERING AND BRAKING SYSTEM

123-6446 CONTROL GP-PARKING BRAKE

S/N: CBJ1-UP
PART OF 200-3166 CONTROL GP-STEERING & TMSN
ALSO AN ATTACHMENT

SMCS-4269, 4284 **i01829131**

NOTE	REF NO	GRAPHIC REF	PART NUMBER	QTY	PART NAME 1 2 3 4 5 6 (PRODUCT LEVEL)	SEE PAGE
	1	1	**6V-8118**	2	SCREW-SOCKET HEAD (6/32X0.625 IN)	
M	2	1	**9X-2546**	3	BOLT (M6X1X20MM)	
	3	1	**9X-6772**	1	STRAP-CABLE	
	4	1	**137-4830**	1	SPRING	
J	5	1	**123-0912**	1	LOCK AS-CYLINDER	
		1	**7F-9223**	1	LOCKWASHER	
		1	**8T-5004**	1	SCREW-MACHINE (1/4-28X0.375 IN)	
	6	1	**214-9184**	1	HOUSING AS	
	6A	1	**214-9183**	1	FILM (PARKING BRAKE)	
	7	1	**118-0639**	1	SWITCH AS-ROCKER (PARKING BRAKE)	
		1	**8T-8729**	12	PIN-CONNECTOR	
		1	**102-8801**	1	KIT-RECEPTACLE (12 PIN)	
					(INCLUDES RECEPTACLE AS & WEDGE)	

J-REQUIRES 5P8500 KEY
M-METRIC PART

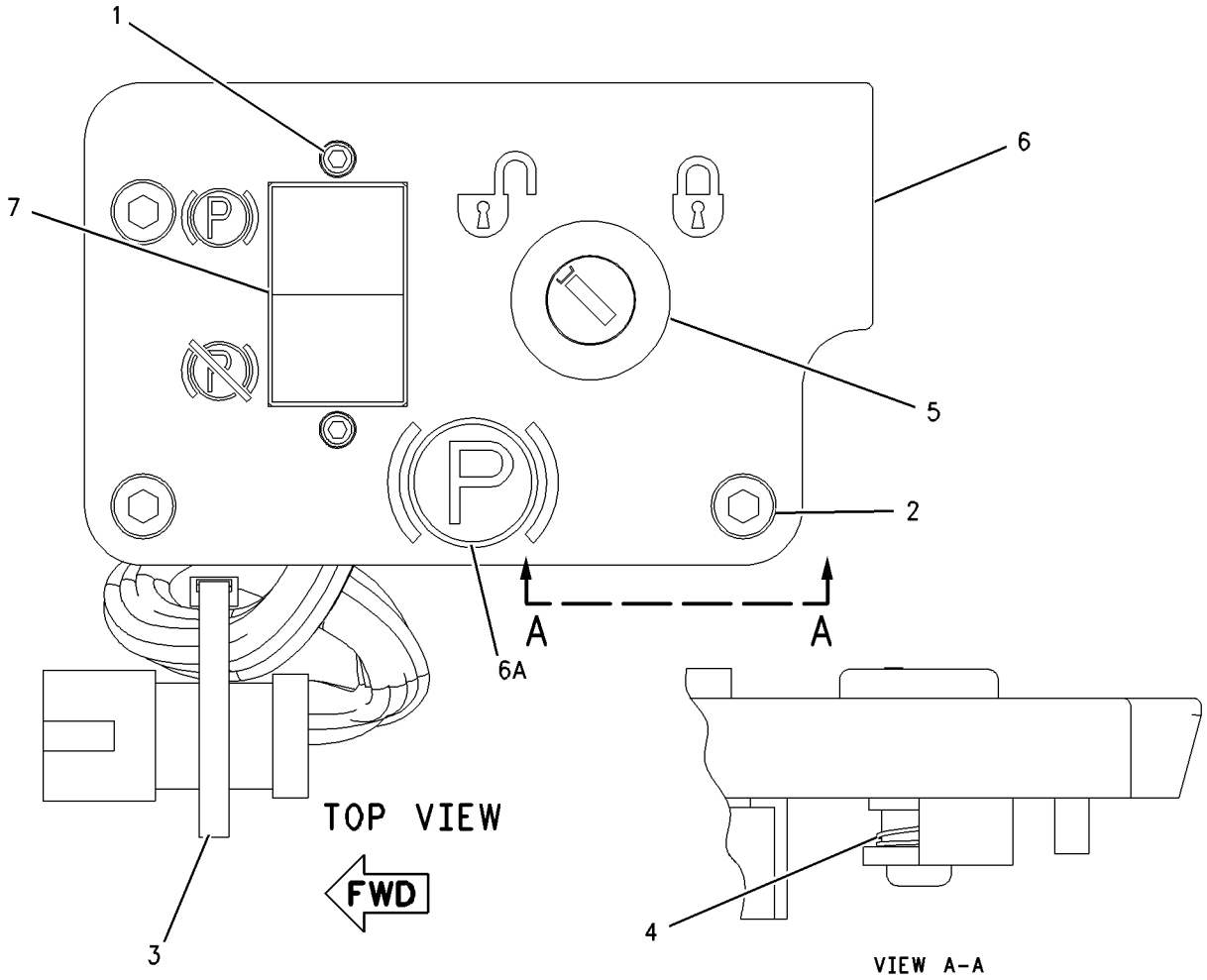

GRAPHIC #1 **<END>** g00862385

STEERING AND BRAKING SYSTEM

156-8955 CONTROL GP-STEERING & TMSN

S/N: CBJ1-UP

PART OF 217-3818 CAB GP, 218-3063 PLATFORM GP-OPERATOR

ALSO AN ATTACHMENT

SMCS-4122 **i01829102**

NOTE	REF NO	GRAPHIC REF	PART NUMBER	QTY	PART NAME 1 2 3 4 5 6 (PRODUCT LEVEL)	SEE PAGE
	1	1	**213-6876**	1	FILM (MONITOR CLUTCH & BRAKE)	
	2	1	**6I-1418**	4	SPACER (8.2X12.7X28.7MM THK)	
	3	1	**8T-9655**	8	MOUNT (ISOLATION)	
M	4	1	**9X-2044**	4	SCREW-TRUSS HEAD (M6X1X16MM)	
Y	5	1	**172-9389**	1	CONTROL GP-UNPROGRAMMED	129
	6	1	**180-5388**	1	COVER AS	
	7	1	**200-2560**	1	PLATE	
Y	8	1	**200-3167**	1	CONTROL GP-STEERING & TMSN (ADJUSTABLE)	299
M	9	1	**7X-0818**	4	BOLT (M8X1.25X45MM)	
	10	1	**8T-4121**	6	WASHER-HARD (11X21X2.5MM THK)	
M	11	1	**8T-4136**	4	BOLT (M10X1.5X25MM)	
M	12	1	**8T-4137**	4	BOLT (M10X1.5X20MM)	
	13	1	**8T-4224**	1	WASHER-HARD (8.8X16X2MM THK)	
	14	1	**9N-0869**	4	WASHER-HARD (8.8X25.5X2MM THK)	
	15	1	**4P-7581**	1	CLIP	

M-METRIC PART
Y-SEPARATE ILLUSTRATION

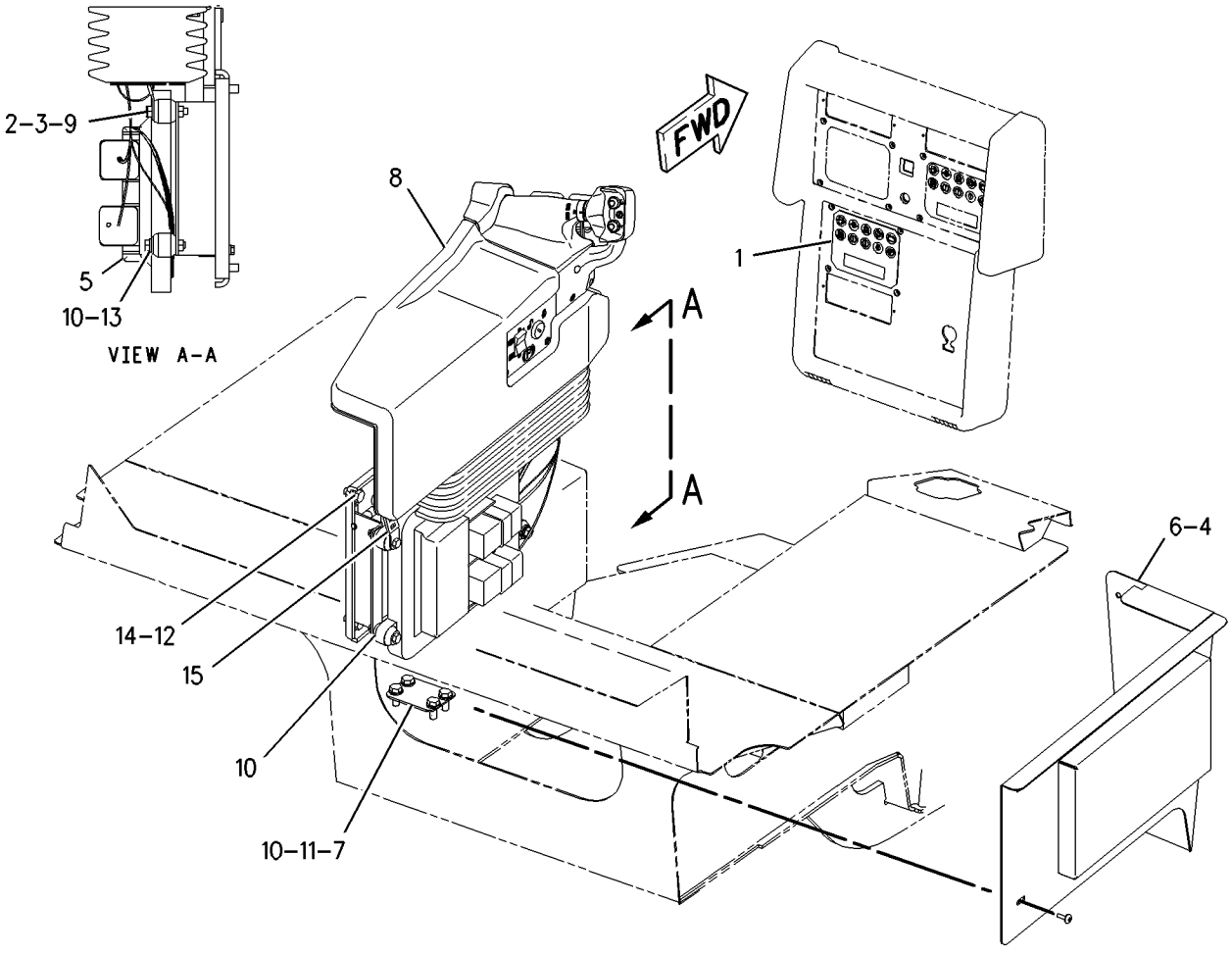

GRAPHIC #1 **<END>** g00931323

200-3166 CONTROL GP-STEERING & TMSN

S/N: CBJ1-UP

PART OF 200-3167 CONTROL GP-STEERING & TMSN

ALSO AN ATTACHMENT

SMCS-4122 **i01892953**

NOTE	REF NO	GRAPHIC REF	PART NUMBER	QTY	PART NAME 1 2 3 4 5 6 (PRODUCT LEVEL)	SEE PAGE
	1	1	**1W-6448**	2	DOWEL	
	2	1	**4B-1270**	1	SCREW-MACHINE (8-32X0.75 IN)	
	3	1	**8T-0328**	1	WASHER-HARD (5.5X10X1MM THK)	
M	4	1	**9X-6615**	6	BOLT (M5X.8X30MM)	
	5	1	**9X-6772**	6	STRAP-CABLE	
M	6	1	**9X-8902**	3	BOLT-SOCKET HEAD (M3X0.5X8MM)	
	7	1	**103-6262**	2	SCREW-MACHINE (4-40X.63 IN)	
Y	8	1	**122-7372**	1	GEAR GP-STEERING	302
	9	1	**123-3295**	1	PLATE	
	10	1	**123-3296**	1	GASKET	
	11	1	**123-3826**	1	HANDLE AS	
	12	1	**123-6377**	1	SWITCH AS-LIMIT (REVERSE)	
	13	1	**123-6392**	1	CUSHION AS	
M		1	**8T-3490**	4	NUT-WELD (M10X1.5 THD)	
Y	14	1	*123-6446*	1	CONTROL GP-PARKING BRAKE	295
	15	1	**123-9812**	1	HANDLE AS (FORWARD/REVERSE)	
Y	16	1	*125-0583*	1	SUPPORT GP-CONTROL	310
Y	17	1	*125-9664*	1	GEAR GP-STEERING	304
	18	1	**126-2487**	1	PLATE	
Y	19	1	**127-2945**	1	DETENT GP	300
M	20	1	**135-8581**	1	BOLT-SOCKET HEAD (M6X1.0X30MM)	
Y	21	1	**214-4863**	2	SENSOR GP-POSITION (ROTARY) (RH/LH STEERING)	155
	22	1	**159-7351**	2	CLIP	
	23	1	**159-7352**	1	PLATE AS	
		1	**4P-8134**	1	CLIP	
		1	**5D-9629**	4	ROD	
M		1	**6V-9632**	4	NUT-WELD (M6X1 THD)	
		1	**7T-1099**	1	LINK	
M		1	**8T-3612**	5	NUT-WELD (M8X1.25 THD)	
Y	24	1	**214-4862**	1	SENSOR GP-POSITION (SPRINGLESS) (FORWARD/NEUTRAL/REVERSE)	154
	25	1	**198-6986**	1	HARNESS AS (FTC)	
		1	**102-8802**	1	KIT-RECEPTACLE (2 PIN)	
					(INCLUDES RECEPTACLE AS & WEDGE)	
		1	**110-6846**	1	PLUG AS-CONNECTOR (40 PIN)	
	26	1	**3K-7942**	1	CLAMP	
	27	1	**6V-0894**	3	SEAL-O-RING	
M	28	1	**7X-7888**	2	BOLT (M6X1X90MM)	
	29	1	**8M-2771**	1	CLIP	
M	30	1	**8T-0267**	1	BOLT-SOCKET HEAD (M6X1X12MM)	
	31	1	**8T-4121**	1	WASHER-HARD (11X21X2.5MM THK)	
M	32	1	**8T-4137**	4	BOLT (M10X1.5X20MM)	
M	33	1	**8T-4138**	2	BOLT (M6X1X20MM)	
	34	1	**9X-8256**	4	WASHER (6.6X12X2MM THK)	

M-METRIC PART
Y-SEPARATE ILLUSTRATION

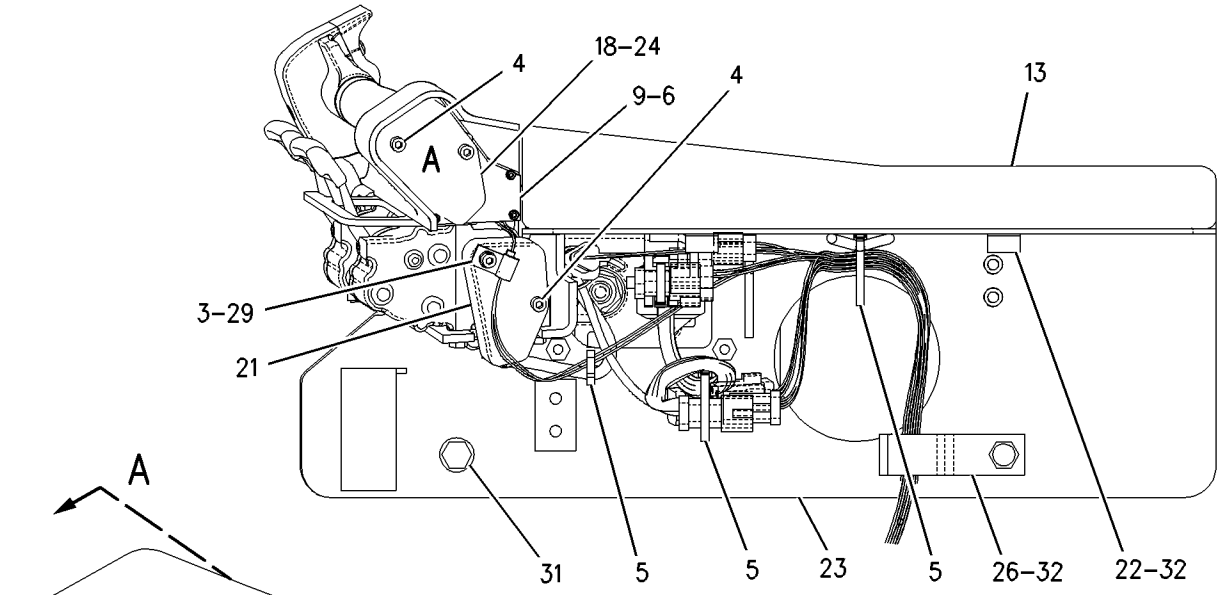

VIEW A–A

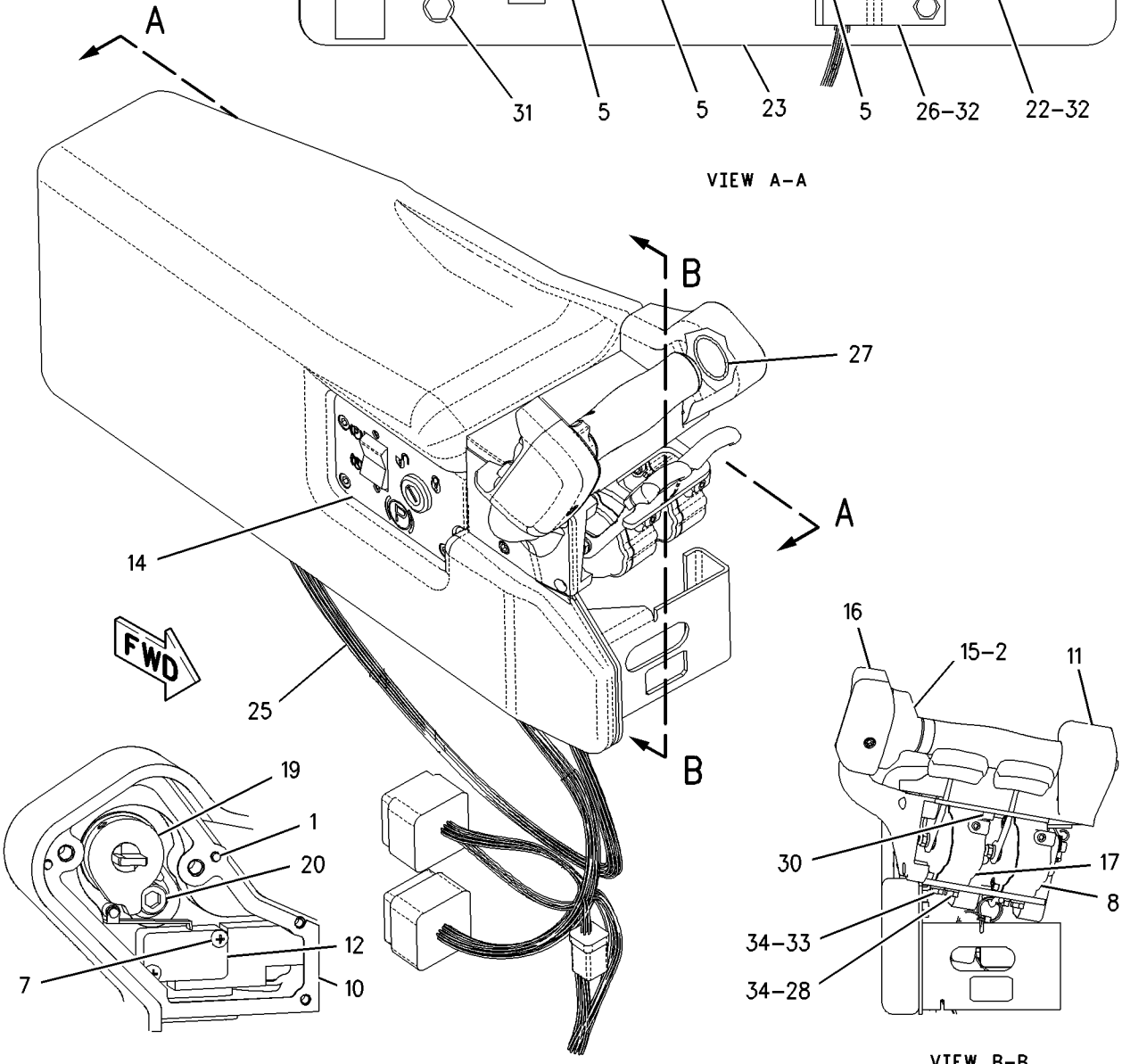

VIEW OF AREA A
(PLATE AND SENSOR GP REMOVED)

VIEW B–B

GRAPHIC #1 **<END>** g00773790

STEERING AND BRAKING SYSTEM

200-3167 CONTROL GP-STEERING & TMSN

S/N: CBJ1-UP
PART OF 156-8955 CONTROL GP-STEERING & TMSN
ALSO AN ATTACHMENT

SMCS-4122 **i01829110**

NOTE	REF NO	GRAPHIC REF	PART NUMBER	QTY	PART NAME 1 2 3 4 5 6 (PRODUCT LEVEL)	SEE PAGE
	1	1	**9X-6772**	4	STRAP-CABLE	
	2	1	**122-8026**	1	PLATE	
	3	1	**123-3283**	1	PLATE AS	
M		1	**6V-9632**	2	NUT-WELD (M6X1 THD)	
	4	1	**123-9176**	1	COVER	
Y	5	1	*124-2354*	1	ADJUSTER GP-STEER & TMSN CONT	289
	6	1	**143-0013**	1	BELLOWS AS	
Y	7	1	*200-3166*	1	CONTROL GP-STEERING & TMSN	297
	8	1	**4P-7581**	3	CLIP	
M	9	1	**5C-9553**	2	BOLT (M6X1X16MM)	
	10	1	**5P-4116**	2	WASHER-HARD (8.8X20.5X2MM THK)	
M	11	1	**8T-4200**	9	BOLT (M8X1.25X16MM)	
	12	1	**8T-4224**	7	WASHER-HARD (8.8X16X2MM THK)	
M	13	1	**9X-2043**	4	SCREW-TRUSS HEAD (M6X1X14MM)	
	14	1	**9X-8256**	2	WASHER (6.6X12X2MM THK)	
M	15	1	**179-1732**	1	BOLT-HEX HEAD (M6X1.0X16MM)	

M-METRIC PART
Y-SEPARATE ILLUSTRATION

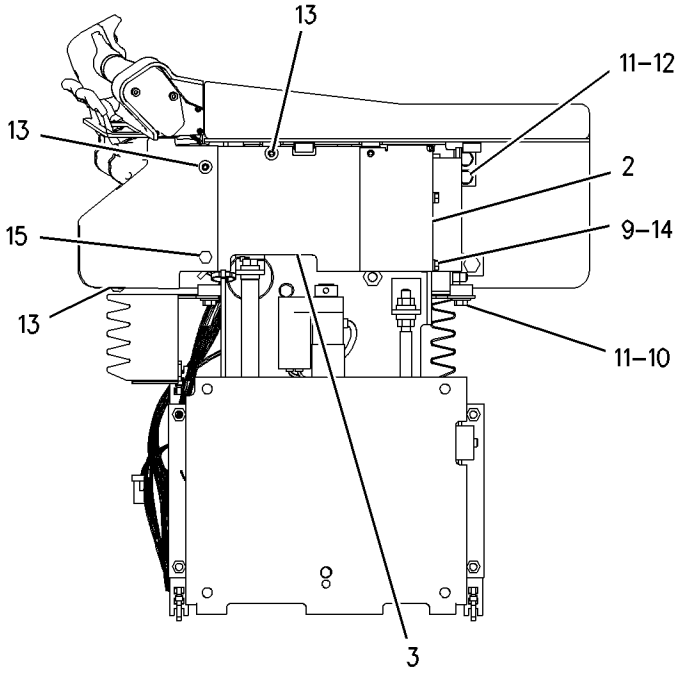

LEFT SIDE VIEW

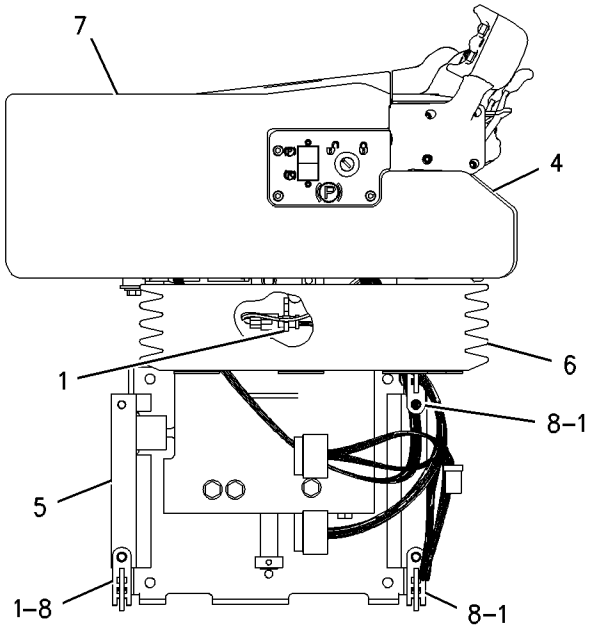

RIGHT SIDE VIEW

GRAPHIC #1 **<END>** g00909571

STEERING AND BRAKING SYSTEM

127-2945 DETENT GP

S/N: CBJ1-UP

PART OF 200-3166 CONTROL GP-STEERING & TMSN

ALSO AN ATTACHMENT

i00600000

NOTE	REF NO	GRAPHIC REF	PART NUMBER	QTY	PART NAME 1 2 3 4 5 6 (PRODUCT LEVEL)	SEE PAGE
Z	1	1		4	BALL	
Z	2	1		1	DOWEL	
Z	3	1		1	PIN-SPRING	
Z	4	1		1	DETENT	
Z	5	1		1	BEARING	
Z	6	1		1	SHAFT	

Z-NOT SERVICED SEPARATELY

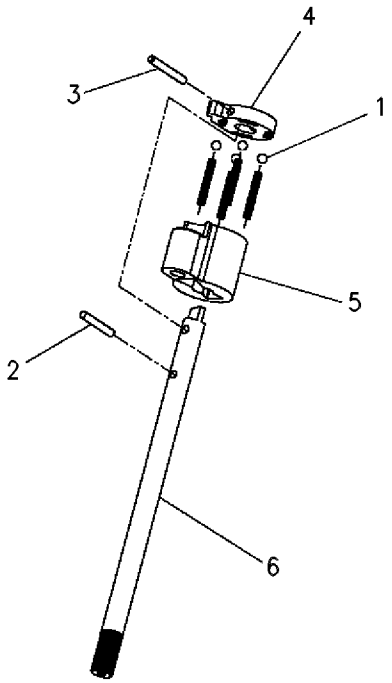

GRAPHIC #1

<END>

g00258540

195-0653 FASTENER GP–STEERING/BRAKE VALVE

S/N: CBJ1-UP

PART OF 195-0645 BRAKE GP-STEERING

SMCS-4307 **i01829895**

NOTE	REF NO	GRAPHIC REF	PART NUMBER	QTY	PART NAME 1 2 3 4 5 6 (PRODUCT LEVEL)	SEE PAGE
	1	1	**3S-0004**	4	WASHER (0.406X0.728X0.09 IN THK)	
	2	1	**6Y-5010**	8	WASHER (10.16X19X.84MM THK)	
	3	1	**8M-5254**	6	SEAL-O-RING	
M	4	1	**7X-2543**	4	BOLT (M10X1.5X120MM)	
	5	1	**8M-4438**	4	SEAL-O-RING	

M-METRIC PART

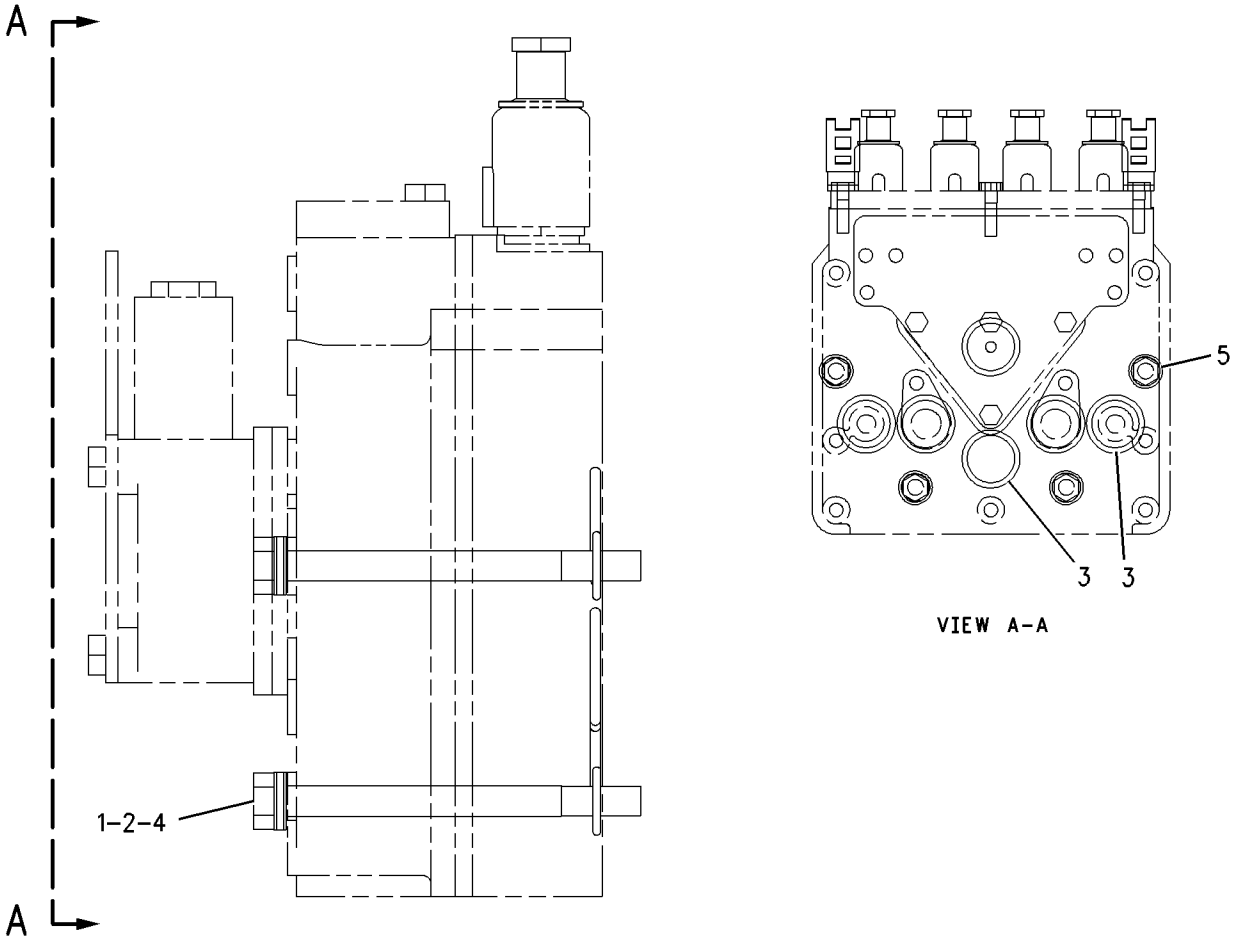

GRAPHIC #1 **<END>** g00954743

122-7372 GEAR GP-STEERING

S/N: CBJ1-UP
PART OF 200-3166 CONTROL GP-STEERING & TMSN
FIELD REPLACEMENT FOR 125-9664—PAGE 304
ALSO AN ATTACHMENT

SMCS-4301 **i00599680**

NOTE	REF NO	GRAPHIC REF	PART NUMBER	QTY	PART NAME 1 2 3 4 5 6 (PRODUCT LEVEL)	SEE PAGE
Z	1	1		1	PLUG-PIPE	
Z	2	1		2	SEAL-LIP	
M	3	1	**129-3178**	1	LOCKNUT (M6X1.0 THD)	
Z	4	1		1	SETSCREW-HEX	
Z	5	1		3	BOLT-SOCKET HEAD	
Z	6	1		1	GEAR AS (40 TEETH)	
Z	7	1		1	GEAR AS (100 TEETH)	
Z	8	1		1	SLEEVE	
Z	9	1		1	SPRING-TORSION	
Z	10	1		1	SPRING-TORSION	
Z	11	1		1	PLATE	
Z	12	1		1	GASKET	
Z	13	1		1	HOUSING AS	
Z	14	1		1	COVER AS	
	15	1	**124-3702**	1	LEVER AS	
		1	**2K-8467**	1	PIN-SPRING	
M	16	1	**125-3298**	4	BOLT-SOCKET HEAD	
	17	1	**9X-8256**	1	WASHER (2MM THK)	

M-METRIC PART
Z-NOT SERVICED SEPARATELY

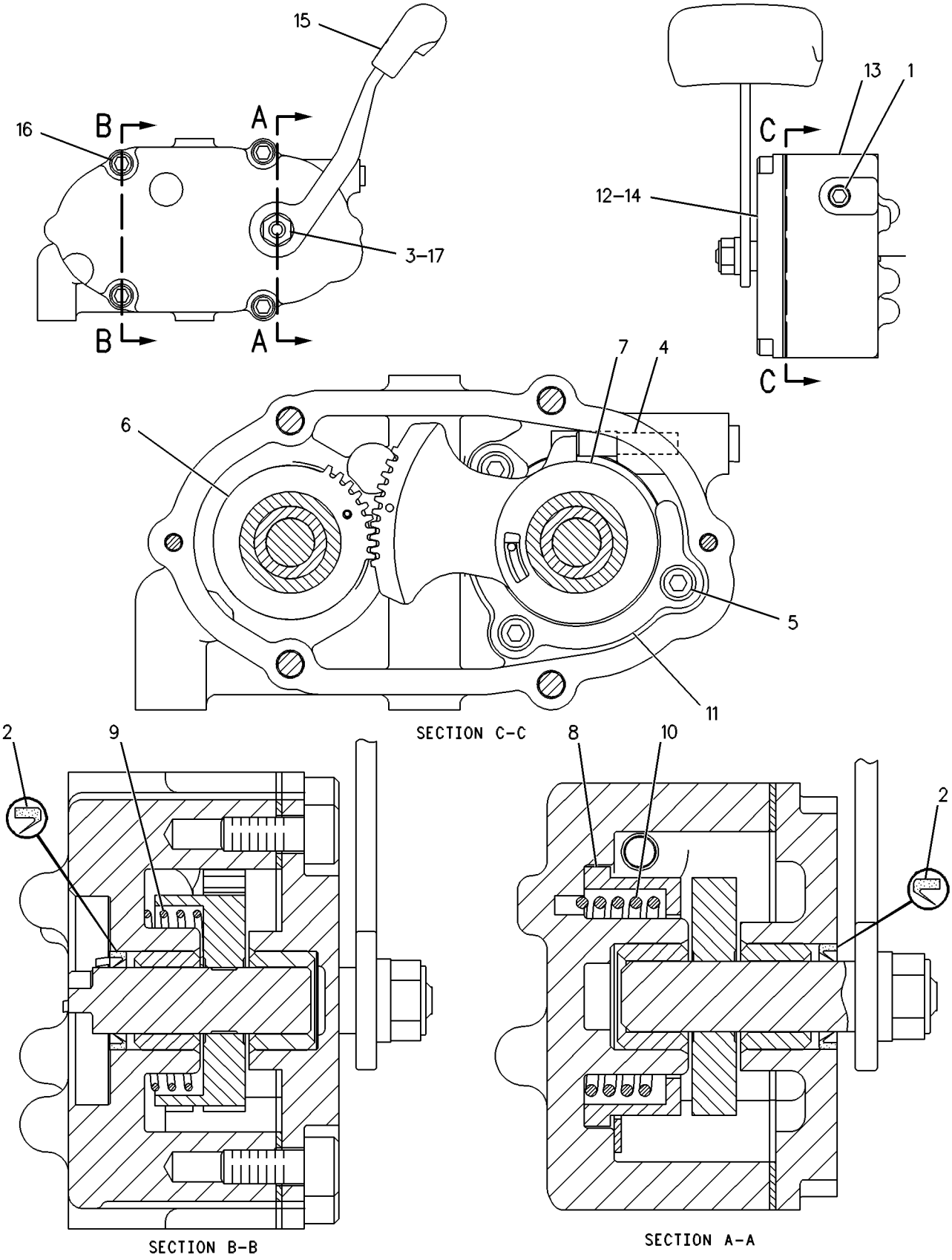

GRAPHIC #1 **<END>** g00252547

125-9664 GEAR GP-STEERING

S/N: CBJ1-UP

PART OF 200-3166 CONTROL GP-STEERING & TMSN

FIELD REPLACEMENT ORDER 122-7372—PAGE 302, 4-125-3299 BOLT-SOCKET HEAD ALSO AN ATTACHMENT

SMCS-4301 **i00599985**

NOTE	REF NO	GRAPHIC REF	PART NUMBER	QTY	PART NAME 1 2 3 4 5 6 (PRODUCT LEVEL)	SEE PAGE
Z	1	1		1	PLUG-PIPE	
Z	2	1		2	SEAL-LIP	
M	3	1	**129-3178**	1	LOCKNUT (M6X1.0 THD)	
Z	4	1		1	SETSCREW-HEX	
Z	5	1		3	BOLT-SOCKET HEAD	
Z	6	1		1	GEAR AS (40 TEETH)	
Z	7	1		1	GEAR AS (100 TEETH)	
Z	8	1		1	SLEEVE	
Z	9	1		1	SPRING-TORSION	
Z	10	1		1	SPRING-TORSION	
Z	11	1		1	PLATE	
Z	12	1		1	GASKET	
Z	13	1		1	HOUSING AS	
Z	14	1		1	COVER AS	
	15	1	**124-3702**	1	LEVER AS	
		1	**2K-8467**	1	PIN-SPRING	
M	16	1	**125-3299**	4	BOLT-SOCKET HEAD	
	17	1	**9X-8256**	1	WASHER (2MM THK)	

M-METRIC PART
Z-NOT SERVICED SEPARATELY

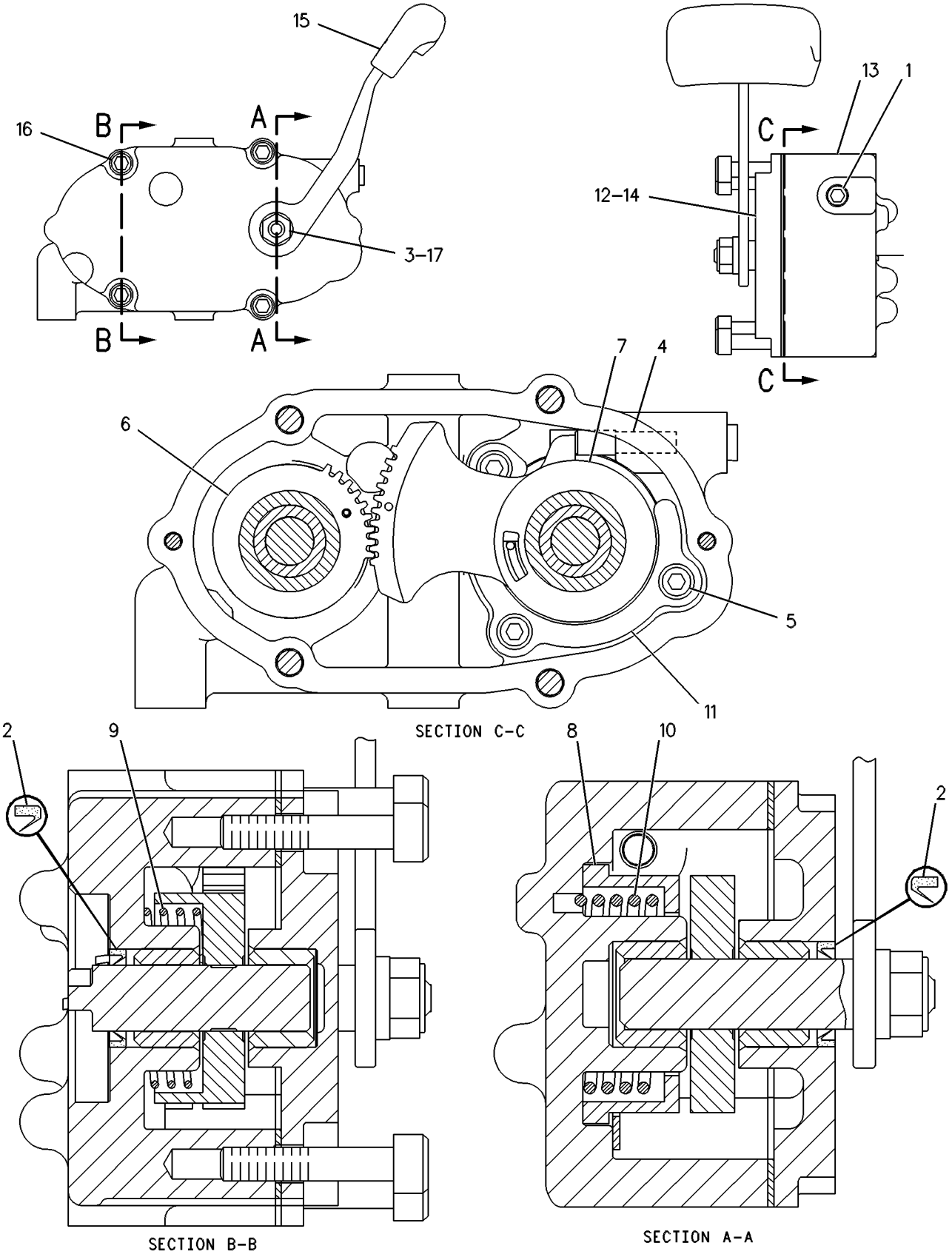

GRAPHIC #1 **<END>** g00252542

164-6093 MANIFOLD & VALVE GP—STEERING/BRAKE

S/N: CBJ1-UP

PART OF 201-7272 VALVE GP-CONTROL

SMCS-4265, 4282 **i01642796**

NOTE	REF NO	GRAPHIC REF	PART NUMBER	QTY	PART NAME 1 2 3 4 5 6 (PRODUCT LEVEL)	SEE PAGE
	1	1	**137-8794**	2	SPOOL AS	
					(EACH INCLUDES)	
	2	1	**3D-7943**	1	RING-RETAINING	
	3	1	**5L-4758**	1	SEAL-O-RING	
	4	1	**137-8793**	1	SPRING	
	5	1	**111-3199**	1	MANIFOLD	
Y	6	1	**174-4909**	4	VALVE GP-SOLENOID	314
	7	1	**1P-1744**	2	DOWEL	

Y-SEPARATE ILLUSTRATION

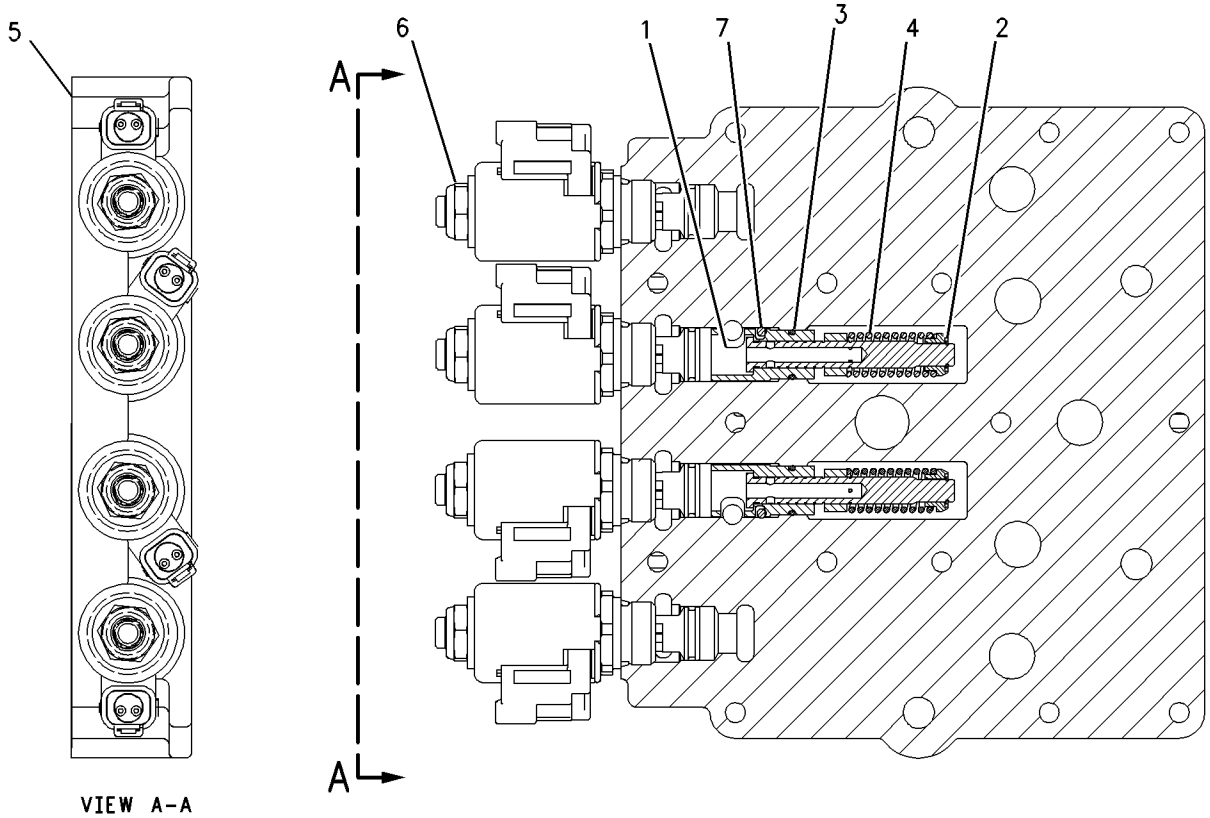

GRAPHIC #1 **<END>** g00753145

175-4972 MANIFOLD & VALVE GP—STEERING/BRAKE

S/N: CBJ1-UP

PART OF 201-7272 VALVE GP-CONTROL

SMCS-4265, 4282 **i01883339**

NOTE	REF NO	GRAPHIC REF	PART NUMBER	QTY	PART NAME 1 2 3 4 5 6 (PRODUCT LEVEL)	SEE PAGE
	1	1	**132-9455**	1	MANIFOLD	
Y	2	1	**172-2392**	2	VALVE GP-SOLENOID	313

Y-SEPARATE ILLUSTRATION

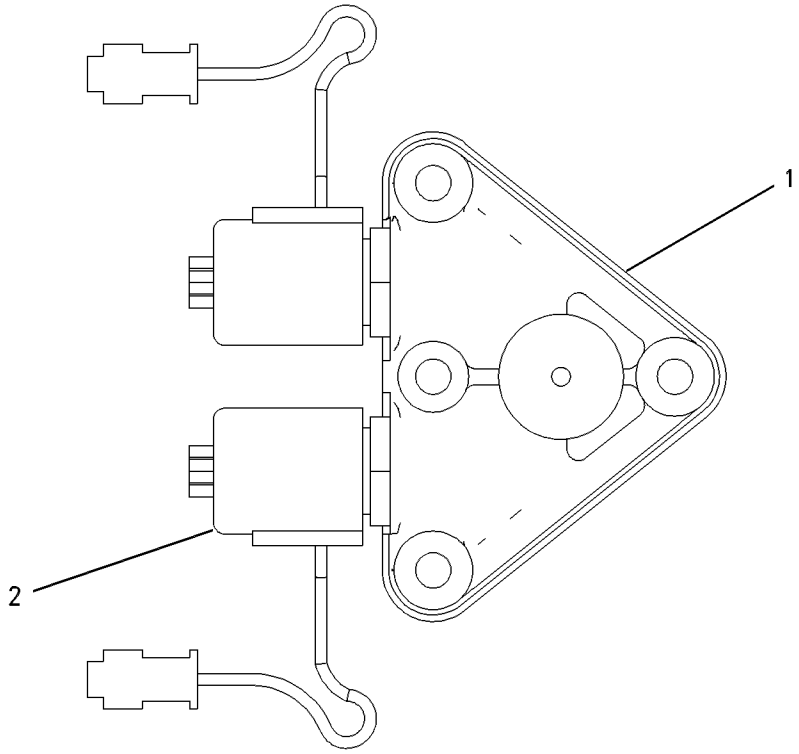

GRAPHIC #1 **<END>** g00653425

STEERING AND BRAKING SYSTEM

199-4801 PEDAL GP-GOVERNOR & BRAKE

S/N: CBJ1-UP

PART OF 217-3818 CAB GP, 218-3063 PLATFORM GP-OPERATOR

ALSO AN ATTACHMENT

SMCS-4122 **i01892975**

NOTE	REF NO	GRAPHIC REF	PART NUMBER	QTY	PART NAME 1 2 3 4 5 6 (PRODUCT LEVEL)	SEE PAGE
	1	1	**7K-1181**	3	STRAP-CABLE	
Y	2	1	**160-2443**	1	SENSOR GP-POSITION (ROTARY) (DECELERATOR PEDAL)	153
	3	1	**199-3616**	1	PEDAL AS-BRAKE (SERVICE)	
	4	1	**199-4159**	1	ARM AS	
	5	1	**199-4787**	1	PIN	
	6	1	**199-4789**	1	SHAFT	
	7	1	**199-4790**	1	SHAFT	
	8	1	**200-8575**	1	PEDAL AS (DECELERATOR)	
	9	1	**206-1487**	1	SWITCH AS-ROLLER (BRAKE ON/OFF)	
		1	**2H-3922**	1	LOCKWASHER	
		1	**6V-8370**	1	NUT-HEX (3/4-32 THD)	
		1	**186-3735**	2	PIN-CONNECTOR	
		1	**9X-0199**	1	BOOT-SWITCH	
		1	**102-8802**	1	KIT-RECEPTACLE (2 PIN)	
					(INCLUDES RECEPTACLE AS & WEDGE)	
	10	1	**214-1606**	1	BOSS	
Y	11	1	**214-4863**	1	SENSOR GP-POSITION (ROTARY) (SERVICE BRAKE PEDAL)	155
	12	1	**214-5012**	2	SPRING	
	13	1	**214-5013**	1	SPRING	
	14	1	**214-7536**	3	SPACER	
	15	1	**095-0916**	1	RING-RETAINING	
	16	1	**138-1645**	1	PIN-SPRING	
	17	1	**225-2860**	1	SUPPORT AS	
	18	1	**2K-9183**	1	PIN-SPRING	
	19	1	**3K-6662**	4	BEARING	
	20	1	**4P-7581**	1	CLIP (LADDER)	
	21	1	**4P-8134**	2	CLIP	
	22	1	**5P-4116**	2	WASHER-HARD (8.8X20.5X2MM THK)	
	23	1	**6V-0894**	2	SEAL-O-RING	
	24	1	**6V-4447**	2	SEAL-LIP	
	25	1	**8T-0328**	4	WASHER-HARD (5.5X10X1MM THK)	
	26	1	**8T-4121**	5	WASHER-HARD (11X21X2.5MM THK)	
M	27	1	**8T-4136**	1	BOLT (M10X1.5X25MM)	
M	28	1	**8T-4189**	3	BOLT (M8X1.25X20MM)	
M	29	1	**8T-4195**	4	BOLT (M10X1.5X30MM)	
M	30	1	**8T-4199**	2	BOLT (M8X1.25X12MM)	
M	31	1	**8T-4908**	2	BOLT (M8X1.25X25MM)	
M	32	1	**8T-6699**	4	BOLT-SOCKET HEAD (M5X.8X35MM)	

M-METRIC PART
Y-SEPARATE ILLUSTRATION

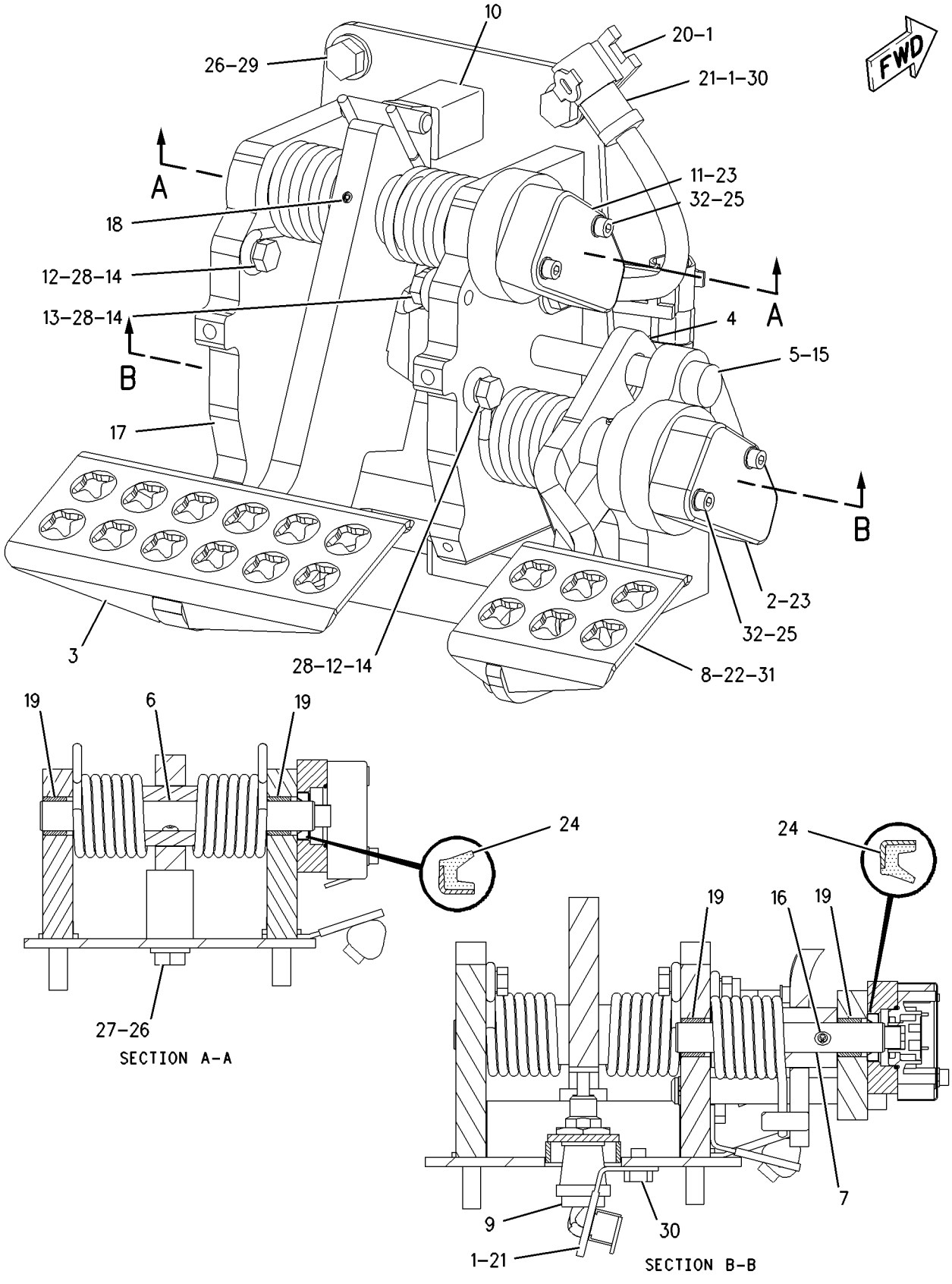

GRAPHIC #1 **<END>** g00938636

125-0583 SUPPORT GP-CONTROL—TRANSMISSION UP/DOWN SHIFT

S/N: CBJ1-UP

PART OF 200-3166 CONTROL GP-STEERING & TMSN

ALSO AN ATTACHMENT

SMCS-4122 **i01176658**

NOTE	REF NO	GRAPHIC REF	PART NUMBER	QTY	PART NAME 1 2 3 4 5 6 (PRODUCT LEVEL)	SEE PAGE
M	1	1	**9X-8902**	1	BOLT-SOCKET HEAD	
	2	1	**5P-8907**	1	SEAL-O-RING (47.35MM ID)	
	3	1	**125-0582**	1	COVER AS	
M	4	1	**125-3298**	1	BOLT-SOCKET HEAD	
	5	1	**125-8826**	1	COVER	
	6	1	**131-0447**	2	NUT	
	7	1	**132-7419**	1	SWITCH AS-PUSH BUTTON (DOWNSHIFT)	
		1	**144-0331**	1	CAP-PUSHBUTTON	
	8	1	**132-7450**	1	SWITCH AS-PUSH BUTTON (UPSHIFT)	
		1	**144-0331**	1	CAP-PUSHBUTTON	
	9	1	**151-9275**	1	KIT-RECEPTACLE (6 PIN)	
					(INCLUDES RECEPTACLE AS & WEDGE)	
	10	1	**8T-8729**	6	PIN-CONNECTOR	
	11	1	**3E-3383**	1	WEDGE-RECEPTACLE LOCK	
BD	12	1	**6V-2689**		TUBE-SHRINKABLE	

B-USE AS REQUIRED
D-ORDER BY THE METER
M-METRIC PART

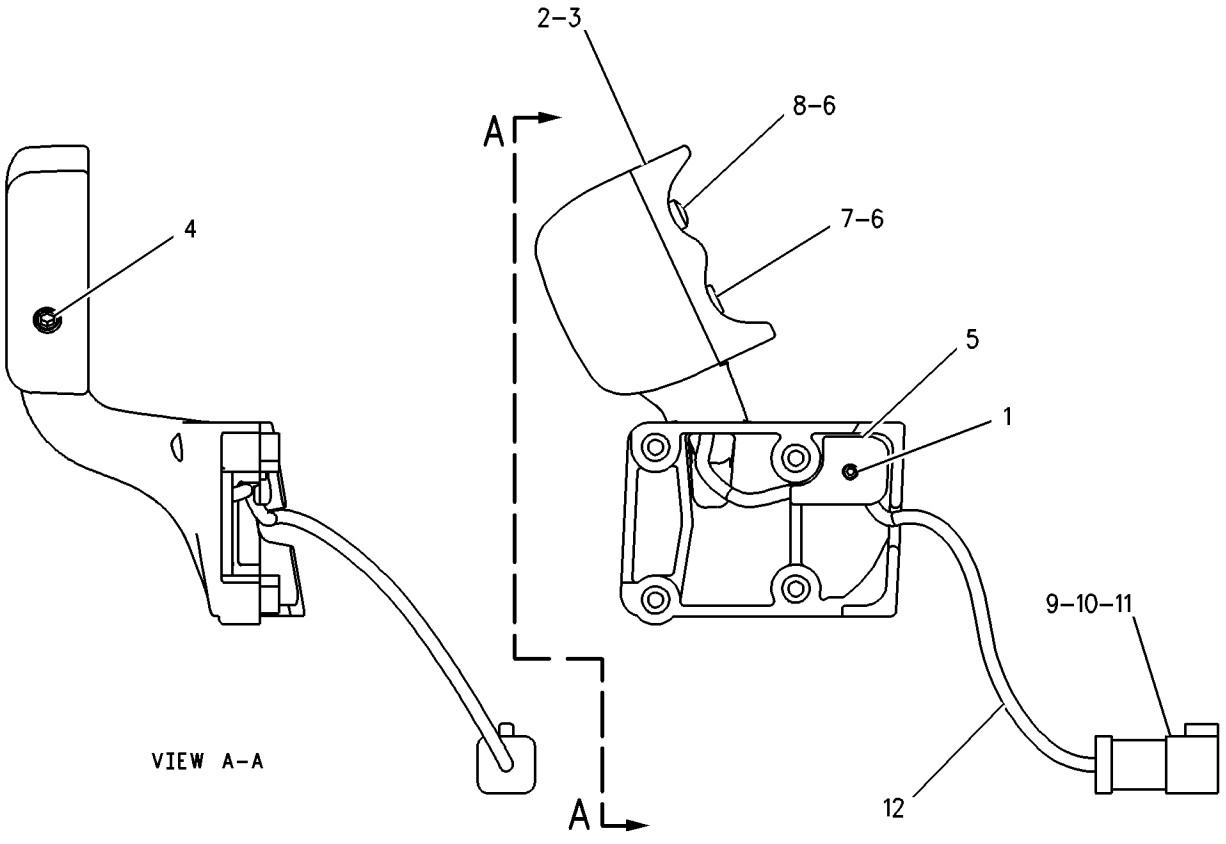

GRAPHIC #1 **<END>** g00629711

201-7272 VALVE GP-CONTROL—STEERING/BRAKE

S/N: CBJ1-UP

PART OF 195-0645 BRAKE GP-STEERING

SMCS-4307 **i01782984**

NOTE	REF NO	GRAPHIC REF	PART NUMBER	QTY	PART NAME 1 2 3 4 5 6 (PRODUCT LEVEL)	SEE PAGE
	1	1	**9P-9150**	36	WASHER (8.25X18X.84MM THK)	
Y	2	1	**164-6093**	1	MANIFOLD & VALVE GP	306
	3	1	**176-0258**	2	PLUG AS (ORIFICE SCREEN)	
	4	1	**108-4434**	1	PLATE-SEPARATOR	
	5	1	**132-9899**	1	PLATE	
	6	1	**132-9900**	1	PLATE	
Y	7	1	*175-4972*	1	MANIFOLD & VALVE GP	307
Y	8	1	*201-7270*	1	VALVE GP-TRANSMISSION CONTROL	233
	9	1	**1T-0738**	16	WASHER (8.4X19X1.83MM THK)	
	10	1	**3S-2093**	4	STRAP-CABLE	
	11	1	**185-3503**	2	SEAL-O-RING	
	12	1	**4J-7533**	4	SEAL-O-RING	
	13	1	**185-3502**	2	SEAL-O-RING	
	14	1	**176-0259**	2	PLUG AS (ORIFICE SCREEN)	
M	15	1	**7X-2541**	3	BOLT (M8X1.25X140MM)	
M	16	1	**8T-3647**	11	BOLT (M8X1.25X80MM)	
M	17	1	**8T-4177**	2	BOLT (M8X1.25X90MM)	
	18	1	**9L-9068**	4	DOWEL	

M-METRIC PART
Y-SEPARATE ILLUSTRATION

201-7272 VALVE GP-CONTROL *(contd.)* i01782984

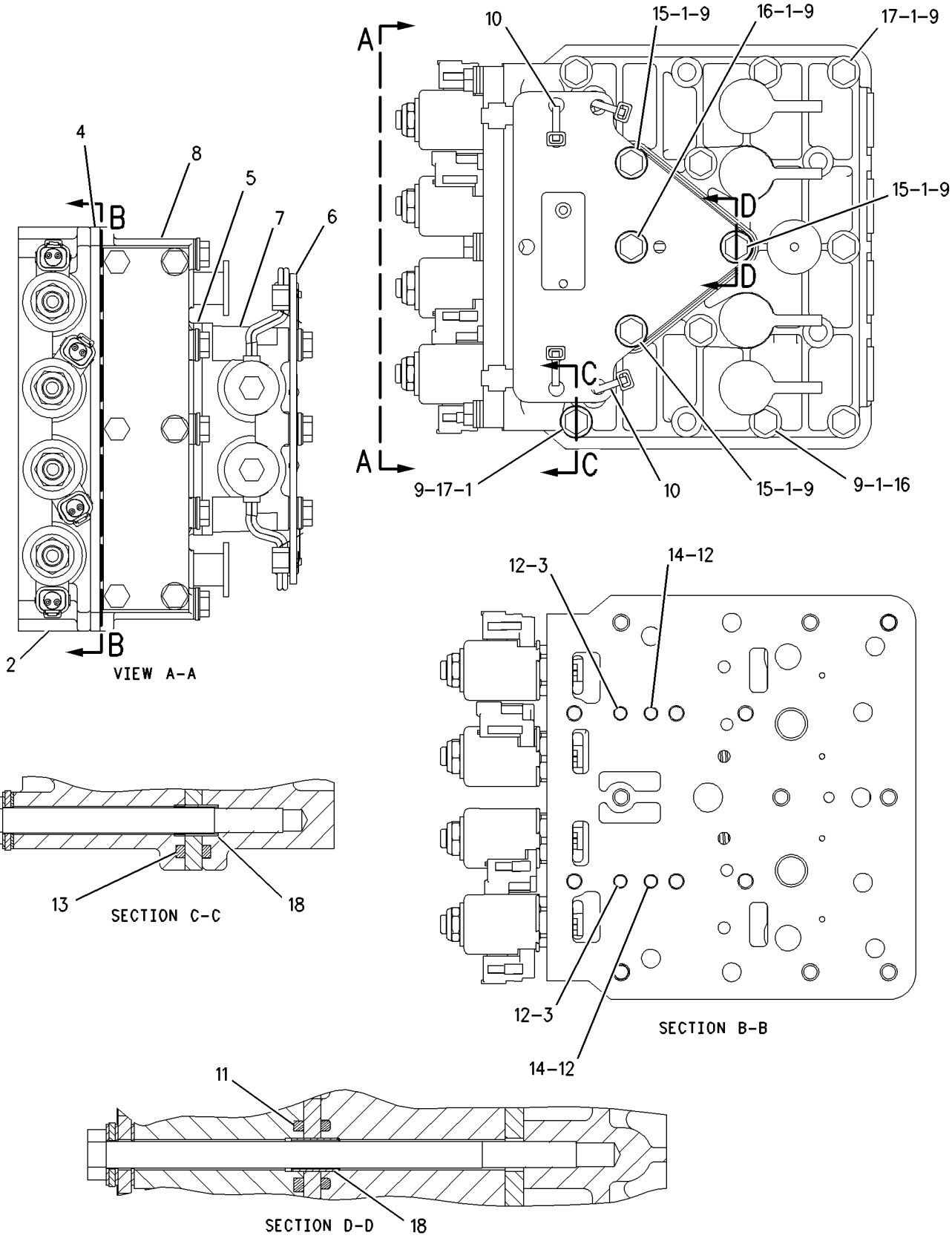

GRAPHIC #1 **<END>** g00769056

172-2392 VALVE GP-SOLENOID—STEERING/BRAKE

S/N: CBJ1-UP
24 VOLT
PART OF 175-4972 MANIFOLD & VALVE GP

SMCS-4804 **i01883348**

NOTE	REF NO	GRAPHIC REF	PART NUMBER	QTY	PART NAME 1 2 3 4 5 6 (PRODUCT LEVEL)	SEE PAGE
	1	1	**156-5970**	1	NUT (1/2-20-2B THD)	
	2	1	**133-2249**	1	COIL AS	
		1	**1S-9593**	2	STRAP-CABLE	
		1	**8T-8729**	2	PIN-CONNECTOR	
		1	**8T-8737**	2	PLUG-SEAL	
		1	**102-8804**	1	KIT-RECEPTACLE (4 PIN)	
					(INCLUDES RECEPTACLE AS & WEDGE)	
	3	1	**172-2391**	1	SPOOL AS	
		1	**156-5970**	1	NUT (1/2-20-2B THD)	
					AVAILABLE REPAIR KIT(S):	
			189-1839	1	KIT-SEAL (SOLENOID VALVE)	
					(INCLUDES SEALS & RING-BACK UP)	

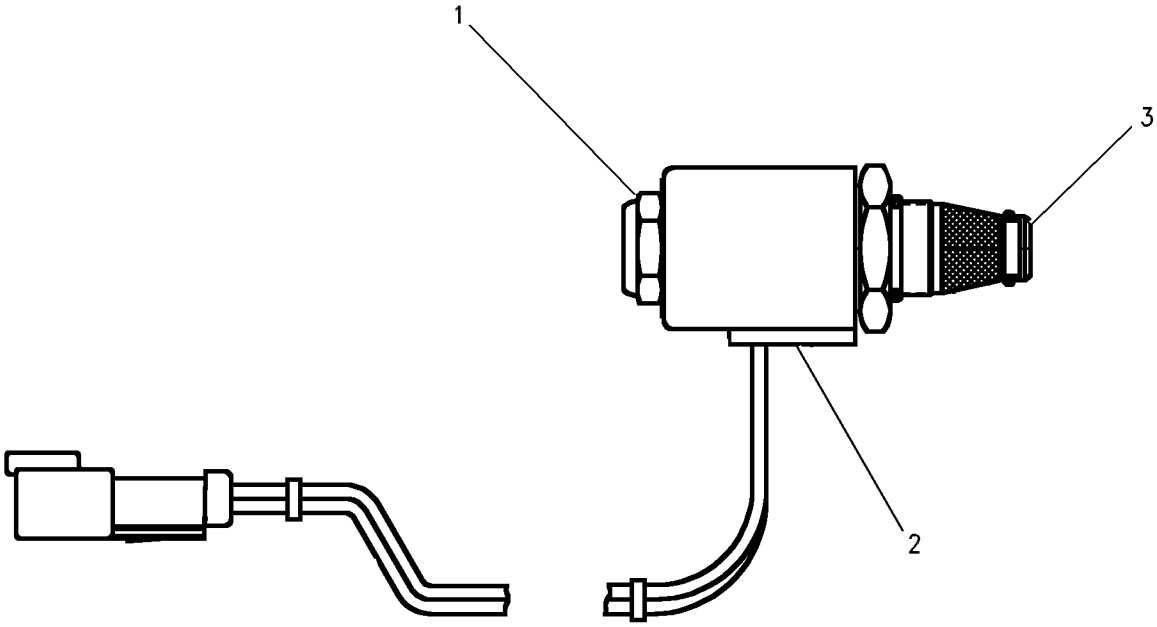

GRAPHIC #1 **<END>** g00653409

174-4909 VALVE GP-SOLENOID–STEERING/BRAKE

S/N: CBJ1-UP

PART OF 164-6093 MANIFOLD & VALVE GP

SMCS-4804 **i01431369**

NOTE	REF NO	GRAPHIC REF	PART NUMBER	QTY	PART NAME 1 2 3 4 5 6 (PRODUCT LEVEL)	SEE PAGE
	1	1	**145-1144**	1	COIL AS	
	2	1	**164-2108**	1	WASHER (2.38MM THK)	
	3	1	**167-9524**	1	NUT-SELF LOCKING (1/2-28 THD)	
	4	1	**8L-2746**	1	SEAL-O-RING (15.6MM ID)	
	5	1	**6V-4589**	1	SEAL-O-RING (19.18MM ID)	

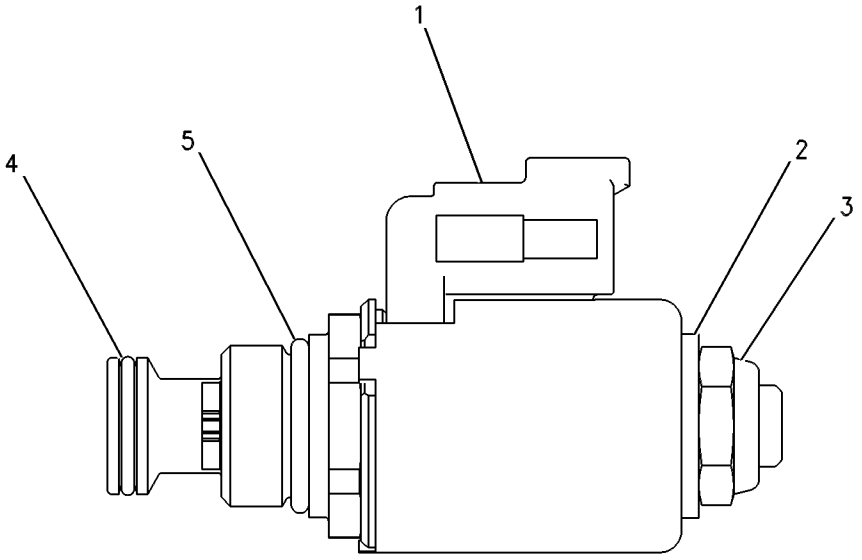

GRAPHIC #1 **<END>** g00638363

HYDRAULIC SYSTEM

156-8948 CONTROL GP-HYDRAULIC HAND–BULLDOZER LIFT/TILT

S/N: CBJ1-UP

PART OF 156-9503 HYDRAULIC AR

SMCS-5063 **i01895715**

NOTE	REF NO	GRAPHIC REF	PART NUMBER	QTY	PART NAME 1 2 3 4 5 6 (PRODUCT LEVEL)	SEE PAGE
	1	1	**1B-0676**	7	PIN	
	2	1	**1B-8704**	1	KEY-WOODRUFF	
	3	1	**3B-4615**	7	PIN-COTTER	
	4	1	**3B-4617**	1	PIN-COTTER	
	5	1	**3W-1493**	1	LEVER	
	6	1	**3W-1495**	1	LEVER	
	7	1	**3W-1615**	1	LEVER	
	8	1	**5P-9209**	14	BEARING-ROLLER	
	9	1	**7F-3713**	3	ROD-CONTROL	
	10	1	**7S-5757**	1	RING-RETAINING	
	11	1	**7X-7662**	1	ROD END	
	12	1	**7X-7915**	4	ROD END (M8X1.25 THD)	
	13	1	**8E-1370**	1	WASHER-THRUST	
M	14	1	**8T-4191**	1	BOLT (M10X1.5X16MM)	
	15	1	**8G-4659**	1	SHAFT AS	
	16	1	**8T-4766**	1	ROD END	
	17	1	**8T-6431**	1	ROD END	
	18	1	**111-9870**	1	SHAFT AS	
	19	1	**111-9871**	1	SUPPORT	
	20	1	**111-9873**	1	ROD	
	21	1	**111-9876**	1	SHAFT AS	
	22	1	**111-9879**	1	LEVER	
	23	1	**111-9887**	1	ROD	
	24	1	**111-9888**	1	ROD	
	25	1	**111-9890**	1	LEVER	
	26	1	**111-9891**	1	SHAFT AS	
	27	1	**111-9892**	1	SUPPORT	
	28	1	**111-9895**	1	YOKE	
	29	1	**112-1869**	1	BUSHING	
	30	1	**115-1153**	1	HANDLE (HYDRAULIC HAND CONTROL)	
	31	1	**118-9674**	1	END-YOKE ROD	
	32	1	**126-6733**	1	ROD	
	33	1	**211-1965**	1	LEVER AS	
	34	1	**220-2667**	1	FILM-INSTRUCTION (BULLDOZER CONTROL)	
	35	1	**166-3325**	1	BOOT	
M	36	1	**5C-7261**	6	NUT (M8X1.25 THD)	
M	37	1	**6V-7744**	2	LOCKNUT (M10X1.5 THD)	
M	38	1	**6V-9189**	5	LOCKNUT (M8X1.25 THD)	
	39	1	**8T-4121**	12	WASHER-HARD (11X21X2.5MM THK)	
M	40	1	**8T-4133**	3	NUT (M10X1.5 THD)	
M	41	1	**8T-4137**	1	BOLT (M10X1.5X20MM)	
M	42	1	**8T-4186**	1	BOLT (M10X1.5X40MM)	
M	43	1	**8T-4195**	9	BOLT (M10X1.5X30MM)	
M	44	1	**8T-4196**	1	BOLT (M10X1.5X35MM)	
	45	1	**8T-4224**	4	WASHER-HARD (8.8X16X2MM THK)	
M	46	1	**8T-4244**	1	NUT (M12X1.75 THD)	
M	47	1	**8T-7547**	4	BOLT (M8X1.25X30MM)	
	48	1	**9X-8257**	6	WASHER (17.5X30X3.5MM THK)	

M-METRIC PART

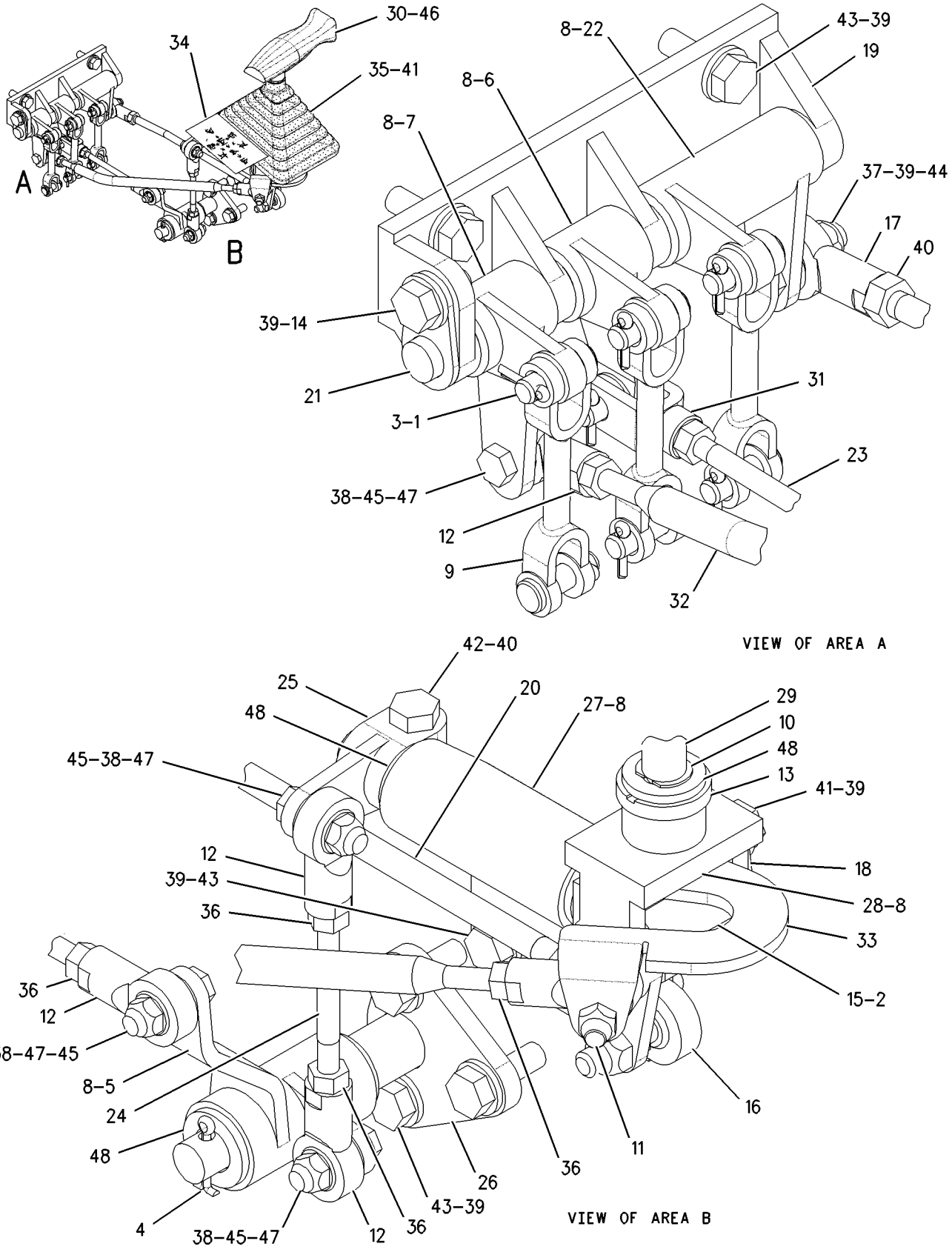

GRAPHIC #1 **<END>** g00907650

164-3504 CONTROL GP-HYDRAULIC HAND–RIPPER

S/N: CBJ1-UP

PART OF 229-2831 HYDRAULIC AR, 173-8641 HYDRAULIC AR-4 VALVE AN ATTACHMENT

SMCS-5063 **i01883367**

NOTE	REF NO	GRAPHIC REF	PART NUMBER	QTY	PART NAME 1 2 3 4 5 6 (PRODUCT LEVEL)	SEE PAGE
	1	1	**1B-0676**	2	PIN	
	2	1	**3B-4615**	2	PIN-COTTER	
	3	1	**3B-4617**	2	PIN-COTTER	
	4	1	**5P-9209**	4	BEARING-ROLLER	
	5	1	**8M-8489**	1	DOWEL	
	6	1	**102-9478**	1	FILM-INSTRUCTION (RIPPER CONTROL)	
	7	1	**111-9899**	1	BRACKET AS	
	8	1	**111-9900**	1	LEVER	
	9	1	**115-1153**	1	HANDLE (HYDRAULIC HAND CONTROL)	
	10	1	**118-9674**	2	END-YOKE ROD	
	11	1	**121-0483**	1	ROD	
	12	1	**121-0484**	1	LEVER	
	13	1	**121-0487**	1	SHAFT AS	
	14	1	**166-3603**	1	BOOT	
	15	1	**177-4229**	1	PLATE AS	
M		1	**6V-9632**	4	NUT-WELD (M6X1 THD)	
	16	1	**177-4230**	1	PLATE	
	17	1	**211-4634**	1	ROD-CONTROL	
	18	1	**1B-2578**	1	NUT (3/8-16 THD)	
	19	1	**2K-4973**	1	LOCKNUT (3/8-16 THD)	
M	20	1	**5C-7261**	2	NUT (M8X1.25 THD)	
	21	1	**8T-0192**	1	BOLT (3/8-16X2.25 IN)	
	22	1	**8T-4121**	15	WASHER-HARD (11X21X2.5MM THK)	
M	23	1	**8T-4195**	8	BOLT (M10X1.5X30MM)	
M	24	1	**8T-4244**	2	NUT (M12X1.75 THD)	
M	25	1	**9X-2041**	3	SCREW-TRUSS HEAD (M10X1.5X20MM)	
M	26	1	**9X-2042**	4	SCREW-TRUSS HEAD (M6X1X12MM)	
	27	1	**9X-8257**	4	WASHER (17.5X30X3.5MM THK)	

M-METRIC PART

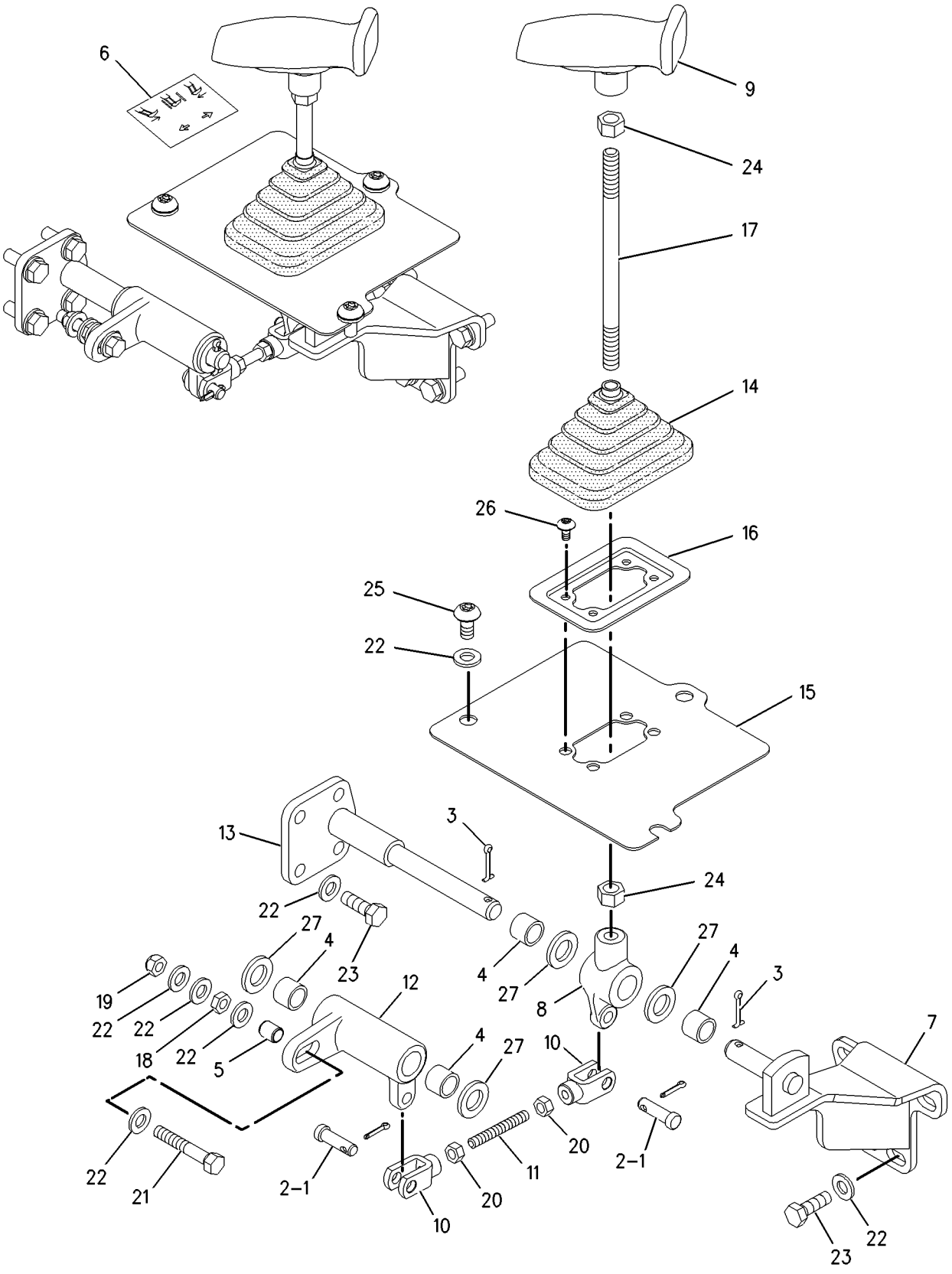

GRAPHIC #1 **<END>** g00936717

HYDRAULIC SYSTEM

165-4481 CONTROL GP-HYDRAULIC HAND–BULLDOZER LIFT/TILT

S/N: CBJ1-UP
PART OF 156-9510, 229-2831 HYDRAULIC AR
AN ATTACHMENT

SMCS-5063 **i01883377**

NOTE	REF NO	GRAPHIC REF	PART NUMBER	QTY	PART NAME 1 2 3 4 5 6 (PRODUCT LEVEL)	SEE PAGE
	1	1	**1B-0676**	5	PIN	
	2	1	**1B-8704**	1	KEY-WOODRUFF	
	3	1	**3B-4615**	5	PIN-COTTER	
	4	1	**3B-4617**	1	PIN-COTTER	
	5	1	**3W-1493**	1	LEVER	
	6	1	**3W-1495**	1	LEVER	
	7	1	**5P-9209**	10	BEARING-ROLLER	
	8	1	**7F-3713**	2	ROD-CONTROL	
	9	1	**7X-7915**	3	ROD END (M8X1.25 THD)	
	10	1	**9X-8257**	5	WASHER (17.5X30X3.5MM THK)	
	11	1	**8G-4659**	1	SHAFT AS	
	12	1	**8T-4766**	1	ROD END	
	13	1	**8T-6431**	1	ROD END	
	14	1	**111-9867**	1	ROD	
	15	1	**111-9870**	1	SHAFT AS	
	16	1	**111-9871**	1	SUPPORT	
	17	1	**111-9873**	1	ROD	
	18	1	**111-9876**	1	SHAFT AS	
	19	1	**111-9879**	1	LEVER	
	20	1	**111-9886**	1	YOKE	
	21	1	**111-9887**	1	ROD	
	22	1	**111-9888**	1	ROD	
	23	1	**111-9890**	1	LEVER	
	24	1	**111-9891**	1	SHAFT AS	
	25	1	**111-9892**	1	SUPPORT	
	26	1	**115-1153**	1	HANDLE (HYDRAULIC HAND CONTROL)	
	27	1	**118-9674**	1	END-YOKE ROD	
	28	1	**220-2666**	1	FILM-INSTRUCTION (BULLDOZER CONTROL)	
	29	1	**166-3325**	1	BOOT	
M	30	1	**5C-7261**	4	NUT (M8X1.25 THD)	
M	31	1	**6V-7744**	2	LOCKNUT (M10X1.5 THD)	
M	32	1	**6V-9189**	3	LOCKNUT (M8X1.25 THD)	
	33	1	**8T-4121**	12	WASHER-HARD (11X21X2.5MM THK)	
M	34	1	**8T-4133**	3	NUT (M10X1.5 THD)	
M	35	1	**8T-4137**	2	BOLT (M10X1.5X20MM)	
M	36	1	**8T-4186**	1	BOLT (M10X1.5X40MM)	
M	37	1	**8T-4195**	9	BOLT (M10X1.5X30MM)	
M	38	1	**8T-4196**	1	BOLT (M10X1.5X35MM)	
	39	1	**8T-4224**	3	WASHER-HARD (8.8X16X2MM THK)	
M	40	1	**8T-4244**	2	NUT (M12X1.75 THD)	
M	41	1	**8T-7547**	3	BOLT (M8X1.25X30MM)	

M-METRIC PART

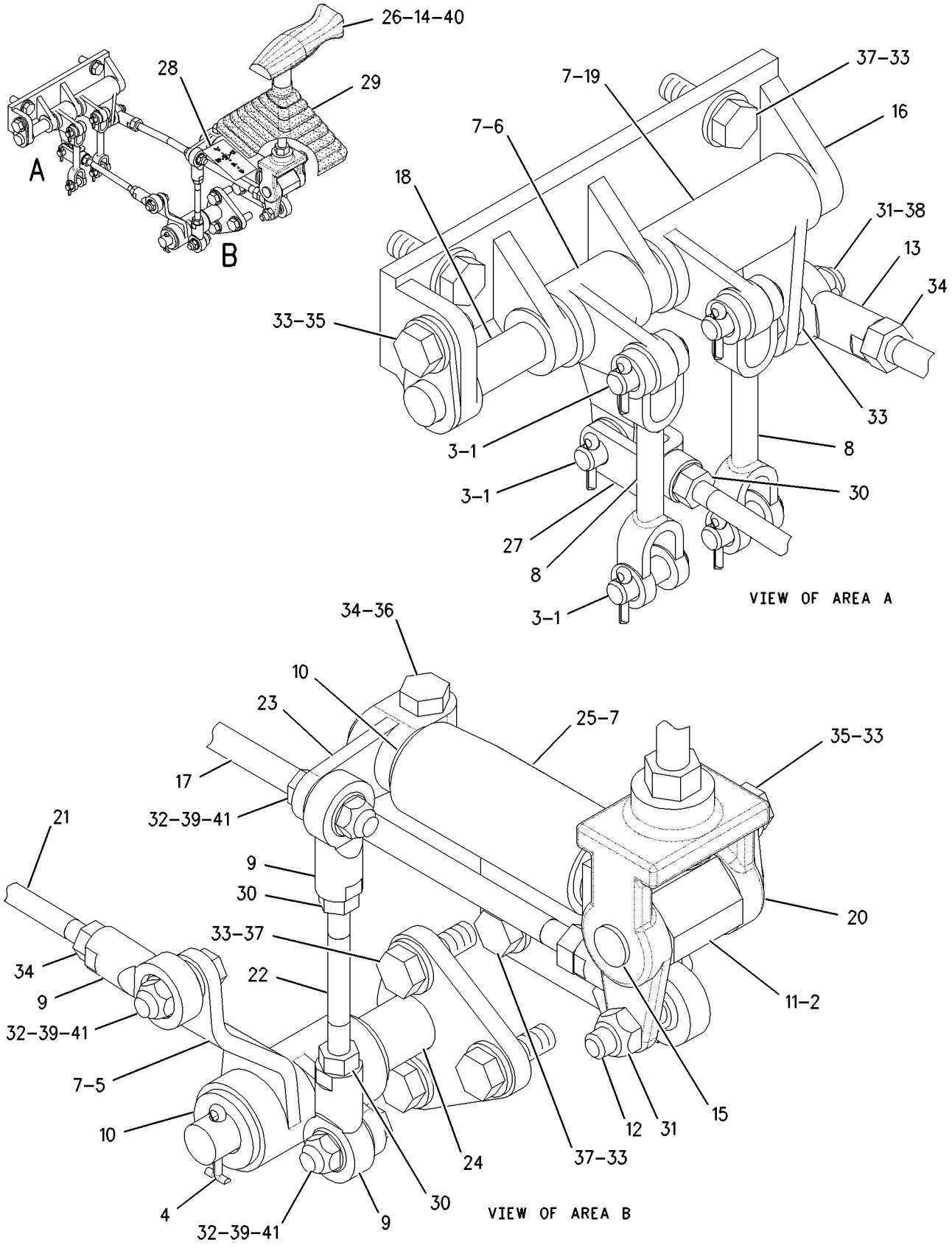

GRAPHIC #1 **<END>** g00917223

HYDRAULIC SYSTEM

228-0320 CYLINDER GP-ANGLING–BULLDOZER

S/N: B6X1-UP
101.6MM (4 IN)BORE X 472MM (18.6 IN) STROKE
PART OF 223-6303 BULLDOZER AR
AN ATTACHMENT

SMCS-5101 **i01831061**

NOTE	REF NO	GRAPHIC REF	PART NUMBER	QTY	PART NAME 1 2 3 4 5 6 (PRODUCT LEVEL)	SEE PAGE
	1	1	**1J-2175**	1	BOLT (1 1/8-7X3.5 IN)	
	2	1	**110-6501**	1	WASHER-HARD (31X57X6MM THK)	
	3	1	**122-9921**	1	PISTON AS	
		1	**8C-9160**	1	SEAL AS	
		1	**8N-5083**	1	SPRING	
		1	**112-6142**	1	PLUNGER	
		1	**122-9918**	1	SPACER	
	4	1	**175-7900**	1	SEAL-O-RING	
	5	1	**2K-6830**	1	RING-BACKUP	
	6	1	**135-7393**	1	HEAD	
		1	**167-2457**	1	SEAL-WIPER	
	7	1	**228-0321**	1	ROD AS	
		1	**2H-5549**	2	RING-RETAINING	
		1	**4D-4431**	1	BEARING-ALIGNING	
	8	1	**167-2457**	1	SEAL-WIPER	
	9	1	**167-2304**	1	SEAL-U-CUP	
	10	1	**167-2195**	1	SEAL AS-BUFFER	
R	11	1	**110-3787**	1	CYLINDER AS	
		1	**9T-7045**	1	BOSS	
		1	**2H-5549**	2	RING-RETAINING	
		1	**4D-4431**	1	BEARING-ALIGNING	
	12	1	**4T-5613**	1	RING-WEAR	
	13	1	**6J-2797**	1	RING-WEAR	

R-REMFG PART MAY BE AVAILABLE

228-0320 CYLINDER GP-ANGLING *(contd.)* **i01831061**

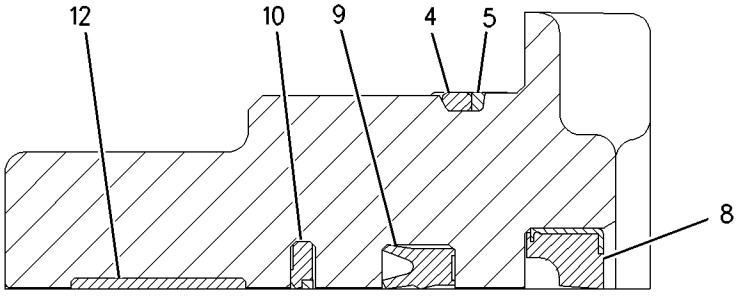

VIEW OF AREA A

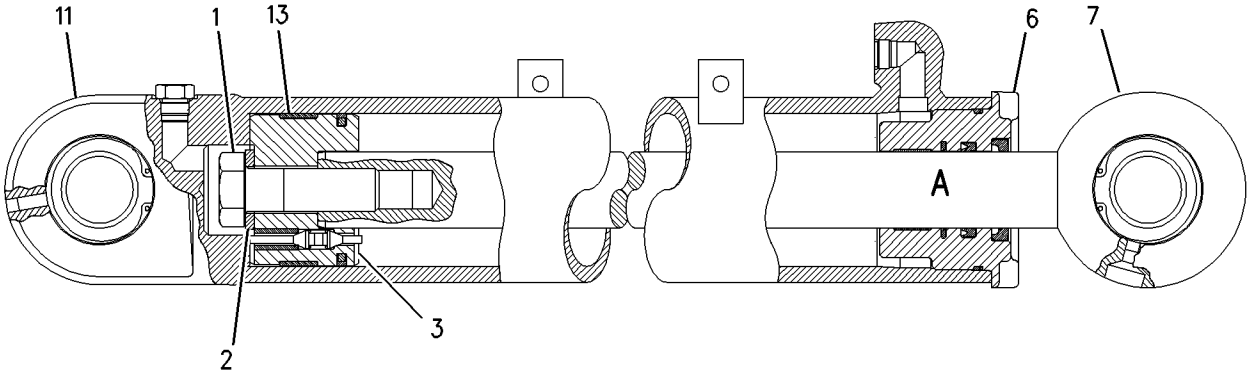

GRAPHIC #1 **<END>** g00938454

110-3269 CYLINDER GP-LIFT–BULLDOZER

S/N: B6X1-UP
114.3MM (4.5 IN) BORE X 430MM (17 IN) STROKE
PART OF 223-6303 BULLDOZER AR
AN ATTACHMENT

SMCS-5102 **i01492754**

NOTE	REF NO	GRAPHIC REF	PART NUMBER	QTY	PART NAME 1 2 3 4 5 6 (PRODUCT LEVEL)	SEE PAGE
R	1	1	**110-3270**	1	CYLINDER AS	
		1	**6E-5449**	1	BEARING	
CM	2	1	**173-9683**	1	BOLT-HEX HEAD (M30X3.5X90MM)	
	3	1	**3S-7023**	1	WASHER (34X57X6MM THK)	
	4	1	**9X-7269**	1	SEAL AS	
	5	1	**4J-3745**	1	RING-WEAR	
	6	1	**6E-3569**	1	PISTON	
C	7	1	**175-7902**	1	SEAL-O-RING	
	8	1	**1K-7095**	1	RING-BACKUP	
	9	1	**6E-3570**	1	HEAD	
	10	1	**110-3271**	1	ROD AS	
		1	**6E-5449**	1	BEARING	
	11	1	**8T-4958**	1	RING-WEAR	
C	12	1	**167-2459**	1	SEAL-WIPER	
C	13	1	**167-2307**	1	SEAL-U-CUP	
C	14	1	**167-2200**	1	SEAL AS	

C-CHANGE FROM PREVIOUS TYPE
M-METRIC PART
R-REMFG PART MAY BE AVAILABLE

110-3269 CYLINDER GP-LIFT *(contd.)* **i01492754**

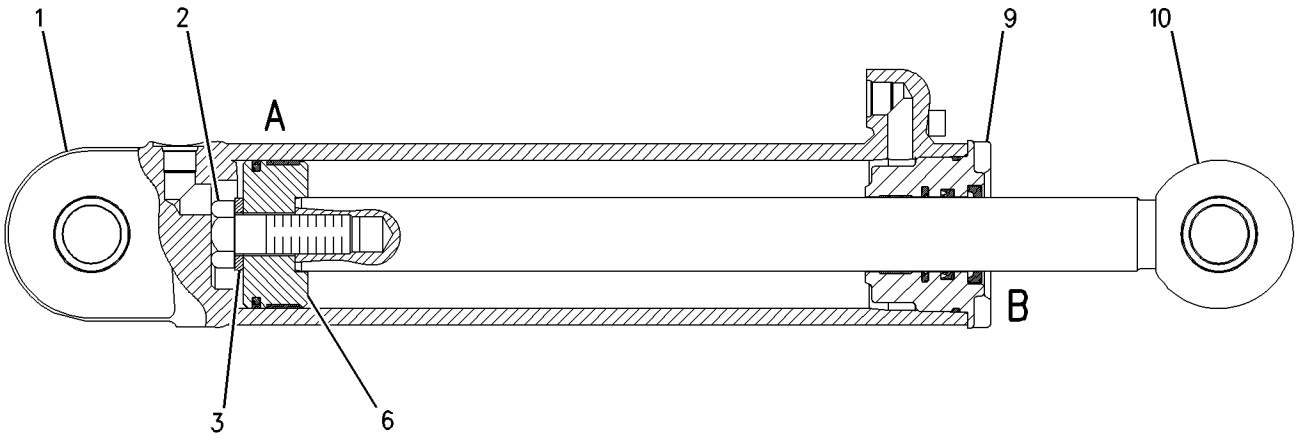

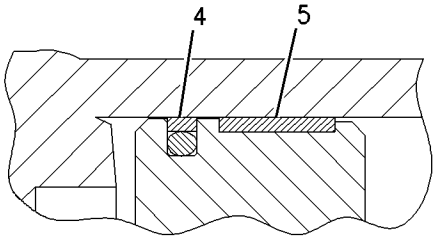

VIEW OF AREA A

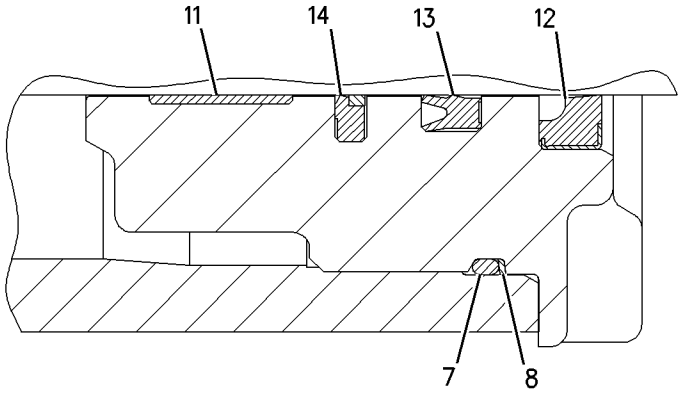

VIEW OF AREA B

GRAPHIC #1 **<END>** g00785498

115-3524 CYLINDER GP-LIFT–BULLDOZER

S/N: S6D1-UP; S6S1-UP
95.25MM (3.75 IN) BORE X 720MM (28.3 IN) STROKE
PART OF 206-9537, 206-9544 BULLDOZER AR-SEMI-UNIVERSAL
AN ATTACHMENT

SMCS-5102 **i01876979**

NOTE	REF NO	GRAPHIC REF	PART NUMBER	QTY	PART NAME 1 2 3 4 5 6 (PRODUCT LEVEL)	SEE PAGE
	1	1	**5J-8011**	1	SEAL AS	
	2	1	**8J-6245**	1	RING-WEAR	
	3	1	**8T-4958**	1	RING-WEAR	
	4	1	**2H-4145**	1	SEAL-O-RING	
	5	1	**1S-0669**	1	RING (BACK UP)	
M	6	1	**8T-0070**	4	BOLT (M20X2.5X120MM)	
M	7	1	**6V-7742**	4	NUT-FULL (M20X2.50 THD)	
	8	1	**4J-0121**	1	CAP-BEARING	
B	9	1	**8E-5703**	16	SHIM (0.8MM THK)	
	10	1	**115-8219**	1	ROD AS	
	11	1	**8J-6020**	1	CROWN	
	12	1	**6E-1410**	1	HEAD	
	13	1	**115-8218**	1	CYLINDER AS	
	14	1	**1K-6985**	2	RING-RETAINING	
	15	1	**9J-7964**	1	BEARING-SPHERICAL	
	16	1	**167-2200**	1	SEAL AS	
	17	1	**3B-8489**	1	FITTING-GREASE (1/8-27 THD) (BULLDOZER LIFT CYLINDER)	
	18	1	**115-8225**	1	PISTON	
	19	1	**9X-8399**	1	WASHER (33X56X6MM THK)	
M	20	1	**173-9683**	1	BOLT-HEX HEAD (M30X3.5X90MM)	
	21	1	**167-2459**	1	SEAL-WIPER	
	22	1	**167-2307**	1	SEAL-U-CUP	

B-USE AS REQUIRED
M-METRIC PART

115-3524 CYLINDER GP-LIFT *(contd.)* **i01876979**

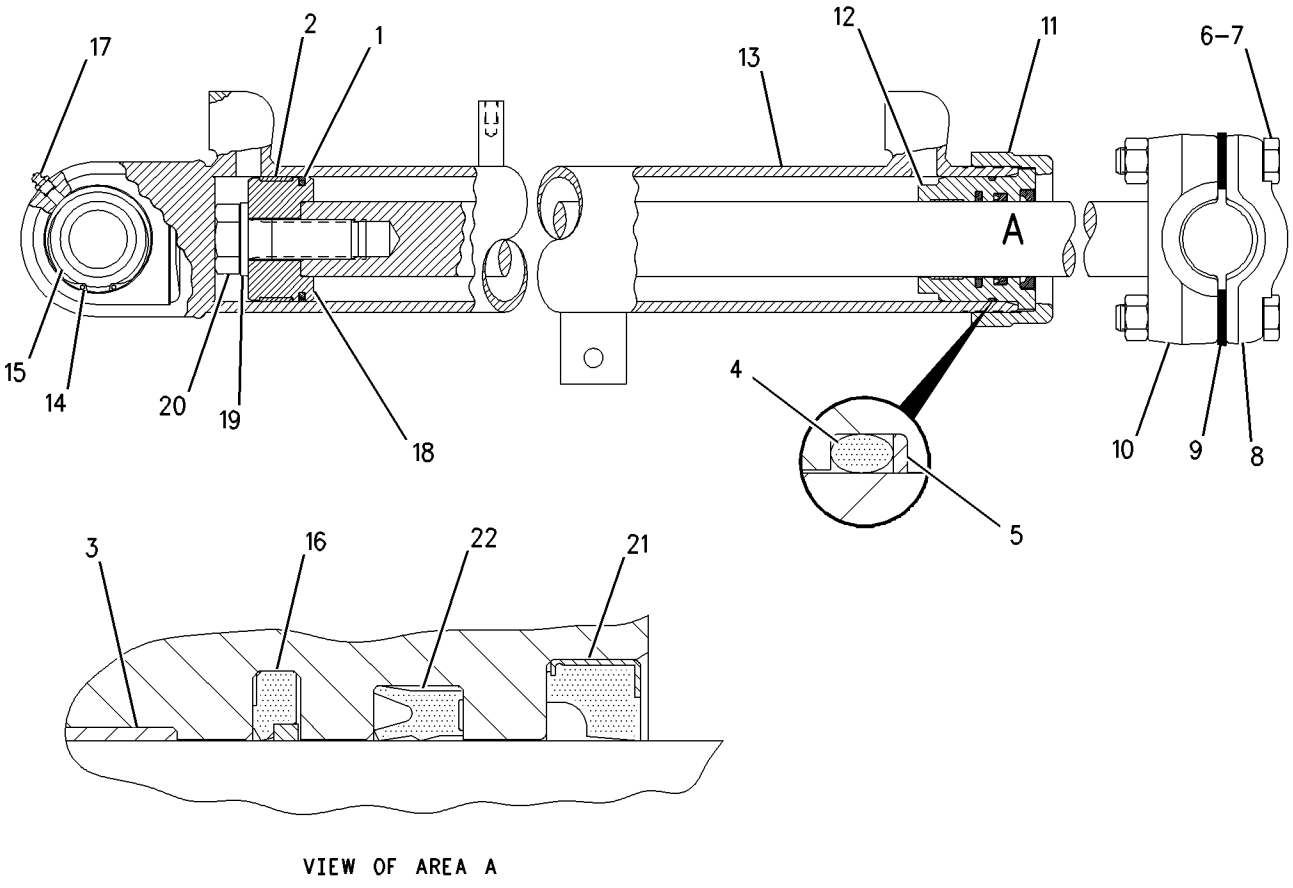

VIEW OF AREA A

GRAPHIC #1 **<END>** g00702913

HYDRAULIC SYSTEM

9T-2716 CYLINDER GP-RIPPER LIFT

S/N: TPP1-UP
127MM (5 IN) BORE X 362MM (14.25 IN) STROKE
PART OF 180-4560 RIPPER AR
AN ATTACHMENT

SMCS-5352 **i01480896**

NOTE	REF NO	GRAPHIC REF	PART NUMBER	QTY	PART NAME 1 2 3 4 5 6 (PRODUCT LEVEL)	SEE PAGE
	1	1	**3G-1753**	1	PISTON	
	2	1	**4J-3420**	1	RING-WEAR	
	3	1	**5J-5020**	1	SEAL AS	
	4	1	**9T-2715**	1	CYLINDER AS	
	5	1	**4K-3128**	2	BEARING-SLEEVE	
	6	1	**9T-6863**	1	HEAD	
	7	1	**167-2201**	1	SEAL AS-BUFFER	
	8	1	**167-2312**	1	SEAL-U-CUP	
	9	1	**167-2463**	1	SEAL-WIPER	
	10	1	**9T-2714**	1	ROD AS	
	11	1	**2K-4507**	1	BEARING-SLEEVE	
	12	1	**1D-4628**	4	BOLT (7/8-9X3.25 IN)	
		1	**5P-8249**	4	WASHER-HARD (24X41.5X4MM THK)	
	13	1	**2K-4096**	1	RING	
	14	1	**5F-3144**	1	SEAL-O-RING	
	15	1	**3G-1757**	1	WASHER	
	16	1	**2J-0564**	1	LOCKNUT	
	17	1	**8T-5668**	1	RING-WEAR	
	18	1	**1P-4576**	4	FLANGE	
	19	1	**4J-5267**	2	SEAL-O-RING	
	20	1	**5H-4018**	2	COVER	
	21	1	**9B-7237**	8	BOLT (3/8-16X1.25 IN)	
		1	**8T-4896**	8	WASHER-HARD (10.2X18.5X2.5MM THK)	

9T-2716 CYLINDER GP-RIPPER LIFT *(contd.)* i01480896

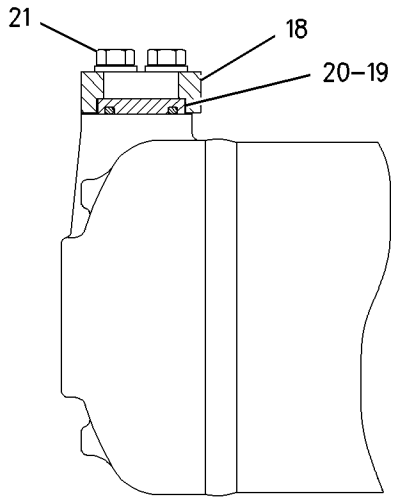

VIEW A–A

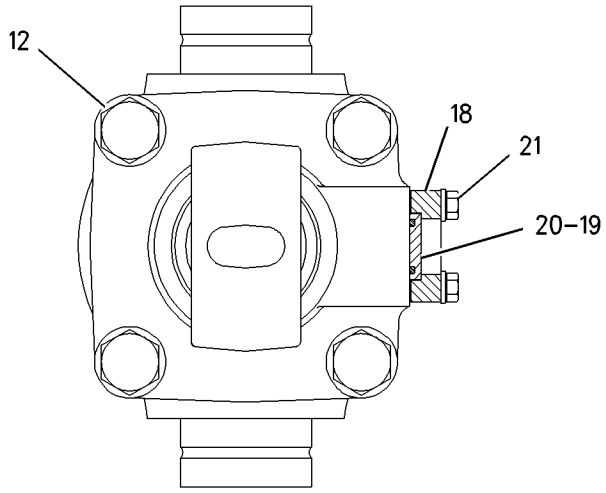

VIEW B–B

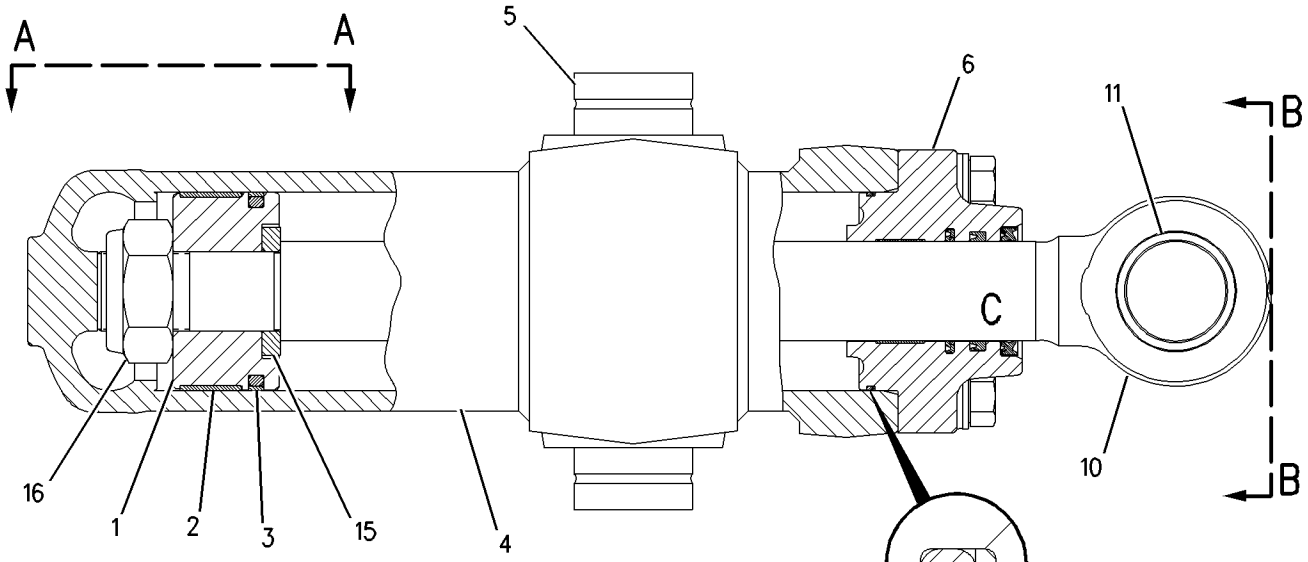

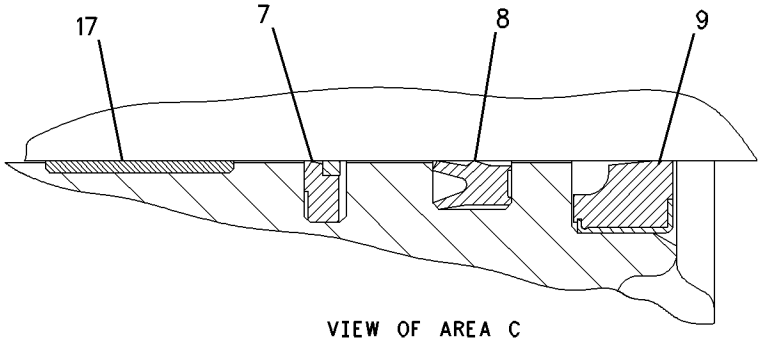

VIEW OF AREA C

GRAPHIC #1 **<END>** g00728785

115-3523 CYLINDER GP-TILT–SEMI UNIVERSAL BULLDOZER

S/N: S6D1-UP; S6S1-UP
165.1MM (6.5 IN) BORE X 128MM (5 IN) STROKE
PART OF 115-4472 PUSH ARM GP
AN ATTACHMENT

SMCS-5104 **i01877785**

NOTE	REF NO	GRAPHIC REF	PART NUMBER	QTY	PART NAME 1 2 3 4 5 6 (PRODUCT LEVEL)	SEE PAGE
	1	1	**116-3089**	1	CYLINDER AS	
		1	**2J-8489**	1	BEARING	
M	2	1	**8T-1605**	1	BOLT (M36X4X100MM)	
	3	1	**3S-6162**	1	WASHER-HARD (40.5X67X6MM THK)	
	4	1	**3J-9703**	1	RING-WEAR	
	5	1	**4T-8695**	1	SEAL AS	
	6	1	**116-3085**	1	PISTON	
	7	1	**116-3083**	1	HEAD	
	8	1	**116-3084**	1	ROD AS	
	9	1	**8J-2880**	1	CAP-BEARING	
CM	10	1	**6V-9167**	4	BOLT (M20X2.5X140MM)	
B	11	1	**8E-5703**	28	SHIM (0.8MM THK)	
M	12	1	**6V-7742**	4	NUT-FULL (M20X2.50 THD)	
	13	1	**7J-8955**	1	RING-BACKUP	
	14	1	**7J-8956**	1	SEAL-O-RING	
M	15	1	**6V-8133**	4	BOLT (M24X3.0X80MM)	
	16	1	**6V-8237**	4	WASHER (26X44X4MM THK)	
C	17	1	**7M-2275**	1	RING-RETAINING	
	18	1	**9T-0094**	1	RING-WEAR	
	19	1	**8C-5218**	1	SEAL-LIP	
	20	1	**5J-8300**	1	SEAL-U-CUP	
	21	1	**8C-9126**	1	SEAL AS	

B-USE AS REQUIRED
C-CHANGE FROM PREVIOUS TYPE
M-METRIC PART

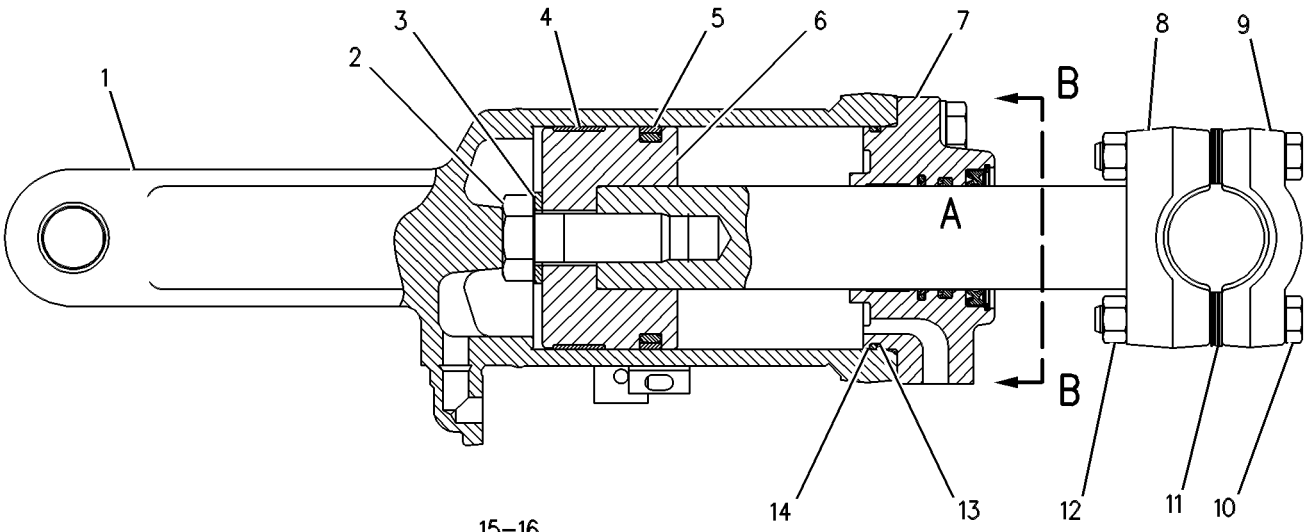

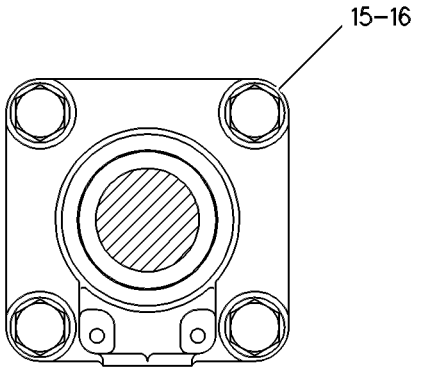

VIEW B-B

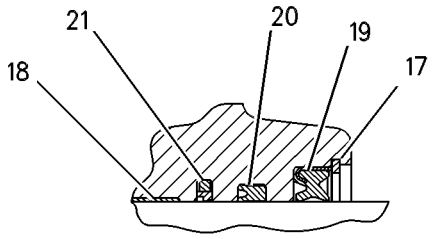

VIEW OF AREA A

GRAPHIC #1 **<END>** g00263251

160-0054 CYLINDER GP-TILT—BULLDOZER

S/N: B6X1-UP
139.7MM (5.5 IN) BORE X 114MM (4.5 IN) STROKE
PART OF 223-6303 BULLDOZER AR
AN ATTACHMENT

SMCS-5104 **i01526342**

NOTE	REF NO	GRAPHIC REF	PART NUMBER	QTY	PART NAME 1 2 3 4 5 6 (PRODUCT LEVEL)	SEE PAGE
	1	1	**160-0055**	1	CYLINDER AS	
	2	1	**8T-7567**	1	RING	
	3	1	**160-0305**	1	BEARING	
	4	1	**160-0060**	1	PISTON	
	5	1	**6E-0465**	1	SEAL AS	
	6	1	**4J-4606**	1	RING-WEAR	
	7	1	**2H-9247**	1	SEAL-O-RING	
	8	1	**2K-2961**	1	RING-BACKUP	
	9	1	**9T-6302**	1	CROWN	
	10	1	**110-4771**	1	HEAD	
	11	1	**8T-5668**	1	RING-WEAR	
	12	1	**3J-9545**	1	LOCKNUT	
	13	1	**1U-4049**	1	WASHER (51X73X12.7MM THK)	
	14	1	**167-2463**	1	SEAL-WIPER	
	15	1	**167-2312**	1	SEAL-U-CUP	
	16	1	**167-2201**	1	SEAL AS-BUFFER	
	17	1	**204-9542**	1	ROD AS	
	18	1	**1S-3311**	1	RING-RETAINING	
	19	1	**7J-1309**	1	BEARING	

160-0054 CYLINDER GP-TILT ***(contd.)*** **i01526342**

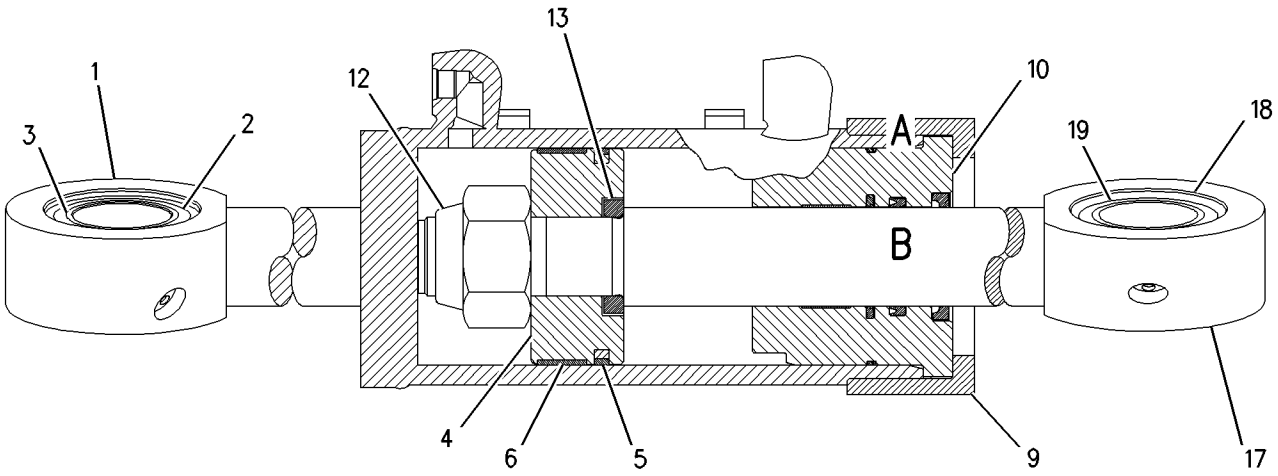

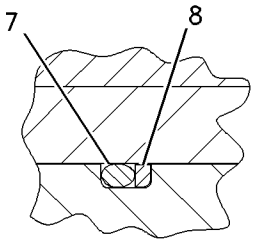

VIEW OF AREA A

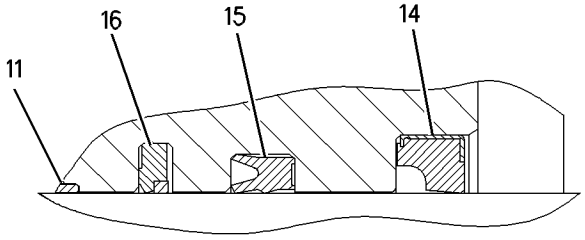

VIEW OF AREA B

GRAPHIC #1 **<END>** g00768553

196-5093 FILTER GP-OIL–HYDRAULIC

S/N: CBJ1-UP

PART OF 160-4137 PUMP & LINES GP-HYDRAULIC

SMCS-5068 **i01893101**

NOTE	REF NO	GRAPHIC REF	PART NUMBER	QTY	PART NAME 1 2 3 4 5 6 (PRODUCT LEVEL)	SEE PAGE
	1	1	**6V-0852**	1	CAP-DUST (HYD. OIL FILTER SAMPLING VALVE)	
	2	1	**144-6691**	1	FILTER ELEMENT AS-OIL (HYDRAULIC) (DISPOSABLE)	
					-OR-	
		1	**121-9868**	1	FILTER-ETHANOL (FIRE RESISTANT FLUID)	
					–OR–	
		1	**126-1815**	1	FILTER AS-OIL (CLEANOUT/HIGH EFFICIENCY)	
	3	1	**183-7264**	1	VALVE AS-FLUID SAMPLING (HYDRAULIC OIL FILTER)	
	4	1	**3J-1907**	2	SEAL-O-RING	
	5	1	**6V-0484**	1	ADAPTER-O-RING	

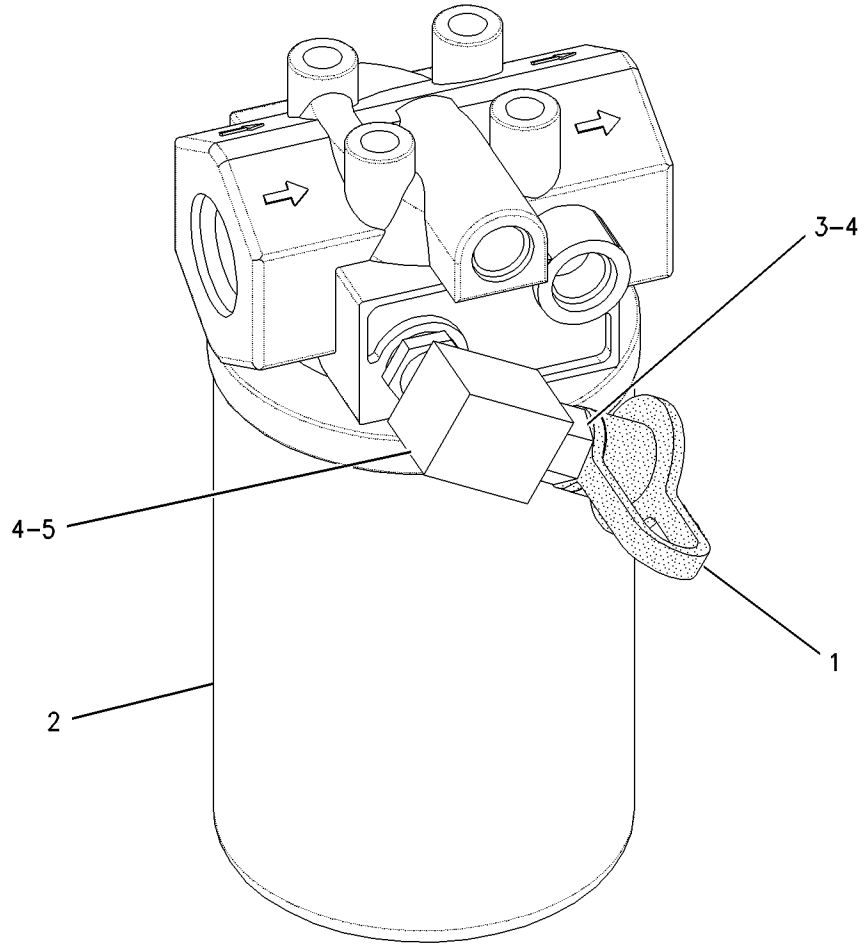

GRAPHIC #1 **<END>** g00782802

HYDRAULIC SYSTEM

156-9503 HYDRAULIC AR–3 VALVE

S/N: CBJ1-UP

PART OF 156-9493 GENERAL AR

SMCS-5051, 5056, 5057, 5073 **i01828560**

NOTE	PART NUMBER	QTY	PART NAME 1 2 3 4 5 6 (PRODUCT LEVEL)	SEE PAGE
Y	*156-8948*	1	CONTROL GP-HYDRAULIC HAND	315
Y	*163-0761*	1	LINES GP-ANGLE & TILT	338
Y	*198-5179*	1	LINES GP-FLUID SAMPLING	340
Y	*220-0896*	1	LINES GP-LIFT CYLINDER	342
Y	*218-0100*	1	MOUNTING GP-VALVE	358
Y	*160-4137*	1	PUMP & LINES GP-HYDRAULIC	359
Y	*174-4485*	1	TANK & FILTER GP-HYDRAULIC	365
Y	**209-6765**	1	VALVE GP-BANK 3	369

Y-SEPARATE ILLUSTRATION

<END>

156-9510 HYDRAULIC AR–2 VALVE

S/N: CBJ1-UP

AN ATTACHMENT

SMCS-5051, 5056, 5057, 5073 **i01895724**

NOTE	PART NUMBER	QTY	PART NAME 1 2 3 4 5 6 (PRODUCT LEVEL)	SEE PAGE
Y	*165-4481*	1	CONTROL GP-HYDRAULIC HAND (LIFT/TILT)	319
Y	**169-4142**	1	LINES GP-TILT CYLINDER	353
Y	**6E-5083**	1	VALVE GP-BANK 2	368

Y-SEPARATE ILLUSTRATION

<END>

229-2831 HYDRAULIC AR–4 VALVE

S/N: CBJ1-UP

FOR USE WITH SEMI-UNIVERSAL BULLDOZER & RIPPER. CANNOT BE USED WITH WINCH

AN ATTACHMENT

SMCS-5051, 5056, 5057, 5073 **i01877579**

NOTE	PART NUMBER	QTY	PART NAME 1 2 3 4 5 6 (PRODUCT LEVEL)	SEE PAGE
Y	*165-4481*	1	CONTROL GP-HYDRAULIC HAND (LIFT/TILT) (BULLDOZER)	319
Y	*164-3504*	1	CONTROL GP-HYDRAULIC HAND (RIPPER)	317
Y	*163-3270*	1	LINES GP-RIPPER	348
Y	*228-3554*	1	LINES GP-TILT CYLINDER	354
Y	**209-6764**	1	VALVE GP-BANK 4	370

Y-SEPARATE ILLUSTRATION

<END>

HYDRAULIC SYSTEM

173-8641 HYDRAULIC AR-4 VALVE

S/N: CBJ1-UP

FOR USE WITH 167-1463—PAGE 427, 180-4560—PAGE 398

AN ATTACHMENT

SMCS-5051 **i01830637**

NOTE	PART NUMBER	QTY	PART NAME 1 2 3 4 5 6 (PRODUCT LEVEL)	SEE PAGE
Y	*164-3504*	1	CONTROL GP-HYDRAULIC HAND (RIPPER)	317
Y	*163-3270*	1	LINES GP-RIPPER	348
Y	**209-6764**	1	VALVE GP-BANK 4	370

Y-SEPARATE ILLUSTRATION

<END>

HYDRAULIC SYSTEM

110-6113 LINES GP-ANGLE & TILT

S/N: B6X1-UP
PART OF 223-6303 BULLDOZER AR
AN ATTACHMENT

SMCS-5057, 5101, 5104 **i01893115**

NOTE	REF NO	GRAPHIC REF	PART NUMBER	QTY	PART NAME 1 2 3 4 5 6 (PRODUCT LEVEL)	SEE PAGE
	1	1	**3B-8489**	8	FITTING-GREASE (1/8-27 THD) (ANGLE & TILT CYLINDERS)	
I	2	1	**112-7454**	2	HOSE AS	
I	3	1	**112-7455**	2	HOSE AS	
I	4	1	**112-7456**	1	HOSE AS	
I	5	1	**112-7457**	1	HOSE AS	
	6	1	**167-7270**	4	FILM-INSTRUCTION (NO STEP)	
	7	1	**222-2773**	1	CHANNEL AS (RH)	
	8	1	**222-2774**	1	CHANNEL AS (LH)	
	9	1	**197-2477**	2	PIN	
I	10	1	**197-2479**	2	HOSE AS	
	11	1	**198-6217**	2	GUARD	
	12	1	**200-2645**	1	GUARD AS	
	13	1	**204-5093**	2	PLATE	
	14	1	**096-7033**	2	PIN-COTTER	
	15	1	*148-8340*	4	CONNECTOR GP	
					(EACH INCLUDES)	
		1	**3K-0360**	1	SEAL-O-RING	
		1	**6V-8398**	1	SEAL-O-RING	
		1	**6V-8639**	1	CONNECTOR	
	16	1	*148-8364*	2	ELBOW AS	
					(EACH INCLUDES)	
		1	**3K-0360**	1	SEAL-O-RING	
		1	**6V-8398**	1	SEAL-O-RING	
		1	**6V-8625**	1	ELBOW	
	17	1	**2P-6470**	1	CLIP (SLOT)	
	18	1	**2P-6471**	1	CLIP (TAB)	
	19	1	**3B-6552**	2	ELBOW	
M	20	1	**3E-4319**	1	STUD-TAPERLOCK (M12-1.75X55 OAL)	
	21	1	**5P-7466**	7	CLIP (SLOT)	
	22	1	**5P-7467**	7	CLIP (TAB)	
	23	1	**5P-8112**	7	GROMMET	
M	24	1	**6V-7687**	6	LOCKNUT (M12X1.75 THD)	
	25	1	**6V-8398**	6	SEAL-O-RING	
	26	1	**7G-3832**	2	GROMMET	
	27	1	**7G-3833**	2	CLIP (TAB)	
	28	1	**7G-3834**	2	CLIP (SLOT)	
	29	1	**7Y-1858**	2	WASHER (21X37X3MM THK)	
M	30	1	**8T-4139**	9	BOLT (M12X1.75X30MM)	
M	31	1	**8T-4183**	8	BOLT (M12X1.75X40MM)	
M	32	1	**8T-4192**	7	BOLT (M12X1.75X25MM)	
	33	1	**8T-4223**	27	WASHER-HARD (13.5X25.5X3MM THK)	
M	34	1	**8T-4244**	3	NUT (M12X1.75 THD)	

I-SEE HOSE FABRICATION GUIDE
M-METRIC PART

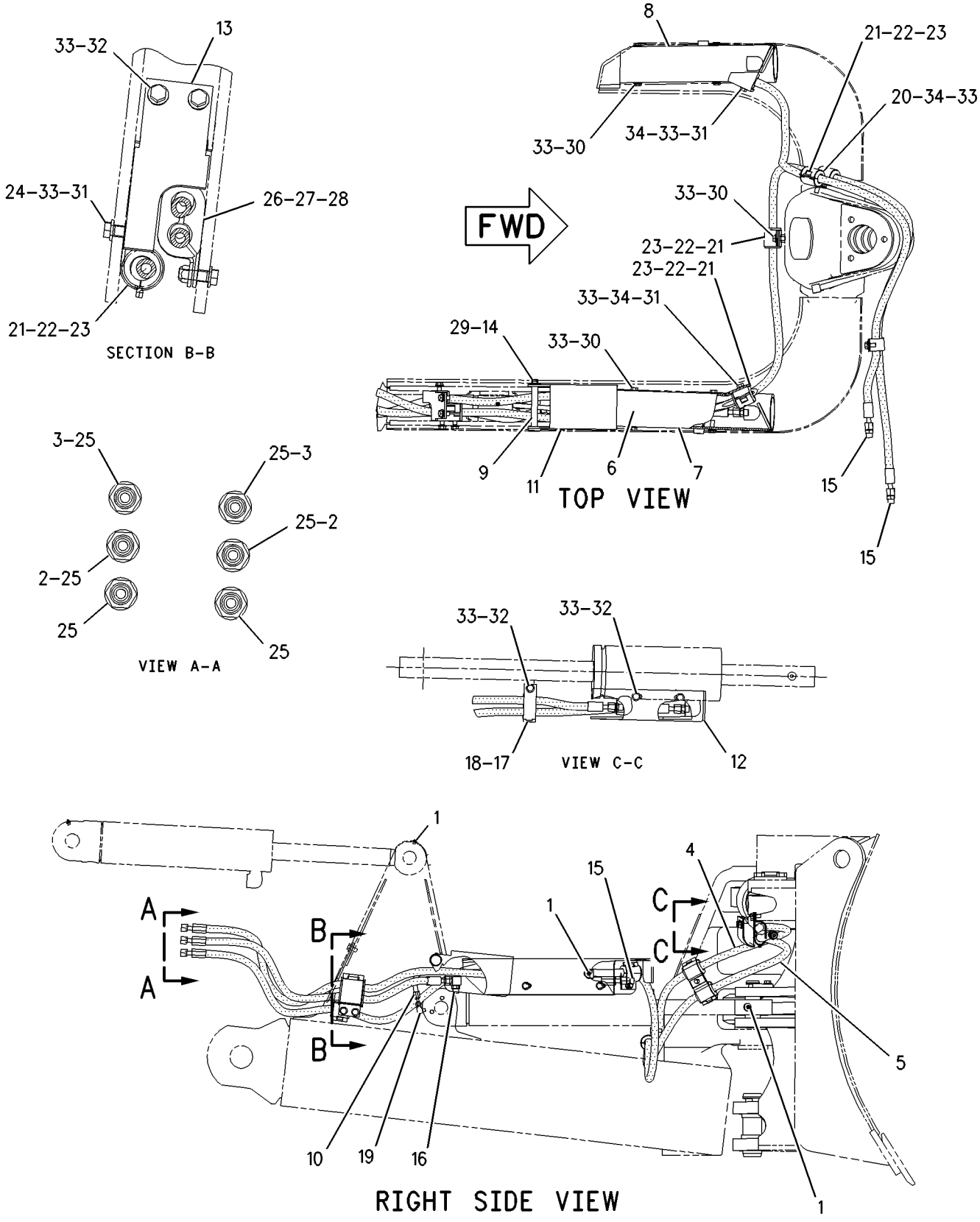

GRAPHIC #1 **<END>** g00885186

HYDRAULIC SYSTEM

163-0761 LINES GP-ANGLE & TILT

S/N: CBJ1-UP

PART OF 156-9503 HYDRAULIC AR

SMCS-5057, 5101, 5104 **i01883497**

NOTE	REF NO	GRAPHIC REF	PART NUMBER	QTY	PART NAME 1 2 3 4 5 6 (PRODUCT LEVEL)	SEE PAGE
	1	1	**5K-2697**	4	CLIP	
	2	1	**8T-0248**	2	TEE	
	3	1	**113-8248**	1	TUBE AS	
	4	1	**113-8249**	1	TUBE AS	
	5	1	**169-6187**	1	TUBE AS	
	6	1	**169-6189**	1	TUBE AS	
	7	1	**169-6192**	1	TUBE AS	
	8	1	**169-6197**	1	TUBE AS	
	9	1	**172-8537**	1	TUBE AS	
	10	1	**172-8538**	1	TUBE AS	
	11	1	**172-8539**	1	TUBE AS	
	12	1	**172-8540**	1	TUBE AS	
	13	1	**172-8541**	1	TUBE AS	
	14	1	**172-8542**	1	TUBE AS	
	15	1	**213-1053**	1	TUBE AS	
	16	1	*148-8327*	2	CONNECTOR AS	
					(EACH INCLUDES)	
		1	**3D-2824**	1	SEAL-O-RING	
		1	**6V-8637**	1	CONNECTOR-SEAL	
		1	**6V-9746**	1	SEAL-O-RING	
	17	1	*148-8344*	2	CONNECTOR GP	
					(EACH INCLUDES)	
		1	**3D-2824**	1	SEAL-O-RING	
		1	**6V-9162**	1	CONNECTOR	
		1	**6V-9746**	1	SEAL-O-RING	
	18	1	*148-8370*	2	ELBOW GP	
					(EACH INCLUDES)	
		1	**6V-8398**	1	SEAL-O-RING	
		1	**6V-9851**	1	ELBOW	
	19	1	*148-8375*	4	ELBOW GP	
					(EACH INCLUDES)	
		1	**6V-8398**	2	SEAL-O-RING	
		1	**6V-8981**	1	ELBOW	
	20	1	*164-6864*	2	ELBOW AS	
					(EACH INCLUDES)	
		1	**6V-8398**	1	SEAL-O-RING	
		1	**7J-9108**	1	SEAL-O-RING	
		1	**8T-1810**	1	ELBOW	
	21	1	**6V-8398**	2	SEAL-O-RING	
	22	1	**6V-9169**	6	NUT-BULKHEAD (13/16-16 THD)	
	23	1	**6V-9746**	4	SEAL-O-RING	
	24	1	**7J-9108**	3	SEAL-O-RING	
	25	1	**7X-7739**	2	WASHER (9.7X25.4 X4MM THK)	
	26	1	**8M-2770**	3	CLIP	
	27	1	**8T-4121**	6	WASHER-HARD (11X21X2.5MM THK)	
M	28	1	**8T-4133**	2	NUT (M10X1.5 THD)	
M	29	1	**8T-4136**	2	BOLT (M10X1.5X25MM)	
M	30	1	**8T-4196**	2	BOLT (M10X1.5X35MM)	
	31	1	**9M-8406**	1	CLIP	

M-METRIC PART

163-0761 **LINES GP-ANGLE & TILT** ***(contd.)*** **i01883497**

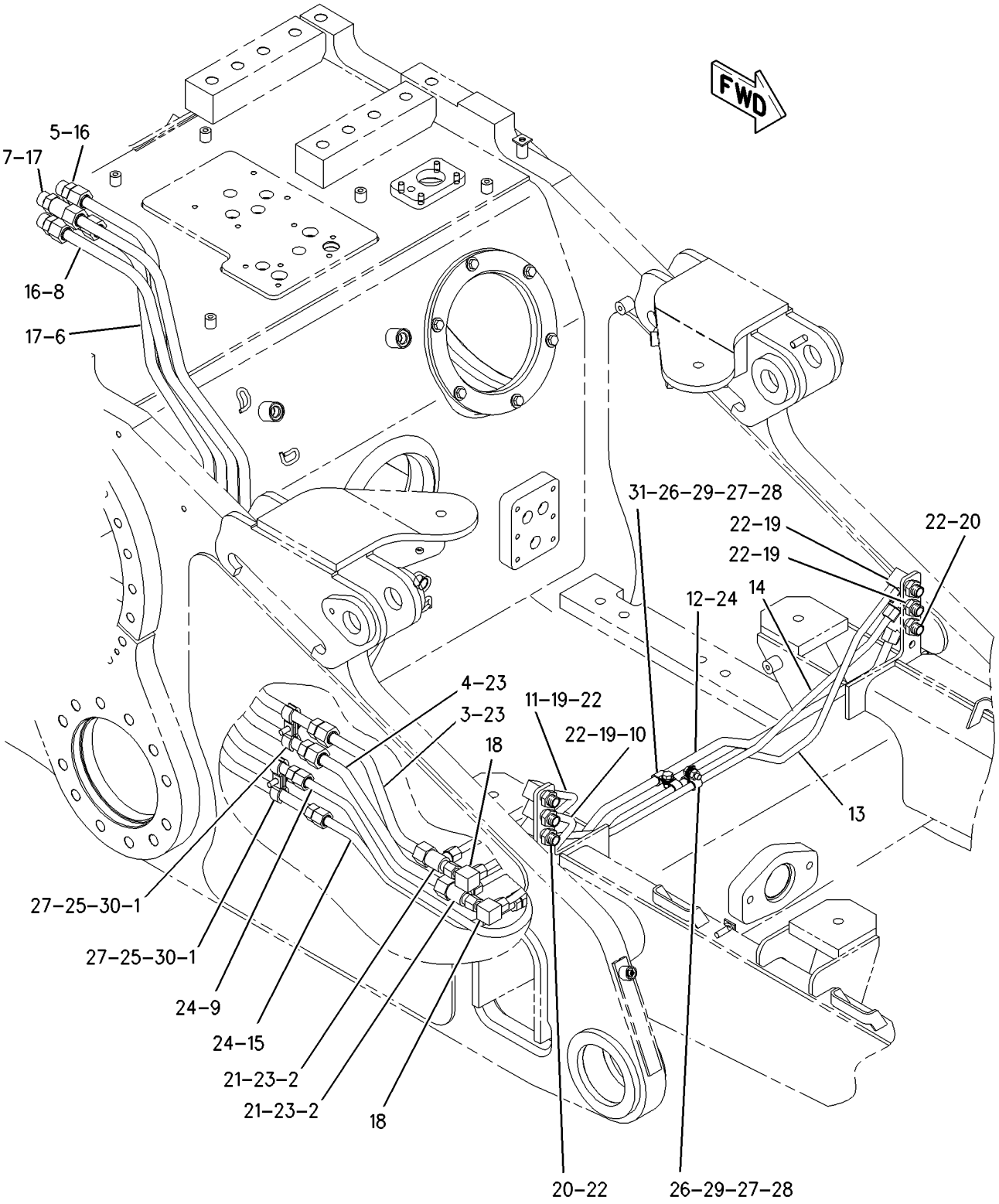

GRAPHIC #1 **<END>** g00956371

HYDRAULIC SYSTEM

198-5179 LINES GP-FLUID SAMPLING—HYDRAULIC OIL

S/N: CBJ1-UP

PART OF 156-9503 HYDRAULIC AR

SMCS-7542 **i01828615**

NOTE	REF NO	GRAPHIC REF	PART NUMBER	QTY	PART NAME 1 2 3 4 5 6 (PRODUCT LEVEL)	SEE PAGE
	1	1	**6V-0852**	7	CAP-DUST (HYDRAULIC OIL SAMPLING VALVES)	
	2	1	**200-0924**	1	BRACKET AS	
M		1	**8T-3490**	1	NUT-WELD (M10X1.5 THD)	
	3	1	**214-4558**	1	BRACKET AS	
M		1	**8T-5413**	1	STUD-WELD (M10X1.5X25MM OAL)	
	4	1	*148-8353*	4	ELBOW GP	
					(EACH INCLUDES)	
		1	**3J-1907**	1	SEAL-O-RING	
		1	**6V-8397**	1	SEAL-O-RING	
		1	**6V-9001**	1	ELBOW	
	5	1	*148-8378*	2	ELBOW AS	
					(EACH INCLUDES)	
		1	**3J-1907**	1	SEAL-O-RING	
		1	**6V-8397**	1	SEAL-O-RING	
		1	**6V-8724**	1	ELBOW	
	6	1	*150-3036*	1	ELBOW GP	
		1	**3J-1907**	1	SEAL-O-RING	
		1	**6V-8397**	1	SEAL-O-RING	
		1	**8T-1905**	1	ELBOW	
	7	1	*150-4046*	2	ADAPTER GP	
					(EACH INCLUDES)	
		1	**2M-9780**	1	SEAL-O-RING	
		1	**5P-1404**	1	ADAPTER-O-RING (STRAIGHT THREAD)	
	8	1	*164-5567*	7	FITTING GP	
					(EACH INCLUDES)	
		1	**3J-1907**	1	SEAL-O-RING	
		1	**6V-3965**	1	FITTING AS	
	9	1	**204-5379**	2	HOSE AS	
	10	1	**204-5380**	1	HOSE AS	
I	11	1	**211-8956**	4	HOSE AS	
	12	1	**3S-2093**	2	STRAP-CABLE	
	13	1	**4D-7388**	2	CLIP	
	14	1	**5N-2840**	1	CLIP	
	15	1	**6V-8397**	7	SEAL-O-RING	
	16	1	**6V-9168**	7	NUT (11/16-16 THD)	
	17	1	**8T-4121**	5	WASHER-HARD (11X21X2.5MM THK)	
M	18	1	**8T-4133**	2	NUT (M10X1.5 THD)	
M	19	1	**8T-4136**	2	BOLT (M10X1.5X25MM)	
M	20	1	**8T-4137**	1	BOLT (M10X1.5X20MM)	
	21	1	**8T-4224**	2	WASHER-HARD (8.8X16X2MM THK)	
M	22	1	**8T-4908**	2	BOLT (M8X1.25X25MM)	
	23	1	**8T-9358**	7	CONNECTOR	
BE	24	1	**5N-8359**		CONDUIT-FLEXIBLE	
	25	1	**198-9003**	1	FILM (HYD. OIL SAMPLING VALVE PANEL)	

B-USE AS REQUIRED
E-ORDER BY THE CENTIMETER
I-SEE HOSE FABRICATION GUIDE
M-METRIC PART

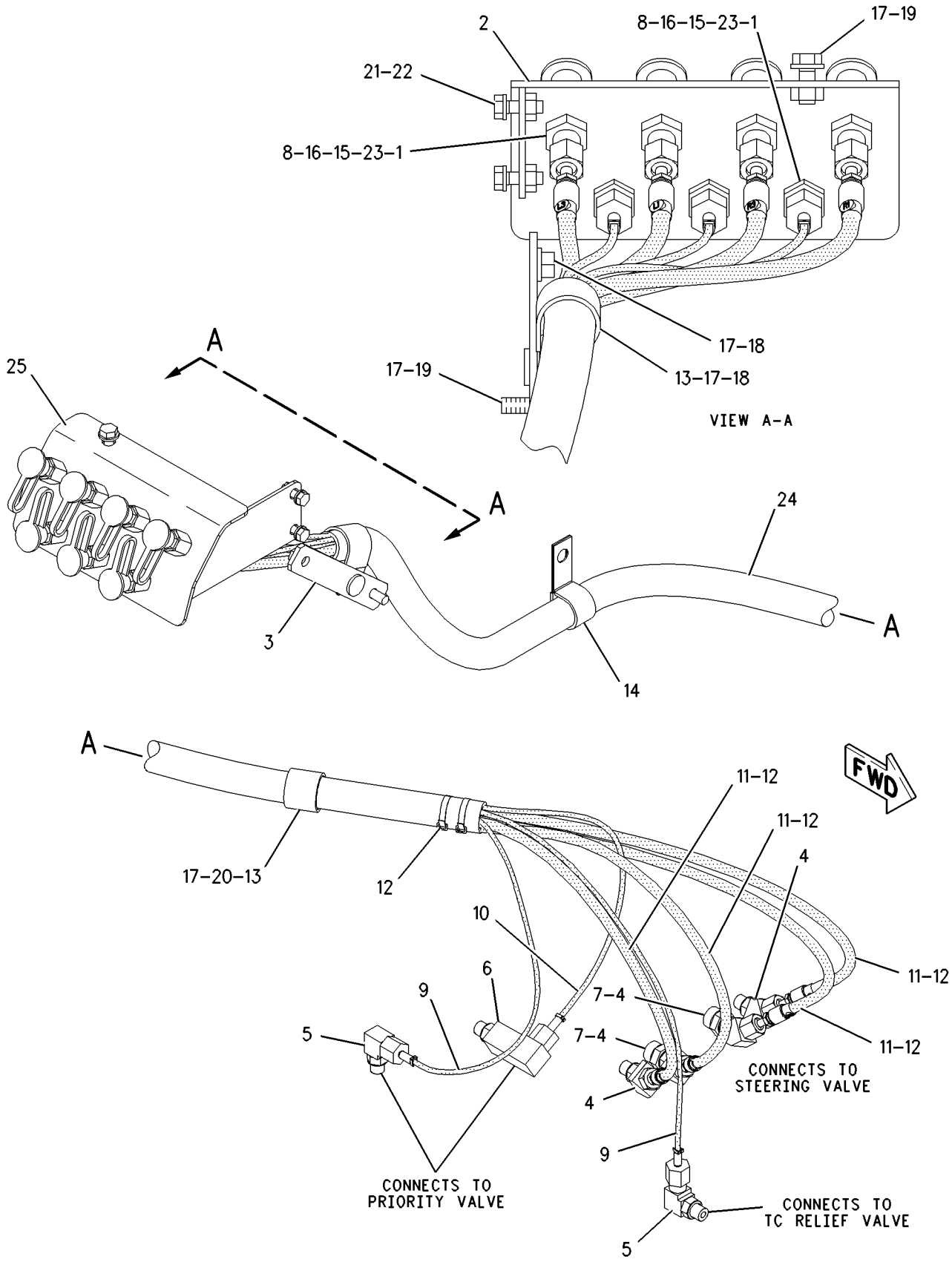

GRAPHIC #1 **<END>** g00938020

HYDRAULIC SYSTEM

220-0896 LINES GP-LIFT CYLINDER—CAB-FRAME

S/N: CBJ1-UP

PART OF 156-9503 HYDRAULIC AR

SMCS-5057, 5102 **i01828623**

NOTE	REF NO	GRAPHIC REF	PART NUMBER	QTY	PART NAME 1 2 3 4 5 6 (PRODUCT LEVEL)	SEE PAGE
	1	1	**220-0899**	1	TUBE AS	
	2	1	**220-0900**	1	TUBE AS	
	3	1	**220-0901**	1	TUBE AS	
	4	1	**220-0902**	1	TUBE AS	
	5	1	**220-0903**	1	TUBE AS	
	6	1	**220-0904**	1	BRACKET AS	
		1	**9R-2821**	1	BOSS (M10X15MM)	
	7	1	**220-0905**	1	BRACKET AS	
		1	**9R-2821**	1	BOSS (M10X15MM)	
	8	1	*148-8327*	1	CONNECTOR AS	
		1	**3D-2824**	1	SEAL-O-RING	
		1	**6V-8637**	1	CONNECTOR-SEAL	
		1	**6V-9746**	1	SEAL-O-RING	
	9	1	*148-8344*	1	CONNECTOR GP	
		1	**3D-2824**	1	SEAL-O-RING	
		1	**6V-9162**	1	CONNECTOR	
		1	**6V-9746**	1	SEAL-O-RING	
	10	1	*148-8449*	1	TEE GP-SWIVEL	
		1	**6V-9746**	2	SEAL-O-RING	
		1	**6V-9839**	1	TEE-SWIVEL	
	11	1	*148-8451*	1	TEE GP	
		1	**6V-8791**	1	TEE-FACE SEAL	
		1	**6V-9746**	3	SEAL-O-RING	
	12	1	*150-3035*	1	ELBOW AS	
		1	**6V-9746**	1	SEAL-O-RING	
		1	**8T-1718**	1	ELBOW	
	13	1	*169-7404*	1	ELBOW AS	
		1	**6V-8982**	1	ELBOW	
		1	**7J-9108**	2	SEAL-O-RING	
	14	1	*169-7409*	1	UNION AS	
		1	**6V-8996**	1	UNION-BULKHEAD	
		1	**7J-9108**	2	SEAL-O-RING	
	15	1	**6V-9170**	4	NUT-BULKHEAD (1-14 THD)	
	16	1	**7J-9108**	2	SEAL-O-RING	
	17	1	**7X-7729**	4	WASHER (11X25X3MM THK)	
	18	1	**8T-1887**	2	CLIP (SLOT)	
	19	1	**8T-1888**	2	CLIP (TAB)	
	20	1	**8T-4121**	5	WASHER-HARD (11X21X2.5MM THK)	
M	21	1	**8T-4133**	2	NUT (M10X1.5 THD)	
M	22	1	**8T-4136**	3	BOLT (M10X1.5X25MM)	
M	23	1	**8T-4137**	4	BOLT (M10X1.5X20MM)	
	24	1	**9M-8406**	4	CLIP	

M-METRIC PART

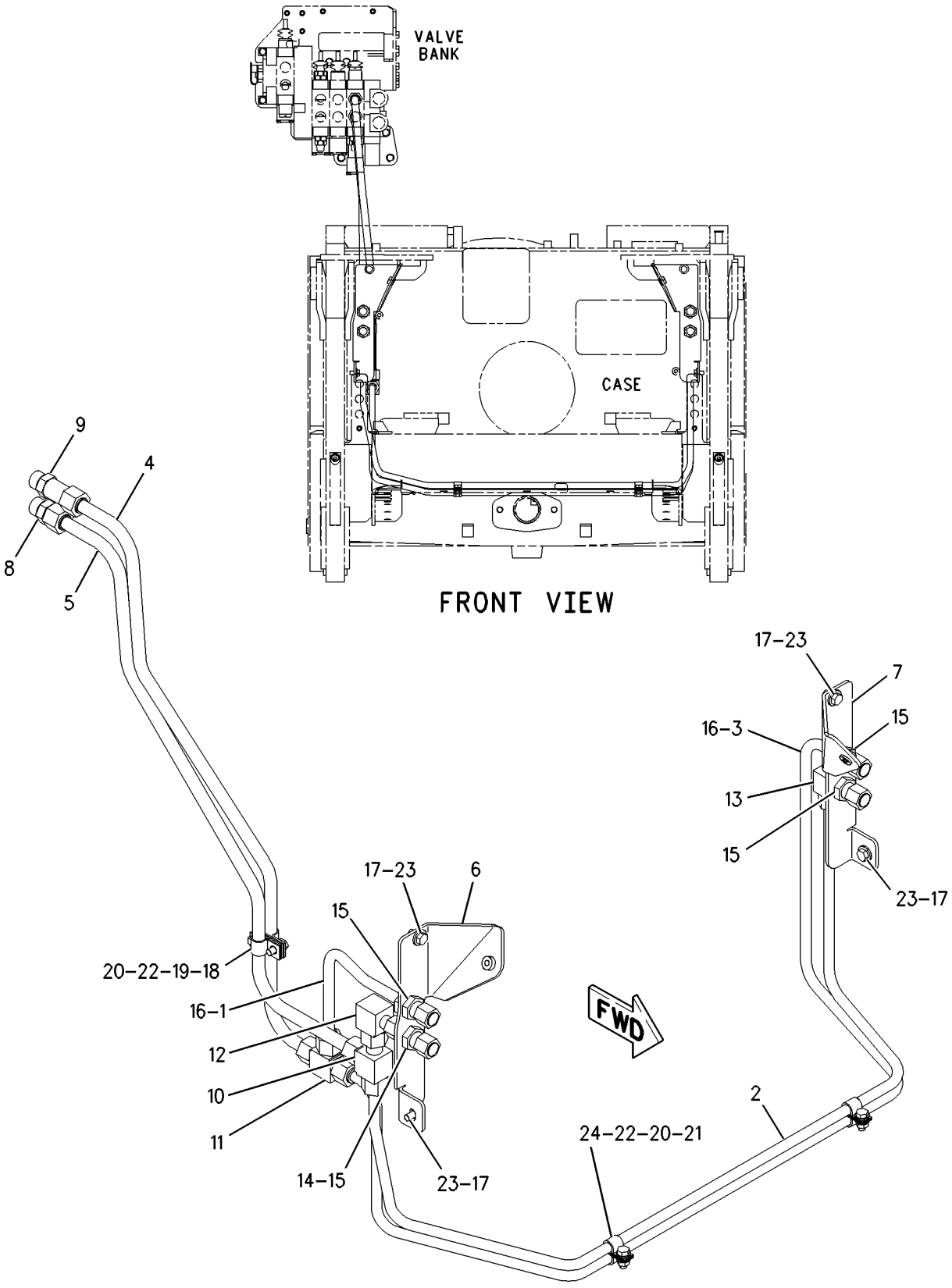

GRAPHIC #1 **<END>** g00956641

HYDRAULIC SYSTEM

220-0897 LINES GP-LIFT CYLINDER—BULLDOZER

S/N: B6X1-UP
PART OF 223-6303 BULLDOZER AR
AN ATTACHMENT

SMCS-5057, 5102 **i01831049**

NOTE	REF NO	GRAPHIC REF	PART NUMBER	QTY	PART NAME 1 2 3 4 5 6 (PRODUCT LEVEL)	SEE PAGE
	1	1	**113-9309**	2	TUBE AS	
	2	1	*148-8341*	2	CONNECTOR GP	
					(EACH INCLUDES)	
		1	**3D-2824**	1	SEAL-O-RING	
		1	**6V-8713**	1	CONNECTOR	
		1	**7J-9108**	1	SEAL-O-RING	
	3	1	*148-8347*	2	ELBOW GP	
					(EACH INCLUDES)	
		1	**3D-2824**	1	SEAL-O-RING	
		1	**6V-9007**	1	ELBOW	
		1	**6V-9746**	1	SEAL-O-RING	
I	4	1	**220-0906**	4	HOSE AS	
	5	1	**7J-9108**	2	SEAL-O-RING	
	6	1	**8T-1887**	2	CLIP (SLOT)	
	7	1	**8T-1888**	2	CLIP (TAB)	
	8	1	**8T-4121**	6	WASHER-HARD (11X21X2.5MM THK)	
M	9	1	**8T-4137**	2	BOLT (M10X1.5X20MM)	

I-SEE HOSE FABRICATION GUIDE
M-METRIC PART

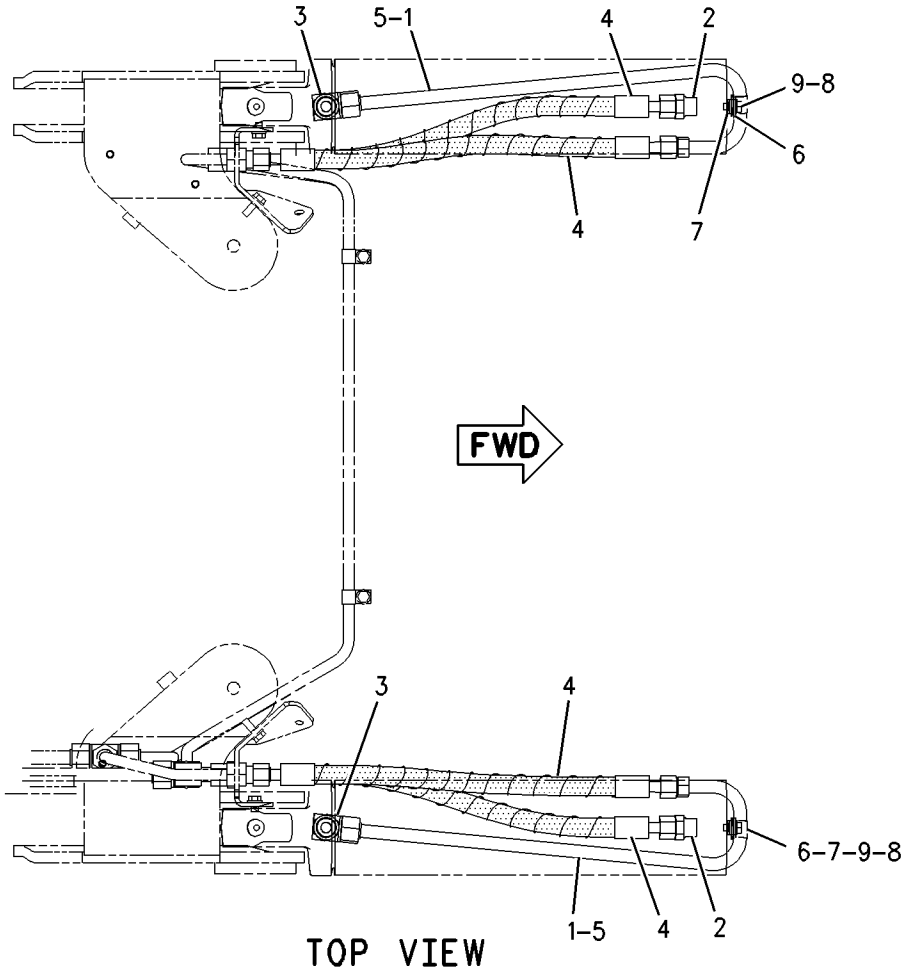

GRAPHIC #1 **<END>** g00937883

HYDRAULIC SYSTEM

227-0756 LINES GP-LIFT CYLINDER—SEMI-UNIVERSAL BULLDOZER

S/N: S6D1-UP; S6S1-UP

PART OF 206-9537, 206-9544 BULLDOZER AR-SEMI-UNIVERSAL

AN ATTACHMENT

SMCS-5057, 5102 **i01877307**

NOTE	REF NO	GRAPHIC REF	PART NUMBER	QTY	PART NAME 1 2 3 4 5 6 (PRODUCT LEVEL)	SEE PAGE
I	1	1	**227-0758**	2	HOSE AS	
I	2	1	**230-0815**	2	HOSE AS	
	3	1	*148-8341*	4	CONNECTOR GP	
					(EACH INCLUDES)	
		1	**3D-2824**	1	SEAL-O-RING	
		1	**6V-8713**	1	CONNECTOR	
		1	**7J-9108**	1	SEAL-O-RING	
	4	1	**5P-7464**	2	CLIP (SLOT)	
	5	1	**5P-7465**	2	CLIP (TAB)	
	6	1	**5P-7468**	2	CLIP (SLOT)	
	7	1	**5P-7469**	2	CLIP (TAB)	
	8	1	**6V-7359**	2	GROMMET	
	9	1	**7G-3833**	4	CLIP (TAB)	
	10	1	**7G-3834**	4	CLIP (SLOT)	
	11	1	**8C-3174**	4	GROMMET	
	12	1	**8T-4121**	2	WASHER-HARD (11X21X2.5MM THK)	
M	13	1	**8T-4136**	2	BOLT (M10X1.5X25MM)	
M	14	1	**8T-4139**	8	BOLT (M12X1.75X30MM)	
M	15	1	**8T-4244**	8	NUT (M12X1.75 THD)	

I-SEE HOSE FABRICATION GUIDE
M-METRIC PART

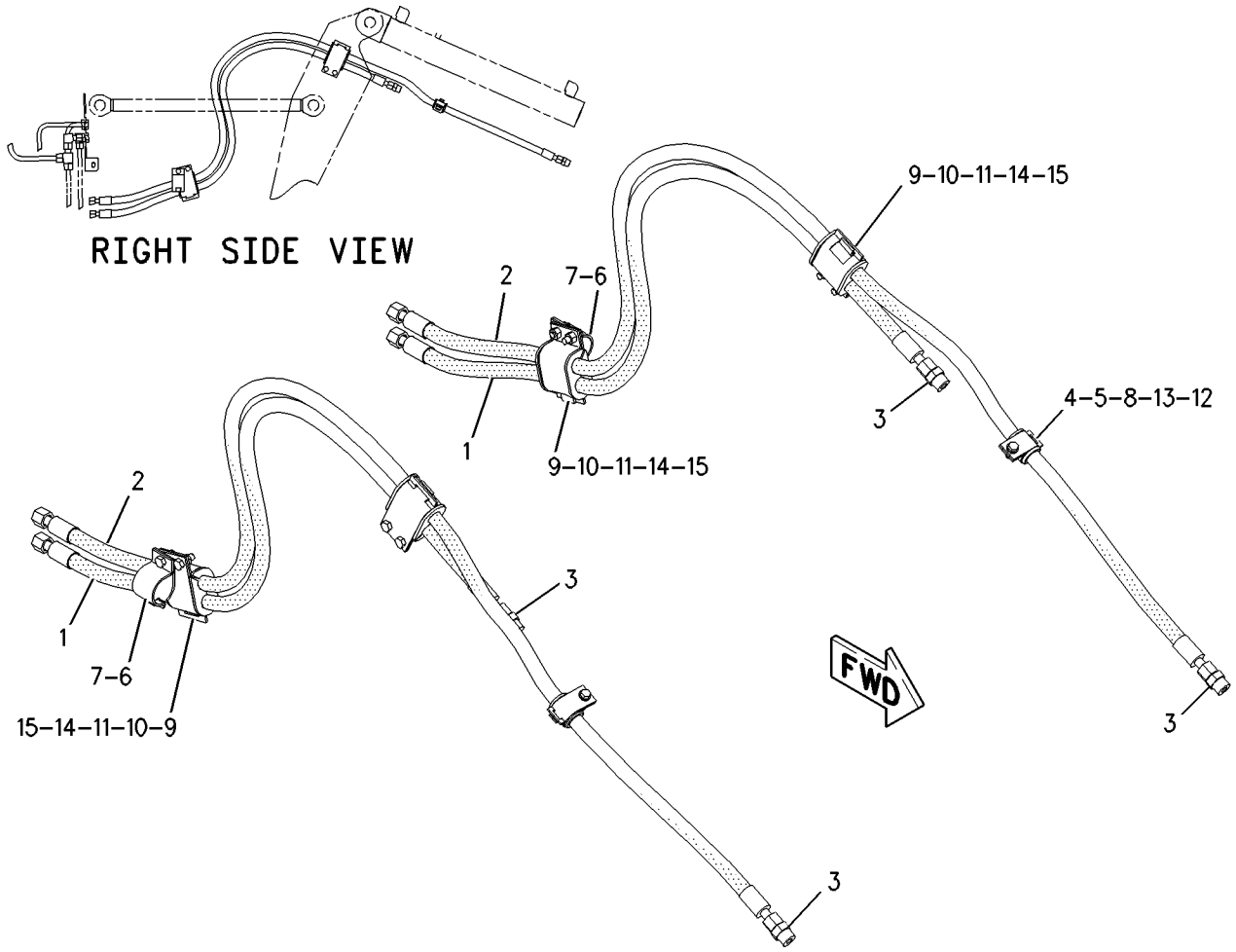

GRAPHIC #1 **<END>** g00938371

HYDRAULIC SYSTEM

163-3270 LINES GP-RIPPER—CAB

S/N: CBJ1-UP

PART OF 229-2831 HYDRAULIC AR, 173-8641 HYDRAULIC AR-4 VALVE AN ATTACHMENT

SMCS-5057, 5352, 5356 **i01830396**

NOTE	REF NO	GRAPHIC REF	PART NUMBER	QTY	PART NAME 1 2 3 4 5 6 (PRODUCT LEVEL)	SEE PAGE
	1	1	**176-1852**	1	TUBE AS	
	2	1	**176-1853**	1	TUBE AS	
	3	1	**178-8647**	1	BRACKET	
	4	1	*148-8327*	2	CONNECTOR AS	
					(EACH INCLUDES)	
		1	**3D-2824**	1	SEAL-O-RING	
		1	**6V-8637**	1	CONNECTOR-SEAL	
		1	**6V-9746**	1	SEAL-O-RING	
	5	1	*171-6723*	1	ELBOW AS	
		1	**8T-8899**	1	ELBOW	
		1	**6V-9746**	1	SEAL-O-RING	
	6	1	**3H-8683**	2	STRAP-CLAMP	
	7	1	**5R-0939**	2	CLIP (TAB)	
	8	1	**5R-0940**	2	CLIP (SLOT)	
	9	1	**6V-9746**	2	SEAL-O-RING	
	10	1	**6V-9832**	2	CAP AS	
					(EACH INCLUDES)	
		1	**6V-8556**	1	NUT (1 3/16-12 THD)	
	11	1	**8T-4121**	5	WASHER-HARD (11X21X2.5MM THK)	
M	12	1	**8T-4133**	2	NUT (M10X1.5 THD)	
M	13	1	**8T-4136**	2	BOLT (M10X1.5X25MM)	
M	14	1	**8T-4186**	1	BOLT (M10X1.5X40MM)	
	15	1	**127-5447**	1	SPACER	

M-METRIC PART

163-3270 **LINES GP-RIPPER** ***(contd.)*** **i01830396**

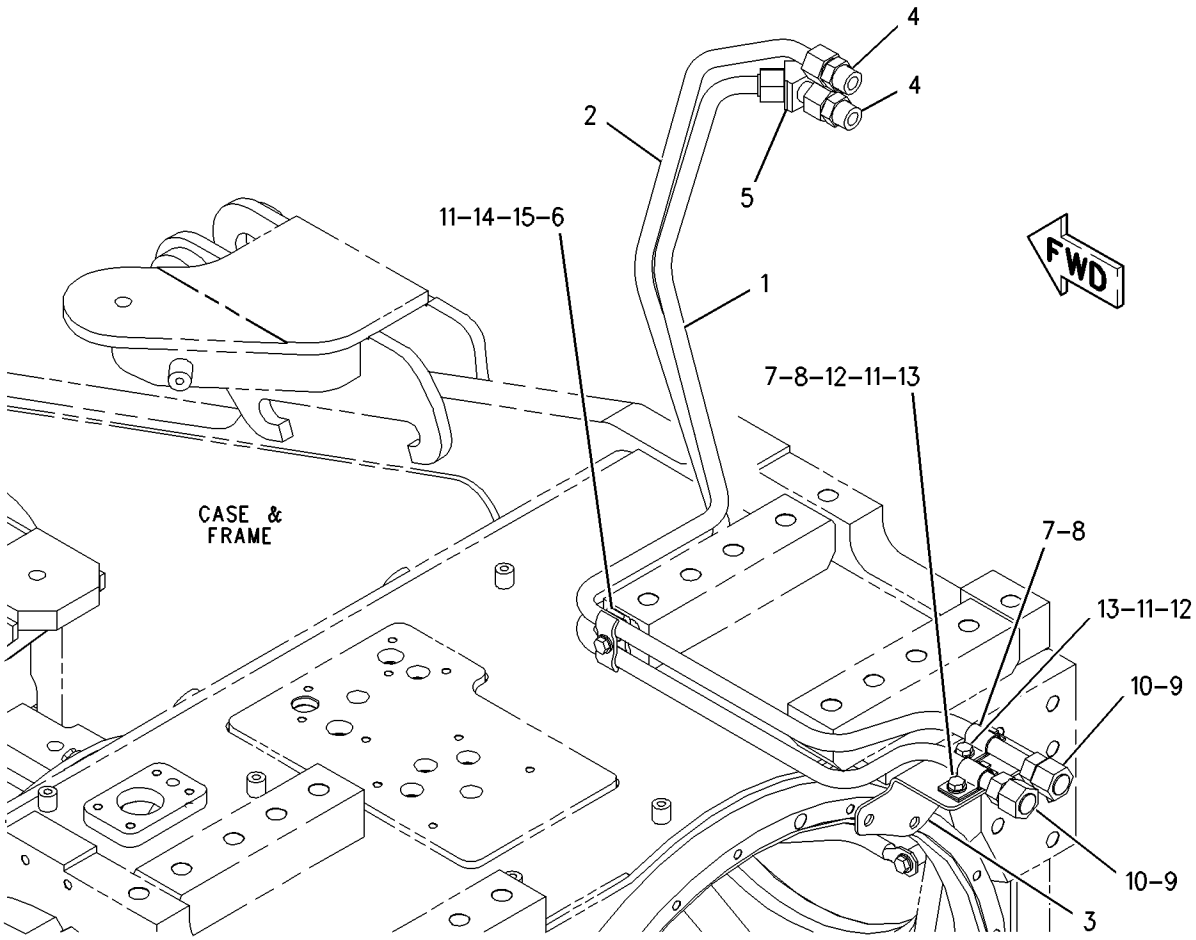

GRAPHIC #1 **<END>** g00918065

HYDRAULIC SYSTEM

180-4561 LINES GP-RIPPER–FRAME

S/N: TPP1-UP
PART OF 180-4560 RIPPER AR
AN ATTACHMENT

SMCS-5057, 5352, 5356 **i01830815**

NOTE	REF NO	GRAPHIC REF	PART NUMBER	QTY	PART NAME 1 2 3 4 5 6 (PRODUCT LEVEL)	SEE PAGE
	1	1	**1L-5081**	1	SPACER (0.41X0.75X0.56 IN THK)	
	2	1	**9M-2904**	2	CLAMP-HOSE	
	3	1	**112-4368**	4	SHIELD	
	4	1	**130-1977**	4	SHIELD	
	5	1	**130-9192**	2	GROMMET	
I	6	1	**183-4599**	1	HOSE AS	
I	7	1	**183-4600**	1	HOSE AS	
	8	1	**196-1746**	1	PLATE AS	
M		1	**8T-3490**	1	NUT-WELD (M10X1.5 THD)	
	9	1	**4J-5267**	2	SEAL-O-RING	
	10	1	**5P-1075**	1	WASHER-HARD (10.2X22.5X3MM THK)	
	11	1	**5P-7464**	1	CLIP (SLOT)	
	12	1	**5P-7465**	1	CLIP (TAB)	
	13	1	**6V-1249**	1	GROMMET	
	14	1	*148-8418*	2	REDUCER GP	
					(EACH INCLUDES)	
		1	**6V-8398**	1	SEAL-O-RING	
		1	**6V-8942**	1	REDUCER-O-RING (FACE)	
	15	1	**6V-8556**	2	NUT (1 3/16-12 THD)	
	16	1	**8T-9377**	1	BOLT (3/8-16X2.25 IN)	
	17	1	**7C-4354**	2	CLIP	
	18	1	**8T-4121**	1	WASHER-HARD (11X21X2.5MM THK)	
M	19	1	**8T-4139**	2	BOLT (M12X1.75X30MM)	
M	20	1	**8T-4196**	1	BOLT (M10X1.5X35MM)	
	21	1	**8T-4223**	2	WASHER-HARD (13.5X25.5X3MM THK)	
	22	1	**8B-8679**	1	SPACER (.44X.406X.75 IN THK)	

I-SEE HOSE FABRICATION GUIDE
M-METRIC PART

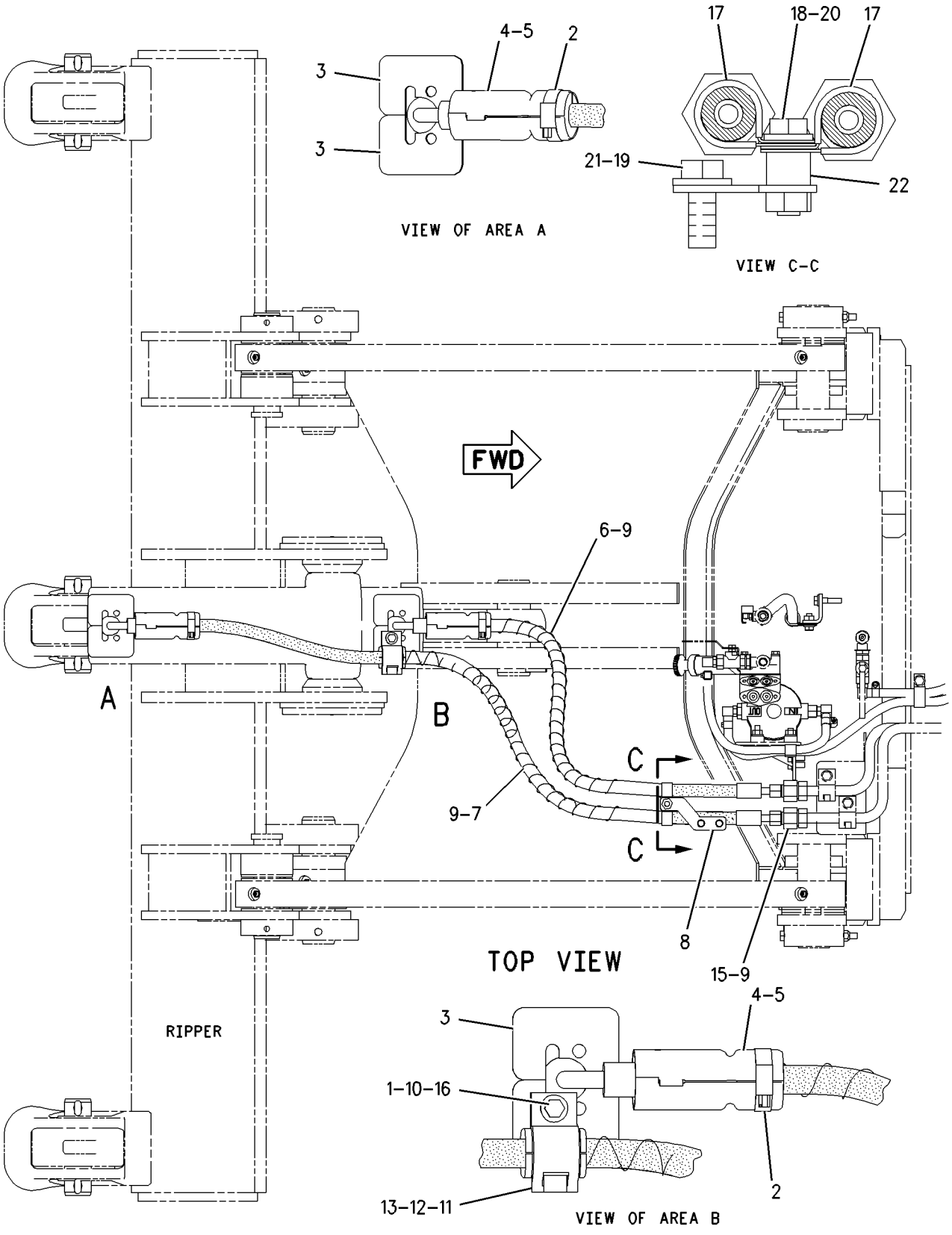

GRAPHIC #1 **<END>** g00918334

HYDRAULIC SYSTEM

115-4564 LINES GP-TILT CYLINDER

S/N: S6D1-UP; S6S1-UP
PART OF 206-9537, 206-9544 BULLDOZER AR-SEMI-UNIVERSAL
AN ATTACHMENT

SMCS-5057, 5104 **i01877299**

NOTE	REF NO	GRAPHIC REF	PART NUMBER	QTY	PART NAME 1 2 3 4 5 6 (PRODUCT LEVEL)	SEE PAGE
I	1	1	**9U-9088**	2	HOSE AS	
	2	1	**6V-9169**	2	NUT-BULKHEAD (13/16-16 THD)	
I	3	1	**7T-6934**	1	HOSE AS	
	4	1	**3Y-5405**	2	RUBBER	
	5	1	**4J-5267**	2	SEAL-O-RING	
	6	1	**8T-4223**	7	WASHER-HARD (13.5X25.5X3MM THK)	
M	7	1	**8T-4139**	4	BOLT (M12X1.75X30MM)	
	8	1	**8C-3205**	4	FLANGE-HALF	
M	9	1	**8T-4196**	8	BOLT (M10X1.5X35MM)	
	10	1	**8T-4121**	8	WASHER-HARD (11X21X2.5MM THK)	
M	11	1	**8T-4192**	3	BOLT (M12X1.75X25MM)	
	12	1	**4T-3521**	1	GUARD	
	13	1	**4T-1563**	1	GUARD AS	
I	14	1	**7T-6931**	1	HOSE AS	
	15	1	**6V-8981**	2	ELBOW	
	16	1	**6V-8398**	6	SEAL-O-RING	

I-SEE HOSE FABRICATION GUIDE
M-METRIC PART

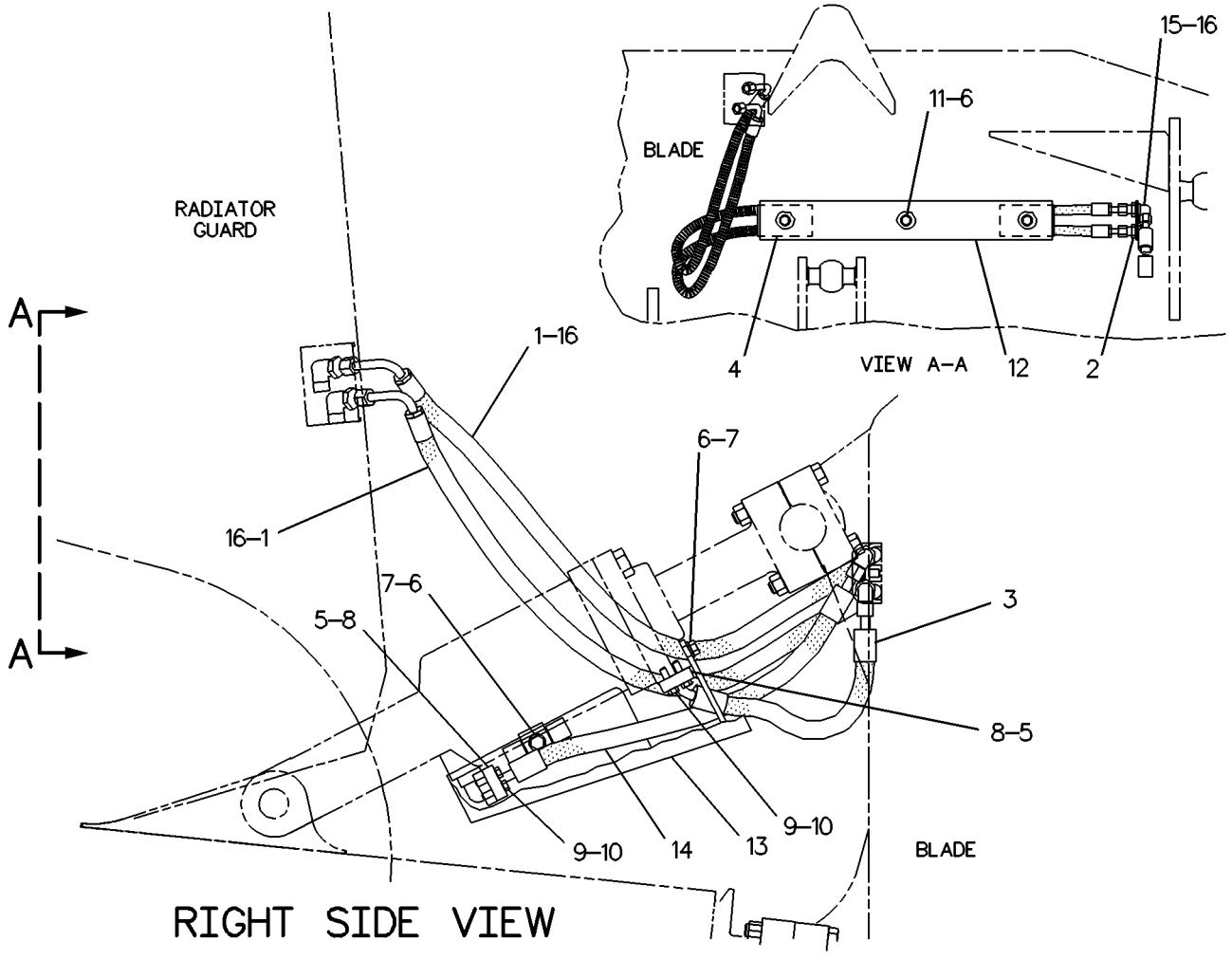

GRAPHIC #1 **<END>** g00223829

HYDRAULIC SYSTEM

169-4142 LINES GP-TILT CYLINDER

S/N: CBJ1-UP
PART OF 156-9510 HYDRAULIC AR
AN ATTACHMENT

SMCS-5057, 5104 **i01883520**

NOTE	PART NUMBER	QTY	PART NAME 1 2 3 4 5 6 (PRODUCT LEVEL)	SEE PAGE
M	**8T-4196**	3	BOLT (M10X1.5X35MM)	
	9M-9130	4	CLAMP	
	5K-2697	2	CLIP	
	6V-9162	1	CONNECTOR	
	6V-8637	1	CONNECTOR-SEAL	
	8T-1810	2	ELBOW	
	7M-3361	2	GROMMET	
	6V-9169	2	NUT-BULKHEAD (13/16-16 THD)	
	3D-2824	2	SEAL-O-RING	
	6V-9746	2	SEAL-O-RING	
	7J-9108	8	SEAL-O-RING	
	126-3695	1	TUBE AS	
	126-3696	1	TUBE AS	
	126-3698	1	TUBE AS	
	126-3699	1	TUBE AS	
	169-6187	1	TUBE AS	
	169-6189	1	TUBE AS	
	172-6650	1	TUBE AS	
	172-6653	1	TUBE AS	
	8T-4121	3	WASHER-HARD (11X21X2.5MM THK)	
			(ILLUSTRATION NOT AVAILABLE AT TIME OF PUBLICATION)	

M-METRIC PART

<END>

HYDRAULIC SYSTEM

228-3554 LINES GP-TILT CYLINDER

S/N: CBJ1-UP
PART OF 229-2831 HYDRAULIC AR
AN ATTACHMENT

SMCS-5057, 5104 **i01877590**

NOTE	REF NO	GRAPHIC REF	PART NUMBER	QTY	PART NAME 1 2 3 4 5 6 (PRODUCT LEVEL)	SEE PAGE
	1	1	**5K-2697**	2	CLIP	
	2	1	**169-6187**	1	TUBE AS	
	3	1	**169-6189**	1	TUBE AS	
	4	1	**172-6650**	1	TUBE AS	
	5	1	**172-6653**	1	TUBE AS	
	6	1	**228-2880**	1	TUBE AS	
	7	1	**228-2881**	1	TUBE AS	
	8	1	**228-2882**	1	TUBE AS	
	9	1	**228-2883**	1	TUBE AS	
	10	1	*148-8327*	1	CONNECTOR AS	
		1	**3D-2824**	1	SEAL-O-RING	
		1	**6V-8637**	1	CONNECTOR-SEAL	
		1	**6V-9746**	1	SEAL-O-RING	
	11	1	*148-8344*	1	CONNECTOR GP	
		1	**3D-2824**	1	SEAL-O-RING	
		1	**6V-9162**	1	CONNECTOR	
		1	**6V-9746**	1	SEAL-O-RING	
	12	1	*164-6864*	2	ELBOW AS	
					(EACH INCLUDES)	
		1	**6V-8398**	1	SEAL-O-RING	
		1	**7J-9108**	1	SEAL-O-RING	
		1	**8T-1810**	1	ELBOW	
	13	1	**4S-8002**	4	CLAMP	
	14	1	**6V-9169**	2	NUT-BULKHEAD (13/16-16 THD)	
	15	1	**7J-9108**	6	SEAL-O-RING	
	16	1	**7M-3361**	2	GROMMET	
	17	1	**8T-4121**	3	WASHER-HARD (11X21X2.5MM THK)	
M	18	1	**8T-4196**	3	BOLT (M10X1.5X35MM)	

M-METRIC PART

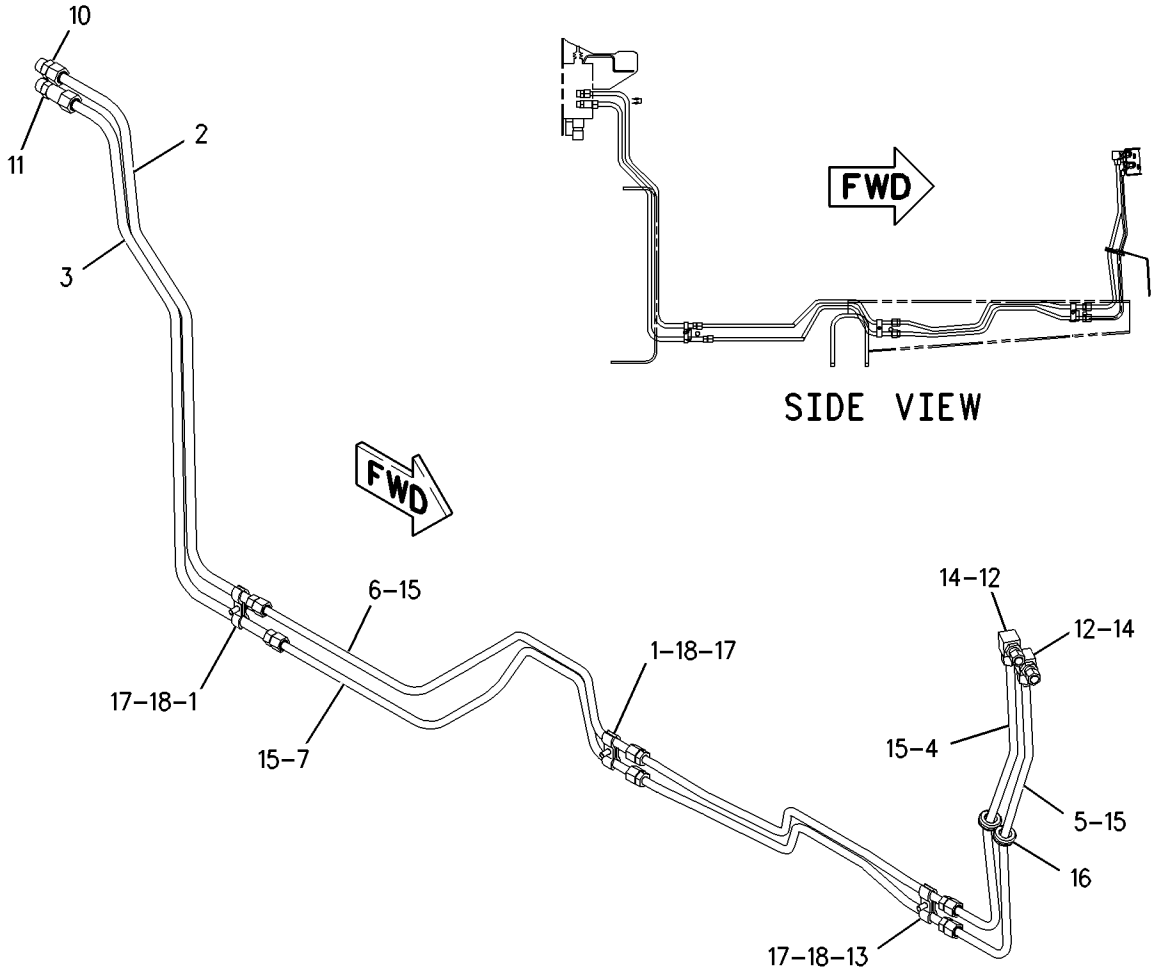

GRAPHIC #1 **<END>** g00938753

138-7033 MOUNTING GP-CYLINDER–BULLDOZER

S/N: S6D1-UP; S6S1-UP

PART OF 206-9537, 206-9544 BULLDOZER AR-SEMI-UNIVERSAL

AN ATTACHMENT

SMCS-7562 **i01877290**

NOTE	REF NO	GRAPHIC REF	PART NUMBER	QTY	PART NAME 1 2 3 4 5 6 (PRODUCT LEVEL)	SEE PAGE
	1	1	**3G-8891**	4	SPACER (45X50X18MM THK)	
	2	1	**4J-0805**	34	WASHER (1.781X2.5X.12 IN THK)	
	3	1	**4T-0231**	8	RETAINER	
	4	1	**6S-6646**	2	PIN-COTTER	
	5	1	**8G-5428**	2	PIN	
J	6	1	**8G-5501**	1	HANDHOLD-RH	
L	7	1	**8G-5502**	1	HANDHOLD-LH	
	8	1	**9W-9996**	2	BAR	
	9	1	**115-4561**	2	BUSHING	
	10	1	**115-4581**	1	SUPPORT AS	
	11	1	**115-4591**	1	SUPPORT AS	
	12	1	**115-4592**	2	LINK AS	
	13	1	**149-6309**	6	PIN	
	14	1	**0S-0175**	2	PIN-CLEVIS	
M	15	1	**6V-7687**	2	LOCKNUT (M12X1.75 THD)	
M	16	1	**8T-4139**	12	BOLT (M12X1.75X30MM)	
M	17	1	**8T-4183**	2	BOLT (M12X1.75X40MM)	
	18	1	**8T-4223**	12	WASHER-HARD (13.5X25.5X3MM THK)	

J-LOCATED ON LH SIDE OF MACHINE
L-LOCATED ON RH SIDE OF MACHINE
M-METRIC PART

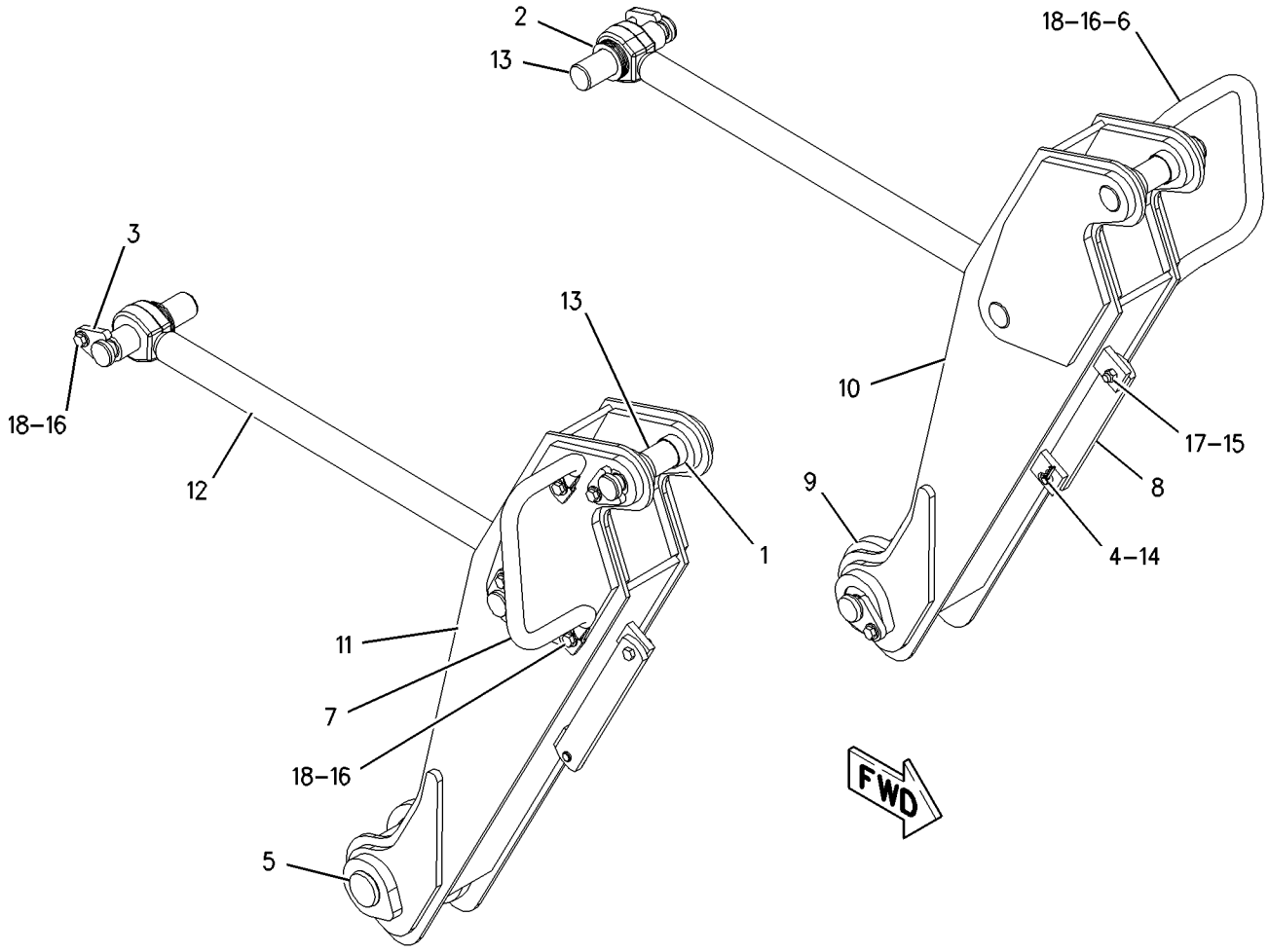

GRAPHIC #1 **<END>** g00776976

218-0100 MOUNTING GP-VALVE–IMPLEMENT CONTROL

S/N: CBJ1-UP

PART OF 156-9503 HYDRAULIC AR

SMCS-5051 **i01828622**

NOTE	REF NO	GRAPHIC REF	PART NUMBER	QTY	PART NAME 1 2 3 4 5 6 (PRODUCT LEVEL)	SEE PAGE
	1	1	**8C-3451**	1	CAP-DUST (CONTROL VALVE FLUID SAMPLING)	
	2	1	**124-6092**	1	PLATE AS	
		1	**7T-1099**	1	LINK	
M		1	**8T-3490**	26	NUT-WELD (M10X1.5 THD)	
	3	1	**183-7264**	1	VALVE AS-FLUID SAMPLING (CONTROL VALVE)	
	4	1	**3J-1907**	1	SEAL-O-RING	
	5	1	**8T-4121**	7	WASHER-HARD (11X21X2.5MM THK)	
M	6	1	**8T-4136**	4	BOLT (M10X1.5X25MM)	
M	7	1	**8T-4186**	2	BOLT (M10X1.5X40MM)	
M	8	1	**8T-6466**	1	BOLT (M10X1.50X60MM)	

M-METRIC PART

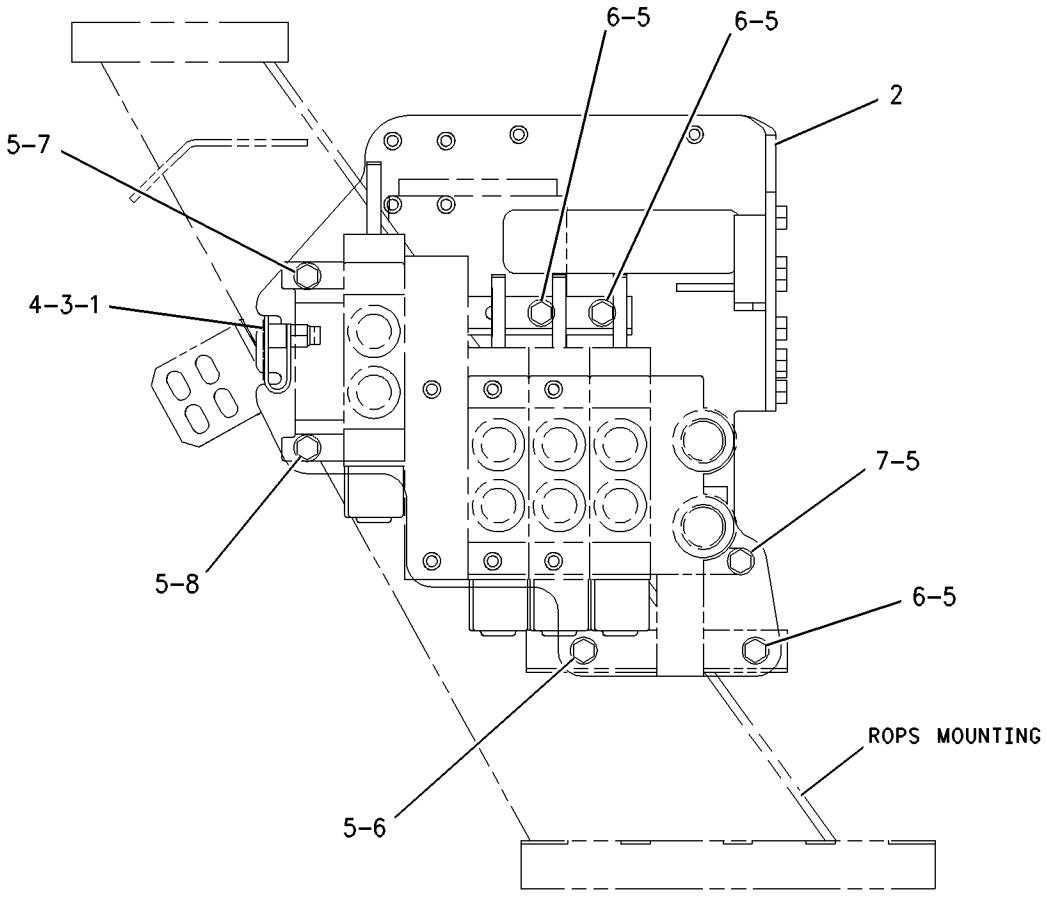

FRONT VIEW

GRAPHIC #1 **<END>** g00938300

HYDRAULIC SYSTEM

160-4137 PUMP & LINES GP-HYDRAULIC

S/N: CBJ1-UP

PART OF 156-9503 HYDRAULIC AR

SMCS-5057 **i01828580**

NOTE	REF NO	GRAPHIC REF	PART NUMBER	QTY	PART NAME 1 2 3 4 5 6 (PRODUCT LEVEL)	SEE PAGE
	1	1	**6V-0852**	2	CAP-DUST (HYDRAULIC OIL SAMPLING VALVE)	
	2	1	**8T-1593**	1	CLIP	
	3	1	**8T-4984**	12	CLAMP-HOSE	
	4	1	**9C-0245**	1	SPACER (10.5X19X35MM THK)	
	5	1	**9G-7101**	1	SPACER (10.5X20X30MM THK)	
	6	1	**108-2781**	1	SPACER (12.4MM THK)	
	7	1	**123-8630**	1	TUBE AS	
	8	1	*153-6248*	1	ADAPTER GP	
		1	**6V-8397**	1	SEAL-O-RING	
		1	**8T-6663**	1	ADAPTER-PORT	
Y	9	1	**156-9084**	1	PUMP GP-PISTON	362
	10	1	**169-6172**	1	TUBE AS	
I	11	1	**169-6891**	1	HOSE AS	
I	12	1	**169-6896**	1	HOSE AS	
	13	1	**169-9064**	1	TUBE AS	
I	14	1	**169-9065**	1	HOSE AS	
I	15	1	**169-9068**	1	HOSE AS	
	16	1	**175-5420**	1	TUBE AS	
	17	1	**183-7264**	1	VALVE AS-FLUID SAMPLING (HYDRAULIC OIL LINES)	
	18	1	**191-1422**	1	BRACKET AS	
	19	1	**194-6478**	3	HOSE	
	20	1	**196-3927**	1	TUBE	
	21	1	**196-3928**	1	TUBE	
Y	22	1	**196-5093**	1	FILTER GP-OIL	333
	23	1	**202-7214**	1	BRACKET AS	
	24	1	**217-0056**	1	BRACKET	
	25	1	**138-7538**	1	CONNECTOR-ORFS	
	26	1	*148-8315*	1	CONNECTOR GP	
		1	**2M-9780**	1	SEAL-O-RING	
		1	**6V-8642**	1	CONNECTOR	
		1	**7J-9108**	1	SEAL-O-RING	
	27	1	*148-8326*	1	CONNECTOR GP	
		1	**3J-7354**	1	SEAL-O-RING	
		1	**6V-8397**	1	SEAL-O-RING	
		1	**6V-9872**	1	CONNECTOR	
	28	1	*148-8333*	1	CONNECTOR GP	
		1	**6V-8400**	1	SEAL-O-RING	
		1	**7M-8485**	1	SEAL-O-RING	
		1	**8T-7927**	1	CONNECTOR	
	29	1	*148-8335*	1	CONNECTOR AS	
		1	**5K-9090**	1	SEAL-O-RING	
		1	**6V-8635**	1	CONNECTOR	
		1	**7M-8485**	1	SEAL-O-RING	
	30	1	*148-8355*	1	ELBOW GP	
		1	**5K-9090**	1	SEAL-O-RING	
		1	**6V-9005**	1	ELBOW	
		1	**7M-8485**	1	SEAL-O-RING	
	31	1	*148-8361*	1	ELBOW GP	
		1	**3J-7354**	1	SEAL-O-RING	
		1	**6V-8397**	1	SEAL-O-RING	
		1	**6V-9200**	1	ELBOW	
	32	1	*148-8367*	1	ELBOW GP	
		1	**6V-8397**	1	SEAL-O-RING	
		1	**6V-9850**	1	ELBOW-SWIVEL	
	33	1	*148-8382*	1	ELBOW GP	
		1	**3D-2824**	1	SEAL-O-RING	

160-4137 **PUMP & LINES GP-HYDRAULIC** *(contd.)* **i01828580**

NOTE	REF NO	GRAPHIC REF	PART NUMBER	QTY	PART NAME 1 2 3 4 5 6 (PRODUCT LEVEL)	SEE PAGE
		1	**7J-9108**	1	SEAL-O-RING	
		1	**8T-0404**	1	ELBOW	
	34	1	*148-8433*	1	TEE GP	
		1	**6V-8397**	2	SEAL-O-RING	
		1	**6V-9836**	1	TEE-SWIVEL	
	35	1	*150-4046*	1	ADAPTER GP	
		1	**2M-9780**	1	SEAL-O-RING	
		1	**5P-1404**	1	ADAPTER-O-RING (STRAIGHT THREAD)	
	36	1	*153-6232*	1	ELBOW AS	
		1	**3D-2824**	1	SEAL-O-RING	
		1	**7J-9108**	1	SEAL-O-RING	
		1	**8T-0120**	1	ELBOW	
	37	1	*164-5567*	1	FITTING GP	
		1	**3J-1907**	1	SEAL-O-RING	
		1	**6V-3965**	1	FITTING AS	
		1	**3D-2824**	1	SEAL-O-RING	
		1	**6V-8713**	1	CONNECTOR	
		1	**7J-9108**	1	SEAL-O-RING	
	38	1	**1P-3708**	1	SEAL-RECTANGULAR	
	39	1	**1P-5763**	2	FLANGE-HALF	
	40	1	**2B-0941**	1	SPACER (10.5X19X19MM THK)	
	41	1	**3G-6883**	2	CLIP (SLOT)	
	42	1	**3G-6884**	2	CLIP (TAB)	
	43	1	**3J-1907**	1	SEAL-O-RING	
	44	1	**4J-0520**	2	SEAL-O-RING	
	45	1	**4P-7428**	1	CLIP	
	46	1	**5F-3106**	1	SEAL-O-RING	
	47	1	**5P-7468**	2	CLIP (SLOT)	
	48	1	**5P-7469**	2	CLIP (TAB)	
	49	1	**6D-4244**	2	CLIP	
	50	1	**6V-0871**	2	GROMMET	
	51	1	**7C-4354**	2	CLIP	
	52	1	**7J-9108**	1	SEAL-O-RING	
	53	1	**7M-8485**	1	SEAL-O-RING	
	54	1	**8C-3206**	4	FLANGE-HALF	
	55	1	**8S-0023**	1	CLIP (SLOT)	
	56	1	**8S-0024**	1	CLIP (TAB)	
	57	1	**8T-4121**	24	WASHER-HARD (11X21X2.5MM THK)	
M	58	1	**8T-4133**	7	NUT (M10X1.5 THD)	
M	59	1	**8T-4136**	6	BOLT (M10X1.5X25MM)	
M	60	1	**8T-4183**	1	BOLT (M12X1.75X40MM)	
M	61	1	**8T-4184**	4	BOLT (M12X1.75X45MM)	
M	62	1	**8T-4195**	1	BOLT (M10X1.5X30MM)	
M	63	1	**8T-4196**	9	BOLT (M10X1.5X35MM)	
	64	1	**8T-4223**	12	WASHER-HARD (13.5X25.5X3MM THK)	
M	65	1	**8T-4910**	3	BOLT (M12X1.75X60MM)	
M	66	1	**8T-4956**	4	BOLT (M12X1.75X35MM)	
M	67	1	**8T-6466**	1	BOLT (M10X1.50X60MM)	
	68	1	**8T-7529**	3	CLIP	
	69	1	**9S-1350**	2	CLIP	

I-SEE HOSE FABRICATION GUIDE
M-METRIC PART
Y-SEPARATE ILLUSTRATION

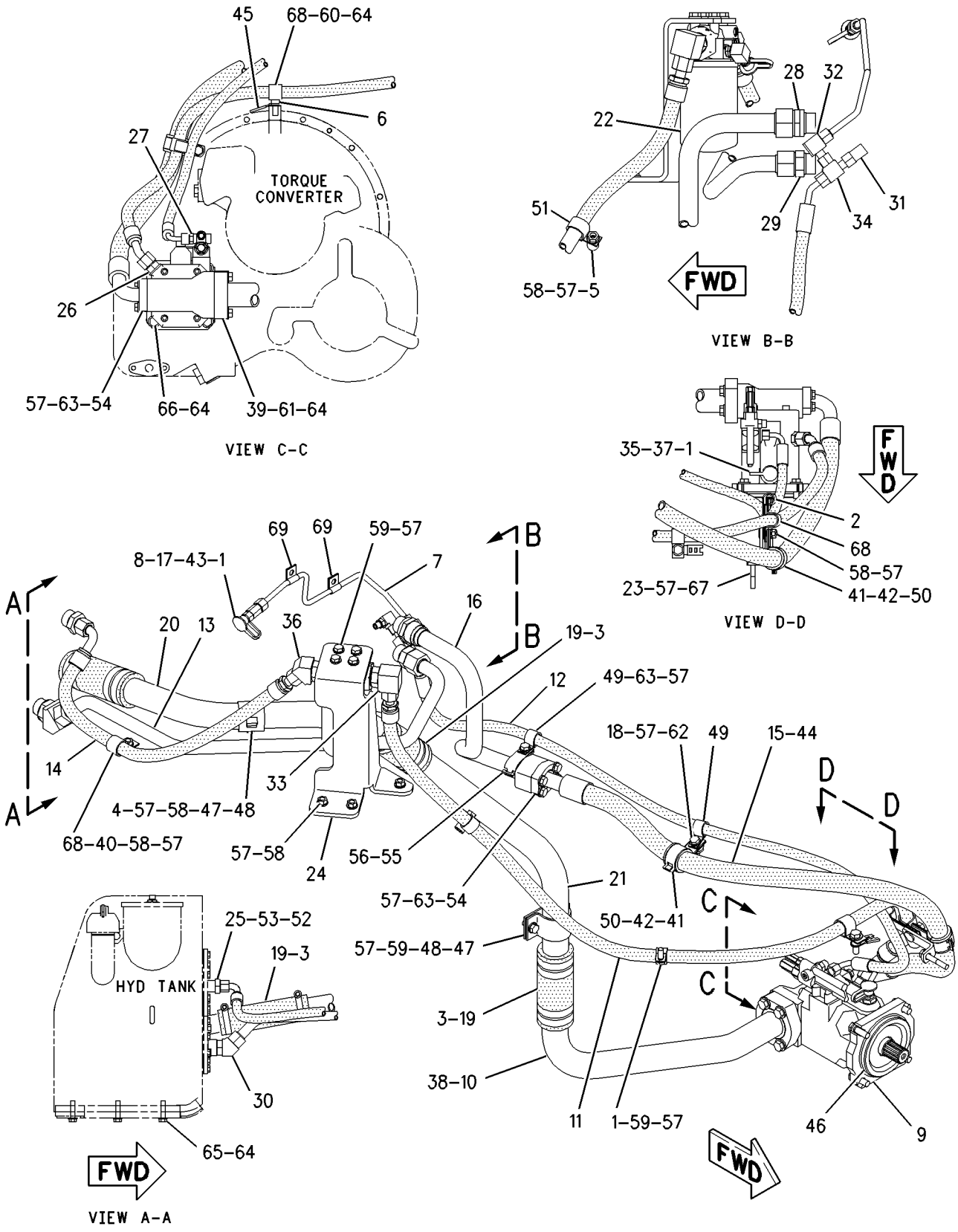

GRAPHIC #1 **<END>** g00917915

HYDRAULIC SYSTEM

156-9084 PUMP GP-PISTON—HYDRAULIC

S/N: CBJ1-UP

PART OF 160-4137 PUMP & LINES GP-HYDRAULIC

SMCS-5070 **i01878337**

NOTE	REF NO	GRAPHIC REF	PART NUMBER	QTY	PART NAME 1 2 3 4 5 6 (PRODUCT LEVEL)	SEE PAGE
M	1	1	**6R-7943**	2	SCREW (M5X15.5MM)	
	2	1	**180-6213**	1	RING-RETAINING	
	3	1	**168-7319**	1	SEAL-SHAFT	
	4	1	**197-2850**	1	SHAFT	
Y	5	1	**168-2210**	1	VALVE GP-PRESS & FLOW CMPNSTR	384
	6	1	**168-2197**	1	SPRING	
	7	1	**168-2198**	1	LINK-CONTROL	
	8	1	**174-9994**	1	PISTON-CONTROL	
	9	1	**168-7863**	1	PLUG-CONTROL	
	10	1	**8T-7525**	1	SEAL-O-RING	
	11	1	**9X-8979**	1	DOWEL	
	12	1	**168-2201**	1	HEAD-PUMP	
	13	1	**168-3504**	1	SEAL	
	14	1	**136-8423**	2	PLUG-BREAK OFF	
M	15	1	**104-8085**	4	BOLT-SOCKET HEAD	
	16	1	**185-0296**	1	BEARING	
	17	1	**9X-7680**	3	SEAL-O-RING	
	18	1	**192-7470**	1	SEAL-O-RING	
M	19	1	**8T-8442**	4	BOLT-SOCKET HEAD (M6X1X30MM)	
	20	1	**168-2203**	1	SHIM-SHAFT	
Y	21	1	**197-2849**	1	ROTATING GP-PUMP	364
	22	1	**168-7317**	1	SWASHPLATE-PUMP	
	23	1	**168-2206**	1	BEARING-CRADLE	
	24	1	**185-0295**	1	BEARING	
	25	1	**9S-8002**	1	PLUG	
	26	1	**3J-7354**	1	SEAL-O-RING	

M-METRIC PART
Y-SEPARATE ILLUSTRATION

156-9084 PUMP GP-PISTON ***(contd.)*** **i01878337**

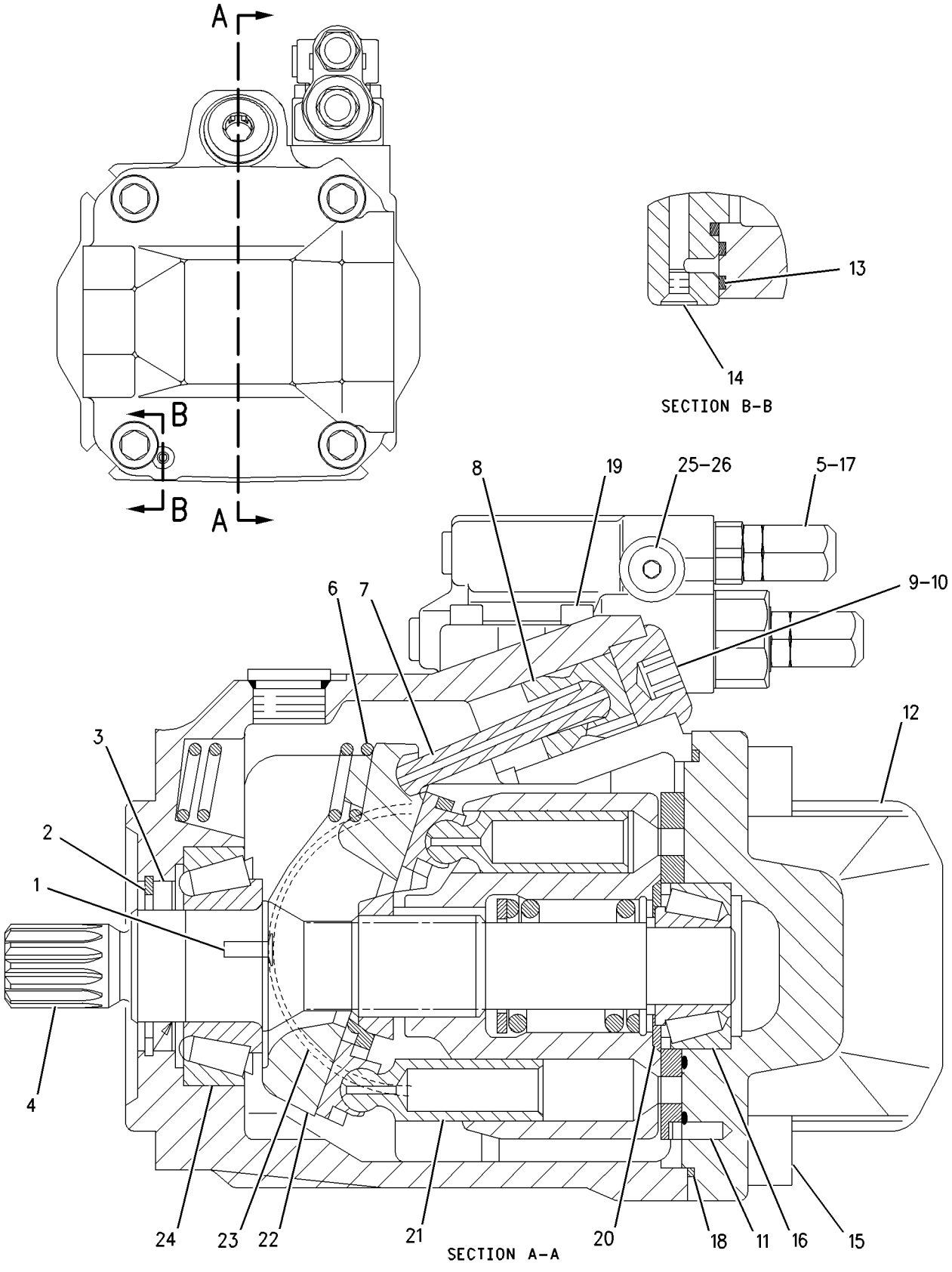

GRAPHIC #1 **<END>** g00956490

197-2849 ROTATING GP-PUMP–HYDRAULIC

S/N: CBJ1-UP

PART OF 156-9084 PUMP GP-PISTON

SMCS-5070 **i01828589**

NOTE	REF NO	GRAPHIC REF	PART NUMBER	QTY	PART NAME 1 2 3 4 5 6 (PRODUCT LEVEL)	SEE PAGE
	1	1	**168-3384**	9	PISTON AS-PUMP	
	2	1	**197-2851**	1	BARREL	
	3	1	**197-2852**	1	PLATE	
	4	1	**168-7321**	1	PLATE-PORT	
	5	1	**197-2853**	1	BEARING	
	6	1	**168-3381**	1	SPRING	
	7	1	**168-3379**	3	PIN	
	8	1	**6V-7723**	1	RING-RETAINING	
	9	1	**168-3382**	1	WASHER	

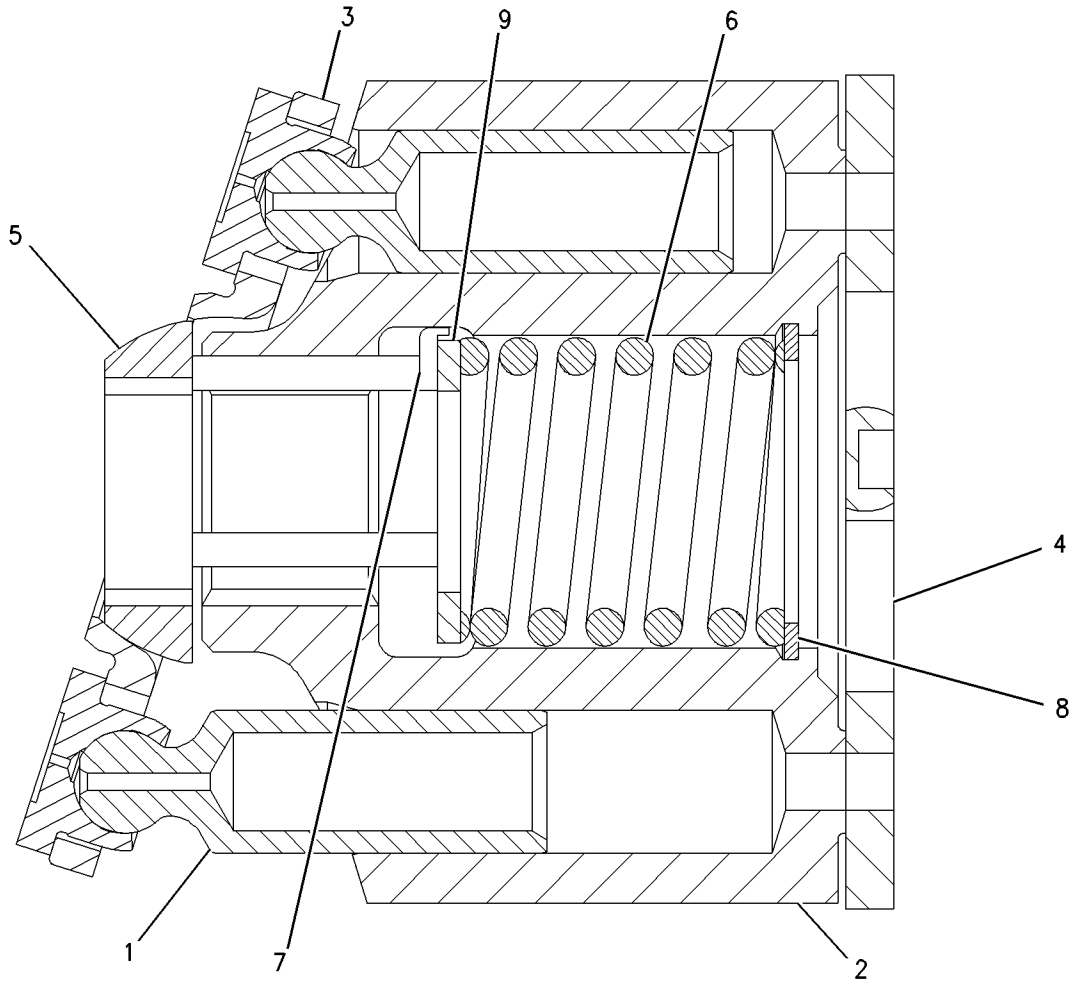

GRAPHIC #1 **<END>** g00719942

HYDRAULIC SYSTEM

174-4485 TANK & FILTER GP-HYDRAULIC

S/N: CBJ1-UP

PART OF 156-9503 HYDRAULIC AR

SMCS-5056, 5068 **i01885512**

NOTE	REF NO	GRAPHIC REF	PART NUMBER	QTY	PART NAME 1 2 3 4 5 6 (PRODUCT LEVEL)	SEE PAGE
	1	1	**1U-2827**	1	GUIDE-VALVE	
	2	1	**7B-3039**	1	SPRING	
	3	1	**8J-8782**	1	BODY-DRAIN VALVE	
	4	1	**8J-8783**	1	VALVE	
	5	1	**9J-3047**	1	STRAINER (HYDRAULIC TANK)	
	6	1	**9J-7031**	1	PLUG-DRAIN (HYDRAULIC TANK)	
	7	1	**152-6649**	1	BASE	
	8	1	**166-9147**	1	TANK AS	
	9	1	**166-9165**	1	COVER AS	
		1	**9T-7512**	2	BOSS-WELD (1-5/16-12 THD)	
		1	**5S-1057**	1	FITTING	
		1	**9F-3721**	1	PLATE	
	10	1	**166-9171**	1	GASKET	
Y	11	1	**145-7028**	1	SENSOR GP-TEMPERATURE (HYDRAULIC TANK)	164
	12	1	**175-7407**	1	SPACER	
	13	1	**187-9194**	1	PLATE	
	14	1	**1L-5072**	1	DOWEL	
	15	1	**2D-4202**	1	PLATE	
	16	1	**2J-7761**	1	RING-RETAINING	
	17	1	**3G-0361**	1	GASKET	
	18	1	**3G-3267**	1	SCREEN AS (HYDRAULIC TANK)	
	19	1	**3J-1907**	1	SEAL-O-RING	
	20	1	**4J-0519**	2	SEAL-O-RING	
	21	1	**4J-8251**	1	GROMMET	
	22	1	**4J-8252**	1	GAUGE-SIGHT (HYDRAULIC TANK)	
	23	1	**4K-0367**	1	NUT-FULL (5/8-11 THD)	
	24	1	**4T-0521**	1	BOLT (5/8-11X4.35MM)	
	25	1	**1R-0735**	1	FILTER ELEMENT AS-OIL (HYDRAULIC/REVERSE FLOW) (DISPOSABLE)	
					—OR—	
		1	**104-6931**	1	FILTER ELEMENT AS-OIL (REVERSE FLOW) (HYDRAULIC FIRE RESISTANT FLUID)	
					—OR—	
		1	**139-1537**	1	FILTER ELEMENT AS-OIL (HYDRAULIC) (CLEANOUT/HIGH EFFICIENCY)	
	26	1	**5D-1911**	1	COVER-HYDRAULIC CAP	
	27	1	**5M-2057**	1	SEAL-O-RING	
	28	1	**5P-3108**	6	SEAL-O-RING	
M	29	1	**6V-1820**	21	BOLT (M10X1.50X30MM)	
	30	1	**6V-5839**	6	WASHER (11X21X2.5MM THK)	
M	31	1	**6V-7744**	6	LOCKNUT (M10X1.5 THD)	
	32	1	**6V-9633**	1	GASKET	
	33	1	**7H-1447**	1	CAP-FILLER (HYDRAULIC TANK)	
	34	1	**8F-9206**	1	SEAL-O-RING	
	35	1	**8J-6913**	1	RETAINER-SIGHT GLASS	
	36	1	**8J-8322**	1	RING-RETAINING	
	37	1	**8J-8436**	1	TUBE AS	
	38	1	**8J-8443**	1	SPRING	
	39	1	**8J-8468**	1	VALVE	
	40	1	**8T-2275**	1	BALL	
	41	1	**8T-3298**	1	SEAL-RECTANGULAR	
	42	1	**8T-9389**	3	BOLT (1/2-13X2.75 IN)	
	43	1	**9H-6454**	1	GASKET	
	44	1	**9J-2914**	1	SPACER	
	45	1	**9M-7394**	1	LEVER	
	46	1	**9T-3264**	1	COVER	

174-4485 **TANK & FILTER GP-HYDRAULIC** *(contd.)* **i01885512**

NOTE	REF NO	GRAPHIC REF	PART NUMBER	QTY	PART NAME 1 2 3 4 5 6 (PRODUCT LEVEL)	SEE PAGE
	47	1	**164-3651**	1	ADAPTER	
	48	1	**7K-1181**	1	STRAP-CABLE	
	49	1	**7J-0204**	1	SEAL-O-RING	
	50	1	**4P-8134**	1	CLIP	

M-METRIC PART
Y-SEPARATE ILLUSTRATION

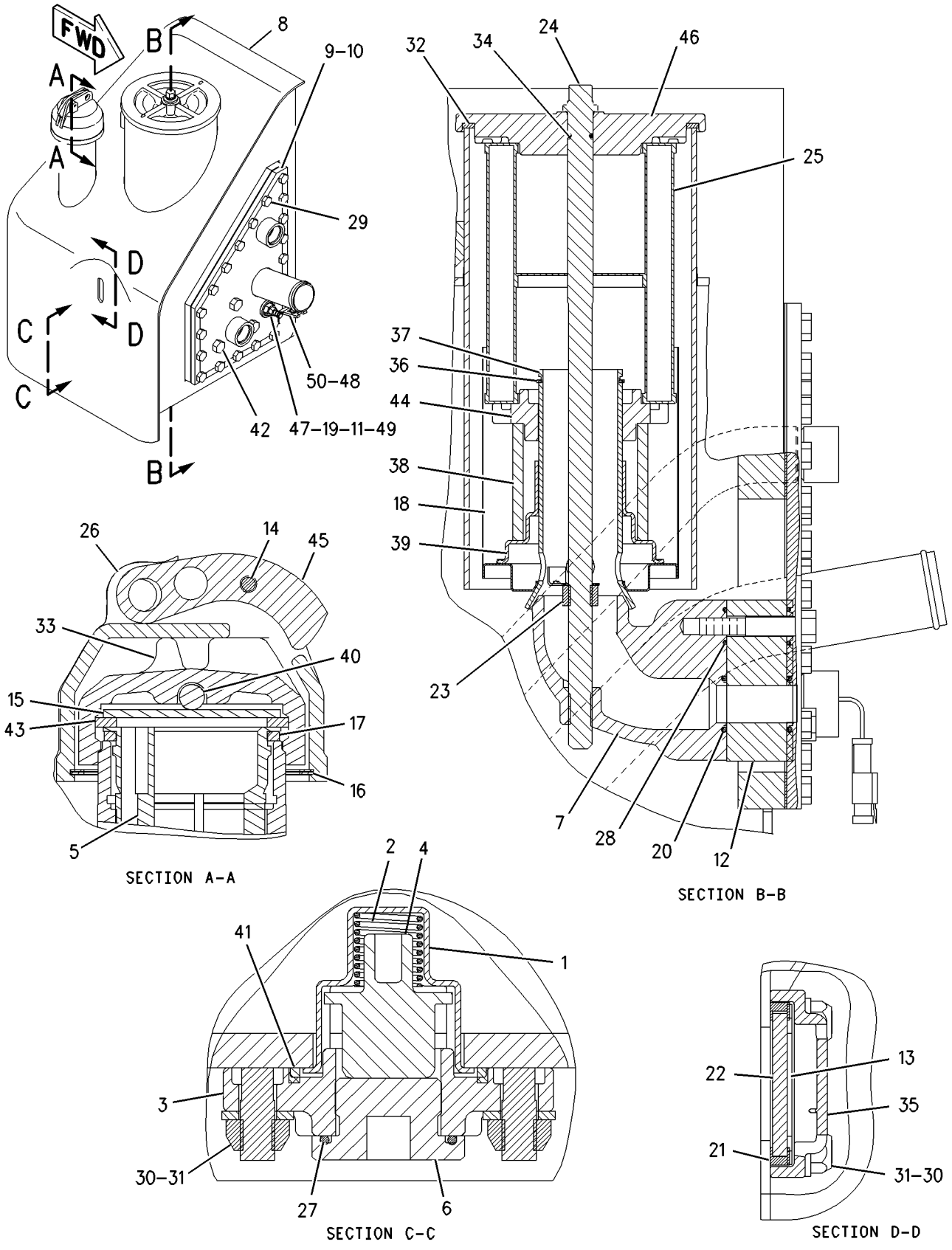

GRAPHIC #1 **<END>** g00910394

6E-5083 VALVE GP-BANK 2—BULLDOZER LIFT/TILT

S/N: CBJ1-UP
PART OF 156-9510 HYDRAULIC AR
AN ATTACHMENT

SMCS-5051 **i01895726**

NOTE	REF NO	GRAPHIC REF	PART NUMBER	QTY	PART NAME 1 2 3 4 5 6 (PRODUCT LEVEL)	SEE PAGE
CY	1	1	**9T-6695**	1	VALVE GP-RELIEF	387
Y	2	1	**6E-5953**	1	VALVE GP-CONTROL (BLADE LIFT)	378
Y	3	1	**6E-4953**	1	VALVE GP-CONTROL (BLADE TILT)	374
	4	1	**4T-2731**	1	COVER	
	5	1	**9S-8004**	1	PLUG	
		1	**3J-1907**	1	SEAL-O-RING	
	6	1	**4D-9986**	6	SEAL-O-RING	
	7	1	**4T-4538**	3	STUD	
		1	**9S-8752**	3	NUT-FULL (3/8-16 THD)	
		1	**5M-2894**	3	WASHER-HARD (10.2X18.5X2.5MM THK)	
	8	1	**4J-5267**	3	SEAL-O-RING	
	9	1	**4J-5140**	3	SEAL-O-RING	
B	10	1	**4T-2723**	9	SHIM (0.076MM THK)	

B-USE AS REQUIRED
C-CHANGE FROM PREVIOUS TYPE
Y-SEPARATE ILLUSTRATION

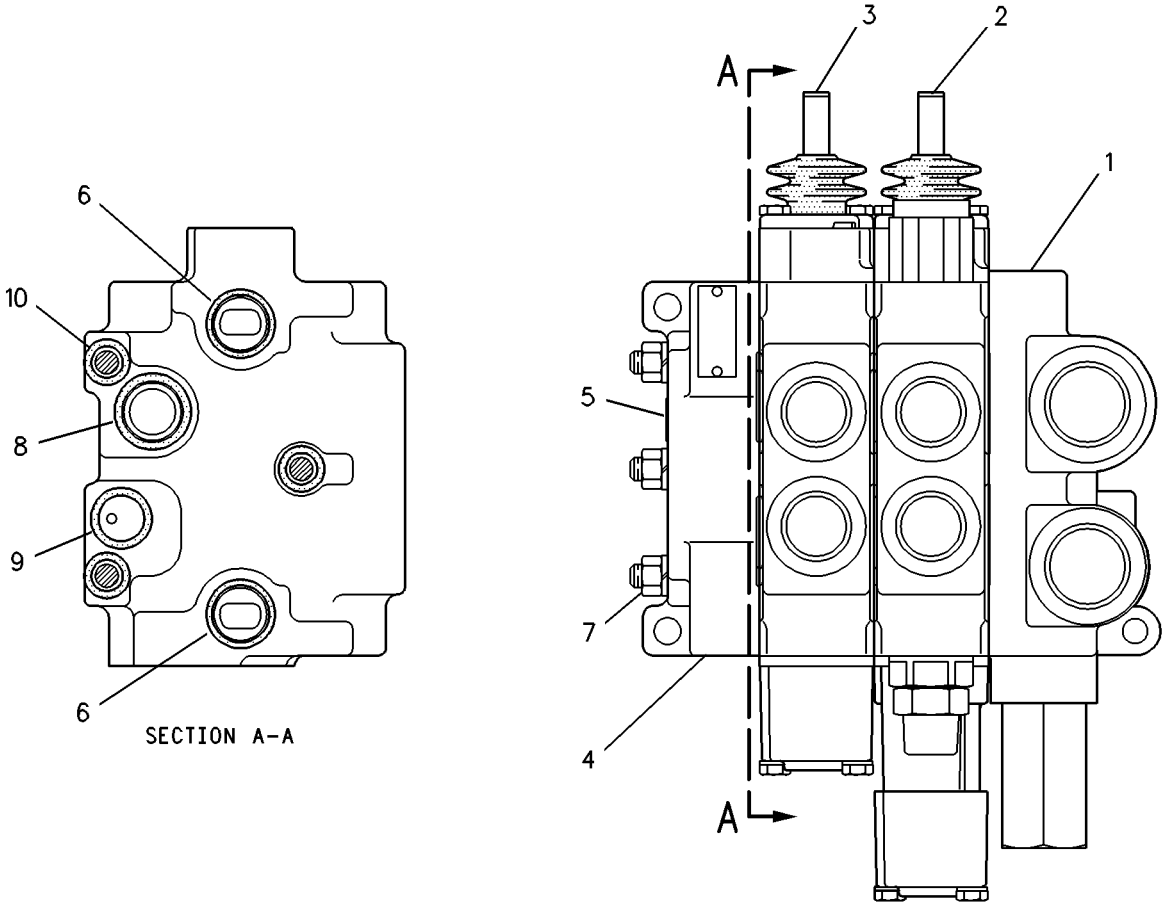

GRAPHIC #1 **<END>** g00233717

209-6765 VALVE GP-BANK 3–BULLDOZER ANGLE-LIFT-TILT

S/N: CBJ1-UP

PART OF 156-9503 HYDRAULIC AR

SMCS-5051 **i01828618**

NOTE	REF NO	GRAPHIC REF	PART NUMBER	QTY	PART NAME 1 2 3 4 5 6 (PRODUCT LEVEL)	SEE PAGE
Y	1	1	**9T-6695**	1	VALVE GP-RELIEF	387
Y	2	1	**209-6761**	1	VALVE GP-CONTROL (LIFT)	380
Y	3	1	**6E-4953**	1	VALVE GP-CONTROL (TILT)	374
Y	4	1	**6E-4954**	1	VALVE GP-CONTROL (ANGLE)	376
	5	1	**4T-2731**	1	COVER	
	6	1	**9S-8004**	1	PLUG	
	7	1	**3J-1907**	1	SEAL-O-RING	
	8	1	**4T-4518**	3	STUD	
	9	1	**9S-8752**	3	NUT-FULL (3/8-16 THD)	
	10	1	**5M-2894**	3	WASHER-HARD (10.2X18.5X2.5MM THK)	
	11	1	**4T-2723**	12	SHIM (0.076MM THK)	
	12	1	**4D-9986**	8	SEAL-O-RING	
	13	1	**4J-5267**	4	SEAL-O-RING	
	14	1	**4J-5140**	4	SEAL-O-RING	

Y-SEPARATE ILLUSTRATION

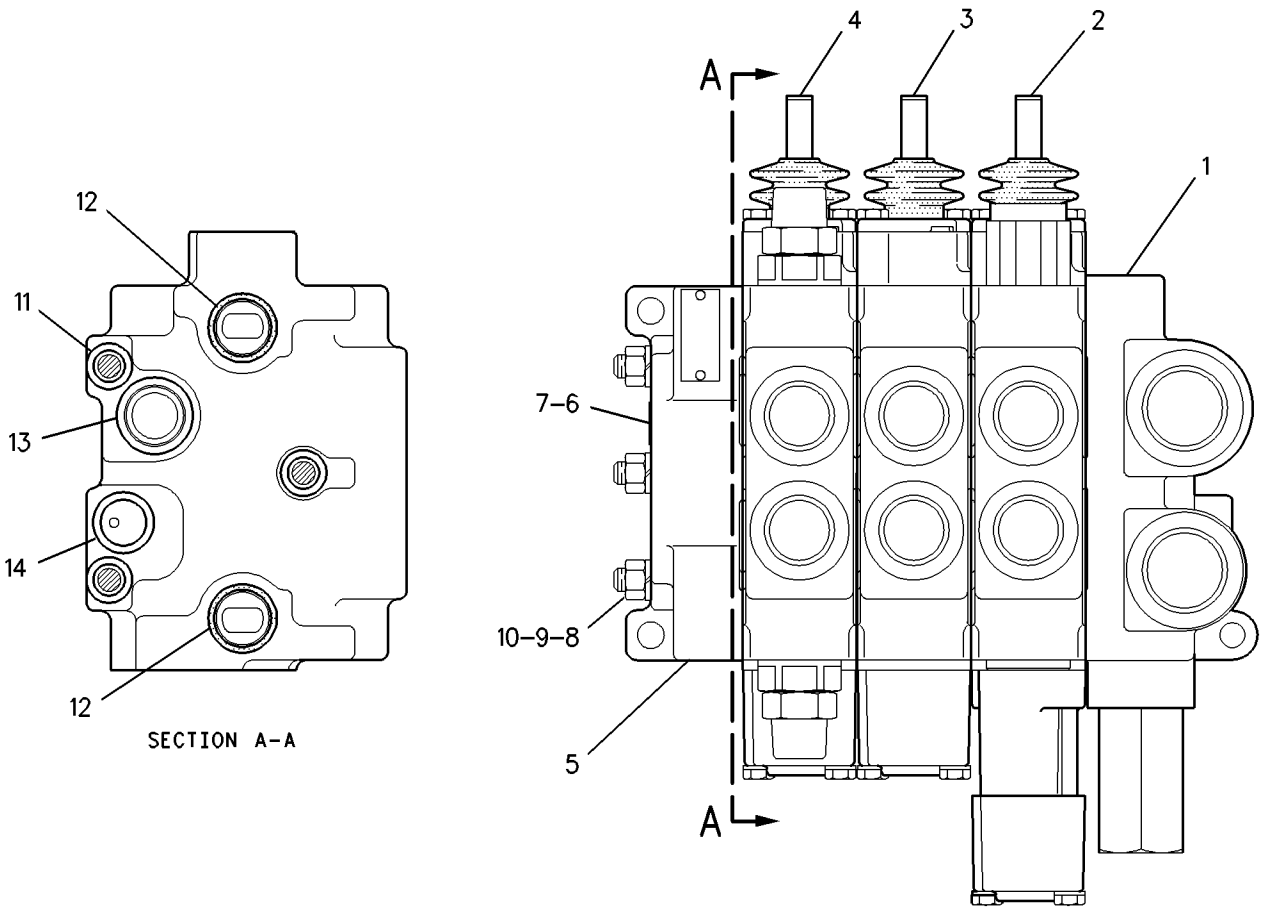

GRAPHIC #1 **<END>** g00875015

HYDRAULIC SYSTEM

209-6764 VALVE GP-BANK 4—BULLDOZER LIFT-ANGLE-TILT & RIPPER

S/N: CBJ1-UP

PART OF 229-2831 HYDRAULIC AR, 173-8641 HYDRAULIC AR-4 VALVE AN ATTACHMENT

SMCS-5051 **i01893138**

NOTE	REF NO	GRAPHIC REF	PART NUMBER	QTY	PART NAME 1 2 3 4 5 6 (PRODUCT LEVEL)	SEE PAGE
Y	1	1	**9T-6695**	1	VALVE GP-RELIEF	387
Y	2	1	**209-6762**	1	VALVE GP-CONTROL (LIFT)	382
Y	3	1	**6E-4953**	1	VALVE GP-CONTROL (TILT)	374
Y	4	1	**6E-4954**	1	VALVE GP-CONTROL (ANGLE)	376
Y	5	1	**6E-4952**	1	VALVE GP-CONTROL (RIPPER)	372
	6	1	**117-0982**	2	STUD	
	7	1	**9S-8004**	1	PLUG	
	8	1	**3J-1907**	1	SEAL-O-RING	
	9	1	**9S-8752**	5	NUT-FULL (3/8-16 THD)	
	10	1	**5M-2894**	5	WASHER-HARD (10.2X18.5X2.5MM THK)	
	11	1	**118-2228**	1	STUD	
	12	1	**4T-2731**	1	COVER	
	13	1	**4T-4216**	2	STUD	
	14	1	**4Z-5788**	1	MANIFOLD AS	
	15	1	**9S-8006**	3	PLUG	
	16	1	**2M-9780**	3	SEAL-O-RING	
	17	1	**4D-9986**	12	SEAL-O-RING	
	18	1	**4J-5267**	6	SEAL-O-RING	
	19	1	**4T-2723**	18	SHIM (0.076MM THK)	
	20	1	**4J-5140**	6	SEAL-O-RING	

Y-SEPARATE ILLUSTRATION

209-6764 VALVE GP-BANK 4 *(contd.)* **i01893138**

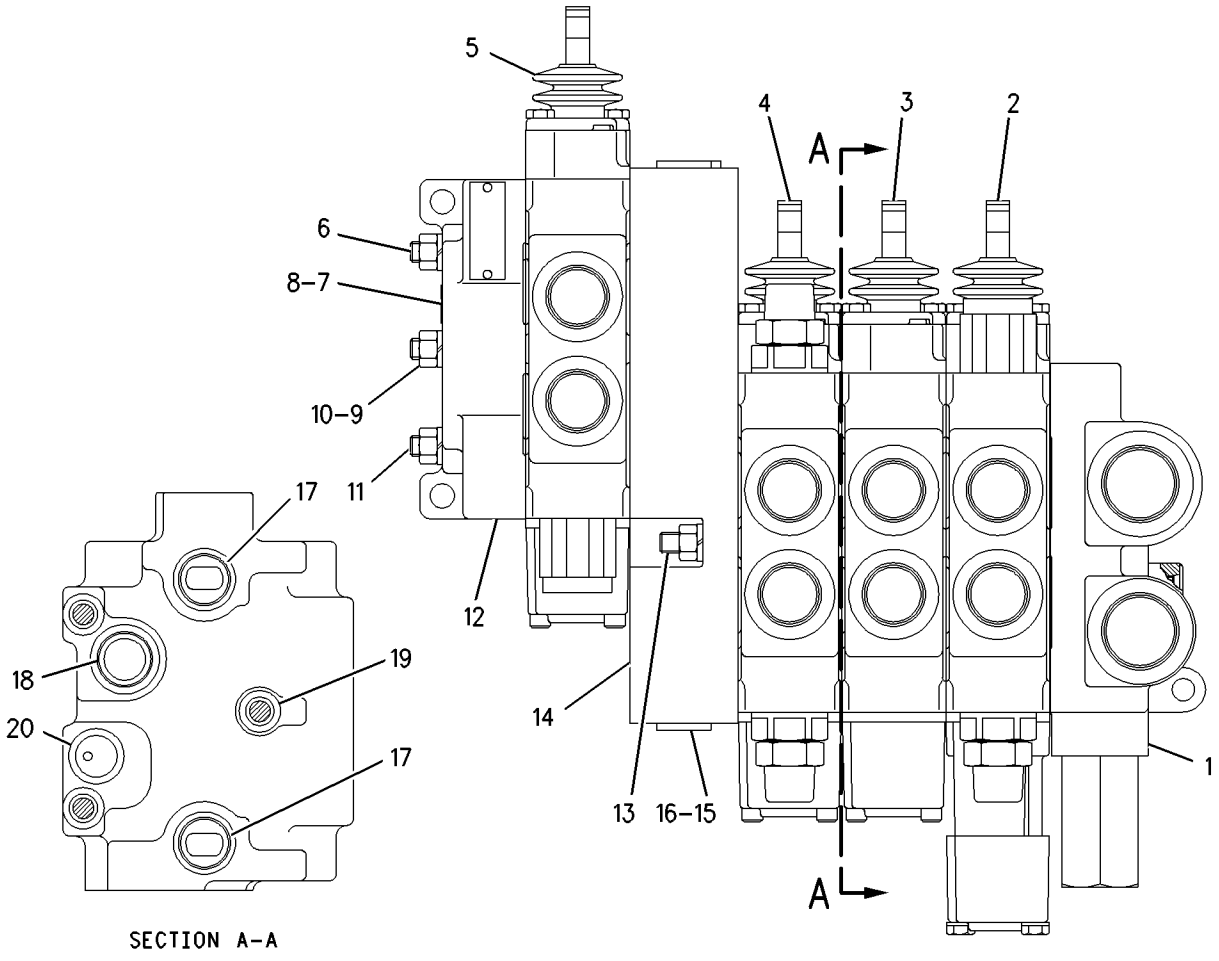

GRAPHIC #1 **<END>** g00941686

HYDRAULIC SYSTEM

6E-4952 VALVE GP-CONTROL–RIPPER

S/N: CBJ1-UP
PART OF 209-6764 VALVE GP-BANK 4
AN ATTACHMENT

SMCS-5051 **i01883597**

NOTE	REF NO	GRAPHIC REF	PART NUMBER	QTY	PART NAME 1 2 3 4 5 6 (PRODUCT LEVEL)	SEE PAGE
	1	1	**4T-4524**	1	GUARD-DUST	
	2	1	**031-0214**	2	BOLT-LOCKING (1/4-20X0.5 IN)	
	3	1	**1U-2744**	1	VALVE GP-CHECK (CONTROL VALVE)	
		1	**4K-1388**	1	SEAL-O-RING	
		1	**3D-2824**	1	SEAL-O-RING	
	3A	1	**4T-7795**	1	RING-BACKUP	
		1	**5K-9090**	1	SEAL-O-RING	
	4	1	**4T-4516**	1	SPRING	
	5	1	**031-5085**	1	BOLT-LOCKING (1/4-20X1.00 IN)	
	6	1	**167-6768**	1	HOUSING	
	7	1	**4T-4521**	2	RETAINER	
	8	1	**4T-4533**	1	SPACER (7.1X17.3X1.5MM THK)	
	9	1	**195-2139**	2	SEAL-O-RING	
	10	1	**4T-4534**	1	SPRING (OUTER)	
	11	1	**9T-3729**	1	SPRING (INNER)	
	12	1	**2M-9780**	1	SEAL-O-RING	
	13	1	**9S-8006**	1	PLUG	
	14	1	**4T-4520**	1	FILTER (CONTROL VALVE)	
	15	1	**4T-4528**	1	RETAINER	
	16	1	**126-5476**	1	SEAT AS-SHUTTLE	
		1	**4T-7807**	1	RING-BACKUP	
		1	**8T-2360**	1	SEAL-O-RING	
		1	**7J-0204**	1	SEAL-O-RING	
	17	1	**126-5796**	1	HOUSING GP (CONTROL VALVE)	
		1	**8T-2361**	1	SEAL-O-RING	
		1	**126-5984**	1	RING-BACKUP	
		1	**126-5985**	1	RING-BACKUP	
		1	**3J-7354**	1	SEAL-O-RING	
		1	**1P-7363**	1	SEAL-O-RING	
	18	1	**8H-0707**	2	BOLT (1/4-20X1 IN)	
	19	1	**5B-9318**	1	BALL	

6E-4952 **VALVE GP-CONTROL** *(contd.)* **i01883597**

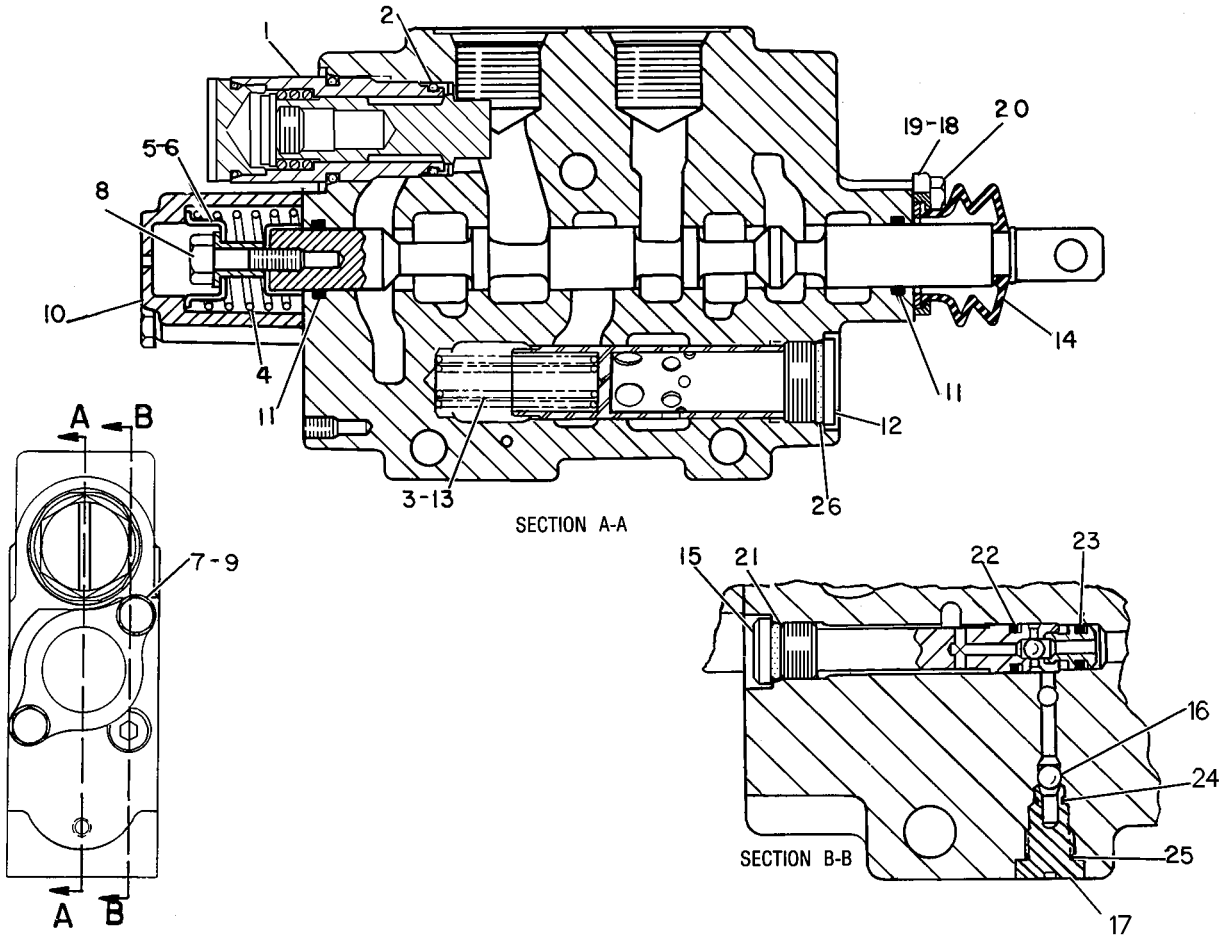

GRAPHIC #1 **<END>** g00232844

HYDRAULIC SYSTEM

6E-4953 VALVE GP-CONTROL–TILT

S/N: CBJ1-UP

PART OF 6E-5083 VALVE GP-BANK 2, 209-6765 VALVE GP-BANK 3, 209-6764 VALVE GP-BANK 4 ALSO AN ATTACHMENT

SMCS-5051 **i01883605**

NOTE	REF NO	GRAPHIC REF	PART NUMBER	QTY	PART NAME 1 2 3 4 5 6 (PRODUCT LEVEL)	SEE PAGE
	1	1	**4T-4524**	1	GUARD-DUST	
	2	1	**031-0214**	2	BOLT-LOCKING (1/4-20X0.5 IN)	
	3	1	**1U-2744**	1	VALVE GP-CHECK (CONTROL VALVE)	
		1	**5K-9090**	1	SEAL-O-RING	
		1	**4T-7795**	1	RING-BACKUP	
		1	**4K-1388**	1	SEAL-O-RING	
		1	**3D-2824**	1	SEAL-O-RING	
	4	1	**9T-0704**	1	VALVE GP-RELIEF (CONTROL VALVE)	
		1	**6E-0358**	1	RING-BACKUP	
		1	**4K-1388**	1	SEAL-O-RING	
		1	**8C-3088**	1	SEAL-O-RING	
	5	1	**4T-4513**	1	SPRING	
	6	1	**100-3567**	1	HOUSING-DETENT	
	7	1	**100-3566**	1	PISTON-DETENT	
	8	1	**4B-9782**	1	BALL	
	9	1	**4T-4532**	1	HOUSING	
	10	1	**144-4277**	1	SHAFT AS-DETENT	
	11	1	**100-3564**	1	SPRING	
	12	1	**4T-4521**	2	RETAINER	
	13	1	**100-3563**	1	SPACER	
	14	1	**8F-0212**	1	SEAL-O-RING	
	15	1	**195-2139**	2	SEAL-O-RING	
	16	1	**4T-4534**	1	SPRING (OUTER)	
	17	1	**9T-3729**	1	SPRING (INNER)	
	18	1	**2M-9780**	1	SEAL-O-RING	
	19	1	**9S-8006**	1	PLUG	
	20	1	**4T-4520**	1	FILTER (CONTROL VALVE)	
	21	1	**4T-4528**	1	RETAINER	
	22	1	**126-5476**	1	SEAT AS-SHUTTLE	
		1	**4T-7807**	1	RING-BACKUP	
		1	**8T-2360**	1	SEAL-O-RING	
		1	**7J-0204**	1	SEAL-O-RING	
	23	1	**126-5796**	1	HOUSING GP (CONTROL VALVE)	
		1	**8T-2361**	1	SEAL-O-RING	
		1	**1P-7363**	1	SEAL-O-RING	
		1	**3J-7354**	1	SEAL-O-RING	
		1	**126-5984**	1	RING-BACKUP	
		1	**126-5985**	1	RING-BACKUP	
	24	1	**5B-9318**	7	BALL	
	25	1	**8S-4710**	2	BOLT (1/4-20X4 IN)	
	26	1	**5P-0537**	2	WASHER-HARD (7.2X14.5X2MM THK)	
	27	1	**128-2776**	1	GASKET	

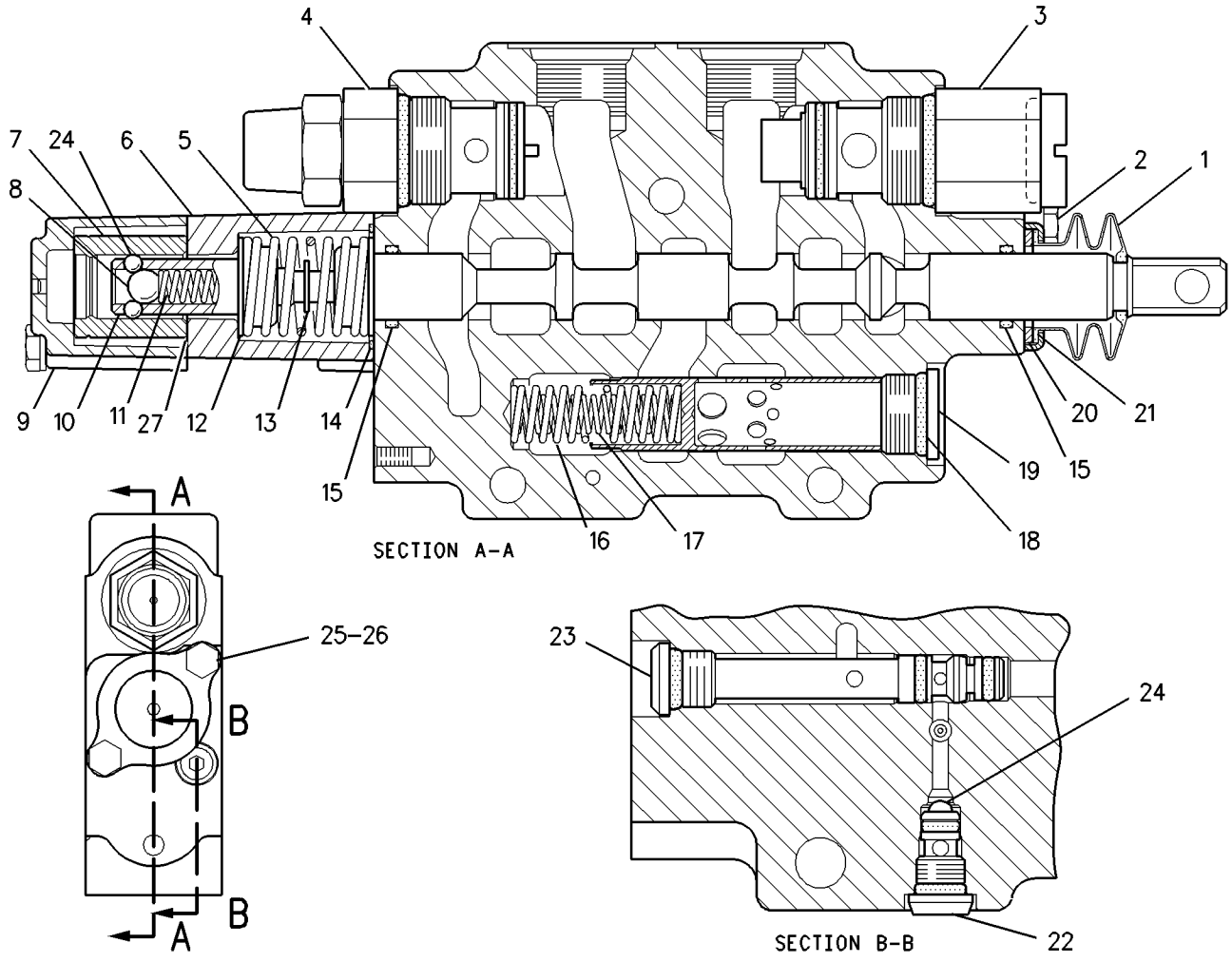

GRAPHIC #1 **<END>** g00938296

HYDRAULIC SYSTEM

6E-4954 VALVE GP-CONTROL–ANGLE

S/N: CBJ1-UP

PART OF 209-6765 VALVE GP-BANK 3, 209-6764 VALVE GP-BANK 4

ALSO AN ATTACHMENT

SMCS-5051 **i01883622**

NOTE	REF NO	GRAPHIC REF	PART NUMBER	QTY	PART NAME 1 2 3 4 5 6 (PRODUCT LEVEL)	SEE PAGE
	1	1	**8H-0707**	2	BOLT (1/4-20X1 IN)	
	2	1	**5B-9318**	1	BALL	
	3	1	**167-6768**	1	HOUSING	
	4	1	**031-5085**	1	BOLT-LOCKING (1/4-20X1.00 IN)	
	5	1	**9T-0874**	1	SPRING-SPOOL	
	6	1	**4T-4533**	1	SPACER (7.1X17.3X1.5MM THK)	
	7	1	**4T-4534**	1	SPRING (OUTER)	
	8	1	**4T-4528**	1	RETAINER	
	9	1	**4T-4520**	1	FILTER (CONTROL VALVE)	
Y	10	1	**6E-0772**	2	VALVE GP-RELIEF (CONTROL VALVE)	386
	11	1	**031-0214**	2	BOLT-LOCKING (1/4-20X0.5 IN)	
	12	1	**4T-4524**	1	GUARD-DUST	
	13	1	**9S-8006**	1	PLUG	
	14	1	**2M-9780**	1	SEAL-O-RING	
	15	1	**9T-3729**	1	SPRING (INNER)	
	16	1	**195-2139**	2	SEAL-O-RING	
	17	1	**4T-4521**	2	RETAINER	
	18	1	**126-5796**	1	HOUSING GP (CONTROL VALVE)	
	19	1	**8T-2361**	1	SEAL-O-RING	
	20	1	**3J-7354**	1	SEAL-O-RING	
	21	1	**126-5985**	1	RING-BACKUP	
	22	1	**1P-7363**	1	SEAL-O-RING	
	23	1	**126-5984**	1	RING-BACKUP	
	24	1	**126-5476**	1	SEAT AS-SHUTTLE	
	25	1	**8T-2360**	1	SEAL-O-RING	
	26	1	**7J-0204**	1	SEAL-O-RING	
	27	1	**4T-7807**	1	RING-BACKUP	

Y-SEPARATE ILLUSTRATION

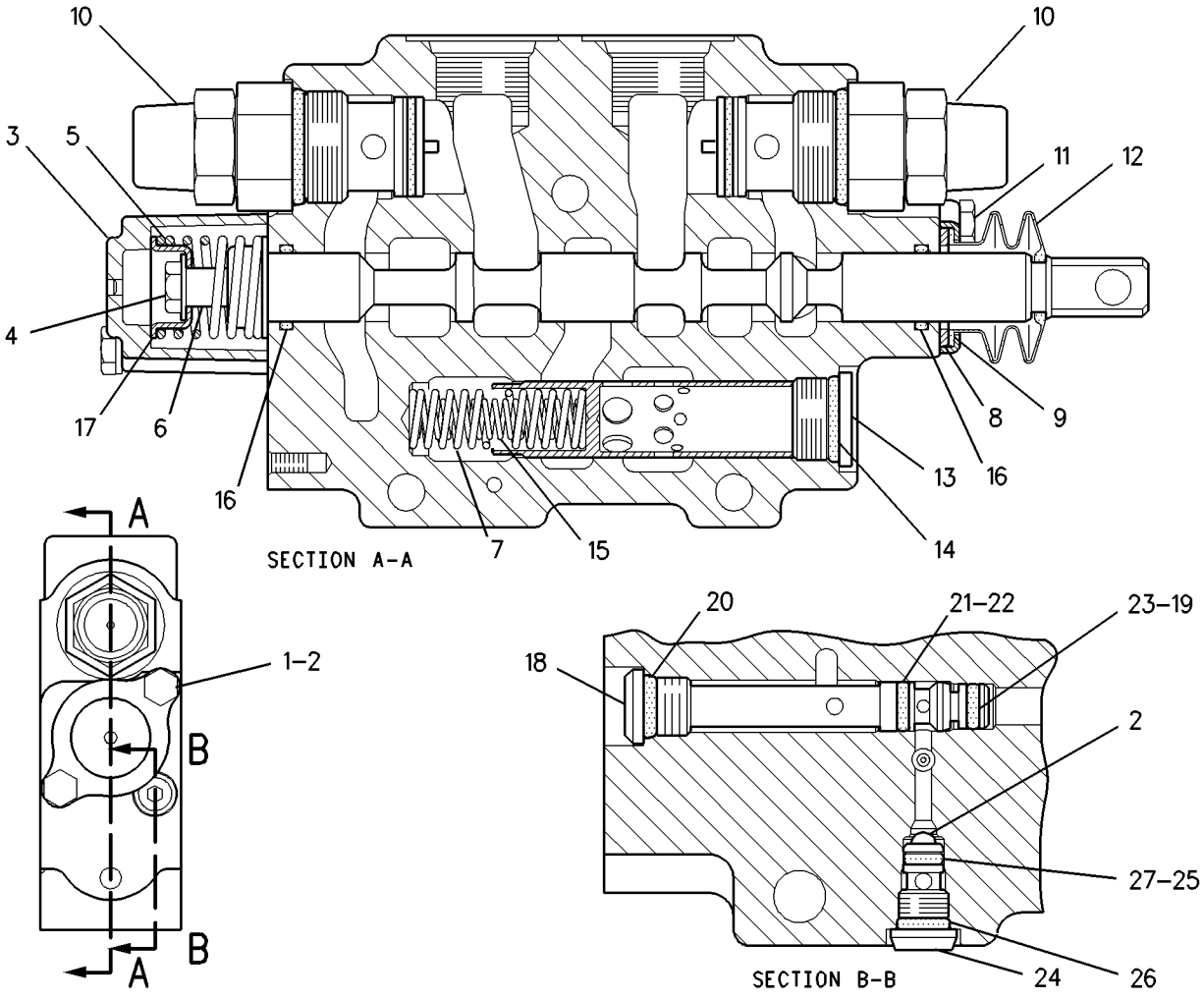

GRAPHIC #1 **<END>** g00782679

HYDRAULIC SYSTEM

6E-5953 VALVE GP-CONTROL—BLADE LIFT

S/N: CBJ1-UP
PART OF 6E-5083 VALVE GP-BANK 2
AN ATTACHMENT

SMCS-5051 **i01883637**

NOTE	REF NO	GRAPHIC REF	PART NUMBER	QTY	PART NAME 1 2 3 4 5 6 (PRODUCT LEVEL)	SEE PAGE
	1	1	**4T-4524**	1	GUARD-DUST	
	2	1	**031-0214**	2	BOLT-LOCKING (1/4-20X0.5 IN)	
	3	1	**1U-2744**	1	VALVE GP-CHECK (CONTROL VALVE)	
		1	**5K-9090**	1	SEAL-O-RING	
		1	**4T-7795**	1	RING-BACKUP	
		1	**4K-1388**	1	SEAL-O-RING	
		1	**3D-2824**	1	SEAL-O-RING	
	4	1	**9T-0704**	1	VALVE GP-RELIEF (CONTROL VALVE)	
		1	**6E-0358**	1	RING-BACKUP	
		1	**4K-1388**	1	SEAL-O-RING	
		1	**8C-3088**	1	SEAL-O-RING	
	5	1	**4T-4513**	1	SPRING	
	6	1	**100-3567**	1	HOUSING-DETENT	
	7	1	**100-3566**	1	PISTON-DETENT	
	8	1	**4B-9782**	1	BALL	
	9	1	**4T-4532**	1	HOUSING	
	10	1	**144-4277**	1	SHAFT AS-DETENT	
	11	1	**100-3564**	1	SPRING	
	12	1	**4T-4521**	2	RETAINER	
	13	1	**100-3563**	1	SPACER	
	14	1	**8F-0212**	1	SEAL-O-RING	
	15	1	**195-2139**	2	SEAL-O-RING	
	16	1	**4T-4534**	1	SPRING (OUTER)	
	17	1	**9T-3729**	1	SPRING (INNER)	
	18	1	**2M-9780**	1	SEAL-O-RING	
	19	1	**9S-8006**	1	PLUG	
	20	1	**4T-4520**	1	FILTER (CONTROL VALVE)	
	21	1	**4T-4528**	1	RETAINER	
	22	1	**126-5476**	1	SEAT AS-SHUTTLE	
		1	**4T-7807**	1	RING-BACKUP	
		1	**8T-2360**	1	SEAL-O-RING	
		1	**7J-0204**	1	SEAL-O-RING	
	23	1	**126-5796**	1	HOUSING GP (CONTROL VALVE)	
		1	**8T-2361**	1	SEAL-O-RING	
		1	**1P-7363**	1	SEAL-O-RING	
		1	**3J-7354**	1	SEAL-O-RING	
		1	**126-5984**	1	RING-BACKUP	
		1	**126-5985**	1	RING-BACKUP	
	24	1	**5B-9318**	7	BALL	
	25	1	**8S-4710**	2	BOLT (1/4-20X4 IN)	
	26	1	**5P-0537**	2	WASHER-HARD (7.2X14.5X2MM THK)	
	27	1	**128-2776**	1	GASKET	

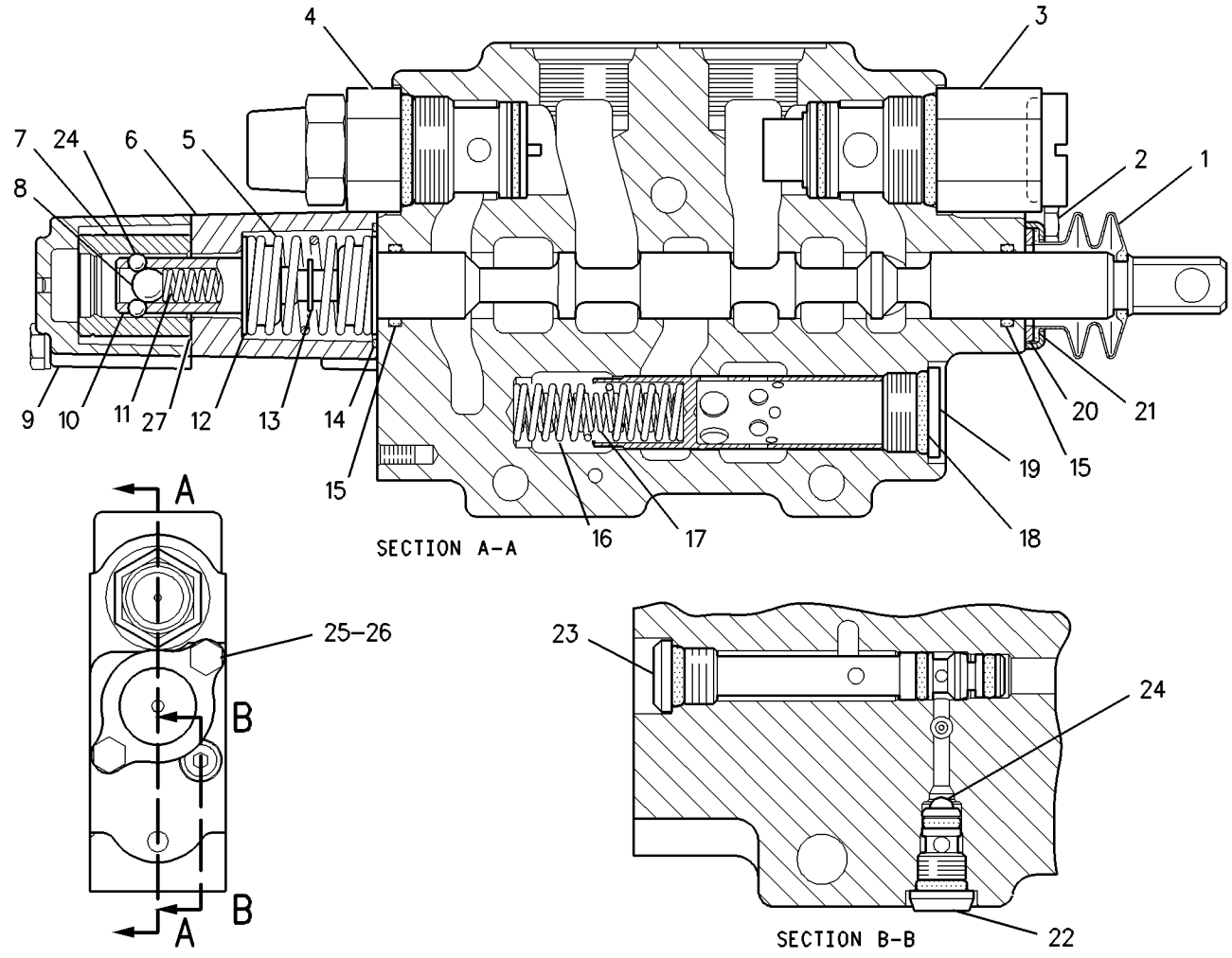

GRAPHIC #1 **<END>** g00938296

HYDRAULIC SYSTEM

209-6761 VALVE GP-CONTROL—BLADE LIFT

S/N: CBJ1-UP

PART OF 209-6765 VALVE GP-BANK 3

SMCS-5051 **i01883674**

NOTE	REF NO	GRAPHIC REF	PART NUMBER	QTY	PART NAME 1 2 3 4 5 6 (PRODUCT LEVEL)	SEE PAGE
	1	1	**4T-4524**	1	GUARD-DUST	
	2	1	**031-0214**	2	BOLT-LOCKING (1/4-20X0.5 IN)	
	3	1	**1U-2744**	1	VALVE GP-CHECK (CONTROL VALVE)	
		1	**3D-2824**	1	SEAL-O-RING	
		1	**4K-1388**	1	SEAL-O-RING	
		1	**5K-9090**	1	SEAL-O-RING	
	4	1	**5K-9090**	1	SEAL-O-RING	
	5	1	**9T-4518**	1	RING-BACKUP	
	6	1	**4K-1388**	1	SEAL-O-RING	
	7	1	**4T-4531**	1	PLUG	
	8	1	**195-2139**	2	SEAL-O-RING	
	9	1	**4T-4513**	1	SPRING	
	10	1	**100-3567**	1	HOUSING-DETENT	
	11	1	**100-3566**	1	PISTON-DETENT	
	12	1	**4B-9782**	1	BALL	
	13	1	**4T-4532**	1	HOUSING	
	14	1	**8S-4710**	2	BOLT (1/4-20X4 IN)	
	15	1	**5P-0537**	2	WASHER-HARD (7.2X14.5X2MM THK)	
	16	1	**100-3564**	1	SPRING	
	17	1	**4T-4521**	2	RETAINER	
	18	1	**100-3563**	1	SPACER	
	19	1	**8F-0212**	1	SEAL-O-RING	
	20	1	**197-2709**	1	SPRING	
	21	1	**128-2776**	1	GASKET	
	22	1	**2M-9780**	1	SEAL-O-RING	
	23	1	**9S-8006**	1	PLUG	
	24	1	**4T-4520**	1	FILTER (CONTROL VALVE)	
	25	1	**4T-4528**	1	RETAINER	
	26	1	**126-5796**	1	HOUSING GP (CONTROL VALVE)	
		1	**1P-7363**	1	SEAL-O-RING	
		1	**3J-7354**	1	SEAL-O-RING	
		1	**8T-2361**	1	SEAL-O-RING	
		1	**126-5984**	1	RING-BACKUP	
		1	**126-5985**	1	RING-BACKUP	
	27	1	**126-5476**	1	SEAT AS-SHUTTLE	
		1	**4T-7807**	1	RING-BACKUP	
		1	**7J-0204**	1	SEAL-O-RING	
		1	**8T-2360**	1	SEAL-O-RING	
	28	1	**5B-9318**	7	BALL	
	29	1	**144-4277**	1	SHAFT AS-DETENT	

209-6761 VALVE GP-CONTROL *(contd.)*

i01883674

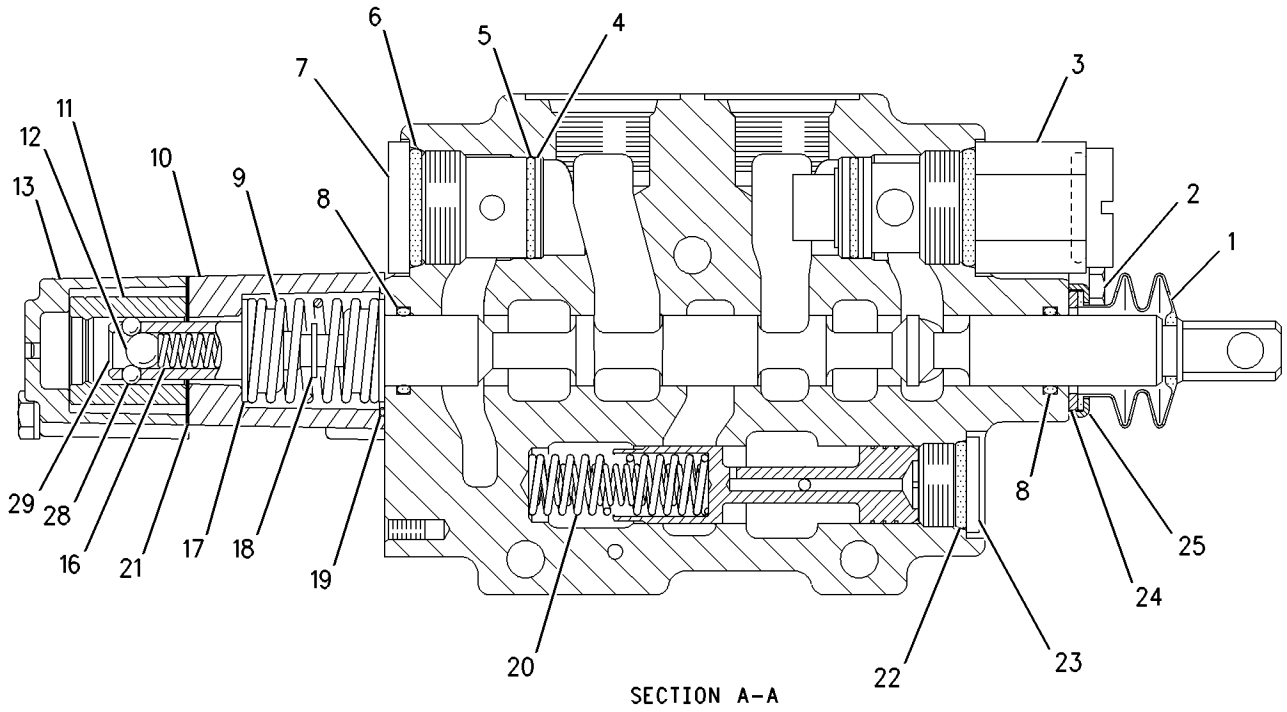

SECTION A-A

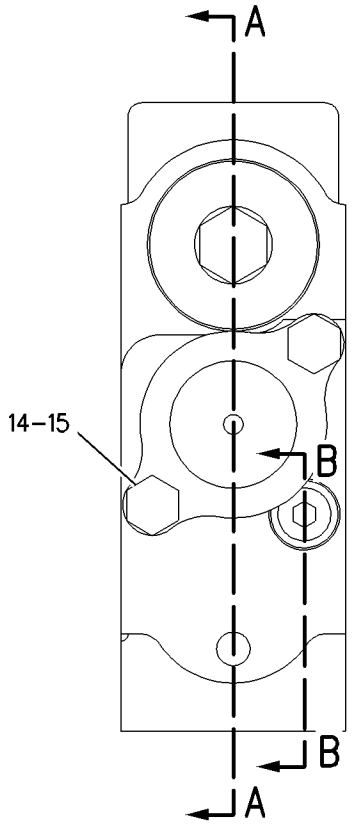

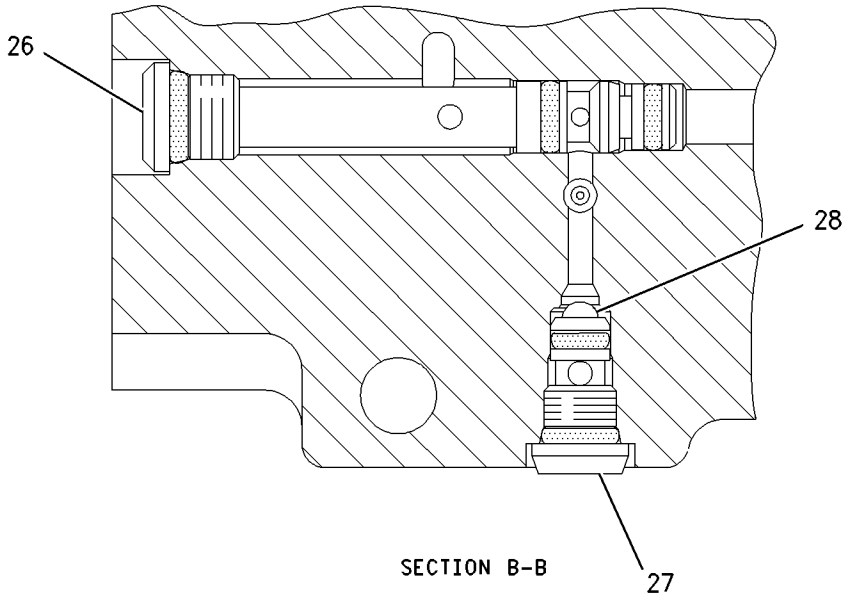

SECTION B-B

GRAPHIC #1

<END>

g00875189

HYDRAULIC SYSTEM

209-6762 VALVE GP-CONTROL—LIFT & TILT

S/N: CBJ1-UP

PART OF 209-6764 VALVE GP-BANK 4

AN ATTACHMENT

SMCS-5051 **i01883687**

NOTE	REF NO	GRAPHIC REF	PART NUMBER	QTY	PART NAME 1 2 3 4 5 6 (PRODUCT LEVEL)	SEE PAGE
	1	1	**4T-4524**	1	GUARD-DUST	
	2	1	**031-0214**	2	BOLT-LOCKING (1/4-20X0.5 IN)	
	3	1	**1U-2744**	1	VALVE GP-CHECK (CONTROL VALVE)	
	3A	1	**3D-2824**	1	SEAL-O-RING	
	3B	1	**4K-1388**	1	SEAL-O-RING	
	3C	1	**9T-4518**	1	RING-BACKUP	
	3D	1	**5K-9090**	1	SEAL-O-RING	
	4	1	**132-5303**	1	VALVE GP-RELIEF (CONTROL VALVE)	
	4A	1	**6E-0358**	1	RING-BACKUP	
	4B	1	**4K-1388**	1	SEAL-O-RING	
	4C	1	**5K-9090**	1	SEAL-O-RING	
	5	1	**4T-4513**	1	SPRING	
	6	1	**100-3567**	1	HOUSING-DETENT	
	7	1	**100-3566**	1	PISTON-DETENT	
	8	1	**4B-9782**	1	BALL	
	9	1	**167-6768**	1	HOUSING	
	10	1	**144-4277**	1	SHAFT AS-DETENT	
	11	1	**100-3564**	1	SPRING	
	12	1	**4T-4521**	2	RETAINER	
	13	1	**100-3563**	1	SPACER	
	14	1	**8F-0212**	1	SEAL-O-RING	
	15	1	**195-2139**	2	SEAL-O-RING	
	16	1	**197-2709**	1	SPRING	
	17	1	**128-2776**	1	GASKET	
	18	1	**2M-9780**	1	SEAL-O-RING	
	19	1	**9S-8006**	1	PLUG	
	20	1	**4T-4520**	1	FILTER (CONTROL VALVE)	
	21	1	**4T-4528**	1	RETAINER	
	22	1	**126-5476**	1	SEAT AS-SHUTTLE	
	22A	1	**4T-7807**	1	RING-BACKUP	
	22B	1	**7J-0204**	1	SEAL-O-RING	
	22C	1	**8T-2360**	1	SEAL-O-RING	
	23	1	**126-5796**	1	HOUSING GP (CONTROL VALVE)	
	23A	1	**1P-7363**	1	SEAL-O-RING	
	23B	1	**3J-7354**	1	SEAL-O-RING	
	23C	1	**8T-2361**	1	SEAL-O-RING	
	23D	1	**126-5984**	1	RING-BACKUP	
	23E	1	**126-5985**	1	RING-BACKUP	
	24	1	**5B-9318**	7	BALL	
	25	1	**8H-0707**	2	BOLT (1/4-20X1 IN)	
	26	1	**5P-0537**	2	WASHER-HARD (7.2X14.5X2MM THK)	

209-6762 **VALVE GP-CONTROL** ***(contd.)*** **i01883687**

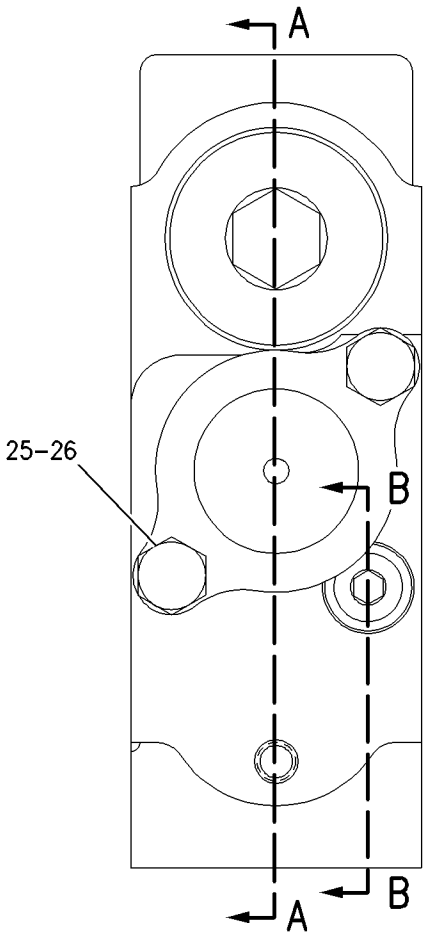

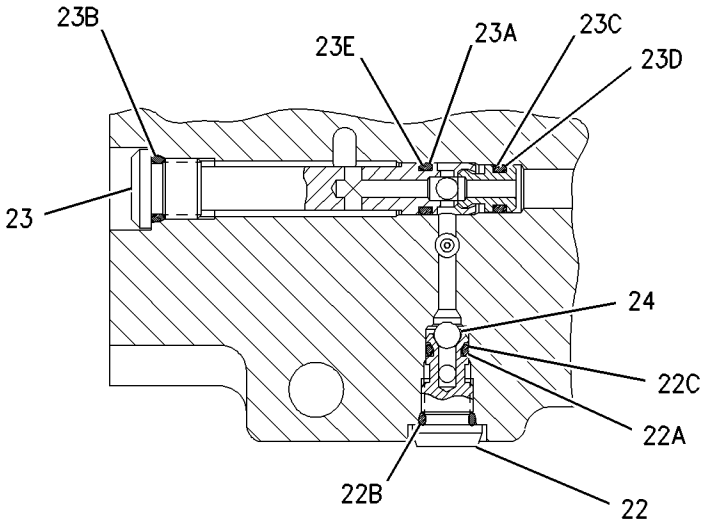

SECTION B-B

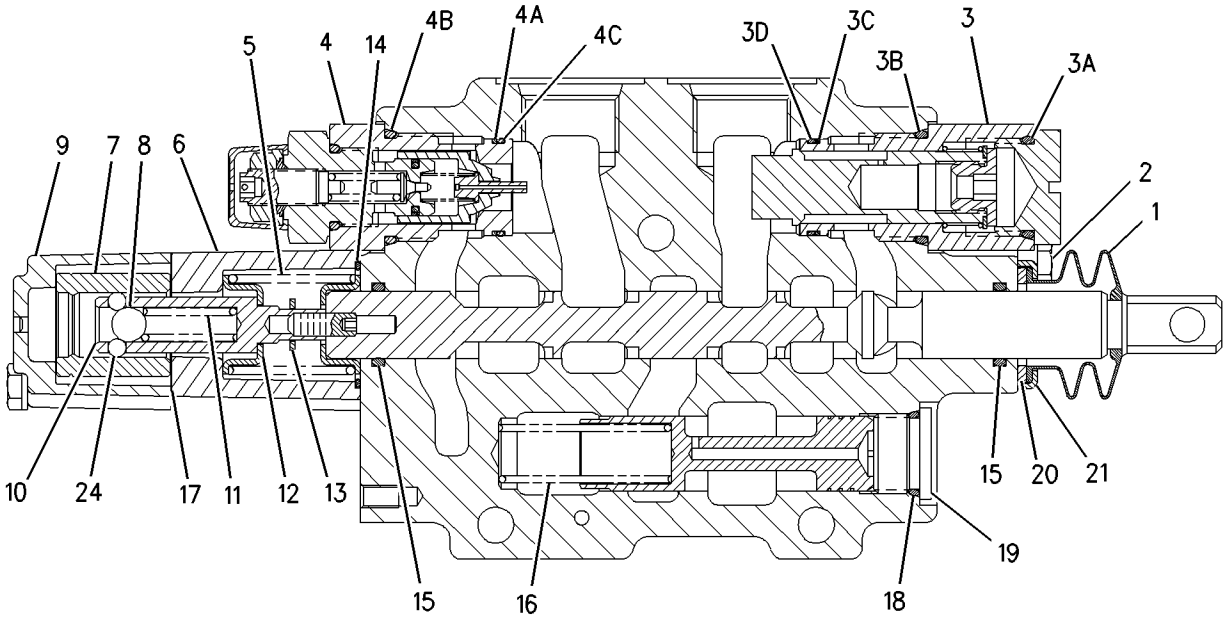

SECTION A-A

GRAPHIC #1 **<END>** g00912262

168-2210 VALVE GP-PRESS & FLOW CMPNSTR–HYDRAULIC PUMP

S/N: CBJ1-UP

PART OF 156-9084 PUMP GP-PISTON

SMCS-5086 **i01828585**

NOTE	REF NO	GRAPHIC REF	PART NUMBER	QTY	PART NAME 1 2 3 4 5 6 (PRODUCT LEVEL)	SEE PAGE
	1	1	**6E-6527**	2	PLUG	
	2	1	**6E-6528**	6	SEAL	
	3	1	**9S-8002**	1	PLUG	
	4	1	**9X-7680**	3	SEAL-O-RING	
	5	1	**5P-9262**	1	SEAL-O-RING	
	6	1	**105-2145**	1	VALVE-ORIFICE	
	7	1	**6E-3268**	1	RETAINER-SPRING	
	8	1	**6E-3269**	1	RETAINER-SPRING	
M	9	1	**8T-8442**	4	BOLT-SOCKET HEAD (M6X1X30MM)	
	10	1	**6E-3273**	1	SEAT	
	11	1	**6V-8352**	1	SEAL-O-RING	
	12	1	**6E-6536**	1	PLUG	
M	13	1	**6E-6537**	2	SCREW-ADJUSTMENT (M8X1X28MM)	
M	14	1	**6E-6538**	2	NUT-ADJUSTMENT (M8X1 THD)	
M	15	1	**6E-6539**	2	NUT-CAP (M8X1 THD)	
	16	1	**6E-6540**	1	PLUG	
	17	1	**033-6043**	1	SEAL-O-RING	
	18	1	**6E-3272**	1	SEAT	
	19	1	**6E-3274**	1	SPRING	
	20	1	**6E-3275**	1	SPRING	
	21	1	**3J-7354**	1	SEAL-O-RING	
	22	1	**201-0780**	1	ORIFICE	
	23	1	**193-1036**	1	SPRING	
	24	1	**6E-3276**	1	SPRING	
Z	25	1		1	STEM	
Z	26	1		1	STEM	
Z	27	1		1	BODY	

M-METRIC PART
Z-NOT SERVICED SEPARATELY

168-2210 VALVE GP-PRESS & FLOW CMPNSTR *(contd.)* i01828585

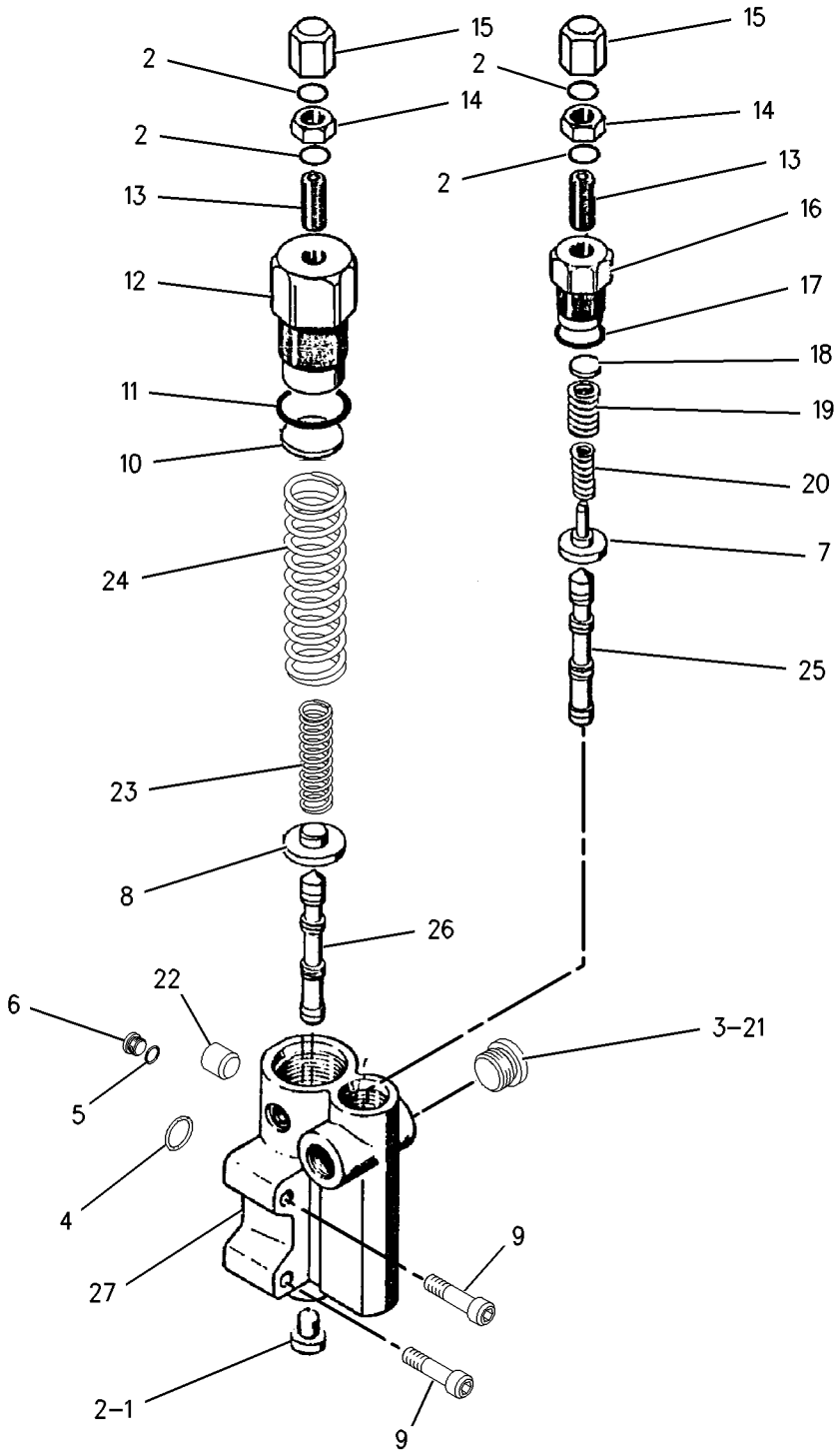

GRAPHIC #1 **<END>** g00918518

6E-0772 VALVE GP-RELIEF–ANGLE CONTROL VALVE

S/N: CBJ1-UP
PART OF 6E-4954 VALVE GP-CONTROL
ALSO AN ATTACHMENT

SMCS-5069, 5117 **i01883691**

NOTE	REF NO	GRAPHIC REF	PART NUMBER	QTY	PART NAME 1 2 3 4 5 6 (PRODUCT LEVEL)	SEE PAGE
	1	1	**4K-1388**	1	SEAL-O-RING	
	2	1	**6E-0358**	1	RING-BACKUP	
	3	1	**5K-9090**	1	SEAL-O-RING	

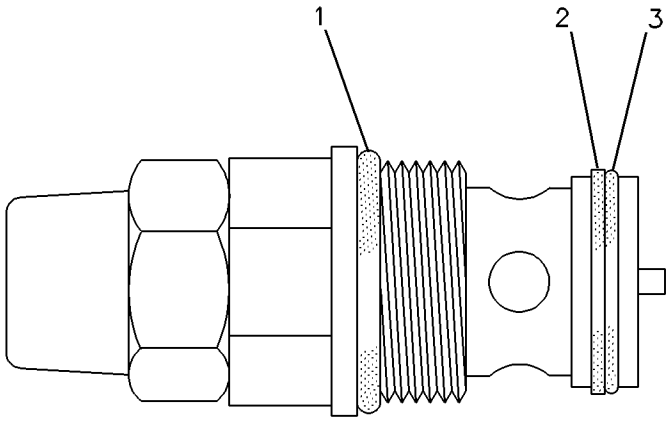

GRAPHIC #1 **<END>** g00206977

9T-6695 VALVE GP-RELIEF—IMPLEMENT CONTROL VALVE

S/N: CBJ1-UP

PART OF 6E-5083 VALVE GP-BANK 2, 209-6765 VALVE GP-BANK 3, 209-6764 VALVE GP-BANK 4

ALSO AN ATTACHMENT

SMCS-5069, 5117 **i01109864**

NOTE	REF NO	GRAPHIC REF	PART NUMBER	QTY	PART NAME 1 2 3 4 5 6 (PRODUCT LEVEL)	SEE PAGE
	1	1	**9T-0657**	1	PLUG	
	2	1	**4K-1388**	1	SEAL-O-RING (26.59MM ID)	
	3	1	**9T-6694**	1	SPRING	
	4	1	**7M-1201**	1	DOWEL	

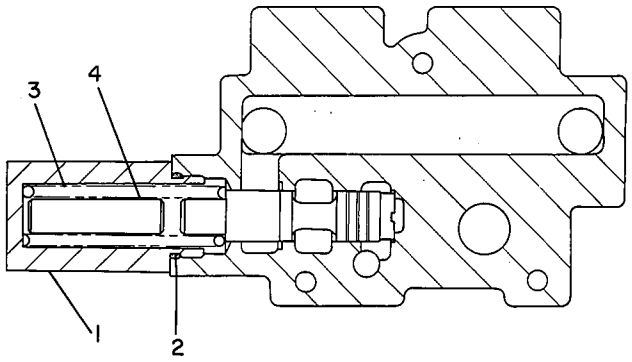

GRAPHIC #1 **<END>** g00195421

223-6303 BULLDOZER AR—POWER ANGLE & TILT WITH ADJUSTABLE PITCH

S/N: B6X1-UP
AN ATTACHMENT

SMCS-6050 **i01892815**

NOTE	PART NUMBER	QTY	PART NAME 1 2 3 4 5 6 (PRODUCT LEVEL)	SEE PAGE
Y	*110-5230*	1	BLADE GP-ANGLING	400
Y	*110-5226*	1	C-FRAME GP-POWER ANGLING	390
Y	**228-0320**	2	CYLINDER GP-ANGLING	321
Y	**110-3269**	2	CYLINDER GP-LIFT	323
Y	**160-0054**	1	CYLINDER GP-TILT	331
Y	*110-6113*	1	LINES GP-ANGLE & TILT	336
Y	*220-0897*	1	LINES GP-LIFT CYLINDER	344
Y	**190-5328**	1	LINK GP-PITCH	392
Y	*134-6775*	1	PIN GP	395
Y	**6V-5343**	1	PLATE & FILM GP	513
	107-8126	2	BEARING (SPECIAL C-FRAME)	
			(PRESSED INTO C-FRAME MOUNTING BORE IN TRACTOR MAIN FRAME PRIOR TO INSTALLATION OF C-FRAME)	
	109-0959	4	RING	

Y-SEPARATE ILLUSTRATION

<END>

206-9537 BULLDOZER AR-SEMI-UNIVERSAL

S/N: S6D1-UP
FOR USE WITH 229-2831—PAGE 334. CANNOT BE USED WITH 169-4912—PAGE 59, 223-6303—PAGE 388, 173-8641—PAGE 335
AN ATTACHMENT

SMCS-6050, 6078 **i01883718**

NOTE	PART NUMBER	QTY	PART NAME 1 2 3 4 5 6 (PRODUCT LEVEL)	SEE PAGE
Y	*115-4594*	1	BLADE GP-SEMI-UNIVERSAL	402
Y	**115-3524**	2	CYLINDER GP-LIFT	325
Y	*155-7704*	1	HOOD & GUARD GP	253
Y	*227-0756*	1	LINES GP-LIFT CYLINDER	346
Y	*115-4564*	1	LINES GP-TILT CYLINDER	352
Y	*138-7033*	1	MOUNTING GP-CYLINDER	356
Y	*115-4472*	1	PUSH ARM GP	396
Y	*142-1229*	1	TRUNNION GP-BULLDOZER	399
M	**8T-4137**	2	BOLT (M10X1.5X20MM)	
	211-8511	1	BRACKET	
	8T-4121	2	WASHER-HARD (11X21X2.5MM THK)	
	4B-4158	2	SCREW-DRIVE (3/16X0.25 IN)	
	2Y-9790	1	PLATE-SERIAL NUMBER (BULLDOZER)	
			ON BACK OF MOLDBOARD - NEAR TOP AT RH END	

M-METRIC PART
Y-SEPARATE ILLUSTRATION

<END>

206-9544 BULLDOZER AR-SEMI-UNIVERSAL–
SOUND SUPPRESSION
S/N: S6S1-UP

FOR USE WITH 229-2831–PAGE 334, 169-4912–PAGE 59. CANNOT BE USED WITH 223-6303–PAGE 388, 206-9537–PAGE 388 AN ATTACHMENT

SMCS-6050, 6078 **i01883722**

NOTE	PART NUMBER	QTY	PART NAME 1 2 3 4 5 6 (PRODUCT LEVEL)	SEE PAGE
Y	*115-4594*	1	BLADE GP-SEMI-UNIVERSAL	402
Y	**115-3524**	2	CYLINDER GP-LIFT	325
Y	*155-7804*	1	HOOD & GUARD GP	255
Y	*227-0756*	1	LINES GP-LIFT CYLINDER	346
Y	*115-4564*	1	LINES GP-TILT CYLINDER	352
Y	*138-7033*	1	MOUNTING GP-CYLINDER	356
Y	*115-4472*	1	PUSH ARM GP	396
Y	*142-1229*	1	TRUNNION GP-BULLDOZER	399
M	**8T-4137**	2	BOLT (M10X1.5X20MM)	
	211-8511	1	BRACKET	
	8T-4121	2	WASHER-HARD (11X21X2.5MM THK)	
	4B-4158	2	SCREW-DRIVE (3/16X0.25 IN)	
	2Y-9790	1	PLATE-SERIAL NUMBER (BULLDOZER)	
			ON BACK OF MOLDBOARD - NEAR TOP AT RH END	

M-METRIC PART
Y-SEPARATE ILLUSTRATION

<END>

IMPLEMENTS

110-5226 C-FRAME GP-POWER ANGLING

S/N: B6X1-UP
PART OF 223-6303 BULLDOZER AR
AN ATTACHMENT

SMCS-6063 **i01621684**

NOTE	REF NO	GRAPHIC REF	PART NUMBER	QTY	PART NAME 1 2 3 4 5 6 (PRODUCT LEVEL)	SEE PAGE
C	1	1	**200-2649**	1	FRAME AS	
		1	**8P-9770**	1	PLATE	
M		1	**9R-2640**	1	BOSS	
		1	**9R-3572**	1	BOSS (M12X20MM)	
	1A	1	**104-7423**	1	TOWER AS	
	1B	1	**203-2897**	1	TOWER AS (RH)	
	1C	1	**124-5240**	2	PLATE	
		1	**200-2650**	1	TOWER AS (LH)	
	1D	1	**145-0804**	1	SLEEVE	
	1E	1	**108-8268**	2	BRACKET	
	2	1	**089-8249**	2	SPACER (4X72X3MM THK)	
	3	1	**109-0958**	2	PIN	
B	4	1	**4Y-4905**	8	WASHER (79X175X2MM THK)	
	5	1	**104-4746**	2	DOWEL	
	6	1	**108-5794**	4	PLUG-PIPE	
	7	1	**104-7391**	1	CAP	
	8	1	**124-5741**	2	PIN	
	9	1	**8T-4123**	3	WASHER-PLATED (22X35X3.5MM THK)	
	10	1	**161-2113**	1	SPACER	
	11	1	**160-5691**	1	PIN	
	12	1	**145-0803**	1	PIN	
B	13	1	**124-5235**	6	SHIM (0.8MM THK)	
	14	1	**124-5234**	2	RETAINER	
	15	1	**105-2058**	1	BRACKET AS	
M	16	1	**7X-2465**	4	BOLT (M24X3.0X180MM)	
	17	1	**8T-1482**	4	WASHER-HARD (26X50X8MM THK)	
	18	1	**110-5217**	2	PLATE	
	19	1	**104-7498**	2	RETAINER	
	20	1	**104-7434**	1	RETAINER	
M	21	1	**7X-2562**	5	BOLT (M20X2.5X45MM)	
	22	1	**104-4817**	1	PIN	
	23	1	**8G-5747**	4	SPACER (45X50X15MM THK)	
M	24	1	**8T-4139**	6	BOLT (M12X1.75X30MM)	
M	25	1	**8T-5041**	2	BOLT (M12X1.75X120MM)	
	26	1	**8T-4223**	2	WASHER-HARD (13.5X25.5X3MM THK)	
	27	1	**124-5233**	2	PIN	

B-USE AS REQUIRED
C-CHANGE FROM PREVIOUS TYPE
M-METRIC PART

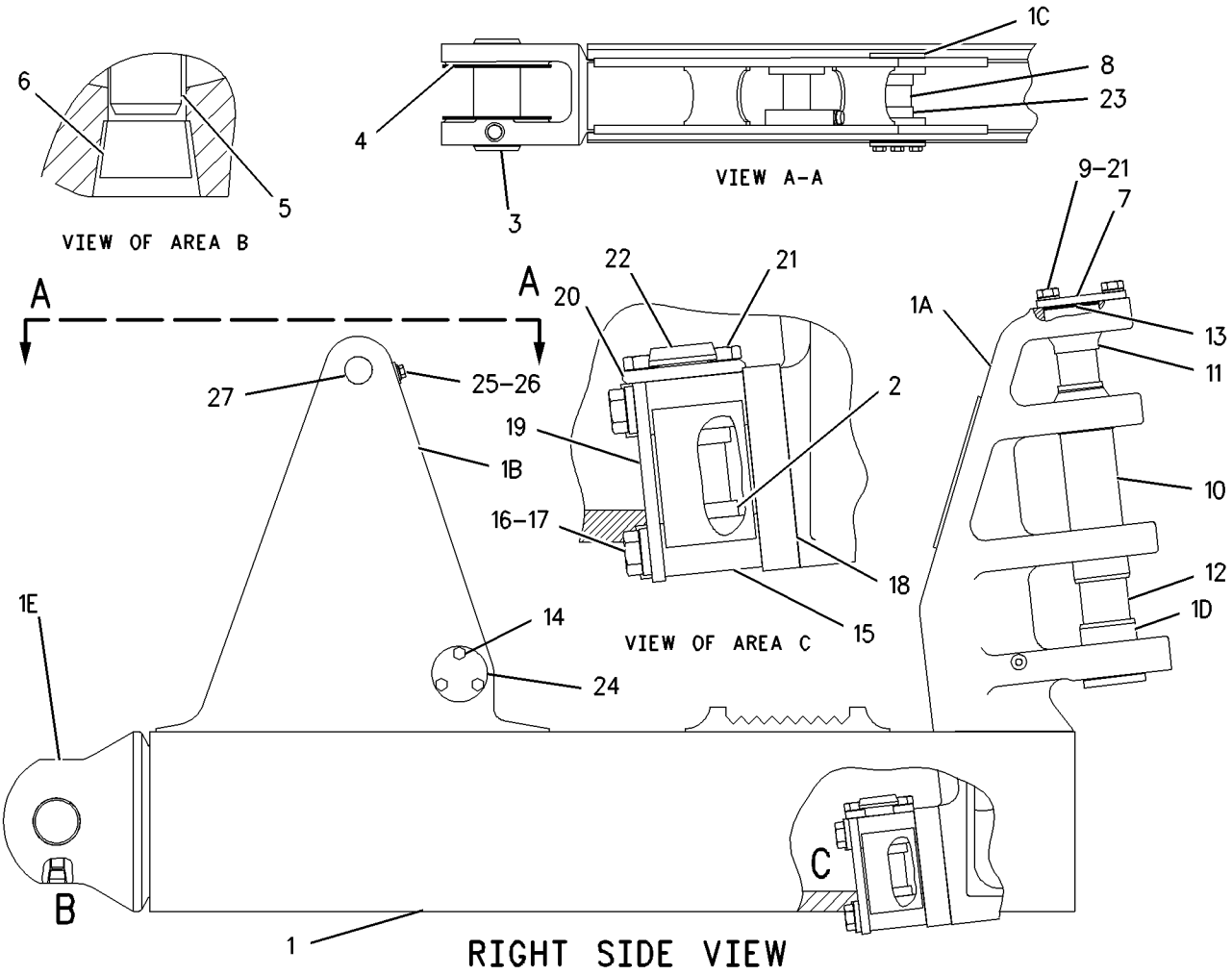

GRAPHIC #1

<END>

g00853018

190-5328 LINK GP-PITCH

S/N: B6X1-UP
PART OF 223-6303 BULLDOZER AR
AN ATTACHMENT

SMCS-6079, 6081 **i01883724**

NOTE	REF NO	GRAPHIC REF	PART NUMBER	QTY	PART NAME 1 2 3 4 5 6 (PRODUCT LEVEL)	SEE PAGE
	1	1	**3B-8489**	2	FITTING-GREASE (1/8-27 THD) (PITCH LINK)	
	2	1	**7J-1309**	2	BEARING	
	3	1	**188-3757**	1	LINK	
	4	1	**1S-3311**	2	RING-RETAINING	

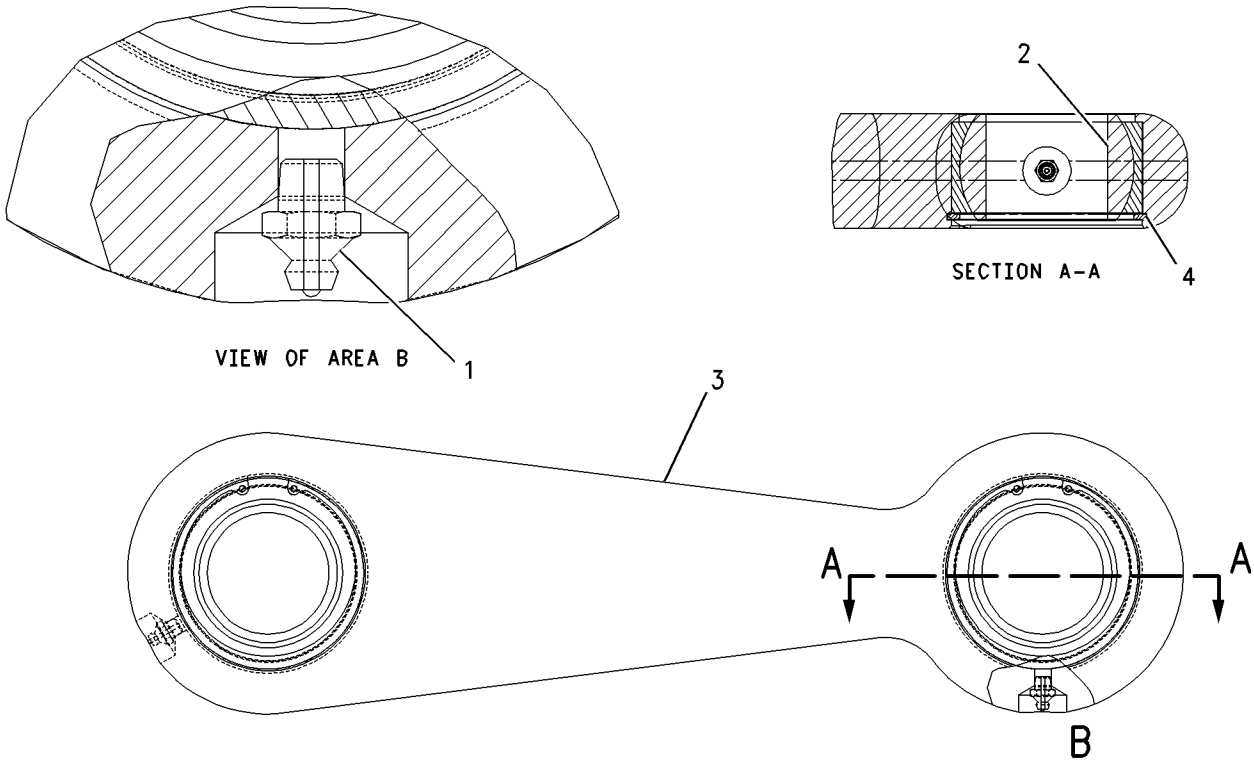

GRAPHIC #1 **<END>** g00827872

3A-8609 MOUNTING GP-RIPPER

S/N: TPP1-UP
PART OF 180-4560 RIPPER AR
AN ATTACHMENT

SMCS-6165, 6324 **i01796750**

NOTE	REF NO	GRAPHIC REF	PART NUMBER	QTY	PART NAME 1 2 3 4 5 6 (PRODUCT LEVEL)	SEE PAGE
	1	1	**1U-0063**	2	PIN	
	2	1	**3A-8613**	1	BRACKET AS-LH	
	3	1	**3A-8614**	1	BRACKET AS-RH	
B	4	1	**193-3074**	6	SPACER (52X120X5MM THK)	
B	5	1	**9N-4450**	12	SPACER (68X120X5MM THK)	
	6	1	**114-5671**	1	PLATE AS-RH	
	7	1	**114-5672**	1	PLATE AS-LH	
	8	1	**1U-0159**	2	PIN	
	9	1	**6K-8987**	2	DOWEL	
M	10	1	**6V-7687**	2	LOCKNUT (M12X1.75 THD)	
M	11	1	**6V-7744**	2	LOCKNUT (M10X1.5 THD)	
	12	1	**8T-4123**	26	WASHER-PLATED (22X35X3.5MM THK)	
M	13	1	**8T-4198**	2	BOLT (M10X1.5X100MM)	
M	14	1	**8T-5412**	2	BOLT (M12X1.75X140MM)	
M	15	1	**8T-6430**	26	BOLT (M20X2.5X50MM)	
B	16	1	**193-3075**	6	SPACER (52X121X.5MM THK)	
B	17	1	**9N-4449**	6	SPACER (68X121X1.5MM THK)	

B-USE AS REQUIRED
M-METRIC PART

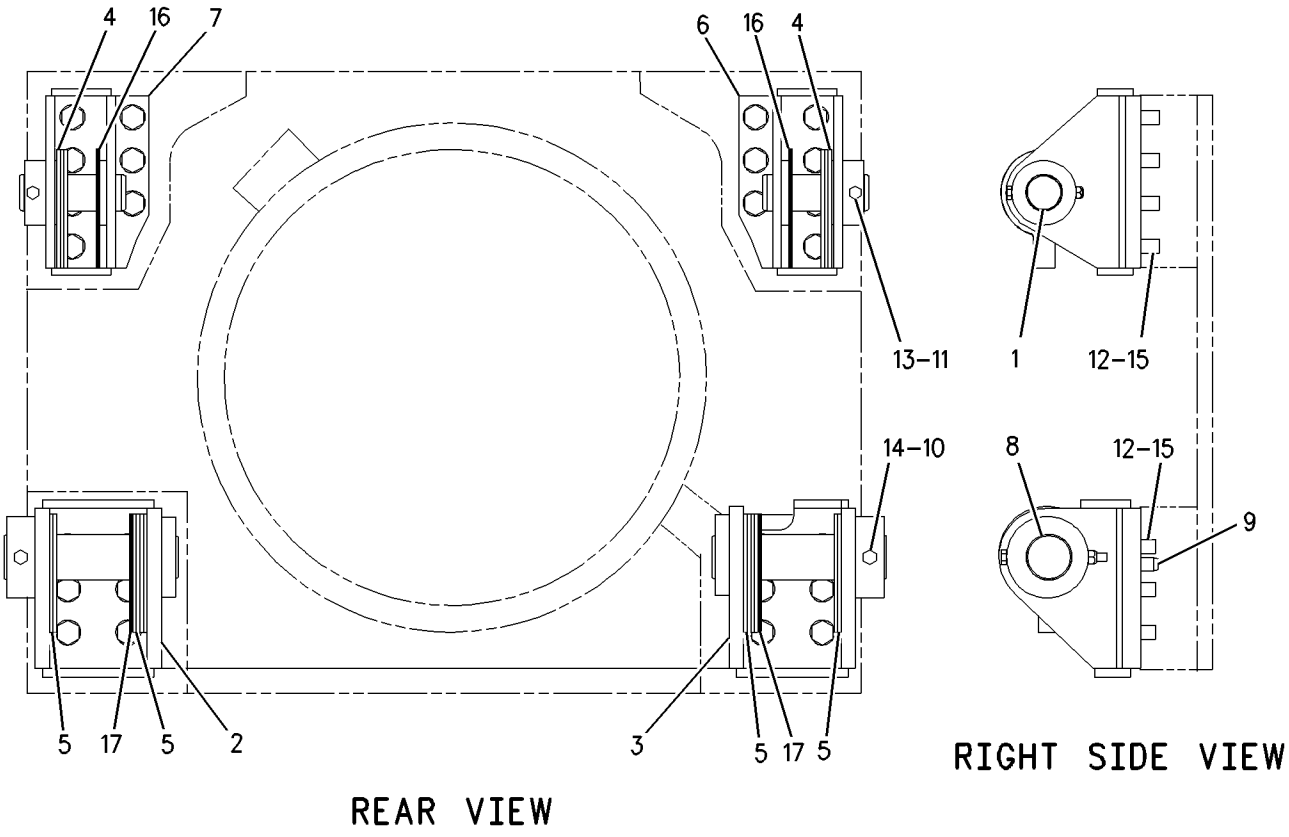

GRAPHIC #1 **<END>** g00921215

134-6775 PIN GP–DOZER

S/N: B6X1-UP
PART OF 223-6303 BULLDOZER AR
AN ATTACHMENT

SMCS-6108 **i00598343**

NOTE	REF NO	GRAPHIC REF	PART NUMBER	QTY	PART NAME 1 2 3 4 5 6 (PRODUCT LEVEL)	SEE PAGE
	1	1	**3G-8932**	2	PIN	
	2	1	**4T-0231**	2	RETAINER	
M	3	1	**8T-4956**	2	BOLT (M12X1.75X35MM)	
B	4	1	**4J-0805**	6	WASHER	
	5	1	**8T-4223**	2	WASHER-HARD (3MM THK)	

B-USE AS REQUIRED
M-METRIC PART

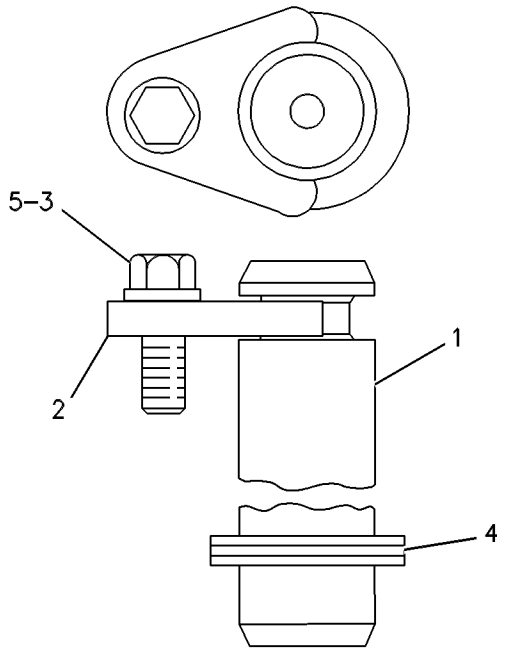

GRAPHIC #1 **<END>** g00263201

IMPLEMENTS

115-4472 PUSH ARM GP

S/N: S6D1-UP; S6S1-UP
PART OF 206-9537, 206-9544 BULLDOZER AR-SEMI-UNIVERSAL
AN ATTACHMENT

SMCS-6061 **i01877294**

NOTE	REF NO	GRAPHIC REF	PART NUMBER	QTY	PART NAME 1 2 3 4 5 6 (PRODUCT LEVEL)	SEE PAGE
	1	1	**8T-4123**	6	WASHER-PLATED (22X35X3.5MM THK)	
	2	1	**8T-5439**	6	WASHER (21.5X45X6MM THK)	
	3	1	**160-6306**	2	CAP-BEARING	
B	4	1	**8E-5701**	52	SHIM (.8MM THK)	
M	5	1	**8T-6381**	4	BOLT (M20X2.5X120MM)	
B	6	1	**8E-5703**	78	SHIM (0.8MM THK)	
	7	1	**8J-2880**	3	CAP-BEARING	
M	8	1	**8T-4131**	22	NUT (M20X2.5 THD)	
Y	9	1	**115-3523**	1	CYLINDER GP-TILT	329
	10	1	**3F-6185**	2	PIN (44.3MM OD)	
	11	1	**4F-0255**	2	PIN (.5 IN OD)	
M	12	1	**7X-2532**	8	BOLT (M20X2.5X130MM)	
	13	1	**124-9672**	1	BRACE AS-TILT	
B		1	**8E-5703**	14	SHIM (0.8MM THK)	
	14	1	**8E-2887**	1	YOKE	
	15	1	**4T-1520**	1	CAGE AS	
	16	1	**6J-5383**	1	BEARING	
M	17	1	**8C-8478**	4	BOLT (M20X2.5X140MM)	
M	18	1	**7X-2566**	6	BOLT (M20X2.5X110MM)	
	19	1	**115-4473**	1	ARM AS	
	20	1	**3G-6313**	1	BEARING	
	21	1	**1U-2533**	1	BAR	
	22	1	**4T-0732**	1	BRACKET	
	23	1	**9W-9165**	1	BEARING	
	24	1	**8P-9770**	1	PLATE	
	25	1	**115-4474**	1	ARM AS	
	26	1	**3G-6313**	1	BEARING	
	27	1	**1U-2533**	1	BAR	
	28	1	**4T-0780**	1	TRUNNION	
	29	1	**9W-9165**	1	BEARING	
	30	1	**8P-9770**	1	PLATE	
	31	1	**115-4522**	1	BRACKET	

B-USE AS REQUIRED
M-METRIC PART
Y-SEPARATE ILLUSTRATION

115-4472 **PUSH ARM GP** ***(contd.)*** **i01877294**

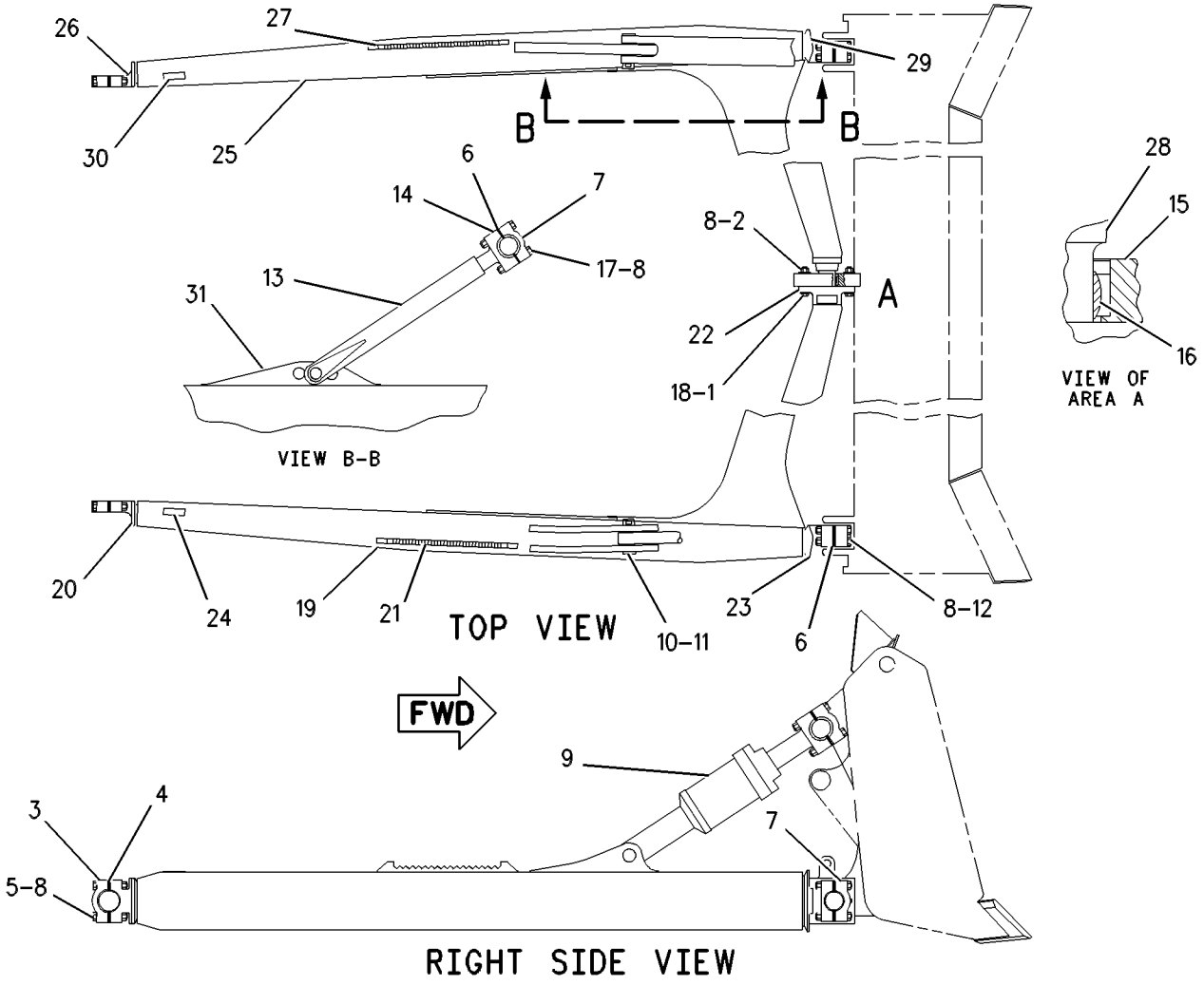

GRAPHIC #1

<END>

g00541344

IMPLEMENTS

180-4560 RIPPER AR

S/N: TPP1-UP

FOR USE WITH 156-9510—PAGE 334. CANNOT BE USED WITH WINCH AR - DRAWBAR MUST BE REMOVED

AN ATTACHMENT

SMCS-6312, 6316 **i01892842**

NOTE	PART NUMBER	QTY	PART NAME 1 2 3 4 5 6 (PRODUCT LEVEL)	SEE PAGE
Y	**9T-2716**	1	CYLINDER GP-RIPPER LIFT	327
Y	*180-4561*	1	LINES GP-RIPPER	350
Y	*3A-8609*	1	MOUNTING GP-RIPPER	393
Y	**5P-1101**	1	PLATE & FILM GP	513
Y	*155-5322*	1	RIPPER GP	406

Y-SEPARATE ILLUSTRATION

<END>

142-1229 TRUNNION GP-BULLDOZER

S/N: S6D1-UP; S6S1-UP
PART OF 206-9537, 206-9544 BULLDOZER AR-SEMI-UNIVERSAL
AN ATTACHMENT

SMCS-6069 **i01877303**

NOTE	REF NO	GRAPHIC REF	PART NUMBER	QTY	PART NAME 1 2 3 4 5 6 (PRODUCT LEVEL)	SEE PAGE
	1	1	**5P-1979**	2	SEAL-O-RING	
	2	1	**9U-8909**	2	TRUNNION AS	
					(EACH INCLUDES)	
		1	**9J-2759**	1	TRUNNION	
M	3	1	**7X-2475**	20	BOLT (M16X2X130MM)	
	4	1	**8T-4122**	20	WASHER-HARD (17X32X3.5MM THK)	
M	5	1	**8T-4192**	4	BOLT (M12X1.75X25MM)	
	6	1	**8T-4223**	4	WASHER-HARD (13.5X25.5X3MM THK)	
	7	1	**143-3148**	2	COVER	

M-METRIC PART

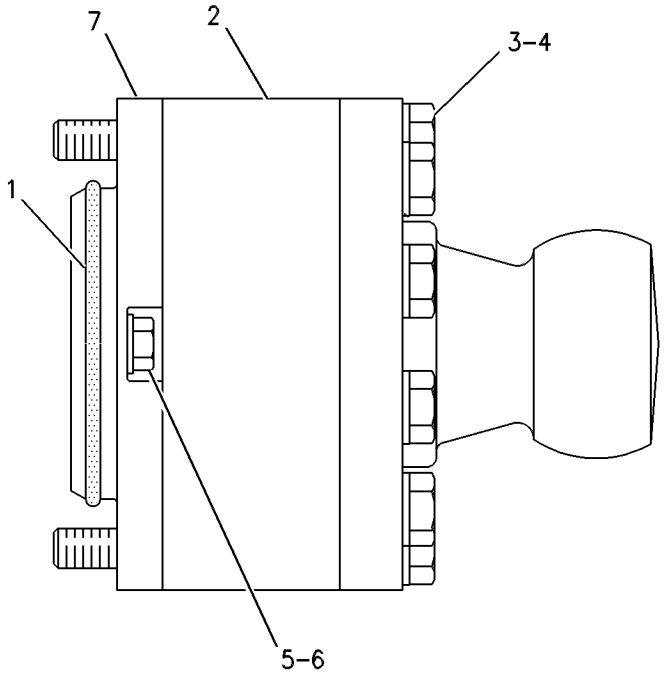

GRAPHIC #1 **<END>** g00289283

110-5230 BLADE GP-ANGLING

S/N: CBJ1-UP; B6X1-UP
PART OF 223-6303 BULLDOZER AR
AN ATTACHMENT

SMCS-6052, 6060 **i01830122**

NOTE	REF NO	GRAPHIC REF	PART NUMBER	QTY	PART NAME 1 2 3 4 5 6 (PRODUCT LEVEL)	SEE PAGE
	1	1	**110-5229**	1	BLADE AS	
	2	1	**8P-9770**	1	PLATE	
	3	1	**110-5227**	1	BRACKET AS (CENTER)	
	4	1	**110-5228**	1	BRACKET AS	
	5	1	**8E-9502**	1	SUPPORT	
M	6	1	**7X-2562**	4	BOLT (M20X2.5X45MM)	
	7	1	**104-7434**	2	RETAINER	
	8	1	**3G-8932**	2	PIN	
	9	1	**4T-0231**	2	RETAINER	
M	10	1	**8T-4956**	2	BOLT (M12X1.75X35MM)	
	11	1	**8T-4223**	2	WASHER-HARD (13.5X25.5X3MM THK)	
	12	1	**197-6440**	1	BEARING	
	13	1	**3B-8489**	2	FITTING-GREASE (ANGLING BULLDOZER BLADE)	
	14	1	**8G-5747**	4	SPACER (45X50X15MM THK)	
	15	1	**089-8249**	4	SPACER (4X72X3MM THK)	
Y	16	1	*8E-9380*	1	EDGE GP-BIT & CUTTING	404
	17	1	**8J-8905**	1	RING-LOCK	
	18	1	**104-4817**	2	PIN	

M-METRIC PART
Y-SEPARATE ILLUSTRATION

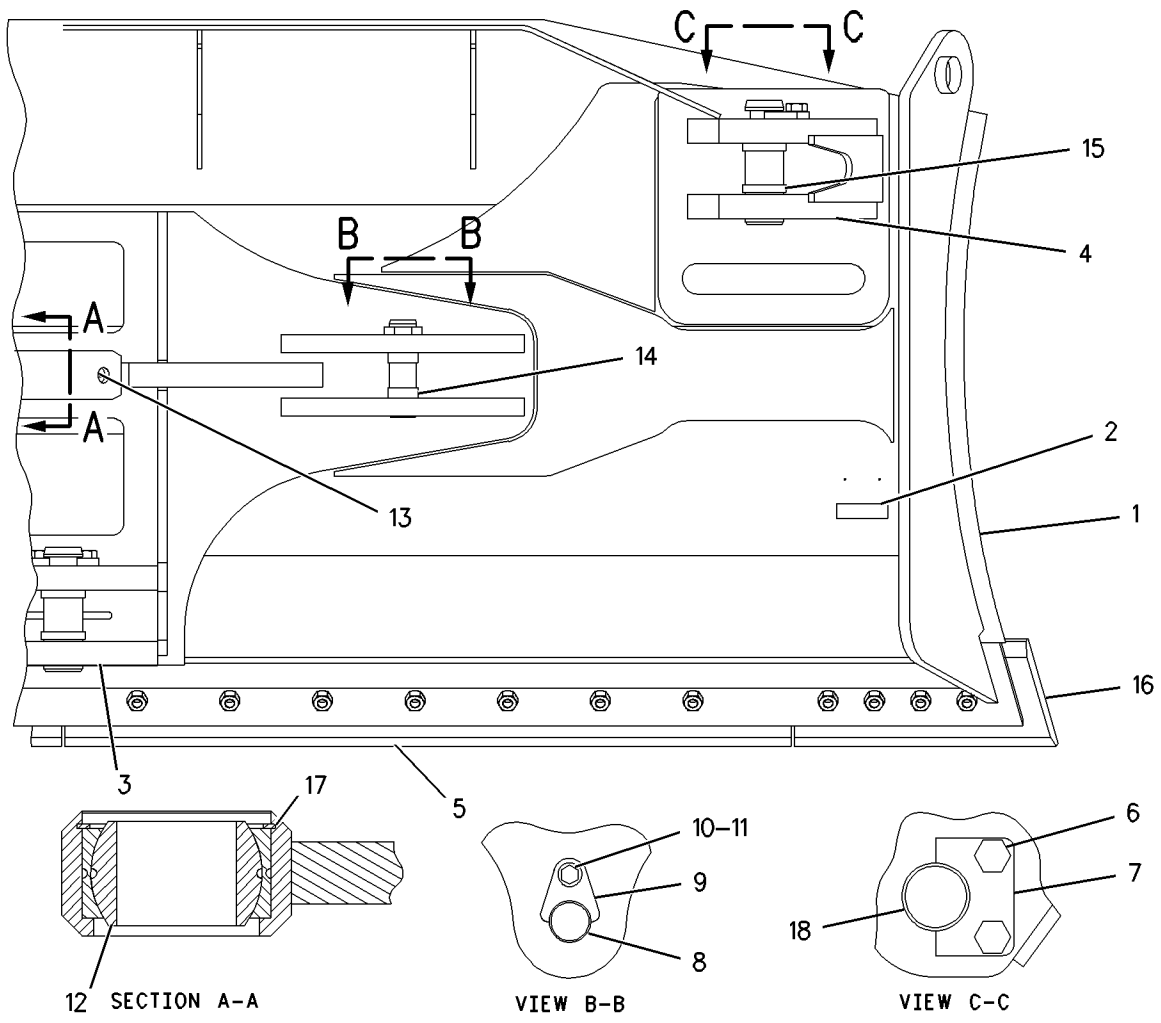

GRAPHIC #1 **<END>** g00883556

WORK TOOLS

115-4594 BLADE GP-SEMI-UNIVERSAL

S/N: S6D1-UP; CBJ1-UP; S6S1-UP
PART OF 206-9537, 206-9544 BULLDOZER AR-SEMI-UNIVERSAL
AN ATTACHMENT

SMCS-6060, 6078 **i01876964**

NOTE	REF NO	GRAPHIC REF	PART NUMBER	QTY	PART NAME 1 2 3 4 5 6 (PRODUCT LEVEL)	SEE PAGE
	1	1	**8H-8898**	2	PIN	
Y	2	1	*9U-8079*	1	EDGE GP-BIT & CUTTING	405
	3	1	**3B-4630**	2	PIN-COTTER	
	4	1	**4T-1481**	1	LINK AS	
	5	1	**115-4595**	1	BLADE AS-SEMI-UNIVERSAL	
	6	1	**1U-0183**	2	DEFLECTOR	
	7	1	**6I-9420**	2	BRACKET AS	
					(EACH INCLUDES)	
		1	**7J-5131**	1	TRUNNION	
	8	1	**8E-5192**	2	BRACKET AS	
					(EACH INCLUDES)	
		1	**4J-1641**	1	TRUNNION	
	9	1	**8E-5194**	1	BRACKET	
	10	1	**8P-9770**	1	PLATE	
	11	1	**9R-3572**	3	BOSS (M12X20MM)	
	12	1	**9U-8506**	2	BRACKET AS	
					(EACH INCLUDES)	
		1	**4T-1504**	1	TRUNNION	
	13	1	**9W-6381**	1	PLATE	
	14	1	**6I-9461**	1	PLATE-LH	
	15	1	**6I-9462**	1	PLATE-RH	

Y-SEPARATE ILLUSTRATION

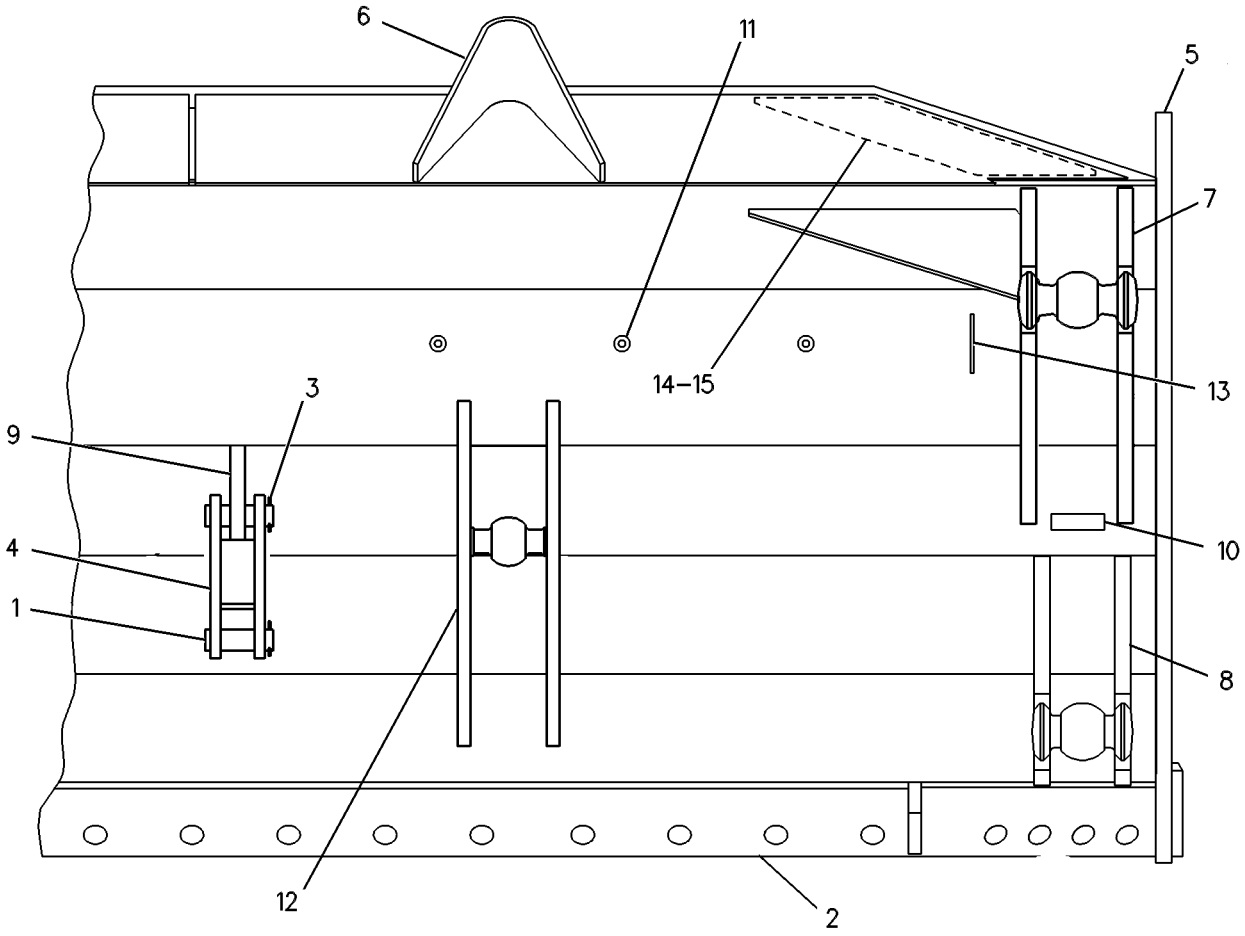

GRAPHIC #1 **<END>** g00253649

8E-9380 EDGE GP-BIT & CUTTING

S/N: CBJ1-UP; B6X1-UP
PART OF 110-5230 BLADE GP-ANGLING
AN ATTACHMENT

SMCS-6801, 6804 **i00599768**

NOTE	REF NO	GRAPHIC REF	PART NUMBER	QTY	PART NAME 1 2 3 4 5 6 (PRODUCT LEVEL)	SEE PAGE
	1	1	**8E-9378**	1	BIT-END-LH	
		1	**8E-9379**	1	BIT-END-RH	
	2	1	**3G-4282**	2	EDGE-CUTTING	
	3	1	**5J-4773**	22	BOLT-PLOW (3/4-10X2.5IN)	
	4	1	**5P-8248**	22	WASHER-HARD (3.5MM THK)	
	5	1	**2J-3506**	22	NUT-FULL (3/4-10 THD)	

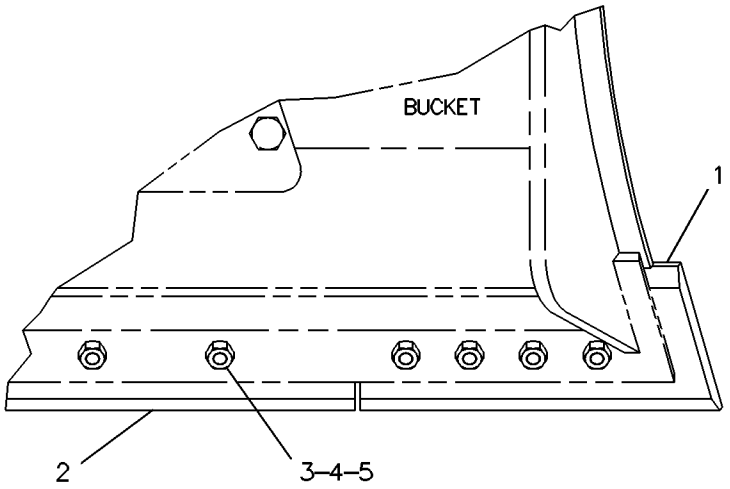

GRAPHIC #1 **<END>** g00223481

9U-8079 EDGE GP-BIT & CUTTING—WIDE GAGE

S/N: S6D1-UP; CBJ1-UP; S6S1-UP
PART OF 115-4594 BLADE GP-SEMI-UNIVERSAL
AN ATTACHMENT

SMCS-6801, 6804 **i01877671**

NOTE	REF NO	GRAPHIC REF	PART NUMBER	QTY	PART NAME 1 2 3 4 5 6 (PRODUCT LEVEL)	SEE PAGE
	1	1	**8E-9378**	1	BIT-END (LH)	
		1	**8E-9379**	1	BIT-END (RH)	
	2	1	**4T-6659**	1	EDGE-CUTTING	
	3	1	**9U-8057**	2	EDGE-CUTTING	
	4	1	**5J-4773**	23	BOLT-PLOW (3/4-10X2.5 IN)	
	5	1	**5P-8248**	23	WASHER-HARD (20X36.5X3.5MM THK)	
	6	1	**2J-3506**	23	NUT-FULL (3/4-10 THD)	

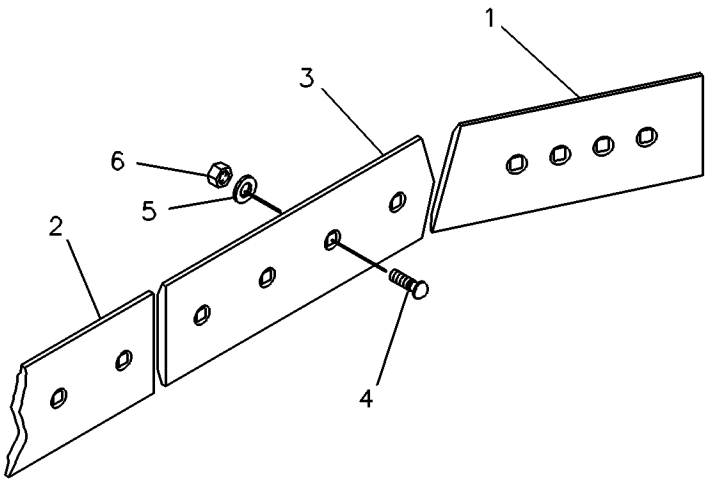

GRAPHIC #1 **<END>** g00223834

WORK TOOLS

155-5322 RIPPER GP

S/N: TPP1-UP
PART OF 180-4560 RIPPER AR
AN ATTACHMENT

SMCS-6311, 6312, 6315, 6316, 6325 **i01883728**

NOTE	REF NO	GRAPHIC REF	PART NUMBER	QTY	PART NAME 1 2 3 4 5 6 (PRODUCT LEVEL)	SEE PAGE
M	1	1	**8T-4648**	8	BOLT (M12X1.75X70MM)	
M	2	1	**8T-4244**	10	NUT (M12X1.75 THD)	
	3	1	**4K-3004**	2	BEARING-TRUNNION SUPPLEMENTARY	
	4	1	**3B-8489**	11	FITTING-GREASE (1/8-27 THD) (RIPPER)	
Y	5	1	*8J-2189*	3	TOOTH GP-RIPPER	408
	6	1	**1U-0159**	2	PIN	
M	7	1	**8T-7929**	2	BOLT (M12X1.75X180MM)	
M	8	1	**6V-7744**	2	LOCKNUT (M10X1.5 THD)	
M		1	**7X-2543**	2	BOLT (M10X1.5X120MM)	
	9	1	**121-0792**	1	LINK AS	
		1	**8P-9770**	1	PLATE	
	10	1	**9W-0099**	4	BEARING-SLEEVE	
	11	1	**2K-0703**	1	BAR	
M	12	1	**8T-4139**	2	BOLT (M12X1.75X30MM)	
	13	1	**3A-8612**	2	LINK AS	
					(EACH INCLUDES)	
	14	1	**7J-9682**	2	BEARING-SLEEVE	
	15	1	**9J-9598**	2	PIN	
		1	**9T-5900**	6	WASHER (51.2X98X4.76MM THK)	
	16	1	**3A-8608**	1	CARRIAGE AS	
	17	1	**8P-9770**	1	PLATE	
	18	1	**5K-7748**	3	HOLDER-TOOTH	
	19	1	**3K-8510**	1	PIN	
	20	1	**8T-4223**	18	WASHER-HARD (13.5X25.5X3MM THK)	

M-METRIC PART
Y-SEPARATE ILLUSTRATION

155-5322 **RIPPER GP** ***(contd.)*** **i01883728**

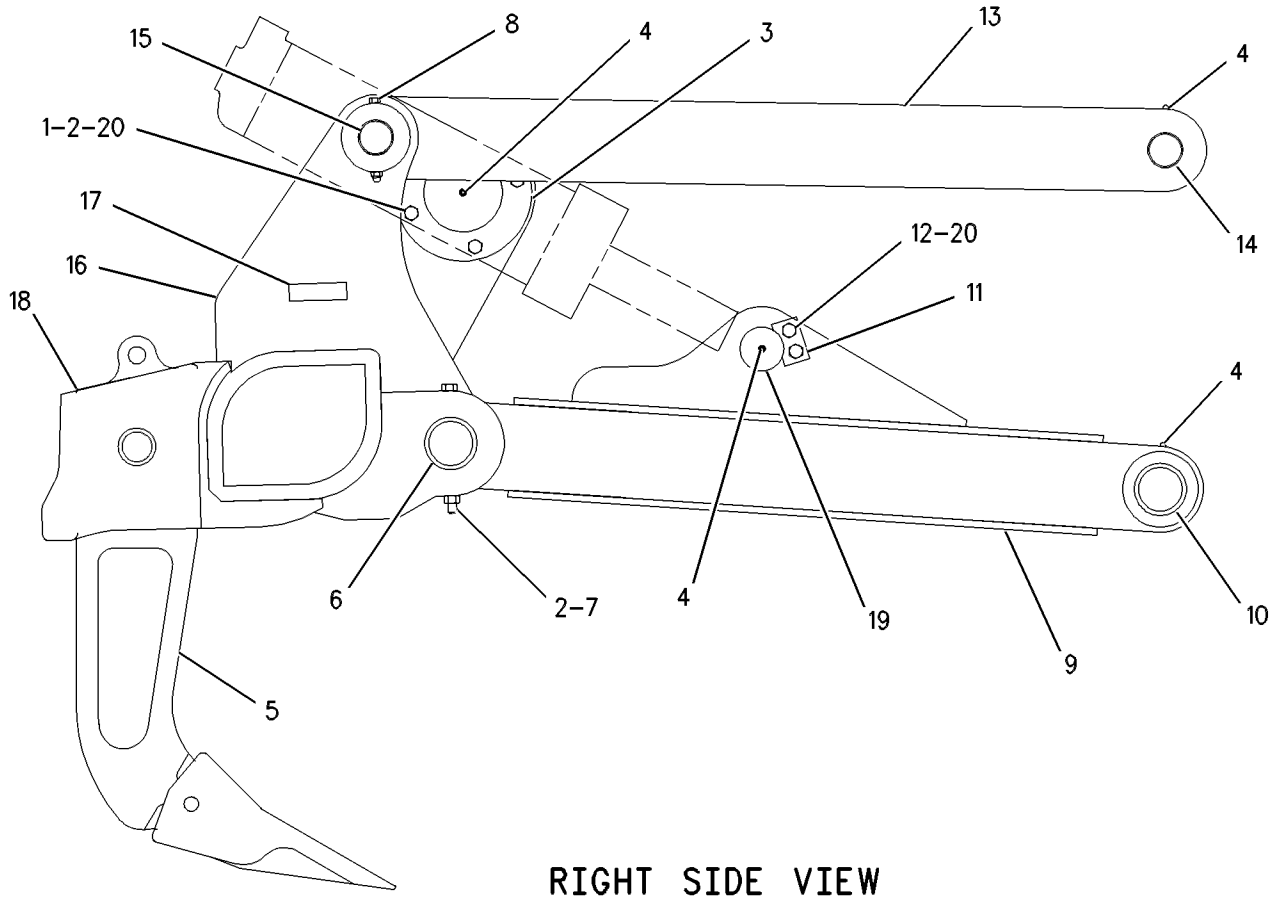

RIGHT SIDE VIEW

GRAPHIC #1 **<END>** g00591224

8J-2189 TOOTH GP-RIPPER—STRAIGHT SHANK

S/N: TPP1-UP
PART OF 155-5322 RIPPER GP
AN ATTACHMENT

SMCS-6808, 6810 **i01893140**

NOTE	REF NO	GRAPHIC REF	PART NUMBER	QTY	PART NAME 1 2 3 4 5 6 (PRODUCT LEVEL)	SEE PAGE
	1	1	**3B-5325**	2	PIN-COTTER	
	2	1	**8J-2190**	1	PIN	
	3	1	**9J-3139**	1	SHANK-RIPPER	
C	4	1	**114-0358**	1	PIN-G.E.T.	
C		1	**114-0359**	1	RETAINER AS-G.E.T.	
	5	1	**6Y-0359**	1	TIP-RIPPER	

C-CHANGE FROM PREVIOUS TYPE

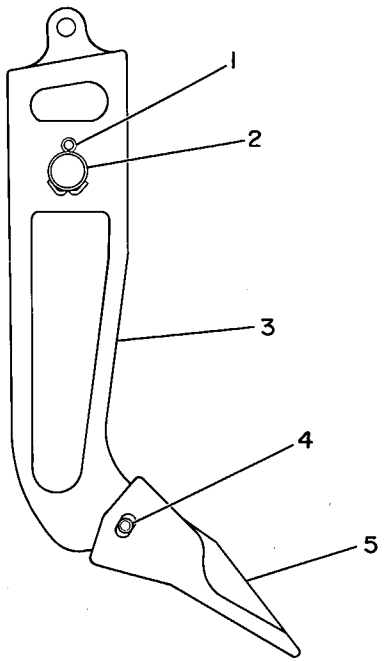

GRAPHIC #1 **<END>** g00081660

9J-8926 TOOTH GP-RIPPER—CURVED SHANK

S/N: CBJ1-UP
PART OF 135-9795 TOOTH GP-RIPPER
AN ATTACHMENT

SMCS-6808, 6810 **i01095060**

NOTE	REF NO	GRAPHIC REF	PART NUMBER	QTY	PART NAME 1 2 3 4 5 6 (PRODUCT LEVEL)	SEE PAGE
	1	1	**3B-5325**	2	COTTER	
	2	1	**8J-2190**	1	PIN	
	3	1	**9J-8923**	1	SHANK-RIPPER	
	4	1	**114-0358**	1	PIN-G.E.T.	
	5	1	**6Y-0352**	1	TIP-RIPPER	
	6	1	**114-0359**	1	RETAINER AS-G.E.T.	

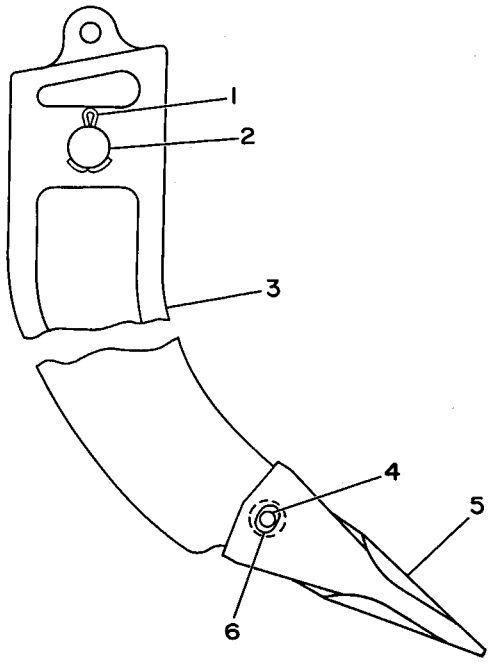

GRAPHIC #1 **<END>** g00174183

135-9795 TOOTH GP-RIPPER—CURVED SHANK

S/N: CBJ1-UP
FOR USE WITH 180-4560—PAGE 398
AN ATTACHMENT

SMCS-6808, 6810 **i01053123**

NOTE	PART NUMBER	QTY	PART NAME 1 2 3 4 5 6 (PRODUCT LEVEL)	SEE PAGE
Y	*9J-8926*	3	TOOTH GP-RIPPER	409

Y-SEPARATE ILLUSTRATION

<END>

OPERATOR STATION

6W-8505 ADJUSTER GP-SEAT

S/N: CBJ1-UP
PART OF 6W-8502 SUSPENSION GP-SEAT
AN ATTACHMENT

SMCS-7321 **i01857995**

NOTE	REF NO	GRAPHIC REF	PART NUMBER	QTY	PART NAME 1 2 3 4 5 6 (PRODUCT LEVEL)	SEE PAGE
	1	1	**8V-4881**	4	ROLLER	
	2	1	**4V-7860**	1	LEVER (SEAT ADJUSTER)	
	3	1	**6W-8506**	1	HOUSING AS-LOWER	
	4	1	**4V-7850**	1	PLATE-SLIDE TRACK	
	5	1	**4V-7855**	1	LATCH AS	
	6	1	**4V-7881**	1	ROD-LATCH	
	7	1	**4V-8256**	2	SPRING	
	8	1	**013-8289**	1	BOLT	
	9	1	**4V-7859**	1	ROD-LATCH	
	10	1	**4V-7857**	1	LATCH AS	
	11	1	**5V-1497**	7	RETAINER	
	12	1	**1B-6182**	1	SPACER (13.11X19.05X1.18MM THK)	
	13	1	**4V-7865**	1	CAP	

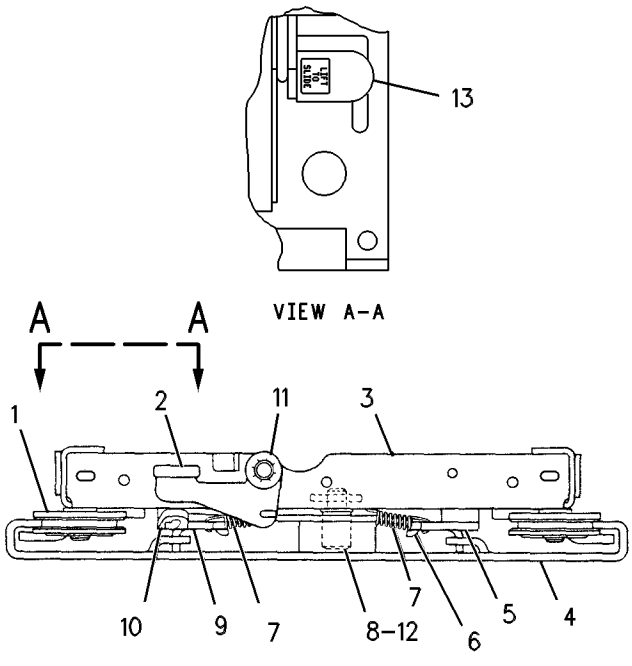

GRAPHIC #1 **<END>** g00088174

OPERATOR STATION

173-1028 ADJUSTER GP-SEAT

S/N: CBJ1-UP
PART OF 178-0603 SEAT GP
AN ATTACHMENT

SMCS-7321 **i01582195**

NOTE	REF NO	GRAPHIC REF	PART NUMBER	QTY	PART NAME 1 2 3 4 5 6 (PRODUCT LEVEL)	SEE PAGE
	1	1	**4V-8256**	4	SPRING	
	2	1	**117-4492**	1	ROD	
	3	1	**136-1544**	1	LATCH AS-LH	
	4	1	**156-5545**	1	LATCH AS-RH	
	5	1	**164-4531**	1	ROD	
	6	1	**170-1112**	1	PLATE AS	
	7	1	**170-1114**	1	HANDLE (SLIDE ADJUSTMENT)	
	8	1	**170-1115**	1	HANDLE (TILT ADJUSTMENT)	
	9	1	**132-0338**	2	WASHER-PLASTIC	
	10	1	**2K-4973**	2	LOCKNUT (3/8-16 THD)	
	11	1	**7X-0608**	2	WASHER-HARD (10.2X16X2.0MM THK)	

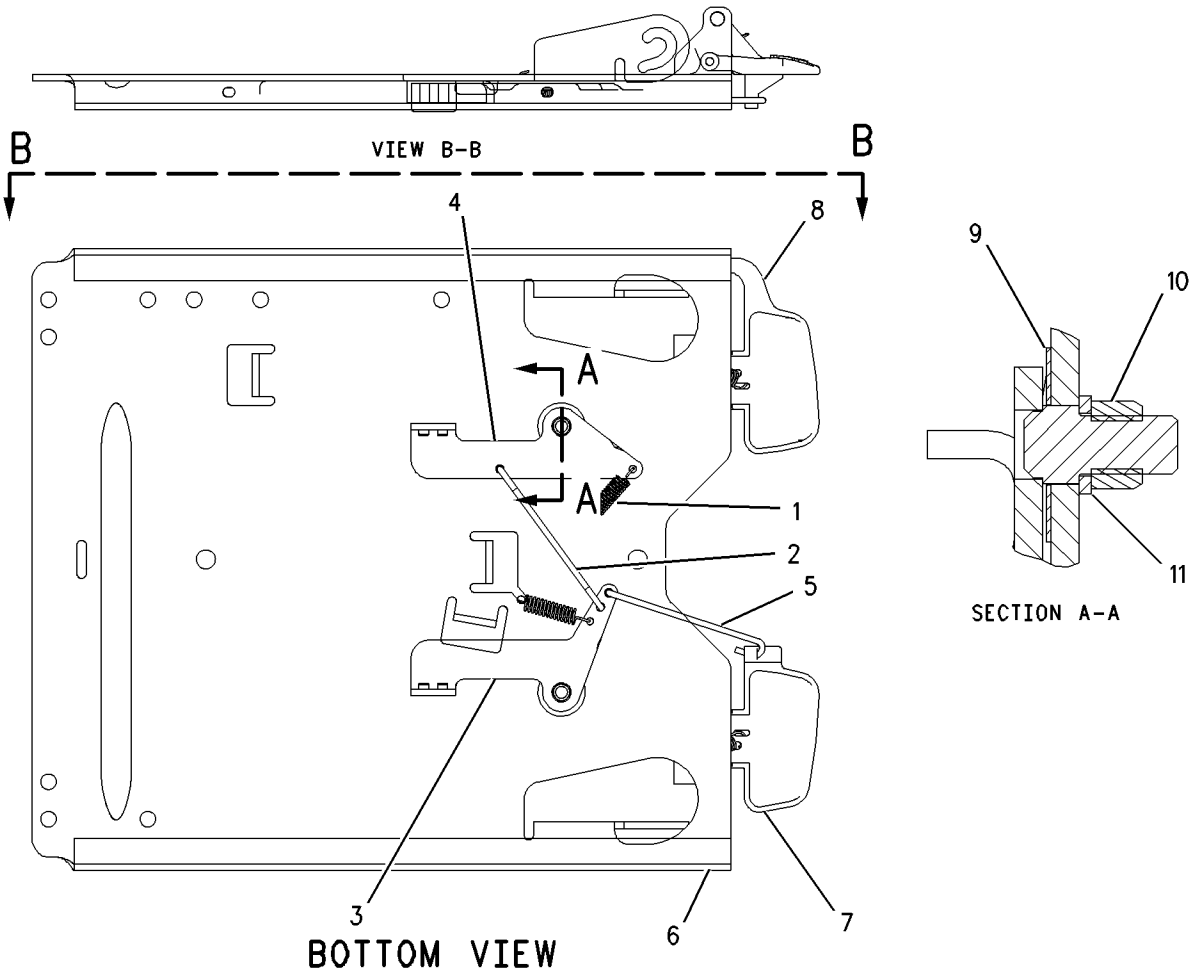

GRAPHIC #1 **<END>** g00816460

OPERATOR STATION

108-0720 AIR CONDITIONER GP

S/N: CBJ1-UP

PART OF 167-1458 AIR CONDITIONER GP

SMCS-7320 **i01894303**

NOTE	REF NO	GRAPHIC REF	PART NUMBER	QTY	PART NAME 1 2 3 4 5 6 (PRODUCT LEVEL)	SEE PAGE
	1	1	**6K-9555**	1	GROMMET (7.9MM OD)	
					–OR–	
		1	**2V-1937**	1	GROMMET (14.3MM OD)	
BD	2	1	**5P-5643**		SEAL	
	3	1	**109-6406**	1	COIL AS	
	4	1	**3E-5464**	1	SWITCH AS-THERMOSTAT (A/C)	
	5	1	**6L-7159**	2	SCREW-MACHINE (8-32X.313 IN)	
M	6	1	**8T-4191**	2	BOLT (M10X1.5X16MM)	
	7	1	**2V-1937**	1	GROMMET	
	8	1	**5P-1075**	2	WASHER-HARD (10.2X22.5X3MM THK)	
B	9	1	**1V-3113**	1	CLIP	
B	10	1	**2A-3211**	1	WASHER (5.5X12.3X.8MM THK)	
B	11	1	**7S-4346**	1	SCREW-MACHINE (10-32X0.5 IN)	
D	12	1	**5P-5992**		HOSE (.1M)	
A	13	1	**110-6109**	1	KNOB-CONTROL (A/C)	

A-NOT PART OF THIS GROUP
B-USE AS REQUIRED
D-ORDER BY THE METER
M-METRIC PART

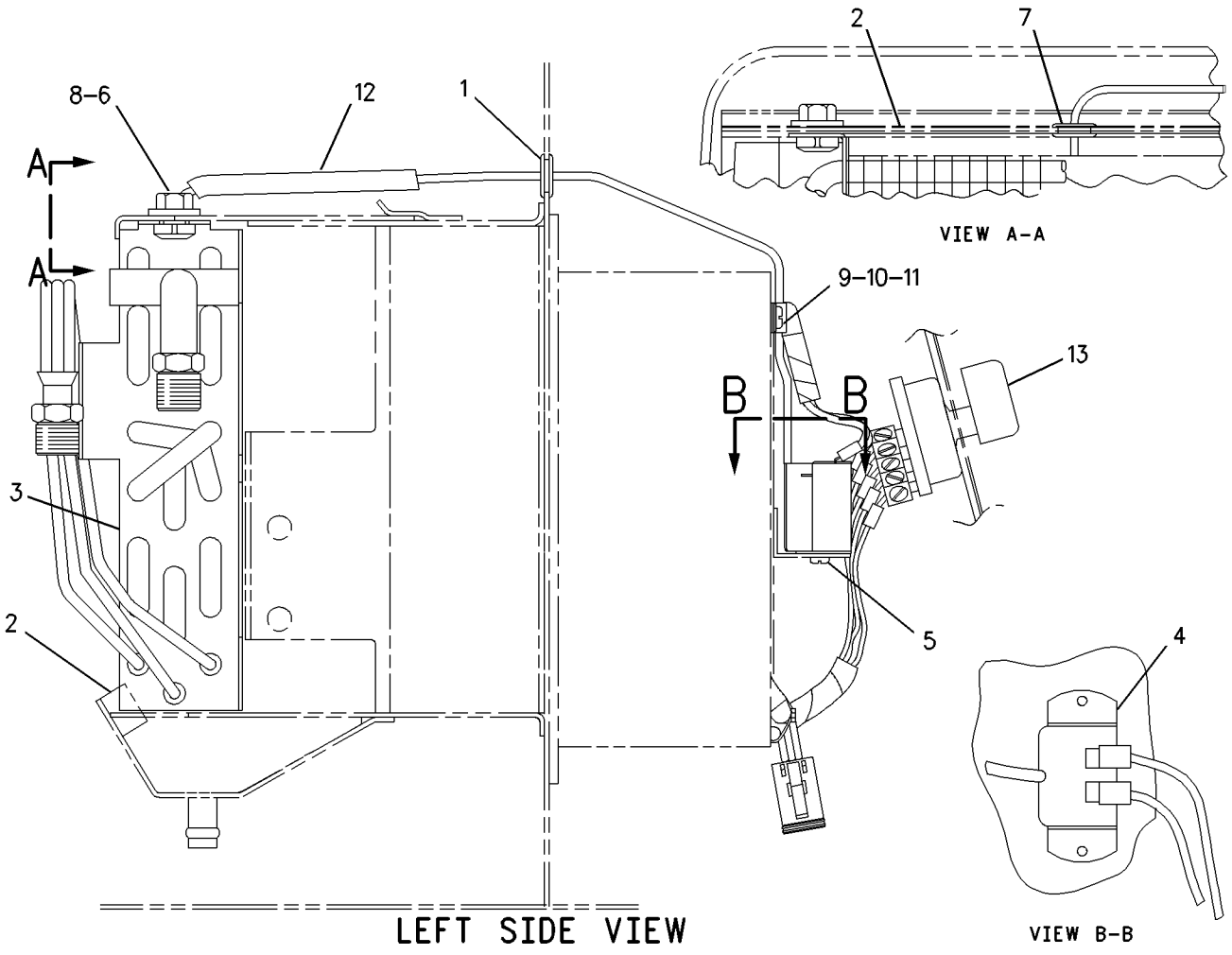

GRAPHIC #1 **<END>** g00632509

OPERATOR STATION

167-1458 AIR CONDITIONER GP

S/N: CBJ1-UP

PART OF 217-3818 CAB GP

SMCS-7320 **i01829137**

NOTE	REF NO	GRAPHIC REF	PART NUMBER	QTY	PART NAME 1 2 3 4 5 6 (PRODUCT LEVEL)	SEE PAGE
Y	1	1	**175-2540**	1	CONDENSER GP-REFRIGERANT	425
Y	2	1	*171-9593*	1	LINES GP-AIR CONDITIONER	453
Y	3	1	*108-0720*	1	AIR CONDITIONER GP	413
	4	1	**7X-7729**	4	WASHER (11X25X3MM THK)	
M	5	1	**8T-4196**	4	BOLT (M10X1.5X35MM)	

M-METRIC PART
Y-SEPARATE ILLUSTRATION

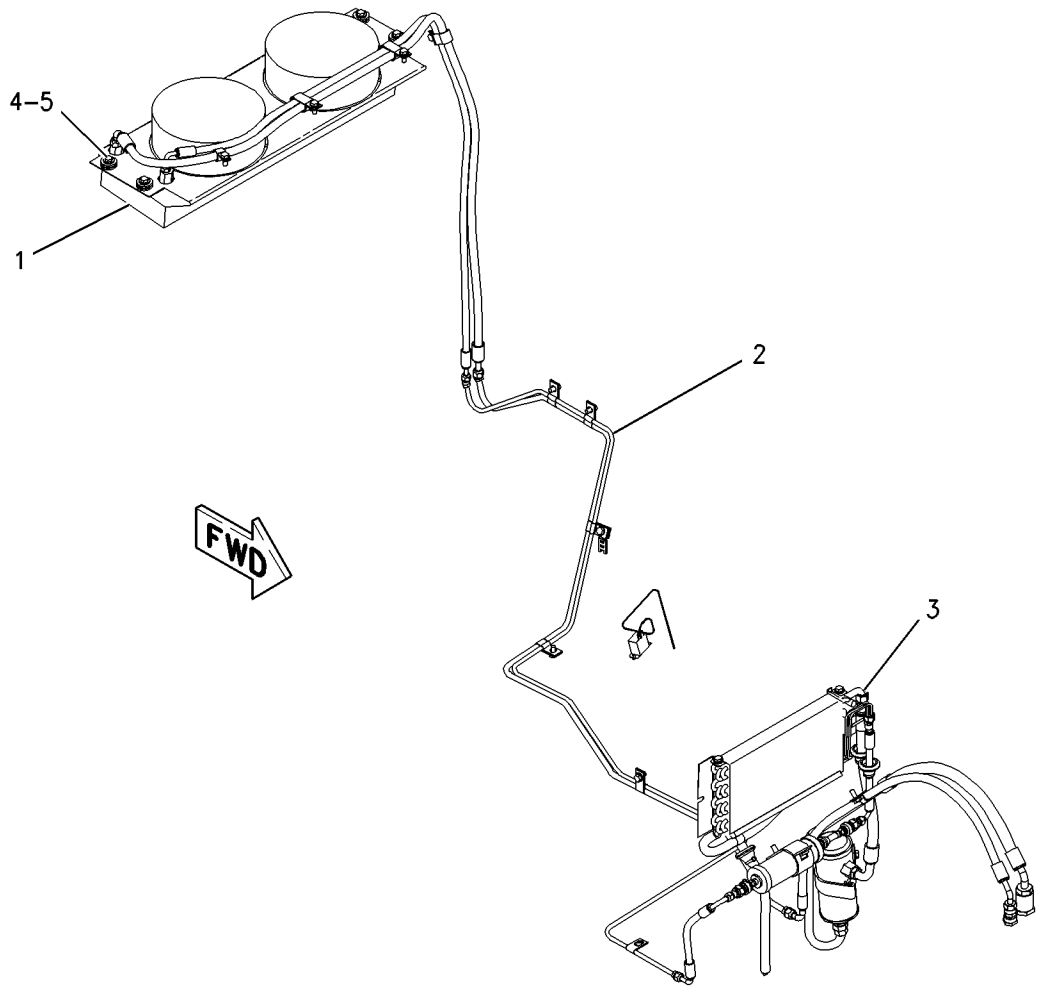

GRAPHIC #1 **<END>** g00909286

OPERATOR STATION

198-7281 BLOWER GP-CAB

S/N: CBJ1-UP

PART OF 163-0152 PRESSURIZER GP-CAB

SMCS-7316 **i01883742**

NOTE	REF NO	GRAPHIC REF	PART NUMBER	QTY	PART NAME 1 2 3 4 5 6 (PRODUCT LEVEL)	SEE PAGE
	1	1	**1M-1230**	4	NUT & LOCK AS	
	2	1	**3S-2093**	1	STRAP-CABLE	
	3	1	**6T-6708**	2	WASHER (7X28.6X4.1MM THK)	
	4	1	**7G-0942**	2	PLATE-ORIFICE	
	5	1	**8C-3756**	1	FILM-IDENTIFICATION (GROUP & SEQUENCE NO.) (CAB BLOWER)	
	6	1	**9G-1950**	1	RESISTOR	
	7	1	**111-7198**	1	HARNESS AS (CAB BLOWER)	
		1	**102-8802**	1	KIT-RECEPTACLE (2 PIN)	
		1	**102-8805**	1	KIT-RECEPTACLE (6 PIN)	
		1	**8T-8737**	1	PLUG-SEAL	
		1	**155-2270**	1	KIT-CONNECTING PLUG (2 PIN)	
	8	1	**118-5194**	1	WHEEL-BLOWER	
		1	**037-4838**	1	CLAMP	
	9	1	**118-5195**	1	WHEEL-BLOWER	
		1	**037-4838**	1	CLAMP	
	10	1	**174-1504**	1	MOTOR AS	
		1	**9W-0852**	2	PIN-CONNECTOR	
		1	**102-8802**	1	KIT-RECEPTACLE (2 PIN)	
	11	1	**174-1505**	1	MOTOR AS	
		1	**9W-0844**	2	SOCKET-CONNECTION	
		1	**155-2270**	1	KIT-CONNECTING PLUG (2 PIN)	
	12	1	**175-0070**	4	BRACKET	
	13	1	**198-7282**	1	PLATE AS	
		1	**1F-0750**	1	NUT-WELD (3/8-16 THD)	
		1	**4K-9230**	1	NUT-WELD (10-32-2B THD)	
		1	**7T-1099**	2	LINK	
	14	1	**198-7284**	1	GASKET	
	15	1	**130-5300**	2	CLIP	
	16	1	**3E-9865**	7	LOCKNUT (1/4-20 THD)	
	17	1	**4B-4274**	4	WASHER (5.5X13X1.2MM THK)	
	18	1	**5P-4115**	6	WASHER-HARD (7.2X19X2MM THK)	
	19	1	**5P-8167**	1	BOLT (3/8-16X0.625 IN)	
	20	1	**5P-8441**	1	GROMMET	
	21	1	**5P-9085**	1	CLIP	
	22	1	**6V-1668**	2	WASHER (6.5X29.1X3MM THK)	
	23	1	**6V-3320**	1	SCREW-MACHINE (1/4-20X7.50 IN)	
	24	1	**8T-4896**	1	WASHER-HARD (10.2X18.5X2.5MM THK)	

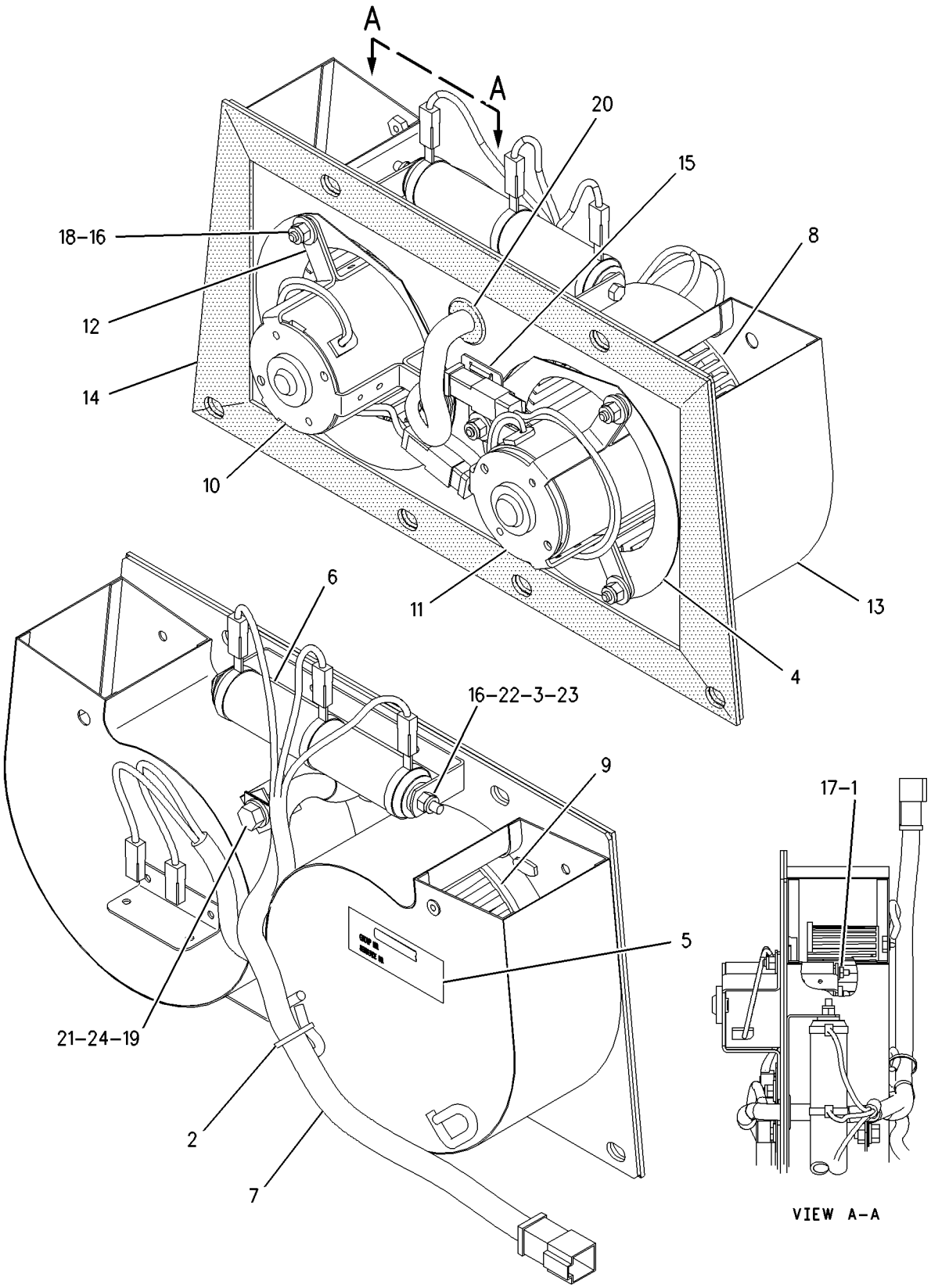

GRAPHIC #1 **<END>** g00942930

OPERATOR STATION

156-9516 CAB AR

S/N: CBJ1-UP

PART OF 156-9493 GENERAL AR

SMCS-7301, 7325, 7335 **i01828698**

NOTE	PART NUMBER	QTY	PART NAME 1 2 3 4 5 6 (PRODUCT LEVEL)	SEE PAGE
Y	*217-3818*	1	CAB GP	422
Y	*202-1871*	1	COVER GP-CONSOLE	433
Y	*177-3860*	1	COVER GP-CONSOLE	431
Y	*204-6414*	1	INSTALLATION GP-LINES (AIR CONDITIONER)	447
Y	*222-3800*	1	LINES GP-HEATER	457
Y	*156-8915*	1	MOUNTING GP-CAB	460
Y	*167-1457*	1	ROPS GP	483
Y	*167-1455*	1	TANK GP-WINDOW WASHER	506

Y-SEPARATE ILLUSTRATION

<END>

OPERATOR STATION

156-8911 CAB GP

S/N: CBJ1-UP

PART OF 217-3818 CAB GP

SMCS-7301, 7325, 7335 **i01893790**

NOTE	REF NO	GRAPHIC REF	PART NUMBER	QTY	PART NAME 1 2 3 4 5 6 (PRODUCT LEVEL)	SEE PAGE
	1	2	**6V-8928**	1	HOOK-COAT	
	2	1,2	**7K-1181**	26	STRAP-CABLE	
	3	1	**8C-5607**	8	MOUNT (ISOLATION)	
	4	1	**8C-5608**	4	SPACER (6.5X9.5X25.4MM THK)	
	5	2	**109-1645**	1	CLIP	
	6	1	**123-6449**	1	WARNING GP-BACKUP	
		1	**102-8802**	1	KIT-RECEPTACLE (2 PIN)	
					(INCLUDES RECEPTACLE AS AND WEDGE)	
		1	**3E-3365**	1	WEDGE-RECEPTACLE LOCK (2 PIN)	
BD		1	**5P-5677**		WIRE-ELECTRICAL (18 GA)	
		1	**186-3735**	2	PIN-CONNECTOR	
BE		1	**9X-1813**		SLEEVE	
	7	2	**132-5792**	4	NUT	
Y	8	1	*156-8916*	1	WINDOW GP-CAB	507
	9	1	**160-9149**	1	HARNESS AS (MAIN)(CAB)	
		1	**102-8802**	5	KIT-RECEPTACLE (2 PIN)	
		1	**102-8803**	1	KIT-RECEPTACLE (3 PIN)	
		1	**102-8805**	1	KIT-RECEPTACLE (6 PIN)	
		1	**102-8806**	1	KIT-RECEPTACLE (8 PIN)	
		1	**102-8801**	1	KIT-RECEPTACLE (12 PIN)	
					(EACH RECEPTACLE KIT INCLUDES RECEPTACLE AS AND WEDGE)	
		1	**8T-8729**	25	PIN-CONNECTOR	
		1	**155-2265**	1	KIT-CONNECTING PLUG (8 PIN)	
		1	**155-2260**	2	KIT-CONNECTING PLUG (3 PIN)	
		1	**155-2270**	6	KIT-CONNECTING PLUG (2 PIN)	
		1	**155-2274**	3	KIT-CONNECTING PLUG (6 PIN)	
					(EACH PLUG KIT INCLUDES PLUG AS, WEDGE AND INTERFACE SEAL)	
	10	1	**161-7000**	1	CAB AS	
M		1	**6V-9632**	6	NUT-WELD (M6X1 THD)	
	10A	1	**9B-2923**	2	HINGE	
	10B	1	**178-9008**	1	HANDLE (RH)	
	10C	1	**178-9009**	1	HANDLE (LH)	
Y	11	2	*163-0152*	1	PRESSURIZER GP-CAB	478
	12	1	**164-9136**	1	GUARD AS	
Y	13	1	*167-1451*	1	DOOR GP-CAB (RH)	434
Y	14	2	*167-1453*	1	DOOR GP-CAB (LH)	436
	15	2	**168-8929**	2	STRIKER AS	
					(EACH INCLUDES)	
M		2	**8T-4244**	1	NUT (M12X1.75 THD)	
		2	**129-3737**	1	STRIKER BOLT-CAB	
	16	2	**170-2062**	1	GRID	
Y	17	2	*170-2084*	1	LINER GP-CAB	452
Y	18	2	*170-2086*	1	WIPER GP-WINDOW	510
Y	19	1	*175-6956*	1	COVER GP-CONSOLE	429
Y	20	2	*175-7654*	1	HEATER GP-CAB	438
	21	2	**176-7456**	1	HARNESS AS (WIPER)	
		2	**102-8805**	1	KIT-RECEPTACLE (6 PIN)	
					(INCLUDES RECEPTACLE AS AND WEDGE)	
		2	**155-2274**	1	KIT-CONNECTING PLUG (6 PIN)	
					(INCLUDES PLUG AS, WEDGE AND INTERFACE SEAL)	
Y	22	1	*177-3851*	1	INSULATION GP-WEATHER	450
Y	23	1	*177-3852*	1	STEP GP	498
	24	1	**178-8375**	2	PLATE	
Y	25	2	*178-9018*	1	INDICATOR GP-AIR FILTER CHANGE	94

156-8911 **CAB GP** ***(contd.)*** **i01893790**

NOTE	REF NO	GRAPHIC REF	PART NUMBER	QTY	PART NAME 1 2 3 4 5 6 (PRODUCT LEVEL)	SEE PAGE
Y	26	2	*194-3315*	1	LATCH GP	451
Y	27	2	*194-3333*	1	INSTALLATION GP-RADIO	449
	28	1	**196-7553**	1	HANDLE AS	
	29	1	*211-0238*	1	FILM (LUBE POINT)	
	30	2	**224-2470**	1	PLATE	
	31	1,2	**224-2669**	8	PLUG-PLASTIC	
	32	1	**2V-8259**	2	GROMMET	
	33	2	**4H-2558**	3	GROMMET	
	34	1	**5P-4116**	4	WASHER-HARD (8.8X20.5X2MM THK)	
	35	2	**5P-8439**	1	GROMMET	
	36	2	**6V-6716**	2	RIVET-TRUSS HEAD	
M	37	2	**6V-7357**	1	BOLT (M6X1.0X25MM)	
	38	1,2	**7X-7729**	21	WASHER (11X25X3MM THK)	
M	39	1	**8C-8451**	4	BOLT (M6X1X40MM)	
Y	40	2	*8E-8706*	1	MIRROR GP	458
	41	2	**8K-1433**	1	GROMMET	
	42	2	**8T-4121**	6	WASHER-HARD (11X21X2.5MM THK)	
M	43	1	**8T-4133**	2	NUT (M10X1.5 THD)	
M	44	1,2	**8T-4137**	7	BOLT (M10X1.5X20MM)	
M	45	2	**8T-4189**	4	BOLT (M8X1.25X20MM)	
M	46	2	**8T-4195**	4	BOLT (M10X1.5X30MM)	
M	47	1	**8T-4198**	2	BOLT (M10X1.5X100MM)	
M	48	1,2	**9X-2040**	4	SCREW-TRUSS HEAD (M10X1.5X25MM)	
	49	1	**9X-6165**	4	WASHER (6.5X22X2.5MM THK)	
BD	50	2	**5P-5952**		SEAL	
BE	51	1	**172-1681**		SEAL	

B-USE AS REQUIRED
D-ORDER BY THE METER
E-ORDER BY THE CENTIMETER
M-METRIC PART
Y-SEPARATE ILLUSTRATION

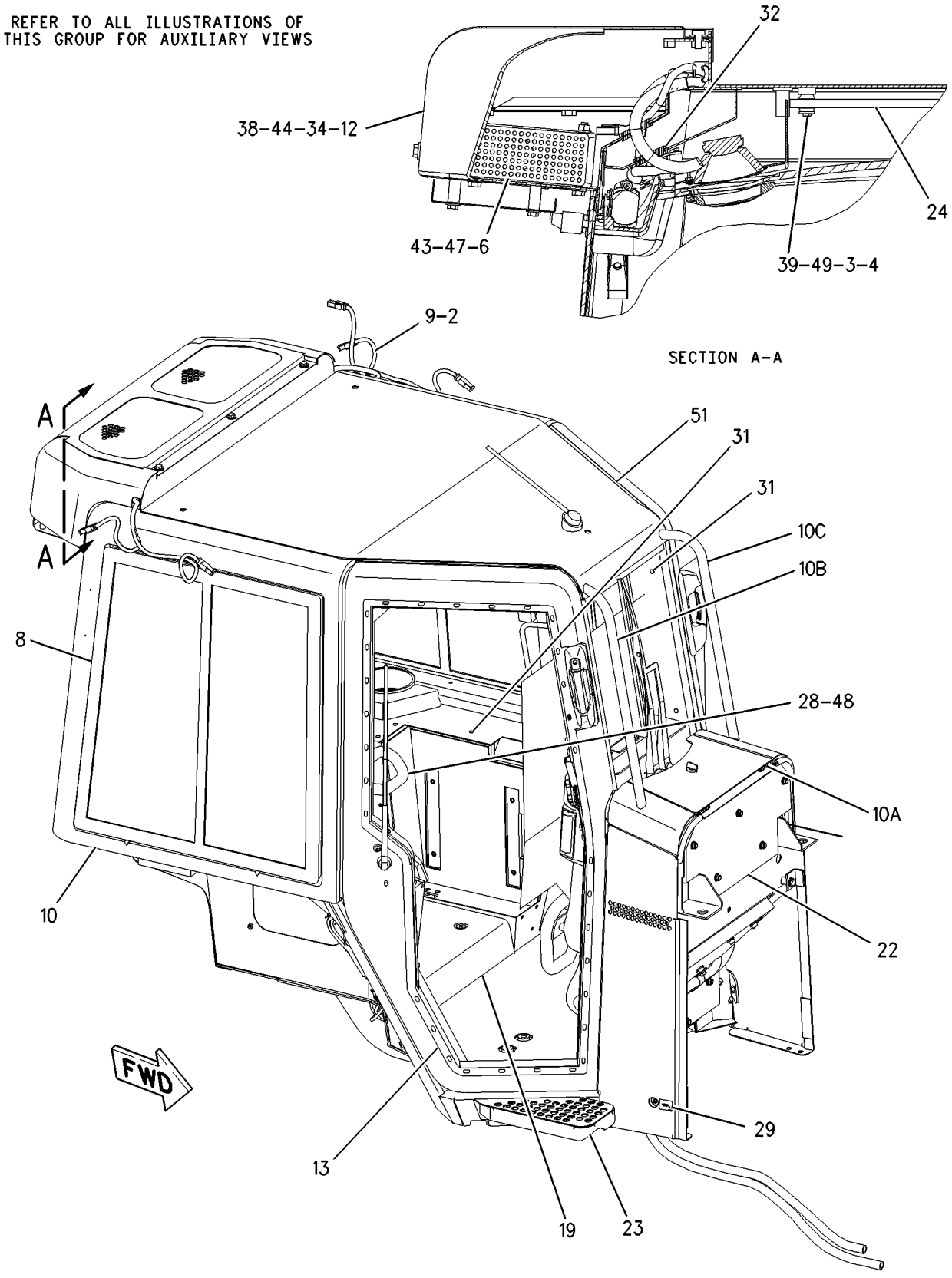

GRAPHIC #1 g00931480

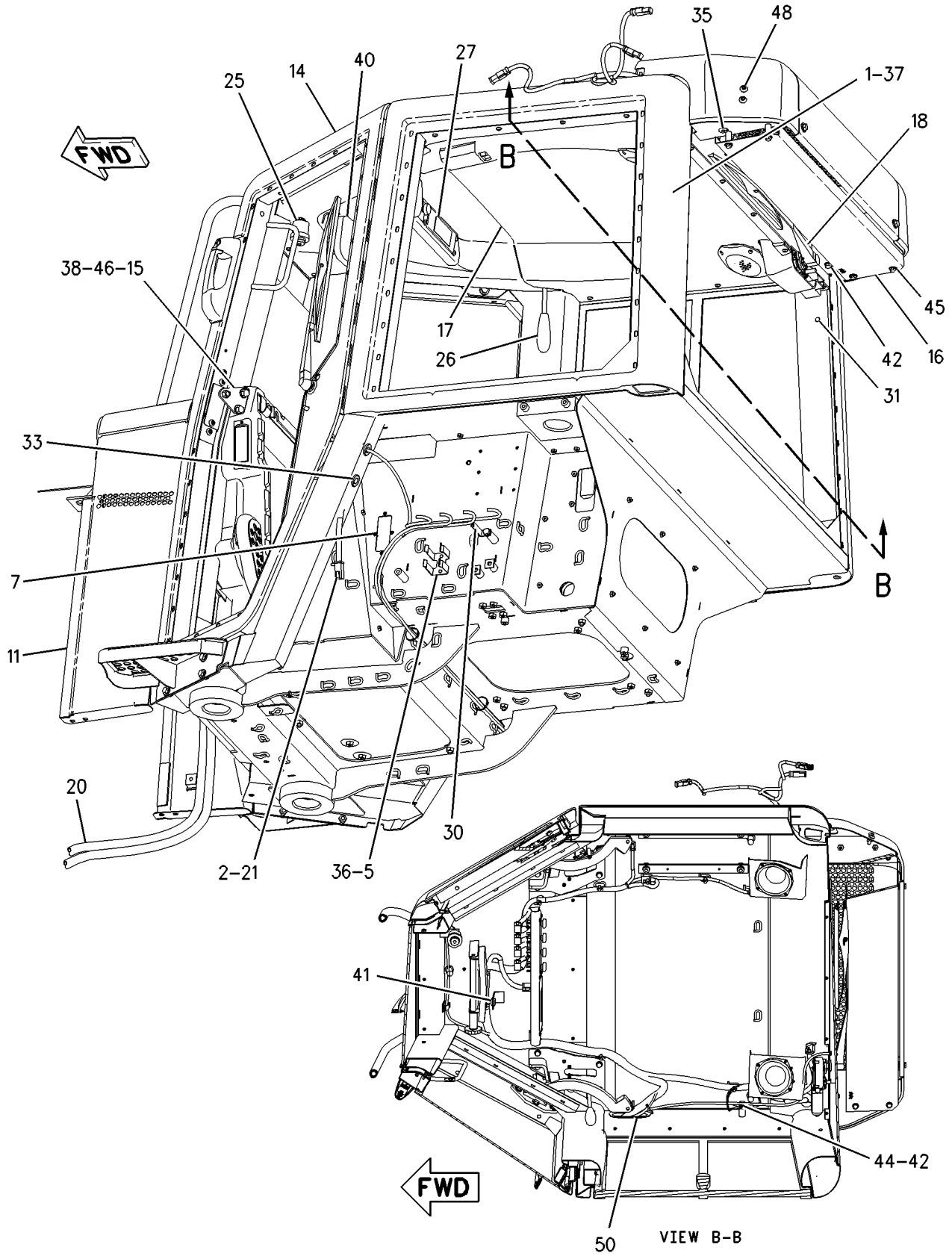

GRAPHIC #2 **<END>** g00931481

OPERATOR STATION

217-3818 CAB GP

S/N: CBJ1-UP
PART OF 156-9516 CAB AR

SMCS-7301, 7325, 7335 **i01892629**

NOTE	PART NUMBER	QTY	PART NAME 1 2 3 4 5 6 (PRODUCT LEVEL)	SEE PAGE
Y	**111-7003**	1	PLUG AS (ECB/ECPC)	477
Y	*156-7378*	1	WIRING GP-PLATFORM	187
Y	*156-8911*	1	CAB GP	418
Y	*156-8951*	1	PANEL GP-INSTRUMENT	466
Y	*156-8955*	1	CONTROL GP-STEERING & TMSN	296
Y	*167-1458*	1	AIR CONDITIONER GP	414
Y	*199-4801*	1	PEDAL GP-GOVERNOR & BRAKE	308
Y	**217-3815**	1	PANEL GP-INSULATION (SOUND)	473
	179-6714	1	PLUG AS	
	5P-5677	1	WIRE-ELECTRICAL (18 GA)	
	186-3736	1	SOCKET-CONNECTOR	
BE	**125-7874**	5	TUBE-HEAT SHRINK	
	155-2265	1	KIT-CONNECTING PLUG (8 PIN)	
			(INCLUDES PLUG AS & WEDGE)	
	220-0229	1	WARNING GP-BACKUP (107DB)	
BD	**5P-5623**		WIRE (16 GA) (4DM)	
BE	**9X-1813**		SLEEVE	
	186-3735	2	PIN-CONNECTOR	
	3E-3365	1	WEDGE-RECEPTACLE LOCK (2 PIN)	
	102-8802	1	KIT-RECEPTACLE (2 PIN)	
			(INCLUDES RECEPTACLE AS & WEDGE)	

B-USE AS REQUIRED
D-ORDER BY THE METER
E-ORDER BY THE CENTIMETER
Y-SEPARATE ILLUSTRATION

<END>

156-9509 CANOPY AR

S/N: CBJ1-UP
CANNOT BE USED WITH , 156-9516—PAGE 417
AN ATTACHMENT

SMCS-7302 **i01830143**

NOTE	PART NUMBER	QTY	PART NAME 1 2 3 4 5 6 (PRODUCT LEVEL)	SEE PAGE
Y	*193-1033*	1	BELT GP (ENGINE)	6
Y	*218-3137*	1	MOUNTING GP-PLATFORM	461
Y	*218-3063*	1	PLATFORM GP-OPERATOR	476
Y	*167-1460*	1	ROPS GP	484
	224-2459	1	HOUSING	
	220-1802	1	FILM-STRIPE (D6N)(LH COWL)	
	220-1801	1	FILM-STRIPE (D6N)(RH COWL)	
M	**9X-2045**	4	SCREW-TRUSS HEAD (M6X1X20MM)	

M-METRIC PART
Y-SEPARATE ILLUSTRATION

<END>

OPERATOR STATION

183-5106 COMPRESSOR GP-REFRIGERANT

S/N: CBJ1-UP

PART OF 189-2229 COMPRESSOR GP-REFRIGERANT

SMCS-1802 **i01849530**

NOTE	REF NO	GRAPHIC REF	PART NUMBER	QTY	PART NAME 1 2 3 4 5 6 (PRODUCT LEVEL)	SEE PAGE
	1	1	**102-8802**	1	KIT-RECEPTACLE (2 PIN)	
					(INCLUDES RECEPTACLE AS AND WEDGE)	
	2	1	**114-3469**	1	VALVE GP-RELIEF	
		1	**9X-7378**	1	SEAL-O-RING	
	3	1	**7T-4532**	1	PLUG AS	
	4	1	**9X-7385**	2	SEAL-O-RING	

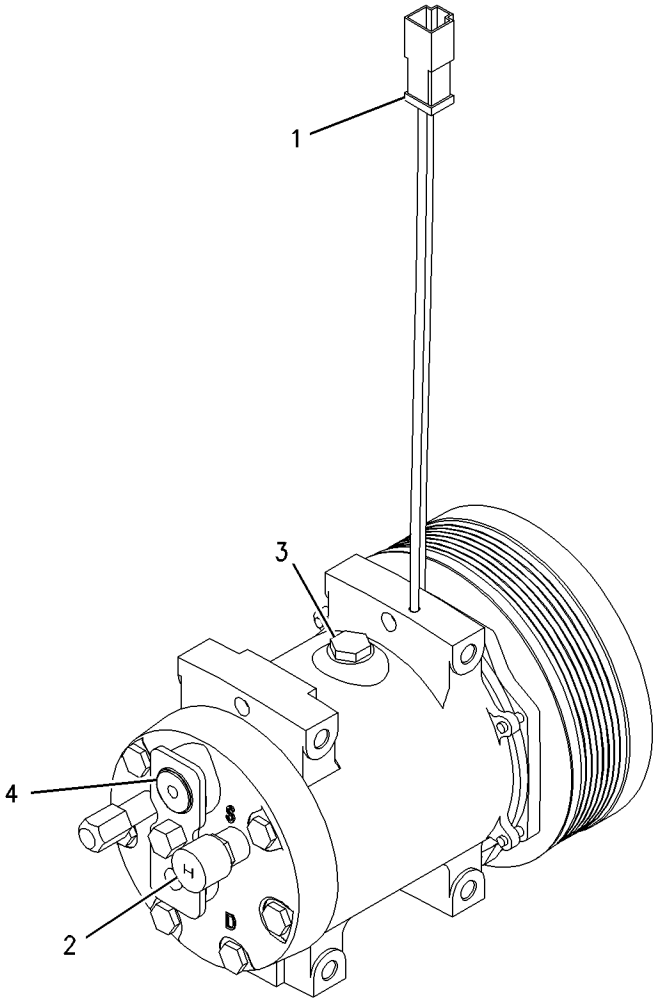

GRAPHIC #1 **<END>** g00781120

189-2229 COMPRESSOR GP-REFRIGERANT

S/N: CBJ1-UP

PART OF 195-1046 INSTALLATION AR-ENGINE

SMCS-1802 **i01842375**

NOTE	REF NO	GRAPHIC REF	PART NUMBER	QTY	PART NAME 1 2 3 4 5 6 (PRODUCT LEVEL)	SEE PAGE
Y	1	1	**123-8395**	1	PULLEY AS-IDLER	51
Y	2	1	**183-5106**	1	COMPRESSOR GP-REFRIGERANT	423
	3	1	**201-4230**	1	GUARD	
M	4	1	**7X-2538**	4	BOLT (M8X1.25X100MM)	
	5	1	**8T-4224**	4	WASHER-HARD (8.8X16X2MM THK)	
	6	1	**106-4159**	1	SPACER (13.5MM THK)	

M-METRIC PART
Y-SEPARATE ILLUSTRATION

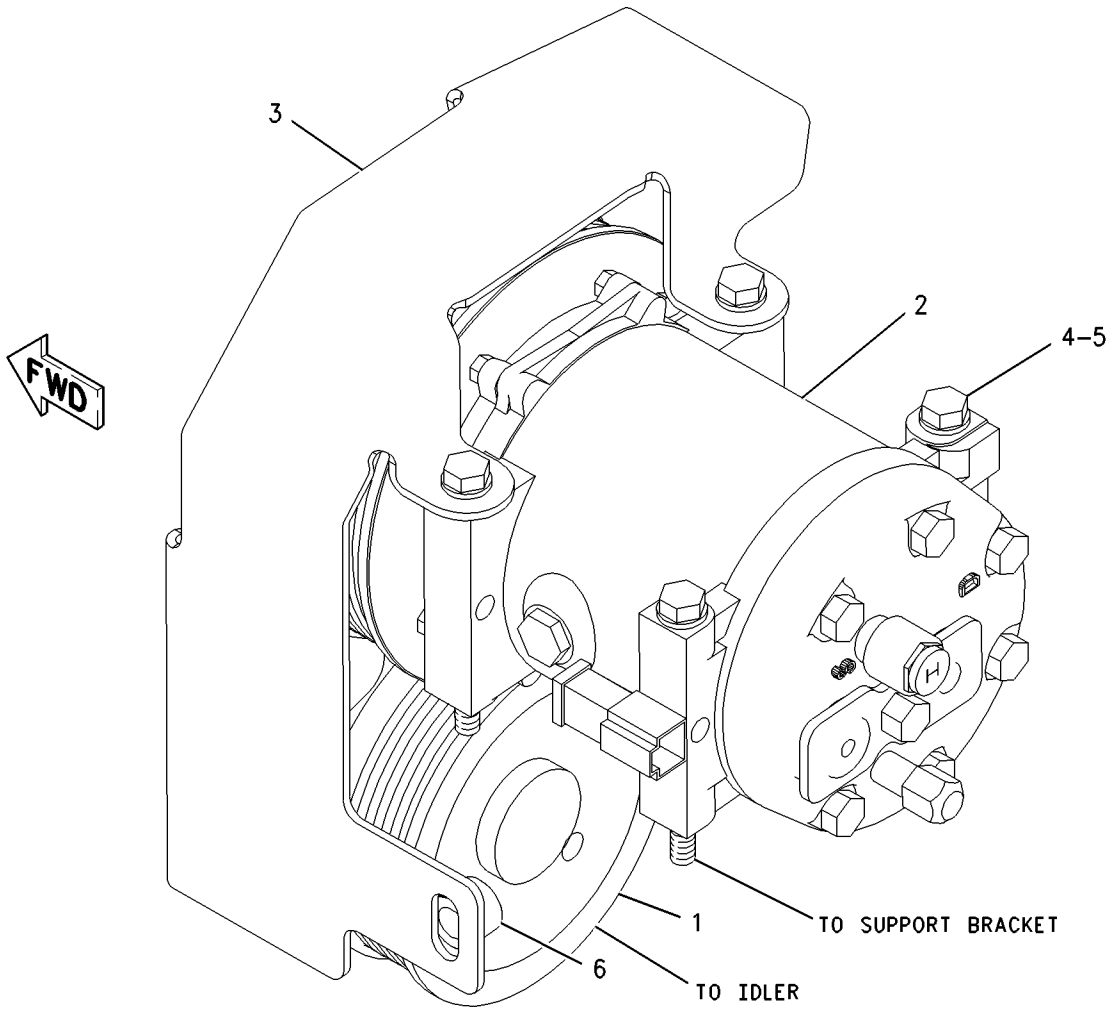

GRAPHIC #1 **<END>** g00941768

OPERATOR STATION

175-2540 CONDENSER GP-REFRIGERANT

S/N: CBJ1-UP
HARD MOUNTING
PART OF 167-1458 AIR CONDITIONER GP

SMCS-1805 **i01829146**

NOTE	REF NO	GRAPHIC REF	PART NUMBER	QTY	PART NAME 1 2 3 4 5 6 (PRODUCT LEVEL)	SEE PAGE
	1	1	**3E-5239**	1	RELAY AS (24 VOLT) (AIR CONDITIONER CONDENSER)	
	2	1	**3S-2093**	1	STRAP-CABLE	
	3	1	**8C-3756**	1	FILM-IDENTIFICATION (GROUP & SEQUENCE NO.) (AIR CONDITIONER CONDENSER)	
	4	1	**169-7434**	2	FAN AS	
					(EACH INCLUDES)	
		1	**102-8802**	1	KIT-RECEPTACLE (2 PIN)	
					(INCLUDES RECEPTACLE AS & WEDGE)	
	5	1	**169-7435**	1	HARNESS AS-AIR CONDITIONER (CONDENSER FANS) (COMPRESSOR)	
	5A	1	**102-8803**	1	KIT-RECEPTACLE (3 PIN)	
					(INCLUDES RECEPTACLE AS & WEDGE)	
	5B	1	**155-2270**	2	KIT-CONNECTING PLUG (2 PIN)	
					(EACH INCLUDES PLUG AS, WEDGE & INTERFACE SEAL)	
	5C	1	**9X-1054**	1	PLUG AS-CONNECTOR (4 PIN)	
	6	1	**175-2539**	1	CASE AS	
	7	1	**199-7698**	1	COIL AS	
	8	1	**179-0589**	2	GUARD-FAN	
M	9	1	**5C-9553**	3	BOLT (M6X1X16MM)	
	10	1	**5P-4116**	8	WASHER-HARD (8.8X20.5X2MM THK)	
	11	1	**8T-4121**	6	WASHER-HARD (11X21X2.5MM THK)	
M	12	1	**8T-4137**	4	BOLT (M10X1.5X20MM)	
M	13	1	**8T-4136**	4	BOLT (M10X1.5X25MM)	
	14	1	**8T-4205**	1	WASHER-HARD (7.2X14.5X2MM THK)	
M	15	1	**8T-4908**	8	BOLT (M8X1.25X25MM)	
BD	16	1	**5P-5673**		SEAL	
BE	17	1	**126-8472**		SEAL	

B-USE AS REQUIRED
D-ORDER BY THE METER
E-ORDER BY THE CENTIMETER
M-METRIC PART

175-2540 CONDENSER GP-REFRIGERANT *(contd.)* i01829146

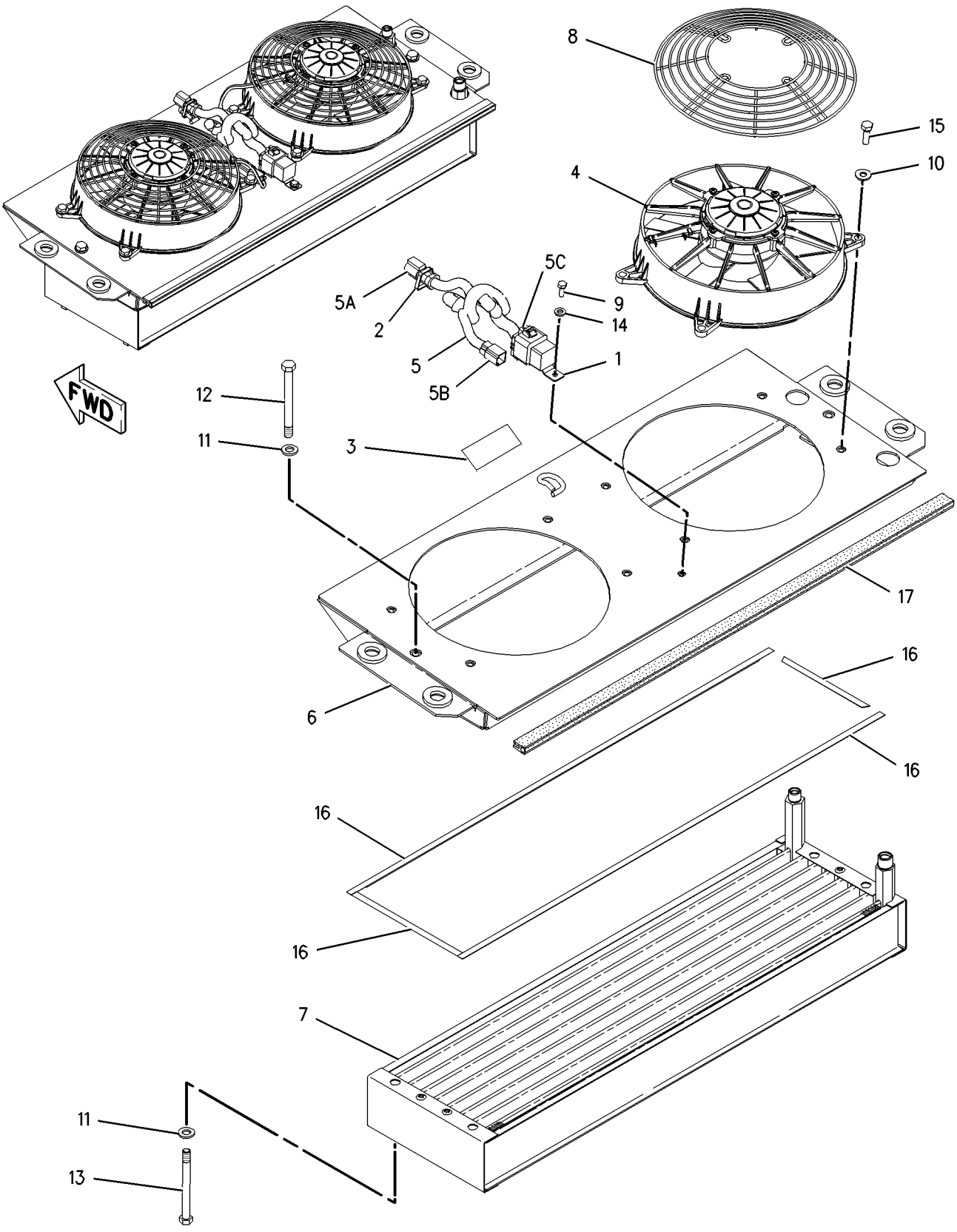

GRAPHIC #1 **<END>** g00774170

167-1463 COVER GP-CONSOLE—IMPLEMENT

S/N: CBJ1-UP

FOR USE WITH , 156-9509—PAGE 422, , 173-8641—PAGE 335. CANNOT BE USED WITH WINCH, , 167-1464—PAGE 428 AN ATTACHMENT

SMCS-5258 **i01830483**

NOTE	REF NO	GRAPHIC REF	PART NUMBER	QTY	PART NAME 1 2 3 4 5 6 (PRODUCT LEVEL)	SEE PAGE
	1	1	**197-0825**	1	CONSOLE	
	2	1	**203-6257**	1	GROMMET	

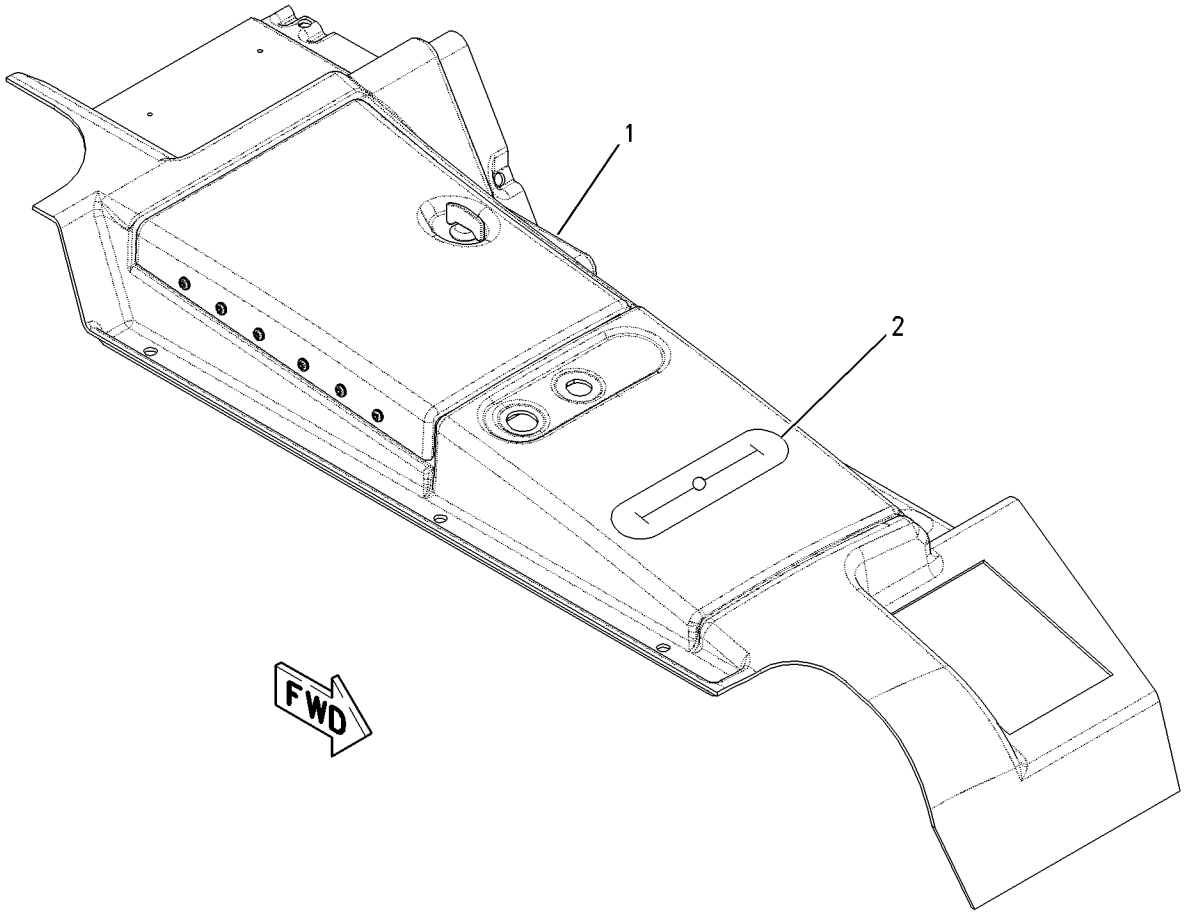

GRAPHIC #1 **<END>** g00960151

OPERATOR STATION

167-1464 COVER GP-CONSOLE—WINCH

S/N: CBJ1-UP

CANNOT BE USED WITH 180-4560—PAGE 398, , 167-1463—PAGE 427

AN ATTACHMENT

SMCS-5258 **i01830490**

NOTE	REF NO	GRAPHIC REF	PART NUMBER	QTY	PART NAME 1 2 3 4 5 6 (PRODUCT LEVEL)	SEE PAGE
	1	1	**195-3985**	1	COVER-WINCH	
	2	1	**197-0826**	1	CONSOLE-WINCH	

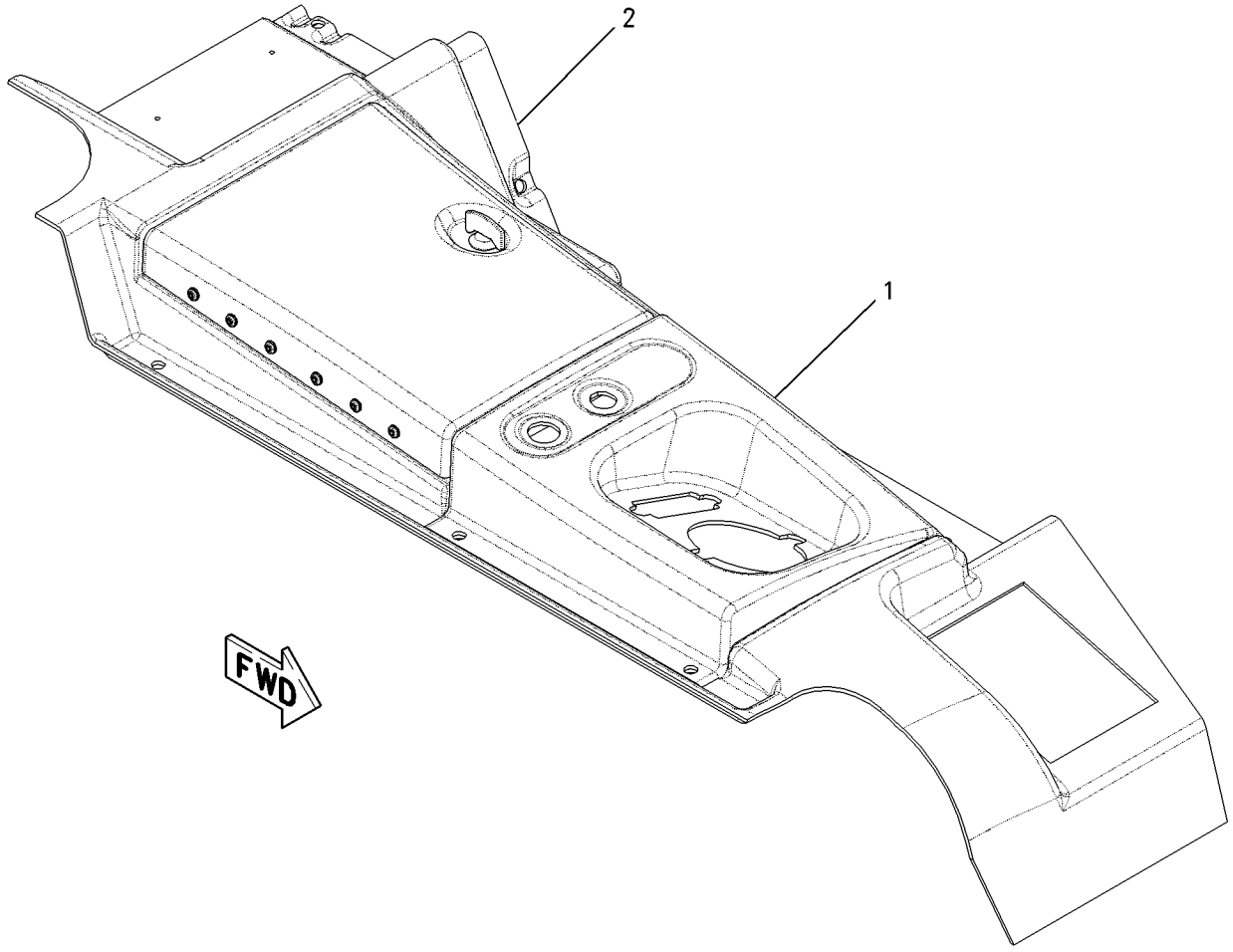

GRAPHIC #1 **<END>** g00776643

OPERATOR STATION

175-6956 COVER GP-CONSOLE—CAB

S/N: CBJ1-UP

PART OF 156-8911 CAB GP

SMCS-5258 **i01880232**

NOTE	REF NO	GRAPHIC REF	PART NUMBER	QTY	PART NAME 1 2 3 4 5 6 (PRODUCT LEVEL)	SEE PAGE
	1	1	**223-0455**	3	LOUVER AS	
	2	1	**169-9108**	1	COVER AS	
		1	**178-8844**	4	SPACER (11X28X20MM THK)	
	3	1	**171-9610**	1	INSULATION (LH)	
	4	1	**171-9612**	1	INSULATION (RH)	
	5	1	**171-9616**	1	FLOOR MAT (REAR)	
M	6	1	**9X-2044**	21	SCREW-TRUSS HEAD (M6X1X16MM)	
	7	1	**171-9618**	1	INSULATION (LH)	
	8	1	**177-3846**	1	PANEL (SOUND)	
	9	1	**177-3847**	1	PANEL (SOUND)	
	10	1	**178-9013**	1	COVER	
	11	1	**178-9016**	1	PAD	
	12	1	**180-1295**	1	INSULATION (RH)	
	13	1	**180-1297**	1	PLATE	
	14	1	**188-1846**	1	PLATE AS-FLOOR	
M		1	**8T-3490**	4	NUT-WELD (M10X1.5 THD)	
	15	1	**198-9452**	1	BRACKET	
	16	1	**212-4357**	1	FOOTREST AS	
	17	1	**214-9413**	1	INSULATION (RH)	
	18	1	**214-9414**	1	INSULATION (RH)	
	19	1	**214-9415**	1	INSULATION (REAR)	
	20	1	**218-2798**	1	COVER (PEDAL RH)	
	21	1	**218-2799**	1	COVER (PEDAL LH)	
	22	1	**218-2800**	1	SHROUD	
	23	1	**224-2466**	1	FOAM	
	24	1	**224-2467**	1	FOAM	
	25	1	**224-2468**	4	FOAM	
	26	1	**224-2469**	1	FOAM	
	27	1	**104-2091**	6	SCREW-FLAT HEAD (6-20X0.5 IN)	
M	28	1	**127-2170**	2	SCREW-TRUSS HEAD (M8X1.25X20MM)	
	29	1	**7X-7729**	5	WASHER (11X25X3MM THK) (REAR)	
	30	1	**8T-4121**	2	WASHER-HARD (11X21X2.5MM THK)	
M	31	1	**8T-4136**	10	BOLT (M10X1.5X25MM)	
M	32	1	**8T-4137**	2	BOLT (M10X1.5X20MM)	
M	33	1	**8T-4189**	2	BOLT (M8X1.25X20MM)	
	34	1	**8T-4222**	9	WASHER-PLATED (11X32X2.5MM THK)	
	35	1	**8T-4224**	2	WASHER-HARD (8.8X16X2MM THK)	
M	36	1	**9X-2040**	6	SCREW-TRUSS HEAD (M10X1.5X25MM)	

M-METRIC PART

175-6956 **COVER GP-CONSOLE** *(contd.)* **i01880232**

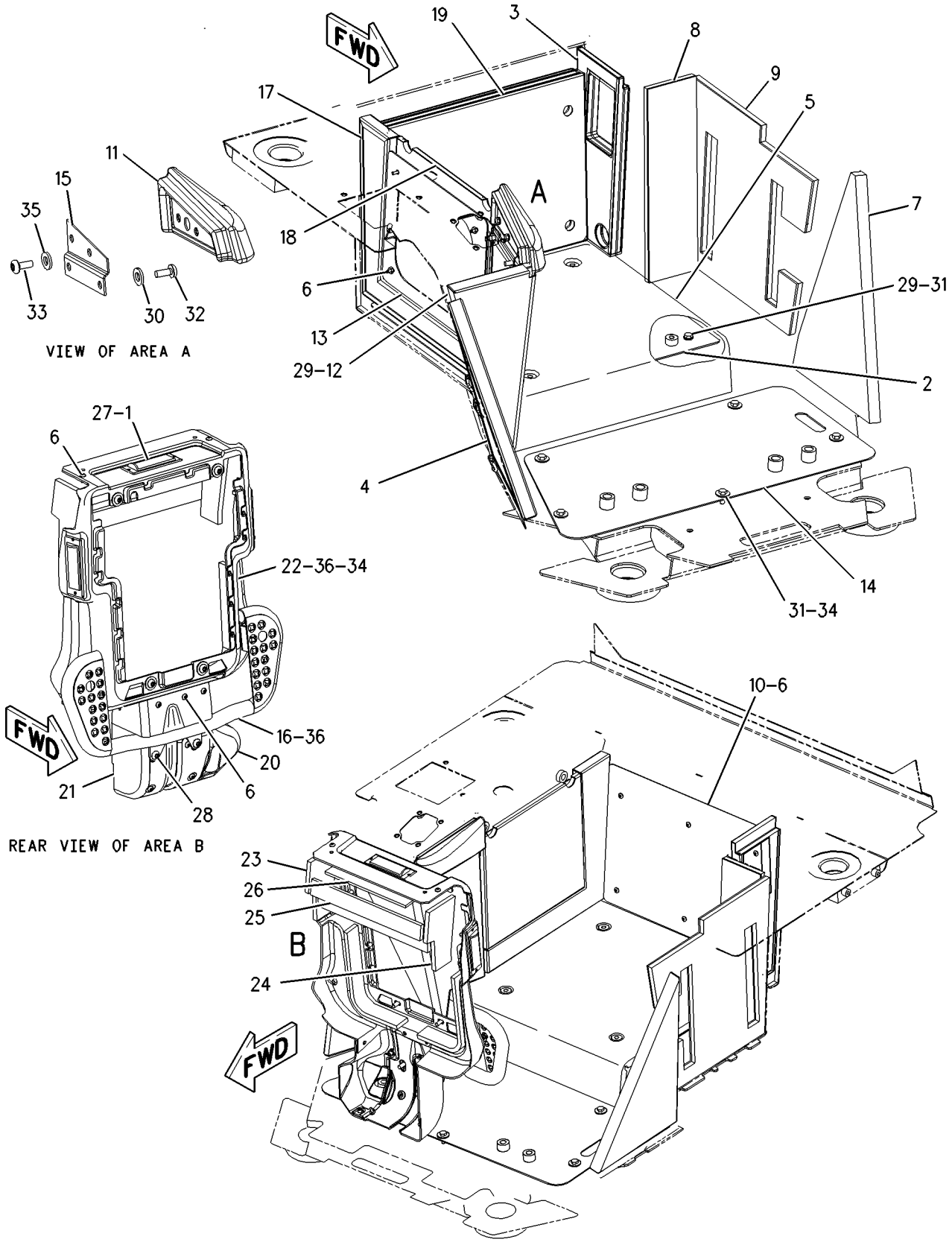

GRAPHIC #1 **<END>** g00974170

OPERATOR STATION

177-3860 COVER GP-CONSOLE—CAB

S/N: CBJ1-UP

PART OF 156-9516 CAB AR

SMCS-5258 **i01895730**

NOTE	REF NO	GRAPHIC REF	PART NUMBER	QTY	PART NAME 1 2 3 4 5 6 (PRODUCT LEVEL)	SEE PAGE
	1	1	**7G-4824**	2	STRAP	
	2	1	**8E-7791**	2	STRAP	
	3	1	**109-3590**	1	PLATE	
	4	1	**117-2311**	1	RECEPTACLE AS-POWER (12 VOLT)	
Y	5	1	**158-6632**	1	SWITCH AS-HORN	171
	6	1	**165-4879**	1	ARMREST AS	
M		1	**5C-9553**	3	BOLT (M6X1X16MM)	
		1	**5P-0537**	3	WASHER-HARD (7.2X14.5X2MM THK)	
	7	1	**169-2876**	1	FILM-IDENTIFICATION (12 VOLT)	
	8	1	**171-9607**	1	COVER-REAR	
	9	1	**171-9617**	1	FLOOR MAT	
	10	1	**197-0823**	1	COVER AS (RH)	
		1	**3H-0240**	7	WASHER (5X9.7X.8MM THK)	
		1	**9M-5733**	7	RIVET-POP (4.78MM DIA)	
		1	**178-0266**	1	HINGE AS	
		1	**188-8846**	1	LATCH AS	
	11	1	**197-0824**	1	CONSOLE AS (LH)	
		1	**3H-0240**	7	WASHER (5X9.7X.8MM THK)	
		1	**9M-5733**	7	RIVET-POP (4.78MM DIA)	
		1	**178-0266**	1	HINGE AS	
		1	**188-8846**	1	LATCH AS	
	12	1	**197-4871**	4	CLIP	
	13	1	**7X-7729**	2	WASHER (11X25X3MM THK)	
	14	1	**8T-4121**	4	WASHER-HARD (11X21X2.5MM THK)	
M	15	1	**8T-4137**	4	BOLT (M10X1.5X20MM)	
M	16	1	**8T-4185**	2	BOLT (M10X1.5X50MM)	
M	17	1	**9X-2045**	25	SCREW-TRUSS HEAD (M6X1X20MM)	

M-METRIC PART
Y-SEPARATE ILLUSTRATION

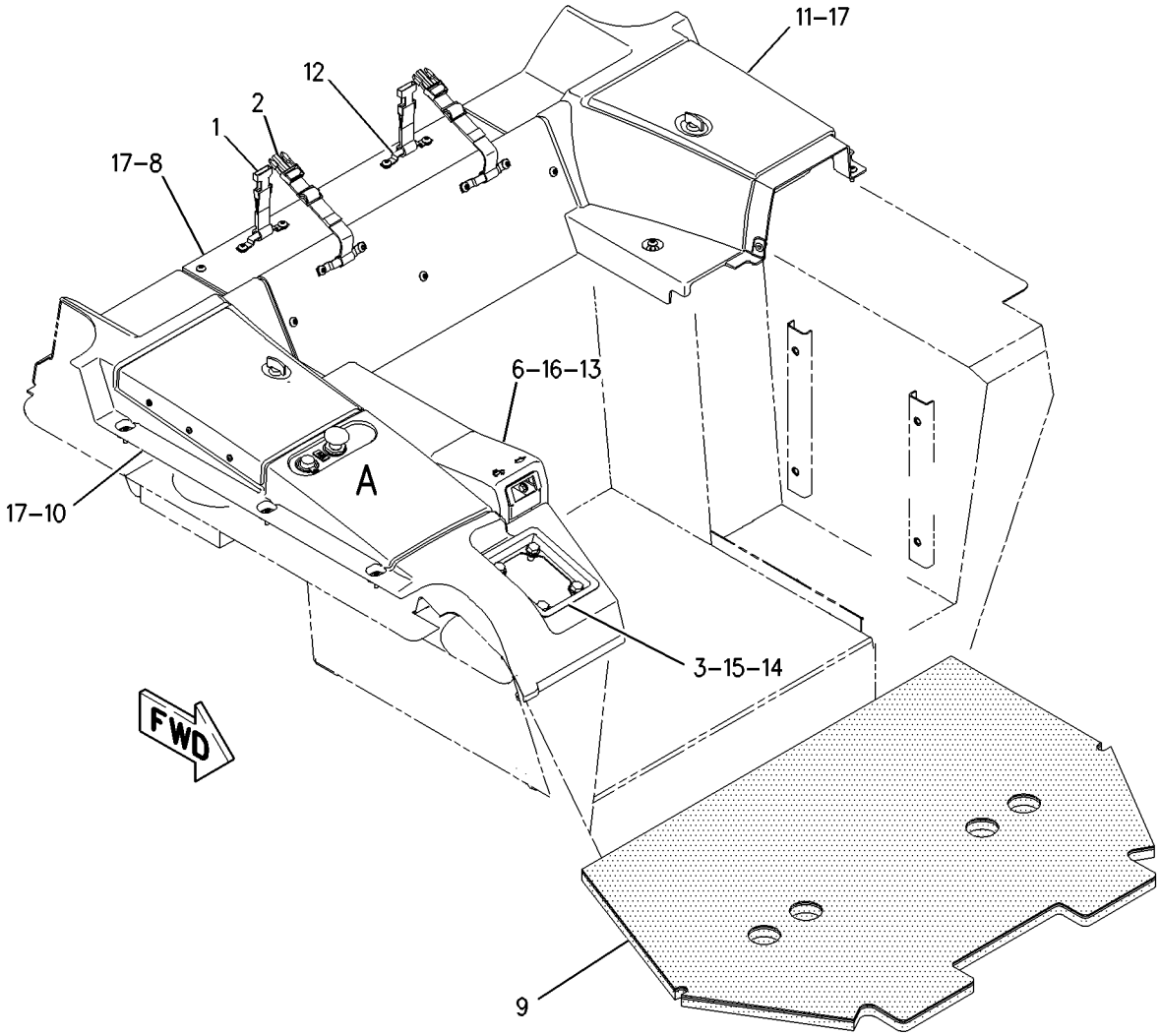

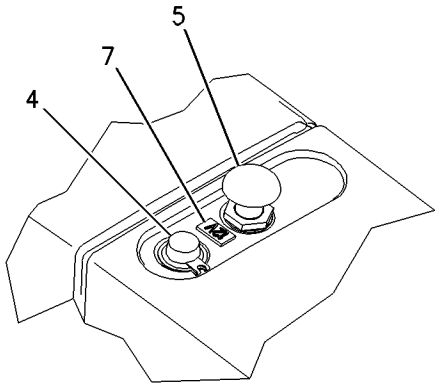

VIEW OF AREA A

GRAPHIC #1 **<END>** g00964093

OPERATOR STATION

202-1871 COVER GP-CONSOLE

S/N: CBJ1-UP

PART OF 156-9516 CAB AR

SMCS-5258 **i01828776**

NOTE	REF NO	GRAPHIC REF	PART NUMBER	QTY	PART NAME 1 2 3 4 5 6 (PRODUCT LEVEL)	SEE PAGE
	1	1	**201-8802**	1	COVER AS	
		1	**114-9125**	1	HOLDER-CUP	
		1	**154-5629**	1	ASHTRAY AS	
M	2	1	**9X-2045**	4	SCREW-TRUSS HEAD (M6X1X20MM)	

M-METRIC PART

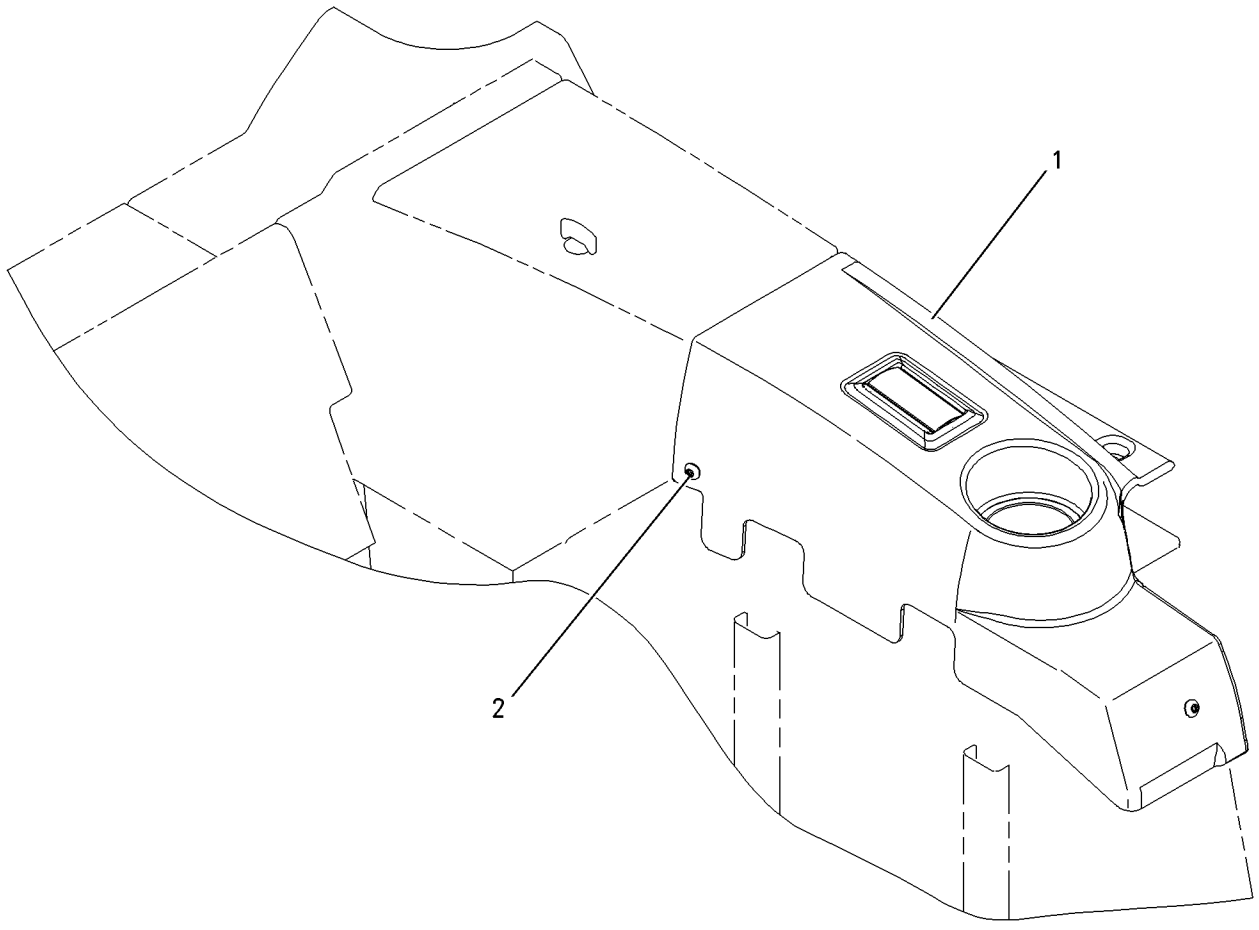

GRAPHIC #1 **<END>** g00911358

OPERATOR STATION

167-1451 DOOR GP-CAB—RH

S/N: CBJ1-UP

PART OF 156-8911 CAB GP

SMCS-7308 **i01828936**

NOTE	REF NO	GRAPHIC REF	PART NUMBER	QTY	PART NAME 1 2 3 4 5 6 (PRODUCT LEVEL)	SEE PAGE
	1	1	**6V-7636**	2	PIN AS-SPRING	
	2	1	**125-8175**	1	BLADE AS-WIPER (RH CAB DOOR)	
	3	1	**161-6989**	1	FRAME AS	
M		1	**6V-9632**	11	NUT-WELD (M6X1 THD)	
M		1	**8T-3490**	3	NUT-WELD (M10X1.5 THD)	
	4	1	**167-1452**	1	WINDOW	
	5	1	**170-6623**	1	MOTOR AS (WINDOW WIPER (RH) DOOR)	
		1	**9G-3695**	1	PLUG (GROMMET SEALING)	
		1	**186-3735**	5	PIN-CONNECTOR	
		1	**102-8805**	1	KIT-RECEPTACLE (6 PIN)	
					(INCLUDES RECEPTACLE AS & WEDGE)	
	6	1	**170-6625**	1	ARM AS-WIPER	
	7	1	**200-7836**	1	HANDLE AS (PULL)	
	8	1	**172-2381**	1	LINKAGE AS	
	9	1	**172-2383**	1	LINK AS	
		1	**6V-8185**	1	NUT (1/4-20 THD)	
		1	**108-5471**	1	CLEVIS	
	10	1	**172-2385**	1	LATCH AS-ROTARY	
	11	1	**173-6778**	1	COVER	
	12	1	**173-6807**	1	PLATE-COVER	
	13	1	**193-4577**	1	BRACKET (RH)	
	14	1	**194-3313**	1	LATCH GP (DOOR)	
M		1	**8T-4195**	3	BOLT (M10X1.5X30MM)	
		1	**8T-4223**	3	WASHER-HARD (13.5X25.5X3MM THK)	
		1	**194-3314**	1	RETAINER AS	
		1	**196-3773**	1	STRIKER AS	
	15	1	**9D-3768**	2	GROMMET	
M	16	1	**3T-0849**	4	BOLT-SOCKET HEAD (M6X1X25MM)	
	17	1	**9D-8508**	2	GROMMET	
	18	1	**8T-5400**	1	CONNECTOR	
M	19	1	**9X-2040**	4	SCREW-TRUSS HEAD (M10X1.5X25MM)	
M	20	1	**9X-2045**	7	SCREW-TRUSS HEAD (M6X1X20MM)	
BE	21	1	**133-3234**		SEAL	
	22	1	**133-9123**	2	PLUG	
	23	1	**224-2669**	4	PLUG-PLASTIC	
M	24	1	**8T-4138**	4	BOLT (M6X1X20MM)	
M	25	1	**8T-4137**	7	BOLT (M10X1.5X20MM)	
	26	1	**7X-7729**	7	WASHER (11X25X3MM THK)	
	27	1	**7K-1181**	1	STRAP-CABLE	

B-USE AS REQUIRED
E-ORDER BY THE CENTIMETER
M-METRIC PART

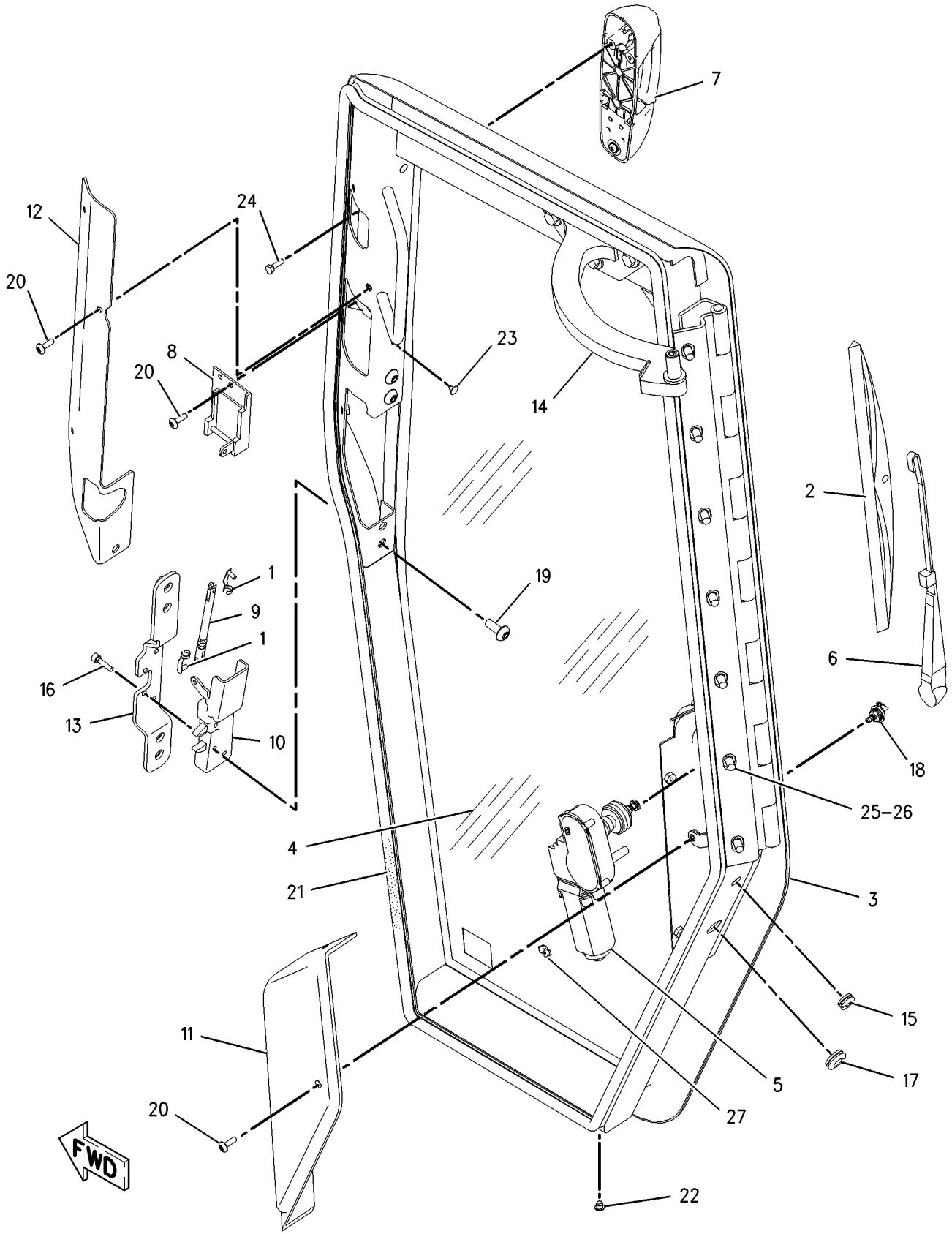

GRAPHIC #1 **<END>** g00909642

OPERATOR STATION

167-1453 DOOR GP-CAB—LH

S/N: CBJ1-UP

PART OF 156-8911 CAB GP

SMCS-7308 **i01893843**

NOTE	REF NO	GRAPHIC REF	PART NUMBER	QTY	PART NAME 1 2 3 4 5 6 (PRODUCT LEVEL)	SEE PAGE
	1	1	**6V-7636**	2	PIN AS-SPRING	
	2	1	**7K-1181**	1	STRAP-CABLE	
	3	1	**125-8175**	1	BLADE AS-WIPER (LH CAB DOOR)	
	4	1	**133-9123**	2	PLUG	
	5	1	**161-6990**	1	FRAME AS	
M		1	**6V-9632**	11	NUT-WELD (M6X1 THD)	
M		1	**8T-3490**	3	NUT-WELD (M10X1.5 THD)	
	6	1	**167-1454**	1	WINDOW	
	7	1	**170-6624**	1	MOTOR AS-WINDOW WIPER (LH)(DOOR)	
		1	**8T-8729**	4	PIN-CONNECTOR	
		1	**102-8804**	1	KIT-RECEPTACLE (4 PIN)	
					(INCLUDES RECEPTACLE AS & WEDGE)	
	8	1	**172-2382**	1	LINKAGE AS	
	9	1	**172-2383**	1	LINK AS	
		1	**6V-8185**	1	NUT (1/4-20 THD)	
		1	**108-5471**	1	CLEVIS	
	10	1	**172-2384**	1	LATCH AS (ROTARY)	
	11	1	**173-6777**	1	COVER	
	12	1	**175-3762**	1	ARM AS-WIPER	
	13	1	**183-4690**	1	COVER	
	14	1	**193-4578**	1	LATCH	
M		1	**8T-3490**	4	NUT-WELD (M10X1.5 THD)	
		1	**175-7643**	1	PLATE	
	15	1	**194-3309**	1	RETAINER GP (CAB DOOR)	
		1	**8T-4121**	3	WASHER-HARD (11X21X2.5MM THK)	
M		1	**8T-4195**	3	BOLT (M10X1.5X30MM)	
		1	**196-3773**	1	STRIKER AS	
	16	1	**200-7836**	1	HANDLE AS (PULL)	
	17	1	**224-2669**	4	PLUG-PLASTIC	
M	18	1	**3T-0849**	4	BOLT-SOCKET HEAD (M6X1X25MM)	
	19	1	**7X-7729**	7	WASHER (11X25X3MM THK)	
M	20	1	**8T-4137**	7	BOLT (M10X1.5X20MM)	
M	21	1	**8T-4138**	4	BOLT (M6X1X20MM)	
	22	1	**8T-5400**	1	CONNECTOR	
	23	1	**9D-3768**	2	GROMMET	
	24	1	**9D-8508**	2	GROMMET	
M	25	1	**9X-2040**	4	SCREW-TRUSS HEAD (M10X1.5X25MM)	
M	26	1	**9X-2045**	7	SCREW-TRUSS HEAD (M6X1X20MM)	
BE	27	1	**133-3234**		SEAL	

B-USE AS REQUIRED
E-ORDER BY THE CENTIMETER
M-METRIC PART

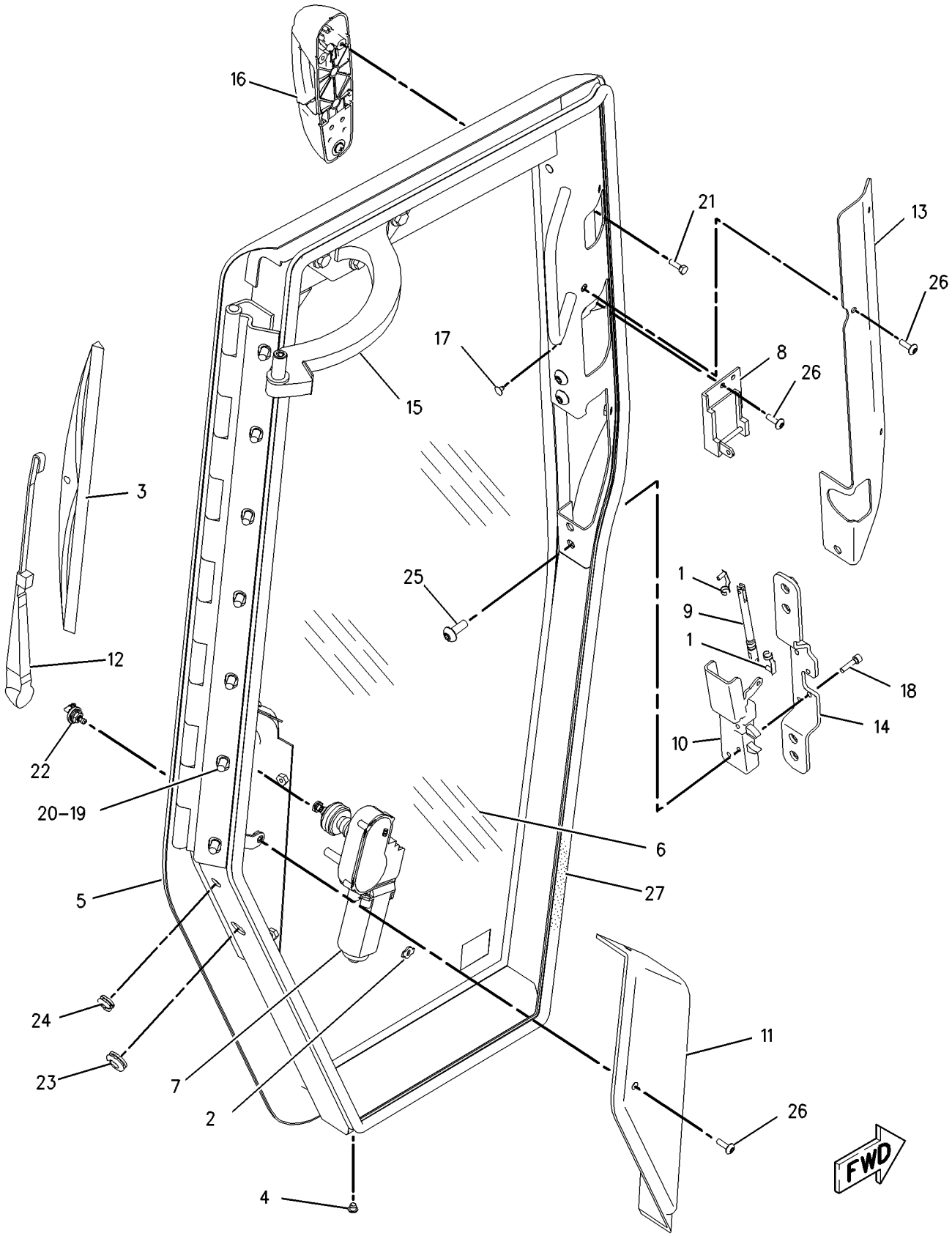

GRAPHIC #1 **<END>** g00912009

OPERATOR STATION

175-7654 HEATER GP-CAB

S/N: CBJ1-UP

PART OF 156-8911 CAB GP

SMCS-7304 **i01885524**

NOTE	REF NO	GRAPHIC REF	PART NUMBER	QTY	PART NAME 1 2 3 4 5 6 (PRODUCT LEVEL)	SEE PAGE
	1	1	**5D-1026**	4	CLAMP-HOSE	
	2	1	**6T-5617**	1	PLATE	
	3	1	**109-6407**	1	COIL AS-HEATER	
	4	1	**134-9602**	1	VALVE AS-WATER (CAB HEATER)	
		1	**3E-1841**	1	LEVER	
		1	**6V-6717**	1	SCREW-WASHER HEAD (8-32X.375 IN)	
		1	**8Y-5737**	1	CLAMP	
		1	**037-4426**	1	RETAINER	
		1	**102-0341**	1	CLIP (TAB)	
	5	1	**156-4449**	1	CABLE AS	
	6	1	**6D-1641**	2	CLIP	
	7	1	**7X-7729**	2	WASHER (11X25X3MM THK)	
	8	1	**8T-4121**	5	WASHER-HARD (11X21X2.5MM THK)	
M	9	1	**8T-4133**	1	NUT (M10X1.5 THD)	
M	10	1	**8T-4137**	6	BOLT (M10X1.5X20MM)	
E	11	1	**5P-0767**		HOSE (18.8CM)	
BD	12	1	**5P-5643**		SEAL	
BD	13	1	**5P-5639**		SEAL	
E	14	1	**5P-0767**		HOSE (17.6CM)	

B-USE AS REQUIRED
D-ORDER BY THE METER
E-ORDER BY THE CENTIMETER
M-METRIC PART

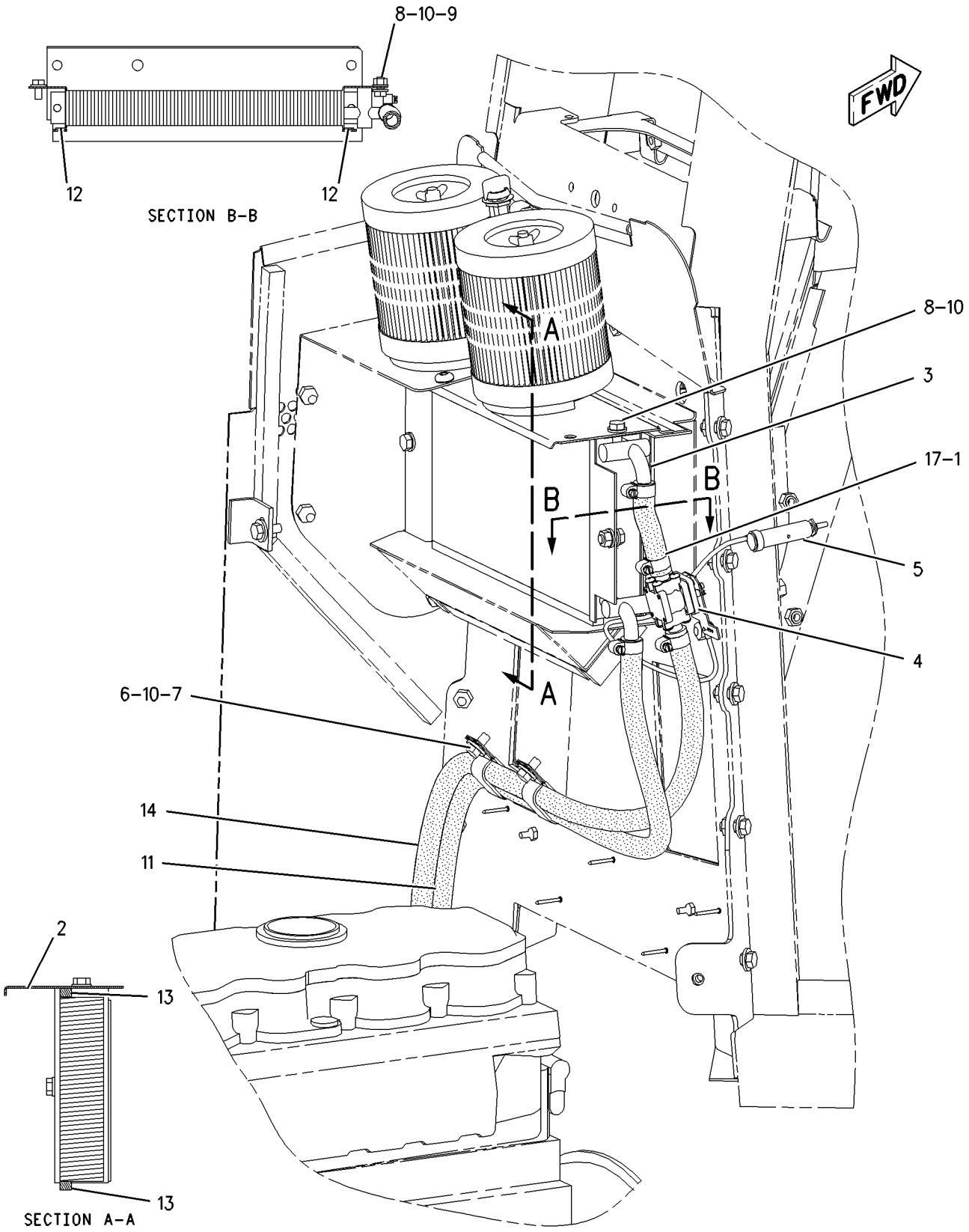

GRAPHIC #1 **<END>** g00935061

OPERATOR STATION

163-1036 HEATER GP-OPEN ROPS

S/N: CBJ1-UP
PART OF 167-1465 HEATER GP-OPEN ROPS
AN ATTACHMENT

SMCS-7304 **i01875994**

NOTE	REF NO	GRAPHIC REF	PART NUMBER	QTY	PART NAME 1 2 3 4 5 6 (PRODUCT LEVEL)	SEE PAGE
	1	1	**3E-0400**	2	WHEEL-BLOWER	
		1	**037-4838**	1	CLAMP	
	2	1	**3S-2093**	3	STRAP-CABLE	
	3	1	**6V-1668**	2	WASHER (6.5X29.1X3MM THK)	
	4	1	**8C-4586**	2	CLAMP	
	5	1	**8P-5141**	2	PLATE-ORIFICE	
M	6	1	**8T-4171**	15	BOLT (M6X1X12MM)	
	7	1	**8T-4205**	28	WASHER-HARD (7.2X14.5X2MM THK)	
	8	1	**9G-1950**	1	RESISTOR	
	9	1	**127-6424**	1	HARNESS AS (HEATER)	
		1	**102-8805**	1	KIT-RECEPTACLE (6 PIN)	
					(INCLUDES RECEPTACLE AS & WEDGE)	
		1	**8T-8737**	2	PLUG-SEAL	
		1	**9W-0844**	2	SOCKET-CONNECTION	
		1	**9W-0852**	4	PIN-CONNECTOR	
		1	**155-2270**	1	KIT-CONNECTING PLUG (2 PIN)	
					(INCLUDES PLUG AS & WEDGE)	
	10	1	**129-1336**	1	PLATE	
	11	1	**129-1368**	1	PLATE	
	12	1	**129-1371**	1	GASKET	
	13	1	**129-1373**	1	GASKET	
	14	1	**129-1374**	1	GASKET	
	15	1	**129-1376**	1	CASE AS	
		1	**5P-4115**	4	WASHER-HARD (7.2X19X2MM THK)	
M		1	**6V-9632**	10	NUT-WELD (M6X1 THD)	
		1	**7T-1099**	3	LINK	
M		1	**8T-3490**	2	NUT-WELD (M10X1.5 THD)	
	16	1	**129-1378**	1	HOUSING AS	
	17	1	**133-9399**	1	GROMMET	
M	18	1	**141-9784**	1	BOLT-HEX HEAD (M6X190MM)	
	19	1	**174-1494**	1	MOTOR GP-ELECTRIC (27 VOLT) (HEATER OPEN ROPS)	
		1	**3E-3365**	1	WEDGE-RECEPTACLE LOCK (2 PIN)	
		1	**9W-0852**	2	PIN-CONNECTOR	
		1	**102-8802**	1	KIT-RECEPTACLE (2 PIN)	
					(INCLUDES RECEPTACLE AS & WEDGE)	
	20	1	**177-6858**	1	COIL AS-HEATER	
M	21	1	**129-3178**	11	LOCKNUT (M6X1 THD)	
M	22	1	**6V-7728**	1	BOLT (M6X1.0X45MM)	
D	23	1	**5P-5908**		SEAL (.2M)	
D	24	1	**6V-2496**		SEAL (1.1M)	

D-ORDER BY THE METER
M-METRIC PART

163-1036 HEATER GP-OPEN ROPS *(contd.)*

i01875994

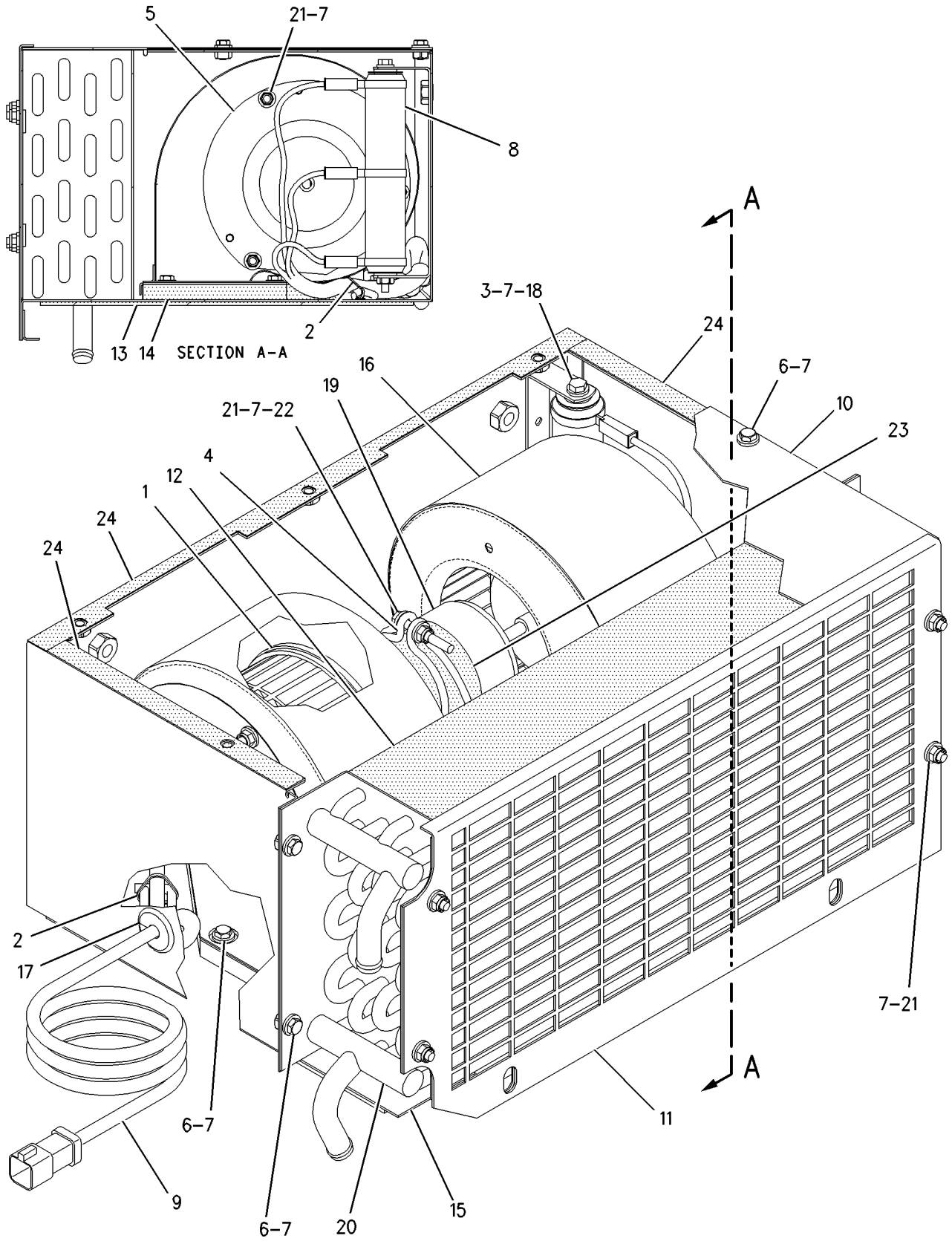

GRAPHIC #1

<END>

g00773308

OPERATOR STATION

167-1465 HEATER GP-OPEN ROPS

S/N: CBJ1-UP

FOR USE WITH CANOPY AR. CANNOT BE USED WITH CAB AR AN ATTACHMENT

SMCS-7304 **i01830517**

NOTE	REF NO	GRAPHIC REF	PART NUMBER	QTY	PART NAME 1 2 3 4 5 6 (PRODUCT LEVEL)	SEE PAGE
	1	1	**6P-3236**	1	SWITCH AS-ROTARY (HEATER BLOWER)	
		1	**6V-8362**	5	SCREW-MACHINE (8-32X0.31 IN)	
		1	**9B-7233**	5	LOCKWASHER	
	2	1	**8Y-6391**	4	LOUVER AS	
	3	1	**9X-2185**	4	SCREW (8-15X0.44 IN)	
	4	1	**9X-6772**	1	STRAP-CABLE	
	5	1	**110-6109**	1	KNOB-CONTROL (HEATER TEMPERATURE)	
Y	6	1	**163-1036**	1	HEATER GP-OPEN ROPS	440
E	7	1	**5P-0767**	1	HOSE (23CM)	
	8	1	**5D-1026**	4	CLAMP-HOSE	
	9	1	**180-5317**	1	VALVE AS-WATER (OPEN ROPS HEATER)	
		1	**3E-1841**	1	LEVER	
		1	**6V-6717**	1	SCREW-WASHER HEAD (8-32X.375 IN)	
		1	**8Y-5737**	1	CLAMP	
		1	**037-4426**	1	RETAINER	
		1	**102-0341**	1	CLIP (TAB)	
	10	1	**132-3332**	16	SCREW (NO 4 X 16MM)	
	11	1	**142-6926**	1	CABLE AS (HEATER TEMPERATURE CONTROL)	
	12	1	**187-6092**	1	FILM (DASH PANEL)	
	13	1	**7X-7729**	4	WASHER (11X25X3MM THK)	
M	14	1	**8T-4137**	2	BOLT (M10X1.5X20MM)	
M	15	1	**8T-4196**	2	BOLT (M10X1.5X35MM)	
	16	1	**110-6109**	1	KNOB-CONTROL (BLOWER FAN SPEED)	

E-ORDER BY THE CENTIMETER
M-METRIC PART
Y-SEPARATE ILLUSTRATION

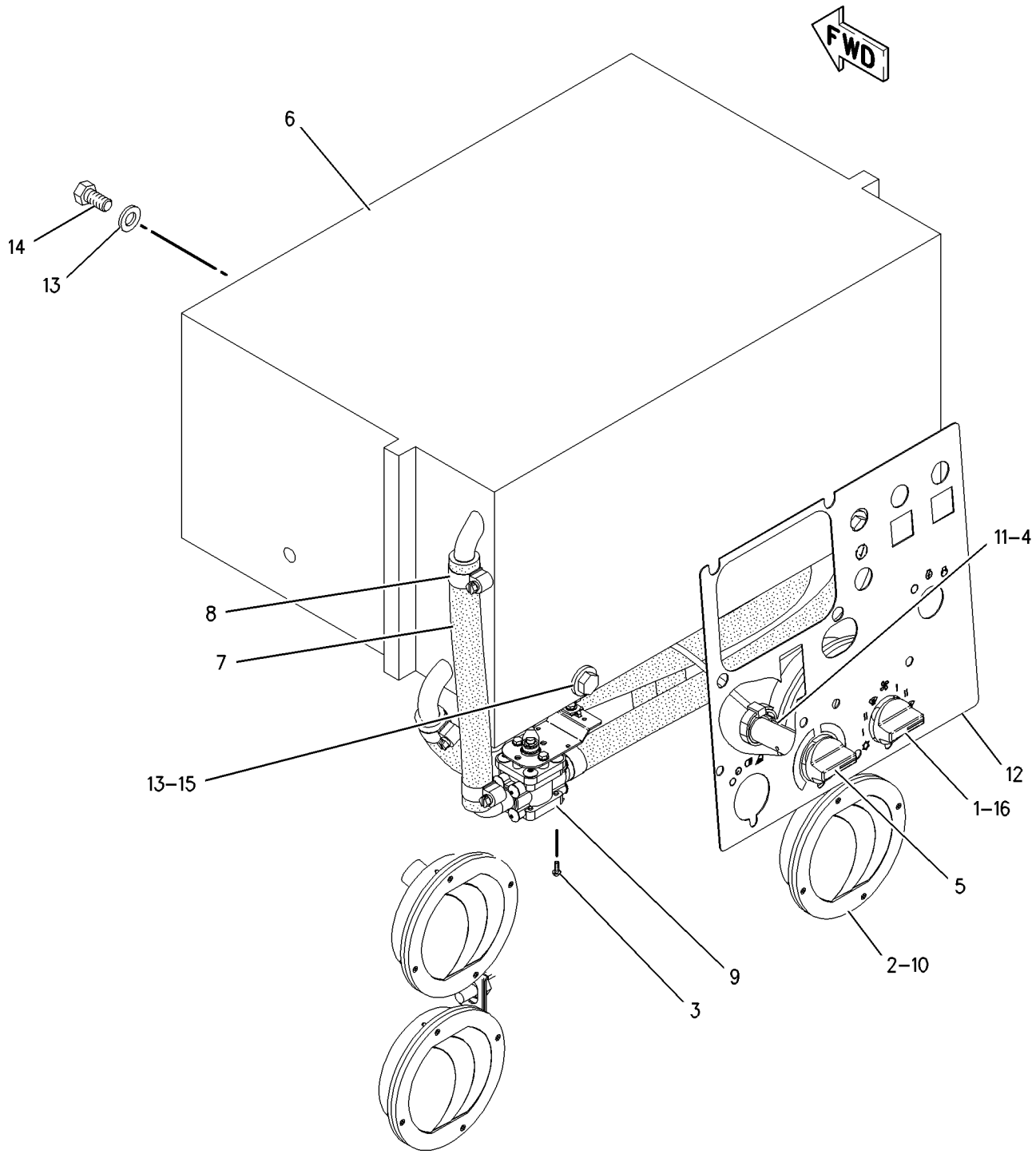

GRAPHIC #1 **<END>** g00911191

OPERATOR STATION

174-2231 HOUSING GP-SEAT SUSPENSION

S/N: CBJ1-UP
PART OF 160-7165 SUSPENSION GP-SEAT
AN ATTACHMENT

SMCS-7321 **i01883773**

NOTE	REF NO	GRAPHIC REF	PART NUMBER	QTY	PART NAME 1 2 3 4 5 6 (PRODUCT LEVEL)	SEE PAGE
	1	1	**1Y-7927**	1	PIN	
	2	1	**2D-6235**	2	LOCKNUT (1/4-20 THD)	
	3	1	**2M-7819**	4	RING-RETAINING	
	4	1	**3D-2975**	2	RING-RETAINING	
	5	1	**4B-5059**	6	WASHER (29.5X15X2.5MM THK)	
	6	1	**4N-2927**	2	RACE-THRUST BEARING	
	7	1	**5D-4822**	2	RING-RETAINING	
	8	1	**5P-8445**	4	RING-RETAINING	
	9	1	**5V-0770**	2	BOLT-CARRIAGE	
	10	1	**7M-7219**	1	BEARING-THRUST	
	11	1	**7V-5191**	2	SPACER (28X10X7.1MM THK)	
	12	1	**8L-8413**	2	STRAP-CABLE	
	13	1	**8S-7803**	4	RING-RETAINING	
	14	1	**8Y-6041**	1	ARM AS	
	15	1	**8Y-6045**	1	CAM	
	16	1	**8Y-6046**	1	PIN	
	17	1	**8Y-6047**	2	PIN	
	18	1	**8Y-6060**	2	ROLLER	
	19	1	**8Y-6062**	1	LINK-ACTUATOR-RH	
	20	1	**8Y-6063**	1	LINK-ACTUATOR-LH	
	21	1	**8Y-6064**	2	ROLLER-SLIDER	
	22	1	**8Y-6066**	1	SPRING	
	23	1	**8Y-6067**	1	SPACER (10.54MM THK)	
	24	1	**8Y-6068**	1	NUT (3/8 X 16 THD)	
	25	1	**8Y-6069**	1	ADJUSTER AS	
	26	1	**9X-8918**	3	SCREW-FLAT HEAD (8-32X0.50 IN)	
	27	1	**095-0878**	1	PIN-SPRING	
	28	1	**131-4242**	1	BOLT (3/8-16X5.18 IN)	
	29	1	**131-5167**	1	KNOB AS-WEIGHT (SEAT SUSPENSION)	
	30	1	**161-5967**	1	SHAFT	
	31	1	**174-2237**	1	HOUSING AS-UPPER	
JZ	32	1		1	KNOB-HEIGHT (SEAT SUSPENSION)	
JZ	33	1		1	KNOB-HEIGHT (SEAT SUSPENSION)	
LZ	34	1		2	SPRING	
LZ	35	1		2	BUSHING	
VZ	36	1		2	SPRING	
VZ	37	1		2	SPACER	
VZ	38	1		2	BUSHING-GUIDE	
VZ	39	1		2	ROD	
PZ	40	1		1	TAPE-INDICATOR	
PZ	41	1		1	GUIDE	
SZ	42	1		1	PIN	
SZ	43	1		1	FOLLOWER-CAM	
TZ	44	1		1	PIN	
TZ	45	1		1	FOLLOWER-CAM	
UZ	46	1		2	ROLLER AS	
UZ	47	1		1	ROLLER AS	
QZ	48	1		3	BUMPER	
					AVAILABLE REPAIR KIT(S):	
J			**8Y-5945**	1	KIT-SUSPENSION KNOB (HEIGHT ADJUSTMENT) (SUSPENSION SEAT)	
L			**8Y-6859**	1	KIT-SPRING (SUSPENSION SEAT)	
V			**8Y-6860**	1	KIT-SPRING (HEIGHT ADJUSTMENT) (SUSPENSION SEAT)	

174-2231 **HOUSING GP-SEAT SUSPENSION** *(contd.)* **i01883773**

NOTE	REF NO	GRAPHIC REF	PART NUMBER	QTY	PART NAME 1 2 3 4 5 6 (PRODUCT LEVEL)	SEE PAGE
P			**100-3224**	1	KIT-INDICATOR (WEIGHT ADJUSTMENT) (SUSPENSION SEAT)	
Q			**100-5179**	1	KIT-BUMPER (WEIGHT ADJUSTMENT) (SUSPENSION SEAT)	
S			**108-4086**	1	KIT-FOLLOWER (SUSPENSION SEAT)	
T			**108-4087**	1	KIT-FOLLOWER (SUSPENSION SEAT)	
U			**108-4103**	1	KIT-BEARING (SUSPENSION SEAT)	

J-KIT MARKED J INCLUDES PARTS MARKED J
L-KIT MARKED L INCLUDES PARTS MARKED L AND RETAINING RING
P-KIT MARKED P INCLUDES PARTS MARKED P AND CABLE STRAP
Q-KIT MARKED Q INCLUDES PARTS MARKED Q
S-KIT MARKED S INCLUDES PARTS MARKED S
T-KIT MARKED T INCLUDES PARTS MARKED T
U-KIT MARKED U INCLUDES PARTS MARKED U
V-KIT MARKED V INCLUDES PARTS MARKED V
Z-NOT SERVICED SEPARATELY

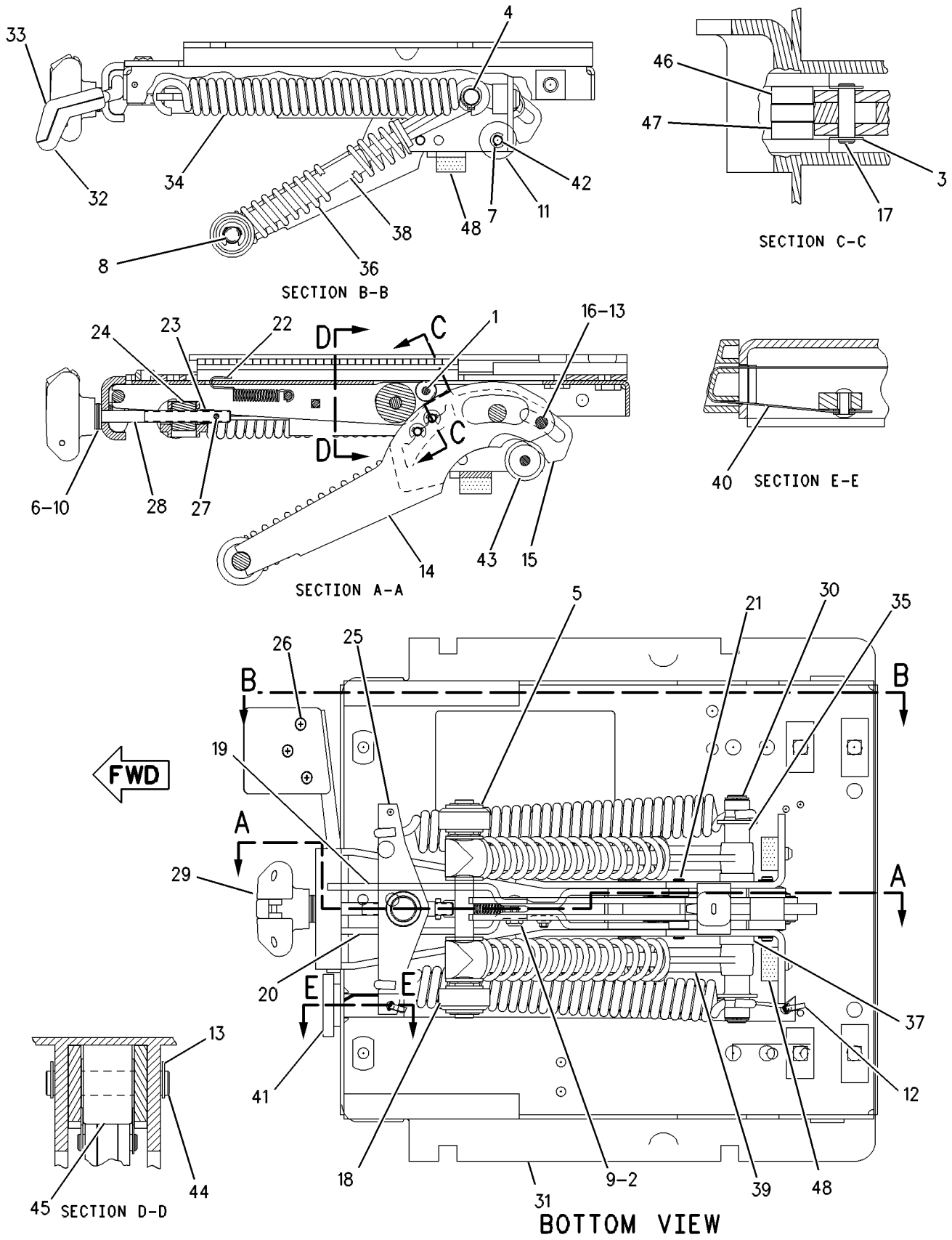

GRAPHIC #1 **<END>** g00608620

204-6414 INSTALLATION GP-LINES—AIR CONDITIONER

S/N: CBJ1-UP

PART OF 156-9516 CAB AR

SMCS-1808 **i01895732**

NOTE	REF NO	GRAPHIC REF	PART NUMBER	QTY	PART NAME 1 2 3 4 5 6 (PRODUCT LEVEL)	SEE PAGE
	1	1	**7K-1181**	3	STRAP-CABLE	
	2	1	**5P-3928**	1	COUPLING AS-SEALING	
		1	**107-4395**	1	VALVE AS	
		1	**107-4396**	1	GASKET	
	3	1	**7K-3176**	1	COUPLING AS	
		1	**107-4393**	1	VALVE AS	
		1	**107-4394**	1	GASKET	
	4	1	**9M-9162**	2	CLAMP	
	5	1	**106-8704**	1	SUPPRESSOR AS-ARC	
	6	1	**110-6393**	1	PLATE-INSTRUCTION (AIR CONDITIONER)	
	7	1	**114-5333**	1	SWITCH AS-PRESSURE (HIGH/LOW) (COMPRESSOR)	
		1	**102-8802**	1	KIT-RECEPTACLE (2 PIN)	
					(INCLUDES RECEPTACLE AS & WEDGE)	
		1	**186-3735**	2	PIN-CONNECTOR	
	8	1	**214-7303**	1	TUBE AS	
	9	1	**225-5518**	1	FITTING GP	
		1	**3E-4058**	1	VALVE AS (AIR CONDITIONER)	
		1	**3E-4052**	1	CAP AS (AIR CONDITIONER)	
	10	1	**1P-6356**	1	PLATE	
	11	1	**4P-7581**	1	CLIP	
	12	1	**4P-8134**	1	CLIP	
	13	1	**8T-4121**	3	WASHER-HARD (11X21X2.5MM THK)	
M	14	1	**8T-4133**	1	NUT (M10X1.5 THD)	
M	15	1	**8T-4195**	1	BOLT (M10X1.5X30MM)	
M	16	1	**8T-6466**	1	BOLT (M10X1.50X60MM)	
	17	1	**9X-7378**	1	SEAL-O-RING	
	18	1	**9X-7383**	1	SEAL-O-RING	
	19	1	**9X-7384**	1	SEAL-O-RING	
	20	1	**9X-7385**	2	SEAL-O-RING	
	21	1	**8M-2770**	1	CLIP	

M-METRIC PART

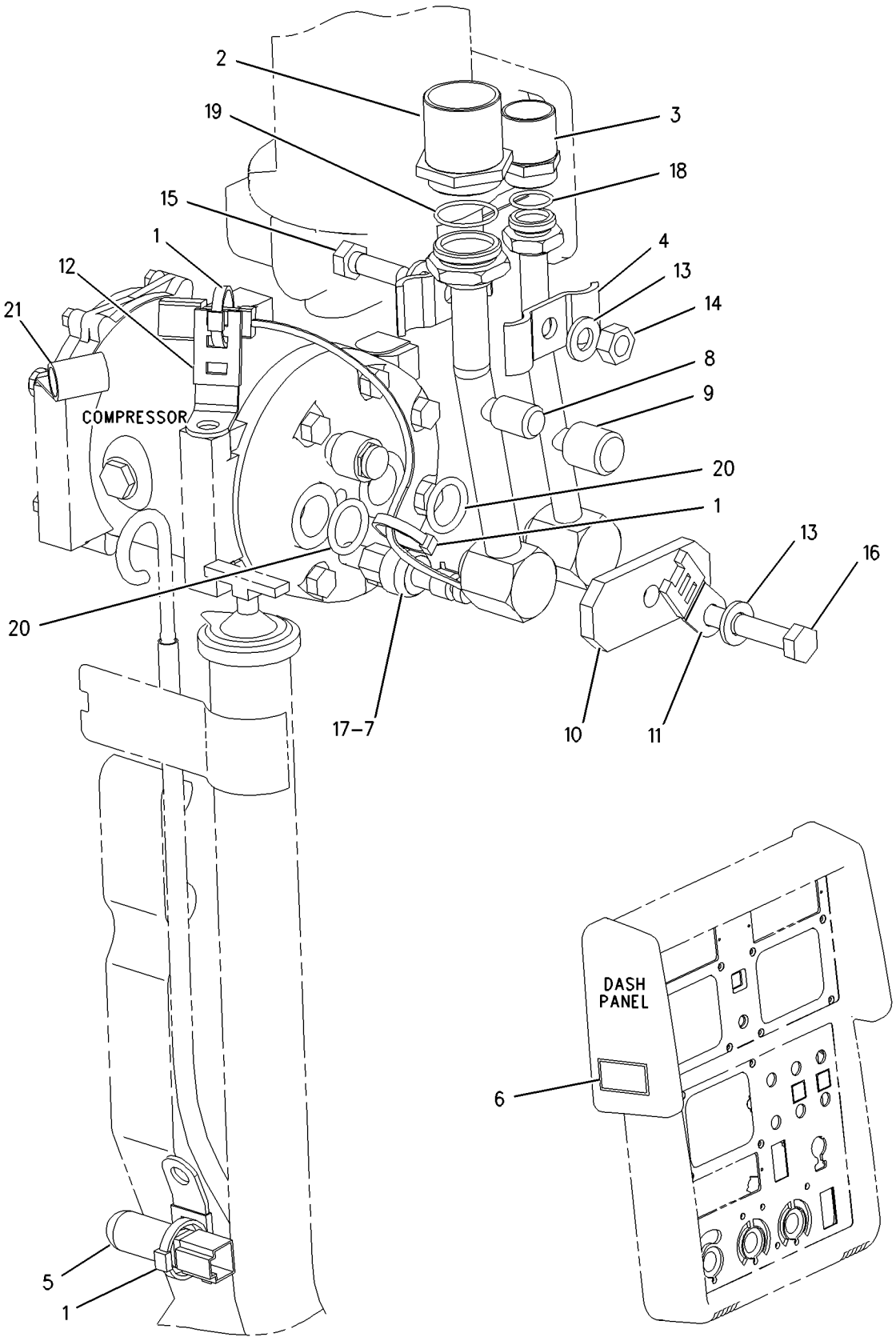

GRAPHIC #1 **<END>** g00931403

194-3333 INSTALLATION GP-RADIO

S/N: CBJ1-UP

PART OF 156-8911 CAB GP

SMCS-7338 **i01878325**

NOTE	REF NO	GRAPHIC REF	PART NUMBER	QTY	PART NAME 1 2 3 4 5 6 (PRODUCT LEVEL)	SEE PAGE
	1	1	**6C-3431**	1	AERIAL	
	2	1	**6T-7695**	2	SPEAKER AS-RADIO	
	3	1	**9U-8263**	1	COVER	
	4	1	**128-7988**	1	FILM-NOTICE (RADIO)	
	5	1	**145-4509**	8	SCREW	

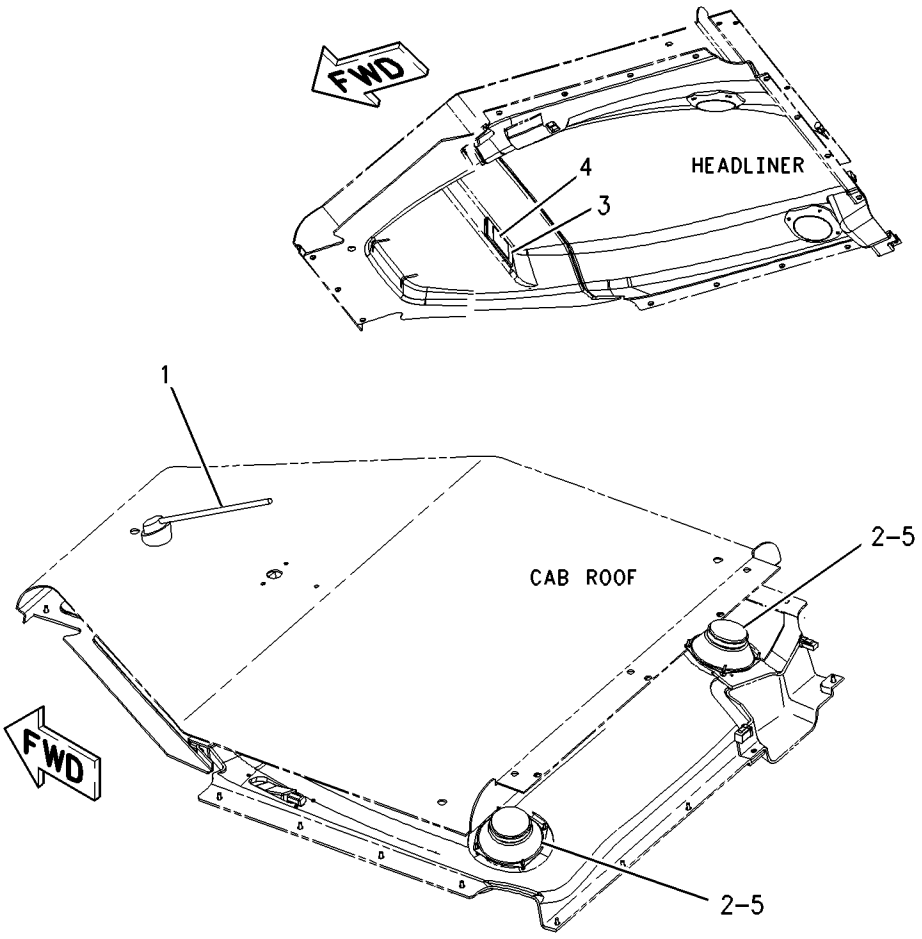

GRAPHIC #1 **<END>** g00931293

OPERATOR STATION

177-3851 INSULATION GP-WEATHER

S/N: CBJ1-UP

PART OF 156-8911 CAB GP

SMCS-7329 **i01828963**

NOTE	REF NO	GRAPHIC REF	PART NUMBER	QTY	PART NAME 1 2 3 4 5 6 (PRODUCT LEVEL)	SEE PAGE
	1	1	**6P-2216**	16	CAP-PUSH ON	
	2	1	**223-4127**	1	INSULATION	
	3	1	**223-4128**	1	INSULATION	
	4	1	**223-4129**	1	INSULATION	

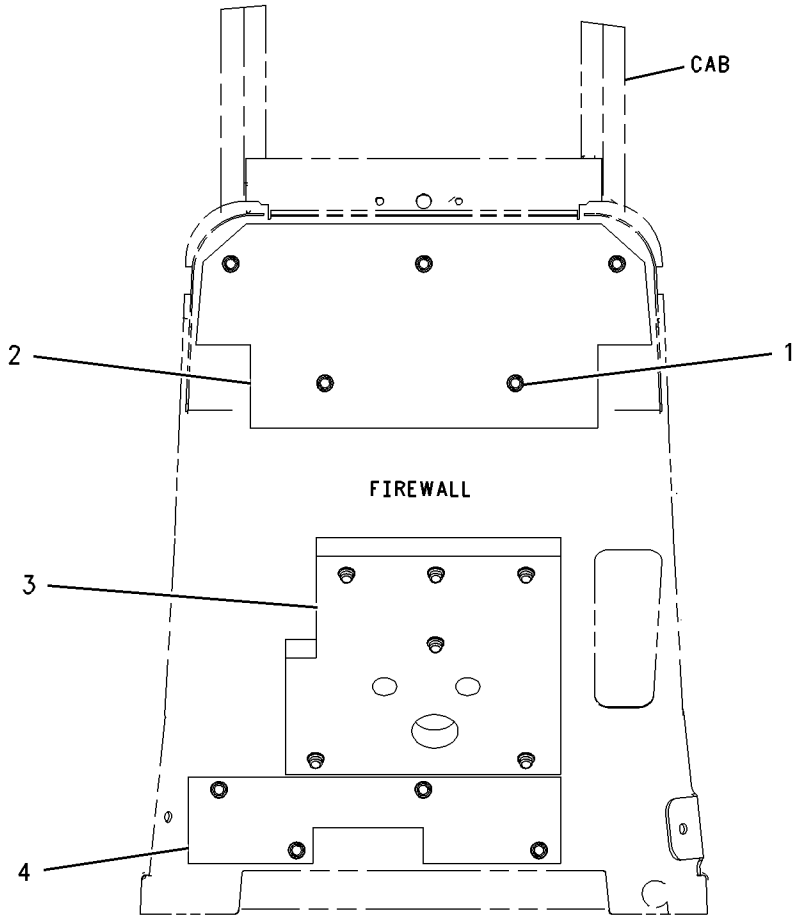

GRAPHIC #1 **<END>** g00914770

OPERATOR STATION

194-3315 LATCH GP–CAB DOORS

S/N: CBJ1-UP

PART OF 156-8911 CAB GP

SMCS-7308 **i01828908**

NOTE	REF NO	GRAPHIC REF	PART NUMBER	QTY	PART NAME 1 2 3 4 5 6 (PRODUCT LEVEL)	SEE PAGE
	1	1	**109-5008**	2	BUMPER-CONICAL	
	2	1	**8C-3442**	2	SPRING-COIL	
	3	1	**110-5602**	2	KNOB (DOOR LATCH)	
	4	1	**224-8445**	1	LATCH AS	
	5	1	**224-8446**	1	LATCH AS	
	6	1	**196-3700**	1	LATCH AS	
	7	1	**196-3701**	1	LATCH AS	
	8	1	**224-8448**	1	ROD AS (LH)	
	9	1	**224-8449**	1	ROD AS (RH)	
M	10	1	**3T-0849**	8	BOLT-SOCKET HEAD (M6X1X25MM)	
M	11	1	**129-3178**	2	LOCKNUT (M6X1 THD)	
	12	1	**8T-4121**	10	WASHER-HARD (11X21X2.5MM THK)	
M	13	1	**8T-4136**	10	BOLT (M10X1.5X25MM)	
	14	1	**9X-8256**	6	WASHER (6.6X12X2MM THK)	

M-METRIC PART

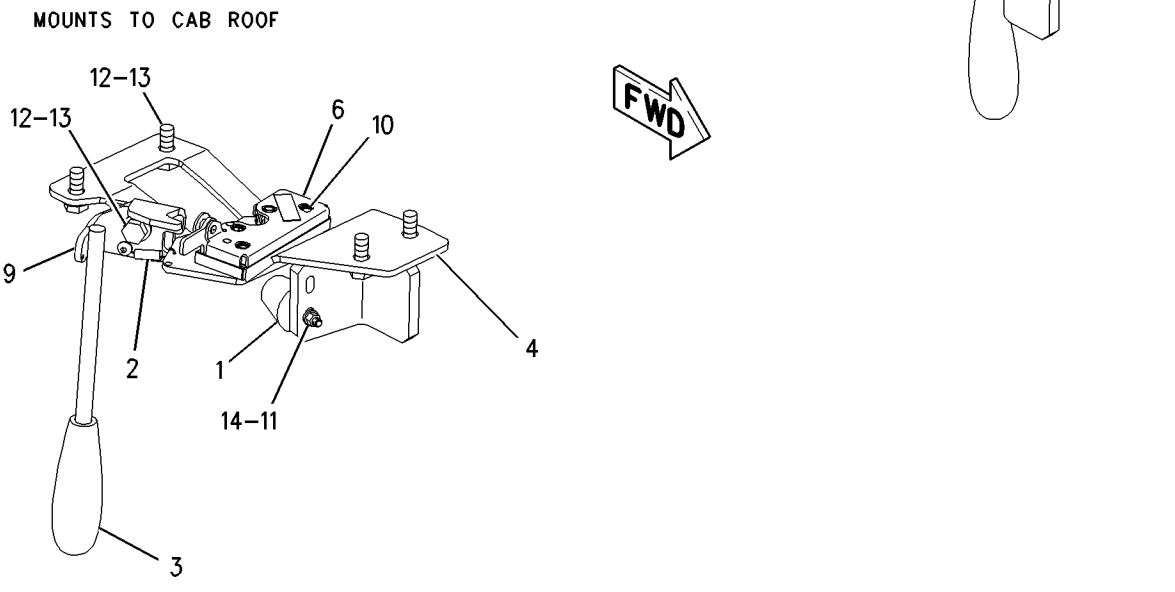

GRAPHIC #1 **<END>** g00914740

OPERATOR STATION

170-2084 LINER GP-CAB

S/N: CBJ1-UP

PART OF 156-8911 CAB GP

SMCS-7329 **i01828950**

NOTE	REF NO	GRAPHIC REF	PART NUMBER	QTY	PART NAME 1 2 3 4 5 6 (PRODUCT LEVEL)	SEE PAGE
Y	1	1	**3E-6389**	1	LAMP GP-DOME (24 VOLT)	140
	2	1	**171-9601**	1	HEADLINER-FRONT	
	3	1	**171-9603**	1	COVER	
	4	1	**205-1420**	1	HEADLINER AS	
M		1	**150-4086**	8	SCREW (M4X.7X16MM)	
		1	**173-9164**	2	GRILL-SPEAKER	
M	5	1	**8T-4127**	3	SCREW-MACHINE (M5X0.8X20MM)	
M	6	1	**9X-2044**	16	SCREW-TRUSS HEAD (M6X1X16MM)	

M-METRIC PART
Y-SEPARATE ILLUSTRATION

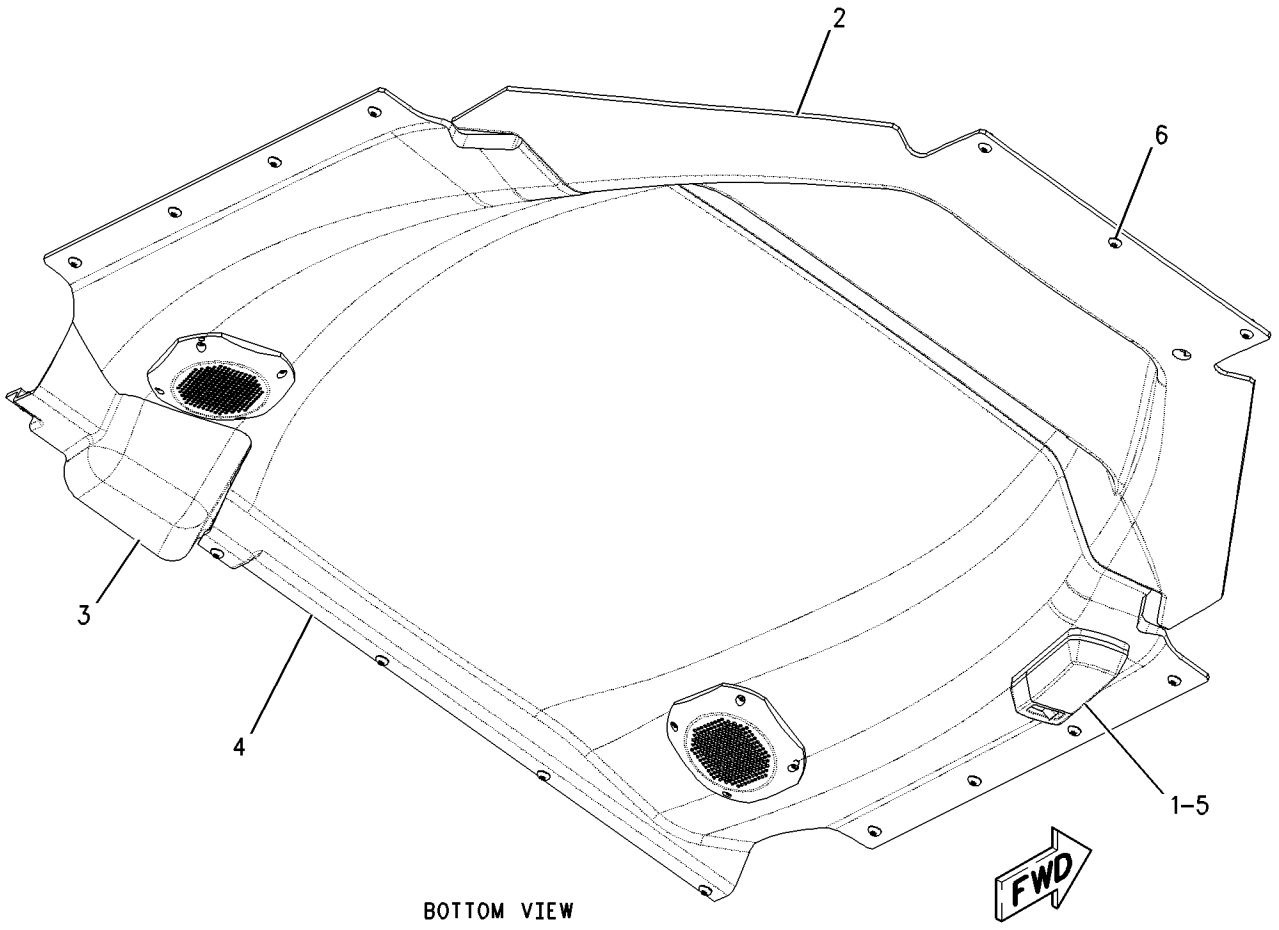

BOTTOM VIEW

GRAPHIC #1 **<END>** g00782760

OPERATOR STATION

171-9593 LINES GP-AIR CONDITIONER

S/N: CBJ1-UP

PART OF 167-1458 AIR CONDITIONER GP

SMCS-1808 **i01829155**

NOTE	REF NO	GRAPHIC REF	PART NUMBER	QTY	PART NAME 1 2 3 4 5 6 (PRODUCT LEVEL)	SEE PAGE
	1	1	**3S-2093**	3	STRAP-CABLE	
	2	1	**5P-3929**	1	COUPLING AS-REFRIGERANT	
	3	1	**5P-3948**	1	COUPLING AS-REFRIGERANT	
	4	1	**7T-8895**	3	GROMMET	
	5	1	**7T-9793**	1	VALVE (CHECK)	
	6	1	**8C-5682**	1	TEE	
	7	1	**103-6100**	2	COUPLER AS-QUICK	
I	8	1	**175-7656**	1	HOSE AS	
I	9	1	**175-7657**	1	HOSE AS	
	10	1	**186-6189**	1	ACCUMULATOR-REFRIGERANT	
I	11	1	**221-5161**	1	HOSE AS	
I	12	1	**221-5162**	1	HOSE AS	
	13	1	**221-5163**	1	TUBE AS	
I	14	1	**221-5164**	1	HOSE AS	
	15	1	**221-5165**	1	TUBE AS	
	16	1	**221-5166**	1	TUBE AS	
	17	1	**222-5086**	1	TUBE GP	
	18	1	**109-1633**	1	CLIP (SLOT)	
	19	1	**109-1634**	1	CLIP (TAB)	
	20	1	**3E-3535**	1	RECEIVER-DRYER GP (REFRIGERANT)	
	21	1	**3S-8536**	2	SPACER (.406X.656X.38IN THK)	
	22	1	**4M-5942**	6	CLIP	
	23	1	**5F-9144**	5	SEAL-O-RING	
	24	1	**5P-3944**	1	SEAL-O-RING	
	25	1	**6D-1641**	3	CLIP	
	26	1	**6D-4246**	4	CLIP	
	27	1	**6M-5062**	3	SEAL-O-RING	
	28	1	**6V-4356**	1	CLIP (SLOT)	
	29	1	**6V-4357**	1	CLIP (TAB)	
	30	1	**7X-7729**	1	WASHER (11X25X3MM THK)	
	31	1	**8T-4121**	16	WASHER-HARD (11X21X2.5MM THK)	
M	32	1	**8T-4136**	7	BOLT (M10X1.5X25MM)	
M	33	1	**8T-4137**	6	BOLT (M10X1.5X20MM)	
M	34	1	**8T-4195**	2	BOLT (M10X1.5X30MM)	
M	35	1	**8T-4196**	2	BOLT (M10X1.5X35MM)	
	36	1	**9S-1310**	8	CLIP	
	37	1	**9X-7381**	1	SEAL-O-RING	
	38	1	**9X-7382**	1	SEAL-O-RING	
	39	1	**9X-7383**	3	SEAL-O-RING	
	40	1	**9X-8250**	1	CLIP	
BE	41	1	**7X-7702**		CONDUIT-FLEXIBLE	
BE	42	1	**223-0118**		SEAL	
BD	43	1	**5P-4829**		TUBE	

B-USE AS REQUIRED
D-ORDER BY THE METER
E-ORDER BY THE CENTIMETER
I-SEE HOSE FABRICATION GUIDE
M-METRIC PART

171-9593 **LINES GP-AIR CONDITIONER** *(contd.)* **i01829155**

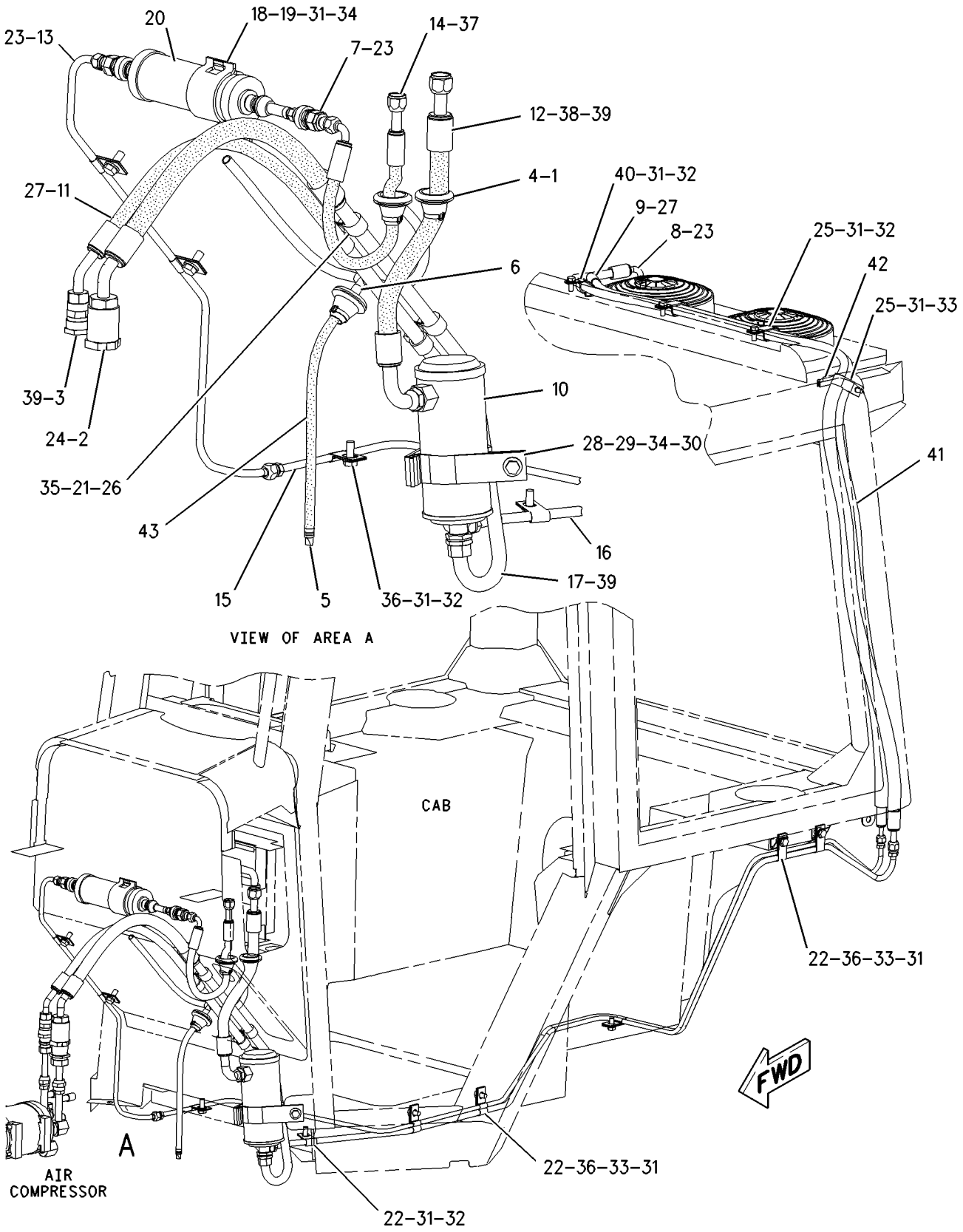

GRAPHIC #1 **<END>** g00911997

OPERATOR STATION

171-9592 LINES GP-HEATER—NON-CAB

S/N: CBJ1-UP

PART OF 218-3063 PLATFORM GP-OPERATOR

AN ATTACHMENT

SMCS-7304 **i01830227**

NOTE	REF NO	GRAPHIC REF	PART NUMBER	QTY	PART NAME 1 2 3 4 5 6 (PRODUCT LEVEL)	SEE PAGE
	1	1	**5D-1026**	2	CLAMP-HOSE	
	2	1	**7T-8894**	4	GROMMET	
	3	1	**226-0636**	1	BRACKET AS	
M		1	**8T-3490**	1	NUT-WELD (M10X1.5 THD)	
		1	**177-3848**	1	PLATE	
	4	1	**5P-6994**	1	CLIP	
	5	1	**8T-4121**	3	WASHER-HARD (11X21X2.5MM THK)	
M	6	1	**8T-4137**	3	BOLT (M10X1.5X20MM)	
M	7	1	**9X-2044**	2	SCREW-TRUSS HEAD (M6X1X16MM)	
	8	1	**9X-8250**	2	CLIP	
	9	1	**9X-8256**	2	WASHER (6.6X12X2MM THK)	
E	10	1	**5P-0767**		HOSE (400CM)	

E-ORDER BY THE CENTIMETER
M-METRIC PART

171-9592 **LINES GP-HEATER** *(contd.)* **i01830227**

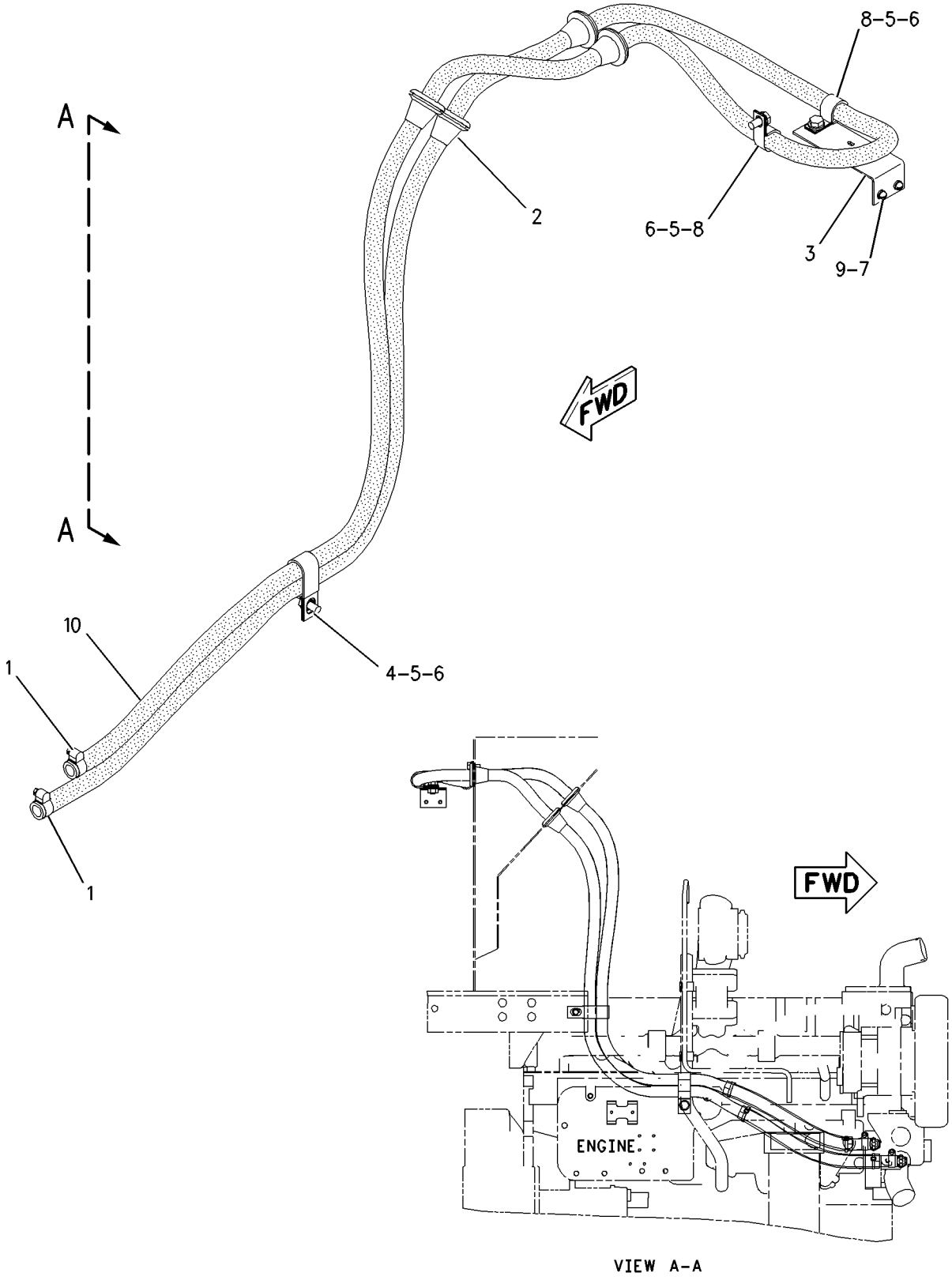

VIEW A–A

GRAPHIC #1 **<END>** g00912203

OPERATOR STATION

222-3800 LINES GP-HEATER–CAB

S/N: CBJ1-UP

PART OF 156-9516 CAB AR

SMCS-7304 **i01895756**

NOTE	REF NO	GRAPHIC REF	PART NUMBER	QTY	PART NAME 1 2 3 4 5 6 (PRODUCT LEVEL)	SEE PAGE
	1	1	**3S-2093**	4	STRAP-CABLE	
	2	1	**5D-1026**	2	CLAMP-HOSE	
	3	1	**6V-7238**	2	VALVE-SHUTOFF (CAB HEATER LINES-ENGINE MOUNT)	
	4	1	**2M-9780**	1	SEAL-O-RING	
	5	1	**3K-0360**	4	SEAL-O-RING	
	6	1	**4D-7735**	1	CLIP	
	7	1	**5P-6994**	2	CLIP	
	8	1	**6V-7420**	1	ADAPTER-STRAIGHT THREAD	
	9	1	**7X-7729**	2	WASHER (11X25X3MM THK)	
	10	1	**8T-1715**	2	ADAPTER-STRAIGHT THREAD	
M	11	1	**8T-4137**	2	BOLT (M10X1.5X20MM)	
BE	12	1	**7X-7702**		CONDUIT-FLEXIBLE	

B-USE AS REQUIRED
E-ORDER BY THE CENTIMETER
M-METRIC PART

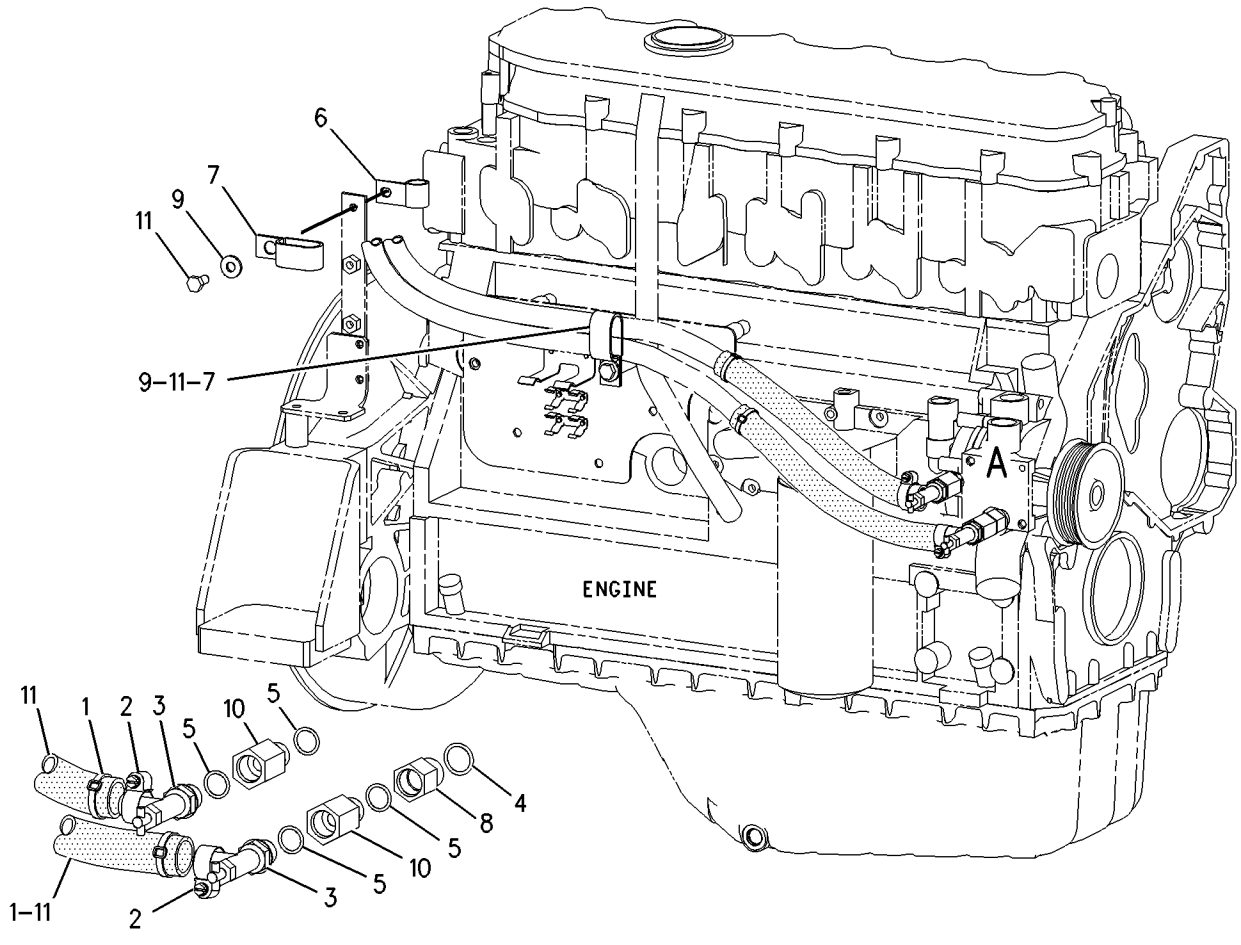

EXPLODED VIEW OF AREA A

GRAPHIC #1 **<END>** g00976465

OPERATOR STATION

8E-8706 MIRROR GP

S/N: CBJ1-UP

PART OF 156-8911 CAB GP

SMCS-7319 **i01895760**

NOTE	REF NO	GRAPHIC REF	PART NUMBER	QTY	PART NAME 1 2 3 4 5 6 (PRODUCT LEVEL)	SEE PAGE
	1	1	**9P-9388**	1	KNOB (MIRROR)	
	2	1	**5P-6874**	1	MIRROR (REAR VIEW)	
	3	1	**5K-9179**	1	BOLT-ROUND HEAD	

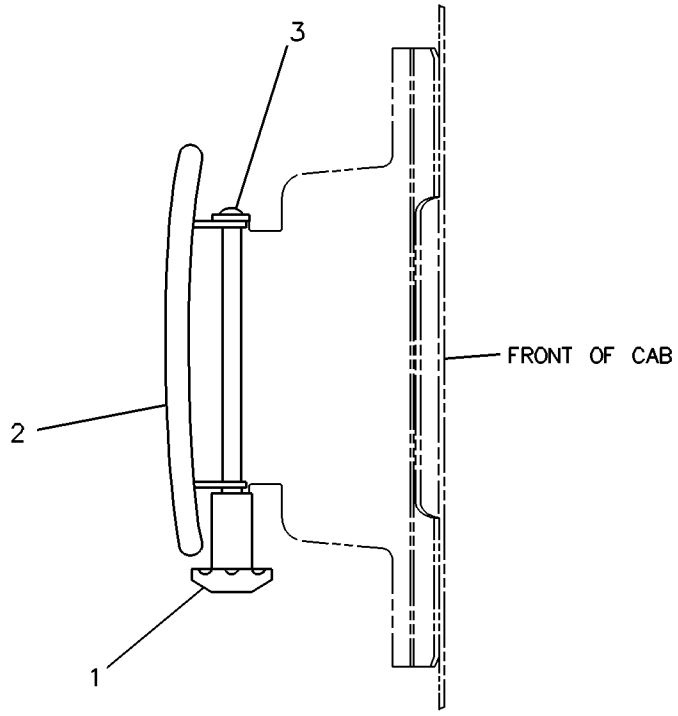

GRAPHIC #1 **<END>** g00223660

OPERATOR STATION

166-6928 MODULE GP-QUAD GAUGE

S/N: CBJ1-UP
PART OF 156-8951, 165-2790 PANEL GP-INSTRUMENT
ALSO AN ATTACHMENT

SMCS-7450, 7451 **i01883788**

NOTE	REF NO	GRAPHIC REF	PART NUMBER	QTY	PART NAME 1 2 3 4 5 6 (PRODUCT LEVEL)	SEE PAGE
	1	1	**102-8805**	1	KIT-RECEPTACLE (6 PIN)	
					(INCLUDES RECEPTACLE AS & WEDGE)	
	2	1	**8T-8729**	6	PIN-CONNECTOR	
	3	1	**3E-3383**	1	WEDGE-RECEPTACLE LOCK	

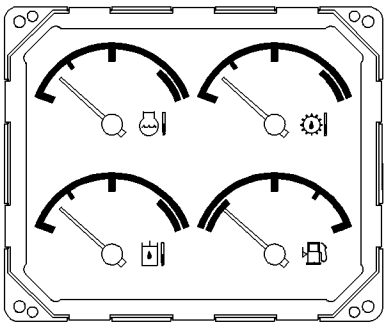

VIEW B-B

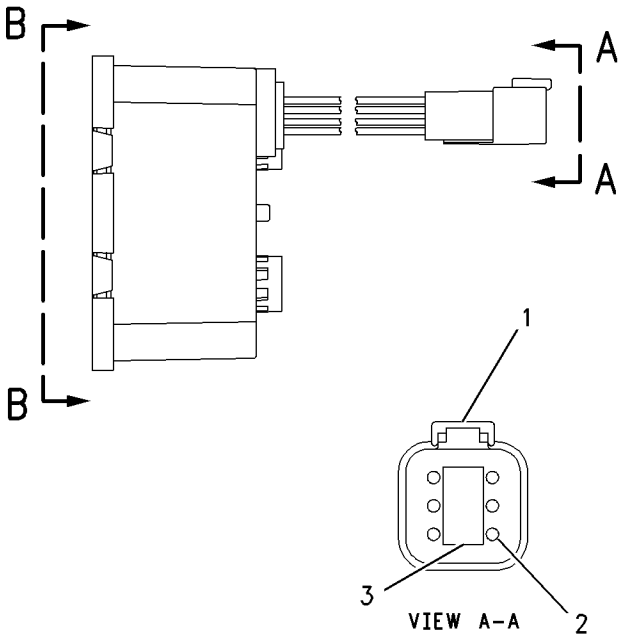

VIEW A-A

GRAPHIC #1 **<END>** g00690309

OPERATOR STATION

156-8915 MOUNTING GP-CAB

S/N: CBJ1-UP

PART OF 156-9516 CAB AR

SMCS-7266, 7301 **i01828708**

NOTE	REF NO	GRAPHIC REF	PART NUMBER	QTY	PART NAME 1 2 3 4 5 6 (PRODUCT LEVEL)	SEE PAGE
	1	1	**3T-3462**	4	PLATE	
	2	1	**212-4024**	1	SUPPORT AS	
	3	1	**117-8131**	8	MOUNT	
	4	1	**212-4023**	1	SUPPORT AS	
	5	1	**171-2133**	4	SLEEVE	
	6	1	**180-1298**	1	PLATE	
	7	1	**188-1845**	1	COVER	
M	8	1	**8C-8478**	4	BOLT (M20X2.5X140MM)	
	9	1	**8T-4123**	4	WASHER-PLATED (22X35X3.5MM THK)	
M	10	1	**8T-4136**	2	BOLT (M10X1.5X25MM)	
	11	1	**8T-4222**	6	WASHER-PLATED (11X32X2.5MM THK)	
M	12	1	**9X-2041**	3	SCREW-TRUSS HEAD (M10X1.5X20MM)	
M	13	1	**8T-4185**	4	BOLT (M10X1.5X50MM)	

M-METRIC PART

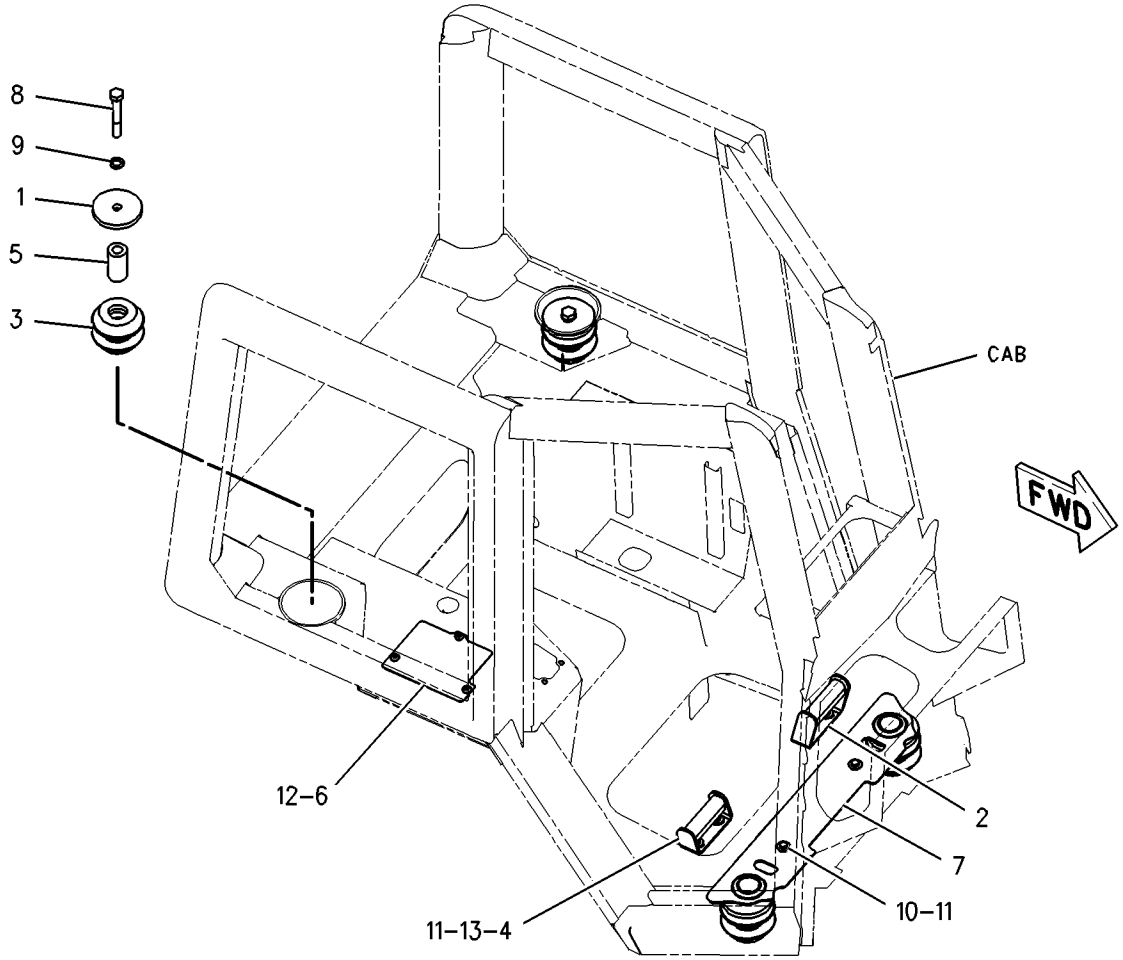

GRAPHIC #1 **<END>** g00909966

OPERATOR STATION

218-3137 MOUNTING GP-PLATFORM

S/N: CBJ1-UP
PART OF 156-9509 CANOPY AR
AN ATTACHMENT

SMCS-7253 **i01830202**

NOTE	REF NO	GRAPHIC REF	PART NUMBER	QTY	PART NAME 1 2 3 4 5 6 (PRODUCT LEVEL)	SEE PAGE
	1	1	**5P-8197**	1	PLATE-WARNING (DO NOT OPERATE)	
	2	1	**7G-4823**	1	STRAP	
	3	1	**7G-4824**	1	STRAP	
	4	1	**7T-0786**	1	RETAINER AS	
	5	1	**8E-5962**	1	PLATE	
Y	6	1	**158-6632**	1	SWITCH AS-HORN	171
	7	1	**165-4879**	1	ARMREST AS	
M		1	**5C-9553**	3	BOLT (M6X1X16MM)	
		1	**5P-0537**	3	WASHER-HARD (7.2X14.5X2MM THK)	
	8	1	**180-1298**	1	PLATE	
	9	1	**5P-4115**	4	WASHER-HARD (7.2X19X2MM THK)	
M	10	1	**7X-2488**	2	BOLT (M20X2.5X160MM)	
M	11	1	**7X-2566**	2	BOLT (M20X2.5X110MM)	
	12	1	**7X-7729**	2	WASHER (11X25X3MM THK)	
M	13	1	**8C-3210**	4	BOLT (M6X1X16MM)	
	14	1	**8T-4121**	4	WASHER-HARD (11X21X2.5MM THK)	
	15	1	**8T-4123**	4	WASHER-PLATED (22X35X3.5MM THK)	
M	16	1	**8T-4137**	4	BOLT (M10X1.5X20MM)	
M	17	1	**8T-4185**	2	BOLT (M10X1.5X50MM)	
	18	1	**9N-1995**	4	RIVET-POP	
M	19	1	**9X-2040**	3	SCREW-TRUSS HEAD (M10X1.5X25MM)	
BE	20	1	**140-1320**		SEAL	
BD	21	1	**211-2355**		SEAL	
F			**206-7737**	1	PIPE AS	
F			**9Y-8315**	1	CLAMP-BENT BOLT	

B-USE AS REQUIRED
D-ORDER BY THE METER
E-ORDER BY THE CENTIMETER
F-NOT SHOWN
M-METRIC PART
Y-SEPARATE ILLUSTRATION

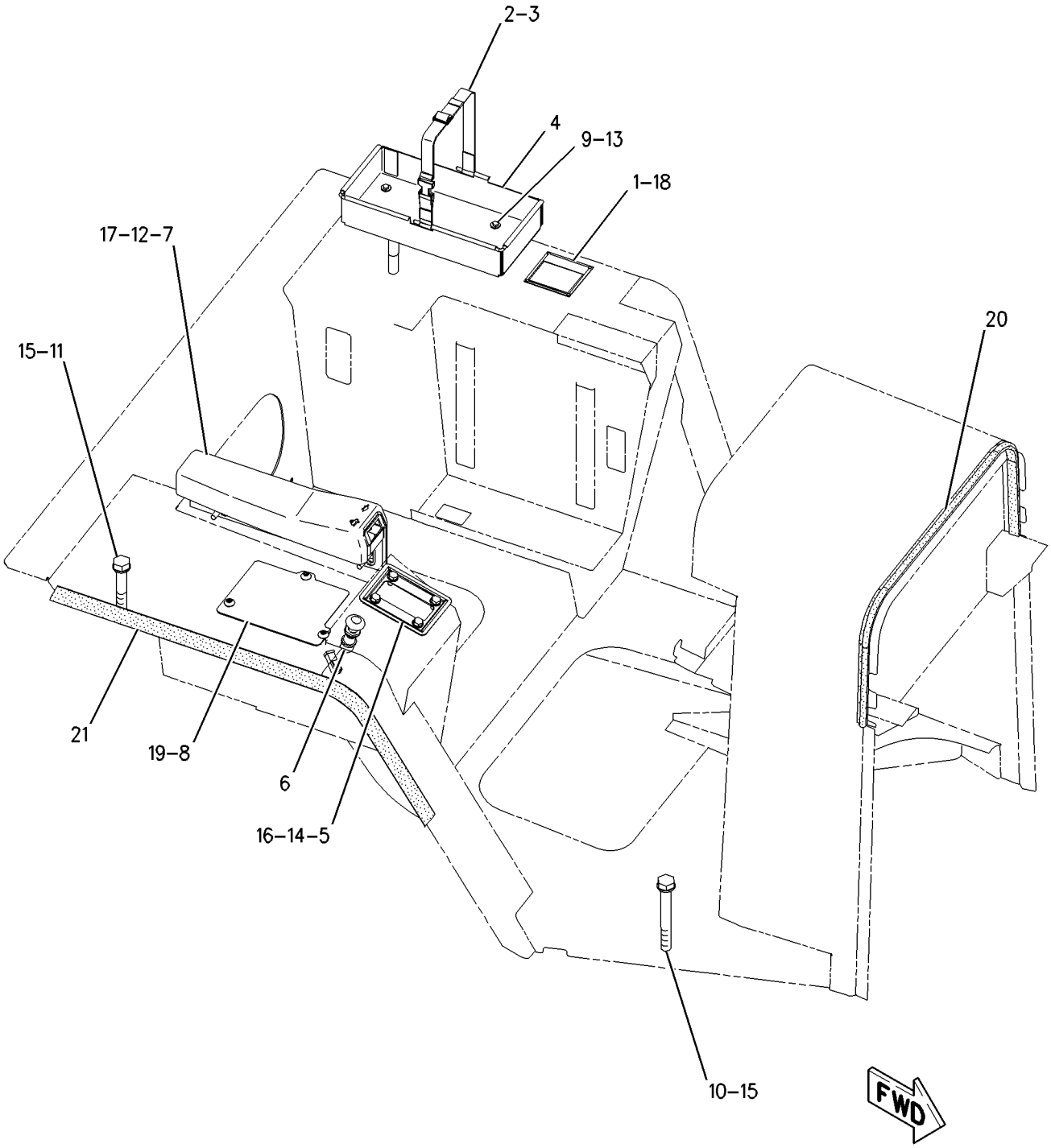

GRAPHIC #1 **<END>** g00912099

OPERATOR STATION

157-4819 MOUNTING GP-ROPS

S/N: CBJ1-UP

PART OF 156-9497 CHASSIS AR

SMCS-7266 **i01828545**

NOTE	REF NO	GRAPHIC REF	PART NUMBER	QTY	PART NAME 1 2 3 4 5 6 (PRODUCT LEVEL)	SEE PAGE
	1	1	**8T-7038**	2	FILM-WARNING (DO NOT LIFT)	
	2	1	**193-6930**	1	PLATE	
	3	1	**193-6931**	1	SUPPORT AS (RH)	
	4	1	**193-6939**	1	PLATE	
	5	1	**193-6940**	1	SUPPORT AS (LH)	
M	6	1	**7X-2454**	20	BOLT (M24X3X110MM)	
	7	1	**8T-4167**	20	WASHER-HARD (26X44X4MM THK)	

M-METRIC PART

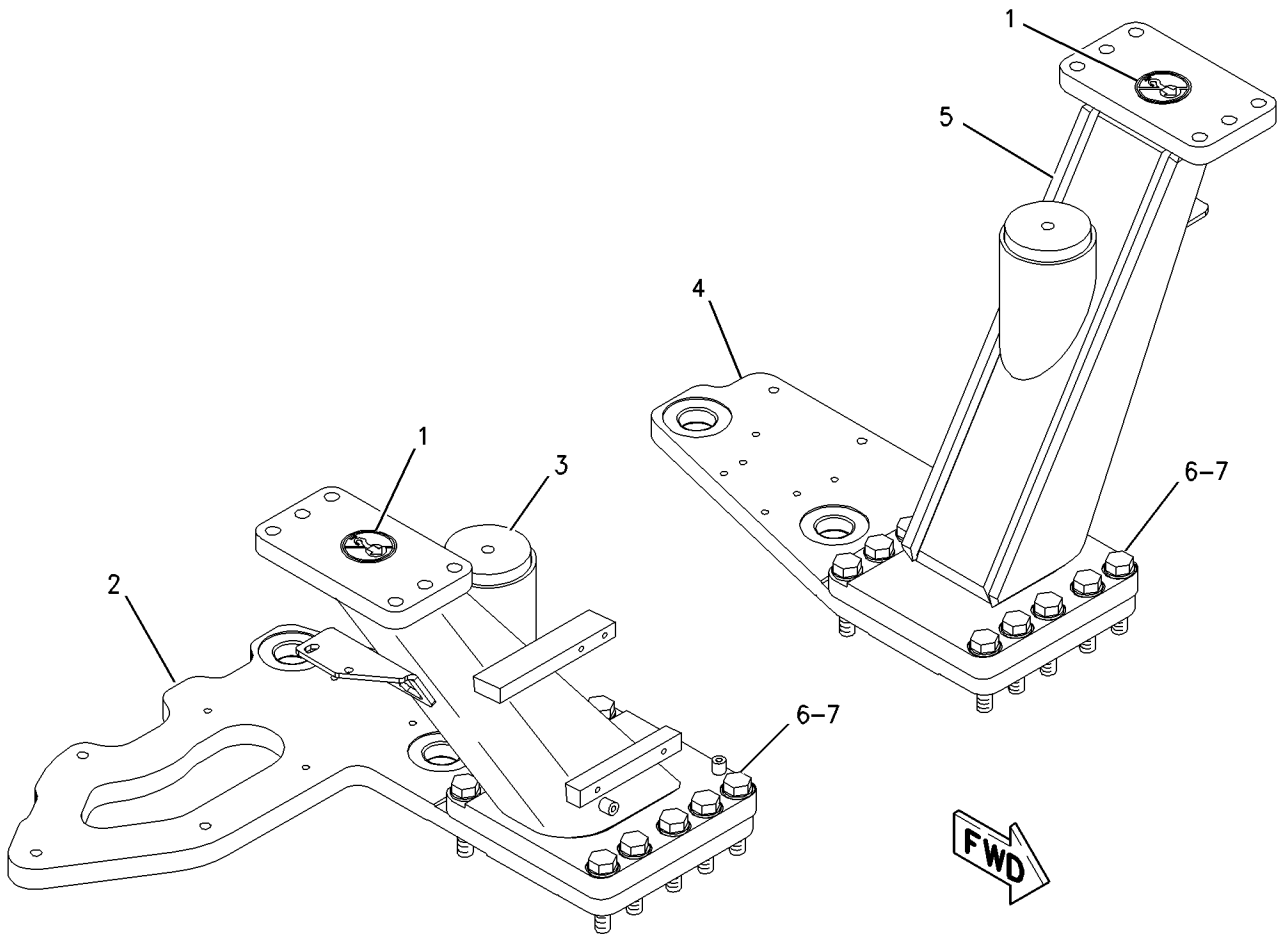

GRAPHIC #1 **<END>** g00774342

OPERATOR STATION

178-0604 PAN GP-BACKREST

S/N: CBJ1-UP
PART OF 178-0603 SEAT GP
AN ATTACHMENT

SMCS-7312 **i01448095**

NOTE	REF NO	GRAPHIC REF	PART NUMBER	QTY	PART NAME 1 2 3 4 5 6 (PRODUCT LEVEL)	SEE PAGE
	1	1	**164-4883**	1	KNOB-LUMBAR	
	2	1	**169-0651**	1	CUSHION AS	
Y	3	1	*178-0605*	1	PAN GP-BACKREST	465
	4	1	**8T-7566**	1	PIN-SPRING	

Y-SEPARATE ILLUSTRATION

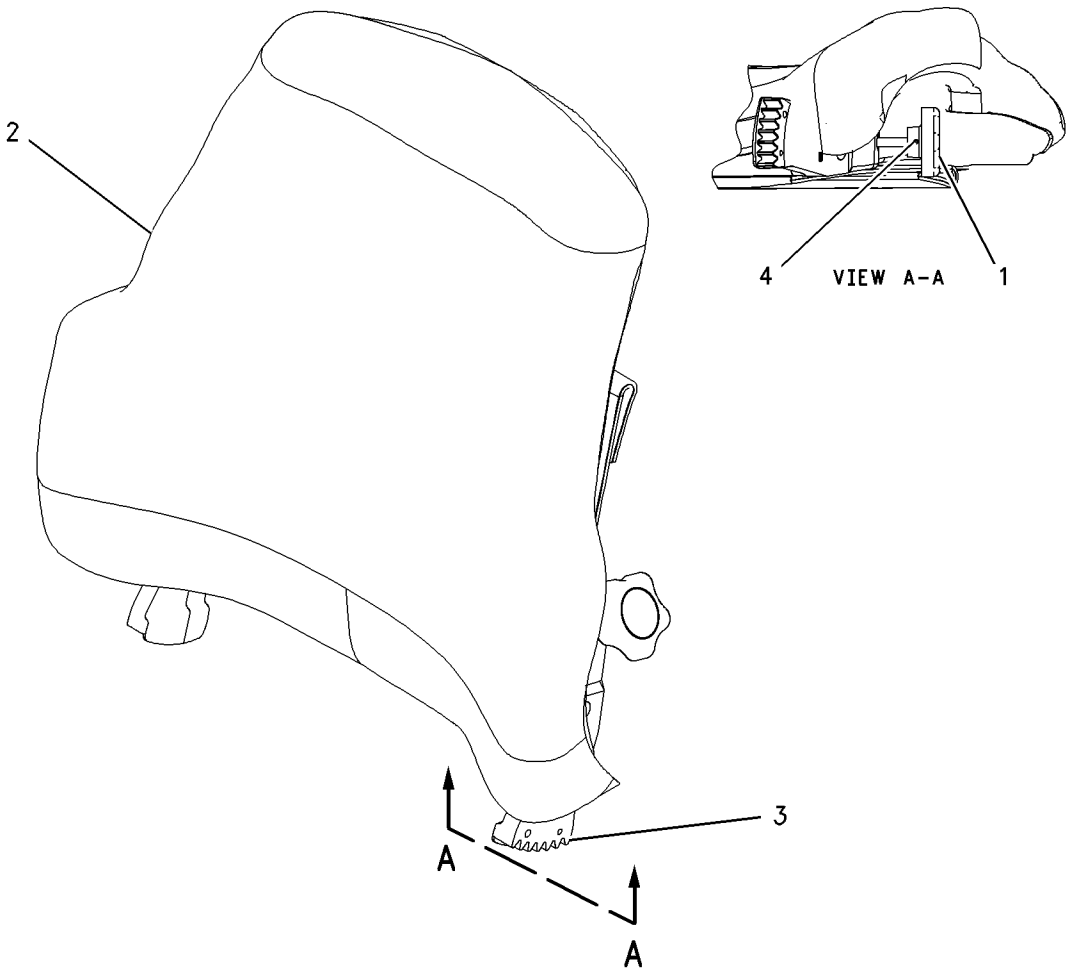

GRAPHIC #1 **<END>** g00727710

OPERATOR STATION

178-0605 PAN GP-BACKREST

S/N: CBJ1-UP
PART OF 178-0604 PAN GP-BACKREST
AN ATTACHMENT

SMCS-7312 **i01437598**

NOTE	REF NO	GRAPHIC REF	PART NUMBER	QTY	PART NAME 1 2 3 4 5 6 (PRODUCT LEVEL)	SEE PAGE
	1	1	**4K-9429**	8	RIVET-POP	
	2	1	**5P-7957**	1	LANYARD	
	3	1	**136-1543**	1	PLATE AS-LUMBAR	
	4	1	**173-2052**	1	RETAINER	
	5	1	**178-7907**	1	HOLDER	
	6	1	**177-4930**	1	PAN AS-BACK	

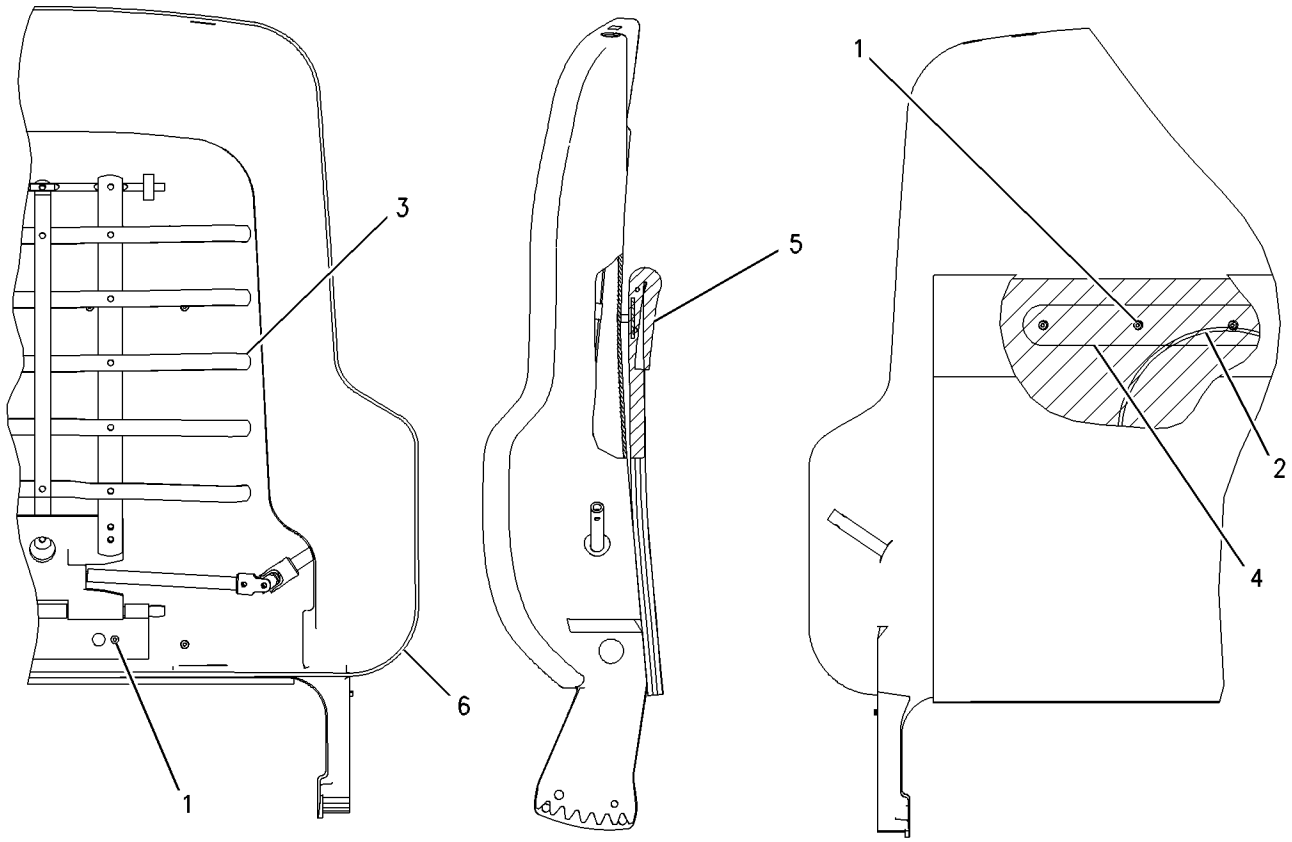

GRAPHIC #1 **<END>** g00716497

OPERATOR STATION

156-8951 PANEL GP-INSTRUMENT—CAB

S/N: CBJ1-UP

PART OF 217-3818 CAB GP

SMCS-7450, 7451 **i01893855**

NOTE	REF NO	GRAPHIC REF	PART NUMBER	QTY	PART NAME 1 2 3 4 5 6 (PRODUCT LEVEL)	SEE PAGE
	1	2	**2P-4339**	1	NUT-JAM (7/16-20 THD)	
	2	1	**3E-0109**	1	PLUG-ROCKER SWITCH	
	3	2	**6P-3236**	1	SWITCH AS-ROTARY (BLOWER A/C-HEATER-DEFROST)	
		2	**6V-8362**	5	SCREW-MACHINE (8-32X0.31 IN)	
		2	**9B-7233**	5	LOCKWASHER	
	4	2	**7K-1181**	15	STRAP-CABLE	
	5	2	**7N-5876**	2	LAMP (24 VOLT) (QUAD GUAGE)	
	6	1	**223-0455**	3	LOUVER AS	
	7	2	**083-9527**	1	SPACER (13X20X1.5MM THK)	
	8	1	**110-6109**	1	KNOB-CONTROL (CAB TEMPERATURE)	
	9	2	**116-6203**	1	RESISTOR AS	
		2	**3E-3365**	1	WEDGE-RECEPTACLE LOCK (2 PIN)	
		2	**186-3735**	2	PIN-CONNECTOR	
	10	2	**116-7964**	2	MOUNT	
	11	2	**122-7127**	8	NUT (NYLON)	
	12	2	**123-0304**	1	INDICATOR AS (ACTION LAMP)	
		2	**115-1748**	1	LAMP (24 VOLT) (ACTION LAMP)	
		2	**123-0306**	1	SOCKET AS	
	13	2	**123-9294**	2	LAMP (24 VOLT) (INSTRUMENT)	
	14	1	**133-9405**	1	SWITCH AS-PUSH BUTTON (AUTO-SHIFT BI DIRECTIONAL)	
		1	**3K-0835**	1	NUT (5/8-24 THD)	
		1	**6F-0253**	1	LOCKWASHER	
		1	**186-3735**	3	PIN-CONNECTOR	
		1	**102-8803**	1	KIT-RECEPTACLE (3 PIN)	
					(INCLUDES RECEPTACLE AS & WEDGE)	
Y	15	1	**154-7443**	1	CONTROL GP-MONITOR (CATERPILLAR MONITORING SYSTEM)	127
	16	2	**159-9257**	1	LIGHT-DASH PANEL	
	17	1	**213-2980**	1	HARNESS AS (INSTRUMENT PANEL)	
		1	**102-8802**	1	KIT-RECEPTACLE (2 PIN)	
		1	**102-8803**	1	KIT-RECEPTACLE (3 PIN)	
		1	**102-8806**	1	KIT-RECEPTACLE (8 PIN)	
					(EACH RECEPTACLE KIT INCLUDES RECEPTACLE AS & WEDGE)	
		1	**155-2255**	1	KIT-CONNECTING PLUG (12 PIN)	
		1	**155-2256**	1	KIT-CONNECTING PLUG (12 PIN)	
		1	**155-2265**	2	KIT-CONNECTING PLUG (8 PIN)	
		1	**155-2260**	4	KIT-CONNECTING PLUG (3 PIN)	
		1	**155-2270**	2	KIT-CONNECTING PLUG (2 PIN)	
		1	**155-2271**	1	KIT-CONNECTING PLUG (4 PIN)	
		1	**155-2274**	4	KIT-CONNECTING PLUG (6 PIN)	
					(EACH PLUG KIT INCLUDES PLUG AS & WEDGE)	
		1	**8T-9834**	1	PLUG AS-CONNECTOR (40 PIN)	
	18	1	**165-0222**	1	FILM-PANEL (DASH)	
	19	1	**165-0225**	1	PANEL AS-INSTRUMENT	
Y	20	1	**166-6928**	1	MODULE GP-QUAD GAUGE	459
	21	2	**172-8212**	1	BRACKET	
	22	1	**213-5139**	1	FILM (ACTION LIGHT) (MALFUNCTION)	
	23	2	**175-3950**	1	SWITCH AS (LIGHTS)	
		2	**9W-0852**	7	PIN-CONNECTOR	
		2	**102-8806**	1	KIT-RECEPTACLE (8 PIN)	
					(INCLUDES RECEPTACLE AS & WEDGE)	
	24	2	**175-4393**	2	SPACER (11.4X17.5X2MM THK)	
	25	2	**175-6579**	1	PLATE	
	26	2	**175-6580**	1	BRACKET	

156-8951 **PANEL GP-INSTRUMENT** ***(contd.)*** **i01893855**

NOTE	REF NO	GRAPHIC REF	PART NUMBER	QTY	PART NAME 1 2 3 4 5 6 (PRODUCT LEVEL)	SEE PAGE
	27	2	**176-1485**	1	CABLE	
	28	1	**223-2455**	1	MODULE GP-DISPLAY (LAMP & GEAR) (TRANSMISSION GEAR INDICATOR)	
		1	**102-8805**	1	KIT-RECEPTACLE (6 PIN)	
					(INCLUDES RECEPTACLE AS & WEDGE)	
	29	1	**104-2091**	6	SCREW-FLAT HEAD (6-20X0.5 IN)	
M	30	2	**123-4950**	7	SCREW-PAN HEAD (M6X1X16MM)	
	31	1	**142-8858**	1	SWITCH AS-KEY START	
		1	**167-1530**	1	NUT	
M	32	2	**153-9301**	3	BOLT-SOCKET HEAD (M4X0.7X10MM)	
	33	2	**4P-7581**	3	CLIP (LADDER)	
	34	2	**4P-8134**	12	CLIP	
	35	2	**5P-4116**	2	WASHER-HARD (8.8X20.5X2MM THK)	
	36	1	**201-0694**	12	SCREW-FLAT HEAD	
M	37	2	**8T-4171**	5	BOLT (M6X1X12MM)	
M	38	2	**8T-4189**	2	BOLT (M8X1.25X20MM)	
	39	2	**8T-4205**	18	WASHER-HARD (7.2X14.5X2MM THK)	
	40	2	**221-3700**	5	BOLT-SOCKET HEAD (M4X0.7X16MM)	
M	41	2	**9X-2042**	7	SCREW-TRUSS HEAD (M6X1X12MM)	
	42	1	**110-6109**	1	KNOB-CONTROL (LIGHTS)	
	43	1	**110-6109**	1	KNOB-CONTROL (BLOWER)	
	44	1	**133-9405**	1	SWITCH AS-PUSH BUTTON (AUTO DOWN SHIFT)	
		1	**3K-0835**	1	NUT (5/8-24 THD)	
		1	**6F-0253**	1	LOCKWASHER	
		1	**186-3735**	3	PIN-CONNECTOR	
		1	**102-8803**	1	KIT-RECEPTACLE (3 PIN)	
					(INCLUDES RECEPTACLE AS & WEDGE)	
	45	1	**133-9405**	1	SWITCH AS-PUSH BUTTON (EMS CYCLE SCROLL)	
		1	**3K-0835**	1	NUT (5/8-24 THD)	
		1	**6F-0253**	1	LOCKWASHER	
		1	**186-3735**	3	PIN-CONNECTOR	
		1	**102-8803**	1	KIT-RECEPTACLE (3 PIN)	
					(INCLUDES RECEPTACLE AS & WEDGE)	

M-METRIC PART
Y-SEPARATE ILLUSTRATION

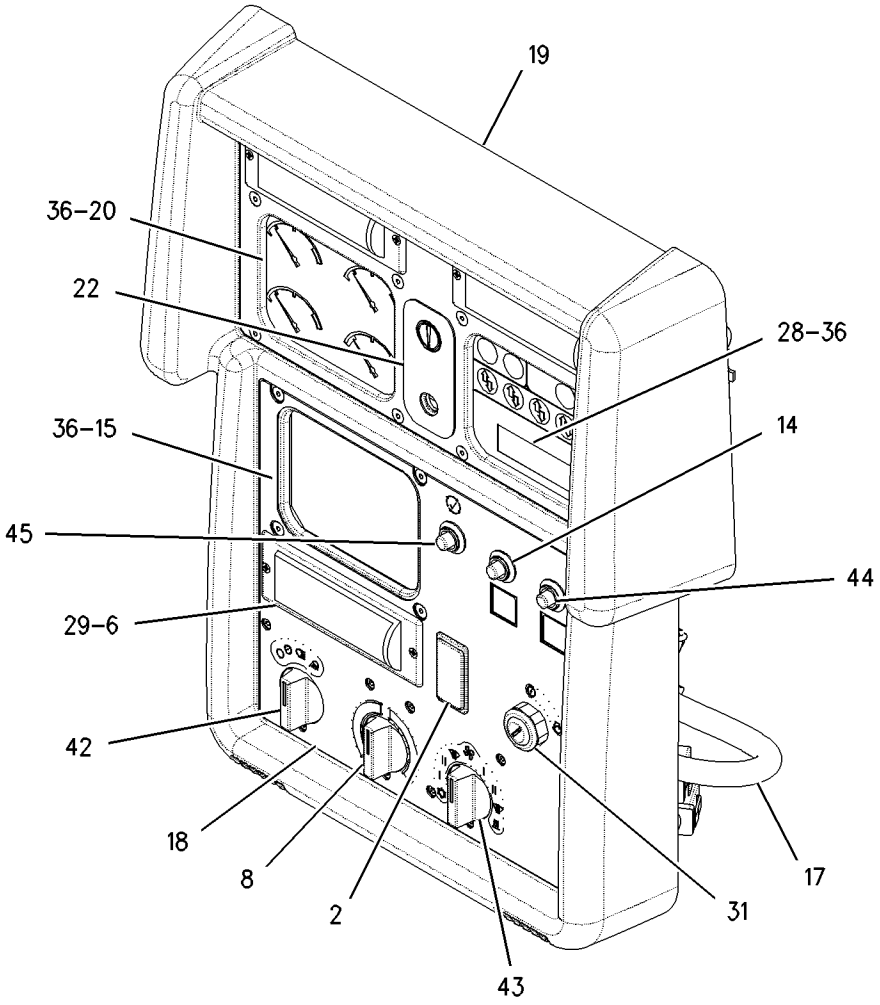

GRAPHIC #1 g00930027

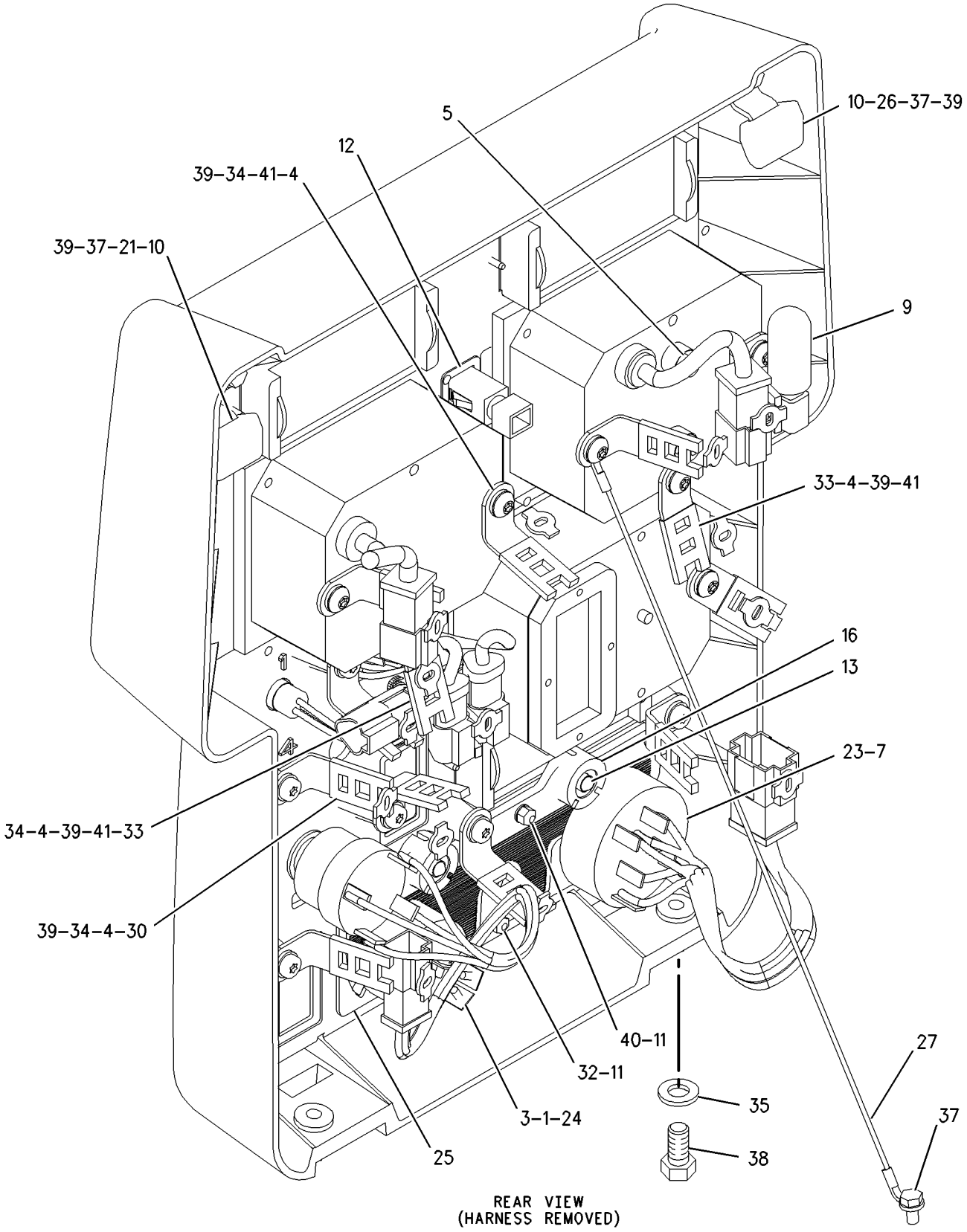

GRAPHIC #2 **<END>** g00910000

OPERATOR STATION

165-2790 PANEL GP-INSTRUMENT—OPEN ROPS

S/N: CBJ1-UP

PART OF 218-3063 PLATFORM GP-OPERATOR

AN ATTACHMENT

SMCS-7450, 7451 **i01893857**

NOTE	REF NO	GRAPHIC REF	PART NUMBER	QTY	PART NAME 1 2 3 4 5 6 (PRODUCT LEVEL)	SEE PAGE
	1	1	**3E-0109**	1	PLUG-ROCKER SWITCH	
M	2	1	**8T-2659**	2	LOCKNUT (M4X0.7 THD)	
	3	1	**7K-1181**	13	STRAP-CABLE	
	4	1	**7N-5876**	2	LAMP (24 VOLT) (QUAD GAUGE)	
J	5	1	**7X-7465**	1	LOCK AS-CYLINDER	
	6	1	**083-9527**	1	SPACER (13X20X1.5MM THK)	
	7	1	**110-6109**	1	KNOB-CONTROL (LIGHTS)	
	8	1	**116-6203**	1	RESISTOR AS	
		1	**3E-3365**	1	WEDGE-RECEPTACLE LOCK (2 PIN)	
		1	**186-3735**	2	PIN-CONNECTOR	
	9	1	**116-7964**	2	MOUNT	
	10	1	**122-7127**	8	NUT	
	11	1	**123-0304**	1	INDICATOR AS (ACTION LAMP)	
		1	**115-1748**	1	LAMP (24 VOLT) (ACTION LAMP)	
		1	**123-0306**	1	SOCKET AS	
	12	1	**123-9294**	2	LAMP (24 VOLT) (INSTRUMENT LIGHTS)	
	13	1	**133-9405**	1	SWITCH AS-PUSH BUTTON (AUTO SHIFT)	
		1	**3E-3371**		WEDGE-RECEPTACLE LOCK (3 PIN)	
		1	**3K-0835**	1	NUT (5/8-24 THD)	
		1	**6F-0253**	1	LOCKWASHER	
		1	**186-3735**	3	PIN-CONNECTOR	
		1	**102-8803**	1	KIT-RECEPTACLE (3 PIN)	
					(INCLUDES RECEPTACLE AS & WEDGE)	
Y	14	1	**154-7443**	1	CONTROL GP-MONITOR (CATERPILLAR MONITORING SYSTEM)	127
	15	1	**159-9257**	1	LIGHT-DASH PANEL	
	16	1	**213-2980**	1	HARNESS AS (INSTRUMENT PANEL)	
		1	**102-8802**	1	KIT-RECEPTACLE (2 PIN)	
		1	**102-8806**	1	KIT-RECEPTACLE (8 PIN)	
					(EACH INCLUDES RECEPTACLE AS & WEDGE)	
		1	**155-2255**	2	KIT-CONNECTING PLUG (12 PIN)	
		1	**155-2265**	3	KIT-CONNECTING PLUG (8 PIN)	
		1	**155-2260**	4	KIT-CONNECTING PLUG (3 PIN)	
		1	**155-2270**	2	KIT-CONNECTING PLUG (2 PIN)	
		1	**155-2271**	1	KIT-CONNECTING PLUG (4 PIN)	
		1	**155-2274**	3	KIT-CONNECTING PLUG (6 PIN)	
					(EACH INCLUDES PLUG AS & WEDGE)	
	17	1	**165-4149**	1	PANEL AS-INSTRUMENT	
	18	1	**165-4150**	1	FILM-PANEL (DASH)	
	19	1	**222-9887**	1	GUARD	
Y	20	1	**166-6928**	1	MODULE GP-QUAD GAUGE	459
	21	1	**172-8212**	1	BRACKET	
	22	1	**213-5139**	1	FILM (ACTION LIGHT) (MALFUNCTION)	
	23	1	**175-3950**	1	SWITCH AS (LAMP)	
		1	**3E-3389**	1	WEDGE-RECEPTACLE LOCK	
		1	**9W-0852**	7	PIN-CONNECTOR	
		1	**102-8806**	1	KIT-RECEPTACLE (8 PIN)	
					(INCLUDES RECEPTACLE AS & WEDGE)	
	24	1	**175-6579**	1	PLATE	
	25	1	**175-6580**	1	BRACKET	
	26	1	**176-1485**	1	CABLE	
	27	1	**223-2455**	1	MODULE GP-DISPLAY (LAMP & GEAR) (TRANSMISSION GEAR INDICATOR)	
		1	**102-8805**	1	KIT-RECEPTACLE (6 PIN)	
					(INCLUDES RECEPTACLE AS & WEDGE)	

165-2790 **PANEL GP-INSTRUMENT** ***(contd.)*** **i01893857**

NOTE	REF NO	GRAPHIC REF	PART NUMBER	QTY	PART NAME 1 2 3 4 5 6 (PRODUCT LEVEL)	SEE PAGE
		1	**186-3733**	6	PIN-CONNECTOR	
M	28	1	**123-4950**	7	SCREW-PAN HEAD (M6X1X16MM)	
	29	1	**142-8858**	1	SWITCH AS-KEY START	
		1	**167-1530**	1	NUT	
M	30	1	**153-9301**	3	BOLT-SOCKET HEAD (M4X0.7X10MM)	
M	31	1	**8T-0337**	2	SCREW-MACHINE (M4X0.7X12MM)	
	32	1	**4P-7581**	3	CLIP (LADDER)	
	33	1	**4P-8134**	13	CLIP	
	34	1	**5P-1075**	2	WASHER-HARD (10.2X22.5X3MM THK)	
	35	1	**201-0694**	12	SCREW-FLAT HEAD	
M	36	1	**8T-4171**	5	BOLT (M6X1X12MM)	
M	37	1	**8T-4189**	2	BOLT (M8X1.25X20MM)	
	38	1	**8T-4205**	18	WASHER-HARD (7.2X14.5X2MM THK)	
	39	1	**221-3700**	5	BOLT-SOCKET HEAD (M4X0.7X16MM)	
M	40	1	**9X-2042**	7	SCREW-TRUSS HEAD (M6X1X12MM)	
	41	1	**8E-7840**	2	CLIP	
	42	1	**133-9405**	1	SWITCH AS-PUSH BUTTON (SCROLL)	
		1	**3E-3371**		WEDGE-RECEPTACLE LOCK (3 PIN)	
		1	**3K-0835**	1	NUT (5/8-24 THD)	
		1	**6F-0253**	1	LOCKWASHER	
		1	**186-3735**	3	PIN-CONNECTOR	
		1	**102-8803**	1	KIT-RECEPTACLE (3 PIN)	
					(INCLUDES RECEPTACLE AS & WEDGE)	
	43	1	**133-9405**	1	SWITCH AS-PUSH BUTTON (AUTO KICK DOWN)	
		1	**3E-3371**		WEDGE-RECEPTACLE LOCK (3 PIN)	
		1	**3K-0835**	1	NUT (5/8-24 THD)	
		1	**6F-0253**	1	LOCKWASHER	
		1	**186-3735**	3	PIN-CONNECTOR	
		1	**102-8803**	1	KIT-RECEPTACLE (3 PIN)	
					(INCLUDES RECEPTACLE AS & WEDGE)	
	44	1	**102-8805**	2	KIT-RECEPTACLE (6 PIN)	
					(EACH INCLUDES RECEPTACLE AS & WEDGE)	
	45	1	**8T-8737**	12	PLUG-SEAL	
	46	1	**111-9251**	1	WASHER-HARD (20X35X1.6MM THK)	

J-REQUIRES 5P8500 KEY
M-METRIC PART
Y-SEPARATE ILLUSTRATION

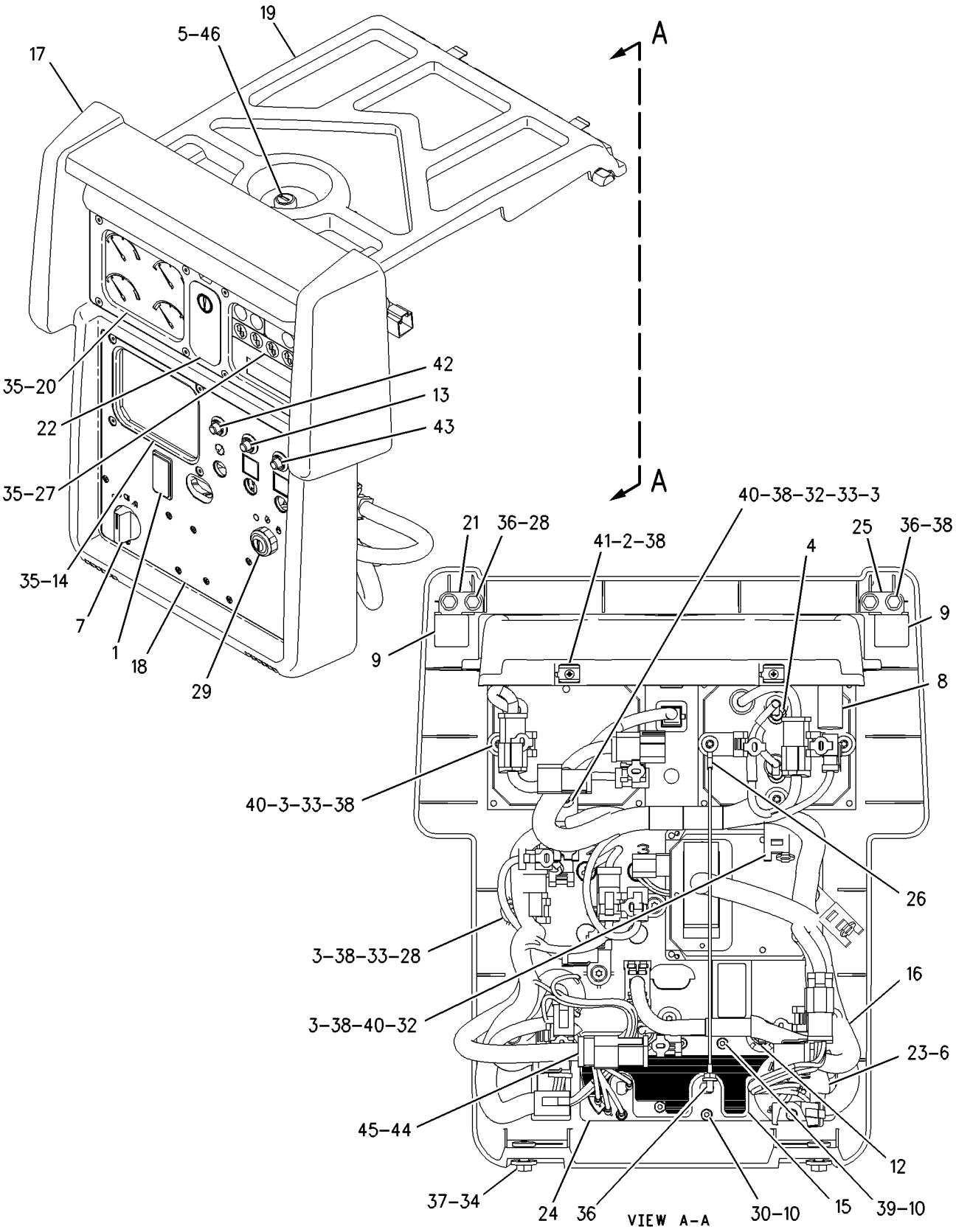

GRAPHIC #1 **<END>** g00932524

OPERATOR STATION

217-3815 PANEL GP-INSULATION

S/N: CBJ1-UP

PART OF 217-3818 CAB GP

SMCS-7329 **i01883187**

NOTE	REF NO	GRAPHIC REF	PART NUMBER	QTY	PART NAME 1 2 3 4 5 6 (PRODUCT LEVEL)	SEE PAGE
	1	1	**171-9619**	1	INSULATION	
	2	1	**201-7882**	1	INSULATION	
	3	1	**212-8710**	1	INSULATION	
	4	1	**212-8711**	1	INSULATION	

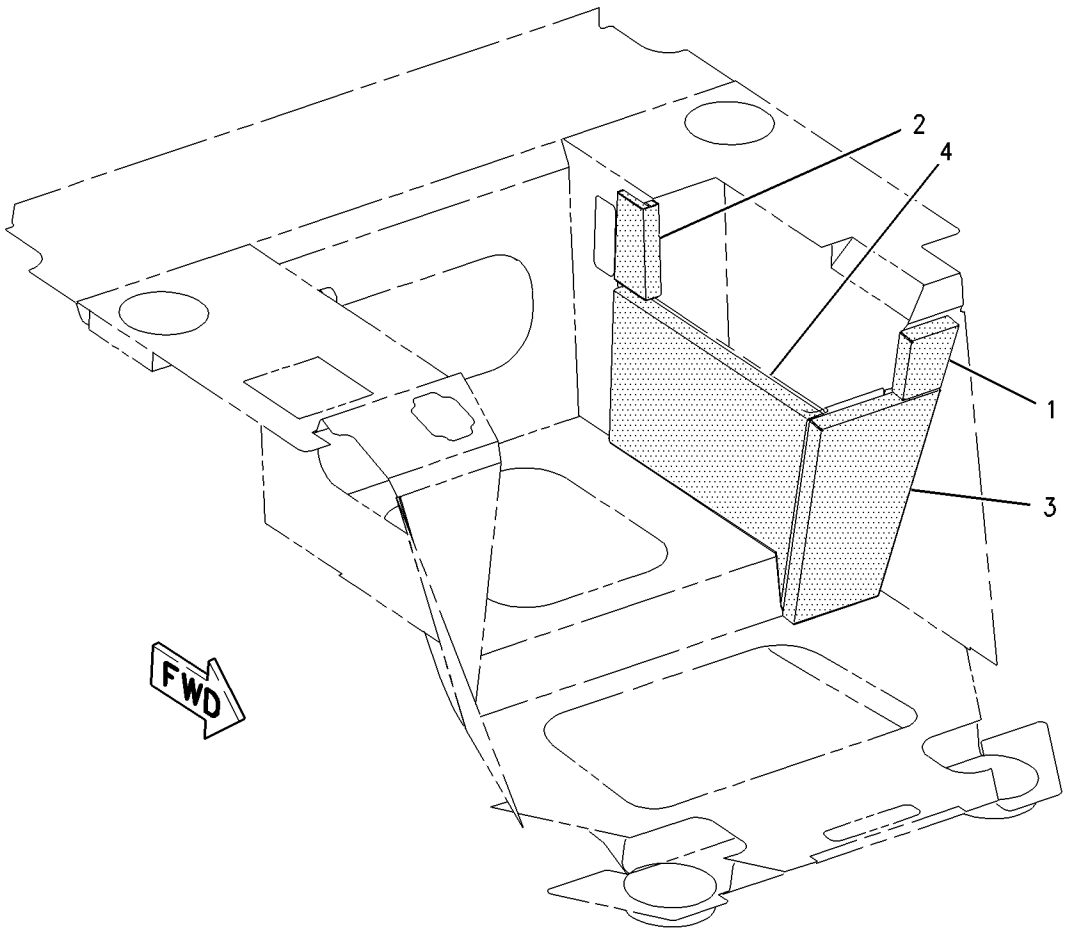

GRAPHIC #1 **<END>** g00928940

OPERATOR STATION

164-9140 PLATFORM GP-OPERATOR

S/N: CBJ1-UP

PART OF 218-3063 PLATFORM GP-OPERATOR

AN ATTACHMENT

SMCS-7253 **i01895762**

NOTE	REF NO	GRAPHIC REF	PART NUMBER	QTY	PART NAME 1 2 3 4 5 6 (PRODUCT LEVEL)	SEE PAGE
	1	1	**3B-8489**	1	FITTING-GREASE (1/8-27 THD) (OPERATOR PLATFORM)	
	2	1	**5P-2948**	1	CONNECTOR GP	
		1	**4K-9821**	1	SLEEVE	
		1	**4K-9822**	1	NUT (5/16-24 THD)	
	3	1	**8N-2694**	1	INDICATOR GP-AIR FILTER CHANGE	
BD	4	1	**5P-5630**		TUBE	
	5	1	**132-5792**	4	NUT	
	6	1	**164-9150**	1	PLATFORM AS	
	6A	1	**3B-6487**	1	COUPLING	
	7	1	**169-9108**	1	COVER AS	
		1	**178-8844**	4	SPACER (11X28X20MM THK)	
	8	1	**178-9013**	1	COVER	
	9	1	**178-9016**	1	PAD	
	10	1	**180-1297**	1	PLATE	
	11	1	**180-5383**	1	FOOTREST AS	
M		1	**8T-3490**	4	NUT-WELD (M10X1.5 THD)	
	12	1	**184-3450**	1	FLOORPLATE AS	
M		1	**8T-3490**	4	NUT-WELD (M10X1.5 THD)	
	13	1	**198-9452**	1	BRACKET	
	14	1	**211-0238**	1	FILM (LUBE POINT) (PLATFORM)	
	15	1	**212-4021**	1	SUPPORT AS (FOOT)	
	16	1	**212-4022**	1	SUPPORT AS (FOOT)	
	17	1	**218-2798**	1	COVER (PEDAL RH)	
	18	1	**218-2799**	1	COVER (PEDAL LH)	
	19	1	**218-2801**	1	SHROUD	
	20	1	**224-2470**	1	PLATE	
	21	1	**224-2669**	3	PLUG-PLASTIC	
	22	1	**0A-2926**	1	FITTING	
	23	1	**3B-6552**	1	ELBOW	
M	24	1	**3E-8020**	4	SCREW-TRUSS HEAD (M6X1X25MM)	
	25	1	**8T-4121**	19	WASHER-HARD (11X21X2.5MM THK)	
M	26	1	**8T-4136**	4	BOLT (M10X1.5X25MM)	
M	27	1	**8T-4137**	15	BOLT (M10X1.5X20MM)	
M	28	1	**8T-4199**	2	BOLT (M8X1.25X12MM)	
	29	1	**8T-4222**	4	WASHER-PLATED (11X32X2.5MM THK)	
	30	1	**8T-4224**	2	WASHER-HARD (8.8X16X2MM THK)	
M	31	1	**9X-2040**	12	SCREW-TRUSS HEAD (M10X1.5X25MM)	
M	32	1	**9X-2044**	10	SCREW-TRUSS HEAD (M6X1X16MM)	

B-USE AS REQUIRED
D-ORDER BY THE METER
M-METRIC PART

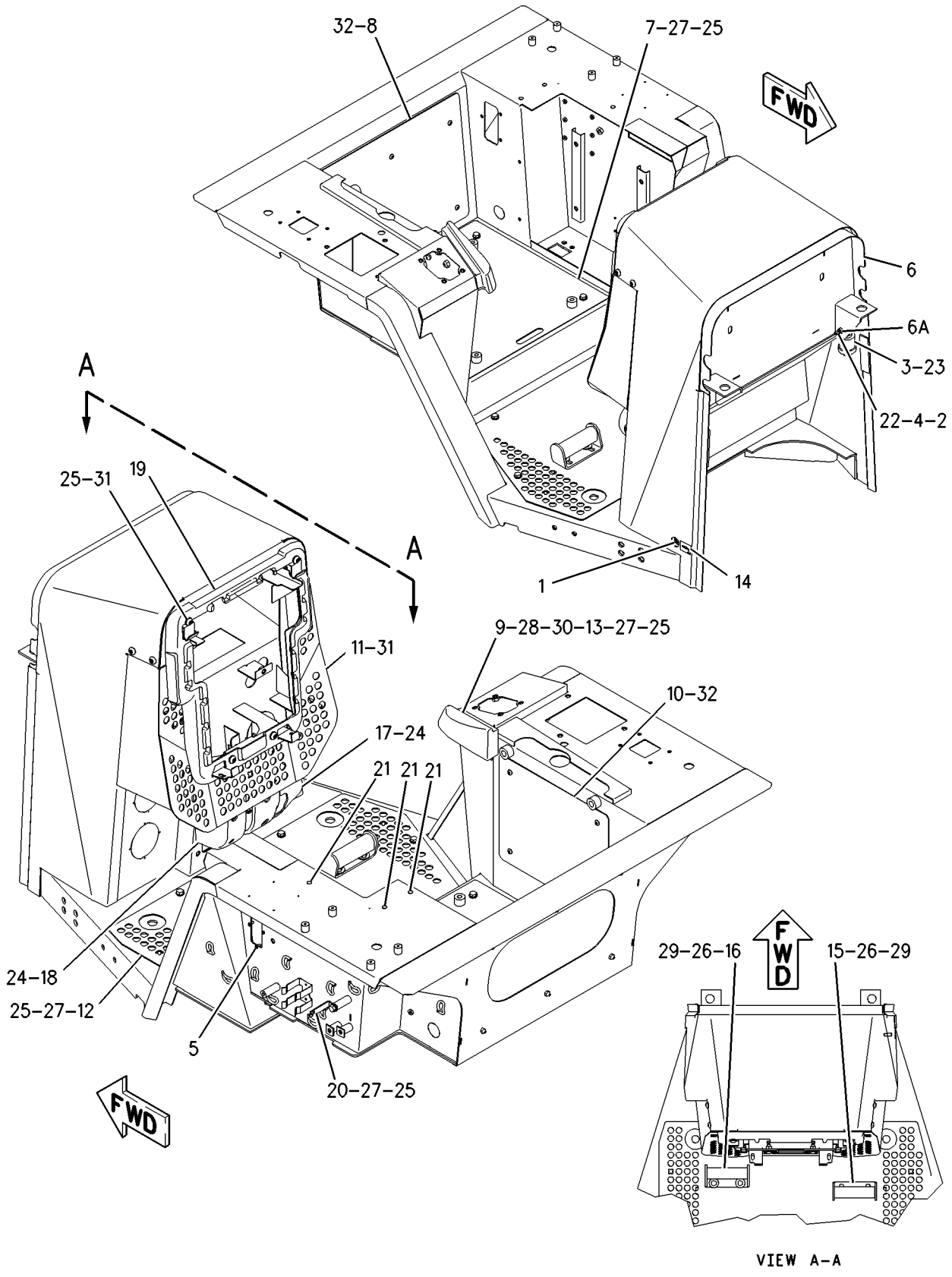

GRAPHIC #1 **<END>** g00932481

OPERATOR STATION

218-3063 PLATFORM GP-OPERATOR

S/N: CBJ1-UP
PART OF 156-9509 CANOPY AR
AN ATTACHMENT

SMCS-7253 **i01830182**

NOTE	PART NUMBER	QTY	PART NAME 1 2 3 4 5 6 (PRODUCT LEVEL)	SEE PAGE
Y	*156-8955*	1	CONTROL GP-STEERING & TMSN	296
Y	*171-9592*	1	LINES GP-HEATER	455
Y	*165-2790*	1	PANEL GP-INSTRUMENT	470
Y	*199-4801*	1	PEDAL GP-GOVERNOR & BRAKE	308
Y	*164-9140*	1	PLATFORM GP-OPERATOR	474
Y	**111-7003**	1	PLUG AS (ECB/ECPC)	477
Y	*156-7378*	1	WIRING GP-PLATFORM	187
	179-6714	1	PLUG AS	
	5P-5677	1	WIRE-ELECTRICAL (18 GA)	
	186-3736	1	SOCKET-CONNECTOR	
	8T-8737	5	PLUG-SEAL	
BE	**125-7874**		TUBE-HEAT SHRINK	
	155-2265	1	KIT-CONNECTING PLUG (8 PIN)	
			(INCLUDES PLUG AS & WEDGE)	

B-USE AS REQUIRED
E-ORDER BY THE CENTIMETER
Y-SEPARATE ILLUSTRATION

<END>

111-7003 PLUG AS—POWER TRAIN

S/N: CBJ1-UP
ELECTRIC CLUTCH & BRAKE/ELECTRIC CLUTCH PRESSURE CONTROL 3-SPEED
PART OF 217-3818 CAB GP, 218-3063 PLATFORM GP-OPERATOR
ALSO AN ATTACHMENT

SMCS-1408 **i01892541**

NOTE	REF NO	GRAPHIC REF	PART NUMBER	QTY	PART NAME 1 2 3 4 5 6 (PRODUCT LEVEL)	SEE PAGE
BD	1	1	**5P-5677**		WIRE-ELECTRICAL (18 GA)	
	2	1	**102-8805**	1	KIT-RECEPTACLE (6 PIN)	
					(INCLUDES RECEPTACLE AS & WEDGE)	
	3	1	**3E-3383**	1	WEDGE-RECEPTACLE LOCK	
	4	1	**8T-8729**	4	PIN-CONNECTOR	
	5	1	**8T-8737**	2	PLUG-SEAL	

B-USE AS REQUIRED
D-ORDER BY THE METER

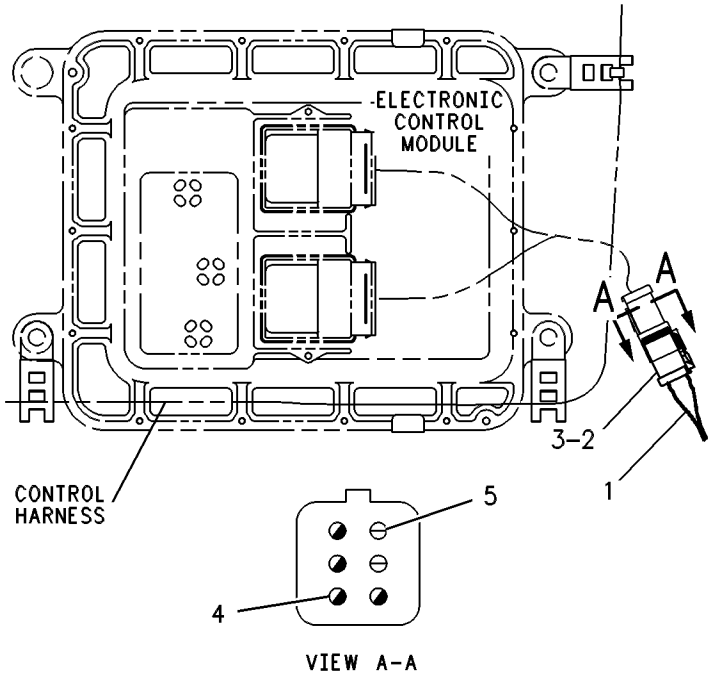

GRAPHIC #1 **<END>** g00265916

OPERATOR STATION

163-0152 PRESSURIZER GP-CAB

S/N: CBJ1-UP

PART OF 156-8911 CAB GP

SMCS-7311 **i01880229**

NOTE	REF NO	GRAPHIC REF	PART NUMBER	QTY	PART NAME 1 2 3 4 5 6 (PRODUCT LEVEL)	SEE PAGE
	1	1	**3B-8489**	1	FITTING-GREASE (CAB PRESSURIZER)	
	2	1	**3E-7904**	2	FILTER AS (CAB AIR)	
	3	1	**3W-6756**	2	KNOB (FILTER COVER)	
	4	1	**7G-8116**	2	FILTER AS (CAB PRESSURIZER)	
					(EACH INCLUDES)	
		1	**141-7903**	1	FILTER-CHARCOAL (CAB PRESSURIZER)	
	5	1	**117-9988**	1	PANEL	
	6	1	**194-0675**	2	PLATE	
Y	7	1	**198-7281**	1	BLOWER GP-CAB	415
	8	1	**209-2928**	1	COVER AS (LH)	
	9	1	**209-2929**	1	COVER AS (RH)	
	10	1	**220-0122**	1	LATCH AS	
	11	1	**229-2604**	2	ROD AS	
					(EACH INCLUDES)	
		1	**5B-3254**	1	NUT-JAM (7/16-20 THD)	
	12	1	**229-2605**	1	PLATE AS	
	13	1	**229-2606**	1	PLATE AS	
	14	1	**7X-7729**	18	WASHER (11X25X3MM THK)	
M	15	1	**8T-4136**	18	BOLT (M10X1.5X25MM)	
M	16	1	**9X-2040**	12	SCREW-TRUSS HEAD (M10X1.5X25MM)	
BD	17	1	**5P-5755**		SEAL (BULK)	
BD	18	1	**5P-5926**		SEAL (BULK)	
BE	19	1	**201-4066**		SEAL (BULK)	
BD	20	1	**5P-5639**		SEAL (BULK)	
BD	21	1	**3E-6573**		SEAL (BULK)	
BE	22	1	**140-1320**		SEAL (40CM)	

B-USE AS REQUIRED
D-ORDER BY THE METER
E-ORDER BY THE CENTIMETER
M-METRIC PART
Y-SEPARATE ILLUSTRATION

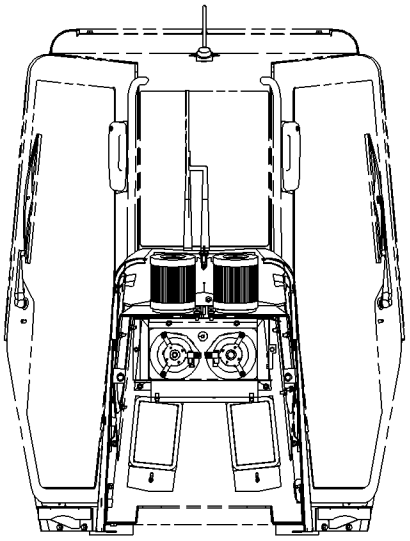

FRONT VIEW

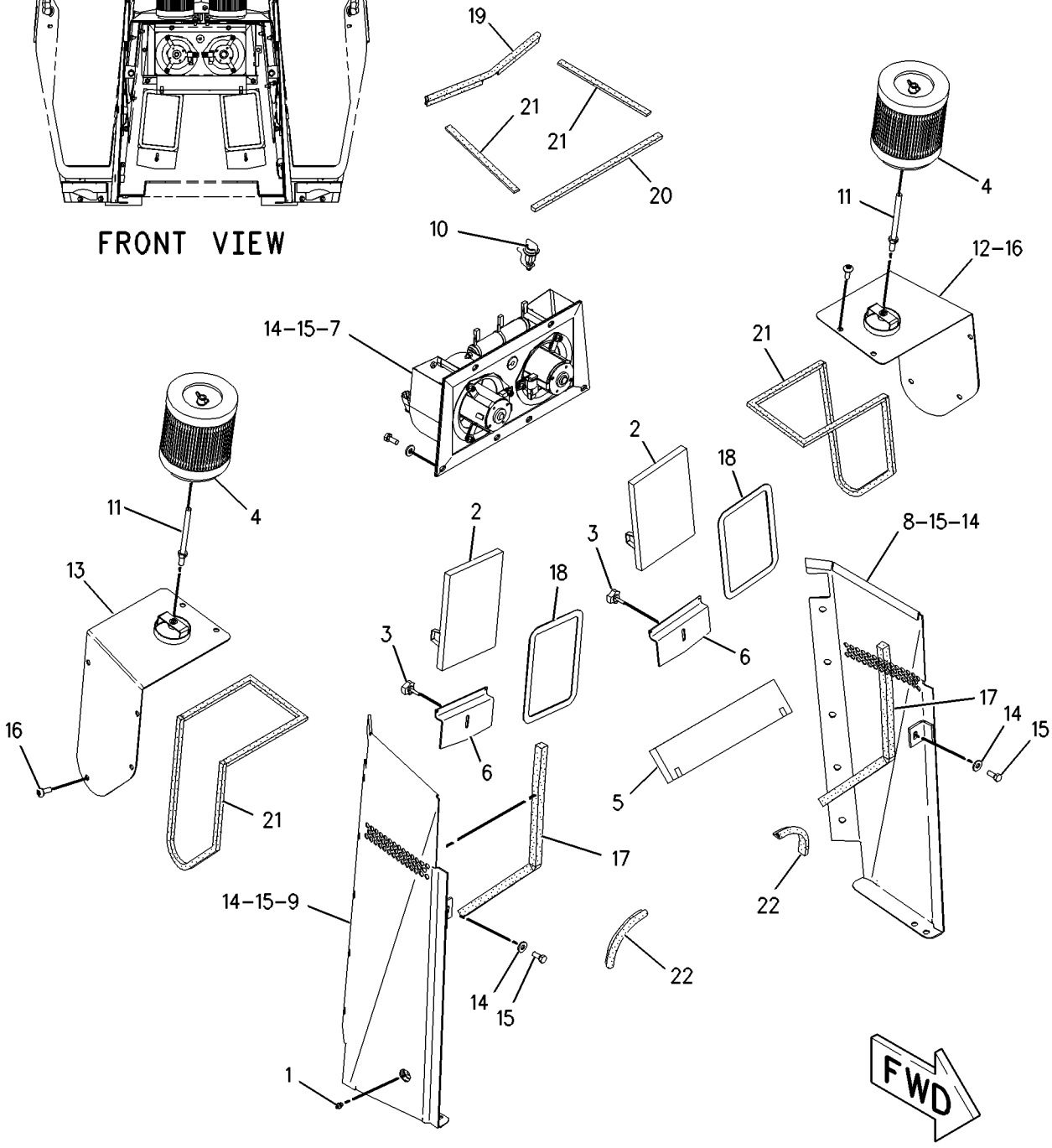

GRAPHIC #1 **<END>** g00970541

OPERATOR STATION

173-6530 RADIO GP–AM/FM

S/N: CBJ1-UP
AN ATTACHMENT

SMCS-7338 **i01883801**

NOTE	REF NO	GRAPHIC REF	PART NUMBER	QTY	PART NAME 1 2 3 4 5 6 (PRODUCT LEVEL)	SEE PAGE
	1	1	**102-8806**	1	KIT-RECEPTACLE (8 PIN)	
					(INCLUDES RECEPTACLE AS & WEDGE)	
	2	1	**3E-3389**	1	WEDGE-RECEPTACLE LOCK	
	3	1	**8T-8737**	1	PLUG-SEAL	
	4	1	**186-3735**	7	PIN-CONNECTOR	
	5	1	**192-7054**	1	SLEEVE	
	6	1	**137-8165**	1	BUMPER	
	7	1	**186-2741**	1	HARNESS AS-RADIO (SPEAKER)	
		1	**102-8806**	1	KIT-RECEPTACLE (8 PIN)	
					(INCLUDES RECEPTACLE AS & WEDGE)	
	8	1	**175-3678**	1	KIT-KNOB (RADIO)	
					(INCLUDES KNOBS: FADER, TONE, VOLUME/SW)	

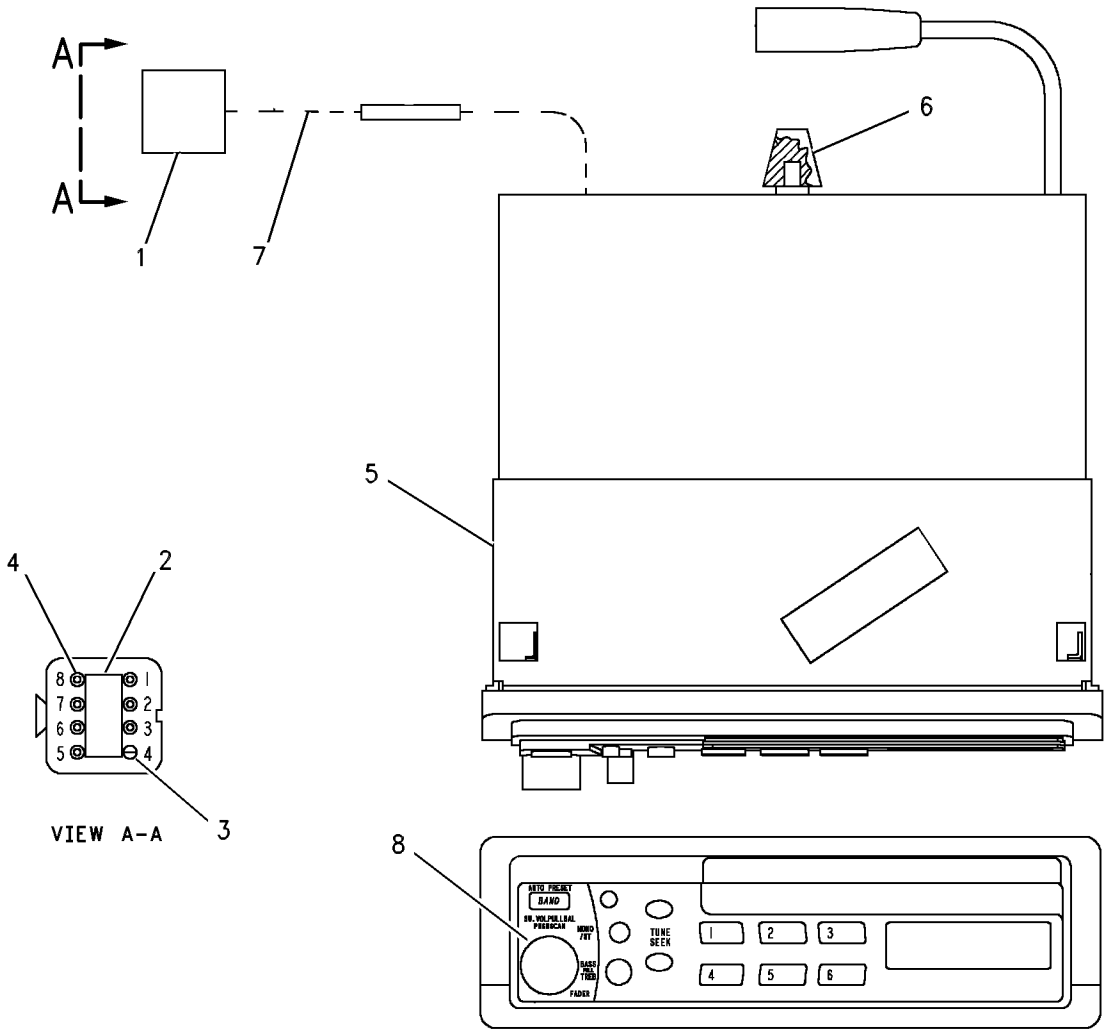

GRAPHIC #1

<END>

g00623314

OPERATOR STATION

173-6532 RADIO GP–AM/FM CASSETTE

S/N: CBJ1-UP

AN ATTACHMENT

SMCS-7338 **i01871001**

NOTE	REF NO	GRAPHIC REF	PART NUMBER	QTY	PART NAME 1 2 3 4 5 6 (PRODUCT LEVEL)	SEE PAGE
	1	1	**102-8806**	1	KIT-RECEPTACLE (8 PIN)	
					(INCLUDES RECEPTACLE AS & WEDGE)	
	2	1	**8T-8729**	7	PIN-CONNECTOR	
	3	1	**8T-8737**	1	PLUG-SEAL	
	4	1	**3E-3389**	1	WEDGE-RECEPTACLE LOCK	
	5	1	**192-7054**	1	SLEEVE	
	6	1	**137-8165**	1	BUMPER	
	7	1	**186-2741**	1	HARNESS AS-RADIO (SPEAKER)	
	8	1	**175-3678**	1	KIT-KNOB (RADIO)	
					(INCLUDES KNOBS: FADER, TONE, VOLUME/SW)	

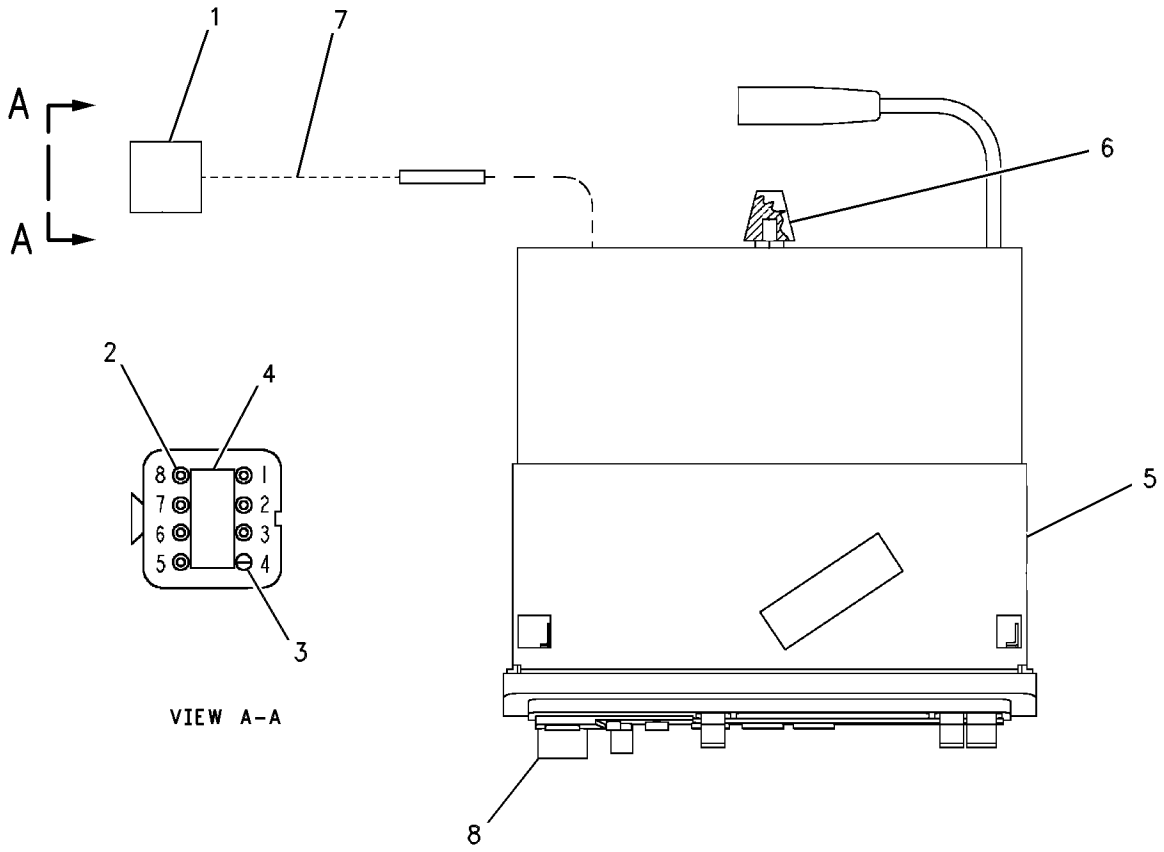

GRAPHIC #1 **<END>** g00618667

OPERATOR STATION

177-4935 RECLINER GP-SEAT

S/N: CBJ1-UP
PART OF 178-0603 SEAT GP
AN ATTACHMENT

SMCS-7312 **i01809930**

NOTE	REF NO	GRAPHIC REF	PART NUMBER	QTY	PART NAME 1 2 3 4 5 6 (PRODUCT LEVEL)	SEE PAGE
	1	1	**217-7933**	1	LATCH	
	2	1	**164-4146**	1	SPRING	
	3	1	**177-1860**	1	GEAR (14 TEETH) (LOCK)	
	4	1	**177-1862**	1	BRACKET	
	5	1	**178-0607**	1	SHAFT AS	
	5A	1	**2K-9111**	2	PIN-SPRING	
	5B	1	**9M-6803**	2	DOWEL	
	5C	1	**170-8590**	1	SPRING	
	6	1	**178-0608**	1	BRACKET AS	
	7	1	**178-0609**	1	BRACKET AS	
	8	1	**031-0214**	1	BOLT-LOCKING (1/4-20X0.5 IN)	
	9	1	**101-2867**	1	WASHER-HARD (7.2X25X2MM THK)	
	10	1	**4M-6425**	1	BOLT (5/16-18X1 IN)	
	11	1	**5S-7383**	1	BOLT (3/8-16X1.75 IN)	
	12	1	**8T-4224**	1	WASHER-HARD (8.8X16X2MM THK)	

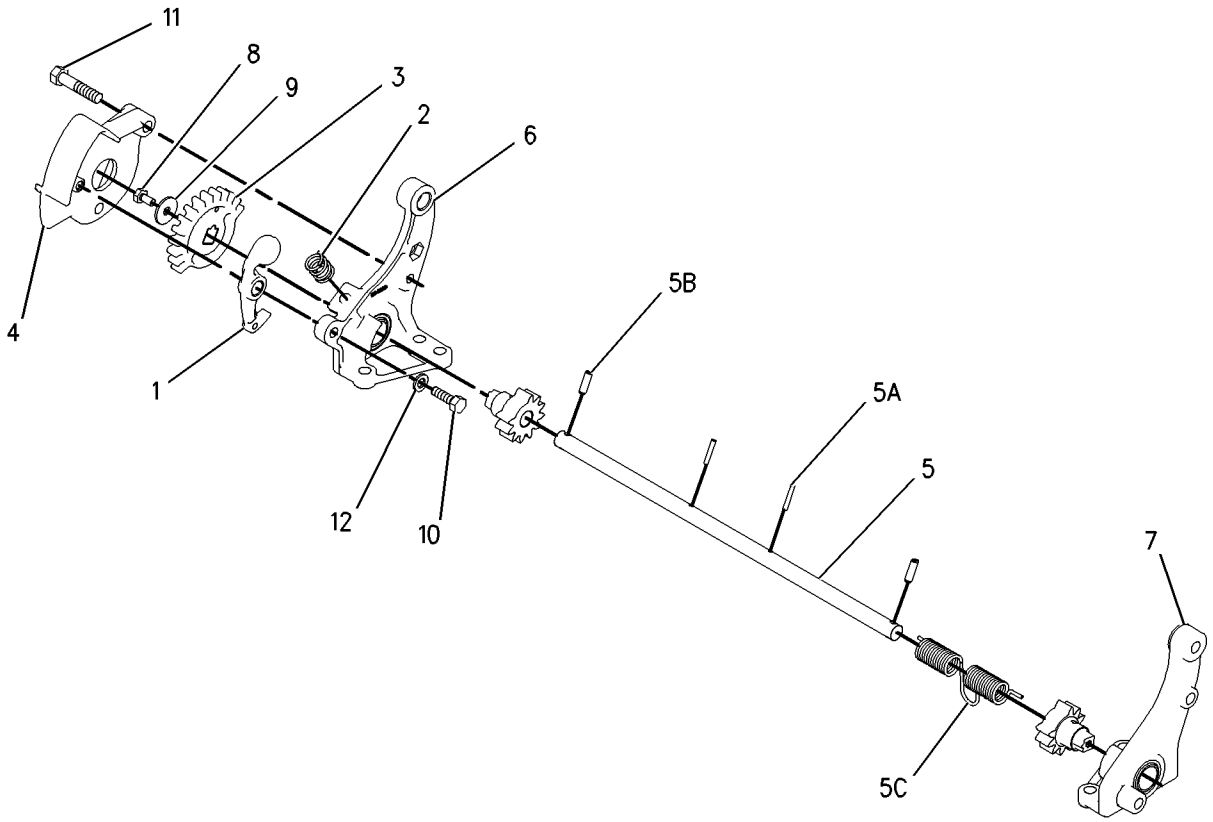

GRAPHIC #1 **<END>** g00673022

OPERATOR STATION

167-1457 ROPS GP—ENCLOSED

S/N: CBJ1-UP

PART OF 156-9516 CAB AR

SMCS-7323, 7325 **i01828737**

NOTE	REF NO	GRAPHIC REF	PART NUMBER	QTY	PART NAME 1 2 3 4 5 6 (PRODUCT LEVEL)	SEE PAGE
	1	1	**171-9587**	1	ROPS AS	
	2	1	**145-4115**	12	SPACER (26X40X12MM THK)	
M	3	1	**8T-5878**	12	BOLT (M24X3X80MM)	

M-METRIC PART

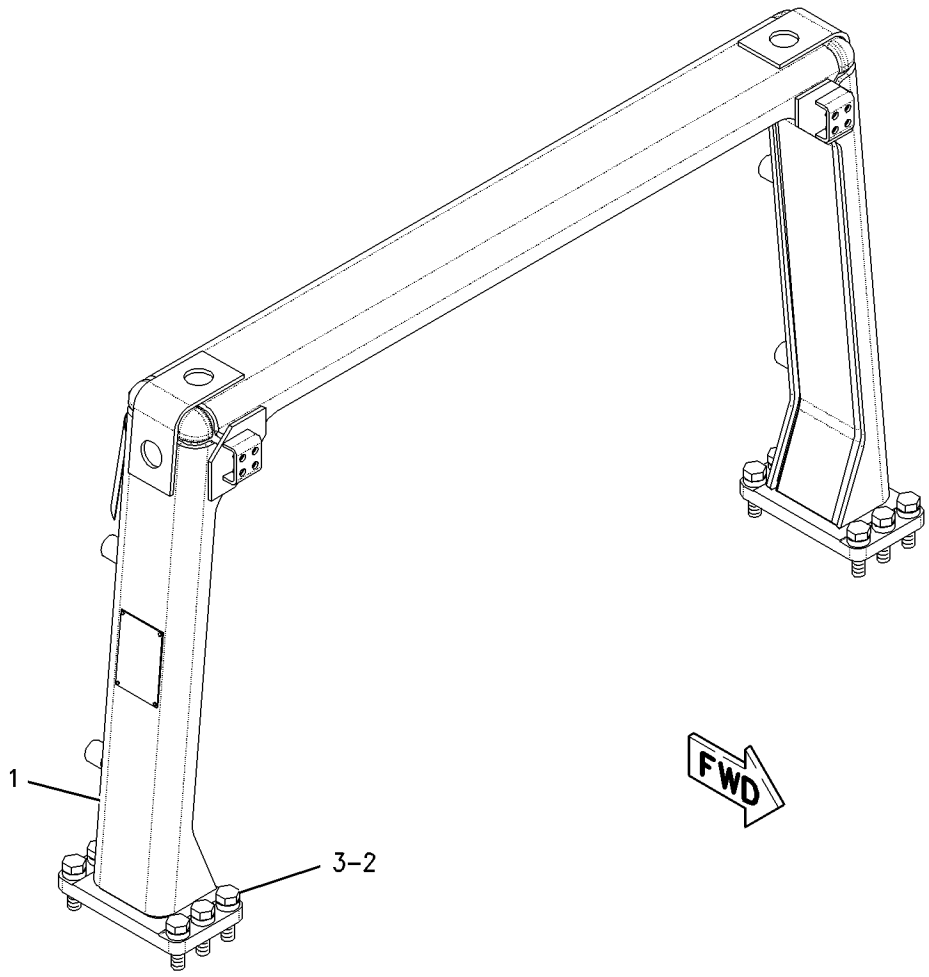

GRAPHIC #1 **<END>** g00776342

OPERATOR STATION

167-1460 ROPS GP—OPEN

S/N: CBJ1-UP
PART OF 156-9509 CANOPY AR
AN ATTACHMENT

SMCS-7323, 7325 **i01893864**

NOTE	REF NO	GRAPHIC REF	PART NUMBER	QTY	PART NAME 1 2 3 4 5 6 (PRODUCT LEVEL)	SEE PAGE
	1	1	**1P-2772**	4	SPACER (26X31X19MM THK)	
	2	1	**3S-2093**	15	STRAP-CABLE	
	3	1	**5P-6874**	1	MIRROR	
	4	1	**8C-5607**	8	MOUNT (ISOLATION)	
	5	1	**8C-5608**	4	SPACER (6.5X9.5X25.4MM THK)	
M	6	1	**8T-4220**	1	BOLT-SQUARE NECK	
	7	1	**211-1913**	1	FOAM	
	8	1	**211-2354**	1	BRACKET	
	9	1	**9S-5187**	2	MOUNTING	
	10	1	**114-3907**	1	STABILIZER AS	
	11	1	**114-6407**	1	STABILIZER AS	
	12	1	**220-0230**	1	WARNING GP-BACKUP (ROPS)	
		1	**102-8802**	1	KIT-RECEPTACLE (2 PIN)	
					(INCLUDES RECEPTACLE AS & WEDGE)	
		1	**3E-3365**	1	WEDGE-RECEPTACLE LOCK (2 PIN)	
		1	**5P-5623**	1	WIRE (16 GA)	
		1	**186-3735**	2	PIN-CONNECTOR	
BE		1	**9X-1813**		SLEEVE	
	13	1	**145-4115**	12	SPACER (26X40X12MM THK)	
	14	1	**160-9147**	1	HARNESS AS (BACKUP ALARM)	
		1	**102-8802**	5	KIT-RECEPTACLE (2 PIN)	
		1	**102-8805**	1	KIT-RECEPTACLE (6 PIN)	
		1	**102-8806**	1	KIT-RECEPTACLE (8 PIN)	
					(EACH RECEPTACLE KIT INCLUDES RECEPTACLE AS & WEDGE)	
		1	**155-2270**	6	KIT-CONNECTING PLUG (2 PIN)	
		1	**155-2274**	1	KIT-CONNECTING PLUG (6 PIN)	
					(EACH PLUG KIT INCLUDES PLUG AS, WEDGE & INTERFACE SEAL)	
	15	1	**9X-6165**	4	WASHER (6.5X22X2.5MM THK)	
	16	1	**173-6809**	1	ROPS AS	
	17	1	**175-7651**	1	HEADLINER	
	18	1	**211-0895**	2	PLATE	
	19	1	**184-3451**	1	STEP AS	
M		1	**8T-3597**	2	NUT-WELD (M12X1.75 THD)	
	20	1	**184-3452**	1	STEP AS	
M		1	**8T-3597**	2	NUT-WELD (M12X1.75 THD)	
	21	1	**197-3522**	1	COVER AS	
M		1	**8T-3490**	2	NUT-WELD (M10X1.5 THD)	
	22	1	**197-6050**	14	WASHER	
	23	1	**197-6051**	14	BUTTON	
	24	1	**5P-8439**	4	GROMMET	
	25	1	**6K-3632**	2	LOCKNUT (1-8 THD)	
M	26	1	**8C-8451**	4	BOLT (M6X1X40MM)	
	27	1	**8C-8843**	2	BOLT (1-8X4.5 IN)	
	28	1	**8P-5244**	4	WASHER (33.3X69.8X6.35MM THK)	
	29	1	**8T-4121**	13	WASHER-HARD (11X21X2.5MM THK)	
M	30	1	**8T-4137**	11	BOLT (M10X1.5X20MM)	
M	31	1	**8T-4139**	4	BOLT (M12X1.75X30MM)	
	32	1	**8T-4161**	1	KNOB	
M	33	1	**8T-4194**	8	BOLT (M12X1.75X50MM)	
M	34	1	**8T-4198**	2	BOLT (M10X1.5X100MM)	
	35	1	**8T-4223**	12	WASHER-HARD (13.5X25.5X3MM THK)	
M	36	1	**8T-5878**	12	BOLT (M24X3X80MM)	
	37	1	**1V-6688**	1	GROMMET	

167-1460 **ROPS GP** ***(contd.)*** **i01893864**

NOTE	REF NO	GRAPHIC REF	PART NUMBER	QTY	PART NAME 1 2 3 4 5 6 (PRODUCT LEVEL)	SEE PAGE
	38	1	**227-4469**	1	CORNER (LH)	
	39	1	**227-4468**	1	CORNER (RH)	

B-USE AS REQUIRED
E-ORDER BY THE CENTIMETER
M-METRIC PART

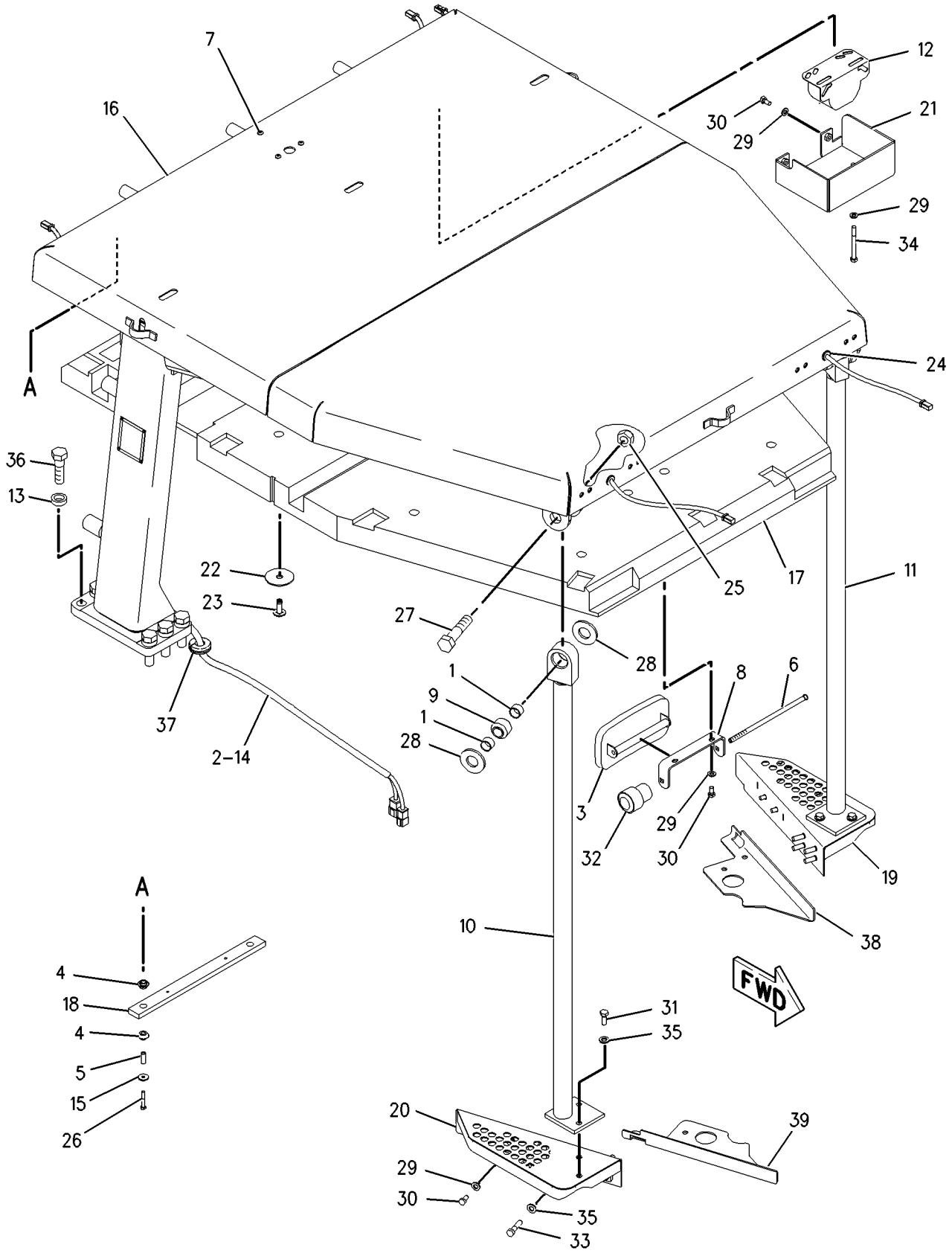

GRAPHIC #1 **<END>** g00918159

OPERATOR STATION

167-1466 SCREEN GP-PROTECTION—CAB

S/N: CBJ1-UP

FOR USE WITH 156-9516—PAGE 417

AN ATTACHMENT

SMCS-7165 **i01830557**

NOTE	REF NO	GRAPHIC REF	PART NUMBER	QTY	PART NAME 1 2 3 4 5 6 (PRODUCT LEVEL)	SEE PAGE
	1	1	**8G-5258**	4	SPACER (17X35X20MM THK)	
	2	1	**195-8421**	1	BRACKET AS (LH)	
	3	1	**195-8422**	1	BRACKET AS (RH)	
					(EACH BRACKET AS INCLUDES)	
M		1	**8T-3597**	4	NUT-WELD (M12X1.75 THD)	
	4	1	**195-8430**	1	SCREEN AS	
M	5	1	**118-4977**	4	BOLT (M16X2X65MM)	
M	6	1	**8T-4139**	8	BOLT (M12X1.75X30MM)	
	7	1	**8T-4223**	8	WASHER-HARD (13.5X25.5X3MM THK)	

M-METRIC PART

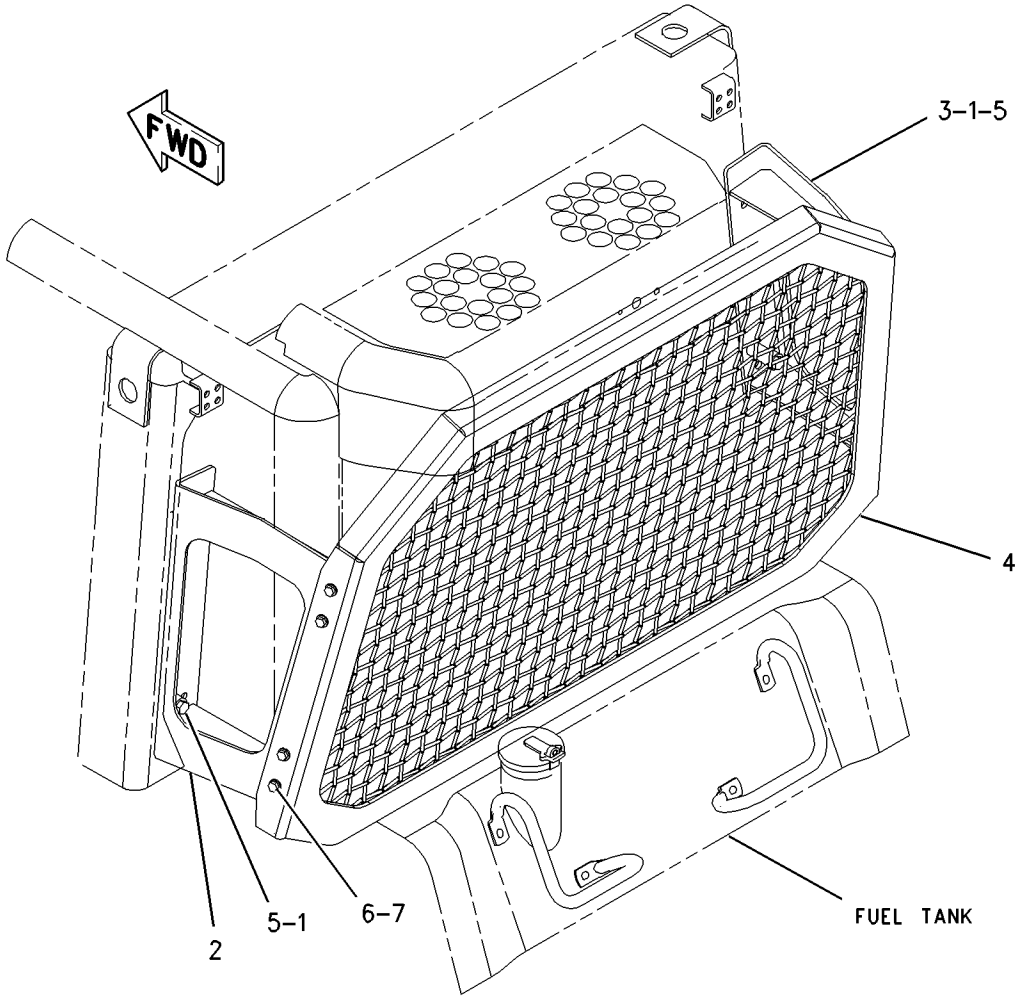

GRAPHIC #1 **<END>** g00776698

OPERATOR STATION

175-7225 SCREEN GP-PROTECTION—OPEN ROPS

S/N: CBJ1-UP

FOR USE WITH 156-9509—PAGE 422. CANNOT BE USED WITH 156-9516—PAGE 417

AN ATTACHMENT

SMCS-7165 **i01830652**

NOTE	REF NO	GRAPHIC REF	PART NUMBER	QTY	PART NAME 1 2 3 4 5 6 (PRODUCT LEVEL)	SEE PAGE
	1	1	**199-2998**	1	SCREEN AS	
	2	1	**175-7223**	1	SCREEN AS	
	3	1	**175-7227**	1	CHANNEL AS	
M		1	**8T-3490**	4	NUT-WELD (M10X1.5 THD)	
	4	1	**176-7453**	1	CHANNEL AS	
M		1	**8T-3490**	4	NUT-WELD (M10X1.5 THD)	
M	5	1	**6V-5686**	4	BOLT (M16X2X50MM)	
	6	1	**7X-0583**	3	WASHER-HARD (17X45X6MM THK)	
	7	1	**8T-4121**	18	WASHER-HARD (11X21X2.5MM THK)	
M	8	1	**8T-4133**	5	NUT (M10X1.5 THD)	
M	9	1	**8T-4195**	5	BOLT (M10X1.5X30MM)	
M	10	1	**8T-4196**	8	BOLT (M10X1.5X35MM)	
M	11	1	**8T-4779**	3	BOLT (M16X2X35MM)	
	12	1	**9X-8268**	4	WASHER (17.5X30X3.5MM THK)	

M-METRIC PART

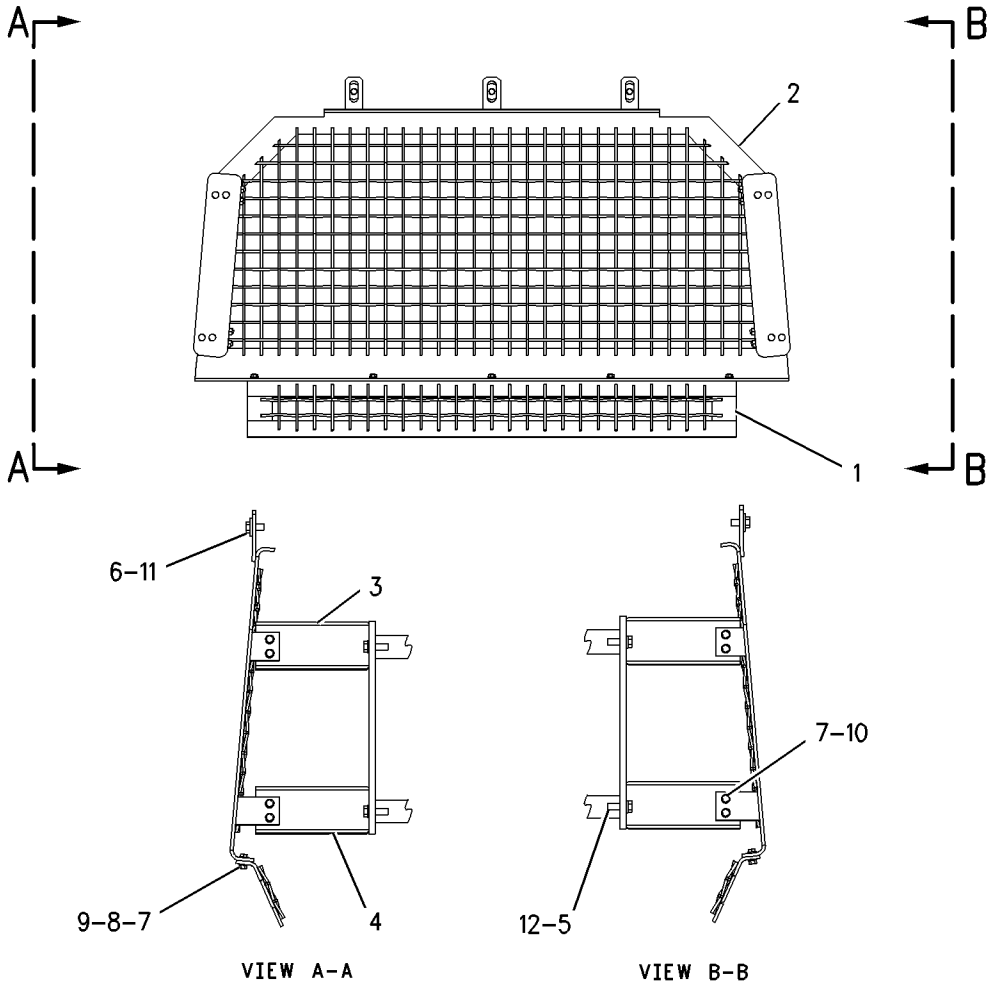

GRAPHIC #1 **<END>** g00671510

OPERATOR STATION

173-6772 SCREEN GP-SUN

S/N: CBJ1-UP

FOR USE WITH , 156-9516—PAGE 417. CANNOT BE USED WITH , 156-9509—PAGE 422 AN ATTACHMENT

SMCS-7165 **i01830628**

NOTE	REF NO	GRAPHIC REF	PART NUMBER	QTY	PART NAME 1 2 3 4 5 6 (PRODUCT LEVEL)	SEE PAGE
	1	1	**228-9379**	1	VISOR AS	
	2	1	**228-9380**	1	VISOR AS	
	3	1	**228-9381**	2	VISOR AS	
	4	1	**228-9382**	8	ROD END	
	5	1	**229-3336**	2	BRACKET	
	6	1	**229-3337**	2	BRACKET	
	7	1	**229-3338**	4	BRACKET	
	8	1	**229-3339**	2	ROD	
	9	1	**229-3340**	2	ROD	
	10	1	**229-3341**	2	ROD	
	11	1	**229-3342**	2	ROD	
M	12	1	**107-3786**	8	BOLT (M4X.7X12MM)	
	13	1	**7X-0620**	8	WASHER-HARD (5.5X13X1.6MM THK)	
M	14	1	**8T-2659**	8	LOCKNUT (M4X0.7 THD)	
M	15	1	**9X-2045**	7	SCREW-TRUSS HEAD (M6X1X20MM)	

M-METRIC PART

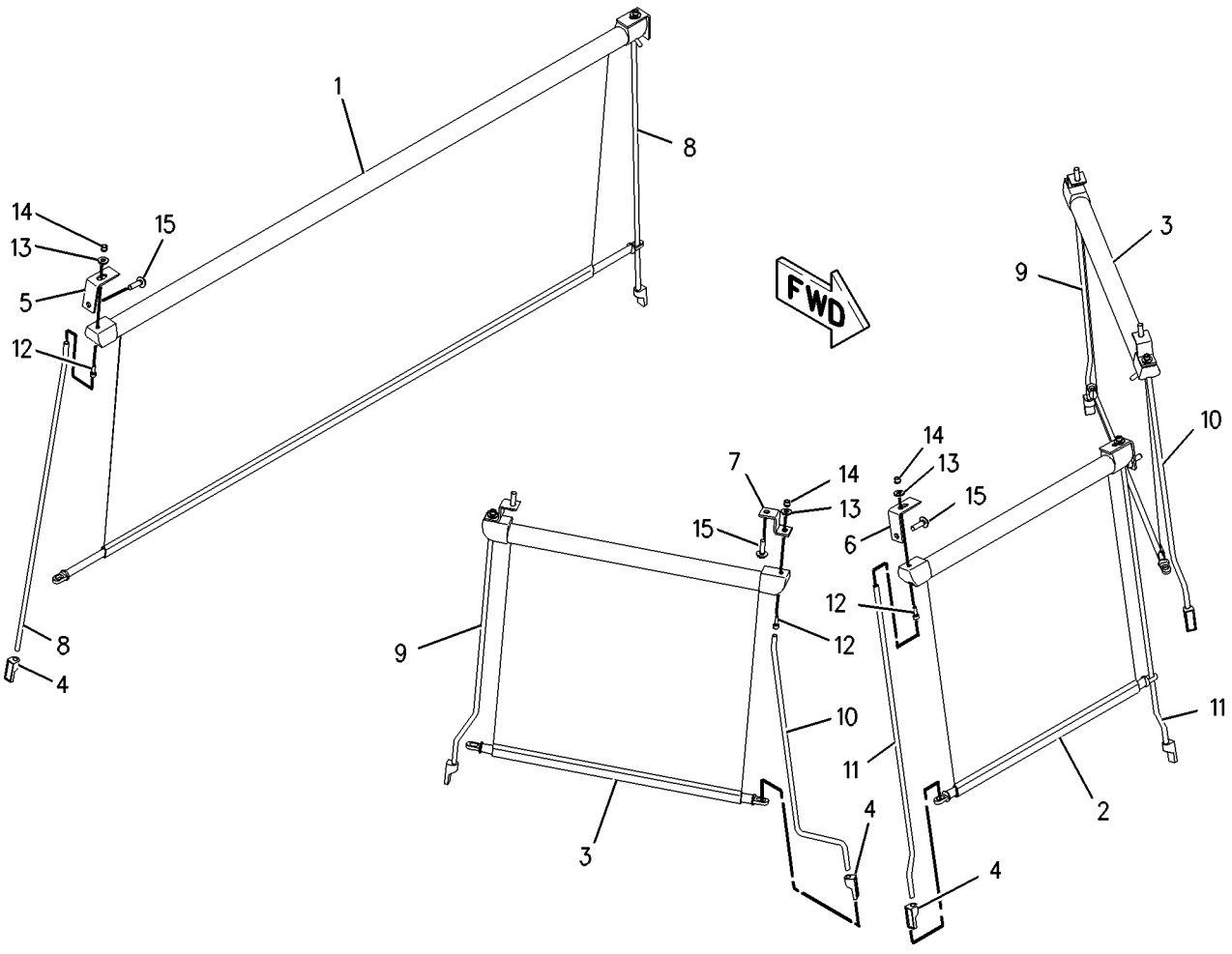

GRAPHIC #1 **<END>** g00931824

OPERATOR STATION

178-0603 SEAT GP

S/N: CBJ1-UP
PART OF 178-0606 SEAT GP
AN ATTACHMENT

SMCS-7312 **i01852208**

NOTE	REF NO	GRAPHIC REF	PART NUMBER	QTY	PART NAME 1 2 3 4 5 6 (PRODUCT LEVEL)	SEE PAGE
	1	1	**135-5499**	1	PAN AS	
		1	**8T-9082**	5	RIVET-POP	
		1	**117-4506**	1	CUSHION AS	
	2	1	**143-1288**	8	LOCKNUT-FLANGE (3/8-16 THD)	
	3	1	**171-1230**	6	SCREW-BUTTON HEAD (3/8-16X1 IN)	
	4	1	**171-6682**	1	BAR-RECLINER	
	5	1	**172-2416**	2	PIN	
Y	6	1	*173-1028*	1	ADJUSTER GP-SEAT	412
	7	1	**177-1863**	2	BOLT-PIVOT (3/8-16X2.89 IN)	
Y	8	1	*177-4935*	1	RECLINER GP-SEAT	482
Y	9	1	*178-0604*	1	PAN GP-BACKREST	464
	10	1	**184-2298**	1	ROD	
	11	1	**184-2299**	4	WASHER (7X25.4X2.54MM THK)	
	12	1	**095-0843**	2	PIN-COTTER	
	13	1	**5V-1496**	2	RETAINER	
	14	1	**6V-7646**	2	WASHER-HARD (7.2X25X2MM THK)	
	15	1	**8T-0328**	1	WASHER-HARD (5.5X10X1MM THK)	
	16	1	**8T-4205**	1	WASHER-HARD (7.2X14.5X2MM THK)	
	17	1	**8Y-6277**	2	SPACER (10.5X28.6X10MM THK)	

Y-SEPARATE ILLUSTRATION

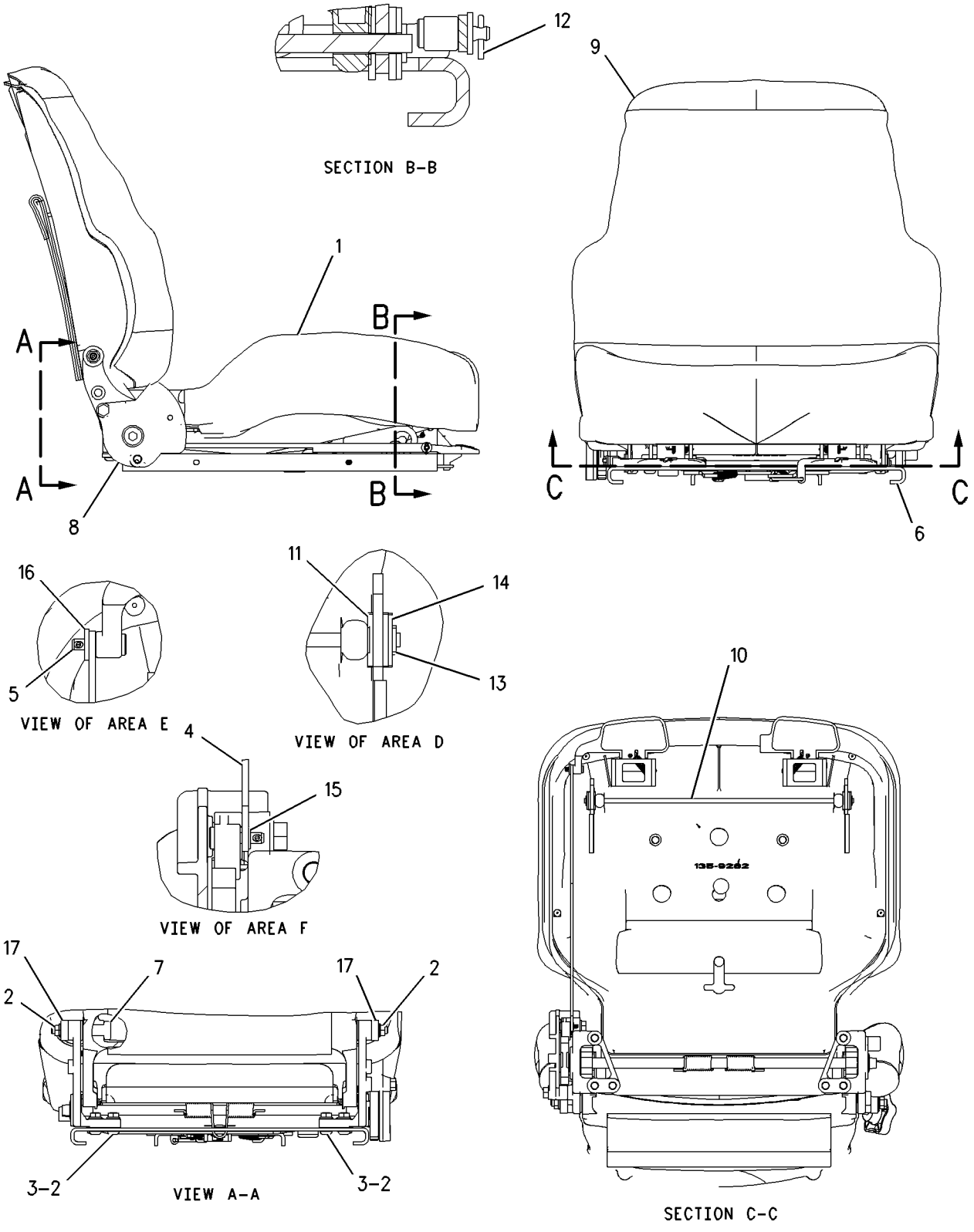

GRAPHIC #1 **<END>** g00729407

178-0606 SEAT GP

S/N: CBJ1-UP
PART OF 160-7186, 200-3174 SEAT GP-SUSPENSION
AN ATTACHMENT

SMCS-7312 **i01883810**

NOTE	REF NO	GRAPHIC REF	PART NUMBER	QTY	PART NAME 1 2 3 4 5 6 (PRODUCT LEVEL)	SEE PAGE
	1	1	**173-3082**	1	EXTENSION GP-BACKREST (FABRIC)	
	2	1	**177-4937**	1	SPACER (11.7X19.8X20.3MM THK)	
Y	3	1	**178-0603**	1	SEAT GP (CLOTH)	490
	4	1	**180-5559**	1	SCREW-PAN HEAD (7/16-20X1.75 IN)	
	5	1	**180-5560**	1	SCREW-PAN HEAD (7/16-20X1.25 IN)	
	6	1	**183-3648**	1	SEAT BELT GP (SUSPENSION SEAT)	

Y-SEPARATE ILLUSTRATION

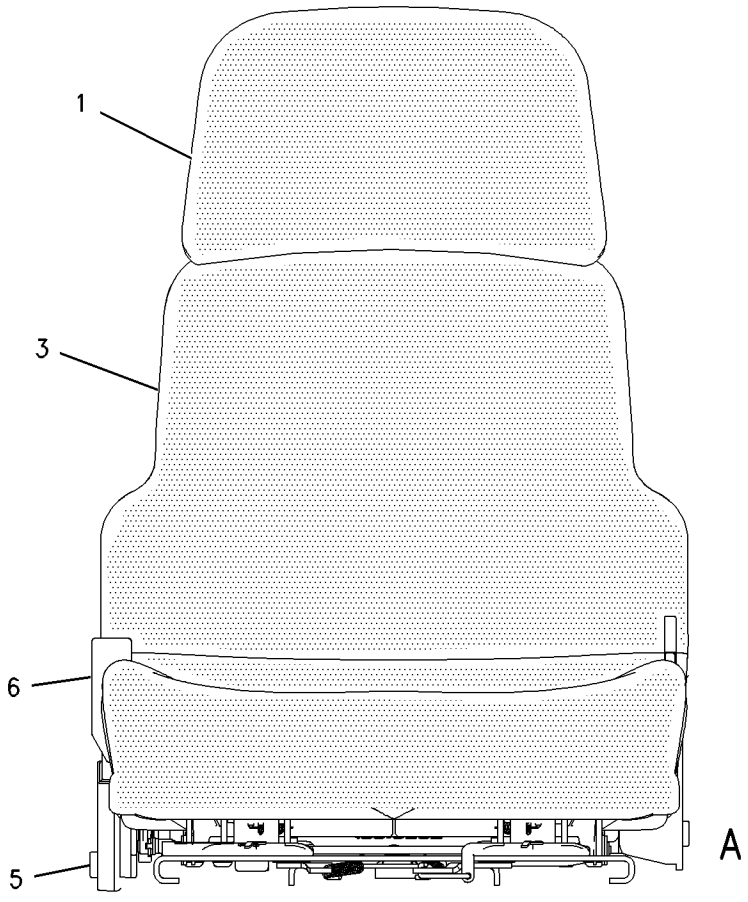

FRONT VIEW

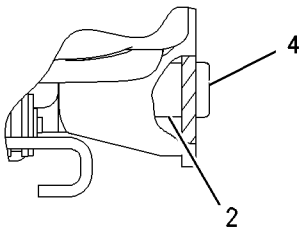

VIEW OF AREA A

GRAPHIC #1 **<END>** g00773865

OPERATOR STATION

6W-9744 SEAT GP-SUSPENSION

S/N: CBJ1-UP
VINYL
PART OF 227-7013 SEAT GP-SUSPENSION
AN ATTACHMENT

SMCS-7321, 7324, 7336 **i01885531**

NOTE	REF NO	GRAPHIC REF	PART NUMBER	QTY	PART NAME 1 2 3 4 5 6 (PRODUCT LEVEL)	SEE PAGE
	1	1	**5M-3062**	2	BOLT (3/8-16X0.75 IN)	
	2	1	**8R-2094**	1	CUSHION AS-SEAT	
		1	**5V-1499**	2	NUT-CLINCH	
		1	**5V-1719**	2	SNAP	
		1	**7K-6536**	2	RIVET-POP	
		1	**9S-0201**	2	WASHER (13.5X22X2.5MM THK)	
		1	**4V-8579**	1	CLIP	
	3	1	**4V-8034**	2	BOLT (1/2-13X1.47 IN)	
Y	4	1	**6W-8502**	1	SUSPENSION GP-SEAT	499
	5	1	**4V-8035**	1	CAP	
	6	1	**4V-8033**	1	BAR	
	7	1	**5S-7379**	2	BOLT (3/8-16X0.875 IN)	
	8	1	**4V-8605**	2	SPACER	
	9	1	**7V-3728**	1	LATCH AS	
	10	1	**8Y-4206**	1	CUSHION AS-BACK	
		1	**6K-3273**	1	RIVET-POP	
		1	**5P-7957**	1	LANYARD	
		1	**5V-1496**	19	RETAINER	
		1	**6K-3274**	1	PLATE-RIVET	
BE		1	**9X-2092**		STRIP-EDGE	
D	11	1	**6V-1584**		SEAL (1.1 M)	
	12	1	**8Y-4002**	1	PAN AS	
	13	1	**4V-8579**	1	CLIP	
	14	1	**4V-8031**	2	SPRING	
	15	1	**5V-1498**	2	LOCKNUT	
		1	**030-7571**	2	BOLT (3/8-16X1 IN)	
	16	1	**5P-2566**	2	BOLT (1/2-13X1.5 IN)	
		1	**4V-8586**	2	SPACER (13.92X32.25X4.22MM THK)	
	17	1	**4V-8029**	1	BRACKET AS-RH	
		1	**4V-8026**	1	BRACKET AS-LH	
					(EACH INCLUDES)	
	18	1	**101-2865**	1	PIN	
	19	1	**2K-4973**	6	LOCKNUT (3/8-16 THD)	
	20	1	**4B-4278**	4	WASHER (10.2X20.5X1.6MM THK)	
	21	1	**4V-7904**	1	PLATE AS-RH	
		1	**4V-7908**	1	PLATE AS-LH	
	22	1	**4V-8256**	2	SPRING	
BE	23	1	**4V-8032**	2	CABLE	
	24	1	**4B-4280**	2	WASHER (13.5X27X2.5MM THK)	
	25	1	**4B-4281**	2	WASHER (16.8X33X2.5MM THK)	
	26	1	**5V-1499**	2	NUT-CLINCH	
AF		1	**5P-7958**	1	SLEEVE-CABLE SPLICE	

A-NOT PART OF THIS GROUP
B-USE AS REQUIRED
D-ORDER BY THE METER
E-ORDER BY THE CENTIMETER
F-NOT SHOWN
Y-SEPARATE ILLUSTRATION

6W-9744 SEAT GP-SUSPENSION *(contd.)* **i01885531**

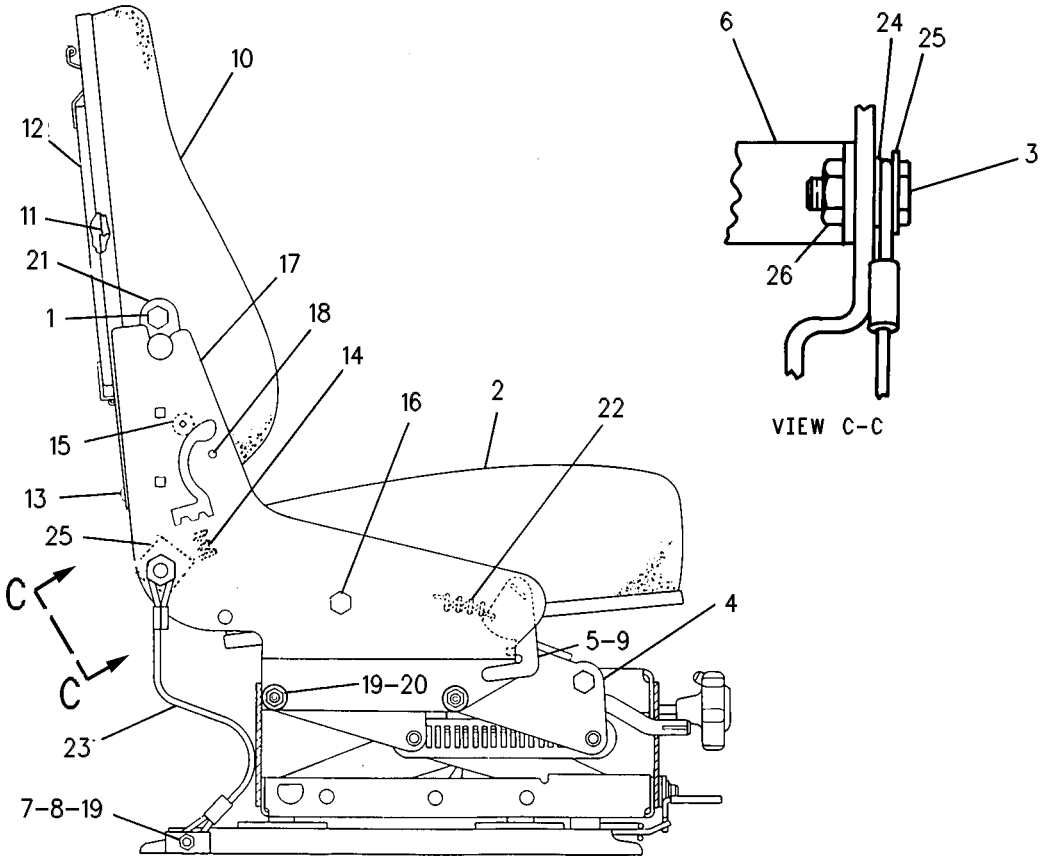

GRAPHIC #1 **<END>** g00106690

OPERATOR STATION

160-7186 SEAT GP-SUSPENSION

S/N: CBJ1-UP
PART OF 227-7010 SEAT GP-SUSPENSION
AN ATTACHMENT

SMCS-7321, 7324, 7336 **i01871057**

NOTE	REF NO	GRAPHIC REF	PART NUMBER	QTY	PART NAME 1 2 3 4 5 6 (PRODUCT LEVEL)	SEE PAGE
Y	1	1	**160-7165**	1	SUSPENSION GP-SEAT	502
Y	2	1	**178-0606**	1	SEAT GP	492
	3	1	**173-5787**	4	SETSCREW (1/4-20 THD)	
	4	1	**4F-4879**	1	BOLT (3/8-16X.5 IN)	
		1	**203-7703**	2	WASHER-HARD (10.2X22.22X2.38MM THK)	
					AVAILABLE REPAIR KIT(S):	
			173-7035	1	KIT-SLIDER BLOCK (SUSPENSION SEAT)	

Y-SEPARATE ILLUSTRATION

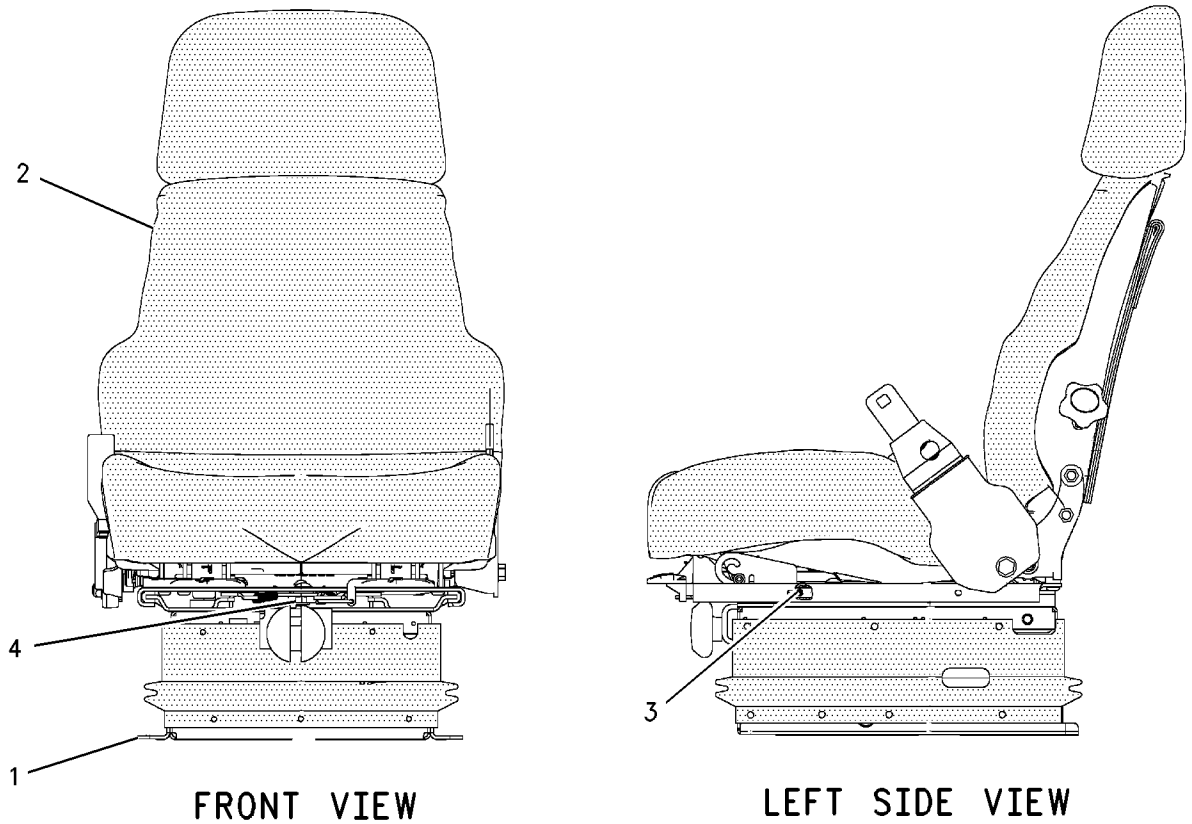

FRONT VIEW LEFT SIDE VIEW

GRAPHIC #1 **<END>** g00825453

OPERATOR STATION

200-3174 SEAT GP-SUSPENSION

S/N: CBJ1-UP
PART OF 227-7012 SEAT GP-SUSPENSION
AN ATTACHMENT

SMCS-7321, 7324, 7336 **i01871059**

NOTE	REF NO	GRAPHIC REF	PART NUMBER	QTY	PART NAME 1 2 3 4 5 6 (PRODUCT LEVEL)	SEE PAGE
J	1	1	**161-9289**	4	BLOCK-SLIDER	
J	2	1	**173-5787**	4	SETSCREW (1/4-20 THD)	
Y	3	1	**178-0606**	1	SEAT GP	492
Y	4	1	**191-2933**	1	SUSPENSION GP-SEAT	504
J	5	1	**203-7703**	2	WASHER-HARD (10.2X22.22X2.38MM THK)	
J	6	1	**4F-4879**	1	BOLT (3/8-16X.5 IN)	
					AVAILABLE REPAIR KIT(S):	
J			**173-7035**	1	KIT-SLIDER BLOCK (SUSPENSION SEAT)	

J-KIT MARKED J INCLUDES PARTS MARKED J
Y-SEPARATE ILLUSTRATION

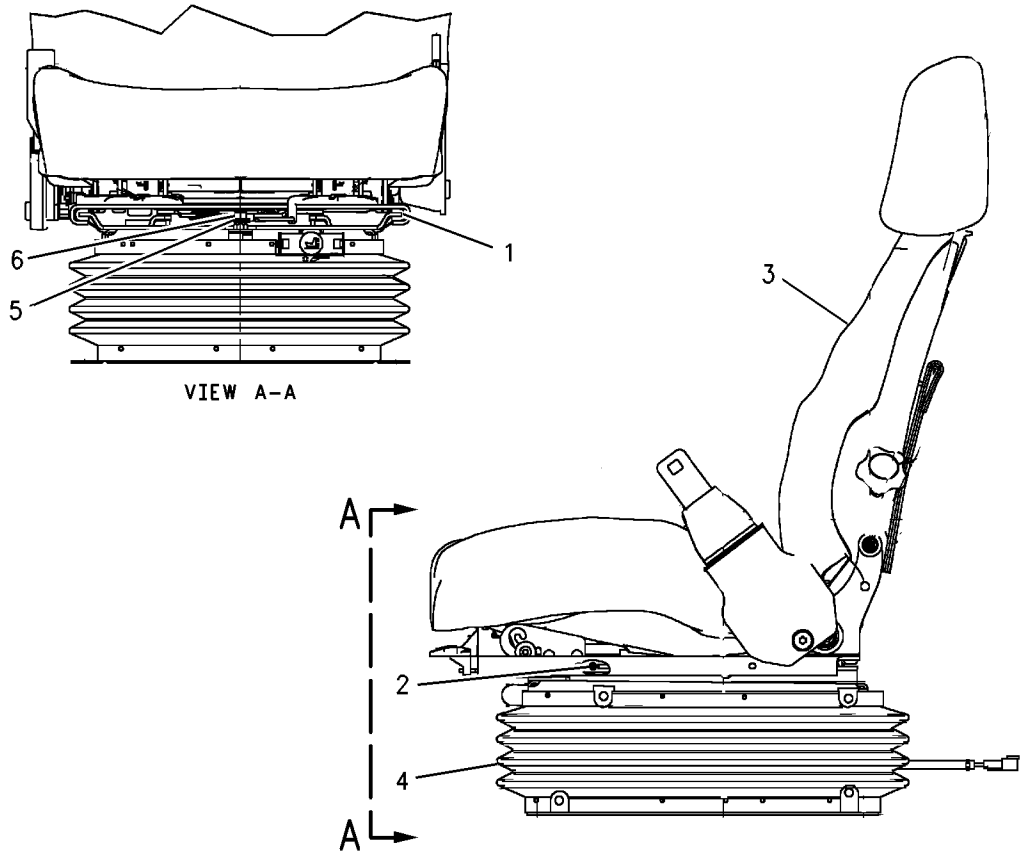

GRAPHIC #1 **<END>** g00933544

OPERATOR STATION

227-7010 SEAT GP-SUSPENSION—CLOTH, MECHANICAL

S/N: CBJ1-UP
CANNOT BE USED WITH , 156-9509—PAGE 422
AN ATTACHMENT

SMCS-7321, 7324, 7336 **i01877530**

NOTE	PART NUMBER	QTY	PART NAME 1 2 3 4 5 6 (PRODUCT LEVEL)	SEE PAGE
Y	**160-7186**	1	SEAT GP-SUSPENSION	495
M	**6V-8335**	4	BOLT-SELF LOCKING (M10X1.5X40MM)	
	7X-7729	4	WASHER (11X25X3MM THK)	

M-METRIC PART
Y-SEPARATE ILLUSTRATION

<END>

227-7012 SEAT GP-SUSPENSION—CLOTH, AIR

S/N: CBJ1-UP
CANNOT BE USED WITH 156-9509—PAGE 422
AN ATTACHMENT

SMCS-7321, 7324, 7336 **i01877542**

NOTE	PART NUMBER	QTY	PART NAME 1 2 3 4 5 6 (PRODUCT LEVEL)	SEE PAGE
Y	**200-3174**	1	SEAT GP-SUSPENSION	496
M	**6V-8335**	4	BOLT-SELF LOCKING (M10X1.5X40MM)	
	7X-7729	4	WASHER (11X25X3MM THK)	

M-METRIC PART
Y-SEPARATE ILLUSTRATION

<END>

227-7013 SEAT GP-SUSPENSION—VINYL, MECHANICAL, LOW BACK

S/N: CBJ1-UP
AN ATTACHMENT

SMCS-7321, 7324, 7336 **i01895770**

NOTE	PART NUMBER	QTY	PART NAME 1 2 3 4 5 6 (PRODUCT LEVEL)	SEE PAGE
Y	**6W-9744**	1	SEAT GP-SUSPENSION	493
M	**9X-2125**	4	BOLT-LOCKING (M10X1.5X25MM)	
	5V-5262	2	BOLT-SHOULDER (7/16-20X1.26 IN)	
	8S-0934	2	LOCKNUT-FLANGE (7/16-20 THD)	
	8Y-4030	1	SEAT BELT GP (SUSPENSION SEAT LOW BACK)	
	7X-7729	4	WASHER (11X25X3MM THK)	

M-METRIC PART
Y-SEPARATE ILLUSTRATION

<END>

OPERATOR STATION

177-3852 STEP GP

S/N: CBJ1-UP

PART OF 156-8911 CAB GP

SMCS-7254 **i01828903**

NOTE	REF NO	GRAPHIC REF	PART NUMBER	QTY	PART NAME 1 2 3 4 5 6 (PRODUCT LEVEL)	SEE PAGE
	1	1	**164-9144**	1	STEP AS	
	2	1	**164-9145**	1	STEP AS	
	3	1	**7X-7729**	8	WASHER (11X25X3MM THK)	
M	4	1	**8T-4137**	8	BOLT (M10X1.5X20MM)	

M-METRIC PART

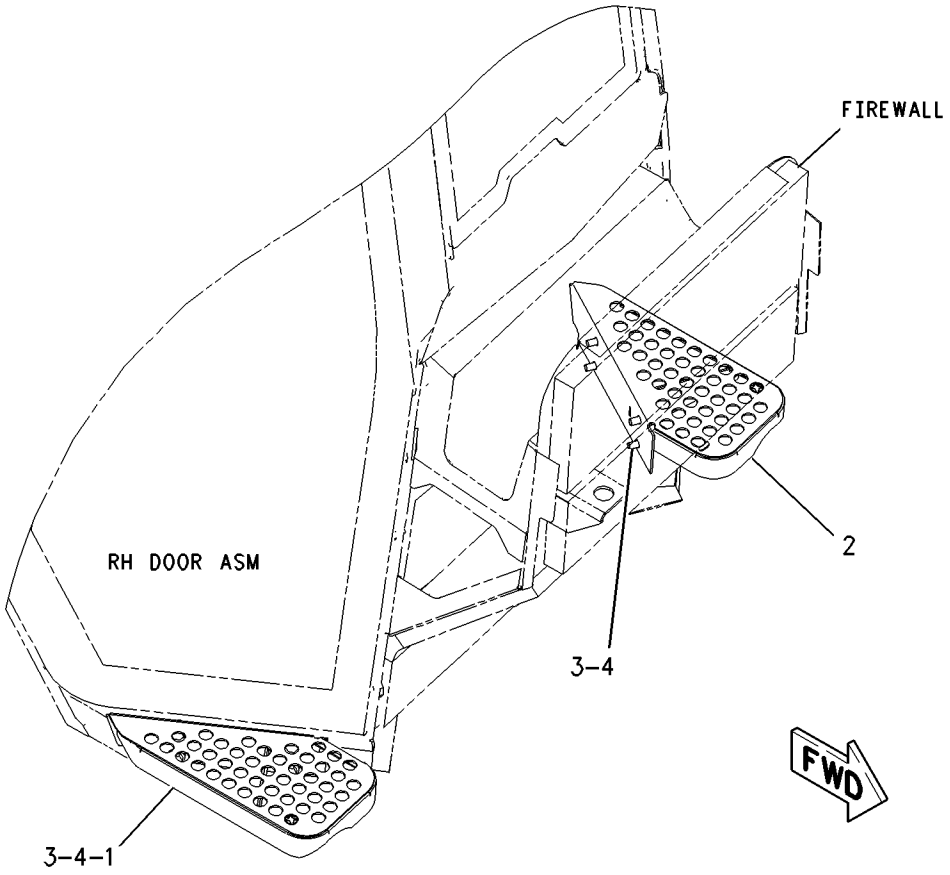

GRAPHIC #1 **<END>** g00942704

OPERATOR STATION

6W-8502 SUSPENSION GP-SEAT

S/N: CBJ1-UP
PART OF 6W-9744 SEAT GP-SUSPENSION
AN ATTACHMENT

SMCS-7324 **i01893902**

NOTE	REF NO	GRAPHIC REF	PART NUMBER	QTY	PART NAME 1 2 3 4 5 6 (PRODUCT LEVEL)	SEE PAGE
	1	1	**5V-1839**	1	LOCKNUT	
	2	1	**4V-7884**	1	BEARING	
	3	1	**4V-8577**	2	BEARING	
	4	1	**8Y-6957**	1	SHAFT AS	
	5	1	**4V-8566**	1	GEAR AS (100 TEETH)	
		1	**4V-8561**	1	WASHER (16.2X50.8X.8MM THK)	
	6	1	**4V-8562**	1	PLATE AS	
	7	1	**2K-9111**	2	PIN-SPRING	
	8	1	**8R-1876**	2	PAD-ROLLER	
	9	1	**4B-4281**	1	WASHER (16.8X33X2.5MM THK)	
	10	1	**7V-5190**	1	GEAR AS (28 TEETH)	
	11	1	**4V-7872**	1	KNOB AS-ADJUSTMENT	
		1	**4V-7873**	1	KNOB (SEAT ADJUSTMENT)	
		1	**5V-1483**	1	PIN-GROOVED	
		1	**4V-7877**	1	SPRING	
	12	1	**4V-7874**	1	HANDLE AS	
		1	**5V-1474**	1	SCREW-FORMING (10-16X0.625 IN)	
		1	**4V-7876**	1	SLEEVE	
		1	**4V-7875**	1	HANDLE	
	13	1	**5H-3182**	1	PIN-SPRING	
	14	1	**4V-8565**	1	INDICATOR	
	15	1	**4V-8554**	1	BRACKET	
	16	1	**9C-2177**	1	CAP	
	17	2	**6W-0590**	1	LEVER (SEAT ADJUSTMENT)	
		2	**3L-1473**	1	PIN-GROOVED	
	18	2	**5V-4855**	4	BOLT (1/2-16X.75 IN)	
	19	2	**4V-7890**	1	SPRING	
	20	2	**4V-8606**	1	HOUSING AS-UPPER	
	21	2	**5V-4846**	1	ARM AS	
	22	2	**163-2661**	2	ARM AS	
	23	2	**8R-1884**	1	SPACER (13X19X25MM THK)	
	24	2	**4V-8264**	1	LINK	
	25	2	**9V-7943**	2	SPRING	
	26	2	**9V-3043**	2	LINK AS	
	27	2	**4V-8265**	1	LINK	
	28	2	**2K-4973**	4	LOCKNUT (3/8-16 THD)	
		2	**4B-4278**	4	WASHER (10.2X20.5X1.6MM THK)	
	29	2	**6W-5233**	1	ABSORBER AS-SHOCK	
	30	2	**4V-8609**	1	BOOT	
	31	2	**4V-8556**	1	BOLT (3/8-16X2.34 IN)	
		2	**6D-0047**	1	LOCKNUT (3/8-16 THD)	
	32	2	**4V-7884**	1	BEARING	
	33	2	**6W-8281**	2	BUMPER	
	34	2	**9V-6754**	23	FASTENER	
	35	2	**4V-8610**	1	SPRING	
	36	2	**8R-1877**	1	SPACER (13X19X35MM THK)	
	37	2	**8R-1878**	1	SPACER (13X19X10MM THK)	
	38	2	**4V-7891**	1	LATCH AS	
Y	39	2	**6W-8505**	1	ADJUSTER GP-SEAT	411
	40	2	**8R-1883**	4	ROLLER-GUIDE	
	41	2	**8R-1876**	2	PAD-ROLLER	
	42	2	**5V-1839**	1	LOCKNUT	
	43	2	**4V-8577**	2	BEARING	
	44	2	**8Y-6957**	1	SHAFT AS	
	45	2	**1B-2693**	2	BOLT (1/4-20X.62 IN)	

6W-8502 **SUSPENSION GP-SEAT** *(contd.)* **i01893902**

NOTE	REF NO	GRAPHIC REF	PART NUMBER	QTY	PART NAME 1 2 3 4 5 6 (PRODUCT LEVEL)	SEE PAGE
	46	2	**027-3924**	2	LOCKNUT (1/4-20 THD)	
Y-SEPARATE ILLUSTRATION						

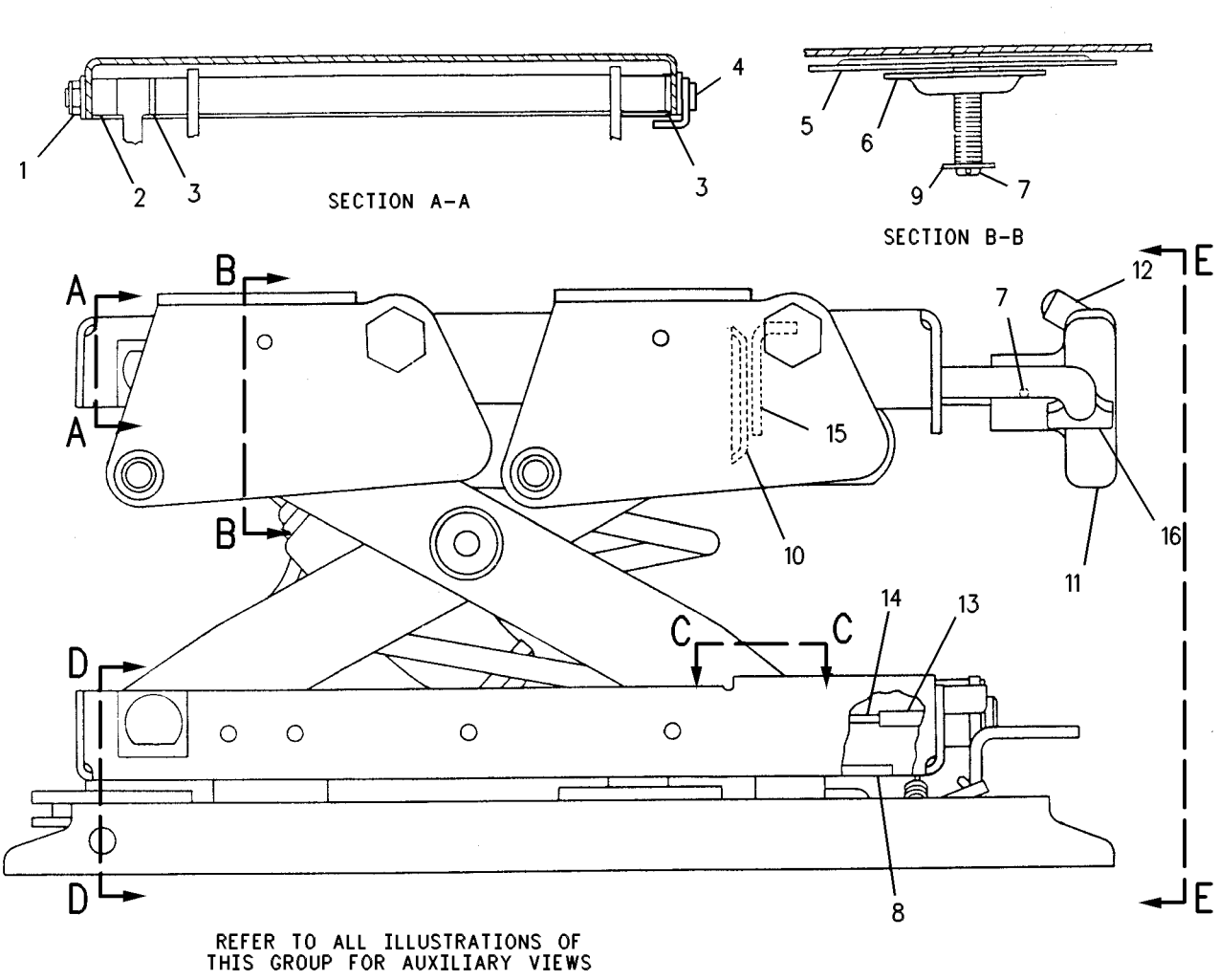

GRAPHIC #1 g00347918

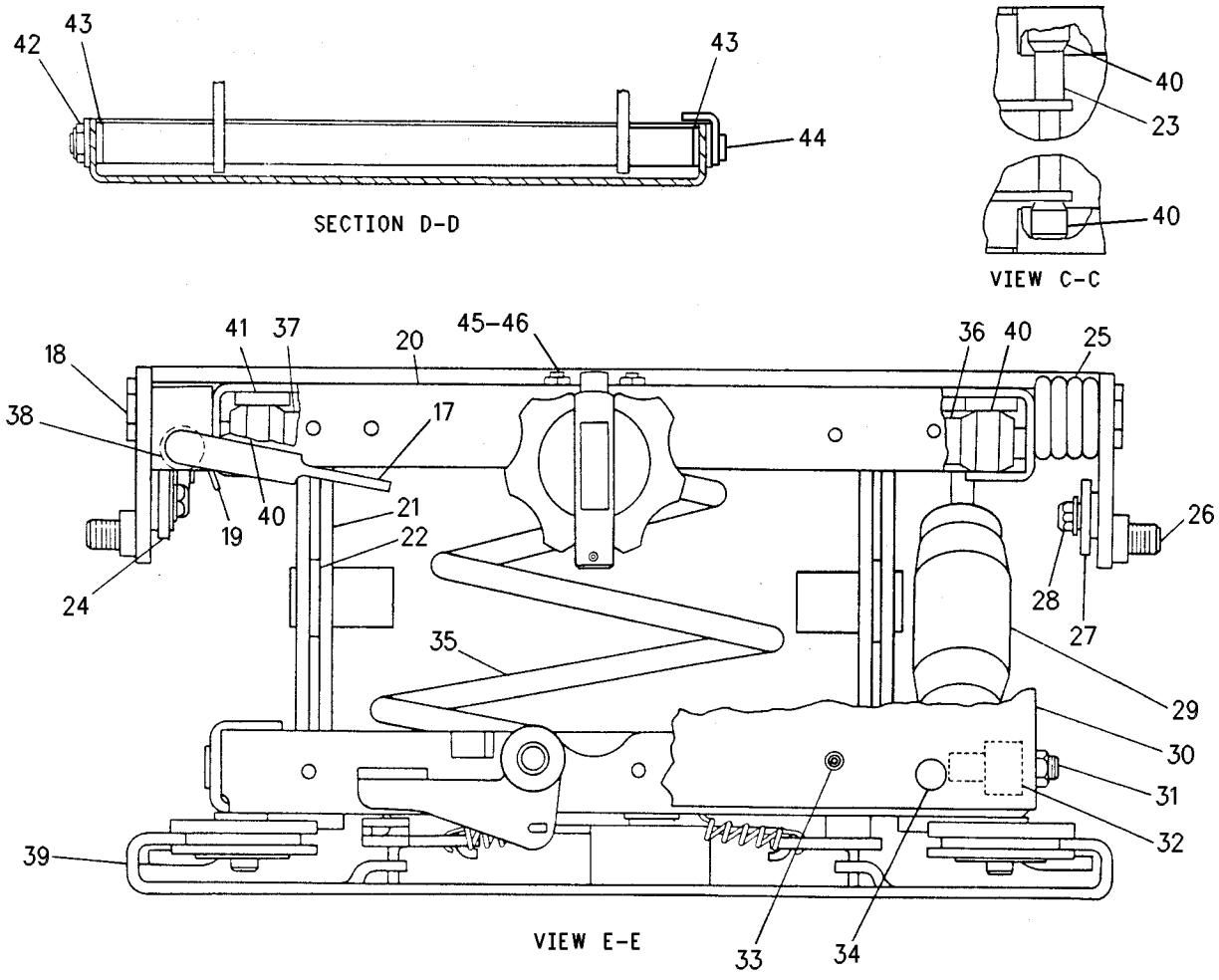

GRAPHIC #2 **<END>** g00509225

OPERATOR STATION

160-7165 SUSPENSION GP-SEAT

S/N: CBJ1-UP
PART OF 160-7186 SEAT GP-SUSPENSION
AN ATTACHMENT

SMCS-7324 **i01883826**

NOTE	REF NO	GRAPHIC REF	PART NUMBER	QTY	PART NAME 1 2 3 4 5 6 (PRODUCT LEVEL)	SEE PAGE
	1	1	**2K-4973**	2	LOCKNUT (3/8-16 THD)	
	2	1	**4V-7884**	2	BEARING	
	3	1	**4V-8577**	4	BEARING	
	4	1	**5V-1497**	1	RETAINER	
	5	1	**8Y-5965**	1	ABSORBER AS-SHOCK	
	6	1	**8Y-6012**	1	ARM AS-SUSPENSION	
	7	1	**8Y-6014**	1	HOUSING AS-LOWER	
	8	1	**8Y-6024**	2	SHAFT AS	
J	9	1	**101-0003**	20	FASTENER	
J	10	1	**166-6781**	3	FASTENER (15.9MM OD)	
J		1	**197-7689**	3	FASTENER (5.9MM OD)	
J	11	1	**163-1146**	3	FASTENER	
	12	1	**145-0326**	1	FILM-INSTRUCTION (SEAT ADJUSTMENT)	
	13	1	**169-7380**	1	BOLT-SOCKET HEAD (3/8-16X0.375 IN)	
Y	14	1	**174-2231**	1	HOUSING GP-SEAT SUSPENSION	444
	15	1	**197-7689**	3	FASTENER	
					AVAILABLE REPAIR KIT(S):	
J			**8Y-5944**	1	KIT-SUSPENSION BOOT (SUPENSION SEAT)	
					(INCLUDES BOOT, RETAINER, FASTENERS & PARTS MARKED J)	
			101-4194	1	KIT-BELT TETHER (SUPENSION SEAT)	
			101-4195	1	KIT-SUSPENSION ROLLER (SUPENSION SEAT)	

J-KIT MARKED J SERVICES PART(S) MARKED J
Y-SEPARATE ILLUSTRATION

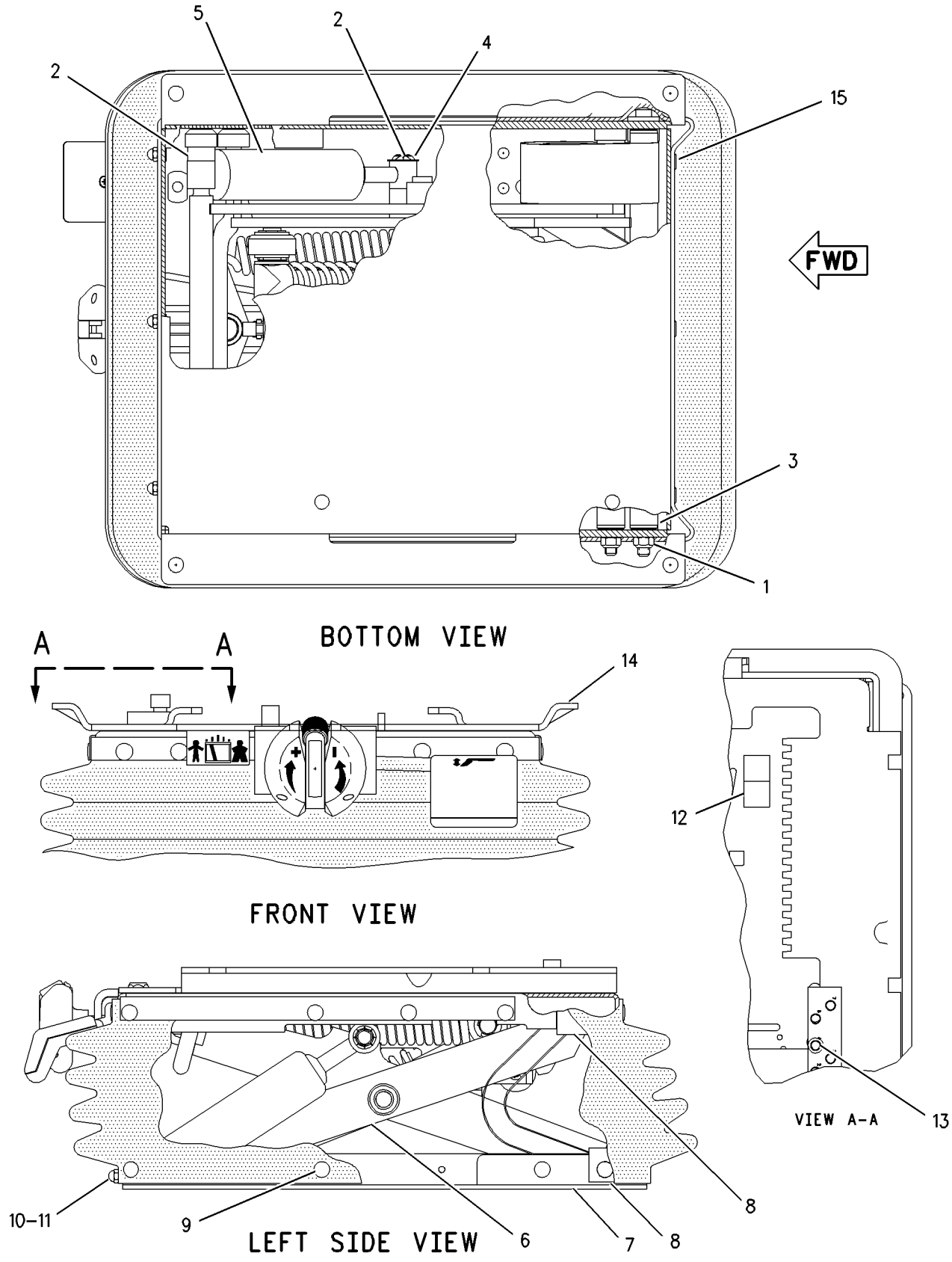

GRAPHIC #1 **<END>** g00801013

OPERATOR STATION

191-2933 SUSPENSION GP-SEAT

S/N: CBJ1-UP
PART OF 200-3174 SEAT GP-SUSPENSION
AN ATTACHMENT

SMCS-7324 **i01871062**

NOTE	REF NO	GRAPHIC REF	PART NUMBER	QTY	PART NAME 1 2 3 4 5 6 (PRODUCT LEVEL)	SEE PAGE
	1	1	**3P-9900**	5	WASHER (10.5X30X3MM THK)	
	2	1	**4B-4278**	2	WASHER (10.2X20.5X1.6MM THK)	
	3	1	**4V-8577**	12	BEARING	
	4	1	**8L-8413**	1	STRAP-CABLE	
	5	1	**145-0326**	1	FILM-INSTRUCTION (SEAT ADJUSTMENT)	
	6	1	**163-1139**	1	BRACKET	
	7	1	**164-1234**	1	PLATE	
	8	1	**164-1270**	33	FASTENER	
	9	1	**169-7380**	1	BOLT-SOCKET HEAD (3/8-16X0.375 IN)	
	10	1	**186-5107**	2	SCREW (NO 8 X 1.25 IN)	
	11	1	**192-7752**	4	SHAFT AS	
	12	1	**192-7755**	1	HOUSING AS	
	13	1	**192-7760**	1	SHAFT	
	14	1	**192-7767**	1	SCISSORS AS	
	15	1	**192-7783**	1	TOGGLE AS	
	16	1	**192-7787**	1	TOGGLE AS	
	17	1	**192-7790**	1	HOUSING AS	
	18	1	**192-7795**	1	BOOT	
	19	1	**192-7805**	1	HARNESS AS-VALVE (AIR COMPRESSOR) (SEAT)	
		1	**102-8802**	1	KIT-RECEPTACLE (2 PIN)	
					(INCLUDES RECEPTACLE AS & WEDGE)	
	20	1	**192-7810**	1	SPRING AS-AIR	
		1	**5P-4423**	1	ELBOW	
		1	**163-1135**	1	SPRING	
	21	1	**192-7812**	1	BOLT-SHOULDER	
	22	1	**192-7820**	3	BUMPER	
	23	1	**192-7822**	1	SHAFT	
	24	1	**192-7846**	1	COMPRESSOR AS	
	25	1	**1H-8296**	1	SCREW-MACHINE	
	26	1	**2K-4973**	8	LOCKNUT (3/8-16 THD)	
	27	1	**3J-4818**	1	LOCKWASHER	
M	28	1	**5C-2890**	3	NUT (M6X1 THD)	
	29	1	**8T-9371**	1	BOLT (3/8-16X0.5 IN)	
E	30	1	**211-5358**		CONDUIT (100CM)	
D	31	1	**5P-6010**		TUBE (1M)	
					AVAILABLE REPAIR KIT(S):	
			192-7799	1	KIT-AIR VALVE (SUSPENSION SEAT)	
					(INCLUDES KNOB AS)	
			192-7848	1	KIT-SHOCK ABSORBER (SUSPENSION SEAT)	
					INCLUDES LOCKNUT, LOCKWASHER, SHOCK ABSORBER, BEARING, WASHER, AND BOLTS	
			211-9294	1	KIT-TETHER (SUSPENSION SEAT)	

D-ORDER BY THE METER
E-ORDER BY THE CENTIMETER
M-METRIC PART

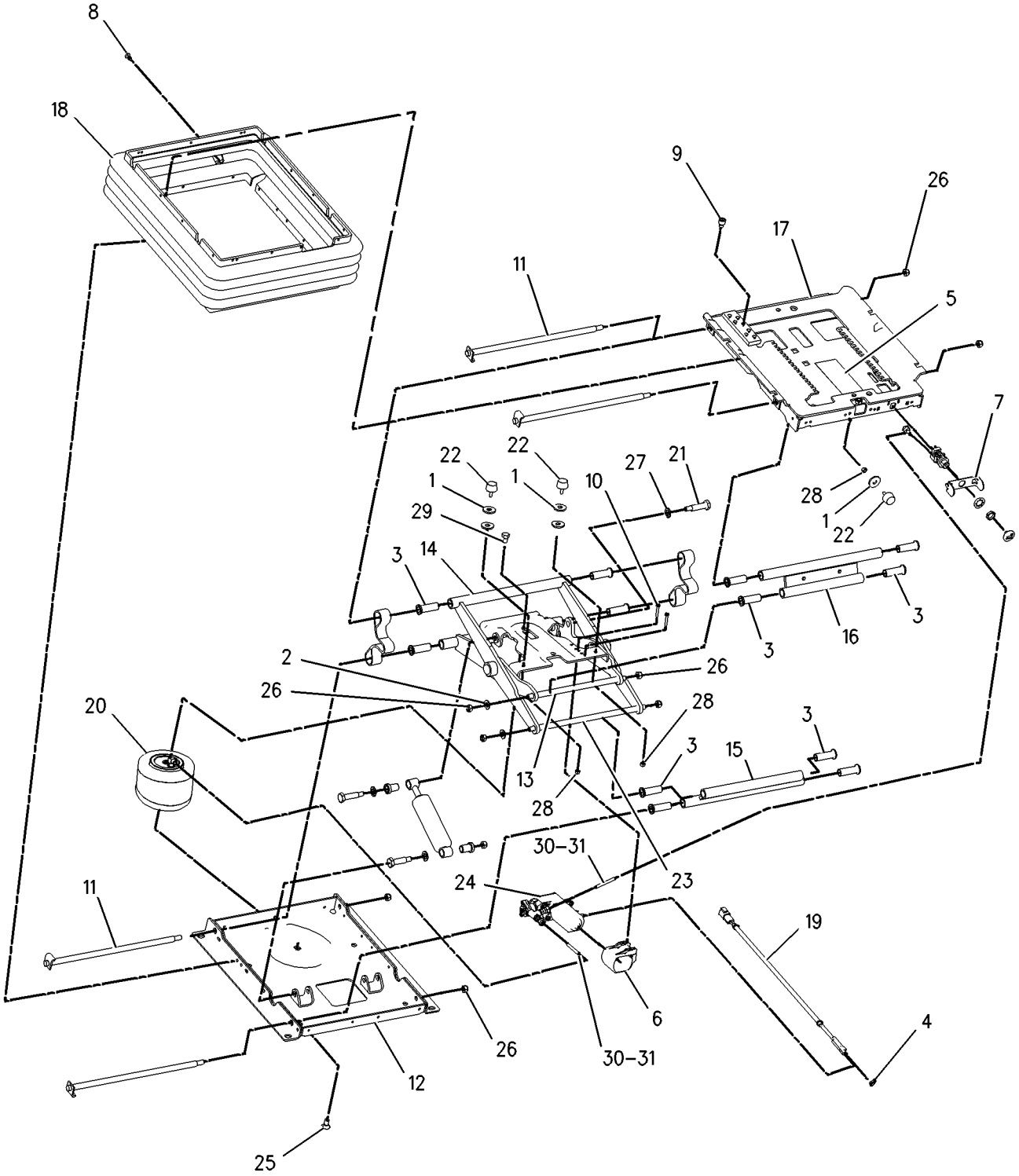

GRAPHIC #1 **<END>** g00913216

OPERATOR STATION

167-1455 TANK GP-WINDOW WASHER

S/N: CBJ1-UP

PART OF 156-9516 CAB AR

SMCS-7306 **i01828744**

NOTE	REF NO	GRAPHIC REF	PART NUMBER	QTY	PART NAME 1 2 3 4 5 6 (PRODUCT LEVEL)	SEE PAGE
	1	1	**3S-2093**	3	STRAP-CABLE	
	2	1	**110-1118**	1	HARNESS AS (WINDOW WASHER)	
		1	**8T-8737**	1	PLUG-SEAL	
		1	**9X-0194**	4	TERMINAL AS	
		1	**102-8805**	1	KIT-RECEPTACLE (6 PIN)	
					(INCLUDES RECEPTACLE AS & WEDGE)	
	3	1	**219-7737**	1	TANK AS-WASHER	
		1	**209-4482**	1	CAP (WINDOW WASHER TANK)	
	4	1	**219-7739**	1	BRACKET	
	5	1	**8M-2770**	1	CLIP	
	6	1	**8T-4121**	2	WASHER-HARD (11X21X2.5MM THK)	
M	7	1	**8T-4133**	2	NUT (M10X1.5 THD)	
BD	8	1	**6V-2496**		SEAL	

B-USE AS REQUIRED
D-ORDER BY THE METER
M-METRIC PART

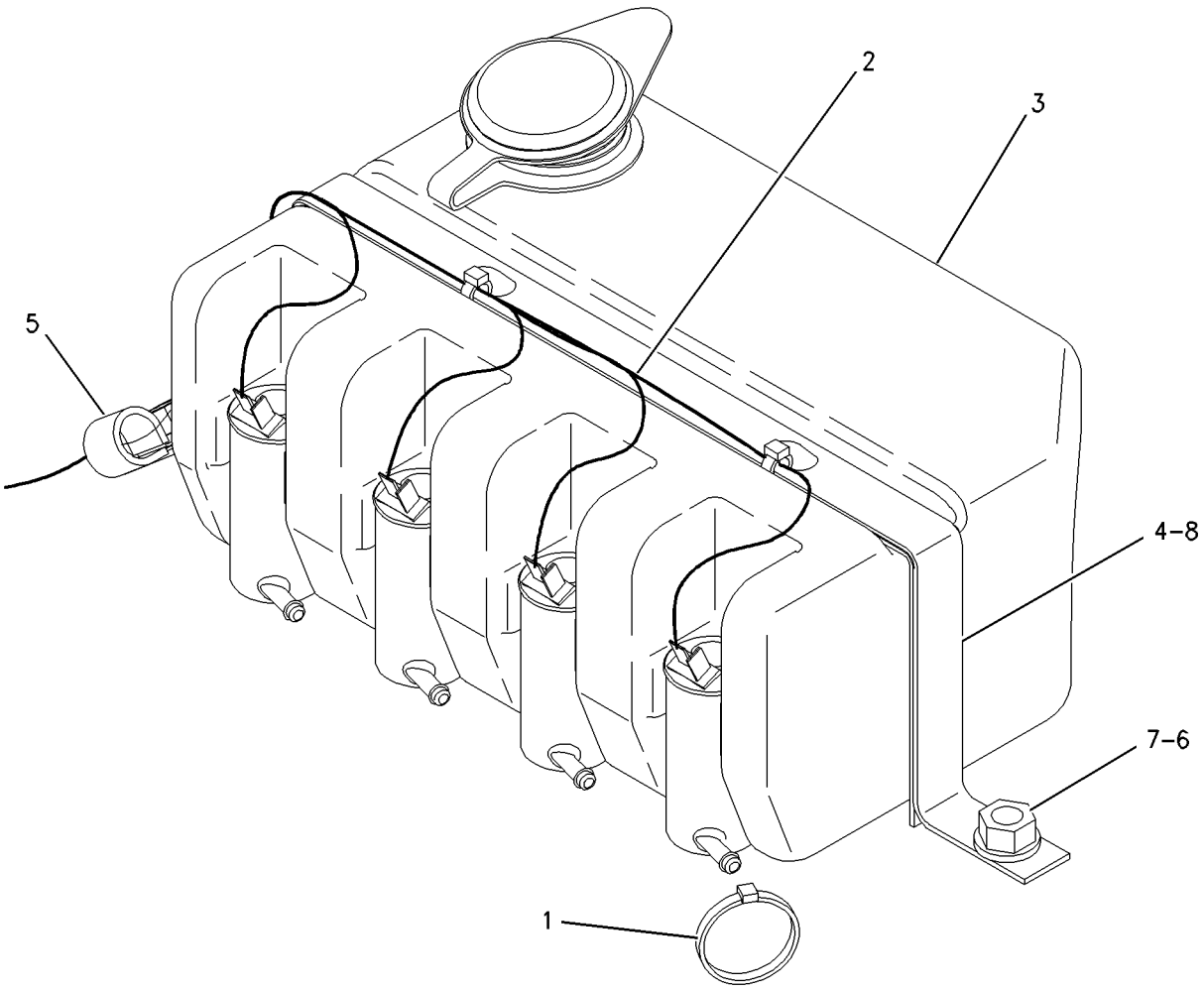

GRAPHIC #1 **<END>** g00911355

OPERATOR STATION

156-8916 WINDOW GP-CAB

S/N: CBJ1-UP

PART OF 156-8911 CAB GP

SMCS-7310 **i01828912**

NOTE	REF NO	GRAPHIC REF	PART NUMBER	QTY	PART NAME 1 2 3 4 5 6 (PRODUCT LEVEL)	SEE PAGE
Y	1	1	**166-2103**	1	WINDOW GP-CAB (LH SIDE)	508
Y	2	1	**166-2104**	1	WINDOW GP-CAB (RH SIDE)	509
	3	1	**170-2069**	1	GLASS (FRONT)	
	4	1	**170-2070**	1	GLASS (REAR)	

Y-SEPARATE ILLUSTRATION

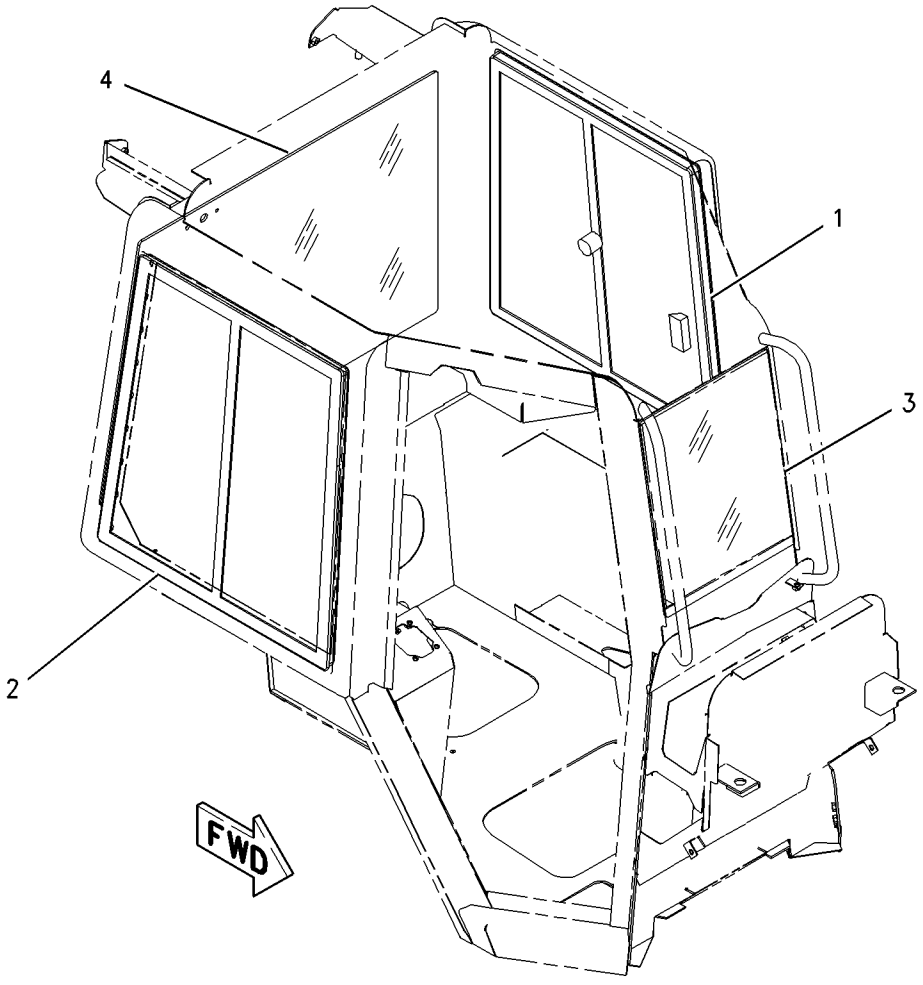

GRAPHIC #1 **<END>** g00911598

OPERATOR STATION

166-2103 WINDOW GP-CAB—LH

S/N: CBJ1-UP

PART OF 156-8916 WINDOW GP-CAB

SMCS-7310 **i01880200**

NOTE	REF NO	GRAPHIC REF	PART NUMBER	QTY	PART NAME 1 2 3 4 5 6 (PRODUCT LEVEL)	SEE PAGE
	1	1	**201-9820**	1	LATCH AS	
	2	1	**201-9821**	1	CATCH	
	3	1	**203-7738**	1	GLASS (FIXED)	
	4	1	**203-7740**	1	GLASS (SLIDING)	

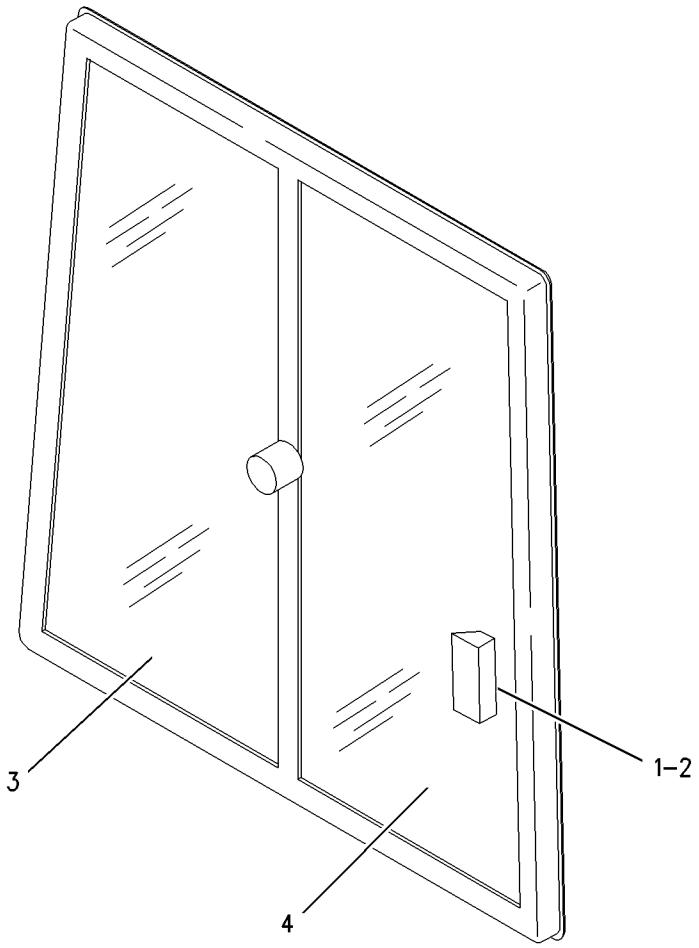

GRAPHIC #1 **<END>** g00914748

OPERATOR STATION

166-2104 WINDOW GP-CAB–RH

S/N: CBJ1-UP

PART OF 156-8916 WINDOW GP-CAB

SMCS-7310 **i01828933**

NOTE	REF NO	GRAPHIC REF	PART NUMBER	QTY	PART NAME 1 2 3 4 5 6 (PRODUCT LEVEL)	SEE PAGE
	1	1	**201-9820**	1	LATCH AS	
	2	1	**201-9821**	1	CATCH	
	3	1	**203-7741**	1	GLASS (FIXED)	
	4	1	**203-7742**	1	GLASS (SLIDING)	

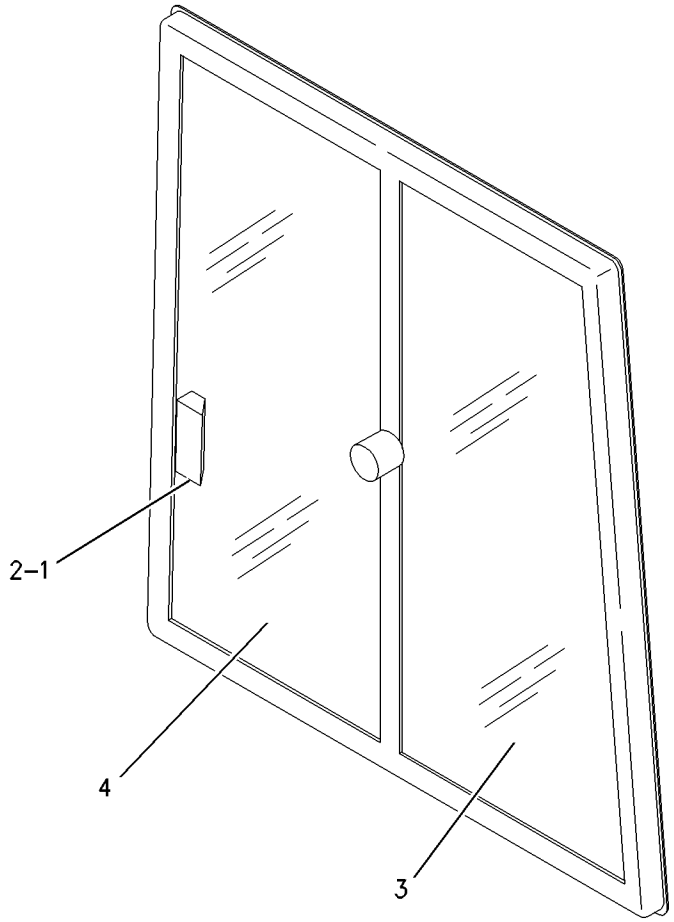

GRAPHIC #1 **<END>** g00914759

OPERATOR STATION

170-2086 WIPER GP-WINDOW

S/N: CBJ1-UP

PART OF 156-8911 CAB GP

SMCS-7305 **i01883833**

NOTE	REF NO	GRAPHIC REF	PART NUMBER	QTY	PART NAME 1 2 3 4 5 6 (PRODUCT LEVEL)	SEE PAGE
	1	1	**112-6174**	1	SWITCH AS-ROTARY (FRONT WINDOW WIPER)	
	2	1	**112-6174**	1	SWITCH AS-ROTARY (LEFT WINDOW WIPER)	
	3	1	**112-6174**	1	SWITCH AS-ROTARY (RIGHT WINDOW WIPER)	
	4	1	**112-6174**	1	SWITCH AS-ROTARY (REAR WINDOW WIPER)	
					(EACH SWITCH AS INCLUDES)	
		1	**7T-9302**	1	KNOB (WIPER) (WINDOW)	
		1	**2H-3920**	1	LOCKWASHER	
		1	**6V-8369**	1	NUT (7/16-28 THD)	
	5	1	**5C-8811**	1	BLADE AS-WIPER (REAR) (WINDOW)	
	6	1	**125-8175**	1	BLADE AS-WIPER (WINDSHIELD)	
	7	1	**127-6509**	1	ARM AS	
	8	1	**175-3759**	1	MOTOR AS (WIPER) (WINDOW FRONT)	
	9	1	**175-3760**	1	MOTOR AS-WINDOW WIPER (REAR)	
		1	**8T-8729**	4	PIN-CONNECTOR	
		1	**102-8804**	1	KIT-RECEPTACLE (4 PIN)	
					(INCLUDES RECEPTACLE AS & WEDGE)	
	10	1	**175-3761**	1	ARM AS	
	11	1	**193-0542**	1	PANEL	
	12	1	**8T-5400**	2	CONNECTOR	
	13	1	**7T-9302**	4	KNOB (WIPER) (WINDOW)	
E	14	1	**144-0195**		HOSE (25CM)	
E	15	1	**144-0195**		HOSE (10CM)	
E	16	1	**144-0195**		HOSE (55CM)	
E	17	1	**144-0195**		HOSE (40CM)	
	18	1	**216-5185**	1	FILM (WINDSHIELD WASHER/WIPER)	
M	19	1	**9X-2045**	6	SCREW-TRUSS HEAD (M6X1X20MM)	
	20	1	**9D-8508**	2	GROMMET	
	21	1	**3S-2093**	6	STRAP-CABLE	
	22	1	**4H-2558**	2	GROMMET	

E-ORDER BY THE CENTIMETER
M-METRIC PART

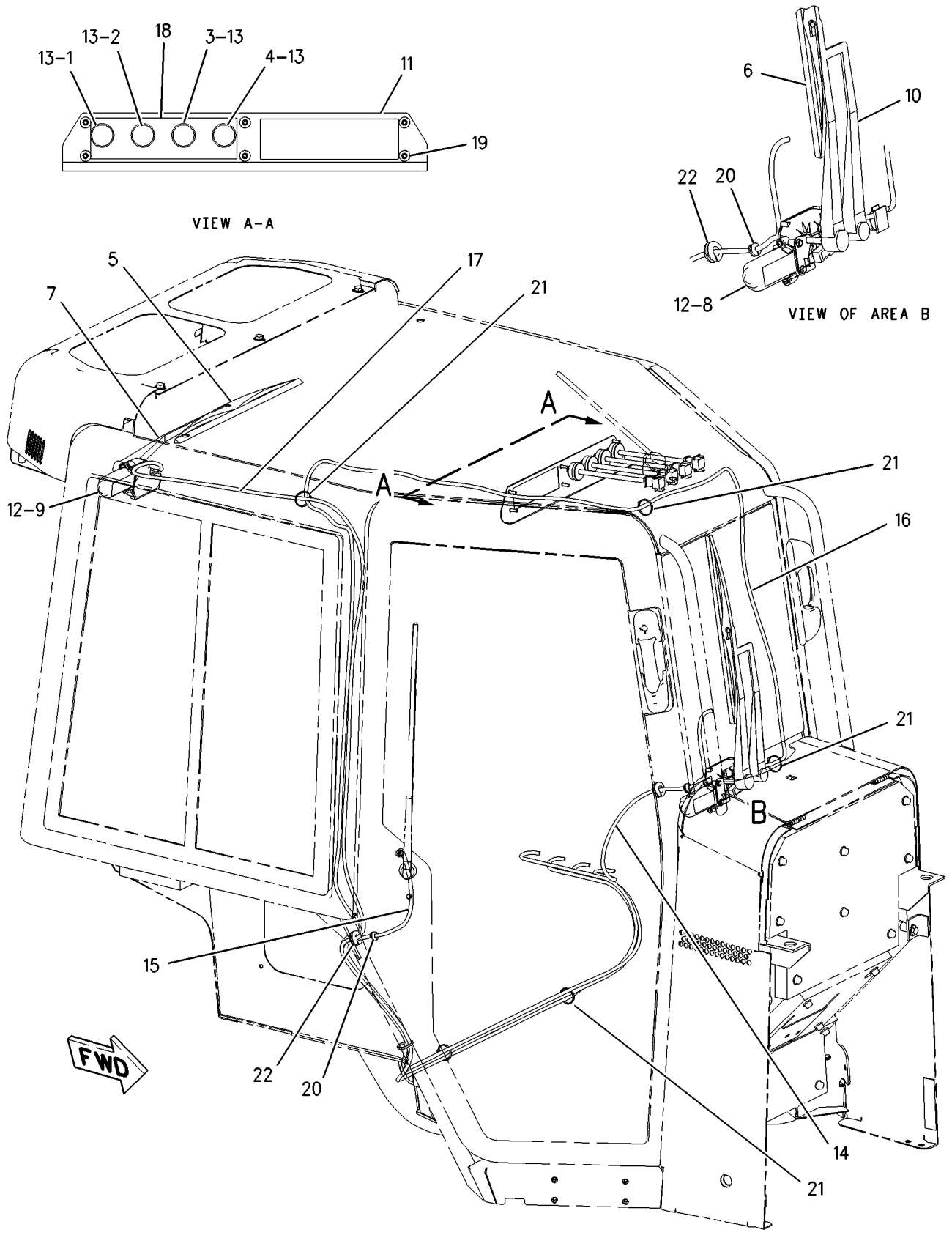

GRAPHIC #1 **<END>** g00928319

SERVICE EQUIPMENT AND SUPPLIES

173-1617 FILM GP

S/N: CBJ1-UP

PART OF 169-4548 PLATE & FILM GP

SMCS-7000 **i01829470**

NOTE	REF NO	GRAPHIC REF	PART NUMBER	QTY	PART NAME 1 2 3 4 5 6 (PRODUCT LEVEL)	SEE PAGE
	1	1	**205-4951**	1	FILM-STRIPE (D6N)(RH FRONT)	
	2	1	**220-1961**	1	FILM-STRIPE (D6N)(RH FRONT)	
	3	1	**205-4952**	1	FILM-STRIPE (D6N)(LH FRONT)	
	4	1	**220-1962**	1	FILM-STRIPE (D6N)(LH FRONT)	
	5	1	**224-3933**	1	FILM-STRIPE (D6N)(LH LOWER COWL)	
	6	1	**224-3937**	1	FILM-STRIPE (D6N)(RH LOWER COWL)	
	7	1	**205-4953**	1	FILM-STRIPE (D6N)(FRONT)	
	8	1	**206-0334**	1	FILM-STRIPE (D6N)(REAR)	
	9	1	**205-7095**	1	FILM-STRIPE (D6NXL)(LH REAR)	
	10	1	**205-7096**	1	FILM-STRIPE (D6N)(LH TRIANGLE)	
	11	1	**205-7097**	1	FILM-STRIPE (D6NXL)(RH REAR)	
	12	1	**205-7098**	1	FILM-STRIPE (D6N)(RH TRIANGLE)	
	13	1	**206-1559**	1	FILM-STRIPE (D6N)(LH REAR CORNER)	
	14	1	**224-2171**	1	FILM-STRIPE (D6N)(LH UPPER COWL)	
	15	1	**224-2172**	1	FILM-STRIPE (D6N)(RH UPPER COWL)	

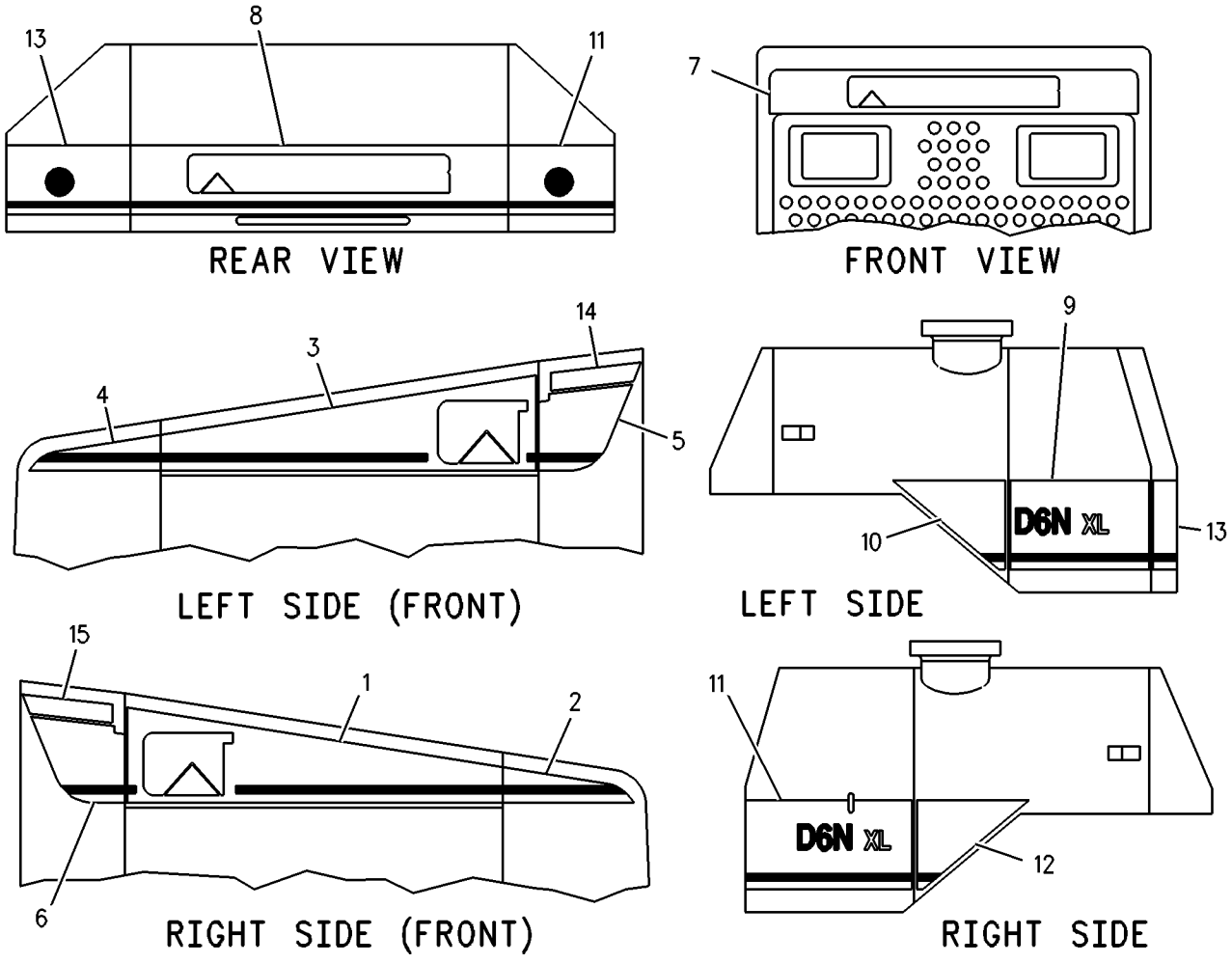

GRAPHIC #1 **<END>** g00942865

SERVICE EQUIPMENT AND SUPPLIES

5P-1101 PLATE & FILM GP

S/N: TPP1-UP
PART OF 180-4560 RIPPER AR
AN ATTACHMENT

SMCS-7557, 7563 **i01866640**

NOTE	PART NUMBER	QTY	PART NAME 1 2 3 4 5 6 (PRODUCT LEVEL)	SEE PAGE
	2Y-9790	1	PLATE-SERIAL NUMBER	
			(ON RH SIDE OF TOWER)	
	4B-4158	2	SCREW-DRIVE (3/16X0.25 IN)	

<END>

6V-5343 PLATE & FILM GP—BULLDOZER

S/N: B6X1-UP
PART OF 223-6303 BULLDOZER AR
AN ATTACHMENT

SMCS-7557, 7563 **i01831025**

NOTE	PART NUMBER	QTY	PART NAME 1 2 3 4 5 6 (PRODUCT LEVEL)	SEE PAGE
	2Y-9790	1	PLATE-SERIAL NUMBER	
			BACK OF MOLDBOARD - NEAR TOP AT RH END.	
	4B-4158	2	SCREW-DRIVE (3/16X0.25 IN)	

<END>

169-4548 PLATE & FILM GP

S/N: CBJ1-UP
PART OF 175-1157 POWER TRAIN AR

SMCS-7557, 7563 **i01829469**

NOTE	PART NUMBER	QTY	PART NAME 1 2 3 4 5 6 (PRODUCT LEVEL)	SEE PAGE
Y	*173-1617*	1	FILM GP	512
	4W-1413	1	PLATE-SERIAL NUMBER (ENGINE)	
			ON LH SIDE OF CYLNDER BLOCK TOWARD THE TOP AND REAR FLAT AREA THAT WOULD BE ABOVE & BEHIND THE ECM WHEN MOUNTED.	
	8T-9905	1	PLATE-IDENTIFICATION (TRANSMISSION OIL FILL TUBE)	
			LEFT SIDE ON THE CAP (VERTICL SHAFT, ON "T" HANDLE).	
	202-9824	1	PLATE-INFORMATION (BRAZIL)	
			CBL INFORMATION PLATE NEAR OF THE PIN PLATE.	
	9X-1878	1	PLATE (PRODUCT IDENTIFICATION)	
			PLATE ON LH REAR OF CASE.	
	9X-6199	1	PLATE-PRODUCT IDENT NUMBER (COMBINATION)	
			PLATE ON LH REAR OF CASE.	
	9F-6656	1	RING-RETAINING	
			LEFT SIDE ON THE CAP (VERTICL SHAFT, ON "T" HANDLE).	
	8T-9530	12	TACK-FASTENER	
			PLATE ON LH REAR OF CASE.	
	4P-6464	1	FILM-AIR CLEANER (RADIAL SEAL)	
			LEFT SIDE, ON AIR CLEANER END COVER ASSEMBLY.	
	223-4299	1	FILM (ALTERNATOR)	
			RH SIDE OF THE MACHINE, ON THE UPPER FLANGE OF THE ALTERNATOR GUARD	

169-4548 **PLATE & FILM GP** ***(contd.)*** **i01829469**

NOTE	PART NUMBER	QTY	PART NAME 1 2 3 4 5 6 (PRODUCT LEVEL)	SEE PAGE
	3E-8241	1	FILM-HYDRAULIC OIL	
			INSIDE RH HYDRAULIC OIL ACCESS DOOR BY FILLER SPOUT.	
	4P-8681	1	FILM-IDENTIFICATION (ENGINE OIL FILTER)	
			ON OIL FILTER.	
	211-0686	1	FILM (IGNITION SW)	
			ON BATTERY DISCONNECT SWITCH.	
	9X-6340	1	FILM-INSTRUCTION (ENGINE OIL)	
			ON OR NEAR ENGINE OIL FILL TUBE.	
	167-7270	2	FILM-INSTRUCTION (NO STEP)	
			ON THE BLADE ANGLE CYLINDERS, EACH SIDE	
	7X-3229	4	FILM-LIFT & TIE DOWN	
			W/O RIPPER - ON SIDE OF TRACK ROLLER FRAME BETWEEN FRONT IDLER & ROLLER & BETWEEN REAR IDLER & ROLLER. (2 EA SIDE)	
			W/ RIPPER - ON SIDE OF TRACK ROLLER FRAME BETWEEN FRONT IDLER & ROLLER & ON SIDE OF RIPPER FRAME BY REAR LIFT CYLINDER	
			PIN (2 EACH SIDE)	
	173-1619	1	FILM-NOTICE (SHIPPING)	
			ON RH SIDE BELOW TOP OF FENDER ON ANGLED VERTICAL SURFACE NEAR FRONT EDGE.	
	3E-8108	1	FILM-OIL LEVEL	
			LH INSIDE ACCESS AREA UNDER TRANS OIL LEVEL STICK.	
	232-3680	1	FILM-FUSE (IDENTIFICATION)	
			INSIDE LH REAR ENCLOSURE DOOR.	
	7X-7644	4	FILM (TIE DOWN)	
			BY FRONT TOWING EYE. AT REAR HITCH CLEVIS. (DRAWBAR OR WINCH ONLY)	
			W/O RIPPER - ON SIDE OF TRACK ROLLER FRAME, CENTERED BETWEEN FRONT & REAR IDLERS. (1 EA SIDE)	
			W/ RIPPER - ON SIDE OF TRACK ROLLER FRAME, CENTERED BETWEEN FRONT & REAR IDLERS & BETWEEN REAR ROLLER & IDLER.	
			(2 EACH SIDE)	
	3E-8112	1	FILM-WARNING	
			INSIDE LH BATTERY SERVICE DOOR.	
	130-3676	1	FILM-WARNING (UNIVERSAL)	
			INSIDE CAB, LH SIDE POST. POSITION THE FILM 230 MM FROM THE BOTTOM OF THE POST.	
	190-2938	1	FILM-WARNING (PRESSURIZED COOLANT)	
			UNDERNEATH THE DOOR TO THE RADIATOR FILL	

Y-SEPARATE ILLUSTRATION

<END>

PART NUMBER INDEX

Part	Page
0	
0A-2926	474
0S-0175	356
0S-0509	195
0S-1587	195
0S-1594	278
0S-1595	195
0S-1599	195
0S-1614	196
0T-0102	190
1	
1A-2223	235
1A-5350	195
1B-0676	315
	317
	319
1B-2578	317
1B-2693	499
1B-3978	193
1B-3980	193
1B-5174	270
1B-6182	411
1B-8704	315
	319
1B-8705	10
	15
	214
1B-8736	214
1D-4540	190
1D-4628	327
1F-0748	120
1F-0750	415
1F-7567	70
	72
	104
1H-3244	116
	118
	148
1H-3338	176
1H-6227	280
	281
	283
1H-8128	193
	273
1H-8171	103
1H-8296	504
1H-8720	278
1H-9696	193
1J-2175	321
1J-6472	219
	267
1J-9671	22
	29
	85
1K-6985	325
1K-7095	323
1L-5072	365
1L-5081	350
1L-6957	195
1M-1230	415
1M-3097	280
1M-4291	278
1M-6119	121
	180
	181
1M-6120	121
	180
	181
1M-8649	206
1M-8747	278
1N-5999	22
	27
	29
1P-0436	103
1P-1547	238
1P-1744	306
1P-2772	263
	265
	484
1P-3708	200
	360
1P-4576	327
1P-5763	360
1P-6356	447
1P-7363	372
	374
	376
	378
	380
	382
1R-0735	365
1R-0739	67
1R-0762	106
1S-0669	325
1S-0994	181
	183
	187
1S-1015	200
1S-1860	286
	287
	288
1S-2563	70
1S-3311	331
	392
1S-4915	181
1S-7251	168
	180
	181
1S-7252	168
	180
1S-8868	293
1S-8947	278
1S-9593	232
	313
1T-0034	221
1T-0043	219
1T-0234	219
1T-0720	195
1T-0738	311
1T-0933	221
1T-1621	219
1T-1639	221
1U-0063	393
1U-0159	393
1U-0183	402
1U-2533	396
1U-2744	372
	374
	378
	380
	382
1U-2827	365
1U-4049	331
1U-8846	11
	12
	42
	48
	57
	93
	112
	135
1V-3113	413
1V-6688	484
1W-2715	25
1W-6448	297
1W-8407	19
1Y-7927	444
2	
2A-3211	413
2A-3576	195
2A-4429	25
2B-0941	360
2B-2404	195
2B-2695	231
2D-0516	206
2D-4202	365
2D-6235	290
	444
2D-6642	43
	293
2D-8009	195
	214
2G-1133	187
2H-3920	510
2H-3922	171
	173
	308
2H-4145	325
2H-5549	321
2H-6338	278
2H-9247	331
2J-0564	327
2J-3506	404
	405
2J-6274	285
2J-6362	195
2J-7761	365
2J-8489	329
2K-0703	406
2K-2961	331
2K-4096	327
2K-4507	327
2K-4821	116
	118
2K-4973	317
2K-6830	321
2K-8467	302
	304
2K-9111	482
	499
2K-9183	308
2M-3340	193
2M-4453	84
2M-6471	18
2M-7041	231
2M-7819	444
2M-9780	18
	22
	27
	29
	48
	67
	85
	104
	206
	233
	340
	359
	360
	370
	372
	374
	376
	378
	380
	382
	457
2N-1287	195
2P-0347	278
2P-1294	41
2P-2537	67
2P-4339	466
2P-6470	336
2P-6471	336
2S-1382	229
2S-1384	229
2S-2053	68
2S-4078	193
	200
	227
	285
2S-5658	216
2S-5926	285
2V-1937	94
	413
2V-8259	419
2W-0027	49
2W-6225	199
2W-6544	12
2W-6546	11
2W-7213	18
2W-7381	31
2W-8147	15
2W-9162	65
2W-9499	14

► **PRIMARY REFERENCE**

PART NUMBER INDEX

Part	Page
2Y-5829	62
	72
2Y-7337	183
2Y-9790	388
	389
	513
3	
3A-8608	406
3A-8609	▶393
	398
3A-8612	406
3A-8613	393
3A-8614	393
3B-1915	195
3B-4501	171
3B-4604	239
3B-4609	259
	261
3B-4615	315
	317
	319
3B-4617	315
	317
	319
3B-4630	402
3B-5325	408
	409
3B-6487	474
3B-6552	336
	474
3B-8489	235
	267
	325
	336
	392
	400
	406
	474
	478
3D-2824	57
	85
	172
	199
	206
	233
	338
	342
	344
	346
	348
	353
	354
	359
	360
	372
	374
	378
	380
	382
3D-2975	444
3D-7943	306
3E-0109	466
	470
3E-0400	440
3E-1841	438
	442
3E-2310	106
3E-3213	39
3E-3365	112
	136
	143
	161
	162
	164
	171
	172
	174
	177
	183
	418
	422
	440
	466
	470
	484
3E-3368	150
	157
	158
3E-3371	140
	152
	153
	154
	155
	156
	163
	470
	471
3E-3383	310
	459
	477
3E-3389	470
	480
	481
3E-3535	453
3E-4052	447
3E-4058	447
3E-4319	336
3E-4320	249
3E-4352	68
	150
3E-5239	425
3E-5446	116
	118
3E-5447	116
	118
3E-5448	116
	118
3E-5450	116
	118
3E-5454	116
	118
3E-5455	116
	118
3E-5457	116
	118
3E-5458	116
	118
3E-5459	116
	118
3E-5460	116
	118
3E-5464	413
3E-6328	▶115
	187
3E-6389	▶140
	452
3E-6573	478
3E-6799	219
3E-7277	176
3E-7842	183
3E-7852	169
3E-7853	169
3E-7855	169
3E-7857	169
3E-7858	169
3E-7860	169
3E-7861	169
3E-7904	478
3E-8017	97
	101
3E-8020	474
3E-8108	514
3E-8112	514
3E-8241	514
3E-8822	147
3E-8825	147
3E-9412	61
3E-9864	263
	265
3E-9865	415
3F-0379	169
3F-6185	396
3G-0361	365
3G-1753	327
3G-1757	327
3G-3267	365
3G-4282	404
3G-6313	396
3G-6883	360
3G-6884	360
3G-7828	238
3G-8891	356
3G-8932	395
	400
3H-0240	431
3H-1461	213
	214
3H-5552	18
3H-8683	348
3H-8726	253
	255
	258
	261
3J-1877	200
3J-1907	22
	27
	29
	104
	181
	183
	192
	199
3J-4818	504
3J-7352	267
3J-7354	57
	104
	150
	200
	206
	267
	359
	362
	372
	374
	376
	378
	380
	382
	384
3J-9545	331
3J-9703	329
3K-0360	12
	22
	29
	32
	33
	50
	82
	85
	87
	92
	93
	104
	106
	181
	193
	199
	221
	293
	336
	457
3K-0835	466
	467
	470
	471
3K-1432	206
3K-3257	168
3K-6662	308
3K-7942	297
3K-8460	150
3K-8510	406
3L-1473	499

▶ **PRIMARY REFERENCE**

PART NUMBER INDEX

Part	Page
3N-3718	116
	118
3P-1156	71
3P-3441	205
3P-7019	206
3P-9900	504
3S-0004	214
	301
3S-2093	78
	94
	147
	148
	178
	183
	190
	311
	340
	415
	425
	440
	453
	457
	484
	506
	510
3S-6049	181
3S-6050	121
	181
3S-6162	329
3S-7023	323
3S-8109	205
	206
3S-8536	453
3S-8652	192
3S-8664	183
3T-0219	195
3T-0810	206
3T-0849	434
	436
	451
3T-3447	205
3T-3462	460
3T-4629	205
3T-6354	116
	118
3T-6469	221
3T-6471	221
3T-6769	206
3T-6795	205
3T-7584	206
3T-7641	263
	265
3T-8469	195
3T-8518	195
3T-8528	195
3T-8724	▶133
3T-8757	214
3T-9315	204
3T-9536	273
3T-9674	195
3T-9819	195
3T-9960	205
3V-0778	68
	183
3V-2431	108
3V-7689	239
3W-1493	315
	319
3W-1495	315
	319
3W-1615	315
3W-2025	270
3W-2369	285
3W-2412	293
3W-2647	242
	247
3W-4346	270
3W-4404	293
3W-6468	263
3W-6756	478
3W-9139	236
3Y-5405	352
4	
4B-1270	297
4B-2043	116
	118
4B-2047	116
	118
4B-3665	221
4B-4098	217
4B-4158	388
	389
	513
4B-4274	415
4B-4278	493
	499
4B-4280	493
4B-4281	493
	499
4B-5059	444
4B-7739	203
4B-9782	374
	378
	380
	382
4B-9783	293
4B-9784	293
4D-4431	321
4D-7388	200
	340
4D-7733	104
4D-7735	457
4D-7794	78
4D-9517	183
4D-9986	368
	369
	370
4F-0255	396
4F-2294	175
4F-4879	495
	496
4F-5695	20
4F-9653	108
4H-1225	104
4H-2558	419
	510
4J-0121	325
4J-0519	365
4J-0520	200
	360
4J-0522	200
4J-0805	356
	395
4J-1641	402
4J-3420	327
4J-3745	323
4J-4606	331
4J-5140	368
	369
	370
4J-5267	327
	350
	352
	368
	369
	370
4J-7533	227
	231
	311
4J-8251	365
4J-8252	365
4K-0367	365
4K-1388	206
	221
	372
	374
	378
	380
	382
	386
	387
4K-2039	227
4K-3004	406
4K-3128	327
4K-8302	104
4K-8603	205
4K-8864	121
	181
4K-9230	415
4K-9429	465
4K-9821	94
	474
4K-9822	94
	474
4L-3641	72
4L-6454	200
4L-9564	65
4M-1751	229
4M-1831	169
4M-5281	116
4M-5858	293
4M-5905	231
4M-5942	453
4M-6425	482
4M-8239	229
4N-2927	444
4N-8227	133
4P-5918	12
	111
4P-6464	513
4P-7428	183
	360
4P-7429	181
4P-7581	132
	136
	139
	145
	181
	183
	187
	296
	299
	308
	447
	467
	471
4P-8134	121
	132
	178
	181
	183
	186
	187
	200
	297
	308
	366
	447
	467
	471
4P-8182	67
4P-8681	514
4P-9942	89
4P-9943	89
4R-9999	56
4S-8002	354
4S-8537	205
4S-8538	293
4S-8541	219
4T-0231	356
	395
	400
4T-0521	365
4T-0732	396
4T-0780	396
4T-1481	402
4T-1504	402
4T-1520	396
4T-1563	352
4T-2723	368
	369
	370
4T-2731	368
	369
	370
4T-3521	352
4T-4216	370
4T-4513	374
	378
	380
	382
4T-4516	372
4T-4518	369
4T-4520	372
	374
	376

▶ **PRIMARY REFERENCE**

PART NUMBER INDEX

Part	Page
	378
	380
	382
4T-4521	372
	374
	376
	378
	380
	382
4T-4524	372
	374
	376
	378
	380
	382
4T-4528	372
	374
	376
	378
	380
	382
4T-4531	380
4T-4532	374
	378
	380
4T-4533	372
	376
4T-4534	372
	374
	376
	378
4T-4538	368
4T-5613	321
4T-6659	405
4T-7795	372
	374
	378
4T-7807	372
	374
	376
	378
	380
	382
4T-8695	329
4V-5091	239
4V-7850	411
4V-7855	411
4V-7857	411
4V-7859	411
4V-7860	411
4V-7865	411
4V-7872	499
4V-7873	499
4V-7874	499
4V-7875	499
4V-7876	499
4V-7877	499
4V-7881	411
4V-7884	499
	502
4V-7890	499
4V-7891	499
4V-7904	493
4V-7908	493
4V-8026	493
4V-8029	493
4V-8031	493
4V-8032	493
4V-8033	493
4V-8034	493
4V-8035	493
4V-8256	411
	412
	493
4V-8264	499
4V-8265	499
4V-8554	499
4V-8556	499
4V-8561	499
4V-8562	499
4V-8565	499
4V-8566	499
4V-8577	499
	502
	504
4V-8579	493
4V-8586	493
4V-8605	493
4V-8606	499
4V-8609	499
4V-8610	499
4W-0253	85
4W-1103	2
	3
	▶41
4W-1413	513
4W-2042	35
4W-2181	68
4W-2232	71
4W-3087	66
4W-4293	187
4W-7592	85
4Y-4905	390
4Y-9652	12
4Z-5788	370

5

Part	Page
5A-8375	278
5B-0841	195
5B-1866	62
5B-3180	231
5B-3254	478
5B-9318	372
	374
	376
	378
	380
	382
5C-2890	135
	148
	174
	176
	504
5C-7261	12
	13
	91
	121
	141
	142
	143
	181
	183
	289
	315
	317
	319
5C-8811	510
5C-9553	112
	148
	299
	425
	431
	461
5D-1026	87
	199
	438
	442
	455
	457
5D-1911	365
5D-4822	444
5D-7523	204
5D-9629	297
5F-3106	213
	360
5F-3144	327
5F-9144	453
5F-9757	78
5G-2247	274
	275
5G-6973	236
5G-8136	293
5H-3182	499
5H-4018	327
5H-6734	270
5I-8270	180
5I-8304	121
	180
5J-3864	206
5J-4773	404
	405
5J-5020	327
5J-8011	325
5J-8300	329
5K-0216	273
5K-1770	200
5K-2697	338
	353
	354
5K-5068	94
5K-7748	406
5K-8451	104
5K-9065	219
5K-9090	200
	359
	372
	374
	378
	380
	382
5K-9106	205
5K-9107	278
5K-9179	458
5K-9660	236
5L-4758	306
5L-7200	171
5M-2043	278
5M-2057	365
5M-2894	190
	195
	273
	278
	368
	369
	370
5M-3062	493
5M-3320	214
5M-9548	227
	229
5N-2840	340
5N-8359	340
5P-0537	14
	103
	195
	374
	378
	380
	382
	431
	461
5P-0695	181
5P-0747	121
	168
	180
5P-0761	121
	180
	181
5P-0767	87
	438
	442
	455
5P-1075	350
	413
	471
5P-1076	242
	263
	265
5P-1101	398
	▶513
5P-1404	104
	340
	360
5P-1442	104
	106
5P-1505	104
5P-1979	277
	399
5P-2230	95
5P-2424	120
5P-2566	493
5P-2675	103
5P-2948	91
	94
	474
5P-3108	365
5P-3131	206
5P-3620	192

▶ **PRIMARY REFERENCE**

PART NUMBER INDEX

Part	Page
5P-3928	447
5P-3929	453
5P-3930	206
5P-3944	453
5P-3948	453
5P-4115	415
	440
	461
5P-4116	145
	181
	289
	299
	308
	419
	425
	467
5P-4295	104
5P-4423	504
5P-4829	453
5P-4920	195
5P-4921	195
5P-4924	104
5P-4961	104
	106
5P-5623	422
	484
5P-5630	94
	474
5P-5639	438
	478
5P-5643	413
	438
5P-5649	90
5P-5673	425
5P-5677	136
	139
	418
	422
	476
	477
5P-5678	14
5P-5755	478
5P-5846	221
5P-5908	440
5P-5926	478
5P-5931	87
	90
5P-5952	419
5P-5992	413
5P-6010	504
5P-6029	188
5P-6414	219
5P-6874	458
	484
5P-6920	116
	118
5P-6944	181
5P-6994	455
	457
5P-7162	148
5P-7464	346
	350
5P-7465	346
	350
5P-7466	336
5P-7467	336
5P-7468	346
	360
5P-7469	346
	360
5P-7807	116
	118
5P-7814	150
5P-7957	465
	493
5P-7958	493
5P-8066	72
5P-8112	336
5P-8167	415
5P-8196	67
5P-8197	461
5P-8245	38
	39
	61
	66
	206
5P-8246	46
5P-8247	17
	46
	269
	282
	284
5P-8248	404
	405
5P-8249	327
5P-8347	82
	123
5P-8439	419
	484
5P-8441	415
5P-8445	444
5P-8907	310
5P-9085	181
	184
	415
5P-9186	206
5P-9209	315
	317
	319
5P-9262	384
5P-9806	203
	221
	293
5P-9891	270
5P-9909	87
5R-0939	348
5R-0940	348
5S-1057	365
5S-7001	229
5S-7349	169
5S-7379	493
5S-7383	482
5S-7816	227
5S-9062	35
5V-0564	204
5V-0770	444
5V-1474	499
5V-1483	499
5V-1496	490
	493
5V-1497	411
	502
5V-1498	493
5V-1499	493
5V-1719	493
5V-1839	499
5V-4846	499
5V-4855	499
5V-5262	497
5V-9221	87
	6
6A-3361	177
6B-2882	199
6B-6863	205
	269
6C-3431	449
6C-9149	245
	246
6D-0047	499
6D-1641	438
	453
6D-3479	267
6D-4244	360
6D-4246	181
	200
	453
6E-0358	374
	378
	382
	386
6E-0465	331
6E-0772	376
	▶386
6E-1410	325
6E-3268	384
6E-3269	384
6E-3272	384
6E-3273	384
6E-3274	384
6E-3275	384
6E-3276	384
6E-3569	323
6E-3570	323
6E-4952	370
	▶372
6E-4953	368
	369
	370
	▶374
6E-4954	369
	370
	▶376
6E-5083	334
	▶368
6E-5449	323
6E-5953	368
	▶378
6E-6527	384
6E-6528	384
6E-6536	384
6E-6537	384
6E-6538	384
6E-6539	384
6E-6540	384
6E-6549	47
6F-0253	466
	467
	470
	471
6F-0711	235
6F-7045	173
6H-3977	200
6H-7382	280
	281
	283
6I-1418	136
	139
	296
6I-2501	91
6I-2502	91
6I-4464	91
6I-8077	216
6I-8078	212
	▶216
6I-8488	206
6I-9420	402
6I-9461	402
6I-9462	402
6J-2419	190
	233
6J-2797	321
6J-5383	396
6K-3273	493
6K-3274	493
6K-3632	484
6K-6361	249
6K-8178	147
6K-8987	393
6K-9555	413
6L-1651	200
6L-5359	200
6L-7159	413
6M-5062	453
6P-2216	255
	258
	450
6P-2233	206
6P-3236	442
	466
6P-5560	81
6P-7742	206
6P-7743	206
6P-7772	205
6P-7773	205
6P-7968	205
6P-7983	205
6P-7985	205
6P-8269	112
6R-7943	362
6S-6251	253
	255
	258
	261
6S-6646	253
	255
	258
	261

▶ **PRIMARY REFERENCE**

PART NUMBER INDEX

Part	Page
	356
6T-0097	205
6T-0837	293
6T-3009	205
6T-5617	438
6T-6708	415
6T-7695	449
6T-7995	195
6T-7996	195
6T-9222	192
6V-0327	193
6V-0328	193
6V-0329	193
6V-0330	193
6V-0439	193
6V-0456	195
6V-0484	106
	333
6V-0834	205
6V-0835	205
6V-0852	206
	333
	340
	359
6V-0871	360
6V-0894	297
	308
6V-0937	216
6V-1230	104
6V-1249	350
6V-1584	493
6V-1586	205
6V-1649	205
6V-1668	415
	440
6V-1792	286
	287
	288
6V-1820	44
	219
	365
6V-1903	103
6V-2317	12
	13
	37
	67
	186
	289
6V-2404	195
6V-2496	440
	506
6V-2689	310
6V-3303	282
	284
6V-3320	415
6V-3531	277
6V-3532	246
6V-3538	11
	19
6V-3821	65
	93
6V-3918	42
	48
	85
	139
6V-3940	10
	11
	49
	71
	82
	150
6V-3965	206
	225
	229
	340
	360
6V-4248	47
	71
	72
6V-4249	36
6V-4292	199
6V-4356	453
6V-4357	453
6V-4365	190
	229
6V-4369	181
6V-4447	308
6V-4589	108
	314
6V-5048	22
	27
	29
	103
	150
6V-5049	72
	106
	108
	150
6V-5163	87
6V-5191	87
6V-5217	42
6V-5218	72
	186
6V-5219	108
6V-5223	82
6V-5343	388
	►513
6V-5686	488
6V-5696	61
	66
6V-5773	195
6V-5815	75
6V-5839	9
	24
	47
	71
	72
	75
	97
	168
	219
	229
	365
6V-5842	41
	47
6V-5843	36
	40
	217
	224
6V-6604	90
6V-6609	150
6V-6703	129
6V-6716	183
	419
6V-6717	438
	442
6V-7238	32
	87
	457
6V-7357	419
6V-7359	346
6V-7420	457
6V-7568	206
6V-7636	434
	436
6V-7646	490
6V-7673	219
6V-7687	336
	356
	393
6V-7723	364
6V-7728	14
	440
6V-7742	325
	329
6V-7744	315
	319
	365
	393
	406
6V-7978	148
6V-8004	35
6V-8076	104
6V-8118	295
6V-8128	219
6V-8133	329
6V-8149	66
6V-8185	434
	436
6V-8186	175
6V-8187	116
	118
	148
6V-8188	169
6V-8197	39
6V-8237	329
6V-8335	497
6V-8336	38
6V-8352	384
6V-8362	442
	466
6V-8369	510
6V-8370	171
	308
6V-8378	169
6V-8397	72
	106
	340
	359
6V-8398	336
	338
	350
	352
	354
6V-8400	200
	359
6V-8513	253
	256
	259
	261
6V-8556	348
	350
6V-8625	336
6V-8634	106
6V-8635	200
	359
6V-8636	72
	106
6V-8637	199
	338
	342
	348
	353
	354
6V-8639	336
6V-8642	108
	359
6V-8713	344
	346
	360
6V-8724	106
	340
6V-8791	342
6V-8837	186
6V-8928	418
6V-8942	350
6V-8981	338
	352
6V-8982	342
6V-8996	342
6V-9001	340
6V-9005	359
6V-9007	344
6V-9008	200
6V-9009	200
6V-9162	338
	342
	353
	354
6V-9167	329
6V-9168	340
6V-9169	338
	352
	353
	354
6V-9170	342
6V-9182	200
6V-9189	315
	319
6V-9200	359
6V-9632	186
	289
	297
	299
	317
	418
	434
	436
	440

► **PRIMARY REFERENCE**

PART NUMBER INDEX

Part	Page
6V-9633	365
6V-9672	187
6V-9746	199
	200
	338
	342
	344
	348
	353
	354
6V-9748	35
6V-9804	108
	123
6V-9832	348
6V-9836	360
6V-9839	342
6V-9843	72
6V-9850	359
6V-9851	338
6V-9872	359
6W-0590	499
6W-5233	499
6W-6005	180
6W-8281	499
6W-8502	493
	▶499
6W-8505	▶411
	499
6W-8506	411
6W-9744	▶493
	497
6Y-0306	205
6Y-0352	409
6Y-0359	408
6Y-0473	273
	274
	275
	280
	281
	283
6Y-0775	190
6Y-0859	193
6Y-1084	219
6Y-1087	219
6Y-1093	219
6Y-2043	278
6Y-3125	276
6Y-3149	219
6Y-3151	219
6Y-3159	219
6Y-3164	221
6Y-3167	219
6Y-3484	205
6Y-3908	▶278
	288
6Y-4365	229
6Y-4638	231
6Y-5010	214
	301
6Y-5352	205
6Y-5692	293
6Y-8473	199
	▶229

7

Part	Page
7B-0863	238
7B-2742	103
7B-3028	270
7B-3039	365
7B-7515	206
7C-0111	49
7C-0752	95
7C-1160	76
7C-1445	13
7C-1493	67
7C-1675	46
7C-1770	2
	3
	▶57
7C-2642	183
7C-4354	350
	360
7C-4532	2
	3
	▶32
7C-4566	2
	3
	▶33
7C-6670	102
7C-6672	102
7C-6976	49
7C-6977	49
7C-7431	97
	101
7C-7980	15
7C-8369	35
7C-8370	35
7C-8634	35
7E-0759	82
7E-2968	17
7E-2985	103
7E-3870	95
7E-5346	103
7E-6794	43
7E-7589	56
7E-7754	89
7E-7779	25
7E-9817	67
7F-3713	315
	319
7F-6935	217
7F-7621	116
	118
7F-8267	84
	280
	281
	283
7F-9223	295
7F-9543	238
7G-0437	205
7G-0942	415
7G-3496	221
7G-3707	205
7G-3708	205
7G-3710	206
7G-3832	336
7G-3833	336
	346
7G-3834	336
	346
7G-4302	205
7G-4306	205
7G-4311	205
7G-4332	280
	281
	283
7G-4823	461
7G-4824	431
	461
7G-5186	87
7G-5614	206
7G-5674	205
7G-5675	205
7G-5730	205
7G-6945	206
7G-8116	478
7G-8121	205
7G-9224	205
7G-9968	293
7H-1447	365
7H-3607	216
7H-4571	278
7H-4574	278
7I-2272	187
7J-0204	22
	27
	29
	184
	227
	366
	372
	374
	376
	378
	380
	382
7J-1309	331
	392
7J-1333	270
7J-5131	402
7J-8955	329
7J-8956	329
7J-9108	108
	338
	342
	344
	346
	353
	354
7J-9682	406
7K-1181	87
	121
	128
	136
	139
	145
	148
	180
	183
	187
	308
	366
	418
	434
	436
	447
	466
	470
7K-3176	447
7K-6536	493
7K-9205	267
7L-2894	169
7M-0475	204
7M-1201	387
7M-2275	329
7M-3361	353
	354
7M-7219	444
7M-8485	200
	227
	231
	359
	360
7M-8592	229
7M-9918	102
7N-0718	▶173
	180
7N-5274	121
	180
7N-5683	19
7N-5876	466
	470
7N-9023	116
	118
7N-9943	140
7P-6596	267
7P-6682	180
7P-9131	112
7S-4244	104
7S-4346	413
7S-4534	206
7S-5757	315
7T-0020	140
7T-0786	461
7T-1099	148
	239
	249
	297
	358
	415
	440
7T-3451	169
7T-3454	169
7T-4515	232
7T-4532	423
7T-6931	352
7T-6934	352
7T-8858	195
7T-8859	195
7T-8894	455
7T-8895	453
7T-9302	510
7T-9356	195
7T-9357	195
7T-9515	171
7T-9793	453

▶ **PRIMARY REFERENCE**

PART NUMBER INDEX

Part	Page
7V-3728	493
7V-5190	499
7V-5191	444
7W-3447	180
7W-3871	12
7W-3872	12
	120
7W-5340	71
7W-6492	82
7W-9415	49
7W-9737	74
7W-9738	74
7W-9740	74
7W-9930	74
7X-0338	120
7X-0458	87
7X-0513	242
7X-0515	245
	246
7X-0550	252
7X-0562	169
7X-0575	121
	181
7X-0583	488
7X-0587	267
7X-0605	252
7X-0608	412
7X-0620	489
7X-0818	78
	296
7X-1950	169
7X-2441	72
7X-2454	463
7X-2465	390
7X-2475	399
7X-2488	461
7X-2532	276
	396
7X-2537	233
7X-2538	424
7X-2540	184
7X-2541	311
7X-2543	187
	301
	406
7X-2546	227
7X-2549	265
7X-2553	245
	246
	249
	263
	265
7X-2554	249
7X-2555	112
7X-2562	390
	400
7X-2563	193
7X-2565	238
7X-2566	396
	461
7X-2576	277
7X-2577	247
7X-3229	514
7X-3347	41
7X-3373	169
7X-6035	186
7X-6222	128
7X-6315	124
	129
7X-7465	470
7X-7608	205
7X-7644	514
7X-7662	315
7X-7700	112
7X-7702	453
	457
7X-7729	78
	80
	81
	87
	89
	90
	99
	104
	239
	253
	256
	259
	261
	289
	342
	414
	419
	429
	431
	434
	436
	438
	442
	453
	457
	461
	478
	497
	498
7X-7739	338
7X-7816	221
7X-7888	297
7X-7915	315
	319
7Y-1858	336
7Y-2854	253
	256
	259
	261
7Y-8171	239
	8
8A-8563	72
8B-8679	350
8C-0563	20
8C-3088	374
	378
8C-3091	11
8C-3101	227
8C-3174	346
8C-3205	200
	352
8C-3206	200
	227
	360
8C-3210	461
8C-3442	451
8C-3445	72
8C-3446	200
8C-3447	199
8C-3451	358
8C-3681	87
8C-3756	415
	425
8C-4586	440
8C-5218	329
8C-5607	418
	484
8C-5608	418
	484
8C-5682	453
8C-5917	121
	180
8C-6561	103
8C-6712	199
8C-7584	155
8C-8451	419
	484
8C-8478	396
	460
8C-8729	193
8C-8837	249
8C-8843	263
	265
	484
8C-8992	235
8C-9126	329
8C-9160	321
8D-0071	195
8D-4771	193
8D-5096	206
8E-1212	270
8E-1370	315
8E-1484	205
8E-1666	206
8E-2887	396
8E-3075	193
8E-4092	285
8E-5192	402
8E-5194	402
8E-5247	219
8E-5701	396
8E-5703	325
	329
	396
8E-5962	461
8E-6539	219
8E-6647	219
8E-6648	219
8E-7791	431
8E-7840	471
8E-8115	205
8E-8117	205
8E-8118	205
8E-8297	206
8E-8299	206
8E-8706	419
	▶458
8E-8789	267
8E-9378	404
	405
8E-9379	404
	405
8E-9380	400
	▶404
8E-9502	400
8E-9642	274
	275
8F-0212	374
	378
	380
	382
8F-1434	116
	118
	169
8F-7702	289
8F-9206	365
8G-0320	236
8G-2192	293
8G-2194	293
8G-2943	277
8G-3102	285
8G-3202	270
8G-4107	277
8G-4189	267
8G-4190	267
8G-4386	236
8G-4510	293
8G-4565	193
8G-4566	193
8G-4568	193
8G-4569	193
8G-4659	315
	319
8G-4945	285
8G-4960	285
8G-5247	236
8G-5258	487
8G-5428	356
8G-5501	356
8G-5502	356
8G-5551	199
8G-5623	239
	248
8G-5654	199
8G-5747	390
	400
8G-5799	277
8G-6683	235
8G-6684	235
8G-7085	238
8G-8316	267
8G-8589	199
8G-9560	199
8H-0707	372
	376
	382
8H-2262	278
8H-5244	62
8H-5303	173
8H-5306	173
8H-8898	402

▶ **PRIMARY REFERENCE**

PART NUMBER INDEX

Part	Page	Part	Page	Part	Page	Part	Page
8H-9818	203	8P-9770	390	8T-1718	342	8T-3597	89
8H-9819	203		396	8T-1810	338		247
8J-2189	406		400		353		484
	▶408		402		354		487
8J-2190	408		406	8T-1887	342	8T-3612	145
	409	8R-1876	499		344		183
8J-2880	329	8R-1877	499	8T-1888	342		249
	396	8R-1878	499		344		259
8J-6020	325	8R-1883	499	8T-1905	340		289
8J-6245	325	8R-1884	499	8T-2223	293		297
8J-6913	365	8R-2094	493	8T-2225	181	8T-3647	311
8J-8322	365	8S-0023	360	8T-2275	365	8T-3666	31
8J-8436	365	8S-0024	360	8T-2353	104	8T-4121	31
8J-8443	365	8S-0527	205		200		44
8J-8468	365	8S-0934	497	8T-2360	372		68
8J-8782	365	8S-3020	121		374		78
8J-8783	365		180		376		80
8J-8905	400		181		378		81
8K-0589	270	8S-3426	205		380		87
8K-1433	419	8S-4710	374		382		89
8L-2746	314		378	8T-2361	372		90
8L-5832	95		380		374		91
8L-6557	195	8S-7803	444		376		95
8L-8413	180	8S-8158	188		378		98
	181	8S-9129	199		380		104
	444	8S-9130	199		382		106
	504	8S-9191	190	8T-2396	110		121
8M-2537	227	8T-0070	325	8T-2561	145		128
8M-2538	229	8T-0100	13	8T-2658	289		145
8M-2770	184		37	8T-2659	470		147
	338		61		489		168
	447	8T-0119	199	8T-2910	239		181
	506	8T-0120	360	8T-3282	24		184
8M-2771	297	8T-0154	34	8T-3298	365		187
8M-4409	229	8T-0192	317	8T-3490	47		193
8M-4432	190	8T-0226	46		78		200
8M-4433	293	8T-0248	338		80		213
8M-4438	293	8T-0267	297		81		221
	301	8T-0276	67		87		227
8M-4445	76		72		89		229
8M-4986	229	8T-0282	269		95		236
8M-4988	200	8T-0328	116		121		239
8M-5249	200		118		145		243
8M-5254	200		169		147		245
	204		187		236		246
	206		297		239		253
	301		308		249		256
8M-5860	20		490		253		259
8M-6393	192	8T-0337	471		255		261
8M-8489	214	8T-0355	214		258		265
	317	8T-0358	46		261		267
8N-0869	181	8T-0375	285		263		270
8N-1725	181	8T-0389	121		289		285
8N-2694	94		181		297		290
	474	8T-0404	360		340		293
8N-5083	321	8T-0639	128		350		296
8P-0058	206	8T-0643	229		358		297
8P-1916	206	8T-0644	9		429		308
8P-5141	440		84		434		315
8P-5244	263	8T-1159	108		436		317
	265	8T-1172	289		440		319
	484	8T-1482	390		455		338
8P-6188	278	8T-1593	359		474		340
8P-6652	281	8T-1605	329		484		342
8P-8950	206	8T-1715	457		488		344

▶ **PRIMARY REFERENCE**

PART NUMBER INDEX

Part	Page
	346
	348
	350
	352
	353
	354
	358
	360
	388
	389
	419
	425
	429
	431
	436
	438
	447
	451
	453
	455
	461
	474
	484
	488
	506
8T-4122	263
	265
	399
8T-4123	45
	193
	235
	238
	276
	390
	393
	396
	460
	461
8T-4127	452
8T-4130	239
8T-4131	276
	396
8T-4132	249
8T-4133	47
	68
	100
	104
	106
	121
	181
	184
	187
	200
	203
	239
	259
	261
	290
	315
	319
	338
	340
	342
	348
	360
8T-4136	68
	78
	80
	81
	87
	90
	91
	95
	98
	99
	104
	184
	190
	193
	195
	200
	203
	206
	229
	236
	239
	243
	245
	246
	259
	261
	270
	290
	296
	308
	338
	340
	342
	346
	348
	358
	360
	425
	429
	451
	453
	460
	474
	478
8T-4137	87
	104
	121
	128
	147
	181
	184
	187
	200
	253
	256
	259
	261
	267
	296
	297
	315
	319
	340
	342
	344
	388
	389
	419
	425
	429
	431
	434
	436
	438
	442
	453
	455
	457
	461
	474
	484
	498
8T-4138	181
	297
	434
	436
8T-4139	111
	112
	239
	270
	336
	346
	350
	352
	356
	390
	406
	484
	487
8T-4140	238
	249
	251
	252
8T-4141	193
8T-4161	484
8T-4167	463
8T-4171	148
	440
	467
	471
8T-4172	200
8T-4177	184
	311
8T-4179	181
8T-4182	31
	145
	147
	203
	213
	285
8T-4183	200
	247
	336
	356
	360
8T-4184	200
	204
	360
8T-4185	100
	203
	253
	256
	259
	261
	431
	460
	461
8T-4186	81
	89
	104
	315
	319
	348
	358
8T-4189	181
	184
	290
	308
	419
	429
	467
	471
8T-4190	267
8T-4191	78
	168
	181
	187
	315
	413
8T-4192	184
	270
	336
	352
	399
8T-4193	193
	242
	244
	277
8T-4194	87
	204
	239
	242
	252
	484
8T-4195	78
	80
	81
	89
	90
	91
	95
	145
	147
	203
	213
	285
	200
	213
	221
	239
	243
	253

► **PRIMARY REFERENCE**

PART NUMBER INDEX

Part	Page	Part	Page	Part	Page	Part	Page
	256		239		145		142
	259		263		290		143
	261		270		308	8T-7038	463
	265		336		340	8T-7044	97
	290		350		425	8T-7338	246
	293		352	8T-4910	221		267
	308		356		360		276
	315		360	8T-4956	200	8T-7525	362
	317		390		240	8T-7529	200
	319		395		242		360
	360		399		252	8T-7532	270
	419		400		263	8T-7547	111
	434		406		360		233
	436		434		395		315
	447		484		400		319
	453		487	8T-4958	323	8T-7566	464
	488	8T-4224	13		325	8T-7567	331
8T-4196	193		37	8T-4984	87	8T-7927	359
	200		78		95	8T-7929	406
	206		91		359	8T-7934	184
	227		104	8T-4986	95		290
	315		111	8T-5004	295	8T-7950	24
	319		120	8T-5005	200	8T-8442	61
	338		136		206		362
	350		141	8T-5041	263		384
	352		142		390	8T-8569	169
	353		143	8T-5071	270	8T-8729	140
	354		145	8T-5400	434		144
	360		184		436		153
	414		233		510		162
	442		290	8T-5410	289		163
	453		296	8T-5412	393		164
	488		299	8T-5413	239		177
8T-4198	393		315		258		183
	419		319		261		295
	484		340		340		310
8T-4199	308		424	8T-5439	396		313
	474		429	8T-5668	327		418
8T-4200	184		474		331		436
	299		482	8T-5878	483		459
8T-4205	112	8T-4226	181		484		477
	116	8T-4244	204	8T-6381	45		481
	118		239		396		510
	148		315	8T-6430	235	8T-8730	128
	169		317		245		175
	289		319		393	8T-8737	128
	425		336	8T-6431	315		139
	440		346		319		148
	467		406	8T-6466	200		150
	471		418		213		180
	490	8T-4648	406		358		183
8T-4220	484	8T-4766	315		360		187
8T-4222	429		319		447		313
	460	8T-4778	238	8T-6663	359		415
	474		252	8T-6685	227		440
8T-4223	104	8T-4779	488	8T-6699	308		471
	112	8T-4896	200	8T-6703	87		476
	120		293		199		477
	181		327	8T-6724	104		480
	184		415	8T-6762	203		481
	193	8T-4908	53	8T-6767	82		506
	200		54	8T-6869	184	8T-8827	183
	204		78	8T-6907	104	8T-8874	147
	227		104	8T-6912	136	8T-8886	155
	235		120		141	8T-8899	348

► **PRIMARY REFERENCE**

PART NUMBER INDEX

Part	Page
8T-8911	103
8T-8917	120
8T-8919	120
8T-9006	289
8T-9082	490
8T-9085	214
8T-9358	340
8T-9367	118
	289
8T-9368	290
8T-9371	504
8T-9377	350
8T-9389	365
8T-9471	187
8T-9530	270
	513
8T-9655	123
	139
	296
8T-9757	121
	180
8T-9834	466
8T-9884	169
8T-9905	513
8V-4881	411
8Y-0709	249
8Y-1387	249
8Y-4002	493
8Y-4030	497
8Y-4206	493
8Y-5737	438
	442
8Y-5944	502
8Y-5945	444
8Y-5965	502
8Y-6012	502
8Y-6014	502
8Y-6024	502
8Y-6041	444
8Y-6045	444
8Y-6046	444
8Y-6047	444
8Y-6060	444
8Y-6062	444
8Y-6063	444
8Y-6064	444
8Y-6066	444
8Y-6067	444
8Y-6068	444
8Y-6069	444
8Y-6277	490
8Y-6391	442
8Y-6859	444
8Y-6860	444
8Y-6957	499
8Y-9603	168

9

Part	Page
9B-2289	281
	283
9B-2923	418
9B-7233	116
	118
9B-7237	327
9C-0245	359
9C-2177	499
9D-3768	434
	436
9D-8508	434
	436
	510
9F-1399	221
9F-3721	365
9F-5644	173
9F-6656	513
9F-8218	68
9G-0002	180
9G-0003	121
9G-0004	121
9G-0005	180
9G-1233	205
9G-1234	206
9G-1488	205
9G-1950	415
	440
9G-3695	434
9G-4876	193
9G-7101	359
9G-8615	206
9H-5604	206
9H-6454	365
9J-0461	221
9J-2759	399
9J-2914	365
9J-3047	365
9J-3139	408
9J-5284	270
9J-7031	365
9J-7964	325
9J-8923	409
9J-8926	▶409
	410
9J-9598	406
9L-5125	267
9L-6378	103
9L-6770	116
	118
9L-9068	311
9L-9188	67
9M-1503	205
9M-1974	11
	12
	42
	48
	61
	67
	71
	72
	82
	85
	93
	103
	108
	123
	186
	190
	231
9M-2904	68
	350
9M-4218	200
9M-4313	227
9M-5733	431
9M-6803	482
9M-7394	365
9M-8406	104
	338
	342
9M-9130	353
9M-9162	447
9M-9812	187
9N-0869	65
	123
	136
	139
	296
9N-1756	226
9N-1995	461
9N-4449	393
9N-4450	393
9N-5253	134
9P-1360	273
9P-3066	112
9P-5558	205
9P-7121	112
9P-8899	270
9P-9150	311
9P-9388	458
9R-2640	390
9R-2672	236
	249
	255
	261
9R-2821	342
9R-3572	390
	402
9S-0201	493
9S-1240	120
9S-1310	453
9S-1350	360
9S-3581	278
9S-3582	278
9S-4167	103
	106
9S-4182	41
	205
9S-4183	41
	206
9S-4185	193
	221
9S-4188	206
	221
9S-4190	206
	233
9S-4191	29
	106
	150
	192
	206
	214
	226
	227
9S-5183	233
	263
	265
9S-5187	263
	265
	484
9S-8001	227
	231
9S-8002	22
	27
	29
	103
	362
	384
9S-8003	22
	29
	85
9S-8004	22
	27
	29
	108
	227
	368
	369
	370
9S-8005	22
	29
	50
	82
	85
	92
	93
	293
9S-8006	18
	22
	27
	29
	48
	85
	370
	372
	374
	376
	378
	380
	382
9S-8007	227
9S-8008	85
	233
9S-8010	285
9S-8752	368
	369
	370
9S-9334	20
	22
	27
	29
9T-0094	329
9T-0657	387
9T-0704	374
	378
9T-0874	376
9T-2714	327
9T-2715	327
9T-2716	▶327

▶ **PRIMARY REFERENCE**

PART NUMBER INDEX

Part	Page
	398
9T-3264	365
9T-3729	372
	374
	376
	378
9T-4518	380
	382
9T-5900	406
9T-6001	236
9T-6302	331
9T-6694	387
9T-6695	368
	369
	370
	▶387
9T-6863	327
9T-7045	321
9T-7512	365
9U-8057	405
9U-8069	227
9U-8079	402
	▶405
9U-8263	449
9U-8506	402
9U-8909	399
9U-9088	352
9U-9522	195
9U-9523	195
9V-3043	499
9V-6754	499
9V-7943	499
9W-0099	406
9W-0844	415
	440
9W-0852	415
	440
	466
	470
9W-1441	148
9W-1442	148
9W-1446	148
9W-3013	195
9W-3714	214
9W-6381	402
9W-6582	45
9W-6584	45
9W-7216	280
	281
	283
9W-9165	396
9W-9930	45
9W-9996	356
9X-0194	187
	506
9X-0199	171
	308
9X-0261	106
9X-0262	150
9X-1054	425
9X-1386	161
9X-1484	114
9X-1813	136
	139
	156
	157
	158
	162
	163
	172
	174
	176
	177
	418
	422
	484
9X-1878	513
9X-2027	217
	224
9X-2040	419
	429
	434
	436
	461
	474
	478
9X-2041	317
	460
9X-2042	317
	467
	471
9X-2043	299
9X-2044	188
	296
	429
	452
	455
	474
9X-2045	422
	431
	433
	434
	436
	489
	510
9X-2092	493
9X-2098	37
9X-2125	497
9X-2185	442
9X-2205	112
9X-2305	74
9X-2546	295
9X-2646	95
9X-2647	95
9X-3294	▶134
9X-3401	171
9X-3404	181
9X-3463	141
	142
	143
9X-4244	141
	142
	143
9X-4271	169
9X-4580	270
9X-4609	200
9X-4821	169
9X-4824	169
9X-4825	169
9X-5699	121
	181
9X-6165	419
	484
9X-6199	513
9X-6340	514
9X-6615	297
9X-6772	289
	295
	297
	299
	442
9X-6932	183
9X-7202	232
9X-7269	323
9X-7345	188
9X-7378	423
	447
9X-7381	453
9X-7382	453
9X-7383	447
	453
9X-7384	447
9X-7385	423
	447
9X-7411	193
9X-7557	58
9X-7680	362
	384
9X-7712	20
	22
	27
	29
9X-7719	221
9X-8250	453
	455
9X-8256	181
	186
	297
	299
	302
	304
	451
	455
9X-8257	112
	193
	244
	249
	252
	267
	276
	277
	315
	317
	319
9X-8268	285
	488
9X-8399	325
9X-8600	112
9X-8902	297
	310
9X-8916	17
9X-8918	444
9X-8979	362
9Y-8315	99
	461

0

Part	Page
003-9835	186
009-3215	104
011-5224	82
012-0380	176
013-8289	411
027-3924	500
030-7571	493
030-9612	116
	118
031-0214	372
	374
	376
	378
	380
	382
	482
031-1119	89
031-2716	150
031-5085	372
	376
032-1267	195
032-1268	195
033-6032	232
033-6043	384
034-3679	199
035-3360	206
036-9823	169
037-4426	438
	442
037-4838	415
	440
052-0572	195
053-2294	273
061-9455	13
064-3843	219
083-9527	466
	470
085-7356	106
089-8249	390
	400
095-0843	490
095-0878	444
095-0913	181
	187
095-0916	308
095-1207	227
096-4885	249
096-5866	183
096-7033	336
099-3600	239
099-3649	80
	81

1

Part	Page
100-3224	445
100-3320	178
100-3563	374
	378
	380
	382
100-3564	374

▶ **PRIMARY REFERENCE**

PART NUMBER INDEX

Part	Page	Part	Page	Part	Page	Part	Page
	378		447	104-5361	293	107-4395	447
	380		466	104-6555	293	107-4396	447
	382		470	104-6729	190	107-5601	▶246
100-3566	374		484	104-6730	190	107-7304	293
	378		504	104-6931	365	107-7566	49
	380	102-8803	139	104-7391	390	107-7694	10
	382		140	104-7423	390	107-7708	15
100-3567	374		152	104-7434	390	107-7977	▶116
	378		153		400	107-8126	388
	380		154	104-7498	390	108-0720	▶413
	382		155	104-8085	362		414
100-5179	445		156	105-1725	15	108-0800	270
100-6551	41		163	105-1797	178		▶285
101-0003	502		178	105-2058	390	108-0801	285
101-0852	129		180	105-2145	384	108-0802	277
101-2865	493		183	106-0669	285	108-0803	277
101-2867	482		418	106-0713	193	108-1138	269
101-3128	123		425	106-0721	221	108-2097	190
101-4194	502		466	106-1607	286	108-2468	206
101-4195	502		467	106-1613	286	108-2470	205
101-5141	293		470	106-1618	274	108-2471	195
101-5144	293		471	106-1625	274	108-2472	206
101-7397	293	102-8804	136		275	108-2611	▶286
101-9754	227		139	106-1626	274	108-2781	359
102-0341	438		187		275	108-3055	206
	442		313	106-1627	274	108-4086	445
102-6229	22		436		275	108-4087	445
	25		510	106-1628	274	108-4103	445
102-8801	136	102-8805	78		275	108-4430	233
	139		128	106-1629	274	108-4433	233
	178		180		275	108-4434	311
	180		187	106-1630	274	108-5471	434
	187		415		275		436
	295		418	106-1642	274	108-5618	205
	418		434		275	108-5619	205
102-8802	112		440		286	108-5620	205
	115		459		287	108-5621	205
	136		467		288	108-5622	205
	138		470	106-4155	148	108-5623	205
	139		471		183	108-5794	390
	143		477	106-4159	424	108-6523	227
	144		484	106-7124	89	108-6587	224
	148		506	106-7149	169	108-7039	▶204
	161	102-8806	187	106-8186	235		212
	162		190	106-8187	235	108-7808	168
	164		418	106-8704	447	108-8250	195
	171		466	106-9212	231	108-8268	390
	172		470	106-9214	231	108-8296	217
	174		480	107-0713	287	109-0367	267
	176		481	107-0714	287	109-0377	267
	177		484	107-0719	274	109-0958	390
	178	102-9478	317		275	109-0959	388
	180	102-9862	147		286	109-1633	95
	183	102-9863	169		287		453
	187	103-0213	187		288	109-1634	95
	232	103-6100	453	107-1763	193		453
	289	103-6262	297	107-3786	489	109-1645	183
	297	103-8133	148	107-4062	1		418
	308	104-2091	429		▶245	109-3207	58
	415		467	107-4068	1	109-3478	267
	418	104-4746	390		▶238	109-3590	431
	422	104-4817	390	107-4098	▶277	109-3968	231
	423		400		288	109-3969	231
	425	104-5358	293	107-4393	447	109-5008	451
	440	104-5360	293	107-4394	447	109-6406	413

▶ **PRIMARY REFERENCE**

PART NUMBER INDEX

Part	Page
109-6407	438
109-6967	89
109-7194	160
109-7195	160
110-1118	506
110-1211	221
110-2049	190
110-2860	190
110-2976	▶274
	286
	287
	288
110-2977	▶286
110-2978	▶287
	288
110-2980	▶287
110-3160	245
110-3162	245
	246
110-3166	246
110-3269	▶323
	388
110-3270	323
110-3271	323
110-3362	273
110-3787	321
110-4771	331
110-5217	390
110-5226	388
	▶390
110-5227	400
110-5228	400
110-5229	400
110-5230	388
	▶400
110-5359	236
110-5390	236
110-5431	236
110-5433	236
110-5602	451
110-5692	270
110-5844	236
110-6057	236
110-6109	413
	442
	466
	467
	470
110-6113	▶336
	388
110-6122	▶269
	288
110-6124	269
110-6393	447
110-6501	321
110-6844	187
110-6845	187
110-6846	297
110-6969	252
110-7563	▶144
	147
110-7618	12
110-7880	289
110-8178	199
110-9734	227
111-2416	178
111-3199	306
111-4643	253
	255
	258
	261
111-5009	236
111-7003	422
	476
	▶477
111-7198	415
111-9251	471
111-9867	319
111-9870	315
	319
111-9871	315
	319
111-9873	315
	319
111-9876	315
	319
111-9879	315
	319
111-9886	319
111-9887	315
	319
111-9888	315
	319
111-9890	315
	319
111-9891	315
	319
111-9892	315
	319
111-9895	315
111-9899	317
111-9900	317
112-1869	315
112-4368	350
112-5056	204
112-5057	204
112-5282	226
112-6142	321
112-6174	510
112-6646	186
112-7454	336
112-7455	336
112-7456	336
112-7457	336
112-8225	236
113-0580	183
113-4630	187
113-6069	40
113-6087	4
	▶15
113-8248	338
113-8249	338
113-9212	205
113-9309	344
114-0358	408
	409
114-0359	408
	409
114-0931	148
114-2312	199
114-2687	72
114-3469	423
114-3907	484
114-5333	447
114-5671	393
114-5672	393
114-6407	484
114-9125	433
115-1153	315
	317
	319
115-1748	466
	470
115-3523	▶329
	396
115-3524	▶325
	388
	389
115-4072	40
115-4210	2
	3
	▶56
115-4219	40
115-4472	388
	389
	▶396
115-4473	396
115-4474	396
115-4522	396
115-4561	356
115-4564	▶352
	388
	389
115-4581	356
115-4591	356
115-4592	356
115-4594	388
	389
	▶402
115-4595	402
115-8218	325
115-8219	325
115-8225	325
116-0118	183
116-3083	329
116-3084	329
116-3085	329
116-3089	329
116-4556	2
	3
	▶38
116-6203	466
	470
116-7964	466
	470
117-0615	286
	287
117-0616	286
	287
117-0982	370
117-1385	150
	159
117-2311	187
	431
117-2983	226
117-3437	85
117-3643	4
	▶76
117-4074	2
	3
	▶67
117-4492	412
117-4506	490
117-5604	239
117-8131	460
117-9988	478
118-0275	111
118-0639	295
118-2228	370
118-3619	33
118-3731	226
118-4977	487
118-5194	415
118-5195	415
118-6345	▶276
	288
118-7226	▶163
	180
118-7284	2
	3
	▶135
118-9602	267
118-9674	315
	317
	319
119-2921	56
119-2942	72
119-3025	85
119-4142	▶159
119-7833	227
120-8971	4
	▶65
121-0483	317
121-0484	317
121-0487	317
121-0792	406
121-0824	▶283
	284
121-0825	283
121-0827	▶280
	282
121-0828	280
121-0830	272
	▶281
121-0831	281
121-0834	280
	281
	283
121-1257	280
	281
	283
121-2844	183
121-9868	333
122-4268	289
122-4270	289
122-4271	289
122-4705	245
	246
122-5053	111
	▶114

▶ **PRIMARY REFERENCE**

PART NUMBER INDEX

Part	Page
122-6046	289
122-6049	289
122-6824	289
122-6825	289
122-6826	289
122-7127	466
	470
122-7372	297
	▶302
122-8026	299
122-9918	321
122-9921	321
123-0304	466
	470
123-0306	466
	470
123-0858	52
123-0912	295
123-3283	299
123-3295	297
123-3296	297
123-3826	297
123-4950	467
	471
123-6377	297
123-6392	297
123-6446	▶295
	297
123-6449	418
123-8395	▶51
	424
123-8630	359
123-9176	299
123-9294	466
	470
123-9812	297
124-0174	181
124-0364	60
124-0378	121
124-0686	134
124-0687	133
124-0799	289
124-2354	▶289
	299
124-3702	302
	304
124-5233	390
124-5234	390
124-5235	390
124-5240	390
124-5741	390
124-6092	358
124-7790	51
124-7791	51
124-7792	51
124-9672	396
125-0582	310
125-0583	297
	▶310
125-1302	148
	▶174
125-1993	60
125-3298	302
	310
125-3299	147
	304
125-4172	▶284
	288
125-4173	▶282
	288
125-7874	422
	476
125-7875	187
125-8175	434
	436
	510
125-8826	310
125-9664	297
	▶304
126-1347	278
126-1774	183
126-1815	333
126-2368	118
126-2487	297
126-3695	353
126-3696	353
126-3698	353
126-3699	353
126-5466	82
126-5476	372
	374
	376
	378
	380
	382
126-5796	372
	374
	376
	378
	380
	382
126-5869	82
126-5984	372
	374
	376
	378
	380
	382
126-5985	372
	374
	376
	378
	380
	382
126-6733	315
126-8472	425
126-8928	247
127-0901	59
	▶60
127-2170	429
127-2945	297
	▶300
127-5447	348
127-5483	148
	183
127-5484	148
	183
127-5485	148
	183
127-5486	183
127-6424	440
127-6509	510
127-7494	289
127-8158	144
127-8732	255
	258
	259
128-2776	374
	378
	380
	382
128-2906	60
128-2907	60
128-2908	60
128-2909	60
128-3473	111
128-3883	42
128-7988	449
128-8557	103
128-9571	35
128-9572	35
129-1163	▶17
	18
129-1164	▶18
	19
129-1165	4
	▶19
129-1170	85
129-1262	219
129-1336	440
129-1368	440
129-1371	440
129-1373	440
129-1374	440
129-1376	440
129-1378	440
129-2380	219
129-3178	302
	304
	440
	451
129-3180	263
	265
129-3737	418
130-0701	289
130-1977	350
130-1985	289
130-3676	514
130-5300	415
130-7975	289
130-9192	350
130-9764	238
130-9811	150
130-9984	199
130-9989	289
130-9990	289
131-0167	214
131-0447	310
131-1845	111
131-4242	444
131-5167	444
131-8742	280
	281
	283
131-9352	280
	281
132-0338	412
132-1222	116
	118
132-1223	116
	118
132-1224	116
	118
132-1225	116
	118
132-1228	116
	118
132-1229	116
	118
132-1230	116
	118
132-1334	288
132-1336	288
132-1337	▶288
132-1448	133
	134
132-2156	▶118
	120
132-3332	442
132-3581	289
132-3844	2
	3
	▶11
132-5246	49
132-5303	382
132-5792	418
	474
132-7419	310
132-7450	310
132-8876	192
132-9455	307
132-9899	311
132-9900	311
133-0155	289
133-1219	214
133-1222	214
133-1279	192
133-2199	192
133-2249	313
133-3234	434
	436
133-3715	58
133-3742	4
	▶24
133-4995	24
133-5055	4
	▶42
133-6379	61
133-6517	133
	134
133-6595	289
133-6974	289
133-7023	55
133-7212	289
133-7214	289
133-7230	289
133-7231	289
133-9123	434
	436
133-9399	440

▶ **PRIMARY REFERENCE**

PART NUMBER INDEX

Part	Page
133-9405	466
	467
	470
	471
134-4126	129
134-4483	25
134-6775	388
	▶395
134-9602	438
135-2172	187
135-2969	4
	▶61
135-4721	293
135-5001	239
135-5499	490
135-5970	49
135-6161	212
	▶218
135-6162	218
135-6163	218
135-6273	293
135-6274	293
135-7393	321
135-7488	199
135-8581	297
135-9795	▶410
135-9819	66
136-0812	82
136-0823	13
136-1543	465
136-1544	412
136-1953	34
136-4183	40
136-8423	362
136-8888	2
	3
	▶13
137-4830	295
137-5541	103
137-6603	233
137-6715	22
	25
137-6717	62
137-6718	25
137-8165	480
	481
137-8752	160
137-8793	306
137-8794	306
138-1645	308
138-3252	24
138-4086	206
138-7033	▶356
	388
	389
138-7198	62
138-7538	359
138-8401	62
138-8402	62
138-8403	62
138-9868	62
139-1537	365
139-3526	13
139-4081	▶43
	61
139-4084	43
139-9476	43
140-1320	461
	478
140-2964	227
140-6188	25
140-9670	22
	25
141-3983	183
141-4976	187
141-7903	478
141-8275	106
141-9784	440
142-1229	388
	389
	▶399
142-3953	47
142-6926	442
142-8858	467
	471
143-0013	299
143-1288	490
143-3148	399
143-4926	2
	3
	▶12
144-0195	510
144-0331	310
144-0367	95
144-0761	205
144-1102	9
144-3472	92
144-4277	374
	378
	380
	382
144-6691	333
144-7339	111
145-0162	15
145-0164	15
145-0168	15
145-0170	15
145-0326	502
	504
145-0803	390
145-0804	390
145-0823	253
	255
145-1144	225
	226
	314
145-2415	169
145-2901	55
145-4115	483
	484
145-4509	449
145-4926	186
145-5157	2
	3
	▶168
145-7028	▶164
	183
	365
145-7376	62
145-7385	62
145-7390	25
146-6695	103
146-6696	103
147-1681	155
147-5088	85
147-8211	25
147-8214	22
	25
147-8218	20
147-8220	22
	25
148-1928	199
148-2903	58
148-8313	104
148-8315	359
148-8318	106
148-8326	359
148-8327	199
	338
	342
	348
	354
148-8333	359
148-8335	199
	359
148-8340	336
148-8341	344
	346
148-8344	338
	342
	354
148-8347	344
148-8353	340
148-8355	359
148-8356	200
148-8357	200
148-8360	200
148-8361	359
148-8364	336
148-8367	359
148-8370	338
148-8375	338
148-8378	340
148-8382	359
148-8407	233
148-8409	233
148-8410	233
148-8418	350
148-8433	360
148-8449	342
148-8451	342
149-4889	289
149-5240	58
149-6309	356
149-9818	187
150-1999	82
150-3024	104
150-3026	199
150-3035	342
150-3036	340
150-4046	104
	340
	360
150-4047	104
	200
150-4086	452
150-4105	58
150-4621	49
150-6766	139
151-2898	55
151-2900	55
151-9275	310
152-3414	12
152-3952	85
152-6649	365
152-8043	▶275
	286
152-8070	274
	275
153-1794	2
	3
	▶92
153-1832	2
	3
	▶14
153-4906	111
153-5043	164
	165
153-5700	121
153-6232	360
153-6248	359
153-8467	62
153-8470	62
153-8920	178
153-9301	467
	471
154-5629	433
154-7443	▶127
	166
	466
	470
154-8016	▶58
	109
154-8025	20
154-9024	72
	82
155-0576	136
155-2255	178
	187
	466
	470
155-2256	466
155-2260	157
	158
	178
	180
	183
	187
	418
	466
	470
155-2261	165
	175
155-2262	187
155-2265	128
	180
	187
	190
	418
	422

▶ **PRIMARY REFERENCE**

PART NUMBER INDEX

Part	Page
	466
	470
	476
155-2269	183
155-2270	139
	148
	165
	175
	178
	180
	183
	187
	190
	289
	415
	418
	425
	440
	466
	470
	484
155-2271	136
	139
	180
	187
	466
	470
155-2274	180
	187
	418
	466
	470
	484
155-4773	61
	▶62
155-5322	398
	▶406
155-5745	192
155-7703	1
	▶249
155-7704	▶253
	388
155-7705	1
	▶242
155-7706	1
	▶239
155-7707	1
	▶112
155-7713	112
155-7714	112
155-7725	239
155-7737	242
155-7738	239
155-7739	239
155-7742	242
155-7769	239
155-7772	239
155-7775	▶247
155-7776	247
155-7785	239
155-7803	253
	255
155-7804	▶255
	389
155-7818	253
155-7819	255
155-9282	253
155-9283	255
155-9284	253
155-9285	255
155-9286	253
	255
155-9287	253
155-9288	255
155-9289	253
155-9290	255
155-9291	253
	255
155-9301	253
	255
	258
	261
155-9302	253
	255
	258
	261
155-9320	249
155-9321	249
155-9323	1
	▶261
155-9329	258
	261
155-9330	258
	261
155-9331	258
	261
155-9332	258
	261
155-9366	▶244
155-9504	20
156-4406	206
156-4449	438
156-4701	275
156-5545	412
156-5970	232
	313
156-6155	126
	136
156-6175	178
156-7278	1
	▶235
156-7279	235
	▶236
156-7280	236
156-7378	▶187
	422
	476
156-8378	▶148
	187
156-8911	▶418
	422
156-8915	417
	▶460
156-8916	418
	▶507
156-8948	▶315
	334
156-8951	422
	▶466
156-8955	▶296
	422
	476
156-9084	359
	▶362
156-9493	▶1
156-9497	1
156-9503	1
	▶334
156-9509	▶422
156-9510	▶334
156-9514	1
	▶130
156-9516	1
	▶417
157-0670	82
157-3458	130
	▶183
157-3459	▶147
157-3460	▶121
157-3463	▶145
157-4819	1
	▶463
157-8371	48
158-6072	102
158-6632	▶171
	431
	461
159-0288	110
159-0300	20
159-1810	2
	3
	▶70
159-1814	2
	3
	▶82
159-2565	3
	▶44
159-2572	2
	3
	▶97
159-3537	135
159-7351	297
159-7352	297
159-9257	466
	470
159-9322	139
	183
160-0054	▶331
	388
160-0055	331
160-0060	331
160-0305	331
160-2179	180
160-2182	180
160-2183	180
160-2184	180
160-2185	180
160-2443	▶153
	308
160-4069	130
	▶180
160-4137	334
	▶359
160-5691	390
160-6306	396
	422
	476
160-7186	▶495
	497
160-7689	183
160-7690	178
160-8123	150
160-9146	▶128
160-9147	484
160-9149	418
160-9756	273
161-2113	390
161-4459	4
161-5967	444
161-6989	434
161-6990	436
161-7000	418
161-7247	273
161-7249	273
161-7350	273
161-7550	273
161-8420	4
	▶49
161-9289	496
162-6966	199
162-8068	2
	3
	▶50
162-9612	111
163-0152	418
	▶478
163-0761	334
	▶338
163-1036	▶440
	442
163-1059	▶199
	212
163-1135	504
163-1139	504
163-1146	502
163-1387	39
163-2661	499
163-3270	334
	335
	▶348
164-1234	504
164-1270	504
164-1525	203
164-2108	225
	226
	314
164-3504	▶317
	334
	335
164-3651	183
	366
164-4146	482
164-4531	412
164-4883	464
164-5567	340
	360
164-5590	200
164-5591	108
164-6093	▶306
	311

▶ **PRIMARY REFERENCE**

PART NUMBER INDEX

Part	Page
164-6864	338
	354
164-7556	141
	142
	143
164-7577	▶172
	180
164-9136	418
164-9140	▶474
	476
164-9144	498
164-9145	498
164-9150	474
165-0222	466
165-0225	466
165-1750	275
165-1751	275
165-1752	275
165-1753	275
165-1768	275
165-2790	▶470
	476
165-3503	148
165-3504	148
165-3505	148
165-4149	470
165-4150	470
165-4157	148
165-4481	▶319
	334
165-4879	431
	461
165-5655	138
	139
165-5674	147
165-6634	87
	▶152
165-8079	192
166-2103	507
	▶508
166-2104	507
	▶509
166-2905	48
166-3325	315
	319
166-3603	317
166-6269	130
	▶131
166-6358	55
166-6781	502
166-6928	▶459
	466
	470
166-9147	365
166-9165	365
166-9171	365
167-0138	148
	▶175
167-1451	418
	▶434
167-1452	434
167-1453	418
	▶436
167-1454	436
167-1455	417
167-1457	417
	▶483
167-1458	▶414
	422
167-1460	422
	▶484
167-1463	▶427
167-1464	▶428
167-1465	▶442
167-1466	▶487
167-1530	467
	471
167-2195	321
167-2200	323
	325
167-2201	327
	331
167-2304	321
167-2307	323
	325
167-2312	327
	331
167-2457	321
167-2459	323
	325
167-2463	327
	331
167-6768	372
	376
	382
167-7270	336
	514
167-8121	31
167-8361	14
167-9524	225
	226
	314
168-2197	362
168-2198	362
168-2201	362
168-2203	362
168-2206	362
168-2210	362
	▶384
168-3379	364
168-3381	364
168-3382	364
168-3384	364
168-3504	362
168-7226	49
168-7317	362
168-7319	362
168-7321	364
168-7863	362
168-8929	418
169-0651	464
169-2876	187
	431
169-3234	130
169-3300	150
	▶160
169-4142	334
	▶353
169-4548	212
169-4912	▶59
169-5862	199
169-6172	359
169-6187	338
	353
	354
169-6189	338
	353
	354
169-6192	338
169-6197	338
169-6891	359
169-6896	359
169-7380	502
	504
169-7404	342
169-7409	342
169-7434	425
169-7435	425
169-9064	359
169-9065	359
169-9068	359
169-9108	429
	474
170-1112	412
170-1114	412
170-1115	412
170-2062	418
170-2069	507
170-2070	507
170-2084	418
	▶452
170-2086	418
	▶510
170-3273	2
	3
	▶93
170-3274	93
170-3304	4
	▶108
170-6623	434
170-6624	436
170-6625	434
170-8590	482
171-1230	490
171-2133	460
171-2210	148
171-5349	161
	162
171-6682	490
171-6723	348
171-9587	483
171-9592	▶455
	476
171-9593	414
	▶453
171-9601	452
171-9603	452
171-9607	431
171-9610	429
171-9612	429
171-9616	429
171-9617	431
171-9618	429
▶513	
171-9619	473
172-1681	419
172-2381	434
172-2382	436
172-2383	434
	436
172-2384	436
172-2385	434
172-2391	313
172-2392	307
	▶313
172-2416	490
172-6031	▶136
172-6280	14
172-6284	97
172-6298	97
172-6650	353
	354
172-6653	353
	354
172-8212	466
	470
172-8537	338
172-8538	338
172-8539	338
172-8540	338
172-8541	338
172-8542	338
172-9389	▶129
	167
	296
172-9872	▶267
	288
172-9999	148
173-0887	227
173-1028	▶412
	490
173-1201	138
	139
173-1437	199
173-1566	187
173-1614	148
173-1617	▶512
	513
173-1619	514
173-2052	465
173-2472	227
173-3082	492
173-3660	267
173-4282	199
173-4283	199
173-5549	62
173-5787	495
	496
173-6530	▶480
173-6532	▶481
173-6772	▶489
173-6777	436
173-6778	434
173-6807	434
173-6809	484
173-7035	495
	496
173-8641	▶335
173-8651	1

▶ **PRIMARY REFERENCE**

PART NUMBER INDEX

Part	Page	Part	Page	Part	Page	Part	Page
	▶288		470	177-6858	440		474
173-9164	452	175-4166	93	177-7185	199	180-1298	460
173-9683	323	175-4291	141	177-7186	199		461
	325		142	178-0266	431	180-4165	206
174-0099	255		143	178-0568	▶192	180-4524	187
	258	175-4292	141		199	180-4560	▶398
174-0100	255		142	178-0603	▶490	180-4561	▶350
	258	175-4393	466		492		398
174-0101	255	175-4972	▶307	178-0604	▶464	180-5317	442
174-0102	255		311		490	180-5383	474
174-0103	255	175-5420	359	178-0605	464	180-5388	296
	258	175-6579	466		▶465	180-5559	492
174-0104	255		470	178-0606	▶492	180-5560	492
	258	175-6580	466		495	180-6213	362
174-0105	255		470		496	180-7341	108
	258	175-6956	418	178-0607	482		▶111
174-0106	255		▶429	178-0608	482	180-9339	156
174-0107	255	175-7058	148	178-0609	482	180-9340	157
174-0108	255	175-7223	488	178-3681	▶195		158
	258	175-7225	▶488		223	183-3648	492
174-0109	255	175-7227	488	178-4434	292	183-4365	62
	258	175-7407	365		▶293	183-4599	350
174-0110	255	175-7564	112	178-6172	128	183-4600	350
	258	175-7643	436	178-6342	▶109	183-4690	436
174-1494	440	175-7651	484		110	183-5106	▶423
174-1504	415	175-7654	418	178-6343	4		424
174-1505	415		▶438		▶110	183-6854	97
174-2231	▶444	175-7656	453	178-6690	212	183-6856	97
	502	175-7657	453		▶217	183-7264	333
174-2237	444	175-7900	321	178-6854	193		358
174-4485	334	175-7902	323	178-7907	465		359
	▶365	176-0238	187	178-8375	418	184-2202	104
174-4909	306	176-0258	311	178-8611	214	184-2298	490
	▶314	176-0259	311	178-8612	214	184-2299	490
174-7599	106	176-1485	467	178-8613	213	184-2472	124
174-7876	180		470		▶214	184-3450	474
174-9994	362	176-1852	348	178-8647	348	184-3451	484
175-0070	415	176-1853	348	178-8844	429	184-3452	484
175-1157	1	176-7453	488		474	184-7773	66
	▶212	176-7456	418	178-9008	418	185-0295	362
175-1171	212	176-9237	183	178-9009	418	185-0296	362
	▶223	177-1570	239	178-9013	429	185-2666	263
175-1367	12		253		474	185-2667	263
175-1834	293		255	178-9016	429	185-3241	108
175-2296	▶219		258		474	185-3502	311
	221		261	178-9018	▶94	185-3503	311
175-2297	212	177-1860	482		418	185-6684	199
	▶221	177-1862	482	178-9041	214	185-7141	128
175-2324	▶176	177-1863	490	178-9220	199	186-2695	91
	186	177-3846	429	178-9221	199	186-2696	91
175-2539	425	177-3847	429	178-9222	199	186-2741	480
175-2540	414	177-3848	455	179-0126	274		481
	▶425	177-3851	418	179-0589	425	186-3396	199
175-2787	199		▶450	179-1732	299		▶227
	▶213	177-3852	418	179-6707	193	186-3398	227
175-3168	68		▶498	179-6714	422	186-3401	227
175-3236	108	177-3860	417		476	186-3525	97
175-3267	195		▶431	179-7001	▶64	186-3733	471
175-3678	480	177-4229	317		108	186-3735	78
	481	177-4230	317	179-7002	64		112
175-3759	510	177-4752	109	179-7004	111		115
175-3760	510	177-4930	465	179-9348	106		136
175-3761	510	177-4935	▶482	179-9355	186		138
175-3762	436		490	180-1295	429		139
175-3950	466	177-4937	492	180-1297	429		143

▶ **PRIMARY REFERENCE**

PART NUMBER INDEX

Part	Page	Part	Page	Part	Page	Part	Page
	148	189-2222	2	192-7783	504	195-0653	292
	152		3	192-7787	504		▶301
	154		▶47	192-7790	504	195-0681	5
	155	189-2223	2	192-7795	504		▶8
	161		3	192-7799	504	195-1040	5
	172		▶36	192-7805	504		▶87
	174	189-2224	5	192-7810	504	195-1041	5
	176		▶120	192-7812	504		▶80
	232	189-2227	2	192-7820	504	195-1042	5
	289		3	192-7822	504		▶90
	308		▶31	192-7846	504	195-1043	▶81
	418	189-2229	5	192-7848	504	195-1045	▶243
	422		▶424	193-0205	95	195-1046	1
	434	189-2233	31	193-0542	510		▶5
	447	189-3158	148	193-1033	▶6	195-1047	5
	466	189-5746	▶161		422		▶95
	467		183	193-1036	384	195-1048	5
	470	189-8772	97	193-1038	▶7		▶99
	471	189-8904	78		59	195-1049	5
	480	190-0801	120		77		▶91
	484	190-1546	▶273	193-2550	▶162	195-1117	181
186-3736	289		288		183	195-1809	87
	422	190-1547	273		195		▶89
	476	190-2808	199		206	195-2037	199
186-5107	504	190-2938	514	193-3074	393	195-2139	372
186-5814	▶103	190-5312	236	193-3075	393		374
	104	190-5328	388	193-3873	199		376
186-6189	453		▶392	193-4577	434		378
186-9980	245	190-5360	87	193-4578	436		380
186-9981	246	190-7614	187	193-5710	180		382
187-1513	49	190-8609	285	193-5712	181	195-2709	235
187-1602	4	191-0083	2	193-6930	463	195-2804	243
	▶101		3	193-6931	463	195-3783	183
187-1603	101		▶186	193-6939	463	195-3985	428
	▶102	191-1422	359	193-6940	463	195-6814	78
187-4807	91	191-1732	236	193-9237	2		80
187-6092	442	191-2111	82		3	195-6815	81
187-7706	44	191-2933	496		▶84	195-7336	178
187-8595	76		▶504	193-9238	84	195-7898	87
187-9194	365	191-4479	1		▶85	195-7899	87
188-1845	460		▶2	193-9239	85	195-7900	183
188-1846	429	191-4481	▶3	193-9240	85	195-8421	487
188-3126	89		59	193-9904	199	195-8422	487
188-3757	392		77	193-9905	199	195-8430	487
188-6126	72	191-4482	2	194-0675	478	196-0077	2
188-7067	233		3	194-2903	199		3
188-7068	233		▶4	194-3309	436		▶48
188-7069	233	191-4916	193	194-3313	434	196-0265	102
188-7726	2	191-4920	193	194-3314	434	196-0267	102
	3	191-4922	193	194-3315	419	196-0268	102
	▶123	191-5215	6		▶451	196-1746	350
188-8846	431	191-6587	150	194-3333	419	196-1791	5
188-8954	81		▶165		▶449		▶52
189-1839	313	191-9529	1	194-5226	165	196-1814	59
189-2194	47		▶104	194-5227	165		77
189-2203	▶35	192-4089	235	194-6478	359		▶78
	36	192-4428	87	194-6723	150	196-1864	▶193
189-2205	35	192-4429	87		▶156		212
189-2207	55	192-7054	480	194-6725	150	196-3700	451
189-2220	2		481		▶157	196-3701	451
	3	192-7470	362	194-6726	150	196-3773	434
	▶55	192-7752	504		▶158		436
189-2221	2	192-7755	504	195-0321	49	196-3927	359
	3	192-7760	504	195-0645	212	196-3928	359
	▶9	192-7767	504		▶292	196-5093	▶333

▶ **PRIMARY REFERENCE**

PART NUMBER INDEX

Part	Page
	359
196-6840	106
196-7074	270
196-7078	270
196-7107	270
196-7108	270
196-7109	270
196-7110	270
196-7553	419
196-9519	15
196-9838	104
197-0823	431
197-0824	431
197-0825	427
197-0826	428
197-2477	336
197-2479	336
197-2709	380
	382
197-2849	362
	▶364
197-2850	362
197-2851	364
197-2852	364
197-2853	364
197-3522	484
197-4816	145
197-4848	90
197-4871	431
197-6050	484
197-6051	484
197-6440	400
197-6587	145
197-7689	502
197-9277	49
198-0315	144
198-0316	144
198-1663	87
198-4605	232
198-4607	227
	▶232
198-5179	334
	▶340
198-5389	138
	139
198-6217	336
198-6986	297
198-7281	▶415
	478
198-7282	415
198-7284	415
198-9003	340
198-9162	195
198-9163	195
198-9452	429
	474
198-9788	288
198-9789	▶270
	288
198-9790	270
198-9791	270
199-1416	91
199-2387	89
199-2565	95
199-2569	95
199-2579	95
199-2580	95
199-2998	488
199-3003	99
199-3164	2
	3
	▶66
199-3616	308
199-4159	308
199-4787	308
199-4789	308
199-4790	308
199-4801	▶308
	422
	476
199-4856	106
199-4858	106
199-5180	100
199-5977	99
	263
199-5995	▶130
	136
199-6103	110
199-6965	▶1
199-7698	425
199-7734	2
	3
	▶150
199-9612	104
	2
200-0924	340
200-0928	80
	81
200-2560	296
200-2645	336
200-2649	390
200-2650	390
200-3166	▶297
	299
200-3167	296
	▶299
200-3174	▶496
	497
200-3736	78
	80
	81
200-3745	95
200-3746	95
200-3747	95
200-4495	40
200-6244	258
200-6245	258
200-6248	59
	▶258
200-7836	434
	436
200-8155	181
200-8498	231
200-8575	308
200-8600	121
200-8616	90
200-8644	195
200-8648	195
201-0438	44
201-0694	467
	471
201-0780	384
201-1281	195
201-1282	195
201-2403	70
201-2670	1
	59
201-4033	253
	255
	258
	261
201-4065	240
201-4066	240
	478
201-4230	424
201-4596	104
201-5349	253
	255
	258
	261
201-5381	2
	3
	▶98
201-5515	5
	▶45
201-7270	▶233
	311
201-7272	292
	▶311
201-7882	473
201-8124	206
201-8316	87
201-8590	54
201-8802	433
201-9063	3
	▶54
201-9473	258
201-9474	258
201-9475	258
201-9476	258
201-9477	258
201-9478	258
201-9820	508
	509
201-9821	508
	509
202-1871	417
	▶433
202-2380	206
202-3197	7
202-3261	72
202-3262	2
	3
	▶72
202-4327	181
202-5293	240
	253
	256
	259
	261
202-6488	214
202-6611	142
202-6612	141
	142
202-6614	141
202-7214	359
202-7356	253
	255
202-7357	253
	255
202-7358	253
	255
202-9824	513
203-2062	59
	▶100
203-2897	390
203-3158	95
203-3768	97
203-3769	92
203-4261	147
203-5856	46
203-5866	2
	3
	▶46
203-6257	427
203-7607	95
203-7703	495
	496
203-7738	508
203-7740	508
203-7741	509
203-7742	509
204-5093	336
204-5341	195
204-5379	340
204-5380	340
204-6365	251
	252
204-6414	417
	▶447
204-7427	100
204-8982	190
204-9542	331
205-0826	138
	139
205-1271	▶20
	22
	25
205-1272	▶22
205-1273	▶25
	27
	29
205-1274	24
	▶27
205-1275	▶29
205-1320	40
205-1321	4
	▶40
205-1322	10
205-1420	452
205-2344	120
205-3237	59
205-3602	190
	▶231
205-3603	▶190
	223

▶ **PRIMARY REFERENCE**

PART NUMBER INDEX

Part	Page	Part	Page	Part	Page	Part	Page
205-4138	195		125		297	219-6339	5
205-4626	190	209-9588	123		308		▶34
205-4951	512		▶125	214-5012	308	219-6487	▶141
205-4952	512	210-3321	12	214-5013	308		145
205-4953	512		37	214-6735	87	219-6488	▶142
205-4955	247	210-5559	74	214-6736	87		145
205-6127	▶251	210-6039	▶248	214-6738	87	219-7737	506
	272	210-6040	248	214-6740	98	219-7739	506
205-6128	▶252	210-7722	97	214-7303	447	220-0122	478
	272	211-0238	419	214-7536	308	220-0229	422
205-6136	▶272		474	214-7568	64	220-0230	177
205-6137	▶272	211-0686	514	214-9183	295		484
205-6141	252	211-0895	484	214-9184	295	220-0896	334
205-6148	252	211-1835	2	214-9413	429		▶342
205-6149	252		3	214-9414	429	220-0897	▶344
205-6160	251		▶68	214-9415	429		388
205-6162	252	211-1913	484	215-1594	285	220-0899	342
205-6163	252	211-1965	315	215-3015	8	220-0900	342
205-7095	512	211-2354	484	215-9260	2	220-0901	342
205-7096	512	211-2355	461		3	220-0902	342
205-7097	512	211-4634	317		▶106	220-0903	342
205-7098	512	211-5358	504	216-3854	136	220-0904	342
205-8257	139	211-8504	249		139	220-0905	342
206-0332	247	211-8511	388	216-5185	510	220-0906	344
206-0334	512		389	216-5338	▶225	220-0907	199
206-1487	308	211-8956	340	216-5344	226	220-1801	422
206-1540	82	211-9294	504	216-5586	18	220-1802	422
206-1559	512	212-2269	▶74	216-6033	239	220-1961	512
206-2080	195		75	216-7613	120	220-1962	512
206-2963	195	212-2270	4	216-7921	10	220-2666	319
206-5162	126		▶75	216-7922	4	220-2667	315
	136	212-3511	239		▶10	220-3257	203
206-5203	138		258	216-9004	199	220-4324	190
206-7737	461		261	217-0056	359		▶226
206-7738	95	212-4021	474	217-0733	239	220-6355	126
206-7740	95	212-4022	474		253		130
206-8784	169	212-4023	460		255	220-6366	61
206-9265	47	212-4024	460		258	221-2718	242
206-9537	▶388	212-4357	429		261		249
206-9544	▶389	212-4893	15	217-1597	270	221-2719	249
207-1519	168	212-8710	473	217-3815	422	221-2720	249
	▶169	212-8711	473		▶473	221-2721	244
207-5262	▶126	213-1053	338	217-3818	417	221-3700	467
	130	213-2980	466		▶422		471
	139		470	217-7933	482	221-5161	453
207-5271	139	213-2983	187	218-0100	334	221-5162	453
207-6796	128	213-2985	148		▶358	221-5163	453
209-0381	187	213-2986	148	218-0589	78	221-5164	453
209-1990	89	213-2989	187	218-1964	78	221-5165	453
209-2928	478	213-3193	49	218-2798	429	221-5166	453
209-2929	478	213-3719	206		474	221-6878	239
209-4482	506	213-5139	466	218-2799	429	221-6879	239
209-6417	128		470		474	221-6880	239
209-6761	369	213-5161	247	218-2800	429	221-6887	239
	▶380	213-6876	296	218-2801	474	222-0297	136
209-6762	370	213-8760	232	218-3063	422		▶138
	▶382	213-9689	239		▶476	222-0894	190
209-6764	334	214-0997	239	218-3137	422	222-1185	62
	335	214-0998	239		▶461	222-1186	62
	▶370	214-1606	308	218-3598	219	222-2773	336
209-6765	334	214-4558	340	219-4457	39	222-2774	336
	▶369	214-4636	239	219-5852	71	222-3351	217
209-7222	▶205	214-4862	▶154	219-5853	2		▶224
	223		297		3	222-3352	224
209-9587	▶124	214-4863	▶155		▶71	222-3800	417

▶ **PRIMARY REFERENCE**

PART NUMBER INDEX

Part	Page
	▶457
222-3870	136
	139
222-5086	453
222-6234	261
222-6235	261
222-6236	261
222-6237	261
222-6238	261
222-6239	253
	259
	261
222-6240	253
	259
	261
222-6241	258
222-6242	258
222-6243	258
222-6244	258
222-6245	258
222-6246	255
	258
222-6247	255
	259
222-6870	239
222-6871	239
222-9887	470
223-0118	453
223-0161	239
223-0162	239
223-0455	429
	466
223-2455	467
	470
223-4127	450
223-4128	450
223-4129	450
223-4299	513
223-6303	▶388
223-6517	190
223-7899	121
223-8934	145
223-8935	145
223-8936	145
223-8945	128
224-0687	253
	255
	259
	261
224-0688	253
	255
	259
	261
224-1296	2
	3
	▶132
224-2171	512
224-2172	512
224-2459	422
224-2466	429
224-2467	429
224-2468	429
224-2469	429
224-2470	419
	474
224-2637	2
	3
	▶39
224-2669	419
	434
	436
	474
224-3933	512
224-3937	512
224-5121	53
224-5123	2
	▶53
224-5367	▶203
	212
224-8445	451
224-8446	451
224-8448	451
224-8449	451
224-9041	66
224-9337	70
225-0435	▶263
225-0437	263
225-0439	263
	265
225-0440	263
	265
225-0441	263
225-0442	263
225-0443	263
	265
225-0444	263
225-1271	▶265
225-2860	308
225-3595	265
225-3596	265
225-3597	265
225-3598	265
225-4264	221
225-5075	▶143
	181
225-5219	72
225-5220	72
225-5518	447
225-5927	139
226-0636	455
226-2261	80
226-3406	▶77
226-6113	131
	167
226-6114	131
	▶167
227-0169	143
227-0756	▶346
	388
	389
227-0758	346
227-1216	178
227-4468	485
227-4469	485
227-7010	▶497
227-7012	▶497
227-7013	▶497
228-0320	▶321
	388
228-0321	321
228-2775	200
228-2880	354
228-2881	354
228-2882	354
228-2883	354
228-3554	334
	▶354
228-5288	2
	3
	▶37
228-5786	2
	3
	▶178
228-8337	270
228-8540	▶139
228-9379	489
228-9380	489
228-9381	489
228-9382	489
229-1948	259
	261
229-1949	259
	261
229-2604	478
229-2605	478
229-2606	478
229-2831	▶334
229-2834	259
	261
229-2835	259
	261
229-3336	489
229-3337	489
229-3338	489
229-3339	489
229-3340	489
229-3341	489
229-3342	489
230-0815	346
230-2204	183
230-8334	259
	261
230-8335	259
	261
231-0530	59
	▶177
231-5849	183
231-6530	130
	166
231-6531	130
	▶166
232-3680	514
232-7305	187
233-0792	147

▶ **PRIMARY REFERENCE**



© 2003 Caterpillar
All Rights Reserved

Printed in U.S.A.