RUTHZIL TRATOR COMERCIAL DE PEÇAS LTDA 11 97083-6812 ROLANDO CITRANGULO

CATERPILLAR®

SEBP3668
March 2003

MARÇO 2003

Parts Manual



See "General Information" for New Parts Manual Features.

D6N XL, D/S TRACK-TYPE TRACTOR

CCK1-Up (Machine)
BMA1100-Up (Engine)
BJG1-Up (Transmission)
3WP1-Up (Bulldozer)
B6X1-Up (Bulldozer)
S6D1-Up (Bulldozer)
S6S1-Up (Bulldozer)
TPP1-Up (Ripper)
BZA1-Up (Torque Converter)

Powered By 3126B Engine

Product and Dealer Information

Note: For product identification plate locations, see the section “Product Identification Information” in the Operation and Maintenance Manual.

Delivery Date: _____

Product Information

Model: _____

Product Identification Number: _____

Engine Serial Number: _____

Transmission Serial Number: _____

Generator Serial Number: _____

Attachment Serial Numbers: _____

Attachment Information: _____

Customer Equipment Number: _____

Dealer Equipment Number: _____

Dealer Information

Name: _____ Branch: _____

Address: _____

_____

_____

	Dealer Contact	Phone Number	Hours
Sales:	_____	_____	_____
Parts:	_____	_____	_____
Service:	_____	_____	_____

Informations produit et concessionnaire

Nota: Voir l'emplacement de la plaque signalétique du produit au chapitre "Informations produit" du guide d'utilisation et d'entretien.

Date de livraison: _____

Informations produit

Modèle: _____

Numéro d'identification produit: _____

Numéro de série du moteur: _____

Numéro de série de la boîte de vitesses: _____

Numéro de série de l'alternateur: _____

Numéros de série d'équipement: _____

Informations sur l'équipement: _____

Numéro matériel client: _____

Numéro matériel concessionnaire: _____

Informations concessionnaire

Nom: _____ Agence: _____

Adresse: _____

_____

_____

	Contact concessionnaire	Numéro de téléphone	Heures
Ventes:			
Pièces:			
Service:			

Información del Producto/Distribuidor

Nota: Para saber la ubicación de las placas de identificación del producto, ver la sección “Información sobre identificación del producto” en el Manual de Operación y Mantenimiento.

Fecha de entrega: _____

Información del producto

Modelo: _____

Número de identificación del producto: _____

Número de serie del motor: _____

Número de serie de la transmisión: _____

Número de serie del generador: _____

Números de serie de los accesorios: _____

Información sobre los accesorios: _____

Número del equipo del cliente: _____

Número del equipo del distribuidor: _____

Información del distribuidor

Nombre: _____ Sucursal: _____

Dirección: _____

_____

_____

	Comunicación con el distribuidor	Número de teléfono	Horas
Ventas:	_____	_____	_____
Piezas:	_____	_____	_____
Servicio:	_____	_____	_____

Informações Sobre Produto e Revendedor

Nota: Para localizações da placa de identificação do produto, consulte a seção, “Informações Sobre Identificação do Produto” no Manual de Operação e Manutenção.

Data de Entrega: _____

Informações Sobre o Produto

Modelo: _____

Número de Identificação do Produto: _____

Número de Série do Motor: _____

Número de Série da Transmissão: _____

Número de Série do Gerador: _____

Números de Série de Acessórios: _____

Informações Sobre Acessórios: _____

Número do Equipamento do Cliente: _____

Número do Equipamento do Revendedor: _____

Informações Sobre o Revendedor

Nome: _____ Filial: _____

Endereço: _____

_____

_____

	Contato do Revendedor	Telefone	Horas
Vendas:	_____	_____	_____
Peças:	_____	_____	_____
Serviço:	_____	_____	_____

Produkt- und Händlerinformation

Anmerkung: Für die Lage der Produkt-Identnummer und Seriennummern siehe Abschnitt "Produkt-Identinformation" im Betriebs- und Wartungshandbuch.

Lieferdatum: _____

Produkt-Identinformation

Modell: _____

Produkt-Identnummer: _____

Seriennummer des Motors: _____

Seriennummer des Getriebes: _____

Seriennummer des Generators: _____

Seriennummern der Arbeitsgeräte: _____

Arbeitsgeräteinformation: _____

Kundennummer: _____

Händlernummer: _____

Händlerinformation

Name: _____ Niederlassung: _____

Adresse: _____

_____

_____

	Kontaktperson beim Händler	Telefon	Dienststunden
Verkauf:	_____	_____	_____
Ersatzteile:	_____	_____	_____
Service:	_____	_____	_____

MEMORANDA

TABLE OF CONTENTS

Name	Page
GENERAL INFORMATION	A21
REPAIR ALTERNATIVES	A40
SUPPLEMENTAL COOLANT ADDITIVES	A45
ENGLISH-PORTUGUESE PARTS NOMENCLATURE	A50
MAINTENANCE PARTS	A58
INDEX	A89
MACHINE ARRANGEMENT	1
CHASSIS AR	1
GENERAL AR	1
MACHINE AR-HIGH AMBIENT TEMP	1
ENGINE ARRANGEMENT	2
ENGINE AR-COMPLETE	2
ENGINE AR-CORE	4
INSTALLATION AR-ENGINE	5
BASIC ENGINE	6
BELT GP	6
BELT TIGHTENER GP	9
CAMSHAFT GP	10
CARRIER GP-SEAL	11
COVER GP-CYLINDER BLOCK	12
COVER GP-FRONT HOUSING	13
COVER GP-VALVE MECHANISM	14
CRANKSHAFT GP	15
CYLINDER BLOCK GP	17
CYLINDER HEAD AS	20
CYLINDER HEAD GP	24
DAMPER & PULLEY GP	31
DRAIN GP-ENGINE OIL	32
DRIVE GP-FAN	35
FASTENER GP-FRONT COVER	37
FASTENER GP-FRONT HOUSING	38
FLYWHEEL GP	39
GEAR GP-FRONT	40
HOUSING GP-FLYWHEEL	41
HOUSING GP-FRONT	42
LIFTER GP-VALVE	43
LIFTING GP-ENGINE	44
MOUNTING GP-ENGINE	45
MOUNTING GP-FAN DRIVE	47
PAN GP-OIL	48
PISTON & ROD GP	49
PLUG GP-ENGINE	50
PULLEY AS-IDLER	51
PULLEY GP	52
PULLEY GP-FAN DRIVE	54
PULLEY GP-IDLER	55
SEAL GP-CRANKSHAFT	56
SEAL GP-FLYWHEEL HOUSING	57
SEAL GP-FUEL INJECTOR	58
SUPPRESSION AR-SOUND	59
SUPPRESSION GP-SOUND	60
VALVE MECHANISM GP	61
LUBRICATION SYSTEM	64
ADAPTER GP-ENGINE OIL LINE	64
BREATHER GP	65
FILLER GP-ENGINE OIL	66
FILTER GP-ENGINE OIL	67
FUMES DISPOSAL GP	68
GAUGE GP-OIL LEVEL (DIPSTICK)	70
LINES GP-ENGINE OIL	71
LINES GP-TURBOCHARGER OIL	72
PUMP GP-ENGINE OIL	74
COOLING SYSTEM	76
COOLER GP-ENGINE OIL	76
COOLING AR	77
FAN GP	78
FAN GP-BLOWER	80
FAN GP-REVERSIBLE	81
LINES GP-WATER	82
PUMP GP-WATER	84
RADIATOR GP	87
AIR INLET AND EXHAUST SYSTEM	90
AFTERCOOLER GP	90
AIR CLEANER GP	91
COVER GP-AIR INLET	92
ELBOW GP-AIR INLET	93
INDICATOR GP-AIR FILTER CHANGE	94
LINES GP-AIR	95
MANIFOLD GP-EXHAUST	97
MOUNTING GP-MUFFLER	98
MUFFLER GP	99
SHIELD GP-AIR CLEANER	100
TURBOCHARGER GP	101
FUEL SYSTEM	103
FILTER GP-WATER SEP & FUEL	103
LINES GP-FUEL	104
LINES GP-FUEL FILTER	106
PUMP & MTG GP-UNIT INJ HYD	108
PUMP GP-UNIT INJECTION	109
PUMP GP-UNIT INJECTOR HYD	111
TANK GP-FUEL	112
VALVE GP-SOLENOID	114
ELECTRICAL AND STARTING SYSTEM	115
ALARM GP	115
ALTERNATOR GP-CHARGING	116

TABLE OF CONTENTS

Name	Page
BATTERY & WIRING GP	121
BATTERY GP	124
CONTROL & MTG GP-ENGINE ELEK	126
CONTROL GP-ENGINE ELECTRONIC	127
CONTROL GP-MACHINE	129
CONTROL GP-MONITOR	130
CONTROL GP-UNPROGRAMMED	132
ELECTRONICS AR-MACHINE	133
ELECTRONICS GP-MACHINE	133
ELECTRONICS GP-MONITOR	133
ELECTRONICS GP-POWER TRAIN	134
FASTENER GP-ENGINE WIRING	135
HEATER GP-JACKET WATER	136
HEATER GP-STARTING AID	138
INSTALLATION GP-SECURITY	139
LAMP GP-DOME	143
LAMP GP-FLOOD	144
LAMP GP-WARNING BEACON	147
LIGHTING GP-FLOOD	148
LIGHTING GP-WARNING BEACON	150
PANEL GP-CIRCUIT BREAKER	151
SENSOR GP-ENGINE	153
SENSOR GP-LIQUID LEVEL	155
SENSOR GP-POSITION	156
SENSOR GP-PRESSURE	159
SENSOR GP-SPEED	162
SENSOR GP-TEMPERATURE	166
SERVICE GP-MONITOR	169
SERVICE GP-POWER TRAIN	170
STARTING MOTOR GP-ELECTRIC	171
SWITCH AS-HORN	174
SWITCH GP-BYPASS	175
SWITCH GP-DISCONNECT	176
SWITCH GP-MAGNETIC	177
WARNING GP-BACKUP	180
WIRING GP	181
WIRING GP-ENGINE	183
WIRING GP-HEATER	186
WIRING GP-PLATFORM	187
POWER TRAIN	190
AXLE GP	190
CONTROL GP-TRANSMISSION	191
DIFFERENTIAL & BEVEL GEAR GP	193
FILTER GP-OIL	197
FINAL DRIVE GP	198
LINES GP-POWER TRAIN OIL	200
MOUNTING GP-TORQUE CONVERTER	203
MOUNTING GP-TRANSMISSION	204
PLANETARY GP-TRANSMISSION	205
POWER TRAIN AR	212
PUMP GP-GEAR	213
SEGMENT GP-SPROCKET	216
SHAFT GP-DRIVE	217
TORQUE CONVERTER GP	218
TRANSMISSION AR	222
UNIVERSAL JOINT GP	223
VALVE GP-MODULATING	224
VALVE GP-PRIORITY	226
VALVE GP-RELIEF	228
VALVE GP-SOLENOID	231
VALVE GP-TRANSMISSION CONTROL	232
FRAME AND BODY	234
CASE & FRAME GP	234
DRAWBAR GP	236
ENCLOSURE GP	237
FENDER GP	240
GRID GP-SAND BLAST ERODING	241
GRILL GP-RADIATOR	242
GUARD GP-BOTTOM	243
GUARD GP-FUEL TANK	245
GUARD GP-POWER TRAIN FILTER	246
GUARD GP-RADIATOR	247
GUARD GP-TRACK GUIDE	249
GUARD GP-TRACK ROLLER	250
HOOD & GUARD GP	251
HOOD GP	259
PANEL GP-SOUND SUPPRESSION	261
SWEEP GP	262
UNDERCARRIAGE	266
BAR GP-EQUALIZER	266
CAP GP-TRACK IDLER	268
FRAME GP-TELESCOPING RECOIL	269
GUIDING AR-UNDERCARRIAGE	271
IDLER GP-TRACK	272
LINK AS-TRACK	273
MOUNTING GP-CARRIER ROLLER	275
PIVOT BAR GP	276
ROLLER GP-TRACK CARRIER	277
ROLLER GP-TRACK-DOUBLE FLANGE	279
ROLLER GP-TRACK-SINGLE FLANGE	283
TRACK ADJUSTER & RECOIL GP	285
TRACK GP	286
UNDERCARRIAGE AR	288
UNDERCARRIAGE GP	288
STEERING AND BRAKING SYSTEM	289
BRAKE & DIFFERENTIAL DRIVE GP	289
BRAKE & PLANETARY GP	293
BRAKE GP-STEERING	295
CONTROL GP-PARKING BRAKE	296
CONTROL GP-STEERING & TMSN	298
FASTENER GP	304
FILTER GP-OIL	305

TABLE OF CONTENTS

Name	Page
HEAD GP-PUMP	306
LINES GP-STEERING	308
MANIFOLD & VALVE GP	311
MOTOR GP-PISTON	313
PEDAL GP-GOVERNOR & BRAKE	314
PUMP GP-CHARGE	316
PUMP GP-PISTON	317
ROTATING GP-MOTOR	319
ROTATING GP-PUMP	321
VALVE GP-BYPASS	323
VALVE GP-CONTROL	324
VALVE GP-FLUSHING	326
VALVE GP-PILOT	327
VALVE GP-PRESS & FLOW CMPNSTR	329
VALVE GP-RELIEF	330
VALVE GP-SERVO	333
VALVE GP-SOLENOID	337
HYDRAULIC SYSTEM	339
CONTROL GP-HYDRAULIC HAND	339
COOLER GP-HYDRAULIC OIL	345
CYLINDER GP-ANGLING	346
CYLINDER GP-LIFT	348
CYLINDER GP-RIPPER LIFT	352
CYLINDER GP-TILT	354
FILTER GP-OIL	358
HYDRAULIC AR	359
HYDRAULIC AR-4 VALVE	360
LINES GP-ANGLE & TILT	361
LINES GP-HYDRAULIC	365
LINES GP-LIFT CYLINDER	368
LINES GP-PILOT	374
LINES GP-PUMP	378
LINES GP-RIPPER	382
LINES GP-TILT CYLINDER	386
MOUNTING GP-CYLINDER	390
MOUNTING GP-VALVE	392
PUMP GP-PISTON	393
ROTATING GP-PUMP	395
TANK & FILTER GP-HYDRAULIC	396
VALVE GP-BANK 2	399
VALVE GP-BANK 3	400
VALVE GP-BANK 4	401
VALVE GP-CONTROL	403
VALVE GP-PRESS & FLOW CMPNSTR	415
VALVE GP-RELIEF	417
IMPLEMENTS	419
BULLDOZER AR	419
BULLDOZER AR-SEMI-UNIVERSAL	419
C-FRAME GP-POWER ANGLING	421
LINK GP-PITCH	423
MOUNTING GP-RIPPER	424
PIN GP	426
PUSH ARM GP	427
RIPPER AR	429
TRUNNION GP-BULLDOZER	430
WORK TOOLS	431
BLADE GP-ANGLING	431
BLADE GP-SEMI-UNIVERSAL	433
EDGE GP-BIT & CUTTING	435
RIPPER GP	437
TOOTH GP-RIPPER	439
OPERATOR STATION	442
ADJUSTER GP-SEAT	442
AIR CONDITIONER GP	444
BLOWER GP-CAB	446
CAB AR	448
CAB GP	449
CANOPY AR	454
COMPRESSOR GP-REFRIGERANT	455
CONDENSER GP-REFRIGERANT	457
COVER GP-CONSOLE	459
DOOR GP-CAB	466
HEATER GP-CAB	470
HEATER GP-OPEN ROPS	472
HOUSING GP-SEAT SUSPENSION	476
INSTALLATION GP-LINES	479
INSTALLATION GP-RADIO	481
INSULATION GP-WEATHER	482
LATCH GP	483
LINER GP-CAB	484
LINES GP-AIR CONDITIONER	485
LINES GP-HEATER	487
MIRROR GP	490
MODULE GP-QUAD GAUGE	491
MOUNTING GP-CAB	492
MOUNTING GP-PLATFORM	493
MOUNTING GP-ROPS	495
PAN GP-BACKREST	496
PANEL GP-INSTRUMENT	499
PLATFORM GP	506
PLATFORM GP-OPERATOR	507
PLUG AS	509
PRESSURIZER GP-CAB	510
RADIO GP	512
RECLINER GP-SEAT	514
ROPS GP	515
SCREEN GP-PROTECTION	519
SCREEN GP-SUN	521
SEAT GP	522
SEAT GP-SUSPENSION	528
STEP GP	535
SUSPENSION GP-SEAT	536
TANK GP-WINDOW WASHER	543
WINDOW GP-CAB	544
WIPER GP-WINDOW	547

TABLE OF CONTENTS

Name	Page	Name	Page
SERVICE EQUIPMENT AND SUPPLIES	549		
FILM GP	549		
PLATE & FILM GP	550		
PART NUMBER INDEX	B1		

TABLE DES MATIÈRES

Désignation	Page
GÉNÉRALITÉS	A24
OPTIONS DE RÉPARATION	A41
ADDITIFS POUR LIQUIDE DE REFROIDISSEMENT	A46
PIÈCES DE RECHANGE	A63
INDEX	A100
VERSION DE MACHINE	1
VERSION DE CHASSIS	1
VUE DU MODÈLE	1
VERSION DE MACHINE-TEMPÉRATURE AMBIANTE ÉLEVÉE	1
VERSION DE MOTEUR	2
MOTEUR COMPLET (VERSION)	2
MOTEUR - PARTIE CENTRALE (VERSION)	4
MONTAGE DE MOTEUR (VERSION)	5
MOTEUR STANDARD	6
COURROIE (ASS)	6
TENDEUR DE COURROIE (ASS)	9
ARBRE A CAMES (ASS)	10
CHÂSSIS-PORTEUR DE JOINT (ASS)	11
BLOC-CYLINDRES - COUVERCLE (ASS)	12
COUVERCLE DE CARTER AV (ASS)	13
CACHE-SOUPAPES (ASS)	14
VILEBREQUIN (ASS)	15
BLOC-CYLINDRES (ASS)	17
CULASSE (ENS)	20
CULASSE (ASS)	24
AMORTISSEUR DE VIBRATIONS ET POULIE (ASS)	31
VIDANGE-HUILE DE MOTEUR (ASS)	32
ENTRAÎNEMENT DE VENTILATEUR (ASS)	35
COUVERCLE DE CARTER AV - BOULONNERIE (ASS)	37
BOULONNERIE DE CARTER AV (ASS)	38
VOLANT MOTEUR (ASS)	39
PIGNONNERIE AV (ASS)	40
CARTER DE VOLANT (ASS)	41
CARTER AV (ASS)	42
POUSSOIR DE SOUPAPE (ASS)	43
OEILLETONS DE LEVAGE MOTEUR (ASS)	44
MONTAGE DE MOTEUR (ASS)	45
MONTAGE D'ENTRAÎNEMENT DE VENTILATEUR (ASS)	47
HUILE MOTEUR - CARTER (ASS)	48
PISTON ET BIELLE (ASS)	49
BOUCHON DE MOTEUR (ASS)	50
POULIE DE ROUE AV (ENS)	51
POULIE (ASS)	52
POULIE D'ENTRAÎNEMENT DE VENTILATEUR (ASS)	54
POULIE-ROUE AVANT (ASS)	55
JOINT DE VILEBREQUIN (ASS)	56
JOINT DE CARTER DE VOLANT (ASS)	57
JOINT DE L'INJECTEUR DE CARBURANT (ASS)	58
INSONORISATION (VERSION)	59
INSONORISATION (ASS)	60
CULBUTERIE (ASS)	61
CIRCUIT DE GRAISSAGE	64
ADAPTATEUR (ASS)-CANALISATION D'HUILE MOTEUR	64
RENIFLARD (ASS)	65
BOUCHON DE REMPLISSAGE D'HUILE MOTEUR (ASS)	66
FILTRE À HUILE MOTEUR (ASS)	67
DISPOSITIF D'EVACUATION DES VAPEURS DE CARTER	68
JAUGE D'HUILE MOTEUR (BAIONNETTE) (ASS)	70
CANALISATIONS D'HUILE MOTEUR (ASS)	71
CANALISATIONS D'HUILE DE TURBOCOMPRESSEUR (ASS)	72
POMPE A HUILE MOTEUR (ASS)	74
CIRCUIT DE REFROIDISSEMENT	76
REFROIDISSEUR D'HUILE MOTEUR (ASS)	76
REFROIDISSEMENT (VERSION)	77
VENTILATEUR (ASS)	78
VENTILATEUR SOUFFLANT (ASS)	80
VENTILATEUR A PALES RÉVERSIBLES (ASS)	81
CANALISATIONS D'EAU (ASS)	82
POMPE A EAU (ASS)	84
RADIATEUR (ASS)	87
CIRCUIT D'ADMISSION D'AIR ET D'ECHAPPEMENT	90
REFROIDISSEUR D'ADMISSION (ASS)	90
FILTRE A AIR (ASS)	91
COUVERCLE DE COLLECTEUR D'ADMISSION (ASS)	92
COUDE D'ADMISSION D'AIR (ASS)	93
INDICATEUR DE COLMATAGE DE FILTRE À AIR (ASS)	94

TABLE DES MATIÈRES

Désignation	Page
CANALISATIONS D'AIR (ASS)	95
COLLECTEUR D'ÉCHAPPEMENT (ASS)	97
MONTAGE DE SILENCIEUX (ASS)	98
SILENCIEUX (ASS)	99
PROTECTION DE FILTRE À AIR (ASS)	100
TURBOCOMPRESSEUR (ASS)	101
CIRCUIT DE CARBURANT	103
FILTRE DE SÉPARATEUR D'EAU ET DE CARBURANT (ASS)	103
CANALISATIONS DE CARBURANT (ASS)	104
CANALISATIONS DU FILTRE A CARBURANT (ASS)	106
POMPE D'INJECTEURS-POMPES HYDRAU. ET MONTAGE	108
POMPE D'INJECTION (ASS)	109
INJECTEURS-POMPES HYDRAULIQUES (ENS)	111
RÉSERVOIR DE CARBURANT (ASS)	112
SOUPAPE - SOLÉNOÏDE (ASS)	114
CIRCUIT DE DÉMARRAGE ET ÉLECTRIQUE	115
AVERTISSEUR (ASS)	115
ALTERNATEUR DE CHARGE (ASS)	116
BATTERIE ET CÂBLAGE	121
BATTERIE (ASS)	124
COMMANDE ET MONTAGE - MOTEUR	126
COMMANDE ELECTRONIQUE DE MOTEUR (ASS)	127
COMMANDE DE MACHINE (ASS)	129
GROUPE DE CONTROLE	130
COMMANDE NON PROGRAMMEE (ASS)	132
COMPOSANTS ÉLECTRONIQUES DE LA MACHINE (VERSION)	133
ÉLECTRONIQUE - MACHINE (ENS)	133
ÉLECTRONIQUE-MONITEUR (ASS)	133
ÉLECTRONIQUE DE TRANSMISSION (ASS)	134
BOULONNERIE DE CABLAGE DU MOTEUR (ASS)	135
EAU DES CHEMISES - RECHAUFFEUR (ASS)	136
RÉCHAUFFEUR D'AIDE AU DÉMARRAGE (ASS)	138
MONTAGE-SÉCURITÉ (ASS)	139
PLAFONNIER (ASS)	143
LAMPE - PHARE (ASS)	144
LAMPE - GYROPHARE (ASS)	147
ÉCLAIRAGE - PROJECTEURS (ASS)	148
ÉCLAIRAGE - GYROPHARE (ASS)	150
DISJONCTEUR DU PANNEAU DE COMMANDE (ASS)	151
CAPTEUR - MOTEUR (ASS)	153
CAPTEUR DE NIVEAU DU LIQUIDE (ASS)	155
SONDE - CIRCUIT DE CARBURANT	156
CAPTEUR DE PRESSION (ASS)	159
CAPTEUR DE VITESSE (ASS)	162
CAPTEUR DE TEMPERATURE (ASS)	166
ENTRETIEN DU MONITEUR (ASS)	169
ENTRETIEN DE LA TRANSMISSION (ASS)	170
DÉMARREUR ÉLECTRIQUE (ASS)	171
INTERRUPTEUR DE KLAXON (ENS)	174
INTERRUPTEUR - DÉRIVATION (ASS)	175
ROBINET DE BATTERIE (ASS)	176
CONTACTEUR MAGNETIQUE (ASS)	177
AVERTISSEUR DE RECUL (ASS)	180
CÂBLAGE (ASS)	181
CABLAGE DE MOTEUR (ASS)	183
CABLAGE DU CHAUFFAGE DE CABINE (ASS)	186
CABLAGE - PLATE-FORME (ASS)	187
TRANSMISSION	190
ESSIEU (ASS)	190
COMMANDE DE BOITE DE VITESSES (ASS)	191
COURONNE ET DIFFERENTIEL (ASS)	193
FILTRE A HUILE (ASS)	197
RÉDUCTEURS (ASS)	198
CANALISATIONS D'HUILE DE TRANSMISSION (ASS)	200
CONVERTISSEUR DE COUPLE - MONTAGE (ASS)	203
REDUCTEUR MARIN - MONTAGE (ASS)	204
BOÎTE PLANÉTAIRE (ASS)	205
TRANSMISSION (VERSION)	212
POMPE A ENGRENAGES (ASS)	213
SEGMENT DE BARBOTIN (ASS)	216
ARBRE D'ENTRAÎNEMENT (ASS)	217
CONVERTISSEUR DE COUPLE (ASS)	218
BOÎTE DE VITESSES (VERSION)	222
JOINT UNIVERSEL (ASS)	223
SOUPAPE DE MODULATION (ASS)	224
SOUPAPE DE PRIORITE (ASS)	226
CLAPET DE DECHARGE (ASS)	228
SOUPAPE - SOLÉNOÏDE (ASS)	231
DISTRIBUTEUR DE BOITE (ASS)	232
CHÂSSIS ET BENNE	234
CHÂSSIS ET CARTER (ASS)	234
BARRE D'ATTELAGE (ASS)	236

TABLE DES MATIÈRES

Désignation	Page
CARENAGE (ASS)	237
GARDE-BOUE (ASS)	240
DEFLECTEUR PARE-SABLE (ASS)	241
GRILLE DE RADIATEUR (ASS)	242
BLINDAGE INFÉRIEUR (ASS)	243
PROTECTION DU RÉSERVOIR DE CARBURANT (ASS)	245
PROTECTION - FILTRE DE TRANSMISSION (ASS)	246
PROTÈGE-RADIATEUR (ASS)	247
GUIDE PROTECTEUR DE CHAÎNE (ASS)	249
PROTEGE-GALETS (ASS)	250
CAPOT ET PROTECTION (ASS)	251
CAPOT (ASS)	259
PANNEAU D'INSONORISATION (ASS)	261
ARCEAUX DE DÉBARDAGE (ASS)	262
TRAIN DE ROULEMENT	266
BALANCIER DE SUSPENSION (ASS)	266
CHAPEAU DE ROUE AV (CHAINE) (ASS)	268
CARTER TELESCOPIQUE DE MECANISME AMORTISSEUR	269
VERSION DE GUIDAGE DE TRAIN DE ROULEMENT	271
ROUE AV - CHAINES (ASS)	272
MAILLON DE CHAINE (ENS)	273
MONTAGE DE GALET SUPÉRIEUR	275
TRAVERSE PIVOT (ASS)	276
GALET SUPERIEUR (ASS)	277
GALET A BOUDIN DOUBLE (ASS)	279
GALET A BOUDIN SIMPLE (ASS)	283
MECANISME AMORTISSEUR ET REGLAGE DE CHAINES (ASS)	285
CHAINES (ASS)	286
TRAIN DE ROULEMENT	288
TRAIN DE ROULEMENT (ASS)	288
CIRCUIT DE DIRECTION ET DE FREIN	289
FREIN ET ENTRAÎNEMENT DE DIFFÉRENTIEL (ASS)	289
FREIN ET TRAINS PLANÉTAIRES (ASS)	293
FREIN DE DIRECTION	295
COMMANDE DE FREIN DE STATIONNEMENT (ASS)	296
COMMANDE DE DIRECTION ET BOITE DE VITESSES	298
BOULONNERIE (ASS)	304
FILTRE A HUILE (ASS)	305
TÊTE DE POMPE (ASS)	306
CANALISATIONS DE DIRECTION (ASS)	308
COLLECTEUR ET SOUPAPE (ASS)	311
GROUPE DE MOTEUR A PISTONS	313
PÉDALE DE RÉGULATEUR ET DE FREIN (ASS)	314
POMPE DE GAVAGE (ASS)	316
POMPE A PISTONS (ASS)	317
GROUPE DE ROTATION DE MOTEUR	319
GROUPE DE ROTATION DE POMPE	321
SOUPAPE DE DÉRIVATION (ASS)	323
DISTRIBUTEUR (ASS)	324
VANNE DE RINÇAGE (ASS)	326
SOUPAPE PILOTE (ASS)	327
SOUPAPE RÉGULATRICE DE PRESSION ET DÉBIT	329
CLAPET DE DECHARGE (ASS)	330
SERVOVALVE (ASS)	333
SOUPAPE - SOLÉNOÏDE (ASS)	337
CIRCUIT HYDRAULIQUE	339
COMMANDE HYDRAULIQUE MANUELLE (ASS)	339
REFROIDISSEUR D'HUILE HYDRAULIQUE (ASS)	345
VERIN D'ORIENTATION (ASS)	346
VÉRIN DE LEVAGE (ASS)	348
VERIN DE LEVAGE DE RIPPER (ASS)	352
VÉRIN D'INCLINAISON (ASS)	354
FILTRE A HUILE (ASS)	358
VERSION HYDRAULIQUE	359
DISTRIBUTEUR QUADRUPLE CORPS (VERSION)	360
CANALISATIONS D'INCLINAISON ET D'ORIENTATION	361
CANALISATIONS HYDRAULIQUES (ASS)	365
CANALISATIONS DE VÉRIN DE LEVAGE (ASS)	368
CANALISATIONS A COMMANDE PILOTE (ASS)	374
CANALISATIONS DE POMPE (ASS)	378
CANALISATIONS DU RIPPER (ASS)	382
CANALISATIONS DU VÉRIN D'INCLINAISON (ASS)	386
MONTAGE DE VÉRIN (ASS)	390
MONTAGE DE SOUPAPE (ASS)	392
POMPE A PISTONS (ASS)	393
GROUPE DE ROTATION DE POMPE	395
RÉSERVOIR HYDRAULIQUE ET FILTRE (ASS)	396
DISTRIBUTEUR DOUBLE ÉLÉMENT (ASS)	399
DISTRIBUTEUR TRIPLE ÉLÉMENT (ASS)	400
DISTRIBUTEUR 4 ÉLÉMENTS (ASS)	401
DISTRIBUTEUR (ASS)	403

TABLE DES MATIÈRES

Désignation	Page
SOUPAPE RÉGULATRICE DE PRESSION ET DÉBIT	415
CLAPET DE DECHARGE (ASS)	417
ÉQUIPEMENTS	419
VERSION DE BULLDOZER	419
LAME DE BULLDOZER SEMI-UNIVERSELLE (VERSION)	419
BATI EN C - LAME ORIENTABLE	421
PAS DU MAILLON (ASS)	423
MONTAGE DE RIPPER (ASS)	424
AXE DE GODET (ASS)	426
BRAS DE POUSSÉE (ASS)	427
RIPPER (VERSION)	429
TOURILLON DE BULLDOZER (ASS)	430
OUTILS DE TRAVAIL	431
LAME À ORIENTATION (ASS)	431
LAME SEMI-UNIVERSELLE (ASS)	433
EMBOUT ET LAME DE COUPE (ASS)	435
RIPPER (ASS)	437
DENT DE RIPPER (ASS)	439
POSTE DE CONDUITE	442
REGLAGE DE SIEGE (ASS)	442
CLIMATISEUR (ASS)	444
VENTILATEUR SOUFFLANT DE CABINE (ASS)	446
CABINE (VERSION)	448
CABINE (ASS)	449
TOIT (VERSION)	454
COMPRESSEUR DE REFRIGERANT (ASS)	455
CONDENSEUR DE RÉFRIGÉRANT	457
COUVERCLE DE LA CONSOLE (ASS)	459
PORTIÈRE DE CABINE (ASS)	466
CHAUFFAGE DE CABINE (ASS)	470
RECHAUFFEUR DE CABINE ROPS OUVERTE (ASS)	472
SUSPENSION DE SIEGE - CARTER (ASS)	476
CANALISATIONS DE MONTAGE (ASS)	479
MONTAGE DE RADIO (ASS)	481
ISOLATION DE CABINE (ASS)	482
VERROU (ASS)	483
CABINE - REVÊTEMENT (ASS)	484
CANALISATIONS DE CLIMATISEUR (ASS)	485
CANALISATIONS DE CHAUFFAGE (ASS)	487
RÉTROVISEUR (ASS)	490
MODULE - QUATRE INSTRUMENTS (ASS)	491
MONTAGE DE CABINE (ASS)	492
MONTAGE DE PLATE-FORME (ASS)	493
MONTAGE DU TOIT ROPS (ASS)	495
COUVERCLE INFÉRIEUR-DOSSIER (ASS)	496
TABLEAU DE BORD (ASS)	499
PLATE-FORME (ASS)	506
PLATE-FORME DE CABINE	507
PRISE (ENS)	509
SURPRESSEUR (ASS)	510
RADIO (ASS)	512
SIÈGE INCLINABLE (ASS)	514
TOIT ROPS (ASS)	515
GRILLE DE PROTECTION (ASS)	519
PARE-SOLEIL (ASS)	521
SIÈGE (ASS)	522
SIÈGE AVEC SUSPENSION (ASS)	528
MARCHEPIED (ASS)	535
SIÈGE AVEC SUSPENSION (ASS)	536
RÉSERVOIR - LAVE-GLACE (ASS)	543
VITRE DE CABINE (ASS)	544
ESSUIE-GLACE (ASS)	547
MATÉRIEL ET FOURNITURES D'ENTRETIEN	549
PLAQUE SIGNALÉTIQUE (ASS)	549
PLAQUES SIGNALETIQUES ET AUTOCOLLANTS (ASS)	550
INDEX DE NUMÉROS DE PIÈCES	B1

CONTENIDO

Nombre	Página
INFORMACIÓN GENERAL	A28
ALTERNATIVAS DE REPARACIÓN	A42
ADITIVOS DE REFRIGERANTE SUPLEMENTARIOS	A47
PIEZAS DE MANTENIMIENTO	A70
INDICE	A112
CONFIGURACIÓN DE MÁQUINA	1
CHASIS (CONFIG)	1
CONFIGURACIÓN GENERAL	1
MAQUINA DE ALTA TEMP. AMBIENTE (CONFIG)	1
CONFIGURACIÓN DE MOTOR	2
MOTOR COMPLETO (CONFIG)	2
MOTOR - NÚCLEO (CONFIG)	4
CONFIGURACIÓN DE INSTALACIÓN DEL MOTOR	5
MOTOR BÁSICO	6
CORREA (GR)	6
AJUSTADOR DE CORREA (GR)	9
ÁRBOL DE LEVAS (GR)	10
SELLO DEL PORTADOR (GR)	11
TAPA DEL BLOQUE MOTOR (GR)	12
TAPA DE LA CAJA DELANTERA (GR)	13
TAPA DEL MECANISMO DE VÁLVULAS (GR)	14
CIGÜEÑAL (GR)	15
BLOQUE MOTOR (GR)	17
CULATA DE CILINDROS (CONJ)	20
CULATA DE CILINDROS (GR)	24
AMORTIGUADOR Y POLEA (GR)	31
DRENAJE DEL ACEITE DE MOTOR	32
IMPULSOR DE VENTILADOR (GR)	35
TORNILLERÍA DE LA TAPA DELANTERA	37
CAJA DELANTERA - TORNILLERÍA DE LA (GR)	38
VOLANTE (GR)	39
ENGRANAJE DELANTERO (GR)	40
VOLANTE - CAJA DE (GR)	41
CAJA DELANTERA (GR)	42
VÁLVULA DE LEVANTAMIENTO (GR)	43
CÁNCAMOS DE LEVANTAMIENTO DEL MOTOR (GR)	44
MONTAJE DEL MOTOR (GR)	45
MONTAJE DEL MANDO DE VENTILADOR (GR)	47
CÁRTER - COLECTOR DEL (GR)	48
PISTÓN Y BIELA (GR)	49
TAPÓN DEL MOTOR (GR)	50
RUEDA GUÍA - POLEA DE	51
POLEA (GR)	52
POLEA DEL MANDO DE VENTILADOR (GR)	54
GRUPO DE POLEA LOCA	55
SELLO DE CIGÜEÑAL (GR)	56
SELLO DE LA CAJA DE VOLANTE (GR)	57
SELLO DEL INYECTOR DEL COMBUSTIBLE (GR)	58
INSONORIZADOR (CONFIG)	59
INSONORIZADOR (GR)	60
MECANISMO DE VÁLVULAS (GR)	61
SISTEMA DE LUBRICACIÓN	64
ADAPTADOR DE TUBERIA DE ACEITE DE MOTOR (GR)	64
RESPIRADERO (GR)	65
TUBO DE LLENADO DE ACEITE (GR)	66
FILTRO DE ACEITE DEL MOTOR (GR)	67
ESCAPE DE GASES (GR)	68
INDICADOR DEL NIVEL DE ACEITE (VARILLA) (GR)	70
TUBERÍAS DE ACEITE DEL MOTOR (GR)	71
TURBOCOMPRESOR - TUBERÍAS DE ACEITE DEL (GR)	72
BOMBA DE ACEITE DEL MOTOR (GR)	74
SISTEMA DE ENFRIAMIENTO	76
ENFRIADOR DE ACEITE DEL MOTOR (GR)	76
CONFIGURACIÓN DE ENFRIAMIENTO	77
VENTILADOR (GR)	78
SOPLADOR - VENTILADOR (GR)	80
VENTILADOR REVERSIBLE (GR)	81
TUBERÍAS DEL AGUA (GR)	82
BOMBA DE AGUA (GR)	84
RADIADOR (GR)	87
SISTEMA DE ADMISIÓN Y ESCAPE DE AIRE	90
POSENFRIADOR (GR)	90
FILTRO DE AIRE (GR)	91
TAPA DE ADMISIÓN DE AIRE (GR)	92
CODO DE ADMISIÓN DE AIRE (GR)	93
INDICADOR DE CAMBIO DE FILTRO DE ACEITE (GR)	94
AIRE - TUBERÍAS DE (GR)	95
MÚLTIPLE DE ESCAPE (GR)	97
MONTAJE DEL SILENCIADOR (GR)	98
SILENCIADOR (GR)	99
GRUPO DE PROTECTOR, FILTRO	100

CONTENIDO

Nombre	Página
TURBOCOMPRESOR (GR)	101
SISTEMA DE COMBUSTIBLE	103
FILTRO DE COMBUSTIBLE Y SEPARADOR DE AGUA (GR)	103
TUBERÍAS DE COMBUSTIBLE (GR)	104
TUBERÍAS DEL FILTRO DE COMBUSTIBLE	106
BOMBA HIDRÁULICA DEL INYECTOR UNITARIO Y MONTAJE	108
BOMBA DE INYECCIÓN UNITARIA (GR)	109
BOMBA HIDRÁULICA DEL INYECTOR UNITARIO (GR)	111
COMBUSTIBLE - TANQUE DE (GR)	112
VÁLVULA DE SOLENOIDE (GR)	114
SISTEMA ELÉCTRICO Y DE ARRANQUE	115
ALARMA (GR)	115
CARGA - ALTERNADOR DE (GR)	116
BATERÍA Y CABLES (GR)	121
BATERÍA (GR)	124
CONTROL ELECTRÓNICO DEL MOTOR Y MONTAJE	126
CONTROL ELECTRÓNICO DEL MOTOR (GR)	127
CONTROL DE MAQUINA (GR)	129
CONTROL DE MONITOR (GR)	130
CONTROL NO PROGRAMADO (GR)	132
CONFIGURACIÓN ELECTRÓNICA DE LA MÁQUINA	133
ELECTRONICA DE LA MAQUINA (GR)	133
ELECTRONICA DE MONITOR (GR)	133
TREN DE FUERZA-GRUPO ELECTRÓNICO	134
TORNILLERIA DE CABLES DEL MOTOR (GR)	135
AGUA DE LAS CAMISAS - CALENTADOR DEL (GR)	136
GRUPO DE CALENTADOR, ARRANQUE ASISTIDO	138
INSTALACION DE SEGURIDAD (GR)	139
LÁMPARA DEL TECHO (GR)	143
REFLECTOR (GR)	144
LÁMPARA DE BALIZA DE ADVERTENCIA (GR)	147
LUCES DE REFLECTOR (GR)	148
LUZ DE BALIZA (GR)	150
PANEL DE DISYUNTORES (GR)	151
SENSOR DEL MOTOR (GR)	153
SENSOR DEL NIVEL DE LÍQUIDO	155
DETECTOR DE POSICIÓN (SISTEMA DE COMBUST.) (GR)	156
SENSOR DE PRESIÓN (GR)	159
SENSOR DE VELOCIDAD (GR)	162
SENSOR DE TEMPERATURA (GR)	166
SERVICIO DE MONITOR (GR)	169
SERVICIO DE TREN DE FUERZA (GR)	170
MOTOR DE ARRANQUE ELÉCTRICO (GR)	171
INTERRUPTOR DE LA BOCINA (CONJ)	174
INTERRUPTOR DE DERIVACIÓN	175
DISYUNTOR (GR)	176
INTERRUPTOR MAGNÉTICO (GR)	177
RETROCESO - ALARMA DE (GR)	180
CABLES (GR)	181
CABLES DEL MOTOR (GR)	183
CABLES DE CALEFACCIÓN (GR)	186
CABLES DE LA PLATAFORMA (GR)	187
TREN DE FUERZA	190
EJE (GR)	190
CONTROL DE LA TRANSMISIÓN (GR)	191
DIFERENCIAL Y CORONA (GR)	193
FILTRO DE ACEITE (GR)	197
MANDO FINAL (GR)	198
TUBERÍAS DE ACEITE DEL TREN DE FUERZA (GR)	200
MONTAJE DEL CONVERTIDOR DE PAR (GR)	203
MONTAJE DE LA TRANSMISIÓN (GR)	204
TRANSMISIÓN PLANETARIA (GR)	205
TREN DE FUERZA (CONFIG)	212
BOMBA DE ENGRANAJES (GR)	213
SEGMENTO DE RUEDA MOTRIZ (GR)	216
EJE DE MANDO (GR)	217
CONVERTIDOR DE PAR (GR)	218
TRANSMISION (CONFIG)	222
JUNTA UNIVERSAL (GR)	223
VÁLVULA DE MODULACIÓN (GR)	224
PRIORIDAD - VÁLVULA DE (GR)	226
VÁLVULA DE ALIVIO (GR)	228
VÁLVULA DE SOLENOIDE (GR)	231
VÁLVULA DE CONTROL DE LA TRANSMISIÓN (GR)	232
BASTIDOR Y CAJA	234
CAJA Y BASTIDOR (GR)	234
BARRA DE TIRO (GR)	236
COMPARTIMIENTO (GR)	237
GUARDABARROS (GR)	240
PROTECTOR CONTRA ARENA (GR)	241
REJILLA DEL RADIADOR (GR)	242
PROTECTOR INFERIOR (GR)	243
PROTECTOR DEL TANQUE DE COMBUSTIBLE (GR)	245
PROTECTOR DEL FILTRO DEL TREN DE FUERZA (GR)	246

CONTENIDO

Nombre	Página
PROTECTOR DEL RADIADOR (GR)	247
PROTECTOR GUÍA DE CADENA (GR)	249
PROTECTOR DE RODILLOS INFERIORES (GR)	250
CAPO Y PROTECTOR (GR)	251
CAPÓ (GR)	259
PANEL DE INSONORIZACIÓN (GR)	261
PROTECTORES DE RAMAS (GR)	262
TREN DE RODAJE	266
BARRA COMPENSADORA (GR)	266
TAPA DE RUEDA GUÍA (GR)	268
BASTIDOR TELESCÓPICO DEL RESORTE TENSOR (GR)	269
GUIAJE DE TREN DE RODAJE (CONFIG)	271
RUEDA GUÍA DE CADENA (GR)	272
ESLABÓN DE CADENA (CONJ)	273
MONTAJE DE RODILLOS SUPERIORES (GR)	275
BARRA PIVOTE (GR)	276
RODILLO SUPERIOR DE CADENAS (GR)	277
RODILLOS DE PESTAÑA DOBLE (GR)	279
RODILLOS DE PESTAÑA SIMPLE (GR)	283
RESORTE TENSOR Y AJUSTADOR DE LA CADENA (GR)	285
CADENAS (GR)	286
TREN DE RODAJE (CONFIG)	288
TREN DE RODAJE (GR)	288
SISTEMA DE FRENOS Y DIRECCIÓN	289
FRENO Y MANDO DE DIFERENCIAL (GR)	289
FRENO Y PLANETARIOS (GR)	293
FRENO DE DIRECCIÓN (GR)	295
CONTROL DEL FRENO DE ESTACIONAMIENTO	296
CONTROL DE DIRECCIÓN Y TRANSMISIÓN (GR)	298
SUJETADOR (GR)	304
FILTRO DE ACEITE (GR)	305
CABEZA DE BOMBA (GR)	306
TUBERÍAS DE DIRECCIÓN (GR)	308
MÚLTIPLE Y VÁLVULA (GR)	311
PISTONES DEL MOTOR (GR)	313
REGULADOR Y PEDAL DEL FRENO (GR)	314
BOMBA DE CARGA HIDRÁULICA (GR)	316
BOMBA DE PISTONES (GR)	317
GRUPO DE ROTACIÓN DEL MOTOR (GR)	319
GRUPO GIRATORIO DE BOMBA	321
DERIVACIÓN - VÁLVULA DE (GR)	323
VÁLVULA DE CONTROL (GR)	324
VÁLVULA DE DESCARGA (GR)	326
VÁLVULA PILOTO (GR)	327
VÁLVULA COMPENSADORA DE FLUJO Y PRESIÓN (GR)	329
VÁLVULA DE ALIVIO (GR)	330
VÁLVULA DE SERVOMANDO (GR)	333
VÁLVULA DE SOLENOIDE (GR)	337
SISTEMA HIDRÁULICO	339
CONTROL HIDRÁULICO MANUAL (GR)	339
ENFRIADOR DEL ACEITE HIDRAULICO (GR)	345
CILINDRO DE ORIENTACION (GR)	346
CILINDRO DE LEVANTAMIENTO (GR)	348
CILINDRO DE LEVANTAMIENTO DEL DESGARRADOR (GR)	352
INCLINACIÓN HORIZONTAL - CILINDRO DE (GR)	354
FILTRO DE ACEITE (GR)	358
HIDRÁULICA (CONFIG)	359
VÁLVULA HIDRÁULICA DE 4 VÍAS (CONFIG)	360
TUBERIAS DE INCLINACIÓN Y ORIENTACIÓN (GR)	361
TUBERÍAS HIDRÁULICAS (GR)	365
CILINDRO DE LEVANTAMIENTO - TUBERÍAS DEL (GR)	368
TUBERÍAS CON SERVOMANDO (GR)	374
BOMBA - TUBERÍAS DE (GR)	378
TUBERÍAS DEL DESGARRADOR (GR)	382
TUBERÍAS DEL CILINDRO DE INCLINACIÓN (GR)	386
MONTAJE DE CILINDRO (GR)	390
VÁLVULA - MONTAJE DE LA (GR)	392
BOMBA DE PISTONES (GR)	393
GRUPO GIRATORIO DE BOMBA	395
TANQUE Y FILTRO HIDRÁULICOS (GR)	396
VÁLVULAS HIDRÁULICAS - GRUPO DE 2	399
GRUPO DE 3 VÁLVULAS HIDRÁULICAS	400
GRUPO DE 4 VÁLVULAS HIDRÁULICAS	401
VÁLVULA DE CONTROL (GR)	403
VÁLVULA COMPENSADORA DE FLUJO Y PRESIÓN (GR)	415
VÁLVULA DE ALIVIO (GR)	417
IMPLEMENTOS	419
HOJA TOPADORA (CONFIG)	419

CONTENIDO

Nombre	Página
HOJA TOPADORA SEMIUNIVERSAL	419
BASTIDOR DE LA HOJA ORIENTABLE A POTENCIA (GR)	421
ESLABÓN - PASO (GR)	423
MONTAJE DEL DESGARRADOR (GR)	424
PASADOR	426
BRAZO DE EMPUJE (GR)	427
DESGARRADOR (CONFIG)	429
MUÑÓN DE LA HOJA TOPADORA (GR)	430
HERRAMIENTAS	431
HOJA ORIENTABLE (GR)	431
HOJA SEMIUNIVERSAL (GR)	433
GRUPO DE CANTONERA Y CUCHILLA	435
DESGARRADOR (GR)	437
DIENTE DE DESGARRADOR (GR)	439
CABINA DEL OPERADOR	442
AJUSTADOR DEL ASIENTO (GR)	442
ACONDICIONADOR DE AIRE (GR)	444
VENTILADOR SOPLADOR DE LA CABINA (GR)	446
CABINA (CONFIG)	448
CABINA (GR)	449
TECHO (CONFIG)	454
COMPRESOR DE REFRIGERANTE (GR)	455
CONDENSADOR DE REFRIGERANTE (GR)	457
TAPA DE LA CONSOLA (GR)	459
PUERTA DE CABINA	466
CALEFACCIÓN DE LA CABINA (GR)	470
CALENTADOR DE LA CABINA ROPS ABIERTA (GR)	472
CAJA DE LA SUSPENSIÓN DEL ASIENTO (GR)	476
GRUPO DE INSTALACIÓN, TUBERIAS	479
INSTALACIÓN DE RADIO (GR)	481
GRUPO DE AISLAMIENTO DE LA CABINA	482
RETÉN (GR)	483
REVESTIMIENTO DE LA CABINA (GR)	484
TUBERÍAS DE ACONDICIONADOR DE AIRE (GR)	485
TUBERÍAS DE LA CALEFACCIÓN (GR)	487
ESPEJO (GR)	490
MODULO ELECTRÓNICO DE CUATRO INDICADORES (GR)	491
GRUPO DE MONTAJE DE LA CABINA	492
MONTAJE DE LA PLATAFORMA (GR)	493
MONTAJE DE LA ESTRUCTURA ROPS (GR)	495
SOPORTE DEL RESPALDO (GR)	496
TABLERO DE INSTRUMENTOS (GR)	499
PLATAFORMA (GR)	506
PLATAFORMA DE LA CABINA	507
ENCHUFE (CONJ)	509
PRESURIZADOR (GR)	510
RADIO (GR)	512
RECLINACION DE ASIENTO (GR)	514
ESTRUCTURA ROPS (GR)	515
REJILLA PROTECTORA (GR)	519
PERSIANA PARA EL SOL (GR)	521
ASIENTO (GR)	522
SUSPENSIÓN - ASIENTO CON (GR)	528
ESTRIBO DEL OPERADOR (GR)	535
ASIENTO CON SUSPENSIÓN (GR)	536
TANQUE DEL LAVAPARABRISAS (GR)	543
VENTANA DE LA CABINA (GR)	544
LIMPIAPARABRISAS DE LA VENTANA (GR)	547
EQUIPOS Y SUMINISTRO DE SERVICIOS	549
ETIQUETA DE ADVERTENCIA (GR)	549
CALCOMANÍAS Y PLACAS DE IDENTIFICACIÓN (GR)	550
INDICE DE NUMEROS DE PIEZA	B1

ÍNDICE

Designação	Página
INFORMAÇÃO GERAL	A32
ALTERNATIVAS DE REPARO	A43
ADITIVOS SUPLEMENTARES DO LÍQUIDO ARREFECEDOR	A48
NOMENCLATURA DE PEÇAS INGLÊS-PORTUGUÊS	A50
PEÇAS DE MANUTENÇÃO	A77
ÍNDICE	A124
MÁQUINA - ARRANJO	1
CHASSI	1
ARRANJO GERAL	1
MÁQUINA-TEMP. AMBIENTE ALTA	1
MOTOR - ARRANJO	2
MOTOR COMPLETO	2
MOTOR - NÚCLEO	4
GRUPO DE INSTALAÇÃO - MOTOR	5
MOTOR BÁSICO	6
CORREIA	6
AJUSTADOR DE CORREIAS	9
EIXO-COMANDO DE VÁLVULA	10
SUPORTE DO RETENTOR	11
TAMPA - BLOCO DO MOTOR	12
TAMPA - CAIXA DIANTEIRA	13
TAMPA - MECANISMO DAS VÁLVULAS	14
VIRABREQUIM	15
BLOCO DO MOTOR	17
CABEÇOTE DO MOTOR	20
AMORTECEDOR DE VIBRAÇÕES E POLIA	31
DRENO - ÓLEO DO MOTOR	32
COMANDO DO VENTILADOR	35
FIXADORES - TAMPA DIANTEIRA	37
FIXADORES - CAIXA DIANTEIRA	38
VOLANTE DO MOTOR	39
ENGRENAGENS DE DISTRIBUIÇÃO	40
CAIXA DO VOLANTE DO MOTOR	41
CAIXA DIANTEIRA	42
TUCHO DA VÁLVULA	43
LEVANTAMENTO DO MOTOR	44
MONTAGEM - MOTOR	45
MONTAGEM - COMANDO DO VENTILADOR	47
CÁRTER DO ÓLEO DO MOTOR	48
PISTÃO E BIELA	49
BUJÃO DO MOTOR	50
POLIA DA RODA-GUIA	51
POLIA	52
POLIA - ACIONADOR DO VENTILADOR	54
POLIA DA RODA-GUIA	55
RETENTOR DO VIRABREQUIM	56
RETENTOR - CAIXA DO VOLANTE	57
RETENTOR - INJETOR DE COMBUSTÍVEL	58
RUÍDO - ARRANJO PARA SUPRESSÃO	59
REDUÇÃO DE RUÍDO	60
MECANISMO DAS VÁLVULAS	61
SISTEMA DE LUBRIFICAÇÃO	64
ADAPTADOR-TUBO DE ÓLEO DO MOTOR	64
RESPIRO	65
BOCAL DE ENCHIMENTO DE ÓLEO DO MOTOR	66
FILTRO - ÓLEO DO MOTOR	67
ELIMINAÇÃO DE VAPORES DO CÁRTER	68
INDICADOR - NÍVEL DO ÓLEO (VARETA)	70
TUBOS - ÓLEO DO MOTOR	71
TUBOS - ÓLEO DO TURBOALIMENTADOR	72
BOMBA DE ÓLEO - MOTOR	74
SISTEMA DE ARREFECIMENTO	76
ARREFECEDOR - ÓLEO DO MOTOR	76
ARREFECIMENTO	77
VENTILADOR	78
VENTILADOR DE SOPRO	80
VENTILADOR REVERSÍVEL	81
TUBOS - ÁGUA	82
BOMBA DE ÁGUA	84
RADIADOR	87
SISTEMA DA ADMISSÃO DE AR E DE ESCAPE	90
PÓS-ARREFECEDOR	90
PURIFICADOR DE AR	91
TAMPA - ADMISSÃO DE AR	92
COTOVELO DE ADMISSÃO DE AR	93
INDICADOR - TROCA DO FILTRO DE AR	94
TUBOS - AR	95
COLETOR DE ESCAPE	97
MONTAGEM - SILENCIADOR	98
SILENCIADOR	99
BLINDAGEM - PURIFICADOR DE AR	100
TURBOALIMENTADOR	101

ÍNDICE

Designação	Página
SISTEMA DE COMBUSTÍVEL	103
FILTRO DE COMBUSTÍVEL E SEPARADOR DE ÁGUA	103
TUBOS - COMBUSTÍVEL	104
TUBOS - FILTRO DO COMBUSTÍVEL	106
BOMBA HIDRÁULICA E MONTAGEM - UNIDADE INJETORA	108
BOMBA DA UNIDADE INJETORA	109
BOMBA HIDRÁULICA - UNIDADE INJETORA	111
TANQUE DE COMBUSTÍVEL	112
VÁLVULA SOLENÓIDE	114
SISTEMA ELÉTRICO E DE PARTIDA	115
ALARME	115
ALTERNADOR DE CORRENTE	116
BATERIA E CABOS / FIOS ELÉTRICOS	121
BATERIA	124
CONTROLE ELETRÔNICO E MONTAGEM - MOTOR	126
CONTROLE ELETRÔNICO - MOTOR	127
CONTROLE DA MÁQUINA	129
CONTROLE DO PAINEL MONITOR	130
CONTROLE - NÃO PROGRAMADO	132
SISTEMA ELETRÔNICO - MÁQUINA	133
SISTEMA ELETRÔNICO - MONITOR	133
SISTEMA ELETRÔNICO - TREM DE FORÇA	134
FIXADORES - CABOS/FIOS ELÉTRICOS DO MOTOR	135
AQUECEDOR DA ÁGUA DO MOTOR	136
AQUECEDOR - AUXILIAR DE PARTIDA	138
INSTALAÇÃO-SEGURANÇA	139
LÂMPADA - TETO	143
LÂMPADA - FAROL	144
LUZ GIRATÓRIA DE ALARME	147
SISTEMA DE ILUMINAÇÃO - FARÓIS	148
SIST. DE ILUMINAÇÃO - PISCA-PISCA GIRATÓRIO DE ADVERTÊNCIA	150
PAINEL - DISJUNTOR ELÉTRICO AUTOMÁTICO	151
SENSOR DO MOTOR	153
SENSOR - NÍVEL DE LÍQUIDO	155
EMISSOR - POSIÇÃO	156
SENSOR - PRESSÃO	159
SENSOR DE VELOCIDADE	162
SENSOR - TEMPERATURA	166
MONITOR DE SERVIÇO	169
GR. DE SERVICO - TREM DE FORÇA	170
MOTOR ELÉTRICO DE PARTIDA	171
INTERRUPTOR - BUZINA	174
INTERRUPTOR DE DERIVAÇÃO	175
CHAVE GERAL	176
INTERRUPTOR - MAGNÉTICO	177
ALARME DE MARCHA À RÉ	180
CABOS/FIOS ELÉTRICOS	181
CABOS/FIOS ELÉTRICOS - MOTOR	183
CABOS/FIOS ELÉTRICOS - AQUECEDOR	186
CABOS/FIOS ELÉTRICOS - PLATAFORMA	187
TREM DE FORÇA	190
EIXO	190
CONTROLE DA TRANSMISSÃO	191
DIFERENCIAL E COROA	193
FILTRO - ÓLEO	197
COMANDO FINAL	198
TUBOS - ÓLEO DA TRANSMISSÃO	200
MONTAGEM - CONVERSOR DE TORQUE	203
MONTAGEM - TRANSMISSÃO	204
ENGRENAGENS PLANETÁRIAS - TRANSMISSÃO	205
TREM DE FORÇA	212
BOMBA DE ENGRENAGENS	213
SEGMENTO DA RODA MOTRIZ	216
EIXO DE TRANSMISSÃO	217
CONVERSOR DE TORQUE	218
TRANSMISSÃO	222
JUNTA UNIVERSAL	223
VÁLVULA DE MODULAÇÃO	224
VÁLVULA DE PRIORIDADE	226
VÁLVULA DE ALÍVIO	228
VÁLVULA SOLENÓIDE	231
VÁLVULA DE CONTROLE - TRANSMISSÃO	232
CHASSI E CARROCERIA	234
CAIXA E CHASSI	234
BARRA DE TRAÇÃO	236
COBERTURA	237
PÁRA-LAMA	240
GRADE DO RADIADOR CONTRA EROSÃO	241
GRADE DO RADIADOR	242
PROTETOR INFERIOR	243
PROTETOR - TANQUE DE COMBUSTÍVEL	245
PROTETOR - FILTRO DO TREM DE FORÇA	246
PROTETOR - RADIADOR	247
PROTETOR - GUIA DOS ROLETES DAS ESTEIRAS	249
PROTETOR - ROLETES DAS ESTEIRAS	250
CAPÔ E PROTETOR	251
CAPÔ	259

ÍNDICE

Designação	Página
PAINEL- REDUÇÃO DE RUÍDO	261
BARRAS DE PROTEÇÃO DO CAPÔ	262
MATERIAL RODANTE	266
BARRA DE SUSPENSÃO	266
TAMPA DA RODA-GUIA	268
ARMAÇÃO TELESCÓPICA DA MOLA TENSORA	269
GUIA-MATERIAL RODANTE	271
RODA-GUIA DAS ESTEIRAS	272
ELO DA ESTEIRA	273
MONTAGEM - ROLETE SUPERIOR	275
BARRA DE ARTICULAÇÃO	276
ROLETE SUPERIOR DA ESTEIRA	277
ROLETE DE ESTEIRA DE FLANGE DUPLO	279
ROLETE DE ESTEIRA DE FLANGE SIMPLES	283
AJUSTADOR DE ESTEIRAS E MOLA TENSORA	285
ESTEIRA	286
MATERIAL RODANTE	288
MATERIAL RODANTE ; ESTRUTURA INFERIOR	288
SISTEMA DE DIREÇÃO E DE FREIO	289
FREIO E COMANDO DO DIFERENCIAL	289
FREIOS E ENGRENAGENS PLANETARIAS	293
FREIO - DIREÇÃO	295
CONTROLE DO FREIO DE ESTACIONAMENTO	296
CONTROLE DE DIREÇÃO E TRANSMISSÃO	298
FIXADORES	304
FILTRO - ÓLEO	305
CABEÇA DA BOMBA	306
TUBOS - DIREÇÃO	308
COLETOR E VÁLVULA	311
MOTOR - PISTÃO	313
PEDAL - GOVERNADOR E FREIO	314
BOMBA DE CARGA	316
BOMBA DE PISTÃO	317
MOTOR DO GRUPO ROTATIVO	319
GRUPO ROTATIVO DA BOMBA	321
VÁLVULA DE DERIVAÇÃO	323
VÁLVULA DE CONTROLE	324
VÁLVULA DE ENXAGUAR	326
VÁLVULA DE CONTROLE PILOTO	327
VÁLVULA DE CONTROLE - PRESSÃO E COMPENSAÇÃO DE FLUXO	329
VÁLVULA DE ALÍVIO	330
SERVO-VÁLVULA	333
VÁLVULA SOLENÓIDE	337
SISTEMA HIDRÁULICO	339
CONTROLE HIDRÁULICO MANUAL	339
ARREFECEDOR DO ÓLEO HIDRÁULICO	345
CILINDRO ANGULÁVEL	346
CILINDRO DE LEVANTAMENTO	348
CILINDRO DE LEVANTAMENTO DO RIPER	352
CILINDRO DE INCLINAÇÃO	354
FILTRO - ÓLEO	358
COMANDO HIDRÁULICO	359
ARRANJO HIDRÁULICO - 4 VÁLVULAS	360
TUBOS - ANGULAGEM E INCLINAÇÃO	361
TUBOS - ÓLEO HIDRÁULICO	365
TUBOS - CILINDRO DE LEVANTAMENTO	368
TUBOS - CIRCUITO PILOTO	374
TUBOS - BOMBA	378
TUBOS - RIPER	382
TUBOS - CILINDRO DE INCLINAÇÃO	386
MONTAGEM - CILINDRO	390
MONTAGEM - VÁLVULA	392
BOMBA DE PISTÃO	393
GRUPO ROTATIVO DA BOMBA	395
TANQUE HIDRÁULICO E FILTRO	396
GRUPO DE VÁLVULAS DE CONTROLE - DUPLO	399
GRUPO DE VÁLVULAS DE CONTROLE - TRIPLO	400
GRUPO DE VÁLVULAS DE CONTROLE - QUÁDRUPLO	401
VÁLVULA DE CONTROLE	403
VÁLVULA DE CONTROLE - PRESSÃO E COMPENSAÇÃO DE FLUXO	415
VÁLVULA DE ALÍVIO	417
ACESSÓRIOS	419
LÂMINA	419
LÂMINA SEMI-UNIVERSAL	419
ARMAÇÃO-C - ANGULAÇÃO HIDRÁULICA	421
ELO DO PASSO	423
MONTAGEM - RIPER	424
PINO	426
BRAÇO DE EMPUXO	427
RIPER	429
MUNHÃO DA LÂMINA	430
FERRAMENTAS DE TRABALHO	431
LÂMINA ANGULÁVEL	431
LÂMINA SEMI-UNIVERSAL	433
BEIRA - PONTA CORTANTE	435
RIPER	437

ÍNDICE

Designação	Página
DENTE DO RÍPER	439
POSTO DO OPERADOR	442
AJUSTADOR DO ASSENTO	442
CONDICIONADOR DE AR	444
VENTILADOR DA CABINE	446
CABINE	448
TOLDO	454
COMPRESSOR DE REFRIGERANTE	455
CONDENSADOR DE REFRIGERANTE	457
TAMPA - CONSOLO	459
PORTA DA CABINE	466
AQUECEDOR DA CABINE	470
AQUECEDOR DA ESTRUTURA ROPS	472
CAIXA - SUSPENSÃO DO ASSENTO	476
INSTALAÇÃO - TUBULAÇÕES	479
INSTALAÇÃO DO RÁDIO	481
ISOLADOR - TEMPO	482
TRINCO	483
REVESTIMENTO DA CABINE	484
TUBOS - AR CONDICIONADO	485
TUBOS - AQUECEDOR	487
ESPELHO	490
MÓDULO ELETRÔNICO DE QUATRO INDICADORES	491
MONTAGEM - CABINE	492
MONTAGEM - PLATAFORMA	493
MONTAGEM - ESTRUTURA ROPS	495
FUNDO - ENCOSTO	496
PAINEL DE INSTRUMENTOS	499
PLATAFORMA	506
PLATAFORMA DO OPERADOR	507
BUJÃO	509
PRESSURIZADOR	510
RÁDIO	512
RECLINAÇÃO - ASSENTO	514
ESTRUTURA ROPS	515
TELA DE PROTEÇÃO	519
TELA PÁRA-SOL	521
ASSENTO	522
ASSENTO COM SUSPENSÃO	528
DEGRAU	535
SUSPENSÃO - ASSENTO	536
TANQUE - LAVADOR DE JANELA	543
JANELA DA CABINE	544
LIMPADOR DO VIDRO	547
EQUIPAMENTO DE SERVIÇO E SUPRIMENTOS	549
DECALQUE	549
PLACA E DECALQUE	550
ÍNDICE DE NÚMERO DE PEÇA	B1

INHALTSVERZEICHNIS

Bezeichnung	Seite
ALLGEMEINE HINWEISE	A36
REPARATURALTERNATIVEN	A44
KÜHLMITTELZUSATZ	A49
WARTUNGSTEILE	A83
STICHWORTVERZEICHNIS	A136
MASCHINE	1
FAHRWERK	1
GRUNDAUSFÜHRUNG	1
MASCHINENAUSFÜHRUNG - HOHE AUSSENTEMPERATUR	1
MOTORAUSFÜHRUNG	2
MOTOR, KOMPLETT	2
MOTORKÜHLERBLOCK	4
MOTOR-EINBAUSATZ	5
MOTOR (GRUNDAUSFÜHRUNG)	6
RIEMEN	6
RIEMENSPANNER	9
NOCKENWELLE	10
DICHTUNGSTRÄGER	11
MOTORBLOCKDECKEL	12
STIRNRADGEHÄUSEDECKEL	13
VENTILDECKEL	14
KURBELWELLE	15
MOTORBLOCK	17
ZYLINDERKOPF	20
DÄMPFER UND RIEMENSCHEIBE	31
MOTORÖLABLASS	32
LÜFTERANTRIEB	35
STIRNRADGEHÄUSE-HALTETEILE	37
SCHWUNGRAD	39
STIRNRAD	40
SCHWUNGRADGEHÄUSE	41
STIRNRADGEHÄUSE	42
HUBVENTIL	43
MOTORHUBÖSE	44
MOTORAUFLAGER	45
LÜFTERANTRIEBSAUFHÄNGUNG	47
ÖLWANNE	48
PLEUELSTANGE UND KOLBEN	49
MOTORSTOPFEN	50
UMLENKRIEMENSCHEIBE	51
RIEMENSCHEIBE	52
LÜFTERRIEMENSCHEIBE	54
RIEMENSPANNER	55
KURBELWELLENDICHTUNG	56
SCHWUNGRADGEHÄUSEDICHTUNG	57
EINSPRITZDÜSENDICHTUNG	58
SCHALLDÄMPFUNG	59
VENTILSTEUERUNG	61
SCHMIERSYSTEM	64
MOTORÖLLEITUNGSADAPTER	64
ENTLÜFTER	65
MOTORÖLEINFÜLLSTUTZEN	66
ÖLFILTER	67
ENTDUNSTER	68
ÖLMESSSTAB	70
MOTORÖLLEITUNGEN	71
TURBOLADERÖLLEITUNGEN	72
SCHMIERPUMPE	74
KÜHLSYSTEM	76
MOTORÖLKÜHLER	76
KÜHLSYSTEM	77
LÜFTER	78
DRUCKLÜFTER	80
UMKEHRLÜFTER	81
KÜHLWASSERLEITUNGEN	82
KÜHLWASSERPUMPE	84
KÜHLER	87
LUFTEINLASS- UND ABGASSYSTEM	90
LADELUFTKÜHLER	90
LUFTREINIGER	91
LUFTEINLASSDECKEL	92
LUFTEINLASSBOGEN	93
LUFTFILTERWARTUNGSANZEIGE	94
DRUCKLUFTLEITUNGEN	95
AUSPUFFKRÜMMER	97
SCHALLDÄMPFERSTÜTZEN	98
SCHALLDÄMPFER	99
LUFTREINIGERSCHUTZ	100
TURBOLADER	101
KRAFTSTOFFSYSTEM	103
WASSERABSCHEIDER- U. KRAFTSTOFFILTER	103
KRAFTSTOFFLEITUNGEN	104
KRAFTSTOFFILTERLEITUNGEN	106
PUMPE UND BEFESTIGUNGSTEILE	108
EINSPRITZDÜSENPUMPE	109
PUMPENDÜSE, HYDRAULISCH	111
KRAFTSTOFFTANK	112
MAGNETVENTIL	114
ELEKTRISCHE ANLAGE UND STARTSYSTEM	115
WARNVORRICHTUNG	115
DREHSTROMGENERATOR	116
BATTERIE UND VERDRAHTUNG	121
BATTERIE	124

INHALTSVERZEICHNIS

Bezeichnung	Seite
STEUERUNGSEINHEIT, ELEKTRON. FÜR MOTOR UND BEFEST.	126
MOTORSTEUERUNG, ELEKTRON.	127
MASCHINENSTEUERUNG	129
MONITORSTEUERUNG	130
STEUERUNG - NICHT PROGRAMMIERT	132
ELEKTRONIK - MASCHINE	133
ELEKTRONIK - MONITOR	133
KRAFTÜBERTRAGUNGSELEKTRONIK	134
MOTORVERDRAHTUNG - BEFESTIGUNG	135
UMLAUFKÜHLWASSERHEIZUNG	136
STARTHILFE - VORWÄRMER	138
SICHERHEITSEINBAUSATZ	139
FAHRERHAUSBELEUCHTUNG	143
ARBEITSLEUCHTEN	144
RUNDUM-KENNLEUCHTE	147
ARBEITSLEUCHTEN	148
RUNDUM-KENNLEUCHTE	150
UNTERBRECHER - INSTRUMENTENTAFEL	151
MOTORSENSOR	153
FLÜSSIGKEITSSTANDSENSOR	155
STELLUNGSSENSOR	156
DRUCKSENSOR	159
DREHZAHLSENSOR	162
TEMPERATURSENSOR	166
MONITOR - SERVICE	169
ANTRIEBSSTRANG-WARTUNGSSATZ	170
STARTERMOTOR	171
WARNHORNSCHALTER	174
UMGEHUNGSSCHALTER	175
TRENNSCHALTER	176
MAGNETSCHALTER	177
RÜCKFAHRWARNHORN	180
VERDRAHTUNG	181
MOTORVERDRAHTUNG	183
HEIZUNGSVERDRAHTUNG	186
FAHRERPLATTFORMVERDRAHTUNG	187
KRAFTÜBERTRAGUNG	190
ACHSE	190
GETRIEBESTEUERUNG	191
DIFFERENTIAL UND TELLERRAD	193
ÖLFILTER	197
SEITENANTRIEB	198
ÖLLEITUNGEN - KRAFTÜBERTRAGUNG	200
DREHMOMENTWANDLERAUFHÄNGUNG	203
GETRIEBEAUFLAGER	204
PLANETENGETRIEBE	205
KRAFTÜBERTRAGUNG	212
ZAHNRADPUMPE	213
KETTENRADSEGMENT	216
ANTRIEBSWELLE	217
DREHMOMENTWANDLER	218
GETRIEBE	222
KREUZGELENK	223
MODULATORVENTIL	224
VORRANGVENTIL	226
ÜBERDRUCKVENTIL	228
MAGNETVENTIL	231
GETRIEBESTEUERVENTIL	232
RAHMEN UND AUFBAU	234
RAHMEN UND GEHÄUSE	234
ZUGHAKEN	236
VERKLEIDUNG	237
SCHUTZBLECHE	240
SANDSTRAHLSCHUTZGITTER	241
KÜHLERGRILL	242
PANZERWANNE	243
KRAFTSTOFFTANKVERKLEIDUNG	245
KRAFTÜBERTRAGUNGSFILTERSCHUTZ	246
KÜHLERSCHUTZ	247
KETTENFÜHRUNGSSCHUTZ	249
LAUFROLLENSCHUTZ	250
MOTORHAUBE UND VERKLEIDUNG	251
MOTORHAUBE	259
SCHALLDÄMPFUNG	261
SCHUTZBÜGEL	262
LAUFWERK	266
QUERTRAVERSE	266
LEITRADAUFSATZ	268
LAUFROLLENRAHMEN (TELESKOPRÜCKLAUF)	269
LAUFWERKFÜHRUNG	271
LEITRAD	272
KETTENGLIEDER	273
TRAGROLLENAUFHÄNGUNG	275
ACHSWELLE	276
TRAGROLLE	277
DOPPELFLANSCHROLLEN	279
EINZELFLANSCHROLLEN	283
KETTENSPANNER UND -FEDERRÜCKLAUF	285
LAUFWERKSKETTE	286
LAUFWERKSRAHMEN	288
LENK- UND BREMSSYSTEM	289
BREMSE UND DIFFERENTIALANTRIEB	289
BREMSE UND PLANETENGETRIEBE	293

INHALTSVERZEICHNIS

Bezeichnung	Seite
LENKBREMSE	295
FESTSTELLBREMSGESTÄNGE	296
LENK- UND GETRIEBESTEUERUNG	298
HALTETEILE	304
ÖLFILTER	305
PUMPENKOPF	306
LENKÖLLEITUNGEN	308
KRÜMMER UND VENTIL	311
KOLBENMOTOR	313
GAS- U. BREMSPEDAL	314
LADEPUMPE	316
KOLBENPUMPE	317
MOTORDREHVORRICHTUNG	319
KOLBENPUMPENUMLAUFSATZ	321
NEBENSTROMVENTIL	323
STEUERVENTIL	324
SPÜLVENTIL	326
VORSTEUERVENTIL	327
DRUCK- U. STROMAUSGLEICHSVENTIL	329
ÜBERDRUCKVENTIL	330
VERSTÄRKERVENTIL	333
MAGNETVENTIL	337
HYDRAULIKSYSTEM	339
HYDRAULIKHANDSTEUERUNG	339
HYDRAULIKÖLKÜHLER	345
SCHWENKSCHILDZYLINDER	346
HUBZYLINDER	348
AUFREISSERHUBZYLINDER	352
KIPPZYLINDER	354
ÖLFILTER	358
HYDRAULIKSYSTEM	359
HYDRAULIKANORDNUNG (4-VENTIL-HYDRAULIK)	360
SCHWENK- UND KIPPZYLINDERLEITUNGEN	361
HYDRAULIKLEITUNGEN	365
HUBZYLINDERLEITUNGEN	368
VORSTEUERLEITUNGEN	374
HYDRAULIKPUMPE UND LEITUNGEN	378
AUFREISSERLEITUNGEN	382
NEIGEZYLINDERLEITUNGEN	386
ZYLINDERAUFHÄNGUNG	390
VENTILAUFHÄNGUNG	392
KOLBENPUMPE	393
KOLBENPUMPENUMLAUFSATZ	395
HYDRAULIKTANK UND SCHMIERFILTER	396
VENTILSATZ (2-VENTIL)	399
VENTILSATZ (3-VENTIL)	400
VENTILSATZ (4-VENTIL)	401
STEUERVENTIL	403
DRUCK- U. STROMAUSGLEICHSVENTIL	415
ÜBERDRUCKVENTIL	417
ARBEITSGERÄTE	419
PLANIEREINRICHTUNG	419
SU-SCHILD	419
C-RAHMEN (SCHWENKSCHILD)	421
NEIGUNGSSTELLGLIED	423
AUFREISSERBEFESTIGUNG	424
BOLZENSATZ	426
SCHUBARM	427
AUFREISSER - TEILLISTE	429
MONTAGEZAPFEN (PLANIERSCHILDEINRICHTUNG)	430
ARBEITSGERÄTE	431
SCHWENKSCHILD	431
SU-SCHILD	433
SCHNEIDMESSER UND EINSATZSTÜCK	435
AUFREISSER	437
AUFREISSERZAHN	439
FAHRERHAUS	442
FAHRERSITZVERSTELLER	442
KLIMAANLAGE	444
FAHRERHAUS-DRUCKLÜFTER	446
FAHRERHAUS	448
WETTERDACH	454
KÄLTEMITTELKOMPRESSOR	455
KÄLTEMITTELKONDENSATOR	457
STEUERKONSOLENABDECKUNG	459
FAHRERHAUSTÜR	466
FAHRERHAUSHEIZUNG	470
HEIZUNG - OFFENES FAHRERHAUS MIT ÜBERROLLSCHUTZ	472
FAHRERSITZFEDERUNGSGEHÄUSE	476
LEITUNGSINSTALLATIONSSATZ	479
RADIOEINBAUSATZ	481
WÄRMEISOLIERUNG	482
VERRIEGELUNG	483
FAHRERHAUSAUSKLEIDUNG	484
KLIMAANLAGENLEITUNGEN	485
HEIZUNGSLEITUNGEN	487
SPIEGEL	490
MODUL - VIER ELEKTRON. ANZEIGEN	491
FAHRERHAUSANBAUSATZ	492
PLATTFORM-ANBAUSATZ	493
ÜBERROLLSCHUTZAUFLAGER	495
SCHALE - RÜCKENLEHNE	496
INSTRUMENTENTAFEL	499
PLATTFORM	506
FAHRERPLATTFORM	507

INHALTSVERZEICHNIS

Bezeichnung	Seite
STECKERSATZ	509
FAHRERHAUSBELÜFTUNG	510
RADIO	512
VERSTELLBARER SITZ	514
ÜBERROLLSCHUTZ	515
SCHUTZGITTER	519
SONNENBLENDE	521
FAHRERSITZ	522
SCHWINGSITZ	528
STEIGLEITER	535
FAHRERSITZFEDERUNG	536
SCHEIBENWASCHMITTELBEHÄLTER	543
FAHRERHAUSFENSTER	544
SCHEIBENWISCHER	547
WARTUNGSAUSRÜSTUNG UND -ZUBEHÖR	549
AUFKLEBER	549
SCHILD UND AUFKLEBER	550
ERSATZTEILNUMMERNINDEX	B1

1. MACHINE IDENTIFICATION

Caterpillar machines are identified by Product Identification Numbers (PIN). Some components included in a machine may be identified by Serial Numbers (S/N). Typical components that will be serialized include engines, transmissions, bulldozers, and rippers. The machine and engine are further identified by arrangement numbers and in some cases modification numbers. These numbers are shown on the product identification plate(s) and on the master plate in the operator's compartment.

Caterpillar dealers need all of these numbers to determine accurate parts identification.

SIS *New Feature*

Effective First Quarter 2001 the Caterpillar Product Identification Number (PIN) changed from 8 to 17 characters. In an effort to provide uniform equipment identification, Caterpillar and other construction equipment manufacturers are moving to comply with the latest version of the product identification numbering standard. Non-road machine PINs are defined by ISO 10261. The new PIN format will apply to all Caterpillar machines and generator sets. The PIN plates and frame marking will display the 17 character PIN. The new format will look like the following:

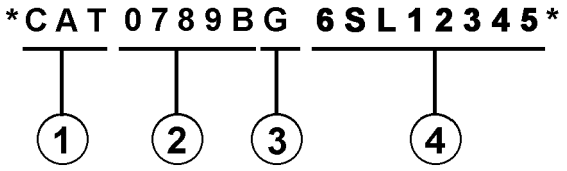

Where:

1. Caterpillar's World Manufacturing Code (characters 1-3)

2. Machine Descriptor (characters 4-8)

3. Check Character (character 9)

4. Machine Indicator Section (MIS) or Product Sequence Number (characters 10-17). These were previously referred to as the Serial Number.

Machines and generator sets produced before First Quarter 2001 will maintain their 8 character PIN format.

Components such as engines, transmissions, axles, etc. and work tools will continue to use an 8 character Serial Number (S/N).

2. ORDERING PARTS

⚠ WARNING

When replacement parts are required for this product Caterpillar recommends using Caterpillar replacement parts or parts with equivalent specifications including, but not limited to, physical dimensions, type, strength and material.

Failure to heed this warning can lead to premature failures, product damage, personal injury or death.

Quality Caterpillar replacement parts are available from Caterpillar dealers throughout the world. Their parts inventories are up to date and include all parts normally required to protect your investment in Caterpillar machines. Dealers may offer repair kits or remanufactured parts to allow selection of the most effective repair alternative for a particular situation. When ordering parts, your order should specify the quantity, part number, part name, and the serial number/product identification number of the machine for which the parts are needed.

3. PARTS MANUAL ORGANIZATION

Product information in this manual is presented as "information elements" that represent all of the components for the specific model. Engine Arrangement and Seat Group are examples of information elements. The information elements are organized alphabetically by part name and secondarily by part number within each major section of the manual.

4. TABLE OF CONTENTS

A table of contents (TOC) is found at the beginning of the manual. The TOC lists each section of the manual with a complete list of all information elements organized as they appear in the manual. Page numbers are provided for quick reference to detailed parts identification illustrations and serviceable consist lists.

5. MAINTENANCE PARTS INDEX

The Maintenance Parts Index, located near the beginning of the manual, references most frequently used maintenance part numbers, providing description, quantity, usage and page number. This information is organized alphabetically by part description.

6. INDEX

The index located near the front of the manual is an alphabetical listing of all information elements included in the manual. Page numbers are provided for quick reference to detailed parts identification illustrations and serviceable consist lists.

7. PART NUMBER INDEX

A numerical index listing all part numbers and the corresponding page number(s) appears at the back of the manual.

8. CAPTIONS

Captions located at the beginning of each information element identify the part number and part name along with additional descriptive information. PIN and S/N information found in each caption should be used to select correct information for a specific machine. Field replacement options, identification of optional attachment components, and where used ("part of") information is also provided.

The first line of a caption is shown in larger type font to indicate the beginning of an information element. Captions for additional pages that may be required to illustrate an information element will be shown in standard type font and will include the term *(contd.)* .

9. NON-SERVICED PARTS

In some instances it is necessary to display non-serviced parts that are a link to a lower level serviceable consist lists. These non-serviced part numbers are shown in *italic* type indicating that they are not available.

10. PARTS LIST REFERENCE NUMBERS

Numbers shown in the Ref No column correspond to numbers used in the associated graphic(s). An alphabetic suffix may be added to a reference number to identify lower level consist items. Numbers shown in the Graphic Ref column refer to the graphic number identifier displayed in the lower left corner of each illustration. The Graphic Ref number may be used in combination with the item Ref No to determine the correct part number. There may be intentional omission of a Ref No in a consist list as information is updated to reflect the latest serviceable part numbers.

11. INDENTED PART NAMES

When a part name is indented in a parts list, it is part of (included in) the group or assembly under which it is indented.

12. ILLUSTRATION REFERENCE LETTERS

When necessary, illustrations contain reference letters (A, B, C etc.) that are intended to track lines and harnesses from one point to another. They are also used to show where to reconnect illustrations that have been separated.

13. ABBREVIATIONS AND SYMBOLS

O.D. – Outside Diameter
I.D. – Inside Diameter
A – Not Part Of This Group
B – Use As Required
C – Change From Previous Type
D – Order By The Meter
E – Order By The Centimeter
F – Not Shown
G – Order By The Inch
I – See Hose Fabrication Guide
M – Metric Part
R – Remfg Part May Be Available
Y – Separate Illustration
Z – Not Serviced Separately

SIS *New Feature*

14.<END>

This symbol indicates the end of an information element.

NOTE:

Continuing improvement and advancement of product design may cause changes to your machine which may not be included in this publication. Whenever a question arises regarding your caterpillar product or this publication, please consult your caterpillar dealer for the latest available information.

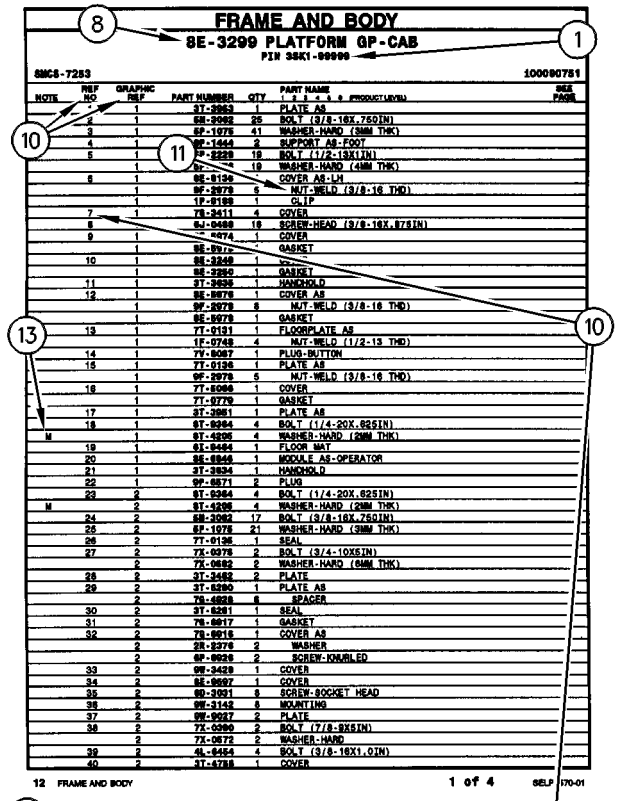

FRAME AND BODY

8E-3299 PLATFORM GP-CAB

PIN 38K1-09999

SMCS-7253 100090751

NOTE	REF NO	GRAPHIC REF	PART NUMBER	QTY	PART NAME (1 2 3 4 5 6 PRODUCT LEVEL)	SEE PAGE
	1	1	3T-3963	1	PLATE AS	
	2	1	5B-2992	25	BOLT (3/8-16X.750IN)	
	3	1	5P-1075	41	WASHER-HARD (3MM THK)	
	4	1	9P-1444	2	SUPPORT AS-FOOT	
	5	1	9P-2229	19	BOLT (1/2-13X1IN)	
		1	5P-[illegible]4	19	WASHER-HARD (4MM THK)	
	6	1	9E-9136	1	COVER AS-LH	
		1	9F-2979	6	NUT-WELD (3/8-16 THD)	
		1	1P-0188	1	CLIP	
	7	1	7S-3411	4	COVER	
	8	1	6J-0488	18	SCREW-HEAD (3/8-16X.875IN)	
	9	1	[illegible]-4474	1	COVER	
		1	9E-9[illegible]7		GASKET	
	10	1	9E-3249	1	[illegible]	
		1	9E-3250	1	GASKET	
	11	1	3T-3935	1	HANDHOLD	
	12	1	9E-9078	1	COVER AS	
		1	9F-2979	8	NUT-WELD (3/8-16 THD)	
		1	9E-9079	1	GASKET	
	13	1	7T-0131	1	FLOORPLATE AS	
		1	1F-0748	4	NUT-WELD (1/2-13 THD)	
	14	1	7Y-9087	1	PLUG-BUTTON	
	15	1	7T-0136	1	PLATE AS	
		1	9F-2978	6	NUT-WELD (3/8-16 THD)	
	16	1	7T-9086	1	COVER	
		1	7T-9779	1	GASKET	
	17	1	3T-3981	1	PLATE AS	
	18	1	6T-9364	4	BOLT (1/4-20X.625IN)	
M		1	6T-4205	4	WASHER-HARD (2MM THK)	
	19	1	6L-9484	1	FLOOR MAT	
	20	1	9E-9946	1	MODULE AS-OPERATOR	
	21	1	3T-3934	1	HANDHOLD	
	22	1	9P-8571	2	PLUG	
	23	2	6T-9364	4	BOLT (1/4-20X.625IN)	
M		2	6T-4205	4	WASHER-HARD (2MM THK)	
	24	2	5B-2992	17	BOLT (3/8-16X.750IN)	
	26	2	5P-1075	21	WASHER-HARD (3MM THK)	
	26	2	7T-0135	1	SEAL	
	27	2	7X-0378	2	BOLT (3/4-10X5IN)	
		2	7X-0682	2	WASHER-HARD (5MM THK)	
	28	2	3T-3482	2	PLATE	
	29	2	3T-5290	1	PLATE AS	
		2	7S-0038	8	SPACER	
	30	2	3T-5281	1	SEAL	
	31	2	7S-9017	1	GASKET	
	32	2	7S-9016	1	COVER AS	
		2	2R-2276	2	WASHER	
		2	6P-9028	2	SCREW-KNURLED	
	33	2	9W-3429	1	COVER	
	34	2	9E-9697	1	COVER	
	35	2	9D-3031	8	SCREW-SOCKET HEAD	
	36	2	9W-3142	8	MOUNTING	
	37	2	9W-9027	2	PLATE	
	38	2	7X-0390	2	BOLT (7/8-9X5IN)	
		2	7X-0672	2	WASHER-HARD	
	39	2	4L-9454	4	BOLT (3/8-16X1.0IN)	
	40	2	3T-4788	1	COVER	

12 FRAME AND BODY 1 of 4 SELP4570-01

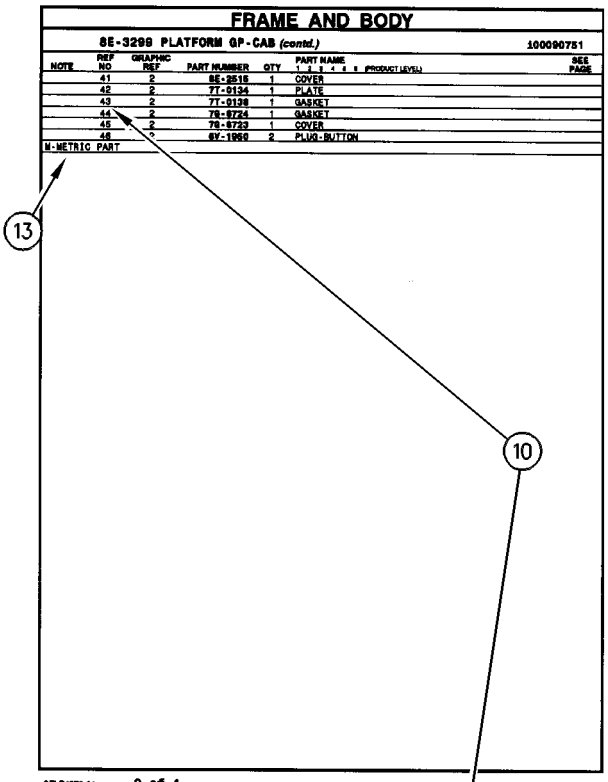

FRAME AND BODY

8E-3299 PLATFORM GP-CAB (contd.) 100090751

NOTE	REF NO	GRAPHIC REF	PART NUMBER	QTY	PART NAME (1 2 3 4 5 6 PRODUCT LEVEL)	SEE PAGE
	41	2	9E-3515	1	COVER	
	42	2	7T-0134	1	PLATE	
	43	2	7T-0139	1	GASKET	
	44	2	7S-9724	1	GASKET	
	45	2	7S-9723	1	COVER	
	46	2	6V-1969	2	PLUG-BUTTON	

M-METRIC PART

SELP4570-01 2 of 4 FRAME AND BODY 13

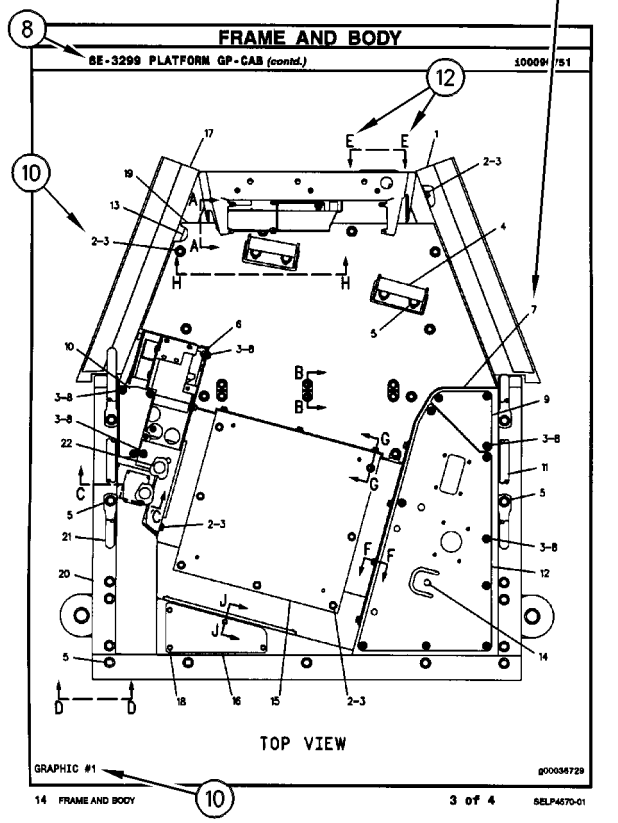

FRAME AND BODY

8E-3299 PLATFORM GP-CAB (contd.) 100090751

TOP VIEW

GRAPHIC #1 g00036729

14 FRAME AND BODY 3 of 4 SELP4570-01

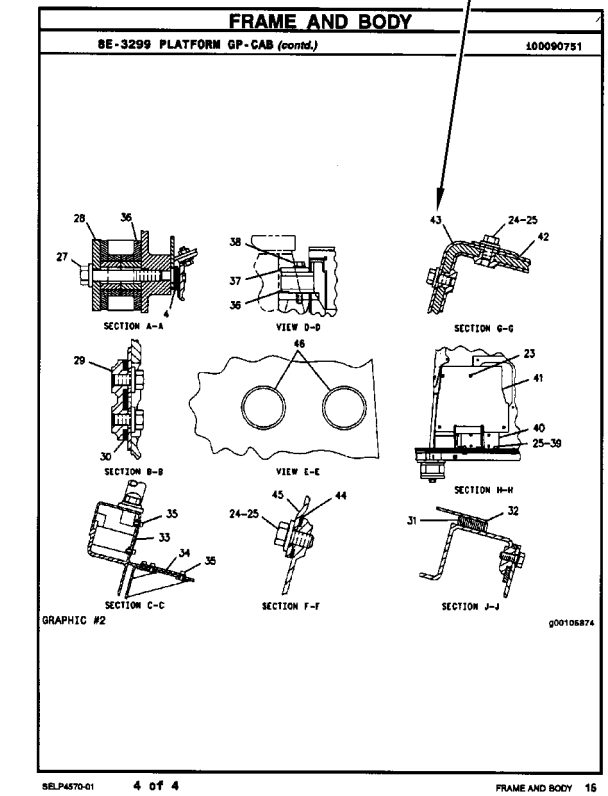

FRAME AND BODY

8E-3299 PLATFORM GP-CAB (contd.) 100090751

SECTION A-A VIEW D-D SECTION G-G

SECTION B-B VIEW E-E SECTION H-H

SECTION C-C SECTION F-F SECTION J-J

GRAPHIC #2 g00105874

SELP4570-01 4 of 4 FRAME AND BODY 15

1. IDENTIFICATION DE LA MACHINE

Toutes les machines Caterpillar portent un numéro d'identification (PIN). Certains composants des machines peuvent porter des numéros de série (S/N). En général, parmi les composants qui portent des numéros de série il y a les moteurs, les transmissions, les bulldozers et les rippers. En plus, la machine et le moteur peuvent recevoir des numéros de version, et dans certains cas, de modification. Ces numéros figurent sur les plaques de numéro de série et sur la plaque signalétique principale qui se trouve dans le poste de conduite.

Les concessionnaires Caterpillar doivent connaître tous ces numéros pour identifier correctement les pièces.

SIS ***Nouvelle Caractéristique***

À partir du premier trimestre 2001, le numéro d'identification produit (PIN) Caterpillar passe de 8 à 17 caractères. Afin de permettre une identification uniforme des matériels, Caterpillar et d'autres constructeurs de machines de travaux publics s'efforcent de se conformer à la norme la plus récente portant sur les numéros d'identification des produits. Les numéros d'identification (PIN) de machines de chantier sont définis par la norme ISO 10261. Le nouveau format du numéro d'identification est valable pour toutes les machines et tous les groupes électrogènes Caterpillar. Le numéro d'identification produit (PIN) figurant sur la plaque et sur le châssis se composera de 17 caractères. Le nouveau format ressemblera à ceci:

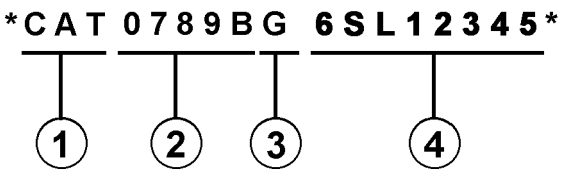

Il se décomposera de la façon suivante:

1. Code international de fabrication de Caterpillar (caractères 1 à 3)

2. Descriptif de la machine (caractères 4 à 8)

3. Contrôle (caractère 9)

4. Indicateur machine (MIS) ou numéro de séquence produit (caractères 10 à 17). Ceux-ci étaient auparavant désignés sous le terme de numéro de série.

Les machines et les groupes électrogènes construits avant le premier trimestre 2001 garderont le format à 8 caractères du numéro d'identification produit (PIN).

Les organes tels que les moteurs, les boîtes de vitesses, les essieux, etc., continueront d'être désignés par un numéro de série (S/N) à 8 caractères.

2. COMMANDE DE PIÈCES

⚠ DANGER

Lorsqu'il faut remplacer des pièces de rechange pour ce produit Caterpillar recommande d'utiliser les pièces de rechange Caterpillar ou les pièces qui ont des spécifications équivalentes dont les dimensions physiques, le type, la force et le matériau. Ces équivalences ne se limitent pas à l'énoncé précédent.

L'inobservation de cette mise en garde peut entraîner des défaillances prématurées, des dommages au produit, des blessures ou même la mort.

Les concessionnaires Caterpillar fournissent dans le monde entier des pièces de rechange de qualité Caterpillar. Leurs stocks de pièces sont constamment réapprovisionnés et comptent toutes les pièces nécessaires pour assurer la bonne marche de vos machines Caterpillar. Certains concessionnaires proposent également des kits de réparation ou des pièces rénovées, ce qui permet de choisir la solution la plus économique dans une situation donnée. Lors des commandes de pièces, mentionner la quantité, le numéro et la désignation des pièces ainsi que le numéro de série ou le numéro d'identification (PIN) de la machine pour laquelle ces pièces sont requises.

3. ORGANISATION DU CATALOGUE DE PIÈCES

Les renseignements sur les produits sont présentés sous forme de "Information element" (élément d'information) représentant tous les composants d'un modèle donné. "Engine Arrangement" (version de moteur) et "Seat Group" (assemblage de siège)" sont des exemples d'éléments d'information. Les éléments d'information sont classés par ordre alphabétique par la désignation standard des pièces et par numéros de pièces dans chaque partie importante du manuel.

4. TABLE DES MATIÈRES

Nouvelle Caractéristique

La table des matières se trouve au début du manuel. La table des matières fournit la liste de tous les chapitres du manuel avec une liste complète de tous les éléments d'information classés par ordre d'apparition dans le manuel. Les numéros de page sont fournis afin que l'utilisateur puisse trouver rapidement les illustrations détaillées concernant l'identification des pièces et les listes des pièces d'entretien.

5. INDEX DES PIÈCES D'ENTRETIEN

La rubrique "Index des pièces d'entretien" qui se trouve au début du manuel renvoie aux pièces d'entretien les plus fréquemment utilisées en précisant la désignation, la quantité, là où la pièce est utilisée et le numéro de page. Ces pièces sont classés par ordre alphabétique.

6. INDEX

L'index qui se trouve vers le début du manuel est une liste alphabétique de tous les éléments d'information du manuel. Les numéros de page sont fournis afin que l'utilisateur puisse trouver rapidement les illustrations détaillées concernant l'identification des pièces et les listes des pièces d'entretien.

7. INDEX DES NUMÉROS DE PIÈCES

Une liste numérique de tous les numéros de pièces et des pages correspondantes se trouve à la fin du manuel.

8. LÉGENDES

Les légendes qui se trouvent en haut de chaque page de chaque élément d'information fournissent le numéro de pièce, la désignation ainsi que des renseignements supplémentaires sur les pièces. Les renseignements concernant les numéros de série (S/N) qui se trouvent dans chaque légende doivent être utilisés pour sélectionner les informations correctes pour un moteur donné. Les informations concernant les options de remplacement sur le chantier, l'identification des composants des équipements offerts en option et les lieux d'application sont aussi fournies.

Nouvelle Caractéristique

Les lettres de la première ligne d'une légende sont présentées en police plus grande afin d'indiquer le début d'une unité d'information. Les légendes qui pourraient être requises pour des pages supplémentaires afin d'illustrer une unité d'information seront présentées en police standard et comprendront le terme (à suivre).

9. PIÈCES NON FOURNIES

Nouvelle Caractéristique

Dans certains cas, il est nécessaire d'indiquer les pièces non fournies qui sont en aval de la liste des pièces d'entretien. Les numéros des pièces non fournies dans la liste des pièces et les légendes seront en italique pour signaler qu'ils ne sont pas disponibles.

10. NUMÉROS DE RÉFÉRENCE DE LA LISTE DES PIÈCES

Nouvelle Caractéristique

Les numéros indiqués dans la colonne des numéros de références correspondent aux numéros utilisés dans les illustrations auxquelles ils sont associés. Un suffixe alphabétique peut être ajouté à un numéro de référence pour identifier la liste des articles en aval. Les numéros indiqués dans la colonne de référence de l'illustration renvoient à l'identification du numéro affiché dans le coin inférieur gauche de chaque illustration. Le numéro de référence de l'illustration pourrait être utilisé avec le numéro de référence de l'article pour déterminer le numéro de pièce correct. Il peut y avoir une omission intentionnelle d'un numéro de référence dans une liste de pièces suite à la mise à jour des informations en vue de refléter les numéros de pièces les plus récentes.

11. DÉSIGNATIONS DE PIÈCES EN RETRAIT

Lorsqu'une désignation de pièce est en retrait, cela veut dire que l'article en regard fait partie de l'ensemble sous lequel il figure.

12. LETTRES DE RÉFÉRENCE DES ILLUSTRATIONS

Quand cela est nécessaire, les illustrations comportent des lettres de référence (A, B, C, etc.) pour montrer le trajet des canalisations et faisceaux de câbles d'un point à l'autre. Elles sont utilisées également pour indiquer où relier les illustrations séparées auparavant.

13. ABRÉVIATIONS ET SYMBOLES

O.D. – Diamètre extérieur
I.D. – Diamètre intérieur
A – Ne fait pas partie de ce groupe
B – Utiliser selon besoin
C – Modification
D – Commander par mètre
E – Commander par centimètre
F – Non représenté
G – Commander par pouce
I – Voir "Hose Fabrication Guide"
M – Pièce métrique
R – Pièce rénovée éventuellement disponible
Y – Illustration séparée
Z – Non fourni séparément

NOTA:

En raison du progrès technique et des améliorations continuelles apportées au matériel, votre machine comporte peut-être des modifications qui n'apparaissent pas dans la présente publication. En cas de doute sur un détail de votre machine Caterpillar ou sur le texte de la présente publication, adressez-vous à votre concessionnaire Caterpillar.

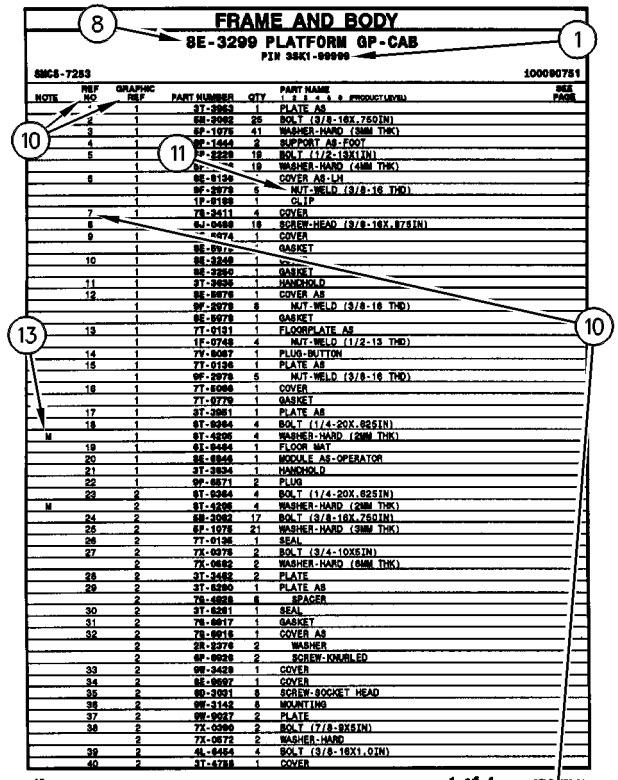

FRAME AND BODY

8E-3299 PLATFORM GP-CAB

PIN 38K1-09999

SMCS-7253 100090751

NOTE	REF NO	GRAPHIC REF	PART NUMBER	QTY	PART NAME (1 2 3 4 5 6 PRODUCT LEVEL)	SEE PAGE
	1	1	3T-2953	1	PLATE AS	
	2	1	5B-2992	25	BOLT (3/8-16X.750IN)	
	3	1	5P-1075	41	WASHER-HARD (3MM THK)	
	4	1	9P-1444	2	SUPPORT AS-FOOT	
	5	1	5P-2229	19	BOLT (1/2-13X1IN)	
		1	5P-[illegible]4	19	WASHER-HARD (4MM THK)	
	6	1	9E-8136	1	COVER AS-LH	
		1	9F-2979	6	NUT-WELD (3/8-16 THD)	
		1	1P-8188	1	CLIP	
	7	1	7S-3411	4	COVER	
	8	1	6J-0488	18	SCREW-HEAD (3/8-16X.875IN)	
	9	1	[illegible]-4474	1	COVER	
		1	9E-8[illegible]7		GASKET	
	10	1	9E-3248	1	[illegible]	
		1	9E-3250	1	GASKET	
	11	1	3T-3835	1	HANDHOLD	
	12	1	9E-8078	1	COVER AS	
		1	9F-2979	8	NUT-WELD (3/8-16 THD)	
		1	9E-8078	1	GASKET	
	13	1	7T-0131	1	FLOORPLATE AS	
		1	1F-0748	4	NUT-WELD (1/2-13 THD)	
	14	1	7Y-8087	1	PLUG-BUTTON	
	15	1	7T-0136	1	PLATE AS	
		1	9F-2979	6	NUT-WELD (3/8-16 THD)	
	16	1	7T-8086	1	COVER	
		1	7T-0779	1	GASKET	
	17	1	3T-3981	1	PLATE AS	
	18	1	6T-9364	4	BOLT (1/4-20X.625IN)	
M		1	6T-4205	4	WASHER-HARD (2MM THK)	
	19	1	6L-8484	1	FLOOR MAT	
	20	1	9E-8946	1	MODULE AS-OPERATOR	
	21	1	3T-3834	1	HANDHOLD	
	22	1	9P-8571	2	PLUG	
	23	2	6T-9364	4	BOLT (1/4-20X.625IN)	
M		2	6T-4205	4	WASHER-HARD (2MM THK)	
	24	2	5B-3062	17	BOLT (3/8-16X.750IN)	
	25	2	5P-1075	21	WASHER-HARD (3MM THK)	
	26	2	7T-0135	1	SEAL	
	27	2	7X-0378	2	BOLT (3/4-10X5IN)	
		2	7X-0682	2	WASHER-HARD (5MM THK)	
	28	2	3T-3482	2	PLATE	
	29	2	3T-8280	1	PLATE AS	
		2	7S-0038	8	SPACER	
	30	2	3T-8281	1	SEAL	
	31	2	7S-0017	1	GASKET	
	32	2	7S-0016	1	COVER AS	
		2	2R-2276	2	WASHER	
		2	6P-0028	2	SCREW-KNURLED	
	33	2	9W-3429	1	COVER	
	34	2	9E-0007	1	COVER	
	35	2	9D-3031	8	SCREW-SOCKET HEAD	
	36	2	9W-3142	8	MOUNTING	
	37	2	9W-9027	2	PLATE	
	38	2	7X-0390	2	BOLT (7/8-9X5IN)	
		2	7X-0672	2	WASHER-HARD	
	39	2	4L-8454	4	BOLT (3/8-16X1.0IN)	
	40	2	3T-4788	1	COVER	

12 FRAME AND BODY 1 of 4 SELP4570-01

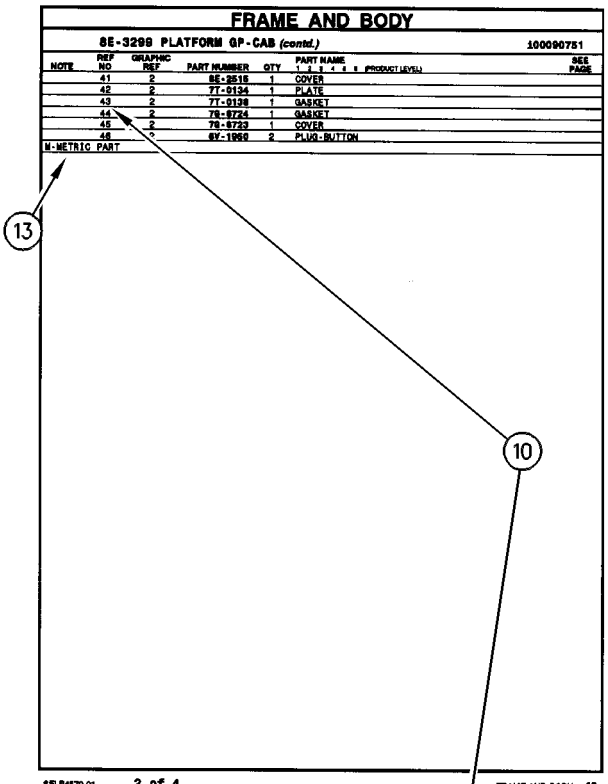

FRAME AND BODY

8E-3299 PLATFORM GP-CAB (contd.) 100090751

NOTE	REF NO	GRAPHIC REF	PART NUMBER	QTY	PART NAME (1 2 3 4 5 6 PRODUCT LEVEL)	SEE PAGE
	41	2	8E-3515	1	COVER	
	42	2	7T-0134	1	PLATE	
	43	2	7T-0139	1	GASKET	
	44	2	7S-0724	1	GASKET	
	45	2	7S-0723	1	COVER	
	46	2	6V-1969	2	PLUG-BUTTON	

M-METRIC PART

SELP4570-01 2 of 4 FRAME AND BODY 13

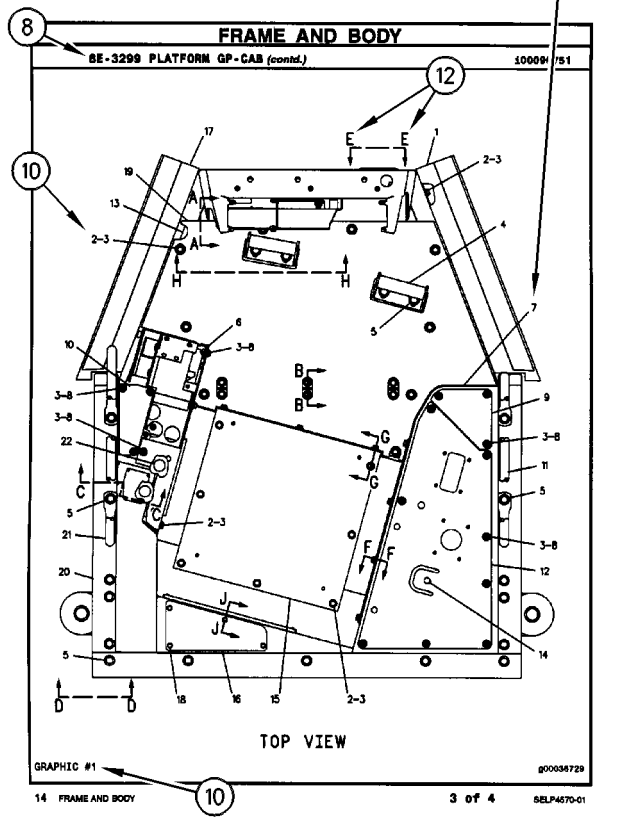

FRAME AND BODY

8E-3299 PLATFORM GP-CAB (contd.) 100090751

GRAPHIC #1 g00036729

TOP VIEW

14 FRAME AND BODY 3 of 4 SELP4570-01

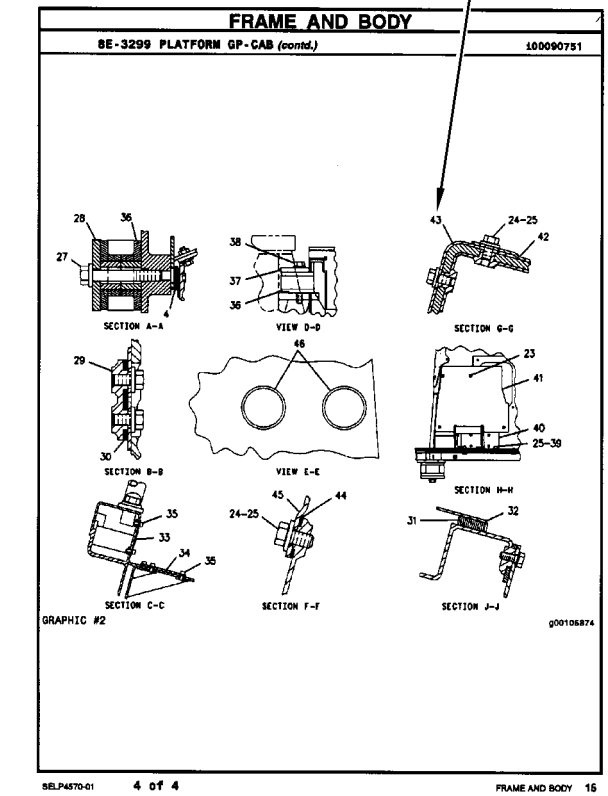

FRAME AND BODY

8E-3299 PLATFORM GP-CAB (contd.) 100090751

SECTION A-A

VIEW D-D

SECTION G-G

SECTION B-B

VIEW E-E

SECTION H-H

SECTION C-C

SECTION F-F

SECTION J-J

GRAPHIC #2 g00105874

SELP4570-01 4 of 4 FRAME AND BODY 15

1. MÁQUINAS

Las máquinas Caterpillar se identifican con Números de Identificación del Producto (PIN). Algunos componentes incluídos en la máquina pueden estar identificados con Números de Serie (N/S). Los componentes que tienen típicamente esta identificación incluyen motores, transmisiones, hojas topadoras y desgarradores. La máquina y el motor se identifican además con Números de Configuración y en algunos casos, Números de Modificación. Estos números están en las placas de identificación del producto o en la placa principal en la cabina del operador.

Los distribuidores Caterpillar necesitan estos números para identificar con exactitud los números de piezas de repuesto.

SIS *Nueva Característica*

A partir del primer trimestre del 2001, el Número de Identificación de Producto (PIN) de Caterpillar cambió de 8 a 17 caracteres. Para hacer más uniforme el método de identificación de equipos, Caterpillar y otros fabricantes de equipo de construcción han tomado medidas para cumplir con la versión más reciente de la norma de numeración de identificación de productos. Los Números de Identificación de Producto para máquinas que no se operan en carreteras son definidos por la norma ISO 10261. El nuevo formato PIN corresponderá a todas las máquinas y grupos electrógenos Caterpillar. Las placas y los caracteres PIN estampados en el bastidor mostrarán el PIN de 17 caracteres. El nuevo formato tendrá la apariencia siguiente:

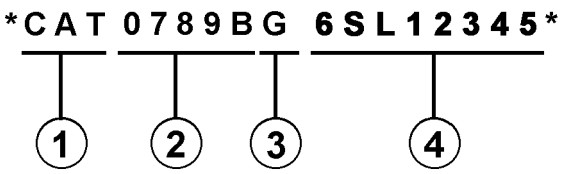

Significado de los caracteres:

1. Código de Fabricación Mundial de Caterpillar (caracteres 1-3)

2. Sección Descriptor de la Máquina (caracteres 4-8)

3. Carácter de Verificación (carácter 9)

4. Sección Indicador de la Máquina (MIS) o Número de Secuencia de Producto (caracteres 10-17). Anteriormente, estos caracteres constituían el Número de Serie.

Las máquinas y grupos electrógenos producidos antes del primer semestre del 2001 mantendrán su formato PIN de 8 caracteres.

Los componentes como motores, transmisiones, ejes, herramientas de trabajo, etc., continuarán usando un Número de Serie (S/N) de 8 caracteres.

2. COMO PEDIR REPUESTOS

⚠ ADVERTENCIA

Cuando se necesiten piezas de repuesto para este producto, Caterpillar recomienda usar piezas de repuesto Caterpillar o piezas que tengan especificaciones equivalentes incluyendo, pero sin estar limitadas a, dimensiones físicas, tipo, fortaleza y material.

El no hacer caso de esta advertencia puede llevar a fallas prematuras, daños al producto y lesiones graves o mortales.

Las piezas de repuesto Caterpillar de calidad están a la disposición de los distribuidores Caterpillar en todo el mundo. Sus existencias actualizadas incluyen todas las piezas normalmente requeridas para proteger su inversión en máquinas Caterpillar. Los distribuidores pueden tener juegos de reparación o piezas remanufacturadas para permitir la selección de la mejor alternativa de reparación en un caso en particular. Al pedir piezas de repuesto, especifique en su pedido la cantidad, el número de pieza, el nombre de la pieza y el número de serie/número de identificación del producto, de la máquina para la cual se necesitan estas piezas.

3. ORGANIZACION DEL MANUAL DE PIEZAS

La información sobre el producto, se presenta en este manual, como "elementos de información" que representan todos los componentes de un modelo específico. Las configuraciones de motores y los grupos de asientos son ejemplos de elementos de información. Los elementos de información están organizados primeramente por nombres de piezas en orden alfabético y en segundo lugar, por el número de pieza dentro de cada sección principal del manual.

4. CONTENIDO

La página de Contenido se encuentra al principio del manual. El Contenido indica cada sección del manual con una lista completa de todos los elementos de información organizados en el orden que aparecen en el manual. Los números de página proporcionan una referencia rápida a las ilustraciones detalladas de identificación de piezas y a las listas de componentes de repuesto de dichas piezas.

5. ÍNDICE DE PIEZAS DE MANTENIMIENTO

Al principio de este catálogo se encuentra un índice de los números de piezas utilizadas más frecuentemente para el mantenimiento, que incluye descripción, cantidad necesaria, lugar de utilización y número de página. Esta información está organizada alfabéticamente, por descripción de la pieza.

6. ÍNDICE

El Índice, ubicado cerca del principio del manual, es una lista en orden alfabético de todos los elementos de información incluídos en el manual. Los números de página proporcionan una referencia rápida a las ilustraciones detalladas de identificación de piezas y a las listas de componentes de repuesto de dichas piezas.

7. INDICE NUMÉRICO DE PIEZAS

Un índice numérico de piezas con el correspondiente número de página aparece al final de este catálogo.

8. TÍTULOS

Los títulos ubicados al principio de cada elemento de información identifican el número y el nombre de la pieza junto con información descriptiva. Se debe usar información sobre los Números de Identificación de Pieza (PIN) y los números de serie (S/N) para seleccionar la información que corresponda a una máquina en particular. También se suministra información sobre las opciones de reparación en el campo, la identificación de componentes de accesorios optativos y el lugar de ubicación de la pieza ("es parte de").

La primera línea del título se muestra con un tipo de letra más grande para indicar el comienzo de un elemento de información. Si se requieren páginas adicionales para ilustrar un elemento de información, los títulos se muestran con un tipo de letra normal y la continuación se indica entre paréntesis.

9. PIEZAS QUE NO SE SUMINISTRAN COMO REPUESTO

En algunos casos es necesario indicar piezas que no se suministran como repuesto pero que pueden estar conectadas a listas de componentes de otras piezas de repuesto. En tal caso, dichas piezas se muestran en cursiva para indicar que no son piezas disponibles.

10. NÚMEROS DE REFERENCIA

Los números en la columna de No. de Referencia corresponden a los números indicados en la ilustración que pertenece a ese número de pieza. Los números que tienen un sufijo alfabético identifican artículos de las listas de componentes de piezas. Los números en la columna de Referencia de la ilustración se identifican en la esquina inferior izquierda de cada ilustración. Para determinar el número de pieza correcto se puede utilizar tanto el No. de Referencia de la ilustración como el No. de Referencia del artículo. A medida que se actualiza la información para indicar los más recientes números de piezas de repuesto, puede omitirse intencionalmente un No. de Referencia en una lista de componentes de piezas.

11. NOMBRES DE PIEZA SANGRADOS

Cuando el nombre de una pieza está sangrado en una lista, significa que esta pieza forma parte del grupo o conjunto del renglón inmediatamente superior.

12. LETRAS DE REFERENCIA DE ILUSTRACIONES

Las ilustraciones contienen algunas veces letras de referencia (A, B, C etc.) cuyo propósito es seguir el trayecto de líneas y mazos de cables de un punto a otro. También se utilizan para mostrar dónde volver a unir ilustraciones que se habían separado.

13. ABREVIATURAS Y SIMBOLOS

O.D. – Diámetro exterior
I.D. – Diámetro interior
A – No es pieza de este grupo
B – Utilizado según la demanda
C – Indica cambio
D – Se pide por metro
E – Se pide por centímetro
F – No se muestra
G – Se pide por pulgada
I – Ver "Hose Fabrication Guide"
M – Pieza métrica
R – Puede estar disponible como pieza remanufacturada
Y – Ilustración separada
Z – No se suministra por separado

SIS *Nueva Característica*

14.<END>

Este símbolo indica el final de un elemento de información.

NOTA:

Las contínuas mejoras y adelantos en diseño podrían originar cambios a su máquina que no se incluyen en esta publicación. Cuando tenga alguna pregunta acerca de su producto Caterpillar o de esta publicación, consulte al distribuidor Caterpillar para obtener la información más reciente.

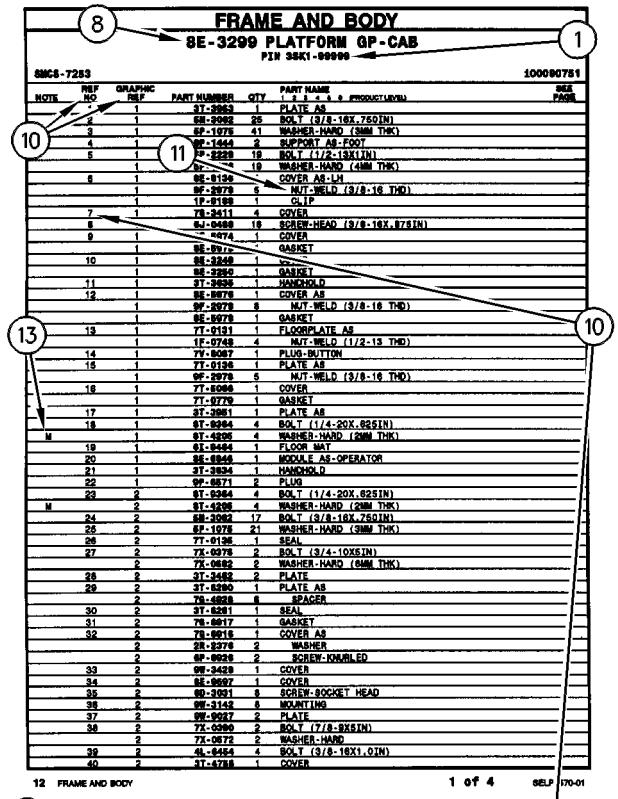

FRAME AND BODY

8E-3299 PLATFORM GP-CAB

PIN 38K1-09999

SMCS-7253 100090751

NOTE	REF NO	GRAPHIC REF	PART NUMBER	QTY	PART NAME (1 2 3 4 5 6 PRODUCT LEVEL)	SEE PAGE
	1	1	3T-3953	1	PLATE AS	
	2	1	5B-2992	25	BOLT (3/8-16X.750IN)	
	3	1	6P-1075	41	WASHER-HARD (3MM THK)	
	4	1	9P-1444	2	SUPPORT AS-FOOT	
	5	1	9P-2228	19	BOLT (1/2-13X1IN)	
		1	9P-[illegible]4	19	WASHER-HARD (4MM THK)	
	6	1	9E-9136	1	COVER AS-LH	
		1	9F-2979	6	NUT-WELD (3/8-16 THD)	
		1	1P-0188	1	CLIP	
	7	1	7S-3411	4	COVER	
	8	1	6J-0488	18	SCREW-HEAD (3/8-16X.875IN)	
	9	1	9[illegible]4	1	COVER	
		1	9E-9[illegible]		GASKET	
	10	1	9E-3249	1	[illegible]	
		1	9E-3250	1	GASKET	
	11	1	3T-3935	1	HANDHOLD	
	12	1	9E-9078	1	COVER AS	
		1	9F-2979	8	NUT-WELD (3/8-16 THD)	
		1	9E-9079	1	GASKET	
	13	1	7T-0131	1	FLOORPLATE AS	
		1	1F-0748	4	NUT-WELD (1/2-13 THD)	
	14	1	7Y-9087	1	PLUG-BUTTON	
	15	1	7T-0136	1	PLATE AS	
		1	9F-2978	6	NUT-WELD (3/8-16 THD)	
	16	1	7T-9086	1	COVER	
		1	7T-9779	1	GASKET	
	17	1	3T-3981	1	PLATE AS	
	18	1	6T-9364	4	BOLT (1/4-20X.625IN)	
M		1	6T-4205	4	WASHER-HARD (2MM THK)	
	19	1	6L-9484	1	FLOOR MAT	
	20	1	9E-9946	1	MODULE AS-OPERATOR	
	21	1	3T-3934	1	HANDHOLD	
	22	1	9P-8571	2	PLUG	
	23	2	6T-9364	4	BOLT (1/4-20X.625IN)	
M		2	6T-4205	4	WASHER-HARD (2MM THK)	
	24	2	5B-3062	17	BOLT (3/8-16X.750IN)	
	26	2	6F-1075	21	WASHER-HARD (3MM THK)	
	26	2	7T-0135	1	SEAL	
	27	2	7X-0378	2	BOLT (3/4-10X5IN)	
		2	7X-0682	2	WASHER-HARD (6MM THK)	
	28	2	3T-3482	2	PLATE	
	29	2	3T-5290	1	PLATE AS	
		2	7S-0038	8	SPACER	
	30	2	3T-5281	1	SEAL	
	31	2	7S-0017	1	GASKET	
	32	2	7S-9016	1	COVER AS	
		2	2R-2276	2	WASHER	
		2	6P-9028	2	SCREW-KNURLED	
	33	2	9W-3429	1	COVER	
	34	2	9E-9097	1	COVER	
	35	2	9D-3031	8	SCREW-SOCKET HEAD	
	36	2	9W-3142	8	MOUNTING	
	37	2	9W-9027	2	PLATE	
	38	2	7X-0390	2	BOLT (7/8-9X5IN)	
		2	7X-0672	2	WASHER-HARD	
	39	2	4L-9454	4	BOLT (3/8-16X1.0IN)	
	40	2	3T-4788	1	COVER	

12 FRAME AND BODY 1 of 4 SELP4570-01

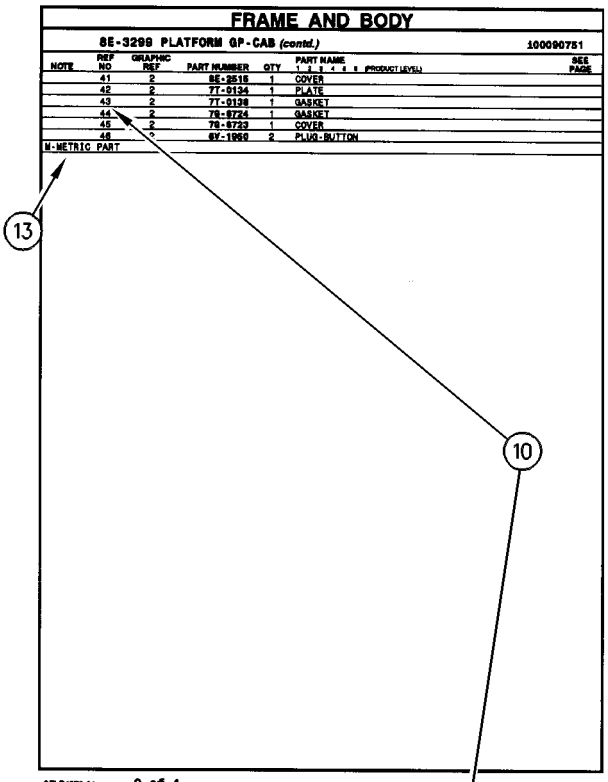

FRAME AND BODY

8E-3299 PLATFORM GP-CAB (contd.) 100090751

NOTE	REF NO	GRAPHIC REF	PART NUMBER	QTY	PART NAME (1 2 3 4 5 6 PRODUCT LEVEL)	SEE PAGE
	41	2	8E-3515	1	COVER	
	42	2	7T-0134	1	PLATE	
	43	2	7T-0139	1	GASKET	
	44	2	7S-9724	1	GASKET	
	45	2	7S-9723	1	COVER	
	46	2	6Y-1969	2	PLUG-BUTTON	

M-METRIC PART

SELP4570-01 2 of 4 FRAME AND BODY 13

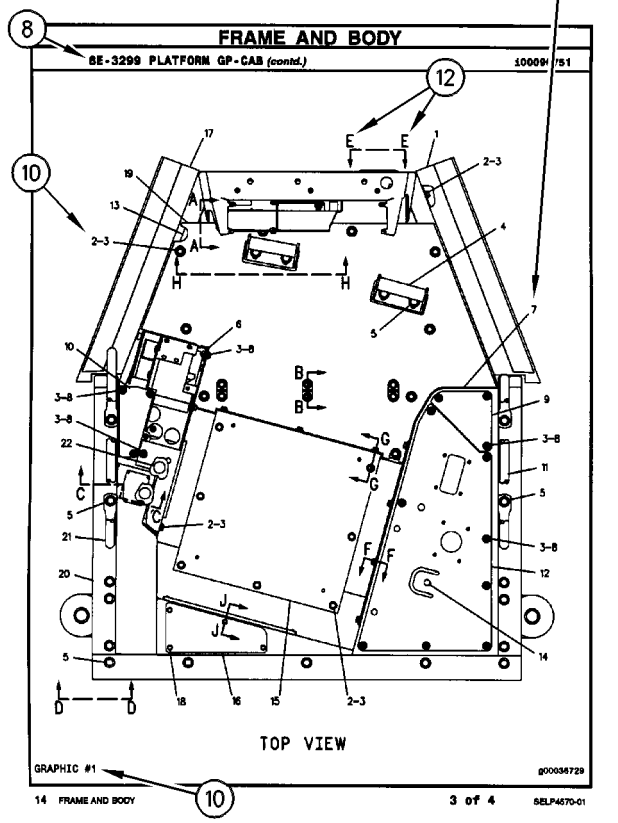

FRAME AND BODY

8E-3299 PLATFORM GP-CAB (contd.) 100090751

TOP VIEW

GRAPHIC #1 g00036729

14 FRAME AND BODY 3 of 4 SELP4570-01

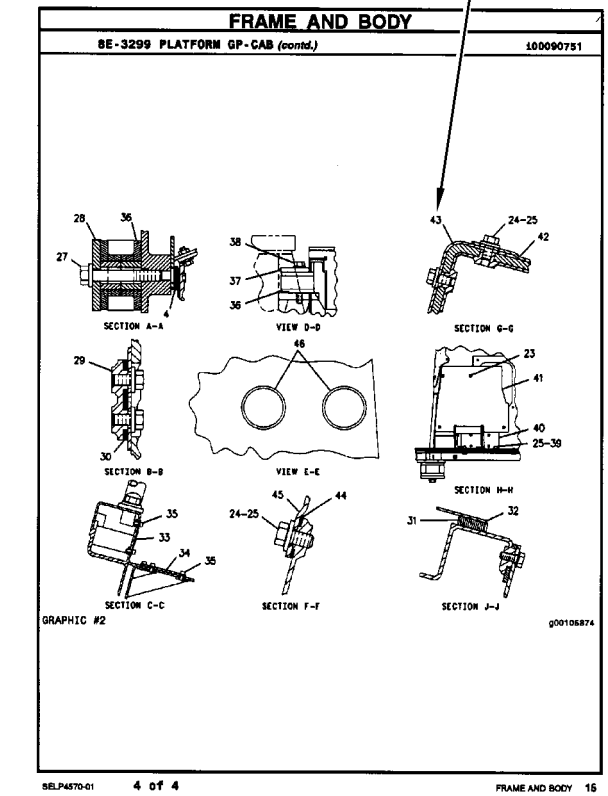

FRAME AND BODY

8E-3299 PLATFORM GP-CAB (contd.) 100090751

SECTION A-A VIEW D-D SECTION G-G

SECTION B-B VIEW E-E SECTION H-H

SECTION C-C SECTION F-F SECTION J-J

GRAPHIC #2 g00105874

SELP4570-01 4 of 4 FRAME AND BODY 15

INFORMAÇÃO GERAL

1. IDENTIFICAÇÃO DA MÁQUINA

As máquinas Caterpillar são identificadas pelos Números de Informação do Produto (PIN). Alguns componentes incluídos numa máquina podem ser identificados por Números de Série (S/N). Componentes típicos que serão enumerados com números de série incluem motores, transmissões, lâminas e ríperes. Além do número de série, a máquina e o motor são ainda identificados por números de arranjo e, em alguns casos, números de modificações. Tais números encontram-se na(s) placa(s) de identificação do produto e na placa mestre no compartimento do operador.

SIS ***Novidades***

A partir do primeiro trimestre de 2001 o Número de Identificação de Produto da Caterpillar (PIN) precisa ser mudado de 8 para 17 caracteres. Esforçando-se para fornecer uma identificação uniforme de equipamentos, a Caterpillar e outros fabricantes de equipamento de construção estão mudando para atender a versão mais atualizada do padrão de identificação de produtos. Os números de PIN para produtos de aplicações não rodoviárias são definidos pela ISO 10261. O novo formato de número PIN será adotado em todas as máquinas e grupos geradores Caterpillar. As placas e as marcações do chassi mostrarão os 17 dígitos de PIN. O novo formato terá a seguinte disposição:

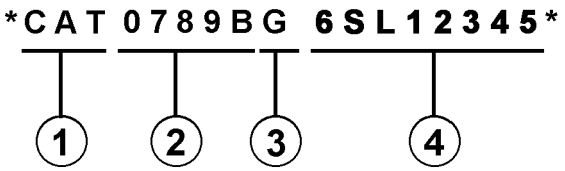

Onde:

1. Código de Fabricação Mundial da Caterpillar (dígitos 1-3)

2. Descrição da Máquina (dígitos 4-8)

3. Dígito de Verificação (dígito 9)

4. Seção de Indicador da Máquina (MIS) ou Número de Seqüência de Produto (dígitos 10-17). Estes eram anteriormente chamados de Número de Série.

Máquinas e grupos geradores produzidos antes do primeiro trimestre de 2001 manterão o formato de 8 caracteres de PIN.

Componentes como motores, transmissões, eixos, ferramentas de trabalho, etc. continuarão a usar Número de Série (S/N) com oito caracteres.

2. COMO OBTER PEÇAS

⚠ CUIDADO

Quando peças de substituição são exigidas para este produto, a Caterpillar recomenda a utilização de peças de substituição Caterpillar ou peças com as especificações equivalentes incluindo, mas não limitadas, à dimensões físicas, tipos, resistência e materiais.

A inobservância desta advertência poderá resultar em falhas prematuras, danos ao produto, ferimentos ou morte.

As Peças de Reposição de Qualidade Caterpillar encontram-se disponíveis nos revendedores Caterpillar no mundo inteiro. Seus estoques de peças são atualizados e incluem todas as peças normalmente necessárias para proteger seu investimento em máquinas Caterpillar. Alguns revendedores podem oferecer jogos de reparo ou peças de troca/remanufaturadas disponíveis como uma opção da alternativa de reparo mais eficaz para uma situação específica. Ao encomendar peças, seu pedido deve especificar a quantidade, o número e o nome da peça e o número de série/número de identificação do produto referentes à máquina para a qual as peças se destinam.

3. ORGANIZAÇÃO DO MANUAL DE PEÇAS

A informação do produto neste manual é apresentada em forma de "elementos de informação" que representam todos os componentes para o modelo específico. Arranjo de Motor e Grupo de Assento são exemplos de elementos de informação. Os elementos de informação são organizados em ordem alfabética por nome de peça ou secundariamente, por número de peça incluído em cada seção principal do manual.

4. LISTA DE CONTEÚDOS

A Lista de Conteúdos (TOC) se encontra no princípio do manual. A Lista de Conteúdos (TOC) relaciona em cada seção do manual uma lista completa com todos os elementos de informação organizados conforme aparecem no manual. Números de página são fornecidos para que se tenha referência rápida de ilustrações de peças detalhadas e listas de conteúdos que podem receber serviço de manutenção.

5. ÍNDICE DE PEÇAS DE MANUTENÇÃO

O Índice de Peças de Manutenção, localizado perto do princípio do manual, faz referência aos números de peça de manutenção usados com maior frequência, fornecendo uma descrição, a quantidade, o uso e o número de página. Esta informação é organizada com a descrição da peça em ordem alfabética.

6. ÍNDICE

O Índice localizado perto do princípio do manual, consiste de uma lista em ordem alfabética de todos os elementos de informação incluídos no manual. Números de página são fornecidos para que se tenha referência rápida de ilustrações de peças detalhadas e listas de conteúdos que podem receber serviço de manutenção.

7. ÍNDICE DE NÚMERO DE PEÇA

Um índice numérico relacionando todos os números de peça e a(s) página(s) correspondentes, aparece no final do manual.

8. LEGENDAS

As legendas localizadas no início de cada elemento de informação identificam o número e o nome de peça, juntamente com informação descritiva adicional. Informações sobre o Número de Informação do Produto (PIN) e o Número de Série (S/N) encontradas em cada legenda devem ser usadas para selecionar a informação correta sobre uma máquina específica. Opções de substituição no campo, identificação de componentes de acessórios opcionais e informações sobre onde são utilizados ("parte de") são também fornecidas.

A primeira linha de uma legenda é indicada em tipo maior para indicar o princípio de um elemento de informação. Legendas para páginas adicionais que podem ser necessárias para ilustrar um elemento de informação serão apresentadas em tipo padrão e incluirão o termo *(continua)* .

9. NÃO DISPONÍVEL SEPARADAMENTE

Em alguns casos, é necessário mostrar peças não disponíveis separadamente que têm uma ligação com listas de conteúdos de nível inferior que podem receber serviço de manutenção. Os números de peça destes componentes não disponíveis aparecerão em *itálico* , a fim de indicar que não estão disponíveis.

10. NÙMEROS DE REFERÊNCIA À LISTA DE PEÇAS

Os números indicados na coluna Ref No (No. de Referência) correspondem-se aos números usados no(s) gráfico(s) correspondente(s). Um sufixo com letras pode ser acrescentado a um número de referência para identificar itens de conteúdo de nível inferior. Os números indicados na coluna Graphic Ref (Referência de Gráfico) referem-se ao identificador de número de gráfico presente no canto esquerdo inferior de cada ilustração. O número de Referência de Gráfico pode ser usado em combinação com o item Ref No para determinar-se o número de peça correto. Poderá haver omissão intencional de um número de referência (Ref No) de uma lista de conteúdos uma vez que as informações são atualizadas para refletir os números de peça mais recentes que podem receber serviço de manutenção.

11. NOMES DE PEÇAS DESALINHADOS

Quando um nome de peça encontra-se desalinhado numa lista de peças, significa que tal item faz parte do (está incluído no) grupo ou conjunto sob o qual está relacionado.

12. LETRAS DE REFERÊNCIA NAS ILUSTRAÇÕES

Quando necessário, as ilustrações contêm letras de referência (A, B, C, etc.) que são utilizadas para seguir tubulações e cabos elétricos de um ponto a outro. Também foram utilizadas para indicar onde se pode reconectar as ilustrações que foram separadas.

13. ABREVIAÇÕES E SÍMBOLOS

O.D. – "Outside Diameter" (Diâmetro Externo)
I.D. – "Inside Diameter" (Diâmetro Interno)
A – Não faz parte deste grupo
B – Use conforme necessário
C – Indica modificação
D – Vendido por metro
E – Vendido por centímetro
F – Não ilustrado
G – Vendido por polegada
I – Consulte o seu revendedor quanto a mangueira
M – Peça métrica
R – Peça remanufaturada pode estar disponível; consulte o seu revendedor Cat
Y – Ilustração separada
Z – Não disponível separadamente

SIS *Novidades*

14. <END>

Este símbolo indica o final de um elemento de informação.

INFORMAÇÃO GERAL

NOTA:

Os contínuos aperfeiçoamentos e avanços no projeto do produto podem ocasionar modificações em sua máquina que talvez ainda não estejam incluídas nesta publicação. Sempre que surgirem dúvidas quanto a um produto Caterpillar ou quanto à presente publicação, consulte o seu revendedor Caterpillar para obter as informações mais recentes disponíveis.

FRAME AND BODY

8E-3299 PLATFORM GP-CAB

PIN 38K1-09999

SMCS-7253 100090751

NOTE	REF NO	GRAPHIC REF	PART NUMBER	QTY	PART NAME (1 2 3 4 5 6 PRODUCT LEVEL)	SEE PAGE
	1	1	3T-3963	1	PLATE AS	
	2	1	5B-3992	25	BOLT (3/8-16X.750IN)	
	3	1	6P-1075	41	WASHER-HARD (3MM THK)	
	4	1	9P-1444	2	SUPPORT AS-FOOT	
	5	1	9P-2229	19	BOLT (1/2-13X1IN)	
		1	6P-[illegible]4	19	WASHER-HARD (4MM THK)	
	6	1	9E-9136		COVER AS-LH	
		1	9F-2979	6	NUT-WELD (3/8-16 THD)	
		1	1P-0188	1	CLIP	
	7	1	7S-3411	4	COVER	
	8	1	6J-0488	18	SCREW-HEAD (3/8-16X.875IN)	
	9	1	[illegible]-4474	1	COVER	
		1	9E-9[illegible]		GASKET	
	10	1	9E-3249	1	[illegible]	
		1	9E-3250	1	GASKET	
	11	1	3T-3935	1	HANDHOLD	
	12	1	9E-9078	1	COVER AS	
		1	9F-2979	8	NUT-WELD (3/8-16 THD)	
		1	9E-9079	1	GASKET	
	13	1	7T-0131	1	FLOORPLATE AS	
		1	1F-0748	4	NUT-WELD (1/2-13 THD)	
	14	1	7Y-9087	1	PLUG-BUTTON	
	15	1	7T-0136	1	PLATE AS	
		1	9F-2979	6	NUT-WELD (3/8-16 THD)	
	16	1	7T-9086	1	COVER	
		1	7T-9779	1	GASKET	
	17	1	3T-3981	1	PLATE AS	
	18	1	6T-9364	4	BOLT (1/4-20X.625IN)	
M		1	6T-4205	4	WASHER-HARD (2MM THK)	
	19	1	6L-9484	1	FLOOR MAT	
	20	1	9E-9946	1	MODULE AS-OPERATOR	
	21	1	3T-3934	1	HANDHOLD	
	22	1	9P-8571	2	PLUG	
	23	2	6T-9364	4	BOLT (1/4-20X.625IN)	
M		2	6T-4205	4	WASHER-HARD (2MM THK)	
	24	2	5B-3982	17	BOLT (3/8-16X.750IN)	
	26	2	6F-1075	21	WASHER-HARD (3MM THK)	
	26	2	7T-0135	1	SEAL	
	27	2	7X-0378	2	BOLT (3/4-10X5IN)	
		2	7X-0682	2	WASHER-HARD (5MM THK)	
	28	2	3T-3482	2	PLATE	
	29	2	3T-5290	1	PLATE AS	
		2	7S-0038	8	SPACER	
	30	2	3T-5281	1	SEAL	
	31	2	7S-9017	1	GASKET	
	32	2	7S-9016	1	COVER AS	
		2	2R-2276	2	WASHER	
		2	6P-9028	2	SCREW-KNURLED	
	33	2	9W-3429	1	COVER	
	34	2	9E-9697	1	COVER	
	35	2	9D-3031	8	SCREW-SOCKET HEAD	
	36	2	9W-3142	8	MOUNTING	
	37	2	9W-9027	2	PLATE	
	38	2	7X-0390	2	BOLT (7/8-9X5IN)	
		2	7X-0672	2	WASHER-HARD	
	39	2	4L-9454	4	BOLT (3/8-16X1.0IN)	
	40	2	3T-4788	1	COVER	

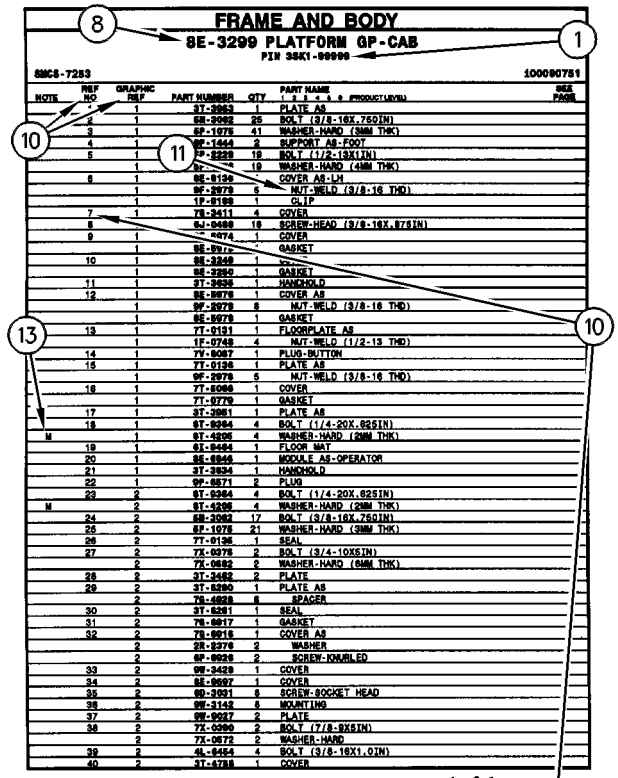

12 FRAME AND BODY 1 of 4 SELP4570-01

FRAME AND BODY

8E-3299 PLATFORM GP-CAB (contd.)

100090751

NOTE	REF NO	GRAPHIC REF	PART NUMBER	QTY	PART NAME (1 2 3 4 5 6 PRODUCT LEVEL)	SEE PAGE
	41	2	8E-3515	1	COVER	
	42	2	7T-0134	1	PLATE	
	43	2	7T-0139	1	GASKET	
	44	2	7S-9724	1	GASKET	
	45	2	7S-9723	1	COVER	
	46	2	6V-1969	2	PLUG-BUTTON	

M-METRIC PART

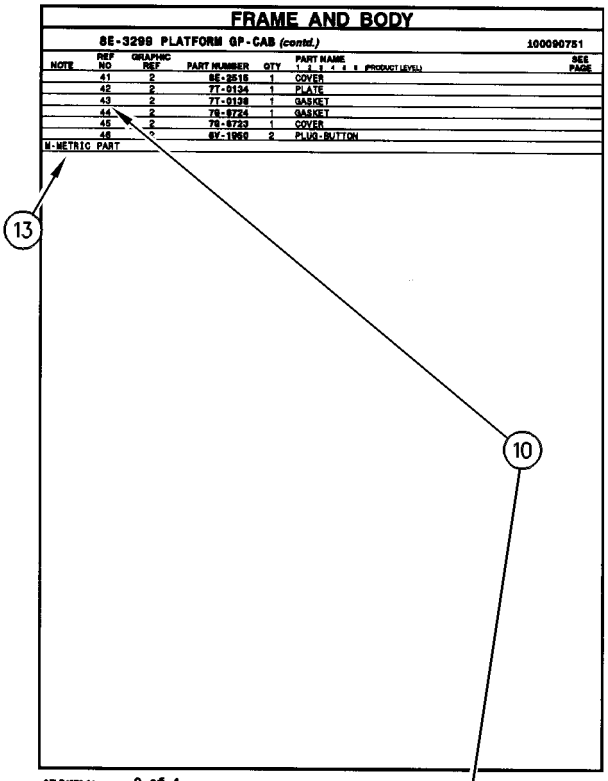

SELP4570-01 2 of 4 FRAME AND BODY 13

FRAME AND BODY

8E-3299 PLATFORM GP-CAB (contd.)

100090751

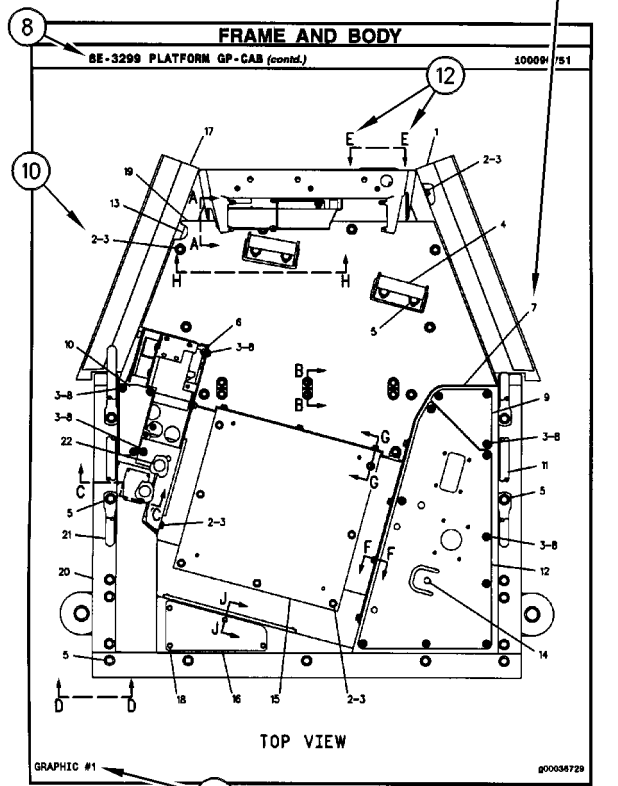

14 FRAME AND BODY 3 of 4 SELP4570-01

FRAME AND BODY

8E-3299 PLATFORM GP-CAB (contd.)

100090751

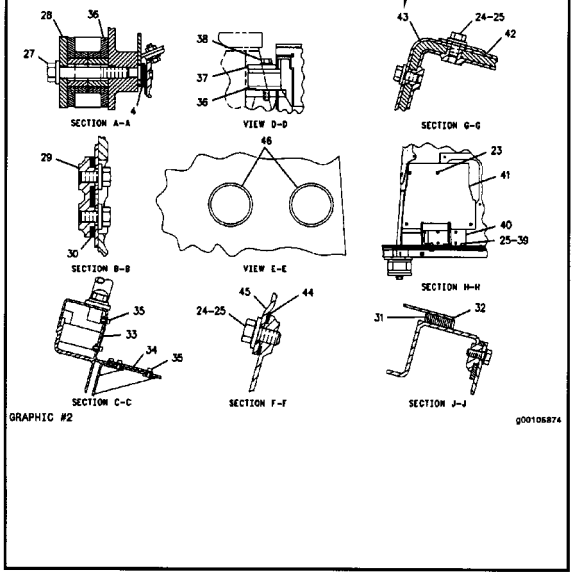

SELP4570-01 4 of 4 FRAME AND BODY 15

ALLGEMEINE HINWEISE

1. MASCHINENKENNZEICHNUNG

Caterpillar-Maschinen sind mit PRODUCT IDENTIFICATION NUMBERS (PIN) (Produkt-Identnummern) gekennzeichnet. Einige Baugruppen, z.B. Motoren, Getriebe, Planierschilde und Aufreißer, sind mit SERIAL NUMBERS (S/N) (Seriennummern) gekennzeichnet. An der Maschine und am Motor befinden sich außerdem ARRANGEMENT NUMBERS (Ausrüstungsnummern) sowie in einigen Fällen MODIFICATION NUMBERS (Änderungsnummern). Sie befinden sich auf den PIN-Schildern und auf dem Typenschild im Fahrerhaus.

Bei Ersatzteilbestellungen müssen dem Händler alle diese Nummern zur Verfügung gestellt werden.

SIS ***Neu im Parts Manual***

Vom ersten Quartal 2001 ab wurde die Caterpillar Produkt-Identnummer (PIN) von 8 auf 17 Zeichen geändert. Um zur Standardisierung der Produkt-Identnummer beizutragen, sind Caterpillar und andere Baumaschinenhersteller bestrebt, die aktuellste Norm zur Produkt-Identnummerierung einzuführen. Produkt-Identnummern für Baumaschinen sind durch ISO 10261 definiert. Das neue Format der Produkt-Identnummern gilt für alle Caterpillar-Maschinen und -Stromaggregate. Die Produkt-Identschilder und -Identrahmenmarkierung enthalten die aus 17 Zeichen bestehende Identnummer. Das neue Format hat folgende Abschnitte:

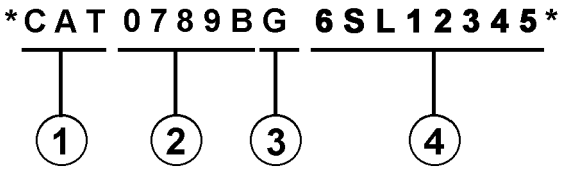

Abschnitte:

1. Caterpillars weltweiter Herstellungscode (Zeichen 1-3)

2. Modell (Zeichen 4-8)

3. Kontrollzeichen (Zeichen 9)

4. Maschinenspezifische Kennung (MIS) oder Produktsequenznummer (Zeichen 10-17). Diese wurde früher als Seriennummer bezeichnet.

Für vor dem ersten Quartal 2001 hergestellte Maschinen und Stromaggregate wird das aus 8 Zeichen bestehende PIN-Format beibehalten.

Bauteile wie z.B. Motoren, Getriebe, Achsen sowie Arbeitsgeräte werden weiterhin eine aus 8 Zeichen bestehende Seriennummer (S/N) aufweisen.

2. BESTELLEN VON ERSATZTEILEN

⚠ WARNUNG

Wenn für diese Maschine Ersatzteile benötigt werden, empfiehlt Caterpillar, ausschließlich Caterpillar-Ersatzteile oder solche zu verwenden, die die gleichen technischen Merkmale hinsichtlich Typ, Festigkeit, Werkzeugeigenschaften und die gleichen Maße aufweisen.

Bei Nichtbeachtung dieser Warnung besteht Verletzungs- oder sogar Lebensgefahr! Ferner kann Nichtbeachtung vorzeitige Ausfälle der Teile und Beschädigung der Maschine zur Folge haben.

Original Caterpillar-Ersatzteile können weltweit bei jedem Caterpillar-Händlern bestellt werden. Die umfangreichen Händlerlager enthalten normalerweise alle Teile, die Sie für Ihre Caterpillar-Maschine benötigen. Einige Händler bieten Reparatursätze, Austausch- oder werküberholte Teile an, so daß Sie eine Auswahl unter verschiedenen Reparaturmöglichkeiten treffen können. Ihre Bestellung muß folgende Angaben enthalten: Anzahl der benötigten Teile, Bestellnummer, Bezeichnung des Teils, Serien-Nr./Produkt-Ident-Nr., Ausrüstungs-Nr. und Änderungs-Nr. der Maschine, für die diese Teile benötigt werden.

3. AUFBAU DES PARTS MANUAL

Die Produktinformationen für alle Komponenten eines bestimmten Modells sind in INFORMATION ELEMENTS (Informationseinheiten) gegliedert. ENGINE ARRANGEMENT (Motorausführung) und SEAT GROUP (Fahrersitz) sind Beispiele für solche Informationseinheiten. Sie sind innerhalb jeder Gruppe alphabetisch, entsprechend der Ersatzteilbezeichnung, und zusätzlich numerisch, entsprechend der Ersatzteilnummer, geordnet.

4. INHALTSVERZEICHNIS

Das Inhaltsverzeichnis befindet sich am Anfang des Buches. Im Inhaltsverzeichnis werden die einzelnen Abschnitte des Buches aufgeführt. Die Abschnitte enthalten eine vollständige Aufstellung aller Informationseinheiten. Diese sind entsprechend ihrem Erscheinen im Buch geordnet. Das Inhaltsverzeichnis enthält Seitenangaben für Schnellverweise auf detaillierte Abbildungen und Teillisten.

5. INDEX FÜR WARTUNGSTEILE

Der Index für Wartungsteile vorn im Buch enthält die Bestellnummern, Seitenangaben, Mengenangaben und Informationen über den Einsatzbereich für die am häufigsten benötigten Ersatzteile. Die Angaben sind alphabetisch entsprechend der Teilebezeichnung geordnet.

6. INDEX

Der Index vorn im Buch enthält eine alphabetische Liste aller Informationseinheiten. Er enthält Seitenangaben für Schnellverweise auf detaillierte Abbildungen und Teillisten.

7. INDEX FÜR BESTELLNUMMERN

Hinten im Buch befindet sich ein numerischer Index, mit allen Bestellnummern und dem Hinweis auf die Seite, auf der sich die betreffende Abbildung befindet.

8. ÜBERSCHRIFTEN

Die Überschriften, die sich am Anfang jeder der Informationseinheiten befinden, enthalten Bestellnummern, Ersatzteilbezeichnungen und zusätzliche beschreibende Informationen. Produkt-Ident- und Seriennummern in den Überschriften sollten zur Auswahl der richtigen Informationen für die betreffende Maschine verwendet werden. Die Überschriften enthalten außerdem Informationen über möglichen Außendienstersatz, mögliche Baugerätekomponenten und die Baugruppe, zu der das Teil gehört.

Die erste Zeile einer Überschrift erscheint in einer größeren Schriftart, um den Anfang einer Informationseinheit zu kennzeichnen. Überschriften für zusätzliche Seiten, die zur Erläuterung einer Informationseinheit notwendig sind, erscheinen in normaler Schriftart und enthalten den Begriff "(contd.)".

9. NICHT EINZELN LIEFERBARE TEILE

In einigen Fällen ist es notwendig nicht lieferbare Teile, die selbst mit einer eigenen Teilliste im Buch vertreten sind, aufzuführen. Die Bestellnummern dieser nicht einzeln lieferbaren Teile erscheinen kursiv, wodurch angezeigt wird, daß sie nur in Verbindung mit anderen Teilen lieferbar sind.

10. REFERENZNUMMER FÜR ERSATZTEILE

Die Zahlen, die in der Spalte "Ref No" aufgeführt sind, stimmen mit den Zahlen in den beigefügten Abbildungen überein. Ein Buchstaben-Suffix kann zu einer Referenznummer hinzugefügt werden, um zu kennzeichnen, daß das Teil mit einer eigenen Teilliste im Buch aufgeführt ist. Die in der Spalte "Graphic Ref" angeführten Zahlen verweisen auf die Identifikationsnummer der Abbildung, die sich in der linken unteren Ecke der Abbildung befindet. Diese Nummer kann zusammen mit der Referenznummer des Teils angegeben werden, um die richtige Ersatzteilnummer zu ermitteln. Referenznummern können absichtlich weggelassen werden, da die Nummern der lieferbaren Ersatzteile ständig aktualisiert werden.

11. EINGERÜCKTE BEZEICHNUNGEN

Wenn eine Bezeichnung eingerückt ist, wird dadurch angezeigt, daß das Teil zu einer Baugruppe gehört, unter deren Bezeichnung es eingerückt ist.

12. REFERENZBUCHSTABEN

Falls erforderlich sind in den Abbildungen Referenzbuchstaben enthalten (z.B. A, B, C, usw.), die Leitungen und Kabelbäume von einem Punkt zum anderen verfolgen. Außerdem geben sie die Stelle an, an der getrennte Abbildungen fortgesetzt werden.

13. ABKÜRZUNGEN UND SYMBOLE

O.D. – Außendurchmesser
I.D. – Innendurchmesser
A – kein Teil dieser Gruppe
B – nach Bedarf verwenden
C – Hinweis auf eine Änderung
D – in Meter-Länge bestellen
E – in Zentimeter-Länge bestellen
F – nicht gezeigt
G – in Zoll-Länge bestellen
I – siehe "Hose Fabrication Guide"
M – metrisches Teil
R – werküberholtes Teil unter Umständen lieferbar
Y – separate Abbildung
Z – nicht einzeln lieferbar

SIS *Neu im Parts Manual*

14. <END>

Dieses Symbol zeigt das Ende eines Informationselements an.

ALLGEMEINE HINWEISE

ANMERKUNG:

Ständig vorgenommene Verbesserungen und Weiterentwicklungen an Ihrer Maschine können Änderungen verursachen, die in der vorliegenden Ausgabe noch nicht berücksichtigt sind. Fragen zu Ihrer Caterpillar-Maschine oder diesem Ersatzteilbuch beantwortet Ihr Caterpillar-Händler.

ALLGEMEINE HINWEISE

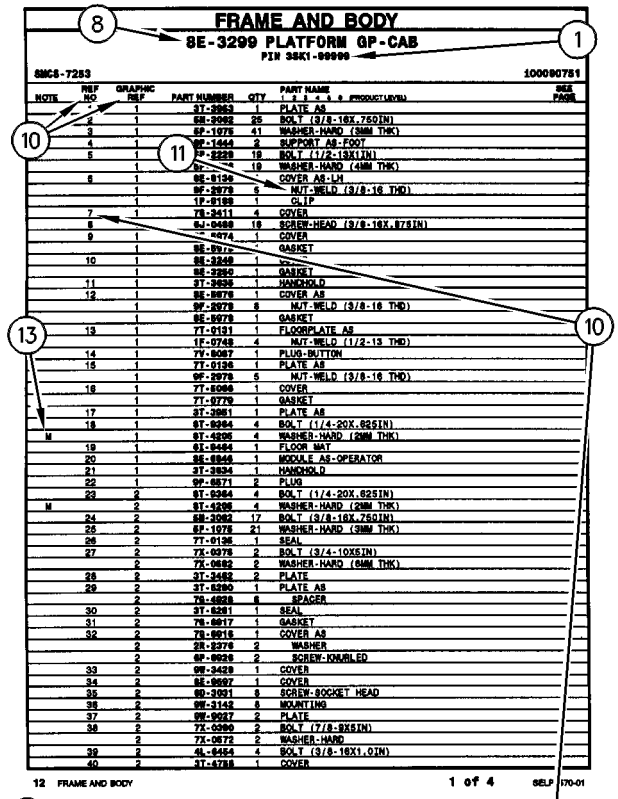

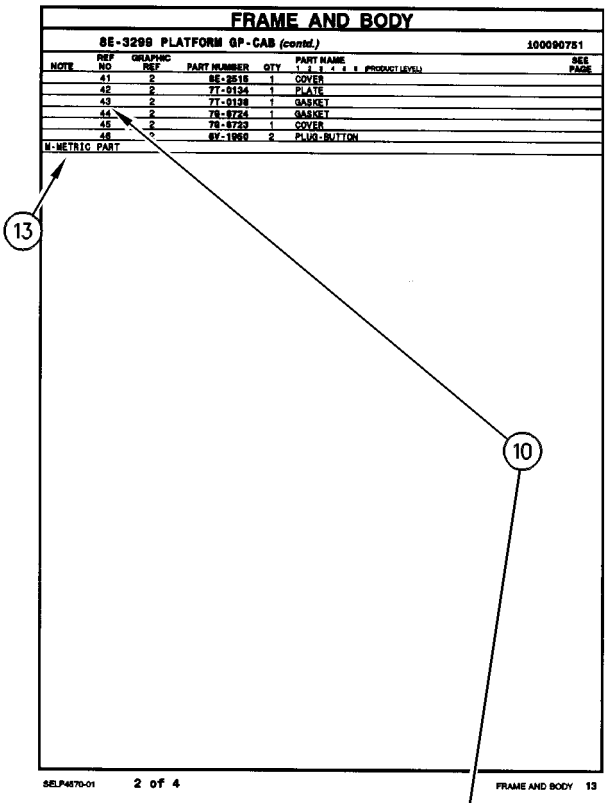

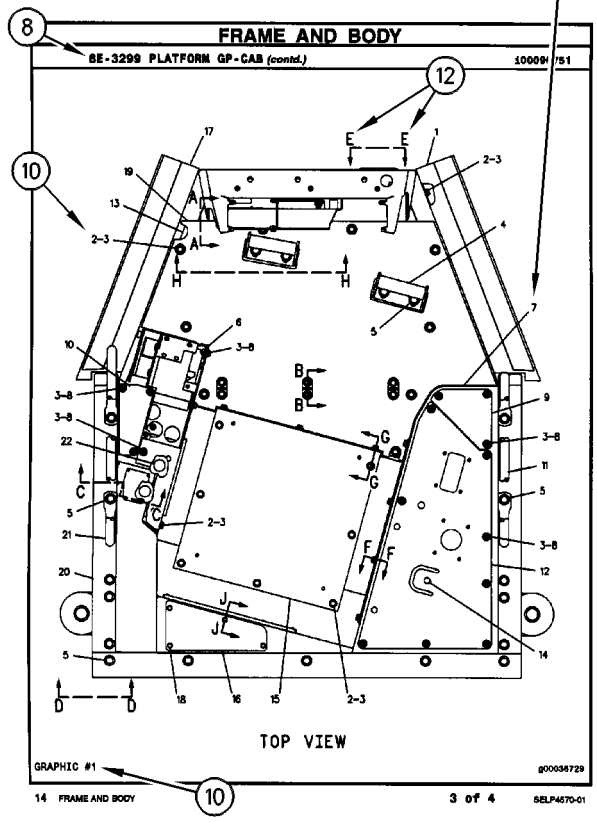

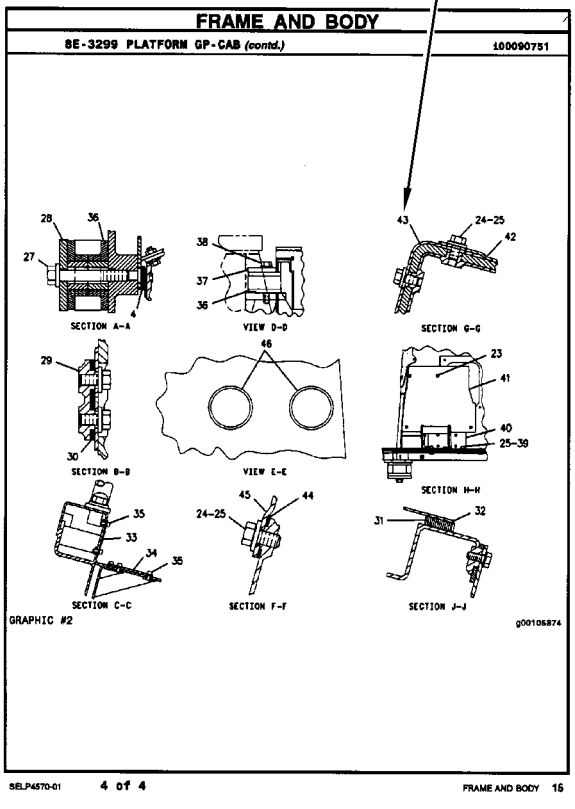

REMANUFACTURED COMPONENTS

As an option when making repairs consider Caterpillar Remanufactured Components. Components that are available through the Caterpillar Remanufactured Program are identified three ways in the parts book:

- with the letter R in the note field of the parts list
- with an R* at the beginning of the first line of the caption
- with an *R at the end of the first line of the caption

Typical components included in the Remanufacturing Program include:

ALTERNATORS
CONNECTING RODS
CRANKSHAFTS - UNDERSIZE
CRANKSHAFTS - UPGRADE TO NEW
CYLINDER HEADS
ELECTRONIC CONTROL MODULES (ECM)
ELECTRONIC SENSORS
FUEL INJECTORS
FUEL NOZZLES
FUEL PUMPS
GOVERNORS
OIL PUMPS
PISTONS
SHORT BLOCKS
STARTERS
TURBOCHARGERS - COMPLETE
TURBOCHARGER CARTRIDGES
WATER PUMPS

Caterpillar Remanufactured engines for many engine arrangements are also available.

COMPOSANTS RÉNOVÉS

Comme option de réparation, considérer les composants rénovés Caterpillar. Les composants disponibles dans le cadre du programme Caterpillar de composants rénovés sont identifiés de trois façons dans le catalogue de pièces:

- avec la lettre "R" dans l'espace note de la liste des pièces
- avec R* au début de la première ligne des légendes
- avec *R à la fin de la première ligne des légendes

Les composants suivants figurent parmi les composants typiques du programme de rénovation:

ALTERNATEURS
BIELLES
VILEBREQUINS - SOUS-DIMENSIONNÉS
VILEBREQUINS - REMIS À NEUF
CULASSES
MODULES DE COMMANDE ÉLECTRONIQUE (ECM)
CAPTEURS ÉLECTRONIQUES
INJECTEURS
TÊTES D'INJECTEURS
POMPES À CARBURANT
RÉGULATEURS
POMPES À HUILE
PISTONS
BLOCS EMBIELLÉS
DÉMARREURS
TURBOCOMPRESSEURS - COMPLETS
CARTOUCHES DE TURBOCOMPRESSEUR
POMPES À EAU

Des moteurs rénovés sont aussi disponibles pour plusieurs versions de moteur.

ALTERNATIVAS DE REPARACIÓN

COMPONENTES REMANUFACTURADOS

Al hacer reparaciones, tenga en cuenta la opción de Componentes Remanufacturados Caterpillar. Los componentes que están disponibles por medio del programa de Productos Remanufacturados Caterpillar se identifican de tres maneras en el manual de piezas:

- con la letra R en el espacio de Nota de la lista de piezas
- con una R* al comienzo de la primera línea de la leyenda
- con una *R al final de la primera línea de la leyenda

Los componentes que se incluyen típicamente en el Programa de Productos Remanufacturados son:

ALTERNADORES
BIELAS
CIGÜEÑALES - BAJOMEDIDA
CIGÜEÑALES - REMANUFACTURADOS A NUEVO
CULATAS
MÓDULOS DE CONTROL ELECTRÓNICO (ECM)
SENSORES ELECTRONICOS
INYECTORES
BOQUILLAS
BOMBAS DE COMBUSTIBLE
REGULADORES
BOMBAS DE ACEITE
PISTONES
MONOBLOQUES
MOTORES DE ARRANQUE
TURBOCOMPRESORES - COMPLETOS
NÚCLEOS DE TURBOCOMPRESOR
BOMBAS DE AGUA

También hay disponibles motores Remanufacturados Caterpillar para muchas de las configuraciones de motores.

COMPONENTES REMANUFATURADOS

Considere o uso de Componentes Remanufaturados Caterpillar ao efetuar reparos. Os componentes disponíveis através do Programa de Remanufatura Caterpillar são identificados de três formas no manual de peças:

- com um R na área da nota da lista de peças
- com um R* no princípio da primeira linha da legenda
- com um *R no final da primeira linha da legenda

Os componentes típicos que constam no Programa de Remanufatura incluem:

ALTERNADORES
BIELAS
VIRABREQUINS - SUBMEDIDAS
VIRABREQUINS - ATUALIZAÇÃO
CABEÇOTES
MÓDULOS DE CONTROLE ELETRÔNICO (ECM)
SENSORES ELETRÔNICOS
INJETORES DE COMBUSTÍVEL
BICOS DE ABASTECIMENTO DE COMBUSTÍVEL
BOMBAS DE COMBUSTÍVEL
GOVERNADORES
BOMBAS DE ÓLEO
PISTÕES
BLOCOS BÁSICOS DO MOTOR
MOTORES DE PARTIDA
TURBOALIMENTADORES - COMPLETOS
CARTUCHOS DE TURBOALIMENTADORES
BOMBAS D'ÁGUA

Motores Remanufaturados Caterpillar também encontram-se disponíveis para diversos arranjos de motor.

REPARATURALTERNATIVEN

WERKÜBERHOLTE AT-PRODUKTE

Bei Reparaturen sollten werküberholte AT-Produkte von Caterpillar in Betracht gezogen werden. Die durch das AT-Programm von Caterpillar erhältlichen Teile sind im Parts Book auf drei verschiedene Arten gekennzeichnet:

- mit dem Buchstaben R in der Spalte NOTE der Ersatzteilliste
- mit einem R* am Anfang der ersten Zeile der Überschrift
- mit einem *R am Ende der ersten Zeile der Überschrift

Das AT-Programm umfaßt u.a. folgende Produkte:

DREHSTROMGENERATOREN
PLEUELSTANGEN
KURBELWELLEN - MIT UNTERMASS
KURBELWELLEN - MIT ORIGINALMASS
ZYLINDERKÖPFE
ELEKTRONISCHE STEUEREINHEITEN (EMC)
ELEKTRONISCHE SENSOREN
PUMPENDÜSEN
EINSPRITZDÜSEN
KRAFTSTOFFPUMPEN
DREHZAHLREGLER
ÖLPUMPEN
KOLBEN
TEILMOTOREN
ANLASSER
TURBOLADER - KOMPLETT
TURBOLADERLAUFZEUGE
KÜHLWASSERPUMPEN

Viele Motoren können durch werküberholte AT-Motoren von Caterpillar ersetzt werden.

SUPPLEMENTAL COOLANT ADDITIVES

CUSTOMER BENEFITS:

Protects against cavitation, foam, erosion, corrosion, and scale buildup in cooling systems.

- Provides measured coolant conditioner.

DESCRIPTION:

Additives deplete from the coolant with normal operation. For this reason, Supplemental Coolant Additives (SCA) must be added to all heavy duty coolants at regular intervals. In addition, when not using a fully formulated, pre-charged antifreeze, like Caterpillar's DEAC, an initial charge of SCA must be added to the cooling system. The amount of SCA added to the system is dependent on the capacity of the system.

The SCA for initial fill is provided as a liquid. SCA's for maintenance intervals are available in liquid form and as a spin-on element. (No Spin-on available for 3600 Family of Engines)

NOTE:

The amount of SCA added at initial fill is not the same as the amount added at maintenance intervals.

The coolant additive elements can be used with any ethylene or propylene glycol type antifreeze which meets ASTM D4985 or ASTM D5345 Specifications.

NOTE:

For use with standard heavy duty coolant only, not for use with Extended Life Coolant.

PARTS NEEDED:

Cooling System Capacity		Liquid SCA at Initial Fill	Liquid SCA at Maintenance*	Spin-on SCA Maintenance Element*
Liters	Gallons			
22-30	(6-8)	3P-2044 (1)	6V-3542 (1)	111-2370 (1)
30-38	(8-10)	3P-2044 (1) 6V-3542 (1)	111-2372 (1)	111-2369 (1)
38-49	(10-13)	3P-2044 (1) 8T-1589 (1)	111-2372 (1)	111-2369 (1)
49-64	(13-17)	3P-2044 (2)	8T-1589 (1)	9N-3368 (1)
64-83	(17-22)	3P-2044 (2) 8T-1589 (1)	111-2372 (1) 6V-3542 (1)	111-2371 (1)
83-114	(22-30)	3P-2044 (3) 8T-1589 (1)	3P-2044 (1)	9N-3718 (1)
114-163	(30-43)	3P-2044 (5)	3P-2044 (1) 6V-3542 (1)	111-2371 (2)
163-242	(43-64)	3P-2044 (8)	3P-2044 (2)	9N-3718 (2)

** Normal maintenance period is 250 hrs. See your Operation and Maintenance Manual for complete coolant maintenance instructions.*

( ) Indicates quantity required.

ADDITIFS POUR LIQUIDE DE REFROIDISSEMENT

AVANTAGES POUR LE CLIENT

L'additif protège contre la cavitation, la mousse, l'érosion, la corrosion et l'accumulation de dépôts dans le circuit de refroidissement.

- L'additif complémentaire fournit une quantité mesurée d'additif.

DESCRIPTION:

Les additifs s'épuisent pendant l'utilisation du moteur. C'est pourquoi l'on doit ajouter de l'additif au liquide de refroidissement/antigel pour moteurs diesel à intervalles réguliers. En plus, si l'on n'utilise pas de l'antigel entièrement formulé et pré-chargé comme le liquide de refroidissement/antigel Caterpillar pour moteurs diesel, une quantité initiale d'additif doit être ajoutée au circuit de refroidissement. La quantité d'additif à ajouter au circuit dépend de la contenance du circuit.

L'additif pour le remplissage initial est fourni sous forme liquide. L'additif pour l'entretien ultérieur est disponible sous forme liquide et sous forme d'élément à visser. (Il n'y a pas d'élément à visser pour les moteurs de la famille 3600).

NOTA:

La quantité d'additif à ajouter au remplissage initial diffère de la quantité à ajouter aux intervalles d'entretien.

Les éléments d'additif peuvent être utilisés avec tout antigel de type éthylène ou propylène-glycol conforme à la norme ASTM D4985 ou ASTM D5345.

NOTA:

A utiliser uniquement avec du liquide de refroidissement pour moteurs diesel et non avec le liquide de refroidissement longue durée.

PIÈCES NÉCESSAIRES:

Contenance du circuit de refroidissement		Additif liquide au remplissage initial	Additif liquide aux intervalles d'entretien*	Elément d'additif à visser aux intervalles d'entretien*
Litres	Gallons U.S.			
22-30	(6-8)	3P-2044 (1)	6V-3542 (1)	111-2370 (1)
30-38	(8-10)	3P-2044 (1) 6V-3542 (1)	111-2372 (1)	111-2369 (1)
38-49	(10-13)	3P-2044 (1) 8T-1589 (1)	111-2372 (1)	111-2369 (1)
49-64	(13-17)	3P-2044 (2)	8T-1589 (1)	9N-3368 (1)
64-83	(17-22)	3P-2044 (2) 8T-1589 (1)	111-2372 (1) 6V-3542 (1)	111-2371 (1)
83-114	(22-30)	3P-2044 (3) 8T-1589 (1)	3P-2044 (1)	9N-3718 (1)
114-163	(30-43)	3P-2044 (5)	3P-2044 (1) 6V-3542 (1)	111-2371 (2)
163-242	(43-64)	3P-2044 (8)	3P-2044 (2)	9N-3718 (2)

** L'intervalle d'entretien normal est de 250 heures-service. Voir le Guide d'utilisation et d'entretien pour de plus amples renseignements concernant l'entretien du circuit de refroidissement.*

( ) Indique la quantité exigée.

ADITIVOS DE REFRIGERANTE SUPLEMENTARIOS

VENTAJAS PARA EL USUARIO:

Protegen contra la cavitación, la formación de espuma, la corrosión y la acumulación de escamas en los sistemas de enfriamiento.

- Suministra un acondicionador dosificado de refrigerante.

DESCRIPCIÓN:

Los aditivos en el refrigerante se agotan con la operación normal. Por esta razón, se debe agregar Aditivo de refrigerante suplementario (SCA) a todos los refrigerantes para servicio pesado, a intervalos regulares. Además, cuando no se usa un anticongelante de precarga completo, tal como el DEAC de Caterpillar, es necesario agregar una cantidad de aditivo de refrigerante suplementario inicial al sistema de enfriamiento. La cantidad de aditivo que se debe agregar depende de la capacidad del sistema.

El SCA de llenado inicial es líquido. El que se usa para el mantenimiento está disponible tanto en líquido como en un elemento enroscable. (No hay elemento enroscable disponible para la Familia de Motores 3600).

NOTA:

La cantidad de aditivo de llenado inicial no es la misma que se agrega en los intervalos de mantenimiento.

Los elementos de aditivo de refrigerante se pueden usar con cualquier anticongelante de tipo glicol etilénico o propílico que esté de acuerdo con las especificaciones de las normas ASTM D4985 o ASTM D5345.

NOTA:

Se debe utilizar únicamente con refrigerante estándar para servicio pesado; no se debe usar con Refrigerante de Larga Duración.

PIEZAS NECESARIAS:

Capacidad del Sistema de Enfriamiento		SCA líquido de llenado inicial	SCA líquido de mantenimiento*	Elemento de mantenimiento enroscable*
litros	gal EE.UU.			
22-30	6-8	3P-2044 (1)	6V-3542 (1)	111-2370 (1)
30-38	8-10	3P-2044 (1) 6V-3542 (1)	111-2372 (1)	111-2369 (1)
38-49	10-13	3P-2044 (1) 8T-1589 (1)	111-2372 (1)	111-2369 (1)
49-64	13-17	3P-2044 (2)	8T-1589 (1)	9N-3368 (1)
64-83	17-22	3P-2044 (2) 8T-1589 (1)	111-2372 (1) 6V-3542 (1)	111-2371 (1)
83-114	22-30	3P-2044 (3) 8T-1589 (1)	3P-2044 (1)	9N-3718 (1)
114-163	30-43	3P-2044 (5)	3P-2044 (1) 6V-3542 (1)	111-2371 (2)
163-242	43-64	3P-2044 (8)	3P-2044 (2)	9N-3718 (2)

** El período normal de mantenimiento es de 250 horas. Para ver las instrucciones completas sobre el mantenimiento del refrigerante, consulte el Manual de Operación y Mantenimiento.*

( ) Indica la cantidad necesaria.

ADITIVOS SUPLEMENTARES DO LÍQUIDO ARREFECEDOR

BENEFÍCIOS PARA O CLIENTE:

Protege contra cavitação, espuma, erosão, corrosão e acúmulo de crostas nos sistemas de arrefecimento.

- Fornece uma quantidade pré-determinada de condicionador de arrefecimento.

DESCRIÇÃO:

Com a operação normal, os aditivos se esgotam do líquido arrefecedor. Por isso, Aditivos Suplementares do Líquido Arrefecedor (SCA) devem ser acrescentados a todos os líquidos arrefecedores para serviço pesado em intervalos regulares. Além disso, quando um anticongelante pré-carregado, totalmente formulado não for usado, como o DEAC Caterpillar, uma carga inicial de SCA deve ser acrescentada ao sistema de arrefecimento. A quantidade de SCA acrescentada ao sistema depende da capacidade do sistema.

O SCA para abastecimento inicial é fornecido em forma de líquido. Os aditivos suplementares (SCA) para intervalos de manutenção estão à disposição em forma líquida e como um elemento com roscas. (Exceto os Motores da Família 3600)

NOTA:

A quantidade de SCA adicionada no abastecimento inicial não é a mesma que a acrescentada nos intervalos de manutenção.

Os elementos do aditivo do líquido arrefecedor podem ser usados com qualquer tipo de anticongelante etileno ou propileno que satisfaz as Especificações ASTM D4985 ou ASTM D5345.

NOTA:

Para uso apenas com líquido arrefecedor para serviço pesado padrão, não deve ser usado com Líquido Arrefecedor de Vida Longa.

PEÇAS NECESSÁRIAS:

Capacidade do Sistema de Arrefecimento		Líquido SCA Durante Abastecimento Inicial	Líquido SCA Durante Manutenção*	Elemento de Manutenção de SCA com Roscas*
Litros	Galões			
22-30	6-8	3P-2044 (1)	6V-3542 (1)	111-2370 (1)
30-38	8-10	3P-2044 (1) 6V-3542 (1)	111-2372 (1)	111-2369 (1)
38-49	10-13	3P-2044 (1) 8T-1589 (1)	111-2372 (1)	111-2369 (1)
49-64	13-17	3P-2044 (2)	8T-1589 (1)	9N-3368 (1)
64-83	17-22	3P-2044 (2) 8T-1589 (1)	111-2372 (1) 6V-3542 (1)	111-2371 (1)
83-114	22-30	3P-2044 (3) 8T-1589 (1)	3P-2044 (1)	9N-3718 (1)
114-163	30-43	3P-2044 (5)	3P-2044 (1) 6V-3542 (1)	111-2371 (2)
163-242	43-64	3P-2044 (8)	3P-2044 (2)	9N-3718 (2)

** O período normal de manutenção é de 250 horas. Consulte o Manual de Operação e Manutenção para obter instruções completas quanto à manutenção do líquido arrefecedor.*

( ) Indica a quantidade exigida.

KÜHLMITTELZUSATZ

VORTEILE FÜR DEN KUNDEN:

Schutz gegen Kavitation, Schaumbildung, Erosion, Korrosion und Kesselsteinbildung in Kühlsystemen.

- Richtig dosierter Kühlmittelzusatz

BESCHREIBUNG:

Additive erschöpfen sich während des Motorbetriebs. Deshalb muß allen HD-Kühlmitteln regelmäßig Kühlmittelzusatz beigefügt werden. Wenn bei Erstfüllung kein vollwertiges Fertigkühlmittel, wie das Frostschutz- und Kühlmittel für Dieselmotoren von Caterpiller (DEAC), verwendet wird, muß bei Erstfüllung Kühlmittelzusatz beigefügt werden. Wieviel Kühlmittelzusatz beigefügt werden muß, hängt vom Inhalt des Kühlsystems ab.

Für Erstfüllung ist Kühlmittelzusatz nur in flüssiger Form erhältlich. Für Wartungsintervalle ist Kühlmittelzusatz in flüssiger Form und als Zusatzelement erhältlich. (Für die Motorbaureihe 3600 sind keine Zusatzelemente erhältlich.)

ANMERKUNG:

Die Kühlmittelmenge bei Erstfüllung ist nicht die gleiche Menge, die bei Wartungsintervallen beigefügt werden muß.

Die Kühlmittelzusatzelemente können mit allen Frostschutzmitteln auf Ethylen- oder Propylenglykolbasis verwendet werden, die den Standards nach ASTM D4985 oder ASTM D5345 entsprechen.

ANMERKUNG:

Den Kühlmittelzusatz nicht mit Langzeitkühlmittel (ELC) von Caterpillar verwenden. Der Kühlmittelzusatz ist nur für HD-Kühlmittel bestimmt.

TEILEBEZEICHNUNG:

Kühlsysteminhalt		Kühlmittelzusatz bei Erstfüllung	Flüssiger Kühlmittelzusatz bei Wartung*	Kühlmittelzusatzelement bei Wartung*
Liter	US-Gall.			
22-30	(6-8)	3P-2044 (1)	6V-3542 (1)	111-2370 (1)
30-38	(8-10)	3P-2044 (1) 6V-3542 (1)	111-2372 (1)	111-2369 (1)
38-49	(10-13)	3P-2044 (1) 8T-1589 (1)	111-2372 (1)	111-2369 (1)
49-64	(13-17)	3P-2044 (2)	8T-1589 (1)	9N-3368 (1)
64-83	(17-22)	3P-2044 (2) 8T-1589 (1)	111-2372 (1) 6V-3542 (1)	111-2371 (1)
83-114	(22-30)	3P-2044 (3) 8T-1589 (1)	3P-2044 (1)	9N-3718 (1)
114-163	(30-43)	3P-2044 (5)	3P-2044 (1) 6V-3542 (1)	111-2371 (2)
163-242	(43-64)	3P-2044 (8)	3P-2044 (2)	9N-3718 (2)

** Der normale Wartungsintervall beträgt 250 Betriebsstunden. Für vollständige Anweisungen zur Wartung des Kühlsystems, siehe Betriebs- und Wartungshandbuch.*

( ) Erforderliche Anzahl

NOMENCLATURA DE PEÇAS INGLÊS-PORTUGUÊS

INGLÊS	PORTUGUÊS
ABOVE	Acima
ABSORBER	Amortecedor
ACCESSORY	Acessório
ACTUATOR	Acionador
ADAPTER	Adaptador
ADHESIVE	Adesivo
ADJUSTER	Adjustador
AFTERCOOLER	Pós-resfriador
AIR	Ar
AIR CLEANER	Purificador de ar
AIR SYSTEM	Sistema de ar
ALARM	Alarme
ALTERNATOR	Alternador
AMMETER	Amperímetro
ANCHOR	Âncora, fixador
ANGLE	Ângulo, canto
ANVIL A.	Bigorna conj.
ARBOR	Mandril, eixo
ARM	Braço
ARMATURE	Armadura, Induzida
ARM REST	Apoio para braço
ARRESTER	Detentor
ASSEM. = ASSEMBLY	Conjunto
ATTACHMENT	Acessório
AVAILABLE	Disponível
AXLE	Eixo
AXLE SHAFT	Semi-eixo, ponta
BACK-UP ALARM	Alarme de marcha à ré
BACK-UP LIGHT	Luz da marcha à ré
BACK-UP SWITCH	Interruptor de marcha à ré
BACKBOARD	Prancha traseira
BACK CUSHION	Encosto
BACKHOE	Retroescavadeira
BAFFLE	Defletor
BAG	Saco, sacola
BAIL	Alça
BALANCER	Balanceador
BALL	Esfera
BALLCHECK ASSEMBLY	Conjunto de (válvula) de esfera de retenção
BALL JOINT	Junta esférica
BALLSTUD	Munhão esférica
BAND	Banda, cinta, tira
BAND & LINING	Banda e revestimento
BAR	Barra
BARREL	Cilindro
BARRIER	Barreira
BASE	Base
BASIN	Bacia, coletor
BATTERY	Bateria
BEAM	Barra, viga, trave
BEARING	Mancal, rolamento
BEARING BALL	Rolamento de esferas
BEARING-SLEEVE	Mancal tipo luva
BEARING-NEEDLE	Rolamento de agulha
BEARING-ROLLER	Rolamento tipo roletes
BELL	Campânula
BELLCRANK	Alavanca angular
BELLOWS	Fole
BELOW	Abaixo
BELT	Correia, cinto
BELT TIGHTENER	Ajustador de correia
BEVEL GEAR	Coroa
BIT-CUTTER	Broca, fresa
BLACK	Preto
BLADE	Lâmina
BLEEDER	Sangrador
BLOCK	Bloco, calço
BLOWER	Ventilador
BLUE	Azul
BOARD	Prancha, tábua
BODY	Corpo
BOLT	Parafuso
BONNET	Tampa
BOOM	Lança
BOOSTER	Reforçador
BOOT	Protetor contra poeira
BORE	Furo
BOSS	Ressalto
BOTH	Ambos (as)
BOTTOM	Fundo
BOWL	Caçamba
BOX	Caixa
BRACE	Tirante
BRACKET	Suporte
BRAKE	Freio
BREAKER	Interruptor
BREATHER	Respiro
BRIDGE	Braço
BROWN	Marrom
BRUSH	Escova
BUCKET	Caçamba
BULB	Bulbo
BULLDOZER	Bulldozer
BUMPER	Pára-choque
BUSHING	Bucha
BUTTON	Botão
BUZZER WARNING	Alarme sonoro
C = CHANGE	Alteração
CAB	Cabina
CABINET	Gabinete
CABLE	Cabo
CAGE	Alojamento
CALIPER	Calibrador
CAM	Excêntrico, ressalto
CAMSHAFT	Eixo-comando-de-válvulas
CANOPY	Coberta, toldo

NOMENCLATURA DE PEÇAS INGLÊS-PORTUGUÊS

INGLÊS	PORTUGUÊS
CAP	Tampa
CAPACITOR	Capacitor, condensador
CARBURETOR	Caburador
CARCASS	Carcaça
CARRIER	Suporte
CARTON	Caixa de papelão
CARTRIDGE	Cartucho
CASE	Caixa, alojamento
CASING	Invólucro, revestimento
CASTER	Rolete, roldana
CAST IRON	Ferro fundido
CATWALK	Passadiço
CENTER	Centro
CHAIN	Corrente
CHAMBER	Câmara
CHANGEOVER	Modificação
CHANNEL	Canal
CHASSIS	Chassi, armação
CHECK-VALVE	Válvula de retenção
CIRCUIT	Circuito
CIRCUIT BREAKER	Interruptor de circuito
CLAMP	Braçadeira
CLASP	Fecho, grampo
CLEANER	Purificador
CLEVIS	Forquilha, garfo
CLIP	Clipe, presilha, grampo
CLOSURE	Fecho
CLUTCH	Embreagem
COARSE	Grosso, áspero
COATING	Capa, revestimento
COCK	Torneira
COIL	Bobina, serpentina
COLLAR	Colar
COLLECTOR	Coletor
COLLET	Mandril
COLUMN	Coluna
COMPACTOR	Compactador
COMPARTMENT	Compartimento
COMPLETE	Completo
COMPOUND	Composto
COMPRESSOR	Compressor
CONCAVE	Côncavo
CONDITIONER	Condicionador
CONDUIT	Conduite, eletroduto
CONE	Cone
CONNECTING	Ligação
CONNECTED ROD	Biela
CONNECTION	Conexão
CONNECTOR	Conetor
CONSISTS OF	Consiste de
CONSOLE	Consolo
CONTACT	Contato, platinado
CONTACTOR	Contactador
CONTINUED FROM	Continuação de
CONTROL	Controle
CONVERSION	Conversão
CONVERTER	Conversor
COOLER	Arrefecedor
COOLING	Arrefecimento
CORK	Cortiça
CORE	Núcleo
CORNER	Canto
COTTER PIN	Contrapino
COUNTER	Contador, tacômetro
COUNTERWEIGHT	Contrapeso
COUPLER	Acoplador, engate
COUPLING	Acoplamento, conexão
COVER	Tampa
COWL	Capota
COWLING	Capota
CRADLE	Armação, suporte
CRANK	Manivela
CRANKCASE	Cárter
CRANKSHAFT	Virabrequim
CROSS UNION	Junta transversal
CROSSBAR	Barra transversal
CUP	Capa, anel externa
CURTAIN	Cortina
CUSHION	Almofada, amortecedor
CUTTER	Fresa, cortador
CUTTING EDGE	Borda cortante
CYLINDER	Cilindro
CYLINDER BLOCK	Bloco do motor
CYLINDER HEAD	Cabeçote
DAMPER	Amortecedor
DARK GREEN	Verde escuro
DASH	Painel
DASH PANEL	Painel de Instrumento
DECELERATOR	Desacelerador
DEFLECTOR	Defletor
DETENT	Retém, pino de trava
DIAGRAM-WIRING	Diagrama dos circuitos elétricos
DIAL	Medidor de dial
DIAPHRAGM	Diafragma
DIESEL ENGINE COMPLETE	Motor diesel completo
DIFFERENTIAL	Diferencial
DIFFUSER	Difusor
DIMMER	Redutor de luminosidade
DIODE	Diodo
DIRECTOR	Diretor
DISC	Disco
DISCONNECT	Desligar
DISPOSABLE	Disponível, substituível
DISSIPATOR	Dissipador de calor
DISTRIBUTOR	Distribuidor
DM = DECIMETER	dm = decímetro

NOMENCLATURA DE PEÇAS INGLÊS-PORTUGUÊS

INGLÊS	PORTUGUÊS
DOME LIGHT	Lâmpada do teto
DOOR	Porta
DOWEL	Pino-guia, cavilha
DOWNSHIFT	Mudança para marcha mais baixa
DOZER	Bulldozer (lâmina)
DRAIN	Dreno
DRAWBAR	Barra de tração
DRILL	Broca
DRILLED	Broqueado, perturado
DRIVE	Comando, acionamento, propulsão
DRIVER	Acionador, mecanismo propulsor
DRIVESHAFT	Eixo acionador, eixo de transmissão
DRUM	Tambor
DUCT	Conduto, canal
EACH	Cada
EDGE	Borda, canto
EFFECTIVE WITH	Efetivo a partir de
EJECTOR	Ejetor
ELBOW	Cotovelo
ELEMENT	Elemento
ENCLOSURE	Cobertura
END	Extremidade
END BIT	Canto de lâmina
END VIEW	Vista traseira
ENGINE	Motor
ENGINE ARRANGEMENT	Arranjo do motor
EXCEPT	Exceto
EXHAUST	Escape
EXHAUST PIPE	Cano de escape
EXPANDER	Expansor
EXPANSION PLUG	Bujão de expansão
EXTENSION	Extensão
EXTINGUISHER	Extintor
EXTRACTOR	Extrator
EYE	Olhal
EYEBOLT	Parafuso de olhal
FABRIC	Tecido, tela textura
FACING	Revestimento, forro
FAN	Ventilador
FASTENED	Fixo, preso
FASTENER	Fixador, prendedor
FENDER	Pára-lamas
FERRULE	Virola
FIELD COIL	Bobina indutora, ou de campo
FIELD REPLACEMENT	Reposicão ou substituicão no campo
FILLER	Bocal de enchimento
FILM	Película
FILTER	Filtro
FINAL DRIVE	Comando final
FINGER	Dedo
FIREWALL	Parede contra fogo
FITTING	Graxeira, conexão
FIXTURE	Dispositivo, Aparelho
FLANGE	Flange
FLASHER	Luz intermitente
FLOAT	Flutuar, livre
FLOOD-LAMP	Farol
FLOOR	Piso
FLOORMAT	Tapete
FLOORPLATE	Chapa do piso
FLYWEIGHT	Peso volante
FLYWHEEL	Volante
FOLLOWER	Seguidor
FOOT	Pé
FORK	Garfo
FOR USE WITH	Para usar com
FOUNDATION	Assentamento, alicerce
FRAME	Armacão, chassi
FRONT	Frente, dianteiro
FT = FOOT	Pé
FUEL INJECTION	Injecão de combustível
FUEL PUMP	Bomba de combustível
FUEL RATIO	Limitador de combustível
FUEL SYSTEM	Sistema do combustível
FUEL TANK	Tanque do combustível
FUMES DISPOSAL	Eliminação de vapores do cárter
FUSE	Fusível
G = GROUP	Grupo
GAGE	Indicador, manômetro
GAP	Folga, lacuna, intervalo
GASKET	Junta
GASKET KIT	Jogo de junta
GATE	Entrada, trava
GAUGE	Indicador, manômetro
GEAR	Engrenagem, marcha
GEAR BOX	Caixa de engrenagem
GEAR PUMP	Bomba de engrenagem
GENERATOR	Gerador
GLAND	Junta, gaxeta, vedacão sobreposta
GLASS	Vidro
GLOW PLUG	Vela incandescente
GOVERNOR	Governador
GRAB IRON	Balaústre corrimão
GRATE	Grade, grelha
GRAY	Cinza
GRID	Grade, grelha
GRILL	Grade, grelha
GRIP	Pega, garra, cabo

NOMENCLATURA DE PEÇAS INGLÊS-PORTUGUÊS

INGLÊS	PORTUGUÊS
GROMMET	Ilhós
GROUND BRUSH	Escova-terra
GROUND (ELECTRIC)	Terra (eletricidade)
GROUSER	Garra (de sapata)
GUARD	Protetor
GUIDE	Guia
GUSSET	Cantoneira
HACKSAW	Serra para metais
HALF	Metade, meio (a)
HALF LINK	Semi-elo
HAMMER	Martelo
HAND CONTROL	Controle manual
HANDLE	Cabo, alça
HANDRAIL	Corrimão, balaústre
HANGER	Suporte, dispositivo de suspensão
HARDWARE	Ferragem
HARDWARE KIT	Jogo de ferragem
HARNESS	Chicote
HEAD = HD	Cabeça
HEADER	Coletor
HEADLAMP	Farol dianteiro
HEADLIGHT	Farol dianteiro
HEAT SINK	Difusor de calor
HEATER	Aquecedor
HIGH-IDLE	Marcha acelerada em vazio
HINGE	Dobradiça, articulacão
HITCH	Engate
HOIST	Guincho, talha
HOLD	Suporte, fixador
HOLD DOWN	Fixar, reter, manter abaixado
HOLDER	Fixador, suporte
HOLE	Furo, buraco
HOOD	Capô
HOOD & DASH	Capô e painel
HOOK	Gancho
HORN	Buzina
HOSE	Mangueira
HOUSING	Alojamento
HUB	Cubo
HYDRAULIC	Hidráulico
ID = INSIDE DIAMETER	Diâmetro interno
IDLER	Roda-guia
IDLER & SHAFT	Roda-guia e eixo
IDLER GEAR	Engrenagem intermediária
IDLER PULLEY	Polia intermediária
IMPELLER	Impulsor, rotor
IN = INCH	Polegada
INCLUDES	Inclui
INDICATE	Indicam
INDICATOR	Indicador
INLAY	Incrustação
INLET	Admissão, entrada
INPUT	Entrada
INSERT	Inserção
INSTALLATION	Instalação
INSTALLED ON MODEL	Instalação no modelo
INSTRUCTION	Instrução
INSTRUMENT	Instrumento
INSULATED BRUSH	Escova isolada
INSULATION	Isolação, isolamento
INSULATOR	Isolante, isolador
INTAKE	Admissão
INTERLOCK	Trava interna
INTERMEDIATE	Intermediário
INTERNAL	Interno
INVERTER	Inversor
IRON	Ferro
JACK	Macaco
JAW	Mandíbula, garra
JET	Jato, vaporizador
JOINT	Junta, articulação
JUNCTION	Junção
KEY	Chaveta
KINGBOLT	Pino de engate
KNIFE	Faca, lâmina
KNOB	Maçaneta, botão
LADDER	Escada
LAMP	Lâmpada
LARGE	Grande
LATCH	Trinco, lingüeta
LEAD	Condutor, cabo
LEG	Perna
LENS	Lente
LEVEL	Nível
LEVER	Alavanca
L.H. = LEFT HAND	Lado esquerdo
LID	Placa, tampa
LIFT	Levantar
LIFT CYLINDER	Cilindro de levantamento
LIFTER	Tucho
LIFTING EYE	Olhal de levantamento
LIGHT GREEN	Verde claro
LIGHTING	Sistema de iluminação
LINE	Tubulação
LINER	Camisa
LINES & PUMP	Tubulação e bomba
LINES & VALVE	Tubulação e válvula
LINING	Revestimento, lona
LINK	Elo
LINKAGE	Articulação
LIP	Lábio, borda
LISTED	Relacionamento
LITERATURE	Literatura
LOCATED	Localizado

NOMENCLATURA DE PEÇAS INGLÊS-PORTUGUÊS

INGLÊS	PORTUGUÊS
LOCATOR	Localizador
LOCK	Trava
LOCKNUT	Contraporca
LOCKWASHER	Arruela de pressão
LOCKWIRE	Arame de trava
LONG	Longo
LOOM	Tubo isolador
LOW IDLE	Marcha lenta
LOUVER	Persiana
LOWER	Abaixar, inferior
LUBRICANT	Lubrificante
LUG	Ressalto, orelha
MACHINE SCREW	Parafuso de fenda
MAGNET	Imã magneto
MAIN	Principal
MAINTENANCE	Manutenção
MANIFOLD	Coletor
MARKED	Marcado (a)
MARKER	Marcador
MASTER PIN	Pino mestre
MAT	Capacho, esteira
METER	Medidor, contador
MINOR	Menor
MIRROR	Espelho
MISCELLANEOUS	Miscelânea
MODIFICATION	Modificação
MOLDBOARD	Armação da lâmina
MOTOR	Motor
MOULDING	Moldura
MOUNT	Montar
MOUNTED	Montado (a)
MOUNTING	Montagem
MUFFLER	Silenciador
NAMEPLATE	Plaqueta de identificação
N.C. (THREAD)	Rosca grossa
NEEDLE	Agulha
N.F. (THREAD)	Rosca fina
NIB	Ponta, bico
NIPPLE	Conexão
NONE	Nenhum (a)
NORMALIZING	Normalização
NOT PART OF	Não faz parte de
NOZZLE	Bocal, bico injetor
N/S = NOT SERVICED	Não vendável
NUMBER (No)	Número (No)
NUT	Porca
NUT-WING	Porca borboleta
NUT-CASTLE	Porca acastelada
NUT-WELD	Porca-soldada
NUT-CAP	Porca cega
NUT-HEX	Porca sextavada
NUT-LOCK	Contraporca
NUT-IMPERIAL	Porca imperial
NUT-JAM	Porca de trava, contraporca
NUT-LOW CROWN	Porca de meia coroa
NUT-RETAINING	Porca de retenção
NUT-SELF LOCK	Porca de autotravamento
NUT-SLOTTED	Porca fendada
NUT-SPANNER	Porca para chaves
O.D. = OUTSIDE DIAMETER	Diâmetro externo
O-RING	Anel "O"
OIL	Óleo
OILPAN	Cárter
OIL PUMP	Bomba de óleo
OIL SYSTEM	Sistema de lubrificação
OILER	Almotolia, lubrificador
ORANGE	Laranja
TO ORDER	Para pedir
ORIFICE	Orifício
OUTER	Externo
OUTER RACE	Anel externo
OUTPUT	Saída
OVERALL	Geral, total
OVERHAUL	Revisão
OVER SIZE	Sobremedida
PACKING	Embalagem, gaxeta
PAD	Coxim, calço
PADLOCK	Cadeado
PAINT	Pintura
PAN	Cárter
PANEL	Painel
PARKING BRAKE	Freio de estacionamento
PARTITION	Separacão
PARTS G	Grupo de peças
PARTS OF	Peça de
PARTS OF ALL ENGINE ARRANGEMENTS	Peças de todos os arranjos do motor exceto
PAWL	Garra
PEDAL	Pedal
PEDESTAL	Pedestal
PERFORMANCE	Desempenho
PILOT	Piloto
PIN	Pino
PIN & BUSHING	Pino e bucha
PIN-COTTER	Contrapino
PINCH BAR	Pé de cabra
PINION	Pinhão
PIPE	Tubo
PISTON	Pistão
PIVOT	Articulação, pivô
PLANETARY	Planetário
PLATE	Placa
PLATFORM	Plataforma
PLUG	Bujão
PLUNGER	Pistão, êmbolo
POINT	Ponta, ponto

NOMENCLATURA DE PEÇAS INGLÊS-PORTUGUÊS

INGLÊS	PORTUGUÊS
POINTER	Ponteiro
POLE & COIL	Polo e bobina
POLE	Polo, lança, vara
POPPET	Gatilho
POST	Poste, coluna
POTENTIOMETER	Potenciômetro
POWER TAKE OFF	Tomada de força
POWER TRAIN	Trem de força
PRE-SCREENER	Tela protetora
PRECHAMBER	Câmara de pré-combustão
PRECLEANER	Pré-purificador
PRECOMBUSTION	Pré-combustão
PRESS	Prensa
PRESS = PRESSURE	Pressão
PREVIOUS	Prévio, anterior
PRIMARY	Primário, principal
PROBE	Prova
PROJECTOR	Projeter
PROTECTION	Proteção
PROTECTOR	Proteter
PULLER	Extrator, sacador
PULLEY	Polia
PUMP	Bomba
PURPLE	Roxo
PUSHROD	Haste de empuxo
QTY = QUANTITY	Quantidade
RACE	Pista
RACE & ROLLER	Pista e rolete
RACK	Cremalheira
RADIATOR	Radiador
RAIL	Trilho, guia
RANGE TRANSM	Transmissão manual
RATCHET	Catraca
REAR	Traseiro (a)
REBORED	Escareado, alargado
REBUILD KIT	Jogo de recondicionamento
RECEPTACLE	Recipiente
RECTIFIER	Retificador
RED	Vermelho
REDUCER	Redutor
REFER	Referir
REGULATOR	Regulador
RELATED REPAIR ITEMS	Itens de reparos relacionados
RELAY	Relé
RELIEF VALVE	Válvula de alívio
REPAIR G	Grupo de reparo
REPAIR KIT	Jogo de reparo
REPAIR ITEMS	Itens de reparo
REPLACEMENT	Reposição, substituição
REQUIRED	Necessário
RESERVOIR A	Reservatôrio
RESIN	Resina
RESISTOR	Resistência
RETAINER	Fixador
RETARDER	Retardador
REVERSIBLE	Reversível
R.H. = RIGHT HAND	Lado direito
RIM	Aro
RIM & TIRE	Aro e pneu
RING	Anel
RIVET	Rebite
ROCKET	Balancim
ROD	Haste
ROD END	Extremidade da haste
ROLLER	Rolete
ROPE-STARTING	Partida à corda
ROTATOR	Girador
ROTOCHAMBER	Càmara pneumática
ROTOCOIL	Girador de válvula
ROTOR	Rotor
RUST INHIBITOR	Antioxidante
SADDLE	Sela, assento
SAFETY	Segurança
SAFETY TREAD	Tiras antiderrapante
SCRAPER	Tampa
SCREEN	Tela
SCREW	Parafuso
SCREW-HEX HD	Parafuso de cabeça hexagonal
SCREW-KIT	Jogos de parafuso
SCREW-MACHINE	Parafuso de fenda
SCREW-ROUND HD	Parafuso de cabeça redonda
SCREW-FLANGED	Parafuso com flange
SCREW-LOCKING	Parafuso de trava
SCREW-THUMB	Parafuso de orelhas
SCREWDRIVER	Chave de fenda
SEAL	Retentor
SEALED UNIT	Unidade vedada
SEALER	Vedador isolante
SEAT	Assento
SECONDARY	Secundário
SECTION	Seção
SEGMENT	Segmento
SENDER	Emissor
SENSOR	Sensor
SEPARATE	Separar, separado
SEPARATOR	Separador
SERIAL NUMBER PLATE	Placa de número de série
SERVICE	Serviço, manutenção
SERVICE KIT	Jogo de manutenção
SERVICE METER	Horômetro
SETSCREW	Parafuso de fixação
SHACKLE	Grilheto, anel, manilha
SHAFT	Eixo
SHANK	Porta-ponta do escarificador

NOMENCLATURA DE PEÇAS INGLÊS-PORTUGUÊS

INGLÊS	PORTUGUÊS
SHEAVE	Polia, roldana
SHEET	Folha, lâmina
SHELL	Invólucro, cápsula, casquilho
SHIELD	Blindagem, protetor
SHIFT	Mudança
SHIM	Calço
SHIPPING	Embarque
SHOCK ABSORBER	Amortecedor de choques
SHOCKMOUNT	Montagem a prova de choques
SHOE	Sapata
SHORT	Curto
SHOWN	Ilustrado, mostrado
SHROUD	Tampa de proteção
SHUNT	Derivação
SHUT OFF	Desligar, parada
SHUTTLE	Pistão de vaivém
SIDE	Lateral
SIDE VIEW	Vista lateral
SILICONE	Silicone
SINK	Absorvente de calor
SKIVING	Desbaste
SLACK ADJUSTER	Adjustador de folga
SLEEVE	Luva, manga, camisa
SLIDER	Cursor, deslizador
SLIDE RAIL	Trilho deslizante
SLING	Cabos, amarras, linga
SLINGER	Defletor
SLUG	Pistão de reação, pistãozinho
SMALL	Pequeno
SNAP RING	Anel de retenção, anel de pressão
SNUBBER	Amortecedor
SOCKET	Soquete, tomada
SOLENOID	Solenóide
SPACER	Espaçador
SPARE	Sobressalente
SPARK PLUG	Vela de ignição
SPECIAL	Especial
SPEEDOMETER	Velocimetro
SPIDER	Cruzeta
SPINDLE	Ponta de eixo
SPLINE	Estria
SPOOL	Carretel
SPOUT	Calha, tubo
SPRING	Mola
SPROCKET	Roda motriz, roda dentada
STABILIZER	Estabilizador
STACK	Chaminé, cano de escapamento
STAND	Suporte, cavalete
STANDPIPE	Suporte vertical de sucção
STAPLE	Grampo
STARTER	Arranque motor de partida
STATOR	Estator
STEERING	Direção
STEM	Haste
STEP	Degrau
STICK	Vareta
STOP	Parar
STORAGE	Armazenagem
STRAINER	Tela filtrante
STRAP	Tira, cinta, suporte de fixação
STREET ELL	Conexão cotovelo
STRIP	Tira, fita, listra
STROKE	Curso do pistão
STUD	Prisioneiro
SUMP	Tanque, reservatório
SUPPLY VALVE	Válvula de suprimento
SUPPORT	Suporte
SUSPENSION	Suspensão
SWITCH	Interruptor
SWIVEL	Articulação giratória
TAB	Tira, aba, lingüeta
TABLE	Mesa
TACHOGRAPH	Tacógrafo
TACHOMETER	Tacômetro
TAG	Etiqueta
TAIL LAMP	Farol traseiro
TAN	Castanho
TANG	Lingüeta
TANK	Tanque
TAP	Macho
TAPE	Fita
TAPPET	Tucho
TEE	Conexão em "T"
TEMP. = TEMPERATURE	Temperatura
TERMINAL	Terminal
TEST UNIT	Unidade de teste
TESTER	Aparelho de teste
THERMISTOR	Termistor
THERMOCOUPLE	Termopar
THERMOMETER	Termômetro
THERMOSTAT	Termostato
THERMOSWITCH	Interruptor térmico
THICK	Grosso (a) espesso (a)
TIE	Ligação, tirante
THREAD (OF NUT)	Rosca (de porca)
THROTTLE	Acelerador de
THROWER	Defletor
THRU = THROUGH	Através de
TIGHTENER	Tensor
TILT CYLINDER	Cilindro de inclinação
TIMING	Sincronização, Distribuição
TIP	Ponta

NOMENCLATURA DE PEÇAS INGLÊS-PORTUGUÊS

INGLÊS	PORTUGUÊS
TIRE	Pneu
TIRE & RIM	Pneu e aro
TONGUE	Língua, lingueta
TOOL	Ferramenta
TOOLCABINET	Armário para ferramenta
TOOTH/TEETH	Dente/dentes
TOP	Topo, parte superior
TORQUE	Torque
TORQ. CONV.	Conversor de torque
TORQ. DIVIDER	Divisor de torque
TOWER	Torre
TRACK	Esteira
TRACK PIN	Pino de esteira
TRACTOR	Trator
TRAILING UNIT	Unidade rebocada
TRANSFER	Decalcomania
TRANSFORMER	Transformador
TRANSISTOR	Transistor
TRANSMISSION	Transmissão
TRANSMISSION OVERHAUL	Revisão da transmissão
TREAD	Piso, banda de rodagem
TREADLE	Pedal
TROLLY	Carrinho
TRUCK	Caminhão
TRUNNION	Munhão
TUBE	Tubo, cano
TUBING	Tubulagem canalização
TURBINE	Turbina
TURBOCHARGER	Turboalimentador
U-BOLT	Parafuso em "U"
U-JOINT	Junta universal
UNDERSIZE	Submedida
UNION	União
UPPER	Superior
USE AS REQUIRED	Usar conforme necessitar
VALUE	Valor
VALVE	Válvula
VALVE GRINDING	Retificação das válvulas
VEE BELT	Correia "V"
VEE BELT SET	Jogo de correia em "V"
VENT	Respiro
VIEW	Vista
VISE	Morsa, torno
VISOR	Pára-sol
WALKWAY	Passadiço, corredor
WARNING G.	Grupo de alarma
WASHER	Arruela
WATER PUMP	Bomba d'água
WEARPLATE	Placa de desgaste
WEDGE	Cunha
WEIGHT	Peso
WELD	Solda
WELDNUT	Porca soldada
WHEEL	Roda
WHITE	Branco
WICK	Mecha, pavio
WINCH	Guincho
WINDOW	Janela
WINDSHIELD	Pára-brisa
WIPER	Limpador
WIRE	Fio
WIRING	Sistema elétrico
WIRING DIAGRAM	Diagrama do sistema elétrico
WITH	Com
WRAPPER	Invólucro, envoltório
WRENCH	Chave
YELLOW	Amarelo
YOKE	Garfo

MAINTENANCE PARTS

DESCRIPTION	PART NUMBER	QTY	WHERE USED	PAGE
AIR INLET AND EXHAUST SYSTEM				
FILTER ELEMENT AS-AIR (PRIMARY)	6I-2501	1	AIR CLEANER GP	91
FILTER ELEMENT AS-AIR (SECONDARY)	6I-2502	1	AIR CLEANER GP	91
BASIC ENGINE				
BELT (WITH A/C EUROPEAN MARKET)	202-3197	1	BELT GP	7
BELT (WITH A/C NORTH AMERICAN MARKET)	215-3015	1	BELT GP	8
BELT (W/O-A/C NORTH AMERICAN MARKET)	191-5215	1	BELT GP	6
PLUG (MAGNETIC OIL DRAIN)	118-3619	1	DRAIN GP-ENGINE OIL	33
COOLING SYSTEM				
CAP AS-RADIATOR (PRESSURE RELIEF)	031-1119	1	RADIATOR GP	89
CAP-DUST (COOLANT SAMPLING VALVE)	157-0670	1	LINES GP-WATER	82
FILTER-WATER (WATER PUMP)	119-3025	1	PUMP GP-WATER	85
GASKET-WATER REGULATOR (COOLANT TEMPERATURE)	136-0812	1	LINES GP-WATER	82
HOSE (LOWER RADIATOR)	198-1663	1	RADIATOR GP	87
HOSE (UPPER RADIATOR)	214-6738	1	RADIATOR GP	87
REGULATOR-WATER TEMPERATURE (94 DEG C) (COOLANT)	126-5869	1	LINES GP-WATER	82

MAINTENANCE PARTS

DESCRIPTION	PART NUMBER	QTY	WHERE USED	PAGE
ELECTRICAL AND STARTING SYSTEM				
BATTERY (MAINTENANCE FREE)(12 VOLT) (HEAVY DUTY)	153-5700	2	BATTERY GP	124
BATTERY (12 VOLT)	9X-3404	2	BATTERY & WIRING GP	122
BRUSH AS-ALTERNATOR	3E-5459	2	ALTERNATOR GP-CHARGING	116
		2	ALTERNATOR GP-CHARGING	118
CAP AS-DUST (JACKET WATER HEATER)	133-6517	1	HEATER GP-JACKET WATER	136
		1	HEATER GP-JACKET WATER	137
CIRCUIT BREAKER AS (80 AMP) (MACHINE MAIN)	171-2210	1	PANEL GP-CIRCUIT BREAKER	151
ELEMENT AS-JACKET WATER HEATER (120 VOLT/1000 WATT)	124-0686	1	HEATER GP-JACKET WATER	137
ELEMENT AS-JACKET WATER HEATER (240 VOLT/1000 WATT)	124-0687	1	HEATER GP-JACKET WATER	136
FUSE (10 AMP)	9W-1442	9	PANEL GP-CIRCUIT BREAKER	151
FUSE (15 AMP)	9W-1441	8	PANEL GP-CIRCUIT BREAKER	151
FUSE (20 AMP)	9W-1446	3	PANEL GP-CIRCUIT BREAKER	151
HOLDER AS-BRUSH (ALTERNATOR)	3E-5460	1	ALTERNATOR GP-CHARGING	116
		1	ALTERNATOR GP-CHARGING	118
KEY (BATTERY DISCONNECT)	8H-5306	1	SWITCH GP-DISCONNECT	176
LAMP AS (12 VOLT) (RED/GREEN LED ACTION LIGHT)	165-5655	1	INSTALLATION GP-SECURITY	141
		1	INSTALLATION GP-SECURITY	142
LAMP-DIODE (LED) (WARNING BEACON)	165-5674	1	LIGHTING GP-WARNING BEACON	150
LAMP-HALOGEN (24 VOLT)(65 WATT) (FLOOD)	9X-3463	1	LAMP GP-FLOOD	144
		1	LAMP GP-FLOOD	145
		1	LAMP GP-FLOOD	146
LAMP (24 VOLT) (DOME)	7N-9943	1	LAMP GP-DOME	143
LAMP (24 VOLT) (THROTTLE ROCKER SWITCH)	3E-8825	2	WIRING GP-PLATFORM	187
LAMP (24 VOLT) (WARNING BEACON)	3E-8825	1	LIGHTING GP-WARNING BEACON	150
LENS (AMBER WARNING BEACON)	198-0316	1	LAMP GP-WARNING BEACON	147
LENS AS (FLOOD)	202-6611	1	LAMP GP-FLOOD	146
LENS AS (FLOOD) (ROPS)	202-6611	1	LAMP GP-FLOOD	145
	202-6614	1	LAMP GP-FLOOD	144
LENS (DOME LAMP)	7T-0020	1	LAMP GP-DOME	143
PULLER-FUSE	202-4327	1	BATTERY & WIRING GP	122
TUBE-FLASH (3 PRONG CONNECTION) (WARNING BEACON)	127-8158	1	LAMP GP-WARNING BEACON	147
TUBE-FLASH (8 PRONG CONNECTION) (WARNING BEACON)	198-0315	1	LAMP GP-WARNING BEACON	147
FRAME AND BODY				
CAP AS (DUST) (RADIATOR FILLER DOOR)	155-9321	1	GUARD GP-RADIATOR	247
FITTING-GREASE (1/8-27 THD) (CASE & FRAME)	3B-8489	2	CASE & FRAME GP	234
PLUG (CASE DRAIN)	106-8187	1	CASE & FRAME GP	234
SEAL-O-RING (CASE DRAIN PLUG)	6F-0711	1	CASE & FRAME GP	234

MAINTENANCE PARTS

DESCRIPTION	PART NUMBER	QTY	WHERE USED	PAGE
FUEL SYSTEM				
CAP AS-FUEL TANK (VENTED LOCKING)	7X-7700	1	TANK GP-FUEL	112
FILTER AS-FUEL (SECONDARY)	1R-0762	1	LINES GP-FUEL FILTER	106
FILTER ELEMENT-FUEL (PRIMARY)	146-6695	1	FILTER GP-WATER SEP & FUEL	103
GASKET (FUEL PRIMING PUMP)	1P-0436	2	FILTER GP-WATER SEP & FUEL	103
STRAINER-FUEL (TANK FILLER)	9P-7121	1	TANK GP-FUEL	112
VALVE-DRAIN (FUEL FILTER)	179-9348	1	LINES GP-FUEL FILTER	106
VALVE-DRAIN (FUEL) (FILTER)	141-8275	1	LINES GP-FUEL FILTER	106
HYDRAULIC SYSTEM				
CAP-DUST (CONTROL VALVE FLUID SAMPLING)	8C-3451	1	MOUNTING GP-VALVE	392
CAP-DUST (DIAGNOSTICS PANEL)	6V-0852	9	LINES GP-HYDRAULIC	365
	187-9008	2	LINES GP-HYDRAULIC	365
CAP-DUST (HYDRAULIC PUMP)	6V-0852	2	LINES GP-PUMP	378
CAP-FILLER (HYDRAULIC TANK)	7H-1447	1	TANK & FILTER GP-HYDRAULIC	396
FILTER AS-OIL (HYDRAULIC)(HIGH EFFICIENCY)	144-0832	1	FILTER GP-OIL	358
FILTER (CONTROL VALVE)	4T-4520	1	VALVE GP-CONTROL	403
		1	VALVE GP-CONTROL	405
		1	VALVE GP-CONTROL	407
		1	VALVE GP-CONTROL	409
		1	VALVE GP-CONTROL	411
		1	VALVE GP-CONTROL	413
FILTER ELEMENT AS-OIL (HYDRAULIC) (CLEANOUT/HIGH EFFICIENCY)	139-1537	1	TANK & FILTER GP-HYDRAULIC	396
FILTER ELEMENT AS-OIL (HYDRAULIC/REVERSE FLOW) (DISPOSABLE)	1R-0735	1	TANK & FILTER GP-HYDRAULIC	396
FILTER ELEMENT AS-OIL (REVERSE FLOW) (HYDRAULIC FIRE RESISTANT FLUID)	104-6931	1	TANK & FILTER GP-HYDRAULIC	396
FILTER-SPIN-ON (HYDRAULIC)	9T-8578	1	FILTER GP-OIL	358
FITTING-GREASE (1/8-27 THD) (ANGLE & TILT CYLINDERS)	3B-8489	8	LINES GP-ANGLE & TILT	361
FITTING-GREASE (1/8-27 THD) (BULLDOZER LIFT CYLINDER)	3B-8489	1	CYLINDER GP-LIFT	350
PLUG-DRAIN (HYDRAULIC TANK)	9J-7031	1	TANK & FILTER GP-HYDRAULIC	396
SCREEN AS (HYDRAULIC TANK)	3G-3267	1	TANK & FILTER GP-HYDRAULIC	396
STRAINER (HYDRAULIC TANK)	9J-3047	1	TANK & FILTER GP-HYDRAULIC	396
IMPLEMENTS				
FITTING-GREASE (1/8-27 THD) (PITCH LINK)	3B-8489	2	LINK GP-PITCH	423
LUBRICATION SYSTEM				
BREATHER AS (ENGINE)	2W-9162	1	BREATHER GP	65
CAP-DUST (TURBO OIL SAMPLING VALVE)	8C-3445	1	LINES GP-TURBOCHARGER OIL	72
CAP-FILLER (ENGINE OIL)	4W-3087	1	FILLER GP-ENGINE OIL	66
FILTER AS-ENGINE OIL	1R-0739	1	FILTER GP-ENGINE OIL	67
HOSE-DISPOSAL (FUMES)	4W-2181	1	FUMES DISPOSAL GP	68
SEAL-O-RING (ENGINE BREATHER)	4L-9564	1	BREATHER GP	65

MAINTENANCE PARTS

DESCRIPTION	PART NUMBER	QTY	WHERE USED	PAGE
OPERATOR STATION				
BLADE AS-WIPER (LH CAB DOOR)	125-8175	1	DOOR GP-CAB	468
BLADE AS-WIPER (REAR) (WINDOW)	5C-8811	1	WIPER GP-WINDOW	547
BLADE AS-WIPER (RH CAB DOOR)	125-8175	1	DOOR GP-CAB	466
BLADE AS-WIPER (WINDSHIELD)	125-8175	1	WIPER GP-WINDOW	547
CAP AS (AIR CONDITIONER)	3E-4052	1	INSTALLATION GP-LINES	479
CAP (WINDOW WASHER TANK)	209-4482	1	TANK GP-WINDOW WASHER	543
FILTER AS (CAB AIR)	3E-7904	2	PRESSURIZER GP-CAB	510
FILTER AS (CAB PRESSURIZER)	7G-8116	2	PRESSURIZER GP-CAB	510
FILTER-CHARCOAL (CAB PRESSURIZER)	141-7903	1	PRESSURIZER GP-CAB	510
FITTING-GREASE (CAB PRESSURIZER)	3B-8489	1	PRESSURIZER GP-CAB	510
FITTING-GREASE (1/8-27 THD) (OPERATOR PLATFORM)	3B-8489	1	PLATFORM GP-OPERATOR	507
KNOB (FILTER COVER)	3W-6756	2	PRESSURIZER GP-CAB	510
LAMP (24 VOLT) (ACTION LAMP)	115-1748	1	PANEL GP-INSTRUMENT	499
		1	PANEL GP-INSTRUMENT	503
LAMP (24 VOLT) (INSTRUMENT)	123-9294	2	PANEL GP-INSTRUMENT	499
LAMP (24 VOLT) (INSTRUMENT LIGHTS)	123-9294	2	PANEL GP-INSTRUMENT	503
LAMP (24 VOLT) (QUAD GAUGE)	7N-5876	2	PANEL GP-INSTRUMENT	503
LAMP (24 VOLT) (QUAD GUAGE)	7N-5876	2	PANEL GP-INSTRUMENT	499
LIGHT-DASH PANEL	159-9257	1	PANEL GP-INSTRUMENT	499
		1	PANEL GP-INSTRUMENT	503
RECEIVER-DRYER GP (REFRIGERANT)	3E-3535	1	LINES GP-AIR CONDITIONER	485
SEAT BELT GP	222-0345	1	SEAT GP	527
SEAT BELT GP (SUSPENSION SEAT)	183-3648	1	SEAT GP	524
SEAT BELT GP (SUSPENSION SEAT LOW BACK)	8Y-4030	1	SEAT GP-SUSPENSION	534

MAINTENANCE PARTS

DESCRIPTION	PART NUMBER	QTY	WHERE USED	PAGE
POWER TRAIN				
BREATHER AS (POWER TRAIN OIL LINES)	185-6684	1	LINES GP-POWER TRAIN OIL	200
CAP AS-OIL FILLER (POWER TRAIN)	2W-6225	1	LINES GP-POWER TRAIN OIL	200
CAP-DUST (POWER TRAIN OIL SAMPLE VALVE)	8C-3447	1	LINES GP-POWER TRAIN OIL	200
CAP-DUST (TRANSMISSION FITTINGS)	6V-0852	6	PLANETARY GP-TRANSMISSION	207
FILTER ELEMENT AS-OIL (POWER TRAIN)	132-8876	1	FILTER GP-OIL	197
FILTER ELEMENT AS-OIL (POWER TRAIN - HIGH EFFICIENCY)	132-8876	1	LINES GP-POWER TRAIN OIL	201
FILTER-MAGNETIC (POWER TRAIN OIL)	8S-9129	1	LINES GP-POWER TRAIN OIL	200
PLUG-DRAIN (TORQUE CONVERTER)	4B-7739	1	MOUNTING GP-TORQUE CONVERTER	203
PLUG (FINAL DRIVE DRAIN)	9S-4185	1	FINAL DRIVE GP	198
PLUG-MAGNETIC (FINAL DRIVE)	6V-0439	1	FINAL DRIVE GP	198
PLUG (TORQUE CONVERTER DRAIN)	9S-4185	2	TORQUE CONVERTER GP	220
	9S-4188	1	TORQUE CONVERTER GP	220
PLUG (TRANSMISSION DRAIN)	9S-4188	1	PLANETARY GP-TRANSMISSION	206
	9S-4190	2	PLANETARY GP-TRANSMISSION	206
SCREEN AS (TORQUE CONVERTER SCAVENGE)	3T-6471	1	TORQUE CONVERTER GP	220
SCREEN-SUCTION (POWER TRAIN OIL LINES)	8S-9130	1	LINES GP-POWER TRAIN OIL	200
SEAL-O-RING (FINAL DRIVE DRAIN PLUG)	3K-0360	1	FINAL DRIVE GP	198
SEAL-O-RING (FINAL DRIVE MAGNETIC PLUG)	2S-4078	1	FINAL DRIVE GP	198
SEAL-O-RING (POWER TRAIN FILTER)	5P-3620	1	FILTER GP-OIL	197
SEAL-O-RING (TORQUE CONVERTER DRAIN PLUG)	3K-0360	2	TORQUE CONVERTER GP	220
	4K-1388	1	TORQUE CONVERTER GP	220
SEAL-O-RING (TRANSMISSION DRAIN PLUG)	2M-9780	2	PLANETARY GP-TRANSMISSION	206
	4K-1388	1	PLANETARY GP-TRANSMISSION	206
STEERING AND BRAKING SYSTEM				
CAP-DUST (STEERING VALVES)	6V-0852	3	LINES GP-STEERING	308
FILTER AS-OIL (HYDRAULIC)	1G-8878	1	FILTER GP-OIL	305
UNDERCARRIAGE				
FITTING-GREASE (EQUALIZER BAR)	3B-8489	2	BAR GP-EQUALIZER	266
WORK TOOLS				
FITTING-GREASE (ANGLING BULLDOZER BLADE)	3B-8489	2	BLADE GP-ANGLING	431
FITTING-GREASE (1/8-27 THD) (RIPPER)	3B-8489	11	RIPPER GP	437

PIÈCES DE RECHANGE

DESCRIPTION	NUMÉRO DE PIECÈS	QTÉ	DOMAINE D'APPLICATION	PAGE
CHÂSSIS ET BENNE				
BOUCHON FILETÉ (RETOUR AU CARTER)	106-8187	1	CHÂSSIS ET CARTER (ASS)	234
CHAPEAU (ENS) (POUSSIÈRE) (PORTE DE REMPLISSAGE DE RADIATEUR)	155-9321	1	PROTÈGE-RADIATEUR (ASS)	247
GRAISSEUR (FILET 1/8-27) (CARTER ET BÂTI)	3B-8489	2	CHÂSSIS ET CARTER (ASS)	234
JOINT TORIQUE (BOUCHON DE VIDANGE DE CARTER)	6F-0711	1	CHÂSSIS ET CARTER (ASS)	234
CIRCUIT D'ADMISSION D'AIR ET D'ECHAPPEMENT				
ÉLÉMENT DE FILTRE À AIR (ENS) (PRINCIPAL)	6I-2501	1	FILTRE A AIR (ASS)	91
ÉLÉMENT DE FILTRE À AIR (ENS) (SECONDAIRE)	6I-2502	1	FILTRE A AIR (ASS)	91
CIRCUIT DE CARBURANT				
BOUCHON DE RÉSERVOIR DE CARBURANT (ENS) (VERROUILLAGE AÉRÉ)	7X-7700	1	RÉSERVOIR DE CARBURANT (ASS)	112
ÉLÉMENT DE FILTRE À CARBURANT (PRINCIPAL)	146-6695	1	FILTRE DE SÉPARATEUR D'EAU ET DE CARBURANT (ASS)	103
FILTRE A CARBURANT (ENS) (AUXILIAIRE)	1R-0762	1	CANALISATIONS DU FILTRE A CARBURANT (ASS)	106
FILTRE À CARBURANT (REMPLISSAGE DU RÉSERVOIR)	9P-7121	1	RÉSERVOIR DE CARBURANT (ASS)	112
JOINT PLAT (POMPE D'AMORÇAGE DE CARBURANT)	1P-0436	2	FILTRE DE SÉPARATEUR D'EAU ET DE CARBURANT (ASS)	103
SOUPAPE DE VIDANGE (CARBURANT) (FILTRE)	141-8275	1	CANALISATIONS DU FILTRE A CARBURANT (ASS)	106
SOUPAPE DE VIDANGE (FILTRE À CARBURANT)	179-9348	1	CANALISATIONS DU FILTRE A CARBURANT (ASS)	106
CIRCUIT DE DÉMARRAGE ET ÉLECTRIQUE				
AMPOULE (24 VOLTS) (CONTACTEUR À BASCULE D'ACCÉLÉRATEUR)	3E-8825	2	CABLAGE - PLATE-FORME (ASS)	187
AMPOULE (24 VOLTS) (GYROPHARE)	3E-8825	1	ÉCLAIRAGE - GYROPHARE (ASS)	150
AMPOULE (24 VOLTS) (PLAFONNIER)	7N-9943	1	PLAFONNIER (ASS)	143
BATTERIE (SANS ENTRETIEN)(12 VOLTS) (GRANDE CAPACITÉ)	153-5700	2	BATTERIE (ASS)	124
BATTERIE (12 VOLTS)	9X-3404	2	BATTERIE ET CÂBLAGE	122
BROSSE D'ALTERNATEUR (ENS)	3E-5459	2	ALTERNATEUR DE CHARGE (ASS)	116
		2	ALTERNATEUR DE CHARGE (ASS)	118
CHAPEAU ANTI-POUSSIERE (RÉCHAUFFEUR D'EAU)	133-6517	1	EAU DES CHEMISES - RECHAUFFEUR (ASS)	136
		1	EAU DES CHEMISES - RECHAUFFEUR (ASS)	137
CLÉ (COUPE-BATTERIE)	8H-5306	1	ROBINET DE BATTERIE (ASS)	176
DISJONCTEUR (ENS) (80 A) (DISJONCTEUR PRINCIPAL DE LA MACHINE)	171-2210	1	DISJONCTEUR DU PANNEAU DE COMMANDE (ASS)	151

* TRADUCTION NON DISPONIBLE AU MOMENT DE LA PUBLICATION

PIÈCES DE RECHANGE

DESCRIPTION	NUMÉRO DE PIECÈS	QTÉ	DOMAINE D'APPLICATION	PAGE
ÉLÉMENT DU RÉCHAUFFEUR D'EAU DES CHEMISES (ENS) (120 VOLTS/1000 WATTS)	124-0686	1	EAU DES CHEMISES - RECHAUFFEUR (ASS)	137
ÉLÉMENT DU RÉCHAUFFEUR D'EAU DES CHEMISES (ENS) (240 V/1000 WATTS)	124-0687	1	EAU DES CHEMISES - RECHAUFFEUR (ASS)	136
EXTRACTEUR DE FUSIBLE	202-4327	1	BATTERIE ET CÂBLAGE	122
FUSIBLE (10A)	9W-1442	9	DISJONCTEUR DU PANNEAU DE COMMANDE (ASS)	151
FUSIBLE (15A)	9W-1441	8	DISJONCTEUR DU PANNEAU DE COMMANDE (ASS)	151
FUSIBLE (20 A)	9W-1446	3	DISJONCTEUR DU PANNEAU DE COMMANDE (ASS)	151
LAMPE-DIODE (LED) (GYROPHARE)	165-5674	1	ÉCLAIRAGE - GYROPHARE (ASS)	150
LAMPE (ENS) (12 VOLTS) (TÉMOIN LUMINEUX PRINCIPAL ROUGE/ VERT)	165-5655	1	MONTAGE-SÉCURITÉ (ASS)	141
		1	MONTAGE-SÉCURITÉ (ASS)	142
LAMPE HALOGÈNE (24 VOLTS)(65 WATTS) (PROJECTEUR)	9X-3463	1	LAMPE - PHARE (ASS)	144
		1	LAMPE - PHARE (ASS)	145
		1	LAMPE - PHARE (ASS)	146
LENTILLE (ENS) (PROJECTEUR)	202-6611	1	LAMPE - PHARE (ASS)	146
LENTILLE (ENS) (PROJECTEUR) (ROPS)	202-6611	1	LAMPE - PHARE (ASS)	145
	202-6614	1	LAMPE - PHARE (ASS)	144
LENTILLE (GYROPHARE JAUNE)	198-0316	1	LAMPE - GYROPHARE (ASS)	147
LENTILLE (PLAFONNIER)	7T-0020	1	PLAFONNIER (ASS)	143
PORTE-BALAIS (ENS) (ALTERNATEUR)	3E-5460	1	ALTERNATEUR DE CHARGE (ASS)	116
		1	ALTERNATEUR DE CHARGE (ASS)	118
TUBE-FLASH (CONNEXION À 3 BROCHES) (GYROPHARE)	127-8158	1	LAMPE - GYROPHARE (ASS)	147
TUBE-FLASH (CONNEXION À 8 BROCHES) (GYROPHARE)	198-0315	1	LAMPE - GYROPHARE (ASS)	147
CIRCUIT DE DIRECTION ET DE FREIN				
FILTRE À HUILE (ENS) (HYDRAULIQUE)	1G-8878	1	FILTRE A HUILE (ASS)	305
PARE-POUSSIERE (SOUPAPES DE DIRECTION)	6V-0852	3	CANALISATIONS DE DIRECTION (ASS)	308

* TRADUCTION NON DISPONIBLE AU MOMENT DE LA PUBLICATION

PIÈCES DE RECHANGE

DESCRIPTION	NUMÉRO DE PIECÈS	QTÉ	DOMAINE D'APPLICATION	PAGE
CIRCUIT DE GRAISSAGE				
BOUCHON DE GOULOTTE DE REMPLISSAGE (HUILE MOTEUR)	4W-3087	1	BOUCHON DE REMPLISSAGE D'HUILE MOTEUR (ASS)	66
FILTRE A HUILE MOTEUR (ENS)	1R-0739	1	FILTRE À HUILE MOTEUR (ASS)	67
JOINT TORIQUE (RENIFLARD DE MOTEUR)	4L-9564	1	RENIFLARD (ASS)	65
PARE-POUSSIERE (ROBINET DE PRÉLÈVEMENT D'HUILE DE TURBOCOMPRESSEUR)	8C-3445	1	CANALISATIONS D'HUILE DE TURBOCOMPRESSEUR (ASS)	72
RENIFLARD (ENS) (MOTEUR)	2W-9162	1	RENIFLARD (ASS)	65
TUYAU D'ÉCHAPPEMENT (VAPEURS)	4W-2181	1	DISPOSITIF D'EVACUATION DES VAPEURS DE CARTER	68
CIRCUIT DE REFROIDISSEMENT				
BOUCHON DE RADIATEUR (ENS) (DÉCHARGE DE PRESSION)	031-1119	1	RADIATEUR (ASS)	89
FILTRE -EAU (POMPE À EAU)	119-3025	1	POMPE A EAU (ASS)	85
FLEXIBLE (RADIATEUR INFÉRIEUR)	198-1663	1	RADIATEUR (ASS)	87
FLEXIBLE (RADIATEUR SUPÉRIEUR)	214-6738	1	RADIATEUR (ASS)	87
JOINT DE RÉGULATEUR D'EAU (TEMPÉRATURE DE LIQUIDE DE REFROIDISSEMENT)	136-0812	1	CANALISATIONS D'EAU (ASS)	82
PARE-POUSSIERE (ROBINET DE PRÉLÈVEMENT DE LIQUIDE DE REFROIDISSEMENT)	157-0670	1	CANALISATIONS D'EAU (ASS)	82
THERMOSTAT-TEMPÉRATURE D'EAU (94 DEG C) (LIQUIDE DE REFROIDISSEMENT)	126-5869	1	CANALISATIONS D'EAU (ASS)	82

* TRADUCTION NON DISPONIBLE AU MOMENT DE LA PUBLICATION

PIÈCES DE RECHANGE

DESCRIPTION	NUMÉRO DE PIECÈS	QTÉ	DOMAINE D'APPLICATION	PAGE
CIRCUIT HYDRAULIQUE				
BOUCHON DE GOULOTTE DE REMPLISSAGE (RÉSERVOIR HYDRAULIQUE)	7H-1447	1	RÉSERVOIR HYDRAULIQUE ET FILTRE (ASS)	396
BOUCHON DE VIDANGE (RÉSERVOIR HYDRAULIQUE)	9J-7031	1	RÉSERVOIR HYDRAULIQUE ET FILTRE (ASS)	396
CREPINE (RÉSERVOIR HYDRAULIQUE)	9J-3047	1	RÉSERVOIR HYDRAULIQUE ET FILTRE (ASS)	396
ÉCRAN (ENS) (RÉSERVOIR HYDRAULIQUE)	3G-3267	1	RÉSERVOIR HYDRAULIQUE ET FILTRE (ASS)	396
ÉLÉMENT DE FILTRE À HUILE (ENS) (DÉBIT HYDRAULIQUE/RETOUR DE DÉBIT) (JETABLE)	1R-0735	1	RÉSERVOIR HYDRAULIQUE ET FILTRE (ASS)	396
ÉLÉMENT DE FILTRE À HUILE (ENS) (HYDRAULIQUE) (NETTOYAGE/GRANDE EFFICACITÉ)	139-1537	1	RÉSERVOIR HYDRAULIQUE ET FILTRE (ASS)	396
ÉLÉMENT DE FILTRE À HUILE (ENS) (RETOUR DE DÉBIT) (LIQUIDE HYDRAULIQUE RÉSISTANT AU FEU)	104-6931	1	RÉSERVOIR HYDRAULIQUE ET FILTRE (ASS)	396
FILTRE À HUILE (ENS) (*HYDRAULIC)(HIGH EFFICIENCY)	144-0832	1	FILTRE A HUILE (ASS)	358
FILTRE A VISSER (HYDRAULIQUE)	9T-8578	1	FILTRE A HUILE (ASS)	358
FILTRE (DISTRIBUTEUR)	4T-4520	1	DISTRIBUTEUR (ASS)	403
		1	DISTRIBUTEUR (ASS)	405
		1	DISTRIBUTEUR (ASS)	407
		1	DISTRIBUTEUR (ASS)	409
		1	DISTRIBUTEUR (ASS)	411
		1	DISTRIBUTEUR (ASS)	413
GRAISSEUR (FILET 1/8-27) (VÉRIN DE LEVAGE DE BULLDOZER)	3B-8489	1	VÉRIN DE LEVAGE (ASS)	350
GRAISSEUR (FILET 1/8-27) (VÉRINS D'INCLINAISON ET D'ORIENTATION)	3B-8489	8	CANALISATIONS D'INCLINAISON ET D'ORIENTATION	361
PARE-POUSSIERE (PANNEAU DE DIAGNOSTICS)	6V-0852	9	CANALISATIONS HYDRAULIQUES (ASS)	365
	187-9008	2	CANALISATIONS HYDRAULIQUES (ASS)	365
PARE-POUSSIERE (POMPE HYDRAULIQUE)	6V-0852	2	CANALISATIONS DE POMPE (ASS)	378
PARE-POUSSIERE (PRÉLÈVEMENT DE LIQUIDE DE DISTRIBUTEUR)	8C-3451	1	MONTAGE DE SOUPAPE (ASS)	392
ÉQUIPEMENTS				
GRAISSEUR (FILET 1/8-27) (BIELLE D'INCLINAISON)	3B-8489	2	PAS DU MAILLON (ASS)	423

* TRADUCTION NON DISPONIBLE AU MOMENT DE LA PUBLICATION

PIÈCES DE RECHANGE

DESCRIPTION	NUMÉRO DE PIECÈS	QTÉ	DOMAINE D'APPLICATION	PAGE
MOTEUR STANDARD				
BOUCHON FILETÉ (VIDANGE D'HUILE MAGNÉTIQUE)	118-3619	1	VIDANGE-HUILE DE MOTEUR (ASS)	33
COURROIE (AVEC CLIMATISEUR MARCHÉ EUROPÉEN)	202-3197	1	COURROIE (ASS)	7
COURROIE (AVEC CLIMATISEUR MARCHÉ NORD-AMÉRICAIN)	215-3015	1	COURROIE (ASS)	8
COURROIE (SANS CLIMATISEUR MARCHÉ NORD-AMÉRICAIN)	191-5215	1	COURROIE (ASS)	6
OUTILS DE TRAVAIL				
GRAISSEUR (FILET 1/8-27) (RIPPER)	3B-8489	11	RIPPER (ASS)	437
GRAISSEUR (LAME DE BULLDOZER ORIENTABLE)	3B-8489	2	LAME À ORIENTATION (ASS)	431

* TRADUCTION NON DISPONIBLE AU MOMENT DE LA PUBLICATION

PIÈCES DE RECHANGE

DESCRIPTION	NUMÉRO DE PIECÈS	QTÉ	DOMAINE D'APPLICATION	PAGE
POSTE DE CONDUITE				
AMPOULE (24 VOLTS) (ÉCLAIRAGE D'INSTRUMENTS)	123-9294	2	TABLEAU DE BORD (ASS)	503
AMPOULE (24 VOLTS) (INSTRUMENT)	123-9294	2	TABLEAU DE BORD (ASS)	499
AMPOULE (24 VOLTS) (QUATRE INSTRUMENTS)	7N-5876	2	TABLEAU DE BORD (ASS)	499
		2	TABLEAU DE BORD (ASS)	503
AMPOULE (24 VOLTS) (VOYANT PRINCIPAL)	115-1748	1	TABLEAU DE BORD (ASS)	499
		1	TABLEAU DE BORD (ASS)	503
BALAI D'ESSUIE-GLACE (ENS) (ARRIÈRE) (GLACE)	5C-8811	1	ESSUIE-GLACE (ASS)	547
BALAI D'ESSUIE-GLACE (ENS) (PARE-BRISE)	125-8175	1	ESSUIE-GLACE (ASS)	547
BALAI D'ESSUIE-GLACE (ENS) (PORTE DE CABINE DE DROITE)	125-8175	1	PORTIÈRE DE CABINE (ASS)	466
BALAI D'ESSUIE-GLACE (ENS) (PORTE DE CABINE DE GAUCHE)	125-8175	1	PORTIÈRE DE CABINE (ASS)	468
BOUTON (COUVERCLE DE FILTRE)	3W-6756	2	SURPRESSEUR (ASS)	510
CEINTURE DE SECURITE (ASS)	222-0345	1	SIÈGE (ASS)	527
CEINTURE DE SECURITE (ASS) (SIEGE A SUSPENSION)	183-3648	1	SIÈGE (ASS)	524
CEINTURE DE SECURITE (ASS) (SIÈGE À SUSPENSION À DOSSIER BAS)	8Y-4030	1	SIÈGE AVEC SUSPENSION (ASS)	534
CHAPEAU (ENS) (CLIMATISEUR)	3E-4052	1	CANALISATIONS DE MONTAGE (ASS)	479
CHAPEAU (RÉSERVOIR DE LAVE-GLACE DE VITRE)	209-4482	1	RÉSERVOIR - LAVE-GLACE (ASS)	543
ECLAIRAGE TABLEAU DE BORD	159-9257	1	TABLEAU DE BORD (ASS)	499
		1	TABLEAU DE BORD (ASS)	503
FILTRE-CHARBON (SURPRESSEUR DE CABINE)	141-7903	1	SURPRESSEUR (ASS)	510
FILTRE (ENS) (AÉRATION DE LA CABINE)	3E-7904	2	SURPRESSEUR (ASS)	510
FILTRE (ENS) (SURPRESSEUR DE CABINE)	7G-8116	2	SURPRESSEUR (ASS)	510
GRAISSEUR (FILET 1/8-27) (PLATE-FORME DE CABINE)	3B-8489	1	PLATE-FORME DE CABINE	507
GRAISSEUR (SURPRESSEUR DE CABINE)	3B-8489	1	SURPRESSEUR (ASS)	510
RÉCEPTEUR-DÉSHYDRATEUR (ASS) (RÉFRIGÉRANT)	3E-3535	1	CANALISATIONS DE CLIMATISEUR (ASS)	485
TRAIN DE ROULEMENT				
GRAISSEUR (BALANCIER DE SUSPENSION)	3B-8489	2	BALANCIER DE SUSPENSION (ASS)	266

* TRADUCTION NON DISPONIBLE AU MOMENT DE LA PUBLICATION

PIÈCES DE RECHANGE

DESCRIPTION	NUMÉRO DE PIECÈS	QTÉ	DOMAINE D'APPLICATION	PAGE
TRANSMISSION				
BOUCHON AIMANTÉ (RÉDUCTEUR)	6V-0439	1	RÉDUCTEURS (ASS)	198
BOUCHON DE GOULOTTE DE REMPLISSAGE D'HUILE MOTEUR (TRANSMISSION)	2W-6225	1	CANALISATIONS D'HUILE DE TRANSMISSION (ASS)	200
BOUCHON DE VIDANGE (CONVERTISSEUR DE COUPLE)	4B-7739	1	CONVERTISSEUR DE COUPLE - MONTAGE (ASS)	203
BOUCHON FILETÉ (VIDANGE DE BOÎTE DE VITESSES)	9S-4190	2	BOÎTE PLANÉTAIRE (ASS)	206
	9S-4188	1	BOÎTE PLANÉTAIRE (ASS)	206
BOUCHON FILETÉ (VIDANGE DE CONVERTISSEUR DE COUPLE)	9S-4185	2	CONVERTISSEUR DE COUPLE (ASS)	220
	9S-4188	1	CONVERTISSEUR DE COUPLE (ASS)	220
BOUCHON FILETÉ (VIDANGE DE RÉDUCTEUR)	9S-4185	1	RÉDUCTEURS (ASS)	198
ÉCRAN (ENS) (GAVAGE DU CONVERTISSEUR DE COUPLE)	3T-6471	1	CONVERTISSEUR DE COUPLE (ASS)	220
ÉCRAN MAGNÉTIQUE (HUILE DE TRANSMISSION)	8S-9129	1	CANALISATIONS D'HUILE DE TRANSMISSION (ASS)	200
ÉLÉMENT DE FILTRE À HUILE (ENS) (*POWER TRAIN - HIGH EFFICIENCY)	132-8876	1	CANALISATIONS D'HUILE DE TRANSMISSION (ASS)	201
ÉLÉMENT DE FILTRE À HUILE (ENS) (TRANSMISSION)	132-8876	1	FILTRE A HUILE (ASS)	197
JOINT TORIQUE (BOUCHON DE VIDANGE DE BOÎTE DE VITESSES)	2M-9780	2	BOÎTE PLANÉTAIRE (ASS)	206
	4K-1388	1	BOÎTE PLANÉTAIRE (ASS)	206
JOINT TORIQUE (BOUCHON DE VIDANGE DE CONVERTISSEUR DE COUPLE)	3K-0360	2	CONVERTISSEUR DE COUPLE (ASS)	220
	4K-1388	1	CONVERTISSEUR DE COUPLE (ASS)	220
JOINT TORIQUE (BOUCHON DE VIDANGE D'ENTRAÎNEMENT DE RÉDUCTEUR)	3K-0360	1	RÉDUCTEURS (ASS)	198
JOINT TORIQUE (BOUCHON MAGNÉTIQUE D'ENTRAÎNEMENT DE RÉDUCTEUR)	2S-4078	1	RÉDUCTEURS (ASS)	198
JOINT TORIQUE (FILTRE DE TRANSMISSION)	5P-3620	1	FILTRE A HUILE (ASS)	197
PARE-POUSSIERE (RACCORDS DE BOÎTE DE VITESSES)	6V-0852	6	BOÎTE PLANÉTAIRE (ASS)	207
PARE-POUSSIERE (ROBINET DE PRÉLÈVEMENT D'HUILE DE TRANSMISSION)	8C-3447	1	CANALISATIONS D'HUILE DE TRANSMISSION (ASS)	200
RENIFLARD (ENS) (CANALISATIONS D'HUILE DE TRANSMISSION)	185-6684	1	CANALISATIONS D'HUILE DE TRANSMISSION (ASS)	200
TAMIS D'ASPIRATION (CANALISATIONS D'HUILE DE TRANSMISSION)	8S-9130	1	CANALISATIONS D'HUILE DE TRANSMISSION (ASS)	200

* TRADUCTION NON DISPONIBLE AU MOMENT DE LA PUBLICATION

PIEZAS DE MANTENIMIENTO

DESCRIPCION	NUMERO DE PIEZA	CANT	SE UTILIZA EN	PAGINA
BASTIDOR Y CAJA				
CONEXIÓN DE ENGRASE (ROSCA DE 1/8-27) (CAJA Y BASTIDOR)	3B-8489	2	CAJA Y BASTIDOR (GR)	234
SELLO ANULAR (TAPÓN DE DRENAJE DE LA CAJA)	6F-0711	1	CAJA Y BASTIDOR (GR)	234
TAPÓN (CONJ) (POLVO) (PUERTA PARA EL LLENADO DE RADIADOR)	155-9321	1	PROTECTOR DEL RADIADOR (GR)	247
TAPÓN (DRENAJE DE LA CAJA)	106-8187	1	CAJA Y BASTIDOR (GR)	234

* NO HAY TRADUCCION DISPONIBLE EN EL MOMENTO DE LA IMPRESION

PIEZAS DE MANTENIMIENTO

DESCRIPCION	NUMERO DE PIEZA	CANT	SE UTILIZA EN	PAGINA
CABINA DEL OPERADOR				
CINTURÓN DE SEGURIDAD (GR)	222-0345	1	ASIENTO (GR)	527
CINTURÓN DE SEGURIDAD (GR) (ASIENTO DE SUSPENSION)	183-3648	1	ASIENTO (GR)	524
CINTURÓN DE SEGURIDAD (GR) (*SUSPENSION SEAT LOW BACK)	8Y-4030	1	SUSPENSIÓN - ASIENTO CON (GR)	534
CONEXIÓN DE ENGRASE (CABINA PRESURIZADA)	3B-8489	1	PRESURIZADOR (GR)	510
CONEXIÓN DE ENGRASE (ROSCA DE 1/8-27) (PLATAFORMA DEL OPERADOR)	3B-8489	1	PLATAFORMA DE LA CABINA	507
FILTRO-CARBON (CABINA PRESURIZADA)	141-7903	1	PRESURIZADOR (GR)	510
FILTRO (CONJ) (AIRE DE LA CABINA)	3E-7904	2	PRESURIZADOR (GR)	510
FILTRO (CONJ) (CABINA PRESURIZADA)	7G-8116	2	PRESURIZADOR (GR)	510
HOJA DE LIMPIAPARABRISAS (CONJ) (PARABRISAS)	125-8175	1	LIMPIAPARABRISAS DE LA VENTANA (GR)	547
HOJA DE LIMPIAPARABRISAS (CONJ) (PUERTA DE LA CABINA LADO DERECHO)	125-8175	1	PUERTA DE CABINA	466
HOJA DE LIMPIAPARABRISAS (CONJ) (PUERTA DE LA CBINA, LADO IZQUIERDO)	125-8175	1	PUERTA DE CABINA	468
HOJA DE LIMPIAPARABRISAS (CONJ) (TRASERO) (VENTANA)	5C-8811	1	LIMPIAPARABRISAS DE LA VENTANA (GR)	547
LÁMPARA (24 VOLTIOS) (DE CUATRO MEDIDORES)	7N-5876	2	TABLERO DE INSTRUMENTOS (GR)	503
LÁMPARA (24 VOLTIOS) (INSTRUMENTO)	123-9294	2	TABLERO DE INSTRUMENTOS (GR)	499
LÁMPARA (24 VOLTIOS) (LUCES DE INSTRUMENTOS)	123-9294	2	TABLERO DE INSTRUMENTOS (GR)	503
LÁMPARA (24 VOLTIOS) (LUZ DE TRABAJO)	115-1748	1	TABLERO DE INSTRUMENTOS (GR)	503
		1	TABLERO DE INSTRUMENTOS (GR)	499
LÁMPARA (24 VOLTIOS) (*QUAD GUAGE)	7N-5876	2	TABLERO DE INSTRUMENTOS (GR)	499
LUZ DE TABLERO DE INSTRUMENTOS	159-9257	1	TABLERO DE INSTRUMENTOS (GR)	499
		1	TABLERO DE INSTRUMENTOS (GR)	503
PERILLA (TAPA DEL FILTRO)	3W-6756	2	PRESURIZADOR (GR)	510
RECEPTOR-SECADOR (GR) (REFRIGERANTE)	3E-3535	1	TUBERÍAS DE ACONDICIONADOR DE AIRE (GR)	485
TAPA (TANQUE DE LIMPIPARABRISA)	209-4482	1	TANQUE DEL LAVAPARABRISAS (GR)	543
TAPÓN (CONJ) (ACONDICIONADOR DE AIRE)	3E-4052	1	GRUPO DE INSTALACIÓN, TUBERIAS	479
HERRAMIENTAS				
CONEXIÓN DE ENGRASE (ANGULO, HOJA TOPADORA)	3B-8489	2	HOJA ORIENTABLE (GR)	431
CONEXIÓN DE ENGRASE (ROSCA DE 1/8-27) (DESGARRADOR)	3B-8489	11	DESGARRADOR (GR)	437

* NO HAY TRADUCCION DISPONIBLE EN EL MOMENTO DE LA IMPRESION

PIEZAS DE MANTENIMIENTO

DESCRIPCION	NUMERO DE PIEZA	CANT	SE UTILIZA EN	PAGINA
IMPLEMENTOS				
CONEXIÓN DE ENGRASE (ROSCA DE 1/8-27) (*PITCH LINK)	3B-8489	2	ESLABÓN - PASO (GR)	423
MOTOR BÁSICO				
CORREA (SIN ACONDICIONADOR DE AIRE, MERCADO DE NORTEAMERICA)	191-5215	1	CORREA (GR)	6
CORREA (*WITH A/C EUROPEAN MARKET)	202-3197	1	CORREA (GR)	7
CORREA (*WITH A/C NORTH AMERICAN MARKET)	215-3015	1	CORREA (GR)	8
TAPÓN (DRENAJE MAGNETIZADO DE ACEITE)	118-3619	1	DRENAJE DEL ACEITE DE MOTOR	33
SISTEMA DE ADMISIÓN Y ESCAPE DE AIRE				
ELEMENTO DEL FILTRO DE AIRE (CONJ) (PRIMARIO)	6I-2501	1	FILTRO DE AIRE (GR)	91
ELEMENTO DEL FILTRO DE AIRE (CONJ) (SECUNDARIO)	6I-2502	1	FILTRO DE AIRE (GR)	91
SISTEMA DE COMBUSTIBLE				
COLADOR DE COMBUSTIBLE (LLENADO DEL TANQUE)	9P-7121	1	COMBUSTIBLE - TANQUE DE (GR)	112
ELEMENTO DE FILTRO DE COMBUSTIBLE (PRIMARIO)	146-6695	1	FILTRO DE COMBUSTIBLE Y SEPARADOR DE AGUA (GR)	103
EMPAQUETADURA (BOMBA DE CEBADO DE COMBUSTIBLE)	1P-0436	2	FILTRO DE COMBUSTIBLE Y SEPARADOR DE AGUA (GR)	103
FILTRO DE COMBUSTIBLE (CONJ) (SECUNDARIO(A))	1R-0762	1	TUBERÍAS DEL FILTRO DE COMBUSTIBLE	106
TAPA DEL TANQUE DE COMBUSTIBLE (CONJ) (RESPIRADERO CON TRABA)	7X-7700	1	COMBUSTIBLE - TANQUE DE (GR)	112
VÁLVULA DE DRENAJE (COMBUSTIBLE) (FILTRO)	141-8275	1	TUBERÍAS DEL FILTRO DE COMBUSTIBLE	106
VÁLVULA DE DRENAJE (FILTRO DE COMBUSTIBLE)	179-9348	1	TUBERÍAS DEL FILTRO DE COMBUSTIBLE	106
SISTEMA DE ENFRIAMIENTO				
EMPAQUETADURA, REGULADOR DE AGUA (TEMPERATURA DEL REFRIGERANTE)	136-0812	1	TUBERÍAS DEL AGUA (GR)	82
FILTRO DE AGUA (BOMBA DE AGUA)	119-3025	1	BOMBA DE AGUA (GR)	85
MANGUERA (RADIADOR INFERIOR)	198-1663	1	RADIADOR (GR)	87
MANGUERA (RADIADOR SUPERIOR)	214-6738	1	RADIADOR (GR)	87
REGULADOR DE TEMPERATURA DEL AGUA (94 GRADOS C) (REFRIGERANTE)	126-5869	1	TUBERÍAS DEL AGUA (GR)	82
TAPA CONTRA EL POLVO (VÁVULA DE MUESTREO DE REFRIGERANTE)	157-0670	1	TUBERÍAS DEL AGUA (GR)	82
TAPA DE RADIADOR (CONJ) (ALIVIO DE PRESIÓN)	031-1119	1	RADIADOR (GR)	89

* NO HAY TRADUCCION DISPONIBLE EN EL MOMENTO DE LA IMPRESION

PIEZAS DE MANTENIMIENTO

DESCRIPCION	NUMERO DE PIEZA	CANT	SE UTILIZA EN	PAGINA
SISTEMA DE FRENOS Y DIRECCIÓN				
FILTRO DE ACEITE (CONJ) (HIDRAULICO)	1G-8878	1	FILTRO DE ACEITE (GR)	305
TAPA CONTRA EL POLVO (VÁLVULAS DE SERVODIRECCIÓN)	6V-0852	3	TUBERÍAS DE DIRECCIÓN (GR)	308
SISTEMA DE LUBRICACIÓN				
FILTRO DE ACEITE DEL MOTOR (CONJ)	1R-0739	1	FILTRO DE ACEITE DEL MOTOR (GR)	67
RESPIRADERO (CONJ) (MOTOR)	2W-9162	1	RESPIRADERO (GR)	65
SELLO ANULAR (*ENGINE BREATHER)	4L-9564	1	RESPIRADERO (GR)	65
TAPA CONTRA EL POLVO (*TURBO OIL SAMPLING VALVE)	8C-3445	1	TURBOCOMPRESOR - TUBERÍAS DE ACEITE DEL (GR)	72
TAPA DEL TUBO DE LLENADO (ACEITE DEL MOTOR)	4W-3087	1	TUBO DE LLENADO DE ACEITE (GR)	66
TUBO DE ESCAPE (VAPORES)	4W-2181	1	ESCAPE DE GASES (GR)	68
SISTEMA ELÉCTRICO Y DE ARRANQUE				
BATERÍA (LIBRE DE MANTENIMIENTO)(12 VOLTIOS) (SERVICIO PESADO)	153-5700	2	BATERÍA (GR)	124
BATERÍA (12 VOLTIOS)	9X-3404	2	BATERÍA Y CABLES (GR)	122
CRISTAL (*AMBER WARNING BEACON)	198-0316	1	LÁMPARA DE BALIZA DE ADVERTENCIA (GR)	147
CRISTAL (LUZ DE TECHO)	7T-0020	1	LÁMPARA DEL TECHO (GR)	143
DISYUNTOR (CONJ) (80 AMP) (PRINCIPAL DE MAQUINA)	171-2210	1	PANEL DE DISYUNTORES (GR)	151
ELEMENTO DEL CALENTADOR DEL AGUA DE LAS CAMISAS (120 VOLTIOS/1000 VATIOS)	124-0686	1	AGUA DE LAS CAMISAS - CALENTADOR DEL (GR)	137
ELEMENTO DEL CALENTADOR DEL AGUA DE LAS CAMISAS (240 VOLTIOS/1000 VATIOS)	124-0687	1	AGUA DE LAS CAMISAS - CALENTADOR DEL (GR)	136
ESCOBILLA DE ALTERNADOR (CONJ)	3E-5459	2	CARGA - ALTERNADOR DE (GR)	116
		2	CARGA - ALTERNADOR DE (GR)	118
EXTRACTOR DE FUSIBLES	202-4327	1	BATERÍA Y CABLES (GR)	122
FUSIBLE (10 A)	9W-1442	9	PANEL DE DISYUNTORES (GR)	151
FUSIBLE (15 A)	9W-1441	8	PANEL DE DISYUNTORES (GR)	151
FUSIBLE (20 A)	9W-1446	3	PANEL DE DISYUNTORES (GR)	151
LÁMPARA (CONJ) (12 VOLTIOS) (ROJA/VERDE LAMPARA DE DIODO)	165-5655	1	INSTALACION DE SEGURIDAD (GR)	141
		1	INSTALACION DE SEGURIDAD (GR)	142
LAMPARA DE DIODO (LED) (BALIZA GIRATORIA DE ADVERTENCIA)	165-5674	1	LUZ DE BALIZA (GR)	150
LÁMPARA (24 VOLTIOS) (BALIZA GIRATORIA DE ADVERTENCIA)	3E-8825	1	LUZ DE BALIZA (GR)	150
LÁMPARA (24 VOLTIOS) (CÚPULA)	7N-9943	1	LÁMPARA DEL TECHO (GR)	143
LÁMPARA (24 VOLTIOS) (INTERRUPTOR DE BALANCIN DE ACELERADOR)	3E-8825	2	CABLES DE LA PLATAFORMA (GR)	187
LLAVE (DESCONECTAR BATERIA)	8H-5306	1	DISYUNTOR (GR)	176

* NO HAY TRADUCCION DISPONIBLE EN EL MOMENTO DE LA IMPRESION

PIEZAS DE MANTENIMIENTO

DESCRIPCION	NUMERO DE PIEZA	CANT	SE UTILIZA EN	PAGINA
LUCES DE ALÓGENO (24 VOLTIOS)(65 VATIOS) (REFLECTOR)	9X-3463	1	REFLECTOR (GR)	144
		1	REFLECTOR (GR)	145
		1	REFLECTOR (GR)	146
PORTAESCOBILLAS (CONJ) (ALTERNADOR)	3E-5460	1	CARGA - ALTERNADOR DE (GR)	116
		1	CARGA - ALTERNADOR DE (GR)	118
TAPA CONTRA EL POLVO (CONJ) (CALENTADOR DE AGUA DE LAS CAMISAS)	133-6517	1	AGUA DE LAS CAMISAS - CALENTADOR DEL (GR)	136
		1	AGUA DE LAS CAMISAS - CALENTADOR DEL (GR)	137
TUBO DESTELLADOR (*3 PRONG CONNECTION) (BALIZA GIRATORIA DE ADVERTENCIA)	127-8158	1	LÁMPARA DE BALIZA DE ADVERTENCIA (GR)	147
TUBO DESTELLADOR (*8 PRONG CONNECTION) (BALIZA GIRATORIA DE ADVERTENCIA)	198-0315	1	LÁMPARA DE BALIZA DE ADVERTENCIA (GR)	147
VIDRIO (CONJ) (FARO)	202-6611	1	REFLECTOR (GR)	146
VIDRIO (CONJ) (FARO) (ROPS)	202-6611	1	REFLECTOR (GR)	145
	202-6614	1	REFLECTOR (GR)	144

* NO HAY TRADUCCION DISPONIBLE EN EL MOMENTO DE LA IMPRESION

PIEZAS DE MANTENIMIENTO

DESCRIPCION	NUMERO DE PIEZA	CANT	SE UTILIZA EN	PAGINA
SISTEMA HIDRÁULICO				
COLADOR (TANQUE HIDRÁULICO)	9J-3047	1	TANQUE Y FILTRO HIDRÁULICOS (GR)	396
CONEXIÓN DE ENGRASE (ROSCA DE 1/8-27) (CILINDROS, ÁNGULO E INCLINACIÓN)	3B-8489	8	TUBERIAS DE INCLINACIÓN Y ORIENTACIÓN (GR)	361
CONEXIÓN DE ENGRASE (ROSCA DE 1/8-27) (HOJA TOPADORA, CILINDRO DE LEVANTAMIENTO)	3B-8489	1	CILINDRO DE LEVANTAMIENTO (GR)	350
ELEMENTO DE FILTRO DE ACEITE (CONJ) (FLUJO INVERSO) (FLUIDO HIDRÁULICO RESISTENTE AL FUEGO)	104-6931	1	TANQUE Y FILTRO HIDRÁULICOS (GR)	396
ELEMENTO DE FILTRO DE ACEITE (CONJ) (HIDRAULICO) (LIMPIAR/ALTA EFICIENCIA)	139-1537	1	TANQUE Y FILTRO HIDRÁULICOS (GR)	396
ELEMENTO DE FILTRO DE ACEITE (CONJ) (HIDRAULICO/FLUJO INVERSO) (DESECHABLE)	1R-0735	1	TANQUE Y FILTRO HIDRÁULICOS (GR)	396
FILTRO DE ACEITE (CONJ) (*HYDRAULIC)(HIGH EFFICIENCY)	144-0832	1	FILTRO DE ACEITE (GR)	358
FILTRO ENROSCABLE (HIDRÁULICO)	9T-8578	1	FILTRO DE ACEITE (GR)	358
FILTRO (VÁLVULA DE CONTROL)	4T-4520	1	VÁLVULA DE CONTROL (GR)	403
		1	VÁLVULA DE CONTROL (GR)	405
		1	VÁLVULA DE CONTROL (GR)	407
		1	VÁLVULA DE CONTROL (GR)	409
		1	VÁLVULA DE CONTROL (GR)	411
		1	VÁLVULA DE CONTROL (GR)	413
PANTALLA (CONJ) (TANQUE HIDRÁULICO)	3G-3267	1	TANQUE Y FILTRO HIDRÁULICOS (GR)	396
TAPA CONTRA EL POLVO (BOMBA HIDRÁUILICA)	6V-0852	2	BOMBA - TUBERÍAS DE (GR)	378
TAPA CONTRA EL POLVO (TABLERO DE DIAGNOSTICO)	6V-0852	9	TUBERÍAS HIDRÁULICAS (GR)	365
	187-9008	2	TUBERÍAS HIDRÁULICAS (GR)	365
TAPA CONTRA EL POLVO (VÁLVULA DE CONTROL DE MUESTREO DE FLUIDO)	8C-3451	1	VÁLVULA - MONTAJE DE LA (GR)	392
TAPA DEL TUBO DE LLENADO (TANQUE HIDRÁULICO)	7H-1447	1	TANQUE Y FILTRO HIDRÁULICOS (GR)	396
TAPÓN DE DRENAJE (TANQUE HIDRÁULICO)	9J-7031	1	TANQUE Y FILTRO HIDRÁULICOS (GR)	396

* NO HAY TRADUCCION DISPONIBLE EN EL MOMENTO DE LA IMPRESION

PIEZAS DE MANTENIMIENTO

DESCRIPCION	NUMERO DE PIEZA	CANT	SE UTILIZA EN	PAGINA
TREN DE FUERZA				
ELEMENTO DE FILTRO DE ACEITE (CONJ) (*POWER TRAIN - HIGH EFFICIENCY)	132-8876	1	TUBERÍAS DE ACEITE DEL TREN DE FUERZA (GR)	201
ELEMENTO DE FILTRO DE ACEITE (CONJ) (TREN DE FUERZA)	132-8876	1	FILTRO DE ACEITE (GR)	197
FILTRO MAGNÉTICO (ACEITE DEL TREN DE FUERZA)	8S-9129	1	TUBERÍAS DE ACEITE DEL TREN DE FUERZA (GR)	200
PANTALLA (CONJ) (BARRIDO DE CONVERTIDOR DE PAR)	3T-6471	1	CONVERTIDOR DE PAR (GR)	220
REJILLA DE SUCCIÓN (TUBERIAS DE ACEITE DEL TREN DE FUERZA)	8S-9130	1	TUBERÍAS DE ACEITE DEL TREN DE FUERZA (GR)	200
RESPIRADERO (CONJ) (TUBERIAS DE ACEITE DEL TREN DE FUERZA)	185-6684	1	TUBERÍAS DE ACEITE DEL TREN DE FUERZA (GR)	200
SELLO ANULAR (FILTRO DEL TREN DE FUERZA)	5P-3620	1	FILTRO DE ACEITE (GR)	197
SELLO ANULAR (TAPÓN DE DRENAJE DE MANDO FINAL)	3K-0360	1	MANDO FINAL (GR)	198
SELLO ANULAR (TAPÓN DE DRENAJE DEL CONVERTIDOR DE PAR)	3K-0360	2	CONVERTIDOR DE PAR (GR)	220
	4K-1388	1	CONVERTIDOR DE PAR (GR)	220
SELLO ANULAR (TAPÓN DE DRENAJE, TRANSMISIÓN)	2M-9780	2	TRANSMISIÓN PLANETARIA (GR)	206
	4K-1388	1	TRANSMISIÓN PLANETARIA (GR)	206
SELLO ANULAR (TAPÓN MAGNÉTICO DEL MANDO FINAL)	2S-4078	1	MANDO FINAL (GR)	198
TAPA CONTRA EL POLVO (CONEXION DE TRANSMISION)	6V-0852	6	TRANSMISIÓN PLANETARIA (GR)	207
TAPA CONTRA EL POLVO (VÁLVULA DE MUESTREO DE ACEITE DEL TREN DE FUERZA)	8C-3447	1	TUBERÍAS DE ACEITE DEL TREN DE FUERZA (GR)	200
TAPA DEL TUBO DE LLENADO DE ACEITE (CONJ) (TREN DE FUERZA)	2W-6225	1	TUBERÍAS DE ACEITE DEL TREN DE FUERZA (GR)	200
TAPÓN DE DRENAJE (CONVERTIDOR DE PAR)	4B-7739	1	MONTAJE DEL CONVERTIDOR DE PAR (GR)	203
TAPÓN (DRENAJE DE LA TRANSMISION)	9S-4188	1	TRANSMISIÓN PLANETARIA (GR)	206
	9S-4190	2	TRANSMISIÓN PLANETARIA (GR)	206
TAPÓN (DRENAJE DE MANDO FINAL)	9S-4185	1	MANDO FINAL (GR)	198
TAPÓN (DRENAJE DEL CONVERTIDOR DE PAR)	9S-4185	2	CONVERTIDOR DE PAR (GR)	220
	9S-4188	1	CONVERTIDOR DE PAR (GR)	220
TAPÓN MAGNÉTICO (MANDO FINAL)	6V-0439	1	MANDO FINAL (GR)	198
TREN DE RODAJE				
CONEXIÓN DE ENGRASE (BARRA COMPENSADORA)	3B-8489	2	BARRA COMPENSADORA (GR)	266

* NO HAY TRADUCCION DISPONIBLE EN EL MOMENTO DE LA IMPRESION

PEÇAS DE MANUTENÇÃO

DESCRIÇÃO	NÚMERO DE PEÇA	QUANT	UTILIZADA EM	PÁGINA
ACESSÓRIOS				
GRAXEIRA (ROSCA 1/8-27 POL) (ELO DO PASSO)	3B-8489	2	ELO DO PASSO	423
CHASSI E CARROCERIA				
GRAXEIRA (ROSCA 1/8-27 POL) (CAIXA E CHASSI)	3B-8489	2	CAIXA E CHASSI	234
RETENTOR DE ANEL-O (BUJÃO DE DRENAGEM DA CAIXA)	6F-0711	1	CAIXA E CHASSI	234
TAMPA (POEIRA) (PORTA DO BOCAL DE ENCHIMENTO DO RADIADOR)	155-9321	1	PROTETOR - RADIADOR	247
TAMPÃO (CAIXA DE DRENAGEM)	106-8187	1	CAIXA E CHASSI	234
FERRAMENTAS DE TRABALHO				
GRAXEIRA (LÂMINA INCLINÃVEL)	3B-8489	2	LÂMINA ANGULÁVEL	431
GRAXEIRA (ROSCA 1/8-27 POL) (RIPER)	3B-8489	11	RIPER	437
MATERIAL RODANTE				
GRAXEIRA (BARRA EQUALIZADORA)	3B-8489	2	BARRA DE SUSPENSÃO	266
MOTOR BÁSICO				
CORREIA (COM A/C MERCADO EUROPEU)	202-3197	1	CORREIA	7
CORREIA (COM A/C MERCADO NORTE-AMERICANO)	215-3015	1	CORREIA	8
CORREIA (SEM A/C MERCADO NORTE-AMERICANO)	191-5215	1	CORREIA	6
TAMPÃO (MAGNÉTICO-DRENO DO ÓLEO)	118-3619	1	DRENO - ÓLEO DO MOTOR	33

* TRADUÇÃO NÃO DISPONÍVEL NO MOMENTO DA IMPRESSÃO

PEÇAS DE MANUTENÇÃO

DESCRIÇÃO	NÚMERO DE PEÇA	QUANT	UTILIZADA EM	PÁGINA
POSTO DO OPERADOR				
CINTO DE SEGURANÇA	222-0345	1	ASSENTO	527
CINTO DE SEGURANÇA (ASSENTO COM SUSPENSÃO PARTE INFERIOR DAS COSTAS)	8Y-4030	1	ASSENTO COM SUSPENSÃO	534
CINTO DE SEGURANÇA (ASSENTO DA SUSPENSÃO)	183-3648	1	ASSENTO	524
FILTRO - CARVÃO (PRESSURIZADOR DA CABINE)	141-7903	1	PRESSURIZADOR	510
FILTRO (AR DA CABINE)	3E-7904	2	PRESSURIZADOR	510
FILTRO (PRESSURIZADOR DA CABINE)	7G-8116	2	PRESSURIZADOR	510
GRAXEIRA (PRESSURIZADOR DA CABINE)	3B-8489	1	PRESSURIZADOR	510
GRAXEIRA (ROSCA 1/8-27 POL) (PLATAFORMA DO OPERADOR)	3B-8489	1	PLATAFORMA DO OPERADOR	507
LÂMINA DO LIMPADOR DE PÁRA-BRISA (PÁRA-BRISA)	125-8175	1	LIMPADOR DO VIDRO	547
LÂMINA DO LIMPADOR DE PÁRA-BRISA (PARTE TRASEIRA) (JANELA)	5C-8811	1	LIMPADOR DO VIDRO	547
LÂMINA DO LIMPADOR DE PÁRA-BRISA (PORTA DIREITA DA CABINE)	125-8175	1	PORTA DA CABINE	466
LÂMINA DO LIMPADOR DE PÁRA-BRISA (PORTA ESQUERDA DA CABINE)	125-8175	1	PORTA DA CABINE	468
LÂMPADA (24 V) (GRUPO DE QUATRO MEDIDORES)	7N-5876	2	PAINEL DE INSTRUMENTOS	503
LÂMPADA (24 V) (INSTRUMENTO)	123-9294	2	PAINEL DE INSTRUMENTOS	499
LÂMPADA (24 V) (LÂMPADA DE AÇÃO)	115-1748	1	PAINEL DE INSTRUMENTOS	499
		1	PAINEL DE INSTRUMENTOS	503
LÂMPADA (24 V) (LUZES DOS INSTRUMENTOS)	123-9294	2	PAINEL DE INSTRUMENTOS	503
LÂMPADA (24 V) (QUATRO MEDIDORES)	7N-5876	2	PAINEL DE INSTRUMENTOS	499
LUZ DO PAINEL DE INSTRUMENTOS	159-9257	1	PAINEL DE INSTRUMENTOS	499
		1	PAINEL DE INSTRUMENTOS	503
MAÇANETA (TAMPA DO FILTRO)	3W-6756	2	PRESSURIZADOR	510
RECEPTOR - SECADOR (REFRIGERANTE)	3E-3535	1	TUBOS - AR CONDICIONADO	485
TAMPA (CONDICIONADOR DE AR)	3E-4052	1	INSTALAÇÃO - TUBULAÇÕES	479
TAMPA (TANQUE DO LAVADOR DE VIDROS)	209-4482	1	TANQUE - LAVADOR DE JANELA	543
SISTEMA DA ADMISSÃO DE AR E DE ESCAPE				
ELEMENTO DO FILTRO DE AR (PRIMÁRIO)	6I-2501	1	PURIFICADOR DE AR	91
ELEMENTO DO FILTRO DE AR (SECUNDÁRIO)	6I-2502	1	PURIFICADOR DE AR	91

* TRADUÇÃO NÃO DISPONÍVEL NO MOMENTO DA IMPRESSÃO

PEÇAS DE MANUTENÇÃO

DESCRIÇÃO	NÚMERO DE PEÇA	QUANT	UTILIZADA EM	PÁGINA
SISTEMA DE ARREFECIMENTO				
FILTRO - ÁGUA (BOMBA D'ÁGUA)	119-3025	1	BOMBA DE ÁGUA	85
JUNTA - REGULADOR DA ÁGUA (TEMPERATURA DO LÍQUIDO ARREFECEDOR)	136-0812	1	TUBOS - ÁGUA	82
MANGUEIRA (RADIADOR INFERIOR)	198-1663	1	RADIADOR	87
MANGUEIRA (RADIADOR SUPERIOR)	214-6738	1	RADIADOR	87
REGULADOR DE TEMPERATURA DA ÁGUA (94 GRAUS C) (LÍQUIDO ARREFECEDOR)	126-5869	1	TUBOS - ÁGUA	82
TAMPA - RADIADOR (ALÍVIO DE PRESSÃO)	031-1119	1	RADIADOR	89
TAMPA CONTRA POEIRA (VÁLVULA DE COLETA DE AMOSTRAS DO LÍQUIDO ARREFECEDOR)	157-0670	1	TUBOS - ÁGUA	82
SISTEMA DE COMBUSTÍVEL				
ELEMENTO DO FILTRO DE COMBUSTÍVEL (PRIMÁRIO)	146-6695	1	FILTRO DE COMBUSTÍVEL E SEPARADOR DE ÁGUA	103
FILTRO - COMBUSTÍVEL (BOCAL DE ENCHIMENTO DO TANQUE)	9P-7121	1	TANQUE DE COMBUSTÍVEL	112
FILTRO - COMBUSTÍVEL (SECUNDÁRIO)	1R-0762	1	TUBOS - FILTRO DO COMBUSTÍVEL	106
JUNTA (BOMBA DE ESCORVA DE COMBUSTÍVEL)	1P-0436	2	FILTRO DE COMBUSTÍVEL E SEPARADOR DE ÁGUA	103
TAMPA DO TANQUE DE COMBUSTÍVEL (TRAVA COM RESPIRO)	7X-7700	1	TANQUE DE COMBUSTÍVEL	112
VÁLVULA DE DRENAGEM (COMBUSTÍVEL) (FILTRO)	141-8275	1	TUBOS - FILTRO DO COMBUSTÍVEL	106
VÁLVULA DE DRENAGEM (FILTRO DE COMBUSTÍVEL)	179-9348	1	TUBOS - FILTRO DO COMBUSTÍVEL	106
SISTEMA DE DIREÇÃO E DE FREIO				
FILTRO - ÓLEO (HIDRÁULICO)	1G-8878	1	FILTRO - ÓLEO	305
TAMPA CONTRA POEIRA (VÁLVULAS DE DIREÇÃO)	6V-0852	3	TUBOS - DIREÇÃO	308
SISTEMA DE LUBRIFICAÇÃO				
FILTRO - ÓLEO DO MOTOR	1R-0739	1	FILTRO - ÓLEO DO MOTOR	67
MANGUEIRA - DESCARTE (VAPORES)	4W-2181	1	ELIMINAÇÃO DE VAPORES DO CÁRTER	68
RESPIRO (MOTOR)	2W-9162	1	RESPIRO	65
RETENTOR DE ANEL-O (RESPIRO DO MOTOR)	4L-9564	1	RESPIRO	65
TAMPA - BOCAL DE ENCHIMENTO (ÓLEO DO MOTOR)	4W-3087	1	BOCAL DE ENCHIMENTO DE ÓLEO DO MOTOR	66
TAMPA CONTRA POEIRA (VÁLVULA DE AMOSTRAGEM DE ÓLEO DO TURBO)	8C-3445	1	TUBOS - ÓLEO DO TURBOALIMENTADOR	72
SISTEMA ELÉTRICO E DE PARTIDA				

* TRADUÇÃO NÃO DISPONÍVEL NO MOMENTO DA IMPRESSÃO

PEÇAS DE MANUTENÇÃO

DESCRIÇÃO	NÚMERO DE PEÇA	QUANT	UTILIZADA EM	PÁGINA
BATERIA (LIVRE DE MANUTENÇÃO)(12 VOLT) (REFORÇADO)	153-5700	2	BATERIA	124
BATERIA (12 V)	9X-3404	2	BATERIA E CABOS / FIOS ELÉTRICOS	122
CHAVE (DESCONECTAR A BATERIA)	8H-5306	1	CHAVE GERAL	176
DISJUNTOR AUTOMÁTICO DE CIRCUITO (80 A) (PRINCIPAL DA MÁQUINA)	171-2210	1	PAINEL - DISJUNTOR ELÉTRICO AUTOMÁTICO	151
ELEMENTO - AQUECEDOR DE ÁGUA DA CAMISA (120 VOLTS / 1.000 WATTS)	124-0686	1	AQUECEDOR DA ÁGUA DO MOTOR	137
ELEMENTO - AQUECEDOR DE ÁGUA DA CAMISA (240 VOLTS - 1.000 WATTS)	124-0687	1	AQUECEDOR DA ÁGUA DO MOTOR	136
ESCOVA DO ALTERNADOR	3E-5459	2	ALTERNADOR DE CORRENTE	116
		2	ALTERNADOR DE CORRENTE	118
FUSÍVEL (10 A)	9W-1442	9	PAINEL - DISJUNTOR ELÉTRICO AUTOMÁTICO	151
FUSÍVEL (15 A)	9W-1441	8	PAINEL - DISJUNTOR ELÉTRICO AUTOMÁTICO	151
FUSÍVEL (20 A)	9W-1446	3	PAINEL - DISJUNTOR ELÉTRICO AUTOMÁTICO	151
LÂMPADA - DIODO (VISOR LED) (PISCA-PISCA DE ADVERTÊNCIA)	165-5674	1	SIST. DE ILUMINAÇÃO - PISCA-PISCA GIRATÓRIO DE ADVERTÊNCIA	150
LÂMPADA - HALOGÊNEO (24 VOLTS)(65 WATTS) (FAROL)	9X-3463	1	LÂMPADA - FAROL	144
		1	LÂMPADA - FAROL	145
		1	LÂMPADA - FAROL	146
LÂMPADA (12 V) (LUZ DE AÇÃO LED VERMELHA/VERDE)	165-5655	1	INSTALAÇÃO-SEGURANÇA	141
		1	INSTALAÇÃO-SEGURANÇA	142
LÂMPADA (24 V) (INTERRUPTOR DE BALANCIM DO ACELERADOR)	3E-8825	2	CABOS/FIOS ELÉTRICOS - PLATAFORMA	187
LÂMPADA (24 V) (PISCA-PISCA DE ADVERTÊNCIA)	3E-8825	1	SIST. DE ILUMINAÇÃO - PISCA-PISCA GIRATÓRIO DE ADVERTÊNCIA	150
LÂMPADA (24 V) (TETO)	7N-9943	1	LÂMPADA - TETO	143
LENTE (FAROL DIANTEIRO)	202-6611	1	LÂMPADA - FAROL	146
LENTE (FAROL DIANTEIRO) (ROPS)	202-6611	1	LÂMPADA - FAROL	145
	202-6614	1	LÂMPADA - FAROL	144
LENTE (LÂMPADA DO TETO)	7T-0020	1	LÂMPADA - TETO	143
LENTE (PISCA-ALERTA ÂMBAR)	198-0316	1	LUZ GIRATÓRIA DE ALARME	147
SACADOR - FUSÍVEL	202-4327	1	BATERIA E CABOS / FIOS ELÉTRICOS	122
SUPORTE - ESCOVA (ALTERNADOR)	3E-5460	1	ALTERNADOR DE CORRENTE	116
		1	ALTERNADOR DE CORRENTE	118
TAMPA CONTRA POEIRA (AQUECEDOR DE ÁGUA DA CAMISA)	133-6517	1	AQUECEDOR DA ÁGUA DO MOTOR	136
		1	AQUECEDOR DA ÁGUA DO MOTOR	137
TUBO DE FAÍSCA (CONEXÃO DE 3 PINOS) (PISCA-PISCA DE ADVERTÊNCIA)	127-8158	1	LUZ GIRATÓRIA DE ALARME	147
TUBO DE FAÍSCA (CONEXÃO DE 8 PINOS) (PISCA-PISCA DE ADVERTÊNCIA)	198-0315	1	LUZ GIRATÓRIA DE ALARME	147

* TRADUÇÃO NÃO DISPONÍVEL NO MOMENTO DA IMPRESSÃO

PEÇAS DE MANUTENÇÃO

DESCRIÇÃO	NÚMERO DE PEÇA	QUANT	UTILIZADA EM	PÁGINA
SISTEMA HIDRÁULICO				
BUJÃO DO DRENO (TANQUE HIDRÁULICO)	9J-7031	1	TANQUE HIDRÁULICO E FILTRO	396
ELEMENTO FILTRANTE - ÓLEO (FLUXO HIDRÁULICO/REVERSO) (DESCARTÁVEL)	1R-0735	1	TANQUE HIDRÁULICO E FILTRO	396
ELEMENTO FILTRANTE - ÓLEO (FLUXO INVERSO) (FLUIDO HIDRÁULICO RESISTENTE A INCÊNDIO)	104-6931	1	TANQUE HIDRÁULICO E FILTRO	396
ELEMENTO FILTRANTE - ÓLEO (HIDRÁULICO) (LIMPAR/ALTA EFICIÊNCIA)	139-1537	1	TANQUE HIDRÁULICO E FILTRO	396
FILTRO - ÓLEO (*HYDRAULIC)(HIGH EFFICIENCY)	144-0832	1	FILTRO - ÓLEO	358
FILTRO COM ROSCAS (HIDRÁULICO)	9T-8578	1	FILTRO - ÓLEO	358
FILTRO (VÁLVULA DE CONTROLE)	4T-4520	1	VÁLVULA DE CONTROLE	403
		1	VÁLVULA DE CONTROLE	405
		1	VÁLVULA DE CONTROLE	407
		1	VÁLVULA DE CONTROLE	409
		1	VÁLVULA DE CONTROLE	411
		1	VÁLVULA DE CONTROLE	413
GRAXEIRA (ROSCA 1/8-27 POL) (CILINDRO DE LEVANTAMENTO DA LÂMINA)	3B-8489	1	CILINDRO DE LEVANTAMENTO	350
GRAXEIRA (ROSCA 1/8-27 POL) (CILINDROS DE ANGULAGEM E INCLINAÇÂO)	3B-8489	8	TUBOS - ANGULAGEM E INCLINAÇÃO	361
TAMPA - BOCAL DE ENCHIMENTO (TANQUE HIDRÁULICO)	7H-1447	1	TANQUE HIDRÁULICO E FILTRO	396
TAMPA CONTRA POEIRA (AMOSTRA DE FLUIDO DA VÁLVULA DE CONTROLE)	8C-3451	1	MONTAGEM - VÁLVULA	392
TAMPA CONTRA POEIRA (BOMBA HIDRÁULICA)	6V-0852	2	TUBOS - BOMBA	378
TAMPA CONTRA POEIRA (PAINEL DE DIAGNÕSTICOS)	6V-0852	9	TUBOS - ÓLEO HIDRÁULICO	365
	187-9008	2	TUBOS - ÓLEO HIDRÁULICO	365
TELA FILTRANTE (TANQUE HIDRÁULICO)	3G-3267	1	TANQUE HIDRÁULICO E FILTRO	396
	9J-3047	1	TANQUE HIDRÁULICO E FILTRO	396

* TRADUÇÃO NÃO DISPONÍVEL NO MOMENTO DA IMPRESSÃO

PEÇAS DE MANUTENÇÃO

DESCRIÇÃO	NÚMERO DE PEÇA	QUANT	UTILIZADA EM	PÁGINA
TREM DE FORÇA				
BUJÃO DO DRENO (CONVERSOR DE TORQUE)	4B-7739	1	MONTAGEM - CONVERSOR DE TORQUE	203
BUJÃO MAGNÉTICO (COMANDO FINAL)	6V-0439	1	COMANDO FINAL	198
ELEMENTO FILTRANTE - ÓLEO (*POWER TRAIN - HIGH EFFICIENCY)	132-8876	1	TUBOS - ÓLEO DA TRANSMISSÃO	201
ELEMENTO FILTRANTE - ÓLEO (TREM DE FORÇA)	132-8876	1	FILTRO - ÓLEO	197
FILTRO - MAGNÉTICO (ÓLEO DO TREM DE FORÇA)	8S-9129	1	TUBOS - ÓLEO DA TRANSMISSÃO	200
RESPIRO (TUBOS DE ÓLEO DO TREM DE FORÇA)	185-6684	1	TUBOS - ÓLEO DA TRANSMISSÃO	200
RETENTOR DE ANEL-O (BUJAÃO DE DRENAGEM DA TRANSMISSÃO)	2M-9780	2	ENGRENAGENS PLANETÁRIAS - TRANSMISSÃO	206
	4K-1388	1	ENGRENAGENS PLANETÁRIAS - TRANSMISSÃO	206
RETENTOR DE ANEL-O (BUJÃO DE DRENAGEM DO CONVERSOR DE TORQUE)	3K-0360	2	CONVERSOR DE TORQUE	220
	4K-1388	1	CONVERSOR DE TORQUE	220
RETENTOR DE ANEL-O (BUJÃO DE DRENAGME DO COMANDO FINAL)	3K-0360	1	COMANDO FINAL	198
RETENTOR DE ANEL-O (BUJÃO MAGNÉTICO DO COMANDO FINAL)	2S-4078	1	COMANDO FINAL	198
RETENTOR DE ANEL-O (FILTRO DO TREM DE FORÇA)	5P-3620	1	FILTRO - ÓLEO	197
TAMPA - BOCAL DE ENCHIMENTO DE ÓLEO (TREM DE FORÇA)	2W-6225	1	TUBOS - ÓLEO DA TRANSMISSÃO	200
TAMPA CONTRA POEIRA (CONEXÕES DA TRANSMISSÃO)	6V-0852	6	ENGRENAGENS PLANETÁRIAS - TRANSMISSÃO	207
TAMPA CONTRA POEIRA (VÁLVULA DE AMOSTRAGEM DO ÓLEO DO TREM DE FORÇA)	8C-3447	1	TUBOS - ÓLEO DA TRANSMISSÃO	200
TAMPÃO (DRENO DA TRANSMISSÃO)	9S-4188	1	ENGRENAGENS PLANETÁRIAS - TRANSMISSÃO	206
	9S-4190	2	ENGRENAGENS PLANETÁRIAS - TRANSMISSÃO	206
TAMPÃO (DRENO DO COMANDO FINAL)	9S-4185	1	COMANDO FINAL	198
TAMPÃO (DRENO DO CONVERSOR DE TORQUE)	9S-4185	2	CONVERSOR DE TORQUE	220
	9S-4188	1	CONVERSOR DE TORQUE	220
TELA DE SUCÇÃO (TUBOS DE ÓLEO DO TREM DE FORÇA)	8S-9130	1	TUBOS - ÓLEO DA TRANSMISSÃO	200
TELA FILTRANTE (RETORNO DO CONVERSOR DE TORQUE)	3T-6471	1	CONVERSOR DE TORQUE	220

* TRADUÇÃO NÃO DISPONÍVEL NO MOMENTO DA IMPRESSÃO

WARTUNGSTEILE

BESCHREIBUNG	ERSATZTEIL-NUMMER	MENGE	VERWENDET IN	SEITE
ARBEITSGERÄTE				
SCHMIERNIPPEL (SCHWENKSCHILD)	3B-8489	2	SCHWENKSCHILD	431
SCHMIERNIPPEL (1/8-27-GEWINDE) (AUFREISSER)	3B-8489	11	AUFREISSER	437
SCHMIERNIPPEL (1/8-27-GEWINDE) (KIPPGESTÄNGE)	3B-8489	2	NEIGUNGSSTELLGLIED	423
ELEKTRISCHE ANLAGE UND STARTSYSTEM				
ABDECKGLAS (ARBEITSSCHEIN-WERFER)	202-6611	1	ARBEITSLEUCHTEN	146
ABDECKGLAS (ARBEITSSCHEINWER-FER) (ÜBERROLLSCHUTZ)	202-6611	1	ARBEITSLEUCHTEN	145
	202-6614	1	ARBEITSLEUCHTEN	144
ABDECKGLAS (FAHRERHAUS-IN-NENLEUCHTE)	7T-0020	1	FAHRERHAUSBELEUCHTUNG	143
ABDECKGLAS (GELBE WARNLEUCHTE)	198-0316	1	RUNDUM-KENNLEUCHTE	147
BATTERIE (WARTUNGSFREI)(12 V) (SCHWEREINSATZ)	153-5700	2	BATTERIE	124
BATTERIE (12 V)	9X-3404	2	BATTERIE UND VERDRAHTUNG	122
BELEUCHTUNGSANLAGE (12 V) (KONTROLLLEUCHTE ROT/GRÜN)	165-5655	1	SICHERHEITSEINBAUSATZ	141
		1	SICHERHEITSEINBAUSATZ	142
BLITZRÖHRE (*3 PRONG CONNECTION) (RUNDUM-KENNLEUCHTE)	127-8158	1	RUNDUM-KENNLEUCHTE	147
BLITZRÖHRE (8 ZACKEN VERBIN-DUNG) (RUNDUM-KENNLEUCHTE)	198-0315	1	RUNDUM-KENNLEUCHTE	147
BÜRSTENHALTER (DREHSTROMGENERATOR)	3E-5460	1	DREHSTROMGENERATOR	116
		1	DREHSTROMGENERATOR	118
DIODENLEUCHTE (LED) (RUNDUM-KENNLEUCHTE)	165-5674	1	RUNDUM-KENNLEUCHTE	150
DREHSTROMGENERATOR-BÜRSTE	3E-5459	2	DREHSTROMGENERATOR	116
		2	DREHSTROMGENERATOR	118
HALOGENSCHINWERFER (24 V)(65 W) (ARBEITSSCHEINWERFER)	9X-3463	1	ARBEITSLEUCHTEN	144
		1	ARBEITSLEUCHTEN	145
		1	ARBEITSLEUCHTEN	146
LEUCHTE (24 V) (FAHRERHAUSDACH)	7N-9943	1	FAHRERHAUSBELEUCHTUNG	143
LEUCHTE (24 V) (GASREGELKIPPSCHALTER)	3E-8825	2	FAHRERPLATTFORMVERDRAHTUNG	187
LEUCHTE (24 V) (RUNDUM-KENNLEUCHTE)	3E-8825	1	RUNDUM-KENNLEUCHTE	150
SCHLÜSSEL (HAUPTSCHALTER)	8H-5306	1	TRENNSCHALTER	176
SICHERUNG (10 A)	9W-1442	9	UNTERBRECHER - INSTRUMENTENTAFEL	151
SICHERUNG (15 A)	9W-1441	8	UNTERBRECHER - INSTRUMENTENTAFEL	151
SICHERUNG (20 A)	9W-1446	3	UNTERBRECHER - INSTRUMENTENTAFEL	151
SICHERUNGSZIEHER	202-4327	1	BATTERIE UND VERDRAHTUNG	122

* ÜBERSETZUNG ZUM ZEITPUNKT DER DRUCKLEGUNG NICHT VORHANDEN

WARTUNGSTEILE

BESCHREIBUNG	ERSATZTEIL-NUMMER	MENGE	VERWENDET IN	SEITE
STAUBKAPPE (UMLAUFKÜHLWASSERHEIZUNG)	133-6517	1	UMLAUFKÜHLWASSERHEIZUNG	136
		1	UMLAUFKÜHLWASSERHEIZUNG	137
UMLAUFKÜHLWASSERHEIZUNGS-ELEMENT (*120 VOLT/1000 WATT)	124-0686	1	UMLAUFKÜHLWASSERHEIZUNG	137
UMLAUFKÜHLWASSERHEIZUNGS-ELEMENT (240 V/1000 W)	124-0687	1	UMLAUFKÜHLWASSERHEIZUNG	136
UNTERBRECHER (80 A) (HAUPTMASCHINE)	171-2210	1	UNTERBRECHER - INSTRUMENTENTAFEL	151
FAHRERHAUS				
FILTERSATZ (FAHRERHAUS - DRUCKBEAUFSCHLAGUNG)	7G-8116	2	FAHRERHAUSBELÜFTUNG	510
FILTERSATZ (FAHRERHAUSLUFT)	3E-7904	2	FAHRERHAUSBELÜFTUNG	510
INSTRUMENTENTAFELBELEUCHTUNG	159-9257	1	INSTRUMENTENTAFEL	499
		1	INSTRUMENTENTAFEL	503
KÄLTEMITTELTROCKNER (KÜHLMITTEL)	3E-3535	1	KLIMAANLAGENLEITUNGEN	485
KAPPE (KLIMAANLAGE)	3E-4052	1	LEITUNGSINSTALLATIONSSATZ	479
KAPPE (SCHEIBENWASCHMITTELBEHÄLTER)	209-4482	1	SCHEIBENWASCHMITTELBEHÄLTER	543
KNOPF (FILTERDECKEL)	3W-6756	2	FAHRERHAUSBELÜFTUNG	510
KOHLEFILTER (FAHRERHAUS - DRUCKBEAUFSCHLAGUNG)	141-7903	1	FAHRERHAUSBELÜFTUNG	510
LEUCHTE (24 V) (ANZEIGE)	123-9294	2	INSTRUMENTENTAFEL	499
LEUCHTE (24 V) (INSTRUMENTENBELEUCHTUNG)	123-9294	2	INSTRUMENTENTAFEL	503
LEUCHTE (24 V) (INSTRUMENTENGRUPPE)	7N-5876	2	INSTRUMENTENTAFEL	499
LEUCHTE (24 V) (VIERFACHANZEIGE)	7N-5876	2	INSTRUMENTENTAFEL	503
LEUCHTE (24 V) (WARNLEUCHTE)	115-1748	1	INSTRUMENTENTAFEL	499
		1	INSTRUMENTENTAFEL	503
SCHEIBENWISCHERBLATT (FRONTSCHEIBE)	125-8175	1	SCHEIBENWISCHER	547
SCHEIBENWISCHERBLATT (HINTEN) (FENSTER)	5C-8811	1	SCHEIBENWISCHER	547
SCHEIBENWISCHERBLATT (LINKE FAHRERHAUSTÜR)	125-8175	1	FAHRERHAUSTÜR	468
SCHEIBENWISCHERBLATT (RECHTE FAHRERHAUSTÜR)	125-8175	1	FAHRERHAUSTÜR	466
SCHMIERNIPPEL (FAHRERHAUS - DRUCKBEAUFSCHLAGUNG)	3B-8489	1	FAHRERHAUSBELÜFTUNG	510
SCHMIERNIPPEL (1/8-27-GEWINDE) (FAHRERPLATTFORM)	3B-8489	1	FAHRERPLATTFORM	507
SICHERHEITSGURT	222-0345	1	FAHRERSITZ	527
SICHERHEITSGURT (SCHWINGSITZ)	183-3648	1	FAHRERSITZ	524
SICHERHEITSGURT (SCHWINGSITZ, UNTERE RÜCKENLEHNE)	8Y-4030	1	SCHWINGSITZ	534

* ÜBERSETZUNG ZUM ZEITPUNKT DER DRUCKLEGUNG NICHT VORHANDEN

WARTUNGSTEILE

BESCHREIBUNG	ERSATZTEIL-NUMMER	MENGE	VERWENDET IN	SEITE
HYDRAULIKSYSTEM				
ABLASSSTOPFEN (HYDRAULIKTANK)	9J-7031	1	HYDRAULIKTANK UND SCHMIERFILTER	396
ANSCHRAUBFILTER (HYDRAULIK)	9T-8578	1	ÖLFILTER	358
EINFÜLLSTUTZENKAPPE (HYDRAULIKTANK)	7H-1447	1	HYDRAULIKTANK UND SCHMIERFILTER	396
FILTER (STEUERVENTIL)	4T-4520	1	STEUERVENTIL	403
		1	STEUERVENTIL	405
		1	STEUERVENTIL	407
		1	STEUERVENTIL	409
		1	STEUERVENTIL	411
		1	STEUERVENTIL	413
ÖLFILTER (*HYDRAULIC)(HIGH EFFICIENCY)	144-0832	1	ÖLFILTER	358
ÖLFILTERELEMENT (HYDRAULIK/STROMUMKEHRUNG) (NICHT WIEDERVERWENDBAR)	1R-0735	1	HYDRAULIKTANK UND SCHMIERFILTER	396
ÖLFILTERELEMENT (HYDRAULISCH) (REINIGUNG/HOCHLEISTUNG)	139-1537	1	HYDRAULIKTANK UND SCHMIERFILTER	396
ÖLFILTERELEMENT (RÜCKFLUSS) (FEUERFESTE HYDRAULIKFLÜSSIGKEIT)	104-6931	1	HYDRAULIKTANK UND SCHMIERFILTER	396
SCHMIERNIPPEL (1/8-27-GEWINDE) (SCHENK- U. KIPPZYLINDER)	3B-8489	8	SCHWENK- UND KIPPZYLINDERLEITUNGEN	361
SCHMIERNIPPEL (1/8-27-GEWINDE) (SCHILDHUBZYLINDER)	3B-8489	1	HUBZYLINDER	350
SIEB (HYDRAULIKTANK)	3G-3267	1	HYDRAULIKTANK UND SCHMIERFILTER	396
	9J-3047	1	HYDRAULIKTANK UND SCHMIERFILTER	396
STAUBKAPPE (DIAGNOSETAFEL)	6V-0852	9	HYDRAULIKLEITUNGEN	365
	187-9008	2	HYDRAULIKLEITUNGEN	365
STAUBKAPPE (HYDRAULIKPUMPE)	6V-0852	2	HYDRAULIKPUMPE UND LEITUNGEN	378
STAUBKAPPE (PROBEENTNAHME-STEUERVENTIL)	8C-3451	1	VENTILAUFHÄNGUNG	392
KRAFTSTOFFSYSTEM				
ABLASSVENTIL (KRAFTSTOFF) (FILTER)	141-8275	1	KRAFTSTOFFILTERLEITUNGEN	106
ABLASSVENTIL (KRAFTSTOFFILTER)	179-9348	1	KRAFTSTOFFILTERLEITUNGEN	106
DICHTUNG (KRAFTSTOFFENTLÜFTUNGSPUMPE)	1P-0436	2	WASSERABSCHEIDER- U. KRAFTSTOFFILTER	103
KRAFTSTOFFILTER (AUSFALLSCHUTZ)	1R-0762	1	KRAFTSTOFFILTERLEITUNGEN	106
KRAFTSTOFFILTERELEMENT (HAUPTELEMENT)	146-6695	1	WASSERABSCHEIDER- U. KRAFTSTOFFILTER	103
KRAFTSTOFFSIEB (TANKFÜLLER)	9P-7121	1	KRAFTSTOFFTANK	112
KRAFTSTOFFTANKKAPPE (ENTLÜFTUNGSSPERRE)	7X-7700	1	KRAFTSTOFFTANK	112

* ÜBERSETZUNG ZUM ZEITPUNKT DER DRUCKLEGUNG NICHT VORHANDEN

WARTUNGSTEILE

BESCHREIBUNG	ERSATZTEIL-NUMMER	MENGE	VERWENDET IN	SEITE
KRAFTÜBERTRAGUNG				
ABLASSSTOPFEN (DREHMOMENTWANDLER)	4B-7739	1	DREHMOMENTWANDLERAUFHÄNGUNG	203
ANSAUGSIEB (KRAFTÜBERTRAGUNG - ÖLLEITUNGEN)	8S-9130	1	ÖLLEITUNGEN - KRAFTÜBERTRAGUNG	200
ENTLÜFTER (KRAFTÜBERTRAGUNG - ÖLLEITUNGEN)	185-6684	1	ÖLLEITUNGEN - KRAFTÜBERTRAGUNG	200
MAGNETFILTER (KRAFTÜBERTRAGUNGSÖL)	8S-9129	1	ÖLLEITUNGEN - KRAFTÜBERTRAGUNG	200
MAGNETSTOPFEN (SEITENANTRIEB)	6V-0439	1	SEITENANTRIEB	198
O-RING-DICHTUNG (DREHMOMENTWANDLERABLASSSCHRAUBE)	3K-0360	2	DREHMOMENTWANDLER	220
	4K-1388	1	DREHMOMENTWANDLER	220
O-RING-DICHTUNG (GETRIEBEABLASSSCHRAUBE)	2M-9780	2	PLANETENGETRIEBE	206
	4K-1388	1	PLANETENGETRIEBE	206
O-RING-DICHTUNG (KRAFTÜBERTRAGUNGSFILTER)	5P-3620	1	ÖLFILTER	197
O-RING-DICHTUNG (SEITENANTRIEB-ABLASSSCHRAUBE)	3K-0360	1	SEITENANTRIEB	198
O-RING-DICHTUNG (SEITENANTRIEB-MAGNETSCHRAUBE)	2S-4078	1	SEITENANTRIEB	198
ÖLEINFÜLLSTUTZEN (KRAFTÜBERTRAGUNG)	2W-6225	1	ÖLLEITUNGEN - KRAFTÜBERTRAGUNG	200
ÖLFILTERELEMENT (KRAFTÜBERTRAGUNG)	132-8876	1	ÖLFILTER	197
ÖLFILTERELEMENT (*POWER TRAIN - HIGH EFFICIENCY)	132-8876	1	ÖLLEITUNGEN - KRAFTÜBERTRAGUNG	201
SCHRAUBE (DREHMOMENTWANDLERBLASS)	9S-4185	2	DREHMOMENTWANDLER	220
	9S-4188	1	DREHMOMENTWANDLER	220
SCHRAUBE (GETRIEBEABLASS)	9S-4188	1	PLANETENGETRIEBE	206
	9S-4190	2	PLANETENGETRIEBE	206
SCHRAUBE (SEITENANTRIEBABLASS)	9S-4185	1	SEITENANTRIEB	198
SIEB (WANDLERRÜCKLAUFSIEB)	3T-6471	1	DREHMOMENTWANDLER	220
STAUBKAPPE (GETRIEBEFITTINGS)	6V-0852	6	PLANETENGETRIEBE	207
STAUBKAPPE (KRAFTÜBERTRAGUNGSÖL - PROBEENTNAHMEVENTIL)	8C-3447	1	ÖLLEITUNGEN - KRAFTÜBERTRAGUNG	200

* ÜBERSETZUNG ZUM ZEITPUNKT DER DRUCKLEGUNG NICHT VORHANDEN

WARTUNGSTEILE

BESCHREIBUNG	ERSATZTEIL-NUMMER	MENGE	VERWENDET IN	SEITE
KÜHLSYSTEM				
KÜHLERKAPPE (DRUCKBEGRENZUNG)	031-1119	1	KÜHLER	89
KÜHLWASSERTHERMOSTATDICHTUNG (KÜHLMITTELTEMPERATUR)	136-0812	1	KÜHLWASSERLEITUNGEN	82
SCHLAUCHLEITUNG (OBERER KÜHLER)	214-6738	1	KÜHLER	87
SCHLAUCHLEITUNG (UNTERER KÜHLER)	198-1663	1	KÜHLER	87
STAUBKAPPE (KÜHLMITTELPROBE-ENTNAHMEVENTIL)	157-0670	1	KÜHLWASSERLEITUNGEN	82
WASSERFILTER (WASSERPUMPE)	119-3025	1	KÜHLWASSERPUMPE	85
WASSERTEMPERATURREGLER (94 GRAD C) (KÜHLMITTEL)	126-5869	1	KÜHLWASSERLEITUNGEN	82
LAUFWERK				
SCHMIERNIPPEL (QUERTRAVERSE)	3B-8489	2	QUERTRAVERSE	266
LENK- UND BREMSSYSTEM				
ÖLFILTER (HYDRAULISCH)	1G-8878	1	ÖLFILTER	305
STAUBKAPPE (LENKUNGSVENTILE)	6V-0852	3	LENKÖLLEITUNGEN	308
LUFTEINLASS- UND ABGASSYSTEM				
LUFTFILTER (HAUPTFILTER)	6I-2501	1	LUFTREINIGER	91
LUFTFILTER (SICHERHEITSFILTER)	6I-2502	1	LUFTREINIGER	91
MOTOR (GRUNDAUSFÜHRUNG)				
KEILRIEMEN (MIT KLIMAANLAGE - EUROPÄISCHER MARKT)	202-3197	1	RIEMEN	7
KEILRIEMEN (MIT KLIMAANLAGE - NORDAMERIKANISCHER MARKT)	215-3015	1	RIEMEN	8
KEILRIEMEN (OHNE KLIMAANALAGE - NORDAMERIKANISCHER MARKT)	191-5215	1	RIEMEN	6
SCHRAUBE (MAGNETISCH -ÖLABLASS)	118-3619	1	MOTORÖLABLASS	33
RAHMEN UND AUFBAU				
KAPPE (STAUB) (KÜHLERFÜLLKLAPPE)	155-9321	1	KÜHLERSCHUTZ	247
O-RING-DICHTUNG (GEHÄUSEABLASSSCHRAUBE)	6F-0711	1	RAHMEN UND GEHÄUSE	234
SCHMIERNIPPEL (1/8-27-GEWINDE) (GEHÄUSE U. RAHMEN)	3B-8489	2	RAHMEN UND GEHÄUSE	234
SCHRAUBE (GEHÄUSEABLASS)	106-8187	1	RAHMEN UND GEHÄUSE	234

* ÜBERSETZUNG ZUM ZEITPUNKT DER DRUCKLEGUNG NICHT VORHANDEN

WARTUNGSTEILE

BESCHREIBUNG	ERSATZTEIL-NUMMER	MENGE	VERWENDET IN	SEITE
SCHMIERSYSTEM				
EINFÜLLSTUTZENKAPPE (MOTORÖL)	4W-3087	1	MOTORÖLEINFÜLLSTUTZEN	66
ENTDUNSTERLEITUNG (ENTDUNSTER)	4W-2181	1	ENTDUNSTER	68
ENTLÜFTER (MOTOR)	2W-9162	1	ENTLÜFTER	65
O-RING-DICHTUNG (MOTOR - ENTLÜFTER)	4L-9564	1	ENTLÜFTER	65
ÖLFILTER	1R-0739	1	ÖLFILTER	67
STAUBKAPPE (PROBEENTNAHME-VENTIL - TURBOLADER)	8C-3445	1	TURBOLADERÖLLEITUNGEN	72

* ÜBERSETZUNG ZUM ZEITPUNKT DER DRUCKLEGUNG NICHT VORHANDEN

INDEX

Name	Page
A	
ACCUMULATOR-REFRIGERANT	485
ADAPTER GP-ENGINE OIL LINE	64
ADJUSTER GP-SEAT	442, 443
AFTERCOOLER GP	90
AIR CLEANER GP	91
AIR CONDITIONER GP	444, 445
ALARM GP–ACTION	115
ALTERNATOR GP-CHARGING	116, 118, 120
AXLE GP	190
B	
BAR GP-EQUALIZER	266
BATTERY & WIRING GP	121
BATTERY GP–HEAVY DUTY	124
BATTERY (MAINTENANCE FREE)(12 VOLT) (HEAVY DUTY)	124
BATTERY (12 VOLT)	122
BEARING-SLEEVE (CAMSHAFT)	18
BEARING (SPECIAL C-FRAME)	419
BELT GP–WITH A/C, EUROPEAN MARKET	7
BELT GP– WITH A/C, NORTH AMERICAN MARKET	8
BELT GP–WITHOUT A/C, NORTH AMERICAN MARKET	6
BELT TIGHTENER GP	9
BELT (WITH A/C EUROPEAN MARKET)	7
BELT (WITH A/C NORTH AMERICAN MARKET)	8
BELT (W/O-A/C NORTH AMERICAN MARKET)	6
BLADE AS-WIPER (LH CAB DOOR)	468
BLADE AS-WIPER (REAR) (WINDOW)	547
BLADE AS-WIPER (RH CAB DOOR)	466
BLADE AS-WIPER (WINDSHIELD)	547
BLADE GP-ANGLING	431
BLADE GP-SEMI-UNIVERSAL	433
BLOWER GP-CAB	446
BRAKE & DIFFERENTIAL DRIVE GP	289
BRAKE & PLANETARY GP	293
BRAKE GP-STEERING	295
BREATHER AS (ENGINE)	65
BREATHER AS (POWER TRAIN OIL LINES)	200
BREATHER GP–ENGINE	65
BRUSH AS-ALTERNATOR	116, 118
BULLDOZER AR–POWER ANGLE & TILT WITH ADJUSTABLE PITCH	419
BULLDOZER AR-SEMI-UNIVERSAL	419
BULLDOZER AR-SEMI-UNIVERSAL– SOUND SUPPRESSION	420
C	
C-FRAME GP-POWER ANGLING	421
CAB AR	448
CAB GP	449, 453
CABLE AS (HEATER TEMPERATURE CONTROL)	474
CAMSHAFT GP	10
CANOPY AR	454
CAP AS (AIR CONDITIONER)	479
CAP AS-DUST (JACKET WATER HEATER)	136, 137
CAP AS (DUST) (RADIATOR FILLER DOOR)	247
CAP AS (ELECTRONIC TECH-SERVICE TOOL)	187
CAP AS-FUEL TANK (VENTED LOCKING)	112
CAP AS-OIL FILLER (POWER TRAIN)	200
CAP AS-RADIATOR (PRESSURE RELIEF)	89
CAP-DUST (CONTROL VALVE FLUID SAMPLING)	392
CAP-DUST (COOLANT SAMPLING VALVE)	82
CAP-DUST (DIAGNOSTICS PANEL)	365
CAP-DUST (HYDRAULIC PUMP)	378
CAP-DUST (POWER TRAIN OIL SAMPLE VALVE)	200
CAP-DUST (STEERING VALVES)	308
CAP-DUST (TRANSMISSION FITTINGS)	207
CAP-DUST (TURBO OIL SAMPLING VALVE)	72
CAP-FILLER (ENGINE OIL)	66
CAP-FILLER (HYDRAULIC TANK)	396
CAP GP-TRACK IDLER–MOUNTING	268
CAP (WINDOW WASHER TANK)	543
CARRIER GP-SEAL	11
CASE & FRAME GP	234
CHASSIS AR	1
CIRCUIT BREAKER AS (80 AMP) (MACHINE MAIN)	151
COMPRESSOR GP-REFRIGERANT	455, 456
CONDENSER GP-REFRIGERANT	457
CONTROL & MTG GP-ENGINE ELEK	126
CONTROL GP-COMMUNICATION (PRODUCT LINK)	131
CONTROL GP-ENGINE ELECTRONIC	127, 128
CONTROL GP-HYDRAULIC HAND– BULLDOZER LIFT/TILT	339, 343
CONTROL GP-HYDRAULIC HAND–RIPPER	341
CONTROL GP-HYDRAULIC HAND (RIPPER)	360
CONTROL GP-MACHINE	129

INDEX

Name	Page
CONTROL GP-MACHINE (SECURITY) (INCLUDES SOFTWARE)	133
CONTROL GP-MONITOR–CATERPILLAR MONITORING SYSTEM	130
CONTROL GP-MONITOR–PRODUCT LINK	131
CONTROL GP-PARKING BRAKE	296
CONTROL GP-STEERING & TMSN	300 302
CONTROL GP-STEERING & TMSN–HANDLE	298
CONTROL GP-TRANSMISSION	191
CONTROL GP-UNPROGRAMMED–POWER TRAIN	132
CONTROL GP-UNPROGRAMMED (MACHINE)	129
CONTROL GP-UNPROGRAMMED (SECURITY)	139
CONVERTER-POWER (24 V TO 12 V)	187
COOLER GP-ENGINE OIL	76
COOLER GP-HYDRAULIC OIL	345
COOLING AR	77
CORE AS-OIL COOLER	89
COVER GP-AIR INLET	92
COVER GP-CONSOLE–CAB	461 463
COVER GP-CONSOLE–DIFFERENTIAL STEERING	465
COVER GP-CONSOLE–IMPLEMENT	459
COVER GP-CONSOLE–WINCH	460
COVER GP-CYLINDER BLOCK	12
COVER GP-FRONT HOUSING	13
COVER GP-VALVE MECHANISM	14
CRANKSHAFT GP	15
CYLINDER BLOCK GP	17 18 19
CYLINDER GP-ANGLING–BULLDOZER	346
CYLINDER GP-LIFT–BULLDOZER	348 350
CYLINDER GP-RIPPER LIFT	352
CYLINDER GP-TILT–BULLDOZER	356
CYLINDER GP-TILT–SEMI UNIVERSAL BULLDOZER	354
CYLINDER HEAD AS	20 22
CYLINDER HEAD GP	24 25 27 29

D

Name	Page
DAMPER & PULLEY GP	31
DIFFERENTIAL & BEVEL GEAR GP	193
DOOR GP-CAB–LH	468
DOOR GP-CAB–RH	466
DOOR GP-CAB (LH)	449
DOOR GP-CAB (RH)	449
DRAIN GP-ENGINE OIL–EXTENSION	34
DRAIN GP-ENGINE OIL–MAGNETIC PLUG	33
DRAIN GP-ENGINE OIL–SHUTOFF VALVE	32
DRAWBAR GP	236
DRIVE GP-FAN	35
DRIVE GP-FAN–BELT	36

E

Name	Page
EDGE GP-BIT & CUTTING	435
EDGE GP-BIT & CUTTING–WIDE GAGE	436
ELBOW GP-AIR INLET	93
ELECTRONICS AR-MACHINE	133
ELECTRONICS GP-MACHINE	133
ELECTRONICS GP-MONITOR	133
ELECTRONICS GP-POWER TRAIN	134
ELEMENT AS-JACKET WATER HEATER (120 VOLT/1000 WATT)	137
ELEMENT AS-JACKET WATER HEATER (240 VOLT/1000 WATT)	136
ENCLOSURE GP	237
ENGINE AR-COMPLETE	2 3
ENGINE AR-CORE	4
EXTENSION GP-BACKREST (FABRIC)	524
EXTENSION GP-BACKREST (SEAT)	527

F

Name	Page
FAN GP	78
FAN GP-BLOWER	80
FAN GP-REVERSIBLE	81
FASTENER GP–STEERING/BRAKE CONTROL VALVE	304
FASTENER GP-ENGINE WIRING	135
FASTENER GP-FRONT COVER	37
FASTENER GP-FRONT HOUSING	38
FENDER GP	240
FILLER GP-ENGINE OIL	66
FILM (ACTION LIGHT) (MALFUNCTION)	499
FILM (ACTION LIGHT) (MALFUNCTION)	503
FILM (DASH PANEL)	474
FILM (DIAGNOSTICS PANEL D/S)	366
FILM (DIFFERENTIAL STEERING)	302
FILM (EXTERIOR) (SOUND)	59
FILM GP	549
FILM-IDENTIFICATION (ACTION LIGHT)	142
FILM-IDENTIFICATION (ACTION LIGHT)	141
FILM-IDENTIFICATION (ALTERNATOR)	151
FILM-IDENTIFICATION (GROUP & SEQUENCE NO.) (AIR CONDITIONER CONDENSER)	457

INDEX

Name	Page
FILM-IDENTIFICATION (GROUP & SEQUENCE NO.) (CAB BLOWER)	446
FILM-IDENTIFICATION (SERVICE CONNECTOR)	151
FILM-IDENTIFICATION (12 VOLT)	187, 463
FILM (IGNITION SWITCH)	141, 142
FILM-INSTRUCTION (BULLDOZER CONTROL)	339, 343
FILM-INSTRUCTION (NO STEP)	361
FILM-INSTRUCTION (RIPPER CONTROL)	341
FILM-INSTRUCTION (SEAT ADJUSTMENT)	539, 541
FILM (LUBE POINT)	450
FILM (LUBE POINT) (PLATFORM)	507
FILM (MACHINE SECURITY SYSTEM)	141, 142
FILM-NOTICE (RADIO)	481
FILM-NOTICE (STEERING)	302
FILM-PANEL (DASH)	499, 503
FILM (SEAT CUSHION IDENTIFICATION)	498
FILM (SECURITY NOTICE)	142
FILM-STRIPE (D6N)(FUEL TANK GUARD)	245
FILM-STRIPE (D6N)(LH COWL)	454
FILM-STRIPE (D6N)(LH REAR FUEL TANK GUARD)	245
FILM-STRIPE (D6N)(RH COWL)	454
FILM-STRIPE (D6N)(RH REAR FUEL TANK GUARD)	245
FILM-WARNING (DO NOT LIFT)	495
FILM-WARNING (PARKING BRAKE CYLINDER)	269
FILM-WARNING (PRODUCT LINK RADIO)	131
FILM (WINDSHIELD WASHER/WIPER)	547
FILTER AS (CAB AIR)	510
FILTER AS (CAB PRESSURIZER)	510
FILTER AS-ENGINE OIL	67
FILTER AS-FUEL (SECONDARY)	106
FILTER AS-OIL (HYDRAULIC)	305
FILTER AS-OIL (HYDRAULIC)(HIGH EFFICIENCY)	358
FILTER-CHARCOAL (CAB PRESSURIZER)	510
FILTER (CONTROL VALVE)	403, 405, 407, 409, 411, 413
FILTER ELEMENT AS-AIR (PRIMARY)	91
FILTER ELEMENT AS-AIR (SECONDARY)	91
FILTER ELEMENT AS-OIL (HYDRAULIC) (CLEANOUT/HIGH EFFICIENCY)	396
FILTER ELEMENT AS-OIL (HYDRAULIC/REVERSE FLOW) (DISPOSABLE)	396
FILTER ELEMENT AS-OIL (POWER TRAIN)	197
FILTER ELEMENT AS-OIL (POWER TRAIN - HIGH EFFICIENCY)	201
FILTER ELEMENT AS-OIL (REVERSE FLOW) (HYDRAULIC FIRE RESISTANT FLUID)	396
FILTER ELEMENT-FUEL (PRIMARY)	103
FILTER GP-ENGINE OIL	67
FILTER GP-OIL–HYDRAULIC	358
FILTER GP-OIL–POWER TRAIN	197
FILTER GP-OIL–STEERING	305
FILTER GP-WATER SEP & FUEL	103
FILTER-MAGNETIC (POWER TRAIN OIL)	200
FILTER-SPIN-ON (HYDRAULIC)	358
FILTER-WATER (WATER PUMP)	85
FINAL DRIVE GP	198
FITTING-GREASE (ANGLING BULLDOZER BLADE)	431
FITTING-GREASE (CAB PRESSURIZER)	510
FITTING-GREASE (EQUALIZER BAR)	266
FITTING-GREASE (1/8-27 THD) (ANGLE & TILT CYLINDERS)	361
FITTING-GREASE (1/8-27 THD) (BULLDOZER LIFT CYLINDER)	350
FITTING-GREASE (1/8-27 THD) (CASE & FRAME)	234
FITTING-GREASE (1/8-27 THD) (OPERATOR PLATFORM)	507
FITTING-GREASE (1/8-27 THD) (PITCH LINK)	423
FITTING-GREASE (1/8-27 THD) (RIPPER)	437
FLOOR MAT (FRONT)	463
FLOOR MAT (REAR)	461
FLYWHEEL GP	39
FRAME GP-TELESCOPING RECOIL	269
FUMES DISPOSAL GP	68
FUSE (10 AMP)	151
FUSE (15 AMP)	151
FUSE (20 AMP)	151

G

GASKET (FUEL PRIMING PUMP)	103
GASKET-WATER REGULATOR (COOLANT TEMPERATURE)	82
GAUGE GP-OIL LEVEL (DIPSTICK)	70
GAUGE-SIGHT (HYDRAULIC TANK)	396
GEAR GP-FRONT	40
GENERAL AR	1
GRID GP-SAND BLAST ERODING	241
GRILL GP-RADIATOR–HEAVY DUTY	242

INDEX

Name	Page
GUARD GP-BOTTOM	243
GUARD GP-BOTTOM–HEAVY DUTY	244
GUARD GP-FUEL TANK	245
GUARD GP-POWER TRAIN FILTER–HEAVY DUTY	246
GUARD GP-RADIATOR	247
GUARD GP-TRACK GUIDE	249
GUARD GP-TRACK ROLLER–EXTREME SERVICE	250
GUIDING AR-UNDERCARRIAGE–EXTRA LONG, HEAVY DUTY	271
GUIDING AR-UNDERCARRIAGE–EXTRA LONG, MODERATE SERVICE	271

H

HARNESS AS-AIR CONDITIONER (CONDENSER FANS) (COMPRESSOR)	457
HARNESS AS (BACKUP ALARM)	516
HARNESS AS (CIRCUIT BREAKER)	151
HARNESS AS (CIRCUIT BREAKER PANEL)	151
HARNESS AS (CONTROL MONITOR)	131
HARNESS AS (CONTROL)(SECURITY)	139 142
HARNESS AS (CRANK WITHOUT INJECTION)	183
HARNESS AS (DRIVE TRAIN CONTROL)	302
HARNESS AS (ENGINE)	121
HARNESS AS (HEATER)	472
HARNESS AS (HYDRAULIC TANK)	121
HARNESS AS (INSTRUMENT PANEL)	499 503
HARNESS AS (MAIN)(CAB)	449
HARNESS AS (PARK BRAKE)	122
HARNESS AS (PLATFORM)	187
HARNESS AS (PLATFORM)	121
HARNESS AS-RADIO (SPEAKER)	512 513
HARNESS AS-SENSOR (14 GA WIRE)	168
HARNESS AS-SENSOR (16-18 GA WIRE)	168
HARNESS AS (TRANSMISSION SHIFT SOLENOIDS)	191
HARNESS AS (TRANSMISSION SPEED SENSORS)	191
HARNESS AS-VALVE (AIR COMPRESSOR) (SEAT)	541
HARNESS AS (WINDOW WASHER)	543
HARNESS AS (WIPER)	449
HEAD GP-PUMP–STEERING	306
HEATER AS	138
HEATER GP-CAB	470
HEATER GP-JACKET WATER	136 137
HEATER GP-OPEN ROPS	472 474
HEATER GP-STARTING AID–AIR INLET	138
HOLDER AS-BRUSH (ALTERNATOR)	116 118
HOOD & GUARD GP–SEMI-UNIVERSAL BULLDOZER	251
HOOD & GUARD GP–SEMI-UNIVERSAL BULLDOZER W/ SOUND SUPPRESSION	253
HOOD & GUARD GP–SOUND SUPPRESSION	256
HOOD GP	259
HORN AS (24 VOLT)(LOW TONE)	121
HOSE-DISPOSAL (FUMES)	68
HOSE (LOWER RADIATOR)	87
HOSE (UPPER RADIATOR)	87
HOUSING GP (CONTROL VALVE)	403 405 407 409 411 413
HOUSING GP-FLYWHEEL	41
HOUSING GP-FRONT	42
HOUSING GP-SEAT SUSPENSION	476
HYDRAULIC AR–2 VALVE	359
HYDRAULIC AR–3 VALVE	359
HYDRAULIC AR–4 VALVE	359
HYDRAULIC AR-4 VALVE	360

I

IDLER GP-TRACK	272
INDICATOR AS (ACTION LAMP)	499 503
INDICATOR GP-AIR FILTER CHANGE	94 507
INJECTOR GP-FUEL	109
INSTALLATION AR-ENGINE	5
INSTALLATION GP-LINES–AIR CONDITIONER	479
INSTALLATION GP-RADIO	481
INSTALLATION GP-SECURITY	139 141
INSTALLATION GP-SECURITY–RETROFIT	142
INSULATION GP-WEATHER	482

K

KEY AS-ELECTRONIC (SECURITY)	129
KEY AS-ELECTRONIC (SECURITY)	139
KEY (BATTERY DISCONNECT)	176
KIT-AIR VALVE (SUSPENSION SEAT)	541
KIT-ALTERNATOR GUARD	118
KIT-ALTERNATOR TERMINAL (BATTERY)	116 118

INDEX

Name	Page
KIT-ALTERNATOR TERMINAL (INDICATOR LIGHT) (RELAY)	116
	118
KIT-ALTERNATOR TERMINAL (RELAY) (INDICATOR LIGHT)	116
	118
KIT-BEARING (PISTON MOTOR ROTATING GP)	319
KIT-BEARING (SUSPENSION SEAT)	477
KIT-BELT TETHER (SUPENSION SEAT)	539
KIT-BOLT (CIRCUIT BREAKER HARNESS)	151
KIT-BOLT (ENGINE HARNESS RETAINING)	183
KIT-BRUSH (STARTER) (MOTOR)	172
KIT-BUMPER (WEIGHT ADJUSTMENT) (SUSPENSION SEAT)	477
KIT-BUSHING (STARTING MOTOR)	172
KIT-CAP FILTER (FUEL TANK)	112
KIT-CONNECTING PLUG (12 PIN)	187
	302
	499
	503
KIT-CONNECTING PLUG (12 PIN)	181
KIT-CONNECTING PLUG (2 PIN)	121
	122
	142
	151
	168
	181
	183
	187
	191
	446
	449
	457
	472
	499
	503
KIT-CONNECTING PLUG (2 PIN)	516
KIT-CONNECTING PLUG (2 PIN) (MAIN POWER RELAY SWITCH)	178
KIT-CONNECTING PLUG (3 PIN)	121
	160
	161
	181
	183
	187
	302
	449
	499
	503
KIT-CONNECTING PLUG (4 PIN)	121
	122
	139
	142
	187
	499
	503
KIT-CONNECTING PLUG (6 PIN)	121
	187
	302
	449
	499
	503
KIT-CONNECTING PLUG (6 PIN)	516
KIT-CONNECTING PLUG (8 PIN)	121
	122
	131
	191
	449
	453
	499
	503
	506
KIT-FOLLOWER (SUSPENSION SEAT)	477
KIT-INDICATOR (WEIGHT ADJUSTMENT) (SUSPENSION SEAT)	477
KIT-INSULATOR (STARTING MOTOR)	172
KIT-KNOB (RADIO)	513
KIT-KNOB (RADIO)	512
KIT-LEVER (STARTING MOTOR)	172
KIT-MAIN BEARING (CRANKSHAFT)	15
KIT-RECEPTACLE (12 PIN)	296
KIT-RECEPTACLE (12 PIN)	121
	139
	142
	151
	181
	187
	449
KIT-RECEPTACLE (2 PIN)	112
	115
	121
	139
	141
	142
	146
	147
	151
	164
	165
	167
	174
	175
	177
	179
	180
	181
	183
	193
	231

INDEX

Name	Page
	314
	446
	449
	453
	455
	457
	472
	479
	499
	503
	516
	541
KIT-RECEPTACLE (2 PIN)	187
KIT-RECEPTACLE (3 PIN)	121
	142
	156
	157
	158
	159
	166
	181
	183
	302
	449
	457
	499
	500
	503
	504
KIT-RECEPTACLE (3 PIN)	143
KIT-RECEPTACLE (3 PIN) (COOLANT LEVEL SENSOR)	155
KIT-RECEPTACLE (4 PIN)	139
	142
	337
	468
	547
KIT-RECEPTACLE (6 PIN)	78
	121
	131
	187
	298
	446
	449
	466
	472
	491
	500
	503
	504
	509
	516
	543
KIT-RECEPTACLE (8 PIN)	187
	191
	449
	499
	503
	512
	513
	516
KIT-RETAINING BOLT (CONTROL GP)	132
KIT-SEAL (JACKET WATER HEATER)	136
	137
KIT-SEAL (PUMP HEAD RELIEF VALVE)	306
KIT-SEAL (RELIEF VALVE)	332
KIT-SEAL (SOLENOID VALVE)	114
	231
	337
KIT-SHOCK ABSORBER (SUSPENSION SEAT)	541
KIT-SLIDER BLOCK (SUSPENSION SEAT)	530
	531
	532
KIT-SOLENOID (STARTING MOTOR)	172
KIT-SPRING (HEIGHT ADJUSTMENT) (SUSPENSION SEAT)	476
KIT-SPRING (SUSPENSION SEAT)	476
KIT-SUSPENSION BOOT (SUPENSION SEAT)	539
KIT-SUSPENSION KNOB (HEIGHT ADJUSTMENT) (SUSPENSION SEAT)	476
KIT-SUSPENSION ROLLER (SUPENSION SEAT)	539
KIT-TETHER (SUSPENSION SEAT)	541
KNOB (FILTER COVER)	510
KNOB-HORN	174
KNOB-LUMBAR	496

L

LAMP AS (12 VOLT) (RED/GREEN LED ACTION LIGHT)	141
	142
LAMP-DIODE (LED) (WARNING BEACON)	150
LAMP GP-DOME	143
LAMP GP-FLOOD–FRONT RADIATOR GRILL	146
LAMP GP-FLOOD–FRONT ROPS	145
LAMP GP-FLOOD–REAR ROPS	144
LAMP GP-WARNING BEACON	147
LAMP-HALOGEN (24 VOLT)(65 WATT) (FLOOD)	144
	145
	146
LAMP (24 VOLT) (ACTION LAMP)	499
	503
LAMP (24 VOLT) (DOME)	143
LAMP (24 VOLT) (INSTRUMENT)	499
LAMP (24 VOLT) (INSTRUMENT LIGHTS)	503

INDEX

Name	Page
LAMP (24 VOLT) (QUAD GAUGE)	503
LAMP (24 VOLT) (QUAD GUAGE)	499
LAMP (24 VOLT) (THROTTLE ROCKER SWITCH)	187
LAMP (24 VOLT) (WARNING BEACON)	150
LATCH GP–CAB DOORS	483
LATCH GP (DOOR)	466
LENS (AMBER WARNING BEACON)	147
LENS AS (FLOOD)	146
LENS AS (FLOOD) (ROPS)	144 145
LENS (DOME LAMP)	143
LIFTER GP-VALVE	43
LIFTING GP-ENGINE	44
LIGHT-DASH PANEL	499 503
LIGHTING GP-FLOOD– ENCLOSED & OPEN ROPS	148
LIGHTING GP-WARNING BEACON	150
LINER GP-CAB	484
LINES GP-AIR	95
LINES GP-AIR CONDITIONER	485
LINES GP-ANGLE & TILT	361 363
LINES GP-ENGINE OIL	71
LINES GP-FUEL	104
LINES GP-FUEL FILTER	106
LINES GP-HEATER–CAB	489
LINES GP-HEATER–NON-CAB	487
LINES GP-HYDRAULIC– REMOTE DIAGNOSTICS	365
LINES GP-LIFT CYLINDER–BULLDOZER	370
LINES GP-LIFT CYLINDER–CAB-FRAME	368
LINES GP-LIFT CYLINDER– SEMI-UNIVERSAL BULLDOZER	372
LINES GP-PILOT–CAB-PLATFORM	374
LINES GP-PILOT–FRAME	376
LINES GP-POWER TRAIN OIL	200
LINES GP-PUMP	378
LINES GP-RIPPER–CAB	382
LINES GP-RIPPER–FRAME	384
LINES GP-STEERING	308
LINES GP-TILT CYLINDER	386 387 388
LINES GP-TURBOCHARGER OIL	72
LINES GP-WATER	82
LINK AS-TRACK	273 274
LINK GP-PITCH	423

M

Name	Page
MACHINE AR-HIGH AMBIENT TEMP	1
MANIFOLD & VALVE GP–STEERING/BRAKE	311 312
MANIFOLD GP-EXHAUST	97
MIRROR GP	490
MODULE GP-DISPLAY (LAMP & GEAR) (TRANSMISSION GEAR INDICATOR)	500 503
MODULE GP-QUAD GAUGE	491
MOTOR GP-ELECTRIC (27 VOLT) (HEATER OPEN ROPS)	472
MOTOR GP-PISTON– DIFFERENTIAL STEERING	313
MOUNTING GP-CAB	492
MOUNTING GP-CARRIER ROLLER	275
MOUNTING GP-CYLINDER–BULLDOZER	390
MOUNTING GP-ENGINE	45 46
MOUNTING GP-FAN DRIVE	47
MOUNTING GP-MUFFLER	98
MOUNTING GP-PLATFORM	493
MOUNTING GP-RIPPER	424
MOUNTING GP-ROPS	495
MOUNTING GP-TORQUE CONVERTER	203
MOUNTING GP-TRANSMISSION	204
MOUNTING GP-VALVE– IMPLEMENT CONTROL	392
MUFFLER GP	99

P

Name	Page
PAN GP-BACKREST	496 497
PAN GP-BACKREST–VINYL SEAT	498
PAN GP-OIL–ENGINE	48
PANEL GP-CIRCUIT BREAKER	151
PANEL GP-INSTRUMENT–CAB	499
PANEL GP-INSTRUMENT–OPEN ROPS	503
PANEL GP-SOUND SUPPRESSION	261
PEDAL GP-GOVERNOR & BRAKE	314
PIN GP–DOZER	426
PISTON & ROD GP	49
PIVOT BAR GP	276
PLANETARY GP-TRANSMISSION	205
PLATE & FILM GP	550
PLATE & FILM GP–BULLDOZER	550
PLATE-INSTRUCTION (AIR CONDITIONER)	479
PLATE-SERIAL NUMBER (BULLDOZER)	419 420
PLATE-SERIAL NUMBER (ENGINE)	550
PLATE-SERIAL NUMBER (TORQUE CONVERTER)	220
PLATE-WARNING (DO NOT OPERATE)	493
PLATE-WARNING (HIGH PRESSURE CYLINDER) (TELESCOPING RECOIL)	269
PLATE-WARNING (RECOIL SPRING)	269

INDEX

Name	Page
PLATFORM GP	506
PLATFORM GP-OPERATOR	507
PLUG AS–POWER TRAIN	509
PLUG (CASE DRAIN)	234
PLUG-DRAIN (HYDRAULIC TANK)	396
PLUG-DRAIN (TORQUE CONVERTER)	203
PLUG (FINAL DRIVE DRAIN)	198
PLUG GP-ENGINE	50
PLUG-MAGNETIC (FINAL DRIVE)	198
PLUG (MAGNETIC OIL DRAIN)	33
PLUG (TORQUE CONVERTER DRAIN)	220
PLUG (TRANSMISSION DRAIN)	206
POWER TRAIN AR	212
PRESSURIZER GP-CAB	510
PULLER-FUSE	122
PULLEY AS-IDLER	51
PULLEY GP–ALTERNATOR	52
PULLEY GP–FAN	53
PULLEY GP-FAN DRIVE	54
PULLEY GP-IDLER	55
PUMP & MTG GP-UNIT INJ HYD	108
PUMP GP-CHARGE–STEERING	316
PUMP GP-ENGINE OIL	74 75
PUMP GP-FUEL PRIMING	103
PUMP GP-FUEL TRANSFER	111
PUMP GP-GEAR–CONVERTER SCAVENGE–CONVERTER/COOLER LUBRICATION–TMSN CHARGING	213
PUMP GP-GEAR–POWER TRAIN OIL	215
PUMP GP-PISTON–HYDRAULIC	393
PUMP GP-PISTON–STEERING	317
PUMP GP-UNIT INJECTION–FUEL	109 110
PUMP GP-UNIT INJECTOR HYD	111
PUMP GP-WATER	84 85
PUSH ARM GP	427

R

Name	Page
RADIATOR GP	87 89
RADIO GP–AM/FM	512
RADIO GP–AM/FM CASSETTE	513
RECEIVER-DRYER GP (REFRIGERANT)	485
RECLINER GP-SEAT	514
REGULATOR AS (FUEL PRESSURE)	106
REGULATOR-WATER TEMPERATURE (94 DEG C) (COOLANT)	82
RETAINER GP (CAB DOOR)	468
RIPPER AR	429
RIPPER GP	437
ROCKER ARM GP (EXHAUST)	62
ROCKER ARM GP (INTAKE)	62
ROLLER GP-TRACK CARRIER	277
ROLLER GP-TRACK-DOUBLE FLANGE	279 282
ROLLER GP-TRACK-DOUBLE FLANGE–UNDERCARRIAGE GUIDING	280
ROLLER GP-TRACK-SINGLE FLANGE	283 284
ROPS GP–ENCLOSED	515
ROPS GP–OPEN	516
ROTATING GP-MOTOR–DIFFERENTIAL STEERING	319
ROTATING GP-PUMP–HYDRAULIC	395
ROTATING GP-PUMP–STEERING	321

S

Name	Page
SCREEN AS (HYDRAULIC TANK)	396
SCREEN AS (TORQUE CONVERTER SCAVENGE)	220
SCREEN GP-PROTECTION–CAB	519
SCREEN GP-PROTECTION–OPEN ROPS	520
SCREEN GP-SUN	521
SCREEN-SUCTION (POWER TRAIN OIL LINES)	200
SEAL GP-CRANKSHAFT	56
SEAL GP-FLYWHEEL HOUSING	57
SEAL GP-FUEL INJECTOR	58
SEAL-O-RING (CASE DRAIN PLUG)	234
SEAL-O-RING (ENGINE BREATHER)	65
SEAL-O-RING (FINAL DRIVE DRAIN PLUG)	198
SEAL-O-RING (FINAL DRIVE MAGNETIC PLUG)	198
SEAL-O-RING (POWER TRAIN FILTER)	197
SEAL-O-RING (TORQUE CONVERTER DRAIN PLUG)	220
SEAL-O-RING (TRANSMISSION DRAIN PLUG)	206
SEAT BELT GP	527
SEAT BELT GP (SUSPENSION SEAT)	524
SEAT BELT GP (SUSPENSION SEAT LOW BACK)	534
SEAT GP	522 524 525 527
SEAT GP-SUSPENSION	528 530 531 532
SEAT GP-SUSPENSION–CLOTH, AIR	533
SEAT GP-SUSPENSION–CLOTH, MECHANICAL	533
SEAT GP-SUSPENSION–VINYL, MECHANICAL	533

INDEX

Name	Page
SEAT GP-SUSPENSION– VINYL, MECHANICAL, LOW BACK	534
SEGMENT GP-SPROCKET	216
SENDER AS-LEVEL (FUEL)	112
SENSOR GP-ENGINE	153
SENSOR GP-LIQUID LEVEL–COOLANT	155
SENSOR GP-POSITION– DECELERATOR PEDAL	156
SENSOR GP-POSITION– SERVICE BRAKE PEDAL	158
SENSOR GP-POSITION– STEERING/TMSN CONTROL HANDLE	157
SENSOR GP-PRESSURE– FUEL/ENGINE OIL	160
SENSOR GP-PRESSURE– INJECTION ACTUATION	161
SENSOR GP-PRESSURE–TURBO OUTLET	159
SENSOR GP-PRESSURE (ENGINE OIL)	153
SENSOR GP-PRESSURE (FUEL)	153
SENSOR GP-SPEED–ENGINE	164
SENSOR GP-SPEED–ENGINE TIMING	162 163
SENSOR GP-SPEED–TRANSMISSION	165
SENSOR GP-SPEED (TIMING) (ENGINE)	153
SENSOR GP-SPEED (TRANSMISSION)	193
SENSOR GP-TEMPERATURE–ENGINE OIL	168
SENSOR GP-TEMPERATURE– HYDRAULIC OIL–POWER TRAIN OIL	167
SENSOR GP-TEMPERATURE– TRANSMISSION	166
SENSOR GP-TEMPERATURE (COOLANT)	153
SENSOR GP-TEMPERATURE (INTAKE AIR)	153
SERVICE GP-MONITOR	169
SERVICE GP-POWER TRAIN	170
SERVICE GP-POWER TRAIN (INCLUDES SOFTWARE)	134
SHAFT GP-DRIVE	217
SHIELD GP-AIR CLEANER–PRECLEANER	100
SLEEVE-OIL SEAL (CRANKSHAFT)	15
SOFTWARE GP-MACHINE (SECURITY)	129
SOFTWARE GP-MACHINE (SECURITY) (SOFTWARE ONLY)	133
SOFTWARE GP-MONITOR	169
SOFTWARE GP-POWER TRAIN	134 170
STARTING MOTOR GP-ELECTRIC	171 172
STEP GP	535
STRAINER-FUEL (TANK FILLER)	112
STRAINER (HYDRAULIC TANK)	396
SUPPRESSION AR-SOUND– EUROPEAN MARKET	59
SUPPRESSION GP-SOUND– BOTTOM GUARD LINERS	60
SUSPENSION GP-SEAT	536
	539 541
SWEEP GP–ENCLOSED ROPS	264
SWEEP GP–OPEN ROPS	262
SWITCH AS-HORN	174
SWITCH AS-KEY START	500 504
SWITCH AS (LAMP)	503
SWITCH AS (LIGHTS)	499
SWITCH AS-LIMIT (PARKING BRAKE)	298
SWITCH AS-MAGNETIC (AIR INLET HEAT)	179
SWITCH AS-PRESSURE (HIGH/LOW) (COMPRESSOR)	479
SWITCH AS-PRESSURE (POWER TRAIN OIL FILTER BYPASS)	121
SWITCH AS-PUSH BUTTON (AUTO DOWN SHIFT)	500
SWITCH AS-PUSH BUTTON (AUTO KICK DOWN)	504
SWITCH AS-PUSH BUTTON (AUTO SHIFT)	503
SWITCH AS-PUSH BUTTON (AUTO-SHIFT BI DIRECTIONAL)	499
SWITCH AS-PUSH BUTTON (ELECTRONIC-DOWNSHIFT)	298
SWITCH AS-PUSH BUTTON (ELECTRONIC-UPSHIFT)	298
SWITCH AS-PUSH BUTTON (EMS CYCLE SCROLL)	500
SWITCH AS-PUSH BUTTON (SCROLL)	504
SWITCH AS-ROCKER (PARKING BRAKE)	296
SWITCH AS-ROLLER (BRAKE ON/OFF)	314
SWITCH AS-ROTARY (BLOWER A/C-HEATER-DEFROST)	499
SWITCH AS-ROTARY (FRONT WINDOW WIPER)	547
SWITCH AS-ROTARY (HEATER BLOWER)	474
SWITCH AS-ROTARY (LEFT WINDOW WIPER)	547
SWITCH AS-ROTARY (REAR WINDOW WIPER)	547
SWITCH AS-ROTARY (RIGHT WINDOW WIPER)	547
SWITCH AS-THERMOSTAT (A/C)	444
SWITCH AS (WARNING BEACON)	150
SWITCH AS (24 VOLT)(ILLUMINATED) (THROTTLE)	187
SWITCH GP-BYPASS– POWER TRAIN FILTER	175
SWITCH GP-DISCONNECT–BATTERY	176
SWITCH GP-MAGNETIC–AIR INLET HEATER	179
SWITCH GP-MAGNETIC–MAIN FUSE RELAY	178
SWITCH GP-MAGNETIC–START RELAY	177

INDEX

Name	Page
T	
TANK & FILTER GP-HYDRAULIC	396
TANK GP-FUEL	112
TANK GP (RADIATOR-UPPER)	89
TANK GP-WINDOW WASHER	543
TOOTH GP-RIPPER–CURVED SHANK	440, 441
TOOTH GP-RIPPER–STRAIGHT SHANK	439
TORQUE CONVERTER GP	218, 220
TRACK ADJUSTER & RECOIL GP	285
TRACK GP–2 REQUIRED	286, 287, 288
TRANSMISSION AR	222
TRUNNION GP-BULLDOZER	430
TUBE-FLASH (3 PRONG CONNECTION) (WARNING BEACON)	147
TUBE-FLASH (8 PRONG CONNECTION) (WARNING BEACON)	147
TURBOCHARGER GP	101, 102
U	
UNDERCARRIAGE AR	288
UNDERCARRIAGE GP	288
UNIVERSAL JOINT GP	223
V	
VALVE AS-FLUID SAMPLING (CONTROL VALVE)	392
VALVE AS-WATER (CAB HEATER)	470
VALVE AS-WATER (OPEN ROPS HEATER)	474
VALVE-BALL (FUEL LINE SHUTOFF)	104
VALVE-DRAIN (CASE)	234
VALVE-DRAIN (FUEL FILTER)	106
VALVE-DRAIN (FUEL) (FILTER)	106
VALVE GP-BANK 2–BULLDOZER LIFT/TILT	399
VALVE GP-BANK 3– BULLDOZER ANGLE-LIFT-TILT	400
VALVE GP-BANK 4– BULLDOZER LIFT-ANGLE-TILT & RIPPER	401
VALVE GP-BYPASS–STEERING	323
VALVE GP-CHECK (CONTROL VALVE)	403, 405, 409, 411, 413
VALVE GP-CONTROL–ANGLE	407
VALVE GP-CONTROL–BLADE LIFT	409, 411
VALVE GP-CONTROL–LIFT	413
VALVE GP-CONTROL–RIPPER	403
VALVE GP-CONTROL–STEERING/BRAKE	324
VALVE GP-CONTROL–TILT	405
VALVE GP-FLUID SAMPLING (COOLANT)	82
VALVE GP-FLUID SAMPLING (POWER TRAIN OIL LINES)	201
VALVE GP-FLUID SAMPLING (TURBOCHARGER OIL)	72
VALVE GP-FLUSHING– DIFFERENTIAL STEERING MOTOR	326
VALVE GP-MODULATING– TRANSMISSION CONTROL	224, 225
VALVE GP-PILOT– STEERING & TMSN CONTROL	327
VALVE GP-PRESS & FLOW CMPNSTR– HYDRAULIC PUMP	415
VALVE GP-PRESS & FLOW CMPNSTR– STEERING PUMP	329
VALVE GP-PRIORITY–POWER TRAIN OIL	226
VALVE GP-RELIEF– ANGLE CONTROL VALVE	417
VALVE GP-RELIEF– IMPLEMENT CONTROL VALVE	418
VALVE GP-RELIEF–POWER TRAIN OIL	228
VALVE GP-RELIEF–STEERING LINES	331, 332
VALVE GP-RELIEF–STEERING PUMP	330
VALVE GP-RELIEF– TRANSMISSION CONTROL	230
VALVE GP-RELIEF (CONTROL VALVE)	405, 409, 413
VALVE GP-RELIEF (PUMP HEAD)	306
VALVE GP-RELIEF (REFRIGERANT COMPRESSOR)	455
VALVE GP-SERVO– STEERING PUMP PILOT PRESS CONT	335
VALVE GP-SERVO– STEERING PUMP PILOT PRESSURE	333
VALVE GP-SOLENOID– POWER TRAIN OIL PRIORITY VALVE	231
VALVE GP-SOLENOID–PRESSURE CONTROL– FUEL	114
VALVE GP-SOLENOID–STEERING/BRAKE	337, 338
VALVE GP-TRANSMISSION CONTROL	232
VALVE MECHANISM GP	61, 62
W	
WARNING GP-BACKUP	180, 449

INDEX

Name	Page	Name	Page
WARNING GP-BACKUP– EUROPEAN MARKET	180		
WARNING GP-BACKUP (ROPS)	516		
WARNING GP-BACKUP (107DB)	453		
WINDOW GP-CAB	544		
WINDOW GP-CAB–LH	545		
WINDOW GP-CAB–RH	546		
WINDOW GP-CAB (LH SIDE)	544		
WINDOW GP-CAB (RH SIDE)	544		
WIPER GP-WINDOW	547		
WIRING GP– ELECTRONIC CONT.-UNIT INJECTOR	181		
WIRING GP-ENGINE	183		
WIRING GP-HEATER–AIR INLET	186		
WIRING GP-PLATFORM	187		

INDEX

Désignation	Page

A

ACCUMULATEUR - RÉFRIGÉRANT 485
ADAPTATEUR (ASS)-CANALISATION D'HUILE MOTEUR 64
ALTERNATEUR DE CHARGE (ASS) 118, 120
ALTERNATEUR DE CHARGE (ASS) 116
AMORTISSEUR DE VIBRATIONS ET POULIE (ASS) 31
AMPOULE (24 VOLTS) (CONTACTEUR À BASCULE D'ACCÉLÉRATEUR) 187
AMPOULE (24 VOLTS) (ÉCLAIRAGE D'INSTRUMENTS) 503
AMPOULE (24 VOLTS) (GYROPHARE) 150
AMPOULE (24 VOLTS) (INSTRUMENT) 499
AMPOULE (24 VOLTS) (PLAFONNIER) 143
AMPOULE (24 VOLTS) (QUATRE INSTRUMENTS) 499, 503
AMPOULE (24 VOLTS) (VOYANT PRINCIPAL) . . . 499, 503
ARBRE A CAMES (ASS) 10
ARBRE D'ENTRAÎNEMENT (ASS) 217
ARCEAUX DE DÉBARDAGE (ASS) 262, 264
AUTOCOLLANT (CONTACTEUR D'ALLUMAGE) 141
AUTOCOLLANT (CONTACTEUR D'ALLUMAGE) 142
AUTOCOLLANT DE MISE EN GARDE (CYLINDRE DE FREIN DE STATIONNEMENT) 269
AUTOCOLLANT DE MISE EN GARDE (NE PAS LEVER) 495
AUTOCOLLANT DE MISE EN GARDE (RADIO DE LIAISON DE PRODUIT) 131
AUTOCOLLANT D'IDENTIFICATION (ALTERNATEUR) 151
AUTOCOLLANT D'IDENTIFICATION (ASSEMBLAGE ET NO DE SÉQUENCE) (CONDENSEUR DE CLIMATISEUR) 457
AUTOCOLLANT D'IDENTIFICATION (ASSEMBLAGE ET NO DE SÉQUENCE) (VENTILATEUR SOUFFLANT DE CABINE) . . . 446
AUTOCOLLANT D'IDENTIFICATION (RACCORD D'ENTRETIEN) 151
AUTOCOLLANT D'IDENTIFICATION (TÉMOIN D'ACTIONNEMENT) 141
AUTOCOLLANT D'IDENTIFICATION (TÉMOIN D'ACTIONNEMENT) 142
AUTOCOLLANT D'IDENTIFICATION (12 VOLTS) 187
AUTOCOLLANT D'IDENTIFICATION (12 VOLTS) 463
AUTOCOLLANT (DIRECTION DU DIFFÉRENTIEL) 302
AUTOCOLLANT DU PANNEAU (TABLEAU DE BORD) 499, 503
AUTOCOLLANT (EXTÉRIEUR) (BRUIT) 59
AUTOCOLLANT (IDENTIFICATION DU COUSSIN DE SIÈGE) 498
AUTOCOLLANT (LAVE-GLACE/ESSUIE-GLACE DE PARE-BRISE) 547
AUTOCOLLANT (MISE EN GARDE) 142
AUTOCOLLANT (PANNEAU DE DIAGNOSTICS D/S) 366
AUTOCOLLANT (POINT DE GRAISSAGE) 450
AUTOCOLLANT (POINT DE GRAISSAGE) (PLATE-FORME) 507
AUTOCOLLANT (SYSTÈME DE SÉCURITÉ DE LA MACHINE) 141, 142
AUTOCOLLANT (TABLEAU DE BORD) 474
AUTOCOLLANT (TÉMOIN D'ACTIONNEMENT) (*MALFUNCTION) 499, 503
AVERTISSEUR (ASS) 115
AVERTISSEUR DE RECUL (ASS) 180
AVERTISSEUR DE RECUL (ASS) 449
AVERTISSEUR DE RECUL (ASS) (ROPS) 516
AVERTISSEUR DE RECUL (ASS) (107DB) 453
AXE DE CULBUTEUR (ASS) (ADMISSION) 62
AXE DE CULBUTEUR (ASS) (ÉCHAPPEMENT) 62
AXE DE GODET (ASS) 426

B

BAGUE (ARBRE À CAMES) 18
BALAI D'ESSUIE-GLACE (ENS) (ARRIÈRE) (GLACE) 547
BALAI D'ESSUIE-GLACE (ENS) (PARE-BRISE) 547
BALAI D'ESSUIE-GLACE (ENS) (PORTE DE CABINE DE DROITE) 466
BALAI D'ESSUIE-GLACE (ENS) (PORTE DE CABINE DE GAUCHE) 468
BALANCIER DE SUSPENSION (ASS) 266
BANDE AUTOCOLLANTE (D6N)(CAPOT DROIT) 454
BANDE AUTOCOLLANTE (D6N)(CAPOT GAUCHE) 454
BANDE AUTOCOLLANTE (D6N)(PROTECTION DE RÉSERVOIR DE CARBURANT) 245

* TRADUCTION NON DISPONIBLE AU MOMENT DE LA PUBLICATION

INDEX

Désignation	Page
BANDE AUTOCOLLANTE (D6N)(PROTECTION DE RÉSERVOIR DE CARBURANT ARRIÈRE DROIT)	245
BANDE AUTOCOLLANTE (D6N)(PROTECTION DE RÉSERVOIR DE CARBURANT ARRIÈRE GAUCHE)	245
BARRE D'ATTELAGE (ASS)	236
BATI EN C - LAME ORIENTABLE	421
BATTERIE (ASS)	124
BATTERIE ET CÂBLAGE	121
BATTERIE (SANS ENTRETIEN)(12 VOLTS) (GRANDE CAPACITÉ)	124
BATTERIE (12 VOLTS)	122
BLINDAGE INFÉRIEUR (ASS)	243 244
BLOC-CYLINDRES - COUVERCLE (ASS)	12
BLOC-CYLINDRES (ASS)	17 18 19
BOÎTE DE VITESSES (VERSION)	222
BOÎTE PLANÉTAIRE (ASS)	205
BOUCHON AIMANTÉ (RÉDUCTEUR)	198
BOUCHON DE GOULOTTE DE REMPLISSAGE D'HUILE MOTEUR (TRANSMISSION)	200
BOUCHON DE GOULOTTE DE REMPLISSAGE (HUILE MOTEUR)	66
BOUCHON DE GOULOTTE DE REMPLISSAGE (RÉSERVOIR HYDRAULIQUE)	396
BOUCHON DE MOTEUR (ASS)	50
BOUCHON DE RADIATEUR (ENS) (DÉCHARGE DE PRESSION)	89
BOUCHON DE REMPLISSAGE D'HUILE MOTEUR (ASS)	66
BOUCHON DE RÉSERVOIR DE CARBURANT (ENS) (VERROUILLAGE AÉRÉ)	112
BOUCHON DE VIDANGE (CONVERTISSEUR DE COUPLE)	203
BOUCHON DE VIDANGE (RÉSERVOIR HYDRAULIQUE)	396
BOUCHON FILETÉ (RETOUR AU CARTER)	234
BOUCHON FILETÉ (VIDANGE DE BOÎTE DE VITESSES)	206
BOUCHON FILETÉ (VIDANGE DE BOÎTE DE VITESSES)	206
BOUCHON FILETÉ (VIDANGE DE CONVERTISSEUR DE COUPLE)	220
BOUCHON FILETÉ (VIDANGE DE RÉDUCTEUR)	198
BOUCHON FILETÉ (VIDANGE D'HUILE MAGNÉTIQUE)	33
BOULONNERIE (ASS)	304
BOULONNERIE DE CABLAGE DU MOTEUR (ASS)	135
BOULONNERIE DE CARTER AV (ASS)	38
BOUTON-AVERTISSEUR	174
BOUTON (COUVERCLE DE FILTRE)	510
BOUTON-LOMBAIRE	496
BRAS DE POUSSÉE (ASS)	427
BROSSE D'ALTERNATEUR (ENS)	116 118

C

Désignation	Page
CABINE - REVÊTEMENT (ASS)	484
CABINE (ASS)	449 453
CABINE (VERSION)	448
CABLAGE - PLATE-FORME (ASS)	187
CÂBLAGE (ASS)	181
CABLAGE DE MOTEUR (ASS)	183
CABLAGE DU CHAUFFAGE DE CABINE (ASS)	186
CABLE (ENS) (COMMANDE DE TEMPÉRATURE DU RÉCHAUFFEUR)	474
CACHE-SOUPAPES (ASS)	14
CANALISATIONS A COMMANDE PILOTE (ASS)	374 376
CANALISATIONS D'AIR (ASS)	95
CANALISATIONS DE CARBURANT (ASS)	104
CANALISATIONS DE CHAUFFAGE (ASS)	487 489
CANALISATIONS DE CLIMATISEUR (ASS)	485
CANALISATIONS DE DIRECTION (ASS)	308
CANALISATIONS DE MONTAGE (ASS)	479
CANALISATIONS DE POMPE (ASS)	378
CANALISATIONS DE VÉRIN DE LEVAGE (ASS)	368 370 372
CANALISATIONS D'EAU (ASS)	82
CANALISATIONS D'HUILE DE TRANSMISSION (ASS)	200
CANALISATIONS D'HUILE DE TURBOCOMPRESSEUR (ASS)	72
CANALISATIONS D'HUILE MOTEUR (ASS)	71
CANALISATIONS D'INCLINAISON ET D'ORIENTATION	361 363
CANALISATIONS DU FILTRE A CARBURANT (ASS)	106
CANALISATIONS DU RIPPER (ASS)	382 384
CANALISATIONS DU VÉRIN D'INCLINAISON (ASS)	386 387

* TRADUCTION NON DISPONIBLE AU MOMENT DE LA PUBLICATION

INDEX

Désignation	Page
	388
CANALISATIONS HYDRAULIQUES (ASS)	365
CAPOT (ASS)	259
CAPOT ET PROTECTION (ASS)	251
	253
	256
CAPTEUR - MOTEUR (ASS)	153
CAPTEUR DE NIVEAU DU LIQUIDE (ASS)	155
CAPTEUR DE PRESSION (ASS)	159
	160
	161
CAPTEUR DE PRESSION (ASS) (CARBURANT)	153
CAPTEUR DE PRESSION (ASS) (HUILE MOTEUR)	153
CAPTEUR DE TEMPERATURE (ASS)	166
	167
	168
CAPTEUR DE TEMPERATURE (ASS) (ADMISSION D'AIR)	153
CAPTEUR DE TEMPERATURE (ASS) (LIQUIDE DE REFROIDISSEMENT)	153
CAPTEUR DE VITESSE (ASS)	162
	163
	164
	165
CAPTEUR DE VITESSE (ASS) (BOÎTE DE VITESSES)	193
CAPTEUR DE VITESSE (ASS) (CALAGE) (MOTEUR)	153
CARENAGE (ASS)	237
CARTER (ASS) (DISTRIBUTEUR)	403
	405
	407
	409
	411
	413
CARTER AV (ASS)	42
CARTER DE VOLANT (ASS)	41
CARTER TELESCOPIQUE DE MECANISME AMORTISSEUR	269
CEINTURE DE SECURITE (ASS)	527
CEINTURE DE SECURITE (ASS) (SIEGE A SUSPENSION)	524
CEINTURE DE SECURITE (ASS) (SIÈGE À SUSPENSION À DOSSIER BAS)	534
CHAINES (ASS)	286
	287
	288
CHAPEAU ANTI-POUSSIERE (RÉCHAUFFEUR D'EAU)	136
	137
CHAPEAU DE ROUE AV (CHAINE) (ASS)	268
CHAPEAU (ENS) (CLIMATISEUR)	479
CHAPEAU (ENS) (*ELECTRONIC TECH-SERVICE TOOL)	187
CHAPEAU (ENS) (POUSSIÈRE) (PORTE DE REMPLISSAGE DE RADIATEUR)	247
CHAPEAU (RÉSERVOIR DE LAVE-GLACE DE VITRE)	543
CHÂSSIS ET CARTER (ASS)	234
CHÂSSIS-PORTEUR DE JOINT (ASS)	11
CHAUFFAGE DE CABINE (ASS)	470
CLAPET A BILLE (COUPURE DE CANALISATION DE CARBURANT)	104
CLAPET DE DECHARGE (ASS)	228
	230
	330
	331
	332
	417
	418
CLAPET DE DECHARGE (ASS) (COMPRESSEUR DE RÉFRIGÉRANT)	455
CLAPET DE DECHARGE (ASS) (DISTRIBUTEUR)	405
	409
	413
CLAPET DE DECHARGE (ASS) (*PUMP HEAD)	306
CLAPET DE RETENUE (ENS) (DISTRIBUTEUR)	403
	405
	409
	411
	413
CLÉ (COUPE-BATTERIE)	176
CLÉ ÉLECTRONIQUE (ENS) (SÉCURITÉ)	129
CLÉ ÉLECTRONIQUE (ENS) (SÉCURITÉ)	139
CLIMATISEUR (ASS)	444
	445
COLLECTEUR D'ÉCHAPPEMENT (ASS)	97
COLLECTEUR ET SOUPAPE (ASS)	311
	312
COMMANDE DE BOITE DE VITESSES (ASS)	191
COMMANDE DE COMMUNICATION (ASS) (LIAISON DE PRODUIT)	131
COMMANDE DE DIRECTION ET BOITE DE VITESSES	298
	300
	302
COMMANDE DE FREIN DE STATIONNEMENT (ASS)	296
COMMANDE DE MACHINE (ASS)	129
COMMANDE DE MACHINE (ASS) (SÉCURITÉ) (COMPREND LE LOGICIEL)	133

* TRADUCTION NON DISPONIBLE AU MOMENT DE LA PUBLICATION

INDEX

Désignation	Page
COMMANDE ELECTRONIQUE DE MOTEUR (ASS)	127, 128
COMMANDE ET MONTAGE - MOTEUR	126
COMMANDE HYDRAULIQUE MANUELLE (ASS)	341, 343
COMMANDE HYDRAULIQUE MANUELLE (ASS)	339
COMMANDE HYDRAULIQUE MANUELLE (ASS) (RIPPER)	360
COMMANDE NON PROGRAMMEE (ASS)	132
COMMANDE NON PROGRAMMEE (ASS) (MACHINE)	129
COMMANDE NON PROGRAMMEE (ASS) (SÉCURITÉ)	139
COMPOSANTS ÉLECTRONIQUES DE LA MACHINE (VERSION)	133
COMPRESSEUR DE REFRIGERANT (ASS)	456
COMPRESSEUR DE REFRIGERANT (ASS)	455
CONDENSEUR DE RÉFRIGÉRANT	457
CONTACTEUR DE DÉMARRAGE À CLÉ (ENS)	500, 504
CONTACTEUR (ENS) (ÉCLAIRAGE)	499
CONTACTEUR (ENS) (GYROPHARE)	150
CONTACTEUR (ENS) (TÉMOIN)	503
CONTACTEUR (ENS) (24 VOLTS) (ILLUMINÉ) (ACCÉLÉRATEUR)	187
CONTACTEUR MAGNETIQUE (ASS)	177, 179
CONTACTEUR MAGNETIQUE (ASS)	178
CONTACTEUR MAGNETIQUE (ENS) (*AIR INLET HEAT)	179
CONVERTISSEUR DE COUPLE - MONTAGE (ASS)	203
CONVERTISSEUR DE COUPLE (ASS)	218, 220
COUDE D'ADMISSION D'AIR (ASS)	93
COURONNE ET DIFFERENTIEL (ASS)	193
COURROIE (ASS)	6, 7, 8
COURROIE (AVEC CLIMATISEUR MARCHÉ EUROPÉEN)	7
COURROIE (AVEC CLIMATISEUR MARCHÉ NORD-AMÉRICAIN)	8
COURROIE (SANS CLIMATISEUR MARCHÉ NORD-AMÉRICAIN)	6
COUSSINET (BÂTI EN C SPÉCIAL)	419
COUVERCLE DE CARTER AV - BOULONNERIE (ASS)	37
COUVERCLE DE CARTER AV (ASS)	13
COUVERCLE DE COLLECTEUR D'ADMISSION (ASS)	92
COUVERCLE DE LA CONSOLE (ASS)	459, 460, 461, 463, 465
COUVERCLE INFÉRIEUR-DOSSIER (ASS)	496, 497, 498
CREPINE (RÉSERVOIR HYDRAULIQUE)	396
CULASSE (ASS)	24, 25, 27, 29
CULASSE (ENS)	20, 22
CULBUTERIE (ASS)	61, 62

D

Désignation	Page
DEFLECTEUR PARE-SABLE (ASS)	241
DÉMARREUR ÉLECTRIQUE (ASS)	171, 172
DENT DE RIPPER (ASS)	439, 440, 441
DISJONCTEUR DE SECURITE (ENS) (FREIN DE STATIONNEMENT)	298
DISJONCTEUR DU PANNEAU DE COMMANDE (ASS)	151
DISJONCTEUR (ENS) (80 A) (DISJONCTEUR PRINCIPAL DE LA MACHINE)	151
DISPOSITIF D'EVACUATION DES VAPEURS DE CARTER	68
DISTRIBUTEUR (ASS)	324, 403
DISTRIBUTEUR (ASS)	405, 407, 409, 411, 413
DISTRIBUTEUR DE BOITE (ASS)	232
DISTRIBUTEUR DOUBLE ÉLÉMENT (ASS)	399
DISTRIBUTEUR QUADRUPLE CORPS (VERSION)	360
DISTRIBUTEUR TRIPLE ÉLÉMENT (ASS)	400
DISTRIBUTEUR 4 ÉLÉMENTS (ASS)	401

* TRADUCTION NON DISPONIBLE AU MOMENT DE LA PUBLICATION

INDEX

Désignation	Page

E

EAU DES CHEMISES - RECHAUFFEUR (ASS)	136, 137
ÉCLAIRAGE - GYROPHARE (ASS)	150
ÉCLAIRAGE - PROJECTEURS (ASS)	148
ECLAIRAGE TABLEAU DE BORD	499, 503
ÉCRAN (ENS) (GAVAGE DU CONVERTISSEUR DE COUPLE)	220
ÉCRAN (ENS) (RÉSERVOIR HYDRAULIQUE)	396
ÉCRAN MAGNÉTIQUE (HUILE DE TRANSMISSION)	200
ÉLECTRONIQUE - MACHINE (ENS)	133
ÉLECTRONIQUE DE TRANSMISSION (ASS)	134
ÉLECTRONIQUE-MONITEUR (ASS)	133
ÉLÉMENT DE FILTRE À AIR (ENS) (PRINCIPAL)	91
ÉLÉMENT DE FILTRE À AIR (ENS) (SECONDAIRE)	91
ÉLÉMENT DE FILTRE À CARBURANT (PRINCIPAL)	103
ÉLÉMENT DE FILTRE À HUILE (ENS) (DÉBIT HYDRAULIQUE/RETOUR DE DÉBIT) (JETABLE)	396
ÉLÉMENT DE FILTRE À HUILE (ENS) (HYDRAULIQUE) (NETTOYAGE/GRANDE EFFICACITÉ)	396
ÉLÉMENT DE FILTRE À HUILE (ENS) (*POWER TRAIN - HIGH EFFICIENCY)	201
ÉLÉMENT DE FILTRE À HUILE (ENS) (RETOUR DE DÉBIT) (LIQUIDE HYDRAULIQUE RÉSISTANT AU FEU)	396
ÉLÉMENT DE FILTRE À HUILE (ENS) (TRANSMISSION)	197
ÉLÉMENT DU RÉCHAUFFEUR D'EAU DES CHEMISES (ENS) (120 VOLTS/1000 WATTS)	137
ÉLÉMENT DU RÉCHAUFFEUR D'EAU DES CHEMISES (ENS) (240 V/1000 WATTS)	136
EMBOUT ET LAME DE COUPE (ASS)	435, 436
ÉMETTEUR DE NIVEAU (ENS) (CARBURANT)	112
ENTRAÎNEMENT DE VENTILATEUR (ASS)	35, 36
ENTRETIEN DE LA TRANSMISSION (ASS)	170
ENTRETIEN DE LA TRANSMISSION (ASS) (COMPREND LE LOGICIEL)	134
ENTRETIEN DU MONITEUR (ASS)	169
ESSIEU (ASS)	190
ESSUIE-GLACE (ASS)	547
EXTRACTEUR DE FUSIBLE	122

F

FAISCEAU DE CABLES - CAPTEUR (ENS) (FIL DE CALIBRE 14)	168
FAISCEAU DE CABLES - CAPTEUR (ENS) (FIL DE CALIBRE 16-18)	168
FAISCEAU DE CABLES DU CLIMATISEUR (ENS) (VENTILATEURS DE CONDENSEUR) (COMPRESSEUR)	457
FAISCEAU DE CABLES (ENS) (AVERTISSEUR DE RECUL)	516
FAISCEAU DE CABLES (ENS) (CAPTEURS DE VITESSE DE BOÎTE)	191
FAISCEAU DE CABLES (ENS) (COMMANDE DE TRANSMISSION)	302
FAISCEAU DE CABLES (ENS) (COMMANDE)(SÉCURITÉ)	139
FAISCEAU DE CABLES (ENS) (COMMANDE)(SÉCURITÉ)	142
FAISCEAU DE CABLES (ENS) (DÉMARRAGE SANS INJECTION)	183
FAISCEAU DE CABLES (ENS) (DISJONCTEUR)	151
FAISCEAU DE CABLES (ENS) (ESSUIE-GLACE)	449
FAISCEAU DE CABLES (ENS) (FREIN DE STATIONNEMENT)	122
FAISCEAU DE CABLES (ENS) (LAVE-VITRE)	543
FAISCEAU DE CABLES (ENS) (MODULE DE COMMANDE)	131
FAISCEAU DE CABLES (ENS) (MOTEUR)	121
FAISCEAU DE CABLES (ENS) (PLATE-FORME)	121, 187
FAISCEAU DE CABLES (ENS) (PRINCIPAL)(CABINE)	449
FAISCEAU DE CABLES (ENS) (RÉCHAUFFEUR)	472
FAISCEAU DE CABLES (ENS) (RÉSERVOIR HYDRAULIQUE)	121
FAISCEAU DE CABLES (ENS) (SOLÉNOÏDES SÉLECTEURS DE BOÎTE DE VITESSES)	191
FAISCEAU DE CABLES (ENS) (TABLEAU DE BORD)	499, 503
FAISCEAU DE CABLES (ENS) (TABLEAU DE DISJONCTEUR)	151
FAISCEAU DE RADIO (ENS) (HAUT-PARLEUR)	512, 513
FAISCEAU DE SOUPAPE (ENS) (COMPRESSEUR D'AIR) (SIÈGE)	541
FAISCEAU DU REFROIDISSEUR D'HUILE (ENS)	89

* TRADUCTION NON DISPONIBLE AU MOMENT DE LA PUBLICATION

INDEX

Désignation	Page
FILTRE -EAU (POMPE À EAU)	85
FILTRE A AIR (ASS)	91
FILTRE A CARBURANT (ENS) (AUXILIAIRE)	106
FILTRE À CARBURANT (REMPLISSAGE DU RÉSERVOIR)	112
FILTRE A HUILE (ASS)	197, 305, 358
FILTRE À HUILE (ENS) (*HYDRAULIC)(HIGH EFFICIENCY)	358
FILTRE À HUILE (ENS) (HYDRAULIQUE)	305
FILTRE À HUILE MOTEUR (ASS)	67
FILTRE A HUILE MOTEUR (ENS)	67
FILTRE A VISSER (HYDRAULIQUE)	358
FILTRE-CHARBON (SURPRESSEUR DE CABINE)	510
FILTRE DE SÉPARATEUR D'EAU ET DE CARBURANT (ASS)	103
FILTRE (DISTRIBUTEUR)	403, 405, 407, 409, 411, 413
FILTRE (ENS) (AÉRATION DE LA CABINE)	510
FILTRE (ENS) (SURPRESSEUR DE CABINE)	510
FLEXIBLE (RADIATEUR INFÉRIEUR)	87
FLEXIBLE (RADIATEUR SUPÉRIEUR)	87
FREIN DE DIRECTION	295
FREIN ET ENTRAÎNEMENT DE DIFFÉRENTIEL (ASS)	289
FREIN ET TRAINS PLANÉTAIRES (ASS)	293
FUSIBLE (10A)	151
FUSIBLE (15A)	151
FUSIBLE (20 A)	151

G

Désignation	Page
GALET A BOUDIN DOUBLE (ASS)	279, 280, 282
GALET A BOUDIN SIMPLE (ASS)	283, 284
GALET SUPERIEUR (ASS)	277
GARDE-BOUE (ASS)	240
GRAISSEUR (BALANCIER DE SUSPENSION)	266
GRAISSEUR (FILET 1/8-27) (BIELLE D'INCLINAISON)	423
GRAISSEUR (FILET 1/8-27) (CARTER ET BÂTI)	234
GRAISSEUR (FILET 1/8-27) (PLATE-FORME DE CABINE)	507
GRAISSEUR (FILET 1/8-27) (RIPPER)	437
GRAISSEUR (FILET 1/8-27) (VÉRIN DE LEVAGE DE BULLDOZER)	350
GRAISSEUR (FILET 1/8-27) (VÉRINS D'INCLINAISON ET D'ORIENTATION)	361
GRAISSEUR (LAME DE BULLDOZER ORIENTABLE)	431
GRAISSEUR (SURPRESSEUR DE CABINE)	510
GRILLE DE PROTECTION (ASS)	519, 520
GRILLE DE RADIATEUR (ASS)	242
GROUPE DE CONTROLE	130, 131
GROUPE DE FIXATION (PORTE DE CABINE)	468
GROUPE DE MOTEUR A PISTONS	313
GROUPE DE ROTATION DE MOTEUR	319
GROUPE DE ROTATION DE POMPE	321, 395
GUIDE PROTECTEUR DE CHAÎNE (ASS)	249

H

Désignation	Page
HUILE MOTEUR - CARTER (ASS)	48

I

Désignation	Page
INDICATEUR DE COLMATAGE DE FILTRE À AIR (ASS)	507
INDICATEUR DE COLMATAGE DE FILTRE À AIR (ASS)	94
INDICATEUR (ENS) (TÉMOIN DE MISE EN GARDE)	499, 503
INJECTEUR DE CARBURANT (ASS)	109
INJECTEURS-POMPES HYDRAULIQUES (ENS)	111
INSONORISATION (ASS)	60
INSONORISATION (VERSION)	59
INTERRUPTEUR - BOUTON-POUSSOIR (ENS) (CHANGEMENT DE VITESSE AUTOMATIQUE)	503
INTERRUPTEUR - BOUTON-POUSSOIR (ENS) (DÉFILEMENT)	504
INTERRUPTEUR - BOUTON-POUSSOIR (ENS) (DÉFILEMENT DU CYCLE EMS)	500
INTERRUPTEUR - BOUTON-POUSSOIR (ENS) (MONTÉE EN VITESSE - INTERR. ÉLECTRON.)	298
INTERRUPTEUR - BOUTON-POUSSOIR (ENS) (PASSAGE AUTOMATIQUE DES VITESSES BIDIRECTIONNEL)	499
INTERRUPTEUR - BOUTON-POUSSOIR (ENS) (RÉTROGRADAGE AUTOMATIQUE)	504

* TRADUCTION NON DISPONIBLE AU MOMENT DE LA PUBLICATION

INDEX

Désignation	Page
INTERRUPTEUR - BOUTON-POUSSOIR (ENS) (RÉTROGRADAGE AUTOMATIQUE)	500
INTERRUPTEUR - BOUTON-POUSSOIR (ENS) (RÉTROGRADATION - INTERR. ÉLECTRON.)	298
INTERRUPTEUR - DÉRIVATION (ASS)	175
INTERRUPTEUR BALANCIER (ENS) (FREIN DE STATIONNEMENT)	296
INTERRUPTEUR DE KLAXON (ENS)	174
INTERRUPTEUR DE THERMOSTAT (ENS) (CLIMATISEUR)	444
INTERRUPTEUR ROTATIF (ENS) (ESSUIE-GLACE ARRIÈRE)	547
INTERRUPTEUR ROTATIF (ENS) (ESSUIE-GLACE AVANT)	547
INTERRUPTEUR ROTATIF (ENS) (ESSUIE-GLACE DROIT)	547
INTERRUPTEUR ROTATIF (ENS) (SOUFFLANTE CLIMATISEUR-CHAUFFAGE--DÉGIVREUR)	499
INTERRUPTEUR ROTATIF (ENS) (SOUFFLANTE DE CHAUFFAGE)	474
INTERRUPTEUR ROTATIF (FREIN SERRÉ/ DESSERRÉ)	314
ISOLATION DE CABINE (ASS)	482

J

Désignation	Page
JAUGE D'HUILE MOTEUR (BAIONNETTE) (ASS)	70
JOINT DE CARTER DE VOLANT (ASS)	57
JOINT DE L'INJECTEUR DE CARBURANT (ASS)	58
JOINT DE RÉGULATEUR D'EAU (TEMPÉRATURE DE LIQUIDE DE REFROIDISSEMENT)	82
JOINT DE VILEBREQUIN (ASS)	56
JOINT PLAT (POMPE D'AMORÇAGE DE CARBURANT)	103
JOINT TORIQUE (BOUCHON DE VIDANGE DE BOÎTE DE VITESSES)	206
JOINT TORIQUE (BOUCHON DE VIDANGE DE CARTER)	234
JOINT TORIQUE (BOUCHON DE VIDANGE DE CONVERTISSEUR DE COUPLE)	220
JOINT TORIQUE (BOUCHON DE VIDANGE D'ENTRAÎNEMENT DE RÉDUCTEUR)	198
JOINT TORIQUE (BOUCHON MAGNÉTIQUE D'ENTRAÎNEMENT DE RÉDUCTEUR)	198
JOINT TORIQUE (FILTRE DE TRANSMISSION)	197
JOINT TORIQUE (RENIFLARD DE MOTEUR)	65
JOINT UNIVERSEL (ASS)	223

K

Désignation	Page
KIT D'AMORTISSEUR (SIEGE A SUSPENSION)	541
KIT D'ATTACHE DE CEINTURE DE SECURITE (SIÈGE À SUSPENSION)	539
KIT D'ATTACHE (SIEGE A SUSPENSION)	541
KIT DE BAGUE (DÉMARREUR)	172
KIT DE BALAIS (DÉMARREUR) (MOTEUR)	172
KIT DE BLOC COULISSANT (SIEGE A SUSPENSION)	530 531 532
KIT DE BORNE D'ALTERNATEUR (BATTERIE)	118
KIT DE BORNE D'ALTERNATEUR (BATTERIE)	116
KIT DE BORNE D'ALTERNATEUR (RELAIS) (TÉMOIN LUMINEUX)	118
KIT DE BORNE D'ALTERNATEUR (RELAIS) (TÉMOIN LUMINEUX)	116
KIT DE BORNE D'ALTERNATEUR (TÉMOIN) (RELAIS)	118
KIT DE BORNE D'ALTERNATEUR (TÉMOIN) (RELAIS)	116
KIT DE BOUGIE (12 BROCHES)	187 302 499 503
KIT DE BOUGIE (12 BROCHES)	181
KIT DE BOUGIE (2 BROCHES)	121 142 151 168 181 183 187 191 446 449 457 472 499 503 516
KIT DE BOUGIE (2 BROCHES)	121 122 191
KIT DE BOUGIE (2 BROCHES) (CONTACTEUR DE RELAIS D'ALIMENTATION PRINCIPALE)	178
KIT DE BOUGIE (3 BROCHES)	121 160 161

* TRADUCTION NON DISPONIBLE AU MOMENT DE LA PUBLICATION

INDEX

Désignation	Page
	181
	183
	187
	302
	449
	499
	503
KIT DE BOUGIE (3 BROCHES)	121
KIT DE BOUGIE (4 BROCHES)	139
	142
	187
	499
	503
KIT DE BOUGIE (4 BROCHES)	121
	122
KIT DE BOUGIE (4 BROCHES)	187
KIT DE BOUGIE (6 BROCHES)	121
	187
	302
	449
	499
	503
	516
KIT DE BOUGIE (8 BROCHES)	131
	449
	453
	499
	503
	506
KIT DE BOUGIE (8 BROCHES)	121
	122
	191
KIT DE BOUTON (RADIO)	512
	513
KIT DE BOUTON (REGLAGE DE HAUTEUR) (SIEGE A SUSPENSION)	476
KIT DE CHAPEAU DE FILTRE (RÉSERVOIR DE CARBURANT)	112
KIT DE COUSSINET (ROTATION DU MOTEUR À PISTONS (ASS))	319
KIT DE COUSSINET (SIEGE A SUSPENSION)	477
KIT DE GAINE (SIÈGE À SUSPENSION)	539
KIT DE JOINTS (CLAPET DE DÉCHARGE)	332
KIT DE JOINTS (ÉLECTROVANNE)	114
	231
	337
KIT DE JOINTS (*PUMP HEAD RELIEF VALVE)	306
KIT DE JOINTS (RÉCHAUFFEUR D'EAU)	136
	137
KIT DE LEVIER (DÉMARREUR)	172
KIT DE PALIER PRINCIPAL (VILEBREQUIN)	15
KIT DE PARE-CHOCS (RÉGLAGE DU POIDS) (SIEGE A SUSPENSION)	477
KIT DE POUSSOIR (SIEGE A SUSPENSION)	477
KIT DE PRISE FEMELLE (12 BROCHES)	296
KIT DE PRISE FEMELLE (12 BROCHES)	121
	139
	142
	151
	181
	187
	449
KIT DE PRISE FEMELLE (2 BROCHES)	112
	115
	121
	139
	141
	142
	146
	147
	151
	164
	165
	167
	174
	179
	180
	181
	183
	187
	193
	314
	446
	449
	453
	455
	457
	472
	499
	503
	516
KIT DE PRISE FEMELLE (2 BROCHES)	175
	177
KIT DE PRISE FEMELLE (2 BROCHES)	121
	231
	479
	541
KIT DE PRISE FEMELLE (3 BROCHES)	121
	142
	143
	156
	157
	158
	166

* TRADUCTION NON DISPONIBLE AU MOMENT DE LA PUBLICATION

INDEX

Désignation	Page
	181
	183
	302
	449
	457
	499
KIT DE PRISE FEMELLE (3 BROCHES)	499
	500
	503
	504
KIT DE PRISE FEMELLE (3 BROCHES)	159
KIT DE PRISE FEMELLE (3 BROCHES) (CAPTEUR DE NIVEAU DE LIQUIDE DE REFROIDISSEMENT)	155
KIT DE PRISE FEMELLE (4 BROCHES)	139
	142
	468
	547
KIT DE PRISE FEMELLE (4 BROCHES)	337
KIT DE PRISE FEMELLE (6 BROCHES)	78
	121
	131
	187
	298
	446
	449
	466
	472
	491
	509
	516
	543
KIT DE PRISE FEMELLE (6 BROCHES)	504
KIT DE PRISE FEMELLE (6 BROCHES)	500
	503
KIT DE PRISE FEMELLE (8 BROCHES)	187
	191
	449
	499
	503
	512
	513
	516
KIT DE PROTECTION D'ALTERNATEUR	118
KIT DE RESSORTS (REGLAGE DE HAUTEUR) (SIEGE A SUSPENSION)	476
KIT DE RESSORTS (SIEGE A SUSPENSION)	476
KIT DE ROULEAU (SIÈGE À SUSPENSION)	539
KIT DE SOLÉNOÏDE (DÉMARREUR)	172
KIT DE SOUPAPE PNEUMATIQUE (SIEGE A SUSPENSION)	541
KIT DE VIS DE RETENUE (COMMANDE (ASS))	132
KIT DE VIS (*ENGINE HARNESS RETAINING)	183
KIT DE VIS (FAISCEAU DE DISJONCTEUR)	151
KIT D'INDICATEUR (RÉGLAGE DU POIDS) (SIEGE A SUSPENSION)	477
KIT D'ISOLANT (DÉMARREUR)	172
KLAXON (ENS) (24 VOLTS)(TON FAIBLE)	121

L

LAME À ORIENTATION (ASS)	431
LAME DE BULLDOZER SEMI-UNIVERSELLE (VERSION)	419
	420
LAME SEMI-UNIVERSELLE (ASS)	433
LAMPE - GYROPHARE (ASS)	147
LAMPE - PHARE (ASS)	144
	145
	146
LAMPE-DIODE (LED) (GYROPHARE)	150
LAMPE (ENS) (12 VOLTS) (TÉMOIN LUMINEUX PRINCIPAL ROUGE/ VERT)	142
LAMPE (ENS) (12 VOLTS) (TÉMOIN LUMINEUX PRINCIPAL ROUGE/ VERT)	141
LAMPE HALOGÈNE (24 VOLTS)(65 WATTS) (PROJECTEUR)	144
	145
	146
LENTILLE (ENS) (PROJECTEUR)	146
LENTILLE (ENS) (PROJECTEUR) (ROPS)	144
	145
LENTILLE (GYROPHARE JAUNE)	147
LENTILLE (PLAFONNIER)	143
LOGICIEL - MACHINE (ENS) (SÉCURITÉ)	129
LOGICIEL - MACHINE (ENS) (SÉCURITÉ) (LOGICIEL SEULEMENT)	133
LOGICIEL - TRANSMISSION (ASS)	134
LOGICIEL - TRANSMISSION (ASS)	170
LOGICIEL - TRANSMISSION (ENS)	170
LOGICIEL-MONITEUR (ASS)	169

M

MAILLON DE CHAINE (ENS)	273
	274
MANCHON - JOINT (VILEBREQUIN)	15
MANOCONTACT (ENS) (DÉRIVATION DU FILTRE À HUILE DE TRANSMISSION)	121
MANOCONTACT (ENS) (HAUTE/BASSE) (COMPRESSEUR)	479
MARCHEPIED (ASS)	535
MECANISME AMORTISSEUR ET REGLAGE DE CHAINES (ASS)	285
MODULE - QUATRE INSTRUMENTS (ASS)	491

* TRADUCTION NON DISPONIBLE AU MOMENT DE LA PUBLICATION

INDEX

Désignation	Page
MODULE D'AFFICHAGE (ASS) (TÉMOIN ET PIGNON) (INDICATEUR DE RAPPORT DE BOÎTE)	500, 503
MONTAGE DE CABINE (ASS)	492
MONTAGE DE GALET SUPÉRIEUR	275
MONTAGE DE MOTEUR (ASS)	45, 46
MONTAGE DE MOTEUR (VERSION)	5
MONTAGE DE PLATE-FORME (ASS)	493
MONTAGE DE RADIO (ASS)	481
MONTAGE DE RIPPER (ASS)	424
MONTAGE DE SILENCIEUX (ASS)	98
MONTAGE DE SOUPAPE (ASS)	392
MONTAGE DE VÉRIN (ASS)	390
MONTAGE D'ENTRAÎNEMENT DE VENTILATEUR (ASS)	47
MONTAGE DU TOIT ROPS (ASS)	495
MONTAGE-SÉCURITÉ (ASS)	139, 142
MONTAGE-SÉCURITÉ (ASS)	141
MOTEUR - PARTIE CENTRALE (VERSION)	4
MOTEUR COMPLET (VERSION)	2, 3
MOTEUR ELECTRIQUE (ASS) (27 VOLTS) (CHAUFFAGE - ROPS OUVERT)	472

O

Désignation	Page
OEILLETONS DE LEVAGE MOTEUR (ASS)	44

P

Désignation	Page
PANNEAU D'INSONORISATION (ASS)	261
PARE-POUSSIERE (PANNEAU DE DIAGNOSTICS)	365
PARE-POUSSIERE (POMPE HYDRAULIQUE)	378
PARE-POUSSIERE (PRÉLÈVEMENT DE LIQUIDE DE DISTRIBUTEUR)	392
PARE-POUSSIERE (RACCORDS DE BOÎTE DE VITESSES)	207
PARE-POUSSIERE (ROBINET DE PRÉLÈVEMENT DE LIQUIDE DE REFROIDISSEMENT)	82
PARE-POUSSIERE (ROBINET DE PRÉLÈVEMENT D'HUILE DE TRANSMISSION)	200
PARE-POUSSIERE (ROBINET DE PRÉLÈVEMENT D'HUILE DE TURBOCOMPRESSEUR)	72
PARE-POUSSIERE (SOUPAPES DE DIRECTION)	308
PARE-SOLEIL (ASS)	521
PAS DU MAILLON (ASS)	423
PÉDALE DE RÉGULATEUR ET DE FREIN (ASS)	314
PIGNONNERIE AV (ASS)	40
PISTON ET BIELLE (ASS)	49
PLAFONNIER (ASS)	143
PLAQUE - AVERTISSEMENT (NE PAS UTILISER)	493
PLAQUE - AVERTISSEMENT (RESSORT AMORTISSEUR)	269
PLAQUE - AVERTISSEMENT (VÉRIN HAUTE PRESSION) (AMORTISSEUR TÉLESCOPIQUE)	269
PLAQUE DE NUMÉRO DE SÉRIE (BULLDOZER)	419, 420
PLAQUE DE NUMÉRO DE SÉRIE (CONVERTISSEUR DE COUPLE)	220
PLAQUE DE NUMÉRO DE SÉRIE (MOTEUR)	550
PLAQUE D'INSTRUCTIONS (CLIMATISEUR)	479
PLAQUE SIGNALÉTIQUE (ASS)	549
PLAQUE SIGNALÉTIQUE (REMARQUE) (DIRECTION)	302
PLAQUE SIGNALÉTIQUE (REMARQUE) (RADIO)	481
PLAQUES SIGNALETIQUES ET AUTOCOLLANTS (ASS)	550
PLATE-FORME (ASS)	506
PLATE-FORME DE CABINE	507
POMPE A EAU (ASS)	84, 85
POMPE A ENGRENAGES (ASS)	213, 215
POMPE A HUILE MOTEUR (ASS)	74, 75
POMPE A PISTONS (ASS)	317, 393
POMPE D'ALIMENTATION EN CARBURANT (ASS)	111
POMPE D'AMORÇAGE DE CARBURANT (ASS)	103
POMPE DE GAVAGE (ASS)	316
POMPE D'INJECTEURS-POMPES HYDRAU. ET MONTAGE	108
POMPE D'INJECTION (ASS)	109
POMPE D'INJECTION (ASS)	110
PORTE-BALAIS (ENS) (ALTERNATEUR)	116, 118
PORTIÈRE DE CABINE (ASS)	466, 468
PORTIÈRE DE CABINE (ASS) (DROITE)	449
PORTIÈRE DE CABINE (ASS) (GAUCHE)	449

* TRADUCTION NON DISPONIBLE AU MOMENT DE LA PUBLICATION

INDEX

Désignation	Page
POULIE (ASS)	52, 53
POULIE DE ROUE AV (ENS)	51
POULIE D'ENTRAÎNEMENT DE VENTILATEUR (ASS)	54
POULIE-ROUE AVANT (ASS)	55
POUSSOIR DE SOUPAPE (ASS)	43
PRISE (ENS)	509
PROTECTION - FILTRE DE TRANSMISSION (ASS)	246
PROTECTION DE FILTRE À AIR (ASS)	100
PROTECTION DU RÉSERVOIR DE CARBURANT (ASS)	245
PROTEGE-GALETS (ASS)	250
PROTÈGE-RADIATEUR (ASS)	247

R

Désignation	Page
RADIATEUR (ASS)	87
RADIATEUR (ASS)	89
RADIO (ASS)	512, 513
RALLONGE DU DOSSIER DE SIEGE (SIÈGE)	527
RALLONGE DU DOSSIER DE SIEGE (TISSU)	524
RÉCEPTEUR-DÉSHYDRATEUR (ASS) (RÉFRIGÉRANT)	485
RÉCHAUFFEUR D'AIDE AU DÉMARRAGE (ASS)	138
RECHAUFFEUR DE CABINE ROPS OUVERTE (ASS)	472
RECHAUFFEUR DE CABINE ROPS OUVERTE (ASS)	474
RECHAUFFEUR (ENS)	138
REDUCTEUR MARIN - MONTAGE (ASS)	204
RÉDUCTEURS (ASS)	198
REFROIDISSEMENT (VERSION)	77
REFROIDISSEUR D'ADMISSION (ASS)	90
REFROIDISSEUR D'HUILE HYDRAULIQUE (ASS)	345
REFROIDISSEUR D'HUILE MOTEUR (ASS)	76
REGARD DE NIVEAU (RÉSERVOIR HYDRAULIQUE)	396
REGLAGE DE SIEGE (ASS)	442, 443
RÉGULATEUR (ENS) (PRESSION DE CARBURANT)	106
RENIFLARD (ASS)	65
RENIFLARD (ENS) (CANALISATIONS D'HUILE DE TRANSMISSION)	200
RENIFLARD (ENS) (MOTEUR)	65
RÉSERVOIR - LAVE-GLACE (ASS)	543
RESERVOIR (ASS) (RADIATEUR SUPÉRIEUR)	89
RÉSERVOIR DE CARBURANT (ASS)	112
RÉSERVOIR HYDRAULIQUE ET FILTRE (ASS)	396
RÉTROVISEUR (ASS)	490
RIPPER (ASS)	437
RIPPER (VERSION)	429
ROBINET DE BATTERIE (ASS)	176
ROBINET-ÉCHANTILLON DE LIQUIDE (ENS) (DISTRIBUTEUR)	392
ROBINET-PRÉLÈVEMENT D'ÉCHANTILLON DE LIQUIDE (ASS) (CANALISATIONS D'HUILE DE TRANSMISSION)	201
ROBINET-PRÉLÈVEMENT D'ÉCHANTILLON DE LIQUIDE (ASS) (HUILE DE TURBOCOMPRESSEUR)	72
ROBINET-PRÉLÈVEMENT D'ÉCHANTILLON DE LIQUIDE (ASS) (LIQUIDE DE REFROIDISSEMENT)	82
ROTATION DE LA ROUE DU VENTILATEUR SOUFFLANT (COMMANDE DE BULLDOZER)	339, 343
ROTATION DE LA ROUE DU VENTILATEUR SOUFFLANT (COMMANDE DE RIPPER)	341
ROTATION DE LA ROUE DU VENTILATEUR SOUFFLANT (N. D'ÉTAPE)	361
ROTATION DE LA ROUE DU VENTILATEUR SOUFFLANT (RÉGLAGE DU SIÈGE)	539, 541
ROUE AV - CHAINES (ASS)	272

S

Désignation	Page
SEGMENT DE BARBOTIN (ASS)	216
SERVOVALVE (ASS)	333, 335
SIÈGE (ASS)	522, 524, 525, 527
SIÈGE AVEC SUSPENSION (ASS)	531, 532, 533, 534, 541
SIÈGE AVEC SUSPENSION (ASS)	528, 530, 536, 539
SIÈGE INCLINABLE (ASS)	514
SILENCIEUX (ASS)	99

* TRADUCTION NON DISPONIBLE AU MOMENT DE LA PUBLICATION

INDEX

Désignation	Page
SONDE - CIRCUIT DE CARBURANT	156, 157, 158
SOUPAPE - EAU (RÉCHAUFFEUR DE CABINE)	470
SOUPAPE - EAU (RÉCHAUFFEUR DU ROPS OUVERT)	474
SOUPAPE - SOLÉNOÏDE (ASS)	114, 337, 338
SOUPAPE - SOLÉNOÏDE (ASS)	231
SOUPAPE DE DÉRIVATION (ASS)	323
SOUPAPE DE MODULATION (ASS)	224, 225
SOUPAPE DE PRIORITE (ASS)	226
SOUPAPE DE VIDANGE (CARBURANT) (FILTRE)	106
SOUPAPE DE VIDANGE (CARTER)	234
SOUPAPE DE VIDANGE (FILTRE À CARBURANT)	106
SOUPAPE PILOTE (ASS)	327
SOUPAPE RÉGULATRICE DE PRESSION ET DÉBIT	329, 415
SURPRESSEUR (ASS)	510
SUSPENSION DE SIEGE - CARTER (ASS)	476

T

TABLEAU DE BORD (ASS)	499, 503
TAMIS D'ASPIRATION (CANALISATIONS D'HUILE DE TRANSMISSION)	200
TAPIS DE PLANCHER (ARRIÈRE)	461
TAPIS DE PLANCHER (AVANT)	463
TENDEUR DE COURROIE (ASS)	9
TÊTE DE POMPE (ASS)	306
THERMOSTAT-TEMPÉRATURE D'EAU (94 DEG C) (LIQUIDE DE REFROIDISSEMENT)	82
TOIT ROPS (ASS)	515, 516
TOIT (VERSION)	454
TOURILLON DE BULLDOZER (ASS)	430
TRAIN DE ROULEMENT	288
TRAIN DE ROULEMENT (ASS)	288
TRANSFORMATEUR DE PUISSANCE (*24 V TO 12 V)	187
TRANSMISSION (VERSION)	212
TRAVERSE PIVOT (ASS)	276
TUBE-FLASH (CONNEXION À 3 BROCHES) (GYROPHARE)	147
TUBE-FLASH (CONNEXION À 8 BROCHES) (GYROPHARE)	147
TURBOCOMPRESSEUR (ASS)	101, 102
TUYAU D'ÉCHAPPEMENT (VAPEURS)	68

V

VANNE DE RINÇAGE (ASS)	326
VENTILATEUR A PALES RÉVERSIBLES (ASS)	81
VENTILATEUR (ASS)	78
VENTILATEUR SOUFFLANT (ASS)	80
VENTILATEUR SOUFFLANT DE CABINE (ASS)	446
VÉRIN DE LEVAGE (ASS)	348, 350
VERIN DE LEVAGE DE RIPPER (ASS)	352
VÉRIN D'INCLINAISON (ASS)	354, 356
VERIN D'ORIENTATION (ASS)	346
VERROU (ASS)	483
VERROU (ASS) (PORTE)	466
VERSION DE BULLDOZER	419
VERSION DE CHASSIS	1
VERSION DE GUIDAGE DE TRAIN DE ROULEMENT	271
VERSION DE MACHINE-TEMPÉRATURE AMBIANTE ÉLEVÉE	1
VERSION HYDRAULIQUE	359
VIDANGE-HUILE DE MOTEUR (ASS)	32, 33, 34
VILEBREQUIN (ASS)	15
VITRE DE CABINE (ASS)	544, 545, 546
VITRE DE CABINE (ASS) (CÔTÉ DROIT)	544
VITRE DE CABINE (ASS) (CÔTÉ GAUCHE)	544
VOLANT MOTEUR (ASS)	39
VUE DU MODÈLE	1

* TRADUCTION NON DISPONIBLE AU MOMENT DE LA PUBLICATION

INDICE

Nombre	Página

A

ACONDICIONADOR DE AIRE (GR) 445
ACONDICIONADOR DE AIRE (GR) 444
ACUMULADOR DE REFRIGERANTE 485
ADAPTADOR DE TUBERIA DE ACEITE DE MOTOR (GR) 64
AGUA DE LAS CAMISAS - CALENTADOR DEL (GR) 137
AGUA DE LAS CAMISAS - CALENTADOR DEL (GR) 136
AIRE - TUBERÍAS DE (GR) 95
AJUSTADOR DE CORREA (GR) 9
AJUSTADOR DEL ASIENTO (GR) 442
443
ALARMA (GR) 115
ALFOMBRILLA DEL PISO (FRENTE) 463
ALFOMBRILLA DEL PISO (PARTE TRASERA) . . . 461
AMORTIGUADOR Y POLEA (GR) 31
ÁRBOL DE LEVAS (GR) 10
ASIENTO CON SUSPENSIÓN (GR) 541
ASIENTO CON SUSPENSIÓN (GR) 536
539
ASIENTO (GR) 522
524
525
527

B

BALANCÍN (GR) (ADMISION) 62
BALANCÍN (GR) (ESCAPE) 62
BARRA COMPENSADORA (GR) 266
BARRA DE TIRO (GR) 236
BARRA PIVOTE (GR) 276
BASTIDOR DE LA HOJA ORIENTABLE A POTENCIA (GR) 421
BASTIDOR TELESCÓPICO DEL RESORTE TENSOR (GR) 269
BATERÍA (GR) 124
BATERÍA (LIBRE DE MANTENIMIENTO)(12 VOLTIOS) (SERVICIO PESADO) 124
BATERÍA Y CABLES (GR) 121
BATERÍA (12 VOLTIOS) 122
BLOQUE DESLIZANTE-JUEGO (ASIENTO DE SUSPENSION) 530
531
532
BLOQUE MOTOR (GR) 17
18
19
BOCINA (CONJ) (24 VOLTIOS)(TONO BAJO) . . . 121

Nombre	Página

BOMBA - TUBERÍAS DE (GR) 378
BOMBA DE ACEITE DEL MOTOR (GR) 74
75
BOMBA DE AGUA (GR) 84
85
BOMBA DE CARGA HIDRÁULICA (GR) 316
BOMBA DE CEBADO DE COMBUSTIBLE (GR) 103
BOMBA DE ENGRANAJES (GR) 213
215
BOMBA DE INYECCIÓN UNITARIA (GR) 109
110
BOMBA DE PISTONES (GR) 317
393
BOMBA DE TRANSFERENCIA DE COMBUSTIBLE (GR) 111
BOMBA HIDRÁULICA DEL INYECTOR UNITARIO (GR) 111
BOMBA HIDRÁULICA DEL INYECTOR UNITARIO Y MONTAJE 108
BRAZO DE EMPUJE (GR) 427

C

CABEZA DE BOMBA (GR) 306
CABINA (CONFIG) 448
CABINA (GR) 449
453
CABLE (CONJ) (CONTROL DE TEMPERATURA DE CALENTADOR) 474
CABLES DE CALEFACCIÓN (GR) 186
CABLES DE LA PLATAFORMA (GR) 187
CABLES DEL MOTOR (GR) 183
CABLES (GR) 181
CADENAS (GR) 286
287
288
CAJA DE LA SUSPENSIÓN DEL ASIENTO (GR) 476
CAJA DELANTERA - TORNILLERÍA DE LA (GR) 38
CAJA DELANTERA (GR) 42
CAJA (GR) (VÁLVULA DE CONTROL) 403
405
407
409
411
413
CAJA Y BASTIDOR (GR) 234
CALCOMANÍA (AVISO DE SEGURIDAD) 142
CALCOMANÍA DE ADVERTENCIA (ASIENTO AJUSTABLE) 539
541

* NO HAY TRADUCCION DISPONIBLE EN EL MOMENTO DE LA IMPRESION

INDICE

Nombre	Página
CALCOMANÍA DE ADVERTENCIA (CILINDRO DE FRENO DE ESTACIONAMIENTO)	269
CALCOMANÍA DE ADVERTENCIA (CONTROL DE DESGARRADOR)	341
CALCOMANÍA DE ADVERTENCIA (CONTROL DE HOJA TOPADORA)	339 343
CALCOMANÍA DE ADVERTENCIA (DIRECCIÓN)	302
CALCOMANÍA DE ADVERTENCIA (NO LEVANTE)	495
CALCOMANÍA DE ADVERTENCIA (NO PISAR)	361
CALCOMANÍA DE ADVERTENCIA (RADIO)	481
CALCOMANÍA DE ADVERTENCIA (RADIO PRODUCT LINK)	131
CALCOMANÍA DE IDENTIFICACIÓN (ALTERNADOR)	151
CALCOMANÍA DE IDENTIFICACIÓN (CONECTOR DE SERVICIO)	151
CALCOMANÍA DE IDENTIFICACIÓN (LUZ DE ACCION)	142
CALCOMANÍA DE IDENTIFICACIÓN (LUZ DE ACCION)	141
CALCOMANÍA DE IDENTIFICACIÓN (NUMERO DE GRUPO Y SECUENCIA) (ABANICO DE CABINA)	446
CALCOMANÍA DE IDENTIFICACIÓN (NUMERO DE GRUPO Y SECUENCIA) (CONDENSADOR DE ACONDICIONADOR DE AIRE)	457
CALCOMANÍA DE IDENTIFICACIÓN (12 VOLTIOS)	463
CALCOMANÍA DE IDENTIFICACIÓN (12 VOLTIOS)	187
CALCOMANÍA DE RAYAS (D6N, CUBRETABLERO LADO DERECHO)	454
CALCOMANÍA DE RAYAS (D6N, CUBRETABLERO LADO IZQUIERDO)	454
CALCOMANÍA DE RAYAS (PROTECTOR DE TANQUE DE COMBUSTIBLE DE PARTE DERECHA, D6N)	245
CALCOMANÍA DE RAYAS (PROTECTOR DE TANQUE DE COMBUSTIBLE, D6N)	245
CALCOMANÍA DE RAYAS (PROTECTOR TRASERO PARTE DERECHA DE TANQUE DE COMBUSTIBLE DN6)	245
CALCOMANÍA (DIFERENCIAL DE SISTEMA DE DIRECCIÓN)	302
CALCOMANÍA (EXTERIOR) (SONIDO)	59
CALCOMANÍA (IDENTIFICACION DE COJIN DE ASIENTO)	498
CALCOMANÍA (INTERRUPTOR DE ENCENDIDO)	141 142
CALCOMANÍA (LIMPIA/LAVAPARABRISAS)	547
CALCOMANÍA (LUZ DE ACCION) (*MALFUNCTION)	499 503
CALCOMANÍA (PUNTO DE LUBRICACIÓN)	450
CALCOMANÍA (PUNTO DE LUBRICACIÓN) (PLATAFORMA)	507
CALCOMANÍA (SISTEMA DE SEGURIDAD DE LA MÁQUINA)	141 142
CALCOMANÍA (TABLERO DE DIAGNOSTICO D/S)	366
CALCOMANÍA (TABLERO DE INSTRUMENTOS)	474
CALCOMANÍAS Y PLACAS DE IDENTIFICACIÓN (GR)	550
CALEFACCIÓN DE LA CABINA (GR)	470
CALENTADOR DE LA CABINA ROPS ABIERTA (GR)	472 474
CÁNCAMOS DE LEVANTAMIENTO DEL MOTOR (GR)	44
CAPÓ (GR)	259
CAPO Y PROTECTOR (GR)	251 253 256
CARGA - ALTERNADOR DE (GR)	118 120
CARGA - ALTERNADOR DE (GR)	116
CÁRTER - COLECTOR DEL (GR)	48
CHASIS (CONFIG)	1
CIGÜEÑAL (GR)	15
CILINDRO DE LEVANTAMIENTO - TUBERÍAS DEL (GR)	368 370 372
CILINDRO DE LEVANTAMIENTO DEL DESGARRADOR (GR)	352
CILINDRO DE LEVANTAMIENTO (GR)	348 350
CILINDRO DE ORIENTACION (GR)	346
CINTURÓN DE SEGURIDAD (GR)	527
CINTURÓN DE SEGURIDAD (GR) (ASIENTO DE SUSPENSION)	524
CINTURÓN DE SEGURIDAD (GR) (*SUSPENSION SEAT LOW BACK)	534
CODO DE ADMISIÓN DE AIRE (GR)	93
COJINETE (BASTIDOR ESPECIAL C)	419
COJINETE (LEVA)	18

* NO HAY TRADUCCION DISPONIBLE EN EL MOMENTO DE LA IMPRESION

INDICE

Nombre	Página
COLADOR DE COMBUSTIBLE (LLENADO DEL TANQUE)	112
COLADOR (TANQUE HIDRÁULICO)	396
COMBUSTIBLE - TANQUE DE (GR)	112
COMPARTIMIENTO (GR)	237
COMPRESOR DE REFRIGERANTE (GR)	456
COMPRESOR DE REFRIGERANTE (GR)	455
CONDENSADOR DE REFRIGERANTE (GR)	457
CONEXIÓN DE ENGRASE (ANGULO, HOJA TOPADORA)	431
CONEXIÓN DE ENGRASE (BARRA COMPENSADORA)	266
CONEXIÓN DE ENGRASE (CABINA PRESURIZADA)	510
CONEXIÓN DE ENGRASE (ROSCA DE 1/8-27) (CAJA Y BASTIDOR)	234
CONEXIÓN DE ENGRASE (ROSCA DE 1/8-27) (CILINDROS, ÁNGULO E INCLINACIÓN)	361
CONEXIÓN DE ENGRASE (ROSCA DE 1/8-27) (DESGARRADOR)	437
CONEXIÓN DE ENGRASE (ROSCA DE 1/8-27) (HOJA TOPADORA, CILINDRO DE LEVANTAMIENTO)	350
CONEXIÓN DE ENGRASE (ROSCA DE 1/8-27) (*PITCH LINK)	423
CONEXIÓN DE ENGRASE (ROSCA DE 1/8-27) (PLATAFORMA DEL OPERADOR)	507
CONFIGURACIÓN DE ENFRIAMIENTO	77
CONFIGURACIÓN DE INSTALACIÓN DEL MOTOR	5
CONFIGURACIÓN ELECTRÓNICA DE LA MÁQUINA	133
CONFIGURACIÓN GENERAL	1
CONJUNTO DE CABLERIA, RADIO (*SPEAKER)	512 513
CONJUNTO DE CABLES, ACONDICIONADOR DE AIRE (VENTILADORES DEL CONDENSADOR) (COMPRESOR)	457
CONJUNTO DE CABLES, VÁLVULA (COMPRESOR DE AIRE) (ASIENTO)	541
CONJUNTO DE LLAVE, ELECTRONICA (SEGURIDAD)	129 139
CONTROL DE COMUNICACION (GR) (ESLABON DE PRODUCTO)	131
CONTROL DE DIRECCIÓN Y TRANSMISIÓN (GR)	300 302
CONTROL DE DIRECCIÓN Y TRANSMISIÓN (GR)	298
CONTROL DE LA TRANSMISIÓN (GR)	191
CONTROL DE MAQUINA (GR)	129
CONTROL DE MAQUINA (GR) (SEGURIDAD) (INCLUYE SOFTWARE)	133
CONTROL DE MONITOR (GR)	130 131
CONTROL DEL FRENO DE ESTACIONAMIENTO	296
CONTROL ELECTRÓNICO DEL MOTOR (GR)	127 128
CONTROL ELECTRÓNICO DEL MOTOR Y MONTAJE	126
CONTROL HIDRÁULICO MANUAL (GR)	339 341 343
CONTROL HIDRÁULICO MANUAL (GR) (DESGARRADOR)	360
CONTROL NO PROGRAMADO (GR)	132
CONTROL NO PROGRAMADO (GR) (MAQUINA)	129
CONTROL NO PROGRAMADO (GR) (SEGURIDAD)	139
CONVERTIDOR DE PAR (GR)	218 220
CONVERTIDOR DE VOLTAJE (*24 V TO 12 V)	187
CORREA (GR)	6 7 8
CORREA (SIN ACONDICIONADOR DE AIRE, MERCADO DE NORTEAMERICA)	6
CORREA (*WITH A/C EUROPEAN MARKET)	7
CORREA (*WITH A/C NORTH AMERICAN MARKET)	8
CRISTAL (*AMBER WARNING BEACON)	147
CRISTAL (LUZ DE TECHO)	143
CULATA DE CILINDROS (CONJ)	20 22
CULATA DE CILINDROS (GR)	24 25 27 29

D

DERIVACIÓN - VÁLVULA DE (GR)	323
DESGARRADOR (CONFIG)	429
DESGARRADOR (GR)	437
DETECTOR DE NIVEL DE COMBUSTIBLE (CONJ) (COMBUSTIBLE)	112
DETECTOR DE POSICIÓN (SISTEMA DE COMBUST.) (GR)	156 157 158

* NO HAY TRADUCCION DISPONIBLE EN EL MOMENTO DE LA IMPRESION

INDICE

Nombre	Página
DIENTE DE DESGARRADOR (GR)	439
	440
	441
DIFERENCIAL Y CORONA (GR)	193
DISYUNTOR (CONJ) (80 AMP) (PRINCIPAL DE MAQUINA)	151
DISYUNTOR (GR)	176
DRENAJE DEL ACEITE DE MOTOR	32
	33
	34
E	
EJE DE MANDO (GR)	217
EJE (GR)	190
ELECTRONICA DE LA MAQUINA (GR)	133
ELECTRONICA DE MONITOR (GR)	133
ELEMENTO DE FILTRO DE ACEITE (CONJ) (FLUJO INVERSO) (FLUIDO HIDRÁULICO RESISTENTE AL FUEGO)	396
ELEMENTO DE FILTRO DE ACEITE (CONJ) (HIDRAULICO) (LIMPIAR/ALTA EFICIENCIA)	396
ELEMENTO DE FILTRO DE ACEITE (CONJ) (HIDRAULICO/FLUJO INVERSO) (DESECHABLE)	396
ELEMENTO DE FILTRO DE ACEITE (CONJ) (*POWER TRAIN - HIGH EFFICIENCY)	201
ELEMENTO DE FILTRO DE ACEITE (CONJ) (TREN DE FUERZA)	197
ELEMENTO DE FILTRO DE COMBUSTIBLE (PRIMARIO)	103
ELEMENTO DEL CALENTADOR DEL AGUA DE LAS CAMISAS (120 VOLTIOS/1000 VATIOS)	137
ELEMENTO DEL CALENTADOR DEL AGUA DE LAS CAMISAS (240 VOLTIOS/1000 VATIOS)	136
ELEMENTO DEL FILTRO DE AIRE (CONJ) (PRIMARIO)	91
ELEMENTO DEL FILTRO DE AIRE (CONJ) (SECUNDARIO)	91
EMPAQUETADURA (BOMBA DE CEBADO DE COMBUSTIBLE)	103
EMPAQUETADURA, REGULADOR DE AGUA (TEMPERATURA DEL REFRIGERANTE)	82
ENCHUFE (CONJ)	509
ENFRIADOR DE ACEITE DEL MOTOR (GR)	76
ENFRIADOR DEL ACEITE HIDRAULICO (GR)	345
ENGRANAJE DELANTERO (GR)	40
ESCAPE DE GASES (GR)	68
ESCOBILLA DE ALTERNADOR (CONJ)	116
	118
ESLABÓN - PASO (GR)	423
ESLABÓN DE CADENA (CONJ)	273
	274
ESPEJO (GR)	490
ESTRIBO DEL OPERADOR (GR)	535
ESTRUCTURA ROPS (GR)	515
	516
ETIQUETA DE ADVERTENCIA (GR)	549
EXTENSIÓN DEL RESPALDO (GR) (ASIENTO)	527
EXTENSIÓN DEL RESPALDO (GR) (TELA)	524
EXTRACTOR DE FUSIBLES	122
F	
FILTRO-CARBON (CABINA PRESURIZADA)	510
FILTRO (CONJ) (AIRE DE LA CABINA)	510
FILTRO (CONJ) (CABINA PRESURIZADA)	510
FILTRO DE ACEITE (CONJ) (HIDRAULICO)	305
FILTRO DE ACEITE (CONJ) (*HYDRAULIC)(HIGH EFFICIENCY)	358
FILTRO DE ACEITE DEL MOTOR (CONJ)	67
FILTRO DE ACEITE DEL MOTOR (GR)	67
FILTRO DE ACEITE (GR)	305
	358
FILTRO DE ACEITE (GR)	197
FILTRO DE AGUA (BOMBA DE AGUA)	85
FILTRO DE AIRE (GR)	91
FILTRO DE COMBUSTIBLE (CONJ) (SECUNDARIO(A))	106
FILTRO DE COMBUSTIBLE Y SEPARADOR DE AGUA (GR)	103
FILTRO ENROSCABLE (HIDRÁULICO)	358
FILTRO MAGNÉTICO (ACEITE DEL TREN DE FUERZA)	200
FILTRO (VÁLVULA DE CONTROL)	403
	405
	407
	409
	411
	413
FRENO DE DIRECCIÓN (GR)	295
FRENO Y MANDO DE DIFERENCIAL (GR)	289
FRENO Y PLANETARIOS (GR)	293
FUSIBLE (10 A)	151
FUSIBLE (15 A)	151
FUSIBLE (20 A)	151
G	
GRUPO DE AISLAMIENTO DE LA CABINA	482

* NO HAY TRADUCCION DISPONIBLE EN EL MOMENTO DE LA IMPRESION

INDICE

Nombre	Página
GRUPO DE CALENTADOR, ARRANQUE ASISTIDO	138
GRUPO DE CANTONERA Y CUCHILLA	435 436
GRUPO DE INSTALACIÓN, TUBERIAS	479
GRUPO DE MONTAJE DE LA CABINA	492
GRUPO DE POLEA LOCA	55
GRUPO DE PROTECTOR, FILTRO	100
GRUPO DE ROTACIÓN DEL MOTOR (GR)	319
GRUPO DE 3 VÁLVULAS HIDRÁULICAS	400
GRUPO DE 4 VÁLVULAS HIDRÁULICAS	401
GRUPO GIRATORIO DE BOMBA	321 395
GUARDABARROS (GR)	240
GUIAJE DE TREN DE RODAJE (CONFIG)	271

H

*HEATER AS	138
HIDRÁULICA (CONFIG)	359
HOJA DE LIMPIAPARABRISAS (CONJ) (PARABRISAS)	547
HOJA DE LIMPIAPARABRISAS (CONJ) (PUERTA DE LA CABINA LADO DERECHO)	466
HOJA DE LIMPIAPARABRISAS (CONJ) (PUERTA DE LA CBINA, LADO IZQUIERDO)	468
HOJA DE LIMPIAPARABRISAS (CONJ) (TRASERO) (VENTANA)	547
HOJA ORIENTABLE (GR)	431
HOJA SEMIUNIVERSAL (GR)	433
HOJA TOPADORA (CONFIG)	419
HOJA TOPADORA SEMIUNIVERSAL	419 420

I

IMPULSOR DE VENTILADOR (GR)	35 36
INCLINACIÓN HORIZONTAL - CILINDRO DE (GR)	354 356
INDICADOR (CONJ) (LUZ DE ACCIÓN)	499 503
INDICADOR DE CAMBIO DE FILTRO DE ACEITE (GR)	94 507
INDICADOR DEL NIVEL DE ACEITE (VARILLA) (GR)	70
INSONORIZADOR (CONFIG)	59
INSONORIZADOR (GR)	60
INSTALACIÓN DE RADIO (GR)	481
INSTALACION DE SEGURIDAD (GR)	139 141
	142
INTERRUPTOR (CONJ) (BALIZA GIRATORIA DE ADVERTENCIA)	150
INTERRUPTOR (CONJ) (ILUMINADO CON 24 VOLTIOS) (ACELERACIÓN)	187
INTERRUPTOR (CONJ) (LÁMPARA)	503
INTERRUPTOR (CONJ) (LUCES)	499
INTERRUPTOR DE ARRANQUE CON LLAVE (CONJ)	500 504
INTERRUPTOR DE DERIVACIÓN	175
INTERRUPTOR DE LA BOCINA (CONJ)	174
INTERRUPTOR DE LÍMITE (CONJ) (FRENO DE ESTACIONAMIENTO)	298
INTERRUPTOR DE PRESIÓN (CONJ) (ALTO/BAJO) (COMPRESOR)	479
INTERRUPTOR DE PRESIÓN (CONJ) (DERIVACION DE FILTRO DE ACEITE DE TREN DE FUERZA)	121
INTERRUPTOR DE RODILLO (CONJ) (FRENOS ACTIVO/INACTIVO)	314
INTERRUPTOR DE VOLQUETE (CONJ) (FRENO DE ESTACIONAMIENTO)	296
INTERRUPTOR DEL TERMOSTATO (CONJ) (A/A)	444
INTERRUPTOR MAGNÉTICO (CONJ) (*AIR INLET HEAT)	179
INTERRUPTOR MAGNÉTICO (GR)	177 179
INTERRUPTOR MAGNÉTICO (GR)	178
INTERRUPTOR PULSADOR (CONJ) (AVANZAR)	504
INTERRUPTOR PULSADOR (CONJ) (CAMBIO ASCENDENTE ELECTRÓNICO)	298
INTERRUPTOR PULSADOR (CONJ) (CAMBIO AUTOMÁTICO DE VELOCIDADES)	503
INTERRUPTOR PULSADOR (CONJ) (CAMBIO AUTOMÁTICO EN AMBOS SENTIDOS)	499
INTERRUPTOR PULSADOR (CONJ) (CAMBIO ELECTRÓNICO DESCENDENTE)	298
INTERRUPTOR PULSADOR (CONJ) (DESCONECCIÓN AUTOMÁTICA)	504
INTERRUPTOR PULSADOR (CONJ) (DESPLAZAMIENTO DE CICLO EMS)	500
INTERRUPTOR PULSADOR (CONJ) (PALANCA DE AUTO DESCONEXIÓN)	500
INTERRUPTOR ROTATIVO (CONJ) (*FRONT WINDOW WIPER)	547
INTERRUPTOR ROTATIVO (CONJ) (*LEFT WINDOW WIPER)	547
INTERRUPTOR ROTATIVO (CONJ) (LIMPIAPARABRISA TRASERO)	547

* NO HAY TRADUCCION DISPONIBLE EN EL MOMENTO DE LA IMPRESION

INDICE

Nombre	Página
INTERRUPTOR ROTATIVO (CONJ) (*RIGHT WINDOW WIPER)	547
INTERRUPTOR ROTATIVO (CONJ) (SOPLADOR CALENTADOR)	474
INTERRUPTOR ROTATIVO (CONJ) (VENTILADOR, ACONDICIONADOR DE AIRE, CALENTADOR Y DESCONGELACIÓN)	499
INYECTOR DE COMBUSTIBLE (GR)	109
J	
JUEGO (AISLADOR) (MOTOR DE ARRANQUE)	172
JUEGO DE AMORTIGUADOR (ASIENTO DE SUSPENSION)	541
JUEGO DE ATADURA (ASIENTO DE SUSPENSION)	541
JUEGO DE BOTÓN (AJUSTE DE ALTURA) (ASIENTO DE SUSPENSION)	476
JUEGO DE BOTÓN (RADIO)	513
JUEGO DE BOTÓN (RADIO)	512
JUEGO DE BUJES (MOTOR DE ARRANQUE)	172
JUEGO DE COJINETE PRINCIPAL (CIGÜEÑAL)	15
JUEGO DE COJINETES (ASIENTO DE SUSPENSION)	477
JUEGO DE COJINETES (GRUPO DE ROTACIÓN DEL PISTÓN DEL MOTOR)	319
JUEGO DE ENCHUFE (12 CLAVIJAS)	181, 187, 302, 499, 503
JUEGO DE ENCHUFE (2 CLAVIJAS)	121, 122, 142, 151, 168, 181, 187, 191, 446, 449, 457, 472, 499, 503, 516
JUEGO DE ENCHUFE (2 CLAVIJAS)	183
JUEGO DE ENCHUFE (2 CLAVIJAS) (INTERRUPTOR DE RELE DE POTENCIA PRINCIPAL)	178
JUEGO DE ENCHUFE (3 CLAVIJAS)	121
JUEGO DE ENCHUFE (4 CLAVIJAS)	121, 122, 139, 142, 187, 499, 503
JUEGO DE ENCHUFE (6 CLAVIJAS)	121, 187, 302, 449, 499, 503
JUEGO DE ENCHUFE (8 CLAVIJAS)	121, 122, 131, 191, 449, 453, 499, 503, 506
JUEGO DE ESCOBILLAS (MOTOR DE ARRANQUE) (MOTOR)	172
JUEGO DE FILTRO DE TAPA (TANQUE DE COMBUSTIBLE)	112
JUEGO DE FUNDA DE LA SUSPENSIÓN DEL ASIENTO (*SUPENSION SEAT)	539
JUEGO DE INDICADOR (AJUSTE DE PESO) (ASIENTO DE SUSPENSION)	477
JUEGO DE PALANCA (MOTOR DE ARRANQUE)	172
JUEGO DE PARAGOLPES (AJUSTE DE PESO) (ASIENTO DE SUSPENSION)	477
JUEGO DE PERNO RETENEDOR (GRUPO DE CONTROL)	132
JUEGO DE PERNOS (CABLERIA DE CIRCUITO DEL DISYUNTOR)	151
JUEGO DE PERNOS (RETENEDOR, CABLERIA DE MOTOR)	183
JUEGO DE RECEPTÁCULO (12 CLAVIJAS)	296
JUEGO DE RECEPTÁCULO (12 CLAVIJAS)	121, 139, 160, 161, 181, 183, 187, 302, 449, 499, 503

* NO HAY TRADUCCION DISPONIBLE EN EL MOMENTO DE LA IMPRESION

INDICE

Nombre	Página
	142
	151
	181
	187
	449
JUEGO DE RECEPTÁCULO (2 CLAVIJAS)	112
	115
	139
	141
	142
	146
	147
	151
	167
	174
	175
	177
	179
	180
	181
	183
	187
	231
	446
	449
	453
	455
	457
	499
	503
	516
	541
JUEGO DE RECEPTÁCULO (2 CLAVIJAS)	121
	314
	479
JUEGO DE RECEPTÁCULO (2 CLAVIJAS)	164
	165
	193
JUEGO DE RECEPTÁCULO (2 CLAVIJAS)	472
JUEGO DE RECEPTÁCULO (3 CLAVIJAS)	142
	156
	157
	158
	159
	166
	181
	183
	302
	449
	457
	499
	500
	504
JUEGO DE RECEPTÁCULO (3 CLAVIJAS)	121
JUEGO DE RECEPTÁCULO (3 CLAVIJAS)	143
	499
	503
JUEGO DE RECEPTÁCULO (3 CLAVIJAS) (SENSOR DE NIVEL DE REFRIGERANTE) . . .	155
JUEGO DE RECEPTÁCULO (4 CLAVIJAS)	139
	142
	337
	468
	547
JUEGO DE RECEPTÁCULO (6 CLAVIJAS)	78
	131
	187
	298
	446
	449
	466
	472
	491
	500
	503
	504
	509
	516
	543
JUEGO DE RECEPTÁCULO (6 CLAVIJAS)	121
JUEGO DE RECEPTÁCULO (8 CLAVIJAS)	187
	191
	449
	499
	503
	512
	513
	516
JUEGO DE RECEPTÁCULO (8 CLAVIJAS)	512
JUEGO DE RESORTES (AJUSTE DE ALTURA) (ASIENTO DE SUSPENSION)	476
JUEGO DE RESORTES (ASIENTO DE SUSPENSION)	476
JUEGO DE RESTRICCIÓN DEL CINTURÓN (*SUPENSION SEAT)	539
JUEGO DE RODILLO (*SUPENSION SEAT)	539
JUEGO DE SEGUIDOR (ASIENTO DE SUSPENSION)	477
JUEGO DE SELLOS (CALENTADOR DE AGUA DE LAS CAMISAS)	136
	137
JUEGO DE SELLOS (*PUMP HEAD RELIEF VALVE)	306
JUEGO DE SELLOS (VALVULA DE ALIVIO)	332
JUEGO DE SELLOS (VALVULA DE SOLENOIDE)	114

* NO HAY TRADUCCION DISPONIBLE EN EL MOMENTO DE LA IMPRESION

INDICE

Nombre	Página
	231
	337
JUEGO DE SOLENOIDE (MOTOR DE ARRANQUE)	172
JUEGO DE TERMINAL DE ALTERNADOR (BATERÍA)	116
	118
JUEGO DE TERMINAL DE ALTERNADOR (LUZ DEL INDICADOR) (RELE)	116
	118
JUEGO DE TERMINAL DE ALTERNADOR (RELE) (LUZ INDICADORA)	116
JUEGO DE TERMINAL DE ALTERNADOR (RELE) (LUZ INDICADORA)	118
JUEGO DE VALVULA DE AIRE (ASIENTO DE SUSPENSION)	541
JUEGO DEL PROTECTOR DE ALTERNADOR	118
JUNTA UNIVERSAL (GR)	223

L

LÁMPARA (CONJ) (12 VOLTIOS) (ROJA/VERDE LAMPARA DE DIODO)	141
LÁMPARA (CONJ) (12 VOLTIOS) (ROJA/VERDE LAMPARA DE DIODO)	142
LÁMPARA DE BALIZA DE ADVERTENCIA (GR)	147
LAMPARA DE DIODO (LED) (BALIZA GIRATORIA DE ADVERTENCIA)	150
LÁMPARA DEL TECHO (GR)	143
LÁMPARA (24 VOLTIOS) (BALIZA GIRATORIA DE ADVERTENCIA)	150
LÁMPARA (24 VOLTIOS) (CÚPULA)	143
LÁMPARA (24 VOLTIOS) (DE CUATRO MEDIDORES)	503
LÁMPARA (24 VOLTIOS) (INSTRUMENTO)	499
LÁMPARA (24 VOLTIOS) (INTERRUPTOR DE BALANCIN DE ACELERADOR)	187
LÁMPARA (24 VOLTIOS) (LUCES DE INSTRUMENTOS)	503
LÁMPARA (24 VOLTIOS) (LUZ DE TRABAJO)	499
	503
LÁMPARA (24 VOLTIOS) (*QUAD GUAGE)	499
LIMPIAPARABRISAS DE LA VENTANA (GR)	547
LLAVE (DESCONECTAR BATERIA)	176
LUCES DE ALÓGENO (24 VOLTIOS)(65 VATIOS) (REFLECTOR)	144
LUCES DE ALÓGENO (24 VOLTIOS)(65 VATIOS) (REFLECTOR)	145
	146
LUCES DE REFLECTOR (GR)	148
LUZ DE BALIZA (GR)	150
LUZ DE TABLERO DE INSTRUMENTOS	499
	503

M

MANDO FINAL (GR)	198
MANGUERA (RADIADOR INFERIOR)	87
MANGUERA (RADIADOR SUPERIOR)	87
MANGUITO-SELLO DE ACEITE (CIGÜEÑAL)	15
MAQUINA DE ALTA TEMP. AMBIENTE (CONFIG)	1
MAZO DE CABLES (ALARMA DE RETROCESO)	516
MAZO DE CABLES (CALEFACTOR)	472
MAZO DE CABLES (CARTER SIN INYECCIÓN)	183
MAZO DE CABLES (CONTROL DEL TREN DE MANDO)	302
MAZO DE CABLES (CONTROL, SEGURIDAD)	139
	142
MAZO DE CABLES DE SENSOR (CONJ) (CABLE CALIBRE 14)	168
MAZO DE CABLES DE SENSOR (CONJ) (CABLE CALIBRE 16-18)	168
MAZO DE CABLES (DISYUNTOR)	151
MAZO DE CABLES (FRENO DE ESTACIONAMIENTO)	122
MAZO DE CABLES (LAVAPARABRISAS)	543
MAZO DE CABLES (LIMPIADOR)	449
MAZO DE CABLES (*MAIN)(CAB)	449
MAZO DE CABLES (MONITOR DE CONTROL)	131
MAZO DE CABLES (MOTOR)	121
MAZO DE CABLES (PLATAFORMA)	121
	187
MAZO DE CABLES (SENSOR DE VELOCIDAD DE TRANSMISION)	191
MAZO DE CABLES (SOLENOIDES DE CAMBIO DE TRANSMISION)	191
MAZO DE CABLES (TABLERO DE INSTRUMENTOS)	499
	503
MAZO DE CABLES (TABLERO DEL CIRCUITO DEL DISYUNTOR)	151
MAZO DE CABLES (TANQUE HIDRÁULICO)	121
MECANISMO DE VÁLVULAS (GR)	61
	62
MIRILLA (TANQUE HIDRÁULICO)	396
MODULO DE LA PANTALLA (GR) (LUZ Y ENGRANAJE) (INDICADOR DE ENGRANAJE DE TRANSMISION)	500
	503

* NO HAY TRADUCCION DISPONIBLE EN EL MOMENTO DE LA IMPRESION

INDICE

Nombre	Página
MODULO ELECTRÓNICO DE CUATRO INDICADORES (GR)	491
MONTAJE DE CILINDRO (GR)	390
MONTAJE DE LA ESTRUCTURA ROPS (GR)	495
MONTAJE DE LA PLATAFORMA (GR)	493
MONTAJE DE LA TRANSMISIÓN (GR)	204
MONTAJE DE RODILLOS SUPERIORES (GR)	275
MONTAJE DEL CONVERTIDOR DE PAR (GR)	203
MONTAJE DEL DESGARRADOR (GR)	424
MONTAJE DEL MANDO DE VENTILADOR (GR)	47
MONTAJE DEL MOTOR (GR)	45
	46
MONTAJE DEL SILENCIADOR (GR)	98
MOTOR - NÚCLEO (CONFIG)	4
MOTOR COMPLETO (CONFIG)	2
	3
MOTOR DE ARRANQUE ELÉCTRICO (GR)	171
	172
MOTOR ELÉCTRICO (GR) (27 VOLTIOS) (*HEATER OPEN ROPS)	472
MÚLTIPLE DE ESCAPE (GR)	97
MÚLTIPLE Y VÁLVULA (GR)	311
	312
MUÑÓN DE LA HOJA TOPADORA (GR)	430

N

Nombre	Página
NÚCLEO DEL ENFRIADOR DE ACEITE (CONJ)	89

P

Nombre	Página
PANEL DE DISYUNTORES (GR)	151
PANEL DE INSONORIZACIÓN (GR)	261
PANTALLA (CONJ) (BARRIDO DE CONVERTIDOR DE PAR)	220
PANTALLA (CONJ) (TANQUE HIDRÁULICO)	396
PASADOR	426
PERILLA DE BOCINA	174
PERILLA LUMBAR	496
PERILLA (TAPA DEL FILTRO)	510
PERSIANA PARA EL SOL (GR)	521
PISTÓN Y BIELA (GR)	49
PISTONES DEL MOTOR (GR)	313
PLACA DE ADVERTENCIA (CILINDRO PARA ALTA PRESION) (RESORTE TELESCÓPICO)	269
PLACA DE ADVERTENCIA (NO OPERE)	493
PLACA DE ADVERTENCIA (RESORTE DE AMORTIGUACION)	269
PLACA DE INSTRUCCIONES (ACONDICIONADOR DE AIRE)	479
PLACA DEL NÚMERO DE SERIE (CONVERTIDOR DE PAR)	220
PLACA DEL NÚMERO DE SERIE (HOJA TOPADORA)	419
	420
PLACA DEL NÚMERO DE SERIE (MOTOR)	550
PLACA DEL TABLERO (TABLERO)	499
	503
PLATAFORMA DE LA CABINA	507
PLATAFORMA (GR)	506
POLEA DEL MANDO DE VENTILADOR (GR)	54
POLEA (GR)	52
	53
PORTAESCOBILLAS (CONJ) (ALTERNADOR)	118
PORTAESCOBILLAS (CONJ) (ALTERNADOR)	116
POSENFRIADOR (GR)	90
PRESURIZADOR (GR)	510
PRIORIDAD - VÁLVULA DE (GR)	226
PROTECTOR CONTRA ARENA (GR)	241
PROTECTOR DE RODILLOS INFERIORES (GR)	250
PROTECTOR DEL FILTRO DEL TREN DE FUERZA (GR)	246
PROTECTOR DEL RADIADOR (GR)	247
PROTECTOR DEL TANQUE DE COMBUSTIBLE (GR)	245
PROTECTOR GUÍA DE CADENA (GR)	249
PROTECTOR INFERIOR (GR)	243
	244
PROTECTORES DE RAMAS (GR)	262
	264
PUERTA DE CABINA	466
	468
PUERTA DE CABINA (IZQUIERDO)	449
PUERTA DE CABINA (LADO DERECHO)	449

R

Nombre	Página
RADIADOR (GR)	87
	89
RADIO (GR)	512
	513
RECEPTOR-SECADOR (GR) (REFRIGERANTE)	485
RECLINACION DE ASIENTO (GR)	514
REFLECTOR (GR)	144
REFLECTOR (GR)	145
	146

* NO HAY TRADUCCION DISPONIBLE EN EL MOMENTO DE LA IMPRESION

INDICE

Nombre	Página
REGULADOR (CONJ) (PRESIÓN DE COMBUSTIBLE)	106
REGULADOR DE TEMPERATURA DEL AGUA (94 GRADOS C) (REFRIGERANTE)	82
REGULADOR Y PEDAL DEL FRENO (GR)	314
REJILLA DE SUCCIÓN (TUBERIAS DE ACEITE DEL TREN DE FUERZA)	200
REJILLA DEL RADIADOR (GR)	242
REJILLA PROTECTORA (GR)	519 520
RESORTE TENSOR Y AJUSTADOR DE LA CADENA (GR)	285
RESPIRADERO (CONJ) (MOTOR)	65
RESPIRADERO (CONJ) (TUBERIAS DE ACEITE DEL TREN DE FUERZA)	200
RESPIRADERO (GR)	65
RETÉN (GR)	483
RETÉN (GR) (PUERTA)	466
RETENEDOR (GR) (PUERTA, CABINA)	468
RETROCESO - ALARMA DE (GR)	449
RETROCESO - ALARMA DE (GR)	180
RETROCESO - ALARMA DE (GR) (ROPS)	516
RETROCESO - ALARMA DE (GR) (107DB)	453
REVESTIMIENTO DE LA CABINA (GR)	484
RODILLO SUPERIOR DE CADENAS (GR)	277
RODILLOS DE PESTAÑA DOBLE (GR)	279 280 282
RODILLOS DE PESTAÑA SIMPLE (GR)	283 284
RUEDA GUÍA - POLEA DE	51
RUEDA GUÍA DE CADENA (GR)	272

S

Nombre	Página
SEGMENTO DE RUEDA MOTRIZ (GR)	216
SELLO ANULAR (*ENGINE BREATHER)	65
SELLO ANULAR (FILTRO DEL TREN DE FUERZA)	197
SELLO ANULAR (TAPÓN DE DRENAJE DE LA CAJA)	234
SELLO ANULAR (TAPÓN DE DRENAJE DE MANDO FINAL)	198
SELLO ANULAR (TAPÓN DE DRENAJE DEL CONVERTIDOR DE PAR)	220
SELLO ANULAR (TAPÓN DE DRENAJE, TRANSMISIÓN)	206
SELLO ANULAR (TAPÓN MAGNÉTICO DEL MANDO FINAL)	198
SELLO DE CIGÜEÑAL (GR)	56
SELLO DE LA CAJA DE VOLANTE (GR)	57
SELLO DEL INYECTOR DEL COMBUSTIBLE (GR)	58
SELLO DEL PORTADOR (GR)	11
SENSOR DE PRESIÓN (GR)	159 160
SENSOR DE PRESIÓN (GR)	161
SENSOR DE PRESIÓN (GR) (ACEITE DEL MOTOR)	153
SENSOR DE PRESIÓN (GR) (COMBUSTIBLE)	153
SENSOR DE TEMPERATURA (GR)	166 167 168
SENSOR DE TEMPERATURA (GR) (AIRE DE ADMISION)	153
SENSOR DE TEMPERATURA (GR) (REFRIGERANTE)	153
SENSOR DE VELOCIDAD (GR)	162 163 164 165
SENSOR DE VELOCIDAD (GR) (SINCRONIZACION) (MOTOR)	153
SENSOR DE VELOCIDAD (GR) (TRANSMISION)	193
SENSOR DEL MOTOR (GR)	153
SENSOR DEL NIVEL DE LÍQUIDO	155
SERVICIO DE MONITOR (GR)	169
SERVICIO DE TREN DE FUERZA (GR)	170
SERVICIO DE TREN DE FUERZA (GR) (INCLUYE SOFTWARE)	134
SILENCIADOR (GR)	99
SOFTWARE DE MONITOR (GR)	169
SOFTWARE DEL TREN DE FUERZA (GR)	134
SOFTWARE DEL TREN DE FUERZA (GR)	170
SOFTWARE PARA LA MAQUINA (GR) (SEGURIDAD)	129
SOFTWARE PARA LA MAQUINA (GR) (SEGURIDAD) (SOLAMENTE SOFTWARE)	133
SOPLADOR - VENTILADOR (GR)	80
SOPORTE DEL RESPALDO (GR)	496 497 498
SUJETADOR (GR)	304
SUSPENSIÓN - ASIENTO CON (GR)	528 530
SUSPENSIÓN - ASIENTO CON (GR)	531 532 533 534

T

Nombre	Página
TABLERO DE INSTRUMENTOS (GR)	499

* NO HAY TRADUCCION DISPONIBLE EN EL MOMENTO DE LA IMPRESION

INDICE

Nombre	Página
	503
TANQUE DEL LAVAPARABRISAS (GR)	543
TANQUE (GR) (*RADIATOR-UPPER)	89
TANQUE Y FILTRO HIDRÁULICOS (GR)	396
TAPA CONTRA EL POLVO (BOMBA HIDRÁUILICA)	378
TAPA CONTRA EL POLVO (CONEXION DE TRANSMISION)	207
TAPA CONTRA EL POLVO (CONJ) (CALENTADOR DE AGUA DE LAS CAMISAS)	136
	137
TAPA CONTRA EL POLVO (TABLERO DE DIAGNOSTICO)	365
TAPA CONTRA EL POLVO (*TURBO OIL SAMPLING VALVE)	72
TAPA CONTRA EL POLVO (VÁLVULA DE CONTROL DE MUESTREO DE FLUIDO)	392
TAPA CONTRA EL POLVO (VÁLVULA DE MUESTREO DE ACEITE DEL TREN DE FUERZA)	200
TAPA CONTRA EL POLVO (VÁLVULAS DE SERVODIRECCIÓN)	308
TAPA CONTRA EL POLVO (VÁVULA DE MUESTREO DE REFRIGERANTE)	82
TAPA DE ADMISIÓN DE AIRE (GR)	92
TAPA DE LA CAJA DELANTERA (GR)	13
TAPA DE LA CONSOLA (GR)	459
	460
	461
	463
	465
TAPA DE RADIADOR (CONJ) (ALIVIO DE PRESIÓN)	89
TAPA DE RUEDA GUÍA (GR)	268
TAPA DEL BLOQUE MOTOR (GR)	12
TAPA DEL MECANISMO DE VÁLVULAS (GR)	14
TAPA DEL TANQUE DE COMBUSTIBLE (CONJ) (RESPIRADERO CON TRABA)	112
TAPA DEL TUBO DE LLENADO (ACEITE DEL MOTOR)	66
TAPA DEL TUBO DE LLENADO DE ACEITE (CONJ) (TREN DE FUERZA)	200
TAPA DEL TUBO DE LLENADO (TANQUE HIDRÁULICO)	396
TAPA (TANQUE DE LIMPIPARABRISA)	543
TAPÓN (CONJ) (ACONDICIONADOR DE AIRE)	479
TAPÓN (CONJ) (*ELECTRONIC TECH-SERVICE TOOL)	187
TAPÓN (CONJ) (POLVO) (PUERTA PARA EL LLENADO DE RADIADOR)	247
TAPÓN DE DRENAJE (CONVERTIDOR DE PAR)	203
TAPÓN DE DRENAJE (TANQUE HIDRÁULICO)	396
TAPÓN DEL MOTOR (GR)	50
TAPÓN (DRENAJE DE LA CAJA)	234
TAPÓN (DRENAJE DE LA TRANSMISION)	206
TAPÓN (DRENAJE DE MANDO FINAL)	198
TAPÓN (DRENAJE DEL CONVERTIDOR DE PAR)	220
TAPÓN (DRENAJE MAGNETIZADO DE ACEITE)	33
TAPÓN MAGNÉTICO (MANDO FINAL)	198
TECHO (CONFIG)	454
TORNILLERIA DE CABLES DEL MOTOR (GR)	135
TORNILLERÍA DE LA TAPA DELANTERA	37
TRANSMISION (CONFIG)	222
TRANSMISIÓN PLANETARIA (GR)	205
TREN DE FUERZA (CONFIG)	212
TREN DE FUERZA-GRUPO ELECTRÓNICO	134
TREN DE RODAJE (CONFIG)	288
TREN DE RODAJE (GR)	288
TUBERÍAS CON SERVOMANDO (GR)	374
	376
TUBERÍAS DE ACEITE DEL MOTOR (GR)	71
TUBERÍAS DE ACEITE DEL TREN DE FUERZA (GR)	200
TUBERÍAS DE ACONDICIONADOR DE AIRE (GR)	485
TUBERÍAS DE COMBUSTIBLE (GR)	104
TUBERÍAS DE DIRECCIÓN (GR)	308
TUBERIAS DE INCLINACIÓN Y ORIENTACIÓN (GR)	361
TUBERIAS DE INCLINACIÓN Y ORIENTACIÓN (GR)	363
TUBERÍAS DE LA CALEFACCIÓN (GR)	487
	489
TUBERÍAS DEL AGUA (GR)	82
TUBERÍAS DEL CILINDRO DE INCLINACIÓN (GR)	386
	387
	388
TUBERÍAS DEL DESGARRADOR (GR)	382
	384
TUBERÍAS DEL FILTRO DE COMBUSTIBLE	106
TUBERÍAS HIDRÁULICAS (GR)	365
TUBO DE ESCAPE (VAPORES)	68
TUBO DE LLENADO DE ACEITE (GR)	66
TUBO DESTELLADOR (*3 PRONG CONNECTION) (BALIZA GIRATORIA DE ADVERTENCIA)	147

* NO HAY TRADUCCION DISPONIBLE EN EL MOMENTO DE LA IMPRESION

INDICE

Nombre	Página
TUBO DESTELLADOR (*8 PRONG CONNECTION) (BALIZA GIRATORIA DE ADVERTENCIA)	147
TURBOCOMPRESOR - TUBERÍAS DE ACEITE DEL (GR)	72
TURBOCOMPRESOR (GR)	101
	102

V

VÁLVULA - ESFERA (TUBERIA DE COMBUSTIBLE, CORTE)	104
VÁLVULA - MONTAJE DE LA (GR)	392
VÁLVULA COMPENSADORA DE FLUJO Y PRESIÓN (GR)	329
	415
VÁLVULA DE AGUA (CONJ) (CALENTADOR DE CABINA)	470
VÁLVULA DE AGUA (CONJ) (CALENTADOR DE ESTRUCTURA ROPS ABIERTA)	474
VÁLVULA DE ALIVIO (GR)	228
	230
	330
	331
	332
	417
	418
VÁLVULA DE ALIVIO (GR) (COMPRESOR DEL REFRIGERANTE)	455
VÁLVULA DE ALIVIO (GR) (*PUMP HEAD)	306
VÁLVULA DE ALIVIO (GR) (VÁLVULA DE CONTROL)	405
	409
	413
VÁLVULA DE CONTROL DE LA TRANSMISIÓN (GR)	232
VÁLVULA DE CONTROL (GR)	324
	403
	405
	407
	409
	411
	413
VÁLVULA DE DESCARGA (GR)	326
VÁLVULA DE DRENAJE (COMBUSTIBLE) (FILTRO)	106
VÁLVULA DE DRENAJE (FILTRO DE COMBUSTIBLE)	106
VÁLVULA DE DRENAJE (RECIPIENTE)	234
VÁLVULA DE LEVANTAMIENTO (GR)	43
VÁLVULA DE MODULACIÓN (GR)	224
	225
VALVULA DE MUESTRA DE FLUIDO (CONJ) (VÁLVULA DE CONTROL)	392
VÁLVULA DE MUESTREO (GR) (REFRIGERANTE)	82
VÁLVULA DE MUESTREO (GR) (TUBERIAS DE ACEITE DEL TREN DE FUERZA)	201
VÁLVULA DE MUESTREO (GR) (TURBOCARGADOR DE ACEITE)	72
VÁLVULA DE RETENCIÓN (GR) (VÁLVULA DE CONTROL)	403
	405
	409
	411
	413
VÁLVULA DE SERVOMANDO (GR)	333
	335
VÁLVULA DE SOLENOIDE (GR)	114
	231
	337
	338
VÁLVULA HIDRÁULICA DE 4 VÍAS (CONFIG)	360
VÁLVULA PILOTO (GR)	327
VÁLVULAS HIDRÁULICAS - GRUPO DE 2	399
VENTANA DE LA CABINA (GR)	544
	545
	546
VENTANA DE LA CABINA (GR) (LADO DERECHO)	544
VENTANA DE LA CABINA (GR) (LADO IZQUIERDO)	544
VENTILADOR (GR)	78
VENTILADOR REVERSIBLE (GR)	81
VENTILADOR SOPLADOR DE LA CABINA (GR)	446
VIDRIO (CONJ) (FARO)	146
VIDRIO (CONJ) (FARO) (ROPS)	144
	145
VOLANTE - CAJA DE (GR)	41
VOLANTE (GR)	39

* NO HAY TRADUCCION DISPONIBLE EN EL MOMENTO DE LA IMPRESION

ÍNDICE

Designação	Página

A

ACUMULADOR - REFRIGERANTE 485
ADAPTADOR-TUBO DE ÓLEO DO MOTOR 64
AJUSTADOR DE CORREIAS 9
AJUSTADOR DE ESTEIRAS E MOLA TENSORA 285
AJUSTADOR DO ASSENTO 442 443
ALARME 115
ALARME DE MARCHA À RÉ 180 449
ALARME DE MARCHA À RÉ (ROPS) 516
ALARME DE MARCHA À RÉ (107DB) 453
ALOJAMENTO (VÁLVULA DE CONTROLE) 403 405 407 409 411 413
ALTERNADOR DE CORRENTE 116 118 120
AMORTECEDOR DE VIBRAÇÕES E POLIA 31
ANEL DE PRESSAO (PORTA DA CABINE) 468
AQUECEDOR 138
AQUECEDOR - AUXILIAR DE PARTIDA 138
AQUECEDOR DA ÁGUA DO MOTOR 136 137
AQUECEDOR DA CABINE 470
AQUECEDOR DA ESTRUTURA ROPS 472 474
ARMAÇÃO-C - ANGULAÇÃO HIDRÁULICA 421
ARMAÇÃO TELESCÓPICA DA MOLA TENSORA 269
ARRANJO GERAL 1
ARRANJO HIDRÁULICO - 4 VÁLVULAS 360
ARREFECEDOR - ÓLEO DO MOTOR 76
ARREFECEDOR DO ÓLEO HIDRÁULICO 345
ARREFECIMENTO 77
ASSENTO 522 524 525 527
ASSENTO COM SUSPENSÃO 528 530 531 532 533 534

B

BALANCIM (ADMISSÃO) 62
BALANCIM (ESCAPE) 62
BARRA DE ARTICULAÇÃO 276
BARRA DE SUSPENSÃO 266
BARRA DE TRAÇÃO 236
BARRAS DE PROTEÇÃO DO CAPÔ 262 264
BATERIA 124
BATERIA E CABOS / FIOS ELÉTRICOS 121
BATERIA (LIVRE DE MANUTENÇÃO)(12 VOLT) (REFORÇADO) 124
BATERIA (12 V) 122
BEIRA - PONTA CORTANTE 435 436
BLINDAGEM - PURIFICADOR DE AR 100
BLOCO DO MOTOR 17 18 19
BOCAL DE ENCHIMENTO DE ÓLEO DO MOTOR 66
BOMBA DA UNIDADE INJETORA 109 110
BOMBA DE ÁGUA 84 85
BOMBA DE CARGA 316
BOMBA DE ENGRENAGENS 213 215
BOMBA DE ESCORVA DO COMBUSTÍVEL 103
BOMBA DE ÓLEO - MOTOR 74 75
BOMBA DE PISTÃO 317 393
BOMBA DE TRANSFERÊNCIA DO COMBUSTÍVEL 111
BOMBA HIDRÁULICA - UNIDADE INJETORA . . . 111
BOMBA HIDRÁULICA E MONTAGEM - UNIDADE INJETORA 108
BOTÃO - CHICOTE 174
BOTÃO - LOMBAR 496
BRAÇO DE EMPUXO 427
BRONZINA TIPO LUVA (EIXO-COMANDO DE VÁLVULAS) 18
BUJÃO 509
BUJÃO DO DRENO (CONVERSOR DE TORQUE) 203
BUJÃO DO DRENO (TANQUE HIDRÁULICO) . . . 396
BUJÃO DO MOTOR 50
BUJÃO MAGNÉTICO (COMANDO FINAL) 198
BUZINA (24 VOLTS)(TONALIDADE BAIXA) 121

C

CABEÇA DA BOMBA 306
CABEÇOTE DO MOTOR 20

* TRADUÇÃO NÃO DISPONÍVEL NO MOMENTO DA IMPRESSÃO

ÍNDICE

Designação	Página
	22
	24
	25
	27
	29
CABINE	448
	449
	453
CABO (CONTROLE DE TEMPERATURA DO AQUECEDOR)	474
CABOS/FIOS ELÉTRICOS	181
CABOS/FIOS ELÉTRICOS - AQUECEDOR	186
CABOS/FIOS ELÉTRICOS - MOTOR	183
CABOS/FIOS ELÉTRICOS - PLATAFORMA	187
CAIXA - SUSPENSÃO DO ASSENTO	476
CAIXA DIANTEIRA	42
CAIXA DO VOLANTE DO MOTOR	41
CAIXA E CHASSI	234
CAPÔ	259
CAPÔ E PROTETOR	251
	253
	256
CÁRTER DO ÓLEO DO MOTOR	48
CHASSI	1
CHAVE - ELETRÔNICO (SEGURANÇA)	129
CHAVE - ELETRÔNICO (SEGURANÇA)	139
CHAVE (DESCONECTAR A BATERIA)	176
CHAVE GERAL	176
CHAVE INTERRUPTORA DE PARTIDA	500
	504
CHICOTE - CONDICIONADOR DE AR DA CABINE (VENTILADORES DO CONDENSADOR) (COMPRESSOR)	457
CHICOTE - SENSOR (FIO 14 GA)	168
CHICOTE - SENSOR (FIO 16-18 GA)	168
CHICOTE - VÁLVULA (COMPRESSOR DE AR) (ASSENTO)	541
CHICOTE (ALARME DE MARCHA-À-RÉ)	516
CHICOTE (AQUECEDOR)	472
CHICOTE (CONTROLE DO TREM DE ACIONAMENTO)	302
CHICOTE (CONTROLE)(SEGURANÇA)	139
	142
CHICOTE (DISJUNTOR)	151
CHICOTE (FREIO DE ESTACIONAMENTO)	122
CHICOTE (LAVADOR DE VIDROS)	543
CHICOTE (LIMPADOR)	449
CHICOTE (MONITOR DE CONTROLE)	131
CHICOTE (MOTOR)	121
CHICOTE (PAINEL DE DISJUNTORES)	151
CHICOTE (PAINEL DE INSTRUMENTOS)	499
	503
CHICOTE (PARTIDA SEM INJEÇÃO)	183
CHICOTE (PLATAFORMA)	121
	187
CHICOTE (PRINCIPAL)(CABINE)	449
CHICOTE (SENSORES DE VELOCIDADE DA TRANSMISSÃO)	191
CHICOTE (SOLENOIDES DE MUDANÇA DE TRANSMISSÃO)	191
CHICOTE (TANQUE HIDRÁULICO)	121
CILINDRO ANGULÁVEL	346
CILINDRO DE INCLINAÇÃO	354
	356
CILINDRO DE LEVANTAMENTO	348
	350
CILINDRO DE LEVANTAMENTO DO RIPER	352
CINTO DE SEGURANÇA	527
CINTO DE SEGURANÇA (ASSENTO COM SUSPENSÃO PARTE INFERIOR DAS COSTAS)	534
CINTO DE SEGURANÇA (ASSENTO DA SUSPENSÃO)	524
COBERTURA	237
COLETOR DE ESCAPE	97
COLETOR E VÁLVULA	311
	312
COLMÉIA - ARREFECEDOR DE ÓLEO	89
COMANDO DO VENTILADOR	35
	36
COMANDO FINAL	198
COMANDO HIDRÁULICO	359
COMPRESSOR DE REFRIGERANTE	455
	456
CONDENSADOR DE REFRIGERANTE	457
CONDICIONADOR DE AR	444
	445
CONTROLE - NÃO PROGRAMADO	132
CONTROLE - NÃO PROGRAMADO (MÁQUINA)	129
CONTROLE - NÃO PROGRAMADO (SEGURANÇA)	139
CONTROLE-COMUNICAÇÃO (PRODUCT LINK)	131
CONTROLE DA MÁQUINA	129
CONTROLE DA MÁQUINA (SEGURANÇA) (INCLUI SOFTWARE)	133
CONTROLE DA TRANSMISSÃO	191
CONTROLE DE DIREÇÃO E TRANSMISSÃO	298
	300
	302
CONTROLE DO FREIO DE ESTACIONAMENTO	296
CONTROLE DO PAINEL MONITOR	130
	131

* TRADUÇÃO NÃO DISPONÍVEL NO MOMENTO DA IMPRESSÃO

ÍNDICE

Designação	Página
CONTROLE ELETRÔNICO - MOTOR	127, 128
CONTROLE ELETRÔNICO E MONTAGEM - MOTOR	126
CONTROLE HIDRÁULICO MANUAL	339, 341, 343
CONTROLE HIDRÁULICO MANUAL (RÍPER)	360
CONVERSOR DE POTÊNCIA (*24 V TO 12 V)	187
CONVERSOR DE TORQUE	218, 220
CORREIA	6, 7, 8
CORREIA (COM A/C MERCADO EUROPEU)	7
CORREIA (COM A/C MERCADO NORTE-AMERICANO)	8
CORREIA (SEM A/C MERCADO NORTE-AMERICANO)	6
COTOVELO DE ADMISSÃO DE AR	93

D

DECALQUE	549
DECALQUE - ADVERTÊNCIA (CILINDRO DE FREIO DE ESTACIONAMENTO)	269
DECALQUE - ADVERTÊNCIA (NÃO LEVANTAR)	495
DECALQUE - ADVERTÊNCIA (RAIO DE ARTICULAÇÃO DO PRODUTO)	131
DECALQUE - AVISO (DIREÇÃO)	302
DECALQUE - AVISO (RÁDIO)	481
DECALQUE - IDENTIFICAÇÃO (ALTERNADOR)	151
DECALQUE - IDENTIFICAÇÃO (CONECTOR DE SERVIÇO)	151
DECALQUE - IDENTIFICAÇÃO (LUZ DE AÇÃO)	142
DECALQUE - IDENTIFICAÇÃO (LUZ DE AÇÃO)	141
DECALQUE - IDENTIFICAÇÃO (NO. DE SEQÜÊNCIA E GRUPO) (CONDENSADOR DO AR CONDICIONADO)	457
DECALQUE - IDENTIFICAÇÃO (NO. DE SEQÜÊNCIA E GRUPO) (VENTILADOR DA CABINE)	446
DECALQUE - IDENTIFICAÇÃO (12 V)	187, 463
DECALQUE - INSTRUÇÃO (AJUSTE DO ASSENTO)	539, 541
DECALQUE - INSTRUÇÃO (CONTROLE DA LÂMINA)	339
DECALQUE - INSTRUÇÃO (CONTROLE DA LÂMINA)	343
DECALQUE - INSTRUÇÃO (CONTROLE DE RÍPER)	341
DECALQUE - INSTRUÇÃO (SEM DEGRAUS)	361
DECALQUE - PAINEL (PAINEL)	499, 503
DECALQUE - TIRA (D6N)(CAPOTA DO LADO DIREITO)	454
DECALQUE - TIRA (D6N)(CAPOTA DO LADO ESQUERDO)	454
DECALQUE - TIRA (D6N)(PROTETOR DO TANQUE DE COMBUSTÍVEL)	245
DECALQUE - TIRA (D6N0)(PROTETOR DO TANQUE DE COMBUSTÍVEL TRASEIRO DIREITO)	245
DECALQUE - TIRA (D6N09PROTETOR DO TANQUE DE COMBUSTÍVEL TRASEIRO ESQUERDO)	245
DECALQUE (ALMOFADA DO ASSENTO - IDENTIFICAÇÃO)	498
DECALQUE (AVISO DE SEGURANÇA)	142
DECALQUE (DIREÇÃO COM DIFERENCIAL)	302
DECALQUE (EXTERIOR) (RUÍDO)	59
DECALQUE (IGNIÇÃO)	141
DECALQUE (IGNIÇÃO)	142
DECALQUE (LAVADOR - LIMPADOR DE PÁRA-BRISA)	547
DECALQUE (LUZ DE AÇÃO) (DEFEITO)	499, 503
DECALQUE (PAINEL DE DIAGNÓSTICOS D;S)	366
DECALQUE (PAINEL DE INSTRUMENTOS)	474
DECALQUE (PONTO DE LUBRIFICAÇÃO)	450
DECALQUE (PONTO DE LUBRIFICAÇÃO) (PLATAFORMA)	507
DECALQUE (SISTEMA DE SEGURANÇA DA MÁQUINA)	141, 142
DEGRAU	535
DENTE DO RÍPER	439, 440, 441
DIFERENCIAL E COROA	193
DISJUNTOR AUTOMÁTICO DE CIRCUITO (80 A) (PRINCIPAL DA MÁQUINA)	151
DRENO - ÓLEO DO MOTOR	32, 33, 34

E

EIXO	190

* TRADUÇÃO NÃO DISPONÍVEL NO MOMENTO DA IMPRESSÃO

ÍNDICE

Designação	Página
EIXO-COMANDO DE VÁLVULA	10
EIXO DE TRANSMISSÃO	217
ELEMENTO - AQUECEDOR DE ÁGUA DA CAMISA (120 VOLTS / 1.000 WATTS)	137
ELEMENTO - AQUECEDOR DE ÁGUA DA CAMISA (240 VOLTS - 1.000 WATTS)	136
ELEMENTO DO FILTRO DE AR (PRIMÁRIO)	91
ELEMENTO DO FILTRO DE AR (SECUNDÁRIO)	91
ELEMENTO DO FILTRO DE COMBUSTÍVEL (PRIMÁRIO)	103
ELEMENTO FILTRANTE - ÓLEO (FLUXO HIDRÁULICO/REVERSO) (DESCARTÁVEL)	396
ELEMENTO FILTRANTE - ÓLEO (FLUXO INVERSO) (FLUIDO HIDRÁULICO RESISTENTE A INCÊNDIO)	396
ELEMENTO FILTRANTE - ÓLEO (HIDRÁULICO) (LIMPAR/ALTA EFICIÊNCIA)	396
ELEMENTO FILTRANTE - ÓLEO (*POWER TRAIN - HIGH EFFICIENCY)	201
ELEMENTO FILTRANTE - ÓLEO (TREM DE FORÇA)	197
ELIMINAÇÃO DE VAPORES DO CÁRTER	68
ELO DA ESTEIRA	273 274
ELO DO PASSO	423
EMISSOR - NÍVEL DO COMBUSTÍVEL (COMBUSTÍVEL)	112
EMISSOR - POSIÇÃO	156 157 158
ENGRENAGENS DE DISTRIBUIÇÃO	40
ENGRENAGENS PLANETÁRIAS - TRANSMISSÃO	205
ESCOVA DO ALTERNADOR	116 118
ESPELHO	490
ESTEIRA	286 287 288
ESTRUTURA ROPS	515 516
EXTENSÃO - ENCOSTO (ASSENTO)	527
EXTENSÃO - ENCOSTO (TECIDO)	524

F

Designação	Página
FIAÇÃO-RÁDIO (ALTO-FALANTE)	512 513
FILTRO - ÁGUA (BOMBA D'ÁGUA)	85
FILTRO - CARVÃO (PRESSURIZADOR DA CABINE)	510
FILTRO - COMBUSTÍVEL (BOCAL DE ENCHIMENTO DO TANQUE)	112
FILTRO - COMBUSTÍVEL (SECUNDÁRIO)	106
FILTRO - MAGNÉTICO (ÓLEO DO TREM DE FORÇA)	200
FILTRO - ÓLEO	197 305 358
FILTRO - ÓLEO DO MOTOR	67
FILTRO - ÓLEO (HIDRÁULICO)	305
FILTRO - ÓLEO (*HYDRAULIC)(HIGH EFFICIENCY)	358
FILTRO (AR DA CABINE)	510
FILTRO COM ROSCAS (HIDRÁULICO)	358
FILTRO DE COMBUSTÍVEL E SEPARADOR DE ÁGUA	103
FILTRO (PRESSURIZADOR DA CABINE)	510
FILTRO (VÁLVULA DE CONTROLE)	403 405 407 409 411 413
FIXADORES	304
FIXADORES - CABOS/FIOS ELÉTRICOS DO MOTOR	135
FIXADORES - CAIXA DIANTEIRA	38
FIXADORES - TAMPA DIANTEIRA	37
FREIO - DIREÇÃO	295
FREIO E COMANDO DO DIFERENCIAL	289
FREIOS E ENGRENAGENS PLANETARIAS	293
FUNDO - ENCOSTO	496 497 498
FUSÍVEL (10 A)	151
FUSÍVEL (15 A)	151
FUSÍVEL (20 A)	151

G

Designação	Página
GR. DE SERVICO - TREM DE FORÇA	170
GR. DE SERVICO - TREM DE FORÇA (INCLUI SOFTWARE)	134
GRADE DO RADIADOR	242
GRADE DO RADIADOR CONTRA EROSÃO	241
GRAXEIRA (BARRA EQUALIZADORA)	266
GRAXEIRA (LÂMINA INCLINÃVEL)	431
GRAXEIRA (PRESSURIZADOR DA CABINE)	510
GRAXEIRA (ROSCA 1/8-27 POL) (CAIXA E CHASSI)	234
GRAXEIRA (ROSCA 1/8-27 POL) (CILINDRO DE LEVANTAMENTO DA LÂMINA)	350

* TRADUÇÃO NÃO DISPONÍVEL NO MOMENTO DA IMPRESSÃO

ÍNDICE

Designação	Página
GRAXEIRA (ROSCA 1/8-27 POL) (CILINDROS DE ANGULAGEM E INCLINAÇÂO)	361
GRAXEIRA (ROSCA 1/8-27 POL) (ELO DO PASSO)	423
GRAXEIRA (ROSCA 1/8-27 POL) (PLATAFORMA DO OPERADOR)	507
GRAXEIRA (ROSCA 1/8-27 POL) (RIPER)	437
GRUPO DE INSTALAÇÃO - MOTOR	5
GRUPO DE VÁLVULAS DE CONTROLE - DUPLO	399
GRUPO DE VÁLVULAS DE CONTROLE - QUÁDRUPLO	401
GRUPO DE VÁLVULAS DE CONTROLE - TRIPLO	400
GRUPO ROTATIVO DA BOMBA	321
	395
GUIA-MATERIAL RODANTE	271

I

INDICADOR - NÍVEL DO ÓLEO (VARETA)	70
INDICADOR - TROCA DO FILTRO DE AR	94
	507
INDICADOR (LÂMPADA DE AÇÃO)	499
	503
INJETOR DE COMBUSTÍVEL	109
INSTALAÇÃO - TUBULAÇÕES	479
INSTALAÇÃO DO RÁDIO	481
INSTALAÇÃO-SEGURANÇA	139
	141
	142
INTERRUPTOR - BALANCIM (FREIO DE ESTACIONAMENTO)	296
INTERRUPTOR - BOTÃO (DESLIGAMENTO AUTOMÁTICO)	504
INTERRUPTOR - BOTÃO (MUDANÇA AUTOMÁTICA BIDIRECIONAL)	499
INTERRUPTOR - BOTÃO (MUDANÇA AUTOMÁTICA DE MARCHAS)	503
INTERRUPTOR - BOTÃO (MUDANÇA AUTOMÁTICA PARA MARCHA MAIS BAIXA)	500
INTERRUPTOR - BOTÃO (MUDANÇA ELETRÔNICA MARCHA MAIS ALTA)	298
INTERRUPTOR - BOTÃO (MUDANÇA ELETRÔNICA MARCHA MAIS BAIXA)	298
INTERRUPTOR - BOTÃO (ROLAR CICLO DE EMS)	500
INTERRUPTOR - BOTÃO (SELEÇÃO)	504
INTERRUPTOR - BUZINA	174
INTERRUPTOR - LIMITADOR (FREIO DE ESTACIONAMENTO)	298
INTERRUPTOR - MAGNÉTICO	177
	178
	179
INTERRUPTOR - MAGNÉTICO (CALOR DA ADMISSÃO DE AR)	179
INTERRUPTOR - PRESSÃO (ALTO/BAIXO) (COMPRESSOR)	479
INTERRUPTOR - PRESSÃO (DERIVAÇÃO DO FILTRO DE ÓLEO DO TREM DE FORÇA)	121
INTERRUPTOR - ROLETAS (FREIOS - LIGAR - DESLIGAR)	314
INTERRUPTOR - ROTATIVO (LIMPADOR DE JANELA TRASEIRA)	547
INTERRUPTOR - ROTATIVO (LIMPADOR DO VIDRO DIANTEIRO)	547
INTERRUPTOR - ROTATIVO (LIMPADOR DO VIDRO DIREITO)	547
INTERRUPTOR - ROTATIVO (LIMPADOR DO VIDRO ESQUERDO)	547
INTERRUPTOR - ROTATIVO (SOPRADOR DO AQUECEDOR)	474
INTERRUPTOR - ROTATIVO (VENTILADOR - AR CONDICIONADO - AQUECEDOR - DESCONGELADOR)	499
INTERRUPTOR - TERMOSTATO (AR CONDICIONADO)	444
INTERRUPTOR DE DERIVAÇÃO	175
INTERRUPTOR (LÂMPADA)	503
INTERRUPTOR (LUZES)	499
INTERRUPTOR (PISCA-PISCA DE ADVERTÊNCIA)	150
INTERRUPTOR (24 VOLT)(ILUMINADO) (ACELERADOR)	187
ISOLADOR - TEMPO	482

J

JANELA DA CABINE	544
	545
	546
JANELA DA CABINE (LADO DIREITO)	544
JANELA DA CABINE (LADO ESQUERDO)	544
JOGO - MANCAL PRINCIPAL (VIRABREQUIM)	15
JOGO DE ALAVANCA (MOTOR DE PARTIDA)	172
JOGO DE AMORTECEDOR DE CHOQUES (ASSENTO DA SUSPENSÃO)	541
JOGO DE BLOCO DESLIZADOR (ASSENTO DA SUSPENSÃO)	530
	531
	532
JOGO DE BOTÃO DE SUSPENSÃO (AJUSTE DE ALTURA) (ASSENTO DA SUSPENSÃO)	476

* TRADUÇÃO NÃO DISPONÍVEL NO MOMENTO DA IMPRESSÃO

ÍNDICE

Designação	Página
JOGO DE BUCHA (MOTOR DE PARTIDA)	172
JOGO DE COIFA DE SUSPENSÃO (ASSENTO COM SUSPENSÃO)	539
JOGO DE CORDÃO (ASSENTO DA SUSPENSÃO)	541
JOGO DE ESCOVA (MOTOR DE PARTIDA) (MOTOR)	172
JOGO DE FILTRO DA TAMPA (TANQUE DE COMBUSTÍVEL)	112
JOGO DE FIXADOR DE CORREIA (ASSENTO COM SUSPENSÃO)	539
JOGO DE INDICADOR (AJUSTAGEM DO PESO) (ASSENTO DA SUSPENSÃO)	477
JOGO DE ISOLADOR (MOTOR DE PARTIDA)	172
JOGO DE MAÇANETA (RADIO)	512
	513
JOGO DE MANCAL (ASSENTO DA SUSPENSÃO)	477
JOGO DE MANCAL (ROTAÇÃO DO MOTOR DO PISTÃO)	319
JOGO DE MOLA (AJUSTE DE ALTURA) (ASSENTO DA SUSPENSÃO)	476
JOGO DE MOLA (ASSENTO DA SUSPENSÃO)	476
JOGO DE PÁRA-CHOQUE (AJUSTAGEM DO PESO) (ASSENTO DA SUSPENSÃO)	477
JOGO DE PARAFUSO DE RETENÇÃO (CONTROLE)	132
JOGO DE PARAFUSO (FIAÇÃO DO DISJUNTOR)	151
JOGO DE PARAFUSO (RETÉM DA FIAÇÃO DO MOTOR)	183
JOGO DE PROTETOR DO ALTERNADOR	118
JOGO DE RECEPTÁCULO (12 PINOS)	296
JOGO DE RECEPTÁCULO (12 PINOS)	121
	139
	142
	181
	187
JOGO DE RECEPTÁCULO (12 PINOS)	151
	449
JOGO DE RECEPTÁCULO (2 PINOS)	112
	115
	121
	139
	141
	142
	146
	147
	164
	165
	167
	174
	175
	177
	179
	180
	181
	183
	187
	193
	231
	314
	446
	449
	453
	455
	457
	472
	499
	503
	516
	541
JOGO DE RECEPTÁCULO (2 PINOS)	516
JOGO DE RECEPTÁCULO (2 PINOS)	479
JOGO DE RECEPTÁCULO (2 PINOS)	151
	449
JOGO DE RECEPTÁCULO (3 PINOS)	121
	142
	143
	156
	157
	158
	159
	166
	181
	183
	302
	457
	499
	500
	503
	504
JOGO DE RECEPTÁCULO (3 PINOS)	449
JOGO DE RECEPTÁCULO (3 PINOS) (SENSOR DE NÍVEL DE LÍQUIDO ARREFECEDOR)	155
JOGO DE RECEPTÁCULO (4 PINOS)	139
	142
	337
	468
	547
JOGO DE RECEPTÁCULO (6 PINOS)	78
	121
	131
	187

* TRADUÇÃO NÃO DISPONÍVEL NO MOMENTO DA IMPRESSÃO

ÍNDICE

Designação	Página
	298
	446
	449
	466
	491
	500
	503
	504
	509
	516
	543
JOGO DE RECEPTÁCULO (6 PINOS)	449
	472
JOGO DE RECEPTÁCULO (8 PINOS)	187
	191
	499
	503
	512
	513
	516
JOGO DE RECEPTÁCULO (8 PINOS)	449
	499
JOGO DE RETENTOR (AQUECEDOR DE ÁGUA DA CAMISA)	136
	137
JOGO DE RETENTOR (*PUMP HEAD RELIEF VALVE)	306
JOGO DE RETENTOR (VÁLVULA DE ALÍVIO)	332
JOGO DE RETENTOR (VÁLVULA SOLENÓIDE)	114
	231
	337
JOGO DE ROLETE DE SUSPENSÃO (ASSENTO COM SUSPENSÃO)	539
JOGO DE SEGUIDOR (ASSENTO DA SUSPENSÃO)	477
JOGO DE SOLENÓIDE (MOTOR DE PARTIDA)	172
JOGO DE TERMINAL ALTERNADOR (BATERIA)	118
JOGO DE TERMINAL ALTERNADOR (BATERIA)	116
JOGO DE TERMINAL ALTERNADOR (LUZ INDICADORA) (RELÉ)	116
	118
JOGO DE TERMINAL ALTERNADOR (RELÉ) (LUZ INDICADORA)	116
	118
JOGO DE TOMADA DE CONEXÃO (12 PINOS)	181
	302
	499
	503

Designação	Página
JOGO DE TOMADA DE CONEXÃO (12 PINOS)	187
JOGO DE TOMADA DE CONEXÃO (2 PINOS)	121
	122
	142
	151
	168
	181
	183
	187
	191
	446
	449
	457
	472
	499
	503
	516
JOGO DE TOMADA DE CONEXÃO (2 PINOS) (INTERRUPTOR DE RELÉ DE FORÇA PRINCIPAL)	178
JOGO DE TOMADA DE CONEXÃO (3 PINOS)	121
	160
	161
	181
	183
	187
	302
	449
	499
	503
JOGO DE TOMADA DE CONEXÃO (4 PINOS)	121
	122
	139
	142
	187
	499
	503
JOGO DE TOMADA DE CONEXÃO (6 PINOS)	121
	187
	302
	449
	499
	503
	516
JOGO DE TOMADA DE CONEXÃO (8 PINOS)	121
	122
	131
	191
	449
	453
	499
	503

* TRADUÇÃO NÃO DISPONÍVEL NO MOMENTO DA IMPRESSÃO

ÍNDICE

Designação	Página
	506
JOGO DE VÁLVULA DE AR (ASSENTO DA SUSPENSÃO)	541
JUNTA - REGULADOR DA ÁGUA (TEMPERATURA DO LÍQUIDO ARREFECEDOR)	82
JUNTA (BOMBA DE ESCORVA DE COMBUSTÍVEL)	103
JUNTA UNIVERSAL	223

L

LÂMINA	419
LÂMINA ANGULÁVEL	431
LÂMINA DO LIMPADOR DE PÁRA-BRISA (PÁRA-BRISA)	547
LÂMINA DO LIMPADOR DE PÁRA-BRISA (PARTE TRASEIRA) (JANELA)	547
LÂMINA DO LIMPADOR DE PÁRA-BRISA (PORTA DIREITA DA CABINE)	466
LÂMINA DO LIMPADOR DE PÁRA-BRISA (PORTA ESQUERDA DA CABINE)	468
LÂMINA SEMI-UNIVERSAL	419 420 433
LÂMPADA - DIODO (VISOR LED) (PISCA-PISCA DE ADVERTÊNCIA)	150
LÂMPADA - FAROL	144 145 146
LÂMPADA - HALOGÊNEO (24 VOLTS)(65 WATTS) (FAROL)	145 146
LÂMPADA - HALOGÊNEO (24 VOLTS)(65 WATTS) (FAROL)	144
LÂMPADA - TETO	143
LÂMPADA (12 V) (LUZ DE AÇÃO LED VERMELHA/VERDE)	141
LÂMPADA (12 V) (LUZ DE AÇÃO LED VERMELHA/VERDE)	142
LÂMPADA (24 V) (GRUPO DE QUATRO MEDIDORES)	503
LÂMPADA (24 V) (INSTRUMENTO)	499
LÂMPADA (24 V) (INTERRUPTOR DE BALANCIM DO ACELERADOR)	187
LÂMPADA (24 V) (LÂMPADA DE AÇÃO)	499 503
LÂMPADA (24 V) (LUZES DOS INSTRUMENTOS)	503
LÂMPADA (24 V) (PISCA-PISCA DE ADVERTÊNCIA)	150
LÂMPADA (24 V) (QUATRO MEDIDORES)	499
LÂMPADA (24 V) (TETO)	143
LENTE (FAROL DIANTEIRO)	146
LENTE (FAROL DIANTEIRO) (ROPS)	144 145
LENTE (LÂMPADA DO TETO)	143
LENTE (PISCA-ALERTA ÂMBAR)	147
LEVANTAMENTO DO MOTOR	44
LIMPADOR DO VIDRO	547
LUZ DO PAINEL DE INSTRUMENTOS	499 503
LUZ GIRATÓRIA DE ALARME	147

M

MAÇANETA (TAMPA DO FILTRO)	510
MANCAL (ESPECIAL - ARMAÇÃO)	419
MANGUEIRA - DESCARTE (VAPORES)	68
MANGUEIRA (RADIADOR INFERIOR)	87
MANGUEIRA (RADIADOR SUPERIOR)	87
MÁQUINA-TEMP. AMBIENTE ALTA	1
MATERIAL RODANTE	288
MATERIAL RODANTE ; ESTRUTURA INFERIOR	288
MECANISMO DAS VÁLVULAS	61 62
MÓDULO DO VISOR (LÂMAPADA E TRANSMISSÃO) (INDICADOR DE MARCHA DA TRANSMISSÃO)	500 503
MÓDULO ELETRÔNICO DE QUATRO INDICADORES	491
MONITOR - SOFTWARE	169
MONITOR DE SERVIÇO	169
MONTAGEM - CABINE	492
MONTAGEM - CILINDRO	390
MONTAGEM - COMANDO DO VENTILADOR	47
MONTAGEM - CONVERSOR DE TORQUE	203
MONTAGEM - ESTRUTURA ROPS	495
MONTAGEM - MOTOR	45 46
MONTAGEM - PLATAFORMA	493
MONTAGEM - RIPER	424
MONTAGEM - ROLETE SUPERIOR	275
MONTAGEM - SILENCIADOR	98
MONTAGEM - TRANSMISSÃO	204
MONTAGEM - VÁLVULA	392
MOTOR - NÚCLEO	4
MOTOR - PISTÃO	313
MOTOR COMPLETO	2 3
MOTOR DO GRUPO ROTATIVO	319
MOTOR ELÉTRICO DE PARTIDA	171 172

* TRADUÇÃO NÃO DISPONÍVEL NO MOMENTO DA IMPRESSÃO

ÍNDICE

Designação	Página
MOTOR ELÉTRICO (27 VOLT) (ROPS ABERTA DO AQUECEDOR)	472
MUNHÃO DA LÂMINA	430

P

PAINEL - DISJUNTOR ELÉTRICO AUTOMÁTICO	151
PAINEL- REDUÇÃO DE RUÍDO	261
PAINEL DE INSTRUMENTOS	499, 503
PÁRA-LAMA	240
PEDAL - GOVERNADOR E FREIO	314
PINO	426
PISTÃO E BIELA	49
PLACA - NÚMERO DE SÉRIE (CONVERSOR DE TORQUE)	220
PLACA - NÚMERO DE SÉRIE (LÃMINA)	419, 420
PLACA - NÚMERO DE SÉRIE (MOTOR)	550
PLACA DE ADVERTÊNCIA (CILINDRO DE ALTA PRESSÃO) (MOLA TENSORA RELESCÓPICA)	269
PLACA DE ADVERTÊNCIA (MOLA TENSORA)	269
PLACA DE ADVERTÊNCIA (NÃO OPERE)	493
PLACA DE INSTRUÇÃO (CONDICIONADOR DE AR)	479
PLACA E DECALQUE	550
PLATAFORMA	506
PLATAFORMA DO OPERADOR	507
POLIA	52, 53
POLIA - ACIONADOR DO VENTILADOR	54
POLIA DA RODA-GUIA	51, 55
PORTA DA CABINE	466, 468
PORTA DA CABINE (LADO DIREITO)	449
PORTA DA CABINE (LADO ESQUERDO)	449
PÓS-ARREFECEDOR	90
PRESSURIZADOR	510
PROTETOR - FILTRO DO TREM DE FORÇA	246
PROTETOR - GUIA DOS ROLETES DAS ESTEIRAS	249
PROTETOR - RADIADOR	247
PROTETOR - ROLETES DAS ESTEIRAS	250
PROTETOR - TANQUE DE COMBUSTÍVEL	245
PROTETOR INFERIOR	243, 244
PURIFICADOR DE AR	91

R

RADIADOR	87, 89
RÁDIO	512, 513
RECEPTOR - SECADOR (REFRIGERANTE)	485
RECLINAÇÃO - ASSENTO	514
REDUÇÃO DE RUÍDO	60
REGULADOR DE TEMPERATURA DA ÁGUA (94 GRAUS C) (LÍQUIDO ARREFECEDOR)	82
REGULADOR (PRESSÃO DO COMBUSTÍVEL)	106
RESPIRO	65
RESPIRO (MOTOR)	65
RESPIRO (TUBOS DE ÓLEO DO TREM DE FORÇA)	200
RETENTOR - CAIXA DO VOLANTE	57
RETENTOR - INJETOR DE COMBUSTÍVEL	58
RETENTOR - ÓLEO DA CAMISA (VIRABREQUIM)	15
RETENTOR DE ANEL-O (BUJAÃO DE DRENAGEM DA TRANSMISSÃO)	206
RETENTOR DE ANEL-O (BUJÃO DE DRENAGEM DA CAIXA)	234
RETENTOR DE ANEL-O (BUJÃO DE DRENAGEM DO CONVERSOR DE TORQUE)	220
RETENTOR DE ANEL-O (BUJÃO DE DRENAGME DO COMANDO FINAL)	198
RETENTOR DE ANEL-O (BUJÃO MAGNÉTICO DO COMANDO FINAL)	198
RETENTOR DE ANEL-O (FILTRO DO TREM DE FORÇA)	197
RETENTOR DE ANEL-O (RESPIRO DO MOTOR)	65
RETENTOR DO VIRABREQUIM	56
REVESTIMENTO DA CABINE	484
RIPER	429, 437
RODA-GUIA DAS ESTEIRAS	272
ROLETE DE ESTEIRA DE FLANGE DUPLO	279, 280, 282
ROLETE DE ESTEIRA DE FLANGE SIMPLES	283, 284
ROLETE SUPERIOR DA ESTEIRA	277
RUÍDO - ARRANJO PARA SUPRESSÃO	59

S

SACADOR - FUSÍVEL	122
SEGMENTO DA RODA MOTRIZ	216
SENSOR - NÍVEL DE LÍQUIDO	155

* TRADUÇÃO NÃO DISPONÍVEL NO MOMENTO DA IMPRESSÃO

ÍNDICE

Designação	Página
SENSOR - PRESSÃO	159, 160, 161
SENSOR - PRESSÃO (COMBUSTÍVEL)	153
SENSOR - PRESSÃO (ÓLEO DO MOTOR)	153
SENSOR - TEMPERATURA	166, 167, 168
SENSOR - TEMPERATURA (AR DE ADMISSÃO)	153
SENSOR - TEMPERATURA (LÍQUIDO ARREFECEDOR)	153
SENSOR DE VELOCIDADE	162, 163, 164, 165
SENSOR DE VELOCIDADE (REGULAGEM) (MOTOR)	153
SENSOR DE VELOCIDADE (TRANSMISSÃO)	193
SENSOR DO MOTOR	153
SERVO-VÁLVULA	333, 335
SILENCIADOR	99
SIST. DE ILUMINAÇÃO - PISCA-PISCA GIRATÓRIO DE ADVERTÊNCIA	150
SISTEMA DE ILUMINAÇÃO - FARÓIS	148
SISTEMA ELETRÔNICO - MÁQUINA	133
SISTEMA ELETRÔNICO - MONITOR	133
SISTEMA ELETRÔNICO - TREM DE FORÇA	134
SOFTWARE - MÁQUINA (SEGURANÇA)	129
SOFTWARE - MÁQUINA (SEGURANÇA) (APENAS SOFTWARE)	133
SOFTWARE - TREM DE FORÇA	134, 170
SUPORTE - ESCOVA (ALTERNADOR)	116
SUPORTE - ESCOVA (ALTERNADOR)	118
SUPORTE DO RETENTOR	11
SUSPENSÃO - ASSENTO	536, 539, 541

T

Designação	Página
TAMPA - ADMISSÃO DE AR	92
TAMPA - BLOCO DO MOTOR	12
TAMPA - BOCAL DE ENCHIMENTO DE ÓLEO (TREM DE FORÇA)	200
TAMPA - BOCAL DE ENCHIMENTO (ÓLEO DO MOTOR)	66
TAMPA - BOCAL DE ENCHIMENTO (TANQUE HIDRÁULICO)	396
TAMPA - CAIXA DIANTEIRA	13
TAMPA - CONSOLO	459, 460, 461, 463, 465
TAMPA - MECANISMO DAS VÁLVULAS	14
TAMPA - RADIADOR (ALÍVIO DE PRESSÃO)	89
TAMPA (CONDICIONADOR DE AR)	479
TAMPA CONTRA POEIRA (AMOSTRA DE FLUIDO DA VÁLVULA DE CONTROLE)	392
TAMPA CONTRA POEIRA (AQUECEDOR DE ÁGUA DA CAMISA)	136, 137
TAMPA CONTRA POEIRA (BOMBA HIDRÁULICA)	378
TAMPA CONTRA POEIRA (CONEXÕES DA TRANSMISSÃO)	207
TAMPA CONTRA POEIRA (PAINEL DE DIAGNÕSTICOS)	365
TAMPA CONTRA POEIRA (VÁLVULA DE AMOSTRAGEM DE ÓLEO DO TURBO)	72
TAMPA CONTRA POEIRA (VÁLVULA DE AMOSTRAGEM DO ÓLEO DO TREM DE FORÇA)	200
TAMPA CONTRA POEIRA (VÁLVULA DE COLETA DE AMOSTRAS DO LÍQUIDO ARREFECEDOR)	82
TAMPA CONTRA POEIRA (VÁLVULAS DE DIREÇÃO)	308
TAMPA DA RODA-GUIA	268
TAMPA DO TANQUE DE COMBUSTÍVEL (TRAVA COM RESPIRO)	112
TAMPA (*ELECTRONIC TECH-SERVICE TOOL)	187
TAMPA (POEIRA) (PORTA DO BOCAL DE ENCHIMENTO DO RADIADOR)	247
TAMPA (TANQUE DO LAVADOR DE VIDROS)	543
TAMPÃO (CAIXA DE DRENAGEM)	234
TAMPÃO (DRENO DA TRANSMISSÃO)	206
TAMPÃO (DRENO DO COMANDO FINAL)	198
TAMPÃO (DRENO DO CONVERSOR DE TORQUE)	220
TAMPÃO (MAGNÉTICO-DRENO DO ÓLEO)	33
TANQUE - LAVADOR DE JANELA	543
TANQUE DE COMBUSTÍVEL	112
TANQUE HIDRÁULICO E FILTRO	396
TANQUE (RADIADOR - SUPERIOR)	89
TAPETE (DIANTEIRO)	463
TAPETE (TRASEIRO)	461
TELA DE PROTEÇÃO	519, 520
TELA DE SUCÇÃO (TUBOS DE ÓLEO DO TREM DE FORÇA)	200

* TRADUÇÃO NÃO DISPONÍVEL NO MOMENTO DA IMPRESSÃO

ÍNDICE

Designação	Página
TELA FILTRANTE (RETORNO DO CONVERSOR DE TORQUE)	220
TELA FILTRANTE (TANQUE HIDRÁULICO)	396
TELA PÁRA-SOL	521
TOLDO	454
TRANSMISSÃO	222
TREM DE FORÇA	212
TRINCO	483
TRINCO (PORTA)	466
TUBO DE FAÍSCA (CONEXÃO DE 3 PINOS) (PISCA-PISCA DE ADVERTÊNCIA)	147
TUBO DE FAÍSCA (CONEXÃO DE 8 PINOS) (PISCA-PISCA DE ADVERTÊNCIA)	147
TUBOS - ÁGUA	82
TUBOS - ANGULAGEM E INCLINAÇÃO	361
	363
TUBOS - AQUECEDOR	487
	489
TUBOS - AR	95
TUBOS - AR CONDICIONADO	485
TUBOS - BOMBA	378
TUBOS - CILINDRO DE INCLINAÇÃO	386
	387
	388
TUBOS - CILINDRO DE LEVANTAMENTO	368
	370
	372
TUBOS - CIRCUITO PILOTO	374
	376
TUBOS - COMBUSTÍVEL	104
TUBOS - DIREÇÃO	308
TUBOS - FILTRO DO COMBUSTÍVEL	106
TUBOS - ÓLEO DA TRANSMISSÃO	200
TUBOS - ÓLEO DO MOTOR	71
TUBOS - ÓLEO DO TURBOALIMENTADOR	72
TUBOS - ÓLEO HIDRÁULICO	365
TUBOS - RIPER	382
	384
TUCHO DA VÁLVULA	43
TURBOALIMENTADOR	101
	102

V

Designação	Página
VÁLVULA - AMOSTRA DE FLUIDOS (VÁLVULA DE CONTROLE)	392
VÁLVULA - ESFERA (CORTE DA TUBULAÇÃO DE COMBUSTÍVEL)	104
VÁLVULA DE ÁGUA (AQUECEDOR DA CABINE)	470
VÁLVULA DE ÁGUA (AQUECEDOR DE ROPS ABERTA)	474
VÁLVULA DE ALÍVIO	228
	230
	330
	331
	332
	417
	418
VÁLVULA DE ALÍVIO (COMPRESSOR DO REFRIGERANTE)	455
VÁLVULA DE ALÍVIO (*PUMP HEAD)	306
VÁLVULA DE ALÍVIO (VÁLVULA DE CONTROLE)	405
	409
	413
VÁLVULA DE CONTROLE	324
	403
	405
	407
	409
	411
	413
VÁLVULA DE CONTROLE - PRESSÃO E COMPENSAÇÃO DE FLUXO	329
	415
VÁLVULA DE CONTROLE - TRANSMISSÃO	232
VÁLVULA DE CONTROLE PILOTO	327
VÁLVULA DE DERIVAÇÃO	323
VÁLVULA DE DRENAGEM (CAIXA)	234
VÁLVULA DE DRENAGEM (COMBUSTÍVEL) (FILTRO)	106
VÁLVULA DE DRENAGEM (FILTRO DE COMBUSTÍVEL)	106
VÁLVULA DE ENXAGUAR	326
VÁLVULA DE MODULAÇÃO	224
	225
VÁLVULA DE PRIORIDADE	226
VÁLVULA DE RETENÇÃO (VÁLVULA DE CONTROLE)	403
	405
	409
	411
	413
VÁLVULA PARA TIRAR AMOSTRAS DE FLUIDOS (LÍQUIDO ARREFECEDOR)	82
VÁLVULA PARA TIRAR AMOSTRAS DE FLUIDOS (ÓLEO DO TURBOALIMENTADOR)	72
VÁLVULA PARA TIRAR AMOSTRAS DE FLUIDOS (TUBOS DE ÓLEO DO TREM DE FORÇA)	201
VÁLVULA SOLENÓIDE	114
	231
	337
	338

* TRADUÇÃO NÃO DISPONÍVEL NO MOMENTO DA IMPRESSÃO

ÍNDICE

Designação	Página	Designação	Página
VENTILADOR	78		
VENTILADOR DA CABINE	446		
VENTILADOR DE SOPRO	80		
VENTILADOR REVERSÍVEL	81		
VIGIA (TANQUE HIDRÁULICO)	396		
VIRABREQUIM	15		
VOLANTE DO MOTOR	39		

* TRADUÇÃO NÃO DISPONÍVEL NO MOMENTO DA IMPRESSÃO

STICHWORTVERZEICHNIS

Bezeichnung	Seite

A

ABDECKGLAS (ARBEITSSCHEINWERFER)	146
ABDECKGLAS (ARBEITSSCHEINWERFER) (ÜBERROLLSCHUTZ)	144, 145
ABDECKGLAS (FAHRERHAUS-INNENLEUCHTE)	143
ABDECKGLAS (GELBE WARNLEUCHTE)	147
ABLASSSTOPFEN (DREHMOMENTWANDLER)	203
ABLASSSTOPFEN (HYDRAULIKTANK)	396
ABLASSVENTIL (KRAFTSTOFF) (FILTER)	106
ABLASSVENTIL (KRAFTSTOFFILTER)	106
ABLASSVENTIL (VENTIL F. DRUCKLOSEN RÜCKLAUF)	234
ACHSE	190
ACHSWELLE	276
ANSAUGSIEB (KRAFTÜBERTRAGUNG - ÖLLEITUNGEN)	200
ANSCHRAUBFILTER (HYDRAULIK)	358
ANTRIEBSSTRANG-WARTUNGSSATZ	170
ANTRIEBSSTRANG-WARTUNGSSATZ (EINSCHL. SOFTWARE)	134
ANTRIEBSWELLE	217
ANZEIGE (WARNLEUCHTE)	499, 503
ANZEIGEMODUL (LAMPE U. GANG) (GETRIEBEGANGANZEIGE)	500, 503
ANZEIGEN-EINBAUSATZ (GEWICHTSEINSTELLUNG) (SCHWINGSITZ)	477
ANZUGSLEINE (SCHWINGSITZ)	541
ARBEITSLEUCHTEN	144, 145, 146, 148
AUFKLEBER	549
AUFKLEBER (AUSSEN) (LÄRM)	59
AUFKLEBER (DIAGNOSETAFEL - DIFFERENZIALLENKUNG)	366
AUFKLEBER (DIFFERENZIALLENKUNG)	302
AUFKLEBER (D6N)(KRAFTSTOFFTANKSCHUTZ)	245
AUFKLEBER (D6N)(LINKE VERKLEIDUNG)	454
AUFKLEBER (D6N)(LINKER KRAFTSTOFFTANKSCHUTZ)	245
AUFKLEBER (D6N)(RECHTE VERKLEIDUNG)	454
AUFKLEBER (D6N)(RECHTER KRAFTSTOFFTANKSCHUTZ)	245
AUFKLEBER (INSTRUMENTENTAFEL)	474
AUFKLEBER (LENKUNG)	302
AUFKLEBER (MASCHINENSICHERHEITSSYSTEM)	141, 142
AUFKLEBER (RADIO)	481
AUFKLEBER (SCHEIBENWASCHER/-WISCHER)	547
AUFKLEBER (SCHMIERPUNKT)	450
AUFKLEBER (SCHMIERPUNKT) (PLATTFORM)	507
AUFKLEBER (SICHERHEITSHINWEIS)	142
AUFKLEBER (SITZKISSENKENNUNG)	498
AUFKLEBER (STARTSCHLÜSSELSCHALTER)	141, 142
AUFKLEBER (WARNLEUCHTE) (*MALFUNCTION)	499, 503
AUFREISSER	437
AUFREISSER - TEILLISTE	429
AUFREISSERBEFESTIGUNG	424
AUFREISSERHUBZYLINDER	352
AUFREISSERLEITUNGEN	382, 384
AUFREISSERZAHN	439, 440, 441
AUSPUFFKRÜMMER	97

B

BATTERIE	124
BATTERIE UND VERDRAHTUNG	121
BATTERIE (WARTUNGSFREI)(12 V) (SCHWEREINSATZ)	124
BATTERIE (12 V)	122
BEFESTIGUNGSSCHRAUBENSATZ (STEUERUNG)	132
BELEUCHTUNGSANLAGE (12 V) (KONTROLLLEUCHTE ROT/GRÜN)	141
BELEUCHTUNGSANLAGE (12 V) (KONTROLLLEUCHTE ROT/GRÜN)	142
BLITZRÖHRE (*3 PRONG CONNECTION) (RUNDUM-KENNLEUCHTE)	147
BLITZRÖHRE (8 ZACKEN VERBINDUNG) (RUNDUM-KENNLEUCHTE)	147
BOLZENSATZ	426
BREMSE UND DIFFERENTIALANTRIEB	289
BREMSE UND PLANETENGETRIEBE	293
BUCHSEN-EINBAUSATZ (STARTERMOTOR)	172
BÜRSTEN-EINBAUSATZ (STARTER) (MOTOR)	172
BÜRSTENHALTER (DREHSTROMGENERATOR)	118

* ÜBERSETZUNG ZUM ZEITPUNKT DER DRUCKLEGUNG NICHT VORHANDEN

STICHWORTVERZEICHNIS

Bezeichnung	Seite
BÜRSTENHALTER (DREHSTROMGENERATOR)	116

C

C-RAHMEN (SCHWENKSCHILD)	421

D

DÄMPFER UND RIEMENSCHEIBE	31
DICHTUNG (KRAFTSTOFFENTLÜFTUNGSPUMPE)	103
DICHTUNGSBUCHSE (KURBELWELLE)	15
DICHTUNGSSATZ (DRUCKBEGRENZUNGSVENTIL)	332
DICHTUNGSSATZ (*PUMP HEAD RELIEF VALVE)	306
DICHTUNGSSATZ (SOLENOIDVENTIL)	114 231 337
DICHTUNGSSATZ (UMLAUFKÜHLWASSERHEIZUNG)	136 137
DICHTUNGSTRÄGER	11
DIFFERENTIAL UND TELLERRAD	193
DIODENLEUCHTE (LED) (RUNDUMKENNLEUCHTE)	150
DOPPELFLANSCHROLLEN	279 280 282
DREHKNOPFSCHALTER (FRONTSCHEIBENWISCHER)	547
DREHKNOPFSCHALTER (GEBLÄSE KLIMAANLAGE-HEIZUNG-ENTFROSTER)	499
DREHKNOPFSCHALTER (HEIZUNGSGEBLÄSE)	474
DREHKNOPFSCHALTER (HINTERER SCHEIBENWISCHER)	547
DREHKNOPFSCHALTER (LINKER SCHEIBENWISCHER)	547
DREHKNOPFSCHALTER (RECHTER SCHEIBENWISCHER)	547
DREHMOMENTWANDLER	218 220
DREHMOMENTWANDLERAUFHÄNGUNG	203
DREHSTROMGENERATOR	116 118 120
DREHSTROMGENERATOR - ANSCHLUSSKLEMMENSATZ (BATTERIE)	116 118
DREHSTROMGENERATOR - ANSCHLUSSKLEMMENSATZ (KONTROLLLEUCHTE) (RELAIS)	118
DREHSTROMGENERATOR - ANSCHLUSSKLEMMENSATZ (KONTROLLLEUCHTE) (RELAIS)	116
DREHSTROMGENERATOR - ANSCHLUSSKLEMMENSATZ (RELAIS) (KONTROLLEUCHTE)	116 118
DREHSTROMGENERATOR-BÜRSTE	116 118
DREHSTROMGENERATOR-SCHUTZVORRICHTUNGSSATZ	118
DREHZAHLSENSOR	162 163 164 165
DREHZAHLSENSOR (GETRIEBE)	193
DREHZAHLSENSOR (TIMING) (MOTOR)	153
DRUCK- U. STROMAUSGLEICHSVENTIL	329
DRUCK- U. STROMAUSGLEICHSVENTIL	415
DRUCKKNOPFSCHALTER (AUTOM. HERUNTERSCHALTEN)	500
DRUCKKNOPFSCHALTER (AUTOM. SCHALTUNG - BIDIREKTIONAL)	499
DRUCKKNOPFSCHALTER (AUTOMATIKSCHALTUNG)	503
DRUCKKNOPFSCHALTER (ELEKTRON. - HERUNTERSCHALTEN)	298
DRUCKKNOPFSCHALTER (ELEKTRON. - HOCHSCHALTEN)	298
DRUCKKNOPFSCHALTER (EMS SCROLLEN)	500
DRUCKKNOPFSCHALTER (KICKDOWN-AUTOMATIK)	504
DRUCKKNOPFSCHALTER (ROLLEN)	504
DRUCKLÜFTER	80
DRUCKLUFTLEITUNGEN	95
DRUCKLUFTVENTILSATZ (SCHWINGSITZ)	541
DRUCKSCHALTER (HOCH/NIEDRIG) (KOMPRESSOR)	479
DRUCKSCHALTER (KRAFTÜBERTRAGUNG - ÖLFILTERUMGEHUNG)	121
DRUCKSENSOR	159 160 161
DRUCKSENSOR (KRAFTSTOFF)	153
DRUCKSENSOR (MOTORÖL)	153

* ÜBERSETZUNG ZUM ZEITPUNKT DER DRUCKLEGUNG NICHT VORHANDEN

STICHWORTVERZEICHNIS

Bezeichnung	Seite

E

EINFÜLLSTUTZENKAPPE (HYDRAULIK-TANK) 396
EINFÜLLSTUTZENKAPPE (MOTORÖL) 66
EINSPRITZDÜSENDICHTUNG 58
EINSPRITZDÜSENPUMPE 109, 110
EINZELFLANSCHROLLEN 283, 284
ELEKTR. UMFORMER (*24 V TO 12 V) 187
ELEKTRONIK - MASCHINE 133
ELEKTRONIK - MONITOR 133
ELEKTRONISCHER SCHLÜSSEL (SICHERHEIT) 129
ELEKTRONISCHER SCHLÜSSEL (SICHERHEIT) 139
ENDSCHALTER (FESTSTELLBREMSE) 298
ENTDUNSTER 68
ENTDUNSTERLEITUNG (ENTDUNSTER) 68
ENTLÜFTER 65
ENTLÜFTER (KRAFTÜBERTRAGUNG - ÖLLEITUNGEN) 200
ENTLÜFTER (MOTOR) 65

F

FAHRERHAUS 448, 449, 453
FAHRERHAUS-DRUCKLÜFTER 446
FAHRERHAUSANBAUSATZ 492
FAHRERHAUSAUSKLEIDUNG 484
FAHRERHAUSBELEUCHTUNG 143
FAHRERHAUSBELÜFTUNG 510
FAHRERHAUSFENSTER 544, 545, 546
FAHRERHAUSFENSTER (LINKS) 544
FAHRERHAUSFENSTER (RECHTE SEITE) 544
FAHRERHAUSHEIZUNG 470
FAHRERHAUSTÜR 466, 468
FAHRERHAUSTÜR (LINKS) 449
FAHRERHAUSTÜR (RECHTS) 449
FAHRERPLATTFORM 507
FAHRERPLATTFORMVERDRAHTUNG 187
FAHRERSITZ 522, 524, 525, 527
FAHRERSITZFEDERUNG 536, 539, 541
FAHRERSITZFEDERUNGSGEHÄUSE 476
FAHRERSITZVERSTELLER 442, 443
FAHRWERK 1
FEDER-EINBAUSATZ (HÖHENEINSTELLUNG) (SCHWINGSITZ) 476
FEDER-EINBAUSATZ (SCHWINGSITZ) 476
FEDERUNGS-EINBAUSATZ (EINSTELLKNOPF) (HÖHENEINSTELLUNG) (SCHWINGSITZ) . . . 476
FEDERUNGS-EINBAUSATZ (MANSCHETTE) (SCHWINGSITZ) 539
FEDERUNGS-EINBAUSATZ (ROLLE) (SCHWINGSITZ) 539
FESTSTELLBREMSGESTÄNGE 296
FILTER (STEUERVENTIL) 403, 405, 407, 409, 411, 413
FILTERSATZ (FAHRERHAUS - DRUCKBEAUF-SCHLAGUNG) 510
FILTERSATZ (FAHRERHAUSLUFT) 510
FLÜSSIGKEITSSTANDSENSOR 155
FUSSMATTE (HINTEN) 461
FUSSMATTE (VORNE) 463

G

GAS- U. BREMSPEDAL 314
GEHÄUSE (STEUERVENTIL) 403, 405, 407, 409, 411, 413
GETRIEBE 222
GETRIEBEAUFLAGER 204
GETRIEBESTEUERUNG 191
GETRIEBESTEUERVENTIL 232
GLEITLAGER (NOCKENWELLE) 18
GLEITSCHIENENBLOCK-EINBAUSATZ (SCHWINGSITZ) 530, 531, 532
GRUNDAUSFÜHRUNG 1

H

HALOGENSCHINWERFER (24 V)(65 W) (ARBEITSSCHEINWERFER) 144
HALOGENSCHINWERFER (24 V)(65 W) (ARBEITSSCHEINWERFER) 145

* ÜBERSETZUNG ZUM ZEITPUNKT DER DRUCKLEGUNG NICHT VORHANDEN

STICHWORTVERZEICHNIS

Bezeichnung	Seite
	146
HALTEBUEGEL (FAHRERHAUSTÜR)	468
HALTETEILE	304
HAUPTLAGERSATZ (KURBELWELLE)	15
HEBEL-EINBAUSATZ (STARTERMOTOR)	172
HEIZUNG	138
HEIZUNG - OFFENES FAHRERHAUS MIT ÜBERROLLSCHUTZ	472
	474
HEIZUNGSLEITUNGEN	487
	489
HEIZUNGSVERDRAHTUNG	186
HUBVENTIL	43
HUBZYLINDER	348
	350
HUBZYLINDERLEITUNGEN	368
	370
	372
HYDRAULIKANORDNUNG (4-VENTIL-HYDRAULIK)	360
HYDRAULIKHANDSTEUERUNG	339
	341
	343
HYDRAULIKHANDSTEUERUNG (AUFREISSER)	360
HYDRAULIKLEITUNGEN	365
HYDRAULIKÖLKÜHLER	345
HYDRAULIKPUMPE UND LEITUNGEN	378
HYDRAULIKSYSTEM	359
HYDRAULIKTANK UND SCHMIERFILTER	396

I

IDENTIFIZIERUNGS-AUFKLEBER (DREHSTROMGENERATOR)	151
IDENTIFIZIERUNGS-AUFKLEBER (GRUPPEN- U. SEQUENZNR.) (KLIMAANLAGENKONDENSATOR)	457
IDENTIFIZIERUNGS-AUFKLEBER (GRUPPEN-U. SEQUENZNR.) (VENTILATOR)	446
IDENTIFIZIERUNGS-AUFKLEBER (SERVICEVERBINDER)	151
IDENTIFIZIERUNGS-AUFKLEBER (WARNLEUCHTE)	141
	142
IDENTIFIZIERUNGS-AUFKLEBER (12 V)	187
IDENTIFIZIERUNGS-AUFKLEBER (12 V)	463
INSTRUKTIONS-AUFKLEBER (AUFREISSER-STEUERUNG)	341
INSTRUKTIONS-AUFKLEBER (FÜR SITZVERSTELLUNG)	539
	541
INSTRUKTIONS-AUFKLEBER (NICHT BETRETEN)	361
INSTRUKTIONS-AUFKLEBER (PLANIER-SCHILDSTEUERUNG)	339
INSTRUKTIONS-AUFKLEBER (SCHILDSTEUE-RUNG)	343
INSTRUKTONSSCHILD (KLIMAANLAGE)	479
INSTRUMENTENBRETT-AUFKLEBER (INSTRUMENTENBRETT)	499
	503
INSTRUMENTENTAFEL	499
	503
INSTRUMENTENTAFELBELEUCHTUNG	499
	503
ISOLATOR-EINBAUSATZ (STARTERMOTOR)	172

K

KABELSATZ (TEMPERATURREGELUNG)	474
KABELSTRANG (DURCHDREHEN OHNE EINSPRITZUNG)	183
KABELSTRANG (FESTSTELLBREMSE)	122
KABELSTRANG (FÜR UNTERBRECHER)	151
KABELSTRANG (GETRIEBEDREHZAHLSEN-SOREN)	191
KABELSTRANG (GETRIEBESCHALTSOLENOI-DE)	191
KABELSTRANG (HAUPT)(FAHRERHAUS)	449
KABELSTRANG (HEIZUNG)	472
KABELSTRANG (HYDRAULIKTANK)	121
KABELSTRANG (INSTRUMENTENTAFEL)	499
	503
KABELSTRANG (KRAFTÜBERTRAGUNGS-STEUERUNG)	302
KABELSTRANG (MOTOR)	121
KABELSTRANG (PLATTFORM)	121
	187
KABELSTRANG (RÜCKFAHRALARM)	516
KABELSTRANG (SCHEIBENWASCHER)	543
KABELSTRANG (SCHEIBENWISCHER)	449
KABELSTRANG (SCHUTZSCHALTERTAFEL)	151
KABELSTRANG (STEUERUNG) (SICHERHEIT)	139
KABELSTRANG (STEUERUNG) (SICHERHEIT)	142
KABELSTRANG (ÜBERWACHUNGSMONI-TOR)	131
KÄLTEMITTEL-DRUCKSPEICHER	485
KÄLTEMITTELKOMPRESSOR	455
	456
KÄLTEMITTELKONDENSATOR	457
KÄLTEMITTELTROCKNER (KÜHLMITTEL)	485

* ÜBERSETZUNG ZUM ZEITPUNKT DER DRUCKLEGUNG NICHT VORHANDEN

STICHWORTVERZEICHNIS

Bezeichnung	Seite
KAPPE (*ELECTRONIC TECH-SERVICE TOOL)	187
KAPPE (KLIMAANLAGE)	479
KAPPE (SCHEIBENWASCHMITTELBEHÄLTER)	543
KAPPE (STAUB) (KÜHLERFÜLLKLAPPE)	247
KAPPENFILTERSATZ (KRAFTSTOFFTANK)	112
KEILRIEMEN (MIT KLIMAANLAGE - EUROPÄISCHER MARKT)	7
KEILRIEMEN (MIT KLIMAANLAGE - NORDAMERIKANISCHER MARKT)	8
KEILRIEMEN (OHNE KLIMAANALAGE - NORDAMERIKANISCHER MARKT)	6
KETTENFÜHRUNGSSCHUTZ	249
KETTENGLIEDER	273 274
KETTENRADSEGMENT	216
KETTENSPANNER UND -FEDERRÜCKLAUF	285
KIPPSCHALTER (FESTSTELLBREMSE)	296
KIPPZYLINDER	354 356
KLIMAANLAGE	444 445
KLIMAANLAGE - KABELSTRANG (KONDESATORGEBLÄSE) (KOMPRESSOR)	457
KLIMAANLAGENLEITUNGEN	485
KNOPF (FILTERDECKEL)	510
KOHLEFILTER (FAHRERHAUS - DRUCKBEAUFSCHLAGUNG)	510
KOLBENMOTOR	313
KOLBENPUMPE	317 393
KOLBENPUMPENUMLAUFSATZ	321 395
KRAFTSTOFF-ENTLÜFTUNGSPUMPE	103
KRAFTSTOFFEINSPRITZDÜSE	109
KRAFTSTOFFILTER (AUSFALLSCHUTZ)	106
KRAFTSTOFFILTERELEMENT (HAUPTELEMENT)	103
KRAFTSTOFFILTERLEITUNGEN	106
KRAFTSTOFFLEITUNGEN	104
KRAFTSTOFFÖRDERPUMPE	111
KRAFTSTOFFSIEB (TANKFÜLLER)	112
KRAFTSTOFFSTANDGEBER (KRAFTSTOFF)	112
KRAFTSTOFFTANK	112
KRAFTSTOFFTANK (OBERER KÜHLER)	89
KRAFTSTOFFTANKKAPPE (ENTLÜFTUNGSSPERRE)	112
KRAFTSTOFFTANKVERKLEIDUNG	245
KRAFTÜBERTRAGUNG	212
KRAFTÜBERTRAGUNGSELEKTRONIK	134
KRAFTÜBERTRAGUNGSFILTERSCHUTZ	246
KREUZGELENK	223
KRÜMMER UND VENTIL	311 312
KUGELVENTIL (KRAFTSTOGGABSPERRUNG)	104
KÜHLER	87 89
KÜHLERGRILL	242
KÜHLERKAPPE (DRUCKBEGRENZUNG)	89
KÜHLERSCHUTZ	247
KÜHLSYSTEM	77
KÜHLWASSERLEITUNGEN	82
KÜHLWASSERPUMPE	84 85
KÜHLWASSERTHERMOSTATDICHTUNG (KÜHLMITTELTEMPERATUR)	82
KURBELWELLE	15
KURBELWELLENDICHTUNG	56

L

LADELUFTKÜHLER	90
LADEPUMPE	316
LAGER (SPEZIAL C-RAHMEN)	419
LAGERSATZ (KOLBENMOTORDREHGRUPPE)	319
LAGERSATZ (SCHWINGSITZ)	477
LAUFROLLENRAHMEN (TELESKOPRÜCKLAUF)	269
LAUFROLLENSCHALTER (BREMSE EIN/AUS)	314
LAUFROLLENSCHUTZ	250
LAUFWERKFÜHRUNG	271
LAUFWERKSKETTE	286 287 288
LAUFWERKSRAHMEN	288
LEITRAD	272
LEITRADAUFSATZ	268
LEITUNGSINSTALLATIONSSATZ	479
LENK- UND GETRIEBESTEUERUNG	298 300 302
LENKBREMSE	295
LENKÖLLEITUNGEN	308
LEUCHTE (24 V) (ANZEIGE)	499
LEUCHTE (24 V) (FAHRERHAUSDACH)	143
LEUCHTE (24 V) (GASREGELKIPPSCHALTER)	187
LEUCHTE (24 V) (INSTRUMENTENBELEUCHTUNG)	503
LEUCHTE (24 V) (INSTRUMENTENGRUPPE)	499
LEUCHTE (24 V) (RUNDUM-KENNLEUCHTE)	150

* ÜBERSETZUNG ZUM ZEITPUNKT DER DRUCKLEGUNG NICHT VORHANDEN

STICHWORTVERZEICHNIS

Bezeichnung	Seite
LEUCHTE (24 V) (VIERFACHANZEIGE)	503
LEUCHTE (24 V) (WARNLEUCHTE)	499
	503
LUFTEINLASSBOGEN	93
LUFTEINLASSDECKEL	92
LÜFTER	78
LÜFTERANTRIEB	35
	36
LÜFTERANTRIEBSAUFHÄNGUNG	47
LÜFTERRIEMENSCHEIBE	54
LUFTFILTER (HAUPTFILTER)	91
LUFTFILTER (SICHERHEITSFILTER)	91
LUFTFILTERWARTUNGSANZEIGE	94
	507
LUFTREINIGER	91
LUFTREINIGERSCHUTZ	100

M

MAGNETFILTER (KRAFTÜBERTRAGUNGS-ÖL)	200
MAGNETSCHALTER	177
	178
	179
MAGNETSCHALTER (*AIR INLET HEAT)	179
MAGNETSTOPFEN (SEITENANTRIEB)	198
MAGNETVENTIL	114
	231
	337
	338
MASCHINENAUSFÜHRUNG - HOHE AUSSENTEMPERATUR	1
MASCHINENSTEUERUNG	129
MASCHINENSTEUERUNG (SICHERHEIT) (EINSCHL. SOFTWARE)	133
MODUL - VIER ELEKTRON. ANZEIGEN	491
MODULATORVENTIL	224
	225
MONITOR - SERVICE	169
MONITOR-SOFTWARE	169
MONITORSTEUERUNG	130
	131
MONTAGEZAPFEN (PLANIERSCHILDEINRICHTUNG)	430
MOTOR-EINBAUSATZ	5
MOTOR, ELEKTR. (27 V) (HEIZUNG - OFFENER ÜBERROLLSCHUTZ)	472
MOTOR, KOMPLETT	2
	3
MOTORAUFLAGER	45
	46
MOTORBLOCK	17
	18
	19
MOTORBLOCKDECKEL	12
MOTORDREHVORRICHTUNG	319
MOTORHAUBE	259
MOTORHAUBE UND VERKLEIDUNG	251
	253
	256
MOTORHUBÖSE	44
MOTORKÜHLERBLOCK	4
MOTORÖLABLASS	32
	33
	34
MOTORÖLEINFÜLLSTUTZEN	66
MOTORÖLKÜHLER	76
MOTORÖLLEITUNGEN	71
MOTORÖLLEITUNGSADAPTER	64
MOTORSENSOR	153
MOTORSTEUERUNG, ELEKTRON.	127
	128
MOTORSTOPFEN	50
MOTORVERDRAHTUNG	183
MOTORVERDRAHTUNG - BEFESTIGUNG	135

N

NEBENSTROMVENTIL	323
NEIGEZYLINDERLEITUNGEN	386
	387
	388
NEIGUNGSSTELLGLIED	423
NOCKENWELLE	10

O

O-RING-DICHTUNG (DREHMOMENTWANDLERABLASSSCHRAUBE)	220
O-RING-DICHTUNG (GEHÄUSEABLASSSCHRAUBE)	234
O-RING-DICHTUNG (GETRIEBEABLASSSCHRAUBE)	206
O-RING-DICHTUNG (KRAFTÜBERTRAGUNGSFILTER)	197
O-RING-DICHTUNG (MOTOR - ENTLÜFTER)	65
O-RING-DICHTUNG (SEITENANTRIEBABLASSSCHRAUBE)	198
O-RING-DICHTUNG (SEITENANTRIEBMAGNETSCHRAUBE)	198
ÖLEINFÜLLSTUTZEN (KRAFTÜBERTRAGUNG)	200
ÖLFILTER	67
	197
	305
	358

* ÜBERSETZUNG ZUM ZEITPUNKT DER DRUCKLEGUNG NICHT VORHANDEN

STICHWORTVERZEICHNIS

Bezeichnung	Seite
ÖLFILTER (*HYDRAULIC)(HIGH EFFICIENCY)	358
ÖLFILTER (HYDRAULISCH)	305
ÖLFILTERELEMENT (HYDRAULIK/ STROMUMKEHRUNG) (NICHT WIEDERVERWENDBAR)	396
ÖLFILTERELEMENT (HYDRAULISCH) (REINIGUNG/HOCHLEISTUNG)	396
ÖLFILTERELEMENT (KRAFTÜBERTRAGUNG)	197
ÖLFILTERELEMENT (*POWER TRAIN - HIGH EFFICIENCY)	201
ÖLFILTERELEMENT (RÜCKFLUSS) (FEUERFESTE HYDRAULIKFLÜSSIGKEIT)	396
ÖLKÜHLERBLOCK	89
ÖLLEITUNGEN - KRAFTÜBERTRAGUNG	200
ÖLMESSSTAB	70
ÖLWANNE	48

P

PANZERWANNE	243 244
PLANETENGETRIEBE	205
PLANIEREINRICHTUNG	419
PLATTFORM	506
PLATTFORM-ANBAUSATZ	493
PLEUELSTANGE UND KOLBEN	49
PROBEENTNAHMEVENTIL F. WARTUNGSFL. (STEUERVENTIL)	392
PROBEENTNAHMEVENTIL (KRAFTÜBERTRAGUNG - ÖLLEITUNGEN)	201
PROBEENTNAHMEVENTIL (KÜHLMITTEL)	82
PROBEENTNAHMEVENTIL (TURBOLADER-ÖL)	72
PUMPE UND BEFESTIGUNGSTEILE	108
PUMPENDÜSE, HYDRAULISCH	111
PUMPENKOPF	306

Q

QUERTRAVERSE	266

R

RADIO	512 513
RADIO - KABELSTRANG (LAUTSPRECHER)	512 513
RADIOEINBAUSATZ	481
RAHMEN UND GEHÄUSE	234
REGLER (KRAFTSTOFFDRUCK)	106
RIEMEN	6 7 8
RIEMENSCHEIBE	52 53
RIEMENSPANNER	9 55
RÜCKENSTÜTZEN-EINSTELLKNOPF	496
RÜCKFAHRWARNHORN	180 449
RÜCKFAHRWARNHORN (ÜBERROLL-SCHUTZ)	516
RÜCKFAHRWARNHORN (107DB)	453
RÜCKLEHNENVERLÄNGERUNG (SITZ)	527
RÜCKLEHNENVERLÄNGERUNG (STOFF)	524
RUNDUM-KENNLEUCHTE	147 150

S

SANDSTRAHLSCHUTZGITTER	241
SCHALE - RÜCKENLEHNE	496 497 498
SCHALLDÄMPFER	99
SCHALLDÄMPFERSTÜTZEN	98
SCHALLDÄMPFUNG	59 60 261
SCHALTER (LEUCHTE)	503
SCHALTER (LEUCHTEN)	499
SCHALTER (RUNDUM-KENNLEUCHTE)	150
SCHALTER (24 V)(ERLEUCHTET) (GASSTEUERUNG)	187
SCHALTKNOPFEINBAUSATZ (RADIO)	512 513
SCHAUGLAS (HYDRAULIKTANK)	396
SCHEIBENWASCHMITTELBEHÄLTER	543
SCHEIBENWISCHER	547
SCHEIBENWISCHERBLATT (FRONTSCHEIBE)	547
SCHEIBENWISCHERBLATT (HINTEN) (FENSTER)	547
SCHEIBENWISCHERBLATT (LINKE FAHRERHAUSTÜR)	468
SCHEIBENWISCHERBLATT (RECHTE FAHRERHAUSTÜR)	466
SCHILD UND AUFKLEBER	550
SCHLAUCHLEITUNG (OBERER KÜHLER)	87
SCHLAUCHLEITUNG (UNTERER KÜHLER)	87
SCHLÜSSEL (HAUPTSCHALTER)	176
SCHMIERNIPPEL (FAHRERHAUS - DRUCKBEAUFSCHLAGUNG)	510
SCHMIERNIPPEL (QUERTRAVERSE)	266

* ÜBERSETZUNG ZUM ZEITPUNKT DER DRUCKLEGUNG NICHT VORHANDEN

STICHWORTVERZEICHNIS

Bezeichnung	Seite
SCHMIERNIPPEL (SCHWENKSCHILD)	431
SCHMIERNIPPEL (1/8-27-GEWINDE) (AUFREISSER)	437
SCHMIERNIPPEL (1/8-27-GEWINDE) (FAHRERPLATTFORM)	507
SCHMIERNIPPEL (1/8-27-GEWINDE) (GEHÄUSE U. RAHMEN)	234
SCHMIERNIPPEL (1/8-27-GEWINDE) (KIPPGESTÄNGE)	423
SCHMIERNIPPEL (1/8-27-GEWINDE) (SCHENK- U. KIPPZYLINDER)	361
SCHMIERNIPPEL (1/8-27-GEWINDE) (SCHILDHUBZYLINDER)	350
SCHMIERPUMPE	74
	75
SCHNEIDMESSER UND EINSATZSTÜCK	435
	436
SCHRAUBE (DREHMOMENTWANDLERB- LASS)	220
SCHRAUBE (GEHÄUSEABLASS)	234
SCHRAUBE (GETRIEBEABLASS)	206
SCHRAUBE (MAGNETISCH -ÖLABLASS)	33
SCHRAUBE (SEITENANTRIEBABLASS)	198
SCHRAUBENSATZ (*ENGINE HARNESS RETAINING)	183
SCHRAUBENSATZ (SCHUTZSCHALTERKABEL- STRANG)	151
SCHUBARM	427
SCHUTZBLECHE	240
SCHUTZBÜGEL	262
	264
SCHUTZGITTER	519
	520
SCHWENK- UND KIPPZYLINDERLEITUN- GEN	361
	363
SCHWENKSCHILD	431
SCHWENKSCHILDZYLINDER	346
SCHWINGSITZ	528
	530
	531
	532
	533
	534
SCHWUNGRAD	39
SCHWUNGRADGEHÄUSE	41
SCHWUNGRADGEHÄUSEDICHTUNG	57
SEITENANTRIEB	198
SENSOR, KABELSTRANG (DRAHTSTÄRKE 14)	168
SENSOR, KABELSTRANG (DRAHTSTÄRKE 16-18)	168
SENSORANSCHLUSSSATZ (12POLIG)	181
	187
	302
	499
	503
SENSORANSCHLUSSSATZ (2POLIG)	121
	122
	142
	151
	168
	181
	183
	187
	191
	446
	449
	457
	472
	499
	503
	516
SENSORANSCHLUSSSATZ (2POLIG)	121
SENSORANSCHLUSSSATZ (2POLIG) (HAUPTSTROMRELAISSCHALTER)	178
SENSORANSCHLUSSSATZ (3POLIG)	121
	160
	161
	181
	183
	187
	302
	449
	499
	503
SENSORANSCHLUSSSATZ (4 POLIG)	139
	187
SENSORANSCHLUSSSATZ (4 POLIG)	121
	122
	142
	187
	499
	503
SENSORANSCHLUSSSATZ (6POLIG)	121
	187
	302
	449
	499
	503
	516
SENSORANSCHLUSSSATZ (8POLIG)	121
	122
	131
	191
	449

* ÜBERSETZUNG ZUM ZEITPUNKT DER DRUCKLEGUNG NICHT VORHANDEN

STICHWORTVERZEICHNIS

Bezeichnung	Seite
	453
	499
	503
	506
SERIENNUMMERNSCHILD (DREHMOMENT-WANDLER)	220
SERIENNUMMERNSCHILD (MOTOR)	550
SERIENNUMMERNSCHILD (PLANIER-SCHILD)	419
	420
SICHERHEITSEINBAUSATZ	139
	141
	142
SICHERHEITSGURT	527
SICHERHEITSGURT (SCHWINGSITZ)	524
SICHERHEITSGURT (SCHWINGSITZ, UNTERE RÜCKENLEHNE)	534
SICHERUNG (10 A)	151
SICHERUNG (15 A)	151
SICHERUNG (20 A)	151
SICHERUNGSZIEHER	122
SIEB (HYDRAULIKTANK)	396
SIEB (WANDLERRÜCKLAUFSIEB)	220
SITZGURT-HALTESEIL (SCHWINGSITZ)	539
SOFTWARE - KRAFTÜBERTRAGUNG	134
	170
SOFTWARE - MASCHINE (SICHERHEIT)	129
SOFTWARE - MASCHINE (SICHERHEIT) (NUR SOFTWARE)	133
SOLENOID-EINBAUSATZ (STARTERMO-TOR)	172
SONNENBLENDE	521
SPERRVENTIL (STEUERVENTIL)	405
	409
	411
	413
SPERRVENTIL (STEUERVENTIL)	403
SPIEGEL	490
SPÜLVENTIL	326
STARTERMOTOR	171
	172
STARTHILFE - VORWÄRMER	138
STARTSCHLÜSSELSCHALTER	500
	504
STAUBKAPPE (DIAGNOSETAFEL)	365
STAUBKAPPE (GETRIEBEFITTINGS)	207
STAUBKAPPE (HYDRAULIKPUMPE)	378
STAUBKAPPE (KRAFTÜBERTRAGUNGSÖL - PROBEENTNAHMEVENTIL)	200
STAUBKAPPE (KÜHLMITTELPROBEENTNAH-MEVENTIL)	82
STAUBKAPPE (LENKUNGSVENTILE)	308
STAUBKAPPE (PROBEENTNAHME-STEUERVENTIL)	392
STAUBKAPPE (PROBEENTNAHMEVENTIL - TURBOLADER)	72
STAUBKAPPE (UMLAUFKÜHLWASSERHEI-ZUNG)	136
	137
STECKDOSEN - EINBAUSATZ (12POLIG)	296
STECKDOSEN - EINBAUSATZ (12POLIG)	121
	151
	181
	449
STECKDOSEN - EINBAUSATZ (12POLIG)	139
	142
STECKDOSEN - EINBAUSATZ (12POLIG)	187
STECKDOSEN - EINBAUSATZ (2POLIG)	112
	115
	121
	139
	141
	142
	146
	147
	151
	164
	165
	167
	174
	175
	177
	183
	193
	231
	446
	449
	453
	455
	457
	516
	541
STECKDOSEN - EINBAUSATZ (2POLIG)	179
	180
	181
	479
	499
	503
STECKDOSEN - EINBAUSATZ (2POLIG)	314
STECKDOSEN - EINBAUSATZ (2POLIG)	187
	472
STECKDOSEN - EINBAUSATZ (3POLIG)	121
	142
	143
	166

* ÜBERSETZUNG ZUM ZEITPUNKT DER DRUCKLEGUNG NICHT VORHANDEN

STICHWORTVERZEICHNIS

Bezeichnung	Seite
	183
	302
	449
	457
	499
	500
	503
	504
STECKDOSEN - EINBAUSATZ (3POLIG)	181
	499
STECKDOSEN - EINBAUSATZ (3POLIG)	156
	157
	158
	159
STECKDOSEN - EINBAUSATZ (3POLIG) (KÜHLMITTELSTANDSENSOR)	155
STECKDOSEN - EINBAUSATZ (4 POLIG)	337
	468
	547
STECKDOSEN - EINBAUSATZ (4 POLIG)	139
	142
STECKDOSEN - EINBAUSATZ (6POLIG)	78
	121
	131
	298
	446
	449
	466
	472
	500
	503
	504
	509
	516
	543
STECKDOSEN - EINBAUSATZ (6POLIG)	491
STECKDOSEN - EINBAUSATZ (6POLIG)	187
STECKDOSEN - EINBAUSATZ (8POLIG)	191
	449
	512
	513
	516
STECKDOSEN - EINBAUSATZ (8POLIG)	499
	503
STECKDOSEN - EINBAUSATZ (8POLIG)	187
	499
	503
STECKERSATZ	509
STEIGLEITER	535
STELLUNGSSENSOR	156
	157
	158
STEUERKONSOLENABDECKUNG	459
	460
	461
	463
	465
STEUERUNG - NICHT PROGRAMMIERT	132
STEUERUNG - NICHT PROGRAMMIERT (MASCHINE)	129
STEUERUNG - NICHT PROGRAMMIERT (SICHERHEIT)	139
STEUERUNGSEINHEIT, ELEKTRON. FÜR MOTOR UND BEFEST.	126
STEUERVENTIL	324
	403
	405
	407
	409
	411
	413
STIRNRAD	40
STIRNRADGEHÄUSE	42
STIRNRADGEHÄUSE-HALTETEILE	37
	38
STIRNRADGEHÄUSEDECKEL	13
STOSSDÄMPFER-REPARATURSATZ (SCHWINGSITZ)	541
STOSSSTANGEN-EINBAUSATZ (GEWICHT-SEINSTELLUNG) (SCHWINGSITZ)	477
SU-SCHILD	419
	420
	433

T

TEMPERATURSENSOR	166
	167
	168
TEMPERATURSENSOR (KÜHLMITTEL)	153
TEMPERATURSENSOR (LUFTEINLASS)	153
THERMOSTATSCHALTER (A/C)	444
TRAGROLLE	277
TRAGROLLENAUFHÄNGUNG	275
TRENNSCHALTER	176
TURBOLADER	101
	102
TURBOLADERÖLLEITUNGEN	72

U

ÜBERDRUCKVENTIL	228
	230
	330
	331
	332

* ÜBERSETZUNG ZUM ZEITPUNKT DER DRUCKLEGUNG NICHT VORHANDEN

STICHWORTVERZEICHNIS

Bezeichnung	Seite
	417
	418
ÜBERDRUCKVENTIL (KÄLTEMITTELKOMPRESSOR)	455
ÜBERDRUCKVENTIL (*PUMP HEAD)	306
ÜBERDRUCKVENTIL (STEUERVENTIL)	405
	409
	413
ÜBERROLLSCHUTZ	515
	516
ÜBERROLLSCHUTZAUFLAGER	495
ÜBERTRAGUNGSSTEURUNG (PRODUCT LINK RADIO)	131
UMGEHUNGSSCHALTER	175
UMKEHRLÜFTER	81
UMLAUFKÜHLWASSERHEIZUNG	136
	137
UMLAUFKÜHLWASSERHEIZUNGS-ELEMENT (*120 VOLT/1000 WATT)	137
UMLAUFKÜHLWASSERHEIZUNGS-ELEMENT (240 V/1000 W)	136
UMLENKRIEMENSCHEIBE	51
UNTERBRECHER - INSTRUMENTENTAFEL	151
UNTERBRECHER (80 A) (HAUPTMASCHINE)	151

V

VENTILAUFHÄNGUNG	392
VENTILDECKEL	14
VENTILKABELSTRANG (LUFTKOMPRESSOR) (SITZ)	541
VENTILKIPPHEBEL (AUSLASS)	62
VENTILKIPPHEBEL (EINLASS)	62
VENTILSATZ (2-VENTIL)	399
VENTILSATZ (3-VENTIL)	400
VENTILSATZ (4-VENTIL)	401
VENTILSTEUERUNG	61
	62
VENTILSTÖSSELSATZ (SCHWINGSITZ)	477
VERDRAHTUNG	181
VERKLEIDUNG	237
VERRIEGELUNG	483
VERRIEGELUNG (TÜR)	466
VERSTÄRKERVENTIL	333
	335
VERSTELLBARER SITZ	514
VORRANGVENTIL	226
VORSTEUERLEITUNGEN	374
	376
VORSTEUERVENTIL	327

W

WÄRMEISOLIERUNG	482
WARNAUFKLEBER (FESTSTELLBREMSZYLINDER)	269
WARNAUFKLEBER (NICHT HEBEN)	495
WARNAUFKLEBER (PRODUCT LINK RADIO)	131
WARNHORN (24V)(NIEDERTON)	121
WARNHORNKNOPF	174
WARNHORNSCHALTER	174
WARNSCHILD (HOCHDRUCKZYLINDER) (*TELESCOPING RECOIL)	269
WARNSCHILD (KETTENSPANNFEDER)	269
WARNSCHILD (NICHT IN BETRIEB NEHMEN)	493
WARNVORRICHTUNG	115
WASSERABSCHEIDER- U. KRAFTSTOFFILTER	103
WASSERFILTER (WASSERPUMPE)	85
WASSERTEMPERATURREGLER (94 GRAD C) (KÜHLMITTEL)	82
WASSERVENTIL (FAHRERHAUSHEIZUNG)	470
WASSERVENTIL (HEIZUNG - OFFENER ÜBERROLLSCHUTZ)	474
WETTERDACH	454

Z

ZAHNRADPUMPE	213
	215
ZUGHAKEN	236
ZYLINDERAUFHÄNGUNG	390
ZYLINDERKOPF	20
	22
	24
	25
	27
	29

* ÜBERSETZUNG ZUM ZEITPUNKT DER DRUCKLEGUNG NICHT VORHANDEN

MACHINE ARRANGEMENT

189-4619 CHASSIS AR

S/N: CCK1-UP

PART OF 189-4616 GENERAL AR

SMCS-7000 **i01831233**

NOTE	PART NUMBER	QTY	PART NAME 1 2 3 4 5 6 (PRODUCT LEVEL)	SEE PAGE
Y	*188-7304*	1	CASE & FRAME GP	234
Y	*107-4068*	1	DRAWBAR GP	236
Y	*155-7706*	1	ENCLOSURE GP	237
Y	*155-7705*	1	FENDER GP	240
Y	*191-9500*	1	GUARD GP-BOTTOM	243
Y	*155-7703*	1	GUARD GP-RADIATOR	247
Y	*155-9323*	1	HOOD GP	259
Y	*191-9529*	1	LINES GP-FUEL	104
Y	*157-4819*	1	MOUNTING GP-ROPS	495
Y	*155-7707*	1	TANK GP-FUEL	112

Y-SEPARATE ILLUSTRATION

<END>

189-4616 GENERAL AR

S/N: CCK1-UP

SMCS-7000 **i01831139**

NOTE	PART NUMBER	QTY	PART NAME 1 2 3 4 5 6 (PRODUCT LEVEL)	SEE PAGE
Y	*191-4824*	1	CAB AR	448
Y	*189-4619*	1	CHASSIS AR	1
Y	*189-4624*	1	ELECTRONICS AR-MACHINE	133
Y	**191-4479**	1	ENGINE AR-COMPLETE	2
Y	*189-4623*	1	HYDRAULIC AR	359
Y	*189-4622*	1	INSTALLATION AR-ENGINE	5
Y	*189-4620*	1	POWER TRAIN AR	212
Y	*173-8651*	1	UNDERCARRIAGE AR	288

Y-SEPARATE ILLUSTRATION

<END>

199-6965 MACHINE AR-HIGH AMBIENT TEMP

S/N: CCK1-UP

AN ATTACHMENT

SMCS-7000 **i01830844**

NOTE	PART NUMBER	QTY	PART NAME 1 2 3 4 5 6 (PRODUCT LEVEL)	SEE PAGE
	201-2670	5	RADIATOR AS	

<END>

ENGINE ARRANGEMENT

191-4479 ENGINE AR-COMPLETE

S/N: BMA1100-UP
104 BRAKE KW (140 BHP) AT 2000 RPM
PART OF 189-4616 GENERAL AR

SMCS-1000 **i01798257**

NOTE	PART NUMBER	QTY	PART NAME 1 2 3 4 5 6 (PRODUCT LEVEL)	SEE PAGE
Y	*189-2221*	1	BELT TIGHTENER GP	9
Y	*132-3844*	1	CARRIER GP-SEAL	11
Y	*188-7726*	1	CONTROL & MTG GP-ENGINE ELEK	126
Y	*153-1794*	1	COVER GP-AIR INLET	92
Y	*143-4926*	1	COVER GP-CYLINDER BLOCK	12
Y	*136-8888*	1	COVER GP-FRONT HOUSING	13
Y	*153-1832*	1	COVER GP-VALVE MECHANISM	14
Y	*189-2227*	1	DAMPER & PULLEY GP	31
Y	*7C-4532*	1	DRAIN GP-ENGINE OIL	32
Y	*7C-4566*	1	DRAIN GP-ENGINE OIL	33
Y	*189-2223*	1	DRIVE GP-FAN	36
Y	*170-3273*	1	ELBOW GP-AIR INLET	93
Y	*191-4482*	1	ENGINE AR-CORE	4
Y	*224-1296*	1	FASTENER GP-ENGINE WIRING	135
Y	*228-5288*	1	FASTENER GP-FRONT COVER	37
Y	*116-4556*	1	FASTENER GP-FRONT HOUSING	38
Y	*199-3164*	1	FILLER GP-ENGINE OIL	66
Y	*117-4074*	1	FILTER GP-ENGINE OIL	67
Y	*224-2637*	1	FLYWHEEL GP	39
Y	*211-1835*	1	FUMES DISPOSAL GP	68
Y	*159-1810*	1	GAUGE GP-OIL LEVEL (DIPSTICK)	70
Y	*118-7284*	1	HEATER GP-AIR INLET	138
Y	*4W-1103*	1	HOUSING GP-FLYWHEEL	41
Y	*189-2220*	1	PULLEY GP-IDLER	55
Y	*219-5853*	1	LINES GP-ENGINE OIL	71
Y	*215-9260*	1	LINES GP-FUEL FILTER	106
Y	*202-3262*	1	LINES GP-TURBOCHARGER OIL	72
Y	*159-1814*	1	LINES GP-WATER	82
Y	*159-2572*	1	MANIFOLD GP-EXHAUST	97
Y	*203-5866*	1	MOUNTING GP-ENGINE	46
Y	*189-2222*	1	MOUNTING GP-FAN DRIVE	47
Y	*201-5381*	1	MOUNTING GP-MUFFLER	98
Y	*196-0077*	1	PAN GP-OIL	48
Y	*162-8068*	1	PLUG GP-ENGINE	50
Y	*224-5123*	1	PULLEY GP	53
Y	*193-9237*	1	PUMP GP-WATER	84
Y	*115-4210*	1	SEAL GP-CRANKSHAFT	56
Y	*7C-1770*	1	SEAL GP-FLYWHEEL HOUSING	57
Y	*199-7734*	1	SENSOR GP-ENGINE	153
Y	*145-5157*	1	STARTING MOTOR GP-ELECTRIC	171
Y	*228-5786*	1	WIRING GP	181
Y	*191-0083*	1	WIRING GP-HEATER	186
			GASKET KITS WILL BE PROVIDED WHEN AVAILABLE	

Y-SEPARATE ILLUSTRATION

ENGINE ARRANGEMENT

191-4481 ENGINE AR-COMPLETE

S/N: BMA1100-UP
104 BRAKE KW (140 BHP) AT 2000 RPM
PART OF 226-3406 COOLING AR, 169-4912 SUPPRESSION AR-SOUND
AN ATTACHMENT

SMCS-1000 **i01801664**

NOTE	PART NUMBER	QTY	PART NAME 1 2 3 4 5 6 (PRODUCT LEVEL)	SEE PAGE
Y	*189-2221*	1	BELT TIGHTENER GP	9
Y	*132-3844*	1	CARRIER GP-SEAL	11
Y	*188-7726*	1	CONTROL & MTG GP-ENGINE ELEK	126
Y	*153-1794*	1	COVER GP-AIR INLET	92
Y	*143-4926*	1	COVER GP-CYLINDER BLOCK	12
Y	*136-8888*	1	COVER GP-FRONT HOUSING	13
Y	*153-1832*	1	COVER GP-VALVE MECHANISM	14
Y	*189-2227*	1	DAMPER & PULLEY GP	31
Y	*7C-4532*	1	DRAIN GP-ENGINE OIL	32
Y	*7C-4566*	1	DRAIN GP-ENGINE OIL	33
Y	*189-2223*	1	DRIVE GP-FAN	36
Y	*170-3273*	1	ELBOW GP-AIR INLET	93
Y	*191-4482*	1	ENGINE AR-CORE	4
Y	*224-1296*	1	FASTENER GP-ENGINE WIRING	135
Y	*228-5288*	1	FASTENER GP-FRONT COVER	37
Y	*116-4556*	1	FASTENER GP-FRONT HOUSING	38
Y	*199-3164*	1	FILLER GP-ENGINE OIL	66
Y	*117-4074*	1	FILTER GP-ENGINE OIL	67
Y	*224-2637*	1	FLYWHEEL GP	39
Y	*211-1835*	1	FUMES DISPOSAL GP	68
Y	*159-1810*	1	GAUGE GP-OIL LEVEL (DIPSTICK)	70
Y	*118-7284*	1	HEATER GP-AIR INLET	138
Y	*4W-1103*	1	HOUSING GP-FLYWHEEL	41
Y	*189-2220*	1	PULLEY GP-IDLER	55
Y	*159-2565*	1	LIFTING GP-ENGINE	44
Y	*219-5853*	1	LINES GP-ENGINE OIL	71
Y	*215-9260*	1	LINES GP-FUEL FILTER	106
Y	*202-3262*	1	LINES GP-TURBOCHARGER OIL	72
Y	*159-1814*	1	LINES GP-WATER	82
Y	*159-2572*	1	MANIFOLD GP-EXHAUST	97
Y	*203-5866*	1	MOUNTING GP-ENGINE	46
Y	*189-2222*	1	MOUNTING GP-FAN DRIVE	47
Y	*201-5381*	1	MOUNTING GP-MUFFLER	98
Y	*196-0077*	1	PAN GP-OIL	48
Y	*162-8068*	1	PLUG GP-ENGINE	50
Y	*201-9063*	1	PULLEY GP-FAN DRIVE	54
Y	*193-9237*	1	PUMP GP-WATER	84
Y	*115-4210*	1	SEAL GP-CRANKSHAFT	56
Y	*7C-1770*	1	SEAL GP-FLYWHEEL HOUSING	57
Y	*199-7734*	1	SENSOR GP-ENGINE	153
Y	*145-5157*	1	STARTING MOTOR GP-ELECTRIC	171
Y	*228-5786*	1	WIRING GP	181
Y	*191-0083*	1	WIRING GP-HEATER	186
			GASKET KITS WILL BE PROVIDED WHEN AVAILABLE	

Y-SEPARATE ILLUSTRATION

ENGINE ARRANGEMENT

191-4482 ENGINE AR-CORE

S/N: BMA1100-UP
PART OF 191-4479, 191-4481 ENGINE AR-COMPLETE
ALSO AN ATTACHMENT

SMCS-1000 **i01831327**

NOTE	PART NUMBER	QTY	PART NAME 1 2 3 4 5 6 (PRODUCT LEVEL)	SEE PAGE
Y	*120-8971*	1	BREATHER GP	65
Y	*216-7922*	1	CAMSHAFT GP	10
Y	*117-3643*	1	COOLER GP-ENGINE OIL	76
Y	*113-6087*	1	CRANKSHAFT GP	15
YR	*129-1165*	1	CYLINDER BLOCK GP	19
Y	*133-3742*	1	CYLINDER HEAD GP	24
	161-4459	1	ELECTRONICS GP-ENGINE RATINGS	
Y	*205-1321*	1	GEAR GP-FRONT	40
Y	*133-5055*	1	HOUSING GP-FRONT	42
YR	*161-8420*	6	PISTON & ROD GP	49
Y	*170-3304*	1	PUMP & MTG GP-UNIT INJ HYD	108
Y	*212-2270*	1	PUMP GP-ENGINE OIL	75
Y	*178-6343*	6	PUMP GP-UNIT INJECTION	110
Y	*187-1602*	1	TURBOCHARGER GP	101
Y	*135-2969*	1	VALVE MECHANISM GP	61

R-REMFG PART MAY BE AVAILABLE
Y-SEPARATE ILLUSTRATION

ENGINE ARRANGEMENT

189-4622 INSTALLATION AR-ENGINE

S/N: CCK1-UP

PART OF 189-4616 GENERAL AR

SMCS-1000 **i01807175**

NOTE	PART NUMBER	QTY	PART NAME 1 2 3 4 5 6 (PRODUCT LEVEL)	SEE PAGE
Y	*195-1042*	1	AFTERCOOLER GP	90
Y	*195-1049*	1	AIR CLEANER GP	91
Y	*189-2224*	1	ALTERNATOR GP-CHARGING	120
Y	*195-0681*	1	BELT GP	8
Y	*189-2229*	1	COMPRESSOR GP-REFRIGERANT	456
Y	*196-2178*	1	COOLER GP-HYDRAULIC OIL	345
Y	*219-6339*	1	DRAIN GP-ENGINE OIL	34
Y	*195-1041*	1	FAN GP-BLOWER	80
Y	*195-1047*	1	LINES GP-AIR	95
Y	*201-5515*	1	MOUNTING GP-ENGINE	45
Y	*195-1048*	1	MUFFLER GP	99
Y	*196-1791*	1	PULLEY GP	52
Y	*195-1040*	1	RADIATOR GP	87

Y-SEPARATE ILLUSTRATION

193-1033 BELT GP—WITHOUT A/C, NORTH AMERICAN MARKET

S/N: CCK1-UP
PART OF 193-3812 CANOPY AR
AN ATTACHMENT

SMCS-1357 **i01830193**

NOTE	REF NO	GRAPHIC REF	PART NUMBER	QTY	PART NAME 1 2 3 4 5 6 (PRODUCT LEVEL)	SEE PAGE
	1	1	**191-5215**	1	BELT (W/O-A/C NORTH AMERICAN MARKET)	

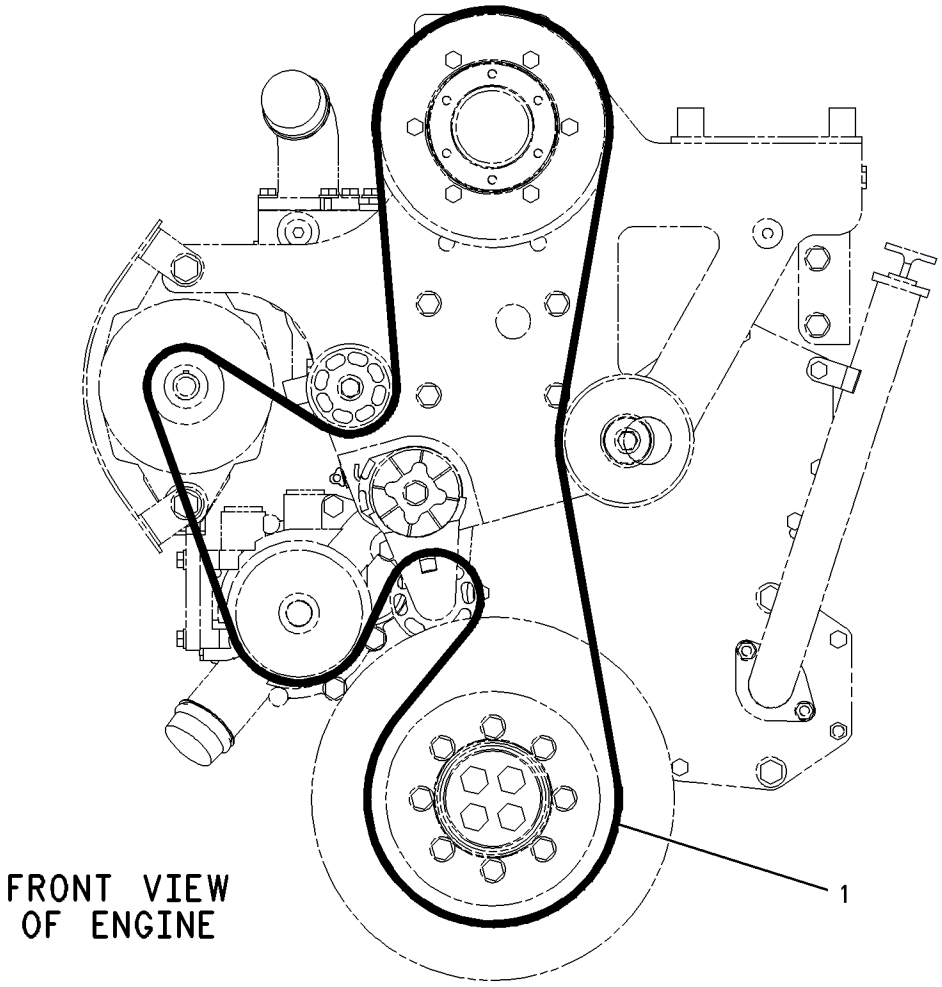

GRAPHIC #1 **<END>** g00773971

193-1038 BELT GP—WITH A/C, EUROPEAN MARKET

S/N: CCK1-UP

PART OF 226-3406 COOLING AR, 169-4912 SUPPRESSION AR-SOUND AN ATTACHMENT

SMCS-1357 **i01830913**

NOTE	REF NO	GRAPHIC REF	PART NUMBER	QTY	PART NAME 1 2 3 4 5 6 (PRODUCT LEVEL)	SEE PAGE
	1	1	**202-3197**	1	BELT (WITH A/C EUROPEAN MARKET)	

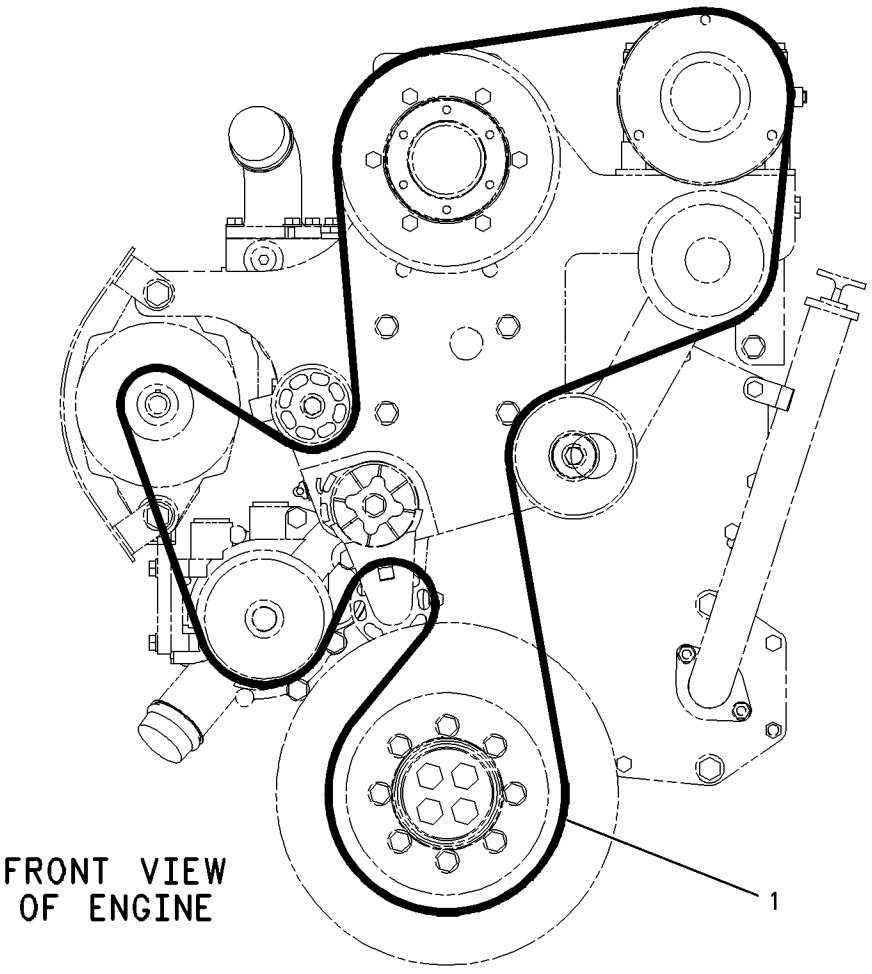

GRAPHIC #1 **<END>** g00773974

BASIC ENGINE

195-0681 BELT GP—WITH A/C, NORTH AMERICAN MARKET

S/N: CCK1-UP

PART OF 189-4622 INSTALLATION AR-ENGINE

SMCS-1357 **i01882520**

NOTE	REF NO	GRAPHIC REF	PART NUMBER	QTY	PART NAME 1 2 3 4 5 6 (PRODUCT LEVEL)	SEE PAGE
	1	1	**215-3015**	1	BELT (WITH A/C NORTH AMERICAN MARKET)	

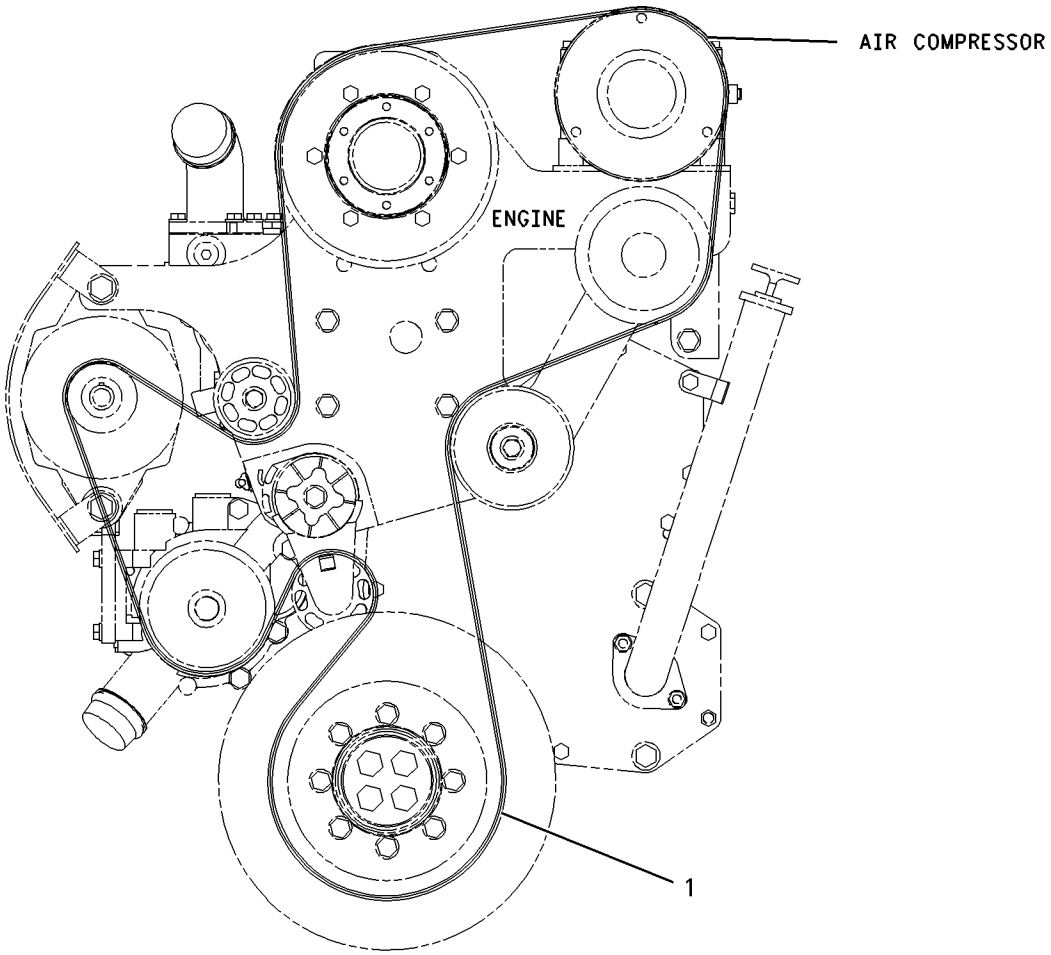

FRONT VIEW

GRAPHIC #1 **<END>** g00942253

BASIC ENGINE

189-2221 BELT TIGHTENER GP

S/N: BMA1100-UP
PART OF 191-4479, 191-4481 ENGINE AR-COMPLETE
ALSO AN ATTACHMENT

SMCS-1358 **i01802412**

NOTE	REF NO	GRAPHIC REF	PART NUMBER	QTY	PART NAME 1 2 3 4 5 6 (PRODUCT LEVEL)	SEE PAGE
	1	1	**144-1102**	1	BELT TIGHTENER	
	2	1	**6V-5839**	1	WASHER (11X21X2.5MM THK)	
M	3	1	**8T-0644**	1	BOLT (M10X1.50X90MM)	

M-METRIC PART

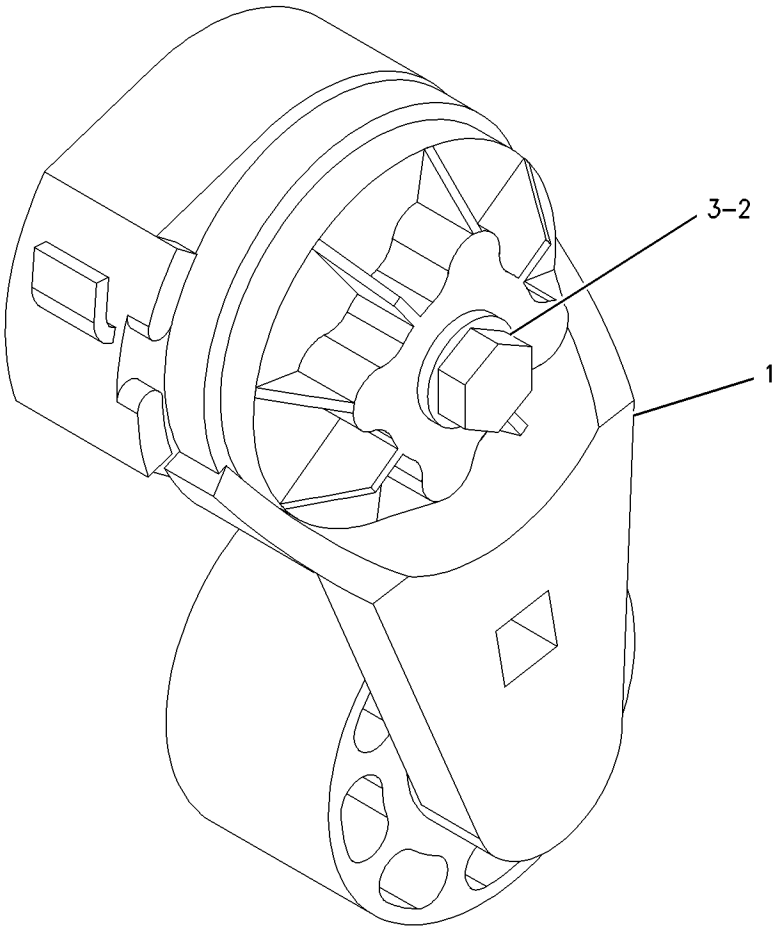

GRAPHIC #1 **<END>** g00714783

BASIC ENGINE

216-7922 CAMSHAFT GP

S/N: BMA1100-UP
PART OF 191-4482 ENGINE AR-CORE
ALSO AN ATTACHMENT

SMCS-1210, 1211, 1212 **i01743088**

NOTE	REF NO	GRAPHIC REF	PART NUMBER	QTY	PART NAME 1 2 3 4 5 6 (PRODUCT LEVEL)	SEE PAGE
	1	1	**107-7694**	1	PLATE-THRUST	
	2	1	**216-7921**	1	CAMSHAFT AS	
	2A	1	**1B-8705**	1	KEY-WOODRUFF	
	2B	1	**205-1322**	1	GEAR (100 TEETH)	
M	3	1	**6V-3940**	2	BOLT (M8X1.25X25MM)	

M-METRIC PART

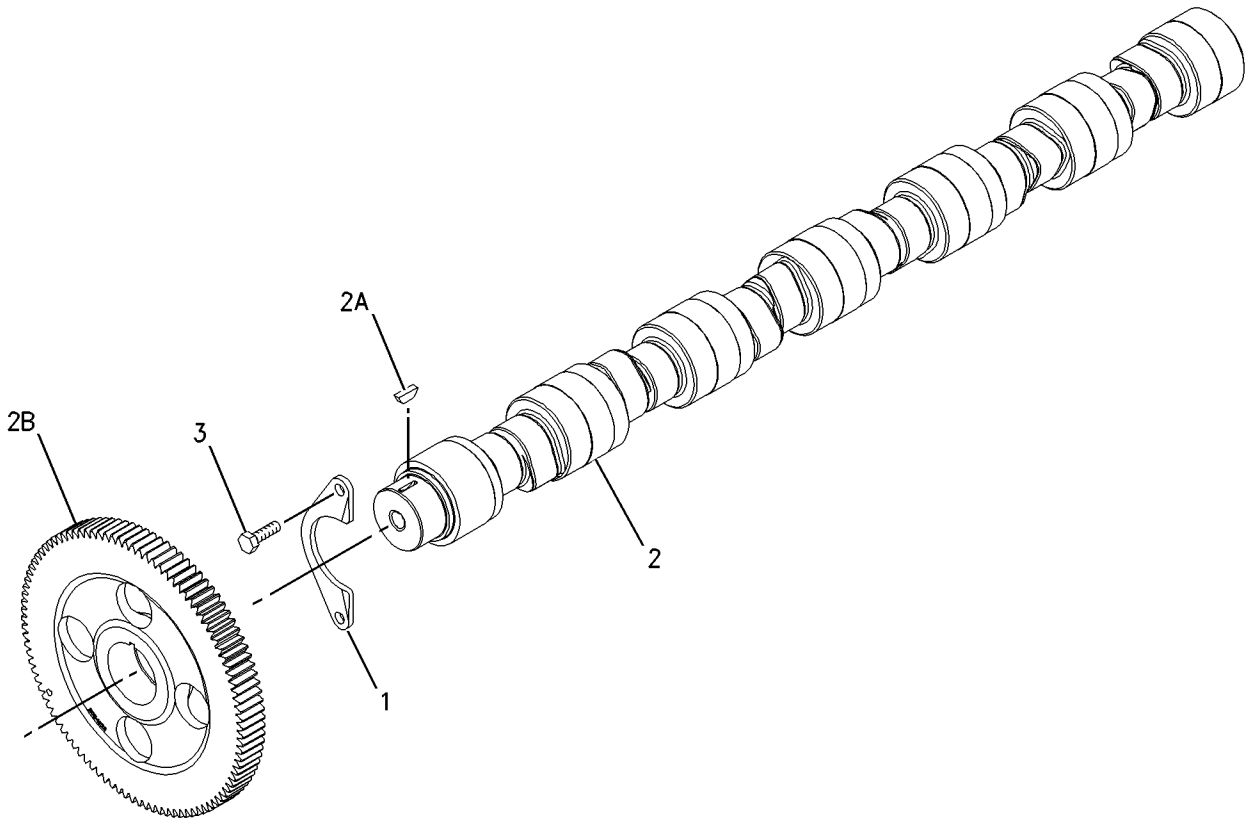

GRAPHIC #1 **<END>** g00869530

BASIC ENGINE

132-3844 CARRIER GP-SEAL

S/N: BMA1100-UP
PART OF 191-4479, 191-4481 ENGINE AR-COMPLETE
ALSO AN ATTACHMENT

SMCS-1161 **i01487432**

NOTE	REF NO	GRAPHIC REF	PART NUMBER	QTY	PART NAME 1 2 3 4 5 6 (PRODUCT LEVEL)	SEE PAGE
M	1	1	**6V-3940**	8	BOLT (M8X1.25X25MM)	
	2	1	**9M-1974**	8	WASHER-HARD (8.8X16X2MM THK)	
	3	1	**2W-6546**	1	COVER	
B	4	1	**1U-8846**		SEALANT-GASKET	
	5	1	**6V-3538**	2	DOWEL	
	6	1	**8C-3091**	1	SEAL-O-RING	

B-USE AS REQUIRED
M-METRIC PART

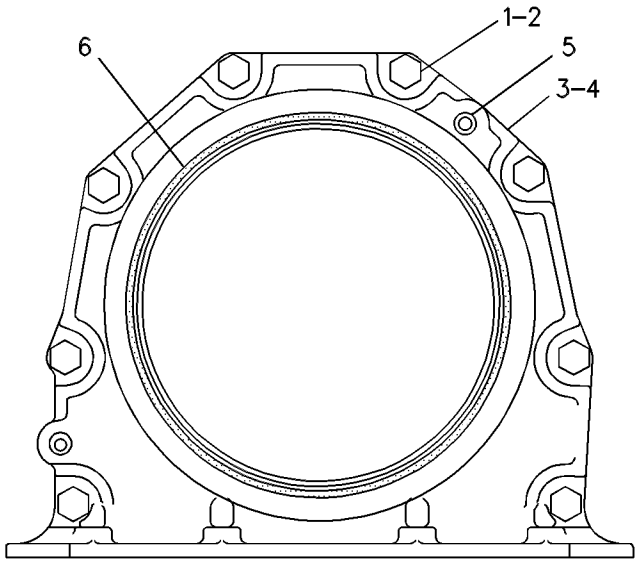

MOUNTED ON REAR OF CYLINDER BLOCK

GRAPHIC #1 **<END>** g00108845

143-4926 COVER GP-CYLINDER BLOCK

S/N: BMA1100-UP
PART OF 191-4479, 191-4481 ENGINE AR-COMPLETE
ALSO AN ATTACHMENT

SMCS-1201 **i01801851**

NOTE	REF NO	GRAPHIC REF	PART NUMBER	QTY	PART NAME 1 2 3 4 5 6 (PRODUCT LEVEL)	SEE PAGE
	1	1	**2W-6544**	1	COVER	
	2	1	**4P-5918**	3	CLIP	
	3	1	**4Y-9652**	3	GASKET	
	4	1	**7W-3871**	3	COVER-SIDE	
	5	1	**7W-3872**	6	SLEEVE	
	7	1	**110-7618**	4	BOLT AS	
	8	1	**152-3414**	1	TEE AS	
		1	**3K-0360**	1	SEAL-O-RING	
	9	1	**175-1367**	12	SPACER (8.8X16X10MM THK)	
	10	1	**210-3321**	1	STUD	
M	11	1	**5C-7261**	1	NUT (M8X1.25 THD)	
M	12	1	**6V-2317**	23	BOLT (M8X1.25X30MM)	
	13	1	**9M-1974**	10	WASHER-HARD (8.8X16X2MM THK)	
B	14	1	**1U-8846**		SEALANT-GASKET	

B-USE AS REQUIRED
M-METRIC PART

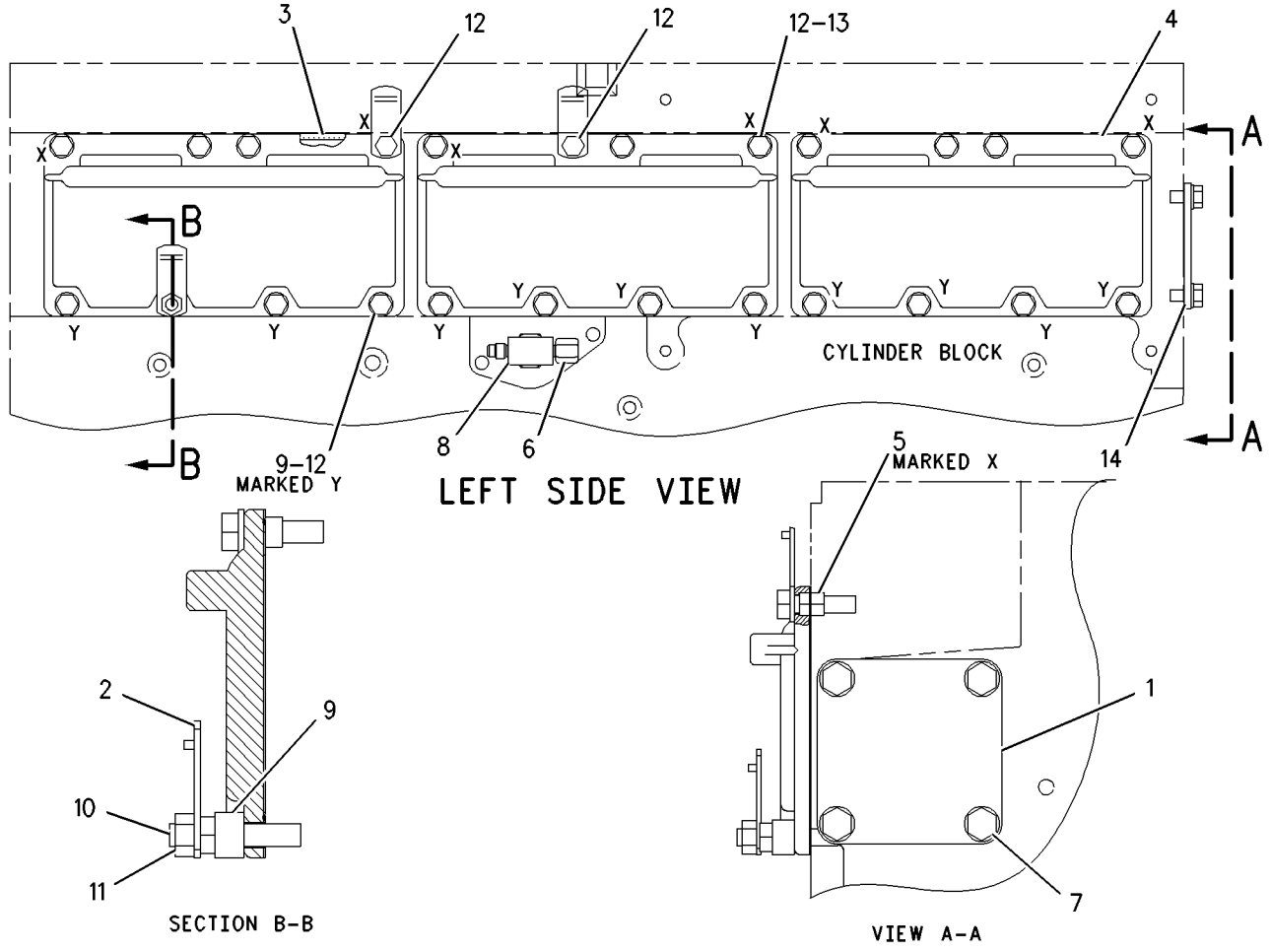

GRAPHIC #1 **<END>** g00922574

136-8888 COVER GP-FRONT HOUSING

S/N: BMA1100-UP
PART OF 191-4479, 191-4481 ENGINE AR-COMPLETE
ALSO AN ATTACHMENT

SMCS-1151, 1162, 1166 **i01802408**

NOTE	REF NO	GRAPHIC REF	PART NUMBER	QTY	PART NAME 1 2 3 4 5 6 (PRODUCT LEVEL)	SEE PAGE
M	1	1	**6V-2317**	7	BOLT (M8X1.25X30MM)	
	2	1	**136-0823**	1	COVER AS-FRONT	
M	3	1	**8T-0100**	1	BOLT (M8X1.25X60MM)	
	4	1	**139-3526**	1	GASKET	
	5	1	**7C-1445**	1	COVER	
	6	1	**061-9455**	1	SEAL-O-RING	
	7	1	**8T-4224**	2	WASHER-HARD (8.8X16X2MM THK)	
M	8	1	**5C-7261**	2	NUT (M8X1.25 THD)	

M-METRIC PART

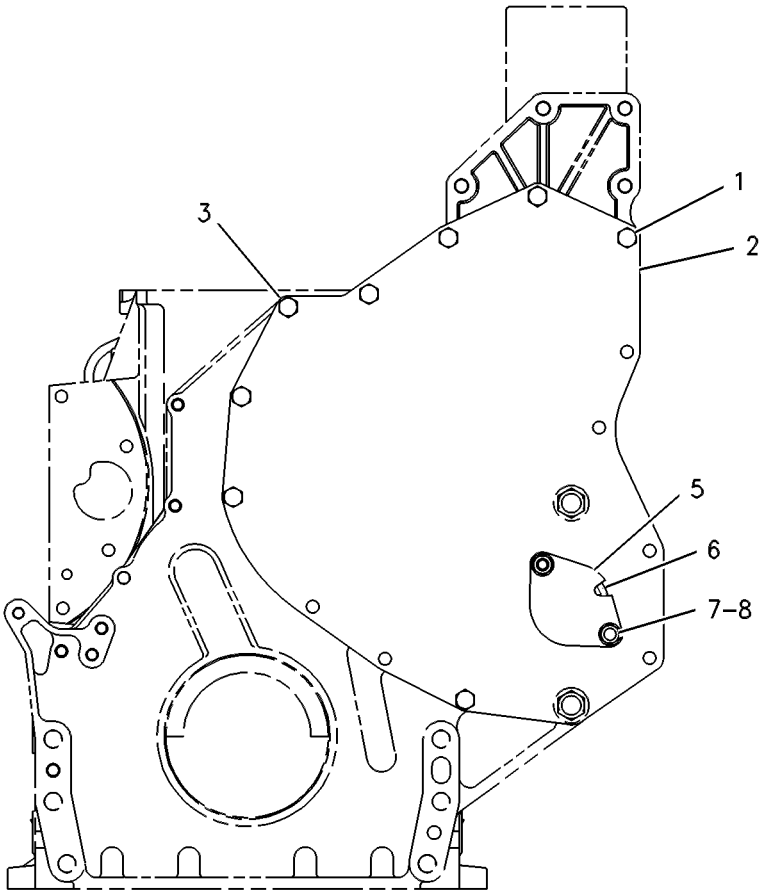

FRONT VIEW

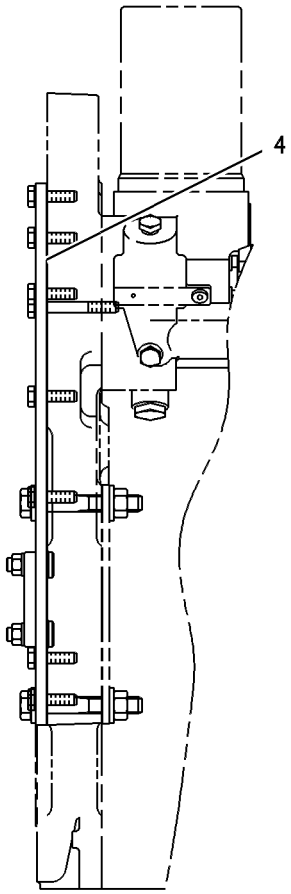

LEFT SIDE VIEW

GRAPHIC #1 **<END>** g00286201

BASIC ENGINE

153-1832 COVER GP-VALVE MECHANISM

S/N: BMA1100-UP
PART OF 191-4479, 191-4481 ENGINE AR-COMPLETE
ALSO AN ATTACHMENT

SMCS-1107, 1120 **i01873065**

NOTE	REF NO	GRAPHIC REF	PART NUMBER	QTY	PART NAME 1 2 3 4 5 6 (PRODUCT LEVEL)	SEE PAGE
	1	1	**167-8361**	1	COVER AS-BASE	
D	1A	1	**5P-5678**		SEAL (2M)	
M	2	1	**2W-9499**	14	BOLT (M6X1.0X40MM)	
	3	1	**172-6280**	1	COVER AS-TOP	
D	3A	1	**5P-5678**		SEAL (2M)	
	4	1	**5P-0537**	28	WASHER-HARD (7.2X14.5X2MM THK)	
M	5	1	**6V-7728**	14	BOLT (M6X1.0X45MM)	

D-ORDER BY THE METER
M-METRIC PART

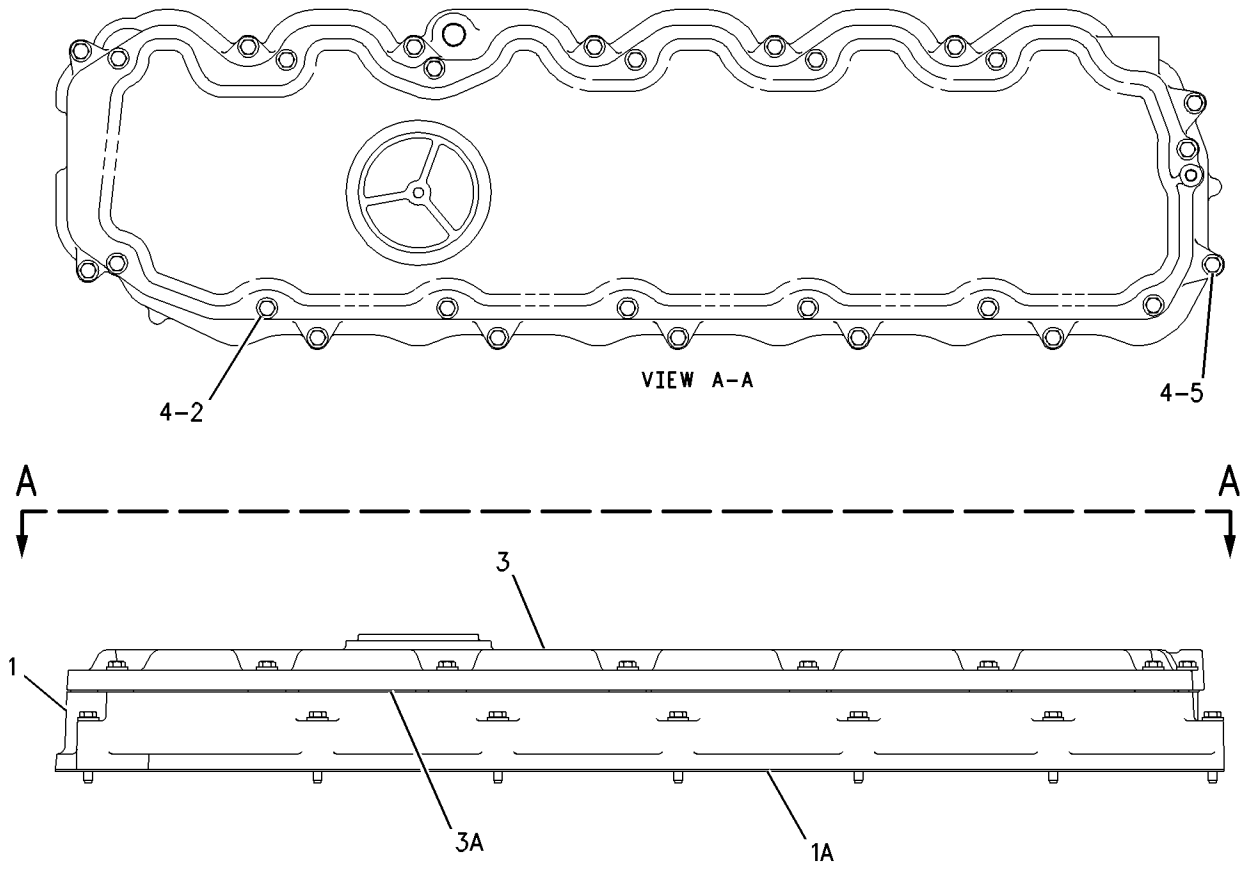

GRAPHIC #1 **<END>** g00676906

BASIC ENGINE

113-6087 CRANKSHAFT GP

S/N: BMA1100-UP
PART OF 191-4482 ENGINE AR-CORE
ALSO AN ATTACHMENT

SMCS-1202, 1203, 1204, 1230, 1231, 1232 **i01882522**

NOTE	REF NO	GRAPHIC REF	PART NUMBER	QTY	PART NAME 1 2 3 4 5 6 (PRODUCT LEVEL)	SEE PAGE
R	1	1	**105-1725**	1	CRANKSHAFT AS	
	2	1	**1B-8705**	1	KEY-WOODRUFF	
	3	1	**2W-8147**	1	GEAR (50 TEETH)	
J	4	1	**212-4893**	1	BEARING-THRUST	
J	5	1	**107-7708**	6	BEARING-MAIN	
AB		1	**145-0168**		BEARING-MAIN (0.5MM OS)	
AB		1	**145-0170**		BEARING-MAIN (0.5MM US - 0.5MM OS)	
AB		1	**145-0162**		BEARING-MAIN (0.25MM US)	
AB		1	**145-0164**		BEARING-MAIN (0.5MM US)	
ABF		1	**7C-7980**	1	SLEEVE-OIL SEAL (CRANKSHAFT)	
					(THIS WEAR SLEEVE IS USED ONLY TO SALVAGE (REPAIR) THE REAR SEAL SURFACE OF THE CRANKSHAFT)	
					AVAILABLE REPAIR KIT(S):	
J			**196-9519**		KIT-MAIN BEARING (CRANKSHAFT)	

A-NOT PART OF THIS GROUP
B-USE AS REQUIRED
F-NOT SHOWN
J-KIT MARKED J SERVICES PARTS MARKED J
R-REMFG PART MAY BE AVAILABLE

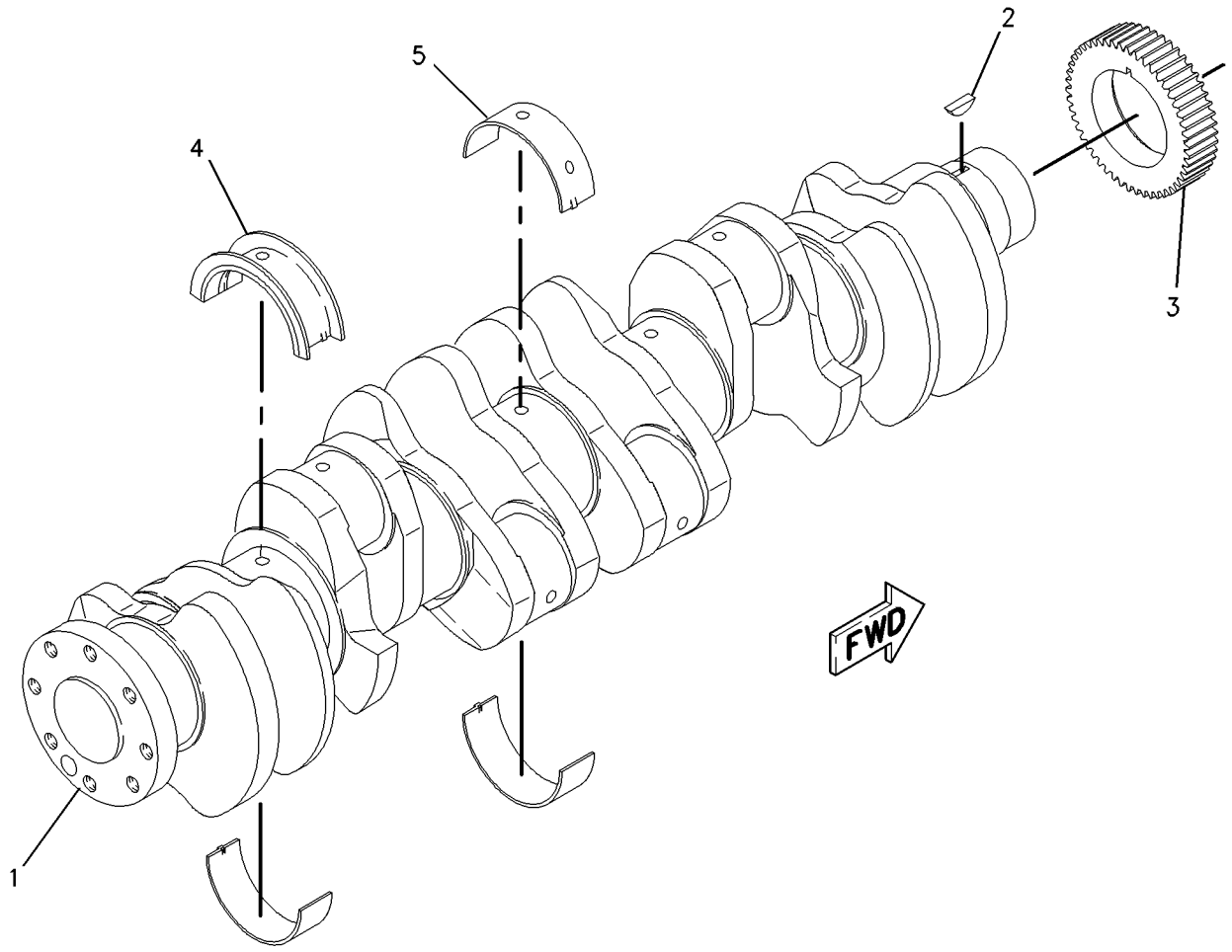

GRAPHIC #1 **<END>** g00785631

BASIC ENGINE

129-1163 CYLINDER BLOCK GP

S/N: BMA1100-UP
PART OF 129-1164 CYLINDER BLOCK GP
ALSO AN ATTACHMENT

SMCS-1201 **i01889624**

NOTE	REF NO	GRAPHIC REF	PART NUMBER	QTY	PART NAME 1 2 3 4 5 6 (PRODUCT LEVEL)	SEE PAGE
	1	1	**5P-8247**	14	WASHER-HARD (17X32X3.5MM THK)	
	2	1	**7E-2968**	7	CAP-CRANKSHAFT BEARING	
M	3	1	**9X-8916**	14	BOLT (M16X2.0X140MM)	

M-METRIC PART

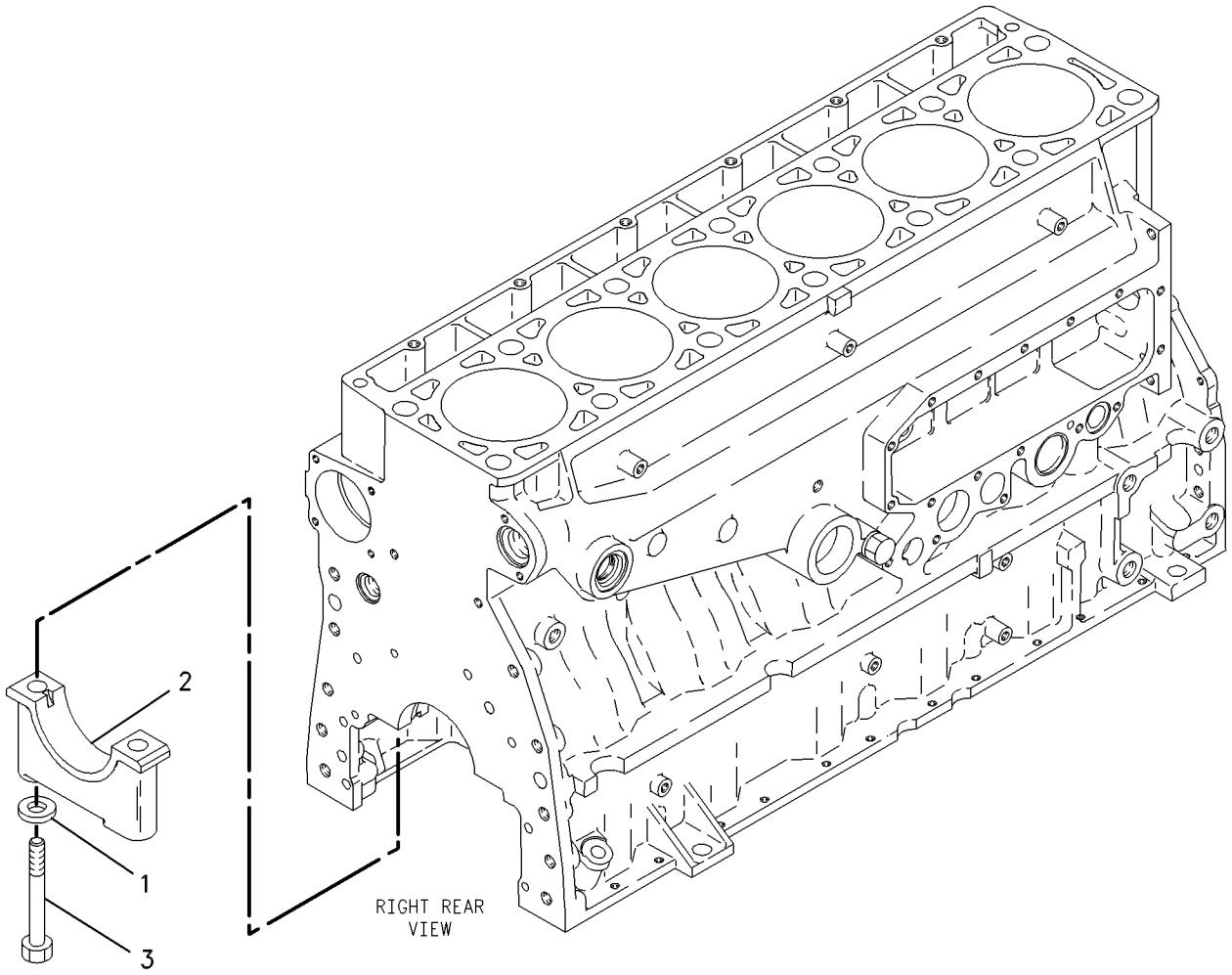

GRAPHIC #1 **<END>** g00284455

129-1164 CYLINDER BLOCK GP*R

S/N: BMA1100-UP
PART OF 129-1165 CYLINDER BLOCK GP
ALSO AN ATTACHMENT

SMCS-1201 **i01818558**

NOTE	REF NO	GRAPHIC REF	PART NUMBER	QTY	PART NAME 1 2 3 4 5 6 (PRODUCT LEVEL)	SEE PAGE
Y	1	1	*129-1163*	1	CYLINDER BLOCK GP	17
	2	1	**2M-6471**	2	PLUG-CUP	
	3	1	**3H-5552**	1	PLUG-CUP	
	4	1	**9S-8006**	1	PLUG	
	5	1	**2M-9780**	1	SEAL-O-RING	
	6	1	**216-5586**	1	BEARING-SLEEVE (CAMSHAFT)	
	7	1	**2W-7213**	6	BEARING-SLEEVE (CAMSHAFT)	

Y-SEPARATE ILLUSTRATION

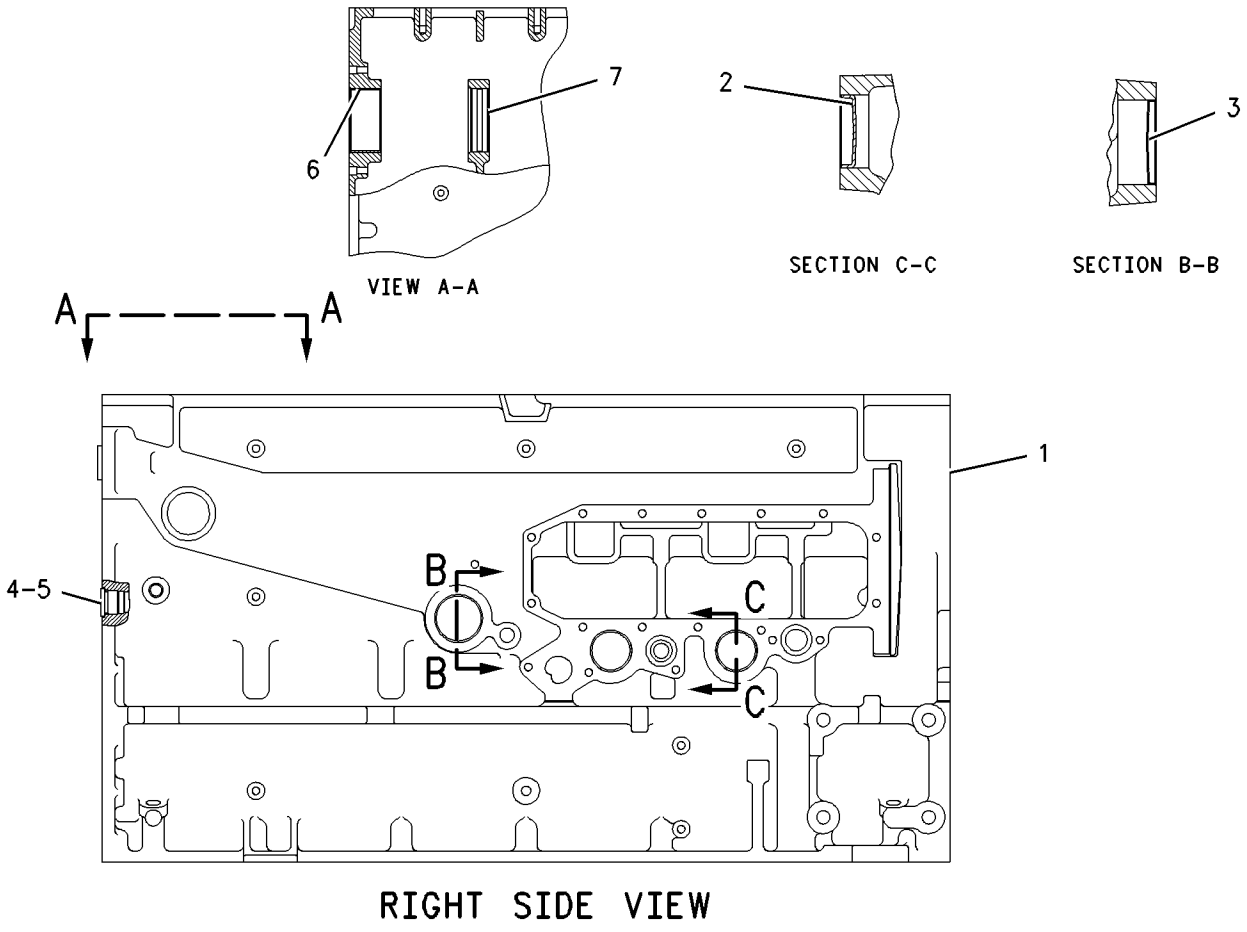

RIGHT SIDE VIEW

GRAPHIC #1 **<END>** g00892412

BASIC ENGINE

129-1165 CYLINDER BLOCK GP

S/N: BMA1100-UP
PART OF 191-4482 ENGINE AR-CORE
ALSO AN ATTACHMENT

SMCS-1201 **i01298139**

NOTE	REF NO	GRAPHIC REF	PART NUMBER	QTY	PART NAME 1 2 3 4 5 6 (PRODUCT LEVEL)	SEE PAGE
YR	1	1	**129-1164**	1	CYLINDER BLOCK GP	18
	3	1	**1W-8407**	2	SLEEVE	
	4	1	**6V-3538**	2	DOWEL (20MM OAL)	
	6	1	**7N-5683**	2	DOWEL (20MM OAL)	

R-REMFG PART MAY BE AVAILABLE
Y-SEPARATE ILLUSTRATION

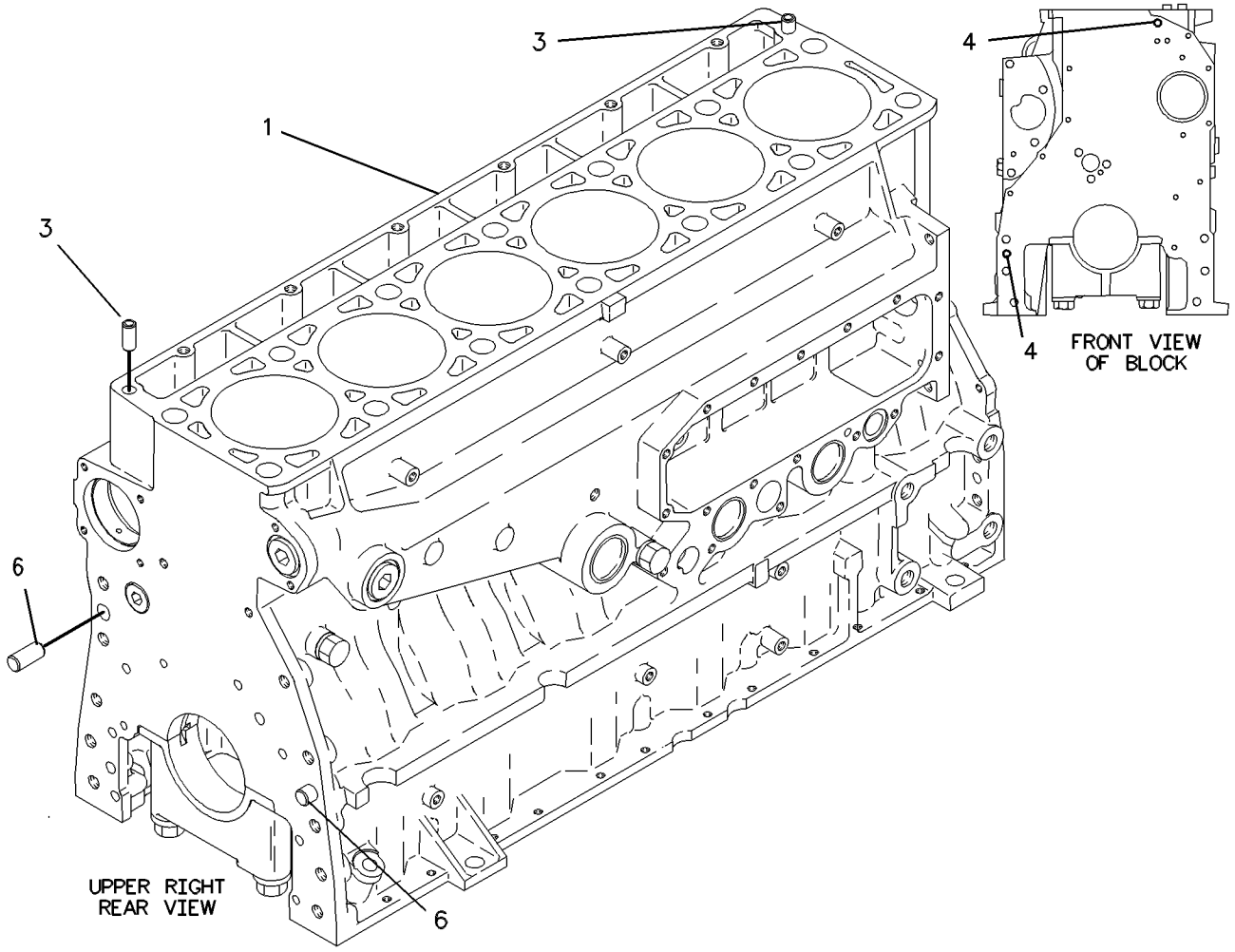

GRAPHIC #1 **<END>** g00588544

205-1271 CYLINDER HEAD AS

S/N: BMA1100-UP
PART OF 205-1272 CYLINDER HEAD AS, 205-1273 CYLINDER HEAD GP
FIELD REPLACEMENT ORDER 205-1272—PAGE 22
ALSO AN ATTACHMENT

SMCS-1100, 1101, 1103, 1104, 1105, 1106, 1108, 1109, 1115, 1117, 1121, 1124, 1125

i01693167

NOTE	REF NO	GRAPHIC REF	PART NUMBER	QTY	PART NAME 1 2 3 4 5 6 (PRODUCT LEVEL)	SEE PAGE
	2	1	**8M-5860**	12	PLUG-CUP	
	3	1	**4F-5695**	2	PLUG-CUP	
	4	1	**159-0300**	6	SLEEVE-INJECTOR	
	5	1	**155-9504**	12	INSERT-VALVE SEAT (INLET)	
	6	1	**147-8218**	6	INSERT-VALVE SEAT (EXHAUST)	
	7	1	**8C-0563**	12	SEAL-O-RING	
	8	1	**154-8025**	6	SETSCREW-SOCKET	
	9	1	**9S-9334**	1	PLUG	
	10	1	**9X-7712**	1	SEAL-O-RING	

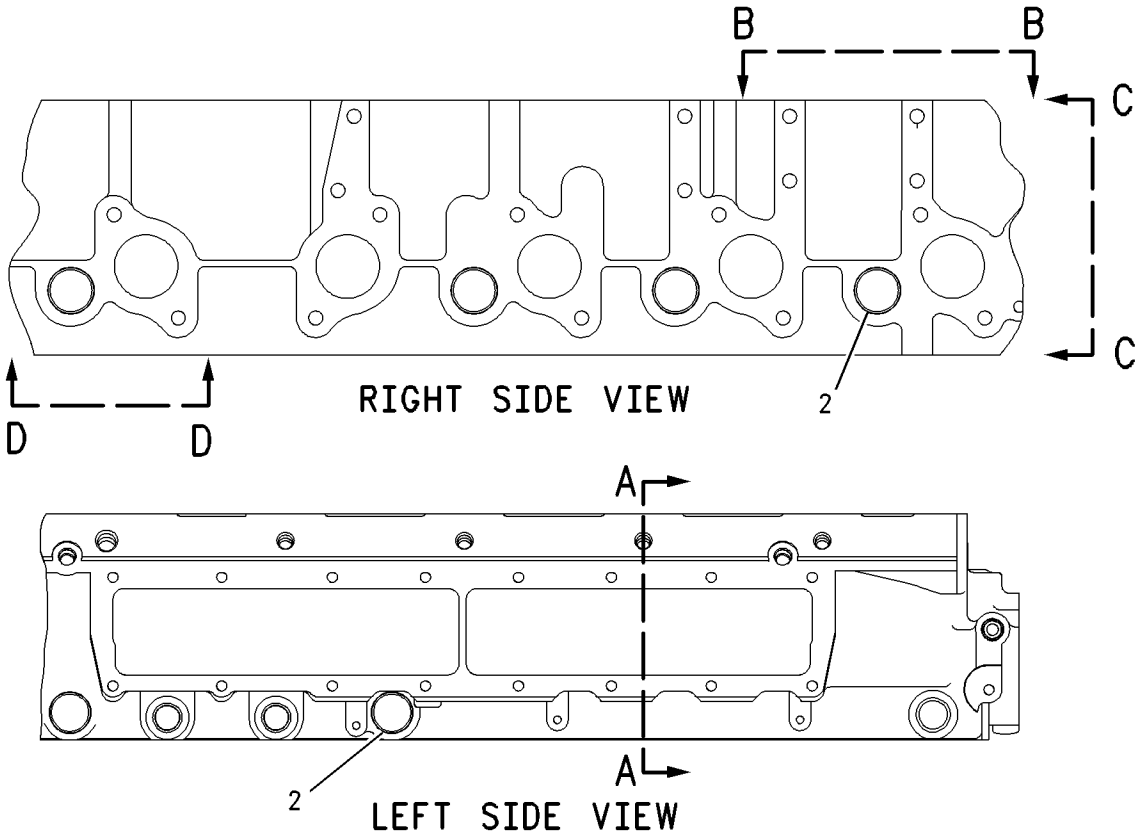

GRAPHIC #1 **<END>** g00826091

BASIC ENGINE

205-1272 CYLINDER HEAD AS

S/N: BMA1100-UP

FIELD REPLACEMENT FOR 205-1271—PAGE 20

SMCS-1100, 1101, 1103, 1104, 1105, 1106, 1108, 1109, 1115, 1117, 1121, 1124, 1125 **i01693212**

NOTE	REF NO	GRAPHIC REF	PART NUMBER	QTY	PART NAME 1 2 3 4 5 6 (PRODUCT LEVEL)	SEE PAGE
Y	1	1	*205-1271*	1	CYLINDER HEAD AS	20
	2	1	**9S-8002**	6	PLUG-O-RING	
	3	1	**6V-5048**	6	SEAL-O-RING	
	4	1	**9S-8004**	4	PLUG	
	5	1	**3J-1907**	4	SEAL-O-RING	
	6	1	**147-8214**	12	SEAL-VALVE STEM	
	7	1	**140-9670**	12	GUIDE-VALVE	
	8	1	**9S-8006**	1	PLUG	
	9	1	**2M-9780**	1	SEAL-O-RING	
	10	1	**9S-9334**	1	PLUG	
	11	1	**9X-7712**	1	SEAL-O-RING	
	12	1	**147-8220**	6	GUIDE-VALVE	
	13	1	**102-6229**	6	SEAL-VALVE STEM	
	14	1	**137-6715**	6	SEAT-VALVE SPRING	
	15	1	**9S-8005**	1	PLUG-O-RING	
	16	1	**3K-0360**	1	SEAL-O-RING	
	17	1	**1N-5999**	2	PLUG	
	18	1	**7J-0204**	2	SEAL-O-RING	
	19	1	**9S-8003**	1	PLUG-O-RING	
	20	1	**1J-9671**	1	SEAL-O-RING	

Y-SEPARATE ILLUSTRATION

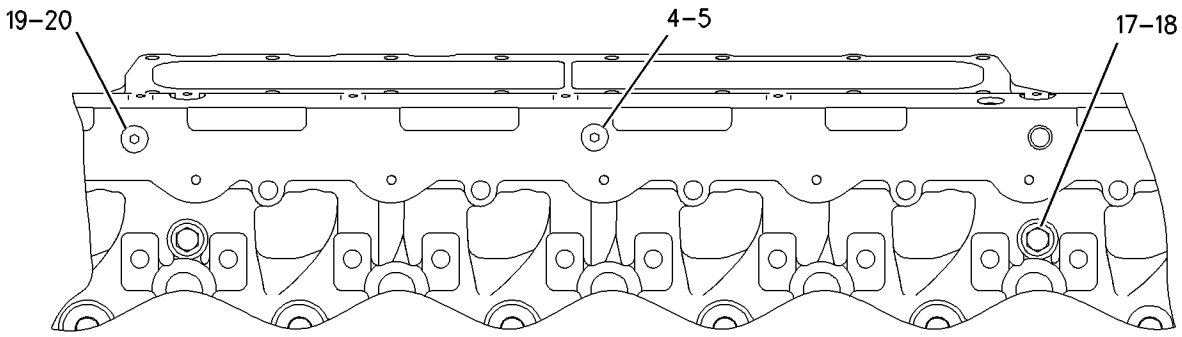

TOP VIEW

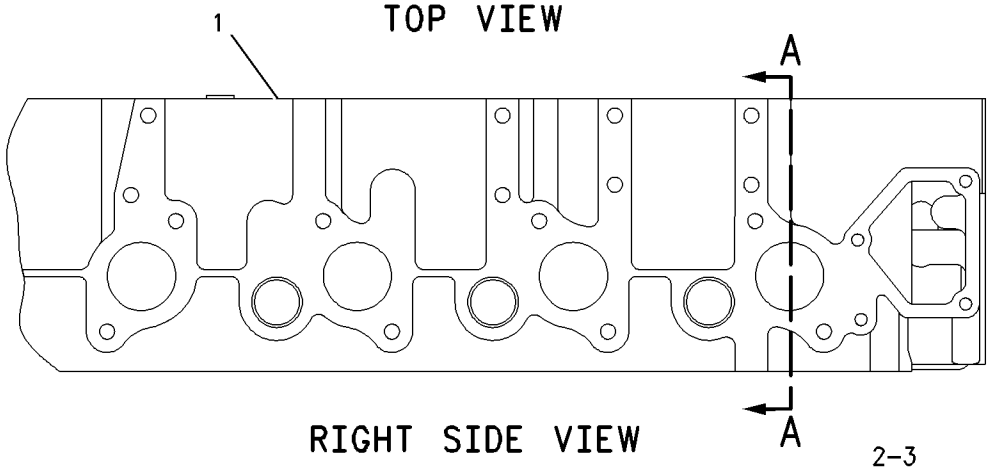

RIGHT SIDE VIEW

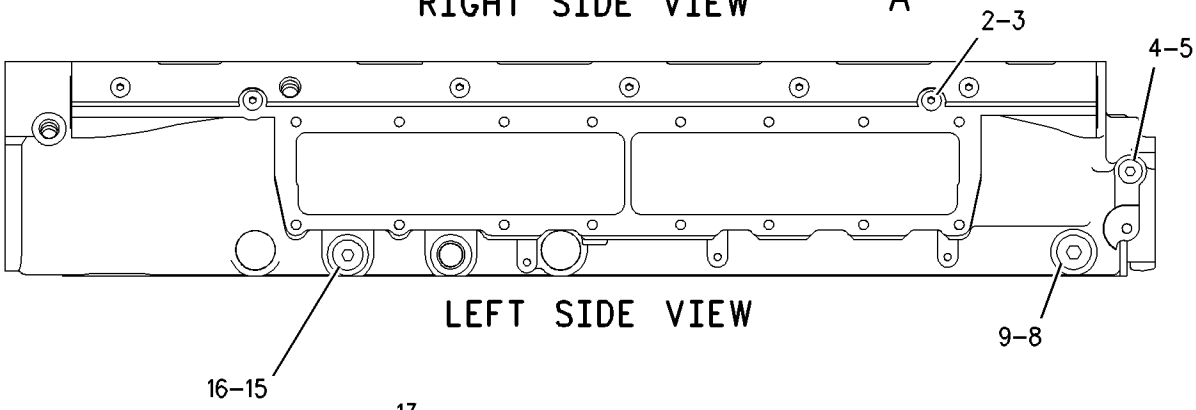

LEFT SIDE VIEW

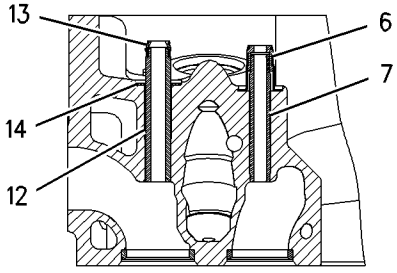

SECTION A-A

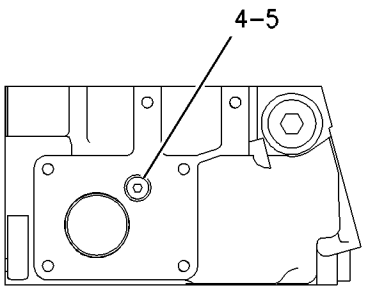

FRONT VIEW

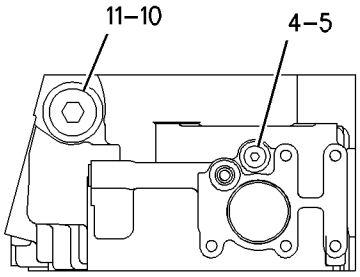

REAR VIEW

GRAPHIC #1 **<END>** g00847258

133-3742 CYLINDER HEAD GP

S/N: BMA1100-UP
PART OF 191-4482 ENGINE AR-CORE
ALSO AN ATTACHMENT

SMCS-1100, 1103, 1104, 1105, 1106, 1108, 1109, 1115, 1117, 1121, 1124, 1125

i01696098

NOTE	REF NO	GRAPHIC REF	PART NUMBER	QTY	PART NAME 1 2 3 4 5 6 (PRODUCT LEVEL)	SEE PAGE
Y	1	1	*205-1274*	1	CYLINDER HEAD GP	27
	2	1	**133-4995**	1	GASKET-CYLINDER HEAD	
	3	1	**8T-3282**	14	WASHER-HARD (22X35X3.5MM THK)	
		1	**138-3252**	14	BOLT-12 POINT HEAD	
M	4	1	**8T-7950**	6	BOLT (M10X1.5X180MM)	
	5	1	**6V-5839**	6	WASHER (11X21X2.5MM THK)	

M-METRIC PART
Y-SEPARATE ILLUSTRATION

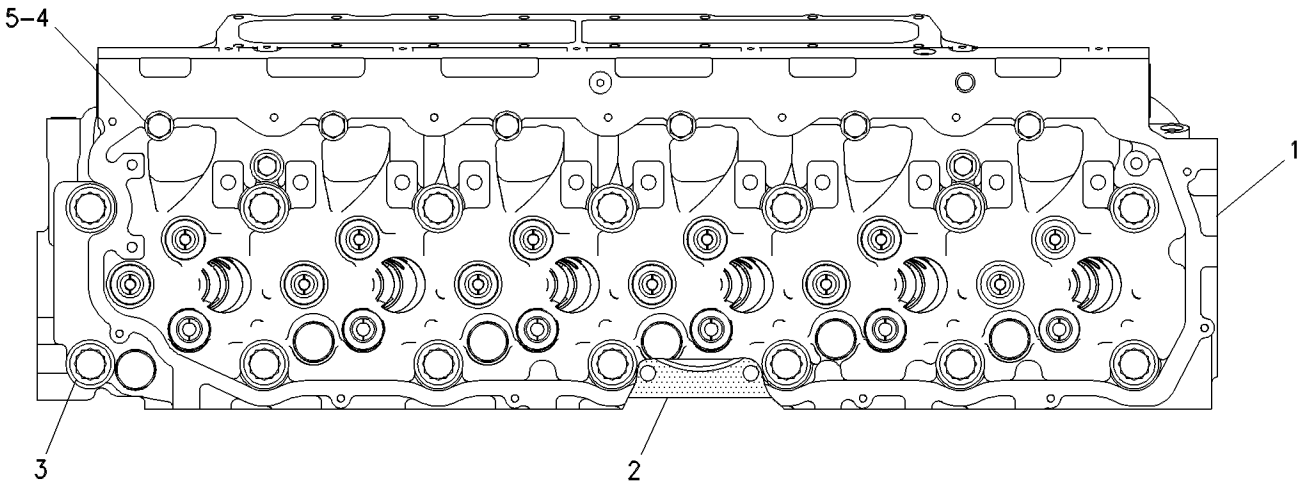

TOP VIEW

GRAPHIC #1

<END>

g00334554

205-1273 CYLINDER HEAD GP

S/N: BMA1100-UP

PART OF 205-1274, 205-1275 CYLINDER HEAD GP

ALSO AN ATTACHMENT

SMCS-1100, 1103, 1104, 1105, 1106, 1108, 1109, 1115, 1117, 1121, 1124, 1125

i01696313

NOTE	REF NO	GRAPHIC REF	PART NUMBER	QTY	PART NAME 1 2 3 4 5 6 (PRODUCT LEVEL)	SEE PAGE
Y	1	1	*205-1271*	1	CYLINDER HEAD AS	20
	2	1	**145-7390**	12	VALVE-INLET	
	3	1	**147-8211**	6	VALVE-EXHAUST	
	4	1	**1W-2715**	24	LOCK-RETAINER	
	5	1	**7E-7779**	12	RETAINER-SPRING	
	6	1	**147-8214**	12	SEAL-VALVE STEM	
	7	1	**140-9670**	12	GUIDE-VALVE	
	8	1	**137-6718**	6	SPRING-VALVE	
	9	1	**140-6188**	12	SPRING-VALVE	
	10	1	**2A-4429**	12	LOCK-RETAINER	
	11	1	**134-4483**	6	RETAINER-SPRING	
	12	1	**147-8220**	6	GUIDE-VALVE	
	13	1	**102-6229**	6	SEAL-VALVE STEM	
	14	1	**137-6715**	6	SEAT-VALVE SPRING	

Y-SEPARATE ILLUSTRATION

205-1273 **CYLINDER HEAD GP** ***(contd.)*** **i01696313**

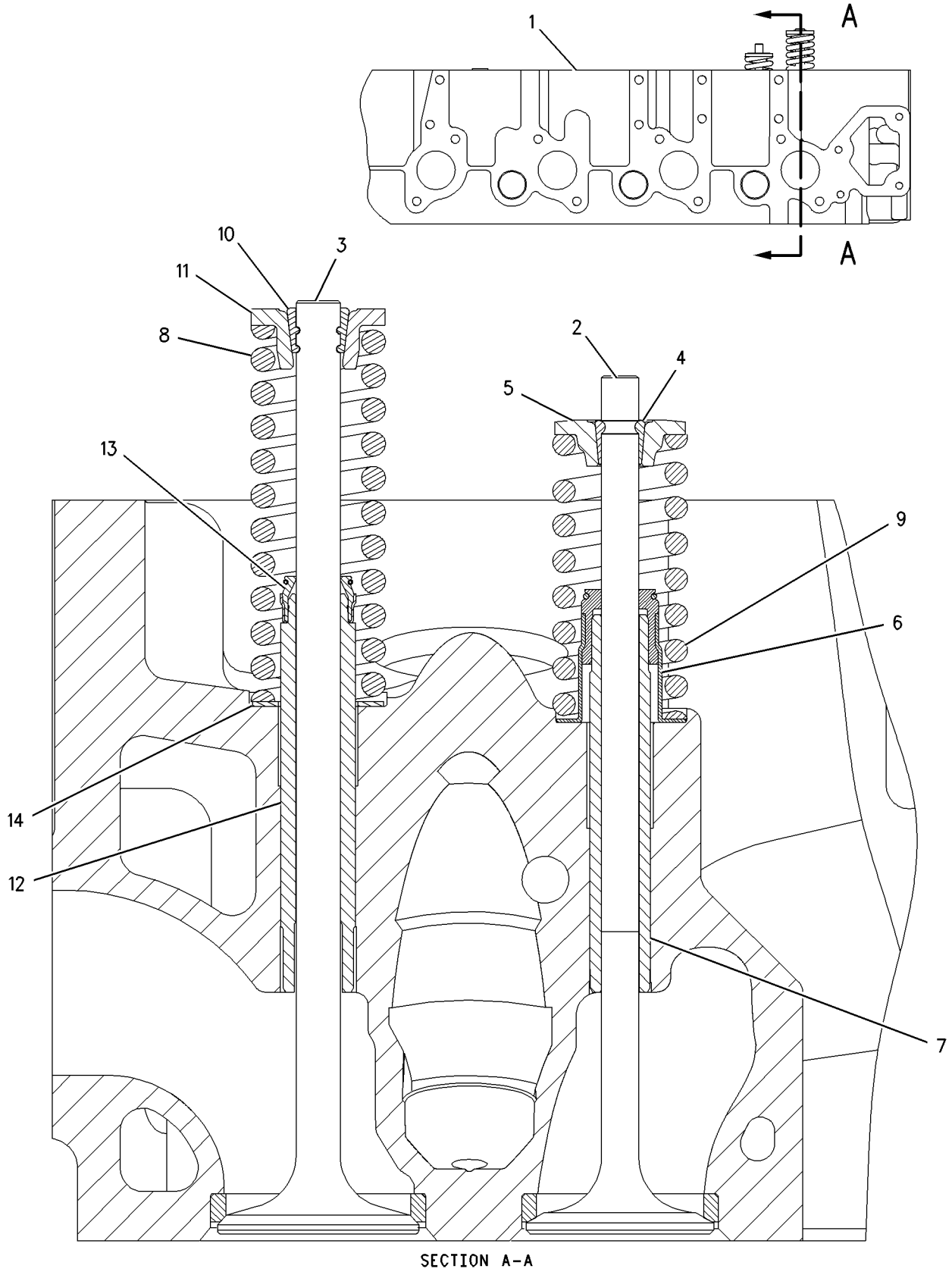

SECTION A-A

GRAPHIC #1 **<END>** g00808330

205-1274 CYLINDER HEAD GP

S/N: BMA1100-UP
PART OF 133-3742 CYLINDER HEAD GP
FIELD REPLACEMENT ORDER 205-1275—PAGE 29
ALSO AN ATTACHMENT

SMCS-1100, 1103, 1104, 1105, 1106, 1108, 1109, 1115, 1117, 1121, 1124, 1125

i01696325

NOTE	REF NO	GRAPHIC REF	PART NUMBER	QTY	PART NAME 1 2 3 4 5 6 (PRODUCT LEVEL)	SEE PAGE
Y	1	1	*205-1273*	1	CYLINDER HEAD GP	25
	2	1	**1N-5999**	2	PLUG	
	3	1	**7J-0204**	2	SEAL-O-RING	
	4	1	**9S-8002**	6	PLUG-O-RING	
	5	1	**6V-5048**	6	SEAL-O-RING	
	6	1	**9S-8004**	3	PLUG	
	7	1	**3J-1907**	3	SEAL-O-RING	
	8	1	**9S-8006**	1	PLUG	
	9	1	**2M-9780**	1	SEAL-O-RING	
	10	1	**9S-9334**	1	PLUG	
	11	1	**9X-7712**	1	SEAL-O-RING	

Y-SEPARATE ILLUSTRATION

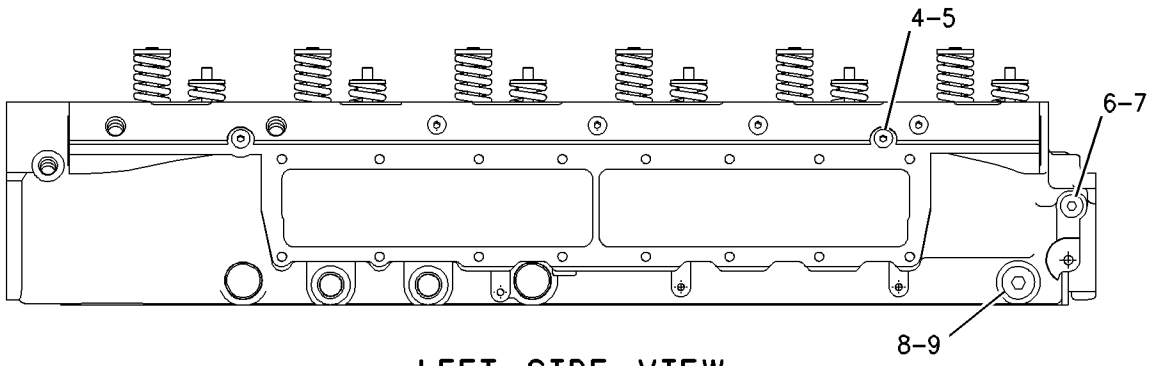

LEFT SIDE VIEW

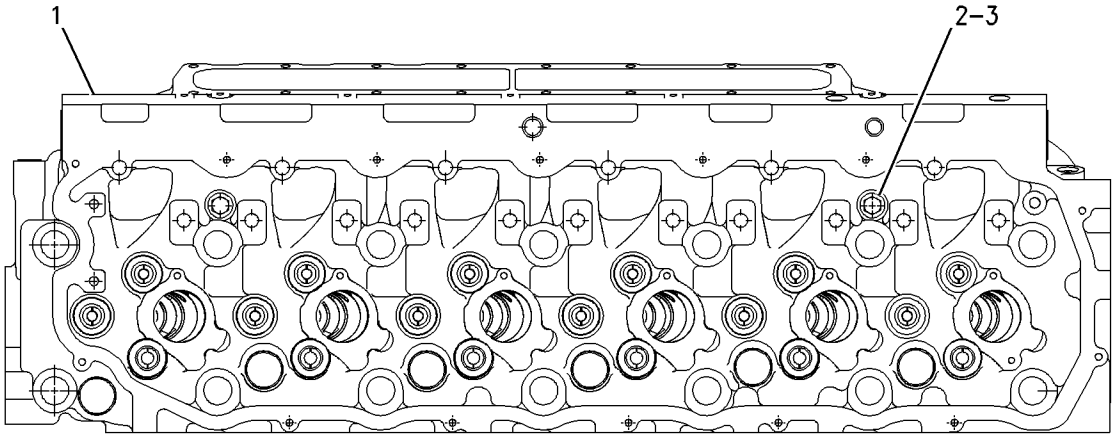

TOP VIEW

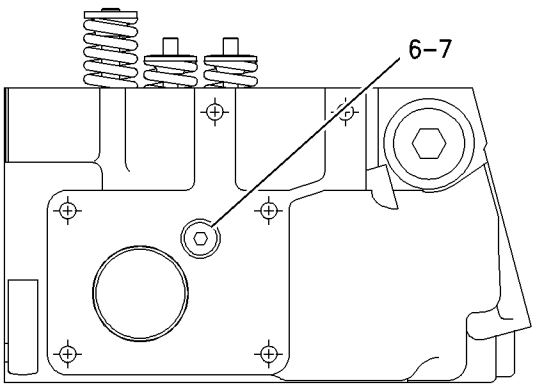

FRONT VIEW

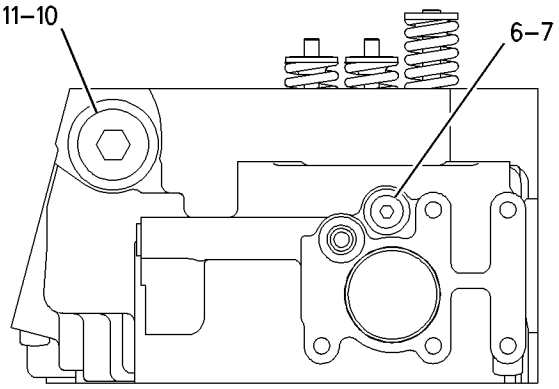

REAR VIEW

GRAPHIC #1 **<END>** g00808348

BASIC ENGINE

205-1275 CYLINDER HEAD GP

S/N: BMA1100-UP

FIELD REPLACEMENT FOR 205-1274—PAGE 27

SMCS-1100, 1103, 1104, 1105, 1106, 1108, 1109, 1115, 1117, 1121, 1124, 1125

i01698531

NOTE	REF NO	GRAPHIC REF	PART NUMBER	QTY	PART NAME 1 2 3 4 5 6 (PRODUCT LEVEL)	SEE PAGE
Y	1	1	*205-1273*	1	CYLINDER HEAD GP	25
	2	1	**1N-5999**	2	PLUG	
	3	1	**7J-0204**	2	SEAL-O-RING	
	4	1	**9S-8002**	6	PLUG	
	5	1	**6V-5048**	6	SEAL-O-RING	
	6	1	**9S-8004**	4	PLUG	
	7	1	**3J-1907**	4	SEAL-O-RING	
	8	1	**9S-8006**	1	PLUG	
	9	1	**2M-9780**	1	SEAL-O-RING	
	10	1	**9S-9334**	1	PLUG	
	11	1	**9X-7712**	1	SEAL-O-RING	
	12	1	**9S-8005**	1	PLUG	
	13	1	**3K-0360**	1	SEAL-O-RING	
	14	1	**9S-8003**	1	PLUG (1/2-20 THD)	
	15	1	**1J-9671**	1	SEAL-O-RING	
	16	1	**9S-4191**	1	PLUG	
		1	**3J-1907**	1	SEAL-O-RING	

Y-SEPARATE ILLUSTRATION

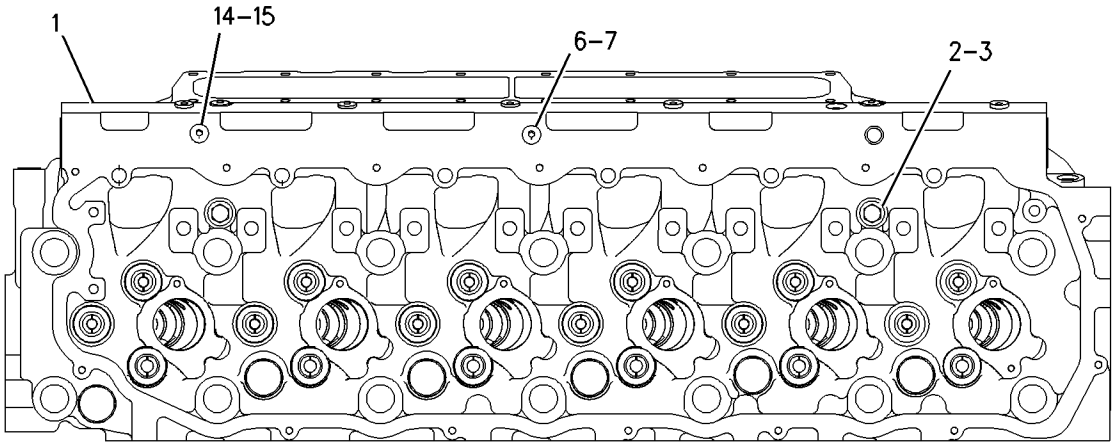

TOP VIEW

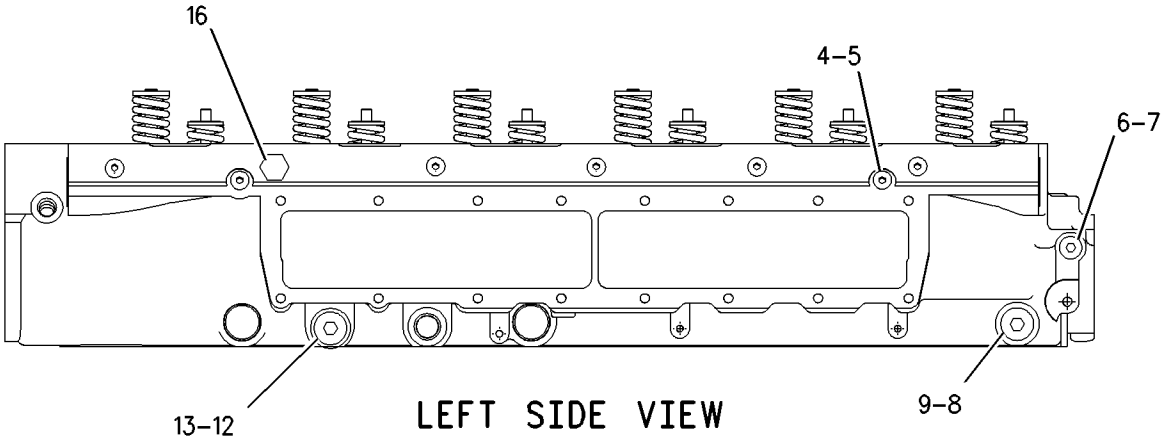

LEFT SIDE VIEW

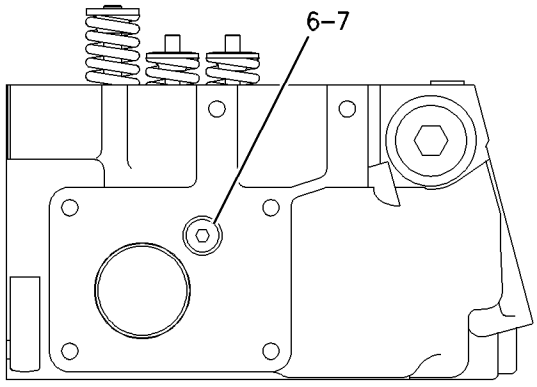

FRONT VIEW

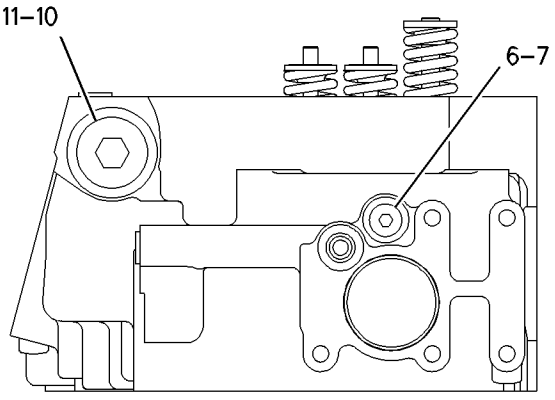

REAR VIEW

GRAPHIC #1 **<END>** g00867459

189-2227 DAMPER & PULLEY GP

S/N: BMA1100-UP
PART OF 191-4479, 191-4481 ENGINE AR-COMPLETE
ALSO AN ATTACHMENT

SMCS-1205 **i01802473**

NOTE	REF NO	GRAPHIC REF	PART NUMBER	QTY	PART NAME 1 2 3 4 5 6 (PRODUCT LEVEL)	SEE PAGE
	1	1	**2W-7381**	1	WASHER	
	2	1	**167-8121**	1	DAMPER AS	
	3	1	**189-2233**	1	PULLEY-CRANKSHAFT	
M	4	1	**8T-3666**	4	BOLT (M14X60MM)	
	5	1	**8T-4121**	8	WASHER-HARD (11X21X2.5MM THK)	
M	6	1	**8T-4182**	8	BOLT (M10X1.5X45MM)	

M-METRIC PART

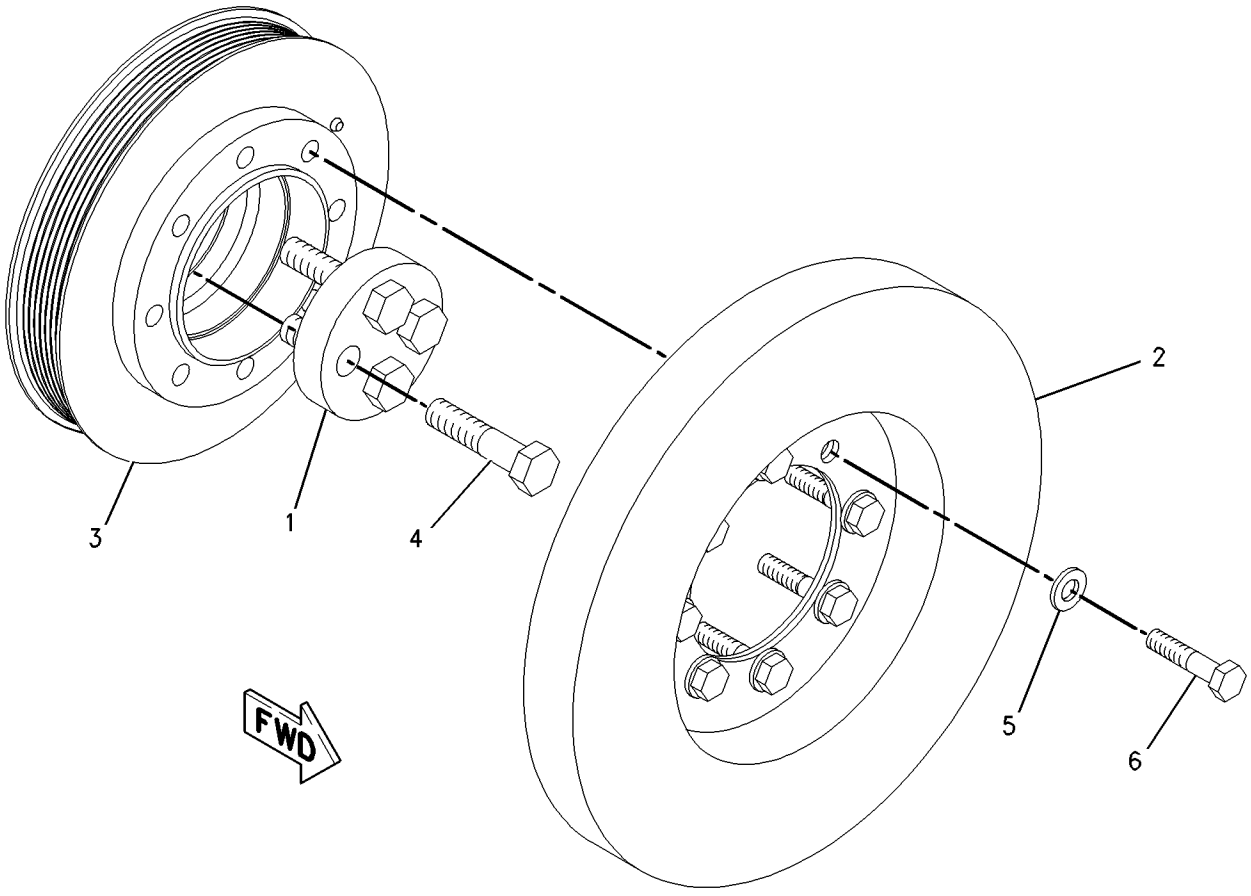

GRAPHIC #1 **<END>** g00729620

7C-4532 DRAIN GP-ENGINE OIL—SHUTOFF VALVE

S/N: BMA1100-UP
PROVIDES A DRAIN VALVE FOR OIL PAN DRAIN
PART OF 191-4479, 191-4481 ENGINE AR-COMPLETE
FOR USE WITH OIL PAN & DRAIN LINE
ALSO AN ATTACHMENT

SMCS-1302 **i01889819**

NOTE	REF NO	GRAPHIC REF	PART NUMBER	QTY	PART NAME 1 2 3 4 5 6 (PRODUCT LEVEL)	SEE PAGE
	1	1	**3K-0360**	1	SEAL-O-RING (SUMP DRAIN)	
	2	1	**6V-7238**	1	VALVE-SHUTOFF (SUMP DRAIN)	

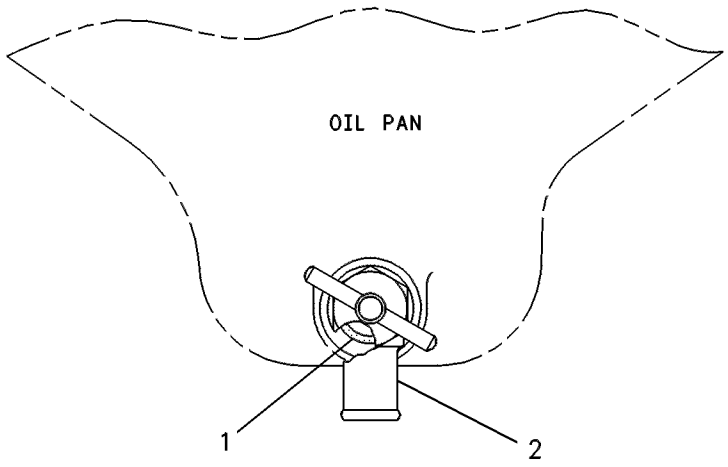

GRAPHIC #1 **<END>** g00117513

7C-4566 DRAIN GP-ENGINE OIL—MAGNETIC PLUG

S/N: BMA1100-UP
PART OF 191-4479, 191-4481 ENGINE AR-COMPLETE
ALSO AN ATTACHMENT

SMCS-1302 **i01802928**

NOTE	REF NO	GRAPHIC REF	PART NUMBER	QTY	PART NAME 1 2 3 4 5 6 (PRODUCT LEVEL)	SEE PAGE
	1	1	**118-3619**	1	PLUG (MAGNETIC OIL DRAIN)	
	2	1	**3K-0360**	1	SEAL-O-RING	

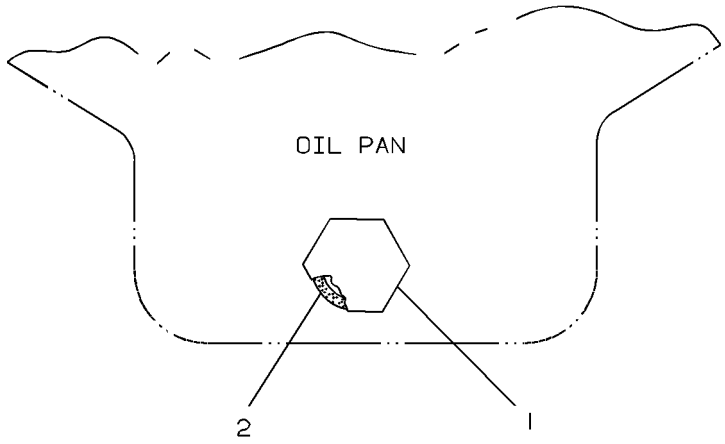

GRAPHIC #1 **<END>** g00125672

219-6339 DRAIN GP-ENGINE OIL–EXTENSION

S/N: CCK1-UP

PART OF 189-4622 INSTALLATION AR-ENGINE

SMCS-1302 **i01775493**

NOTE	REF NO	GRAPHIC REF	PART NUMBER	QTY	PART NAME 1 2 3 4 5 6 (PRODUCT LEVEL)	SEE PAGE
	1	1	**8T-0154**	1	CLAMP-HOSE	
E	2	1	**136-1953**		HOSE (30CM)	

E-ORDER BY THE CENTIMETER

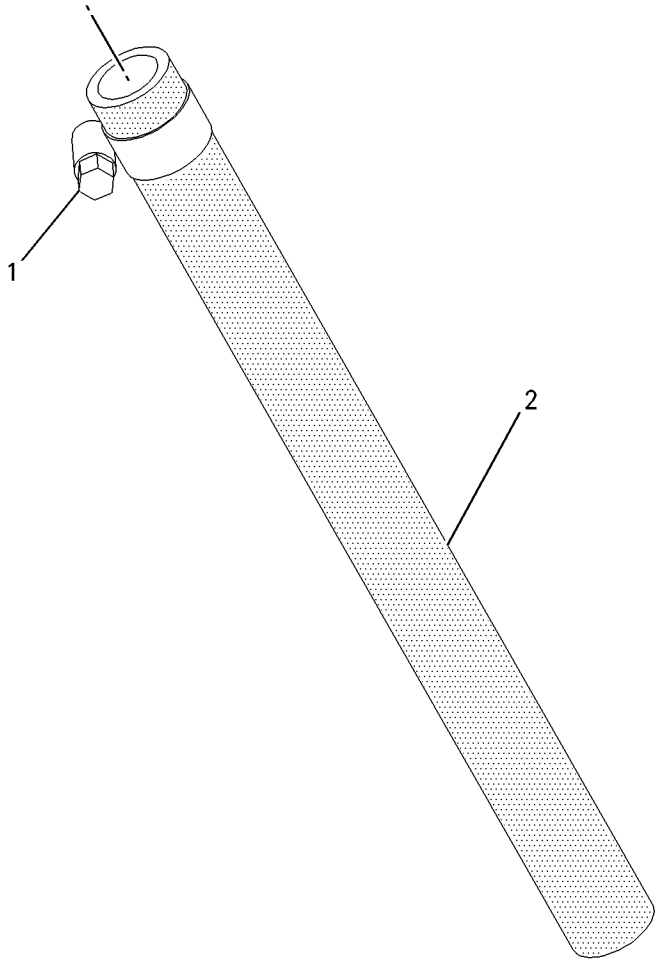

GRAPHIC #1 **<END>** g00911098

BASIC ENGINE

189-2203 DRIVE GP-FAN

S/N: BMA1100-UP
PART OF 189-2223 DRIVE GP-FAN
ALSO AN ATTACHMENT

SMCS-1357, 1358, 1359, 1390 **i01889675**

NOTE	REF NO	GRAPHIC REF	PART NUMBER	QTY	PART NAME 1 2 3 4 5 6 (PRODUCT LEVEL)	SEE PAGE
	1	1	**4W-2042**	1	SPACER (35.3X45.5X38.331MM THK)	
	2	1	**5S-9062**	1	SPACER (35.032X50.8X15.88MM THK)	
	3	1	**7C-8369**	1	HUB	
	4	1	**7C-8634**	1	PLATE	
	5	1	**128-9571**	2	CONE	
	6	1	**128-9572**	2	CUP	
	7	1	**189-2205**	1	BRACKET AS-FAN	
M	8	1	**6V-8004**	1	BOLT (M12X1.75X120MM)	
	9	1	**6V-9748**	1	SEAL-LIP	
	10	1	**7C-8370**	1	CAP-DUST	

M-METRIC PART

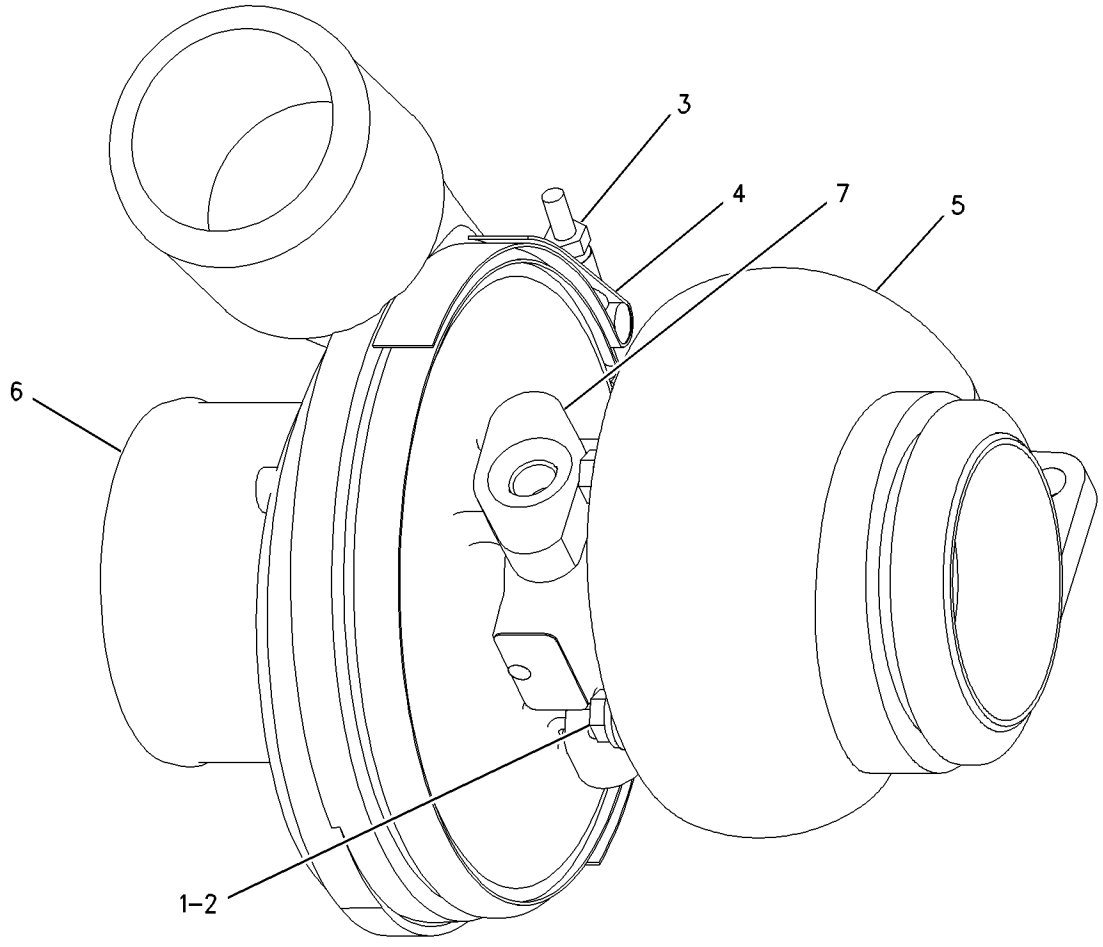

GRAPHIC #1 **<END>** g00759808

189-2223 DRIVE GP-FAN–BELT

S/N: BMA1100-UP
PART OF 191-4479, 191-4481 ENGINE AR-COMPLETE
ALSO AN ATTACHMENT

SMCS-1357, 1358, 1359, 1390 **i01802471**

NOTE	REF NO	GRAPHIC REF	PART NUMBER	QTY	PART NAME 1 2 3 4 5 6 (PRODUCT LEVEL)	SEE PAGE
Y	1	1	**189-2203**	1	DRIVE GP-FAN	35
M	2	1	**6V-4249**	2	BOLT (M10X1.5X50 MM)	
M	3	1	**6V-5843**	2	BOLT (M10X1.50X45MM)	

M-METRIC PART
Y-SEPARATE ILLUSTRATION

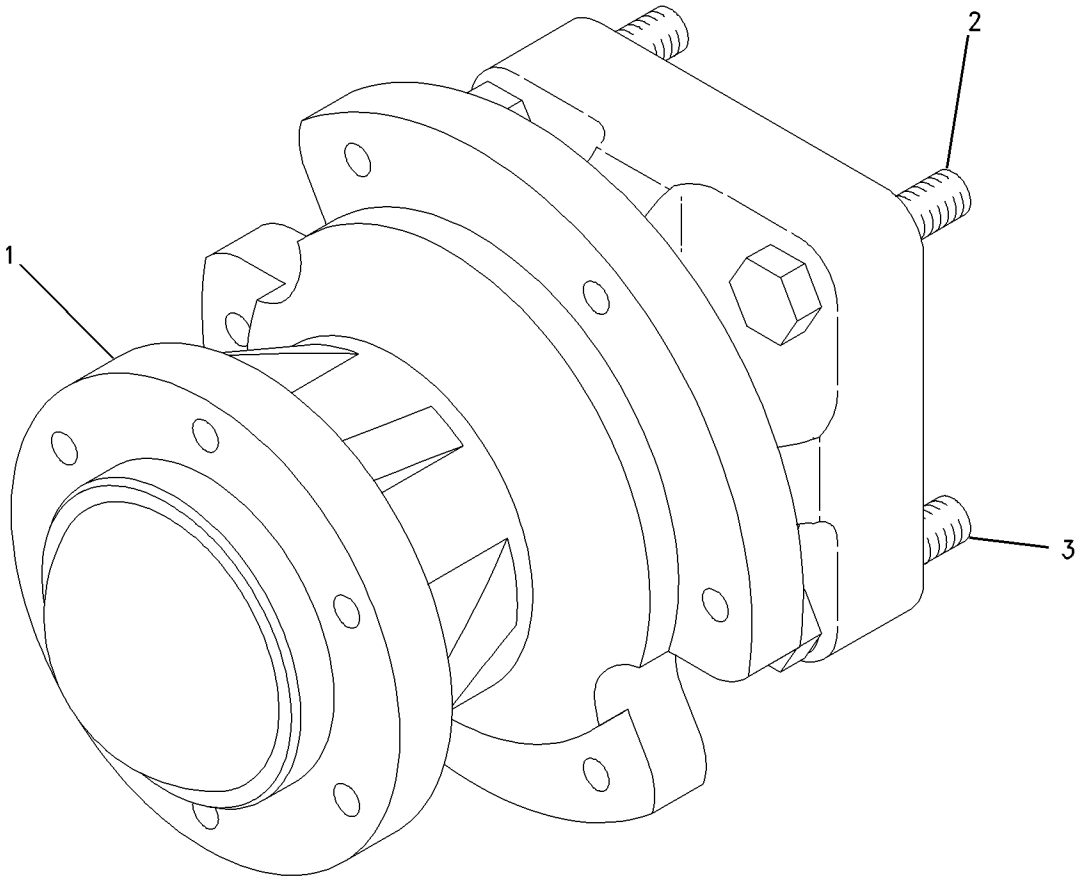

GRAPHIC #1 **<END>** g00824850

BASIC ENGINE

228-5288 FASTENER GP-FRONT COVER

S/N: BMA1100-UP

PART OF 191-4479, 191-4481 ENGINE AR-COMPLETE

ALSO AN ATTACHMENT

SMCS-1151, 1166 **i01802323**

NOTE	REF NO	GRAPHIC REF	PART NUMBER	QTY	PART NAME 1 2 3 4 5 6 (PRODUCT LEVEL)	SEE PAGE
M	1	1	**9X-2098**	1	STUDBOLT (M8X1.25X67.75MM OAL)	
	3	1	**210-3321**	2	STUD	
M	4	1	**6V-2317**	3	BOLT (M8X1.25X30MM)	
M	5	1	**8T-0100**	1	BOLT (M8X1.25X60MM)	
	6	1	**8T-4224**	1	WASHER-HARD (8.8X16X2MM THK)	

M-METRIC PART

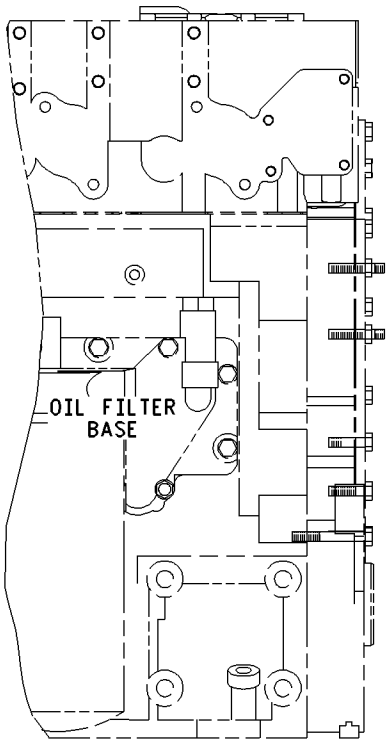

RIGHT SIDE VIEW

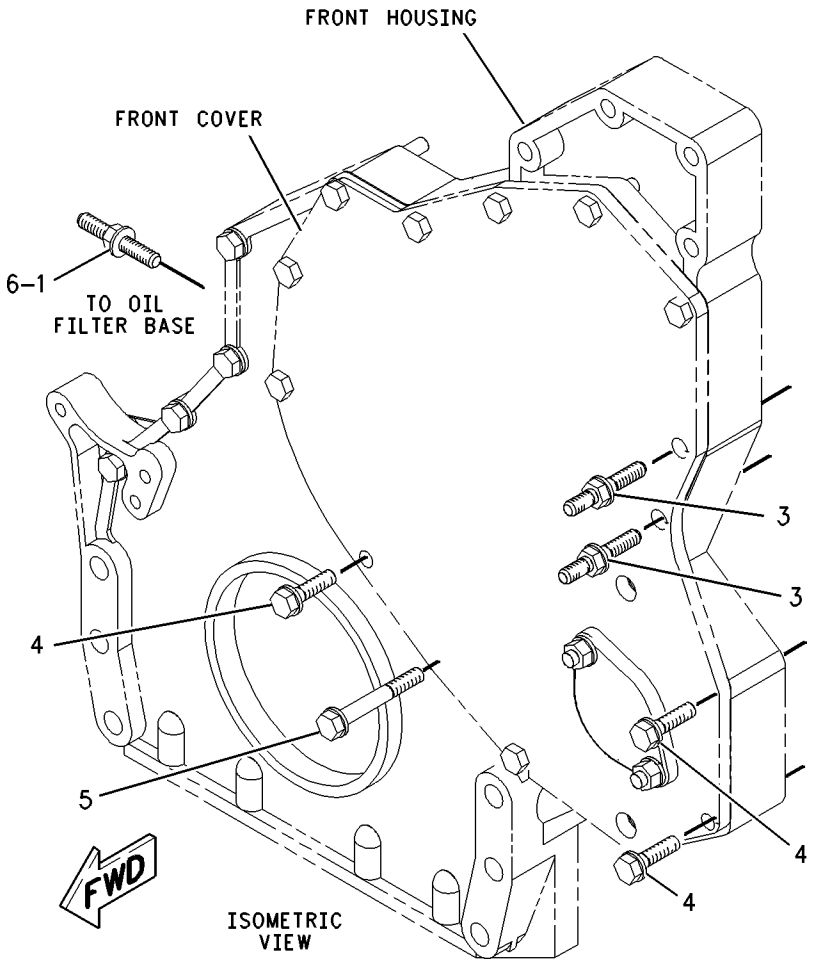

GRAPHIC #1 **<END>** g00925514

116-4556 FASTENER GP-FRONT HOUSING

S/N: BMA1100-UP
PART OF 191-4479, 191-4481 ENGINE AR-COMPLETE
ALSO AN ATTACHMENT

SMCS-1151 **i01487429**

NOTE	REF NO	GRAPHIC REF	PART NUMBER	QTY	PART NAME 1 2 3 4 5 6 (PRODUCT LEVEL)	SEE PAGE
M	1	1	**6V-8336**	6	BOLT (M12X1.75X70MM)	
		1	**5P-8245**	6	WASHER-HARD (13.5X25.5X3MM THK)	

M-METRIC PART

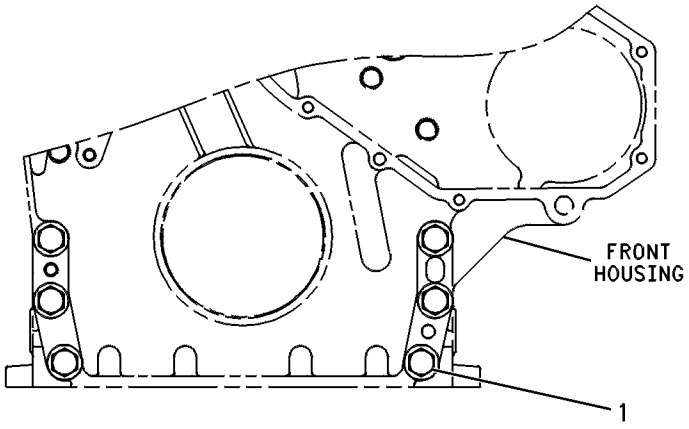

FRONT VIEW

GRAPHIC #1 **<END>** g00244671

224-2637 FLYWHEEL GP

S/N: BMA1100-UP
PART OF 191-4479, 191-4481 ENGINE AR-COMPLETE
ALSO AN ATTACHMENT

SMCS-1156, 1158 **i01804599**

NOTE	REF NO	GRAPHIC REF	PART NUMBER	QTY	PART NAME 1 2 3 4 5 6 (PRODUCT LEVEL)	SEE PAGE
	1	1	**219-4457**	1	FLYWHEEL AS	
	1A	1	**163-1387**	1	GEAR-FLYWHEEL (134 TEETH)	
	2	1	**3E-3213**	1	PIN-SPRING	
	3	1	**5P-8245**	8	WASHER-HARD (13.5X25.5X3MM THK)	
M	4	1	**6V-8197**	8	BOLT (M12X1.75X40MM)	

M-METRIC PART

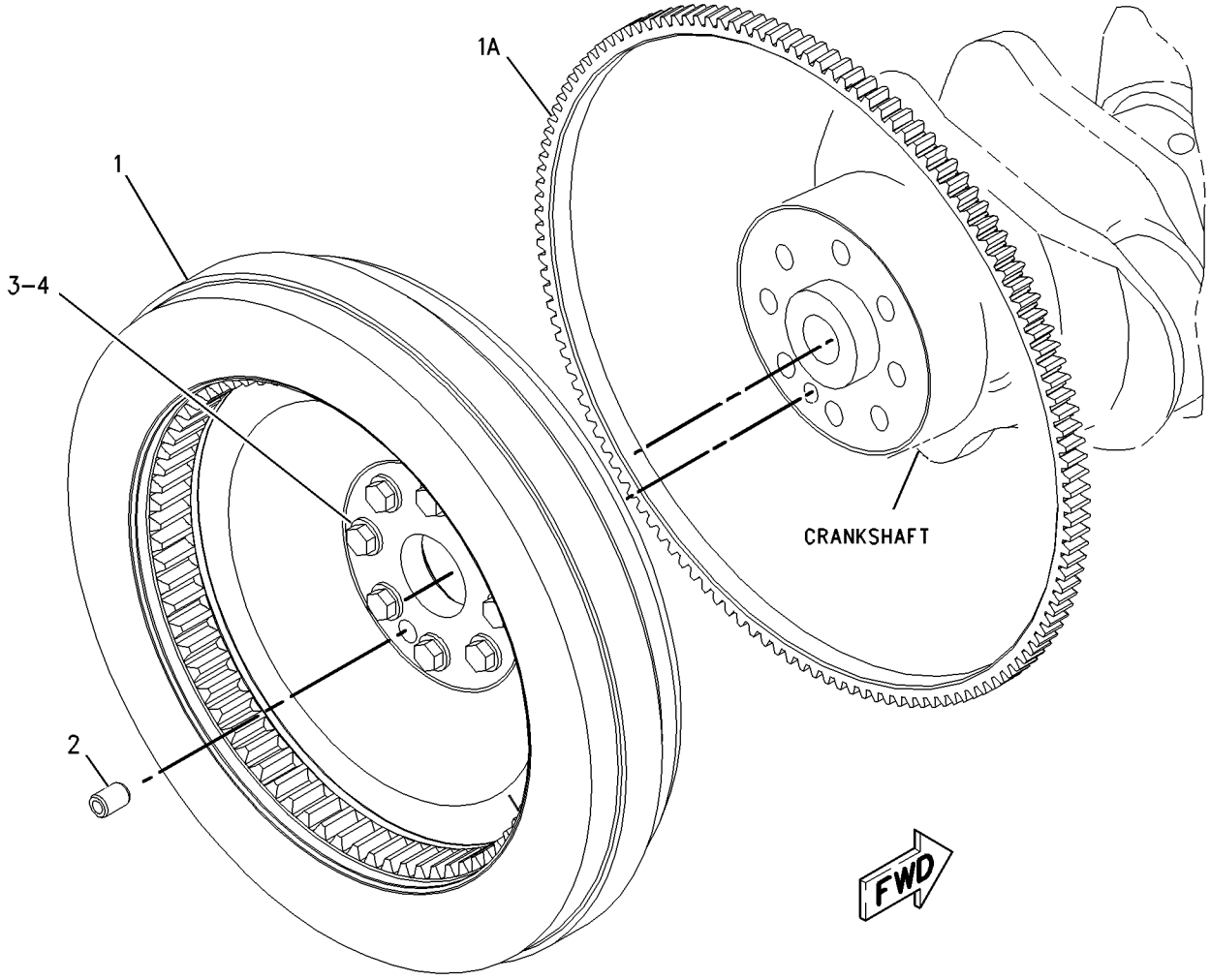

GRAPHIC #1 **<END>** g00901192

205-1321 GEAR GP-FRONT

S/N: BMA1100-UP
PART OF 191-4482 ENGINE AR-CORE
ALSO AN ATTACHMENT

SMCS-1206 **i01696307**

NOTE	REF NO	GRAPHIC REF	PART NUMBER	QTY	PART NAME 1 2 3 4 5 6 (PRODUCT LEVEL)	SEE PAGE
	1	1	**113-6069**	1	PLATE-THRUST	
	2	1	**115-4219**	1	PLATE-RETAINING	
	3	1	**200-4495**	1	SHAFT-IDLER	
	4	1	**205-1320**	1	GEAR AS-IDLER (50 TEETH)	
	4A	1	**115-4072**	1	BEARING	
M	5	1	**136-4183**	1	BOLT-12 POINT HEAD (M10X1.5X30MM)	
M	6	1	**6V-5843**	2	BOLT (M10X1.50X45MM)	

M-METRIC PART

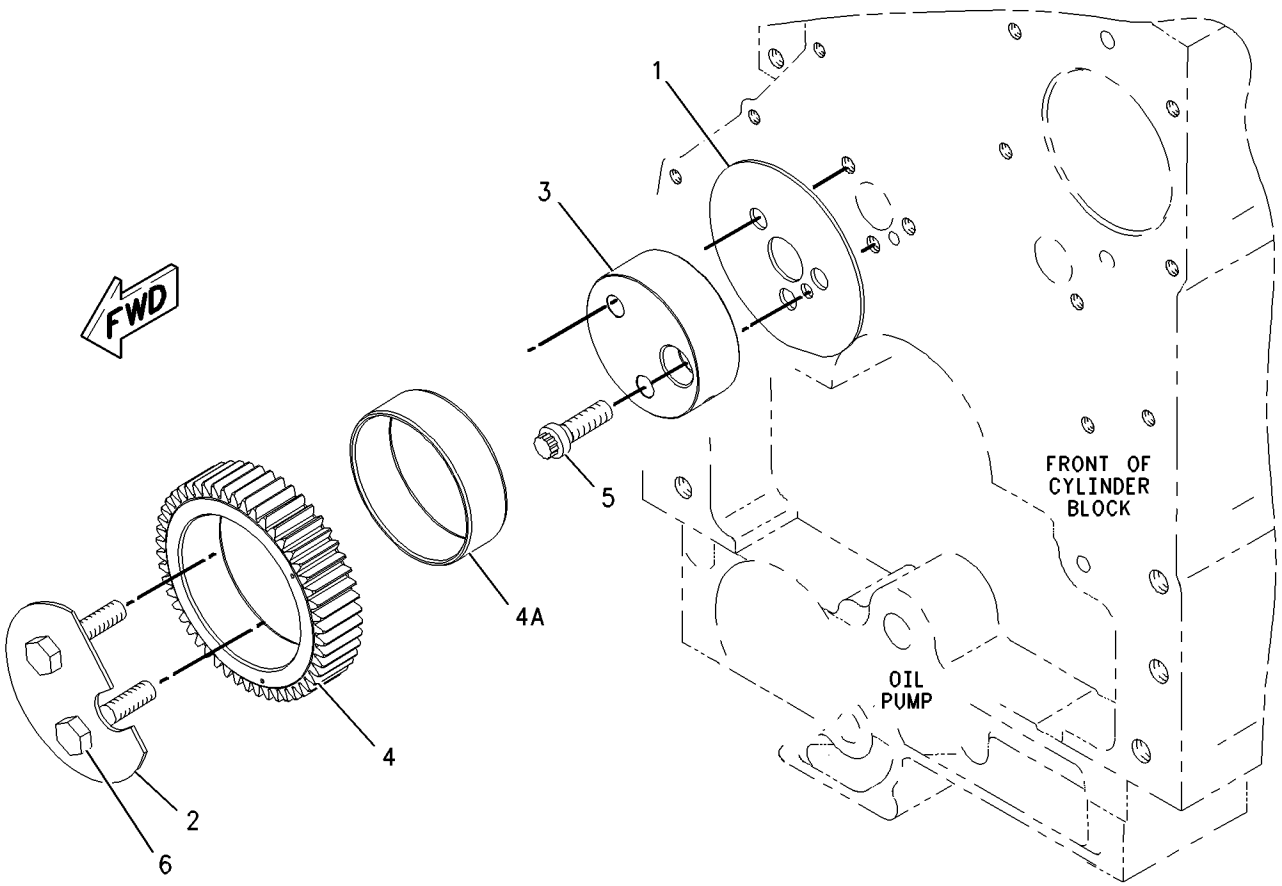

GRAPHIC #1 **<END>** g00873940

4W-1103 HOUSING GP-FLYWHEEL

S/N: BMA1100-UP
SAE NO.2. PROVIDES STARTING MOTOR MOUNTING FLANGE ON RH SIDE
PART OF 191-4479, 191-4481 ENGINE AR-COMPLETE
ALSO AN ATTACHMENT

SMCS-1157 **i00350052**

NOTE	REF NO	GRAPHIC REF	PART NUMBER	QTY	PART NAME 1 2 3 4 5 6 (PRODUCT LEVEL)	SEE PAGE
	1	1	**100-6551**	1	HOUSING-FLYWHEEL	
	2	1	**2P-1294**	1	PLUG-SEAL	
M	3	1	**6V-5842**	2	BOLT (M10X1.50X40MM)	
M	4	1	**7X-3347**	10	BOLT-LOCKING (M14X2X45MM)	
	5	1	**9S-4182**	1	PLUG (7/16-20 THD)	
	6	1	**9S-4183**	1	PLUG (1 1/16-12 THD)	

M-METRIC PART

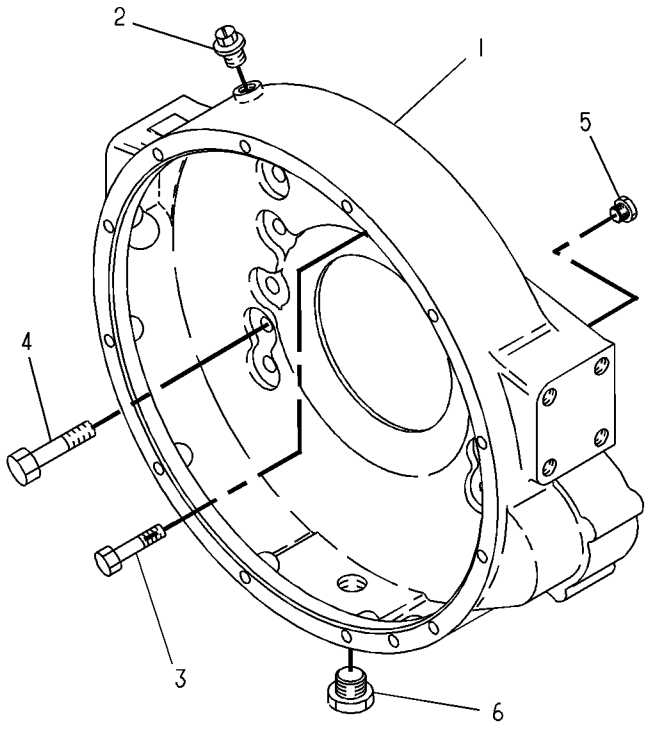

GRAPHIC #1 **<END>** g00108334

133-5055 HOUSING GP-FRONT

S/N: BMA1100-UP
PART OF 191-4482 ENGINE AR-CORE
ALSO AN ATTACHMENT

SMCS-1151, 1162, 1166 **i01615429**

NOTE	REF NO	GRAPHIC REF	PART NUMBER	QTY	PART NAME 1 2 3 4 5 6 (PRODUCT LEVEL)	SEE PAGE
	1	1	**128-3883**	1	HOUSING-FRONT	
M	2	1	**6V-5217**	8	BOLT (M8X1.25X20MM)	
	3	1	**9M-1974**	12	WASHER-HARD (8.8X16X2MM THK)	
M	4	1	**6V-3918**	4	BOLT (M8X1.25X50MM)	
B	5	1	**1U-8846**		SEALANT-GASKET	

B-USE AS REQUIRED
M-METRIC PART

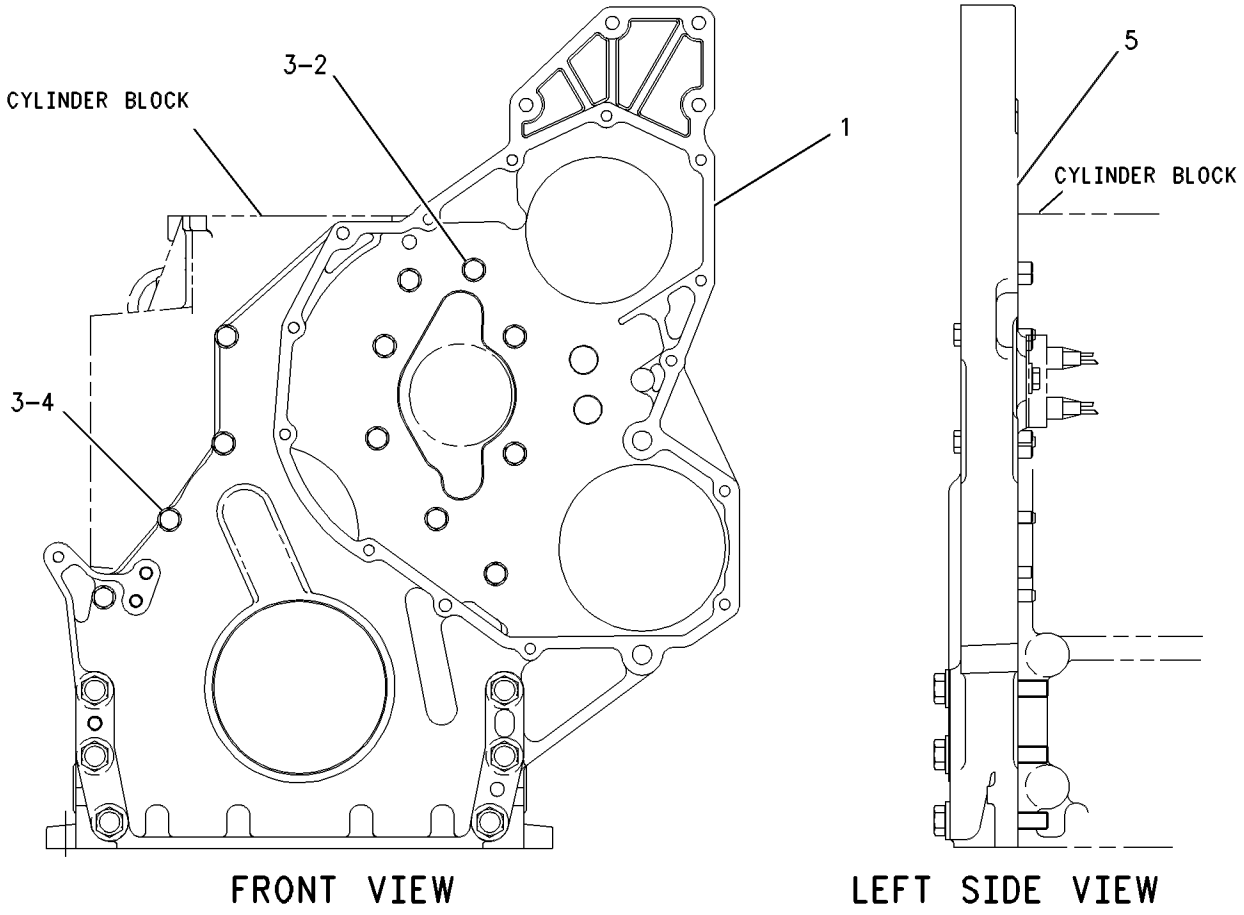

GRAPHIC #1 **<END>** g00285827

139-4081 LIFTER GP-VALVE

S/N: BMA1100-UP
PART OF 135-2969 VALVE MECHANISM GP
ALSO AN ATTACHMENT

SMCS-1112 **i01615435**

NOTE	REF NO	GRAPHIC REF	PART NUMBER	QTY	PART NAME 1 2 3 4 5 6 (PRODUCT LEVEL)	SEE PAGE
	1	1	**139-9476**	1	SHAFT AS-LIFTER	
		1	**2D-6642**	2	BALL	
	2	1	**7E-6794**	4	ARM AS-INJECTOR	
	3	1	**139-4084**	2	SPACER-FOLLOWER	

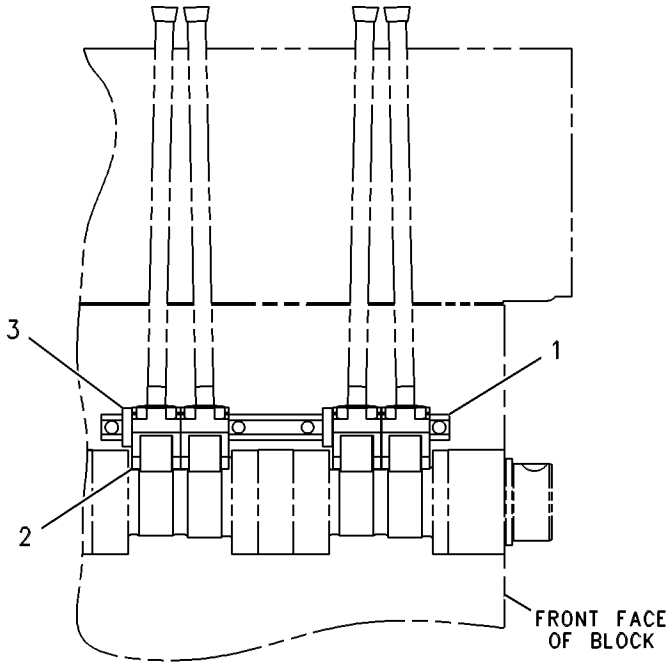

RIGHT SIDE VIEW

GRAPHIC #1 **<END>** g00288708

BASIC ENGINE

159-2565 LIFTING GP-ENGINE

S/N: BMA1100-UP
PART OF 191-4481 ENGINE AR-COMPLETE
AN ATTACHMENT

SMCS-1122 **i01804583**

NOTE	REF NO	GRAPHIC REF	PART NUMBER	QTY	PART NAME 1 2 3 4 5 6 (PRODUCT LEVEL)	SEE PAGE
	1	1	**187-7706**	1	PLATE-LIFTING	
	2	1	**201-0438**	1	LIFTING AS	
M	3	1	**6V-1820**	4	BOLT (M10X1.50X30MM)	
	4	1	**8T-4121**	4	WASHER-HARD (11X21X2.5MM THK)	

M-METRIC PART

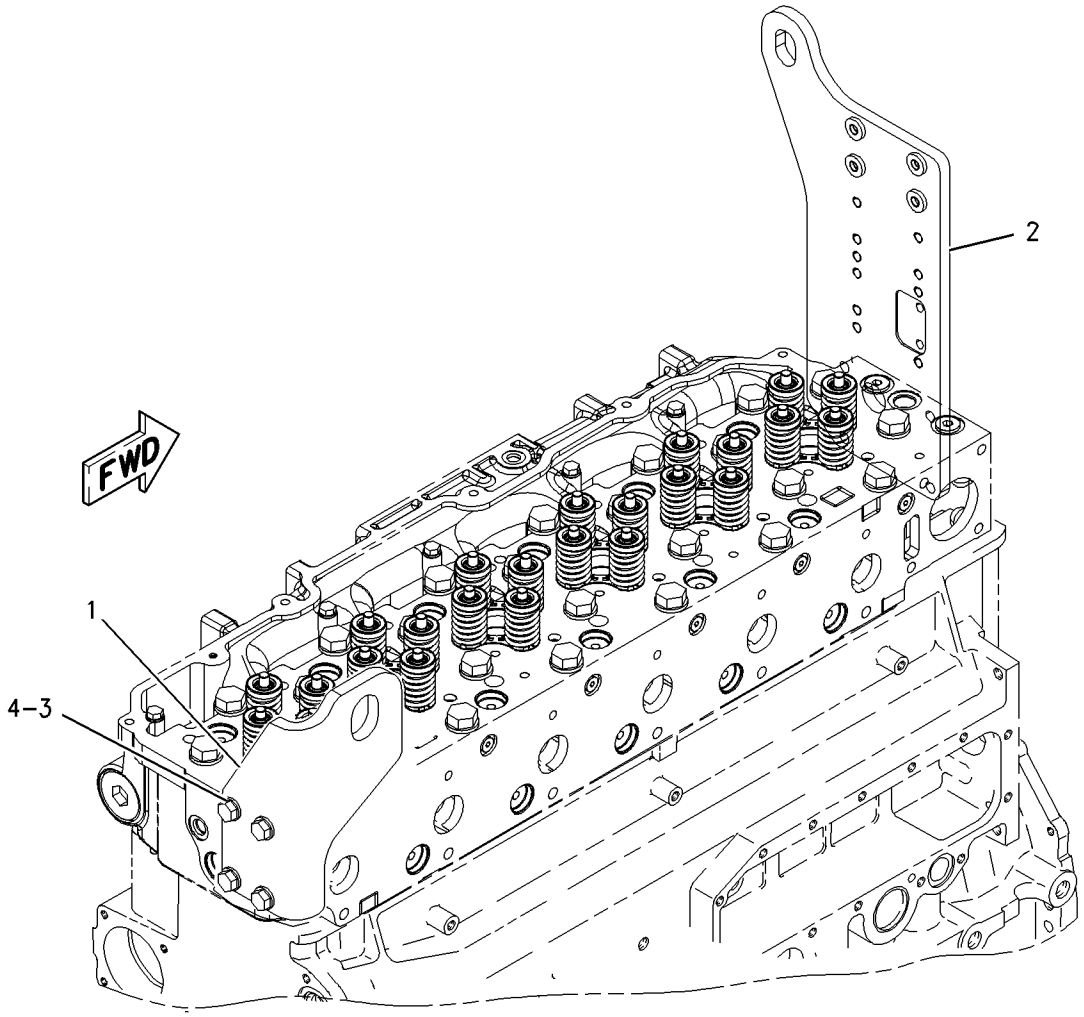

GRAPHIC #1 **<END>** g00782800

201-5515 MOUNTING GP-ENGINE

S/N: CCK1-UP

PART OF 189-4622 INSTALLATION AR-ENGINE

SMCS-1152, 1153, 1154 **i01843271**

NOTE	REF NO	GRAPHIC REF	PART NUMBER	QTY	PART NAME 1 2 3 4 5 6 (PRODUCT LEVEL)	SEE PAGE
	1	1	**9W-6582**	4	SLEEVE	
	2	1	**9W-9930**	4	MOUNT AS	
	3	1	**8T-4123**	4	WASHER-PLATED (22X35X3.5MM THK)	
M	4	1	**8T-6381**	4	BOLT (M20X2.5X120MM)	
	5	1	**9W-6584**	4	WASHER (20.5X114X10MM THK)	

M-METRIC PART

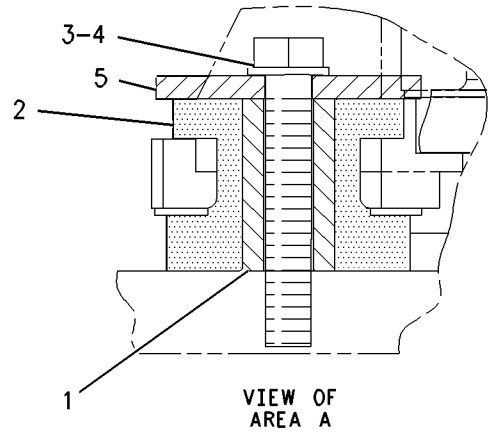

VIEW OF AREA A

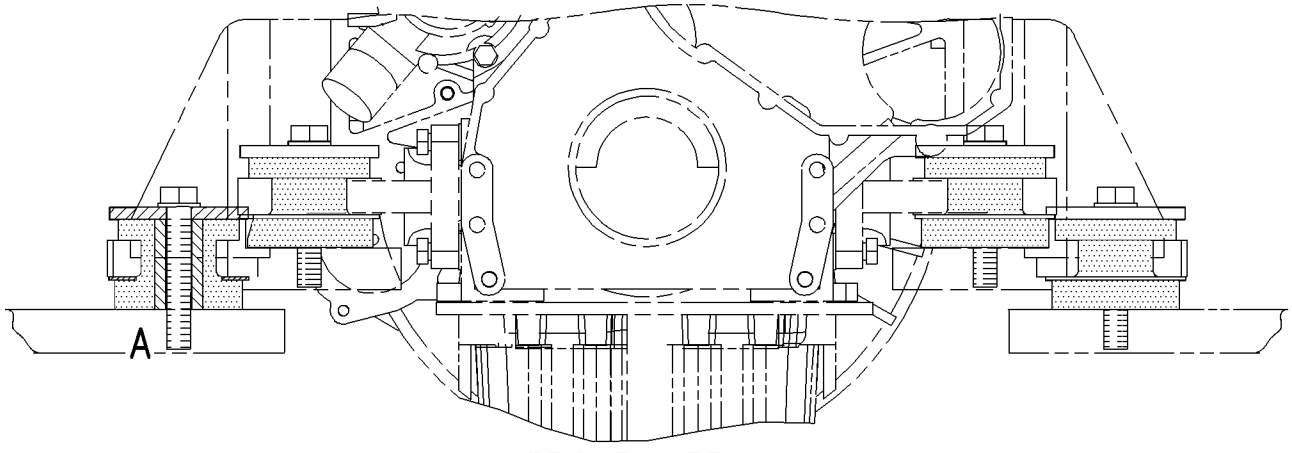

FRONT VIEW

GRAPHIC #1 **<END>** g00769036

203-5866 MOUNTING GP-ENGINE

S/N: BMA1100-UP
PART OF 191-4479, 191-4481 ENGINE AR-COMPLETE
ALSO AN ATTACHMENT

SMCS-1152, 1153, 1154 **i01804594**

NOTE	REF NO	GRAPHIC REF	PART NUMBER	QTY	PART NAME 1 2 3 4 5 6 (PRODUCT LEVEL)	SEE PAGE
	1	1	**7C-1675**	2	SUPPORT	
	2	1	**203-5856**	2	SUPPORT AS	
	3	1	**5P-8246**	8	WASHER-HARD (15.5X29X3MM THK)	
	4	1	**5P-8247**	8	WASHER-HARD (17X32X3.5MM THK)	
M	5	1	**8T-0226**	8	BOLT (M14X2X45 MM)	
M	6	1	**8T-0358**	8	BOLT (M16X2.0X90MM)	

M-METRIC PART

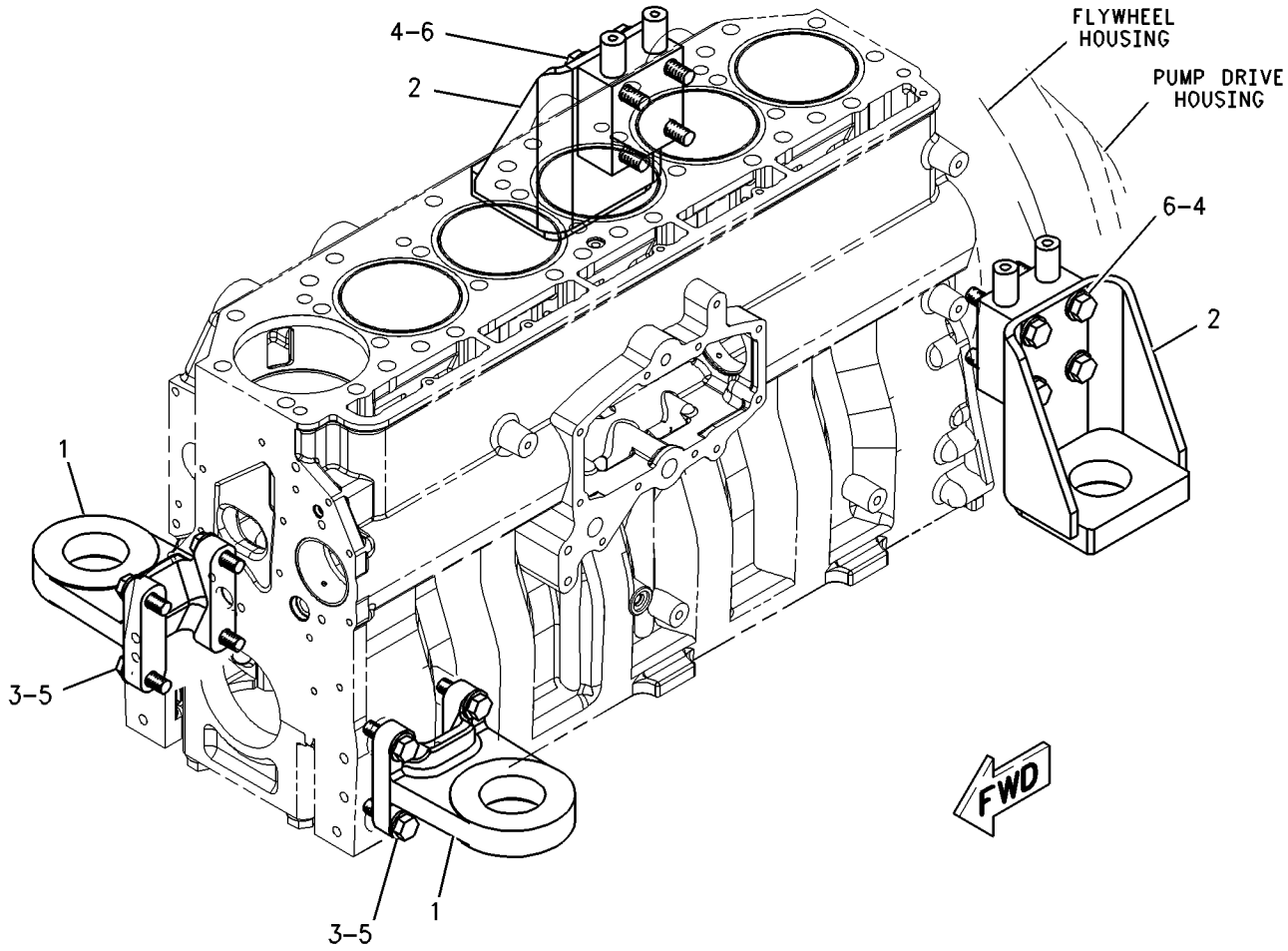

GRAPHIC #1 **<END>** g00923423

189-2222 MOUNTING GP-FAN DRIVE

S/N: BMA1100-UP
PART OF 191-4479, 191-4481 ENGINE AR-COMPLETE
ALSO AN ATTACHMENT

SMCS-1359 **i01802556**

NOTE	REF NO	GRAPHIC REF	PART NUMBER	QTY	PART NAME 1 2 3 4 5 6 (PRODUCT LEVEL)	SEE PAGE
M	1	1	**142-3953**	2	STUD	
	2	1	**206-9265**	1	SUPPORT AS-FAN	
M		1	**8T-3490**	1	NUT-WELD (M10X1.5 THD)	
	3	1	**189-2194**	1	BRACKET AS	
M		1	**8T-3490**	2	NUT-WELD (M10X1.5 THD)	
M	4	1	**6V-4248**	2	BOLT (M10X1.50X25MM)	
	5	1	**6V-5839**	8	WASHER (11X21X2.5MM THK)	
M	6	1	**6V-5842**	4	BOLT (M10X1.50X40MM)	
M	7	1	**8T-4133**	2	NUT (M10X1.5 THD)	
	8	1	**6E-6549**	2	PLATE	

M-METRIC PART

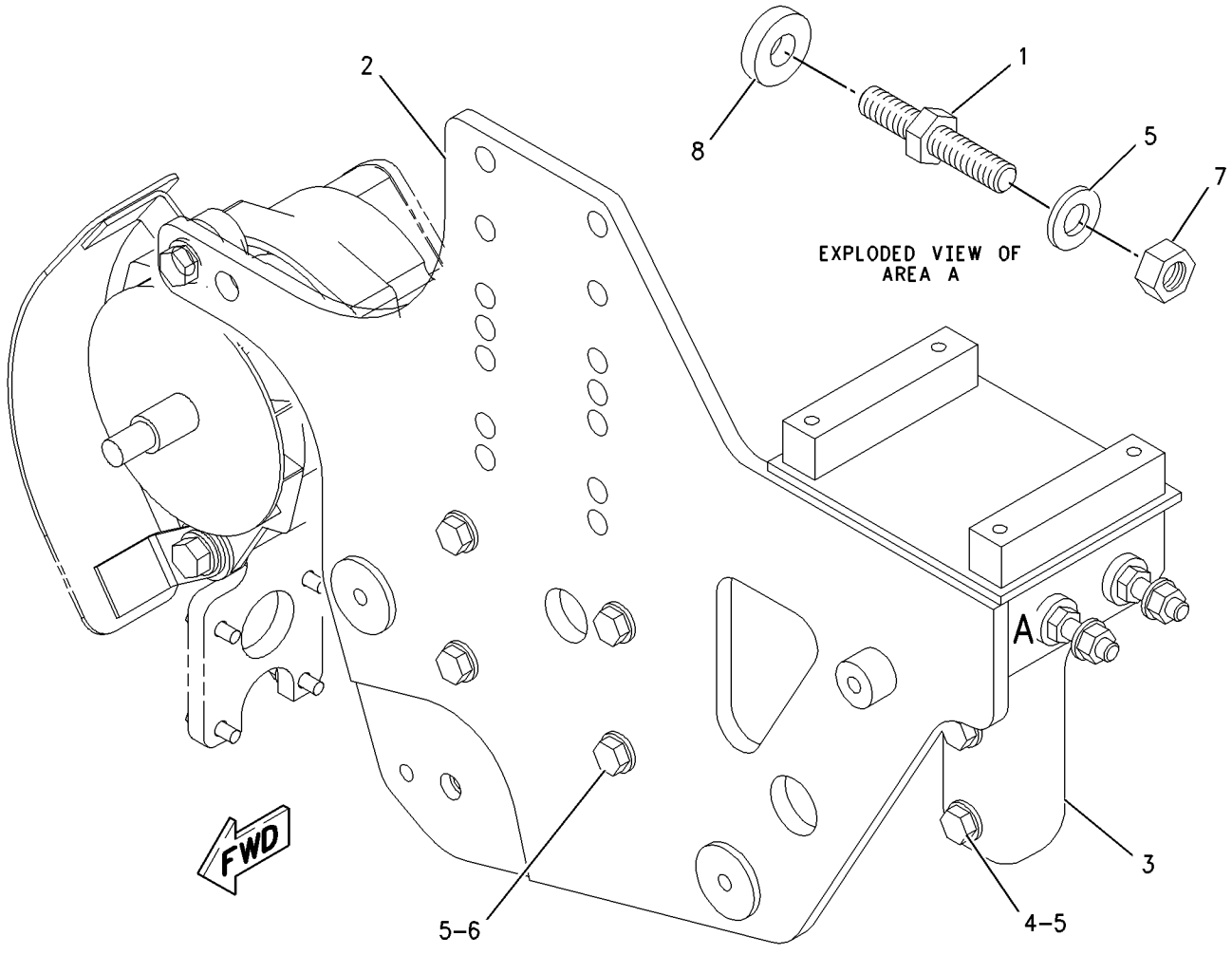

GRAPHIC #1 **<END>** g00923284

196-0077 PAN GP-OIL—ENGINE

S/N: BMA1100-UP
PART OF 191-4479, 191-4481 ENGINE AR-COMPLETE
ALSO AN ATTACHMENT

SMCS-1302 **i01802475**

NOTE	REF NO	GRAPHIC REF	PART NUMBER	QTY	PART NAME 1 2 3 4 5 6 (PRODUCT LEVEL)	SEE PAGE
	1	1	**9S-8006**	1	PLUG (OIL)	
	3	1	**166-2905**	1	SEAL-INTEGRAL	
	4	1	**157-8371**	1	PAN-OIL	
	5	1	**2M-9780**	1	SEAL-O-RING	
M	6	1	**6V-3918**	36	BOLT (M8X1.25X50MM)	
	7	1	**9M-1974**	36	WASHER-HARD (8.8X16X2MM THK)	
B	8	1	**1U-8846**		SEALANT-GASKET	

B-USE AS REQUIRED
M-METRIC PART

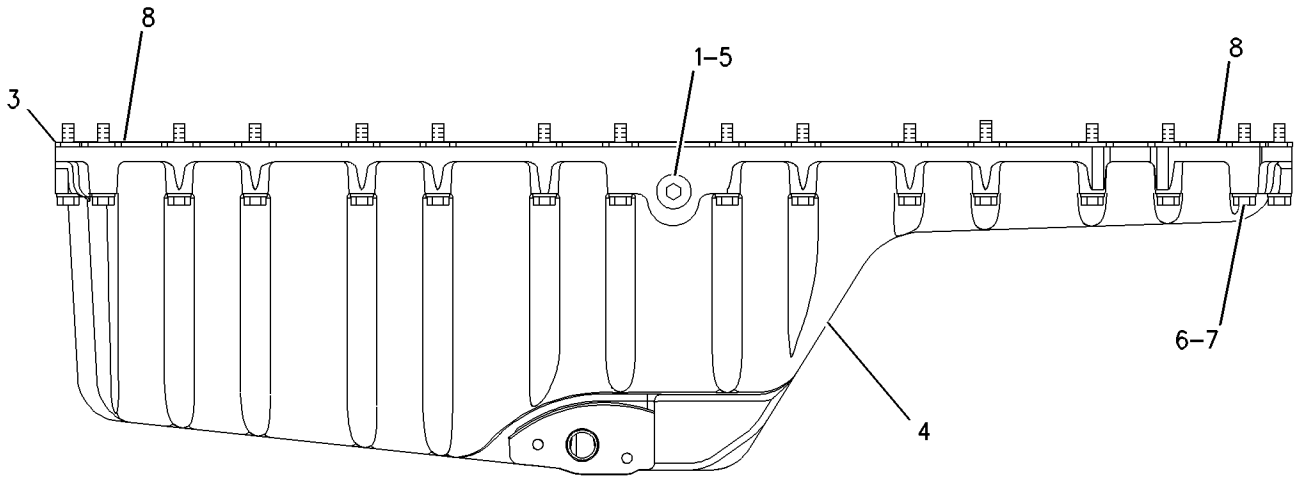

LEFT SIDE VIEW

GRAPHIC #1 **<END>** g00923679

161-8420 PISTON & ROD GP*R

S/N: BMA1100-UP
16:1 RATIO
PART OF 191-4482 ENGINE AR-CORE
ALSO AN ATTACHMENT

SMCS-1213, 1214, 1215, 1218, 1219, 1225, 1239 **i01746930**

NOTE	REF NO	GRAPHIC REF	PART NUMBER	QTY	PART NAME 1 2 3 4 5 6 (PRODUCT LEVEL)	SEE PAGE
	1	1	**150-4621**	1	CROWN AS-PISTON	
	2	1	**132-5246**	1	RING-PISTON (TOP)	
	3	1	**197-9277**	1	RING-PISTON (INTERMEDIATE)	
	4	1	**107-7566**	1	RING-PISTON (OIL CONTROL)	
	5	1	**7C-0111**	2	RETAINER-PIN	
	6	1	**168-7226**	1	PIN-PISTON	
	7	1	**213-3193**	1	ROD AS-CONNECTING (NON-DRILLED)	
	7A	1	**2W-0027**	1	BEARING (EYE END)	
	7B	1	**195-0321**	2	BOLT	
	8	1	**7W-9415**	1	BEARING-CONNECTING ROD (STANDARD)	
A		1	**7C-6976**	1	BEARING (.25MM US)	
A		1	**7C-6977**	1	BEARING (.5MM US)	
	9	1	**187-1513**	1	SKIRT-PISTON	
	10	1	**135-5970**	1	TUBE AS-PISTON COOLING JET	
M	11	1	**6V-3940**	1	BOLT (M8X1.25X25MM)	

A-NOT PART OF THIS GROUP
M-METRIC PART

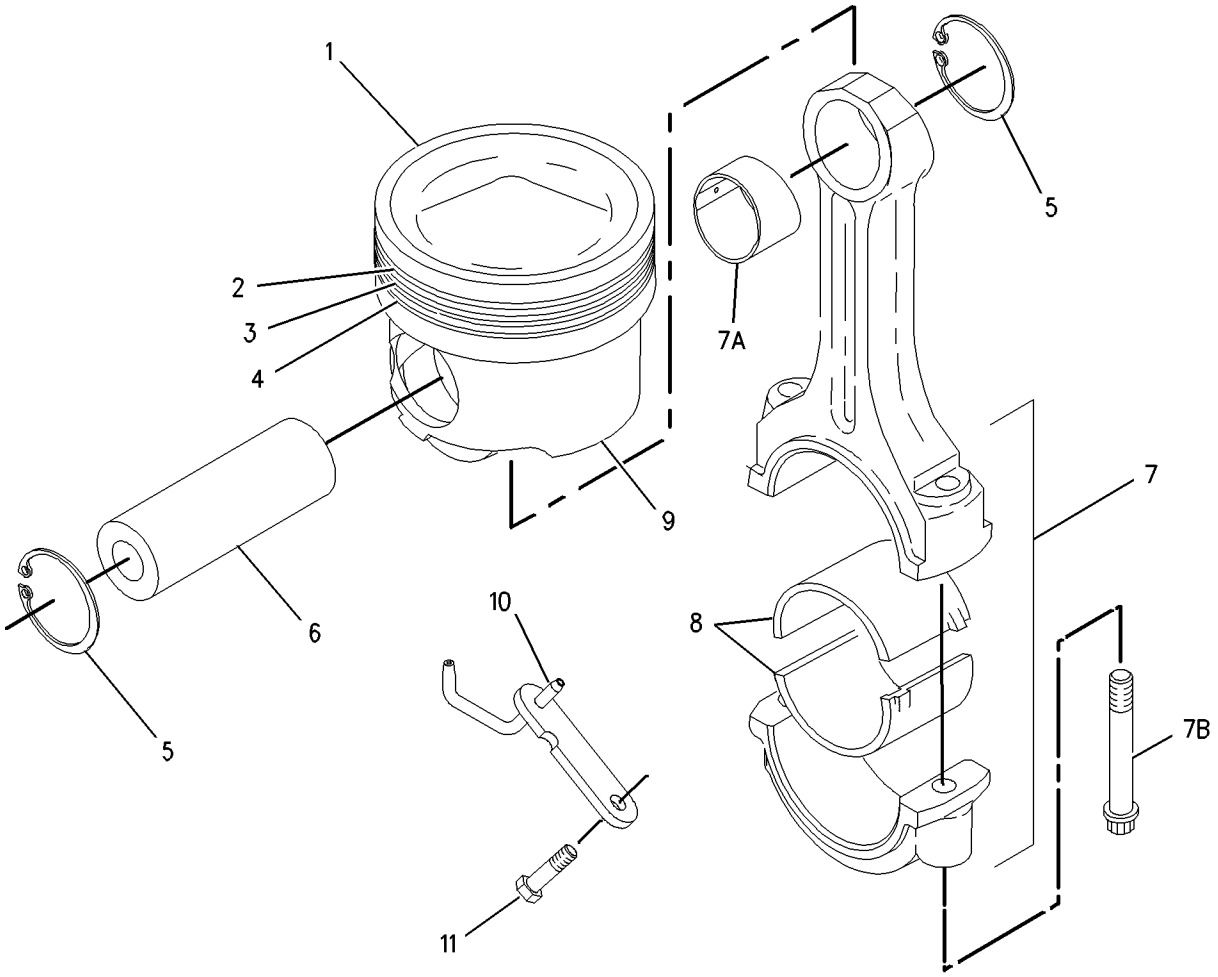

GRAPHIC #1 **<END>** g00878306

162-8068 PLUG GP-ENGINE

S/N: BMA1100-UP
PART OF 191-4479, 191-4481 ENGINE AR-COMPLETE
ALSO AN ATTACHMENT

SMCS-1000 **i01743134**

NOTE	REF NO	GRAPHIC REF	PART NUMBER	QTY	PART NAME 1 2 3 4 5 6 (PRODUCT LEVEL)	SEE PAGE
	1	1	**9S-8005**	1	PLUG	
	2	1	**3K-0360**	1	SEAL-O-RING	

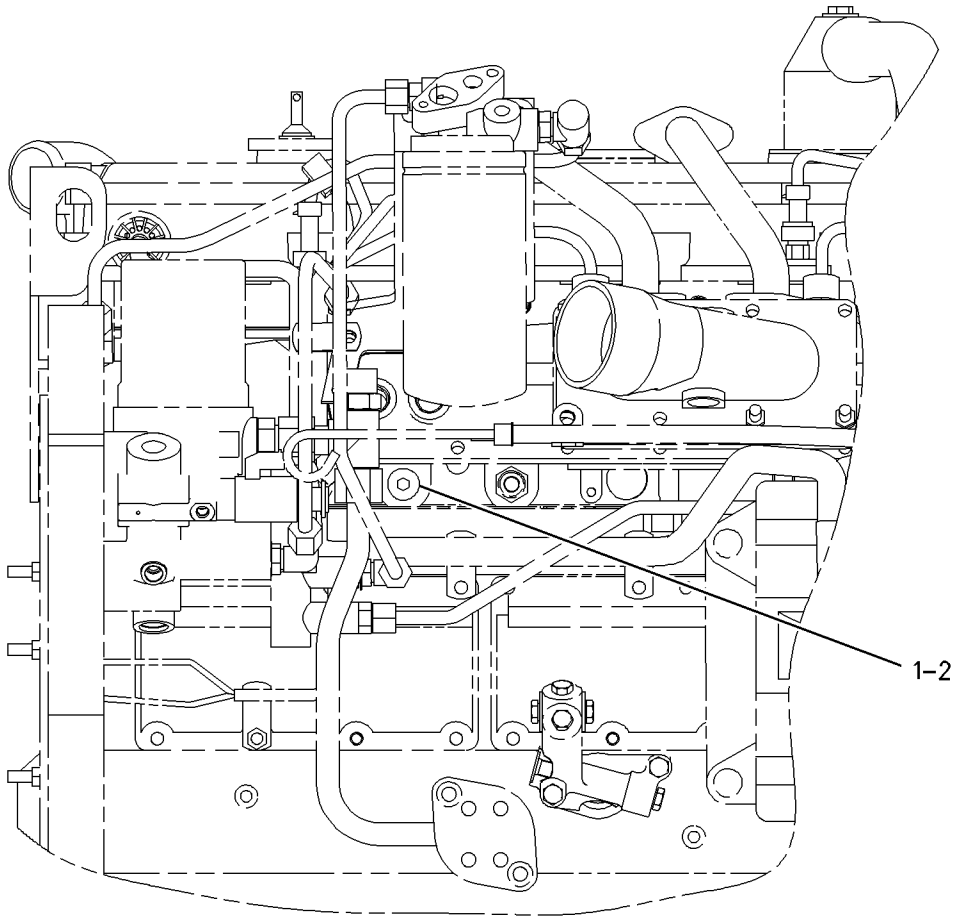

LEFT SIDE VIEW

GRAPHIC #1 **<END>** g00892422

123-8395 PULLEY AS-IDLER

S/N: CCK1-UP
8 GROOVE
PART OF 189-2229 COMPRESSOR GP-REFRIGERANT
FOR USE WITH 3126 POSITIVE BUILD. CANNOT BE USED WITH CUSTOMER SUPPLIED REFRIGERANT COMPRESSOR. PERIPHERAL IRON

SMCS-1358 **i01849526**

NOTE	REF NO	GRAPHIC REF	PART NUMBER	QTY	PART NAME 1 2 3 4 5 6 (PRODUCT LEVEL)	SEE PAGE
	1	1	**124-7792**	1	PULLEY AS-IDLER	
	2	1	**124-7791**	1	COVER-DUST	
M	3	1	**124-7790**	1	BOLT-SPECIAL (M10X1.5X40MM)	

M-METRIC PART

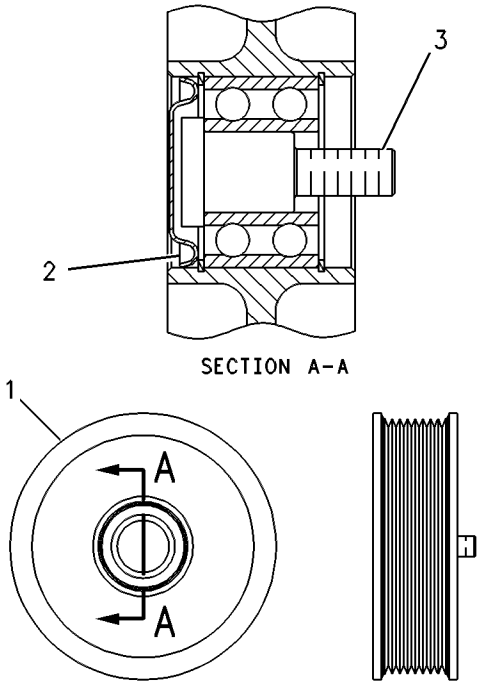

GRAPHIC #1 **<END>** g00288090

196-1791 PULLEY GP–ALTERNATOR

S/N: CCK1-UP

PART OF 189-4622 INSTALLATION AR-ENGINE

SMCS-1425 **i01843144**

NOTE	REF NO	GRAPHIC REF	PART NUMBER	QTY	PART NAME 1 2 3 4 5 6 (PRODUCT LEVEL)	SEE PAGE
	1	1	**123-0858**	1	PULLEY-ALTERNATOR (8 GROOVE)	

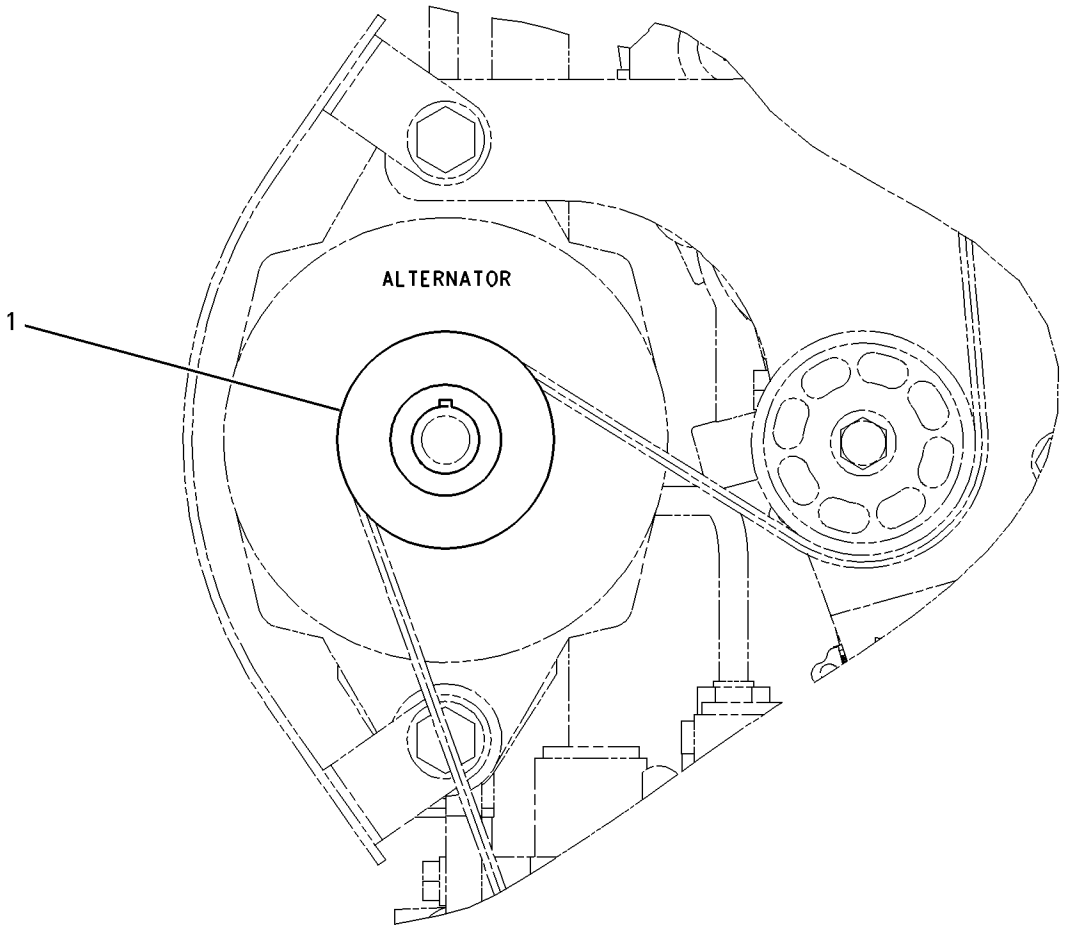

FRONT VIEW

GRAPHIC #1 **<END>** g00942304

224-5123 PULLEY GP–FAN

S/N: BMA1100-UP

PART OF 191-4479 ENGINE AR-COMPLETE

SMCS-1425 **i01809751**

NOTE	REF NO	GRAPHIC REF	PART NUMBER	QTY	PART NAME 1 2 3 4 5 6 (PRODUCT LEVEL)	SEE PAGE
	1	1	**224-5121**	1	PULLEY-FAN (8 GROOVE)	
M	2	1	**8T-4908**	6	BOLT (M8X1.25X25MM)	

M-METRIC PART

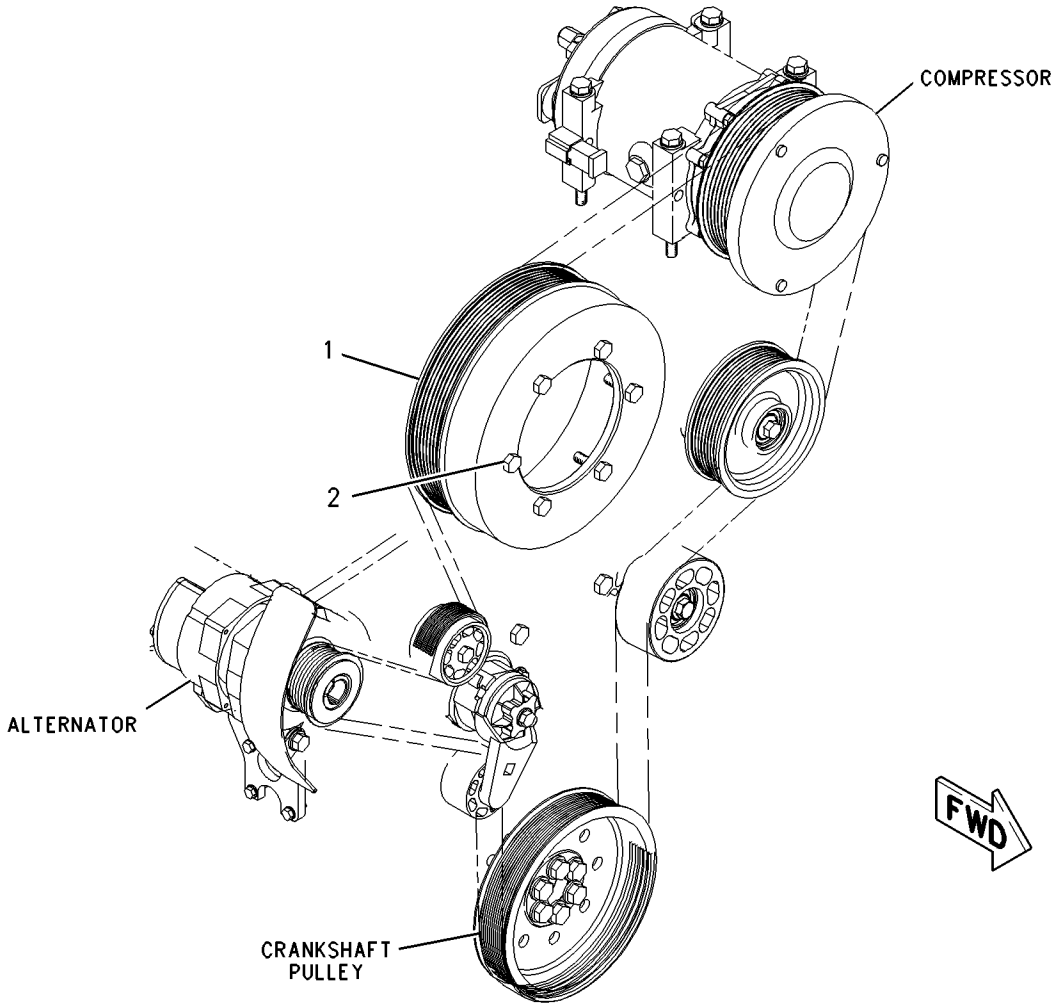

GRAPHIC #1 **<END>** g00926195

BASIC ENGINE

201-9063 PULLEY GP-FAN DRIVE

S/N: BMA1100-UP
PART OF 191-4481 ENGINE AR-COMPLETE
AN ATTACHMENT

SMCS-1356, 1357, 1359 **i01804592**

NOTE	REF NO	GRAPHIC REF	PART NUMBER	QTY	PART NAME 1 2 3 4 5 6 (PRODUCT LEVEL)	SEE PAGE
	1	1	**201-8590**	1	PULLEY-FAN (8 GROOVE)	
M	2	1	**8T-4908**	6	BOLT (M8X1.25X25MM)	

M-METRIC PART

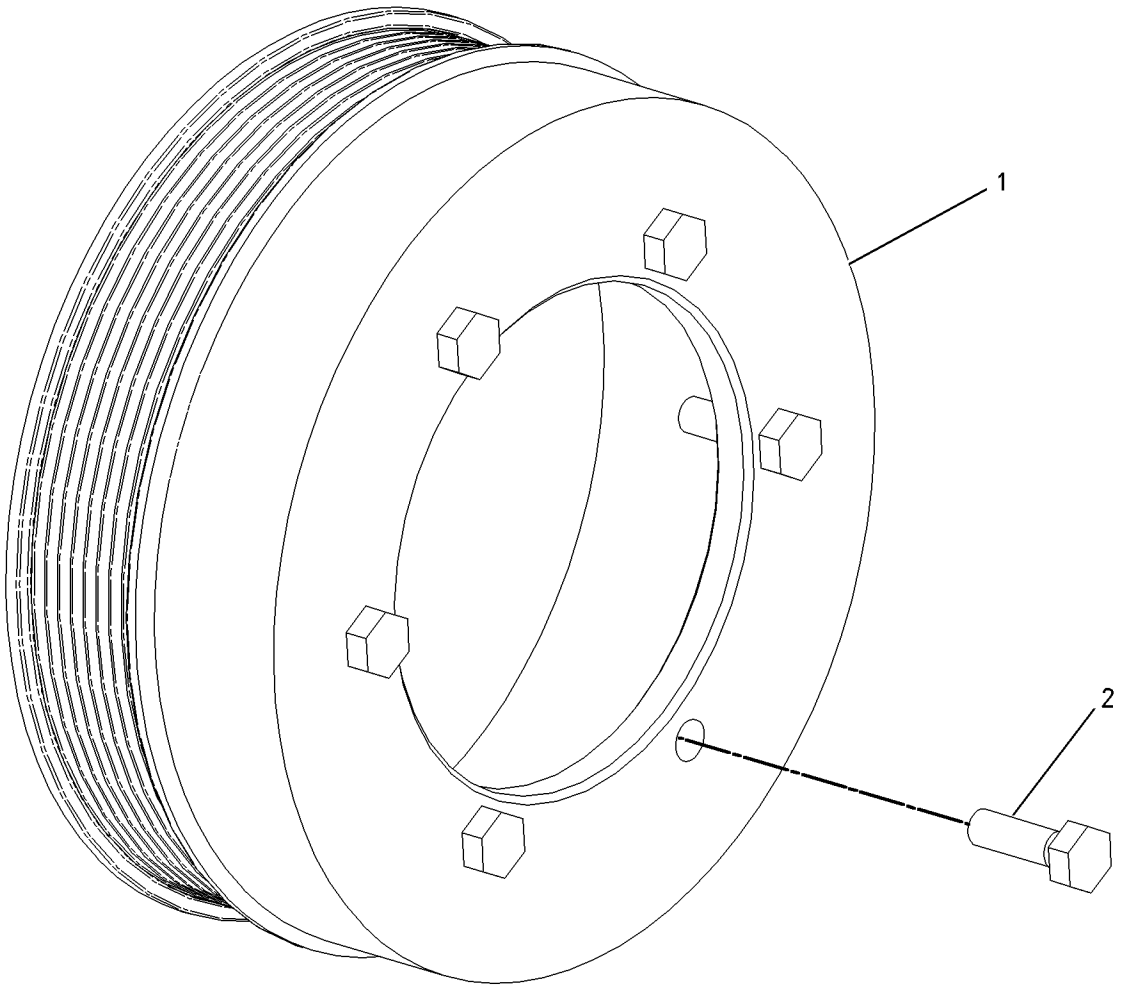

GRAPHIC #1 **<END>** g00771719

189-2220 PULLEY GP-IDLER

S/N: BMA1100-UP
PART OF 191-4479, 191-4481 ENGINE AR-COMPLETE
ALSO AN ATTACHMENT

SMCS-1358 **i01884401**

NOTE	REF NO	GRAPHIC REF	PART NUMBER	QTY	PART NAME 1 2 3 4 5 6 (PRODUCT LEVEL)	SEE PAGE
	1	1	**133-7023**	1	PULLEY AS-IDLER	
	1A	1	**151-2898**	1	SPACER	
	1B	1	**151-2900**	1	BOLT (M10X1.5X54.25MM)	
	1C	1	**166-6358**	1	COVER-DUST	
	2	1	**189-2207**	1	PULLEY AS-IDLER	
	2A	1	**145-2901**	1	COVER-DUST	
	2B	1	**151-2898**	1	SPACER	
	2C	1	**151-2900**	1	BOLT (M10X1.5X54.25MM)	

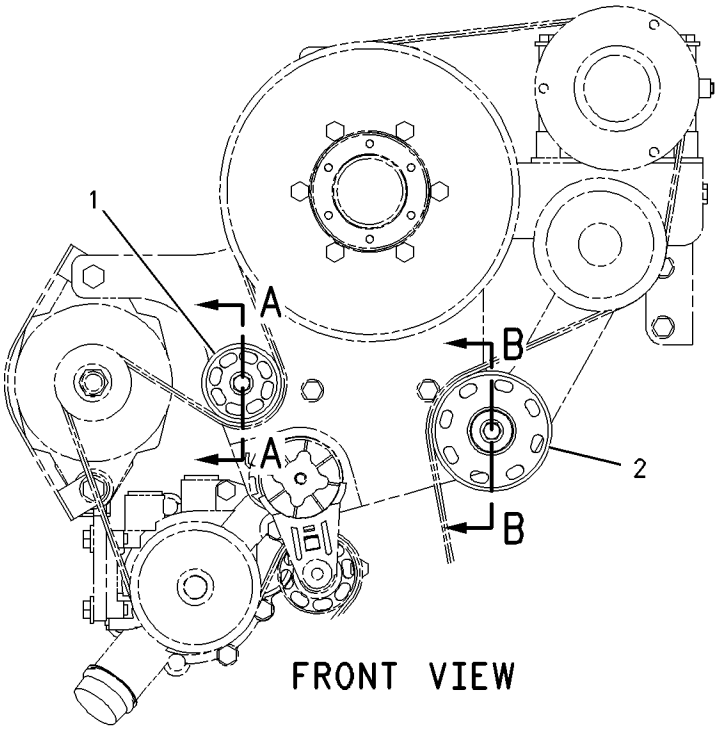

FRONT VIEW

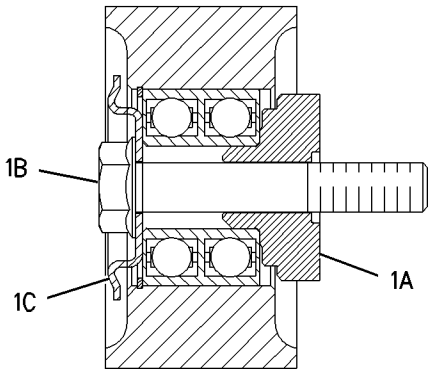

SECTION A-A

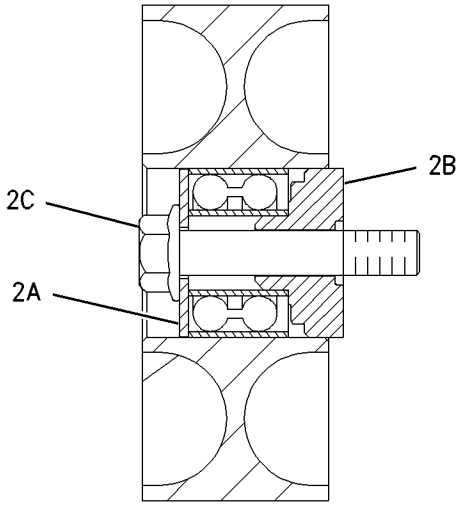

SECTION B-B

GRAPHIC #1 **<END>** g00730246

115-4210 SEAL GP-CRANKSHAFT

S/N: BMA1100-UP
PART OF 191-4479, 191-4481 ENGINE AR-COMPLETE
ALSO AN ATTACHMENT

SMCS-1160, 1161 **i01146413**

NOTE	REF NO	GRAPHIC REF	PART NUMBER	QTY	PART NAME 1 2 3 4 5 6 (PRODUCT LEVEL)	SEE PAGE
	1	1	**7E-7589**	1	SEAL GP-CRANKSHAFT	
	2	1	**119-2921**	1	SEAL GP-CRANKSHAFT	
	3	1	**4R-9999**	1	EXCLUDER-CRANKSHAFT SEAL	

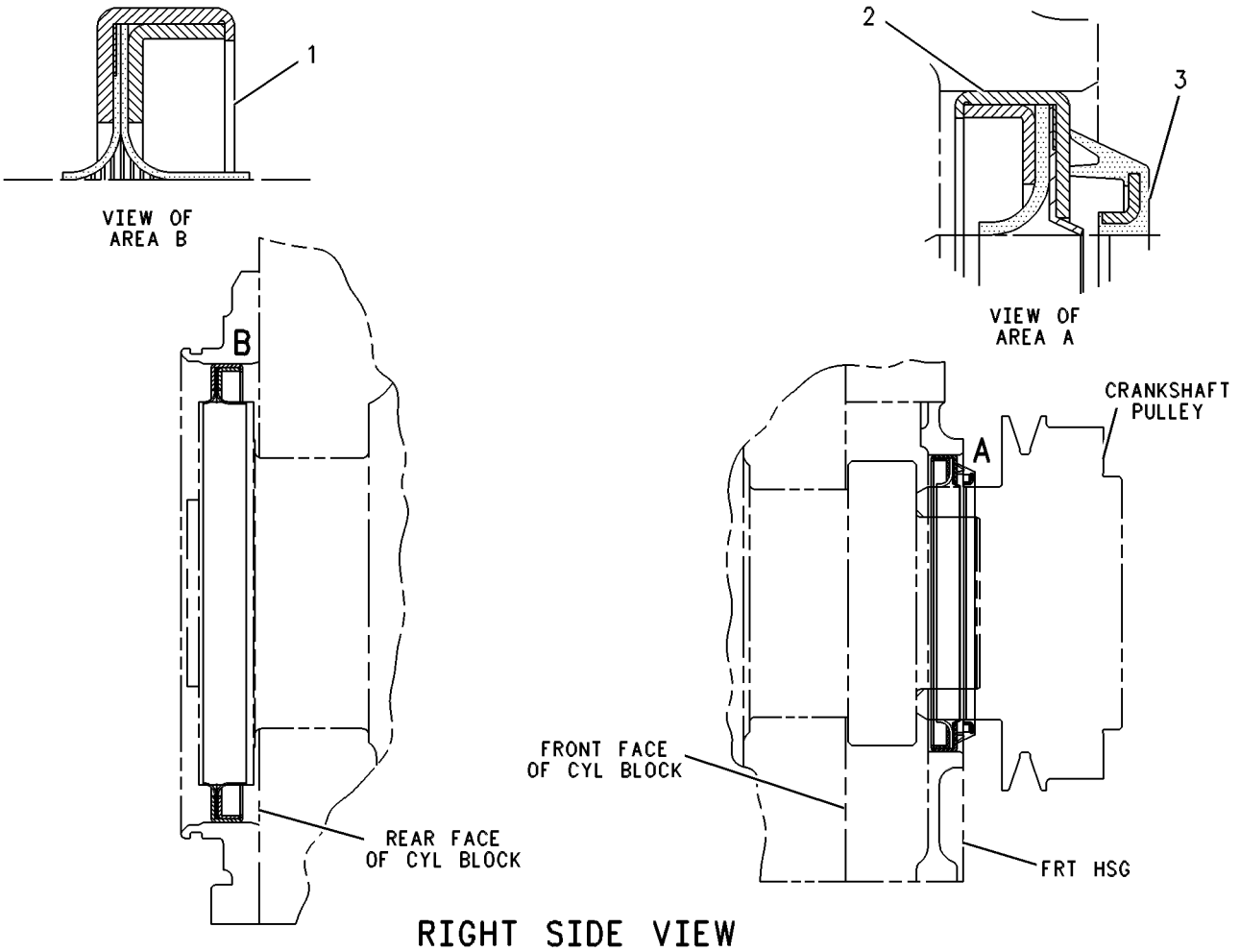

RIGHT SIDE VIEW

GRAPHIC #1 **<END>** g00109240

7C-1770 SEAL GP-FLYWHEEL HOUSING

S/N: BMA1100-UP

PART OF 191-4479, 191-4481 ENGINE AR-COMPLETE

ALSO AN ATTACHMENT

SMCS-1157, 1161 **i01746891**

NOTE	REF NO	GRAPHIC REF	PART NUMBER	QTY	PART NAME 1 2 3 4 5 6 (PRODUCT LEVEL)	SEE PAGE
B	1	1	**1U-8846**		SEALANT-GASKET	
	2	1	**3J-7354**	1	SEAL-O-RING (8.92MM ID)	
B	3	1	**3D-2824**	1	SEAL-O-RING (23.47MM ID)	

B-USE AS REQUIRED

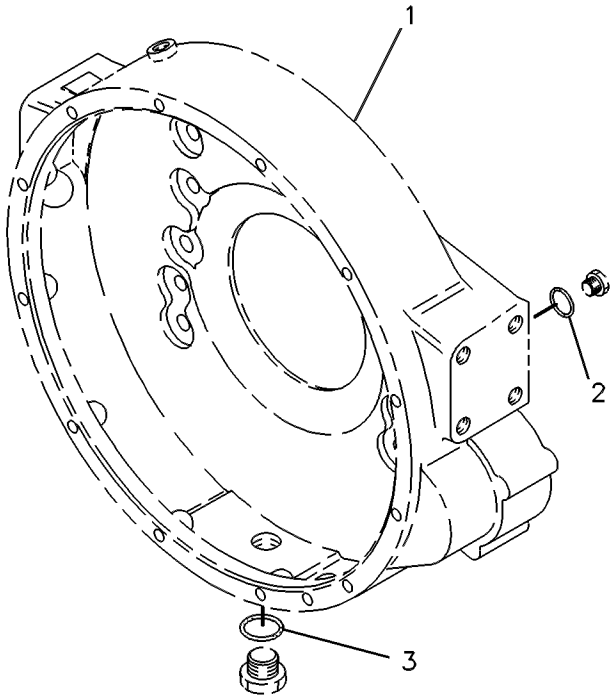

GRAPHIC #1 **<END>** g00108872

154-8016 SEAL GP-FUEL INJECTOR

S/N: BMA1100-UP
PART OF 178-6342 PUMP GP-UNIT INJECTION
ALSO AN ATTACHMENT

SMCS-1290 **i01615418**

NOTE	REF NO	GRAPHIC REF	PART NUMBER	QTY	PART NAME 1 2 3 4 5 6 (PRODUCT LEVEL)	SEE PAGE
	1	1	**150-4105**	1	RING-BACKUP	
	2	1	**9X-7557**	1	SEAL-O-RING (32.92MM ID)	
	3	1	**148-2903**	1	SEAL-O-RING (31.34MM ID)	
	4	1	**149-5240**	1	RING-BACKUP	
	5	1	**109-3207**	1	SEAL-O-RING (23.39MM ID)	
	6	1	**133-3715**	1	RING-BACKUP	

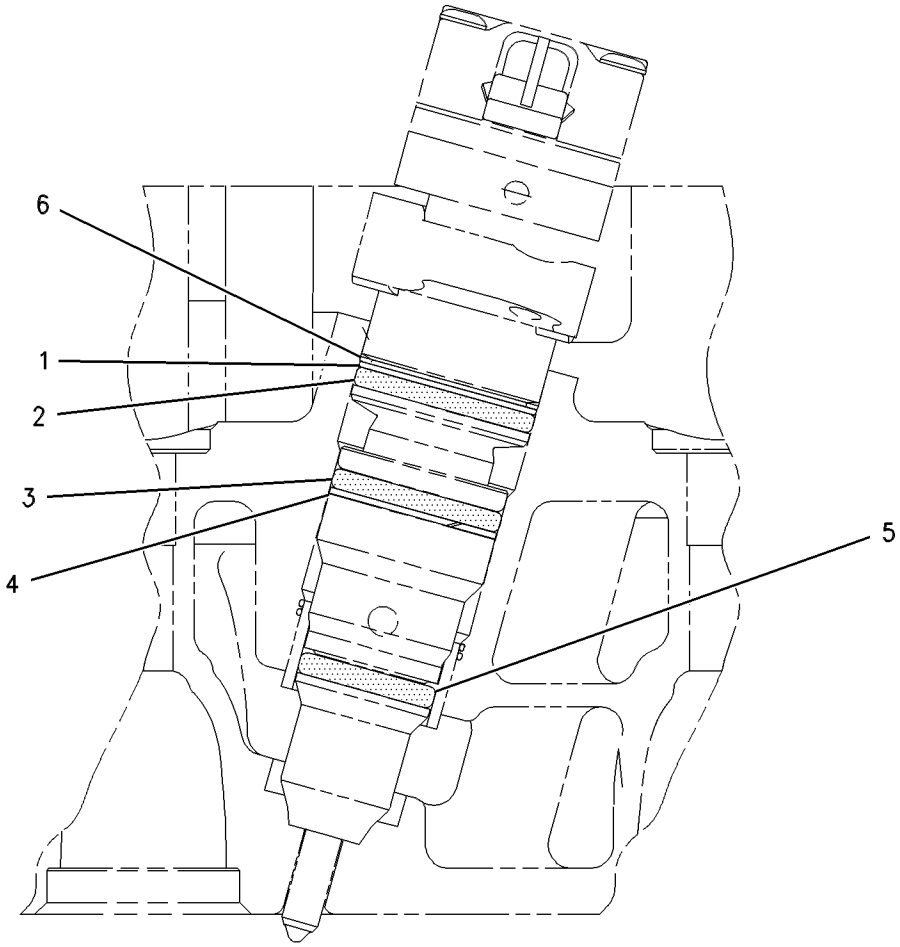

GRAPHIC #1 **<END>** g00433901

169-4912 SUPPRESSION AR-SOUND—EUROPEAN MARKET

S/N: CCK1-UP
AN ATTACHMENT

SMCS-1801 **i01888761**

NOTE	PART NUMBER	QTY	PART NAME 1 2 3 4 5 6 (PRODUCT LEVEL)	SEE PAGE
Y	*191-4481*	1	ENGINE AR-COMPLETE	3
Y	*193-1038*	1	BELT GP	7
Y	*196-1814*	1	FAN GP	78
Y	*200-6248*	1	HOOD & GUARD GP	256
Y	*127-0901*	1	SUPPRESSION GP-SOUND	60
Y	*203-2062*	1	SHIELD GP-AIR CLEANER (PRECLEANER)	100
Y	*231-0530*	1	WARNING GP-BACKUP	180
	201-2670	5	RADIATOR AS	
	205-3237	1	FILM (EXTERIOR) (SOUND)	
			ON FRONT FACE OF RIGHT HAND SIDE CONSOLE VISIBLE THROUGH CAB DOOR.	

Y-SEPARATE ILLUSTRATION

<END>

127-0901 SUPPRESSION GP-SOUND—BOTTOM GUARD LINERS

S/N: CCK1-UP
PART OF 169-4912 SUPPRESSION AR-SOUND
AN ATTACHMENT

SMCS-1801 **i01877495**

NOTE	REF NO	GRAPHIC REF	PART NUMBER	QTY	PART NAME 1 2 3 4 5 6 (PRODUCT LEVEL)	SEE PAGE
	1	1	**124-0364**	4	LINER	
	2	1	**125-1993**	4	LINER	
	3	1	**128-2906**	1	LINER	
	4	1	**128-2907**	1	LINER	
	5	1	**128-2908**	1	LINER	
	6	1	**128-2909**	1	LINER	

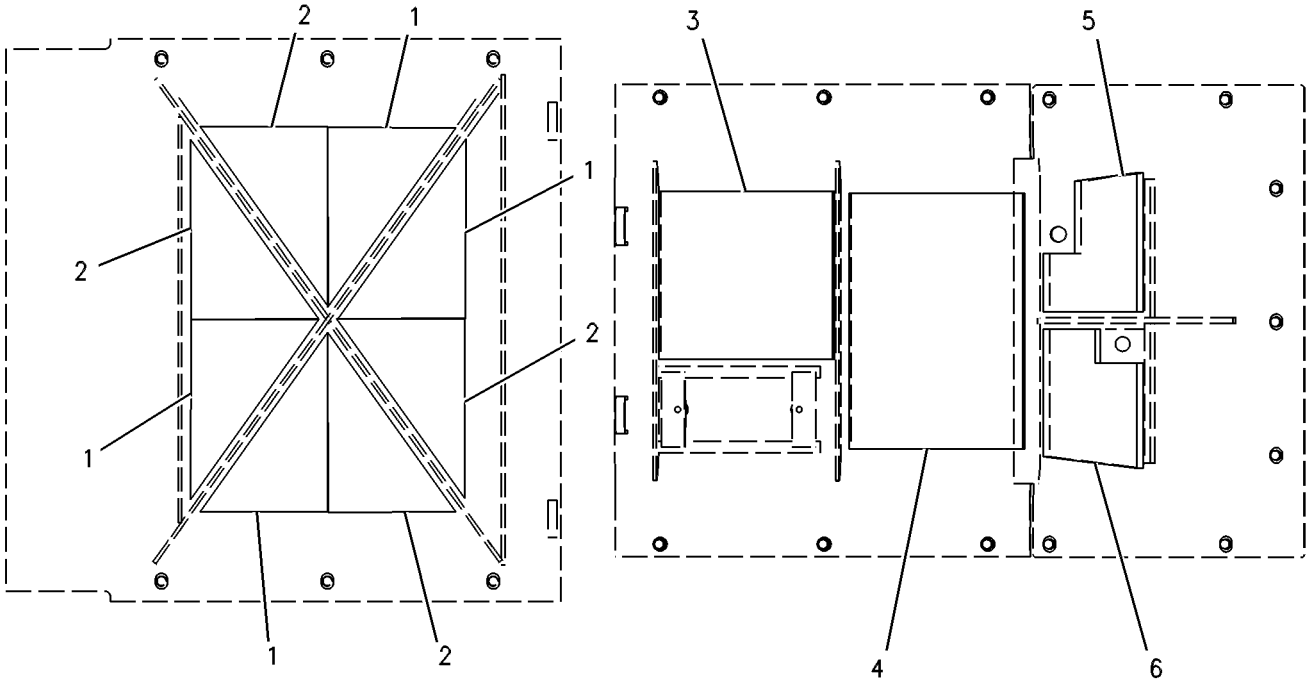

GRAPHIC #1 **<END>** g00279295

135-2969 VALVE MECHANISM GP

S/N: BMA1100-UP
PART OF 191-4482 ENGINE AR-CORE
ALSO AN ATTACHMENT

SMCS-1102, 1112, 1121, 1123, 1208, 1209 **i01875926**

NOTE	REF NO	GRAPHIC REF	PART NUMBER	QTY	PART NAME 1 2 3 4 5 6 (PRODUCT LEVEL)	SEE PAGE
	1	1	**133-6379**	12	ROD	
	2	1	**220-6366**	6	BRIDGE-VALVE	
Y	3	1	*139-4081*	3	LIFTER GP-VALVE	43
M	4	1	**8T-8442**	12	BOLT-SOCKET HEAD (M6X1X30MM)	
	5	1	**3E-9412**	6	DOWEL-BUSHING	
Y	6	1	*155-4773*	1	VALVE MECHANISM GP	62
M	7	1	**6V-5696**	11	BOLT (M12X1.75X80MM)	
	8	1	**9M-1974**	2	WASHER-HARD (8.8X16X2MM THK)	
	9	1	**5P-8245**	11	WASHER-HARD (13.5X25.5X3MM THK)	
M	10	1	**8T-0100**	2	BOLT (M8X1.25X60MM)	

M-METRIC PART
Y-SEPARATE ILLUSTRATION

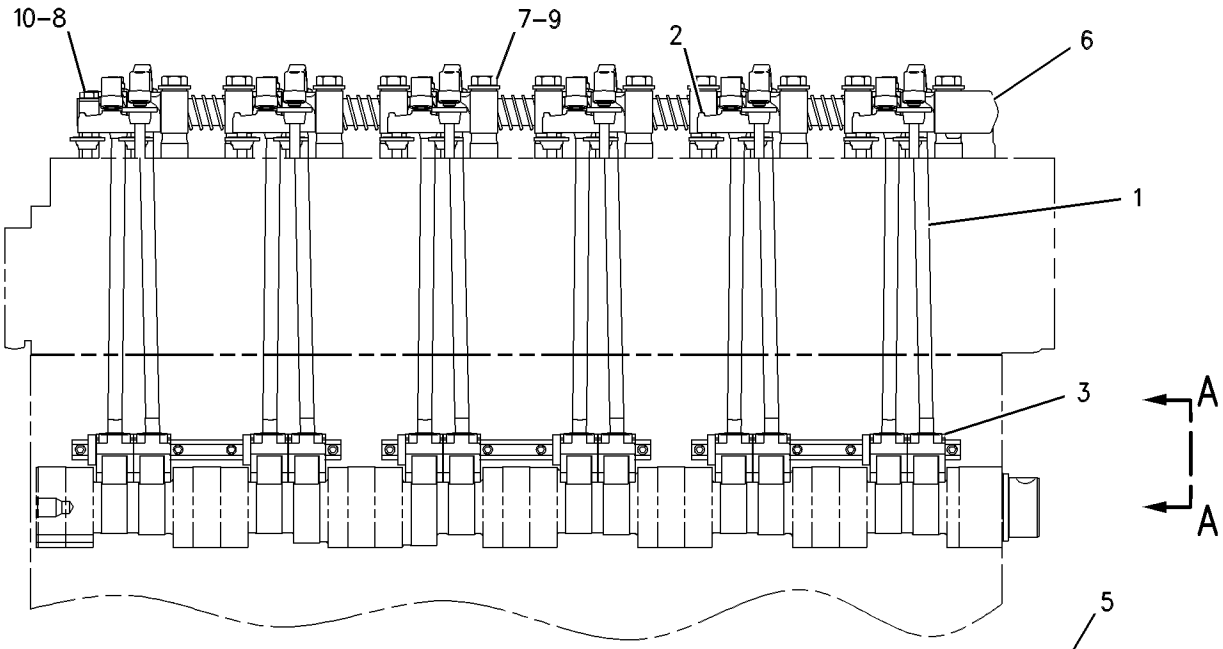

RIGHT SIDE VIEW

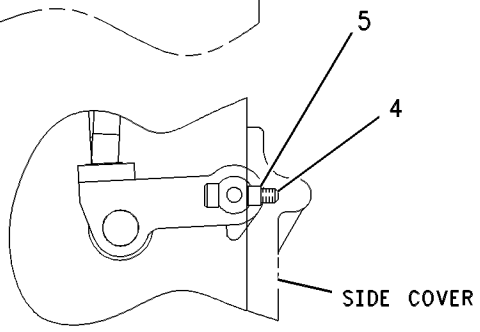

VIEW A-A

GRAPHIC #1 **<END>** g00286874

BASIC ENGINE

155-4773 VALVE MECHANISM GP

S/N: BMA1100-UP

PART OF 135-2969 VALVE MECHANISM GP

ALSO AN ATTACHMENT

SMCS-1102, 1112, 1121, 1123, 1208, 1209 **i01882767**

NOTE	REF NO	GRAPHIC REF	PART NUMBER	QTY	PART NAME 1 2 3 4 5 6 (PRODUCT LEVEL)	SEE PAGE
	1	1	**137-6717**	5	SPRING	
	2	1	*222-1185*	6	ROCKER ARM GP (INTAKE)	
					(EACH INCLUDES)	
M	2A	1	**2Y-5829**	1	NUT (M10X1.5 THD)	
M		1	**183-4365**	1	SCREW-ADJUSTING (M10X1.5 THD)	
	2B	1	**153-8467**	1	ROCKER ARM AS	
	2C	1	**173-5549**	1	SEAL-O-RING	
	2D	1	**145-7376**	1	BUTTON-ROCKER ARM	
	2E	1	**145-7385**	1	SOCKET-ROCKER ARM	
	3	1	**138-8403**	1	STAND	
	4	1	*222-1186*	6	ROCKER ARM GP (EXHAUST)	
					(EACH INCLUDES)	
M	4A	1	**2Y-5829**	1	NUT (M10X1.5 THD)	
M		1	**183-4365**	1	SCREW-ADJUSTING (M10X1.5 THD)	
	4B	1	**153-8470**	1	ROCKER ARM AS	
	4C	1	**173-5549**	1	SEAL-O-RING	
	4D	1	**145-7376**	1	BUTTON-ROCKER ARM	
	4E	1	**145-7385**	1	SOCKET-ROCKER ARM	
	5	1	**138-8401**	10	STAND	
	6	1	**138-8402**	1	STAND	
	7	1	**138-9868**	1	RING-RETAINING	
	8	1	**8H-5244**	1	DOWEL	
	9	1	**138-7198**	1	SHAFT AS	
		1	**5B-1866**	1	PLUG-CUP	

M-METRIC PART

155-4773 **VALVE MECHANISM GP** ***(contd.)*** **i01882767**

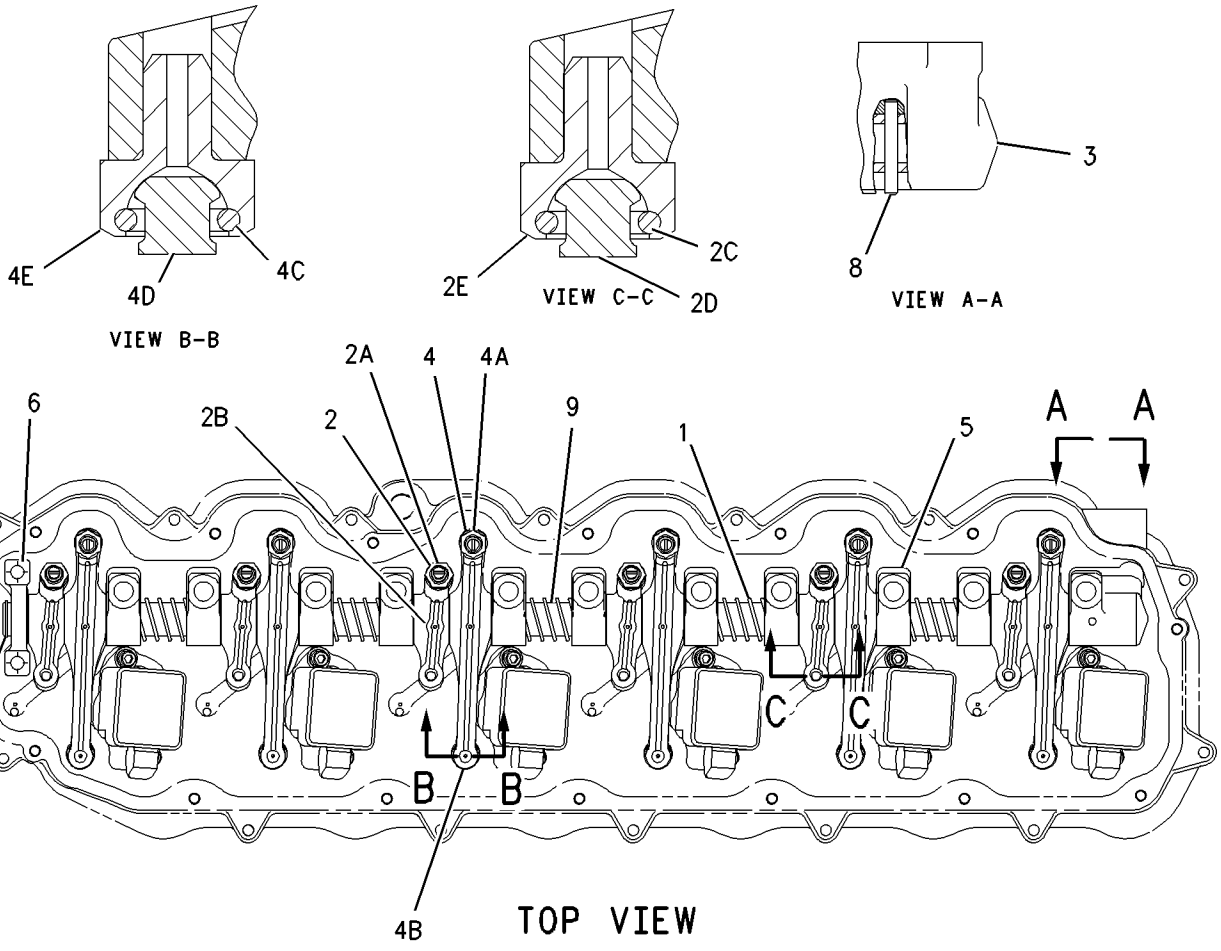

GRAPHIC #1 **<END>** g00901133

179-7001 ADAPTER GP-ENGINE OIL LINE

S/N: BMA1100-UP
PART OF 170-3304 PUMP & MTG GP-UNIT INJ HYD
ALSO AN ATTACHMENT

SMCS-1307 **i01836714**

NOTE	REF NO	GRAPHIC REF	PART NUMBER	QTY	PART NAME 1 2 3 4 5 6 (PRODUCT LEVEL)	SEE PAGE
	1	1	**179-7002**	1	ADAPTER AS	
	2	1	**214-7568**	1	SEAL-O-RING (11.89MM ID)	

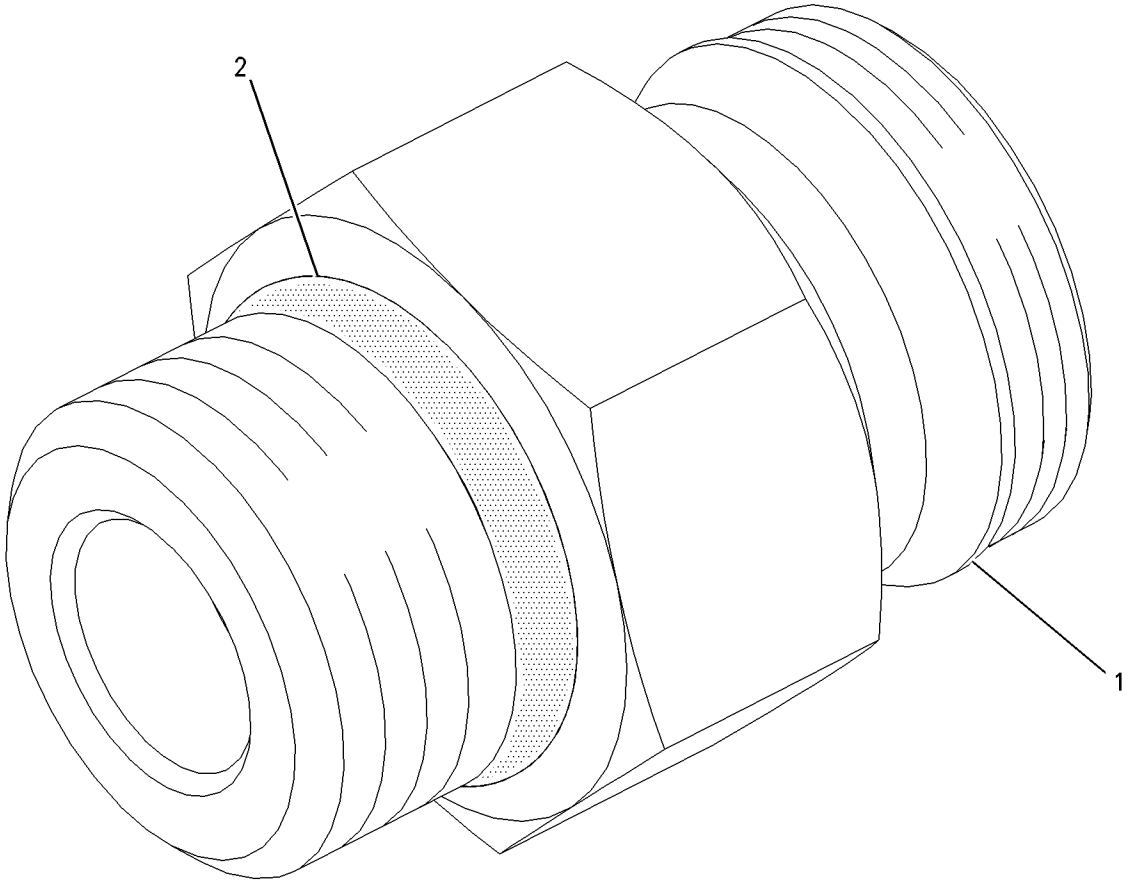

GRAPHIC #1 **<END>** g00938522

120-8971 BREATHER GP–ENGINE

S/N: BMA1100-UP
PART OF 191-4482 ENGINE AR-CORE
ALSO AN ATTACHMENT

SMCS-1317 **i01882544**

NOTE	REF NO	GRAPHIC REF	PART NUMBER	QTY	PART NAME 1 2 3 4 5 6 (PRODUCT LEVEL)	SEE PAGE
	1	1	**2W-9162**	1	BREATHER AS (ENGINE)	
	2	1	**4L-9564**	1	SEAL-O-RING (ENGINE BREATHER)	
M	3	1	**6V-3821**	1	BOLT (M8X1.25X110MM)	
	4	1	**9N-0869**	1	WASHER-HARD (8.8X25.5X2.0MM THK)	

M-METRIC PART

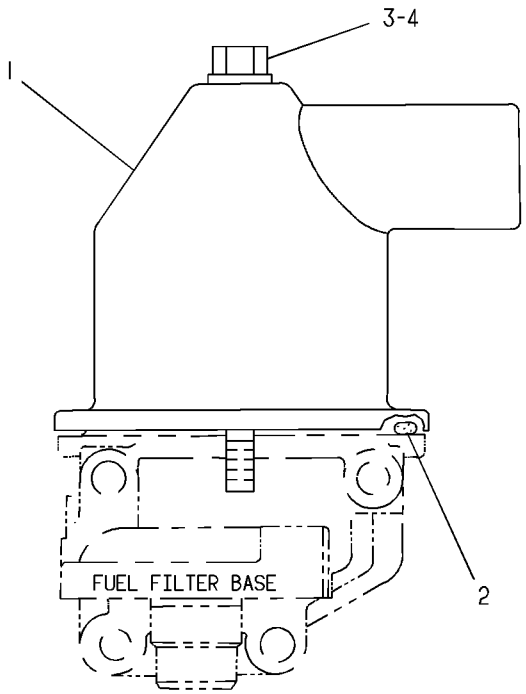

GRAPHIC #1 **<END>** g00108310

199-3164 FILLER GP-ENGINE OIL

S/N: BMA1100-UP
PART OF 191-4479, 191-4481 ENGINE AR-COMPLETE
ALSO AN ATTACHMENT

SMCS-1316 **i01882548**

NOTE	REF NO	GRAPHIC REF	PART NUMBER	QTY	PART NAME 1 2 3 4 5 6 (PRODUCT LEVEL)	SEE PAGE
	1	1	**4W-3087**	1	CAP-FILLER (ENGINE OIL)	
	2	1	**135-9819**	1	SEAL (INTEGRAL)	
	3	1	**224-9041**	1	TUBE AS	
	4	1	**5P-8245**	4	WASHER-HARD (13.5X25.5X3MM THK)	
M	5	1	**6V-5696**	2	BOLT (M12X1.75X80MM)	
M	6	1	**6V-8149**	2	NUT (M12X1.75 THD)	
	7	1	**184-7773**	1	SPACER (9.14MM THK)	

M-METRIC PART

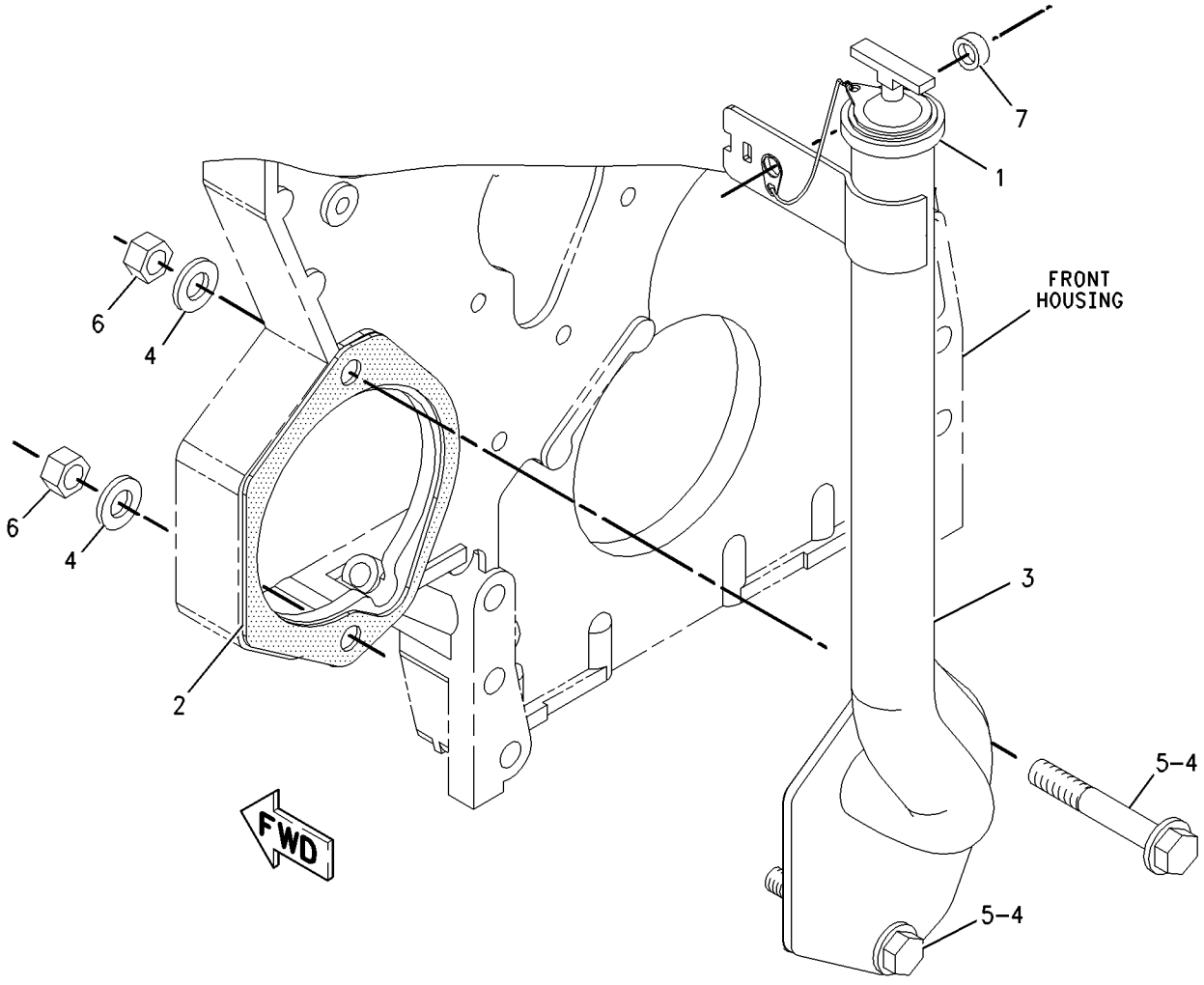

GRAPHIC #1 **<END>** g00923970

117-4074 FILTER GP-ENGINE OIL

S/N: BMA1100-UP
PART OF 191-4479, 191-4481 ENGINE AR-COMPLETE
ALSO AN ATTACHMENT

SMCS-1306, 1308, 1318 **i01803469**

NOTE	REF NO	GRAPHIC REF	PART NUMBER	QTY	PART NAME 1 2 3 4 5 6 (PRODUCT LEVEL)	SEE PAGE
	1	1	**1R-0739**	1	FILTER AS-ENGINE OIL	
M	2	1	**8T-0276**	4	BOLT (M8X1.25X45MM) (MARKED X)	
	3	1	**9M-1974**	14	WASHER-HARD (8.8X16X2MM THK)	
M	4	1	**6V-2317**	10	BOLT (M8X1.25X30MM)	
	5	1	**7C-1493**	2	VALVE AS-BYPASS	
	6	1	**9L-9188**	2	SPRING-VALVE	
	7	1	**2M-9780**	2	SEAL-O-RING	
M	8	1	**5P-8196**	2	PLUG	
	9	1	**4P-8182**	1	BASE AS-OIL FILTER	
		1	**2P-2537**	1	STUD-HOLLOW	
	10	1	**7E-9817**	1	GASKET	

M-METRIC PART

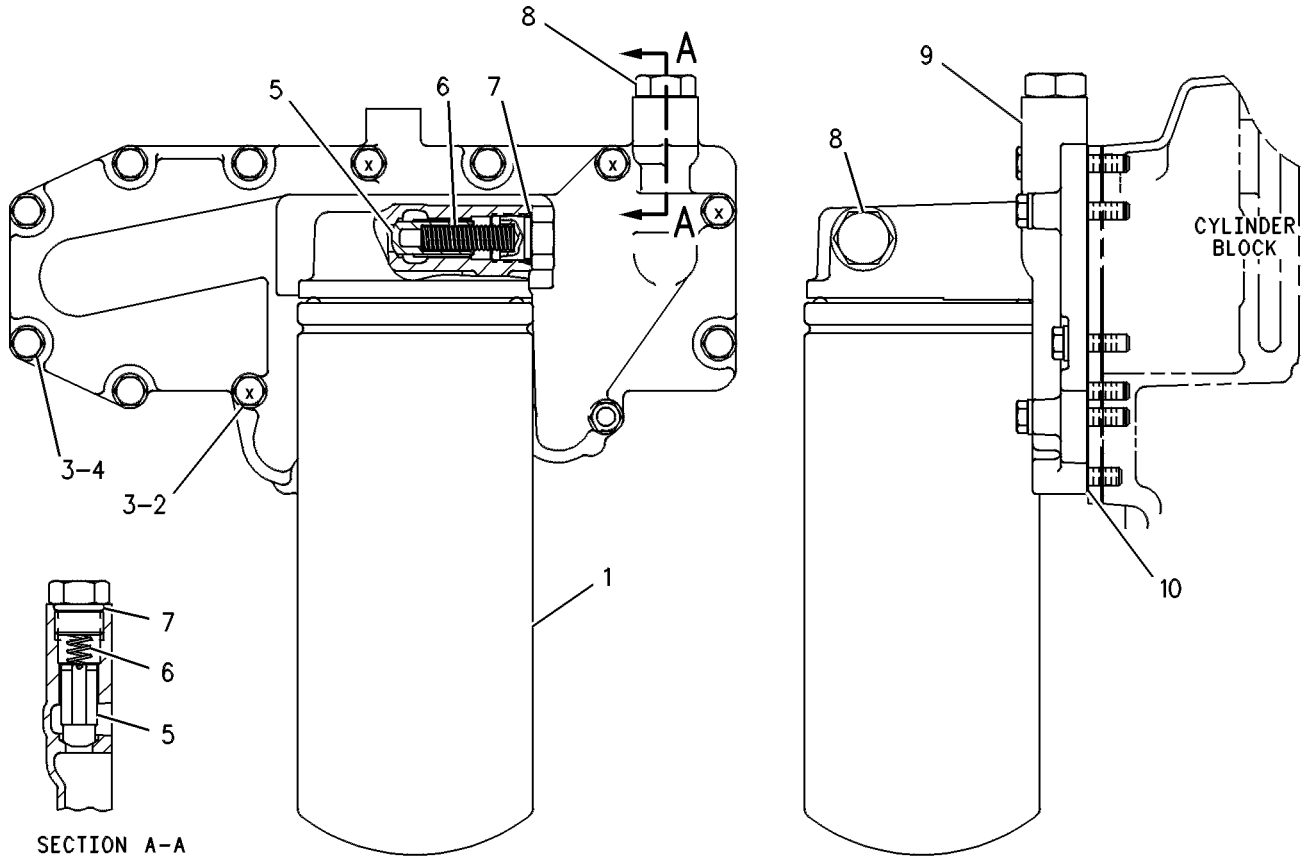

GRAPHIC #1 **<END>** g00243739

LUBRICATION SYSTEM

211-1835 FUMES DISPOSAL GP

S/N: BMA1100-UP
PART OF 191-4479, 191-4481 ENGINE AR-COMPLETE
ALSO AN ATTACHMENT

SMCS-1317 **i01882549**

NOTE	REF NO	GRAPHIC REF	PART NUMBER	QTY	PART NAME 1 2 3 4 5 6 (PRODUCT LEVEL)	SEE PAGE
	1	1	**3V-0778**	1	BRACKET	
	2	1	**4W-2181**	1	HOSE-DISPOSAL (FUMES)	
	3	1	**9M-2904**	1	CLAMP-HOSE	
M	4	1	**175-3168**	1	BOLT	
	5	1	**2S-2053**	1	CLIP	
	6	1	**3E-4352**	1	WASHER-HARD (8.8X20.5X2.5MM THK)	
	7	1	**8T-4121**	2	WASHER-HARD (11X21X2.5MM THK)	
M	8	1	**8T-4133**	1	NUT (M10X1.5 THD)	
M	9	1	**8T-4136**	1	BOLT (M10X1.5X25MM)	
	10	1	**9F-8218**	1	SPACER	

M-METRIC PART

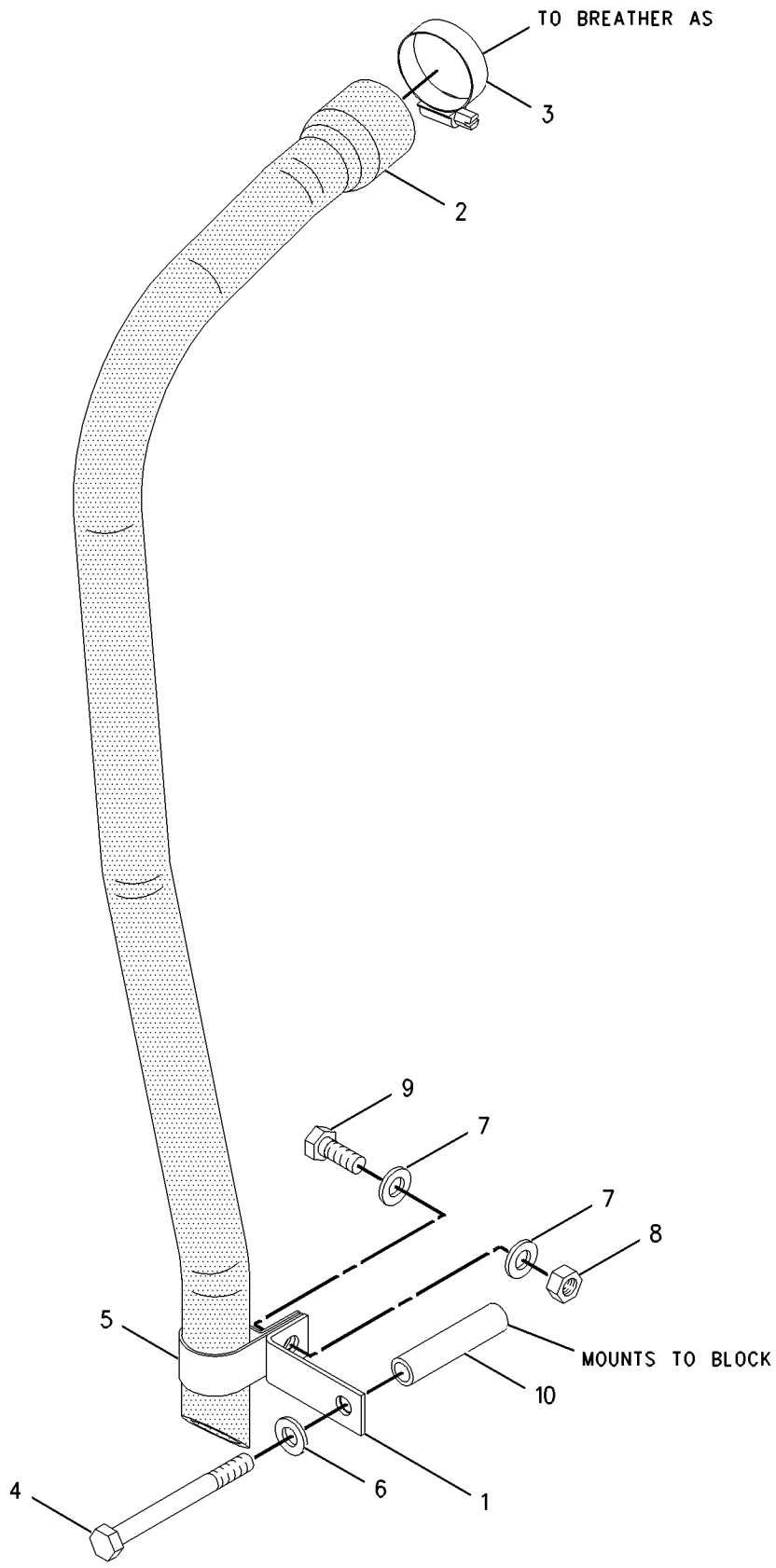

GRAPHIC #1 **<END>** g00923042

159-1810 GAUGE GP-OIL LEVEL (DIPSTICK)

S/N: BMA1100-UP
PART OF 191-4479, 191-4481 ENGINE AR-COMPLETE
ALSO AN ATTACHMENT

SMCS-1326 **i01803590**

NOTE	REF NO	GRAPHIC REF	PART NUMBER	QTY	PART NAME 1 2 3 4 5 6 (PRODUCT LEVEL)	SEE PAGE
J	1	1	**1S-2563**	3	PLUG	
	2	1	**201-2403**	1	GAUGE-OIL LEVEL	
	3	1	**224-9337**	1	TUBE AS	
	4	1	**1F-7567**	1	CLIP	

J-USE TO PLUG OPTIONAL DIPSTICK LOCATIONS IN CYLINDER BLOCK

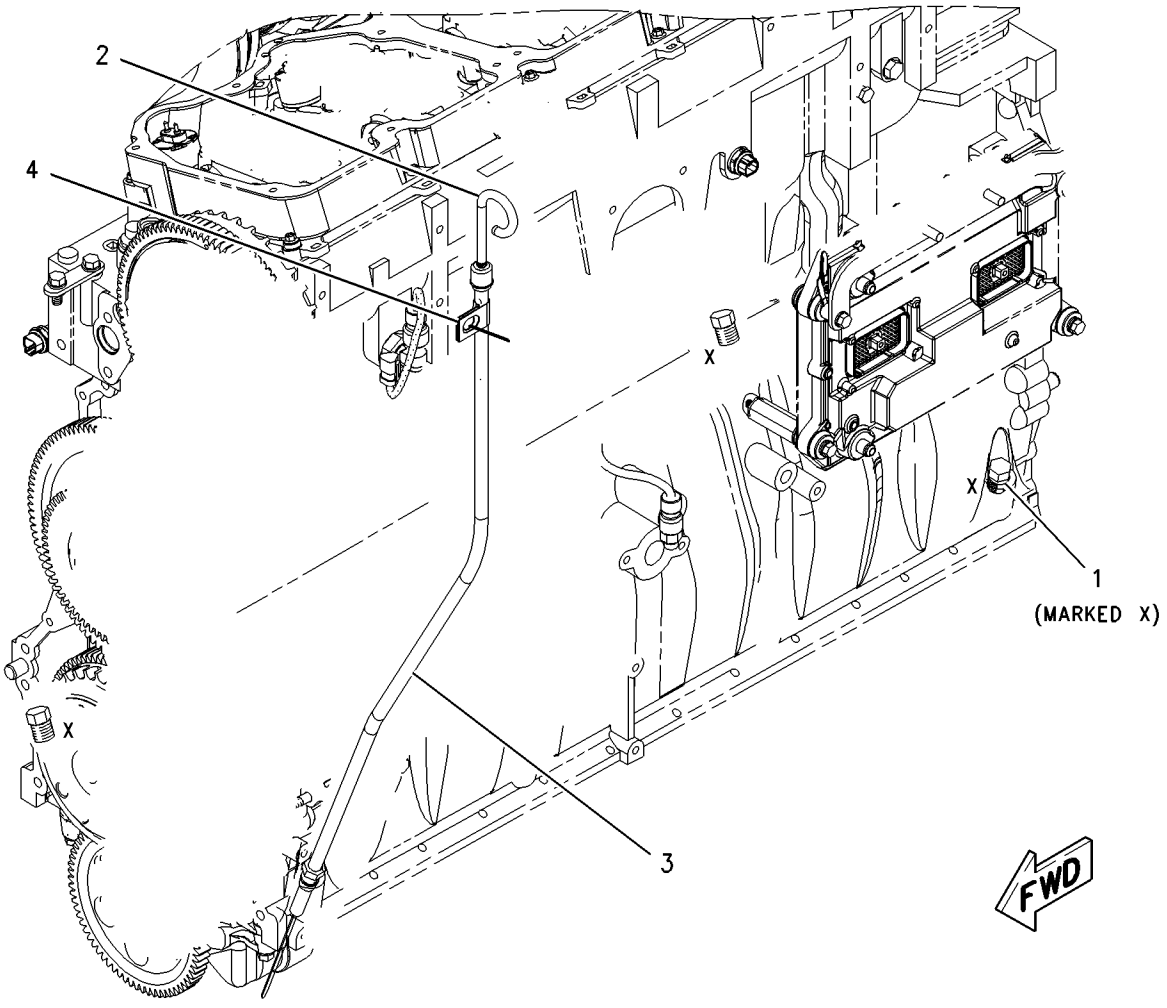

GRAPHIC #1 **<END>** g00923688

219-5853 LINES GP-ENGINE OIL

S/N: BMA1100-UP

PART OF 191-4479, 191-4481 ENGINE AR-COMPLETE

ALSO AN ATTACHMENT

SMCS-1307 **i01804597**

NOTE	REF NO	GRAPHIC REF	PART NUMBER	QTY	PART NAME 1 2 3 4 5 6 (PRODUCT LEVEL)	SEE PAGE
	1	1	**7W-5340**	1	GASKET	
	2	1	**219-5852**	1	TUBE AS	
	3	1	**3P-1156**	2	SEAL-O-RING	
	4	1	**4W-2232**	1	ELBOW-OUTLET	
M	5	1	**6V-3940**	4	BOLT (M8X1.25X25MM)	
M	6	1	**6V-4248**	1	BOLT (M10X1.50X25MM)	
	7	1	**6V-5839**	1	WASHER (11X21X2.5MM THK)	
	8	1	**9M-1974**	2	WASHER-HARD (8.8X16X2MM THK)	

M-METRIC PART

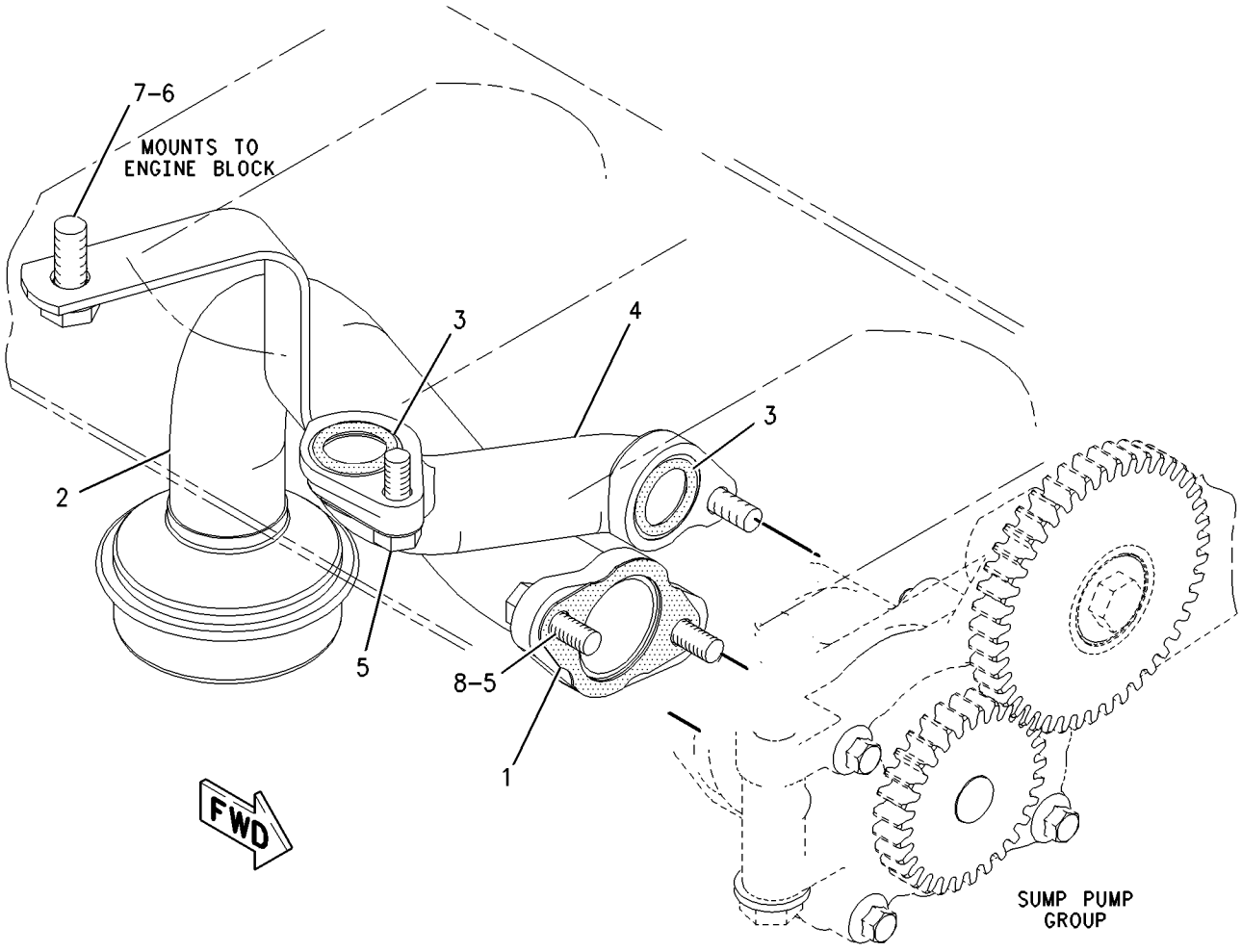

GRAPHIC #1 **<END>** g00901042

LUBRICATION SYSTEM

202-3262 LINES GP-TURBOCHARGER OIL

S/N: BMA1100-UP

PART OF 191-4479, 191-4481 ENGINE AR-COMPLETE

ALSO AN ATTACHMENT

SMCS-1052, 1307 **i01882551**

NOTE	REF NO	GRAPHIC REF	PART NUMBER	QTY	PART NAME 1 2 3 4 5 6 (PRODUCT LEVEL)	SEE PAGE
	1	1	**8A-8563**	2	SPACER	
	2	1	**8C-3445**	1	CAP-DUST (TURBO OIL SAMPLING VALVE)	
	3	1	**119-2942**	1	ADAPTER	
	4	1	**188-6126**	1	GASKET	
	5	1	**202-3261**	1	TUBE AS	
	6	1	**225-5219**	1	TUBE AS	
	7	1	**225-5220**	1	TUBE AS	
	8	1	**114-2687**	1	SEAL-O-RING	
	9	1	**154-9024**	1	VALVE GP-FLUID SAMPLING (TURBOCHARGER OIL)	
	10	1	**1F-7567**	2	CLIP	
M	11	1	**2Y-5829**	2	NUT (M10X1.5 THD)	
	12	1	**4L-3641**	2	CLIP	
	13	1	**5P-8066**	1	SEAL-O-RING	
M	14	1	**6V-4248**	2	BOLT (M10X1.50X25MM)	
	15	1	**6V-5049**	2	SEAL-O-RING	
M	16	1	**6V-5218**	2	BOLT (M8X1.25X35MM)	
	17	1	**6V-5839**	4	WASHER (11X21X2.5MM THK)	
	18	1	**6V-8397**	5	SEAL-O-RING	
	19	1	**6V-8636**	2	CONNECTOR	
	20	1	**6V-9843**	1	TEE-SWIVEL	
	21	1	**7X-2441**	1	ADAPTER	
M	22	1	**8T-0276**	2	BOLT (M8X1.25X45MM)	
	23	1	**9M-1974**	2	WASHER-HARD (8.8X16X2MM THK)	

M-METRIC PART

202-3262 **LINES GP-TURBOCHARGER OIL** ***(contd.)*** **i01882551**

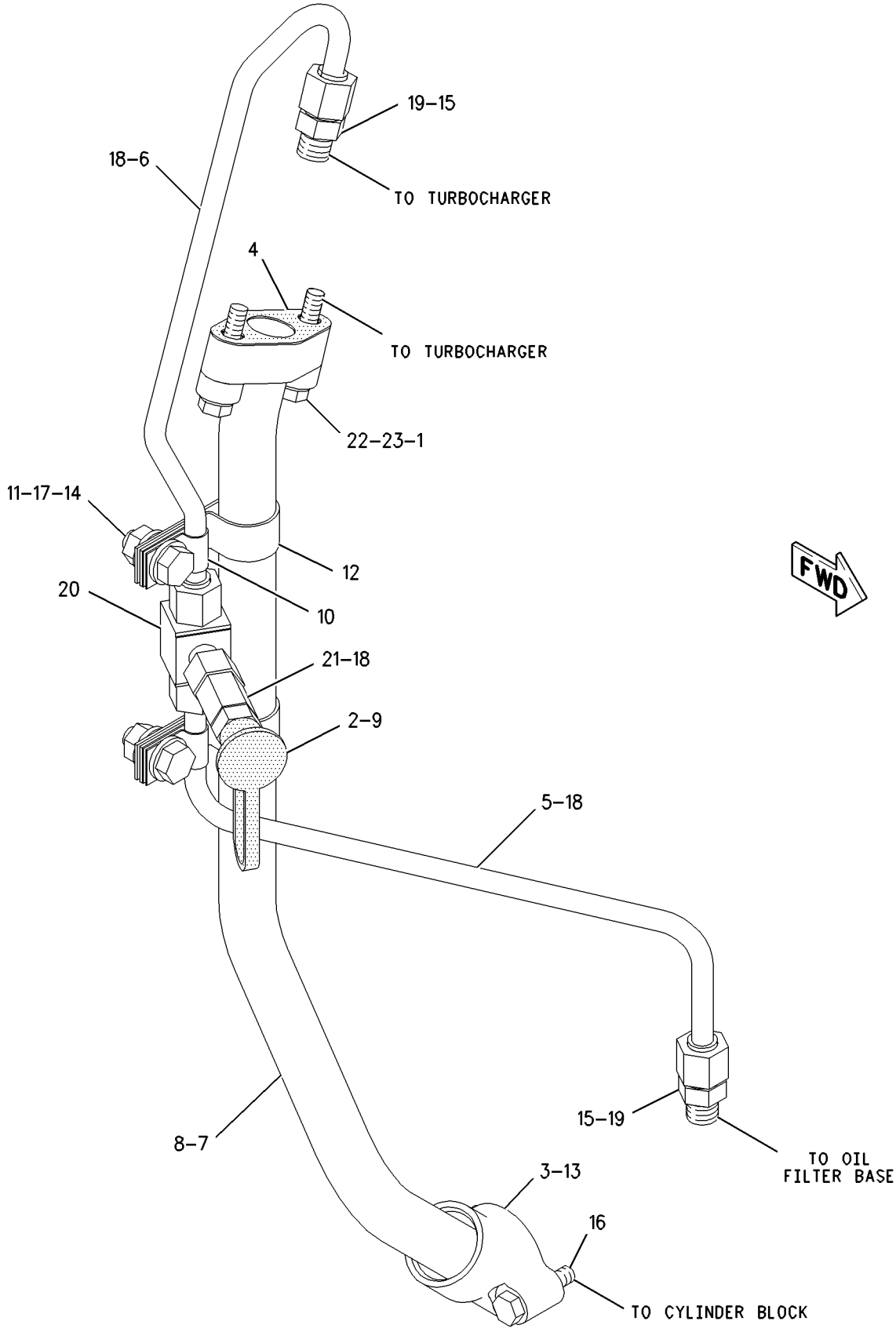

GRAPHIC #1 **<END>** g00924635

LUBRICATION SYSTEM

212-2269 PUMP GP-ENGINE OIL

S/N: BMA1100-UP
PART OF 212-2270 PUMP GP-ENGINE OIL
ALSO AN ATTACHMENT

SMCS-1304, 1315 **i01697514**

NOTE	REF NO	GRAPHIC REF	PART NUMBER	QTY	PART NAME 1 2 3 4 5 6 (PRODUCT LEVEL)	SEE PAGE
	1	1	**7W-9737**	1	SHAFT-OIL PUMP	
	2	1	**7W-9738**	1	WASHER (10.5X38X1.6MM THK)	
	3	1	**7W-9740**	1	GEAR AS-IDLER (43 TEETH)	
		1	**7W-9930**	1	BEARING-SLEEVE	
M	4	1	**9X-2305**	1	BOLT-LOCKING (M10X1.5 THD)	
	5	1	**210-5559**	1	PUMP AS-GEROTOR	

M-METRIC PART

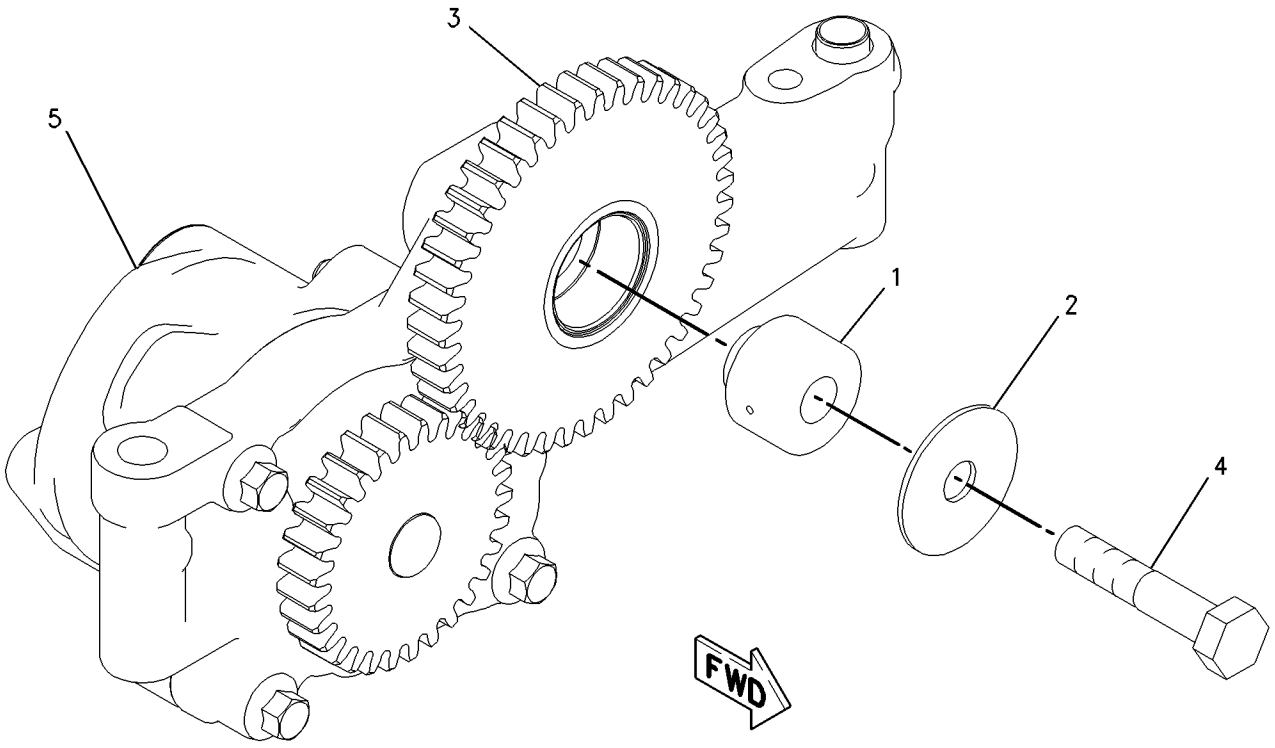

GRAPHIC #1 **<END>** g00849418

212-2270 PUMP GP-ENGINE OIL

S/N: BMA1100-UP
PART OF 191-4482 ENGINE AR-CORE
ALSO AN ATTACHMENT

SMCS-1304, 1315 **i01697510**

NOTE	REF NO	GRAPHIC REF	PART NUMBER	QTY	PART NAME 1 2 3 4 5 6 (PRODUCT LEVEL)	SEE PAGE
Y	1	1	**212-2269**	1	PUMP GP-ENGINE OIL	74
M	2	1	**6V-5815**	2	BOLT (M10X1.5X75MM)	
	3	1	**6V-5839**	2	WASHER (11X21X2.5MM THK)	

M-METRIC PART
Y-SEPARATE ILLUSTRATION

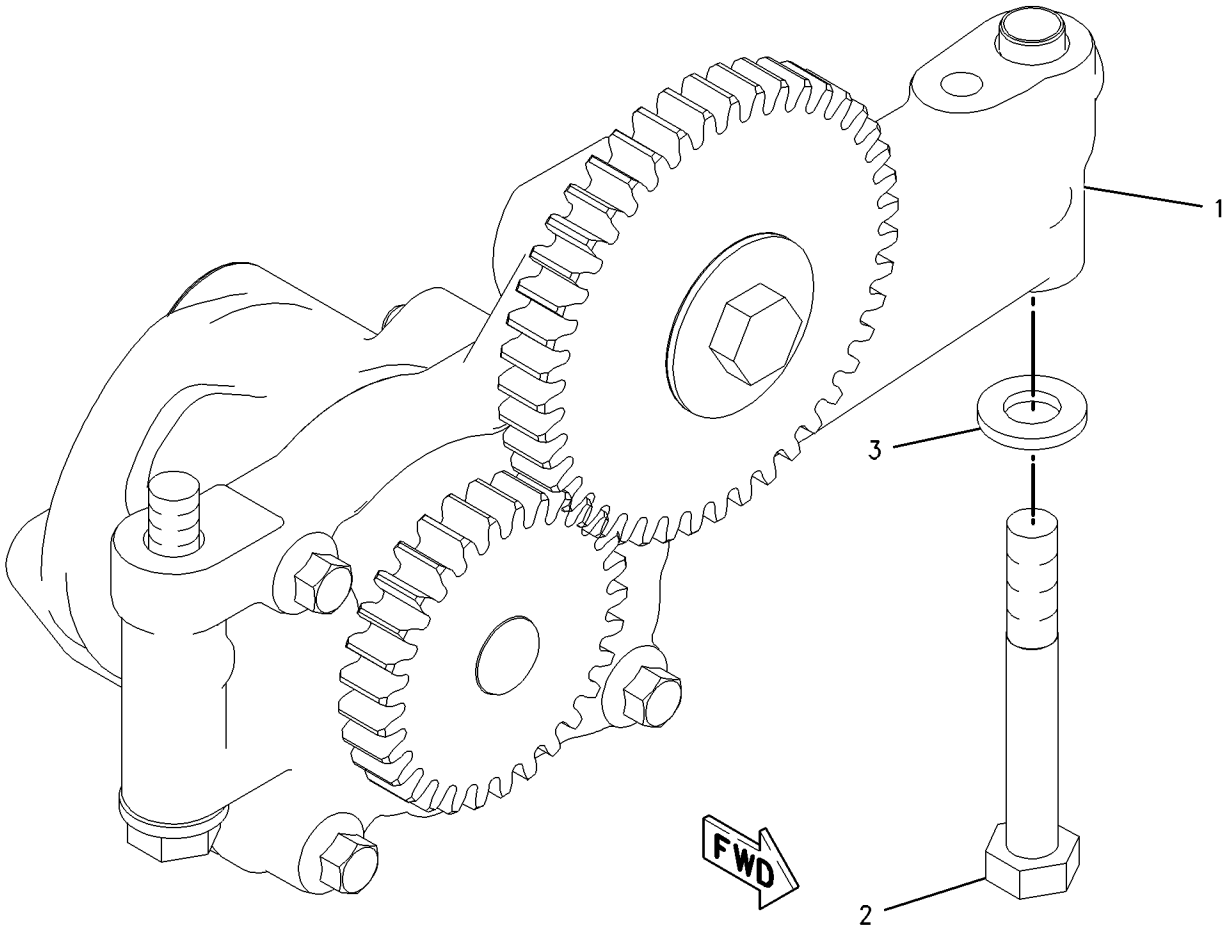

GRAPHIC #1 **<END>** g00849437

117-3643 COOLER GP-ENGINE OIL

S/N: BMA1100-UP
PART OF 191-4482 ENGINE AR-CORE
ALSO AN ATTACHMENT

SMCS-1378 **i01858175**

NOTE	REF NO	GRAPHIC REF	PART NUMBER	QTY	PART NAME 1 2 3 4 5 6 (PRODUCT LEVEL)	SEE PAGE
R	1	1	**187-8595**	1	CORE AS-ENGINE OIL COOLER	
	2	1	**7C-1160**	1	GASKET	
M	3	1	**8M-4445**	2	SEAL-O-RING	

M-METRIC PART
R-REMFG PART MAY BE AVAILABLE

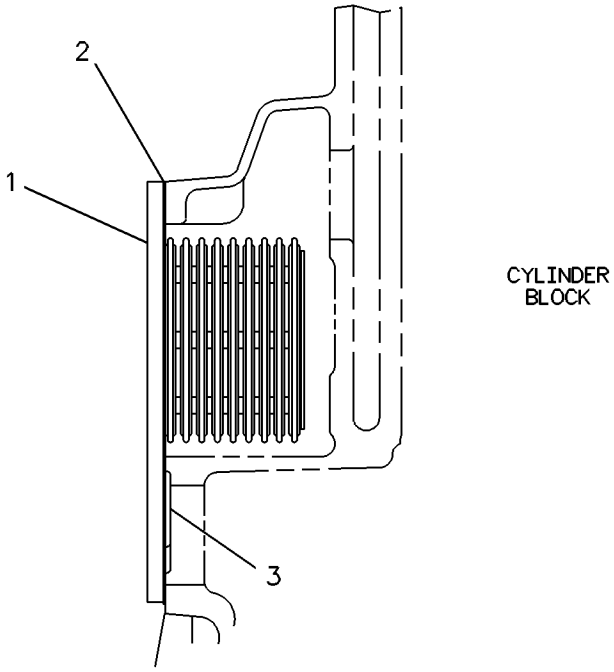

GRAPHIC #1 **<END>** g00117316

COOLING SYSTEM

226-3406 COOLING AR

S/N: CCK1-UP

CANNOT BE USED WITH , 195-1043—PAGE 81

AN ATTACHMENT

SMCS-1353 **i01877560**

NOTE	PART NUMBER	QTY	PART NAME 1 2 3 4 5 6 (PRODUCT LEVEL)	SEE PAGE
Y	*193-1038*	1	BELT GP	7
Y	*191-4481*	1	ENGINE AR-COMPLETE	3
Y	*196-1814*	1	FAN GP	78

Y-SEPARATE ILLUSTRATION

<END>

COOLING SYSTEM

196-1814 FAN GP

S/N: CCK1-UP

PART OF 226-3406 COOLING AR, 169-4912 SUPPRESSION AR-SOUND AN ATTACHMENT

SMCS-1356 **i01877797**

NOTE	REF NO	GRAPHIC REF	PART NUMBER	QTY	PART NAME 1 2 3 4 5 6 (PRODUCT LEVEL)	SEE PAGE
	1	1	**189-8904**	1	SPIDER AS-FAN (BLOWER)(6 BLADES)	
	2	1	**195-6814**	1	GUARD AS-FAN	
	3	1	**218-1964**	1	DRIVE AS-FAN	
		1	**102-8805**	1	KIT-RECEPTACLE (6 PIN)	
					(INCLUDES RECEPTACLE AS & WEDGE)	
		1	**186-3735**	1	PIN-CONNECTOR	
	4	1	**200-3736**	1	GUARD AS-FAN	
M		1	**8T-3490**	4	NUT-WELD (M10X1.5 THD)	
	5	1	**4D-7794**	1	CLIP	
	6	1	**218-0589**	2	BRACKET	
M	7	1	**7X-0818**	6	BOLT (M8X1.25X45MM)	
M	8	1	**8T-4191**	2	BOLT (M10X1.5X16MM)	
	9	1	**7X-7729**	4	WASHER (11X25X3MM THK)	
	10	1	**8T-4121**	10	WASHER-HARD (11X21X2.5MM THK)	
M	11	1	**8T-4136**	4	BOLT (M10X1.5X25MM)	
M	12	1	**8T-4195**	8	BOLT (M10X1.5X30MM)	
	13	1	**8T-4224**	12	WASHER-HARD (8.8X16X2MM THK)	
	14	1	**5F-9757**	1	GROMMET	
M	15	1	**8T-4908**	6	BOLT (M8X1.25X25MM)	
	16	1	**3S-2093**	5	STRAP-CABLE	

M-METRIC PART

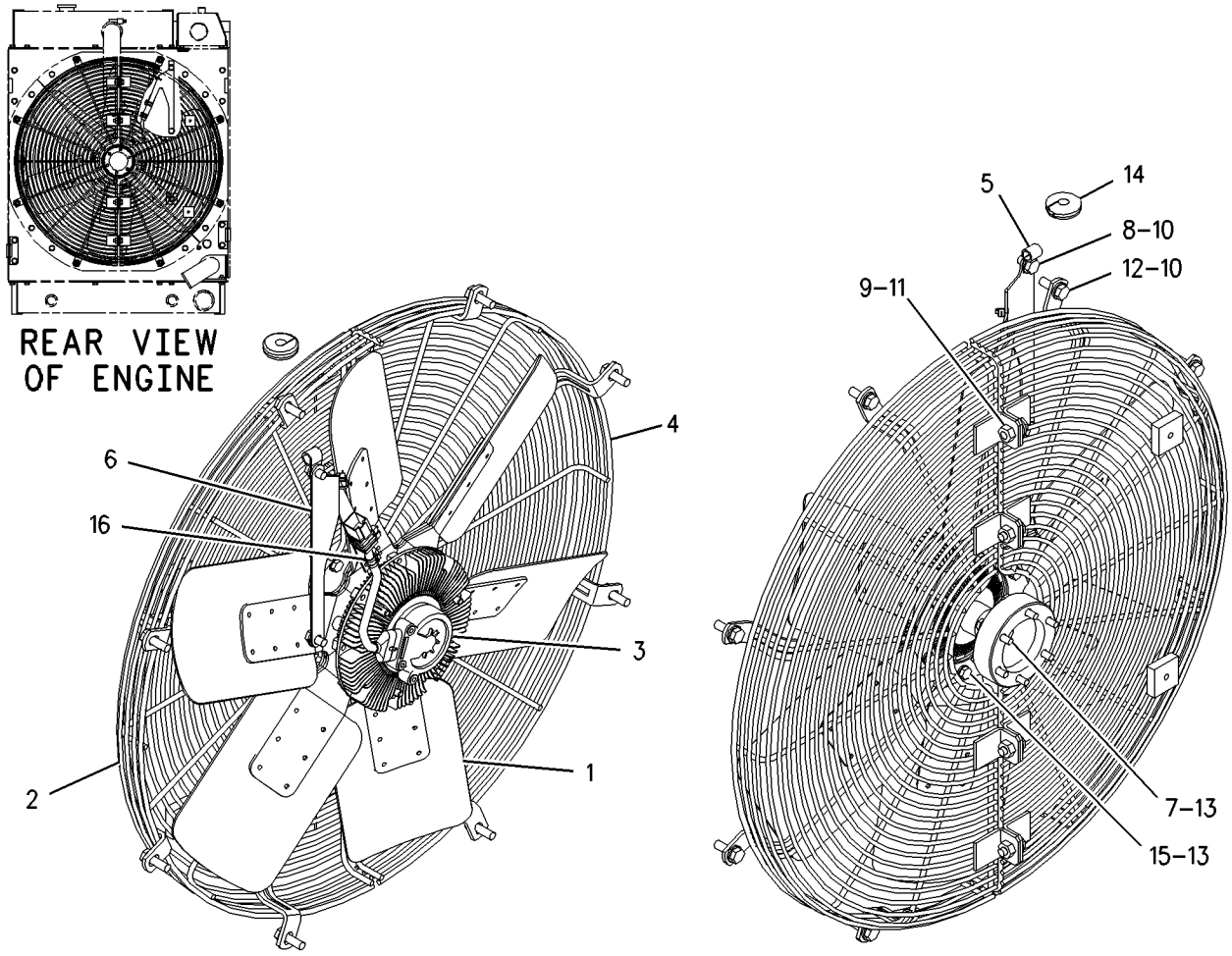

GRAPHIC #1 **<END>** g00937647

195-1041 FAN GP-BLOWER

S/N: CCK1-UP

PART OF 189-4622 INSTALLATION AR-ENGINE

SMCS-1356, 1360 **i01842757**

NOTE	REF NO	GRAPHIC REF	PART NUMBER	QTY	PART NAME 1 2 3 4 5 6 (PRODUCT LEVEL)	SEE PAGE
	1	1	**226-2261**	1	SPIDER AS-FAN	
	2	1	**195-6814**	1	GUARD AS-FAN (RIGHT)	
	3	1	**200-0928**	1	ADAPTER	
	4	1	**200-3736**	1	GUARD AS-FAN (LEFT)	
M		1	**8T-3490**	4	NUT-WELD (M10X1.5 THD)	
M	5	1	**099-3649**	6	BOLT (M8X1.25X40MM)	
	6	1	**7X-7729**	4	WASHER (11X25X3MM THK)	
	7	1	**8T-4121**	14	WASHER-HARD (11X21X2.5MM THK)	
M	8	1	**8T-4136**	4	BOLT (M10X1.5X25MM)	
M	9	1	**8T-4195**	14	BOLT (M10X1.5X30MM)	

M-METRIC PART

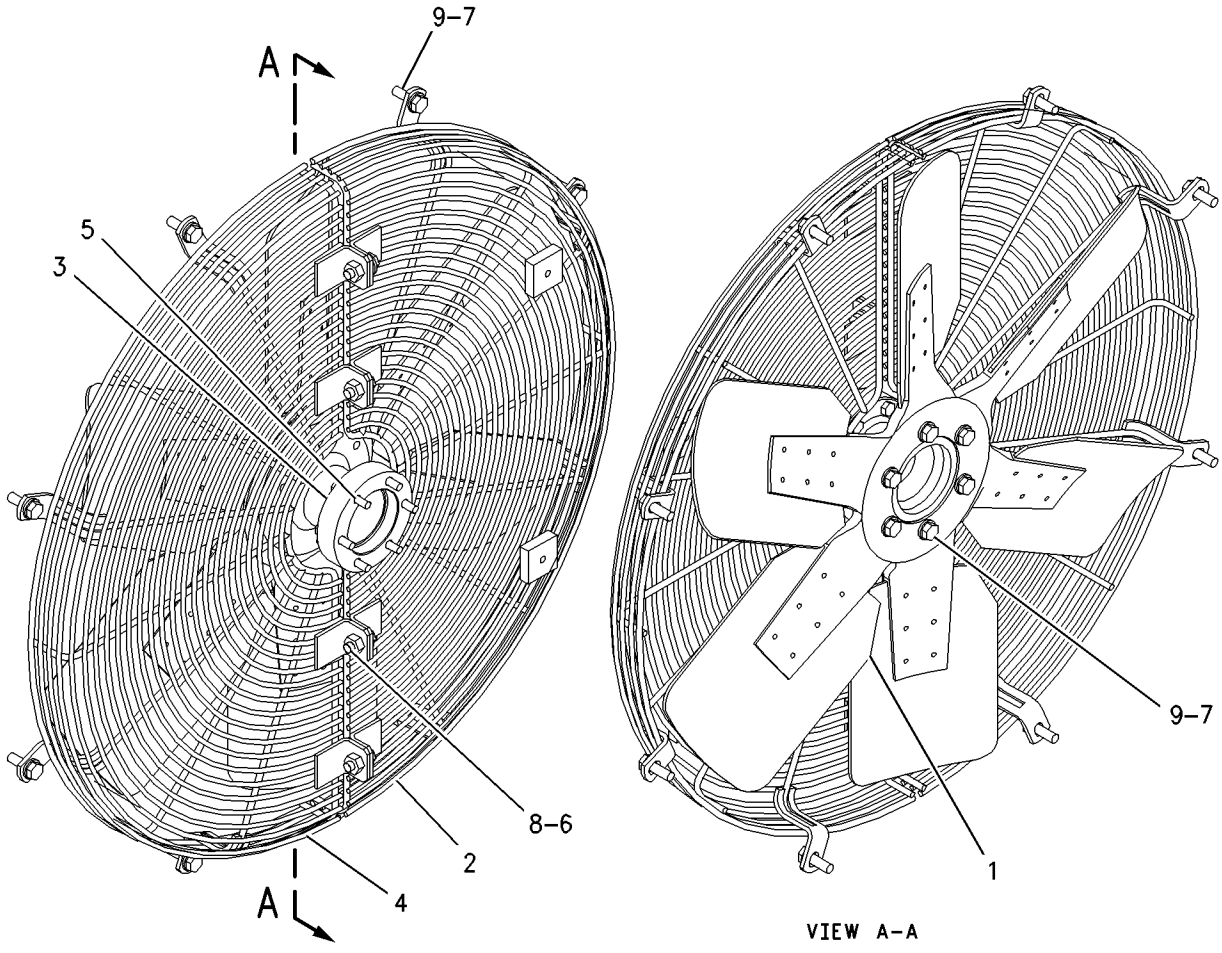

GRAPHIC #1 **<END>** g00771054

195-1043 FAN GP-REVERSIBLE

S/N: CCK1-UP

CANNOT BE USED WITH 196-1814—PAGE 78, 195-1045—PAGE 241, , 195-1041—PAGE 80 AN ATTACHMENT

SMCS-1356, 1360 **i01830826**

NOTE	REF NO	GRAPHIC REF	PART NUMBER	QTY	PART NAME 1 2 3 4 5 6 (PRODUCT LEVEL)	SEE PAGE
	1	1	**6P-5560**	1	GROMMET	
	2	1	**188-8954**	1	SPIDER AS-FAN	
	3	1	**195-6815**	1	GUARD AS-FAN (REV)	
	4	1	**200-0928**	1	ADAPTER	
	5	1	**200-3736**	1	GUARD AS-FAN (LEFT)	
M		1	**8T-3490**	4	NUT-WELD (M10X1.5 THD)	
M	6	1	**099-3649**	6	BOLT (M8X1.25X40MM)	
	7	1	**7X-7729**	4	WASHER (11X25X3MM THK)	
	8	1	**8T-4121**	14	WASHER-HARD (11X21X2.5MM THK)	
M	9	1	**8T-4136**	4	BOLT (M10X1.5X25MM)	
M	10	1	**8T-4195**	8	BOLT (M10X1.5X30MM)	
M	11	1	**8T-4186**	6	BOLT (M10X1.5X40MM)	

M-METRIC PART

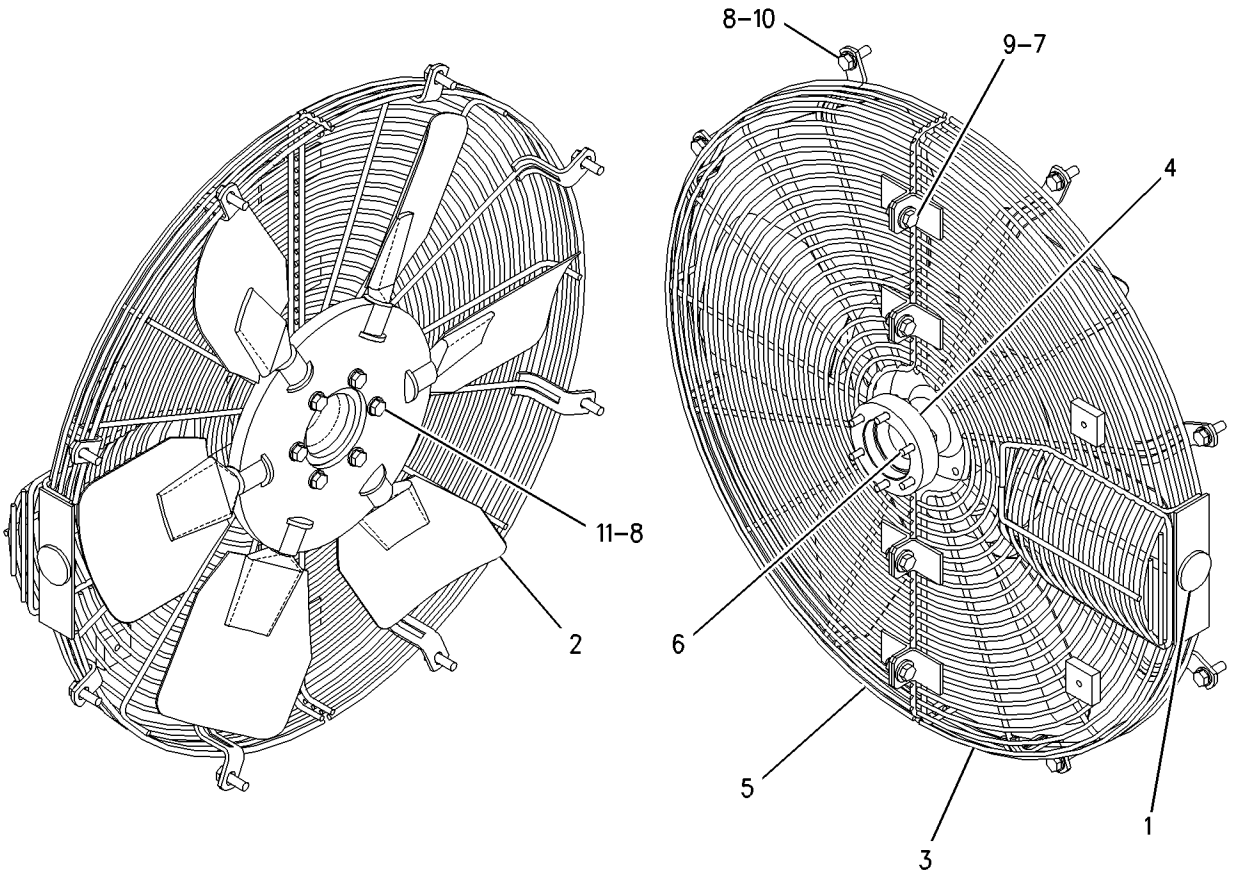

GRAPHIC #1 **<END>** g00772264

COOLING SYSTEM

159-1814 LINES GP-WATER

S/N: BMA1100-UP
PART OF 191-4479, 191-4481 ENGINE AR-COMPLETE
ALSO AN ATTACHMENT

SMCS-1355, 1380, 1393 **i01882556**

NOTE	REF NO	GRAPHIC REF	PART NUMBER	QTY	PART NAME 1 2 3 4 5 6 (PRODUCT LEVEL)	SEE PAGE
	1	1	**7E-0759**	1	HOSE	
	3	1	**157-0670**	1	CAP-DUST (COOLANT SAMPLING VALVE)	
	4	1	**126-5466**	1	GASKET	
	5	1	**126-5869**	1	REGULATOR-WATER TEMPERATURE (94 DEG C) (COOLANT)	
	6	1	**206-1540**	1	HOUSING	
	7	1	**136-0812**	1	GASKET-WATER REGULATOR (COOLANT TEMPERATURE)	
	8	1	**150-1999**	2	CLAMP	
	9	1	**191-2111**	1	ELBOW	
	10	1	**011-5224**	1	BUSHING-TERMINAL	
	11	1	**9S-8005**	1	PLUG	
	11A	1	**3K-0360**	1	SEAL-O-RING	
	12	1	**154-9024**	1	VALVE GP-FLUID SAMPLING (COOLANT)	
M	13	1	**5P-8347**	2	BOLT (M8X1.25X70MM)	
M	14	1	**6V-3940**	6	BOLT (M8X1.25X25MM)	
M	15	1	**6V-5223**	1	BOLT (M8X1.25X100MM)	
	16	1	**7W-6492**	3	PLUG-PIPE	
	17	1	**8T-6767**	1	PLUG-PIPE	
	18	1	**9M-1974**	6	WASHER-HARD (8.8X16X2MM THK)	

M-METRIC PART

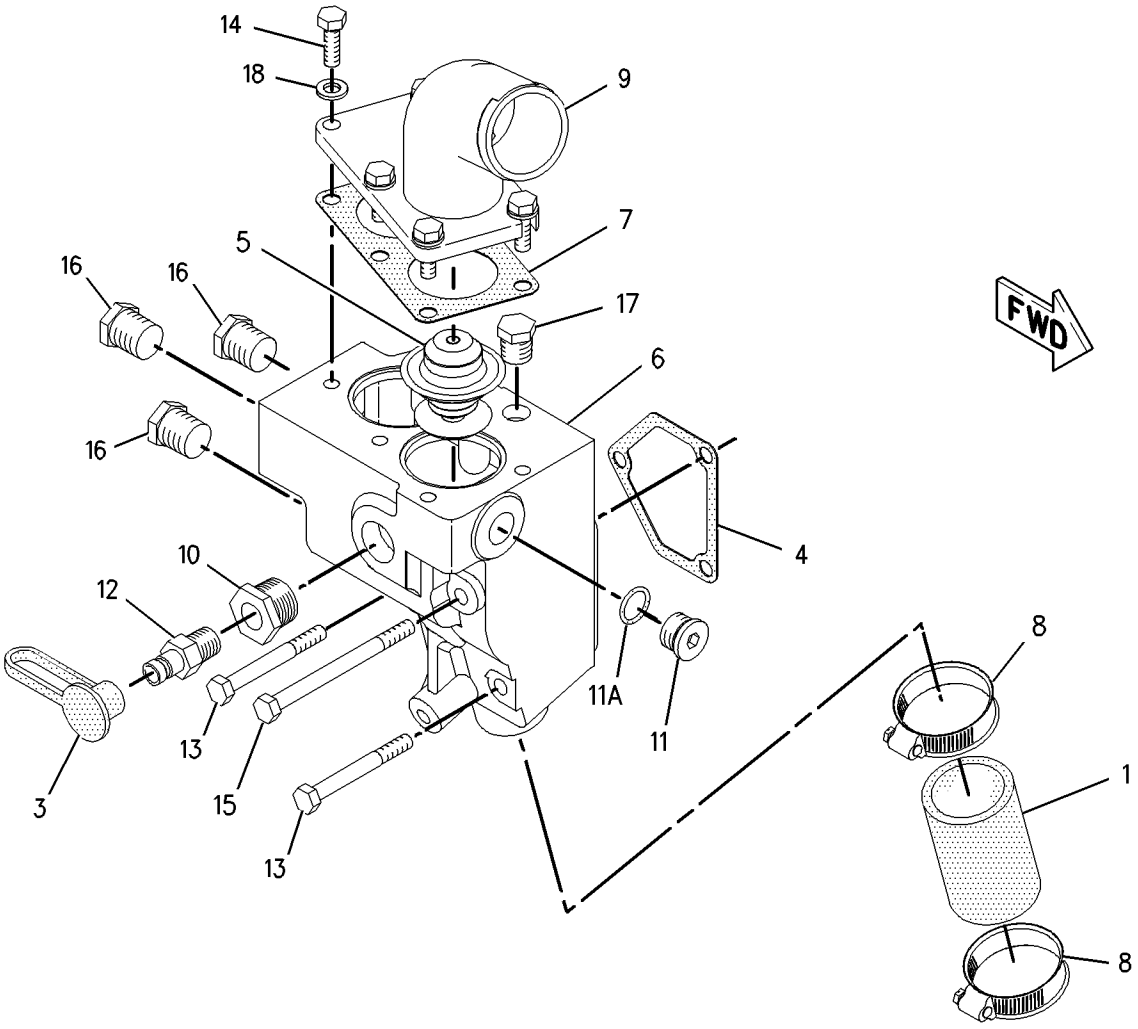

GRAPHIC #1 **<END>** g00781109

193-9237 PUMP GP-WATER

S/N: BMA1100-UP
PART OF 191-4479, 191-4481 ENGINE AR-COMPLETE
ALSO AN ATTACHMENT

SMCS-1361, 1363, 1364, 1373, 1384, 1389, 1394 **i01483815**

NOTE	REF NO	GRAPHIC REF	PART NUMBER	QTY	PART NAME 1 2 3 4 5 6 (PRODUCT LEVEL)	SEE PAGE
Y	1	1	*193-9238*	1	PUMP GP-WATER	85
M	2	1	**8T-0644**	4	BOLT (M10X1.50X90MM)	
	3	1	**2M-4453**	1	SEAL-O-RING	
	4	1	**7F-8267**	1	SEAL-O-RING	

M-METRIC PART
Y-SEPARATE ILLUSTRATION

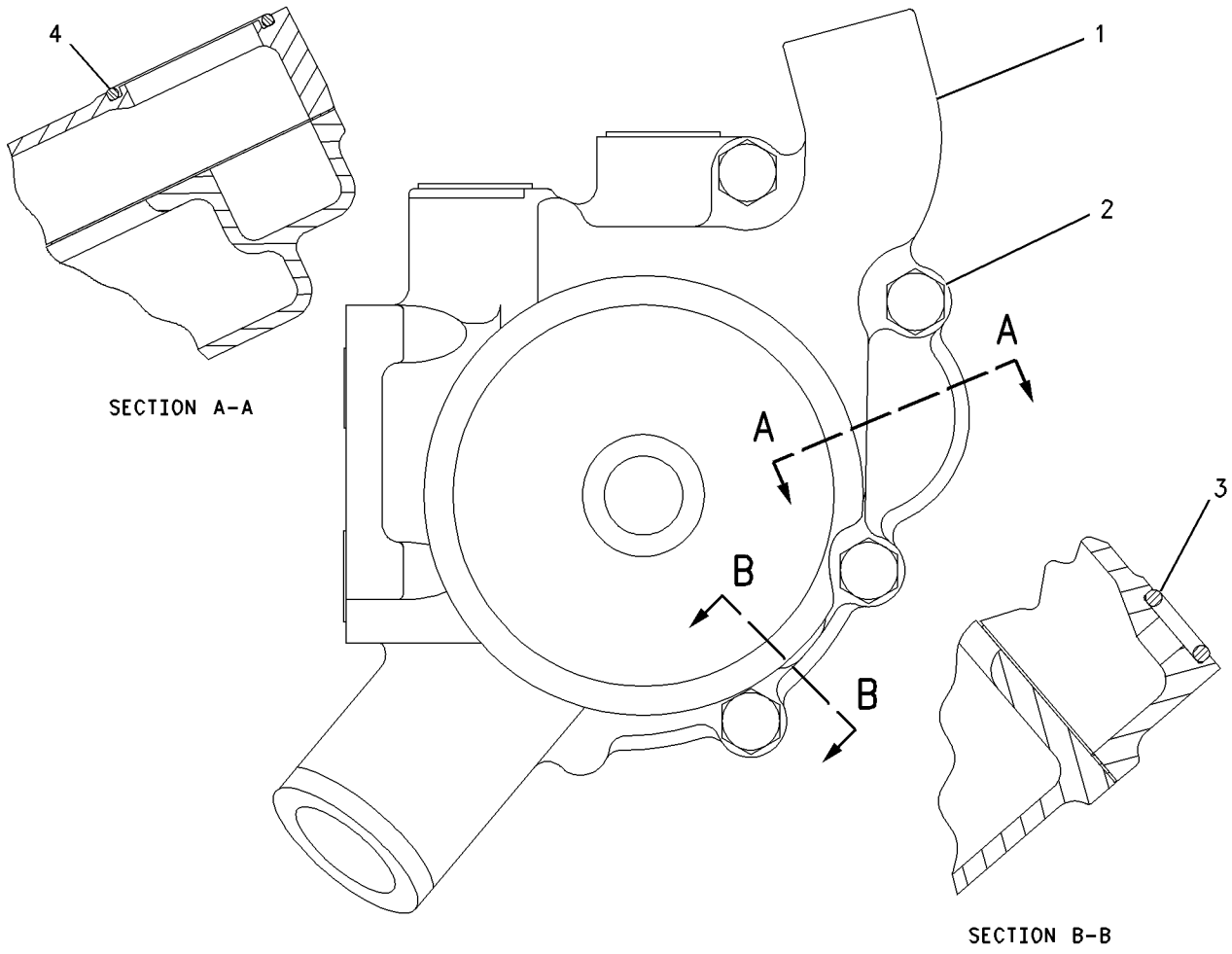

GRAPHIC #1 **<END>** g00772077

COOLING SYSTEM

193-9238 PUMP GP-WATER

S/N: BMA1100-UP
PART OF 193-9237 PUMP GP-WATER
ALSO AN ATTACHMENT

SMCS-1361, 1363, 1364, 1373, 1384, 1389, 1394 **i01884402**

NOTE	REF NO	GRAPHIC REF	PART NUMBER	QTY	PART NAME 1 2 3 4 5 6 (PRODUCT LEVEL)	SEE PAGE
	1	1	**193-9239**	1	PUMP AS-WATER	
	1A	1	**117-3437**	1	PULLEY (8 GROOVE)	
	1B	1	**119-3025**	1	FILTER-WATER (WATER PUMP)	
	1C	1	**129-1170**	1	SHAFT AS	
	1D	1	**147-5088**	1	SEAL AS-WATER PUMP	
	1E	1	**152-3952**	1	IMPELLER-PUMP	
	1F	1	**193-9240**	1	HOUSING-PUMP	
	2	1	**4W-7592**	1	GASKET	
	3	1	**4W-0253**	1	COVER	
M	4	1	**6V-3918**	4	BOLT (M8X1.25X50MM)	
	5	1	**9M-1974**	4	WASHER-HARD (8.8X16X2MM THK)	
	6	1	**9S-8003**	1	PLUG	
	7	1	**1J-9671**	1	SEAL-O-RING	
	8	1	**9S-8005**	2	PLUG	
	9	1	**3K-0360**	2	SEAL-O-RING	
	10	1	**9S-8008**	2	PLUG	
	11	1	**3D-2824**	2	SEAL-O-RING	
	12	1	**9S-8006**	1	PLUG	
	13	1	**2M-9780**	1	SEAL-O-RING	

M-METRIC PART

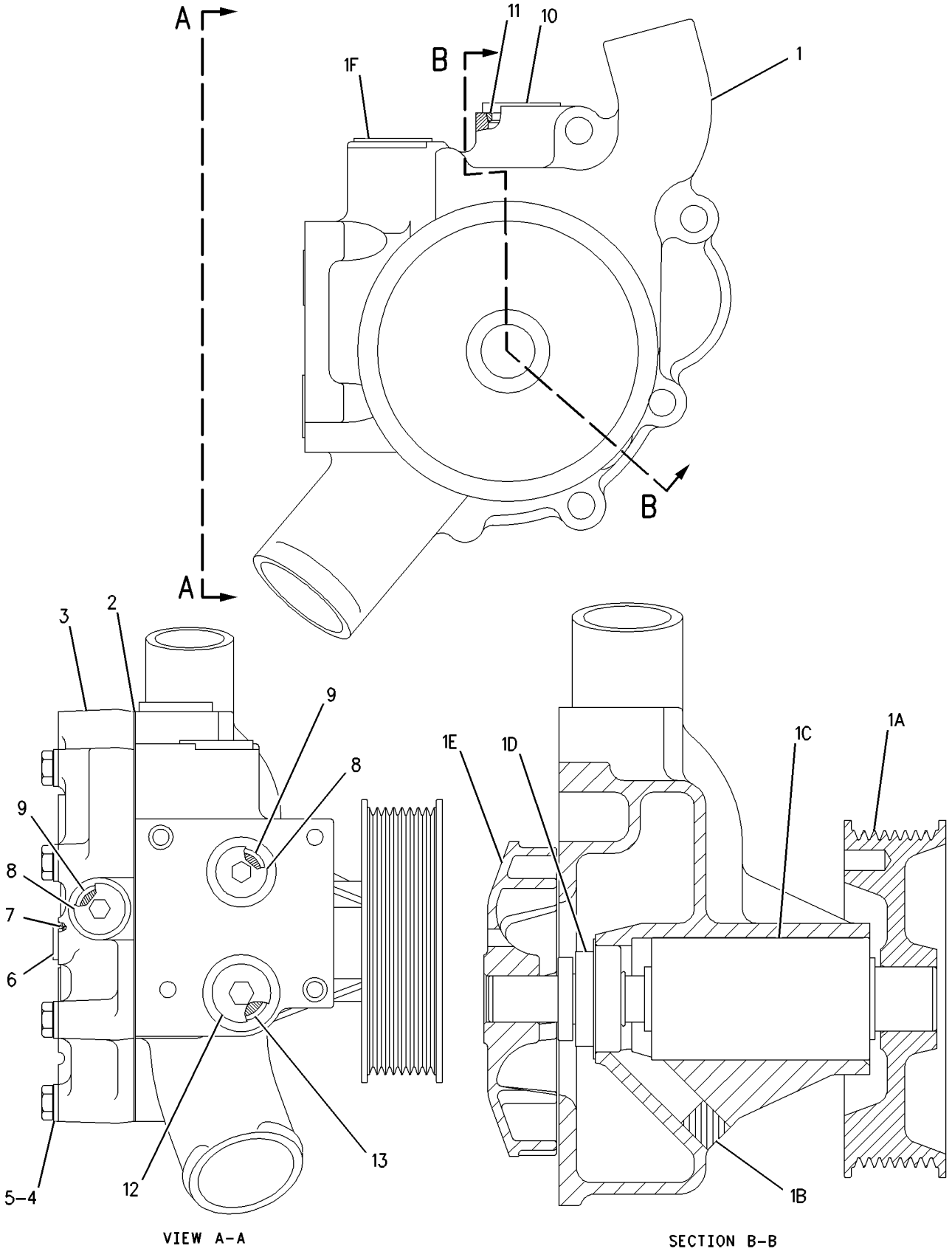

GRAPHIC #1 **<END>** g00772119

COOLING SYSTEM

195-1040 RADIATOR GP

S/N: CCK1-UP

PART OF 189-4622 INSTALLATION AR-ENGINE

SMCS-1351 **i01884404**

NOTE	REF NO	GRAPHIC REF	PART NUMBER	QTY	PART NAME 1 2 3 4 5 6 (PRODUCT LEVEL)	SEE PAGE
	2	1	**5D-1026**	1	CLAMP-HOSE	
	3	1	**5V-9221**	2	SPACER (13.8X25X25MM THK)	
	4	1	**6V-7238**	1	VALVE-SHUTOFF	
	5	1	**7K-1181**	3	STRAP-CABLE	
	6	1	**7X-0458**	1	CLIP	
	7	1	**8T-4984**	1	CLAMP-HOSE	
	8	1	**8T-6703**	3	CLAMP-HOSE	
Y	9	1	**165-6634**	1	SENSOR GP-LIQUID LEVEL (COOLANT)	155
	10	1	**192-4428**	1	BRACKET	
	11	1	**192-4429**	1	BRACKET	
Y	12	1	**195-1809**	1	RADIATOR GP	89
	13	1	**195-7898**	2	STRIP	
	14	1	**195-7899**	2	BAFFLE AS	
					(EACH INCLUDES)	
		1	**7G-5186**	8	SPACER (13X19X4.5MM THK)	
	15	1	**198-1663**	1	HOSE (LOWER RADIATOR)	
	16	1	**201-8316**	4	BRACKET AS	
	17	1	**214-6735**	1	PLATE AS	
M		1	**8T-3490**	8	NUT-WELD (M10X1.5 THD)	
	18	1	**214-6736**	1	SHROUD AS	
M		1	**8T-3490**	10	NUT-WELD (M10X1.5 THD)	
	19	1	**214-6738**	1	HOSE (UPPER RADIATOR)	
	22	1	**190-5360**	1	SHROUD AS	
M		1	**8T-3490**	12	NUT-WELD (M10X1.5 THD)	
	23	1	**3K-0360**	1	SEAL-O-RING	
	24	1	**7X-7729**	7	WASHER (11X25X3MM THK)	
	25	1	**8T-4121**	27	WASHER-HARD (11X21X2.5MM THK)	
M	26	1	**8T-4136**	26	BOLT (M10X1.5X25MM)	
M	27	1	**8T-4137**	8	BOLT (M10X1.5X20MM)	
M	28	1	**8T-4194**	2	BOLT (M12X1.75X50MM)	
E	29	1	**5P-0767**		HOSE (70 CM)	
E	30	1	**8C-3681**		HOSE (129CM)	
D	31	1	**6V-5191**		SEAL (1M)	
D	32	1	**5P-9909**		SEAL (.55M)	
D	32A	1	**5P-9909**		SEAL (.07M)	
D	33	1	**5P-5931**		SEAL (.9M)	
D	34	1	**6V-5163**		SEAL (.9M)	

D-ORDER BY THE METER
E-ORDER BY THE CENTIMETER
M-METRIC PART
Y-SEPARATE ILLUSTRATION

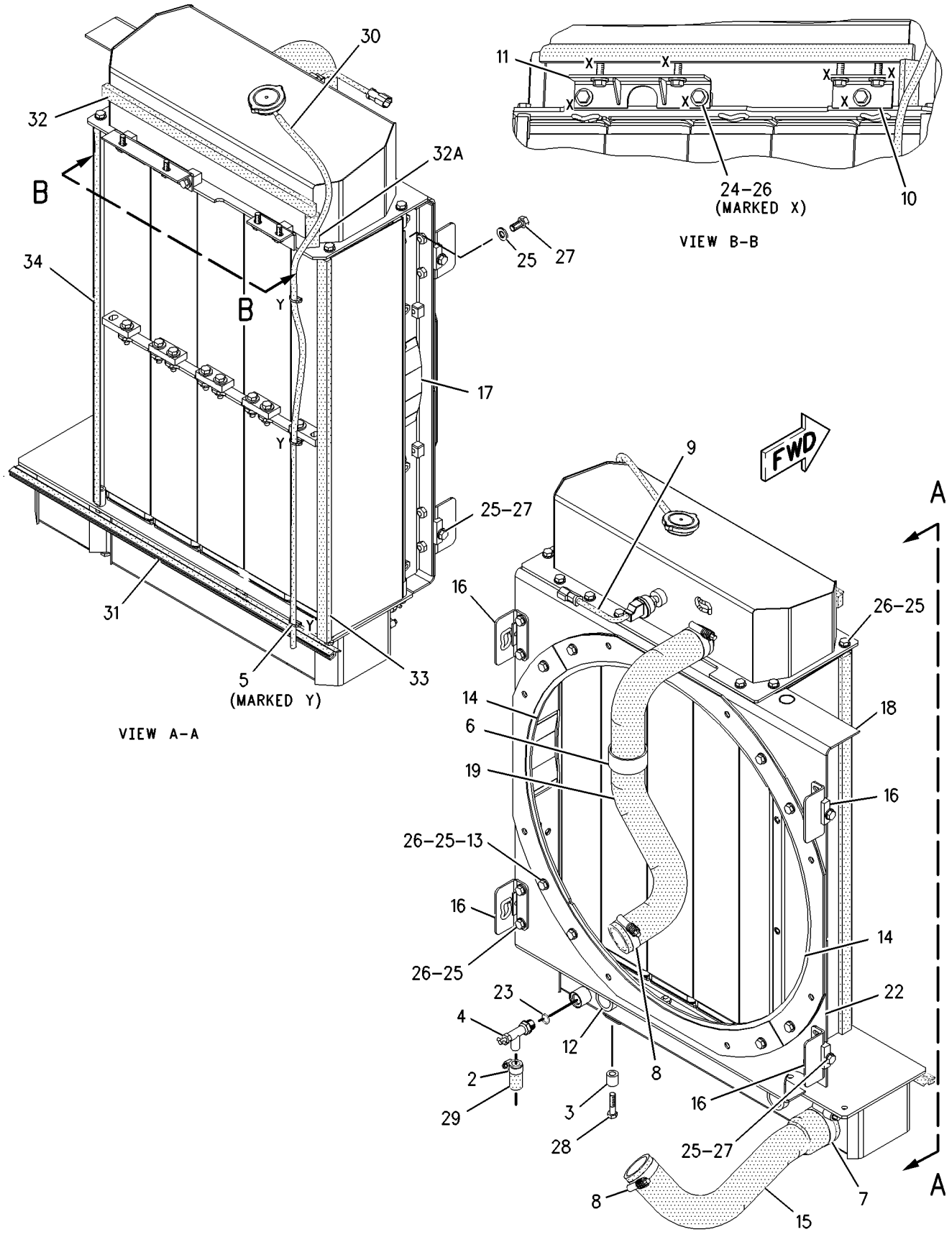

GRAPHIC #1 **<END>** g00975028

COOLING SYSTEM

195-1809 RADIATOR GP

S/N: CCK1-UP

PART OF 195-1040 RADIATOR GP

SMCS-1351 **i01881063**

NOTE	REF NO	GRAPHIC REF	PART NUMBER	QTY	PART NAME 1 2 3 4 5 6 (PRODUCT LEVEL)	SEE PAGE
	1	1	**4P-9942**	5	SEAL-END TANK	
	2	1	**4P-9943**	5	SEAL-END TANK	
	3	1	**7E-7754**	4	STRAP AS	
	4	1	**109-6967**	2	PLATE AS	
					(EACH INCLUDES)	
M		1	**8T-3490**	4	NUT-WELD (M10X1.5 THD)	
	5	1	**199-2387**	1	TANK AS (RADIATOR)	
M		1	**8T-3597**	2	NUT-WELD (M12X1.75 THD)	
		1	**106-7124**	1	CORE AS-OIL COOLER	
	6	1	**209-1990**	1	TANK GP (RADIATOR-UPPER)	
		1	**031-1119**	1	CAP AS-RADIATOR (PRESSURE RELIEF)	
	7	1	**188-3126**	5	RADIATOR AS	
	8	1	**7X-7729**	8	WASHER (11X25X3MM THK)	
	9	1	**8T-4121**	8	WASHER-HARD (11X21X2.5MM THK)	
M	10	1	**8T-4186**	8	BOLT (M10X1.5X40MM)	
M	11	1	**8T-4195**	8	BOLT (M10X1.5X30MM)	

M-METRIC PART

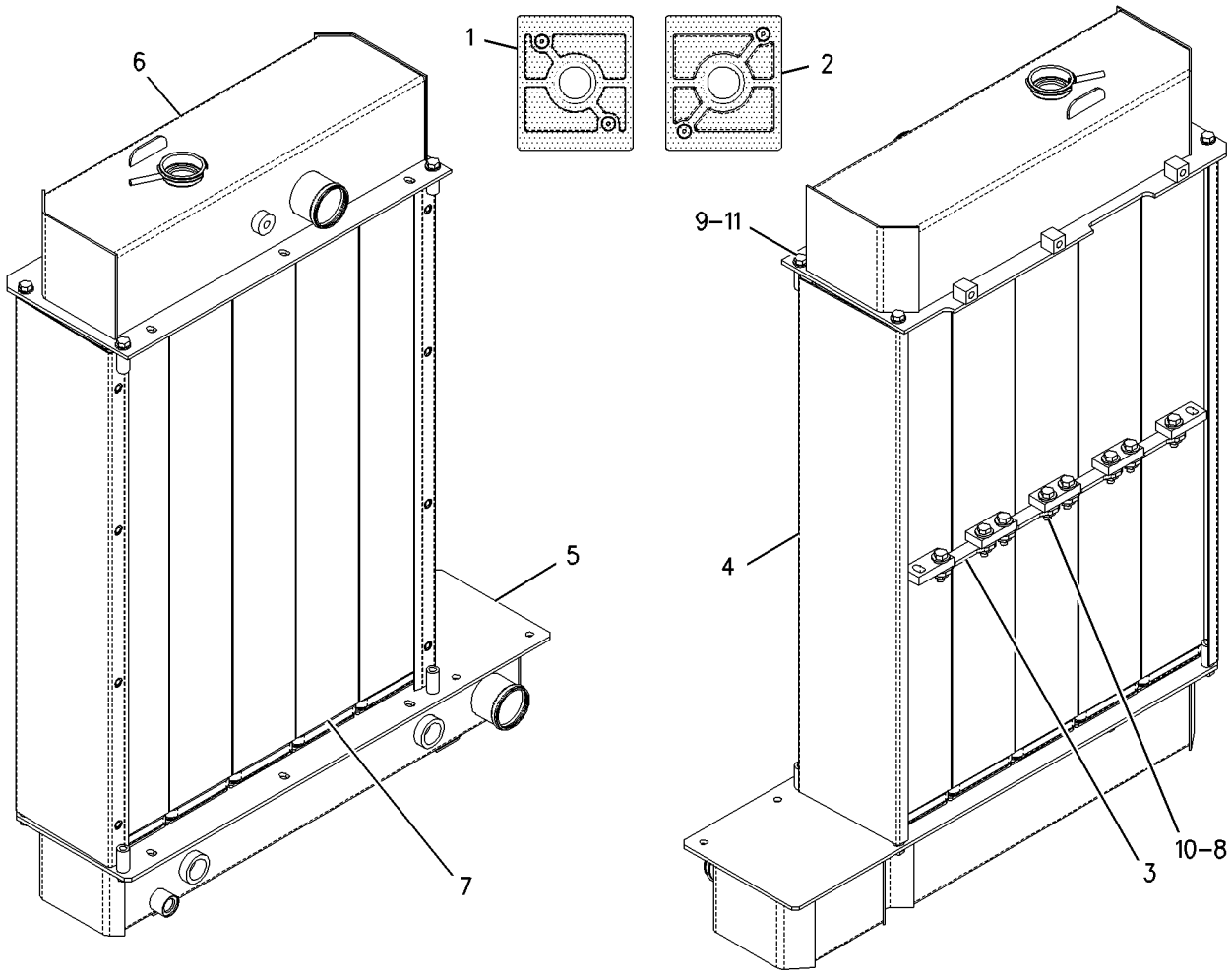

GRAPHIC #1 **<END>** g00773959

AIR INLET AND EXHAUST SYSTEM

195-1042 AFTERCOOLER GP

S/N: CCK1-UP

PART OF 189-4622 INSTALLATION AR-ENGINE

SMCS-1063, 1064, 1079 **i01842783**

NOTE	REF NO	GRAPHIC REF	PART NUMBER	QTY	PART NAME 1 2 3 4 5 6 (PRODUCT LEVEL)	SEE PAGE
	1	1	**197-4848**	1	BRACKET	
	2	1	**200-8616**	1	AFTERCOOLER AS	
	3	1	**7X-7729**	4	WASHER (11X25X3MM THK)	
	4	1	**8T-4121**	6	WASHER-HARD (11X21X2.5MM THK)	
M	5	1	**8T-4136**	8	BOLT (M10X1.5X25MM)	
M	6	1	**8T-4195**	2	BOLT (M10X1.5X30MM)	
E	7	1	**5P-5649**		SEAL (10 CM)	
E	8	1	**6V-6604**		SEAL (40 CM)	
E	9	1	**5P-5931**		SEAL (90 CM)	

E-ORDER BY THE CENTIMETER
M-METRIC PART

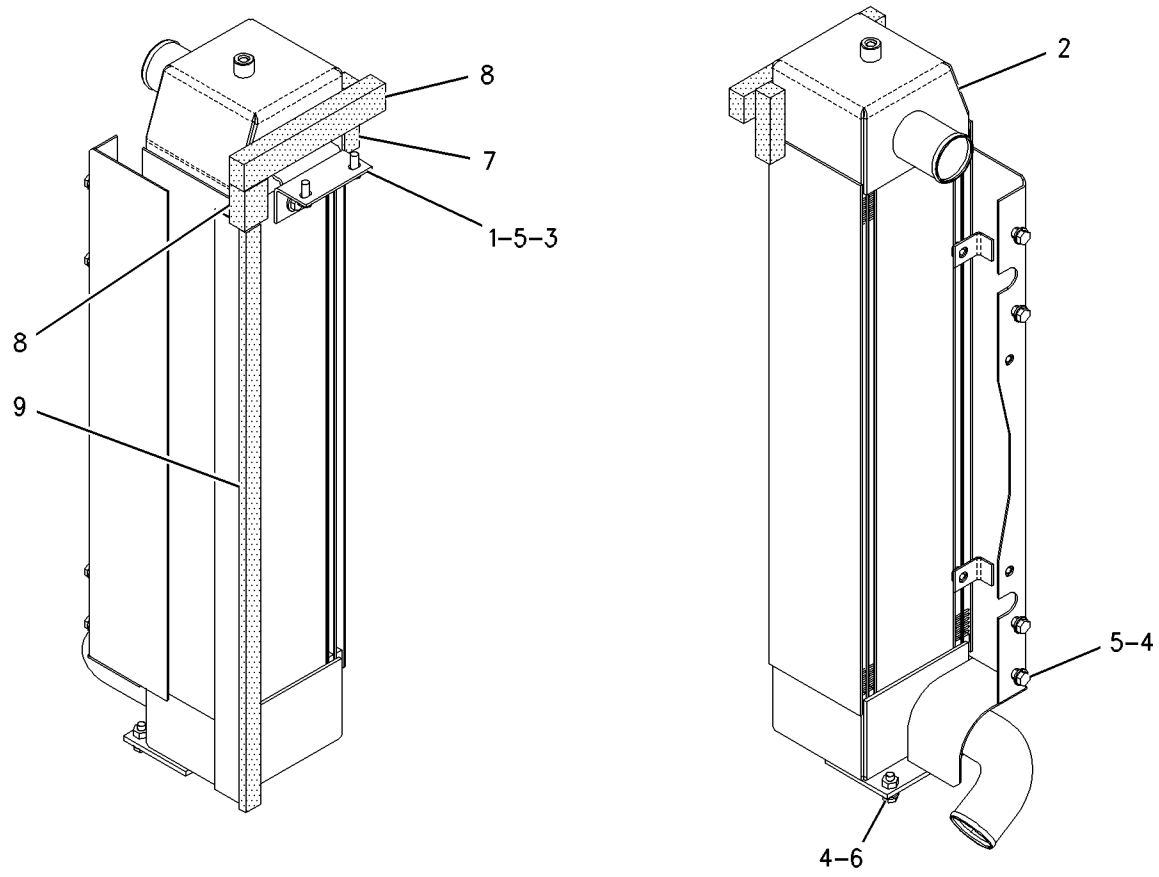

GRAPHIC #1 **<END>** g00772048

AIR INLET AND EXHAUST SYSTEM

195-1049 AIR CLEANER GP

S/N: CCK1-UP

PART OF 189-4622 INSTALLATION AR-ENGINE

SMCS-1051, 1054 **i01843128**

NOTE	REF NO	GRAPHIC REF	PART NUMBER	QTY	PART NAME 1 2 3 4 5 6 (PRODUCT LEVEL)	SEE PAGE
	1	1	**5P-2948**	1	CONNECTOR GP	
	2	1	**186-2695**	1	PLATE	
	3	1	**186-2696**	1	BRACKET AS	
	4	1	**187-4807**	1	BRACKET AS	
	5	1	**199-1416**	1	AIR CLEANER AS	
		1	**6I-2501**	1	FILTER ELEMENT AS-AIR (PRIMARY)	
		1	**6I-2502**	1	FILTER ELEMENT AS-AIR (SECONDARY)	
		1	**6I-4464**	1	COVER AS-AIR CLEANER	
M	6	1	**5C-7261**	3	NUT (M8X1.25 THD)	
	8	1	**8T-4121**	11	WASHER-HARD (11X21X2.5MM THK)	
M	9	1	**8T-4136**	7	BOLT (M10X1.5X25MM)	
M	11	1	**8T-4195**	4	BOLT (M10X1.5X30MM)	
	12	1	**8T-4224**	3	WASHER-HARD (8.8X16X2MM THK)	

M-METRIC PART

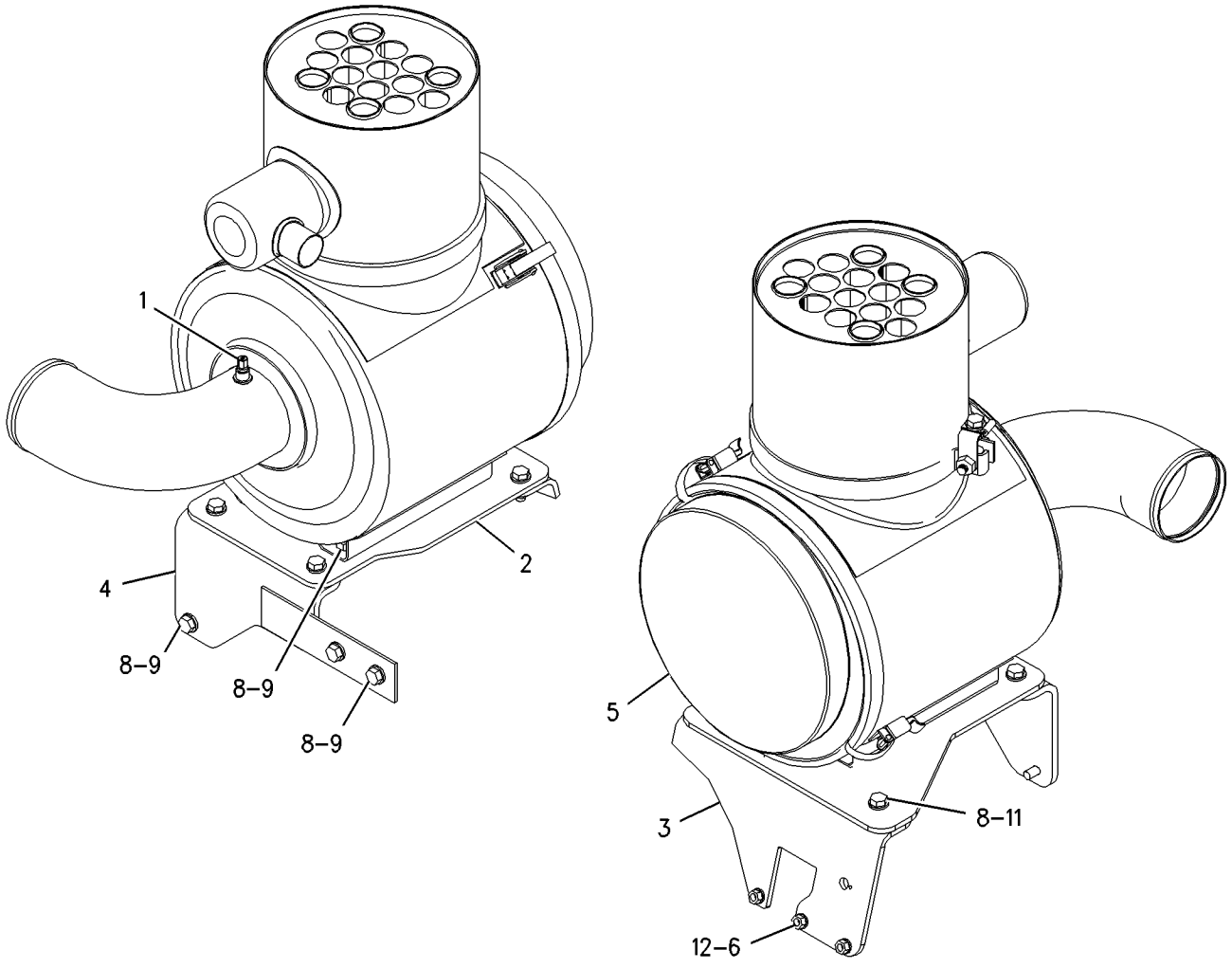

GRAPHIC #1 **<END>** g00941932

AIR INLET AND EXHAUST SYSTEM

153-1794 COVER GP-AIR INLET

S/N: BMA1100-UP
PART OF 191-4479, 191-4481 ENGINE AR-COMPLETE
ALSO AN ATTACHMENT

SMCS-1087 **i01802450**

NOTE	REF NO	GRAPHIC REF	PART NUMBER	QTY	PART NAME 1 2 3 4 5 6 (PRODUCT LEVEL)	SEE PAGE
	1	1	**203-3769**	1	COVER-AIR INLET	
	2	1	**144-3472**	1	GASKET	
	3	1	**9S-8005**	2	PLUG	
	4	1	**3K-0360**	2	SEAL-O-RING	

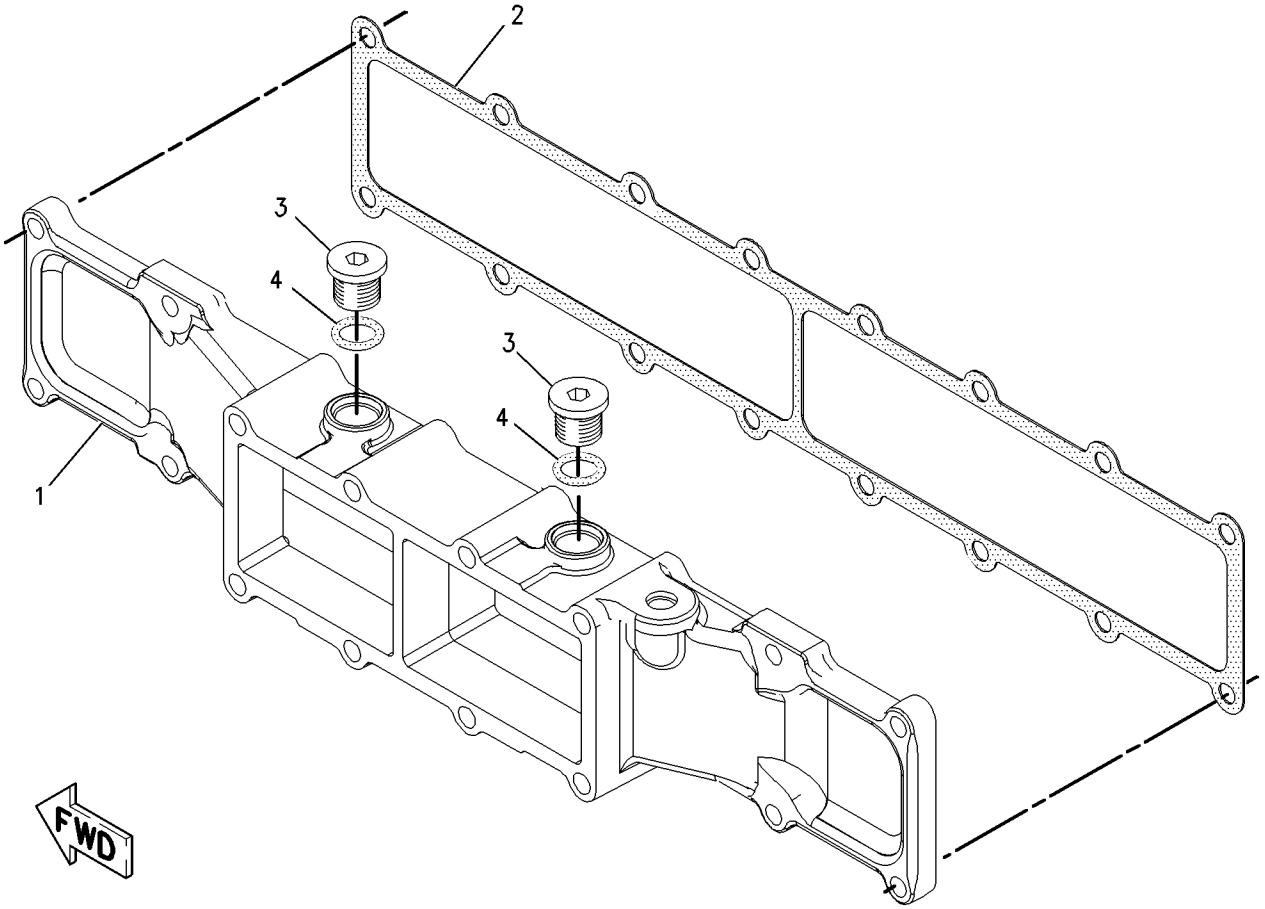

GRAPHIC #1 **<END>** g00826727

AIR INLET AND EXHAUST SYSTEM

170-3273 ELBOW GP-AIR INLET

S/N: BMA1100-UP
PART OF 191-4479, 191-4481 ENGINE AR-COMPLETE
ALSO AN ATTACHMENT

SMCS-1087 **i01859783**

NOTE	REF NO	GRAPHIC REF	PART NUMBER	QTY	PART NAME 1 2 3 4 5 6 (PRODUCT LEVEL)	SEE PAGE
B	1	1	**1U-8846**		SEALANT-GASKET	
	3	1	**170-3274**	1	ELBOW	
M	4	1	**175-4166**	4	STUD	
	5	1	**3K-0360**	1	SEAL-O-RING	
M	6	1	**6V-3821**	4	BOLT (M8X1.25X110MM)	
	7	1	**9M-1974**	8	WASHER-HARD (8.8X16X2MM THK)	
	8	1	**9S-8005**	1	PLUG	

B-USE AS REQUIRED
M-METRIC PART

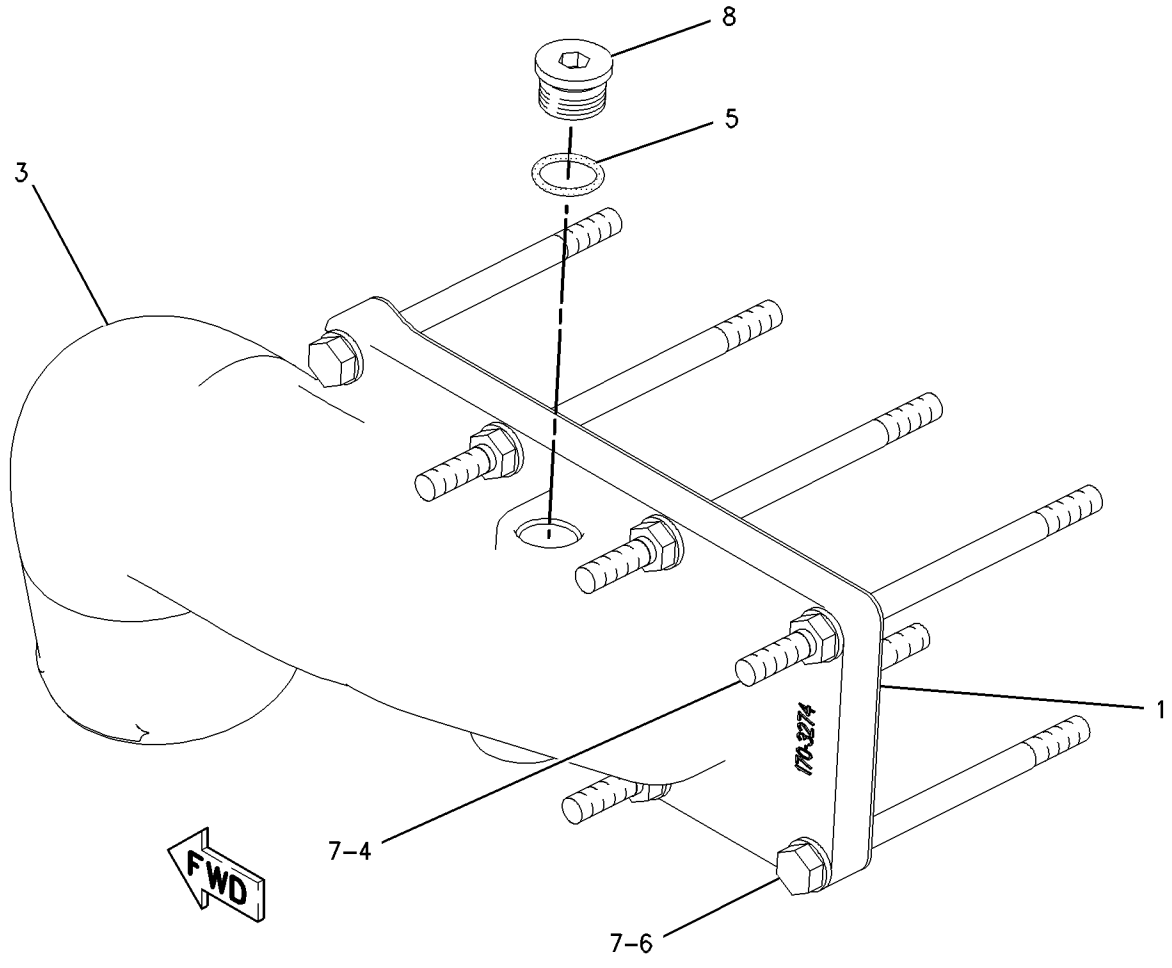

GRAPHIC #1 **<END>** g00948042

AIR INLET AND EXHAUST SYSTEM

178-9018 INDICATOR GP-AIR FILTER CHANGE

S/N: CCK1-UP

PART OF 156-8911 CAB GP

SMCS-7452 **i01882566**

NOTE	REF NO	GRAPHIC REF	PART NUMBER	QTY	PART NAME 1 2 3 4 5 6 (PRODUCT LEVEL)	SEE PAGE
	1	1	**3S-2093**	1	STRAP-CABLE	
BD	2	1	**5P-5630**		TUBE	
	3	1	**5P-2948**	1	CONNECTOR GP	
		1	**4K-9821**	1	SLEEVE	
		1	**4K-9822**	1	NUT (5/16-24 THD)	
	4	1	**8N-2694**	1	INDICATOR GP-AIR FILTER CHANGE	
	5	1	**2V-1937**	1	GROMMET	
	6	1	**5K-5068**	1	FITTING	

B-USE AS REQUIRED
D-ORDER BY THE METER

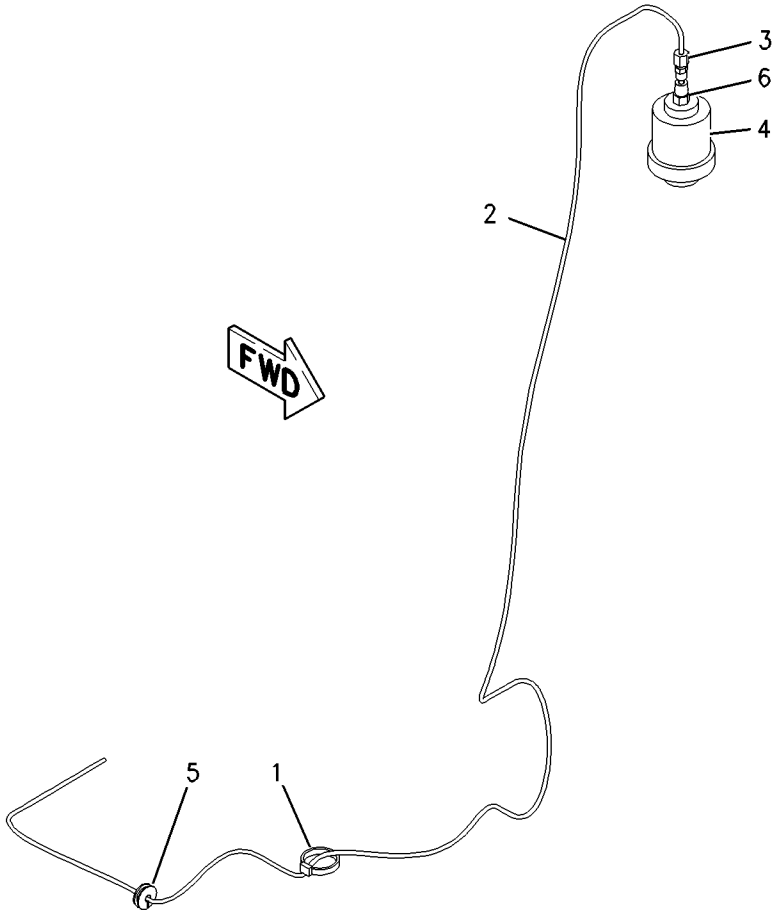

GRAPHIC #1 **<END>** g00940007

AIR INLET AND EXHAUST SYSTEM

195-1047 LINES GP-AIR

S/N: CCK1-UP

PART OF 189-4622 INSTALLATION AR-ENGINE

SMCS-1071 **i01881429**

NOTE	REF NO	GRAPHIC REF	PART NUMBER	QTY	PART NAME 1 2 3 4 5 6 (PRODUCT LEVEL)	SEE PAGE
M	1	1	**8T-4195**	1	BOLT (M10X1.5X30MM)	
	2	1	**7E-3870**	1	CLAMP	
	3	1	**8T-4984**	6	CLAMP-HOSE	
	4	1	**8T-4986**	4	CLAMP-HOSE	
	5	1	**144-0367**	10	CLAMP-HOSE	
	6	1	**193-0205**	1	HOSE-REDUCER	
	7	1	**199-2565**	1	HOSE	
	8	1	**199-2569**	1	TUBE	
	9	1	**199-2579**	1	BRACKET AS	
M		1	**8T-3490**	1	NUT-WELD (M10X1.5 THD)	
	10	1	**199-2580**	1	HOSE	
	11	1	**200-3745**	1	HOSE	
	12	1	**200-3746**	1	BRACKET AS	
M		1	**8T-3490**	1	NUT-WELD (M10X1.5 THD)	
	13	1	**200-3747**	1	TUBE	
	14	1	**203-3158**	1	ADAPTER-EXHAUST	
	15	1	**203-7607**	1	HOSE	
	16	1	**206-7738**	1	ELBOW	
E	17	1	**206-7740**	1	HOSE	
	18	1	**109-1633**	2	CLIP (SLOT)	
	19	1	**109-1634**	2	CLIP (TAB)	
	20	1	**7C-0752**	1	CLAMP (TURBINE)	
	21	1	**8L-5832**	1	NUT-HEX (10-32 THD)	
	22	1	**8T-4121**	6	WASHER-HARD (11X21X2.5MM THK)	
M	23	1	**8T-4136**	5	BOLT (M10X1.5X25MM)	
	24	1	**9X-2646**	1	CLIP (SLOT)	
	25	1	**9X-2647**	1	CLIP (TAB)	
	26	1	**5P-2230**	2	CLAMP-HOSE	

E-ORDER BY THE CENTIMETER
M-METRIC PART

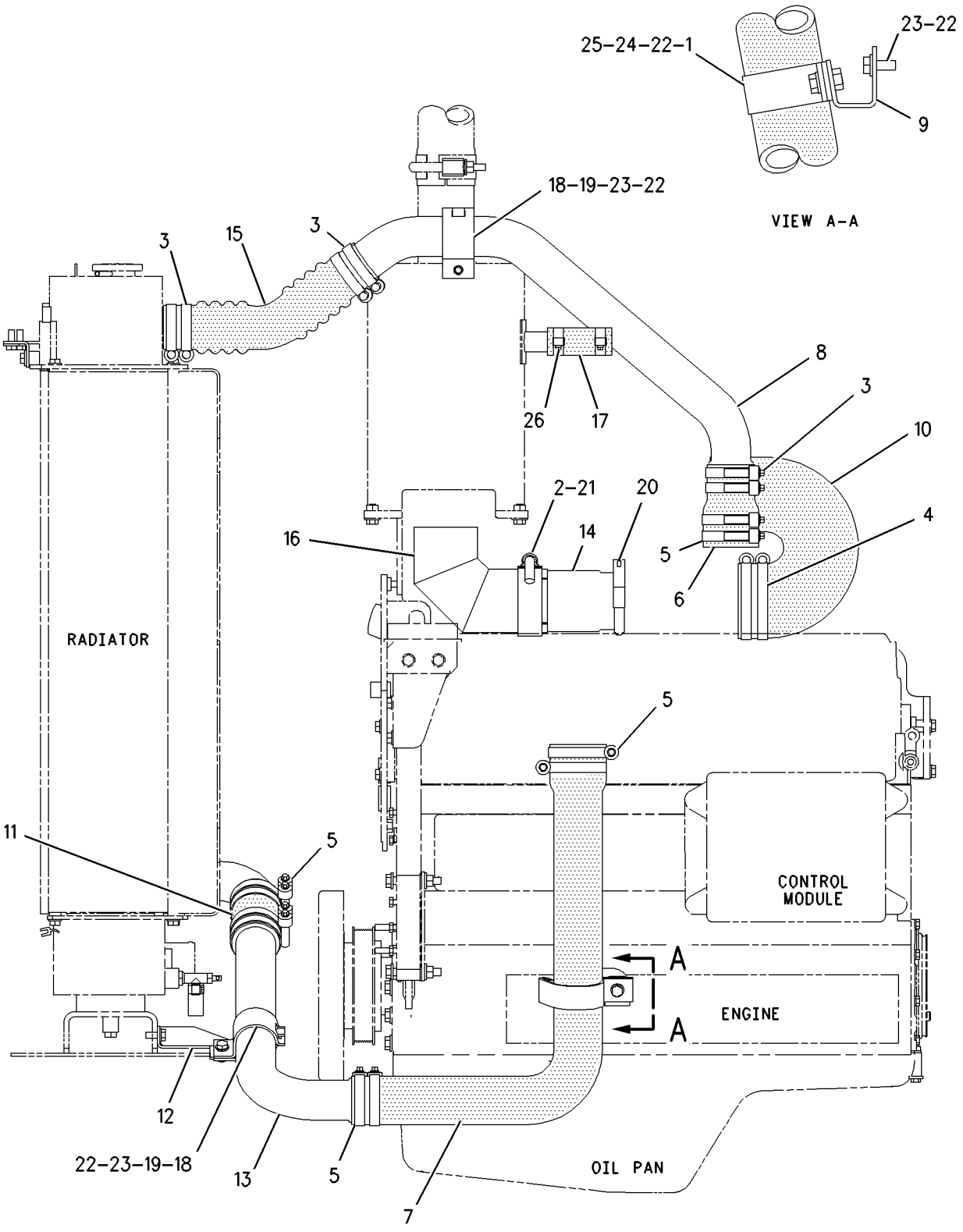

LEFT SIDE VIEW

GRAPHIC #1 **<END>** g00970493

AIR INLET AND EXHAUST SYSTEM

159-2572 MANIFOLD GP-EXHAUST

S/N: BMA1100-UP
FORWARD EXHAUST, HIGH-MOUNT TURBO
PART OF 191-4479, 191-4481 ENGINE AR-COMPLETE
ALSO AN ATTACHMENT

SMCS-1059 **i01804584**

NOTE	REF NO	GRAPHIC REF	PART NUMBER	QTY	PART NAME 1 2 3 4 5 6 (PRODUCT LEVEL)	SEE PAGE
	1	1	**172-6284**	3	GASKET	
M	2	1	**172-6298**	10	BOLT-FLANGE HEAD (M10)	
	3	1	**183-6854**	1	MANIFOLD-EXHAUST	
	4	1	**183-6856**	2	MANIFOLD-EXHAUST	
	5	1	**186-3525**	1	ELBOW	
	6	1	**189-8772**	10	SPACER	
	7	1	**203-3768**	2	SPACER	
	8	1	**210-7722**	2	BOLT-FLANGE HEAD (M10)	
M	9	1	**3E-8017**	4	LOCKNUT	
	10	1	**6V-5839**	4	WASHER (11X21X2.5MM THK)	
	11	1	**7C-7431**	1	GASKET-TURBOCHARGER	
M	12	1	**8T-7044**	8	STUD-TAPERLOCK	

M-METRIC PART

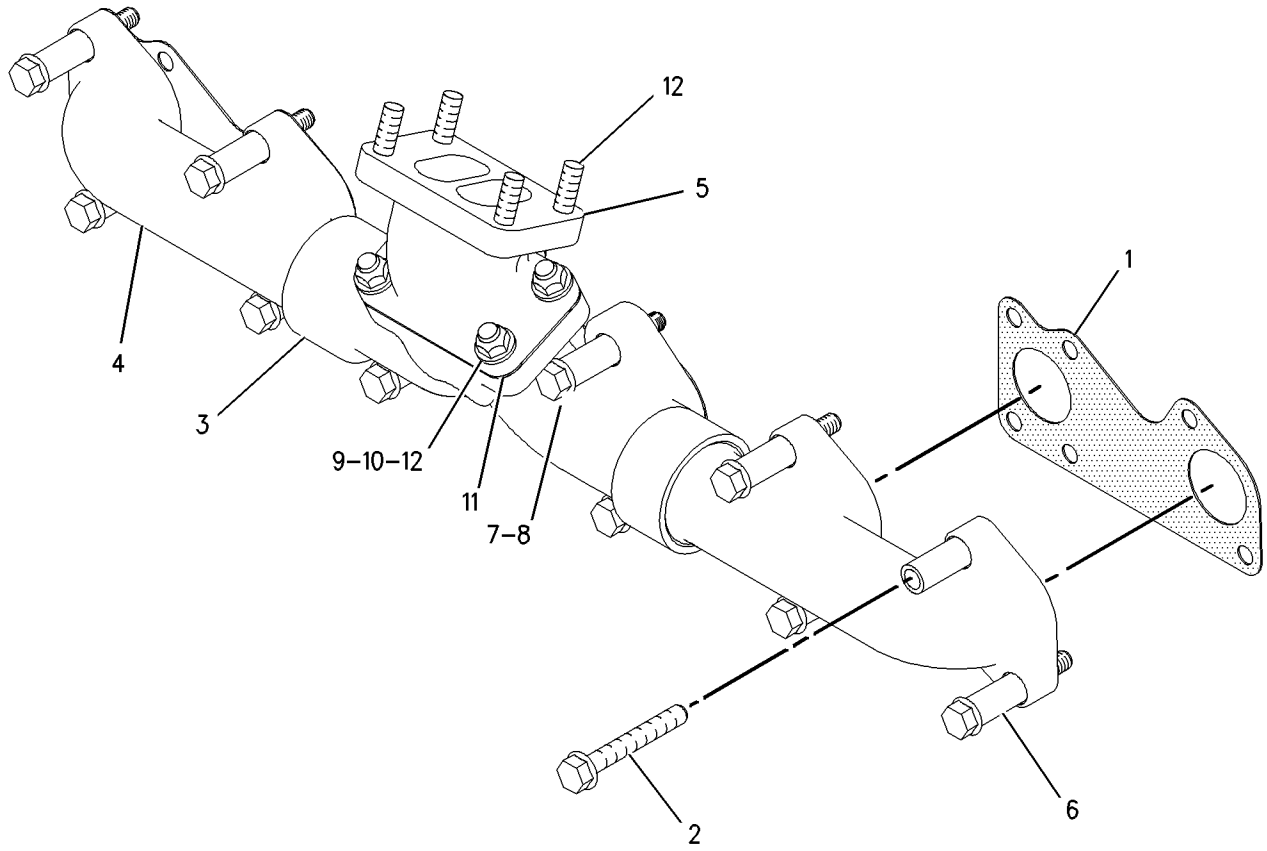

GRAPHIC #1 **<END>** g00923244

AIR INLET AND EXHAUST SYSTEM

201-5381 MOUNTING GP-MUFFLER

S/N: BMA1100-UP
PART OF 191-4479, 191-4481 ENGINE AR-COMPLETE
ALSO AN ATTACHMENT

SMCS-1062 **i01804591**

NOTE	REF NO	GRAPHIC REF	PART NUMBER	QTY	PART NAME 1 2 3 4 5 6 (PRODUCT LEVEL)	SEE PAGE
	1	1	**214-6740**	1	BRACKET AS	
	2	1	**8T-4121**	6	WASHER-HARD (11X21X2.5MM THK)	
M	3	1	**8T-4136**	6	BOLT (M10X1.5X25MM)	

M-METRIC PART

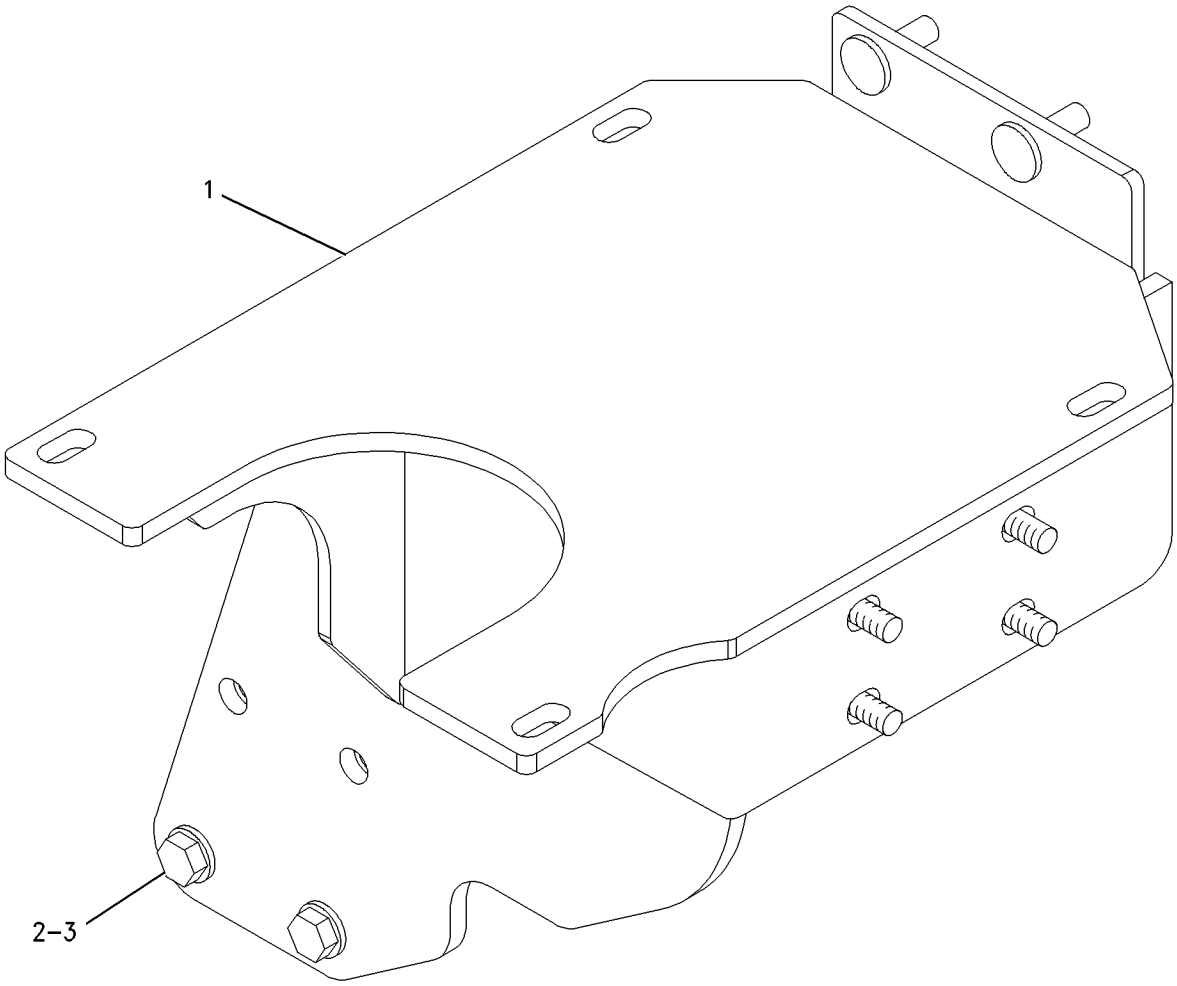

GRAPHIC #1 **<END>** g00769558

AIR INLET AND EXHAUST SYSTEM

195-1048 MUFFLER GP

S/N: CCK1-UP

PART OF 189-4622 INSTALLATION AR-ENGINE

SMCS-1062 **i01882420**

NOTE	REF NO	GRAPHIC REF	PART NUMBER	QTY	PART NAME 1 2 3 4 5 6 (PRODUCT LEVEL)	SEE PAGE
	1	1	**199-3003**	1	MUFFLER AS	
	2	1	**199-5977**	1	PIPE AS-EXHAUST	
	2A	1	**9Y-8315**	1	CLAMP-BENT BOLT	
	3	1	**7X-7729**	4	WASHER (11X25X3MM THK)	
M	4	1	**8T-4136**	4	BOLT (M10X1.5X25MM)	

M-METRIC PART

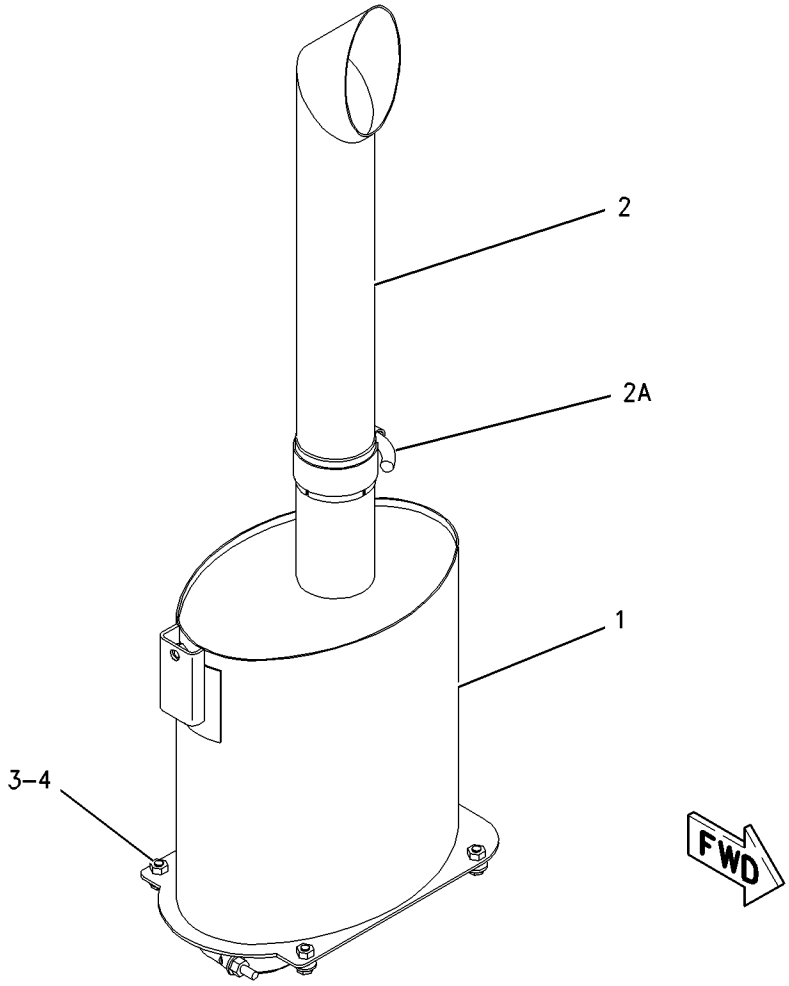

GRAPHIC #1 **<END>** g00941845

AIR INLET AND EXHAUST SYSTEM

203-2062 SHIELD GP-AIR CLEANER–PRECLEANER

S/N: CCK1-UP
PART OF 169-4912 SUPPRESSION AR-SOUND
AN ATTACHMENT

SMCS-1051 **i01877499**

NOTE	REF NO	GRAPHIC REF	PART NUMBER	QTY	PART NAME 1 2 3 4 5 6 (PRODUCT LEVEL)	SEE PAGE
	1	1	**199-5180**	1	SHIELD AS	
	2	1	**204-7427**	1	CLAMP	
M	3	1	**8T-4133**	1	NUT (M10X1.5 THD)	
M	4	1	**8T-4185**	1	BOLT (M10X1.5X50MM)	

M-METRIC PART

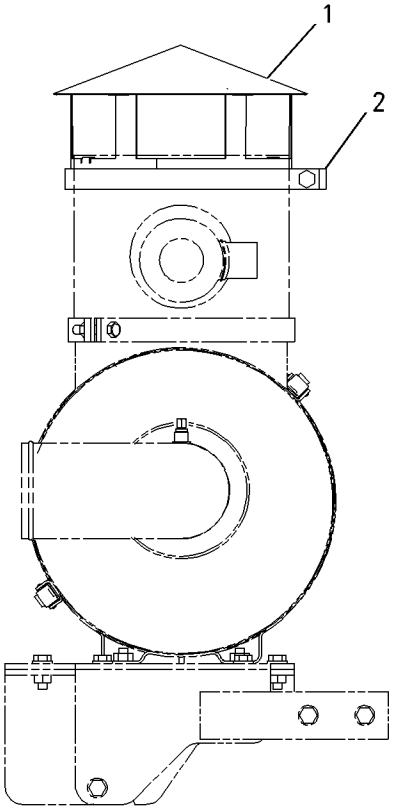

LEFT SIDE OF ENGINE

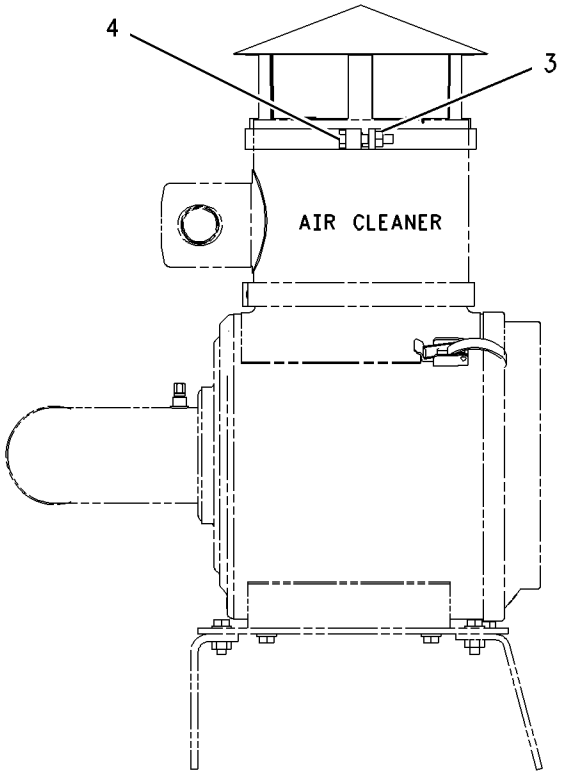

FRONT VIEW

GRAPHIC #1 **<END>** g00829142

AIR INLET AND EXHAUST SYSTEM

187-1602 TURBOCHARGER GP

S/N: BMA1100-UP
PART OF 191-4482 ENGINE AR-CORE
ALSO AN ATTACHMENT

SMCS-1052, 1060, 1065, 1077 **i01807197**

NOTE	REF NO	GRAPHIC REF	PART NUMBER	QTY	PART NAME 1 2 3 4 5 6 (PRODUCT LEVEL)	SEE PAGE
M	1	1	**3E-8017**	4	LOCKNUT (M10X1.5)	
	2	1	**7C-7431**	1	GASKET-TURBOCHARGER	
Y	3	1	**187-1603**	1	TURBOCHARGER GP	102

M-METRIC PART
Y-SEPARATE ILLUSTRATION

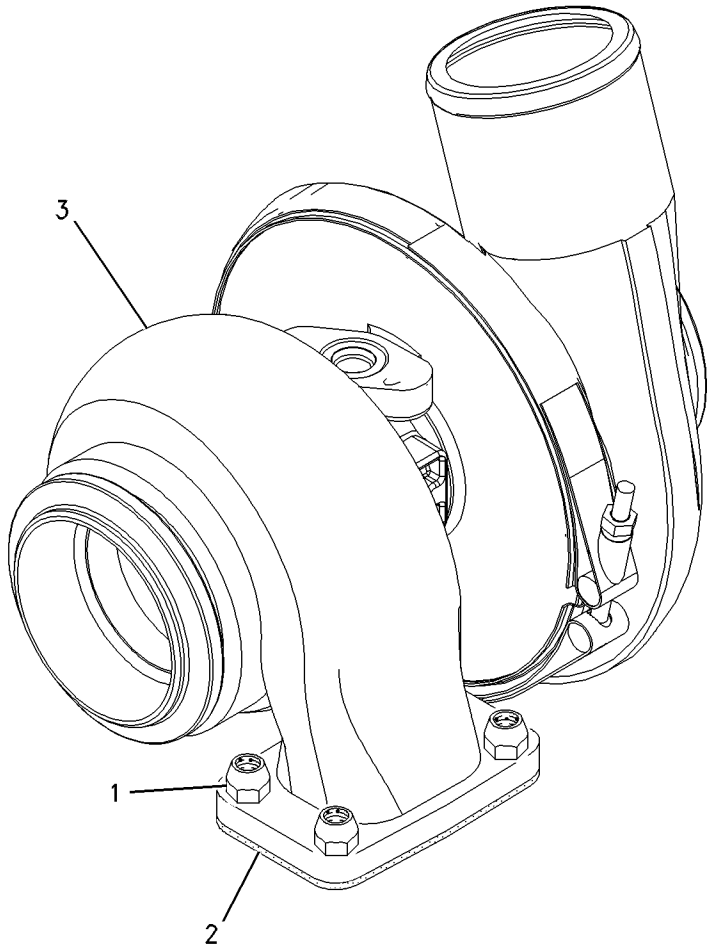

GRAPHIC #1 **<END>** g00771138

AIR INLET AND EXHAUST SYSTEM

187-1603 TURBOCHARGER GP

S/N: BMA1100-UP
PART OF 187-1602 TURBOCHARGER GP
ALSO AN ATTACHMENT

SMCS-1052, 1060, 1065, 1077 **i01696296**

NOTE	REF NO	GRAPHIC REF	PART NUMBER	QTY	PART NAME 1 2 3 4 5 6 (PRODUCT LEVEL)	SEE PAGE
M	1	1	**7C-6670**	4	BOLT (M8X12.5MM)	
	2	1	**7C-6672**	2	PLATE-CLAMP	
	3	1	**7M-9918**	1	LOCKNUT (1/4-28 THD)	
	4	1	**158-6072**	1	CLAMP AS	
	5	1	**196-0265**	1	HOUSING-TURBINE	
	6	1	**196-0267**	1	COVER-COMPRESSOR	
	7	1	**196-0268**	1	CARTRIDGE GP-TURBOCHARGER	

M-METRIC PART

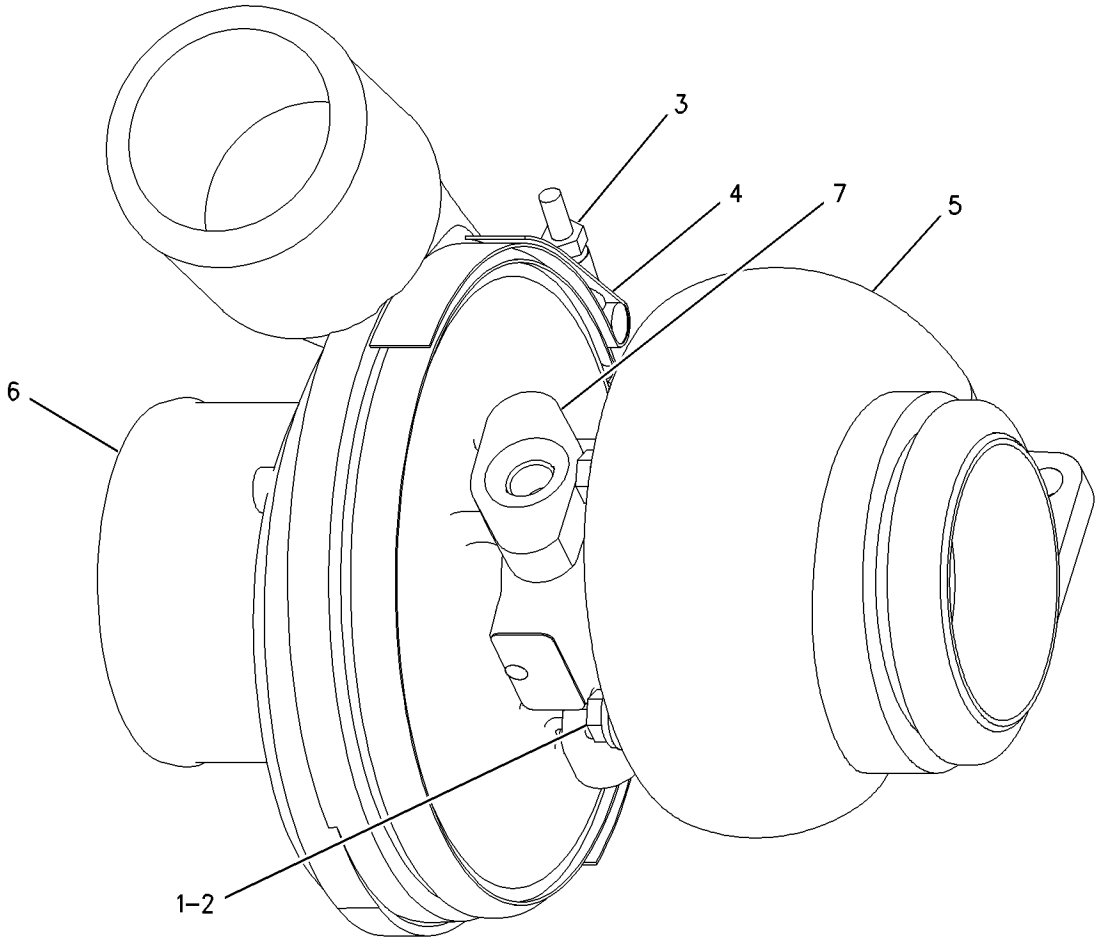

GRAPHIC #1 **<END>** g00759808

FUEL SYSTEM

186-5814 FILTER GP-WATER SEP & FUEL

S/N: CCK1-UP

PART OF 191-9529 LINES GP-FUEL

SMCS-1261, 1263 **i01884440**

NOTE	REF NO	GRAPHIC REF	PART NUMBER	QTY	PART NAME 1 2 3 4 5 6 (PRODUCT LEVEL)	SEE PAGE
	1	1	**1P-0436**	2	GASKET (FUEL PRIMING PUMP)	
	2	1	**9L-6378**	1	ADAPTER-PRIMING PUMP	
	3	1	**128-8557**	1	BASE AS-FILTER	
		1	**9S-4167**	1	STUD-HOLLOW	
		1	**7E-5346**	1	VALVE AS	
	4	1	**146-6695**	1	FILTER ELEMENT-FUEL (PRIMARY)	
	5	1	**137-5541**	1	PUMP GP-FUEL PRIMING	
		1	**1H-8171**	1	SEAL-O-RING	
		1	**6V-1903**	1	SEAL-O-RING	
		1	**7E-2985**	2	VALVE AS	
	6	1	**5P-0537**	2	WASHER-HARD (7.2X14.5X2MM THK)	
	7	1	**5P-2675**	1	BOLT (1/4-20X1.75 IN)	
	8	1	**6V-5048**	4	SEAL-O-RING	
	9	1	**7B-2742**	1	BOLT (1/4-20X1.25 IN)	
	10	1	**8C-6561**	1	BOLT (5/16-18X1.375 IN)	
	11	1	**8T-8911**	1	BOLT (5/16-18X2 IN)	
	12	1	**9M-1974**	2	WASHER-HARD (8.8X16X2MM THK)	
	13	1	**9S-8002**	4	PLUG	
	14	1	**146-6696**	1	BOWL	

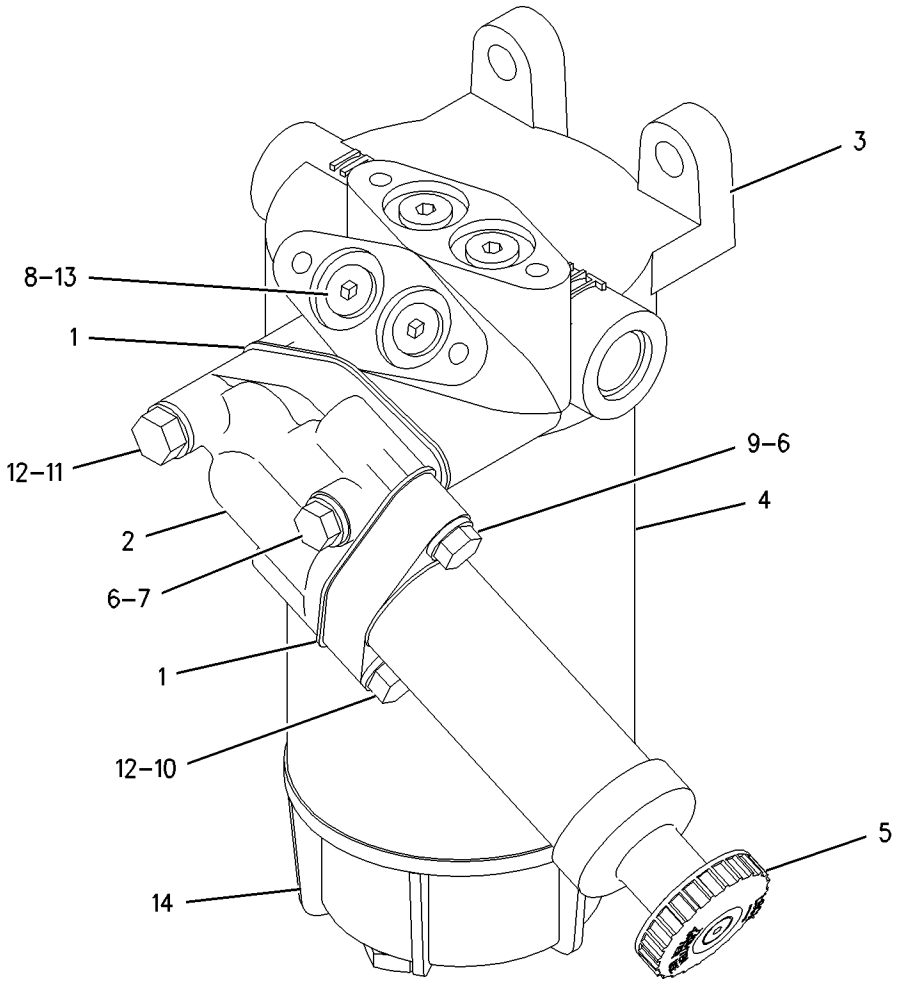

GRAPHIC #1 **<END>** g00909667

FUEL SYSTEM

191-9529 LINES GP-FUEL

S/N: CCK1-UP

PART OF 189-4619 CHASSIS AR

SMCS-1274 **i01828549**

NOTE	REF NO	GRAPHIC REF	PART NUMBER	QTY	PART NAME 1 2 3 4 5 6 (PRODUCT LEVEL)	SEE PAGE
	1	1	**4H-1225**	1	WASHER (11X22X6MM THK)	
	2	1	**5P-4961**	12	CLAMP-HOSE	
	3	1	**6V-1230**	1	ELBOW	
	4	1	**6V-8076**	2	ELBOW	
	5	1	**8T-6724**	1	VALVE-BALL (FUEL LINE SHUTOFF)	
	6	1	**8T-6907**	2	VALVE-BALL (FUEL LINE SHUTOFF)	
	7	1	**009-3215**	1	INSERT	
	8	1	*150-3024*	4	ELBOW GP	
					(EACH INCLUDES)	
		1	**3J-1907**	1	SEAL-O-RING	
		1	**5P-4924**	1	ELBOW	
	9	1	**184-2202**	1	BRACKET AS	
Y	10	1	**186-5814**	1	FILTER GP-WATER SEP & FUEL	103
	11	1	**196-9838**	1	TUBE AS	
	12	1	**199-9612**	1	TUBE AS	
	13	1	**201-4596**	1	TUBE AS	
	14	1	**148-8313**	1	ADAPTER GP	
	15	1	*150-4046*	1	ADAPTER GP	
		1	**2M-9780**	1	SEAL-O-RING	
		1	**5P-1404**	1	ADAPTER-O-RING (STRAIGHT THREAD)	
	16	1	*150-4047*	1	ADAPTER GP	
		1	**3J-7354**	1	SEAL-O-RING	
		1	**8T-2353**	1	ADAPTER-STRAIGHT THREAD	
	17	1	**1F-7567**	1	CLIP	
	18	1	**3J-1907**	4	SEAL-O-RING	
	19	1	**3K-0360**	2	SEAL-O-RING	
	20	1	**4D-7733**	1	CLIP	
	21	1	**4K-8302**	1	CLIP	
	22	1	**5K-8451**	2	CLIP	
	23	1	**5P-4295**	1	CLIP	
	24	1	**7S-4244**	3	CLIP	
	25	1	**7X-7729**	3	WASHER (11X25X3MM THK)	
	26	1	**8T-4121**	11	WASHER-HARD (11X21X2.5MM THK)	
M	27	1	**8T-4133**	2	NUT (M10X1.5 THD)	
M	28	1	**8T-4136**	3	BOLT (M10X1.5X25MM)	
M	29	1	**8T-4137**	4	BOLT (M10X1.5X20MM)	
M	30	1	**8T-4186**	2	BOLT (M10X1.5X40MM)	
	31	1	**8T-4223**	1	WASHER-HARD (13.5X25.5X3MM THK)	
	32	1	**8T-4224**	1	WASHER-HARD (8.8X16X2MM THK)	
M	33	1	**8T-4908**	1	BOLT (M8X1.25X25MM)	
	34	1	**9M-8406**	1	CLIP	
E	35	1	**5P-1505**		HOSE (58CM)	
E	36	1	**5P-1442**		HOSE (42CM)	
E	37	1	**5P-1442**		HOSE (64CM)	
E	38	1	**5P-1442**		HOSE (40CM)	
E	39	1	**5P-1442**		HOSE (92CM)	
E	40	1	**5P-1442**		HOSE (119CM)	
E	41	1	**5P-1442**		HOSE (15CM)	

E-ORDER BY THE CENTIMETER
M-METRIC PART
Y-SEPARATE ILLUSTRATION

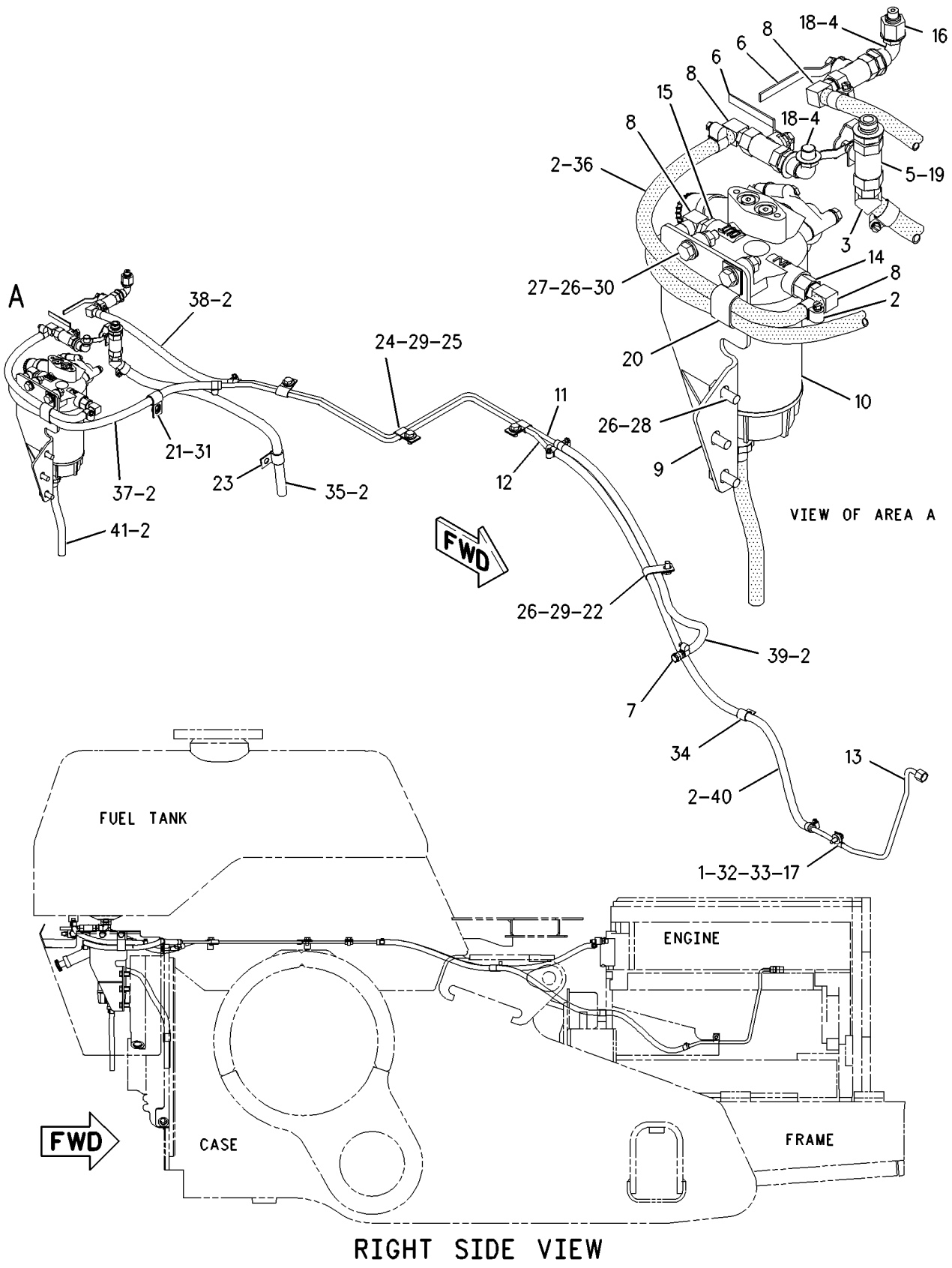

RIGHT SIDE VIEW

GRAPHIC #1 **<END>** g00955284

215-9260 LINES GP-FUEL FILTER

S/N: BMA1100-UP
PART OF 191-4479, 191-4481 ENGINE AR-COMPLETE
ALSO AN ATTACHMENT

SMCS-1261, 1274 **i01885431**

NOTE	REF NO	GRAPHIC REF	PART NUMBER	QTY	PART NAME 1 2 3 4 5 6 (PRODUCT LEVEL)	SEE PAGE
	1	1	**3E-2310**	1	TEE	
	2	1	**5P-4961**	2	CLAMP-HOSE	
	4	1	**174-7599**	1	BASE AS-FUEL FILTER	
		1	**9S-4167**	1	STUD-HOLLOW	
	5	1	**179-9348**	1	VALVE-DRAIN (FUEL FILTER)	
	6	1	**196-6840**	1	REGULATOR AS (FUEL PRESSURE)	
	7	1	**199-4856**	1	TUBE AS	
	8	1	**199-4858**	1	TUBE AS	
	9	1	**085-7356**	1	FITTING	
	10	1	**141-8275**	1	VALVE-DRAIN (FUEL) (FILTER)	
	11	1	*148-8318*	1	CONNECTOR GP	
		1	**3K-0360**	1	SEAL-O-RING	
		1	**6V-8397**	1	SEAL-O-RING	
		1	**6V-8634**	1	CONNECTOR	
	12	1	**1R-0762**	1	FILTER AS-FUEL (SECONDARY)	
	13	1	**6V-0484**	1	ADAPTER-O-RING	
	14	1	**6V-5049**	14	SEAL-O-RING	
	15	1	**6V-8397**	4	SEAL-O-RING	
	16	1	**6V-8636**	2	CONNECTOR	
	17	1	**6V-8724**	1	ELBOW	
	19	1	**8T-4121**	4	WASHER-HARD (11X21X2.5MM THK)	
M	20	1	**8T-4133**	4	NUT (M10X1.5 THD)	
	21	1	**9S-4191**	3	PLUG	
	22	1	**9X-0261**	1	ADAPTER	
E	23	1	**5P-1442**		HOSE (34CM)	
E	23A	1	**5P-1442**		HOSE (39CM)	

E-ORDER BY THE CENTIMETER
M-METRIC PART

215-9260 **LINES GP-FUEL FILTER** *(contd.)* **i01885431**

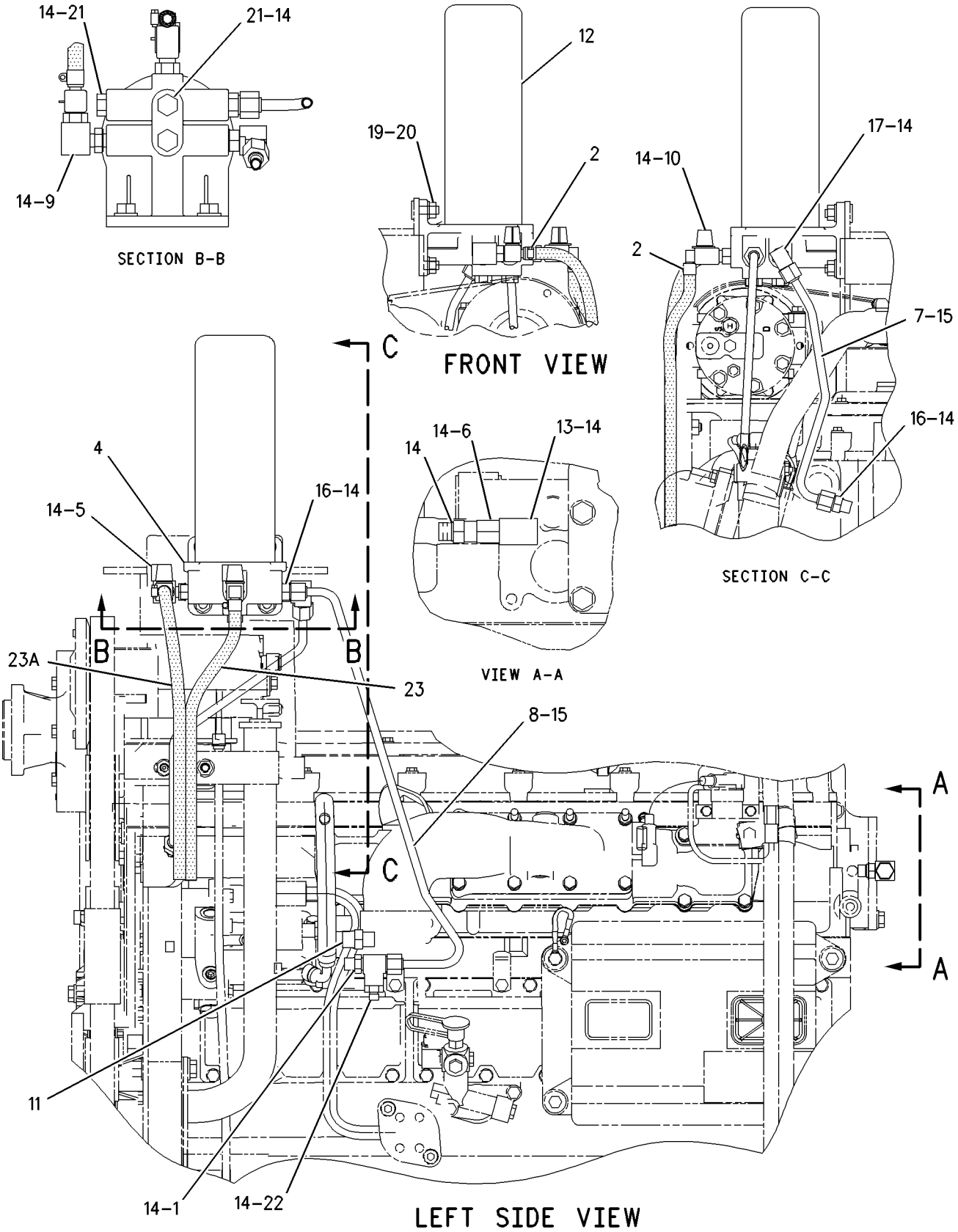

GRAPHIC #1 **<END>** g00902129

170-3304 PUMP & MTG GP-UNIT INJ HYD

S/N: BMA1100-UP
PART OF 191-4482 ENGINE AR-CORE
ALSO AN ATTACHMENT

SMCS-1714 **i01836476**

NOTE	REF NO	GRAPHIC REF	PART NUMBER	QTY	PART NAME 1 2 3 4 5 6 (PRODUCT LEVEL)	SEE PAGE
	1	1	**164-5591**	1	TUBE AS	
Y	2	1	**180-7341**	1	PUMP GP-UNIT INJECTOR HYD	111
	3	1	**185-3241**	1	SEAL-O-RING (92.41MM ID)	
	4	1	**175-3236**	1	HOSE AS	
Y	5	1	*179-7001*	1	ADAPTER GP-ENGINE OIL LINE	64
	6	1	**3V-2431**	2	WASHER (10.2X16.0X2.0MM THK)	
	7	1	**4F-9653**	1	SEAL-O-RING (46.99MM ID)	
	8	1	**6V-4589**	1	SEAL-O-RING (19.18MM ID)	
M	9	1	**6V-5219**	1	BOLT (M8X1.25X40MM)	
	10	1	**6V-8642**	1	CONNECTOR	
M	11	1	**6V-9804**	2	BOLT (M8X75MM)	
	12	1	**7J-9108**	1	SEAL-O-RING	
M	13	1	**8T-1159**	2	BOLT-SOCKET HEAD (M10X1.5X25MM)	
	14	1	**9M-1974**	3	WASHER-HARD (8.8X16X2MM THK)	
	15	1	**6V-5049**	1	SEAL-O-RING	
	16	1	**9S-8004**	1	PLUG (9/16-18 THD)	

M-METRIC PART
Y-SEPARATE ILLUSTRATION

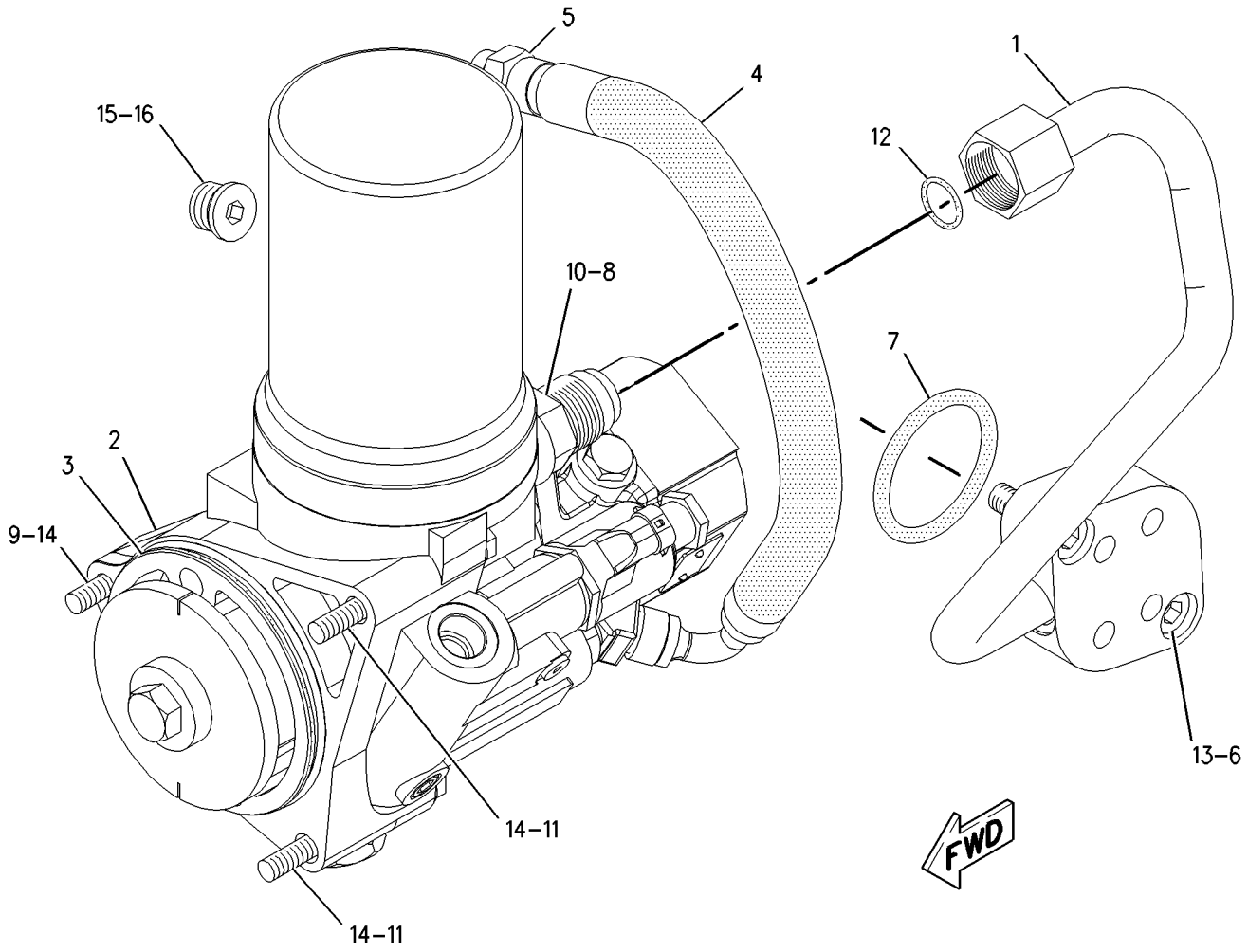

GRAPHIC #1 **<END>** g00905882

178-6342 PUMP GP-UNIT INJECTION–FUEL

S/N: BMA1100-UP
PART OF 178-6343 PUMP GP-UNIT INJECTION
ALSO AN ATTACHMENT

SMCS-1251, 1290, 1714 **i01882780**

NOTE	REF NO	GRAPHIC REF	PART NUMBER	QTY	PART NAME 1 2 3 4 5 6 (PRODUCT LEVEL)	SEE PAGE
	1	1	**177-4752**	1	INJECTOR GP-FUEL	
Y	2	1	*154-8016*	1	SEAL GP-FUEL INJECTOR	58

Y-SEPARATE ILLUSTRATION

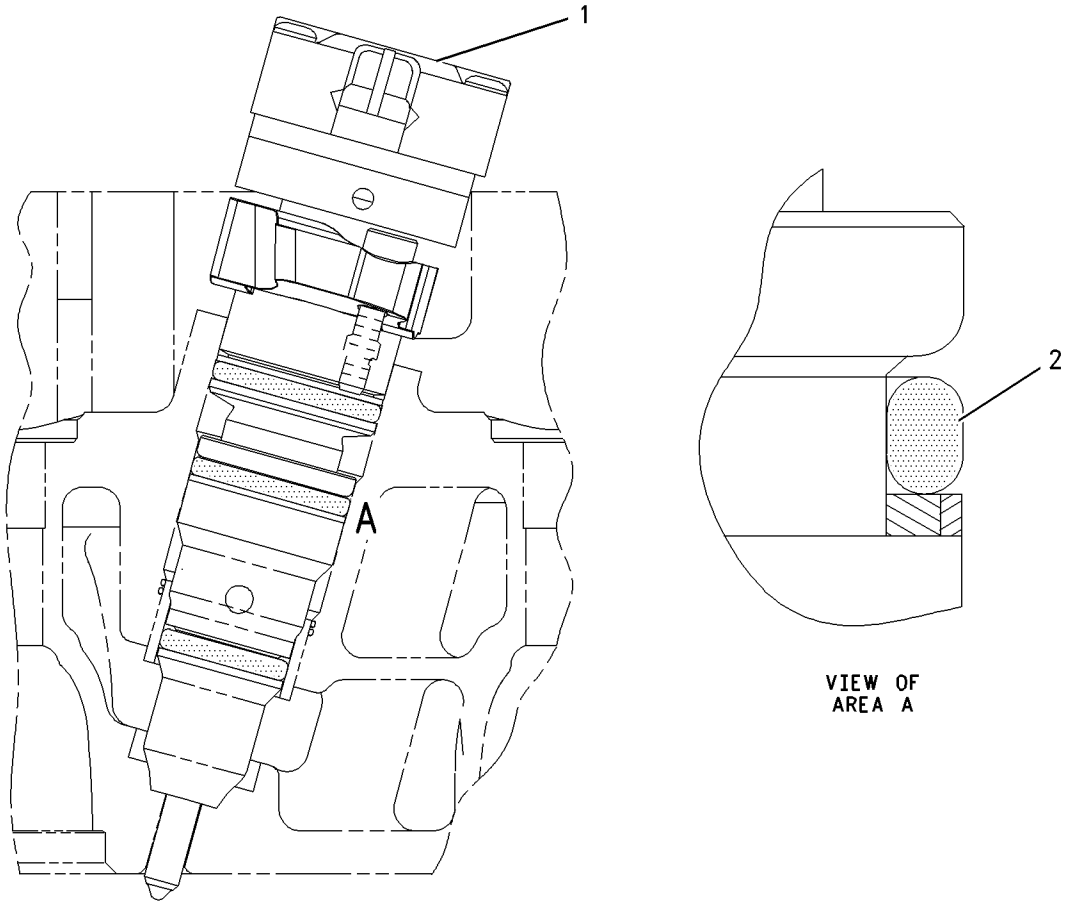

GRAPHIC #1 **<END>** g00717469

178-6343 PUMP GP-UNIT INJECTION–FUEL

S/N: BMA1100-UP
PART OF 191-4482 ENGINE AR-CORE
ALSO AN ATTACHMENT

SMCS-1251, 1290, 1714 **i01696289**

NOTE	REF NO	GRAPHIC REF	PART NUMBER	QTY	PART NAME 1 2 3 4 5 6 (PRODUCT LEVEL)	SEE PAGE
Y	1	1	*178-6342*	1	PUMP GP-UNIT INJECTION	109
	2	1	**199-6103**	1	BOLT-SHOULDER	
	3	1	**159-0288**	1	DEFLECTOR	
M	4	1	**8T-2396**	1	BOLT (M6X1.0X60MM)	

M-METRIC PART
Y-SEPARATE ILLUSTRATION

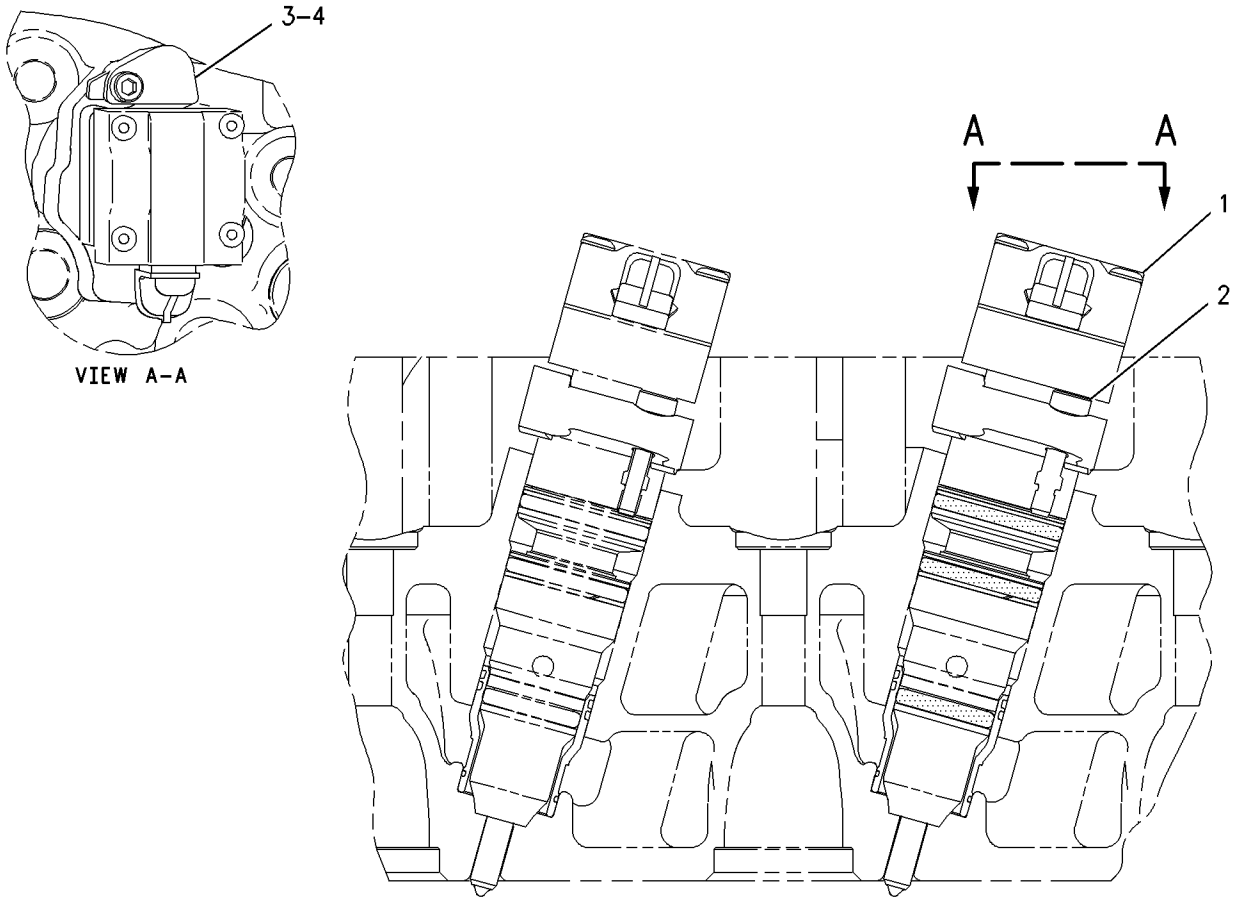

GRAPHIC #1 **<END>** g00718221

180-7341 PUMP GP-UNIT INJECTOR HYD

S/N: BMA1100-UP
PART OF 170-3304 PUMP & MTG GP-UNIT INJ HYD
ALSO AN ATTACHMENT

SMCS-1714 **i01883997**

NOTE	REF NO	GRAPHIC REF	PART NUMBER	QTY	PART NAME 1 2 3 4 5 6 (PRODUCT LEVEL)	SEE PAGE
Y	1	1	**122-5053**	1	VALVE GP-SOLENOID (INJECTION ACTUATION)	114
	2	1	**128-3473**	1	GEAR-PUMP DRIVE (36 TEETH)	
	4	1	**162-9612**	1	PUMP GP-FUEL TRANSFER	
	5	1	**179-7004**	1	ADAPTER AS	
		1	**153-4906**	1	SEAL-O-RING	
	6	1	**4P-5918**	1	CLIP	
	7	1	**8T-4224**	1	WASHER-HARD (8.8X16X2MM THK)	
M	8	1	**8T-7547**	2	BOLT (M8X1.25X30MM)	
	9	1	**118-0275**	1	WASHER	
	10	1	**131-1845**	1	PLUG-HEX SOCKET	
	11	1	**144-7339**	1	SEAL-O-RING	
M	12	1	**8T-4139**	1	BOLT (M12X1.75X30MM)	

M-METRIC PART
Y-SEPARATE ILLUSTRATION

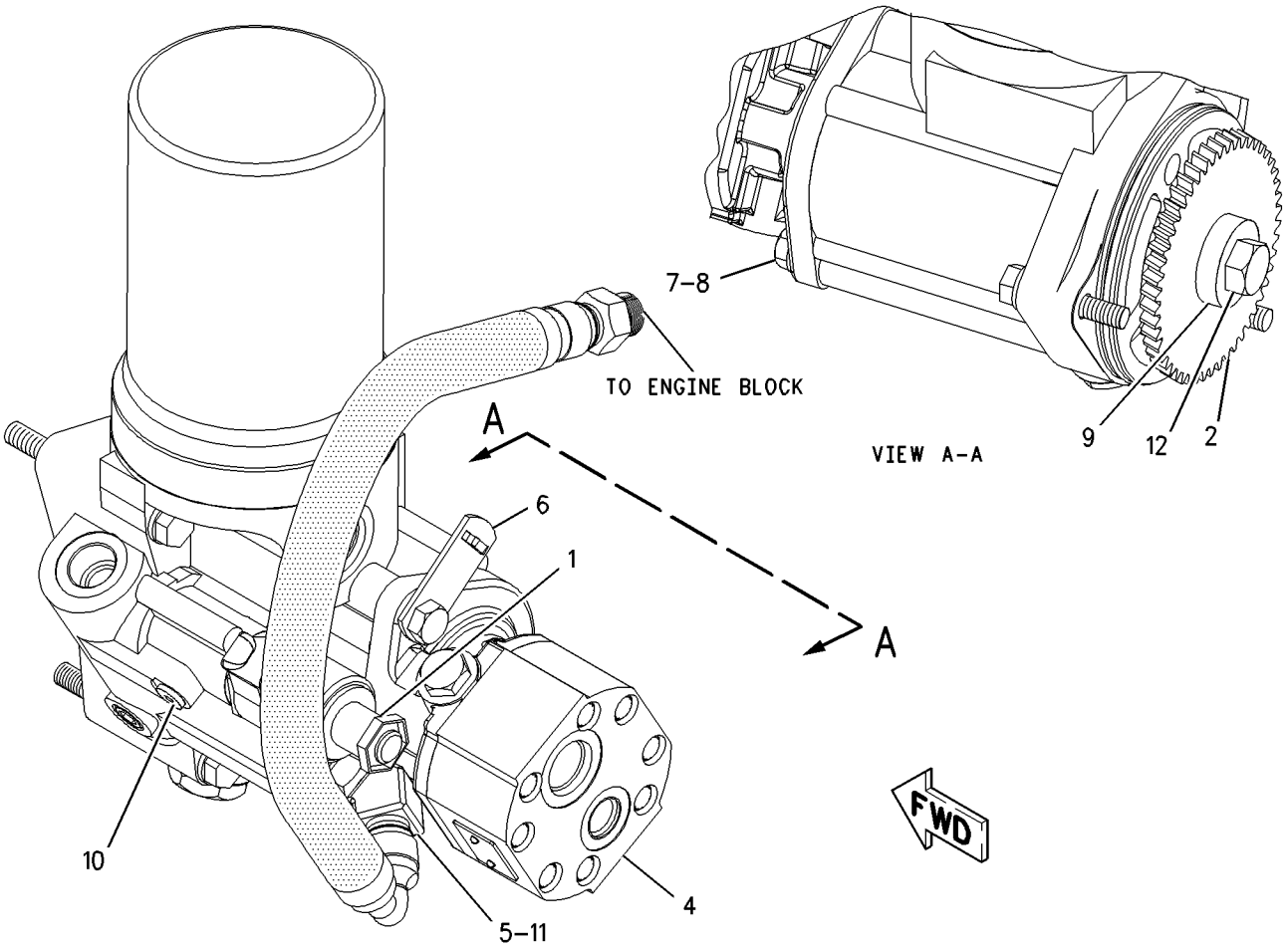

GRAPHIC #1 **<END>** g00875168

FUEL SYSTEM

155-7707 TANK GP-FUEL

S/N: CCK1-UP

PART OF 189-4619 CHASSIS AR

SMCS-1273 **i01882600**

NOTE	REF NO	GRAPHIC REF	PART NUMBER	QTY	PART NAME 1 2 3 4 5 6 (PRODUCT LEVEL)	SEE PAGE
	1	1	**7P-9131**	1	HANDHOLD	
	2	1	**9P-3066**	8	MOUNTING	
	3	1	**9P-7121**	1	STRAINER-FUEL (TANK FILLER)	
	4	1	**7X-7700**	1	CAP AS-FUEL TANK (VENTED LOCKING)	
		1	**9X-2205**	1	KIT-CAP FILTER (FUEL TANK)	
		1	**9X-8600**	1	SEAL-O-RING	
	5	1	**155-7713**	1	TANK AS-FUEL	
	6	1	**155-7714**	2	HANDHOLD	
	7	1	**175-7564**	1	SENDER AS-LEVEL (FUEL)	
		1	**3E-3365**	1	WEDGE-RECEPTACLE LOCK (2 PIN)	
		1	**186-3735**	2	PIN-CONNECTOR	
		1	**102-8802**	1	KIT-RECEPTACLE (2 PIN)	
					(INCLUDES RECEPTACLE AS AND WEDGE)	
		1	**3E-3365**	1	WEDGE-RECEPTACLE LOCK (2 PIN)	
M	8	1	**5C-9553**	5	BOLT (M6X1X16MM)	
	9	1	**6P-8269**	4	WASHER (20.5X88X6MM THK)	
M	10	1	**7X-2555**	4	BOLT (M16X2X80MM)	
M	11	1	**8T-4139**	6	BOLT (M12X1.75X30MM)	
	12	1	**8T-4205**	5	WASHER-HARD (7.2X14.5X2MM THK)	
	13	1	**8T-4223**	6	WASHER-HARD (13.5X25.5X3MM THK)	
	14	1	**9X-8257**	4	WASHER (17.5X30X3.5MM THK)	
B	15	1	**1U-8846**		SEALANT-GASKET	

B-USE AS REQUIRED
M-METRIC PART

155-7707 **TANK GP-FUEL** ***(contd.)*** **i01882600**

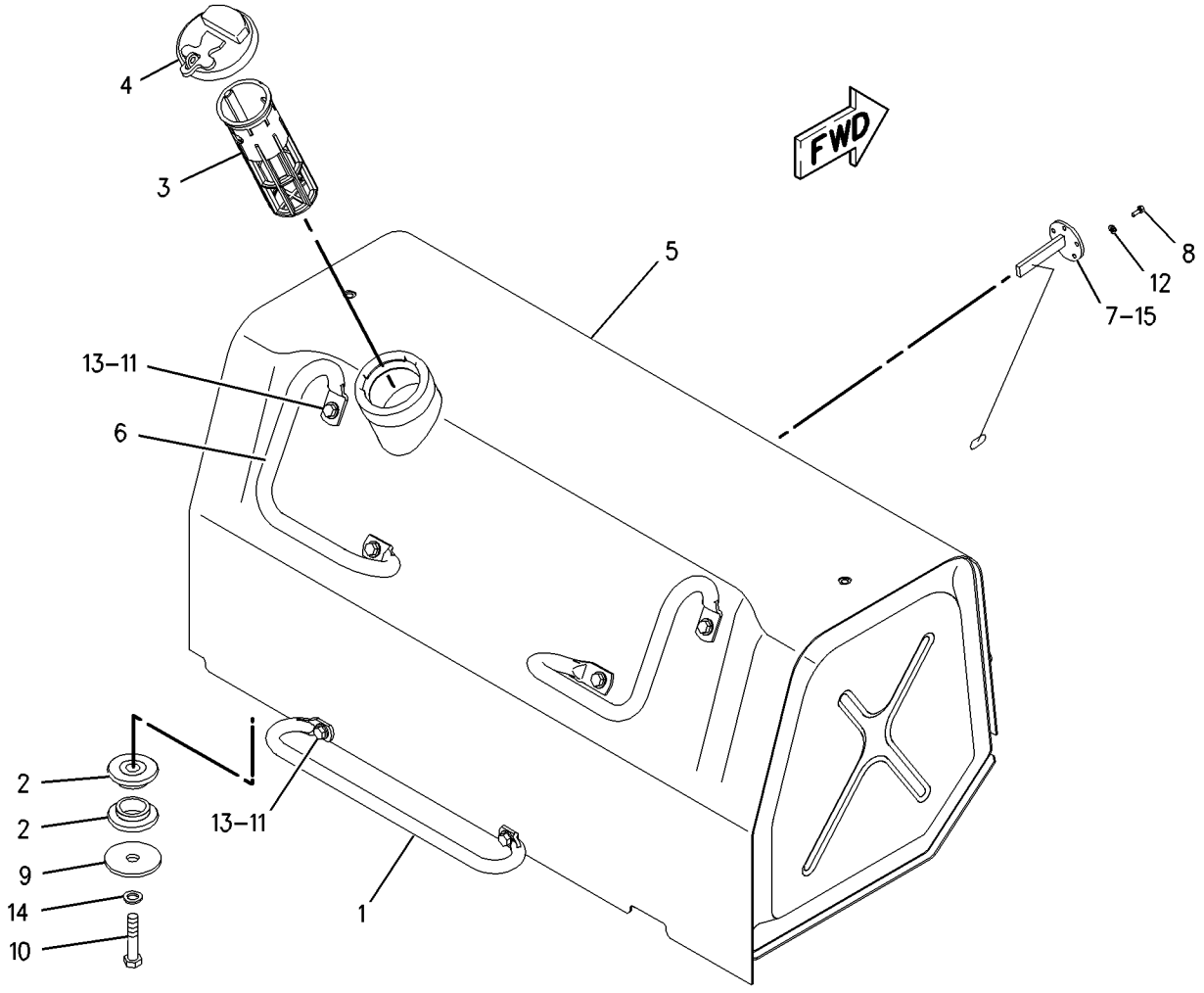

GRAPHIC #1 **<END>** g00923526

122-5053 VALVE GP-SOLENOID—PRESSURE CONTROL—FUEL

S/N: BMA1100-UP
PART OF 180-7341 PUMP GP-UNIT INJECTOR HYD
ALSO AN ATTACHMENT

SMCS-1259 **i01882605**

NOTE	REF NO	GRAPHIC REF	PART NUMBER	QTY	PART NAME 1 2 3 4 5 6 (PRODUCT LEVEL)	SEE PAGE
JZ	1	1		1	SEAL-O-RING	
JZ	2	1		1	RING-BACKUP	
JZ	3	1		1	SPACER	
JZ	4	1		1	NUT-RETAINER (1/2-20 THD)	
JZ	5	1		1	SEAL-O-RING	
					AVAILABLE REPAIR KIT(S):	
J			**9X-1484**	1	KIT-SEAL (SOLENOID VALVE)	

J-KIT MARKED J INCLUDES PARTS MARKED J
Z-NOT SERVICED SEPARATELY

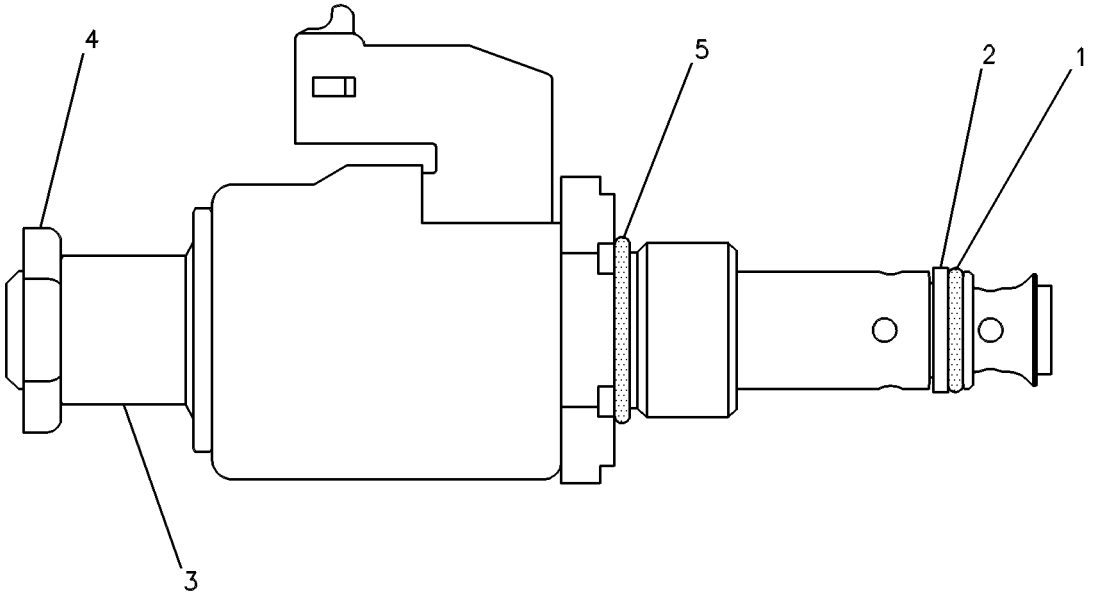

GRAPHIC #1 **<END>** g00085024

3E-6328 ALARM GP–ACTION

S/N: CCK1-UP
24 VOLT
PART OF 192-9082 WIRING GP-PLATFORM
ALSO AN ATTACHMENT

SMCS-7402 **i01487980**

NOTE	REF NO	GRAPHIC REF	PART NUMBER	QTY	PART NAME 1 2 3 4 5 6 (PRODUCT LEVEL)	SEE PAGE
	1	1	**102-8802**	1	KIT-RECEPTACLE (2 PIN)	
					(INCLUDES RECEPTACLE AS & WEDGE)	
	2	1	**186-3735**	2	PIN-CONNECTOR	

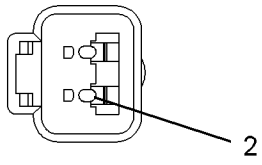

VIEW A–A

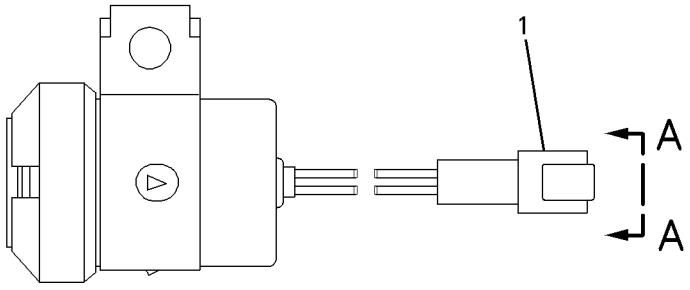

GRAPHIC #1 **<END>** g00697818

ELECTRICAL AND STARTING SYSTEM

107-7977 ALTERNATOR GP-CHARGING*R

S/N: CCK1-UP
24 VOLT, 70 AMPERE
FIELD REPLACEMENT FOR 132-2156—PAGE 118

SMCS-1405, 1410, 1425 **i01884408**

NOTE	REF NO	GRAPHIC REF	PART NUMBER	QTY	PART NAME 1 2 3 4 5 6 (PRODUCT LEVEL)	SEE PAGE
	1	1	**1H-3244**	2	LOCKWASHER	
	2	1	**6V-8187**	1	NUT (1/4-28 THD)	
	3	1	**8T-4205**	2	WASHER-HARD (7.2X14.5X2MM THK)	
	4	1	**3T-6354**	1	REGULATOR AS (24 VOLT)	
	5	1	**9L-6770**	1	CAP	
	6	1	**2K-4821**	1	LOCKNUT (5/8-18 THD)	
	7	1	**7F-7621**	1	WASHER (0.635X1.25X0.09 IN THK)	
	8	1	**4B-2047**	1	NUT (10-24 THD)	
	9	1	**8T-0328**	1	WASHER-HARD (5.5X10X1MM THK)	
	10	1	**8F-1434**	1	LOCKWASHER	
	11	1	**3E-5450**	1	COVER	
	12	1	**4B-2043**	4	NUT (8-32 THD)	
	13	1	**9B-7233**	4	LOCKWASHER	
	14	1	**3E-5448**	1	CONNECTOR	
	15	1	**3E-5446**	1	CONNECTOR	
	16	1	**3E-5457**	1	DIODE AS	
	17	1	**132-1225**	1	RECTIFIER AS-ALTERNATOR	
	18	1	**7N-9023**	3	SCREW AS (8-32 X 26.9MM)	
	19	1	**3E-5460**	1	HOLDER AS-BRUSH (ALTERNATOR)	
	20	1	**3E-5459**	2	BRUSH AS-ALTERNATOR	
	21	1	**3N-3718**	2	SCREW AS	
	22	1	**3E-5458**	1	CAPACITOR AS-ALTERNATOR	
	23	1	**4M-5281**	1	BOLT (1/4-20X.750 IN)	
	24	1	**3E-5454**	1	FAN-ALTERNATOR	
	25	1	**3E-5455**	1	HOUSING	
	26	1	**5P-7807**	1	BALL BEARING	
	27	1	**3E-5447**	1	PLATE	
	28	1	**030-9612**	3	SCREW-FORMING (10-24X.5 IN)	
	29	1	**132-1222**	1	ROTOR AS-ALTERNATOR (24 VOLT)	
	30	1	**132-1223**	1	STATOR AS-ALTERNATOR (24 VOLT)	
	31	1	**132-1224**	1	FRAME AS-ALTERNATOR	
	32	1	**5P-6920**	1	BEARING-ROLLER	
	33	1	**132-1228**	1	KIT-ALTERNATOR TERMINAL (BATTERY)	
					(INCLUDES NUTS, TERMINAL, LOCKWASHER, INSULATOR & ADAPTER)	
	34	1	**132-1229**	1	KIT-ALTERNATOR TERMINAL (INDICATOR LIGHT) (RELAY)	
					(INCLUDES NUTS, LOCKWASHER, INSULATOR, BUSHING, WASHERS, CONNECTOR, TERMINAL & RECTIFIER)	
	35	1	**132-1230**	1	KIT-ALTERNATOR TERMINAL (RELAY) (INDICATOR LIGHT)	
					(INCLUDES INSULATOR, WASHER, NUT & TERMINAL)	

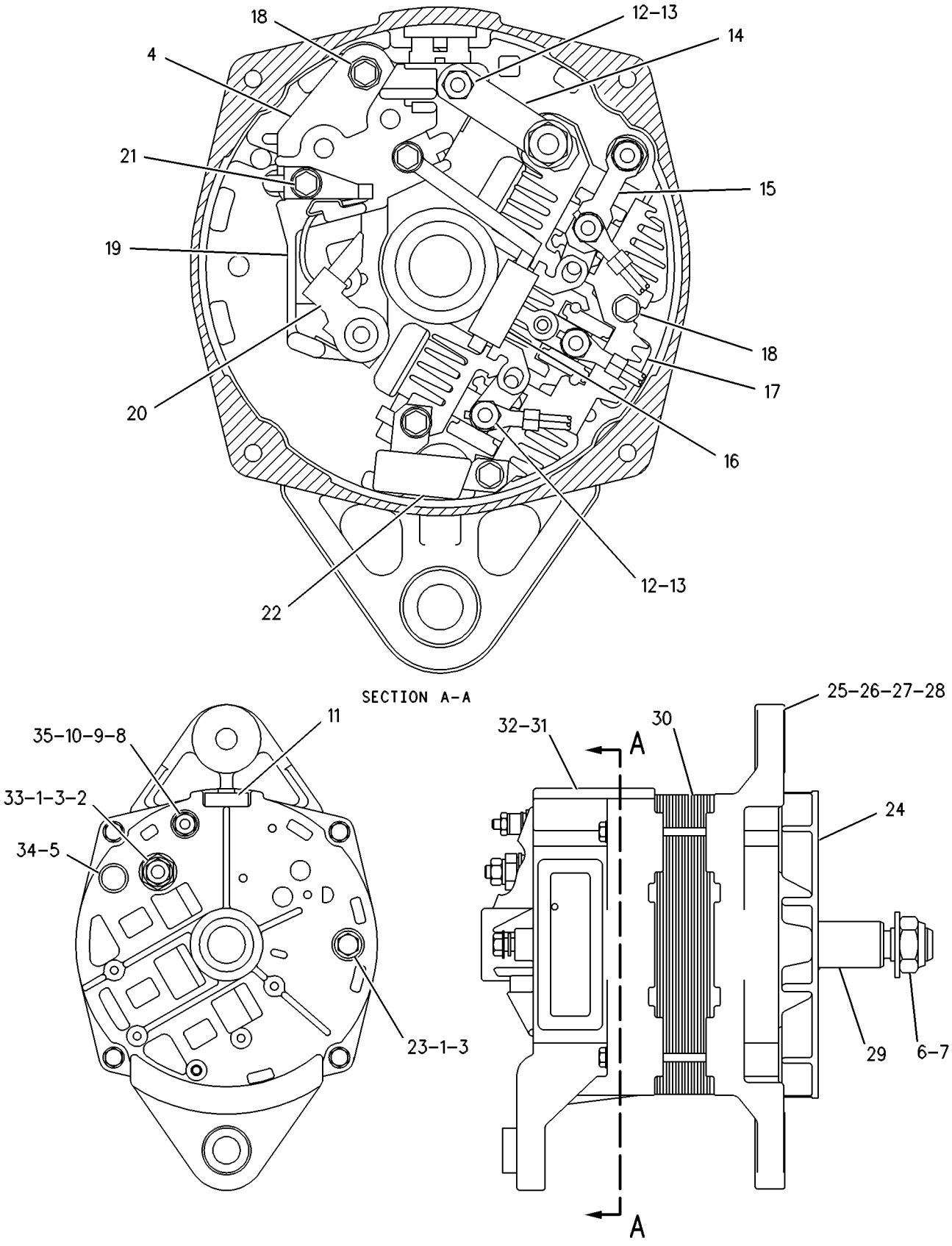

GRAPHIC #1 **<END>** g00122232

ELECTRICAL AND STARTING SYSTEM

132-2156 ALTERNATOR GP-CHARGING*R

S/N: CCK1-UP
24 VOLT, 70 AMPERE
PART OF 189-2224 ALTERNATOR GP-CHARGING
FIELD REPLACEMENT ORDER 107-7977–PAGE 116

SMCS-1405, 1410, 1425 **i01882613**

NOTE	REF NO	GRAPHIC REF	PART NUMBER	QTY	PART NAME 1 2 3 4 5 6 (PRODUCT LEVEL)	SEE PAGE
	1	1	**1H-3244**	2	LOCKWASHER	
	2	1	**6V-8187**	1	NUT (1/4-28 THD)	
	3	1	**8T-4205**	2	WASHER-HARD (7.2X14.5X2MM THK)	
	4	1	**3T-6354**	1	REGULATOR AS (24 VOLT)	
	5	1	**9L-6770**	1	CAP	
	6	1	**2K-4821**	1	LOCKNUT (5/8-18 THD)	
	7	1	**7F-7621**	1	WASHER (0.635X1.25X0.09 IN THK)	
	8	1	**4B-2047**	1	NUT (10-24 THD)	
	9	1	**8T-0328**	1	WASHER-HARD (5.5X10X1MM THK)	
	10	1	**8F-1434**	1	LOCKWASHER	
	11	1	**3E-5450**	1	COVER	
	12	1	**4B-2043**	4	NUT (8-32 THD)	
	13	1	**9B-7233**	4	LOCKWASHER	
	14	1	**3E-5448**	1	CONNECTOR	
	15	1	**3E-5446**	1	CONNECTOR	
	16	1	**3E-5457**	1	DIODE AS (ALTERNATOR)	
	17	1	**132-1225**	1	RECTIFIER AS-ALTERNATOR	
	18	1	**7N-9023**	3	SCREW AS (8-32 X 26.9MM)	
	19	1	**3E-5460**	1	HOLDER AS-BRUSH (ALTERNATOR)	
	20	1	**3E-5459**	2	BRUSH AS-ALTERNATOR	
	21	1	**3N-3718**	2	SCREW AS	
	22	1	**3E-5458**	1	CAPACITOR AS-ALTERNATOR	
	23	1	**8T-9367**	1	BOLT (1/4-20X2 IN)	
	24	1	**3E-5454**	1	FAN-ALTERNATOR	
	25	1	**3E-5455**	1	HOUSING	
	26	1	**5P-7807**	1	BALL BEARING	
	27	1	**3E-5447**	1	PLATE	
	28	1	**030-9612**	3	SCREW-FORMING (10-24X.5 IN)	
	29	1	**132-1222**	1	ROTOR AS-ALTERNATOR (24 VOLT)	
	30	1	**132-1223**	1	STATOR AS-ALTERNATOR (24 VOLT)	
	31	1	**132-1224**	1	FRAME AS-ALTERNATOR	
	32	1	**5P-6920**	1	BEARING-ROLLER	
	33	1	**126-2368**	1	KIT-ALTERNATOR GUARD	
					(INCLUDES BOLT,SCREW & LOCKWASHER)	
	34	1	**132-1230**	1	KIT-ALTERNATOR TERMINAL (RELAY) (INDICATOR LIGHT)	
					(INCLUDES WASHER, NUT, TERMINAL & INSULATOR)	
	35	1	**132-1229**	1	KIT-ALTERNATOR TERMINAL (INDICATOR LIGHT) (RELAY)	
					(INCLUDES BUSHINGS, NUTS, CONNECTOR, LOCKWASHER, WASHER, RECTIFIER & TERMINAL)	
	36	1	**132-1228**	1	KIT-ALTERNATOR TERMINAL (BATTERY)	
					(INCLUDES TERMINAL, NUTS, ADAPTER, LOCKWASHER & INSULATOR)	

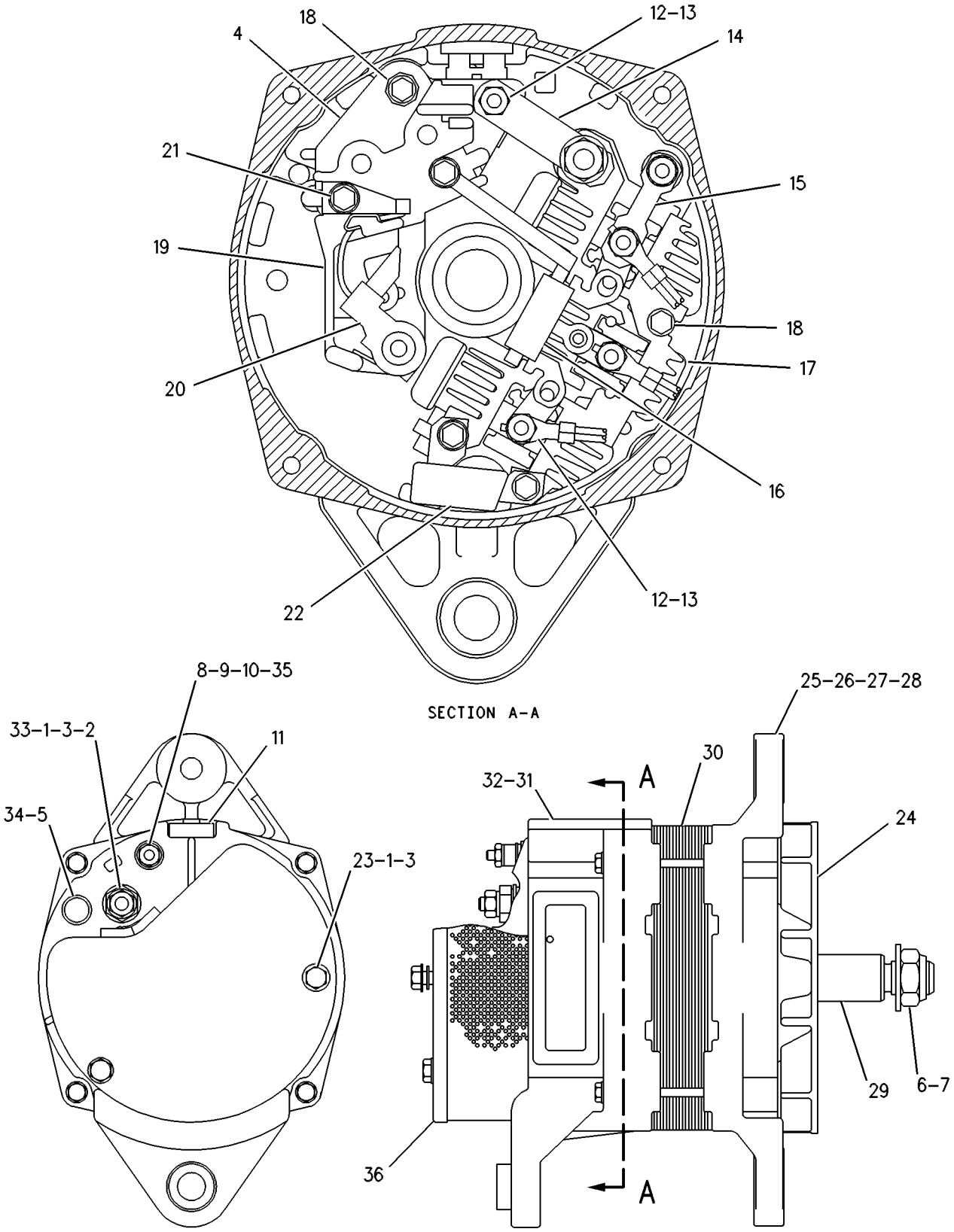

GRAPHIC #1 **<END>** g00265036

189-2224 ALTERNATOR GP-CHARGING

S/N: CCK1-UP
24 VOLT, 70 AMPERE
PART OF 189-4622 INSTALLATION AR-ENGINE

SMCS-1405, 1410, 1425 **i01881592**

NOTE	REF NO	GRAPHIC REF	PART NUMBER	QTY	PART NAME 1 2 3 4 5 6 (PRODUCT LEVEL)	SEE PAGE
	1	1	**7W-3872**	2	SLEEVE	
	2	1	**9S-1240**	1	NUT AS	
YR	3	1	*132-2156*	1	ALTERNATOR GP-CHARGING	118
	4	1	**190-0801**	1	BRACKET AS-ALTERNATOR	
	5	1	**205-2344**	1	SPACER	
	6	1	**216-7613**	1	GUARD AS	
		1	**1F-0748**	1	NUT-WELD (1/2-13 THD)	
	7	1	**5P-2424**	1	BOLT (1/2-13X2.25 IN)	
	8	1	**7X-0338**	1	BOLT (1/2-13X6 IN)	
	9	1	**8T-4223**	4	WASHER-HARD (13.5X25.5X3MM THK)	
	10	1	**8T-4224**	4	WASHER-HARD (8.8X16X2MM THK)	
M	11	1	**8T-4908**	4	BOLT (M8X1.25X25MM)	
	12	1	**8T-8917**	1	BOLT (1/2-13X1.25 IN)	
	13	1	**8T-8919**	1	BOLT (1/2-13X1.75 IN)	

M-METRIC PART
R-REMFG PART MAY BE AVAILABLE
Y-SEPARATE ILLUSTRATION

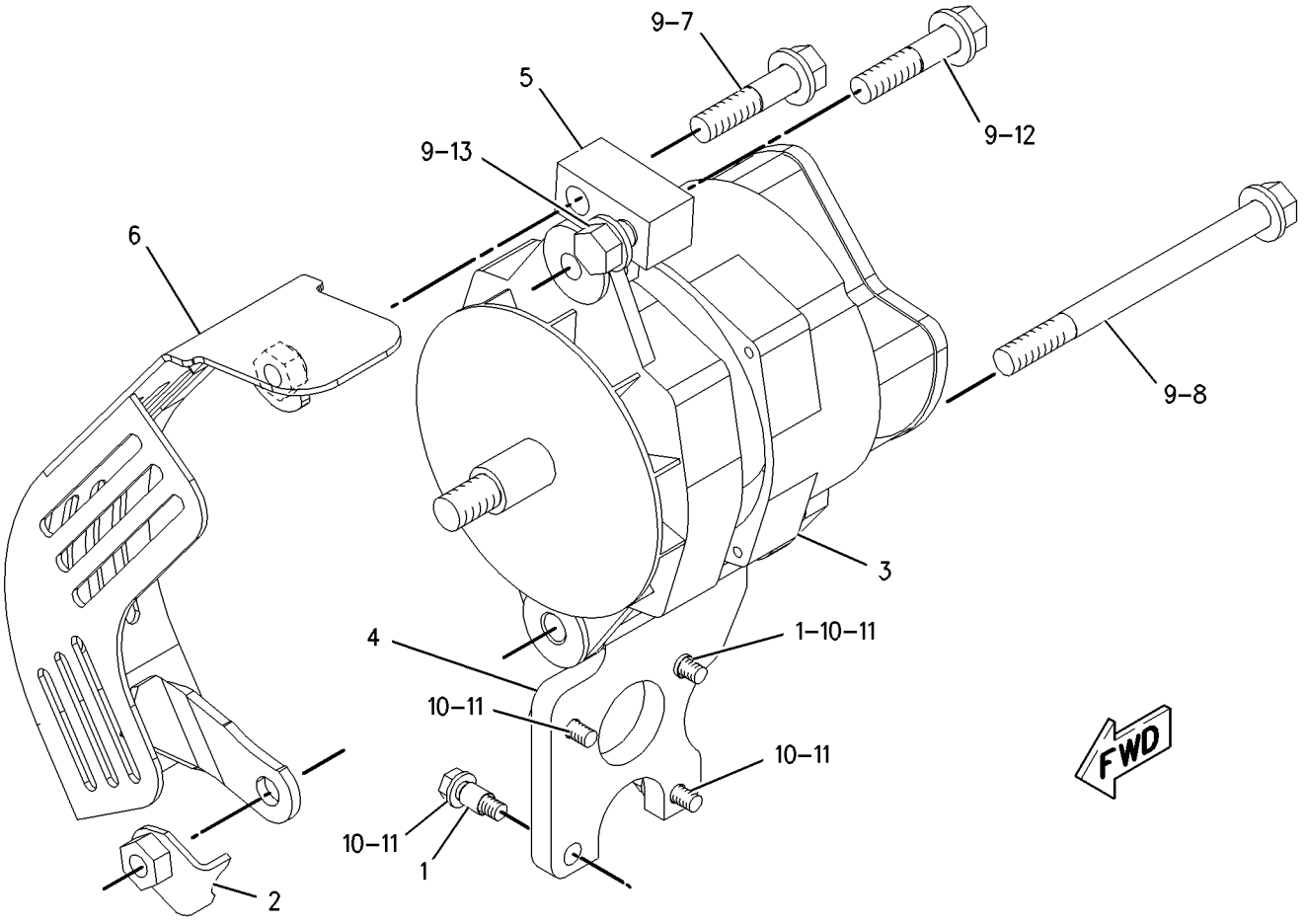

GRAPHIC #1 **<END>** g00939990

192-9081 BATTERY & WIRING GP

S/N: CCK1-UP

PART OF 189-4624 ELECTRONICS AR-MACHINE

SMCS-1401, 1402, 1408 **i01898144**

NOTE	REF NO	GRAPHIC REF	PART NUMBER	QTY	PART NAME 1 2 3 4 5 6 (PRODUCT LEVEL)	SEE PAGE
	1	1	**5I-8270**	1	COVER-BATTERY	
	2	1	**5I-8304**	1	ROD	
	3	1	**6W-6005**	1	HOLD-DOWN-BATTERY	
	4	1	**7K-1181**	54	STRAP-CABLE	
Y	5	1	**7N-0718**	1	SWITCH GP-DISCONNECT (BATTERY)	176
	6	1	**7P-6682**	1	CABLE AS (STARTER GND TO FRAME GND)	
		1	**1S-7251**	2	TERMINAL-RING	
E		1	**5P-0747**		CABLE (00GA)(BLACK) (40CM)	
	7	1	**7W-3447**	1	SPACER (10.2X19.05X10.2MM THK)	
	8	1	**8E-3431**	1	STRIP	
	9	1	**117-7773**	1	SWITCH AS-PRESSURE (POWER TRAIN OIL FILTER BYPASS)	
		1	**102-8802**	1	KIT-RECEPTACLE (2 PIN)	
					(INCLUDES RECEPTACLE AS & WEDGE)	
		1	**186-3735**	2	PIN-CONNECTOR	
BE		1	**9X-1813**		SLEEVE	
Y	10	1	**118-7226**	1	SENSOR GP-TEMPERATURE (TRANSMISSION)	166
	11	1	**160-2179**	1	CABLE AS	
		1	**1S-7252**	1	TERMINAL-RING	
E		1	**5P-0747**		CABLE (00GA)(BLACK) (69CM)	
		1	**8S-3020**	1	TERMINAL-CABLE	
	12	1	**160-2182**	1	CABLE AS (BATTERY (POS) TO BATTERY (NEG))	
E		1	**5P-0761**		CABLE (00GA)(RED) (33CM)	
		1	**9G-0002**	1	COVER-TERMINAL	
		1	**9G-0005**	1	COVER-TERMINAL (BLACK)	
		1	**8C-5917**	1	TERMINAL AS-BATTERY (POSITIVE)	
		1	**8T-9757**	1	TERMINAL AS-BATTERY (NEGATIVE)	
	13	1	**160-2183**	1	HARNESS AS (ENGINE)	
		1	**102-8802**	1	KIT-RECEPTACLE (2 PIN)	
		1	**102-8803**	1	KIT-RECEPTACLE (3 PIN)	
		1	**102-8805**	1	KIT-RECEPTACLE (6 PIN)	
		1	**102-8801**	1	KIT-RECEPTACLE (12 PIN)	
					(EACH RECEPTACLE KIT INCLUDES RECEPTACLE AS AND WEDGE)	
		1	**155-2260**	1	KIT-CONNECTING PLUG (3 PIN)	
		1	**155-2270**	3	KIT-CONNECTING PLUG (2 PIN)	
		1	**155-2274**	11	KIT-CONNECTING PLUG (6 PIN)	
					(EACH PLUG KIT INCLUDES PLUG AS, WEDGE AND INTERFACE SEAL)	
	14	1	**160-2184**	1	HARNESS AS (HYDRAULIC TANK)	
		1	**155-2270**	2	KIT-CONNECTING PLUG (2 PIN)	
		1	**155-2271**	1	KIT-CONNECTING PLUG (4 PIN)	
					(EACH PLUG KIT INCLUDES PLUG AS, WEDGE AND INTERFACE SEAL)	
	15	1	**160-2185**	1	HARNESS AS (PLATFORM)	
		1	**155-2265**	1	KIT-CONNECTING PLUG (8 PIN)	
		1	**155-2260**	1	KIT-CONNECTING PLUG (3 PIN)	
		1	**155-2270**	1	KIT-CONNECTING PLUG (2 PIN)	
					(EACH PLUG KIT INCLUDES PLUG AS, WEDGE AND INTERFACE SEAL)	
Y	16	1	**164-7577**	1	SWITCH GP-BYPASS (FILTER) (POWER TRAIN FILTER)	175
	17	1	**174-7876**	1	HORN AS (24 VOLT)(LOW TONE)	
	18	1	**193-5710**	1	CABLE AS	
E		1	**5P-0747**		CABLE (00GA)(BLACK) (105CM)	
		1	**7N-5274**	1	COVER-TERMINAL (BLACK)	
		1	**8S-3020**	1	TERMINAL-CABLE	
		1	**3S-6050**	1	TERMINAL AS-BATTERY (NEGATIVE)	

192-9081 **BATTERY & WIRING GP** ***(contd.)*** **i01898144**

NOTE	REF NO	GRAPHIC REF	PART NUMBER	QTY	PART NAME 1 2 3 4 5 6 (PRODUCT LEVEL)	SEE PAGE
		1	**1M-6119**	1	BOLT (5/16-18X1.375 IN)	
		1	**1M-6120**	1	NUT (5/16-18 THD)	
		1	**9X-5699**	1	BOOT	
	19	1	**193-5712**	1	CABLE AS	
		1	**1S-4915**	2	LINER (CONDUIT)	
		1	**1S-7251**	1	TERMINAL-RING	
BE		1	**5P-0695**		CONDUIT	
E		1	**5P-0761**		CABLE (00GA)(RED) (333CM)	
		1	**8N-0869**	1	COVER-TERMINAL (RED)	
		1	**8N-1725**	1	COVER-TERMINAL (RED)	
BE		1	**8T-2225**		TUBE-HEAT SHRINK	
		1	**3S-6049**	1	TERMINAL AS-BATTERY (POSITIVE)	
		1	**1M-6119**	1	BOLT (5/16-18X1.375 IN)	
		1	**1M-6120**	1	NUT (5/16-18 THD)	
	20	1	**195-1117**	2	BRACKET	
	21	1	**201-8772**	1	HARNESS AS (PARK BRAKE)	
		1	**8T-8737**	4	PLUG-SEAL	
		1	**155-2265**	1	KIT-CONNECTING PLUG (8 PIN)	
		1	**155-2270**	2	KIT-CONNECTING PLUG (2 PIN)	
		1	**155-2271**	2	KIT-CONNECTING PLUG (4 PIN)	
					(KITS INCLUDES PLUG AS & WEDGE)	
	22	1	**202-4327**	1	PULLER-FUSE	
Y	23	1	**225-5075**	2	LAMP GP-FLOOD	146
	24	1	**124-0174**	1	CLIP	
	25	1	**148-8313**	1	ADAPTER GP	
	26	1	**1S-0994**	5	CLIP	
	27	1	**3J-1907**	2	SEAL-O-RING	
	28	1	**4K-8864**	5	CLIP	
	29	1	**4P-7428**	1	CLIP	
	30	1	**4P-7429**	1	CLIP	
	31	1	**4P-7581**	5	CLIP	
	32	1	**4P-8134**	9	CLIP	
M	33	1	**5C-7261**	2	NUT (M8X1.25 THD)	
	34	1	**5P-4116**	2	WASHER-HARD (8.8X20.5X2MM THK)	
	35	1	**5P-9085**	2	CLIP	
	36	1	**6V-4369**	1	CLIP	
	37	1	**7X-0575**	1	WASHER-HARD (10.2X22.5X5MM THK)	
	38	1	**7X-0613**	1	WASHER-HARD (8.8X25.5X5MM THK)	
	39	1	**8S-0948**	1	CLIP	
M	40	1	**8T-0389**	1	LOCKNUT (M10X1.5 THD)	
	41	1	**8T-4121**	15	WASHER-HARD (11X21X2.5MM THK)	
M	42	1	**8T-4133**	7	NUT (M10X1.5 THD)	
M	43	1	**8T-4136**	1	BOLT (M10X1.5X25MM)	
M	44	1	**8T-4137**	3	BOLT (M10X1.5X20MM)	
M	45	1	**8T-4138**	1	BOLT (M6X1X20MM)	
M	46	1	**8T-4139**	1	BOLT (M12X1.75X30MM)	
M	47	1	**8T-4189**	2	BOLT (M8X1.25X20MM)	
M	48	1	**8T-4191**	1	BOLT (M10X1.5X16MM)	
M	49	1	**8T-4195**	3	BOLT (M10X1.5X30MM)	
	50	1	**8T-4223**	2	WASHER-HARD (13.5X25.5X3MM THK)	
	51	1	**8T-4224**	1	WASHER-HARD (8.8X16X2MM THK)	
	52	1	**8T-4226**	1	WASHER-PLATED (10.5X45X3MM THK)	
M	53	1	**8T-4244**	1	NUT (M12X1.75 THD)	
	54	1	**9X-3404**	2	BATTERY (12 VOLT)	
	55	1	**9X-8256**	1	WASHER (6.6X12X2MM THK)	
BE	56	1	**103-2543**		SEAL (3CM)	

B-USE AS REQUIRED
E-ORDER BY THE CENTIMETER
M-METRIC PART
Y-SEPARATE ILLUSTRATION

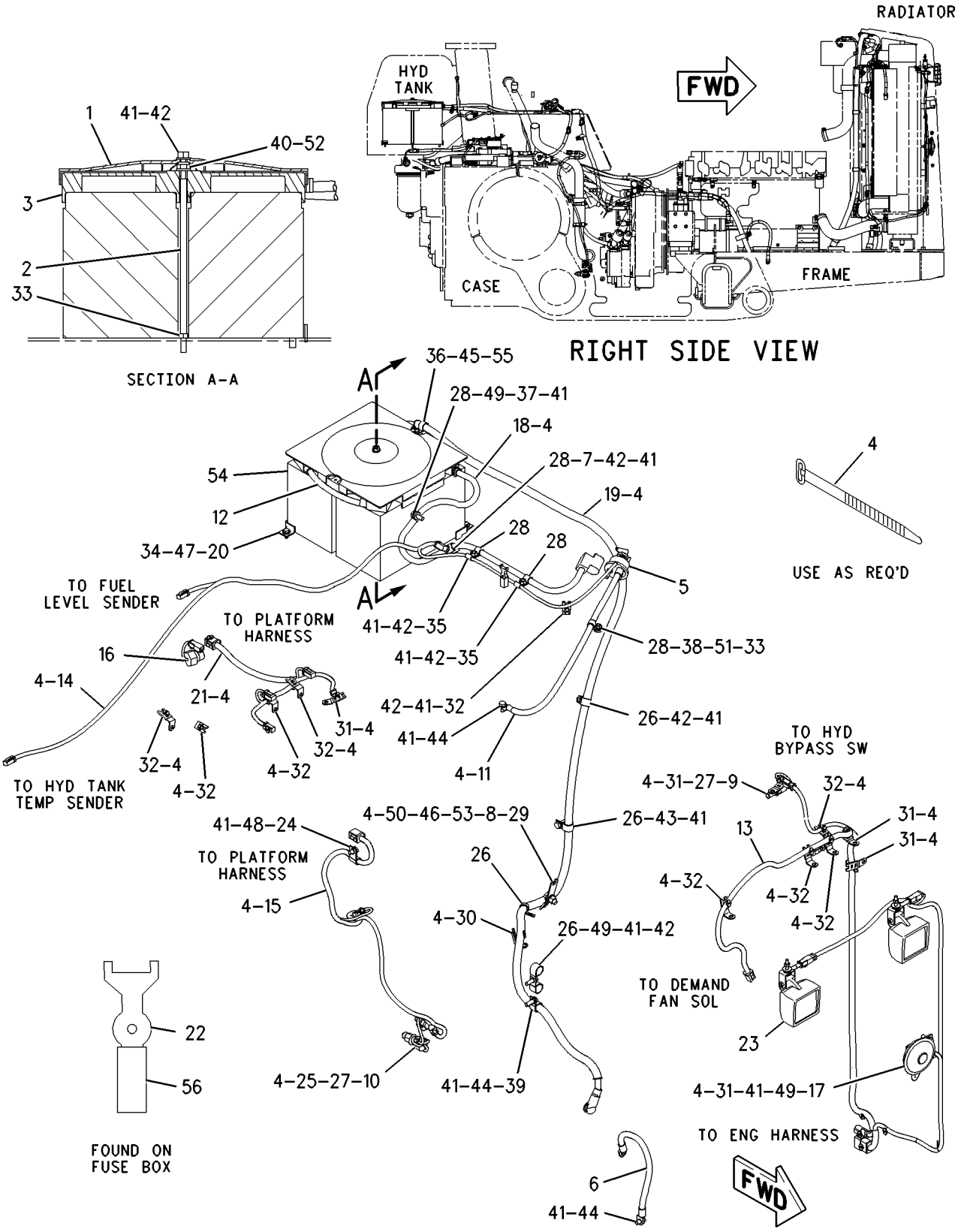

GRAPHIC #1 **<END>** g00964338

157-3460 BATTERY GP–HEAVY DUTY

S/N: CCK1-UP
AN ATTACHMENT

SMCS-1401 **i01892437**

NOTE	REF NO	GRAPHIC REF	PART NUMBER	QTY	PART NAME 1 2 3 4 5 6 (PRODUCT LEVEL)	SEE PAGE
	1	1	**5I-8304**	1	ROD	
	2	1	**223-7899**	1	CABLE AS	
E		1	**5P-0747**		CABLE (00GA)(BLACK) (114CM)	
		1	**7N-5274**	1	COVER-TERMINAL (BLACK)	
		1	**8S-3020**	1	TERMINAL-CABLE	
		1	**3S-6050**	1	TERMINAL AS-BATTERY (NEGATIVE)	
		1	**1M-6119**	1	BOLT (5/16-18X1.375 IN)	
		1	**1M-6120**	1	NUT (5/16-18 THD)	
		1	**9X-5699**	1	BOOT	
	3	1	**7K-1181**	2	STRAP-CABLE	
	4	1	**124-0378**	1	CABLE AS	
E		1	**5P-0761**		CABLE (00GA)(RED) (12CM)	
	4A	1	**8C-5917**	1	TERMINAL AS-BATTERY (POSITIVE)	
	4B	1	**8T-9757**	1	TERMINAL AS-BATTERY (NEGATIVE)	
					(EACH TERMINAL AS INCLUDES)	
		1	**1M-6119**	1	BOLT (5/16-18X1.375 IN)	
		1	**1M-6120**	1	NUT (5/16-18 THD)	
	4C	1	**9G-0003**	1	COVER-TERMINAL (BLACK)	
	4D	1	**9G-0004**	1	COVER-TERMINAL (RED)	
	5	1	**153-5700**	2	BATTERY (MAINTENANCE FREE)(12 VOLT) (HEAVY DUTY)	
	6	1	**200-8600**	1	HOLD-DOWN AS	
M		1	**8T-3490**	1	NUT-WELD (M10X1.5 THD)	
M	7	1	**8T-4133**	1	NUT (M10X1.5 THD)	
M	8	1	**5C-7261**	1	NUT (M8X1.25 THD)	
M	9	1	**8T-0389**	1	LOCKNUT (M10X1.5 THD)	
	10	1	**8T-4121**	3	WASHER-HARD (11X21X2.5MM THK)	
M	11	1	**8T-4137**	1	BOLT (M10X1.5X20MM)	
	12	1	**7X-0575**	1	WASHER-HARD (10.2X22.5X5MM THK)	
	13	1	**4P-8134**	2	CLIP	
	14	1	**4K-8864**	1	CLIP	

E-ORDER BY THE CENTIMETER
M-METRIC PART

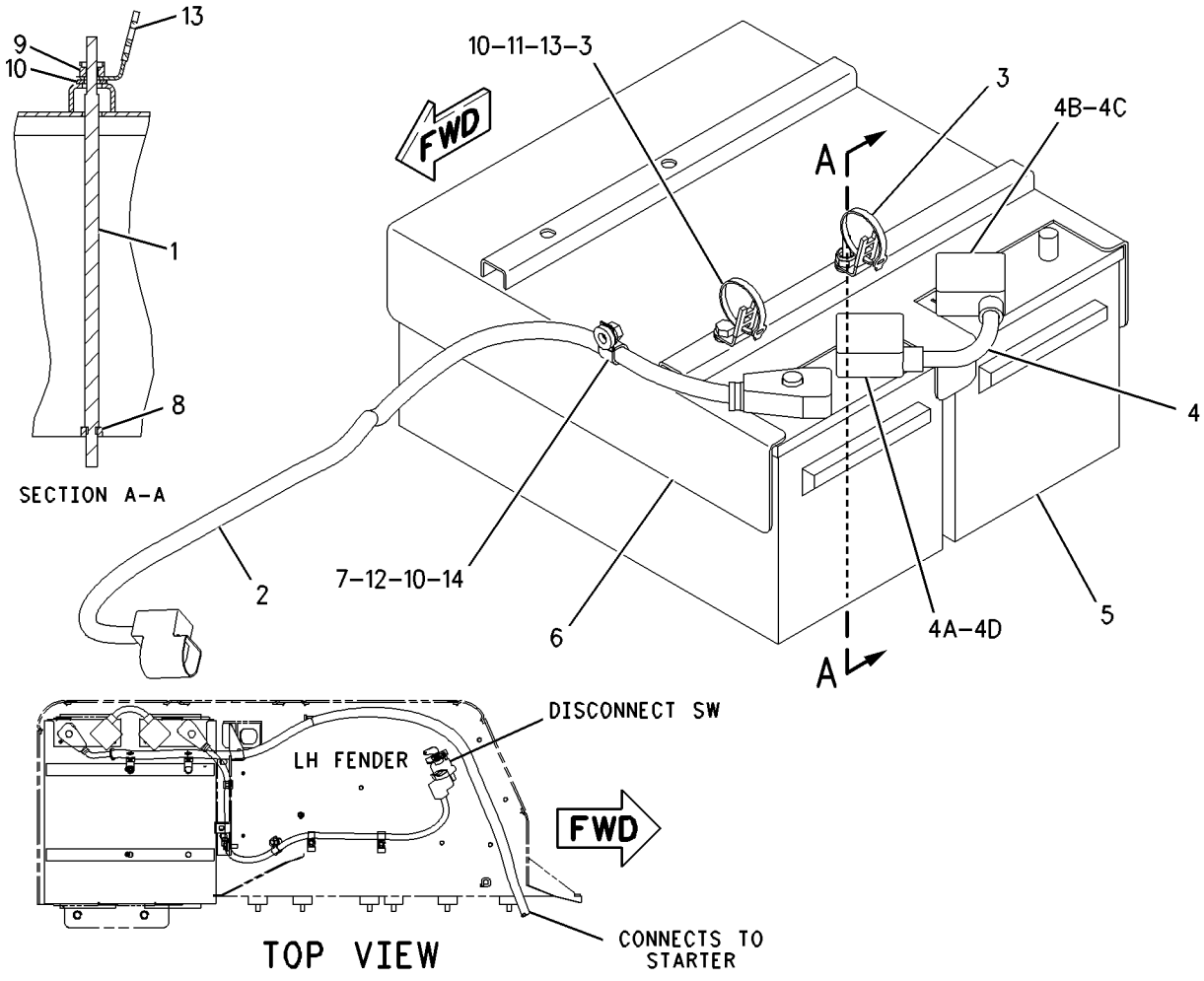

GRAPHIC #1 **<END>** g00915175

188-7726 CONTROL & MTG GP-ENGINE ELEK

S/N: BMA1100-UP
PART OF 191-4479, 191-4481 ENGINE AR-COMPLETE
ALSO AN ATTACHMENT

SMCS-1901 **i01802410**

NOTE	REF NO	GRAPHIC REF	PART NUMBER	QTY	PART NAME 1 2 3 4 5 6 (PRODUCT LEVEL)	SEE PAGE
	2	1	**8T-9655**	8	MOUNT (ISOLATION)	
	3	1	**101-3128**	4	SPACER	
M	4	1	**6V-9804**	1	BOLT (M8X75MM)	
Y	6	1	**209-9588**	1	CONTROL GP-ENGINE ELECTRONIC	128
M	7	1	**5P-8347**	3	BOLT (M8X1.25X70MM)	
	8	1	**9M-1974**	1	WASHER-HARD (8.8X16X2MM THK)	
	9	1	**9N-0869**	4	WASHER-HARD (8.8X25.5X2MM THK)	

M-METRIC PART
Y-SEPARATE ILLUSTRATION

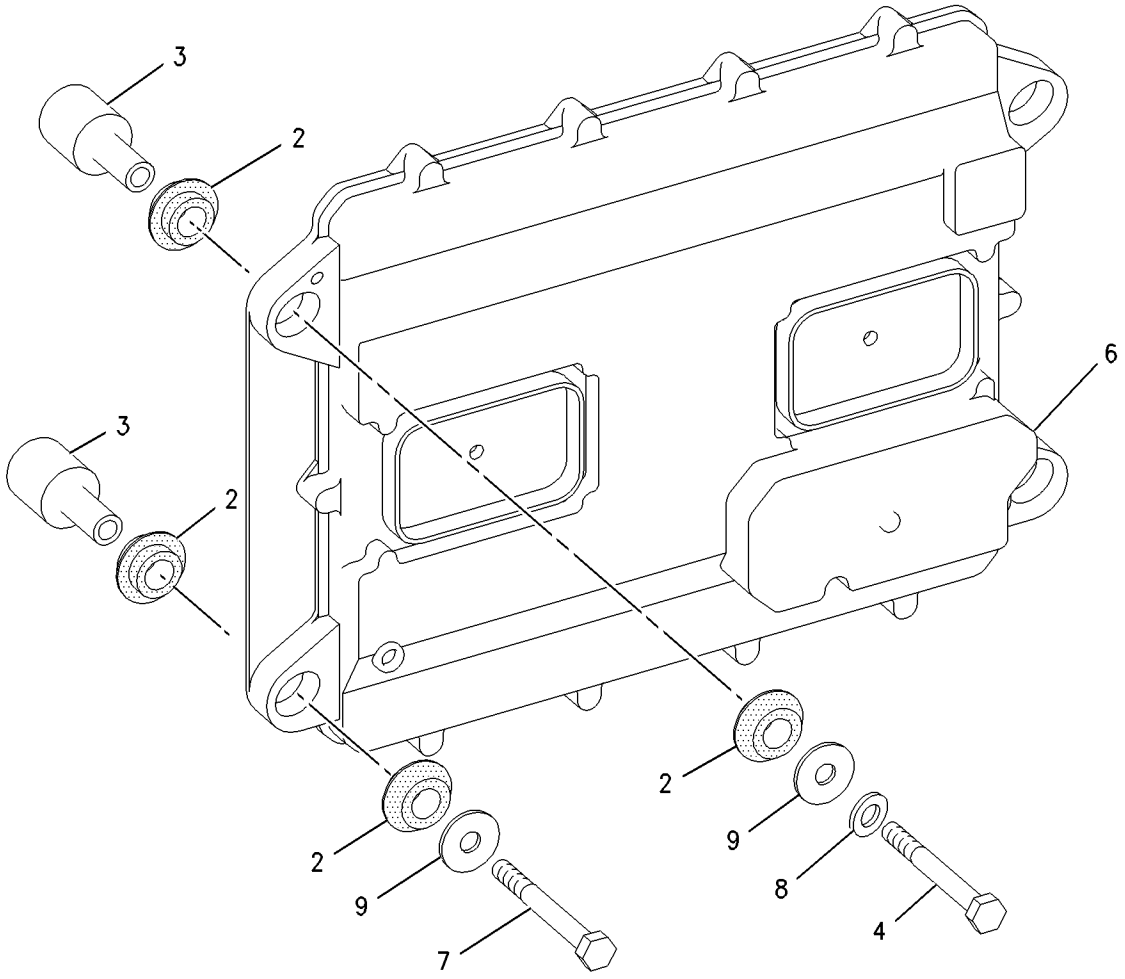

GRAPHIC #1 **<END>** g00922695

209-9587 CONTROL GP-ENGINE ELECTRONIC

S/N: BMA1100-UP
PART OF 209-9588 CONTROL GP-ENGINE ELECTRONIC
FIELD REPLACEMENT FOR 209-9588—PAGE 128
ALSO AN ATTACHMENT

SMCS-1901 **i01802523**

NOTE	REF NO	GRAPHIC REF	PART NUMBER	QTY	PART NAME 1 2 3 4 5 6 (PRODUCT LEVEL)	SEE PAGE
	1	1	**184-2472**	1	SCREW-PAN HEAD (LUBRICATED)	
	2	1	**7X-6315**	1	STRAP AS-GROUND	

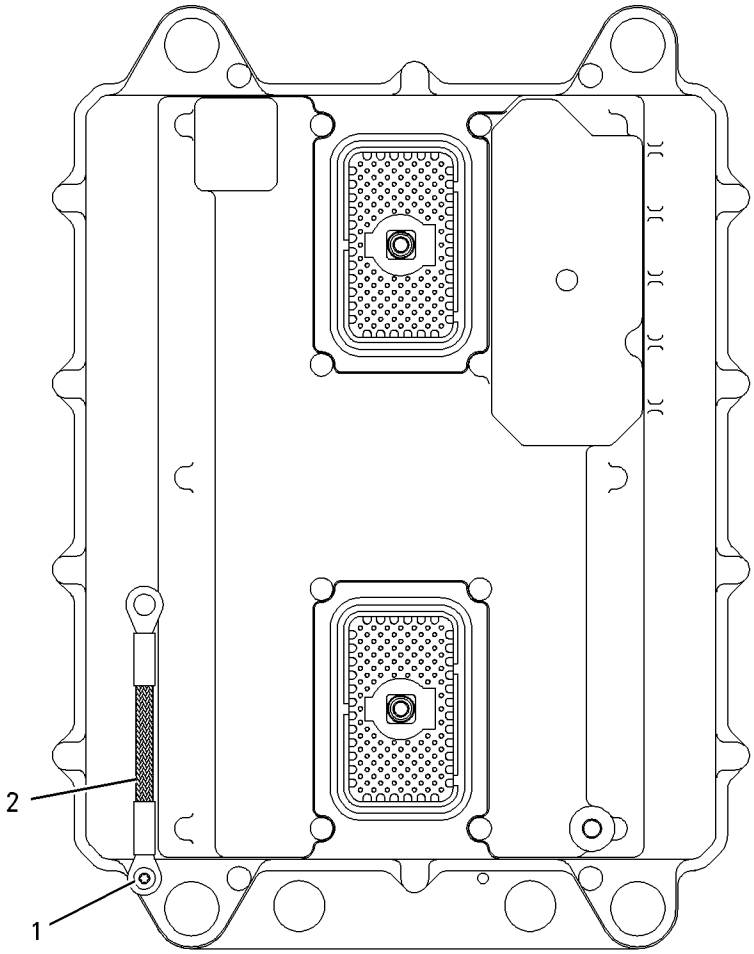

GRAPHIC #1 **<END>** g00912273

209-9588 CONTROL GP-ENGINE ELECTRONIC

S/N: BMA1100-UP
PART OF 188-7726 CONTROL & MTG GP-ENGINE ELEK
FIELD REPLACEMENT ORDER 209-9587—PAGE 127
ALSO AN ATTACHMENT

SMCS-1901 **i01809422**

NOTE	REF NO	GRAPHIC REF	PART NUMBER	QTY	PART NAME 1 2 3 4 5 6 (PRODUCT LEVEL)	SEE PAGE
Y	1	1	**209-9587**	1	CONTROL GP-ENGINE ELECTRONIC	127

Y-SEPARATE ILLUSTRATION

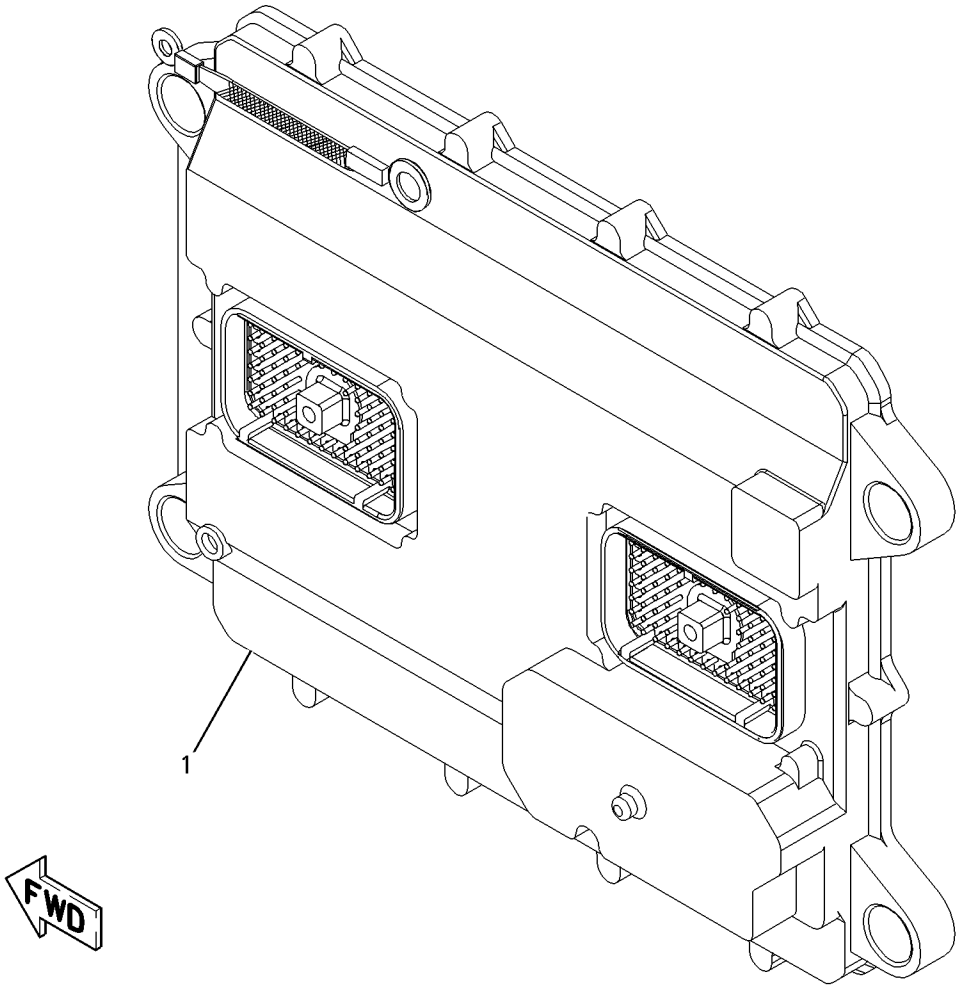

GRAPHIC #1 **<END>** g00913420

207-5262 CONTROL GP-MACHINE

S/N: CCK1-UP

PART OF 199-5995 ELECTRONICS GP-MACHINE, 228-8540 INSTALLATION GP-SECURITY AN ATTACHMENT

i01882670

NOTE	REF NO	GRAPHIC REF	PART NUMBER	QTY	PART NAME 1 2 3 4 5 6 (PRODUCT LEVEL)	SEE PAGE
	1	1	**156-6155**	1	CONTROL GP-UNPROGRAMMED (MACHINE)	
	2	1	**206-5162**	2	KEY AS-ELECTRONIC (SECURITY)	
F		1	**220-6355**	1	SOFTWARE GP-MACHINE (SECURITY)	

F-NOT SHOWN

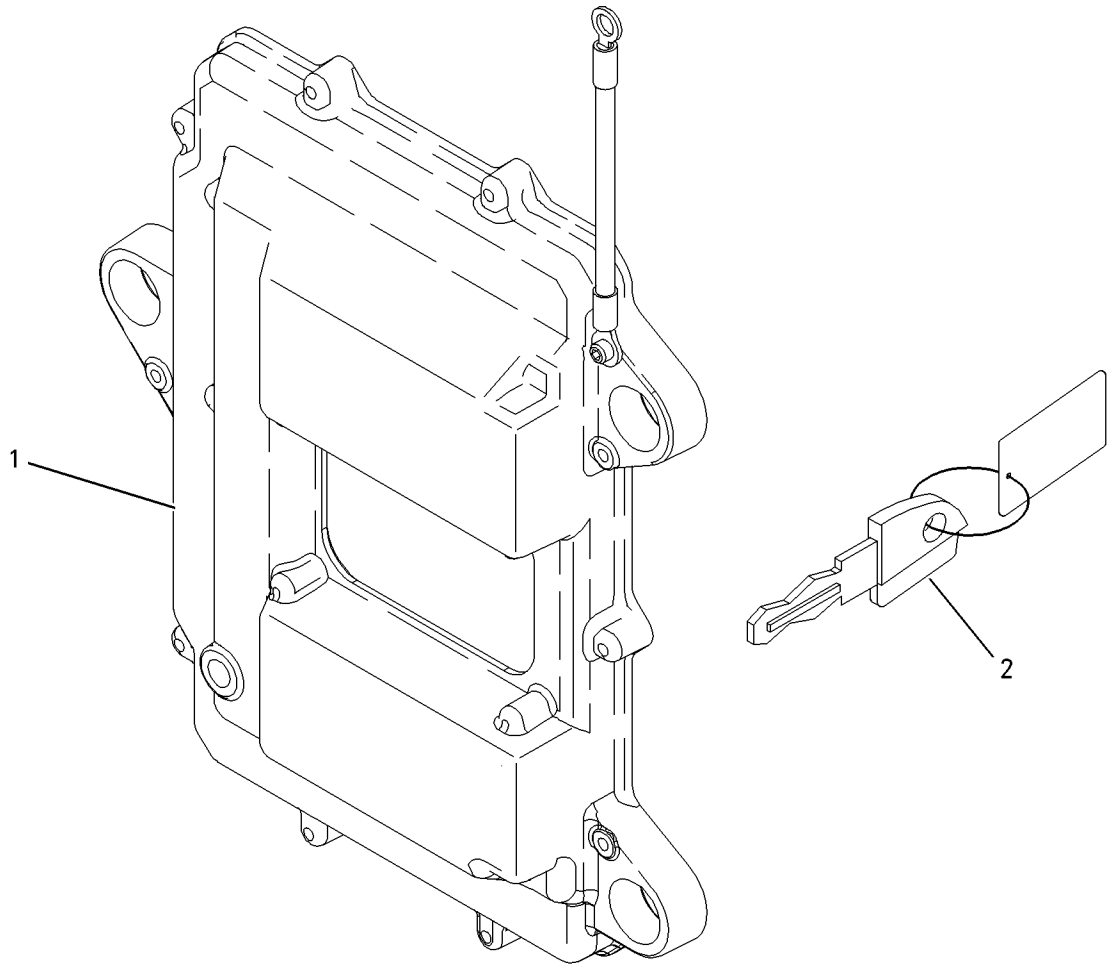

GRAPHIC #1

<END>

g00913550

154-7443 CONTROL GP-MONITOR—CATERPILLAR MONITORING SYSTEM

S/N: CCK1-UP

PART OF 156-8951, 165-2790 PANEL GP-INSTRUMENT, 231-6531 SERVICE GP-MONITOR

ALSO AN ATTACHMENT

SMCS-7490 **i01829251**

NOTE	PART NUMBER	QTY	PART NAME 1 2 3 4 5 6 (PRODUCT LEVEL)	SEE PAGE
			(NO SERVICED PARTS)	

<END>

160-9146 CONTROL GP-MONITOR–PRODUCT LINK

S/N: CCK1-UP
AN ATTACHMENT

SMCS-7490 **i01830476**

NOTE	REF NO	GRAPHIC REF	PART NUMBER	QTY	PART NAME 1 2 3 4 5 6 (PRODUCT LEVEL)	SEE PAGE
	1	1	**209-6417**	1	CONTROL GP-COMMUNICATION (PRODUCT LINK)	
	2	1	**178-6172**	1	HARNESS AS (CONTROL MONITOR)	
		1	**102-8805**	1	KIT-RECEPTACLE (6 PIN)	
					(INCLUDES RECEPTACLE AS & WEDGE)	
		1	**7X-6222**	1	PLUG AS-CONNECTOR (24 PIN)	
					(INCLUDES PLUG AS & WEDGE)	
		1	**8T-8730**	13	SOCKET-CONNECTOR	
		1	**8T-8737**	12	PLUG-SEAL	
		1	**155-2265**	1	KIT-CONNECTING PLUG (8 PIN)	
					(INCLUDES PLUG AS & WEDGE)	
B	3	1	**185-7141**	1	FILM-WARNING (PRODUCT LINK RADIO)	
M	4	1	**8T-0639**	4	BOLT (M6X1.00X12MM)	
M	5	1	**8T-4137**	2	BOLT (M10X1.5X20MM)	
	6	1	**207-6796**	1	ANTENNA AS	
	7	1	**223-8945**	1	BRACKET	
	8	1	**8T-4121**	2	WASHER-HARD (11X21X2.5MM THK)	
	9	1	**7K-1181**	10	STRAP-CABLE	

B-USE AS REQUIRED
M-METRIC PART

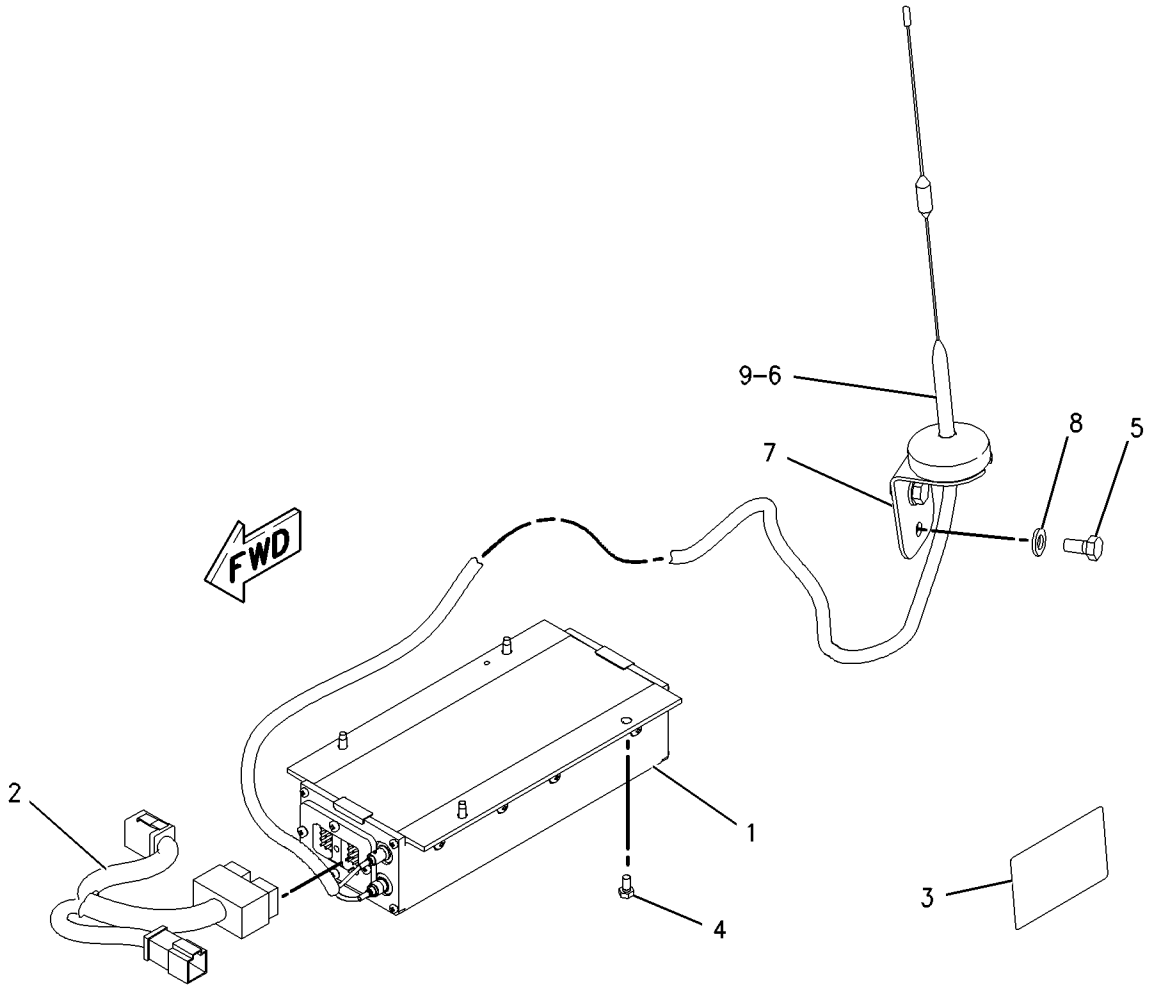

GRAPHIC #1 **<END>** g00913776

172-9389 CONTROL GP-UNPROGRAMMED–POWER TRAIN

S/N: CCK1-UP

PART OF 193-5673 CONTROL GP-STEERING & TMSN, 226-6114 SERVICE GP-POWER TRAIN

ALSO AN ATTACHMENT

SMCS-3030 **i01885436**

NOTE	REF NO	GRAPHIC REF	PART NUMBER	QTY	PART NAME 1 2 3 4 5 6 (PRODUCT LEVEL)	SEE PAGE
	1	1	**7X-6315**	1	STRAP AS-GROUND	
	2	1	**101-0852**	1	SCREW-PAN HEAD (NO 8 X 3/8 IN)	
M	3	1	**6V-6703**	2	KIT-RETAINING BOLT (CONTROL GP)	
					(EACH INCLUDES BOLT, RING, AND SEALS)	
	4	1	**134-4126**	1	WASHER (4.52X8.28X.76MM THK)	
					FOR SOFTWARE, SEE ELECTRONICS GP	

M-METRIC PART

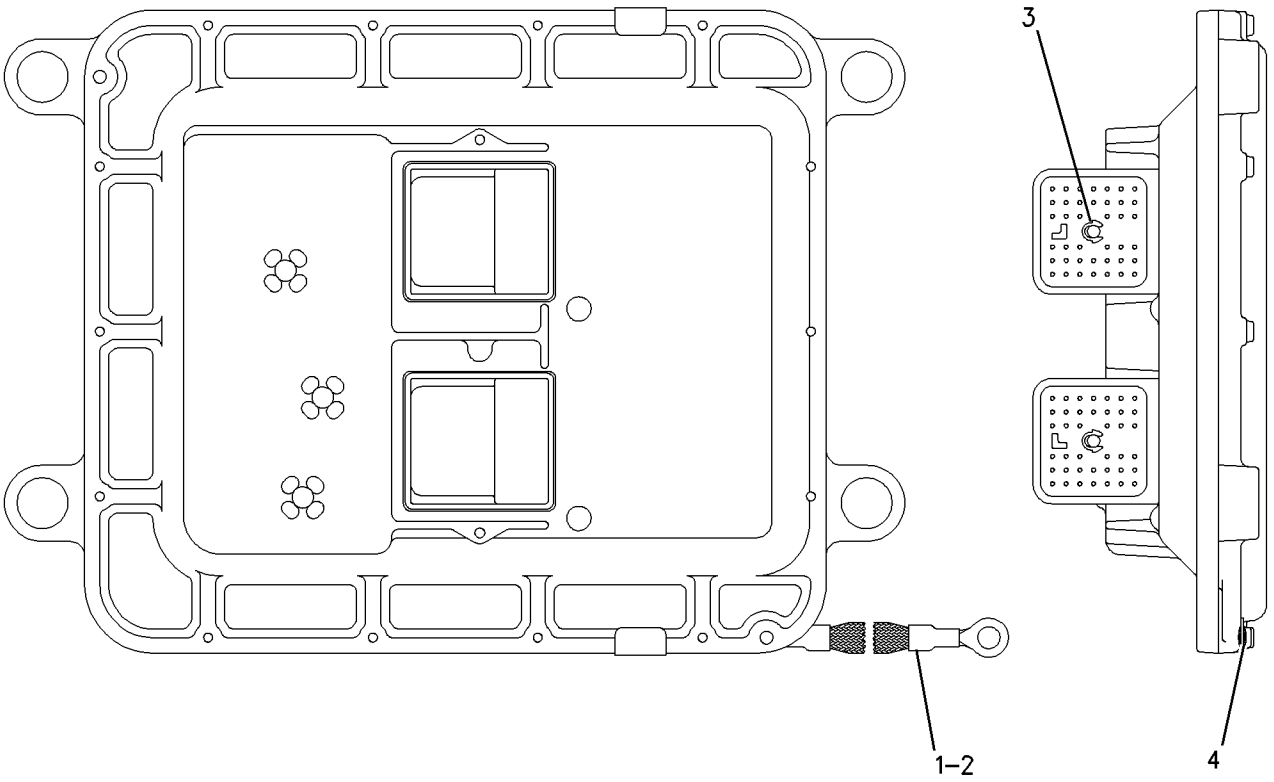

GRAPHIC #1 **<END>** g00951290

189-4624 ELECTRONICS AR-MACHINE

S/N: CCK1-UP

PART OF 189-4616 GENERAL AR

SMCS-7000 **i01834858**

NOTE	PART NUMBER	QTY	PART NAME 1 2 3 4 5 6 (PRODUCT LEVEL)	SEE PAGE
Y	*192-9081*	1	BATTERY & WIRING GP	121
Y	*169-3234*	1	ELECTRONICS GP-MONITOR	133
Y	*166-6269*	1	ELECTRONICS GP-POWER TRAIN	134
Y	*157-3458*	1	WIRING GP-ENGINE	183

Y-SEPARATE ILLUSTRATION

<END>

199-5995 ELECTRONICS GP-MACHINE

S/N: CCK1-UP

PART OF 172-6031 INSTALLATION GP-SECURITY

AN ATTACHMENT

SMCS-7000 **i01889622**

NOTE	PART NUMBER	QTY	PART NAME 1 2 3 4 5 6 (PRODUCT LEVEL)	SEE PAGE
	220-6355	1	SOFTWARE GP-MACHINE (SECURITY) (SOFTWARE ONLY)	
			—OR—	
Y	**207-5262**	1	CONTROL GP-MACHINE (SECURITY) (INCLUDES SOFTWARE)	129
			(OPTIONAL SERVICE REPLACEMENT)	

Y-SEPARATE ILLUSTRATION

<END>

169-3234 ELECTRONICS GP-MONITOR

S/N: CCK1-UP

PART OF 189-4624 ELECTRONICS AR-MACHINE

SMCS-7490, 7601, 7603, 7620 **i01881581**

NOTE	PART NUMBER	QTY	PART NAME 1 2 3 4 5 6 (PRODUCT LEVEL)	SEE PAGE
Y	**231-6531**	1	SERVICE GP-MONITOR	169
			(OPTIONAL SERVICE REPLACEMENT)(INCLUDES MONITOR AND SOFTWARE)	
			—OR—	
	231-6530	1	SOFTWARE GP-MONITOR	
			(SOFTWARE ONLY)	

Y-SEPARATE ILLUSTRATION

<END>

ELECTRICAL AND STARTING SYSTEM

166-6269 ELECTRONICS GP-POWER TRAIN

S/N: CCK1-UP

PART OF 189-4624 ELECTRONICS AR-MACHINE

SMCS-1400, 4808, 4812, 4820 **i01828673**

NOTE	PART NUMBER	QTY	PART NAME 1 2 3 4 5 6 (PRODUCT LEVEL)	SEE PAGE
	226-6113	1	SOFTWARE GP-POWER TRAIN (SOFTWARE ONLY)	
			—OR—	
Y	**226-6114**	1	SERVICE GP-POWER TRAIN (INCLUDES SOFTWARE)	170
			(OPTIONAL SERVICE REPLACEMENT)	

Y-SEPARATE ILLUSTRATION

<END>

224-1296 FASTENER GP-ENGINE WIRING

S/N: BMA1100-UP
PART OF 191-4479, 191-4481 ENGINE AR-COMPLETE
ALSO AN ATTACHMENT

SMCS-1408 **i01804598**

NOTE	REF NO	GRAPHIC REF	PART NUMBER	QTY	PART NAME 1 2 3 4 5 6 (PRODUCT LEVEL)	SEE PAGE
	1	1	**4P-7581**	2	CLIP	
	2	1	**4P-8134**	1	CLIP	

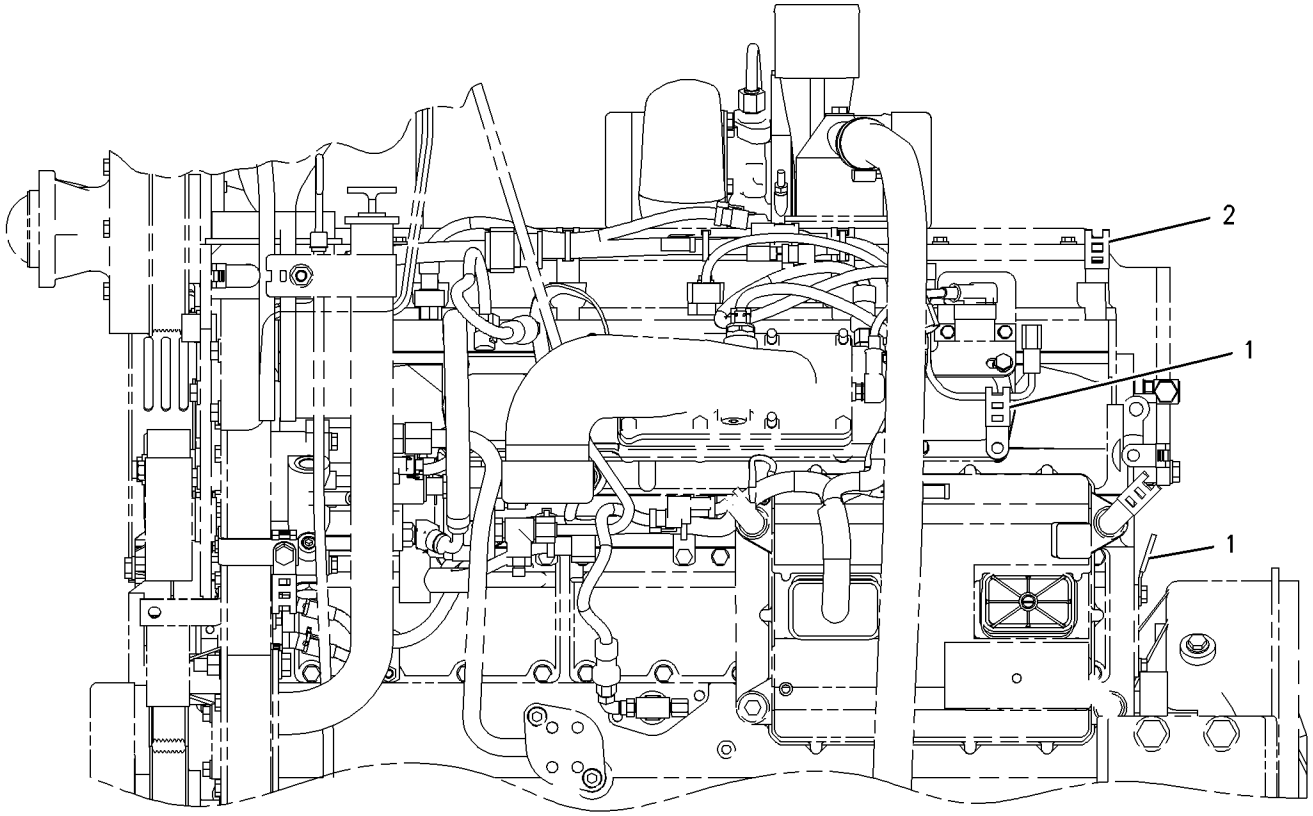

LEFT SIDE VIEW

GRAPHIC #1 **<END>** g00923462

3T-8724 HEATER GP-JACKET WATER

S/N: CCK1-UP
240 VOLT/1000 WATT
CANNOT BE USED WITH 9X-3294—PAGE 137
AN ATTACHMENT

SMCS-1383 **i01887606**

NOTE	REF NO	GRAPHIC REF	PART NUMBER	QTY	PART NAME 1 2 3 4 5 6 (PRODUCT LEVEL)	SEE PAGE
	1	1	**4N-8227**	1	CORD AS-HEATER	
C	2	1	**124-0687**	1	ELEMENT AS-JACKET WATER HEATER (240 VOLT/1000 WATT)	
	3	1	**133-6517**	1	CAP AS-DUST (JACKET WATER HEATER)	
					AVAILABLE REPAIR KIT(S):	
			132-1448	1	KIT-SEAL (JACKET WATER HEATER)	
					(INCLUDES SEAL, RINGS, SPACER & EXT. SNAP RING)	

C-CHANGE FROM PREVIOUS TYPE

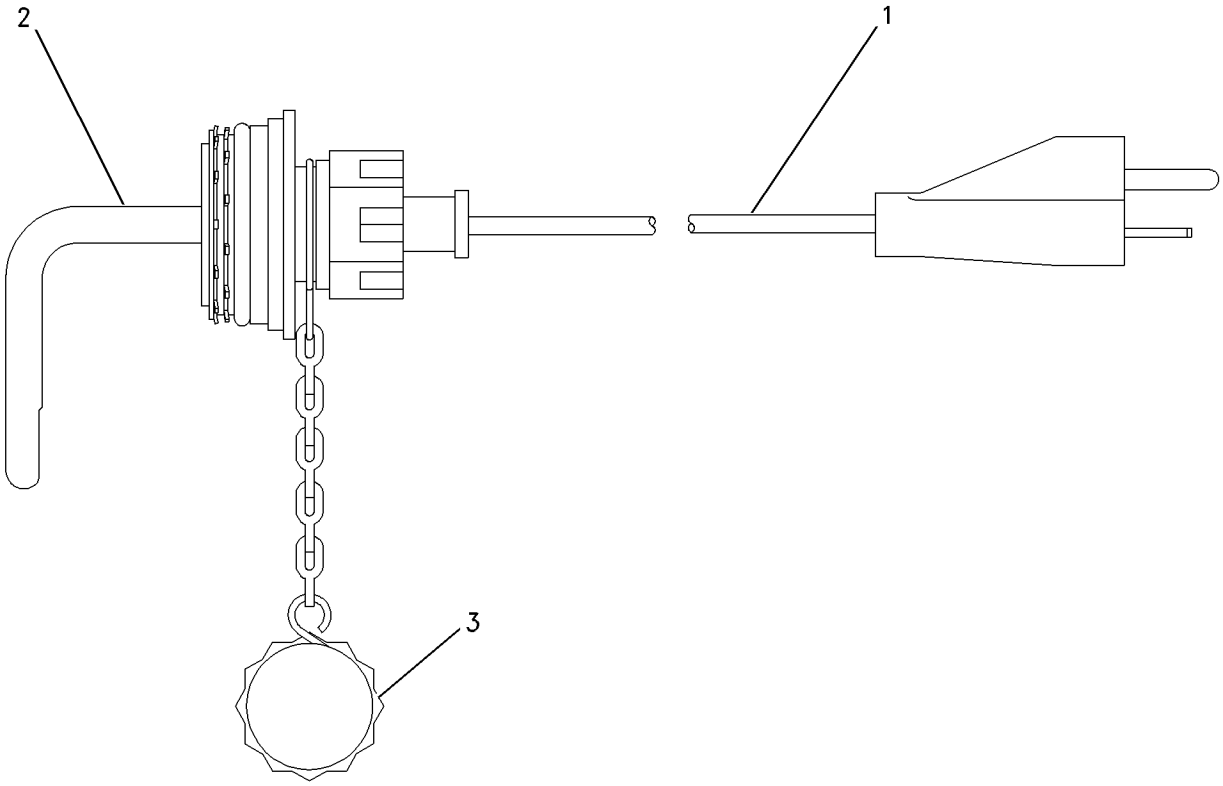

GRAPHIC #1 **<END>** g00892783

9X-3294 HEATER GP-JACKET WATER

S/N: CCK1-UP
120 VOLT/1000 WATT
CANNOT BE USED WITH 3T-8724—PAGE 136
AN ATTACHMENT

SMCS-1383 **i01882674**

NOTE	REF NO	GRAPHIC REF	PART NUMBER	QTY	PART NAME 1 2 3 4 5 6 (PRODUCT LEVEL)	SEE PAGE
	1	1	**9N-5253**	1	CORD AS-JACKET WATER HEATER	
C	2	1	**124-0686**	1	ELEMENT AS-JACKET WATER HEATER (120 VOLT/1000 WATT)	
	3	1	**133-6517**	1	CAP AS-DUST (JACKET WATER HEATER)	
					AVAILABLE REPAIR KIT(S):	
			132-1448	1	KIT-SEAL (JACKET WATER HEATER)	
					(INCLUDES SEAL, RINGS, SPACER & EXT. SNAP RING)	

C-CHANGE FROM PREVIOUS TYPE

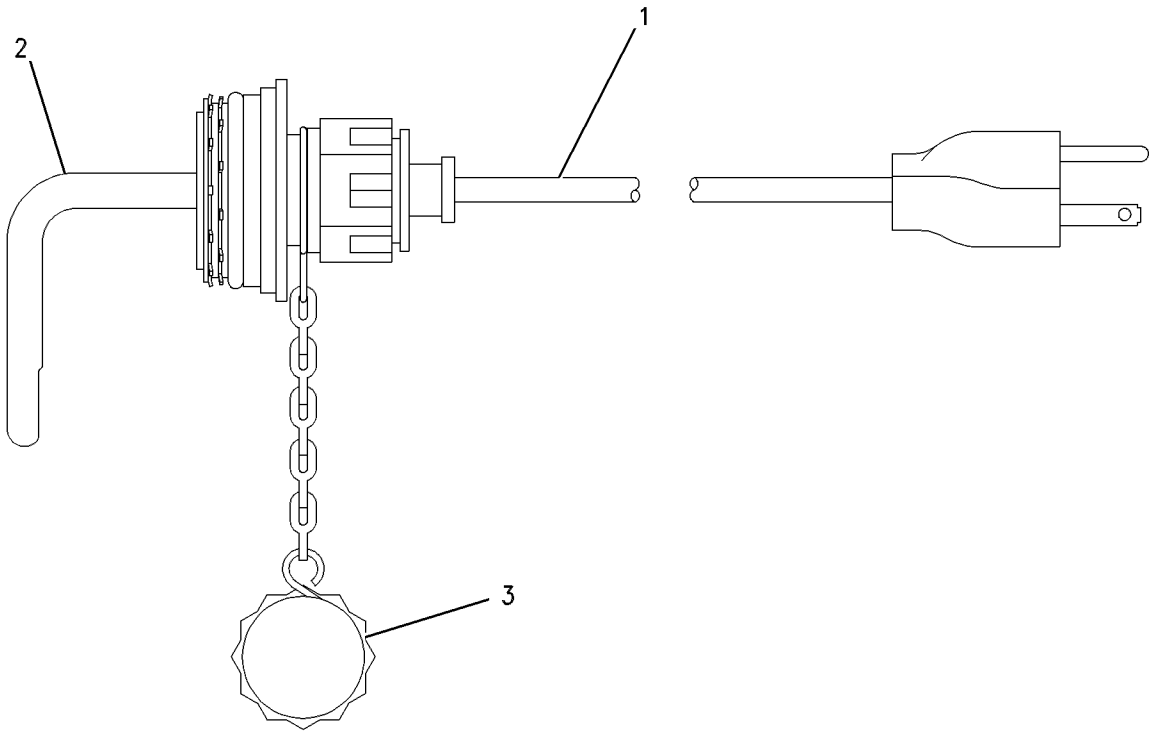

GRAPHIC #1 **<END>** g00467191

118-7284 HEATER GP-STARTING AID–AIR INLET

S/N: BMA1100-UP
PART OF 191-4479, 191-4481 ENGINE AR-COMPLETE
ALSO AN ATTACHMENT

SMCS-1090 **i01895544**

NOTE	REF NO	GRAPHIC REF	PART NUMBER	QTY	PART NAME 1 2 3 4 5 6 (PRODUCT LEVEL)	SEE PAGE
B	1	1	**1U-8846**		SEALANT-GASKET	
	2	1	**159-3537**	1	HEATER AS	
M	3	1	**5C-2890**	2	NUT (M6X1 THD)	

B-USE AS REQUIRED
M-METRIC PART

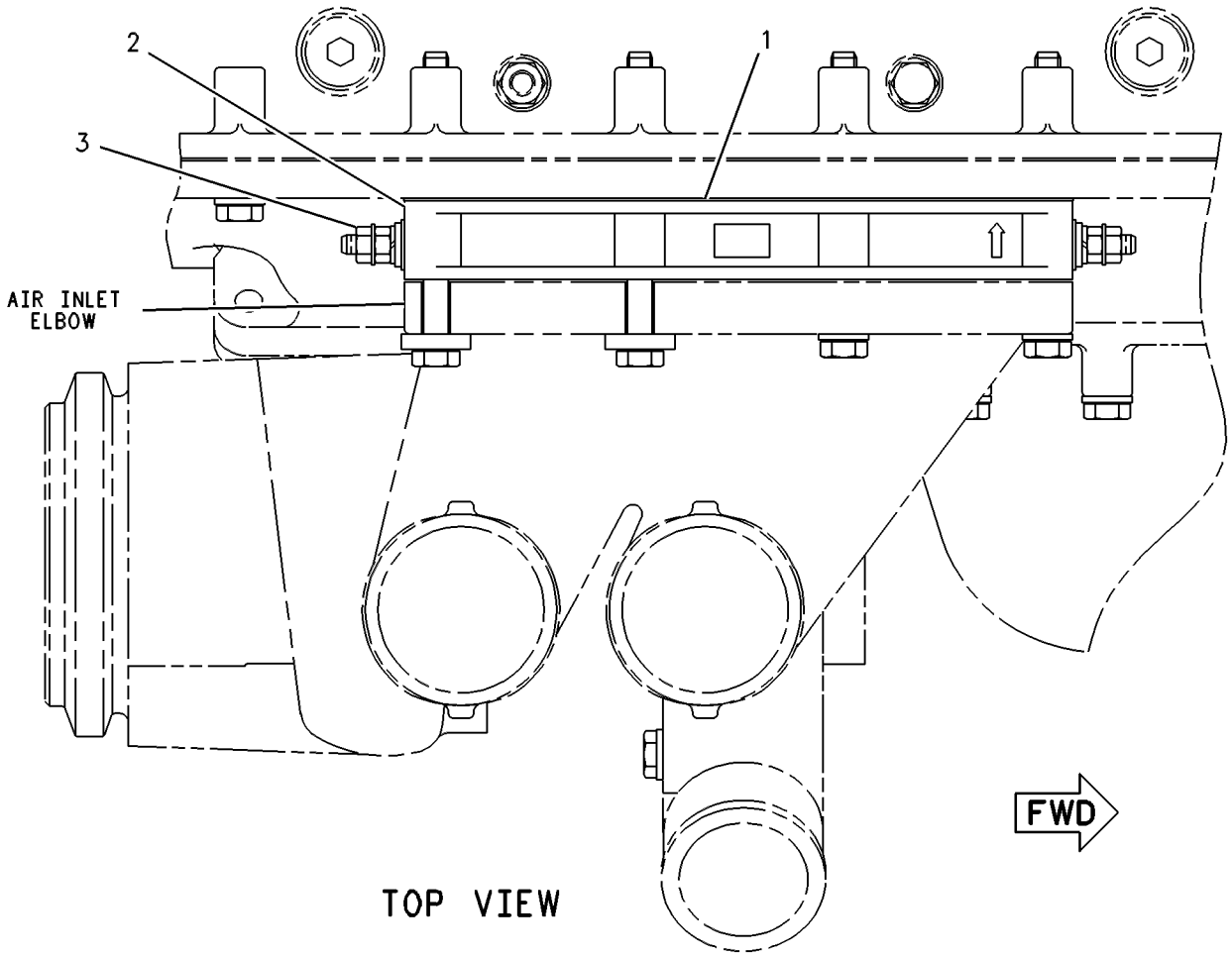

GRAPHIC #1 **<END>** g00250922

ELECTRICAL AND STARTING SYSTEM

172-6031 INSTALLATION GP-SECURITY

S/N: CCK1-UP
AN ATTACHMENT

SMCS-7631 **i01898147**

NOTE	REF NO	GRAPHIC REF	PART NUMBER	QTY	PART NAME 1 2 3 4 5 6 (PRODUCT LEVEL)	SEE PAGE
	1	1	**6I-1418**	3	SPACER (8.2X12.7X28.7MM THK)	
	2	1	**7K-1181**	3	STRAP-CABLE	
	3	1	**156-6155**	1	CONTROL GP-UNPROGRAMMED (SECURITY)	
	4	1	**216-3854**	1	HARNESS AS (CONTROL)(SECURITY)	
		1	**102-8804**	1	KIT-RECEPTACLE (4 PIN)	
		1	**102-8801**	1	KIT-RECEPTACLE (12 PIN)	
					(EACH INCLUDES RECEPTACLE AS & WEDGE)	
		1	**155-2271**	1	KIT-CONNECTING PLUG (4 PIN)	
					(INCLUDES PLUG AS & WEDGE)	
Y	5	1	**222-0297**	1	INSTALLATION GP-SECURITY	141
	6	1	**222-3870**	1	COIL AS	
		1	**102-8802**	2	KIT-RECEPTACLE (2 PIN)	
					(EACH INCLUDES RECEPTACLE AS & WEDGE)	
		1	**3E-3365**	1	WEDGE-RECEPTACLE LOCK (2 PIN)	
		1	**186-3735**	4	PIN-CONNECTOR	
BE		1	**9X-1813**		SLEEVE	
BD		1	**5P-5677**		WIRE-ELECTRICAL (18 GA) (BLACK)	
	7	1	**155-0576**	6	MOUNT-ISOLATION	
	8	1	**4P-7581**	2	CLIP	
	9	1	**8T-4224**	1	WASHER-HARD (8.8X16X2MM THK)	
M	10	1	**8T-6912**	3	BOLT (M8X1.25X50MM)	
	11	1	**9N-0869**	3	WASHER-HARD (8.8X25.5X2.0MM THK)	
Y	12	1	**199-5995**	1	ELECTRONICS GP-MACHINE (SECURITY)	133
	13	1	**206-5162**	2	KEY AS-ELECTRONIC (SECURITY)	

B-USE AS REQUIRED
D-ORDER BY THE METER
E-ORDER BY THE CENTIMETER
M-METRIC PART
Y-SEPARATE ILLUSTRATION

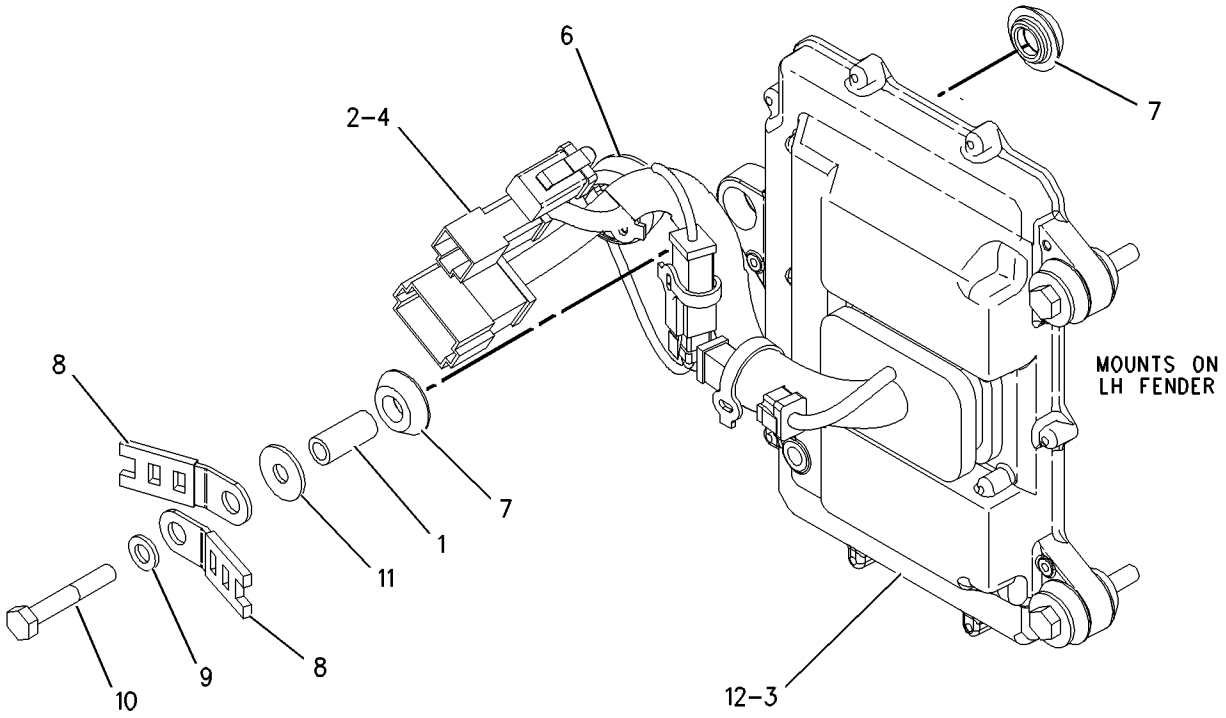

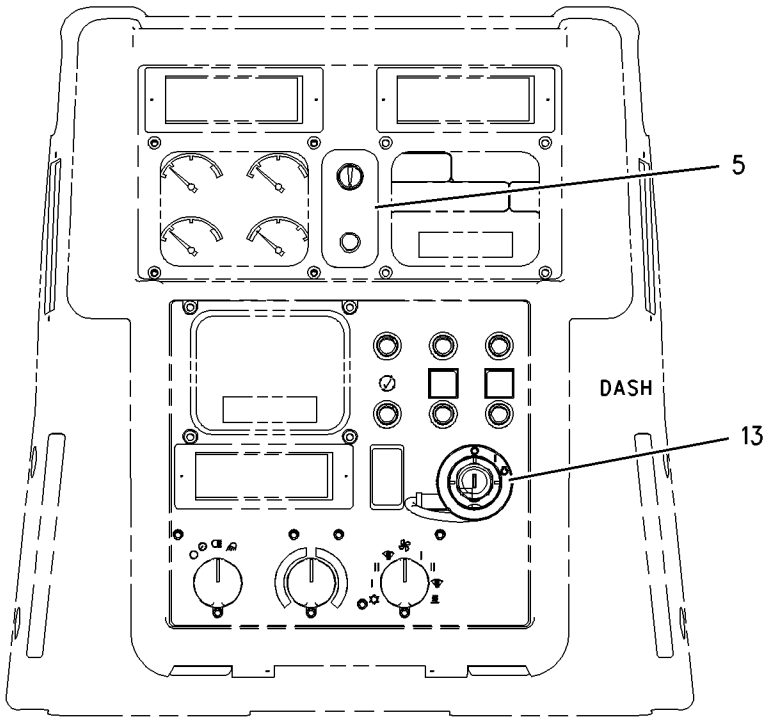

GRAPHIC #1 **<END>** g00913543

222-0297 INSTALLATION GP-SECURITY

S/N: CCK1-UP
PART OF 172-6031 INSTALLATION GP-SECURITY
AN ATTACHMENT

SMCS-7631 **i01882681**

NOTE	REF NO	GRAPHIC REF	PART NUMBER	QTY	PART NAME 1 2 3 4 5 6 (PRODUCT LEVEL)	SEE PAGE
	1	1	**173-1201**	1	FILM-IDENTIFICATION (ACTION LIGHT)	
	2	1	**165-5655**	1	LAMP AS (12 VOLT) (RED/GREEN LED ACTION LIGHT)	
		1	**186-3735**	3	PIN-CONNECTOR	
	3	1	**205-0826**	1	FILM (MACHINE SECURITY SYSTEM)	
	4	1	**206-5203**	1	COIL AS	
		1	**102-8802**	1	KIT-RECEPTACLE (2 PIN)	
					(INCLUDES RECEPTACLE AS & WEDGE)	
		1	**198-5389**	1	FILM (IGNITION SWITCH)	

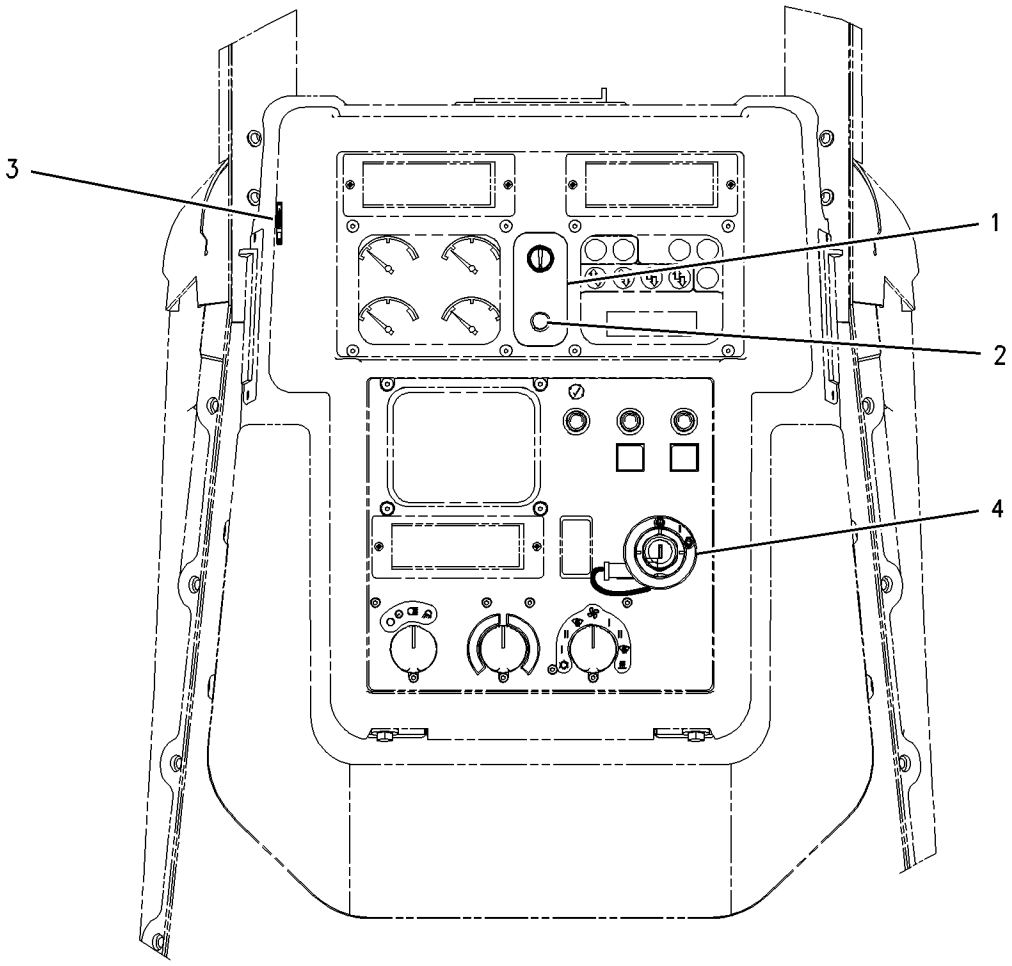

GRAPHIC #1 **<END>** g00912260

228-8540 INSTALLATION GP-SECURITY–RETROFIT

S/N: CCK1-UP

FIELD INSTALLATION

SMCS-7631 **i01882683**

NOTE	PART NUMBER	QTY	PART NAME 1 2 3 4 5 6 (PRODUCT LEVEL)	SEE PAGE
Y	**207-5262**	1	CONTROL GP-MACHINE (SECURITY)	129
	205-8257	1	COIL AS	
BD	**5P-5677**		WIRE-ELECTRICAL (18 GA)	
	186-3735	1	PIN-CONNECTOR	
	207-5271	1	WASHER	
	222-3870	1	COIL AS	
	102-8802	1	KIT-RECEPTACLE (2 PIN)	
			(INCLUDES RECEPTACLE AS & WEDGE)	
BD	**5P-5677**		WIRE-ELECTRICAL (18 GA)	
	186-3735	1	PIN-CONNECTOR	
	9X-1813	15	SLEEVE	
	216-3854	1	HARNESS AS (CONTROL)(SECURITY)	
	102-8804	1	KIT-RECEPTACLE (4 PIN)	
	102-8801	1	KIT-RECEPTACLE (12 PIN)	
			(EACH INCLUDES RECEPTACLE AS & WEDGE)	
	8T-8737	55	PLUG-SEAL	
	150-6766	1	PLUG AS-CONNECTOR	
	159-9322	1	SEAL-O-RING	
	155-2270	1	KIT-CONNECTING PLUG (2 PIN)	
	155-2271	1	KIT-CONNECTING PLUG (4 PIN)	
			(EACH INCLUDES PLUG AS & WEDGE)	
	102-8802	1	KIT-RECEPTACLE (2 PIN)	
	102-8803	1	KIT-RECEPTACLE (3 PIN)	
			(EACH INCLUDES RECEPTACLE AS & WEDGE)	
	165-5655	1	LAMP AS (12 VOLT) (RED/GREEN LED ACTION LIGHT)	
	186-3735	3	PIN-CONNECTOR	
M	**6V-3918**	3	BOLT (M8X1.25X50MM)	
	4P-7581	2	CLIP	
	8T-9655	6	MOUNT (ISOLATION)	
	6I-1418	3	SPACER (8.2X12.7X28.7MM THK)	
	7K-1181	5	STRAP-CABLE	
	9N-0869	4	WASHER-HARD (8.8X25.5X2.0MM THK)	
	198-5389	1	FILM (IGNITION SWITCH)	
	205-0826	1	FILM (MACHINE SECURITY SYSTEM)	
	225-5927	1	FILM (SECURITY NOTICE)	
	173-1201	1	FILM-IDENTIFICATION (ACTION LIGHT)	

B-USE AS REQUIRED
D-ORDER BY THE METER
M-METRIC PART
Y-SEPARATE ILLUSTRATION

<END>

3E-6389 LAMP GP-DOME

S/N: CCK1-UP
24 VOLT. WITH SWITCH
PART OF 170-2084 LINER GP-CAB

SMCS-1429 **i01855896**

NOTE	REF NO	GRAPHIC REF	PART NUMBER	QTY	PART NAME 1 2 3 4 5 6 (PRODUCT LEVEL)	SEE PAGE
	1	1	**7N-9943**	1	LAMP (24 VOLT) (DOME)	
	2	1	**102-8803**	1	KIT-RECEPTACLE (3 PIN)	
					(INCLUDES RECEPTACLE AS & WEDGE)	
		1	**3E-3371**	1	WEDGE-RECEPTACLE LOCK (3 PIN)	
		1	**8T-8729**	3	PIN-CONNECTOR	
	3	1	**7T-0020**	1	LENS (DOME LAMP)	

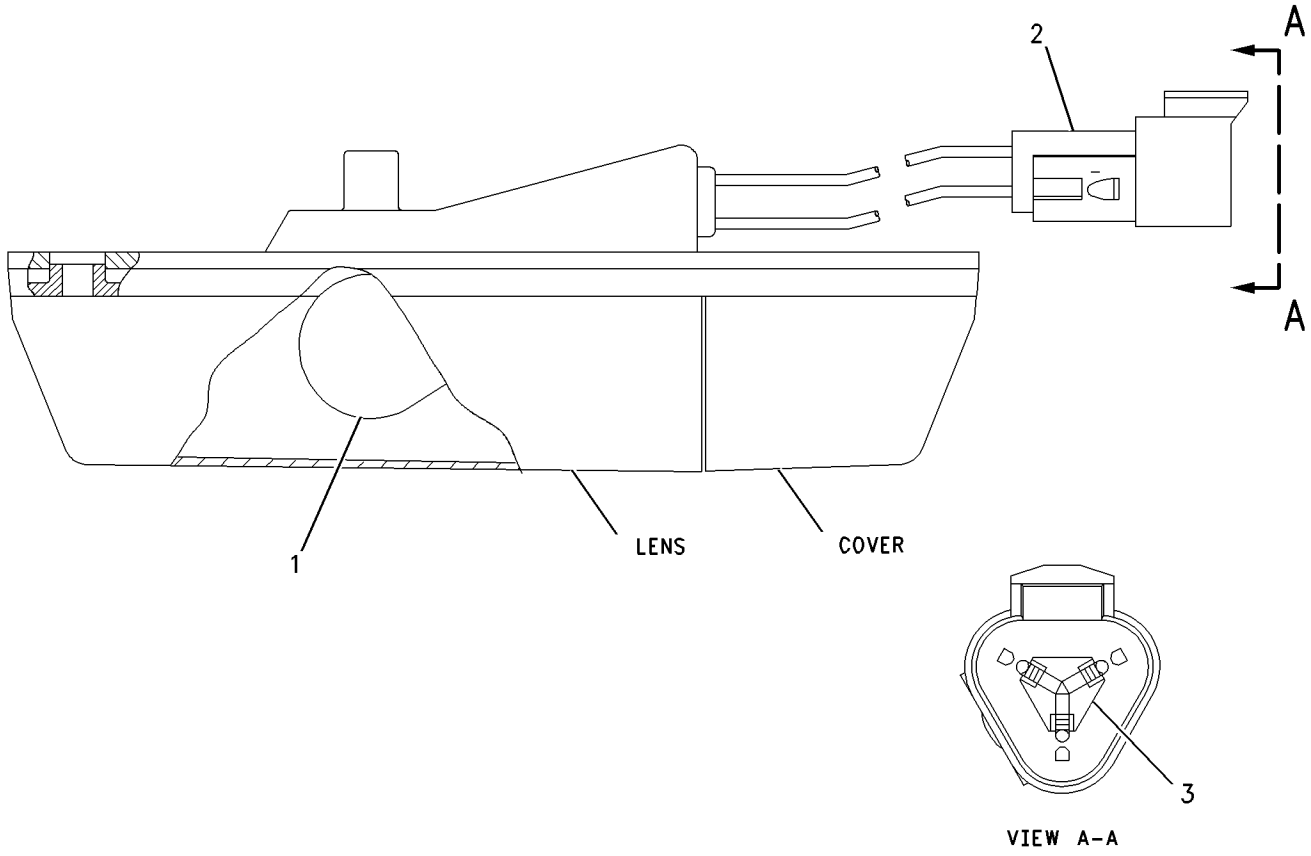

GRAPHIC #1 **<END>** g00892785

219-6487 LAMP GP-FLOOD–REAR ROPS

S/N: CCK1-UP
PART OF 157-3463 LIGHTING GP-FLOOD
AN ATTACHMENT

SMCS-1434 **i01892535**

NOTE	REF NO	GRAPHIC REF	PART NUMBER	QTY	PART NAME 1 2 3 4 5 6 (PRODUCT LEVEL)	SEE PAGE
	1	1	**9X-3463**	1	LAMP-HALOGEN (24 VOLT)(65 WATT) (FLOOD)	
M	2	1	**8T-6912**	1	BOLT (M8X1.25X50MM)	
M	3	1	**5C-7261**	1	NUT (M8X1.25 THD)	
	4	1	**8T-4224**	2	WASHER-HARD (8.8X16X2MM THK)	
	5	1	**9X-4244**	2	SCREW	
	6	1	**202-6612**	1	SEAL	
	7	1	**202-6614**	1	LENS AS (FLOOD) (ROPS)	
	8	1	**175-4292**	1	BODY AS	
	9	1	**164-7556**	1	CLIP	
	10	1	**175-4291**	1	BRACKET AS	

M-METRIC PART

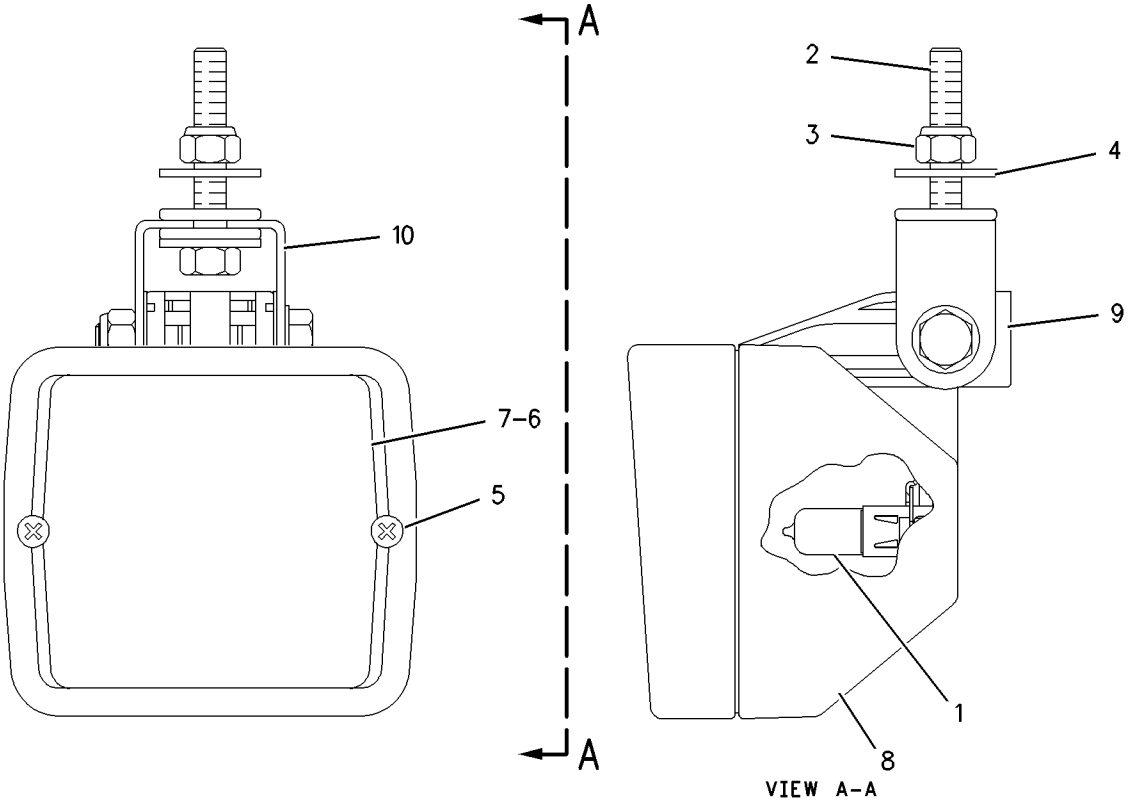

GRAPHIC #1 **<END>** g00912360

219-6488 LAMP GP-FLOOD–FRONT ROPS

S/N: CCK1-UP
24 VOLT
PART OF 157-3463 LIGHTING GP-FLOOD
AN ATTACHMENT

SMCS-1434 **i01892538**

NOTE	REF NO	GRAPHIC REF	PART NUMBER	QTY	PART NAME 1 2 3 4 5 6 (PRODUCT LEVEL)	SEE PAGE
	1	1	**9X-3463**	1	LAMP-HALOGEN (24 VOLT)(65 WATT) (FLOOD)	
M	2	1	**8T-6912**	1	BOLT (M8X1.25X50MM)	
M	3	1	**5C-7261**	1	NUT (M8X1.25 THD)	
	4	1	**8T-4224**	2	WASHER-HARD (8.8X16X2MM THK)	
	5	1	**9X-4244**	2	SCREW	
	6	1	**202-6612**	1	SEAL	
	7	1	**202-6611**	1	LENS AS (FLOOD) (ROPS)	
	8	1	**175-4292**	1	BODY AS	
	9	1	**164-7556**	1	CLIP	
	10	1	**175-4291**	1	BRACKET AS	

M-METRIC PART

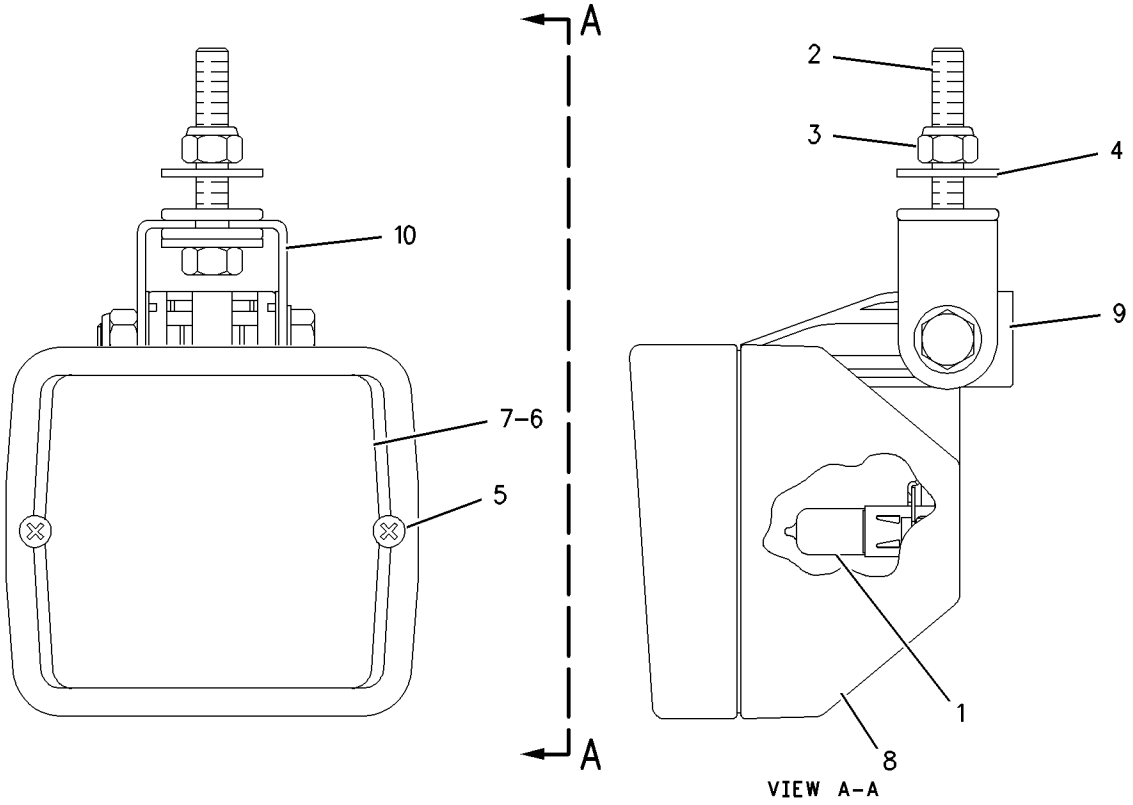

GRAPHIC #1 **<END>** g00912360

225-5075 LAMP GP-FLOOD—FRONT RADIATOR GRILL

S/N: CCK1-UP
24 VOLT, SHOCK RESISTANT
PART OF 192-9081 BATTERY & WIRING GP

SMCS-1434 **i01898150**

NOTE	REF NO	GRAPHIC REF	PART NUMBER	QTY	PART NAME 1 2 3 4 5 6 (PRODUCT LEVEL)	SEE PAGE
	1	1	**9X-3463**	1	LAMP-HALOGEN (24 VOLT)(65 WATT) (FLOOD)	
M	2	1	**8T-6912**	1	BOLT (M8X1.25X50MM)	
M	3	1	**5C-7261**	1	NUT (M8X1.25 THD)	
	4	1	**8T-4224**	2	WASHER-HARD (8.8X16X2MM THK)	
	5	1	**9X-4244**	2	SCREW	
	6	1	**202-6611**	1	LENS AS (FLOOD)	
	7	1	**227-0169**	1	BODY AS	
	8	1	**164-7556**	1	CLIP	
	9	1	**175-4291**	1	BRACKET AS	
	10	1	**102-8802**	1	KIT-RECEPTACLE (2 PIN)	
					(INCLUDES RECEPTACLE AS & WEDGE)	
	11	1	**186-3735**	2	PIN-CONNECTOR	
	12	1	**3E-3365**	1	WEDGE-RECEPTACLE LOCK (2 PIN)	

M-METRIC PART

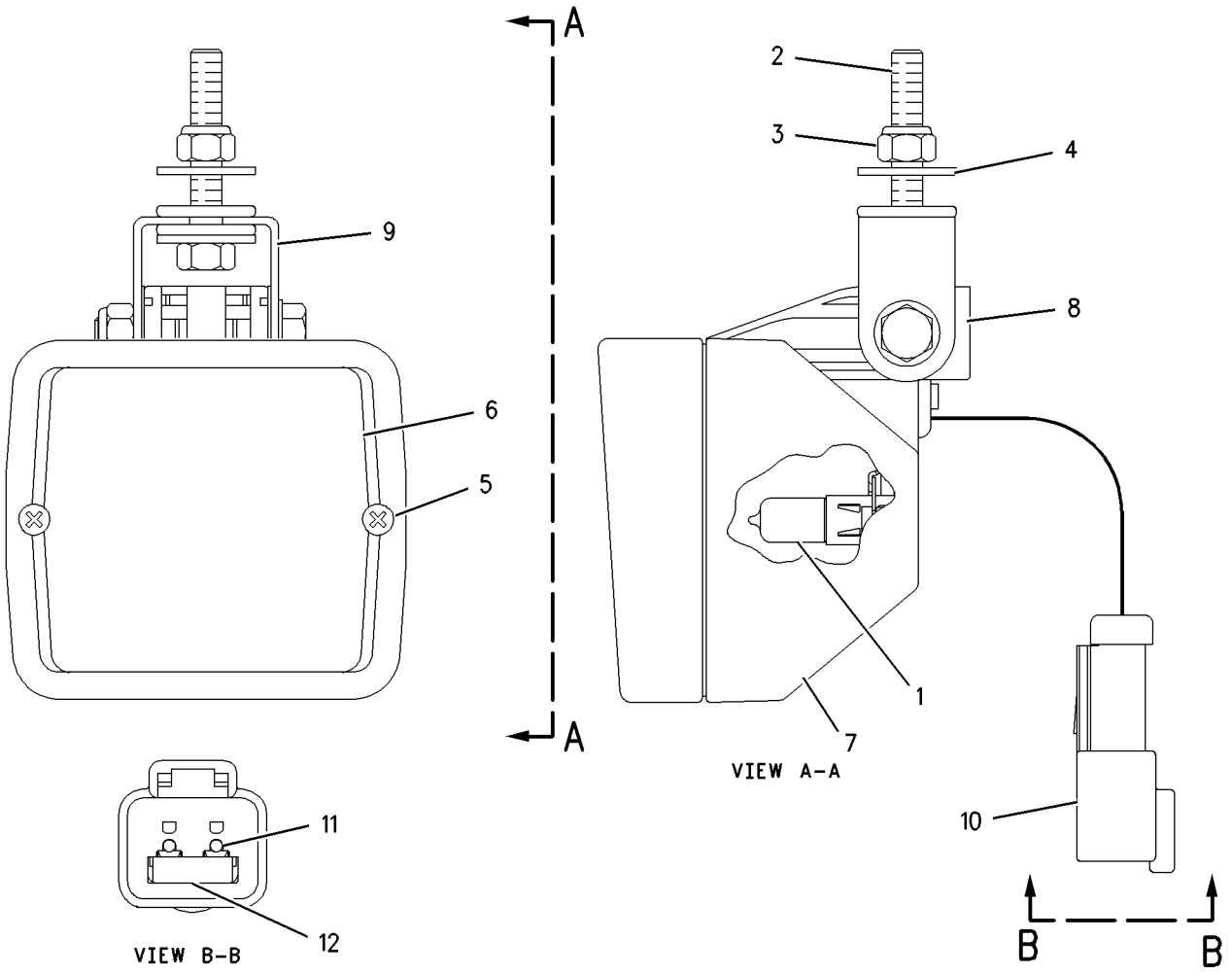

GRAPHIC #1 **<END>** g00912419

110-7563 LAMP GP-WARNING BEACON

S/N: CCK1-UP
PART OF 157-3459 LIGHTING GP-WARNING BEACON
AN ATTACHMENT

SMCS-1431 **i01882697**

NOTE	REF NO	GRAPHIC REF	PART NUMBER	QTY	PART NAME 1 2 3 4 5 6 (PRODUCT LEVEL)	SEE PAGE
	1	1	**102-8802**	1	KIT-RECEPTACLE (2 PIN)	
					(INCLUDES RECEPTACLE AS & WEDGE)	
	2	1	**8T-8729**	2	PIN-CONNECTOR	
	3	1	**198-0316**	1	LENS (AMBER WARNING BEACON)	
F		1	**198-0315**	1	TUBE-FLASH (8 PRONG CONNECTION) (WARNING BEACON)	
F		1	**127-8158**	1	TUBE-FLASH (3 PRONG CONNECTION) (WARNING BEACON)	

F-NOT SHOWN

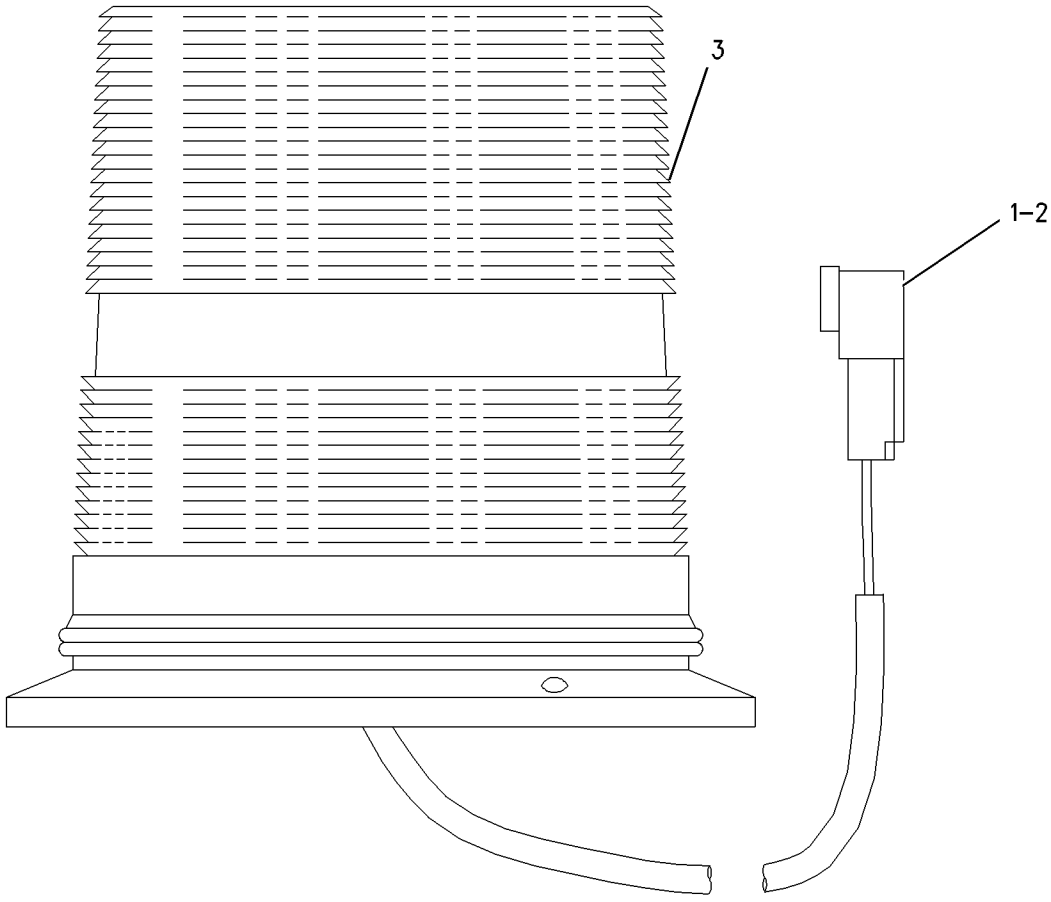

GRAPHIC #1 **<END>** g00748973

157-3463 LIGHTING GP-FLOOD—ENCLOSED & OPEN ROPS

S/N: CCK1-UP

AN ATTACHMENT

SMCS-1429 **i01898167**

NOTE	REF NO	GRAPHIC REF	PART NUMBER	QTY	PART NAME 1 2 3 4 5 6 (PRODUCT LEVEL)	SEE PAGE
	1	1	**7K-1181**	4	STRAP-CABLE	
	2	1	**197-4816**	4	PLATE	
	3	1	**197-6587**	4	BRACKET AS	
					(EACH INCLUDES)	
M		1	**8T-3490**	2	NUT-WELD (M10X1.5 THD)	
Y	4	1	**219-6487**	2	LAMP GP-FLOOD (24 VOLT, SUSPENDED MOUNT) (REAR ROPS)	144
Y	5	1	**219-6488**	2	LAMP GP-FLOOD (SUSPENDED MOUNT) (24 VOLT, FRONT ROPS)	145
	6	1	**223-8934**	4	GUARD AS	
					(EACH INCLUDES)	
M		1	**8T-3612**	4	NUT-WELD (M8X1.25 THD)	
	7	1	**223-8935**	1	SCREEN AS (RH)	
	8	1	**223-8936**	1	SCREEN AS (LH)	
					(EACH SCREEN AS INCLUDES)	
		1	**8T-2561**	1	WASHER-HARD (10.5X28.5X5MM THK)	
	9	1	**4P-7581**	4	CLIP	
	10	1	**5P-4116**	4	WASHER-HARD (8.8X20.5X2MM THK)	
	11	1	**8T-4121**	28	WASHER-HARD (11X21X2.5MM THK)	
M	12	1	**8T-4182**	4	BOLT (M10X1.5X45MM)	
M	13	1	**8T-4195**	24	BOLT (M10X1.5X30MM)	
	14	1	**8T-4224**	6	WASHER-HARD (8.8X16X2MM THK)	
M	15	1	**8T-4908**	6	BOLT (M8X1.25X25MM)	

M-METRIC PART
Y-SEPARATE ILLUSTRATION

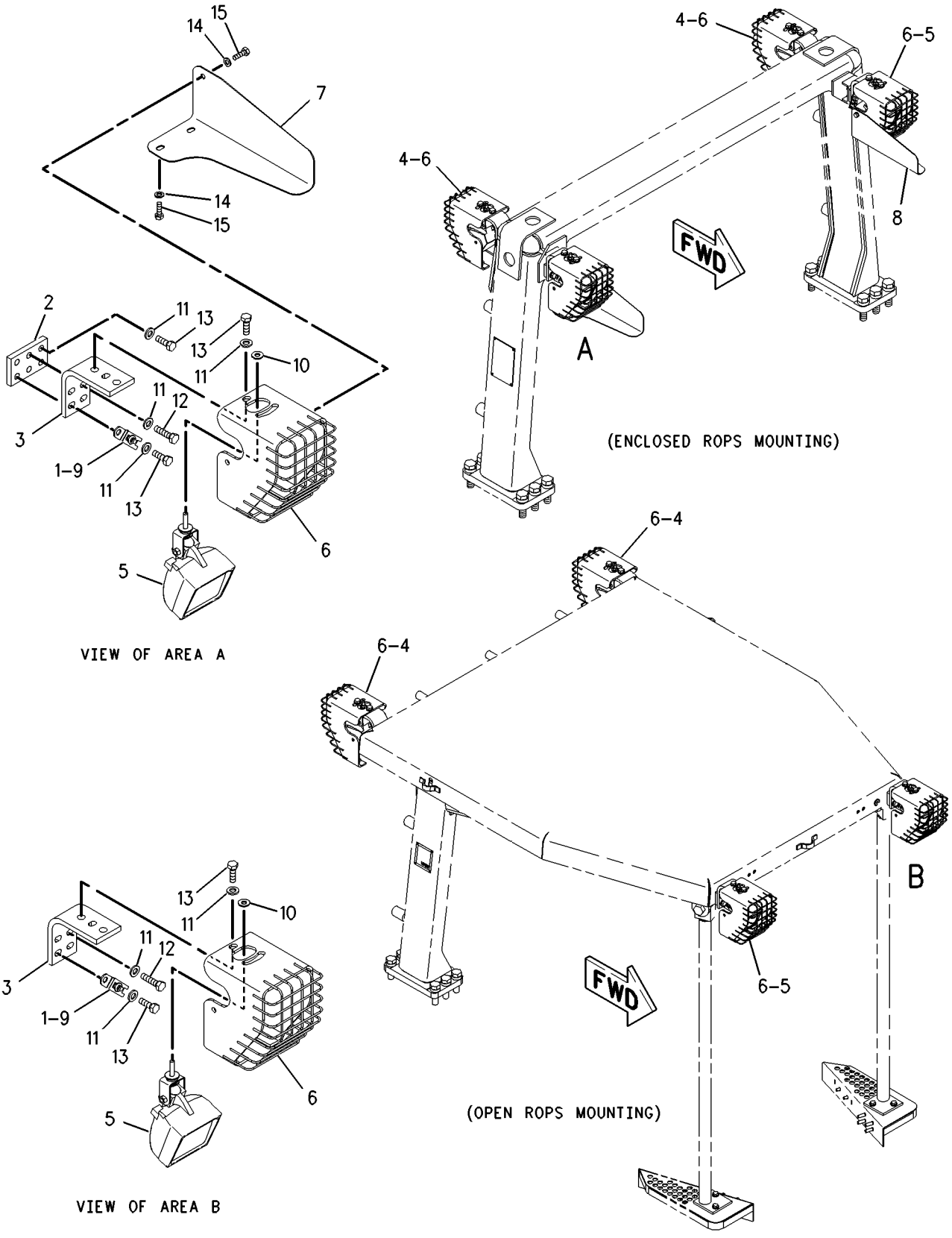

GRAPHIC #1 **<END>** g00970392

ELECTRICAL AND STARTING SYSTEM

157-3459 LIGHTING GP-WARNING BEACON

S/N: CCK1-UP
AN ATTACHMENT

SMCS-1431 **i01884410**

NOTE	REF NO	GRAPHIC REF	PART NUMBER	QTY	PART NAME 1 2 3 4 5 6 (PRODUCT LEVEL)	SEE PAGE
	1	1	**3S-2093**	1	STRAP-CABLE	
M	2	1	**125-3299**	3	BOLT-SOCKET HEAD (M5X0.8X25MM)	
	3	1	**203-4261**	1	BRACKET AS	
M		1	**8T-3490**	1	NUT-WELD (M10X1.5 THD)	
M		1	**8T-8874**	3	NUT-WELD (M5X0.8 THD)	
	4	1	**102-9862**	1	SWITCH AS (WARNING BEACON)	
		1	**3E-8822**	1	ACTUATOR-ROCKER	
		1	**3E-8825**	1	LAMP (24 VOLT) (WARNING BEACON)	
					—OR—	
		1	**165-5674**	1	LAMP-DIODE (LED) (WARNING BEACON)	
	5	1	**233-0792**	1	PLATE	
Y	6	1	**110-7563**	1	LAMP GP-WARNING BEACON	147
	7	1	**6K-8178**	1	CLIP	
	8	1	**8T-4121**	7	WASHER-HARD (11X21X2.5MM THK)	
M	9	1	**8T-4137**	3	BOLT (M10X1.5X20MM)	
M	10	1	**8T-4182**	1	BOLT (M10X1.5X45MM)	
M	11	1	**8T-4195**	3	BOLT (M10X1.5X30MM)	

M-METRIC PART
Y-SEPARATE ILLUSTRATION

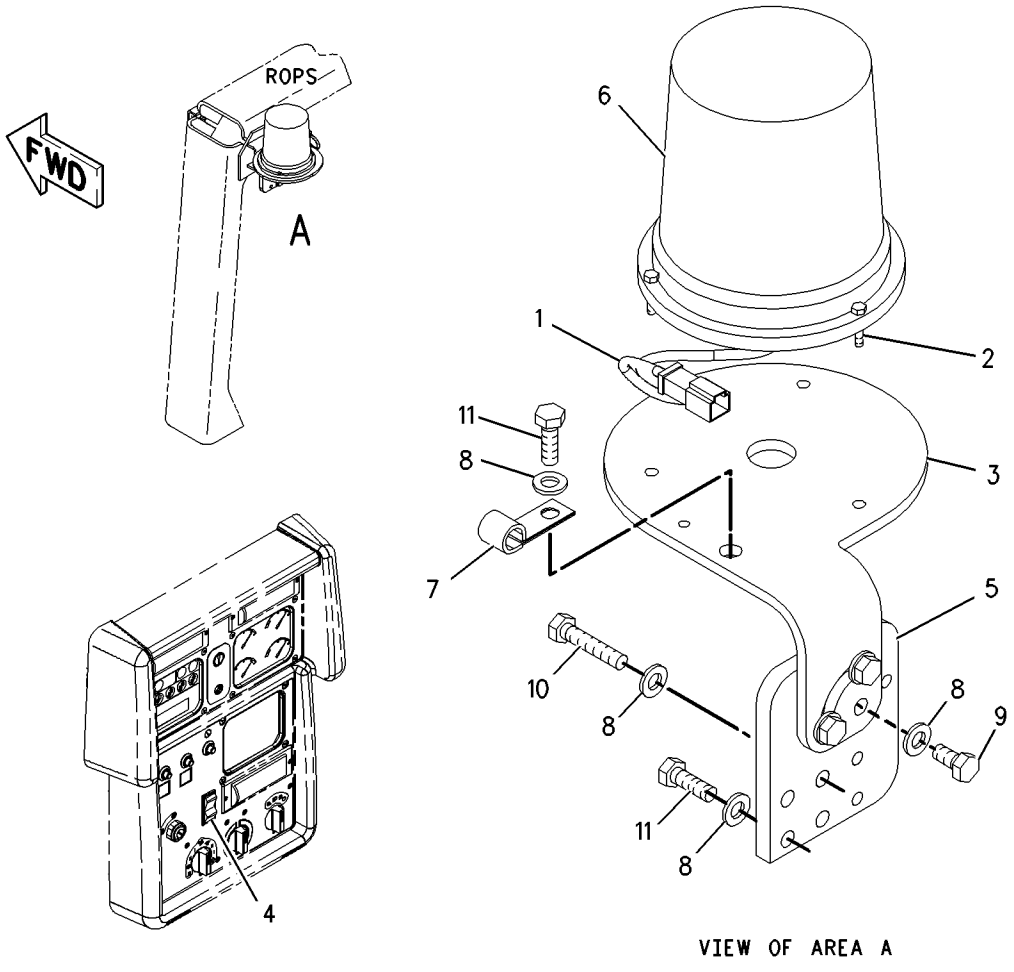

VIEW OF AREA A

GRAPHIC #1 **<END>** g00976190

156-8378 PANEL GP-CIRCUIT BREAKER

S/N: CCK1-UP
PART OF 192-9082 WIRING GP-PLATFORM
ALSO AN ATTACHMENT

SMCS-1417, 1420 **i01885438**

NOTE	REF NO	GRAPHIC REF	PART NUMBER	QTY	PART NAME 1 2 3 4 5 6 (PRODUCT LEVEL)	SEE PAGE
	1	1	**189-3158**	1	SUPPRESSOR-ARC	
	2	1	**7K-1181**	8	STRAP-CABLE	
	3	1	**9W-1441**	8	FUSE (15 AMP)	
	4	1	**9W-1442**	9	FUSE (10 AMP)	
	5	1	**9W-1446**	3	FUSE (20 AMP)	
	6	1	**114-0931**	1	FILM-IDENTIFICATION (SERVICE CONNECTOR)	
Y	7	1	**125-1302**	1	SWITCH GP-MAGNETIC (START RELAY)	177
	8	1	**213-2985**	1	HARNESS AS (CIRCUIT BREAKER)	
		1	**102-8802**	1	KIT-RECEPTACLE (2 PIN)	
		1	**103-8133**	1	KIT-RECEPTACLE (12 PIN)	
					(EACH RECEPTACLE KIT INCLUDES RECEPTACLE AS & WEDGE)	
		1	**155-2270**	1	KIT-CONNECTING PLUG (2 PIN)	
					(INCLUDES PLUG AS, WEDGE AND INTERFACE SEAL)	
		1	**106-4155**	1	KIT-BOLT (CIRCUIT BREAKER HARNESS)	
					(INCLUDES BOLT,RING AND SEAL)	
		1	**186-3735**	42	PIN-CONNECTOR	
		1	**3S-2093**	4	STRAP-CABLE	
		1	**8T-8737**	23	PLUG-SEAL	
		1	**175-7058**	1	BLOCK AS-FUSE	
	9	1	**165-3503**	1	STRIP	
	10	1	**165-3504**	1	WIRE AS	
	11	1	**165-3505**	1	WIRE AS	
	12	1	**213-2986**	1	PANEL AS	
		1	**7T-1099**	3	LINK	
	13	1	**165-4157**	1	STRIP	
Y	14	1	**167-0138**	1	SWITCH GP-MAGNETIC (MAIN FUSE RELAY)	178
	15	1	**171-2210**	1	CIRCUIT BREAKER AS (80 AMP) (MACHINE MAIN)	
		1	**1H-3244**	2	LOCKWASHER	
		1	**6V-8187**	2	NUT (1/4-28 THD)	
		1	**8T-4205**	2	WASHER-HARD (7.2X14.5X2MM THK)	
	16	1	**172-9999**	1	HARNESS AS (CIRCUIT BREAKER PANEL)	
		1	**127-5483**	2	PLUG AS-CONNECTOR (1 PIN)	
		1	**127-5484**	1	RECEPTACLE AS (1 PIN)	
		1	**127-5485**	1	PLUG AS-CONNECTOR (1 PIN)	
	17	1	**173-1614**	1	FILM-IDENTIFICATION (ALTERNATOR)	
	18	1	**5P-7162**	4	SCREW-MACHINE (10-32 THD)	
M	19	1	**5C-2890**	4	NUT (M6X1 THD)	
M	20	1	**5C-9553**	4	BOLT (M6X1X16MM)	
	21	1	**6V-7978**	2	SCREW-MACHINE (10-32X0.375 IN)	
M	22	1	**8T-4171**	2	BOLT (M6X1X12MM)	
	23	1	**8T-4205**	10	WASHER-HARD (7.2X14.5X2MM THK)	

M-METRIC PART
Y-SEPARATE ILLUSTRATION

156-8378 **PANEL GP-CIRCUIT BREAKER** ***(contd.)*** **i01885438**

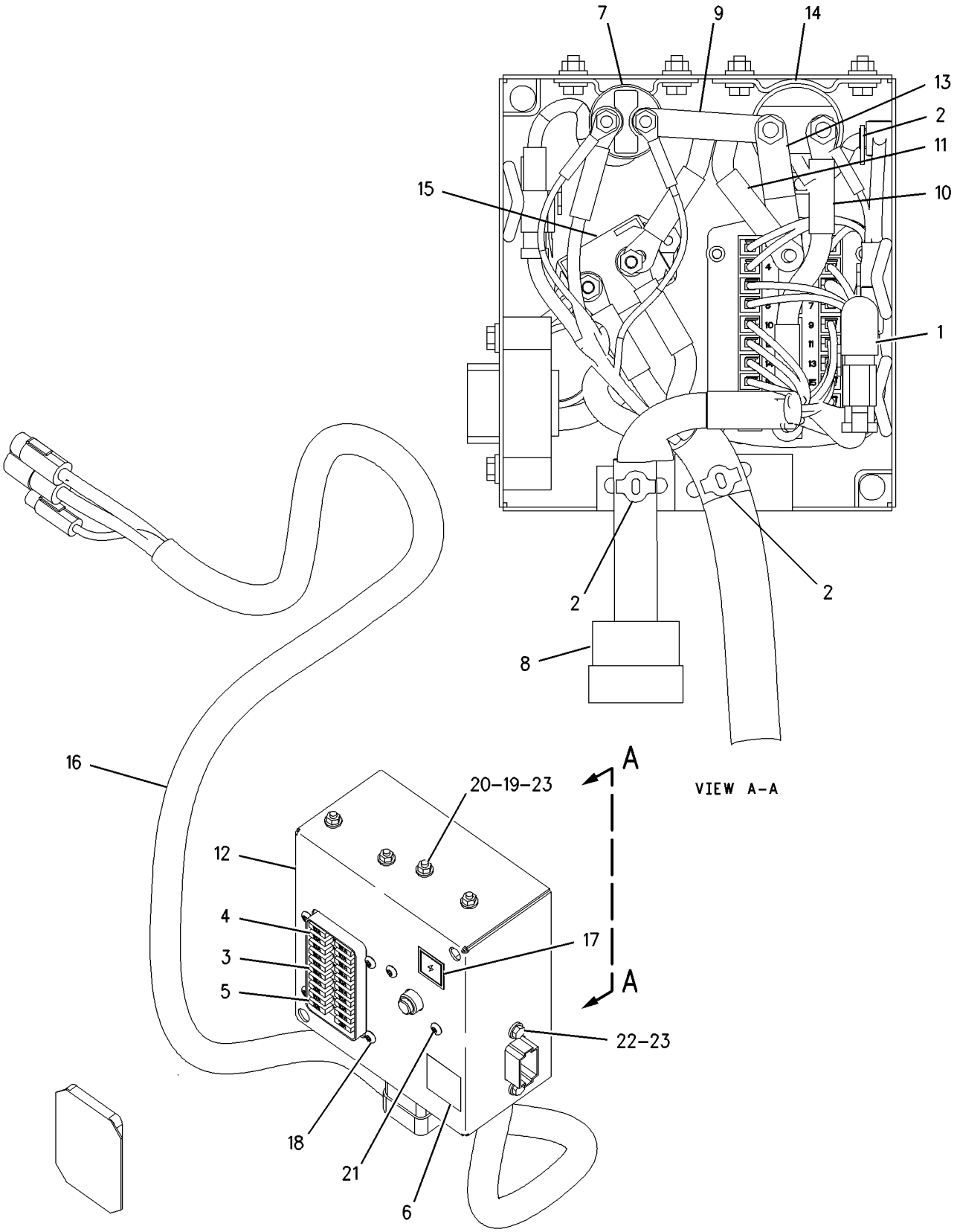

GRAPHIC #1 **<END>** g00912248

199-7734 SENSOR GP-ENGINE

S/N: BMA1100-UP
PART OF 191-4479, 191-4481 ENGINE AR-COMPLETE
ALSO AN ATTACHMENT

SMCS-1718, 1906, 1912, 1924, 1929 **i01892542**

NOTE	REF NO	GRAPHIC REF	PART NUMBER	QTY	PART NAME 1 2 3 4 5 6 (PRODUCT LEVEL)	SEE PAGE
	1	1	**9X-0262**	1	ADAPTER	
	2	1	**031-2716**	1	ELBOW	
	3	1	**130-9811**	1	SENSOR GP-TEMPERATURE (COOLANT)	
	3A	1	**130-9811**	1	SENSOR GP-TEMPERATURE (INTAKE AIR)	
	4	1	**160-8123**	1	PLUG AS	
		1	**3E-3368**	1	WEDGE-PLUG LOCK	
		1	**8T-8737**	3	PLUG-SEAL	
Y	5	1	**191-6587**	1	SENSOR GP-TEMPERATURE (ENGINE OIL)	168
Y	6	1	**194-6723**	1	SENSOR GP-PRESSURE (TURBO OUTLET)	159
Y	7	1	**194-6725**	1	SENSOR GP-PRESSURE (FUEL)	160
Y	7A	1	**194-6725**	1	SENSOR GP-PRESSURE (ENGINE OIL)	160
Y	8	1	**194-6726**	1	SENSOR GP-PRESSURE (INJECTION ACTUATION)	161
	9	1	**117-1385**	2	SEAL-O-RING	
Y	10	1	*169-3300*	1	SENSOR GP-SPEED (TIMING) (ENGINE)	163
	11	1	**3K-8460**	1	PLUG (1/2-20 THD)	
		1	**5P-7814**	1	SEAL-O-RING	
	12	1	**6V-5049**	1	SEAL-O-RING	
		1	**9S-4191**	1	PLUG	
	13	1	**3E-4352**	1	WASHER-HARD (8.8X20.5X2.5MM THK)	
	14	1	**3J-7354**	2	SEAL-O-RING	
	15	1	**5P-7814**	1	SEAL-O-RING	
M	16	1	**6V-3940**	1	BOLT (M8X1.25X25MM)	
	17	1	**6V-5048**	2	SEAL-O-RING	
	18	1	**6V-5049**	1	SEAL-O-RING	
	19	1	**6V-6609**	2	SEAL-O-RING	

M-METRIC PART
Y-SEPARATE ILLUSTRATION

199-7734 **SENSOR GP-ENGINE** ***(contd.)*** **i01892542**

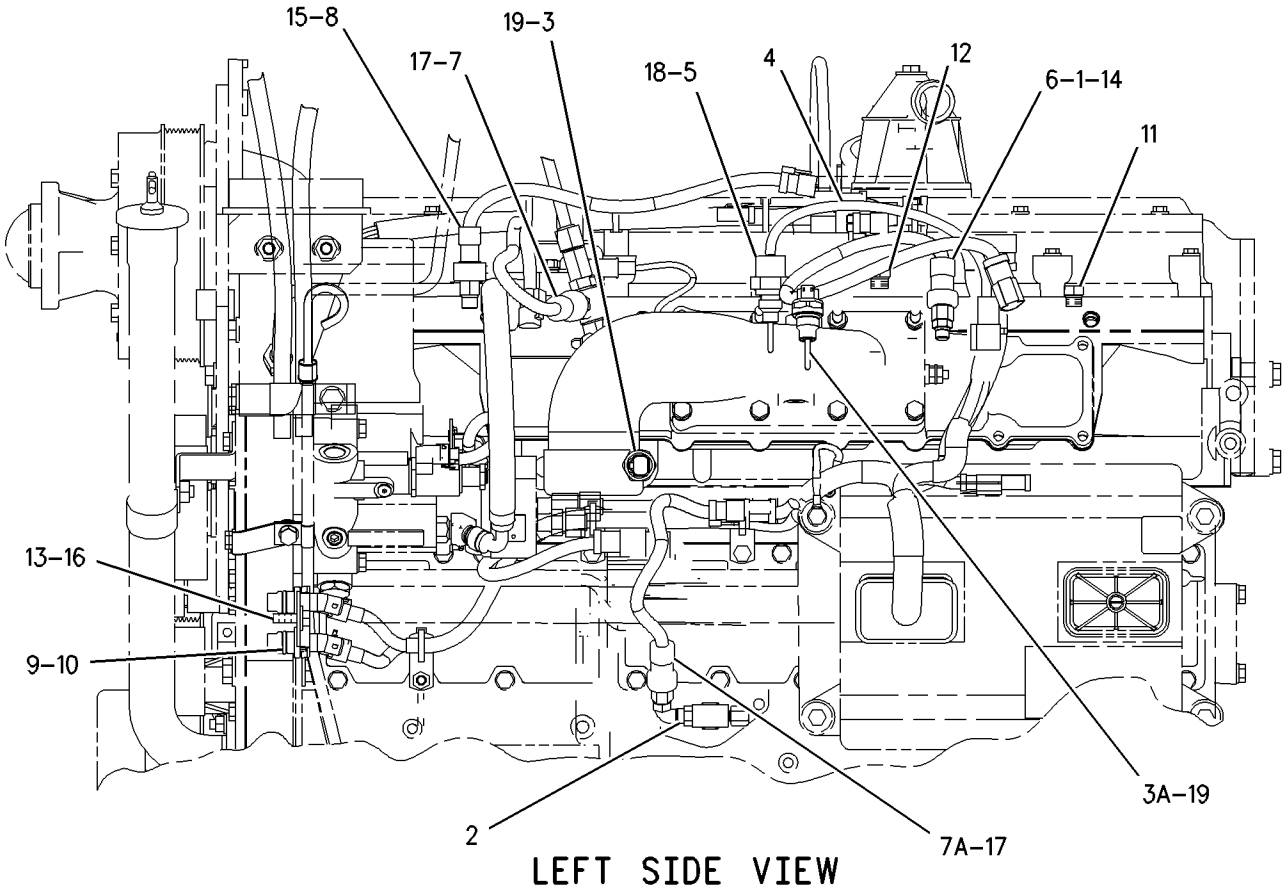

LEFT SIDE VIEW

GRAPHIC #1 **<END>** g00896956

165-6634 SENSOR GP-LIQUID LEVEL–COOLANT

S/N: CCK1-UP

PART OF 195-1040 RADIATOR GP

SMCS-7422 **i01849533**

NOTE	REF NO	GRAPHIC REF	PART NUMBER	QTY	PART NAME 1 2 3 4 5 6 (PRODUCT LEVEL)	SEE PAGE
J	1	1	**102-8803**	1	KIT-RECEPTACLE (3 PIN) (COOLANT LEVEL SENSOR)	
					(INCLUDES RECEPTACLE AS & PART MARKED J)	
J	2	1	**3E-3371**	1	WEDGE-RECEPTACLE LOCK (3 PIN)	
	3	1	**186-3735**	3	PIN-CONNECTOR	

J-KIT MARKED J INCLUDES PART MARKED J

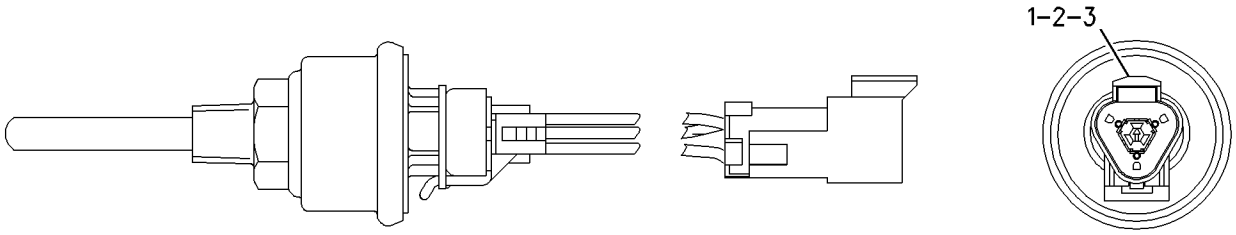

GRAPHIC #1 **<END>** g00785629

160-2443 SENSOR GP-POSITION—DECELERATOR PEDAL

S/N: CCK1-UP
ROTARY
PART OF 199-4801 PEDAL GP-GOVERNOR & BRAKE
ALSO AN ATTACHMENT

SMCS-1408 **i01431988**

NOTE	REF NO	GRAPHIC REF	PART NUMBER	QTY	PART NAME 1 2 3 4 5 6 (PRODUCT LEVEL)	SEE PAGE
	1	1	**102-8803**	1	KIT-RECEPTACLE (3 PIN)	
					(INCLUDES RECEPTACLE AS & WEDGE)	
	2	1	**8T-8729**	3	PIN-CONNECTOR	
	3	1	**3E-3371**	1	WEDGE-RECEPTACLE LOCK (3 PIN)	

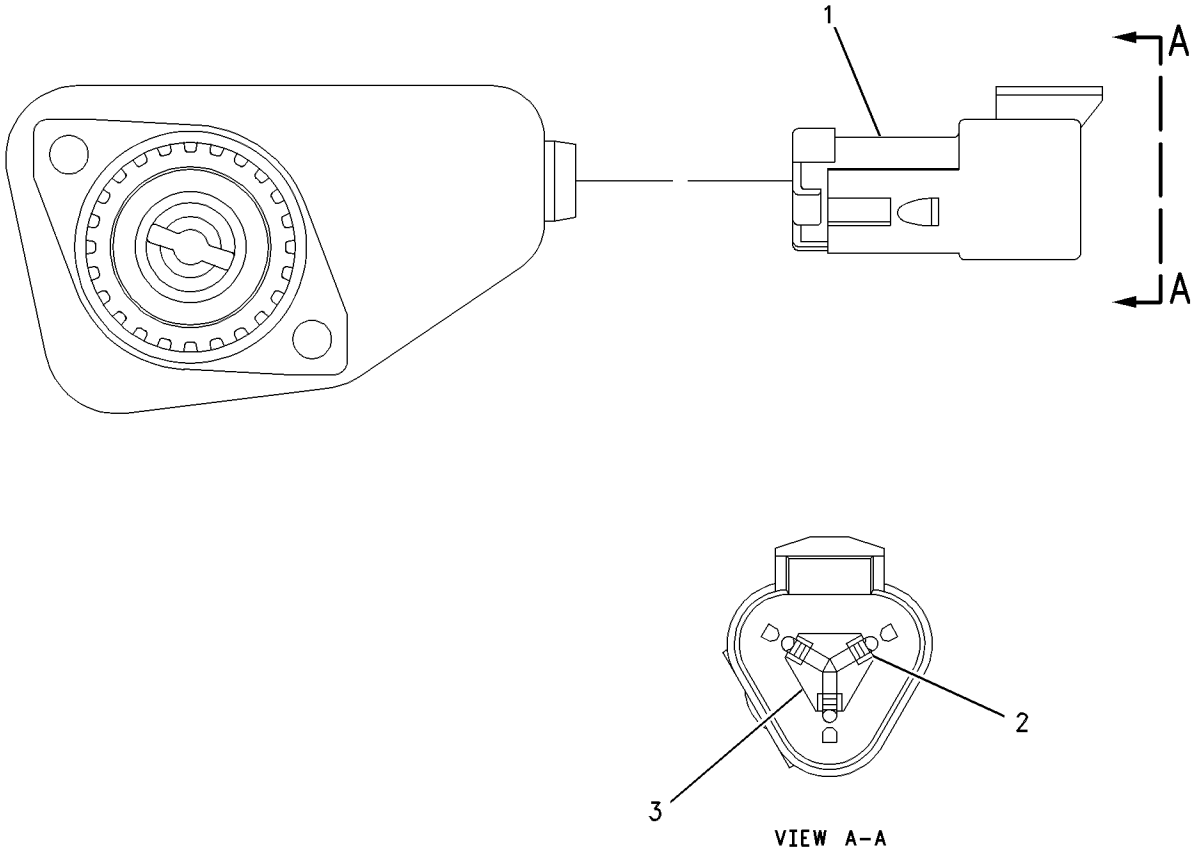

GRAPHIC #1 **<END>** g00637818

214-4862 SENSOR GP-POSITION–STEERING/TMSN CONTROL HANDLE

S/N: CCK1-UP
PART OF 112-4820 CONTROL GP-STEERING & TMSN
ALSO AN ATTACHMENT

SMCS-1408 **i01874618**

NOTE	REF NO	GRAPHIC REF	PART NUMBER	QTY	PART NAME 1 2 3 4 5 6 (PRODUCT LEVEL)	SEE PAGE
	1	1	**102-8803**	1	KIT-RECEPTACLE (3 PIN)	
					(INCLUDES RECEPTACLE AS & WEDGE)	
	2	1	**186-3735**	3	PIN-CONNECTOR	
	3	1	**3E-3371**	1	WEDGE-RECEPTACLE LOCK (3 PIN)	

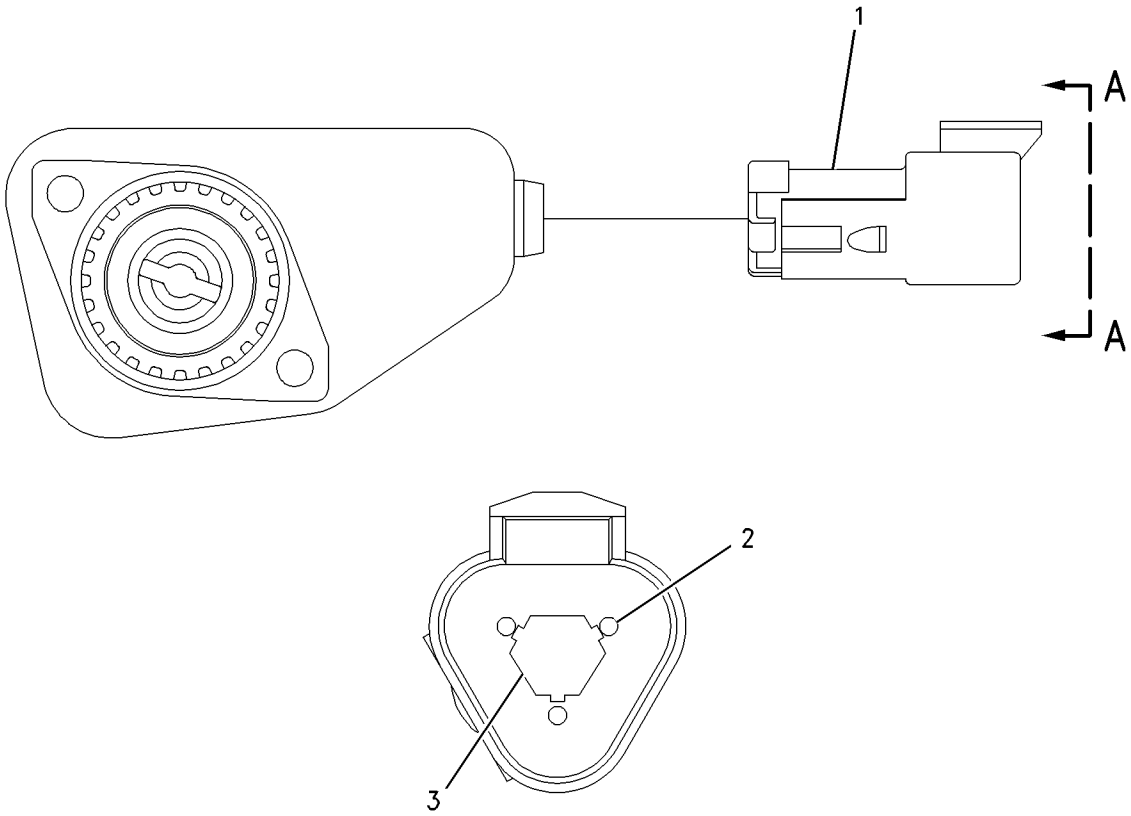

VIEW A–A

GRAPHIC #1 **<END>** g00893828

214-4863 SENSOR GP-POSITION–SERVICE BRAKE PEDAL

S/N: CCK1-UP

PART OF 199-4801 PEDAL GP-GOVERNOR & BRAKE

ALSO AN ATTACHMENT

SMCS-1408 **i01898168**

NOTE	REF NO	GRAPHIC REF	PART NUMBER	QTY	PART NAME 1 2 3 4 5 6 (PRODUCT LEVEL)	SEE PAGE
	1	1	**102-8803**	1	KIT-RECEPTACLE (3 PIN)	
					(INCLUDES RECEPTACLE AS & WEDGE)	
	2	1	**186-3735**	1	PIN-CONNECTOR	
	3	1	**3E-3371**	1	WEDGE-RECEPTACLE LOCK (3 PIN)	

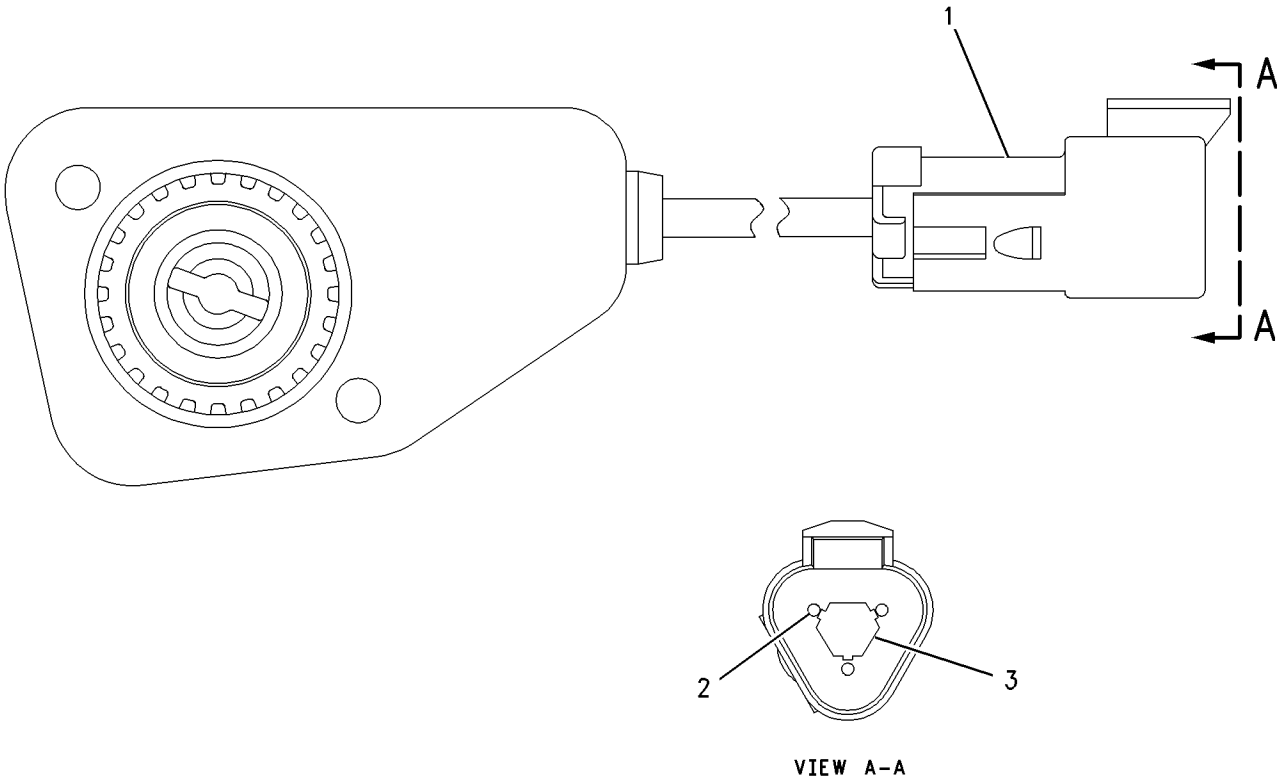

VIEW A-A

GRAPHIC #1 **<END>** g00925281

194-6723 SENSOR GP-PRESSURE–TURBO OUTLET

S/N: BMA1100-UP
PART OF 199-7734 SENSOR GP-ENGINE
ALSO AN ATTACHMENT

SMCS-1408 **i01682010**

NOTE	REF NO	GRAPHIC REF	PART NUMBER	QTY	PART NAME 1 2 3 4 5 6 (PRODUCT LEVEL)	SEE PAGE
BE	1	1	**9X-1813**		SLEEVE (34 CM)	
	2	1	**102-8803**	1	KIT-RECEPTACLE (3 PIN)	
					(INCLUDES RECEPTACLE AS & WEDGE)	
	3	1	**180-9339**	3	PIN-CONNECTOR (FOR 14 GAUGE WIRE)	
	4	1	**3E-3371**	1	WEDGE-RECEPTACLE LOCK (3 PIN)	

B-USE AS REQUIRED
E-ORDER BY THE CENTIMETER

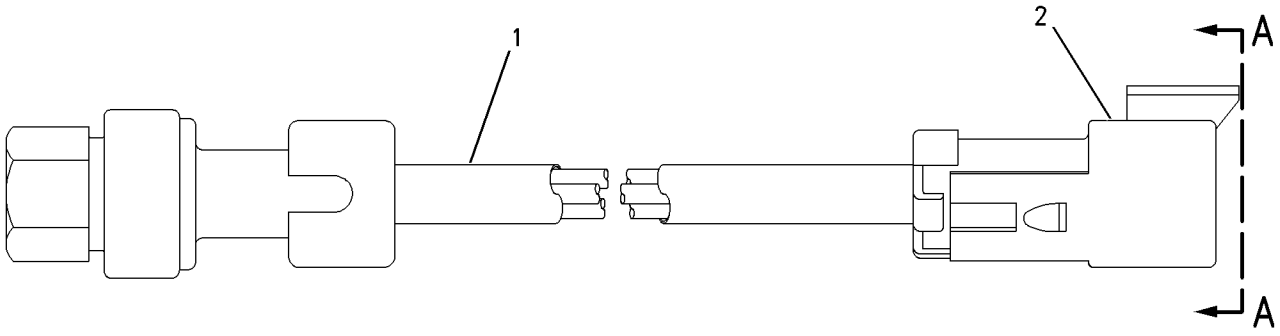

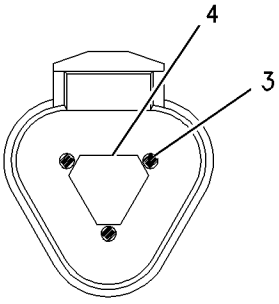

VIEW A-A

GRAPHIC #1 **<END>** g00865974

194-6725 SENSOR GP-PRESSURE–FUEL/ENGINE OIL

S/N: BMA1100-UP
PART OF 199-7734 SENSOR GP-ENGINE
ALSO AN ATTACHMENT

SMCS-1408 **i01681907**

NOTE	REF NO	GRAPHIC REF	PART NUMBER	QTY	PART NAME 1 2 3 4 5 6 (PRODUCT LEVEL)	SEE PAGE
BE	1	1	**9X-1813**		SLEEVE (34 CM)	
	2	1	**155-2260**	1	KIT-CONNECTING PLUG (3 PIN)	
					(INCLUDES PLUG AS AND WEDGE)	
	3	1	**180-9340**	3	SOCKET-CONNECTOR	
	4	1	**3E-3368**	1	WEDGE-PLUG LOCK	

B-USE AS REQUIRED
E-ORDER BY THE CENTIMETER

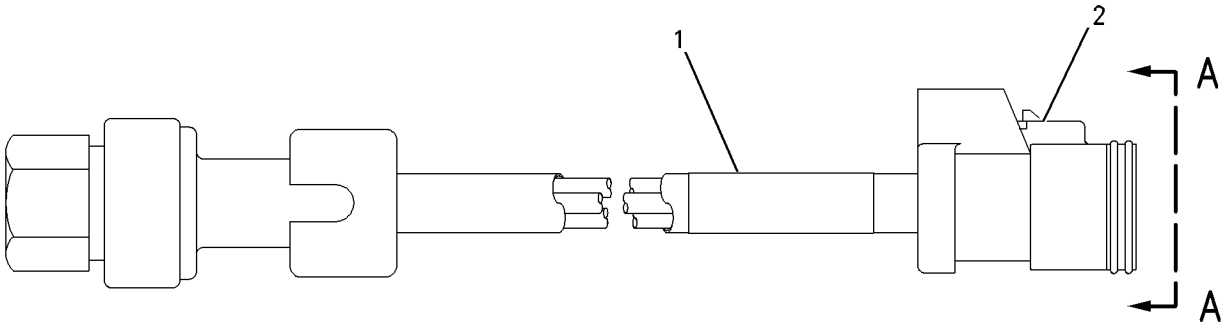

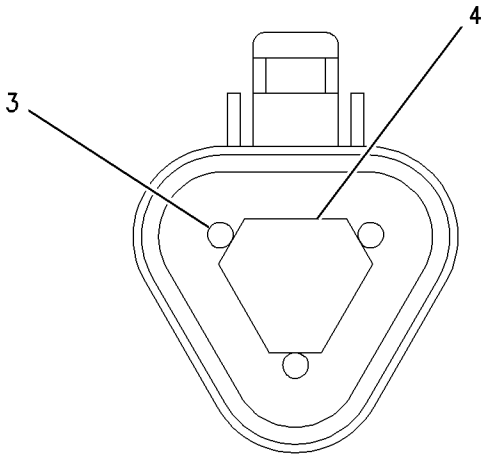

VIEW A-A

GRAPHIC #1 **<END>** g00851220

194-6726 SENSOR GP-PRESSURE–INJECTION ACTUATION

S/N: BMA1100-UP
PART OF 199-7734 SENSOR GP-ENGINE
ALSO AN ATTACHMENT

SMCS-1408 **i01694644**

NOTE	REF NO	GRAPHIC REF	PART NUMBER	QTY	PART NAME 1 2 3 4 5 6 (PRODUCT LEVEL)	SEE PAGE
E	1	1	**9X-1813**		SLEEVE (34 CM)	
	2	1	**155-2260**	1	KIT-CONNECTING PLUG (3 PIN)	
					(INCLUDES PLUG AS & WEDGE)	
	3	1	**180-9340**	3	SOCKET-CONNECTOR (FOR 16-18 GA WIRE)	
	4	1	**3E-3368**	1	WEDGE-PLUG LOCK	

E-ORDER BY THE CENTIMETER

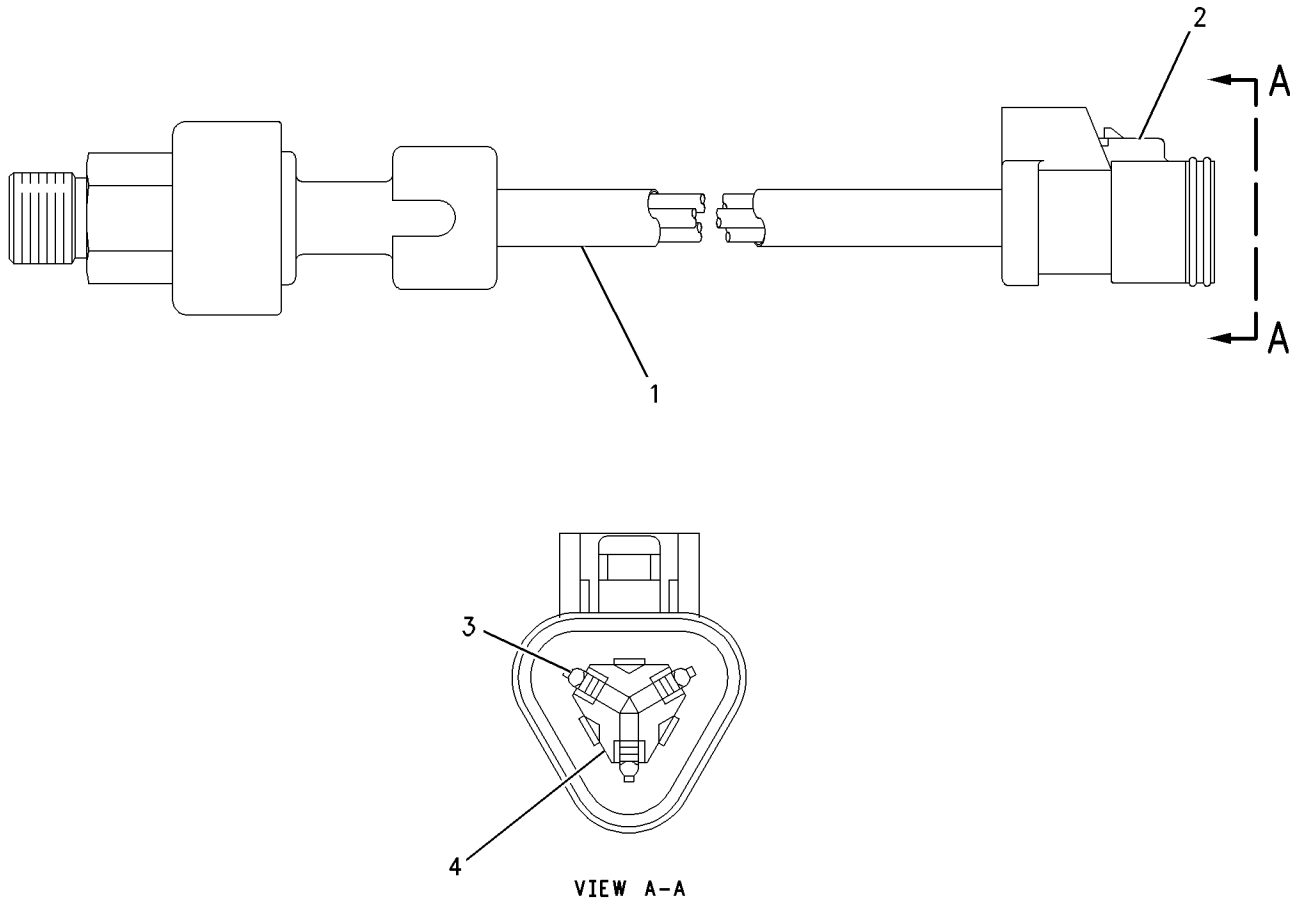

GRAPHIC #1 **<END>** g00851235

119-4142 SENSOR GP-SPEED—ENGINE TIMING

S/N: BMA1100-UP

FIELD REPLACEMENT FOR 169-3300—PAGE 163

SMCS-1408 **i01633524**

NOTE	REF NO	GRAPHIC REF	PART NUMBER	QTY	PART NAME 1 2 3 4 5 6 (PRODUCT LEVEL)	SEE PAGE
	1	1	**117-1385**	2	SEAL-O-RING	

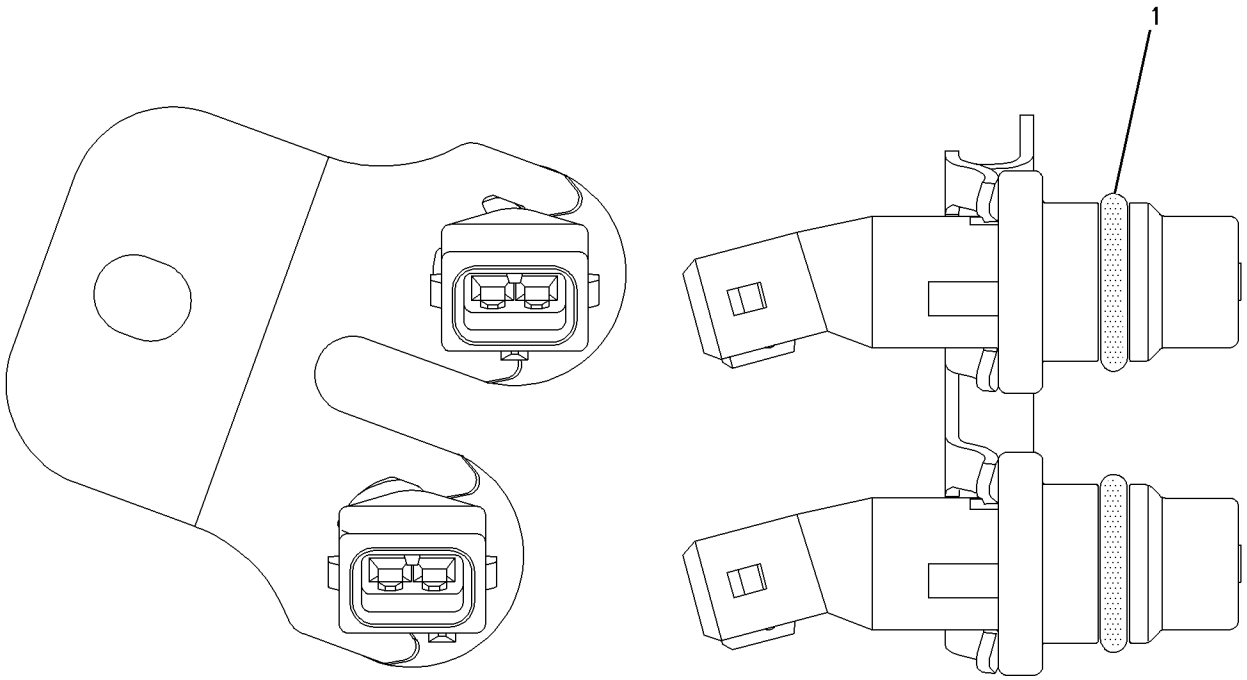

FRONT VIEW

LEFT SIDE VIEW

GRAPHIC #1 **<END>** g00825060

169-3300 SENSOR GP-SPEED—ENGINE TIMING

S/N: BMA1100-UP
PART OF 199-7734 SENSOR GP-ENGINE
FIELD REPLACEMENT ORDER 119-4142—PAGE 162
ALSO AN ATTACHMENT

SMCS-1408 **i01850940**

NOTE	REF NO	GRAPHIC REF	PART NUMBER	QTY	PART NAME 1 2 3 4 5 6 (PRODUCT LEVEL)	SEE PAGE
	1	1	**109-7194**	1	PICKUP AS-MAGNETIC (LOW SPEED/TIMING)	
	2	1	**109-7195**	1	PICKUP AS-MAGNETIC (HIGH SPEED/TIMING)	
	3	1	**137-8752**	1	BRACKET	

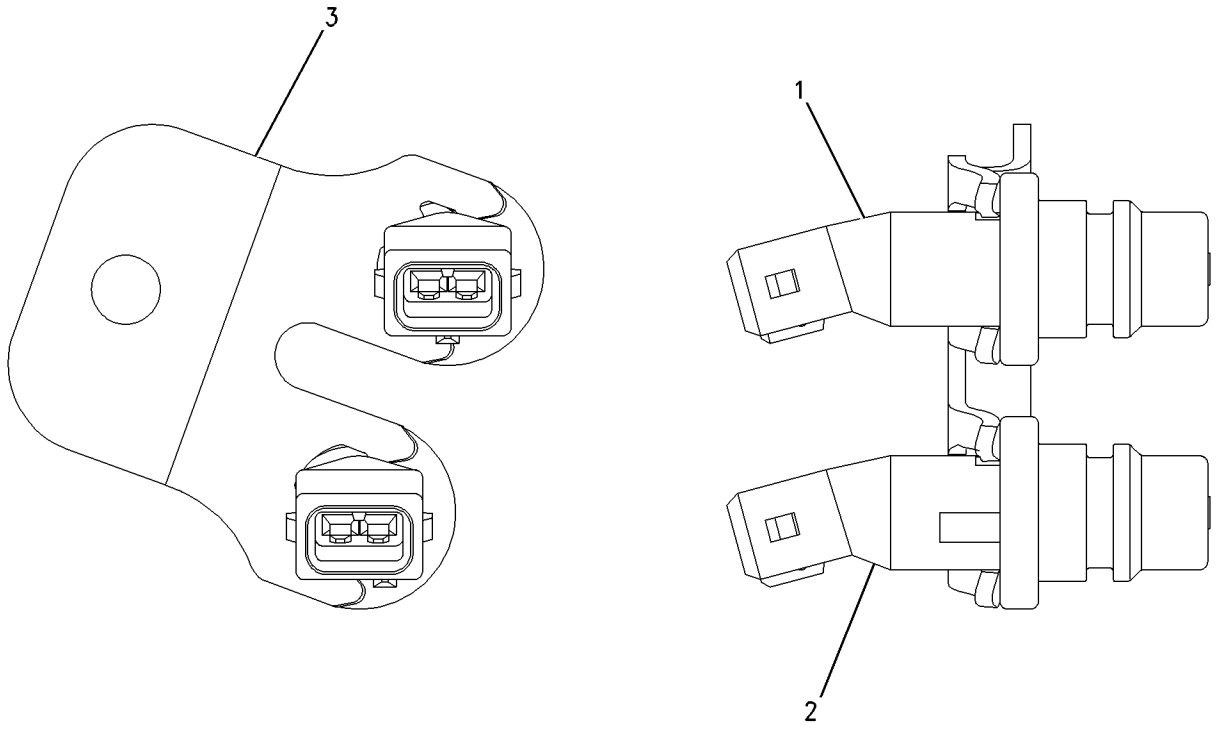

GRAPHIC #1 **<END>** g00673510

189-5746 SENSOR GP-SPEED–ENGINE

S/N: CCK1-UP

PART OF 157-3458 WIRING GP-ENGINE

SMCS-1408 **i01898173**

NOTE	REF NO	GRAPHIC REF	PART NUMBER	QTY	PART NAME 1 2 3 4 5 6 (PRODUCT LEVEL)	SEE PAGE
	1	1	**171-5349**	1	STRAP-MARKER	
	2	1	**102-8802**	1	KIT-RECEPTACLE (2 PIN)	
					(INCLUDES WEDGE AND RECEPTACLE ASSEMBLY)	
	3	1	**186-3735**	2	PIN-CONNECTOR	
	4	1	**3E-3365**	1	WEDGE-RECEPTACLE LOCK (2 PIN)	
E	5	1	**9X-1386**		SLEEVE (14CM)	

E-ORDER BY THE CENTIMETER

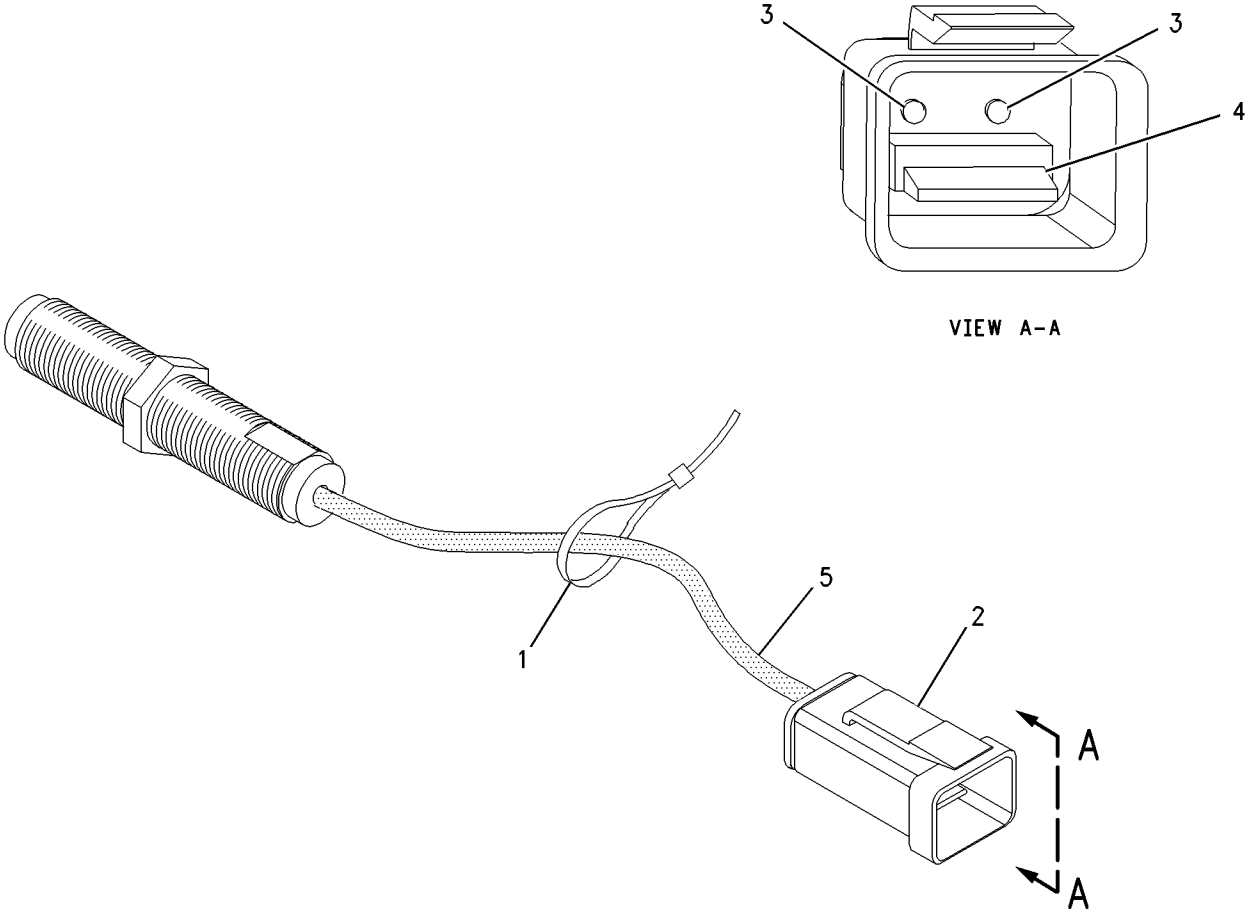

GRAPHIC #1 **<END>** g00837278

193-2550 SENSOR GP-SPEED–TRANSMISSION

S/N: BJG1-UP; CCK1-UP

PART OF 203-2296 PLANETARY GP-TRANSMISSION, 157-3458 WIRING GP-ENGINE

SMCS-1408 **i01479454**

NOTE	REF NO	GRAPHIC REF	PART NUMBER	QTY	PART NAME 1 2 3 4 5 6 (PRODUCT LEVEL)	SEE PAGE
	1	1	**171-5349**	1	STRAP-MARKER	
	2	1	**102-8802**	1	KIT-RECEPTACLE (2 PIN)	
					(INCLUDES RECEPTACLE AS & WEDGE)	
	3	1	**8T-8729**	2	PIN-CONNECTOR	
	4	1	**3E-3365**	1	WEDGE-RECEPTACLE LOCK (2 PIN)	
E	5	1	**9X-1813**		SLEEVE (14CM)	

E-ORDER BY THE CENTIMETER

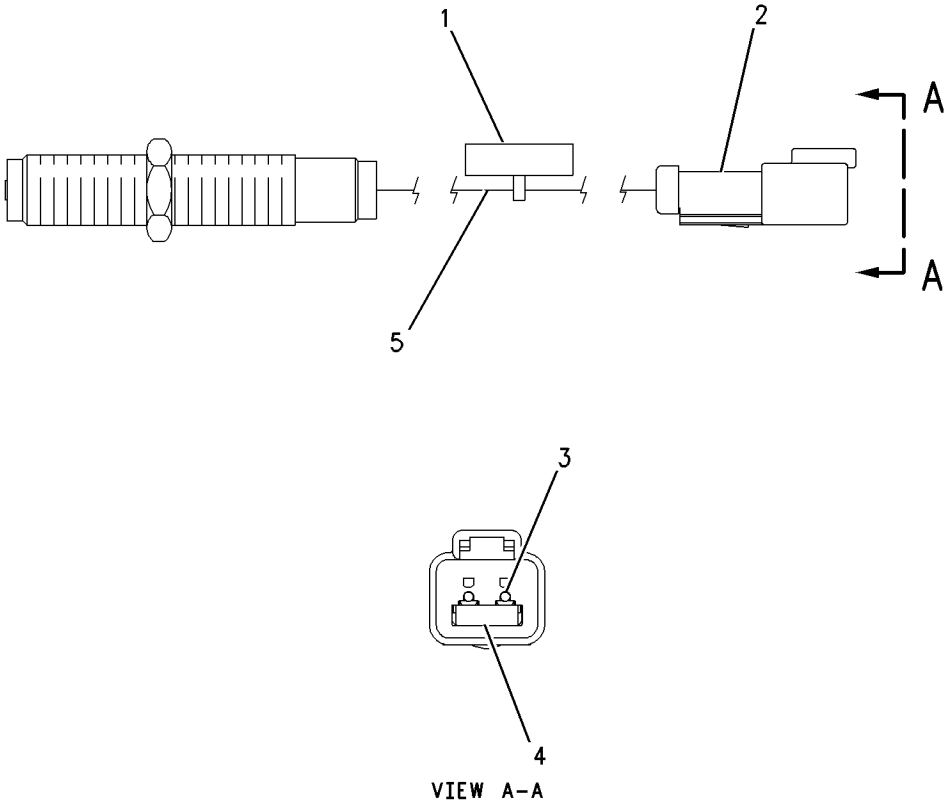

GRAPHIC #1 **<END>** g00690327

118-7226 SENSOR GP-TEMPERATURE–TRANSMISSION

S/N: CCK1-UP
8 VOLT. PULSE WIDTH MODULATION
PART OF 192-9081 BATTERY & WIRING GP

SMCS-1408, 1906, 1921, 1922, 7400 **i01147923**

NOTE	REF NO	GRAPHIC REF	PART NUMBER	QTY	PART NAME 1 2 3 4 5 6 (PRODUCT LEVEL)	SEE PAGE
BE	1	1	**9X-1813**		SLEEVE	
	2	1	**102-8803**	1	KIT-RECEPTACLE (3 PIN)	
					(INCLUDES WEDGE & RECEPTACLE AS)	
	3	1	**8T-8729**	3	PIN-CONNECTOR	
	4	1	**3E-3371**	1	WEDGE-RECEPTACLE LOCK	

B-USE AS REQUIRED
E-ORDER BY THE CENTIMETER

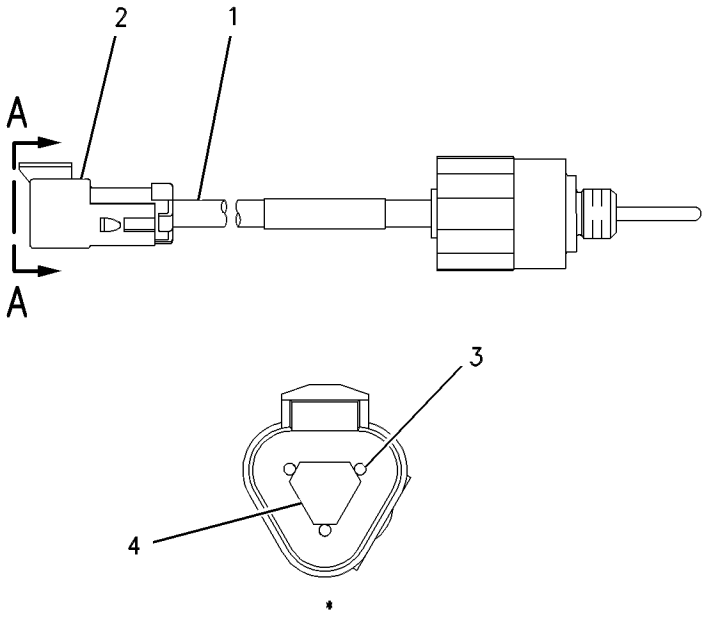

GRAPHIC #1 **<END>** g00609258

145-7028 SENSOR GP-TEMPERATURE–HYDRAULIC OIL–POWER TRAIN OIL

S/N: CCK1-UP

PART OF 174-4485 TANK & FILTER GP-HYDRAULIC, 157-3458 WIRING GP-ENGINE

SMCS-1408, 1906, 1921, 1922, 7400 **i01828633**

NOTE	REF NO	GRAPHIC REF	PART NUMBER	QTY	PART NAME 1 2 3 4 5 6 (PRODUCT LEVEL)	SEE PAGE
	1	1	**102-8802**	1	KIT-RECEPTACLE (2 PIN)	
					(INCLUDES RECEPTACLE AS & WEDGE)	
BJ	2	1	**153-5043**		SLEEVE	
	3	1	**8T-8729**	2	PIN-CONNECTOR	
	4	1	**3E-3365**	1	WEDGE-RECEPTACLE LOCK (2 PIN)	

B-USE AS REQUIRED
J-ORDER BY THE DECIMETER

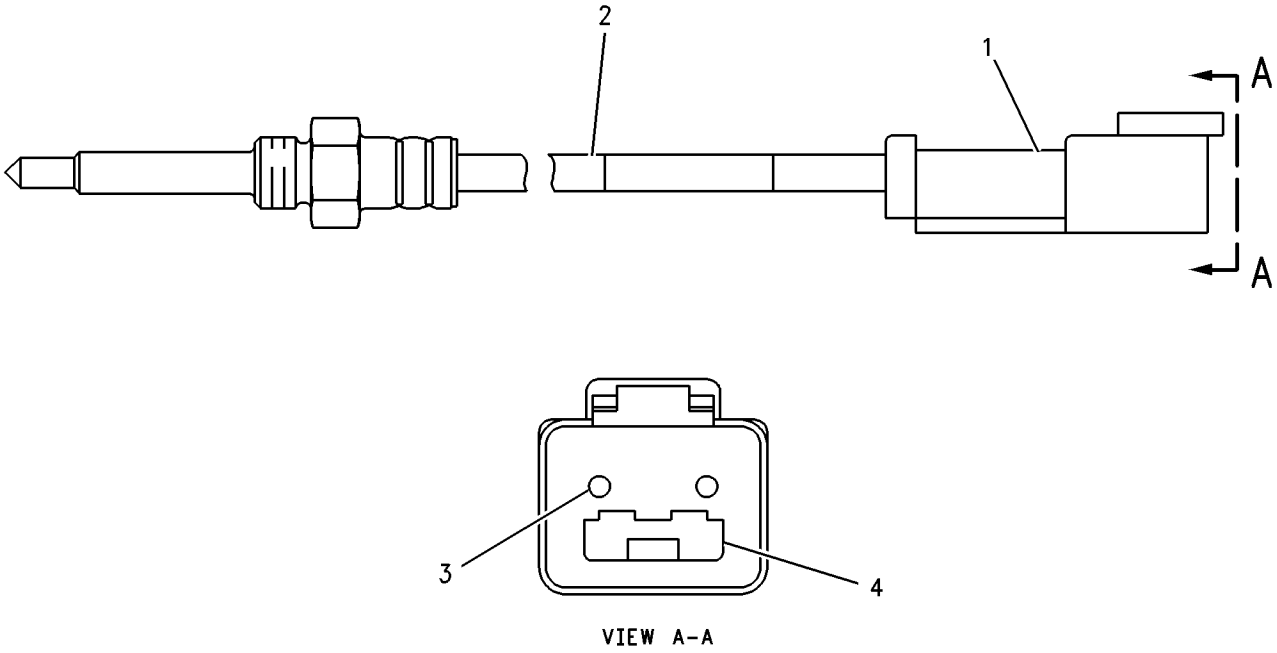

VIEW A-A

GRAPHIC #1 **<END>** g00917620

191-6587 SENSOR GP-TEMPERATURE—ENGINE OIL

S/N: BMA1100-UP
PART OF 199-7734 SENSOR GP-ENGINE
ALSO AN ATTACHMENT

SMCS-1408, 1906, 1921, 1922, 7400 **i01872179**

NOTE	REF NO	GRAPHIC REF	PART NUMBER	QTY	PART NAME 1 2 3 4 5 6 (PRODUCT LEVEL)	SEE PAGE
J	1	1	**153-5043**		SLEEVE (1.3DM)	
	2	1	**155-2270**	1	KIT-CONNECTING PLUG (2 PIN)	
					(INCLUDES PLUG AS & WEDGE)	
	3	1	**194-5226**	2	HARNESS AS-SENSOR (16-18 GA WIRE)	
					—OR—	
		1	**194-5227**	2	HARNESS AS-SENSOR (14 GA WIRE)	
	4	1	**155-2261**	1	WEDGE-PLUG LOCK (2 PIN)	

J-ORDER BY THE DECIMETER

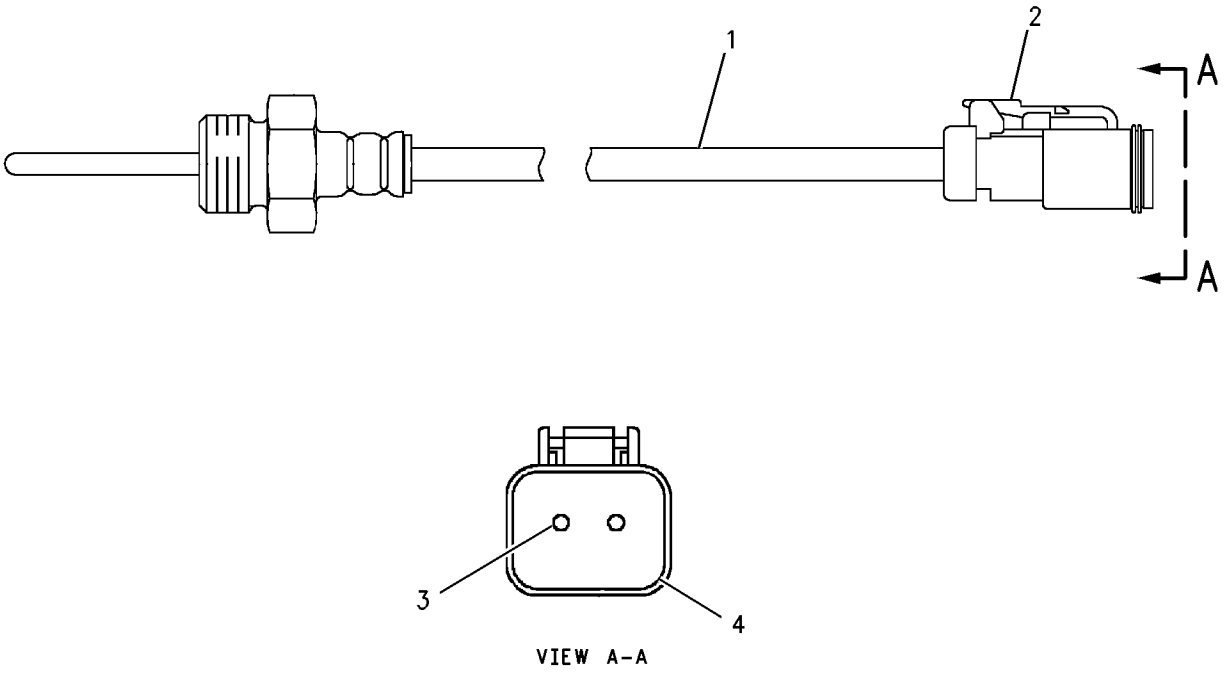

VIEW A-A

GRAPHIC #1 **<END>** g00865978

231-6531 SERVICE GP-MONITOR

S/N: CCK1-UP

PART OF 169-3234 ELECTRONICS GP-MONITOR

SMCS-7610 **i01882062**

NOTE	REF NO	GRAPHIC REF	PART NUMBER	QTY	PART NAME 1 2 3 4 5 6 (PRODUCT LEVEL)	SEE PAGE
Y	1	1	**154-7443**	1	CONTROL GP-MONITOR (CATERPILLAR MONITORING SYSTEM)	130
F			**231-6530**	1	SOFTWARE GP-MONITOR	

F-NOT SHOWN
Y-SEPARATE ILLUSTRATION

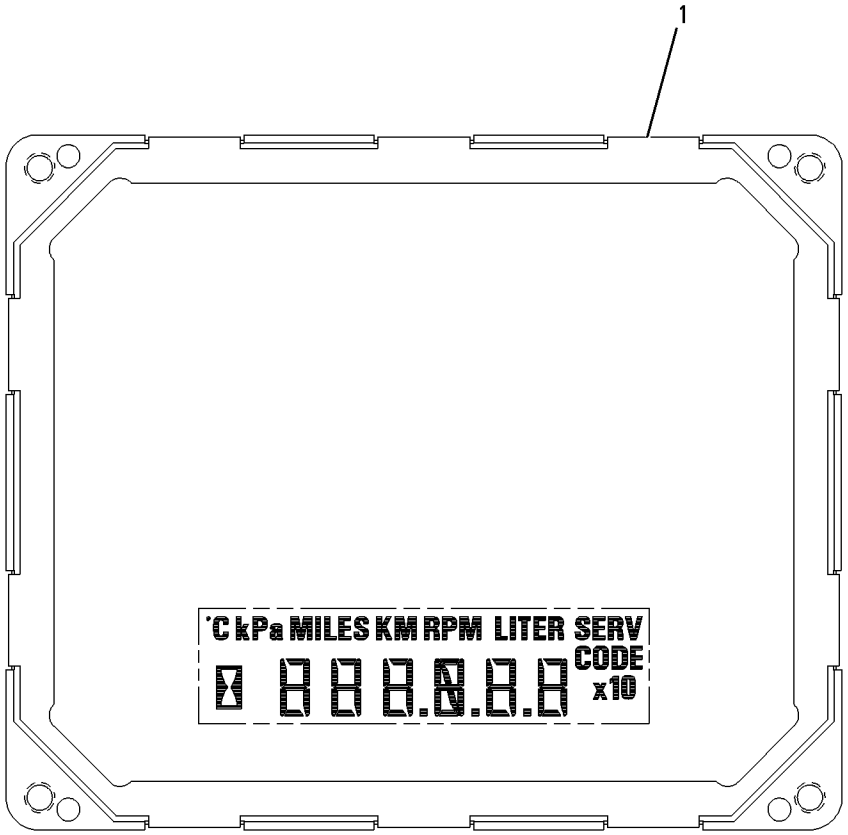

GRAPHIC #1 **<END>** g00942882

226-6114 SERVICE GP-POWER TRAIN

S/N: CCK1-UP

PART OF 166-6269 ELECTRONICS GP-POWER TRAIN

SMCS-7610 **i01834862**

NOTE	REF NO	GRAPHIC REF	PART NUMBER	QTY	PART NAME 1 2 3 4 5 6 (PRODUCT LEVEL)	SEE PAGE
Y	1	1	*172-9389*	1	CONTROL GP-UNPROGRAMMED	132
F		1	*226-6113*	1	SOFTWARE GP-POWER TRAIN	

F-NOT SHOWN
Y-SEPARATE ILLUSTRATION

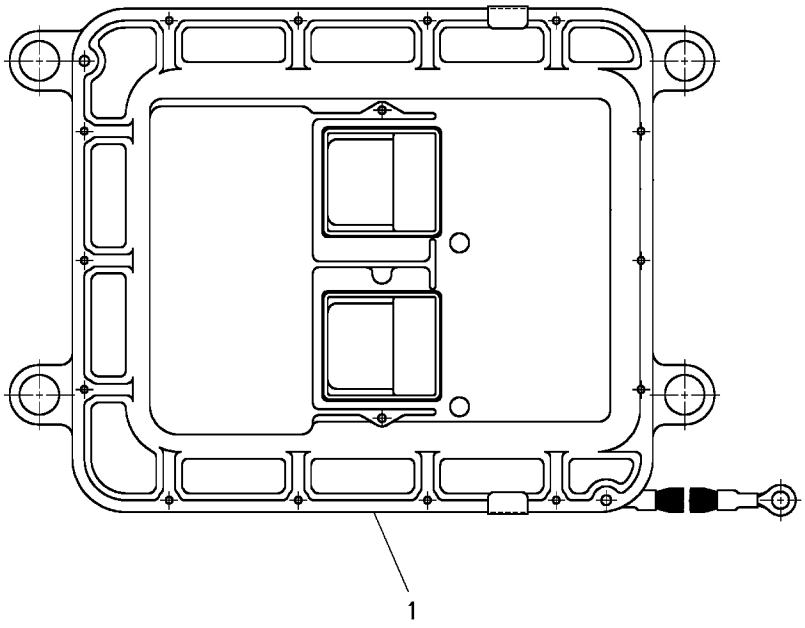

GRAPHIC #1 **<END>** g00925946

145-5157 STARTING MOTOR GP-ELECTRIC

S/N: BMA1100-UP
PART OF 191-4479, 191-4481 ENGINE AR-COMPLETE
ALSO AN ATTACHMENT

SMCS-1453, 1454, 1465 **i01664436**

NOTE	REF NO	GRAPHIC REF	PART NUMBER	QTY	PART NAME 1 2 3 4 5 6 (PRODUCT LEVEL)	SEE PAGE
M	1	1	**108-7808**	3	BOLT (M10X1.5X35MM)	
	2	1	**6V-5839**	3	WASHER (11X21X2.5MM THK)	
	3	1	**3K-3257**	1	GASKET	
M	4	1	**8T-4191**	1	BOLT (M10X1.5X16MM)	
	5	1	**8Y-9603**	1	CABLE AS-STARTING	
		1	**1S-7251**	1	TERMINAL-RING (FOR 1/2 IN BOLT)	
		1	**1S-7252**	1	TERMINAL-RING (FOR 3/8 IN BOLT)	
E		1	**5P-0747**		CABLE (00GA)(BLACK) (27.5CM)	
	6	1	**8T-4121**	1	WASHER-HARD (11X21X2.5MM THK)	
Y	7	1	**207-1519**	1	STARTING MOTOR GP-ELECTRIC	172

E-ORDER BY THE CENTIMETER
M-METRIC PART
Y-SEPARATE ILLUSTRATION

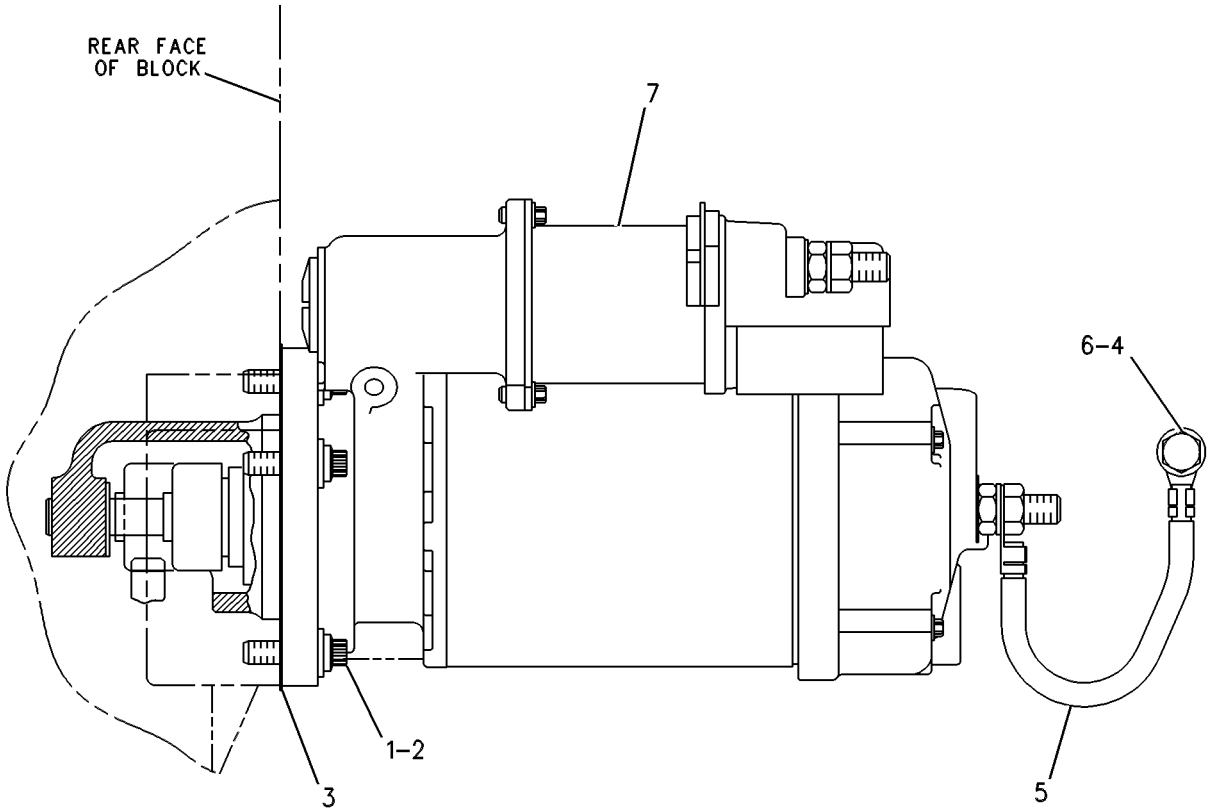

RIGHT SIDE VIEW

GRAPHIC #1 **<END>** g00329692

207-1519 STARTING MOTOR GP-ELECTRIC

S/N: BMA1100-UP
24 VOLT
PART OF 145-5157 STARTING MOTOR GP-ELECTRIC
ALSO AN ATTACHMENT

SMCS-1453, 1454, 1465 **i01883300**

NOTE	REF NO	GRAPHIC REF	PART NUMBER	QTY	PART NAME 1 2 3 4 5 6 (PRODUCT LEVEL)	SEE PAGE
	1	1	**8T-9884**	1	KIT-INSULATOR (STARTING MOTOR)	
	2	1	**106-7149**	1	HOUSING AS-STARTER	
	3	1	**102-9863**	1	TERMINAL AS-STARTER	
	4	1	**6V-8188**	4	NUT (1/2-13 THD)	
	5	1	**7X-0562**	4	WASHER-HARD (13.5X19X0.8MM THK)	
	6	1	**3E-7853**	1	TERMINAL-STARTING MOTOR	
	7	1	**9X-4821**	1	PLATE AS	
	8	1	**3E-7852**	1	COIL-STARTING MOTOR	
	9	1	**7T-3454**	1	INSULATOR	
	10	1	**9X-4271**	1	CONNECTOR	
	11	1	**7T-3451**	1	INSULATOR-TERMINAL	
	12	1	**8T-8569**	1	INSULATOR-TERMINAL	
	13	1	**5S-7349**	4	BOLT (1/4-20X0.5 IN)	
	14	1	**8T-4205**	4	WASHER-HARD (7.2X14.5X2MM THK)	
	15	1	**7X-1950**	4	SHOE-POLE	
	16	1	**3E-7861**	1	KIT-LEVER (STARTING MOTOR)	
					(INCLUDES LEVER AS, GASKET, SHAFT AS, NUT, RING & O-RINGS)	
	17	1	**3F-0379**	8	SCREW-POLE SHOE (3/8-24 THD)	
	18	1	**3E-7855**	1	ARMATURE AS-STARTER (24 VOLT)	
	19	1	**145-2415**	1	HOUSING AS-LEVER	
	20	1	**4M-1831**	1	PLUG-LEVER HOUSING	
	21	1	**7L-2894**	1	GASKET	
	22	1	**036-9823**	5	BOLT	
	23	1	**3E-7857**	1	DRIVE AS-STARTING MOTOR	
	24	1	**3E-7858**	1	HOUSING AS-STARTER	
	25	1	**7X-3373**	6	BOLT (5/16-18X0.88 IN)	
	26	1	**206-8784**	1	KIT-SOLENOID (STARTING MOTOR)	
	27	1	**6V-8378**	2	NUT (10-32 THD)	
	28	1	**8F-1434**	1	LOCKWASHER	
	29	1	**8T-0328**	2	WASHER-HARD (5.5X10X1MM THK)	
	30	1	**9X-4824**	1	COVER-STARTING MOTOR	
	31	1	**9X-4825**	1	KIT-BRUSH (STARTER) (MOTOR)	
					(INCLUDES SCREW AS, O-RING, SCREWS, BRUSHES & SPRINGS)	
					AVAILABLE REPAIR KIT(S):	
			3E-7860	1	KIT-BUSHING (STARTING MOTOR)	
					(INCLUDES SEAL, NUT, GASKET, SPACER, SCREW AS, CUPS, BUSHINGS, WASHERS, O-RINGS & PLUGS)	

207-1519 STARTING MOTOR GP-ELECTRIC *(contd.)* **i01883300**

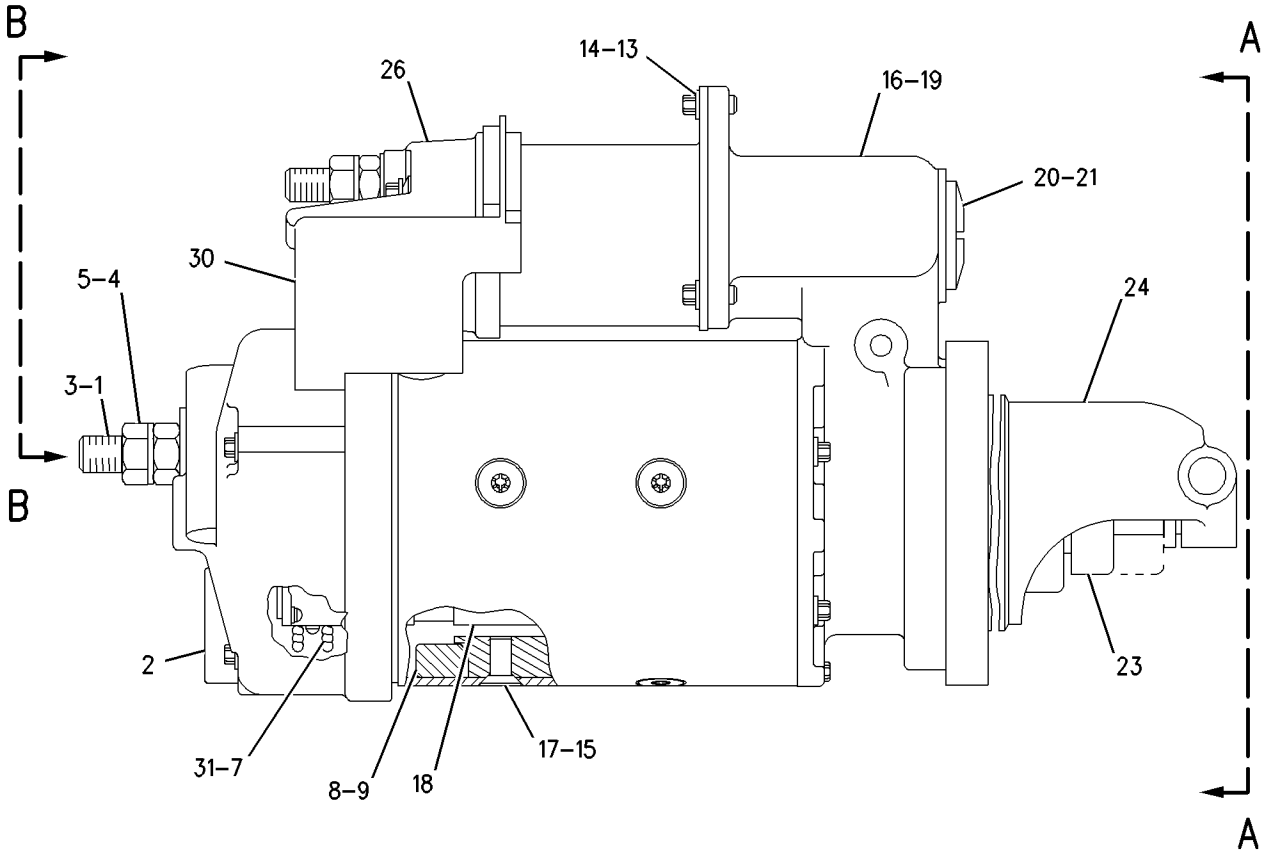

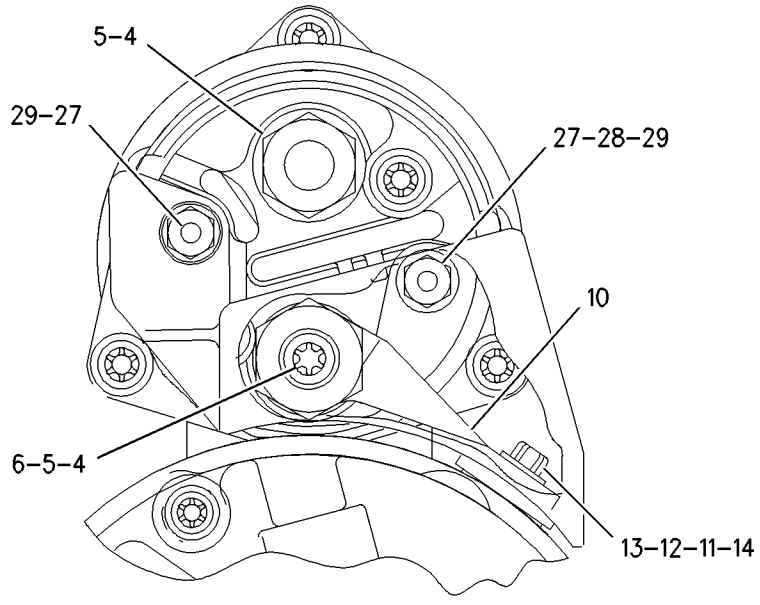

VIEW B–B

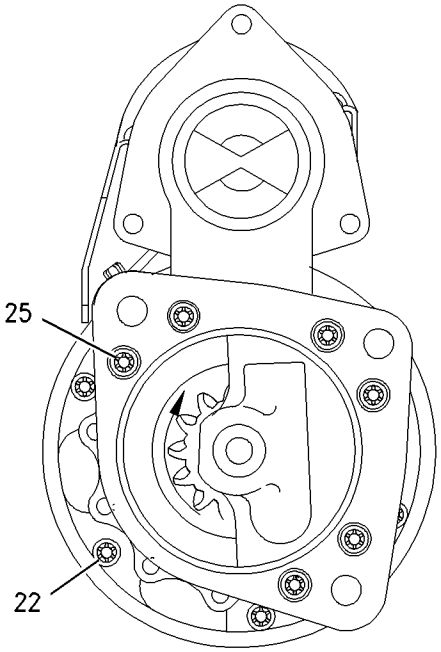

VIEW A–A

GRAPHIC #1 **<END>** g00847040

158-6632 SWITCH AS-HORN

S/N: CCK1-UP

PART OF 177-3860 COVER GP-CONSOLE, 218-3137 MOUNTING GP-PLATFORM

ALSO AN ATTACHMENT

SMCS-7402 **i01837970**

NOTE	REF NO	GRAPHIC REF	PART NUMBER	QTY	PART NAME 1 2 3 4 5 6 (PRODUCT LEVEL)	SEE PAGE
	1	1	**9X-0199**	1	BOOT-SWITCH	
	2	1	**7T-9515**	1	KNOB-HORN	
	3	1	**5L-7200**	1	SCREW (8-32X0.375 IN)	
	4	1	**3B-4501**	1	LOCKWASHER	
	5	1	**6V-8370**	1	NUT-HEX (3/4-32 THD)	
	6	1	**2H-3922**	1	LOCKWASHER	
	7	1	**102-8802**	1	KIT-RECEPTACLE (2 PIN)	
					(INCLUDES RECEPTACLE AS & WEDGE)	
	8	1	**9X-3401**	2	PIN-CONNECTOR	
	9	1	**3E-3365**	1	WEDGE-RECEPTACLE LOCK (2 PIN)	

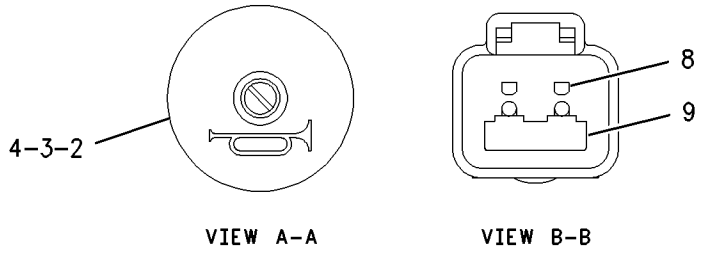

VIEW A-A VIEW B-B

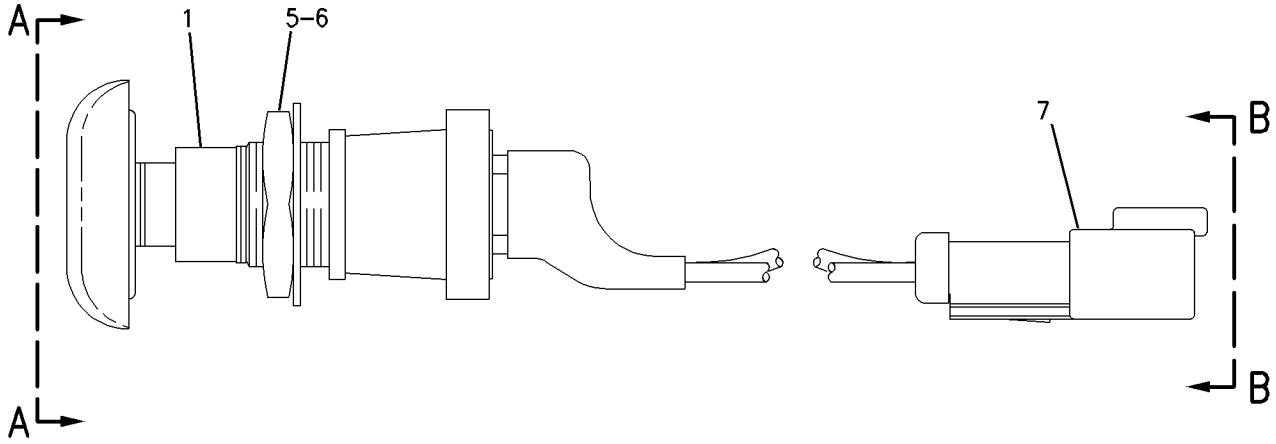

GRAPHIC #1 **<END>** g00942674

164-7577 SWITCH GP-BYPASS–POWER TRAIN FILTER

S/N: CCK1-UP

PART OF 192-9081 BATTERY & WIRING GP

SMCS-1408 **i01431493**

NOTE	REF NO	GRAPHIC REF	PART NUMBER	QTY	PART NAME 1 2 3 4 5 6 (PRODUCT LEVEL)	SEE PAGE
BE	1	1	**9X-1813**		SLEEVE	
	2	1	**102-8802**	1	KIT-RECEPTACLE (2 PIN)	
					(INCLUDES RECEPTACLE AS & WEDGE)	
	3	1	**186-3735**	2	PIN-CONNECTOR	
	4	1	**3E-3365**	1	WEDGE-RECEPTACLE LOCK (2 PIN)	
	5	1	**3D-2824**	1	SEAL-O-RING (23.47MM ID)	
Z	6	1		1	SWITCH AS	

B-USE AS REQUIRED
E-ORDER BY THE CENTIMETER
Z-NOT SERVICED SEPARATELY

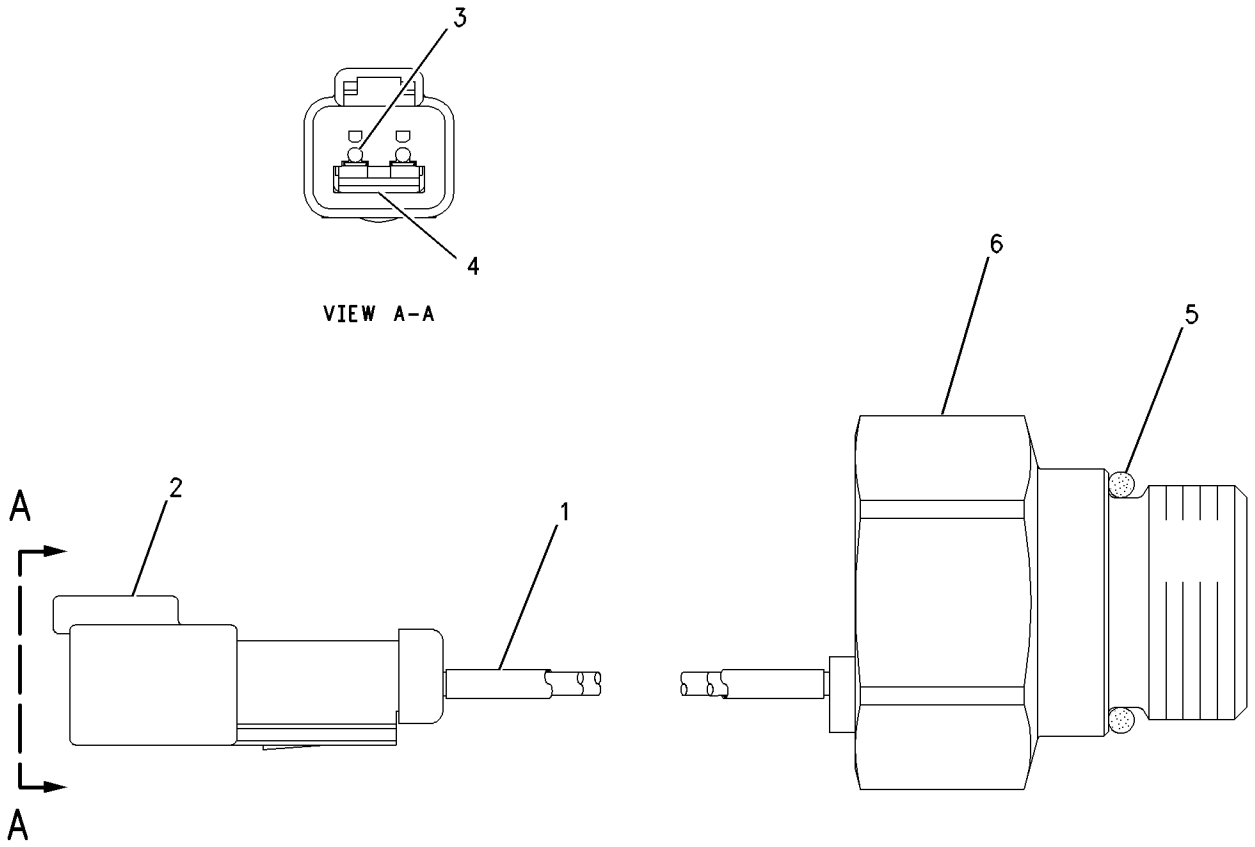

GRAPHIC #1 **<END>** g00750019

7N-0718 SWITCH GP-DISCONNECT–BATTERY

S/N: CCK1-UP

PART OF 192-9081 BATTERY & WIRING GP

SMCS-1411 **i01810002**

NOTE	REF NO	GRAPHIC REF	PART NUMBER	QTY	PART NAME 1 2 3 4 5 6 (PRODUCT LEVEL)	SEE PAGE
	1	1	**8H-5306**	1	KEY (BATTERY DISCONNECT)	
	2	1	**8H-5303**	1	NUT (3/4-16 THD)	
	3	1	**2H-3922**	2	LOCKWASHER	
	4	1	**9F-5644**	2	LOCKWASHER	
	5	1	**6F-7045**	2	NUT-FULL (3/8X24 THD)	

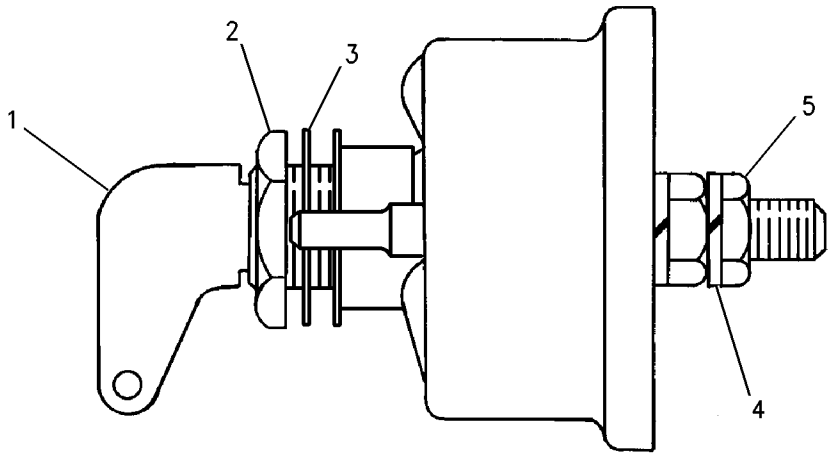

GRAPHIC #1 **<END>** g00715584

125-1302 SWITCH GP-MAGNETIC—START RELAY

S/N: CCK1-UP
PART OF 156-8378 PANEL GP-CIRCUIT BREAKER
ALSO AN ATTACHMENT

SMCS-7499 **i01808067**

NOTE	REF NO	GRAPHIC REF	PART NUMBER	QTY	PART NAME 1 2 3 4 5 6 (PRODUCT LEVEL)	SEE PAGE
BE	1	1	**9X-1813**		SLEEVE	
	2	1	**102-8802**	1	KIT-RECEPTACLE (2 PIN)	
					(INCLUDES RECEPTACLE AS & WEDGE)	
	3	1	**3E-3365**	1	WEDGE-RECEPTACLE LOCK (2 PIN)	
M	4	1	**5C-2890**	2	NUT (M6X1 THD)	
	5	1	**186-3735**	2	PIN-CONNECTOR	

B-USE AS REQUIRED
E-ORDER BY THE CENTIMETER
M-METRIC PART

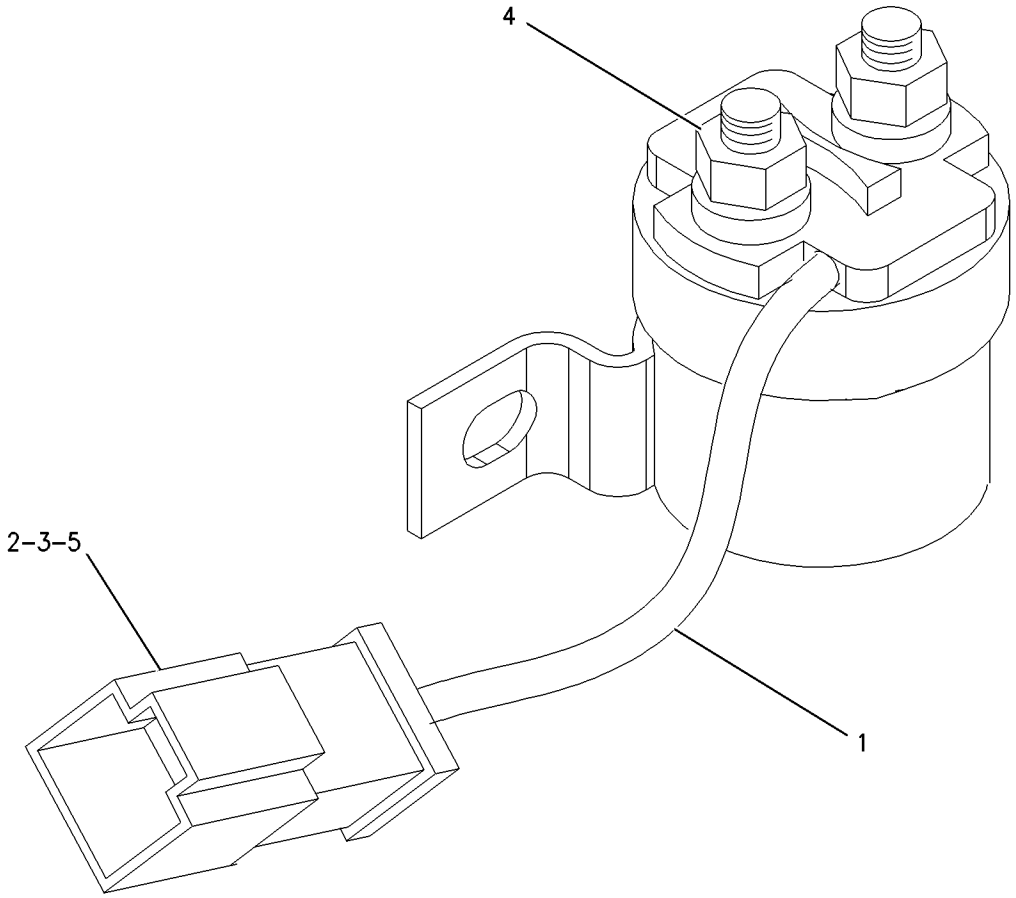

GRAPHIC #1 **<END>** g00893913

167-0138 SWITCH GP-MAGNETIC—MAIN FUSE RELAY

S/N: CCK1-UP
24V
PART OF 156-8378 PANEL GP-CIRCUIT BREAKER
ALSO AN ATTACHMENT

SMCS-7499 **i01589032**

NOTE	REF NO	GRAPHIC REF	PART NUMBER	QTY	PART NAME 1 2 3 4 5 6 (PRODUCT LEVEL)	SEE PAGE
	1	1	**4F-2294**	2	NUT-JAM (5/16-24 THD)	
	2	1	**6V-8186**	2	NUT-FULL (5/16-24 THD)	
	3	1	**155-2270**	1	KIT-CONNECTING PLUG (2 PIN) (MAIN POWER RELAY SWITCH)	
	4	1	**8T-8730**	2	SOCKET-CONNECTOR	
	5	1	**155-2261**	1	WEDGE-PLUG LOCK (2 PIN)	

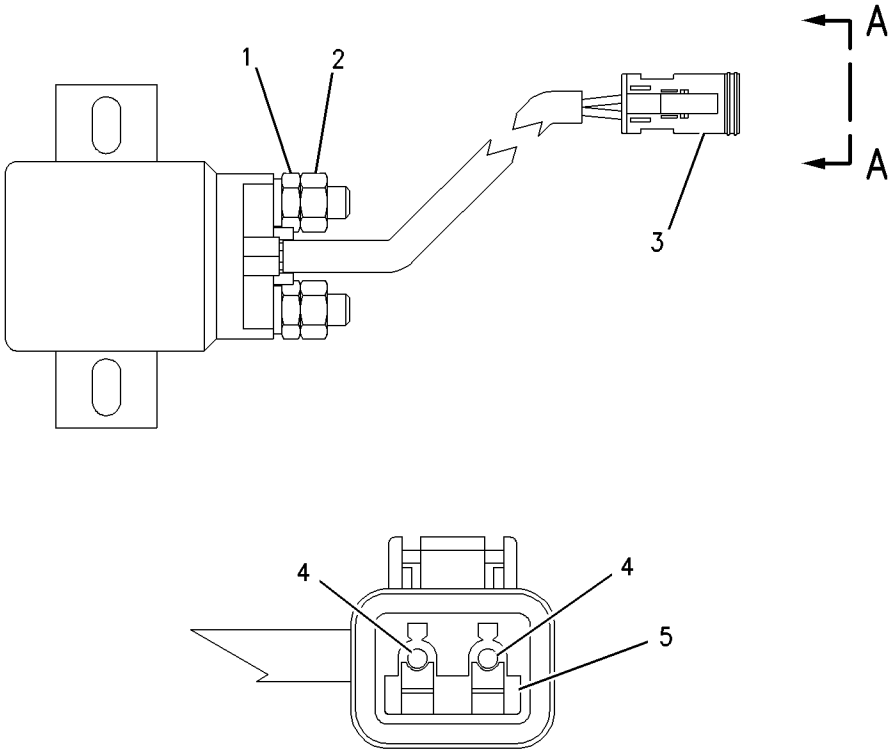

VIEW A-A

GRAPHIC #1 **<END>** g00823979

175-2324 SWITCH GP-MAGNETIC–AIR INLET HEATER

S/N: BMA1100-UP
PART OF 191-0083 WIRING GP-HEATER
ALSO AN ATTACHMENT

SMCS-7499 **i01891520**

NOTE	REF NO	GRAPHIC REF	PART NUMBER	QTY	PART NAME 1 2 3 4 5 6 (PRODUCT LEVEL)	SEE PAGE
	1	1	**3E-7277**	1	SWITCH AS-MAGNETIC (AIR INLET HEAT)	
	2	1	**102-8802**	1	KIT-RECEPTACLE (2 PIN)	
					(INCLUDES RECEPTACLE AS AND WEDGE)	
	3	1	**186-3735**	2	PIN-CONNECTOR	
	4	1	**1H-3338**	2	LOCKWASHER	
	5	1	**012-0380**	2	LOCKWASHER	
M	6	1	**5C-2890**	2	NUT (M6X1 THD)	
E	7	1	**9X-1813**		SLEEVE (16CM)	

E-ORDER BY THE CENTIMETER
M-METRIC PART

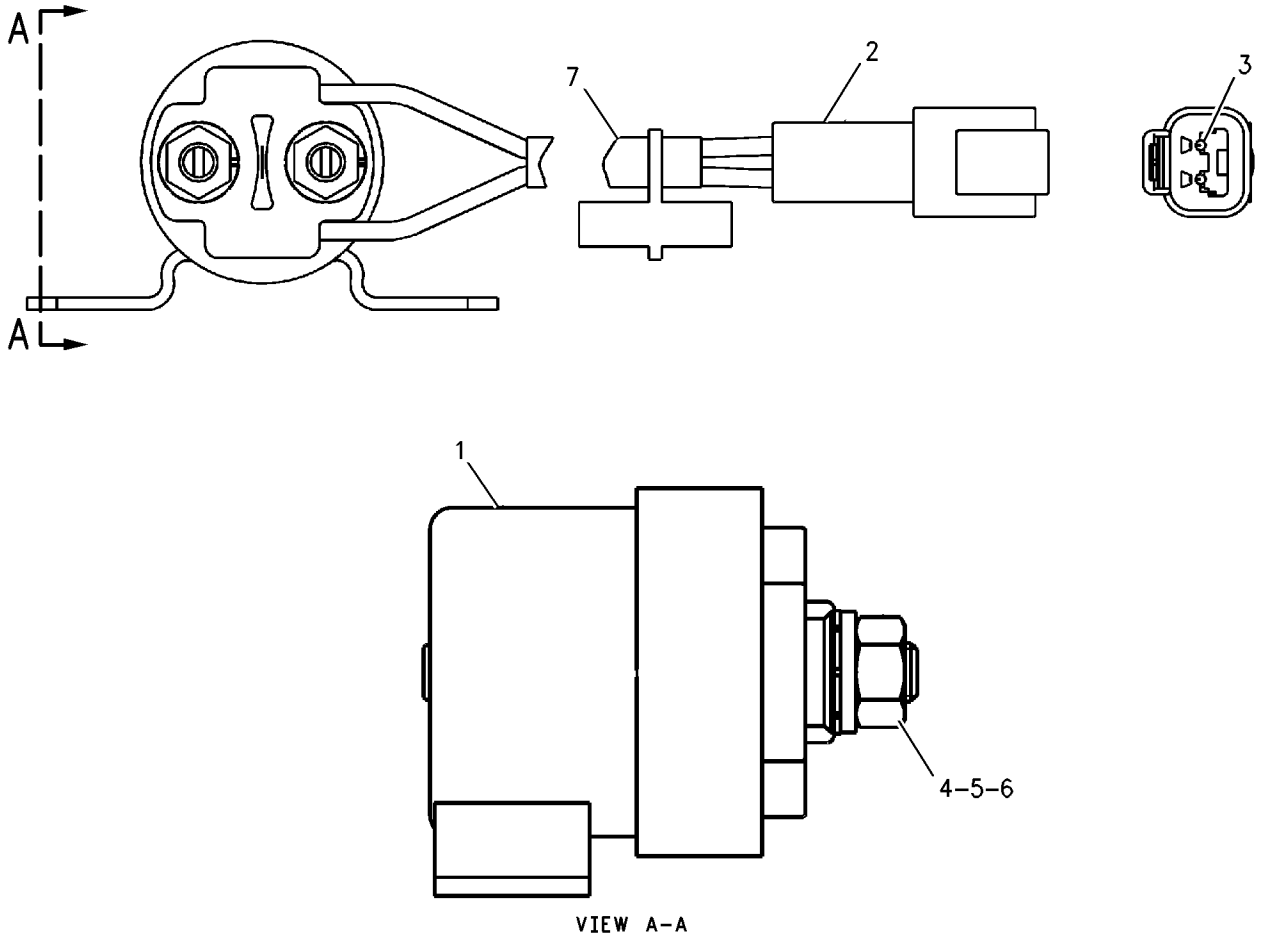

VIEW A–A

GRAPHIC #1 **<END>** g00985960

231-0530 WARNING GP-BACKUP—EUROPEAN MARKET

S/N: CCK1-UP

PART OF 169-4912 SUPPRESSION AR-SOUND

AN ATTACHMENT

SMCS-7406 **i01877418**

NOTE	PART NUMBER	QTY	PART NAME 1 2 3 4 5 6 (PRODUCT LEVEL)	SEE PAGE
	220-0230	1	WARNING GP-BACKUP	
	102-8802	1	KIT-RECEPTACLE (2 PIN)	
	3E-3365	1	WEDGE-RECEPTACLE LOCK (2 PIN)	
	6A-3361	4	WIRE-ELECTRICAL (16 GA)	
	8T-8729	2	PIN-CONNECTOR	
	9X-1813	31	SLEEVE	

<END>

228-5786 WIRING GP—ELECTRONIC CONT.-UNIT INJECTOR

S/N: BMA1100-UP

PART OF 191-4479, 191-4481 ENGINE AR-COMPLETE

ALSO AN ATTACHMENT

SMCS-1408 **i01802322**

NOTE	REF NO	GRAPHIC REF	PART NUMBER	QTY	PART NAME 1 2 3 4 5 6 (PRODUCT LEVEL)	SEE PAGE
	1	1	**3S-2093**	20	STRAP-CABLE	
	2	1	**105-1797**	6	MOUNT	
	3	1	**153-8920**	1	HARNESS AS-ENGINE (UNIT INJECTOR)	
		1	**155-2255**	1	KIT-CONNECTING PLUG (12 PIN)	
					(INCLUDES PLUG AS AND WEDGE)	
	4	1	**195-7336**	1	HARNESS AS-ENGINE (ELECTRONIC CONTROL)	
		1	**102-8802**	1	KIT-RECEPTACLE (2 PIN)	
					(INCLUDES RECEPTACLE AS AND WEDGE)	
		1	**102-8802**	2	KIT-RECEPTACLE (2 PIN)	
					(INCLUDES RECEPTACLE AS AND WEDGE)	
		1	**102-8803**	4	KIT-RECEPTACLE (3 PIN)	
					(INCLUDES RECEPTACLE AS AND WEDGE)	
		1	**102-8801**	1	KIT-RECEPTACLE (12 PIN)	
					(INCLUDES RECEPTACLE AS AND WEDGE)	
		1	**100-3320**	1	PLUG AS-CONNECTOR (2 PIN)	
		1	**111-2416**	1	PLUG AS-CONNECTOR (2 PIN)	
		1	**155-2260**	1	KIT-CONNECTING PLUG (3 PIN)	
					(INCLUDES PLUG AS AND WEDGE)	
		1	**155-2270**	4	KIT-CONNECTING PLUG (2 PIN)	
					(INCLUDES PLUG AS AND WEDGE)	
		1	**160-7690**	1	PLUG AS-CONNECTOR (70 PIN)	
	5	1	**227-1216**	1	BRACKET	
	6	1	**156-6175**	1	CLIP	
	7	1	**4P-8134**	1	CLIP	

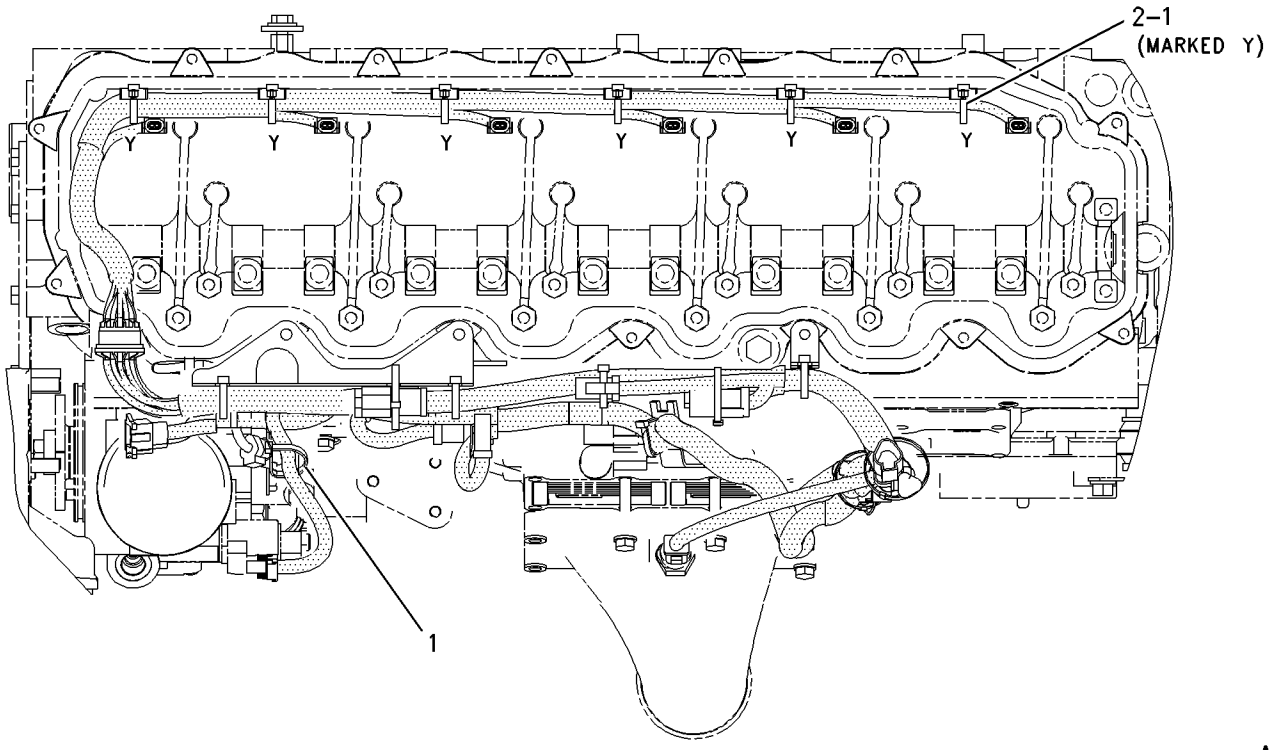

A VIEW A-A A

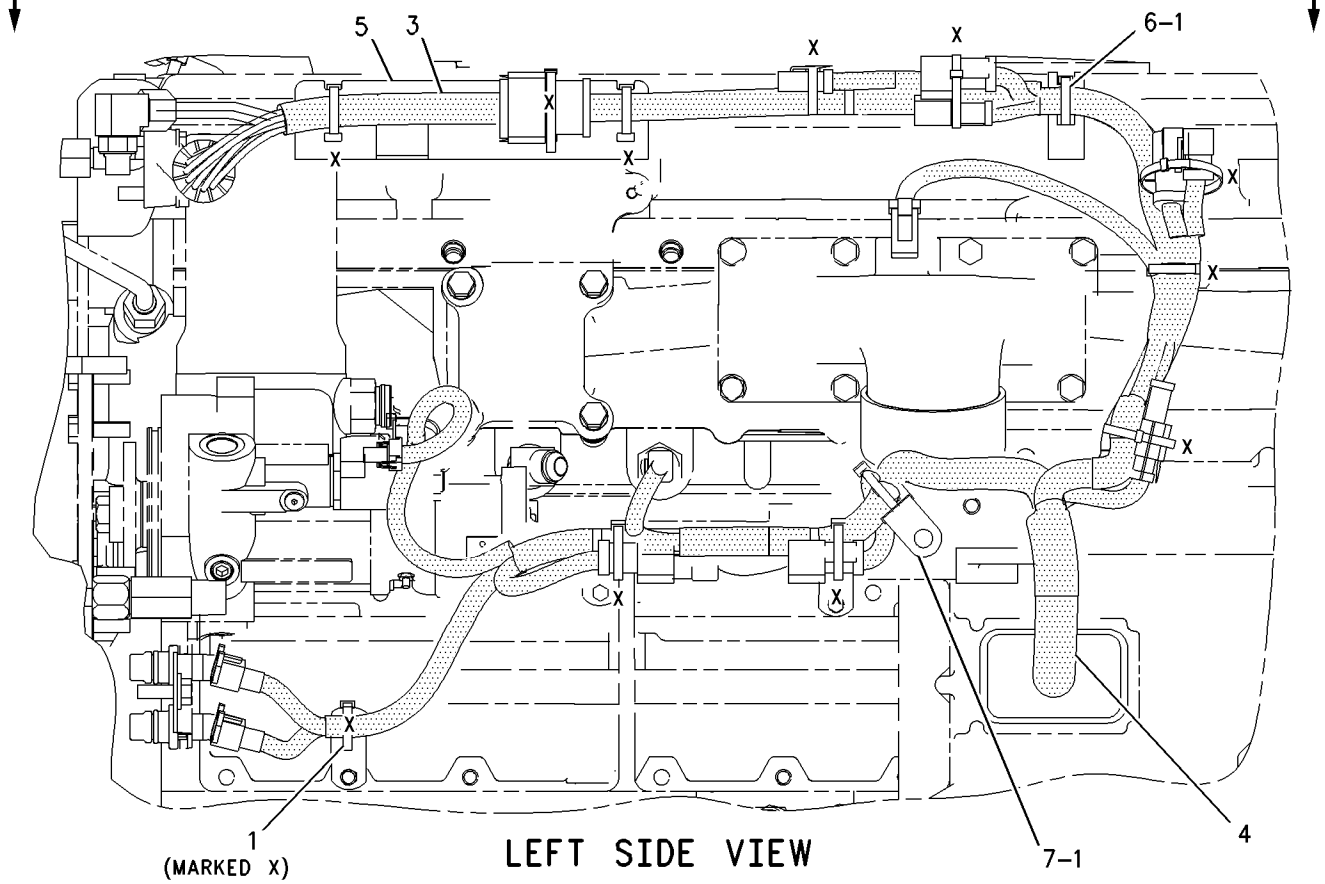

LEFT SIDE VIEW

GRAPHIC #1 **<END>** g00924331

157-3458 WIRING GP-ENGINE

S/N: CCK1-UP

PART OF 189-4624 ELECTRONICS AR-MACHINE

SMCS-1403, 1408 **i01885452**

NOTE	REF NO	GRAPHIC REF	PART NUMBER	QTY	PART NAME 1 2 3 4 5 6 (PRODUCT LEVEL)	SEE PAGE
	1	1	**3V-0778**	1	BRACKET	
	2	1	**7K-1181**	28	STRAP-CABLE	
	3	1	**116-0118**	1	CLIP	
	4	1	**121-2844**	1	HARNESS AS (CRANK WITHOUT INJECTION)	
		1	**102-8803**	2	KIT-RECEPTACLE (3 PIN)	
					(INCLUDES RECEPTACLE AS & WEDGE)	
		1	**155-2260**	1	KIT-CONNECTING PLUG (3 PIN)	
					(INCLUDES PLUG AS, WEDGE AND INTERFACE SEAL)	
		1	**8T-8737**	5	PLUG-SEAL	
	5	1	**141-3983**	1	SPACER (11X19X48MM THK)	
Y	6	1	**145-7028**	1	SENSOR GP-TEMPERATURE (POWER TRAIN OIL)	167
	7	1	**164-3651**	1	ADAPTER	
M	8	1	**176-9237**	1	STUD	
Y	9	1	**193-2550**	1	SENSOR GP-SPEED (TRANSMISSION)	165
	10	1	**195-3783**	1	PLATE AS	
		1	**6V-6716**	8	RIVET-TRUSS HEAD	
		1	**7C-2642**	3	CLIP	
M		1	**8T-3612**	1	NUT-WELD (M8X1.25 THD)	
		1	**109-1645**	1	CLIP	
	11	1	**195-7900**	1	WIRE AS	
	12	1	**230-2204**	1	SPACER	
	13	1	**231-5849**	1	HARNESS AS (ENGINE)	
		1	**102-8802**	3	KIT-RECEPTACLE (2 PIN)	
					(INCLUDES RECEPTACLE AS AND WEDGE)	
		1	**102-8803**	1	KIT-RECEPTACLE (3 PIN)	
					(INLUDES RECEPTACLE AS AND WEDGE	
		1	**8T-8737**	70	PLUG-SEAL	
		1	**113-0580**	1	RECEPTACLE AS (40 PIN)	
		1	**106-4155**	1	KIT-BOLT (ENGINE HARNESS RETAINING)	
					(INCLUDES BOLT, RING, AND SEAL)	
		1	**3S-2093**	2	STRAP-CABLE	
		1	**8T-8827**	1	BOOT	
		1	**9X-6932**	1	BOOT-TERMINAL	
		1	**126-1774**	1	COVER	
		1	**127-5483**	1	PLUG AS-CONNECTOR (1 PIN)	
		1	**127-5484**	1	RECEPTACLE AS (1 PIN)	
		1	**127-5486**	1	RECEPTACLE AS (1 PIN)	
		1	**155-2269**	7	PLUG AS-CONNECTOR (2 PIN)	
		1	**155-2270**	1	KIT-CONNECTING PLUG (2 PIN)	
					(INCLUDES PLUG AS AND WEDGE)	
		1	**160-7689**	1	PLUG AS-CONNECTOR (70 PIN)	
		1	**159-9322**	1	SEAL-O-RING	
M	14	1	**096-5866**	2	BOLT (M8X1.25X75MM)	
Y	15	1	**189-5746**	1	SENSOR GP-SPEED (ENGINE)	164
	16	1	**1S-0994**	2	CLIP	
	17	1	**2Y-7337**	1	SPACER	
	18	1	**3E-7842**	1	RESISTOR AS	
		1	**3E-3365**	1	WEDGE-RECEPTACLE LOCK (2 PIN)	
		1	**8T-8729**	2	PIN-CONNECTOR	
	19	1	**3J-1907**	1	SEAL-O-RING	
	20	1	**3S-8664**	1	CLIP	
	21	1	**4D-9517**	1	CLIP	
	22	1	**4P-7428**	2	CLIP	
	23	1	**4P-7581**	10	CLIP	
	24	1	**4P-8134**	7	CLIP	
M	25	1	**5C-7261**	2	NUT (M8X1.25 THD)	

157-3458 **WIRING GP-ENGINE** ***(contd.)*** **i01885452**

NOTE	REF NO	GRAPHIC REF	PART NUMBER	QTY	PART NAME 1 2 3 4 5 6 (PRODUCT LEVEL)	SEE PAGE
	26	1	**5P-9085**	1	CLIP	
	27	1	**7J-0204**	1	SEAL-O-RING	
M	28	1	**7X-2540**	1	BOLT (M8X1.25X120MM)	
	29	1	**8M-2770**	1	CLIP	
	30	1	**8T-4121**	7	WASHER-HARD (11X21X2.5MM THK)	
M	31	1	**8T-4133**	3	NUT (M10X1.5 THD)	
M	32	1	**8T-4136**	1	BOLT (M10X1.5X25MM)	
M	33	1	**8T-4137**	2	BOLT (M10X1.5X20MM)	
M	34	1	**8T-4177**	1	BOLT (M8X1.25X90MM)	
M	35	1	**8T-4189**	2	BOLT (M8X1.25X20MM)	
M	36	1	**8T-4192**	1	BOLT (M12X1.75X25MM)	
M	37	1	**8T-4200**	2	BOLT (M8X1.25X16MM)	
	38	1	**8T-4223**	1	WASHER-HARD (13.5X25.5X3MM THK)	
	39	1	**8T-4224**	14	WASHER-HARD (8.8X16X2MM THK)	
M	40	1	**8T-6869**	1	BOLT (M8X1.25X60MM)	
	41	1	**8T-7934**	1	WASHER-HARD (11X21X5MM THK)	

M-METRIC PART
Y-SEPARATE ILLUSTRATION

157-3458 **WIRING GP-ENGINE** ***(contd.)*** **i01885452**

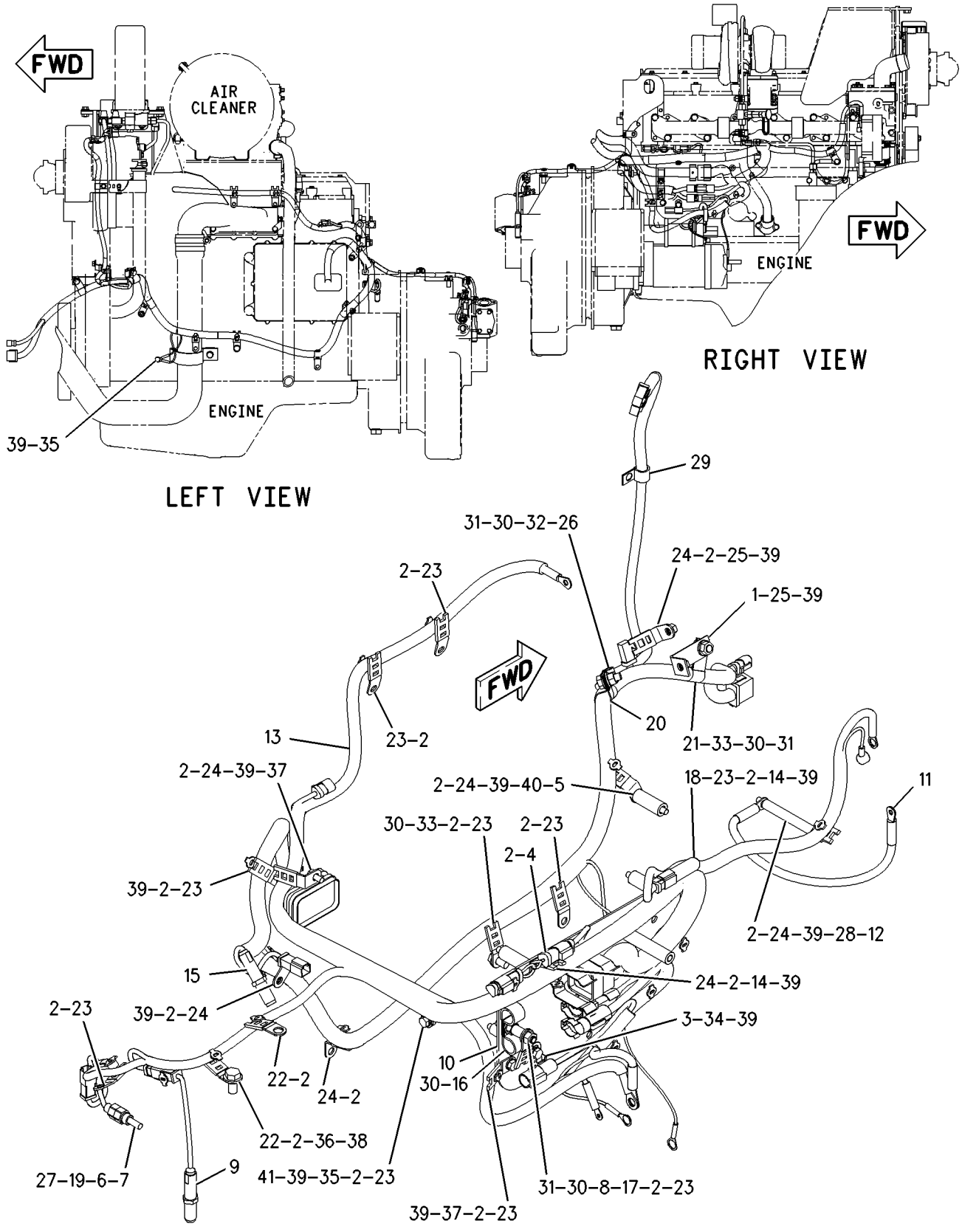

GRAPHIC #1 **<END>** g00974853

191-0083 WIRING GP-HEATER–AIR INLET

S/N: BMA1100-UP
PART OF 191-4479, 191-4481 ENGINE AR-COMPLETE
ALSO AN ATTACHMENT

SMCS-1408 **i01891350**

NOTE	REF NO	GRAPHIC REF	PART NUMBER	QTY	PART NAME 1 2 3 4 5 6 (PRODUCT LEVEL)	SEE PAGE
	1	1	**7X-6035**	1	STRAP-GROUNDING	
	2	1	**003-9835**	2	PROTECTOR	
M	3	1	**112-6646**	2	LOCKNUT	
	4	1	**145-4926**	1	BRACKET AS	
M		1	**6V-9632**	2	NUT-WELD (M6X1 THD)	
Y	5	1	*175-2324*	1	SWITCH GP-MAGNETIC (AIR INLET HEATER)	179
	6	1	**179-9355**	1	WIRE AS	
	7	1	**4P-8134**	1	CLIP (LADDER)	
M	8	1	**6V-2317**	6	BOLT (M8X1.25X30MM)	
M	9	1	**6V-5218**	2	BOLT (M8X1.25X35MM)	
M	10	1	**6V-8837**	2	BOLT (M6X1X16 MM)	
	11	1	**9M-1974**	7	WASHER-HARD (8.8X16X2MM THK)	
	12	1	**9X-8256**	2	WASHER (6.6X12X2MM THK)	

M-METRIC PART
Y-SEPARATE ILLUSTRATION

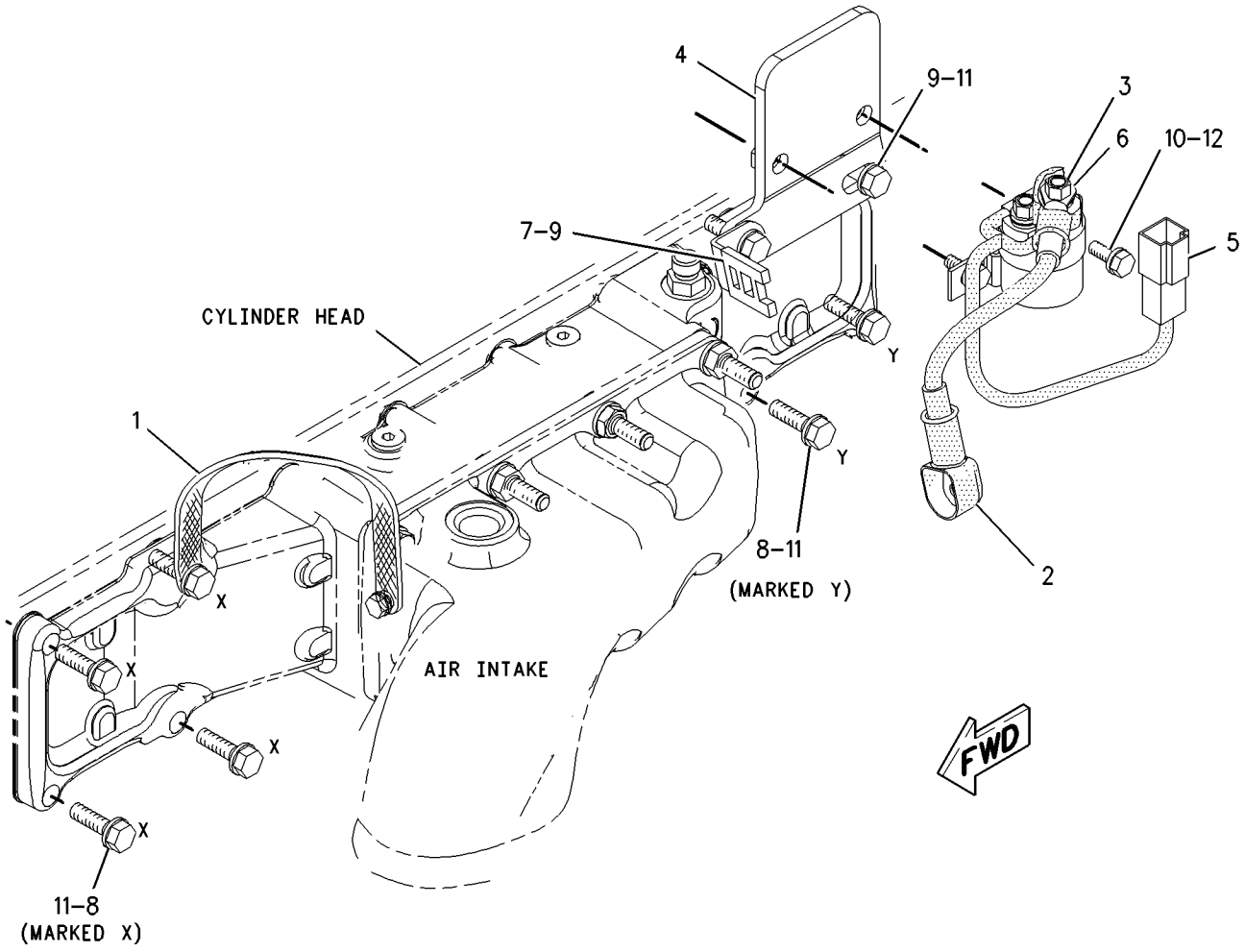

GRAPHIC #1 **<END>** g00924156

ELECTRICAL AND STARTING SYSTEM

192-9082 WIRING GP-PLATFORM

S/N: CCK1-UP
PART OF 217-3819 CAB GP, 218-3064 PLATFORM GP
ALSO AN ATTACHMENT

SMCS-1408 **i01898192**

NOTE	REF NO	GRAPHIC REF	PART NUMBER	QTY	PART NAME 1 2 3 4 5 6 (PRODUCT LEVEL)	SEE PAGE
Y	1	1	**3E-6328**	1	ALARM GP (24V) (ACTION)	115
	2	1	**7K-1181**	56	STRAP-CABLE	
	3	1	**9M-9812**	1	WIRE AS	
	4	1	**117-2311**	1	RECEPTACLE AS-POWER (12 VOLT)	
	5	1	**135-2172**	2	PLATE	
	6	1	**149-9818**	1	PLATE	
Y	7	1	**156-8378**	1	PANEL GP-CIRCUIT BREAKER	151
	8	1	**169-2876**	1	FILM-IDENTIFICATION (12 VOLT)	
	9	1	**173-1566**	1	CAP AS (ELECTRONIC TECH-SERVICE TOOL)	
		1	**8C-6354**	1	CAP-RECEPTACLE	
		1	**155-2271**	1	KIT-CONNECTING PLUG (4 PIN)	
		1	**2L-8077**	1	TERMINAL (RING)	
BE		1	**125-7875**		TUBE-HEAT SHRINK (6CM)	
		1	**155-2262**	1	WEDGE-PLUG LOCK (4 PIN)	
D		1	**5P-5677**		WIRE-ELECTRICAL (18 GA) (6DM)	
	10	1	**176-0238**	1	GROMMET-RUBBER	
	11	1	**209-0381**	1	CONVERTER-POWER (24 V TO 12 V)	
	12	1	**213-2982**	1	HARNESS AS (PLATFORM)	
		1	**102-8802**	4	KIT-RECEPTACLE (2 PIN)	
		1	**190-7614**	1	KIT-RECEPTACLE (12 PIN)	
		1	**102-8801**	2	KIT-RECEPTACLE (12 PIN)	
		1	**102-8805**	3	KIT-RECEPTACLE (6 PIN)	
		1	**102-8806**	3	KIT-RECEPTACLE (8 PIN)	
		1	**102-8801**	3	KIT-RECEPTACLE (12 PIN)	
					(EACH KIT INCLUDES RECEPTACLE AS & WEDGE)	
		1	**110-6845**	1	PLUG AS-CONNECTOR (40 PIN)	
		1	**110-6844**	1	SEAL	
		1	**9X-0194**	1	TERMINAL AS	
		1	**4W-4293**	1	PLUG AS	
		1	**8T-8737**	115	PLUG-SEAL	
		1	**8T-9471**	1	GROMMET	
		1	**103-0213**	1	RECEPTACLE AS (70 PIN)	
		1	**113-4630**	1	RECEPTACLE AS	
		1	**155-2255**	2	KIT-CONNECTING PLUG (12 PIN)	
		1	**155-2264**	1	PLUG AS-CONNECTOR	
		1	**155-2260**	2	KIT-CONNECTING PLUG (3 PIN)	
		1	**155-2270**	8	KIT-CONNECTING PLUG (2 PIN)	
		1	**155-2271**	2	KIT-CONNECTING PLUG (4 PIN)	
		1	**155-2274**	5	KIT-CONNECTING PLUG (6 PIN)	
					(EACH KIT INCLUDES PLUG AS & WEDGE)	
	13	1	**213-2989**	1	PLATE	
	14	1	**217-0508**	2	BRACKET AS	
	15	1	**095-0913**	2	CLIP	
	16	1	**141-4976**	8	SCREW-WASHER HEAD	
	17	1	*180-4523*	1	SWITCH AS-ROCKER (THROTTLE)	
		1	**105-9149**	1	SWITCH AS (24 VOLT)(ILLUMINATED) (THROTTLE)	
		1	**3E-8825**	2	LAMP (24 VOLT) (THROTTLE ROCKER SWITCH)	
		1	**180-4524**	1	ACTUATOR-ROCKER	
	18	1	**1S-0994**	2	CLIP	
	19	1	**2G-1133**	1	GROMMET	
	20	1	**4P-7581**	1	CLIP	
	21	1	**4P-8134**	1	CLIP	
M	22	1	**6V-9672**	4	SCREW-MACHINE (M4X.7X16MM)	
M	23	1	**7I-2272**	6	BOLT (M5X0.8X12MM)	
M	24	1	**7X-2543**	2	BOLT (M10X1.5X120MM)	

192-9082 **WIRING GP-PLATFORM** ***(contd.)*** **i01898192**

NOTE	REF NO	GRAPHIC REF	PART NUMBER	QTY	PART NAME 1 2 3 4 5 6 (PRODUCT LEVEL)	SEE PAGE
	25	1	**8T-0328**	6	WASHER-HARD (5.5X10X1MM THK)	
	26	1	**8T-4121**	11	WASHER-HARD (11X21X2.5MM THK)	
M	27	1	**8T-4137**	4	BOLT (M10X1.5X20MM)	
M	28	1	**8T-4191**	5	BOLT (M10X1.5X16MM)	
M	29	1	**9X-2044**	3	SCREW-TRUSS HEAD (M6X1X16MM)	
	30	1	**9X-7345**	1	GROMMET	
	31	1	**8S-8158**	1	SEAL-WIRE	
BD	32	1	**5P-6029**		LOCKWIRE	

B-USE AS REQUIRED
D-ORDER BY THE METER
E-ORDER BY THE CENTIMETER
M-METRIC PART
Y-SEPARATE ILLUSTRATION

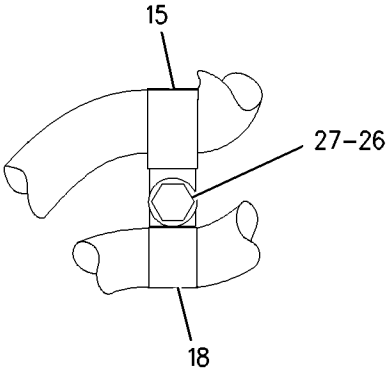

VIEW A–A

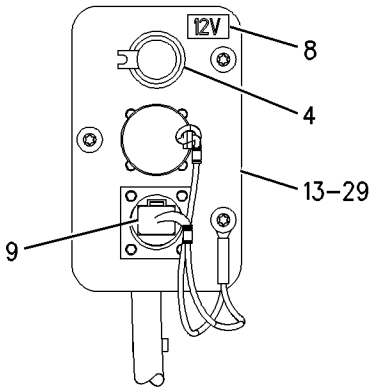

VIEW B–B

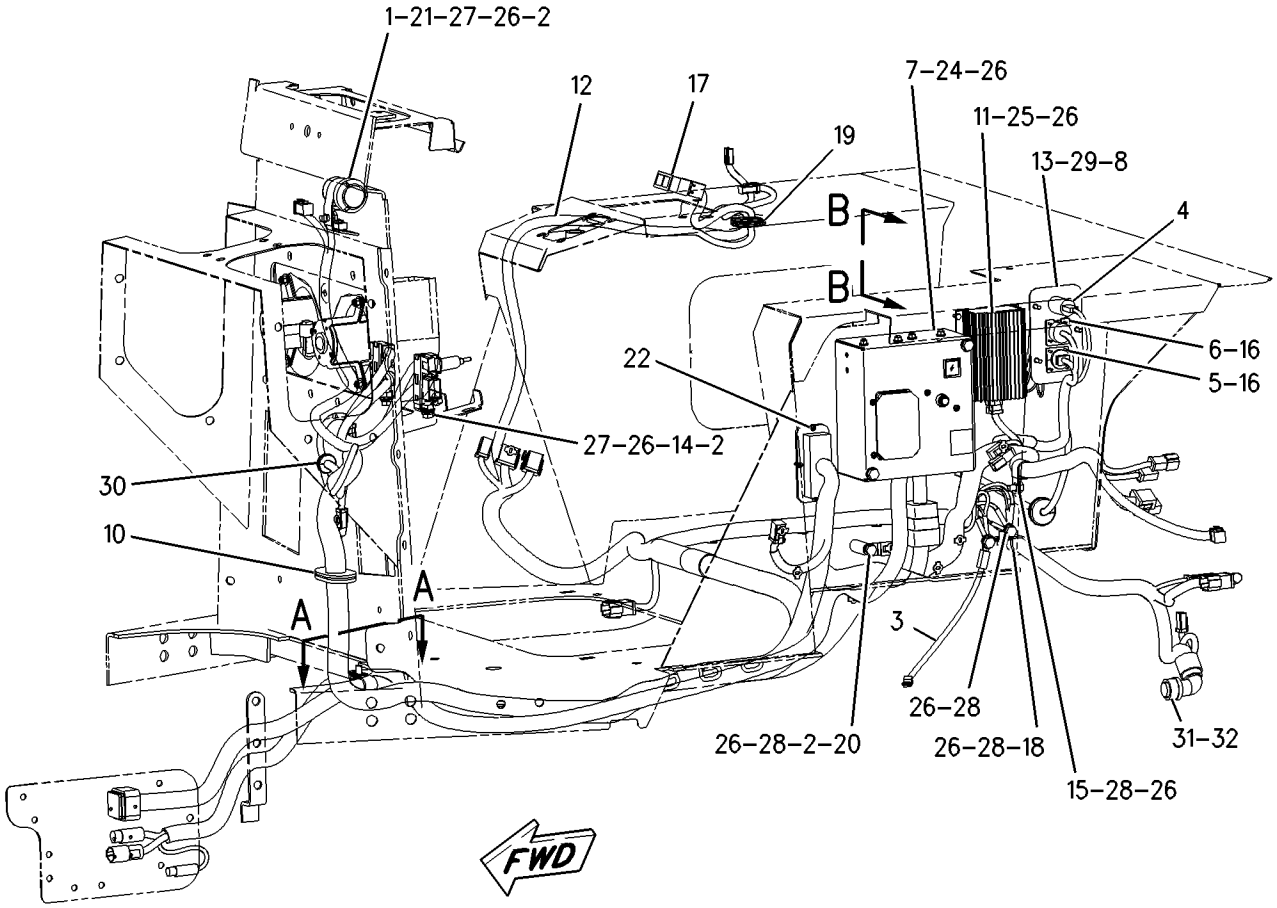

GRAPHIC #1 **<END>** g00940047

193-7361 AXLE GP

S/N: CCK1-UP

PART OF 189-4620 POWER TRAIN AR

SMCS-3282 **i01833348**

NOTE	REF NO	GRAPHIC REF	PART NUMBER	QTY	PART NAME 1 2 3 4 5 6 (PRODUCT LEVEL)	SEE PAGE
	1	1	**191-4916**	1	SHAFT-SUN GEAR	
	2	1	**193-7365**	1	SHAFT	
	3	1	**193-7366**	1	SHAFT-SUN GEAR	

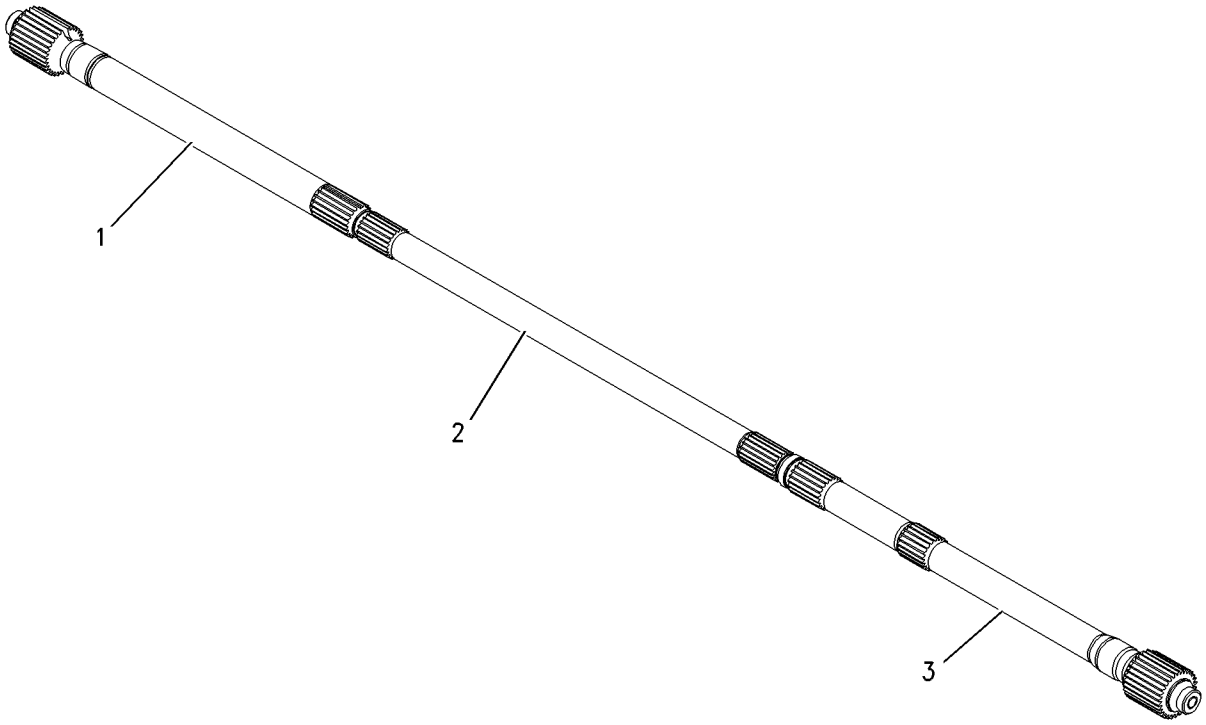

GRAPHIC #1 **<END>** g00776189

205-3603 CONTROL GP-TRANSMISSION

S/N: BJG1-UP

PART OF 188-2003 TRANSMISSION AR

SMCS-3065, 3209 **i01829863**

NOTE	REF NO	GRAPHIC REF	PART NUMBER	QTY	PART NAME 1 2 3 4 5 6 (PRODUCT LEVEL)	SEE PAGE
	1	1	**3S-2093**	2	STRAP-CABLE	
	2	1	**6Y-0775**	5	SLEEVE	
	3	1	**104-6729**	1	RETAINER	
	4	1	**104-6730**	1	GASKET	
	5	1	**108-2097**	1	PLATE	
	6	1	**110-2049**	2	SLEEVE	
	7	1	**110-2860**	1	CLIP AS-CONNECTING	
	8	1	**204-8982**	1	GROMMET	
Y	9	1	**205-3602**	1	VALVE GP-RELIEF (TRANSMISSION CONTROL)	230
	10	1	**205-4626**	1	HARNESS AS (TRANSMISSION SHIFT SOLENOIDS)	
		1	**3S-2093**	5	STRAP-CABLE	
		1	**102-8806**	1	KIT-RECEPTACLE (8 PIN)	
					(INCLUDES RECEPTACLE AS & WEDGE)	
		1	**6J-2419**	1	SEAL-O-RING	
		1	**155-2270**	1	KIT-CONNECTING PLUG (2 PIN)	
					(INCLUDES PLUG AS & WEDGE)	
Y	11	1	**220-4324**	5	VALVE GP-MODULATING (TRANSMISSION CONTROL)	225
	12	1	**222-0894**	2	CLIP	
	13	1	**223-6517**	1	HARNESS AS (TRANSMISSION SPEED SENSORS)	
		1	**3S-2093**	1	STRAP-CABLE	
		1	**155-2270**	4	KIT-CONNECTING PLUG (2 PIN)	
		1	**155-2265**	1	KIT-CONNECTING PLUG (8 PIN)	
					(EACH INCLUDES PLUG AS & WEDGE)	
	14	1	**0T-0102**	5	BOLT (3/8-16X0.625 IN)	
	15	1	**1D-4540**	10	BOLT (5/16-18X2.75 IN)	
	16	1	**5M-2894**	4	WASHER-HARD (10.2X18.5X2.5MM THK)	
	17	1	**6V-4365**	10	SEAL-O-RING	
	18	1	**8M-4432**	4	SEAL-O-RING	
	19	1	**8S-9191**	4	BOLT (3/8-16X4 IN)	
M	20	1	**8T-4136**	2	BOLT (M10X1.5X25MM)	
	21	1	**9M-1974**	10	WASHER-HARD (8.8X16X2MM THK)	

M-METRIC PART
Y-SEPARATE ILLUSTRATION

205-3603 **CONTROL GP-TRANSMISSION** *(contd.)* **i01829863**

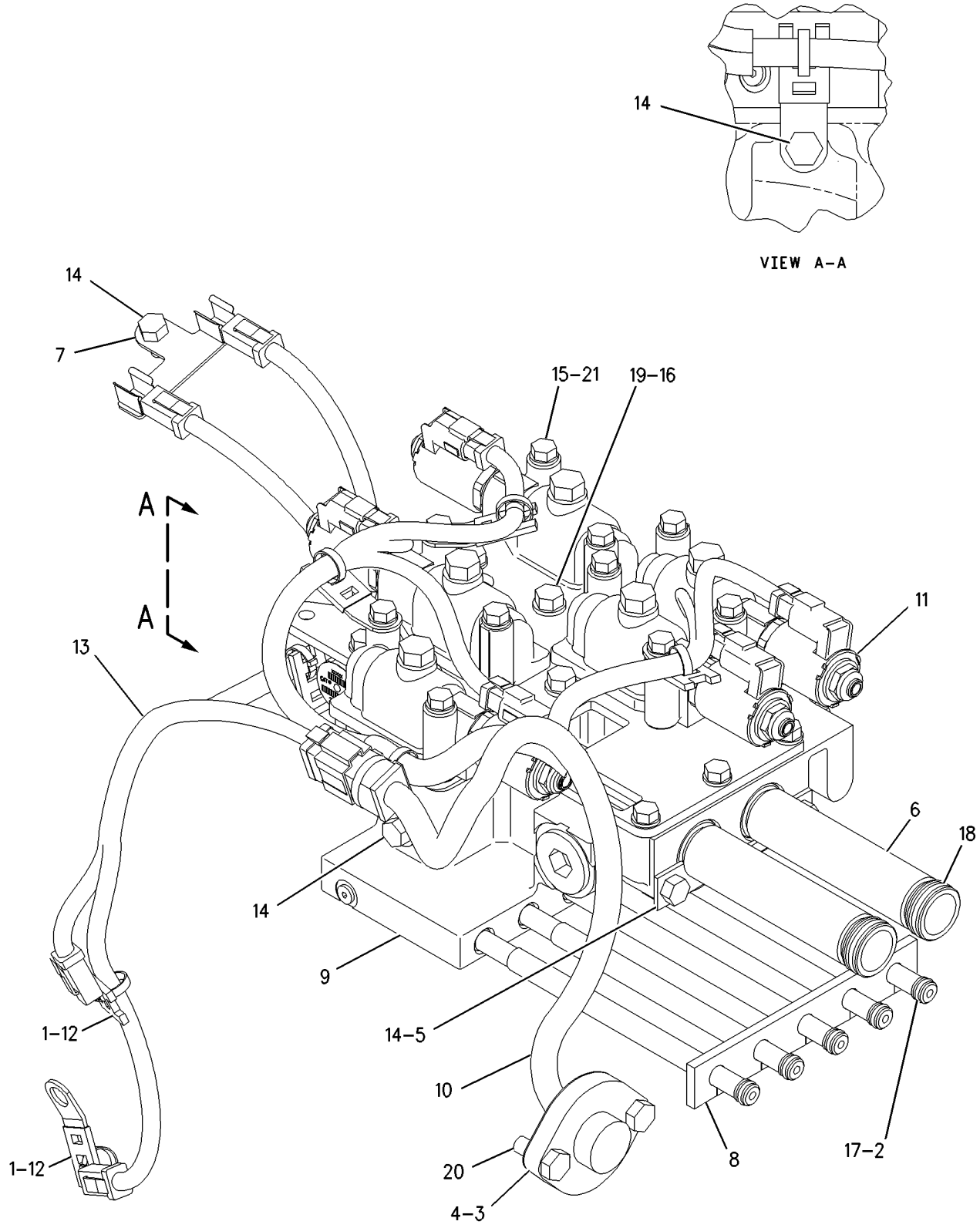

GRAPHIC #1 **<END>** g00930638

POWER TRAIN

188-2009 DIFFERENTIAL & BEVEL GEAR GP

S/N: BJG1-UP

PART OF 188-2003 TRANSMISSION AR

SMCS-3258, 3281, 3283 **i01832750**

NOTE	REF NO	GRAPHIC REF	PART NUMBER	QTY	PART NAME 1 2 3 4 5 6 (PRODUCT LEVEL)	SEE PAGE
	1	1	**205-4138**	3	CONE-BEARING	
	2	2	**205-7398**	1	CUP-BEARING (TAPERED ROLLER)	
	3	2	**205-7396**	1	CONE-BEARING (TAPERED ROLLER)	
	4	2	**205-7397**	1	CONE-BEARING (TAPERED ROLLER)	
	5	1	**2J-6362**	1	BEARING	
	6	2	**5P-4920**	1	RACE & ROLLER AS	
	7	2	**5P-4921**	1	RACE-BEARING OUTER	
	8	2	**6V-1864**	1	CUP-BEARING	
	9	1	**7T-8858**	1	CONE-BEARING	
	10	1	**7T-8859**	1	CUP-BEARING	
	11	2	**1L-6957**	1	LOCKNUT-BEARING	
	12	1	**2D-8009**	1	SEAL-O-RING	
	13	2	**2S-8983**	2	RING-SEAL	
	14	2	**3T-8469**	1	GEAR-BEVEL (31 TEETH)	
B	15	1	**3T-9819**	1	SHIM PACK (INCLUDES 19 SHIMS)	
	16	1	**6T-7995**	1	TUBE AS	
	17	1	**6T-7996**	1	TUBE AS	
	18	2	**6V-2404**	1	LOCKWASHER-BEARING	
	19	1	**6V-5773**	1	SEAL (LIP)	
	20	1	**7T-9357**	1	PINION-BEVEL (14 TEETH)	
	21	1	**8D-0071**	1	TEE-FLARED	
	22	2	**9P-7072**	1	WASHER (90.6X115X2.5MM THK)	
	23	1	**106-0543**	2	SENSOR GP-SPEED (TRANSMISSION)	
					(EACH INCLUDES)	
		1	**102-8802**	1	KIT-RECEPTACLE (2 PIN)	
		1	**186-3735**	2	PIN-CONNECTOR	
		1	**9X-1813**	14	SLEEVE	
		1	**171-5349**	1	STRAP-MARKER	
	24	1	**108-2471**	1	CAGE-BEARING	
	25	1	**108-8250**	1	CARRIER-SEAL	
	26	1	**198-9162**	1	TUBE AS	
	27	1	**198-9163**	1	TUBE AS	
B	28	2	**200-8644**	2	SHIM PACK (INCLUDES 24 SHIMS) (EACH)	
	29	1	**200-8648**	1	CASE AS-TRANSMISSION	
		1	**2A-3576**	1	PIN	
		1	**7T-9356**	1	PLUG-CUP	
	30	1	**201-1281**	1	COVER	
	31	2	**203-4786**	1	CARRIER	
	32	1	**204-5341**	1	TEE	
	33	2	**204-9092**	1	SHAFT	
	34	2	**204-9096**	1	CAGE AS	
		2	**124-6657**	1	ORIFICE	
	35	1	**205-4137**	3	CUP-BEARING	
	36	1	**206-2080**	1	TUBE AS	
	37	1	**206-2963**	1	TUBE AS	
	38	1	**225-4315**	1	GEAR (TRANSFER)(28 TEETH)	
	39	1	**225-4316**	1	GEAR (TRANSFER)(31 TEETH)	
	40	1	**032-1267**	1	CONNECTOR	
	41	1	**032-1268**	1	ELBOW	
	42	1	**052-0572**	1	TEE-SWIVEL	
	43	1	**0S-0509**	1	BOLT (3/8-16X0.75 IN)	
	44	1,2	**0S-1595**	19	BOLT (1/2-13X1.25 IN)	
	45	1	**0S-1599**	1	BOLT (1/2-20X2.75 IN)	
	46	1	**0S-1614**	2	BOLT (1/4-20X0.5 IN)	
	47	1	**1A-5350**	2	CLIP	
	48	1	**1T-0720**	3	BOLT-12 POINT HEAD (3/8-16X1.25 IN)	

NOTE	REF NO	GRAPHIC REF	PART NUMBER	QTY	PART NAME 1 2 3 4 5 6 (PRODUCT LEVEL)	SEE PAGE
B	49	1	**201-1282**	1	SHIM PACK (INCLUDES 25 SHIMS)	
	50	1	**2B-2404**	1	CLIP	
	51	1	**2N-1287**	1	ELBOW-FLARED	
	52	1	**3B-1915**	6	BOLT (3/8-16X1.37 IN)	
	53	1	**3T-9674**	1	RETAINER	
	54	2	**5B-0841**	20	BOLT (5/8-18X1.75 IN)	
	55	1	**5M-2894**	1	WASHER-HARD (10.2X18.5X2.5MM THK)	
	56	1	**5P-0537**	2	WASHER-HARD (7.2X14.5X2MM THK)	
	57	1	**8L-6557**	1	CONNECTOR	
M	58	1	**8T-4136**	4	BOLT (M10X1.5X25MM)	

B-USE AS REQUIRED
M-METRIC PART

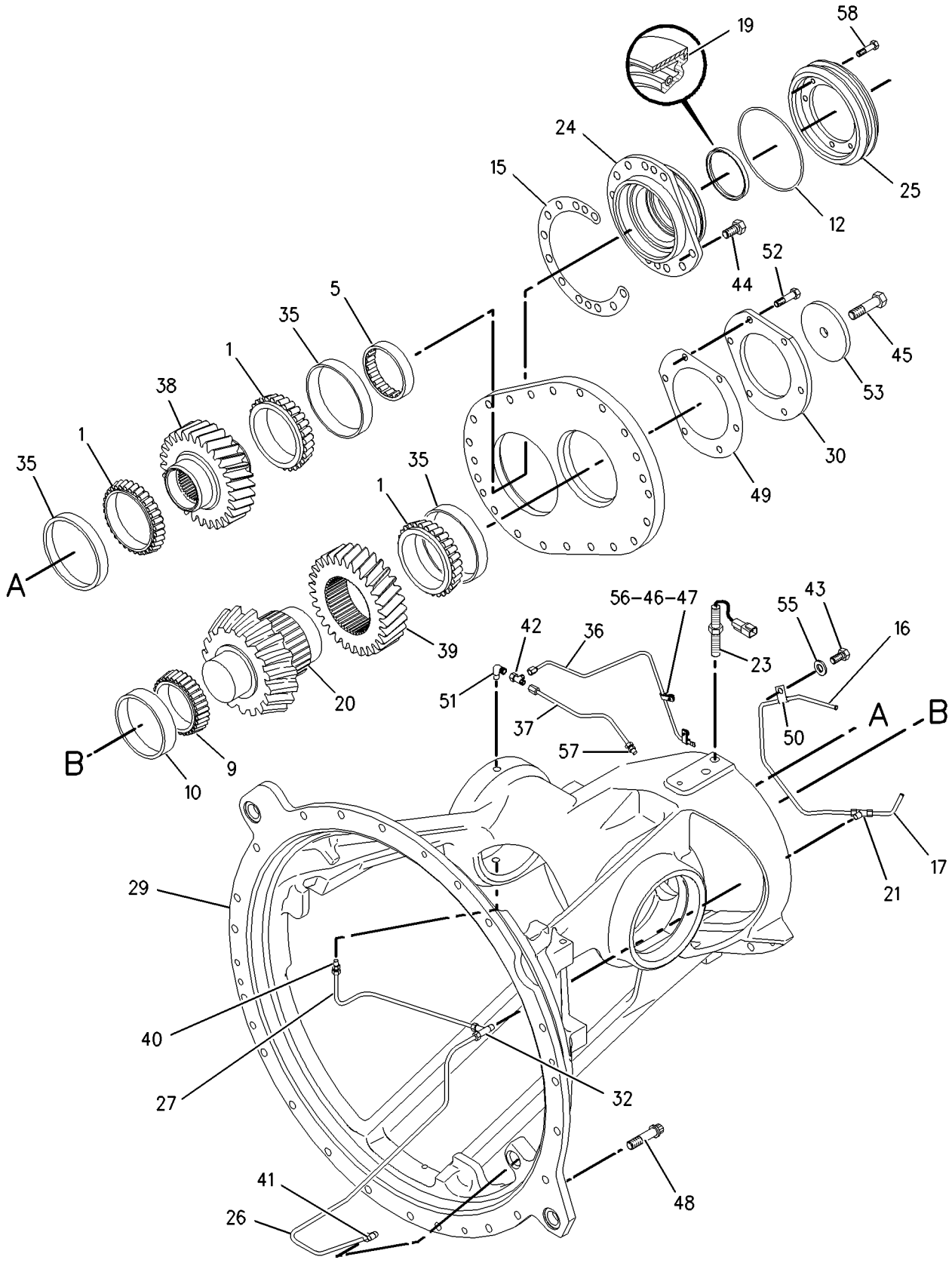

GRAPHIC #1

g00940649

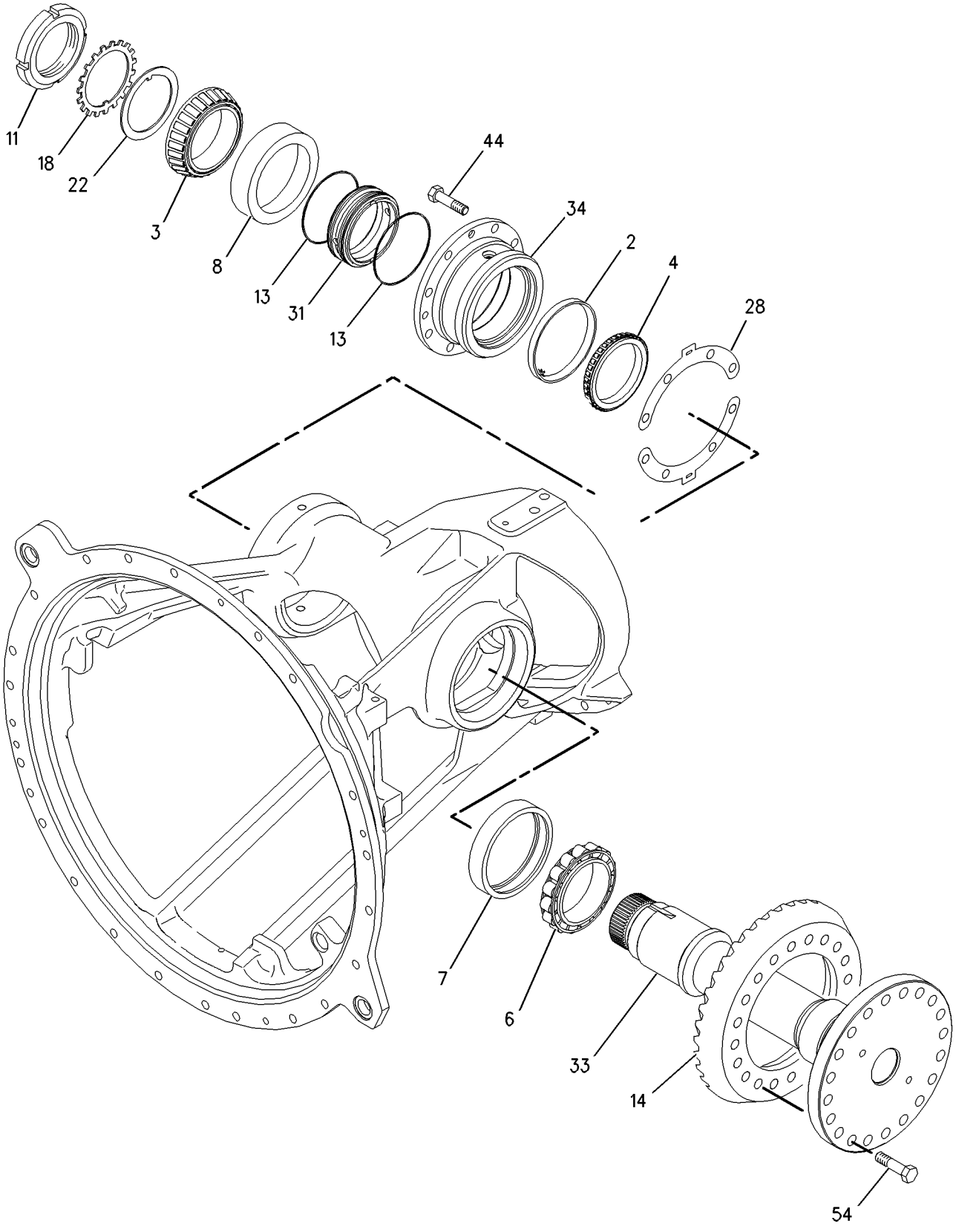

GRAPHIC #2 **<END>** g00940650

178-0568 FILTER GP-OIL—POWER TRAIN

S/N: CCK1-UP

PART OF 191-9530 LINES GP-POWER TRAIN OIL

SMCS-3004 **i01883307**

NOTE	REF NO	GRAPHIC REF	PART NUMBER	QTY	PART NAME 1 2 3 4 5 6 (PRODUCT LEVEL)	SEE PAGE
	1	1	**3J-1907**	2	SEAL-O-RING	
	2	1	**3S-8652**	1	SPRING	
	3	1	**5P-3620**	1	SEAL-O-RING (POWER TRAIN FILTER)	
	4	1	**6T-9222**	1	SPOOL	
	5	1	**8M-6393**	1	RING-RETAINING	
	6	1	**132-8876**	1	FILTER ELEMENT AS-OIL (POWER TRAIN)	
	7	1	**133-1279**	1	HOUSING AS-OIL FILTER	
	8	1	**133-2199**	1	SPRING	
	9	1	**155-5745**	1	BASE-FILTER	
	10	1	**165-8079**	1	RETAINER	
	11	1	**9S-4191**	1	PLUG	

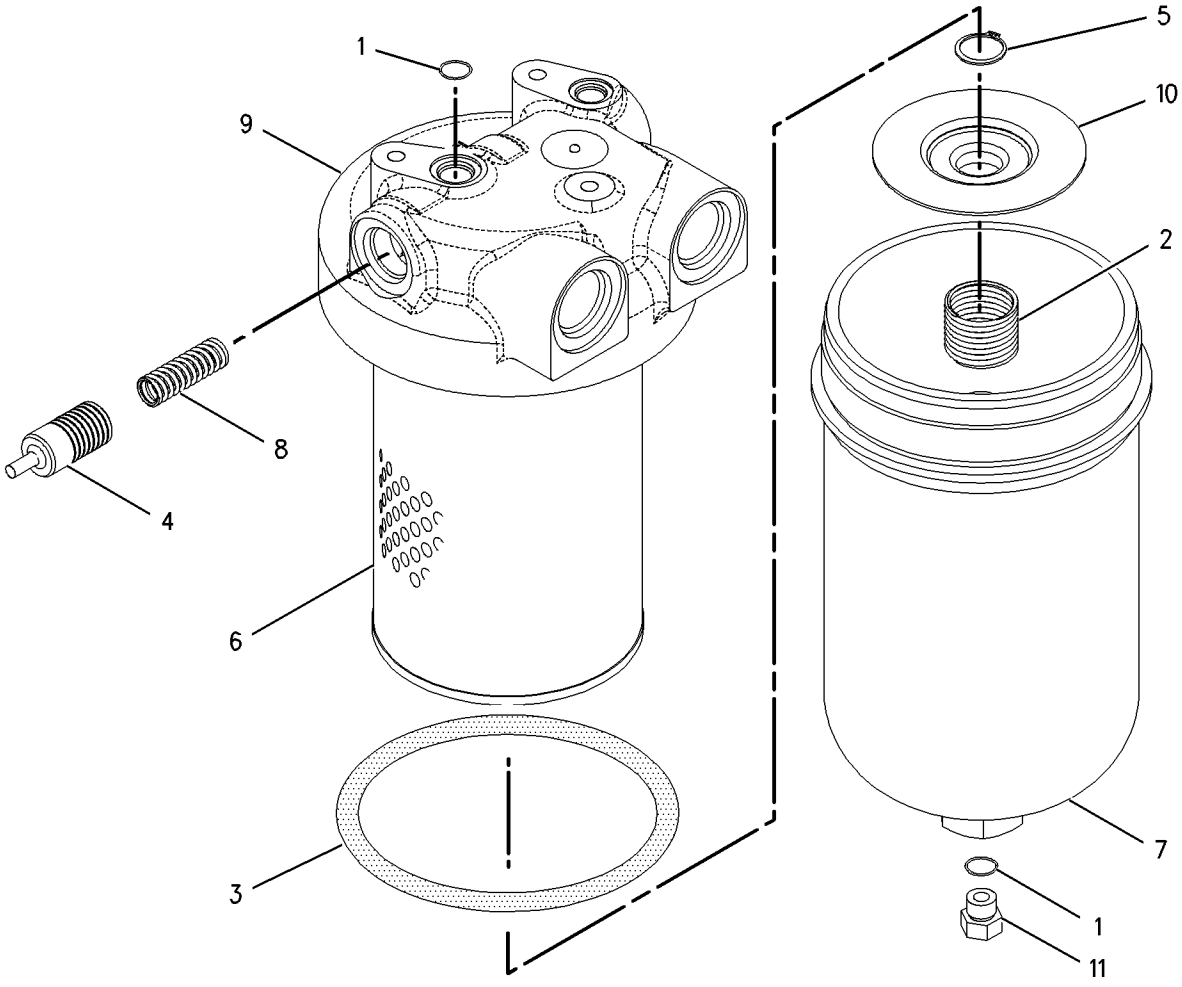

GRAPHIC #1 **<END>** g00770456

POWER TRAIN

191-4931 FINAL DRIVE GP

S/N: CCK1-UP

PART OF 189-4620 POWER TRAIN AR

SMCS-4050 **i01898223**

NOTE	REF NO	GRAPHIC REF	PART NUMBER	QTY	PART NAME 1 2 3 4 5 6 (PRODUCT LEVEL)	SEE PAGE
	1	1	**1B-3978**	6	CUP-BEARING	
	2	1	**1B-3980**	6	CONE-BEARING	
	3	1	**6V-0327**	1	CUP-BEARING	
	4	1	**6V-0328**	1	CONE-BEARING	
	5	1	**6V-0329**	1	CONE-BEARING	
	6	1	**6V-0330**	1	CUP-BEARING	
	7	1	**6V-0439**	1	PLUG-MAGNETIC (FINAL DRIVE)	
	8	1	**6Y-0859**	1	SEAL GP-DUO-CONE	
	8A	1	**1M-9011**	2	RING-SEALING	
Z	8B	1		2	SEAL-RING	
	9	1	**8E-3075**	3	RETAINER	
	10	1	**8G-4565**	3	GEAR-PLANETARY (30 TEETH)	
	11	1	**8G-4566**	1	PLATE	
	12	1	**8G-4568**	1	GEAR (74 TEETH)	
	13	1	**8G-4569**	1	RING	
	14	1	**9G-4876**	1	RETAINER	
	15	1	**106-0713**	1	CARRIER	
	16	1	**107-1763**	1	HUB-SPROCKET	
	17	1	**178-6854**	1	HUB-RING GEAR	
	18	1	**179-6707**	3	SHAFT	
	19	1	**191-4922**	1	BEARING-SLEEVE	
	20	1	**191-4923**	1	SPINDLE	
	21	1	**1H-8128**	1	SEAL-O-RING	
	22	1	**1H-9696**	3	SEAL-O-RING	
	23	1	**2R-0098**	1	SEAL-O-RING	
	24	1	**2S-4078**	1	SEAL-O-RING (FINAL DRIVE MAGNETIC PLUG)	
	25	1	**3K-0360**	1	SEAL-O-RING (FINAL DRIVE DRAIN PLUG)	
M	26	1	**7X-2563**	28	BOLT (M20X2.5X60MM)	
M	27	1	**8C-8729**	9	BOLT-SOCKET HEAD (M12X1.75X80MM)	
	28	1	**8T-4121**	3	WASHER-HARD (11X21X2.5MM THK)	
	29	1	**8T-4123**	54	WASHER-PLATED (22X35X3.5MM THK)	
M	30	1	**8T-4136**	3	BOLT (M10X1.5X25MM)	
M	31	1	**8T-4141**	26	BOLT (M20X2.5X70MM)	
M	32	1	**8T-4193**	3	BOLT (M16X2X50MM)	
	33	1	**8T-4223**	11	WASHER-HARD (13.5X25.5X3MM THK)	
	34	1	**8T-8919**	2	BOLT (1/2-13X1.75 IN)	
	35	1	**8D-4771**	1	SEAL-O-RING	
	36	1	**9S-4185**	1	PLUG (FINAL DRIVE DRAIN)	
	37	1	**9X-7411**	1	SEAL-LIP	
	38	1	**9X-8257**	3	WASHER (17.5X30X3.5MM THK)	

M-METRIC PART
Z-NOT SERVICED SEPARATELY

191-4931 FINAL DRIVE GP *(contd.)* i01898223

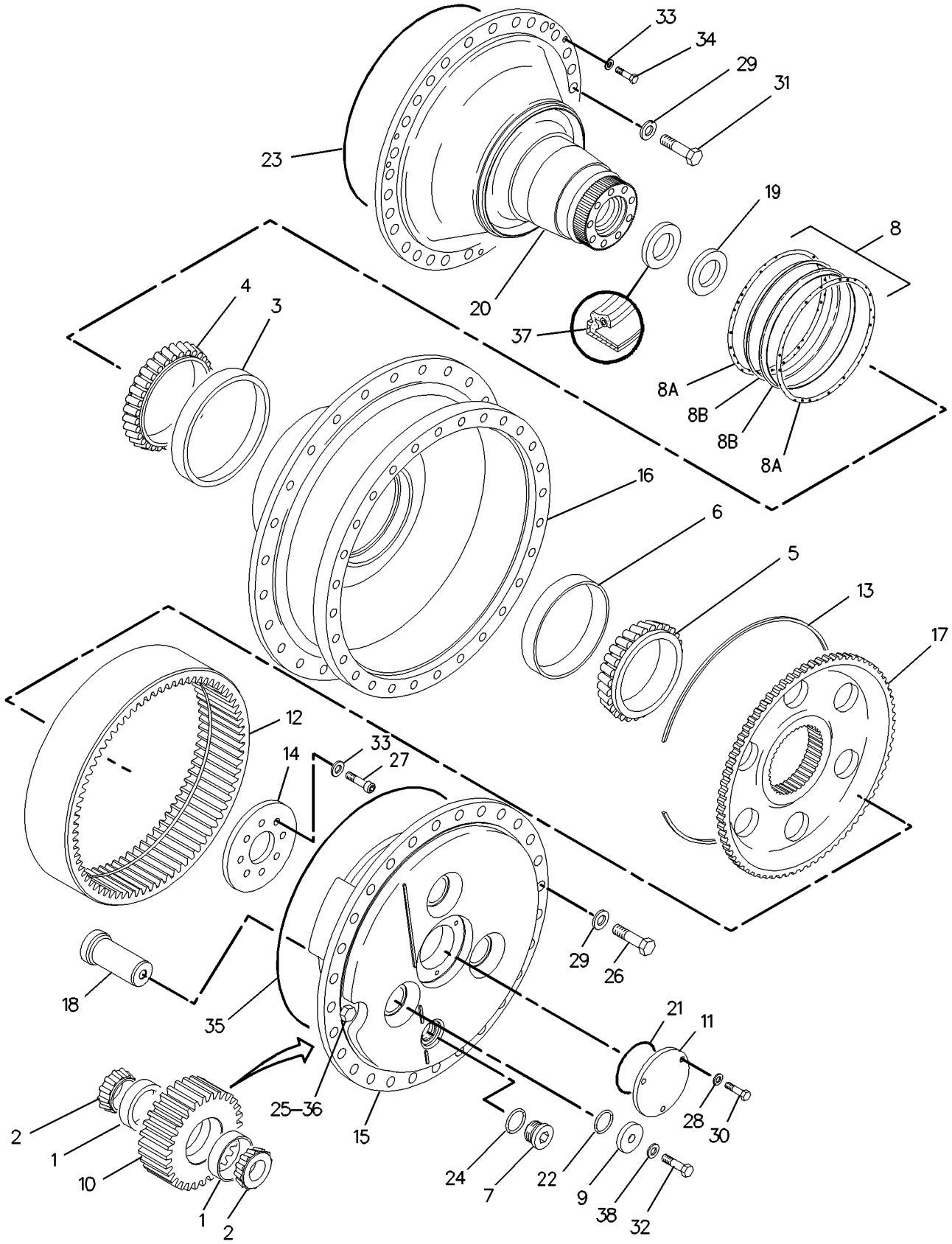

GRAPHIC #1 **<END>** g00773403

191-9530 LINES GP-POWER TRAIN OIL

S/N: CCK1-UP

PART OF 189-4620 POWER TRAIN AR

SMCS-3016 **i01898324**

NOTE	REF NO	GRAPHIC REF	PART NUMBER	QTY	PART NAME 1 2 3 4 5 6 (PRODUCT LEVEL)	SEE PAGE
	1	1	**2W-6225**	1	CAP AS-OIL FILLER (POWER TRAIN)	
	2	1	**5D-1026**	4	CLAMP-HOSE	
	3	1	**6B-2882**	3	SPACER (.406X.75X.312 IN THK)	
	4	1	**6V-1230**	1	ELBOW	
Y	5	1	**6Y-8473**	1	VALVE GP-RELIEF (POWER TRAIN OIL LINES)	228
	6	1	**8C-3447**	1	CAP-DUST (POWER TRAIN OIL SAMPLE VALVE)	
	7	1	**8G-5551**	1	FLANGE	
	8	1	**8G-5654**	1	GASKET	
	9	1	**8G-8589**	1	HOUSING-SCREEN	
	10	1	**8G-9560**	1	TUBE AS	
	11	1	**8S-9129**	1	FILTER-MAGNETIC (POWER TRAIN OIL)	
	12	1	**8S-9130**	1	SCREEN-SUCTION (POWER TRAIN OIL LINES)	
	13	1	**8T-6703**	2	CLAMP-HOSE	
	14	1	**114-2312**	1	COVER AS	
	15	1	**130-9984**	4	CLIP	
	16	1	**148-1928**	1	VALVE-RELIEF	
	17	1	*150-3026*	1	ELBOW AS	
		1	**3K-0360**	1	SEAL-O-RING	
		1	**6V-4292**	1	ELBOW	
	18	1	**162-6966**	1	TUBE AS	
	19	1	*169-5862*	1	ELBOW AS	
		1	**3J-1907**	1	SEAL-O-RING	
		1	**8C-6712**	1	ELBOW	
	20	1	**173-1437**	2	FLANGE-HALF	
	21	1	**173-4282**	1	TUBE AS	
	22	1	**177-3382**	1	MANIFOLD	
I	23	1	**177-7185**	1	HOSE AS	
I	24	1	**177-7186**	1	HOSE AS	
Y	25	1	*178-0568*	1	FILTER GP-OIL (POWER TRAIN)	197
	26	1	**178-9220**	1	PLATE	
	27	1	**185-6684**	1	BREATHER AS (POWER TRAIN OIL LINES)	
Y	28	1	**193-3849**	1	VALVE GP-PRIORITY (POWER TRAIN OIL)	226
I	29	1	**194-6479**	1	HOSE AS	
I	30	1	**194-6480**	1	HOSE AS	
I	31	1	**194-6481**	1	HOSE AS	
I	32	1	**194-6482**	1	HOSE AS	
I	33	1	**194-6483**	1	HOSE AS	
	34	1	*195-2037*	2	FITTING AS	
					(EACH INCLUDES)	
		1	**3K-0360**	1	SEAL-O-RING	
		1	**034-3679**	1	FITTING	
	35	1	**199-1222**	1	GAUGE	
Y	36	1	**202-4365**	1	PUMP GP-GEAR (POWER TRAIN OIL)	215
	37	1	**203-4599**	1	HOSE	
	38	1	**203-4600**	1	HOSE	
	39	1	**214-3509**	1	BRACKET AS	
M		1	**170-7491**	1	STUD-WELD	
	40	1	**214-3927**	1	TUBE AS	
	41	1	**220-0907**	1	HOSE	
	42	1	*148-8327*	1	CONNECTOR AS	
		1	**3D-2824**	1	SEAL-O-RING	
		1	**6V-8637**	1	CONNECTOR-SEAL	
		1	**6V-9746**	1	SEAL-O-RING	
	43	1	*148-8335*	2	CONNECTOR AS	
					(EACH INCLUDES)	
		1	**5K-9090**	1	SEAL-O-RING	

191-9530 LINES GP-POWER TRAIN OIL *(contd.)* i01898324

NOTE	REF NO	GRAPHIC REF	PART NUMBER	QTY	PART NAME 1 2 3 4 5 6 (PRODUCT LEVEL)	SEE PAGE
		1	**6V-8635**	1	CONNECTOR	
		1	**7M-8485**	1	SEAL-O-RING	
	44	1	*148-8360*	2	ELBOW AS	
					(EACH INCLUDES)	
		1	**6V-9182**	1	ELBOW	
		1	**6V-9746**	1	SEAL-O-RING	
		1	**7M-8485**	1	SEAL-O-RING	
	45	1	*148-8408*	1	PLUG AS	
		1	**3D-2824**	1	SEAL-O-RING	
		1	**9S-4183**	1	PLUG	
	46	1	*150-4047*	1	ADAPTER GP	
		1	**3J-7354**	1	SEAL-O-RING	
		1	**8T-2353**	1	ADAPTER-STRAIGHT THREAD	
	47	1	*164-5590*	1	VALVE GP-FLUID SAMPLING (POWER TRAIN OIL LINES)	
		1	**3J-7354**	1	SEAL-O-RING	
		1	**8C-3446**	1	VALVE GP-FLUID SAMPLING (POWER TRAIN OIL LINES)	
	48	1	**1P-3708**	1	SEAL-RECTANGULAR	
	49	1	**3K-0360**	1	SEAL-O-RING	
	50	1	**3V-0409**	1	SPACER (.423X.675X1.25 IN THK)	
	51	1	**4D-7388**	1	CLIP	
	52	1	**4J-0520**	6	SEAL-O-RING	
	53	1	**4J-0522**	3	SEAL-O-RING	
	54	1	**4L-6454**	3	BOLT (3/8-16X1 IN)	
	55	1	**5K-1770**	1	SEAL-O-RING	
	56	1	**5P-2369**	1	CLIP	
	57	1	**5P-8066**	1	SEAL-O-RING	
	58	1	**6H-3977**	1	SEAL-O-RING	
	59	1	**6L-5359**	1	SEAL-O-RING	
	60	1	**8C-3205**	2	FLANGE-HALF	
	61	1	**8C-3206**	4	FLANGE-HALF	
	62	1	**8M-4988**	1	SEAL-O-RING	
	63	1	**8M-5254**	5	SEAL-O-RING	
	64	1	**8T-4121**	40	WASHER-HARD (11X21X2.5MM THK)	
M	65	1	**8T-4133**	3	NUT (M10X1.5 THD)	
M	66	1	**8T-4136**	5	BOLT (M10X1.5X25MM)	
M	67	1	**8T-4137**	4	BOLT (M10X1.5X20MM)	
M	68	1	**8T-4172**	3	BOLT (M10X1.50X80MM)	
M	69	1	**8T-4183**	4	BOLT (M12X1.75X40MM)	
M	70	1	**8T-4184**	8	BOLT (M12X1.75X45MM)	
M	71	1	**8T-4195**	1	BOLT (M10X1.5X30MM)	
M	72	1	**8T-4196**	20	BOLT (M10X1.5X35MM)	
	73	1	**8T-4223**	16	WASHER-HARD (13.5X25.5X3MM THK)	
	74	1	**8T-4896**	3	WASHER-HARD (10.2X18.5X2.5MM THK)	
M	75	1	**8T-4956**	4	BOLT (M12X1.75X35MM)	
M	76	1	**8T-5005**	1	BOLT (M10X1.50X70MM)	
M	77	1	**8T-6466**	6	BOLT (M10X1.50X60MM)	
	78	1	**8T-7529**	3	CLIP	
	79	1	**9M-4218**	1	SEAL-O-RING	
	80	1	**9X-4609**	1	SEAL-O-RING	
	81	1	**132-8876**	1	FILTER ELEMENT AS-OIL (POWER TRAIN - HIGH EFFICIENCY)	

I-SEE HOSE FABRICATION GUIDE
M-METRIC PART
Y-SEPARATE ILLUSTRATION

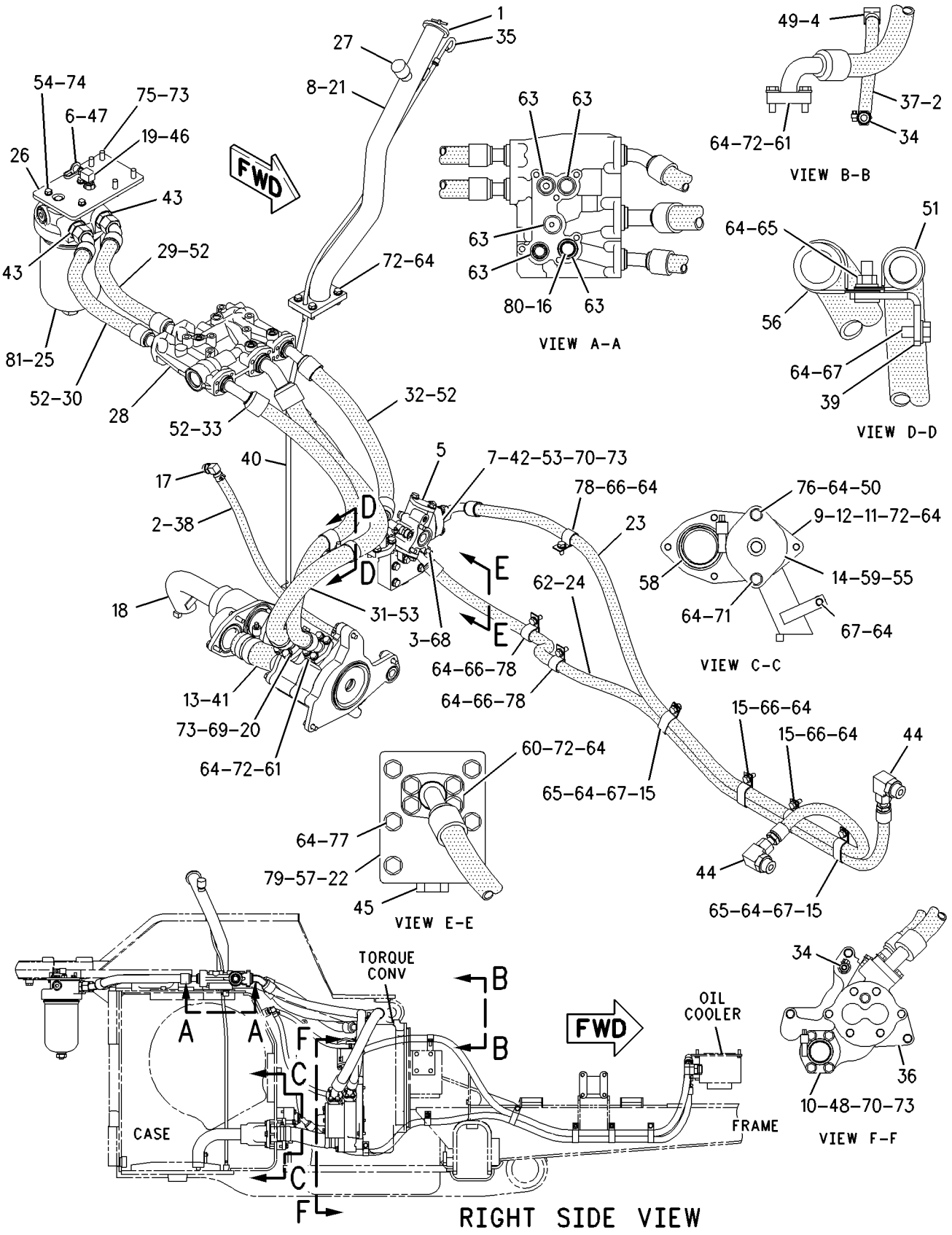

GRAPHIC #1 **<END>** g00936882

224-5368 MOUNTING GP-TORQUE CONVERTER

S/N: CCK1-UP

PART OF 189-4620 POWER TRAIN AR

SMCS-3101 **i01833634**

NOTE	REF NO	GRAPHIC REF	PART NUMBER	QTY	PART NAME 1 2 3 4 5 6 (PRODUCT LEVEL)	SEE PAGE
	1	1	**4B-7739**	1	PLUG-DRAIN (TORQUE CONVERTER)	
	2	1	**8H-9819**	1	ADAPTER-PLUG	
	3	1	**164-1525**	7	ROD	
	4	1	**220-3257**	1	ADAPTER	
	5	1	**5P-9806**	1	SEAL-O-RING	
	6	1	**8H-9818**	1	GASKET	
M	7	1	**8T-4133**	7	NUT (M10X1.5 THD)	
M	8	1	**8T-4136**	2	BOLT (M10X1.5X25MM)	
M	9	1	**8T-4182**	1	BOLT (M10X1.5X45MM)	
M	10	1	**8T-4185**	4	BOLT (M10X1.5X50MM)	
	11	1	**8T-6762**	1	PLUG-PIPE (TORQUE CONVERTER)	

M-METRIC PART

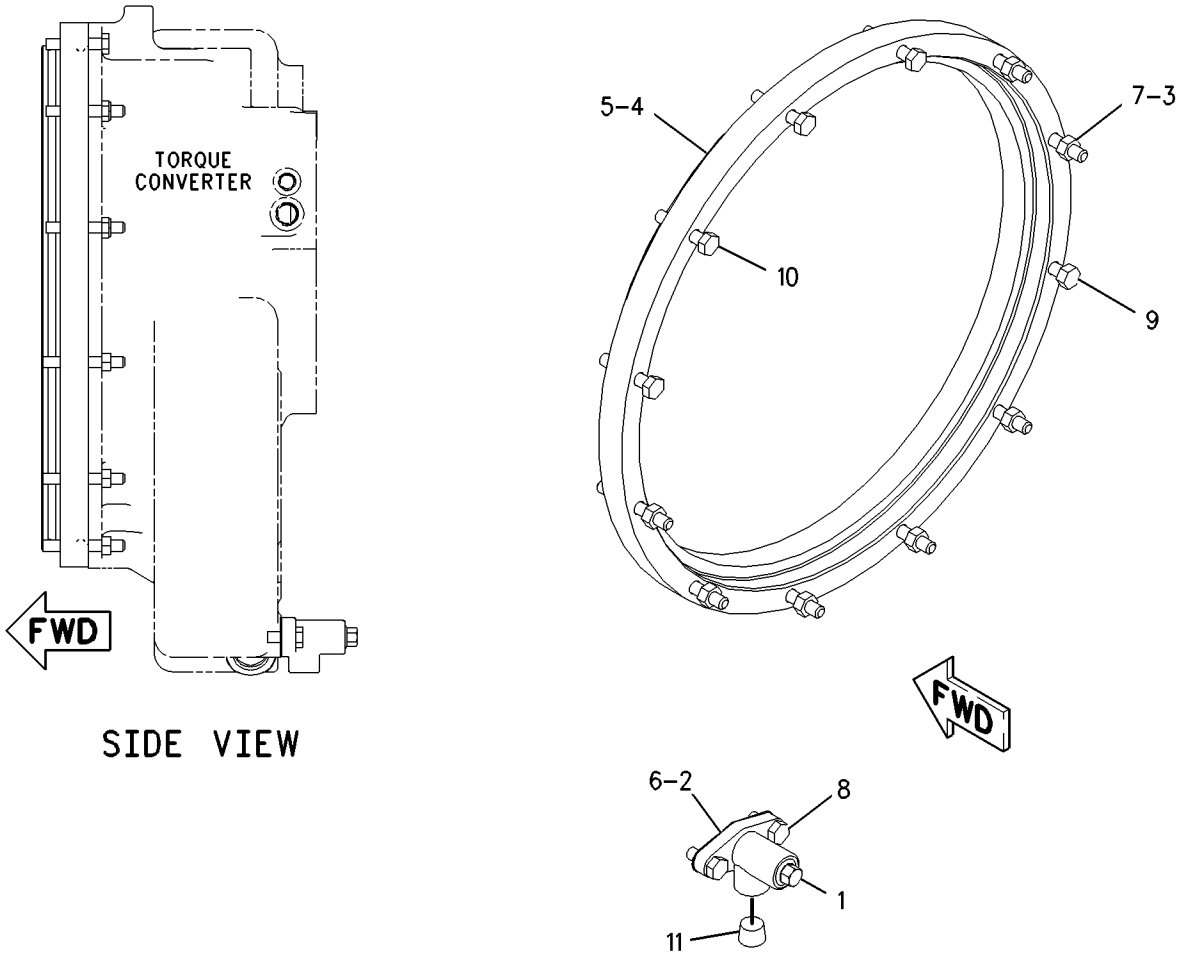

GRAPHIC #1 **<END>** g00956511

POWER TRAIN

108-7039 MOUNTING GP-TRANSMISSION

S/N: CCK1-UP

PART OF 189-4620 POWER TRAIN AR

SMCS-3030 **i00821657**

NOTE	REF NO	GRAPHIC REF	PART NUMBER	QTY	PART NAME 1 2 3 4 5 6 (PRODUCT LEVEL)	SEE PAGE
	1	1	**7M-0475**	1	RING-SEALING	
	2	1	**8T-4223**	6	WASHER-HARD (3MM THK)	
M	3	1	**8T-4244**	2	NUT (M12X1.75 THD)	
M	4	1	**8T-4184**	4	BOLT (M12X1.75X45MM)	
	5	1	**112-5057**	1	BRACKET AS	
M	6	1	**8T-4194**	23	BOLT (M12X1.75X50MM)	
	7	1	**3T-9315**	2	SPACER	
	8	1	**5V-0564**	2	SPACER	
	9	1	**5D-7523**	1	SEAL-O-RING	
	10	1	**112-5056**	1	BRACKET	
	11	1	**8M-5254**	2	SEAL-O-RING (31.34MM ID)	

M-METRIC PART

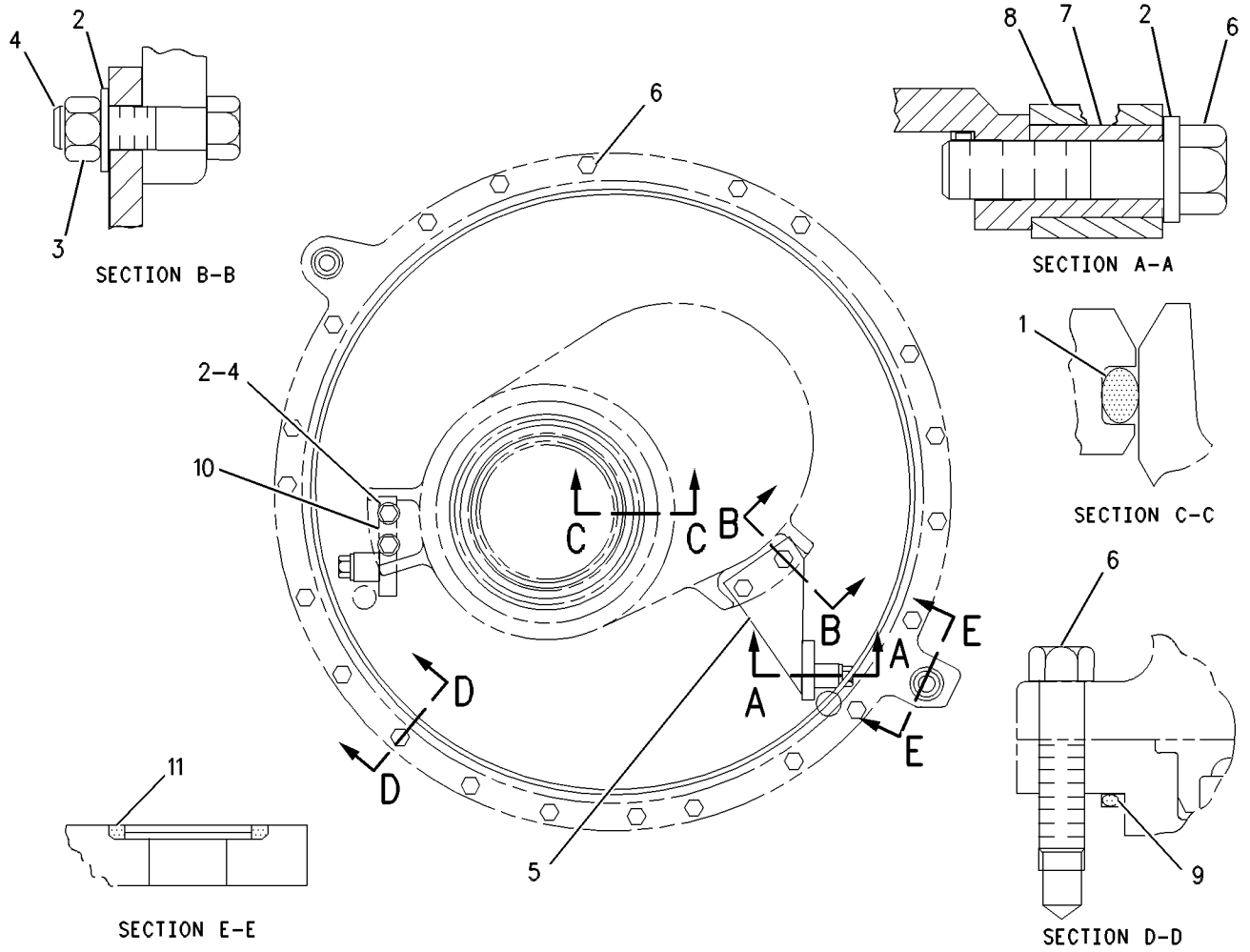

GRAPHIC #1 **<END>** g00402358

203-2296 PLANETARY GP-TRANSMISSION

S/N: BJG1-UP

PART OF 188-2003 TRANSMISSION AR

SMCS-3155, 3160, 3169, 3170, 3187, 3189, 3190, 3304 **i01884418**

NOTE	REF NO	GRAPHIC REF	PART NUMBER	QTY	PART NAME 1 2 3 4 5 6 (PRODUCT LEVEL)	SEE PAGE
	1	1,2	**9S-4182**	1	PLUG	
	2	1,2	**113-9212**	1	DISC-THRUST	
	3	1,2	**7G-9224**	1	RING-SEAL	
	4	1,2,3,4	**6P-7773**	3	RING-SEAL	
	5	1,2	**7G-3707**	1	PISTON-CLUTCH	
	6	1,2	**8E-8117**	1	GEAR-SUN (32 TEETH)	
	7	1,2	**144-0761**	1	CARRIER-PLANETARY	
	8	1,2	**3T-4629**	1	GEAR-RING (80 TEETH)	
	9	1,2,3,4	**6Y-5352**	13	DISC-FRICTION	
	10	1,2,3,4	**7G-0437**	13	PLATE-CLUTCH	
	11	1,2	**7G-4311**	1	COUPLING	
	12	1,2	**8E-8118**	1	CARRIER-RING	
	13	1,2	**7G-4306**	1	PLATE-CENTER	
	14	1,2	**9P-5558**	1	RING-RETAINING	
	15	1,2,3,4	**7G-8121**	2	RING-LOCK	
	16	1,2	**6V-1649**	2	BALL BEARING	
	17	1,2	**108-5618**	1	GEAR-SUN (33 TEETH)	
	18	1,2	**108-5622**	1	GEAR-RING (71 TEETH)	
	19	1,2	**7G-3708**	1	PISTON-CLUTCH	
	20	1,2	**7G-5674**	1	RING-SEAL	
	21	1,2	**7G-4302**	1	HOUSING-CLUTCH	
	22	1,2,3,4	**7G-5675**	3	RING-SEAL	
	23	1,2	**5K-9106**	1	RING-RETAINING	
	24	1,2	**6V-0834**	1	RING-RETAINING	
	25	1,2	**108-5619**	1	GEAR-SUN (33 TEETH)	
	26	1,2	**108-5620**	1	CARRIER-PLANETARY	
	27	3,4	**108-5623**	1	GEAR-RING (71 TEETH)	
	28	3,4	**3T-6795**	2	PISTON-CLUTCH	
	29	1,2	**6V-0835**	1	RING-RETAINING	
	30	3,4	*6T-0097*	1	HOUSING AS-CLUTCH	
		3,4	**4K-8603**	1	PLUG-CUP	
		3,4	**6B-6863**	1	PIN-SPRING	
		3,4	**9G-1488**	1	HOUSING-CLUTCH	
	31	3,4	**9M-1503**	1	RING-METAL SEAL	
	32	3,4	**108-5621**	1	CARRIER-PLANETARY	
	33	3,4	**6P-7983**	1	RING-RETAINING	
	34	3,4	**6P-7968**	3	PLATE-CLUTCH	
	35	3,4	**3T-9960**	4	DISC-FRICTION	
	36	3,4	**3T-3447**	1	GEAR AS-SUN (44 TEETH)	
		3,4	**8S-0527**	2	PLUG-CUP	
	37	3,4	**8E-1484**	1	HOUSING AS-CLUTCH	
		3,4	**3S-8109**	1	PIN-SPRING	
		3,4	**4S-8537**	1	DOWEL	
	38	3,4	**6T-3009**	1	PISTON	
	39	3,4	**108-2470**	1	HOUSING-SUPPORT	
	40	3,4	**6V-1586**	1	RING-RETAINING	
	41	3,4	**7G-5730**	1	RING-SEAL	
	42	3,4	**6P-7985**	2	RING-SEAL	
	43	3,4	**7X-7608**	1	RING-RETAINING	
	44	3,4	**6Y-3484**	1	BALL BEARING	
	45	3,4	**3P-3441**	1	RING-RETAINING	
	46	1,2	**8E-8115**	1	SHAFT AS-OUTPUT	
		1,2	**6Y-0306**	2	BEARING-SLEEVE	
		1,2	**8S-3426**	1	DOWEL	
	47	3,4	**9G-1233**	1	COUPLING	
	48	3,4	**6P-7772**	1	RING-SEAL	

203-2296 PLANETARY GP-TRANSMISSION *(contd.)* i01884418

NOTE	REF NO	GRAPHIC REF	PART NUMBER	QTY	PART NAME 1 2 3 4 5 6 (PRODUCT LEVEL)	SEE PAGE
	49	3,4	**8E-1666**	1	PLATE-RETAINER	
	50	3,4	**9G-1234**	5	SPRING-DISC	
	51	3,4	**9H-5604**	1	RING-RETAINING	
	52	3,4	**6I-8488**	1	GEAR-RING (82 TEETH)	
	53	3,4	**035-3360**	1	RING-RETAINING	
	54	3,4	**6V-7568**	6	BOLT (1/2-13X14.86 IN)	
	55	1,2,3,4	**5P-8245**	9	WASHER-HARD (13.5X25.5X3MM THK)	
	56	3,4	**213-3719**	1	PLATE-REACTION	
	57	3,4	**7G-6945**	8	SPRING	
	58	3,4	**7G-3710**	4	ROD	
	59	3,4	**7G-5614**	3	SHAFT-PLANETARY	
	60	3,4	**8E-8297**	6	DISC-THRUST	
	61	3,4	**5P-3131**	3	BEARING AS-ROLLER	
	62	3,4	**6P-2233**	3	GEAR-PLANETARY (20 TEETH)	
	63	1,2,3,4	**3S-8109**	11	PIN-SPRING	
	64	1,2	**2D-0516**	3	BOLT (1/2-13X8.75 IN)	
	65	1,2	**8E-8299**	24	DISC-THRUST	
	66	1	**8P-1916**	8	GEAR-PLANETARY (20 TEETH)	
	67	1,2	**3T-7584**	4	SPRING	
	68	1	**5P-3930**	8	BEARING AS-ROLLER	
	69	1	**6P-7743**	4	SHAFT-PLANETARY	
	70	1,2	**7S-4534**	4	BEARING-CAGED	
	71	1,2	**3T-6769**	4	GEAR-PLANETARY (24 TEETH)	
	72	1,2	**6P-7742**	4	SHAFT-PLANETARY	
	73	1,2	**5P-9186**	2	SEAL-O-RING	
	74	1,2	**3T-0810**	1	SLEEVE	
	75	1,2	**9S-4190**	2	PLUG (TRANSMISSION DRAIN)	
	76	1,2	**2M-9780**	2	SEAL-O-RING (TRANSMISSION DRAIN PLUG)	
	77	1,2	**8P-8950**	2	RING-METAL SEAL	
	78	1,2	**3K-1432**	2	RING-METAL SEAL	
	79	1,2	**3P-7019**	2	SEAL-METAL	
	80	1,2	**7B-7515**	1	BALL BEARING	
	81	1,2	**5J-3864**	1	RING-LOCK	
	82	1,2	**9G-8615**	1	COVER	
	83	1,2	**8P-0058**	1	GASKET-COVER	
	84	1,2	**202-2380**	1	SHAFT AS-INPUT	
		1,2	**156-4406**	1	PLUG-PIPE	
	85	1,2	**1M-8649**	1	RING-RETAINING	
M	86	1,2	**8T-4136**	10	BOLT (M10X1.5X25MM)	
	87	1,2	**204-7875**	1	HOUSING AS	
		1,2	**204-7876**	1	ORIFICE	
	88	1,2	**108-2472**	1	COVER-TRANSMISSION	
	89	1,2	**9S-4191**	1	PLUG	
	90	1,2	**3J-1907**	7	SEAL-O-RING	
M	91	1,2	**8T-4196**	6	BOLT (M10X1.5X35MM)	
	92	1,2	**201-8124**	1	COVER	
	93	1,2	**108-3055**	1	GASKET	
	94	1,2	**138-4086**	1	GASKET	
	95	1,2	**9S-4183**	1	PLUG	
	96	1,2	**3D-2824**	1	SEAL-O-RING	
	97	1,2	**8D-5096**	1	SEAL-O-RING	
Y	98	3,4	**193-2550**	2	SENSOR GP-SPEED (TRANSMISSION)	165
	99	1,2	**180-4165**	1	COVER AS	
	100	1,2	**8M-5254**	4	SEAL-O-RING	
M	101	1,2	**8T-5005**	8	BOLT (M10X1.50X70MM)	
	102	1,2	**9S-4188**	1	PLUG (TRANSMISSION DRAIN)	
	103	1,2	**4K-1388**	1	SEAL-O-RING (TRANSMISSION DRAIN PLUG)	
	104	1,2	**3J-7354**	1	SEAL-O-RING	
	105	1,2	**6V-3965**	6	FITTING AS	

203-2296 **PLANETARY GP-TRANSMISSION** *(contd.)* **i01884418**

NOTE	REF NO	GRAPHIC REF	PART NUMBER	QTY	PART NAME 1 2 3 4 5 6 (PRODUCT LEVEL)	SEE PAGE
	106	1,2	**6V-0852**	6	CAP-DUST (TRANSMISSION FITTINGS)	

M-METRIC PART
Y-SEPARATE ILLUSTRATION

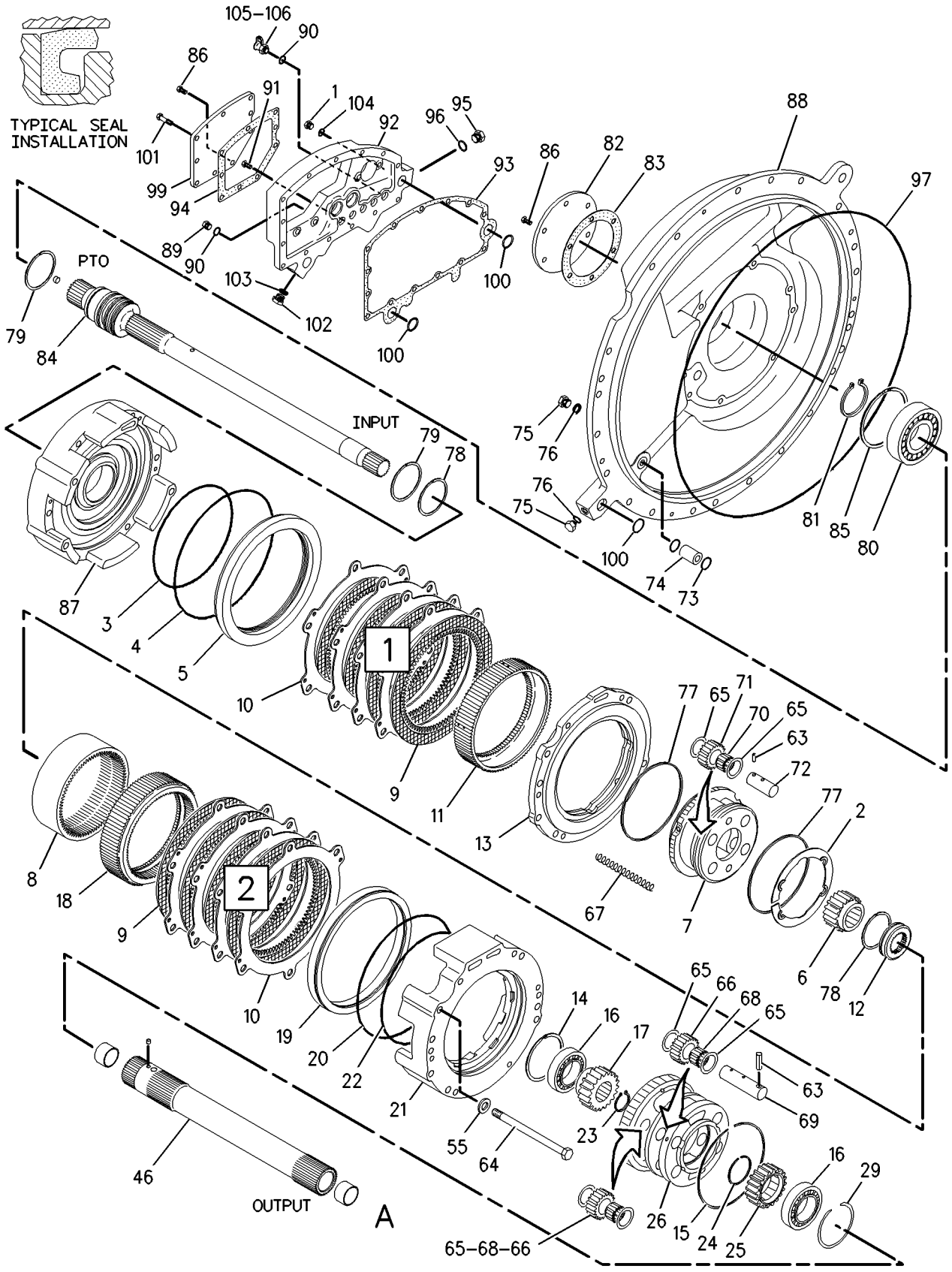

GRAPHIC #1

g00939417

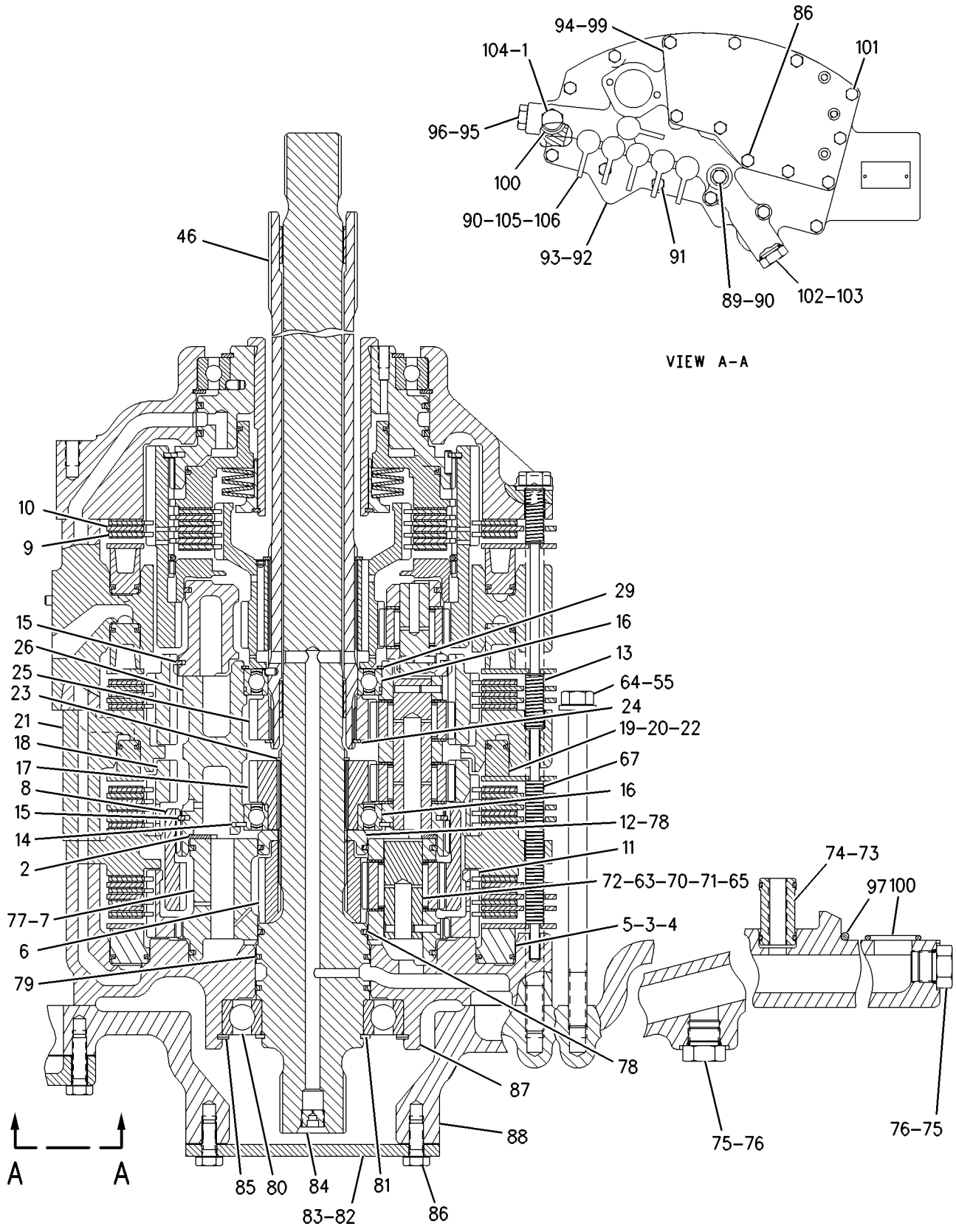

GRAPHIC #2

g00941000

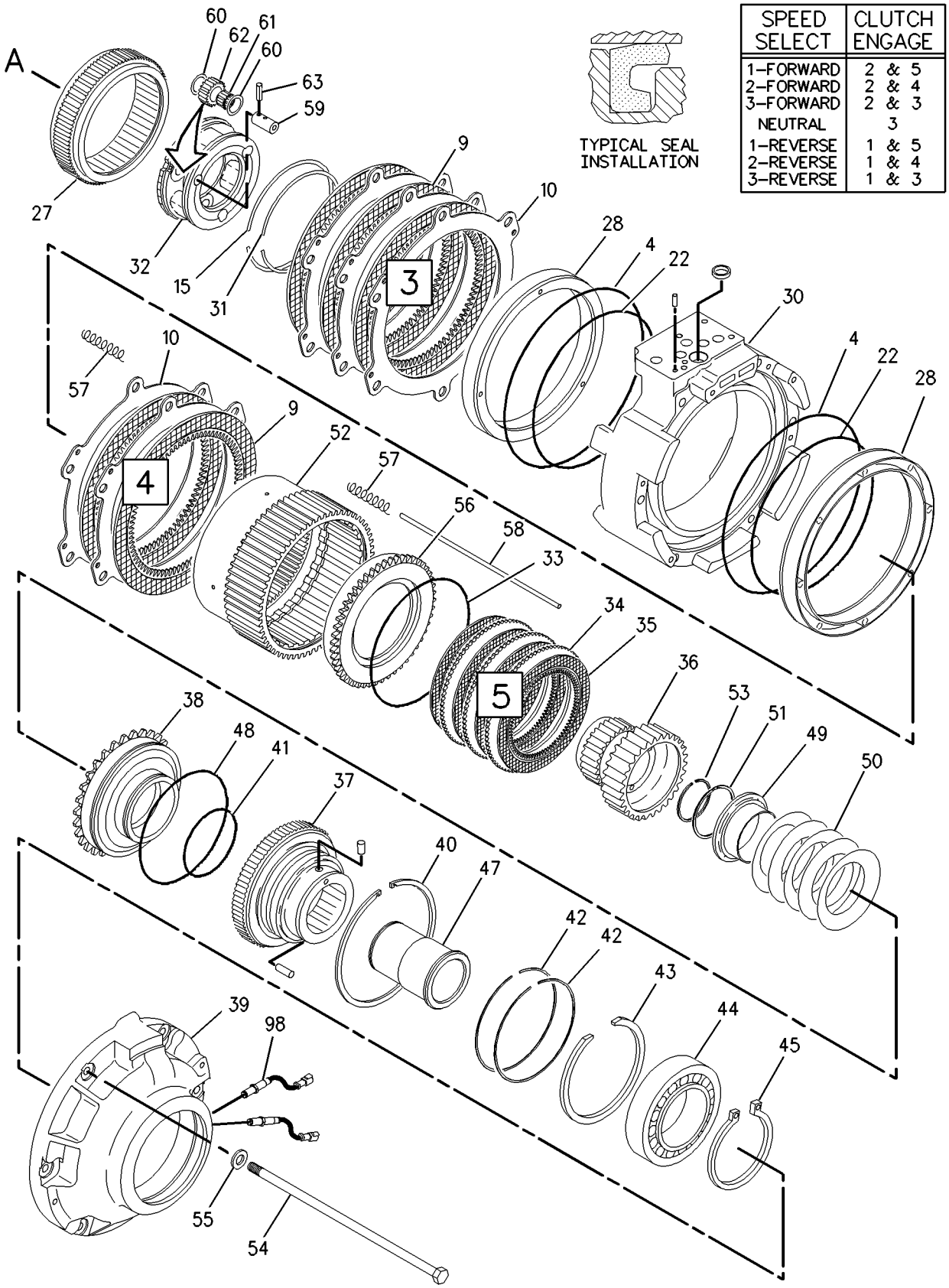

SPEED SELECT	CLUTCH ENGAGE
1–FORWARD	2 & 5
2–FORWARD	2 & 4
3–FORWARD	2 & 3
NEUTRAL	3
1–REVERSE	1 & 5
2–REVERSE	1 & 4
3–REVERSE	1 & 3

GRAPHIC #3 g00939418

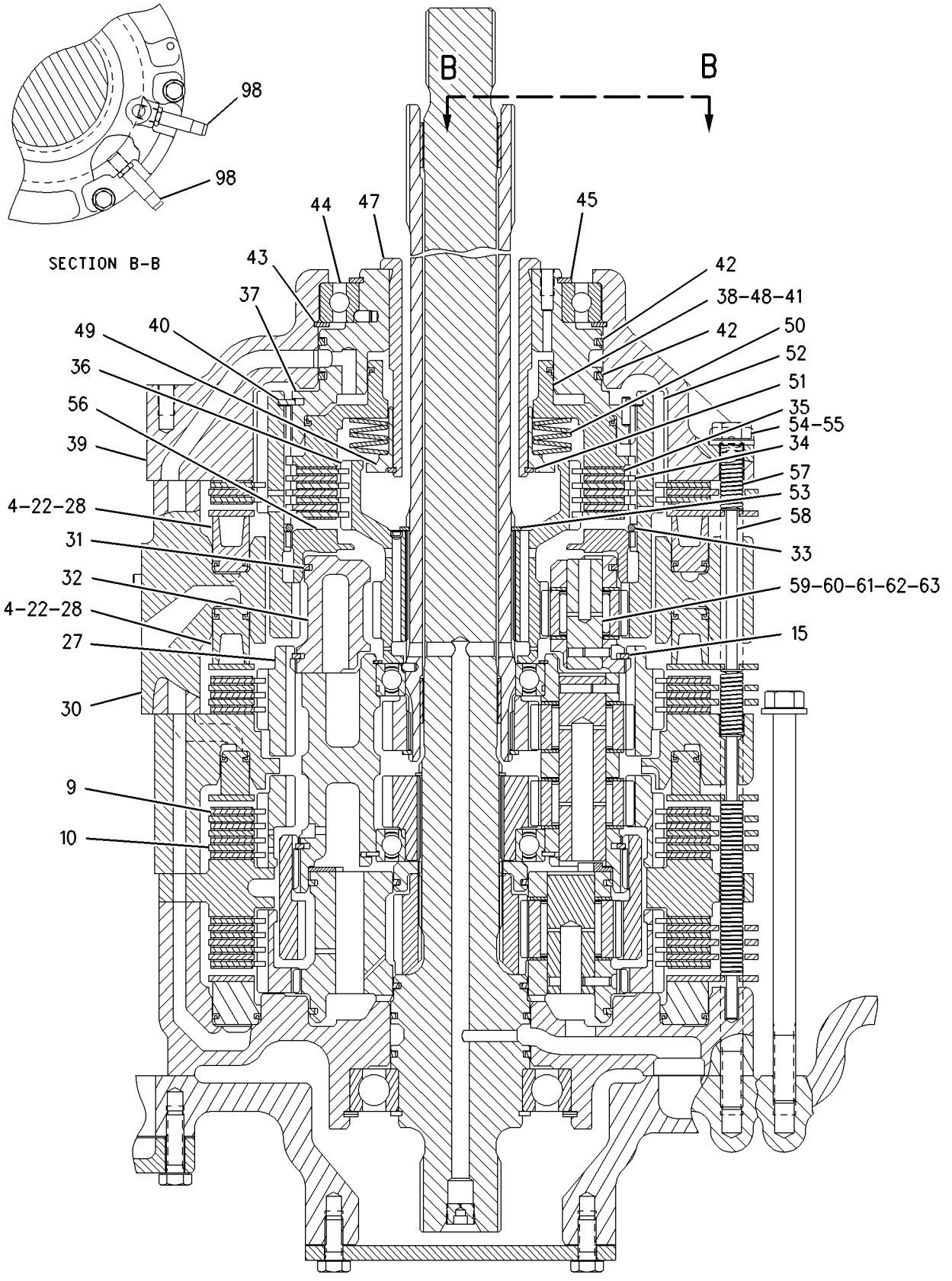

GRAPHIC #4 **<END>** g00941001

POWER TRAIN

189-4620 POWER TRAIN AR

S/N: CCK1-UP

PART OF 189-4616 GENERAL AR

SMCS-3000 **i01831305**

NOTE	PART NUMBER	QTY	PART NAME 1 2 3 4 5 6 (PRODUCT LEVEL)	SEE PAGE
Y	*193-7361*	1	AXLE GP	190
Y	*195-0644*	1	BRAKE GP-STEERING	295
Y	**191-4931**	2	FINAL DRIVE GP	198
Y	*191-9530*	1	LINES GP-POWER TRAIN OIL	200
Y	*224-5368*	1	MOUNTING GP-TORQUE CONVERTER	203
Y	*108-7039*	1	MOUNTING GP-TRANSMISSION	204
Y	*192-3195*	1	PLATE & FILM GP	550
Y	*6I-8078*	2	SEGMENT GP-SPROCKET	216
Y	*178-6690*	1	SHAFT GP-DRIVE	217
Y	*188-0502*	1	TORQUE CONVERTER GP	220
Y	**188-2003**	1	TRANSMISSION AR	222

Y-SEPARATE ILLUSTRATION

<END>

202-4364 PUMP GP-GEAR–CONVERTER SCAVENGE–CONVERTER/COOLER LUBRICATION–TMSN CHARGING

S/N: CCK1-UP

PART OF 202-4365 PUMP GP-GEAR

SMCS-3115, 3153 **i01832919**

NOTE	REF NO	GRAPHIC REF	PART NUMBER	QTY	PART NAME 1 2 3 4 5 6 (PRODUCT LEVEL)	SEE PAGE
	1	1	**202-6488**	1	BODY-OIL PUMP (CONVERTER SCAVENGE)	
	2	1	**178-9041**	1	BODY AS-OIL PUMP (TRANSMISSION CHARGING)	
	2A	1	**5M-3320**	2	BEARING-SLEEVE	
	2B	1	**8M-8489**	4	DOWEL	
	3	1	**202-0552**	1	BODY AS-OIL PUMP (CONVERTER/COOLER LUBRICATION)	
	3A	1	**131-0167**	2	BEARING-SLEEVE	
	3B	1	**8M-8489**	2	DOWEL	
M	4	1	**8T-5030**	2	BOLT (M10X1.5X120MM)	
	5	1	**3S-0004**	6	WASHER (0.406X0.728X0.09 IN THK)	
	6	1	**1B-8736**	1	KEY-WOODRUFF	
	7	1	**133-1222**	1	COVER AS-OIL PUMP	
	7A	1	**131-0167**	2	BEARING-SLEEVE	
	8	1	**2D-8009**	3	SEAL-O-RING	
	9	1	**202-0551**	2	GEAR-OIL PUMP (12 TEETH)	
	10	1	**202-0549**	1	GEAR-OIL PUMP (12 TEETH)	
	11	1	**3T-8757**	1	GEAR-OIL PUMP (12 TEETH)	
	12	1	**202-0550**	1	GEAR-OIL PUMP (12 TEETH)	
	13	1	**1B-8705**	1	KEY-WOODRUFF	
	14	1	**3H-1461**	1	SEAL-O-RING	
	15	1	**9S-4191**	1	PLUG (9/16-18 THD)	
	16	1	**3J-1907**	1	SEAL-O-RING	
M	17	1	**8T-0356**	4	BOLT (M10X1.5X160 MM)	
	18	1	**6Y-5010**	8	WASHER (10.16X19X.84MM THK)	

M-METRIC PART

202-4364 PUMP GP-GEAR *(contd.)*

i01832919

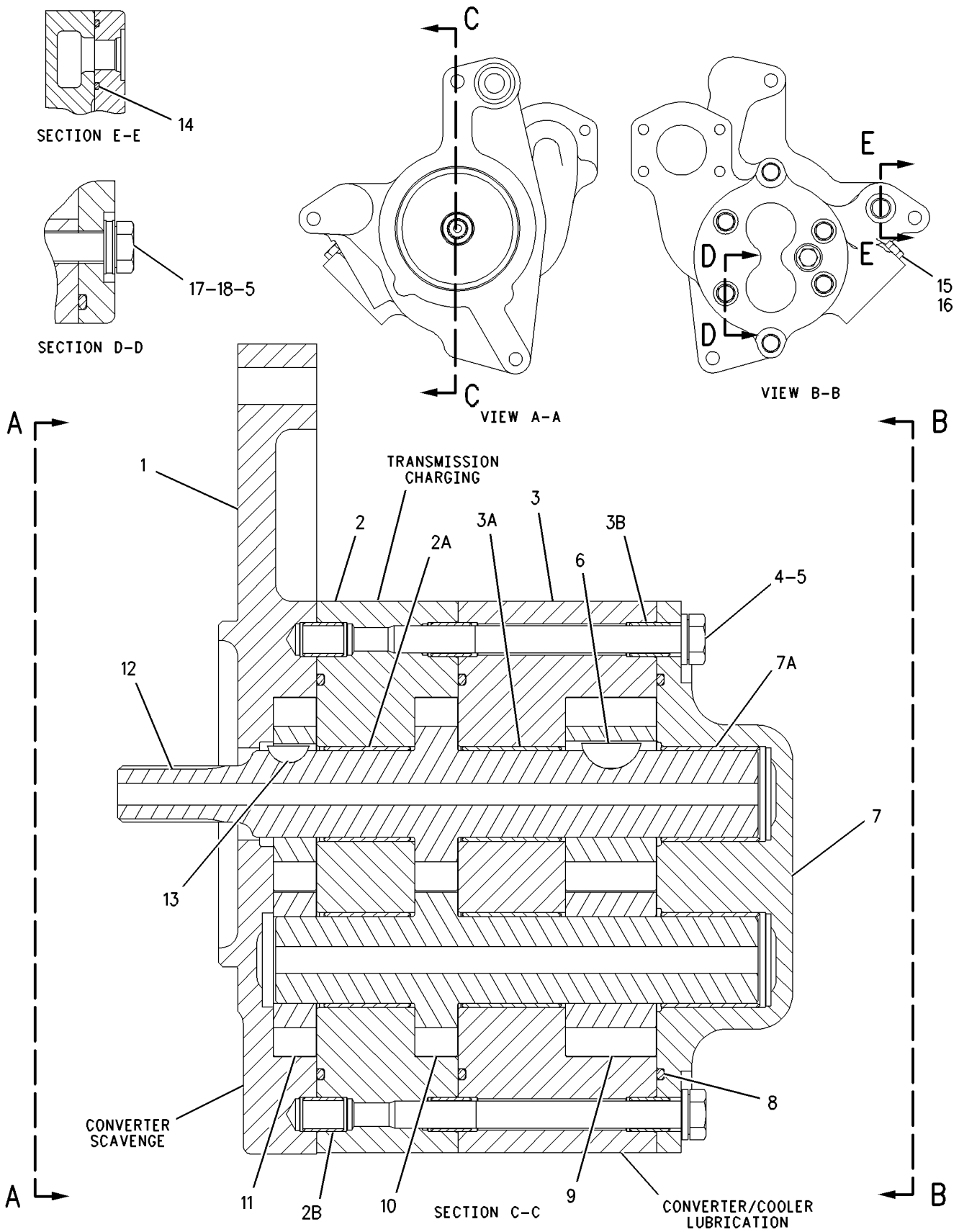

GRAPHIC #1

<END>

g00778277

202-4365 PUMP GP-GEAR–POWER TRAIN OIL

S/N: CCK1-UP

PART OF 191-9530 LINES GP-POWER TRAIN OIL

SMCS-3115, 3153 **i01832910**

NOTE	REF NO	GRAPHIC REF	PART NUMBER	QTY	PART NAME 1 2 3 4 5 6 (PRODUCT LEVEL)	SEE PAGE
Y	1	1	**202-4364**	1	PUMP GP-GEAR	213
	2	1	**5F-3106**	1	SEAL-O-RING	
M	3	1	**8T-4182**	1	BOLT (M10X1.5X45MM)	
	4	1	**8T-4121**	3	WASHER-HARD (11X21X2.5MM THK)	
M	5	1	**8T-6466**	1	BOLT (M10X1.50X60MM)	
M	6	1	**8T-4195**	1	BOLT (M10X1.5X30MM)	
	7	1	**3H-1461**	1	SEAL-O-RING	

M-METRIC PART
Y-SEPARATE ILLUSTRATION

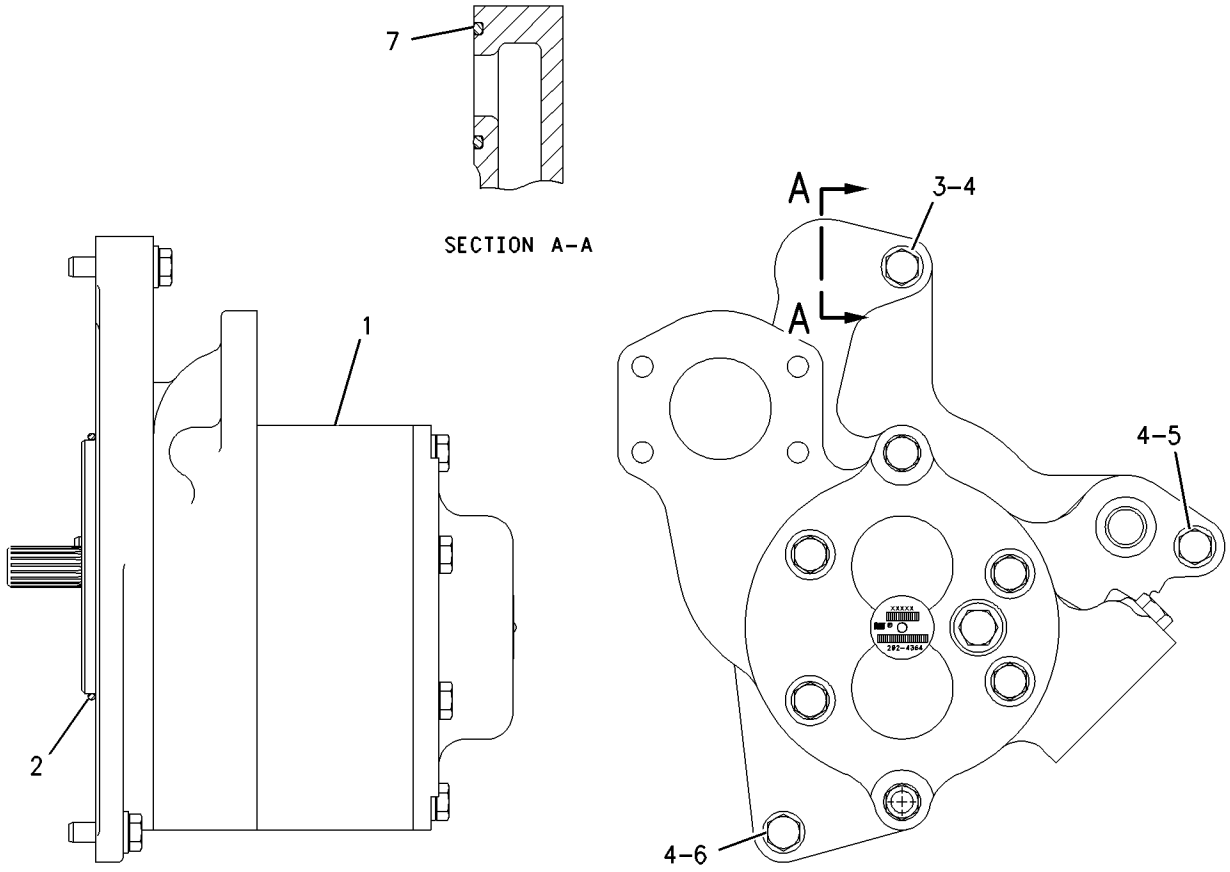

GRAPHIC #1 **<END>** g00942888

6I-8078 SEGMENT GP-SPROCKET

S/N: CCK1-UP

PART OF 189-4620 POWER TRAIN AR

SMCS-4155 **i00599656**

NOTE	REF NO	GRAPHIC REF	PART NUMBER	QTY	PART NAME 1 2 3 4 5 6 (PRODUCT LEVEL)	SEE PAGE
	1	1	**6I-8077**	5	SEGMENT-SPROCKET	
	2	1	**2S-5658**	25	WASHER-HARD (3.0MM THK)	
	3	1	**6V-0937**	25	BOLT-SPROCKET	
	4	1	**7H-3607**	25	NUT	

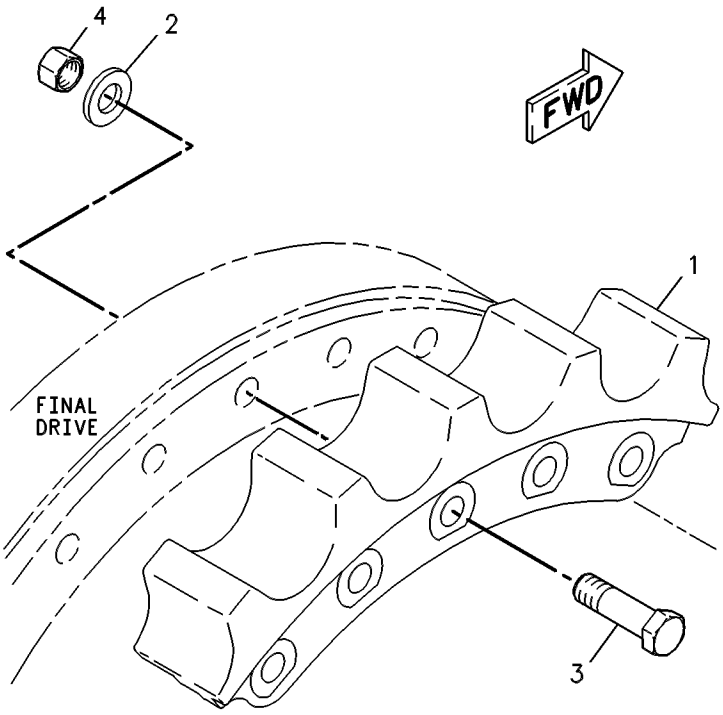

GRAPHIC #1 **<END>** g00252401

178-6690 SHAFT GP-DRIVE

S/N: CCK1-UP

PART OF 189-4620 POWER TRAIN AR

SMCS-3253 **i01829883**

NOTE	REF NO	GRAPHIC REF	PART NUMBER	QTY	PART NAME 1 2 3 4 5 6 (PRODUCT LEVEL)	SEE PAGE
	1	1	**108-8296**	1	YOKE AS	
		1	**4B-4098**	1	PLUG-CUP	
		1	**7F-6935**	1	RACE-BEARING INNER	
Y	2	1	**222-3351**	1	UNIVERSAL JOINT GP	223
M	3	1	**6V-5843**	8	BOLT (M10X1.50X45MM)	
	4	1	**9X-2027**	8	WASHER (11X18X2MM THK)	

M-METRIC PART
Y-SEPARATE ILLUSTRATION

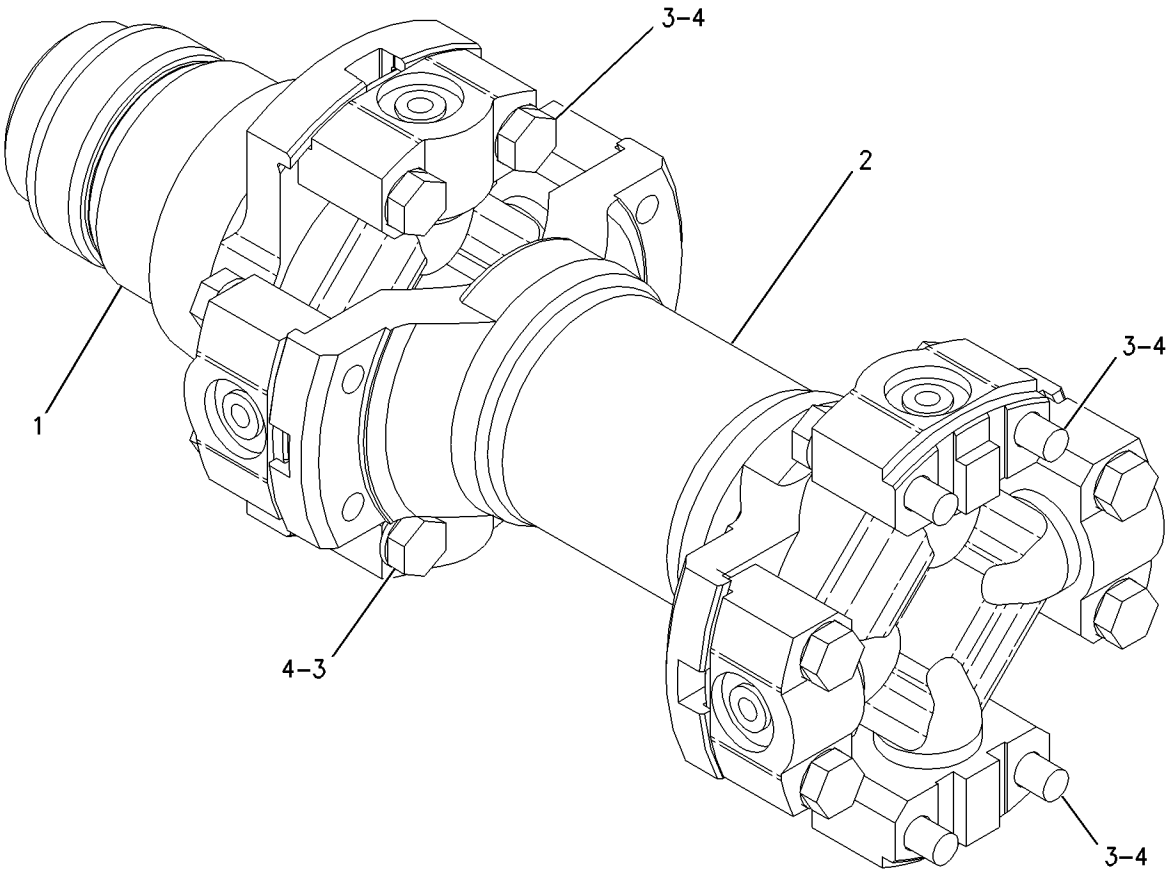

GRAPHIC #1 **<END>** g00932307

POWER TRAIN

175-2296 TORQUE CONVERTER GP

S/N: BZA1-UP

PART OF 188-0502 TORQUE CONVERTER GP

SMCS-3101, 3102, 3105, 3127, 3128, 3129, 3130, 3131, 3134, 3135, 3136 **i01829878**

NOTE	REF NO	GRAPHIC REF	PART NUMBER	QTY	PART NAME 1 2 3 4 5 6 (PRODUCT LEVEL)	SEE PAGE
	1	1	**6Y-3159**	1	SHAFT-OUTPUT	
	2	1	**1T-0043**	1	BALL BEARING	
	3	1	**1J-6472**	1	RING-RETAINING	
	4	1	**129-1262**	1	CARRIER AS	
		1	**4S-8541**	1	DOWEL	
	5	1	**129-2380**	1	BALL BEARING	
	6	1	**6Y-3167**	1	GEAR-PUMP DRIVE (77 TEETH)	
	7	1	**8E-6647**	1	SPACER	
	8	1	**6Y-1084**	1	IMPELLER-CONVERTER	
	9	1	**6Y-3151**	1	STATOR-CONVERTER	
	10	1	**218-3598**	1	HOUSING	
	11	1	**6Y-3149**	1	TURBINE-CONVERTER	
M	12	1	**6V-1820**	34	BOLT (M10X1.50X30MM)	
	13	1	**6V-5839**	34	WASHER (11X21X2.5MM THK)	
	14	1	**8E-6539**	1	HUB AS	
		1	**4S-8541**	1	DOWEL	
	15	1	**8E-5247**	1	BALL BEARING	
	16	1	**8E-6648**	1	SPACER (60.2X80X3MM THK)	
	17	1	**064-3843**	1	RING-SNAP	
	18	1	**6Y-1087**	1	COVER-END	
	19	1	**6V-8128**	2	RING-RETAINING	
	20	1	**6Y-1093**	1	ADAPTER-SPLINED	
	21	1	**5K-9065**	1	RING-RETAINING	
	22	1	**3E-6799**	1	SEAL-O-RING	
	23	1	**5P-6414**	2	RING-RETAINING	
M	24	1	**6V-7673**	8	BOLT (M12X1.75X50MM)	
	25	1	**1T-1621**	1	RING-SEAL	
	26	1	**1T-0234**	1	RING-METAL SEAL	

M-METRIC PART

175-2296 **TORQUE CONVERTER GP** ***(contd.)*** **i01829878**

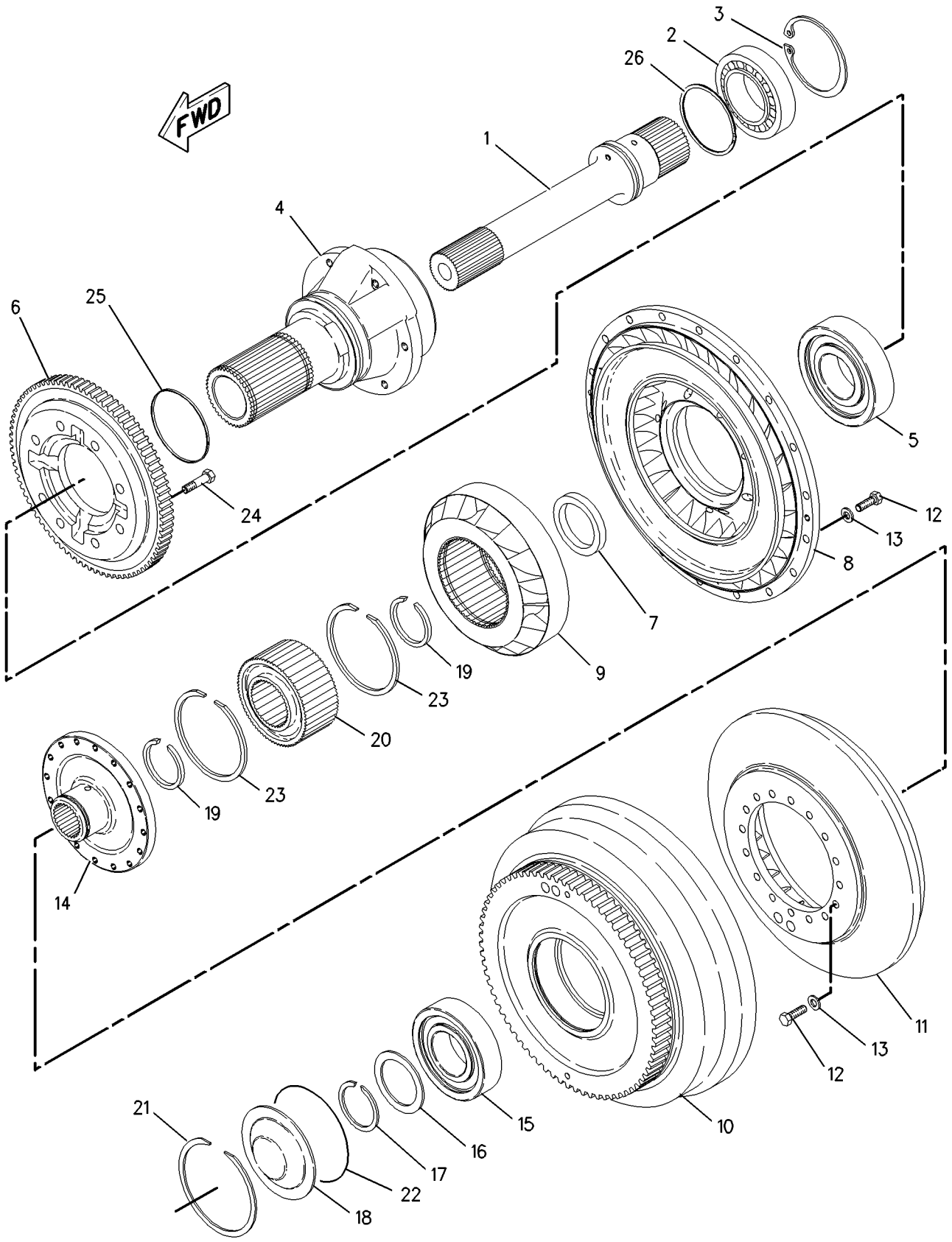

GRAPHIC #1 **<END>** g00773718

188-0502 TORQUE CONVERTER GP

S/N: CCK1-UP

PART OF 189-4620 POWER TRAIN AR

SMCS-3101, 3102, 3105, 3127, 3128, 3129, 3130, 3131, 3134, 3135, 3136 **i01898240**

NOTE	REF NO	GRAPHIC REF	PART NUMBER	QTY	PART NAME 1 2 3 4 5 6 (PRODUCT LEVEL)	SEE PAGE
	1	1	**1T-0034**	2	RING-LOCK	
	2	1	**1T-0205**	1	RING-SNAP	
	3	1	**1T-0933**	2	RING-RETAINING	
	4	1	**3T-6471**	1	SCREEN AS (TORQUE CONVERTER SCAVENGE)	
		1	**3T-6469**	1	WASHER	
	5	1	**7G-3496**	1	RETAINER	
	6	1	**9X-7719**	1	SEAL-LIP	
	7	1	**9J-0461**	1	SPRING	
	8	1	**110-1211**	1	GEAR-PUMP DRIVE (77 TEETH)	
	9	1	**106-0721**	1	YOKE	
Y	10	1	**175-2296**	1	TORQUE CONVERTER GP	218
	11	1	**6Y-3164**	1	GEAR-PUMP DRIVE (77 TEETH)	
	12	1	**188-0501**	1	HOUSING	
	13	1	**225-4286**	1	GEAR-PUMP DRIVE (68 TEETH)	
	14	1	**1T-0043**	1	BALL BEARING	
	15	1	**1T-1639**	1	RING	
	16	1	**3K-0360**	2	SEAL-O-RING (TORQUE CONVERTER DRAIN PLUG)	
	17	1	**4B-3665**	2	BALL BEARING	
	18	1	**4K-1388**	1	SEAL-O-RING (TORQUE CONVERTER DRAIN PLUG)	
	19	1	**5P-5846**	1	SEAL-O-RING	
	20	1	**5P-9806**	1	SEAL-O-RING	
	21	1	**8C-3229**	1	RING-RETAINING	
	22	1	**8T-4121**	8	WASHER-HARD (11X21X2.5MM THK)	
M	23	1	**8T-4195**	8	BOLT (M10X1.5X30MM)	
M	24	1	**8T-4910**	1	BOLT (M12X1.75X60MM)	
	25	1	**9S-4188**	1	PLUG (TORQUE CONVERTER DRAIN)	
	26	1	**9F-1399**	1	SEAL-O-RING	
	27	1	**9S-4185**	2	PLUG (TORQUE CONVERTER DRAIN)	
F		1	**7X-7816**	1	PLATE-SERIAL NUMBER (TORQUE CONVERTER)	

F-NOT SHOWN
M-METRIC PART
Y-SEPARATE ILLUSTRATION

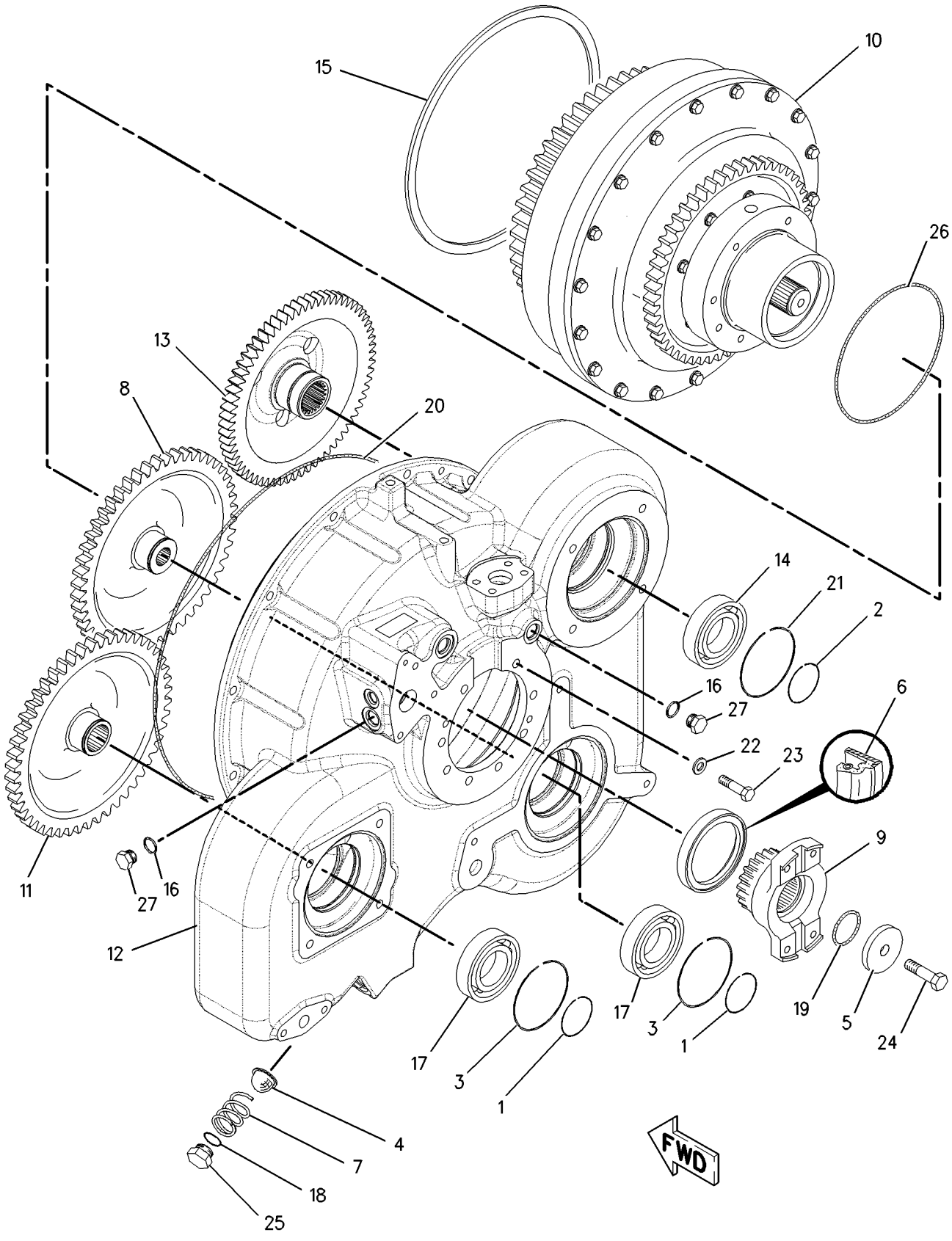

GRAPHIC #1 **<END>** g00913726

188-2003 TRANSMISSION AR

S/N: BJG1-UP

PART OF 189-4620 POWER TRAIN AR

SMCS-3030, 3060, 3160 **i01831415**

NOTE	PART NUMBER	QTY	PART NAME 1 2 3 4 5 6 (PRODUCT LEVEL)	SEE PAGE
Y	*205-3603*	1	CONTROL GP-TRANSMISSION	191
Y	*188-2009*	1	DIFFERENTIAL & BEVEL GEAR GP	193
Y	*203-2296*	1	PLANETARY GP-TRANSMISSION	205

Y-SEPARATE ILLUSTRATION

<END>

222-3351 UNIVERSAL JOINT GP

S/N: CCK1-UP

PART OF 178-6690 SHAFT GP-DRIVE

SMCS-3251, 3253 **i01829885**

NOTE	REF NO	GRAPHIC REF	PART NUMBER	QTY	PART NAME 1 2 3 4 5 6 (PRODUCT LEVEL)	SEE PAGE
	1	1	**108-6587**	2	BEARING	
	2	1	**222-3352**	1	TUBE	
M	3	1	**6V-5843**	8	BOLT (M10X1.50X45MM)	
	4	1	**9X-2027**	8	WASHER (11X18X2MM THK)	

M-METRIC PART

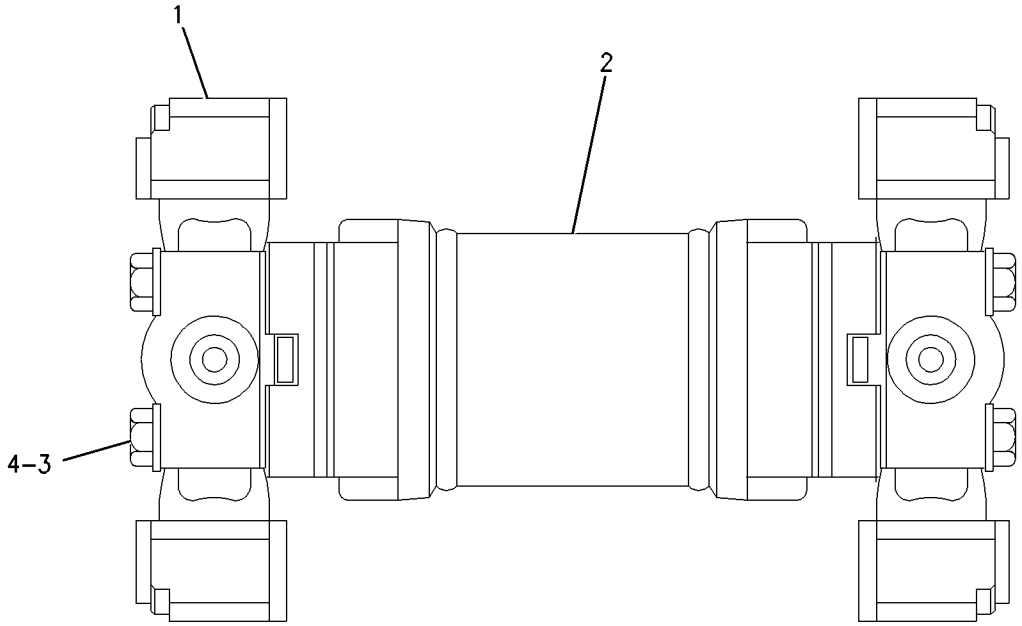

GRAPHIC #1 **<END>** g00938014

216-5338 VALVE GP-MODULATING—TRANSMISSION CONTROL

S/N: BJG1-UP

FIELD REPLACEMENT FOR 220-4324—PAGE 225

SMCS-3139 **i01890932**

NOTE	REF NO	GRAPHIC REF	PART NUMBER	QTY	PART NAME 1 2 3 4 5 6 (PRODUCT LEVEL)	SEE PAGE
	1	1	**6V-3965**	1	FITTING AS	
	2	1	**145-1144**	1	COIL AS	
	3	1	**164-2108**	1	WASHER (13.03X25.4X2.38MM THK)	
	4	1	**167-9524**	1	NUT-SELF LOCKING (1/2-28 THD)	
	5	1		1	VALVE AS	
	6	1	**3J-1907**	1	SEAL-O-RING	

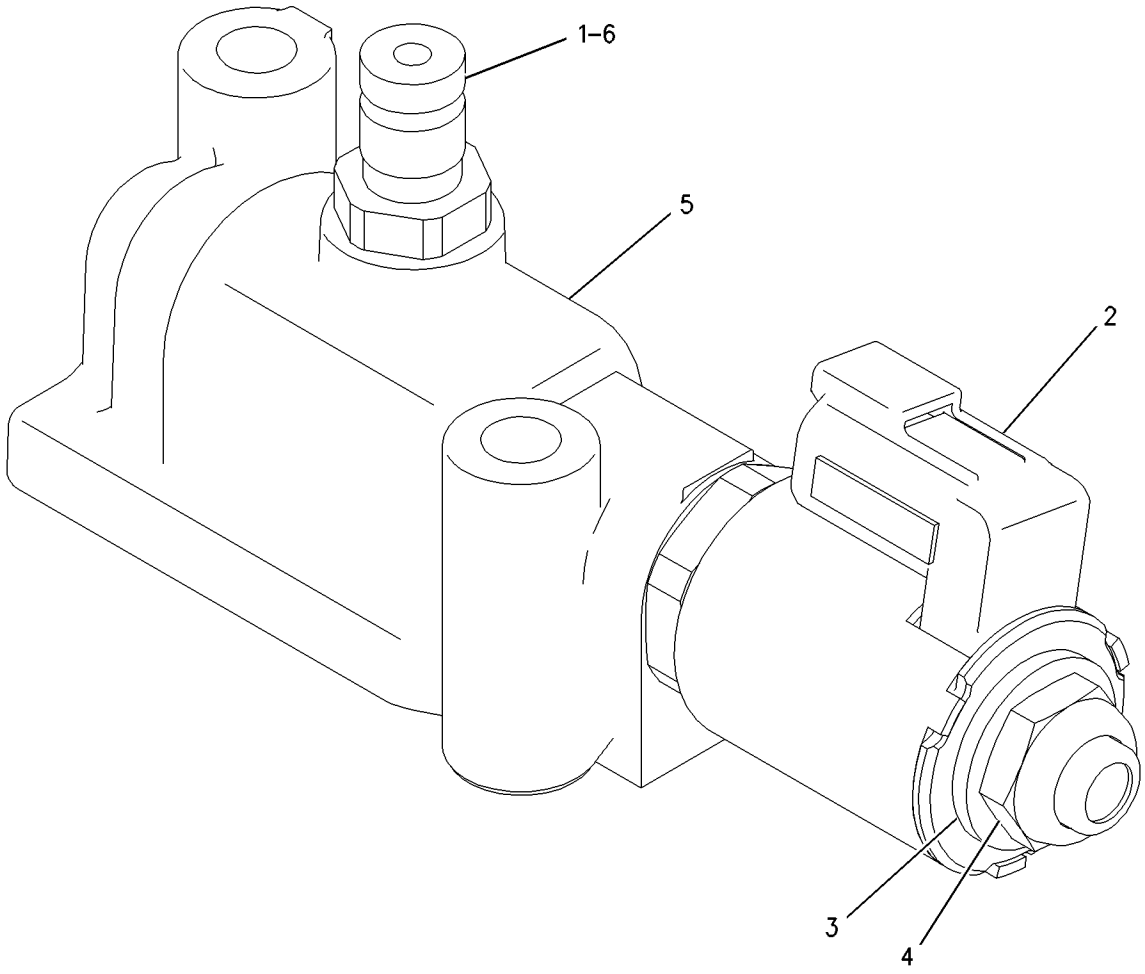

GRAPHIC #1 **<END>** g00913352

220-4324 VALVE GP-MODULATING—TRANSMISSION CONTROL

S/N: BJG1-UP

PART OF 205-3603 CONTROL GP-TRANSMISSION

FIELD REPLACEMENT ORDER 216-5338—PAGE 224

SMCS-3139 **i01892773**

NOTE	REF NO	GRAPHIC REF	PART NUMBER	QTY	PART NAME 1 2 3 4 5 6 (PRODUCT LEVEL)	SEE PAGE
	1	1	**145-1144**	1	COIL AS	
	2	1	**164-2108**	1	WASHER (13.03X25.4X2.38MM THK)	
	3	1	**167-9524**	1	NUT-SELF LOCKING (1/2-28 THD)	
	4	1	*216-5344*	1	VALVE AS	
		1	**118-3731**	1	SPRING	
		1	**112-5282**	1	SEAL-O-RING	
		1	**117-2983**	1	SEAL-O-RING	
		1	**9N-1756**	1	SEAL-O-RING	
	5	1	**3J-1907**	1	SEAL-O-RING	
	6	1	**9S-4191**	1	PLUG	

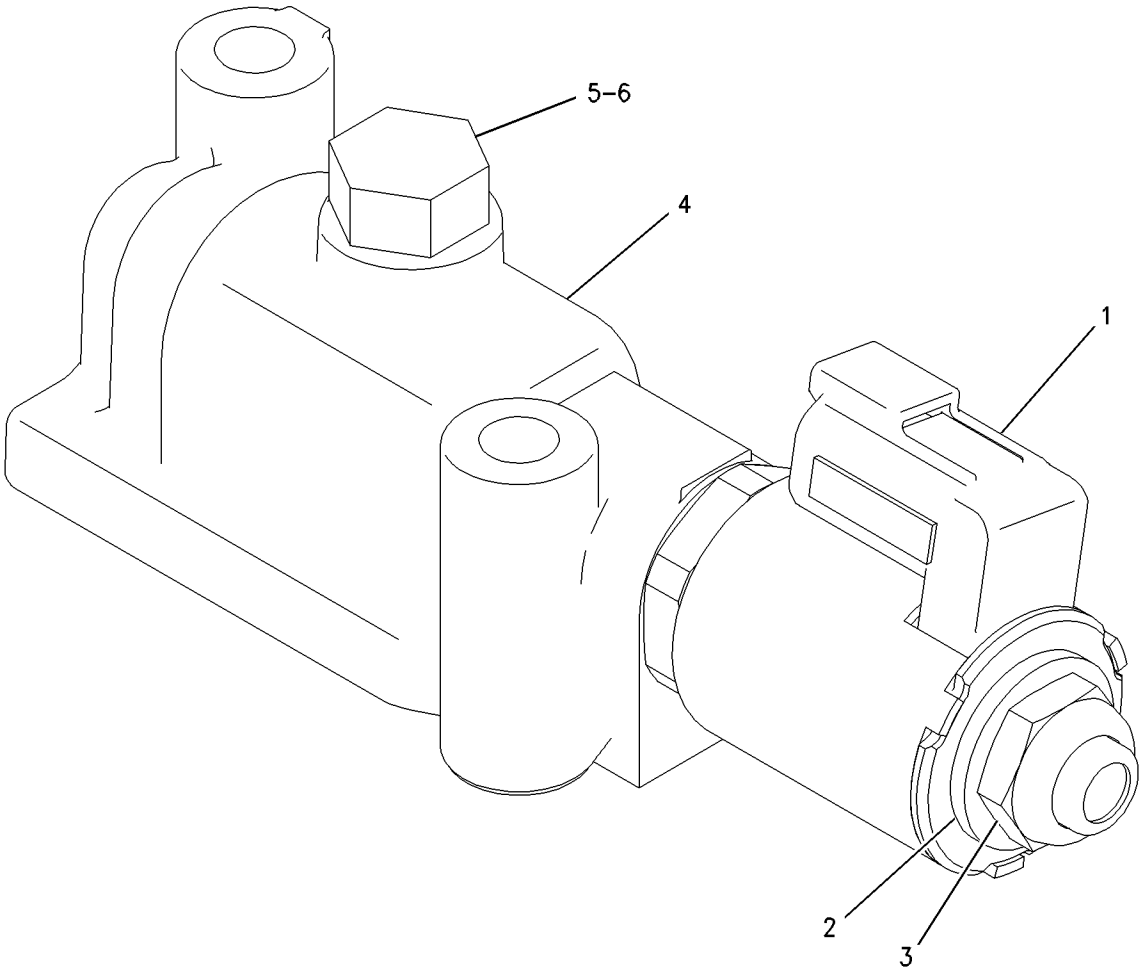

GRAPHIC #1 **<END>** g00913356

193-3849 VALVE GP-PRIORITY—POWER TRAIN OIL

S/N: CCK1-UP

PART OF 191-9530 LINES GP-POWER TRAIN OIL

SMCS-3180, 4320 **i01832889**

NOTE	REF NO	GRAPHIC REF	PART NUMBER	QTY	PART NAME 1 2 3 4 5 6 (PRODUCT LEVEL)	SEE PAGE
	1	1	**5S-7816**	1	SLUG	
	2	1	**9S-8001**	4	PLUG	
	3	1	**108-6523**	1	ADJUSTER AS	
		1	**4K-2039**	1	SEAL-O-RING	
		1	**7M-8485**	1	SEAL-O-RING	
		1	**8T-4223**	1	WASHER-HARD (13.5X25.5X3MM THK)	
		1	**9U-8069**	1	PLUG	
M		1	**095-1207**	1	NUT (M12X1.75 THD)	
		1	**101-9754**	1	SCREW-ADJUSTMENT	
	4	1	**110-9734**	1	VALVE	
	5	1	**140-2964**	1	RETAINER AS	
	6	1	**150-7938**	1	SPRING	
	7	1	**153-4247**	1	STOP	
	8	1	**173-2472**	1	SPOOL AS	
		1	**5M-9548**	1	SPRING	
		1	**8M-2537**	1	RETAINER	
		1	**9M-4313**	1	POPPET	
		1	**173-0887**	1	RING-RETAINING	
	9	1	**9S-4191**	3	PLUG	
Y	10	1	**198-4607**	1	VALVE GP-SOLENOID	231
	11	1	**9S-8004**	3	PLUG	
	12	1	**217-2730**	1	ORIFICE	
	13	1	**1P-4578**	2	FLANGE-HALF	
	14	1	**2S-4078**	1	SEAL-O-RING	
	15	1	**3J-1907**	6	SEAL-O-RING	
	16	1	**4J-7533**	4	SEAL-O-RING	
	17	1	**8C-3101**	1	SEAL-O-RING	
	18	1	**8C-3206**	8	FLANGE-HALF	
	19	1	**8T-4121**	26	WASHER-HARD (11X21X2.5MM THK)	
M	20	1	**8T-4196**	20	BOLT (M10X1.5X35MM)	
M	21	1	**8T-4198**	6	BOLT (M10X1.5X100MM)	

M-METRIC PART
Y-SEPARATE ILLUSTRATION

193-3849 VALVE GP-PRIORITY *(contd.)* **i01832889**

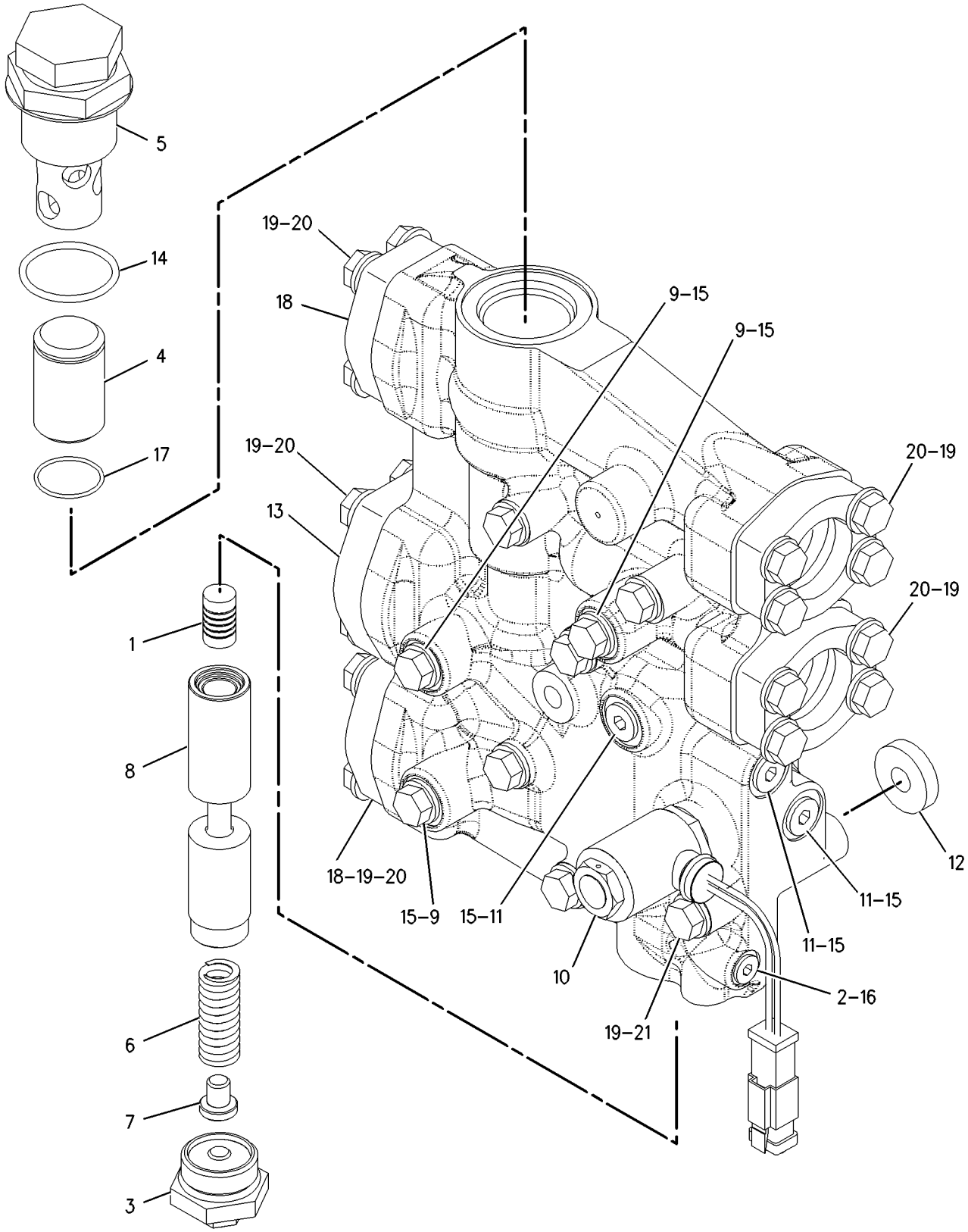

GRAPHIC #1 **<END>** g00942207

6Y-8473 VALVE GP-RELIEF—POWER TRAIN OIL

S/N: CCK1-UP

PART OF 191-9530 LINES GP-POWER TRAIN OIL

SMCS-3133, 3182 **i01823044**

NOTE	REF NO	GRAPHIC REF	PART NUMBER	QTY	PART NAME 1 2 3 4 5 6 (PRODUCT LEVEL)	SEE PAGE
M	3	1	**8T-4136**	4	BOLT (M10X1.5X25MM)	
	4	1	**8T-4121**	4	WASHER-HARD (11X21X2.5MM THK)	
	5	1	**3J-1907**	1	SEAL-O-RING	
	6	1	**6V-3965**	1	FITTING AS	
B	7	1	**4M-1751**	3	SPACER (15.09X0.4MM THK)	
B	8	1	**5S-7001**	5	SPACER (7.54X14.15X.9MM THK)	
	9	1	**8M-4986**	3	SEAL-O-RING	
	10	1	**2S-1382**	1	SPRING (.094X.594X1.97IN)	
	11	1	**2S-1384**	1	SPOOL AS-RELIEF	
		1	**5M-9548**	1	SPRING	
		1	**7M-8592**	1	RING-RETAINING	
		1	**8M-2538**	1	POPPET	
		1	**8M-4409**	1	RETAINER	
	12	1	**6V-4365**	1	SEAL-O-RING	
	13	1	**4M-8239**	2	COVER	
	14	1	**6Y-4365**	1	FENDER AS-LH	
M	15	1	**8T-0643**	3	BOLT (M10X1.50X80MM)	
	16	1	**6V-5839**	3	WASHER (11X21X2.5MM THK)	

B-USE AS REQUIRED
M-METRIC PART

6Y-8473 VALVE GP-RELIEF *(contd.)* **i01823044**

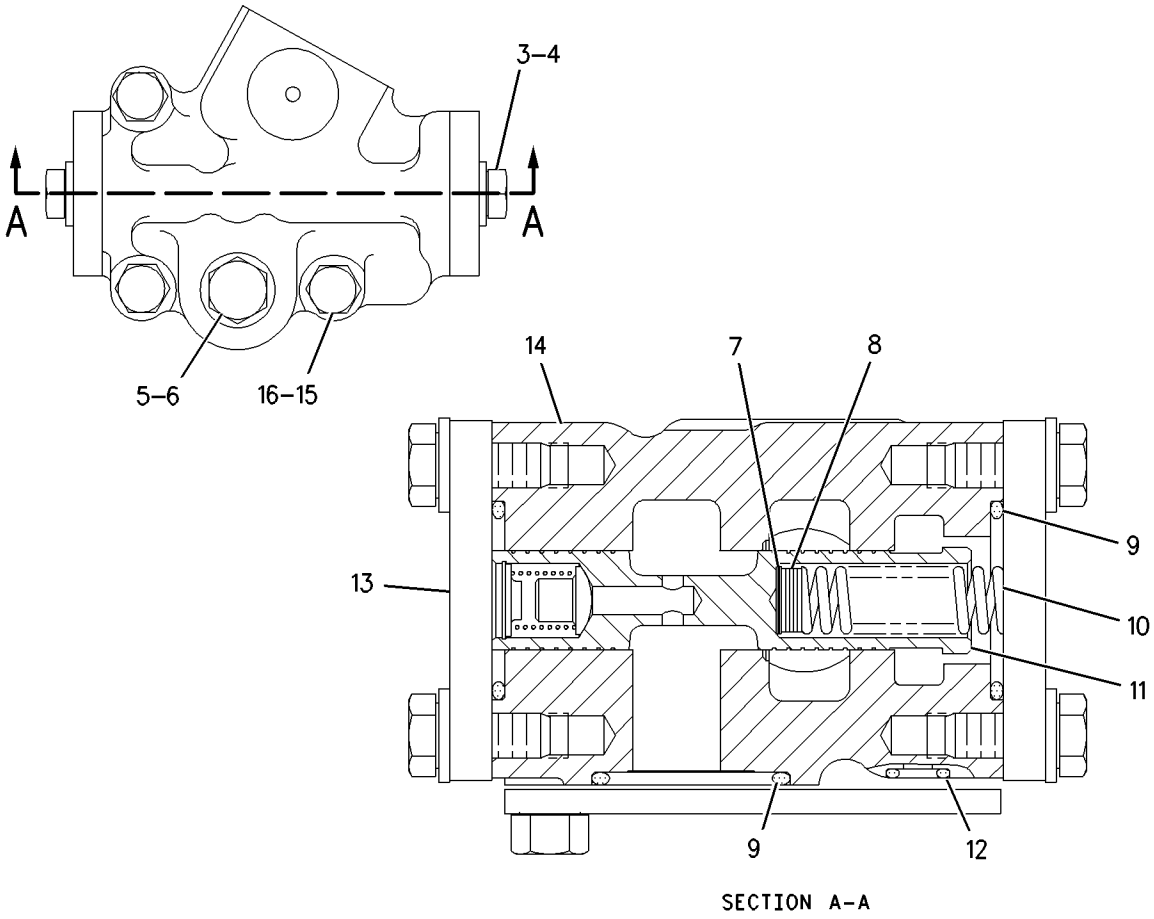

GRAPHIC #1 **<END>** g00937011

205-3602 VALVE GP-RELIEF–TRANSMISSION CONTROL

S/N: BJG1-UP

PART OF 205-3603 CONTROL GP-TRANSMISSION

SMCS-3133, 3182 **i01829866**

NOTE	REF NO	GRAPHIC REF	PART NUMBER	QTY	PART NAME 1 2 3 4 5 6 (PRODUCT LEVEL)	SEE PAGE
	1	1	**200-8498**	1	MANIFOLD	
	2	1	**106-9214**	1	PLATE	
	3	1	**2B-2695**	6	BOLT (5/16-18X0.875 IN)	
	4	1	**9M-1974**	7	WASHER-HARD (8.8X16X2MM THK)	
	5	1	**109-3968**	1	SPOOL AS-RELIEF	
	6	1	**106-9212**	1	SPRING	
	7	1	**109-3969**	1	STOP	
	8	1	**4M-5905**	1	SCREW-ADJUSTMENT (5/16-18X1 IN)	
	9	1	**5B-3180**	1	NUT (5/16-18 THD)	
	10	1	**6Y-4638**	1	PLUG-HEX SOCKET	
	11	1	**7M-8485**	1	SEAL-O-RING	
	12	1	**2M-7041**	1	SLUG	
	13	1	**9S-8001**	7	PLUG	
	14	1	**4J-7533**	7	SEAL-O-RING	

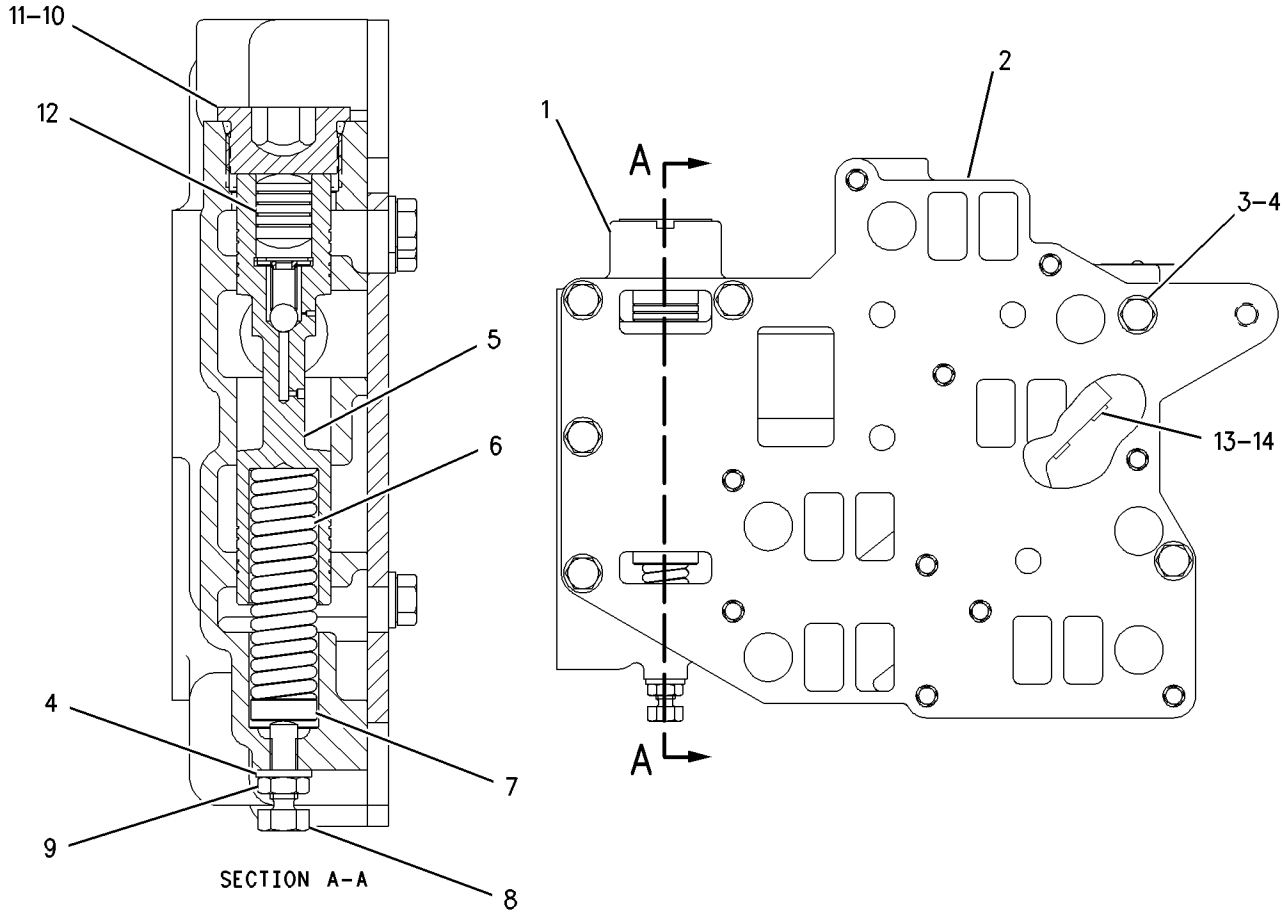

GRAPHIC #1 **<END>** g00909569

198-4607 VALVE GP-SOLENOID—POWER TRAIN OIL PRIORITY VALVE

S/N: CCK1-UP

PART OF 193-3849 VALVE GP-PRIORITY

SMCS-4282, 5479 **i01885464**

NOTE	REF NO	GRAPHIC REF	PART NUMBER	QTY	PART NAME 1 2 3 4 5 6 (PRODUCT LEVEL)	SEE PAGE
	1	1	**9X-7202**	1	WASHER (13.59X23.88X1.02MM THK)	
	2	1	**156-5970**	1	NUT (1/2-20-2B THD)	
	3	1	**213-8760**	1	COIL AS	
		1	**1S-9593**	2	STRAP-CABLE	
		1	**102-8802**	1	KIT-RECEPTACLE (2 PIN)	
					(INCLUDES RECEPTACLE AS & WEDGE)	
		1	**186-3735**	2	PIN-CONNECTOR	
		1	**033-6032**	1	SEAL-O-RING	
	4	1	**198-4605**	1	SPOOL AS	
		1	**9X-7202**	1	WASHER (13.59X23.88X1.02MM THK)	
		1	**156-5970**	1	NUT (1/2-20-2B THD)	
					AVAILABLE REPAIR KIT(S):	
			7T-4515	1	KIT-SEAL (SOLENOID VALVE)	
					(INCLUDES SEALS)	

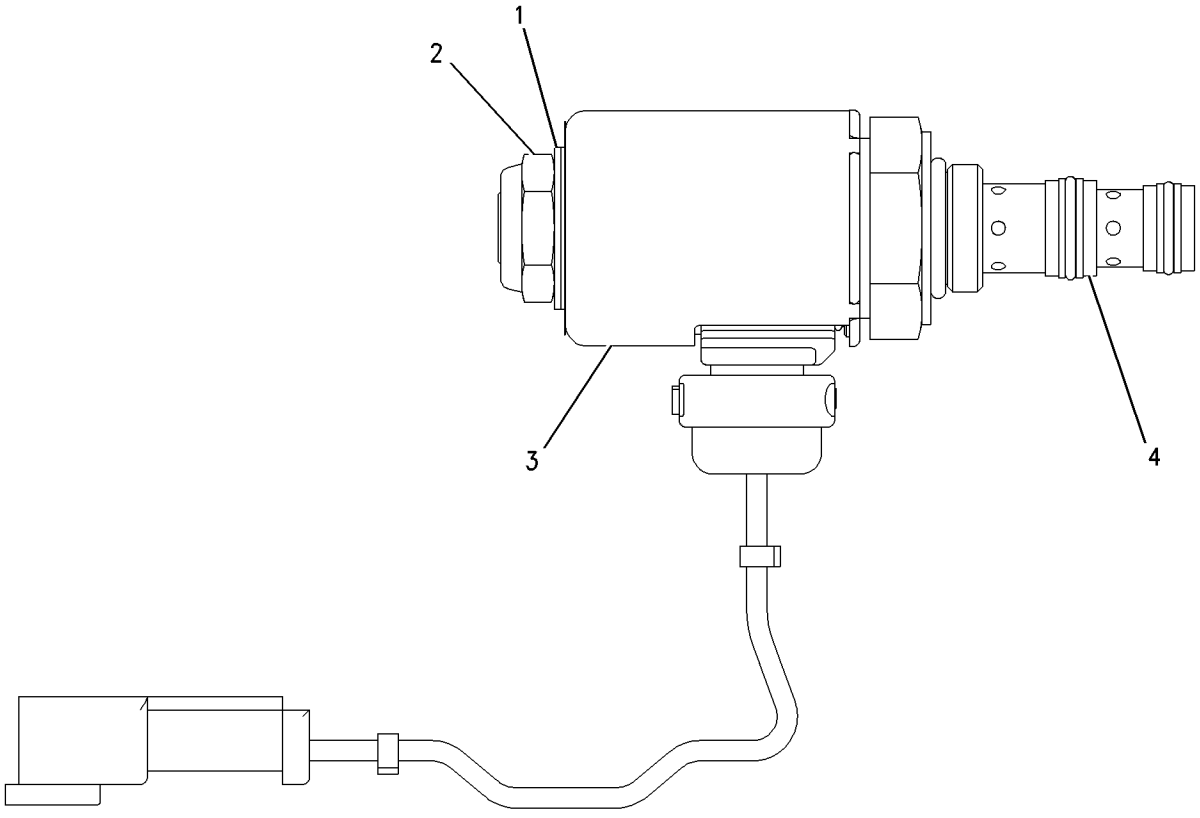

GRAPHIC #1 **<END>** g00845356

201-7269 VALVE GP-TRANSMISSION CONTROL

S/N: CCK1-UP

PART OF 201-7274 VALVE GP-CONTROL

SMCS-3073 **i01833567**

NOTE	REF NO	GRAPHIC REF	PART NUMBER	QTY	PART NAME 1 2 3 4 5 6 (PRODUCT LEVEL)	SEE PAGE
Z	1	1		1	BODY-VALVE	
	2	1	**188-7067**	2	SPRING	
	3	1	**188-7068**	2	RETAINER	
	4	1	**188-7069**	2	PISTON-LOAD	
	5	1	**108-4430**	2	SPRING	
	6	1	**110-2842**	1	PLATE-END	
	7	1	**137-6603**	2	SPOOL	
	8	1	*148-8410*	2	PLUG AS	
					(EACH INCLUDES)	
		1	**2M-9780**	1	SEAL-O-RING	
		1	**9S-4190**	1	PLUG	
	9	1	*148-8409*	2	PLUG AS	
					(EACH INCLUDES)	
		1	**3D-2824**	1	SEAL-O-RING	
		1	**9S-8008**	1	PLUG	
	10	1	**6J-2419**	2	SEAL-O-RING	
M	11	1	**7X-2537**	2	BOLT (M8X1.25X35MM)	
	12	1	**8T-4224**	2	WASHER-HARD (8.8X16X2MM THK)	
M	13	1	**8T-7547**	2	BOLT (M8X1.25X30MM)	

M-METRIC PART
Z-NOT SERVICED SEPARATELY

201-7269 VALVE GP-TRANSMISSION CONTROL *(contd.)* i01833567

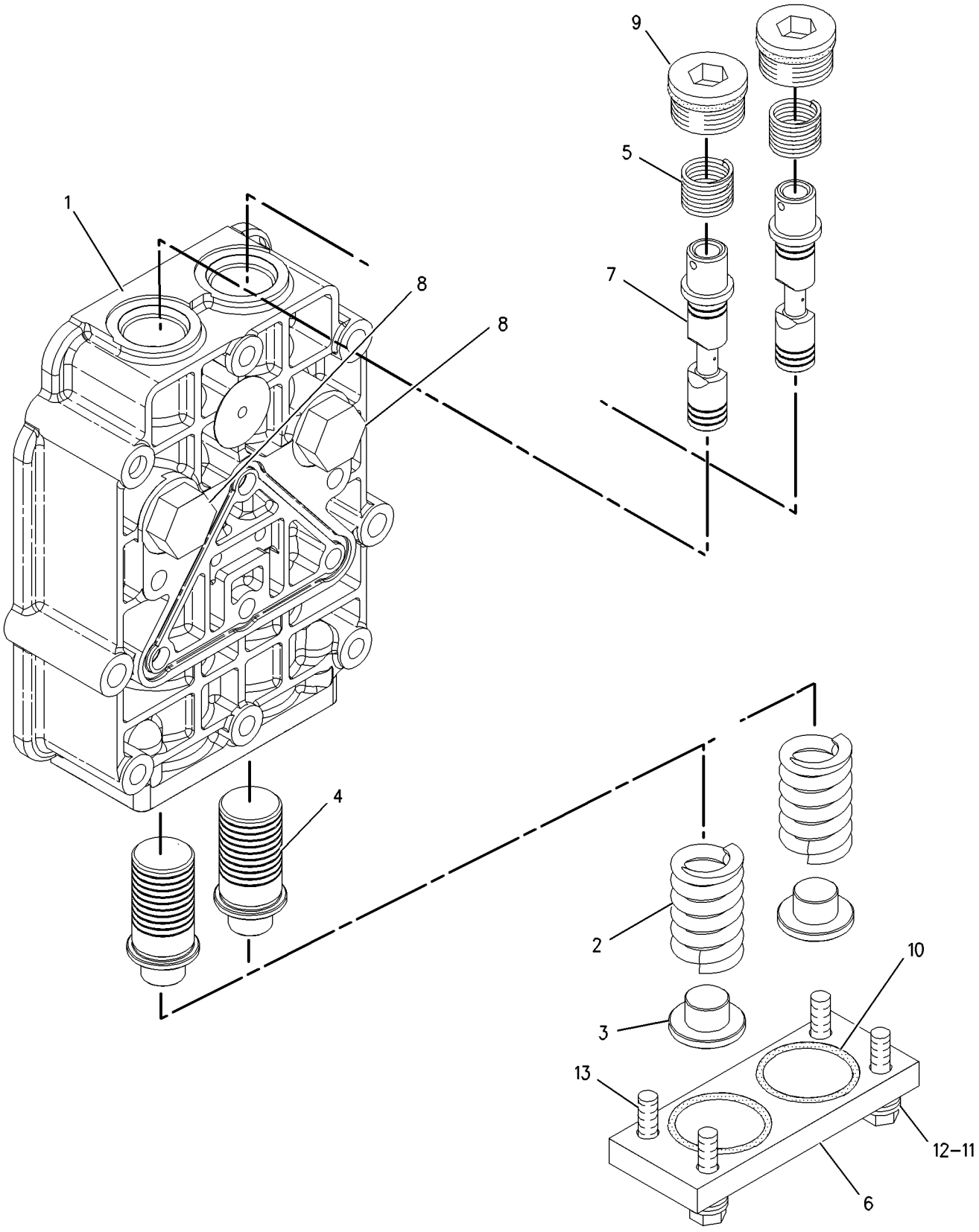

GRAPHIC #1 **<END>** g00936934

FRAME AND BODY

188-7304 CASE & FRAME GP

S/N: CCK1-UP

PART OF 189-4619 CHASSIS AR

SMCS-7051 **i01831274**

NOTE	REF NO	GRAPHIC REF	PART NUMBER	QTY	PART NAME 1 2 3 4 5 6 (PRODUCT LEVEL)	SEE PAGE
	1	1	**3B-8489**	2	FITTING-GREASE (1/8-27 THD) (CASE & FRAME)	
	2	1	**8G-6683**	1	RAIL AS	
	3	1	**8G-6684**	1	RAIL AS	
	4	1	**106-8186**	1	VALVE-DRAIN (CASE)	
	5	1	**106-8187**	1	PLUG (CASE DRAIN)	
	6	1	**188-7303**	1	CASE & FRAME AS	
	6A	1	**5K-9660**	2	CLIP	
M	6B	1	**6V-1820**	2	BOLT (M10X1.50X30MM)	
		1	**8T-4121**	2	WASHER-HARD (11X21X2.5MM THK)	
	7	1	**191-1734**	1	RING	
	8	1	**2D-9572**	1	SEAL-O-RING	
	9	1	**6F-0711**	1	SEAL-O-RING (CASE DRAIN PLUG)	
	10	1	**7X-7729**	6	WASHER (11X25X3MM THK)	
M	11	1	**8C-8992**	4	BOLT-LOCKING (M12X1.75X30MM)	
M	12	1	**8T-4137**	6	BOLT (M10X1.5X20MM)	
	13	1	**8T-4223**	4	WASHER-HARD (13.5X25.5X3MM THK)	
	14	1	**1A-2223**	4	DOWEL	
	15	1	**8T-4123**	8	WASHER-PLATED (22X35X3.5MM THK)	
M	16	1	**8T-6430**	8	BOLT (M20X2.5X50MM)	
	17	1	**192-4089**	1	PLATE AS	
	18	1	**195-2709**	1	PLATE AS	
					(EACH PLATE AS INCLUDES)	
		1	**9R-2672**	1	BOSS (M10X20MM)	

M-METRIC PART

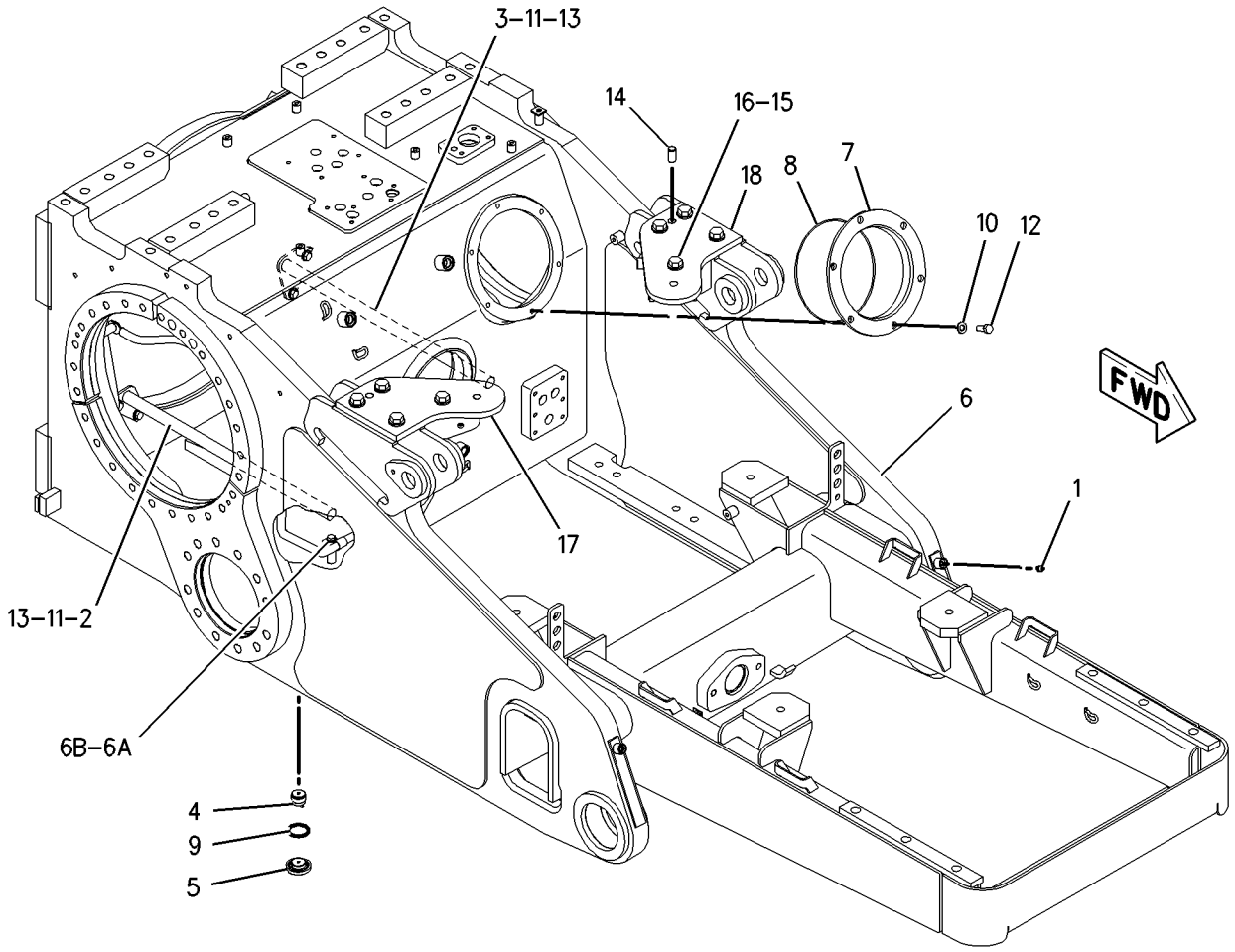

GRAPHIC #1 **<END>** g00918378

107-4068 DRAWBAR GP

S/N: CCK1-UP

PART OF 189-4619 CHASSIS AR

SMCS-7105, 7119 **i00598296**

NOTE	REF NO	GRAPHIC REF	PART NUMBER	QTY	PART NAME 1 2 3 4 5 6 (PRODUCT LEVEL)	SEE PAGE
M	1	1	**7X-2565**	12	BOLT (M20X2.5X100MM)	
	2	1	**8T-4123**	12	WASHER-PLATED (3.5MM THK)	
	3	1	**7B-0863**	1	LATCH-PIN	
	4	1	**8G-7085**	1	PIN AS	
	5	1	**7F-9543**	1	COLLAR	
M	6	1	**8T-4140**	1	BOLT (M16X2.0X60MM)	
M	7	1	**8T-4778**	1	LOCKNUT (M16X2.00 THD)	
	8	1	**130-9764**	1	DRAWBAR AS	
	9	1	**1P-1547**	1	PLATE-LOCKING	
	10	1	**3G-7828**	1	PLATE	

M-METRIC PART

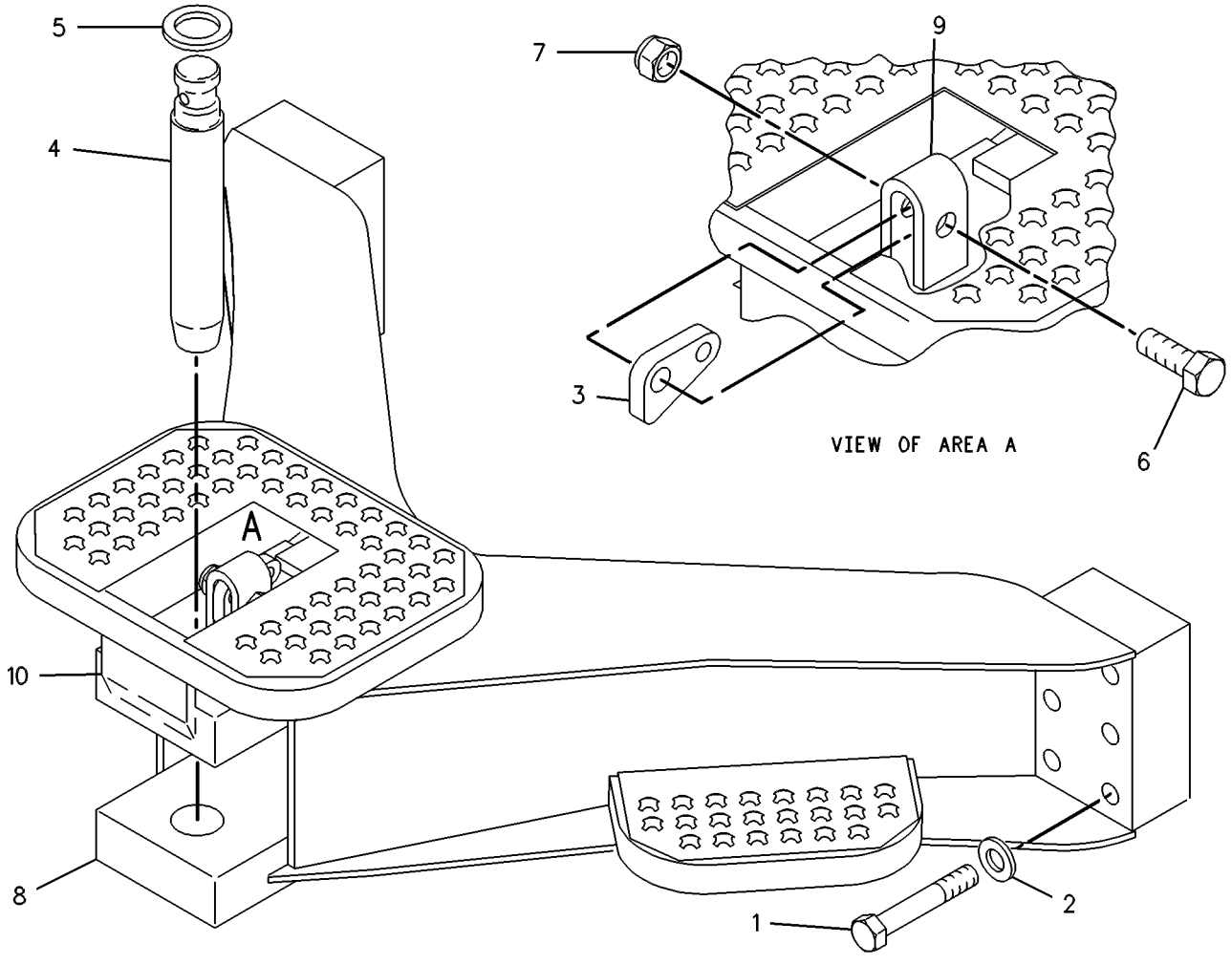

GRAPHIC #1 **<END>** g00267467

155-7706 ENCLOSURE GP

S/N: CCK1-UP

PART OF 189-4619 CHASSIS AR

SMCS-7153 **i01874496**

NOTE	REF NO	GRAPHIC REF	PART NUMBER	QTY	PART NAME 1 2 3 4 5 6 (PRODUCT LEVEL)	SEE PAGE
	1	1	**3V-7689**	1	HANDLE AS	
M	2	1	**8T-2910**	1	NUT-WING	
	3	1	**135-5001**	1	ROD	
	4	1	**155-7725**	1	BRACKET AS	
M		1	**8T-3490**	2	NUT-WELD (M10X1.5 THD)	
	5	1	**155-7738**	1	BRACKET AS	
M		1	**8T-3490**	2	NUT-WELD (M10X1.5 THD)	
	6	1	**155-7739**	2	PLATE AS	
					(EACH INCLUDES)	
M		1	**8T-3490**	3	NUT-WELD (M10X1.5 THD)	
	7	1	**155-7785**	1	GUARD AS	
		1	**8G-5623**	1	HINGE	
	8	1	**177-1570**	3	LATCH AS	
					(EACH INCLUDES)	
J		1	**217-0733**	1	LOCK AS	
	9	1	**212-3511**	3	LATCH (CAM)	
	10	1	**213-9689**	2	BRACKET	
	11	1	**214-0997**	1	BRACKET AS (LH)	
M		1	**8T-5413**	1	STUD-WELD (M10X1.5X25MM OAL)	
M		1	**8T-3490**	4	NUT-WELD (M10X1.5 THD)	
	12	1	**214-0998**	1	BRACKET AS (RH)	
M		1	**8T-5413**	1	STUD-WELD (M10X1.5X25MM OAL)	
M		1	**8T-3490**	3	NUT-WELD (M10X1.5 THD)	
	13	1	**214-4636**	3	CABLE	
	14	1	**216-6033**	1	SCREEN AS	
M		1	**8T-3490**	4	NUT-WELD (M10X1.5 THD)	
M		1	**8T-5413**	1	STUD-WELD (M10X1.5X25MM OAL)	
	15	1	**221-6878**	1	COVER AS (BATTERY)	
M		1	**8T-5413**	1	STUD-WELD (M10X1.5X25MM OAL)	
M		1	**8T-3490**	2	NUT-WELD (M10X1.5 THD)	
	16	1	**221-6879**	1	COVER AS (LH)	
	17	1	**221-6880**	1	COVER AS (RH)	
		1	**7T-1099**	2	LINK	
	18	1	**221-6887**	2	BRACKET	
	19	1	**222-6870**	1	DOOR AS (LH)	
M		1	**8T-4130**	1	STUD (M6X1X18 MM)	
		1	**117-5604**	2	STUD	
		1	**155-7772**	1	HINGE AS (LH)	
	20	1	**222-6871**	1	DOOR AS (RH)	
		1	**117-5604**	1	STUD	
		1	**155-7769**	1	HINGE AS (RH)	
	21	1	**223-0161**	2	BRACKET	
	22	1	**223-0162**	1	BRACKET	
	23	1	**099-3600**	6	WASHER (12.7X30X4MM THK)	
	24	1	**3B-4604**	1	PIN-COTTER	
	25	1	**4V-5091**	3	GROMMET	
	26	1	**7X-7729**	34	WASHER (11X25X3MM THK)	
	27	1	**7Y-8171**	1	GROMMET	
	28	1	**8T-4121**	3	WASHER-HARD (11X21X2.5MM THK)	
M	29	1	**8T-4133**	12	NUT (M10X1.5 THD)	
M	30	1	**8T-4136**	18	BOLT (M10X1.5X25MM)	
M	31	1	**8T-4139**	8	BOLT (M12X1.75X30MM)	
M	32	1	**8T-4194**	1	BOLT (M12X1.75X50MM)	
M	33	1	**8T-4195**	4	BOLT (M10X1.5X30MM)	
	34	1	**8T-4223**	14	WASHER-HARD (13.5X25.5X3MM THK)	
M	35	1	**8T-4244**	8	NUT (M12X1.75 THD)	

155-7706 **ENCLOSURE GP** ***(contd.)*** **i01874496**

NOTE	REF NO	GRAPHIC REF	PART NUMBER	QTY	PART NAME 1 2 3 4 5 6 (PRODUCT LEVEL)	SEE PAGE
M	36	1	**8T-4956**	2	BOLT (M12X1.75X35MM)	
BD	37	1	**201-4065**		SEAL	
BD	38	1	**201-4066**		SEAL	
BD	39	1	**202-5293**		SEAL	

B-USE AS REQUIRED
D-ORDER BY THE METER
J-REQUIRES 5P8500 KEY
M-METRIC PART

155-7706 **ENCLOSURE GP** ***(contd.)*** **i01874496**

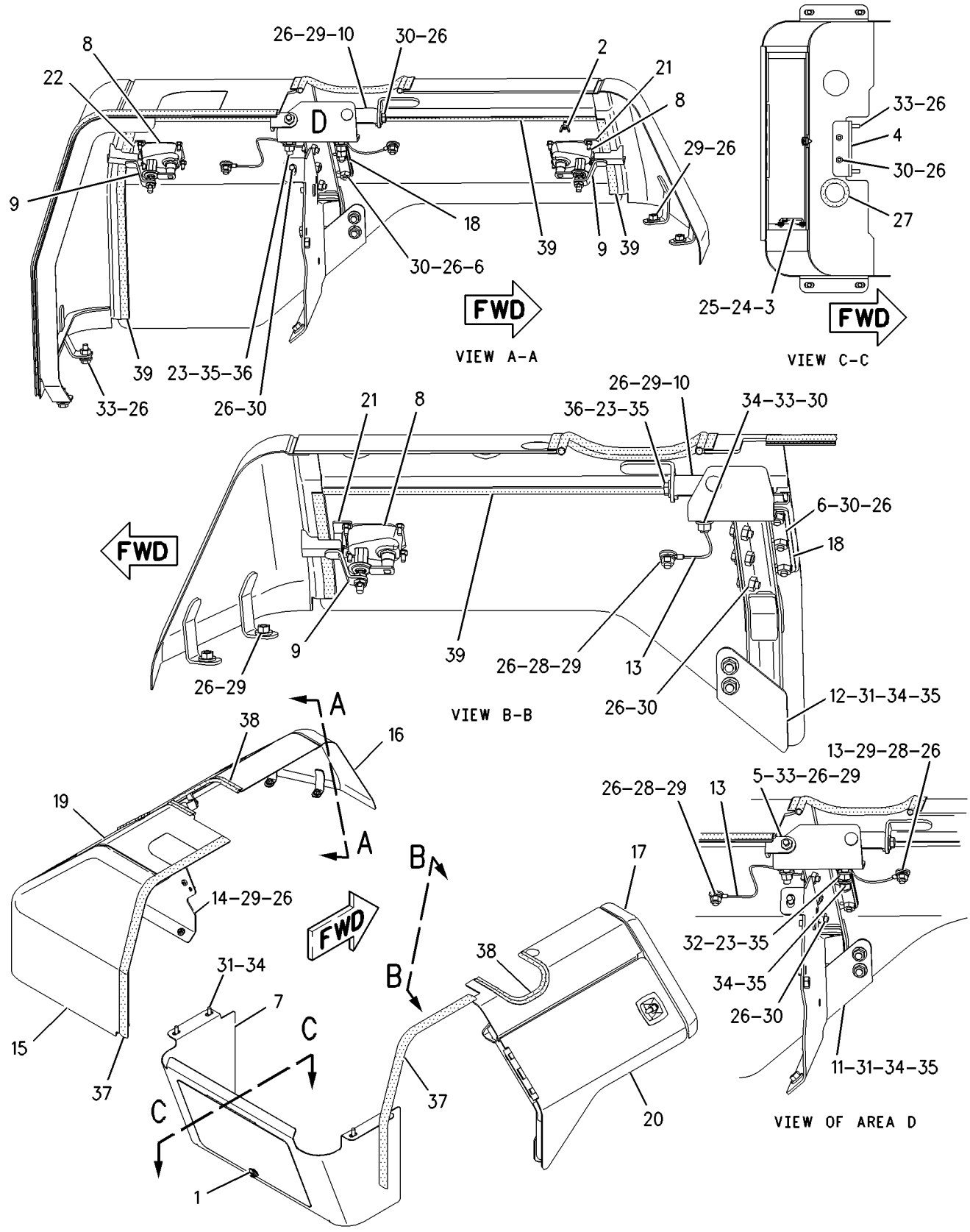

GRAPHIC #1 **<END>** g00956543

FRAME AND BODY

155-7705 FENDER GP

S/N: CCK1-UP

PART OF 189-4619 CHASSIS AR

SMCS-7252 **i01828469**

NOTE	REF NO	GRAPHIC REF	PART NUMBER	QTY	PART NAME 1 2 3 4 5 6 (PRODUCT LEVEL)	SEE PAGE
	1	1	**3W-2647**	2	SPACER (13.5X30X10MM THK)	
	2	1	**155-7737**	1	FENDER AS-RH	
	3	1	**155-7742**	1	FENDER AS-LH	
	4	1	**5P-1076**	12	WASHER-HARD (13.5X30X4MM THK)	
	5	1	**7X-0513**	2	WASHER-HARD (17X30X5MM THK)	
M	6	1	**8T-4193**	2	BOLT (M16X2X50MM)	
M	7	1	**8T-4194**	12	BOLT (M12X1.75X50MM)	
	8	1	**221-2718**	6	BUMPER	
M	9	1	**8T-4956**	2	BOLT (M12X1.75X35MM)	

M-METRIC PART

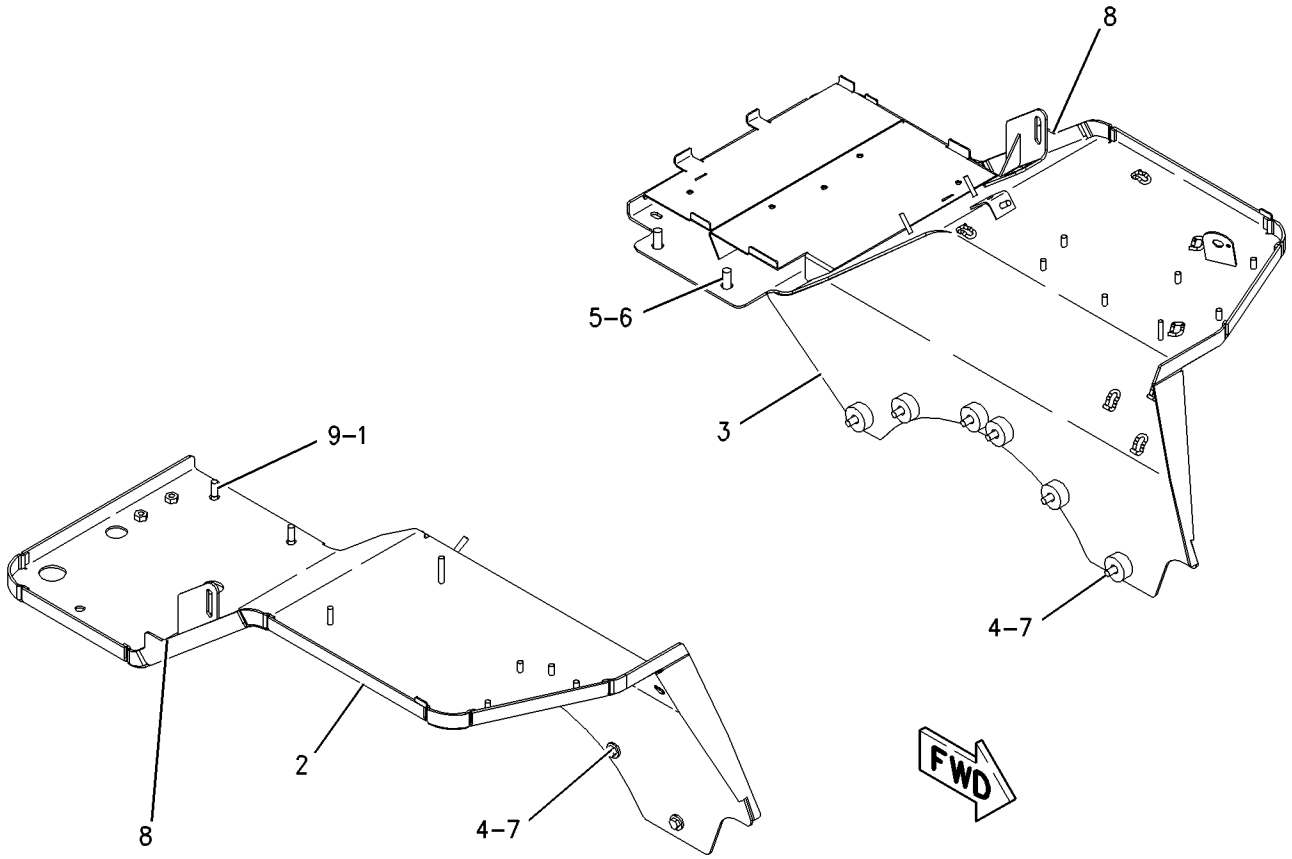

GRAPHIC #1 **<END>** g00918995

195-1045 GRID GP-SAND BLAST ERODING

S/N: CCK1-UP
CANNOT BE USED WITH , 195-1043—PAGE 81
AN ATTACHMENT

SMCS-7179 **i01830836**

NOTE	REF NO	GRAPHIC REF	PART NUMBER	QTY	PART NAME 1 2 3 4 5 6 (PRODUCT LEVEL)	SEE PAGE
	1	1	**195-2804**	1	GRID GP-SAND BLAST ERODING	
	2	1	**8T-4121**	9	WASHER-HARD (11X21X2.5MM THK)	
M	3	1	**8T-4136**	4	BOLT (M10X1.5X25MM)	
M	4	1	**8T-4195**	5	BOLT (M10X1.5X30MM)	

M-METRIC PART

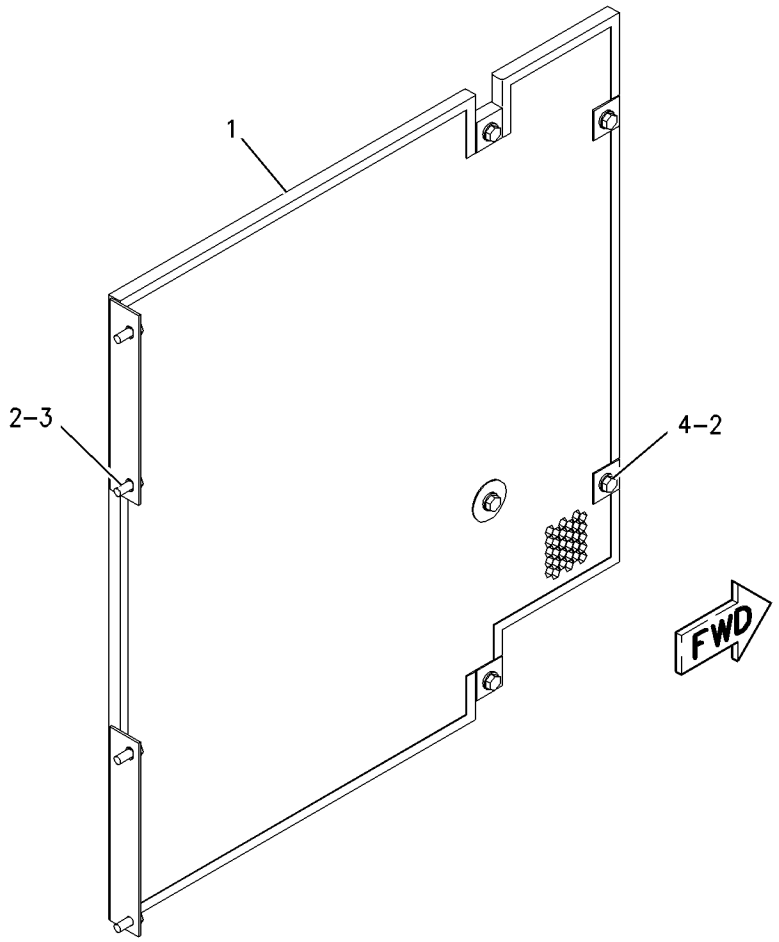

GRAPHIC #1 **<END>** g00937531

155-9366 GRILL GP-RADIATOR–HEAVY DUTY

S/N: CCK1-UP
AN ATTACHMENT

SMCS-7170 **i01830134**

NOTE	REF NO	GRAPHIC REF	PART NUMBER	QTY	PART NAME 1 2 3 4 5 6 (PRODUCT LEVEL)	SEE PAGE
	1	1	**221-2721**	1	GRILL AS	
M	2	1	**8T-4193**	2	BOLT (M16X2X50MM)	
	3	1	**9X-8257**	2	WASHER (17.5X30X3.5MM THK)	

M-METRIC PART

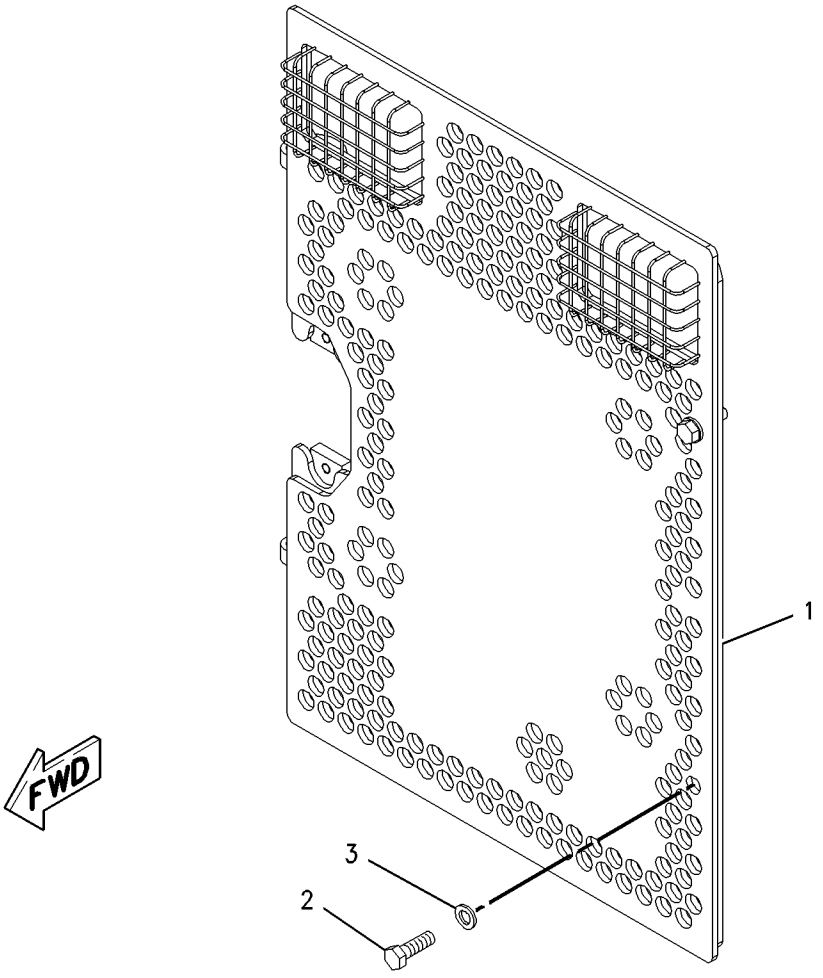

GRAPHIC #1 **<END>** g00916996

191-9500 GUARD GP-BOTTOM

S/N: CCK1-UP

PART OF 189-4619 CHASSIS AR

SMCS-7153 **i01831275**

NOTE	REF NO	GRAPHIC REF	PART NUMBER	QTY	PART NAME 1 2 3 4 5 6 (PRODUCT LEVEL)	SEE PAGE
	1	1	**110-3160**	1	GUARD AS	
	2	1	**110-3162**	1	GUARD AS	
	3	1	**122-4705**	1	COVER AS	
	4	1	**186-9980**	1	GUARD AS	
	5	1	**6C-9149**	12	WASHER (22X50X10MM THK)	
	6	1	**7X-0515**	13	WASHER-HARD (17X35X5MM THK)	
M	7	1	**7X-2553**	13	BOLT (M16X2X40MM)	
	8	1	**8T-4121**	2	WASHER-HARD (11X21X2.5MM THK)	
M	9	1	**8T-4136**	2	BOLT (M10X1.5X25MM)	
M	10	1	**8T-6430**	12	BOLT (M20X2.5X50MM)	

M-METRIC PART

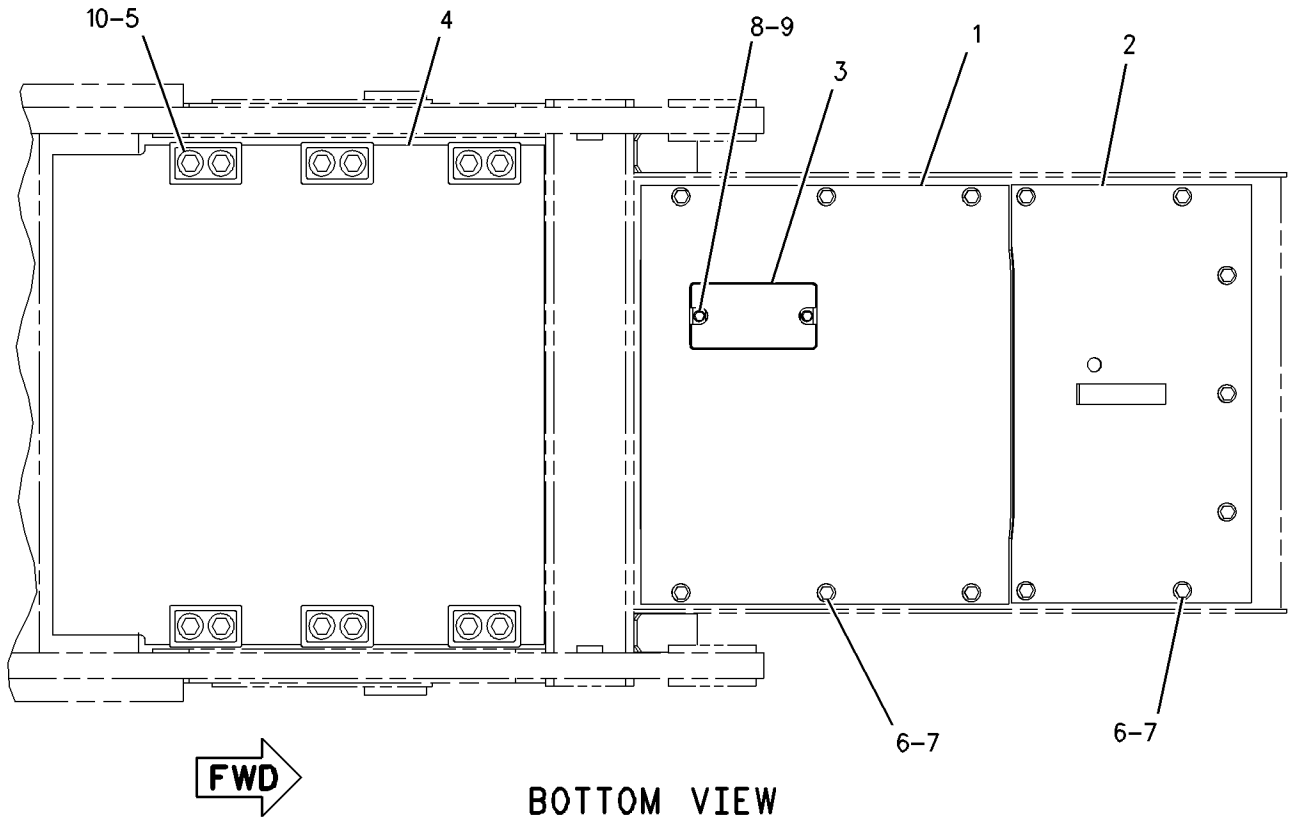

BOTTOM VIEW

GRAPHIC #1 **<END>** g00775472

191-9501 GUARD GP-BOTTOM–HEAVY DUTY

S/N: CCK1-UP
AN ATTACHMENT

SMCS-7153 **i01835406**

NOTE	REF NO	GRAPHIC REF	PART NUMBER	QTY	PART NAME 1 2 3 4 5 6 (PRODUCT LEVEL)	SEE PAGE
	1	1	**186-9981**	1	GUARD AS	
	2	1	**110-3162**	1	GUARD AS	
	3	1	**110-3166**	1	GUARD AS	
	4	1	**122-4705**	1	COVER AS	
	5	1	**7X-0515**	13	WASHER-HARD (17X35X5MM THK)	
	6	1	**8T-4121**	2	WASHER-HARD (11X21X2.5MM THK)	
M	7	1	**7X-2553**	7	BOLT (M16X2X40MM)	
M	8	1	**8T-4136**	2	BOLT (M10X1.5X25MM)	
M	9	1	**8T-7338**	6	BOLT (M16X2.0X45MM)	
	10	1	**6C-9149**	12	WASHER (22X50X10MM THK)	
M	11	1	**6V-3532**	12	BOLT (M20X2.5X60MM)	

M-METRIC PART

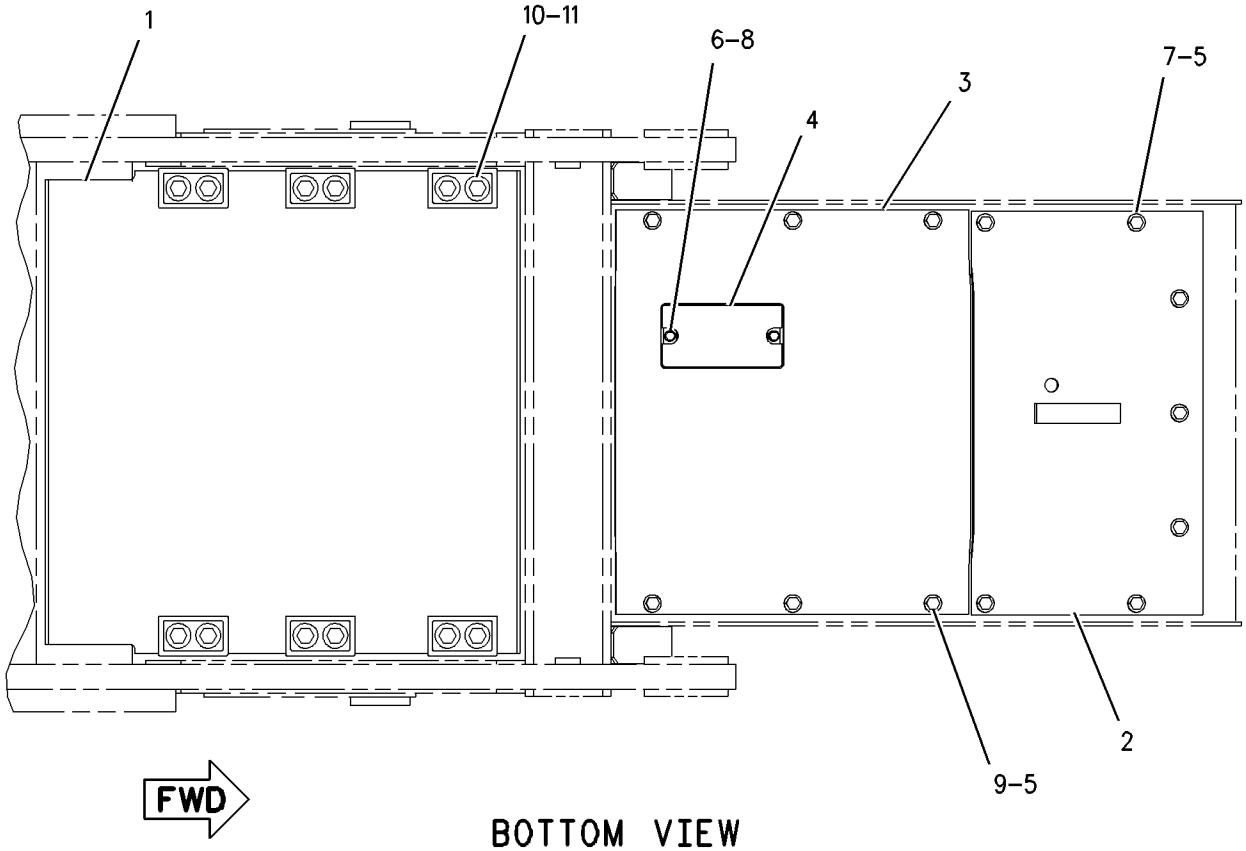

BOTTOM VIEW

GRAPHIC #1 **<END>** g00775494

FRAME AND BODY

155-7775 GUARD GP-FUEL TANK

S/N: CCK1-UP
AN ATTACHMENT

SMCS-1273 **i01830132**

NOTE	REF NO	GRAPHIC REF	PART NUMBER	QTY	PART NAME 1 2 3 4 5 6 (PRODUCT LEVEL)	SEE PAGE
	1	1	**3W-2647**	4	SPACER (13.5X30X10MM THK)	
	2	1	**155-7776**	1	GUARD AS	
M		1	**8T-3597**	6	NUT-WELD (M12X1.75 THD)	
M	3	1	**7X-2577**	4	BOLT (M24X3X90MM)	
M	4	1	**8T-4183**	4	BOLT (M12X1.75X40MM)	
	5	1	**126-8928**	4	WASHER-HARD	
	6	1	**213-5161**	1	FILM-STRIPE (D6N)(RH REAR FUEL TANK GUARD)	
	7	1	**206-0332**	1	FILM-STRIPE (D6N)(LH REAR FUEL TANK GUARD)	
	8	1	**205-4955**	1	FILM-STRIPE (D6N)(FUEL TANK GUARD)	

M-METRIC PART

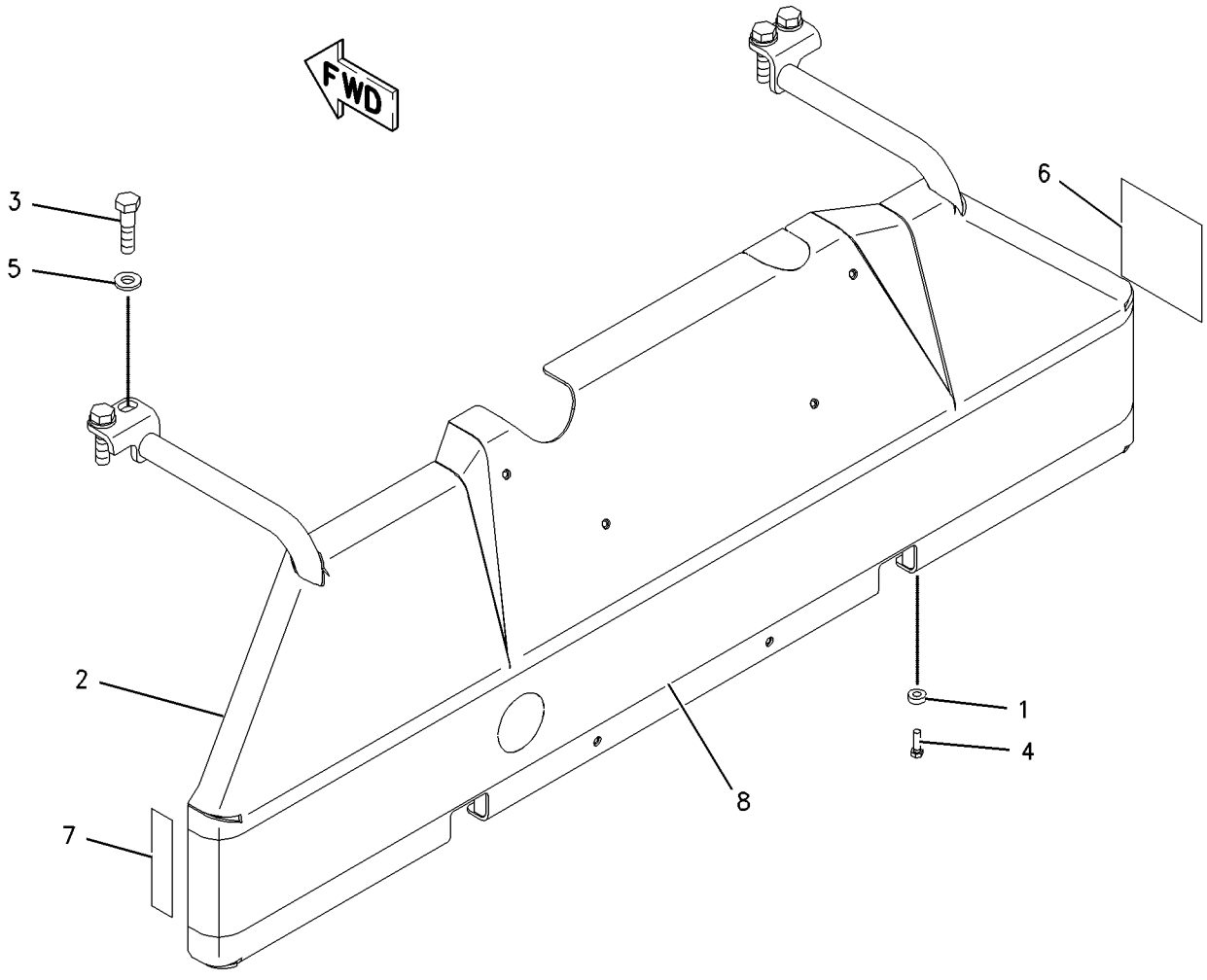

GRAPHIC #1 **<END>** g00917900

210-6039 GUARD GP-POWER TRAIN FILTER–HEAVY DUTY

S/N: CCK1-UP
CANNOT BE USED WITH A WINCH
AN ATTACHMENT

SMCS-7150 **i01877517**

NOTE	REF NO	GRAPHIC REF	PART NUMBER	QTY	PART NAME 1 2 3 4 5 6 (PRODUCT LEVEL)	SEE PAGE
	1	1	**210-6040**	1	GUARD AS	
	1A	1	**8G-5623**	1	HINGE	

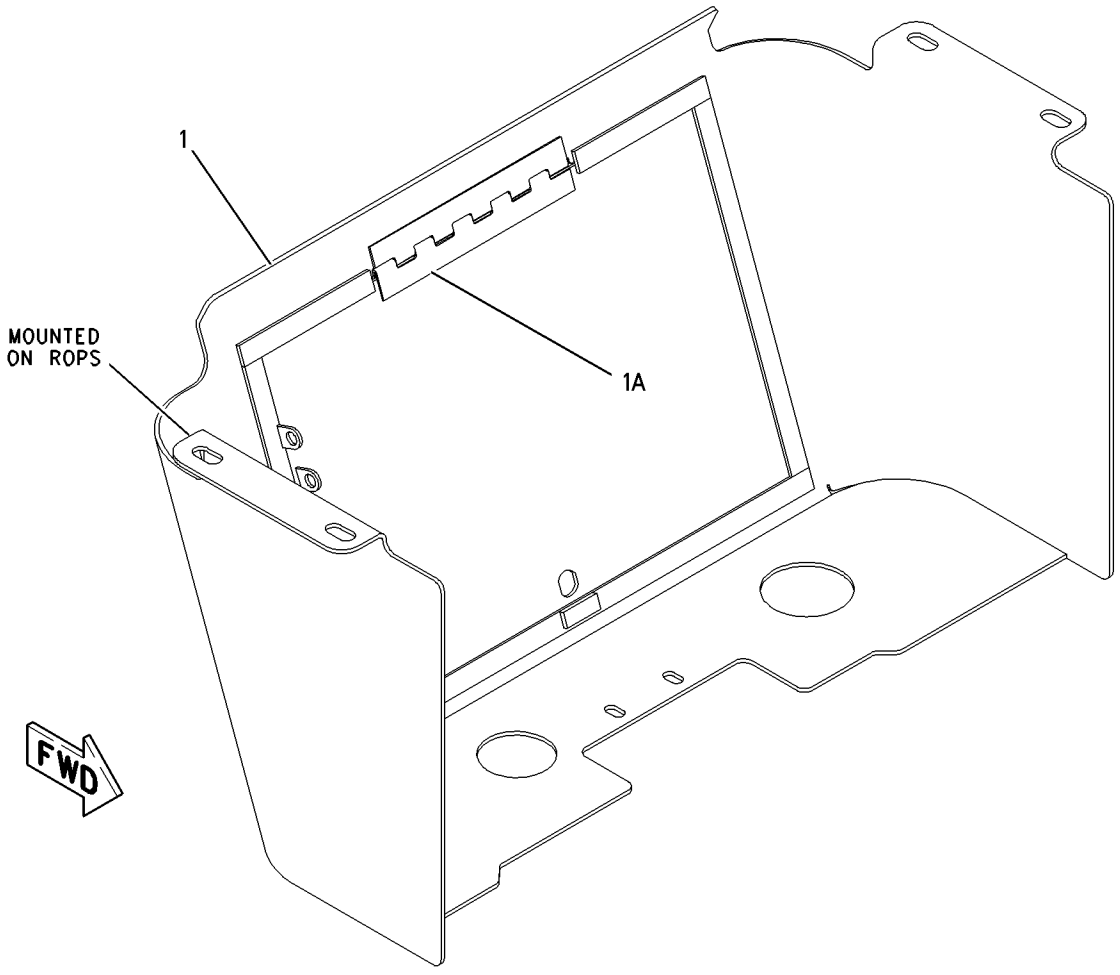

GRAPHIC #1 **<END>** g00938219

155-7703 GUARD GP-RADIATOR

S/N: CCK1-UP

PART OF 189-4619 CHASSIS AR

SMCS-7155 **i01828457**

NOTE	REF NO	GRAPHIC REF	PART NUMBER	QTY	PART NAME 1 2 3 4 5 6 (PRODUCT LEVEL)	SEE PAGE
J	1	1	**8C-8837**	1	LOCK AS-CYLINDER	
	2	1	**155-9320**	1	CAM-LATCH	
	3	1	**155-9321**	1	CAP AS (DUST) (RADIATOR FILLER DOOR)	
	4	1	**211-8504**	1	GUARD GP-RADIATOR	
M	4A	1	**8T-3612**	2	NUT-WELD (M8X1.25 THD)	
	4B	1	**7T-1099**	6	LINK	
M	4C	1	**8T-3490**	11	NUT-WELD (M10X1.5 THD)	
M	4D	1	**8T-4132**	8	NUT (M16X2 THD)	
	4E	1	**8Y-0709**	1	CLIP	
	4F	1	**9R-2672**	1	BOSS (M10X20MM)	
	5	1	**221-2719**	4	BUMPER	
	6	1	**221-2720**	1	GRILL AS	
M	7	1	**096-4885**	2	LOCKNUT (M16X2 THD)	
M	8	1	**3E-4320**	4	SCREW (M3X0.5X10MM)	
M	9	1	**7X-2553**	2	BOLT (M16X2X40MM)	
M	10	1	**7X-2554**	2	BOLT (M16X2X70MM)	
	11	1	**6K-6361**	6	BUTTON-PLUG	
M	12	1	**8T-4140**	6	BOLT (M16X2X60MM)	
	13	1	**8Y-1387**	1	ROD	
	14	1	**9X-8257**	8	WASHER (17.5X30X3.5MM THK)	
	15	1	**221-2718**	4	BUMPER	

J-REQUIRES 5P8500 KEY
M-METRIC PART

155-7703 **GUARD GP-RADIATOR** *(contd.)* **i01828457**

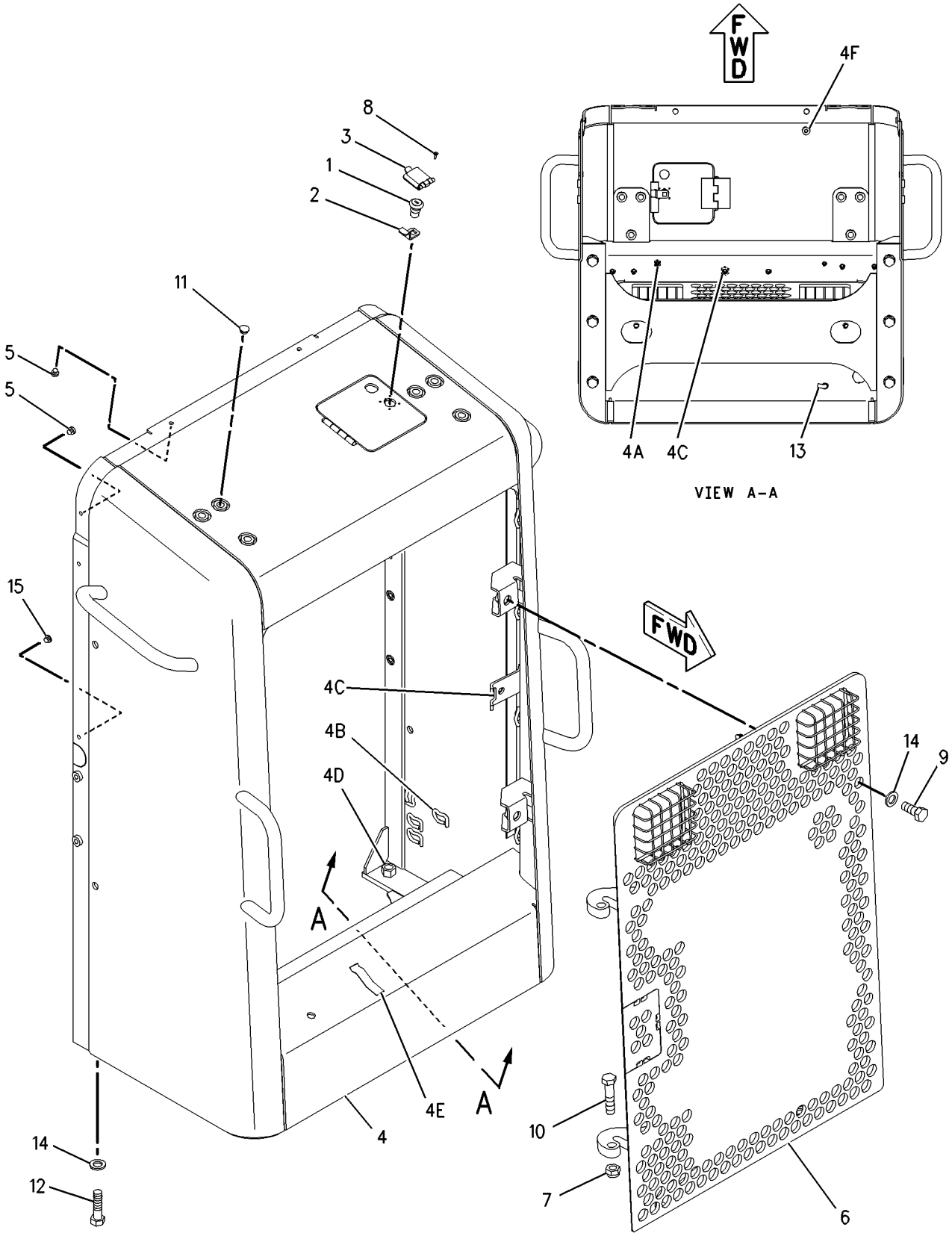

GRAPHIC #1 **<END>** g00923131

205-6127 GUARD GP-TRACK GUIDE

S/N: CCK1-UP
PART OF 205-6136 GUIDING AR-UNDERCARRIAGE
AN ATTACHMENT

SMCS-4177 **i01830997**

NOTE	REF NO	GRAPHIC REF	PART NUMBER	QTY	PART NAME 1 2 3 4 5 6 (PRODUCT LEVEL)	SEE PAGE
	1	1	**204-6365**	16	SPACER (.8X35X15MM THK)	
	2	1	**205-6160**	4	GUIDE AS	
M	3	1	**8T-4140**	16	BOLT (M16X2X60MM)	

M-METRIC PART

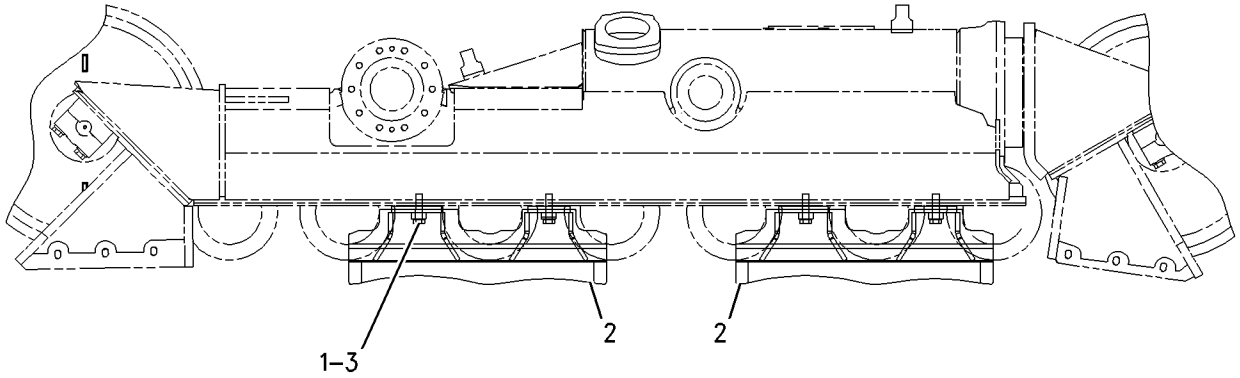

RIGHT SIDE VIEW

GRAPHIC #1 **<END>** g00899177

205-6128 GUARD GP-TRACK ROLLER–EXTREME SERVICE

S/N: CCK1-UP
PART OF 205-6137 GUIDING AR-UNDERCARRIAGE
AN ATTACHMENT

SMCS-7152 **i01831007**

NOTE	REF NO	GRAPHIC REF	PART NUMBER	QTY	PART NAME 1 2 3 4 5 6 (PRODUCT LEVEL)	SEE PAGE
	1	1	**204-6365**	24	SPACER (.8X35X15MM THK)	
	2	1	**205-6141**	8	TUBE	
	3	1	**205-6148**	2	BRACKET AS	
	4	1	**205-6149**	2	BRACKET AS	
	5	1	**205-6162**	2	GUARD AS	
	6	1	**205-6163**	2	GUARD AS	
M	7	1	**110-6969**	8	BOLT-HEX HEAD	
	8	1	**7X-0550**	12	WASHER-HARD (13.5X32X5MM THK)	
	9	1	**7X-0605**	4	WASHER-HARD (13X28X1.6MM THK)	
M	10	1	**8T-4140**	24	BOLT (M16X2X60MM)	
M	11	1	**8T-4956**	8	BOLT (M12X1.75X35MM)	
M	12	1	**8T-4194**	4	BOLT (M12X1.75X50MM)	
M	13	1	**8T-4778**	8	LOCKNUT (M16X2 THD)	
	14	1	**9X-8257**	16	WASHER (17.5X30X3.5MM THK)	

M-METRIC PART

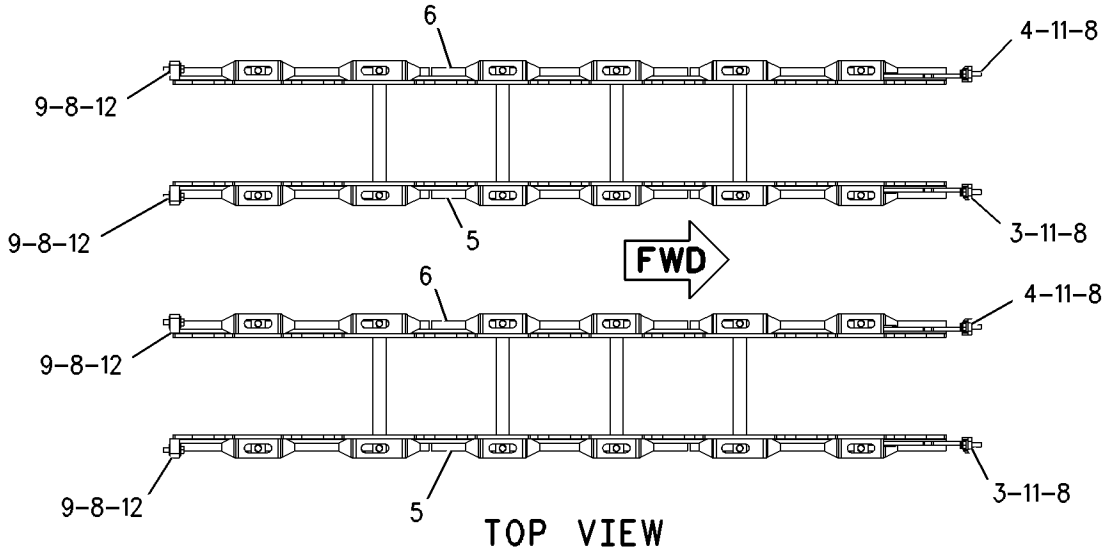

TOP VIEW

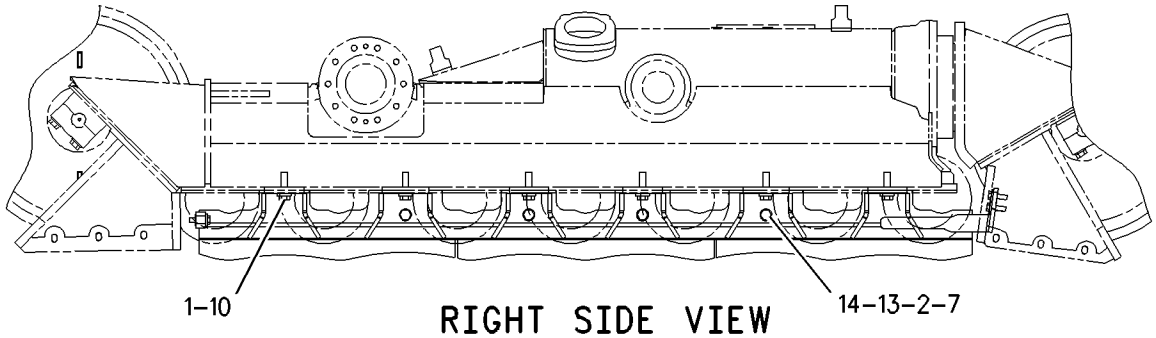

RIGHT SIDE VIEW

GRAPHIC #1

<END>

g00899167

155-7704 HOOD & GUARD GP—SEMI-UNIVERSAL BULLDOZER

S/N: S6D1-UP
PART OF 206-9537 BULLDOZER AR-SEMI-UNIVERSAL
AN ATTACHMENT

SMCS-7251 **i01876929**

NOTE	REF NO	GRAPHIC REF	PART NUMBER	QTY	PART NAME 1 2 3 4 5 6 (PRODUCT LEVEL)	SEE PAGE
	1	1	**6S-6251**	2	MOUNT	
	2	1	**6S-6646**	2	PIN-COTTER	
	3	1	**7Y-2854**	4	SPACER (24X38X3MM THK)	
	4	1	**111-4643**	2	PLATE	
	5	1	**145-0823**	4	BUMPER	
	6	1	**155-7803**	2	CAM-LATCH	
	7	1	**155-7818**	1	HOOD AS	
M		1	**8T-3490**	2	NUT-WELD (M10X1.5 THD)	
	8	1	**155-9282**	1	DOOR AS (RH)	
	9	1	**155-9284**	1	SHEET AS (RH)	
	10	1	**155-9286**	1	SUPPORT AS (RH)	
M		1	**8T-3490**	2	NUT-WELD (M10X1.5 THD)	
	11	1	**155-9287**	1	DOOR AS (LH)	
	12	1	**155-9289**	1	SHEET AS (LH)	
	13	1	**155-9291**	1	SUPPORT AS (LH)	
M		1	**8T-3490**	1	NUT-WELD (M10X1.5 THD)	
	14	1	**155-9301**	1	PLATE AS-RH	
M		1	**8T-3490**	2	NUT-WELD (M10X1.5 THD)	
	15	1	**155-9302**	1	PLATE AS-LH	
M		1	**8T-3490**	2	NUT-WELD (M10X1.5 THD)	
	16	1	**177-1570**	4	LATCH AS	
					(EACH INCLUDES)	
J		1	**217-0733**	1	LOCK AS	
	17	1	**201-4033**	2	PLATE AS	
					(EACH INCLUDES)	
		1	**3H-8726**	1	MOUNT AS	
	18	1	**201-5349**	2	SHAFT AS	
	19	1	**202-7356**	1	BRACKET AS (RH)	
	20	1	**202-7357**	1	BRACKET AS (LH)	
	21	1	**202-7358**	2	CAM (LATCH)	
	22	1	**222-6239**	1	SHEET (RH)	
	23	1	**222-6240**	1	SHEET (LH)	
	24	1	**224-0687**	1	BRACKET (LH)	
	25	1	**224-0688**	1	BRACKET (RH)	
	26	1	**6V-8513**	4	WASHER-HARD (11X35X2.5MM THK)	
	27	1	**7X-7729**	10	WASHER (11X25X3MM THK)	
	28	1	**8T-4121**	18	WASHER-HARD (11X21X2.5MM THK)	
M	29	1	**8T-4137**	8	BOLT (M10X1.5X20MM)	
M	30	1	**8T-4185**	2	BOLT (M10X1.5X50MM)	
M	31	1	**8T-4195**	20	BOLT (M10X1.5X30MM)	
BD	32	1	**202-5293**		SEAL	

B-USE AS REQUIRED
D-ORDER BY THE METER
J-REQUIRES 5P8500 KEY
M-METRIC PART

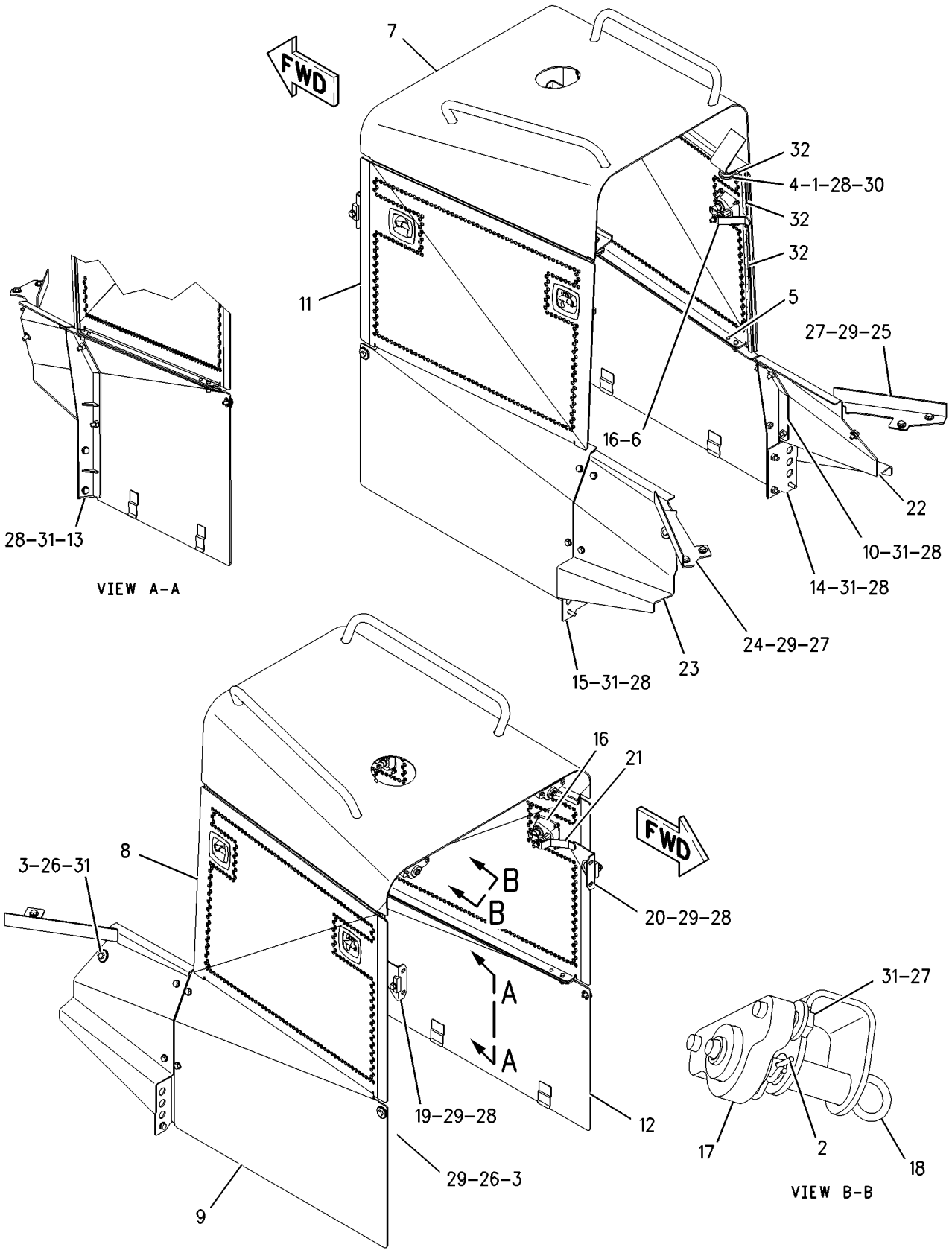

GRAPHIC #1 **<END>** g00917659

155-7804 HOOD & GUARD GP–

SEMI-UNIVERSAL BULLDOZER W/ SOUND SUPPRESSION

S/N: S6S1-UP

PART OF 206-9544 BULLDOZER AR-SEMI-UNIVERSAL

AN ATTACHMENT

SMCS-7251 **i01877311**

NOTE	REF NO	GRAPHIC REF	PART NUMBER	QTY	PART NAME 1 2 3 4 5 6 (PRODUCT LEVEL)	SEE PAGE
	1	1	**6P-2216**	60	CAP-PUSH ON	
	2	1	**6S-6251**	2	MOUNT	
	3	1	**6S-6646**	2	PIN-COTTER	
	4	1	**111-4643**	2	PLATE	
	5	1	**145-0823**	4	BUMPER	
	6	1	**155-7803**	2	CAM-LATCH	
	7	1	**155-7819**	1	HOOD AS	
M		1	**8T-3490**	2	NUT-WELD (M10X1.5 THD)	
		1	**127-8732**	6	PIN-WELD	
	8	1	**155-9283**	1	DOOR AS (RH)	
		1	**127-8732**	10	PIN-WELD	
	9	1	**155-9285**	1	SHEET AS (RH)	
		1	**127-8732**	1	PIN-WELD	
	10	1	**155-9286**	1	SUPPORT AS (RH)	
		1	**9R-2672**	1	BOSS (M10X20MM)	
M		1	**8T-3490**	2	NUT-WELD (M10X1.5 THD)	
	11	1	**155-9288**	1	DOOR AS (LH)	
		1	**127-8732**	10	PIN-WELD	
	12	1	**155-9290**	1	SHEET AS (RH)	
		1	**127-8732**	11	PIN-WELD	
	13	1	**155-9291**	1	SUPPORT AS (LH)	
M		1	**8T-3490**	1	NUT-WELD (M10X1.5 THD)	
	14	1	**155-9301**	1	PLATE AS-RH	
M		1	**8T-3490**	2	NUT-WELD (M10X1.5 THD)	
	15	1	**155-9302**	1	PLATE AS-LH	
M		1	**8T-3490**	2	NUT-WELD (M10X1.5 THD)	
	16	1	**174-0099**	1	LINER-LH	
	17	1	**174-0100**	1	LINER (RH)	
	18	1	**174-0101**	1	LINER (RH)	
	19	1	**174-0102**	1	LINER (RH)	
	20	1	**174-0103**	1	LINER (RH)	
	21	1	**174-0104**	1	LINER (RH)	
	22	1	**174-0105**	1	LINER (RH)	
	23	1	**174-0106**	1	LINER (LH)	
	24	1	**174-0107**	1	LINER (RH)	
	25	1	**174-0108**	1	LINER (LH)	
	26	1	**174-0109**	1	LINER (LH)	
	27	1	**174-0110**	1	LINER-RH	
	28	1	**177-1570**	4	LATCH AS	
					(EACH INCLUDES)	
J		1	**217-0733**	1	LOCK AS	
	29	1	**201-4033**	2	PLATE AS	
					(EACH INCLUDES)	
		1	**3H-8726**	1	MOUNT AS	
	30	1	**201-5349**	2	SHAFT AS	
	31	1	**202-7356**	1	BRACKET AS (RH)	
	32	1	**202-7357**	1	BRACKET AS (LH)	
	33	1	**202-7358**	2	CAM (LATCH)	
	34	1	**222-6246**	1	SHEET AS (RH)	
		1	**127-8732**	6	PIN-WELD	
	35	1	**222-6247**	1	SHEET AS (LH)	
		1	**127-8732**	6	PIN-WELD	
	36	1	**224-0687**	1	BRACKET (LH)	
	37	1	**224-0688**	1	BRACKET (RH)	

155-7804 **HOOD & GUARD GP** *(contd.)* **i01877311**

NOTE	REF NO	GRAPHIC REF	PART NUMBER	QTY	PART NAME 1 2 3 4 5 6 (PRODUCT LEVEL)	SEE PAGE
	38	1	**6V-8513**	4	WASHER-HARD (11X35X2.5MM THK)	
	39	1	**7X-7729**	8	WASHER (11X25X3MM THK)	
	40	1	**7Y-2854**	4	SPACER (24X38X3MM THK)	
	41	1	**8T-4121**	18	WASHER-HARD (11X21X2.5MM THK)	
M	42	1	**8T-4137**	8	BOLT (M10X1.5X20MM)	
M	43	1	**8T-4185**	2	BOLT (M10X1.5X50MM)	
M	44	1	**8T-4195**	20	BOLT (M10X1.5X30MM)	
BD	45	1	**202-5293**		SEAL	

B-USE AS REQUIRED
D-ORDER BY THE METER
J-REQUIRES 5P8500 KEY
M-METRIC PART

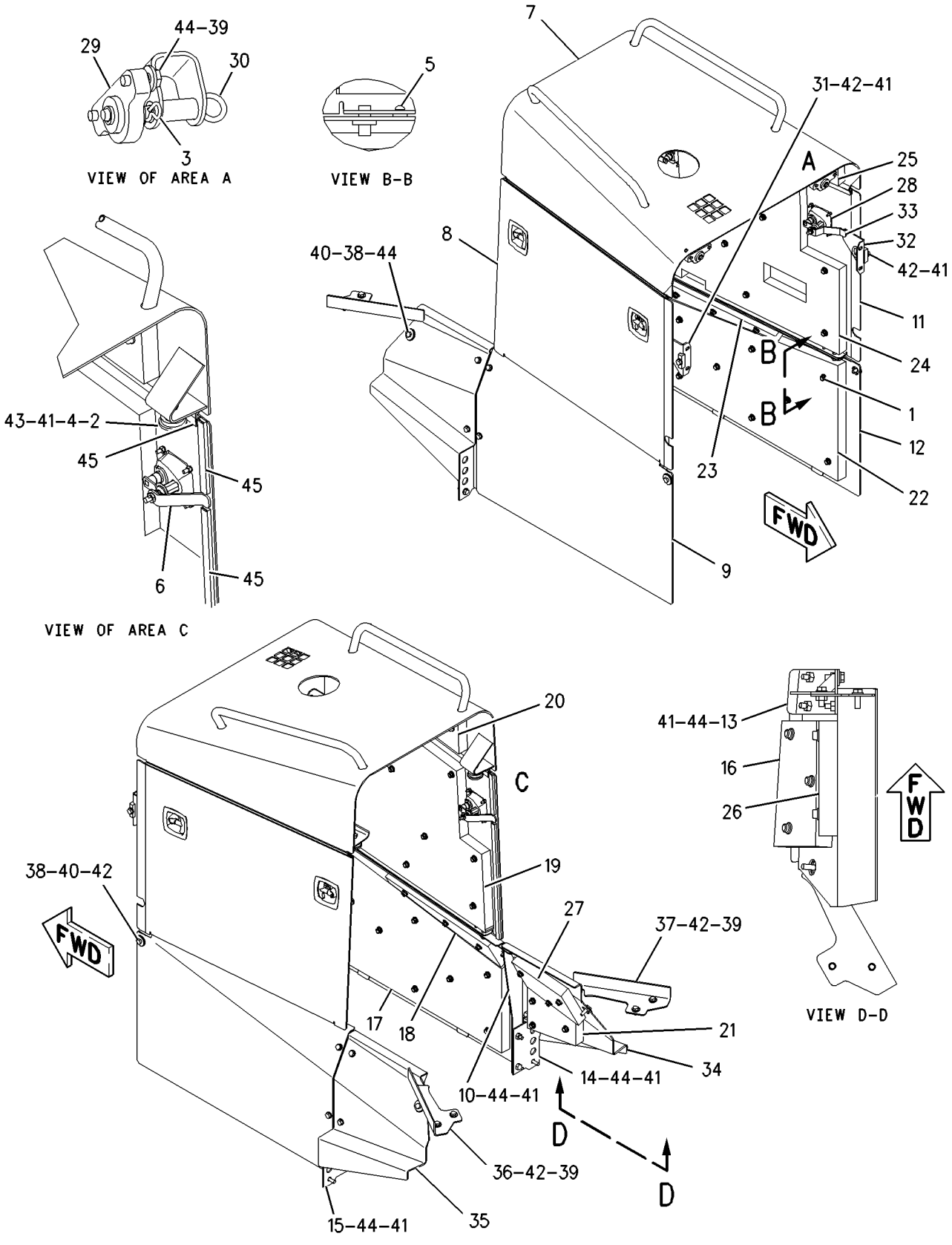

GRAPHIC #1 **<END>** g00914906

FRAME AND BODY

200-6248 HOOD & GUARD GP–SOUND SUPPRESSION

S/N: CCK1-UP
PART OF 169-4912 SUPPRESSION AR-SOUND
AN ATTACHMENT

SMCS-7251 **i01881389**

NOTE	REF NO	GRAPHIC REF	PART NUMBER	QTY	PART NAME 1 2 3 4 5 6 (PRODUCT LEVEL)	SEE PAGE
	1	1	**6P-2216**	68	CAP-PUSH ON	
	2	1	**6S-6251**	2	MOUNT	
	3	1	**6S-6646**	2	PIN-COTTER	
	4	1	**111-4643**	2	PLATE	
	5	1	**155-9301**	1	PLATE AS-RH	
M		1	**8T-3490**	2	NUT-WELD (M10X1.5 THD)	
	6	1	**155-9302**	1	PLATE AS-LH	
M		1	**8T-3490**	2	NUT-WELD (M10X1.5 THD)	
	7	1	**155-9331**	1	SUPPORT AS	
M		1	**8T-3490**	4	NUT-WELD (M10X1.5 THD)	
	8	1	**155-9332**	1	SUPPORT AS	
M		1	**8T-3490**	3	NUT-WELD (M10X1.5 THD)	
	9	1	**174-0099**	1	LINER-LH	
	10	1	**174-0100**	1	LINER (RH)	
	11	1	**174-0103**	1	LINER (RH)	
	12	1	**174-0104**	1	LINER (RH)	
	13	1	**174-0105**	1	LINER (RH)	
	14	1	**174-0108**	1	LINER (LH)	
	15	1	**174-0109**	1	LINER (LH)	
	16	1	**174-0110**	1	LINER-RH	
	17	1	**177-1570**	2	LATCH AS	
					(EACH INCLUDES)	
J		1	**217-0733**	1	LOCK AS	
	18	1	**200-6244**	1	SHEET AS-LH	
		1	**127-8732**	8	PIN-WELD	
		1	**155-9330**	1	SHEET AS (LH)	
	19	1	**200-6245**	1	SHEET AS-RH	
		1	**127-8732**	8	PIN-WELD	
		1	**155-9329**		SHEET AS (RH)	
	20	1	**201-4033**	2	PLATE AS	
					(EACH INCLUDES)	
		1	**3H-8726**	1	MOUNT AS	
	21	1	**201-5349**	2	SHAFT AS	
	22	1	**201-9473**	1	LINER-RH	
	23	1	**201-9474**	1	LINER-RH	
	24	1	**201-9475**	1	LINER-LH	
	25	1	**201-9476**	1	LINER-RH	
	26	1	**201-9477**	1	LINER-RH	
	27	1	**201-9478**	1	LINER-RH	
	28	1	**212-3511**	2	LATCH (CAM)	
	29	1	**222-6241**	1	HOOD AS	
M		1	**8T-3490**	2	NUT-WELD (M10X1.5 THD)	
		1	**127-8732**	6	PIN-WELD	
	30	1	**222-6242**	1	DOOR AS (RH)	
M		1	**8T-5413**	4	STUD-WELD (M10X1.5X25MM OAL)	
		1	**127-8732**	11	PIN-WELD	
	31	1	**222-6243**	1	DOOR AS (LH)	
M		1	**8T-5413**	4	STUD-WELD (M10X1.5X25MM OAL)	
		1	**127-8732**	11	PIN-WELD	
	32	1	**222-6244**	1	SHEET AS (RH INT)	
		1	**127-8732**	6	PIN-WELD	
	33	1	**222-6245**	1	SHEET AS (LH)	
		1	**127-8732**	6	PIN-WELD	
	34	1	**222-6246**	1	SHEET AS (RH)	
		1	**127-8732**	6	PIN-WELD	

200-6248 **HOOD & GUARD GP** *(contd.)* **i01881389**

NOTE	REF NO	GRAPHIC REF	PART NUMBER	QTY	PART NAME 1 2 3 4 5 6 (PRODUCT LEVEL)	SEE PAGE
		1	**222-6239**	1	SHEET (RH)	
	35	1	**222-6247**	1	SHEET AS (LH)	
		1	**127-8732**	6	PIN-WELD	
		1	**222-6240**	1	SHEET (LH)	
	36	1	**224-0687**	1	BRACKET (LH)	
M		1	**8T-3612**	1	NUT-WELD (M8X1.25 THD)	
	37	1	**224-0688**	1	BRACKET (RH)	
M		1	**8T-3612**	1	NUT-WELD (M8X1.25 THD)	
	38	1	**229-1948**	1	SUPPORT AS (RH)	
	39	1	**229-1949**	1	SUPPORT AS (LH)	
	40	1	**229-2834**	1	PLATE AS (LH)	
	41	1	**229-2835**	1	PLATE AS (RH)	
	42	1	**230-8334**	1	BRACKET AS (RH)	
	43	1	**230-8335**	1	BRACKET AS (LH)	
	44	1	**6V-8513**	6	WASHER-HARD (11X35X2.5MM THK)	
	45	1	**3B-4609**	2	PIN-COTTER	
	46	1	**7X-7729**	8	WASHER (11X25X3MM THK)	
	47	1	**7Y-2854**	6	SPACER (24X38X3MM THK)	
	48	1	**8T-4121**	30	WASHER-HARD (11X21X2.5MM THK)	
M	49	1	**8T-4133**	8	NUT (M10X1.5 THD)	
M	50	1	**8T-4136**	4	BOLT (M10X1.5X25MM)	
M	51	1	**8T-4137**	8	BOLT (M10X1.5X20MM)	
M	52	1	**8T-4185**	2	BOLT (M10X1.5X50MM)	
M	53	1	**8T-4195**	20	BOLT (M10X1.5X30MM)	
BD	54	1	**202-5293**		SEAL	

B-USE AS REQUIRED
D-ORDER BY THE METER
J-REQUIRES 5P8500 KEY
M-METRIC PART

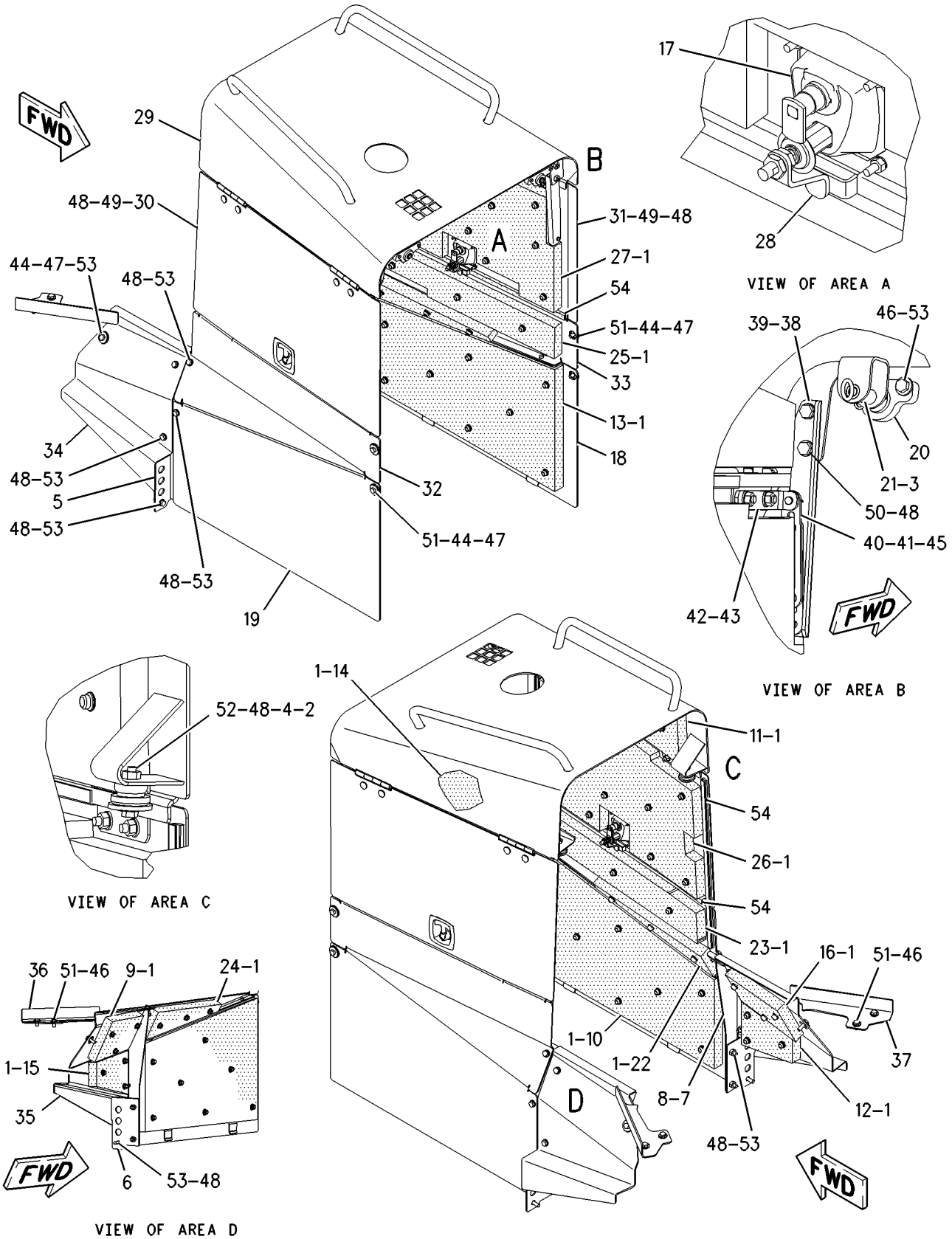

GRAPHIC #1 **<END>** g00974433

FRAME AND BODY

155-9323 HOOD GP

S/N: CCK1-UP

PART OF 189-4619 CHASSIS AR

SMCS-7251 **i01874555**

NOTE	REF NO	GRAPHIC REF	PART NUMBER	QTY	PART NAME 1 2 3 4 5 6 (PRODUCT LEVEL)	SEE PAGE
	1	1	**6S-6251**	2	MOUNT	
	2	1	**6S-6646**	2	PIN-COTTER	
	3	1	**111-4643**	2	PLATE	
	4	1	**155-9301**	1	PLATE AS-RH	
M		1	**8T-3490**	2	NUT-WELD (M10X1.5 THD)	
	5	1	**155-9302**	1	PLATE AS-LH	
M		1	**8T-3490**	2	NUT-WELD (M10X1.5 THD)	
	6	1	**155-9329**	1	SHEET AS (RH)	
	7	1	**155-9330**	1	SHEET AS (LH)	
	8	1	**155-9331**	1	SUPPORT AS (RH)	
		1	**9R-2672**	1	BOSS (M10X20MM)	
M		1	**8T-3490**	4	NUT-WELD (M10X1.5 THD)	
	9	1	**155-9332**	1	SUPPORT AS (LH)	
M		1	**8T-3490**	4	NUT-WELD (M10X1.5 THD)	
	10	1	**177-1570**	2	LATCH AS	
					(EACH INCLUDES)	
J		1	**217-0733**	1	LOCK AS	
	11	1	**201-4033**	2	PLATE AS	
					(EACH INCLUDES)	
		1	**3H-8726**	1	MOUNT AS	
	12	1	**201-5349**	2	SHAFT AS	
	13	1	**212-3511**	2	LATCH (CAM)	
	14	1	**222-6234**	1	HOOD AS	
M		1	**8T-3490**	2	NUT-WELD (M10X1.5 THD)	
	15	1	**222-6235**	1	DOOR AS (RH)	
M		1	**8T-5413**	4	STUD-WELD (M10X1.5X25MM OAL)	
	16	1	**222-6236**	1	DOOR AS (LH)	
M		1	**8T-5413**	4	STUD-WELD (M10X1.5X25MM OAL)	
	17	1	**222-6237**	1	SHEET AS (RH)	
	18	1	**222-6238**	1	SHEET AS (LH)	
	19	1	**222-6239**	1	SHEET (RH)	
	20	1	**222-6240**	1	SHEET (LH)	
	21	1	**224-0687**	1	BRACKET (LH)	
	22	1	**224-0688**	1	BRACKET (RH)	
	23	1	**229-1948**	1	SUPPORT AS (RH)	
	24	1	**229-1949**	1	SUPPORT AS (LH)	
	25	1	**229-2834**	1	PLATE AS (LH)	
	26	1	**229-2835**	1	PLATE AS (RH)	
	27	1	**230-8334**	1	BRACKET AS (RH)	
	28	1	**230-8335**	1	BRACKET AS (LH)	
	29	1	**6V-8513**	6	WASHER-HARD (11X35X2.5MM THK)	
	30	1	**3B-4609**	4	PIN-COTTER	
	31	1	**7X-7729**	8	WASHER (11X25X3MM THK)	
	32	1	**7Y-2854**	6	SPACER (24X38X3MM THK)	
	33	1	**8T-4121**	30	WASHER-HARD (11X21X2.5MM THK)	
M	34	1	**8T-4133**	8	NUT (M10X1.5 THD)	
M	35	1	**8T-4136**	4	BOLT (M10X1.5X25MM)	
M	36	1	**8T-4137**	8	BOLT (M10X1.5X20MM)	
M	37	1	**8T-4185**	2	BOLT (M10X1.5X50MM)	
M	38	1	**8T-4195**	20	BOLT (M10X1.5X30MM)	
BD	39	1	**202-5293**		SEAL	

B-USE AS REQUIRED
D-ORDER BY THE METER
J-REQUIRES 5P8500 KEY
M-METRIC PART

155-9323 **HOOD GP** ***(contd.)*** **i01874555**

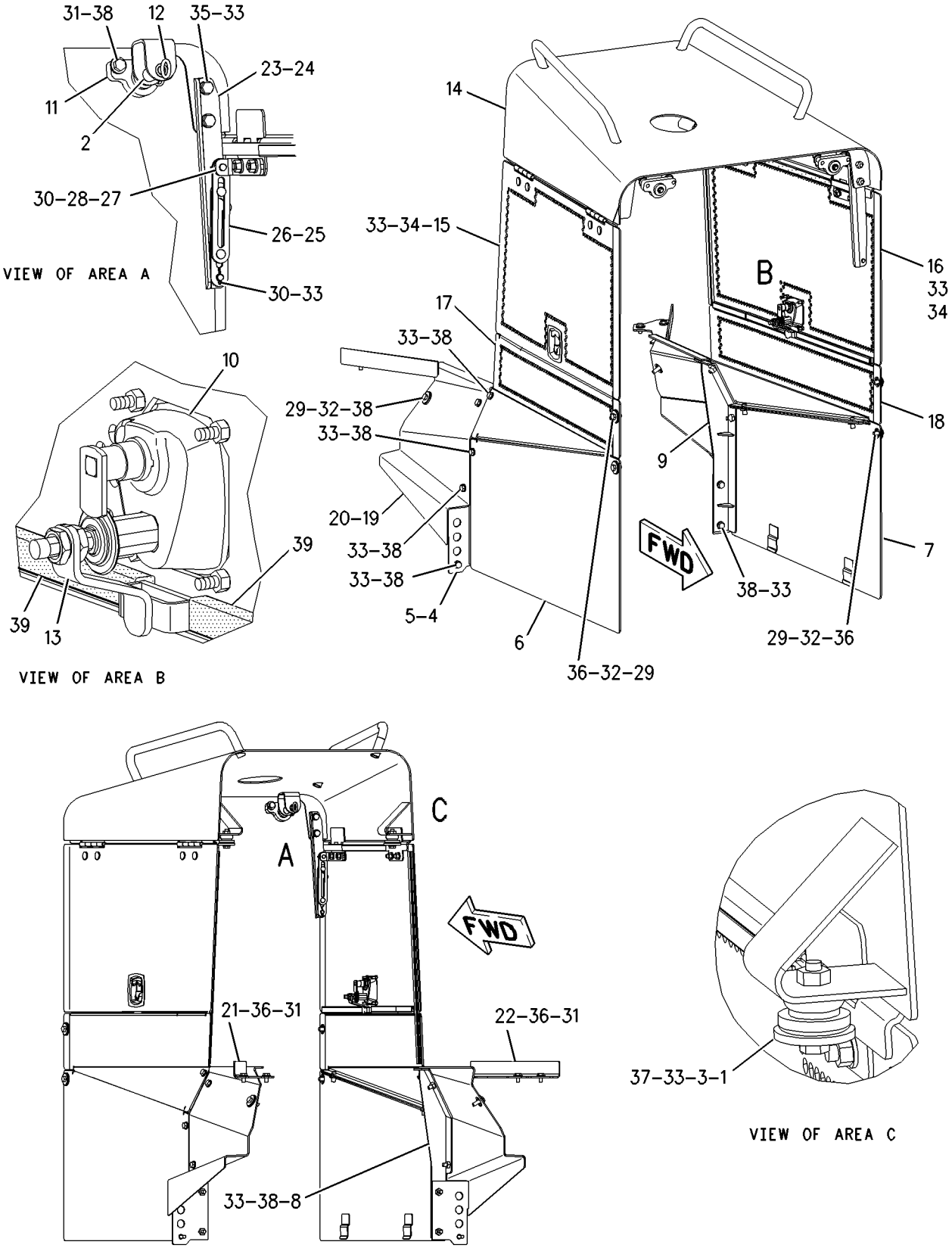

GRAPHIC #1 **<END>** g00956277

217-3841 PANEL GP-SOUND SUPPRESSION

S/N: CCK1-UP

PART OF 217-3819 CAB GP

SMCS-7076 **i01835123**

NOTE	REF NO	GRAPHIC REF	PART NUMBER	QTY	PART NAME 1 2 3 4 5 6 (PRODUCT LEVEL)	SEE PAGE
	1	1	**208-1210**	1	INSULATION	
	2	1	**208-1211**	1	INSULATION	

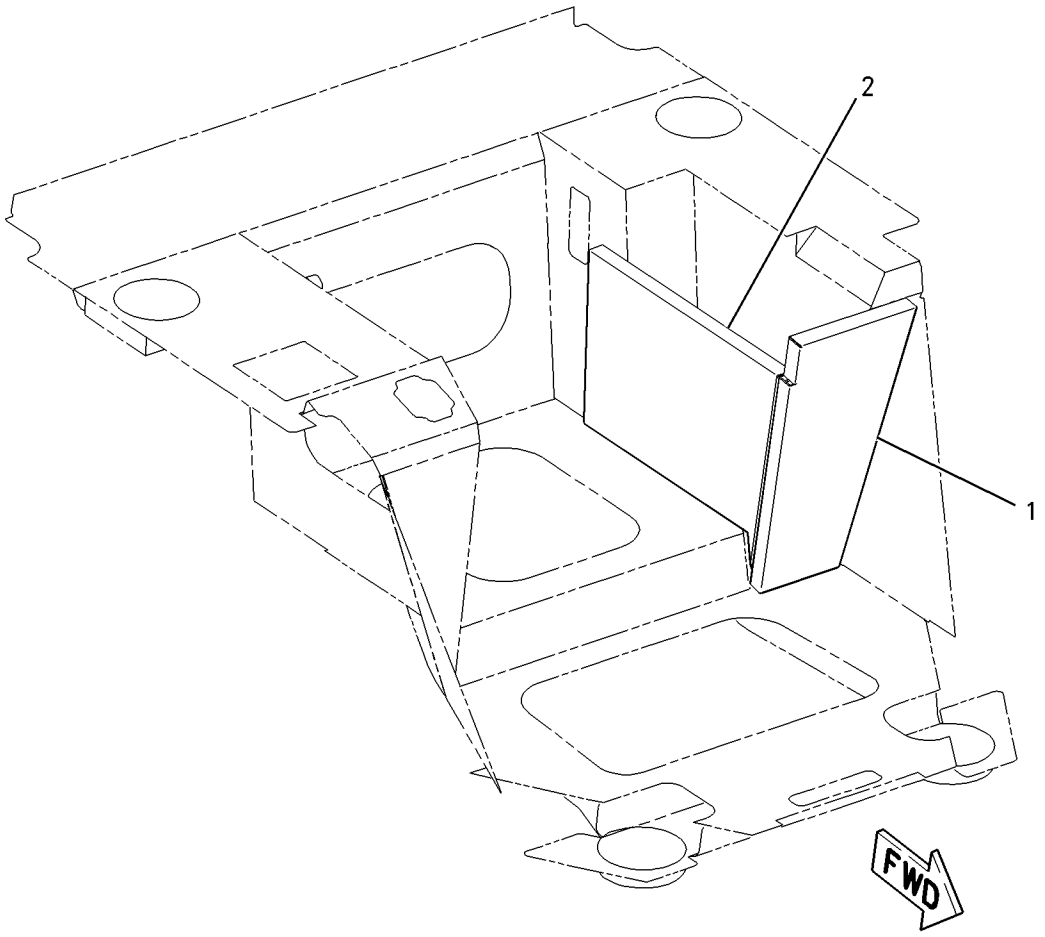

GRAPHIC #1 **<END>** g00937115

FRAME AND BODY

225-0435 SWEEP GP—OPEN ROPS

S/N: CCK1-UP
CANNOT BE USED WITH CAB AR
AN ATTACHMENT

SMCS-7162 **i01831065**

NOTE	REF NO	GRAPHIC REF	PART NUMBER	QTY	PART NAME 1 2 3 4 5 6 (PRODUCT LEVEL)	SEE PAGE
	1	1	**1P-2772**	8	SPACER (26X31X19MM THK)	
	2	1	**9S-5187**	4	MOUNTING	
	3	1	**185-2666**	1	STABILIZER AS	
		1	**3T-7641**	1	PLATE	
		1	**3W-6468**	1	PLATE	
	4	1	**185-2667**	1	STABILIZER AS	
		1	**3T-7641**	1	PLATE	
		1	**3W-6468**	1	PLATE	
	5	1	**225-0437**	2	SWEEP AS	
					(EACH INCLUDES)	
		1	**3W-6468**	2	PLATE	
		1	**9S-5183**	2	BRACKET	
	6	1	**225-0439**	1	BRACKET AS (RH)	
		1	**3T-7641**	1	PLATE	
		1	**225-0440**	1	BRACKET AS (LH)	
		1	**3T-7641**	1	PLATE	
	8	1	**225-0441**	1	SUPPORT AS (RH)	
M		1	**8T-3490**	4	NUT-WELD (M10X1.5 THD)	
	9	1	**225-0442**	1	SUPPORT AS (LH)	
M		1	**8T-3490**	4	NUT-WELD (M10X1.5 THD)	
	10	1	**225-0443**	4	PLATE	
	11	1	**225-0444**	1	TUBE	
M	12	1	**129-3180**	8	LOCKNUT (M12X1.75 THD)	
	13	1	**199-5977**	1	PIPE AS-EXHAUST	
	14	1	**3E-9864**	4	LOCKNUT (1-8 THD)	
	15	1	**5P-1076**	16	WASHER-HARD (13.5X30X4MM THK)	
M	16	1	**7X-2553**	6	BOLT (M16X2X40MM)	
	17	1	**8C-8843**	4	BOLT (1-8X4.5 IN)	
	18	1	**8P-5244**	8	WASHER (33.3X69.8X6.35MM THK)	
	19	1	**8T-4122**	6	WASHER-HARD (17X32X3.5MM THK)	
	20	1	**8T-4223**	10	WASHER-HARD (13.5X25.5X3MM THK)	
M	21	1	**8T-4956**	10	BOLT (M12X1.75X35MM)	
M	22	1	**8T-5041**	8	BOLT (M12X1.75X120MM)	

M-METRIC PART

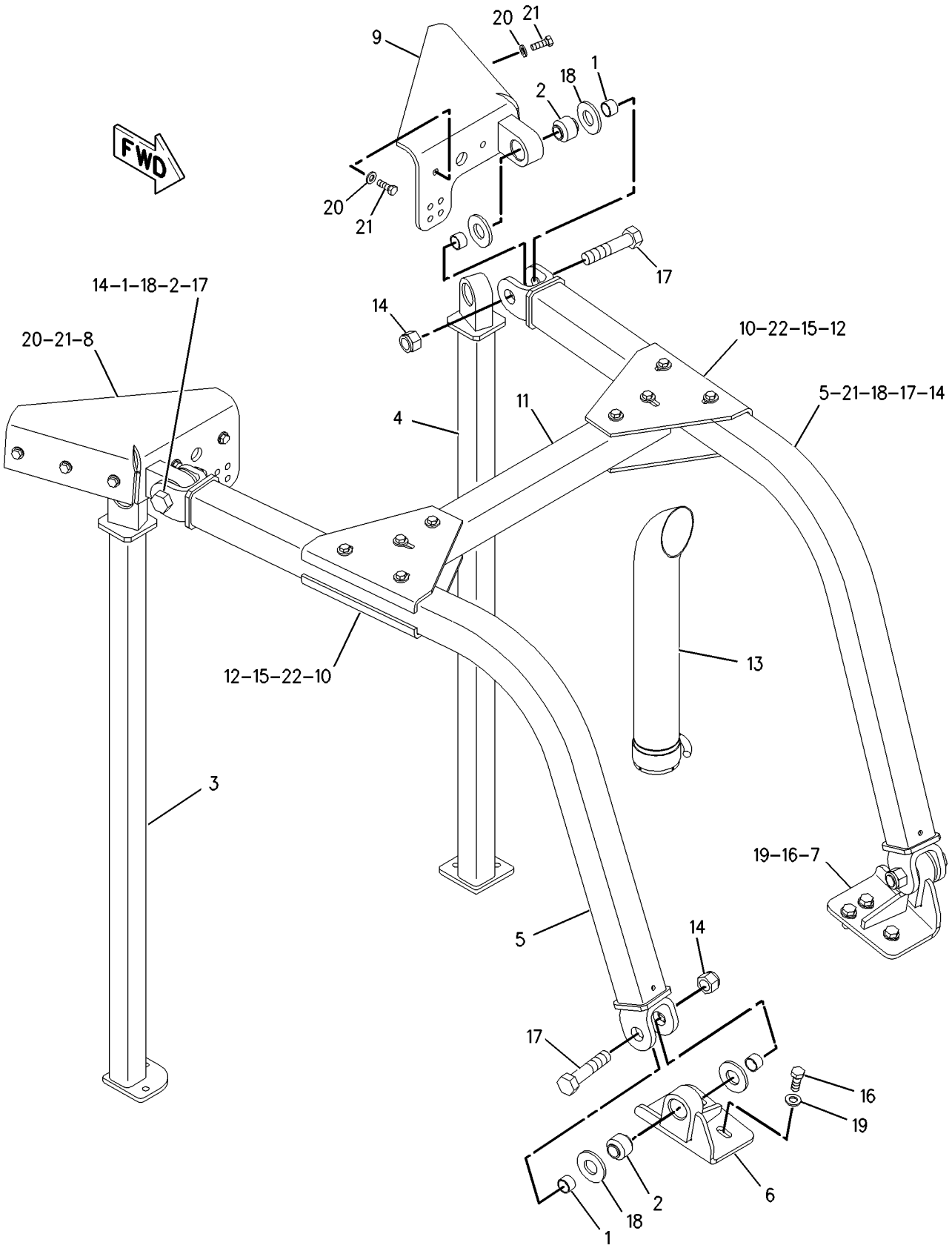

GRAPHIC #1 **<END>** g00938254

225-1271 SWEEP GP—ENCLOSED ROPS

S/N: CCK1-UP
CANNOT BE USED WITH CANOPY AR
AN ATTACHMENT

SMCS-7162 **i01885497**

NOTE	REF NO	GRAPHIC REF	PART NUMBER	QTY	PART NAME 1 2 3 4 5 6 (PRODUCT LEVEL)	SEE PAGE
	1	1	**1P-2772**	8	SPACER (26X31X19MM THK)	
	2	1	**9S-5187**	4	MOUNTING	
	3	1	**225-0439**	1	BRACKET AS (RH)	
		1	**3T-7641**	1	PLATE	
	4	1	**225-0440**	1	BRACKET AS (LH)	
		1	**3T-7641**	1	PLATE	
	5	1	**225-0443**	4	PLATE	
	6	1	**225-3595**	2	SWEEP AS	
					(EACH INCLUDES)	
		1	**9S-5183**	2	BRACKET	
	7	1	**225-3596**	1	SUPPORT AS (RH)	
	8	1	**225-3597**	1	SUPPORT AS (LH)	
	9	1	**225-3598**	1	TUBE	
M	10	1	**129-3180**	8	LOCKNUT (M12X1.75 THD)	
	11	1	**3E-9864**	4	LOCKNUT (1-8 THD)	
	12	1	**5P-1076**	16	WASHER-HARD (13.5X30X4MM THK)	
M	13	1	**7X-2549**	8	BOLT (M12X1.75X100MM)	
M	14	1	**7X-2553**	6	BOLT (M16X2X40MM)	
	15	1	**8C-8843**	4	BOLT (1-8X4.5 IN)	
	16	1	**8P-5244**	8	WASHER (33.3X69.8X6.35MM THK)	
	17	1	**8T-4121**	8	WASHER-HARD (11X21X2.5MM THK)	
	18	1	**8T-4122**	6	WASHER-HARD (17X32X3.5MM THK)	
M	19	1	**8T-4195**	8	BOLT (M10X1.5X30MM)	

M-METRIC PART

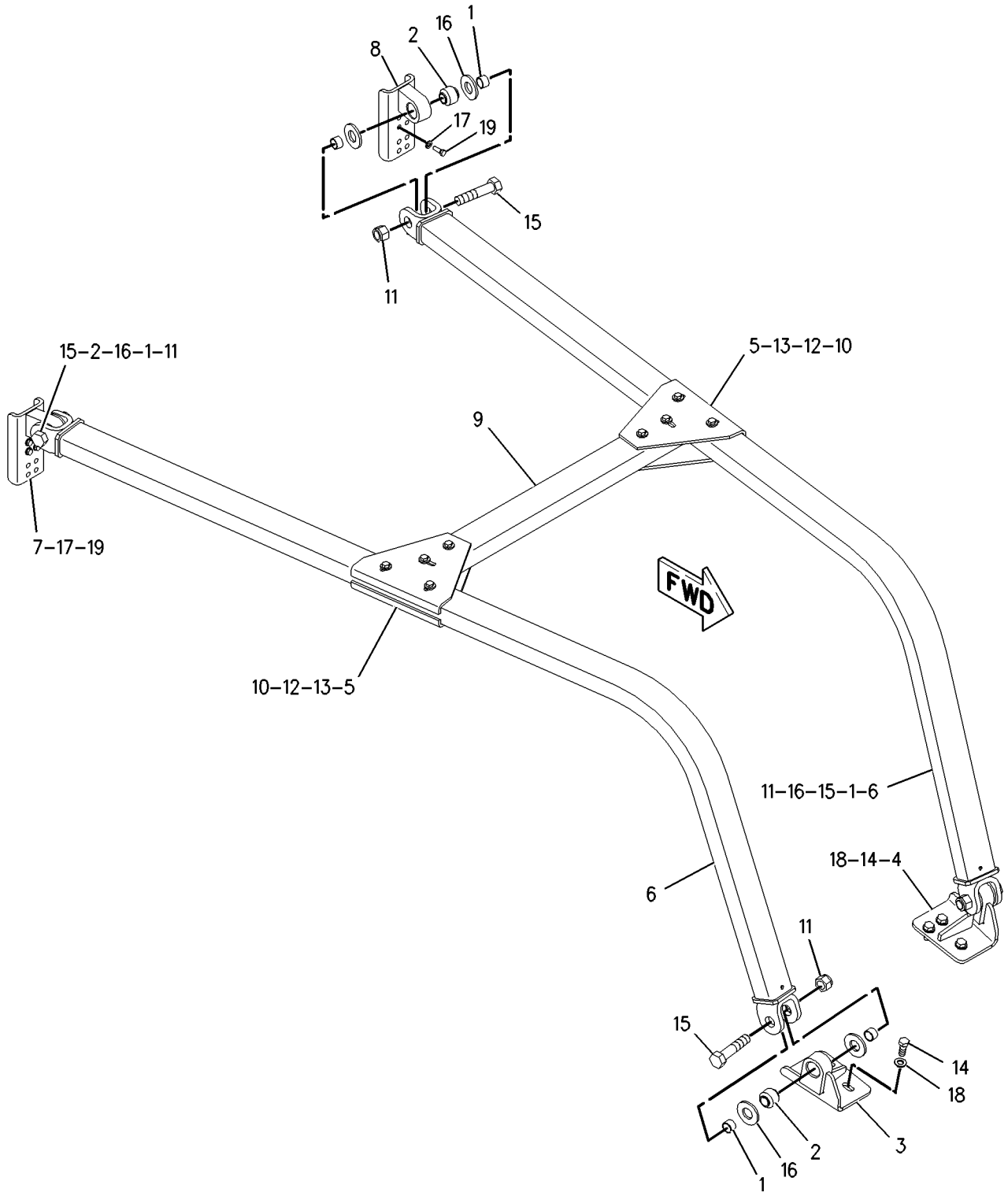

GRAPHIC #1 **<END>** g00938337

UNDERCARRIAGE

172-9872 BAR GP-EQUALIZER

S/N: CCK1-UP

PART OF 173-8651 UNDERCARRIAGE AR

SMCS-7206 **i01829304**

NOTE	REF NO	GRAPHIC REF	PART NUMBER	QTY	PART NAME 1 2 3 4 5 6 (PRODUCT LEVEL)	SEE PAGE
	1	1	**3B-8489**	2	FITTING-GREASE (EQUALIZER BAR)	
	2	1	**7X-0587**	2	WASHER-HARD (17X54X3MM THK)	
	3	1	**8E-8789**	1	BAR AS	
	3A	1	**7P-6596**	2	BEARING-SLEEVE	
	4	1	**8G-4189**	2	BEARING-SELF-ALIGNING	
	5	1	**8G-8316**	2	SPACER (64.7X85X7MM THK)	
	6	1	**109-0367**	1	PIN	
	7	1	**109-0377**	2	PIN AS	
	8	1	**109-3478**	1	COVER	
	9	1	**118-9602**	1	COVER	
I	10	1	**173-3660**	1	HOSE AS	
	11	1	**1J-6472**	4	RING-RETAINING	
	12	1	**3J-7352**	1	CONNECTOR	
	13	1	**3J-7354**	1	SEAL-O-RING	
	14	1	**6D-3479**	2	CLIP	
	15	1	**7K-9205**	2	SEAL-LIP	
	16	1	**8G-4190**	4	SEAL	
	17	1	**9L-5125**	1	ELBOW	
	18	1	**8T-4121**	2	WASHER-HARD (11X21X2.5MM THK)	
M	19	1	**8T-4137**	2	BOLT (M10X1.5X20MM)	
M	20	1	**8T-4190**	2	BOLT (M16X2X25MM)	
M	21	1	**8T-7338**	4	BOLT (M16X2.0X45MM)	
	22	1	**9X-8257**	4	WASHER (17.5X30X3.5MM THK)	

I-SEE HOSE FABRICATION GUIDE
M-METRIC PART

172-9872 **BAR GP-EQUALIZER** *(contd.)* **i01829304**

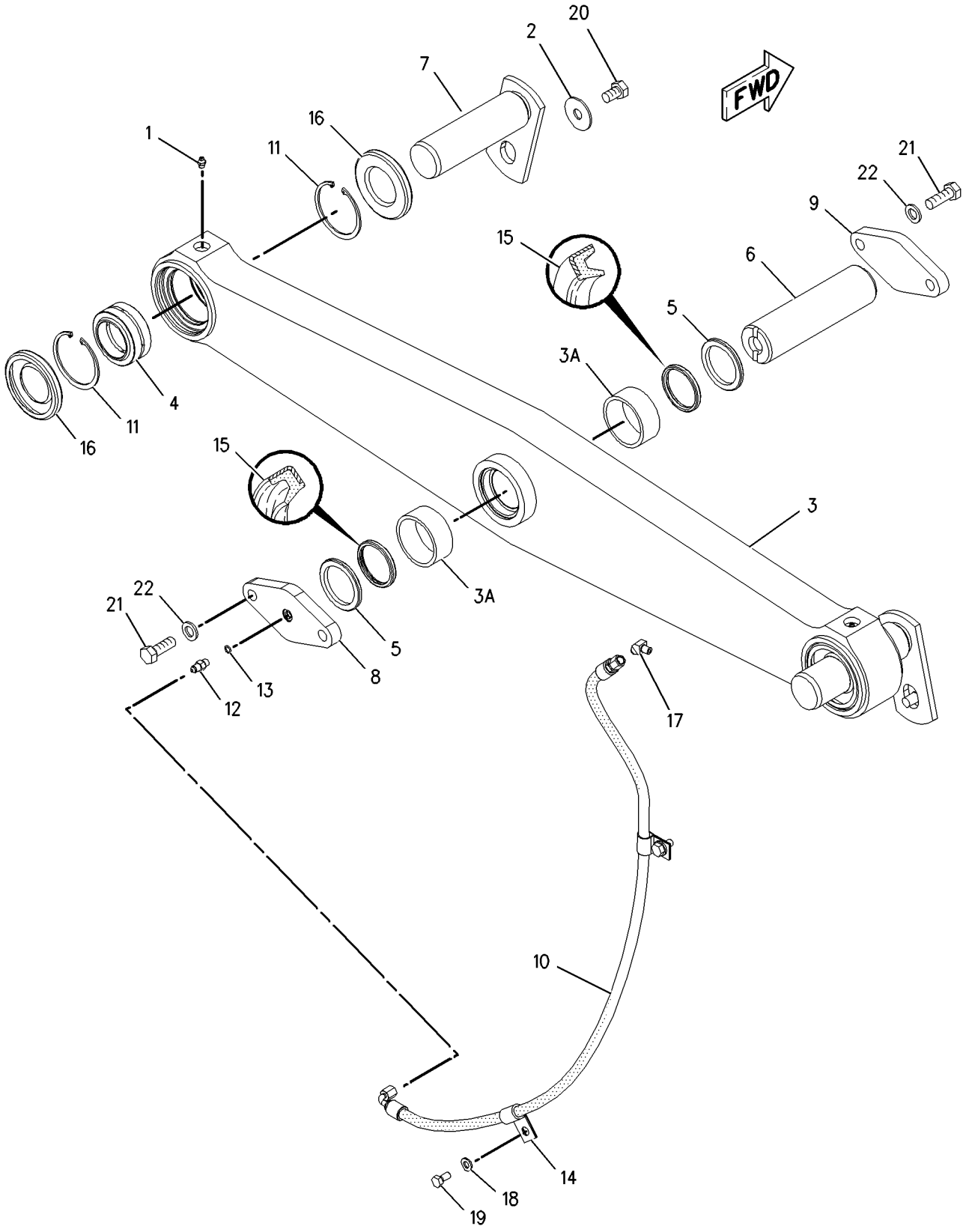

GRAPHIC #1 **<END>** g00914855

110-6122 CAP GP-TRACK IDLER—MOUNTING

S/N: CCK1-UP

PART OF 198-9788 UNDERCARRIAGE GP

SMCS-4159 **i01829374**

NOTE	REF NO	GRAPHIC REF	PART NUMBER	QTY	PART NAME 1 2 3 4 5 6 (PRODUCT LEVEL)	SEE PAGE
	1	1	**108-1138**	1	CAP AS-TRACK IDLER	
		1	**6B-6863**	1	PIN-SPRING	
	2	1	**110-6124**	1	BLOCK-TRACK IDLER	
M	3	1	**8T-0282**	2	BOLT (M16X2.0X120MM)	
	4	1	**5P-8247**	2	WASHER-HARD (17X32X3.5MM THK)	

M-METRIC PART

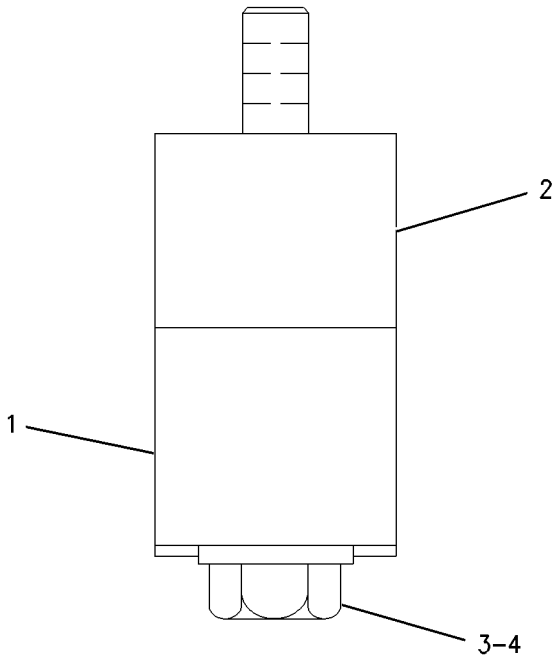

GRAPHIC #1 **<END>** g00940288

198-9789 FRAME GP-TELESCOPING RECOIL

S/N: CCK1-UP

PART OF 198-9788 UNDERCARRIAGE GP

SMCS-4151 **i01898248**

NOTE	REF NO	GRAPHIC REF	PART NUMBER	QTY	PART NAME 1 2 3 4 5 6 (PRODUCT LEVEL)	SEE PAGE
B	1	1	**3W-4346**	8	SHIM (4MM THK)	
	2	1	**8E-1212**	2	COVER AS	
					(EACH INCLUDES)	
		1	**5P-9891**	1	PLATE-WARNING (HIGH PRESSURE CYLINDER) (TELESCOPING RECOIL)	
		1	**7B-3028**	4	SCREW-DRIVE (NO 4X3/16 IN)	
	3	1	**9X-4580**	2	SEAL AS	
					(EACH INCLUDES)	
		1	**8T-5071**	1	GUARD-SEAL	
Y	4	1	*108-0800*	2	TRACK ADJUSTER & RECOIL GP	285
	5	1	**110-5692**	4	RETAINER AS	
					(EACH INCLUDES)	
		1	**8T-7532**	1	FILM-WARNING (PARKING BRAKE CYLINDER)	
	6	1	**196-7074**	4	STRIP-WEAR	
	7	1	**196-7078**	4	STRIP-WEAR	
	8	1	**198-9790**	1	FRAME AS-RH	
		1	**198-9791**	1	FRAME AS-LH	
					(EACH FRAME AS INCLUDES)	
		1	**7J-1333**	1	BEARING	
	8A	1	**8K-0589**	2	DOWEL	
		1	**9J-5284**	1	BEARING-SLEEVE	
	9	1	**196-7109**	1	GUARD AS (RH)	
	10	1	**196-7110**	1	GUARD AS (LH)	
	11	1	**228-8337**	2	FRAME AS	
					(EACH INCLUDES)	
		1	**217-1597**	1	PLATE-WARNING (RECOIL SPRING)	
		1	**8T-9530**	2	TACK-FASTENER	
		1	**8G-3202**	1	BEARING-SLEEVE	
		1	**8K-0589**	2	DOWEL	
	12	1	**196-7107**	1	GUARD AS (RH)	
	13	1	**196-7108**	1	GUARD AS (LH)	
	14	1	**1B-5174**	2	PLUG-PIPE	
	15	1	**3W-2025**	2	RING-RETAINING	
	16	1	**5H-6734**	2	SEAL-O-RING	
	17	1	**8T-4121**	8	WASHER-HARD (11X21X2.5MM THK)	
M	18	1	**8T-4136**	8	BOLT (M10X1.5X25MM)	
M	19	1	**8T-4139**	24	BOLT (M12X1.75X30MM)	
M	20	1	**8T-4192**	24	BOLT (M12X1.75X25MM)	
	21	1	**8T-4223**	48	WASHER-HARD (13.5X25.5X3MM THK)	
	22	1	**9P-8899**	2	BEARING	

B-USE AS REQUIRED
M-METRIC PART
Y-SEPARATE ILLUSTRATION

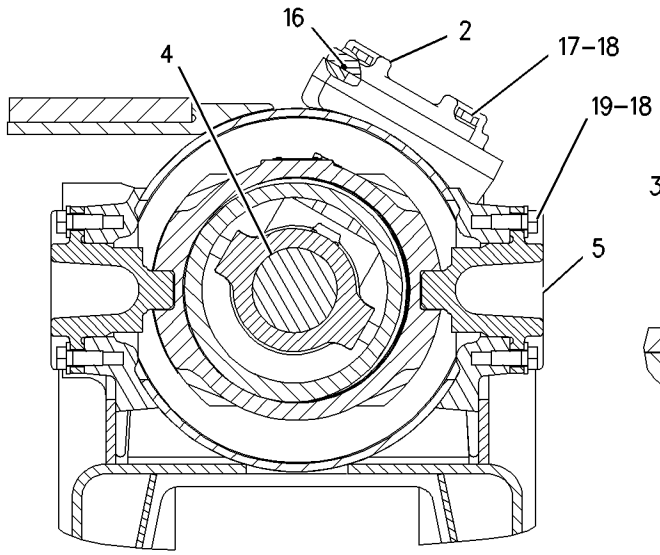

SECTION A-A

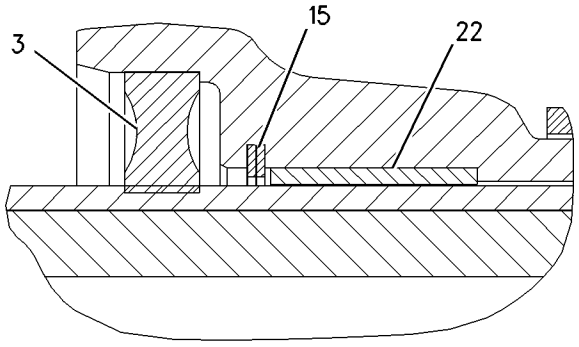

SECTION B-B

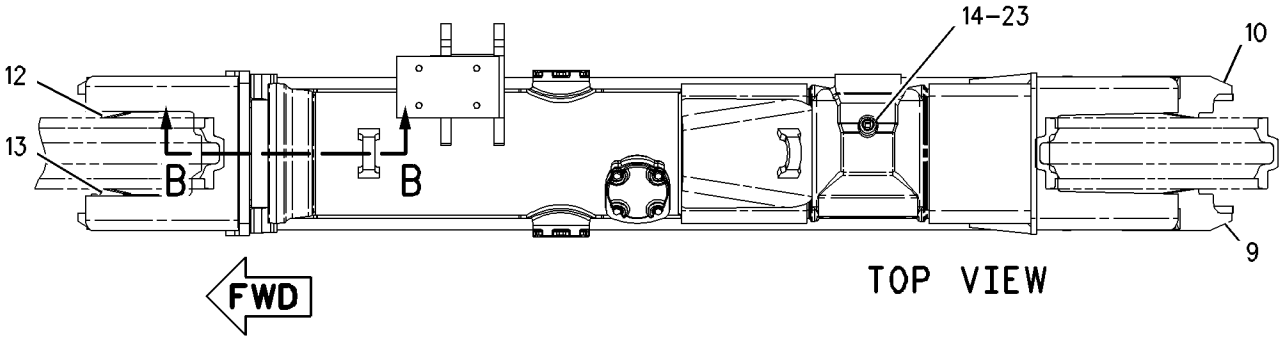

TOP VIEW

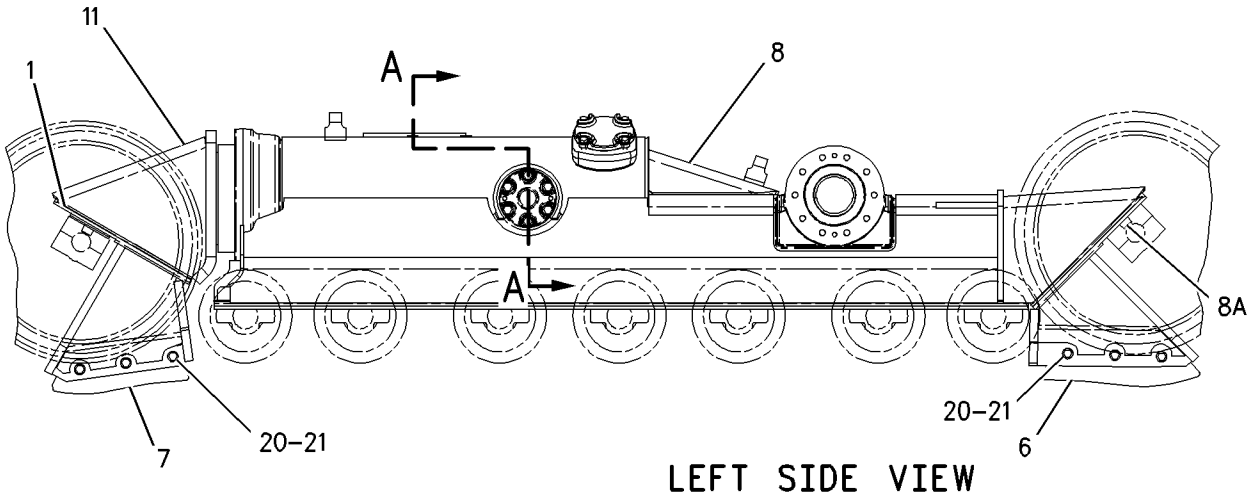

LEFT SIDE VIEW

GRAPHIC #1 **<END>** g00896975

205-6136 GUIDING AR-UNDERCARRIAGE–EXTRA LONG, MODERATE SERVICE

S/N: CCK1-UP

AN ATTACHMENT

SMCS-4150 **i01830916**

NOTE	PART NUMBER	QTY	PART NAME 1 2 3 4 5 6 (PRODUCT LEVEL)	SEE PAGE
Y	*205-6127*	1	GUARD GP-TRACK GUIDE	249
Y	**121-0830**	10	ROLLER GP-TRACK-DOUBLE FLANGE	280

Y-SEPARATE ILLUSTRATION

<END>

205-6137 GUIDING AR-UNDERCARRIAGE–EXTRA LONG, HEAVY DUTY

S/N: CCK1-UP

AN ATTACHMENT

SMCS-4150 **i01830999**

NOTE	PART NUMBER	QTY	PART NAME 1 2 3 4 5 6 (PRODUCT LEVEL)	SEE PAGE
Y	*205-6128*	1	GUARD GP-TRACK ROLLER	250
Y	**121-0830**	10	ROLLER GP-TRACK-DOUBLE FLANGE	280

Y-SEPARATE ILLUSTRATION

<END>

190-1546 IDLER GP-TRACK

S/N: CCK1-UP

PART OF 198-9788 UNDERCARRIAGE GP

SMCS-4159 **i01581537**

NOTE	REF NO	GRAPHIC REF	PART NUMBER	QTY	PART NAME 1 2 3 4 5 6 (PRODUCT LEVEL)	SEE PAGE
	1	1	**1H-8128**	2	SEAL-O-RING	
	2	1	**3T-9536**	1	STOPPER-RUBBER	
	3	1	**5K-0216**	2	SEAL-O-RING	
	4	1	**6Y-0473**	1	PLUG-CLEAR	
	5	1	**110-3362**	2	WASHER-THRUST	
	6	1	**160-9756**	2	COLLAR	
	7	1	**161-7247**	2	SEAL GP-DUO-CONE	
		1	**161-7249**	2	RING-TORIC	
	8	1	**161-7350**	1	SHAFT-TRACK IDLER	
	9	1	**161-7550**	2	RETAINER	
	10	1	**190-1547**	1	IDLER & BEARING AS	
		1	**9P-1360**	2	BEARING-SLEEVE	
	11	1	**053-2294**	12	BOLT-12 POINT HEAD (3/8-16X1.75 IN)	
	12	1	**5M-2894**	12	WASHER-HARD (10.2X18.5X2.5MM THK)	

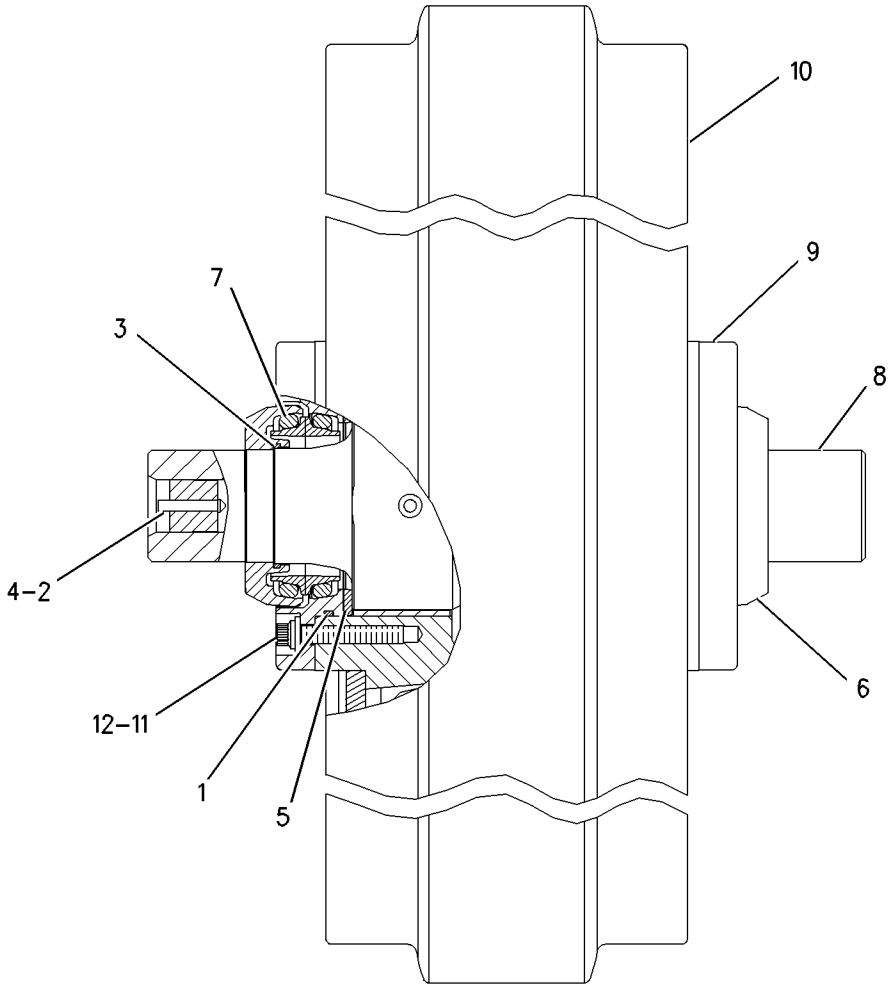

GRAPHIC #1 **<END>** g00838811

110-2976 LINK AS-TRACK

S/N: CCK1-UP
SEALED & LUBRICATED-HEAVY DUTY
PART OF 110-2977, 110-2978, 110-2980, 132-1337 TRACK GP
ALSO AN ATTACHMENT

SMCS-4169, 4171 **i01898254**

NOTE	REF NO	GRAPHIC REF	PART NUMBER	QTY	PART NAME 1 2 3 4 5 6 (PRODUCT LEVEL)	SEE PAGE
	1	1	**6Y-0473**	40	PLUG-CLEAR	
C	2	1	**5G-2247**	40	STOPPER-RUBBER	
	3	1	**152-8070**	80	RING-THRUST	
	4	1	**8E-9642**	80	SEAL AS	
	5	1	**106-1626**	39	LINK-TRACK (LH)	
	6	1	**106-1625**	39	LINK-TRACK (RH)	
	7	1	**106-1628**	1	LINK-MASTER-LH (PIN END)	
	8	1	**106-1627**	1	LINK-MASTER-RH (PIN END)	
	9	1	**106-1630**	1	LINK-MASTER-LH (BUSHING END)	
	10	1	**106-1629**	1	LINK-MASTER-RH (BUSHING END)	
	11	1	**106-1618**	40	BUSHING-TRACK	
C	12	1	**179-0126**	40	PIN-TRACK	
	13	1	**106-1642**	2	BOLT-TRACK MASTER (3/4-16X2.9 IN)	
					(FOR ALL TRACK SHOES EXCEPT SELF-CLEANING)	
	14	1	**107-0719**	2	BOLT-TRACK MASTER (3/4-16X3.9 IN)	
	15	1	**107-0717**	2	BOLT-MASTER TRACK (3/4-16X3.62 IN)	
					(FOR SELF CLEANING TRACK SHOES)	

C-CHANGE FROM PREVIOUS TYPE

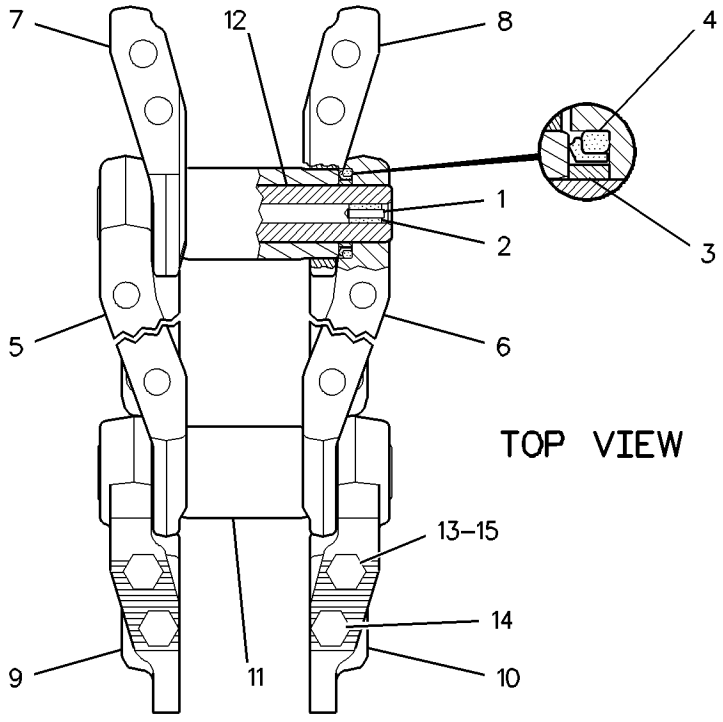

GRAPHIC #1 **<END>** g00987696

152-8043 LINK AS-TRACK

S/N: CCK1-UP
SEALED & LUBRICATED, ROTATING BUSHING TRACK
PART OF 108-2611 TRACK GP
AN ATTACHMENT

SMCS-4169, 4171 **i01830109**

NOTE	REF NO	GRAPHIC REF	PART NUMBER	QTY	PART NAME 1 2 3 4 5 6 (PRODUCT LEVEL)	SEE PAGE
	1	1	**152-8070**	160	RING-THRUST	
	2	1	**8E-9642**	160	SEAL AS	
	3	1	**106-1627**	1	LINK-MASTER-RH (PIN END)	
	4	1	**106-1628**	1	LINK-MASTER-LH (PIN END)	
	5	1	**165-1753**	1	JOINT AS	
		1	**106-1630**	1	LINK-MASTER-LH (BUSHING END)	
	6	1	**165-1752**	1	JOINT AS	
		1	**106-1629**	1	LINK-MASTER-RH (BUSHING END)	
	7	1	**156-4701**	40	PIN-TRACK	
	8	1	**165-1768**	40	BUSHING-TRACK	
	9	1	**165-1751**	39	JOINT AS-TRACK	
					(EACH INCLUDES)	
		1	**106-1626**	1	LINK-TRACK (LH)	
	10	1	**165-1750**	39	JOINT AS-TRACK	
					(EACH INCLUDES)	
		1	**106-1625**	1	LINK-TRACK (RH)	
	11	1	**6Y-0473**	40	PLUG-CLEAR	
	12	1	**5G-2247**	40	STOPPER-RUBBER	
	13	1	**106-1642**	2	BOLT-TRACK MASTER (3/4-16X2.9 IN)	
	14	1	**107-0719**	2	BOLT-TRACK MASTER (3/4-16X3.9 IN)	

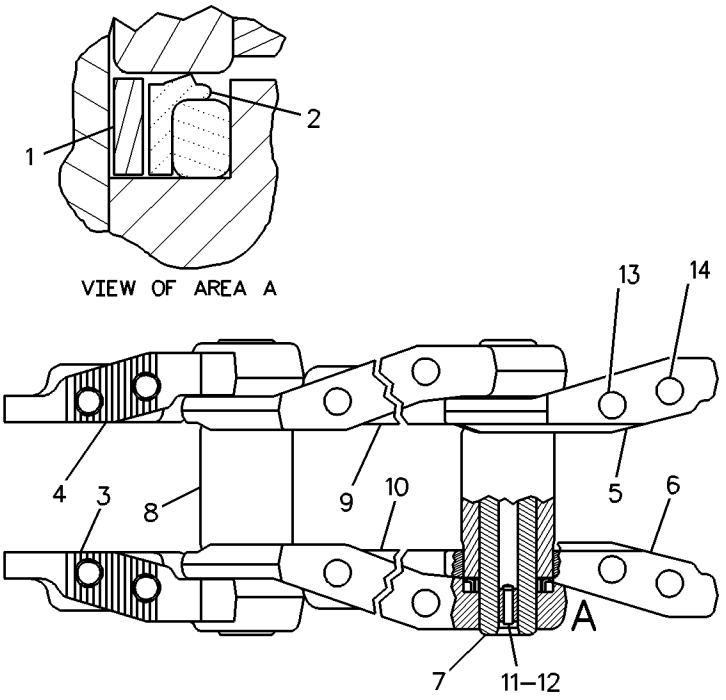

GRAPHIC #1 **<END>** g00896122

118-6345 MOUNTING GP-CARRIER ROLLER

S/N: CCK1-UP

PART OF 173-8651 UNDERCARRIAGE AR

SMCS-4154 **i00599914**

NOTE	REF NO	GRAPHIC REF	PART NUMBER	QTY	PART NAME 1 2 3 4 5 6 (PRODUCT LEVEL)	SEE PAGE
	1	1	**6Y-3125**	2	BRACKET AS	
M	2	1	**7X-2532**	4	BOLT (M20X2.5X130MM)	
	3	1	**8T-4123**	8	WASHER-PLATED (3.5MM THK)	
M	4	1	**8T-4131**	4	NUT (M20X2.50 THD)	
M	5	1	**8T-7338**	8	BOLT (M16X2.0X45MM)	
	6	1	**9X-8257**	8	WASHER (3.50MM THK)	

M-METRIC PART

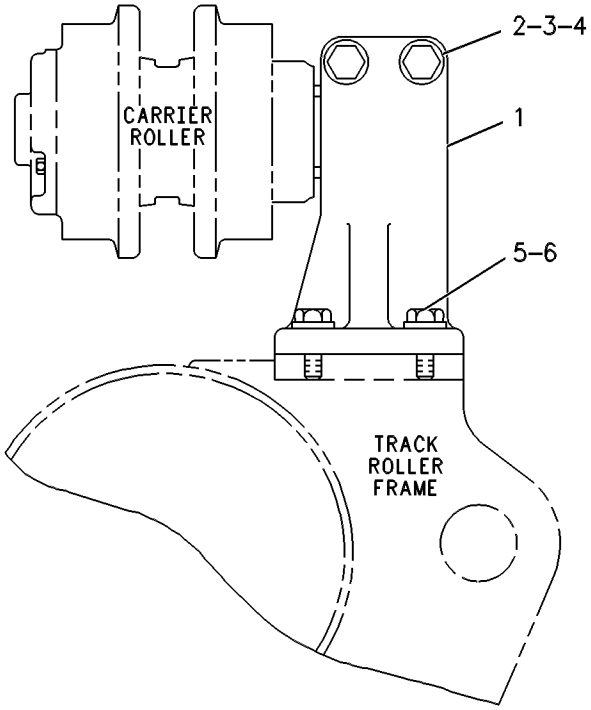

GRAPHIC #1 **<END>** g00252461

UNDERCARRIAGE

107-4098 PIVOT BAR GP

S/N: CCK1-UP

PART OF 173-8651 UNDERCARRIAGE AR

SMCS-4153 **i01321574**

NOTE	REF NO	GRAPHIC REF	PART NUMBER	QTY	PART NAME 1 2 3 4 5 6 (PRODUCT LEVEL)	SEE PAGE
	1	1	**108-0802**	2	COVER	
M	2	1	**6V-3531**	6	BOLT (M20X2.5X50MM)	
M	3	1	**8T-4193**	20	BOLT (M16X2.0X50MM)	
	4	1	**9X-8257**	20	WASHER (3.50MM THK)	
	5	1	**5P-1979**	2	SEAL-O-RING (132.72MM ID)	
	6	1	**8G-4107**	2	PLATE	
M	7	1	**7X-2576**	24	BOLT (M24X3X70MM)	
	8	1	**108-0803**	2	SHAFT AS	
					(EACH INCLUDES)	
		1	**8G-5799**	1	RING	
	9	1	**8G-2943**	2	SEAL	

M-METRIC PART

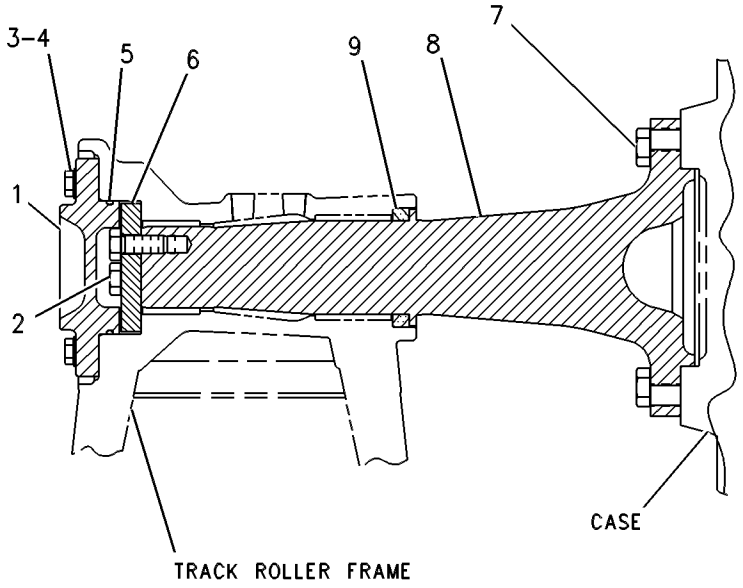

GRAPHIC #1 **<END>** g00252496

UNDERCARRIAGE

6Y-3908 ROLLER GP-TRACK CARRIER

S/N: CCK1-UP

PART OF 173-8651 UNDERCARRIAGE AR

SMCS-4154 **i01884253**

NOTE	REF NO	GRAPHIC REF	PART NUMBER	QTY	PART NAME 1 2 3 4 5 6 (PRODUCT LEVEL)	SEE PAGE
	1	1	**7H-4574**	1	RING	
	2	1	**7H-4571**	1	COLLAR AS	
	3	1	**1M-4291**	2	DOWEL	
	4	1	**1H-8720**	1	SEAL-O-RING	
	5	1	**1M-8747**	1	SEAL GP-DUO-CONE	
	6	1	**8H-2262**	2	RING-TORIC	
	7	1	**126-1347**	2	BEARING AS-SPECIAL	
					(EACH INCLUDES)	
	8	1	**9S-3582**	1	CONE-BEARING	
	9	1	**9S-3581**	1	CUP-BEARING	
	10	1	**5A-8375**	1	ROLLER AS	
	11	1	**2P-0347**	1	PLUG	
	12	1	**1S-8947**	1	SEAL-O-RING	
	13	1	**0S-1594**	3	BOLT (3/8-16X1 IN)	
	14	1	**8P-6188**	1	PLATE-RETAINER	
	15	1	**5M-2043**	1	COVER-ROLLER	
	16	1	**2H-6338**	1	SEAL-O-RING	
	17	1	**5K-9107**	2	BOLT-LOCKING (3/8-16X0.75 IN)	
	18	1	**5M-2894**	3	WASHER-HARD (10.2X18.5X2.5MM THK)	
	19	1	**6Y-2043**	1	SHAFT-CARRIER ROLLER	

6Y-3908 **ROLLER GP-TRACK CARRIER** *(contd.)* **i01884253**

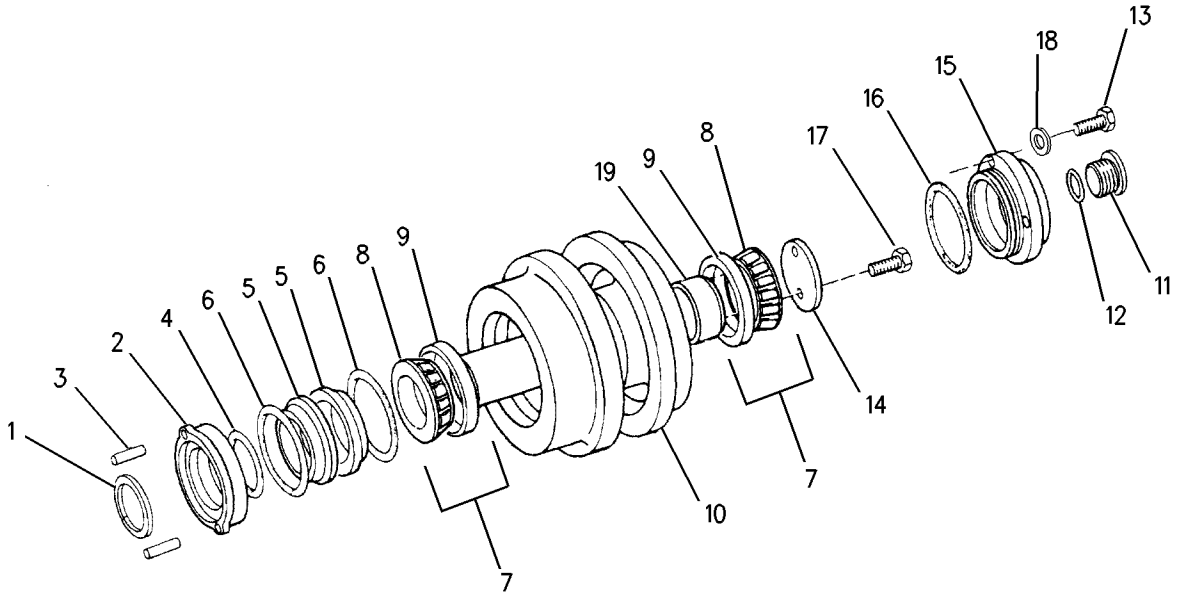

GRAPHIC #1 **<END>** g00675856

121-0827 ROLLER GP-TRACK-DOUBLE FLANGE

S/N: CCK1-UP

PART OF 125-4173 ROLLER GP-TRACK-DOUBLE FLANGE

SMCS-4180 **i01883320**

NOTE	REF NO	GRAPHIC REF	PART NUMBER	QTY	PART NAME 1 2 3 4 5 6 (PRODUCT LEVEL)	SEE PAGE
	1	1	**121-0834**	2	BUSHING AS	
	2	1	**131-8742**	1	SHAFT-TRACK ROLLER	
	3	1	**131-9352**	2	COLLAR-TRACK ROLLER	
	4	1	**121-1257**	2	RING-RETAINING	
	5	1	**1H-6227**	2	SEAL-O-RING	
	6	1	**121-0828**	1	RIM AS-DOUBLE FLANGE	
	7	1	**6H-7382**	2	RING-LOCK	
	8	1	**7F-8267**	2	SEAL-O-RING	
R	9	1	**9W-7216**	1	SEAL GP-DUO-CONE	
		1	**1M-3097**	2	RING-SEALING	
	10	1	**6Y-0473**	1	PLUG-CLEAR	
		1	**7G-4332**	1	STOPPER	

R-REMFG PART MAY BE AVAILABLE

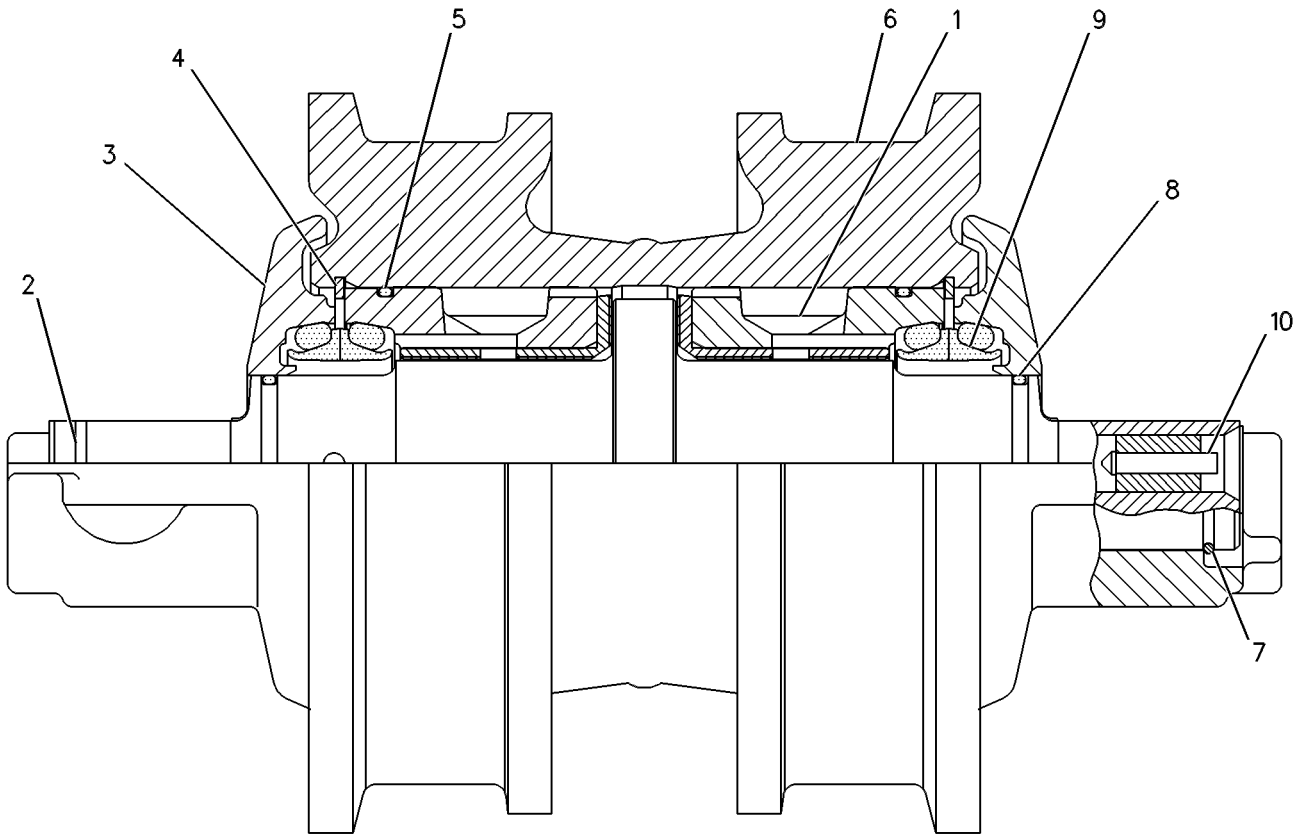

GRAPHIC #1 **<END>** g00252463

121-0830 ROLLER GP-TRACK-DOUBLE FLANGE–

UNDERCARRIAGE GUIDING

S/N: CCK1-UP

PART OF 205-6136, 205-6137 GUIDING AR-UNDERCARRIAGE

AN ATTACHMENT

SMCS-4180 **i01830923**

NOTE	REF NO	GRAPHIC REF	PART NUMBER	QTY	PART NAME 1 2 3 4 5 6 (PRODUCT LEVEL)	SEE PAGE
	1	1	**131-8742**	1	SHAFT-TRACK ROLLER	
	2	1	**131-9352**	2	COLLAR-TRACK ROLLER	
	3	1	**121-1257**	2	RING-RETAINING	
	4	1	**1H-6227**	2	SEAL-O-RING	
	5	1	**121-0831**	1	RIM AS-DOUBLE FLANGE	
	6	1	**121-0834**	2	BUSHING AS	
					(EACH INCLUDES)	
		1	**9B-2289**	2	PIN	
		1	**8P-6652**	1	BEARING AS	
	7	1	**7F-8267**	2	SEAL-O-RING	
	8	1	**6H-7382**	2	RING-LOCK	
	9	1	**7G-4332**	1	STOPPER	
		1	**6Y-0473**	1	PLUG-CLEAR	
R	10	1	**9W-7216**	2	SEAL GP-DUO-CONE	
					(EACH INCLUDES)	
		1	**1M-3097**	2	RING-SEALING	

R-REMFG PART MAY BE AVAILABLE

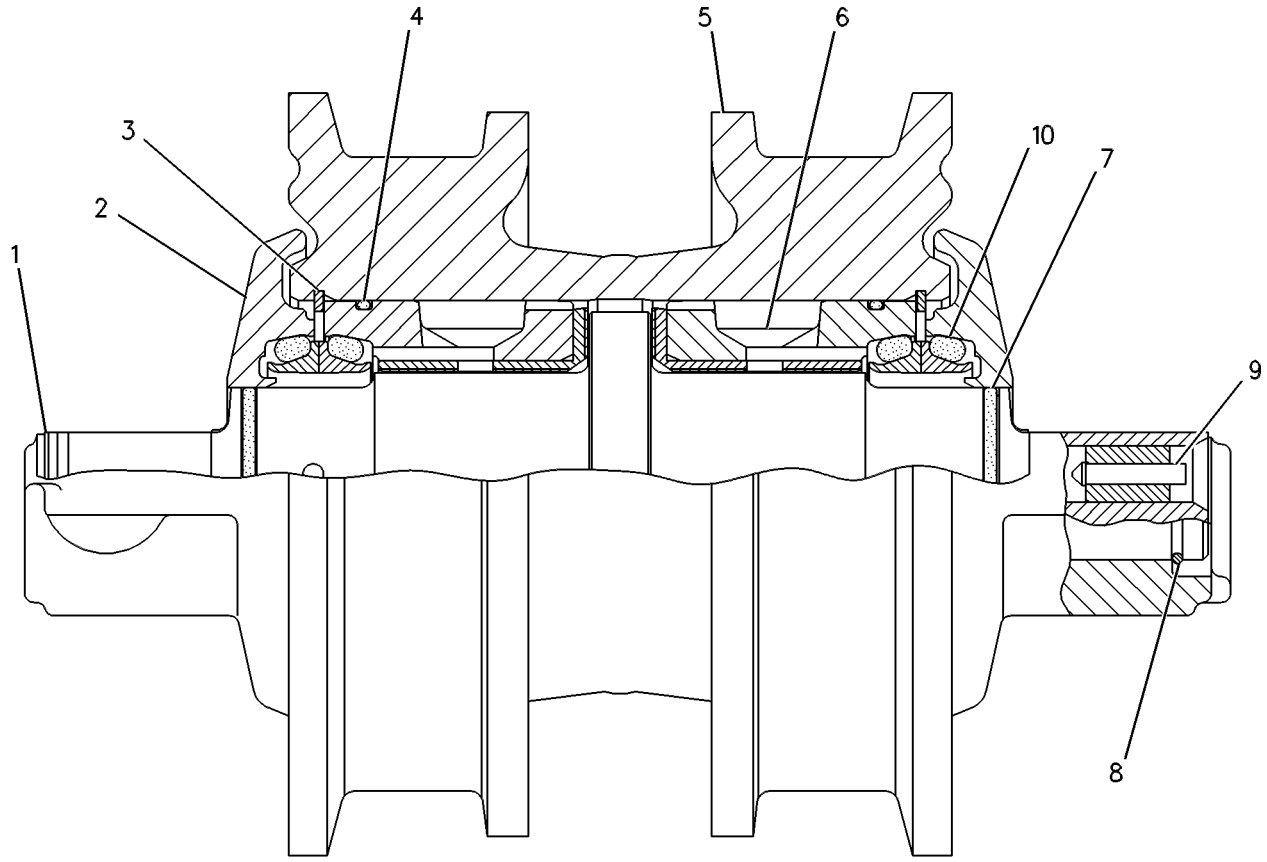

GRAPHIC #1 **<END>** g00263912

125-4173 ROLLER GP-TRACK-DOUBLE FLANGE

S/N: CCK1-UP

PART OF 198-9788 UNDERCARRIAGE GP

SMCS-4180 **i00598528**

NOTE	PART NUMBER	QTY	PART NAME 1 2 3 4 5 6 (PRODUCT LEVEL)	SEE PAGE
M	**6V-3303**	4	BOLT (M16X2.0X60MM)	
Y	**121-0827**	1	ROLLER GP-TRACK-DOUBLE FLANGE	279
	5P-8247	4	WASHER-HARD (3.5MM THK)	

M-METRIC PART
Y-SEPARATE ILLUSTRATION

<END>

121-0824 ROLLER GP-TRACK-SINGLE FLANGE

S/N: CCK1-UP

PART OF 125-4172 ROLLER GP-TRACK-SINGLE FLANGE

SMCS-4180 **i01884258**

NOTE	REF NO	GRAPHIC REF	PART NUMBER	QTY	PART NAME 1 2 3 4 5 6 (PRODUCT LEVEL)	SEE PAGE
	1	1	**131-9352**	2	COLLAR-TRACK ROLLER	
	2	1	**131-8742**	1	SHAFT-TRACK ROLLER	
R	3	1	**9W-7216**	2	SEAL GP-DUO-CONE	
					(EACH INCLUDES)	
		1	**1M-3097**	2	RING-SEALING	
	4	1	**121-1257**	2	RING-RETAINING	
	5	1	**1H-6227**	2	SEAL-O-RING	
	6	1	**121-0825**	1	RIM AS-SINGLE FLANGE	
	7	1	**121-0834**	2	BUSHING AS	
					(EACH INCLUDES)	
		1	**9B-2289**	2	PIN	
	8	1	**7F-8267**	2	SEAL-O-RING	
	9	1	**6Y-0473**	1	PLUG-CLEAR	
		1	**7G-4332**	1	STOPPER	
	10	1	**6H-7382**	2	RING-LOCK	

R-REMFG PART MAY BE AVAILABLE

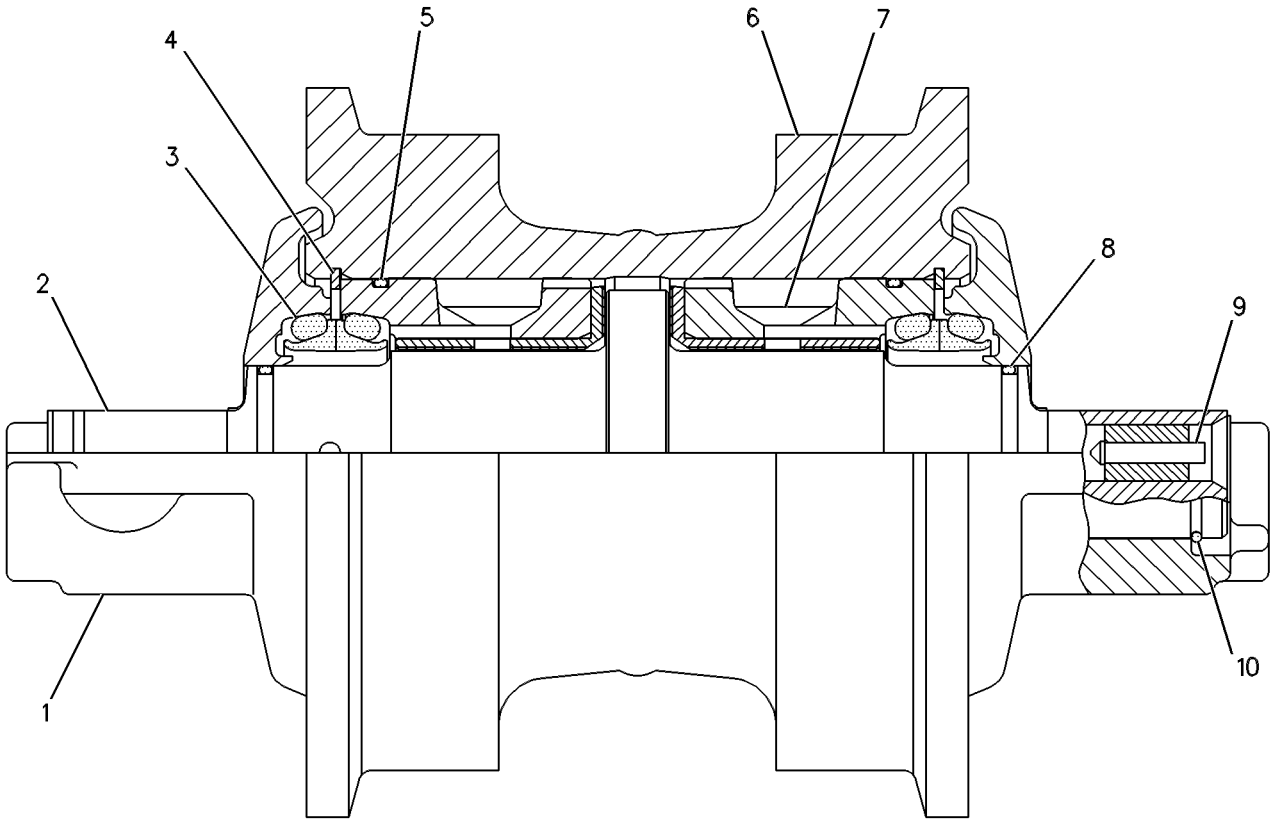

GRAPHIC #1 **<END>** g00252462

125-4172 ROLLER GP-TRACK-SINGLE FLANGE

S/N: CCK1-UP

PART OF 198-9788 UNDERCARRIAGE GP

SMCS-4180 **i00601011**

NOTE	PART NUMBER	QTY	PART NAME 1 2 3 4 5 6 (PRODUCT LEVEL)	SEE PAGE
Y	**121-0824**	1	ROLLER GP-TRACK-SINGLE FLANGE	283
M	**6V-3303**	4	BOLT (M16X2.0X60MM)	
	5P-8247	4	WASHER-HARD (3.5MM THK)	

M-METRIC PART
Y-SEPARATE ILLUSTRATION

<END>

UNDERCARRIAGE

108-0800 TRACK ADJUSTER & RECOIL GP

S/N: CCK1-UP

PART OF 198-9789 FRAME GP-TELESCOPING RECOIL

SMCS-4157, 4158 **i01885503**

NOTE	REF NO	GRAPHIC REF	PART NUMBER	QTY	PART NAME 1 2 3 4 5 6 (PRODUCT LEVEL)	SEE PAGE
	1	1	**190-8609**	1	VALVE-FILL (TRACK ADJUST & RECOIL CYLINDER)	
	2	1	**2S-5926**	1	VALVE (RELIEF) (TRACK ADJUST & RECOIL CYLINDER)	
	3	1	**3W-2369**	1	PLATE AS	
	4	1	**8G-3102**	1	PISTON	
	5	1	**8G-4945**	1	SEAL AS	
	6	1	**8G-4960**	1	RETAINER	
C	7	1	**215-1594**	1	TUBE AS	
	8	1	**106-0669**	1	SPRING	
	9	1	**108-0801**	1	CYLINDER	
	10	1	**2J-6274**	1	SEAL-O-RING	
	11	1	**2S-4078**	1	SEAL-O-RING	
	12	1	**8E-4092**	2	RETAINER	
M	13	1	**8T-0375**	4	BOLT (M16X2X45MM)	
	14	1	**8T-4121**	2	WASHER-HARD (11X21X2.5MM THK)	
M	15	1	**8T-4182**	2	BOLT (M10X1.5X45MM)	
	16	1	**9S-8010**	1	PLUG	
	17	1	**9X-8268**	4	WASHER (17.5X30X3.5MM THK)	

C-CHANGE FROM PREVIOUS TYPE
M-METRIC PART

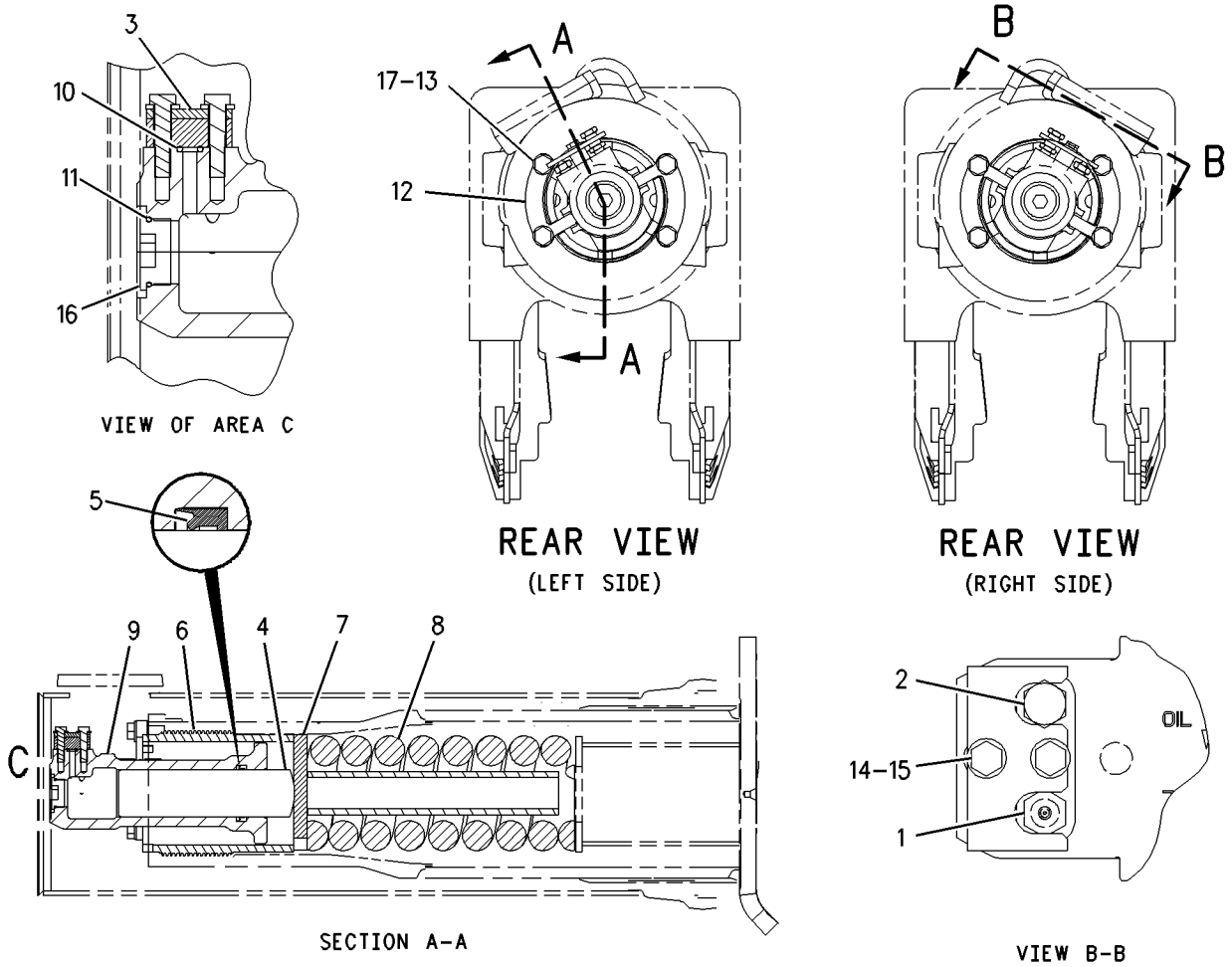

GRAPHIC #1 **<END>** g00937566

108-2611 TRACK GP–2 REQUIRED

S/N: CCK1-UP
600MM (23.6 IN) GROUSER SHOE.
SEALED & LUBRICATED, ROTATING BUSHING TRACK-MODERATE SERVICE
AN ATTACHMENT

SMCS-4170 **i01830103**

NOTE	PART NUMBER	QTY	PART NAME 1 2 3 4 5 6 (PRODUCT LEVEL)	SEE PAGE
Y	**152-8043**	1	LINK AS-TRACK	274
	6V-1792	156	BOLT-TRACK (3/4-16X2.4 IN)	
	106-1642	2	BOLT-TRACK MASTER (3/4-16X2.9 IN)	
	107-0719	2	BOLT-TRACK MASTER (3/4-16X3.9 IN)	
	1S-1860	156	NUT-TRACK (3/4-16 THD)	
	117-0616	1	SHOE-MASTER TRACK	
	117-0615	39	SHOE-TRACK	
Y-SEPARATE ILLUSTRATION				

<END>

110-2977 TRACK GP–2 REQUIRED

S/N: CCK1-UP
560MM (22 IN) GROUSER SHOE. SEALED & LUBRICATED-MODERATE SERVICE-HEAVY DUTY
AN ATTACHMENT

SMCS-4170 **i01321586**

NOTE	PART NUMBER	QTY	PART NAME 1 2 3 4 5 6 (PRODUCT LEVEL)	SEE PAGE
Y	**110-2976**	1	LINK AS-TRACK	273
	6V-1792	156	BOLT-TRACK (3/4-16X2.4 IN)	
	107-0719	2	BOLT-TRACK MASTER (3/4-16X3.9IN)	
	106-1642	2	BOLT-TRACK MASTER (3/4-16X2.9IN)	
	1S-1860	156	NUT-TRACK (3/4-16 THD)	
	106-1607	39	SHOE-TRACK	
	106-1613	1	SHOE-TRACK	
Y-SEPARATE ILLUSTRATION				

<END>

110-2978 TRACK GP–2 REQUIRED

S/N: CCK1-UP

600MM (23.6 IN) GROUSER SHOE. SEALED & LUBRICATED- MODERATE SERVICE-HEAVY DUTY

PART OF 173-8651 UNDERCARRIAGE AR

SMCS-4170 **i01321595**

NOTE	PART NUMBER	QTY	PART NAME 1 2 3 4 5 6 (PRODUCT LEVEL)	SEE PAGE
Y	**110-2976**	1	LINK AS-TRACK	273
	6V-1792	156	BOLT-TRACK (3/4-16X2.4 IN)	
	107-0719	2	BOLT-TRACK MASTER (3/4-16X3.9IN)	
	106-1642	2	BOLT-TRACK MASTER (3/4-16X2.9IN)	
	1S-1860	156	NUT-TRACK (3/4-16 THD)	
	117-0616	1	SHOE-MASTER TRACK	
	117-0615	39	SHOE-TRACK	

Y-SEPARATE ILLUSTRATION

<END>

110-2980 TRACK GP–2 REQUIRED

S/N: CCK1-UP

560MM (22 IN) GROUSER SHOE. SEALED & LUBRICATED-EXTREME SERVICE-HEAVY DUTY

AN ATTACHMENT

SMCS-4170 **i01321601**

NOTE	PART NUMBER	QTY	PART NAME 1 2 3 4 5 6 (PRODUCT LEVEL)	SEE PAGE
Y	**110-2976**	1	LINK AS-TRACK	273
	6V-1792	156	BOLT-TRACK (3/4-16X2.4 IN)	
	106-1642	2	BOLT-TRACK MASTER (3/4-16X2.9IN)	
	107-0719	2	BOLT-TRACK MASTER (3/4-16X3.9IN)	
	1S-1860	156	NUT-TRACK (3/4-16 THD)	
	107-0714	1	SHOE-MASTER TRACK	
	107-0713	39	SHOE-TRACK	

Y-SEPARATE ILLUSTRATION

<END>

UNDERCARRIAGE

132-1337 TRACK GP–2 REQUIRED

S/N: CCK1-UP

600MM (23.6 IN) GROUSER SHOE. EXTREME SERVICE, HEAVY DUTY, SEALED & LUBRICATED AN ATTACHMENT

SMCS-4170 **i01830129**

NOTE	PART NUMBER	QTY	PART NAME 1 2 3 4 5 6 (PRODUCT LEVEL)	SEE PAGE
Y	**110-2976**	1	LINK AS-TRACK	273
	6V-1792	156	BOLT-TRACK (3/4-16X2.4 IN)	
	106-1642	2	BOLT-TRACK MASTER (3/4-16X2.9 IN)	
	107-0719	2	BOLT-TRACK MASTER (3/4-16X3.9 IN)	
	1S-1860	156	NUT-TRACK (3/4-16 THD)	
	132-1334	39	SHOE-TRACK	
	132-1336	1	SHOE-TRACK MASTER	
Y-SEPARATE ILLUSTRATION				

<END>

173-8651 UNDERCARRIAGE AR

S/N: CCK1-UP

PART OF 189-4616 GENERAL AR

SMCS-4150 **i01829302**

NOTE	PART NUMBER	QTY	PART NAME 1 2 3 4 5 6 (PRODUCT LEVEL)	SEE PAGE
Y	*172-9872*	1	BAR GP-EQUALIZER	266
Y	*118-6345*	1	MOUNTING GP-CARRIER ROLLER	275
Y	*107-4098*	1	PIVOT BAR GP	276
Y	**6Y-3908**	2	ROLLER GP-TRACK CARRIER	277
Y	**110-2978**	2	TRACK GP	287
Y	*198-9788*	1	UNDERCARRIAGE GP	288
Y-SEPARATE ILLUSTRATION				

<END>

198-9788 UNDERCARRIAGE GP

S/N: CCK1-UP

PART OF 173-8651 UNDERCARRIAGE AR

SMCS-4150 **i01829359**

NOTE	PART NUMBER	QTY	PART NAME 1 2 3 4 5 6 (PRODUCT LEVEL)	SEE PAGE
Y	*110-6122*	8	CAP GP-TRACK IDLER	268
Y	*198-9789*	1	FRAME GP-TELESCOPING RECOIL	269
Y	**190-1546**	4	IDLER GP-TRACK	272
Y	*125-4173*	6	ROLLER GP-TRACK-DOUBLE FLANGE	282
Y	*125-4172*	8	ROLLER GP-TRACK-SINGLE FLANGE	284
Y-SEPARATE ILLUSTRATION				

<END>

STEERING AND BRAKING SYSTEM

193-4119 BRAKE & DIFFERENTIAL DRIVE GP

S/N: CCK1-UP

PART OF 195-0644 BRAKE GP-STEERING

SMCS-4131 **i01833463**

NOTE	REF NO	GRAPHIC REF	PART NUMBER	QTY	PART NAME 1 2 3 4 5 6 (PRODUCT LEVEL)	SEE PAGE
	1	1	**2K-5069**	1	CUP-BEARING	
	2	1	**2K-9295**	1	CONE-BEARING	
	3	1	**3B-4124**	1	CUP-BEARING	
	4	2	**3S-2708**	7	PIN-SPRING	
B	5	2	**1U-8846**		SEALANT-GASKET	
	6	2	**3T-4568**	3	SHAFT-PLANETARY	
	7	2	**3T-4824**	4	GEAR-PLANETARY (30 TEETH)	
	8	1	**3T-5638**	1	GEAR-BEVEL (74 TEETH)	
	9	1	**3T-6394**	1	PINION-BEVEL (15 TEETH)	
	10	2	**3T-6963**	1	SEAL-RING	
B	11	1	**3T-9272**	1	SHIM PACK (INCLUDES 8 SHIMS)	
	12	2	**5M-0578**	3	BEARING AS	
	13	2	**5M-7925**	4	BEARING-ROLLER	
	14	2	**6I-8724**	1	RING-LOCK	
	15	1	**6P-1735**	1	LOCKWASHER	
	16	1	**6P-1736**	1	WASHER (55X76X2.75MM THK)	
	17	2	**6T-0062**	1	PLATE	
	18	2	**6T-0064**	4	SHAFT-PLANETARY	
	19	1	**6T-0850**	2	WASHER-THRUST (287X255X2.75 THK)	
	20	1	**6V-0855**	1	CONE-BEARING	
	21	1	**6V-7646**	3	WASHER-HARD (7.2X25X2MM THK)	
	22	2	**6Y-0926**	3	GEAR-PLANETARY (23 TEETH)	
	23	2	**6Y-0984**	1	GEAR-RING (75 TEETH)	
	24	1	**6Y-2704**	1	SPRING-DISC	
	25	1	**6Y-9373**	4	DISC-FRICTION	
	26	2	**7G-1596**	1	RING-RETAINING	
	27	1	**7H-4566**	2	CUP-BEARING	
	28	1	**7T-1885**	1	RING	
	29	1	**7T-6994**	3	PLATE-CLUTCH & BRAKE	
	30	2	**7T-8130**	1	RING-RETAINING	
	31	1	**7T-9832**	1	RETAINER	
	32	1	**7T-9837**	1	PLATE	
	33	1	**8E-5277**	1	RETAINER	
	34	1	**8E-5279**	1	PISTON	
	35	2	**8E-8307**	6	DISC-THRUST	
	36	2	**8E-8310**	8	DISC-THRUST	
	37	1	**9B-0576**	1	LOCKNUT-BEARING	
	38	2	**9W-1571**	1	SLINGER	
B	39	1	**9W-2853**	1	SHIM PACK (INCLUDES 21 SHIMS)	
	40	2	**9W-3937**	1	SPACER (88.83X107X36.65MM THK)	
	41	2	**9W-3939**	1	RING-LOCK	
	42	1	**9W-4274**	1	CARRIER	
	43	2	**9W-6102**	1	GEAR-RING (84 TEETH)	
	44	2	**9W-6103**	1	RING-THRUST	
	45	1	**205-5311**	1	HOUSING AS	
	45A	1	**1A-2223**	2	DOWEL	
	45B	1	**1A-1460**	12	BOLT (1/2-13X2 IN)	
	45C	1	**5P-8245**	12	WASHER-HARD (13.5X25.5X3MM THK)	
Z	45D	1		1	SUPPORT-MOTOR	
	46	1	**005-4834**	2	CONE-BEARING	
	47	1	**136-1595**	1	HOUSING-ROTATING	
	48	2	**191-0938**	1	CARRIER-PLANETARY	
	49	2	**191-0940**	1	CARRIER-PLANETARY	
	50	2	**193-0733**	1	GEAR-SUN (24/30 TEETH)	
	51	1	**193-7405**	1	HUB	
	52	2	**030-2135**	4	BOLT-LOCKING	

193-4119 **BRAKE & DIFFERENTIAL DRIVE GP** ***(contd.)*** **i01833463**

NOTE	REF NO	GRAPHIC REF	PART NUMBER	QTY	PART NAME 1 2 3 4 5 6 (PRODUCT LEVEL)	SEE PAGE
	53	1	**0L-1143**	21	BOLT (3/8-16X2.50 IN)	
	54	1	**0S-1585**	6	BOLT (1/2-13X1.50 IN)	
	55	1	**0S-1614**	3	BOLT (1/4-20X0.5 IN)	
	56	1	**1A-2029**	6	BOLT (3/8-16X1.125 IN)	
	57	1	**2A-4639**	1	BOLT (3/8-16X1.625 IN)	
	58	1	**3K-0360**	2	SEAL-O-RING	
	59	2	**5K-9107**	3	BOLT-LOCKING (3/8-16X0.75 IN)	
	60	1	**5M-2894**	7	WASHER-HARD (10.2X18.5X2.5MM THK)	
	61	1	**5P-8245**	6	WASHER-HARD (13.5X25.5X3MM THK)	
	62	1	**6F-6673**	2	SEAL-O-RING	
	63	1	**6P-5317**	1	RING-SEAL	
	64	1	**6Y-4003**	1	RING-SEAL	
	65	1	**7W-6534**	4	PLUG-PIPE	
	66	1	**8D-4771**	1	SEAL-O-RING	
	67	1	**8M-4438**	1	SEAL-O-RING	
M	68	1	**8T-2223**	2	BOLT-SOCKET HEAD (M10X1.5X45MM)	
	69	1	**9L-9132**	3	WASHER (10.2X25.5X2.5MM THK)	
	70	1	**9S-8005**	2	PLUG	
	71	1	**9X-2027**	2	WASHER (11X18X2MM THK)	

B-USE AS REQUIRED
M-METRIC PART
Z-NOT SERVICED SEPARATELY

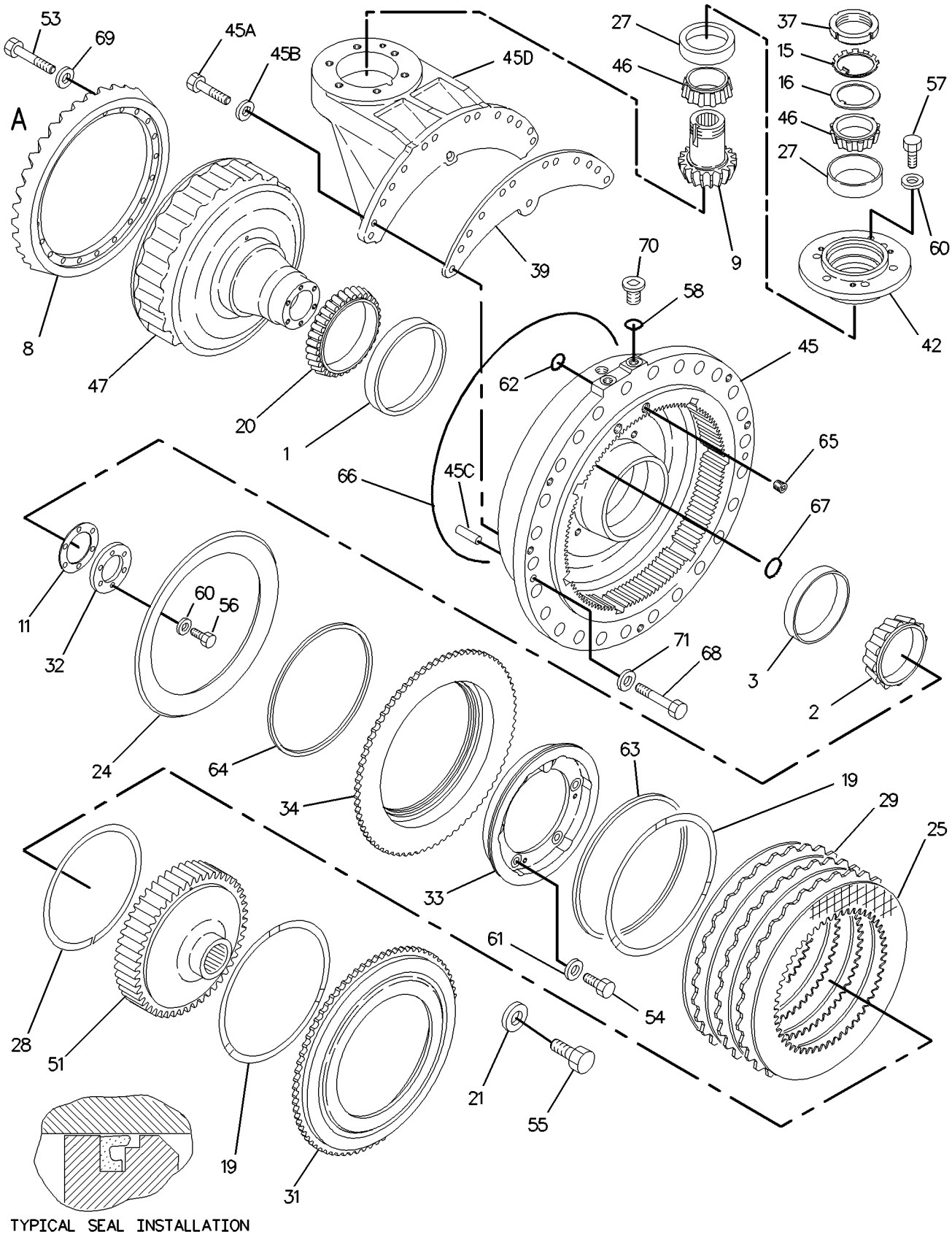

TYPICAL SEAL INSTALLATION

GRAPHIC #1 g00937178

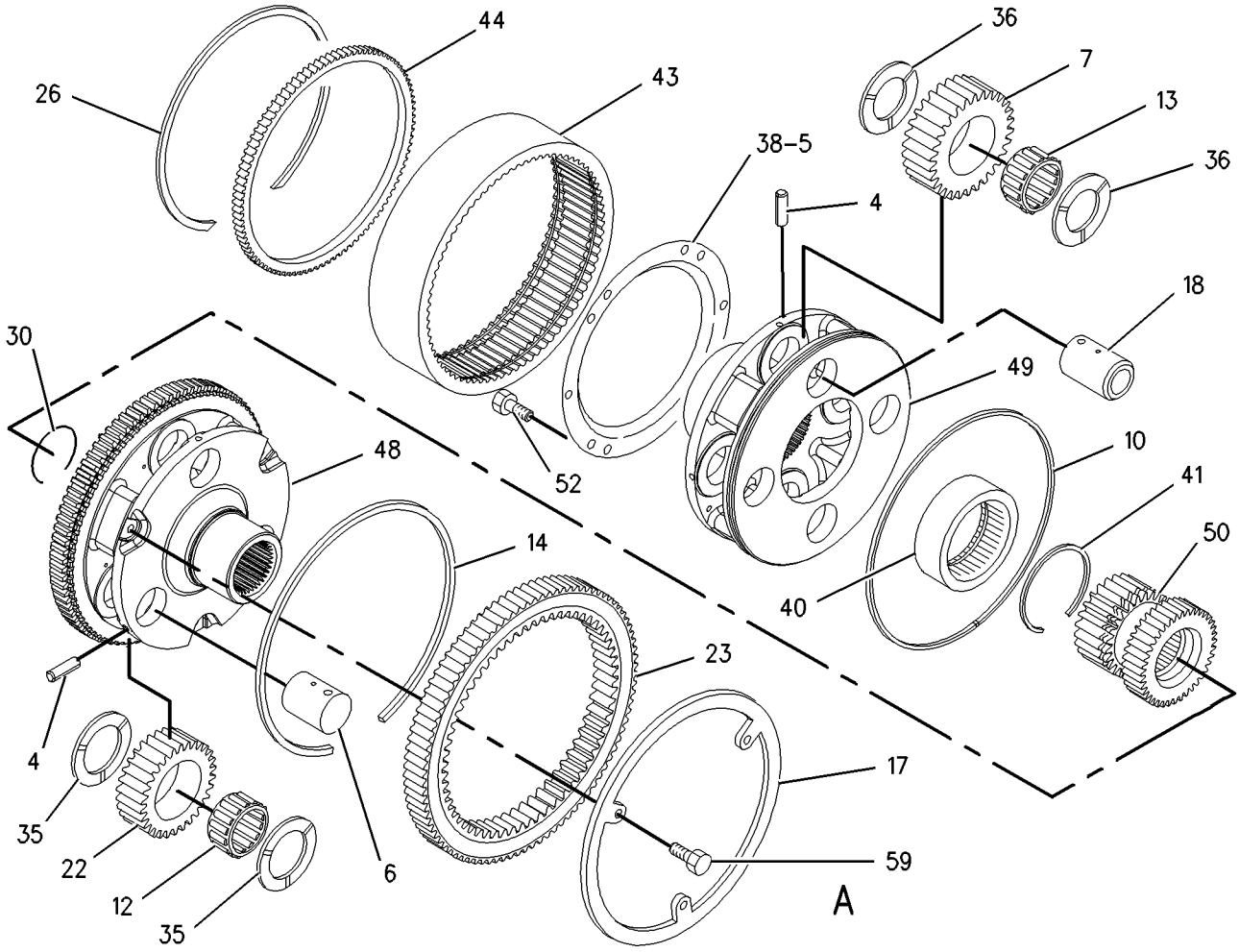

GRAPHIC #2 **<END>** g00937180

STEERING AND BRAKING SYSTEM

193-4120 BRAKE & PLANETARY GP

S/N: CCK1-UP

PART OF 195-0644 BRAKE GP-STEERING

SMCS-4132 **i01833494**

NOTE	REF NO	GRAPHIC REF	PART NUMBER	QTY	PART NAME 1 2 3 4 5 6 (PRODUCT LEVEL)	SEE PAGE
	1	1	**3S-2708**	3	PIN-SPRING	
B	2	1	**1U-8846**		SEALANT-GASKET	
	3	1	**3T-5807**	1	SLINGER	
	4	1	**5M-0578**	6	BEARING AS	
	5	1	**6Y-2704**	1	SPRING-DISC	
	6	1	**6Y-9373**	4	DISC-FRICTION	
	7	1	**7T-1885**	1	RING	
	8	1	**7T-6994**	3	PLATE-CLUTCH & BRAKE	
	9	1	**7T-8136**	3	SHAFT-PLANETARY	
	10	1	**7T-9031**	1	GEAR (75 TEETH)	
	11	1	**7T-9837**	1	PLATE	
	12	1	**8E-5278**	1	RETAINER AS	
	12A	1	**8S-0527**	1	PLUG-CUP	
	13	1	**8E-5279**	1	PISTON	
	14	1	**8E-8307**	6	DISC-THRUST	
	15	1	**205-5314**	1	HOUSING	
	16	1	**9W-7481**	3	GEAR (23 TEETH)	
	17	1	**9W-7925**	2	CONE-BEARING	
	18	1	**9W-7926**	2	CUP-BEARING	
	19	1	**191-0939**	1	CARRIER-PLANETARY	
	20	1	**193-0736**	1	GEAR AS (30 TEETH)	
	21	1	**0S-1585**	18	BOLT (1/2-13X1.50 IN)	
	22	1	**1A-2029**	6	BOLT (3/8-16X1.125 IN)	
	23	1	**1C-0569**	6	BOLT (5/16-18X0.5 IN)	
	24	1	**3K-0360**	2	SEAL-O-RING	
	25	1	**5M-2894**	6	WASHER-HARD (10.2X18.5X2.5MM THK)	
	26	1	**5P-8245**	18	WASHER-HARD (13.5X25.5X3MM THK)	
	27	1	**6F-6673**	2	SEAL-O-RING	
	28	1	**6P-5317**	1	RING-SEAL	
	29	1	**6Y-4003**	1	RING-SEAL	
	30	1	**8D-4771**	1	SEAL-O-RING	
	31	1	**8M-4438**	1	SEAL-O-RING	
M	32	1	**8T-2223**	2	BOLT-SOCKET HEAD (M10X1.5X45MM)	
	33	1	**9S-8005**	2	PLUG	
	34	1	**9X-2027**	2	WASHER (11X18X2MM THK)	

B-USE AS REQUIRED
M-METRIC PART

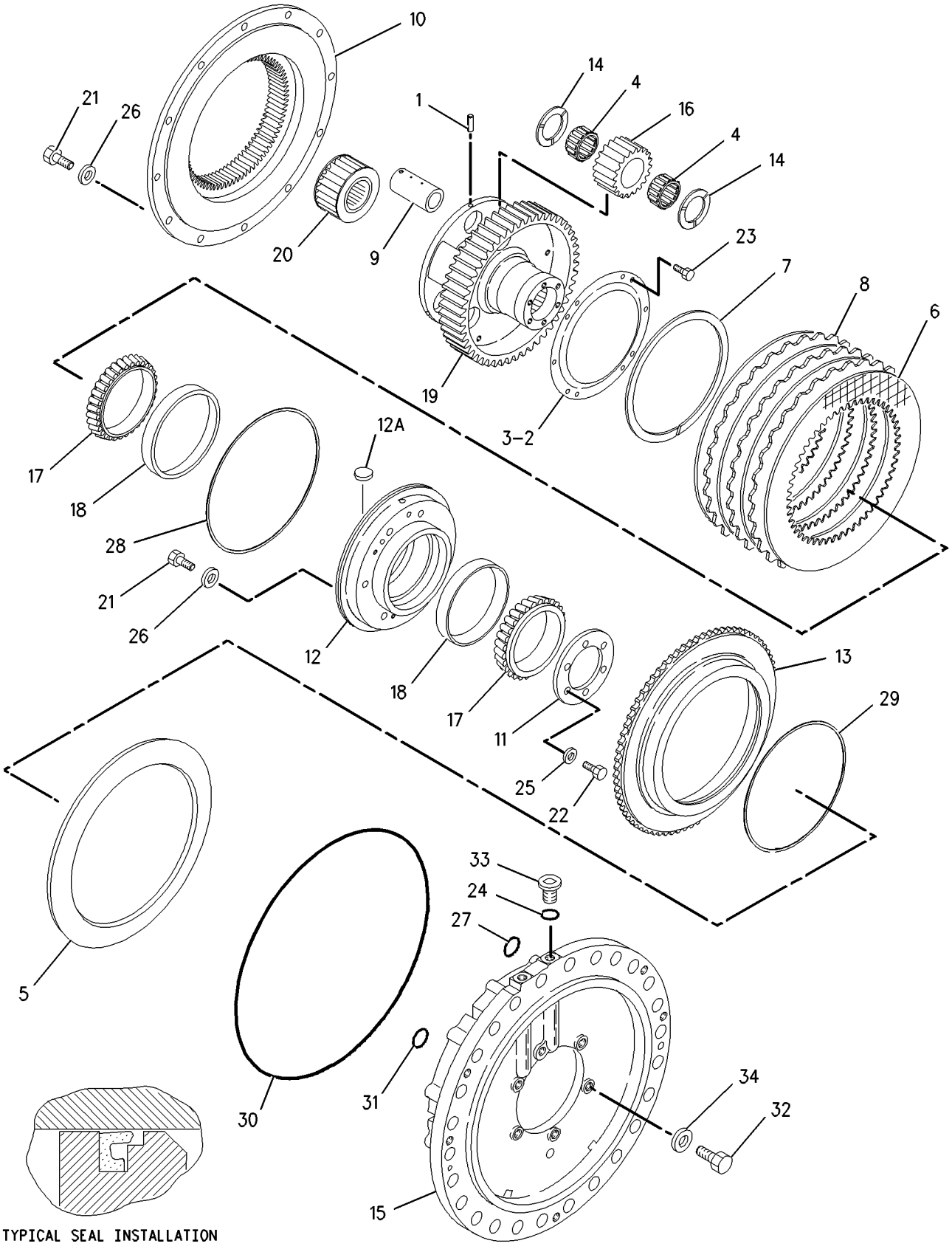

TYPICAL SEAL INSTALLATION

GRAPHIC #1 **<END>** g00912379

195-0644 BRAKE GP-STEERING

S/N: CCK1-UP

PART OF 189-4620 POWER TRAIN AR

SMCS-4111 **i01833423**

NOTE	PART NUMBER	QTY	PART NAME 1 2 3 4 5 6 (PRODUCT LEVEL)	SEE PAGE
Y	*193-4119*	1	BRAKE & DIFFERENTIAL DRIVE GP	289
Y	*193-4120*	1	BRAKE & PLANETARY GP	293
Y	**195-0652**	1	FASTENER GP (STEERING/BRAKE CONTROL VALVE)	304
Y	**201-7274**	1	VALVE GP-CONTROL (STEERING/BRAKE)	324

Y-SEPARATE ILLUSTRATION

<END>

STEERING AND BRAKING SYSTEM

107-3881 CONTROL GP-PARKING BRAKE

S/N: CCK1-UP

PART OF 166-6082 CONTROL GP-STEERING & TMSN

ALSO AN ATTACHMENT

SMCS-4269, 4284 **i01883328**

NOTE	REF NO	GRAPHIC REF	PART NUMBER	QTY	PART NAME 1 2 3 4 5 6 (PRODUCT LEVEL)	SEE PAGE
	1	1	**2N-3680**	3	SCREW-HEAD	
	2	1	**2R-5001**	1	DOWEL	
	3	1	**3B-4605**	2	PIN-COTTER	
	4	1	**4V-6981**	2	SCREW-BUTTON HEAD (1/4-20X0.75 IN)	
	5	1	**6V-8118**	2	SCREW-SOCKET HEAD (6/32X0.625 IN)	
	6	1	**7H-9737**	1	PIN-COTTER	
	7	1	**8T-5410**	2	SEAL-LIP	
	8	1	**9S-1305**	2	PIN-CLEVIS	
	9	1	**107-3888**	1	BRACKET AS	
	10	1	**9F-6445**	2	NUT-WELD (1/4-20 THD)	
	11	1	**112-2660**	1	COVER	
	12	1	**118-0639**	1	SWITCH AS-ROCKER (PARKING BRAKE)	
	13	1	**102-8801**	1	KIT-RECEPTACLE (12 PIN)	
					(INCLUDES WEDGE & RECEPTACLE AS)	
		1	**3E-5180**	1	WEDGE-RECEPTACLE LOCK	
		1	**8T-8729**	12	PIN-CONNECTOR	
	14	1	**208-9647**	1	KNOB (PARKING BRAKE)	
	15	1	**167-7751**	1	PLATE AS	
	16	1	**127-1596**	1	SHAFT (69MM LG)	
	17	1	**127-1597**	1	SHAFT	
	18	1	**8T-0328**	2	WASHER-HARD (5.5X10X1MM THK)	
	19	1	**8T-4205**	1	WASHER-HARD (7.2X14.5X2MM THK)	
M	20	1	**5C-2890**	1	NUT (M6X1 THD)	
	21	1	**6V-8185**	3	NUT (1/4-20 THD)	
E	22	1	**8C-5063**		CONDUIT-FLEXIBLE (30CM)	

E-ORDER BY THE CENTIMETER
M-METRIC PART

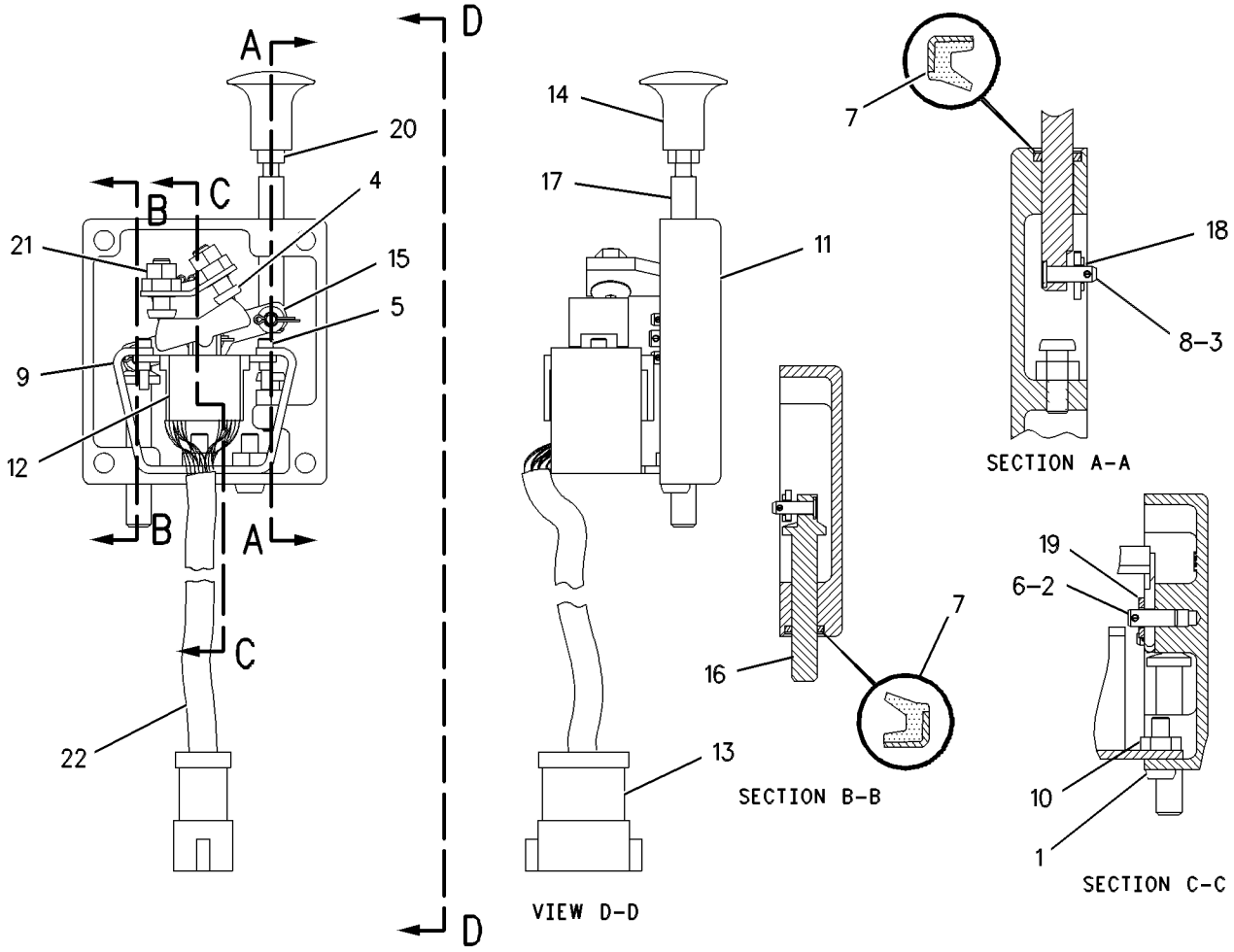

GRAPHIC #1 **<END>** g00597844

STEERING AND BRAKING SYSTEM

112-4820 CONTROL GP-STEERING & TMSN—HANDLE

S/N: CCK1-UP

PART OF 166-6082 CONTROL GP-STEERING & TMSN

ALSO AN ATTACHMENT

SMCS-4122 **i01874684**

NOTE	REF NO	GRAPHIC REF	PART NUMBER	QTY	PART NAME 1 2 3 4 5 6 (PRODUCT LEVEL)	SEE PAGE
	1	1	**1H-3340**	1	BOLT (M10X24X25.4MM)	
	2	1	**151-9275**	1	KIT-RECEPTACLE (6 PIN)	
					(INCLUDES RECEPTACLE AS & WEDGE)	
	3	1	**3E-3383**	1	WEDGE-RECEPTACLE LOCK	
	4	1	**5H-9899**	1	RING-RETAINING (EXTERNAL)	
M	5	1	**6V-2314**	2	BOLT (M5X0.8X35MM)	
	6	1	**6V-3545**	1	BEARING-ROLLER	
	7	1	**7X-4771**	1	SEAL-V-RING	
M	8	1	**7Y-5226**	2	NUT (M5X0.8 THD)	
	9	1	**8T-8729**	6	PIN-CONNECTOR	
	10	1	**103-6262**	2	SCREW-MACHINE (4-40X.63 IN)	
CY	11	1	**214-4862**	1	SENSOR GP-POSITION (STEERING/TMSN CONTROL HANDLE)	157
	12	1	**110-2028**	2	SCREW-PAN HEAD (10-14X.75 IN)	
	13	1	**110-7882**	1	SWITCH AS-LIMIT (PARKING BRAKE)	
		1	**5S-4246**	3	LOCKWASHER	
		1	**6V-8818**	3	SCREW-MACHINE (4-40 THD)	
	14	1	**111-8642**	1	COVER-FRONT	
	15	1	**111-8950**	1	ANGLE	
	16	1	**112-4740**	1	HANDLE	
	17	1	**112-4757**	1	COVER	
	18	1	**128-2660**	1	WIRE AS	
	19	1	**131-0447**	2	NUT	
	20	1	**132-7419**	1	SWITCH AS-PUSH BUTTON (ELECTRONIC-DOWNSHIFT)	
		1	**144-0331**	1	CAP-PUSHBUTTON	
	21	1	**132-7450**	1	SWITCH AS-PUSH BUTTON (ELECTRONIC-UPSHIFT)	
		1	**144-0331**	1	CAP-PUSHBUTTON	
	22	1	**151-5803**	1	SHAFT AS-DETENT	
	23	1	**158-2734**	2	SPRING	
	24	1	**158-2735**	1	BASE	
	25	1	**6V-1232**	2	SCREW-BUTTON HEAD (8-32X9.52MM)	
	26	1	**9W-1464**	2	SCREW (1/4-20 X 1 IN)	
	27	1	**7X-0584**	1	WASHER-HARD (13.5X20.5X2MM THK)	
	28	1	**8T-4205**	2	WASHER-HARD (7.2X14.5X2MM THK)	
	29	1	**9X-8256**	3	WASHER (6.6X12X2MM THK)	
BD	30	1	**6V-2689**		TUBE-HEAT SHRINK	
	31	1	**8M-2771**	1	CLIP	
	32	1	**226-9423**	2	SPRING	

B-USE AS REQUIRED
C-CHANGE FROM PREVIOUS TYPE
D-ORDER BY THE METER
M-METRIC PART
Y-SEPARATE ILLUSTRATION

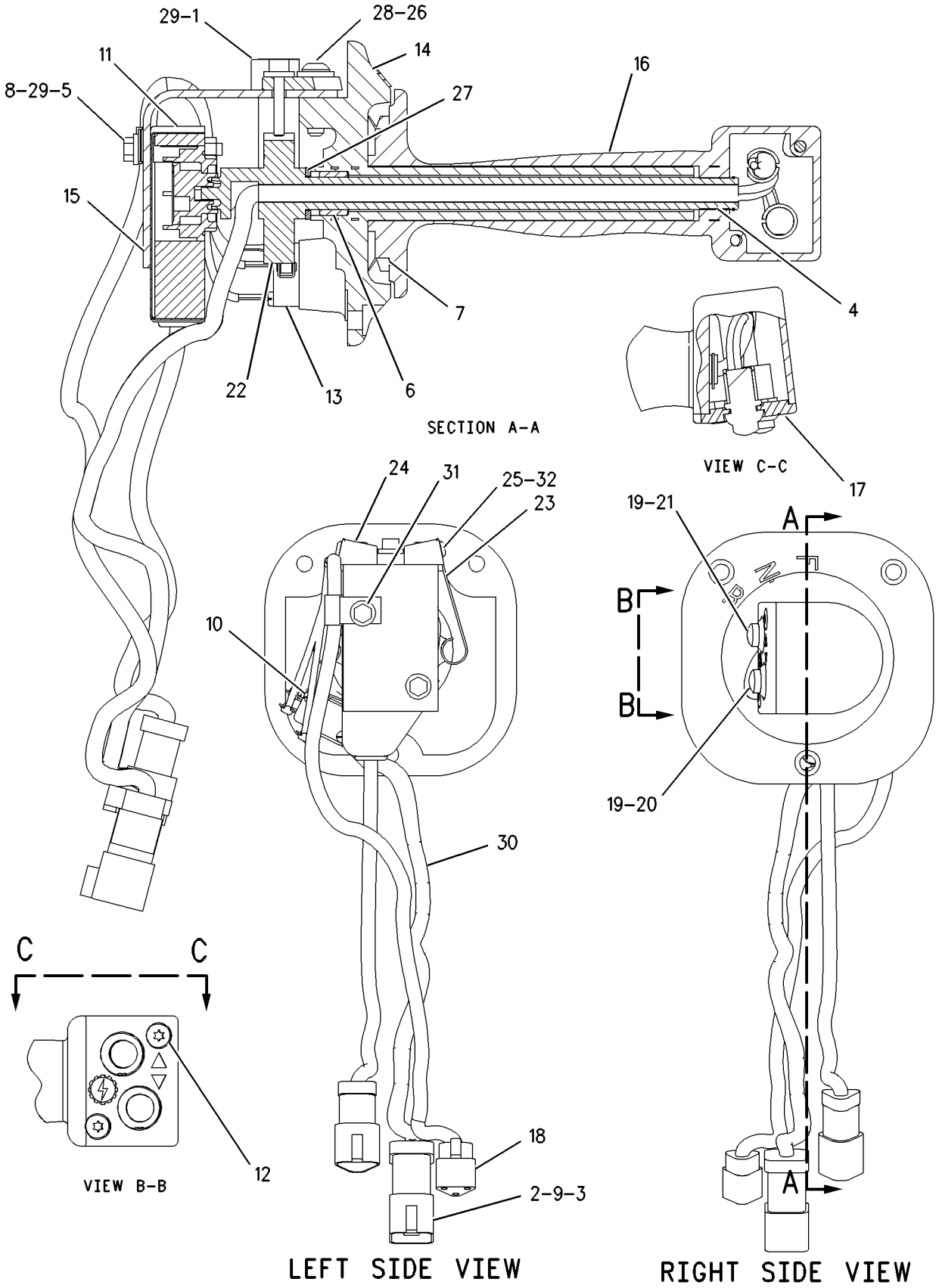

GRAPHIC #1

<END>

g00930201

STEERING AND BRAKING SYSTEM

166-6082 CONTROL GP-STEERING & TMSN

S/N: CCK1-UP

PART OF 193-5673 CONTROL GP-STEERING & TMSN

ALSO AN ATTACHMENT

SMCS-4122 **i01885457**

NOTE	REF NO	GRAPHIC REF	PART NUMBER	QTY	PART NAME 1 2 3 4 5 6 (PRODUCT LEVEL)	SEE PAGE
	1	1	**2L-6267**	1	LOCKNUT	
	2	1	**2N-3680**	3	SCREW-HEAD	
	3	1	**5L-2029**	2	BALL BEARING	
	4	1	**7V-0008**	1	BLOCK	
	5	1	**8E-3131**	1	ROLLER-CAM	
	6	1	**8E-8242**	1	SPACER (71.4X88.9X11.5MM THK)	
Y	7	1	**9T-8693**	1	VALVE GP-PILOT	327
Y	8	1	**107-3881**	1	CONTROL GP-PARKING BRAKE	296
Y	9	1	**112-4820**	1	CONTROL GP-STEERING & TMSN (HANDLE)	298
M	10	1	**9X-2045**	6	SCREW-TRUSS HEAD (M6X1X20MM)	
	11	1	**127-1598**	1	GASKET	
	12	1	**127-1599**	1	GASKET	
	13	1	**149-3137**	1	LOCK AS	
	14	1	**160-1436**	1	HOUSING-BEARING	
	15	1	**160-1437**	1	HOUSING-BEARING	
	16	1	**161-6041**	1	HOUSING	
	17	1	**193-0217**	1	CONSOLE AS	
	18	1	**193-0220**	1	COVER AS	
	19	1	**201-9624**	1	HOUSING-MAIN	
	20	1	**4M-5282**	4	BOLT (1/4-20X1.50 IN)	
	21	1	**5P-1075**	2	WASHER-HARD (10.2X22.5X3MM THK)	
	22	1	**6V-8801**	2	NUT (3/8-16 THD)	
	23	1	**7X-0290**	2	BOLT (3/8-16X3.50 IN)	
	24	1	**9X-2038**	6	WASHER (7X19X2MM THK)	
	25	1	**8T-2502**	3	BOLT (3/8-16X1.125 IN)	
	26	1	**8T-4896**	7	WASHER-HARD (10.2X18.5X2.5MM THK)	
	27	1	**8T-7008**	2	BOLT (3/8-16X3 IN)	

M-METRIC PART
Y-SEPARATE ILLUSTRATION

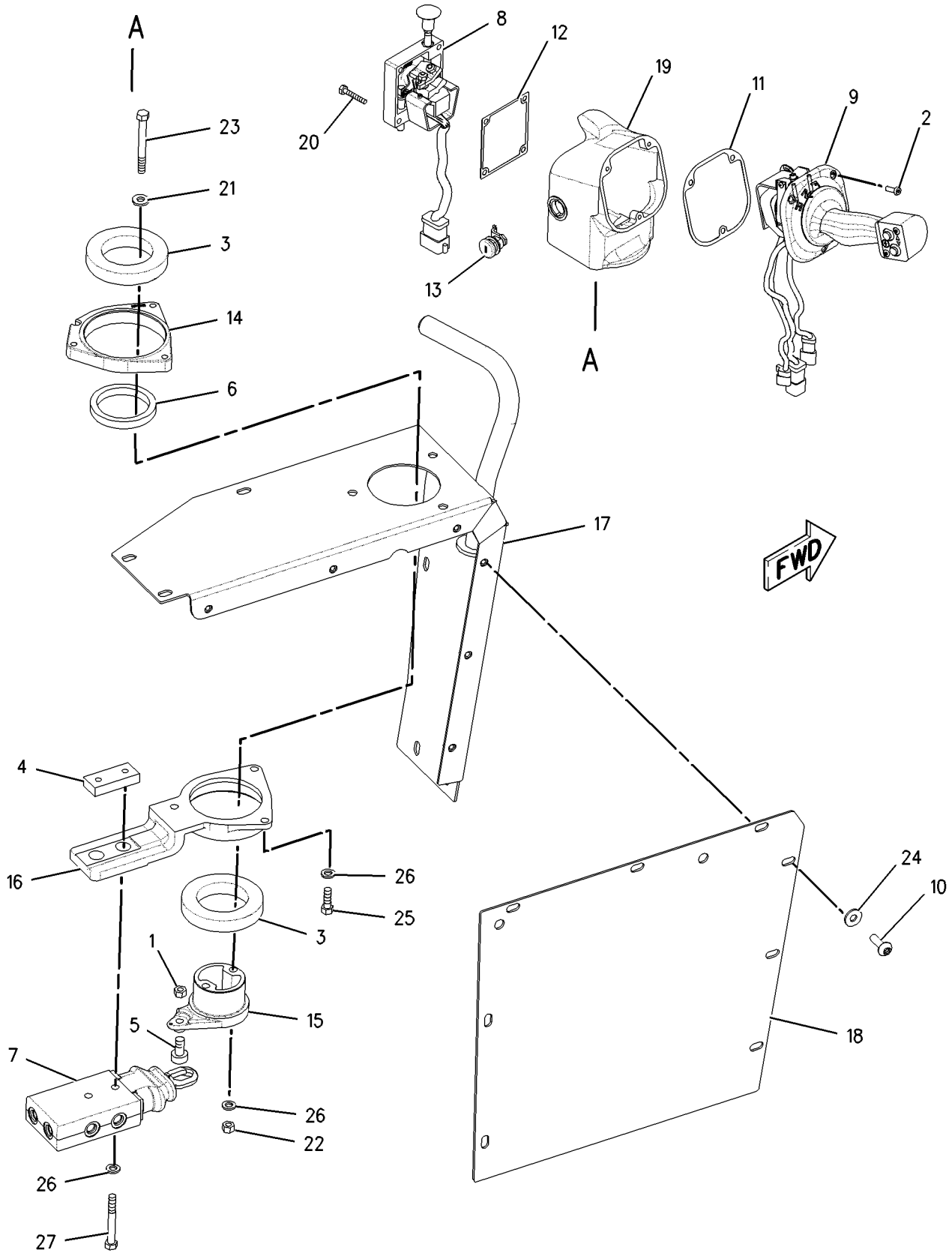

GRAPHIC #1 **<END>** g00914848

STEERING AND BRAKING SYSTEM

193-5673 CONTROL GP-STEERING & TMSN

S/N: CCK1-UP
PART OF 217-3819 CAB GP, 218-3064 PLATFORM GP
ALSO AN ATTACHMENT

SMCS-4122 **i01835085**

NOTE	REF NO	GRAPHIC REF	PART NUMBER	QTY	PART NAME 1 2 3 4 5 6 (PRODUCT LEVEL)	SEE PAGE
	1	1	**6I-1418**	4	SPACER (8.2X12.7X28.7MM THK)	
	2	1	**8T-9655**	8	MOUNT (ISOLATION)	
	3	1	**126-3701**	1	ARMREST AS	
Y	4	1	**166-6082**	1	CONTROL GP-STEERING & TMSN (HANDLE)	300
Y	5	1	**172-9389**	1	CONTROL GP-UNPROGRAMMED	132
	6	1	**193-7839**	1	PLATE AS	
M		1	**6V-9632**	1	NUT-WELD (M6X1 THD)	
	7	1	**9N-0869**	7	WASHER-HARD (8.8X25.5X2.0MM THK)	
M	8	1	**9X-2045**	8	SCREW-TRUSS HEAD (M6X1X20MM)	
	9	1	**220-5946**	3	CLIP	
M	10	1	**7X-0818**	4	BOLT (M8X1.25X45MM)	
	11	1	**8T-4121**	2	WASHER-HARD (11X21X2.5MM THK)	
M	12	1	**8T-4137**	2	BOLT (M10X1.5X20MM)	
M	13	1	**8T-4191**	4	BOLT (M10X1.5X16MM)	
	14	1	**8T-4222**	4	WASHER-PLATED (11X32X2.5MM THK)	
	15	1	**142-2769**	1	FILM-NOTICE (STEERING)	
	16	1	**213-6874**	1	FILM (DIFFERENTIAL STEERING)	
	17	1	**7K-1181**	5	STRAP-CABLE	
M	18	1	**5C-9553**	1	BOLT (M6X1X16MM)	
	19	1	**197-5799**	1	HARNESS AS (DRIVE TRAIN CONTROL)	
		1	**102-8803**	1	KIT-RECEPTACLE (3 PIN)	
					(INCLUDES RECEPTACLE AS & WEDGE)	
		1	**110-6846**	1	PLUG AS-CONNECTOR (40 PIN)	
		1	**110-6844**	1	SEAL	
		1	**8T-8737**	57	PLUG-SEAL	
		1	**9X-4391**	1	PLUG AS-CONNECTOR (70 PIN)	
		1	**3E-4367**	1	RING-RETAINING	
M		1	**3E-8557**	1	BOLT (M5X0.8X39.37MM)	
		1	**9X-5615**	2	SEAL (INTERFACE)(70 PIN)	
		1	**110-6848**	1	PLUG AS-CONNECTOR (40 PIN)	
		1	**110-6844**	1	SEAL	
		1	**155-2255**	1	KIT-CONNECTING PLUG (12 PIN)	
		1	**155-2260**	1	KIT-CONNECTING PLUG (3 PIN)	
		1	**155-2274**	2	KIT-CONNECTING PLUG (6 PIN)	
					(EACH KIT INCLUDES PLUG AS & WEDGE)	

M-METRIC PART
Y-SEPARATE ILLUSTRATION

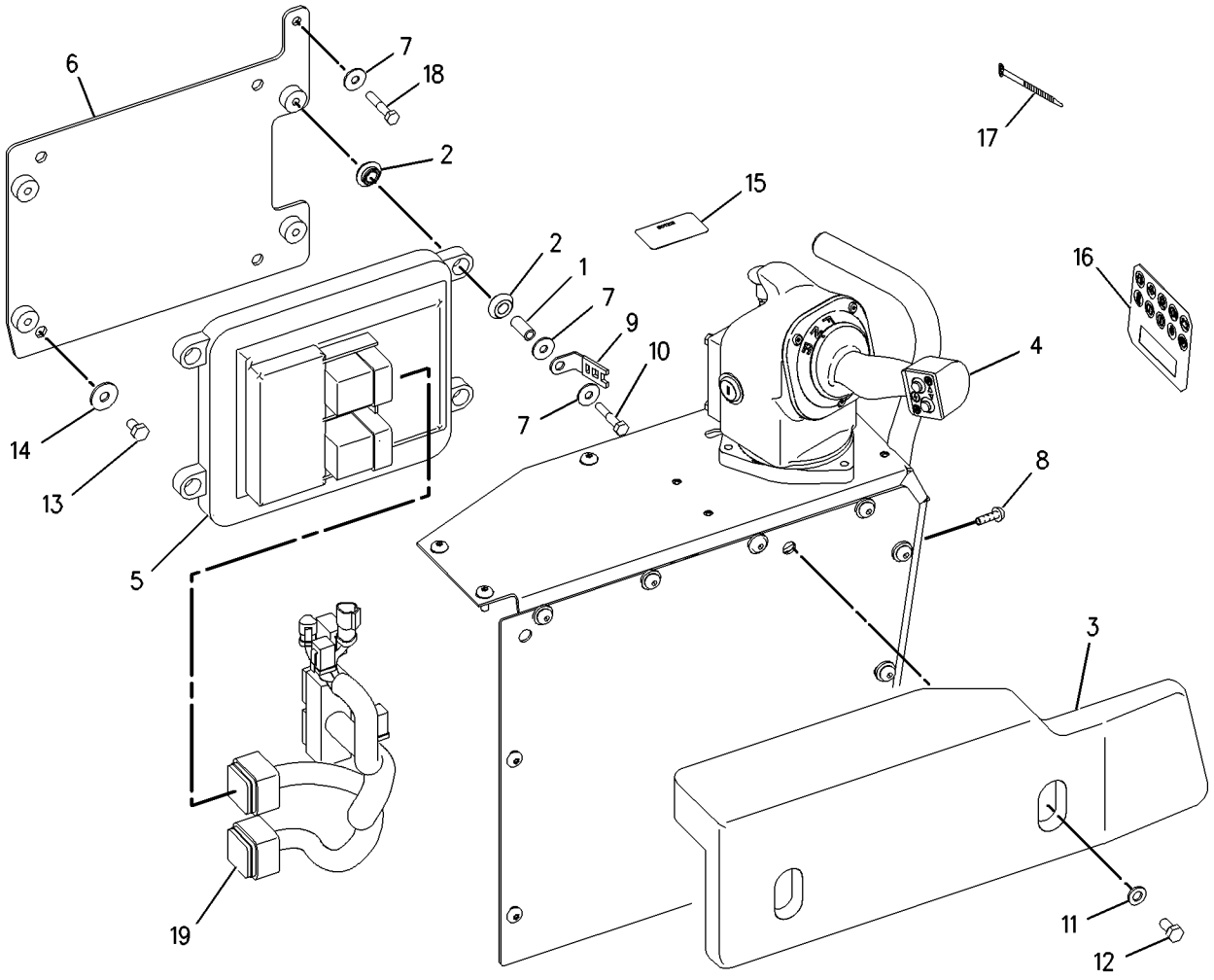

GRAPHIC #1 **<END>** g00939162

195-0652 FASTENER GP–STEERING/BRAKE CONTROL VALVE

S/N: CCK1-UP

PART OF 195-0644 BRAKE GP-STEERING

SMCS-4307 **i01833469**

NOTE	REF NO	GRAPHIC REF	PART NUMBER	QTY	PART NAME 1 2 3 4 5 6 (PRODUCT LEVEL)	SEE PAGE
M	1	1	**7X-2543**	4	BOLT (M10X1.5X120MM)	
	2	1	**8M-5254**	4	SEAL-O-RING	
	3	1	**8T-4121**	4	WASHER-HARD (11X21X2.5MM THK)	

M-METRIC PART

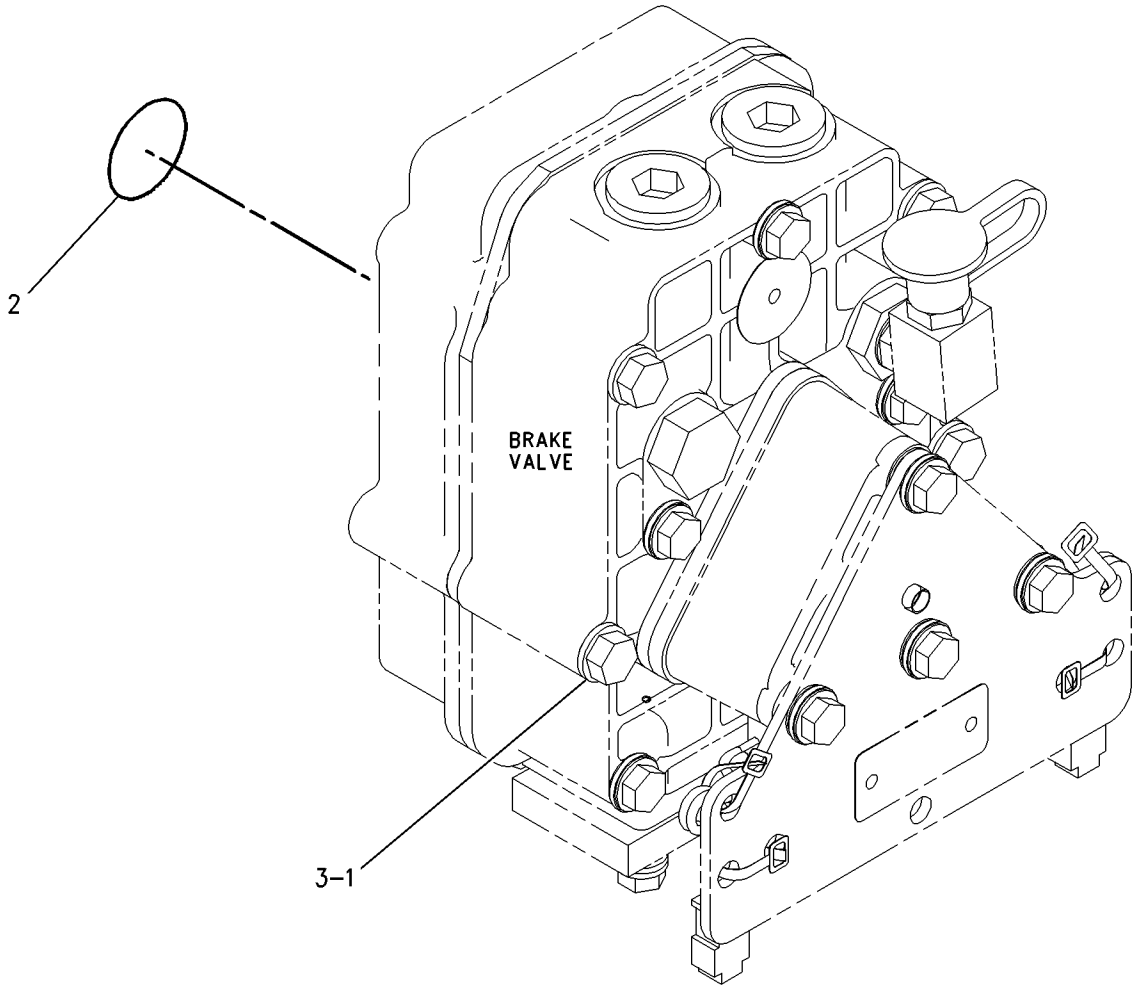

GRAPHIC #1 **<END>** g00776307

110-4664 FILTER GP-OIL–STEERING

S/N: CCK1-UP

PART OF 191-9532 LINES GP-STEERING

SMCS-5068 **i01834288**

NOTE	REF NO	GRAPHIC REF	PART NUMBER	QTY	PART NAME 1 2 3 4 5 6 (PRODUCT LEVEL)	SEE PAGE
	1	1	**1G-8878**	1	FILTER AS-OIL (HYDRAULIC)	
	2	1	**164-6709**	1	PLUG AS	
		1	**3J-1907**	1	SEAL-O-RING	
		1	**5F-9144**	1	SEAL-O-RING	

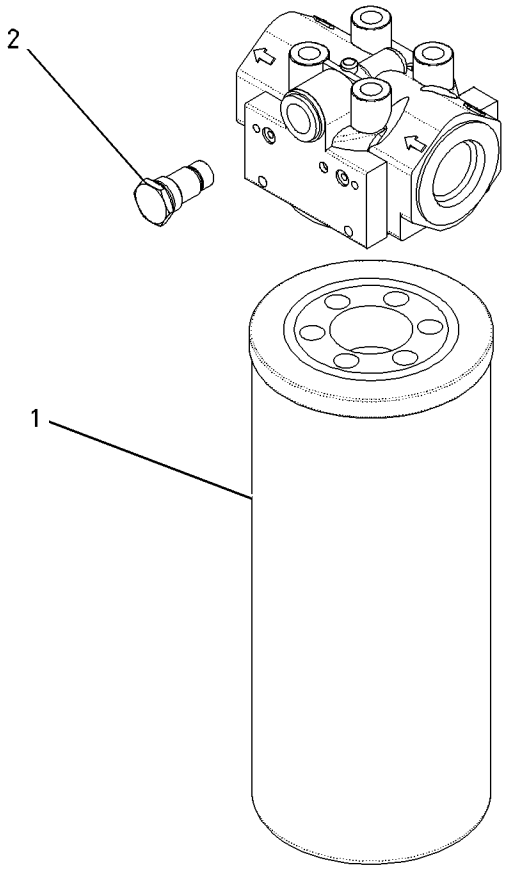

GRAPHIC #1 **<END>** g00667189

202-2329 HEAD GP-PUMP—STEERING

S/N: CCK1-UP

PART OF 222-1214 PUMP GP-PISTON

SMCS-5070 **i01898328**

NOTE	REF NO	GRAPHIC REF	PART NUMBER	QTY	PART NAME 1 2 3 4 5 6 (PRODUCT LEVEL)	SEE PAGE
	1	1	**202-2340**	1	HEAD	
	2	1	**1G-7407**	2	VALVE GP-RELIEF (PUMP HEAD)	
					(EACH INCLUDES)	
		1	**123-7556**	1	CAP	
		1	**145-0905**	1	KIT-SEAL (PUMP HEAD RELIEF VALVE)	
Y	3	1	**201-9105**	1	VALVE GP-PRESS & FLOW CMPNSTR	329
	4	1	**087-4772**	3	PLUG	
	5	1	**120-4394**	2	PLUG-BREAK OFF	
	6	1	**123-7560**	1	BEARING-BUSHING	
	7	1	**123-7559**	1	BUSHING	
	8	1	**6V-8398**	2	SEAL-O-RING	
M	9	1	**123-2017**	1	PLUG	
	10	1	**9S-8002**	2	PLUG	
	11	1	**3J-7354**	2	SEAL-O-RING	
M	12	1	**3E-8008**	4	BOLT-SOCKET HEAD (M16X2X90MM)	
	13	1	**6V-8397**	2	SEAL-O-RING	
M	14	1	**9T-3928**	1	PLUG AS	
		1	**187-8001**	1	SEAL	
Y	15	1	**6E-4402**	1	VALVE GP-RELIEF	330
	16	1	**126-1477**	1	BUSHING-COUPLING	
	17	1	**6S-3002**	1	SEAL-O-RING	

M-METRIC PART
Y-SEPARATE ILLUSTRATION

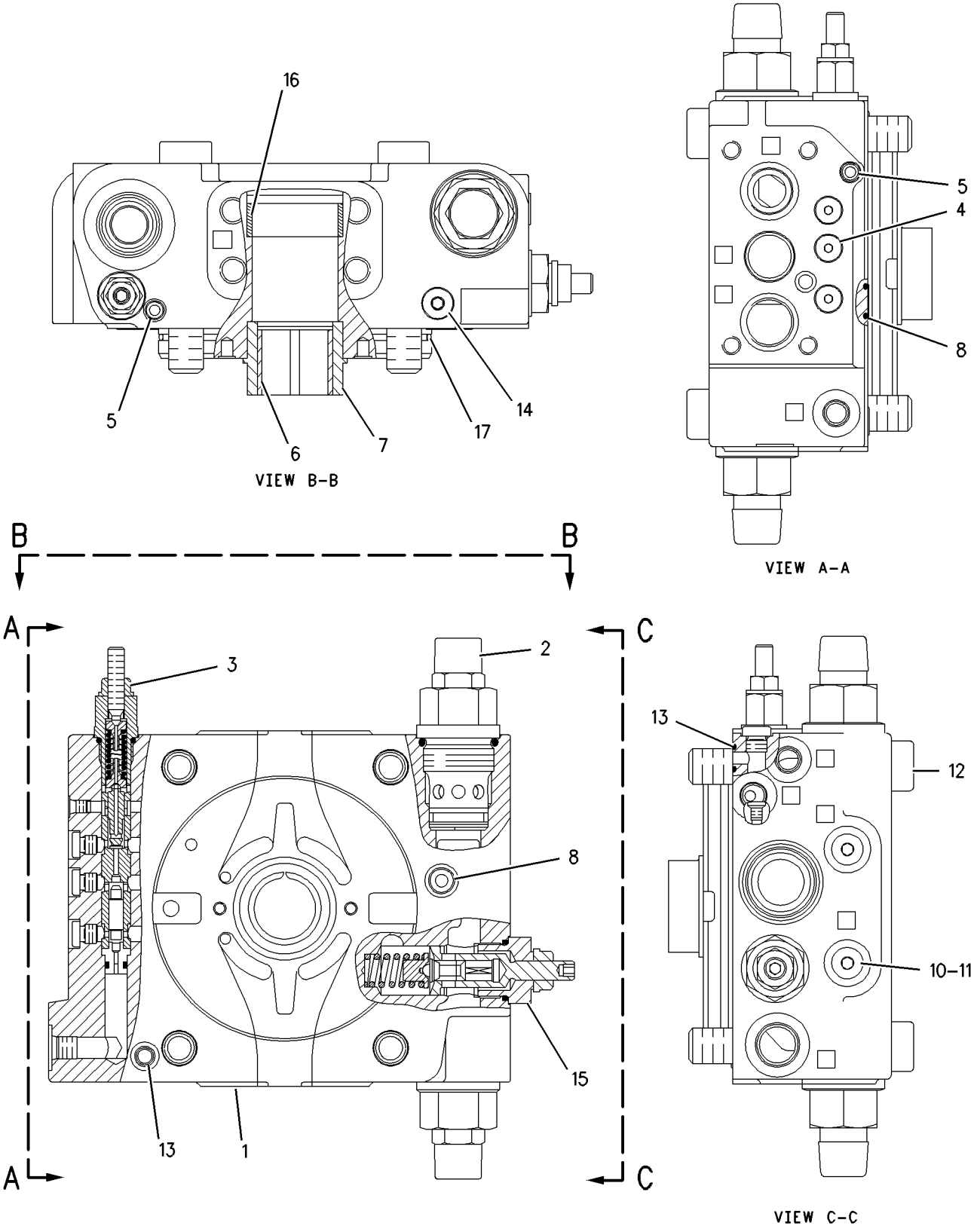

GRAPHIC #1 **<END>** g00778828

STEERING AND BRAKING SYSTEM

191-9532 LINES GP-STEERING

S/N: CCK1-UP

PART OF 189-4623 HYDRAULIC AR

SMCS-4104, 4133, 4304 **i01833841**

NOTE	REF NO	GRAPHIC REF	PART NUMBER	QTY	PART NAME 1 2 3 4 5 6 (PRODUCT LEVEL)	SEE PAGE
	1	1	**6V-0852**	3	CAP-DUST (STEERING VALVES)	
	2	1	**6W-2928**	1	BOSS	
	3	1	**9X-6578**	1	NUT	
	4	1	*106-8715*	1	ELBOW GP	
		1	**8C-8400**	1	ELBOW	
		1	**3D-2824**	1	SEAL-O-RING	
		1	**6V-9746**	1	SEAL-O-RING	
Y	5	1	**126-0747**	1	VALVE GP-BYPASS (STEERING LINES)	323
	6	1	*148-8430*	1	TEE AS	
		1	**6V-9746**	1	SEAL-O-RING	
		1	**7X-0873**	1	TEE	
	7	1	*165-4932*	1	TEE GP	
		1	**2S-4078**	1	SEAL-O-RING	
		1	**6V-8400**	2	SEAL-O-RING	
		1	**6V-8786**	1	TEE	
	8	1	**195-1808**	1	ADAPTER	
I	9	1	**195-3649**	1	HOSE AS	
I	10	1	**195-3650**	1	HOSE AS	
I	11	1	**196-9827**	1	HOSE AS	
I	12	1	**196-9829**	1	HOSE AS	
I	13	1	**196-9836**	1	HOSE AS	
I	14	1	**196-9837**	1	HOSE AS	
Y	15	1	**198-9219**	1	VALVE GP-RELIEF (STEERING LINES)	331
I	16	1	**198-9545**	1	TUBE AS	
	17	1	**200-8155**	1	BRACKET AS	
M		1	**6V-9632**	2	NUT-WELD (M6X1 THD)	
M		1	**8T-3490**	3	NUT-WELD (M10X1.5 THD)	
I	18	1	**201-5001**	1	HOSE AS	
I	19	1	**201-5002**	1	HOSE AS	
	20	1	**209-0594**	1	COVER	
	21	1	**209-4912**	1	BRACKET AS	
Y	22	1	**110-4664**	1	FILTER GP-OIL (STEERING)	305
	23	1	*148-8339*	2	CONNECTOR AS	
					(EACH INCLUDES)	
		1	**6V-8716**	1	CONNECTOR	
		1	**6V-9746**	1	SEAL-O-RING	
		1	**7M-8485**	1	SEAL-O-RING	
	24	1	*148-8347*	2	ELBOW GP	
					(EACH INCLUDES)	
		1	**6V-9007**	1	ELBOW	
		1	**3D-2824**	1	SEAL-O-RING	
		1	**6V-9746**	1	SEAL-O-RING	
	25	1	*148-8359*	1	ELBOW GP	
		1	**3K-0360**	1	SEAL-O-RING	
		1	**6V-9877**	1	ELBOW	
		1	**6V-9746**	1	SEAL-O-RING	
	26	1	*148-8360*	3	ELBOW AS	
					(EACH INCLUDES)	
		1	**6V-9182**	1	ELBOW	
		1	**6V-9746**	1	SEAL-O-RING	
		1	**7M-8485**	1	SEAL-O-RING	
	27	1	*148-8392*	1	ELBOW GP	
		1	**6V-9853**	1	ELBOW-SWIVEL	
		1	**6V-9746**	1	SEAL-O-RING	
	28	1	*148-8449*	1	TEE GP-SWIVEL	
		1	**6V-9839**	1	TEE-SWIVEL	

191-9532 **LINES GP-STEERING** ***(contd.)*** **i01833841**

NOTE	REF NO	GRAPHIC REF	PART NUMBER	QTY	PART NAME 1 2 3 4 5 6 (PRODUCT LEVEL)	SEE PAGE
		1	**6V-9746**	2	SEAL-O-RING	
	29	1	*150-4047*	2	ADAPTER GP	
					(EACH INCLUDES)	
		1	**3J-7354**	1	SEAL-O-RING	
		1	**8T-2353**	1	ADAPTER-STRAIGHT THREAD	
	30	1	*164-4058*	1	REDUCER GP	
		1	**5K-9090**	1	SEAL-O-RING	
		1	**6V-8948**	1	REDUCER AS	
	31	1	*164-5561*	1	ADAPTER AS	
		1	**2M-9780**	1	SEAL-O-RING	
		1	**5P-1042**	1	ADAPTER-O-RING	
	32	1	*164-5567*	3	FITTING GP	
					(EACH INCLUDES)	
		1	**3J-1907**	1	SEAL-O-RING	
		1	**6V-3965**	1	FITTING AS	
	33	1	*164-5551*	1	TEE GP	
		1	**4I-7651**	1	TEE-O-RING PORT	
		1	**3K-0360**	1	SEAL-O-RING	
		1	**6V-8398**	1	SEAL-O-RING	
		1	**6V-9746**	1	SEAL-O-RING	
	34	1	*171-6723*	1	ELBOW AS	
		1	**6V-9746**	1	SEAL-O-RING	
		1	**8T-8899**	1	ELBOW	
	35	1	*185-0002*	1	REDUCER AS	
		1	**6V-9746**	1	SEAL-O-RING	
		1	**6V-8947**	1	REDUCER	
	36	1	**1P-3703**	4	SEAL-RECTANGULAR	
	37	1	**2K-2939**	1	SEAL-O-RING	
	38	1	**3N-0759**	1	RING-SEALING	
	39	1	**5P-0718**	4	HOSE	
	40	1	**5F-3106**	1	SEAL-O-RING	
	41	1	**5I-4198**	1	ELBOW	
	42	1	**5S-7379**	4	BOLT (3/8-16X0.875 IN)	
	43	1	**6V-0400**	8	FLANGE-HALF	
	44	1	**6V-1889**	8	CLIP	
	45	1	**6V-9746**	1	SEAL-O-RING	
	46	1	**7C-4354**	1	CLIP	
	47	1	**7M-8485**	1	SEAL-O-RING	
M	48	1	**7X-2563**	2	BOLT (M20X2.5X60MM)	
	49	1	**8T-4121**	17	WASHER-HARD (11X21X2.5MM THK)	
	50	1	**8T-4123**	2	WASHER-PLATED (22X35X3.5MM THK)	
M	51	1	**8T-4133**	3	NUT (M10X1.5 THD)	
M	52	1	**8T-4136**	3	BOLT (M10X1.5X25MM)	
M	53	1	**8T-4137**	4	BOLT (M10X1.5X20MM)	
M	54	1	**8T-4177**	3	BOLT (M8X1.25X90MM)	
M	55	1	**8T-4184**	16	BOLT (M12X1.75X45MM)	
M	56	1	**8T-4186**	2	BOLT (M10X1.5X40MM)	
M	57	1	**8T-4189**	2	BOLT (M8X1.25X20MM)	
M	58	1	**8T-4195**	1	BOLT (M10X1.5X30MM)	
M	59	1	**8T-4200**	2	BOLT (M8X1.25X16MM)	
	60	1	**8T-4223**	26	WASHER-HARD (13.5X25.5X3MM THK)	
	61	1	**8T-4224**	7	WASHER-HARD (8.8X16X2MM THK)	
M	62	1	**8T-4956**	4	BOLT (M12X1.75X35MM)	
	63	1	**8T-9389**	6	BOLT (1/2-13X2.75 IN)	
M	64	1	**9X-2480**	2	BOLT (M6X1.0X45MM)	
	65	1	**9X-8256**	2	WASHER (6.6X12X2MM THK)	

I-SEE HOSE FABRICATION GUIDE
M-METRIC PART
Y-SEPARATE ILLUSTRATION

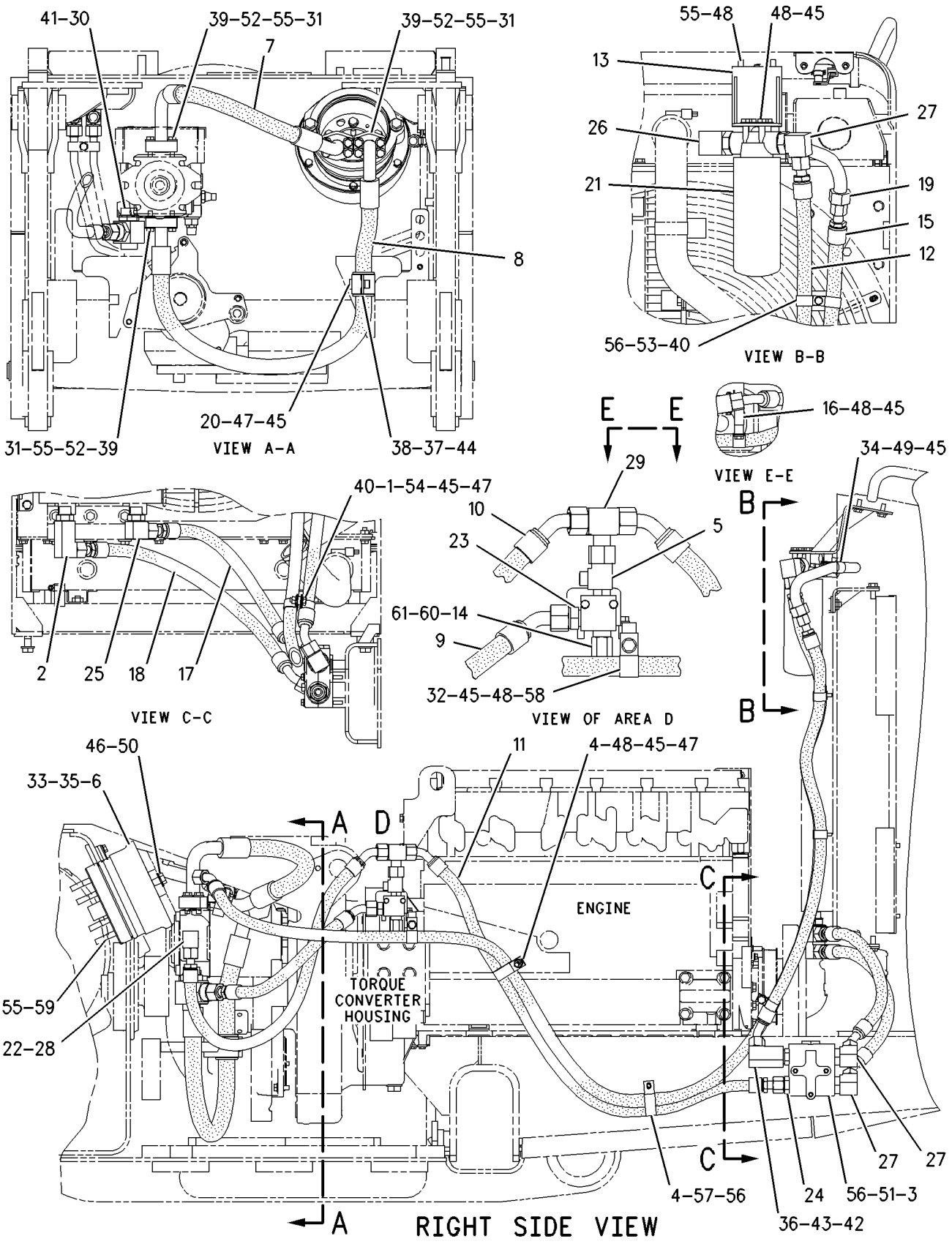

GRAPHIC #1 **<END>** g00781172

162-5357 MANIFOLD & VALVE GP—STEERING/BRAKE

S/N: CCK1-UP

PART OF 201-7274 VALVE GP-CONTROL

SMCS-4265, 4282 **i01883330**

NOTE	REF NO	GRAPHIC REF	PART NUMBER	QTY	PART NAME 1 2 3 4 5 6 (PRODUCT LEVEL)	SEE PAGE
	1	1	**9S-4190**	1	PLUG	
	2	1	**162-5358**	1	MANIFOLD	
Y	3	1	**174-4909**	1	VALVE GP-SOLENOID	338
	4	1	**1P-1744**	1	DOWEL	
	5	1	**2M-9780**	1	SEAL-O-RING	
	6	1	**137-8794**	1	SPOOL AS	
	6A	1	**5L-4758**	1	SEAL-O-RING	
	6B	1	**137-8793**	1	SPRING	
	6C	1	**3D-7943**	1	RING-RETAINING	

Y-SEPARATE ILLUSTRATION

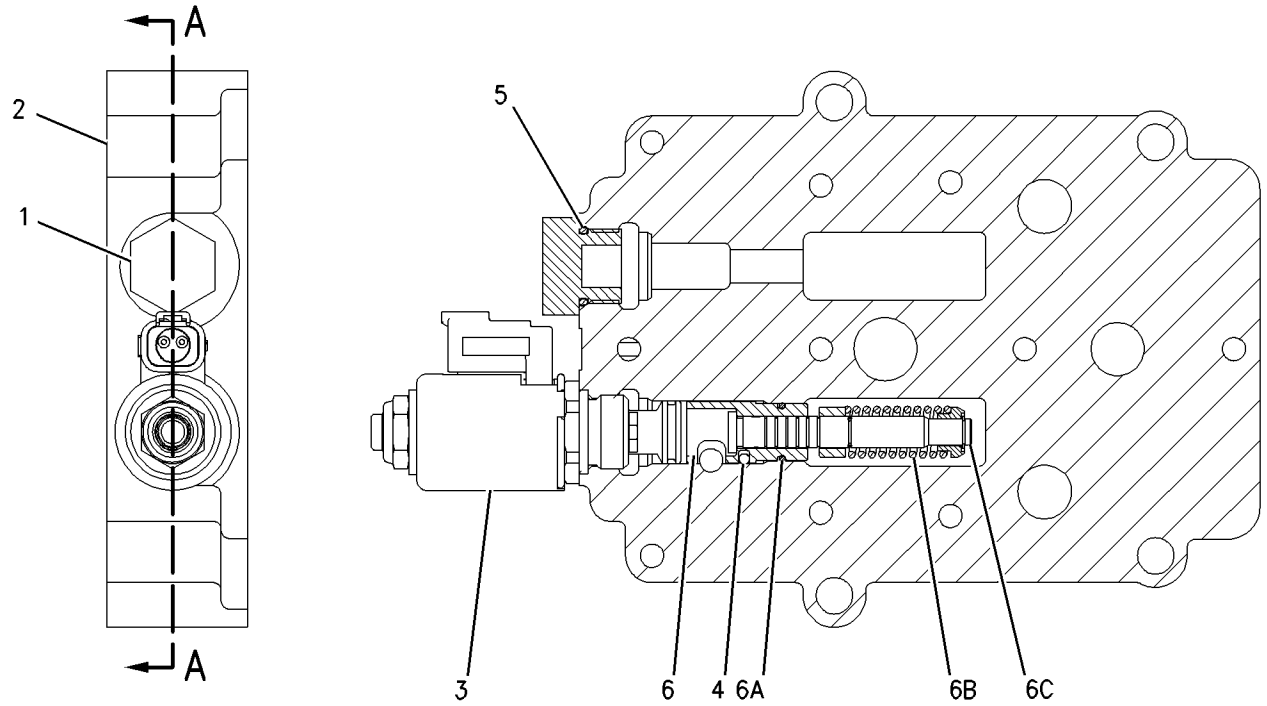

SECTION A-A

GRAPHIC #1 **<END>** g00800452

175-4972 MANIFOLD & VALVE GP–STEERING/BRAKE

S/N: CCK1-UP

PART OF 201-7274 VALVE GP-CONTROL

SMCS-4265, 4282 **i01883339**

NOTE	REF NO	GRAPHIC REF	PART NUMBER	QTY	PART NAME 1 2 3 4 5 6 (PRODUCT LEVEL)	SEE PAGE
	1	1	**132-9455**	1	MANIFOLD	
Y	2	1	**172-2392**	2	VALVE GP-SOLENOID	337

Y-SEPARATE ILLUSTRATION

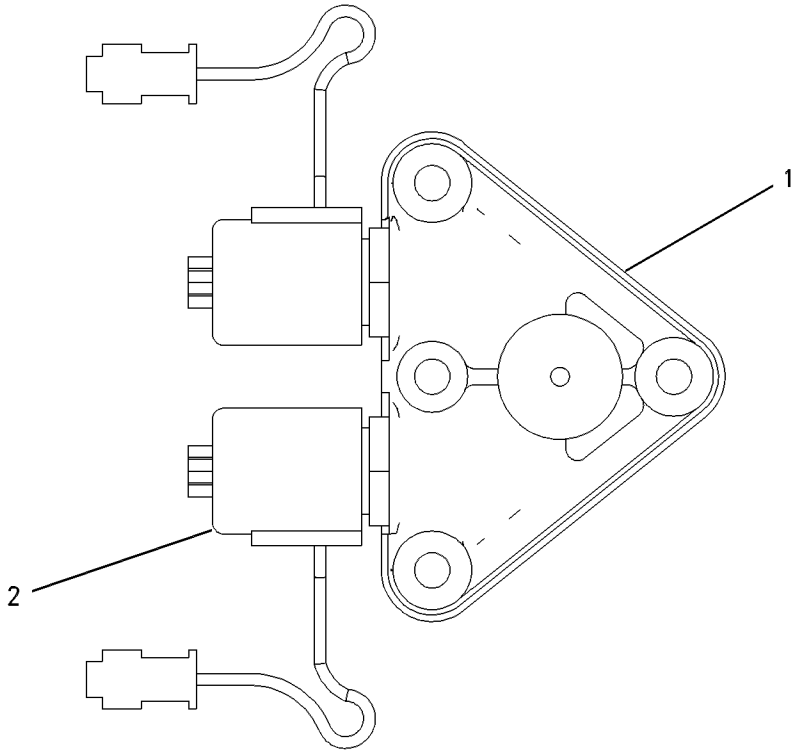

GRAPHIC #1 **<END>** g00653425

191-9536 MOTOR GP-PISTON—DIFFERENTIAL STEERING

S/N: CCK1-UP

PART OF 189-4623 HYDRAULIC AR

SMCS-5058 **i01834294**

NOTE	REF NO	GRAPHIC REF	PART NUMBER	QTY	PART NAME 1 2 3 4 5 6 (PRODUCT LEVEL)	SEE PAGE
Y	1	1	**202-0968**	1	ROTATING GP-MOTOR	319
	2	1	**123-3294**	1	HOUSING	
	3	1	**137-5524**	1	HEAD	
	4	1	**1G-3174**	1	PIN	
	5	1	**2M-9780**	1	SEAL-O-RING	
	6	1	**6R-0365**	1	SEAL-O-RING	
M	7	1	**8T-3957**	6	BOLT-HEX SOCKET (M12X1.75X30MM)	
	8	1	**9S-8006**	1	PLUG	

M-METRIC PART
Y-SEPARATE ILLUSTRATION

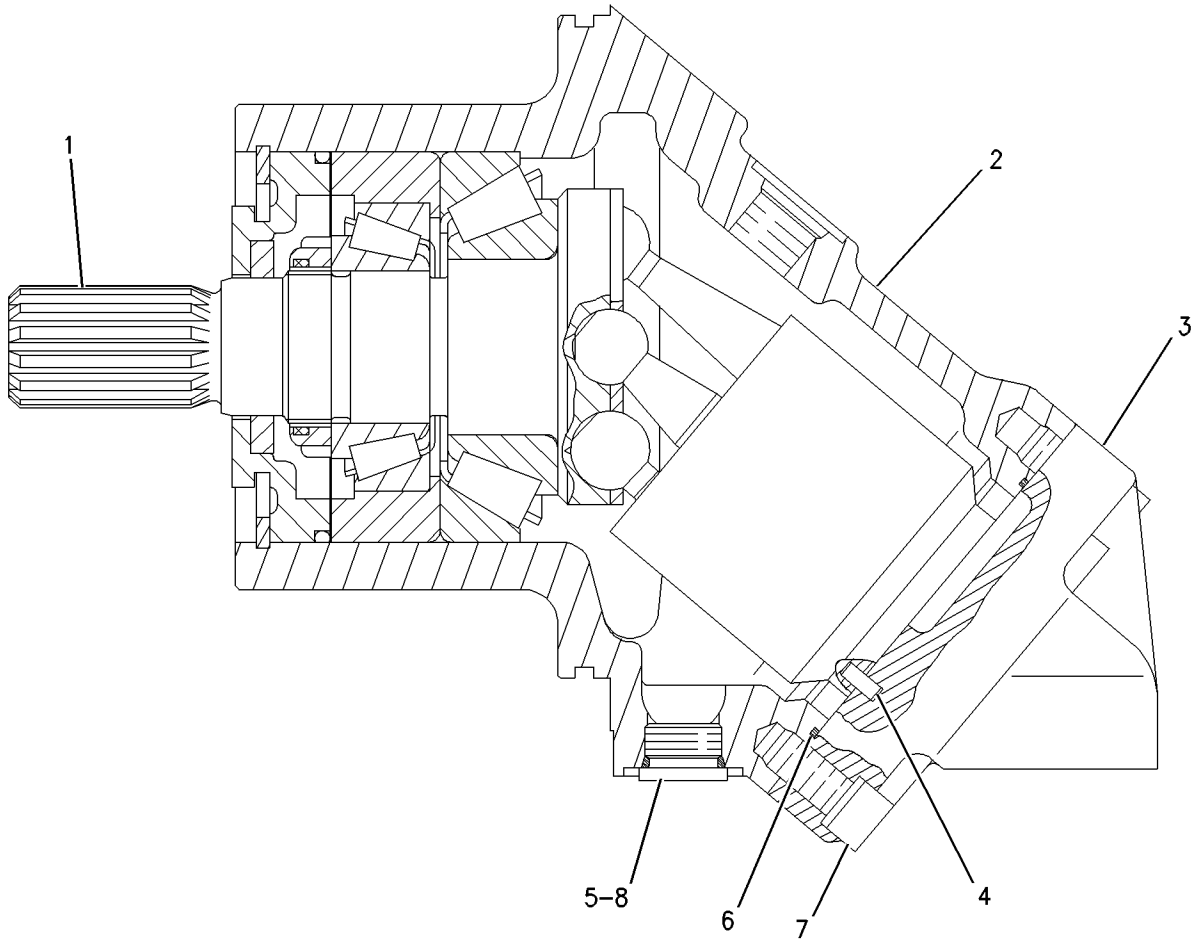

GRAPHIC #1 **<END>** g00778947

STEERING AND BRAKING SYSTEM

199-4801 PEDAL GP-GOVERNOR & BRAKE

S/N: CCK1-UP
PART OF 217-3819 CAB GP, 218-3064 PLATFORM GP
ALSO AN ATTACHMENT

SMCS-4122 **i01898333**

NOTE	REF NO	GRAPHIC REF	PART NUMBER	QTY	PART NAME 1 2 3 4 5 6 (PRODUCT LEVEL)	SEE PAGE
	1	1	**7K-1181**	3	STRAP-CABLE	
Y	2	1	**160-2443**	1	SENSOR GP-POSITION (ROTARY) (DECELERATOR PEDAL)	156
	3	1	**199-3616**	1	PEDAL AS-BRAKE (SERVICE)	
	4	1	**199-4159**	1	ARM AS	
	5	1	**199-4787**	1	PIN	
	6	1	**199-4789**	1	SHAFT	
	7	1	**199-4790**	1	SHAFT	
	8	1	**200-8575**	1	PEDAL AS (DECELERATOR)	
	9	1	**206-1487**	1	SWITCH AS-ROLLER (BRAKE ON/OFF)	
		1	**2H-3922**	1	LOCKWASHER	
		1	**6V-8370**	1	NUT-HEX (3/4-32 THD)	
		1	**186-3735**	2	PIN-CONNECTOR	
		1	**9X-0199**	1	BOOT-SWITCH	
		1	**102-8802**	1	KIT-RECEPTACLE (2 PIN)	
					(INCLUDES RECEPTACLE AS & WEDGE)	
	10	1	**214-1606**	1	BOSS	
Y	11	1	**214-4863**	1	SENSOR GP-POSITION (ROTARY) (SERVICE BRAKE PEDAL)	158
	12	1	**214-5012**	2	SPRING	
	13	1	**214-5013**	1	SPRING	
	14	1	**214-7536**	3	SPACER	
	15	1	**095-0916**	1	RING-RETAINING	
	16	1	**138-1645**	1	PIN-SPRING	
	17	1	**225-2860**	1	SUPPORT AS	
	18	1	**2K-9183**	1	PIN-SPRING	
	19	1	**3K-6662**	4	BEARING	
	20	1	**4P-7581**	1	CLIP	
	21	1	**4P-8134**	2	CLIP	
	22	1	**5P-4116**	2	WASHER-HARD (8.8X20.5X2MM THK)	
	23	1	**6V-0894**	2	SEAL-O-RING	
	24	1	**6V-4447**	2	SEAL-LIP	
	25	1	**8T-0328**	4	WASHER-HARD (5.5X10X1MM THK)	
	26	1	**8T-4121**	5	WASHER-HARD (11X21X2.5MM THK)	
M	27	1	**8T-4136**	1	BOLT (M10X1.5X25MM)	
M	28	1	**8T-4189**	3	BOLT (M8X1.25X20MM)	
M	29	1	**8T-4195**	4	BOLT (M10X1.5X30MM)	
M	30	1	**8T-4199**	2	BOLT (M8X1.25X12MM)	
M	31	1	**8T-4908**	2	BOLT (M8X1.25X25MM)	
M	32	1	**8T-6699**	4	BOLT-SOCKET HEAD (M5X.8X35MM)	

M-METRIC PART
Y-SEPARATE ILLUSTRATION

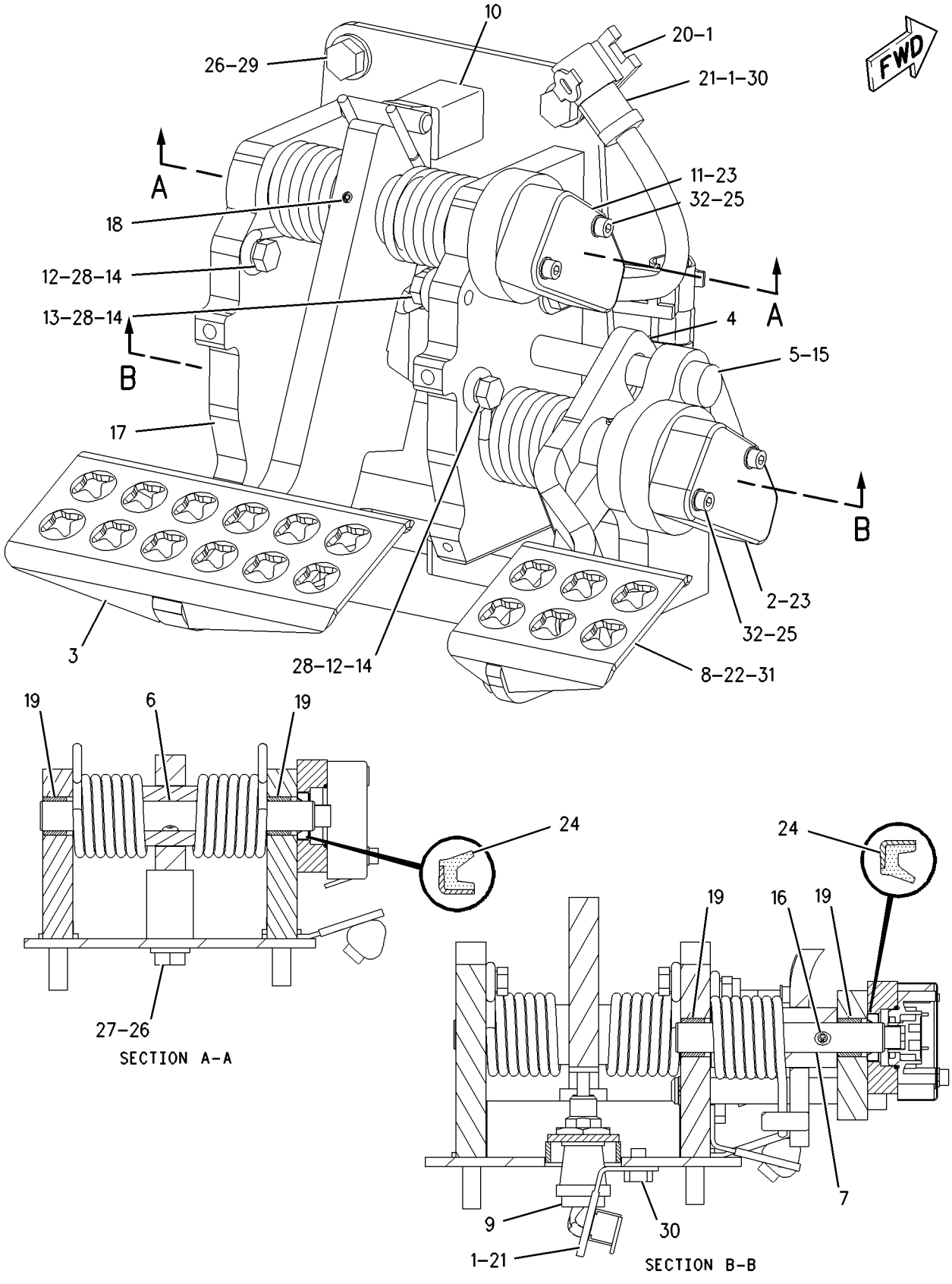

GRAPHIC #1 **<END>** g00938636

145-1077 PUMP GP-CHARGE–STEERING

S/N: CCK1-UP

PART OF 222-1214 PUMP GP-PISTON

SMCS-3204 **i01834400**

NOTE	REF NO	GRAPHIC REF	PART NUMBER	QTY	PART NAME 1 2 3 4 5 6 (PRODUCT LEVEL)	SEE PAGE
M	1	1	**8T-1159**	4	BOLT-SOCKET HEAD (M10X1.5X25MM)	
	2	1	**126-1477**	1	BUSHING-COUPLING	
	3	1	**145-1833**	1	SHAFT	
	4	1	**117-7296**	1	SPRING	
	5	1	**145-0909**	1	RING	
	6	1	**6V-2483**	2	SEAL-O-RING	
	7	1	**145-0911**	1	PLATE-WEAR	

M-METRIC PART

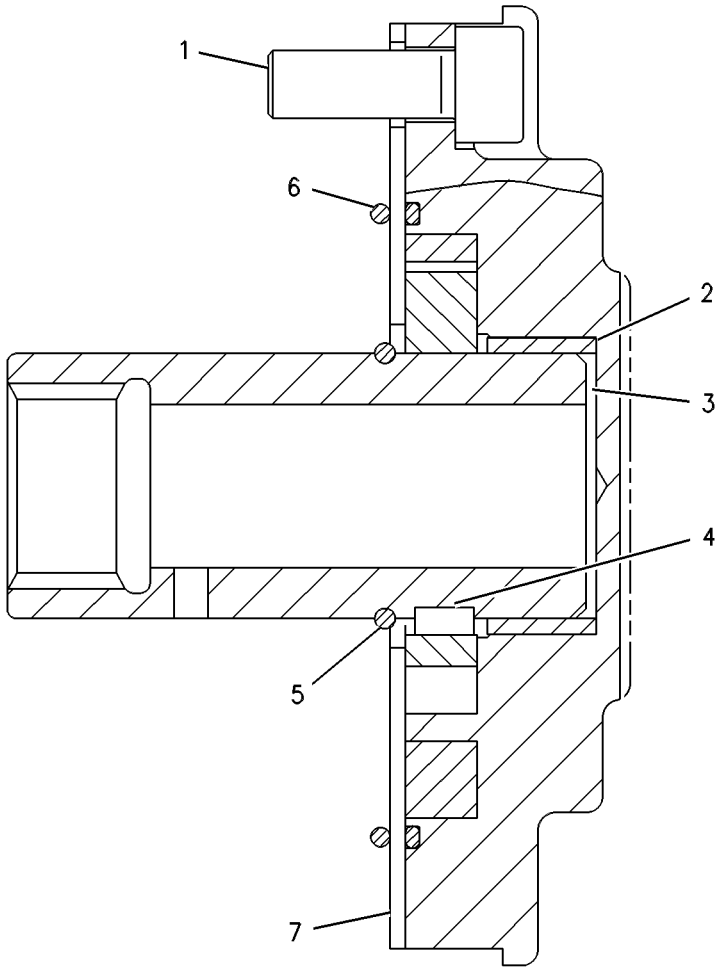

GRAPHIC #1 **<END>** g00278924

222-1214 PUMP GP-PISTON—STEERING

S/N: CCK1-UP

PART OF 189-4623 HYDRAULIC AR

SMCS-5070 **i01834368**

NOTE	REF NO	GRAPHIC REF	PART NUMBER	QTY	PART NAME 1 2 3 4 5 6 (PRODUCT LEVEL)	SEE PAGE
Y	1	1	**196-4232**	1	ROTATING GP-PUMP	321
Y	2	1	**227-5862**	1	VALVE GP-SERVO (PILOT PRESSURE CONTROL MODULE)	335
Y	3	1	**202-2329**	1	HEAD GP-PUMP	306
Y	4	1	**145-1077**	1	PUMP GP-CHARGE	316
Y	5	1	**202-2333**	1	VALVE GP-SERVO (HYDRAULIC PILOT PRESSURE)	333
	6	1	**196-8683**	1	HOUSING	
	7	1	**126-1638**	2	PIN-JOINT	
	8	1	**6E-4350**	1	PIN	
	9	1	**9S-8008**	1	PLUG	
	10	1	**3D-2824**	1	SEAL-O-RING	
	11	1	**9S-8004**	1	PLUG	
	12	1	**3J-1907**	1	SEAL-O-RING	
	13	1	**9S-8002**	4	PLUG	
	14	1	**3J-7354**	4	SEAL-O-RING	
	15	1	**120-4394**	1	PLUG-BREAK OFF	
	16	1	**167-6805**	2	PIN	
M	17	1	**9T-3928**	2	PLUG AS	
					(EACH INCLUDES)	
		1	**187-8001**	1	SEAL	
	18	1	**081-3801**	2	PLUG	
					(EACH INCLUDES)	
		1	**126-9092**	1	SEAL	
	19	1	**126-1661**	1	PLUG	
	20	1	**123-7582**	1	PIN-THREADED	
M	21	1	**6E-4385**	1	LOCKNUT	
	22	1	**9S-8005**	1	PLUG	
	23	1	**3K-0360**	1	SEAL-O-RING	
	24	1	**123-7583**	1	ORIFICE	

M-METRIC PART
Y-SEPARATE ILLUSTRATION

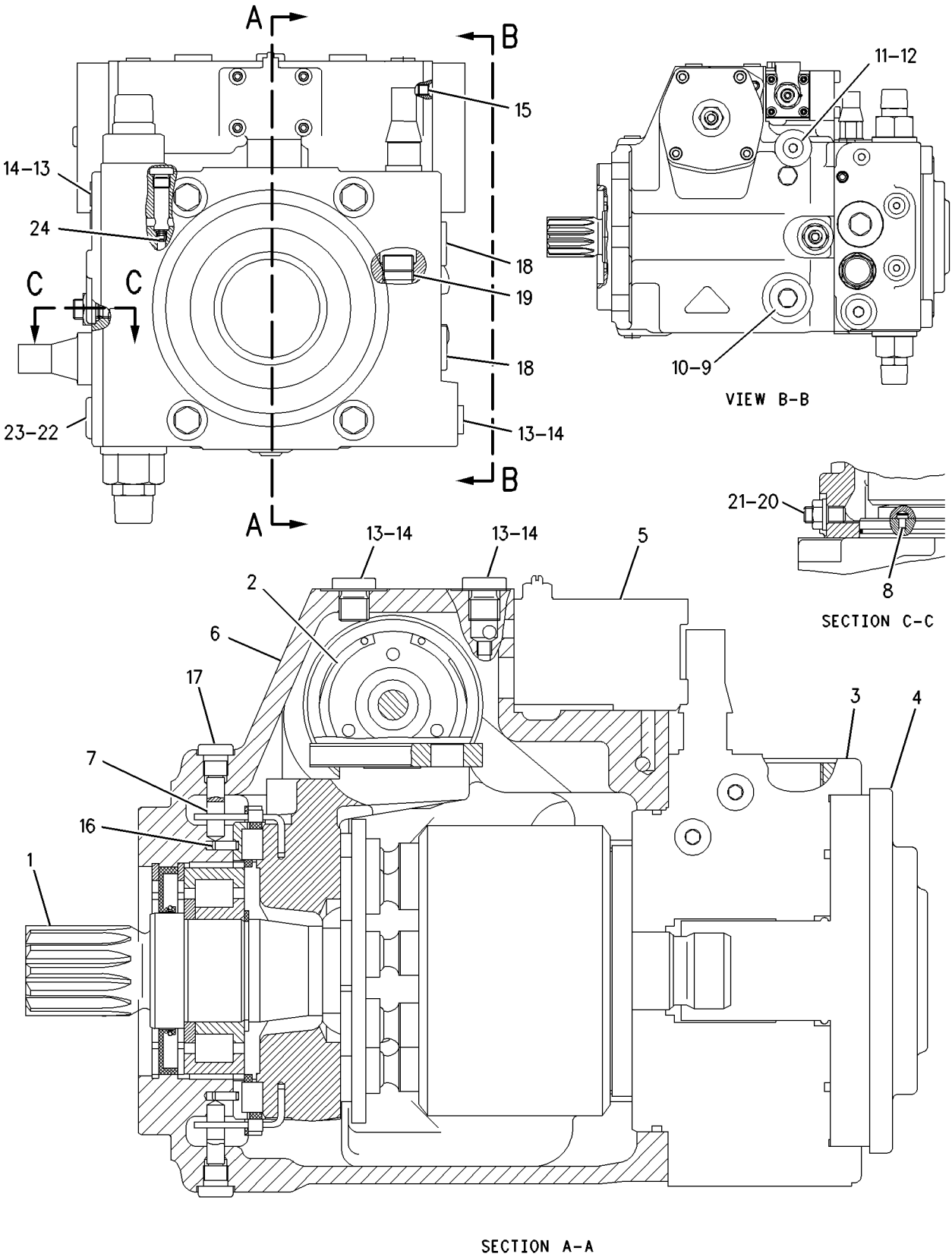

GRAPHIC #1 **<END>** g00937928

202-0968 ROTATING GP-MOTOR—DIFFERENTIAL STEERING

S/N: CCK1-UP

PART OF 191-9536 MOTOR GP-PISTON

SMCS-5058 **i01834296**

NOTE	REF NO	GRAPHIC REF	PART NUMBER	QTY	PART NAME 1 2 3 4 5 6 (PRODUCT LEVEL)	SEE PAGE
	1	1	**180-1415**	1	SHAFT AS	
		1	**180-1413**	1	SHAFT	
	1A	1	**171-5990**	1	KIT-BEARING (PISTON MOTOR ROTATING GP)	
	2	1	**9T-2560**	1	COVER	
	3	1	**9T-2584**	1	RING-RETAINING	
	4	1	**133-8739**	1	SEAL	
	5	1	**2H-3928**	1	SEAL-O-RING	
B	6	1	**9T-2581**	2	SHIM (0.1MM THK)	
B	7	1	**9T-2582**	1	SHIM (0.3MM THK)	
	8	1	**111-8287**	1	BARREL	
Y	9	1	**111-7346**	1	VALVE GP-FLUSHING	326
	10	1	**166-7409**	1	PIN-CENTER	
	11	1	**165-6968**	7	PISTON AS	
					(EACH INCLUDES)	
		1	**6E-6350**	2	RING	
	12	1	**9T-2559**	1	DISC-RETAINING	
B	13	1	**141-0250**	1	SHIM (3.80MM THK)	
B	14	1	**141-0252**	1	SHIM (4.00MM THK)	
B	15	1	**141-0249**	1	SHIM (3.70MM THK)	
B	16	1	**141-0248**	1	SHIM (3.60MM THK)	
B	17	1	**141-0247**	1	SHIM (3.50MM THK)	
	18	1	**166-7410**	1	SPRING	
	19	1	**123-3299**	1	PLATE-RETAINING	
M	20	1	**113-4417**	7	SCREW	
B	21	1	**141-0251**	1	SHIM (3.90MM THK)	
	22	1	**202-0972**	1	WASHER	

B-USE AS REQUIRED
M-METRIC PART
Y-SEPARATE ILLUSTRATION

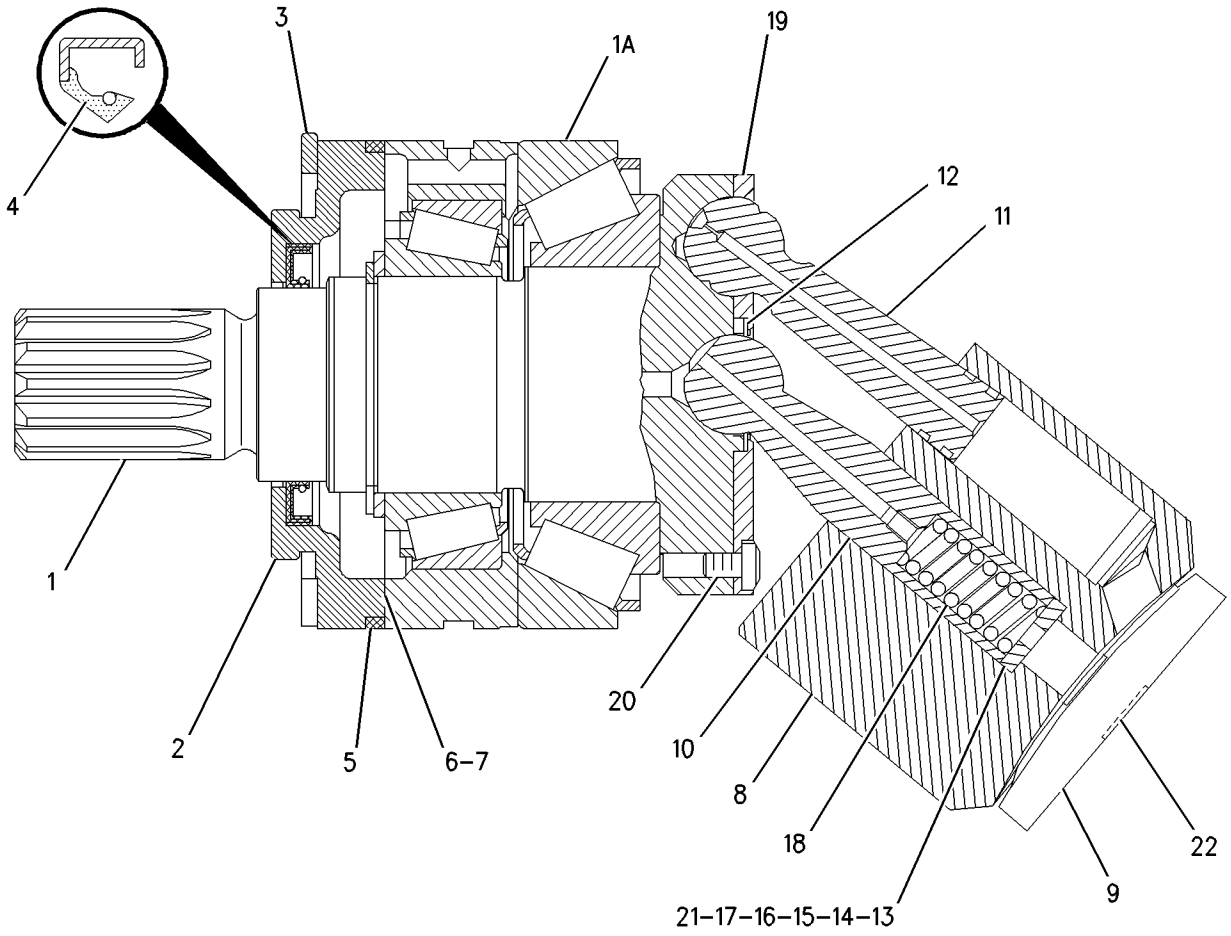

GRAPHIC #1 **<END>** g00773314

STEERING AND BRAKING SYSTEM

196-4232 ROTATING GP-PUMP—STEERING

S/N: CCK1-UP

PART OF 222-1214 PUMP GP-PISTON

SMCS-5070 **i01834512**

NOTE	REF NO	GRAPHIC REF	PART NUMBER	QTY	PART NAME 1 2 3 4 5 6 (PRODUCT LEVEL)	SEE PAGE
	1	1	**6V-5201**	1	RING-RETAINING (36.5X1.75MM) (EXTERNAL)	
	2	1	**142-9437**	2	WASHER	
	3	1	**9X-2857**	1	RING-RETAINING (INTERNAL)	
	4	1	**142-9429**	1	SHAFT	
	5	1	**159-9854**	2	RING-RETAINING	
	6	1	**142-9435**	1	BALL-RETAINER	
	7	1	**142-9427**	1	SWASHPLATE	
	8	1	**142-9434**	1	PLATE-RETAINER	
	9	1	**142-9425**	9	PISTON AS	
	10	1	**196-4238**	1	BARREL AS	
B	11	1	**142-9430**	1	SHIM (1.2MM THK)	
B	12	1	**142-9431**	1	SHIM (1.0MM THK)	
B	13	1	**142-9432**	1	SHIM (0.8MM THK)	
B	14	1	**142-9433**	1	SHIM (0.6MM THK)	
	15	1	**142-9438**	1	SPRING-COIL	
	16	1	**142-9426**	1	SPRING AS	
	17	1	**130-7806**	2	ROD	
	18	1	**142-9436**	1	BEARING AS	
	19	1	**201-5382**	1	SEAL-SHAFT	
	20	1	**126-1403**	1	PLATE-ADJUSTMENT	
	21	1	**142-9440**	1	BEARING AS	
	22	1	**142-9439**	1	BEARING AS	

B-USE AS REQUIRED

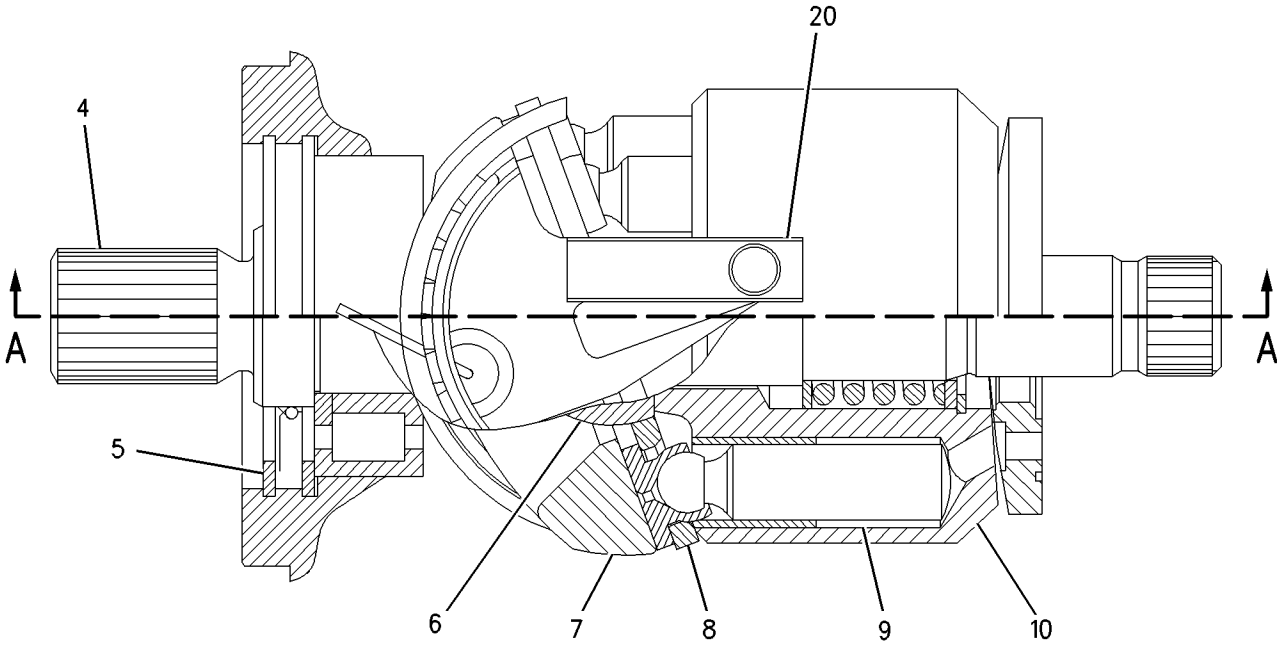

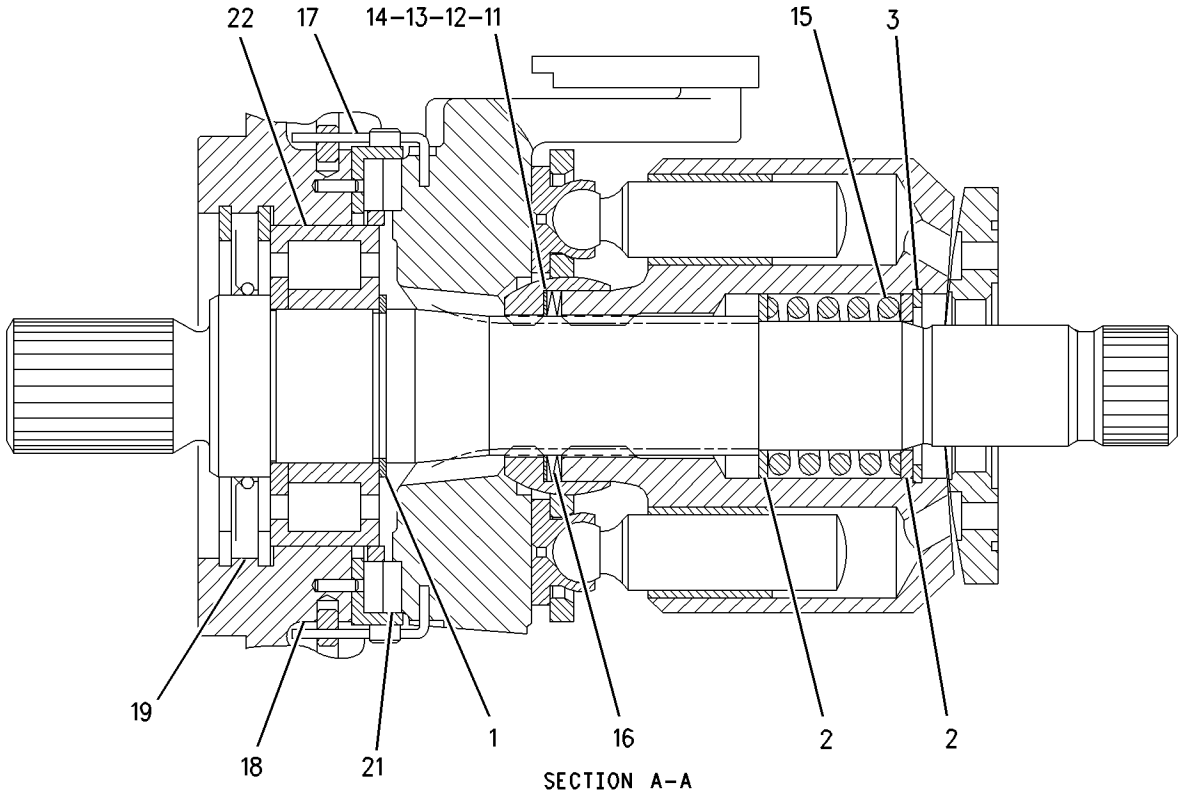

SECTION A-A

GRAPHIC #1 **<END>** g00771245

STEERING AND BRAKING SYSTEM

126-0747 VALVE GP-BYPASS–STEERING

S/N: CCK1-UP

PART OF 191-9532 LINES GP-STEERING

SMCS-5093 **i01458199**

NOTE	REF NO	GRAPHIC REF	PART NUMBER	QTY	PART NAME 1 2 3 4 5 6 (PRODUCT LEVEL)	SEE PAGE
	1	1	**9S-4191**	1	PLUG-STRAIGHT THREAD	
	2	1	**126-0748**	1	BODY	
	3	1	**3J-1907**	1	SEAL-O-RING	
	4	1	**6V-8218**	1	SEAL-O-RING	

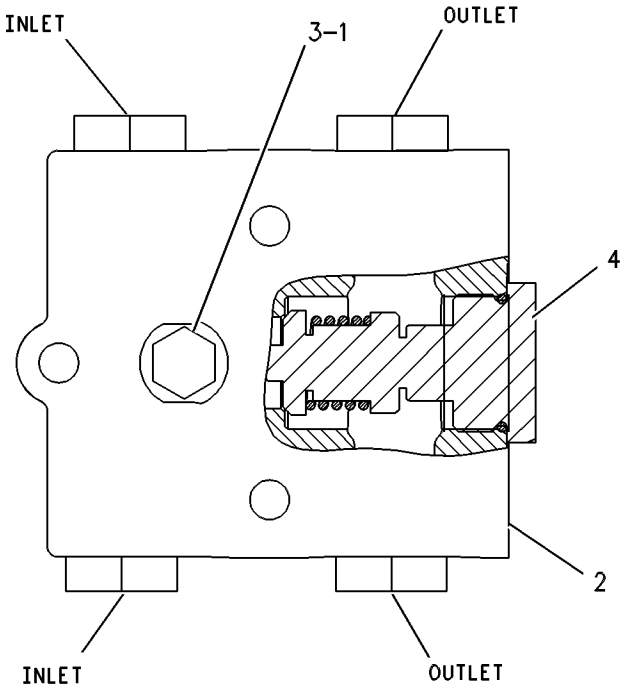

GRAPHIC #1 **<END>** g00449170

201-7274 VALVE GP-CONTROL—STEERING/BRAKE

S/N: CCK1-UP

PART OF 195-0644 BRAKE GP-STEERING

SMCS-4307 **i01872987**

NOTE	REF NO	GRAPHIC REF	PART NUMBER	QTY	PART NAME 1 2 3 4 5 6 (PRODUCT LEVEL)	SEE PAGE
	1	1	**9L-9068**	4	DOWEL	
Y	2	1	*162-5357*	1	MANIFOLD & VALVE GP	311
Y	3	1	*175-4972*	1	MANIFOLD & VALVE GP	312
	4	1	**176-0259**	1	PLUG AS (ORIFICE SCREEN)	
M	5	1	**8T-4177**	2	BOLT (M8X1.25X90MM)	
Y	6	1	**201-7269**	1	VALVE GP-TRANSMISSION CONTROL	232
	7	1	**122-3771**	2	SEAL-O-RING	
	8	1	**132-9899**	1	PLATE	
	9	1	**132-9900**	1	PLATE	
	10	1	**134-1251**	1	PLATE-SEPARATOR	
	11	1	**185-3503**	2	SEAL-O-RING	
	12	1	**1T-0738**	10	WASHER (8.4X19X1.83MM THK)	
	13	1	**3S-2093**	4	STRAP-CABLE	
	14	1	**4J-7533**	1	SEAL-O-RING	
M	15	1	**7X-2541**	4	BOLT (M8X1.25X140MM)	
M	16	1	**8T-3647**	4	BOLT (M8X1.25X80MM)	
	17	1	**9P-9150**	24	WASHER (8.25X18X.84MM THK)	

M-METRIC PART
Y-SEPARATE ILLUSTRATION

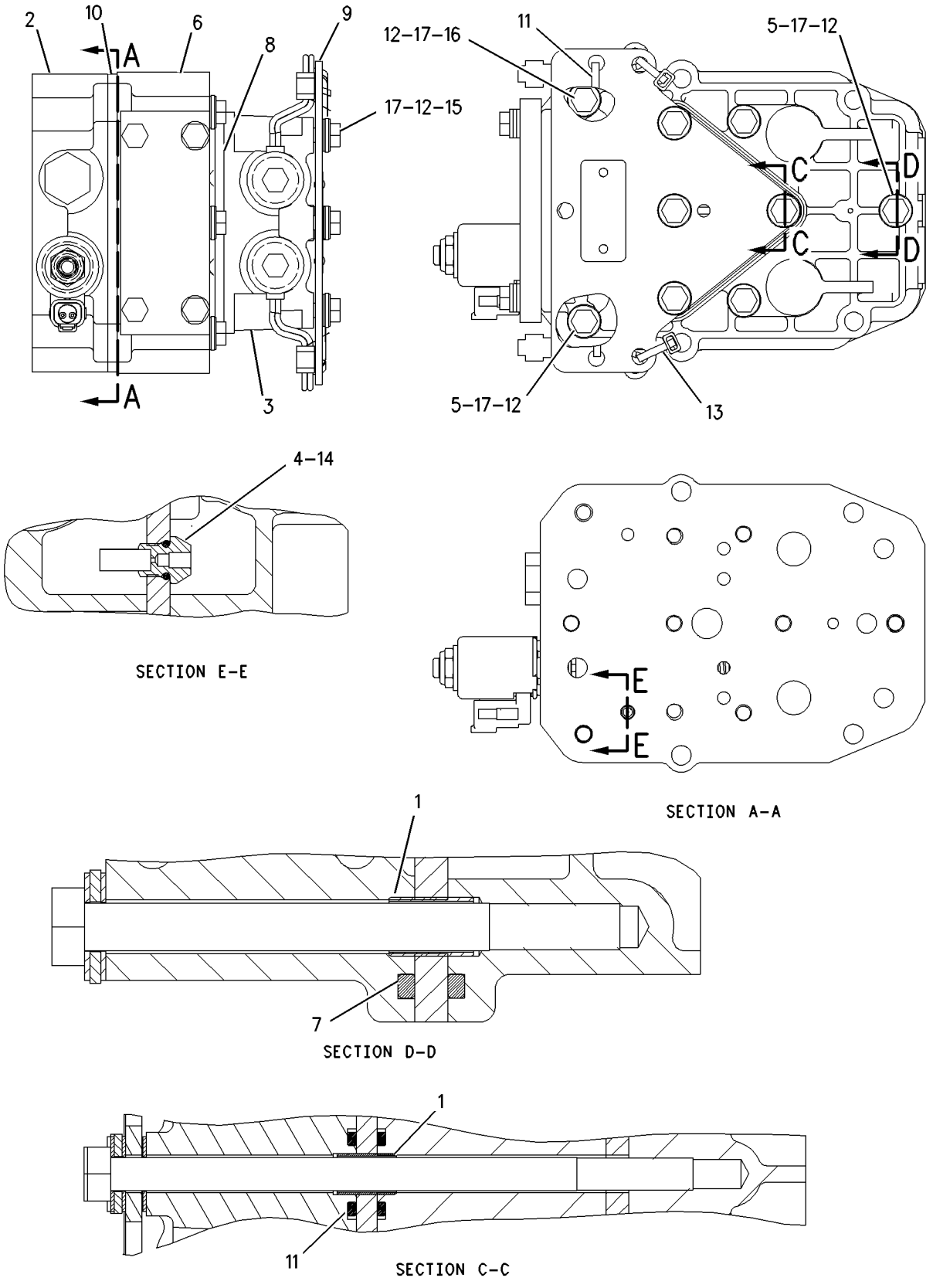

GRAPHIC #1 **<END>** g00936951

111-7346 VALVE GP-FLUSHING—DIFFERENTIAL STEERING MOTOR

S/N: CCK1-UP

PART OF 202-0968 ROTATING GP-MOTOR

SMCS-5066 **i01834298**

NOTE	REF NO	GRAPHIC REF	PART NUMBER	QTY	PART NAME 1 2 3 4 5 6 (PRODUCT LEVEL)	SEE PAGE
	1	1	**111-8288**	1	PLATE	
	2	1	**111-8289**	1	ROD	
	3	1	**119-6110**	2	RETAINER	
	4	1	**6E-4102**	2	SPRING	
	5	1	**112-9327**	2	DOWEL	

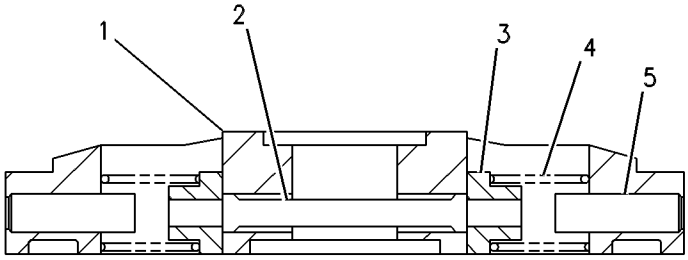

GRAPHIC #1 **<END>** g00115015

9T-8693 VALVE GP-PILOT—STEERING & TMSN CONTROL

S/N: CCK1-UP

PART OF 166-6082 CONTROL GP-STEERING & TMSN

ALSO AN ATTACHMENT

SMCS-4307 **i01835112**

NOTE	REF NO	GRAPHIC REF	PART NUMBER	QTY	PART NAME 1 2 3 4 5 6 (PRODUCT LEVEL)	SEE PAGE
	1	1	**6E-1134**	1	LEVER	
	2	1	**1B-4427**	2	NUT-JAM (1/4-20 THD)	
	3	1	**114-5157**	2	ADJUSTER	
	4	1	**6E-1135**	1	PIN	
	5	1	**1U-3147**	4	SEAL-U-CUP	
	6	1	**033-6044**	2	SEAL-O-RING	
B	7	1	**5S-7018**	4	SPACER (14.15X7.54X.25MM THK)	
	8	1	**6E-1982**	2	SPRING (MIDDLE)	
	9	1	**1S-6250**	2	DOWEL	
	10	1	**3N-2818**	2	BEARING	
	11	1	**6E-1981**	2	SPRING (INNER)	
	12	1	**6E-1136**	2	RETAINER	
	13	1	**1U-2071**	2	RETAINER	
	14	1	**199-9102**	1	BRACKET	
	15	1	**8J-1622**	2	NUT (7/8-20 THD)	
	16	1	**9T-2378**	2	SLEEVE	
	17	1	**1U-2752**	2	PLUNGER	
	18	1	**202-1214**	1	BOOT	
	19	1	**1W-3963**	2	SPRING-OUTER	
	20	1	**6E-2193**	2	RETAINER	

B-USE AS REQUIRED

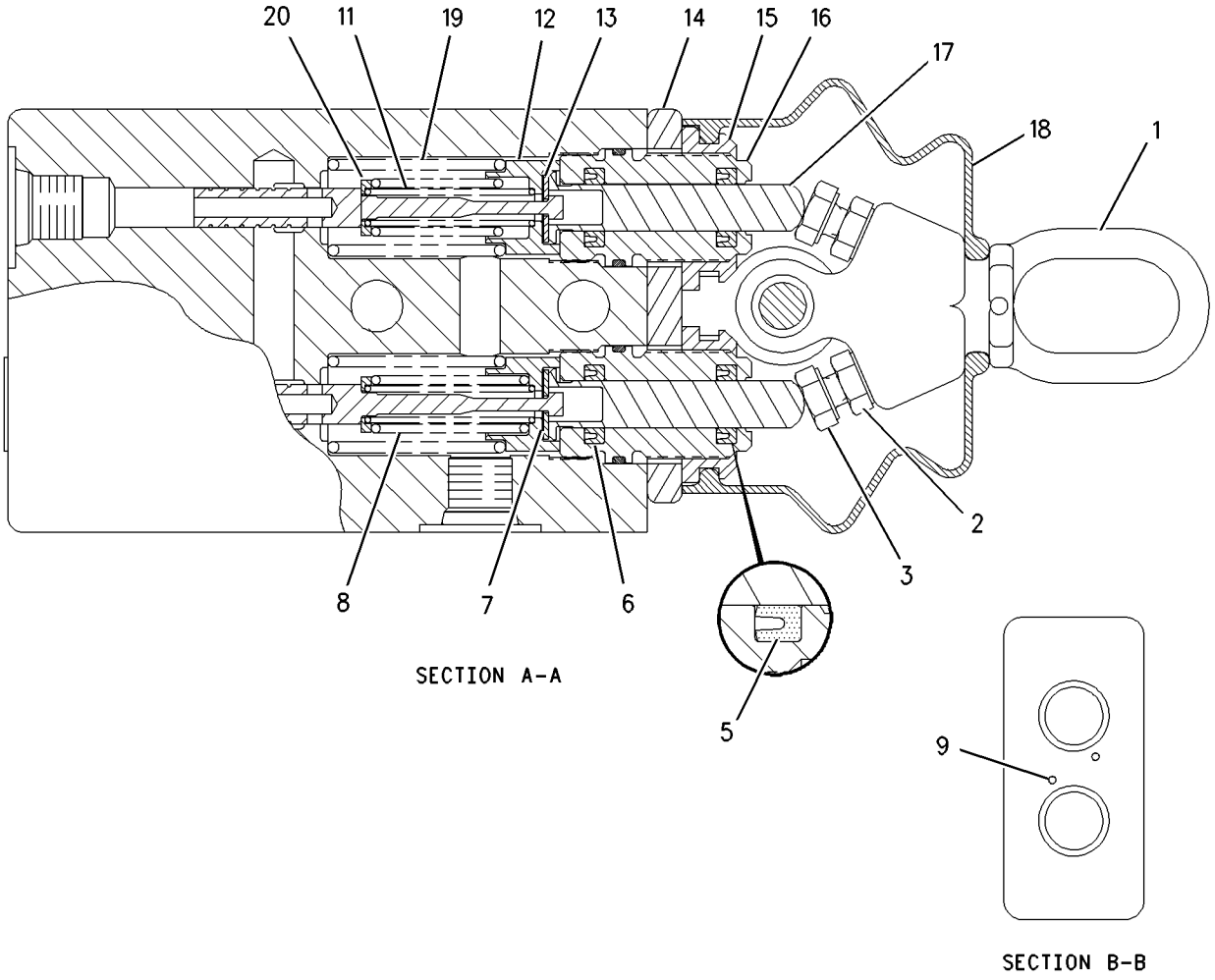

GRAPHIC #1 **<END>** g00940430

201-9105 VALVE GP-PRESS & FLOW CMPNSTR–STEERING PUMP

S/N: CCK1-UP

PART OF 202-2329 HEAD GP-PUMP

SMCS-5086 **i01834477**

NOTE	REF NO	GRAPHIC REF	PART NUMBER	QTY	PART NAME 1 2 3 4 5 6 (PRODUCT LEVEL)	SEE PAGE
	1	1	**6V-8351**	1	SEAL-O-RING	
M	2	1	**6E-1607**	1	LOCKNUT-SEALING	
	3	1	**6V-5586**	1	SEAL-O-RING	
M	4	1	**6E-4401**	1	SETSCREW-ADJUSTMENT	

M-METRIC PART

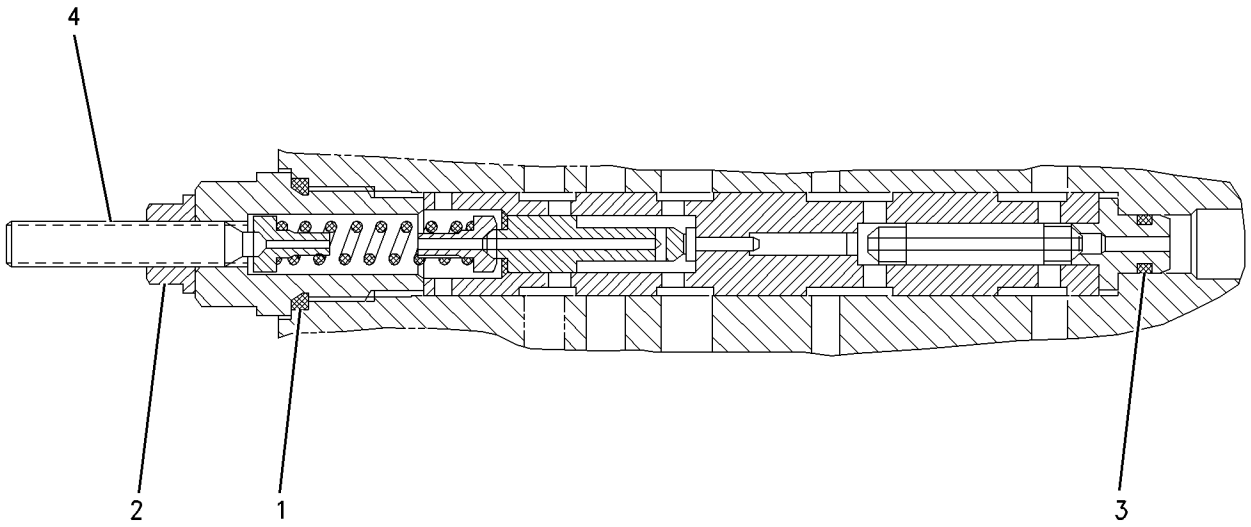

GRAPHIC #1 **<END>** g00937140

6E-4402 VALVE GP-RELIEF–STEERING PUMP

S/N: CCK1-UP

PART OF 202-2329 HEAD GP-PUMP

SMCS-4307 **i01834440**

NOTE	REF NO	GRAPHIC REF	PART NUMBER	QTY	PART NAME 1 2 3 4 5 6 (PRODUCT LEVEL)	SEE PAGE
	1	1	**202-2342**	1	SPRING	
	2	1	**6E-4404**	1	VALVE-POPPET	
	3	1	**183-8410**	1	SCREW	
	4	1	**6E-4403**	1	PLUG	
M	5	1	**6E-4240**	1	NUT-SEALING (M10X1 THD)	
	6	1	**6V-8352**	1	SEAL-O-RING	
	7	1	**6E-4388**	1	RETAINER-SPRING	

M-METRIC PART

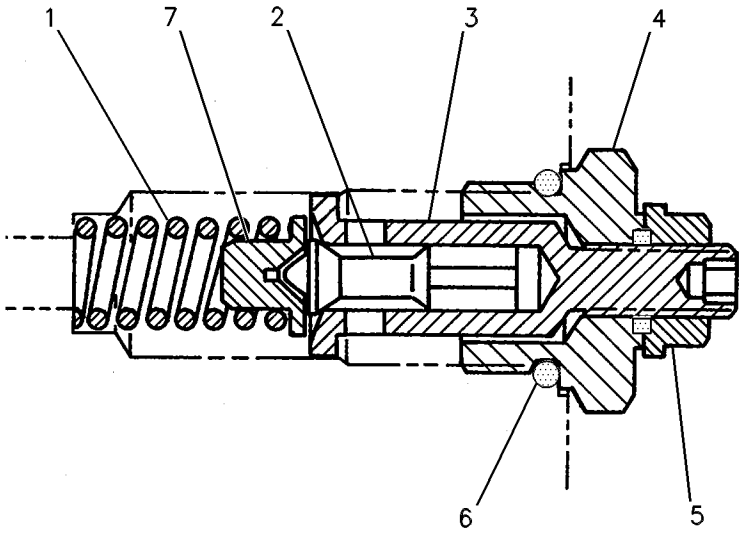

GRAPHIC #1 **<END>** g00252131

198-9219 VALVE GP-RELIEF—STEERING LINES

S/N: CCK1-UP

PART OF 191-9532 LINES GP-STEERING

SMCS-4307 **i01834289**

NOTE	PART NUMBER	QTY	PART NAME 1 2 3 4 5 6 (PRODUCT LEVEL)	SEE PAGE
Y	**198-9220**	1	VALVE GP-RELIEF	332

Y-SEPARATE ILLUSTRATION

<END>

198-9220 VALVE GP-RELIEF—STEERING LINES

S/N: CCK1-UP

PART OF 198-9219 VALVE GP-RELIEF

SMCS-4307 **i01834291**

NOTE	REF NO	GRAPHIC REF	PART NUMBER	QTY	PART NAME 1 2 3 4 5 6 (PRODUCT LEVEL)	SEE PAGE
J	1	1	**2M-9780**	1	SEAL-O-RING	
J	2	1	**161-6149**	1	SEAL-O-RING	
J	3	1	**161-6161**	2	RING-BACKUP	
					AVAILABLE REPAIR KIT(S):	
			133-5545	1	KIT-SEAL (RELIEF VALVE)	
J-KIT MARKED J INCLUDE PARTS MARKED J						

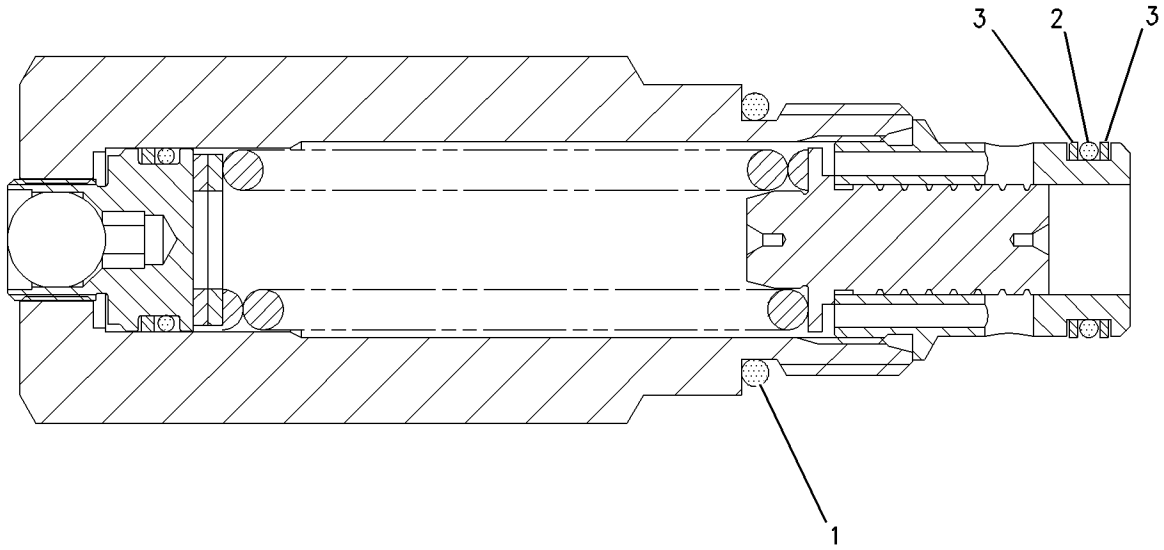

GRAPHIC #1 **<END>** g00938075

202-2333 VALVE GP-SERVO—STEERING PUMP PILOT PRESSURE

S/N: CCK1-UP

PART OF 222-1214 PUMP GP-PISTON

SMCS-4307 **i01834525**

NOTE	REF NO	GRAPHIC REF	PART NUMBER	QTY	PART NAME 1 2 3 4 5 6 (PRODUCT LEVEL)	SEE PAGE
	1	1	**202-2343**	1	HOUSING AS	
	2	1	**202-2344**	2	HOUSING	
	3	1	**196-4251**	1	COVER	
	4	1	**202-0971**	1	SPRING	
	5	1	**203-5592**	1	GASKET	
	6	1	**202-2791**	2	SCREW	
M	7	1	**6E-4385**	2	LOCKNUT	
M	8	1	**8C-8580**	8	BOLT-SOCKET HEAD (M5X.8X16MM)	
M	9	1	**8T-2922**	4	BOLT-SOCKET HEAD (M6X1X65MM)	
	10	1	**117-7316**	1	SEAL	
	11	1	**9T-3853**	2	LOCKNUT	
		1	**085-7539**	3	SEAL-O-RING	
	12	1	**196-9445**	1	BOLT-SOCKET HEAD (M6X1X45MM)	
	13	1	**202-2341**	2	PIN	
	14	1	**202-2339**	2	COLLAR	
	15	1	**5E-7045**	1	PIN-CYLINDER	
	18	1	**196-4254**	2	SPRING	
	19	1	**183-8398**	2	SPRING	
	20	1	**183-8395**	2	RETAINER-SPRING	

M-METRIC PART

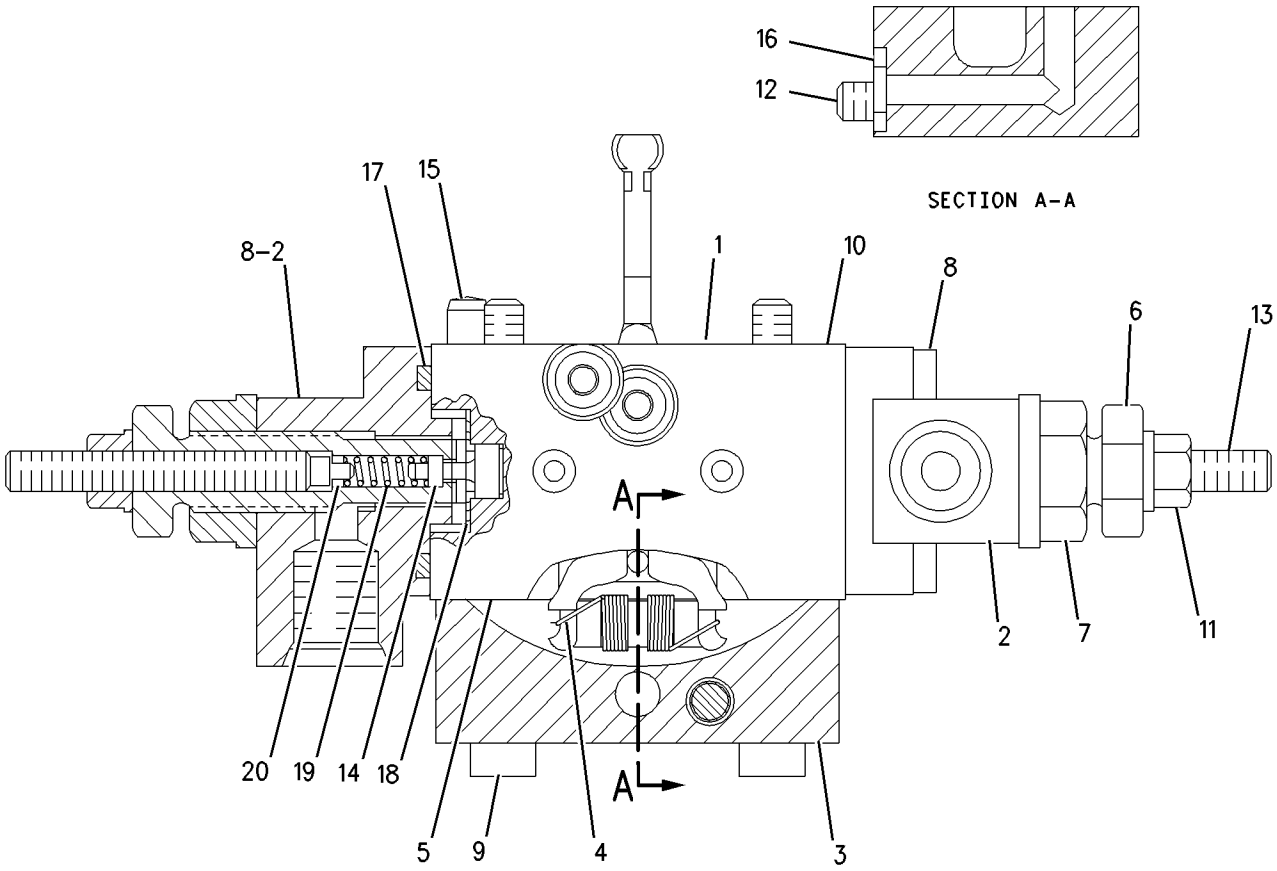

GRAPHIC #1 **<END>** g00778984

227-5862 VALVE GP-SERVO—STEERING PUMP PILOT PRESS CONT

S/N: CCK1-UP

PART OF 222-1214 PUMP GP-PISTON

SMCS-4307 **i01834502**

NOTE	REF NO	GRAPHIC REF	PART NUMBER	QTY	PART NAME 1 2 3 4 5 6 (PRODUCT LEVEL)	SEE PAGE
M	1	1	**8T-0269**	8	BOLT-SOCKET HEAD (M6X1X20MM)	
	2	1	**123-7547**	2	SEAL-V-RING	
	3	1	**188-7792**	1	PISTON	
	4	1	**6V-8397**	1	SEAL-O-RING	
	5	1	**145-0834**	1	ROD	
B	6	1	**188-7793**	2	SPACER (9.2X15.95X5.82MM THK)	
B	7	1	**188-7794**	2	SPACER (9.2X15.95X5.87MM THK)	
B	8	1	**188-7795**	2	SPACER (9.2X15.95X5.92MM THK)	
B	9	1	**188-7796**	2	SPACER (9.2X15.95X5.97MM THK)	
B	10	1	**188-7797**	2	SPACER (9.2X15.95X6.02MM THK)	
B	11	1	**188-7798**	2	SPACER (9.2X15.95X5.67MM THK)	
M	12	1	**188-7789**	1	NUT (M12X1.50 THD)	
	13	1	**145-0838**	2	RETAINER-SPRING	
	14	1	**004-1964**	2	SEAL-O-RING	
	15	1	**153-2783**	2	RETAINER-SPRING	
	16	1	**123-7544**	2	SPRING-PRESSURE	
	17	1	**188-7790**	2	RING-GUIDE	
	18	1	**202-2337**	1	COVER	
	19	1	**202-2336**	1	COVER	
	20	1	**188-7800**	2	RING	
	21	1	**188-7791**	2	RING	
B	22	1	**188-7799**	2	SPACER (9.2X15.95X5.72MM THK)	
	23	1	**106-7532**	1	SPACER (9.2X15.95X5.77MM THK)	

B-USE AS REQUIRED
M-METRIC PART

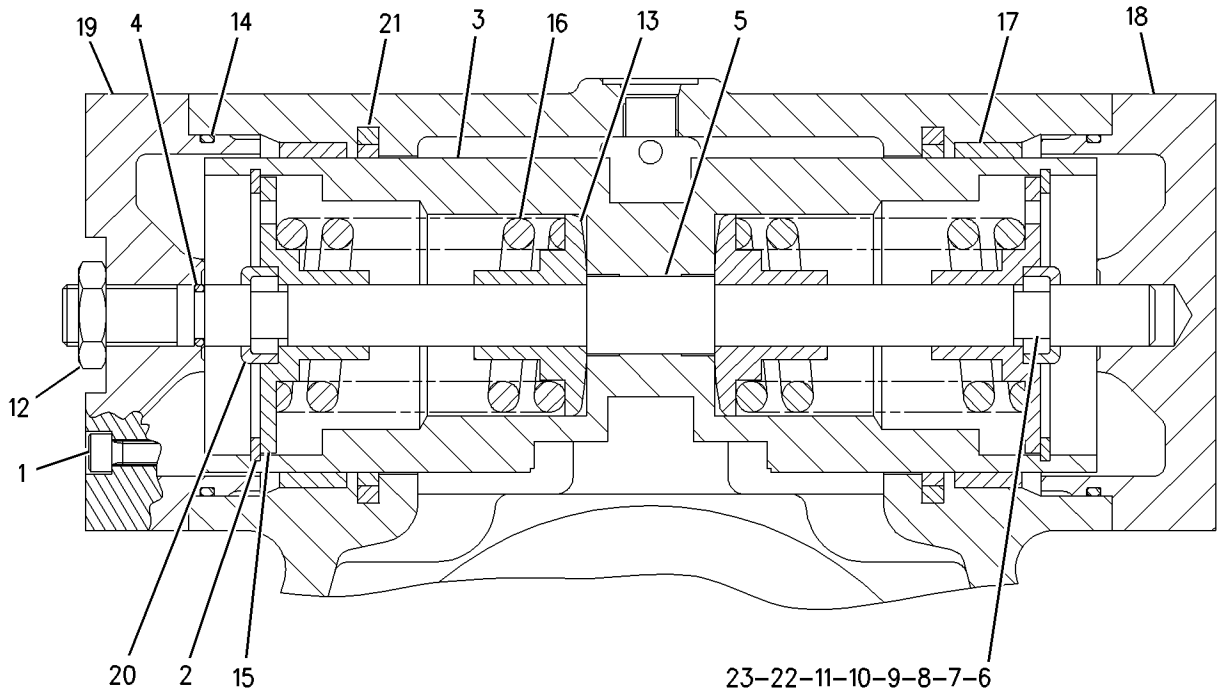

GRAPHIC #1 **<END>** g00938444

172-2392 VALVE GP-SOLENOID—STEERING/BRAKE

S/N: CCK1-UP
24 VOLT
PART OF 175-4972 MANIFOLD & VALVE GP

SMCS-4804 **i01883348**

NOTE	REF NO	GRAPHIC REF	PART NUMBER	QTY	PART NAME 1 2 3 4 5 6 (PRODUCT LEVEL)	SEE PAGE
	1	1	**156-5970**	1	NUT (1/2-20-2B THD)	
	2	1	**133-2249**	1	COIL AS	
		1	**1S-9593**	2	STRAP-CABLE	
		1	**8T-8729**	2	PIN-CONNECTOR	
		1	**8T-8737**	2	PLUG-SEAL	
		1	**102-8804**	1	KIT-RECEPTACLE (4 PIN)	
					(INCLUDES RECEPTACLE AS & WEDGE)	
	3	1	**172-2391**	1	SPOOL AS	
		1	**156-5970**	1	NUT (1/2-20-2B THD)	
					AVAILABLE REPAIR KIT(S):	
			189-1839	1	KIT-SEAL (SOLENOID VALVE)	
					(INCLUDES SEALS & RING-BACK UP)	

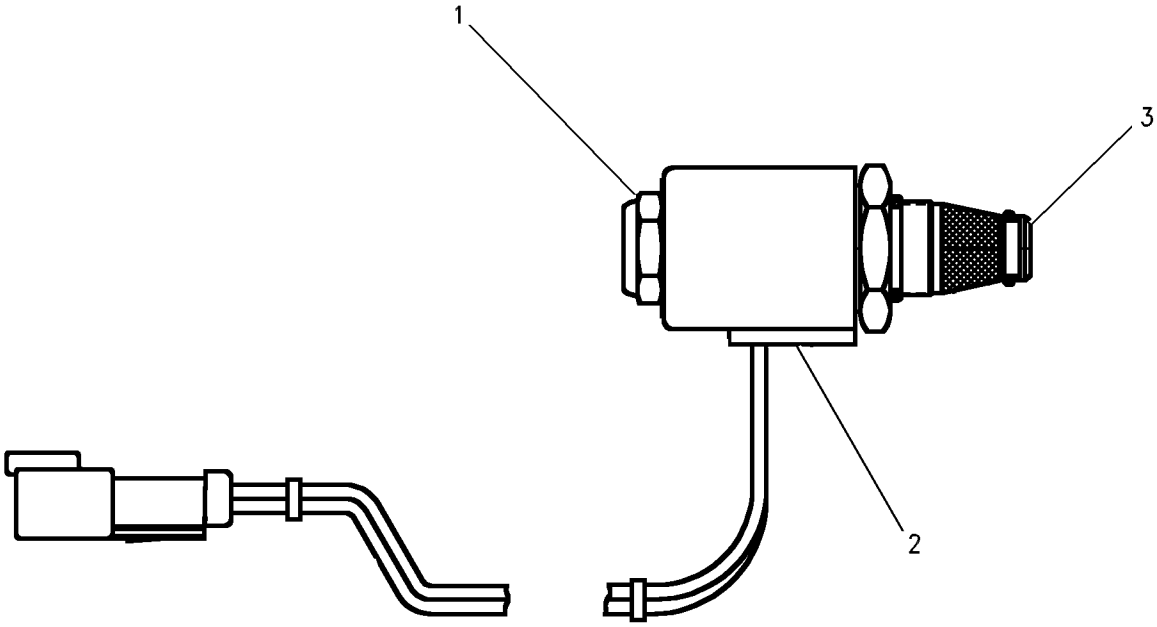

GRAPHIC #1 **<END>** g00653409

174-4909 VALVE GP-SOLENOID–STEERING/BRAKE

S/N: CCK1-UP

PART OF 162-5357 MANIFOLD & VALVE GP

SMCS-4804 **i01431369**

NOTE	REF NO	GRAPHIC REF	PART NUMBER	QTY	PART NAME 1 2 3 4 5 6 (PRODUCT LEVEL)	SEE PAGE
	1	1	**145-1144**	1	COIL AS	
	2	1	**164-2108**	1	WASHER (2.38MM THK)	
	3	1	**167-9524**	1	NUT-SELF LOCKING (1/2-28 THD)	
	4	1	**8L-2746**	1	SEAL-O-RING (15.6MM ID)	
	5	1	**6V-4589**	1	SEAL-O-RING (19.18MM ID)	

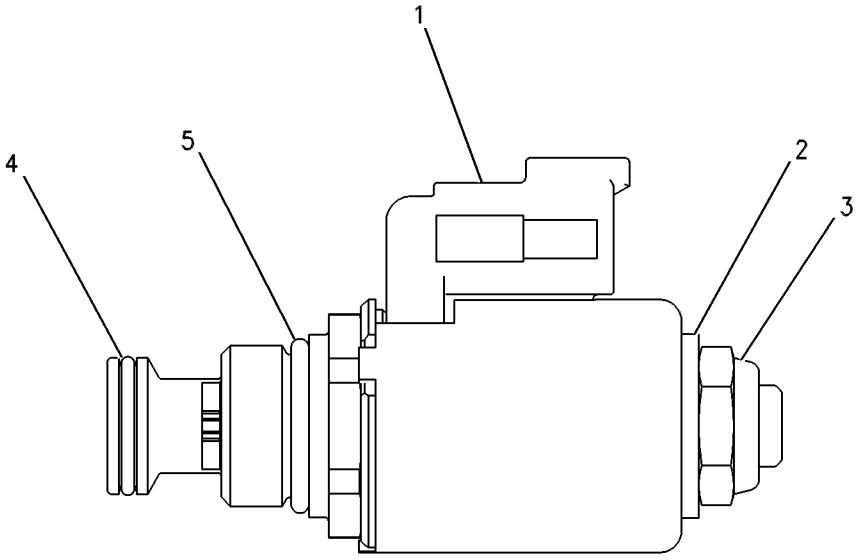

GRAPHIC #1 **<END>** g00638363

HYDRAULIC SYSTEM

156-8948 CONTROL GP-HYDRAULIC HAND–BULLDOZER LIFT/TILT

S/N: CCK1-UP

PART OF 189-4623 HYDRAULIC AR

SMCS-5063 **i01895715**

NOTE	REF NO	GRAPHIC REF	PART NUMBER	QTY	PART NAME 1 2 3 4 5 6 (PRODUCT LEVEL)	SEE PAGE
	1	1	**1B-0676**	7	PIN	
	2	1	**1B-8704**	1	KEY-WOODRUFF	
	3	1	**3B-4615**	7	PIN-COTTER	
	4	1	**3B-4617**	1	PIN-COTTER	
	5	1	**3W-1493**	1	LEVER	
	6	1	**3W-1495**	1	LEVER	
	7	1	**3W-1615**	1	LEVER	
	8	1	**5P-9209**	14	BEARING-ROLLER	
	9	1	**7F-3713**	3	ROD-CONTROL	
	10	1	**7S-5757**	1	RING-RETAINING	
	11	1	**7X-7662**	1	ROD END	
	12	1	**7X-7915**	4	ROD END (M8X1.25 THD)	
	13	1	**8E-1370**	1	WASHER-THRUST	
M	14	1	**8T-4191**	1	BOLT (M10X1.5X16MM)	
	15	1	**8G-4659**	1	SHAFT AS	
	16	1	**8T-4766**	1	ROD END	
	17	1	**8T-6431**	1	ROD END	
	18	1	**111-9870**	1	SHAFT AS	
	19	1	**111-9871**	1	SUPPORT	
	20	1	**111-9873**	1	ROD	
	21	1	**111-9876**	1	SHAFT AS	
	22	1	**111-9879**	1	LEVER	
	23	1	**111-9887**	1	ROD	
	24	1	**111-9888**	1	ROD	
	25	1	**111-9890**	1	LEVER	
	26	1	**111-9891**	1	SHAFT AS	
	27	1	**111-9892**	1	SUPPORT	
	28	1	**111-9895**	1	YOKE	
	29	1	**112-1869**	1	BUSHING	
	30	1	**115-1153**	1	HANDLE (HYDRAULIC HAND CONTROL)	
	31	1	**118-9674**	1	END-YOKE ROD	
	32	1	**126-6733**	1	ROD	
	33	1	**211-1965**	1	LEVER AS	
	34	1	**220-2667**	1	FILM-INSTRUCTION (BULLDOZER CONTROL)	
	35	1	**166-3325**	1	BOOT	
M	36	1	**5C-7261**	6	NUT (M8X1.25 THD)	
M	37	1	**6V-7744**	2	LOCKNUT (M10X1.5 THD)	
M	38	1	**6V-9189**	5	LOCKNUT (M8X1.25 THD)	
	39	1	**8T-4121**	12	WASHER-HARD (11X21X2.5MM THK)	
M	40	1	**8T-4133**	3	NUT (M10X1.5 THD)	
M	41	1	**8T-4137**	1	BOLT (M10X1.5X20MM)	
M	42	1	**8T-4186**	1	BOLT (M10X1.5X40MM)	
M	43	1	**8T-4195**	9	BOLT (M10X1.5X30MM)	
M	44	1	**8T-4196**	1	BOLT (M10X1.5X35MM)	
	45	1	**8T-4224**	4	WASHER-HARD (8.8X16X2MM THK)	
M	46	1	**8T-4244**	1	NUT (M12X1.75 THD)	
M	47	1	**8T-7547**	4	BOLT (M8X1.25X30MM)	
	48	1	**9X-8257**	6	WASHER (17.5X30X3.5MM THK)	

M-METRIC PART

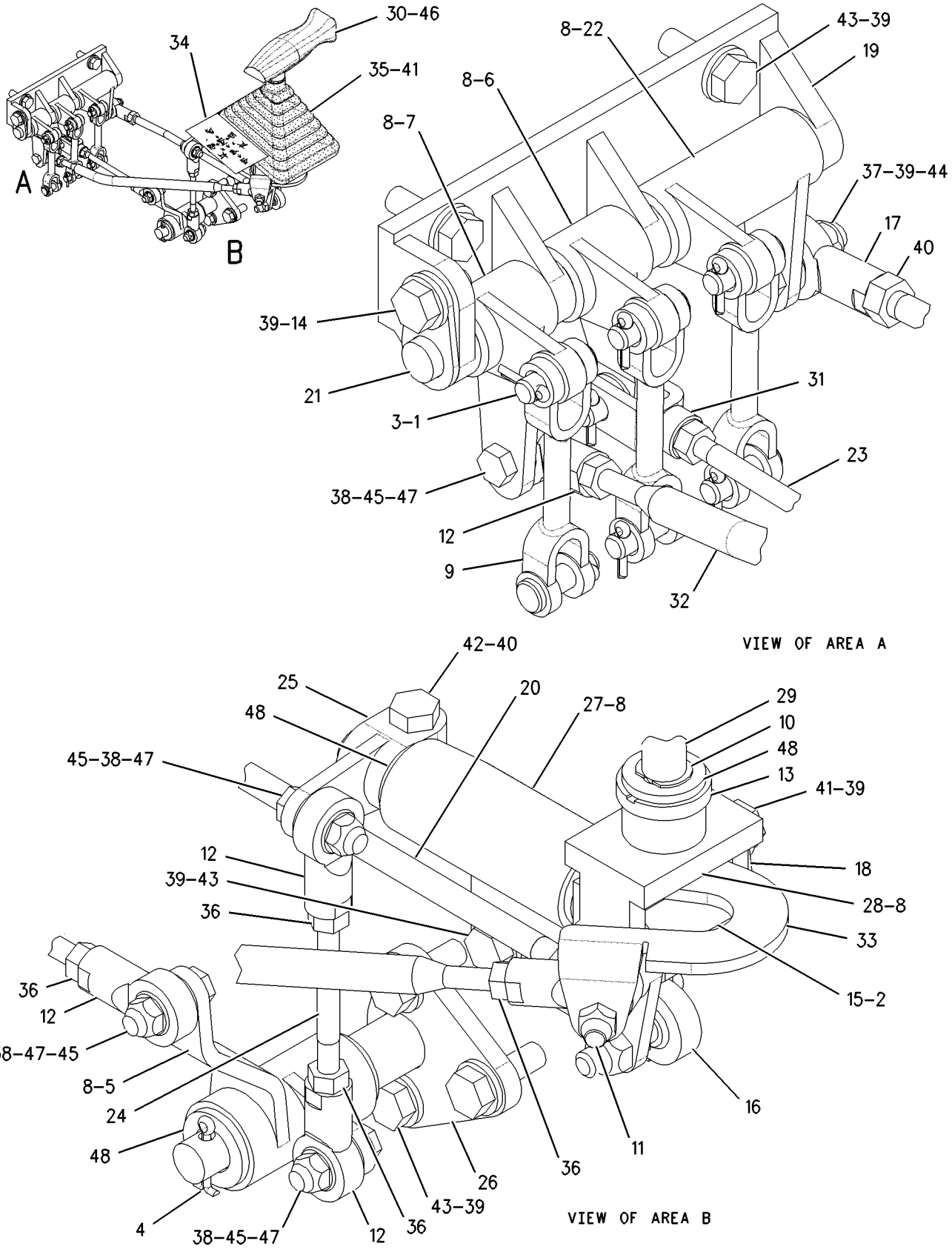

GRAPHIC #1 **<END>** g00907650

164-3504 CONTROL GP-HYDRAULIC HAND–RIPPER

S/N: CCK1-UP

PART OF 229-2831 HYDRAULIC AR, 173-8641 HYDRAULIC AR-4 VALVE AN ATTACHMENT

SMCS-5063 **i01883367**

NOTE	REF NO	GRAPHIC REF	PART NUMBER	QTY	PART NAME 1 2 3 4 5 6 (PRODUCT LEVEL)	SEE PAGE
	1	1	**1B-0676**	2	PIN	
	2	1	**3B-4615**	2	PIN-COTTER	
	3	1	**3B-4617**	2	PIN-COTTER	
	4	1	**5P-9209**	4	BEARING-ROLLER	
	5	1	**8M-8489**	1	DOWEL	
	6	1	**102-9478**	1	FILM-INSTRUCTION (RIPPER CONTROL)	
	7	1	**111-9899**	1	BRACKET AS	
	8	1	**111-9900**	1	LEVER	
	9	1	**115-1153**	1	HANDLE (HYDRAULIC HAND CONTROL)	
	10	1	**118-9674**	2	END-YOKE ROD	
	11	1	**121-0483**	1	ROD	
	12	1	**121-0484**	1	LEVER	
	13	1	**121-0487**	1	SHAFT AS	
	14	1	**166-3603**	1	BOOT	
	15	1	**177-4229**	1	PLATE AS	
M		1	**6V-9632**	4	NUT-WELD (M6X1 THD)	
	16	1	**177-4230**	1	PLATE	
	17	1	**211-4634**	1	ROD-CONTROL	
	18	1	**1B-2578**	1	NUT (3/8-16 THD)	
	19	1	**2K-4973**	1	LOCKNUT (3/8-16 THD)	
M	20	1	**5C-7261**	2	NUT (M8X1.25 THD)	
	21	1	**8T-0192**	1	BOLT (3/8-16X2.25 IN)	
	22	1	**8T-4121**	15	WASHER-HARD (11X21X2.5MM THK)	
M	23	1	**8T-4195**	8	BOLT (M10X1.5X30MM)	
M	24	1	**8T-4244**	2	NUT (M12X1.75 THD)	
M	25	1	**9X-2041**	3	SCREW-TRUSS HEAD (M10X1.5X20MM)	
M	26	1	**9X-2042**	4	SCREW-TRUSS HEAD (M6X1X12MM)	
	27	1	**9X-8257**	4	WASHER (17.5X30X3.5MM THK)	

M-METRIC PART

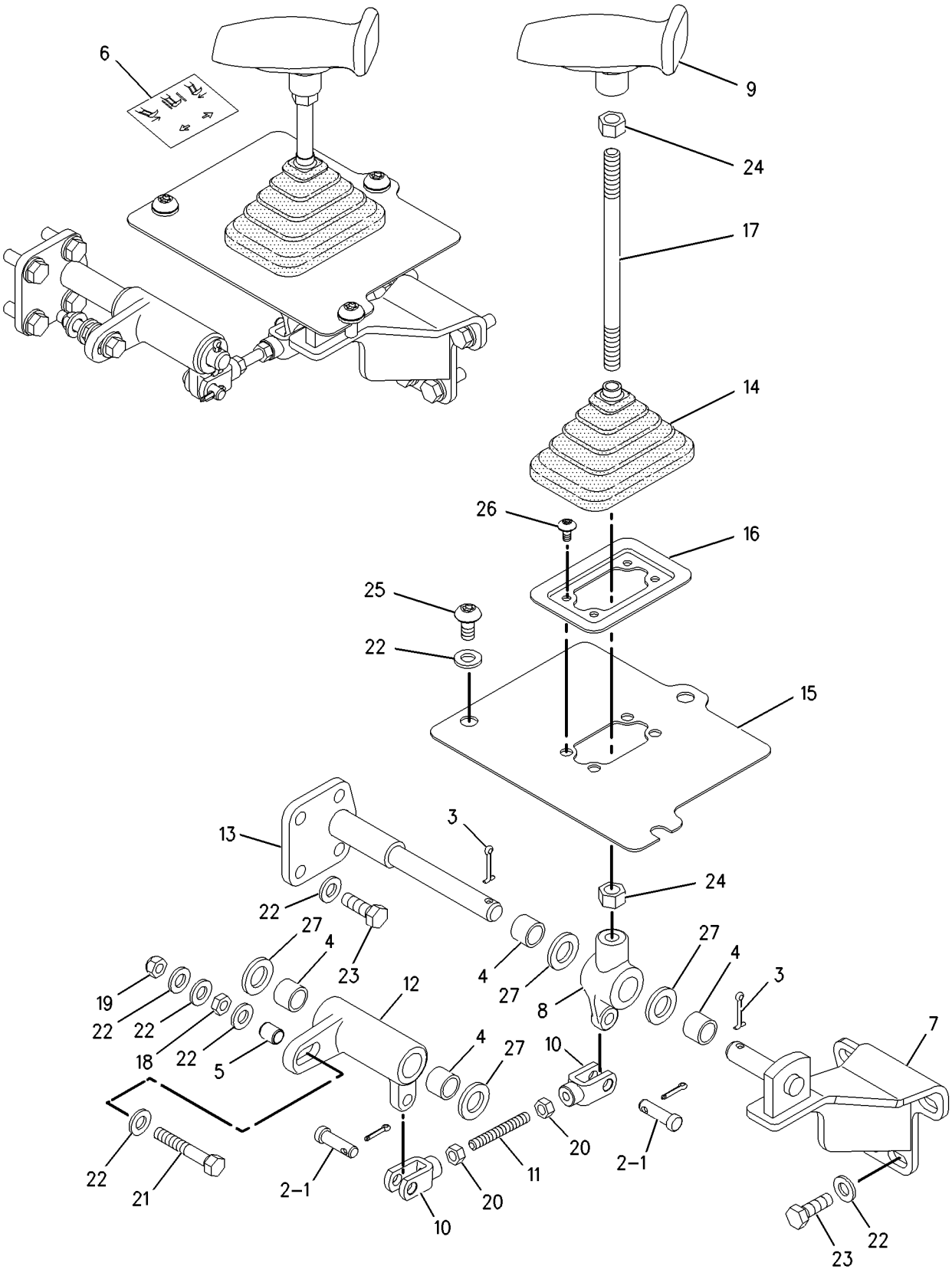

GRAPHIC #1 **<END>** g00936717

165-4481 CONTROL GP-HYDRAULIC HAND–BULLDOZER LIFT/TILT

S/N: CCK1-UP
PART OF 156-9510, 229-2831 HYDRAULIC AR
AN ATTACHMENT

SMCS-5063 **i01883377**

NOTE	REF NO	GRAPHIC REF	PART NUMBER	QTY	PART NAME 1 2 3 4 5 6 (PRODUCT LEVEL)	SEE PAGE
	1	1	**1B-0676**	5	PIN	
	2	1	**1B-8704**	1	KEY-WOODRUFF	
	3	1	**3B-4615**	5	PIN-COTTER	
	4	1	**3B-4617**	1	PIN-COTTER	
	5	1	**3W-1493**	1	LEVER	
	6	1	**3W-1495**	1	LEVER	
	7	1	**5P-9209**	10	BEARING-ROLLER	
	8	1	**7F-3713**	2	ROD-CONTROL	
	9	1	**7X-7915**	3	ROD END (M8X1.25 THD)	
	10	1	**9X-8257**	5	WASHER (17.5X30X3.5MM THK)	
	11	1	**8G-4659**	1	SHAFT AS	
	12	1	**8T-4766**	1	ROD END	
	13	1	**8T-6431**	1	ROD END	
	14	1	**111-9867**	1	ROD	
	15	1	**111-9870**	1	SHAFT AS	
	16	1	**111-9871**	1	SUPPORT	
	17	1	**111-9873**	1	ROD	
	18	1	**111-9876**	1	SHAFT AS	
	19	1	**111-9879**	1	LEVER	
	20	1	**111-9886**	1	YOKE	
	21	1	**111-9887**	1	ROD	
	22	1	**111-9888**	1	ROD	
	23	1	**111-9890**	1	LEVER	
	24	1	**111-9891**	1	SHAFT AS	
	25	1	**111-9892**	1	SUPPORT	
	26	1	**115-1153**	1	HANDLE (HYDRAULIC HAND CONTROL)	
	27	1	**118-9674**	1	END-YOKE ROD	
	28	1	**220-2666**	1	FILM-INSTRUCTION (BULLDOZER CONTROL)	
	29	1	**166-3325**	1	BOOT	
M	30	1	**5C-7261**	4	NUT (M8X1.25 THD)	
M	31	1	**6V-7744**	2	LOCKNUT (M10X1.5 THD)	
M	32	1	**6V-9189**	3	LOCKNUT (M8X1.25 THD)	
	33	1	**8T-4121**	12	WASHER-HARD (11X21X2.5MM THK)	
M	34	1	**8T-4133**	3	NUT (M10X1.5 THD)	
M	35	1	**8T-4137**	2	BOLT (M10X1.5X20MM)	
M	36	1	**8T-4186**	1	BOLT (M10X1.5X40MM)	
M	37	1	**8T-4195**	9	BOLT (M10X1.5X30MM)	
M	38	1	**8T-4196**	1	BOLT (M10X1.5X35MM)	
	39	1	**8T-4224**	3	WASHER-HARD (8.8X16X2MM THK)	
M	40	1	**8T-4244**	2	NUT (M12X1.75 THD)	
M	41	1	**8T-7547**	3	BOLT (M8X1.25X30MM)	

M-METRIC PART

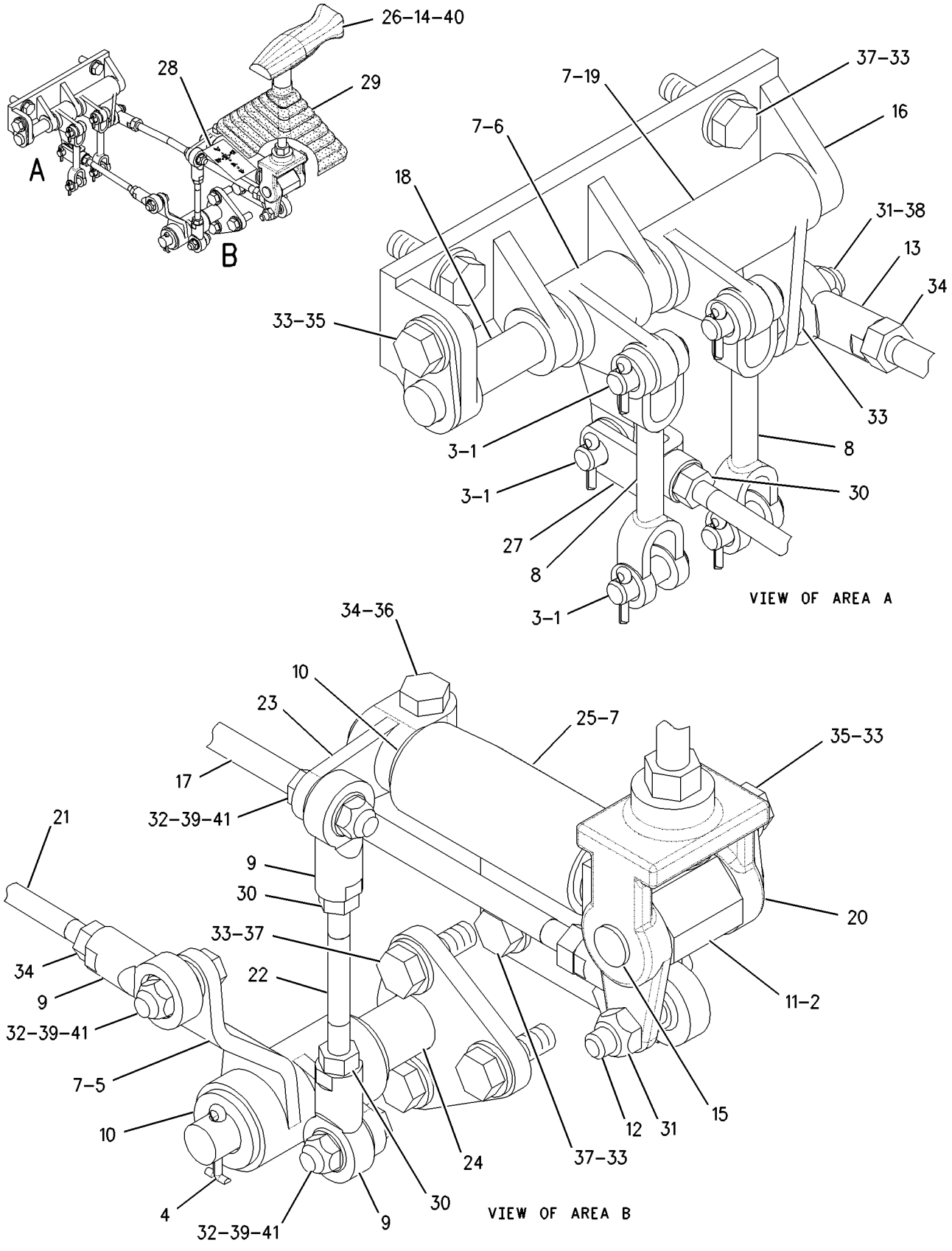

GRAPHIC #1 **<END>** g00917223

HYDRAULIC SYSTEM

196-2178 COOLER GP-HYDRAULIC OIL

S/N: CCK1-UP

PART OF 189-4622 INSTALLATION AR-ENGINE

SMCS-1374, 5071 **i01843207**

NOTE	REF NO	GRAPHIC REF	PART NUMBER	QTY	PART NAME 1 2 3 4 5 6 (PRODUCT LEVEL)	SEE PAGE
	1	1	**197-8164**	1	BRACKET AS	
M		1	**8T-3490**	3	NUT-WELD (M10X1.5 THD)	
	2	1	**214-6734**	1	BRACKET AS	
M		1	**8T-3490**	3	NUT-WELD (M10X1.5 THD)	
	3	1	**217-0316**	1	CORE AS-OIL COOLER	
	4	1	**8T-4121**	9	WASHER-HARD (11X21X2.5MM THK)	
M	5	1	**8T-4136**	9	BOLT (M10X1.5X25MM)	
M	6	1	**8T-4186**	3	BOLT (M10X1.5X40MM)	

M-METRIC PART

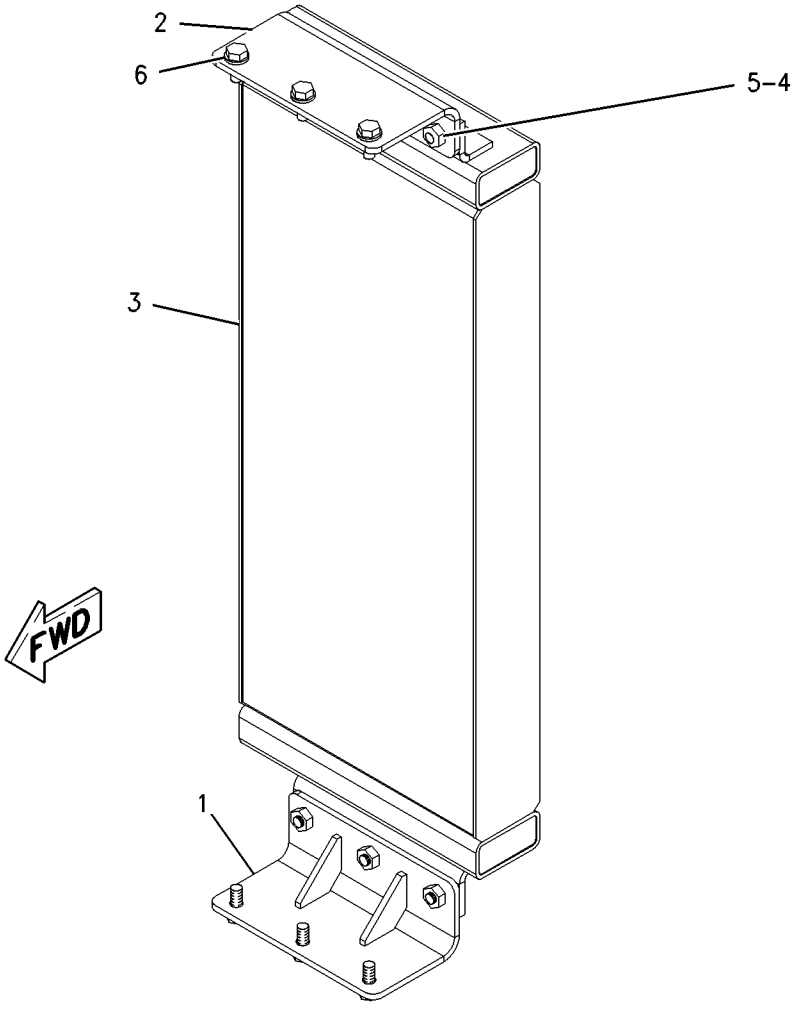

GRAPHIC #1 **<END>** g00941871

228-0320 CYLINDER GP-ANGLING–BULLDOZER

S/N: B6X1-UP
101.6MM (4 IN)BORE X 472MM (18.6 IN) STROKE
PART OF 223-6303 BULLDOZER AR
AN ATTACHMENT

SMCS-5101 **i01831061**

NOTE	REF NO	GRAPHIC REF	PART NUMBER	QTY	PART NAME 1 2 3 4 5 6 (PRODUCT LEVEL)	SEE PAGE
	1	1	**1J-2175**	1	BOLT (1 1/8-7X3.5 IN)	
	2	1	**110-6501**	1	WASHER-HARD (31X57X6MM THK)	
	3	1	**122-9921**	1	PISTON AS	
		1	**8C-9160**	1	SEAL AS	
		1	**8N-5083**	1	SPRING	
		1	**112-6142**	1	PLUNGER	
		1	**122-9918**	1	SPACER	
	4	1	**175-7900**	1	SEAL-O-RING	
	5	1	**2K-6830**	1	RING-BACKUP	
	6	1	**135-7393**	1	HEAD	
		1	**167-2457**	1	SEAL-WIPER	
	7	1	**228-0321**	1	ROD AS	
		1	**2H-5549**	2	RING-RETAINING	
		1	**4D-4431**	1	BEARING-ALIGNING	
	8	1	**167-2457**	1	SEAL-WIPER	
	9	1	**167-2304**	1	SEAL-U-CUP	
	10	1	**167-2195**	1	SEAL AS-BUFFER	
R	11	1	**110-3787**	1	CYLINDER AS	
		1	**9T-7045**	1	BOSS	
		1	**2H-5549**	2	RING-RETAINING	
		1	**4D-4431**	1	BEARING-ALIGNING	
	12	1	**4T-5613**	1	RING-WEAR	
	13	1	**6J-2797**	1	RING-WEAR	

R-REMFG PART MAY BE AVAILABLE

228-0320 CYLINDER GP-ANGLING *(contd.)* **i01831061**

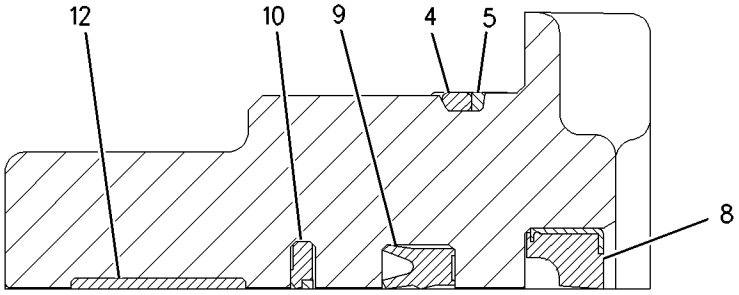

VIEW OF AREA A

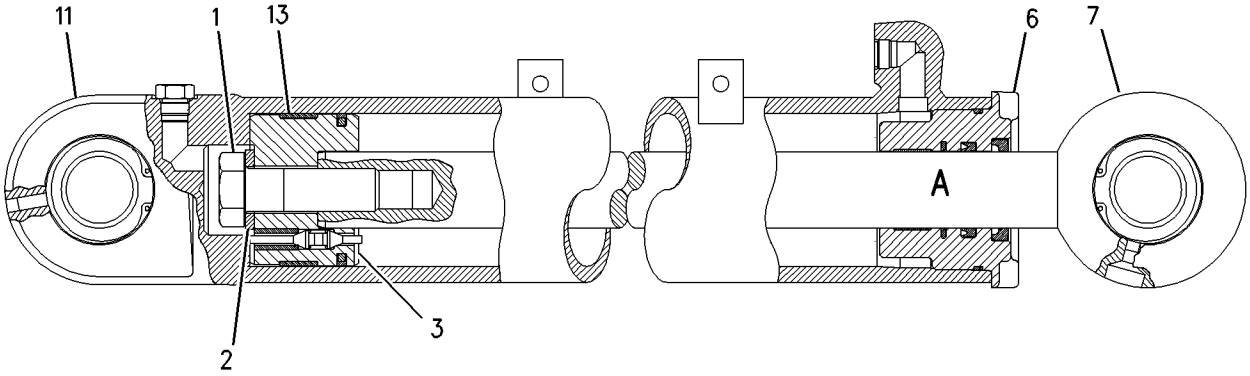

GRAPHIC #1 **<END>** g00938454

HYDRAULIC SYSTEM

110-3269 CYLINDER GP-LIFT–BULLDOZER

S/N: B6X1-UP
114.3MM (4.5 IN) BORE X 430MM (17 IN) STROKE
PART OF 223-6303 BULLDOZER AR
AN ATTACHMENT

SMCS-5102 **i01492754**

NOTE	REF NO	GRAPHIC REF	PART NUMBER	QTY	PART NAME 1 2 3 4 5 6 (PRODUCT LEVEL)	SEE PAGE
R	1	1	**110-3270**	1	CYLINDER AS	
		1	**6E-5449**	1	BEARING	
CM	2	1	**173-9683**	1	BOLT-HEX HEAD (M30X3.5X90MM)	
	3	1	**3S-7023**	1	WASHER (34X57X6MM THK)	
	4	1	**9X-7269**	1	SEAL AS	
	5	1	**4J-3745**	1	RING-WEAR	
	6	1	**6E-3569**	1	PISTON	
C	7	1	**175-7902**	1	SEAL-O-RING	
	8	1	**1K-7095**	1	RING-BACKUP	
	9	1	**6E-3570**	1	HEAD	
	10	1	**110-3271**	1	ROD AS	
		1	**6E-5449**	1	BEARING	
	11	1	**8T-4958**	1	RING-WEAR	
C	12	1	**167-2459**	1	SEAL-WIPER	
C	13	1	**167-2307**	1	SEAL-U-CUP	
C	14	1	**167-2200**	1	SEAL AS	

C-CHANGE FROM PREVIOUS TYPE
M-METRIC PART
R-REMFG PART MAY BE AVAILABLE

110-3269 CYLINDER GP-LIFT *(contd.)* i01492754

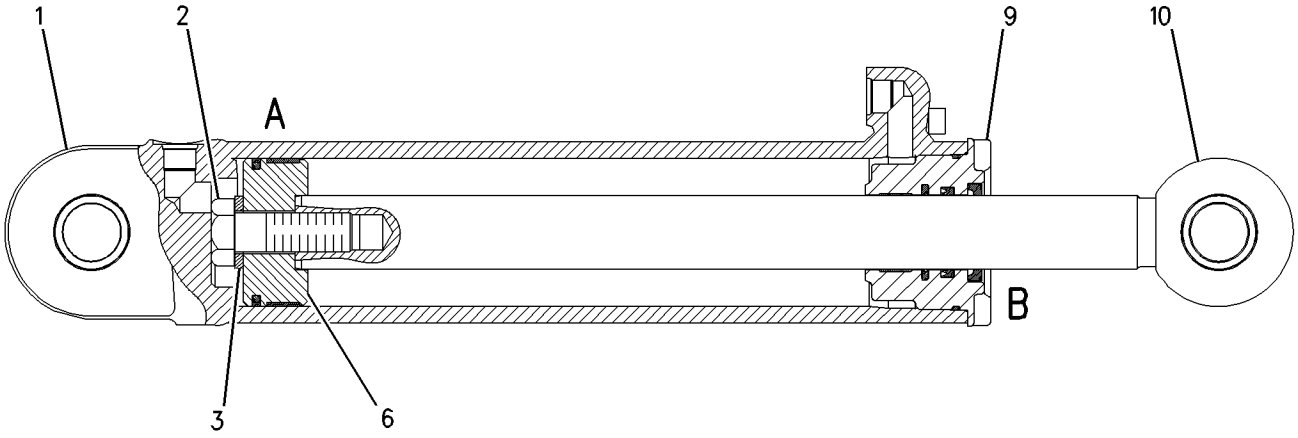

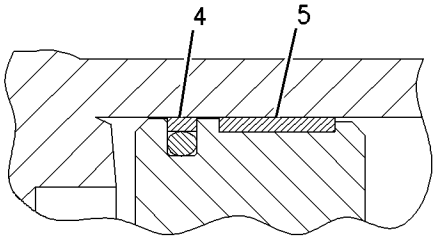

VIEW OF AREA A

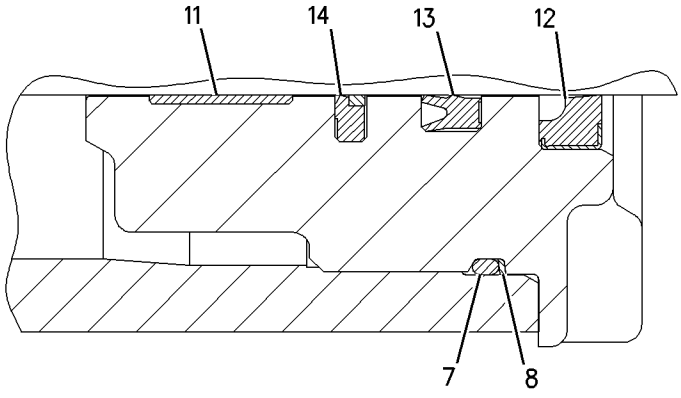

VIEW OF AREA B

GRAPHIC #1 **<END>** g00785498

115-3524 CYLINDER GP-LIFT–BULLDOZER

S/N: S6D1-UP; S6S1-UP
95.25MM (3.75 IN) BORE X 720MM (28.3 IN) STROKE
PART OF 206-9537, 206-9544 BULLDOZER AR-SEMI-UNIVERSAL
AN ATTACHMENT

SMCS-5102 **i01876979**

NOTE	REF NO	GRAPHIC REF	PART NUMBER	QTY	PART NAME 1 2 3 4 5 6 (PRODUCT LEVEL)	SEE PAGE
	1	1	**5J-8011**	1	SEAL AS	
	2	1	**8J-6245**	1	RING-WEAR	
	3	1	**8T-4958**	1	RING-WEAR	
	4	1	**2H-4145**	1	SEAL-O-RING	
	5	1	**1S-0669**	1	RING (BACK UP)	
M	6	1	**8T-0070**	4	BOLT (M20X2.5X120MM)	
M	7	1	**6V-7742**	4	NUT-FULL (M20X2.50 THD)	
	8	1	**4J-0121**	1	CAP-BEARING	
B	9	1	**8E-5703**	16	SHIM (0.8MM THK)	
	10	1	**115-8219**	1	ROD AS	
	11	1	**8J-6020**	1	CROWN	
	12	1	**6E-1410**	1	HEAD	
	13	1	**115-8218**	1	CYLINDER AS	
	14	1	**1K-6985**	2	RING-RETAINING	
	15	1	**9J-7964**	1	BEARING-SPHERICAL	
	16	1	**167-2200**	1	SEAL AS	
	17	1	**3B-8489**	1	FITTING-GREASE (1/8-27 THD) (BULLDOZER LIFT CYLINDER)	
	18	1	**115-8225**	1	PISTON	
	19	1	**9X-8399**	1	WASHER (33X56X6MM THK)	
M	20	1	**173-9683**	1	BOLT-HEX HEAD (M30X3.5X90MM)	
	21	1	**167-2459**	1	SEAL-WIPER	
	22	1	**167-2307**	1	SEAL-U-CUP	

B-USE AS REQUIRED
M-METRIC PART

115-3524 CYLINDER GP-LIFT *(contd.)* i01876979

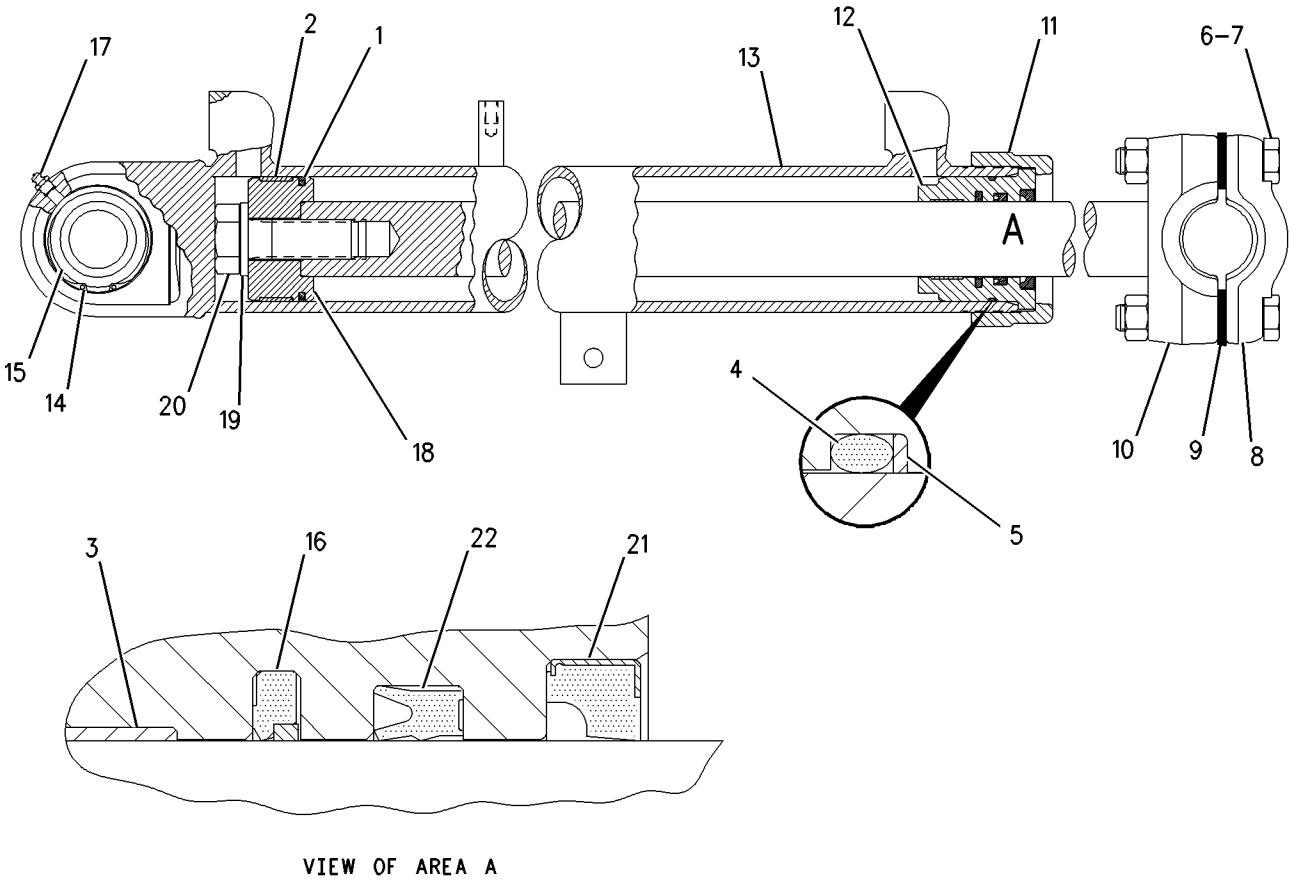

VIEW OF AREA A

GRAPHIC #1 **<END>** g00702913

HYDRAULIC SYSTEM

9T-2716 CYLINDER GP-RIPPER LIFT

S/N: TPP1-UP
127MM (5 IN) BORE X 362MM (14.25 IN) STROKE
PART OF 180-4560 RIPPER AR
AN ATTACHMENT

SMCS-5352 **i01480896**

NOTE	REF NO	GRAPHIC REF	PART NUMBER	QTY	PART NAME 1 2 3 4 5 6 (PRODUCT LEVEL)	SEE PAGE
	1	1	**3G-1753**	1	PISTON	
	2	1	**4J-3420**	1	RING-WEAR	
	3	1	**5J-5020**	1	SEAL AS	
	4	1	**9T-2715**	1	CYLINDER AS	
	5	1	**4K-3128**	2	BEARING-SLEEVE	
	6	1	**9T-6863**	1	HEAD	
	7	1	**167-2201**	1	SEAL AS-BUFFER	
	8	1	**167-2312**	1	SEAL-U-CUP	
	9	1	**167-2463**	1	SEAL-WIPER	
	10	1	**9T-2714**	1	ROD AS	
	11	1	**2K-4507**	1	BEARING-SLEEVE	
	12	1	**1D-4628**	4	BOLT (7/8-9X3.25 IN)	
		1	**5P-8249**	4	WASHER-HARD (24X41.5X4MM THK)	
	13	1	**2K-4096**	1	RING	
	14	1	**5F-3144**	1	SEAL-O-RING	
	15	1	**3G-1757**	1	WASHER	
	16	1	**2J-0564**	1	LOCKNUT	
	17	1	**8T-5668**	1	RING-WEAR	
	18	1	**1P-4576**	4	FLANGE	
	19	1	**4J-5267**	2	SEAL-O-RING	
	20	1	**5H-4018**	2	COVER	
	21	1	**9B-7237**	8	BOLT (3/8-16X1.25 IN)	
		1	**8T-4896**	8	WASHER-HARD (10.2X18.5X2.5MM THK)	

9T-2716 CYLINDER GP-RIPPER LIFT *(contd.)* i01480896

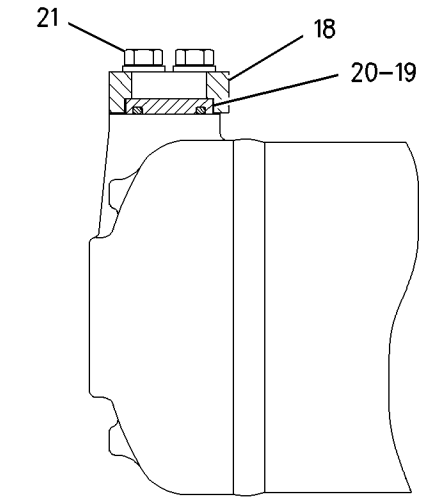

VIEW A–A

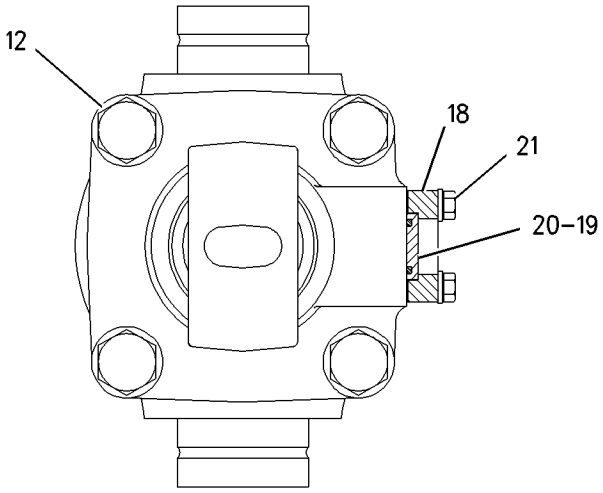

VIEW B–B

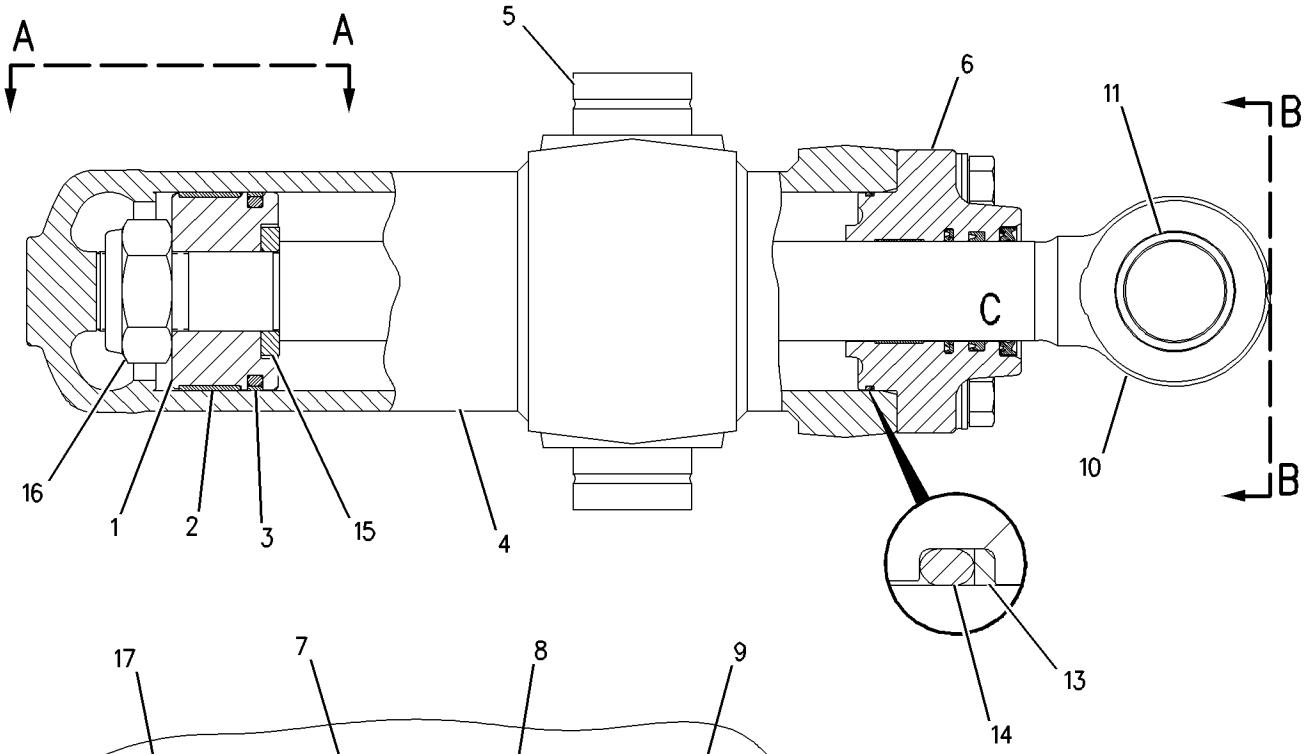

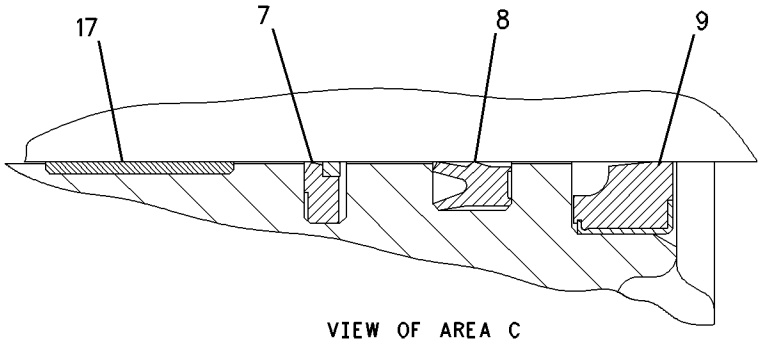

VIEW OF AREA C

GRAPHIC #1 **<END>** g00728785

HYDRAULIC SYSTEM

115-3523 CYLINDER GP-TILT—SEMI UNIVERSAL BULLDOZER

S/N: S6D1-UP; S6S1-UP
165.1MM (6.5 IN) BORE X 128MM (5 IN) STROKE
PART OF 115-4472 PUSH ARM GP
AN ATTACHMENT

SMCS-5104 **i01877785**

NOTE	REF NO	GRAPHIC REF	PART NUMBER	QTY	PART NAME 1 2 3 4 5 6 (PRODUCT LEVEL)	SEE PAGE
	1	1	**116-3089**	1	CYLINDER AS	
		1	**2J-8489**	1	BEARING	
M	2	1	**8T-1605**	1	BOLT (M36X4X100MM)	
	3	1	**3S-6162**	1	WASHER-HARD (40.5X67X6MM THK)	
	4	1	**3J-9703**	1	RING-WEAR	
	5	1	**4T-8695**	1	SEAL AS	
	6	1	**116-3085**	1	PISTON	
	7	1	**116-3083**	1	HEAD	
	8	1	**116-3084**	1	ROD AS	
	9	1	**8J-2880**	1	CAP-BEARING	
CM	10	1	**6V-9167**	4	BOLT (M20X2.5X140MM)	
B	11	1	**8E-5703**	28	SHIM (0.8MM THK)	
M	12	1	**6V-7742**	4	NUT-FULL (M20X2.50 THD)	
	13	1	**7J-8955**	1	RING-BACKUP	
	14	1	**7J-8956**	1	SEAL-O-RING	
M	15	1	**6V-8133**	4	BOLT (M24X3.0X80MM)	
	16	1	**6V-8237**	4	WASHER (26X44X4MM THK)	
C	17	1	**7M-2275**	1	RING-RETAINING	
	18	1	**9T-0094**	1	RING-WEAR	
	19	1	**8C-5218**	1	SEAL-LIP	
	20	1	**5J-8300**	1	SEAL-U-CUP	
	21	1	**8C-9126**	1	SEAL AS	

B-USE AS REQUIRED
C-CHANGE FROM PREVIOUS TYPE
M-METRIC PART

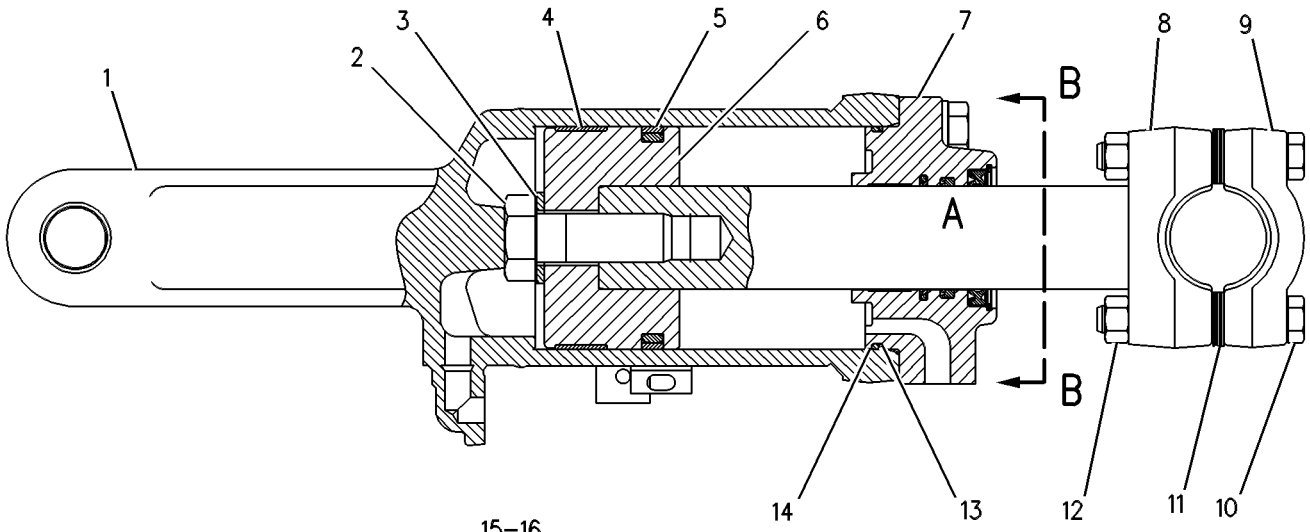

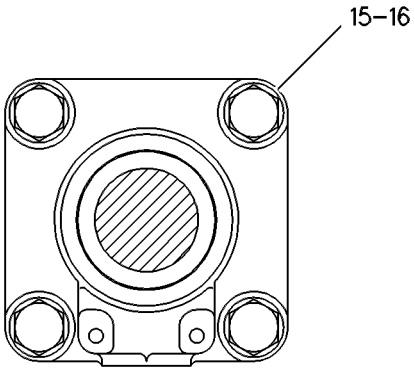

VIEW B-B

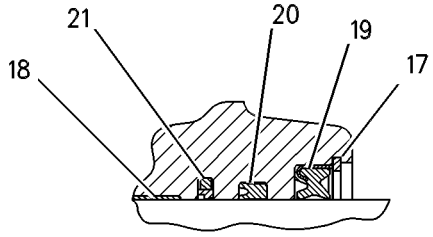

VIEW OF AREA A

GRAPHIC #1 **<END>** g00263251

160-0054 CYLINDER GP-TILT–BULLDOZER

S/N: B6X1-UP
139.7MM (5.5 IN) BORE X 114MM (4.5 IN) STROKE
PART OF 223-6303 BULLDOZER AR
AN ATTACHMENT

SMCS-5104 **i01526342**

NOTE	REF NO	GRAPHIC REF	PART NUMBER	QTY	PART NAME 1 2 3 4 5 6 (PRODUCT LEVEL)	SEE PAGE
	1	1	**160-0055**	1	CYLINDER AS	
	2	1	**8T-7567**	1	RING	
	3	1	**160-0305**	1	BEARING	
	4	1	**160-0060**	1	PISTON	
	5	1	**6E-0465**	1	SEAL AS	
	6	1	**4J-4606**	1	RING-WEAR	
	7	1	**2H-9247**	1	SEAL-O-RING	
	8	1	**2K-2961**	1	RING-BACKUP	
	9	1	**9T-6302**	1	CROWN	
	10	1	**110-4771**	1	HEAD	
	11	1	**8T-5668**	1	RING-WEAR	
	12	1	**3J-9545**	1	LOCKNUT	
	13	1	**1U-4049**	1	WASHER (51X73X12.7MM THK)	
	14	1	**167-2463**	1	SEAL-WIPER	
	15	1	**167-2312**	1	SEAL-U-CUP	
	16	1	**167-2201**	1	SEAL AS-BUFFER	
	17	1	**204-9542**	1	ROD AS	
	18	1	**1S-3311**	1	RING-RETAINING	
	19	1	**7J-1309**	1	BEARING	

160-0054 CYLINDER GP-TILT ***(contd.)*** **i01526342**

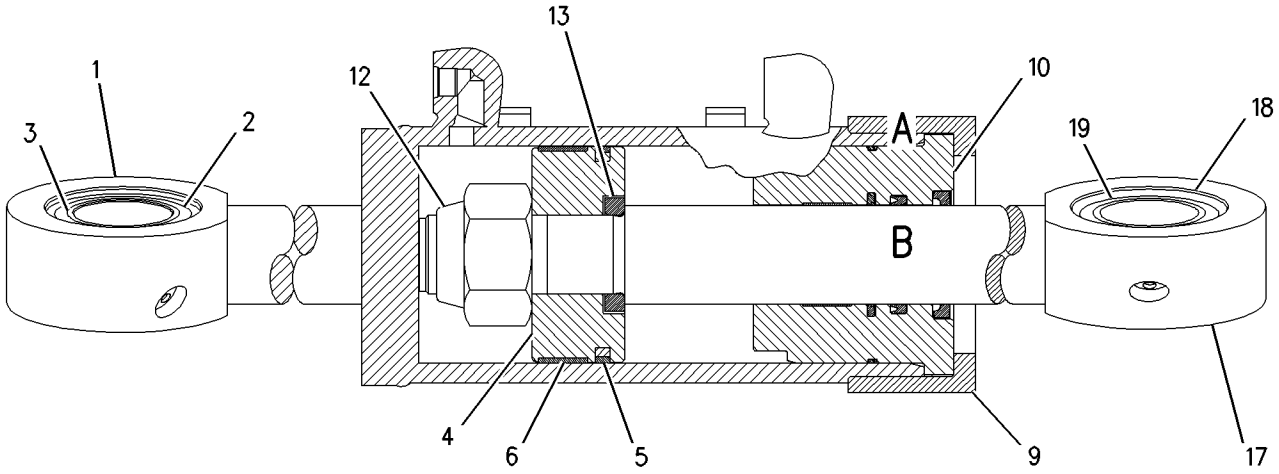

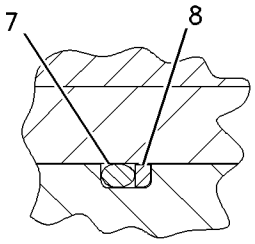

VIEW OF AREA A

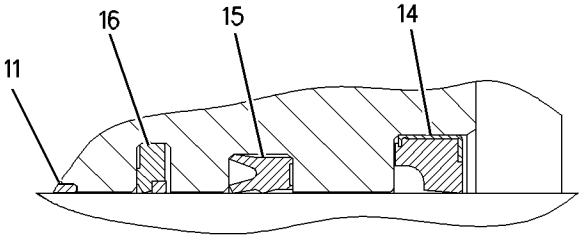

VIEW OF AREA B

GRAPHIC #1 **<END>** g00768553

HYDRAULIC SYSTEM

169-4019 FILTER GP-OIL–HYDRAULIC

S/N: CCK1-UP

PART OF 191-9531 LINES GP-PUMP

SMCS-5068 **i01899140**

NOTE	REF NO	GRAPHIC REF	PART NUMBER	QTY	PART NAME 1 2 3 4 5 6 (PRODUCT LEVEL)	SEE PAGE
	1	1	**9T-8578**	1	FILTER-SPIN-ON (HYDRAULIC)	
					–OR–	
		1	**144-0832**	1	FILTER AS-OIL (HYDRAULIC)(HIGH EFFICIENCY)	

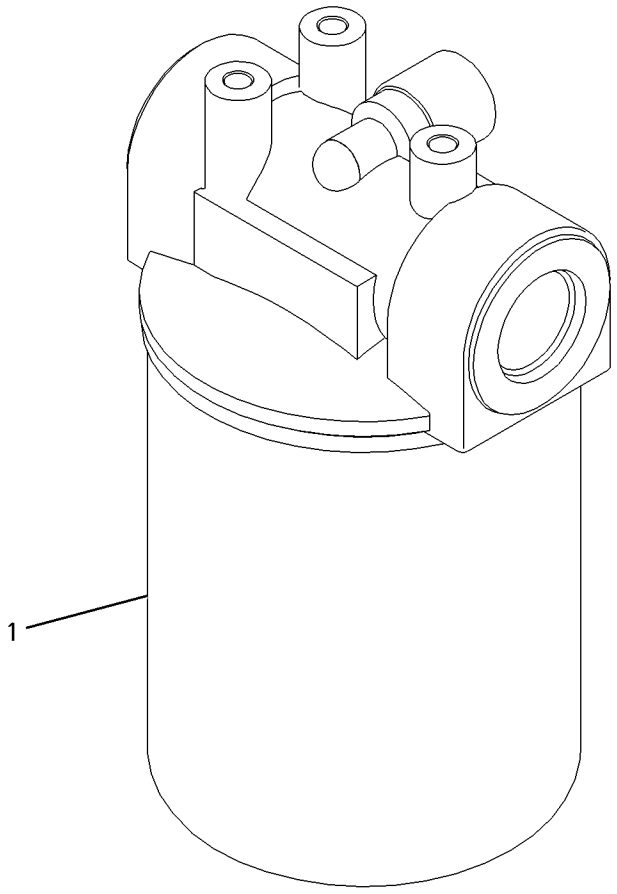

GRAPHIC #1 **<END>** g00932693

HYDRAULIC SYSTEM

156-9510 HYDRAULIC AR–2 VALVE

S/N: CCK1-UP

AN ATTACHMENT

SMCS-5051, 5056, 5057, 5073 **i01895724**

NOTE	PART NUMBER	QTY	PART NAME 1 2 3 4 5 6 (PRODUCT LEVEL)	SEE PAGE
Y	*165-4481*	1	CONTROL GP-HYDRAULIC HAND (LIFT/TILT)	343
Y	**169-4142**	1	LINES GP-TILT CYLINDER	387
Y	**6E-5083**	1	VALVE GP-BANK 2	399

Y-SEPARATE ILLUSTRATION

<END>

189-4623 HYDRAULIC AR–3 VALVE

S/N: CCK1-UP

PART OF 189-4616 GENERAL AR

SMCS-5051, 5056, 5057, 5073 **i01885509**

NOTE	PART NUMBER	QTY	PART NAME 1 2 3 4 5 6 (PRODUCT LEVEL)	SEE PAGE
Y	*156-8948*	1	CONTROL GP-HYDRAULIC HAND	339
Y	*163-0761*	1	LINES GP-ANGLE & TILT	363
Y	*198-5180*	1	LINES GP-HYDRAULIC	365
Y	*220-0896*	1	LINES GP-LIFT CYLINDER	368
Y	*220-1322*	1	LINES GP-PILOT	376
Y	*191-9531*	1	LINES GP-PUMP	378
Y	*191-9532*	1	LINES GP-STEERING	308
Y	**191-9536**	1	MOTOR GP-PISTON	313
Y	*218-0100*	1	MOUNTING GP-VALVE	392
Y	**222-1214**	1	PUMP GP-PISTON	317
Y	*174-4485*	1	TANK & FILTER GP-HYDRAULIC	396
Y	**209-6765**	1	VALVE GP-BANK 3	400

Y-SEPARATE ILLUSTRATION

<END>

229-2831 HYDRAULIC AR–4 VALVE

S/N: CCK1-UP

FOR USE WITH SEMI-UNIVERSAL BULLDOZER & RIPPER. CANNOT BE USED WITH WINCH

AN ATTACHMENT

SMCS-5051, 5056, 5057, 5073 **i01877579**

NOTE	PART NUMBER	QTY	PART NAME 1 2 3 4 5 6 (PRODUCT LEVEL)	SEE PAGE
Y	*165-4481*	1	CONTROL GP-HYDRAULIC HAND (LIFT/TILT) (BULLDOZER)	343
Y	*164-3504*	1	CONTROL GP-HYDRAULIC HAND (RIPPER)	341
Y	*163-3270*	1	LINES GP-RIPPER	382
Y	*228-3554*	1	LINES GP-TILT CYLINDER	388
Y	**209-6764**	1	VALVE GP-BANK 4	401

Y-SEPARATE ILLUSTRATION

<END>

HYDRAULIC SYSTEM

173-8641 HYDRAULIC AR-4 VALVE

S/N: CCK1-UP

FOR USE WITH 167-1463—PAGE 459, 180-4560—PAGE 429

AN ATTACHMENT

SMCS-5051 **i01830637**

NOTE	PART NUMBER	QTY	PART NAME 1 2 3 4 5 6 (PRODUCT LEVEL)	SEE PAGE
Y	*164-3504*	1	CONTROL GP-HYDRAULIC HAND (RIPPER)	341
Y	*163-3270*	1	LINES GP-RIPPER	382
Y	**209-6764**	1	VALVE GP-BANK 4	401

Y-SEPARATE ILLUSTRATION

<END>

HYDRAULIC SYSTEM

110-6113 LINES GP-ANGLE & TILT

S/N: B6X1-UP
PART OF 223-6303 BULLDOZER AR
AN ATTACHMENT

SMCS-5057, 5101, 5104 **i01893115**

NOTE	REF NO	GRAPHIC REF	PART NUMBER	QTY	PART NAME 1 2 3 4 5 6 (PRODUCT LEVEL)	SEE PAGE
	1	1	**3B-8489**	8	FITTING-GREASE (1/8-27 THD) (ANGLE & TILT CYLINDERS)	
I	2	1	**112-7454**	2	HOSE AS	
I	3	1	**112-7455**	2	HOSE AS	
I	4	1	**112-7456**	1	HOSE AS	
I	5	1	**112-7457**	1	HOSE AS	
	6	1	**167-7270**	4	FILM-INSTRUCTION (NO STEP)	
	7	1	**222-2773**	1	CHANNEL AS (RH)	
	8	1	**222-2774**	1	CHANNEL AS (LH)	
	9	1	**197-2477**	2	PIN	
I	10	1	**197-2479**	2	HOSE AS	
	11	1	**198-6217**	2	GUARD	
	12	1	**200-2645**	1	GUARD AS	
	13	1	**204-5093**	2	PLATE	
	14	1	**096-7033**	2	PIN-COTTER	
	15	1	*148-8340*	4	CONNECTOR GP	
					(EACH INCLUDES)	
		1	**3K-0360**	1	SEAL-O-RING	
		1	**6V-8398**	1	SEAL-O-RING	
		1	**6V-8639**	1	CONNECTOR	
	16	1	*148-8364*	2	ELBOW AS	
					(EACH INCLUDES)	
		1	**3K-0360**	1	SEAL-O-RING	
		1	**6V-8398**	1	SEAL-O-RING	
		1	**6V-8625**	1	ELBOW	
	17	1	**2P-6470**	1	CLIP (SLOT)	
	18	1	**2P-6471**	1	CLIP (TAB)	
	19	1	**3B-6552**	2	ELBOW	
M	20	1	**3E-4319**	1	STUD-TAPERLOCK (M12-1.75X55 OAL)	
	21	1	**5P-7466**	7	CLIP (SLOT)	
	22	1	**5P-7467**	7	CLIP (TAB)	
	23	1	**5P-8112**	7	GROMMET	
M	24	1	**6V-7687**	6	LOCKNUT (M12X1.75 THD)	
	25	1	**6V-8398**	6	SEAL-O-RING	
	26	1	**7G-3832**	2	GROMMET	
	27	1	**7G-3833**	2	CLIP (TAB)	
	28	1	**7G-3834**	2	CLIP (SLOT)	
	29	1	**7Y-1858**	2	WASHER (21X37X3MM THK)	
M	30	1	**8T-4139**	9	BOLT (M12X1.75X30MM)	
M	31	1	**8T-4183**	8	BOLT (M12X1.75X40MM)	
M	32	1	**8T-4192**	7	BOLT (M12X1.75X25MM)	
	33	1	**8T-4223**	27	WASHER-HARD (13.5X25.5X3MM THK)	
M	34	1	**8T-4244**	3	NUT (M12X1.75 THD)	

I-SEE HOSE FABRICATION GUIDE
M-METRIC PART

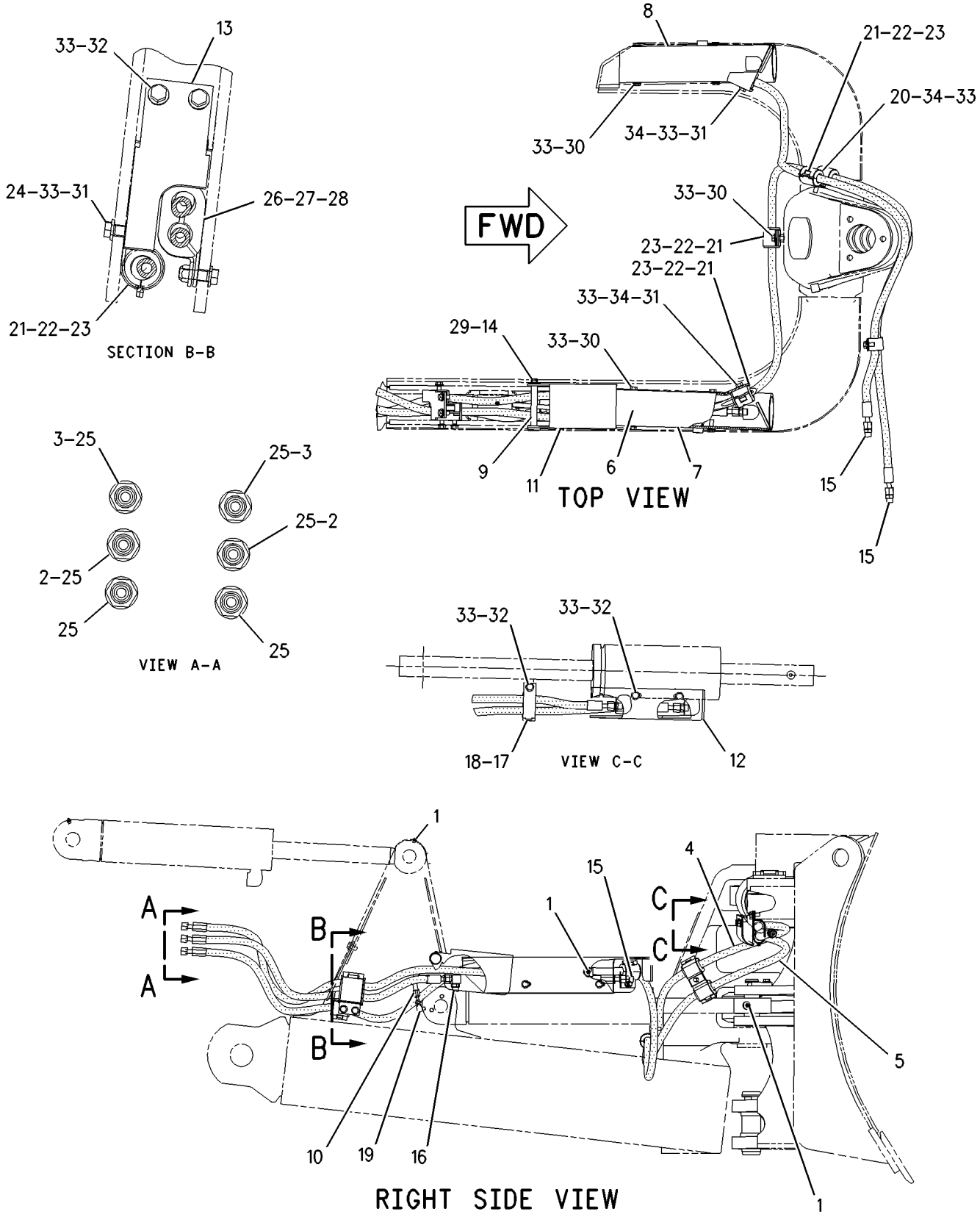

GRAPHIC #1 **<END>** g00885186

HYDRAULIC SYSTEM

163-0761 LINES GP-ANGLE & TILT

S/N: CCK1-UP

PART OF 189-4623 HYDRAULIC AR

SMCS-5057, 5101, 5104 **i01883497**

NOTE	REF NO	GRAPHIC REF	PART NUMBER	QTY	PART NAME 1 2 3 4 5 6 (PRODUCT LEVEL)	SEE PAGE
	1	1	**5K-2697**	4	CLIP	
	2	1	**8T-0248**	2	TEE	
	3	1	**113-8248**	1	TUBE AS	
	4	1	**113-8249**	1	TUBE AS	
	5	1	**169-6187**	1	TUBE AS	
	6	1	**169-6189**	1	TUBE AS	
	7	1	**169-6192**	1	TUBE AS	
	8	1	**169-6197**	1	TUBE AS	
	9	1	**172-8537**	1	TUBE AS	
	10	1	**172-8538**	1	TUBE AS	
	11	1	**172-8539**	1	TUBE AS	
	12	1	**172-8540**	1	TUBE AS	
	13	1	**172-8541**	1	TUBE AS	
	14	1	**172-8542**	1	TUBE AS	
	15	1	**213-1053**	1	TUBE AS	
	16	1	*148-8327*	2	CONNECTOR AS	
					(EACH INCLUDES)	
		1	**3D-2824**	1	SEAL-O-RING	
		1	**6V-8637**	1	CONNECTOR-SEAL	
		1	**6V-9746**	1	SEAL-O-RING	
	17	1	*148-8344*	2	CONNECTOR GP	
					(EACH INCLUDES)	
		1	**3D-2824**	1	SEAL-O-RING	
		1	**6V-9162**	1	CONNECTOR	
		1	**6V-9746**	1	SEAL-O-RING	
	18	1	*148-8370*	2	ELBOW GP	
					(EACH INCLUDES)	
		1	**6V-8398**	1	SEAL-O-RING	
		1	**6V-9851**	1	ELBOW	
	19	1	*148-8375*	4	ELBOW GP	
					(EACH INCLUDES)	
		1	**6V-8398**	2	SEAL-O-RING	
		1	**6V-8981**	1	ELBOW	
	20	1	*164-6864*	2	ELBOW AS	
					(EACH INCLUDES)	
		1	**6V-8398**	1	SEAL-O-RING	
		1	**7J-9108**	1	SEAL-O-RING	
		1	**8T-1810**	1	ELBOW	
	21	1	**6V-8398**	2	SEAL-O-RING	
	22	1	**6V-9169**	6	NUT-BULKHEAD (13/16-16 THD)	
	23	1	**6V-9746**	4	SEAL-O-RING	
	24	1	**7J-9108**	3	SEAL-O-RING	
	25	1	**7X-7739**	2	WASHER (9.7X25.4 X4MM THK)	
	26	1	**8M-2770**	3	CLIP	
	27	1	**8T-4121**	6	WASHER-HARD (11X21X2.5MM THK)	
M	28	1	**8T-4133**	2	NUT (M10X1.5 THD)	
M	29	1	**8T-4136**	2	BOLT (M10X1.5X25MM)	
M	30	1	**8T-4196**	2	BOLT (M10X1.5X35MM)	
	31	1	**9M-8406**	1	CLIP	

M-METRIC PART

163-0761 **LINES GP-ANGLE & TILT** *(contd.)* **i01883497**

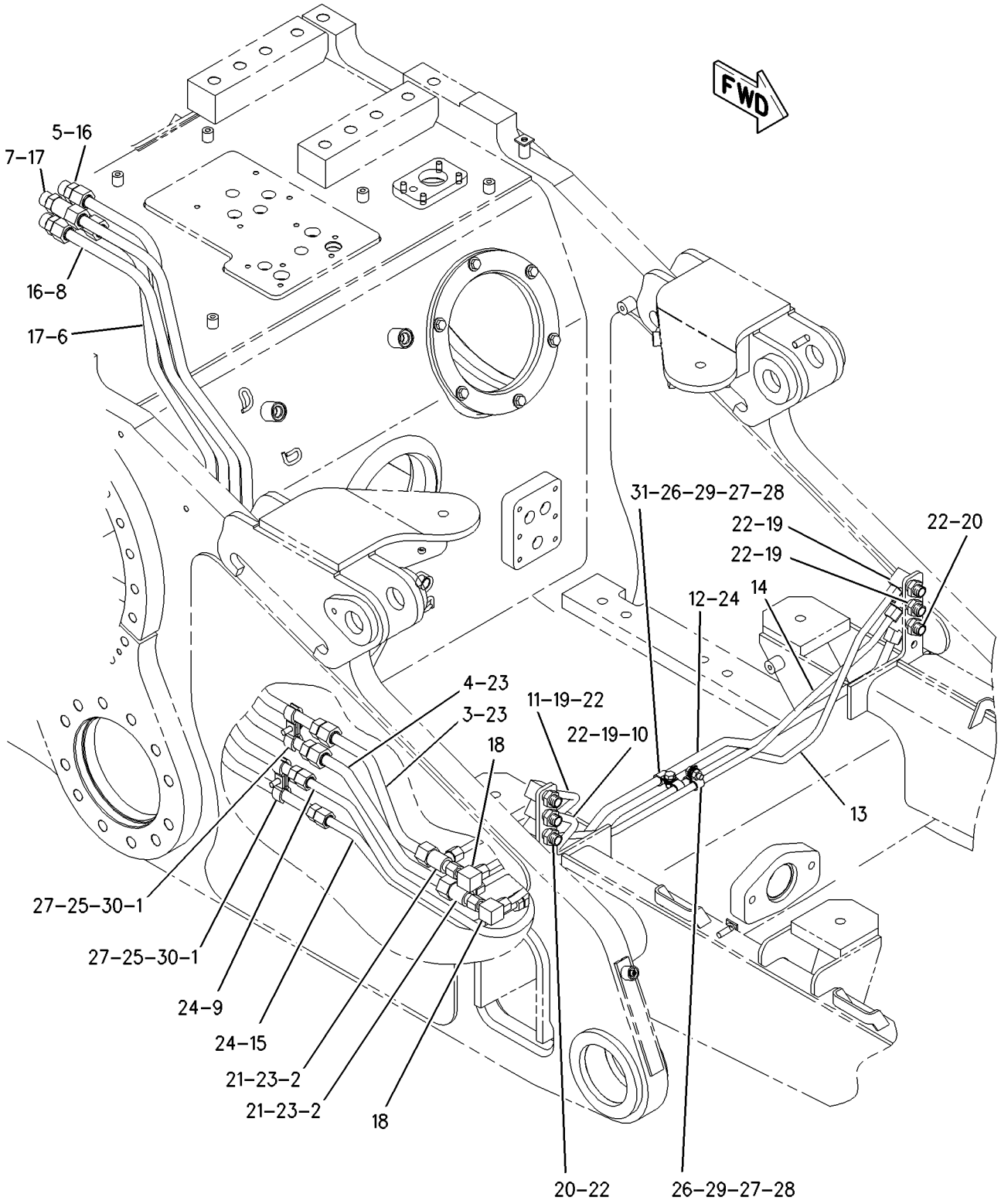

GRAPHIC #1 **<END>** g00956371

HYDRAULIC SYSTEM

198-5180 LINES GP-HYDRAULIC—REMOTE DIAGNOSTICS

S/N: CCK1-UP

PART OF 189-4623 HYDRAULIC AR

SMCS-5057 **i01834300**

NOTE	REF NO	GRAPHIC REF	PART NUMBER	QTY	PART NAME 1 2 3 4 5 6 (PRODUCT LEVEL)	SEE PAGE
	1	1	**8T-4121**	9	WASHER-HARD (11X21X2.5MM THK)	
M	2	1	**8T-4133**	4	NUT (M10X1.5 THD)	
	3	1	**6V-0852**	9	CAP-DUST (DIAGNOSTICS PANEL)	
	4	1	**164-5567**	9	FITTING GP	
		1	**3J-1907**	1	SEAL-O-RING	
	5	1	**187-3547**	2	FITTING	
	6	1	**187-9008**	2	CAP-DUST (DIAGNOSTICS PANEL)	
	7	1	**191-1422**	1	BRACKET AS	
M		1	**8T-3490**	1	NUT-WELD (M10X1.5 THD)	
	8	1	**200-2191**	1	BRACKET AS	
M		1	**7X-2478**	2	NUT-WELD	
M		1	**8T-3490**	1	NUT-WELD (M10X1.5 THD)	
I	9	1	**208-5100**	1	HOSE AS	
I	10	1	**208-5417**	1	HOSE AS	
	11	1	**214-4558**	1	BRACKET AS	
M		1	**8T-5413**	1	STUD-WELD (M10X1.5X25MM OAL)	
M	12	1	**8T-4136**	4	BOLT (M10X1.5X25MM)	
	13	1	**8T-4224**	2	WASHER-HARD (8.8X16X2MM THK)	
M	14	1	**8T-4908**	2	BOLT (M8X1.25X25MM)	
M	15	1	**8T-6466**	1	BOLT (M10X1.50X60MM)	
	16	1	**8T-9358**	11	CONNECTOR	
BD	17	1	**5N-8360**		CONDUIT-FLEXIBLE	
BD	18	1	**5N-8359**		CONDUIT-FLEXIBLE	
	19	1	**225-4991**	1	BRACKET AS	
M		1	**8T-5413**	1	STUD-WELD (M10X1.5X25MM OAL)	
	20	1	**033-8248**	1	CLIP	
	21	1	**137-9629**	1	HOSE AS	
	22	1	*148-8319*	1	CONNECTOR GP	
		1	**2M-9780**	1	SEAL-O-RING	
		1	**6V-8397**	1	SEAL-O-RING	
		1	*6V-8715*	1	CONNECTOR	
	23	1	*148-8326*	1	CONNECTOR GP	
		1	**3J-7354**	1	SEAL-O-RING	
		1	**6V-8397**	1	SEAL-O-RING	
		1	**6V-9872**	1	CONNECTOR	
	24	1	*148-8361*	1	ELBOW GP	
		1	**3J-7354**	1	SEAL-O-RING	
		1	**6V-8397**	1	SEAL-O-RING	
		1	**6V-9200**	1	ELBOW	
	25	1	*148-8363*	1	ELBOW GP	
		1	**3K-0360**	1	SEAL-O-RING	
		1	**6V-8397**	1	SEAL-O-RING	
		1	**6V-9876**	1	ELBOW	
	26	1	*148-8367*	1	ELBOW GP	
		1	**6V-8397**	1	SEAL-O-RING	
		1	**6V-9850**	1	ELBOW-SWIVEL	
	27	1	*148-8378*	3	ELBOW AS	
					(EACH INCLUDES)	
		1	**3J-1907**	1	SEAL-O-RING	
		1	**6V-8397**	1	SEAL-O-RING	
		1	**6V-8724**	1	ELBOW	
	28	1	*148-8415*	1	REDUCER GP	
		1	**6V-8397**	1	SEAL-O-RING	
		1	**6V-8936**	1	REDUCER	
	29	1	*164-7908*	1	ELBOW GP	
		1	**3J-7354**	1	SEAL-O-RING	

198-5180 **LINES GP-HYDRAULIC** ***(contd.)*** **i01834300**

NOTE	REF NO	GRAPHIC REF	PART NUMBER	QTY	PART NAME 1 2 3 4 5 6 (PRODUCT LEVEL)	SEE PAGE
		1	**6V-8397**	1	SEAL-O-RING	
		1	**8T-7546**	1	ELBOW	
	30	1	**198-9004**	1	FILM (DIAGNOSTICS PANEL D/S)	
	31	1	**204-5379**	2	HOSE AS	
	32	1	**204-5380**	2	HOSE AS	
	33	1	**210-0691**	2	HOSE AS	
	34	1	**215-7487**	2	HOSE AS	
	35	1	**3S-2093**	2	STRAP-CABLE	
	36	1	**4D-7388**	1	CLIP	
	37	1	**5N-2840**	1	CLIP	
	38	1	**5P-2369**	1	CLIP	
	39	1	**5P-7854**	1	CLIP	
	40	1	**6V-8397**	11	SEAL-O-RING	
	41	1	**6V-9168**	11	NUT (11/16-16 THD)	
	42	1	**7C-4354**	1	CLIP	
	43	1	**8G-6557**	1	SPACER (10.5X25X40MM THK)	

B-USE AS REQUIRED
D-ORDER BY THE METER
I-SEE HOSE FABRICATION GUIDE
M-METRIC PART

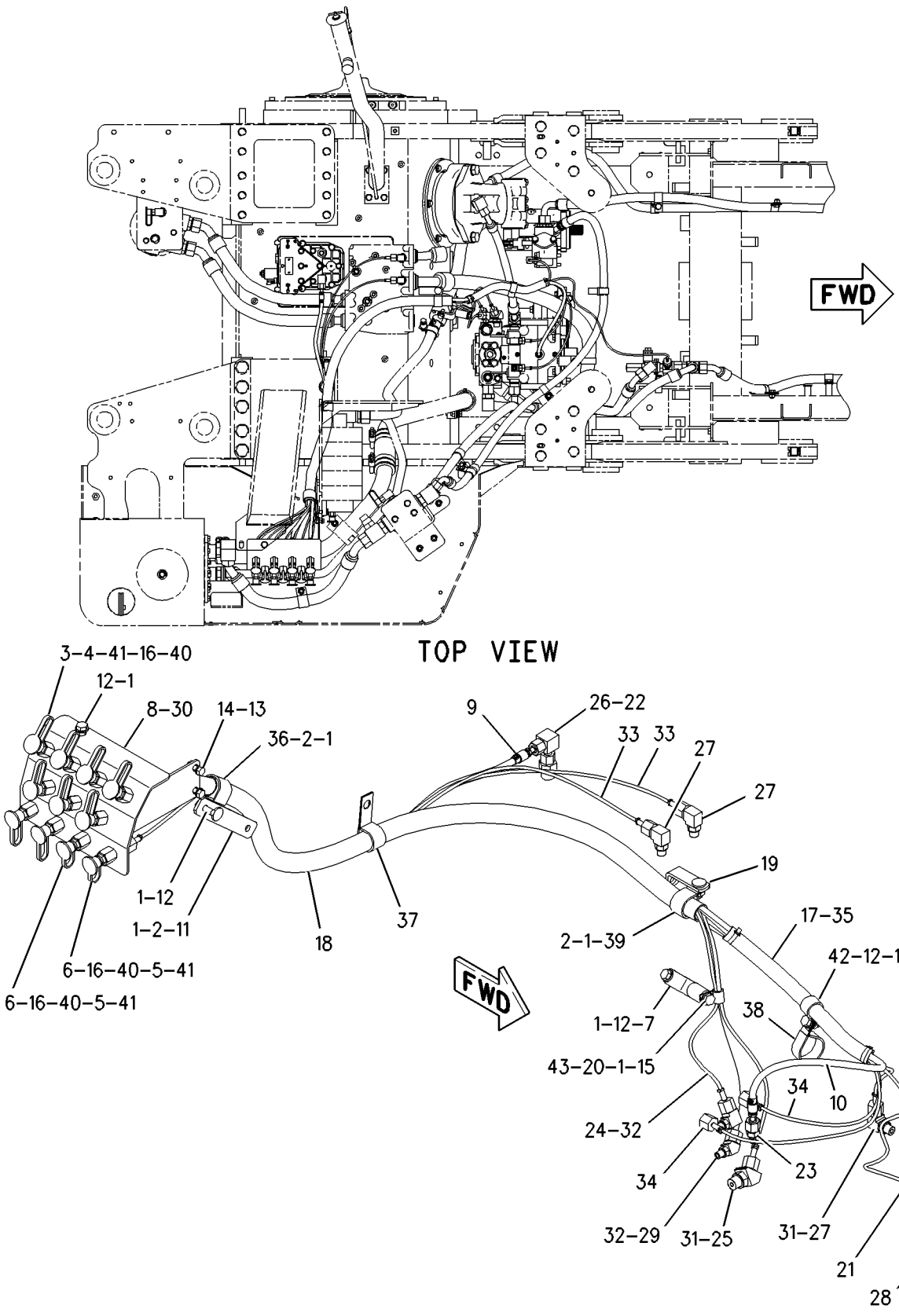

GRAPHIC #1 **<END>** g00940080

HYDRAULIC SYSTEM

220-0896 LINES GP-LIFT CYLINDER—CAB-FRAME

S/N: CCK1-UP

PART OF 189-4623 HYDRAULIC AR

SMCS-5057, 5102 **i01828623**

NOTE	REF NO	GRAPHIC REF	PART NUMBER	QTY	PART NAME 1 2 3 4 5 6 (PRODUCT LEVEL)	SEE PAGE
	1	1	**220-0899**	1	TUBE AS	
	2	1	**220-0900**	1	TUBE AS	
	3	1	**220-0901**	1	TUBE AS	
	4	1	**220-0902**	1	TUBE AS	
	5	1	**220-0903**	1	TUBE AS	
	6	1	**220-0904**	1	BRACKET AS	
		1	**9R-2821**	1	BOSS (M10X15MM)	
	7	1	**220-0905**	1	BRACKET AS	
		1	**9R-2821**	1	BOSS (M10X15MM)	
	8	1	*148-8327*	1	CONNECTOR AS	
		1	**3D-2824**	1	SEAL-O-RING	
		1	**6V-8637**	1	CONNECTOR-SEAL	
		1	**6V-9746**	1	SEAL-O-RING	
	9	1	*148-8344*	1	CONNECTOR GP	
		1	**3D-2824**	1	SEAL-O-RING	
		1	**6V-9162**	1	CONNECTOR	
		1	**6V-9746**	1	SEAL-O-RING	
	10	1	*148-8449*	1	TEE GP-SWIVEL	
		1	**6V-9746**	2	SEAL-O-RING	
		1	**6V-9839**	1	TEE-SWIVEL	
	11	1	*148-8451*	1	TEE GP	
		1	**6V-8791**	1	TEE-FACE SEAL	
		1	**6V-9746**	3	SEAL-O-RING	
	12	1	*150-3035*	1	ELBOW AS	
		1	**6V-9746**	1	SEAL-O-RING	
		1	**8T-1718**	1	ELBOW	
	13	1	*169-7404*	1	ELBOW AS	
		1	**6V-8982**	1	ELBOW	
		1	**7J-9108**	2	SEAL-O-RING	
	14	1	*169-7409*	1	UNION AS	
		1	**6V-8996**	1	UNION-BULKHEAD	
		1	**7J-9108**	2	SEAL-O-RING	
	15	1	**6V-9170**	4	NUT-BULKHEAD (1-14 THD)	
	16	1	**7J-9108**	2	SEAL-O-RING	
	17	1	**7X-7729**	4	WASHER (11X25X3MM THK)	
	18	1	**8T-1887**	2	CLIP (SLOT)	
	19	1	**8T-1888**	2	CLIP (TAB)	
	20	1	**8T-4121**	5	WASHER-HARD (11X21X2.5MM THK)	
M	21	1	**8T-4133**	2	NUT (M10X1.5 THD)	
M	22	1	**8T-4136**	3	BOLT (M10X1.5X25MM)	
M	23	1	**8T-4137**	4	BOLT (M10X1.5X20MM)	
	24	1	**9M-8406**	4	CLIP	

M-METRIC PART

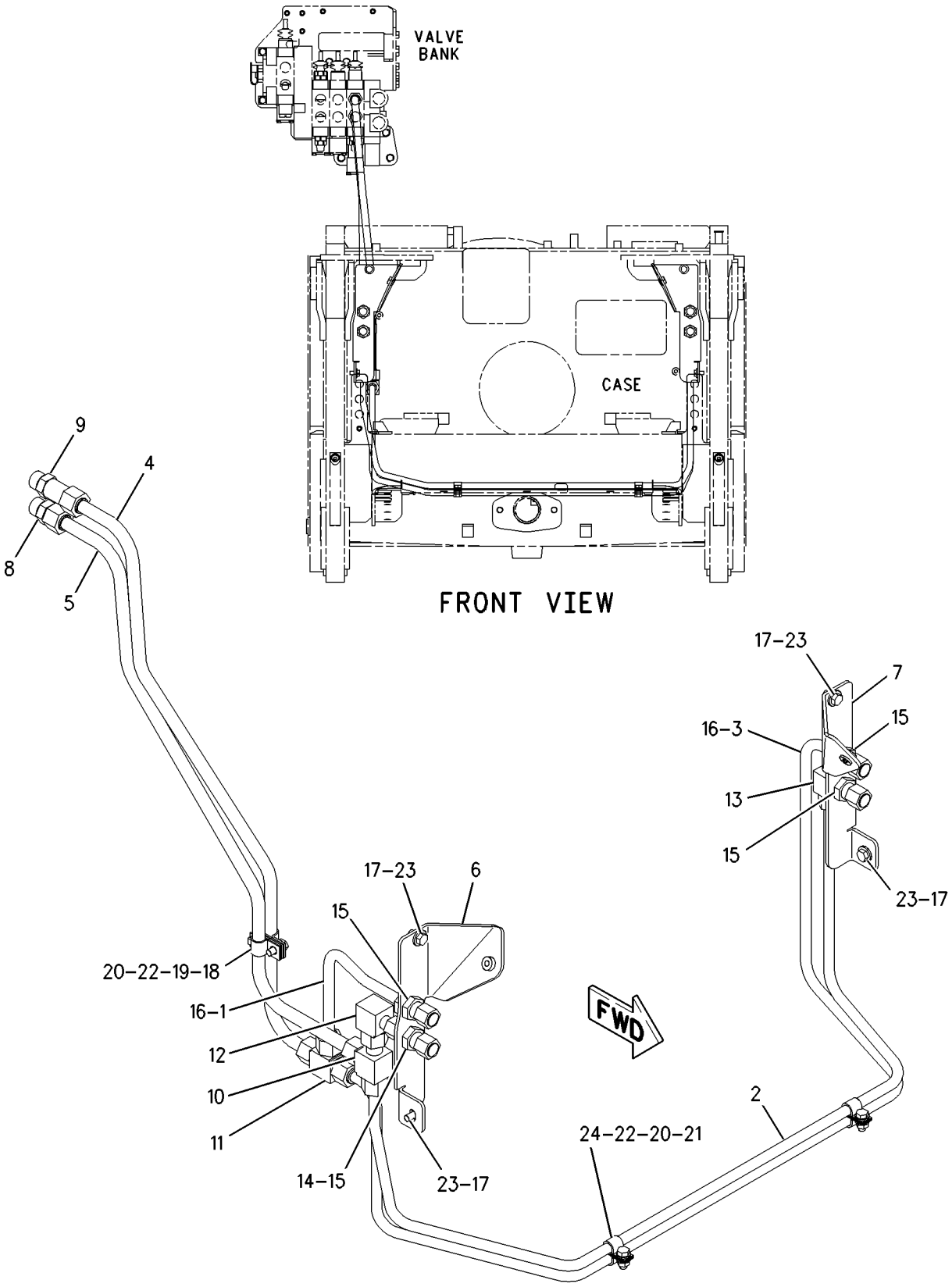

GRAPHIC #1 **<END>** g00956641

HYDRAULIC SYSTEM

220-0897 LINES GP-LIFT CYLINDER—BULLDOZER

S/N: B6X1-UP
PART OF 223-6303 BULLDOZER AR
AN ATTACHMENT

SMCS-5057, 5102 **i01831049**

NOTE	REF NO	GRAPHIC REF	PART NUMBER	QTY	PART NAME 1 2 3 4 5 6 (PRODUCT LEVEL)	SEE PAGE
	1	1	**113-9309**	2	TUBE AS	
	2	1	*148-8341*	2	CONNECTOR GP	
					(EACH INCLUDES)	
		1	**3D-2824**	1	SEAL-O-RING	
		1	**6V-8713**	1	CONNECTOR	
		1	**7J-9108**	1	SEAL-O-RING	
	3	1	*148-8347*	2	ELBOW GP	
					(EACH INCLUDES)	
		1	**3D-2824**	1	SEAL-O-RING	
		1	**6V-9007**	1	ELBOW	
		1	**6V-9746**	1	SEAL-O-RING	
I	4	1	**220-0906**	4	HOSE AS	
	5	1	**7J-9108**	2	SEAL-O-RING	
	6	1	**8T-1887**	2	CLIP (SLOT)	
	7	1	**8T-1888**	2	CLIP (TAB)	
	8	1	**8T-4121**	6	WASHER-HARD (11X21X2.5MM THK)	
M	9	1	**8T-4137**	2	BOLT (M10X1.5X20MM)	

I-SEE HOSE FABRICATION GUIDE
M-METRIC PART

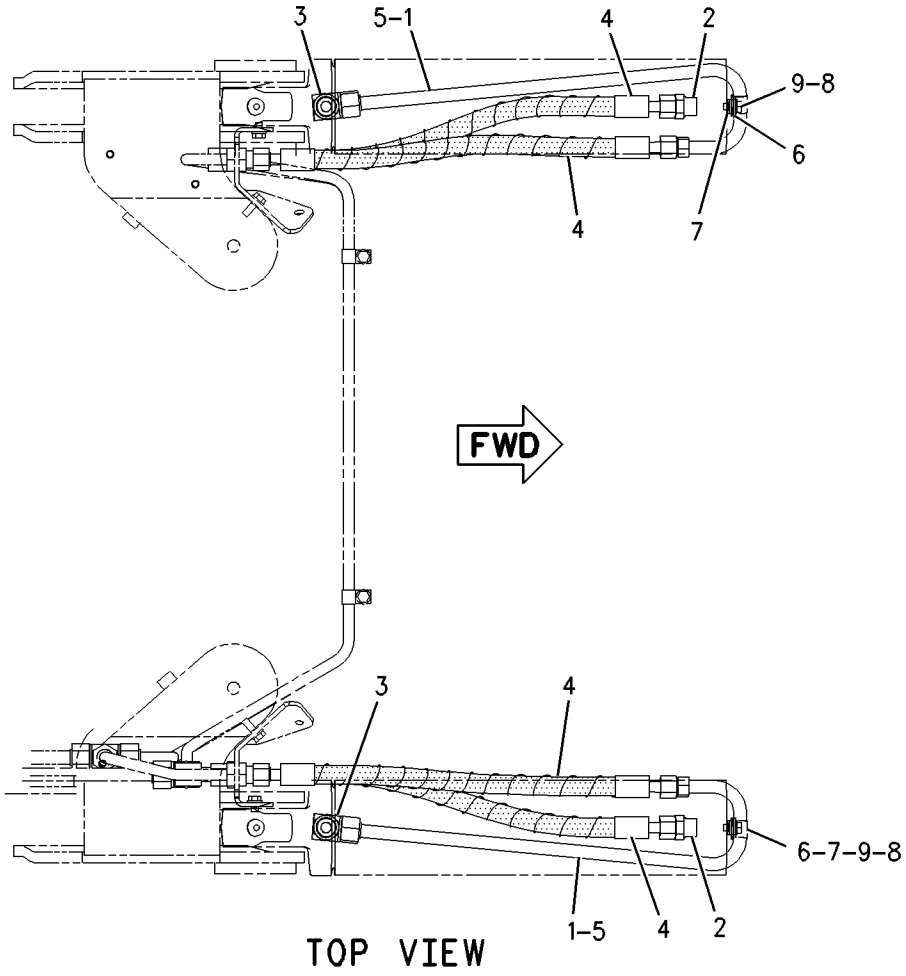

GRAPHIC #1 **<END>** g00937883

HYDRAULIC SYSTEM

227-0756 LINES GP-LIFT CYLINDER—SEMI-UNIVERSAL BULLDOZER

S/N: S6D1-UP; S6S1-UP

PART OF 206-9537, 206-9544 BULLDOZER AR-SEMI-UNIVERSAL

AN ATTACHMENT

SMCS-5057, 5102 **i01877307**

NOTE	REF NO	GRAPHIC REF	PART NUMBER	QTY	PART NAME 1 2 3 4 5 6 (PRODUCT LEVEL)	SEE PAGE
I	1	1	**227-0758**	2	HOSE AS	
I	2	1	**230-0815**	2	HOSE AS	
	3	1	*148-8341*	4	CONNECTOR GP	
					(EACH INCLUDES)	
		1	**3D-2824**	1	SEAL-O-RING	
		1	**6V-8713**	1	CONNECTOR	
		1	**7J-9108**	1	SEAL-O-RING	
	4	1	**5P-7464**	2	CLIP (SLOT)	
	5	1	**5P-7465**	2	CLIP (TAB)	
	6	1	**5P-7468**	2	CLIP (SLOT)	
	7	1	**5P-7469**	2	CLIP (TAB)	
	8	1	**6V-7359**	2	GROMMET	
	9	1	**7G-3833**	4	CLIP (TAB)	
	10	1	**7G-3834**	4	CLIP (SLOT)	
	11	1	**8C-3174**	4	GROMMET	
	12	1	**8T-4121**	2	WASHER-HARD (11X21X2.5MM THK)	
M	13	1	**8T-4136**	2	BOLT (M10X1.5X25MM)	
M	14	1	**8T-4139**	8	BOLT (M12X1.75X30MM)	
M	15	1	**8T-4244**	8	NUT (M12X1.75 THD)	

I-SEE HOSE FABRICATION GUIDE
M-METRIC PART

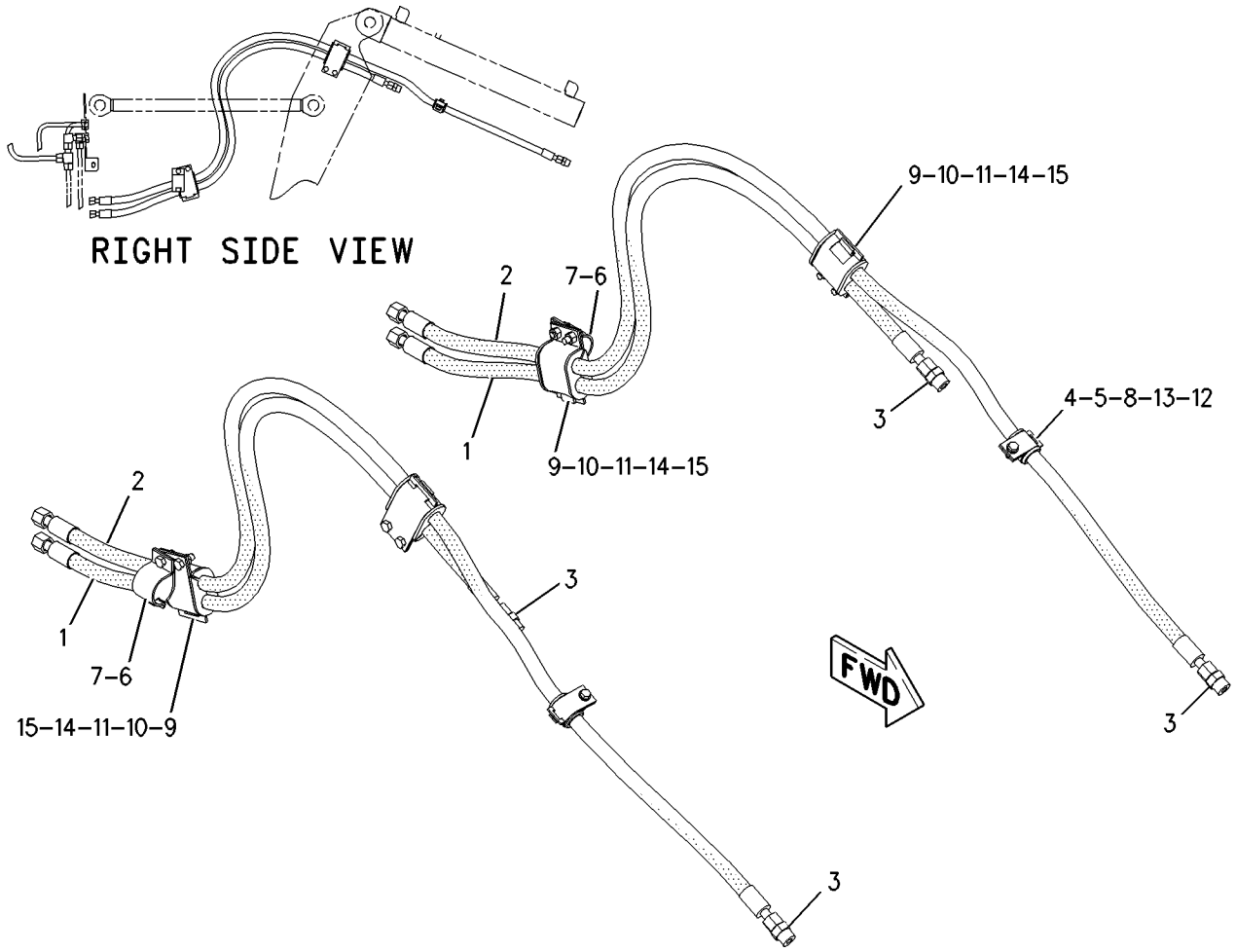

GRAPHIC #1 **<END>** g00938371

HYDRAULIC SYSTEM

218-4304 LINES GP-PILOT—CAB-PLATFORM

S/N: CCK1-UP

PART OF 217-3819 CAB GP, 218-3064 PLATFORM GP

ALSO AN ATTACHMENT

SMCS-5057 **i01835052**

NOTE	REF NO	GRAPHIC REF	PART NUMBER	QTY	PART NAME 1 2 3 4 5 6 (PRODUCT LEVEL)	SEE PAGE
	1	1	**196-3935**	1	TUBE AS	
	2	1	**196-3936**	1	TUBE AS	
	3	1	**196-3937**	1	TUBE AS	
	4	1	**196-3938**	1	TUBE AS	
	5	1	**199-5973**	2	BRACKET AS	
					(EACH INCLUDES)	
M		1	**8T-4133**	1	NUT (M10X1.5 THD)	
	6	1	**199-5974**	1	BRACKET	
	7	1	*148-8365*	3	ELBOW GP	
					(EACH INCLUDES)	
		1	**3J-1907**	1	SEAL-O-RING	
		1	**6V-8398**	1	SEAL-O-RING	
		1	**8T-6876**	1	ELBOW	
	8	1	*148-8457*	1	UNION GP	
		1	**6V-8398**	2	SEAL-O-RING	
		1	**6V-8995**	1	UNION-BULKHEAD	
	9	1	*164-5624*	1	ELBOW GP	
		1	**3J-1907**	1	SEAL-O-RING	
		1	**6V-8398**	1	SEAL-O-RING	
		1	**9X-2085**	1	ELBOW	
	10	1	*185-3365*	3	UNION AS	
					(EACH INCLUDES)	
		1	**6V-8397**	1	SEAL-O-RING	
		1	**6V-8398**	1	SEAL-O-RING	
		1	**8T-0129**	1	UNION-BULKHEAD	
	11	1	**6V-9169**	4	NUT-BULKHEAD (13/16-16 THD)	
	12	1	**6V-9829**	3	CAP AS	
	13	1	**6V-9830**	1	CAP AS	
	14	1	**8T-4121**	8	WASHER-HARD (11X21X2.5MM THK)	
M	15	1	**8T-4133**	2	NUT (M10X1.5 THD)	
M	16	1	**8T-4137**	4	BOLT (M10X1.5X20MM)	
M	17	1	**8T-4191**	2	BOLT (M10X1.5X16MM)	

M-METRIC PART

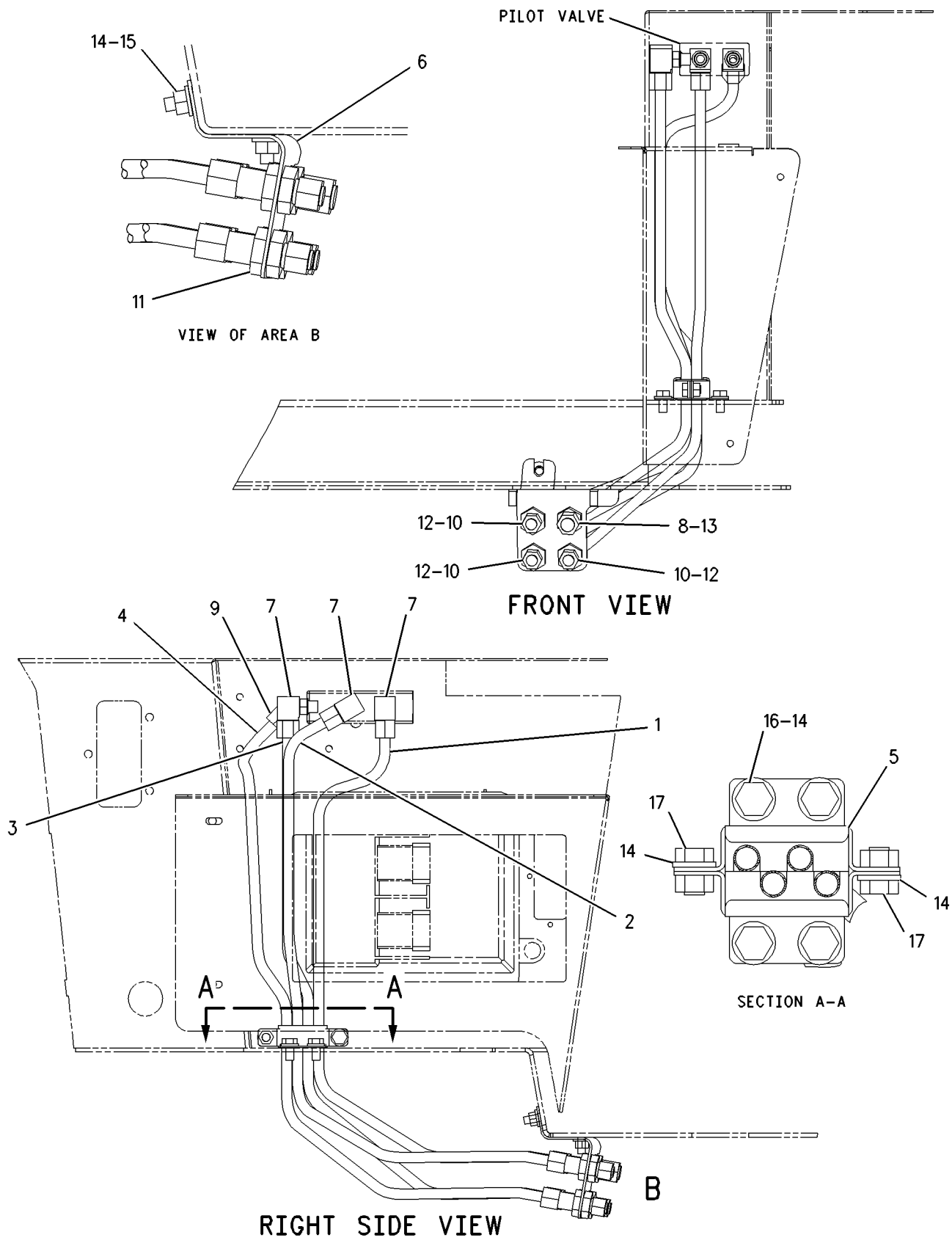

GRAPHIC #1 **<END>** g00938410

HYDRAULIC SYSTEM

220-1322 LINES GP-PILOT–FRAME

S/N: CCK1-UP

PART OF 189-4623 HYDRAULIC AR

SMCS-5057 **i01834332**

NOTE	REF NO	GRAPHIC REF	PART NUMBER	QTY	PART NAME 1 2 3 4 5 6 (PRODUCT LEVEL)	SEE PAGE
	1	1	**4W-3277**	1	BRACKET	
I	2	1	**196-3939**	1	HOSE AS	
I	3	1	**196-3940**	1	HOSE AS	
I	4	1	**196-3941**	1	HOSE AS	
I	5	1	**196-3942**	1	HOSE AS	
	6	1	**067-2551**	1	CLIP	
	7	1	*148-8417*	1	REDUCER AS	
		1	**6V-8397**	1	SEAL-O-RING	
		1	**6V-8941**	1	REDUCER	
	8	1	*148-8435*	1	TEE AS	
		1	**3J-1907**	1	SEAL-O-RING	
		1	**6V-8397**	2	SEAL-O-RING	
		1	**6V-8781**	1	TEE-FACE SEAL	
	9	1	*148-8439*	1	TEE AS	
		1	**3J-1907**	1	SEAL-O-RING	
		1	**6V-8397**	2	SEAL-O-RING	
		1	**6V-8774**	1	TEE	
	10	1	*148-8451*	1	TEE GP	
		1	**6V-8791**	1	TEE-FACE SEAL	
		1	**6V-9746**	3	SEAL-O-RING	
	11	1	**3D-2824**	1	SEAL-O-RING	
	12	1	**4D-7733**	1	CLIP	
	13	1	**6V-8556**	1	NUT (1 3/16-12 THD)	
	14	1	**7C-4354**	3	CLIP	
	15	1	**7X-3166**	1	ADAPTER-SWIVEL	
	16	1	**8T-4121**	4	WASHER-HARD (11X21X2.5MM THK)	
M	17	1	**8T-4133**	2	NUT (M10X1.5 THD)	
M	18	1	**8T-4136**	1	BOLT (M10X1.5X25MM)	
M	19	1	**8T-4139**	1	BOLT (M12X1.75X30MM)	
M	20	1	**8T-4195**	1	BOLT (M10X1.5X30MM)	
	21	1	**8T-4223**	1	WASHER-HARD (13.5X25.5X3MM THK)	

I-SEE HOSE FABRICATION GUIDE
M-METRIC PART

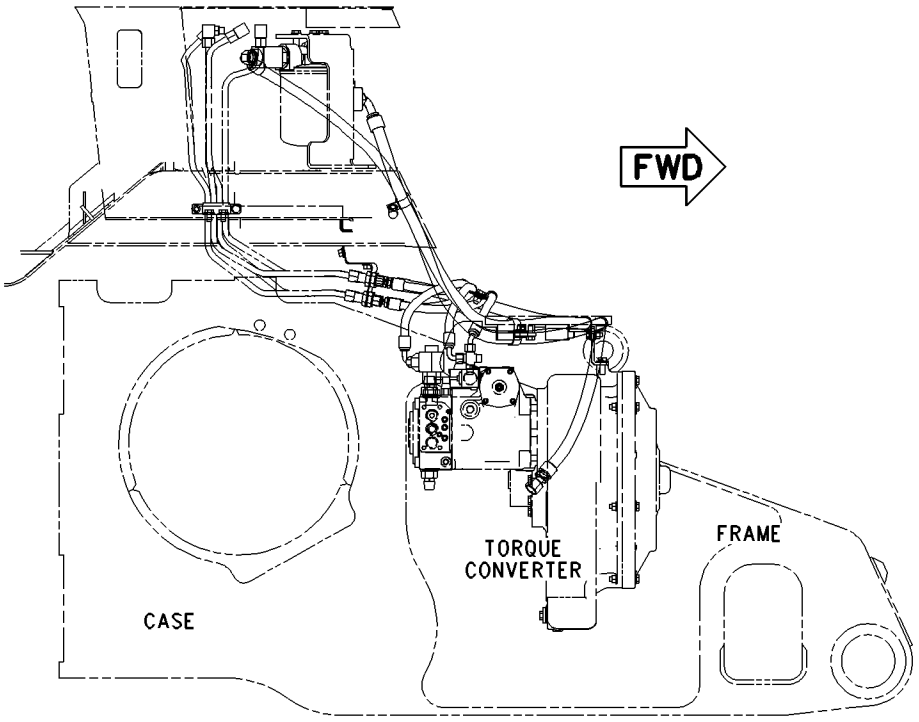

RIGHT SIDE VIEW

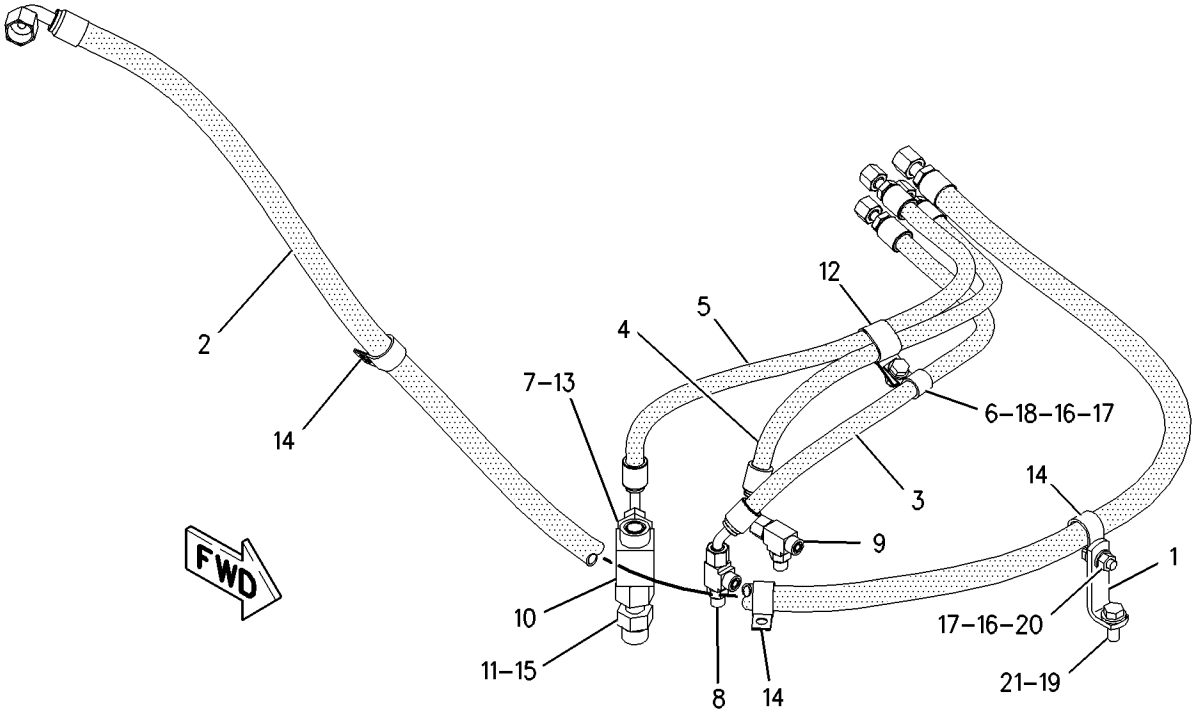

GRAPHIC #1 **<END>** g00940375

HYDRAULIC SYSTEM

191-9531 LINES GP-PUMP

S/N: CCK1-UP

PART OF 189-4623 HYDRAULIC AR

SMCS-5057 **i01878058**

NOTE	REF NO	GRAPHIC REF	PART NUMBER	QTY	PART NAME 1 2 3 4 5 6 (PRODUCT LEVEL)	SEE PAGE
	1	1	**3T-9315**	1	SPACER (13.5X19.05X29MM THK)	
	2	1	**6V-0852**	2	CAP-DUST (HYDRAULIC PUMP)	
	3	1	**8T-4984**	12	CLAMP-HOSE	
	4	1	**9G-7101**	1	SPACER (10.5X20X30MM THK)	
	5	1	**123-8630**	1	TUBE AS	
	6	1	**133-6934**	1	SPACER (11X20X25MM THK)	
	7	1	*153-6248*	1	ADAPTER GP	
		1	**6V-8397**	1	SEAL-O-RING	
		1	**8T-6663**	1	ADAPTER-PORT	
Y	8	1	**169-4019**	1	FILTER GP-OIL (HYDRAULIC)	358
	9	1	**169-9064**	1	TUBE AS	
G	10	1	**194-6478**	3	HOSE (6 INCHES EACH)	
Y	11	1	**195-9097**	1	PUMP GP-PISTON (HYDRAULIC OIL)	393
	12	1	**196-1747**	1	BRACKET AS	
M		1	**8T-3490**	1	NUT-WELD (M10X1.5 THD)	
	13	1	**196-2244**	1	ELBOW	
I	14	1	**196-3923**	1	HOSE AS	
I	15	1	**196-3924**	1	HOSE AS	
	16	1	**196-3927**	1	TUBE	
	17	1	**196-3928**	1	TUBE	
	18	1	**196-3929**	1	TUBE AS	
	19	1	**196-3930**	1	TUBE AS	
I	20	1	**196-3931**	1	HOSE AS	
I	21	1	**196-3933**	1	HOSE AS	
	22	1	**214-4659**	1	BRACKET	
I	23	1	**216-2756**	1	HOSE AS	
I	24	1	**216-2757**	1	HOSE AS	
I	25	1	**216-2762**	1	HOSE AS	
	26	1	**223-1395**	1	BRACKET AS	
M		1	**8T-5413**	1	STUD-WELD (M10X1.5X25MM OAL)	
	27	1	**124-8333**	1	ELBOW	
	28	1	*148-8326*	1	CONNECTOR GP	
		1	**3J-7354**	1	SEAL-O-RING	
		1	**6V-8397**	1	SEAL-O-RING	
		1	**6V-9872**	1	CONNECTOR	
	29	1	*148-8327*	1	CONNECTOR AS	
		1	**3D-2824**	1	SEAL-O-RING	
M		1	**6V-8337**	1	BOLT-SOCKET HEAD (M8X1.25X35MM)	
		1	**6V-9746**	1	SEAL-O-RING	
	30	1	*148-8333*	1	CONNECTOR GP	
		1	**6V-8400**	1	SEAL-O-RING	
		1	**7M-8485**	1	SEAL-O-RING	
		1	**8T-7927**	1	CONNECTOR	
	31	1	*148-8335*	2	CONNECTOR AS	
					(EACH INCLUDES)	
		1	**5K-9090**	1	SEAL-O-RING	
		1	**6V-8635**	1	CONNECTOR	
		1	**7M-8485**	1	SEAL-O-RING	
	32	1	*148-8347*	1	ELBOW GP	
		1	**3D-2824**	1	SEAL-O-RING	
		1	**6V-9007**	1	ELBOW	
		1	**6V-9746**	1	SEAL-O-RING	
	33	1	*148-8355*	1	ELBOW GP	
		1	**5K-9090**	1	SEAL-O-RING	
		1	**7M-8485**	1	SEAL-O-RING	
		1	**6V-9005**	1	ELBOW	

191-9531 **LINES GP-PUMP** ***(contd.)*** **i01878058**

NOTE	REF NO	GRAPHIC REF	PART NUMBER	QTY	PART NAME 1 2 3 4 5 6 (PRODUCT LEVEL)	SEE PAGE
	34	1	*148-8357*	1	ELBOW GP	
		1	**5K-9090**	1	SEAL-O-RING	
		1	**7M-8485**	1	SEAL-O-RING	
		1	**6V-9008**	1	ELBOW	
	35	1	*148-8361*	1	ELBOW GP	
		1	**3J-7354**	1	SEAL-O-RING	
		1	**6V-8397**	1	SEAL-O-RING	
		1	**6V-9200**	1	ELBOW	
	36	1	*148-8367*	1	ELBOW GP	
		1	**6V-8397**	1	SEAL-O-RING	
		1	**6V-9850**	1	ELBOW-SWIVEL	
	37	1	*148-8390*	1	ELBOW GP	
		1	**2M-9780**	1	SEAL-O-RING	
		1	**6V-8626**	1	ELBOW	
		1	**7J-9108**	1	SEAL-O-RING	
	38	1	*148-8414*	1	REDUCER AS	
		1	**6V-8943**	1	REDUCER AS	
		1	**7J-9108**	1	SEAL-O-RING	
	39	1	*148-8422*	1	TEE AS	
		1	**5K-9090**	1	SEAL-O-RING	
		1	**6V-9746**	1	SEAL-O-RING	
		1	**7M-8485**	1	SEAL-O-RING	
	40	1	*148-8433*	1	TEE GP	
		1	**6V-8397**	2	SEAL-O-RING	
		1	**6V-9836**	1	TEE-SWIVEL	
	41	1	*150-4046*	1	ADAPTER GP	
		1	**2M-9780**	1	SEAL-O-RING	
		1	**5P-1404**	1	ADAPTER-O-RING (STRAIGHT THREAD)	
	42	1	*155-3504*	1	ELBOW GP	
		1	**2M-9780**	1	SEAL-O-RING	
		1	**6V-9003**	1	ELBOW	
		1	**7J-9108**	1	SEAL-O-RING	
	43	1	*164-5567*	2	FITTING GP	
					(EACH INCLUDES)	
		1	**3J-1907**	1	SEAL-O-RING	
		1	**6V-3965**	1	FITTING AS	
	44	1	**1P-3708**	1	SEAL-RECTANGULAR	
	45	1	**1P-4577**	2	FLANGE-HALF	
	46	1	**1P-5763**	2	FLANGE-HALF	
	47	1	**1S-0994**	3	CLIP	
	48	1	**2B-0941**	2	SPACER (10.5X19X19MM THK)	
	49	1	**3P-2404**	1	CLIP	
	50	1	**4D-7388**	1	CLIP	
	51	1	**4J-0520**	2	SEAL-O-RING	
	52	1	**4J-0527**	1	SEAL-O-RING	
	53	1	**4S-4455**	1	CLIP	
	54	1	**5F-3106**	1	SEAL-O-RING	
	55	1	**5K-9090**	1	SEAL-O-RING	
	56	1	**5P-1076**	3	WASHER-HARD (13.5X30X4MM THK)	
	57	1	**5P-7468**	2	CLIP (SLOT)	
	58	1	**5P-7469**	2	CLIP (TAB)	
	59	1	**6V-9746**	1	SEAL-O-RING	
	60	1	**7D-7233**	1	CLIP	
	61	1	**7J-9108**	1	SEAL-O-RING	
	62	1	**7M-8485**	1	SEAL-O-RING	
M	63	1	**7X-2549**	2	BOLT (M12X1.75X100MM)	
	64	1	**8C-3206**	2	FLANGE-HALF	
	65	1	**8S-0023**	1	CLIP (SLOT)	
	66	1	**8S-0024**	1	CLIP (TAB)	

191-9531 **LINES GP-PUMP** ***(contd.)*** **i01878058**

NOTE	REF NO	GRAPHIC REF	PART NUMBER	QTY	PART NAME 1 2 3 4 5 6 (PRODUCT LEVEL)	SEE PAGE
	67	1	**8T-4121**	29	WASHER-HARD (11X21X2.5MM THK)	
M	68	1	**8T-4133**	10	NUT (M10X1.5 THD)	
M	69	1	**8T-4136**	5	BOLT (M10X1.5X25MM)	
M	70	1	**8T-4137**	3	BOLT (M10X1.5X20MM)	
M	71	1	**8T-4182**	1	BOLT (M10X1.5X45MM)	
M	72	1	**8T-4185**	1	BOLT (M10X1.5X50MM)	
M	73	1	**8T-4194**	6	BOLT (M12X1.75X50MM)	
M	74	1	**8T-4195**	1	BOLT (M10X1.5X30MM)	
M	75	1	**8T-4196**	8	BOLT (M10X1.5X35MM)	
	76	1	**8T-4223**	12	WASHER-HARD (13.5X25.5X3MM THK)	
M	77	1	**8T-4910**	3	BOLT (M12X1.75X60MM)	
M	78	1	**8T-4956**	4	BOLT (M12X1.75X35MM)	
	79	1	**8T-6755**	1	TEE-UNION	
	80	1	**9S-1350**	2	CLIP	
	81	1	**9X-8250**	4	CLIP	

G-ORDER BY THE INCH
I-SEE HOSE FABRICATION GUIDE
M-METRIC PART
Y-SEPARATE ILLUSTRATION

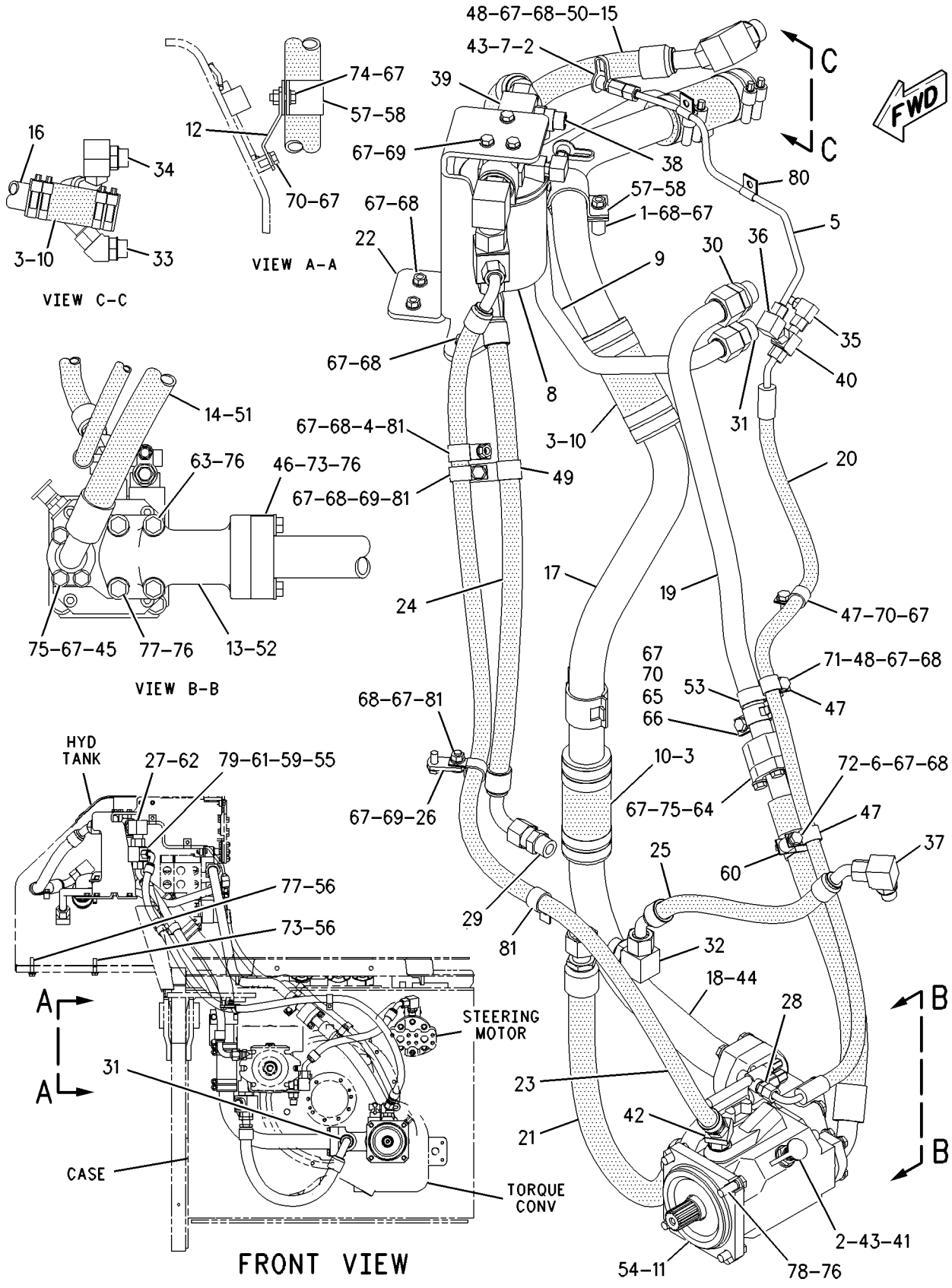

GRAPHIC #1 **<END>** g00956429

HYDRAULIC SYSTEM

163-3270 LINES GP-RIPPER—CAB

S/N: CCK1-UP

PART OF 229-2831 HYDRAULIC AR, 173-8641 HYDRAULIC AR-4 VALVE AN ATTACHMENT

SMCS-5057, 5352, 5356 **i01830396**

NOTE	REF NO	GRAPHIC REF	PART NUMBER	QTY	PART NAME 1 2 3 4 5 6 (PRODUCT LEVEL)	SEE PAGE
	1	1	**176-1852**	1	TUBE AS	
	2	1	**176-1853**	1	TUBE AS	
	3	1	**178-8647**	1	BRACKET	
	4	1	*148-8327*	2	CONNECTOR AS	
					(EACH INCLUDES)	
		1	**3D-2824**	1	SEAL-O-RING	
		1	**6V-8637**	1	CONNECTOR-SEAL	
		1	**6V-9746**	1	SEAL-O-RING	
	5	1	*171-6723*	1	ELBOW AS	
		1	**8T-8899**	1	ELBOW	
		1	**6V-9746**	1	SEAL-O-RING	
	6	1	**3H-8683**	2	STRAP-CLAMP	
	7	1	**5R-0939**	2	CLIP (TAB)	
	8	1	**5R-0940**	2	CLIP (SLOT)	
	9	1	**6V-9746**	2	SEAL-O-RING	
	10	1	**6V-9832**	2	CAP AS	
					(EACH INCLUDES)	
		1	**6V-8556**	1	NUT (1 3/16-12 THD)	
	11	1	**8T-4121**	5	WASHER-HARD (11X21X2.5MM THK)	
M	12	1	**8T-4133**	2	NUT (M10X1.5 THD)	
M	13	1	**8T-4136**	2	BOLT (M10X1.5X25MM)	
M	14	1	**8T-4186**	1	BOLT (M10X1.5X40MM)	
	15	1	**127-5447**	1	SPACER	

M-METRIC PART

163-3270 **LINES GP-RIPPER** ***(contd.)*** **i01830396**

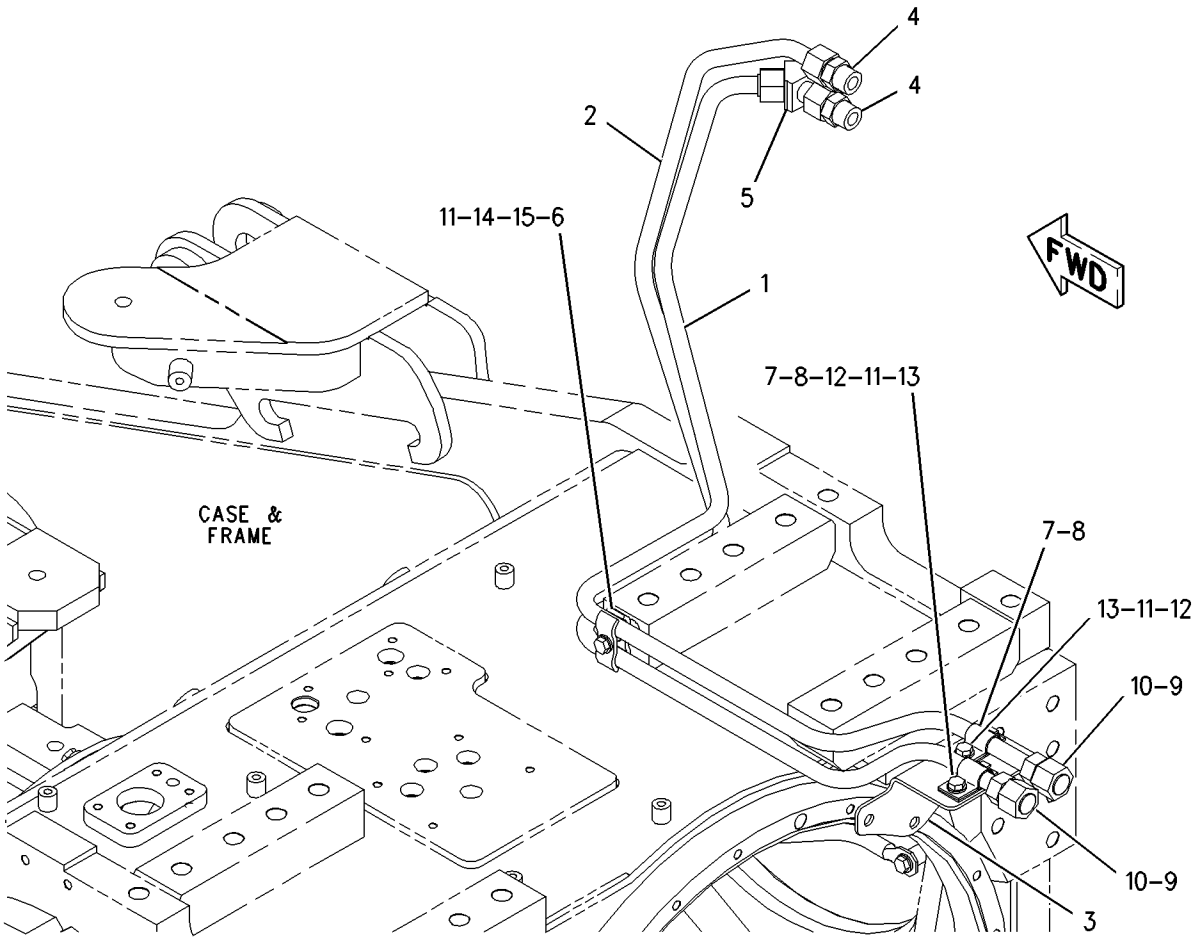

GRAPHIC #1 **<END>** g00918065

HYDRAULIC SYSTEM

180-4561 LINES GP-RIPPER–FRAME

S/N: TPP1-UP
PART OF 180-4560 RIPPER AR
AN ATTACHMENT

SMCS-5057, 5352, 5356 **i01830815**

NOTE	REF NO	GRAPHIC REF	PART NUMBER	QTY	PART NAME 1 2 3 4 5 6 (PRODUCT LEVEL)	SEE PAGE
	1	1	**1L-5081**	1	SPACER (0.41X0.75X0.56 IN THK)	
	2	1	**9M-2904**	2	CLAMP-HOSE	
	3	1	**112-4368**	4	SHIELD	
	4	1	**130-1977**	4	SHIELD	
	5	1	**130-9192**	2	GROMMET	
I	6	1	**183-4599**	1	HOSE AS	
I	7	1	**183-4600**	1	HOSE AS	
	8	1	**196-1746**	1	PLATE AS	
M		1	**8T-3490**	1	NUT-WELD (M10X1.5 THD)	
	9	1	**4J-5267**	2	SEAL-O-RING	
	10	1	**5P-1075**	1	WASHER-HARD (10.2X22.5X3MM THK)	
	11	1	**5P-7464**	1	CLIP (SLOT)	
	12	1	**5P-7465**	1	CLIP (TAB)	
	13	1	**6V-1249**	1	GROMMET	
	14	1	*148-8418*	2	REDUCER GP	
					(EACH INCLUDES)	
		1	**6V-8398**	1	SEAL-O-RING	
		1	**6V-8942**	1	REDUCER-O-RING (FACE)	
	15	1	**6V-8556**	2	NUT (1 3/16-12 THD)	
	16	1	**8T-9377**	1	BOLT (3/8-16X2.25 IN)	
	17	1	**7C-4354**	2	CLIP	
	18	1	**8T-4121**	1	WASHER-HARD (11X21X2.5MM THK)	
M	19	1	**8T-4139**	2	BOLT (M12X1.75X30MM)	
M	20	1	**8T-4196**	1	BOLT (M10X1.5X35MM)	
	21	1	**8T-4223**	2	WASHER-HARD (13.5X25.5X3MM THK)	
	22	1	**8B-8679**	1	SPACER (.44X.406X.75 IN THK)	

I-SEE HOSE FABRICATION GUIDE
M-METRIC PART

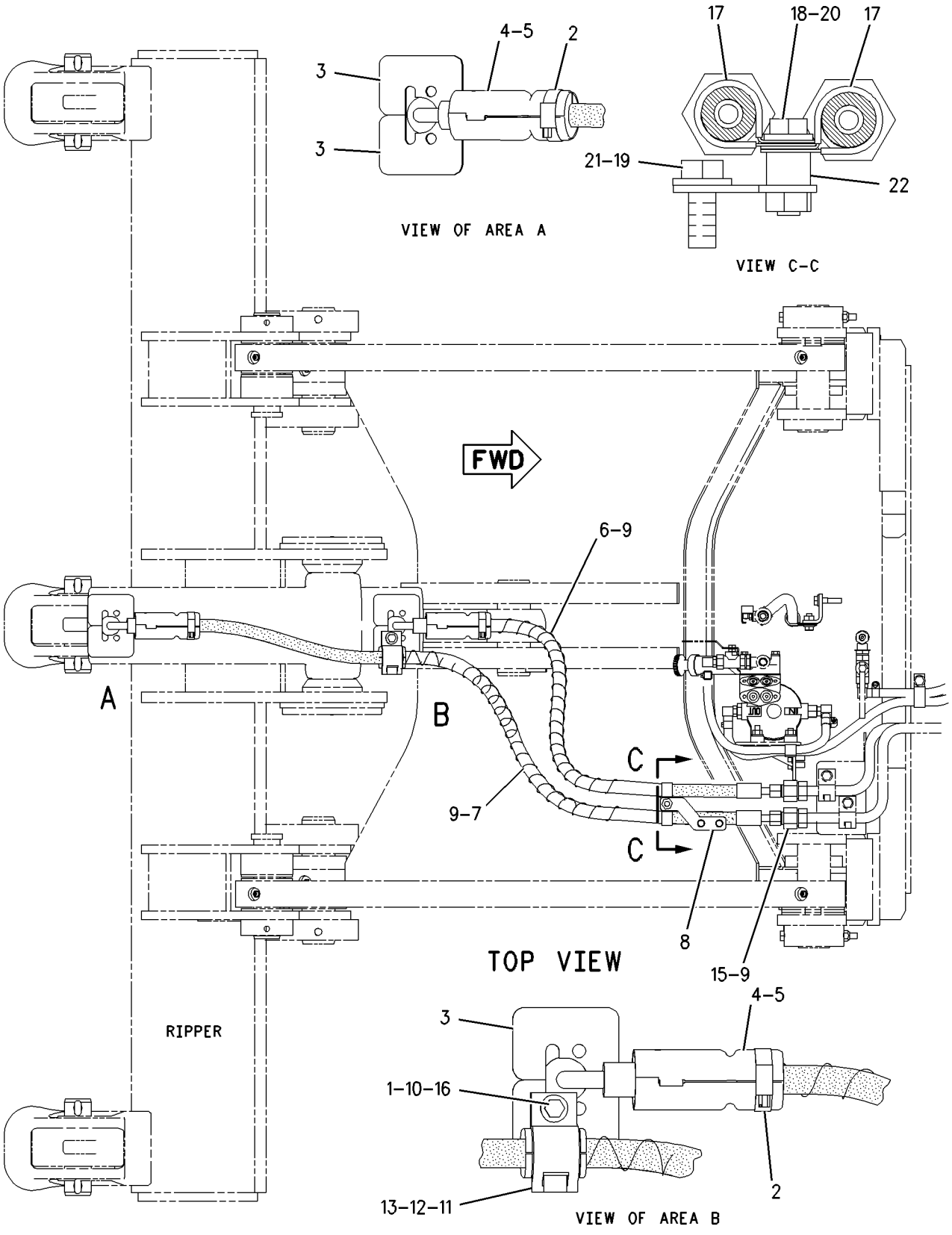

GRAPHIC #1 **<END>** g00918334

HYDRAULIC SYSTEM

115-4564 LINES GP-TILT CYLINDER

S/N: S6D1-UP; S6S1-UP
PART OF 206-9537, 206-9544 BULLDOZER AR-SEMI-UNIVERSAL
AN ATTACHMENT

SMCS-5057, 5104 **i01877299**

NOTE	REF NO	GRAPHIC REF	PART NUMBER	QTY	PART NAME 1 2 3 4 5 6 (PRODUCT LEVEL)	SEE PAGE
I	1	1	**9U-9088**	2	HOSE AS	
	2	1	**6V-9169**	2	NUT-BULKHEAD (13/16-16 THD)	
I	3	1	**7T-6934**	1	HOSE AS	
	4	1	**3Y-5405**	2	RUBBER	
	5	1	**4J-5267**	2	SEAL-O-RING	
	6	1	**8T-4223**	7	WASHER-HARD (13.5X25.5X3MM THK)	
M	7	1	**8T-4139**	4	BOLT (M12X1.75X30MM)	
	8	1	**8C-3205**	4	FLANGE-HALF	
M	9	1	**8T-4196**	8	BOLT (M10X1.5X35MM)	
	10	1	**8T-4121**	8	WASHER-HARD (11X21X2.5MM THK)	
M	11	1	**8T-4192**	3	BOLT (M12X1.75X25MM)	
	12	1	**4T-3521**	1	GUARD	
	13	1	**4T-1563**	1	GUARD AS	
I	14	1	**7T-6931**	1	HOSE AS	
	15	1	**6V-8981**	2	ELBOW	
	16	1	**6V-8398**	6	SEAL-O-RING	

I-SEE HOSE FABRICATION GUIDE
M-METRIC PART

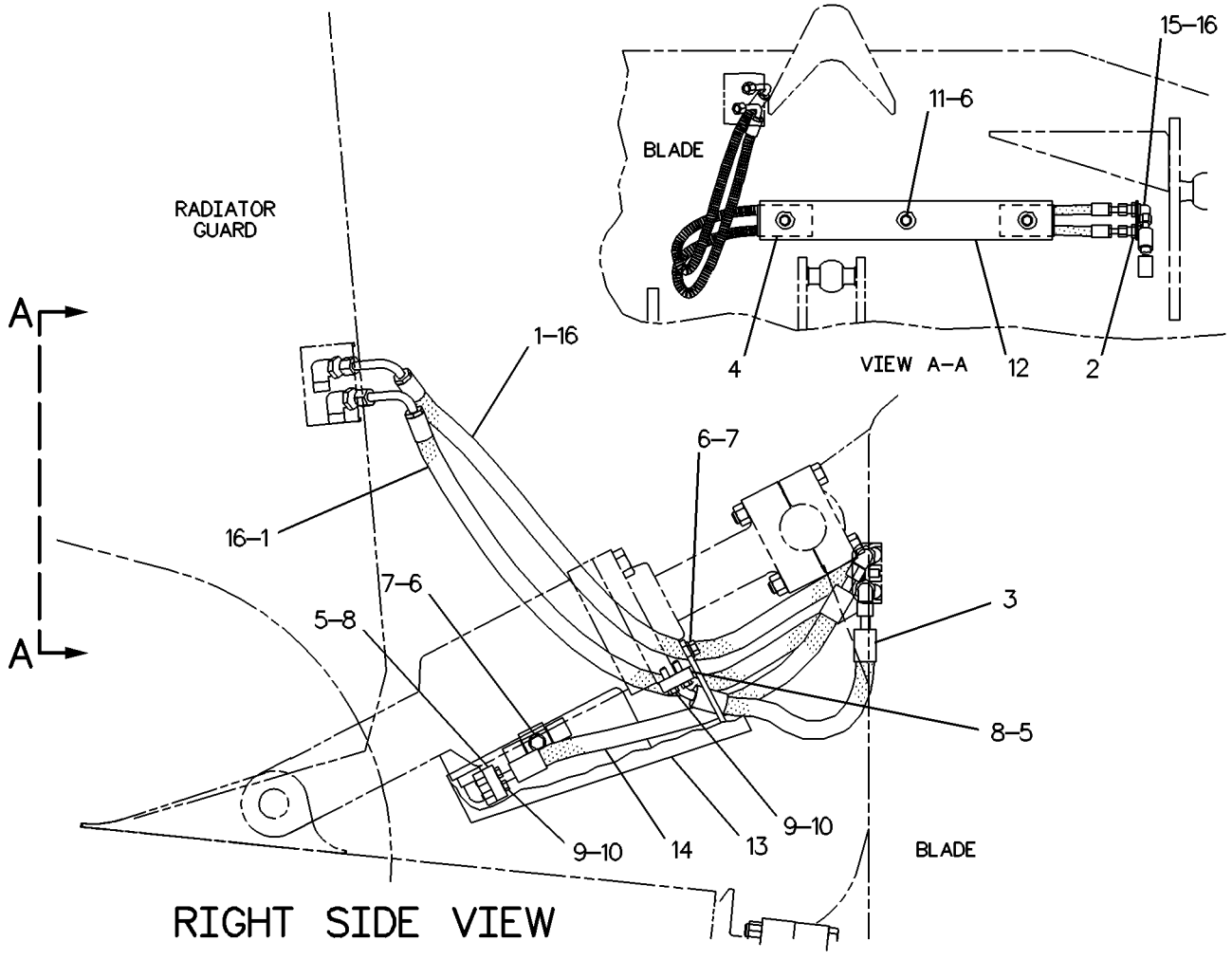

GRAPHIC #1 **<END>** g00223829

HYDRAULIC SYSTEM

169-4142 LINES GP-TILT CYLINDER

S/N: CCK1-UP
PART OF 156-9510 HYDRAULIC AR
AN ATTACHMENT

SMCS-5057, 5104 **i01883520**

NOTE	PART NUMBER	QTY	PART NAME 1 2 3 4 5 6 (PRODUCT LEVEL)	SEE PAGE
M	**8T-4196**	3	BOLT (M10X1.5X35MM)	
	9M-9130	4	CLAMP	
	5K-2697	2	CLIP	
	6V-9162	1	CONNECTOR	
	6V-8637	1	CONNECTOR-SEAL	
	8T-1810	2	ELBOW	
	7M-3361	2	GROMMET	
	6V-9169	2	NUT-BULKHEAD (13/16-16 THD)	
	3D-2824	2	SEAL-O-RING	
	6V-9746	2	SEAL-O-RING	
	7J-9108	8	SEAL-O-RING	
	126-3695	1	TUBE AS	
	126-3696	1	TUBE AS	
	126-3698	1	TUBE AS	
	126-3699	1	TUBE AS	
	169-6187	1	TUBE AS	
	169-6189	1	TUBE AS	
	172-6650	1	TUBE AS	
	172-6653	1	TUBE AS	
	8T-4121	3	WASHER-HARD (11X21X2.5MM THK)	
			(ILLUSTRATION NOT AVAILABLE AT TIME OF PUBLICATION)	

M-METRIC PART

<END>

HYDRAULIC SYSTEM

228-3554 LINES GP-TILT CYLINDER

S/N: CCK1-UP
PART OF 229-2831 HYDRAULIC AR
AN ATTACHMENT

SMCS-5057, 5104 **i01877590**

NOTE	REF NO	GRAPHIC REF	PART NUMBER	QTY	PART NAME 1 2 3 4 5 6 (PRODUCT LEVEL)	SEE PAGE
	1	1	**5K-2697**	2	CLIP	
	2	1	**169-6187**	1	TUBE AS	
	3	1	**169-6189**	1	TUBE AS	
	4	1	**172-6650**	1	TUBE AS	
	5	1	**172-6653**	1	TUBE AS	
	6	1	**228-2880**	1	TUBE AS	
	7	1	**228-2881**	1	TUBE AS	
	8	1	**228-2882**	1	TUBE AS	
	9	1	**228-2883**	1	TUBE AS	
	10	1	*148-8327*	1	CONNECTOR AS	
		1	**3D-2824**	1	SEAL-O-RING	
		1	**6V-8637**	1	CONNECTOR-SEAL	
		1	**6V-9746**	1	SEAL-O-RING	
	11	1	*148-8344*	1	CONNECTOR GP	
		1	**3D-2824**	1	SEAL-O-RING	
		1	**6V-9162**	1	CONNECTOR	
		1	**6V-9746**	1	SEAL-O-RING	
	12	1	*164-6864*	2	ELBOW AS	
					(EACH INCLUDES)	
		1	**6V-8398**	1	SEAL-O-RING	
		1	**7J-9108**	1	SEAL-O-RING	
		1	**8T-1810**	1	ELBOW	
	13	1	**4S-8002**	4	CLAMP	
	14	1	**6V-9169**	2	NUT-BULKHEAD (13/16-16 THD)	
	15	1	**7J-9108**	6	SEAL-O-RING	
	16	1	**7M-3361**	2	GROMMET	
	17	1	**8T-4121**	3	WASHER-HARD (11X21X2.5MM THK)	
M	18	1	**8T-4196**	3	BOLT (M10X1.5X35MM)	

M-METRIC PART

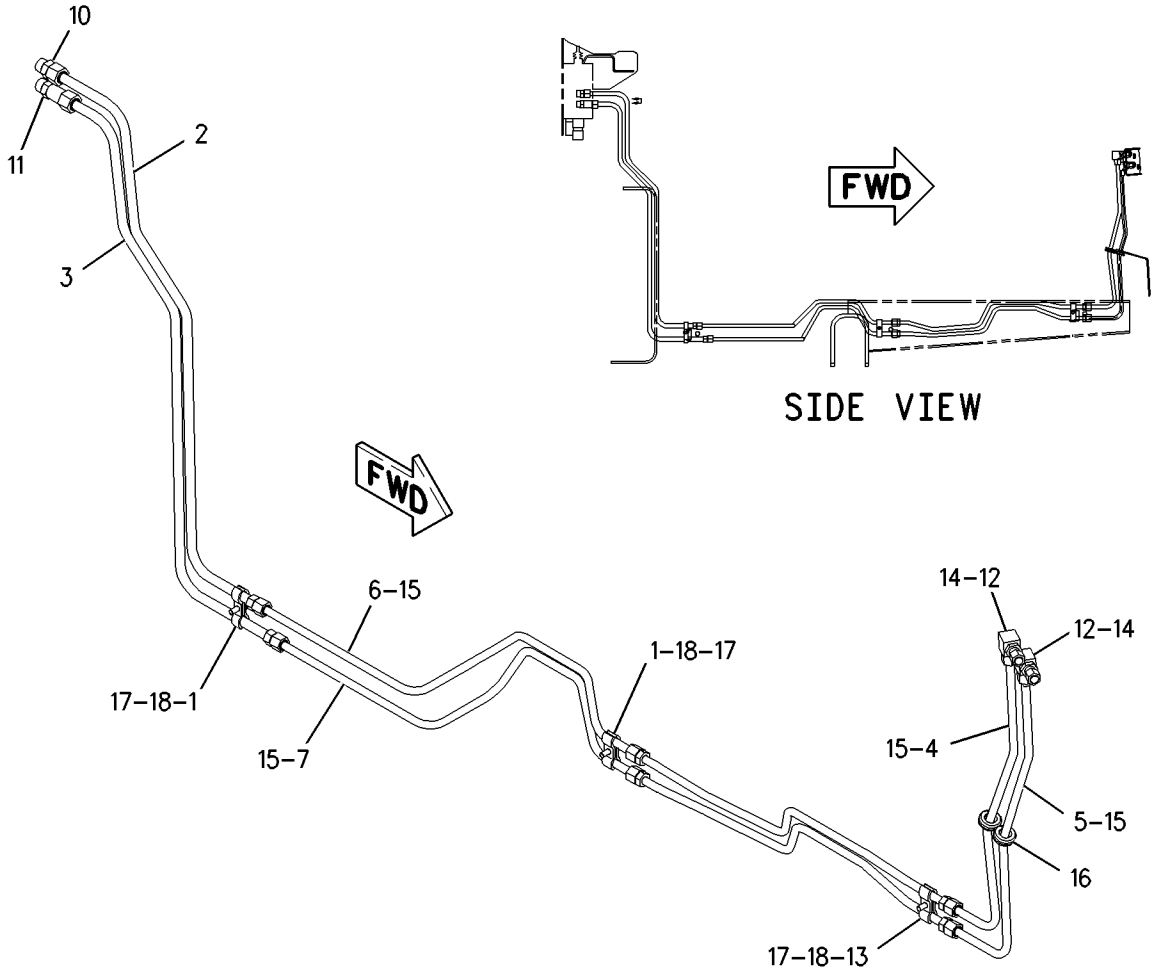

GRAPHIC #1 **<END>** g00938753

138-7033 MOUNTING GP-CYLINDER–BULLDOZER

S/N: S6D1-UP; S6S1-UP

PART OF 206-9537, 206-9544 BULLDOZER AR-SEMI-UNIVERSAL

AN ATTACHMENT

SMCS-7562 **i01877290**

NOTE	REF NO	GRAPHIC REF	PART NUMBER	QTY	PART NAME 1 2 3 4 5 6 (PRODUCT LEVEL)	SEE PAGE
	1	1	**3G-8891**	4	SPACER (45X50X18MM THK)	
	2	1	**4J-0805**	34	WASHER (1.781X2.5X.12 IN THK)	
	3	1	**4T-0231**	8	RETAINER	
	4	1	**6S-6646**	2	PIN-COTTER	
	5	1	**8G-5428**	2	PIN	
J	6	1	**8G-5501**	1	HANDHOLD-RH	
L	7	1	**8G-5502**	1	HANDHOLD-LH	
	8	1	**9W-9996**	2	BAR	
	9	1	**115-4561**	2	BUSHING	
	10	1	**115-4581**	1	SUPPORT AS	
	11	1	**115-4591**	1	SUPPORT AS	
	12	1	**115-4592**	2	LINK AS	
	13	1	**149-6309**	6	PIN	
	14	1	**0S-0175**	2	PIN-CLEVIS	
M	15	1	**6V-7687**	2	LOCKNUT (M12X1.75 THD)	
M	16	1	**8T-4139**	12	BOLT (M12X1.75X30MM)	
M	17	1	**8T-4183**	2	BOLT (M12X1.75X40MM)	
	18	1	**8T-4223**	12	WASHER-HARD (13.5X25.5X3MM THK)	

J-LOCATED ON LH SIDE OF MACHINE
L-LOCATED ON RH SIDE OF MACHINE
M-METRIC PART

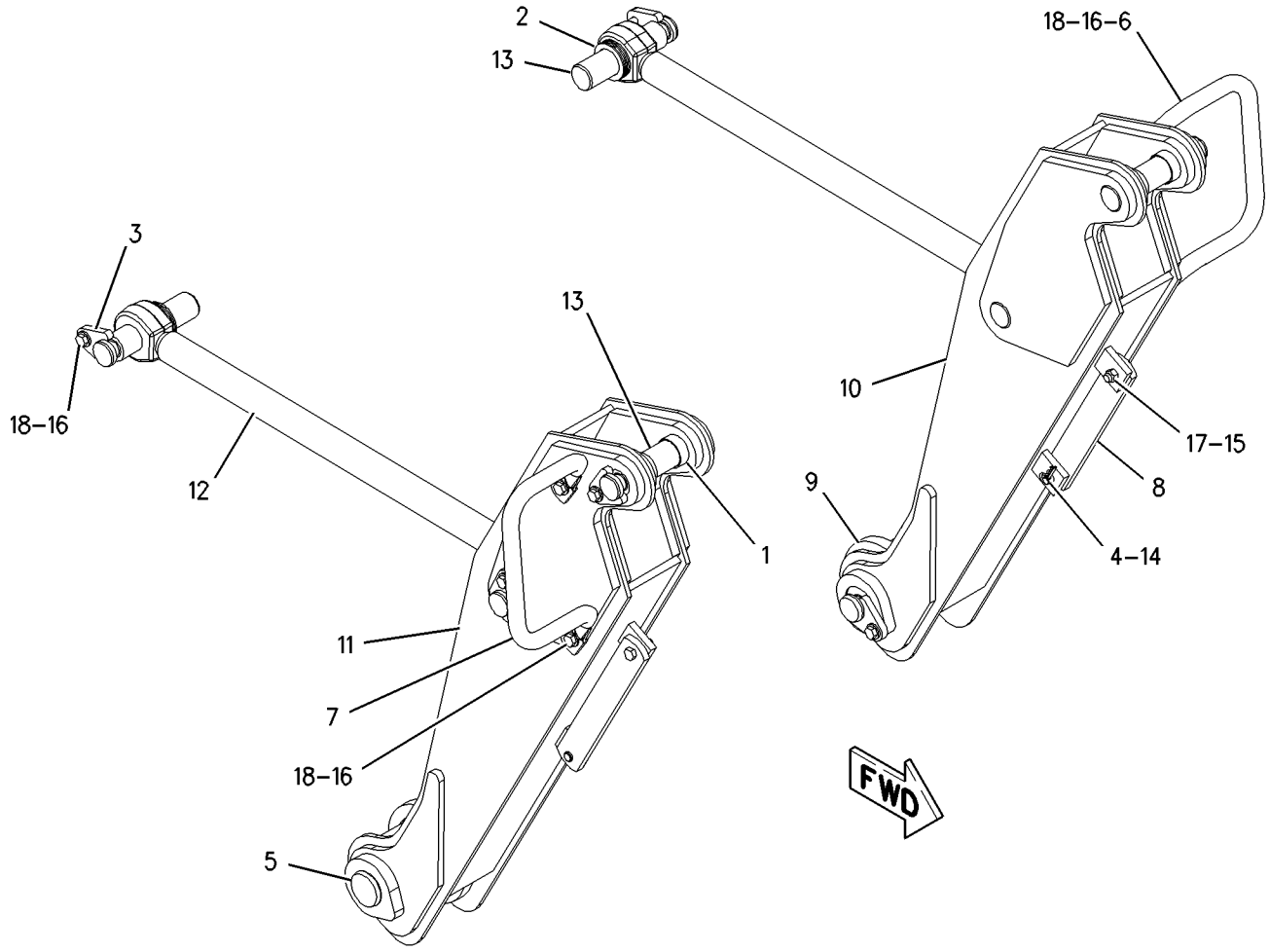

GRAPHIC #1 **<END>** g00776976

218-0100 MOUNTING GP-VALVE–IMPLEMENT CONTROL

S/N: CCK1-UP

PART OF 189-4623 HYDRAULIC AR

SMCS-5051 **i01828622**

NOTE	REF NO	GRAPHIC REF	PART NUMBER	QTY	PART NAME 1 2 3 4 5 6 (PRODUCT LEVEL)	SEE PAGE
	1	1	**8C-3451**	1	CAP-DUST (CONTROL VALVE FLUID SAMPLING)	
	2	1	**124-6092**	1	PLATE AS	
		1	**7T-1099**	1	LINK	
M		1	**8T-3490**	26	NUT-WELD (M10X1.5 THD)	
	3	1	**183-7264**	1	VALVE AS-FLUID SAMPLING (CONTROL VALVE)	
	4	1	**3J-1907**	1	SEAL-O-RING	
	5	1	**8T-4121**	7	WASHER-HARD (11X21X2.5MM THK)	
M	6	1	**8T-4136**	4	BOLT (M10X1.5X25MM)	
M	7	1	**8T-4186**	2	BOLT (M10X1.5X40MM)	
M	8	1	**8T-6466**	1	BOLT (M10X1.50X60MM)	

M-METRIC PART

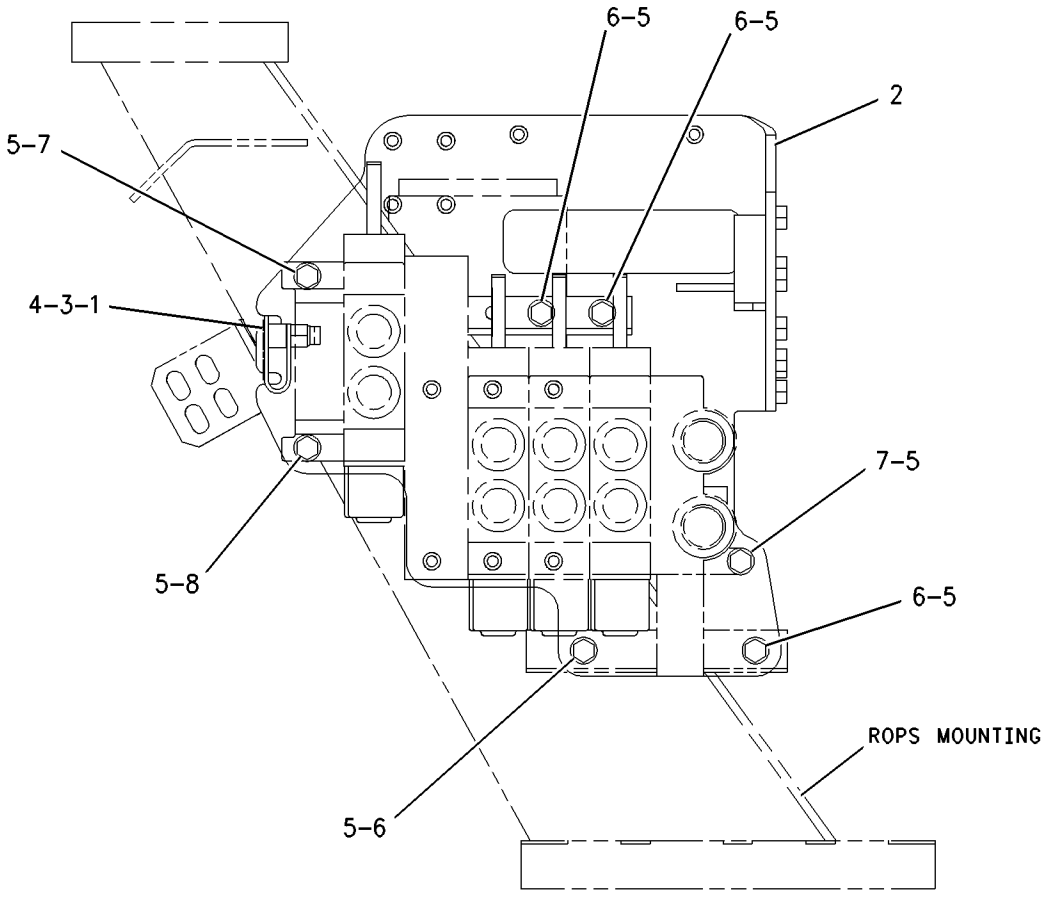

FRONT VIEW

GRAPHIC #1 **<END>** g00938300

HYDRAULIC SYSTEM

195-9097 PUMP GP-PISTON—HYDRAULIC

S/N: CCK1-UP

PART OF 191-9531 LINES GP-PUMP

SMCS-5070 **i01833758**

NOTE	REF NO	GRAPHIC REF	PART NUMBER	QTY	PART NAME 1 2 3 4 5 6 (PRODUCT LEVEL)	SEE PAGE
	1	1	**180-6213**	1	RING-RETAINING	
	2	1	**168-7319**	1	SEAL-SHAFT	
M	3	1	**6R-7943**	2	SCREW (M5X15.5MM)	
	4	1	**168-2197**	1	SPRING	
	5	1	**168-2198**	1	LINK-CONTROL	
	6	1	**174-9994**	1	PISTON-CONTROL	
	7	1	**8T-7525**	1	SEAL-O-RING	
	8	1	**198-5351**	1	PLUG	
	9	1	**185-0296**	1	BEARING	
	10	1	**3J-7354**	1	SEAL-O-RING	
	11	1	**198-5361**	4	BOLT	
	12	1	**9X-8979**	1	DOWEL	
	13	1	**192-7470**	1	SEAL-O-RING	
	14	1	**168-2203**	1	SHIM-SHAFT	
Y	15	1	**197-2849**	1	ROTATING GP-PUMP	395
	16	1	**168-7317**	1	SWASHPLATE-PUMP	
	17	1	**168-2206**	2	BEARING-CRADLE	
	18	1	**185-0295**	1	BEARING	
M	19	1	**8T-8442**	4	BOLT-SOCKET HEAD (M6X1X30MM)	
	20	1	**190-6507**	1	STOP	
	21	1	**197-2850**	1	SHAFT	
	22	1	**136-8423**	2	PLUG-BREAK OFF	
	23	1	**168-3504**	2	SEAL	
	24	1	**9X-7680**	3	SEAL-O-RING	
	25	1	**9S-8002**	1	PLUG	
Y	26	1	**168-2210**	1	VALVE GP-PRESS & FLOW CMPNSTR	415

M-METRIC PART
Y-SEPARATE ILLUSTRATION

195-9097 PUMP GP-PISTON *(contd.)* **i01833758**

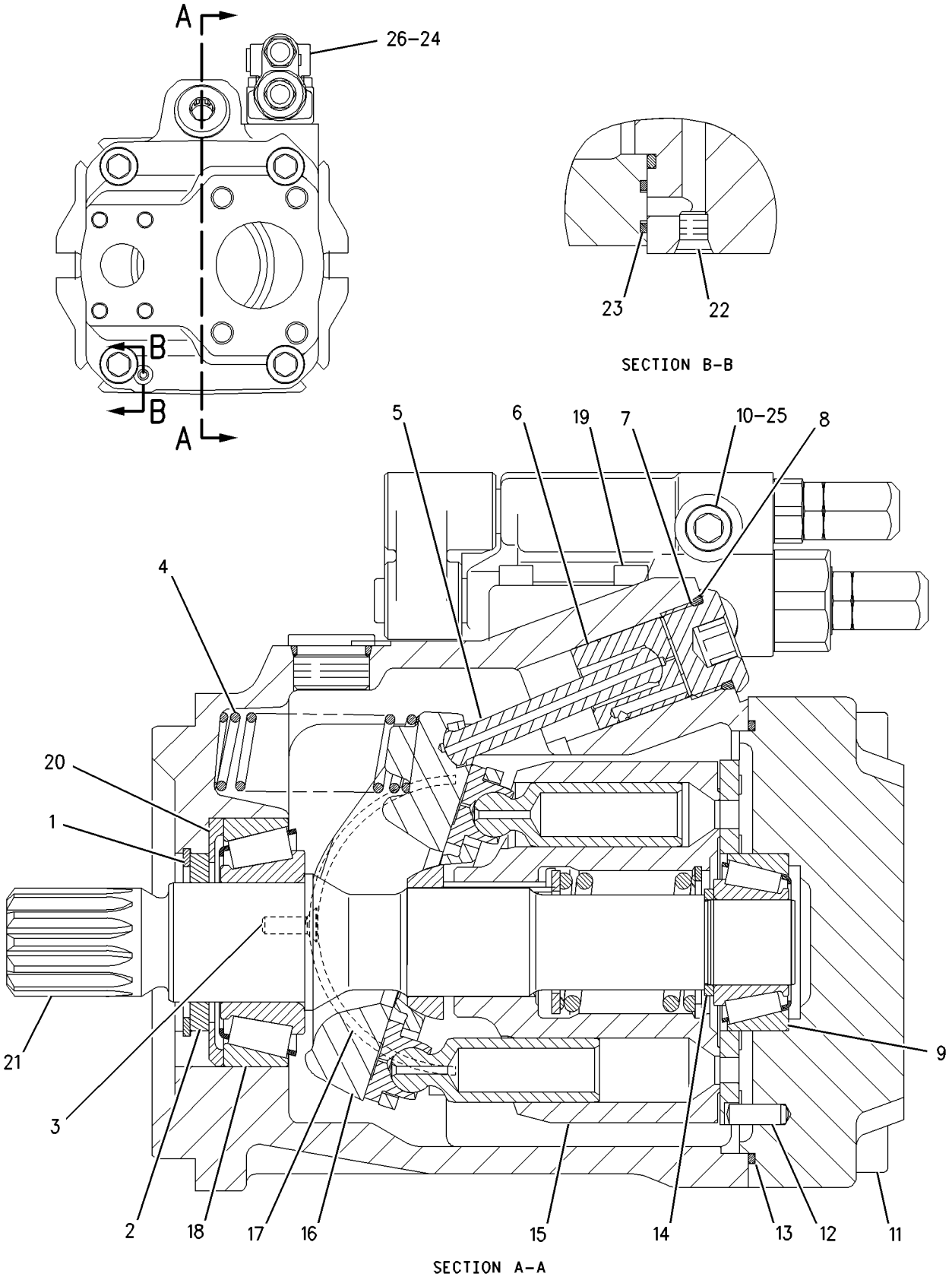

GRAPHIC #1 **<END>** g00937104

197-2849 ROTATING GP-PUMP—HYDRAULIC

S/N: CCK1-UP

PART OF 195-9097 PUMP GP-PISTON

SMCS-5070 **i01828589**

NOTE	REF NO	GRAPHIC REF	PART NUMBER	QTY	PART NAME 1 2 3 4 5 6 (PRODUCT LEVEL)	SEE PAGE
	1	1	**168-3384**	9	PISTON AS-PUMP	
	2	1	**197-2851**	1	BARREL	
	3	1	**197-2852**	1	PLATE	
	4	1	**168-7321**	1	PLATE-PORT	
	5	1	**197-2853**	1	BEARING	
	6	1	**168-3381**	1	SPRING	
	7	1	**168-3379**	3	PIN	
	8	1	**6V-7723**	1	RING-RETAINING	
	9	1	**168-3382**	1	WASHER	

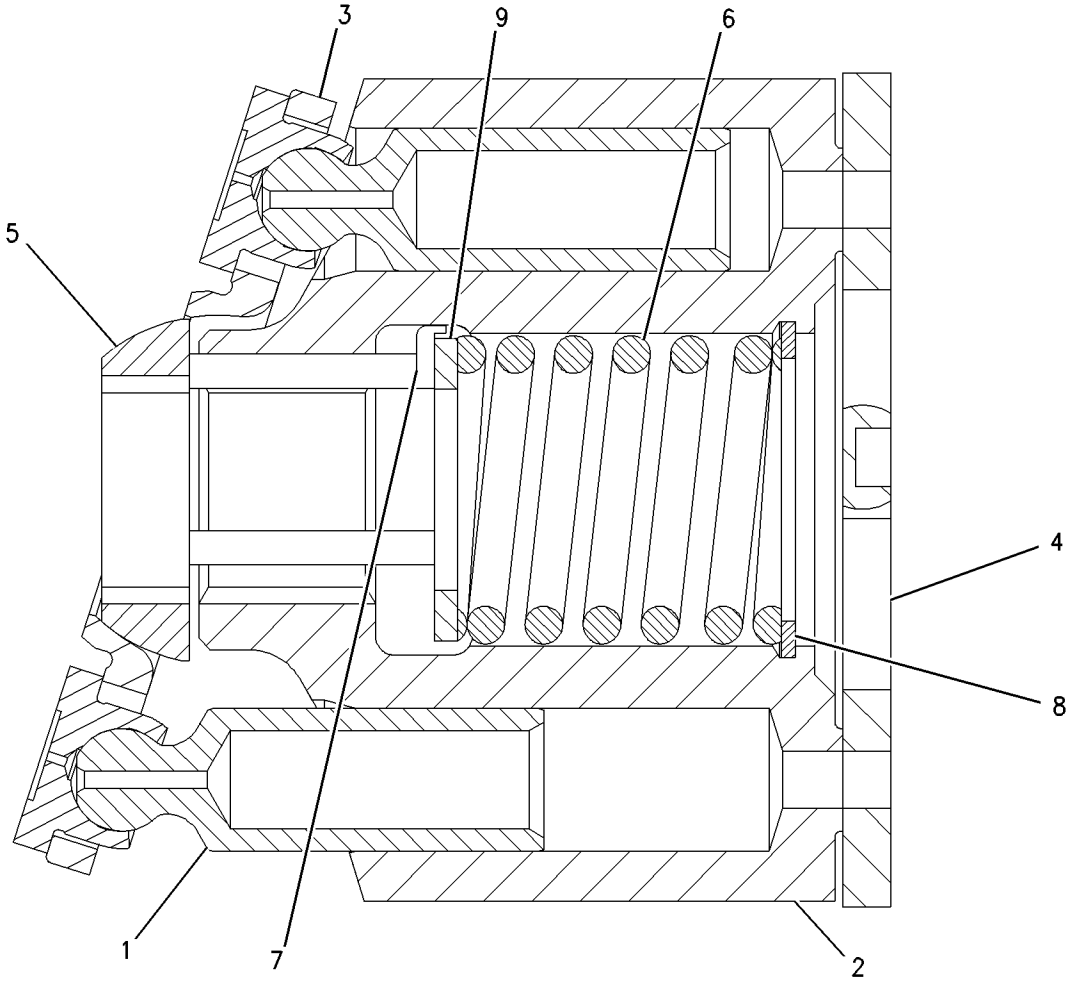

GRAPHIC #1 **<END>** g00719942

HYDRAULIC SYSTEM

174-4485 TANK & FILTER GP-HYDRAULIC

S/N: CCK1-UP

PART OF 189-4623 HYDRAULIC AR

SMCS-5056, 5068 **i01885512**

NOTE	REF NO	GRAPHIC REF	PART NUMBER	QTY	PART NAME 1 2 3 4 5 6 (PRODUCT LEVEL)	SEE PAGE
	1	1	**1U-2827**	1	GUIDE-VALVE	
	2	1	**7B-3039**	1	SPRING	
	3	1	**8J-8782**	1	BODY-DRAIN VALVE	
	4	1	**8J-8783**	1	VALVE	
	5	1	**9J-3047**	1	STRAINER (HYDRAULIC TANK)	
	6	1	**9J-7031**	1	PLUG-DRAIN (HYDRAULIC TANK)	
	7	1	**152-6649**	1	BASE	
	8	1	**166-9147**	1	TANK AS	
	9	1	**166-9165**	1	COVER AS	
		1	**9T-7512**	2	BOSS-WELD (1-5/16-12 THD)	
		1	**5S-1057**	1	FITTING	
		1	**9F-3721**	1	PLATE	
	10	1	**166-9171**	1	GASKET	
Y	11	1	**145-7028**	1	SENSOR GP-TEMPERATURE (HYDRAULIC TANK)	167
	12	1	**175-7407**	1	SPACER	
	13	1	**187-9194**	1	PLATE	
	14	1	**1L-5072**	1	DOWEL	
	15	1	**2D-4202**	1	PLATE	
	16	1	**2J-7761**	1	RING-RETAINING	
	17	1	**3G-0361**	1	GASKET	
	18	1	**3G-3267**	1	SCREEN AS (HYDRAULIC TANK)	
	19	1	**3J-1907**	1	SEAL-O-RING	
	20	1	**4J-0519**	2	SEAL-O-RING	
	21	1	**4J-8251**	1	GROMMET	
	22	1	**4J-8252**	1	GAUGE-SIGHT (HYDRAULIC TANK)	
	23	1	**4K-0367**	1	NUT-FULL (5/8-11 THD)	
	24	1	**4T-0521**	1	BOLT (5/8-11X4.35MM)	
	25	1	**1R-0735**	1	FILTER ELEMENT AS-OIL (HYDRAULIC/REVERSE FLOW) (DISPOSABLE)	
					—OR—	
		1	**104-6931**	1	FILTER ELEMENT AS-OIL (REVERSE FLOW) (HYDRAULIC FIRE RESISTANT FLUID)	
					—OR—	
		1	**139-1537**	1	FILTER ELEMENT AS-OIL (HYDRAULIC) (CLEANOUT/HIGH EFFICIENCY)	
	26	1	**5D-1911**	1	COVER-HYDRAULIC CAP	
	27	1	**5M-2057**	1	SEAL-O-RING	
	28	1	**5P-3108**	6	SEAL-O-RING	
M	29	1	**6V-1820**	21	BOLT (M10X1.50X30MM)	
	30	1	**6V-5839**	6	WASHER (11X21X2.5MM THK)	
M	31	1	**6V-7744**	6	LOCKNUT (M10X1.5 THD)	
	32	1	**6V-9633**	1	GASKET	
	33	1	**7H-1447**	1	CAP-FILLER (HYDRAULIC TANK)	
	34	1	**8F-9206**	1	SEAL-O-RING	
	35	1	**8J-6913**	1	RETAINER-SIGHT GLASS	
	36	1	**8J-8322**	1	RING-RETAINING	
	37	1	**8J-8436**	1	TUBE AS	
	38	1	**8J-8443**	1	SPRING	
	39	1	**8J-8468**	1	VALVE	
	40	1	**8T-2275**	1	BALL	
	41	1	**8T-3298**	1	SEAL-RECTANGULAR	
	42	1	**8T-9389**	3	BOLT (1/2-13X2.75 IN)	
	43	1	**9H-6454**	1	GASKET	
	44	1	**9J-2914**	1	SPACER	
	45	1	**9M-7394**	1	LEVER	
	46	1	**9T-3264**	1	COVER	

174-4485 TANK & FILTER GP-HYDRAULIC *(contd.)* i01885512

NOTE	REF NO	GRAPHIC REF	PART NUMBER	QTY	PART NAME 1 2 3 4 5 6 (PRODUCT LEVEL)	SEE PAGE
	47	1	**164-3651**	1	ADAPTER	
	48	1	**7K-1181**	1	STRAP-CABLE	
	49	1	**7J-0204**	1	SEAL-O-RING	
	50	1	**4P-8134**	1	CLIP	

M-METRIC PART
Y-SEPARATE ILLUSTRATION

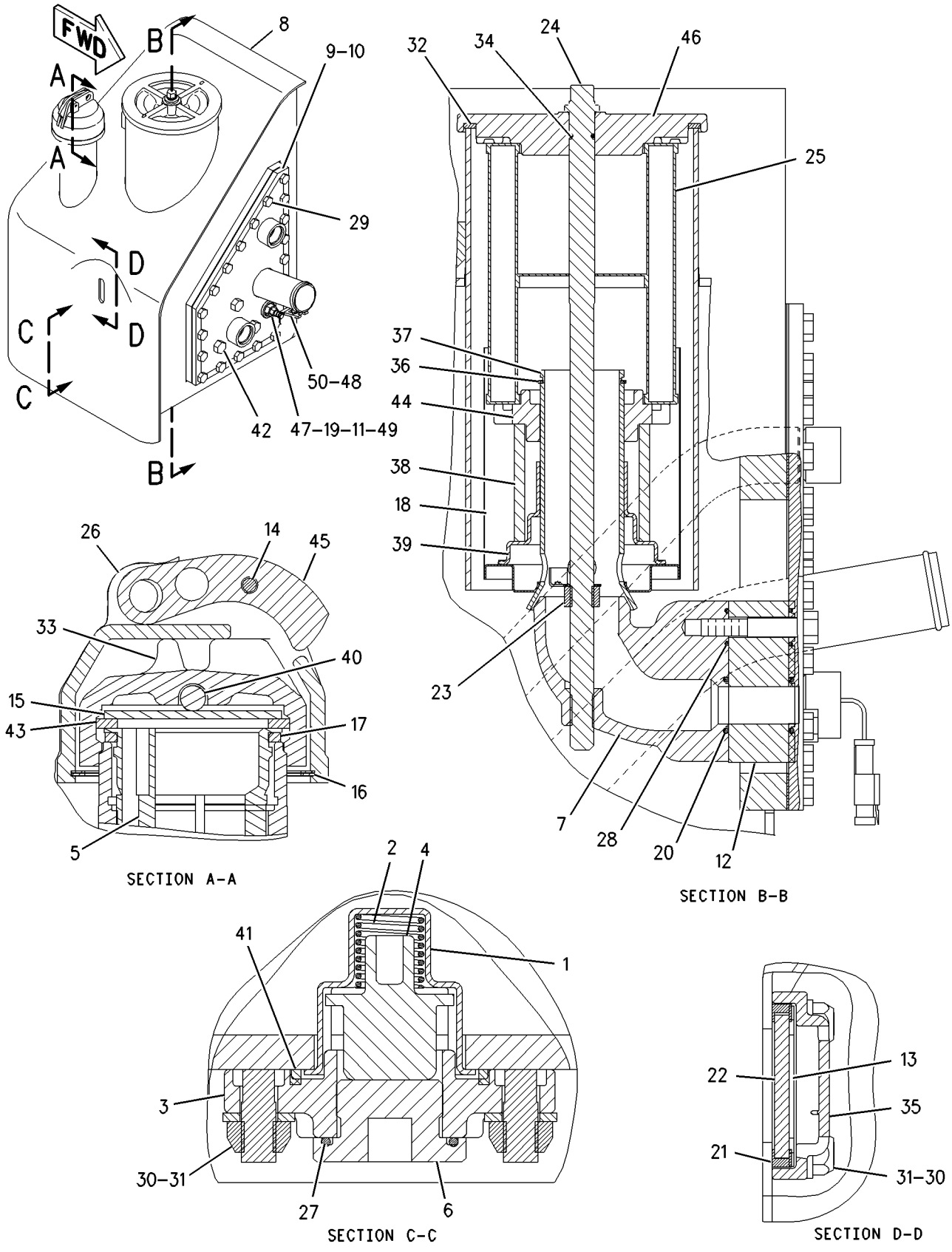

GRAPHIC #1 **<END>** g00910394

6E-5083 VALVE GP-BANK 2–BULLDOZER LIFT/TILT

S/N: CCK1-UP
PART OF 156-9510 HYDRAULIC AR
AN ATTACHMENT

SMCS-5051 **i01895726**

NOTE	REF NO	GRAPHIC REF	PART NUMBER	QTY	PART NAME 1 2 3 4 5 6 (PRODUCT LEVEL)	SEE PAGE
CY	1	1	**9T-6695**	1	VALVE GP-RELIEF	418
Y	2	1	**6E-5953**	1	VALVE GP-CONTROL (BLADE LIFT)	409
Y	3	1	**6E-4953**	1	VALVE GP-CONTROL (BLADE TILT)	405
	4	1	**4T-2731**	1	COVER	
	5	1	**9S-8004**	1	PLUG	
		1	**3J-1907**	1	SEAL-O-RING	
	6	1	**4D-9986**	6	SEAL-O-RING	
	7	1	**4T-4538**	3	STUD	
		1	**9S-8752**	3	NUT-FULL (3/8-16 THD)	
		1	**5M-2894**	3	WASHER-HARD (10.2X18.5X2.5MM THK)	
	8	1	**4J-5267**	3	SEAL-O-RING	
	9	1	**4J-5140**	3	SEAL-O-RING	
B	10	1	**4T-2723**	9	SHIM (0.076MM THK)	

B-USE AS REQUIRED
C-CHANGE FROM PREVIOUS TYPE
Y-SEPARATE ILLUSTRATION

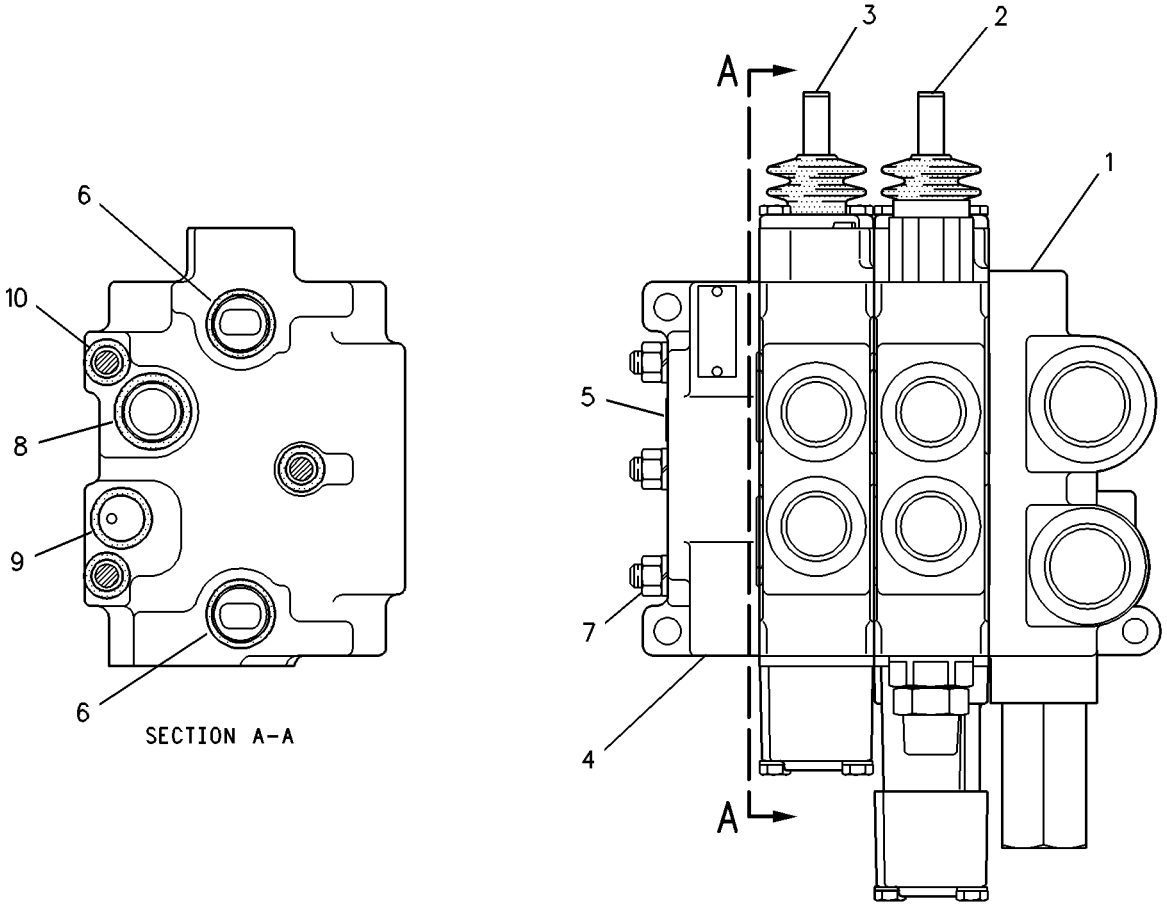

GRAPHIC #1 **<END>** g00233717

209-6765 VALVE GP-BANK 3–BULLDOZER ANGLE-LIFT-TILT

S/N: CCK1-UP

PART OF 189-4623 HYDRAULIC AR

SMCS-5051 **i01828618**

NOTE	REF NO	GRAPHIC REF	PART NUMBER	QTY	PART NAME 1 2 3 4 5 6 (PRODUCT LEVEL)	SEE PAGE
Y	1	1	**9T-6695**	1	VALVE GP-RELIEF	418
Y	2	1	**209-6761**	1	VALVE GP-CONTROL (LIFT)	411
Y	3	1	**6E-4953**	1	VALVE GP-CONTROL (TILT)	405
Y	4	1	**6E-4954**	1	VALVE GP-CONTROL (ANGLE)	407
	5	1	**4T-2731**	1	COVER	
	6	1	**9S-8004**	1	PLUG	
	7	1	**3J-1907**	1	SEAL-O-RING	
	8	1	**4T-4518**	3	STUD	
	9	1	**9S-8752**	3	NUT-FULL (3/8-16 THD)	
	10	1	**5M-2894**	3	WASHER-HARD (10.2X18.5X2.5MM THK)	
	11	1	**4T-2723**	12	SHIM (0.076MM THK)	
	12	1	**4D-9986**	8	SEAL-O-RING	
	13	1	**4J-5267**	4	SEAL-O-RING	
	14	1	**4J-5140**	4	SEAL-O-RING	

Y-SEPARATE ILLUSTRATION

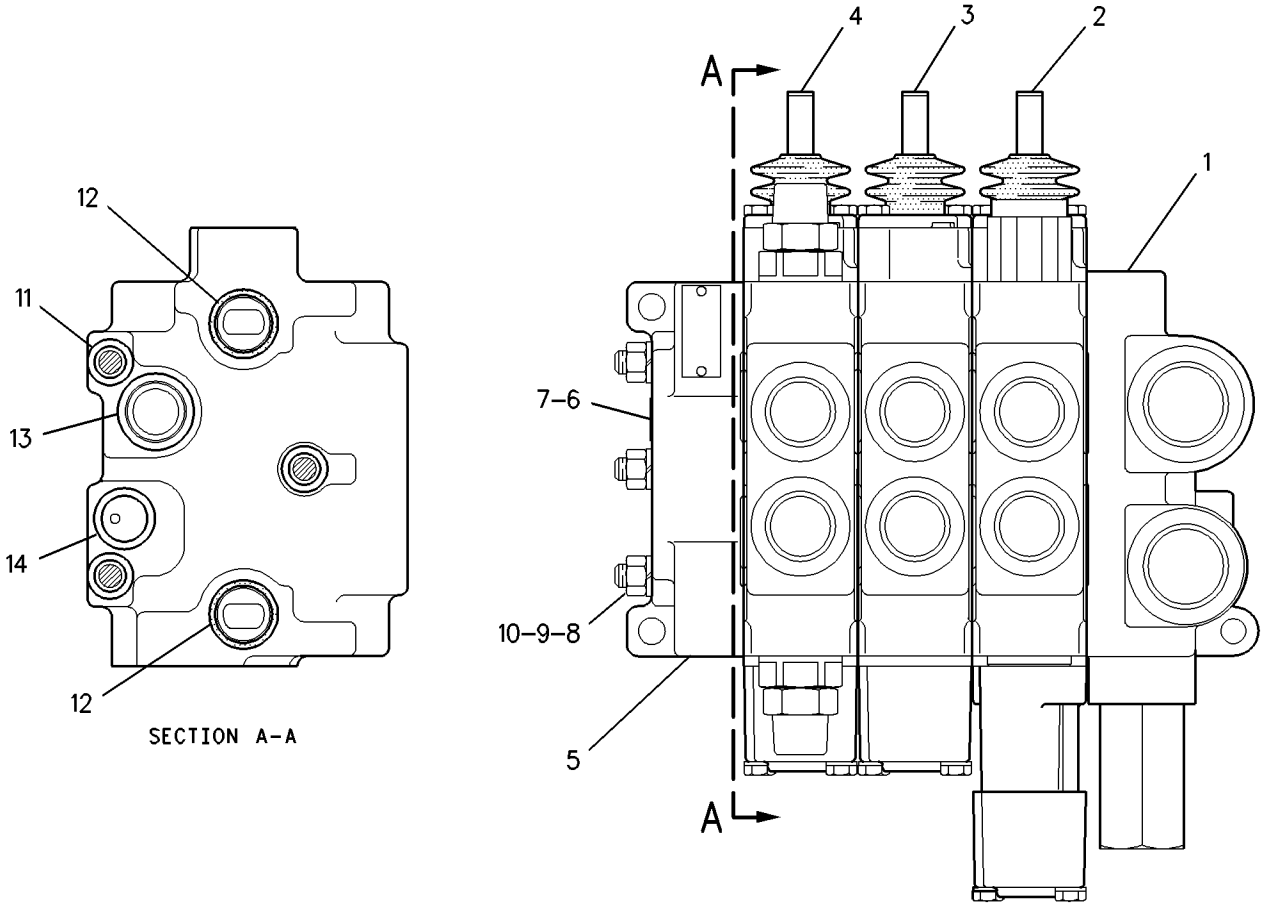

GRAPHIC #1 **<END>** g00875015

209-6764 VALVE GP-BANK 4—BULLDOZER LIFT-ANGLE-TILT & RIPPER

S/N: CCK1-UP

PART OF 229-2831 HYDRAULIC AR, 173-8641 HYDRAULIC AR-4 VALVE AN ATTACHMENT

SMCS-5051 **i01893138**

NOTE	REF NO	GRAPHIC REF	PART NUMBER	QTY	PART NAME 1 2 3 4 5 6 (PRODUCT LEVEL)	SEE PAGE
Y	1	1	**9T-6695**	1	VALVE GP-RELIEF	418
Y	2	1	**209-6762**	1	VALVE GP-CONTROL (LIFT)	413
Y	3	1	**6E-4953**	1	VALVE GP-CONTROL (TILT)	405
Y	4	1	**6E-4954**	1	VALVE GP-CONTROL (ANGLE)	407
Y	5	1	**6E-4952**	1	VALVE GP-CONTROL (RIPPER)	403
	6	1	**117-0982**	2	STUD	
	7	1	**9S-8004**	1	PLUG	
	8	1	**3J-1907**	1	SEAL-O-RING	
	9	1	**9S-8752**	5	NUT-FULL (3/8-16 THD)	
	10	1	**5M-2894**	5	WASHER-HARD (10.2X18.5X2.5MM THK)	
	11	1	**118-2228**	1	STUD	
	12	1	**4T-2731**	1	COVER	
	13	1	**4T-4216**	2	STUD	
	14	1	**4Z-5788**	1	MANIFOLD AS	
	15	1	**9S-8006**	3	PLUG	
	16	1	**2M-9780**	3	SEAL-O-RING	
	17	1	**4D-9986**	12	SEAL-O-RING	
	18	1	**4J-5267**	6	SEAL-O-RING	
	19	1	**4T-2723**	18	SHIM (0.076MM THK)	
	20	1	**4J-5140**	6	SEAL-O-RING	

Y-SEPARATE ILLUSTRATION

209-6764 VALVE GP-BANK 4 ***(contd.)*** **i01893138**

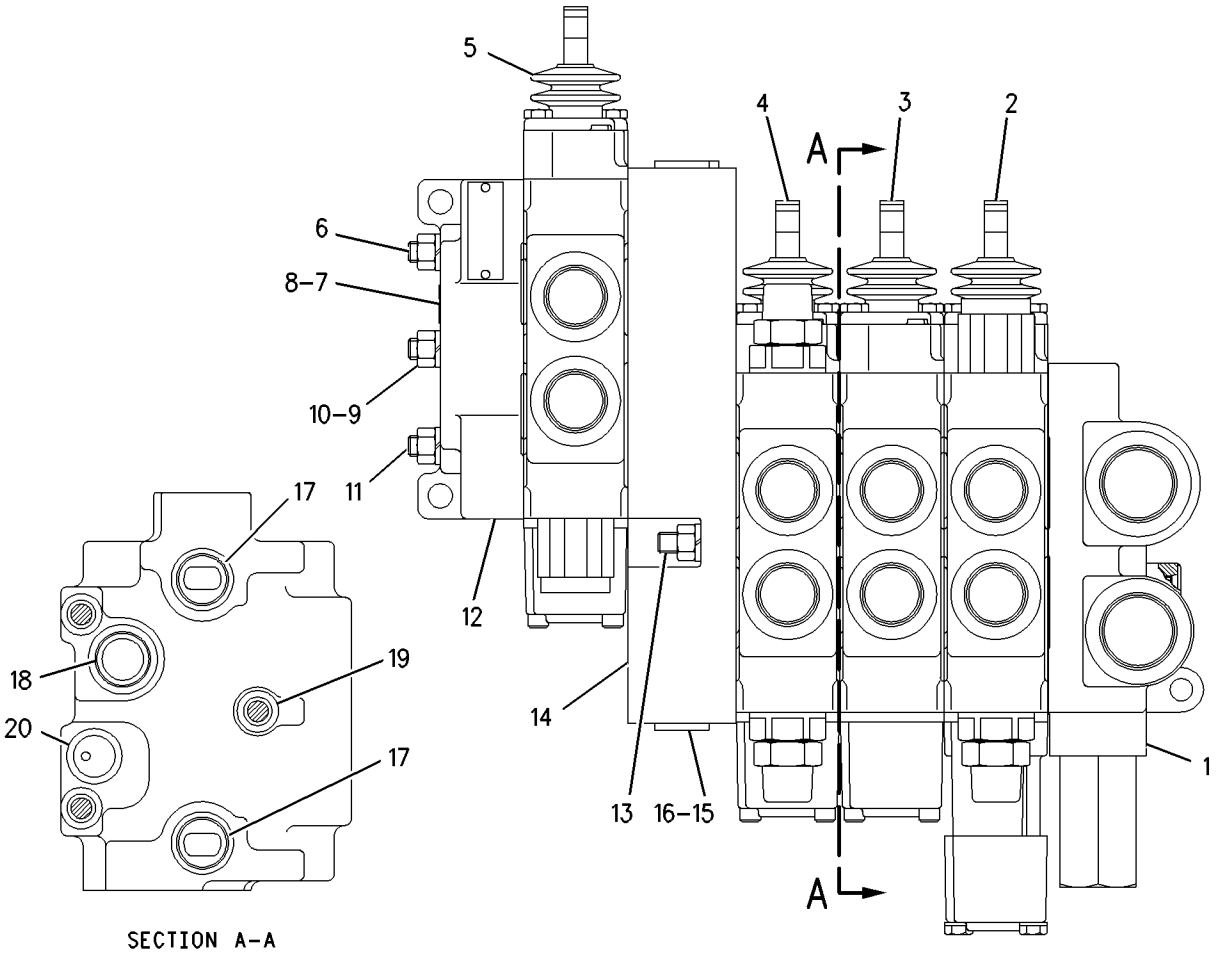

GRAPHIC #1 **<END>** g00941686

6E-4952 VALVE GP-CONTROL–RIPPER

S/N: CCK1-UP
PART OF 209-6764 VALVE GP-BANK 4
AN ATTACHMENT

SMCS-5051 **i01883597**

NOTE	REF NO	GRAPHIC REF	PART NUMBER	QTY	PART NAME 1 2 3 4 5 6 (PRODUCT LEVEL)	SEE PAGE
	1	1	**4T-4524**	1	GUARD-DUST	
	2	1	**031-0214**	2	BOLT-LOCKING (1/4-20X0.5 IN)	
	3	1	**1U-2744**	1	VALVE GP-CHECK (CONTROL VALVE)	
		1	**4K-1388**	1	SEAL-O-RING	
		1	**3D-2824**	1	SEAL-O-RING	
	3A	1	**4T-7795**	1	RING-BACKUP	
		1	**5K-9090**	1	SEAL-O-RING	
	4	1	**4T-4516**	1	SPRING	
	5	1	**031-5085**	1	BOLT-LOCKING (1/4-20X1.00 IN)	
	6	1	**167-6768**	1	HOUSING	
	7	1	**4T-4521**	2	RETAINER	
	8	1	**4T-4533**	1	SPACER (7.1X17.3X1.5MM THK)	
	9	1	**195-2139**	2	SEAL-O-RING	
	10	1	**4T-4534**	1	SPRING (OUTER)	
	11	1	**9T-3729**	1	SPRING (INNER)	
	12	1	**2M-9780**	1	SEAL-O-RING	
	13	1	**9S-8006**	1	PLUG	
	14	1	**4T-4520**	1	FILTER (CONTROL VALVE)	
	15	1	**4T-4528**	1	RETAINER	
	16	1	**126-5476**	1	SEAT AS-SHUTTLE	
		1	**4T-7807**	1	RING-BACKUP	
		1	**8T-2360**	1	SEAL-O-RING	
		1	**7J-0204**	1	SEAL-O-RING	
	17	1	**126-5796**	1	HOUSING GP (CONTROL VALVE)	
		1	**8T-2361**	1	SEAL-O-RING	
		1	**126-5984**	1	RING-BACKUP	
		1	**126-5985**	1	RING-BACKUP	
		1	**3J-7354**	1	SEAL-O-RING	
		1	**1P-7363**	1	SEAL-O-RING	
	18	1	**8H-0707**	2	BOLT (1/4-20X1 IN)	
	19	1	**5B-9318**	1	BALL	

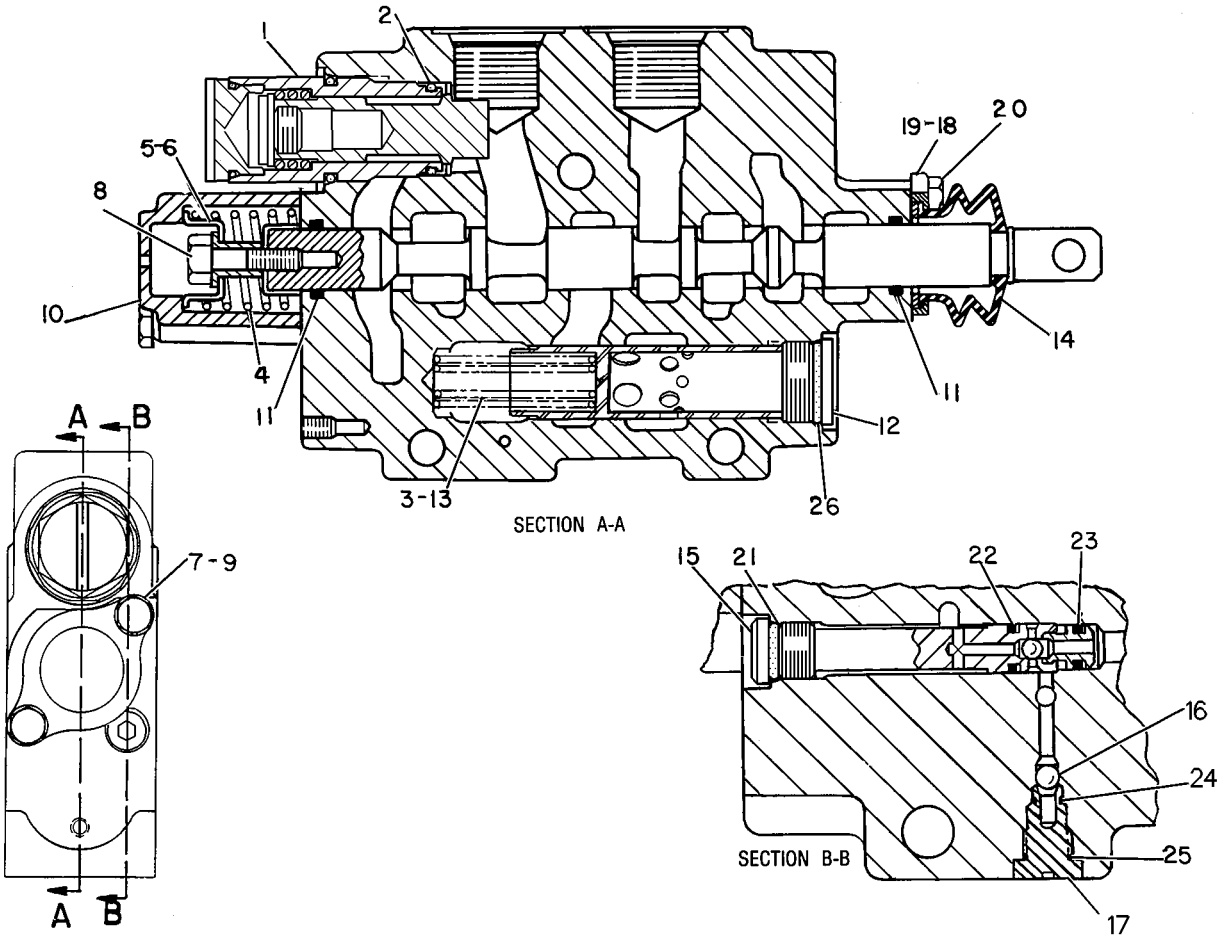

GRAPHIC #1 **<END>** g00232844

HYDRAULIC SYSTEM

6E-4953 VALVE GP-CONTROL–TILT

S/N: CCK1-UP

PART OF 6E-5083 VALVE GP-BANK 2, 209-6765 VALVE GP-BANK 3, 209-6764 VALVE GP-BANK 4
ALSO AN ATTACHMENT

SMCS-5051 **i01883605**

NOTE	REF NO	GRAPHIC REF	PART NUMBER	QTY	PART NAME 1 2 3 4 5 6 (PRODUCT LEVEL)	SEE PAGE
	1	1	**4T-4524**	1	GUARD-DUST	
	2	1	**031-0214**	2	BOLT-LOCKING (1/4-20X0.5 IN)	
	3	1	**1U-2744**	1	VALVE GP-CHECK (CONTROL VALVE)	
		1	**5K-9090**	1	SEAL-O-RING	
		1	**4T-7795**	1	RING-BACKUP	
		1	**4K-1388**	1	SEAL-O-RING	
		1	**3D-2824**	1	SEAL-O-RING	
	4	1	**9T-0704**	1	VALVE GP-RELIEF (CONTROL VALVE)	
		1	**6E-0358**	1	RING-BACKUP	
		1	**4K-1388**	1	SEAL-O-RING	
		1	**8C-3088**	1	SEAL-O-RING	
	5	1	**4T-4513**	1	SPRING	
	6	1	**100-3567**	1	HOUSING-DETENT	
	7	1	**100-3566**	1	PISTON-DETENT	
	8	1	**4B-9782**	1	BALL	
	9	1	**4T-4532**	1	HOUSING	
	10	1	**144-4277**	1	SHAFT AS-DETENT	
	11	1	**100-3564**	1	SPRING	
	12	1	**4T-4521**	2	RETAINER	
	13	1	**100-3563**	1	SPACER	
	14	1	**8F-0212**	1	SEAL-O-RING	
	15	1	**195-2139**	2	SEAL-O-RING	
	16	1	**4T-4534**	1	SPRING (OUTER)	
	17	1	**9T-3729**	1	SPRING (INNER)	
	18	1	**2M-9780**	1	SEAL-O-RING	
	19	1	**9S-8006**	1	PLUG	
	20	1	**4T-4520**	1	FILTER (CONTROL VALVE)	
	21	1	**4T-4528**	1	RETAINER	
	22	1	**126-5476**	1	SEAT AS-SHUTTLE	
		1	**4T-7807**	1	RING-BACKUP	
		1	**8T-2360**	1	SEAL-O-RING	
		1	**7J-0204**	1	SEAL-O-RING	
	23	1	**126-5796**	1	HOUSING GP (CONTROL VALVE)	
		1	**8T-2361**	1	SEAL-O-RING	
		1	**1P-7363**	1	SEAL-O-RING	
		1	**3J-7354**	1	SEAL-O-RING	
		1	**126-5984**	1	RING-BACKUP	
		1	**126-5985**	1	RING-BACKUP	
	24	1	**5B-9318**	7	BALL	
	25	1	**8S-4710**	2	BOLT (1/4-20X4 IN)	
	26	1	**5P-0537**	2	WASHER-HARD (7.2X14.5X2MM THK)	
	27	1	**128-2776**	1	GASKET	

6E-4953 **VALVE GP-CONTROL** *(contd.)* **i01883605**

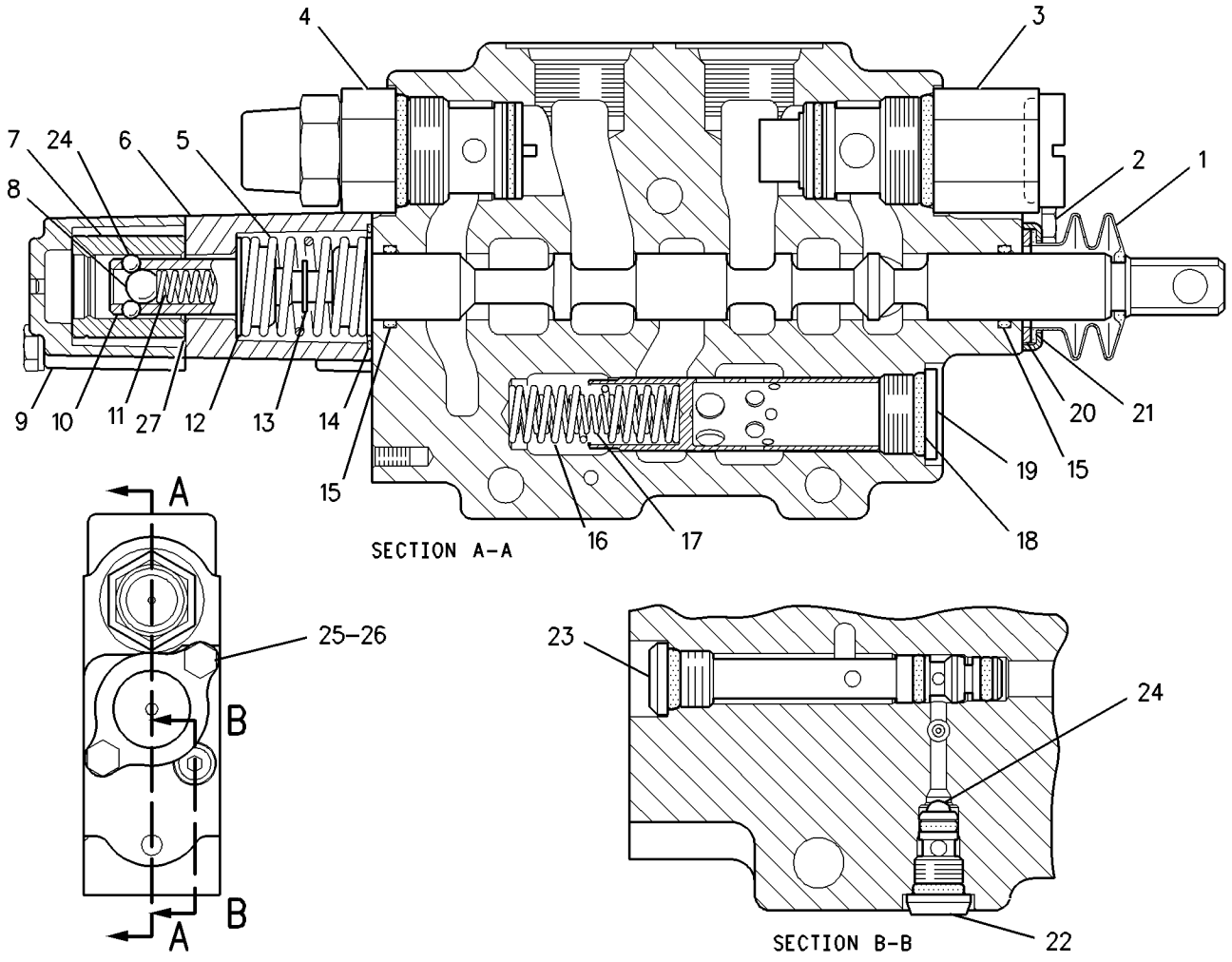

GRAPHIC #1 **<END>** g00938296

6E-4954 VALVE GP-CONTROL–ANGLE

S/N: CCK1-UP

PART OF 209-6765 VALVE GP-BANK 3, 209-6764 VALVE GP-BANK 4

ALSO AN ATTACHMENT

SMCS-5051 **i01883622**

NOTE	REF NO	GRAPHIC REF	PART NUMBER	QTY	PART NAME 1 2 3 4 5 6 (PRODUCT LEVEL)	SEE PAGE
	1	1	**8H-0707**	2	BOLT (1/4-20X1 IN)	
	2	1	**5B-9318**	1	BALL	
	3	1	**167-6768**	1	HOUSING	
	4	1	**031-5085**	1	BOLT-LOCKING (1/4-20X1.00 IN)	
	5	1	**9T-0874**	1	SPRING-SPOOL	
	6	1	**4T-4533**	1	SPACER (7.1X17.3X1.5MM THK)	
	7	1	**4T-4534**	1	SPRING (OUTER)	
	8	1	**4T-4528**	1	RETAINER	
	9	1	**4T-4520**	1	FILTER (CONTROL VALVE)	
Y	10	1	**6E-0772**	2	VALVE GP-RELIEF (CONTROL VALVE)	417
	11	1	**031-0214**	2	BOLT-LOCKING (1/4-20X0.5 IN)	
	12	1	**4T-4524**	1	GUARD-DUST	
	13	1	**9S-8006**	1	PLUG	
	14	1	**2M-9780**	1	SEAL-O-RING	
	15	1	**9T-3729**	1	SPRING (INNER)	
	16	1	**195-2139**	2	SEAL-O-RING	
	17	1	**4T-4521**	2	RETAINER	
	18	1	**126-5796**	1	HOUSING GP (CONTROL VALVE)	
	19	1	**8T-2361**	1	SEAL-O-RING	
	20	1	**3J-7354**	1	SEAL-O-RING	
	21	1	**126-5985**	1	RING-BACKUP	
	22	1	**1P-7363**	1	SEAL-O-RING	
	23	1	**126-5984**	1	RING-BACKUP	
	24	1	**126-5476**	1	SEAT AS-SHUTTLE	
	25	1	**8T-2360**	1	SEAL-O-RING	
	26	1	**7J-0204**	1	SEAL-O-RING	
	27	1	**4T-7807**	1	RING-BACKUP	

Y-SEPARATE ILLUSTRATION

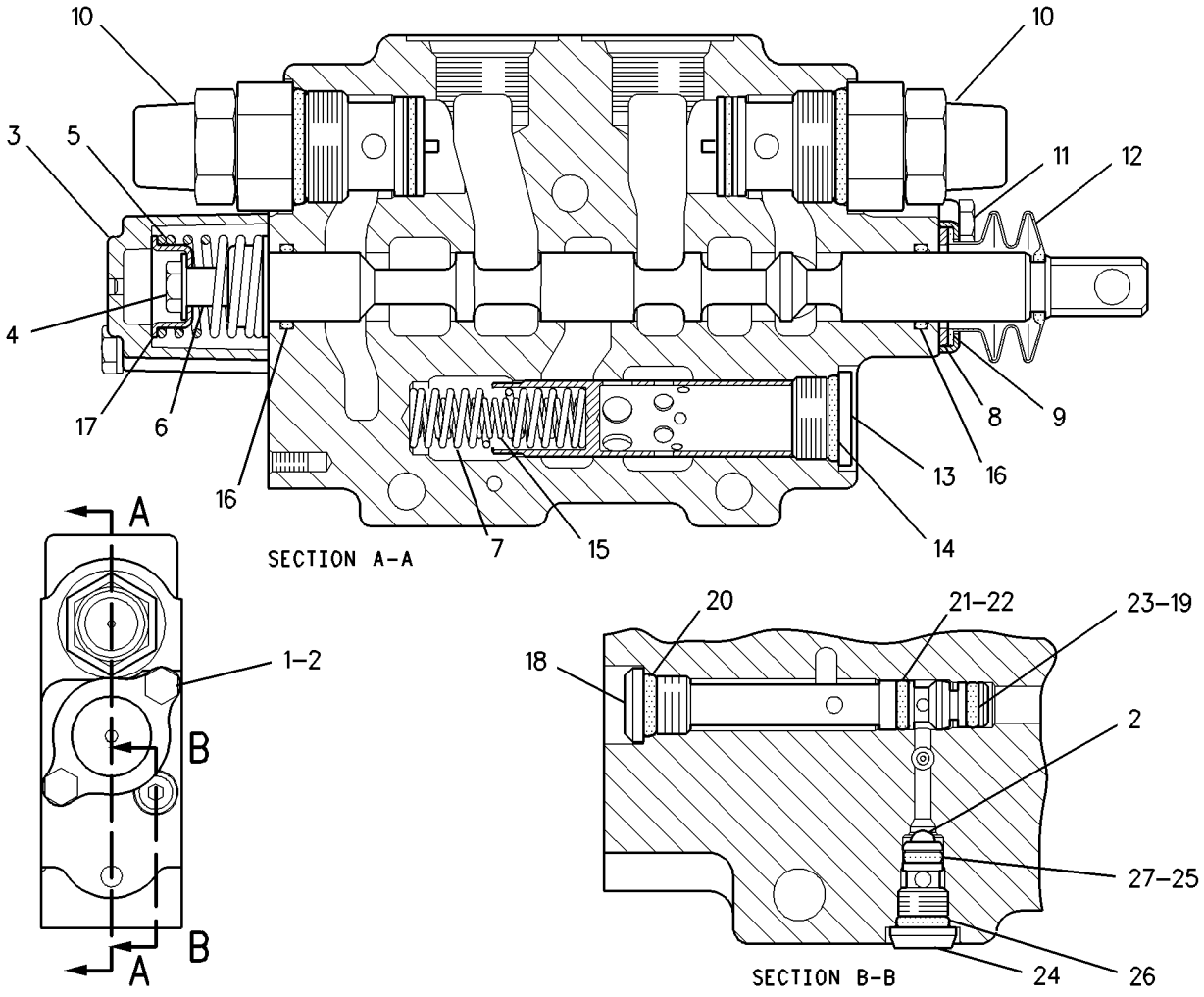

GRAPHIC #1 **<END>** g00782679

HYDRAULIC SYSTEM

6E-5953 VALVE GP-CONTROL—BLADE LIFT

S/N: CCK1-UP
PART OF 6E-5083 VALVE GP-BANK 2
AN ATTACHMENT

SMCS-5051 **i01883637**

NOTE	REF NO	GRAPHIC REF	PART NUMBER	QTY	PART NAME 1 2 3 4 5 6 (PRODUCT LEVEL)	SEE PAGE
	1	1	**4T-4524**	1	GUARD-DUST	
	2	1	**031-0214**	2	BOLT-LOCKING (1/4-20X0.5 IN)	
	3	1	**1U-2744**	1	VALVE GP-CHECK (CONTROL VALVE)	
		1	**5K-9090**	1	SEAL-O-RING	
		1	**4T-7795**	1	RING-BACKUP	
		1	**4K-1388**	1	SEAL-O-RING	
		1	**3D-2824**	1	SEAL-O-RING	
	4	1	**9T-0704**	1	VALVE GP-RELIEF (CONTROL VALVE)	
		1	**6E-0358**	1	RING-BACKUP	
		1	**4K-1388**	1	SEAL-O-RING	
		1	**8C-3088**	1	SEAL-O-RING	
	5	1	**4T-4513**	1	SPRING	
	6	1	**100-3567**	1	HOUSING-DETENT	
	7	1	**100-3566**	1	PISTON-DETENT	
	8	1	**4B-9782**	1	BALL	
	9	1	**4T-4532**	1	HOUSING	
	10	1	**144-4277**	1	SHAFT AS-DETENT	
	11	1	**100-3564**	1	SPRING	
	12	1	**4T-4521**	2	RETAINER	
	13	1	**100-3563**	1	SPACER	
	14	1	**8F-0212**	1	SEAL-O-RING	
	15	1	**195-2139**	2	SEAL-O-RING	
	16	1	**4T-4534**	1	SPRING (OUTER)	
	17	1	**9T-3729**	1	SPRING (INNER)	
	18	1	**2M-9780**	1	SEAL-O-RING	
	19	1	**9S-8006**	1	PLUG	
	20	1	**4T-4520**	1	FILTER (CONTROL VALVE)	
	21	1	**4T-4528**	1	RETAINER	
	22	1	**126-5476**	1	SEAT AS-SHUTTLE	
		1	**4T-7807**	1	RING-BACKUP	
		1	**8T-2360**	1	SEAL-O-RING	
		1	**7J-0204**	1	SEAL-O-RING	
	23	1	**126-5796**	1	HOUSING GP (CONTROL VALVE)	
		1	**8T-2361**	1	SEAL-O-RING	
		1	**1P-7363**	1	SEAL-O-RING	
		1	**3J-7354**	1	SEAL-O-RING	
		1	**126-5984**	1	RING-BACKUP	
		1	**126-5985**	1	RING-BACKUP	
	24	1	**5B-9318**	7	BALL	
	25	1	**8S-4710**	2	BOLT (1/4-20X4 IN)	
	26	1	**5P-0537**	2	WASHER-HARD (7.2X14.5X2MM THK)	
	27	1	**128-2776**	1	GASKET	

6E-5953 **VALVE GP-CONTROL** ***(contd.)*** **i01883637**

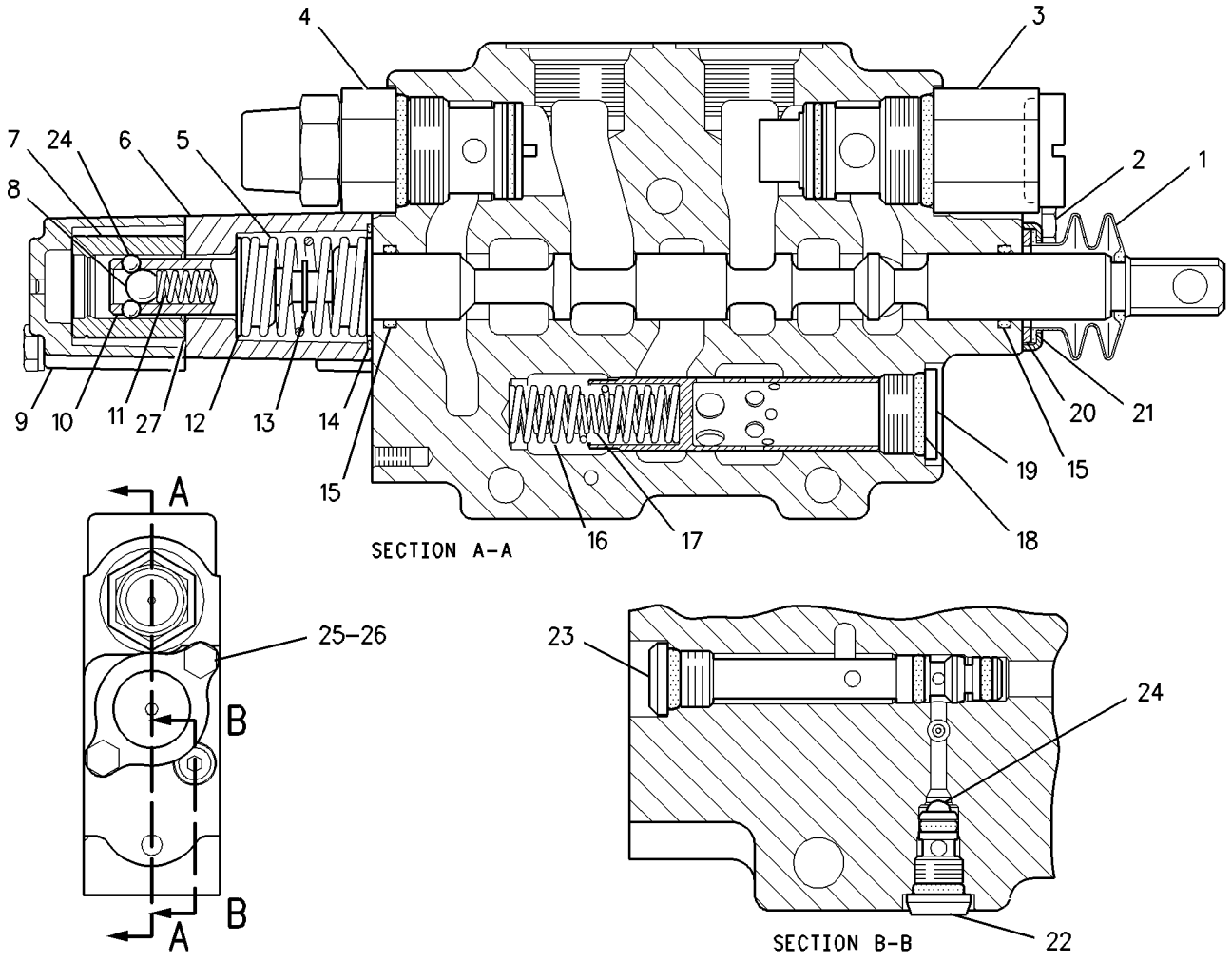

GRAPHIC #1 **<END>** g00938296

HYDRAULIC SYSTEM

209-6761 VALVE GP-CONTROL—BLADE LIFT

S/N: CCK1-UP

PART OF 209-6765 VALVE GP-BANK 3

SMCS-5051 **i01883674**

NOTE	REF NO	GRAPHIC REF	PART NUMBER	QTY	PART NAME 1 2 3 4 5 6 (PRODUCT LEVEL)	SEE PAGE
	1	1	**4T-4524**	1	GUARD-DUST	
	2	1	**031-0214**	2	BOLT-LOCKING (1/4-20X0.5 IN)	
	3	1	**1U-2744**	1	VALVE GP-CHECK (CONTROL VALVE)	
		1	**3D-2824**	1	SEAL-O-RING	
		1	**4K-1388**	1	SEAL-O-RING	
		1	**5K-9090**	1	SEAL-O-RING	
	4	1	**5K-9090**	1	SEAL-O-RING	
	5	1	**9T-4518**	1	RING-BACKUP	
	6	1	**4K-1388**	1	SEAL-O-RING	
	7	1	**4T-4531**	1	PLUG	
	8	1	**195-2139**	2	SEAL-O-RING	
	9	1	**4T-4513**	1	SPRING	
	10	1	**100-3567**	1	HOUSING-DETENT	
	11	1	**100-3566**	1	PISTON-DETENT	
	12	1	**4B-9782**	1	BALL	
	13	1	**4T-4532**	1	HOUSING	
	14	1	**8S-4710**	2	BOLT (1/4-20X4 IN)	
	15	1	**5P-0537**	2	WASHER-HARD (7.2X14.5X2MM THK)	
	16	1	**100-3564**	1	SPRING	
	17	1	**4T-4521**	2	RETAINER	
	18	1	**100-3563**	1	SPACER	
	19	1	**8F-0212**	1	SEAL-O-RING	
	20	1	**197-2709**	1	SPRING	
	21	1	**128-2776**	1	GASKET	
	22	1	**2M-9780**	1	SEAL-O-RING	
	23	1	**9S-8006**	1	PLUG	
	24	1	**4T-4520**	1	FILTER (CONTROL VALVE)	
	25	1	**4T-4528**	1	RETAINER	
	26	1	**126-5796**	1	HOUSING GP (CONTROL VALVE)	
		1	**1P-7363**	1	SEAL-O-RING	
		1	**3J-7354**	1	SEAL-O-RING	
		1	**8T-2361**	1	SEAL-O-RING	
		1	**126-5984**	1	RING-BACKUP	
		1	**126-5985**	1	RING-BACKUP	
	27	1	**126-5476**	1	SEAT AS-SHUTTLE	
		1	**4T-7807**	1	RING-BACKUP	
		1	**7J-0204**	1	SEAL-O-RING	
		1	**8T-2360**	1	SEAL-O-RING	
	28	1	**5B-9318**	7	BALL	
	29	1	**144-4277**	1	SHAFT AS-DETENT	

209-6761 VALVE GP-CONTROL *(contd.)* i01883674

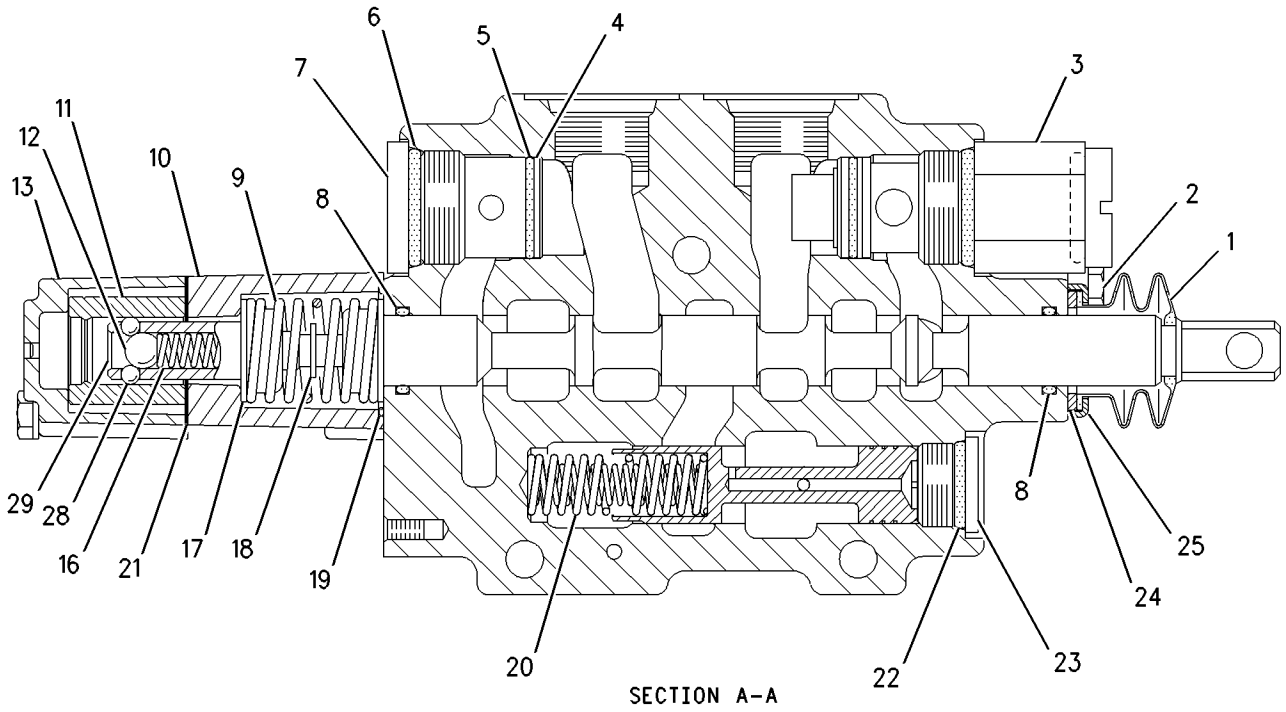

SECTION A-A

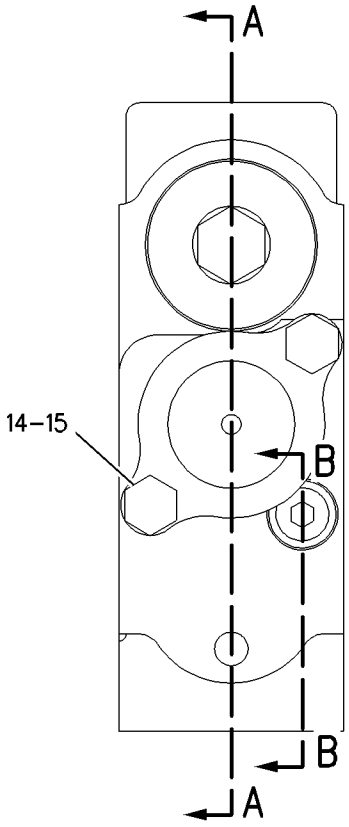

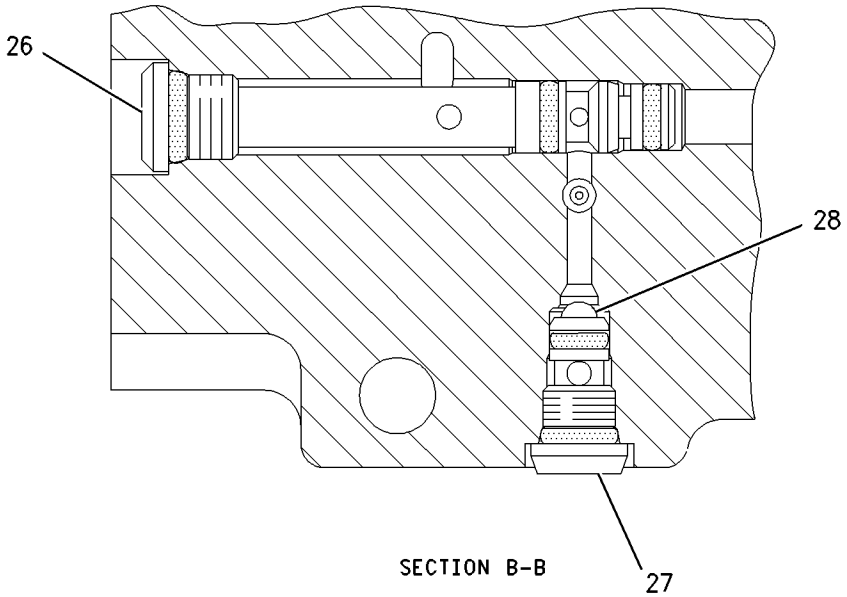

SECTION B-B

GRAPHIC #1 **<END>** g00875189

HYDRAULIC SYSTEM

209-6762 VALVE GP-CONTROL–LIFT

S/N: CCK1-UP
PART OF 209-6764 VALVE GP-BANK 4
AN ATTACHMENT

SMCS-5051 **i01883687**

NOTE	REF NO	GRAPHIC REF	PART NUMBER	QTY	PART NAME 1 2 3 4 5 6 (PRODUCT LEVEL)	SEE PAGE
	1	1	**4T-4524**	1	GUARD-DUST	
	2	1	**031-0214**	2	BOLT-LOCKING (1/4-20X0.5 IN)	
	3	1	**1U-2744**	1	VALVE GP-CHECK (CONTROL VALVE)	
	3A	1	**3D-2824**	1	SEAL-O-RING	
	3B	1	**4K-1388**	1	SEAL-O-RING	
	3C	1	**9T-4518**	1	RING-BACKUP	
	3D	1	**5K-9090**	1	SEAL-O-RING	
	4	1	**132-5303**	1	VALVE GP-RELIEF (CONTROL VALVE)	
	4A	1	**6E-0358**	1	RING-BACKUP	
	4B	1	**4K-1388**	1	SEAL-O-RING	
	4C	1	**5K-9090**	1	SEAL-O-RING	
	5	1	**4T-4513**	1	SPRING	
	6	1	**100-3567**	1	HOUSING-DETENT	
	7	1	**100-3566**	1	PISTON-DETENT	
	8	1	**4B-9782**	1	BALL	
	9	1	**167-6768**	1	HOUSING	
	10	1	**144-4277**	1	SHAFT AS-DETENT	
	11	1	**100-3564**	1	SPRING	
	12	1	**4T-4521**	2	RETAINER	
	13	1	**100-3563**	1	SPACER	
	14	1	**8F-0212**	1	SEAL-O-RING	
	15	1	**195-2139**	2	SEAL-O-RING	
	16	1	**197-2709**	1	SPRING	
	17	1	**128-2776**	1	GASKET	
	18	1	**2M-9780**	1	SEAL-O-RING	
	19	1	**9S-8006**	1	PLUG	
	20	1	**4T-4520**	1	FILTER (CONTROL VALVE)	
	21	1	**4T-4528**	1	RETAINER	
	22	1	**126-5476**	1	SEAT AS-SHUTTLE	
	22A	1	**4T-7807**	1	RING-BACKUP	
	22B	1	**7J-0204**	1	SEAL-O-RING	
	22C	1	**8T-2360**	1	SEAL-O-RING	
	23	1	**126-5796**	1	HOUSING GP (CONTROL VALVE)	
	23A	1	**1P-7363**	1	SEAL-O-RING	
	23B	1	**3J-7354**	1	SEAL-O-RING	
	23C	1	**8T-2361**	1	SEAL-O-RING	
	23D	1	**126-5984**	1	RING-BACKUP	
	23E	1	**126-5985**	1	RING-BACKUP	
	24	1	**5B-9318**	7	BALL	
	25	1	**8H-0707**	2	BOLT (1/4-20X1 IN)	
	26	1	**5P-0537**	2	WASHER-HARD (7.2X14.5X2MM THK)	

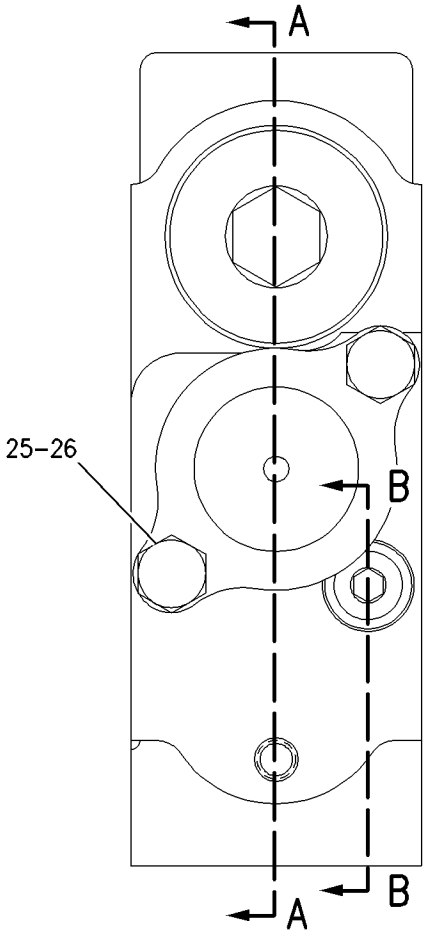

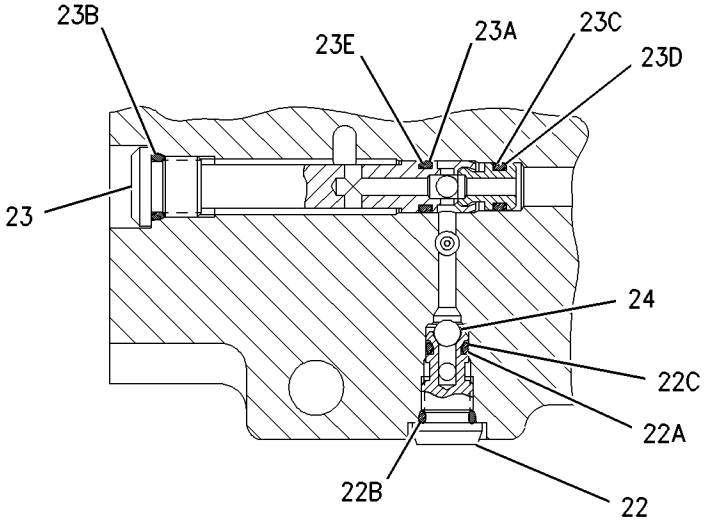

SECTION B-B

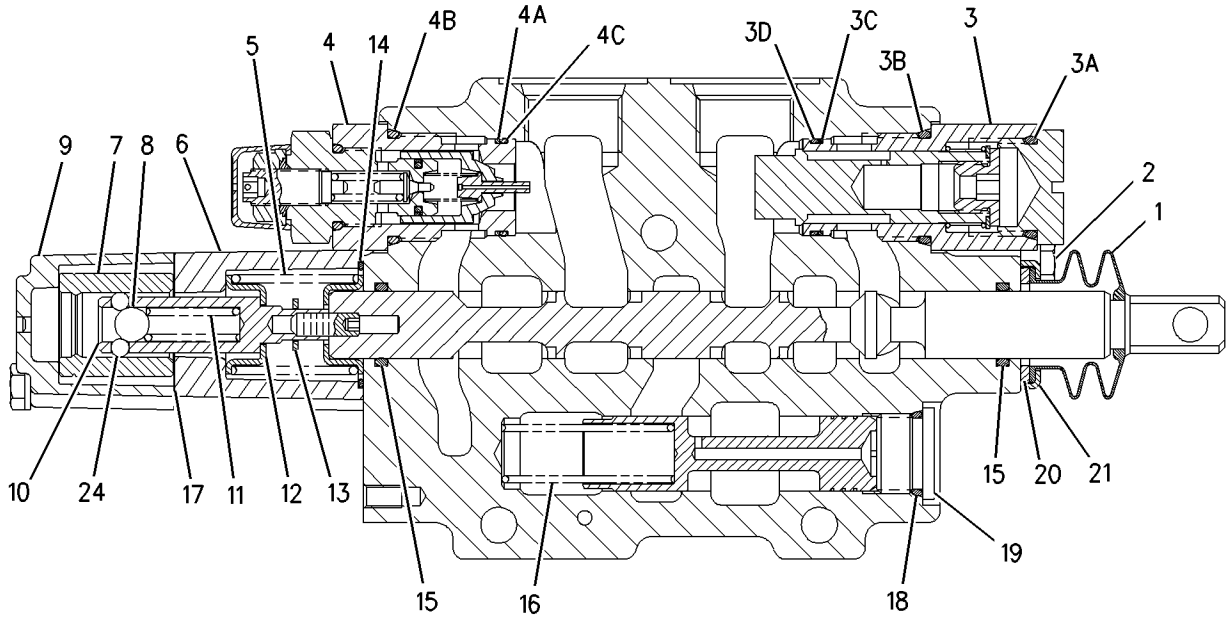

SECTION A-A

GRAPHIC #1 **<END>** g00912262

168-2210 VALVE GP-PRESS & FLOW CMPNSTR—HYDRAULIC PUMP

S/N: CCK1-UP

PART OF 195-9097 PUMP GP-PISTON

SMCS-5086 **i01828585**

NOTE	REF NO	GRAPHIC REF	PART NUMBER	QTY	PART NAME 1 2 3 4 5 6 (PRODUCT LEVEL)	SEE PAGE
	1	1	**6E-6527**	2	PLUG	
	2	1	**6E-6528**	6	SEAL	
	3	1	**9S-8002**	1	PLUG	
	4	1	**9X-7680**	3	SEAL-O-RING	
	5	1	**5P-9262**	1	SEAL-O-RING	
	6	1	**105-2145**	1	VALVE-ORIFICE	
	7	1	**6E-3268**	1	RETAINER-SPRING	
	8	1	**6E-3269**	1	RETAINER-SPRING	
M	9	1	**8T-8442**	4	BOLT-SOCKET HEAD (M6X1X30MM)	
	10	1	**6E-3273**	1	SEAT	
	11	1	**6V-8352**	1	SEAL-O-RING	
	12	1	**6E-6536**	1	PLUG	
M	13	1	**6E-6537**	2	SCREW-ADJUSTMENT (M8X1X28MM)	
M	14	1	**6E-6538**	2	NUT-ADJUSTMENT (M8X1 THD)	
M	15	1	**6E-6539**	2	NUT-CAP (M8X1 THD)	
	16	1	**6E-6540**	1	PLUG	
	17	1	**033-6043**	1	SEAL-O-RING	
	18	1	**6E-3272**	1	SEAT	
	19	1	**6E-3274**	1	SPRING	
	20	1	**6E-3275**	1	SPRING	
	21	1	**3J-7354**	1	SEAL-O-RING	
	22	1	**201-0780**	1	ORIFICE	
	23	1	**193-1036**	1	SPRING	
	24	1	**6E-3276**	1	SPRING	
Z	25	1		1	STEM	
Z	26	1		1	STEM	
Z	27	1		1	BODY	

M-METRIC PART
Z-NOT SERVICED SEPARATELY

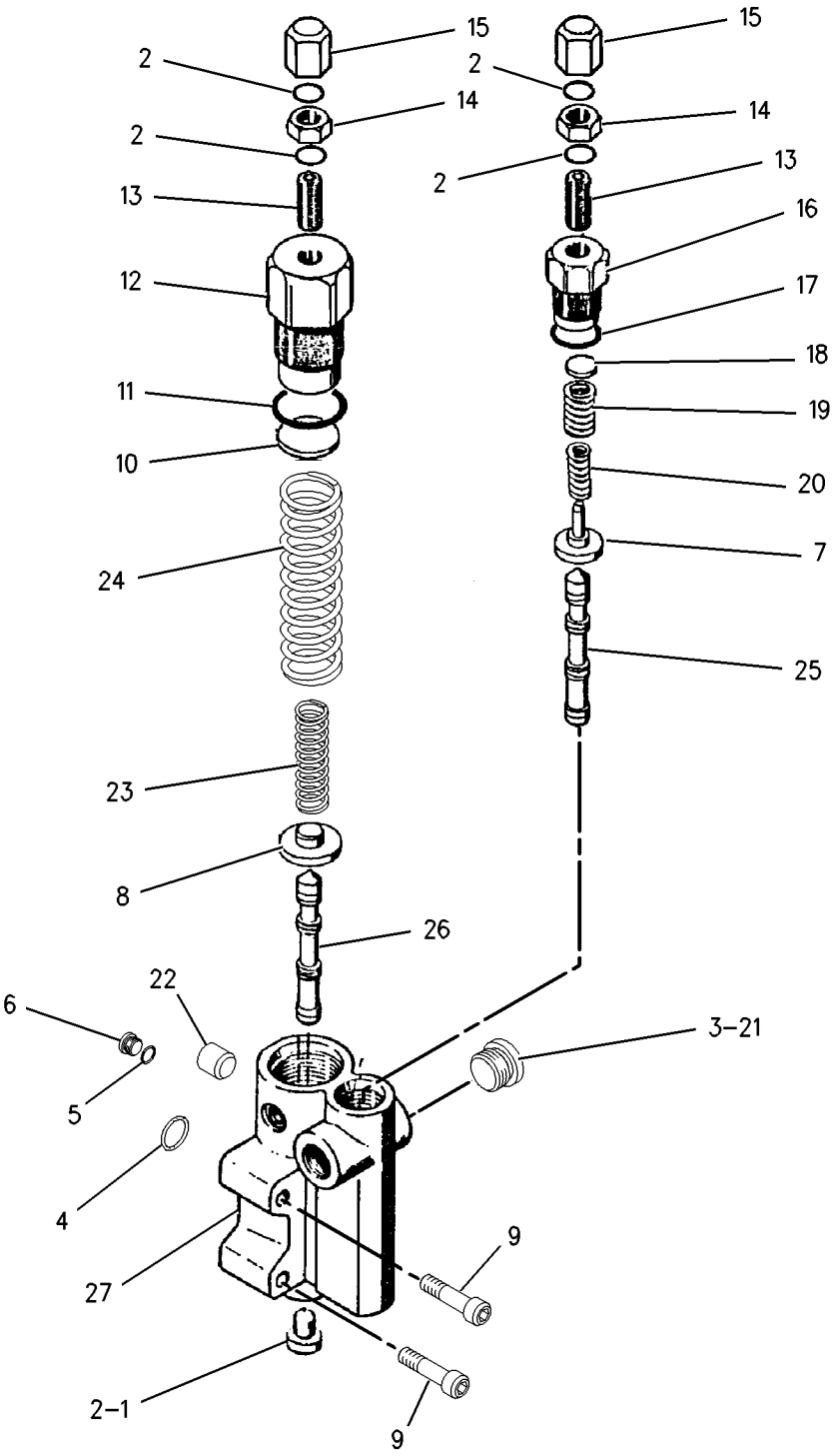

GRAPHIC #1 **<END>** g00918518

HYDRAULIC SYSTEM

6E-0772 VALVE GP-RELIEF–ANGLE CONTROL VALVE

S/N: CCK1-UP
PART OF 6E-4954 VALVE GP-CONTROL
ALSO AN ATTACHMENT

SMCS-5069, 5117 **i01883691**

NOTE	REF NO	GRAPHIC REF	PART NUMBER	QTY	PART NAME 1 2 3 4 5 6 (PRODUCT LEVEL)	SEE PAGE
	1	1	**4K-1388**	1	SEAL-O-RING	
	2	1	**6E-0358**	1	RING-BACKUP	
	3	1	**5K-9090**	1	SEAL-O-RING	

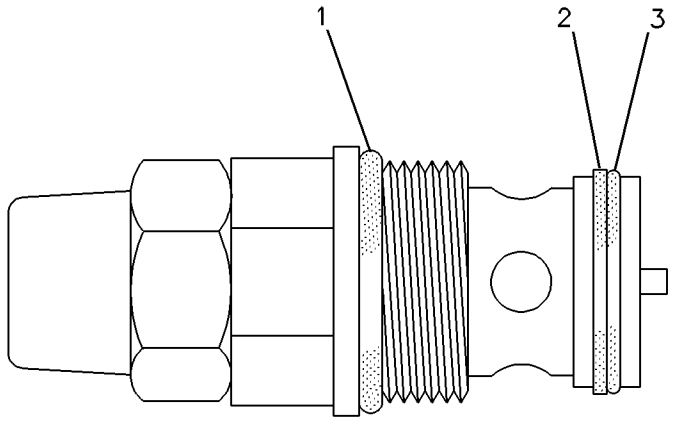

GRAPHIC #1 **<END>** g00206977

9T-6695 VALVE GP-RELIEF–IMPLEMENT CONTROL VALVE

S/N: CCK1-UP

PART OF 6E-5083 VALVE GP-BANK 2, 209-6765 VALVE GP-BANK 3, 209-6764 VALVE GP-BANK 4

ALSO AN ATTACHMENT

SMCS-5069, 5117 **i01109864**

NOTE	REF NO	GRAPHIC REF	PART NUMBER	QTY	PART NAME 1 2 3 4 5 6 (PRODUCT LEVEL)	SEE PAGE
	1	1	**9T-0657**	1	PLUG	
	2	1	**4K-1388**	1	SEAL-O-RING (26.59MM ID)	
	3	1	**9T-6694**	1	SPRING	
	4	1	**7M-1201**	1	DOWEL	

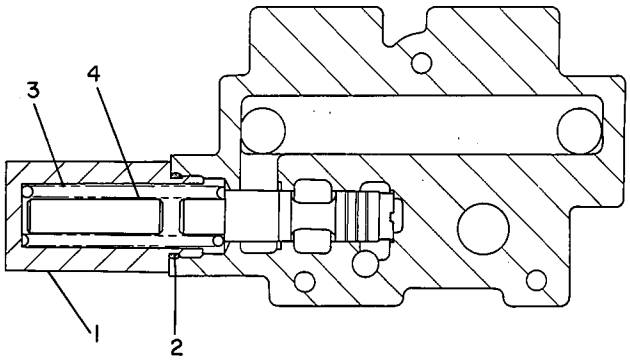

GRAPHIC #1 **<END>** g00195421

223-6303 BULLDOZER AR—POWER ANGLE & TILT WITH ADJUSTABLE PITCH

S/N: B6X1-UP
AN ATTACHMENT

SMCS-6050 **i01892815**

NOTE	PART NUMBER	QTY	PART NAME 1 2 3 4 5 6 (PRODUCT LEVEL)	SEE PAGE
Y	*110-5230*	1	BLADE GP-ANGLING	431
Y	*110-5226*	1	C-FRAME GP-POWER ANGLING	421
Y	**228-0320**	2	CYLINDER GP-ANGLING	346
Y	**110-3269**	2	CYLINDER GP-LIFT	348
Y	**160-0054**	1	CYLINDER GP-TILT	356
Y	*110-6113*	1	LINES GP-ANGLE & TILT	361
Y	*220-0897*	1	LINES GP-LIFT CYLINDER	370
Y	**190-5328**	1	LINK GP-PITCH	423
Y	*134-6775*	1	PIN GP	426
Y	**6V-5343**	1	PLATE & FILM GP	550
	107-8126	2	BEARING (SPECIAL C-FRAME)	
			(PRESSED INTO C-FRAME MOUNTING BORE IN TRACTOR MAIN FRAME PRIOR TO INSTALLATION OF C-FRAME)	
	109-0959	4	RING	

Y-SEPARATE ILLUSTRATION

<END>

206-9537 BULLDOZER AR-SEMI-UNIVERSAL

S/N: S6D1-UP
FOR USE WITH 229-2831—PAGE 359. CANNOT BE USED WITH 169-4912—PAGE 59, 223-6303—PAGE 419, 173-8641—PAGE 360
AN ATTACHMENT

SMCS-6050, 6078 **i01883718**

NOTE	PART NUMBER	QTY	PART NAME 1 2 3 4 5 6 (PRODUCT LEVEL)	SEE PAGE
Y	*115-4594*	1	BLADE GP-SEMI-UNIVERSAL	433
Y	**115-3524**	2	CYLINDER GP-LIFT	350
Y	*155-7704*	1	HOOD & GUARD GP	251
Y	*227-0756*	1	LINES GP-LIFT CYLINDER	372
Y	*115-4564*	1	LINES GP-TILT CYLINDER	386
Y	*138-7033*	1	MOUNTING GP-CYLINDER	390
Y	*115-4472*	1	PUSH ARM GP	427
Y	*142-1229*	1	TRUNNION GP-BULLDOZER	430
M	**8T-4137**	2	BOLT (M10X1.5X20MM)	
	211-8511	1	BRACKET	
	8T-4121	2	WASHER-HARD (11X21X2.5MM THK)	
	4B-4158	2	SCREW-DRIVE (3/16X0.25 IN)	
	2Y-9790	1	PLATE-SERIAL NUMBER (BULLDOZER)	
			ON BACK OF MOLDBOARD - NEAR TOP AT RH END	

M-METRIC PART
Y-SEPARATE ILLUSTRATION

<END>

206-9544 BULLDOZER AR-SEMI-UNIVERSAL–

SOUND SUPPRESSION

S/N: S6S1-UP

FOR USE WITH 229-2831–PAGE 359, 169-4912–PAGE 59. CANNOT BE USED WITH 223-6303–PAGE 419, 206-9537–PAGE 419

AN ATTACHMENT

SMCS-6050, 6078 **i01883722**

NOTE	PART NUMBER	QTY	PART NAME 1 2 3 4 5 6 (PRODUCT LEVEL)	SEE PAGE
Y	*115-4594*	1	BLADE GP-SEMI-UNIVERSAL	433
Y	**115-3524**	2	CYLINDER GP-LIFT	350
Y	*155-7804*	1	HOOD & GUARD GP	253
Y	*227-0756*	1	LINES GP-LIFT CYLINDER	372
Y	*115-4564*	1	LINES GP-TILT CYLINDER	386
Y	*138-7033*	1	MOUNTING GP-CYLINDER	390
Y	*115-4472*	1	PUSH ARM GP	427
Y	*142-1229*	1	TRUNNION GP-BULLDOZER	430
M	**8T-4137**	2	BOLT (M10X1.5X20MM)	
	211-8511	1	BRACKET	
	8T-4121	2	WASHER-HARD (11X21X2.5MM THK)	
	4B-4158	2	SCREW-DRIVE (3/16X0.25 IN)	
	2Y-9790	1	PLATE-SERIAL NUMBER (BULLDOZER)	
			ON BACK OF MOLDBOARD - NEAR TOP AT RH END	

M-METRIC PART
Y-SEPARATE ILLUSTRATION

<END>

IMPLEMENTS

110-5226 C-FRAME GP-POWER ANGLING

S/N: B6X1-UP
PART OF 223-6303 BULLDOZER AR
AN ATTACHMENT

SMCS-6063 **i01621684**

NOTE	REF NO	GRAPHIC REF	PART NUMBER	QTY	PART NAME 1 2 3 4 5 6 (PRODUCT LEVEL)	SEE PAGE
C	1	1	**200-2649**	1	FRAME AS	
		1	**8P-9770**	1	PLATE	
M		1	**9R-2640**	1	BOSS	
		1	**9R-3572**	1	BOSS (M12X20MM)	
	1A	1	**104-7423**	1	TOWER AS	
	1B	1	**203-2897**	1	TOWER AS (RH)	
	1C	1	**124-5240**	2	PLATE	
		1	**200-2650**	1	TOWER AS (LH)	
	1D	1	**145-0804**	1	SLEEVE	
	1E	1	**108-8268**	2	BRACKET	
	2	1	**089-8249**	2	SPACER (4X72X3MM THK)	
	3	1	**109-0958**	2	PIN	
B	4	1	**4Y-4905**	8	WASHER (79X175X2MM THK)	
	5	1	**104-4746**	2	DOWEL	
	6	1	**108-5794**	4	PLUG-PIPE	
	7	1	**104-7391**	1	CAP	
	8	1	**124-5741**	2	PIN	
	9	1	**8T-4123**	3	WASHER-PLATED (22X35X3.5MM THK)	
	10	1	**161-2113**	1	SPACER	
	11	1	**160-5691**	1	PIN	
	12	1	**145-0803**	1	PIN	
B	13	1	**124-5235**	6	SHIM (0.8MM THK)	
	14	1	**124-5234**	2	RETAINER	
	15	1	**105-2058**	1	BRACKET AS	
M	16	1	**7X-2465**	4	BOLT (M24X3.0X180MM)	
	17	1	**8T-1482**	4	WASHER-HARD (26X50X8MM THK)	
	18	1	**110-5217**	2	PLATE	
	19	1	**104-7498**	2	RETAINER	
	20	1	**104-7434**	1	RETAINER	
M	21	1	**7X-2562**	5	BOLT (M20X2.5X45MM)	
	22	1	**104-4817**	1	PIN	
	23	1	**8G-5747**	4	SPACER (45X50X15MM THK)	
M	24	1	**8T-4139**	6	BOLT (M12X1.75X30MM)	
M	25	1	**8T-5041**	2	BOLT (M12X1.75X120MM)	
	26	1	**8T-4223**	2	WASHER-HARD (13.5X25.5X3MM THK)	
	27	1	**124-5233**	2	PIN	

B-USE AS REQUIRED
C-CHANGE FROM PREVIOUS TYPE
M-METRIC PART

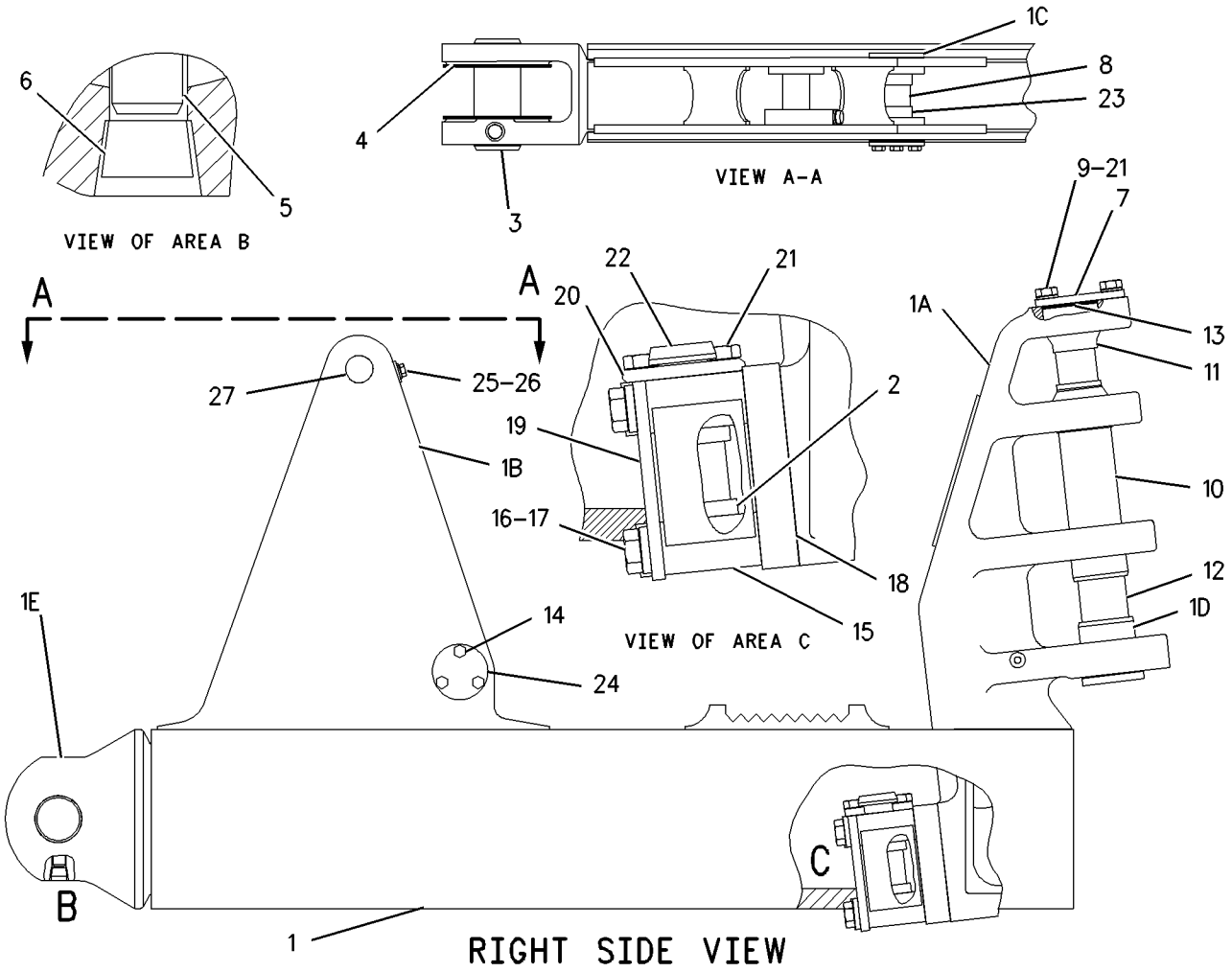

GRAPHIC #1

<END>

g00853018

190-5328 LINK GP-PITCH

S/N: B6X1-UP
PART OF 223-6303 BULLDOZER AR
AN ATTACHMENT

SMCS-6079, 6081 **i01883724**

NOTE	REF NO	GRAPHIC REF	PART NUMBER	QTY	PART NAME 1 2 3 4 5 6 (PRODUCT LEVEL)	SEE PAGE
	1	1	**3B-8489**	2	FITTING-GREASE (1/8-27 THD) (PITCH LINK)	
	2	1	**7J-1309**	2	BEARING	
	3	1	**188-3757**	1	LINK	
	4	1	**1S-3311**	2	RING-RETAINING	

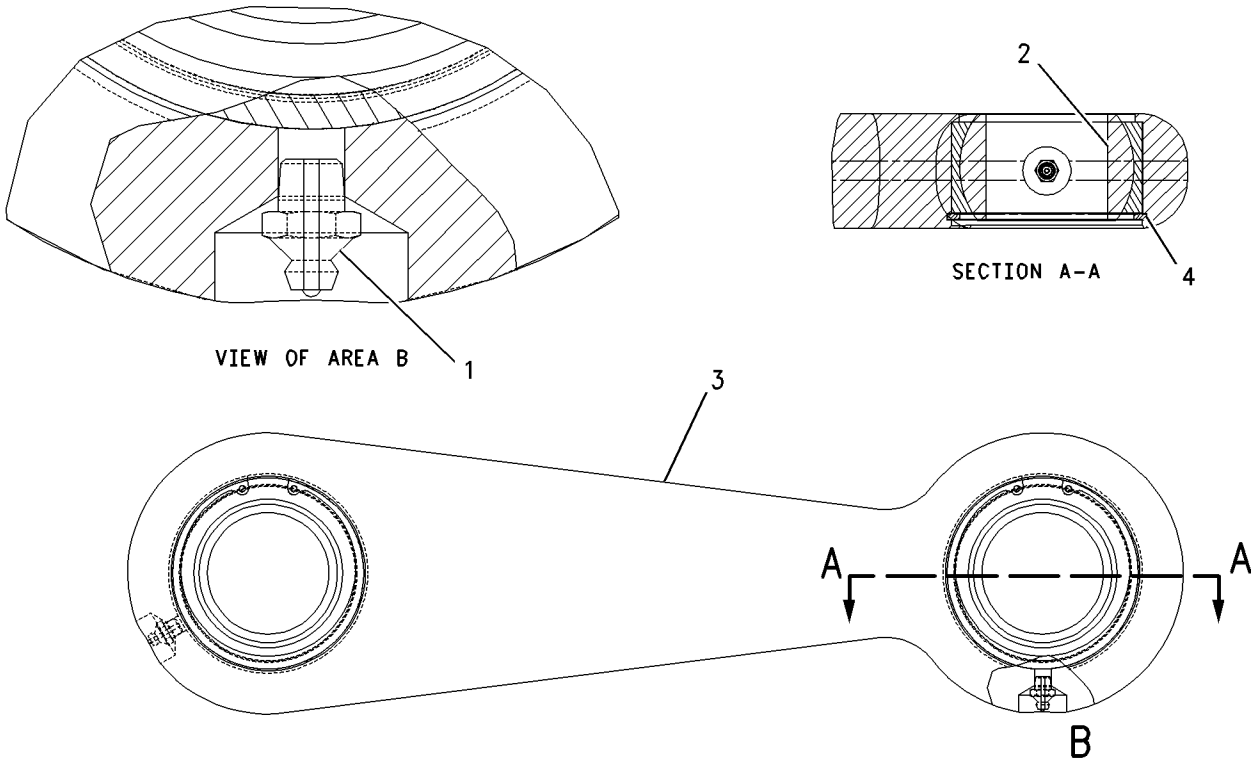

GRAPHIC #1 **<END>** g00827872

3A-8609 MOUNTING GP-RIPPER

S/N: TPP1-UP
PART OF 180-4560 RIPPER AR
AN ATTACHMENT

SMCS-6165, 6324 **i01796750**

NOTE	REF NO	GRAPHIC REF	PART NUMBER	QTY	PART NAME 1 2 3 4 5 6 (PRODUCT LEVEL)	SEE PAGE
	1	1	**1U-0063**	2	PIN	
	2	1	**3A-8613**	1	BRACKET AS-LH	
	3	1	**3A-8614**	1	BRACKET AS-RH	
B	4	1	**193-3074**	6	SPACER (52X120X5MM THK)	
B	5	1	**9N-4450**	12	SPACER (68X120X5MM THK)	
	6	1	**114-5671**	1	PLATE AS-RH	
	7	1	**114-5672**	1	PLATE AS-LH	
	8	1	**1U-0159**	2	PIN	
	9	1	**6K-8987**	2	DOWEL	
M	10	1	**6V-7687**	2	LOCKNUT (M12X1.75 THD)	
M	11	1	**6V-7744**	2	LOCKNUT (M10X1.5 THD)	
	12	1	**8T-4123**	26	WASHER-PLATED (22X35X3.5MM THK)	
M	13	1	**8T-4198**	2	BOLT (M10X1.5X100MM)	
M	14	1	**8T-5412**	2	BOLT (M12X1.75X140MM)	
M	15	1	**8T-6430**	26	BOLT (M20X2.5X50MM)	
B	16	1	**193-3075**	6	SPACER (52X121X.5MM THK)	
B	17	1	**9N-4449**	6	SPACER (68X121X1.5MM THK)	

B-USE AS REQUIRED
M-METRIC PART

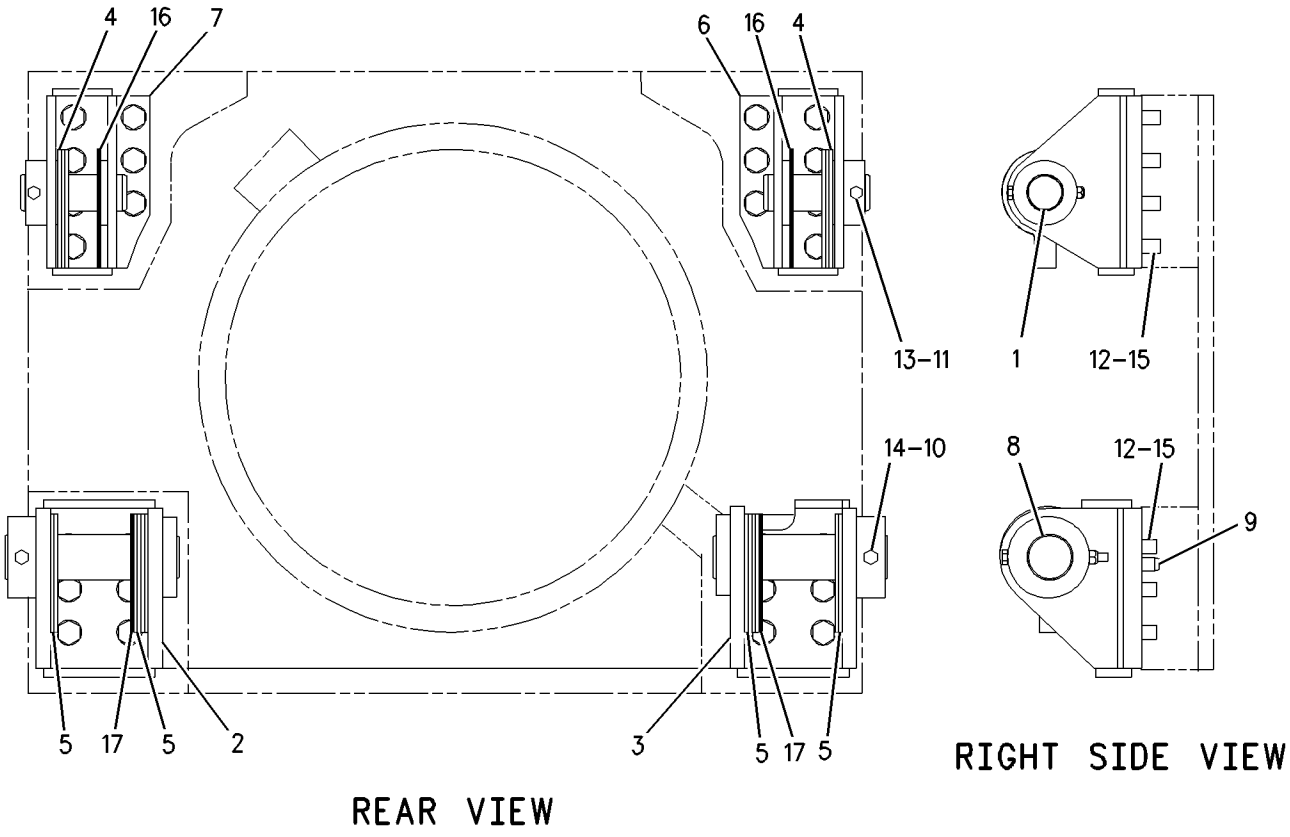

GRAPHIC #1 **<END>** g00921215

134-6775 PIN GP–DOZER

S/N: B6X1-UP
PART OF 223-6303 BULLDOZER AR
AN ATTACHMENT

SMCS-6108 **i00598343**

NOTE	REF NO	GRAPHIC REF	PART NUMBER	QTY	PART NAME 1 2 3 4 5 6 (PRODUCT LEVEL)	SEE PAGE
	1	1	**3G-8932**	2	PIN	
	2	1	**4T-0231**	2	RETAINER	
M	3	1	**8T-4956**	2	BOLT (M12X1.75X35MM)	
B	4	1	**4J-0805**	6	WASHER	
	5	1	**8T-4223**	2	WASHER-HARD (3MM THK)	

B-USE AS REQUIRED
M-METRIC PART

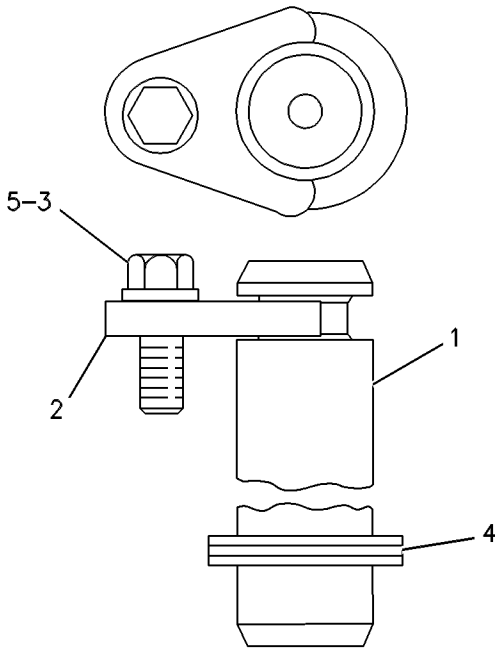

GRAPHIC #1 **<END>** g00263201

115-4472 PUSH ARM GP

S/N: S6D1-UP; S6S1-UP
PART OF 206-9537, 206-9544 BULLDOZER AR-SEMI-UNIVERSAL
AN ATTACHMENT

SMCS-6061 **i01877294**

NOTE	REF NO	GRAPHIC REF	PART NUMBER	QTY	PART NAME 1 2 3 4 5 6 (PRODUCT LEVEL)	SEE PAGE
	1	1	**8T-4123**	6	WASHER-PLATED (22X35X3.5MM THK)	
	2	1	**8T-5439**	6	WASHER (21.5X45X6MM THK)	
	3	1	**160-6306**	2	CAP-BEARING	
B	4	1	**8E-5701**	52	SHIM (.8MM THK)	
M	5	1	**8T-6381**	4	BOLT (M20X2.5X120MM)	
B	6	1	**8E-5703**	78	SHIM (0.8MM THK)	
	7	1	**8J-2880**	3	CAP-BEARING	
M	8	1	**8T-4131**	22	NUT (M20X2.5 THD)	
Y	9	1	**115-3523**	1	CYLINDER GP-TILT	354
	10	1	**3F-6185**	2	PIN (44.3MM OD)	
	11	1	**4F-0255**	2	PIN (.5 IN OD)	
M	12	1	**7X-2532**	8	BOLT (M20X2.5X130MM)	
	13	1	**124-9672**	1	BRACE AS-TILT	
B		1	**8E-5703**	14	SHIM (0.8MM THK)	
	14	1	**8E-2887**	1	YOKE	
	15	1	**4T-1520**	1	CAGE AS	
	16	1	**6J-5383**	1	BEARING	
M	17	1	**8C-8478**	4	BOLT (M20X2.5X140MM)	
M	18	1	**7X-2566**	6	BOLT (M20X2.5X110MM)	
	19	1	**115-4473**	1	ARM AS	
	20	1	**3G-6313**	1	BEARING	
	21	1	**1U-2533**	1	BAR	
	22	1	**4T-0732**	1	BRACKET	
	23	1	**9W-9165**	1	BEARING	
	24	1	**8P-9770**	1	PLATE	
	25	1	**115-4474**	1	ARM AS	
	26	1	**3G-6313**	1	BEARING	
	27	1	**1U-2533**	1	BAR	
	28	1	**4T-0780**	1	TRUNNION	
	29	1	**9W-9165**	1	BEARING	
	30	1	**8P-9770**	1	PLATE	
	31	1	**115-4522**	1	BRACKET	

B-USE AS REQUIRED
M-METRIC PART
Y-SEPARATE ILLUSTRATION

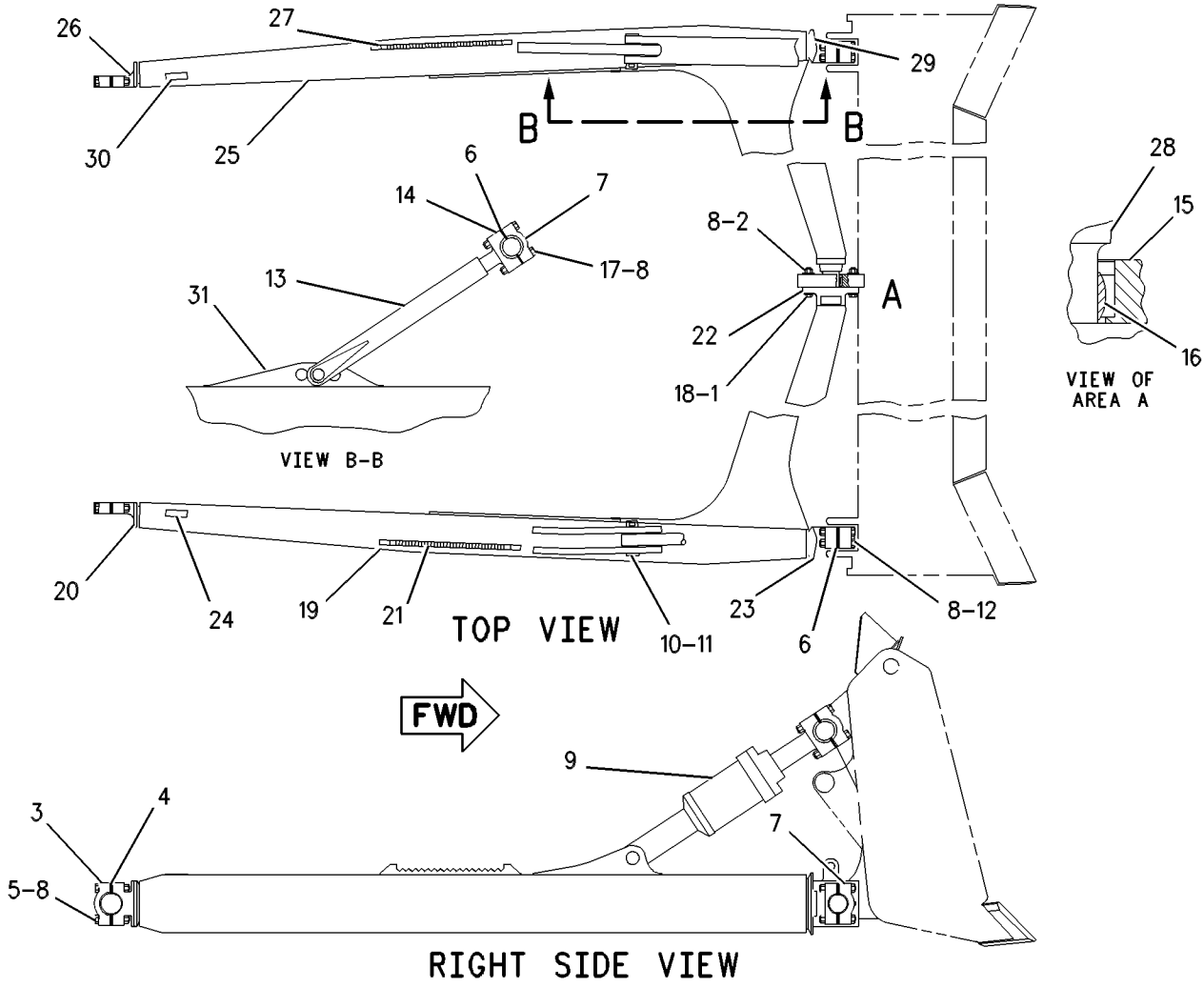

GRAPHIC #1

<END>

g00541344

180-4560 RIPPER AR

S/N: TPP1-UP

FOR USE WITH 156-9510—PAGE 359. CANNOT BE USED WITH WINCH AR, DRAWBAR MUST BE REMOVED, 107-4068—PAGE 236

AN ATTACHMENT

SMCS-6312, 6316 **i01892842**

NOTE	PART NUMBER	QTY	PART NAME 1 2 3 4 5 6 (PRODUCT LEVEL)	SEE PAGE
Y	**9T-2716**	1	CYLINDER GP-RIPPER LIFT	352
Y	*180-4561*	1	LINES GP-RIPPER	384
Y	*3A-8609*	1	MOUNTING GP-RIPPER	424
Y	**5P-1101**	1	PLATE & FILM GP	550
Y	*155-5322*	1	RIPPER GP	437

Y-SEPARATE ILLUSTRATION

<END>

142-1229 TRUNNION GP-BULLDOZER

S/N: S6D1-UP; S6S1-UP
PART OF 206-9537, 206-9544 BULLDOZER AR-SEMI-UNIVERSAL
AN ATTACHMENT

SMCS-6069 **i01877303**

NOTE	REF NO	GRAPHIC REF	PART NUMBER	QTY	PART NAME 1 2 3 4 5 6 (PRODUCT LEVEL)	SEE PAGE
	1	1	**5P-1979**	2	SEAL-O-RING	
	2	1	**9U-8909**	2	TRUNNION AS	
					(EACH INCLUDES)	
		1	**9J-2759**	1	TRUNNION	
M	3	1	**7X-2475**	20	BOLT (M16X2X130MM)	
	4	1	**8T-4122**	20	WASHER-HARD (17X32X3.5MM THK)	
M	5	1	**8T-4192**	4	BOLT (M12X1.75X25MM)	
	6	1	**8T-4223**	4	WASHER-HARD (13.5X25.5X3MM THK)	
	7	1	**143-3148**	2	COVER	

M-METRIC PART

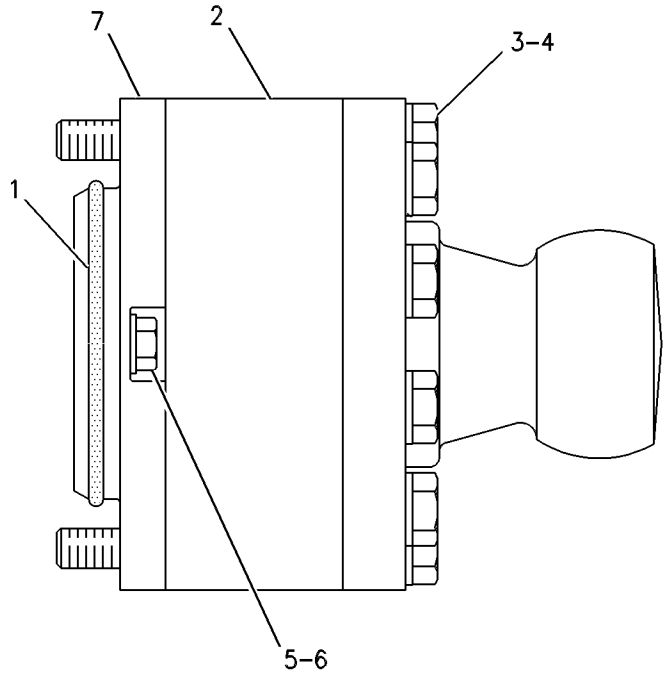

GRAPHIC #1 **<END>** g00289283

WORK TOOLS

110-5230 BLADE GP-ANGLING

S/N: CCK1-UP; B6X1-UP
PART OF 223-6303 BULLDOZER AR
AN ATTACHMENT

SMCS-6052, 6060 **i01830122**

NOTE	REF NO	GRAPHIC REF	PART NUMBER	QTY	PART NAME 1 2 3 4 5 6 (PRODUCT LEVEL)	SEE PAGE
	1	1	**110-5229**	1	BLADE AS	
	2	1	**8P-9770**	1	PLATE	
	3	1	**110-5227**	1	BRACKET AS (CENTER)	
	4	1	**110-5228**	1	BRACKET AS	
	5	1	**8E-9502**	1	SUPPORT	
M	6	1	**7X-2562**	4	BOLT (M20X2.5X45MM)	
	7	1	**104-7434**	2	RETAINER	
	8	1	**3G-8932**	2	PIN	
	9	1	**4T-0231**	2	RETAINER	
M	10	1	**8T-4956**	2	BOLT (M12X1.75X35MM)	
	11	1	**8T-4223**	2	WASHER-HARD (13.5X25.5X3MM THK)	
	12	1	**197-6440**	1	BEARING	
	13	1	**3B-8489**	2	FITTING-GREASE (ANGLING BULLDOZER BLADE)	
	14	1	**8G-5747**	4	SPACER (45X50X15MM THK)	
	15	1	**089-8249**	4	SPACER (4X72X3MM THK)	
Y	16	1	*8E-9380*	1	EDGE GP-BIT & CUTTING	435
	17	1	**8J-8905**	1	RING-LOCK	
	18	1	**104-4817**	2	PIN	

M-METRIC PART
Y-SEPARATE ILLUSTRATION

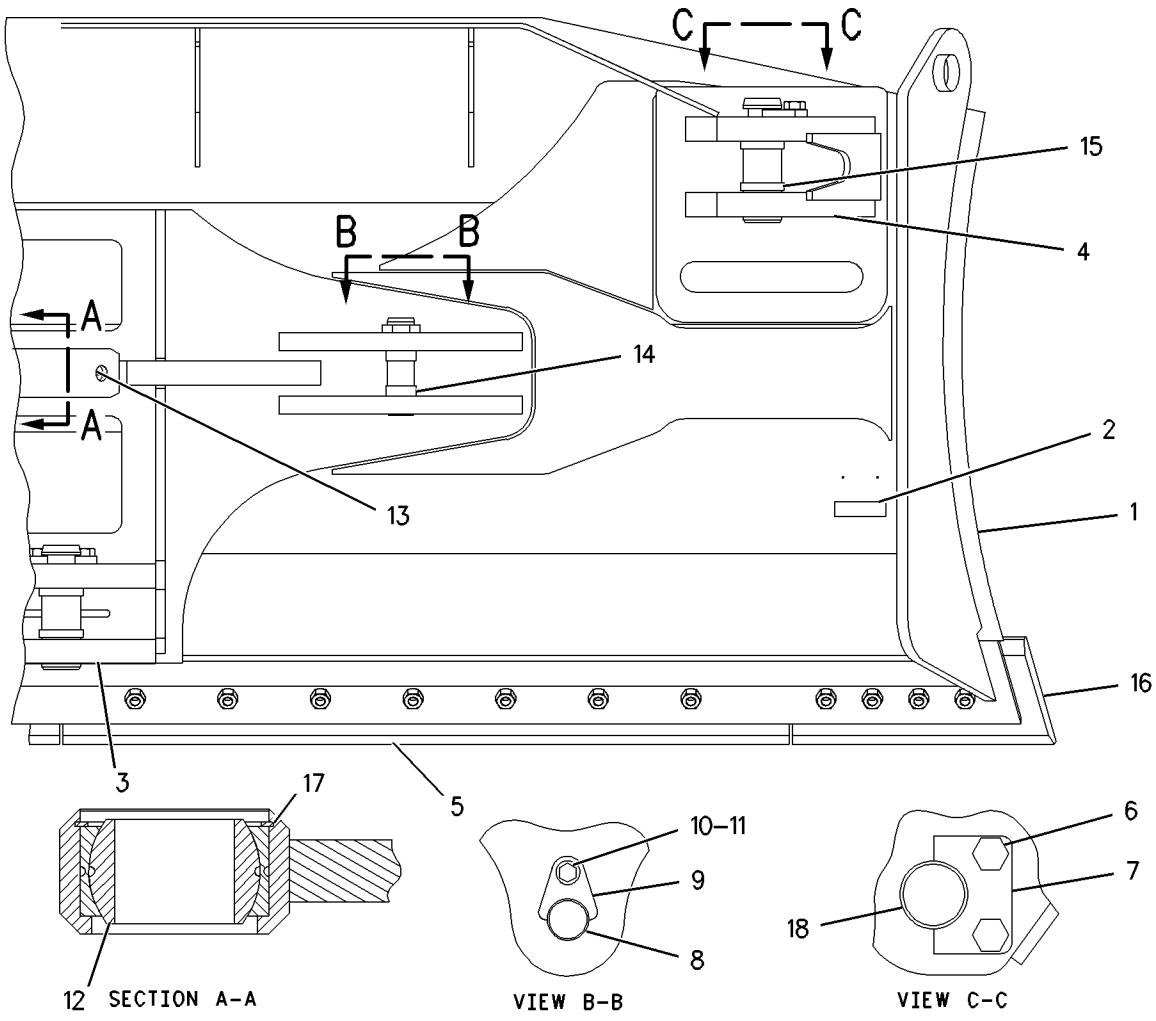

GRAPHIC #1 **<END>** g00883556

WORK TOOLS

115-4594 BLADE GP-SEMI-UNIVERSAL

S/N: S6D1-UP; CCK1-UP; S6S1-UP
PART OF 206-9537, 206-9544 BULLDOZER AR-SEMI-UNIVERSAL
AN ATTACHMENT

SMCS-6060, 6078 **i01876964**

NOTE	REF NO	GRAPHIC REF	PART NUMBER	QTY	PART NAME 1 2 3 4 5 6 (PRODUCT LEVEL)	SEE PAGE
	1	1	**8H-8898**	2	PIN	
Y	2	1	*9U-8079*	1	EDGE GP-BIT & CUTTING	436
	3	1	**3B-4630**	2	PIN-COTTER	
	4	1	**4T-1481**	1	LINK AS	
	5	1	**115-4595**	1	BLADE AS-SEMI-UNIVERSAL	
	6	1	**1U-0183**	2	DEFLECTOR	
	7	1	**6I-9420**	2	BRACKET AS	
					(EACH INCLUDES)	
		1	**7J-5131**	1	TRUNNION	
	8	1	**8E-5192**	2	BRACKET AS	
					(EACH INCLUDES)	
		1	**4J-1641**	1	TRUNNION	
	9	1	**8E-5194**	1	BRACKET	
	10	1	**8P-9770**	1	PLATE	
	11	1	**9R-3572**	3	BOSS (M12X20MM)	
	12	1	**9U-8506**	2	BRACKET AS	
					(EACH INCLUDES)	
		1	**4T-1504**	1	TRUNNION	
	13	1	**9W-6381**	1	PLATE	
	14	1	**6I-9461**	1	PLATE-LH	
	15	1	**6I-9462**	1	PLATE-RH	

Y-SEPARATE ILLUSTRATION

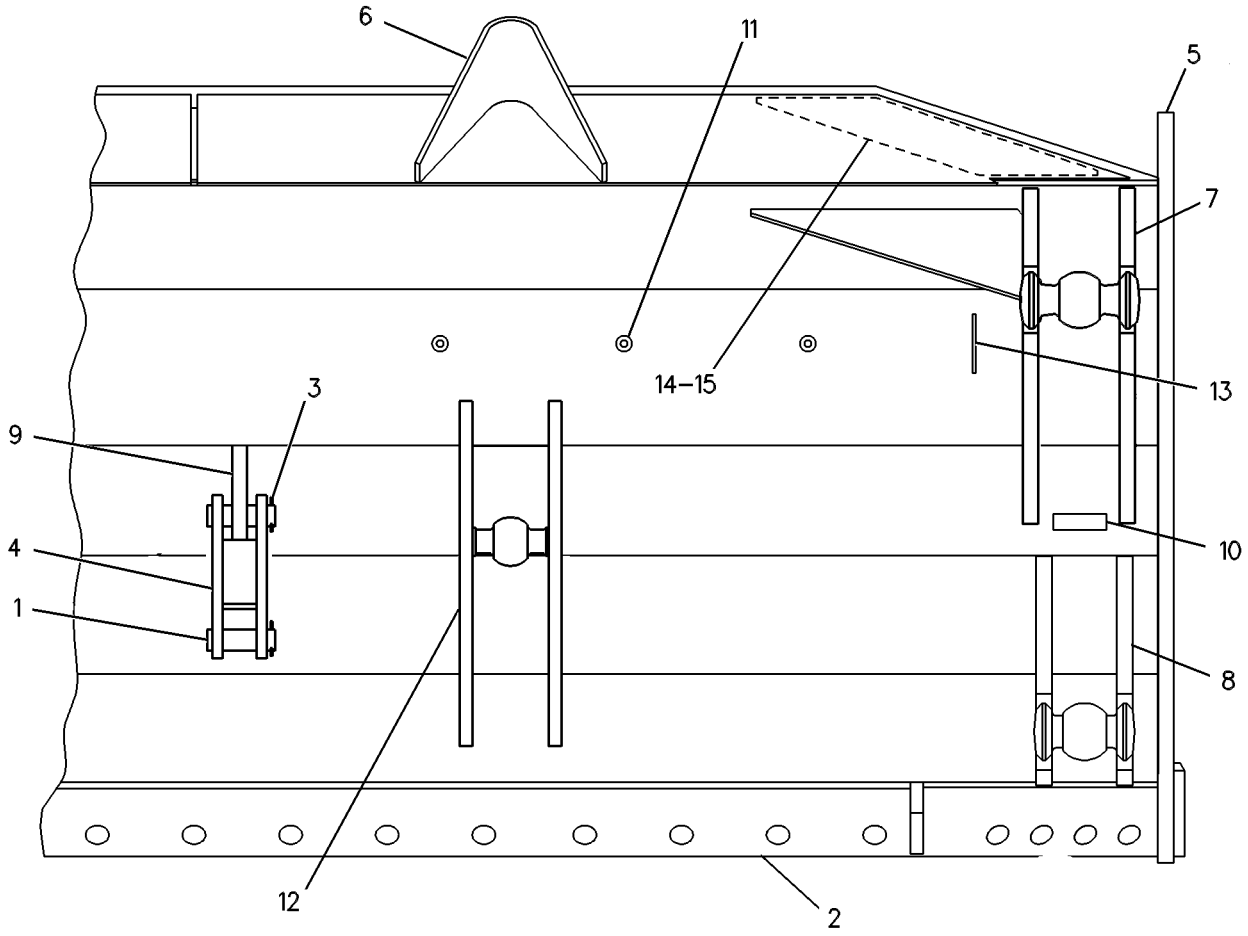

GRAPHIC #1 **<END>** g00253649

8E-9380 EDGE GP-BIT & CUTTING

S/N: CCK1-UP; B6X1-UP
PART OF 110-5230 BLADE GP-ANGLING
AN ATTACHMENT

SMCS-6801, 6804 **i00599768**

NOTE	REF NO	GRAPHIC REF	PART NUMBER	QTY	PART NAME 1 2 3 4 5 6 (PRODUCT LEVEL)	SEE PAGE
	1	1	**8E-9378**	1	BIT-END-LH	
		1	**8E-9379**	1	BIT-END-RH	
	2	1	**3G-4282**	2	EDGE-CUTTING	
	3	1	**5J-4773**	22	BOLT-PLOW (3/4-10X2.5IN)	
	4	1	**5P-8248**	22	WASHER-HARD (3.5MM THK)	
	5	1	**2J-3506**	22	NUT-FULL (3/4-10 THD)	

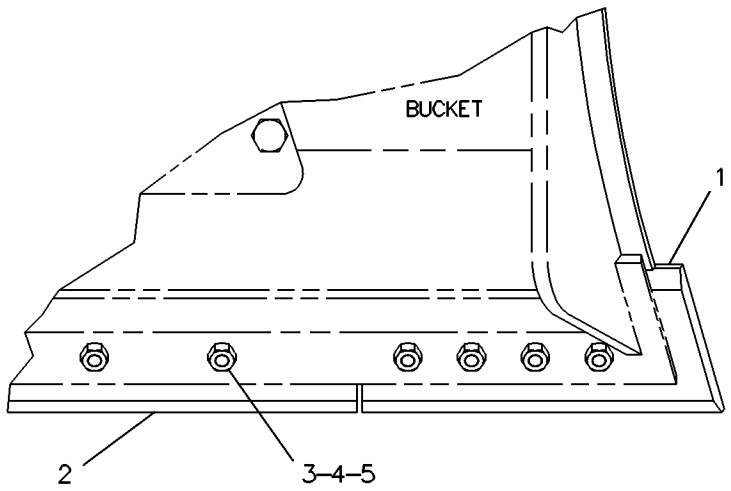

GRAPHIC #1 **<END>** g00223481

9U-8079 EDGE GP-BIT & CUTTING—WIDE GAGE

S/N: S6D1-UP; CCK1-UP; S6S1-UP
PART OF 115-4594 BLADE GP-SEMI-UNIVERSAL
AN ATTACHMENT

SMCS-6801, 6804 **i01877671**

NOTE	REF NO	GRAPHIC REF	PART NUMBER	QTY	PART NAME 1 2 3 4 5 6 (PRODUCT LEVEL)	SEE PAGE
	1	1	**8E-9378**	1	BIT-END (LH)	
		1	**8E-9379**	1	BIT-END (RH)	
	2	1	**4T-6659**	1	EDGE-CUTTING	
	3	1	**9U-8057**	2	EDGE-CUTTING	
	4	1	**5J-4773**	23	BOLT-PLOW (3/4-10X2.5 IN)	
	5	1	**5P-8248**	23	WASHER-HARD (20X36.5X3.5MM THK)	
	6	1	**2J-3506**	23	NUT-FULL (3/4-10 THD)	

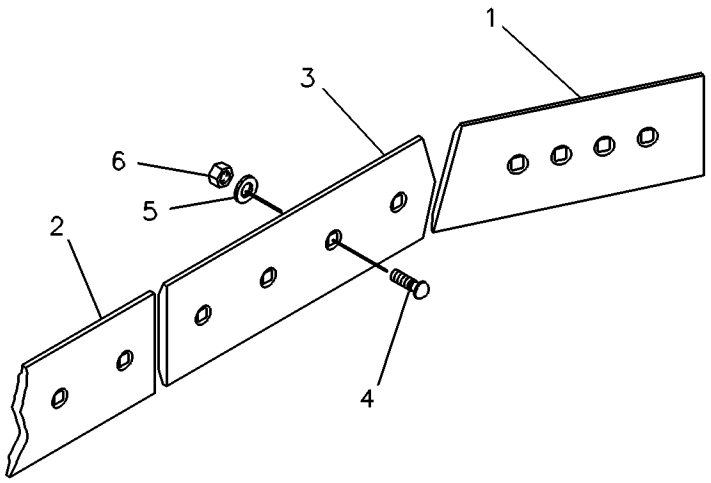

GRAPHIC #1 **<END>** g00223834

WORK TOOLS

155-5322 RIPPER GP

S/N: TPP1-UP
PART OF 180-4560 RIPPER AR
AN ATTACHMENT

SMCS-6311, 6312, 6315, 6316, 6325 **i01883728**

NOTE	REF NO	GRAPHIC REF	PART NUMBER	QTY	PART NAME 1 2 3 4 5 6 (PRODUCT LEVEL)	SEE PAGE
M	1	1	**8T-4648**	8	BOLT (M12X1.75X70MM)	
M	2	1	**8T-4244**	10	NUT (M12X1.75 THD)	
	3	1	**4K-3004**	2	BEARING-TRUNNION SUPPLEMENTARY	
	4	1	**3B-8489**	11	FITTING-GREASE (1/8-27 THD) (RIPPER)	
Y	5	1	*8J-2189*	3	TOOTH GP-RIPPER	439
	6	1	**1U-0159**	2	PIN	
M	7	1	**8T-7929**	2	BOLT (M12X1.75X180MM)	
M	8	1	**6V-7744**	2	LOCKNUT (M10X1.5 THD)	
M		1	**7X-2543**	2	BOLT (M10X1.5X120MM)	
	9	1	**121-0792**	1	LINK AS	
		1	**8P-9770**	1	PLATE	
	10	1	**9W-0099**	4	BEARING-SLEEVE	
	11	1	**2K-0703**	1	BAR	
M	12	1	**8T-4139**	2	BOLT (M12X1.75X30MM)	
	13	1	**3A-8612**	2	LINK AS	
					(EACH INCLUDES)	
	14	1	**7J-9682**	2	BEARING-SLEEVE	
	15	1	**9J-9598**	2	PIN	
		1	**9T-5900**	6	WASHER (51.2X98X4.76MM THK)	
	16	1	**3A-8608**	1	CARRIAGE AS	
	17	1	**8P-9770**	1	PLATE	
	18	1	**5K-7748**	3	HOLDER-TOOTH	
	19	1	**3K-8510**	1	PIN	
	20	1	**8T-4223**	18	WASHER-HARD (13.5X25.5X3MM THK)	

M-METRIC PART
Y-SEPARATE ILLUSTRATION

155-5322 **RIPPER GP** *(contd.)* **i01883728**

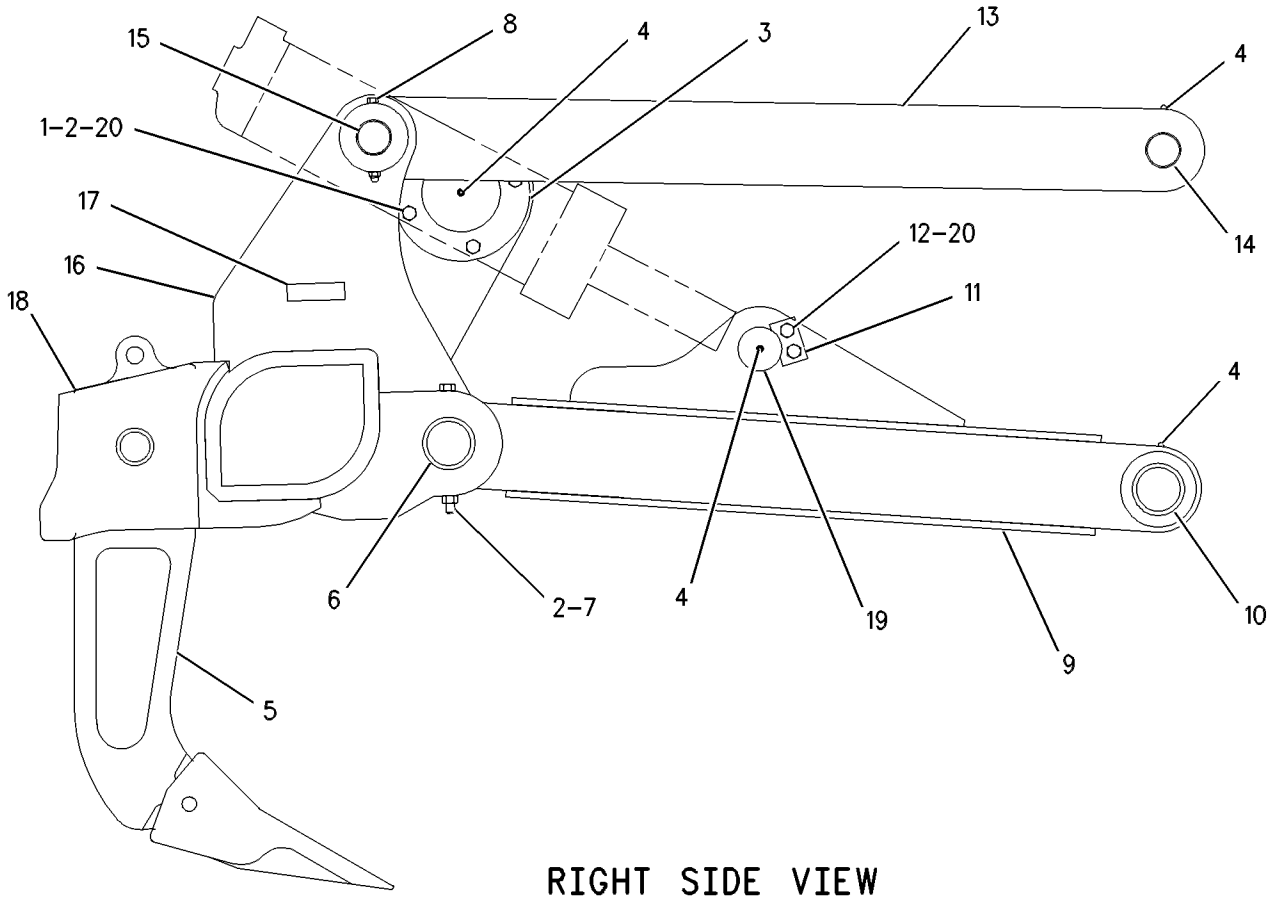

RIGHT SIDE VIEW

GRAPHIC #1 **<END>** g00591224

8J-2189 TOOTH GP-RIPPER—STRAIGHT SHANK

S/N: TPP1-UP
PART OF 155-5322 RIPPER GP
AN ATTACHMENT

SMCS-6808, 6810 **i01893140**

NOTE	REF NO	GRAPHIC REF	PART NUMBER	QTY	PART NAME 1 2 3 4 5 6 (PRODUCT LEVEL)	SEE PAGE
	1	1	**3B-5325**	2	PIN-COTTER	
	2	1	**8J-2190**	1	PIN	
	3	1	**9J-3139**	1	SHANK-RIPPER	
C	4	1	**114-0358**	1	PIN-G.E.T.	
C		1	**114-0359**	1	RETAINER AS-G.E.T.	
	5	1	**6Y-0359**	1	TIP-RIPPER	

C-CHANGE FROM PREVIOUS TYPE

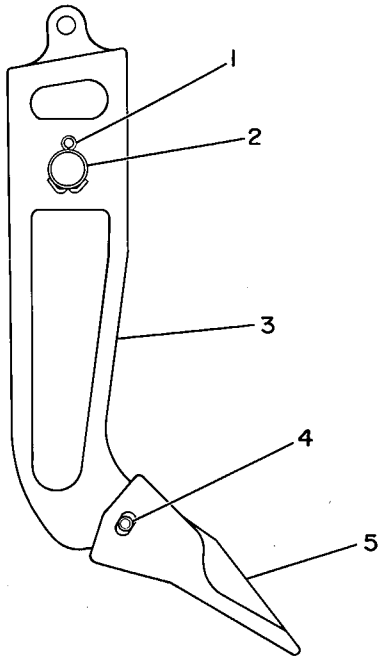

GRAPHIC #1 **<END>** g00081660

9J-8926 TOOTH GP-RIPPER—CURVED SHANK

S/N: CCK1-UP
PART OF 135-9795 TOOTH GP-RIPPER
AN ATTACHMENT

SMCS-6808, 6810 **i01095060**

NOTE	REF NO	GRAPHIC REF	PART NUMBER	QTY	PART NAME 1 2 3 4 5 6 (PRODUCT LEVEL)	SEE PAGE
	1	1	**3B-5325**	2	COTTER	
	2	1	**8J-2190**	1	PIN	
	3	1	**9J-8923**	1	SHANK-RIPPER	
	4	1	**114-0358**	1	PIN-G.E.T.	
	5	1	**6Y-0352**	1	TIP-RIPPER	
	6	1	**114-0359**	1	RETAINER AS-G.E.T.	

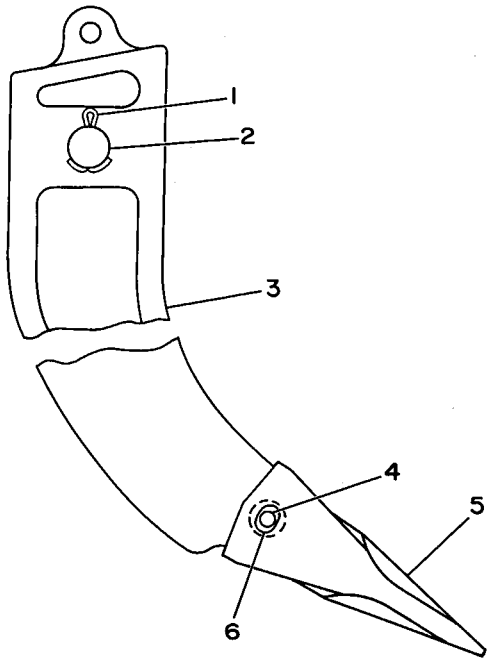

GRAPHIC #1 **<END>** g00174183

WORK TOOLS

135-9795 TOOTH GP-RIPPER—CURVED SHANK

S/N: CCK1-UP

FOR USE WITH 180-4560—PAGE 429

AN ATTACHMENT

SMCS-6808, 6810 **i01053123**

NOTE	PART NUMBER	QTY	PART NAME 1 2 3 4 5 6 (PRODUCT LEVEL)	SEE PAGE
Y	*9J-8926*	3	TOOTH GP-RIPPER	440
Y-SEPARATE ILLUSTRATION				

<END>

OPERATOR STATION

6W-8505 ADJUSTER GP-SEAT

S/N: CCK1-UP
PART OF 6W-8502 SUSPENSION GP-SEAT
AN ATTACHMENT

SMCS-7321 **i01857995**

NOTE	REF NO	GRAPHIC REF	PART NUMBER	QTY	PART NAME 1 2 3 4 5 6 (PRODUCT LEVEL)	SEE PAGE
	1	1	**8V-4881**	4	ROLLER	
	2	1	**4V-7860**	1	LEVER (SEAT ADJUSTER)	
	3	1	**6W-8506**	1	HOUSING AS-LOWER	
	4	1	**4V-7850**	1	PLATE-SLIDE TRACK	
	5	1	**4V-7855**	1	LATCH AS	
	6	1	**4V-7881**	1	ROD-LATCH	
	7	1	**4V-8256**	2	SPRING	
	8	1	**013-8289**	1	BOLT	
	9	1	**4V-7859**	1	ROD-LATCH	
	10	1	**4V-7857**	1	LATCH AS	
	11	1	**5V-1497**	7	RETAINER	
	12	1	**1B-6182**	1	SPACER (13.11X19.05X1.18MM THK)	
	13	1	**4V-7865**	1	CAP	

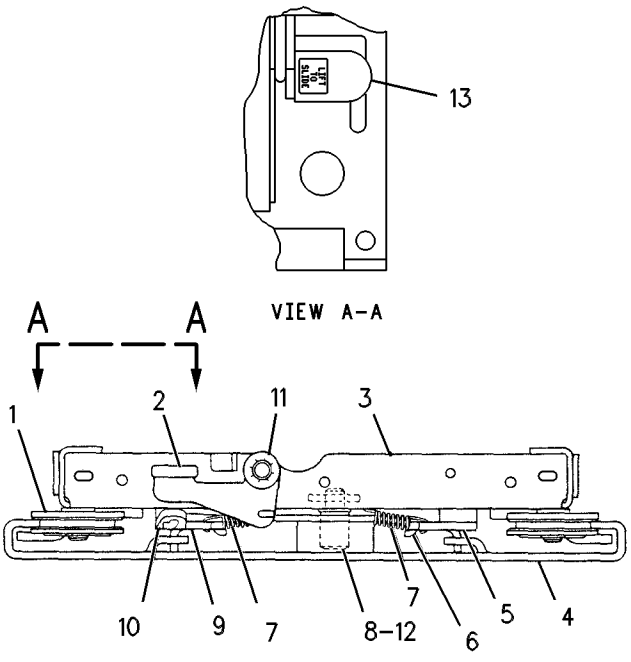

GRAPHIC #1 **<END>** g00088174

173-1028 ADJUSTER GP-SEAT

S/N: CCK1-UP
PART OF 178-0603, 180-7304 SEAT GP
AN ATTACHMENT

SMCS-7321 **i01582195**

NOTE	REF NO	GRAPHIC REF	PART NUMBER	QTY	PART NAME 1 2 3 4 5 6 (PRODUCT LEVEL)	SEE PAGE
	1	1	**4V-8256**	4	SPRING	
	2	1	**117-4492**	1	ROD	
	3	1	**136-1544**	1	LATCH AS-LH	
	4	1	**156-5545**	1	LATCH AS-RH	
	5	1	**164-4531**	1	ROD	
	6	1	**170-1112**	1	PLATE AS	
	7	1	**170-1114**	1	HANDLE (SLIDE ADJUSTMENT)	
	8	1	**170-1115**	1	HANDLE (TILT ADJUSTMENT)	
	9	1	**132-0338**	2	WASHER-PLASTIC	
	10	1	**2K-4973**	2	LOCKNUT (3/8-16 THD)	
	11	1	**7X-0608**	2	WASHER-HARD (10.2X16X2.0MM THK)	

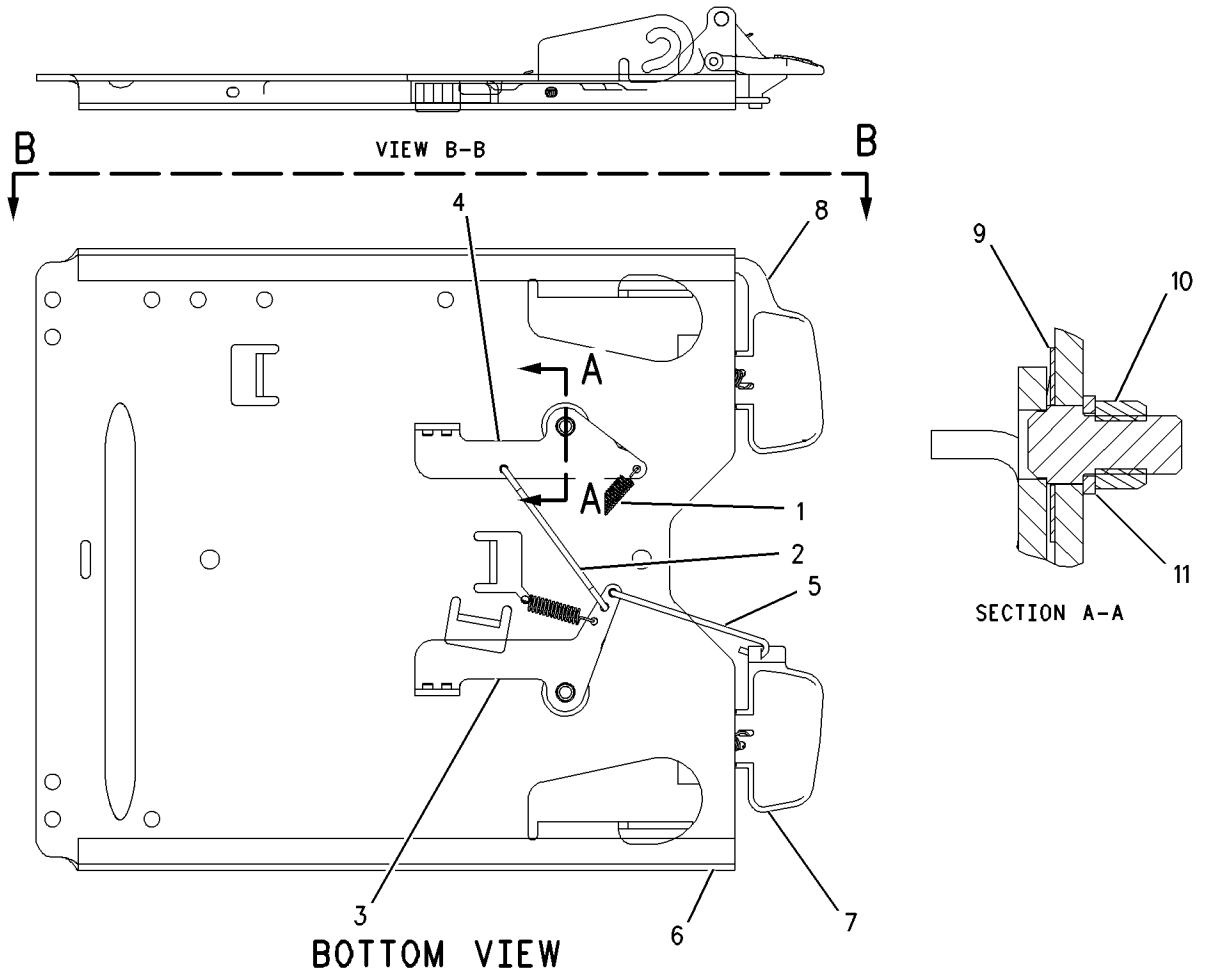

GRAPHIC #1 **<END>** g00816460

OPERATOR STATION

108-0720 AIR CONDITIONER GP

S/N: CCK1-UP

PART OF 167-1458 AIR CONDITIONER GP

SMCS-7320 **i01894303**

NOTE	REF NO	GRAPHIC REF	PART NUMBER	QTY	PART NAME 1 2 3 4 5 6 (PRODUCT LEVEL)	SEE PAGE
	1	1	**6K-9555**	1	GROMMET (7.9MM OD)	
					–OR–	
		1	**2V-1937**	1	GROMMET (14.3MM OD)	
BD	2	1	**5P-5643**		SEAL	
	3	1	**109-6406**	1	COIL AS	
	4	1	**3E-5464**	1	SWITCH AS-THERMOSTAT (A/C)	
	5	1	**6L-7159**	2	SCREW-MACHINE (8-32X.313 IN)	
M	6	1	**8T-4191**	2	BOLT (M10X1.5X16MM)	
	7	1	**2V-1937**	1	GROMMET	
	8	1	**5P-1075**	2	WASHER-HARD (10.2X22.5X3MM THK)	
B	9	1	**1V-3113**	1	CLIP	
B	10	1	**2A-3211**	1	WASHER (5.5X12.3X.8MM THK)	
B	11	1	**7S-4346**	1	SCREW-MACHINE (10-32X0.5 IN)	
D	12	1	**5P-5992**		HOSE (.1M)	
A	13	1	**110-6109**	1	KNOB-CONTROL (A/C)	

A-NOT PART OF THIS GROUP
B-USE AS REQUIRED
D-ORDER BY THE METER
M-METRIC PART

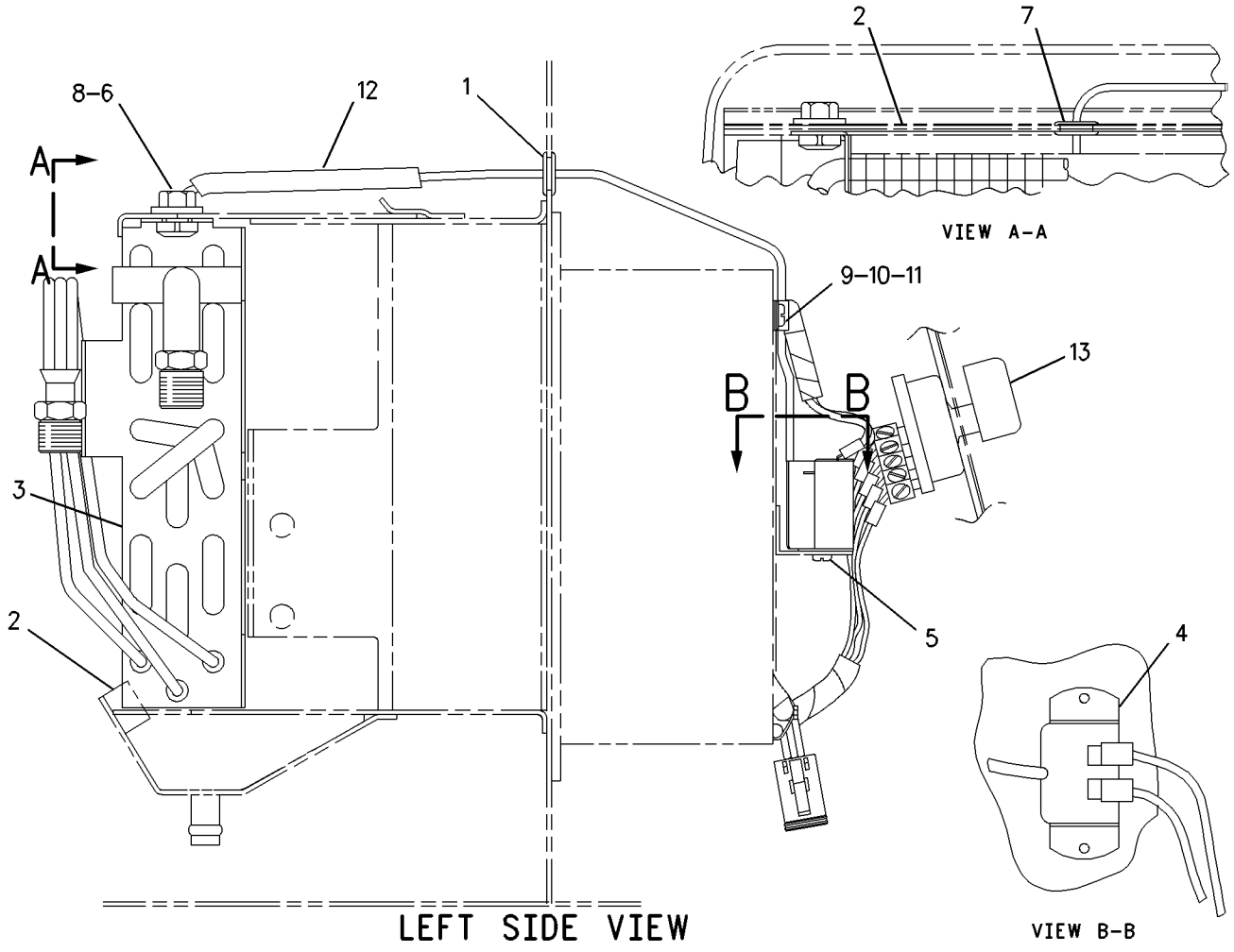

GRAPHIC #1 **<END>** g00632509

OPERATOR STATION

167-1458 AIR CONDITIONER GP

S/N: CCK1-UP

PART OF 217-3819 CAB GP

SMCS-7320 **i01829137**

NOTE	REF NO	GRAPHIC REF	PART NUMBER	QTY	PART NAME 1 2 3 4 5 6 (PRODUCT LEVEL)	SEE PAGE
Y	1	1	**175-2540**	1	CONDENSER GP-REFRIGERANT	457
Y	2	1	*171-9593*	1	LINES GP-AIR CONDITIONER	485
Y	3	1	*108-0720*	1	AIR CONDITIONER GP	444
	4	1	**7X-7729**	4	WASHER (11X25X3MM THK)	
M	5	1	**8T-4196**	4	BOLT (M10X1.5X35MM)	

M-METRIC PART
Y-SEPARATE ILLUSTRATION

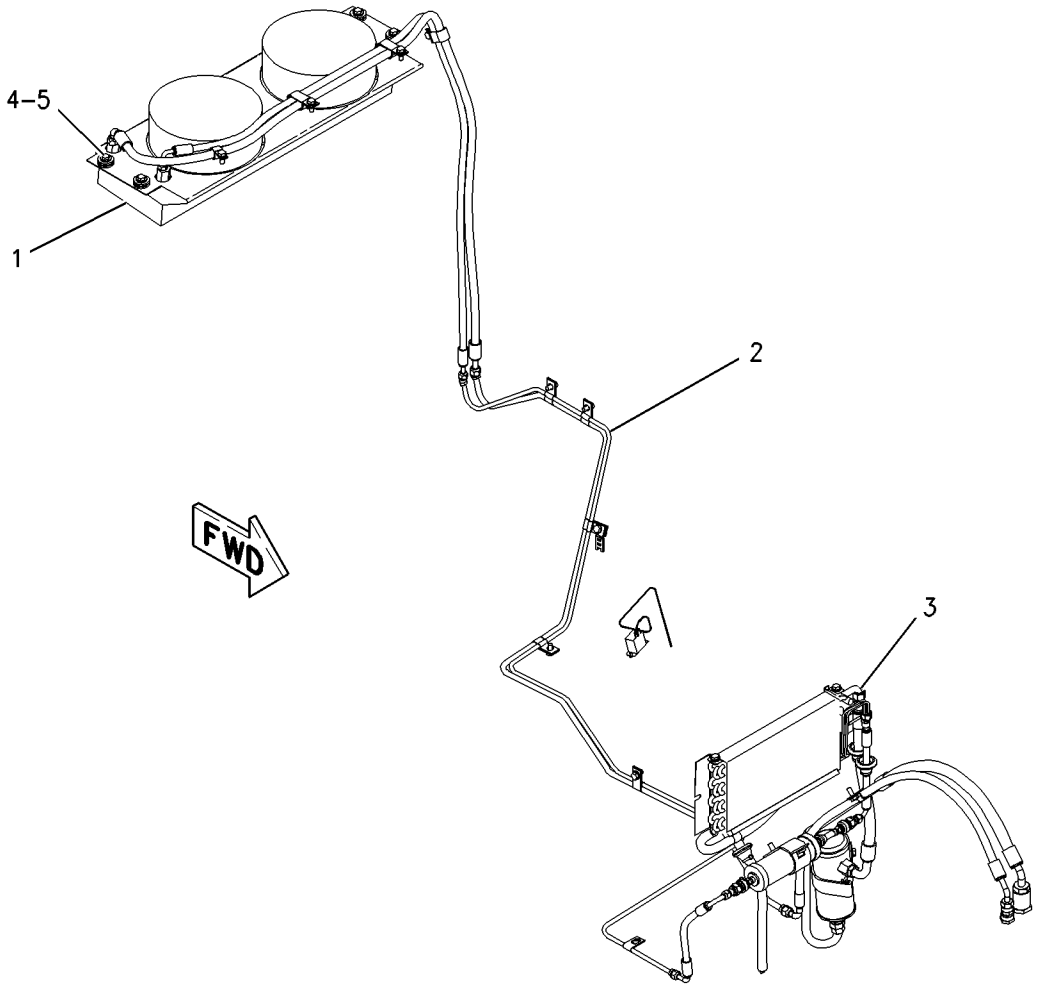

GRAPHIC #1 **<END>** g00909286

OPERATOR STATION

198-7281 BLOWER GP-CAB

S/N: CCK1-UP

PART OF 163-0152 PRESSURIZER GP-CAB

SMCS-7316 **i01899227**

NOTE	REF NO	GRAPHIC REF	PART NUMBER	QTY	PART NAME 1 2 3 4 5 6 (PRODUCT LEVEL)	SEE PAGE
	1	1	**1M-1230**	4	NUT & LOCK AS	
	2	1	**3S-2093**	1	STRAP-CABLE	
	3	1	**6T-6708**	2	WASHER (7X28.6X4.1MM THK)	
	4	1	**7G-0942**	2	PLATE-ORIFICE	
	5	1	**8C-3756**	1	FILM-IDENTIFICATION (GROUP & SEQUENCE NO.) (CAB BLOWER)	
	6	1	**9G-1950**	1	RESISTOR	
	7	1	**111-7198**	1	HARNESS AS (CAB BLOWER)	
		1	**102-8802**	1	KIT-RECEPTACLE (2 PIN)	
		1	**102-8805**	1	KIT-RECEPTACLE (6 PIN)	
					(EACH RECEPTACLE KIT INCLUDES RECEPTACLE AS AND WEDGE)	
		1	**8T-8737**	1	PLUG-SEAL	
		1	**155-2270**	1	KIT-CONNECTING PLUG (2 PIN)	
					(INCLUDES PLUG AS, WEDGE AND INTERFACE SEAL)	
	8	1	**118-5194**	1	WHEEL-BLOWER	
		1	**037-4838**	1	CLAMP	
	9	1	**118-5195**	1	WHEEL-BLOWER	
		1	**037-4838**	1	CLAMP	
	10	1	**174-1504**	1	MOTOR AS	
		1	**9W-0852**	2	PIN-CONNECTOR	
		1	**102-8802**	1	KIT-RECEPTACLE (2 PIN)	
					(INCLUDES RECEPTACLE AS AND WEDGE)	
	11	1	**174-1505**	1	MOTOR AS	
		1	**9W-0844**	2	SOCKET-CONNECTION	
		1	**155-2270**	1	KIT-CONNECTING PLUG (2 PIN)	
					(INCLUDES PLUG AS, WEDGE AND INTERFACE SEAL)	
	12	1	**175-0070**	4	BRACKET	
	13	1	**198-7282**	1	PLATE AS	
		1	**1F-0750**	1	NUT-WELD (3/8-16 THD)	
		1	**4K-9230**	1	NUT-WELD (10-32-2B THD)	
		1	**7T-1099**	2	LINK	
	14	1	**198-7284**	1	GASKET	
	15	1	**130-5300**	2	CLIP	
	16	1	**3E-9865**	7	LOCKNUT (1/4-20 THD)	
	17	1	**4B-4274**	4	WASHER (5.5X13X1.2MM THK)	
	18	1	**5P-4115**	6	WASHER-HARD (7.2X19X2MM THK)	
	19	1	**5P-8167**	1	BOLT (3/8-16X0.625 IN)	
	20	1	**5P-8441**	1	GROMMET	
	21	1	**5P-9085**	1	CLIP	
	22	1	**6V-1668**	2	WASHER (6.5X29.1X3MM THK)	
	23	1	**6V-3320**	1	SCREW-MACHINE (1/4-20X7.50 IN)	
	24	1	**8T-4896**	1	WASHER-HARD (10.2X18.5X2.5MM THK)	

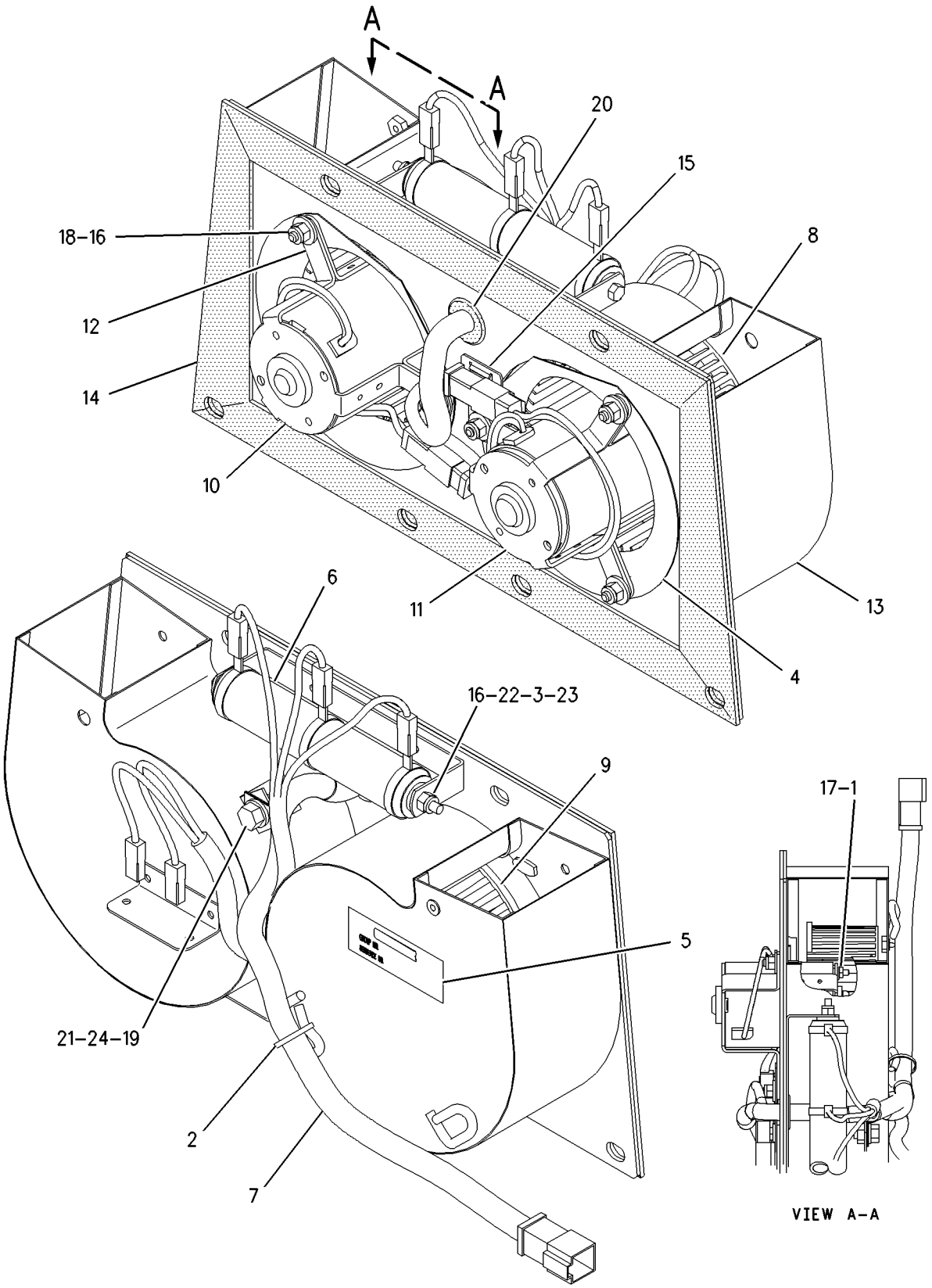

GRAPHIC #1 **<END>** g00942930

OPERATOR STATION

191-4824 CAB AR

S/N: CCK1-UP

PART OF 189-4616 GENERAL AR

SMCS-7301, 7325, 7335 **i01834902**

NOTE	PART NUMBER	QTY	PART NAME 1 2 3 4 5 6 (PRODUCT LEVEL)	SEE PAGE
Y	*217-3819*	1	CAB GP	453
Y	*192-2545*	1	COVER GP-CONSOLE	465
Y	**177-3860**	1	COVER GP-CONSOLE	463
Y	*204-6414*	1	INSTALLATION GP-LINES (AIR CONDITIONER)	479
Y	*222-3800*	1	LINES GP-HEATER	489
Y	*156-8915*	1	MOUNTING GP-CAB	492
Y	*167-1457*	1	ROPS GP	515
Y	*167-1455*	1	TANK GP-WINDOW WASHER	543

Y-SEPARATE ILLUSTRATION

<END>

OPERATOR STATION

156-8911 CAB GP

S/N: CCK1-UP

PART OF 217-3819 CAB GP

SMCS-7301, 7325, 7335 **i01893790**

NOTE	REF NO	GRAPHIC REF	PART NUMBER	QTY	PART NAME 1 2 3 4 5 6 (PRODUCT LEVEL)	SEE PAGE
	1	2	**6V-8928**	1	HOOK-COAT	
	2	1,2	**7K-1181**	26	STRAP-CABLE	
	3	1	**8C-5607**	8	MOUNT (ISOLATION)	
	4	1	**8C-5608**	4	SPACER (6.5X9.5X25.4MM THK)	
	5	2	**109-1645**	1	CLIP	
	6	1	**123-6449**	1	WARNING GP-BACKUP	
		1	**102-8802**	1	KIT-RECEPTACLE (2 PIN)	
					(INCLUDES RECEPTACLE AS AND WEDGE)	
		1	**3E-3365**	1	WEDGE-RECEPTACLE LOCK (2 PIN)	
BD		1	**5P-5677**		WIRE-ELECTRICAL (18 GA)	
		1	**186-3735**	2	PIN-CONNECTOR	
BE		1	**9X-1813**		SLEEVE	
	7	2	**132-5792**	4	NUT	
Y	8	1	*156-8916*	1	WINDOW GP-CAB	544
	9	1	**160-9149**	1	HARNESS AS (MAIN)(CAB)	
		1	**102-8802**	5	KIT-RECEPTACLE (2 PIN)	
		1	**102-8803**	1	KIT-RECEPTACLE (3 PIN)	
		1	**102-8805**	1	KIT-RECEPTACLE (6 PIN)	
		1	**102-8806**	1	KIT-RECEPTACLE (8 PIN)	
		1	**102-8801**	1	KIT-RECEPTACLE (12 PIN)	
					(EACH RECEPTACLE KIT INCLUDES RECEPTACLE AS AND WEDGE)	
		1	**8T-8729**	25	PIN-CONNECTOR	
		1	**155-2265**	1	KIT-CONNECTING PLUG (8 PIN)	
		1	**155-2260**	2	KIT-CONNECTING PLUG (3 PIN)	
		1	**155-2270**	6	KIT-CONNECTING PLUG (2 PIN)	
		1	**155-2274**	3	KIT-CONNECTING PLUG (6 PIN)	
					(EACH PLUG KIT INCLUDES PLUG AS, WEDGE AND INTERFACE SEAL)	
	10	1	**161-7000**	1	CAB AS	
M		1	**6V-9632**	6	NUT-WELD (M6X1 THD)	
	10A	1	**9B-2923**	2	HINGE	
	10B	1	**178-9008**	1	HANDLE (RH)	
	10C	1	**178-9009**	1	HANDLE (LH)	
Y	11	2	*163-0152*	1	PRESSURIZER GP-CAB	510
	12	1	**164-9136**	1	GUARD AS	
Y	13	1	*167-1451*	1	DOOR GP-CAB (RH)	466
Y	14	2	*167-1453*	1	DOOR GP-CAB (LH)	468
	15	2	**168-8929**	2	STRIKER AS	
					(EACH INCLUDES)	
M		2	**8T-4244**	1	NUT (M12X1.75 THD)	
		2	**129-3737**	1	STRIKER BOLT-CAB	
	16	2	**170-2062**	1	GRID	
Y	17	2	*170-2084*	1	LINER GP-CAB	484
Y	18	2	*170-2086*	1	WIPER GP-WINDOW	547
Y	19	1	*175-6956*	1	COVER GP-CONSOLE	461
Y	20	2	*175-7654*	1	HEATER GP-CAB	470
	21	2	**176-7456**	1	HARNESS AS (WIPER)	
		2	**102-8805**	1	KIT-RECEPTACLE (6 PIN)	
					(INCLUDES RECEPTACLE AS AND WEDGE)	
		2	**155-2274**	1	KIT-CONNECTING PLUG (6 PIN)	
					(INCLUDES PLUG AS, WEDGE AND INTERFACE SEAL)	
Y	22	1	*177-3851*	1	INSULATION GP-WEATHER	482
Y	23	1	*177-3852*	1	STEP GP	535
	24	1	**178-8375**	2	PLATE	
Y	25	2	*178-9018*	1	INDICATOR GP-AIR FILTER CHANGE	94

156-8911 **CAB GP** ***(contd.)*** **i01893790**

NOTE	REF NO	GRAPHIC REF	PART NUMBER	QTY	PART NAME 1 2 3 4 5 6 (PRODUCT LEVEL)	SEE PAGE
Y	26	2	*194-3315*	1	LATCH GP	483
Y	27	2	*194-3333*	1	INSTALLATION GP-RADIO	481
	28	1	**196-7553**	1	HANDLE AS	
	29	1	*211-0238*	1	FILM (LUBE POINT)	
	30	2	**224-2470**	1	PLATE	
	31	1,2	**224-2669**	8	PLUG-PLASTIC	
	32	1	**2V-8259**	2	GROMMET	
	33	2	**4H-2558**	3	GROMMET	
	34	1	**5P-4116**	4	WASHER-HARD (8.8X20.5X2MM THK)	
	35	2	**5P-8439**	1	GROMMET	
	36	2	**6V-6716**	2	RIVET-TRUSS HEAD	
M	37	2	**6V-7357**	1	BOLT (M6X1.0X25MM)	
	38	1,2	**7X-7729**	21	WASHER (11X25X3MM THK)	
M	39	1	**8C-8451**	4	BOLT (M6X1X40MM)	
Y	40	2	*8E-8706*	1	MIRROR GP	490
	41	2	**8K-1433**	1	GROMMET	
	42	2	**8T-4121**	6	WASHER-HARD (11X21X2.5MM THK)	
M	43	1	**8T-4133**	2	NUT (M10X1.5 THD)	
M	44	1,2	**8T-4137**	7	BOLT (M10X1.5X20MM)	
M	45	2	**8T-4189**	4	BOLT (M8X1.25X20MM)	
M	46	2	**8T-4195**	4	BOLT (M10X1.5X30MM)	
M	47	1	**8T-4198**	2	BOLT (M10X1.5X100MM)	
M	48	1,2	**9X-2040**	4	SCREW-TRUSS HEAD (M10X1.5X25MM)	
	49	1	**9X-6165**	4	WASHER (6.5X22X2.5MM THK)	
BD	50	2	**5P-5952**		SEAL	
BE	51	1	**172-1681**		SEAL	

B-USE AS REQUIRED
D-ORDER BY THE METER
E-ORDER BY THE CENTIMETER
M-METRIC PART
Y-SEPARATE ILLUSTRATION

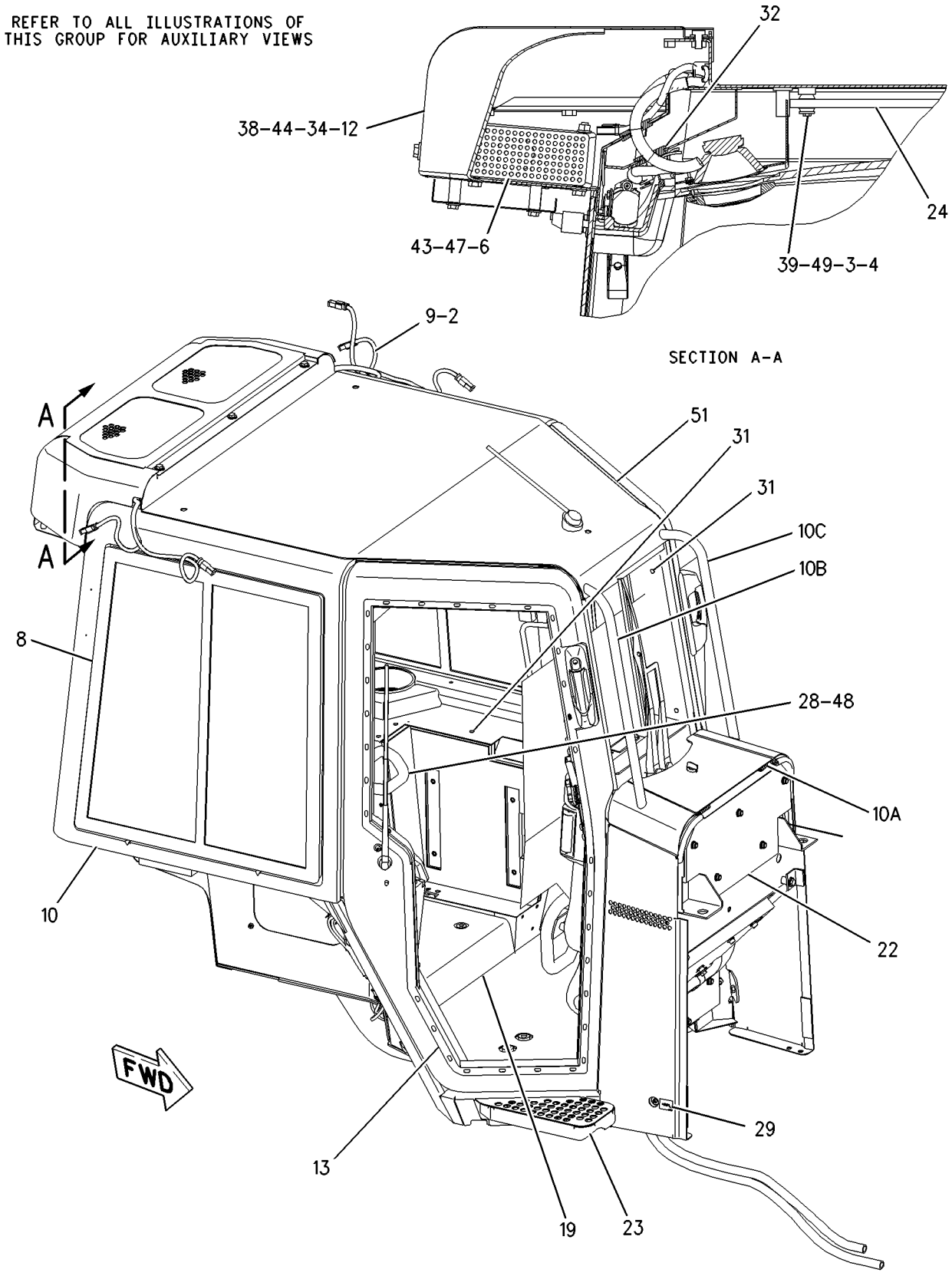

GRAPHIC #1 g00931480

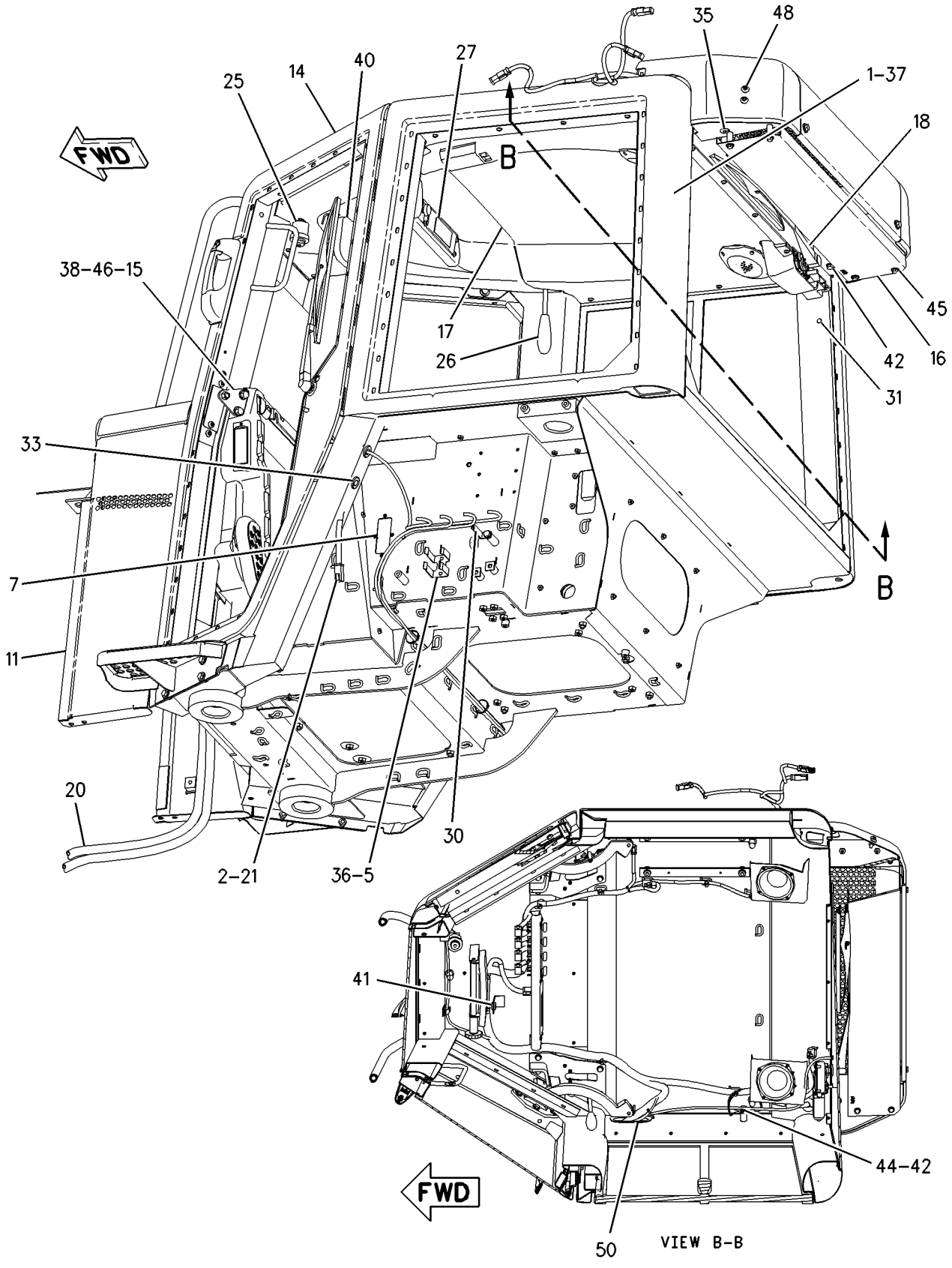

GRAPHIC #2 **<END>** g00931481

OPERATOR STATION

217-3819 CAB GP

S/N: CCK1-UP

PART OF 191-4824 CAB AR

SMCS-7301, 7325, 7335 **i01883217**

NOTE	PART NUMBER	QTY	PART NAME 1 2 3 4 5 6 (PRODUCT LEVEL)	SEE PAGE
Y	*156-8911*	1	CAB GP	449
Y	*156-8951*	1	PANEL GP-INSTRUMENT	499
Y	*167-1458*	1	AIR CONDITIONER GP	445
Y	**184-0870**	1	PLUG AS (POWER TRAIN)	509
Y	*192-9082*	1	WIRING GP-PLATFORM	187
Y	*193-5673*	1	CONTROL GP-STEERING & TMSN	302
Y	**217-3841**	1	PANEL GP-SOUND SUPPRESSION	261
Y	*199-4801*	1	PEDAL GP-GOVERNOR & BRAKE	314
Y	*218-4304*	1	LINES GP-PILOT	374
	220-0229	1	WARNING GP-BACKUP (107DB)	
	3E-3365	1	WEDGE-RECEPTACLE LOCK (2 PIN)	
D	**5P-5623**		WIRE (16 GA) (4DM)	
	186-3735	2	PIN-CONNECTOR	
E	**9X-1813**		SLEEVE (31CM)	
	102-8802	1	KIT-RECEPTACLE (2 PIN)	
			(INCLUDES RECEPTACLE AS & WEDGE)	
	201-4931	1	PLUG AS	
	5P-5677	1	WIRE-ELECTRICAL (18 GA)	
	186-3736	1	SOCKET-CONNECTOR	
	8T-8737	4	PLUG-SEAL	
BE	**125-7874**		TUBE-HEAT SHRINK	
	155-2265	1	KIT-CONNECTING PLUG (8 PIN)	
			(INCLUDES PLUG AS & WEDGE)	

B-USE AS REQUIRED
D-ORDER BY THE METER
E-ORDER BY THE CENTIMETER
Y-SEPARATE ILLUSTRATION

<END>

OPERATOR STATION

193-3812 CANOPY AR

S/N: CCK1-UP

CANNOT BE USED WITH CAB AR, 191-4824—PAGE 448

AN ATTACHMENT

SMCS-7302 **i01899273**

NOTE	PART NUMBER	QTY	PART NAME 1 2 3 4 5 6 (PRODUCT LEVEL)	SEE PAGE
Y	*193-1033*	1	BELT GP (ENGINE) (WITHOUT A/C)	6
Y	*218-3137*	1	MOUNTING GP-PLATFORM	493
Y	*218-3064*	1	PLATFORM GP	506
Y	*167-1460*	1	ROPS GP	516
	224-2459	1	HOUSING	
	220-1802	1	FILM-STRIPE (D6N)(LH COWL)	
	220-1801	1	FILM-STRIPE (D6N)(RH COWL)	
M	**9X-2045**	4	SCREW-TRUSS HEAD (M6X1X20MM)	

M-METRIC PART
Y-SEPARATE ILLUSTRATION

<END>

183-5106 COMPRESSOR GP-REFRIGERANT

S/N: CCK1-UP

PART OF 189-2229 COMPRESSOR GP-REFRIGERANT

SMCS-1802 **i01899287**

NOTE	REF NO	GRAPHIC REF	PART NUMBER	QTY	PART NAME 1 2 3 4 5 6 (PRODUCT LEVEL)	SEE PAGE
	1	1	**102-8802**	1	KIT-RECEPTACLE (2 PIN)	
					(INCLUDES RECEPTACLE AS AND WEDGE)	
	2	1	**114-3469**	1	VALVE GP-RELIEF (REFRIGERANT COMPRESSOR)	
		1	**9X-7378**	1	SEAL-O-RING	
	3	1	**7T-4532**	1	PLUG AS	
	4	1	**9X-7385**	2	SEAL-O-RING	

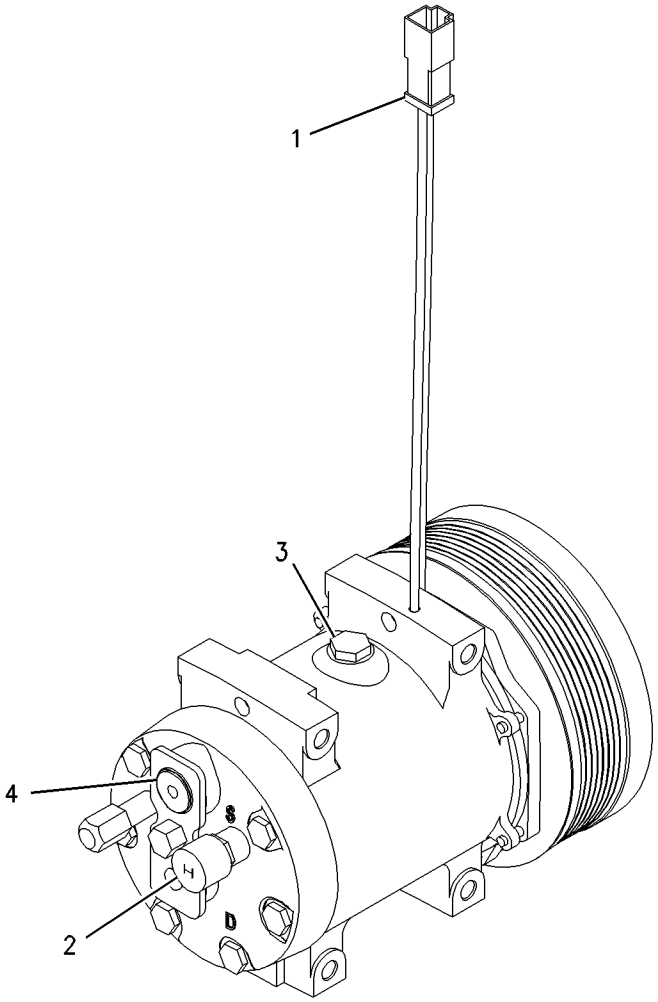

GRAPHIC #1 **<END>** g00781120

OPERATOR STATION

189-2229 COMPRESSOR GP-REFRIGERANT

S/N: CCK1-UP

PART OF 189-4622 INSTALLATION AR-ENGINE

SMCS-1802 **i01842375**

NOTE	REF NO	GRAPHIC REF	PART NUMBER	QTY	PART NAME 1 2 3 4 5 6 (PRODUCT LEVEL)	SEE PAGE
Y	1	1	**123-8395**	1	PULLEY AS-IDLER	51
Y	2	1	**183-5106**	1	COMPRESSOR GP-REFRIGERANT	455
	3	1	**201-4230**	1	GUARD	
M	4	1	**7X-2538**	4	BOLT (M8X1.25X100MM)	
	5	1	**8T-4224**	4	WASHER-HARD (8.8X16X2MM THK)	
	6	1	**106-4159**	1	SPACER (13.5MM THK)	

M-METRIC PART
Y-SEPARATE ILLUSTRATION

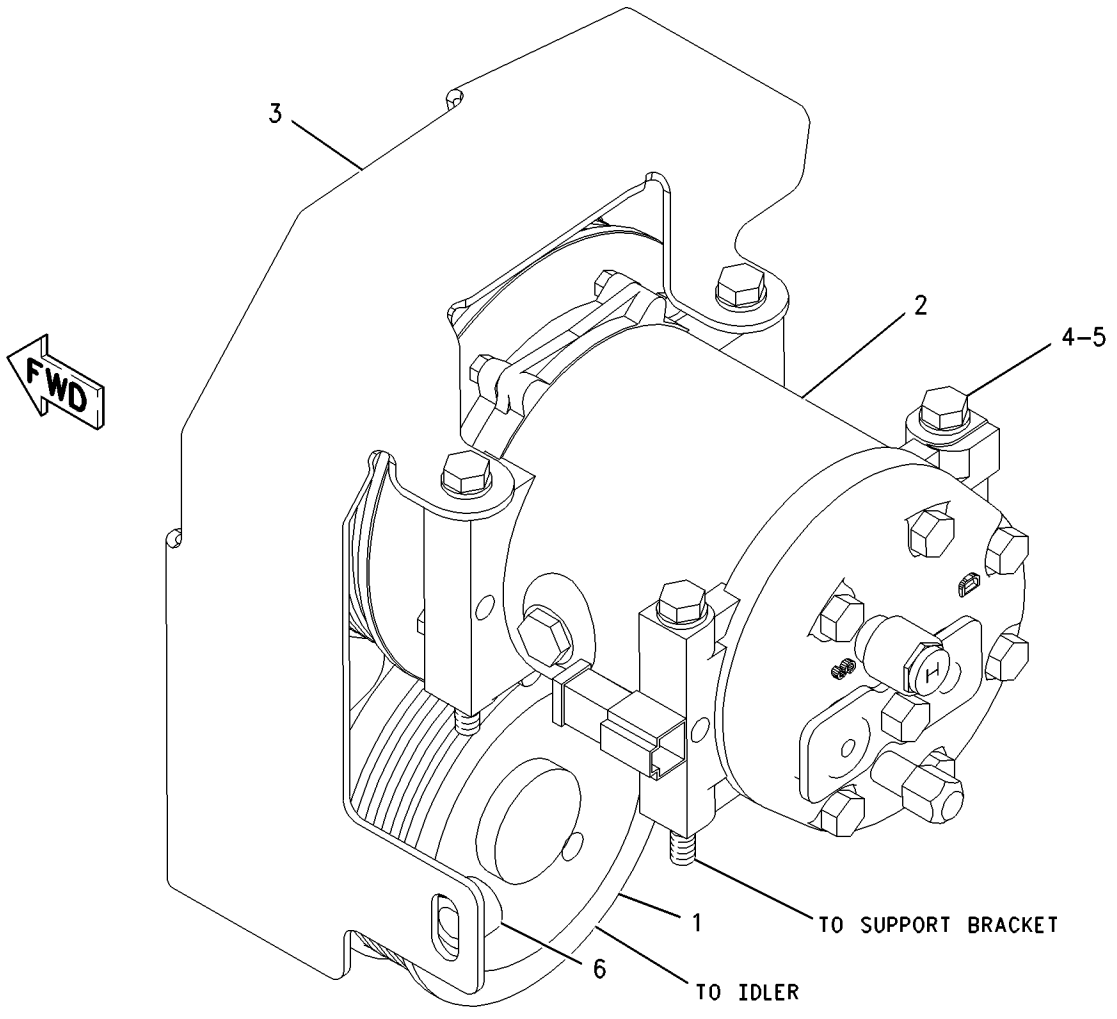

GRAPHIC #1 **<END>** g00941768

OPERATOR STATION

175-2540 CONDENSER GP-REFRIGERANT

S/N: CCK1-UP
HARD MOUNTING
PART OF 167-1458 AIR CONDITIONER GP

SMCS-1805 **i01829146**

NOTE	REF NO	GRAPHIC REF	PART NUMBER	QTY	PART NAME 1 2 3 4 5 6 (PRODUCT LEVEL)	SEE PAGE
	1	1	**3E-5239**	1	RELAY AS (24 VOLT) (AIR CONDITIONER CONDENSER)	
	2	1	**3S-2093**	1	STRAP-CABLE	
	3	1	**8C-3756**	1	FILM-IDENTIFICATION (GROUP & SEQUENCE NO.) (AIR CONDITIONER CONDENSER)	
	4	1	**169-7434**	2	FAN AS	
					(EACH INCLUDES)	
		1	**102-8802**	1	KIT-RECEPTACLE (2 PIN)	
					(INCLUDES RECEPTACLE AS & WEDGE)	
	5	1	**169-7435**	1	HARNESS AS-AIR CONDITIONER (CONDENSER FANS) (COMPRESSOR)	
	5A	1	**102-8803**	1	KIT-RECEPTACLE (3 PIN)	
					(INCLUDES RECEPTACLE AS & WEDGE)	
	5B	1	**155-2270**	2	KIT-CONNECTING PLUG (2 PIN)	
					(EACH INCLUDES PLUG AS, WEDGE & INTERFACE SEAL)	
	5C	1	**9X-1054**	1	PLUG AS-CONNECTOR (4 PIN)	
	6	1	**175-2539**	1	CASE AS	
	7	1	**199-7698**	1	COIL AS	
	8	1	**179-0589**	2	GUARD-FAN	
M	9	1	**5C-9553**	3	BOLT (M6X1X16MM)	
	10	1	**5P-4116**	8	WASHER-HARD (8.8X20.5X2MM THK)	
	11	1	**8T-4121**	6	WASHER-HARD (11X21X2.5MM THK)	
M	12	1	**8T-4137**	4	BOLT (M10X1.5X20MM)	
M	13	1	**8T-4136**	4	BOLT (M10X1.5X25MM)	
	14	1	**8T-4205**	1	WASHER-HARD (7.2X14.5X2MM THK)	
M	15	1	**8T-4908**	8	BOLT (M8X1.25X25MM)	
BD	16	1	**5P-5673**		SEAL	
BE	17	1	**126-8472**		SEAL	

B-USE AS REQUIRED
D-ORDER BY THE METER
E-ORDER BY THE CENTIMETER
M-METRIC PART

175-2540 CONDENSER GP-REFRIGERANT *(contd.)* i01829146

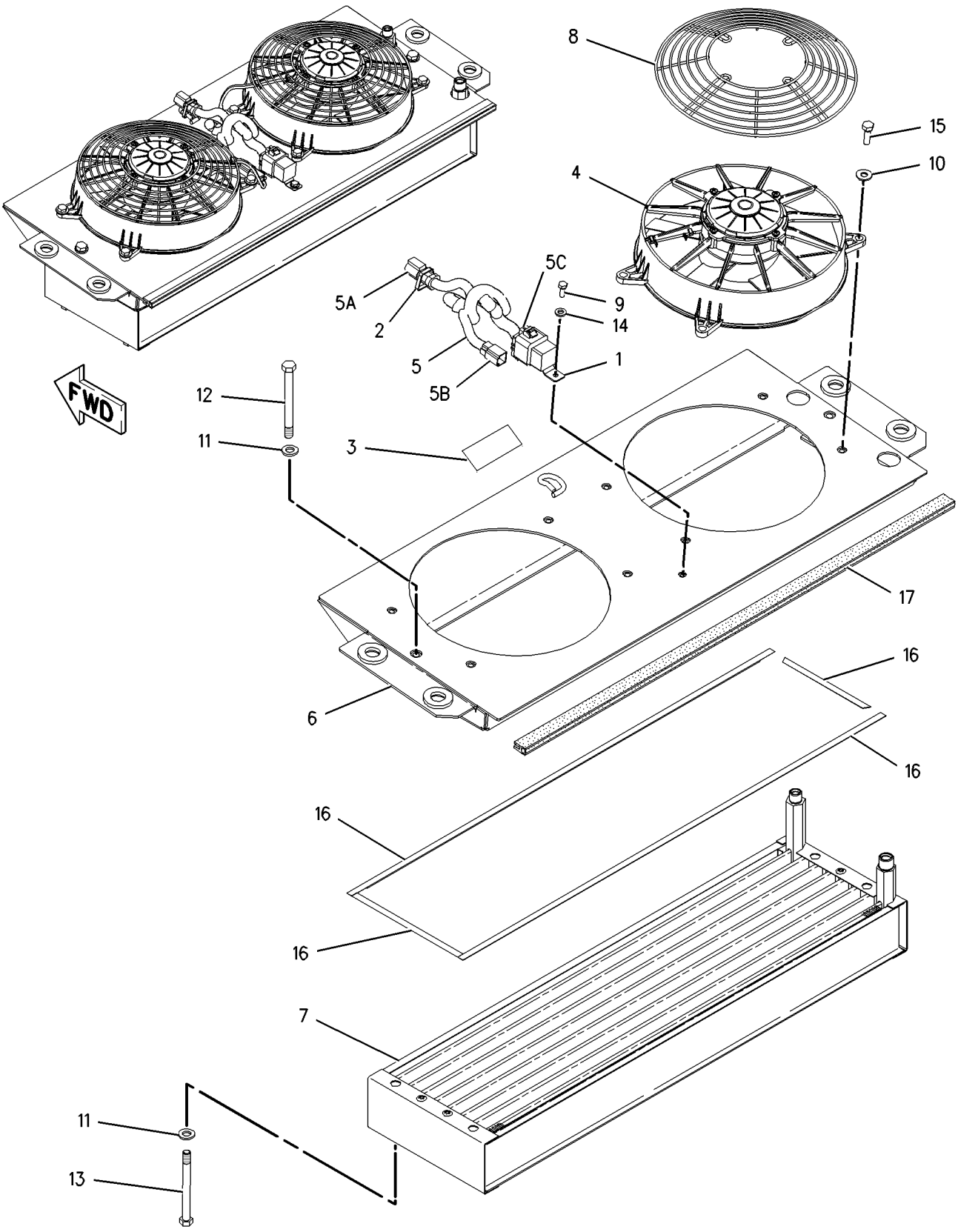

GRAPHIC #1 **<END>** g00774170

167-1463 COVER GP-CONSOLE—IMPLEMENT

S/N: CCK1-UP

FOR USE WITH 173-8641—PAGE 360, 193-3812—PAGE 454. CANNOT BE USED WITH WINCH, 167-1464—PAGE 460

AN ATTACHMENT

SMCS-5258 **i01830483**

NOTE	REF NO	GRAPHIC REF	PART NUMBER	QTY	PART NAME 1 2 3 4 5 6 (PRODUCT LEVEL)	SEE PAGE
	1	1	**197-0825**	1	CONSOLE	
	2	1	**203-6257**	1	GROMMET	

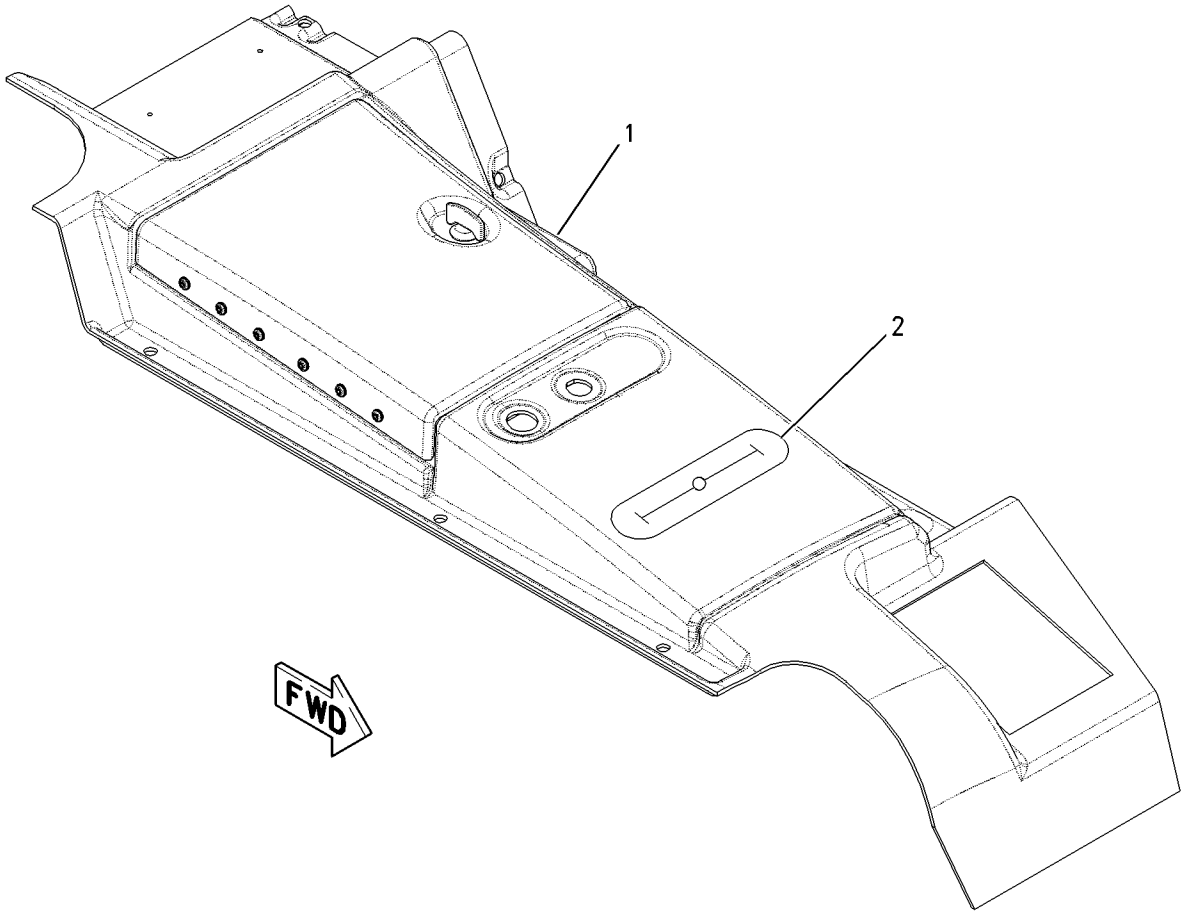

GRAPHIC #1 **<END>** g00960151

OPERATOR STATION

167-1464 COVER GP-CONSOLE—WINCH

S/N: CCK1-UP

CANNOT BE USED WITH 180-4560—PAGE 429, 193-3812—PAGE 454, 167-1463—PAGE 459

AN ATTACHMENT

SMCS-5258 **i01830490**

NOTE	REF NO	GRAPHIC REF	PART NUMBER	QTY	PART NAME 1 2 3 4 5 6 (PRODUCT LEVEL)	SEE PAGE
	1	1	**195-3985**	1	COVER-WINCH	
	2	1	**197-0826**	1	CONSOLE-WINCH	

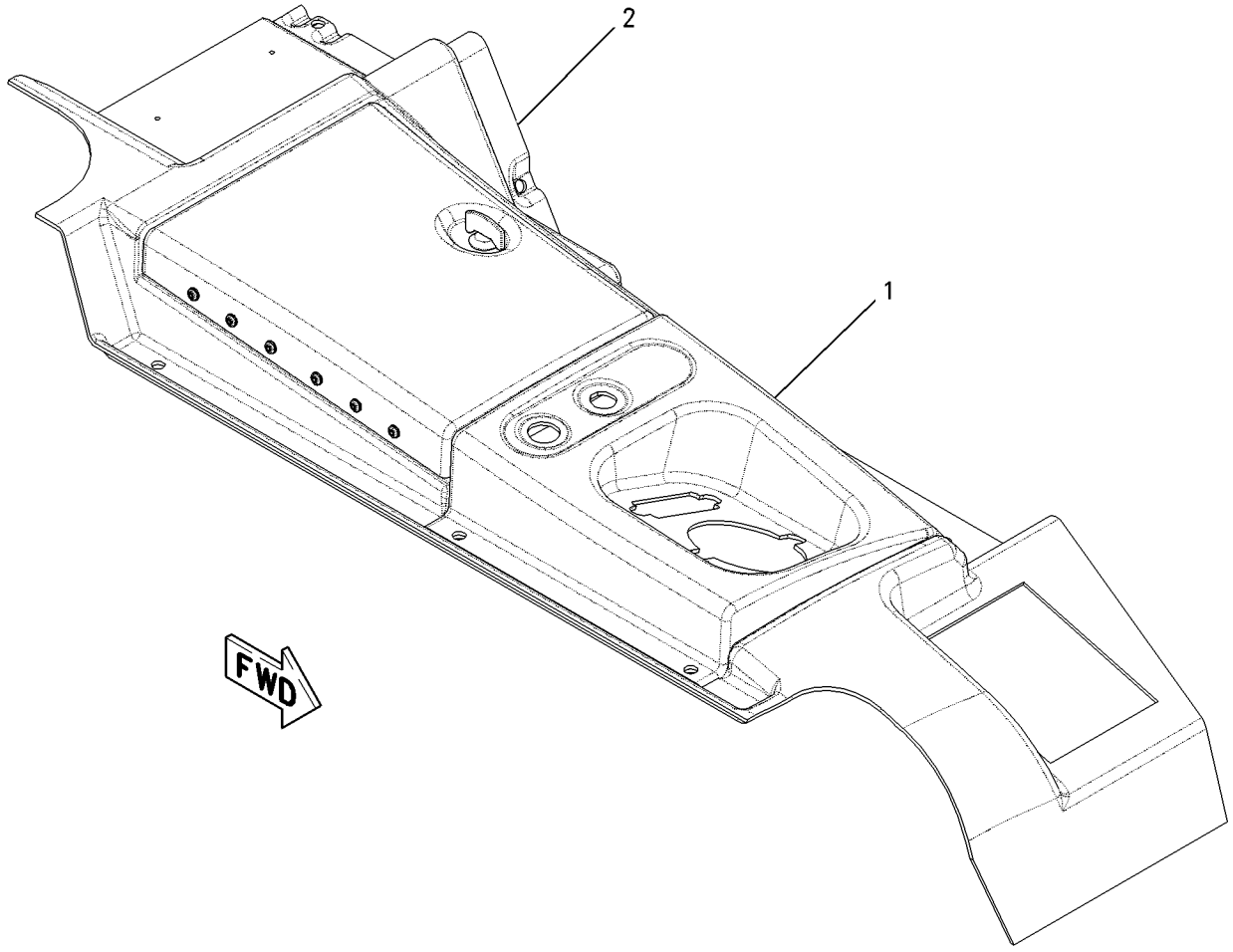

GRAPHIC #1 **<END>** g00776643

OPERATOR STATION

175-6956 COVER GP-CONSOLE–CAB

S/N: CCK1-UP

PART OF 156-8911 CAB GP

SMCS-5258 **i01880232**

NOTE	REF NO	GRAPHIC REF	PART NUMBER	QTY	PART NAME 1 2 3 4 5 6 (PRODUCT LEVEL)	SEE PAGE
	1	1	**223-0455**	3	LOUVER AS	
	2	1	**169-9108**	1	COVER AS	
		1	**178-8844**	4	SPACER (11X28X20MM THK)	
	3	1	**171-9610**	1	INSULATION (LH)	
	4	1	**171-9612**	1	INSULATION (RH)	
	5	1	**171-9616**	1	FLOOR MAT (REAR)	
M	6	1	**9X-2044**	21	SCREW-TRUSS HEAD (M6X1X16MM)	
	7	1	**171-9618**	1	INSULATION (LH)	
	8	1	**177-3846**	1	PANEL (SOUND)	
	9	1	**177-3847**	1	PANEL (SOUND)	
	10	1	**178-9013**	1	COVER	
	11	1	**178-9016**	1	PAD	
	12	1	**180-1295**	1	INSULATION (RH)	
	13	1	**180-1297**	1	PLATE	
	14	1	**188-1846**	1	PLATE AS-FLOOR	
M		1	**8T-3490**	4	NUT-WELD (M10X1.5 THD)	
	15	1	**198-9452**	1	BRACKET	
	16	1	**212-4357**	1	FOOTREST AS	
	17	1	**214-9413**	1	INSULATION (RH)	
	18	1	**214-9414**	1	INSULATION (RH)	
	19	1	**214-9415**	1	INSULATION (REAR)	
	20	1	**218-2798**	1	COVER (PEDAL RH)	
	21	1	**218-2799**	1	COVER (PEDAL LH)	
	22	1	**218-2800**	1	SHROUD	
	23	1	**224-2466**	1	FOAM	
	24	1	**224-2467**	1	FOAM	
	25	1	**224-2468**	4	FOAM	
	26	1	**224-2469**	1	FOAM	
	27	1	**104-2091**	6	SCREW-FLAT HEAD (6-20X0.5 IN)	
M	28	1	**127-2170**	2	SCREW-TRUSS HEAD (M8X1.25X20MM)	
	29	1	**7X-7729**	5	WASHER (11X25X3MM THK) (REAR)	
	30	1	**8T-4121**	2	WASHER-HARD (11X21X2.5MM THK)	
M	31	1	**8T-4136**	10	BOLT (M10X1.5X25MM)	
M	32	1	**8T-4137**	2	BOLT (M10X1.5X20MM)	
M	33	1	**8T-4189**	2	BOLT (M8X1.25X20MM)	
	34	1	**8T-4222**	9	WASHER-PLATED (11X32X2.5MM THK)	
	35	1	**8T-4224**	2	WASHER-HARD (8.8X16X2MM THK)	
M	36	1	**9X-2040**	6	SCREW-TRUSS HEAD (M10X1.5X25MM)	

M-METRIC PART

175-6956 **COVER GP-CONSOLE** *(contd.)* **i01880232**

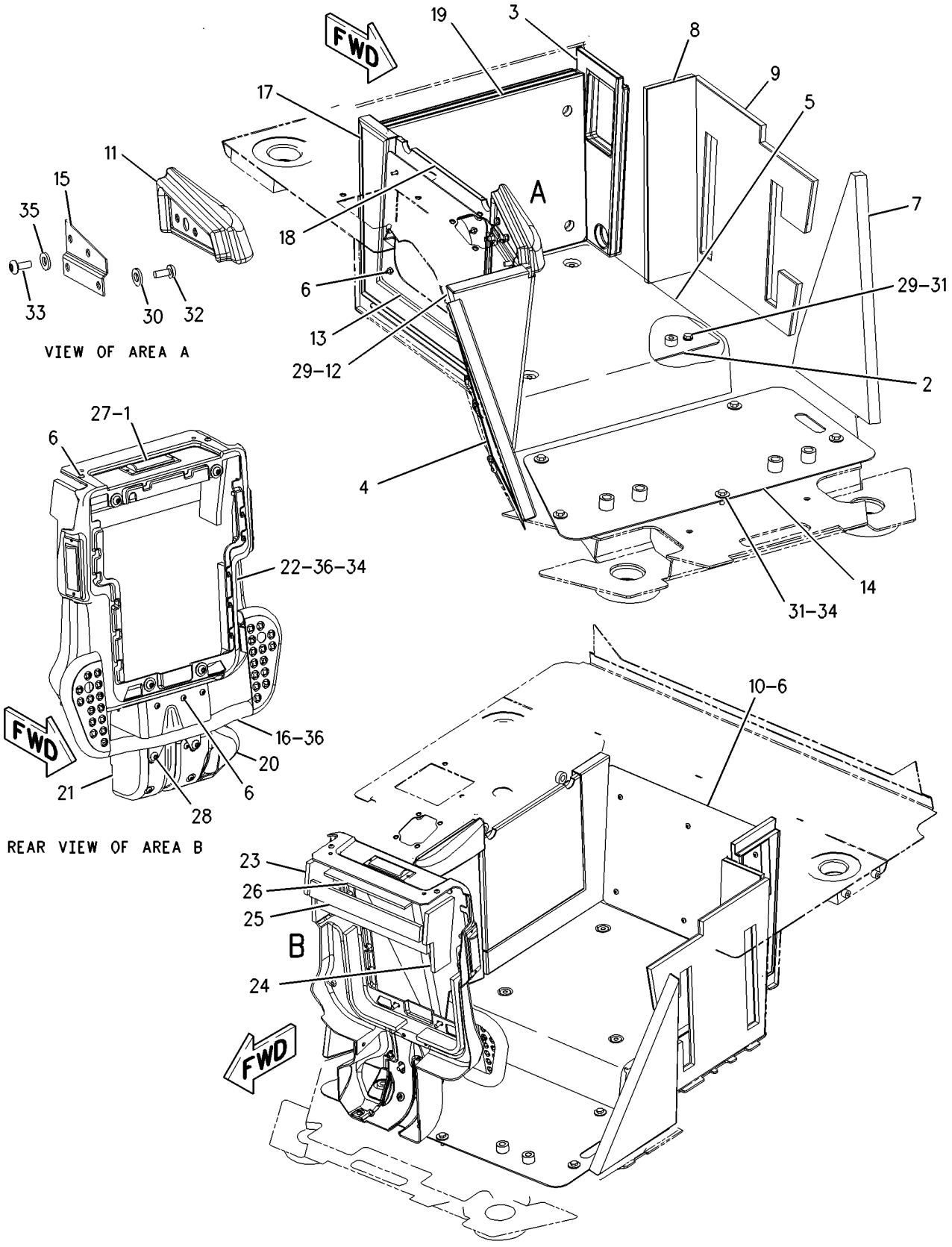

GRAPHIC #1 **<END>** g00974170

OPERATOR STATION

177-3860 COVER GP-CONSOLE—CAB

S/N: CCK1-UP

PART OF 191-4824 CAB AR

SMCS-5258 **i01899302**

NOTE	REF NO	GRAPHIC REF	PART NUMBER	QTY	PART NAME 1 2 3 4 5 6 (PRODUCT LEVEL)	SEE PAGE
	1	1	**7G-4824**	2	STRAP	
	2	1	**8E-7791**	2	STRAP	
	3	1	**109-3590**	1	PLATE	
	4	1	**117-2311**	1	RECEPTACLE AS-POWER (12 VOLT)	
Y	5	1	**158-6632**	1	SWITCH AS-HORN	174
	6	1	**165-4879**	1	ARMREST AS	
M		1	**5C-9553**	3	BOLT (M6X1X16MM)	
		1	**5P-0537**	3	WASHER-HARD (7.2X14.5X2MM THK)	
	7	1	**169-2876**	1	FILM-IDENTIFICATION (12 VOLT)	
	8	1	**171-9607**	1	COVER-REAR	
	9	1	**171-9617**	1	FLOOR MAT (FRONT)	
	10	1	**197-0823**	1	COVER AS (RH)	
		1	**3H-0240**	7	WASHER (5X9.7X.8MM THK)	
		1	**9M-5733**	7	RIVET-POP (4.78MM DIA)	
		1	**178-0266**	1	HINGE AS	
		1	**188-8846**	1	LATCH AS	
	11	1	**197-0824**	1	CONSOLE AS (LH)	
		1	**3H-0240**	7	WASHER (5X9.7X.8MM THK)	
		1	**9M-5733**	7	RIVET-POP (4.78MM DIA)	
		1	**178-0266**	1	HINGE AS	
		1	**188-8846**	1	LATCH AS	
	12	1	**197-4871**	4	CLIP	
	13	1	**7X-7729**	2	WASHER (11X25X3MM THK)	
	14	1	**8T-4121**	4	WASHER-HARD (11X21X2.5MM THK)	
M	15	1	**8T-4137**	4	BOLT (M10X1.5X20MM)	
M	16	1	**8T-4185**	2	BOLT (M10X1.5X50MM)	
M	17	1	**9X-2045**	25	SCREW-TRUSS HEAD (M6X1X20MM)	

M-METRIC PART
Y-SEPARATE ILLUSTRATION

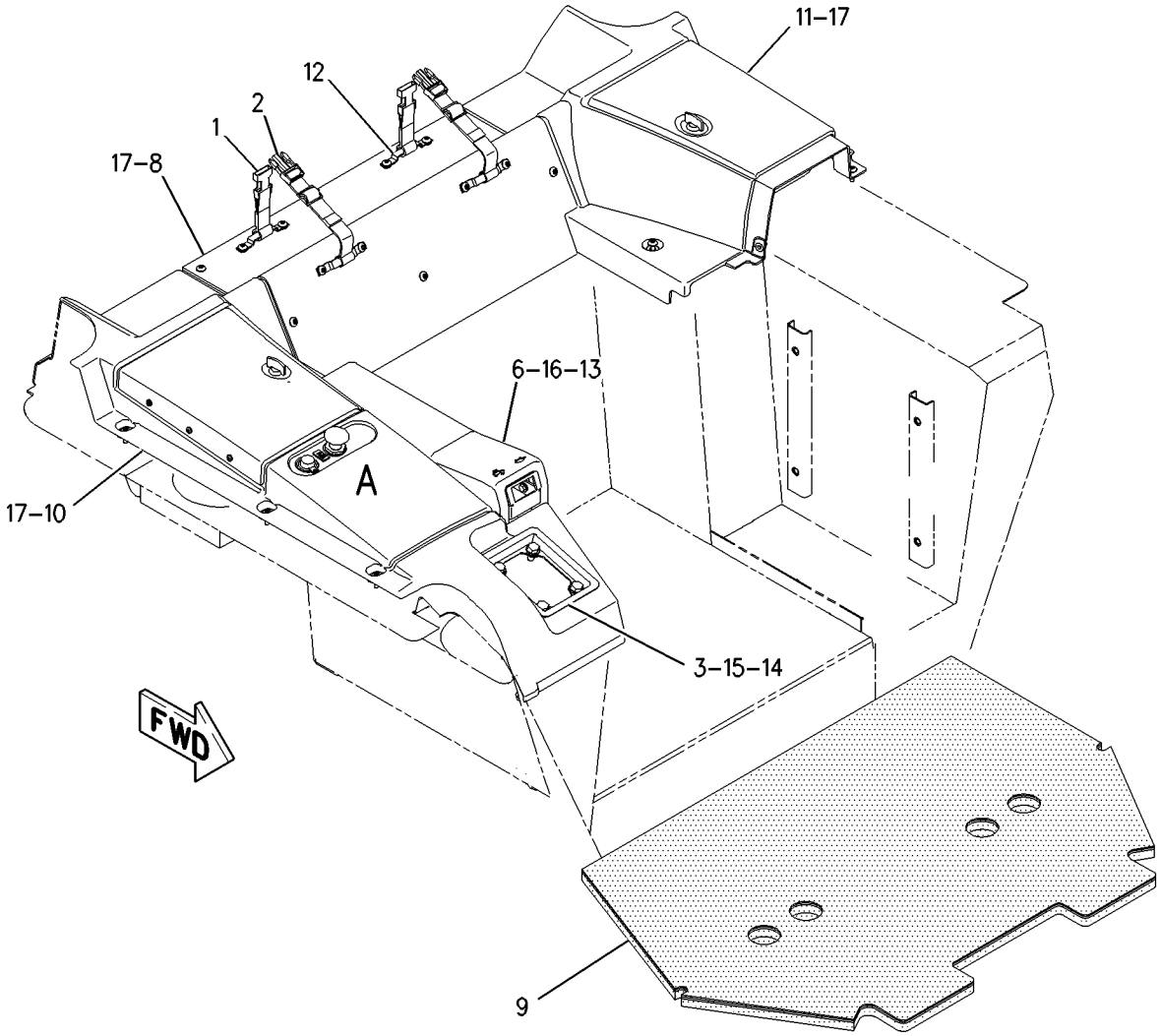

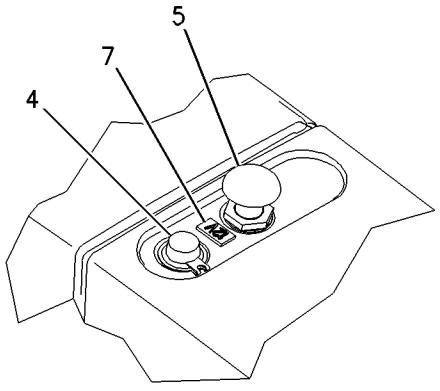

VIEW OF AREA A

GRAPHIC #1 **<END>** g00964093

OPERATOR STATION

192-2545 COVER GP-CONSOLE—DIFFERENTIAL STEERING

S/N: CCK1-UP

PART OF 191-4824 CAB AR

SMCS-5258 **i01834944**

NOTE	REF NO	GRAPHIC REF	PART NUMBER	QTY	PART NAME 1 2 3 4 5 6 (PRODUCT LEVEL)	SEE PAGE
	1	1	**201-8212**	1	COVER-FRONT	
	2	1	**201-8803**	1	COVER AS	
		1	**154-5629**	1	ASHTRAY AS	
M	3	1	**9X-2045**	6	SCREW-TRUSS HEAD (M6X1X20MM)	
M	4	1	**9X-2043**	1	SCREW-TRUSS HEAD (M6X1X14MM)	

M-METRIC PART

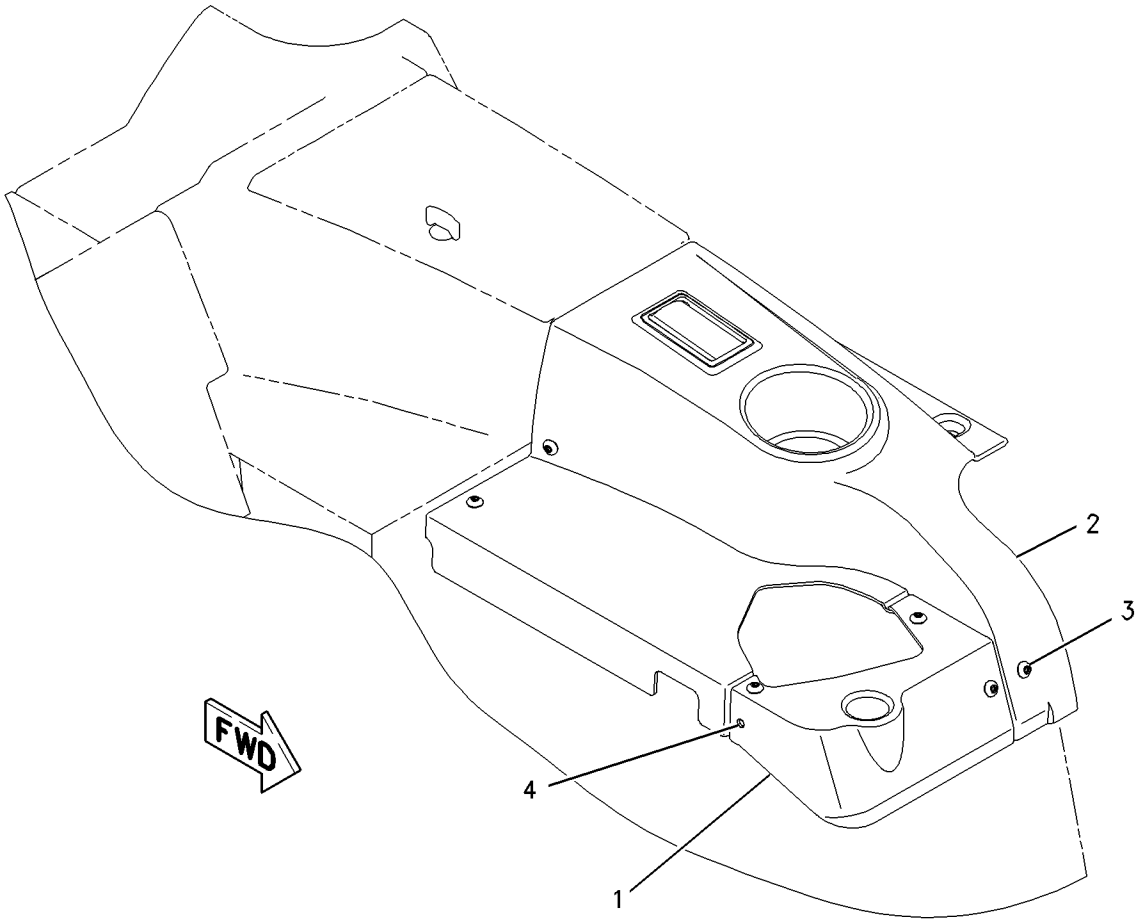

GRAPHIC #1 **<END>** g00955768

OPERATOR STATION

167-1451 DOOR GP-CAB—RH

S/N: CCK1-UP

PART OF 156-8911 CAB GP

SMCS-7308 **i01899304**

NOTE	REF NO	GRAPHIC REF	PART NUMBER	QTY	PART NAME 1 2 3 4 5 6 (PRODUCT LEVEL)	SEE PAGE
	1	1	**6V-7636**	2	PIN AS-SPRING	
	2	1	**125-8175**	1	BLADE AS-WIPER (RH CAB DOOR)	
	3	1	**161-6989**	1	FRAME AS	
M		1	**6V-9632**	11	NUT-WELD (M6X1 THD)	
M		1	**8T-3490**	3	NUT-WELD (M10X1.5 THD)	
	4	1	**167-1452**	1	WINDOW	
	5	1	**170-6623**	1	MOTOR AS (WINDOW WIPER (RH) DOOR)	
		1	**9G-3695**	1	PLUG (GROMMET SEALING)	
		1	**186-3735**	5	PIN-CONNECTOR	
		1	**102-8805**	1	KIT-RECEPTACLE (6 PIN)	
					(INCLUDES RECEPTACLE AS & WEDGE)	
	6	1	**170-6625**	1	ARM AS-WIPER	
	7	1	**200-7836**	1	HANDLE AS (PULL)	
	8	1	**172-2381**	1	LINKAGE AS	
	9	1	**172-2383**	1	LINK AS	
		1	**6V-8185**	1	NUT (1/4-20 THD)	
		1	**108-5471**	1	CLEVIS	
	10	1	**172-2385**	1	LATCH AS-ROTARY	
	11	1	**173-6778**	1	COVER	
	12	1	**173-6807**	1	PLATE-COVER	
	13	1	**193-4577**	1	BRACKET (RH)	
	14	1	**194-3313**	1	LATCH GP (DOOR)	
M		1	**8T-4195**	3	BOLT (M10X1.5X30MM)	
		1	**8T-4223**	3	WASHER-HARD (13.5X25.5X3MM THK)	
		1	**194-3314**	1	RETAINER AS	
		1	**196-3773**	1	STRIKER AS	
	15	1	**9D-3768**	2	GROMMET	
M	16	1	**3T-0849**	4	BOLT-SOCKET HEAD (M6X1X25MM)	
	17	1	**9D-8508**	2	GROMMET	
	18	1	**8T-5400**	1	CONNECTOR	
M	19	1	**9X-2040**	4	SCREW-TRUSS HEAD (M10X1.5X25MM)	
M	20	1	**9X-2045**	7	SCREW-TRUSS HEAD (M6X1X20MM)	
BE	21	1	**133-3234**		SEAL	
	22	1	**133-9123**	2	PLUG	
	23	1	**224-2669**	4	PLUG-PLASTIC	
M	24	1	**8T-4138**	4	BOLT (M6X1X20MM)	
M	25	1	**8T-4137**	7	BOLT (M10X1.5X20MM)	
	26	1	**7X-7729**	7	WASHER (11X25X3MM THK)	
	27	1	**7K-1181**	1	STRAP-CABLE	

B-USE AS REQUIRED
E-ORDER BY THE CENTIMETER
M-METRIC PART

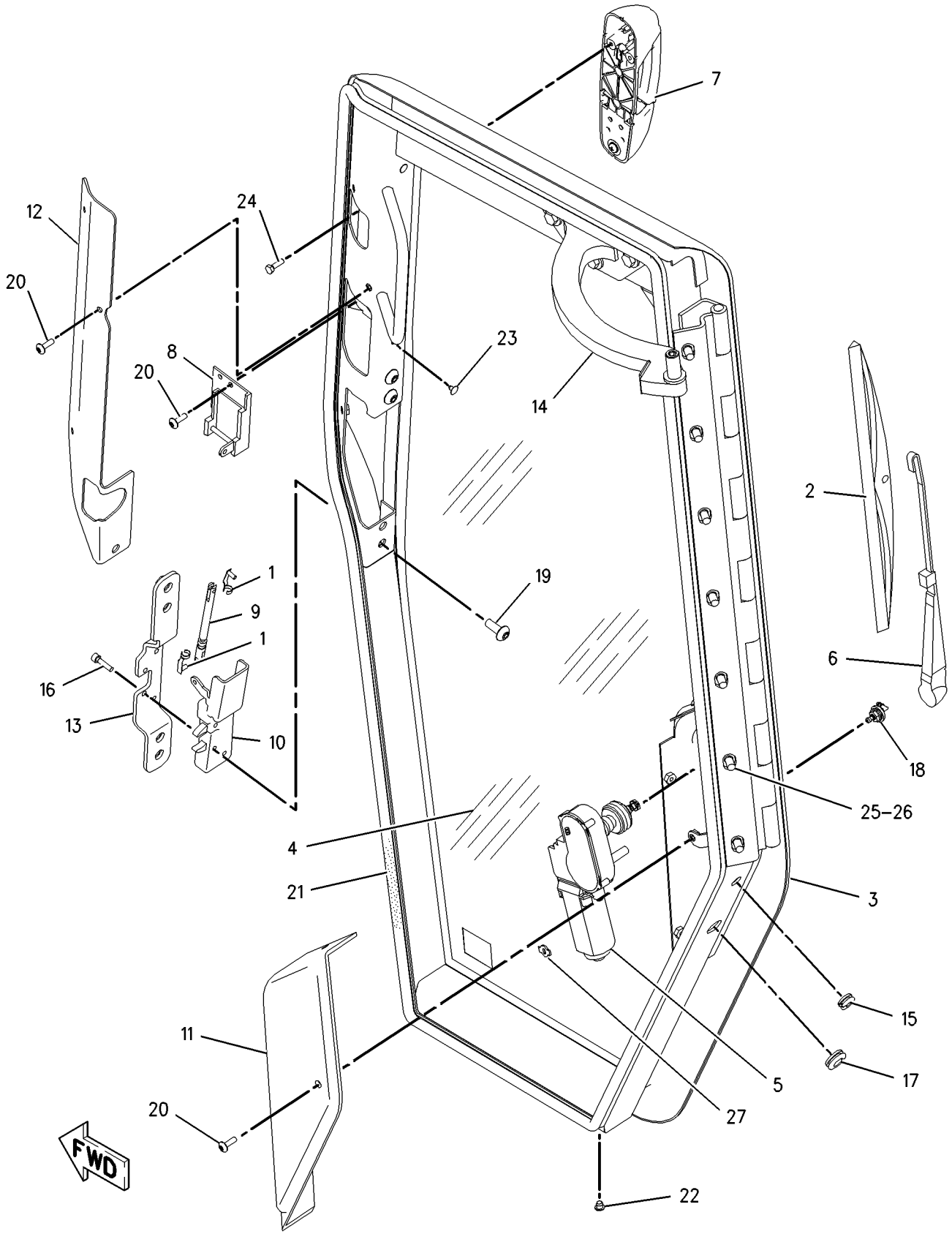

GRAPHIC #1 **<END>** g00909642

OPERATOR STATION

167-1453 DOOR GP-CAB—LH

S/N: CCK1-UP

PART OF 156-8911 CAB GP

SMCS-7308 **i01899307**

NOTE	REF NO	GRAPHIC REF	PART NUMBER	QTY	PART NAME 1 2 3 4 5 6 (PRODUCT LEVEL)	SEE PAGE
	1	1	**6V-7636**	2	PIN AS-SPRING	
	2	1	**7K-1181**	1	STRAP-CABLE	
	3	1	**125-8175**	1	BLADE AS-WIPER (LH CAB DOOR)	
	4	1	**133-9123**	2	PLUG	
	5	1	**161-6990**	1	FRAME AS	
M		1	**6V-9632**	11	NUT-WELD (M6X1 THD)	
M		1	**8T-3490**	3	NUT-WELD (M10X1.5 THD)	
	6	1	**167-1454**	1	WINDOW	
	7	1	**170-6624**	1	MOTOR AS-WINDOW WIPER (LH)(DOOR)	
		1	**8T-8729**	4	PIN-CONNECTOR	
		1	**102-8804**	1	KIT-RECEPTACLE (4 PIN)	
					(INCLUDES RECEPTACLE AS & WEDGE)	
	8	1	**172-2382**	1	LINKAGE AS	
	9	1	**172-2383**	1	LINK AS	
		1	**6V-8185**	1	NUT (1/4-20 THD)	
		1	**108-5471**	1	CLEVIS	
	10	1	**172-2384**	1	LATCH AS (ROTARY)	
	11	1	**173-6777**	1	COVER	
	12	1	**175-3762**	1	ARM AS-WIPER	
	13	1	**183-4690**	1	COVER	
	14	1	**193-4578**	1	LATCH	
M		1	**8T-3490**	4	NUT-WELD (M10X1.5 THD)	
		1	**175-7643**	1	PLATE	
	15	1	**194-3309**	1	RETAINER GP (CAB DOOR)	
		1	**8T-4121**	3	WASHER-HARD (11X21X2.5MM THK)	
M		1	**8T-4195**	3	BOLT (M10X1.5X30MM)	
		1	**196-3773**	1	STRIKER AS	
	16	1	**200-7836**	1	HANDLE AS (PULL)	
	17	1	**224-2669**	4	PLUG-PLASTIC	
M	18	1	**3T-0849**	4	BOLT-SOCKET HEAD (M6X1X25MM)	
	19	1	**7X-7729**	7	WASHER (11X25X3MM THK)	
M	20	1	**8T-4137**	7	BOLT (M10X1.5X20MM)	
M	21	1	**8T-4138**	4	BOLT (M6X1X20MM)	
	22	1	**8T-5400**	1	CONNECTOR	
	23	1	**9D-3768**	2	GROMMET	
	24	1	**9D-8508**	2	GROMMET	
M	25	1	**9X-2040**	4	SCREW-TRUSS HEAD (M10X1.5X25MM)	
M	26	1	**9X-2045**	7	SCREW-TRUSS HEAD (M6X1X20MM)	
BE	27	1	**133-3234**		SEAL	

B-USE AS REQUIRED
E-ORDER BY THE CENTIMETER
M-METRIC PART

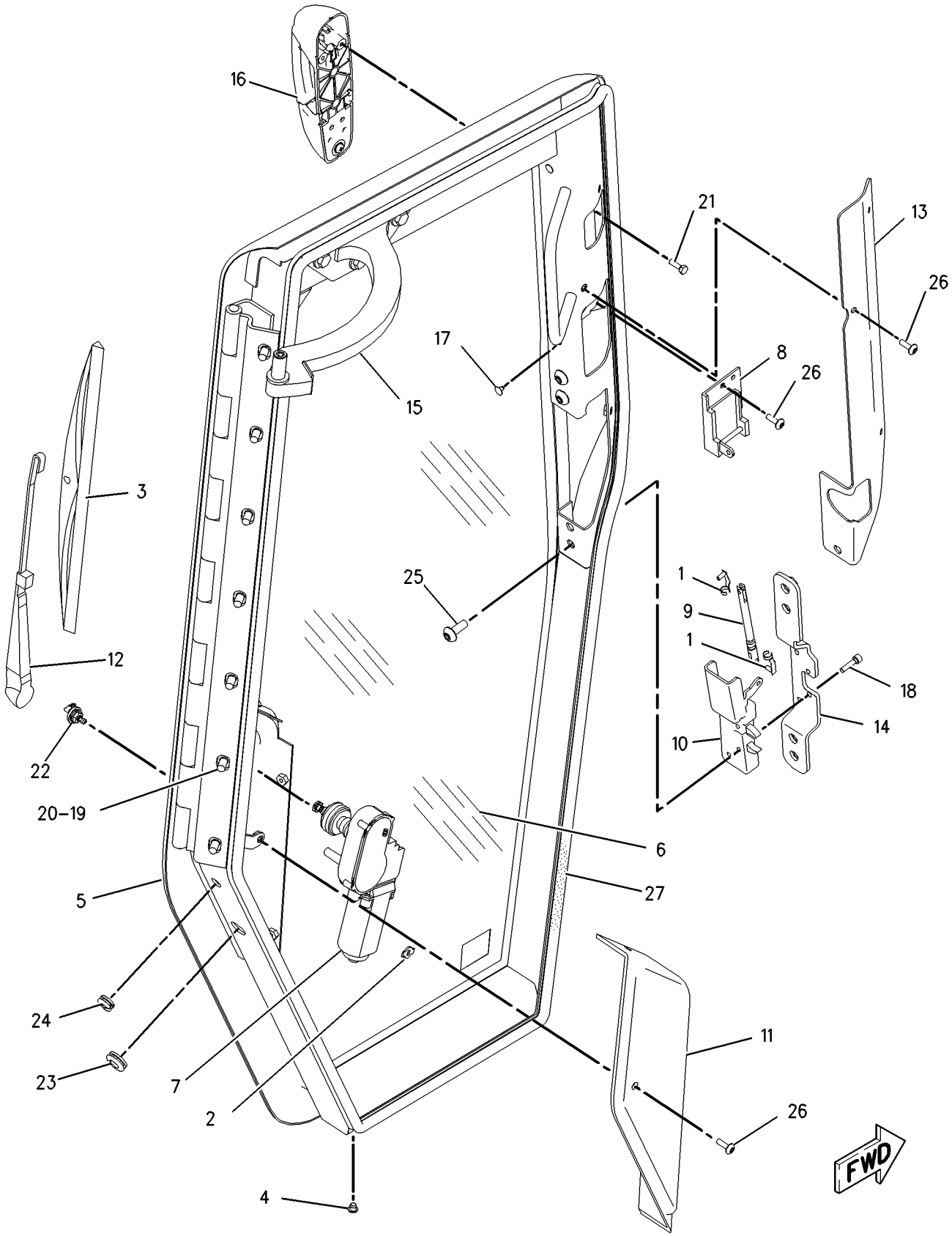

GRAPHIC #1 **<END>** g00912009

OPERATOR STATION

175-7654 HEATER GP-CAB

S/N: CCK1-UP

PART OF 156-8911 CAB GP

SMCS-7304 **i01885524**

NOTE	REF NO	GRAPHIC REF	PART NUMBER	QTY	PART NAME 1 2 3 4 5 6 (PRODUCT LEVEL)	SEE PAGE
	1	1	**5D-1026**	4	CLAMP-HOSE	
	2	1	**6T-5617**	1	PLATE	
	3	1	**109-6407**	1	COIL AS-HEATER	
	4	1	**134-9602**	1	VALVE AS-WATER (CAB HEATER)	
		1	**3E-1841**	1	LEVER	
		1	**6V-6717**	1	SCREW-WASHER HEAD (8-32X.375 IN)	
		1	**8Y-5737**	1	CLAMP	
		1	**037-4426**	1	RETAINER	
		1	**102-0341**	1	CLIP (TAB)	
	5	1	**156-4449**	1	CABLE AS	
	6	1	**6D-1641**	2	CLIP	
	7	1	**7X-7729**	2	WASHER (11X25X3MM THK)	
	8	1	**8T-4121**	5	WASHER-HARD (11X21X2.5MM THK)	
M	9	1	**8T-4133**	1	NUT (M10X1.5 THD)	
M	10	1	**8T-4137**	6	BOLT (M10X1.5X20MM)	
E	11	1	**5P-0767**		HOSE (18.8CM)	
BD	12	1	**5P-5643**		SEAL	
BD	13	1	**5P-5639**		SEAL	
E	14	1	**5P-0767**		HOSE (17.6CM)	

B-USE AS REQUIRED
D-ORDER BY THE METER
E-ORDER BY THE CENTIMETER
M-METRIC PART

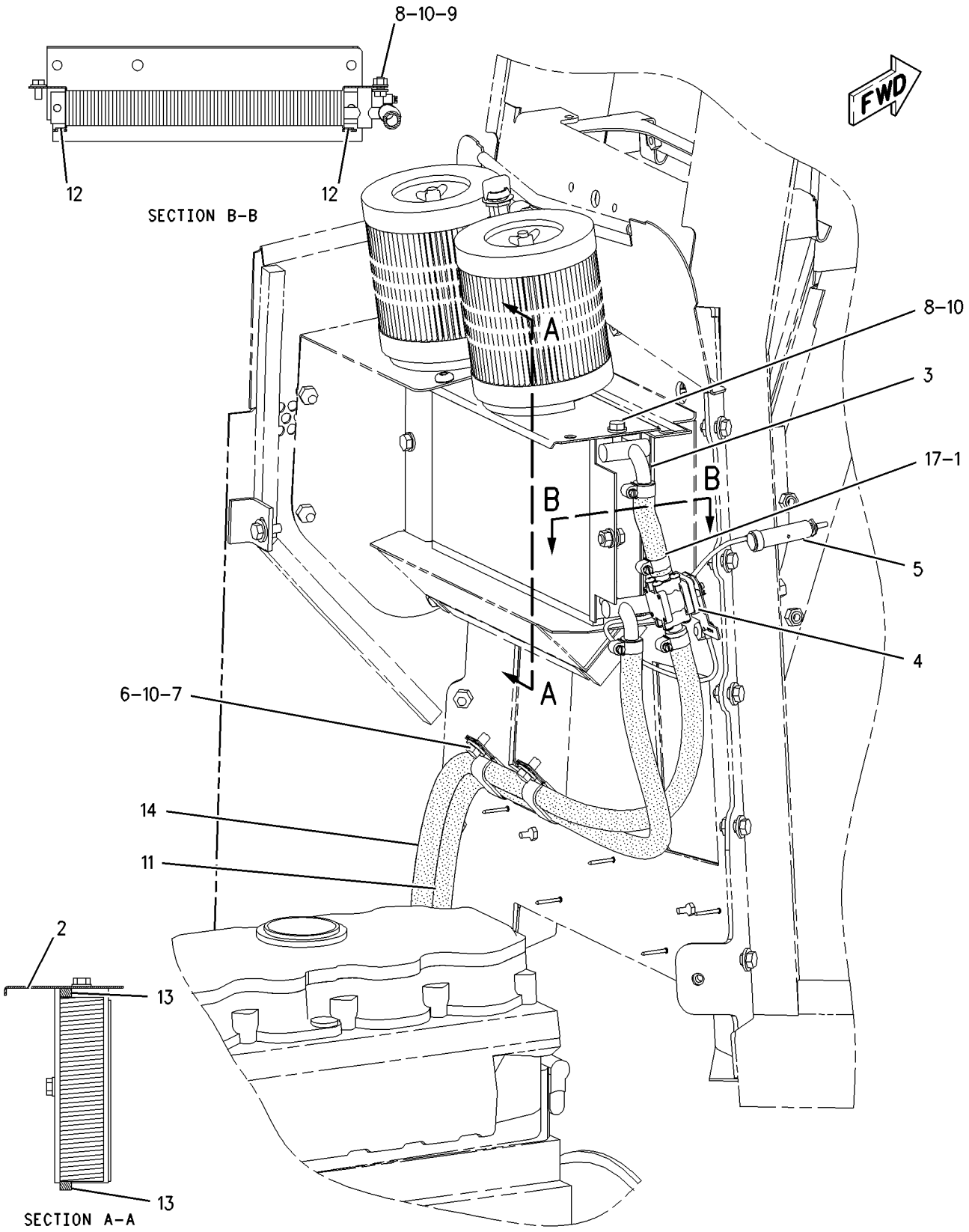

GRAPHIC #1 **<END>** g00935061

OPERATOR STATION

163-1036 HEATER GP-OPEN ROPS

S/N: CCK1-UP
PART OF 167-1465 HEATER GP-OPEN ROPS
AN ATTACHMENT

SMCS-7304 **i01899310**

NOTE	REF NO	GRAPHIC REF	PART NUMBER	QTY	PART NAME 1 2 3 4 5 6 (PRODUCT LEVEL)	SEE PAGE
	1	1	**3E-0400**	2	WHEEL-BLOWER	
					(EACH INCLUDES)	
		1	**037-4838**	1	CLAMP	
	2	1	**3S-2093**	3	STRAP-CABLE	
	3	1	**6V-1668**	2	WASHER (6.5X29.1X3MM THK)	
	4	1	**8C-4586**	2	CLAMP	
	5	1	**8P-5141**	2	PLATE-ORIFICE	
M	6	1	**8T-4171**	15	BOLT (M6X1X12MM)	
	7	1	**8T-4205**	28	WASHER-HARD (7.2X14.5X2MM THK)	
	8	1	**9G-1950**	1	RESISTOR	
	9	1	**127-6424**	1	HARNESS AS (HEATER)	
		1	**102-8805**	1	KIT-RECEPTACLE (6 PIN)	
					(INCLUDES RECEPTACLE AS & WEDGE)	
		1	**8T-8737**	2	PLUG-SEAL	
		1	**9W-0844**	2	SOCKET-CONNECTION	
		1	**9W-0852**	4	PIN-CONNECTOR	
		1	**155-2270**	1	KIT-CONNECTING PLUG (2 PIN)	
					(INCLUDES PLUG AS & WEDGE)	
	10	1	**129-1336**	1	PLATE	
	11	1	**129-1368**	1	PLATE	
	12	1	**129-1371**	1	GASKET	
	13	1	**129-1373**	1	GASKET	
	14	1	**129-1374**	1	GASKET	
	15	1	**129-1376**	1	CASE AS	
		1	**5P-4115**	4	WASHER-HARD (7.2X19X2MM THK)	
M		1	**6V-9632**	10	NUT-WELD (M6X1 THD)	
		1	**7T-1099**	3	LINK	
M		1	**8T-3490**	2	NUT-WELD (M10X1.5 THD)	
	16	1	**129-1378**	1	HOUSING AS	
	17	1	**133-9399**	1	GROMMET	
M	18	1	**141-9784**	1	BOLT-HEX HEAD (M6X190MM)	
	19	1	**174-1494**	1	MOTOR GP-ELECTRIC (27 VOLT) (HEATER OPEN ROPS)	
		1	**3E-3365**	1	WEDGE-RECEPTACLE LOCK (2 PIN)	
		1	**9W-0852**	2	PIN-CONNECTOR	
		1	**102-8802**	1	KIT-RECEPTACLE (2 PIN)	
					(INCLUDES RECEPTACLE AS & WEDGE)	
	20	1	**177-6858**	1	COIL AS-HEATER	
M	21	1	**129-3178**	11	LOCKNUT (M6X1 THD)	
M	22	1	**6V-7728**	1	BOLT (M6X1.0X45MM)	
D	23	1	**5P-5908**		SEAL (.2M)	
D	24	1	**6V-2496**		SEAL (1.1M)	

D-ORDER BY THE METER
M-METRIC PART

163-1036 HEATER GP-OPEN ROPS *(contd.)* i01899310

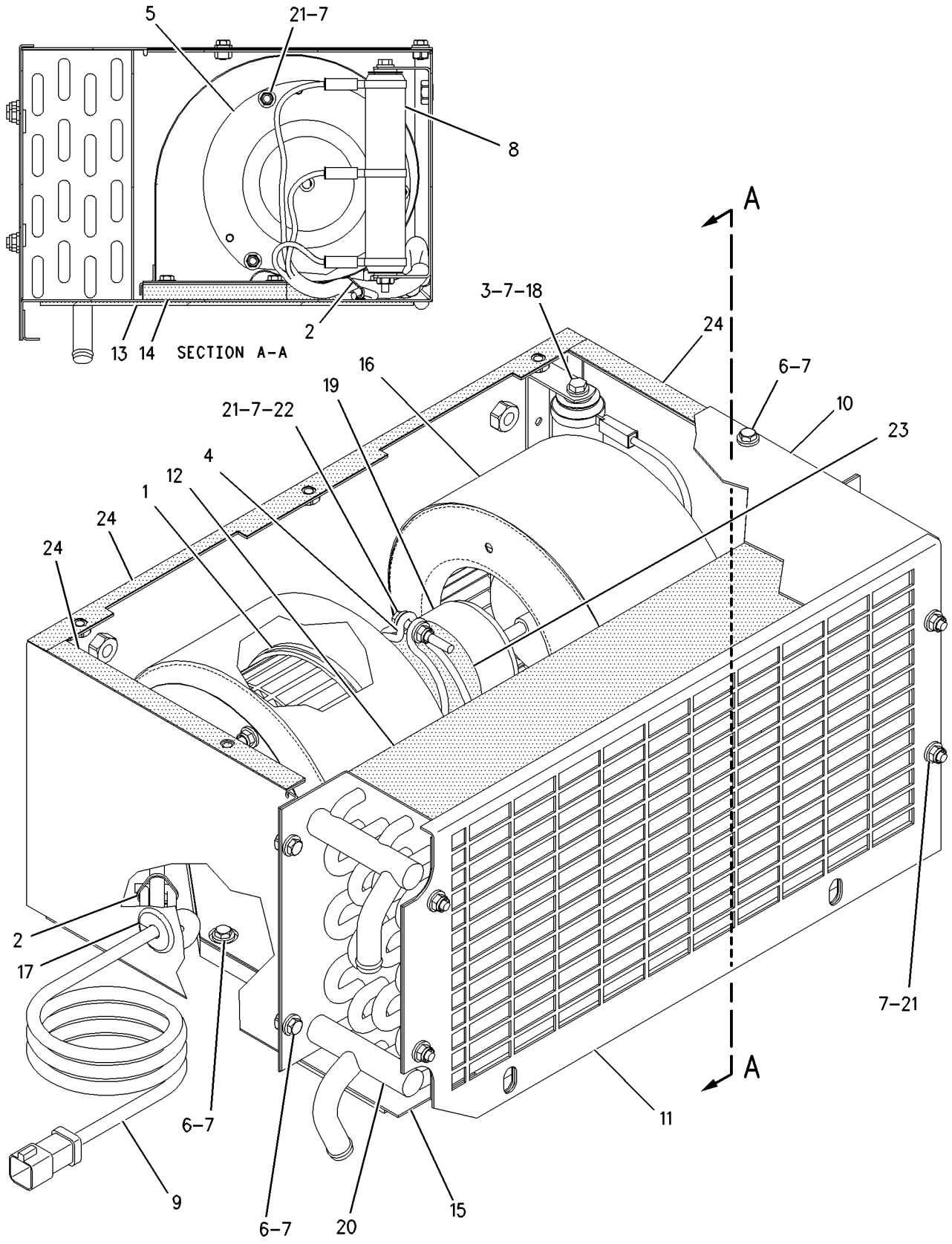

GRAPHIC #1 **<END>** g00773308

OPERATOR STATION

167-1465 HEATER GP-OPEN ROPS

S/N: CCK1-UP
FOR USE WITH CANOPY AR. CANNOT BE USED WITH CAB AR
AN ATTACHMENT

SMCS-7304 **i01830517**

NOTE	REF NO	GRAPHIC REF	PART NUMBER	QTY	PART NAME 1 2 3 4 5 6 (PRODUCT LEVEL)	SEE PAGE
	1	1	**6P-3236**	1	SWITCH AS-ROTARY (HEATER BLOWER)	
		1	**6V-8362**	5	SCREW-MACHINE (8-32X0.31 IN)	
		1	**9B-7233**	5	LOCKWASHER	
	2	1	**8Y-6391**	4	LOUVER AS	
	3	1	**9X-2185**	4	SCREW (8-15X0.44 IN)	
	4	1	**9X-6772**	1	STRAP-CABLE	
	5	1	**110-6109**	1	KNOB-CONTROL (HEATER TEMPERATURE)	
Y	6	1	**163-1036**	1	HEATER GP-OPEN ROPS	472
E	7	1	**5P-0767**	1	HOSE (23CM)	
	8	1	**5D-1026**	4	CLAMP-HOSE	
	9	1	**180-5317**	1	VALVE AS-WATER (OPEN ROPS HEATER)	
		1	**3E-1841**	1	LEVER	
		1	**6V-6717**	1	SCREW-WASHER HEAD (8-32X.375 IN)	
		1	**8Y-5737**	1	CLAMP	
		1	**037-4426**	1	RETAINER	
		1	**102-0341**	1	CLIP (TAB)	
	10	1	**132-3332**	16	SCREW (NO 4 X 16MM)	
	11	1	**142-6926**	1	CABLE AS (HEATER TEMPERATURE CONTROL)	
	12	1	**187-6092**	1	FILM (DASH PANEL)	
	13	1	**7X-7729**	4	WASHER (11X25X3MM THK)	
M	14	1	**8T-4137**	2	BOLT (M10X1.5X20MM)	
M	15	1	**8T-4196**	2	BOLT (M10X1.5X35MM)	
	16	1	**110-6109**	1	KNOB-CONTROL (BLOWER FAN SPEED)	

E-ORDER BY THE CENTIMETER
M-METRIC PART
Y-SEPARATE ILLUSTRATION

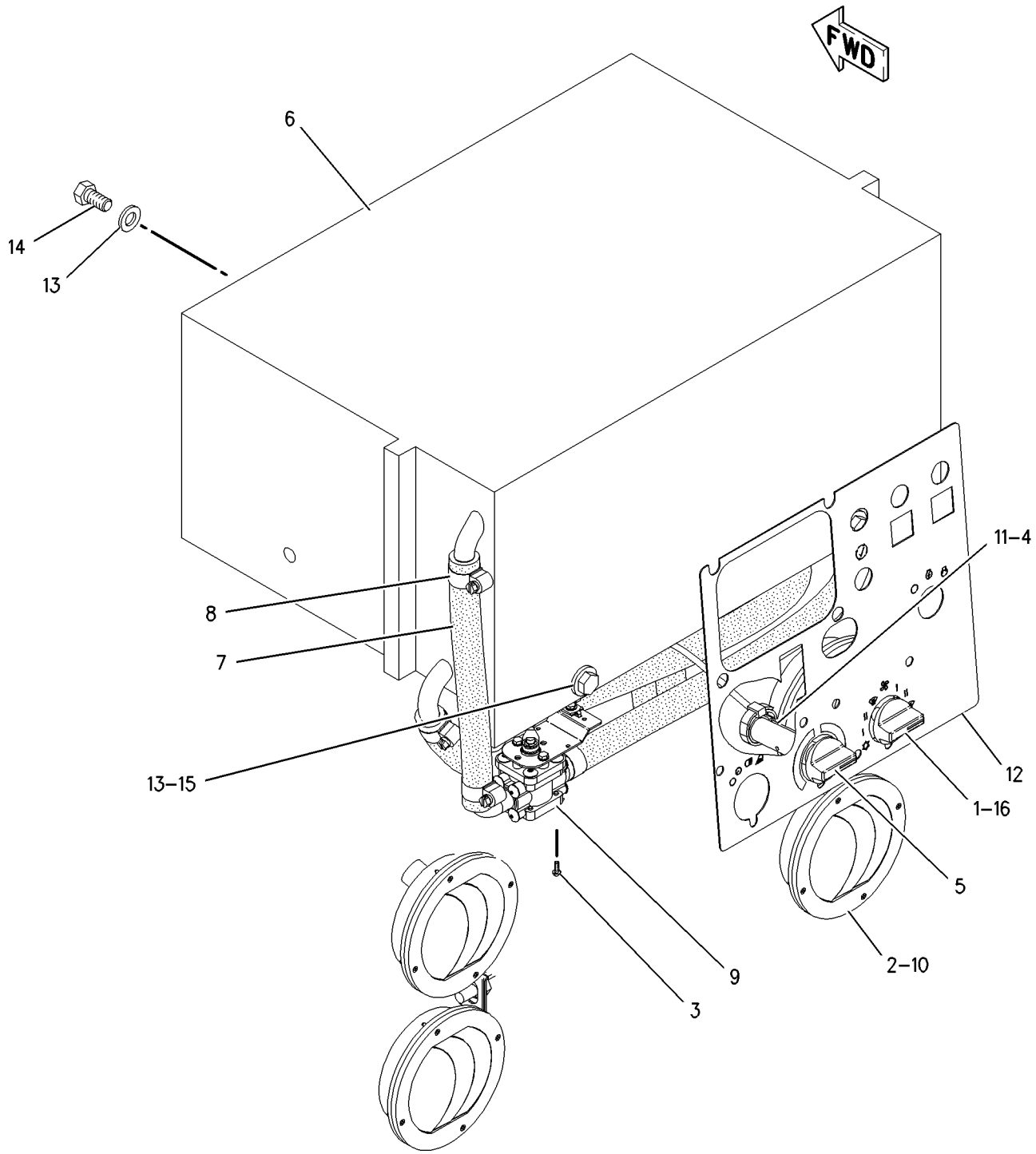

GRAPHIC #1 **<END>** g00911191

OPERATOR STATION

174-2231 HOUSING GP-SEAT SUSPENSION

S/N: CCK1-UP
PART OF 160-7165 SUSPENSION GP-SEAT
AN ATTACHMENT

SMCS-7321 **i01883773**

NOTE	REF NO	GRAPHIC REF	PART NUMBER	QTY	PART NAME 1 2 3 4 5 6 (PRODUCT LEVEL)	SEE PAGE
	1	1	**1Y-7927**	1	PIN	
	2	1	**2D-6235**	2	LOCKNUT (1/4-20 THD)	
	3	1	**2M-7819**	4	RING-RETAINING	
	4	1	**3D-2975**	2	RING-RETAINING	
	5	1	**4B-5059**	6	WASHER (29.5X15X2.5MM THK)	
	6	1	**4N-2927**	2	RACE-THRUST BEARING	
	7	1	**5D-4822**	2	RING-RETAINING	
	8	1	**5P-8445**	4	RING-RETAINING	
	9	1	**5V-0770**	2	BOLT-CARRIAGE	
	10	1	**7M-7219**	1	BEARING-THRUST	
	11	1	**7V-5191**	2	SPACER (28X10X7.1MM THK)	
	12	1	**8L-8413**	2	STRAP-CABLE	
	13	1	**8S-7803**	4	RING-RETAINING	
	14	1	**8Y-6041**	1	ARM AS	
	15	1	**8Y-6045**	1	CAM	
	16	1	**8Y-6046**	1	PIN	
	17	1	**8Y-6047**	2	PIN	
	18	1	**8Y-6060**	2	ROLLER	
	19	1	**8Y-6062**	1	LINK-ACTUATOR-RH	
	20	1	**8Y-6063**	1	LINK-ACTUATOR-LH	
	21	1	**8Y-6064**	2	ROLLER-SLIDER	
	22	1	**8Y-6066**	1	SPRING	
	23	1	**8Y-6067**	1	SPACER (10.54MM THK)	
	24	1	**8Y-6068**	1	NUT (3/8 X 16 THD)	
	25	1	**8Y-6069**	1	ADJUSTER AS	
	26	1	**9X-8918**	3	SCREW-FLAT HEAD (8-32X0.50 IN)	
	27	1	**095-0878**	1	PIN-SPRING	
	28	1	**131-4242**	1	BOLT (3/8-16X5.18 IN)	
	29	1	**131-5167**	1	KNOB AS-WEIGHT (SEAT SUSPENSION)	
	30	1	**161-5967**	1	SHAFT	
	31	1	**174-2237**	1	HOUSING AS-UPPER	
JZ	32	1		1	KNOB-HEIGHT (SEAT SUSPENSION)	
JZ	33	1		1	KNOB-HEIGHT (SEAT SUSPENSION)	
LZ	34	1		2	SPRING	
LZ	35	1		2	BUSHING	
VZ	36	1		2	SPRING	
VZ	37	1		2	SPACER	
VZ	38	1		2	BUSHING-GUIDE	
VZ	39	1		2	ROD	
PZ	40	1		1	TAPE-INDICATOR	
PZ	41	1		1	GUIDE	
SZ	42	1		1	PIN	
SZ	43	1		1	FOLLOWER-CAM	
TZ	44	1		1	PIN	
TZ	45	1		1	FOLLOWER-CAM	
UZ	46	1		2	ROLLER AS	
UZ	47	1		1	ROLLER AS	
QZ	48	1		3	BUMPER	
					AVAILABLE REPAIR KIT(S):	
J			**8Y-5945**	1	KIT-SUSPENSION KNOB (HEIGHT ADJUSTMENT) (SUSPENSION SEAT)	
L			**8Y-6859**	1	KIT-SPRING (SUSPENSION SEAT)	
V			**8Y-6860**	1	KIT-SPRING (HEIGHT ADJUSTMENT) (SUSPENSION SEAT)	

174-2231 **HOUSING GP-SEAT SUSPENSION** *(contd.)* **i01883773**

NOTE	REF NO	GRAPHIC REF	PART NUMBER	QTY	PART NAME 1 2 3 4 5 6 (PRODUCT LEVEL)	SEE PAGE
P			**100-3224**	1	KIT-INDICATOR (WEIGHT ADJUSTMENT) (SUSPENSION SEAT)	
Q			**100-5179**	1	KIT-BUMPER (WEIGHT ADJUSTMENT) (SUSPENSION SEAT)	
S			**108-4086**	1	KIT-FOLLOWER (SUSPENSION SEAT)	
T			**108-4087**	1	KIT-FOLLOWER (SUSPENSION SEAT)	
U			**108-4103**	1	KIT-BEARING (SUSPENSION SEAT)	

J-KIT MARKED J INCLUDES PARTS MARKED J
L-KIT MARKED L INCLUDES PARTS MARKED L AND RETAINING RING
P-KIT MARKED P INCLUDES PARTS MARKED P AND CABLE STRAP
Q-KIT MARKED Q INCLUDES PARTS MARKED Q
S-KIT MARKED S INCLUDES PARTS MARKED S
T-KIT MARKED T INCLUDES PARTS MARKED T
U-KIT MARKED U INCLUDES PARTS MARKED U
V-KIT MARKED V INCLUDES PARTS MARKED V
Z-NOT SERVICED SEPARATELY

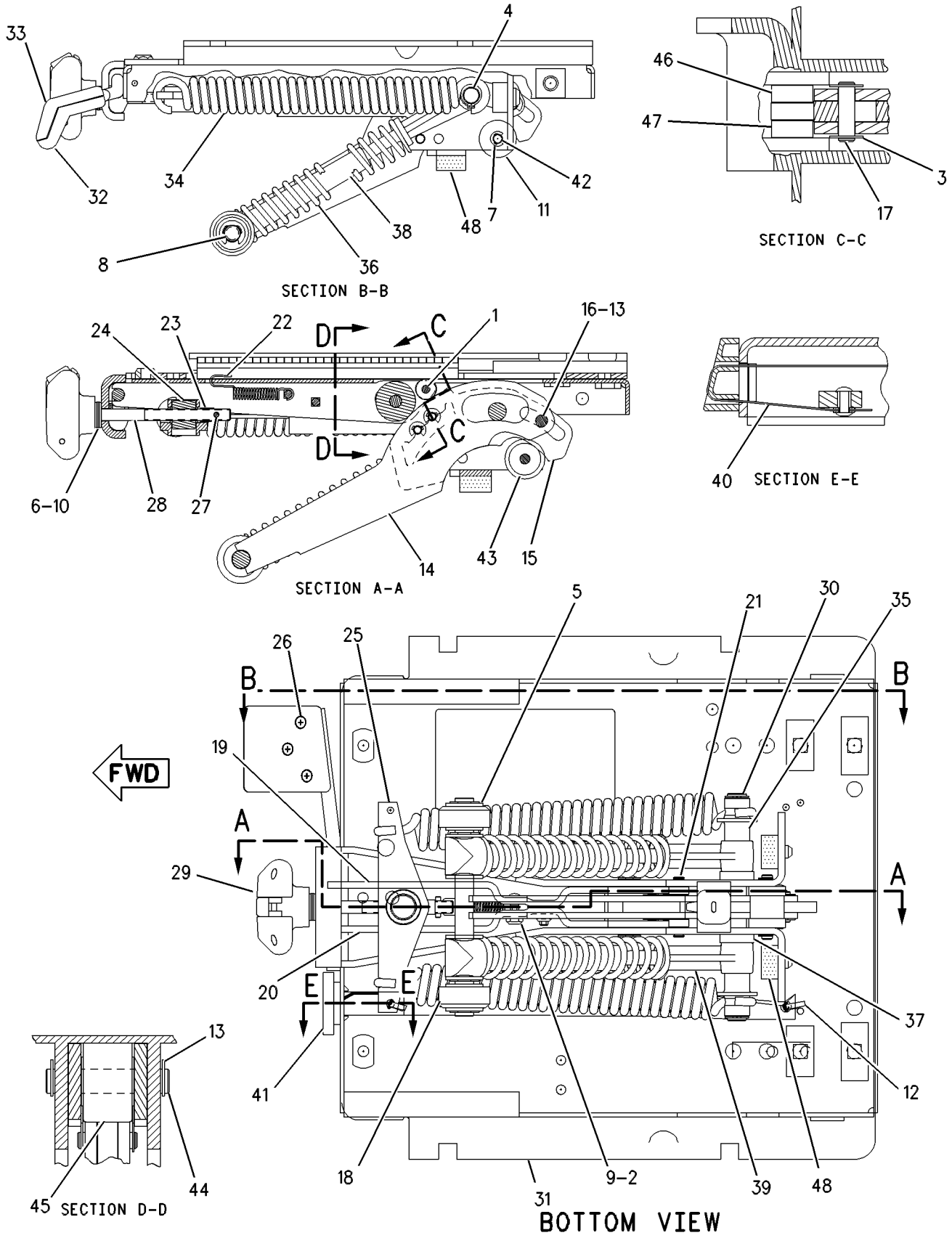

GRAPHIC #1 **<END>** g00608620

204-6414 INSTALLATION GP-LINES—AIR CONDITIONER

S/N: CCK1-UP

PART OF 191-4824 CAB AR

SMCS-1808 **i01895732**

NOTE	REF NO	GRAPHIC REF	PART NUMBER	QTY	PART NAME 1 2 3 4 5 6 (PRODUCT LEVEL)	SEE PAGE
	1	1	**7K-1181**	3	STRAP-CABLE	
	2	1	**5P-3928**	1	COUPLING AS-SEALING	
		1	**107-4395**	1	VALVE AS	
		1	**107-4396**	1	GASKET	
	3	1	**7K-3176**	1	COUPLING AS	
		1	**107-4393**	1	VALVE AS	
		1	**107-4394**	1	GASKET	
	4	1	**9M-9162**	2	CLAMP	
	5	1	**106-8704**	1	SUPPRESSOR AS-ARC	
	6	1	**110-6393**	1	PLATE-INSTRUCTION (AIR CONDITIONER)	
	7	1	**114-5333**	1	SWITCH AS-PRESSURE (HIGH/LOW) (COMPRESSOR)	
		1	**102-8802**	1	KIT-RECEPTACLE (2 PIN)	
					(INCLUDES RECEPTACLE AS & WEDGE)	
		1	**186-3735**	2	PIN-CONNECTOR	
	8	1	**214-7303**	1	TUBE AS	
	9	1	**225-5518**	1	FITTING GP	
		1	**3E-4058**	1	VALVE AS (AIR CONDITIONER)	
		1	**3E-4052**	1	CAP AS (AIR CONDITIONER)	
	10	1	**1P-6356**	1	PLATE	
	11	1	**4P-7581**	1	CLIP	
	12	1	**4P-8134**	1	CLIP	
	13	1	**8T-4121**	3	WASHER-HARD (11X21X2.5MM THK)	
M	14	1	**8T-4133**	1	NUT (M10X1.5 THD)	
M	15	1	**8T-4195**	1	BOLT (M10X1.5X30MM)	
M	16	1	**8T-6466**	1	BOLT (M10X1.50X60MM)	
	17	1	**9X-7378**	1	SEAL-O-RING	
	18	1	**9X-7383**	1	SEAL-O-RING	
	19	1	**9X-7384**	1	SEAL-O-RING	
	20	1	**9X-7385**	2	SEAL-O-RING	
	21	1	**8M-2770**	1	CLIP	

M-METRIC PART

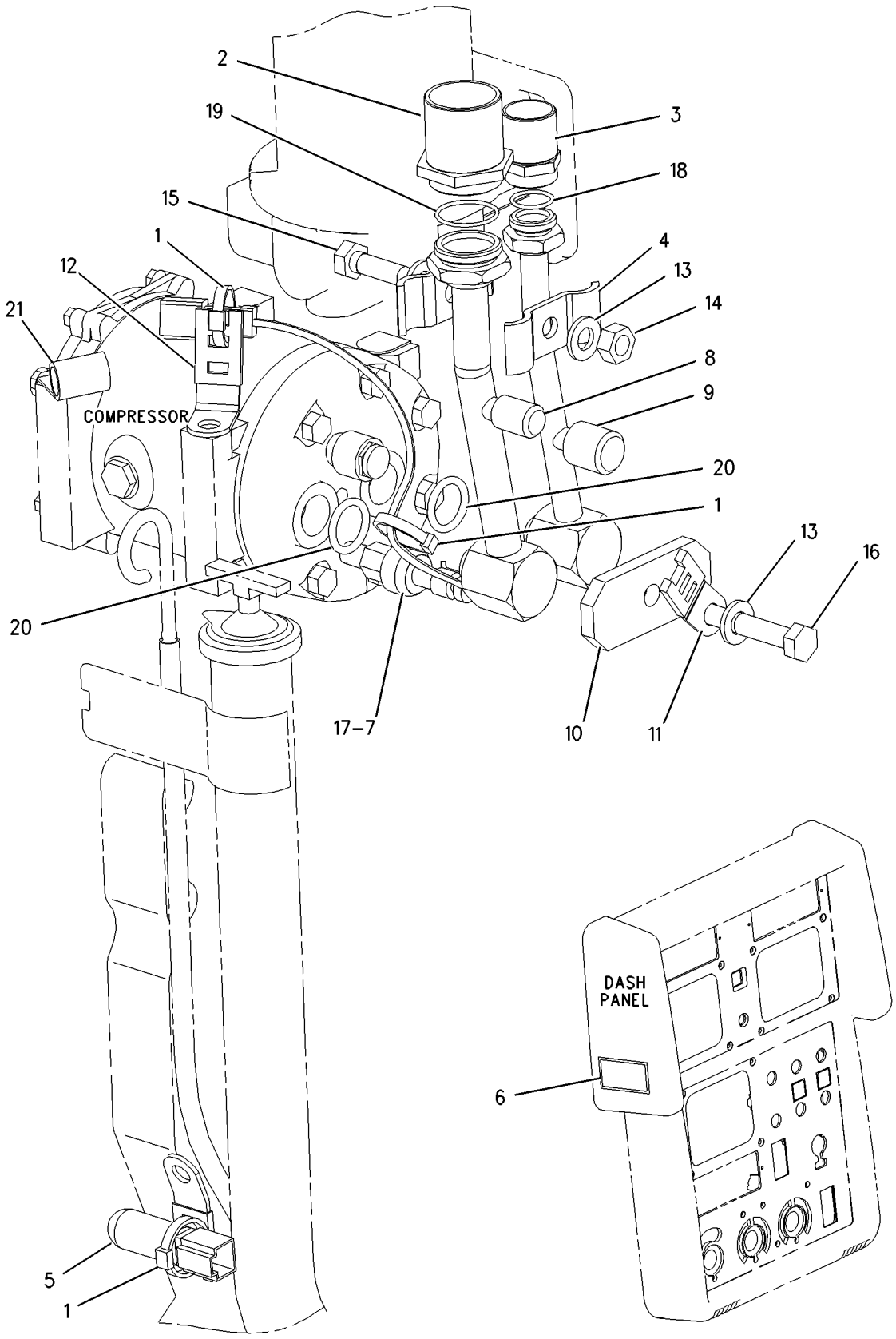

GRAPHIC #1 **<END>** g00931403

OPERATOR STATION

194-3333 INSTALLATION GP-RADIO

S/N: CCK1-UP

PART OF 156-8911 CAB GP

SMCS-7338 **i01878325**

NOTE	REF NO	GRAPHIC REF	PART NUMBER	QTY	PART NAME 1 2 3 4 5 6 (PRODUCT LEVEL)	SEE PAGE
	1	1	**6C-3431**	1	AERIAL	
	2	1	**6T-7695**	2	SPEAKER AS-RADIO	
	3	1	**9U-8263**	1	COVER	
	4	1	**128-7988**	1	FILM-NOTICE (RADIO)	
	5	1	**145-4509**	8	SCREW	

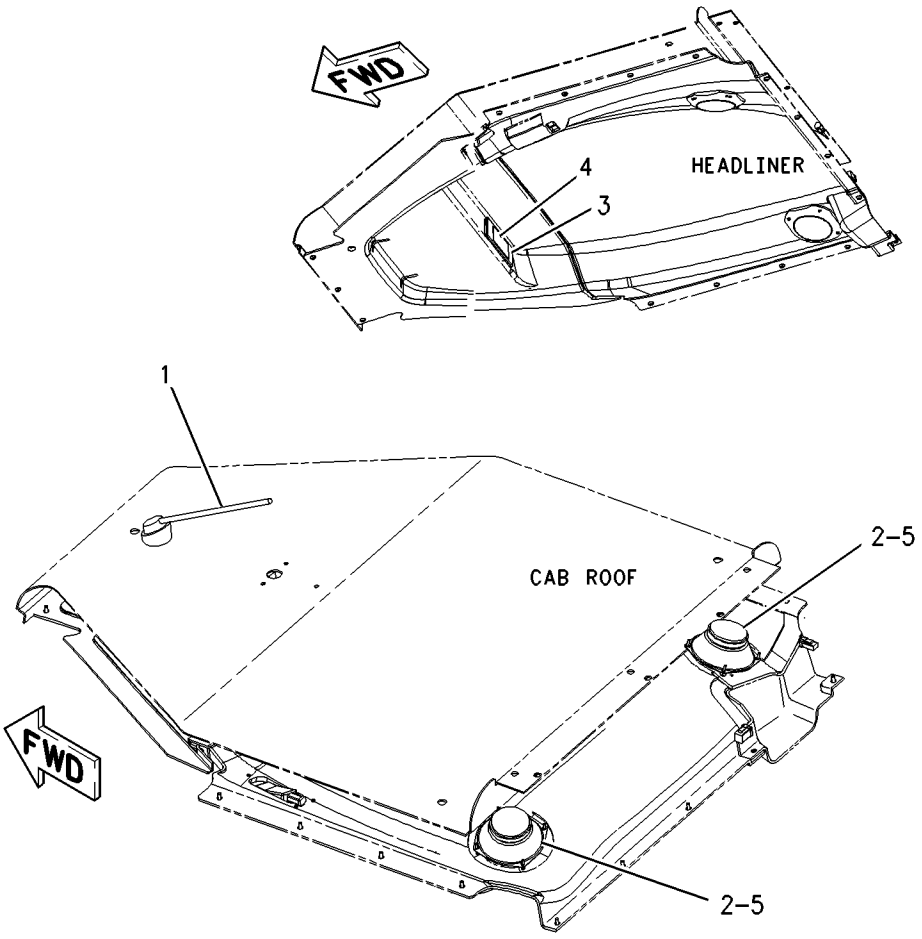

GRAPHIC #1 **<END>** g00931293

OPERATOR STATION

177-3851 INSULATION GP-WEATHER

S/N: CCK1-UP

PART OF 156-8911 CAB GP

SMCS-7329 **i01828963**

NOTE	REF NO	GRAPHIC REF	PART NUMBER	QTY	PART NAME 1 2 3 4 5 6 (PRODUCT LEVEL)	SEE PAGE
	1	1	**6P-2216**	16	CAP-PUSH ON	
	2	1	**223-4127**	1	INSULATION	
	3	1	**223-4128**	1	INSULATION	
	4	1	**223-4129**	1	INSULATION	

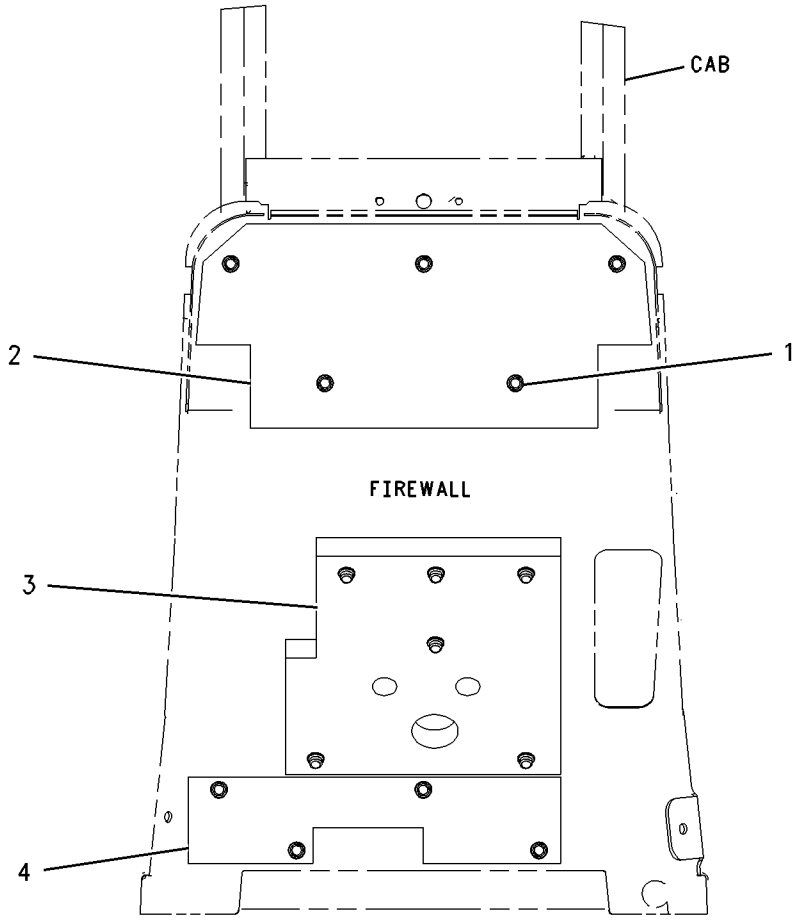

GRAPHIC #1 **<END>** g00914770

OPERATOR STATION

194-3315 LATCH GP–CAB DOORS

S/N: CCK1-UP

PART OF 156-8911 CAB GP

SMCS-7308 **i01828908**

NOTE	REF NO	GRAPHIC REF	PART NUMBER	QTY	PART NAME 1 2 3 4 5 6 (PRODUCT LEVEL)	SEE PAGE
	1	1	**109-5008**	2	BUMPER-CONICAL	
	2	1	**8C-3442**	2	SPRING-COIL	
	3	1	**110-5602**	2	KNOB (DOOR LATCH)	
	4	1	**224-8445**	1	LATCH AS	
	5	1	**224-8446**	1	LATCH AS	
	6	1	**196-3700**	1	LATCH AS	
	7	1	**196-3701**	1	LATCH AS	
	8	1	**224-8448**	1	ROD AS (LH)	
	9	1	**224-8449**	1	ROD AS (RH)	
M	10	1	**3T-0849**	8	BOLT-SOCKET HEAD (M6X1X25MM)	
M	11	1	**129-3178**	2	LOCKNUT (M6X1 THD)	
	12	1	**8T-4121**	10	WASHER-HARD (11X21X2.5MM THK)	
M	13	1	**8T-4136**	10	BOLT (M10X1.5X25MM)	
	14	1	**9X-8256**	6	WASHER (6.6X12X2MM THK)	

M-METRIC PART

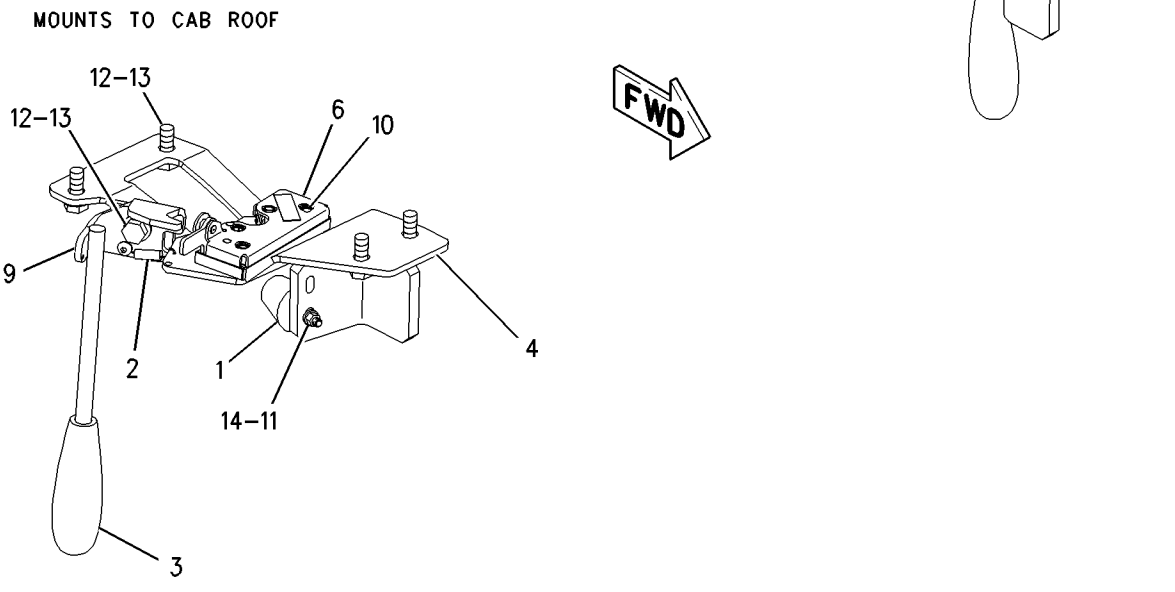

GRAPHIC #1 **<END>** g00914740

OPERATOR STATION

170-2084 LINER GP-CAB

S/N: CCK1-UP

PART OF 156-8911 CAB GP

SMCS-7329 **i01828950**

NOTE	REF NO	GRAPHIC REF	PART NUMBER	QTY	PART NAME 1 2 3 4 5 6 (PRODUCT LEVEL)	SEE PAGE
Y	1	1	**3E-6389**	1	LAMP GP-DOME (24 VOLT)	143
	2	1	**171-9601**	1	HEADLINER-FRONT	
	3	1	**171-9603**	1	COVER	
	4	1	**205-1420**	1	HEADLINER AS	
M		1	**150-4086**	8	SCREW (M4X.7X16MM)	
		1	**173-9164**	2	GRILL-SPEAKER	
M	5	1	**8T-4127**	3	SCREW-MACHINE (M5X0.8X20MM)	
M	6	1	**9X-2044**	16	SCREW-TRUSS HEAD (M6X1X16MM)	

M-METRIC PART
Y-SEPARATE ILLUSTRATION

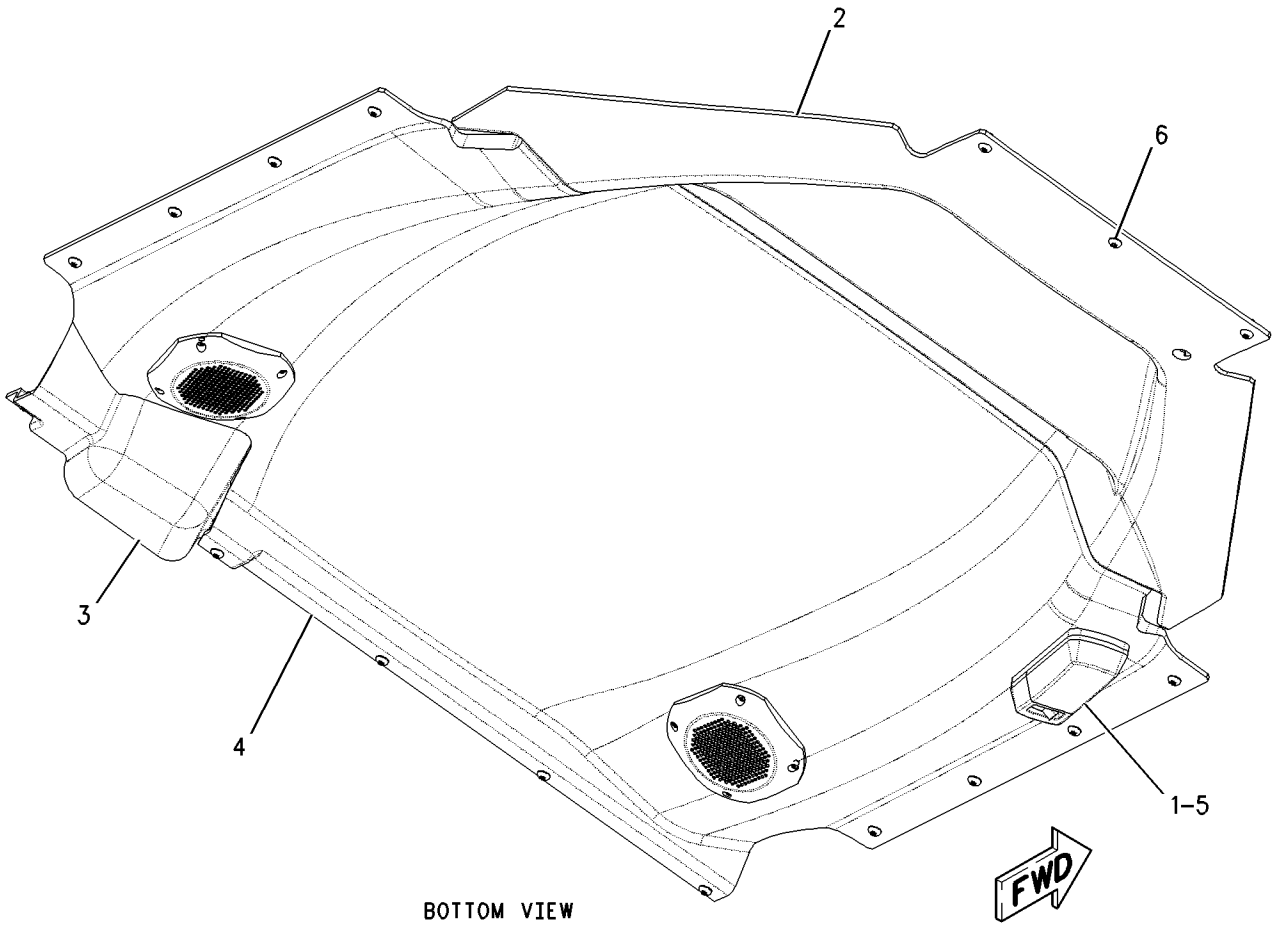

BOTTOM VIEW

GRAPHIC #1 **<END>** g00782760

OPERATOR STATION

171-9593 LINES GP-AIR CONDITIONER

S/N: CCK1-UP

PART OF 167-1458 AIR CONDITIONER GP

SMCS-1808 **i01829155**

NOTE	REF NO	GRAPHIC REF	PART NUMBER	QTY	PART NAME 1 2 3 4 5 6 (PRODUCT LEVEL)	SEE PAGE
	1	1	**3S-2093**	3	STRAP-CABLE	
	2	1	**5P-3929**	1	COUPLING AS-REFRIGERANT	
	3	1	**5P-3948**	1	COUPLING AS-REFRIGERANT	
	4	1	**7T-8895**	3	GROMMET	
	5	1	**7T-9793**	1	VALVE (CHECK)	
	6	1	**8C-5682**	1	TEE	
	7	1	**103-6100**	2	COUPLER AS-QUICK	
I	8	1	**175-7656**	1	HOSE AS	
I	9	1	**175-7657**	1	HOSE AS	
	10	1	**186-6189**	1	ACCUMULATOR-REFRIGERANT	
I	11	1	**221-5161**	1	HOSE AS	
I	12	1	**221-5162**	1	HOSE AS	
	13	1	**221-5163**	1	TUBE AS	
I	14	1	**221-5164**	1	HOSE AS	
	15	1	**221-5165**	1	TUBE AS	
	16	1	**221-5166**	1	TUBE AS	
	17	1	**222-5086**	1	TUBE GP	
	18	1	**109-1633**	1	CLIP (SLOT)	
	19	1	**109-1634**	1	CLIP (TAB)	
	20	1	**3E-3535**	1	RECEIVER-DRYER GP (REFRIGERANT)	
	21	1	**3S-8536**	2	SPACER (.406X.656X.38IN THK)	
	22	1	**4M-5942**	6	CLIP	
	23	1	**5F-9144**	5	SEAL-O-RING	
	24	1	**5P-3944**	1	SEAL-O-RING	
	25	1	**6D-1641**	3	CLIP	
	26	1	**6D-4246**	4	CLIP	
	27	1	**6M-5062**	3	SEAL-O-RING	
	28	1	**6V-4356**	1	CLIP (SLOT)	
	29	1	**6V-4357**	1	CLIP (TAB)	
	30	1	**7X-7729**	1	WASHER (11X25X3MM THK)	
	31	1	**8T-4121**	16	WASHER-HARD (11X21X2.5MM THK)	
M	32	1	**8T-4136**	7	BOLT (M10X1.5X25MM)	
M	33	1	**8T-4137**	6	BOLT (M10X1.5X20MM)	
M	34	1	**8T-4195**	2	BOLT (M10X1.5X30MM)	
M	35	1	**8T-4196**	2	BOLT (M10X1.5X35MM)	
	36	1	**9S-1310**	8	CLIP	
	37	1	**9X-7381**	1	SEAL-O-RING	
	38	1	**9X-7382**	1	SEAL-O-RING	
	39	1	**9X-7383**	3	SEAL-O-RING	
	40	1	**9X-8250**	1	CLIP	
BE	41	1	**7X-7702**		CONDUIT-FLEXIBLE	
BE	42	1	**223-0118**		SEAL	
BD	43	1	**5P-4829**		TUBE	

B-USE AS REQUIRED
D-ORDER BY THE METER
E-ORDER BY THE CENTIMETER
I-SEE HOSE FABRICATION GUIDE
M-METRIC PART

171-9593 **LINES GP-AIR CONDITIONER** *(contd.)* **i01829155**

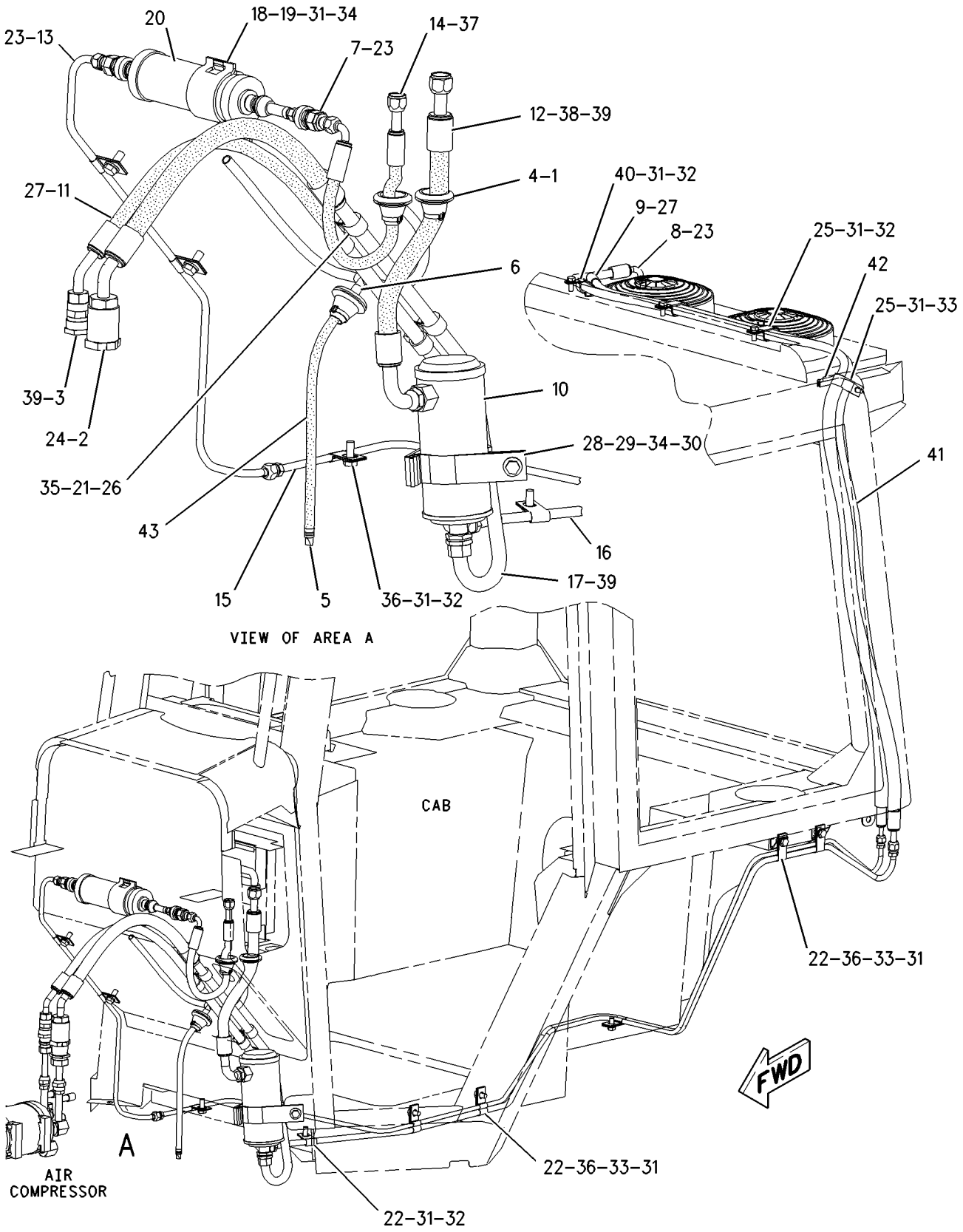

GRAPHIC #1 **<END>** g00911997

OPERATOR STATION

171-9592 LINES GP-HEATER—NON-CAB

S/N: CCK1-UP
PART OF 218-3064 PLATFORM GP
AN ATTACHMENT

SMCS-7304 **i01830227**

NOTE	REF NO	GRAPHIC REF	PART NUMBER	QTY	PART NAME 1 2 3 4 5 6 (PRODUCT LEVEL)	SEE PAGE
	1	1	**5D-1026**	2	CLAMP-HOSE	
	2	1	**7T-8894**	4	GROMMET	
	3	1	**226-0636**	1	BRACKET AS	
M		1	**8T-3490**	1	NUT-WELD (M10X1.5 THD)	
		1	**177-3848**	1	PLATE	
	4	1	**5P-6994**	1	CLIP	
	5	1	**8T-4121**	3	WASHER-HARD (11X21X2.5MM THK)	
M	6	1	**8T-4137**	3	BOLT (M10X1.5X20MM)	
M	7	1	**9X-2044**	2	SCREW-TRUSS HEAD (M6X1X16MM)	
	8	1	**9X-8250**	2	CLIP	
	9	1	**9X-8256**	2	WASHER (6.6X12X2MM THK)	
E	10	1	**5P-0767**		HOSE (400CM)	

E-ORDER BY THE CENTIMETER
M-METRIC PART

171-9592 **LINES GP-HEATER** ***(contd.)*** **i01830227**

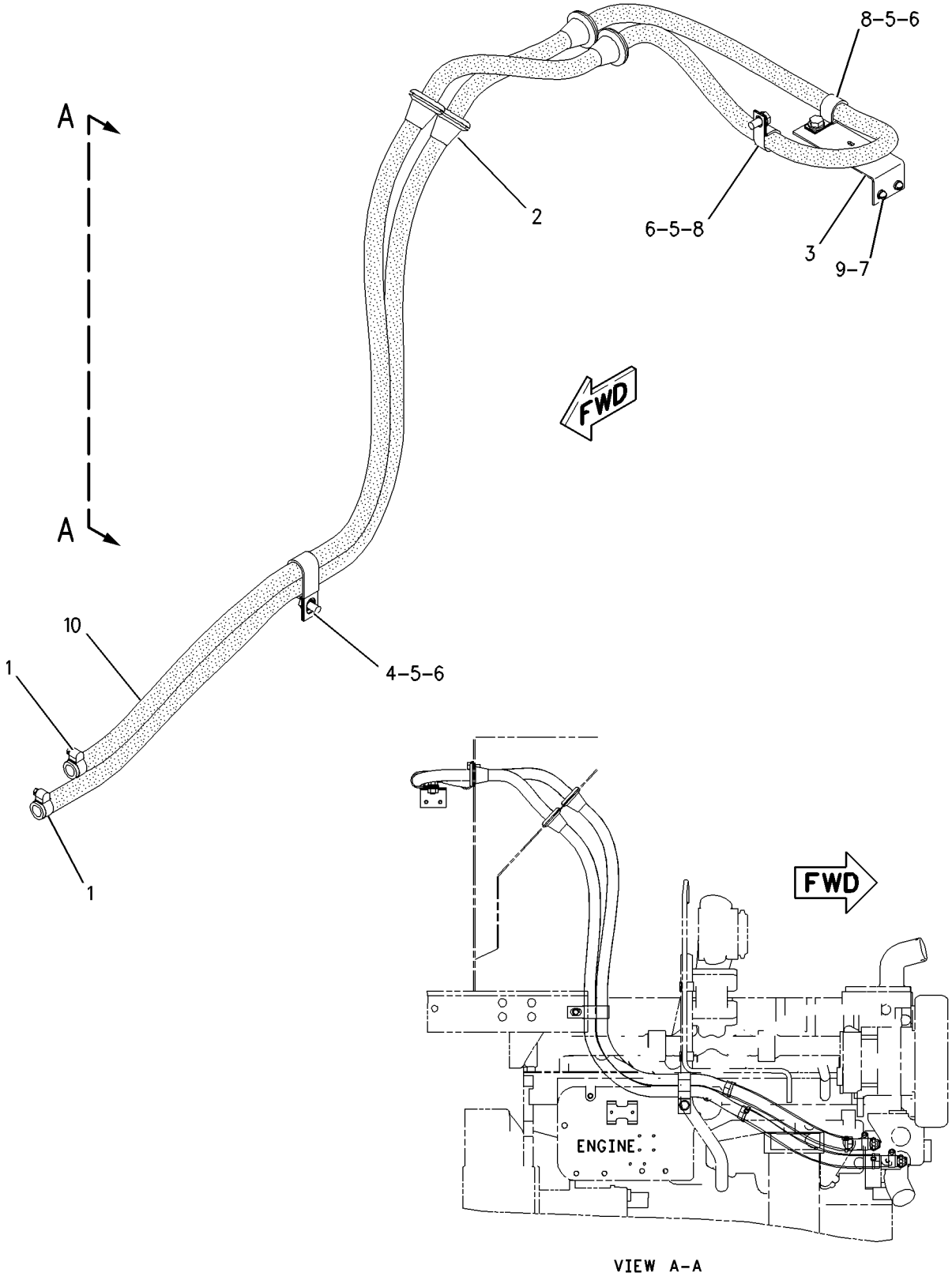

VIEW A–A

GRAPHIC #1 **<END>** g00912203

222-3800 LINES GP-HEATER–CAB

S/N: CCK1-UP

PART OF 191-4824 CAB AR

SMCS-7304 **i01899316**

NOTE	REF NO	GRAPHIC REF	PART NUMBER	QTY	PART NAME 1 2 3 4 5 6 (PRODUCT LEVEL)	SEE PAGE
	1	1	**3S-2093**	4	STRAP-CABLE	
	2	1	**5D-1026**	2	CLAMP-HOSE	
	3	1	**6V-7238**	2	VALVE-SHUTOFF (CAB HEATER LINES-ENGINE MOUNT)	
	4	1	**2M-9780**	1	SEAL-O-RING	
	5	1	**3K-0360**	4	SEAL-O-RING	
	6	1	**4D-7735**	1	CLIP	
	7	1	**5P-6994**	2	CLIP	
	8	1	**6V-7420**	1	ADAPTER-STRAIGHT THREAD	
	9	1	**7X-7729**	2	WASHER (11X25X3MM THK)	
	10	1	**8T-1715**	2	ADAPTER-STRAIGHT THREAD	
M	11	1	**8T-4137**	2	BOLT (M10X1.5X20MM)	
BE	12	1	**7X-7702**		CONDUIT-FLEXIBLE	

B-USE AS REQUIRED
E-ORDER BY THE CENTIMETER
M-METRIC PART

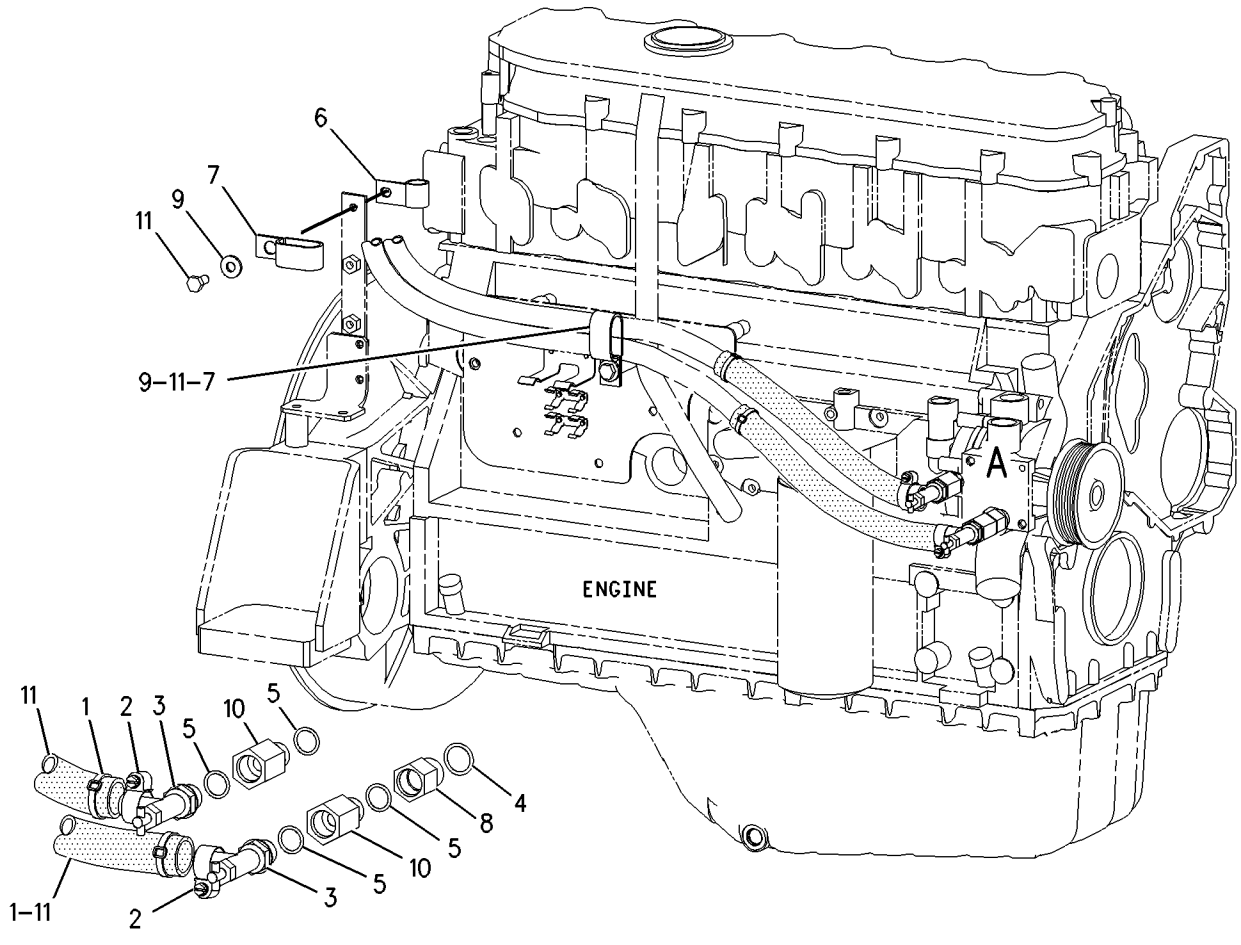

EXPLODED VIEW OF AREA A

GRAPHIC #1 **<END>** g00976465

OPERATOR STATION

8E-8706 MIRROR GP

S/N: CCK1-UP

PART OF 156-8911 CAB GP

SMCS-7319 **i01895760**

NOTE	REF NO	GRAPHIC REF	PART NUMBER	QTY	PART NAME 1 2 3 4 5 6 (PRODUCT LEVEL)	SEE PAGE
	1	1	**9P-9388**	1	KNOB (MIRROR)	
	2	1	**5P-6874**	1	MIRROR (REAR VIEW)	
	3	1	**5K-9179**	1	BOLT-ROUND HEAD	

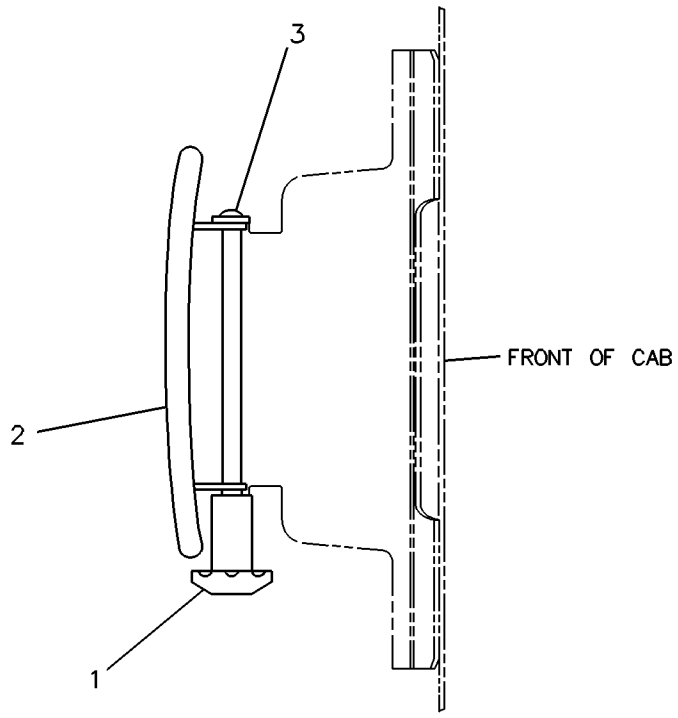

GRAPHIC #1 **<END>** g00223660

OPERATOR STATION

166-6928 MODULE GP-QUAD GAUGE

S/N: CCK1-UP
PART OF 156-8951, 165-2790 PANEL GP-INSTRUMENT
ALSO AN ATTACHMENT

SMCS-7450, 7451 **i01883788**

NOTE	REF NO	GRAPHIC REF	PART NUMBER	QTY	PART NAME 1 2 3 4 5 6 (PRODUCT LEVEL)	SEE PAGE
	1	1	**102-8805**	1	KIT-RECEPTACLE (6 PIN)	
					(INCLUDES RECEPTACLE AS & WEDGE)	
	2	1	**8T-8729**	6	PIN-CONNECTOR	
	3	1	**3E-3383**	1	WEDGE-RECEPTACLE LOCK	

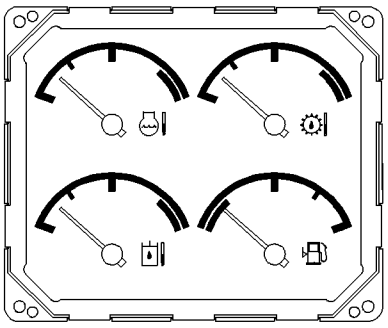

VIEW B-B

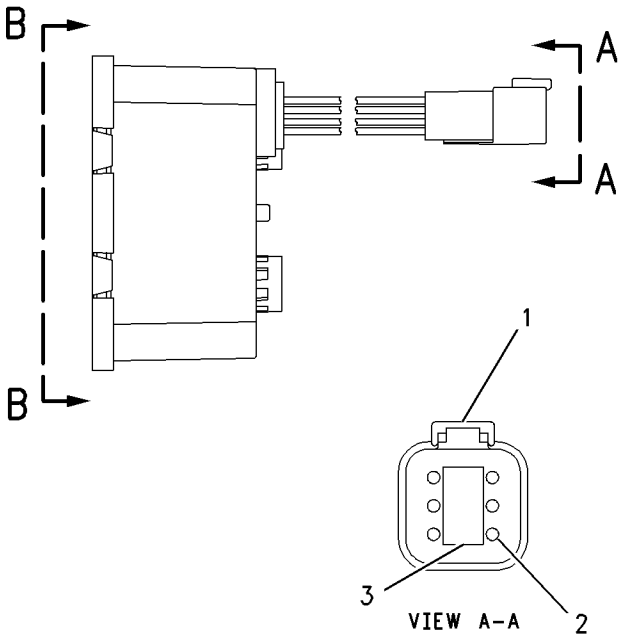

VIEW A-A

GRAPHIC #1 **<END>** g00690309

OPERATOR STATION

156-8915 MOUNTING GP-CAB

S/N: CCK1-UP

PART OF 191-4824 CAB AR

SMCS-7266, 7301 **i01828708**

NOTE	REF NO	GRAPHIC REF	PART NUMBER	QTY	PART NAME 1 2 3 4 5 6 (PRODUCT LEVEL)	SEE PAGE
	1	1	**3T-3462**	4	PLATE	
	2	1	**212-4024**	1	SUPPORT AS	
	3	1	**117-8131**	8	MOUNT	
	4	1	**212-4023**	1	SUPPORT AS	
	5	1	**171-2133**	4	SLEEVE	
	6	1	**180-1298**	1	PLATE	
	7	1	**188-1845**	1	COVER	
M	8	1	**8C-8478**	4	BOLT (M20X2.5X140MM)	
	9	1	**8T-4123**	4	WASHER-PLATED (22X35X3.5MM THK)	
M	10	1	**8T-4136**	2	BOLT (M10X1.5X25MM)	
	11	1	**8T-4222**	6	WASHER-PLATED (11X32X2.5MM THK)	
M	12	1	**9X-2041**	3	SCREW-TRUSS HEAD (M10X1.5X20MM)	
M	13	1	**8T-4185**	4	BOLT (M10X1.5X50MM)	

M-METRIC PART

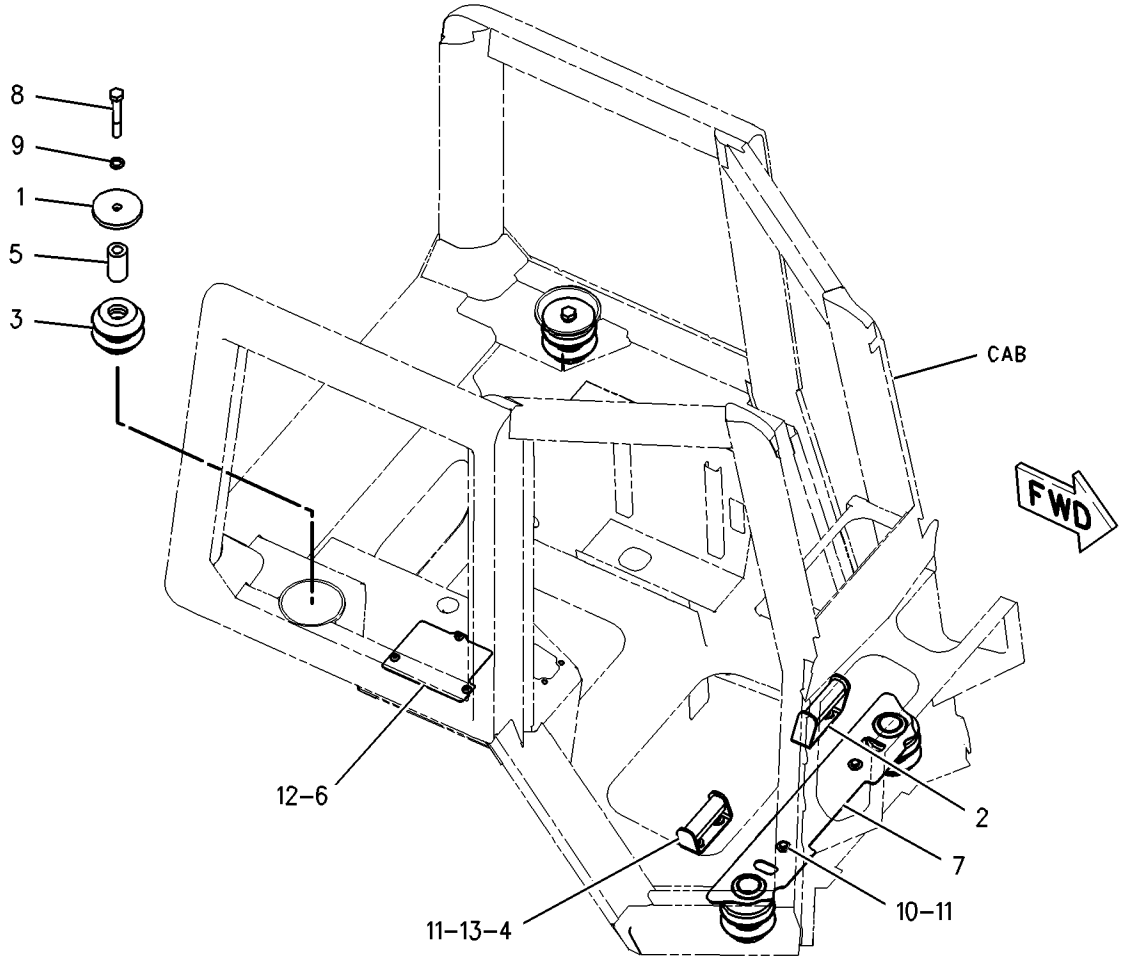

GRAPHIC #1 **<END>** g00909966

OPERATOR STATION

218-3137 MOUNTING GP-PLATFORM

S/N: CCK1-UP
PART OF 193-3812 CANOPY AR
AN ATTACHMENT

SMCS-7253 **i01830202**

NOTE	REF NO	GRAPHIC REF	PART NUMBER	QTY	PART NAME 1 2 3 4 5 6 (PRODUCT LEVEL)	SEE PAGE
	1	1	**5P-8197**	1	PLATE-WARNING (DO NOT OPERATE)	
	2	1	**7G-4823**	1	STRAP	
	3	1	**7G-4824**	1	STRAP	
	4	1	**7T-0786**	1	RETAINER AS	
	5	1	**8E-5962**	1	PLATE	
Y	6	1	**158-6632**	1	SWITCH AS-HORN	174
	7	1	**165-4879**	1	ARMREST AS	
M		1	**5C-9553**	3	BOLT (M6X1X16MM)	
		1	**5P-0537**	3	WASHER-HARD (7.2X14.5X2MM THK)	
	8	1	**180-1298**	1	PLATE	
	9	1	**5P-4115**	4	WASHER-HARD (7.2X19X2MM THK)	
M	10	1	**7X-2488**	2	BOLT (M20X2.5X160MM)	
M	11	1	**7X-2566**	2	BOLT (M20X2.5X110MM)	
	12	1	**7X-7729**	2	WASHER (11X25X3MM THK)	
M	13	1	**8C-3210**	4	BOLT (M6X1X16MM)	
	14	1	**8T-4121**	4	WASHER-HARD (11X21X2.5MM THK)	
	15	1	**8T-4123**	4	WASHER-PLATED (22X35X3.5MM THK)	
M	16	1	**8T-4137**	4	BOLT (M10X1.5X20MM)	
M	17	1	**8T-4185**	2	BOLT (M10X1.5X50MM)	
	18	1	**9N-1995**	4	RIVET-POP	
M	19	1	**9X-2040**	3	SCREW-TRUSS HEAD (M10X1.5X25MM)	
BE	20	1	**140-1320**		SEAL	
BD	21	1	**211-2355**		SEAL	
F			**206-7737**	1	PIPE AS	
F			**9Y-8315**	1	CLAMP-BENT BOLT	

B-USE AS REQUIRED
D-ORDER BY THE METER
E-ORDER BY THE CENTIMETER
F-NOT SHOWN
M-METRIC PART
Y-SEPARATE ILLUSTRATION

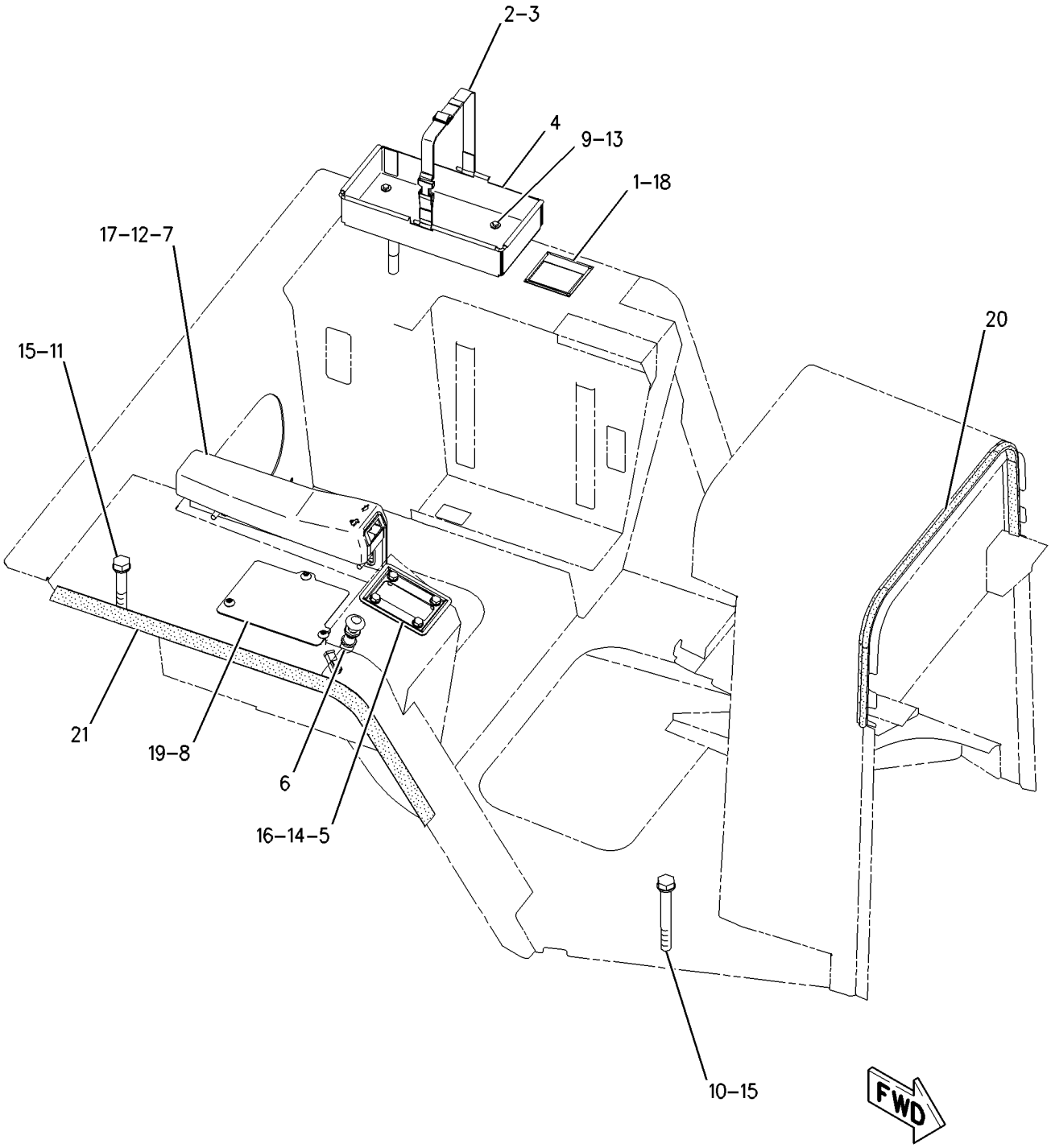

GRAPHIC #1 **<END>** g00912099

OPERATOR STATION

157-4819 MOUNTING GP-ROPS

S/N: CCK1-UP

PART OF 189-4619 CHASSIS AR

SMCS-7266 **i01828545**

NOTE	REF NO	GRAPHIC REF	PART NUMBER	QTY	PART NAME 1 2 3 4 5 6 (PRODUCT LEVEL)	SEE PAGE
	1	1	**8T-7038**	2	FILM-WARNING (DO NOT LIFT)	
	2	1	**193-6930**	1	PLATE	
	3	1	**193-6931**	1	SUPPORT AS (RH)	
	4	1	**193-6939**	1	PLATE	
	5	1	**193-6940**	1	SUPPORT AS (LH)	
M	6	1	**7X-2454**	20	BOLT (M24X3X110MM)	
	7	1	**8T-4167**	20	WASHER-HARD (26X44X4MM THK)	

M-METRIC PART

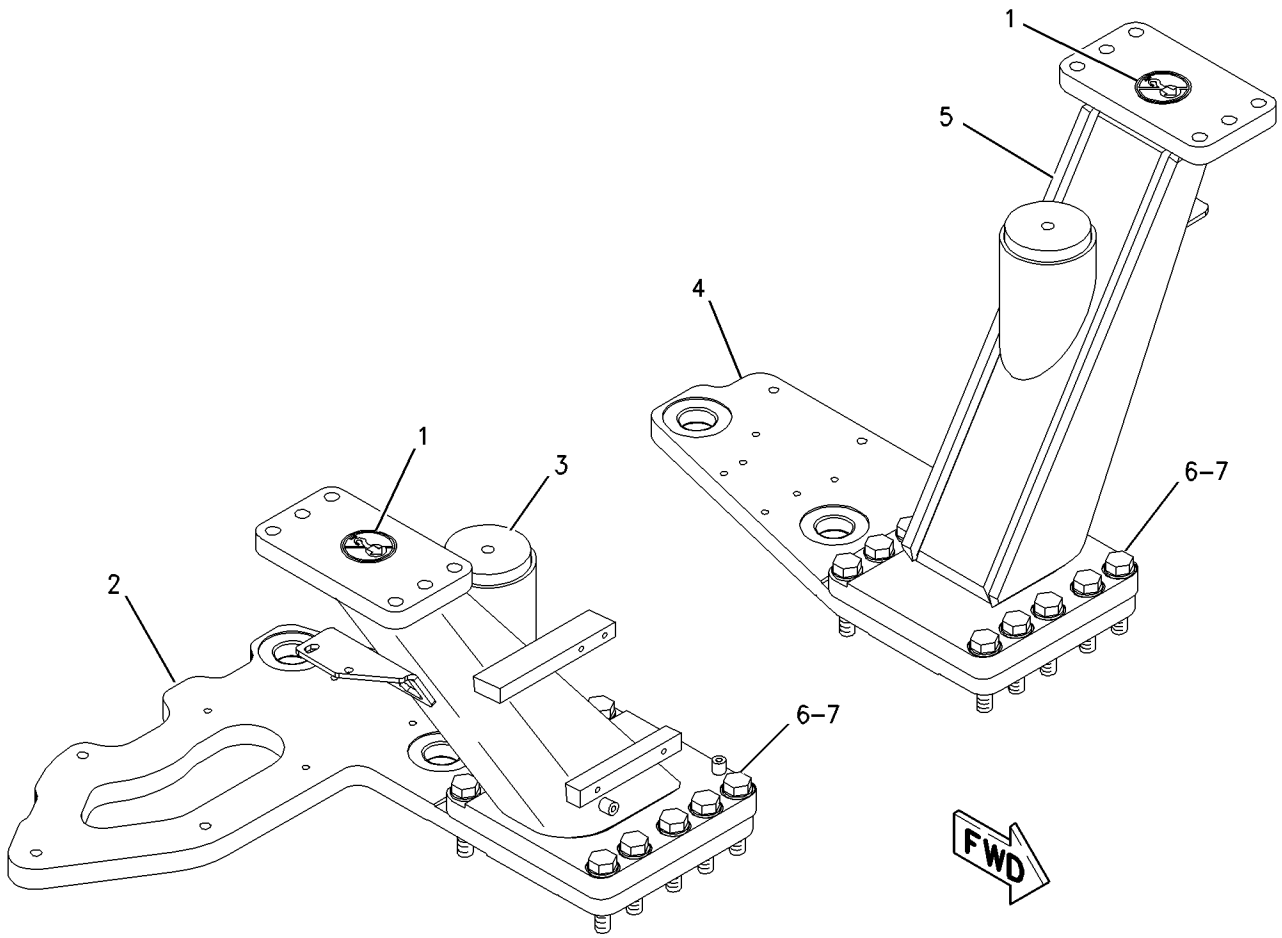

GRAPHIC #1 **<END>** g00774342

OPERATOR STATION

178-0604 PAN GP-BACKREST

S/N: CCK1-UP
PART OF 178-0603 SEAT GP
AN ATTACHMENT

SMCS-7312 **i01448095**

NOTE	REF NO	GRAPHIC REF	PART NUMBER	QTY	PART NAME 1 2 3 4 5 6 (PRODUCT LEVEL)	SEE PAGE
	1	1	**164-4883**	1	KNOB-LUMBAR	
	2	1	**169-0651**	1	CUSHION AS	
Y	3	1	*178-0605*	1	PAN GP-BACKREST	497
	4	1	**8T-7566**	1	PIN-SPRING	

Y-SEPARATE ILLUSTRATION

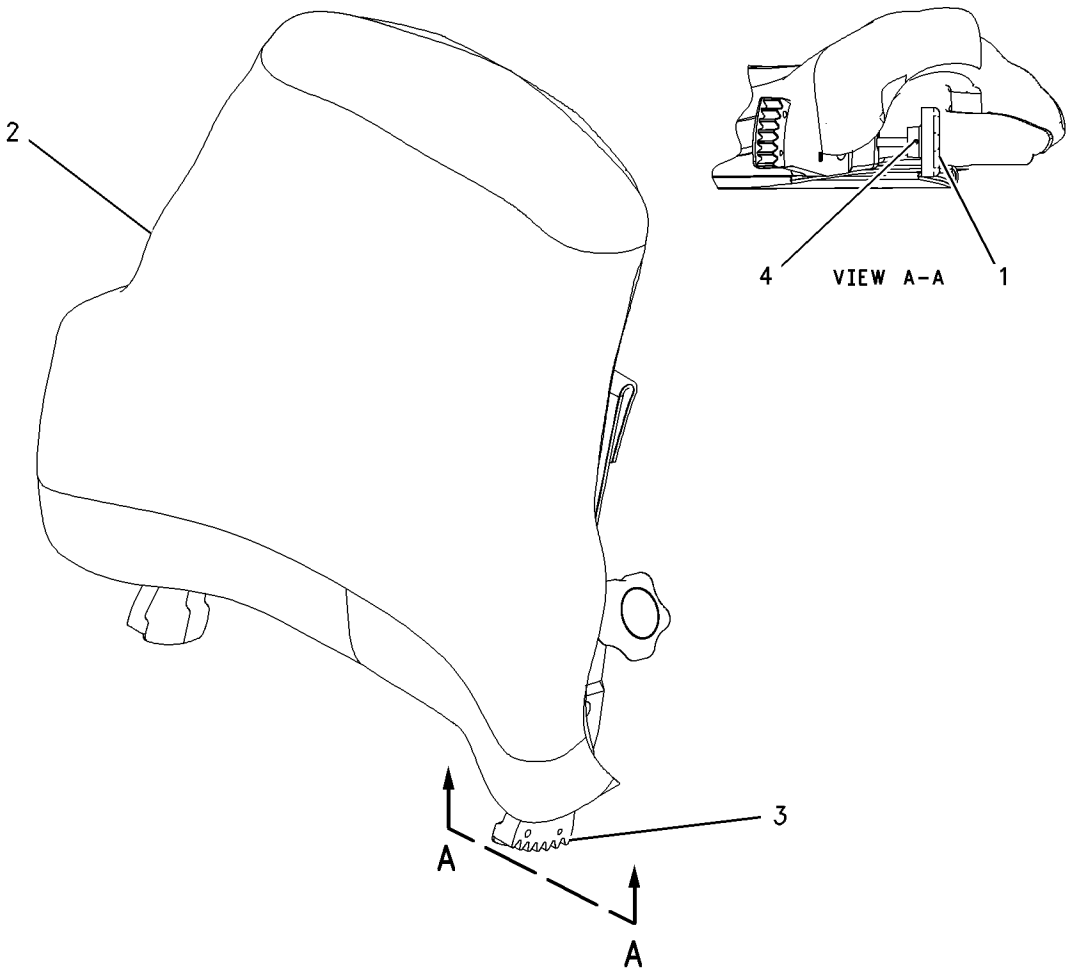

GRAPHIC #1 **<END>** g00727710

OPERATOR STATION

178-0605 PAN GP-BACKREST

S/N: CCK1-UP

PART OF 178-0604, 180-7305 PAN GP-BACKREST

AN ATTACHMENT

SMCS-7312 **i01437598**

NOTE	REF NO	GRAPHIC REF	PART NUMBER	QTY	PART NAME 1 2 3 4 5 6 (PRODUCT LEVEL)	SEE PAGE
	1	1	**4K-9429**	8	RIVET-POP	
	2	1	**5P-7957**	1	LANYARD	
	3	1	**136-1543**	1	PLATE AS-LUMBAR	
	4	1	**173-2052**	1	RETAINER	
	5	1	**178-7907**	1	HOLDER	
	6	1	**177-4930**	1	PAN AS-BACK	

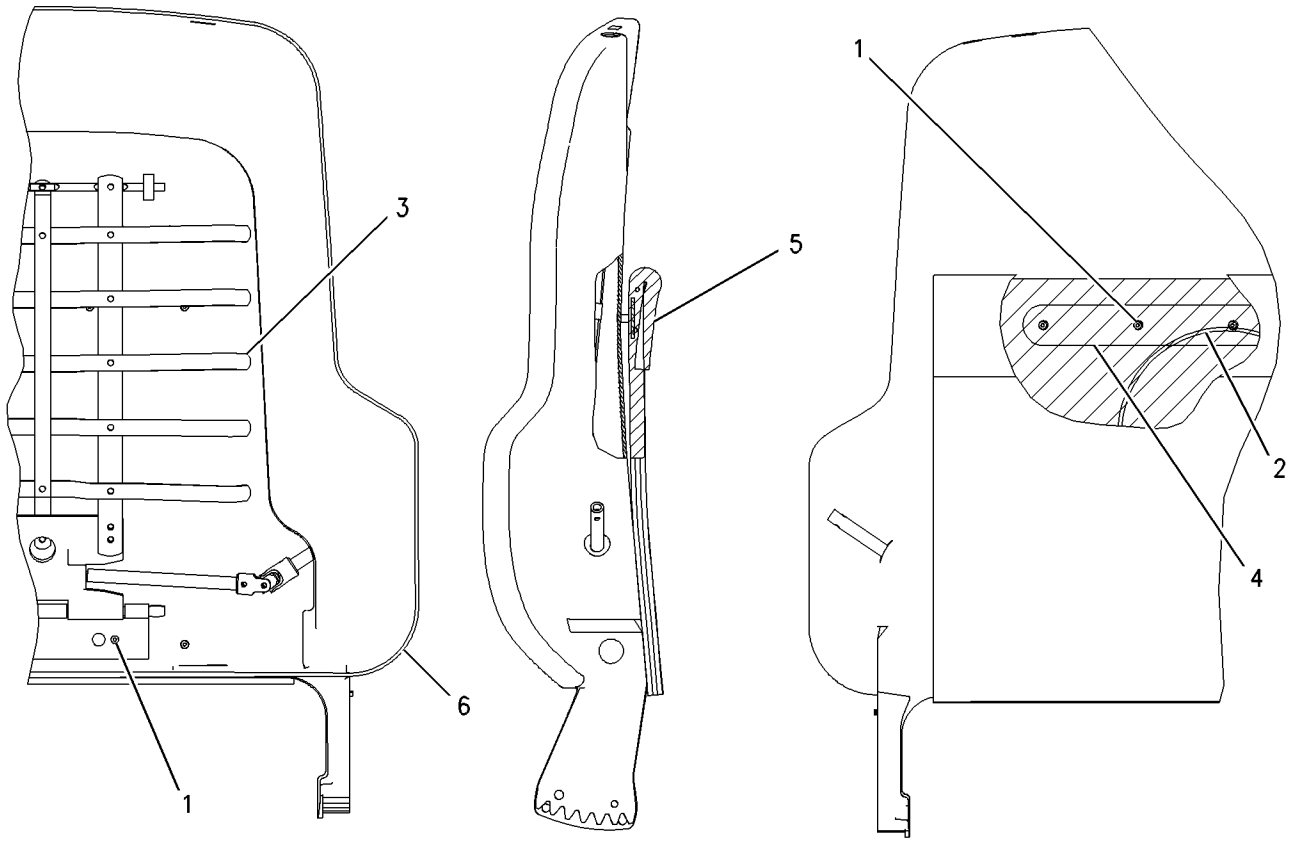

GRAPHIC #1 **<END>** g00716497

180-7305 PAN GP-BACKREST–VINYL SEAT

S/N: CCK1-UP
PART OF 180-7304 SEAT GP
AN ATTACHMENT

SMCS-7312 **i01883796**

NOTE	REF NO	GRAPHIC REF	PART NUMBER	QTY	PART NAME 1 2 3 4 5 6 (PRODUCT LEVEL)	SEE PAGE
	1	1	**164-4883**	1	KNOB-LUMBAR	
	2	1	**169-0697**	1	CUSHION AS	
		1	**184-2300**	1	FILM (SEAT CUSHION IDENTIFICATION)	
Y	3	1	*178-0605*	1	PAN GP-BACKREST	497
	4	1	**8T-7566**	1	PIN-SPRING	

Y-SEPARATE ILLUSTRATION

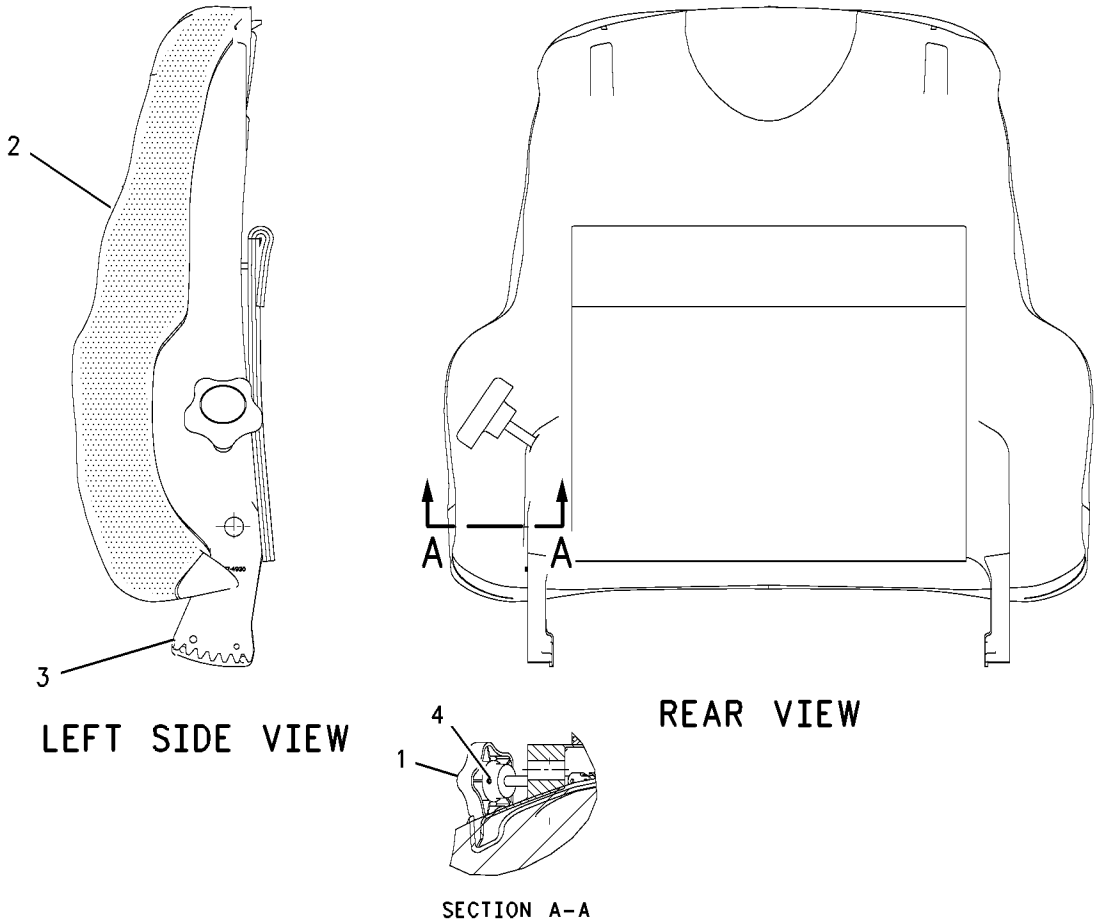

LEFT SIDE VIEW

REAR VIEW

SECTION A-A

GRAPHIC #1

<END>

g00678939

OPERATOR STATION

156-8951 PANEL GP-INSTRUMENT–CAB

S/N: CCK1-UP

PART OF 217-3819 CAB GP

SMCS-7450, 7451 **i01893855**

NOTE	REF NO	GRAPHIC REF	PART NUMBER	QTY	PART NAME 1 2 3 4 5 6 (PRODUCT LEVEL)	SEE PAGE
	1	2	**2P-4339**	1	NUT-JAM (7/16-20 THD)	
	2	1	**3E-0109**	1	PLUG-ROCKER SWITCH	
	3	2	**6P-3236**	1	SWITCH AS-ROTARY (BLOWER A/C-HEATER-DEFROST)	
		2	**6V-8362**	5	SCREW-MACHINE (8-32X0.31 IN)	
		2	**9B-7233**	5	LOCKWASHER	
	4	2	**7K-1181**	15	STRAP-CABLE	
	5	2	**7N-5876**	2	LAMP (24 VOLT) (QUAD GUAGE)	
	6	1	**223-0455**	3	LOUVER AS	
	7	2	**083-9527**	1	SPACER (13X20X1.5MM THK)	
	8	1	**110-6109**	1	KNOB-CONTROL (CAB TEMPERATURE)	
	9	2	**116-6203**	1	RESISTOR AS	
		2	**3E-3365**	1	WEDGE-RECEPTACLE LOCK (2 PIN)	
		2	**186-3735**	2	PIN-CONNECTOR	
	10	2	**116-7964**	2	MOUNT	
	11	2	**122-7127**	8	NUT (NYLON)	
	12	2	**123-0304**	1	INDICATOR AS (ACTION LAMP)	
		2	**115-1748**	1	LAMP (24 VOLT) (ACTION LAMP)	
		2	**123-0306**	1	SOCKET AS	
	13	2	**123-9294**	2	LAMP (24 VOLT) (INSTRUMENT)	
	14	1	**133-9405**	1	SWITCH AS-PUSH BUTTON (AUTO-SHIFT BI DIRECTIONAL)	
		1	**3K-0835**	1	NUT (5/8-24 THD)	
		1	**6F-0253**	1	LOCKWASHER	
		1	**186-3735**	3	PIN-CONNECTOR	
		1	**102-8803**	1	KIT-RECEPTACLE (3 PIN)	
					(INCLUDES RECEPTACLE AS & WEDGE)	
Y	15	1	**154-7443**	1	CONTROL GP-MONITOR (CATERPILLAR MONITORING SYSTEM)	130
	16	2	**159-9257**	1	LIGHT-DASH PANEL	
	17	1	**213-2980**	1	HARNESS AS (INSTRUMENT PANEL)	
		1	**102-8802**	1	KIT-RECEPTACLE (2 PIN)	
		1	**102-8803**	1	KIT-RECEPTACLE (3 PIN)	
		1	**102-8806**	1	KIT-RECEPTACLE (8 PIN)	
					(EACH RECEPTACLE KIT INCLUDES RECEPTACLE AS & WEDGE)	
		1	**155-2255**	1	KIT-CONNECTING PLUG (12 PIN)	
		1	**155-2256**	1	KIT-CONNECTING PLUG (12 PIN)	
		1	**155-2265**	2	KIT-CONNECTING PLUG (8 PIN)	
		1	**155-2260**	4	KIT-CONNECTING PLUG (3 PIN)	
		1	**155-2270**	2	KIT-CONNECTING PLUG (2 PIN)	
		1	**155-2271**	1	KIT-CONNECTING PLUG (4 PIN)	
		1	**155-2274**	4	KIT-CONNECTING PLUG (6 PIN)	
					(EACH PLUG KIT INCLUDES PLUG AS & WEDGE)	
		1	**8T-9834**	1	PLUG AS-CONNECTOR (40 PIN)	
	18	1	**165-0222**	1	FILM-PANEL (DASH)	
	19	1	**165-0225**	1	PANEL AS-INSTRUMENT	
Y	20	1	**166-6928**	1	MODULE GP-QUAD GAUGE	491
	21	2	**172-8212**	1	BRACKET	
	22	1	**213-5139**	1	FILM (ACTION LIGHT) (MALFUNCTION)	
	23	2	**175-3950**	1	SWITCH AS (LIGHTS)	
		2	**9W-0852**	7	PIN-CONNECTOR	
		2	**102-8806**	1	KIT-RECEPTACLE (8 PIN)	
					(INCLUDES RECEPTACLE AS & WEDGE)	
	24	2	**175-4393**	2	SPACER (11.4X17.5X2MM THK)	
	25	2	**175-6579**	1	PLATE	
	26	2	**175-6580**	1	BRACKET	

156-8951 **PANEL GP-INSTRUMENT** *(contd.)* **i01893855**

NOTE	REF NO	GRAPHIC REF	PART NUMBER	QTY	PART NAME 1 2 3 4 5 6 (PRODUCT LEVEL)	SEE PAGE
	27	2	**176-1485**	1	CABLE	
	28	1	**223-2455**	1	MODULE GP-DISPLAY (LAMP & GEAR) (TRANSMISSION GEAR INDICATOR)	
		1	**102-8805**	1	KIT-RECEPTACLE (6 PIN)	
					(INCLUDES RECEPTACLE AS & WEDGE)	
	29	1	**104-2091**	6	SCREW-FLAT HEAD (6-20X0.5 IN)	
M	30	2	**123-4950**	7	SCREW-PAN HEAD (M6X1X16MM)	
	31	1	**142-8858**	1	SWITCH AS-KEY START	
		1	**167-1530**	1	NUT	
M	32	2	**153-9301**	3	BOLT-SOCKET HEAD (M4X0.7X10MM)	
	33	2	**4P-7581**	3	CLIP (LADDER)	
	34	2	**4P-8134**	12	CLIP	
	35	2	**5P-4116**	2	WASHER-HARD (8.8X20.5X2MM THK)	
	36	1	**201-0694**	12	SCREW-FLAT HEAD	
M	37	2	**8T-4171**	5	BOLT (M6X1X12MM)	
M	38	2	**8T-4189**	2	BOLT (M8X1.25X20MM)	
	39	2	**8T-4205**	18	WASHER-HARD (7.2X14.5X2MM THK)	
	40	2	**221-3700**	5	BOLT-SOCKET HEAD (M4X0.7X16MM)	
M	41	2	**9X-2042**	7	SCREW-TRUSS HEAD (M6X1X12MM)	
	42	1	**110-6109**	1	KNOB-CONTROL (LIGHTS)	
	43	1	**110-6109**	1	KNOB-CONTROL (BLOWER)	
	44	1	**133-9405**	1	SWITCH AS-PUSH BUTTON (AUTO DOWN SHIFT)	
		1	**3K-0835**	1	NUT (5/8-24 THD)	
		1	**6F-0253**	1	LOCKWASHER	
		1	**186-3735**	3	PIN-CONNECTOR	
		1	**102-8803**	1	KIT-RECEPTACLE (3 PIN)	
					(INCLUDES RECEPTACLE AS & WEDGE)	
	45	1	**133-9405**	1	SWITCH AS-PUSH BUTTON (EMS CYCLE SCROLL)	
		1	**3K-0835**	1	NUT (5/8-24 THD)	
		1	**6F-0253**	1	LOCKWASHER	
		1	**186-3735**	3	PIN-CONNECTOR	
		1	**102-8803**	1	KIT-RECEPTACLE (3 PIN)	
					(INCLUDES RECEPTACLE AS & WEDGE)	

M-METRIC PART
Y-SEPARATE ILLUSTRATION

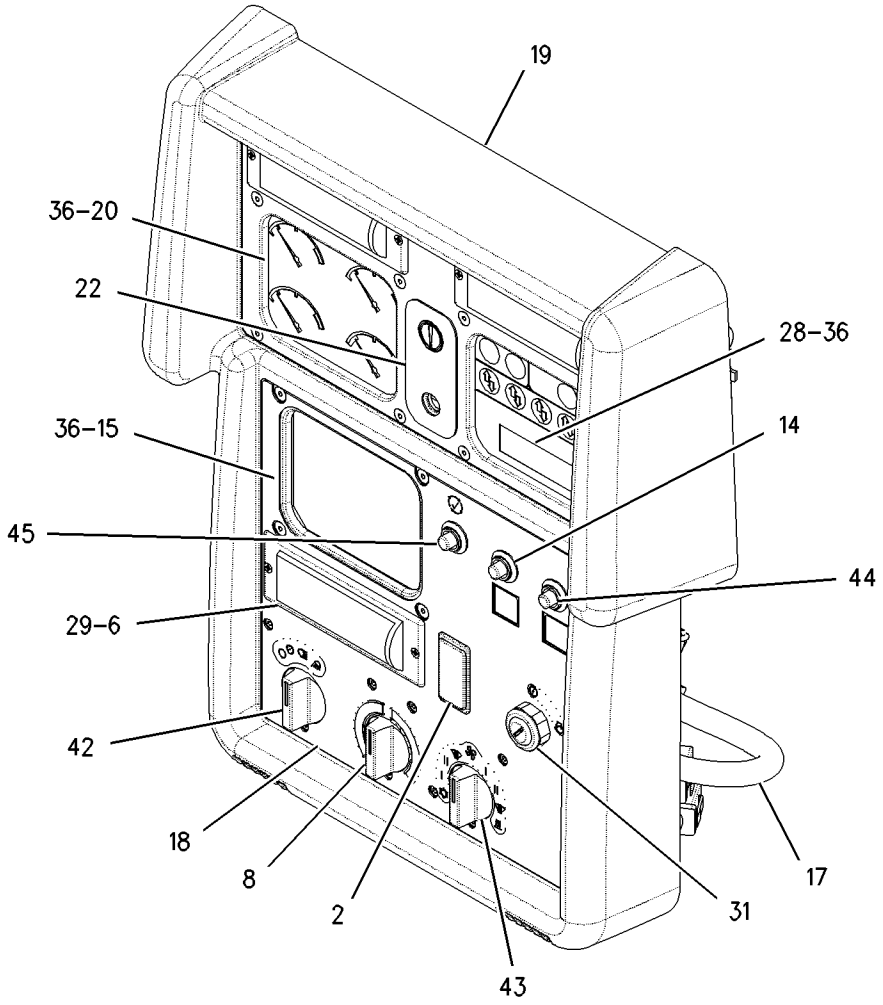

GRAPHIC #1 g00930027

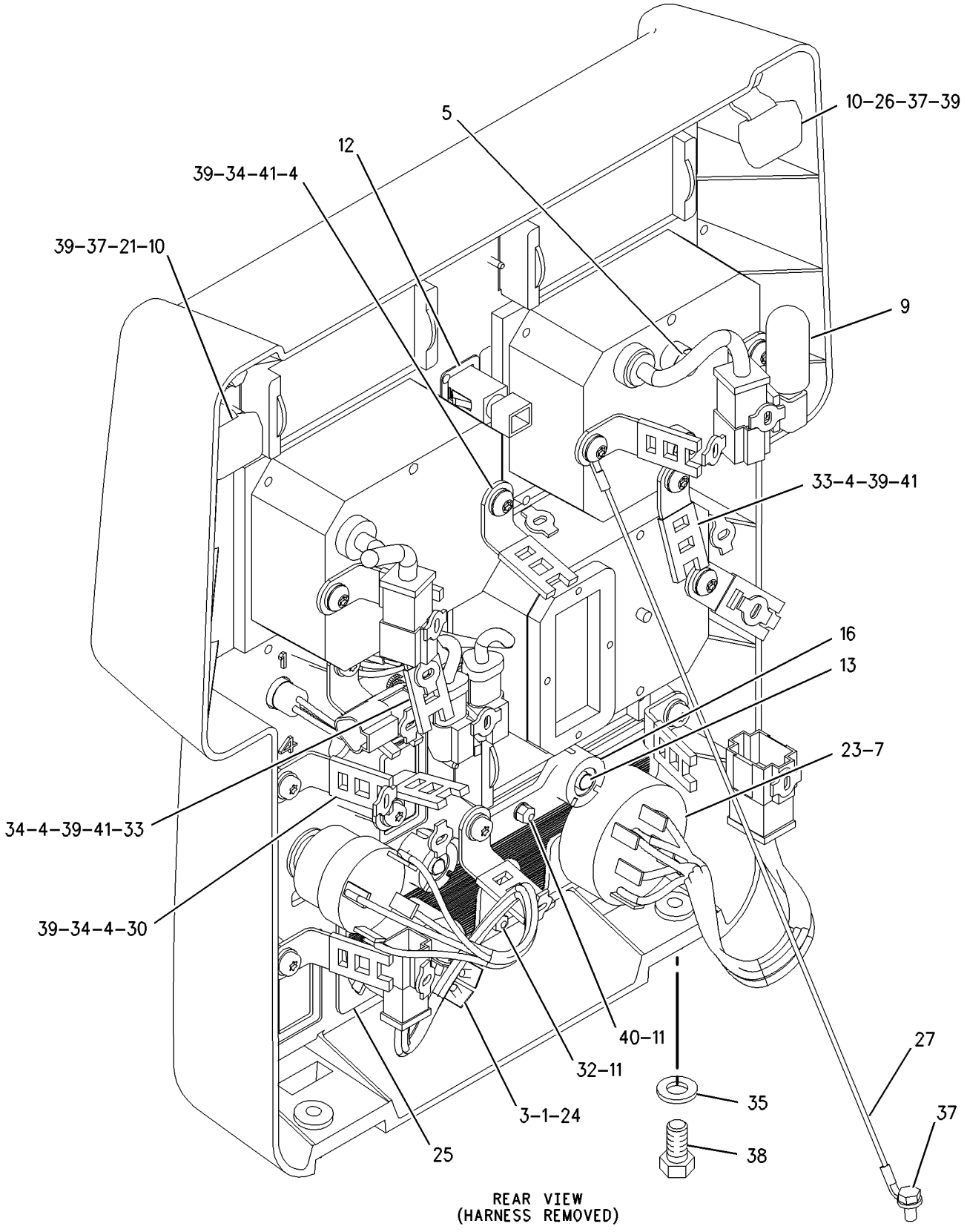

GRAPHIC #2 **<END>** g00910000

OPERATOR STATION

165-2790 PANEL GP-INSTRUMENT—OPEN ROPS

S/N: CCK1-UP
PART OF 218-3064 PLATFORM GP
AN ATTACHMENT

SMCS-7450, 7451 **i01893857**

NOTE	REF NO	GRAPHIC REF	PART NUMBER	QTY	PART NAME 1 2 3 4 5 6 (PRODUCT LEVEL)	SEE PAGE
	1	1	**3E-0109**	1	PLUG-ROCKER SWITCH	
M	2	1	**8T-2659**	2	LOCKNUT (M4X0.7 THD)	
	3	1	**7K-1181**	13	STRAP-CABLE	
	4	1	**7N-5876**	2	LAMP (24 VOLT) (QUAD GAUGE)	
J	5	1	**7X-7465**	1	LOCK AS-CYLINDER	
	6	1	**083-9527**	1	SPACER (13X20X1.5MM THK)	
	7	1	**110-6109**	1	KNOB-CONTROL (LIGHTS)	
	8	1	**116-6203**	1	RESISTOR AS	
		1	**3E-3365**	1	WEDGE-RECEPTACLE LOCK (2 PIN)	
		1	**186-3735**	2	PIN-CONNECTOR	
	9	1	**116-7964**	2	MOUNT	
	10	1	**122-7127**	8	NUT	
	11	1	**123-0304**	1	INDICATOR AS (ACTION LAMP)	
		1	**115-1748**	1	LAMP (24 VOLT) (ACTION LAMP)	
		1	**123-0306**	1	SOCKET AS	
	12	1	**123-9294**	2	LAMP (24 VOLT) (INSTRUMENT LIGHTS)	
	13	1	**133-9405**	1	SWITCH AS-PUSH BUTTON (AUTO SHIFT)	
		1	**3E-3371**		WEDGE-RECEPTACLE LOCK (3 PIN)	
		1	**3K-0835**	1	NUT (5/8-24 THD)	
		1	**6F-0253**	1	LOCKWASHER	
		1	**186-3735**	3	PIN-CONNECTOR	
		1	**102-8803**	1	KIT-RECEPTACLE (3 PIN)	
					(INCLUDES RECEPTACLE AS & WEDGE)	
Y	14	1	**154-7443**	1	CONTROL GP-MONITOR (CATERPILLAR MONITORING SYSTEM)	130
	15	1	**159-9257**	1	LIGHT-DASH PANEL	
	16	1	**213-2980**	1	HARNESS AS (INSTRUMENT PANEL)	
		1	**102-8802**	1	KIT-RECEPTACLE (2 PIN)	
		1	**102-8806**	1	KIT-RECEPTACLE (8 PIN)	
					(EACH INCLUDES RECEPTACLE AS & WEDGE)	
		1	**155-2255**	2	KIT-CONNECTING PLUG (12 PIN)	
		1	**155-2265**	3	KIT-CONNECTING PLUG (8 PIN)	
		1	**155-2260**	4	KIT-CONNECTING PLUG (3 PIN)	
		1	**155-2270**	2	KIT-CONNECTING PLUG (2 PIN)	
		1	**155-2271**	1	KIT-CONNECTING PLUG (4 PIN)	
		1	**155-2274**	3	KIT-CONNECTING PLUG (6 PIN)	
					(EACH INCLUDES PLUG AS & WEDGE)	
	17	1	**165-4149**	1	PANEL AS-INSTRUMENT	
	18	1	**165-4150**	1	FILM-PANEL (DASH)	
	19	1	**222-9887**	1	GUARD	
Y	20	1	**166-6928**	1	MODULE GP-QUAD GAUGE	491
	21	1	**172-8212**	1	BRACKET	
	22	1	**213-5139**	1	FILM (ACTION LIGHT) (MALFUNCTION)	
	23	1	**175-3950**	1	SWITCH AS (LAMP)	
		1	**3E-3389**	1	WEDGE-RECEPTACLE LOCK	
		1	**9W-0852**	7	PIN-CONNECTOR	
		1	**102-8806**	1	KIT-RECEPTACLE (8 PIN)	
					(INCLUDES RECEPTACLE AS & WEDGE)	
	24	1	**175-6579**	1	PLATE	
	25	1	**175-6580**	1	BRACKET	
	26	1	**176-1485**	1	CABLE	
	27	1	**223-2455**	1	MODULE GP-DISPLAY (LAMP & GEAR) (TRANSMISSION GEAR INDICATOR)	
		1	**102-8805**	1	KIT-RECEPTACLE (6 PIN)	
					(INCLUDES RECEPTACLE AS & WEDGE)	

165-2790 **PANEL GP-INSTRUMENT** *(contd.)* **i01893857**

NOTE	REF NO	GRAPHIC REF	PART NUMBER	QTY	PART NAME 1 2 3 4 5 6 (PRODUCT LEVEL)	SEE PAGE
		1	**186-3733**	6	PIN-CONNECTOR	
M	28	1	**123-4950**	7	SCREW-PAN HEAD (M6X1X16MM)	
	29	1	**142-8858**	1	SWITCH AS-KEY START	
		1	**167-1530**	1	NUT	
M	30	1	**153-9301**	3	BOLT-SOCKET HEAD (M4X0.7X10MM)	
M	31	1	**8T-0337**	2	SCREW-MACHINE (M4X0.7X12MM)	
	32	1	**4P-7581**	3	CLIP (LADDER)	
	33	1	**4P-8134**	13	CLIP	
	34	1	**5P-1075**	2	WASHER-HARD (10.2X22.5X3MM THK)	
	35	1	**201-0694**	12	SCREW-FLAT HEAD	
M	36	1	**8T-4171**	5	BOLT (M6X1X12MM)	
M	37	1	**8T-4189**	2	BOLT (M8X1.25X20MM)	
	38	1	**8T-4205**	18	WASHER-HARD (7.2X14.5X2MM THK)	
	39	1	**221-3700**	5	BOLT-SOCKET HEAD (M4X0.7X16MM)	
M	40	1	**9X-2042**	7	SCREW-TRUSS HEAD (M6X1X12MM)	
	41	1	**8E-7840**	2	CLIP	
	42	1	**133-9405**	1	SWITCH AS-PUSH BUTTON (SCROLL)	
		1	**3E-3371**		WEDGE-RECEPTACLE LOCK (3 PIN)	
		1	**3K-0835**	1	NUT (5/8-24 THD)	
		1	**6F-0253**	1	LOCKWASHER	
		1	**186-3735**	3	PIN-CONNECTOR	
		1	**102-8803**	1	KIT-RECEPTACLE (3 PIN)	
					(INCLUDES RECEPTACLE AS & WEDGE)	
	43	1	**133-9405**	1	SWITCH AS-PUSH BUTTON (AUTO KICK DOWN)	
		1	**3E-3371**		WEDGE-RECEPTACLE LOCK (3 PIN)	
		1	**3K-0835**	1	NUT (5/8-24 THD)	
		1	**6F-0253**	1	LOCKWASHER	
		1	**186-3735**	3	PIN-CONNECTOR	
		1	**102-8803**	1	KIT-RECEPTACLE (3 PIN)	
					(INCLUDES RECEPTACLE AS & WEDGE)	
	44	1	**102-8805**	2	KIT-RECEPTACLE (6 PIN)	
					(EACH INCLUDES RECEPTACLE AS & WEDGE)	
	45	1	**8T-8737**	12	PLUG-SEAL	
	46	1	**111-9251**	1	WASHER-HARD (20X35X1.6MM THK)	

J-REQUIRES 5P8500 KEY
M-METRIC PART
Y-SEPARATE ILLUSTRATION

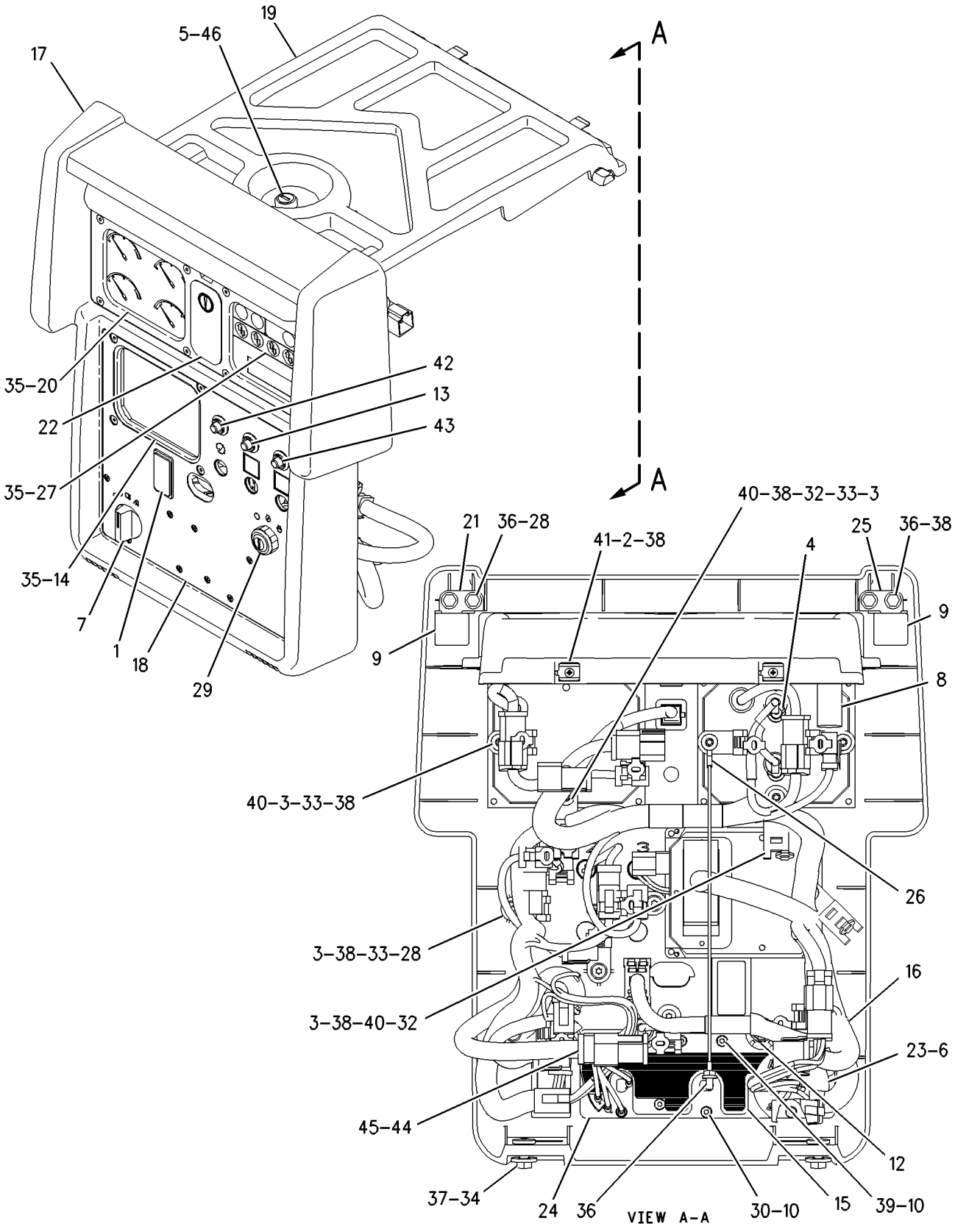

GRAPHIC #1 **<END>** g00932524

OPERATOR STATION

218-3064 PLATFORM GP

S/N: CCK1-UP
PART OF 193-3812 CANOPY AR
AN ATTACHMENT

SMCS-7253, 7254 **i01835619**

NOTE	PART NUMBER	QTY	PART NAME 1 2 3 4 5 6 (PRODUCT LEVEL)	SEE PAGE
Y	*193-5673*	1	CONTROL GP-STEERING & TMSN	302
Y	*165-2790*	1	PANEL GP-INSTRUMENT	503
Y	*218-4304*	1	LINES GP-PILOT	374
Y	*199-4801*	1	PEDAL GP-GOVERNOR & BRAKE	314
Y	*164-9140*	1	PLATFORM GP-OPERATOR	507
Y	**184-0870**	1	PLUG AS (POWER TRAIN)	509
Y	*171-9592*	1	LINES GP-HEATER	487
Y	*192-9082*	1	WIRING GP-PLATFORM	187
	201-4931	1	PLUG AS	
	5P-5677	1	WIRE-ELECTRICAL (18 GA)	
	186-3736	1	SOCKET-CONNECTOR	
	8T-8737	4	PLUG-SEAL	
BE	**125-7874**		TUBE-HEAT SHRINK	
	155-2259	1	WEDGE-PLUG LOCK (8 PIN)	
	155-2265	1	KIT-CONNECTING PLUG (8 PIN)	
			(INCLUDES PLUG AS & WEDGE)	

B-USE AS REQUIRED
E-ORDER BY THE CENTIMETER
Y-SEPARATE ILLUSTRATION

<END>

OPERATOR STATION

164-9140 PLATFORM GP-OPERATOR

S/N: CCK1-UP
PART OF 218-3064 PLATFORM GP
AN ATTACHMENT

SMCS-7253 **i01895762**

NOTE	REF NO	GRAPHIC REF	PART NUMBER	QTY	PART NAME 1 2 3 4 5 6 (PRODUCT LEVEL)	SEE PAGE
	1	1	**3B-8489**	1	FITTING-GREASE (1/8-27 THD) (OPERATOR PLATFORM)	
	2	1	**5P-2948**	1	CONNECTOR GP	
		1	**4K-9821**	1	SLEEVE	
		1	**4K-9822**	1	NUT (5/16-24 THD)	
	3	1	**8N-2694**	1	INDICATOR GP-AIR FILTER CHANGE	
BD	4	1	**5P-5630**		TUBE	
	5	1	**132-5792**	4	NUT	
	6	1	**164-9150**	1	PLATFORM AS	
	6A	1	**3B-6487**	1	COUPLING	
	7	1	**169-9108**	1	COVER AS	
		1	**178-8844**	4	SPACER (11X28X20MM THK)	
	8	1	**178-9013**	1	COVER	
	9	1	**178-9016**	1	PAD	
	10	1	**180-1297**	1	PLATE	
	11	1	**180-5383**	1	FOOTREST AS	
M		1	**8T-3490**	4	NUT-WELD (M10X1.5 THD)	
	12	1	**184-3450**	1	FLOORPLATE AS	
M		1	**8T-3490**	4	NUT-WELD (M10X1.5 THD)	
	13	1	**198-9452**	1	BRACKET	
	14	1	**211-0238**	1	FILM (LUBE POINT) (PLATFORM)	
	15	1	**212-4021**	1	SUPPORT AS (FOOT)	
	16	1	**212-4022**	1	SUPPORT AS (FOOT)	
	17	1	**218-2798**	1	COVER (PEDAL RH)	
	18	1	**218-2799**	1	COVER (PEDAL LH)	
	19	1	**218-2801**	1	SHROUD	
	20	1	**224-2470**	1	PLATE	
	21	1	**224-2669**	3	PLUG-PLASTIC	
	22	1	**0A-2926**	1	FITTING	
	23	1	**3B-6552**	1	ELBOW	
M	24	1	**3E-8020**	4	SCREW-TRUSS HEAD (M6X1X25MM)	
	25	1	**8T-4121**	19	WASHER-HARD (11X21X2.5MM THK)	
M	26	1	**8T-4136**	4	BOLT (M10X1.5X25MM)	
M	27	1	**8T-4137**	15	BOLT (M10X1.5X20MM)	
M	28	1	**8T-4199**	2	BOLT (M8X1.25X12MM)	
	29	1	**8T-4222**	4	WASHER-PLATED (11X32X2.5MM THK)	
	30	1	**8T-4224**	2	WASHER-HARD (8.8X16X2MM THK)	
M	31	1	**9X-2040**	12	SCREW-TRUSS HEAD (M10X1.5X25MM)	
M	32	1	**9X-2044**	10	SCREW-TRUSS HEAD (M6X1X16MM)	

B-USE AS REQUIRED
D-ORDER BY THE METER
M-METRIC PART

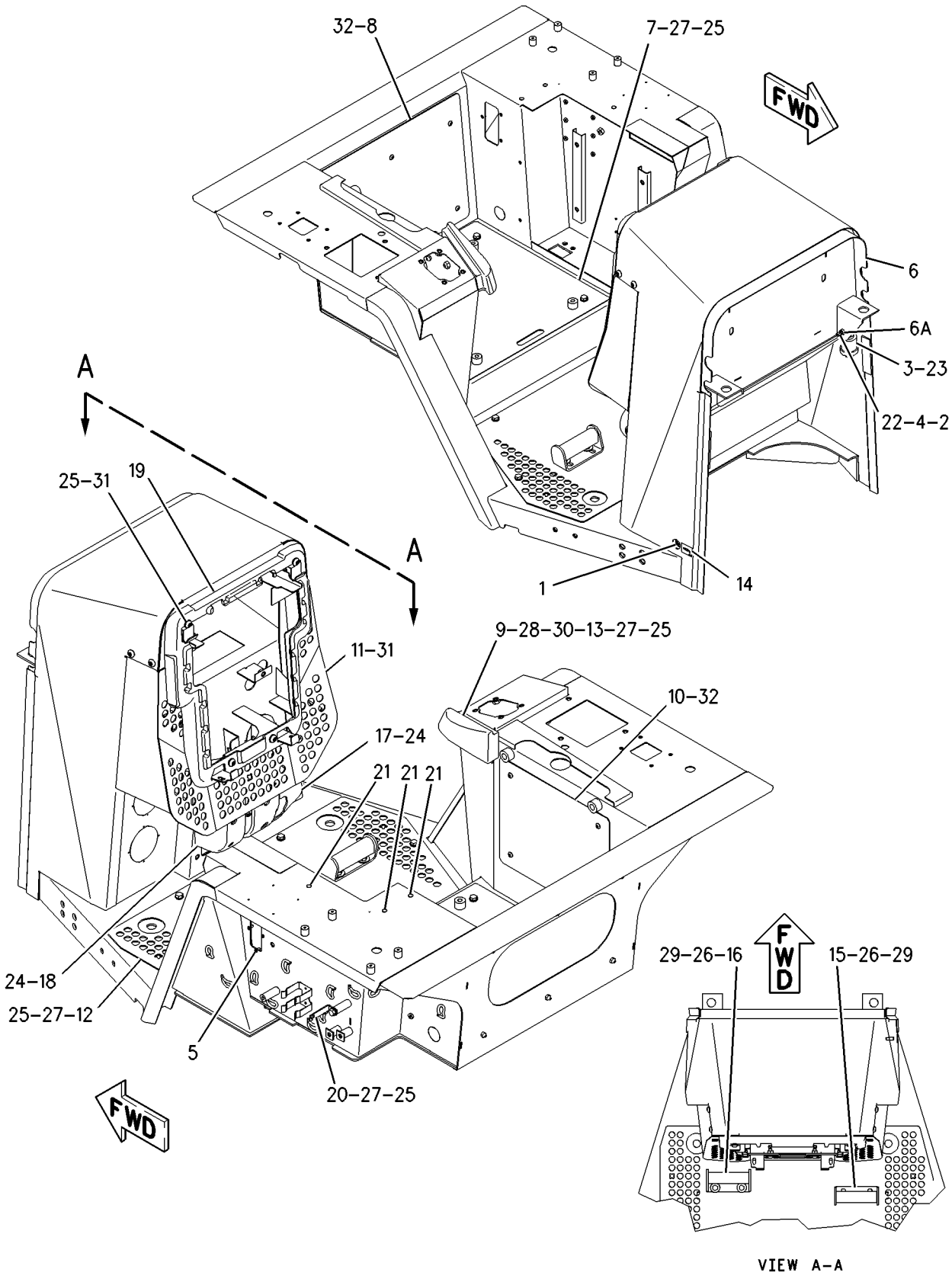

GRAPHIC #1 **<END>** g00932481

184-0870 PLUG AS—POWER TRAIN

S/N: CCK1-UP

PART OF 217-3819 CAB GP, 218-3064 PLATFORM GP

ALSO AN ATTACHMENT

SMCS-1408 **i01885443**

NOTE	REF NO	GRAPHIC REF	PART NUMBER	QTY	PART NAME 1 2 3 4 5 6 (PRODUCT LEVEL)	SEE PAGE
BD	1	1	**5P-5677**		WIRE-ELECTRICAL (18 GA)	
BE		1	**119-3662**		TUBE-HEAT SHRINK	
	2	1	**102-8805**	1	KIT-RECEPTACLE (6 PIN)	
					(INCLUDES RECEPTACLE AS & WEDGE)	
		1	**3E-3383**	1	WEDGE-RECEPTACLE LOCK	
		1	**8T-8737**	2	PLUG-SEAL	
		1	**9X-3401**	4	PIN-CONNECTOR	
					(FOR 16-18 GA WIRE)	
					—OR—	
		1	**126-1767**	4	PIN-CONNECTOR	
					(FOR 14 GA WIRE)	

B-USE AS REQUIRED
D-ORDER BY THE METER
E-ORDER BY THE CENTIMETER

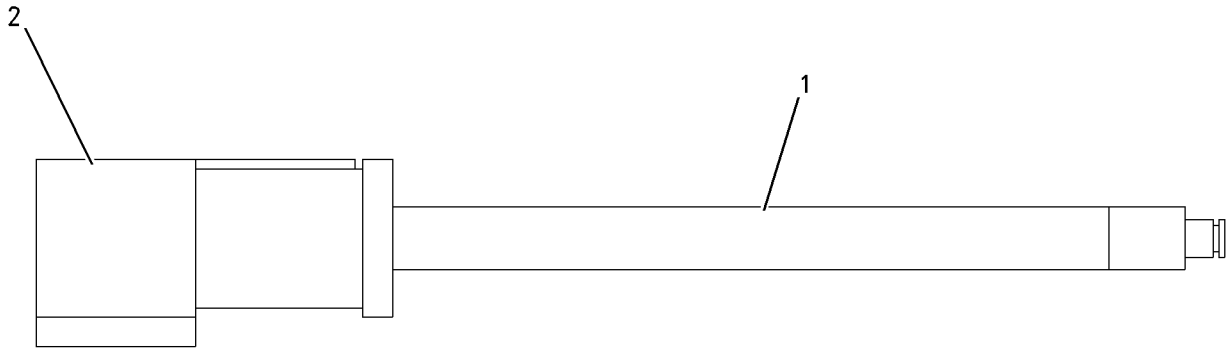

GRAPHIC #1 **<END>** g00726927

OPERATOR STATION

163-0152 PRESSURIZER GP-CAB

S/N: CCK1-UP

PART OF 156-8911 CAB GP

SMCS-7311 **i01880229**

NOTE	REF NO	GRAPHIC REF	PART NUMBER	QTY	PART NAME 1 2 3 4 5 6 (PRODUCT LEVEL)	SEE PAGE
	1	1	**3B-8489**	1	FITTING-GREASE (CAB PRESSURIZER)	
	2	1	**3E-7904**	2	FILTER AS (CAB AIR)	
	3	1	**3W-6756**	2	KNOB (FILTER COVER)	
	4	1	**7G-8116**	2	FILTER AS (CAB PRESSURIZER)	
					(EACH INCLUDES)	
		1	**141-7903**	1	FILTER-CHARCOAL (CAB PRESSURIZER)	
	5	1	**117-9988**	1	PANEL	
	6	1	**194-0675**	2	PLATE	
Y	7	1	**198-7281**	1	BLOWER GP-CAB	446
	8	1	**209-2928**	1	COVER AS (LH)	
	9	1	**209-2929**	1	COVER AS (RH)	
	10	1	**220-0122**	1	LATCH AS	
	11	1	**229-2604**	2	ROD AS	
					(EACH INCLUDES)	
		1	**5B-3254**	1	NUT-JAM (7/16-20 THD)	
	12	1	**229-2605**	1	PLATE AS	
	13	1	**229-2606**	1	PLATE AS	
	14	1	**7X-7729**	18	WASHER (11X25X3MM THK)	
M	15	1	**8T-4136**	18	BOLT (M10X1.5X25MM)	
M	16	1	**9X-2040**	12	SCREW-TRUSS HEAD (M10X1.5X25MM)	
BD	17	1	**5P-5755**		SEAL (BULK)	
BD	18	1	**5P-5926**		SEAL (BULK)	
BE	19	1	**201-4066**		SEAL (BULK)	
BD	20	1	**5P-5639**		SEAL (BULK)	
BD	21	1	**3E-6573**		SEAL (BULK)	
BE	22	1	**140-1320**		SEAL (40CM)	

B-USE AS REQUIRED
D-ORDER BY THE METER
E-ORDER BY THE CENTIMETER
M-METRIC PART
Y-SEPARATE ILLUSTRATION

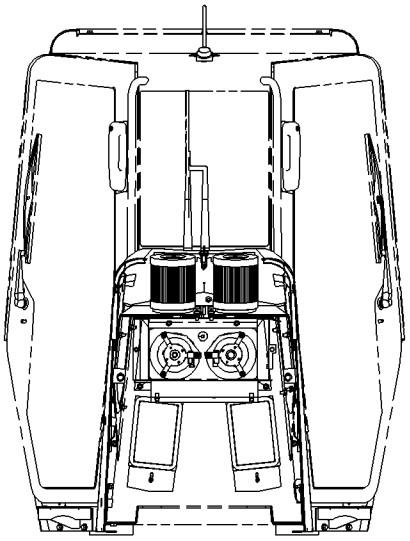

FRONT VIEW

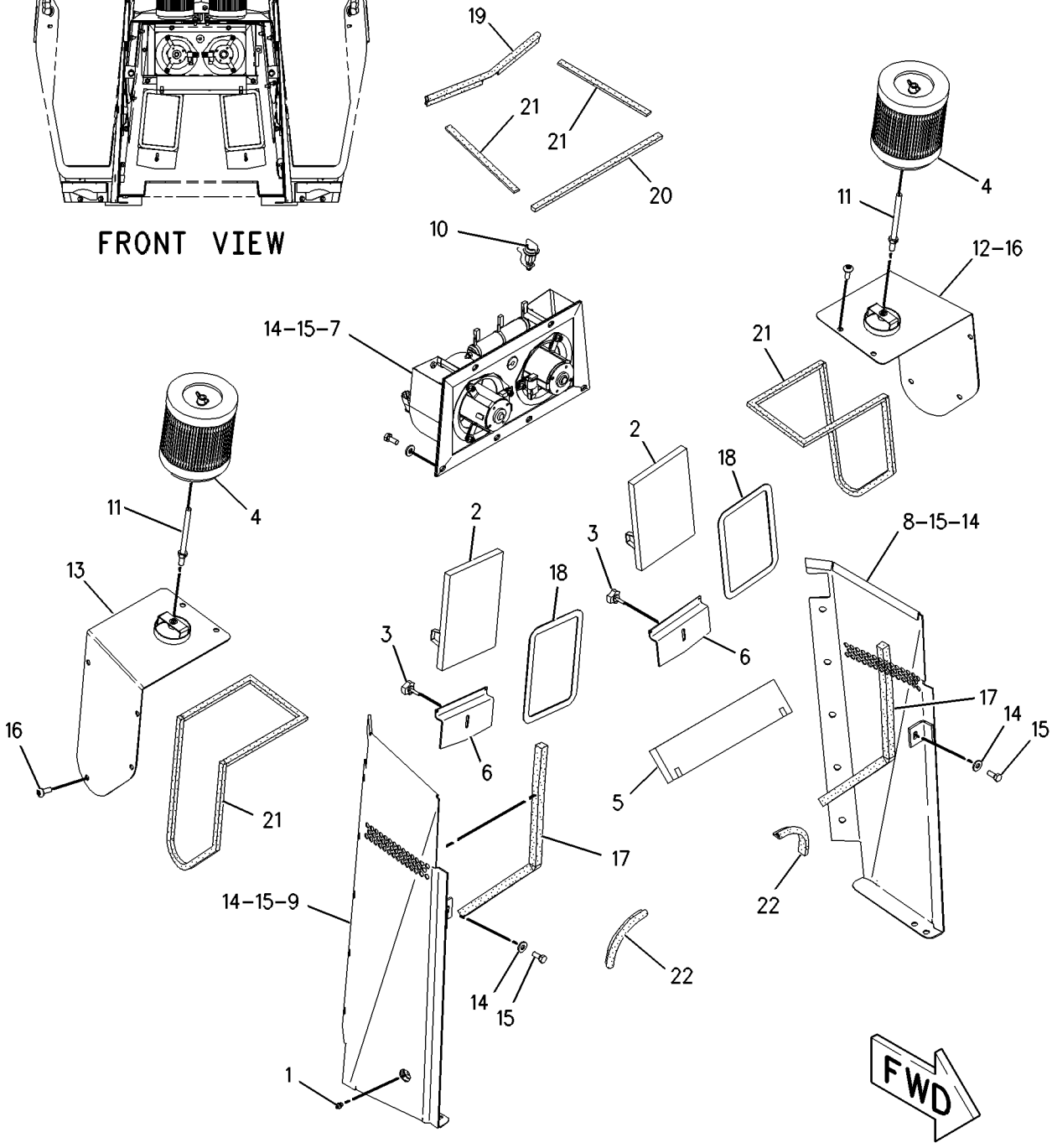

GRAPHIC #1 **<END>** g00970541

OPERATOR STATION

173-6530 RADIO GP–AM/FM

S/N: CCK1-UP
AN ATTACHMENT

SMCS-7338 **i01883801**

NOTE	REF NO	GRAPHIC REF	PART NUMBER	QTY	PART NAME 1 2 3 4 5 6 (PRODUCT LEVEL)	SEE PAGE
	1	1	**102-8806**	1	KIT-RECEPTACLE (8 PIN)	
					(INCLUDES RECEPTACLE AS & WEDGE)	
	2	1	**3E-3389**	1	WEDGE-RECEPTACLE LOCK	
	3	1	**8T-8737**	1	PLUG-SEAL	
	4	1	**186-3735**	7	PIN-CONNECTOR	
	5	1	**192-7054**	1	SLEEVE	
	6	1	**137-8165**	1	BUMPER	
	7	1	**186-2741**	1	HARNESS AS-RADIO (SPEAKER)	
		1	**102-8806**	1	KIT-RECEPTACLE (8 PIN)	
					(INCLUDES RECEPTACLE AS & WEDGE)	
	8	1	**175-3678**	1	KIT-KNOB (RADIO)	
					(INCLUDES KNOBS: FADER, TONE, VOLUME/SW)	

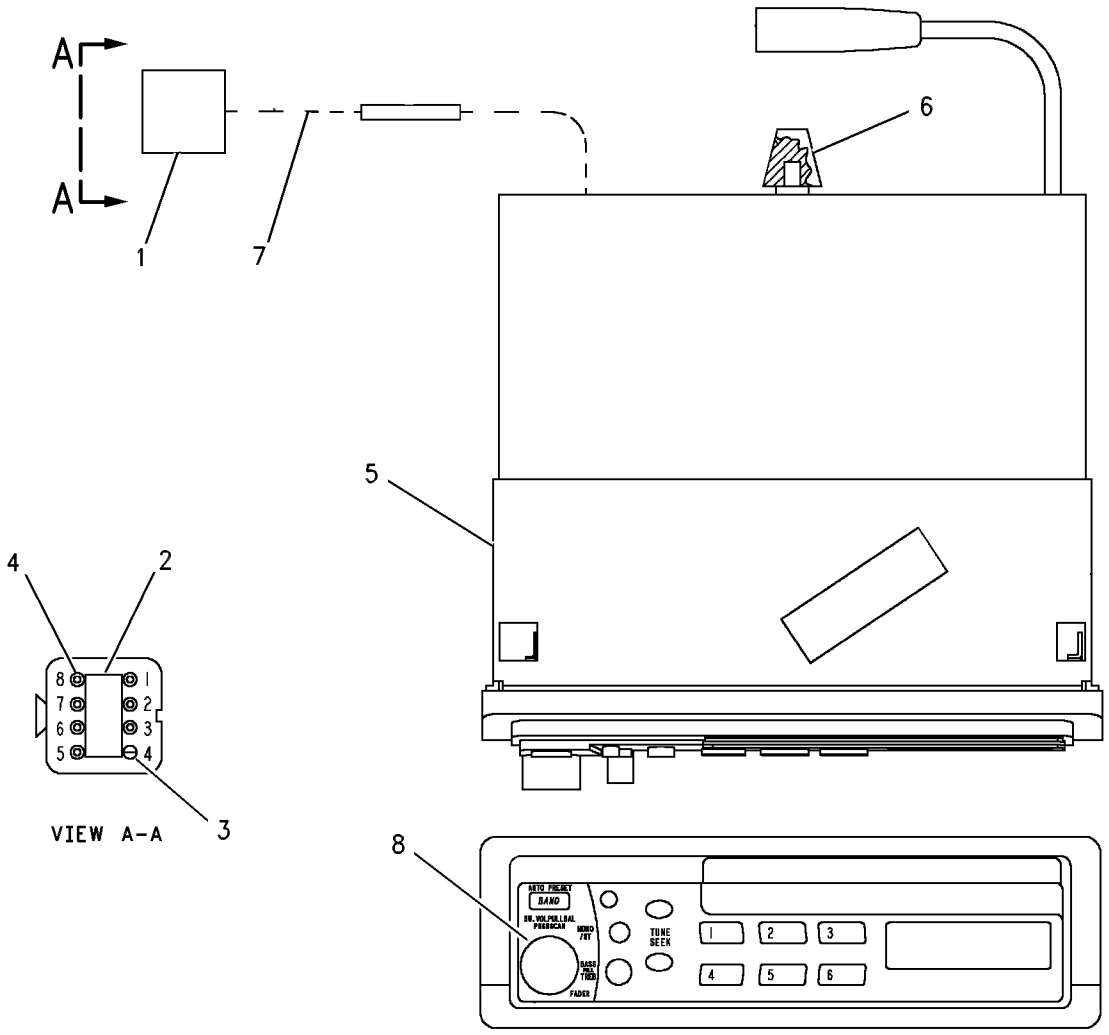

GRAPHIC #1

<END>

g00623314

OPERATOR STATION

173-6532 RADIO GP—AM/FM CASSETTE

S/N: CCK1-UP

AN ATTACHMENT

SMCS-7338 **i01871001**

NOTE	REF NO	GRAPHIC REF	PART NUMBER	QTY	PART NAME 1 2 3 4 5 6 (PRODUCT LEVEL)	SEE PAGE
	1	1	**102-8806**	1	KIT-RECEPTACLE (8 PIN)	
					(INCLUDES RECEPTACLE AS & WEDGE)	
	2	1	**8T-8729**	7	PIN-CONNECTOR	
	3	1	**8T-8737**	1	PLUG-SEAL	
	4	1	**3E-3389**	1	WEDGE-RECEPTACLE LOCK	
	5	1	**192-7054**	1	SLEEVE	
	6	1	**137-8165**	1	BUMPER	
	7	1	**186-2741**	1	HARNESS AS-RADIO (SPEAKER)	
	8	1	**175-3678**	1	KIT-KNOB (RADIO)	
					(INCLUDES KNOBS: FADER, TONE, VOLUME/SW)	

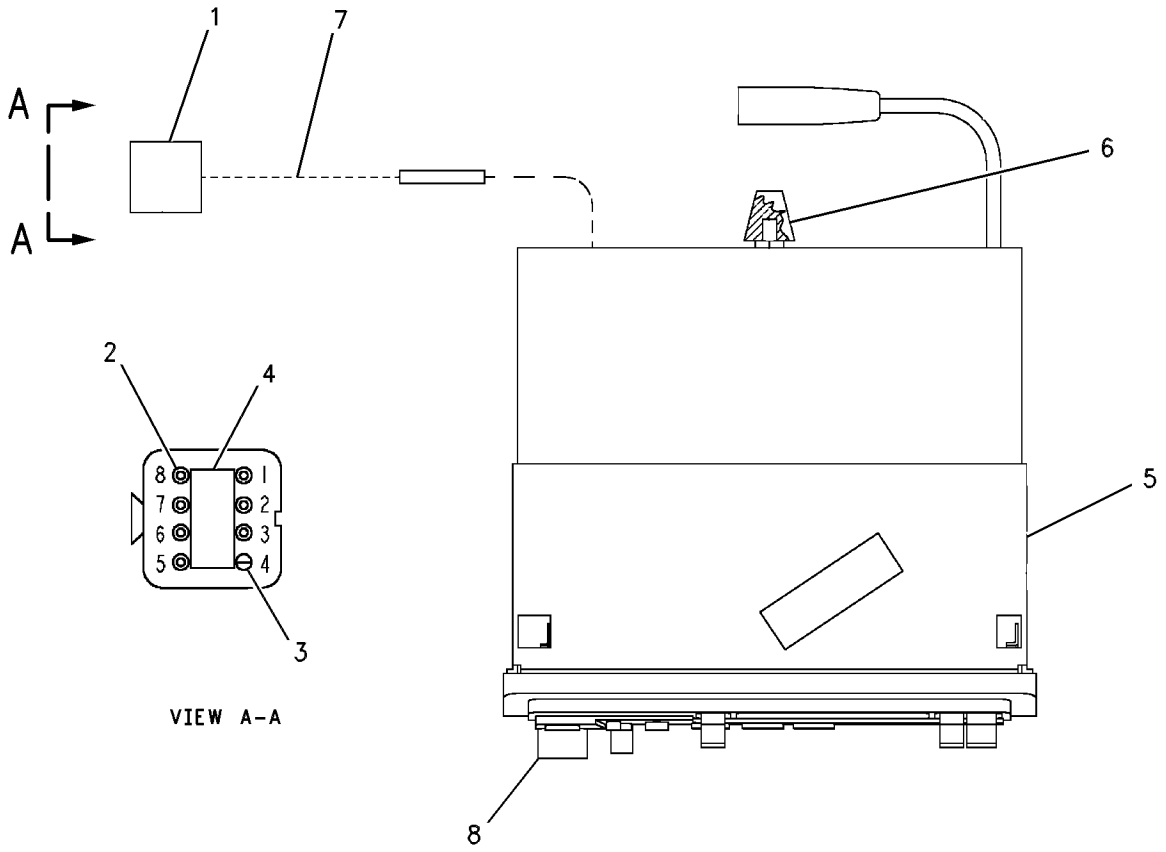

GRAPHIC #1 **<END>** g00618667

OPERATOR STATION

177-4935 RECLINER GP-SEAT

S/N: CCK1-UP
PART OF 178-0603, 180-7304 SEAT GP
AN ATTACHMENT

SMCS-7312 **i01809930**

NOTE	REF NO	GRAPHIC REF	PART NUMBER	QTY	PART NAME 1 2 3 4 5 6 (PRODUCT LEVEL)	SEE PAGE
	1	1	**217-7933**	1	LATCH	
	2	1	**164-4146**	1	SPRING	
	3	1	**177-1860**	1	GEAR (14 TEETH) (LOCK)	
	4	1	**177-1862**	1	BRACKET	
	5	1	**178-0607**	1	SHAFT AS	
	5A	1	**2K-9111**	2	PIN-SPRING	
	5B	1	**9M-6803**	2	DOWEL	
	5C	1	**170-8590**	1	SPRING	
	6	1	**178-0608**	1	BRACKET AS	
	7	1	**178-0609**	1	BRACKET AS	
	8	1	**031-0214**	1	BOLT-LOCKING (1/4-20X0.5 IN)	
	9	1	**101-2867**	1	WASHER-HARD (7.2X25X2MM THK)	
	10	1	**4M-6425**	1	BOLT (5/16-18X1 IN)	
	11	1	**5S-7383**	1	BOLT (3/8-16X1.75 IN)	
	12	1	**8T-4224**	1	WASHER-HARD (8.8X16X2MM THK)	

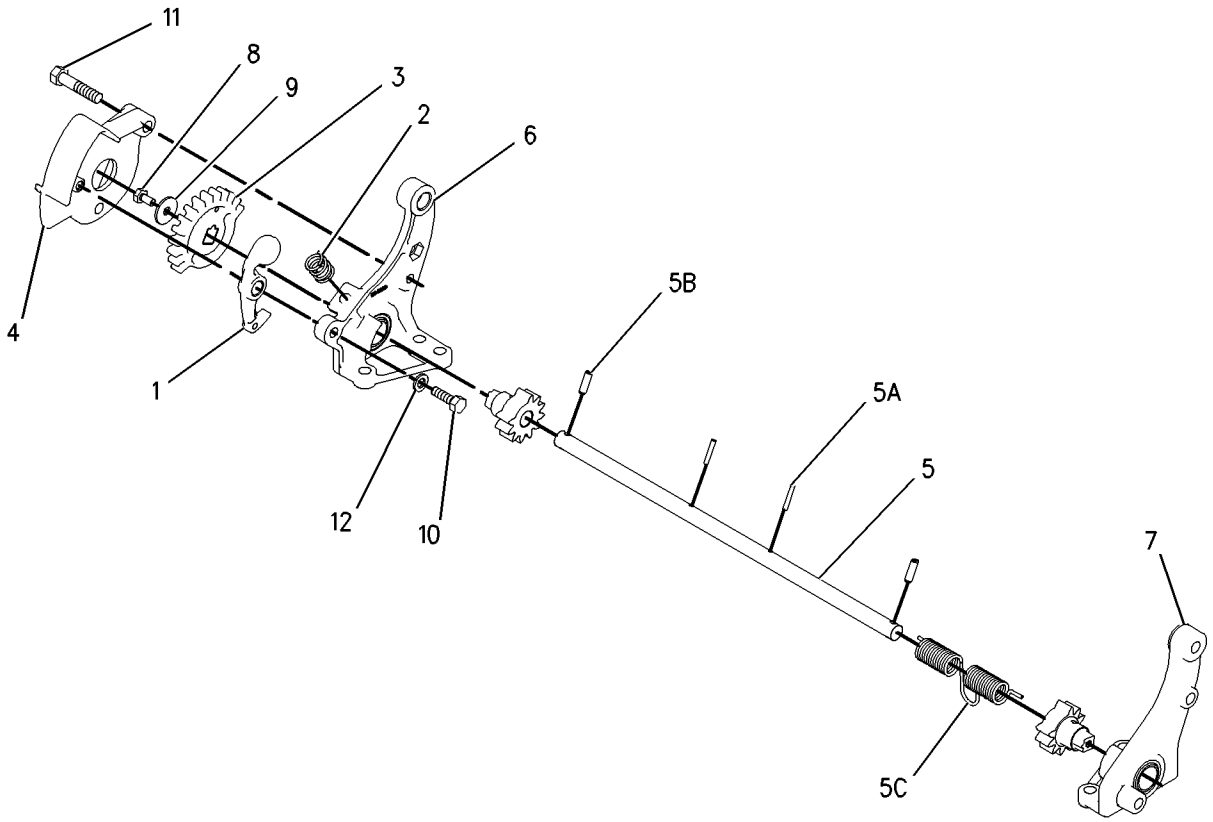

GRAPHIC #1 **<END>** g00673022

OPERATOR STATION

167-1457 ROPS GP—ENCLOSED

S/N: CCK1-UP

PART OF 191-4824 CAB AR

SMCS-7323, 7325 **i01828737**

NOTE	REF NO	GRAPHIC REF	PART NUMBER	QTY	PART NAME 1 2 3 4 5 6 (PRODUCT LEVEL)	SEE PAGE
	1	1	**171-9587**	1	ROPS AS	
	2	1	**145-4115**	12	SPACER (26X40X12MM THK)	
M	3	1	**8T-5878**	12	BOLT (M24X3X80MM)	

M-METRIC PART

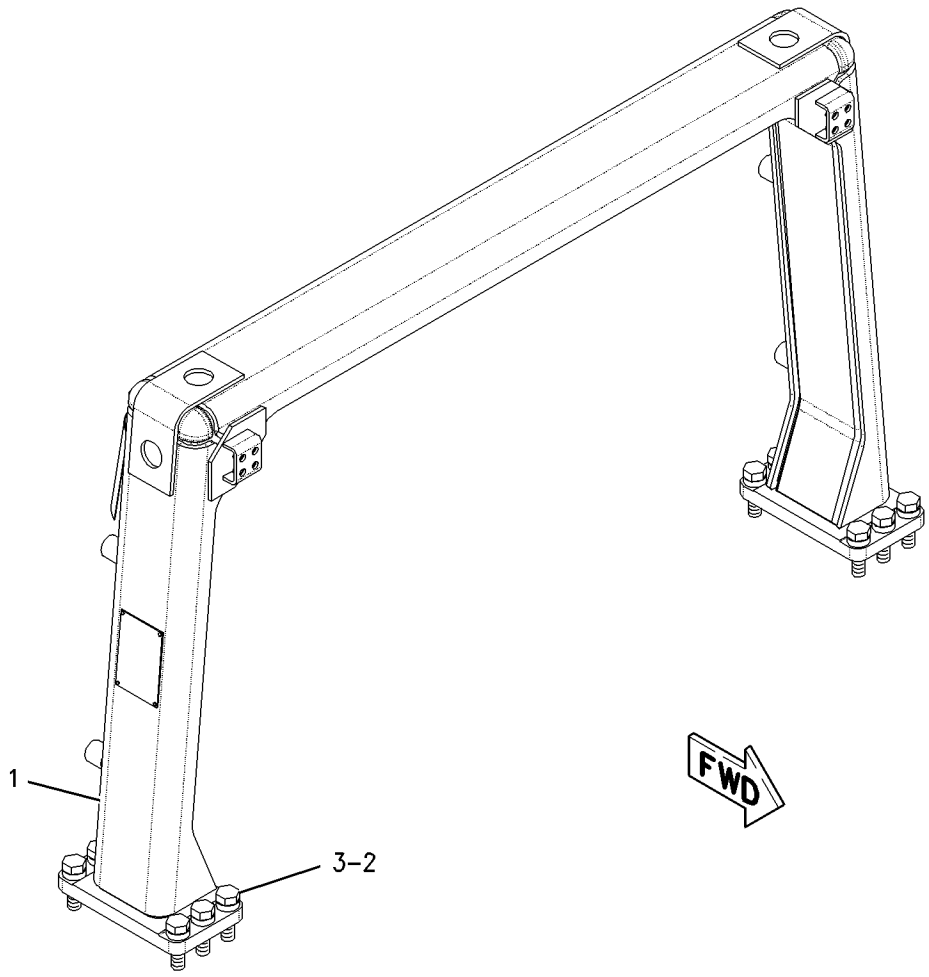

GRAPHIC #1 **<END>** g00776342

OPERATOR STATION

167-1460 ROPS GP—OPEN

S/N: CCK1-UP
PART OF 193-3812 CANOPY AR
AN ATTACHMENT

SMCS-7323, 7325 **i01893864**

NOTE	REF NO	GRAPHIC REF	PART NUMBER	QTY	PART NAME 1 2 3 4 5 6 (PRODUCT LEVEL)	SEE PAGE
	1	1	**1P-2772**	4	SPACER (26X31X19MM THK)	
	2	1	**3S-2093**	15	STRAP-CABLE	
	3	1	**5P-6874**	1	MIRROR	
	4	1	**8C-5607**	8	MOUNT (ISOLATION)	
	5	1	**8C-5608**	4	SPACER (6.5X9.5X25.4MM THK)	
M	6	1	**8T-4220**	1	BOLT-SQUARE NECK	
	7	1	**211-1913**	1	FOAM	
	8	1	**211-2354**	1	BRACKET	
	9	1	**9S-5187**	2	MOUNTING	
	10	1	**114-3907**	1	STABILIZER AS	
	11	1	**114-6407**	1	STABILIZER AS	
	12	1	**220-0230**	1	WARNING GP-BACKUP (ROPS)	
		1	**102-8802**	1	KIT-RECEPTACLE (2 PIN)	
					(INCLUDES RECEPTACLE AS & WEDGE)	
		1	**3E-3365**	1	WEDGE-RECEPTACLE LOCK (2 PIN)	
		1	**5P-5623**	1	WIRE (16 GA)	
		1	**186-3735**	2	PIN-CONNECTOR	
BE		1	**9X-1813**		SLEEVE	
	13	1	**145-4115**	12	SPACER (26X40X12MM THK)	
	14	1	**160-9147**	1	HARNESS AS (BACKUP ALARM)	
		1	**102-8802**	5	KIT-RECEPTACLE (2 PIN)	
		1	**102-8805**	1	KIT-RECEPTACLE (6 PIN)	
		1	**102-8806**	1	KIT-RECEPTACLE (8 PIN)	
					(EACH RECEPTACLE KIT INCLUDES RECEPTACLE AS & WEDGE)	
		1	**155-2270**	6	KIT-CONNECTING PLUG (2 PIN)	
		1	**155-2274**	1	KIT-CONNECTING PLUG (6 PIN)	
					(EACH PLUG KIT INCLUDES PLUG AS, WEDGE & INTERFACE SEAL)	
	15	1	**9X-6165**	4	WASHER (6.5X22X2.5MM THK)	
	16	1	**173-6809**	1	ROPS AS	
	17	1	**175-7651**	1	HEADLINER	
	18	1	**211-0895**	2	PLATE	
	19	1	**184-3451**	1	STEP AS	
M		1	**8T-3597**	2	NUT-WELD (M12X1.75 THD)	
	20	1	**184-3452**	1	STEP AS	
M		1	**8T-3597**	2	NUT-WELD (M12X1.75 THD)	
	21	1	**197-3522**	1	COVER AS	
M		1	**8T-3490**	2	NUT-WELD (M10X1.5 THD)	
	22	1	**197-6050**	14	WASHER	
	23	1	**197-6051**	14	BUTTON	
	24	1	**5P-8439**	4	GROMMET	
	25	1	**6K-3632**	2	LOCKNUT (1-8 THD)	
M	26	1	**8C-8451**	4	BOLT (M6X1X40MM)	
	27	1	**8C-8843**	2	BOLT (1-8X4.5 IN)	
	28	1	**8P-5244**	4	WASHER (33.3X69.8X6.35MM THK)	
	29	1	**8T-4121**	13	WASHER-HARD (11X21X2.5MM THK)	
M	30	1	**8T-4137**	11	BOLT (M10X1.5X20MM)	
M	31	1	**8T-4139**	4	BOLT (M12X1.75X30MM)	
	32	1	**8T-4161**	1	KNOB	
M	33	1	**8T-4194**	8	BOLT (M12X1.75X50MM)	
M	34	1	**8T-4198**	2	BOLT (M10X1.5X100MM)	
	35	1	**8T-4223**	12	WASHER-HARD (13.5X25.5X3MM THK)	
M	36	1	**8T-5878**	12	BOLT (M24X3X80MM)	
	37	1	**1V-6688**	1	GROMMET	

167-1460 **ROPS GP** ***(contd.)*** **i01893864**

NOTE	REF NO	GRAPHIC REF	PART NUMBER	QTY	PART NAME 1 2 3 4 5 6 (PRODUCT LEVEL)	SEE PAGE
	38	1	**227-4469**	1	CORNER (LH)	
	39	1	**227-4468**	1	CORNER (RH)	

B-USE AS REQUIRED
E-ORDER BY THE CENTIMETER
M-METRIC PART

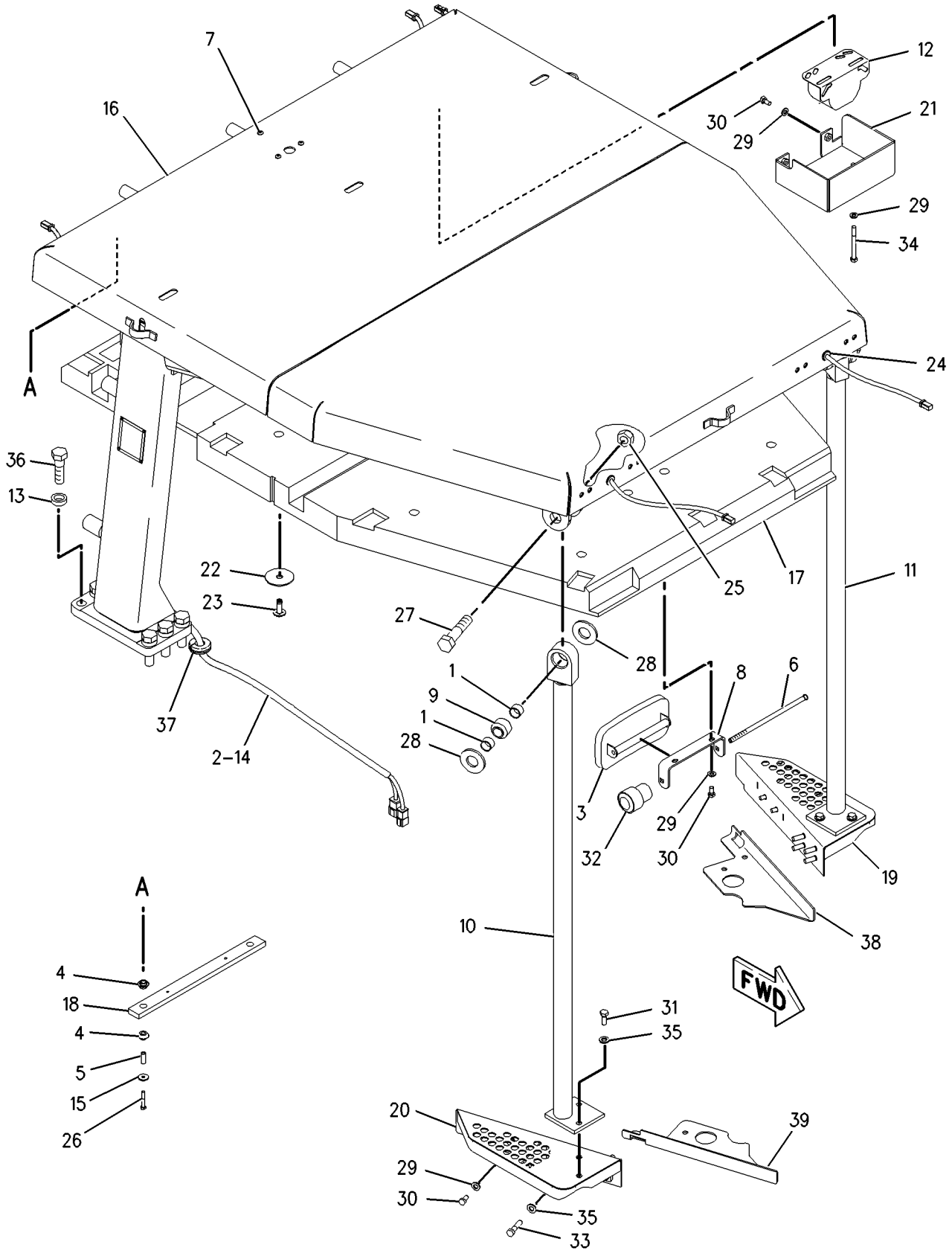

GRAPHIC #1 **<END>** g00918159

OPERATOR STATION

167-1466 SCREEN GP-PROTECTION—CAB

S/N: CCK1-UP

FOR USE WITH 191-4824—PAGE 448. CANNOT BE USED WITH 193-3812—PAGE 454 AN ATTACHMENT

SMCS-7165 **i01830557**

NOTE	REF NO	GRAPHIC REF	PART NUMBER	QTY	PART NAME 1 2 3 4 5 6 (PRODUCT LEVEL)	SEE PAGE
	1	1	**8G-5258**	4	SPACER (17X35X20MM THK)	
	2	1	**195-8421**	1	BRACKET AS (LH)	
	3	1	**195-8422**	1	BRACKET AS (RH)	
					(EACH BRACKET AS INCLUDES)	
M		1	**8T-3597**	4	NUT-WELD (M12X1.75 THD)	
	4	1	**195-8430**	1	SCREEN AS	
M	5	1	**118-4977**	4	BOLT (M16X2X65MM)	
M	6	1	**8T-4139**	8	BOLT (M12X1.75X30MM)	
	7	1	**8T-4223**	8	WASHER-HARD (13.5X25.5X3MM THK)	

M-METRIC PART

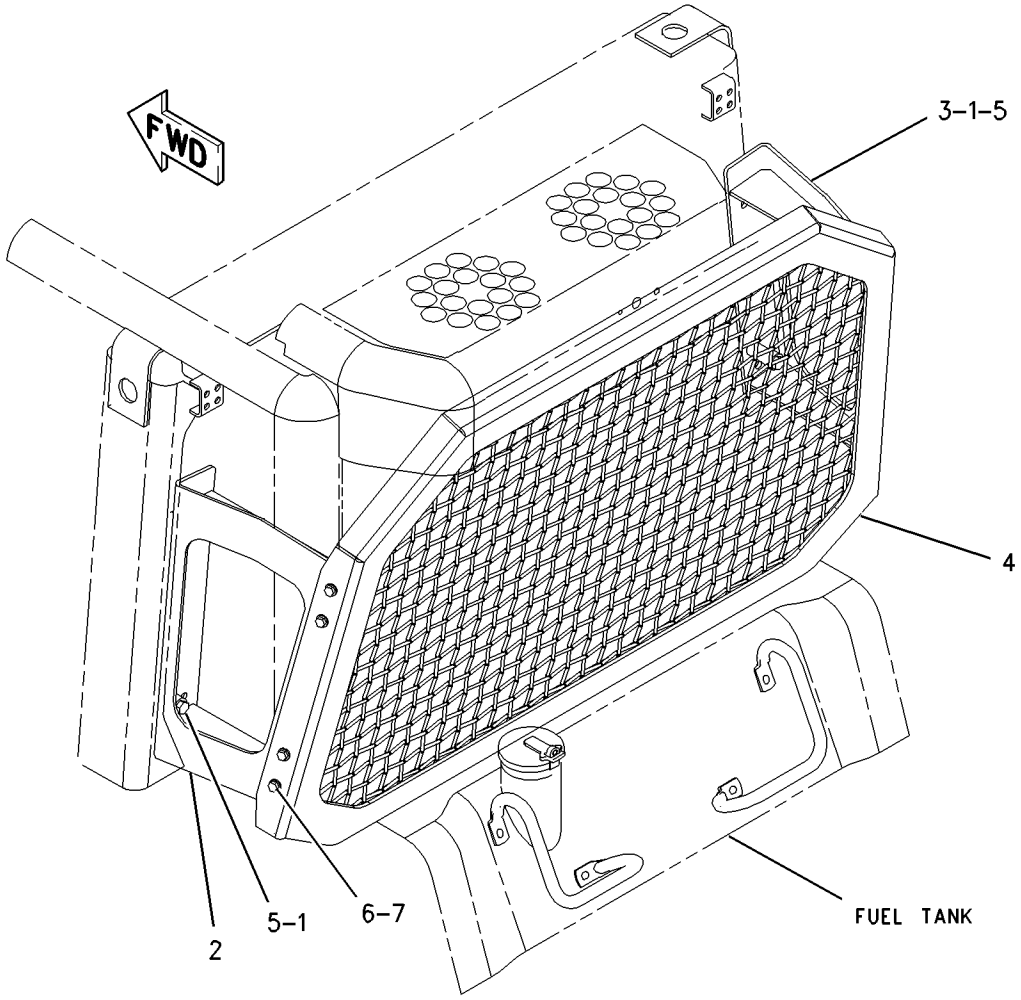

GRAPHIC #1 **<END>** g00776698

OPERATOR STATION

175-7225 SCREEN GP-PROTECTION—OPEN ROPS

S/N: CCK1-UP

FOR USE WITH 193-3812—PAGE 454. CANNOT BE USED WITH 191-4824—PAGE 448 AN ATTACHMENT

SMCS-7165 **i01830652**

NOTE	REF NO	GRAPHIC REF	PART NUMBER	QTY	PART NAME 1 2 3 4 5 6 (PRODUCT LEVEL)	SEE PAGE
	1	1	**199-2998**	1	SCREEN AS	
	2	1	**175-7223**	1	SCREEN AS	
	3	1	**175-7227**	1	CHANNEL AS	
M		1	**8T-3490**	4	NUT-WELD (M10X1.5 THD)	
	4	1	**176-7453**	1	CHANNEL AS	
M		1	**8T-3490**	4	NUT-WELD (M10X1.5 THD)	
M	5	1	**6V-5686**	4	BOLT (M16X2X50MM)	
	6	1	**7X-0583**	3	WASHER-HARD (17X45X6MM THK)	
	7	1	**8T-4121**	18	WASHER-HARD (11X21X2.5MM THK)	
M	8	1	**8T-4133**	5	NUT (M10X1.5 THD)	
M	9	1	**8T-4195**	5	BOLT (M10X1.5X30MM)	
M	10	1	**8T-4196**	8	BOLT (M10X1.5X35MM)	
M	11	1	**8T-4779**	3	BOLT (M16X2X35MM)	
	12	1	**9X-8268**	4	WASHER (17.5X30X3.5MM THK)	

M-METRIC PART

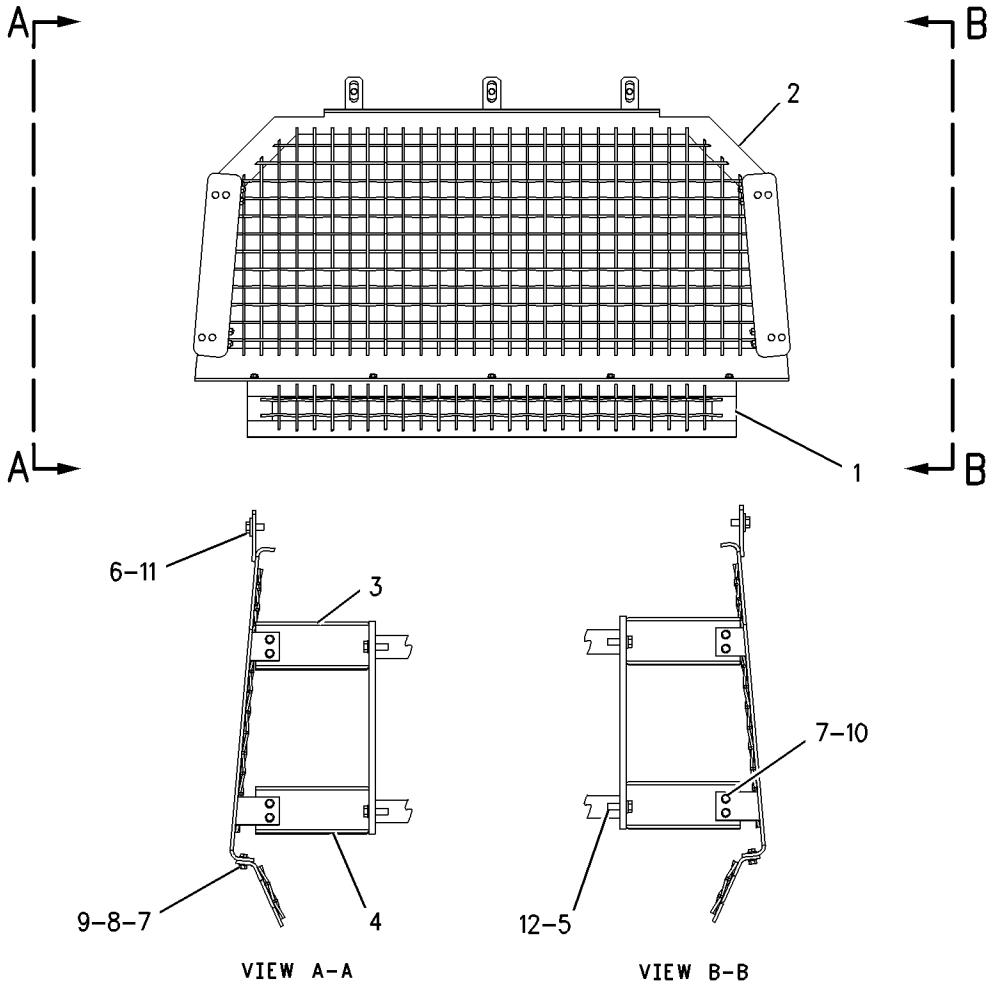

GRAPHIC #1 **<END>** g00671510

OPERATOR STATION

173-6772 SCREEN GP-SUN

S/N: CCK1-UP

FOR USE WITH 191-4824—PAGE 448, . CANNOT BE USED WITH 193-3812—PAGE 454, AN ATTACHMENT

SMCS-7165 **i01830628**

NOTE	REF NO	GRAPHIC REF	PART NUMBER	QTY	PART NAME 1 2 3 4 5 6 (PRODUCT LEVEL)	SEE PAGE
	1	1	**228-9379**	1	VISOR AS	
	2	1	**228-9380**	1	VISOR AS	
	3	1	**228-9381**	2	VISOR AS	
	4	1	**228-9382**	8	ROD END	
	5	1	**229-3336**	2	BRACKET	
	6	1	**229-3337**	2	BRACKET	
	7	1	**229-3338**	4	BRACKET	
	8	1	**229-3339**	2	ROD	
	9	1	**229-3340**	2	ROD	
	10	1	**229-3341**	2	ROD	
	11	1	**229-3342**	2	ROD	
M	12	1	**107-3786**	8	BOLT (M4X.7X12MM)	
	13	1	**7X-0620**	8	WASHER-HARD (5.5X13X1.6MM THK)	
M	14	1	**8T-2659**	8	LOCKNUT (M4X0.7 THD)	
M	15	1	**9X-2045**	7	SCREW-TRUSS HEAD (M6X1X20MM)	

M-METRIC PART

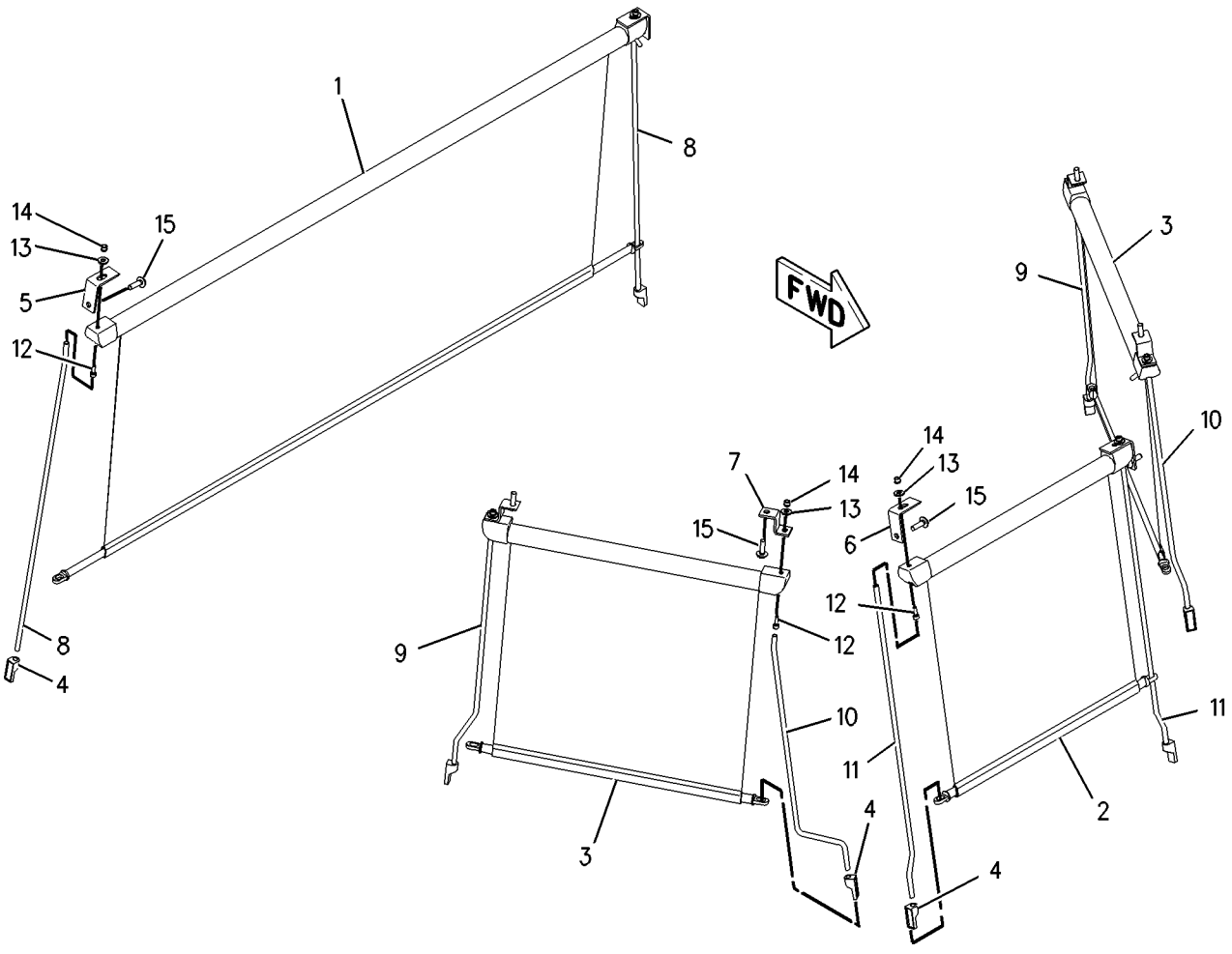

GRAPHIC #1 **<END>** g00931824

OPERATOR STATION

178-0603 SEAT GP

S/N: CCK1-UP
PART OF 178-0606 SEAT GP
AN ATTACHMENT

SMCS-7312 **i01852208**

NOTE	REF NO	GRAPHIC REF	PART NUMBER	QTY	PART NAME 1 2 3 4 5 6 (PRODUCT LEVEL)	SEE PAGE
	1	1	**135-5499**	1	PAN AS	
		1	**8T-9082**	5	RIVET-POP	
		1	**117-4506**	1	CUSHION AS	
	2	1	**143-1288**	8	LOCKNUT-FLANGE (3/8-16 THD)	
	3	1	**171-1230**	6	SCREW-BUTTON HEAD (3/8-16X1 IN)	
	4	1	**171-6682**	1	BAR-RECLINER	
	5	1	**172-2416**	2	PIN	
Y	6	1	*173-1028*	1	ADJUSTER GP-SEAT	443
	7	1	**177-1863**	2	BOLT-PIVOT (3/8-16X2.89 IN)	
Y	8	1	*177-4935*	1	RECLINER GP-SEAT	514
Y	9	1	*178-0604*	1	PAN GP-BACKREST	496
	10	1	**184-2298**	1	ROD	
	11	1	**184-2299**	4	WASHER (7X25.4X2.54MM THK)	
	12	1	**095-0843**	2	PIN-COTTER	
	13	1	**5V-1496**	2	RETAINER	
	14	1	**6V-7646**	2	WASHER-HARD (7.2X25X2MM THK)	
	15	1	**8T-0328**	1	WASHER-HARD (5.5X10X1MM THK)	
	16	1	**8T-4205**	1	WASHER-HARD (7.2X14.5X2MM THK)	
	17	1	**8Y-6277**	2	SPACER (10.5X28.6X10MM THK)	

Y-SEPARATE ILLUSTRATION

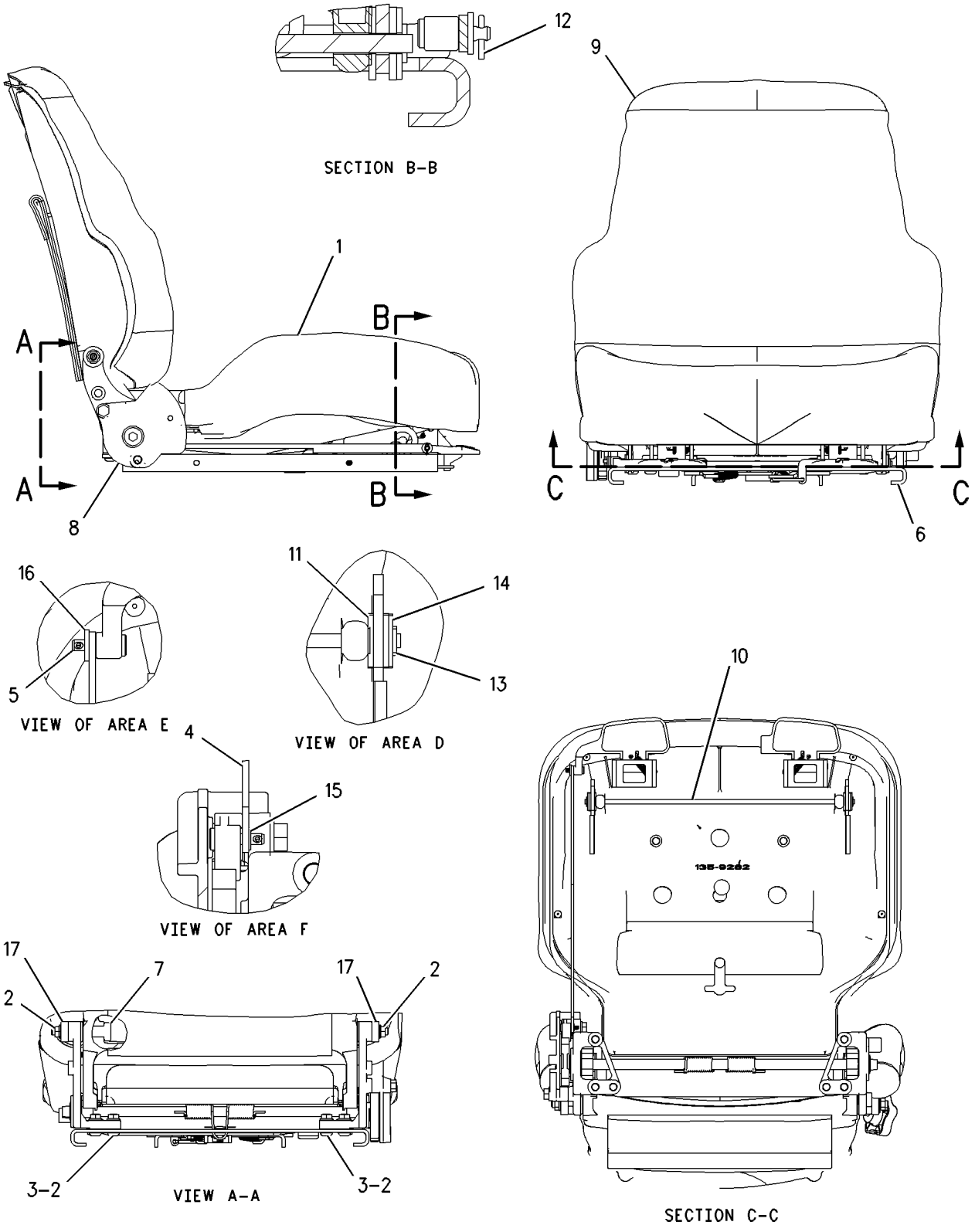

GRAPHIC #1 **<END>** g00729407

OPERATOR STATION

178-0606 SEAT GP

S/N: CCK1-UP
PART OF 160-7186, 200-3174 SEAT GP-SUSPENSION
AN ATTACHMENT

SMCS-7312 **i01883810**

NOTE	REF NO	GRAPHIC REF	PART NUMBER	QTY	PART NAME 1 2 3 4 5 6 (PRODUCT LEVEL)	SEE PAGE
	1	1	**173-3082**	1	EXTENSION GP-BACKREST (FABRIC)	
	2	1	**177-4937**	1	SPACER (11.7X19.8X20.3MM THK)	
Y	3	1	**178-0603**	1	SEAT GP (CLOTH)	522
	4	1	**180-5559**	1	SCREW-PAN HEAD (7/16-20X1.75 IN)	
	5	1	**180-5560**	1	SCREW-PAN HEAD (7/16-20X1.25 IN)	
	6	1	**183-3648**	1	SEAT BELT GP (SUSPENSION SEAT)	

Y-SEPARATE ILLUSTRATION

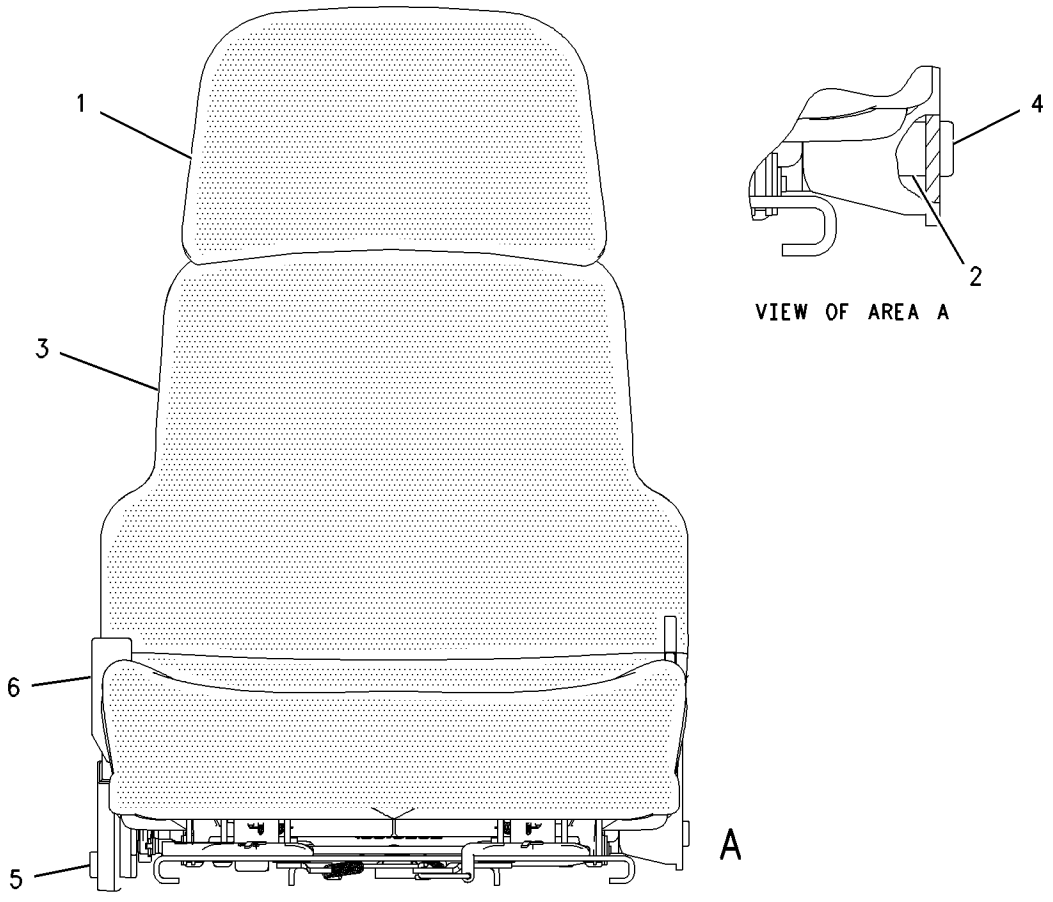

FRONT VIEW

GRAPHIC #1 **<END>** g00773865

OPERATOR STATION

180-7304 SEAT GP

S/N: CCK1-UP
PART OF 184-6011 SEAT GP
AN ATTACHMENT

SMCS-7312 **i01883816**

NOTE	REF NO	GRAPHIC REF	PART NUMBER	QTY	PART NAME 1 2 3 4 5 6 (PRODUCT LEVEL)	SEE PAGE
	1	1	**6K-3273**	5	RIVET-POP	
		1	**169-1026**	1	CUSHION AS	
	2	1	**143-1288**	8	LOCKNUT-FLANGE (3/8-16 THD)	
	3	1	**171-1230**	6	SCREW-BUTTON HEAD (3/8-16X1 IN)	
	4	1	**171-6682**	1	BAR-RECLINER	
	5	1	**172-2416**	2	PIN	
Y	6	1	*173-1028*	1	ADJUSTER GP-SEAT	443
	7	1	**177-1863**	2	BOLT-PIVOT (3/8-16X2.89 IN)	
Y	8	1	*177-4935*	1	RECLINER GP-SEAT	514
Y	9	1	*180-7305*	1	PAN GP-BACKREST	498
	10	1	**184-2298**	1	ROD	
	11	1	**184-2299**	4	WASHER (7X25.4X2.54MM THK)	
	12	1	**095-0843**	2	PIN-COTTER	
	13	1	**8Y-6277**	2	SPACER (10.5X28.6X10MM THK)	
	14	1	**5V-1496**	2	RETAINER	
	15	1	**6V-7646**	2	WASHER-HARD (7.2X25X2MM THK)	
	16	1	**8T-0328**	1	WASHER-HARD (5.5X10X1MM THK)	
	17	1	**8T-4205**	1	WASHER-HARD (7.2X14.5X2MM THK)	

Y-SEPARATE ILLUSTRATION

180-7304 SEAT GP ***(contd.)*** **i01883816**

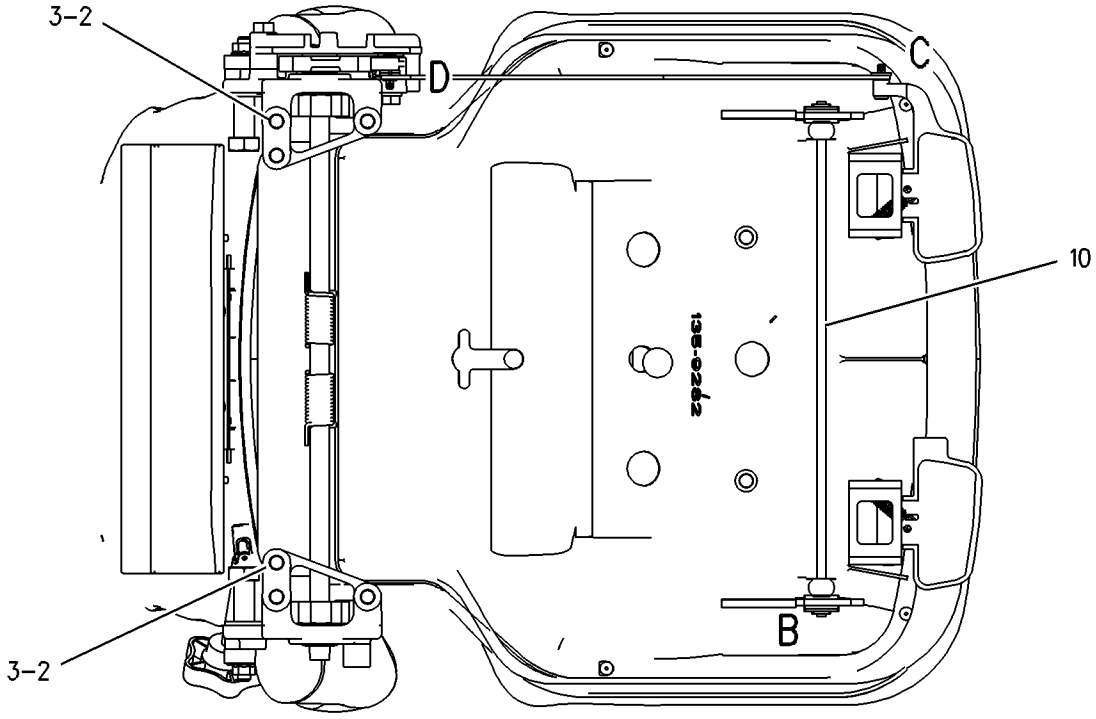

SECTION A-A

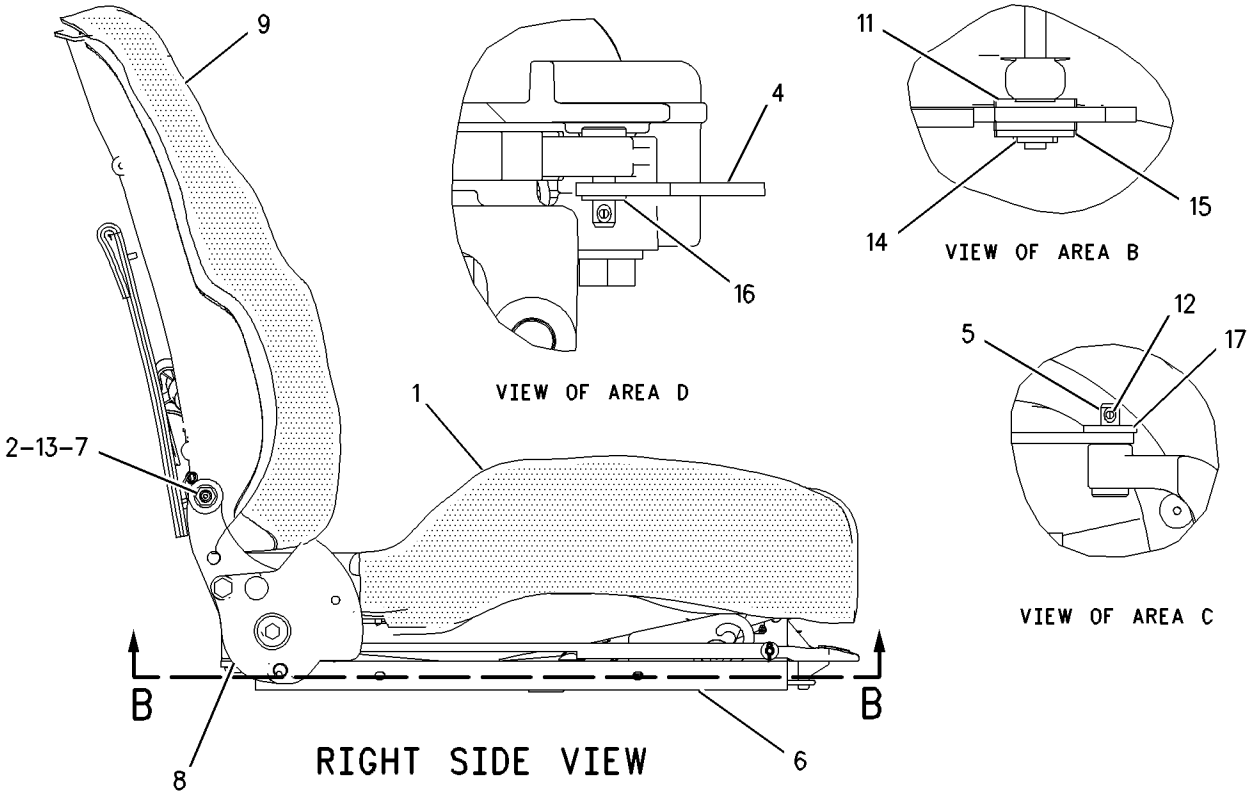

GRAPHIC #1 **<END>** g00726860

OPERATOR STATION

184-6011 SEAT GP

S/N: CCK1-UP
PART OF 159-2950 SEAT GP-SUSPENSION
AN ATTACHMENT

SMCS-7312 **i01899322**

NOTE	REF NO	GRAPHIC REF	PART NUMBER	QTY	PART NAME 1 2 3 4 5 6 (PRODUCT LEVEL)	SEE PAGE
	1	1	**173-3083**	1	EXTENSION GP-BACKREST (SEAT)	
		1	**117-4491**	1	ROD	
	2	1	**177-4937**	1	SPACER (11.7X19.8X20.3MM THK)	
	3	1	**205-6388**	1	BOLT (7/16-20X44.45MM)	
	4	1	**0T-0244**	1	BOLT (7/16-20X1.25 IN)	
Y	5	1	**180-7304**	1	SEAT GP (VINYL)	525
	6	1	**222-0345**	1	SEAT BELT GP	

Y-SEPARATE ILLUSTRATION

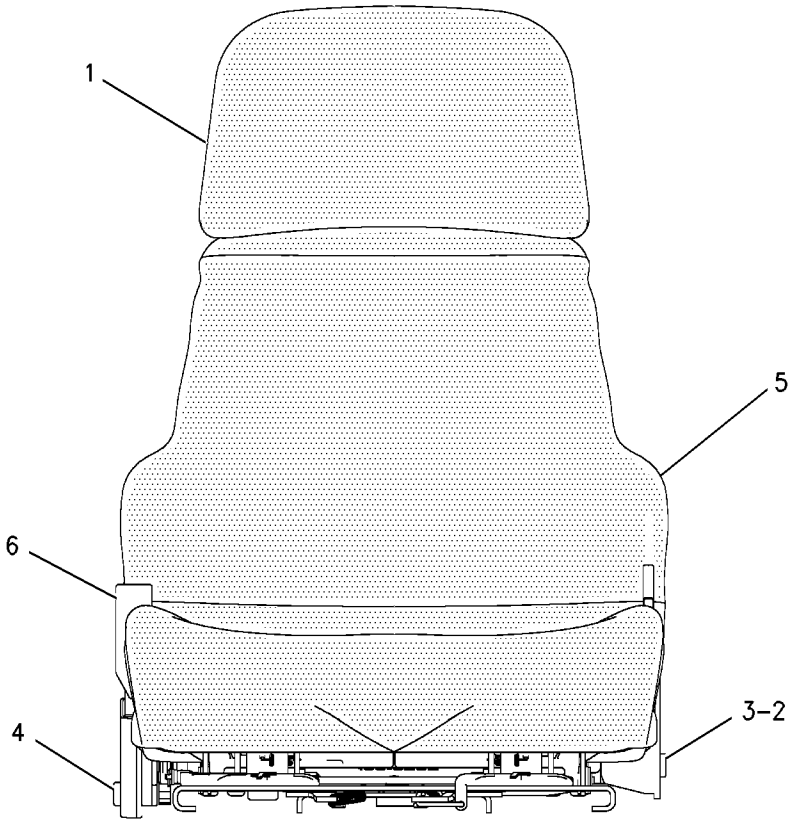

FRONT VIEW

GRAPHIC #1 **<END>** g00683843

OPERATOR STATION

6W-9744 SEAT GP-SUSPENSION

S/N: CCK1-UP
PART OF 227-7013 SEAT GP-SUSPENSION
AN ATTACHMENT

SMCS-7321, 7324, 7336 **i01885531**

NOTE	REF NO	GRAPHIC REF	PART NUMBER	QTY	PART NAME 1 2 3 4 5 6 (PRODUCT LEVEL)	SEE PAGE
	1	1	**5M-3062**	2	BOLT (3/8-16X0.75 IN)	
	2	1	**8R-2094**	1	CUSHION AS-SEAT	
		1	**5V-1499**	2	NUT-CLINCH	
		1	**5V-1719**	2	SNAP	
		1	**7K-6536**	2	RIVET-POP	
		1	**9S-0201**	2	WASHER (13.5X22X2.5MM THK)	
		1	**4V-8579**	1	CLIP	
	3	1	**4V-8034**	2	BOLT (1/2-13X1.47 IN)	
Y	4	1	**6W-8502**	1	SUSPENSION GP-SEAT	536
	5	1	**4V-8035**	1	CAP	
	6	1	**4V-8033**	1	BAR	
	7	1	**5S-7379**	2	BOLT (3/8-16X0.875 IN)	
	8	1	**4V-8605**	2	SPACER	
	9	1	**7V-3728**	1	LATCH AS	
	10	1	**8Y-4206**	1	CUSHION AS-BACK	
		1	**6K-3273**	1	RIVET-POP	
		1	**5P-7957**	1	LANYARD	
		1	**5V-1496**	19	RETAINER	
		1	**6K-3274**	1	PLATE-RIVET	
BE		1	**9X-2092**		STRIP-EDGE	
D	11	1	**6V-1584**		SEAL (1.1 M)	
	12	1	**8Y-4002**	1	PAN AS	
	13	1	**4V-8579**	1	CLIP	
	14	1	**4V-8031**	2	SPRING	
	15	1	**5V-1498**	2	LOCKNUT	
		1	**030-7571**	2	BOLT (3/8-16X1 IN)	
	16	1	**5P-2566**	2	BOLT (1/2-13X1.5 IN)	
		1	**4V-8586**	2	SPACER (13.92X32.25X4.22MM THK)	
	17	1	**4V-8029**	1	BRACKET AS-RH	
		1	**4V-8026**	1	BRACKET AS-LH	
					(EACH INCLUDES)	
	18	1	**101-2865**	1	PIN	
	19	1	**2K-4973**	6	LOCKNUT (3/8-16 THD)	
	20	1	**4B-4278**	4	WASHER (10.2X20.5X1.6MM THK)	
	21	1	**4V-7904**	1	PLATE AS-RH	
		1	**4V-7908**	1	PLATE AS-LH	
	22	1	**4V-8256**	2	SPRING	
BE	23	1	**4V-8032**	2	CABLE	
	24	1	**4B-4280**	2	WASHER (13.5X27X2.5MM THK)	
	25	1	**4B-4281**	2	WASHER (16.8X33X2.5MM THK)	
	26	1	**5V-1499**	2	NUT-CLINCH	
AF		1	**5P-7958**	1	SLEEVE-CABLE SPLICE	

A-NOT PART OF THIS GROUP
B-USE AS REQUIRED
D-ORDER BY THE METER
E-ORDER BY THE CENTIMETER
F-NOT SHOWN
Y-SEPARATE ILLUSTRATION

6W-9744 SEAT GP-SUSPENSION *(contd.)* i01885531

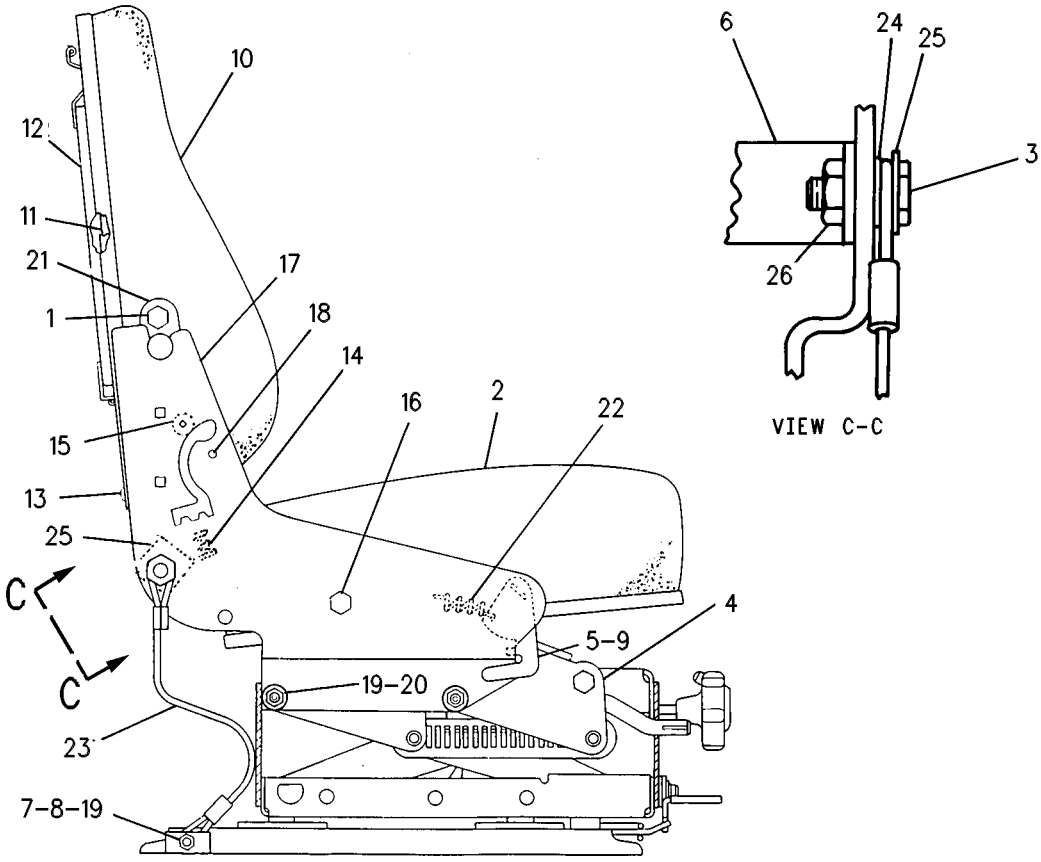

GRAPHIC #1 **<END>** g00106690

OPERATOR STATION

159-2950 SEAT GP-SUSPENSION

S/N: CCK1-UP
PART OF 227-7011 SEAT GP-SUSPENSION
AN ATTACHMENT

SMCS-7321, 7324, 7336 **i01871053**

NOTE	REF NO	GRAPHIC REF	PART NUMBER	QTY	PART NAME 1 2 3 4 5 6 (PRODUCT LEVEL)	SEE PAGE
Y	1	1	**160-7165**	1	SUSPENSION GP-SEAT	539
Y	2	1	*184-6011*	1	SEAT GP	527
JZ	3	1		4	BLOCK-SLIDER	
	4	1	**4F-4879**	1	BOLT (3/8-16X.5 IN)	
	5	1	**203-7703**	2	WASHER-HARD (10.2X22.22X2.38MM THK)	
J	6	1	**173-5787**	4	SETSCREW (1/4-20 THD)	
					AVAILABLE REPAIR KIT(S):	
J			**173-7035**	1	KIT-SLIDER BLOCK (SUSPENSION SEAT)	

J-KIT MARKED J INCLUDES PART(S) MARKED J
Y-SEPARATE ILLUSTRATION
Z-NOT SERVICED SEPARATELY

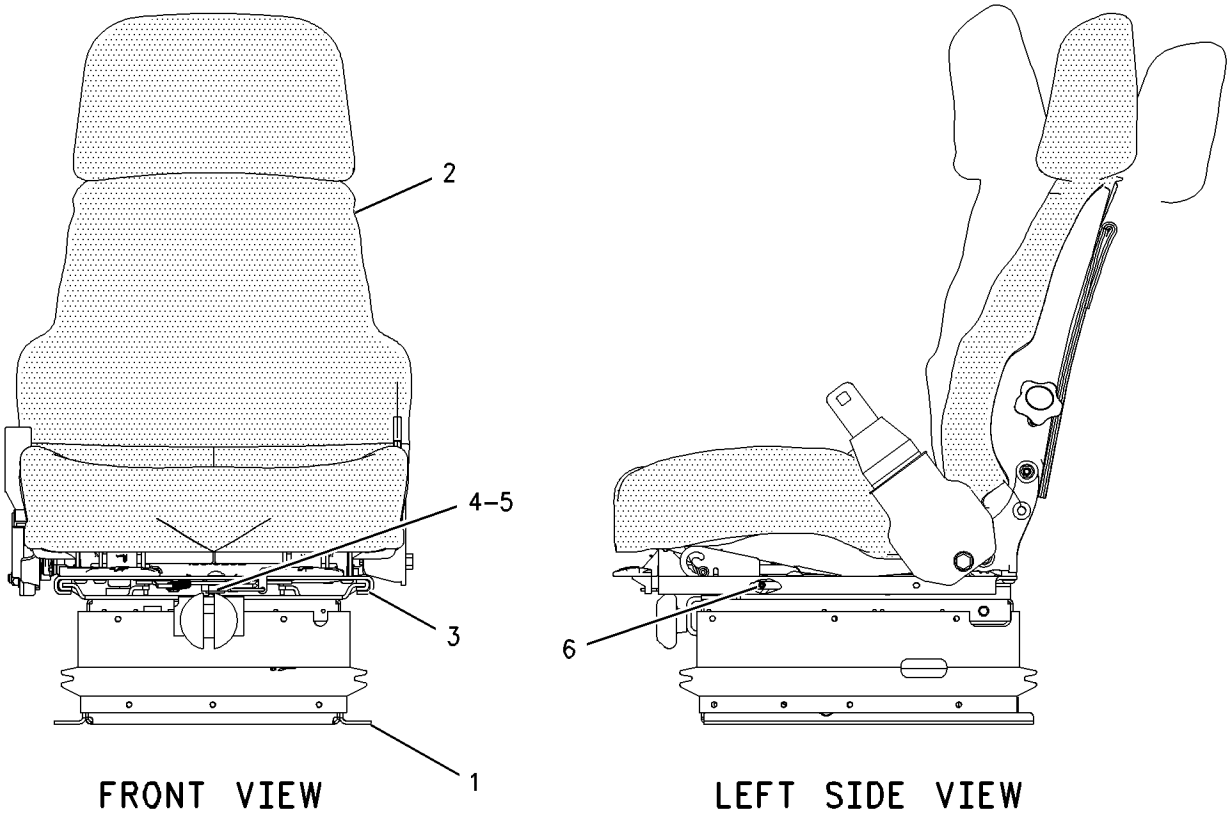

GRAPHIC #1 **<END>** g00819547

OPERATOR STATION

160-7186 SEAT GP-SUSPENSION

S/N: CCK1-UP
PART OF 227-7010 SEAT GP-SUSPENSION
AN ATTACHMENT

SMCS-7321, 7324, 7336 **i01871057**

NOTE	REF NO	GRAPHIC REF	PART NUMBER	QTY	PART NAME 1 2 3 4 5 6 (PRODUCT LEVEL)	SEE PAGE
Y	1	1	**160-7165**	1	SUSPENSION GP-SEAT	539
Y	2	1	**178-0606**	1	SEAT GP	524
	3	1	**173-5787**	4	SETSCREW (1/4-20 THD)	
	4	1	**4F-4879**	1	BOLT (3/8-16X.5 IN)	
		1	**203-7703**	2	WASHER-HARD (10.2X22.22X2.38MM THK)	
					AVAILABLE REPAIR KIT(S):	
			173-7035	1	KIT-SLIDER BLOCK (SUSPENSION SEAT)	

Y-SEPARATE ILLUSTRATION

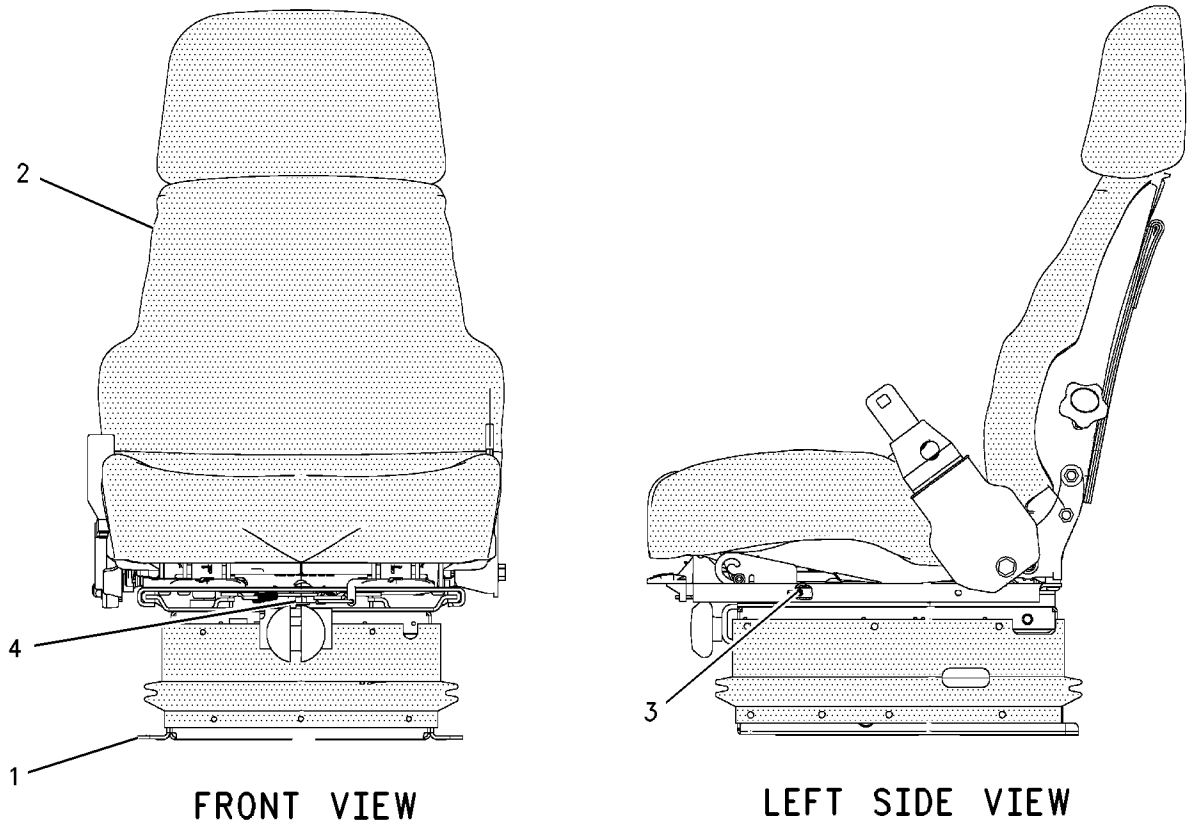

FRONT VIEW LEFT SIDE VIEW

GRAPHIC #1 **<END>** g00825453

OPERATOR STATION

200-3174 SEAT GP-SUSPENSION

S/N: CCK1-UP
PART OF 227-7012 SEAT GP-SUSPENSION
AN ATTACHMENT

SMCS-7321, 7324, 7336 **i01871059**

NOTE	REF NO	GRAPHIC REF	PART NUMBER	QTY	PART NAME 1 2 3 4 5 6 (PRODUCT LEVEL)	SEE PAGE
J	1	1	**161-9289**	4	BLOCK-SLIDER	
J	2	1	**173-5787**	4	SETSCREW (1/4-20 THD)	
Y	3	1	**178-0606**	1	SEAT GP	524
Y	4	1	**191-2933**	1	SUSPENSION GP-SEAT	541
J	5	1	**203-7703**	2	WASHER-HARD (10.2X22.22X2.38MM THK)	
J	6	1	**4F-4879**	1	BOLT (3/8-16X.5 IN)	
					AVAILABLE REPAIR KIT(S):	
J			**173-7035**	1	KIT-SLIDER BLOCK (SUSPENSION SEAT)	

J-KIT MARKED J INCLUDES PARTS MARKED J
Y-SEPARATE ILLUSTRATION

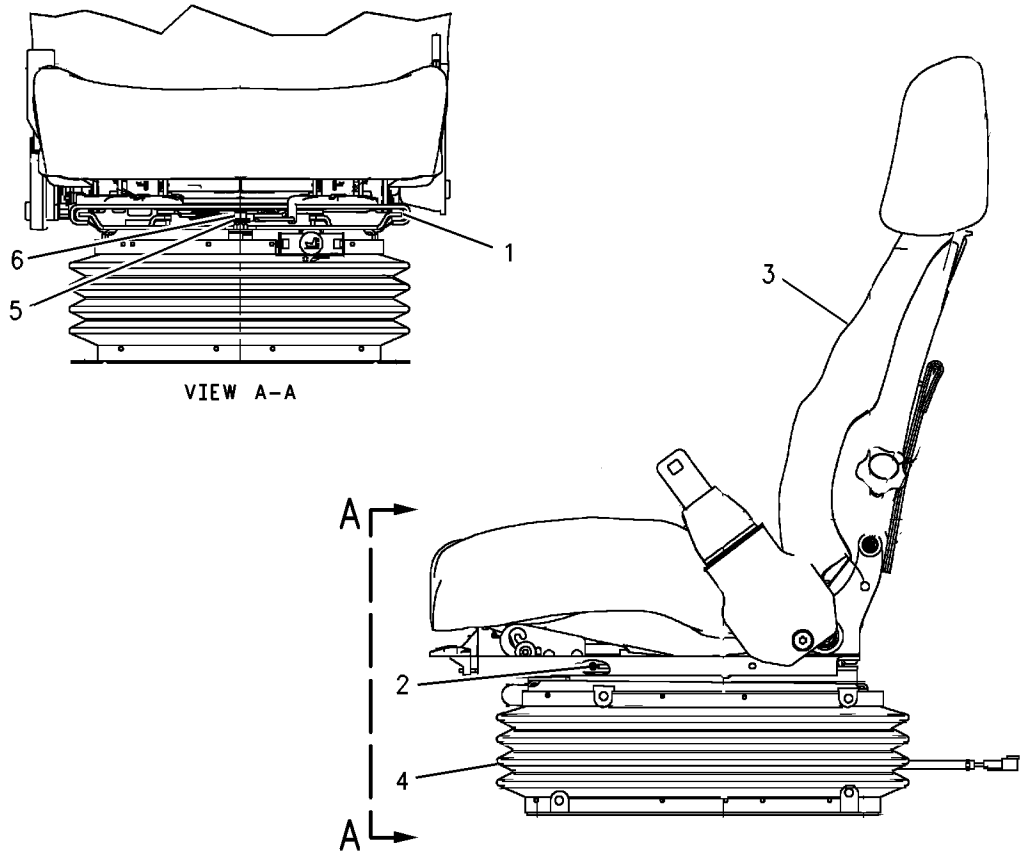

GRAPHIC #1 **<END>** g00933544

OPERATOR STATION

227-7010 SEAT GP-SUSPENSION—CLOTH, MECHANICAL

S/N: CCK1-UP
CANNOT BE USED WITH 193-3812—PAGE 454,
AN ATTACHMENT

SMCS-7321, 7324, 7336 **i01877530**

NOTE	PART NUMBER	QTY	PART NAME 1 2 3 4 5 6 (PRODUCT LEVEL)	SEE PAGE
Y	**160-7186**	1	SEAT GP-SUSPENSION	531
M	**6V-8335**	4	BOLT-SELF LOCKING (M10X1.5X40MM)	
	7X-7729	4	WASHER (11X25X3MM THK)	

M-METRIC PART
Y-SEPARATE ILLUSTRATION

<END>

227-7011 SEAT GP-SUSPENSION—VINYL, MECHANICAL

S/N: CCK1-UP
AN ATTACHMENT

SMCS-7321, 7324, 7336 **i01877535**

NOTE	PART NUMBER	QTY	PART NAME 1 2 3 4 5 6 (PRODUCT LEVEL)	SEE PAGE
Y	**159-2950**	1	SEAT GP-SUSPENSION	530
M	**6V-8335**	4	BOLT-SELF LOCKING (M10X1.5X40MM)	
	7X-7729	4	WASHER (11X25X3MM THK)	

M-METRIC PART
Y-SEPARATE ILLUSTRATION

<END>

227-7012 SEAT GP-SUSPENSION—CLOTH, AIR

S/N: CCK1-UP
CANNOT BE USED WITH 193-3812—PAGE 454
AN ATTACHMENT

SMCS-7321, 7324, 7336 **i01877542**

NOTE	PART NUMBER	QTY	PART NAME 1 2 3 4 5 6 (PRODUCT LEVEL)	SEE PAGE
Y	**200-3174**	1	SEAT GP-SUSPENSION	532
M	**6V-8335**	4	BOLT-SELF LOCKING (M10X1.5X40MM)	
	7X-7729	4	WASHER (11X25X3MM THK)	

M-METRIC PART
Y-SEPARATE ILLUSTRATION

<END>

OPERATOR STATION

227-7013 SEAT GP-SUSPENSION—VINYL, MECHANICAL, LOW BACK

S/N: CCK1-UP

AN ATTACHMENT

SMCS-7321, 7324, 7336 **i01895770**

NOTE	PART NUMBER	QTY	PART NAME 1 2 3 4 5 6 (PRODUCT LEVEL)	SEE PAGE
Y	**6W-9744**	1	SEAT GP-SUSPENSION	528
M	**9X-2125**	4	BOLT-LOCKING (M10X1.5X25MM)	
	5V-5262	2	BOLT-SHOULDER (7/16-20X1.26 IN)	
	8S-0934	2	LOCKNUT-FLANGE (7/16-20 THD)	
	8Y-4030	1	SEAT BELT GP (SUSPENSION SEAT LOW BACK)	
	7X-7729	4	WASHER (11X25X3MM THK)	

M-METRIC PART
Y-SEPARATE ILLUSTRATION

<END>

OPERATOR STATION

177-3852 STEP GP

S/N: CCK1-UP

PART OF 156-8911 CAB GP

SMCS-7254 **i01828903**

NOTE	REF NO	GRAPHIC REF	PART NUMBER	QTY	PART NAME 1 2 3 4 5 6 (PRODUCT LEVEL)	SEE PAGE
	1	1	**164-9144**	1	STEP AS	
	2	1	**164-9145**	1	STEP AS	
	3	1	**7X-7729**	8	WASHER (11X25X3MM THK)	
M	4	1	**8T-4137**	8	BOLT (M10X1.5X20MM)	

M-METRIC PART

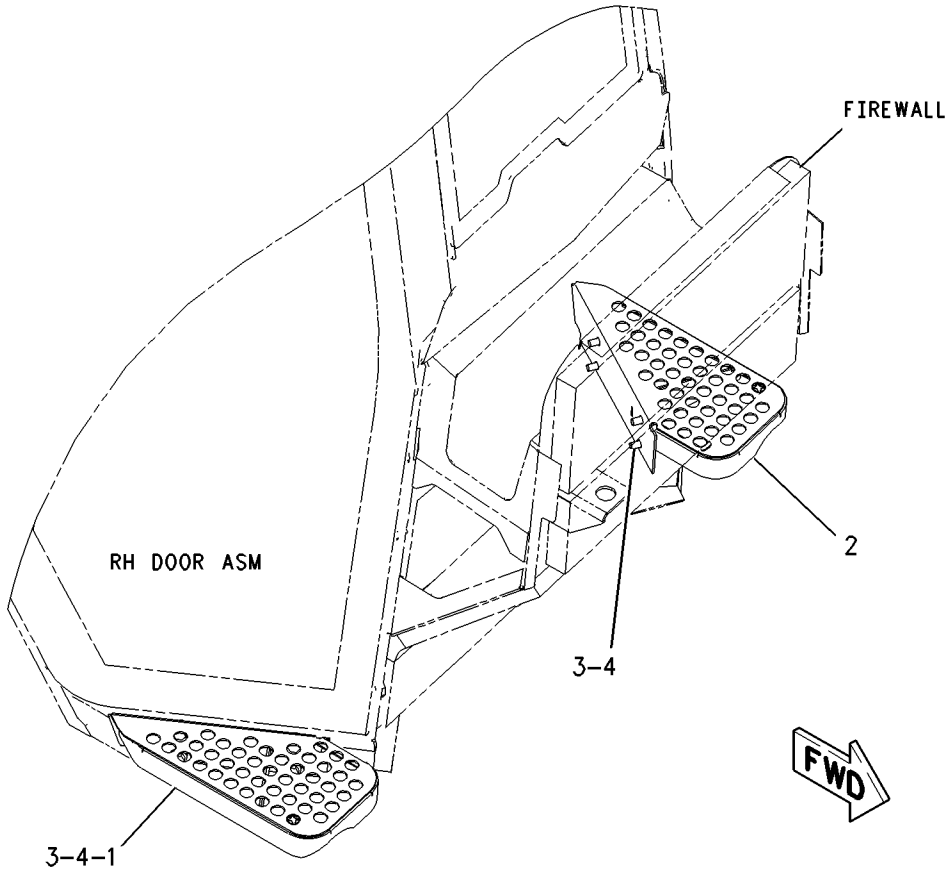

GRAPHIC #1 **<END>** g00942704

OPERATOR STATION

6W-8502 SUSPENSION GP-SEAT

S/N: CCK1-UP
PART OF 6W-9744 SEAT GP-SUSPENSION
AN ATTACHMENT

SMCS-7324 **i01893902**

NOTE	REF NO	GRAPHIC REF	PART NUMBER	QTY	PART NAME 1 2 3 4 5 6 (PRODUCT LEVEL)	SEE PAGE
	1	1	**5V-1839**	1	LOCKNUT	
	2	1	**4V-7884**	1	BEARING	
	3	1	**4V-8577**	2	BEARING	
	4	1	**8Y-6957**	1	SHAFT AS	
	5	1	**4V-8566**	1	GEAR AS (100 TEETH)	
		1	**4V-8561**	1	WASHER (16.2X50.8X.8MM THK)	
	6	1	**4V-8562**	1	PLATE AS	
	7	1	**2K-9111**	2	PIN-SPRING	
	8	1	**8R-1876**	2	PAD-ROLLER	
	9	1	**4B-4281**	1	WASHER (16.8X33X2.5MM THK)	
	10	1	**7V-5190**	1	GEAR AS (28 TEETH)	
	11	1	**4V-7872**	1	KNOB AS-ADJUSTMENT	
		1	**4V-7873**	1	KNOB (SEAT ADJUSTMENT)	
		1	**5V-1483**	1	PIN-GROOVED	
		1	**4V-7877**	1	SPRING	
	12	1	**4V-7874**	1	HANDLE AS	
		1	**5V-1474**	1	SCREW-FORMING (10-16X0.625 IN)	
		1	**4V-7876**	1	SLEEVE	
		1	**4V-7875**	1	HANDLE	
	13	1	**5H-3182**	1	PIN-SPRING	
	14	1	**4V-8565**	1	INDICATOR	
	15	1	**4V-8554**	1	BRACKET	
	16	1	**9C-2177**	1	CAP	
	17	2	**6W-0590**	1	LEVER (SEAT ADJUSTMENT)	
		2	**3L-1473**	1	PIN-GROOVED	
	18	2	**5V-4855**	4	BOLT (1/2-16X.75 IN)	
	19	2	**4V-7890**	1	SPRING	
	20	2	**4V-8606**	1	HOUSING AS-UPPER	
	21	2	**5V-4846**	1	ARM AS	
	22	2	**163-2661**	2	ARM AS	
	23	2	**8R-1884**	1	SPACER (13X19X25MM THK)	
	24	2	**4V-8264**	1	LINK	
	25	2	**9V-7943**	2	SPRING	
	26	2	**9V-3043**	2	LINK AS	
	27	2	**4V-8265**	1	LINK	
	28	2	**2K-4973**	4	LOCKNUT (3/8-16 THD)	
		2	**4B-4278**	4	WASHER (10.2X20.5X1.6MM THK)	
	29	2	**6W-5233**	1	ABSORBER AS-SHOCK	
	30	2	**4V-8609**	1	BOOT	
	31	2	**4V-8556**	1	BOLT (3/8-16X2.34 IN)	
		2	**6D-0047**	1	LOCKNUT (3/8-16 THD)	
	32	2	**4V-7884**	1	BEARING	
	33	2	**6W-8281**	2	BUMPER	
	34	2	**9V-6754**	23	FASTENER	
	35	2	**4V-8610**	1	SPRING	
	36	2	**8R-1877**	1	SPACER (13X19X35MM THK)	
	37	2	**8R-1878**	1	SPACER (13X19X10MM THK)	
	38	2	**4V-7891**	1	LATCH AS	
Y	39	2	**6W-8505**	1	ADJUSTER GP-SEAT	442
	40	2	**8R-1883**	4	ROLLER-GUIDE	
	41	2	**8R-1876**	2	PAD-ROLLER	
	42	2	**5V-1839**	1	LOCKNUT	
	43	2	**4V-8577**	2	BEARING	
	44	2	**8Y-6957**	1	SHAFT AS	
	45	2	**1B-2693**	2	BOLT (1/4-20X.62 IN)	

6W-8502 **SUSPENSION GP-SEAT** *(contd.)* i01893902

NOTE	REF NO	GRAPHIC REF	PART NUMBER	QTY	PART NAME 1 2 3 4 5 6 (PRODUCT LEVEL)	SEE PAGE
	46	2	**027-3924**	2	LOCKNUT (1/4-20 THD)	
Y-SEPARATE ILLUSTRATION						

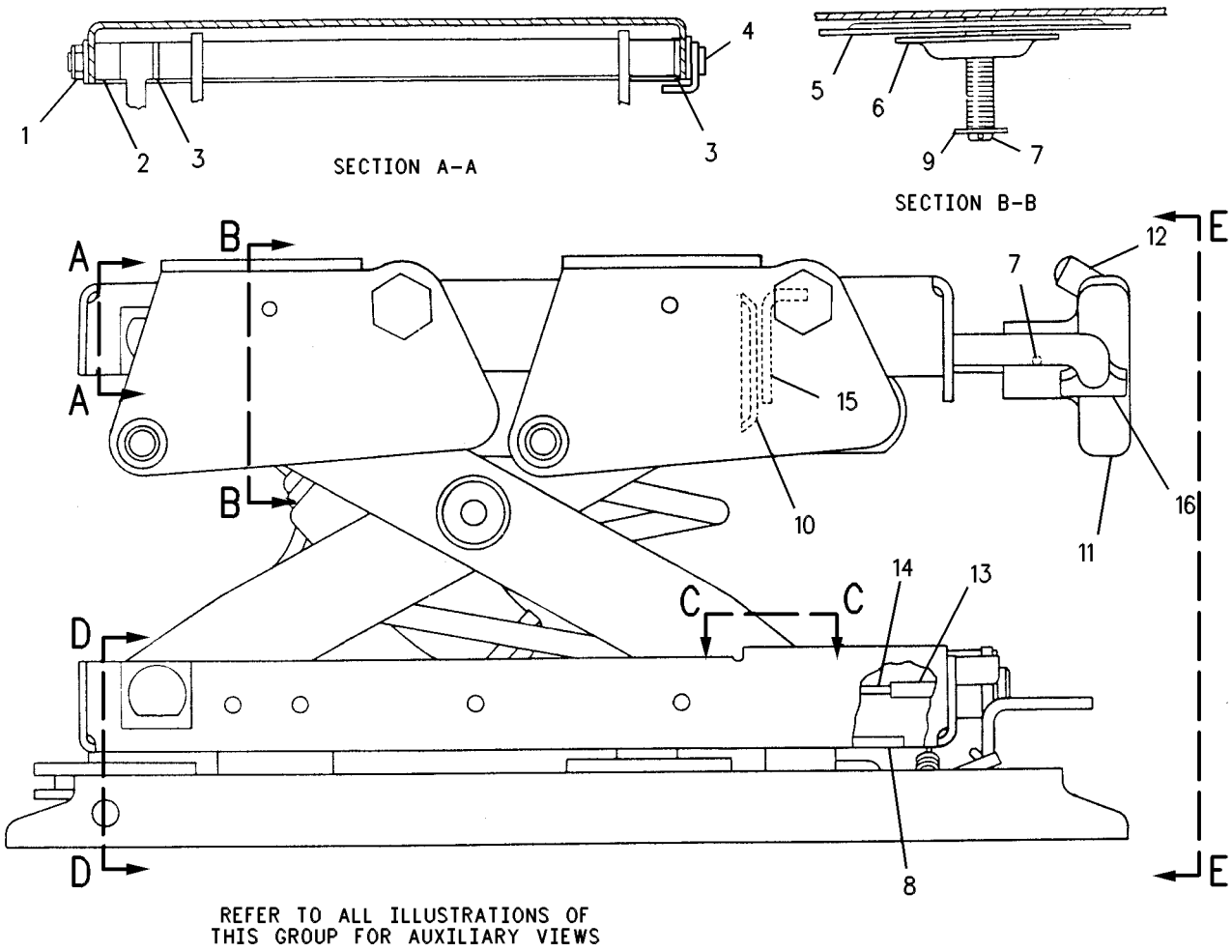

GRAPHIC #1 g00347918

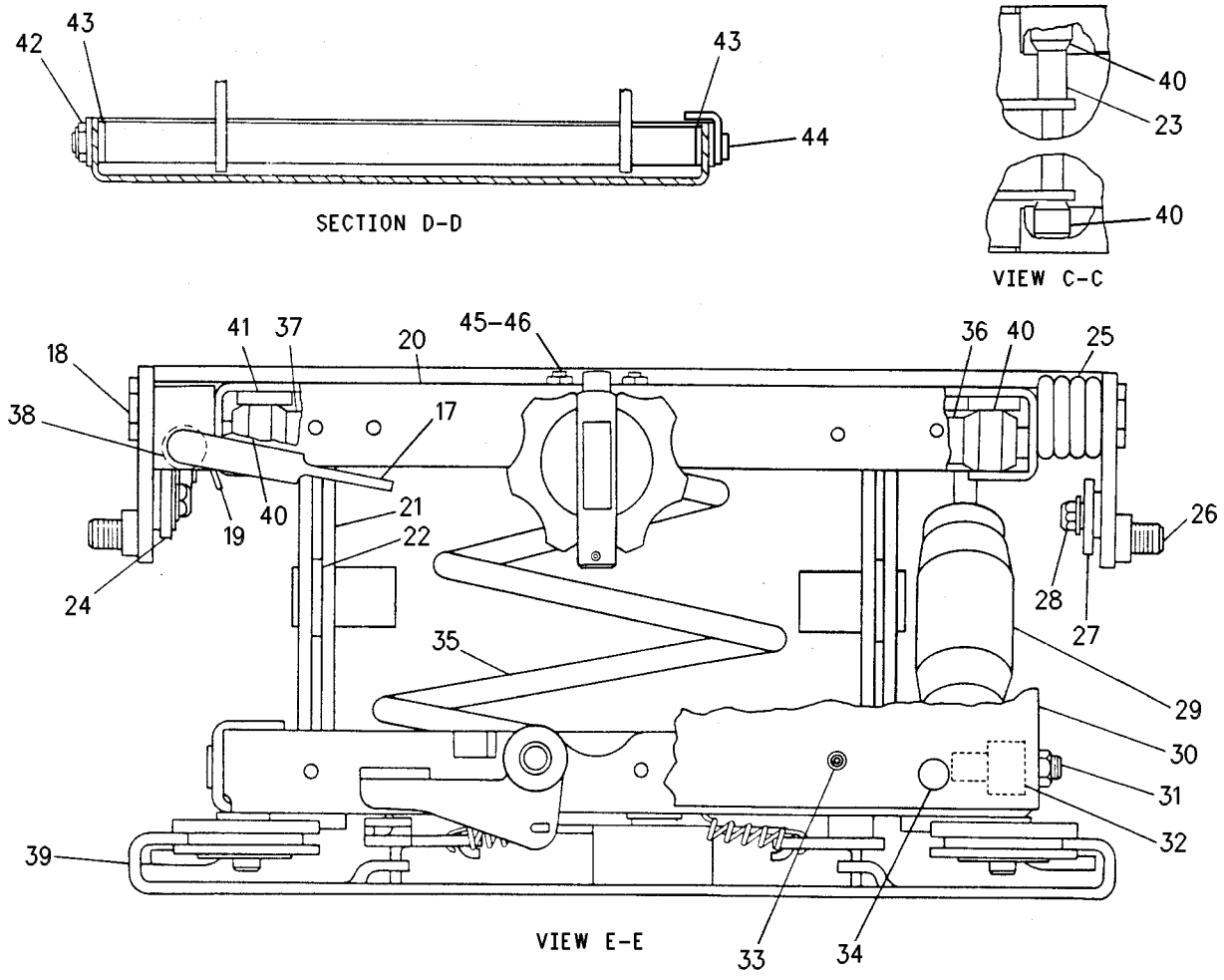

GRAPHIC #2 **<END>** g00509225

OPERATOR STATION

160-7165 SUSPENSION GP-SEAT

S/N: CCK1-UP
PART OF 159-2950, 160-7186 SEAT GP-SUSPENSION
AN ATTACHMENT

SMCS-7324 **i01883826**

NOTE	REF NO	GRAPHIC REF	PART NUMBER	QTY	PART NAME 1 2 3 4 5 6 (PRODUCT LEVEL)	SEE PAGE
	1	1	**2K-4973**	2	LOCKNUT (3/8-16 THD)	
	2	1	**4V-7884**	2	BEARING	
	3	1	**4V-8577**	4	BEARING	
	4	1	**5V-1497**	1	RETAINER	
	5	1	**8Y-5965**	1	ABSORBER AS-SHOCK	
	6	1	**8Y-6012**	1	ARM AS-SUSPENSION	
	7	1	**8Y-6014**	1	HOUSING AS-LOWER	
	8	1	**8Y-6024**	2	SHAFT AS	
J	9	1	**101-0003**	20	FASTENER	
J	10	1	**166-6781**	3	FASTENER (15.9MM OD)	
J		1	**197-7689**	3	FASTENER (5.9MM OD)	
J	11	1	**163-1146**	3	FASTENER	
	12	1	**145-0326**	1	FILM-INSTRUCTION (SEAT ADJUSTMENT)	
	13	1	**169-7380**	1	BOLT-SOCKET HEAD (3/8-16X0.375 IN)	
Y	14	1	**174-2231**	1	HOUSING GP-SEAT SUSPENSION	476
	15	1	**197-7689**	3	FASTENER	
					AVAILABLE REPAIR KIT(S):	
J			**8Y-5944**	1	KIT-SUSPENSION BOOT (SUPENSION SEAT)	
					(INCLUDES BOOT, RETAINER, FASTENERS & PARTS MARKED J)	
			101-4194	1	KIT-BELT TETHER (SUPENSION SEAT)	
			101-4195	1	KIT-SUSPENSION ROLLER (SUPENSION SEAT)	

J-KIT MARKED J SERVICES PART(S) MARKED J
Y-SEPARATE ILLUSTRATION

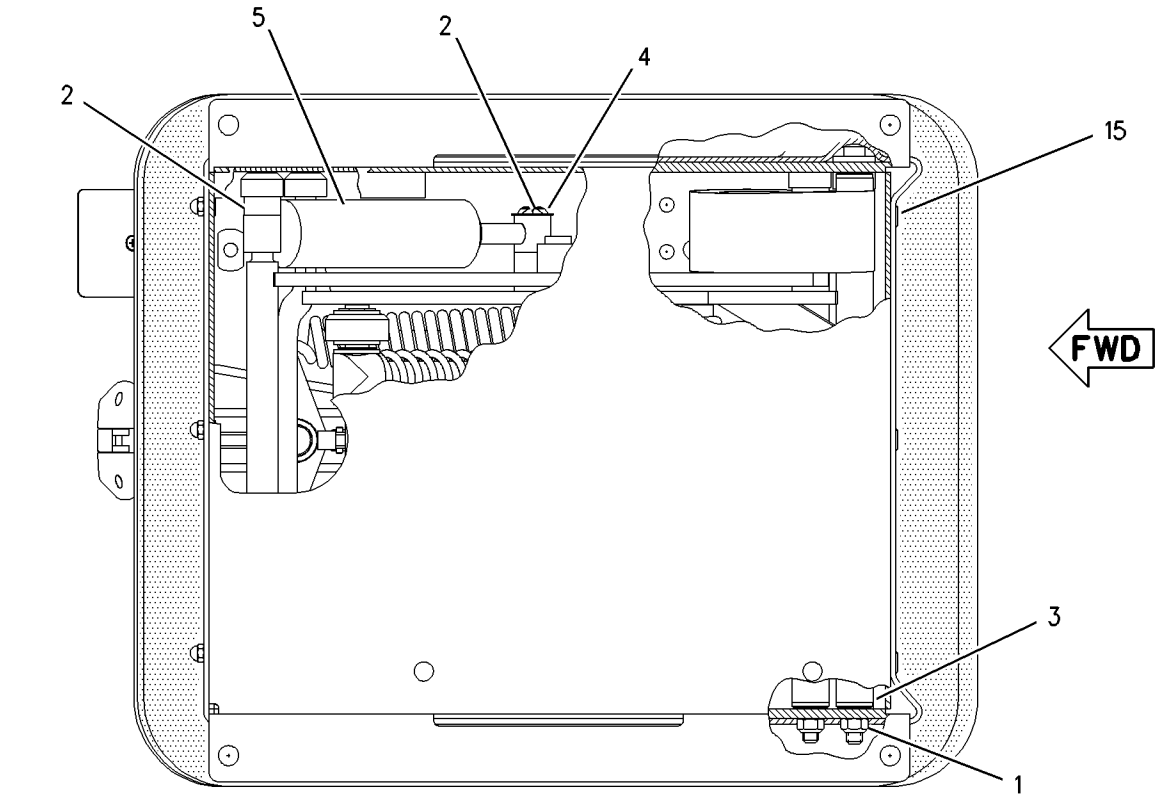

BOTTOM VIEW

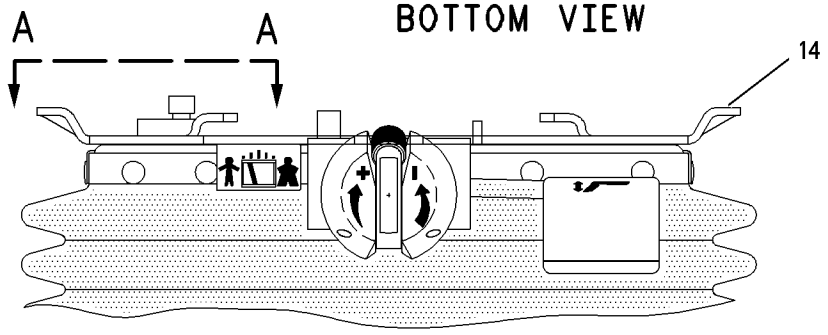

FRONT VIEW

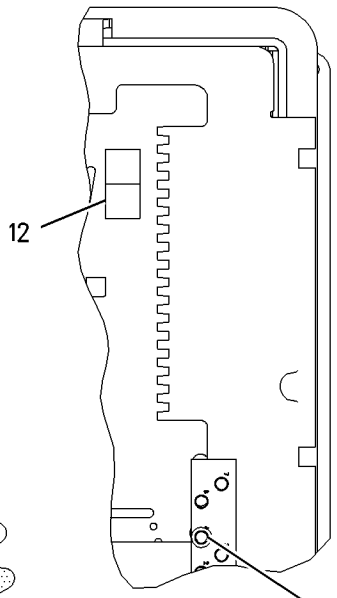

VIEW A-A

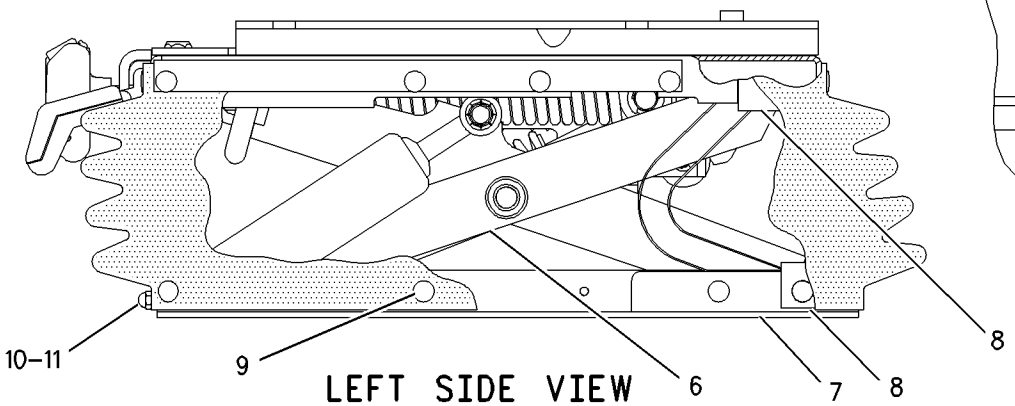

LEFT SIDE VIEW

GRAPHIC #1 **<END>** g00801013

OPERATOR STATION

191-2933 SUSPENSION GP-SEAT

S/N: CCK1-UP
PART OF 200-3174 SEAT GP-SUSPENSION
AN ATTACHMENT

SMCS-7324 **i01871062**

NOTE	REF NO	GRAPHIC REF	PART NUMBER	QTY	PART NAME 1 2 3 4 5 6 (PRODUCT LEVEL)	SEE PAGE
	1	1	**3P-9900**	5	WASHER (10.5X30X3MM THK)	
	2	1	**4B-4278**	2	WASHER (10.2X20.5X1.6MM THK)	
	3	1	**4V-8577**	12	BEARING	
	4	1	**8L-8413**	1	STRAP-CABLE	
	5	1	**145-0326**	1	FILM-INSTRUCTION (SEAT ADJUSTMENT)	
	6	1	**163-1139**	1	BRACKET	
	7	1	**164-1234**	1	PLATE	
	8	1	**164-1270**	33	FASTENER	
	9	1	**169-7380**	1	BOLT-SOCKET HEAD (3/8-16X0.375 IN)	
	10	1	**186-5107**	2	SCREW (NO 8 X 1.25 IN)	
	11	1	**192-7752**	4	SHAFT AS	
	12	1	**192-7755**	1	HOUSING AS	
	13	1	**192-7760**	1	SHAFT	
	14	1	**192-7767**	1	SCISSORS AS	
	15	1	**192-7783**	1	TOGGLE AS	
	16	1	**192-7787**	1	TOGGLE AS	
	17	1	**192-7790**	1	HOUSING AS	
	18	1	**192-7795**	1	BOOT	
	19	1	**192-7805**	1	HARNESS AS-VALVE (AIR COMPRESSOR) (SEAT)	
		1	**102-8802**	1	KIT-RECEPTACLE (2 PIN)	
					(INCLUDES RECEPTACLE AS & WEDGE)	
	20	1	**192-7810**	1	SPRING AS-AIR	
		1	**5P-4423**	1	ELBOW	
		1	**163-1135**	1	SPRING	
	21	1	**192-7812**	1	BOLT-SHOULDER	
	22	1	**192-7820**	3	BUMPER	
	23	1	**192-7822**	1	SHAFT	
	24	1	**192-7846**	1	COMPRESSOR AS	
	25	1	**1H-8296**	1	SCREW-MACHINE	
	26	1	**2K-4973**	8	LOCKNUT (3/8-16 THD)	
	27	1	**3J-4818**	1	LOCKWASHER	
M	28	1	**5C-2890**	3	NUT (M6X1 THD)	
	29	1	**8T-9371**	1	BOLT (3/8-16X0.5 IN)	
E	30	1	**211-5358**		CONDUIT (100CM)	
D	31	1	**5P-6010**		TUBE (1M)	
					AVAILABLE REPAIR KIT(S):	
			192-7799	1	KIT-AIR VALVE (SUSPENSION SEAT)	
					(INCLUDES KNOB AS)	
			192-7848	1	KIT-SHOCK ABSORBER (SUSPENSION SEAT)	
					INCLUDES LOCKNUT, LOCKWASHER, SHOCK ABSORBER, BEARING, WASHER, AND BOLTS	
			211-9294	1	KIT-TETHER (SUSPENSION SEAT)	

D-ORDER BY THE METER
E-ORDER BY THE CENTIMETER
M-METRIC PART

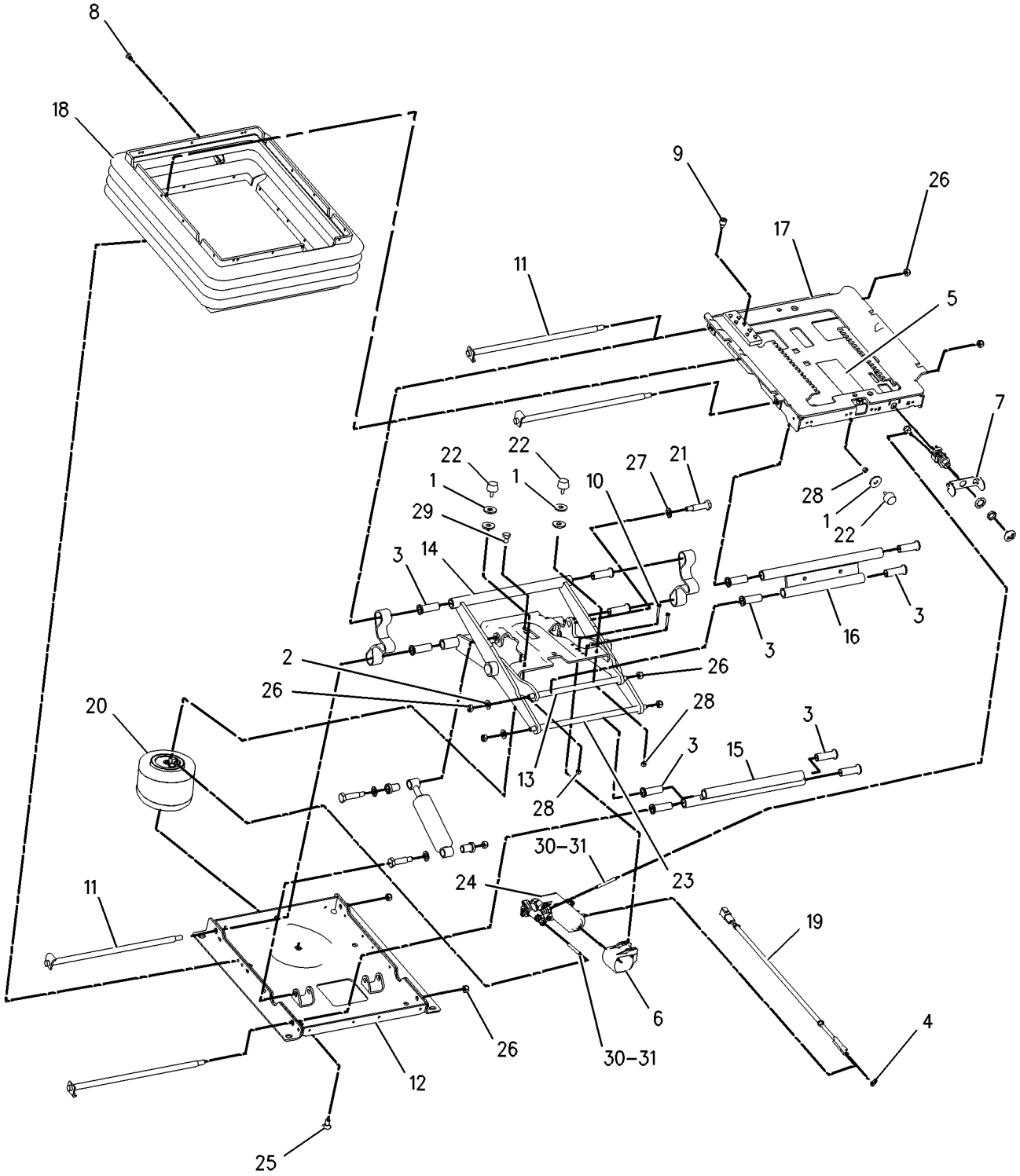

GRAPHIC #1 **<END>** g00913216

OPERATOR STATION

167-1455 TANK GP-WINDOW WASHER

S/N: CCK1-UP

PART OF 191-4824 CAB AR

SMCS-7306 **i01828744**

NOTE	REF NO	GRAPHIC REF	PART NUMBER	QTY	PART NAME 1 2 3 4 5 6 (PRODUCT LEVEL)	SEE PAGE
	1	1	**3S-2093**	3	STRAP-CABLE	
	2	1	**110-1118**	1	HARNESS AS (WINDOW WASHER)	
		1	**8T-8737**	1	PLUG-SEAL	
		1	**9X-0194**	4	TERMINAL AS	
		1	**102-8805**	1	KIT-RECEPTACLE (6 PIN)	
					(INCLUDES RECEPTACLE AS & WEDGE)	
	3	1	**219-7737**	1	TANK AS-WASHER	
		1	**209-4482**	1	CAP (WINDOW WASHER TANK)	
	4	1	**219-7739**	1	BRACKET	
	5	1	**8M-2770**	1	CLIP	
	6	1	**8T-4121**	2	WASHER-HARD (11X21X2.5MM THK)	
M	7	1	**8T-4133**	2	NUT (M10X1.5 THD)	
BD	8	1	**6V-2496**		SEAL	

B-USE AS REQUIRED
D-ORDER BY THE METER
M-METRIC PART

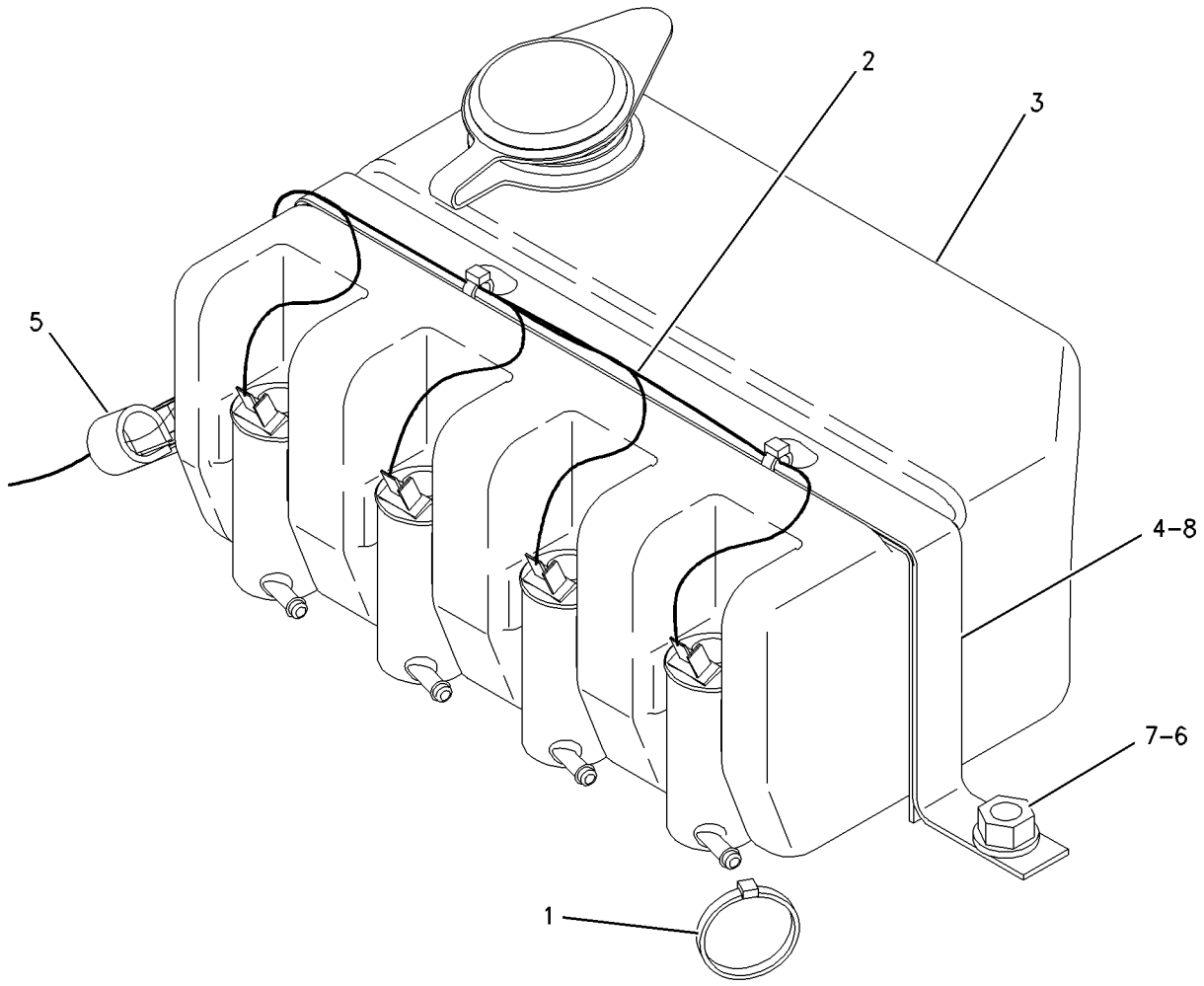

GRAPHIC #1 **<END>** g00911355

OPERATOR STATION

156-8916 WINDOW GP-CAB

S/N: CCK1-UP

PART OF 156-8911 CAB GP

SMCS-7310 **i01828912**

NOTE	REF NO	GRAPHIC REF	PART NUMBER	QTY	PART NAME 1 2 3 4 5 6 (PRODUCT LEVEL)	SEE PAGE
Y	1	1	**166-2103**	1	WINDOW GP-CAB (LH SIDE)	545
Y	2	1	**166-2104**	1	WINDOW GP-CAB (RH SIDE)	546
	3	1	**170-2069**	1	GLASS (FRONT)	
	4	1	**170-2070**	1	GLASS (REAR)	

Y-SEPARATE ILLUSTRATION

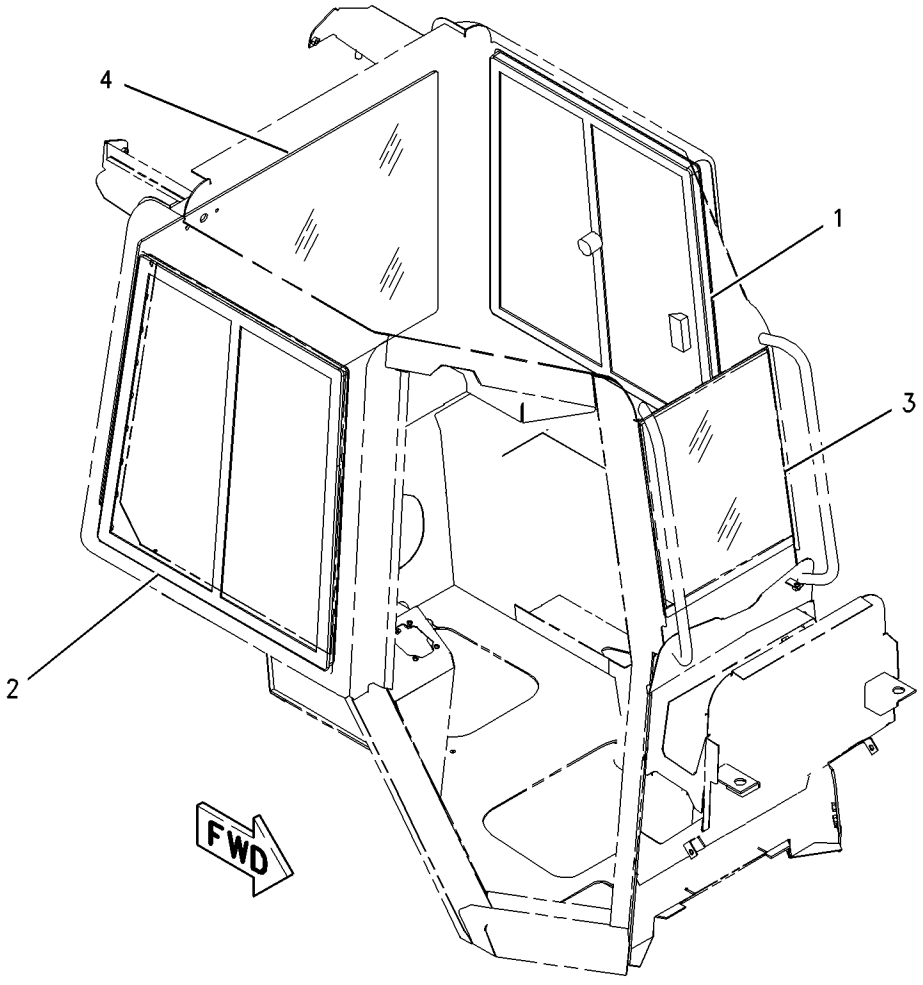

GRAPHIC #1 **<END>** g00911598

OPERATOR STATION

166-2103 WINDOW GP-CAB—LH

S/N: CCK1-UP

PART OF 156-8916 WINDOW GP-CAB

SMCS-7310 **i01880200**

NOTE	REF NO	GRAPHIC REF	PART NUMBER	QTY	PART NAME 1 2 3 4 5 6 (PRODUCT LEVEL)	SEE PAGE
	1	1	**201-9820**	1	LATCH AS	
	2	1	**201-9821**	1	CATCH	
	3	1	**203-7738**	1	GLASS (FIXED)	
	4	1	**203-7740**	1	GLASS (SLIDING)	

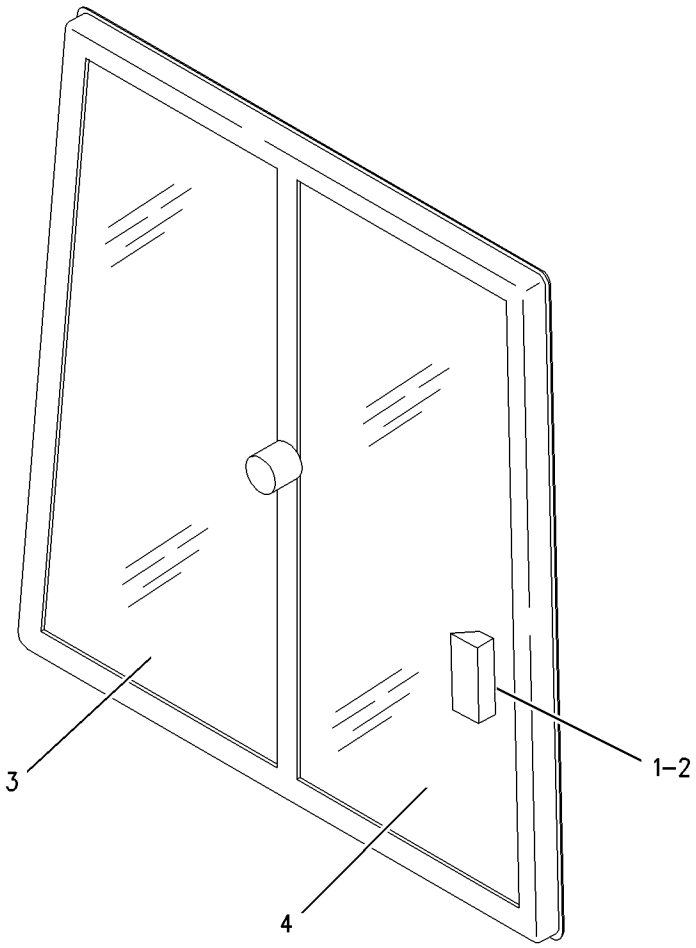

GRAPHIC #1 **<END>** g00914748

OPERATOR STATION

166-2104 WINDOW GP-CAB—RH

S/N: CCK1-UP

PART OF 156-8916 WINDOW GP-CAB

SMCS-7310 **i01828933**

NOTE	REF NO	GRAPHIC REF	PART NUMBER	QTY	PART NAME 1 2 3 4 5 6 (PRODUCT LEVEL)	SEE PAGE
	1	1	**201-9820**	1	LATCH AS	
	2	1	**201-9821**	1	CATCH	
	3	1	**203-7741**	1	GLASS (FIXED)	
	4	1	**203-7742**	1	GLASS (SLIDING)	

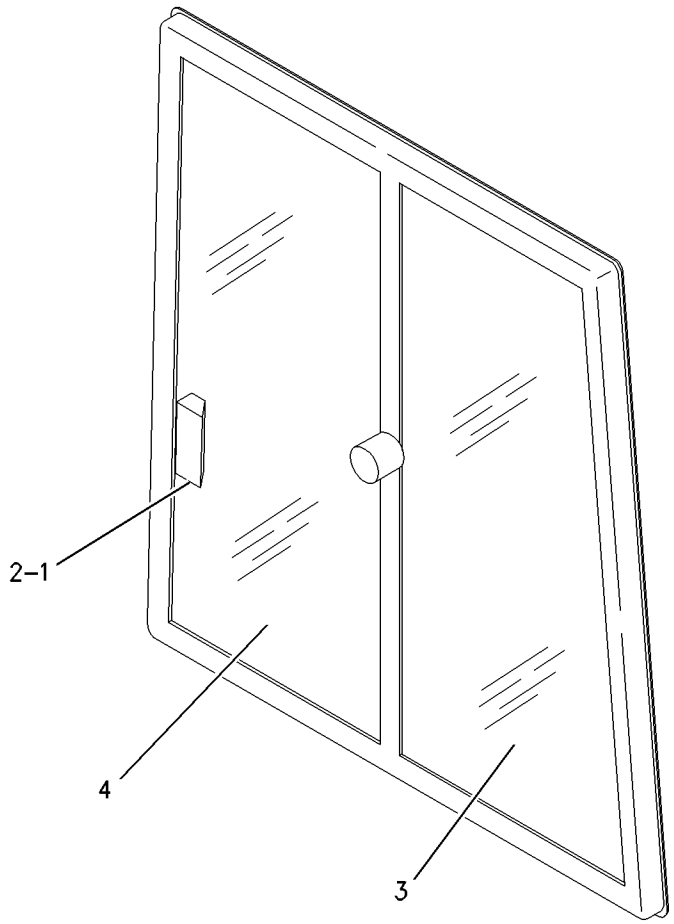

GRAPHIC #1 **<END>** g00914759

OPERATOR STATION

170-2086 WIPER GP-WINDOW

S/N: CCK1-UP

PART OF 156-8911 CAB GP

SMCS-7305 **i01883833**

NOTE	REF NO	GRAPHIC REF	PART NUMBER	QTY	PART NAME 1 2 3 4 5 6 (PRODUCT LEVEL)	SEE PAGE
	1	1	**112-6174**	1	SWITCH AS-ROTARY (FRONT WINDOW WIPER)	
	2	1	**112-6174**	1	SWITCH AS-ROTARY (LEFT WINDOW WIPER)	
	3	1	**112-6174**	1	SWITCH AS-ROTARY (RIGHT WINDOW WIPER)	
	4	1	**112-6174**	1	SWITCH AS-ROTARY (REAR WINDOW WIPER)	
					(EACH SWITCH AS INCLUDES)	
		1	**7T-9302**	1	KNOB (WIPER) (WINDOW)	
		1	**2H-3920**	1	LOCKWASHER	
		1	**6V-8369**	1	NUT (7/16-28 THD)	
	5	1	**5C-8811**	1	BLADE AS-WIPER (REAR) (WINDOW)	
	6	1	**125-8175**	1	BLADE AS-WIPER (WINDSHIELD)	
	7	1	**127-6509**	1	ARM AS	
	8	1	**175-3759**	1	MOTOR AS (WIPER) (WINDOW FRONT)	
	9	1	**175-3760**	1	MOTOR AS-WINDOW WIPER (REAR)	
		1	**8T-8729**	4	PIN-CONNECTOR	
		1	**102-8804**	1	KIT-RECEPTACLE (4 PIN)	
					(INCLUDES RECEPTACLE AS & WEDGE)	
	10	1	**175-3761**	1	ARM AS	
	11	1	**193-0542**	1	PANEL	
	12	1	**8T-5400**	2	CONNECTOR	
	13	1	**7T-9302**	4	KNOB (WIPER) (WINDOW)	
E	14	1	**144-0195**		HOSE (25CM)	
E	15	1	**144-0195**		HOSE (10CM)	
E	16	1	**144-0195**		HOSE (55CM)	
E	17	1	**144-0195**		HOSE (40CM)	
	18	1	**216-5185**	1	FILM (WINDSHIELD WASHER/WIPER)	
M	19	1	**9X-2045**	6	SCREW-TRUSS HEAD (M6X1X20MM)	
	20	1	**9D-8508**	2	GROMMET	
	21	1	**3S-2093**	6	STRAP-CABLE	
	22	1	**4H-2558**	2	GROMMET	

E-ORDER BY THE CENTIMETER
M-METRIC PART

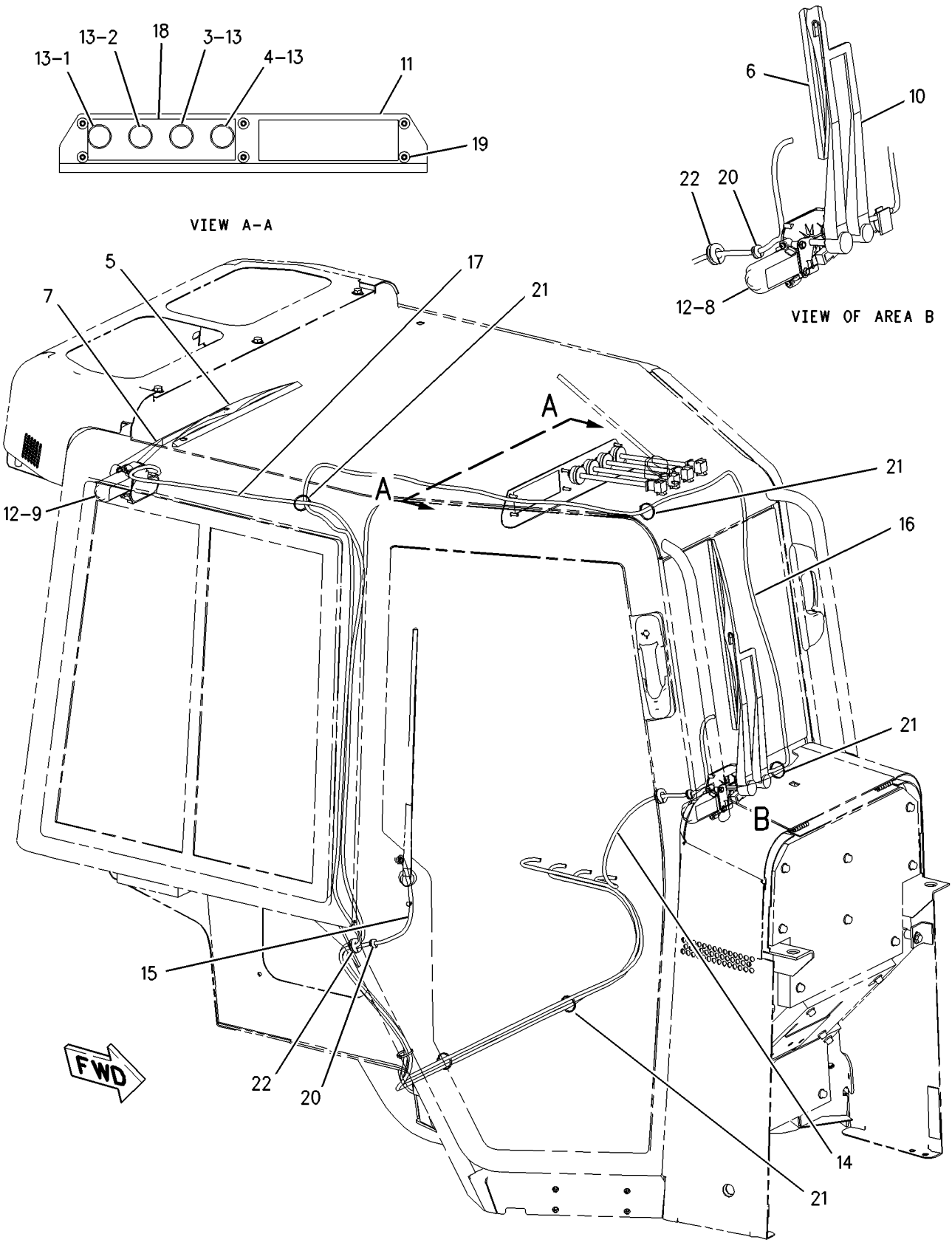

GRAPHIC #1 **<END>** g00928319

221-3697 FILM GP

S/N: CCK1-UP

PART OF 192-3195 PLATE & FILM GP

SMCS-7000 **i01833326**

NOTE	REF NO	GRAPHIC REF	PART NUMBER	QTY	PART NAME 1 2 3 4 5 6 (PRODUCT LEVEL)	SEE PAGE
	1	1	**205-4951**	1	FILM-STRIPE (D6N)(RH FRONT)	
	2	1	**220-1961**	1	FILM-STRIPE (D6N)(RH FRONT)	
	3	1	**205-4952**	1	FILM-STRIPE (D6N)(LH FRONT)	
	4	1	**220-1962**	1	FILM-STRIPE (D6N)(LH FRONT)	
	5	1	**224-3933**	1	FILM-STRIPE (D6N)(LH LOWER COWL)	
	6	1	**224-3937**	1	FILM-STRIPE (D6N)(RH LOWER COWL)	
	7	1	**205-4953**	1	FILM-STRIPE (D6N)(FRONT)	
	8	1	**206-0334**	1	FILM-STRIPE (D6N)(REAR)	
	9	1	**205-7095**	1	FILM-STRIPE (D6NXL)(LH REAR)	
	10	1	**205-7096**	1	FILM-STRIPE (D6N)(LH TRIANGLE)	
	11	1	**205-7097**	1	FILM-STRIPE (D6NXL)(RH REAR)	
	12	1	**205-7098**	1	FILM-STRIPE (D6N)(RH TRIANGLE)	
	13	1	**206-1559**	1	FILM-STRIPE (D6N)(LH REAR CORNER)	
	14	1	**224-2171**	1	FILM-STRIPE (D6N)(LH UPPER COWL)	
	15	1	**224-2172**	1	FILM-STRIPE (D6N)(RH UPPER COWL)	
	16	1	**222-1780**	2	FILM (DIFF STEER)	

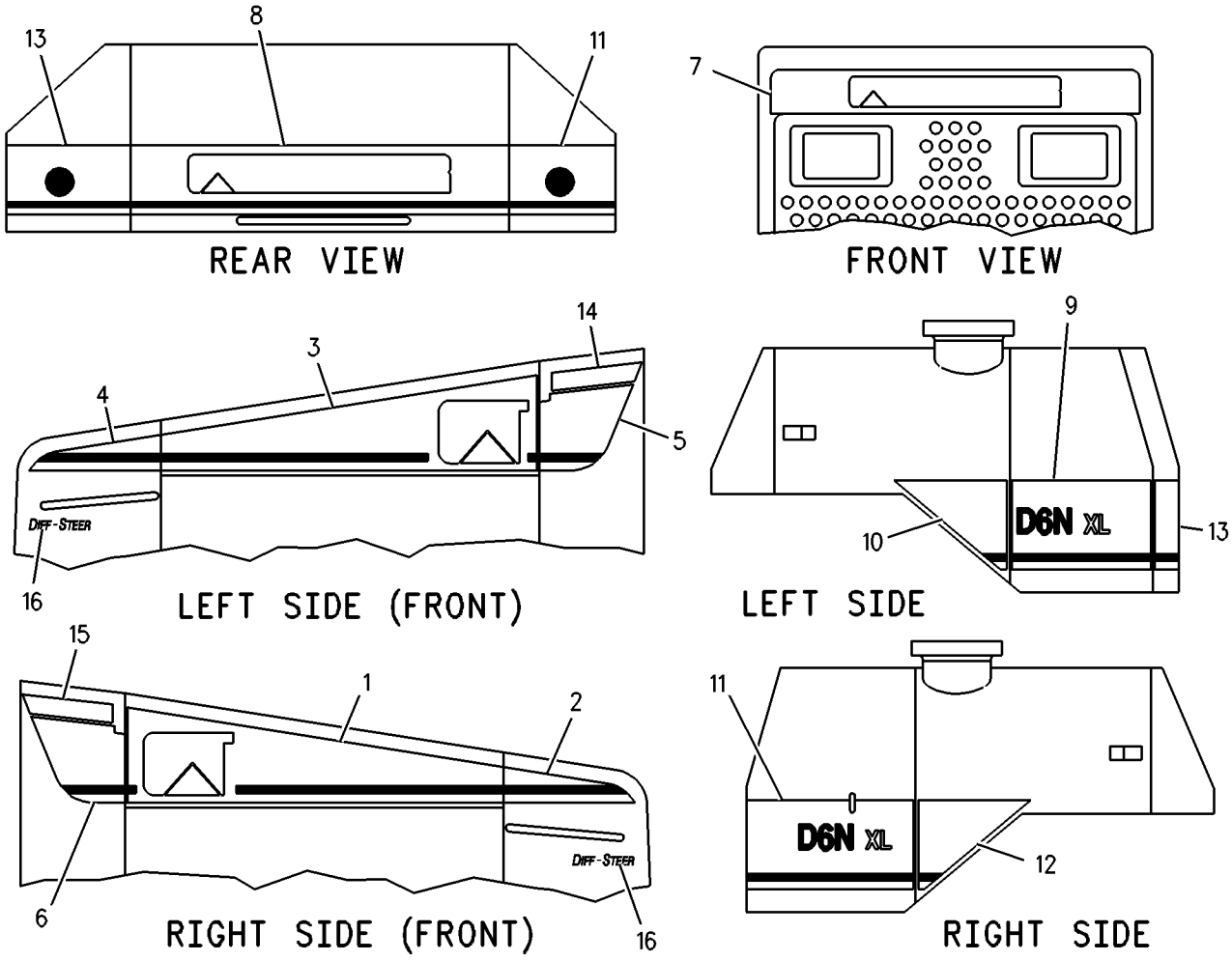

GRAPHIC #1 **<END>** g00938707

5P-1101 PLATE & FILM GP

S/N: TPP1-UP
PART OF 180-4560 RIPPER AR
AN ATTACHMENT

SMCS-7557, 7563 **i01866640**

NOTE	PART NUMBER	QTY	PART NAME 1 2 3 4 5 6 (PRODUCT LEVEL)	SEE PAGE
	2Y-9790	1	PLATE-SERIAL NUMBER	
			(ON RH SIDE OF TOWER)	
	4B-4158	2	SCREW-DRIVE (3/16X0.25 IN)	

<END>

6V-5343 PLATE & FILM GP—BULLDOZER

S/N: B6X1-UP
PART OF 223-6303 BULLDOZER AR
AN ATTACHMENT

SMCS-7557, 7563 **i01831025**

NOTE	PART NUMBER	QTY	PART NAME 1 2 3 4 5 6 (PRODUCT LEVEL)	SEE PAGE
	2Y-9790	1	PLATE-SERIAL NUMBER	
			BACK OF MOLDBOARD - NEAR TOP AT RH END.	
	4B-4158	2	SCREW-DRIVE (3/16X0.25 IN)	

<END>

192-3195 PLATE & FILM GP

S/N: CCK1-UP
PART OF 189-4620 POWER TRAIN AR

SMCS-7557, 7563 **i01833317**

NOTE	PART NUMBER	QTY	PART NAME 1 2 3 4 5 6 (PRODUCT LEVEL)	SEE PAGE
Y	*221-3697*	1	FILM GP (D6N XL D/S)	549
	4W-1413	1	PLATE-SERIAL NUMBER (ENGINE)	
			ON LH SIDE OF CYLINDER BLOCK TOWARD THE TOP AND REAR FLAT AREA THAT WOULD BE ABOVE AND BEHIND THE ECM WHEN MOUNTED.	
	8T-9905	1	PLATE-IDENTIFICATION (TRANSMISSION OIL FILL TUBE)	
			LEFT SIDE ON THE CAP (VERTICAL SHAFT, ON "T" HANDLE).	
	202-9824	1	PLATE-INFORMATION (BRAZIL)	
			CBL INFORMATION PLATE NEAR OF THE PIN PLATE.	
	9X-1878	1	PLATE (PRODUCT IDENTIFICATION)	
			ON LH REAR OF CASE.	
	9X-6199	1	PLATE-PRODUCT IDENT NUMBER (COMBINATION)	
			ON LH REAR OF CASE.	
	9F-6656	1	RING-RETAINING	
			LEFT SIDE ON THE CAP (VERTICAL SHAFT, ON "T" HANDLE).	
	8T-9530	10	TACK-FASTENER	
			ON LH REAR OF CASE.	
	4P-6464	1	FILM-AIR CLEANER (RADIAL SEAL)	
			LEFT SIDE, ON AIR CLEANER END COVER ASSEMBLY.	
	223-4299	1	FILM (ALTERNATOR)	
			RH SIDE OF THE MACHINE, ON THE UPPER FLANGE OF THE ALTERNATOR GUARD.	

192-3195 **PLATE & FILM GP** ***(contd.)*** **i01833317**

NOTE	PART NUMBER	QTY	PART NAME 1 2 3 4 5 6 (PRODUCT LEVEL)	SEE PAGE
	3E-8241	1	FILM-HYDRAULIC OIL	
			INSIDE RH HYDRAULIC OIL ACCESS DOOR BY FILLER SPOUT.	
	4P-8681	1	FILM-IDENTIFICATION (ENGINE OIL FILTER)	
			ON OIL FILTER.	
	211-0686	1	FILM (IGNITION SW)	
			ON BATTERY DISCONNECT SWITCH.	
	9X-6340	1	FILM-INSTRUCTION (ENGINE OIL)	
			ON OR NEAR ENGINE OIL FILL TUBE.	
	167-7270	2	FILM-INSTRUCTION (NO STEP)	
			ON THE BLADE ANGLE CYLINDERS, EACH SIDE.	
	7X-3229	4	FILM-LIFT & TIE DOWN	
			W/O RIPPER - ON SIDE OF TRACK ROLLER FRAME BETWEEN FRONT IDLER & ROLLER & BETWEEN REAR IDLER & ROLLER. (2 EA SIDE)	
			W/ RIPER - ON SIDE OF TRACK ROLLER FRAME BETWEEN FRONT IDLER & ROLLER & ON SIDE OF RIPPER FRAME BY REAR LIFT CYLINDER	
			PIN. (2 EACH SIDE)	
	173-1619	1	FILM-NOTICE (SHIPPING)	
			ON RH SIDE BELOW TOP OF FENDER ON ANGLED VERTICAL SURFACE NEAR FRONT EDGE.	
	3E-8108	1	FILM-OIL LEVEL (TRANSMISSION)	
			LH INSIDE ACCESS AREA UNDER TRANS OIL LEVEL STICK.	
	232-3680	1	FILM-FUSE (FUSE IDENTIFICATION)	
			INSIDE LH REAR ENCLOSURE DOOR.	
	7X-7644	4	FILM (TIE DOWN)	
			BY FRONT TOWING EYE. AT REAR HITCH CLEVIS. (DRAWBAR OR WINCH ONLY)	
			W/O RIPPER - ON SIDE OF TRACK ROLLER FRAME, CENTERED BETWEEN FRONT & REAR IDLERS. (1 EACH SIDE)	
			W/ RIPPER - ON SIDE OF TRACK ROLLER FRAME, CENTERED BETWEEN FRONT & REAR IDLERS & BETWEEN REAR ROLLER & IDLER.	
			(2 EACH SIDE)	
	3E-8112	1	FILM-WARNING (JUMPER CABLES)	
			INSIDE LH BATTERY SERVICE DOOR.	
	130-3676	1	FILM-WARNING (UNIVERSAL)	
			INSIDE CAB, LH SIDE POST. POSITION THE FILM 230 MM FROM THE BOTTOM OF THE POST.	
	190-2938	1	FILM-WARNING (PRESSURIZED COOLANT)	
			UNDERNEATH THE DOOR TO THE RADIATOR FILL	

Y-SEPARATE ILLUSTRATION

<END>

MEMORANDA

PART NUMBER INDEX

Part	Page
0	
0A-2926	507
0L-1143	290
0S-0175	390
0S-0509	193
0S-1585	290
	293
0S-1594	277
0S-1595	193
0S-1599	193
0S-1614	193
	290
0T-0102	191
0T-0244	527
1	
1A-1460	289
1A-2029	290
	293
1A-2223	234
	289
1A-5350	193
1B-0676	339
	341
	343
1B-2578	341
1B-2693	536
1B-3978	198
1B-3980	198
1B-4427	327
1B-5174	269
1B-6182	442
1B-8704	339
	343
1B-8705	10
	15
	213
1B-8736	213
1C-0569	293
1D-4540	191
1D-4628	352
1F-0748	120
1F-0750	446
1F-7567	70
	72
	104
1G-3174	313
1G-7407	306
1G-8878	305
1H-3244	116
	118
	151
1H-3338	179
1H-3340	298
1H-6227	279
	280
	283
1H-8128	198
	272
1H-8171	103
1H-8296	541
1H-8720	277
1H-9696	198
1J-2175	346
1J-6472	218
	266
1J-9671	22
	29
	85
1K-6985	350
1K-7095	348
1L-5072	396
1L-5081	384
1L-6957	193
1M-1230	446
1M-3097	279
	280
	283
1M-4291	277
1M-6119	122
	124
1M-6120	122
	124
1M-8649	206
1M-8747	277
1M-9011	198
1N-5999	22
	27
	29
1P-0436	103
1P-1547	236
1P-1744	311
1P-2772	262
	264
	516
1P-3703	309
1P-3708	201
	379
1P-4576	352
1P-4577	379
1P-4578	226
1P-5763	379
1P-6356	479
1P-7363	403
	405
	407
	409
	411
	413
1R-0735	396
1R-0739	67
1R-0762	106
1S-0669	350
1S-0994	122
	183
	187
	379
1S-1860	286
	287
	288
1S-2563	70
1S-3311	356
	423
1S-4915	122
1S-6250	327
1S-7251	121
	122
	171
1S-7252	121
	171
1S-8947	277
1S-9593	231
	337
1T-0034	220
1T-0043	218
	220
1T-0205	220
1T-0234	218
1T-0720	193
1T-0738	324
1T-0933	220
1T-1621	218
1T-1639	220
1U-0063	424
1U-0159	424
	437
1U-0183	433
1U-2071	327
1U-2533	427
1U-2744	403
	405
	409
	411
	413
1U-2752	327
1U-2827	396
1U-3147	327
1U-4049	356
1U-8846	11
	12
	42
	48
	57
	93
	112
	138
	289
	293
1V-3113	444
1V-6688	516
1W-2715	25
1W-3963	327
1W-8407	19
1Y-7927	476
2	
2A-3211	444
2A-3576	193
2A-4429	25
2A-4639	290
2B-0941	379
2B-2404	194
2B-2695	230
2D-0516	206
2D-4202	396
2D-6235	476
2D-6642	43
2D-8009	193
	213
2D-9572	234
2G-1133	187
2H-3920	547
2H-3922	174
	176
	314
2H-3928	319
2H-4145	350
2H-5549	346
2H-6338	277
2H-9247	356
2J-0564	352
2J-3506	435
	436
2J-6274	285
2J-6362	193
2J-7761	396
2J-8489	354
2K-0703	437
2K-2939	309
2K-2961	356
2K-4096	352
2K-4507	352
2K-4821	116
	118
2K-4973	341
	443
	528
	536
	539
	541
2K-5069	289
2K-6830	346
2K-9111	514
	536
2K-9183	314
2K-9295	289
2L-6267	300
2L-8077	187
2M-4453	84
2M-6471	18
2M-7041	230
2M-7819	476
2M-9780	18
	22
	27
	29
	48
	67
	85
	104
	206
	232
	309
	311
	313
	332
	365
	379
	401
	403
	405
	407
	409
	411
	413

► **PRIMARY REFERENCE**

PART NUMBER INDEX

Part	Page
	489
2N-1287	194
2N-3680	296
	300
2P-0347	277
2P-1294	41
2P-2537	67
2P-4339	499
2P-6470	361
2P-6471	361
2R-0098	198
2R-5001	296
2S-1382	228
2S-1384	228
2S-2053	68
2S-4078	198
	226
	285
	308
2S-5658	216
2S-5926	285
2S-8983	193
2V-1937	94
	444
2V-8259	450
2W-0027	49
2W-6225	200
2W-6544	12
2W-6546	11
2W-7213	18
2W-7381	31
2W-8147	15
2W-9162	65
2W-9499	14
2Y-5829	62
	72
2Y-7337	183
2Y-9790	419
	420
	550

3

Part	Page
3A-8608	437
3A-8609	▶424
	429
3A-8612	437
3A-8613	424
3A-8614	424
3B-1915	194
3B-4124	289
3B-4501	174
3B-4604	237
3B-4605	296
3B-4609	257
	259
3B-4615	339
	341
	343
3B-4617	339
	341
	343
3B-4630	433
3B-5325	439
	440
3B-6487	507
3B-6552	361
	507
3B-8489	234
	266
	350
	361
	423
	431
	437
	507
	510
3D-2824	57
	85
	175
	200
	201
	206
	232
	308
	317
	363
	368
	370
	372
	376
	378
	382
	387
	388
	403
	405
	409
	411
	413
3D-2975	476
3D-7943	311
3E-0109	499
	503
3E-0400	472
3E-1841	470
	474
3E-2310	106
3E-3213	39
3E-3365	112
	139
	146
	164
	165
	167
	174
	175
	177
	180
	183
	449
	453
	472
	499
	503
	516
3E-3368	153
	160
	161
3E-3371	143
	155
	156
	157
	158
	159
	166
	503
	504
3E-3383	298
	491
	509
3E-3389	503
	512
	513
3E-3535	485
3E-4052	479
3E-4058	479
3E-4319	361
3E-4320	247
3E-4352	68
	153
3E-4367	302
3E-5180	296
3E-5239	457
3E-5446	116
	118
3E-5447	116
	118
3E-5448	116
	118
3E-5450	116
	118
3E-5454	116
	118
3E-5455	116
	118
3E-5457	116
	118
3E-5458	116
	118
3E-5459	116
	118
3E-5460	116
	118
3E-5464	444
3E-6328	▶115
	187
3E-6389	▶143
	484
3E-6573	510
3E-6799	218
3E-7277	179
3E-7842	183
3E-7852	172
3E-7853	172
3E-7855	172
3E-7857	172
3E-7858	172
3E-7860	172
3E-7861	172
3E-7904	510
3E-8008	306
3E-8017	97
	101
3E-8020	507
3E-8108	551
3E-8112	551
3E-8241	551
3E-8557	302
3E-8822	150
3E-8825	150
	187
3E-9412	61
3E-9864	262
	264
3E-9865	446
3F-0379	172
3F-6185	427
3G-0361	396
3G-1753	352
3G-1757	352
3G-3267	396
3G-4282	435
3G-6313	427
3G-7828	236
3G-8891	390
3G-8932	426
	431
3H-0240	463
3H-1461	213
	215
3H-5552	18
3H-8683	382
3H-8726	251
	253
	256
	259
3J-1907	22
	27
	29
	104
	122
	183
	197
	200
	206
	213
	224
	225
	226
	228
	305
	309
	317
	323
	365
	374
	376
	379
	392
	396
	399
	400
	401
3J-4818	541
3J-7352	266
3J-7354	57
	104
	153

▶ **PRIMARY REFERENCE**

PART NUMBER INDEX

Part	Page	Part	Page	Part	Page	Part	Page
	201		94	3W-1493	339		379
	206		150		343	4J-0522	201
	266		151	3W-1495	339	4J-0527	379
	306		181		343	4J-0805	390
	309		183	3W-1615	339		426
	317		191	3W-2025	269	4J-1641	433
	365		324	3W-2369	285	4J-3420	352
	378		366	3W-2647	240	4J-3745	348
	379		446		245	4J-4606	356
	393		457	3W-4346	269	4J-5140	399
	403		472	3W-6468	262		400
	405		485	3W-6756	510		401
	407		489	3Y-5405	386	4J-5267	352
	409		516				384
	411		543				386
	413		547	**4**			399
	415	3S-2708	289				400
3J-9545	356		293	4B-2043	116		401
3J-9703	354	3S-6049	122		118	4J-7533	226
3K-0360	12	3S-6050	121	4B-2047	116		230
	22		124		118		324
	29	3S-6162	354	4B-3665	220	4J-8251	396
	32	3S-7023	348	4B-4098	217	4J-8252	396
	33	3S-8109	205	4B-4158	419	4K-0367	396
	50		206		420	4K-1388	206
	82	3S-8536	485		550		220
	85	3S-8652	197	4B-4274	446		403
	87	3S-8664	183	4B-4278	528		405
	92	3T-0810	206		536		409
	93	3T-0849	466		541		411
	104		468	4B-4280	528		413
	106		483	4B-4281	528		417
	198	3T-3447	205		536		418
	200	3T-3462	492	4B-5059	476	4K-2039	226
	201	3T-4568	289	4B-7739	203	4K-3004	437
	220	3T-4629	205	4B-9782	405	4K-3128	352
	290	3T-4824	289		409	4K-8302	104
	293	3T-5638	289		411	4K-8603	205
	308	3T-5807	293		413	4K-8864	122
	309	3T-6354	116	4D-4431	346		124
	317		118	4D-7388	201	4K-9230	446
	361	3T-6394	289		366	4K-9429	497
	365	3T-6469	220		379	4K-9821	94
	489	3T-6471	220	4D-7733	104		507
3K-0835	499	3T-6769	206		376	4K-9822	94
	500	3T-6795	205	4D-7735	489		507
	503	3T-6963	289	4D-7794	78	4L-3641	72
	504	3T-7584	206	4D-9517	183	4L-6454	201
3K-1432	206	3T-7641	262	4D-9986	399	4L-9564	65
3K-3257	171		264		400	4M-1751	228
3K-6662	314	3T-8469	193		401	4M-1831	172
3K-8460	153	3T-8724	▶136	4F-0255	427	4M-5281	116
3K-8510	437	3T-8757	213	4F-2294	178	4M-5282	300
3L-1473	536	3T-9272	289	4F-4879	530	4M-5905	230
3N-0759	309	3T-9315	204		531	4M-5942	485
3N-2818	327		378		532	4M-6425	514
3N-3718	116	3T-9536	272	4F-5695	20	4M-8239	228
	118	3T-9674	194	4F-9653	108	4N-2927	476
3P-1156	71	3T-9819	193	4H-1225	104	4N-8227	136
3P-2404	379	3T-9960	205	4H-2558	450	4P-5918	12
3P-3441	205	3V-0409	201		547		111
3P-7019	206	3V-0778	68	4I-7651	309	4P-6464	550
3P-9900	541		183	4J-0121	350	4P-7428	122
3S-0004	213	3V-2431	108	4J-0519	396		183
3S-2093	78	3V-7689	237	4J-0520	201	4P-7429	122

▶ **PRIMARY REFERENCE**

PART NUMBER INDEX

Part	Page
4P-7581	122
	135
	139
	142
	148
	183
	187
	314
	479
	500
	504
4P-8134	122
	124
	135
	181
	183
	186
	187
	314
	397
	479
	500
	504
4P-8182	67
4P-8681	551
4P-9942	89
4P-9943	89
4R-9999	56
4S-4455	379
4S-8002	388
4S-8537	205
4S-8541	218
4T-0231	390
	426
	431
4T-0521	396
4T-0732	427
4T-0780	427
4T-1481	433
4T-1504	433
4T-1520	427
4T-1563	386
4T-2723	399
	400
	401
4T-2731	399
	400
	401
4T-3521	386
4T-4216	401
4T-4513	405
	409
	411
	413
4T-4516	403
4T-4518	400
4T-4520	403
	405
	407
	409
	411
	413
4T-4521	403
	405
	407
	409
4T-4524	403
	405
	407
	409
	411
	413
4T-4528	403
	405
	407
	409
	411
	413
4T-4531	411
4T-4532	405
	409
	411
4T-4533	403
	407
4T-4534	403
	405
	407
	409
4T-4538	399
4T-5613	346
4T-6659	436
4T-7795	403
	405
	409
4T-7807	403
	405
	407
	409
	411
	413
4T-8695	354
4V-5091	237
4V-6981	296
4V-7850	442
4V-7855	442
4V-7857	442
4V-7859	442
4V-7860	442
4V-7865	442
4V-7872	536
4V-7873	536
4V-7874	536
4V-7875	536
4V-7876	536
4V-7877	536
4V-7881	442
4V-7884	536
	539
4V-7890	536
4V-7891	536
4V-7904	528
4V-7908	528
4V-8026	528
4V-8029	528
4V-8031	528
4V-8032	528
4V-8033	528
4V-8034	528
4V-8035	528
4V-8256	442
	443
	528
4V-8264	536
4V-8265	536
4V-8554	536
4V-8556	536
4V-8561	536
4V-8562	536
4V-8565	536
4V-8566	536
4V-8577	536
	539
	541
4V-8579	528
4V-8586	528
4V-8605	528
4V-8606	536
4V-8609	536
4V-8610	536
4W-0253	85
4W-1103	2
	3
	▶41
4W-1413	550
4W-2042	35
4W-2181	68
4W-2232	71
4W-3087	66
4W-3277	376
4W-4293	187
4W-7592	85
4Y-4905	421
4Y-9652	12
4Z-5788	401
5	
5A-8375	277
5B-0841	194
5B-1866	62
5B-3180	230
5B-3254	510
5B-9318	403
	405
	407
	409
	411
	413
5C-2890	138
	151
	177
	179
	296
	541
5C-7261	12
	13
	91
	122
	124
	144
	145
	146
5C-8811	547
5C-9553	112
	151
	302
	457
	463
	493
5D-1026	87
	200
	470
	474
	487
	489
5D-1911	396
5D-4822	476
5D-7523	204
5E-7045	333
5F-3106	215
	309
	379
5F-3144	352
5F-9144	305
	485
5F-9757	78
5G-2247	273
	274
5H-3182	536
5H-4018	352
5H-6734	269
5H-9899	298
5I-4198	309
5I-8270	121
5I-8304	121
	124
5J-3864	206
5J-4773	435
	436
5J-5020	352
5J-8011	350
5J-8300	354
5K-0216	272
5K-1770	201
5K-2697	363
	387
	388
5K-5068	94
5K-7748	437
5K-8451	104
5K-9065	218
5K-9090	200
	309
	378
	379
	403
	405
	409
	411
	413
	417
5K-9106	205
5K-9107	277

▶ **PRIMARY REFERENCE**

PART NUMBER INDEX

Part	Page	Part	Page	Part	Page	Part	Page
	290		430		516	5R-0940	382
5K-9179	490	5P-2230	95	5P-6920	116	5S-1057	396
5K-9660	234	5P-2369	201		118	5S-4246	298
5L-2029	300		366	5P-6994	487	5S-7001	228
5L-4758	311	5P-2424	120		489	5S-7018	327
5L-7200	174	5P-2566	528	5P-7162	151	5S-7349	172
5M-0578	289	5P-2675	103	5P-7464	372	5S-7379	309
	293	5P-2948	91		384		528
5M-2043	277		94	5P-7465	372	5S-7383	514
5M-2057	396		507		384	5S-7816	226
5M-2894	191	5P-3108	396	5P-7466	361	5S-9062	35
	194	5P-3131	206	5P-7467	361	5V-0564	204
	272	5P-3620	197	5P-7468	372	5V-0770	476
	277	5P-3928	479		379	5V-1474	536
	290	5P-3929	485	5P-7469	372	5V-1483	536
	293	5P-3930	206		379	5V-1496	522
	399	5P-3944	485	5P-7807	116		525
	400	5P-3948	485		118		528
	401	5P-4115	446	5P-7814	153	5V-1497	442
5M-3062	528		472	5P-7854	366		539
5M-3320	213		493	5P-7957	497	5V-1498	528
5M-7925	289	5P-4116	122		528	5V-1499	528
5M-9548	226		148	5P-7958	528	5V-1719	528
	228		314	5P-8066	72	5V-1839	536
5N-2840	366		450		201	5V-4846	536
5N-8359	365		457	5P-8112	361	5V-4855	536
5N-8360	365		500	5P-8167	446	5V-5262	534
5P-0537	14	5P-4295	104	5P-8196	67	5V-9221	87
	103	5P-4423	541	5P-8197	493		
	194	5P-4829	485	5P-8245	38		
	405	5P-4920	193		39	**6**	
	409	5P-4921	193		61		
	411	5P-4924	104		66	6A-3361	180
	413	5P-4961	104		206	6B-2882	200
	463		106		289	6B-6863	205
	493	5P-5623	453		290		268
5P-0695	122		516		293	6C-3431	481
5P-0718	309	5P-5630	94	5P-8246	46	6C-9149	243
5P-0747	121		507	5P-8247	17		244
	124	5P-5639	470		46	6D-0047	536
	171		510		268	6D-1641	470
5P-0761	121	5P-5643	444		282		485
	122		470		284	6D-3479	266
	124	5P-5649	90	5P-8248	435	6D-4246	485
5P-0767	87	5P-5673	457		436	6E-0358	405
	470	5P-5677	139	5P-8249	352		409
	474		142	5P-8347	82		413
	487		187		126		417
5P-1042	309		449	5P-8439	450	6E-0465	356
5P-1075	300		453		516	6E-0772	407
	384		506	5P-8441	446		▶417
	444		509	5P-8445	476	6E-1134	327
	504	5P-5678	14	5P-9085	122	6E-1135	327
5P-1076	240	5P-5755	510		184	6E-1136	327
	262	5P-5846	220		446	6E-1410	350
	264	5P-5908	472	5P-9186	206	6E-1607	329
	379	5P-5926	510	5P-9209	339	6E-1981	327
5P-1101	429	5P-5931	87		341	6E-1982	327
	▶550		90		343	6E-2193	327
5P-1404	104	5P-5952	450	5P-9262	415	6E-3268	415
	379	5P-5992	444	5P-9806	203	6E-3269	415
5P-1442	104	5P-6010	541		220	6E-3272	415
	106	5P-6029	188	5P-9891	269	6E-3273	415
5P-1505	104	5P-6414	218	5P-9909	87	6E-3274	415
5P-1979	276	5P-6874	490	5R-0939	382	6E-3275	415

▶ **PRIMARY REFERENCE**

PART NUMBER INDEX

Part	Page
6E-3276	415
6E-3569	348
6E-3570	348
6E-4102	326
6E-4240	330
6E-4350	317
6E-4385	317
	333
6E-4388	330
6E-4401	329
6E-4402	306
	▶330
6E-4403	330
6E-4404	330
6E-4952	401
	▶403
6E-4953	399
	400
	401
	▶405
6E-4954	400
	401
	▶407
6E-5083	359
	▶399
6E-5449	348
6E-5953	399
	▶409
6E-6350	319
6E-6527	415
6E-6528	415
6E-6536	415
6E-6537	415
6E-6538	415
6E-6539	415
6E-6540	415
6E-6549	47
6F-0253	499
	500
	503
	504
6F-0711	234
6F-6673	290
	293
6F-7045	176
6H-3977	201
6H-7382	279
	280
	283
6I-1418	139
	142
	302
6I-2501	91
6I-2502	91
6I-4464	91
6I-8077	216
6I-8078	212
	▶216
6I-8488	206
6I-8724	289
6I-9420	433
6I-9461	433
6I-9462	433
6J-2419	191
	232
6J-2797	346
6J-5383	427
6K-3273	525
	528
6K-3274	528
6K-3632	516
6K-6361	247
6K-8178	150
6K-8987	424
6K-9555	444
6L-5359	201
6L-7159	444
6M-5062	485
6P-1735	289
6P-1736	289
6P-2216	253
	256
	482
6P-2233	206
6P-3236	474
	499
6P-5317	290
	293
6P-5560	81
6P-7742	206
6P-7743	206
6P-7772	205
6P-7773	205
6P-7968	205
6P-7983	205
6P-7985	205
6P-8269	112
6R-0365	313
6R-7943	393
6S-3002	306
6S-6251	251
	253
	256
	259
6S-6646	251
	253
	256
	259
	390
6T-0062	289
6T-0064	289
6T-0097	205
6T-0850	289
6T-3009	205
6T-5617	470
6T-6708	446
6T-7695	481
6T-7995	193
6T-7996	193
6T-9222	197
6V-0327	198
6V-0328	198
6V-0329	198
6V-0330	198
6V-0400	309
6V-0439	198
6V-0484	106
6V-0834	205
6V-0835	205
6V-0852	207
	308
	365
	378
6V-0855	289
6V-0894	314
6V-0937	216
6V-1230	104
	200
6V-1232	298
6V-1249	384
6V-1584	528
6V-1586	205
6V-1649	205
6V-1668	446
	472
6V-1792	286
	287
	288
6V-1820	44
	218
	234
	396
6V-1864	193
6V-1889	309
6V-1903	103
6V-2314	298
6V-2317	12
	13
	37
	67
	186
6V-2404	193
6V-2483	316
6V-2496	472
	543
6V-2689	298
6V-3303	282
	284
6V-3320	446
6V-3531	276
6V-3532	244
6V-3538	11
	19
6V-3545	298
6V-3821	65
	93
6V-3918	42
	48
	85
	142
6V-3940	10
	11
	49
	71
	82
	153
6V-3965	206
	224
	228
	309
	379
6V-4248	47
	71
	72
6V-4249	36
6V-4292	200
6V-4356	485
6V-4357	485
6V-4365	191
	228
6V-4369	122
6V-4447	314
6V-4589	108
	338
6V-5048	22
	27
	29
	103
	153
6V-5049	72
	106
	108
	153
6V-5163	87
6V-5191	87
6V-5201	321
6V-5217	42
6V-5218	72
	186
6V-5219	108
6V-5223	82
6V-5343	419
	▶550
6V-5586	329
6V-5686	520
6V-5696	61
	66
6V-5773	193
6V-5815	75
6V-5839	9
	24
	47
	71
	72
	75
	97
	171
	218
	228
	396
6V-5842	41
	47
6V-5843	36
	40
	217
	223
6V-6604	90
6V-6609	153
6V-6703	132
6V-6716	183
	450
6V-6717	470
	474
6V-7238	32
	87
	489
6V-7357	450
6V-7359	372
6V-7420	489
6V-7568	206

▶ **PRIMARY REFERENCE**

PART NUMBER INDEX

Part	Page
6V-7636	466
	468
6V-7646	289
	522
	525
6V-7673	218
6V-7687	361
	390
	424
6V-7723	395
6V-7728	14
	472
6V-7742	350
	354
6V-7744	339
	343
	396
	424
	437
6V-7978	151
6V-8004	35
6V-8076	104
6V-8118	296
6V-8128	218
6V-8133	354
6V-8149	66
6V-8185	296
	466
	468
6V-8186	178
6V-8187	116
	118
	151
6V-8188	172
6V-8197	39
6V-8218	323
6V-8237	354
6V-8335	533
6V-8336	38
6V-8337	378
6V-8351	329
6V-8352	330
	415
6V-8362	474
	499
6V-8369	547
6V-8370	174
	314
6V-8378	172
6V-8397	72
	106
	306
	335
	365
	366
	374
	376
	378
	379
6V-8398	306
	309
	361
	363
	374
	384
6V-8400	308
	378
6V-8513	251
	254
	257
	259
6V-8556	376
	382
	384
6V-8625	361
6V-8626	379
6V-8634	106
6V-8635	201
	378
6V-8636	72
	106
6V-8637	200
	363
	368
	382
	387
	388
6V-8639	361
6V-8642	108
6V-8713	370
	372
6V-8715	365
6V-8716	308
6V-8724	106
	365
6V-8774	376
6V-8781	376
6V-8786	308
6V-8791	368
	376
6V-8801	300
6V-8818	298
6V-8837	186
6V-8928	449
6V-8936	365
6V-8941	376
6V-8942	384
6V-8943	379
6V-8947	309
6V-8948	309
6V-8981	363
	386
6V-8982	368
6V-8995	374
6V-8996	368
6V-9003	379
6V-9005	378
6V-9007	308
	370
	378
6V-9008	379
6V-9162	363
	368
	387
	388
6V-9167	354
6V-9168	366
6V-9169	363
6V-9170	368
6V-9182	201
	308
6V-9189	339
	343
6V-9200	365
	379
6V-9632	186
	302
	308
	341
	449
	466
	468
	472
6V-9633	396
6V-9672	187
6V-9746	200
	201
	308
	309
	363
	368
	370
	376
	378
	379
	382
	387
	388
6V-9748	35
6V-9804	108
	126
6V-9829	374
6V-9830	374
6V-9832	382
6V-9836	379
6V-9839	308
	368
6V-9843	72
6V-9850	365
	379
6V-9851	363
6V-9853	308
6V-9872	365
	378
6V-9876	365
6V-9877	308
6W-0590	536
6W-2928	308
6W-5233	536
6W-6005	121
6W-8281	536
6W-8502	528
	536
6W-8505	442
	536
6W-8506	442
6W-9744	528
	534
6Y-0306	205
6Y-0352	440
6Y-0359	439
6Y-0473	272
	273
	274
	279
	280
	283
6Y-0775	191
6Y-0859	198
6Y-0926	289
6Y-0984	289
6Y-1084	218
6Y-1087	218
6Y-1093	218
6Y-2043	277
6Y-2704	289
	293
6Y-3125	275
6Y-3149	218
6Y-3151	218
6Y-3159	218
6Y-3164	220
6Y-3167	218
6Y-3484	205
6Y-3908	▶277
	288
6Y-4003	290
	293
6Y-4365	228
6Y-4638	230
6Y-5010	213
6Y-5352	205
6Y-8473	200
	▶228
6Y-9373	289
	293
	374
	374
	382
	379
	308
	368
	72
	365
	379
	363
	308
	365
	378
	365
	308
	379
	308
	536
	121
	536
	528
	▶536
	▶442
	536
	442
	▶528
	534
	205
7B-0863	236
7B-2742	103
7B-3028	269
7B-3039	396
7B-7515	206
7C-0111	49
7C-0752	95
7C-1160	76
7C-1445	13
7C-1493	67
7C-1675	46
7C-1770	2
	3
	▶57
7C-2642	183
7C-4354	309
	366
	376
	384
7C-4532	2
	3
	▶32
7C-4566	2
	3

7

▶ **PRIMARY REFERENCE**

PART NUMBER INDEX

Part	Page
	►33
7C-6670	102
7C-6672	102
7C-6976	49
7C-6977	49
7C-7431	97
	101
7C-7980	15
7C-8369	35
7C-8370	35
7C-8634	35
7D-7233	379
7E-0759	82
7E-2968	17
7E-2985	103
7E-3870	95
7E-5346	103
7E-6794	43
7E-7589	56
7E-7754	89
7E-7779	25
7E-9817	67
7F-3713	339
	343
7F-6935	217
7F-7621	116
	118
7F-8267	84
	279
	280
	283
7F-9543	236
7G-0437	205
7G-0942	446
7G-1596	289
7G-3496	220
7G-3707	205
7G-3708	205
7G-3710	206
7G-3832	361
7G-3833	361
	372
7G-3834	361
	372
7G-4302	205
7G-4306	205
7G-4311	205
7G-4332	279
	280
	283
7G-4823	493
7G-4824	463
	493
7G-5186	87
7G-5614	206
7G-5674	205
7G-5675	205
7G-5730	205
7G-6945	206
7G-8116	510
7G-8121	205
7G-9224	205
7H-1447	396
7H-3607	216
7H-4566	289
7H-4571	277
7H-4574	277
7H-9737	296
7I-2272	187
7J-0204	22
	27
	29
	184
	397
	403
	405
	407
	409
	411
	413
7J-1309	356
	423
7J-1333	269
7J-5131	433
7J-8955	354
7J-8956	354
7J-9108	108
	363
	368
	370
	372
	379
	387
	388
7J-9682	437
7K-1181	87
	121
	124
	131
	139
	142
	148
	151
	183
	187
	302
	314
	397
	449
	466
	468
	479
	499
	503
7K-3176	479
7K-6536	528
7K-9205	266
7L-2894	172
7M-0475	204
7M-1201	418
7M-2275	354
7M-3361	387
	388
7M-7219	476
7M-8485	201
	226
	230
	308
	309
	378
	379
7M-8592	228
7M-9918	102
7N-0718	121
	►176
7N-5274	121
	124
7N-5683	19
7N-5876	499
	503
7N-9023	116
	118
7N-9943	143
7P-6596	266
7P-6682	121
7P-9131	112
7S-4244	104
7S-4346	444
7S-4534	206
7S-5757	339
7T-0020	143
7T-0786	493
7T-1099	151
	237
	247
	392
	446
	472
7T-1885	289
	293
7T-3451	172
7T-3454	172
7T-4515	231
7T-4532	455
7T-6931	386
7T-6934	386
7T-6994	289
	293
7T-8130	289
7T-8136	293
7T-8858	193
7T-8859	193
7T-8894	487
7T-8895	485
7T-9031	293
7T-9302	547
7T-9356	193
7T-9357	193
7T-9515	174
7T-9793	485
7T-9832	289
7T-9837	289
	293
7V-0008	300
7V-3728	528
7V-5190	536
7V-5191	476
7W-3447	121
7W-3871	12
7W-3872	12
	120
7W-5340	71
7W-6492	82
7W-6534	290
7W-9415	49
7W-9737	74
7W-9738	74
7W-9740	74
7W-9930	74
7X-0290	300
7X-0338	120
7X-0458	87
7X-0513	240
7X-0515	243
	244
7X-0550	250
7X-0562	172
7X-0575	122
	124
7X-0583	520
7X-0584	298
7X-0587	266
7X-0605	250
7X-0608	443
7X-0613	122
7X-0620	521
7X-0818	78
	302
7X-0873	308
7X-1950	172
7X-2441	72
7X-2454	495
7X-2465	421
7X-2475	430
7X-2478	365
7X-2488	493
7X-2532	275
	427
7X-2537	232
7X-2538	456
7X-2540	184
7X-2541	324
7X-2543	187
	304
	437
7X-2549	264
	379
7X-2553	243
	244
	247
	262
	264
7X-2554	247
7X-2555	112
7X-2562	421
	431
7X-2563	198
	309
7X-2565	236
7X-2566	427
	493
7X-2576	276
7X-2577	245
7X-3166	376
7X-3229	551
7X-3347	41
7X-3373	172
7X-4771	298
7X-6035	186
7X-6222	131

► **PRIMARY REFERENCE**

PART NUMBER INDEX

Part	Page	Part	Page	Part	Page	Part	Page
7X-6315	127		226	8E-6539	218	8G-9560	200
	132		379	8E-6647	218	8H-0707	403
7X-7465	503	8C-3210	493	8E-6648	218		407
7X-7608	205	8C-3229	220	8E-7791	463		413
7X-7644	551	8C-3442	483	8E-7840	504	8H-2262	277
7X-7662	339	8C-3445	72	8E-8115	205	8H-5244	62
7X-7700	112	8C-3446	201	8E-8117	205	8H-5303	176
7X-7702	485	8C-3447	200	8E-8118	205	8H-5306	176
	489	8C-3451	392	8E-8242	300	8H-8898	433
7X-7729	78	8C-3681	87	8E-8297	206	8H-9818	203
	80	8C-3756	446	8E-8299	206	8H-9819	203
	81		457	8E-8307	289	8J-1622	327
	87	8C-4586	472		293	8J-2189	437
	89	8C-5063	296	8E-8310	289		▶439
	90	8C-5218	354	8E-8706	450	8J-2190	439
	99	8C-5607	449		▶490		440
	104		516	8E-8789	266	8J-2880	354
	234	8C-5608	449	8E-9378	435		427
	237		516		436	8J-6020	350
	251	8C-5682	485	8E-9379	435	8J-6245	350
	254	8C-5917	121		436	8J-6913	396
	257		124	8E-9380	431	8J-8322	396
	259	8C-6354	187		▶435	8J-8436	396
	368	8C-6561	103	8E-9502	431	8J-8443	396
	445	8C-6712	200	8E-9642	273	8J-8468	396
	450	8C-8400	308		274	8J-8782	396
	461	8C-8451	450	8F-0212	405	8J-8783	396
	463		516		409	8J-8905	431
	466	8C-8478	427		411	8K-0589	269
	468		492		413	8K-1433	450
	470	8C-8580	333	8F-1434	116	8L-2746	338
	474	8C-8729	198		118	8L-5832	95
	485	8C-8837	247		172	8L-6557	194
	489	8C-8843	262	8F-9206	396	8L-8413	476
	493		264	8G-2943	276		541
	510		516	8G-3102	285	8M-2537	226
	533	8C-8992	234	8G-3202	269	8M-2538	228
	534	8C-9126	354	8G-4107	276	8M-2770	184
	535	8C-9160	346	8G-4189	266		363
7X-7739	363	8D-0071	193	8G-4190	266		479
7X-7816	220	8D-4771	198	8G-4565	198		543
7X-7915	339		290	8G-4566	198	8M-2771	298
	343		293	8G-4568	198	8M-4409	228
7Y-1858	361	8D-5096	206	8G-4569	198	8M-4432	191
7Y-2854	251	8E-1212	269	8G-4659	339	8M-4438	290
	254	8E-1370	339		343		293
	257	8E-1484	205	8G-4945	285	8M-4445	76
	259	8E-1666	206	8G-4960	285	8M-4986	228
7Y-5226	298	8E-2887	427	8G-5258	519	8M-4988	201
7Y-8171	237	8E-3075	198	8G-5428	390	8M-5254	201
		8E-3131	300	8G-5501	390		204
		8E-3431	121	8G-5502	390		206
8		8E-4092	285	8G-5551	200		304
		8E-5192	433	8G-5623	237	8M-5860	20
8A-8563	72	8E-5194	433		246	8M-6393	197
8B-8679	384	8E-5247	218	8G-5654	200	8M-8489	213
8C-0563	20	8E-5277	289	8G-5747	421		341
8C-3088	405	8E-5278	293		431	8N-0869	122
	409	8E-5279	289	8G-5799	276	8N-1725	122
8C-3091	11		293	8G-6557	366	8N-2694	94
8C-3101	226	8E-5701	427	8G-6683	234		507
8C-3174	372	8E-5703	350	8G-6684	234	8N-5083	346
8C-3205	201		354	8G-7085	236	8P-0058	206
	386		427	8G-8316	266	8P-1916	206
8C-3206	201	8E-5962	493	8G-8589	200	8P-5141	472

▶ **PRIMARY REFERENCE**

PART NUMBER INDEX

Part	Page
8P-5244	262
	264
	516
8P-6188	277
8P-6652	280
8P-8950	206
8P-9770	421
	427
	431
	433
	437
8R-1876	536
8R-1877	536
8R-1878	536
8R-1883	536
8R-1884	536
8R-2094	528
8S-0023	379
8S-0024	379
8S-0527	205
	293
8S-0934	534
8S-0948	122
8S-3020	121
	124
8S-3426	205
8S-4710	405
	409
	411
8S-7803	476
8S-8158	188
8S-9129	200
8S-9130	200
8S-9191	191
8T-0070	350
8T-0100	13
	37
	61
8T-0129	374
8T-0154	34
8T-0192	341
8T-0226	46
8T-0248	363
8T-0269	335
8T-0276	67
	72
8T-0282	268
8T-0328	116
	118
	172
	188
	296
	314
	522
	525
8T-0337	504
8T-0356	213
8T-0358	46
8T-0375	285
8T-0389	122
	124
8T-0639	131
8T-0643	228
8T-0644	9
	84
8T-1159	108
	316
8T-1482	421
8T-1605	354
8T-1715	489
8T-1718	368
8T-1810	363
	387
	388
8T-1887	368
	370
8T-1888	368
	370
8T-2223	290
	293
8T-2225	122
8T-2275	396
8T-2353	104
	201
	309
8T-2360	403
	405
	407
	409
	411
	413
8T-2361	403
	405
	407
	409
	411
	413
8T-2396	110
8T-2502	300
8T-2561	148
8T-2659	503
	521
8T-2910	237
8T-2922	333
8T-3282	24
8T-3298	396
8T-3490	47
	78
	80
	81
	87
	89
	95
	124
	148
	150
	237
	247
	251
	253
	256
	259
	262
	308
	345
	365
	378
	384
	392
	461
	466
	468
	472
	487
	507
	516
	520
8T-3597	89
	245
	516
	519
8T-3612	148
	183
	247
	257
8T-3647	324
8T-3666	31
8T-3957	313
8T-4121	31
	44
	68
	78
	80
	81
	87
	89
	90
	91
	95
	98
	104
	106
	122
	124
	131
	148
	150
	171
	184
	188
	198
	201
	215
	220
	226
	228
	234
	237
	241
	243
	244
	251
	254
	257
	259
	264
	266
	269
	285
	302
	304
	309
	314
	339
	341
	343
	345
	363
	365
	368
	370
	372
	374
	376
	380
	382
	384
	386
	387
	388
	392
	419
	420
	450
	457
	461
	463
	468
	470
	479
	483
	485
	487
	493
	507
	516
	520
	543
8T-4122	262
	264
	430
8T-4123	45
	198
	234
	236
	275
	309
	421
	424
	427
	492
	493
8T-4127	484
8T-4130	237
8T-4131	275
	427
8T-4132	247
8T-4133	47
	68
	100
	104
	106
	122
	124
	184
	201
	203
	237
	257
	259

► **PRIMARY REFERENCE**

PART NUMBER INDEX

Part	Page	Part	Page	Part	Page	Part	Page
	309		150	8T-4177	184		240
	339		184		309		250
	343		188		324		380
	363		201	8T-4182	31		516
	365		234		148	8T-4195	78
	368		251		150		80
	374		254		203		81
	376		257		215		89
	380		259		285		90
	382		266		380		91
	450		302	8T-4183	201		95
	470		309		245		122
	479		339		361		148
	520		343		390		150
	543		368	8T-4184	201		201
8T-4136	68		370		204		215
	78		374		309		220
	80		380	8T-4185	100		237
	81		419		203		241
	87		420		251		251
	90		450		254		254
	91		457		257		257
	95		461		259		259
	98		463		380		264
	99		466		463		309
	104		468		492		314
	122		470		493		339
	184		474	8T-4186	81		341
	191		485		89		343
	194		487		104		376
	198		489		309		380
	201		493		339		450
	203		507		343		466
	206		516		345		468
	228		535		382		479
	237	8T-4138	122		392		485
	241		466	8T-4189	122		520
	243		468		184	8T-4196	201
	244	8T-4139	111		309		206
	257		112		314		226
	259		122		450		339
	269		237		461		343
	309		269		500		363
	314		361		504		380
	345		372	8T-4190	266		384
	363		376	8T-4191	78		386
	365		384		122		387
	368		386		171		388
	372		390		188		445
	376		421		302		474
	380		437		339		485
	382		516		374		520
	392		519		444	8T-4198	226
	457	8T-4140	236	8T-4192	184		424
	461		247		269		450
	483		249		361		516
	485		250		386	8T-4199	314
	492	8T-4141	198		430		507
	507	8T-4161	516	8T-4193	198	8T-4200	184
	510	8T-4167	495		240		309
8T-4137	87	8T-4171	151		242	8T-4205	112
	104		472		276		116
	122		500	8T-4194	87		118
	124		504		204		151
	131	8T-4172	201		237		172

► **PRIMARY REFERENCE**

PART NUMBER INDEX

Part	Page	Part	Page	Part	Page	Part	Page
	296	8T-4244	122	8T-5878	515		449
	298		204		516		468
	457		237	8T-6381	45		491
	472		339		427		513
	500		341	8T-6430	234		547
	504		343		243	8T-8730	131
	522		361		424		178
	525		372	8T-6431	339	8T-8737	122
8T-4220	516		437		343		131
8T-4222	302		449	8T-6466	201		142
	461	8T-4648	437		215		151
	492	8T-4766	339		365		153
	507		343		392		183
8T-4223	104	8T-4778	236		479		187
	112		250	8T-6663	378		302
	120	8T-4779	520	8T-6699	314		337
	122	8T-4896	201	8T-6703	87		446
	184		300		200		453
	198		352	8T-6724	104		472
	201		446	8T-6755	380		504
	204	8T-4908	53	8T-6762	203		506
	226		54	8T-6767	82		509
	234		78	8T-6869	184		512
	237		104	8T-6876	374		513
	262		120	8T-6907	104		543
	269		148	8T-6912	139	8T-8827	183
	309		314		144	8T-8874	150
	361		365		145	8T-8899	309
	376		457		146		382
	380	8T-4910	220	8T-7008	300	8T-8911	103
	384		380	8T-7038	495	8T-8917	120
	386	8T-4956	201	8T-7044	97	8T-8919	120
	390		238	8T-7338	244		198
	421		240		266	8T-9082	522
	426		250		275	8T-9358	365
	430		262	8T-7525	393	8T-9367	118
	431		309	8T-7529	201	8T-9371	541
	437		380	8T-7532	269	8T-9377	384
	466		426	8T-7546	366	8T-9389	309
	516		431	8T-7547	111		396
	519	8T-4958	348		232	8T-9471	187
8T-4224	13		350		339	8T-9530	269
	37	8T-4984	87		343		550
	78		95	8T-7566	496	8T-9655	126
	91		378		498		142
	104	8T-4986	95	8T-7567	356		302
	111	8T-5005	201	8T-7927	378	8T-9757	121
	120		206	8T-7929	437		124
	122	8T-5030	213	8T-7934	184	8T-9834	499
	139	8T-5041	262	8T-7950	24	8T-9884	172
	144		421	8T-8442	61	8T-9905	550
	145	8T-5071	269		393	8V-4881	442
	146	8T-5400	466		415	8Y-0709	247
	148		468	8T-8569	172	8Y-1387	247
	184		547	8T-8729	143	8Y-4002	528
	232	8T-5410	296		147	8Y-4030	534
	309	8T-5412	424		156	8Y-4206	528
	339	8T-5413	237		165	8Y-5737	470
	343		256		166		474
	365		259		167	8Y-5944	539
	456		365		180	8Y-5945	476
	461		378		183	8Y-5965	539
	507	8T-5439	427		296	8Y-6012	539
	514	8T-5668	352		298	8Y-6014	539
8T-4226	122		356		337	8Y-6024	539

► **PRIMARY REFERENCE**

PART NUMBER INDEX

Part	Page
8Y-6041	476
8Y-6045	476
8Y-6046	476
8Y-6047	476
8Y-6060	476
8Y-6062	476
8Y-6063	476
8Y-6064	476
8Y-6066	476
8Y-6067	476
8Y-6068	476
8Y-6069	476
8Y-6277	522
	525
8Y-6391	474
8Y-6859	476
8Y-6860	476
8Y-6957	536
8Y-9603	171
9	
9B-0576	289
9B-2289	280
	283
9B-2923	449
9B-7233	116
	118
	474
	499
9B-7237	352
9C-2177	536
9D-3768	466
	468
9D-8508	466
	468
	547
9F-1399	220
9F-3721	396
9F-5644	176
9F-6445	296
9F-6656	550
9F-8218	68
9G-0002	121
9G-0003	124
9G-0004	124
9G-0005	121
9G-1233	205
9G-1234	206
9G-1488	205
9G-1950	446
	472
9G-3695	466
9G-4876	198
9G-7101	378
9G-8615	206
9H-5604	206
9H-6454	396
9J-0461	220
9J-2759	430
9J-2914	396
9J-3047	396
9J-3139	439
9J-5284	269
9J-7031	396
9J-7964	350
9J-8923	440
9J-8926	►440
	441
9J-9598	437
9L-5125	266
9L-6378	103
9L-6770	116
	118
9L-9068	324
9L-9132	290
9L-9188	67
9M-1503	205
9M-1974	11
	12
	42
	48
	61
	67
	71
	72
	82
	85
	93
	103
	108
	126
	186
	191
	230
9M-2904	68
	384
9M-4218	201
9M-4313	226
9M-5733	463
9M-6803	514
9M-7394	396
9M-8406	104
	363
	368
9M-9130	387
9M-9162	479
9M-9812	187
9N-0869	65
	126
	139
	142
	302
9N-1756	225
9N-1995	493
9N-4449	424
9N-4450	424
9N-5253	137
9P-1360	272
9P-3066	112
9P-5558	205
9P-7072	193
9P-7121	112
9P-8899	269
9P-9150	324
9P-9388	490
9R-2640	421
9R-2672	234
	247
	253
	259
9R-2821	368
9R-3572	421
	433
9S-0201	528
9S-1240	120
9S-1305	296
9S-1310	485
9S-1350	380
9S-3581	277
9S-3582	277
9S-4167	103
	106
9S-4182	41
	205
9S-4183	41
	201
	206
9S-4185	198
	220
9S-4188	206
	220
9S-4190	206
	232
	311
9S-4191	29
	106
	153
	197
	206
	213
	225
	226
	323
9S-5183	262
	264
9S-5187	262
	264
	516
9S-8001	226
	230
9S-8002	22
	27
	29
	103
	306
	317
	393
	415
9S-8003	22
	29
	85
9S-8004	22
	27
	29
	108
	226
	317
	399
	400
9S-8005	22
	29
	50
9S-8006	18
	22
	27
	29
	48
	85
	313
	401
	403
	405
	407
	409
	411
	413
9S-8008	85
	232
	317
9S-8010	285
9S-8752	399
	400
	401
9S-9334	20
	22
	27
	29
9T-0094	354
9T-0657	418
9T-0704	405
	409
9T-0874	407
9T-2378	327
9T-2559	319
9T-2560	319
9T-2581	319
9T-2582	319
9T-2584	319
9T-2714	352
9T-2715	352
9T-2716	►352
	429
9T-3264	396
9T-3729	403
	405
	407
	409
9T-3853	333
9T-3928	306
	317
9T-4518	411
	413
9T-5900	437
9T-6302	356
9T-6694	418
9T-6695	399
	400
	401
	►418
9T-6863	352

► **PRIMARY REFERENCE**

PART NUMBER INDEX

Part	Page
9T-7045	346
9T-7512	396
9T-8578	358
9T-8693	300
	▶327
9U-8057	436
9U-8069	226
9U-8079	433
	▶436
9U-8263	481
9U-8506	433
9U-8909	430
9U-9088	386
9V-3043	536
9V-6754	536
9V-7943	536
9W-0099	437
9W-0844	446
	472
9W-0852	446
	472
	499
	503
9W-1441	151
9W-1442	151
9W-1446	151
9W-1464	298
9W-1571	289
9W-2853	289
9W-3937	289
9W-3939	289
9W-4274	289
9W-6102	289
9W-6103	289
9W-6381	433
9W-6582	45
9W-6584	45
9W-7216	279
	280
	283
9W-7481	293
9W-7925	293
9W-7926	293
9W-9165	427
9W-9930	45
9W-9996	390
9X-0194	187
	543
9X-0199	174
	314
9X-0261	106
9X-0262	153
9X-1054	457
9X-1386	164
9X-1484	114
9X-1813	121
	139
	142
	159
	160
	161
	165
	166
	175
	177
	179
	180
	193
	449
	453
	516
9X-1878	550
9X-2027	217
	223
	290
	293
9X-2038	300
9X-2040	450
	461
	466
	468
	493
	507
	510
9X-2041	341
	492
9X-2042	341
	500
	504
9X-2043	465
9X-2044	188
	461
	484
	487
	507
9X-2045	300
	302
	454
	463
	465
	466
	468
	521
	547
9X-2085	374
9X-2092	528
9X-2098	37
9X-2125	534
9X-2185	474
9X-2205	112
9X-2305	74
9X-2480	309
9X-2646	95
9X-2647	95
9X-2857	321
9X-3294	▶137
9X-3401	174
	509
9X-3404	122
9X-3463	144
	145
	146
9X-4244	144
	145
	146
9X-4271	172
9X-4391	302
9X-4580	269
9X-4609	201
9X-4821	172
9X-4824	172
9X-4825	172
9X-5615	302
9X-5699	122
	124
9X-6165	450
	516
9X-6199	550
9X-6340	551
9X-6578	308
9X-6772	474
9X-6932	183
9X-7202	231
9X-7269	348
9X-7345	188
9X-7378	455
	479
9X-7381	485
9X-7382	485
9X-7383	479
	485
9X-7384	479
9X-7385	455
	479
9X-7411	198
9X-7557	58
9X-7680	393
	415
9X-7712	20
	22
	27
	29
9X-7719	220
9X-8250	380
	485
	487
9X-8256	122
	186
	298
	309
	483
	487
9X-8257	112
	198
	242
	247
	250
	266
	275
	276
	339
	341
	343
9X-8268	285
	520
9X-8399	350
9X-8600	112
9X-8916	17
9X-8918	476
9X-8979	393
9Y-8315	99
	493

0

Part	Page
003-9835	186
004-1964	335
005-4834	289
009-3215	104
011-5224	82
012-0380	179
013-8289	442
027-3924	537
030-2135	289
030-7571	528
030-9612	116
	118
031-0214	403
	405
	407
	409
	411
	413
	514
031-1119	89
031-2716	153
031-5085	403
	407
032-1267	193
032-1268	193
033-6032	231
033-6043	415
033-6044	327
033-8248	365
034-3679	200
035-3360	206
036-9823	172
037-4426	470
	474
037-4838	446
	472
052-0572	193
053-2294	272
061-9455	13
064-3843	218
067-2551	376
081-3801	317
083-9527	499
	503
085-7356	106
085-7539	333
087-4772	306
089-8249	421
	431
095-0843	522
	525
095-0878	476
095-0913	187
095-0916	314
095-1207	226
096-4885	247
096-5866	183
096-7033	361
099-3600	237
099-3649	80
	81

▶ **PRIMARY REFERENCE**

PART NUMBER INDEX

Part	Page
1	
100-3224	477
100-3320	181
100-3563	405
	409
	411
	413
100-3564	405
	409
	411
	413
100-3566	405
	409
	411
	413
100-3567	405
	409
	411
	413
100-5179	477
100-6551	41
101-0003	539
101-0852	132
101-2865	528
101-2867	514
101-3128	126
101-4194	539
101-4195	539
101-9754	226
102-0341	470
	474
102-6229	22
	25
102-8801	121
	139
	142
	181
	187
	296
	449
102-8802	112
	115
	121
	139
	141
	142
	146
	147
	151
	164
	165
	167
	174
	175
	177
	179
	180
	181
	183
	187
	193
	231
	314
	446
102-8803	121
	142
	143
	155
	156
	157
	158
	159
	166
	181
	183
	302
	449
	457
	499
	503
	516
	541
102-8804	139
	142
	337
	468
	547
102-8805	78
	121
	131
	187
	446
	449
	466
	472
	491
	500
	503
	504
	509
	516
	543
102-8806	187
	191
	449
	499
	503
	512
	513
	516
102-9478	341
102-9862	150
102-9863	172
103-0213	187
103-2543	122
103-6100	485
103-6262	298
103-8133	151
104-2091	461
	500
104-4746	421
104-4817	421
	431
104-6729	191
104-6730	191
104-6931	396
104-7391	421
104-7423	421
104-7434	421
	431
104-7498	421
105-1725	15
105-1797	181
105-2058	421
105-2145	415
105-9149	187
106-0543	193
106-0669	285
106-0713	198
106-0721	220
106-1607	286
106-1613	286
106-1618	273
106-1625	273
	274
106-1626	273
	274
106-1627	273
	274
106-1628	273
	274
106-1629	273
	274
106-1630	273
	274
106-1642	273
	274
	286
	287
	288
106-4155	151
	183
106-4159	456
106-7124	89
106-7149	172
106-7532	335
106-8186	234
106-8187	234
106-8704	479
106-8715	308
106-9212	230
106-9214	230
107-0713	287
107-0714	287
107-0717	273
107-0719	273
	274
	286
	287
	288
107-1763	198
107-3786	521
107-3881	▶296
	300
107-3888	296
107-4068	1
	▶236
107-4098	▶276
	288
107-4393	479
107-4394	479
107-4395	479
107-4396	479
107-7566	49
107-7694	10
107-7708	15
107-7977	▶116
107-8126	419
108-0720	▶444
	445
108-0800	269
	▶285
108-0801	285
108-0802	276
108-0803	276
108-1138	268
108-2097	191
108-2470	205
108-2471	193
108-2472	206
108-2611	▶286
108-3055	206
108-4086	477
108-4087	477
108-4103	477
108-4430	232
108-5471	466
	468
108-5618	205
108-5619	205
108-5620	205
108-5621	205
108-5622	205
108-5623	205
108-5794	421
108-6523	226
108-6587	223
108-7039	▶204
	212
108-7808	171
108-8250	193
108-8268	421
108-8296	217
109-0367	266
109-0377	266
109-0958	421
109-0959	419
109-1633	95
	485
109-1634	95
	485
109-1645	183
	449
109-3207	58
109-3478	266
109-3590	463
109-3968	230
109-3969	230
109-5008	483

▶ **PRIMARY REFERENCE**

PART NUMBER INDEX

Part	Page
109-6406	444
109-6407	470
109-6967	89
109-7194	163
109-7195	163
110-1118	543
110-1211	220
110-2028	298
110-2049	191
110-2842	232
110-2860	191
110-2976	▶273
	286
	287
	288
110-2977	▶286
110-2978	▶287
	288
110-2980	▶287
110-3160	243
110-3162	243
	244
110-3166	244
110-3269	▶348
	419
110-3270	348
110-3271	348
110-3362	272
110-3787	346
110-4664	▶305
	308
110-4771	356
110-5217	421
110-5226	419
	▶421
110-5227	431
110-5228	431
110-5229	431
110-5230	419
	▶431
110-5602	483
110-5692	269
110-6109	444
	474
	499
	500
	503
110-6113	▶361
	419
110-6122	▶268
	288
110-6124	268
110-6393	479
110-6501	346
110-6844	187
	302
110-6845	187
110-6846	302
110-6848	302
110-6969	250
110-7563	▶147
	150
110-7618	12
110-7882	298
110-9734	226
111-2416	181
111-4643	251
	253
	256
	259
111-7198	446
111-7346	319
	▶326
111-8287	319
111-8288	326
111-8289	326
111-8642	298
111-8950	298
111-9251	504
111-9867	343
111-9870	339
	343
111-9871	339
	343
111-9873	339
	343
111-9876	339
	343
111-9879	339
	343
111-9886	343
111-9887	339
	343
111-9888	339
	343
111-9890	339
	343
111-9891	339
	343
111-9892	339
	343
111-9895	339
111-9899	341
111-9900	341
112-1869	339
112-2660	296
112-4368	384
112-4740	298
112-4757	298
112-4820	▶298
	300
112-5056	204
112-5057	204
112-5282	225
112-6142	346
112-6174	547
112-6646	186
112-7454	361
112-7455	361
112-7456	361
112-7457	361
112-9327	326
113-0580	183
113-4417	319
113-4630	187
113-6069	40
113-6087	4
	▶15
113-8248	363
113-8249	363
113-9212	205
113-9309	370
114-0358	439
	440
114-0359	439
	440
114-0931	151
114-2312	200
114-2687	72
114-3469	455
114-3907	516
114-5157	327
114-5333	479
114-5671	424
114-5672	424
114-6407	516
115-1153	339
	341
	343
115-1748	499
	503
115-3523	▶354
	427
115-3524	▶350
	419
	420
115-4072	40
115-4210	2
	3
	▶56
115-4219	40
115-4472	419
	420
	▶427
115-4473	427
115-4474	427
115-4522	427
115-4561	390
115-4564	▶386
	419
	420
115-4581	390
115-4591	390
115-4592	390
115-4594	419
	420
	▶433
115-4595	433
115-8218	350
115-8219	350
115-8225	350
116-0118	183
116-3083	354
116-3084	354
116-3085	354
116-3089	354
116-4556	2
	3
	▶38
116-6203	499
	503
116-7964	499
	503
117-0615	286
	287
117-0616	286
	287
117-0982	401
117-1385	153
	162
117-2311	187
	463
117-2983	225
117-3437	85
117-3643	4
	▶76
117-4074	2
	3
	▶67
117-4491	527
117-4492	443
117-4506	522
117-5604	237
117-7296	316
117-7316	333
117-7773	121
117-8131	492
117-9988	510
118-0275	111
118-0639	296
118-2228	401
118-3619	33
118-3731	225
118-4977	519
118-5194	446
118-5195	446
118-6345	▶275
	288
118-7226	121
	▶166
118-7284	2
	3
	▶138
118-9602	266
118-9674	339
	341
	343
119-2921	56
119-2942	72
119-3025	85
119-3662	509
119-4142	▶162
119-6110	326
120-4394	306
	317
120-8971	4
	▶65
121-0483	341
121-0484	341
121-0487	341
121-0792	437
121-0824	▶283
	284
121-0825	283
121-0827	▶279
	282
121-0828	279
121-0830	271
	▶280
121-0831	280

▶ **PRIMARY REFERENCE**

PART NUMBER INDEX

Part	Page
121-0834	279
	280
	283
121-1257	279
	280
	283
121-2844	183
122-3771	324
122-4705	243
	244
122-5053	111
	▶114
122-7127	499
	503
122-9918	346
122-9921	346
123-0304	499
	503
123-0306	499
	503
123-0858	52
123-2017	306
123-3294	313
123-3299	319
123-4950	500
	504
123-6449	449
123-7544	335
123-7547	335
123-7556	306
123-7559	306
123-7560	306
123-7582	317
123-7583	317
123-8395	▶51
	456
123-8630	378
123-9294	499
	503
124-0174	122
124-0364	60
124-0378	124
124-0686	137
124-0687	136
124-5233	421
124-5234	421
124-5235	421
124-5240	421
124-5741	421
124-6092	392
124-6657	193
124-7790	51
124-7791	51
124-7792	51
124-8333	378
124-9672	427
125-1302	151
	▶177
125-1993	60
125-3299	150
125-4172	▶284
	288
125-4173	▶282
	288
125-7874	453
	506
125-7875	187
125-8175	466
	468
	547
126-0747	308
	▶323
126-0748	323
126-1347	277
126-1403	321
126-1477	306
	316
126-1638	317
126-1661	317
126-1767	509
126-1774	183
126-2368	118
126-3695	387
126-3696	387
126-3698	387
126-3699	387
126-3701	302
126-5466	82
126-5476	403
	405
	407
	409
	411
	413
126-5796	403
	405
	407
	409
	411
	413
126-5869	82
126-5984	403
	405
	407
	409
	411
	413
126-5985	403
	405
	407
	409
	411
	413
126-6733	339
126-8472	457
126-8928	245
126-9092	317
127-0901	59
	▶60
127-1596	296
127-1597	296
127-1598	300
127-1599	300
127-2170	461
127-5447	382
127-5483	151
	183
127-5484	151
	183
127-5485	151
127-5486	183
127-6424	472
127-6509	547
127-8158	147
127-8732	253
	256
	257
128-2660	298
128-2776	405
	409
	411
	413
128-2906	60
128-2907	60
128-2908	60
128-2909	60
128-3473	111
128-3883	42
128-7988	481
128-8557	103
128-9571	35
128-9572	35
129-1163	▶17
	18
129-1164	▶18
	19
129-1165	4
	▶19
129-1170	85
129-1262	218
129-1336	472
129-1368	472
129-1371	472
129-1373	472
129-1374	472
129-1376	472
129-1378	472
129-2380	218
129-3178	472
	483
129-3180	262
	264
129-3737	449
130-1977	384
130-3676	551
130-5300	446
130-7806	321
130-9192	384
130-9764	236
130-9811	153
130-9984	200
131-0167	213
131-0447	298
131-1845	111
131-4242	476
131-5167	476
131-8742	279
	280
	283
131-9352	279
	280
	283
132-0338	443
132-1222	116
	118
132-1223	116
	118
132-1224	116
	118
132-1225	116
	118
132-1228	116
	118
132-1229	116
	118
132-1230	116
	118
132-1334	288
132-1336	288
132-1337	▶288
132-1448	136
	137
132-2156	▶118
	120
132-3332	474
132-3844	2
	3
	▶11
132-5246	49
132-5303	413
132-5792	449
	507
132-7419	298
132-7450	298
132-8876	197
	201
132-9455	312
132-9899	324
132-9900	324
133-1222	213
133-1279	197
133-2199	197
133-2249	337
133-3234	466
	468
133-3715	58
133-3742	4
	▶24
133-4995	24
133-5055	4
	▶42
133-5545	332
133-6379	61
133-6517	136
	137
133-6934	378
133-7023	55
133-8739	319
133-9123	466
	468
133-9399	472
133-9405	499
	500
	503
	504
134-1251	324
134-4126	132
134-4483	25
134-6775	419
	▶426

▶ **PRIMARY REFERENCE**

PART NUMBER INDEX

Part	Page
134-9602	470
135-2172	187
135-2969	4
	▶61
135-5001	237
135-5499	522
135-5970	49
135-7393	346
135-9795	▶441
135-9819	66
136-0812	82
136-0823	13
136-1543	497
136-1544	443
136-1595	289
136-1953	34
136-4183	40
136-8423	393
136-8888	2
	3
	▶13
137-5524	313
137-5541	103
137-6603	232
137-6715	22
	25
137-6717	62
137-6718	25
137-8165	512
	513
137-8752	163
137-8793	311
137-8794	311
137-9629	365
138-1645	314
138-3252	24
138-4086	206
138-7033	▶390
	419
	420
138-7198	62
138-8401	62
138-8402	62
138-8403	62
138-9868	62
139-1537	396
139-3526	13
139-4081	▶43
	61
139-4084	43
139-9476	43
140-1320	493
	510
140-2964	226
140-6188	25
140-9670	22
	25
141-0247	319
141-0248	319
141-0249	319
141-0250	319
141-0251	319
141-0252	319
141-3983	183
141-4976	187
141-7903	510
141-8275	106
141-9784	472
142-1229	419
	420
	▶430
142-2769	302
142-3953	47
142-6926	474
142-8858	500
	504
142-9425	321
142-9426	321
142-9427	321
142-9429	321
142-9430	321
142-9431	321
142-9432	321
142-9433	321
142-9434	321
142-9435	321
142-9436	321
142-9437	321
142-9438	321
142-9439	321
142-9440	321
143-1288	522
	525
143-3148	430
143-4926	2
	3
	▶12
144-0195	547
144-0331	298
144-0367	95
144-0761	205
144-0832	358
144-1102	9
144-3472	92
144-4277	405
	409
	411
	413
144-7339	111
145-0162	15
145-0164	15
145-0168	15
145-0170	15
145-0326	539
	541
145-0803	421
145-0804	421
145-0823	251
	253
145-0834	335
145-0838	335
145-0905	306
145-0909	316
145-0911	316
145-1077	▶316
	317
145-1144	224
	225
	338
145-1833	316
145-2415	172
145-2901	55
145-4115	515
	516
145-4509	481
145-4926	186
145-5157	2
	3
	▶171
145-7028	▶167
	183
	396
145-7376	62
145-7385	62
145-7390	25
146-6695	103
146-6696	103
147-5088	85
147-8211	25
147-8214	22
	25
147-8218	20
147-8220	22
	25
148-1928	200
148-2903	58
148-8313	104
	122
148-8318	106
148-8319	365
148-8326	365
	378
148-8327	200
	363
	368
	378
	382
	388
148-8333	378
148-8335	200
	378
148-8339	308
148-8340	361
148-8341	370
	372
148-8344	363
	368
	388
148-8347	308
	370
	378
148-8355	378
148-8357	379
148-8359	308
148-8360	201
	308
148-8361	365
	379
148-8363	365
148-8364	361
148-8365	374
148-8367	365
	379
148-8370	363
148-8375	363
148-8378	365
148-8390	379
148-8392	308
148-8408	201
148-8409	232
148-8410	232
148-8414	379
148-8415	365
148-8417	376
148-8418	384
148-8422	379
148-8430	308
148-8433	379
148-8435	376
148-8439	376
148-8449	308
	368
148-8451	368
	376
148-8457	374
149-3137	300
149-5240	58
149-6309	390
149-9818	187
150-1999	82
150-3024	104
150-3026	200
150-3035	368
150-4046	104
	379
150-4047	104
	201
	309
150-4086	484
150-4105	58
150-4621	49
150-6766	142
150-7938	226
151-2898	55
151-2900	55
151-5803	298
151-9275	298
152-3414	12
152-3952	85
152-6649	396
152-8043	▶274
	286
152-8070	273
	274
153-1794	2
	3
	▶92
153-1832	2
	3
	▶14
153-2783	335
153-4247	226
153-4906	111
153-5043	167
	168
153-5700	124
153-6248	378
153-8467	62
153-8470	62
153-8920	181

▶ **PRIMARY REFERENCE**

PART NUMBER INDEX

Part	Page
153-9301	500
	504
154-5629	465
154-7443	▶130
	169
	499
	503
154-8016	▶58
	109
154-8025	20
154-9024	72
	82
155-0576	139
155-2255	181
	187
	302
	499
	503
155-2256	499
155-2259	506
155-2260	121
	160
	161
	181
	183
	187
	302
	449
	499
	503
155-2261	168
	178
155-2262	187
155-2264	187
155-2265	121
	122
	131
	191
	449
	453
	499
	503
	506
155-2269	183
155-2270	121
	122
	142
	151
	168
	178
	181
	183
	187
	191
	446
	449
	457
	472
	499
	503
	516
155-2271	121
	122
	139
	142
	187
155-2274	121
	187
	302
	449
	499
	503
	516
155-3504	379
155-4773	61
	▶62
155-5322	429
	▶437
155-5745	197
155-7703	1
	▶247
155-7704	▶251
	419
155-7705	1
	▶240
155-7706	1
	▶237
155-7707	1
	▶112
155-7713	112
155-7714	112
155-7725	237
155-7737	240
155-7738	237
155-7739	237
155-7742	240
155-7769	237
155-7772	237
155-7775	▶245
155-7776	245
155-7785	237
155-7803	251
	253
155-7804	▶253
	420
155-7818	251
155-7819	253
155-9282	251
155-9283	253
155-9284	251
155-9285	253
155-9286	251
	253
155-9287	251
155-9288	253
155-9289	251
155-9290	253
155-9291	251
	253
155-9301	251
	253
	256
	259
155-9302	251
	253
	256
	259
155-9320	247
	1
	▶259
155-9321	247
155-9323	1
	▶259
155-9329	256
	259
155-9330	256
	259
155-9331	256
	259
155-9332	256
	259
155-9366	▶242
155-9504	20
156-4406	206
156-4449	470
156-4701	274
156-5545	443
156-5970	231
	337
156-6155	129
	139
156-6175	181
156-8378	▶151
	187
156-8911	▶449
	453
156-8915	448
	▶492
156-8916	449
	▶544
156-8948	▶339
	359
156-8951	453
	▶499
156-9510	▶359
157-0670	82
157-3458	133
	▶183
157-3459	▶150
157-3460	▶124
157-3463	▶148
157-4819	1
	▶495
157-8371	48
158-2734	298
158-2735	298
158-6072	102
158-6632	▶174
	463
	493
159-0288	110
159-0300	20
159-1810	2
	3
	▶70
159-1814	2
	3
	▶82
159-2565	3
	▶44
159-2572	2
	3
	▶97
159-2950	▶530
	533
159-3537	138
159-9257	499
	503
159-9322	142
	183
159-9854	321
160-0054	▶356
	419
160-0055	356
160-0060	356
160-0305	356
160-1436	300
160-1437	300
160-2179	121
160-2182	121
160-2183	121
160-2184	121
160-2185	121
160-2443	▶156
	314
160-5691	421
160-6306	427
160-7165	530
	531
	▶539
160-7186	▶531
	533
160-7689	183
160-7690	181
160-8123	153
160-9146	▶131
160-9147	516
160-9149	449
160-9756	272
161-2113	421
161-4459	4
161-5967	476
161-6041	300
161-6149	332
161-6161	332
161-6989	466
161-6990	468
161-7000	449
161-7247	272
161-7249	272
161-7350	272
161-7550	272
161-8420	4
	▶49
161-9289	532
162-5357	▶311
	324
162-5358	311
162-6966	200
162-8068	2
	3
	▶50
162-9612	111
163-0152	449
	▶510
163-0761	359
	▶363
163-1036	▶472
	474
163-1135	541

▶ **PRIMARY REFERENCE**

PART NUMBER INDEX

Part	Page
163-1139	541
163-1146	539
163-1387	39
163-2661	536
163-3270	359
	360
	▶382
164-1234	541
164-1270	541
164-1525	203
164-2108	224
	225
	338
164-3504	▶341
	359
	360
164-3651	183
	397
164-4058	309
164-4146	514
164-4531	443
164-4883	496
	498
164-5551	309
164-5561	309
164-5567	309
	365
	379
164-5590	201
164-5591	108
164-5624	374
164-6709	305
164-6864	363
	388
164-7556	144
	145
	146
164-7577	121
	▶175
164-7908	365
164-9136	449
164-9140	506
	▶507
164-9144	535
164-9145	535
164-9150	507
165-0222	499
165-0225	499
165-1750	274
165-1751	274
165-1752	274
165-1753	274
165-1768	274
165-2790	▶503
	506
165-3503	151
165-3504	151
165-3505	151
165-4149	503
165-4150	503
165-4157	151
165-4481	▶343
	359
165-4879	463
	493
165-4932	308
165-5655	141
	142
165-5674	150
165-6634	87
	▶155
165-6968	319
165-8079	197
166-2103	544
	▶545
166-2104	544
	▶546
166-2905	48
166-3325	339
	343
166-3603	341
166-6082	▶300
	302
166-6269	133
	▶134
166-6358	55
166-6781	539
166-6928	▶491
	499
	503
166-7409	319
166-7410	319
166-9147	396
166-9165	396
166-9171	396
167-0138	151
	▶178
167-1451	449
	▶466
167-1452	466
167-1453	449
	▶468
167-1454	468
167-1455	448
	▶543
167-1457	448
	▶515
167-1458	▶445
	453
167-1460	454
	▶516
167-1463	▶459
167-1464	▶460
167-1465	▶474
167-1466	▶519
167-1530	500
	504
167-2195	346
167-2200	348
	350
167-2201	352
	356
167-2304	346
167-2307	348
	350
167-2312	352
	356
167-2457	346
167-2459	348
	350
167-2463	352
	356
167-6768	403
	407
	413
167-6805	317
167-7270	361
	551
167-7751	296
167-8121	31
167-8361	14
167-9524	224
	225
	338
168-2197	393
168-2198	393
168-2203	393
168-2206	393
168-2210	393
	▶415
168-3379	395
168-3381	395
168-3382	395
168-3384	395
168-3504	393
168-7226	49
168-7317	393
168-7319	393
168-7321	395
168-8929	449
169-0651	496
169-0697	498
169-1026	525
169-2876	187
	463
169-3234	133
169-3300	153
	▶163
169-4019	▶358
	378
169-4142	359
	▶387
169-4912	▶59
169-5862	200
169-6187	363
	387
	388
169-6189	363
	387
	388
169-6192	363
169-6197	363
169-7380	539
	541
169-7404	368
169-7409	368
169-7434	457
169-7435	457
169-9064	378
169-9108	461
	507
170-1112	443
170-1114	443
170-1115	443
170-2062	449
170-2069	544
170-2070	544
170-2084	449
	▶484
170-2086	449
	▶547
170-3273	2
	3
	▶93
170-3274	93
170-3304	4
	▶108
170-6623	466
170-6624	468
170-6625	466
170-7491	200
170-8590	514
171-1230	522
	525
171-2133	492
171-2210	151
171-5349	164
	165
	193
171-5990	319
171-6682	522
	525
171-6723	309
	382
171-9587	515
171-9592	▶487
	506
171-9593	445
	▶485
171-9601	484
171-9603	484
171-9607	463
171-9610	461
171-9612	461
171-9616	461
171-9617	463
171-9618	461
172-1681	450
172-2381	466
172-2382	468
172-2383	466
	468
172-2384	468
172-2385	466
172-2391	337
172-2392	312
	▶337
172-2416	522
	525
172-6031	▶139
172-6280	14
172-6284	97
172-6298	97
172-6650	387
	388
172-6653	387
	388
172-8212	499
	503
172-8537	363

▶ **PRIMARY REFERENCE**

PART NUMBER INDEX

Part	Page
172-8538	363
172-8539	363
172-8540	363
172-8541	363
172-8542	363
172-9389	▶132
	170
	302
172-9872	▶266
	288
172-9999	151
173-0887	226
173-1028	▶443
	522
	525
173-1201	141
	142
173-1437	200
173-1566	187
173-1614	151
173-1619	551
173-2052	497
173-2472	226
173-3082	524
173-3083	527
173-3660	266
173-4282	200
173-5549	62
173-5787	530
	531
	532
173-6530	▶512
173-6532	▶513
173-6772	▶521
173-6777	468
173-6778	466
173-6807	466
173-6809	516
173-7035	530
	531
	532
173-8641	▶360
173-8651	1
	▶288
173-9164	484
173-9683	348
	350
174-0099	253
	256
174-0100	253
	256
174-0101	253
174-0102	253
174-0103	253
	256
174-0104	253
	256
174-0105	253
	256
174-0106	253
174-0107	253
174-0108	253
	256
174-0109	253
	256
174-0110	253
	256
174-1494	472
174-1504	446
174-1505	446
174-2231	▶476
	539
174-2237	476
174-4485	359
	▶396
174-4909	311
	▶338
174-7599	106
174-7876	121
174-9994	393
175-0070	446
175-1367	12
175-2296	▶218
	220
175-2324	▶179
	186
175-2539	457
175-2540	445
	▶457
175-3168	68
175-3236	108
175-3678	512
	513
175-3759	547
175-3760	547
175-3761	547
175-3762	468
175-3950	499
	503
175-4166	93
175-4291	144
	145
	146
175-4292	144
	145
	499
175-4972	▶312
	324
175-6579	499
	503
175-6580	499
	503
175-6956	449
	▶461
175-7058	151
175-7223	520
175-7225	▶520
175-7227	520
175-7407	396
175-7564	112
175-7643	468
175-7651	516
175-7654	449
	▶470
175-7656	485
175-7657	485
175-7900	346
175-7902	348
176-0238	187
176-0259	324
176-1485	500
	503
176-1852	382
176-1853	382
176-7453	520
176-7456	449
176-9237	183
177-1570	237
	251
	253
	256
	259
177-1860	514
177-1862	514
177-1863	522
	525
177-3382	200
177-3846	461
177-3847	461
177-3848	487
177-3851	449
	▶482
177-3852	449
	▶535
177-3860	448
	▶463
177-4229	341
177-4230	341
177-4752	109
177-4930	497
177-4935	▶514
	522
	525
177-4937	524
	527
177-6858	472
177-7185	200
177-7186	200
178-0266	463
178-0568	▶197
	200
178-0603	▶522
	524
178-0604	▶496
	522
178-0605	496
	▶497
	498
178-0606	▶524
	531
	532
178-0607	514
178-0608	514
178-0609	514
178-6172	131
178-6342	▶109
	110
178-6343	4
	▶110
178-6690	212
	▶217
178-6854	198
178-7907	497
178-8375	449
178-8647	382
178-8844	461
	507
178-9008	449
178-9009	449
178-9013	461
	507
178-9016	461
	507
178-9018	▶94
	449
178-9041	213
178-9220	200
179-0126	273
179-0589	457
179-6707	198
179-7001	▶64
	108
179-7002	64
179-7004	111
179-9348	106
179-9355	186
180-1295	461
180-1297	461
	507
180-1298	492
	493
180-1413	319
180-1415	319
180-4165	206
180-4523	187
180-4524	187
180-4560	▶429
180-4561	▶384
	429
180-5317	474
180-5383	507
180-5559	524
180-5560	524
180-6213	393
180-7304	▶525
	527
180-7305	▶498
	525
180-7341	108
	▶111
180-9339	159
180-9340	160
	161
183-3648	524
183-4365	62
183-4599	384
183-4600	384
183-4690	468
183-5106	▶455
	456
183-6854	97
183-6856	97
183-7264	392
183-8395	333
183-8398	333
183-8410	330
184-0870	453
	506
	▶509
184-2202	104

▶ **PRIMARY REFERENCE**

PART NUMBER INDEX

Part	Page
184-2298	522
	525
184-2299	522
	525
184-2300	498
184-2472	127
184-3450	507
184-3451	516
184-3452	516
184-6011	▶527
	530
184-7773	66
185-0002	309
185-0295	393
185-0296	393
185-2666	262
185-2667	262
185-3241	108
185-3365	374
185-3503	324
185-6684	200
185-7141	131
186-2695	91
186-2696	91
186-2741	512
	513
186-3525	97
186-3733	504
186-3735	78
	112
	115
	121
	139
	141
	142
	146
	151
	155
	157
	158
	164
	175
	177
	179
	193
	231
	314
	449
	453
	466
	479
	499
	500
	503
	504
	512
	516
186-3736	453
	506
186-5107	541
186-5814	▶103
	104
186-6189	485
186-9980	243
186-9981	244
187-1513	49
187-1602	4
	▶101
187-1603	101
	▶102
187-3547	365
187-4807	91
187-6092	474
187-7706	44
187-8001	306
	317
187-8595	76
187-9008	365
187-9194	396
188-0501	220
188-0502	212
	▶220
188-1845	492
188-1846	461
188-2003	212
	▶222
188-2009	▶193
	222
188-3126	89
188-3757	423
188-6126	72
188-7067	232
188-7068	232
188-7069	232
188-7303	234
188-7304	1
	▶234
188-7726	2
	3
	▶126
188-7789	335
188-7790	335
188-7791	335
188-7792	335
188-7793	335
188-7794	335
188-7795	335
188-7796	335
188-7797	335
188-7798	335
188-7799	335
188-7800	335
188-8846	463
188-8954	81
189-1839	337
189-2194	47
189-2203	▶35
	36
189-2205	35
189-2207	55
189-2220	2
	3
	▶55
189-2221	2
	3
	▶9
189-2222	2
	3
	▶47
189-2223	2
	3
	▶36
189-2224	5
	▶120
189-2227	2
	3
	▶31
189-2229	5
	▶456
189-2233	31
189-3158	151
189-4616	▶1
189-4619	1
189-4620	1
	▶212
189-4622	1
	▶5
189-4623	1
	▶359
189-4624	1
	▶133
189-5746	▶164
	183
189-8772	97
189-8904	78
190-0801	120
190-1546	▶272
	288
190-1547	272
190-2938	551
190-5328	419
	▶423
190-5360	87
190-6507	393
190-7614	187
190-8609	285
191-0083	2
	3
	▶186
191-0938	289
191-0939	293
191-0940	289
191-1422	365
191-1734	234
191-2111	82
191-2933	532
	▶541
191-4479	1
	▶2
191-4481	▶3
	59
	77
191-4482	2
	3
	▶4
191-4824	1
	▶448
191-4916	190
191-4922	198
191-4923	198
191-4931	▶198
	212
191-5215	6
191-6587	153
	▶168
191-9500	1
	▶243
191-9501	▶244
191-9529	1
	▶104
191-9530	▶200
	212
191-9531	359
	▶378
191-9532	▶308
	359
191-9536	▶313
	359
192-2545	448
	▶465
192-3195	212
	▶550
192-4089	234
192-4428	87
192-4429	87
192-7054	512
	513
192-7470	393
192-7752	541
192-7755	541
192-7760	541
192-7767	541
192-7783	541
192-7787	541
192-7790	541
192-7795	541
192-7799	541
192-7805	541
192-7810	541
192-7812	541
192-7820	541
192-7822	541
192-7846	541
192-7848	541
192-9081	▶121
	133
192-9082	▶187
	453
	506
193-0205	95
193-0217	300
193-0220	300
193-0542	547
193-0733	289
193-0736	293
193-1033	▶6
	454
193-1036	415
193-1038	▶7
	59
	77
193-2550	▶165
	183
	206
193-3074	424
193-3075	424
193-3812	▶454
193-3849	200
	▶226
193-4119	▶289

▶ **PRIMARY REFERENCE**

PART NUMBER INDEX

Part	Page
	295
193-4120	▶293
	295
193-4577	466
193-4578	468
193-5673	▶302
	453
	506
193-5710	121
193-5712	122
193-6930	495
193-6931	495
193-6939	495
193-6940	495
193-7361	▶190
	212
193-7365	190
193-7366	190
193-7405	289
193-7839	302
193-9237	2
	3
	▶84
193-9238	84
	▶85
193-9239	85
193-9240	85
194-0675	510
194-3309	468
194-3313	466
194-3314	466
194-3315	450
	▶483
194-3333	450
	▶481
194-5226	168
194-5227	168
194-6478	378
194-6479	200
194-6480	200
194-6481	200
194-6482	200
194-6483	200
194-6723	153
	▶159
194-6725	153
	▶160
194-6726	153
	▶161
195-0321	49
195-0644	212
	▶295
195-0652	295
	▶304
195-0681	5
	▶8
195-1040	5
	▶87
195-1041	5
	▶80
195-1042	5
	▶90
195-1043	▶81
195-1045	▶241
195-1047	5
	▶95
195-1048	5
	▶99
195-1049	5
	▶91
195-1117	122
195-1808	308
195-1809	87
	▶89
195-2037	200
195-2139	403
	405
	407
	409
	411
	413
195-2709	234
195-2804	241
195-3649	308
195-3650	308
195-3783	183
195-3985	460
195-6814	78
	80
195-6815	81
195-7336	181
195-7898	87
195-7899	87
195-7900	183
195-8421	519
195-8422	519
195-8430	519
195-9097	378
	▶393
196-0077	2
	3
	▶48
196-0265	102
196-0267	102
196-0268	102
196-1746	384
196-1747	378
196-1791	5
	▶52
196-1814	59
	77
	▶78
196-2178	5
	▶345
196-2244	378
196-3700	483
196-3701	483
196-3773	466
	468
196-3923	378
196-3924	378
196-3927	378
196-3928	378
196-3929	378
196-3930	378
196-3931	378
196-3933	378
196-3935	374
196-3936	374
196-3937	374
196-3938	374
196-3939	376
196-3940	376
196-3941	376
196-3942	376
196-4232	317
	▶321
196-4238	321
196-4251	333
196-4254	333
196-6840	106
196-7074	269
196-7078	269
196-7107	269
196-7108	269
196-7109	269
196-7110	269
196-7553	450
196-8683	317
196-9445	333
196-9519	15
196-9827	308
196-9829	308
196-9836	308
196-9837	308
196-9838	104
197-0823	463
197-0824	463
197-0825	459
197-0826	460
197-2477	361
197-2479	361
197-2709	411
	413
197-2849	393
	▶395
197-2850	393
197-2851	395
197-2852	395
197-2853	395
197-3522	516
197-4816	148
197-4848	90
197-4871	463
197-5799	302
197-6050	516
197-6051	516
197-6440	431
197-6587	148
197-7689	539
197-8164	345
197-9277	49
198-0315	147
198-0316	147
198-1663	87
198-4605	231
198-4607	226
	▶231
198-5180	359
	▶365
198-5351	393
198-5361	393
198-5389	141
	142
198-6217	361
198-7281	▶446
	510
198-7282	446
198-7284	446
198-9004	366
198-9162	193
198-9163	193
198-9219	308
	▶331
198-9220	331
	▶332
198-9452	461
	507
198-9545	308
198-9788	▶288
198-9789	▶269
	288
198-9790	269
198-9791	269
199-1222	200
199-1416	91
199-2387	89
199-2565	95
199-2569	95
199-2579	95
199-2580	95
199-2998	520
199-3003	99
199-3164	2
	3
	▶66
199-3616	314
199-4159	314
199-4787	314
199-4789	314
199-4790	314
199-4801	▶314
	453
	506
199-4856	106
199-4858	106
199-5180	100
199-5973	374
199-5974	374
199-5977	99
	262
199-5995	▶133
	139
199-6103	110
199-6965	▶1
199-7698	457
199-7734	2
	3
	▶153
199-9102	327
199-9612	104
200-0928	80
	81
200-2191	365
200-2645	361
200-2649	421

2

▶ **PRIMARY REFERENCE**

PART NUMBER INDEX

Part	Page
200-2650	421
200-3174	▶532
	533
200-3736	78
	80
	81
200-3745	95
200-3746	95
200-3747	95
200-4495	40
200-6244	256
200-6245	256
200-6248	59
	▶256
200-7836	466
	468
200-8155	308
200-8498	230
200-8575	314
200-8600	124
200-8616	90
200-8644	193
200-8648	193
201-0438	44
201-0694	500
	504
201-0780	415
201-1281	193
201-1282	194
201-2403	70
201-2670	1
	59
201-4033	251
	253
	256
	259
201-4065	238
201-4066	238
	510
201-4230	456
201-4596	104
201-4931	453
	506
201-5001	308
201-5002	308
201-5349	251
	253
	256
	259
201-5381	2
	3
	▶98
201-5382	321
201-5515	5
	▶45
201-7269	▶232
	324
201-7274	295
	▶324
201-8124	206
201-8212	465
201-8316	87
201-8590	54
201-8772	122
201-8803	465
201-9063	3
	▶54
201-9105	306
	▶329
201-9473	256
201-9474	256
201-9475	256
201-9476	256
201-9477	256
201-9478	256
201-9624	300
201-9820	545
	546
201-9821	545
	546
202-0549	213
202-0550	213
202-0551	213
202-0552	213
202-0968	313
	▶319
202-0971	333
202-0972	319
202-1214	327
202-2329	▶306
	317
202-2333	317
	▶333
202-2336	335
202-2337	335
202-2339	333
202-2340	306
202-2341	333
202-2342	330
202-2343	333
202-2344	333
202-2380	206
202-2791	333
202-3197	7
202-3261	72
202-3262	2
	3
	▶72
202-4327	122
202-4364	▶213
	215
202-4365	200
	▶215
202-5293	238
	251
	254
	257
	259
202-6488	213
202-6611	145
	146
202-6612	144
	145
202-6614	144
202-7356	251
	253
202-7357	251
	253
202-7358	251
	253
202-9824	550
203-2062	59
	▶100
203-2296	▶205
	222
203-2897	421
203-3158	95
203-3768	97
203-3769	92
203-4261	150
203-4599	200
203-4600	200
203-4786	193
203-5592	333
203-5856	46
203-5866	2
	3
	▶46
203-6257	459
203-7607	95
203-7703	530
	531
	532
203-7738	545
203-7740	545
203-7741	546
203-7742	546
204-5093	361
204-5341	193
204-5379	366
204-5380	366
204-6365	249
	250
204-6414	448
	▶479
204-7427	100
204-7875	206
204-7876	206
204-8982	191
204-9092	193
204-9096	193
204-9542	356
205-0826	141
	142
205-1271	▶20
	22
	25
205-1272	▶22
205-1273	▶25
	27
	29
205-1274	24
	▶27
205-1275	▶29
205-1320	40
205-1321	4
	▶40
205-1322	10
205-1420	484
205-2344	120
205-3237	59
205-3602	191
	▶230
205-3603	▶191
	222
205-4137	193
205-4138	193
205-4626	191
205-4951	549
205-4952	549
205-4953	549
205-4955	245
205-5311	289
205-5314	293
205-6127	▶249
	271
205-6128	▶250
	271
205-6136	▶271
205-6137	▶271
205-6141	250
205-6148	250
205-6149	250
205-6160	249
205-6162	250
205-6163	250
205-6388	527
205-7095	549
205-7096	549
205-7097	549
205-7098	549
205-7396	193
205-7397	193
205-7398	193
205-8257	142
206-0332	245
206-0334	549
206-1487	314
206-1540	82
206-1559	549
206-2080	193
206-2963	193
206-5162	129
	139
206-5203	141
206-7737	493
206-7738	95
206-7740	95
206-8784	172
206-9265	47
206-9537	▶419
206-9544	▶420
207-1519	171
	▶172
207-5262	▶129
	133
	142
207-5271	142
207-6796	131
208-1210	261
208-1211	261
208-5100	365
208-5417	365
208-9647	296
209-0381	187
209-0594	308
209-1990	89
209-2928	510
209-2929	510
209-4482	543

▶ **PRIMARY REFERENCE**

PART NUMBER INDEX

Part	Page	Part	Page	Part	Page	Part	Page
209-4912	308	213-8760	231	218-2798	461		550
209-6417	131	213-9689	237		507	221-3700	500
209-6761	400	214-0997	237	218-2799	461		504
	▶411	214-0998	237		507	221-5161	485
209-6762	401	214-1606	314	218-2800	461	221-5162	485
	▶413	214-3509	200	218-2801	507	221-5163	485
209-6764	359	214-3927	200	218-3064	454	221-5164	485
	360	214-4558	365		▶506	221-5165	485
	▶401	214-4636	237	218-3137	454	221-5166	485
209-6765	359	214-4659	378		▶493	221-6878	237
	▶400	214-4862	▶157	218-3598	218	221-6879	237
209-9587	▶127		298	218-4304	▶374	221-6880	237
	128	214-4863	▶158		453	221-6887	237
209-9588	126		314		506	222-0297	139
	▶128	214-5012	314	219-4457	39		▶141
210-0691	366	214-5013	314	219-5852	71	222-0345	527
210-3321	12	214-6734	345	219-5853	2	222-0894	191
	37	214-6735	87		3	222-1185	62
210-5559	74	214-6736	87		▶71	222-1186	62
210-6039	▶246	214-6738	87	219-6339	5	222-1214	▶317
210-6040	246	214-6740	98		▶34		359
210-7722	97	214-7303	479	219-6487	▶144	222-1780	549
211-0238	450	214-7536	314		148	222-2773	361
	507	214-7568	64	219-6488	▶145	222-2774	361
211-0686	551	214-9413	461		148	222-3351	217
211-0895	516	214-9414	461	219-7737	543		▶223
211-1835	2	214-9415	461	219-7739	543	222-3352	223
	3	215-1594	285	220-0122	510	222-3800	448
	▶68	215-3015	8	220-0229	453		▶489
211-1913	516	215-7487	366	220-0230	180	222-3870	139
211-1965	339	215-9260	2		516		142
211-2354	516		3	220-0896	359	222-5086	485
211-2355	493		▶106		▶368	222-6234	259
211-4634	341	216-2756	378	220-0897	▶370	222-6235	259
211-5358	541	216-2757	378		419	222-6236	259
211-8504	247	216-2762	378	220-0899	368	222-6237	259
211-8511	419	216-3854	139	220-0900	368	222-6238	259
	420		142	220-0901	368	222-6239	251
211-9294	541	216-5185	547	220-0902	368		257
212-2269	▶74	216-5338	▶224	220-0903	368		259
	75	216-5344	225	220-0904	368	222-6240	251
212-2270	4	216-5586	18	220-0905	368		257
	▶75	216-6033	237	220-0906	370		259
212-3511	237	216-7613	120	220-0907	200	222-6241	256
	256	216-7921	10	220-1322	359	222-6242	256
	259	216-7922	4		▶376	222-6243	256
212-4021	507		▶10	220-1801	454	222-6244	256
212-4022	507	217-0316	345	220-1802	454	222-6245	256
212-4023	492	217-0508	187	220-1961	549	222-6246	253
212-4024	492	217-0733	237	220-1962	549		256
212-4357	461		251	220-2666	343	222-6247	253
212-4893	15		253	220-2667	339		257
213-1053	363		256	220-3257	203	222-6870	237
213-2980	499		259	220-4324	191	222-6871	237
	503	217-1597	269		▶225	222-9887	503
213-2982	187	217-2730	226	220-5946	302	223-0118	485
213-2985	151	217-3819	448	220-6355	129	223-0161	237
213-2986	151		▶453		133	223-0162	237
213-2989	187	217-3841	▶261	220-6366	61	223-0455	461
213-3193	49		453	221-2718	240		499
213-3719	206	217-7933	514		247	223-1395	378
213-5139	499	218-0100	359	221-2719	247	223-2455	500
	503		▶392	221-2720	247		503
213-5161	245	218-0589	78	221-2721	242	223-4127	482
213-6874	302	218-1964	78	221-3697	▶549	223-4128	482

▶ **PRIMARY REFERENCE**

PART NUMBER INDEX

Part	Page
223-4129	482
223-4299	550
223-6303	▶419
223-6517	191
223-7899	124
223-8934	148
223-8935	148
223-8936	148
223-8945	131
224-0687	251
	253
	257
	259
224-0688	251
	253
	257
	259
224-1296	2
	3
	▶135
224-2171	549
224-2172	549
224-2459	454
224-2466	461
224-2467	461
224-2468	461
224-2469	461
224-2470	450
	507
224-2637	2
	3
	▶39
224-2669	450
	466
	468
	507
224-3933	549
224-3937	549
224-5121	53
224-5123	2
	▶53
224-5368	▶203
	212
224-8445	483
224-8446	483
224-8448	483
224-8449	483
224-9041	66
224-9337	70
225-0435	▶262
225-0437	262
225-0439	262
	264
225-0440	262
	264
225-0441	262
225-0442	262
225-0443	262
	264
225-0444	262
225-1271	▶264
225-2860	314
225-3595	264
225-3596	264
225-3597	264
225-3598	264
225-4286	220
225-4315	193
225-4316	193
225-4991	365
225-5075	122
	▶146
225-5219	72
225-5220	72
225-5518	479
225-5927	142
226-0636	487
226-2261	80
226-3406	▶77
226-6113	134
	170
226-6114	134
	▶170
226-9423	298
227-0169	146
227-0756	▶372
	419
	420
227-0758	372
227-1216	181
227-4468	517
227-4469	517
227-5862	317
	▶335
227-7010	▶533
227-7011	▶533
227-7012	▶533
227-7013	▶534
228-0320	▶346
	419
228-0321	346
228-2880	388
228-2881	388
228-2882	388
228-2883	388
228-3554	359
	▶388
228-5288	2
	3
	▶37
228-5786	2
	3
	▶181
228-8337	269
228-8540	▶142
228-9379	521
228-9380	521
228-9381	521
228-9382	521
229-1948	257
	259
229-1949	257
	259
229-2604	510
229-2605	510
229-2606	510
229-2831	▶359
229-2834	257
	259
229-2835	257
	259
229-3336	521
229-3337	521
229-3338	521
229-3339	521
229-3340	521
229-3341	521
229-3342	521
230-0815	372
230-2204	183
230-8334	257
	259
230-8335	257
	259
231-0530	59
	▶180
231-5849	183
231-6530	133
	169
231-6531	133
	▶169
232-3680	551
233-0792	150

▶ **PRIMARY REFERENCE**



© 2003 Caterpillar
All Rights Reserved

Printed in U.S.A.