CATERPILLAR®

SEBC1874-03
October 1998

RUTHZIL TRATOR COMERCIAL DE PEÇAS LTDA 11 97083-6812 ROLANDO CITRANGULO

Parts Manual



See "General Information" for New Parts Manual Features.

D6R Custom Parts Manual Track-Type Tractors

2YN1-Up (Machine)
3ZN1-Up (Machine)
4MN1-Up (Machine)
5LN1-Up (Machine)
6JN1-Up (Machine)
7KN1-Up (Machine)
8LN1-Up (Machine)
9PN1-Up (Machine)
08Z93150-99999 (Engine)
6NC1-Up (Engine)
1GY1-Up (Transmission)

Powered By 3306 Engine

DLR TAR00475
126743

Product and Dealer Information

Note: For product identification plate locations, see the section "Product Identification Information" in the Operation and Maintenance Manual.

Delivery Date: _____

Product Information

Model: DGR

Product Identification Number: 9PN01353

Engine Serial Number: 6NC15969

Transmission Serial Number: _____

Generator Serial Number: N/A

Attachment Serial Numbers: _____

Attachment Information: 6S LGP 6YP00246 NKK 108 3973

Customer Equipment Number: _____

Dealer Equipment Number: _____

Dealer Information

Name: _____ Branch: _____

Address: _____

_____

_____

	Dealer Contact	Phone Number	Hours
Sales:			
Parts:			
Service:			

TABLE OF CONTENTS

Name	Page
GENERAL INFORMATION	A4
REPAIR ALTERNATIVES	A7
SUPPLEMENTAL COOLANT ADDITIVES	A8
MAINTENANCE PARTS	A9
INDEX	A11
MACHINE ARRANGEMENT	1
DISPOSAL AR	1
MODIFICATION AR	6
ENGINE ARRANGEMENT	7
ENGINE AR-CUSTOM	7
ENGINE AR	10
BASIC ENGINE	11
CAMSHAFT GP	11
COVER GP-CYLINDER BLOCK	12
COVER GP-FRONT HOUSING	13
COVER GP-VALVE MECHANISM	14
CRANKSHAFT GP	15
CYLINDER BLOCK AS	16
CYLINDER BLOCK GP	18
CYLINDER HEAD GP	20
DAMPER GP	24
FAN SPEED INCREASE AR	25
FASTENER GP-CYLINDER HEAD	26
FASTENER GP-FRONT HOUSING	27
FASTENER GP-OIL PAN	28
FLYWHEEL GP	29
GEAR GP-FRONT	30
GEAR GP-REAR	31
HOUSING GP-FLYWHEEL	32
HOUSING GP-FRONT	34
LIFTING GP-ENGINE	35
PAN GP-OIL	36
PISTON & ROD GP	37
PULLEY GP-CRANKSHAFT	38
SEAL GP-CRANKSHAFT	39
SUPPORT GP-ENGINE	40
TRUNNION GP-ENGINE	41
V-BELT SET	42
VALVE MECHANISM GP	43
LUBRICATION SYSTEM	45
BASE GP-OIL FILTER	45
BREATHER GP	47
FILLER GP-ENGINE OIL	48
GAUGE GP-OIL LEVEL (DIPSTICK)	49
LINES GP-ENGINE OIL	50
LINES GP-TURBOCHARGER OIL	52
OIL CHANGE GP-HIGH SPEED	56
PRELUBE CHG AR	60
PRELUBE AR-ENGINE	62
PUMP GP-ENGINE OIL	64
COOLING SYSTEM	67
COOLING AR-HYDRAULIC OIL	67
COOLING AR	68
COOLER GP-FLTR BASE & ENG OIL	70
COOLER GP-TRANSMISSION OIL	73
FAN AR-EJECTOR	74
FAN AR-VARIABLE	76
LINES GP-HYDRAULIC OIL COOLER	78
LINES GP-TURBOCHARGER WATER	79
LINES GP-WATER	80
PUMP GP-WATER	84
RADIATOR AR-HI-AMBIENT	90
RADIATOR AR-TRASH	91
RADIATOR GP	92
TANK GP-COOLANT	96
TANK GP-WATER	98
AIR INLET AND EXHAUST SYSTEM	100
AIR CLEANER GP	100
CARTRIDGE GP-TURBOCHARGER	102
DUST EJECTOR GP	103
FASTENER GP-EXHAUST MANIFOLD	104
FILTER ELEMENT AS-PRIMARY AIR	106
FILTER ELEMENT AS-SEC AIR	107
LINES GP-AIR	108
MANIFOLD GP-EXHAUST	111
MUFFLER GP	113
PRECLEANER AR	114
SHIELD AR-THERMO	116
SHIELD AR	120
SHIELD GP-MANIFOLD	123
SHIELD GP-TURBOCHARGER	124
TURBOCHARGER GP	125
FUEL SYSTEM	129
CONTROL GP-FUEL RATIO	130
FASTENER GP-FUEL INJ PUMP	132
FILTER GP-PRIMARY FUEL	133
FILTER GP-SECONDARY FUEL	136
GOVERNOR GP	138
LINES GP-DRAIN	142
LINES GP-FUEL INJECTION	143
PROTECTION GP-FUEL SYSTEM	152
PUMP & MTG GP-FUEL TRANSFER	153
PUMP GP-FUEL INJECTION	154
PUMP GP-FUEL TRANSFER	158
PUMP GP-GOV & FUEL INJ	160
SEAL GP	162
TORQUE CONTROL GP	163

TABLE OF CONTENTS

Name	Page
ELECTRICAL AND STARTING SYSTEM	164
ALTERNATOR AR-CHARGING	164
ALTERNATOR GP-CHARGING	166
CONTROL GP-EMS ELECTRONIC	169
LAMP GP-DOME	170
LAMP GP-FLOOD	171
LIGHTING AR	176
LIGHTING GP-AUXILIARY	186
LIGHTING GP-FLOOD	187
MOTOR GP-ELECTRIC	188
MOUNTING GP-ALTERNATOR	190
SWITCH AS-HANDLE	191
SWITCH GP-START	192
POWER TRAIN	193
CASE & PARTS GP-PLANETARY	194
CONTROL GP-TRANSMISSION HYD	198
FINAL DRIVE GP	202
GEAR GP-BEVEL & TRANSFER	226
PLANETARY GP-TRANSMISSION	230
SEGMENT GP-SPROCKET	242
TRANSMISSION AR	244
VALVE GP-MODULATING	245
FRAME AND BODY	248
BAR AR-STRIKER	248
BAR AS-STRIKER	250
BAR GP-STRIKER	254
CASE & FRAME AS	256
CASE & FRAME GP	260
COUNTERWEIGHT GP	261
FRAME GP-TELESCOPING RECOIL	264
GAUGE AR-TRACK	268
GAUGE GP	269
FINAL DRIVE GUARD AR	270
GUARD AR-FINAL DRIVE	272
GUARD AS-LH	274
GUARD AS	275
GUARD AS-RH	278
GUARD GP-BOTTOM	279
GUARD GP-TRANSMISSION	280
HOOD & GUARD GP	281
IDLER GP-TRACK	282
LATCH AS	284
LINK AS-TRACK	285
MOUNTING GP-CARRIER ROLLER	295
PIVOT BAR GP	296
ROLLER AR	297
ROLLER AR-CARR	298
ROLLER GP-TRACK CARRIER	299
STRIKER GP	300
STRIKER GP-FRONT	301
STRIKER GP-REAR	303
TRACK ADJUSTER & RECOIL GP	306
TRACK GP	307

Name	Page
HYDRAULIC SYSTEM	340
CYLINDER & LINES GP	340
CYLINDER GP-LIFT	344
CYLINDER GP-RIPPER LIFT	346
CYLINDER GP-TILT	348
HOSE AS	354
LINES GP-RIPPER	382
LINE GP-TILT	383
LINES GP-TILT	384
LINES GP-TILT CYLINDER	386
MOUNTING GP-CYLINDER	388
PUMP GP-HYDRAULIC	389
VALVE GP-BYPASS	390
VALVE GP-DIVERTER	391
VALVE GP-RELIEF	393
VALVE GP-SELECTOR & PRESS CONT	394
VALVE GP-SOLENOID	395
IMPLEMENTS	396
BIT & CUTTING EDGE GP	396
BLADE & EDGE GP	401
BLADE & EDGE GP-SEMI-UNIVERSAL	405
BLADE & EDGE GP-SU	406
BLADE & EDGE GP-SEMI-UNIVERSAL	407
BLADE AS	408
BLADE AS-SEMI-UNIVERSAL	410
BLADE AS-STRAIGHT	417
BLADE GP	420
BLADE GP-SEMI-UNIVERSAL	421
BLADE GP-LOW GROUND PRESSURE	423
BLADE GP	424
BRACE GP	426
BULLDOZER AR	428
BULLDOZER AR-MODIFICATION	429
BULLDOZER AR	431
BULLDOZER AR-ANGLING	432
BULLDOZER AR-PWR ANGLE & TILT	434
BULLDOZER AR-SEMI-UNIVERSAL	436
C-FRAME AS	438
C-FRAME GP	439
LINKAGE GP-IMPLEMENT	440
MOUNTING GP-RIPPER	441
PUSH ARM GP	442
RAKE GP	444
RIPPER AR-LGP	446
RIPPER GP	448
TOOTH GP-RIPPER	450
TRUNNION GP	451
OPERATOR STATION	452
AIR CONDITIONER AR	452
BLOWER GP	460
BOTTLE GP-WINDOW WASHER	462
CAB AR	466
CAB GP	470

TABLE OF CONTENTS

Name	Page	Name	Page
COMPRESSOR GP-REFRIGERANT	473		
CONDENSER & MTG GP-REFRIGERANT	478		
CONDENSER AR-REFRIGERANT	480		
CONDENSER GP-REFRIGERANT	482		
CONTROL GP-DISPLAY ELECTRONIC	484		
COVER GP-CONSOLE	486		
EXTENSION GP-BACKREST	492		
HANDHOLD AR	493		
HANDHOLD GP	494		
HEATER GP-CAB	496		
INDICATOR AR	498		
INSTALLATION GP-RADIO	500		
LINER GP-CAB	502		
LINES GP-HEATER	505		
MIRROR GP-REAR VIEW	506		
MODULE GP-QUAD GAUGE	507		
WIPER GP	508		
MOTOR GP-WINDOW WIPER	509		
MOUNTING GP-CAB	**512**		
PAN GP-SEAT	514		
INSTRUMENT GP-ROPS	516		
PLATFORM AR	520		
PLATFORM GP-CAB	524		
PRESSURIZER GP-CAB	526		
ROPS GP	527		
SEAT BELT GP	528		
SEAT GP	530		
SEAT GP-SUSPENSION	534		
SUSPENSION GP-SEAT	540		
SWEEP AS	548		
WASHER GP-WINDSHIELD	550		
WASHER GP-WINDOW	554		
WINDOW AS-SLIDING	557		
WINDOW GP	560		
WINDOW GP-CAB	561		
WINDOW GP	562		
WINDOW GP-CAB	563		
WINDOW GP	564		
WINDOW GP-CAB	565		
WINDOW GP	567		
WINDOW GP-CAB	569		
WINDOW GP	570		
WINDOW GP-CAB	571		
WIPER GP	572		
WIPER GP-WINDOW	574		
WIPER PIVOT GP	576		

PART NUMBER INDEX B1

GENERAL INFORMATION

1. MACHINE IDENTIFICATION

Caterpillar machines are identified by Product Information Numbers (PIN). Some components included in a machine may be identified by Serial Numbers (S/N). Typical components that will be serialized include engines, transmissions, bulldozers, and rippers. The machine and engine are further identified by arrangement numbers and in some cases modification numbers. These numbers are shown on the product identification plate(s) and on the master plate in the operator's compartment.

Caterpillar dealers need all of these numbers to determine accurate parts identification.

2. ORDERING PARTS

Quality Caterpillar replacement parts are available from Caterpillar dealers throughout the world. Their parts inventories are up to date and include all parts normally required to protect your investment in Caterpillar machines. Dealers may offer repair kits or remanufactured parts to allow selection of the most effective repair alternative for a particular situation. When ordering parts, your order should specify the quantity, part number, part name, and the serial number/product identification number of the machine for which the parts are needed.

3. PARTS MANUAL ORGANIZATION

Product information in this manual is presented as "information elements" that represent all of the components for the specific model. Engine Arrangement and Seat Group are examples of information elements. The information elements are organized alphabetically by part name and secondarily by part number within each major section of the manual.

4. TABLE OF CONTENTS

SIS ***New Feature***

A table of contents (TOC) is found at the beginning of the manual. The TOC lists each section of the manual with a complete list of all information elements organized as they appear in the manual. Page numbers are provided for quick reference to detailed parts identification illustrations and serviceable consist lists.

5. MAINTENANCE PARTS INDEX

The Maintenance Parts Index, located near the beginning of the manual, references most frequently used maintenance part numbers, providing description, quantity, usage and page number. This information is organized alphabetically by part description.

6. INDEX

The index located near the front of the manual is an alphabetical listing of all information elements included in the manual. Page numbers are provided for quick reference to detailed parts identification illustrations and serviceable consist lists.

7. PART NUMBER INDEX

A numerical index listing all part numbers and the corresponding page number(s) appears at the back of the manual.

8. CAPTIONS

Captions located at the top of each page of an information element identify the part number and part name along with additional descriptive information. PIN and S/N information found in each caption should be used to select correct information for a specific machine. Field replacement options, identification of optional attachment components, and where used ("part of") information is also provided.

SIS ***New Feature***

The first line of a caption is shown in larger type font to indicate the beginning of an information element. Captions for additional pages that may be required to illustrate an information element will be shown in standard type font and will include the term *(contd.)*

9. NON-SERVICED PARTS

SIS ***New Feature***

In some instances it is necessary to display non-serviced parts that are a link to a lower level serviceable consist lists. These non-serviced part numbers are shown in *italic* type indicating that they are not available.

10. PARTS LIST REFERENCE NUMBERS

SIS *New Feature*

Numbers shown in the Ref No column correspond to numbers used in the associated graphic(s). An alphabetic suffix may be added to a reference number to identify lower level consist items. Numbers shown in the Graphic Ref column refer to the graphic number identifier displayed in the lower left corner of each illustration. The Graphic Ref number may be used in combination with the item Ref No to determine the correct part number. There may be intentional omission of a Ref No in a consist list as information is updated to reflect the latest serviceable part numbers.

11. INDENTED PART NAMES

When a part name is indented in a parts list, it is part of (included in) the group or assembly under which it is indented.

12. ILLUSTRATION REFERENCE LETTERS

When necessary, illustrations contain reference letters (A, B, C etc.) that are intended to track lines and harnesses from one point to another. They are also used to show where to reconnect illustrations that have been separated.

13. ABBREVIATIONS AND SYMBOLS

O.D. – Outside Diameter
I.D. – Inside Diameter
A – Not Part Of This Group
B – Use As Required
C – Change From Previous Type
D – Order By The Meter
E – Order By The Centimeter
F – Not Shown
G – Order By The Inch
I – See Hose Fabrication Guide
M – Metric Part
R – Remfg Part May Be Available
Y – Separate Illustration
Z – Not Serviced Separately

NOTE:

Continuing improvement and advancement of product design may cause changes to your machine which may not be included in this publication. Whenever a question arises regarding your Caterpillar product or this publication, please consult your Caterpillar dealer for the latest available information.

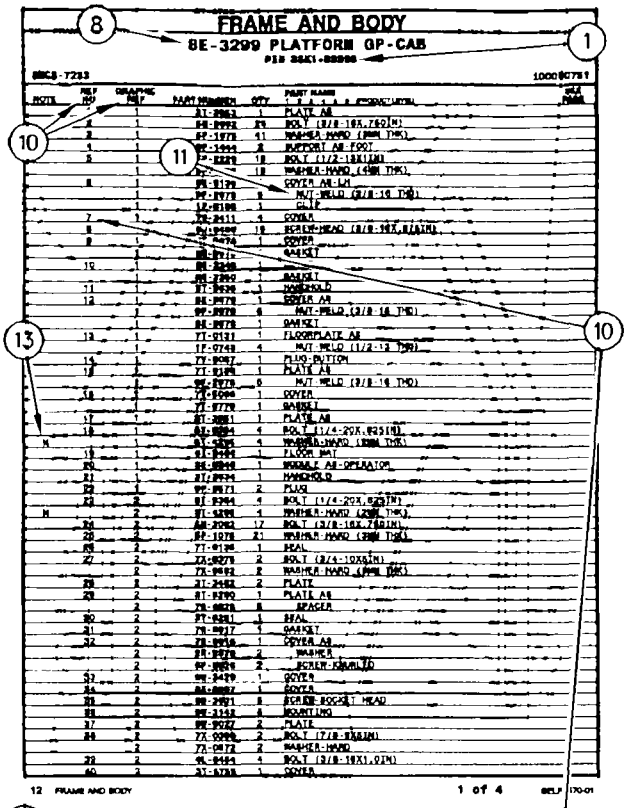
FRAME AND BODY
8E-3299 PLATFORM GP-CAB
1 of 4

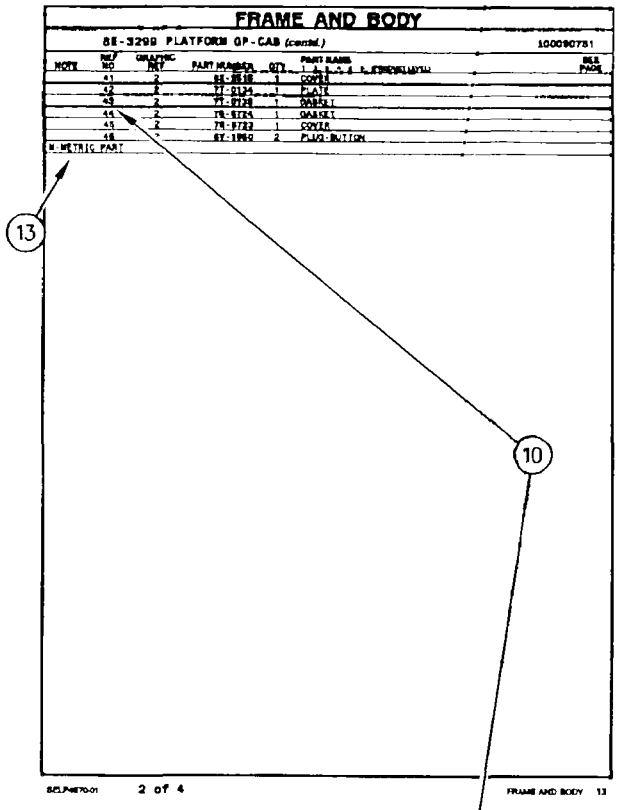
FRAME AND BODY
8E-3299 PLATFORM GP-CAB (contd.)
2 of 4

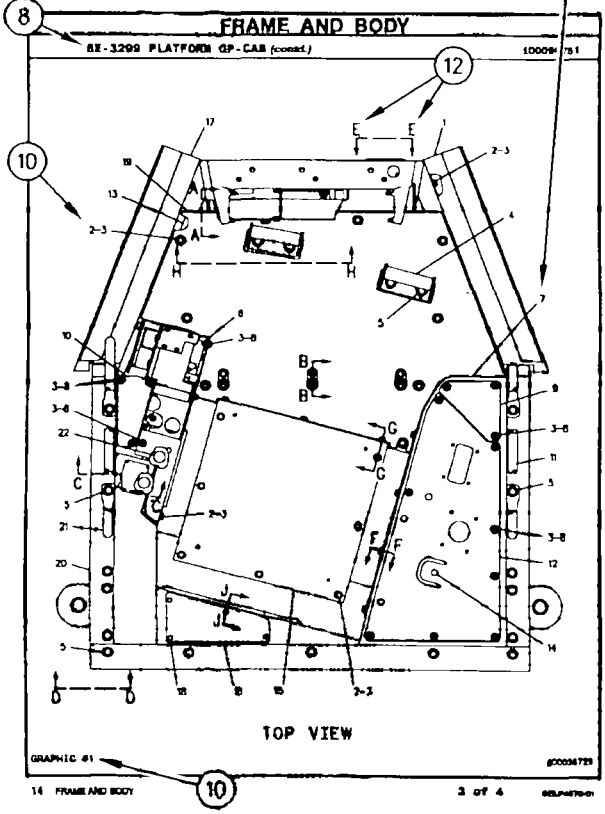
FRAME AND BODY
8E-3299 PLATFORM GP-CAB (contd.)
TOP VIEW
3 of 4

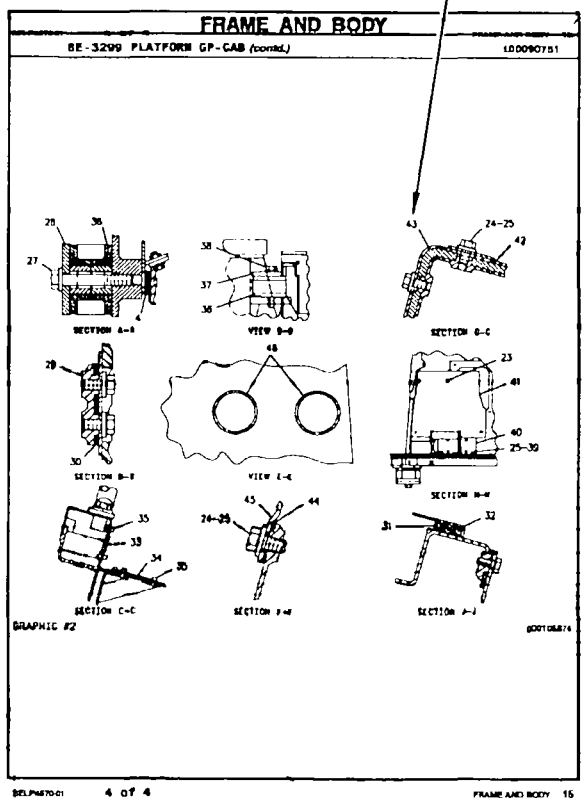
FRAME AND BODY
8E-3299 PLATFORM GP-CAB (contd.)
4 of 4

REMANUFACTURED COMPONENTS

As an option when making repairs consider Caterpillar Remanufactured Components. Components that are available through the Caterpillar Remanufactured Program are identified three ways in the parts book:

- with the letter R in the note field of the parts list
- with an R* at the beginning of the first line of the caption
- with an *R at the end of the first line of the caption

Typical components included in the Remanufacturing Program include:

ALTERNATORS
CONNECTING RODS
CRANKSHAFTS - UNDERSIZE
CRANKSHAFTS - UPGRADE TO NEW
CYLINDER HEADS
ELECTRONIC CONTROL MODULES (ECM)
ELECTRONIC SENSORS
FUEL INJECTORS
FUEL NOZZLES
FUEL PUMPS
GOVERNORS
OIL PUMPS
PISTONS
SHORT BLOCKS
STARTERS
TURBOCHARGERS - COMPLETE
TURBOCHARGER CARTRIDGES
WATER PUMPS

Caterpillar Remanufactured engines for many engine arrangements are also available.

SUPPLEMENTAL COOLANT ADDITIVES

CUSTOMER BENEFITS:

Protects against cavitation, foam, erosion, corrosion, and scale buildup in cooling systems.

- Provides measured coolant conditioner.

DESCRIPTION:

Additives deplete from the coolant with normal operation. For this reason, Supplemental Coolant Additives (SCA) must be added to all heavy duty coolants at regular intervals. In addition, when not using a fully formulated, pre-charged antifreeze, like Caterpillar's DEAC, an initial charge of SCA must be added to the cooling system. The amount of SCA added to the system is dependent on the capacity of the system.

The SCA for initial fill is provided as a liquid. SCA's for maintenance intervals are available in liquid form and as a spin-on element. (No Spin-on available for 3600 Family of Engines)

NOTE:

The amount of SCA added at initial fill is not the same as the amount added at maintenance intervals.

The coolant additive elements can be used with any ethylene or propylene glycol type antifreeze which meets ASTM D4985 or ASTM D5345 Specifications.

NOTE:

For use with standard heavy duty coolant only, not for use with Extended Life Coolant.

PARTS NEEDED:

Cooling System Capacity		Liquid SCA at Initial Fill	Liquid SCA at Maintenance*	Spin-on SCA Maintenance Element*
Liters	Gallons			
22-30	(6-8)	3P-2044 (1)	6V-3542 (1)	111-2370 (1)
30-38	(8-10)	3P-2044 (1) 6V-3542 (1)	111-2372 (1)	111-2369 (1)
38-49	(10-13)	3P-2044 (1) 8T-1589 (1)	111-2372 (1)	111-2369 (1)
49-64	(13-17)	3P-2044 (2)	8T-1589 (1)	9N-3368 (1)
64-83	(17-22)	3P-2044 (2) 8T-1589 (1)	111-2372 (1) 6V-3542 (1)	111-2371)1)
83-114	(22-30)	3P-2044 (3) 8T-1589 (1)	3P-2044 (1)	9N-3718 (1)
114-163	(30-43)	3P-2044 (5)	3P-2044 (1) 6V-3542 (1)	111-2371 (2)
163-242	(43-64)	3P-2044 (8)	3P-2044 (2)	9N-3718 (2)

** Normal maintenance period is 250 hrs. See your Operation and Maintenance Manual for complete coolant maintenance instructions.*

( ) Indicates quantity required.

MAINTENANCE PARTS

DESCRIPTION	PART NUMBER	QTY	WHERE USED	PAGE
AIR INLET AND EXHAUST SYSTEM				
CAP AS-RAIN (EXH)	9S-7148	1	DUST EJECTOR GP	103
FILTER ELEMENT AS-PRIMARY AIR	6I-2501	1	AIR CLEANER GP	100
FILTER ELEMENT AS-SEC AIR	6I-2502	1	AIR CLEANER GP	100
INDICATOR-AIR FILTER SERVICE	1W-0613	1	AIR CLEANER GP	101
BASIC ENGINE				
GASKET-OIL PAN	8S-1965	1	PAN GP-OIL	36
V-BELT SET	2W-8951	1	FAN SPEED INCREASE AR	25
COOLING SYSTEM				
CAP AS-RADIATOR	031-1119	1	TANK GP-COOLANT	96
FILTER	4N-5834	1	PUMP GP-WATER	88
	4N-5834	1	PUMP GP-WATER	84
FILTER AS-OIL	1R-0739	1	COOLER GP-FLTR BASE & ENG OIL	72
FUSE (1/4 AMP)	137-2082	1	FAN AR-VARIABLE	76
FUSE (15 AMP)	8M-8948	1	FAN AR-VARIABLE	76
ELECTRICAL AND STARTING SYSTEM				
FUSE (15 AMP)	8M-8948	1	LIGHTING AR	176
	8M-8948	1	LIGHTING AR	178
	8M-8948	1	LIGHTING AR	184
FUSE (20 AMP)	8M-0456	1	LIGHTING AR	176
	8M-0456	1	LIGHTING AR	178
	8M-0456	1	LIGHTING AR	184
LAMP	7N-9943	1	LAMP GP-DOME	170
	9X-3463	1	LAMP GP-FLOOD	172
	9X-3463	1	LAMP GP-FLOOD	175
LAMP (24 VOLT)	9X-3463	1	LAMP GP-FLOOD	171
	9X-3463	1	LAMP GP-FLOOD	173
	9X-3463	1	LAMP GP-FLOOD	174
FRAME AND BODY				
FITTING-GREASE (1/8-27 THD)	3B-8489	2	IDLER GP-TRACK	282
	3B-8489	2	IDLER GP-TRACK	283
FUEL SYSTEM				
ELEMENT AS-FUEL FILTER	9M-2341	1	FILTER GP-PRIMARY FUEL	135
FILTER AS-FUEL	1R-0750	1	FILTER GP-SECONDARY FUEL	136
GASKET	8H-2778	1	FILTER GP-PRIMARY FUEL	135
SCREEN AS	8N-6680	1	PUMP GP-GOV & FUEL INJ	160
HYDRAULIC SYSTEM				
FITTING-GREASE (1/8-27 THD)	3B-8489	2	MOUNTING GP-CYLINDER	388
IMPLEMENTS				
FITTING-GREASE (1/8-27 THD)	3B-8489	11	RIPPER GP	448

MAINTENANCE PARTS

DESCRIPTION	PART NUMBER	QTY	WHERE USED	PAGE
LUBRICATION SYSTEM				
BREATHER AS-CRANKCASE	2W-9162	1	BREATHER GP	47
CAP AS-FILLER	6N-2985	1	FILLER GP-ENGINE OIL	48
CAP-DUST	8C-3445	1	BASE GP-OIL FILTER	46
OPERATOR STATION				
BLADE AS-WIPER	6V-5851	2	WIPER GP	572
	6V-5849	2	WIPER GP	572
	6V-5851	2	WIPER GP-WINDOW	574
	6V-5849	2	WIPER GP-WINDOW	574
CAP-AIR CONDITIONER VALVE (7/16X20 THD)	2L-1224	1	CONDENSER GP-REFRIGERANT	482
CAP-PUSH ON	6P-2216	6	PLATFORM AR	520
FILTER AS (CAB REC AIR)	6T-5068	1	PRESSURIZER GP-CAB	526
FILTER (CAB FRESH AIR)	6T-0988	1	PRESSURIZER GP-CAB	526
INDICATOR-AIR FILTER SERVICE	8N-2694	1	INDICATOR AR	498
LAMP-MINIATURE	123-9294	3	INSTRUMENT GP-ROPS	516
LAMP-MINIATURE (24V)	115-1748	1	INSTRUMENT GP-ROPS	516
LAMP-MINIATURE (28 VOLT)	7N-5876	2	INSTRUMENT GP-ROPS	516
V-BELT	1P-9744	1	AIR CONDITIONER AR	454
POWER TRAIN				
CAP-DUST	6V-0852	1	CASE & PARTS GP-PLANETARY	194
	6V-0852	1	CASE & PARTS GP-PLANETARY	194

INDEX

Name	Page
A	
AIR CLEANER GP	100
	101
AIR CONDITIONER AR	452
ALTERNATOR AR-CHARGING	164
ALTERNATOR GP-CHARGING	166
ASHTRAY	486
	488
	490
B	
BAR AR-STRIKER	248
BAR AS-STRIKER	250
	252
BAR GP-STRIKER	254
BASE GP-OIL FILTER	45
	46
BIT & CUTTING EDGE GP	396
	397
	398
	399
	400
BLADE & EDGE GP	401
	402
	403
	404
BLADE & EDGE GP-SEMI-UNIVERSAL	405
	407
BLADE & EDGE GP-SU	406
BLADE AS	408
BLADE AS-SEMI-UNIVERSAL	410
	411
	412
	413
	414
	415
	416
BLADE AS-STRAIGHT	417
	418
	419
BLADE AS-WIPER	572
	574
BLADE GP	420
	424
BLADE GP-LOW GROUND PRESSURE	423
BLADE GP-SEMI-UNIVERSAL	421
	422
BLOWER GP	460
BOLT (3/4-10X4.50IN)	262
BOTTLE GP-WINDOW WASHER	462
	463
	464
	465
BRACE GP	426
BREATHER AS-CRANKCASE	47
BREATHER GP	47
BULLDOZER AR	428
	431
BULLDOZER AR-ANGLING	432
	433
BULLDOZER AR-MODIFICATION	429
	430
BULLDOZER AR-PWR ANGLE & TILT	434
	435
BULLDOZER AR-SEMI-UNIVERSAL	436
	437
C	
CAB AR	466
	467
	468
CAB GP	470
CAB WINDOW	561
CAMSHAFT GP	11
CAP AS-FILLER	48
CAP AS-RADIATOR	96
CAP AS-RAIN (EXH)	103
CAP-AIR CONDITIONER VALVE (7/16X20 THD)	482
CAP-DUST	46
	194
CAP-PUSH ON	520
CARTRIDGE GP-TURBOCHARGER	102
CASE & FRAME AS	256
	258
CASE & FRAME GP	260
CASE & PARTS GP-PLANETARY	194
C-FRAME AS	438
C-FRAME GP	439
COMPRESSOR GP-REFRIGERANT	473
	474
	475
	476
CONDENSER & MTG GP-REFRIGERANT	478
CONDENSER AR-REFRIGERANT	480
CONDENSER GP-REFRIGERANT	482
CONTROL GP-DISPLAY ELECTRONIC	484
	516
CONTROL GP-EMS ELECTRONIC	169
CONTROL GP-EMS ELECTRONIC (LED)	516
CONTROL GP-FUEL RATIO	130
CONTROL GP-TRANSMISSION HYD	198
	200
COOLER GP-FLTR BASE & ENG OIL	70
	72
COOLER GP-TRANSMISSION OIL	73
COOLING AR	68

INDEX

Name	Page
COOLING AR-HYDRAULIC OIL	67
COUNTERWEIGHT GP	261
	262
COVER GP-CONSOLE	486
	488
	490
COVER GP-CYLINDER BLOCK	12
COVER GP-FRONT HOUSING	13
COVER GP-VALVE MECHANISM	14
CRANKSHAFT GP	15
CYLINDER & LINES GP	340
	342
CYLINDER BLOCK AS	16
CYLINDER BLOCK GP	18
CYLINDER GP-LIFT	344
CYLINDER GP-RIPPER LIFT	346
CYLINDER GP-TILT	348
	350
	352
	353
CYLINDER HEAD GP	20
	22

D

DAMPER GP	24
DISPOSAL AR	1
	2
	3
	4
	5
DUST EJECTOR GP	103

E

ELEMENT AS-FUEL FILTER	135
ENGINE AR	10
ENGINE AR-CUSTOM	7
	8
	9
EXTENSION GP-BACKREST	492

F

FAN AR-EJECTOR	74
FAN AR-VARIABLE	76
FAN SPEED INCREASE AR	25
FASTENER GP-CYLINDER HEAD	26
FASTENER GP-EXHAUST MANIFOLD	104
	105
FASTENER GP-FRONT HOUSING	27
FASTENER GP-FUEL INJ PUMP	132
FASTENER GP-OIL PAN	28
FILLER GP-ENGINE OIL	48
FILM-AIR CLEANER	100
FILM-IDENTIFICATION	482
FILM-INSTRUCTION	544
FILM-WARNING	264
	266
FILTER	84
	88
FILTER AS (CAB REC AIR)	526
FILTER AS-FUEL	136
FILTER AS-OIL	72
FILTER ELEMENT AS-PRIMARY AIR	100
	106
FILTER ELEMENT AS-SEC AIR	100
	107
FILTER GP-PRIMARY FUEL	133
	134
	135
FILTER GP-SECONDARY FUEL	136
FILTER (CAB FRESH AIR)	526
FINAL DRIVE GP	202
	206
	210
	212
	214
	216
	218
	222
FINAL DRIVE GUARD AR	270
	271
FITTING-GREASE (1/8-27 THD)	282
	283
	388
	448
FLOOR MAT	486
	488
	490
FLYWHEEL GP	29
FRAME GP-TELESCOPING RECOIL	264
	266
FUSE (1/4 AMP)	76
FUSE (15 AMP)	76
	176
	178
	184
FUSE (20 AMP)	176
	178
	184

G

GASKET	135
GASKET-OIL PAN	36
GAUGE AR-TRACK	268
GAUGE GP	269
GAUGE GP-OIL LEVEL (DIPSTICK)	49
GEAR GP-BEVEL & TRANSFER	226

INDEX

Name	Page
GEAR GP-FRONT	30
GEAR GP-REAR	31
GEAR KIT-STARTING MOTOR (STARTER GEAR KIT)	188
GOVERNOR & FUEL INJECTION PUMP	160
GOVERNOR GP	138
GUARD AR-FINAL DRIVE	272
	273
GUARD AS	275
	276
GUARD AS-LH	274
GUARD AS-RH	278
GUARD GP-BOTTOM	279
GUARD GP-TRANSMISSION	280

H

HANDHOLD AR	493
HANDHOLD GP	494
HEATER GP-CAB	496
HOOD & GUARD GP	281
HOSE AS	354
	355
	356
	357
	358
	359
	360
	361
	362
	363
	364
	365
	366
	367
	368
	369
	370
	371
	372
	373
	374
	375
	376
	377
	378
	379
	380
	381
HOUSING GP-FLYWHEEL	32
HOUSING GP-FRONT	34

I

IDLER GP-TRACK	282
	283
INDICATOR AR	498
INDICATOR AS (ACTION)	516
INDICATOR-AIR FILTER SERVICE	101
	498
INSTALLATION GP-RADIO	500
INSTRUMENT GP-ROPS	516

K

KIT-ADJUSTER	514
KIT-AIR SPRING	540
KIT-BACK TILT	514
KIT-BEARING (STARTER BEARING KIT)	188
KIT-BRUSH (STARTER BRUSH KIT)	188
KIT-BUSHING (STARTER BUSHING KIT)	188
KIT-CATCH	570
KIT-CATCH (INCLUDES CATCH AS &2 SCREWS)	569
KIT-CATCH (INCLUDES CATCH AS2 SCREWS)	568
KIT-CATCH (2 SCREWS)	570
KIT-COMPRESSOR	540
KIT-CONNECTING PLUG	245
	460
KIT-CONNECTING PLUG (2 PIN)	77
KIT-CONNECTING PLUG (2 PIN) (INCL. PLUG AS & WEDGE)	247
KIT-DIODE JUNCTION STUD	166
KIT-FASTENER	540
	544
KIT-HOUSING	540
	544
KIT-HYD CYLINDER SEAL	348
KIT-INSULATOR (STARTER INSULATOR KIT)	188
KIT-LEAF SPRING	567
KIT-LEAF SPRING (INCLS SPRING AS & RIVET)	566
	571
KIT-LEVER (STARTER LEVER KIT)	188
KIT-MOTOR BRUSH	460
KIT-OUTPUT TERMINAL	166
KIT-POSITIVE DIODE	167
KIT-RECEPTACLE	169
	170
	460
	484
	508
	509
	510
	516
	517
	550
	554

INDEX

Name	Page
KIT-RECEPTACLE (INCL. RECEPTACLE & WEDGE)	511
KIT-RECEPTACLE (INCLUDES WEDGE & RECEPTACLE AS)	173 174
KIT-RECEPTACLE (2 PIN)	60 62 231 392 452 473 482 516 540
KIT-RECEPTACLE (2 PIN) (INCL. RECEPTACLE AS & WEDGE)	238
KIT-RECEPTACLE (6 PIN)	507
KIT-RELAY TERMINAL	166
KIT-ROLLER	540 544
KIT-RUNNER GUIDE	570
KIT-RUNNER GUIDE (INCL GUIDE & SCREW)	569
KIT-RUNNER GUIDE (INCLUDES GUIDE & SCREW)	568 569
KIT-SEAL	395
KIT-SEAT CUSHION	535
KIT-SEAT KNOB	535
KIT-SEAT TILT	514
KIT-SLIDER BLOCK	537 538
KIT-STOP RAIL	571
KIT-TETHER	540 544
KIT-TILT PAN	535
KIT-WATER PUMP REBUILD	88
KIT-WIRING HARNESS	540 544

L

Name	Page
LAMP	170 172 175
LAMP GP-DOME	170
LAMP GP-FLOOD	171 172 173 174 175
LAMP-MINIATURE	516
LAMP-MINIATURE (24V)	516
LAMP-MINIATURE (28 VOLT)	516
LAMP (24 VOLT)	171
LATCH AS	284
LENS	170
LIFTING GP-ENGINE	35
LIGHTER AS	488
LIGHTER AS-CIGAR	486 490
LIGHTING AR	176 178 180 182 184
LIGHTING GP-AUXILIARY	186
LIGHTING GP-FLOOD	187
LINE GP-TILT	383
LINER GP-CAB	502 504
LINES GP-AIR	108 109 110
LINES GP-DRAIN	142
LINES GP-ENGINE OIL	50
LINES GP-FUEL INJECTION	143 144 145 146 148 150
LINES GP-HEATER	505
LINES GP-HYDRAULIC OIL COOLER	78
LINES GP-RIPPER	382
LINES GP-TILT	384
LINES GP-TILT CYLINDER	386
LINES GP-TURBOCHARGER OIL	52 54
LINES GP-TURBOCHARGER WATER	79
LINES GP-WATER	80 81 82
LINK AS-TRACK	285 286 287 288 289 290 292 294
LINKAGE GP-IMPLEMENT	440

M

Name	Page
MANIFOLD GP-EXHAUST	111 112
MIRROR GP-REAR VIEW	506

INDEX

Name	Page
MODIFICATION AR	6
MODULE GP-QUAD GAUGE	507
MODULE GP-QUAD GAUGE ELEK	516
MONITOR-DISPLAY	76
MOTOR GP-ELECTRIC	188
MOTOR GP-WINDOW WIPER	509
	510
	511
MOUNTING GP-ALTERNATOR	190
MOUNTING GP-CAB	512
MOUNTING GP-CARRIER ROLLER	295
MOUNTING GP-CYLINDER	388
MOUNTING GP-RIPPER	441
MUFFLER GP	113
O	
OIL CHANGE GP-HIGH SPEED	56
	58
OIL COOLER & FILTER BASE	70
ORIFICE-JET	50
P	
PAN GP-OIL	36
PAN GP-SEAT	514
PISTON & ROD GP	37
PIVOT BAR GP	296
PLANETARY GP-TRANSMISSION	230
	236
PLATFORM AR	520
PLATFORM GP-CAB	524
PRECLEANER AR	114
	115
PRELUBE AR-ENGINE	62
PRELUBE CHG AR	60
PRESSURIZER GP-CAB	526
PROTECTION GP-FUEL SYSTEM	152
PULLEY GP-CRANKSHAFT	38
PUMP & MTG GP-FUEL TRANSFER	153
PUMP GP-ENGINE OIL	64
	65
	66
PUMP GP-FUEL INJECTION	154
	156
PUMP GP-FUEL TRANSFER	158
PUMP GP-GOV & FUEL INJ	160
PUMP GP-HYDRAULIC	389
PUMP GP-WATER	84
	86
	87
	88
PUSH ARM GP	442

Name	Page
R	
RADIATOR AR-HI-AMBIENT	90
RADIATOR AR-TRASH	91
RADIATOR GP	92
	94
RAKE GP	444
	445
RELAY AS (24 VOLT)	482
RIPPER AR-LGP	446
RIPPER GP	448
ROCKER ARM GP (EXHAUST)	43
ROCKER ARM GP (INLET)	43
ROLLER AR	297
ROLLER AR-CARR	298
ROLLER GP-TRACK CARRIER	299
ROPS GP	527
S	
SCREEN AS	160
SEAL GP	84
	162
SEAL GP-CRANKSHAFT	39
SEAT BELT GP	528
	529
SEAT GP	530
	531
	532
SEAT GP-SUSPENSION	534
	537
	538
SEGMENT GP-SPROCKET	242
	243
SENSOR GP-SPEED	231
	237
SENSOR WIPER	508
SENSOR-TEMPERATURE	76
SHIELD AR	120
	121
	122
SHIELD AR-THERMO	116
	117
	118
	119
SHIELD GP-MANIFOLD	123
SHIELD GP-TURBOCHARGER	124
SLEEVE-CABLE SPLICE	534
SLIDE	560
	564
	565
SOLENOID AS	188
SPEAKER AS-RADIO	504
STRIKER GP	300
STRIKER GP-FRONT	301

INDEX

Name	Page
	302
STRIKER GP-REAR	303
	304
	305
SUPPORT GP-ENGINE	40
SUSPENSION GP-SEAT	540
	544
SWEEP AS	548
SWITCH & COVER AS (SINGLE/DUAL TILT)	191
SWITCH AS	60
	62
SWITCH AS (AUTO KICKDOWN)	517
SWITCH AS (AUTO SHIFT)	516
SWITCH AS-HANDLE	191
	440
SWITCH AS (PITCH CONTROL)	191
SWITCH AS-PRESSURE	60
	62
	452
SWITCH AS-ROTARY	467
	468
SWITCH AS-ROTARY (LIGHTS)	516
SWITCH AS-ROTARY (WIPER/WASHER)	504
SWITCH AS (START AID)	516
SWITCH AS-THERMOSTAT	453
SWITCH AS (VIDEO INDICATOR DIAL)	517
SWITCH GP-START	192
	516

T

TANK GP-COOLANT	96
TANK GP-WATER	98
TIMER	60
	62
TOOTH GP-RIPPER	450
TORQUE CONTROL GP	163
TRACK ADJUSTER & RECOIL GP	306
TRACK GP	307
	308
	309
	310
	311
	312
	313
	314
	315
	316
	317
	318
	319
	320
	321
	322
	323
	324
	325
	326
	327
	328
	329
	330
	331
	332
	333
	334
	335
	336
	337
	338
	339
TRANSMISSION AR	244
TRUNNION GP	451
TRUNNION GP-ENGINE	41
TURBOCHARGER GP	125
	126
	127
	128

V

VALVE AS-WATER	496
VALVE GP-BYPASS	390
VALVE GP-DIVERTER	391
	392
VALVE GP-MODULATING	245
	246
	247
VALVE GP-RELIEF	393
VALVE GP-SELECTOR & PRESS CONT	**394**
VALVE GP-SOLENOID	395
VALVE MECHANISM GP	43
	44
VALVE (CHECK)	453
VALVE (FILL)	306
VALVE-FLUID SAMPLING	46
VALVE-INLET	20
VALVE (RELIEF)	306
V-BELT	454
V-BELT SET	25
	42

W

WASHER GP-WINDOW	554
WASHER GP-WINDSHIELD	550
WINDOW AS-SLIDING	557
	558
	559
WINDOW GP	560

MACHINE ARRANGEMENT

128-4092 DISPOSAL AR

PIN 2YN1-UP; 3ZN1-UP; 4MN1-UP; 5LN1-UP; 6JN1-UP; 7KN1-UP; 8LN1-UP; 9PN1-UP

WASTE

PART OF 128-7274, 129-2161, 129-2162, 129-2163 DISPOSAL AR

SMCS-7000 **i00689112**

NOTE	PART NUMBER	QTY	PART NAME 1 2 3 4 5 6 (PRODUCT LEVEL)	SEE PAGE
Y	*128-7276*	1	GUARD AS	275
Y	*128-7277*	1	GUARD AS	276
Y	*129-2160*	1	GUARD AS-LH	274
Y	*129-2159*	1	GUARD AS-RH	278
Y	*1Z-0742*	1	HANDHOLD AR	493
Y	*126-8870*	1	LIGHTING AR	180
Y	*129-2166*	1	SEAL GP	162
	8N-1978	1	PRESCREENER AS	
	8S-2384	1	STACK AS-AIR	

Y-SEPARATE ILLUSTRATION

MACHINE ARRANGEMENT

128-7274 DISPOSAL AR–WASTE–CUSTOM

PIN 8LN1-UP; 9PN1-UP

MUST BE USED WITH HEAVY DUTY ENGINE ENCLOSURES & ATTACHMENT LIGHTING

FOR USE WITH DIFFERENTIAL STEERING, FINGER TIP CONTROL, LGP MACHINES

SMCS-7000 **i01009375**

NOTE	PART NUMBER	QTY	PART NAME 1 2 3 4 5 6 (PRODUCT LEVEL)	SEE PAGE
Y	*131-0704*	1	ALTERNATOR AR-CHARGING	164
Y	*128-4092*	1	DISPOSAL AR	1
Y	*134-2922*	1	GUARD AR-FINAL DRIVE	273
YI	*4Z-8919*	1	HOSE AS	354
YI	*4Z-8920*	1	HOSE AS	355
	128-7273	1	BAR AS	
I	**9Z-8212**	1	HOSE AS	
I	**9Z-8213**	1	HOSE AS	

I-SEE HOSE FABRICATION GUIDE
Y-SEPARATE ILLUSTRATION

MACHINE ARRANGEMENT

129-2161 DISPOSAL AR–WASTE–CUSTOM

PIN 2YN1-UP; 3ZN1-UP

DIFFERENTIAL STEERING AND FINGER TIP CONTROL STANDARD MACHINES

SMCS-7000 **i01009384**

NOTE	PART NUMBER	QTY	PART NAME 1 2 3 4 5 6 (PRODUCT LEVEL)	SEE PAGE
Y	*131-0704*	1	ALTERNATOR AR-CHARGING	164
Y	*128-4092*	1	DISPOSAL AR	1
Y	*134-2921*	1	GUARD AR-FINAL DRIVE	272
YI	*4Z-8954*	1	HOSE AS	356
YI	*4Z-8955*	1	HOSE AS	357
	128-7273	1	BAR AS	
I	**9Z-8212**	1	HOSE AS	
I	**9Z-8213**	1	HOSE AS	

I-SEE HOSE FABRICATION GUIDE
Y-SEPARATE ILLUSTRATION

MACHINE ARRANGEMENT

129-2162 DISPOSAL AR–WASTE–CUSTOM

PIN 6JN1-UP; 7KN1-UP

DIFFERENTIAL STEERING AND FINGER TIP CONTROL, EXTENDED REAR TRACK ROLLER FRAME

SMCS-7000 **i01009508**

NOTE	PART NUMBER	QTY	PART NAME 1 2 3 4 5 6 (PRODUCT LEVEL)	SEE PAGE
Y	*131-0704*	1	ALTERNATOR AR-CHARGING	164
Y	*128-4092*	1	DISPOSAL AR	1
Y	*1Q-2275*	2	FINAL DRIVE GP	206
Y	*134-2920*	4	IDLER GP-TRACK	282
YI	*4Z-8954*	1	HOSE AS	356
YI	*4Z-8955*	1	HOSE AS	357
	128-7273	1	BAR AS	
I	**9Z-8212**	1	HOSE AS	
I	**9Z-8213**	1	HOSE AS	

I-SEE HOSE FABRICATION GUIDE
Y-SEPARATE ILLUSTRATION

MACHINE ARRANGEMENT

129-2163 DISPOSAL AR–WASTE–CUSTOM

PIN 4MN1-UP; 5LN1-UP

DIFFERENTIAL STEERING AND FINGER TIP CONTROL, EXTENDED FRONT TRACK ROLLER FRAME

SMCS-7000 **i01009513**

NOTE	PART NUMBER	QTY	PART NAME 1 2 3 4 5 6 (PRODUCT LEVEL)	SEE PAGE
Y	*131-0704*	1	ALTERNATOR AR-CHARGING	164
Y	*128-4092*	1	DISPOSAL AR	1
Y	*134-2921*	1	GUARD AR-FINAL DRIVE	272
	128-7273	1	BAR AS	
I	**9Z-8212**	1	HOSE AS	
I	**9Z-8213**	1	HOSE AS	
I	**108-6013**	1	HOSE AS	
I	**108-6014**	1	HOSE AS	

I-SEE HOSE FABRICATION GUIDE
Y-SEPARATE ILLUSTRATION

ENGINE ARRANGEMENT

8Q-1761 ENGINE AR-CUSTOM–CUSTOM

PIN 2YN1-UP; 3ZN1-UP
3306 DI-T W/LTS
PART OF 8Q-1768 SHIELD AR-THERMO

SMCS-1000 i01015173

NOTE	PART NUMBER	QTY	PART NAME 1 2 3 4 5 6 (PRODUCT LEVEL)	SEE PAGE
Y	1W-1154	1	HOUSING GP-FLYWHEEL	32
Y	8N-0303	1	HOUSING GP-FRONT	34
Y	6N-8326	1	LIFTING GP-ENGINE	35
Y	7C-8672	1	LINES GP-AIR	108
Y	2P-6105	1	LINES GP-ENGINE OIL	50
Y	2W-1605	1	LINES GP-FUEL DRAIN	142
Y	8Q-1758	1	LINES GP-FUEL INJECTION	148
Y	7C-8666	1	LINES GP-TURBOCHARGER OIL	52
Y	7C-8665	1	LINES GP-TURBOCHARGER WATER	79
Y	2W-6779	1	LINES GP-WATER	80
Y	7C-8669	1	MANIFOLD GP-EXHAUST	112
Y	2W-0176	1	MOUNTING GP-ALTERNATOR	190
Y	2P-6152	1	PAN GP-OIL	36
Y	1W-6588	6	PISTON & ROD GP	37
Y	128-7984	1	PROTECTION GP-FUEL SYSTEM	152
Y	109-5176	1	PULLEY GP-CRANKSHAFT	38
Y	2W-4160	1	PUMP & MTG GP-FUEL TRANSFER	153
Y	106-8957	1	PUMP GP-ENGINE OIL	65
Y	111-3768	1	PUMP GP-GOV & FUEL INJ	160
Y	116-7556	1	PUMP GP-WATER	86
Y	2P-6224	1	SEAL GP-CRANKSHAFT	39
Y	8Q-1842	1	SHIELD GP-MANIFOLD	123
Y	8N-4422	1	SUPPORT GP-ENGINE	40
Y	8N-0107	1	TRUNNION GP-ENGINE	41
Y	8Q-1757	1	TURBOCHARGER GP	125
Y	7N-8026	1	VALVE MECHANISM GP	44

Y-SEPARATE ILLUSTRATION

ENGINE ARRANGEMENT

8Q-1762 ENGINE AR-CUSTOM–CUSTOM

PIN 8LN1-UP; 9PN1-UP
3306 DI-T W/LTS
PART OF 8Q-1769 SHIELD AR-THERMO

SMCS-1000 i01017657

NOTE	PART NUMBER	QTY	PART NAME 1 2 3 4 5 6 (PRODUCT LEVEL)	SEE PAGE
Y	1P-4244	1	BREATHER GP	47
Y	1N-4406	1	CAMSHAFT GP	11
Y	2W-2272	1	COOLER GP-FLTR BASE & ENG OIL	72
Y	7N-2731	1	COOLER GP-TRANSMISSION OIL	73
Y	7N-1342	1	COVER GP-CYLINDER BLOCK	12
Y	2P-6528	1	COVER GP-FRONT HOUSING	13
Y	8N-4745	1	COVER GP-VALVE MECHANISM	14
Y	4P-9856	1	CRANKSHAFT GP	15
YR	8N-5286	1	CYLINDER BLOCK GP	18
Y	8N-0246	1	CYLINDER HEAD GP	22
Y	1W-7831	1	DAMPER GP	24
Y	7N-9536	1	FASTENER GP-CYLINDER HEAD	26
Y	1W-3218	1	FASTENER GP-EXHAUST MANIFOLD	104
Y	8N-0872	1	FASTENER GP-FRONT HOUSING	27
Y	9Y-0066	1	FASTENER GP-OIL PAN	28
Y	7C-9336	1	FILLER GP-ENGINE OIL	48
Y	1W-1690	1	FILTER GP-PRIMARY FUEL	133
Y	7W-5156	1	FILTER GP-SECONDARY FUEL	136
Y	7N-2729	1	FLYWHEEL GP	29
Y	7C-9335	1	GAUGE GP-OIL LEVEL (DIPSTICK)	49
Y	111-8001	1	GEAR GP-FRONT	30
Y	7C-0502	1	GEAR GP-REAR	31
Y	1W-1154	1	HOUSING GP-FLYWHEEL	32
Y	8N-0303	1	HOUSING GP-FRONT	34
Y	6N-8326	1	LIFTING GP-ENGINE	35
Y	7C-8672	1	LINES GP-AIR	108
Y	2P-6105	1	LINES GP-ENGINE OIL	50
Y	2W-1605	1	LINES GP-FUEL DRAIN	142
Y	8Q-1758	1	LINES GP-FUEL INJECTION	148
Y	7C-8666	1	LINES GP-TURBOCHARGER OIL	52
Y	7C-8665	1	LINES GP-TURBOCHARGER WATER	79
Y	2W-6779	1	LINES GP-WATER	80
Y	7C-8669	1	MANIFOLD GP-EXHAUST	112
Y	2W-0176	1	MOUNTING GP-ALTERNATOR	190
Y	2P-6152	1	PAN GP-OIL	36
Y	1W-6588	6	PISTON & ROD GP	37
Y	128-7984	1	PROTECTION GP-FUEL SYSTEM	152
Y	109-5176	1	PULLEY GP-CRANKSHAFT	38
Y	2W-4160	1	PUMP & MTG GP-FUEL TRANSFER	153
Y	106-8957	1	PUMP GP-ENGINE OIL	65
Y	111-3768	1	PUMP GP-GOV & FUEL INJ	160
Y	116-7556	1	PUMP GP-WATER	86
Y	2P-6224	1	SEAL GP-CRANKSHAFT	39
Y	8Q-1842	1	SHIELD GP-MANIFOLD	123
Y	8N-4422	1	SUPPORT GP-ENGINE	40
Y	8N-0107	1	TRUNNION GP-ENGINE	41
Y	8Q-1757	1	TURBOCHARGER GP	125
Y	7N-8026	1	VALVE MECHANISM GP	44

R-REMFG PART MAY BE AVAILABLE
Y-SEPARATE ILLUSTRATION

ENGINE ARRANGEMENT

8Q-1763 ENGINE AR-CUSTOM–CUSTOM

PIN 4MN1-UP; 5LN1-UP; 6JN1-UP; 7KN1-UP
3306 DI-T W/LTS
PART OF 8Q-1770 SHIELD AR-THERMO

SMCS-1000 i01017773

NOTE	PART NUMBER	QTY	PART NAME 1 2 3 4 5 6 (PRODUCT LEVEL)	SEE PAGE
Y	1P-4244	1	BREATHER GP	47
Y	1N-4406	1	CAMSHAFT GP	11
Y	2W-2272	1	COOLER GP-FLTR BASE & ENG OIL	72
Y	7N-2731	1	COOLER GP-TRANSMISSION OIL	73
Y	7N-1342	1	COVER GP-CYLINDER BLOCK	12
Y	2P-6528	1	COVER GP-FRONT HOUSING	13
Y	8N-4745	1	COVER GP-VALVE MECHANISM	14
Y	4P-9856	1	CRANKSHAFT GP	15
YR	8N-5286	1	CYLINDER BLOCK GP	18
Y	8N-0246	1	CYLINDER HEAD GP	22
Y	1W-7831	1	DAMPER GP	24
Y	7N-9536	1	FASTENER GP-CYLINDER HEAD	26
Y	1W-3218	1	FASTENER GP-EXHAUST MANIFOLD	104
Y	8N-0872	1	FASTENER GP-FRONT HOUSING	27
Y	9Y-0066	1	FASTENER GP-OIL PAN	28
Y	7C-9336	1	FILLER GP-ENGINE OIL	48
Y	1W-1690	1	FILTER GP-PRIMARY FUEL	133
Y	7W-5156	1	FILTER GP-SECONDARY FUEL	136
Y	7N-2729	1	FLYWHEEL GP	29
Y	7C-9335	1	GAUGE GP-OIL LEVEL (DIPSTICK)	49
Y	111-8001	1	GEAR GP-FRONT	30
Y	7C-0502	1	GEAR GP-REAR	31
Y	1W-1154	1	HOUSING GP-FLYWHEEL	32
Y	8N-0303	1	HOUSING GP-FRONT	34
Y	6N-8326	1	LIFTING GP-ENGINE	35
Y	7C-8672	1	LINES GP-AIR	108
Y	2P-6105	1	LINES GP-ENGINE OIL	50
Y	2W-1605	1	LINES GP-FUEL DRAIN	142
Y	8Q-1758	1	LINES GP-FUEL INJECTION	148
Y	7C-8666	1	LINES GP-TURBOCHARGER OIL	52
Y	7C-8665	1	LINES GP-TURBOCHARGER WATER	79
Y	2W-6779	1	LINES GP-WATER	80
Y	7C-8669	1	MANIFOLD GP-EXHAUST	112
Y	2W-0176	1	MOUNTING GP-ALTERNATOR	190
Y	2P-6152	1	PAN GP-OIL	36
Y	1W-6588	6	PISTON & ROD GP	37
Y	128-7984	1	PROTECTION GP-FUEL SYSTEM	152
Y	109-5176	1	PULLEY GP-CRANKSHAFT	38
Y	2W-4160	1	PUMP & MTG GP-FUEL TRANSFER	153
Y	106-8957	1	PUMP GP-ENGINE OIL	65
Y	111-3768	1	PUMP GP-GOV & FUEL INJ	160
Y	116-7556	1	PUMP GP-WATER	86
Y	2P-6224	1	SEAL GP-CRANKSHAFT	39
Y	8Q-1842	1	SHIELD GP-MANIFOLD	123
Y	8N-4422	1	SUPPORT GP-ENGINE	40
Y	8N-0107	1	TRUNNION GP-ENGINE	41
Y	8Q-1757	1	TURBOCHARGER GP	125
Y	7N-8026	1	VALVE MECHANISM GP	44

R-REMFG PART MAY BE AVAILABLE
Y-SEPARATE ILLUSTRATION

ENGINE ARRANGEMENT

108-1078 ENGINE AR

S/N 6NC1-UP; 08Z93150-99999
PART OF 151-6170 GAUGE AR-TRACK

SMCS-1000 i00869689

NOTE	PART NUMBER	QTY	PART NAME 1 2 3 4 5 6 (PRODUCT LEVEL)	SEE PAGE
Y	1P-4244	1	BREATHER GP	47
Y	1N-4406	1	CAMSHAFT GP	11
Y	2W-2272	1	COOLER GP-FLTR BASE & ENG OIL	72
Y	7N-2731	1	COOLER GP-TRANSMISSION OIL	73
Y	7N-1342	1	COVER GP-CYLINDER BLOCK	12
Y	2P-6528	1	COVER GP-FRONT HOUSING	13
Y	8N-4745	1	COVER GP-VALVE MECHANISM	14
Y	4P-9856	1	CRANKSHAFT GP	15
YR	8N-5286	1	CYLINDER BLOCK GP	18
YR	7N-8876	1	CYLINDER HEAD GP	20
Y	1W-7831	1	DAMPER GP	24
Y	7N-9536	1	FASTENER GP-CYLINDER HEAD	26
Y	1W-4486	1	FASTENER GP-EXHAUST MANIFOLD	105
Y	8N-0872	1	FASTENER GP-FRONT HOUSING	27
Y	9Y-0066	1	FASTENER GP-OIL PAN	28
Y	7C-9336	1	FILLER GP-ENGINE OIL	48
Y	1W-1690	1	FILTER GP-PRIMARY FUEL	133
Y	7W-5156	1	FILTER GP-SECONDARY FUEL	136
Y	7N-2729	1	FLYWHEEL GP	29
Y	7C-9335	1	GAUGE GP-OIL LEVEL (DIPSTICK)	49
Y	111-8001	1	GEAR GP-FRONT	30
Y	7C-0502	1	GEAR GP-REAR	31
Y	1W-1154	1	HOUSING GP-FLYWHEEL	32
Y	8N-0303	1	HOUSING GP-FRONT	34
Y	6N-8326	1	LIFTING GP-ENGINE	35
Y	113-5368	1	LINES GP-AIR	110
Y	2P-6105	1	LINES GP-ENGINE OIL	50
Y	2W-1605	1	LINES GP-FUEL DRAIN	142
Y	113-5341	1	LINES GP-FUEL INJECTION	150
Y	9Y-5727	1	LINES GP-TURBOCHARGER OIL	54
Y	2W-6779	1	LINES GP-WATER	80
Y	6N-0164	1	MANIFOLD GP-EXHAUST	111
Y	2W-0176	1	MOUNTING GP-ALTERNATOR	190
Y	2P-6152	1	PAN GP-OIL	36
Y	1W-6588	6	PISTON & ROD GP	37
Y	128-7984	1	PROTECTION GP-FUEL SYSTEM	152
Y	109-5176	1	PULLEY GP-CRANKSHAFT	38
Y	2W-4160	1	PUMP & MTG GP-FUEL TRANSFER	153
Y	106-8957	1	PUMP GP-ENGINE OIL	65
Y	111-3768	1	PUMP GP-GOV & FUEL INJ	160
Y	116-7556	1	PUMP GP-WATER	86
Y	2P-6224	1	SEAL GP-CRANKSHAFT	39
Y	8N-4422	1	SUPPORT GP-ENGINE	40
Y	8N-0107	1	TRUNNION GP-ENGINE	41
Y	113-5340	1	TURBOCHARGER GP	126
Y	7N-8026	1	VALVE MECHANISM GP	44
			(GASKET KITS WILL BE PROVIDED WHEN AVAILABLE)	

R-REMFG PART MAY BE AVAILABLE
Y-SEPARATE ILLUSTRATION

1N-4406 CAMSHAFT GP

PIN 4MN1-UP; 5LN1-UP; 6JN1-UP; 7KN1-UP;
8LN1-UP; 9PN1-UP. S/N 6NC1-UP; 08Z93150-99999
PART OF 108-1078, 8Q-1762, 8Q-1763 ENGINE AR

SMCS-1210, 1211, 1212 i00126817

NOTE	REF NO	GRAPHIC REF	PART NUMBER	QTY	PART NAME 1 2 3 4 5 6 (PRODUCT LEVEL)	SEE PAGE
R	1	1	4P-2942	1	CAMSHAFT AS	
	2	1	7S-2204	1	WASHER-THRUST	
	3	1	8S-1491	1	LOCK	
	4	1	0S-0509	2	BOLT (3/8-16X.75IN)	

R-REMFG PART MAY BE AVAILABLE

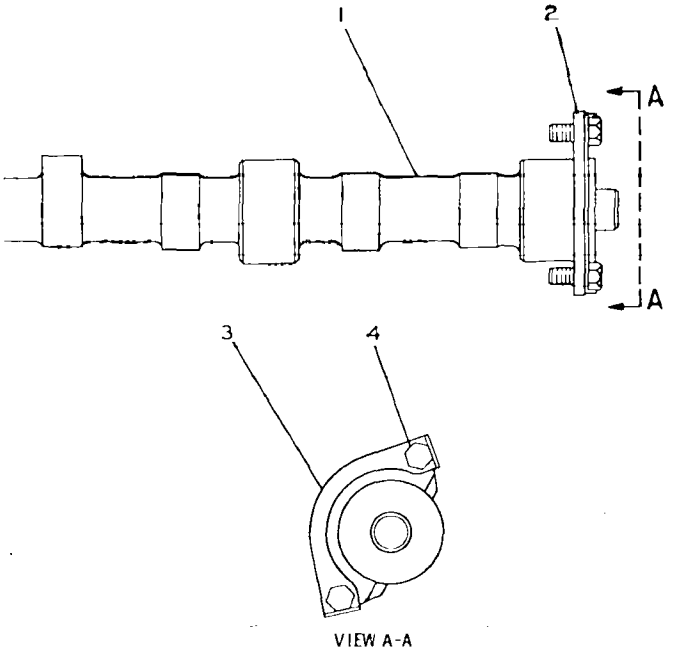

VIEW A-A

GRAPHIC #1 g00108277

BASIC ENGINE

7N-1342 COVER GP-CYLINDER BLOCK

PIN 4MN1-UP; 5LN1-UP; 6JN1-UP; 7KN1-UP;
8LN1-UP; 9PN1-UP. S/N 6NC1-UP; 08Z93150-99999
PART OF 108-1078, 8Q-1762, 8Q-1763 ENGINE AR

SMCS-1201 **i00160139**

NOTE	REF NO	GRAPHIC REF	PART NUMBER	QTY	PART NAME 1 2 3 4 5 6 (PRODUCT LEVEL)	SEE PAGE
B	1	1	0L-1351	2	BOLT (3/8-16X.875IN)	
B	2	1	5M-2894	2	WASHER (2.5MM THK)	
B	3	1	8L-8662	1	COVER	
B	4	1	5S-8055	1	GASKET	
	5	1	4B-3938	1	PLUG-CUP	
	6	1	2A-3798	2	DOWEL	
B	7	1	8M-3267	1	SCREW-HEX SOCKET	
BC	8	1	5M-6214	1	PLUG-PIPE (1/8-27 THD)	

B-USE AS REQUIRED
C-CHANGE FROM PREVIOUS TYPE

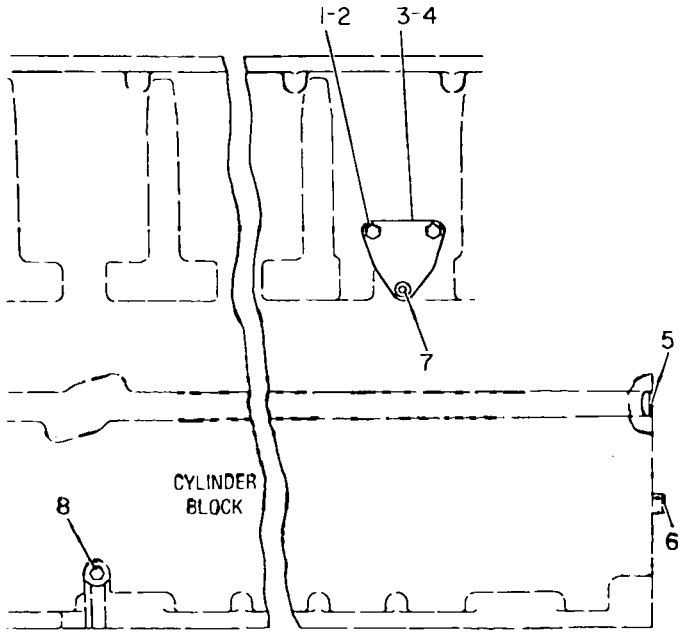

GRAPHIC #1 g00112428

BASIC ENGINE

2P-6528 COVER GP-FRONT HOUSING

PIN 4MN1-UP; 5LN1-UP; 6JN1-UP; 7KN1-UP;
8LN1-UP; 9PN1-UP. S/N 6NC1-UP; 08Z93150-99999
PART OF 108-1078, 8Q-1762, 8Q-1763 ENGINE AR

SMCS-1151, 1162, 1166 i00165332

NOTE	REF NO	GRAPHIC REF	PART NUMBER	QTY	PART NAME 1 2 3 4 5 6 (PRODUCT LEVEL)	SEE PAGE
C	1	1	**9N-5769**	1	COVER-HOUSING	
	2	1	**6N-7887**	1	GASKET-HOUSING COVER	
	3	1	**3S-2713**	6	NUT-FULL (3/8-24 THD)	
		1	**8M-9024**	6	WASHER-HARD (5MM THK)	
	4	1	**5M-2894**	3	WASHER (2.5MM THK)	
C	5	1	**1W-4542**	1	COVER-WATER PUMP	
	6	1	**3B-1915**	3	BOLT (3/8-16X1.375IN)	
	7	1	**0S-1566**	4	BOLT (5/8-11X1.5IN)	
		1	**5P-8247**	4	WASHER-HARD (3.5MM THK)	
	8	1	**2P-0220**	1	GASKET-PUMP	
	9	1	**5F-3106**	1	SEAL-O-RING (126.59MM ID)	
	10	1	**7N-8374**	1	COVER-DRIVE OPENING	

C-CHANGE FROM PREVIOUS TYPE

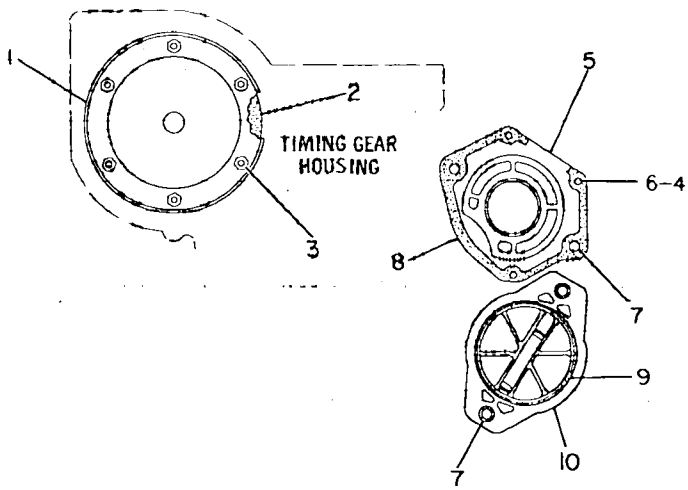

GRAPHIC #1 g00116901

8N-4745 COVER GP-VALVE MECHANISM

PIN 4MN1-UP; 5LN1-UP; 6JN1-UP; 7KN1-UP;
8LN1-UP; 9PN1-UP. S/N 6NC1-UP; 08Z93150-99999
PART OF 108-1078, 8Q-1762, 8Q-1763 ENGINE AR

SMCS-1107, 1120 i00696643

NOTE	REF NO	GRAPHIC REF	PART NUMBER	QTY	PART NAME 1 2 3 4 5 6 (PRODUCT LEVEL)	SEE PAGE
C	1	1	2W-1086	1	COVER AS-CYLINDER HEAD	
	2	1	0S-1617	15	BOLT (5/16-18X.75IN)	
	3	1	9M-1974	15	WASHER-HARD (2MM THK)	
	4	1	133-1247	1	SEAL-INTEGRAL	

C-CHANGE FROM PREVIOUS TYPE

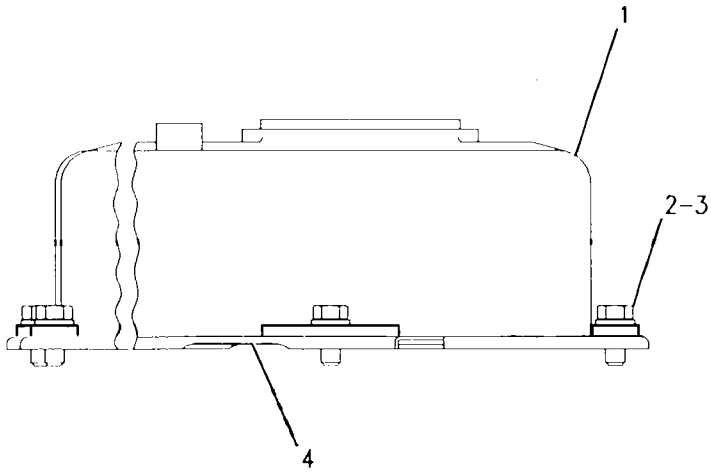

GRAPHIC #1 g00301640

BASIC ENGINE

4P-9856 CRANKSHAFT GP

PIN 4MN1-UP; 5LN1-UP; 6JN1-UP; 7KN1-UP;
8LN1-UP; 9PN1-UP. S/N 6NC1-UP; 08Z93150-99999
PART OF 108-1078, 8Q-1762, 8Q-1763 ENGINE AR

SMCS-1202, 1203, 1204, 1230, 1231, 1232 i00882907

NOTE	REF NO	GRAPHIC REF	PART NUMBER	QTY	PART NAME 1 2 3 4 5 6 (PRODUCT LEVEL)	SEE PAGE
	1	1	100-3652	2	PLATE-THRUST	
	2	1	4P-9857	1	CRANKSHAFT AS	
		1	4P-7827	1	GEAR-CRANKSHAFT (33 T)	
		1	5H-2671	1	KEY-WOODRUFF	
		1	8T-6757	6	PLUG-PIPE (1/8-27 NPTF THD)	
	3	1	4W-5738	7	BEARING-MAIN (STANDARD)	
A		1	8N-8225	7	BEARING-MAIN (.25MM US)	
A		1	8N-8226	7	BEARING-MAIN (.51MM US)	
A		1	8N-8227	7	BEARING-MAIN (.76MM US)	
A		1	8N-8228	7	BEARING-MAIN (.51MM OS)	
A		1	8N-8229	7	BEARING-MAIN (.25MM US/.51MM OS)	
A		1	4P-7305	7	BEARING-MAIN (.51MM US/.51MM OS)	
A		1	4P-7306	7	BEARING-MAIN (.76MM US/.51MM OS)	

A-NOT PART OF THIS GROUP

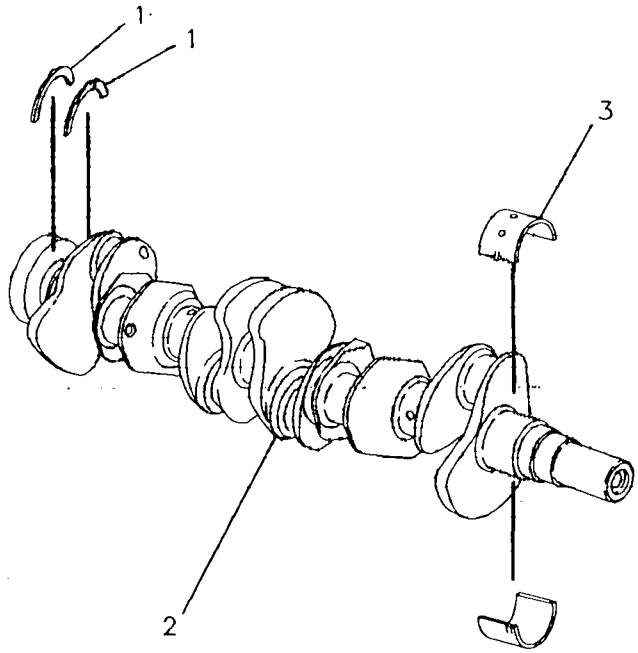

GRAPHIC #1 g00108385

7N-6550 CYLINDER BLOCK AS

PIN 4MN1-UP; 5LN1-UP; 6JN1-UP; 7KN1-UP; 8LN1-UP; 9PN1-UP. S/N 08Z93150-99999
PART OF 8N-5286 CYLINDER BLOCK GP

SMCS-1117, 1201, 1211, 1216, 1217, 1221, 1222, 1223, 1224, 1238, 1239, 1240, 1331

i00128460

NOTE	REF NO	GRAPHIC REF	PART NUMBER	QTY	PART NAME 1 2 3 4 5 6 (PRODUCT LEVEL)	SEE PAGE
	1	1	5S-6670	18	SEAL-O-RING (117.1MM ID)	
	2	1	110-5800	6	LINER-CYLINDER	
AJ		1	104-5512	6	INSERT-LINER SEAT (.822MM THK)	
AJ		1	104-5518	6	INSERT-LINER SEAT (1.605MM THK)	
AJ		1	104-5527	6	INSERT-LINER SEAT (2.710MM THK)	
AJ		1	104-5530	6	INSERT-LINER SEAT (5.210MM THK)	
C	3	1	2W-6134	6	BAND-FILLER	
	4	1	7S-3224	14	BOLT (5/8-11X5.25IN)	
		1	2S-5658	14	WASHER-HARD (3.0MM THK)	
	5	1	6N-8003	7	CAP-CRANKSHAFT BEARING	
					J-FOR USE WITH CYLINDER BLOCKS WITH LIGHT DAMAGE DUE TO EROSION/FRETTING IN THE LINER FLANGE SEATING AREA	

A-NOT PART OF THIS GROUP
C-CHANGE FROM PREVIOUS TYPE

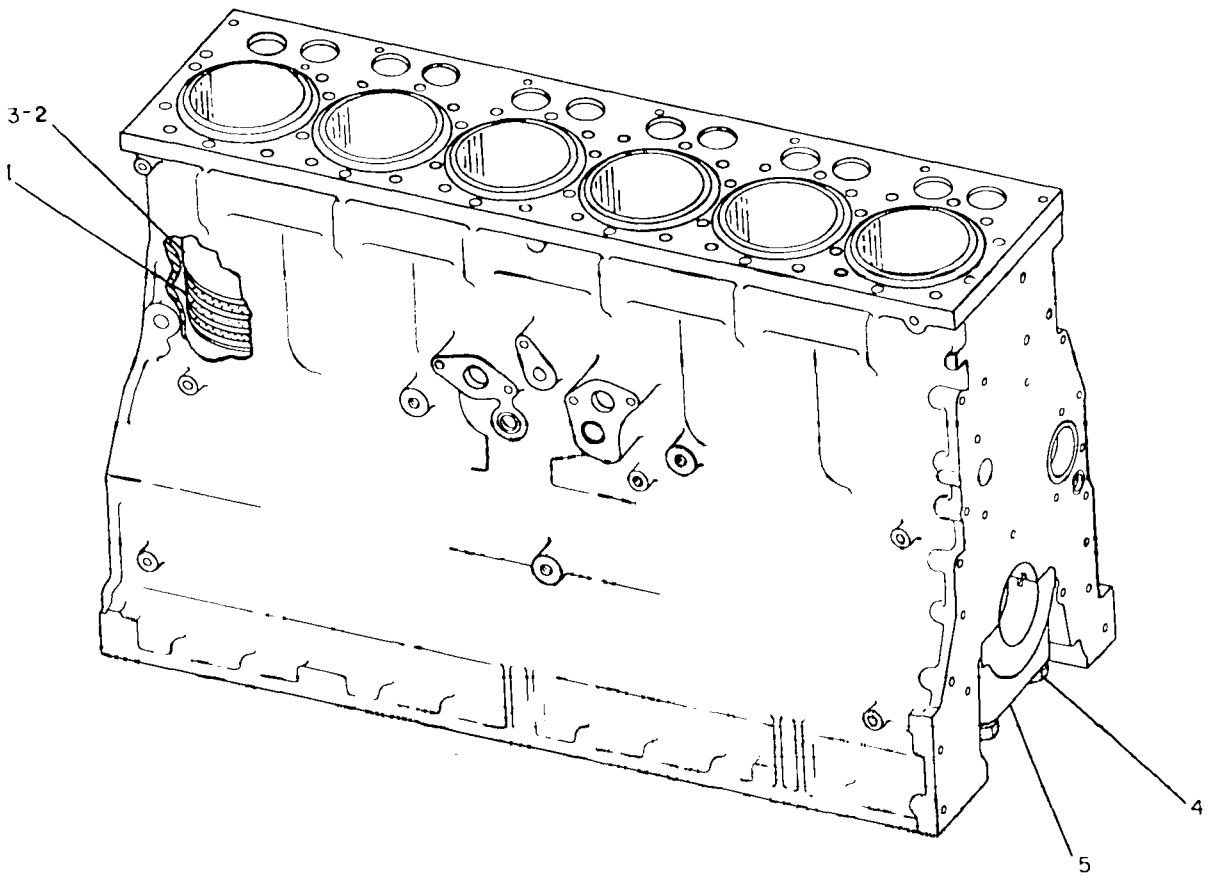

GRAPHIC #1

g00108280

BASIC ENGINE

8N-5286 CYLINDER BLOCK GP*R

PIN 4MN1-UP; 5LN1-UP; 6JN1-UP; 7KN1-UP;
8LN1-UP; 9PN1-UP. S/N 6NC1-UP; 08Z93150-99999
PART OF 108-1078, 8Q-1762, 8Q-1763 ENGINE AR

SMCS-1117, 1200, 1201, 1211, 1216, 1217, 1221, 1222, 1223, 1224, 1238, 1239, 1240, 1331

i00937959

NOTE	REF NO	GRAPHIC REF	PART NUMBER	QTY	PART NAME 1 2 3 4 5 6 (PRODUCT LEVEL)	SEE PAGE
CY	1	1	**7N-6550**	1	CYLINDER BLOCK AS	16
	2	1	**7M-4046**	4	BEARING-SLEEVE	
	3	1	**8K-1207**	2	DOWEL	
	4	1	**3S-5496**	1	SEAL-O-RING (9.53MM ID)	
	5	1	**8B-6349**	2	DOWEL (15.88 MM X 34.92 MM)	
	6	1	**7N-7998**	1	PLATE-BLOCK	
C	7	1	**115-7550**	1	GASKET-PLATE	
	8	1	**8T-6764**	1	PLUG-PIPE (1/8-27 NPTF THD)	
	9	1	**8T-6763**	1	PLUG	
	10	1	**8T-6765**	4	PLUG-PIPE (1/4-18 NPTF THD)	
	11	1	**8M-9307**	1	PLUG-DRAIN	
		1	**6F-7062**	1	WASHER	
C	12	1	**8T-6762**	3	PLUG-PIPE	
	13	1	**5B-7652**	2	DOWEL (15.72 MM X 15.88 MM)	
	14	1	**8N-4110**	1	BEARING-SLEEVE	
	15	1	**4B-5387**	1	PLUG-CUP	
	16	1	**4B-9782**	1	BALL (9.52MM DIA)	
	17	1	**1S-9540**	1	DOWEL (30.23 MM X 9.37 MM)	
	18	1	**5S-8462**	1	STUD	
C	19	1	**4B-3938**	1	PLUG-CUP	

C-CHANGE FROM PREVIOUS TYPE
Y-SEPARATE ILLUSTRATION

8N-5286 CYLINDER BLOCK GP *(contd.)* i00937959

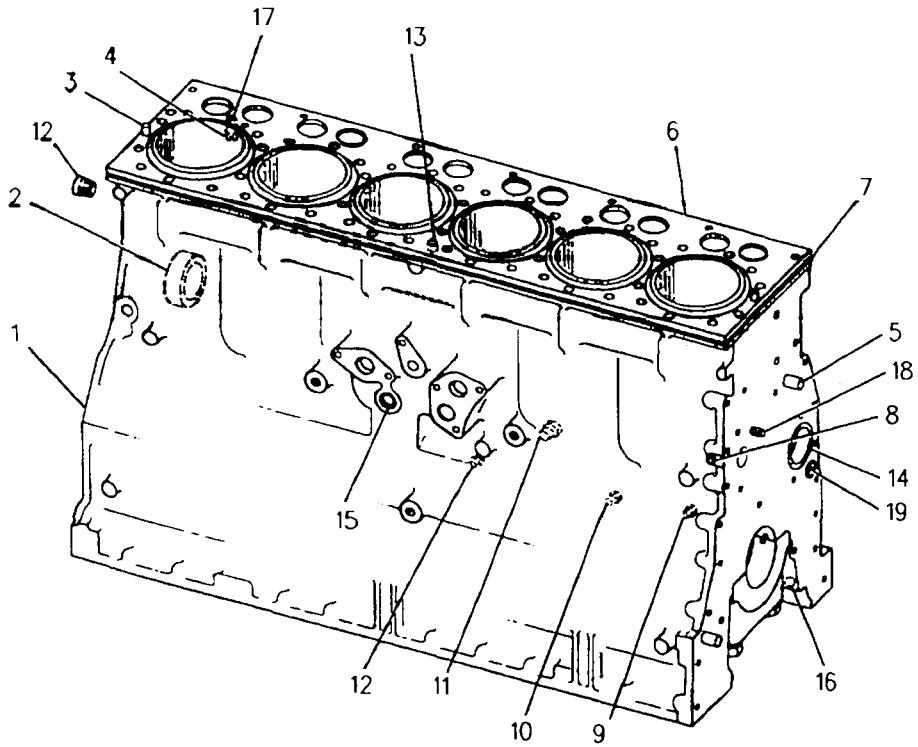

GRAPHIC #1 g00390419

BASIC ENGINE

7N-8876 CYLINDER HEAD GP*R

S/N 6NC1-UP; 08Z93150-99999
PART OF 108-1078 ENGINE AR

SMCS-1100, 1103, 1104, 1105, 1106, 1108, 1109, 1115, 1117, 1121, 1124, 1125

i00736472

NOTE	REF NO	GRAPHIC REF	PART NUMBER	QTY	PART NAME 1 2 3 4 5 6 (PRODUCT LEVEL)	SEE PAGE
	1	1	**7S-7144**	12	SPRING-VALVE	
	2	1	**1W-5300**	12	ROTOCOIL AS	
					(EACH INCLUDES)	
		1	**6N-7174**	1	SHIELD-OIL	
	3	1	**2A-4429**	24	LOCK-RETAINER	
	4	1	**3S-5496**	1	SEAL-O-RING (9.53MM ID)	
	5	1	**111-8015**	1	GASKET AS-CYLINDER HEAD	
	6	1	**6N-9915**	6	VALVE-INLET	
	7	1	**148-7455**	6	VALVE-EXHAUST	
	8	1	**9Y-1798**	18	SEAL-WATER	
	9	1	**148-7425**	12	GUIDE-VALVE	
	10	1	**3S-8313**	7	PLUG-CUP	
	11	1	**3P-1896**	13	PLUG-CUP (35.31MM AVG OD)	
	12	1	**107-0268**	6	INSERT-VALVE SEAT (INT)	
	13	1	**107-0265**	6	INSERT-VALVE SEAT	
	14	1	**3B-0623**	6	PLUG-CUP (25.73MM AVG OD)	
	15	1	**8T-6762**	3	PLUG-PIPE	
	16	1	**7N-8018**	6	SEAL-WATER	
	17	1	**8T-6763**	1	PLUG	

7N-8876 CYLINDER HEAD GP *(contd.)* i00736472

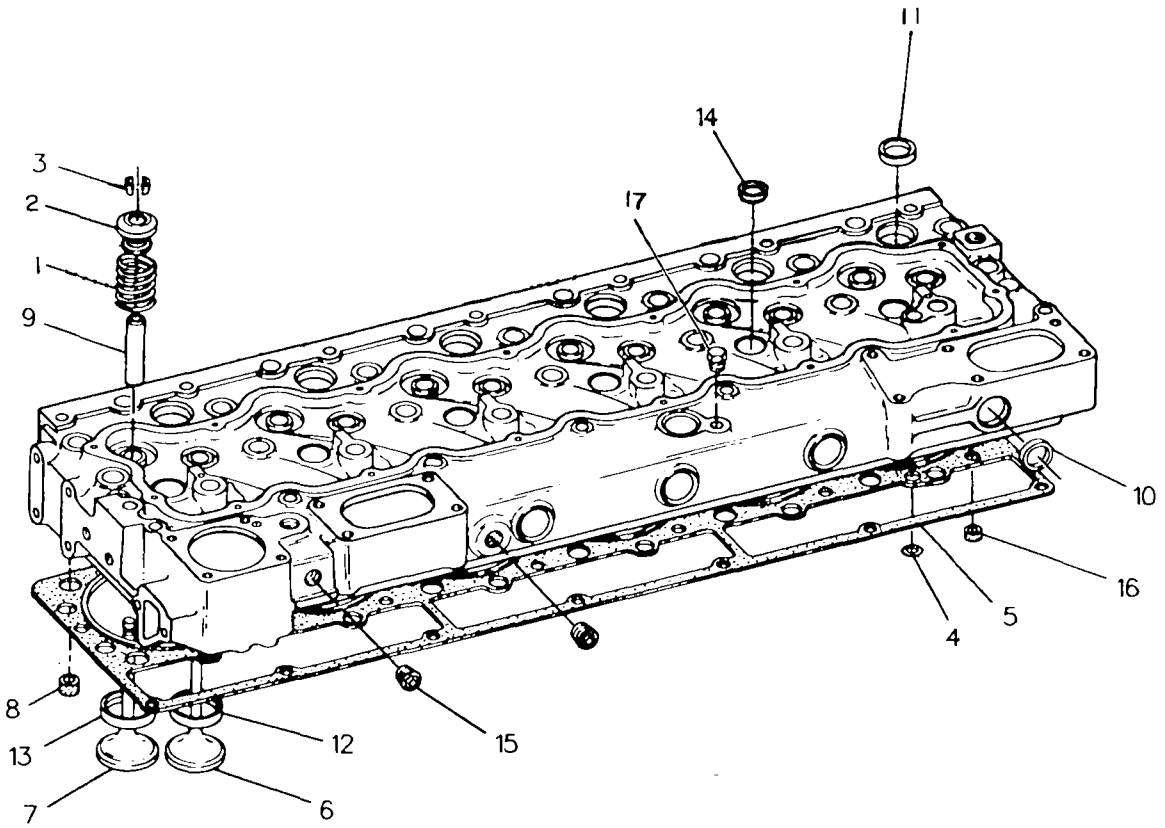

GRAPHIC #1 g00108420

BASIC ENGINE

8N-0246 CYLINDER HEAD GP

PIN 4MN1-UP; 5LN1-UP; 6JN1-UP; 7KN1-UP; 8LN1-UP; 9PN1-UP
PART OF 8Q-1762, 8Q-1763 ENGINE AR

SMCS-1100, 1103, 1104, 1105, 1106, 1108, 1109, 1115, 1117, 1121, 1124, 1125

i00747099

NOTE	REF NO	GRAPHIC REF	PART NUMBER	QTY	PART NAME 1 2 3 4 5 6 (PRODUCT LEVEL)	SEE PAGE
	1	1	**7S-7144**	12	SPRING-VALVE	
	2	1	**1W-5300**	12	ROTOCOIL AS	
					(EACH INCLUDES)	
		1	**103-2454**	1	SPRING-VALVE	
		1	**6N-7174**	1	SHIELD-OIL	
	3	1	**2A-4429**	24	LOCK-RETAINER	
	4	1	**7N-8018**	6	SEAL-WATER	
	5	1	**9Y-1798**	18	SEAL-WATER	
	6	1	**148-7455**	6	VALVE-EXHAUST (EXHAUST)	
	7	1	**100-7860**	6	VALVE-INLET	
	8	1	**111-8015**	1	GASKET AS-CYLINDER HEAD	
	9	1	**3B-0623**	6	PLUG-CUP (25.73MM AVG OD)	
	10	1	**3S-8313**	7	PLUG-CUP	
	11	1	**3S-5496**	1	SEAL-O-RING (9.53MM ID)	
	12	1	**8T-6763**	1	PLUG	
	13	1	**107-0268**	6	INSERT-VALVE SEAT (INT)	
	14	1	**107-0265**	6	INSERT-VALVE SEAT	
	15	1	**148-7425**	12	GUIDE-VALVE	
	16	1	**3P-1896**	13	PLUG-CUP (35.31MM AVG OD)	
B	17	1	**8T-6762**	3	PLUG-PIPE	

B-USE AS REQUIRED

8N-0246 CYLINDER HEAD GP *(contd.)* i00747099

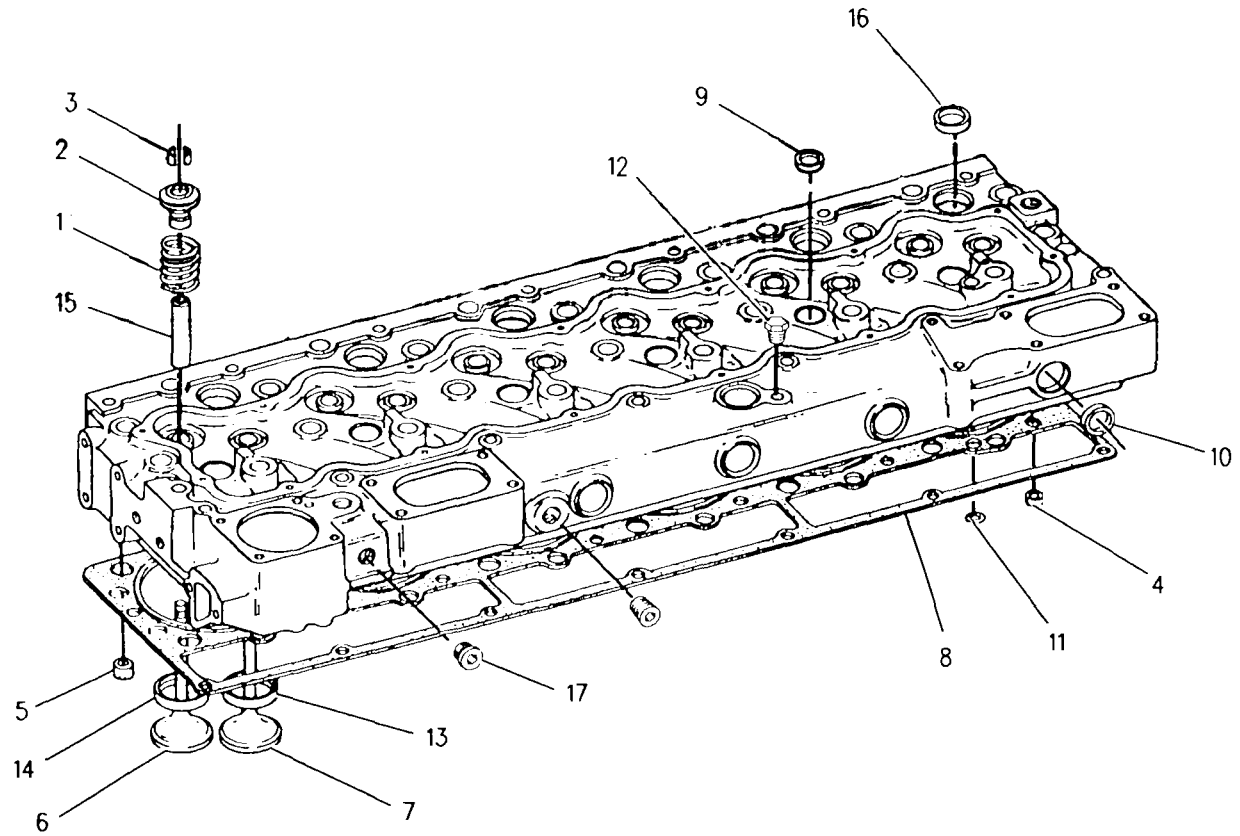

GRAPHIC #1 g00291526

1W-7831 DAMPER GP

PIN 4MN1-UP; 5LN1-UP; 6JN1-UP; 7KN1-UP;
8LN1-UP; 9PN1-UP. S/N 6NC1-UP; 08Z93150-99999
PART OF 108-1078, 8Q-1762, 8Q-1763 ENGINE AR

SMCS-1205 i00173416

NOTE	REF NO	GRAPHIC REF	PART NUMBER	QTY	PART NAME 1 2 3 4 5 6 (PRODUCT LEVEL)	SEE PAGE
	1	1	4W-2446	1	DAMPER AS	
	2	1	6H-1717	6	BOLT (1/2-13X1.125IN)	

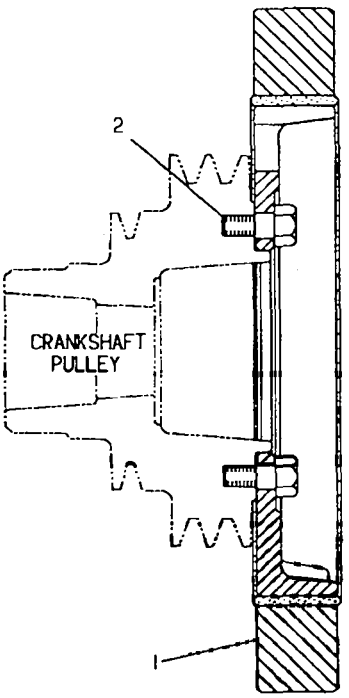

GRAPHIC #1 g00118388

8Q-0704 FAN SPEED INCREASE AR-CUSTOM

PIN 2YN1-UP; 3ZN1-UP; 4MN1-UP; 5LN1-UP; 6JN1-UP; 7KN1-UP; 8LN1-UP; 9PN1-UP
16 % FAN SPEED INCREASE AT 1306 RPM
PART OF 8Q-1992 FAN AR-EJECTOR

SMCS-1357, 1359 i01010539

NOTE	REF NO	GRAPHIC REF	PART NUMBER	QTY	PART NAME 1 2 3 4 5 6 (PRODUCT LEVEL)	SEE PAGE
	1	1	7N-9149	1	PULLEY-FAN DRIVE	
Y	2	1	2W-8951	1	V-BELT SET	42

Y-SEPARATE ILLUSTRATION

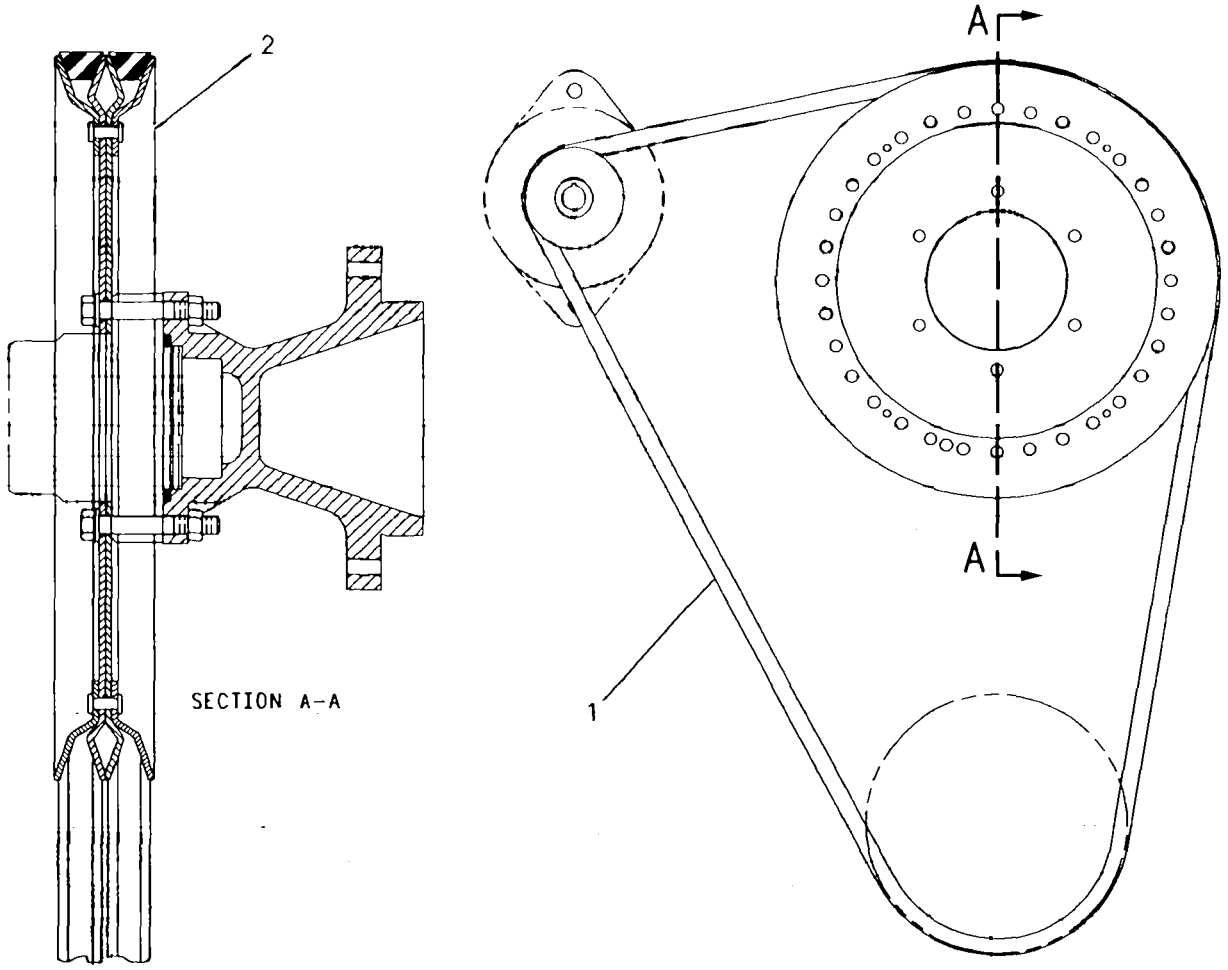

GRAPHIC #1 g00294634

BASIC ENGINE

7N-9536 FASTENER GP-CYLINDER HEAD

PIN 4MN1-UP; 5LN1-UP; 6JN1-UP; 7KN1-UP;
8LN1-UP; 9PN1-UP. S/N 6NC1-UP; 08Z93150-99999
PART OF 108-1078, 8Q-1762, 8Q-1763 ENGINE AR

SMCS-1100 i00128512

NOTE	REF NO	GRAPHIC REF	PART NUMBER	QTY	PART NAME 1 2 3 4 5 6 (PRODUCT LEVEL)	SEE PAGE
	1	1	5B-9603	7	BOLT (3/8-16X5IN)	
C	2	1	1B-7709	5	BOLT (5/8-11X8IN) (LOCATION X)	
B	3	1	1D-4595	20	BOLT (5/8-11X6IN)	
C	4	1	2S-0736	25	WASHER-HARD	

B-USE AS REQUIRED
C-CHANGE FROM PREVIOUS TYPE

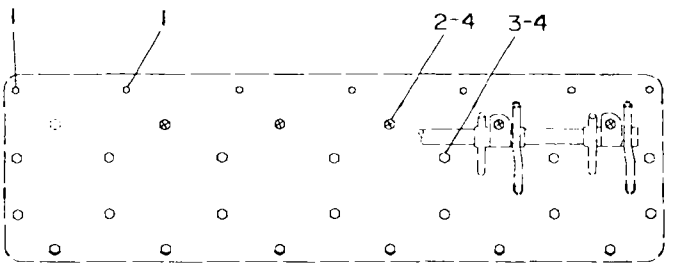

GRAPHIC #1 g00108194

8N-0872 FASTENER GP-FRONT HOUSING

PIN 4MN1-UP; 5LN1-UP; 6JN1-UP; 7KN1-UP;
8LN1-UP; 9PN1-UP. S/N 6NC1-UP; 08Z93150-99999
PART OF 108-1078, 8Q-1762, 8Q-1763 ENGINE AR

SMCS-1151 i00751459

NOTE	REF NO	GRAPHIC REF	PART NUMBER	QTY	PART NAME 1 2 3 4 5 6 (PRODUCT LEVEL)	SEE PAGE
C	1	1	3E-6914	6	BOLT	
C	2	1	0L-2070	11	BOLT (3/8-16X2.25IN)	
C	3	1	5M-2894	3	WASHER (2.5MM THK)	
	4	1	6V-8801	3	NUT (3/8-16 THD)	
	5	1	1C-2251	2	BOLT (3/8-16X1.87IN)	
B	6	1	0L-2070	9	BOLT (3/8-16X2.25IN)	
B	7	1	5M-2894	5	WASHER (2.5MM THK)	
B	8	1	6V-8801	5	NUT (3/8-16 THD)	

B-USE AS REQUIRED
C-CHANGE FROM PREVIOUS TYPE

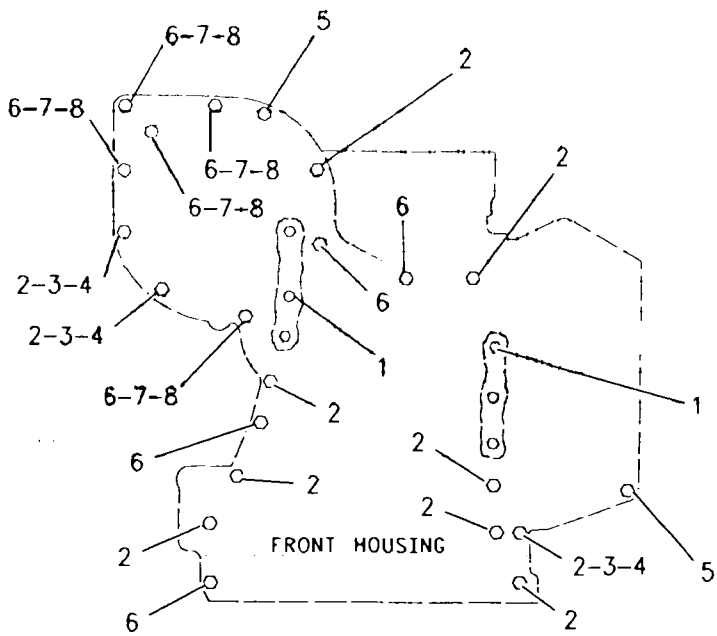

GRAPHIC #1 g00338012

9Y-0066 FASTENER GP-OIL PAN

PIN 4MN1-UP; 5LN1-UP; 6JN1-UP; 7KN1-UP;
8LN1-UP; 9PN1-UP. S/N 6NC1-UP; 08Z93150-99999
PART OF 108-1078, 8Q-1762, 8Q-1763 ENGINE AR

SMCS-1302 i00576105

NOTE	REF NO	GRAPHIC REF	PART NUMBER	QTY	PART NAME 1 2 3 4 5 6 (PRODUCT LEVEL)	SEE PAGE
	1	1	0T-0573	5	BOLT (3/8-16X2.75IN)	
	2	1	5M-2894	46	WASHER (2.5MM THK)	
	3	1	0S-1591	20	BOLT (3/8-16X1.5IN)	
	4	1	3B-1915	18	BOLT (3/8-16X1.375IN)	
	5	1	9Y-0630	2	PLATE	
	6	1	0L-1352	3	BOLT (3/8-16X3.25IN)	
	7	1	9Y-0629	1	PLATE	

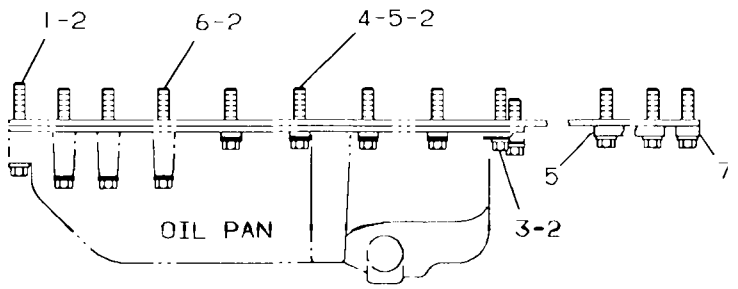

GRAPHIC #1 g00116912

BASIC ENGINE

7N-2729 FLYWHEEL GP

PIN 4MN1-UP; 5LN1-UP; 6JN1-UP; 7KN1-UP;
8LN1-UP; 9PN1-UP. S/N 6NC1-UP; 08Z93150-99999
PART OF 108-1078, 8Q-1762, 8Q-1763 ENGINE AR

SMCS-1156, 1158 i00574866

NOTE	REF NO	GRAPHIC REF	PART NUMBER	QTY	PART NAME 1 2 3 4 5 6 (PRODUCT LEVEL)	SEE PAGE
	1	1	1W-4938	1	FLYWHEEL AS	
		1	7N-9146	1	GEAR (156 TEETH)	
	2	1	0S-2318	9	BOLT (5/8-18X3.25IN)	

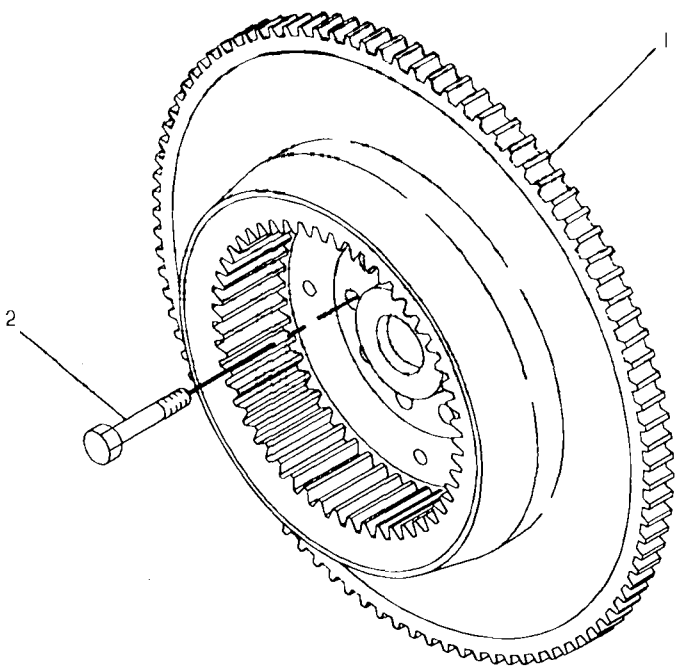

GRAPHIC #1 g00165704

BASIC ENGINE

111-8001 GEAR GP-FRONT

PIN 4MN1-UP; 5LN1-UP; 6JN1-UP; 7KN1-UP;
8LN1-UP; 9PN1-UP. S/N 6NC1-UP; 08Z93150-99999
PART OF 108-1078, 8Q-1762, 8Q-1763 ENGINE AR

SMCS-1206 **i00574865**

NOTE	REF NO	GRAPHIC REF	PART NUMBER	QTY	PART NAME 1 2 3 4 5 6 (PRODUCT LEVEL)	SEE PAGE
	1	1	**102-8636**	1	GEAR-DRIVE (66 TEETH)	
	2	1	**7N-2994**	1	WASHER	
	3	1	**8N-4960**	1	PLATE-THRUST	
	4	1	**0S-1618**	2	BOLT (5/16X18X1IN)	
	5	1	**105-9772**	1	SHAFT-DRIVE IDLER	
	6	1	**0S-1748**	4	BOLT (3/8-24X2IN)	
	7	1	**5M-2894**	2	WASHER (2.5MM THK)	
	8	1	**4P-7828**	1	GEAR AS-OIL IDLER (50 TEETH)	
		1	**2P-1168**	1	BEARING-SLEEVE	
	9	1	**4P-7826**	1	GEAR-CAMSHAFT (66 TEETH)	
	10	1	**1A-1135**	1	BOLT (5/8-11X2IN)	
	11	1	**0S-1594**	2	BOLT (3/8-16X1IN)	
	12	1	**107-2206**	1	GEAR AS-FUEL PUMP IDLER (27 TEETH)	
		1	**2S-6692**	1	BEARING-SLEEVE	
	13	1	**5B-9079**	1	NUT-JAM (3/8-24 THD)	

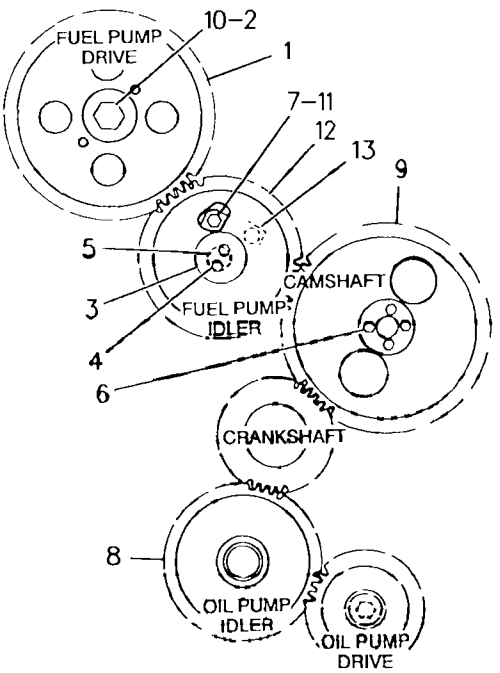

GRAPHIC #1 g00108640

BASIC ENGINE

7C-0502 GEAR GP-REAR

PIN 4MN1-UP; 5LN1-UP; 6JN1-UP; 7KN1-UP; 8LN1-UP; 9PN1-UP. S/N 6NC1-UP; 08Z93150-99999
PART OF 108-1078, 8Q-1762, 8Q-1763 ENGINE AR

SMCS-1204 i00574698

NOTE	REF NO	GRAPHIC REF	PART NUMBER	QTY	PART NAME 1 2 3 4 5 6 (PRODUCT LEVEL)	SEE PAGE
	1	1	7C-1112	1	ADAPTER AS-PUMP	
		1	7C-0282	1	ADAPTER-HYDRAULIC PUMP	
	2	1	8M-9315	1	BEARING-SLEEVE	
	3	1	1W-4741	2	GEAR AS-IDLER (70 TEETH) (EACH INCLUDES)	
	4	1	1W-4738	1	BEARING-SLEEVE	
	5	1	4N-1230	2	SEAL-O-RING	
	6	1	0S-1594	12	BOLT (3/8-16X1IN)	
	7	1	1W-4744	1	ADAPTER AS-PUMP	
	8	1	8M-9315	1	BEARING-SLEEVE	
	9	1	1W-4740	2	GEAR AS-DRIVE (64 TEETH) (EACH INCLUDES)	
	10	1	4F-6024	1	PIN	
	11	1	1W-4746	2	RETAINER-GEAR	
	12	1	1A-1460	6	BOLT (1/2-13X2IN)	
	13	1	1W-4737	1	GEAR-CRANKSHAFT (68 TEETH)	

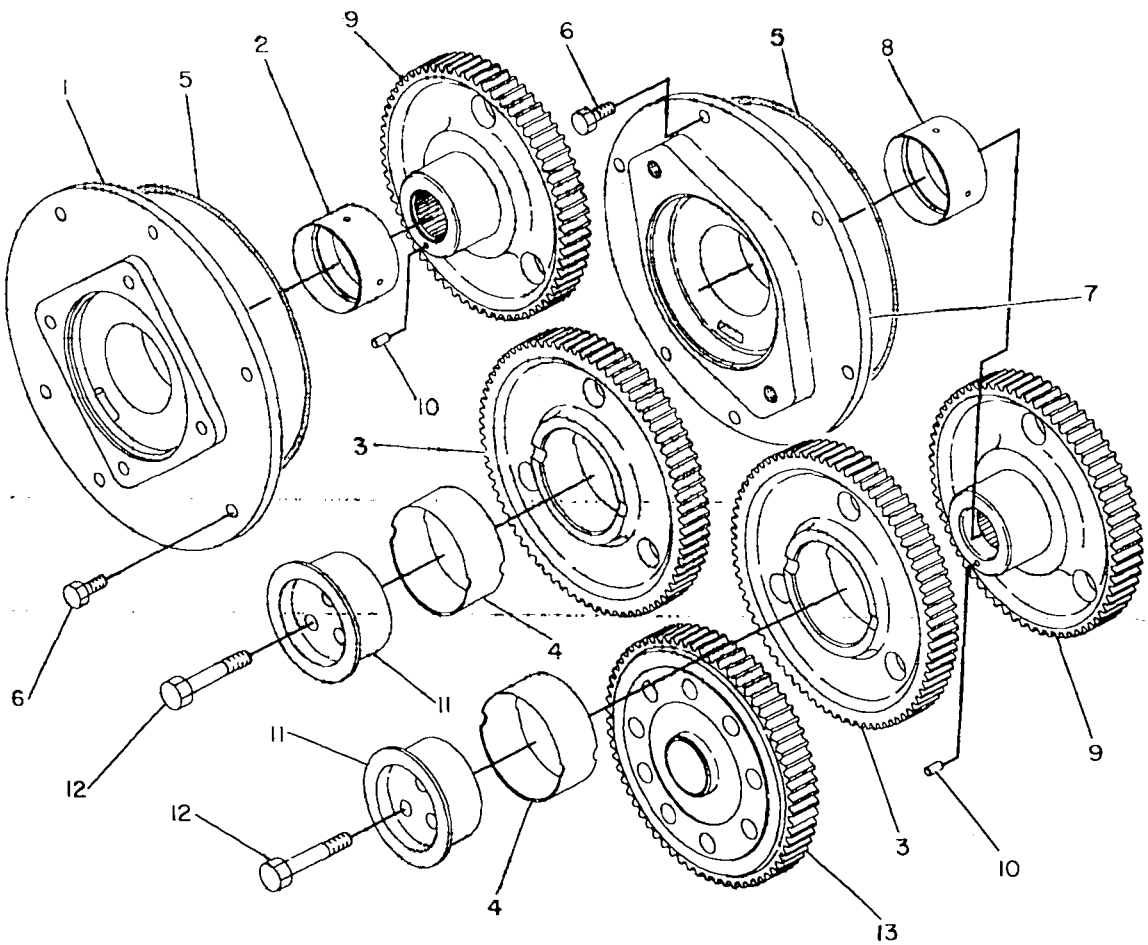

GRAPHIC #1 g00188332

BASIC ENGINE

1W-1154 HOUSING GP-FLYWHEEL

PIN 2YN1-UP; 3ZN1-UP; 4MN1-UP; 5LN1-UP; 6JN1-UP; 7KN1-UP; 8LN1-UP; 9PN1-UP. S/N 6NC1-UP; 08Z93150-99999
PART OF 108-1078, 8Q-1761, 8Q-1762, 8Q-1763 ENGINE AR

SMCS-1157 **i00575931**

NOTE	REF NO	GRAPHIC REF	PART NUMBER	QTY	PART NAME 1 2 3 4 5 6 (PRODUCT LEVEL)	SEE PAGE
	1	1	**4B-4043**	4	BOLT (5/8-11X1.375IN)	
	2	1	**5P-8247**	4	WASHER-HARD (3.5MM THK)	
	3	1	**7N-8374**	2	COVER-DRIVE OPENING	
		1	**5F-3106**	2	SEAL-O-RING (126.59MM ID)	
	4	1	**8T-6765**	1	PLUG-PIPE (1/4-18 NPTF THD)	
B	5	1	**1U-8846**		GASKET-LIQUID	
	6	1	**0S-1587**	13	BOLT (1/2-13X1.75IN)	
	7	1	**120-6608**	1	HOUSING AS-FLYWHEEL	
	8	1	**8M-9315**	2	BEARING-SLEEVE	
C	9	1	**9S-4191**	4	PLUG-O-RING (9/16-18 THD)	
C		1	**3J-1907**	4	SEAL-O-RING (11.89MM ID)	
	10	1	**9S-4185**	2	PLUG-O-RING (3/4-16 THD)	
	11	1	**9S-8005**	2	PLUG-O-RING (3/4-16 THD)	
	12	1	**3K-0360**	4	SEAL-O-RING (16.36MM ID)	
C	13	1	**9S-4182**	1	PLUG (7/16-20 THD)	
C		1	**3J-7354**	1	SEAL-O-RING (8.92MM ID)	
	14	1	**5F-0304**	1	PLUG-DRAIN	
		1	**2A-1162**	1	GASKET	

B-USE AS REQUIRED
C-CHANGE FROM PREVIOUS TYPE

1W-1154 HOUSING GP-FLYWHEEL *(contd.)* i00575931

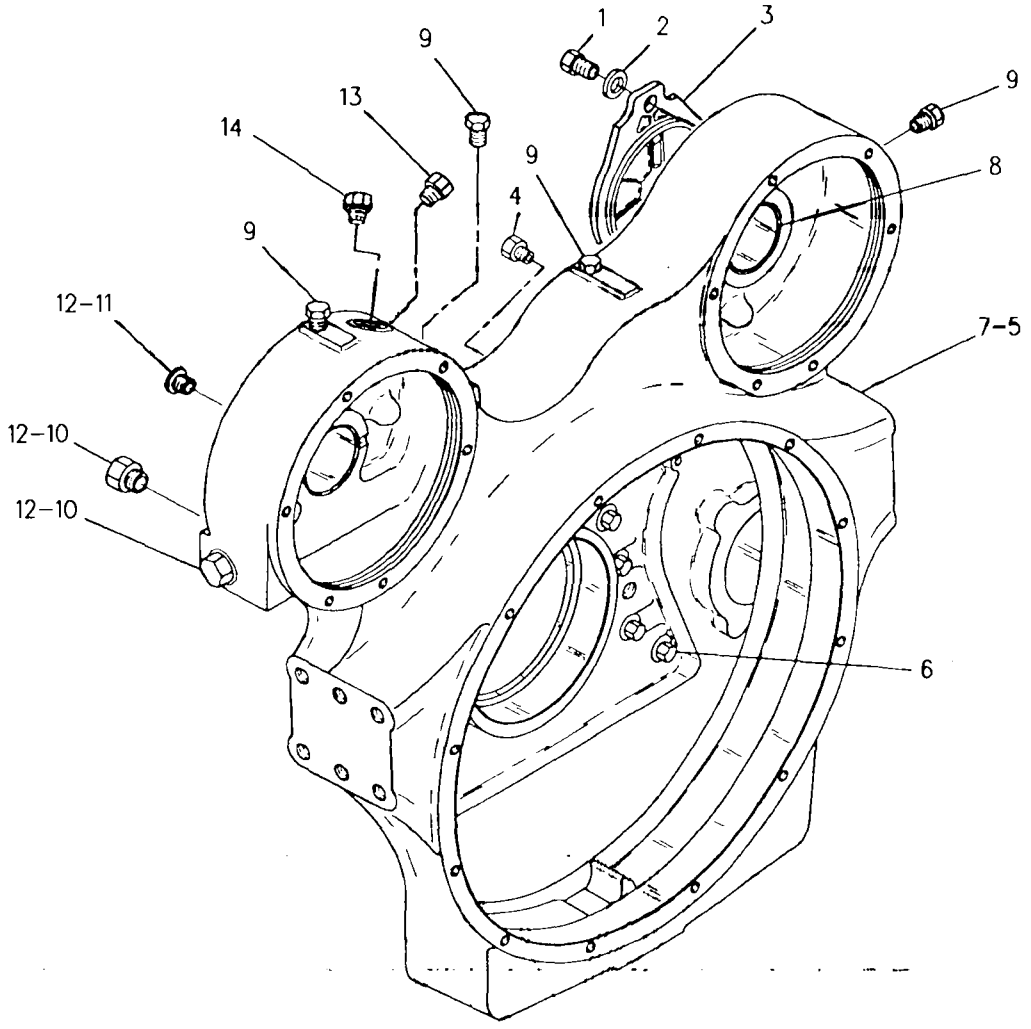

GRAPHIC #1 g00253679

BASIC ENGINE

8N-0303 HOUSING GP-FRONT

PIN 2YN1-UP; 3ZN1-UP; 4MN1-UP; 5LN1-UP; 6JN1-UP;
7KN1-UP; 8LN1-UP; 9PN1-UP. S/N 6NC1-UP; 08Z93150-99999
PART OF 108-1078, 8Q-1761, 8Q-1762, 8Q-1763 ENGINE AR

SMCS-1151, 1162, 1166 i00126745

NOTE	REF NO	GRAPHIC REF	PART NUMBER	QTY	PART NAME 1 2 3 4 5 6 (PRODUCT LEVEL)	SEE PAGE
	1	1	8N-0109	1	HOUSING AS-FRONT	
	2	1	2S-0042	6	STUD	
C	3	1	1W-7816	1	PLATE AS-FRONT	
		1	1W-7110	1	PLATE-FRONT	
		1	5M-6214	1	PLUG-PIPE (1/8-27 THD)	
	4	1	6H-0192	3	STUD	
	5	1	8N-0110	1	GASKET-FRONT PLATE	
C	6	1	1W-3900	1	GASKET	

C CHANGE FROM PREVIOUS TYPE

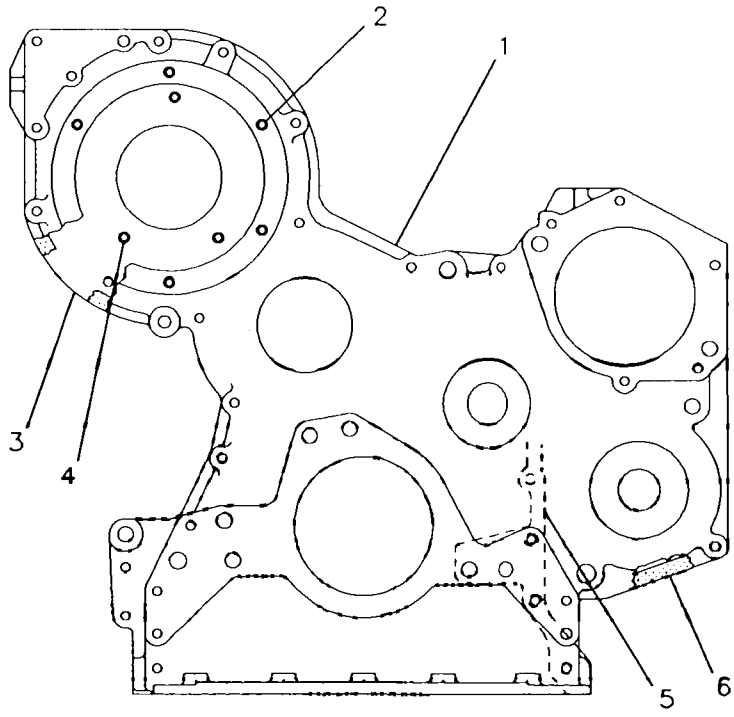

GRAPHIC #1 g00108428

BASIC ENGINE

6N-8326 LIFTING GP-ENGINE

PIN 2YN1-UP; 3ZN1-UP; 4MN1-UP; 5LN1-UP; 6JN1-UP;
7KN1-UP; 8LN1-UP; 9PN1-UP. S/N 6NC1-UP; 08Z93150-99999
PART OF 108-1078, 8Q-1761, 8Q-1762, 8Q-1763 ENGINE AR

SMCS-1122 i00959621

NOTE	REF NO	GRAPHIC REF	PART NUMBER	QTY	PART NAME 1 2 3 4 5 6 (PRODUCT LEVEL)	SEE PAGE
BC	1	1	8N-8721	2	PLATE-LIFTING EYE	
C	2	1	6V-1999	4	BOLT	
		1	8D-5054	4	WASHER-HARD	

B-USE AS REQUIRED
C-CHANGE FROM PREVIOUS TYPE

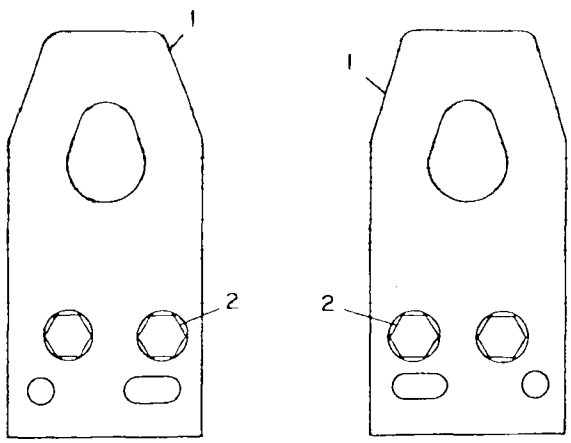

MOUNTED ON REAR OF ENGINE

MOUNTED ON FRONT OF ENGINE

GRAPHIC #1 g00114436

2P-6152 PAN GP-OIL

PIN 2YN1-UP; 3ZN1-UP; 4MN1-UP; 5LN1-UP; 6JN1-UP;
7KN1-UP; 8LN1-UP; 9PN1-UP. S/N 6NC1-UP; 08Z93150-99999
PART OF 108-1078, 8Q-1761, 8Q-1762, 8Q-1763 ENGINE AR

SMCS-1302 i00645626

NOTE	REF NO	GRAPHIC REF	PART NUMBER	QTY	PART NAME 1 2 3 4 5 6 (PRODUCT LEVEL)	SEE PAGE
	1	1	129-0357	1	GASKET	
	2	1	8S-1965	1	GASKET-OIL PAN	
	3	1	2P-1738	1	PLATE AS-OIL PAN	
C	4	1	4N-7820	1	PAN GP-OIL	
		1	8N-6184	1	PAN-OIL	
	5	1	3B-1915	2	BOLT (3/8-16X1.375IN)	
C	6	1	5N-8780	1	PLUG-DRAIN (ENGINE)	
	7	1	8N-6854	1	GASKET-ADAPTER	
	8	1	8N-6849	1	ADAPTER-PLUG	
CB	9	1	3E-7430	1	PLUG-PIPE	

B-USE AS REQUIRED
C-CHANGE FROM PREVIOUS TYPE

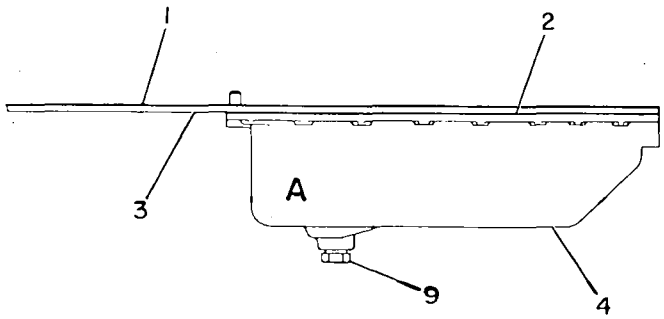

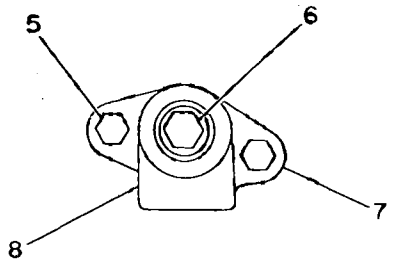

REAR VIEW OF
AREA A

GRAPHIC #1 g00116208

BASIC ENGINE

1W-6588 PISTON & ROD GP

PIN 2YN1-UP; 3ZN1-UP; 4MN1-UP; 5LN1-UP; 6JN1-UP;
7KN1-UP; 8LN1-UP; 9PN1-UP. S/N 6NC1-UP; 08Z93150-99999
16:1 RATIO
PART OF 108-1078, 8Q-1761, 8Q-1762, 8Q-1763 ENGINE AR

SMCS-1213, 1214, 1215, 1218, 1219, 1225, 1239 i00126311

NOTE	REF NO	GRAPHIC REF	PART NUMBER	QTY	PART NAME 1 2 3 4 5 6 (PRODUCT LEVEL)	SEE PAGE
	1	1	7N-9805	1	PIN-PISTON	
	2	1	1S-9543	2	RETAINER-PIN	
R	3	1	8N-1721	1	ROD AS-CONNECTING	
		1	8N-1849	1	BEARING-CONNECTING ROD	
	4	1	1P-9956	2	BOLT-CONNECTING ROD	
		1	5S-6348	2	NUT	
C	5	1	4W-5739	1	BEARING-CONNECTING ROD (STANDARD)	
AC		1	8N-8221	1	BEARING-CONNECTING ROD (.254MM UNDERSIZE)	
AC		1	8N-8222	1	BEARING-CONNECTING ROD (.508MM UNDERSIZE)	
AC		1	8N-8223	1	BEARING-CONNECTING ROD (.762MM UNDERSIZE)	
	6	1	129-0359	1	BODY AS-PISTON	
	7	1	7E-6047	1	RING-PISTON (OIL)	
	8	1	5S-6750	1	RING-PISTON (INTERMEDIATE)	
	9	1	9S-3029	1	RING-PISTON (TOP)	
AC	10	1	2W-6091	1	RING GP-PISTON	
	11	1	9S-3029	1	RING-PISTON	
	12	1	5S-6750	1	RING-PISTON (INTERMEDIATE)	
	13	1	7E-6047	1	RING-PISTON (OIL)	

A-NOT PART OF THIS GROUP
C-CHANGE FROM PREVIOUS TYPE
R-REMFG PART MAY BE AVAILABLE

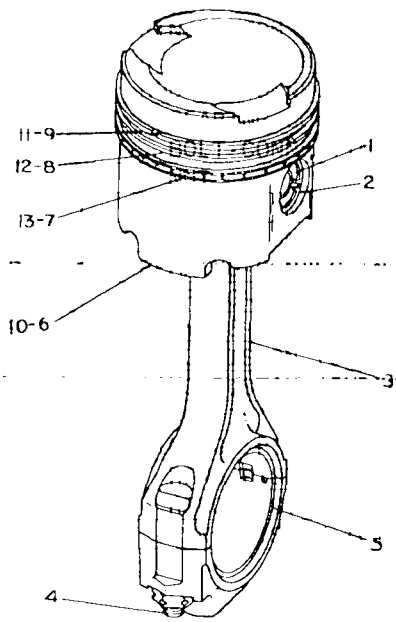

GRAPHIC #1 g00108214

109-5176 PULLEY GP-CRANKSHAFT

PIN 2YN1-UP; 3ZN1-UP; 4MN1-UP; 5LN1-UP; 6JN1-UP;
7KN1-UP; 8LN1-UP; 9PN1-UP. S/N 6NC1-UP; 08Z93150-99999
PART OF 108-1078, 8Q-1761, 8Q-1762, 8Q-1763 ENGINE AR

SMCS-1205 i00574660

NOTE	REF NO	GRAPHIC REF	PART NUMBER	QTY	PART NAME 1 2 3 4 5 6 (PRODUCT LEVEL)	SEE PAGE
	1	1	109-4848	1	PULLEY-CRANKSHAFT	
	2	1	5S-9948	1	WASHER-PULLEY	
	3	1	7B-5163	1	BOLT (3/4-16X4.75IN)	

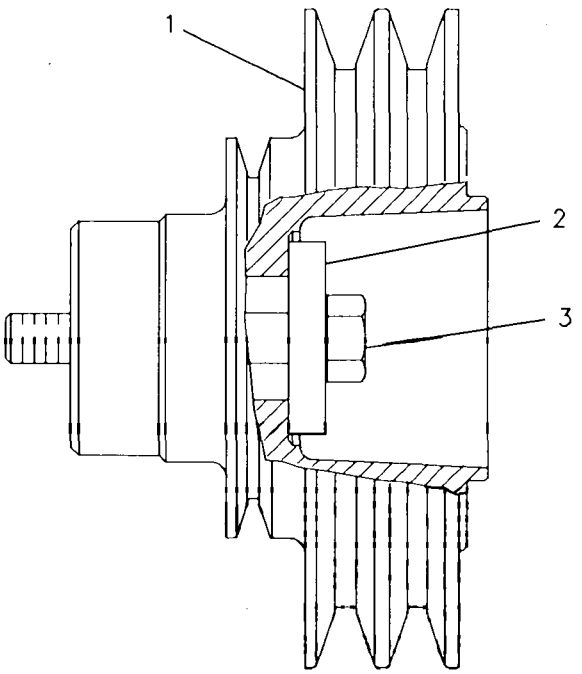

GRAPHIC #1 g00235493

2P-6224 SEAL GP-CRANKSHAFT

PIN 2YN1-UP; 3ZN1-UP; 4MN1-UP; 5LN1-UP; 6JN1-UP;
7KN1-UP; 8LN1-UP; 9PN1-UP. S/N 6NC1-UP; 08Z93150-99999
PART OF 108-1078, 8Q-1761, 8Q-1762, 8Q-1763 ENGINE AR

SMCS-1160, 1161 i00571647

NOTE	REF NO	GRAPHIC REF	PART NUMBER	QTY	PART NAME 1 2 3 4 5 6 (PRODUCT LEVEL)	SEE PAGE
C	1	1	4W-0452	1	SEAL GP-CRANKSHAFT	
	2	1	9Y-9895	1	SEAL GP-CRANKSHAFT	

C-CHANGE FROM PREVIOUS TYPE

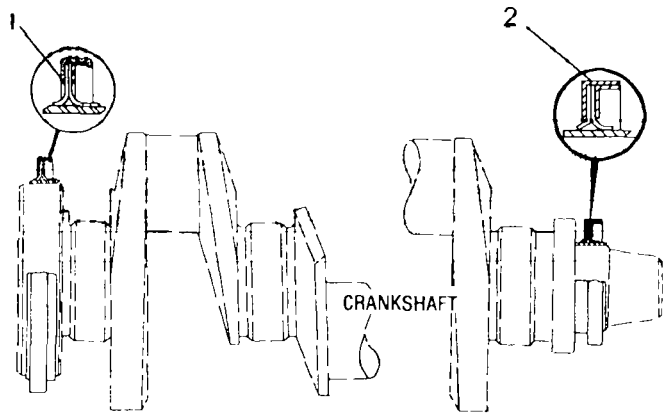

GRAPHIC #1 g00108388

BASIC ENGINE

8N-4422 SUPPORT GP-ENGINE

PIN 2YN1-UP; 3ZN1-UP; 4MN1-UP; 5LN1-UP; 6JN1-UP;
7KN1-UP; 8LN1-UP; 9PN1-UP. S/N 6NC1-UP; 08Z93150-99999
PART OF 108-1078, 8Q-1761, 8Q-1762, 8Q-1763 ENGINE AR

SMCS-1152, 1153, 1154 i00574982

NOTE	REF NO	GRAPHIC REF	PART NUMBER	QTY	PART NAME 1 2 3 4 5 6 (PRODUCT LEVEL)	SEE PAGE
	1	1	131-7736	1	SUPPORT AS-ENGINE	
	2	1	7B-3235	6	BOLT (1/2-13X1.375IN)	
	3	1	5P-8245	6	WASHER (3MM THK)	

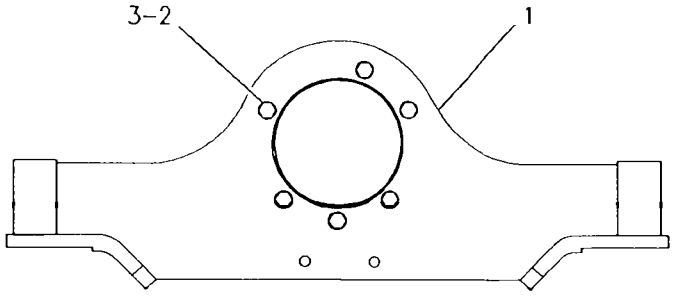

FRONT VIEW

GRAPHIC #1 g00255782

8N-0107 TRUNNION GP-ENGINE

PIN 2YN1-UP; 3ZN1-UP; 4MN1-UP; 5LN1-UP; 6JN1-UP;
7KN1-UP; 8LN1-UP; 9PN1-UP. S/N 6NC1-UP; 08Z93150-99999
PART OF 108-1078, 8Q-1761, 8Q-1762, 8Q-1763 ENGINE AR

SMCS-1152, 1153, 1154 i00165341

NOTE	REF NO	GRAPHIC REF	PART NUMBER	QTY	PART NAME 1 2 3 4 5 6 (PRODUCT LEVEL)	SEE PAGE
	1	1	8N-0105	1	TRUNNION AS	
		1	2P-1487	1	RING	
C	2	1	0L-1329	6	BOLT (1/2-13X3IN)	
	3	1	2P-1692	1	SEAL-O-RING	

C-CHANGE FROM PREVIOUS TYPE

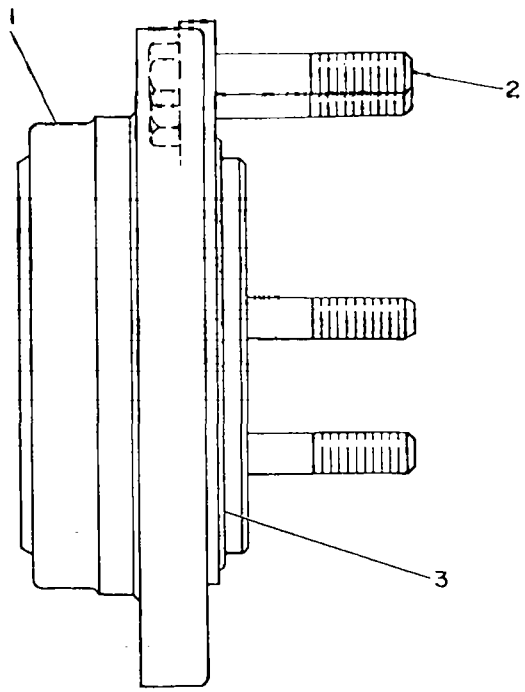

GRAPHIC #1 g00117399

BASIC ENGINE

2W-8951 V-BELT SET

PIN 2YN1-UP; 3ZN1-UP; 4MN1-UP; 5LN1-UP; 6JN1-UP; 7KN1-UP; 8LN1-UP; 9PN1-UP
PART OF 8Q-0704 DRIVE AR-FAN
FOR USE WITH 130-5480 PULLEY GP, 130-5481
PULLEY GP, 131-9141 PULLEY GP, 128-3405 PULLEY GP

SMCS-1357 i01025721

NOTE	PART NUMBER	QTY	PART NAME 1 2 3 4 5 6 (PRODUCT LEVEL)	SEE PAGE
			CONSISTS OF 2 BELTS	

7C-7013 VALVE MECHANISM GP

PIN 2YN1-UP; 3ZN1-UP; 4MN1-UP; 5LN1-UP; 6JN1-UP; 7KN1-UP; 8LN1-UP; 9PN1-UP. S/N 6NC1-UP; 08Z93150-99999

PART OF 7N-8026 VALVE MECHANISM GP

SMCS-1102, 1112, 1121, 1123, 1208, 1209 i00126540

NOTE	REF NO	GRAPHIC REF	PART NUMBER	QTY	PART NAME 1 2 3 4 5 6 (PRODUCT LEVEL)	SEE PAGE
	1	1	8N-3251	1	SHAFT-ROCKER ARM	
		1	6V-3508	2	PLUG-CUP	
	2	1	3K-8460	1	PLUG (1/2-20 THD)	
	3	1	7C-7011	1	BRACKET-SHAFT	
	4	1	5M-4606	1	DOWEL	
	5	1	4B-4910	5	SPRING	
	6	1	9M-9886	13	WASHER	
	7	1	5S-5879	4	BRACKET-SHAFT	
	8	1	8N-3325	6	ROCKER ARM GP (EXHAUST)	
	9	1	8N-3327	6	ROCKER ARM GP (INLET)	
					(EACH ROCKER ARM GP INCLUDES)	
	10	1	3S-2713	1	NUT-FULL (3/8-24 THD)	
	11	1	5S-5917	1	SCREW-ROCKER ADJUSTMENT	
	12	1	8S-1499	1	BRACKET AS-SHAFT	
	13	1	1L-5072	1	DOWEL	
	14	1	7N-0550	2	WASHER-SPRING	
	15	1	9H-1113	2	RING-RETAINER	
	16	1	8M-4448	1	SEAL-O-RING	
	17	1	1B-7709	1	BOLT (5/8-11X8IN)	
		1	2S-0736	1	WASHER-HARD	

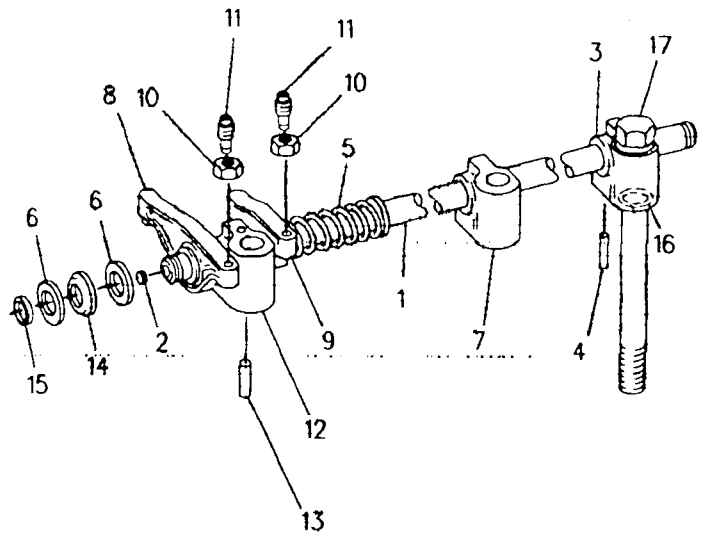

GRAPHIC #1 g00108500

BASIC ENGINE

7N-8026 VALVE MECHANISM GP

PIN 2YN1-UP; 3ZN1-UP; 4MN1-UP; 5LN1-UP; 6JN1-UP; 7KN1-UP; 8LN1-UP; 9PN1-UP. S/N 6NC1-UP; 08Z93150-99999
PART OF 108-1078, 8Q-1761, 8Q-1762, 8Q-1763 ENGINE AR

SMCS-1102, 1112, 1121, 1123, 1208, 1209 i00947497

NOTE	REF NO	GRAPHIC REF	PART NUMBER	QTY	PART NAME 1 2 3 4 5 6 (PRODUCT LEVEL)	SEE PAGE
CY	1	1	7C-7013	1	VALVE MECHANISM GP	43
	2	1	7S-3161	12	LIFTER-VALVE	
	3	1	5S-5918	12	PUSHROD-VALVE	

C-CHANGE FROM PREVIOUS TYPE
Y-SEPARATE ILLUSTRATION

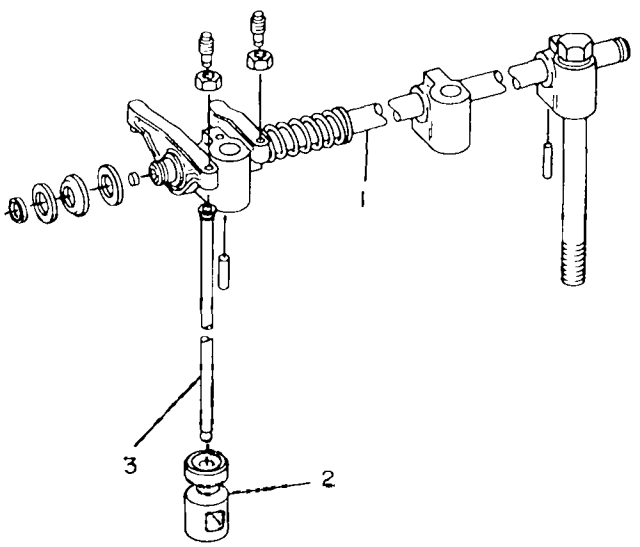

GRAPHIC #1 g00108367

8N-4457 BASE GP-OIL FILTER

PIN 4MN1-UP; 5LN1-UP; 6JN1-UP; 7KN1-UP; 8LN1-UP; 9PN1-UP
PART OF 2W-2271 COOLER GP-FLTR BASE & ENG OIL

SMCS-1306, 1314 i01017653

NOTE	REF NO	GRAPHIC REF	PART NUMBER	QTY	PART NAME 1 2 3 4 5 6 (PRODUCT LEVEL)	SEE PAGE
	1	1	2W-6681	1	BASE AS-OIL FILTER	
	2	1	2B-0858	3	PLUG-PIPE (1/2-14 NPTF)	
	3	1	2P-2537	1	STUD-HOLLOW	
C	4	1	1P-1367	2	PLUNGER	
C	5	1	0S-1618	3	BOLT (5/16-18X1.0IN)	
C	6	1	9M-1974	3	WASHER-HARD (2MM THK)	
	7	1	8N-6986	2	COVER-VALVE	
	8	1	8N-6985	2	GASKET	
	9	1	8M-3182	2	SPRING	
BC	10	1	0S-1618	1	BOLT (5/16-18X1.0IN)	
BC		1	9M-1974	1	WASHER-HARD (2MM THK)	

B-USE AS REQUIRED
C-CHANGE FROM PREVIOUS TYPE

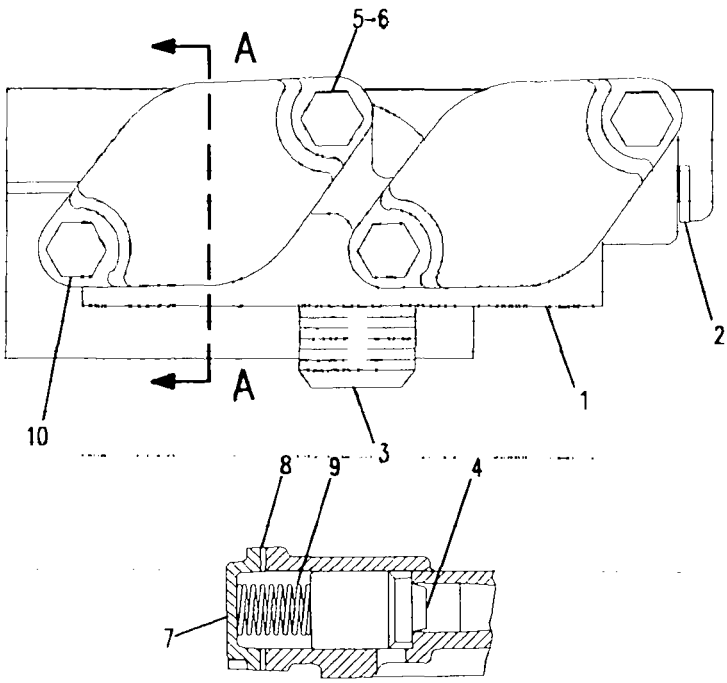

SECTION A-A

GRAPHIC #1 g00114068

LUBRICATION SYSTEM

8N-4457 BASE GP-OIL FILTER

S/N 08Z93150-99999

PART OF 2W-2271 COOLER GP-FLTR BASE & ENG OIL

SMCS-1306, 1314 i01014335

NOTE	REF NO	GRAPHIC REF	PART NUMBER	QTY	PART NAME 1 2 3 4 5 6 (PRODUCT LEVEL)	SEE PAGE
C	1	1	9Y-7149	1	BASE AS-OIL FILTER	
		1	3B-0645	3	PLUG-CUP (32.08MM AVG OD)	
	2	1	8T-6762	1	PLUG-PIPE (1/4-14 NPTF THD)	
	3	1	2P-2537	1	STUD-HOLLOW	
	4	1	1P-1367	2	PLUNGER	
C	5	1	0S-1618	1	BOLT (5/16-18X1.0IN)	
	6	1	9M-1974	3	WASHER-HARD (2MM THK)	
C	7	1	9Y-6859	1	COVER	
C		1	9Y-6860	1	GASKET	
C	8	1	1B-2790	2	BOLT (5/16-18X1.375IN)	
	9	1	8M-3182	2	SPRING	
B	10	1	0S-1618	1	BOLT (5/16-18X1.0IN)	
B		1	9M-1974	1	WASHER-HARD (2MM THK)	
C	11	1	8C-3445	1	CAP-DUST	
C		1	3J-7354	1	SEAL-O-RING (8.92MM ID)	
C		1	8C-3446	1	VALVE-FLUID SAMPLING	

B-USE AS REQUIRED
C-CHANGE FROM PREVIOUS TYPE

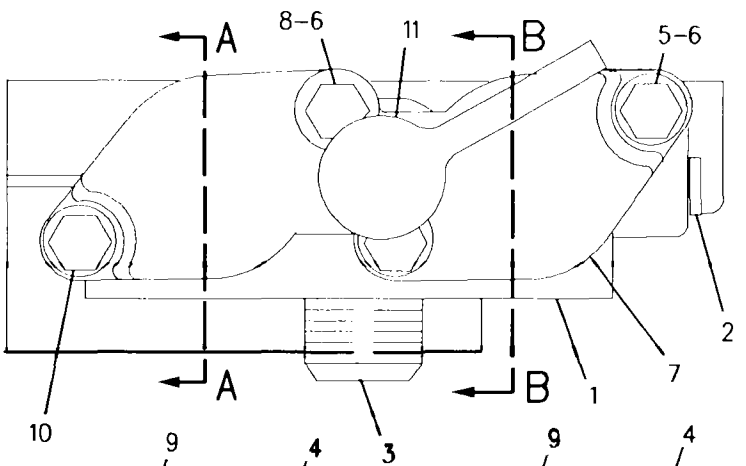

SECTION A-A SECTION B-B

GRAPHIC #1 g00523030

LUBRICATION SYSTEM

1P-4244 BREATHER GP

PIN 4MN1-UP; 5LN1-UP; 6JN1-UP; 7KN1-UP; 8LN1-UP; 9PN1-UP. S/N 6NC1-UP; 08Z93150-99999
CRANKCASE
PART OF 108-1078, 8Q-1762, 8Q-1763 ENGINE AR

SMCS-1317 **i00126829**

NOTE	REF NO	GRAPHIC REF	PART NUMBER	QTY	PART NAME 1 2 3 4 5 6 (PRODUCT LEVEL)	SEE PAGE
	1	1	**3H-3243**	1	BOLT (5/16-18X4.75IN)	
C	2	1	**9N-0869**	1	WASHER (2MM THK)	
C	3	1	**2W-9162**	1	BREATHER AS-CRANKCASE	
C	4	1	**4L-9564**	1	SEAL-O-RING (81.92MM ID)	

C-CHANGE FROM PREVIOUS TYPE

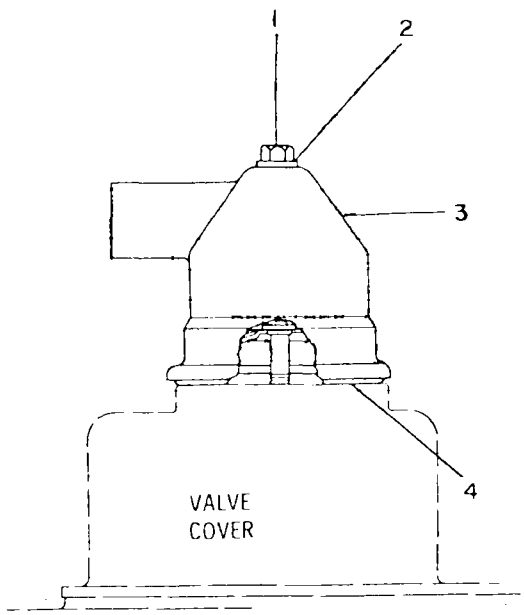

GRAPHIC #1 g00108276

LUBRICATION SYSTEM

7C-9336 FILLER GP-ENGINE OIL

PIN 4MN1-UP; 5LN1-UP; 6JN1-UP; 7KN1-UP;
8LN1-UP; 9PN1-UP. S/N 6NC1-UP; 08Z93150-99999
PART OF 108-1078, 8Q-1762, 8Q-1763 ENGINE AR

SMCS-1316 i00836573

NOTE	REF NO	GRAPHIC REF	PART NUMBER	QTY	PART NAME 1 2 3 4 5 6 (PRODUCT LEVEL)	SEE PAGE
	1	1	4W-4485	1	TUBE AS	
	2	1	6N-2985	1	CAP AS-FILLER	
	3	1	2P-2717	1	HASP-OIL FILLER	
	4	1	4N-6045	1	LUG	
	5	1	8D-9558	1	RIVET	
	6	1	2A-3211	1	WASHER (0.8MM THICK)	
	7	1	0S-1571	3	BOLT (3/8-16X1.75IN)	
	8	1	5M-2894	3	WASHER (2.5MM THK)	
	9	1	1D-4717	1	NUT (3/8-16 THD)	
	10	1	2P-2720	1	GASKET	
	11	1	4W-4187	1	BRACKET	
	12	1	3B-1915	1	BOLT (3/8-16X1.375IN)	
	13	1	8M-6744	1	CLAMP	

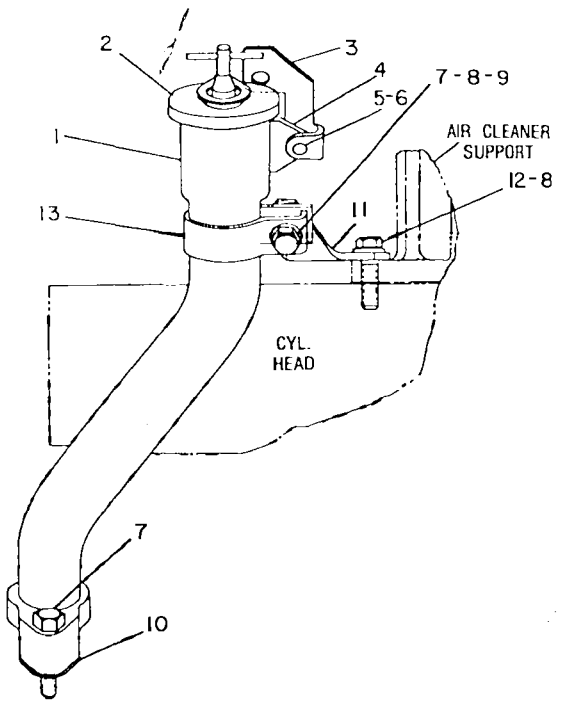

GRAPHIC #1 g00201612

7C-9335 GAUGE GP-OIL LEVEL (DIPSTICK)

PIN 4MN1-UP; 5LN1-UP; 6JN1-UP; 7KN1-UP;
8LN1-UP; 9PN1-UP. S/N 6NC1-UP; 08Z93150-99999
PART OF 108-1078, 8Q-1762, 8Q-1763 ENGINE AR

SMCS-1326 i00574694

NOTE	REF NO	GRAPHIC REF	PART NUMBER	QTY	PART NAME 1 2 3 4 5 6 (PRODUCT LEVEL)	SEE PAGE
	1	1	4W-4189	1	GAUGE AS-OIL LEVEL (DIPSTICK)	
	2	1	4W-4188	1	TUBE AS-GUIDE	
	3	1	8S-1326	1	CONNECTOR AS	
		1	5P-4443	1	SLEEVE-AIR BRAKE	
		1	5P-4448	1	NUT-AIR BRAKE	
	4	1	5K-9243	2	ELBOW-FLARED	
	5	1	2P-2697	1	TUBE AS-AIR VENT	
C	6	1	0S-1588	1	BOLT (3/8-16X1.25IN)	
C	7	1	5M-2894	3	WASHER (2.5MM THK)	
C	8	1	1D-4717	1	NUT (3/8-16 THD)	
	9	1	7E-2964	1	GUARD AS-OIL LEVEL	
	10	1	3B-1915	1	BOLT (3/8-16X1.375IN)	

C-CHANGE FROM PREVIOUS TYPE

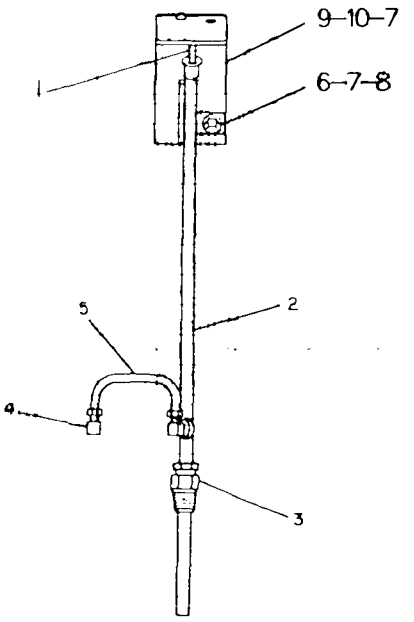

GRAPHIC #1 g00208693

LUBRICATION SYSTEM

2P-6105 LINES GP-ENGINE OIL

PIN 2YN1-UP; 3ZN1-UP; 4MN1-UP; 5LN1-UP; 6JN1-UP;
7KN1-UP; 8LN1-UP; 9PN1-UP. S/N 6NC1-UP; 08Z93150-99999
PART OF 108-1078, 8Q-1761, 8Q-1762, 8Q-1763 ENGINE AR

SMCS-1307 i00816926

NOTE	REF NO	GRAPHIC REF	PART NUMBER	QTY	PART NAME 1 2 3 4 5 6 (PRODUCT LEVEL)	SEE PAGE
	1	1	8N-7318	1	TUBE AS-INLET	
	2	1	5M-6213	1	PLUG	
	3	1	114-2687	3	SEAL-O-RING (23.16MM ID)	
	4	1	8N-7315	1	TUBE AS-OUTLET	
	5	1	0S-1594	3	BOLT (3/8-16X1IN)	
	6	1	7F-7590	1	GASKET	
	7	1	0S-1571	1	BOLT (3/8-16X1.75IN)	
		1	1L-5081	1	SPACER (9/16IN THK)	
		1	5M-2894	1	WASHER (2.5MM THK)	
	8	1	4L-3641	1	CLIP	
	9	1	2P-1739	1	TUBE AS-PUMP	
	10	1	0T-0102	2	BOLT (3/8-16X0.625IN)	
C	11	1	7W-9020	1	BELL AS-PUMP SUCTION	
	12	1	8S-8874	1	LOCK-NUT	
	13	1	8M-0904	1	GASKET	
	14	1	0L-2070	1	BOLT (3/8-16X2.25IN)	
	15	1	2S-1541	6	ORIFICE-JET	
	16	1	1A-2029	1	BOLT (3/8-16X1.125IN)	
	17	1	2M-5407	1	GASKET	
	18	1	0L-0364	1	LOCK	
	19	1	5H-3204	1	LOCK (T-SHAPED)	

C-CHANGE FROM PREVIOUS TYPE

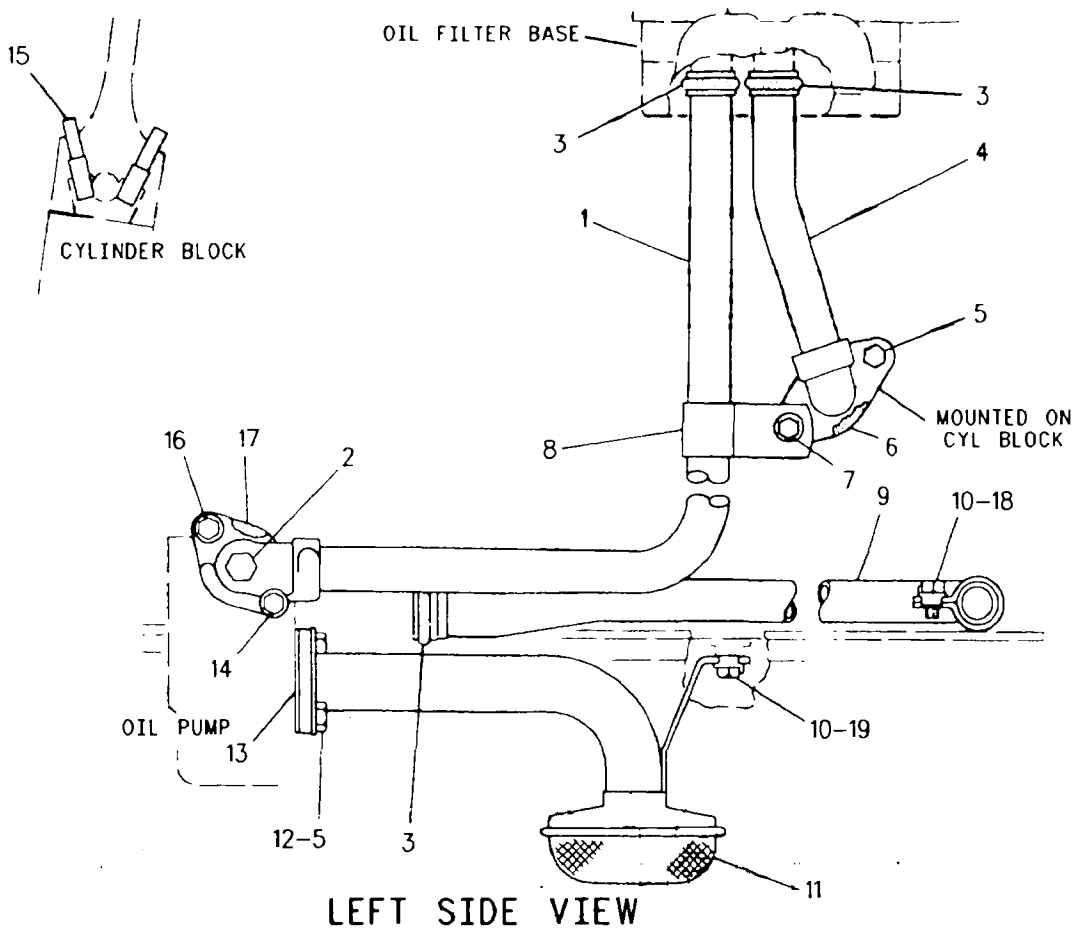

LEFT SIDE VIEW

GRAPHIC #1

g00390416

LUBRICATION SYSTEM

7C-8666 LINES GP-TURBOCHARGER OIL

PIN 2YN1-UP; 3ZN1-UP; 4MN1-UP; 5LN1-UP; 6JN1-UP; 7KN1-UP; 8LN1-UP; 9PN1-UP
PART OF 8Q-1761, 8Q-1762, 8Q-1763 ENGINE AR

SMCS-1052, 1307 i00588814

NOTE	REF NO	GRAPHIC REF	PART NUMBER	QTY	PART NAME 1 2 3 4 5 6 (PRODUCT LEVEL)	SEE PAGE
	1	1	0S-1618	2	BOLT (5/16X18X1IN)	
	2	1	9M-1974	4	WASHER-HARD (2MM THK)	
	3	1	1W-3854	1	GASKET-OIL SUPPLY	
	4	1	1W-5527	1	GASKET-OIL DRAIN	
	5	1	1A-2029	5	BOLT (3/8-16X1.125IN)	
	6	1	5M-2894	4	WASHER (2.5MM THK)	
	7	1	0S-1617	1	BOLT (5/16-18X.75IN)	
	8	1	5S-0003	1	NUT-FULL (5/16-18 THD)	
	9	1	6N-6033	2	CLIP	
	10	1	9M-4849	1	SEAL-O-RING (23.16 ID)	
	11	1	3K-0360	2	SEAL-O-RING (16.36MM ID)	
	12	1	9S-4185	1	PLUG-O-RING (3/4-16 THD)	
	13	1	030-7948	1	ELBOW	
	14	1	8M-5253	1	SEAL (18.72MM ID)	
	15	1	8M-5248	2	SEAL-O-RING (28.17 ID)	
	16	1	5M-6213	1	PLUG	
	17	1	7C-8641	1	TUBE AS (OIL DRAIN)	
	18	1	7C-8642	1	TUBE AS (OIL SUPPLY)	
	19	1	4W-1512	1	SUPPORT AS-PUMP	
		1	5H-4279	1	PLUG-CUP	
	20	1	9S-8002	1	PLUG-O-RING (7/16-20 THD)	
	21	1	3J-7354	1	SEAL-O-RING (8.92MM ID)	
	22	1	8N-1149	1	ELBOW	
	23	1	4M-6480	1	GASKET	
	24	1	0L-2070	1	BOLT (3/8-16X2.25IN)	

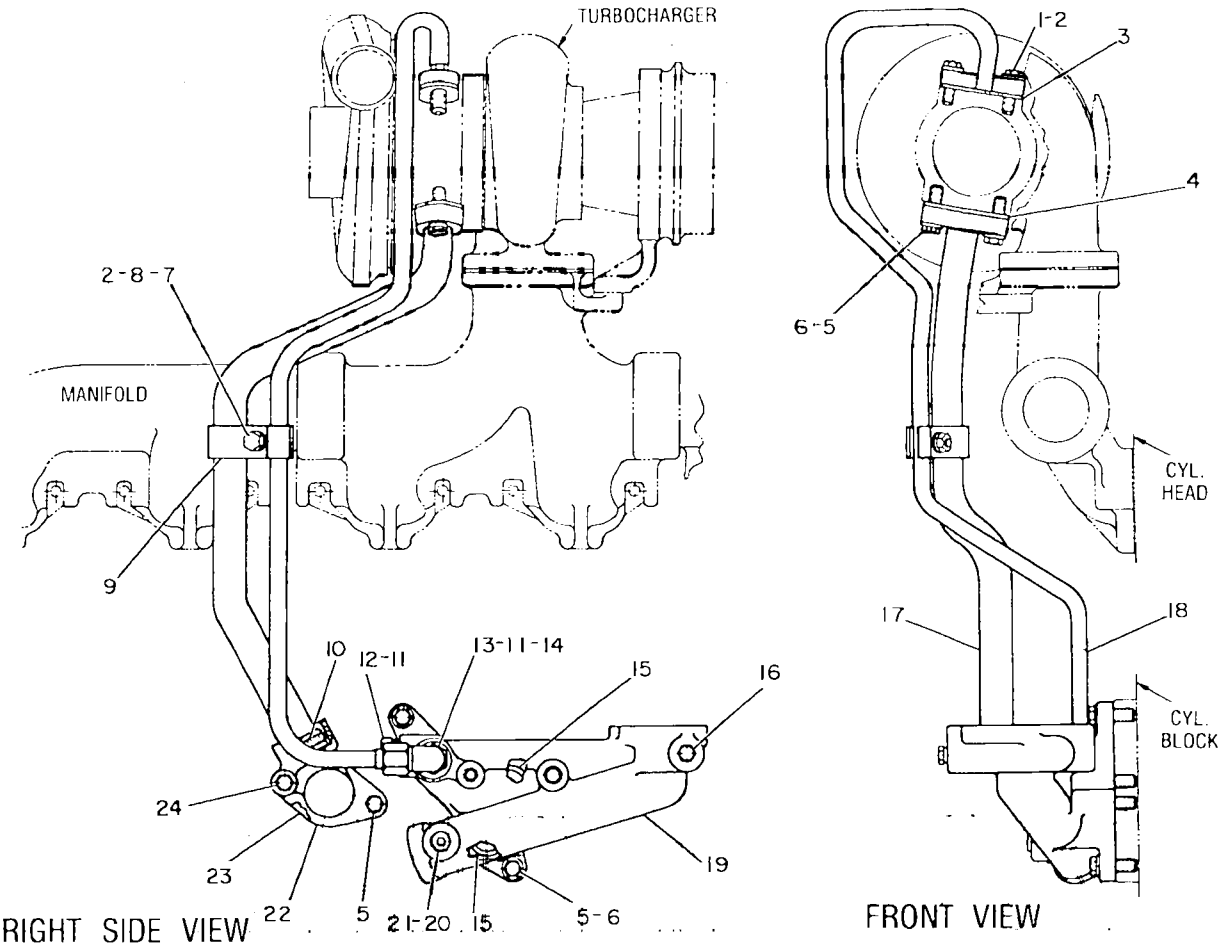

GRAPHIC #1 g00188554

LUBRICATION SYSTEM

9Y-5727 LINES GP-TURBOCHARGER OIL

S/N 6NC1-UP; 08Z93150-99999
PART OF 108-1078 ENGINE AR

SMCS-1052, 1307 **i00576118**

NOTE	REF NO	GRAPHIC REF	PART NUMBER	QTY	PART NAME 1 2 3 4 5 6 (PRODUCT LEVEL)	SEE PAGE
	1	1	**1B-2790**	1	BOLT (5/16-18X1.375IN)	
	2	1	**8H-9788**	1	GASKET	
	3	1	**9Y-3595**	1	GASKET	
	4	1	**1A-2029**	3	BOLT (3/8-16X1.125IN)	
	5	1	**5M-2894**	4	WASHER (2.5MM THK)	
	6	1	**6N-6033**	2	CLIP	
		1	**0S-1617**	1	BOLT (5/16-18X.75IN)	
		1	**1D-4716**	1	NUT-FULL (5/16-18 THD)	
		1	**9M-1974**	2	WASHER-HARD (2MM THK)	
	7	1	**9Y-5725**	1	TUBE AS-DRAIN	
	8	1	**9M-4849**	1	SEAL-O-RING (23.16 ID)	
	9	1	**8M-0505**	1	CONNECTOR	
	10	1	**3K-0360**	2	SEAL-O-RING (16.36MM ID)	
	11	1	**4B-3388**	1	BOLT (5/16-18X1.125IN)	
	12	1	**5M-6213**	1	PLUG	
	13	1	**4W-1512**	1	SUPPORT AS-PUMP	
		1	**5H-4279**	1	PLUG-CUP	
	14	1	**8M-5248**	2	SEAL-O-RING (28.17 ID)	
	15	1	**9S-8002**	1	PLUG-O-RING (7/16-20 THD)	
	16	1	**8M-5253**	1	SEAL (18.72MM ID)	
	17	1	**9S-4185**	1	PLUG-O-RING (3/4-16 THD)	
	18	1	**8N-1149**	1	ELBOW	
	19	1	**4M-6480**	1	GASKET	
	20	1	**0L-2070**	1	BOLT (3/8-16X2.25IN)	
	21	1	**9Y-5726**	1	TUBE AS-SUPPLY	
	22	1	**3J-7354**	1	SEAL-O-RING (8.92MM ID)	
	23	1	**0S-1594**	2	BOLT (3/8-16X1IN)	

9Y-5727 LINES GP-TURBOCHARGER OIL *(contd.)* i00576118

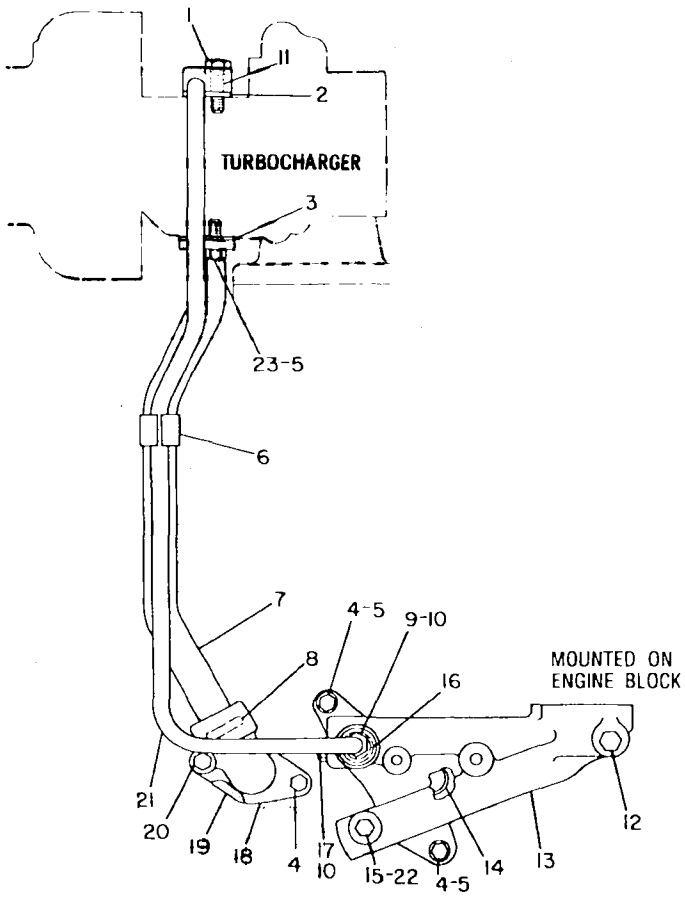

GRAPHIC #1 g00199552

LUBRICATION SYSTEM

130-8952 OIL CHANGE GP-HIGH SPEED–CUSTOM

PIN 2YN1-UP; 3ZN1-UP; 4MN1-UP; 5LN1-UP; 6JN1-UP; 7KN1-UP; 8LN1-UP; 9PN1-UP
HIGH SPEED FOR ENGINE AND POWERTRAIN OIL

SMCS-1325 **i01009515**

NOTE	REF NO	GRAPHIC REF	PART NUMBER	QTY	PART NAME 1 2 3 4 5 6 (PRODUCT LEVEL)	SEE PAGE
	1	1	**130-8951**	1	GUARD AS	
		1	**1F-0750**	2	NUT-WELD (3/8-16 THD)	
		1	**7G-4928**	2	SPACER	
I	2	1	**8W-0237**	1	HOSE AS	
	3	1	**6V-9004**	1	ELBOW-45 DEGREE (1 1/16-12 THD)	
	4	1	**3D-2824**	2	SEAL-O-RING (23.47MM ID)	
	5	1	**3M-7045**	1	PLUG	
	6	1	**8W-0327**	1	ADAPTER	
	7	1	**8N-6854**	1	GASKET-ADAPTER	
	8	1	**108-8089**	1	COVER-TOP	
	9	1	**6V-8637**	2	CONNECTOR-SEAL	
YI	10	1	**112-1529**	1	HOSE AS	362
	11	1	**5P-7466**	2	CLIP (SLOT)	
	12	1	**5P-7467**	2	CLIP (TAB)	
	13	1	**5P-8112**	2	GROMMET	
	14	1	**6V-9746**	4	SEAL-O-RING (18.94MM ID)	
	15	1	**8W-3214**	1	CAP AS	
	16	1	**8T-5373**	1	COUPLER-MALE	
	17	1	**2P-1293**	1	LOCKNUT-BULKHEAD (1 3/16-12 THD)	
	18	1	**5H-3124**	2	SPACER (15.88MM THK)	
	19	1	**8T-9377**	2	BOLT (3/8-16X2.25IN)	
	20	1	**1Q-5764**	1	FILM-INSTRUCTION	
	21	1	**1Q-5767**	1	FILM-INSTRUCTION	
	22	1	**110-8319**	1	RECEIVER AS	
		1	**110-8318**	1	CAP	
	23	1	**2P-1286**	1	LOCKNUT-BULKHEAD	

I-SEE HOSE FABRICATION GUIDE
Y-SEPARATE ILLUSTRATION

130-8952 OIL CHANGE GP-HIGH SPEED *(contd.)* i01009515

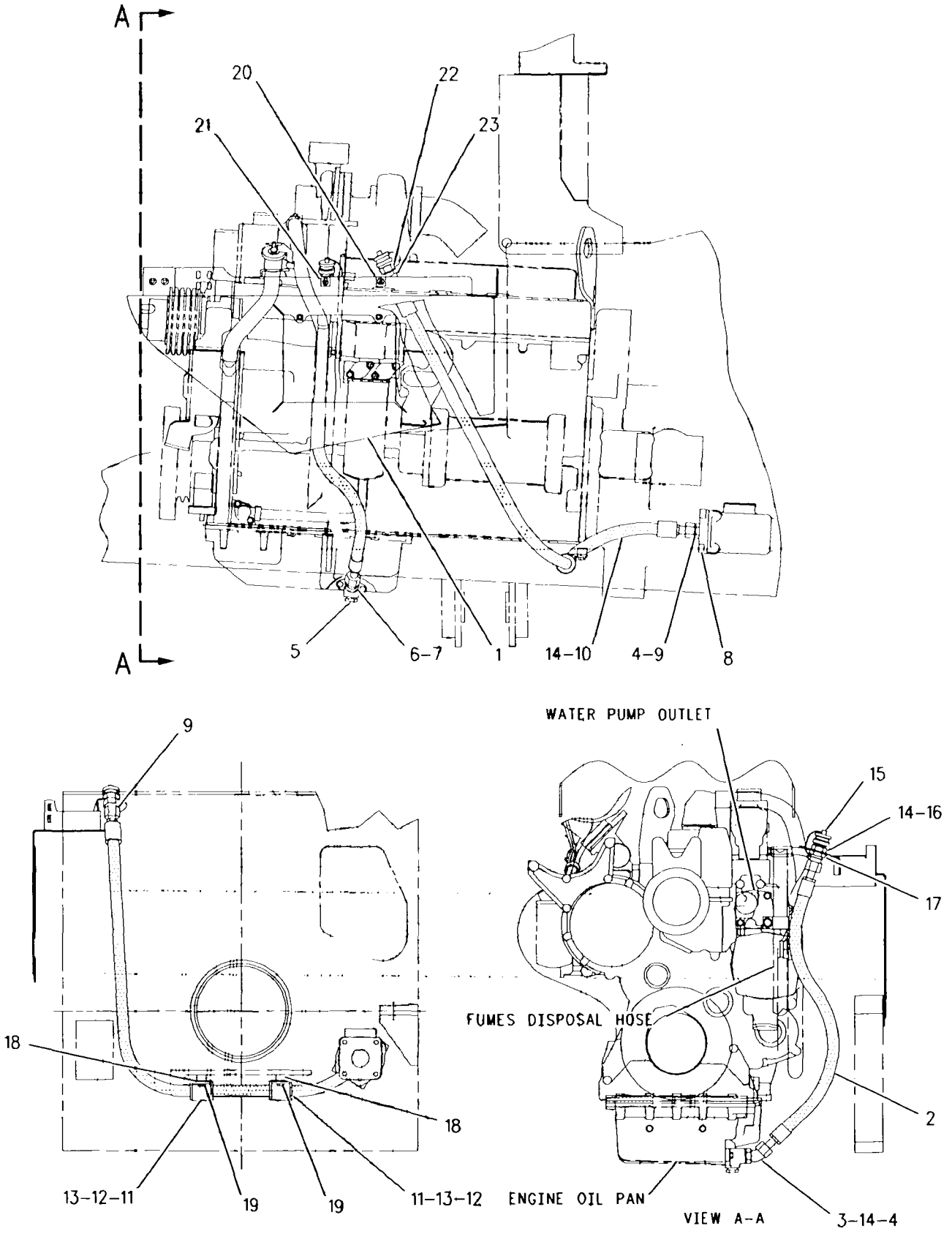

GRAPHIC #1 g00284863

LUBRICATION SYSTEM

131-0692 OIL CHANGE GP-HIGH SPEED–CUSTOM

PIN 2YN1-UP; 3ZN1-UP; 4MN1-UP; 5LN1-UP; 6JN1-UP; 7KN1-UP; 8LN1-UP; 9PN1-UP
WITH OR WITHOUT ENGINE ENCLOSURE

SMCS-1325 i01009520

NOTE	REF NO	GRAPHIC REF	PART NUMBER	QTY	PART NAME 1 2 3 4 5 6 (PRODUCT LEVEL)	SEE PAGE
	1	1	**130-8951**	1	GUARD AS	
		1	**1F-0750**	2	NUT-WELD (3/8-16 THD)	
		1	**7G-4928**	2	SPACER	
	2	1	**8W-0327**	1	ADAPTER	
	3	1	**8N-6854**	1	GASKET-ADAPTER	
	4	1	**3M-7045**	1	PLUG	
	5	1	**6V-9004**	1	ELBOW-45 DEGREE (1 1/16-12 THD)	
	6	1	**6V-9746**	2	SEAL-O-RING (18.94MM ID)	
	7	1	**3D-2824**	1	SEAL-O-RING (23.47MM ID)	
I	8	1	**8W-0237**	1	HOSE AS	
	9	1	**8W-3214**	1	CAP AS	
	10	1	**8T-5373**	1	COUPLER-MALE	
	11	1	**2P-1293**	1	LOCKNUT-BULKHEAD (1 3/16-12 THD)	

I-SEE HOSE FABRICATION GUIDE

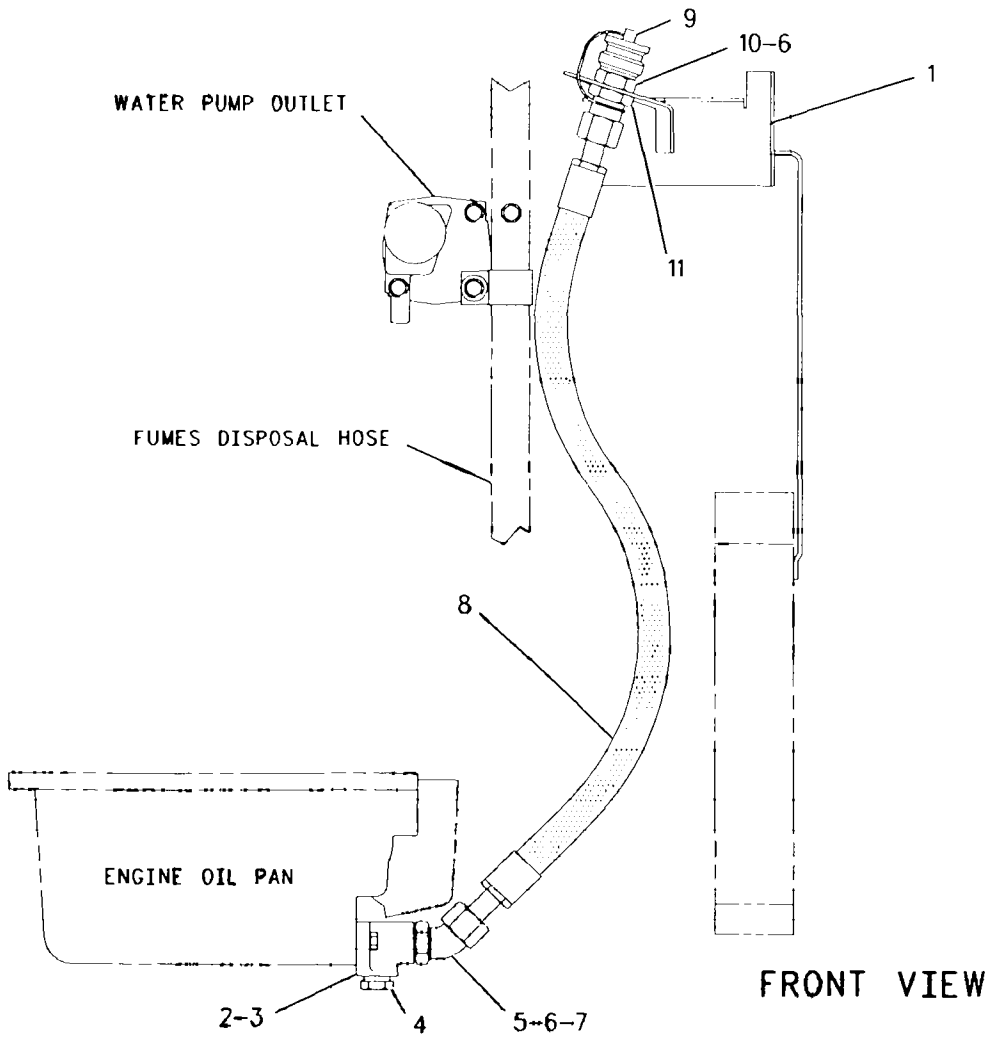

GRAPHIC #1 g00286830

LUBRICATION SYSTEM

128-3157 PRELUBE CHG AR–CUSTOM

PIN 2YN1-UP; 3ZN1-UP; 4MN1-UP; 5LN1-UP; 6JN1-UP; 7KN1-UP; 8LN1-UP; 9PN1-UP

SMCS-1316 i01009267

NOTE	REF NO	GRAPHIC REF	PART NUMBER	QTY	PART NAME 1 2 3 4 5 6 (PRODUCT LEVEL)	SEE PAGE
	1	1	147-1460	1	PLATE AS	
	2	1	128-3153	1	HARNESS AS	
	3	1	105-9152	1	SWITCH AS-PRESSURE	
		1	102-8802	1	KIT-RECEPTACLE (2 PIN)	
		1	3E-3365	1	WEDGE	
		1	8T-8729	2	PIN-CONNECTOR	
	4	1	6V-8801	2	NUT (3/8-16 THD)	
	5	1	5P-1075	4	WASHER-HARD (3MM THK)	
	6	1	7K-1181	9	STRAP-CABLE (4.00IN DIA)	
	7	1	8T-4205	2	WASHER-HARD (2MM THK)	
	8	1	8T-9367	2	BOLT (1/4-20X2IN)	
Y	9	1	128-3160	1	HOSE AS	363
	10	1	140-3107	1	SWITCH AS	
	11	1	8C-6872	1	CONNECTOR	
	12	1	6V-8398	2	SEAL-O-RING (12.47MM ID)	
	13	1	4H-7869	1	GASKET	
	14	1	6V-8777	1	TEE	
	15	1	3D-2824	1	SEAL-O-RING (23.47MM ID)	
	16	1	6V-9746	4	SEAL-O-RING (18.94MM ID)	
	17	1	8W-0327	1	ADAPTER	
	18	1	3B-1915	2	BOLT (3/8-16X1.375IN)	
	19	1	3M-7045	1	PLUG	
	20	1	8N-6854	1	GASKET-ADAPTER	
	21	1	4L-7412	1	ADAPTER	
	22	1	037-4685	1	ELBOW	
	23	1	1Q-3249	1	VALVE-CHECK	
	24	1	147-1459	2	PLATE AS (EACH INCLUDES)	
		1	1F-0750	1	NUT-WELD (3/8-16 THD)	
	25	1	6D-4244	2	CLIP (22.22MM ID)	
	26	1	8T-4896	2	WASHER-HARD (2.5MM THK)	
	27	1	4L-6454	4	BOLT (3/8-16X1.0IN)	
	28	1	5P-8998	1	NIPPLE	
	29	1	3P-2404	1	CLIP (28.58MM ID)	
	30	1	4M-5317	1	BUSHING-TERMINAL	
	31	1	7B-0192	1	CONNECTOR	
	32	1	130-8951	1	GUARD AS	
		1	1F-0750	2	NUT-WELD (3/8-16 THD)	
		1	7G-4928	2	SPACER	
	33	1	107-7856	1	HOSE AS	
	34	1	8W-3214	1	CAP AS	
	35	1	8T-5373	1	COUPLER-MALE	
	36	1	2P-1293	1	LOCKNUT-BULKHEAD (1 3/16-12 THD)	
YR	37	1	128-3172	1	MOTOR GP-ELECTRIC	188
	38	1	125-0473	1	FILM-ADHESIVE	
Y	39	1	128-3161	1	HOSE AS	364
	40	1	6V-8640	1	CONNECTOR-SEAL	
	41	1	2M-9780	1	SEAL-O-RING (19.18MM ID)	
	42	1	6V-8639	1	CONNECTOR-SEAL	
	43	1	3K-0360	1	SEAL-O-RING (16.36MM ID)	
	44	1	140-3108	1	TIMER	

R-REMFG PART MAY BE AVAILABLE
Y-SEPARATE ILLUSTRATION

128-3157 PRELUBE CHG AR *(contd.)* i01009267

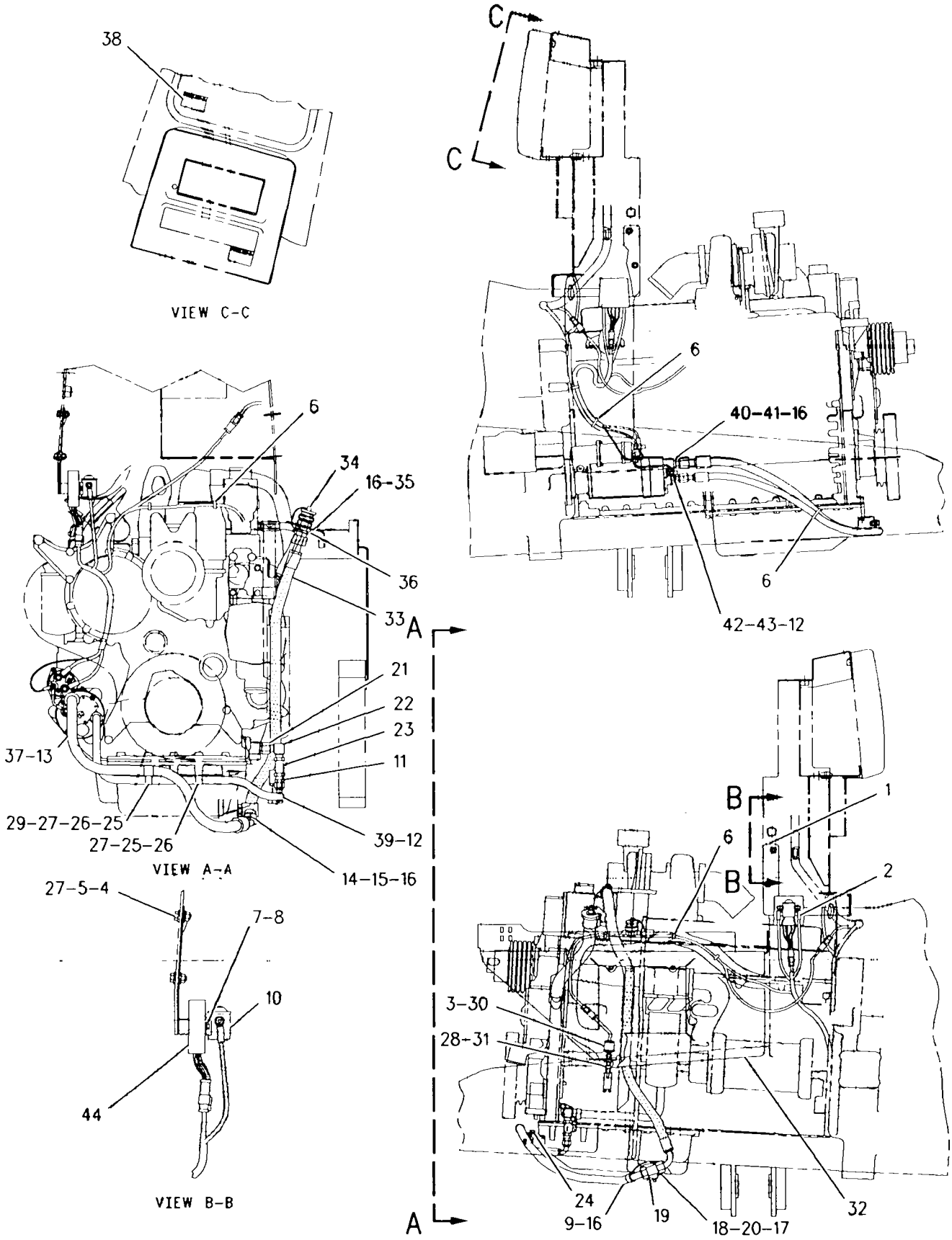

GRAPHIC #1 g00286422

LUBRICATION SYSTEM

128-3156 PRELUBE AR-ENGINE—CUSTOM

PIN 2YN1-UP; 3ZN1-UP; 4MN1-UP; 5LN1-UP; 6JN1-UP; 7KN1-UP; 8LN1-UP; 9PN1-UP
WITH OR WITHOUT HIGH SPEED OIL CHANGE

SMCS-1319 i01002839

NOTE	REF NO	GRAPHIC REF	PART NUMBER	QTY	PART NAME 1 2 3 4 5 6 (PRODUCT LEVEL)	SEE PAGE
	1	1	128-3153	1	HARNESS AS	
	2	1	147-1460	1	PLATE AS	
	3	1	6V-8801	2	NUT (3/8-16 THD)	
	4	1	5P-1075	4	WASHER-HARD (3MM THK)	
	5	1	7K-1181	9	STRAP-CABLE (4.00IN DIA)	
	6	1	8T-4205	2	WASHER-HARD (2MM THK)	
	7	1	8T-9367	2	BOLT (1/4-20X2IN)	
	8	1	8C-6872	1	CONNECTOR	
Y	9	1	128-3161	1	HOSE AS	364
	10	1	6V-8398	2	SEAL-O-RING (12.47MM ID)	
	11	1	140-3107	1	SWITCH AS	
		1	140-3108	1	TIMER	
YR	12	1	128-3172	1	MOTOR GP-ELECTRIC	188
	13	1	4H-7869	1	GASKET	
	14	1	6V-9007	1	ELBOW-90 DEGREE (1 1/16-12 THD)	
	15	1	3D-2824	1	SEAL-O-RING (23.47MM ID)	
Y	16	1	128-3160	1	HOSE AS	363
	17	1	6V-9746	2	SEAL-O-RING (18.94MM ID)	
	18	1	8W-0327	1	ADAPTER	
	19	1	3B-1915	2	BOLT (3/8-16X1.375IN)	
	20	1	3M-7045	1	PLUG	
	21	1	8N-6854	1	GASKET-ADAPTER	
	22	1	4L-7412	1	ADAPTER	
	23	1	037-4685	1	ELBOW	
	24	1	1Q-3249	1	VALVE-CHECK	
	25	1	161-1178	2	PLATE AS	
					(EACH INCLUDES)	
		1	1F-0750	1	NUT-WELD (3/8-16 THD)	
	26	1	6D-4244	2	CLIP (22.22MM ID)	
	27	1	8T-4896	2	WASHER-HARD (2.5MM THK)	
	28	1	4L-6454	4	BOLT (3/8-16X1.0IN)	
	29	1	5P-8998	1	NIPPLE	
	30	1	3P-2404	1	CLIP (28.58MM ID)	
	31	1	4M-5317	1	BUSHING-TERMINAL	
	32	1	105-9152	1	SWITCH AS-PRESSURE	
		1	102-8802	1	KIT-RECEPTACLE (2 PIN)	
		1	3E-3365	1	WEDGE	
		1	8T-8729	2	PIN-CONNECTOR	
	33	1	125-0473	1	FILM-ADHESIVE	
	34	1	7B-0192	1	CONNECTOR	
	35	1	6V-8639	1	CONNECTOR-SEAL	
	36	1	3K-0360	1	SEAL-O-RING (16.36MM ID)	
	37	1	6V-8640	1	CONNECTOR-SEAL	
	38	1	2M-9780	1	SEAL-O-RING (19.18MM ID)	

R-REMFG PART MAY BE AVAILABLE
Y-SEPARATE ILLUSTRATION

128-3156 **PRELUBE AR-ENGINE** *(contd.)* **i01002839**

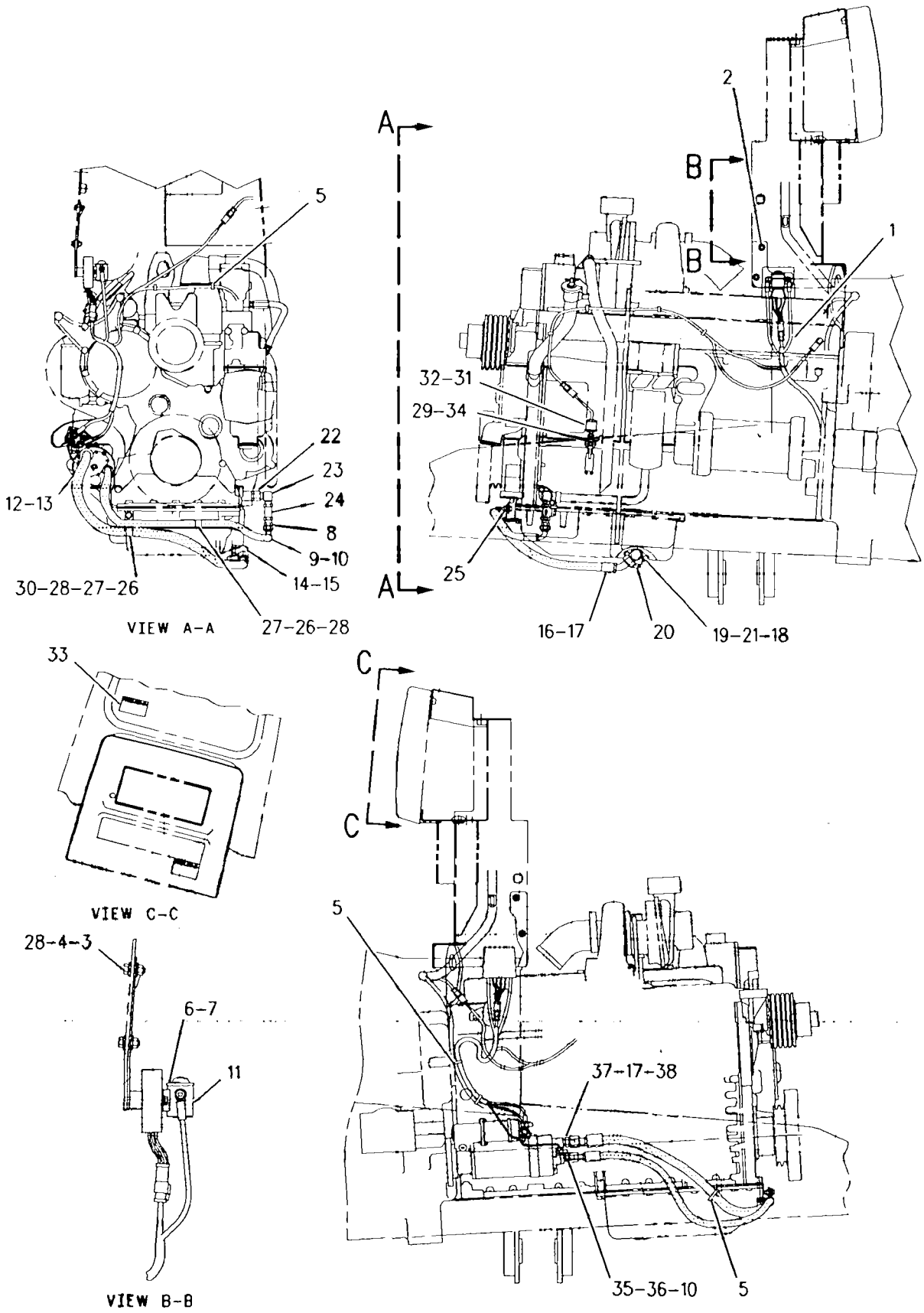

GRAPHIC #1

g00515019

LUBRICATION SYSTEM

6I-1346 PUMP GP-ENGINE OIL

PIN 2YN1-UP; 3ZN1-UP; 4MN1-UP; 5LN1-UP; 6JN1-UP;
7KN1-UP; 8LN1-UP; 9PN1-UP. S/N 6NC1-UP; 08Z93150-99999
TWO SECTION GEAR
PART OF 106-8958 PUMP GP-ENGINE OIL

SMCS-1304, 1315 i00126338

NOTE	REF NO	GRAPHIC REF	PART NUMBER	QTY	PART NAME 1 2 3 4 5 6 (PRODUCT LEVEL)	SEE PAGE
	1	1	4W-2322	1	BODY AS-OIL PUMP	
	2	1	2P-1170	1	SHAFT AS-GEAR	
	3	1	4B-9782	1	BALL	
	4	1	4B-9880	1	BALL	
	5	1	1F-1006	1	DOWEL	
	6	1	8S-6511	2	BEARING-SLEEVE (.8775IN ID)	
	7	1	2P-1781	1	SPACER-OIL PUMP	
	8	1	4P-3546	1	VALVE AS-RELIEF	
	9	1	2B-2694	1	BOLT (5/16-18X2IN)	
		1	9M-1974	1	WASHER-HARD (2MM THK)	
	10	1	4N-3732	1	COVER-VALVE	
	11	1	6N-1036	2	GEAR-OIL PUMP (8 TEETH)	
	12	1	0T-0065	3	BOLT (3/8-16X3.5IN)	
	13	1	8S-0493	1	SHAFT AS-PUMP	
	14	1	6I-1345	1	SHAFT AS-OIL PUMP	
	15	1	4W-2321	1	BODY AS-PUMP	
	16	1	8S-6511	2	BEARING-SLEEVE (.8775IN ID)	
	17	1	1B-8709	1	KEY-WOODRUFF	

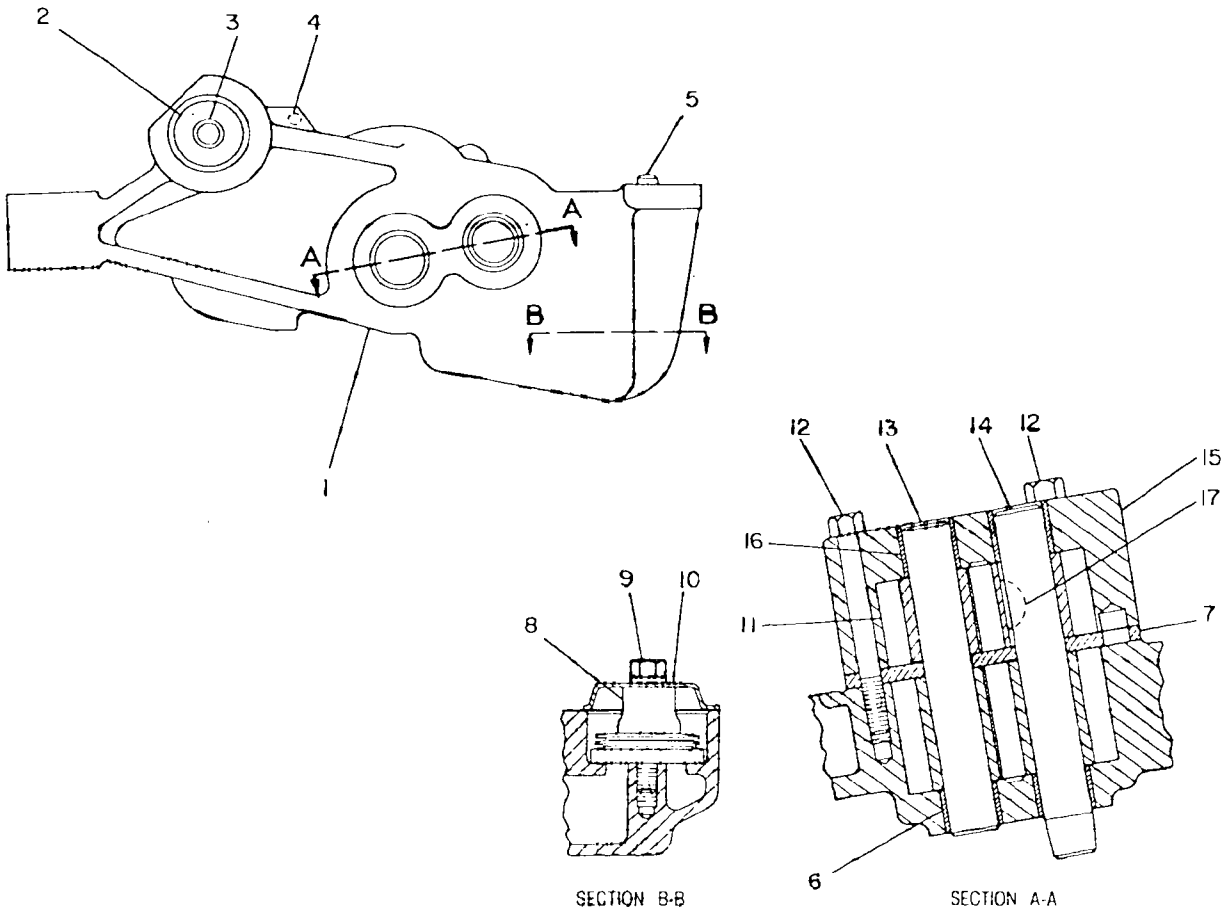

GRAPHIC #1 g00108222

106-8957 PUMP GP-ENGINE OIL

PIN 2YN1-UP; 3ZN1-UP; 4MN1-UP; 5LN1-UP; 6JN1-UP;
7KN1-UP; 8LN1-UP; 9PN1-UP. S/N 6NC1-UP; 08Z93150-99999
PART OF 108-1078, 8Q-1761, 8Q-1762, 8Q-1763 ENGINE AR

SMCS-1304, 1315 i00937966

NOTE	REF NO	GRAPHIC REF	PART NUMBER	QTY	PART NAME 1 2 3 4 5 6 (PRODUCT LEVEL)	SEE PAGE
	1	1	**3B-1915**	2	BOLT (3/8-16X1.375IN)	
	2	1	**0S-1619**	1	BOLT (3/8X3.0IN)	
	3	1	**4N-5353**	1	ELBOW-LINE	
		1	**2P-8746**	1	GASKET	
	4	1	**0S-1590**	3	BOLT (3/8-16X2IN)	
Y	5	1	*106-8958*	1	PUMP GP-ENGINE OIL	66
	6	1	**5M-2894**	4	WASHER (2.5MM THK)	

Y-SEPARATE ILLUSTRATION

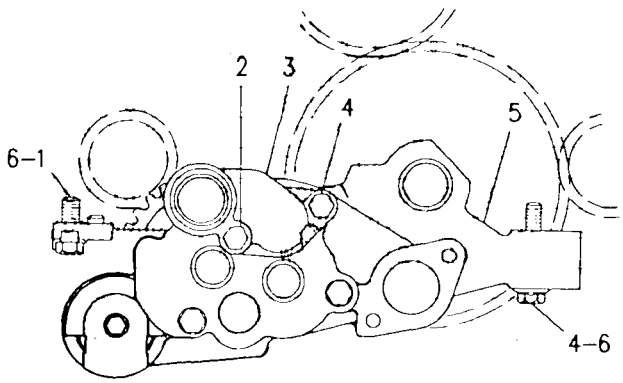

GRAPHIC #1 g00108559

LUBRICATION SYSTEM

106-8958 PUMP GP-ENGINE OIL

PIN 2YN1-UP; 3ZN1-UP; 4MN1-UP; 5LN1-UP; 6JN1-UP;
7KN1-UP; 8LN1-UP; 9PN1-UP. S/N 6NC1-UP; 08Z93150-99999
PART OF 106-8957 PUMP GP-ENGINE OIL

SMCS-1304, 1315 i00124281

NOTE	REF NO	GRAPHIC REF	PART NUMBER	QTY	PART NAME 1 2 3 4 5 6 (PRODUCT LEVEL)	SEE PAGE
YR	1	1	6I-1346	1	PUMP GP-ENGINE OIL	64
	2	1	4P-7830	1	GEAR-OIL DRIVE (33 TEETH)	
	3	1	0S-1590	1	BOLT (3/8-16X2IN)	
	4	1	1P-7346	1	WASHER	

R-REMFG PART MAY BE AVAILABLE
Y-SEPARATE ILLUSTRATION

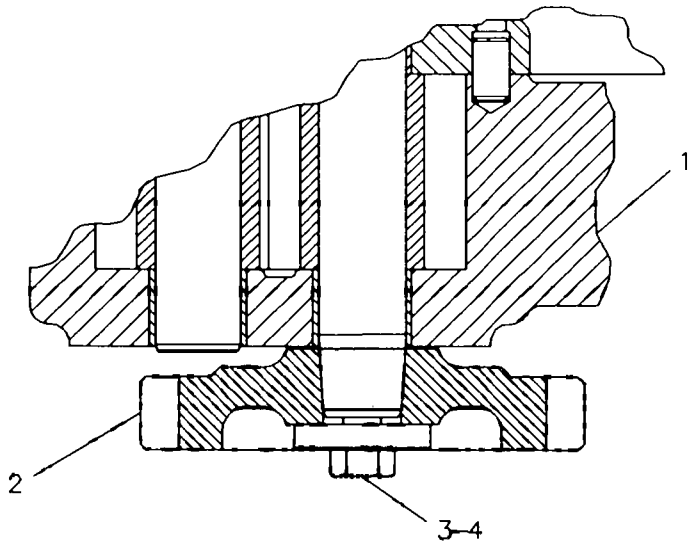

GRAPHIC #1 g00108424

COOLING SYSTEM

149-8916 COOLING AR-HYDRAULIC OIL–CUSTOM

PIN 2YN1-UP; 4MN1-UP

SMCS-1374 **i01007470**

NOTE	PART NUMBER	QTY	PART NAME 1 2 3 4 5 6 (PRODUCT LEVEL)	SEE PAGE
Y	*152-4669*	1	LINES GP-HYDRAULIC OIL COOLER	78
Y	*152-4670*	1	PUMP GP-HYDRAULIC	389
Y	*108-0084*	1	RADIATOR GP	92

Y-SEPARATE ILLUSTRATION

149-8917 COOLING AR–POWERTRAIN OIL–CUSTOM

PIN 2YN1-UP; 4MN1-UP

SMCS-1374 i01007540

NOTE	REF NO	GRAPHIC REF	PART NUMBER	QTY	PART NAME 1 2 3 4 5 6 (PRODUCT LEVEL)	SEE PAGE
	1	1	3V-9244	4	WASHER	
	2	1	6Y-3954	1	SUPPORT AS	
	3	1	7V-8532	2	SPACER	
I	4	1	112-1646	1	HOSE AS	
	5	1	118-6633	1	CORE AS-HYDRAULIC OIL COOLER	
	6	1	130-1433	2	SPACER	
Y	7	1	150-7197	1	HOSE AS	366
Y	8	1	150-7198	1	HOSE AS	367
Y	9	1	150-7199	1	HOSE AS	368
	10	1	152-6440	1	PLATE AS	
		1	1F-0750	8	NUT-WELD (3/8-16 THD)	
	11	1	152-6441	1	PLATE AS	
		1	1F-0750	4	NUT-WELD (3/8-16 THD)	
	12	1	152-6442	1	GUARD AS	
		1	1F-0750	4	NUT-WELD (3/8-16 THD)	
		1	8N-4406	1	BLOCK	
	13	1	152-6443	1	PLATE AS	
		1	3Y-7829	1	BOSS (3/8-16 THD)	
	14	1	152-6444	1	PLATE AS	
		1	1F-0750	1	NUT-WELD (3/8-16 THD)	
	15	1	152-6445	1	PLATE AS	
		1	3W-2764	1	BOSS	
	16	1	100-4336	4	CLIP (20.62MM ID)	
	17	1	1P-4578	6	FLANGE-HALF	
	18	1	1S-0994	2	CLIP (20.64MM ID)	
	19	1	2M-9780	2	SEAL-O-RING (19.18MM ID)	
	20	1	3K-0360	2	SEAL-O-RING (16.36MM ID)	
	21	1	4L-6454	3	BOLT (3/8-16X1.0IN)	
	22	1	5P-1075	13	WASHER-HARD (3MM THK)	
	23	1	5S-7379	1	BOLT (3/8-16X.875IN)	
	24	1	5S-7383	1	BOLT (3/8-16X1.75IN)	
	25	1	6V-8398	4	SEAL-O-RING (12.47MM ID)	
	26	1	6V-8625	1	ELBOW-90 DEGREE (3/4-16 THD)	
	27	1	6V-8638	2	CONNECTOR-SEAL	
	28	1	6V-8801	1	NUT (3/8-16 THD)	
	29	1	6V-9002	1	ELBOW-45 DEGREE (3/4-16 THD)	
	30	1	7X-0288	1	BOLT (3/8-16X1.625IN)	
	31	1	7X-0313	8	BOLT (7/16-14X2.75IN)	
	32	1	7X-0345	4	BOLT (5/8-11X1.75IN)	
	33	1	8M-4986	6	SEAL-O-RING (37.69MM ID)	
	34	1	8T-2501	1	BOLT (3/8-16X2.0IN)	
	35	1	8T-2502	3	BOLT (3/8-16X1.13IN)	
	36	1	8T-4122	16	WASHER (3.5MM THK)	
	37	1	8T-4896	4	WASHER-HARD (2.5MM THK)	
	38	1	8T-5360	12	WASHER (2.5MM THK)	
	39	1	8T-8916	4	BOLT (7/16-14X1.5IN)	
	40	1	9B-7237	6	BOLT (3/8-16X1.25IN)	

I-SEE HOSE FABRICATION GUIDE
Y-SEPARATE ILLUSTRATION

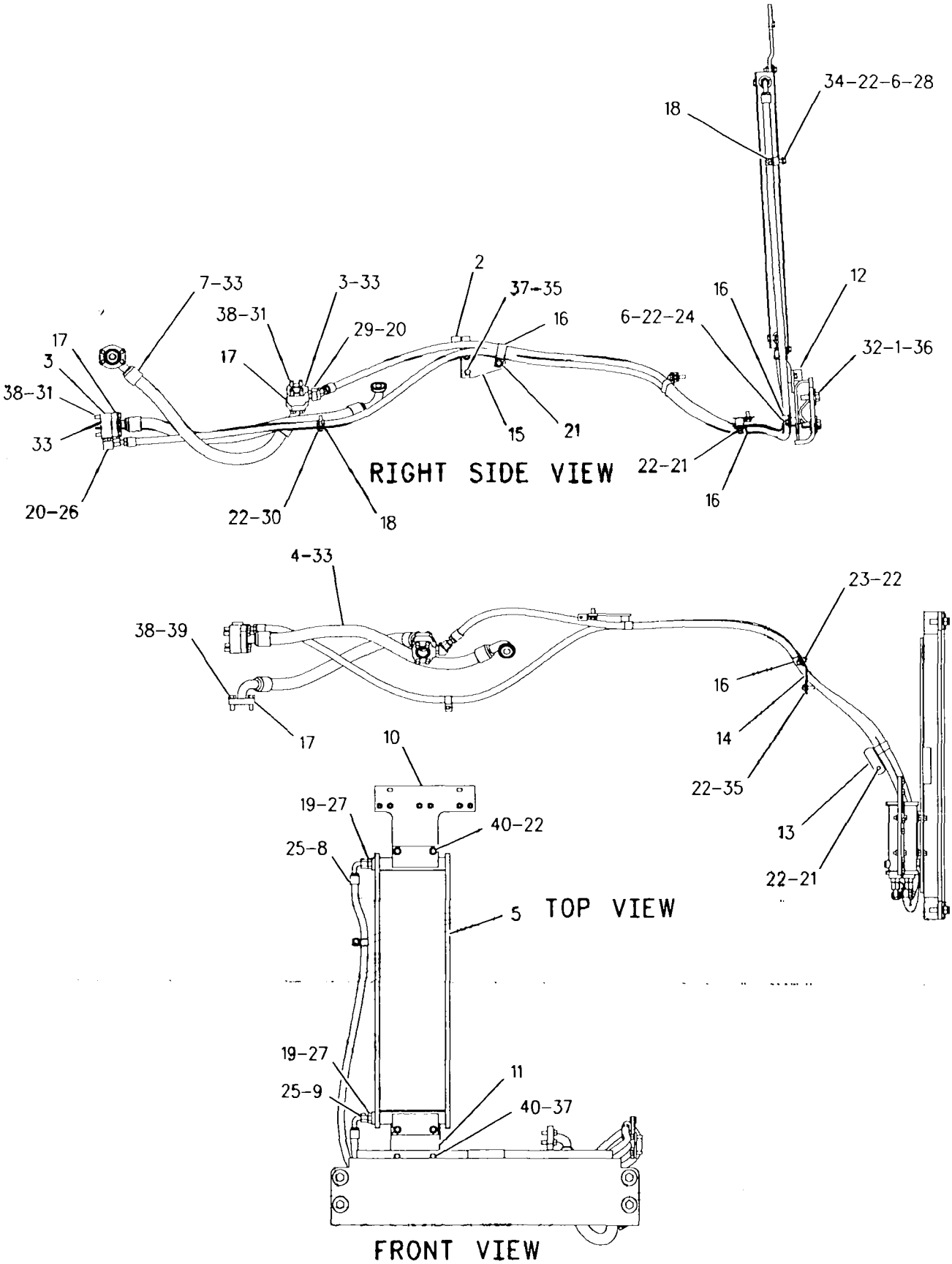

GRAPHIC #1

g00519288

COOLING SYSTEM

2W-2271 COOLER GP-FLTR BASE & ENG OIL

PIN 4MN1-UP; 5LN1-UP; 6JN1-UP; 7KN1-UP; 8LN1-UP; 9PN1-UP. S/N 08Z93150-99999
PART OF 2W-2272 COOLER GP-FLTR BASE & ENG OIL

SMCS-1306, 1314, 1378 **i00575951**

NOTE	REF NO	GRAPHIC REF	PART NUMBER	QTY	PART NAME 1 2 3 4 5 6 (PRODUCT LEVEL)	SEE PAGE
C	1	1	**2W-5240**	1	PIPE-PUMP OUTLET	
R	2	1	**7N-0165**	1	CORE AS-OIL COOLER	
	3	1	**100-5985**	1	BONNET-OIL COOLER	
Y	4	1	*8N-4457*	1	BASE GP-OIL FILTER	45
C	5	1	**1A-2029**	3	BOLT (3/8-16X1.125IN)	
	6	1	**1T-0765**	1	BOLT (3/8-16X1.00IN)	
	7	1	**0L-2070**	1	BOLT (3/8-16X2.25IN)	
	8	1	**5S-6051**	2	GASKET	
	9	1	**9M-1974**	4	WASHER-HARD (2MM THK)	
	10	1	**1D-4540**	1	BOLT (5/16-18X2.75IN)	
	11	1	**1B-9575**	3	BOLT (5/16-18X1.75IN)	
	12	1	**5P-8118**	2	SEAL-O-RING (26.57MM ID)	
	13	1	**8T-6761**	1	PLUG-PIPE (1-11-1/2 NPTF THD)	
	14	1	**7X-7731**	1	PLUG-PIPE (3/4-14 NPTF THD)	
	15	1	**8T-6767**	1	PLUG-PIPE (3/8-18 NPTF THD)	
C	16	1	**0S-1588**	3	BOLT (3/8-16X1.25IN)	
C	17	1	**5M-2894**	5	WASHER (2.5MM THK)	
B	18	1	**2A-3541**	1	GASKET	
B	19	1	**6B-0041**	1	COVER	
B	20	1	**5M-2894**	2	WASHER (2.5MM THK)	
B	21	1	**0L-1351**	2	BOLT (3/8-16X.875IN)	

B-USE AS REQUIRED
C-CHANGE FROM PREVIOUS TYPE
R-REMFG PART MAY BE AVAILABLE
Y-SEPARATE ILLUSTRATION

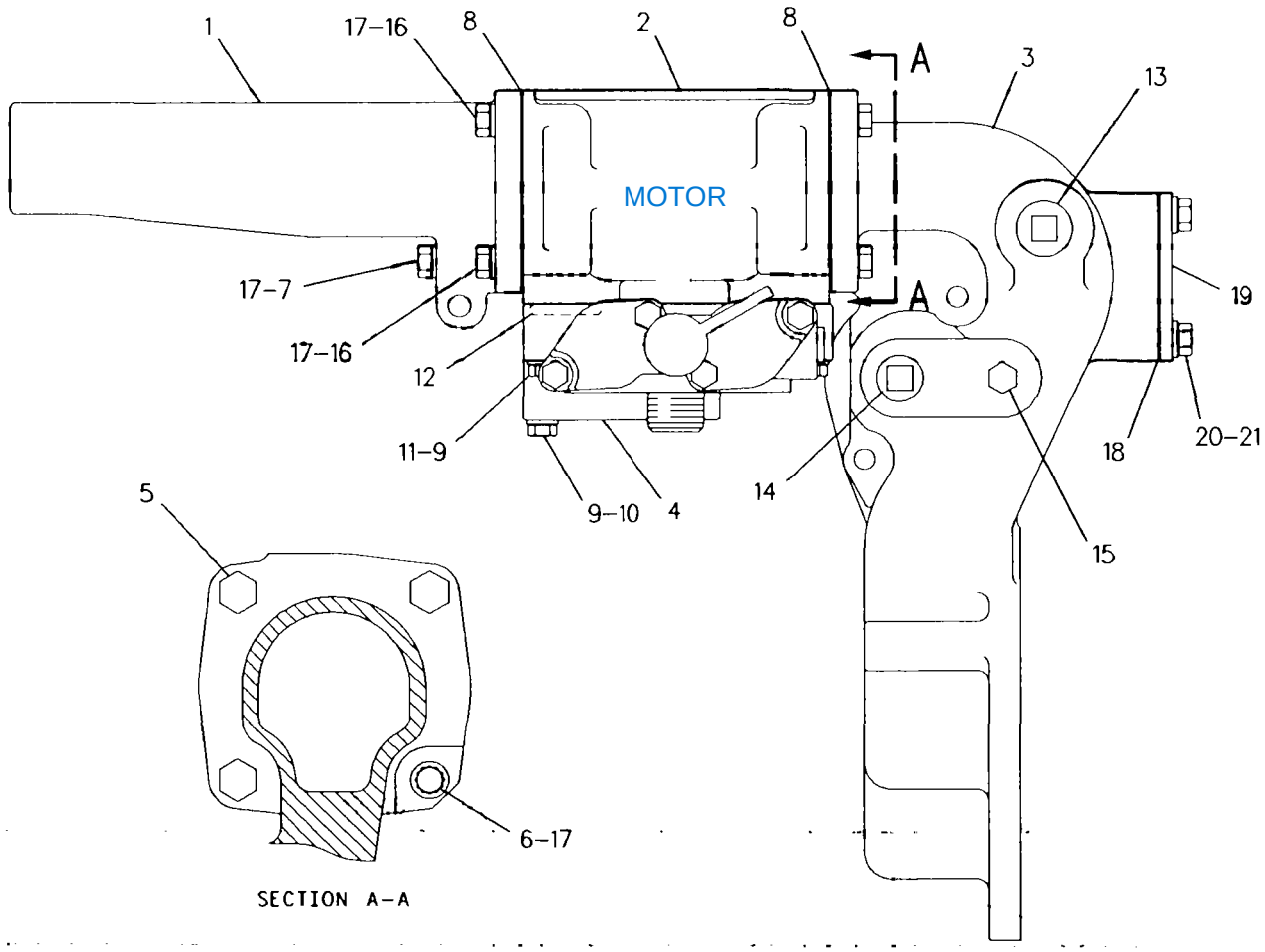

GRAPHIC #1 g00256244

2W-2272 COOLER GP-FLTR BASE & ENG OIL

PIN 4MN1-UP; 5LN1-UP; 6JN1-UP; 7KN1-UP;
8LN1-UP; 9PN1-UP. S/N 6NC1-UP; 08Z93150-99999
PART OF 108-1078, 8Q-1762, 8Q-1763 ENGINE AR

SMCS-1306, 1314, 1378 i00575957

NOTE	REF NO	GRAPHIC REF	PART NUMBER	QTY	PART NAME 1 2 3 4 5 6 (PRODUCT LEVEL)	SEE PAGE
Y	1	1	*2W-2271*	1	COOLER GP-FLTR BASE & ENG OIL	70
	2	1	**0S-1588**	1	BOLT (3/8-16X1.25IN)	
					-OR-	
C		1	**3B-1915**	1	BOLT (3/8-16X1.375IN)	
C		1	**5M-2894**	1	WASHER (2.5MM THK)	
	3	1	**1R-0739**	1	FILTER AS-OIL	
	4	1	**0S-1619**	2	BOLT (3/8-16X3IN)	
	5	1	**2W-4561**	1	GASKET	

C-CHANGE FROM PREVIOUS TYPE
Y-SEPARATE ILLUSTRATION

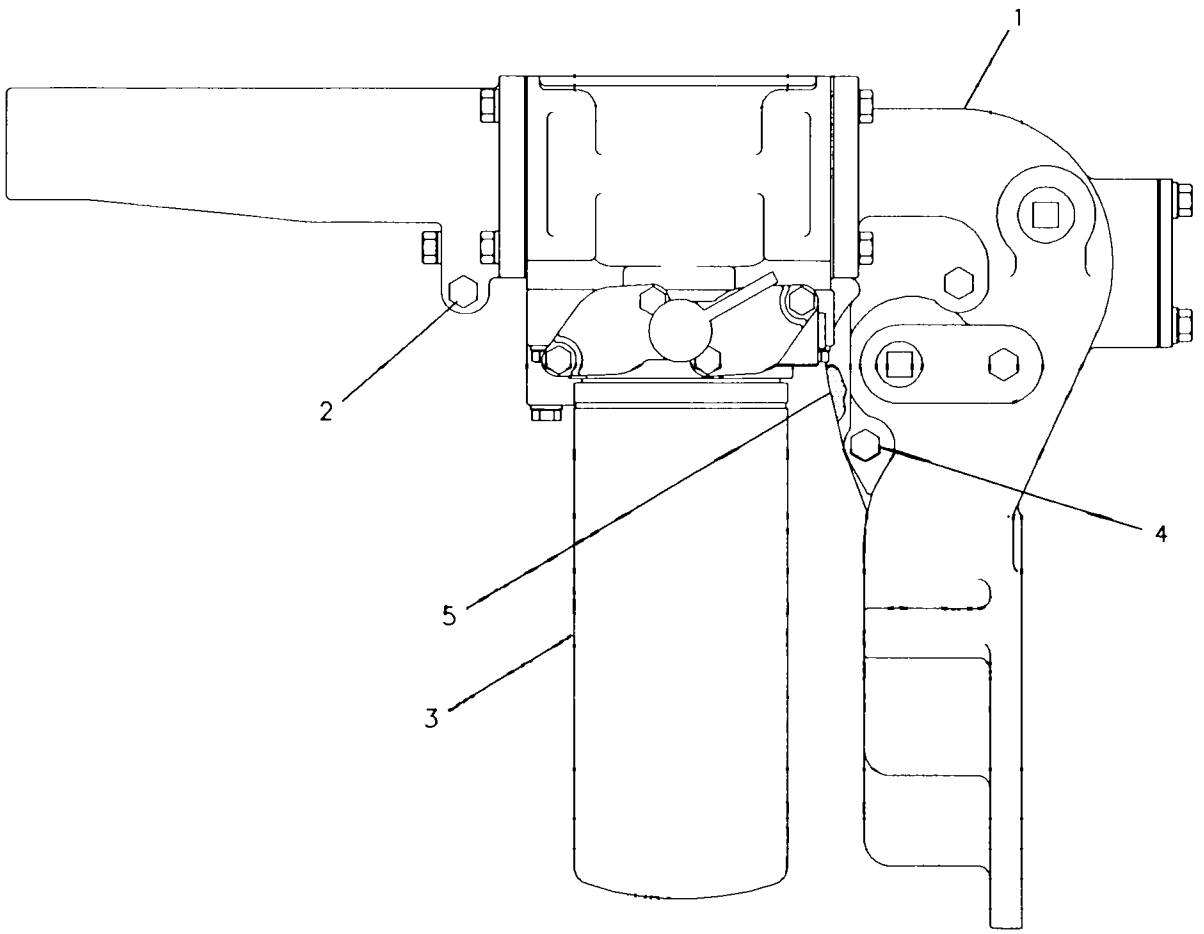

GRAPHIC #1 g00233237

COOLING SYSTEM

7N-2731 COOLER GP-TRANSMISSION OIL

PIN 4MN1-UP; 5LN1-UP; 6JN1-UP; 7KN1-UP;
8LN1-UP; 9PN1-UP. S/N 6NC1-UP; 08Z93150-99999
PART OF 108-1078, 8Q-1762, 8Q-1763 ENGINE AR

SMCS-1375 i00574862

NOTE	REF NO	GRAPHIC REF	PART NUMBER	QTY	PART NAME 1 2 3 4 5 6 (PRODUCT LEVEL)	SEE PAGE
	1	1	127-5537	1	CORE AS	
	2	1	7B-3235	3	BOLT (1/2-13X1.375IN)	
	3	1	1B-2886	3	BOLT (1/2-13X3.75IN)	
	4	1	0L-1351	2	BOLT (3/8-16X.875IN)	
		1	5M-2894	2	WASHER (2.5MM THK)	
	5	1	2S-0795	2	GASKET	
	6	1	1A-1460	2	BOLT (1/2-13X2IN)	
		1	5P-8245	2	WASHER (3MM THK)	
	7	1	8S-4304	1	BONNET-TMSN OIL COOLER (REAR)	
	8	1	0S-1595	4	BOLT (1/2-13X1.25IN)	
	9	1	8M-9307	1	PLUG-DRAIN (OIL COOLER)	
		1	6F-7062	1	WASHER	
	10	1	1W-4855	1	BRACKET-OIL COOLER (REAR MOUNTING)	

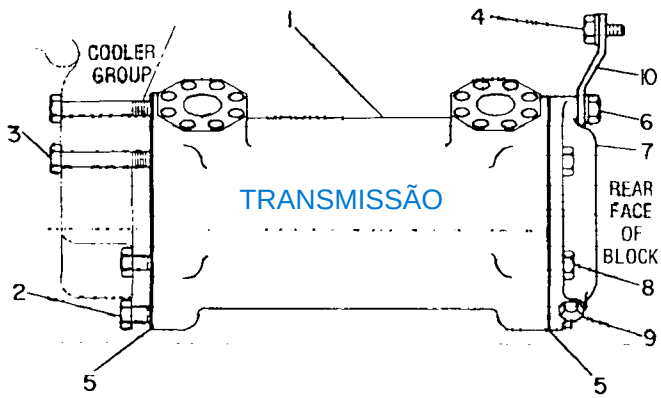

GRAPHIC #1 g00236250

COOLING SYSTEM

8Q-1992 FAN AR-EJECTOR–CUSTOM

PIN 2YN1-UP; 3ZN1-UP; 4MN1-UP; 5LN1-UP; 6JN1-UP; 7KN1-UP; 8LN1-UP; 9PN1-UP

16 % FAN SPEED INCREASE AT 1306 RPM

SMCS-1356 **i01012295**

NOTE	PART NUMBER	QTY	PART NAME 1 2 3 4 5 6 (PRODUCT LEVEL)	SEE PAGE
Y	*8Q-0704*	1	FAN SPEED INCREASE AR	25
	8Q-1530	2	BAFFLE AS-RADIATOR	
	1F-0750	4	NUT-WELD (3/8-16 THD)	
	8Q-1911	1	SPIDER AS-FAN	

Y-SEPARATE ILLUSTRATION

COOLING SYSTEM

134-2300 FAN AR-VARIABLE—CUSTOM

PIN 2YN1-UP; 3ZN1-UP; 4MN1-UP; 5LN1-UP; 6JN1-UP; 7KN1-UP; 8LN1-UP; 9PN1-UP
FLEXXAIRE RETROFIT

SMCS-1356 i01005886

NOTE	PART NUMBER	QTY	PART NAME 1 2 3 4 5 6 (PRODUCT LEVEL)	SEE PAGE
	126-2741	1	ACTUATOR	
	1T-0414	1	BOLT-12 POINT HEAD (5/16-18X1)	
	1T-0765	1	BOLT (3/8-16X1.00IN)	
	4F-4879	1	BOLT (3/8-16X.5IN)	
	4K-5175	1	BOLT-12 POINT HEAD (1/2-13X1.5IN)	
	5S-7349	1	BOLT (1/4-20X0.5IN)	
	9K-7290	1	BOLT-12 POINT HEAD	
	019-1209	1	BOLT-SOCKET HEAD	
	112-1155	2	BEARING	
	154-8279	1	BEARING-CARRIER	
	1T-0416	1	BOLT (5/16-18X.75IN)	
	114-4992	2	BOLT	
	154-8390	1	BOLT-SOCKET HEAD	
	156-3875	1	BOLT-12 POINT	
	154-8391	1	BRACKET	
	154-8342	1	BRACKET AS-MOUNTING	
	154-8377	1	BRACKET-MANIFOLD	
	154-8826	3	BUSHING	
	165-2441	1	CLEVIS AS	
	165-6558	1	CONTROL GP-FAN	
	163-0270	2	FILM	
	156-3892	1	MOUNT AS	
	137-3556	1	CABLE AS	
	154-8813	1	BRACKET-MOUNTING	
	154-8820	1	SCREW	
	156-6342	1	CONTROLLER	
	159-9811	1	ENCLOSURE AS	
	8M-8948	1	FUSE (15 AMP)	
	126-1601	1	WIRE AS	
	126-1602	1	WIRE AS	
	126-2741	1	ACTUATOR	
	126-2869	1	CLAMP	
	126-6232	1	WIRE AS	
	137-2082	1	FUSE (1/4 AMP)	
	127-1622	1	BOX-CONTROL	
	2Q-3371	1	SENSOR-TEMPERATURE	
	126-5144	1	MONITOR-DISPLAY	
	154-8374	1	COVER	
	2Q-3386	1	COLLAR	
	154-8327	1	EXTENSION	
	154-8382	1	FITTING	
	154-8351	1	FITTING-ELBOW	
	154-8277	1	FITTING-GREASE	
	154-8804	1	GUARD	
	154-9259	1	HOSE AS-GREASE	
	165-4434	1	HOSE AS-GREASE	
	165-4436	1	HOSE AS-GREASE	
	154-8818	1	HUB AS	
	154-8759	1	PLATE-COVER	
	154-8806	1	SHAFT-MOUNTING	
	156-3881	1	SEAL-O-RING	
	156-3884	1	BOLT-HEAD	
	156-3888	1	BOLT-12 POINT	
	154-8795	1	BLOCK AS-SHIFTER	
	1T-0765	1	BOLT (3/8-16X1.00IN)	
	4B-1284	1	SCREW-MACHINE	

134-2300 FAN AR-VARIABLE *(contd.)* i01005886

NOTE	PART NUMBER	QTY	PART NAME 1 2 3 4 5 6 (PRODUCT LEVEL)	SEE PAGE
	5S-7349	1	BOLT (1/4-20X0.5IN)	
	6L-3921	1	WASHER-SEAL	
	154-4196	1	SEAL-O-RING	
	154-8288	1	FLANGE	
	154-8312	1	BEARING-THRUST	
	154-8314	1	BLOCK-PIVOT	
	154-8326	1	WASHER	
	154-8345	1	COLLAR & PIN AS	
	154-8317	1	LOCKNUT	
	6V-8188	1	NUT (1/2-13 THD)	
	154-8837	1	NUT	
	2Q-3370	1	PIN-HITCH	
	165-2442	1	PLATE-ALIGNMENT	
	154-8392	1	PLATE-GUARD	
	1Q-3613	1	PLATE-WARNING	
	154-8828	1	PLUG-FROST	
	165-2344	1	PULLEY	
	2Q-3398	2	SETSCREW	
	154-8373	1	SHAFT	
	154-8318	2	SHAFT-MAIN	
	154-8372	1	SPOOL	
	165-6036	1	STUD	
	165-2348	1	SUPPORT-ARM	
	111-9560	1	SWITCH AS-PRESSURE	
	102-8807	1	KIT-CONNECTING PLUG (2 PIN)	
	3E-3362	1	WEDGE-PLUG LOCK	
	8T-8730	2	SOCKET-CONNECTOR	
	156-3878	1	WASHER	
			AVAILABLE REPAIR KIT(S):	
	159-7295	1	KIT-ACTUATOR	
	159-7282	1	KIT-BEARING	
	159-7289	1	KIT-BUSHING	
	159-7291	1	KIT-BUSHING	
	159-7284	1	KIT-COVER	
	159-7287	1	KIT-CLUTCH	
	159-7288	1	KIT-GEAR	
	159-7283	1	KIT-MOTOR	
	159-7281	1	KIT-SEAL	
	159-7285	1	KIT-SEAL	
	159-7286	1	KIT-SCREW	
	156-3890	1	KIT-BLADE	
	159-7294	1	KIT-PLUG	
	159-7278	1	KIT-INSERT	

COOLING SYSTEM

152-4669 LINES GP-HYDRAULIC OIL COOLER–CUSTOM

PIN 2YN1-UP; 4MN1-UP

PART OF 149-8916 COOLER AR-HYDRAULIC OIL

SMCS-1374 i01006004

NOTE	PART NUMBER	QTY	PART NAME 1 2 3 4 5 6 (PRODUCT LEVEL)	SEE PAGE
YI	153-0090	1	HOSE AS	369
YI	153-0091	1	HOSE AS	370
YI	153-0092	1	HOSE AS	371
Y	9T-5774	1	VALVE GP-BYPASS	390
	5P-5777	1	ADAPTER-O-RING	
	4L-6454	8	BOLT (3/8-16X1.0IN)	
	5M-3062	2	BOLT (3/8-16X.75IN)	
	5P-2566	1	BOLT (1/2-13X1.50IN)	
	5S-7379	1	BOLT (3/8-16X.875IN)	
	5S-7382	1	BOLT (3/8-16X34.92)	
	7X-0290	3	BOLT (3/8-16X3.50IN)	
	7X-0347	1	BOLT (5/8-11X2.25IN)	
	8T-2502	1	BOLT (3/8-16X1.13IN)	
	1P-4908	2	BRACKET AS	
	6Y-5827	1	BRACKET AS	
	6H-0853	1	BUSHING-TERMINAL	
	1S-0994	2	CLIP (20.64MM ID)	
	3G-8054	1	CLIP (TAB)	
	3G-8057	1	CLIP (SLOT)	
	3P-2404	1	CLIP (28.58MM ID)	
	8S-0948	1	CLIP (20.64MM ID)	
	9M-4972	3	CLIP (28.58MM ID)	
	100-4336	3	CLIP (20.62MM ID)	
	6V-9182	1	ELBOW	
	8C-6920	1	ELBOW-45 DEGREE	
	8T-4149	1	ELBOW-45 DEGREE	
	6V-9002	1	ELBOW-45 DEGREE (3/4-16 THD)	
	6V-8625	3	ELBOW-90 DEGREE (3/4-16 THD)	
	6V-8721	1	ELBOW-90 DEGREE (7/8-14 THD)	
	6V-9007	1	ELBOW-90 DEGREE (1 1/16-12 THD)	
	6V-0974	1	GROMMET	
I	112-8571	2	HOSE AS	
I	112-8573	1	HOSE AS	
I	112-8569	1	HOSE AS	
	6V-8801	4	NUT (3/8-16 THD)	
	6V-9169	1	NUT-BULKHEAD (13/16-16 THD)	
	120-6852	1	PLATE	
	3D-2834	1	SEAL	
	6V-9746	6	SEAL-O-RING (18.94MM ID)	
	7M-8485	3	SEAL-O-RING (29.74MM ID)	
	3K-0360	6	SEAL-O-RING (16.36MM ID)	
	6V-8398	10	SEAL-O-RING (12.47MM ID)	
	2M-9780	1	SEAL-O-RING (19.18MM ID)	
	1P-3709	1	SEAL-RECTANGULAR	
	4E-1303	1	SPACER	
	6V-8782	1	TEE-FACE SEAL	
	150-2984	1	TUBE AS	
	6V-8995	1	UNION-BULKHEAD (13/16-16 THD)	
	5P-1075	2	WASHER-HARD (3MM THK)	
	8T-4223	1	WASHER-HARD (3MM THK)	
	8T-4896	18	WASHER-HARD (2.5MM THK)	

I-SEE HOSE FABRICATION GUIDE
Y-SEPARATE ILLUSTRATION

7C-8665 LINES GP-TURBOCHARGER WATER

PIN 2YN1-UP; 3ZN1-UP; 4MN1-UP; 5LN1-UP; 6JN1-UP; 7KN1-UP; 8LN1-UP; 9PN1-UP
SUPPLY
PART OF 8Q-1761, 8Q-1762, 8Q-1763 ENGINE AR

SMCS-1052, 1380 i00588785

NOTE	REF NO	GRAPHIC REF	PART NUMBER	QTY	PART NAME 1 2 3 4 5 6 (PRODUCT LEVEL)	SEE PAGE
	1	1	7F-9311	1	FITTING	
	2	1	032-1267	1	CONNECTOR-FLARED	
	3	1	7C-8645	1	TUBE AS-WATER	
	4	1	9S-1350	2	CLIP	
	5	1	0L-1351	2	BOLT (3/8-16X.875IN)	
		1	5M-2894	2	WASHER (2.5MM THK)	
	6	1	1W-3853	1	GASKET	

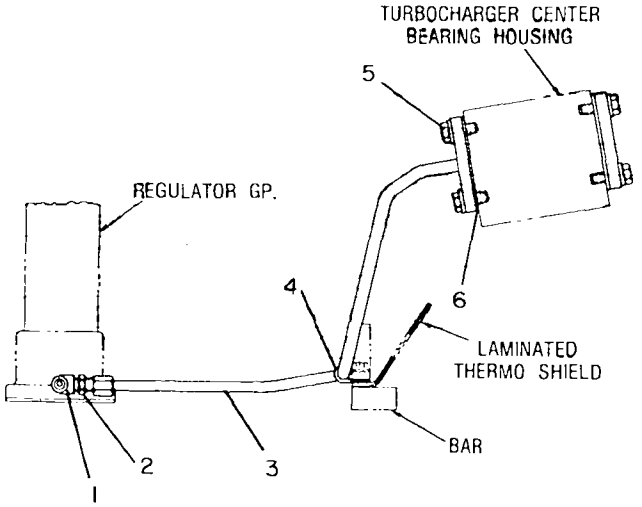

END VIEW

GRAPHIC #1 g00188541

COOLING SYSTEM

2W-6779 LINES GP-WATER

PIN 2YN1-UP; 3ZN1-UP; 4MN1-UP; 5LN1-UP; 6JN1-UP;
7KN1-UP; 8LN1-UP; 9PN1-UP. S/N 6NC1-UP; 08Z93150-99999
PART OF 108-1078, 8Q-1761, 8Q-1762, 8Q-1763 ENGINE AR

SMCS-1355, 1380, 1393 i00946602

NOTE	REF NO	GRAPHIC REF	PART NUMBER	QTY	PART NAME 1 2 3 4 5 6 (PRODUCT LEVEL)	SEE PAGE
	1	1	0T-0065	1	BOLT (3/8-16X3.5IN)	
	2	1	2P-6132	1	GASKET-ELBOW	
	3	1	8T-4984	2	CLAMP-HOSE	
	4	1	0S-1590	1	BOLT (3/8-16X2IN)	
	5	1	0S-1619	2	BOLT (3/8X3.0IN)	
BE	6	1	131-6645	1	HOSE	
Y	7	1	8N-4112	1	LINES GP-WATER	81
	8	1	7N-0200	1	GASKET	

B-USE AS REQUIRED
E-ORDER BY THE CENTIMETER
Y-SEPARATE ILLUSTRATION

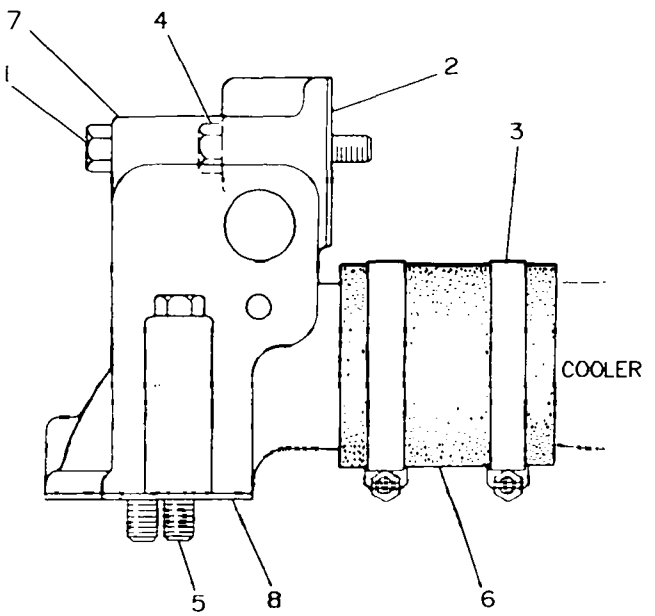

GRAPHIC #1 g00117182

8N-4112 LINES GP-WATER

PIN 2YN1-UP; 3ZN1-UP; 4MN1-UP; 5LN1-UP; 6JN1-UP; 7KN1-UP; 8LN1-UP; 9PN1-UP. S/N 6NC1-UP; 08Z93150-99999

BYPASS & OUTLET ELBOW

PART OF 2W-6779 LINES GP-WATER

SMCS-1355, 1380, 1393 i00165467

NOTE	REF NO	GRAPHIC REF	PART NUMBER	QTY	PART NAME 1 2 3 4 5 6 (PRODUCT LEVEL)	SEE PAGE
B	1	1	3J-5390	1	PLUG (3/8-18 THD)	
	2	1	7N-0172	1	ELBOW	
B	3	1	1B-5174	3	PLUG-PIPE (3/4-14 NPTF)	
B	4	1	5M-6213	2	PLUG	

B-USE AS REQUIRED

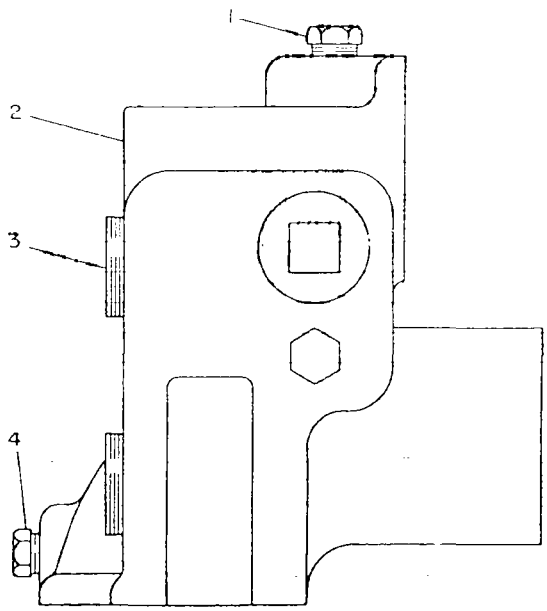

GRAPHIC #1 g00112429

COOLING SYSTEM

8Q-1776 LINES GP-WATER–CUSTOM

PIN 2YN1-UP; 3ZN1-UP; 4MN1-UP; 5LN1-UP; 6JN1-UP; 7KN1-UP; 8LN1-UP; 9PN1-UP
PART OF 8Q-1771 SHIELD AR-THERMO

SMCS-1355, 1380, 1393 **i00697591**

NOTE	REF NO	GRAPHIC REF	PART NUMBER	QTY	PART NAME 1 2 3 4 5 6 (PRODUCT LEVEL)	SEE PAGE
	1	1	6V-8397	2	SEAL-O-RING (9.27MM ID)	
	2	1	5P-4653	1	CONNECTOR	
I	3	1	8W-0184	1	HOSE AS	
	4	1	2T-2310	2	CONNECTOR-O-RING	
	5	1	2P-1279	1	LOCKNUT (9/16-18 THD)	
	6	1	1W-3853	1	GASKET	
	7	1	7C-8646	1	TUBE AS-WATER	
	8	1	5S-7379	1	BOLT (3/8-16X.875IN)	
	9	1	8T-4896	4	WASHER-HARD (2.5MM THK)	
	10	1	6V-8801	1	NUT (3/8-16 THD)	
	11	1	9S-1350	1	CLIP	
	12	1	0S-2307	2	SPACER-PAWL	
	13	1	5S-7383	2	BOLT (3/8-16X1.75IN)	
F		1	6V-9850	1	ELBOW-SWIVEL (11/16-16 THD)	
F		1	6V-8397	1	SEAL-O-RING (9.27MM ID)	

F-NOT SHOWN
I-SEE HOSE FABRICATION GUIDE

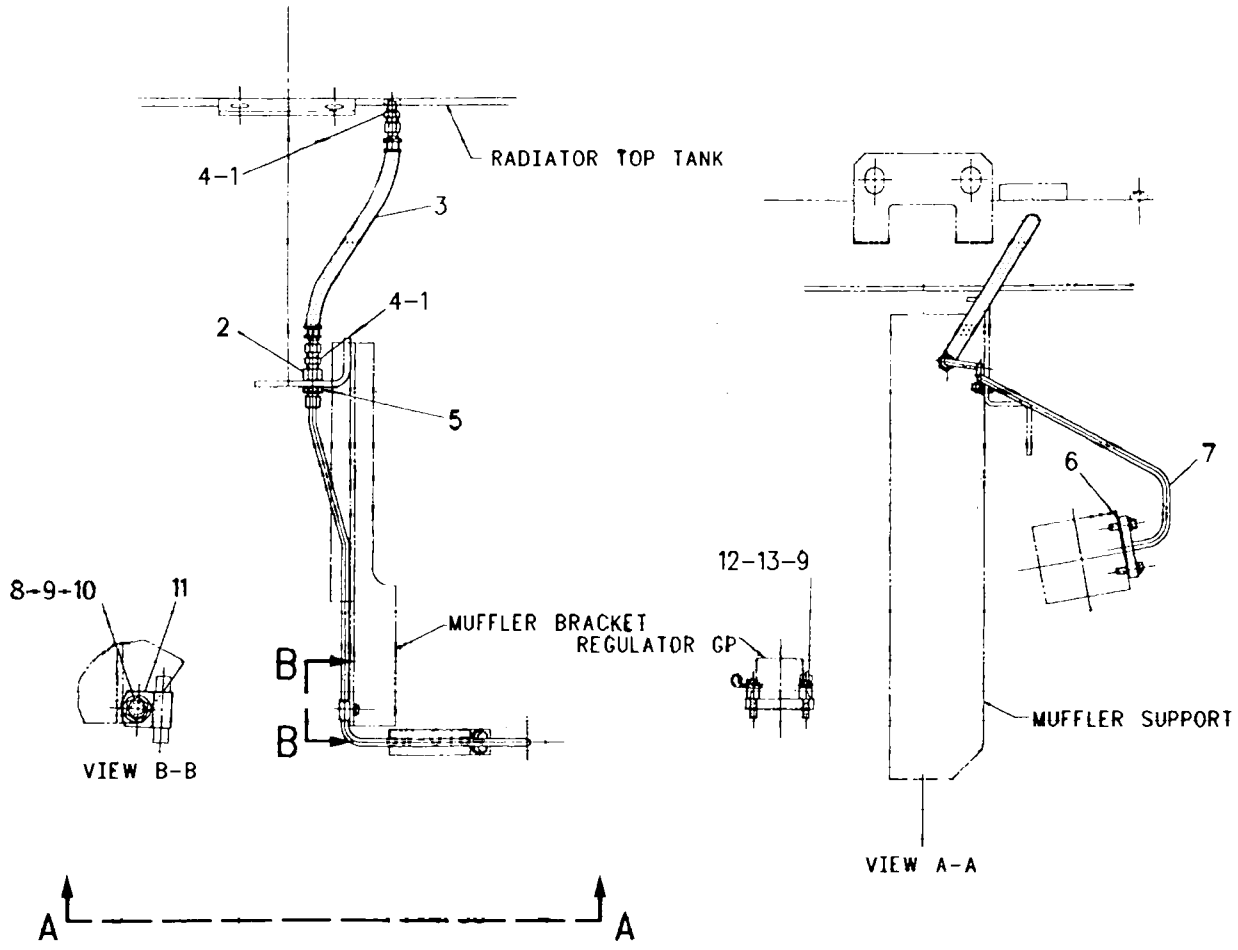

GRAPHIC #1 g00287738

COOLING SYSTEM

115-7560 PUMP GP-WATER

PIN 2YN1-UP; 3ZN1-UP; 4MN1-UP; 5LN1-UP; 6JN1-UP; 7KN1-UP; 8LN1-UP; 9PN1-UP. S/N 6NC1-UP; 08Z93150-99999

PART OF 116-7556 PUMP GP-WATER

SMCS-1361, 1363, 1364, 1373, 1384, 1389, 1394 i00579626

NOTE	REF NO	GRAPHIC REF	PART NUMBER	QTY	PART NAME 1 2 3 4 5 6 (PRODUCT LEVEL)	SEE PAGE
	1	1	1W-4619	1	HOUSING-PUMP	
	2	1	8N-5928	1	GASKET	
	3	1	8N-5929	1	COVER-WATER PUMP	
	4	1	134-7422	1	IMPELLER-PUMP	
	5	1	2W-7255	1	SHAFT-WATER PUMP	
	6	1	0S-1594	1	BOLT (3/8-16X1IN)	
	7	1	118-9163	1	SEAL GP	
	8	1	8C-5210	1	SEAL-LIP	
	9	1	1K-6985	1	RING-RETAINING	
	10	1	3B-8428	1	BOLT (7/16-14X3.25IN)	
	11	1	6H-3957	1	BALL BEARING	
	12	1	115-7559	1	GEAR-WATER PUMP	
	13	1	4S-9191	1	WASHER (5MM THK)	
	14	1	4N-5834	1	FILTER	
	15	1	8T-6765	1	PLUG-PIPE (1/4-18 NPTF THD)	
	16	1	0L-1351	2	BOLT (3/8-16X.875IN)	
	17	1	5M-2894	2	WASHER (2.5MM THK)	
	18	1	8H-9789	1	BALL BEARING	
	19	1	9X-6458	1	WASHER-HARD (3MM THK)	

115-7560 PUMP GP-WATER *(contd.)*

i00579626

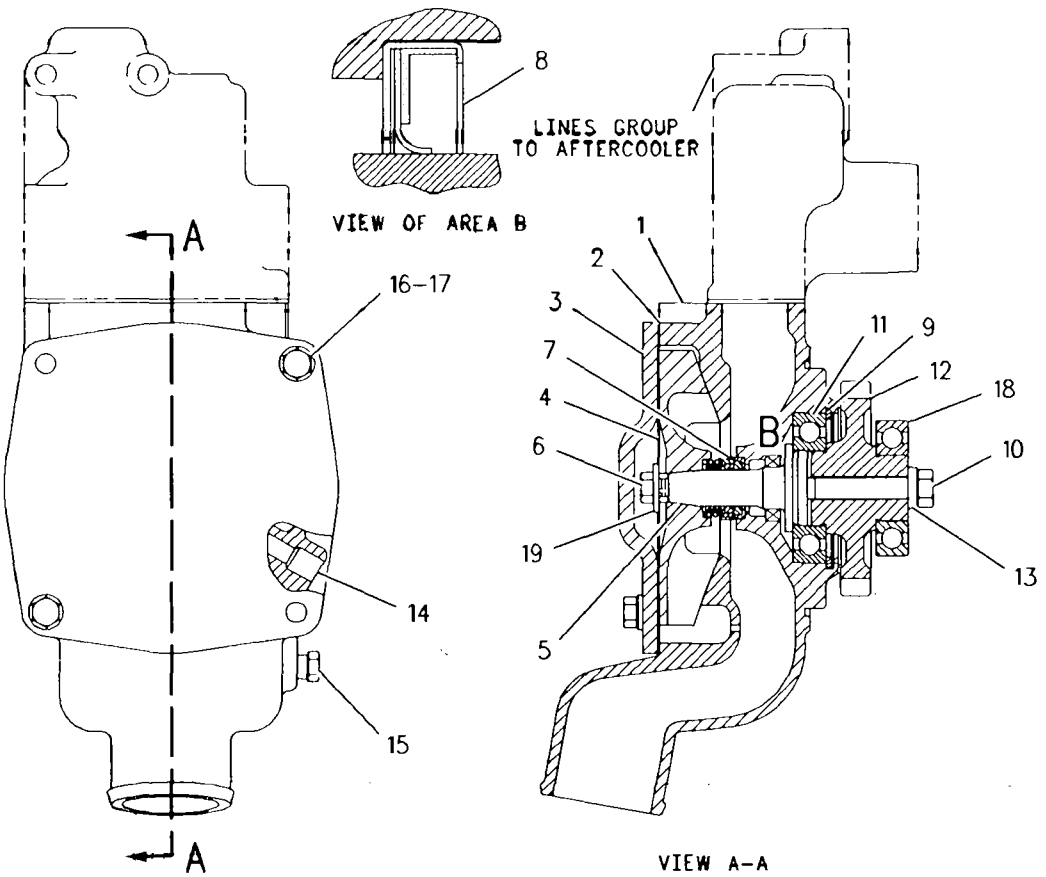

GRAPHIC #1

g00278812

COOLING SYSTEM

116-7556 PUMP GP-WATER

PIN 2YN1-UP; 3ZN1-UP; 4MN1-UP; 5LN1-UP; 6JN1-UP; 7KN1-UP; 8LN1-UP; 9PN1-UP. S/N 6NC1-UP; 08Z93150-99999
PART OF 108-1078, 8Q-1761, 8Q-1762, 8Q-1763 ENGINE AR

SMCS-1361, 1363, 1364, 1373, 1384, 1389, 1394 i00744683

NOTE	REF NO	GRAPHIC REF	PART NUMBER	QTY	PART NAME 1 2 3 4 5 6 (PRODUCT LEVEL)	SEE PAGE
YR	1	1	*115-7560*	1	PUMP GP-WATER	84
	2	1	**5F-3106**	1	SEAL-O-RING (126.59MM ID)	
B	3	1	**0T-0055**	2	BOLT (3/8-16X4.25IN)	
B	4	1	**5M-2894**	2	WASHER (2.5MM THK)	

B-USE AS REQUIRED
R-REMFG PART MAY BE AVAILABLE
Y-SEPARATE ILLUSTRATION

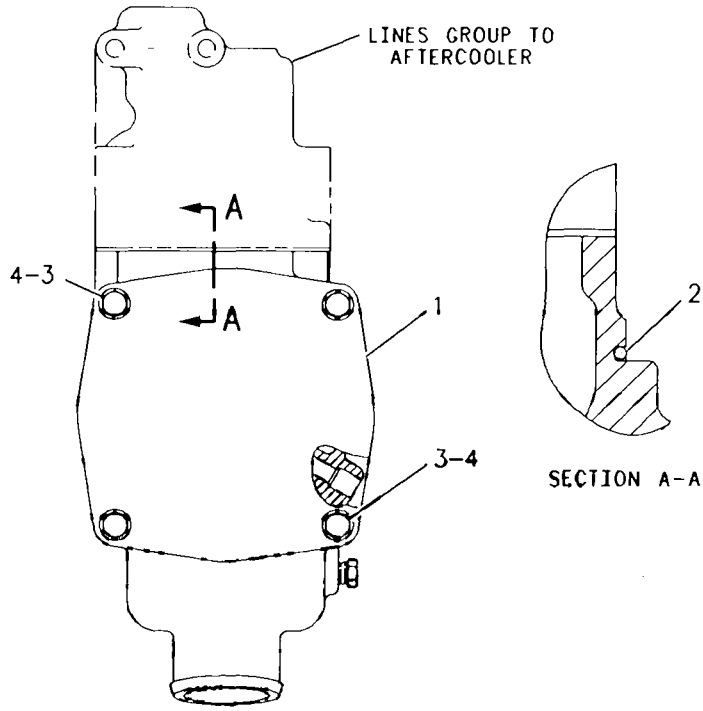

GRAPHIC #1 g00333496

COOLING SYSTEM

116-7556 PUMP GP-WATER

PIN 2YN1-UP; 3ZN1-UP; 4MN1-UP; 5LN1-UP;
7KN1-UP; 8LN1-UP; 9PN1-UP. S/N 6NC1-UP
PART OF 108-1078, 8Q-1761, 8Q-1762, 8Q-1763 ENGINE AR

SMCS-1361, 1363, 1364, 1373, 1384, 1389, 1394 **i00882870**

NOTE	REF NO	GRAPHIC REF	PART NUMBER	QTY	PART NAME 1 2 3 4 5 6 (PRODUCT LEVEL)	SEE PAGE
CY	1	1	**155-0066**	1	PUMP GP-WATER	88
	2	1	**5F-3106**	1	SEAL-O-RING (126.59MM ID)	
B	3	1	**0T-0055**	2	BOLT (3/8-16X4.25IN)	
B	4	1	**5M-2894**	2	WASHER (2.5MM THK)	

B-USE AS REQUIRED
C-CHANGE FROM PREVIOUS TYPE
Y-SEPARATE ILLUSTRATION

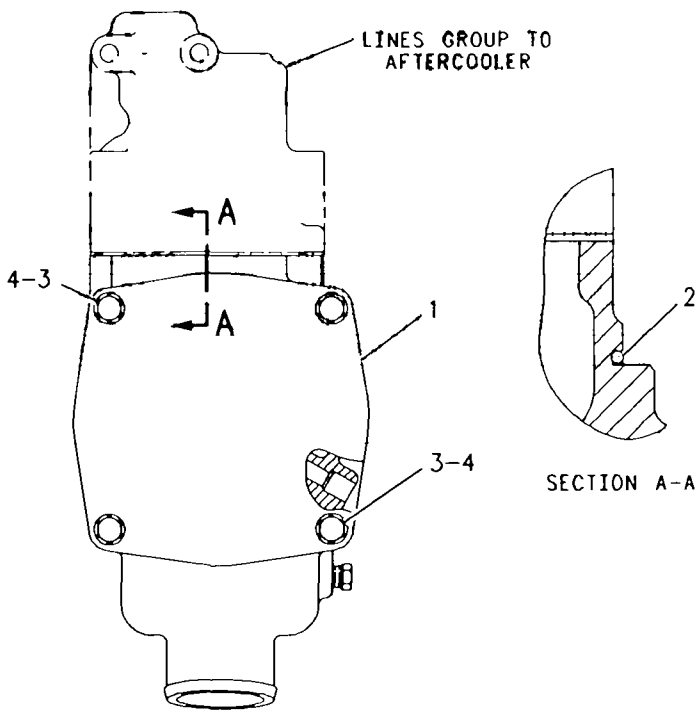

GRAPHIC #1 g00333496

155-0066 PUMP GP-WATER

PIN 2YN1-UP; 3ZN1-UP; 4MN1-UP; 5LN1-UP; 7KN1-UP; 8LN1-UP; 9PN1-UP. S/N 6NC1-UP

PART OF 116-7556 PUMP GP-WATER

SMCS-1361, 1363, 1364, 1373, 1384, 1389, 1394 i00882880

NOTE	REF NO	GRAPHIC REF	PART NUMBER	QTY	PART NAME 1 2 3 4 5 6 (PRODUCT LEVEL)	SEE PAGE
	1	1	**154-3945**	1	HOUSING-WATER PUMP	
	2	1	**8N-5928**	1	GASKET	
	3	1	**8N-5929**	1	COVER-WATER PUMP	
	4	1	**155-8758**	1	IMPELLER-PUMP	
J	5	1	**149-0791**	1	SHAFT-WATER PUMP	
J	6	1	**0S-1594**	1	BOLT (3/8-16X1IN)	
	7	1	*154-9291*	1	SEAL GP-WATER PUMP	
	8	1	**154-4482**	1	SEAL-LIP TYPE	
J	9	1	**1K-6985**	1	RING-RETAINING	
	10	1	**3B-8428**	1	BOLT (7/16-14X3.25IN)	
J	11	1	**6H-3957**	1	BALL BEARING	
	12	1	**115-7559**	1	GEAR-WATER PUMP	
	13	1	**4S-9191**	1	WASHER (5MM THK)	
J	14	1	**4N-5834**	1	FILTER	
	15	1	**8T-6765**	1	PLUG-PIPE (1/4-18 NPTF THD)	
	16	1	**0L-1351**	2	BOLT (3/8-16X.875IN)	
	17	1	**5M-2894**	2	WASHER (2.5MM THK)	
J	18	1	**8H-9789**	1	BALL BEARING	
	19	1	**9X-6458**	1	WASHER-HARD (3MM THK)	
					AVAILABLE REPAIR KIT(S):	
			6V-9906	1	KIT-WATER PUMP REBUILD (INCLUDES PARTS MARKED J)	

155-0066 PUMP GP-WATER *(contd.)* i00882880

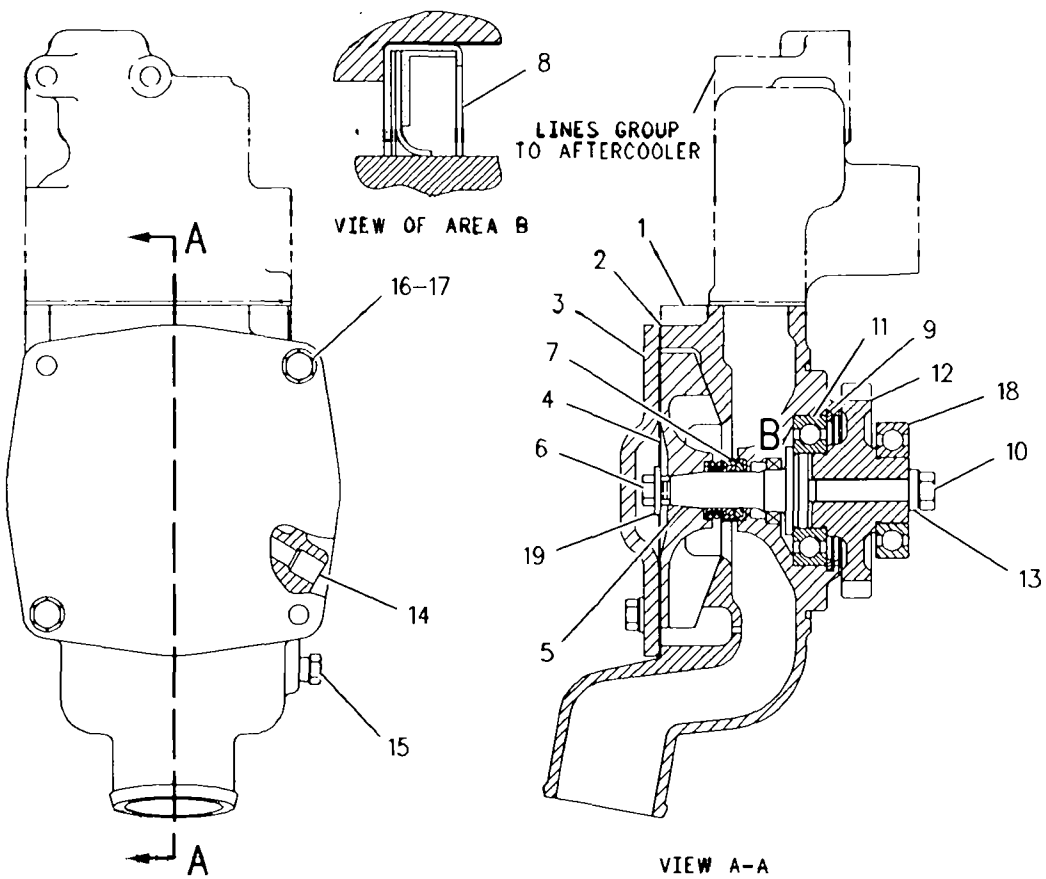

GRAPHIC #1 g00278812

8Q-1789 RADIATOR AR-TRASH-CUSTOM

PIN 2YN1-UP; 3ZN1-UP; 4MN1-UP; 5LN1-UP; 6JN1-UP; 7KN1-UP; 8LN1-UP; 9PN1-UP

SMCS-1353, 1377, 1382 i01012292

NOTE	REF NO	GRAPHIC REF	PART NUMBER	QTY	PART NAME 1 2 3 4 5 6 (PRODUCT LEVEL)	SEE PAGE
	1	1	124-7505	7	CORE AS-RADIATOR	
	2	1	6I-2431	7	SEAL	
	3	1	6I-2435	7	SPACER	

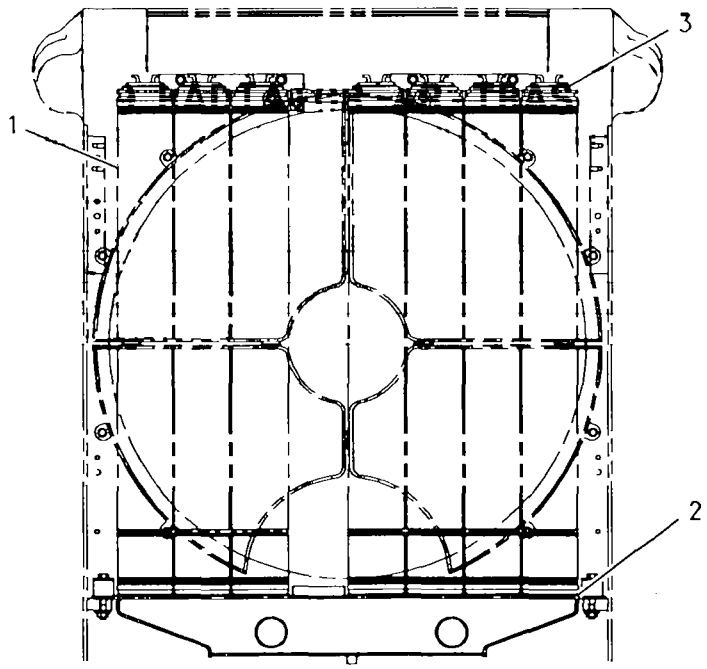

REAR VIEW

GRAPHIC #1 g00285238

COOLING SYSTEM

108-0084 RADIATOR GP

PIN 2YN1-UP; 4MN1-UP

PART OF 149-8916 COOLER AR-HYDRAULIC OIL

SMCS-1351 **i00920201**

NOTE	REF NO	GRAPHIC REF	PART NUMBER	QTY	PART NAME 1 2 3 4 5 6 (PRODUCT LEVEL)	SEE PAGE
	1	1	157-6023	1	SHIELD AS-UPPER	
		1	1F-0750	2	NUT-WELD (3/8-16 THD)	
		1	4D-6716	4	RIVET-POP (4.75MM DIA)	
		1	7G-5186	3	SPACER	
	2	1	157-6013	1	SHIELD AS-BOTTOM	
		1	1F-0750	2	NUT-WELD (3/8-16 THD)	
		1	4D-6716	3	RIVET-POP (4.75MM DIA)	
		1	7G-5186	3	SPACER	
	3	1	157-6010	1	SHIELD AS-BOTTOM	
		1	1F-0750	2	NUT-WELD (3/8-16 THD)	
		1	4D-6716	3	RIVET-POP (4.75MM DIA)	
		1	7G-5186	3	SPACER	
	4	1	157-6021	1	SHIELD AS-UPPER	
		1	1F-0750	2	NUT-WELD (3/8-16 THD)	
		1	4D-6716	4	RIVET-POP (4.75MM DIA)	
		1	7G-5186	3	SPACER	
	5	1	8T-8917	10	BOLT (1/2-13X1.25IN)	
	6	1	8T-4223	10	WASHER-HARD (3MM THK)	
	7	1	4L-6454	20	BOLT (3/8-16X1.0IN)	
	8	1	5P-1075	26	WASHER-HARD (3MM THK)	
	15	1	110-6132	2	BAFFLE AS-RADIATOR	
					(EACH INCLUDES)	
		1	1F-0750	4	NUT-WELD (3/8-16 THD)	
		1	6B-4594	5	RIVET (4.85MM DIA)	
	16	1	4L-9337	4	BOLT	
	17	1	110-6136	1	BRACKET AS	
		1	1F-0750	10	NUT-WELD (3/8-16 THD)	
	18	1	110-6138	1	BAFFLE AS-RADIATOR	
		1	1F-0750	4	NUT-WELD (3/8-16 THD)	
		1	6B-4594	7	RIVET (4.85MM DIA)	
	19	1	4P-0854	1	CORE AS-OIL COOLER	
	20	1	4W-2357	4	MOUNT AS	
	21	1	8C-3121	4	BOLT (5/16-18X1.50IN)	
	22	1	5P-4116	6	WASHER (2MM THK)	
	23	1	4M-6425	2	BOLT (5/16-18X1IN)	
	24	1	110-6134	1	BRACKET AS	
		1	1F-0750	1	NUT-WELD (3/8-16 THD)	
	25	1	110-6133	1	BRACKET AS	
		1	1F-0750	1	NUT-WELD (3/8-16 THD)	
	26	1	136-4843	1	BAFFLE AS	
		1	6B-4594	3	RIVET (4.85MM DIA)	
Y	27	1	*110-6095*	1	RADIATOR GP	94
	28	1	106-4572	5	HOSE	
	29	1	1P-4278	12	CLAMP	
	30	1	110-6139	1	HOSE-JUMPER	
	31	1	9B-7237	2	BOLT (3/8-16X1.25IN)	
	32	1	136-4844	1	BAFFLE AS	
		1	6B-4594	1	RIVET (4.85MM DIA)	
	33	1	003-2143	1	ELBOW	
	34	1	8F-8151	1	VALVE-DRAIN	
	35	1	1Y-7452	1	NIPPLE	
	36	1	003-9514	1	COUPLING-PIPE	

Y-SEPARATE ILLUSTRATION

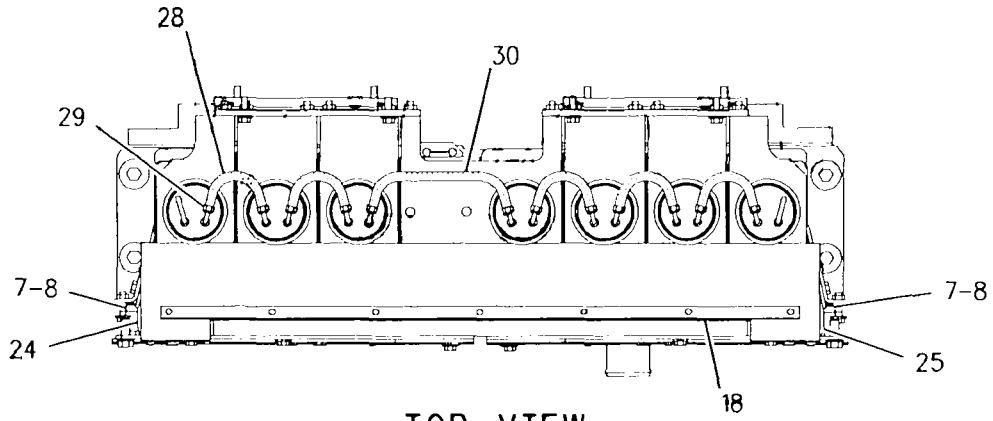

TOP VIEW

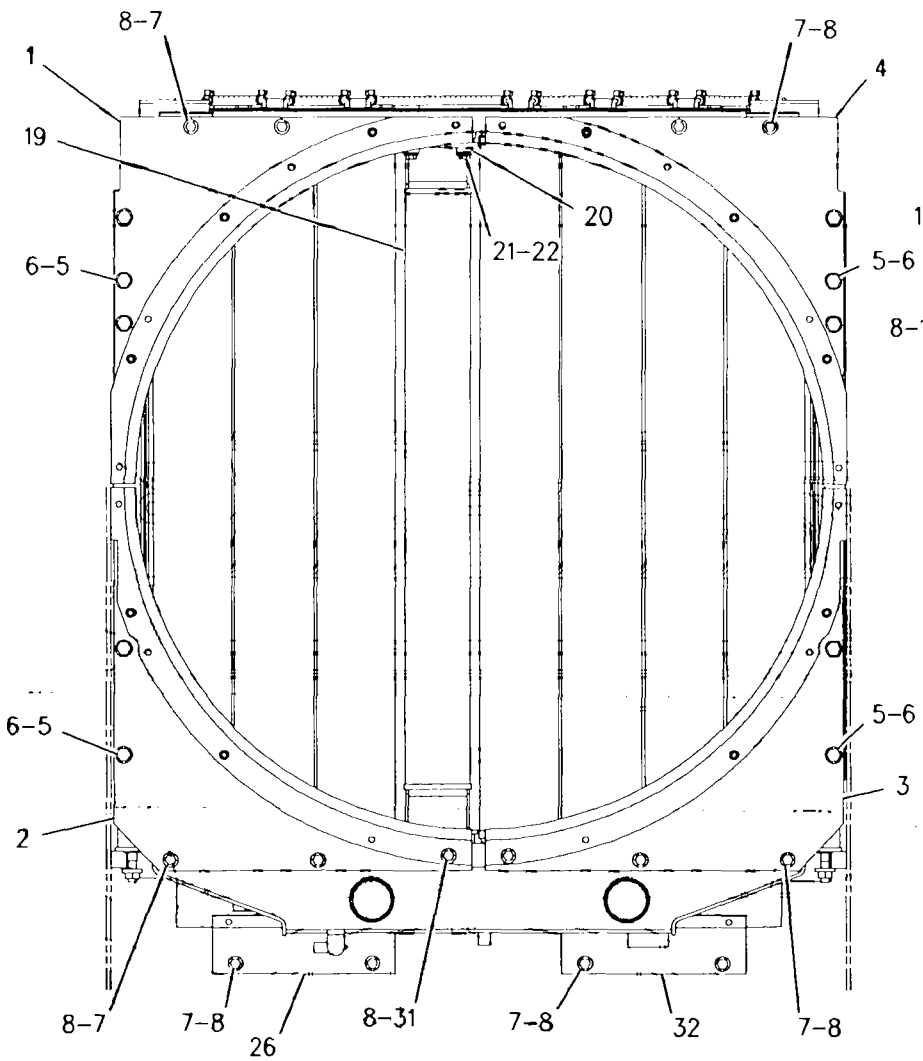

REAR VIEW

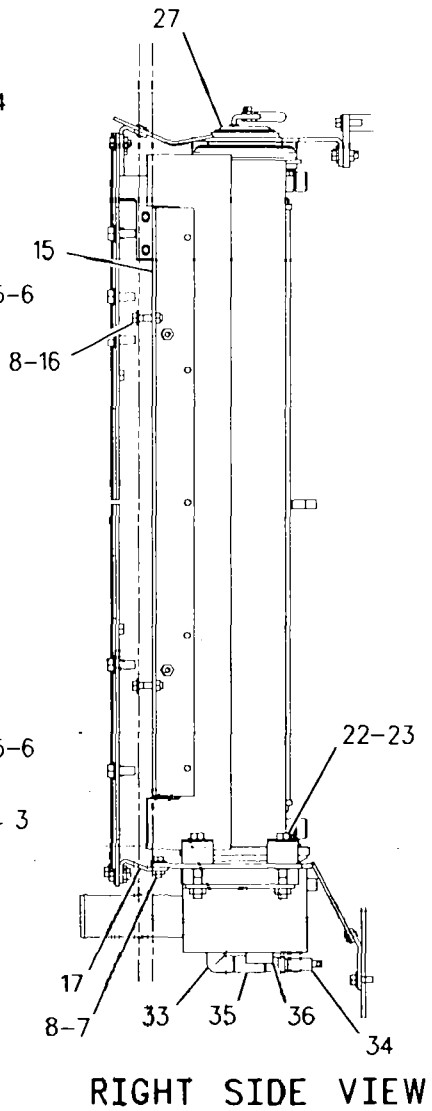

RIGHT SIDE VIEW

GRAPHIC #1 g00471795

COOLING SYSTEM

110-6095 RADIATOR GP

PIN 2YN1-UP; 4MN1-UP

PART OF 108-0084 RADIATOR GP

SMCS-1351 **i00782676**

NOTE	REF NO	GRAPHIC REF	PART NUMBER	QTY	PART NAME 1 2 3 4 5 6 (PRODUCT LEVEL)	SEE PAGE
	1	1	**113-9536**	7	CORE AS-RADIATOR	
	2	1	**6I-2431**	7	SEAL	
	3	1	**6I-2435**	7	SPACER	
	4	1	**151-0132**	4	RETAINER-CORE	
	5	1	**151-0129**	1	RETAINER AS-CORE	
		1	**1F-0750**	2	NUT-WELD (3/8-16 THD)	
	6	1	**9B-7237**	16	BOLT (3/8-16X1.25IN)	
	7	1	**5P-1075**	16	WASHER-HARD (3MM THK)	
	8	1	**110-6105**	2	PLATE AS-RETAINER (EACH INCLUDES)	
		1	**1F-0750**	6	NUT-WELD (3/8-16 THD)	
	9	1	**110-6107**	2	PLATE AS-RETAINER (EACH INCLUDES)	
		1	**1F-0748**	2	NUT-WELD (1/2-13 THD)	
	10	1	**109-5876**	1	TANK AS-BOTTOM	
		1	**8F-9836**	3	LUG (3/8-16 THD)	
E		1	**125-6743**	92	SEAL-RUBBER	
	11	1	**9S-4497**	4	BLOCK-MOUNTING	
	12	1	**7X-0328**	4	BOLT (1/2-13X3.50IN)	
	13	1	**5R-4787**	4	PLATE	
	14	1	**151-0130**	1	RETAINER-CORE	
	15	1	**151-0131**	1	RETAINER-CORE	

E-ORDER BY THE CENTIMETER

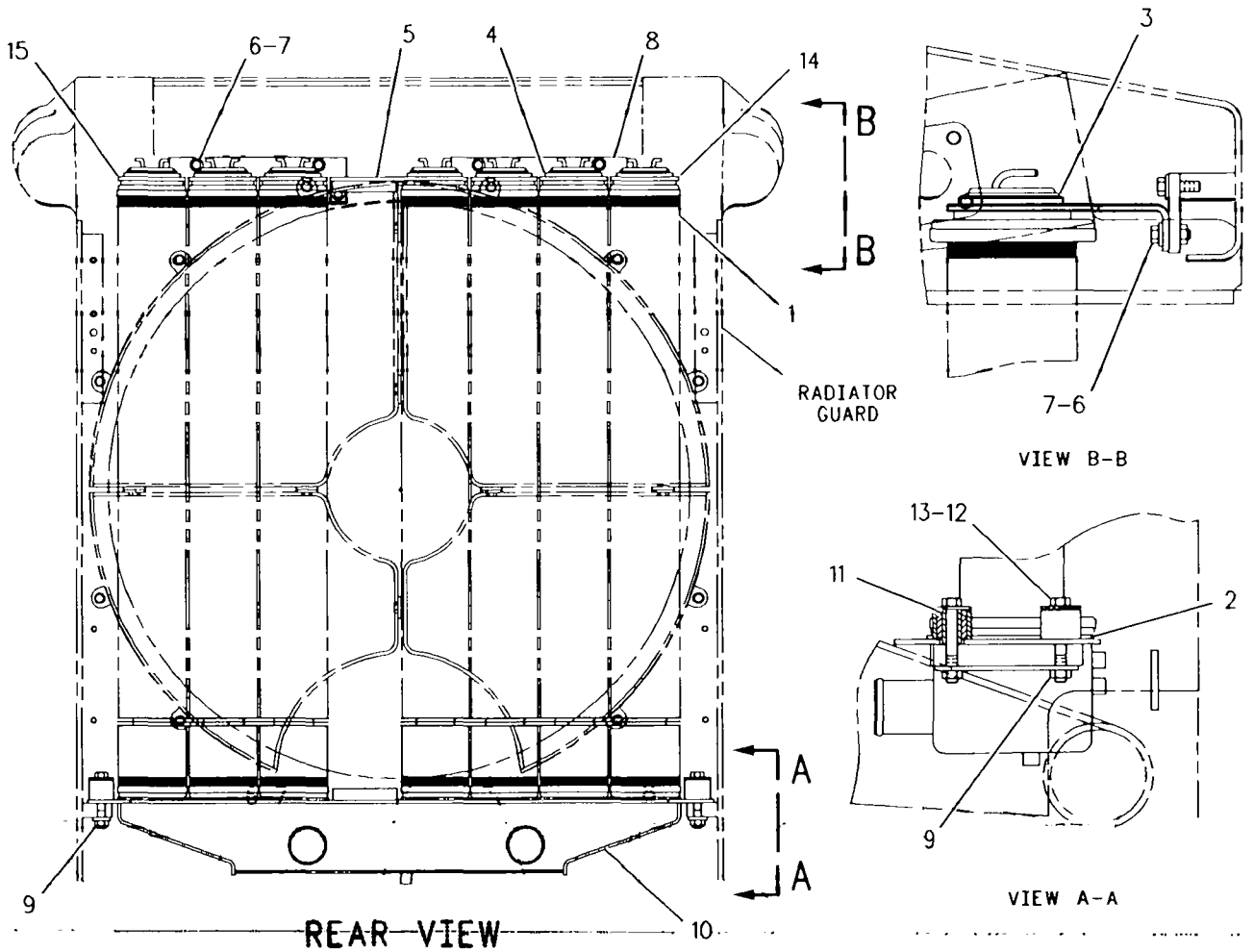

GRAPHIC #1 g00253618

COOLING SYSTEM

140-6370 TANK GP-COOLANT

PIN 2YN1-UP; 3ZN1-UP; 4MN1-UP; 5LN1-UP; 6JN1-UP; 7KN1-UP; 8LN1-UP; 9PN1-UP
PART OF 8Q-1778 TANK GP-WATER
FOR USE WITH LAMINATED THERMAL SHIELD
WITH WATERCOOLED TURBO BEARING HOUSING

SMCS-1354, 1377 i00698667

NOTE	PART NUMBER	QTY	PART NAME 1 2 3 4 5 6 (PRODUCT LEVEL)	SEE PAGE
	031-1119	1	CAP AS-RADIATOR	
	8Q-1787	1	TANK AS-EXPANSION	
	1F-2417	1	BOSS	
	8N-8846	1	NECK-FILLER	

COOLING SYSTEM

8Q-1778 TANK GP-WATER–CUSTOM

PIN 2YN1-UP; 3ZN1-UP; 4MN1-UP; 5LN1-UP; 6JN1-UP; 7KN1-UP; 8LN1-UP; 9PN1-UP
PART OF 8Q-1771 SHIELD AR-THERMO

SMCS-1377 **i01012287**

NOTE	REF NO	GRAPHIC REF	PART NUMBER	QTY	PART NAME 1 2 3 4 5 6 (PRODUCT LEVEL)	SEE PAGE
Y	1	1	*140-6370*	1	TANK GP-COOLANT	96
E	2	1	**5P-1465**		HOSE (122CM)	
	3	1	**1P-4278**	6	CLAMP	
	4	1	**6K-0806**	1	STRAP-CABLE	
E	5	1	**5P-1251**		HOSE (25.4MM ID) (80CM)	
	6	1	**110-2445**	2	CLAMP-HOSE	
	7	1	**004-5703**	1	ADAPTER-PIPE	
	8	1	**033-0820**	1	ELBOW	
	9	1	**4L-6454**	7	BOLT (3/8-16X1.0IN)	
	10	1	**5P-1075**	7	WASHER-HARD (3MM THK)	
	11	1	**113-3376**	2	BRACKET AS	
E	12	1	**8C-3681**		HOSE (145CM)	
	13	1	**9Y-9236**	1	BODY AS-GAUGE	
	14	1	**7M-8485**	1	SEAL-O-RING (29.74MM ID)	
	15	1	**033-8248**	4	CLIP (11.11MM ID)	

E-ORDER BY THE CENTIMETER
Y-SEPARATE ILLUSTRATION

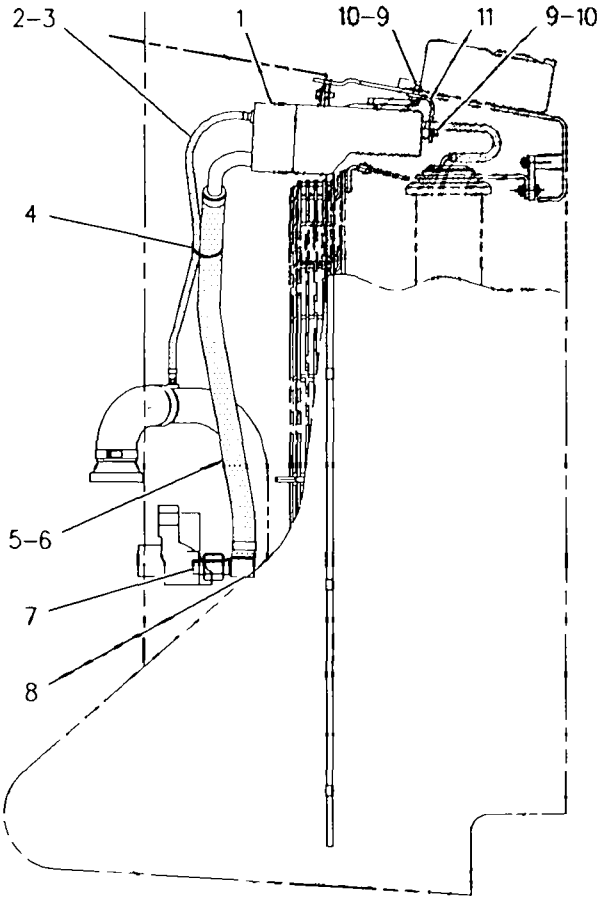

RIGHT SIDE VIEW

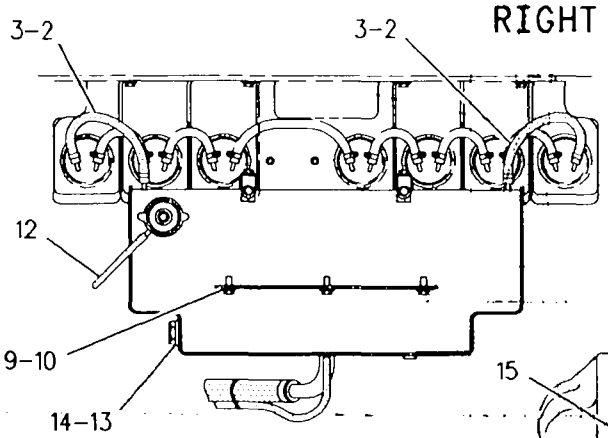

VIEW A-A

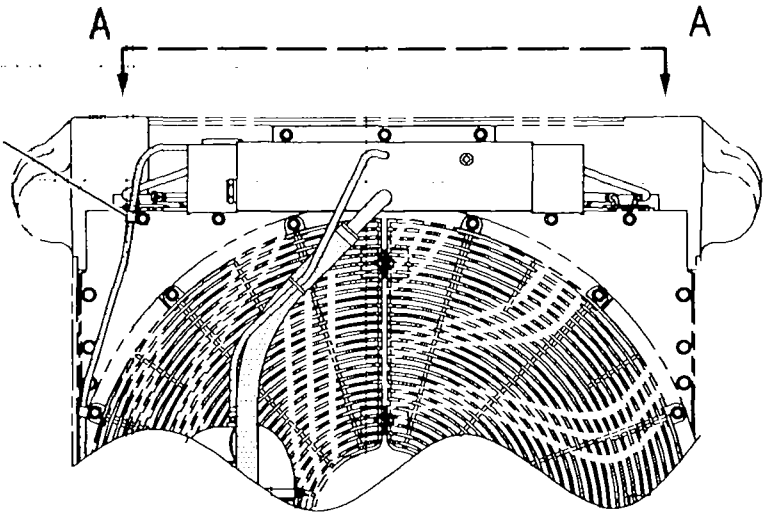

REAR VIEW

GRAPHIC #1 g00287739

AIR INLET AND EXHAUST SYSTEM

6I-2566 AIR CLEANER GP–CUSTOM

PIN 2YN1-UP; 3ZN1-UP; 4MN1-UP; 5LN1-UP; 6JN1-UP; 7KN1-UP; 8LN1-UP; 9PN1-UP

BASIC

PART OF 8Q-1772 AIR CLEANER GP

SMCS-1051, 1054 **i01010467**

NOTE	PART NUMBER	QTY	PART NAME 1 2 3 4 5 6 (PRODUCT LEVEL)	SEE PAGE
Y	**6I-2501**	1	FILTER ELEMENT AS-PRIMARY AIR	106
Y	**6I-2502**	1	FILTER ELEMENT AS-SEC AIR	107
	6I-4464	1	COVER AS-AIR CLEANER	
	4P-5524	1	SEAL-O-RING	
	101-2850	1	FILM-AIR CLEANER	

Y-SEPARATE ILLUSTRATION

AIR INLET AND EXHAUST SYSTEM

8Q-1772 AIR CLEANER GP–CUSTOM

PIN 2YN1-UP; 3ZN1-UP; 4MN1-UP; 5LN1-UP; 6JN1-UP; 7KN1-UP; 8LN1-UP; 9PN1-UP
3306 DI-T W/LTS-RADIAL SEAL
PART OF 8Q-1771 SHIELD AR-THERMO

SMCS-1051, 1054 **i01012277**

NOTE	PART NUMBER	QTY	PART NAME 1 2 3 4 5 6 (PRODUCT LEVEL)	SEE PAGE
Y	**6I-2566**	1	AIR CLEANER GP	100
	2W-0994	1	BODY AS-PRECLEANER	
	5S-7382	4	BOLT (3/8-16X34.92)	
	5M-3062	4	BOLT (3/8-16X.75IN)	
	5P-3860	2	CLAMP-HOSE	
	3B-6552	1	ELBOW	
	9S-1274	1	GASKET	
	9S-6758	1	HOOD AS	
	9S-2592	1	HOSE-HUMP	
	1W-0613	1	INDICATOR-AIR FILTER SERVICE	
	2K-4973	8	LOCKNUT (3/8-16 THD)	
	5K-5068	1	NIPPLE	
	8T-4896	12	WASHER-HARD (2.5MM THK)	

Y-SEPARATE ILLUSTRATION

AIR INLET AND EXHAUST SYSTEM

115-5864 CARTRIDGE GP-TURBOCHARGER*R

PIN 2YN1-UP; 3ZN1-UP; 4MN1-UP; 5LN1-UP; 6JN1-UP; 7KN1-UP; 8LN1-UP; 9PN1-UP

PART OF 129-4534 TURBOCHARGER GP

SMCS-1053, 1056, 1077 i00697209

NOTE	PART NUMBER	QTY	PART NAME 1 2 3 4 5 6 (PRODUCT LEVEL)	SEE PAGE
	1W-4795	1	PLATE-IDENTIFICATION	

AIR INLET AND EXHAUST SYSTEM

8Q-1774 DUST EJECTOR GP–CUSTOM

PIN 2YN1-UP; 3ZN1-UP; 4MN1-UP; 5LN1-UP; 6JN1-UP; 7KN1-UP; 8LN1-UP; 9PN1-UP

PART OF 8Q-1771 SHIELD AR-THERMO

SMCS-1068 **i00605157**

NOTE	REF NO	GRAPHIC REF	PART NUMBER	QTY	PART NAME 1 2 3 4 5 6 (PRODUCT LEVEL)	SEE PAGE
	1	1	7C-6445	1	EJECTOR AS	
	2	1	9S-7148	1	CAP AS-RAIN (EXH)	
	3	1	5P-0597	2	CLAMP	
	4	1	8S-6783	1	CLAMP	
	5	1	0S-1590	1	BOLT (3/8-16X2IN)	
		1	5M-2894	2	WASHER (2.5MM THK)	
		1	2K-4973	1	LOCKNUT (3/8-16 THD)	
E	6	1	5P-2817		HOSE (65CM)	

E-ORDER BY THE CENTIMETER

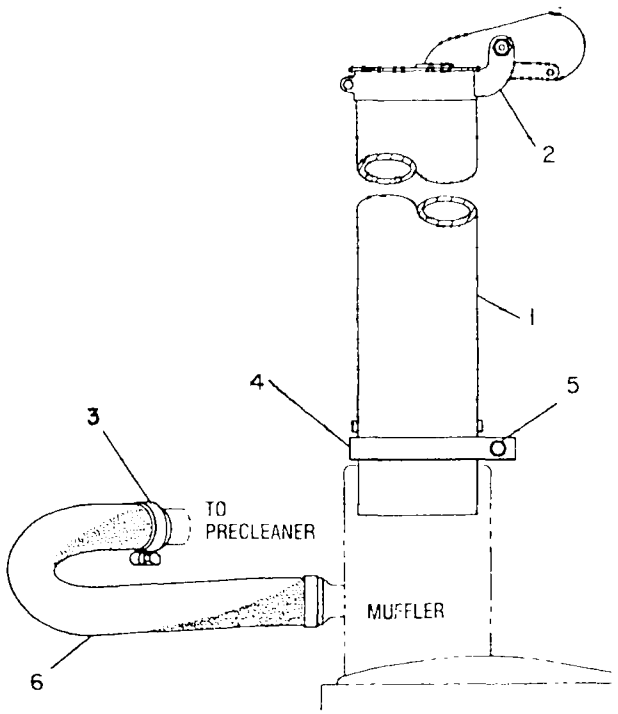

GRAPHIC #1 g00267399

AIR INLET AND EXHAUST SYSTEM

1W-3218 FASTENER GP-EXHAUST MANIFOLD

PIN 4MN1-UP; 5LN1-UP; 6JN1-UP; 7KN1-UP; 8LN1-UP; 9PN1-UP
PART OF 8Q-1762, 8Q-1763 ENGINE AR

SMCS-1059 i00165578

NOTE	REF NO	GRAPHIC REF	PART NUMBER	QTY	PART NAME 1 2 3 4 5 6 (PRODUCT LEVEL)	SEE PAGE
	1	1	9L-1658	8	STUD-TAPERLOCK 3/8-16 X 2.3/4	
	2	1	8M-7145	11	WASHER (5MM THK)	
	3	1	6V-1525	4	STUD-TAPERLOCK	
	4	1	2N-2766	12	LOCKNUT (3/8-16 NPTF THD)	
	5	1	9M-6527	1	WASHER-HARD (5.0MM THK)	

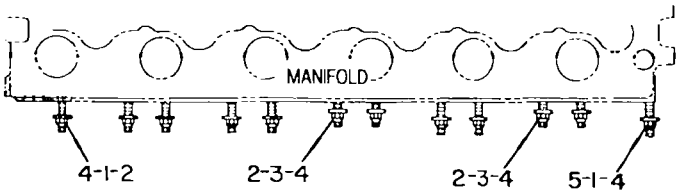

GRAPHIC #1 g00115974

AIR INLET AND EXHAUST SYSTEM

1W-4486 FASTENER GP-EXHAUST MANIFOLD

S/N 6NC1-UP; 08Z93150-99999

PART OF 108-1078 ENGINE AR

SMCS-1059 **i00150694**

NOTE	REF NO	GRAPHIC REF	PART NUMBER	QTY	PART NAME 1 2 3 4 5 6 (PRODUCT LEVEL)	SEE PAGE
C	1	1	**4P-3306**	1	SHIELD-HEAT	
C	2	1	**6V-1426**	9	STUD-TAPERLOCK	
C	3	1	**6V-1427**	2	STUD-TAPERLOCK	
C	4	1	**6B-7469**	1	SPACER	
C	5	1	**5M-2894**	2	WASHER (2.5MM THK)	
	6	1	**134-0641**	1	WASHER-HARD	
C	7	1	**2N-2766**	12	LOCKNUT (3/8-16 NPTF THD)	
	8	1	**2S-6160**	11	WASHER-HARD (5MM THK)	
	9	1	**1M-7643**	1	SPACER	
C	10	1	**106-1793**	1	STUD-TAPERLOCK	

C-CHANGE FROM PREVIOUS TYPE

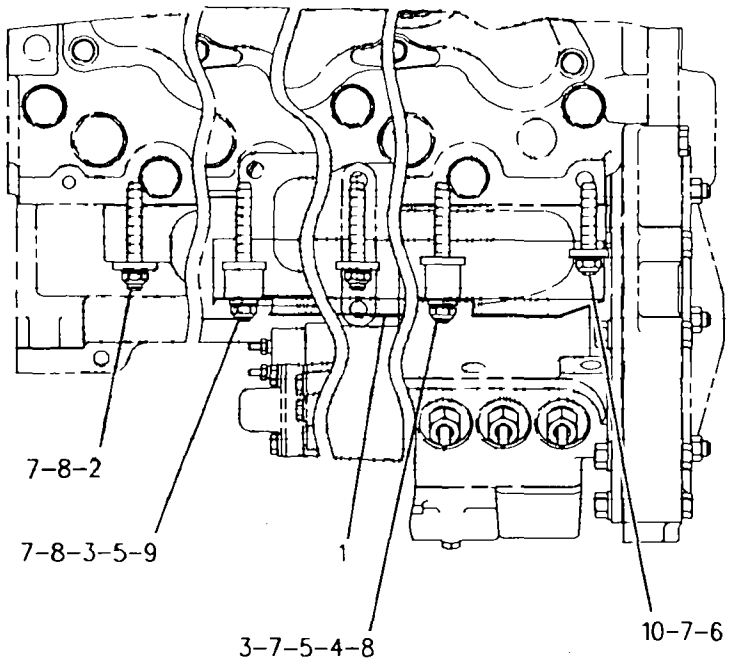

TOP VIEW

GRAPHIC #1 g00109379

AIR INLET AND EXHAUST SYSTEM

6I-2501 FILTER ELEMENT AS-PRIMARY AIR

PIN 2YN1-UP; 3ZN1-UP; 4MN1-UP; 5LN1-UP; 6JN1-UP; 7KN1-UP; 8LN1-UP; 9PN1-UP
152.7 MM (6 IN) OUTLET TUBE
PART OF 6I-2566 AIR CLEANER GP

SMCS-1054 i00709560

NOTE	PART NUMBER	QTY	PART NAME 1 2 3 4 5 6 (PRODUCT LEVEL)	SEE PAGE
			(INDIVIDUAL PARTS ARE NOT SERVICED SEPARATELY)	

AIR INLET AND EXHAUST SYSTEM

6I-2502 FILTER ELEMENT AS-SEC AIR

PIN 2YN1-UP; 3ZN1-UP; 4MN1-UP; 5LN1-UP; 6JN1-UP; 7KN1-UP; 8LN1-UP; 9PN1-UP
147.4 MM (5.8 IN) OUTLET TUBE
PART OF 6I-2566 AIR CLEANER GP

SMCS-1054 i00709556

NOTE	PART NUMBER	QTY	PART NAME 1 2 3 4 5 6 (PRODUCT LEVEL)	SEE PAGE
			(NO BREAKDOWN OF SERVICEABLE PARTS IS AVAILABLE AT THIS TIME)	

AIR INLET AND EXHAUST SYSTEM

7C-8672 LINES GP-AIR

PIN 2YN1-UP; 3ZN1-UP; 4MN1-UP; 5LN1-UP; 6JN1-UP; 7KN1-UP; 8LN1-UP; 9PN1-UP
PART OF 8Q-1761, 8Q-1762, 8Q-1763 ENGINE AR

SMCS-1058 i00588861

NOTE	REF NO	GRAPHIC REF	PART NUMBER	QTY	PART NAME 1 2 3 4 5 6 (PRODUCT LEVEL)	SEE PAGE
	1	1	5P-0597	2	CLAMP	
	2	1	4N-9216	1	HOSE-AIR	
	3	1	7C-8284	1	ELBOW-OUTLET	
	4	1	4L-8337	2	SEAL-O-RING (81MM ID)	
	5	1	2N-1287	1	ELBOW-FLARED	
	6	1	6K-6967	1	ADAPTER-PIPE	
	7	1	0S-1591	2	BOLT (3/8-16X1.5IN)	
	8	1	4W-0950	1	PIPE-AIR INLET	
	9	1	1A-2029	4	BOLT (3/8-16X1.125IN)	
	10	1	5S-6735	2	GASKET	
	11	1	7C-8787	1	TUBE AS-CONTROL	
	12	1	2B-2404	2	CLIP (6.35MM ID)	
	13	1	2H-3755	2	BOLT (5/16-18X.625IN)	
		1	9M-1974	2	WASHER-HARD (2MM THK)	
	14	1	8N-3214	1	SUPPORT-AIR CLEANER	
	15	1	3J-7352	1	CONNECTOR (7/16-20 STR THD)	
		1	3J-7354	1	SEAL-O-RING (8.92MM ID)	

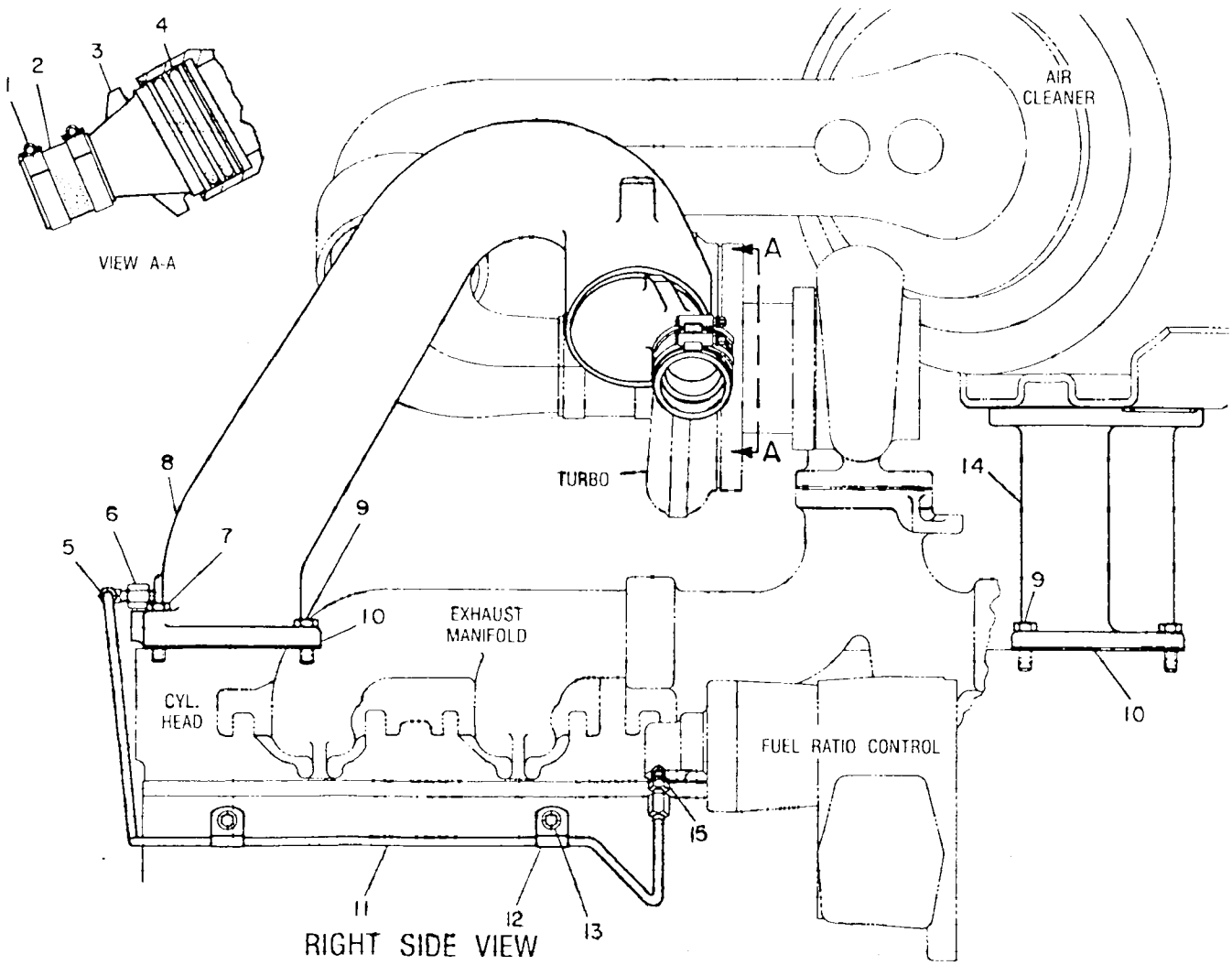

GRAPHIC #1 g00187220

AIR INLET AND EXHAUST SYSTEM

8Q-1775 LINES GP-AIR–CUSTOM

PIN 2YN1-UP; 3ZN1-UP; 4MN1-UP; 5LN1-UP; 6JN1-UP; 7KN1-UP; 8LN1-UP; 9PN1-UP
PART OF 8Q-1771 SHIELD AR-THERMO

SMCS-1058 i01012284

NOTE	PART NUMBER	QTY	PART NAME 1 2 3 4 5 6 (PRODUCT LEVEL)	SEE PAGE
	5S-7379	3	BOLT (3/8-16X.875IN)	
	2N-2765	2	BOLT-HIGH TEMPERATURE	
	4W-0952	1	BRACKET	
	5P-0598	2	CLAMP	
	7C-8282	1	COUPLING-TURBOCHARGER	
	7C-8283	1	ELBOW-INLET	
	5P-1263	1	HOSE	
	2N-2766	2	LOCKNUT (3/8-16 THD)	
	4W-5538	1	PIPE AS-AIR CLEANER	
	6N-0009	1	RING-METAL SEAL	
	5L-8854	1	RING-SEALING	
	5H-7704	2	SEAL-O-RING	
	1W-3089	1	SUPPORT-EXHAUST PIPE	
	5P-1075	3	WASHER-HARD (3MM THK)	

AIR INLET AND EXHAUST SYSTEM

113-5368 LINES GP-AIR

S/N 6NC1-UP; 08Z93150-99999
PART OF 108-1078 ENGINE AR

SMCS-1058 i00574993

NOTE	REF NO	GRAPHIC REF	PART NUMBER	QTY	PART NAME 1 2 3 4 5 6 (PRODUCT LEVEL)	SEE PAGE
	1	1	2N-1287	1	ELBOW-FLARED	
	2	1	9M-1974	2	WASHER-HARD (2MM THK)	
	3	1	3J-7352	1	CONNECTOR (7/16-20 STR THD)	
	4	1	3J-7354	1	SEAL-O-RING (8.92MM ID)	
	5	1	2B-2404	1	CLIP (6.35MM ID)	
	6	1	8A-8563	1	SPACER	
	7	1	4B-3388	1	BOLT (5/16-18X1.125IN)	
	8	1	110-0018	1	TUBE AS-FUEL RATIO	
	9	1	1H-7666	1	GASKET	
	10	1	2P-8862	1	ELBOW-AIR TRANSFER	
	11	1	5S-6735	2	GASKET	
	12	1	5P-0597	2	CLAMP	
BE	13	1	4N-9216	1	HOSE-AIR	
	14	1	1A-2029	10	BOLT (3/8-16X1.125IN)	
	15	1	6N-0511	1	ELBOW-TRANSFER	
	16	1	8N-3214	1	SUPPORT-AIR CLEANER	

B-USE AS REQUIRED
E-ORDER BY THE CENTIMETER

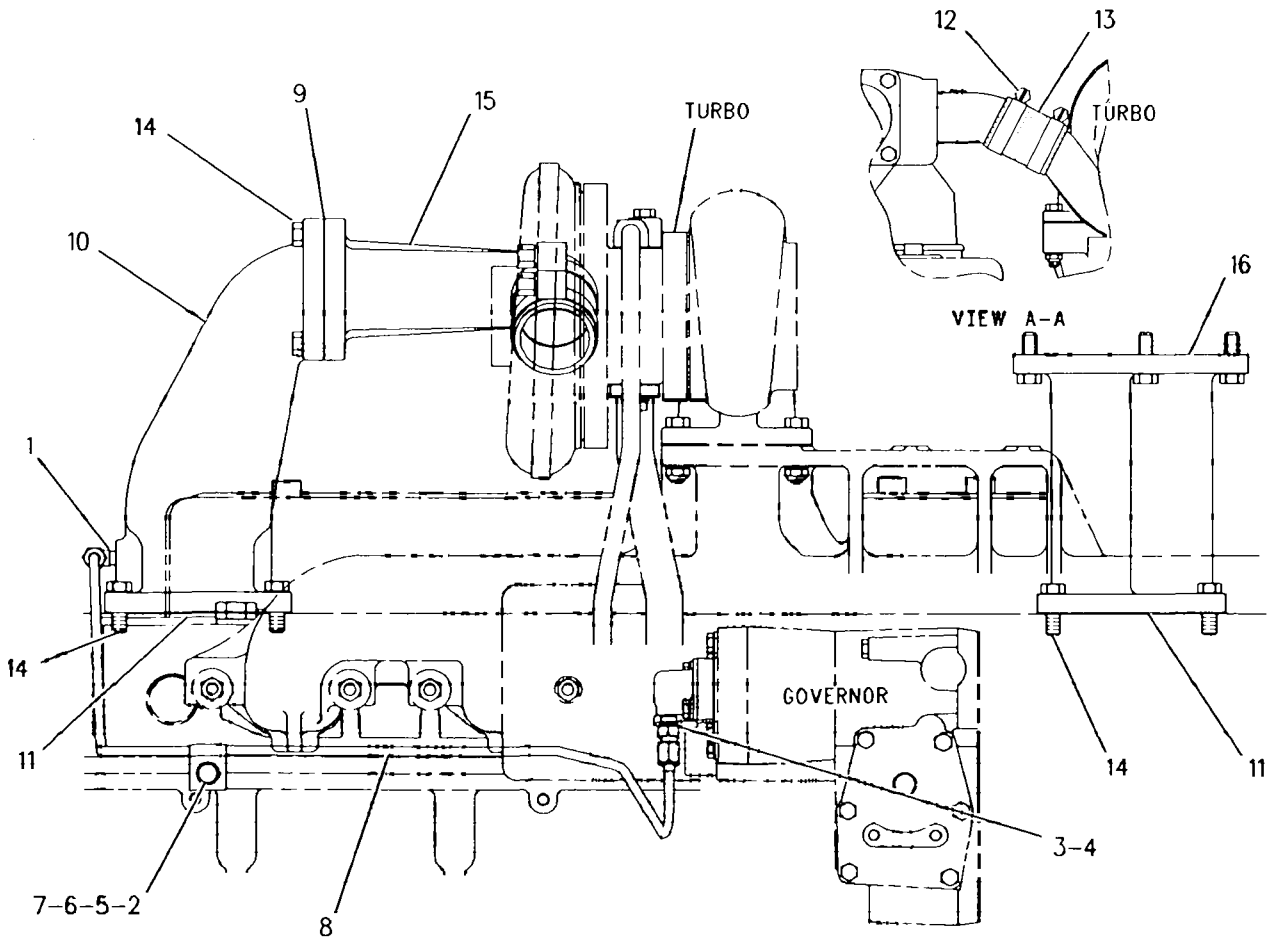

RIGHT SIDE VIEW

GRAPHIC #1 g00253597

AIR INLET AND EXHAUST SYSTEM

6N-0164 MANIFOLD GP-EXHAUST

S/N 6NC1-UP; 08Z93150-99999
PART OF 108-1078 ENGINE AR

SMCS-1059 i00126351

NOTE	REF NO	GRAPHIC REF	PART NUMBER	QTY	PART NAME 1 2 3 4 5 6 (PRODUCT LEVEL)	SEE PAGE
	1	1	7N-3486	1	MANIFOLD-EXHAUST	
C	2	1	9Y-1979	3	GASKET-MANIFOLD	

C-CHANGE FROM PREVIOUS TYPE

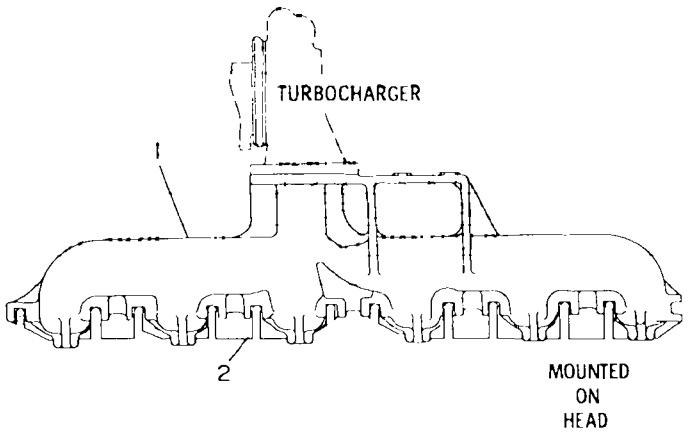

GRAPHIC #1 g00108362

AIR INLET AND EXHAUST SYSTEM

7C-8669 MANIFOLD GP-EXHAUST

PIN 2YN1-UP; 3ZN1-UP; 4MN1-UP; 5LN1-UP; 6JN1-UP; 7KN1-UP; 8LN1-UP; 9PN1-UP
PART OF 8Q-1761, 8Q-1762, 8Q-1763 ENGINE AR

SMCS-1059 **i00588832**

NOTE	REF NO	GRAPHIC REF	PART NUMBER	QTY	PART NAME 1 2 3 4 5 6 (PRODUCT LEVEL)	SEE PAGE
	1	1	**2W-6440**	1	MANIFOLD-EXHAUST	
	2	1	**7C-8667**	1	MANIFOLD-EXHAUST	
	3	1	**7W-4472**	1	MANIFOLD-EXHAUST	
C	4	1	**9Y-1979**	3	GASKET-MANIFOLD	
	5	1	**6L-8562**	1	STUD-TAPERLOCK (3/8-16X1.77IN)	

C-CHANGE FROM PREVIOUS TYPE

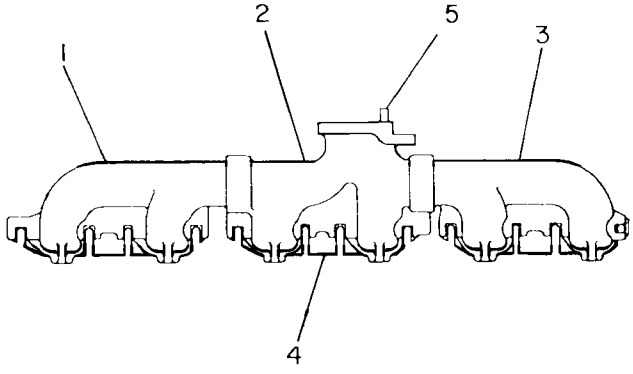

GRAPHIC #1 g00200740

AIR INLET AND EXHAUST SYSTEM

8Q-1773 MUFFLER GP–CUSTOM

PIN 2YN1-UP; 3ZN1-UP; 4MN1-UP; 5LN1-UP; 6JN1-UP; 7KN1-UP; 8LN1-UP; 9PN1-UP
PART OF 8Q-1771 SHIELD AR-THERMO

SMCS-1062 i01012280

NOTE	REF NO	GRAPHIC REF	PART NUMBER	QTY	PART NAME 1 2 3 4 5 6 (PRODUCT LEVEL)	SEE PAGE
	1	1	7C-6444	1	MUFFLER AS	
	2	1	7C-5589	1	BRACKET	
	3	1	1A-2029	4	BOLT (3/8-16X1.125IN)	
	4	1	1W-3088	1	CLAMP	
	5	1	7C-5590	1	SUPPORT	
	6	1	5S-7382	3	BOLT (3/8-16X34.92)	
	7	1	6V-8801	3	NUT (3/8-16 THD)	
	8	1	5P-1075	12	WASHER-HARD (3MM THK)	
	9	1	5S-7379	2	BOLT (3/8-16X.875IN)	

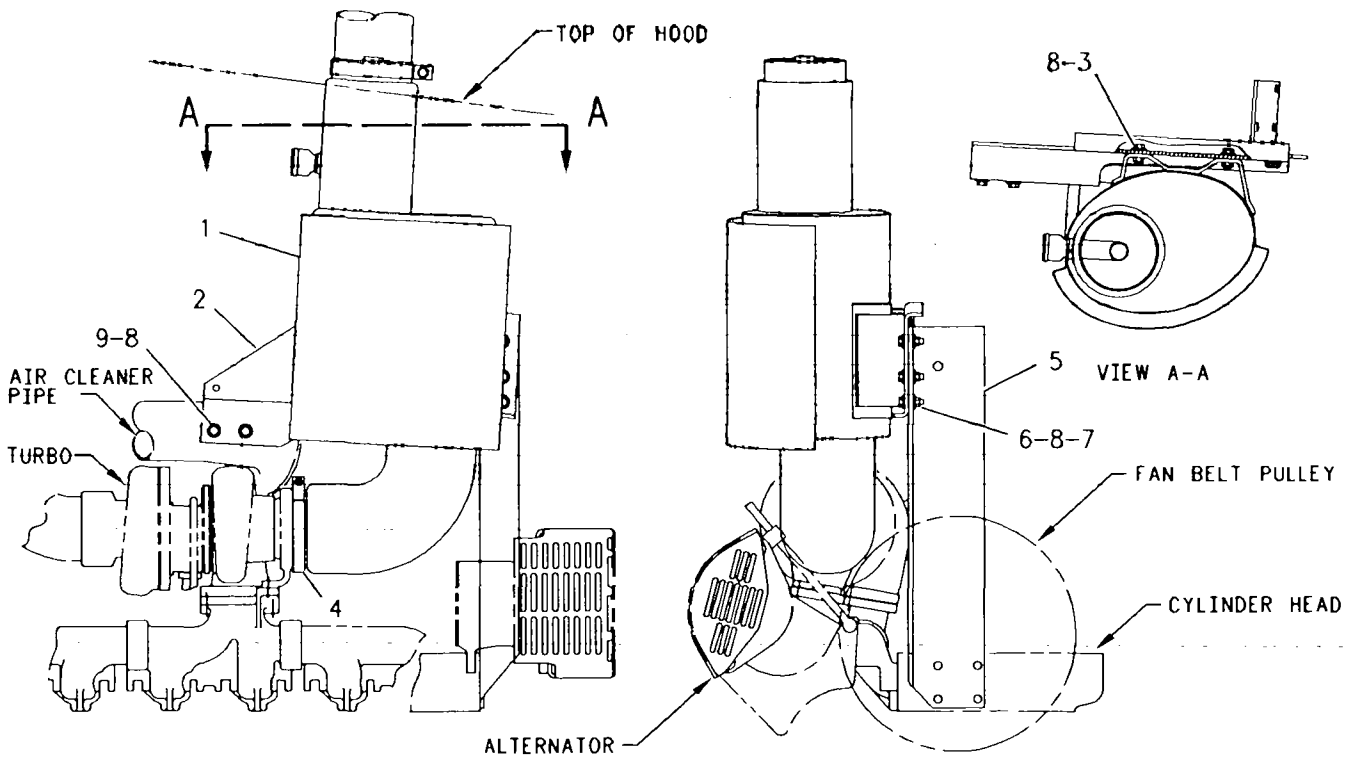

GRAPHIC #1 g00287737

AIR INLET AND EXHAUST SYSTEM

130-8942 PRECLEANER AR

PIN 2YN1-UP; 3ZN1-UP; 4MN1-UP; 5LN1-UP; 6JN1-UP; 7KN1-UP; 8LN1-UP; 9PN1-UP
TURBINE (WITH SCREEN)

SMCS-1055 **i00956181**

NOTE	REF NO	GRAPHIC REF	PART NUMBER	QTY	PART NAME 1 2 3 4 5 6 (PRODUCT LEVEL)	SEE PAGE
	1	1	**142-7071**	1	PRECLEANER AS	
		1	**130-3280**	1	PRECLEANER AS	
	2	1	**116-2659**	2	DAMPER	
	3	1	**154-2379**	1	KIT-INSTALLATION (INCLUDES DAMPER, PIPE AS AND PARTS MARKED J)	
	4	1	**153-1277**	1	KIT-SCREEN (INCLUDES CLAMP, TUBE, DAMPER, PRESCREEN AND 8 SCREWS)	
J	5	1	**4L-6454**	4	BOLT (3/8-16X1.0IN)	
J	6	1	**8T-4896**	4	WASHER-HARD (2.5MM THK)	
Y	7	1	**128-3158**	1	INDICATOR AR	498

J-INCLUDED IN 154-2379 INSTALLATION KIT
Y-SEPARATE ILLUSTRATION

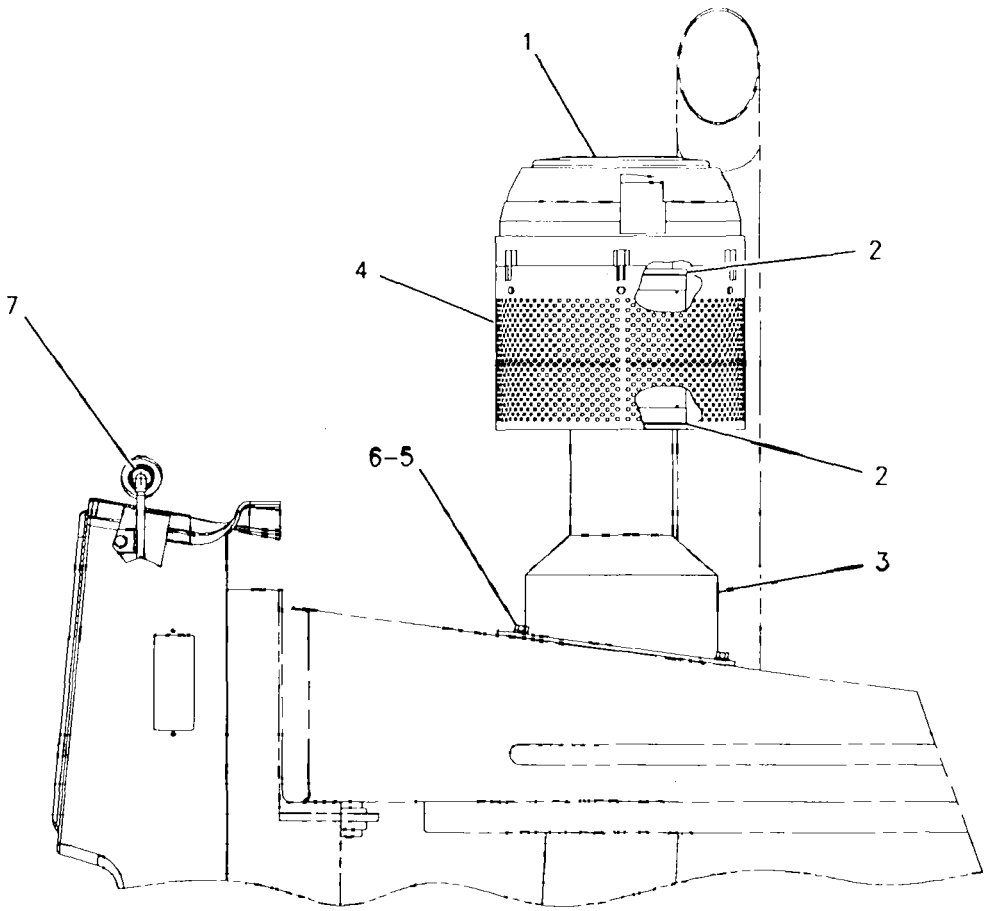

RIGHT SIDE VIEW

GRAPHIC #1 g00487433

AIR INLET AND EXHAUST SYSTEM

130-8943 PRECLEANER AR

PIN 2YN1-UP; 3ZN1-UP; 4MN1-UP; 5LN1-UP; 6JN1-UP; 7KN1-UP; 8LN1-UP; 9PN1-UP
TURBINE (NO SCREEN)

SMCS-1055 **i00950354**

NOTE	REF NO	GRAPHIC REF	PART NUMBER	QTY	PART NAME 1 2 3 4 5 6 (PRODUCT LEVEL)	SEE PAGE
	1	1	**143-1221**	1	PRECLEANER AS	
		1	**130-3280**	1	PRECLEANER AS	
	2	1	**116-2659**	1	DAMPER	
	3	1	**154-2379**	1	KIT-INSTALLATION (INCLUDES DAMPER, PIPE AS AND PARTS MARKED J)	
J	4	1	**4L-6454**	4	BOLT (3/8-16X1.0IN)	
J	5	1	**8T-4896**	4	WASHER-HARD (2.5MM THK)	
Y	6	1	**128-3158**	1	INDICATOR AR	498

J-INCLUDED IN 154-2379 INSTALLATION KIT
Y-SEPARATE ILLUSTRATION

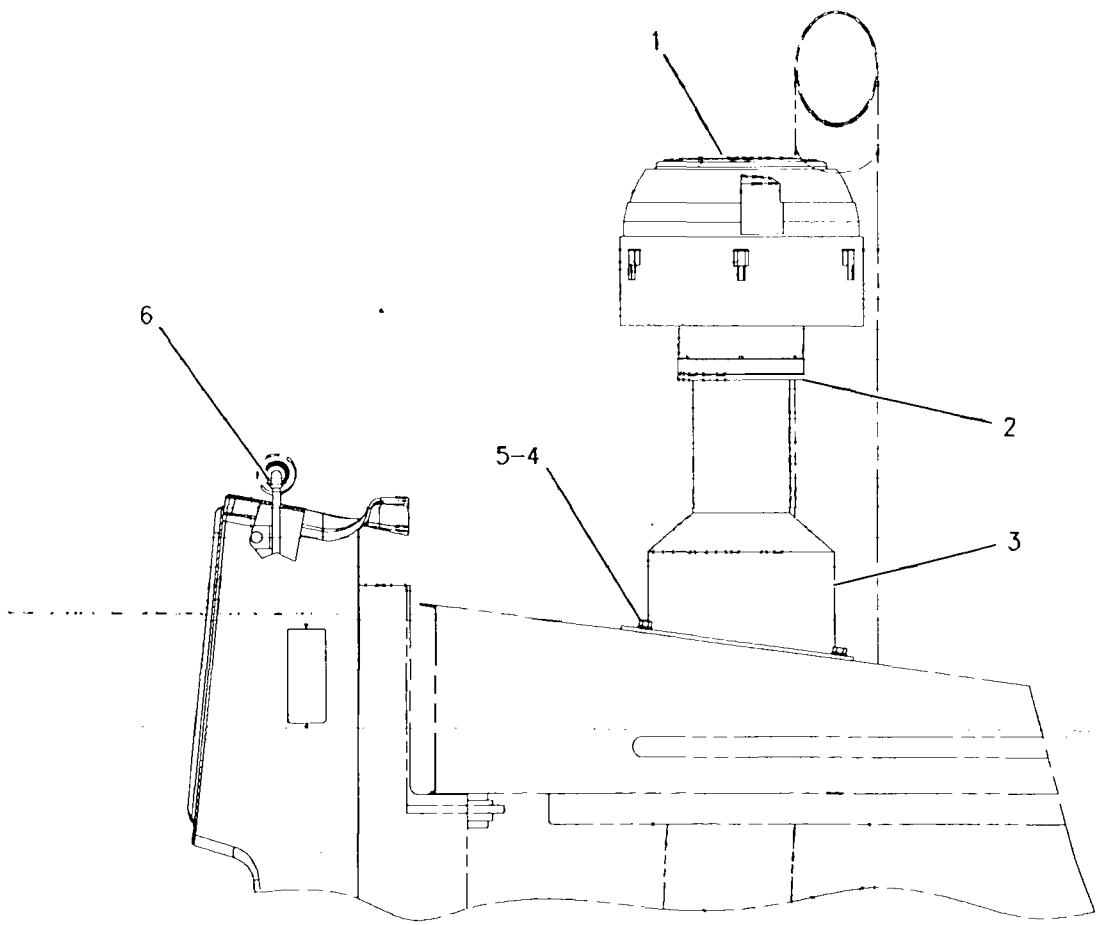

RIGHT SIDE VIEW

GRAPHIC #1 g00486740

AIR INLET AND EXHAUST SYSTEM

8Q-1768 SHIELD AR-THERMO–CUSTOM

PIN 2YN1-UP; 3ZN1-UP

INSTALLATION-ENGINE-LAMINATED

PART OF 131-0696 SHIELD AR-THERMO

SMCS-1067, 1073 **i01012244**

NOTE	PART NUMBER	QTY	PART NAME 1 2 3 4 5 6 (PRODUCT LEVEL)	SEE PAGE
Y	*8Q-1761*	1	ENGINE AR-CUSTOM	7
Y	*8Q-1771*	1	SHIELD AR-THERMO	119
	1A-9252	1	END-ADJUSTMENT ROD	
	2K-0400	1	END-YOKE ROD	
	110-2908	1	LEVER-GOVERNOR	
	6V-8183	2	NUT-FULL (3/8-24 THD)	
	6I-9380	1	ROD	
	3E-4374	2	STUD	

Y-SEPARATE ILLUSTRATION

AIR INLET AND EXHAUST SYSTEM

8Q-1769 SHIELD AR-THERMO–CUSTOM

PIN 8LN1-UP; 9PN1-UP
INSTALLATION-ENGINE-LAMINATED
PART OF 131-0699 SHIELD AR-THERMO

SMCS-1067, 1073 **i01012268**

NOTE	PART NUMBER	QTY	PART NAME 1 2 3 4 5 6 (PRODUCT LEVEL)	SEE PAGE
Y	*8Q-1762*	1	ENGINE AR-CUSTOM	8
Y	*8Q-1771*	1	SHIELD AR-THERMO	119
	1A-9252	1	END-ADJUSTMENT ROD	
	2K-0400	1	END-YOKE ROD	
	110-2908	1	LEVER-GOVERNOR	
	6V-8183	2	NUT-FULL (3/8-24 THD)	
	6I-9380	1	ROD	
	3E-4374	2	STUD	

Y-SEPARATE ILLUSTRATION

AIR INLET AND EXHAUST SYSTEM

8Q-1770 SHIELD AR-THERMO–CUSTOM

PIN 4MN1-UP; 5LN1-UP; 6JN1-UP; 7KN1-UP

INSTALLATION-ENGINE-LAMINATED

PART OF 131-0698 SHIELD AR-THERMO

SMCS-1067, 1073 **i01012270**

NOTE	PART NUMBER	QTY	PART NAME 1 2 3 4 5 6 (PRODUCT LEVEL)	SEE PAGE
Y	*8Q-1763*	1	ENGINE AR-CUSTOM	9
Y	*8Q-1771*	1	SHIELD AR-THERMO	119
	1A-9252	1	END-ADJUSTMENT ROD	
	2K-0400	1	END-YOKE ROD	
	110-2908	1	LEVER-GOVERNOR	
	6V-8183	2	NUT-FULL (3/8-24 THD)	
	6I-9380	1	ROD	
	3E-4374	2	STUD	

Y-SEPARATE ILLUSTRATION

AIR INLET AND EXHAUST SYSTEM

8Q-1771 SHIELD AR-THERMO–CUSTOM

PIN 2YN1-UP; 3ZN1-UP; 4MN1-UP; 5LN1-UP; 6JN1-UP; 7KN1-UP; 8LN1-UP; 9PN1-UP
INSTALLATION-ENGINE-LAMINATED-TRACTOR PARTS
PART OF 8Q-1768, 8Q-1769, 8Q-1770 SHIELD AR-THERMO

SMCS-1067, 1073 **i01012276**

NOTE	PART NUMBER	QTY	PART NAME 1 2 3 4 5 6 (PRODUCT LEVEL)	SEE PAGE
Y	*8Q-1772*	1	AIR CLEANER GP	101
Y	*8Q-1774*	1	DUST EJECTOR GP	103
Y	*8Q-1776*	1	LINES GP-WATER	82
Y	*8Q-1775*	1	LINES GP-AIR	109
Y	*8Q-1773*	1	MUFFLER GP	113
Y	*8Q-1777*	1	SHIELD GP-TURBOCHARGER	124
Y	*8Q-1778*	1	TANK GP-WATER	98

Y-SEPARATE ILLUSTRATION

AIR INLET AND EXHAUST SYSTEM

131-0696 SHIELD AR–CUSTOM

PIN 2YN1-UP; 3ZN1-UP

LAMINATED THERMAL

SMCS-1067, 1073 **i01009521**

NOTE	PART NUMBER	QTY	PART NAME 1 2 3 4 5 6 (PRODUCT LEVEL)	SEE PAGE
Y	*8Q-1768*	1	SHIELD AR-THERMO	116
	131-0694	1	HOOD AS	
	126-7975	2	HANDHOLD	
	1F-0750	13	NUT-WELD (3/8-16 THD)	
	3J-5169	1	NUT (5/8-11 THD)	

Y-SEPARATE ILLUSTRATION

AIR INLET AND EXHAUST SYSTEM

131-0698 SHIELD AR–CUSTOM

PIN 4MN1-UP; 5LN1-UP; 6JN1-UP; 7KN1-UP

LAMINATED THERMAL

SMCS-1067, 1073 **i01009523**

NOTE	PART NUMBER	QTY	PART NAME 1 2 3 4 5 6 (PRODUCT LEVEL)	SEE PAGE
Y	*8Q-1770*	1	SHIELD AR-THERMO	118
	131-0694	1	HOOD AS	
	126-7975	2	HANDHOLD	
	1F-0750	13	NUT-WELD (3/8-16 THD)	
	3J-5169	1	NUT (5/8-11 THD)	

Y-SEPARATE ILLUSTRATION

AIR INLET AND EXHAUST SYSTEM

131-0699 SHIELD AR–CUSTOM

PIN 8LN1-UP; 9PN1-UP
LAMINATED THERMAL

SMCS-1067, 1073 i01009524

NOTE	PART NUMBER	QTY	PART NAME 1 2 3 4 5 6 (PRODUCT LEVEL)	SEE PAGE
Y	*8Q-1769*	1	SHIELD AR-THERMO	117
	131-0694	1	HOOD AS	
	126-7975	2	HANDHOLD	
	1F-0750	13	NUT-WELD (3/8-16 THD)	
	3J-5169	1	NUT (5/8-11 THD)	

Y-SEPARATE ILLUSTRATION

AIR INLET AND EXHAUST SYSTEM

8Q-1842 SHIELD GP-MANIFOLD-CUSTOM

PIN 2YN1-UP; 3ZN1-UP; 4MN1-UP; 5LN1-UP; 6JN1-UP; 7KN1-UP; 8LN1-UP; 9PN1-UP
PART OF 8Q-1761, 8Q-1762, 8Q-1763 ENGINE AR

SMCS-1067 i01015174

NOTE	REF NO	GRAPHIC REF	PART NUMBER	QTY	PART NAME 1 2 3 4 5 6 (PRODUCT LEVEL)	SEE PAGE
	1	1	0S-1617	2	BOLT (5/16-18X.75IN)	
	2	1	5P-4116	2	WASHER (2MM THK)	
	3	1	9M-6590	1	BOLT-12 POINT HEAD (1/2-13X1.0IN)	
	4	1	5P-7213	1	WASHER-HARD (2MM THK)	
	5	1	1T-0765	3	BOLT (3/8-16X1.00IN)	
	6	1	3V-2431	3	WASHER (2.0MM THK)	
	7	1	7E-8529	1	BAR	
	8	1	9Q-3735	1	SHIELD AS-MANIFOLD	
		1	4K-9097	1	NUT-WELD (5/16-18 THD)	
	9	1	7C-2214	1	SHIELD AS-MANIFOLD	
		1	6V-5044	1	NUT-WELD	

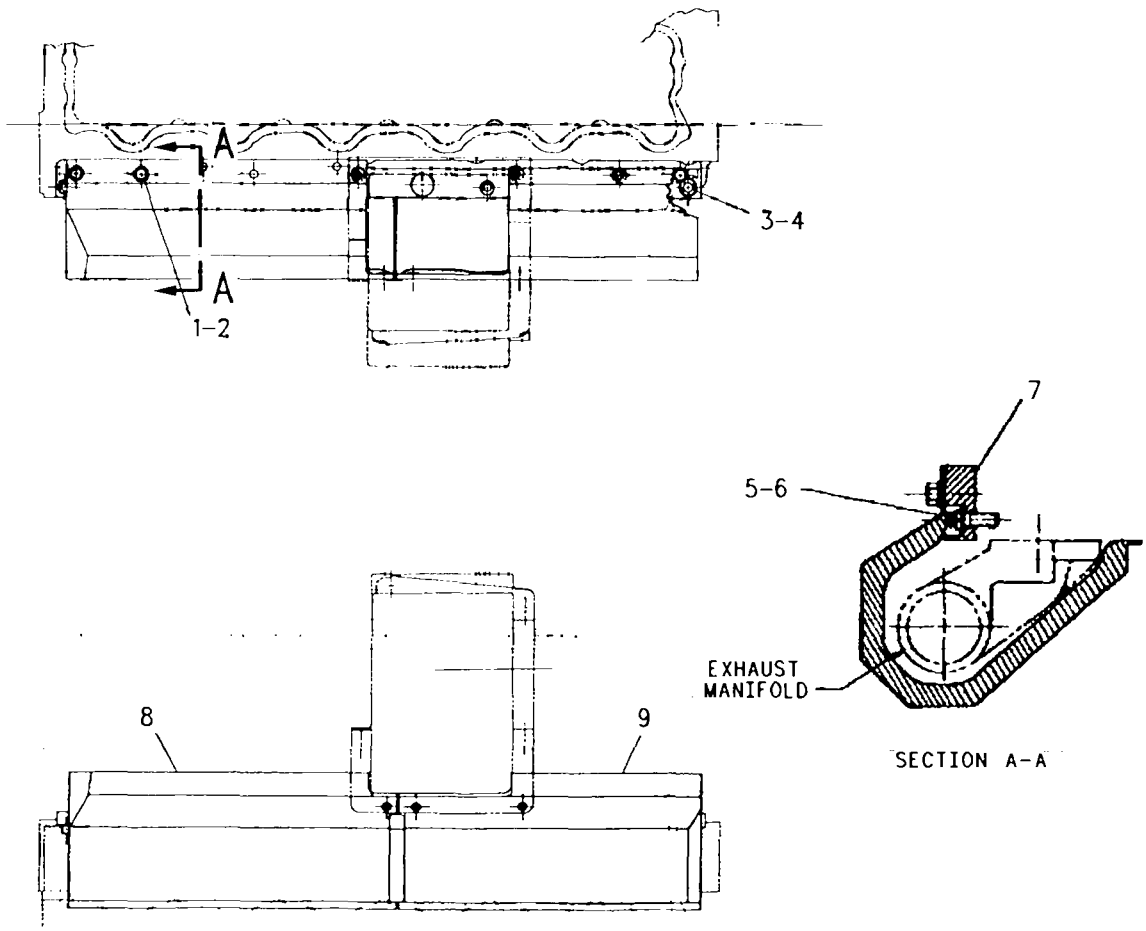

GRAPHIC #1 g00287740

AIR INLET AND EXHAUST SYSTEM

8Q-1777 SHIELD GP-TURBOCHARGER–CUSTOM

PIN 2YN1-UP; 3ZN1-UP; 4MN1-UP; 5LN1-UP; 6JN1-UP; 7KN1-UP; 8LN1-UP; 9PN1-UP

PART OF 8Q-1771 SHIELD AR-THERMO

SMCS-1073 i00697596

NOTE	REF NO	GRAPHIC REF	PART NUMBER	QTY	PART NAME 1 2 3 4 5 6 (PRODUCT LEVEL)	SEE PAGE
	1	1	3W-9669	1	PLATE	
	2	1	7C-8658	1	SHIELD AS-TURBOCHARGER	
		1	6V-5044	1	NUT-WELD	
	3	1	7C-8659	1	SHIELD AS-TURBOCHARGER	
		1	6V-5044	3	NUT-WELD	
	4	1	7C-5993	1	SHIELD	
	5	1	5K-0906	3	BOLT (5/16-18X0.63IN)	
	6	1	6V-8189	3	NUT (5/16-18 THD)	
	7	1	6V-2712	3	STUD	
	8	1	6K-8178	1	CLIP (15.88MM ID)	
	9	1	5P-4116	8	WASHER (2MM THK)	
	10	1	0S-2307	1	SPACER-PAWL	
	11	1	6V-8918	1	BOLT (5/16-18X1.25IN)	
	12	1	4M-6425	1	BOLT (5/16-18X1IN)	
	13	1	4P-8134	1	CLIP (10.5MM ID)	

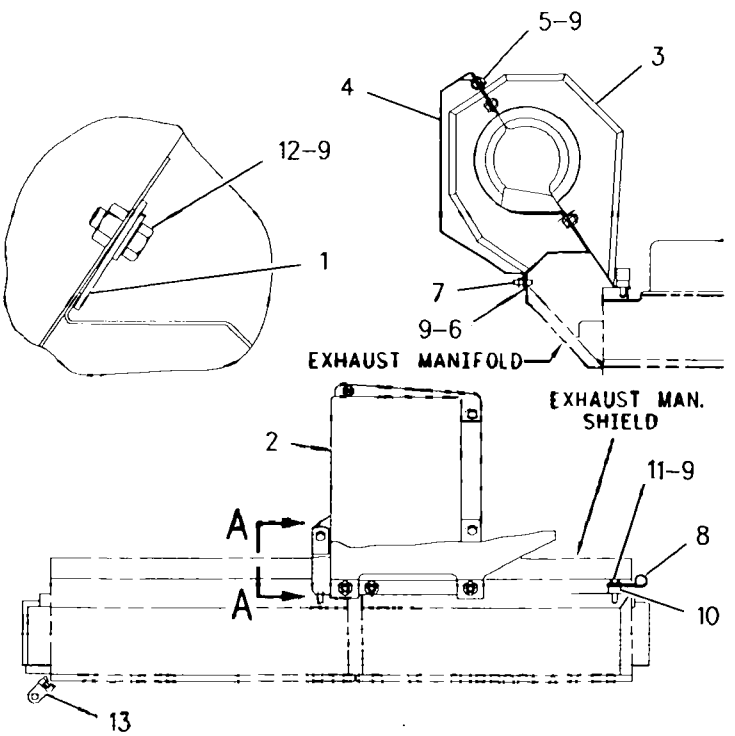

GRAPHIC #1 g00290638

AIR INLET AND EXHAUST SYSTEM

8Q-1757 TURBOCHARGER GP

PIN 2YN1-UP; 3ZN1-UP; 4MN1-UP; 5LN1-UP; 6JN1-UP; 7KN1-UP; 8LN1-UP; 9PN1-UP
PART OF 8Q-1761, 8Q-1762, 8Q-1763 ENGINE AR

SMCS-1052, 1053, 1056, 1060, 1065, 1066, 1077 i00697573

NOTE	PART NUMBER	QTY	PART NAME 1 2 3 4 5 6 (PRODUCT LEVEL)	SEE PAGE
Y	*129-4534*	1	TURBOCHARGER GP	128
	7L-3195	3	BOLT (3/8-16X1-3/4)	
	1P-0451	1	GASKET-TURBOCHARGER	
	2N-2766	4	LOCKNUT (3/8-16 THD)	

Y-SEPARATE ILLUSTRATION

AIR INLET AND EXHAUST SYSTEM

113-5340 TURBOCHARGER GP

S/N 6NC1-UP; 08Z93150-99999
PART OF 108-1078 ENGINE AR

SMCS-1052, 1053, 1056, 1060, 1065, 1066, 1077 i00124477

NOTE	REF NO	GRAPHIC REF	PART NUMBER	QTY	PART NAME 1 2 3 4 5 6 (PRODUCT LEVEL)	SEE PAGE
YR	1	1	113-7919	1	TURBOCHARGER GP	127
	2	1	2N-2766	4	LOCKNUT (3/8-16 NPTF THD)	
	3	1	1P-0451	1	GASKET-TURBOCHARGER	
	4	1	9L-2295	2	BOLT-HIGH TEMPERATURE (3/8-16X1 1/2IN)	
	5	1	7L-6443	2	BOLT (3/8-16X2.25IN)	
BA		1	5P-3931		COMPOUND-THREAD	

A-NOT PART OF THIS GROUP
B-USE AS REQUIRED
R-REMFG PART MAY BE AVAILABLE
Y-SEPARATE ILLUSTRATION

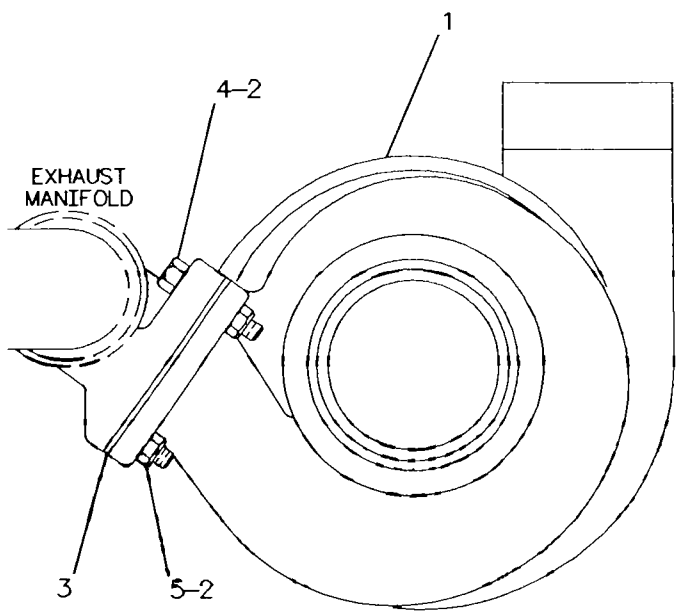

GRAPHIC #1 g00108563

AIR INLET AND EXHAUST SYSTEM

113-7919 TURBOCHARGER GP*R

S/N 6NC1-UP; 08Z93150-99999

PART OF 113-5340 TURBOCHARGER GP

SMCS-1052, 1053, 1056, 1060, 1065, 1066, 1077 i00575007

NOTE	REF NO	GRAPHIC REF	PART NUMBER	QTY	PART NAME 1 2 3 4 5 6 (PRODUCT LEVEL)	SEE PAGE
R	1	1	**113-8315**	1	CARTRIDGE GP-TURBOCHARGER	
	2	1	**113-8317**	1	COVER-COMPRESSOR	
	3	1	**113-8316**	1	HOUSING-TURBINE	
	4	1	**7C-9532**	1	CLAMP AS	
	5	1	**7C-9538**	1	CLAMP AS-COMPRESSOR	
	6	1	**1W-4795**	1	PLATE-IDENTIFICATION	
		1	**8H-3710**	1	SCREW-TAPPING	

R-REMFG PART MAY BE AVAILABLE

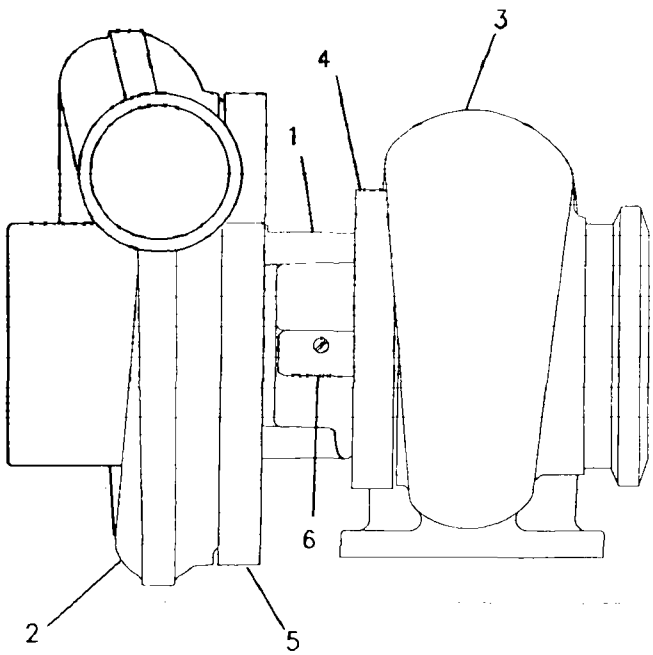

GRAPHIC #1 g00108557

AIR INLET AND EXHAUST SYSTEM

129-4534 TURBOCHARGER GP

PIN 2YN1-UP; 3ZN1-UP; 4MN1-UP; 5LN1-UP; 6JN1-UP; 7KN1-UP; 8LN1-UP; 9PN1-UP
PART OF 8Q-1757 TURBOCHARGER GP

SMCS-1052, 1053, 1056, 1060, 1065, 1066, 1077 i00697562

NOTE	PART NUMBER	QTY	PART NAME 1 2 3 4 5 6 (PRODUCT LEVEL)	SEE PAGE
YR	*115-5864*	1	CARTRIDGE GP-TURBOCHARGER	102
	7C-9538	1	CLAMP AS-COMPRESSOR	
	7C-9532	1	CLAMP AS	
	113-8317	1	COVER-COMPRESSOR	
	113-8316	1	HOUSING-TURBINE	
	1W-4795	1	PLATE-IDENTIFICATION	
	8H-3710	1	SCREW-TAPPING	

R-REMFG PART MAY BE AVAILABLE
Y-SEPARATE ILLUSTRATION

FUEL SYSTEM

111-5162 CONTROL GP-FUEL RATIO

PIN 2YN1-UP; 3ZN1-UP; 4MN1-UP; 5LN1-UP; 6JN1-UP; 7KN1-UP; 8LN1-UP; 9PN1-UP. S/N 6NC1-UP; 08Z93150-99999

PART OF 111-3768 PUMP GP-GOV & FUEL INJ

SMCS-1278 **i01015129**

NOTE	REF NO	GRAPHIC REF	PART NUMBER	QTY	PART NAME 1 2 3 4 5 6 (PRODUCT LEVEL)	SEE PAGE
	1	1	**2W-9315**	2	WASHER-SPRING	
	2	1	**5P-0537**	4	WASHER (2MM THK)	
	3	1	**2A-5546**	2	BOLT (1/4-20X1.375IN)	
	4	1	**5P-6945**	2	BOLT (1/4-20X1.25IN)	
	5	1	**3E-6760**	1	SEAL-O-RING (7.65MM ID)	
	6	1	**4P-7274**	1	COVER	
	7	1	**9S-8748**	1	NUT-FULL (1/4-28 THD)	
	8	1	**4W-0924**	1	RETAINER	
	9	1	**5P-8210**	1	SEAL-O-RING (31.34MM ID)	
	10	1	**7W-2826**	1	SPRING	
	11	1	**4P-7275**	1	COVER	
	12	1	**106-6493**	1	WASHER (35MM OD)	
	13	1	**151-4552**	1	DIAPHRAGM	
	14	1	**9N-1754**	1	SPRING	
	15	1	**7W-2828**	1	SPRING	
	16	1	**7W-2015**	1	EXTENSION-VALVE	
	17	1	**7N-9035**	1	RETAINER	
	18	1	**7N-9062**	1	HOUSING	
	19	1	**8N-5763**	1	SEAL	
	20	1	**8N-5764**	1	PISTON	
	21	1	**8F-4610**	1	RING-RETAINING	
	22	1	**2W-9316**	1	VALVE AS	
	23	1	**9Y-8088**	1	VALVE-INTERNAL	
	24	1	**8N-5765**	1	SPRING	
	25	1	**115-3358**	1	WASHER (12.7MM OD)	

111-5162 CONTROL GP-FUEL RATIO *(contd.)* i01015129

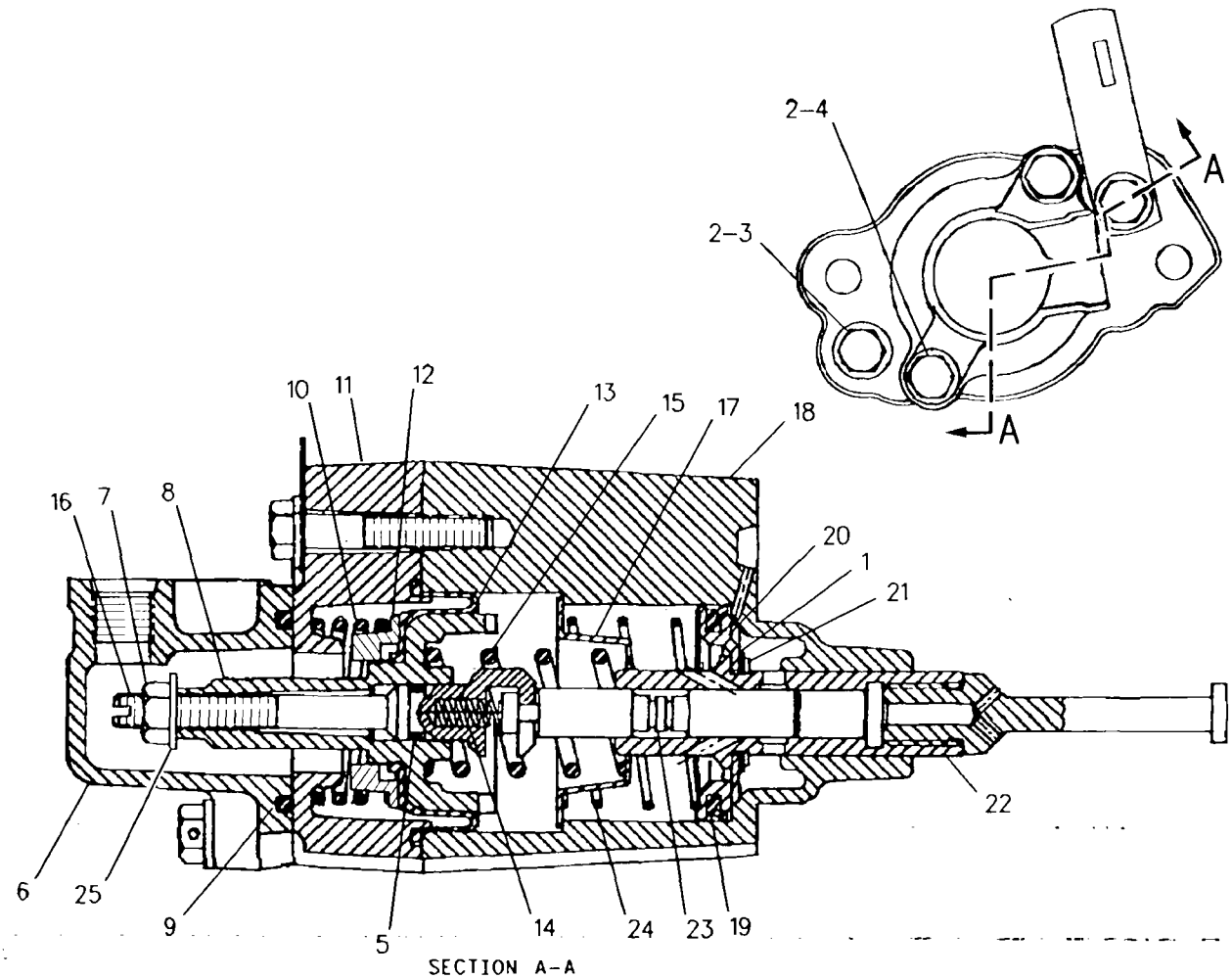

SECTION A-A

GRAPHIC #1 g00520779

7C-8993 FASTENER GP-FUEL INJ PUMP

PIN 2YN1-UP; 3ZN1-UP; 4MN1-UP; 5LN1-UP; 6JN1-UP; 7KN1-UP; 8LN1-UP; 9PN1-UP. S/N 6NC1-UP; 08Z93150-99999

PART OF 111-3768 PUMP GP-GOV & FUEL INJ

SMCS-1251 **i00126563**

NOTE	REF NO	GRAPHIC REF	PART NUMBER	QTY	PART NAME 1 2 3 4 5 6 (PRODUCT LEVEL)	SEE PAGE
	1	1	8B-2377	4	BOLT (1/4-20X2IN)	
	2	1	4N-1761	4	BOLT (1/4-20X6.5IN)	
	3	1	9S-4191	1	PLUG-O-RING (9/16-18 THD)	
	4	1	0S-1614	3	BOLT (1/4-20X.5IN)	
C	5	1	4F-7957	8	BOLT (1/4-20X.875IN)	
	6	1	2S-7383	1	BOLT	
	7	1	8F-8178	2	BOLT (1/4-20X3.25IN)	
	8	1	6B-4198	2	BOLT (1/4-20X4.19IN)	

C-CHANGE FROM PREVIOUS TYPE

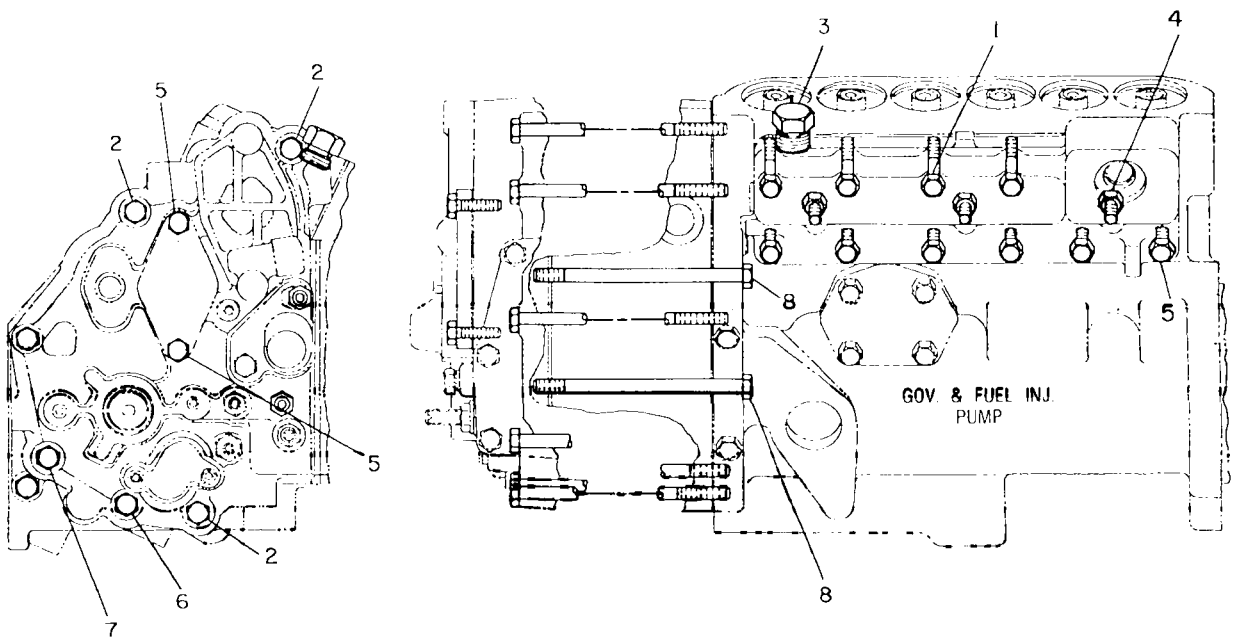

GRAPHIC #1 g00108338

1W-1690 FILTER GP-PRIMARY FUEL

PIN 4MN1-UP; 5LN1-UP; 6JN1-UP; 7KN1-UP;
8LN1-UP; 9PN1-UP. S/N 6NC1-UP; 08Z93150-99999
PART OF 108-1078, 8Q-1762, 8Q-1763 ENGINE AR

SMCS-1260, 1261 i00575939

NOTE	REF NO	GRAPHIC REF	PART NUMBER	QTY	PART NAME 1 2 3 4 5 6 (PRODUCT LEVEL)	SEE PAGE
Y	1	1	*1W-5686*	1	FILTER GP-PRIMARY FUEL	134
	2	1	**030-8194**	1	CONNECTOR-FLARED	
	3	1	**0S-1588**	1	BOLT (3/8-16X1.25IN)	
	4	1	**8S-9191**	1	BOLT (3/8-16X4IN)	
	5	1	**5M-2894**	2	WASHER (2.5MM THK)	
	6	1	**2M-9780**	1	SEAL-O-RING (19.18MM ID)	

Y-SEPARATE ILLUSTRATION

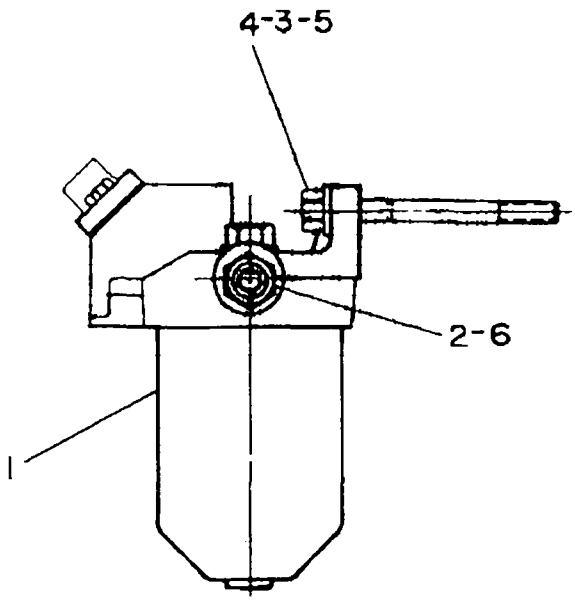

GRAPHIC #1 g00221500

1W-5686 FILTER GP-PRIMARY FUEL

PIN 4MN1-UP; 5LN1-UP; 6JN1-UP; 7KN1-UP; 8LN1-UP; 9PN1-UP. S/N 08Z93150-99999
PART OF 1W-1690 FILTER GP-PRIMARY FUEL

SMCS-1260, 1261 i01014254

NOTE	REF NO	GRAPHIC REF	PART NUMBER	QTY	PART NAME 1 2 3 4 5 6 (PRODUCT LEVEL)	SEE PAGE
	1	1	**6N-4414**	1	COVER-FILTER BASE	
	2	1	**1B-2790**	1	BOLT (5/16-18X1.375IN)	
		1	**9M-1974**	1	WASHER-HARD (2MM THK)	
	3	1	**7B-2742**	1	BOLT (1/4X1.25IN)	
		1	**5P-0537**	1	WASHER (2MM THK)	
	4	1	**1P-0436**	1	GASKET (PRIMING PUMP)	
Y	5	1	*1W-6351*	1	FILTER GP-PRIMARY FUEL	135

Y-SEPARATE ILLUSTRATION

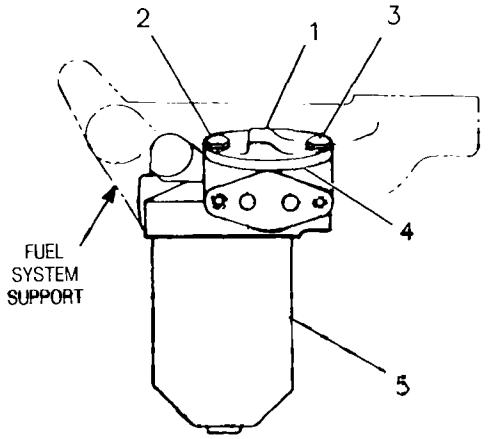

GRAPHIC #1 g00108432

1W-6351 FILTER GP-PRIMARY FUEL

PIN 4MN1-UP; 5LN1-UP; 6JN1-UP; 7KN1-UP; 8LN1-UP; 9PN1-UP. S/N 08Z93150-99999
PART OF 1W-5686 FILTER GP-PRIMARY FUEL

SMCS-1260, 1261 i00131379

NOTE	REF NO	GRAPHIC REF	PART NUMBER	QTY	PART NAME 1 2 3 4 5 6 (PRODUCT LEVEL)	SEE PAGE
	1	1	8N-0803	1	BASE-FILTER	
	2	1	8H-2807	1	NUT	
	3	1	2J-0157	1	SEAL-O-RING (15.47MM ID)	
	4	1	8H-2778	1	GASKET	
	5	1	1L-3769	1	RING-RETAINING	
	6	1	9M-2341	1	ELEMENT AS-FUEL FILTER	
	7	1	7H-9678	1	RETAINER-ELEMENT	
	8	1	7S-9323	1	SPRING	
	9	1	8H-2810	1	CASE AS-FILTER	
	10	1	9S-8003	2	PLUG-O-RING (1/2-20 THD)	
		1	1J-9671	2	SEAL-O-RING (10.52MM ID)	
	11	1	7E-5346	1	VALVE AS	
	12	1	2H-3429	1	RING-RETAINING	

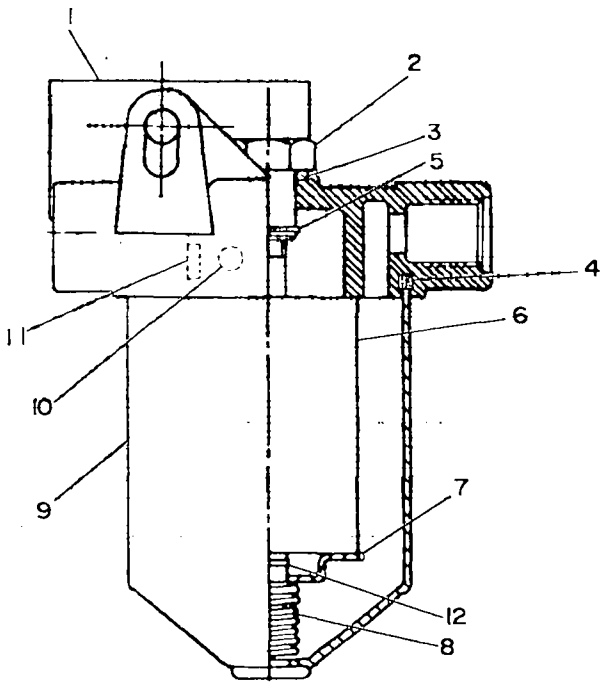

GRAPHIC #1 g00108224

FUEL SYSTEM

7W-5156 FILTER GP-SECONDARY FUEL

PIN 4MN1-UP; 5LN1-UP; 6JN1-UP; 7KN1-UP;
8LN1-UP; 9PN1-UP. S/N 6NC1-UP; 08Z93150-99999
PART OF 108-1078, 8Q-1762, 8Q-1763 ENGINE AR

SMCS-1261 i00574835

NOTE	REF NO	GRAPHIC REF	PART NUMBER	QTY	PART NAME 1 2 3 4 5 6 (PRODUCT LEVEL)	SEE PAGE
	1	1	7N-9519	1	BASE AS-FUEL FILTER	
	2	1	5M-6214	1	PLUG-PIPE (1/8-27 THD)	
	3	1	9S-4167	1	STUD-HOLLOW	
	4	1	9S-4191	1	PLUG-O-RING (9/16-18 THD)	
		1	3J-1907	1	SEAL-O-RING (11.89MM ID)	
	5	1	7W-5220	1	TUBE AS-SECONDARY	
	6	1	030-7947	1	ELBOW (9/16-18 STR THD)	
	7	1	6B-4198	2	BOLT (1/4-20X4.19IN)	
		1	5P-0537	2	WASHER (2MM THK)	
	8	1	7N-9520	1	GASKET-FILTER BASE	
	9	1	1R-0750	1	FILTER AS-FUEL	
	10	1	5P-4289	1	ELBOW-O-RING	
	11	1	3J-1907	2	SEAL-O-RING (11.89MM ID)	

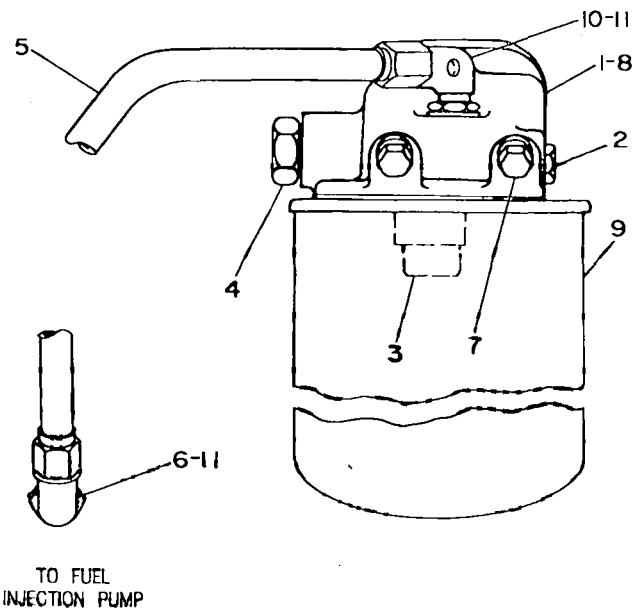

GRAPHIC #1 g00166327

FUEL SYSTEM

2W-2410 GOVERNOR GP

PIN 2YN1-UP; 3ZN1-UP; 4MN1-UP; 5LN1-UP; 6JN1-UP;
7KN1-UP; 8LN1-UP; 9PN1-UP. S/N 6NC1-UP; 08Z93150-99999
PART OF 111-3768 PUMP GP-GOV & FUEL INJ

SMCS-1264 i00773651

NOTE	REF NO	GRAPHIC REF	PART NUMBER	QTY	PART NAME 1 2 3 4 5 6 (PRODUCT LEVEL)	SEE PAGE
C	1	1	1W-6523	1	PLUG-O-RING	
C	2	1	8N-3259	1	COVER-HIGH IDLE	
C		1	6I-2003	1	GASKET	
C	3	1	7N-2594	1	SETSCREW-SLOTTED	
C		1	7N-8775	1	NUT-HIGH IDLE	
C	4	1	5P-6945	2	BOLT (1/4-20X1.25IN)	
		1	5P-0537	2	WASHER (2MM THK)	
C	5	1	3J-7354	1	SEAL-O-RING (8.92MM ID)	
C	6	1	4N-5485	1	BODY-VALVE	
C		1	5F-9144	1	SEAL-O-RING (7.65MM ID)	
C	7	1	4N-5484	1	VALVE-NEEDLE	
C		1	6H-9691	1	SEAL-O-RING (2.9MM ID)	
C	8	1	0S-1616	6	BOLT (1/4-20X1 IN)	
C	9	1	7N-8780	1	COVER AS-CONTROL	
C	10	1	5P-3272	1	SEAL-LIP	
C	11	1	150-3728	1	GASKET-GOVERNOR	
C	12	1	3P-0009	1	INSULATOR-STUD	
C	13	1	1P-2497	2	BOLT-HEAD	
		1	8T-0328	2	WASHER-HARD (1MM THK)	
C	14	1	8N-3258	1	COVER-LOAD STOP	
C		1	6I-2004	1	GASKET	
	15	1	6D-3897	1	BOLT	
	16	1	6L-5897	2	BOLT (1/4-20X7/8IN)	
	17	1	2W-6104	1	BLOCK AS-STOP	
		1	2W-6103	1	DOWEL	
	18	1	1W-4243	1	SPRING-BUMPER	
	19	1	8N-2488	1	BOLT-LOAD STOP	
	20	1	8N-3256	1	COLLAR-LOAD STOP	
	21	1	8L-5832	1	NUT-HEX (10-32 THD)	
	22	1	9Y-4701	1	SETSCREW-SOCKET (34.92MM LG)	
	23	2	2P-9556	1	WASHER	
	24	2	1N-3800	1	SLEEVE-RACK CONTROL	
	25	2	6N-3504	1	SEAT-GOVERNOR SPRING	
	26	2	2W-2216	1	SPRING-LINK	
	27	2	2M-7819	2	RING-RETAINING	
	28	2	1N-3802	1	SEAT-SPRING	
	29	2	8N-2507	1	PISTON AS-SERVO	
		2	8N-2505	1	VALVE-GOVERNOR SERVO	
		2	7N-7271	1	LEVER-CONTROL	
		2	3G-3835	1	PIN	
C	30	2	1W-4098	1	PISTON-GOVERNOR SERVO	
C	31	2	7W-0250	1	SLEEVE	
	32	2	5P-9757	1	SEAL-O-RING (18.77MM ID)	
	33	2	031-0216	3	BOLT (1/4-20X.75IN)	
	34	2	4N-2953	1	LOCKRING	
	35	2	7E-4892	2	RACE-THRUST BEARING	
	36	2	7M-7219	1	BEARING-THRUST	
	37	2	4W-6868	1	RISER-GOVERNOR	
	38	2	2N-0828	2	WASHER	
	39	2	8N-2495	1	HOUSING AS-GOVERNOR	
		2	8S-6814	4	PIN	
		2	4F-6024	2	PIN	
	40	2	8N-2503	1	DASHPOT AS-GOVERNOR	
		2	4N-6407	1	SPOOL-DASHPOT	
		2	4N-6406	1	RING-SPACER	

2W-2410 GOVERNOR GP *(contd.)*

i00773651

NOTE	REF NO	GRAPHIC REF	PART NUMBER	QTY	PART NAME 1 2 3 4 5 6 (PRODUCT LEVEL)	SEE PAGE
	41	2	4N-6404	1	RING-RETAINING	
C	42	3	7N-8785	1	SHAFT-PIVOT	
C	43	3	150-3730	1	GASKET-GOVERNOR	
C	44	3	7N-7270	2	SLEEVE-SPRING	
C	45	3	7N-8821	3	RING-RETAINING	
C	46	3	3K-5733	1	SPRING	
C	47	3	8N-2501	1	HOUSING AS-GOVERNOR	
		3	7E-5346	1	VALVE AS	
C	48	3	8N-2499	1	SPRING-GUIDE	
C	49	3	3D-8317	1	RING-RETAINING	
C	50	3	4N-0260	1	SEAL-LIP	
C	51	3	2F-2290	1	PLUG-CORE	
C	52	3	2W-9305	2	PLATE-THROTTLE	
C	53	3	4N-0432	1	BALL BEARING	
C	54	3	7N-2594	1	SETSCREW-SLOTTED	
C		3	7W-4272	1	NUT-SEALING	
C	55	3	7N-2171	4	RING-RETAINING	
C	56	3	7N-2172	2	PIN	
C	57	3	8N-3087	1	STOP-IDLE DETENT	
C	58	3	2W-7400	1	SPRING	
C	59	3	2W-6102	1	LEVER-SPRING SEAT	
C	60	3	8N-3168	1	LEVER-THROTTLE	

C-CHANGE FROM PREVIOUS TYPE

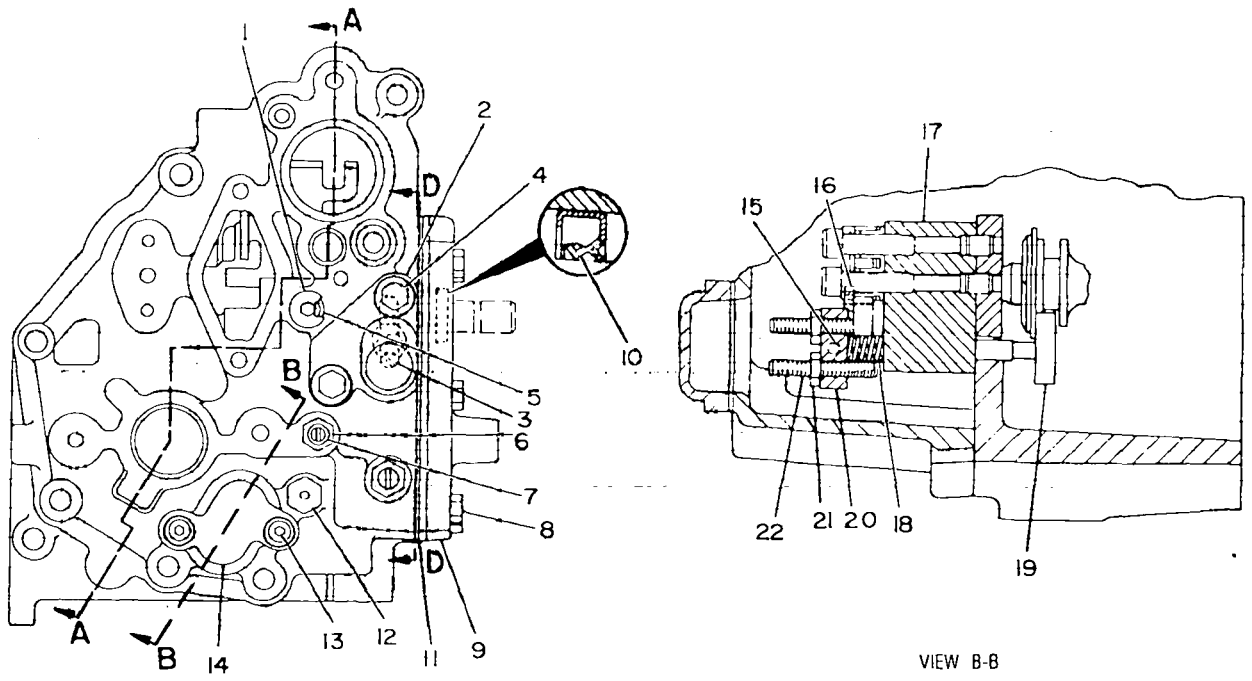

VIEW B-B

REFER TO ALL ILLUSTRATIONS OF THIS GROUP FOR AUXILIARY VIEWS

GRAPHIC #1

g00108435

2W-2410 GOVERNOR GP *(contd.)* i00773651

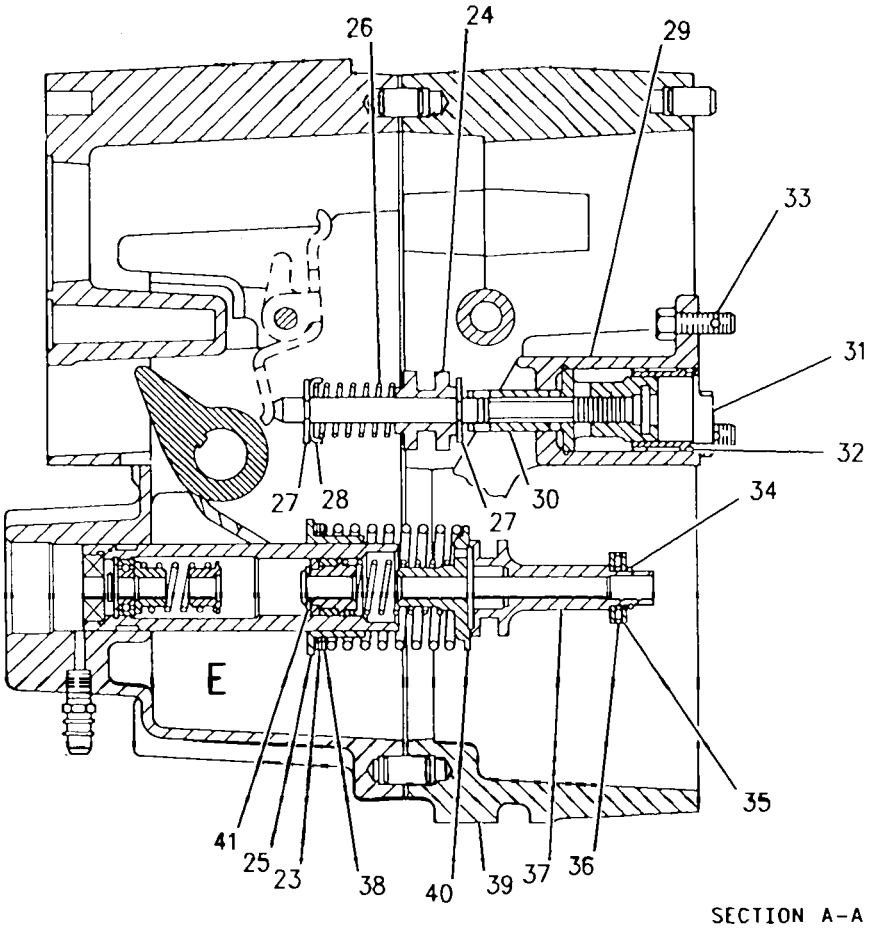

SECTION A-A

GRAPHIC #2 g00353651

2W-2410 GOVERNOR GP *(contd.)* i00773651

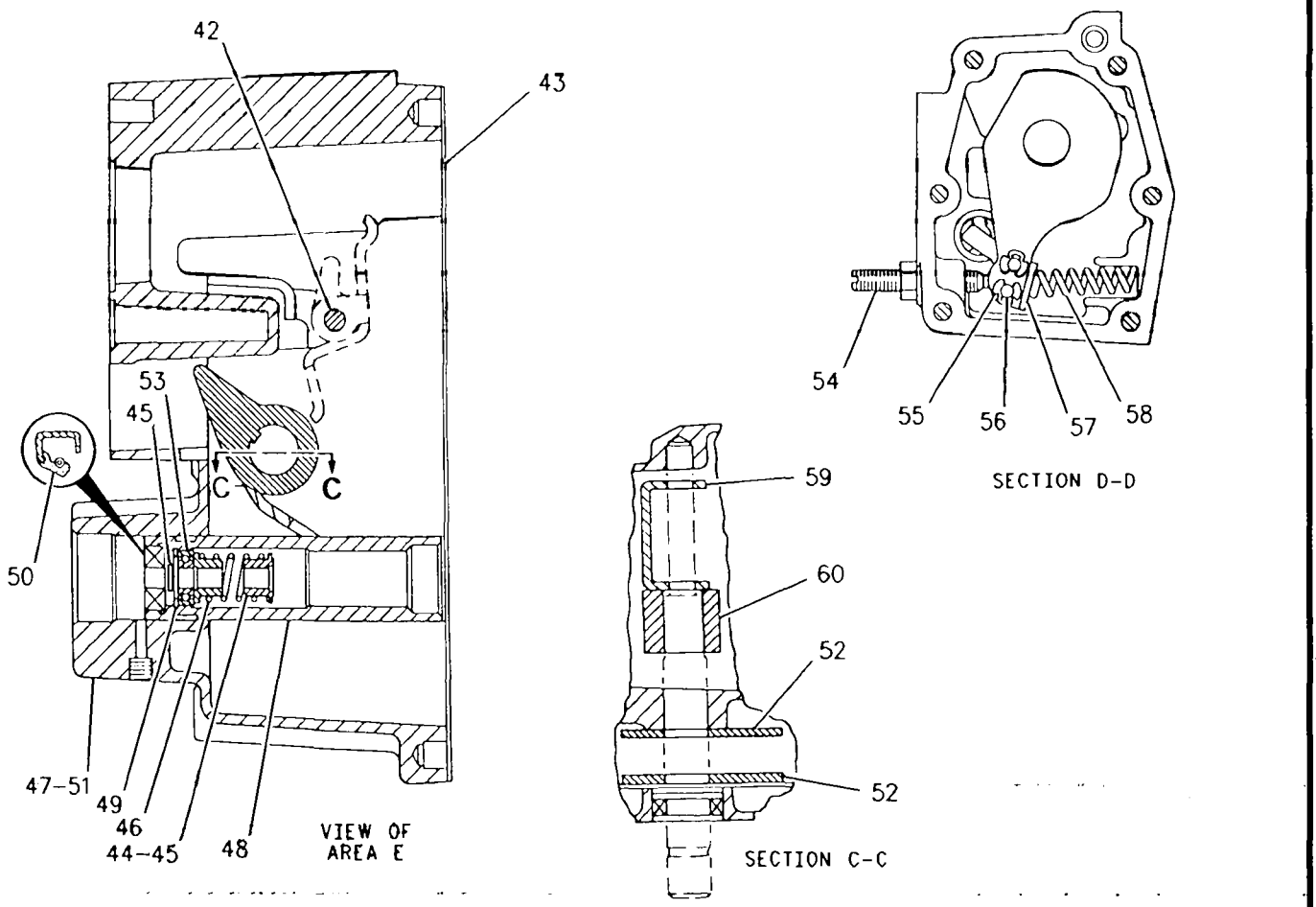

GRAPHIC #3 g00353652

FUEL SYSTEM

2W-1605 LINES GP-DRAIN

PIN 2YN1-UP; 3ZN1-UP; 4MN1-UP; 5LN1-UP; 6JN1-UP; 7KN1-UP; 8LN1-UP; 9PN1-UP. S/N 6NC1-UP; 08Z93150-99999 PART OF 108-1078, 8Q-1761, 8Q-1762, 8Q-1763 ENGINE AR

SMCS-1274 i00168488

NOTE	REF NO	GRAPHIC REF	PART NUMBER	QTY	PART NAME 1 2 3 4 5 6 (PRODUCT LEVEL)	SEE PAGE
	1	1	1W-6629	1	TUBE AS-FUEL FILTER	
C	2	1	4W-7629	1	COVER	
C	3	1	4M-8303	1	SEAL-O-RING (20.29MM ID)	
C	4	1	5P-0537	2	WASHER (2MM THK)	
C	5	1	0S-1615	2	BOLT (1/4-20X.75IN)	
C	6	1	030-7946	1	ELBOW (7/16-20 STR THD)	
	7	1	3J-1907	1	SEAL-O-RING (11.89MM ID)	
C	8	1	3J-7354	1	SEAL-O-RING (8.92MM ID)	
	9	1	030-7947	1	ELBOW (9/16-18 STR THD)	

C-CHANGE FROM PREVIOUS TYPE

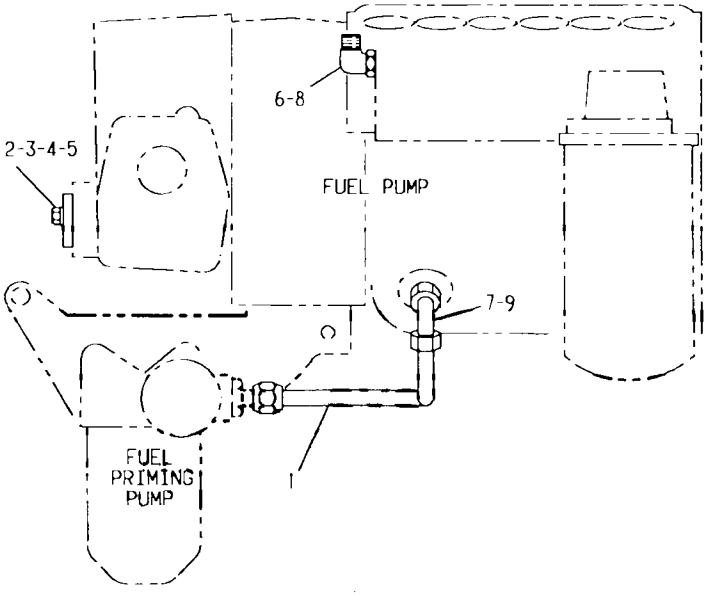

GRAPHIC #1 g00115912

FUEL SYSTEM

4P-9330 LINES GP-FUEL INJECTION

S/N 6NC1-UP; 08Z93150-99999

PART OF 113-5341 LINES GP-FUEL INJECTION

SMCS-1252, 1254 i00573462

NOTE	REF NO	GRAPHIC REF	PART NUMBER	QTY	PART NAME 1 2 3 4 5 6 (PRODUCT LEVEL)	SEE PAGE
	1	1	4P-9381	1	LINE AS-FUEL INJ	
	2	1	4P-9382	1	LINE AS-FUEL INJ	
C	3	1	104-4253	1	LINE AS-FUEL INJ	
C	4	1	104-4254	1	LINE AS-FUEL INJ	
	5	1	1W-9169	9	CLAMP (TAPPED)	
	6	1	1W-9168	7	CLAMP (UNTAPPED)	
	7	1	5P-4939	6	SCREW AS-MACHINE	
	8	1	9N-3388	3	LOCKSCREW	
C	9	1	1W-9167	2	CLAMP AS-FUEL LINE (W/SPACER)	
	10	1	7C-7614	1	BRACKET AS	
	11	1	4B-4274	3	WASHER (1.2MM THK)	
	12	1	9Y-7524	1	PLATE	

C-CHANGE FROM PREVIOUS TYPE

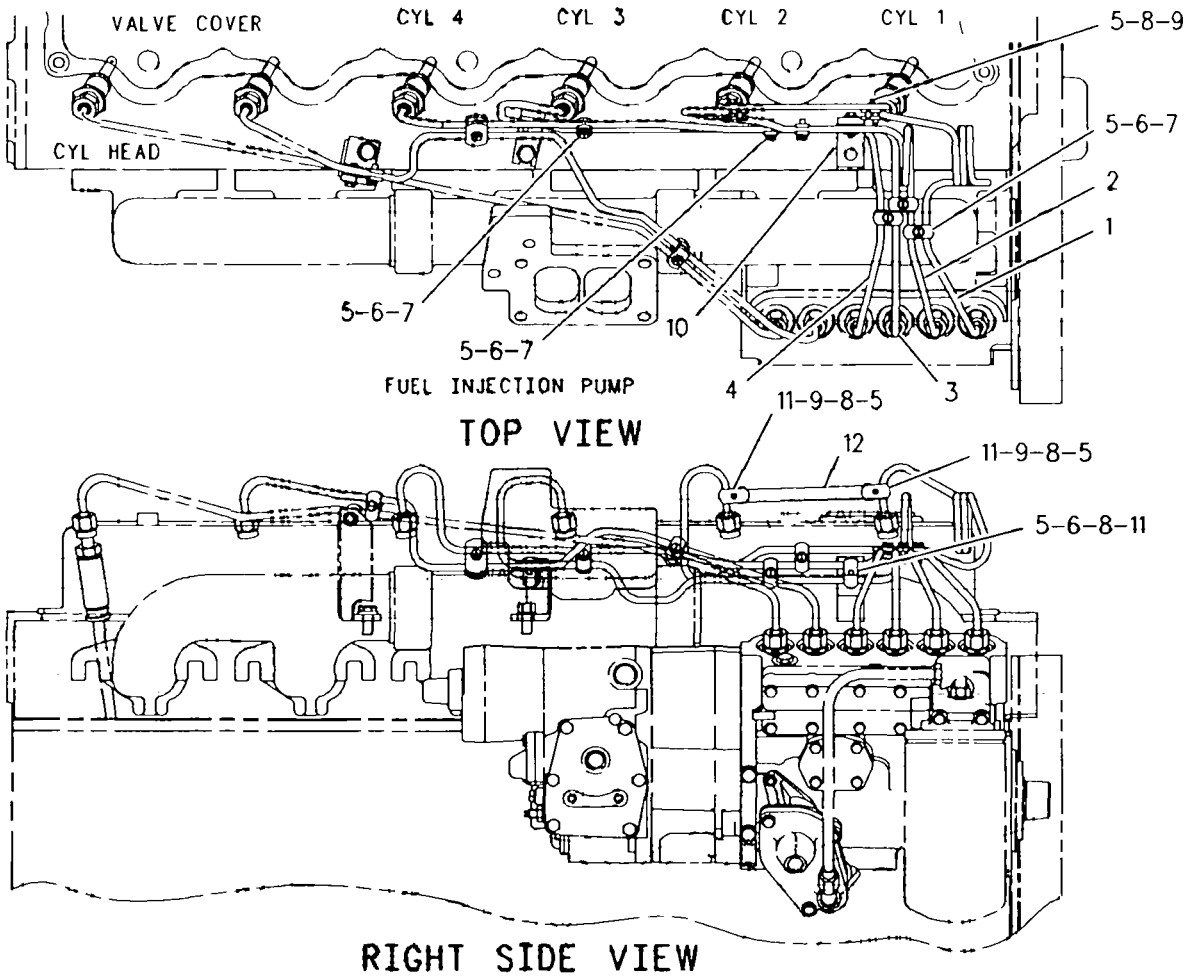

GRAPHIC #1 g00274011

4P-9331 LINES GP-FUEL INJECTION

S/N 6NC1-UP; 08Z93150-99999

PART OF 113-5341 LINES GP-FUEL INJECTION

SMCS-1252, 1254 i00727041

NOTE	REF NO	GRAPHIC REF	PART NUMBER	QTY	PART NAME 1 2 3 4 5 6 (PRODUCT LEVEL)	SEE PAGE
	1	1	4P-9385	1	LINE AS-FUEL INJ	
	2	1	4P-9386	1	LINE AS-FUEL INJ	
	3	1	122-9405	1	BRACKET AS	
	4	1	1W-9169	2	CLAMP (TAPPED)	
	5	1	1W-9168	4	CLAMP (UNTAPPED)	
	6	1	5P-4939	2	SCREW-MACHINE	
	7	1	9N-3388	1	LOCKSCREW	

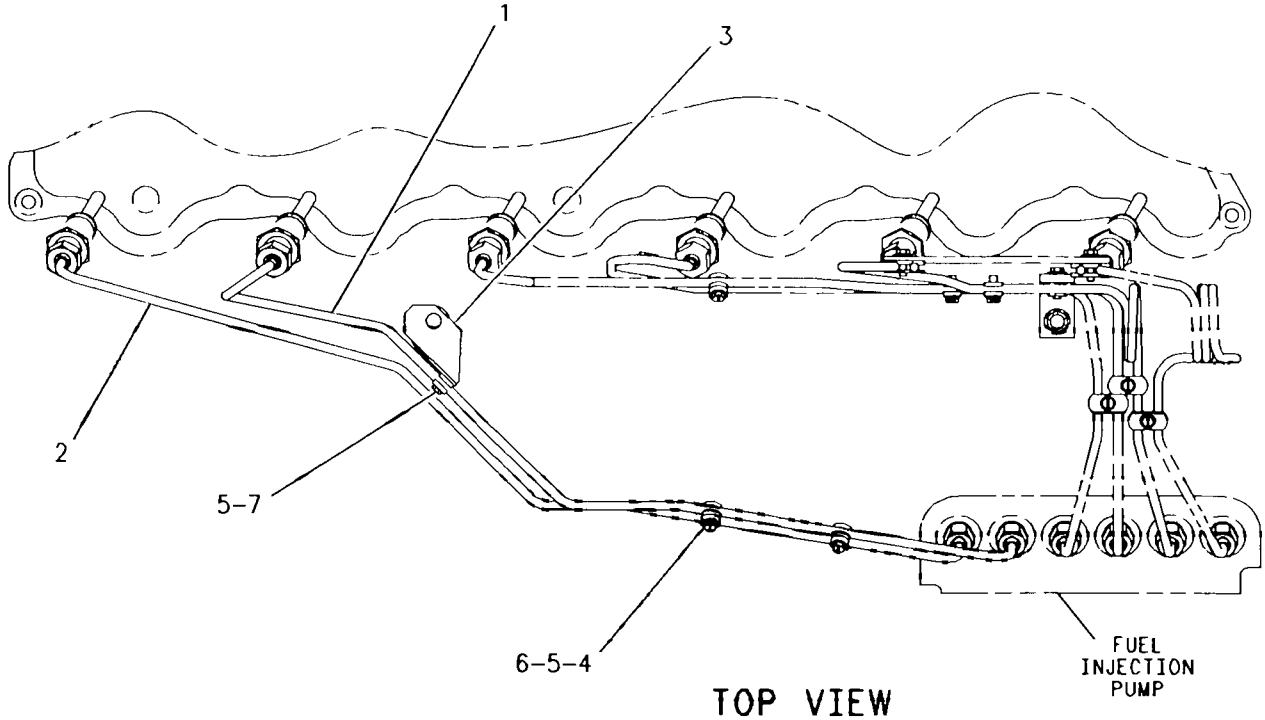

TOP VIEW

GRAPHIC #1 g00323282

FUEL SYSTEM

6I-0357 LINES GP-FUEL INJECTION

PIN 2YN1-UP; 3ZN1-UP; 4MN1-UP; 5LN1-UP; 6JN1-UP; 7KN1-UP; 8LN1-UP; 9PN1-UP
PART OF 8Q-1758 LINES GP-FUEL INJECTION

SMCS-1252, 1254 i00165621

NOTE	REF NO	GRAPHIC REF	PART NUMBER	QTY	PART NAME 1 2 3 4 5 6 (PRODUCT LEVEL)	SEE PAGE
	1	1	6I-0342	1	LINE AS-FUEL INJ (NO 2)	
	2	1	6I-0341	1	LINE AS-FUEL INJ (NO 1)	
	3	1	6I-0343	1	LINE AS-FUEL INJ (NO 3)	
	4	1	1W-9168	11	CLAMP (UNTAPPED)	
	5	1	1W-9169	7	CLAMP (TAPPED)	
	6	1	5P-4939	7	SCREW AS-MACHINE	
	7	1	7C-5887	1	BRACKET	
	8	1	9N-3388	3	LOCKSCREW	
	9	1	1W-9167	2	CLAMP AS-FUEL LINE (W/SPACER)	
	10	1	7E-1356	1	BRACKET	
	11	1	7M-9831	2	SCREW-MACHINE	
		1	4B-2047	2	NUT (10-24 THD)	
	12	1	2W-7264	1	CLAMP-FUEL LINE	
	13	1	2W-7263	1	CLAMP-FUEL LINE (TAPPED)	
	14	1	9L-9159	1	SPACER	
	15	1	7E-5788	1	BRACKET	
	16	1	7E-9095	1	CLAMP-FUEL LINE	
	17	1	7E-9452	2	DAMPER-FUEL LINE	
	18	1	7E-9094	1	CLAMP-FUEL LINE	
	19	1	4B-4274	5	WASHER (1.2MM THK)	

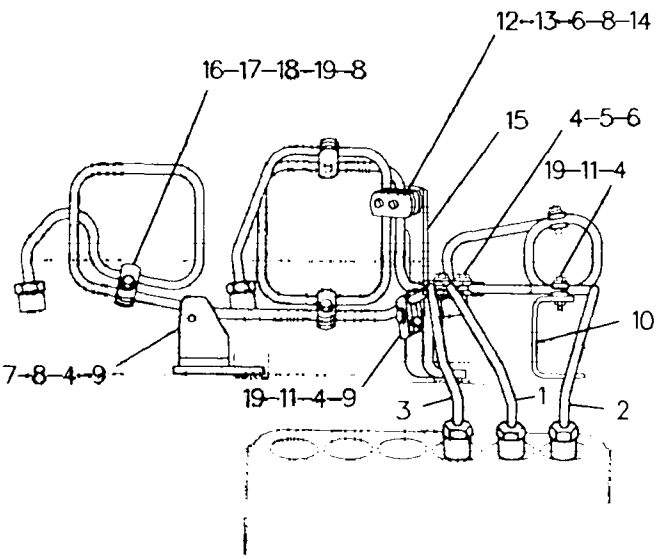

GRAPHIC #1 g00117141

6I-0358 LINES GP-FUEL INJECTION

PIN 2YN1-UP; 3ZN1-UP; 4MN1-UP; 5LN1-UP; 6JN1-UP; 7KN1-UP; 8LN1-UP; 9PN1-UP
PART OF 8Q-1758 LINES GP-FUEL INJECTION

SMCS-1252, 1254 i00165821

NOTE	REF NO	GRAPHIC REF	PART NUMBER	QTY	PART NAME 1 2 3 4 5 6 (PRODUCT LEVEL)	SEE PAGE
	1	1	6I-0346	1	LINE AS-FUEL INJ	
	2	1	6I-0345	1	LINE AS-FUEL INJ	
	3	1	6I-0344	1	LINE AS-FUEL INJ	
	4	1	7E-8530	1	BRACKET AS	
	5	1	9N-3388	3	LOCKSCREW	
	6	1	1W-9168	11	CLAMP (UNTAPPED)	
		1	1W-9169	11	CLAMP (TAPPED)	
		1	5P-4939	8	SCREW AS-MACHINE	
	7	1	7E-9028	1	BRACKET AS	
	8	1	4B-4274	2	WASHER (1.2MM THK)	

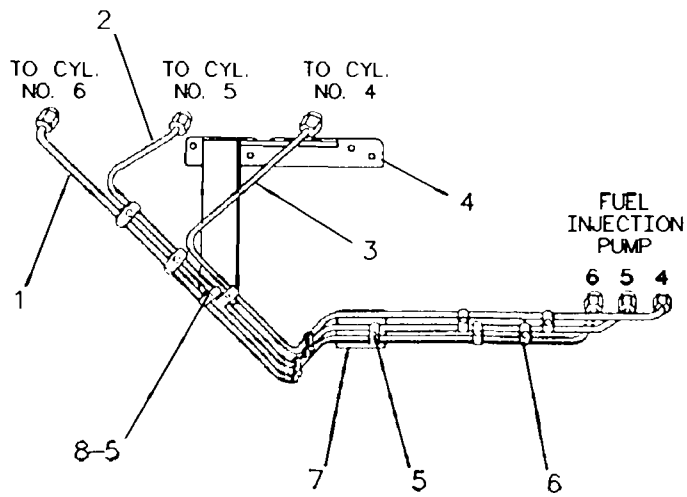

TOP VIEW

GRAPHIC #1 g00117023

8Q-1758 LINES GP-FUEL INJECTION–CUSTOM

PIN 2YN1-UP; 3ZN1-UP; 4MN1-UP; 5LN1-UP; 6JN1-UP; 7KN1-UP; 8LN1-UP; 9PN1-UP
3306 DI-T W/LTS
PART OF 8Q-1761, 8Q-1762, 8Q-1763 ENGINE AR

SMCS-1252, 1254 **i01015169**

NOTE	REF NO	GRAPHIC REF	PART NUMBER	QTY	PART NAME 1 2 3 4 5 6 (PRODUCT LEVEL)	SEE PAGE
Y	1	1	*6I-0357*	1	LINES GP-FUEL INJECTION	145
	2	1	**3S-2713**	3	NUT-FULL (3/8-24 THD)	
	3	1	**6V-6921**	1	SEAL-RING (20.32MM OD)	
	4	1	**2H-3934**	1	SEAL (98.02MM ID)	
	5	1	**5F-7054**	1	SEAL-O-RING (18.6MM ID)	
	6	1	**2H-3932**	1	SEAL (28.17MM ID)	
	7	1	**0L-2070**	2	BOLT (3/8-16X2.25IN)	
		1	**5M-2894**	2	WASHER (2.5MM THK)	
	8	1	**4M-6425**	7	BOLT (5/16-18X1IN)	
		1	**8T-4224**	7	WASHER-HARD (2MM THK)	
	9	1	**9F-6580**	2	BOLT	
	10	1	**7E-9074**	1	PLATE	
Y	11	1	*6I-0358*	1	LINES GP-FUEL INJECTION	146
	12	1	**1T-0416**	6	BOLT (5/16-18X.75IN)	
	13	1	**8H-9204**	6	WASHER-FELT	
	14	1	**8N-5132**	6	CLAMP-NOZZLE	
R	15	1	**7W-7038**	6	NOZZLE AS-FUEL VALVE (EACH INCLUDES)	
	16	1	**9L-9098**	1	SEAL-CARBON STOP (3/8 IN OD)	
	17	1	**7W-4486**	1	WASHER	
	18	1	**8T-0659**	1	WASHER-SEAL	
M	19	1	**9X-2836**	1	SCREW-BUTTON HEAD	

M-METRIC PART
R-REMFG PART MAY BE AVAILABLE
Y-SEPARATE ILLUSTRATION

8Q-1758 LINES GP-FUEL INJECTION *(contd.)* i01015169

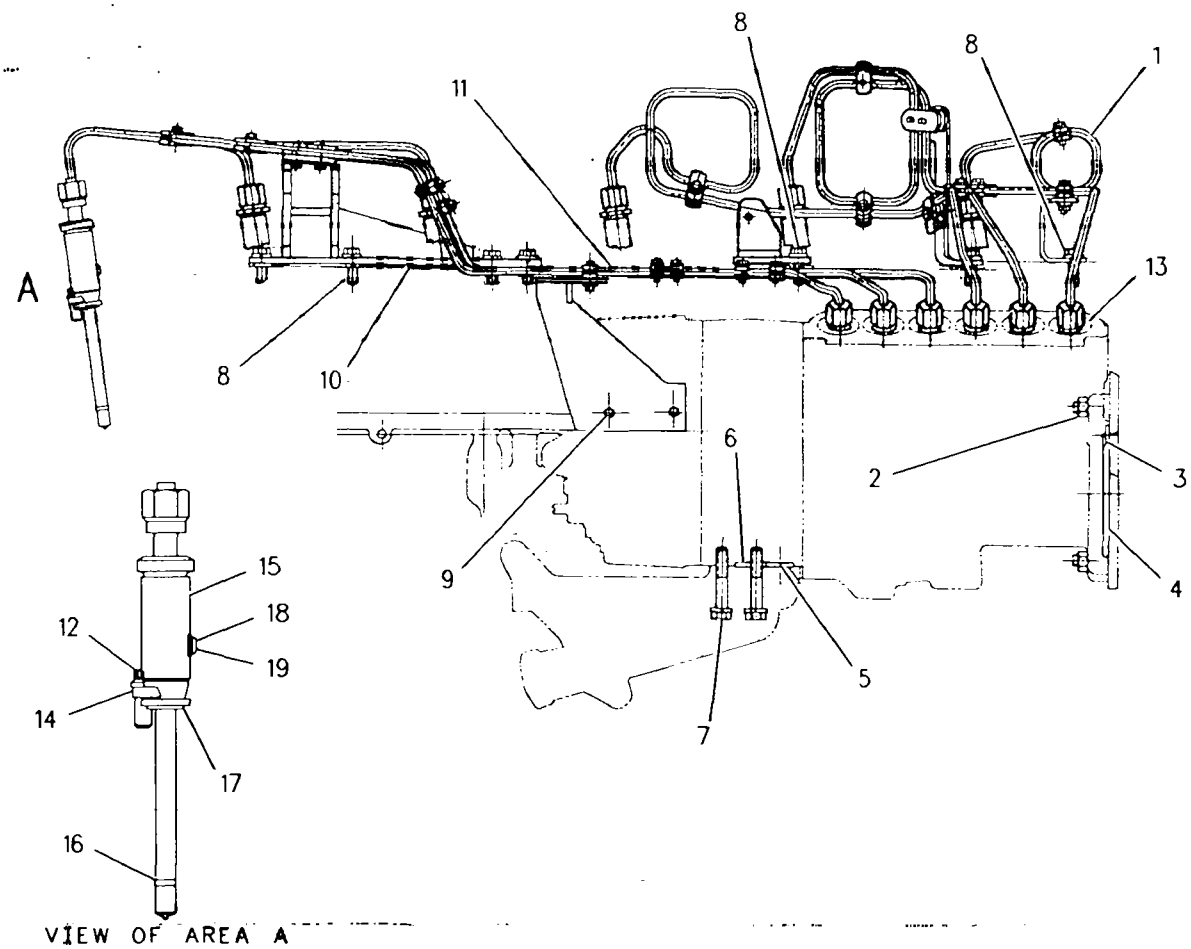

GRAPHIC #1 g00279132

FUEL SYSTEM

113-5341 LINES GP-FUEL INJECTION

S/N 6NC1-UP; 08Z93150-99999
PART OF 108-1078 ENGINE AR

SMCS-1252, 1254 **i00903824**

NOTE	REF NO	GRAPHIC REF	PART NUMBER	QTY	PART NAME 1 2 3 4 5 6 (PRODUCT LEVEL)	SEE PAGE
Y	1	1	*4P-9330*	1	LINES GP-FUEL INJECTION	143
Y	2	1	*4P-9331*	1	LINES GP-FUEL INJECTION	144
	3	1	**0L-2070**	2	BOLT (3/8-16X2.25IN)	
	4	1	**8N-5132**	6	CLAMP-NOZZLE	
	5	1	**1T-0416**	6	BOLT (5/16-18X.75IN)	
	6	1	**0S-1591**	1	BOLT (3/8-16X1.5IN)	
	7	1	**5M-2894**	4	WASHER (2.5MM THK)	
	8	1	**0T-0055**	1	BOLT (3/8-16X4.25IN)	
	9	1	**8H-9204**	6	WASHER-FELT	
	10	1	**2P-3200**	1	BOLT-WASHER HEAD	
	11	1	**4P-2578**	1	BRACKET	
	12	1	**1W-9167**	1	CLAMP AS-FUEL LINE (W/SPACER)	
	13	1	**1W-9169**	1	CLAMP (TAPPED)	
	14	1	**9N-3388**	1	LOCKSCREW	
	15	1	**4B-4274**	1	WASHER (1.2MM THK)	
	16	1	**3S-2713**	3	NUT-FULL (3/8-24 THD)	
	17	1	**6V-6921**	1	SEAL-RING (20.32MM OD)	
	18	1	**2H-3934**	1	SEAL (98.02MM ID)	
	19	1	**5P-6718**	1	SEAL-O-RING (18.64MM ID)	
	20	1	**061-9458**	1	SEAL-O-RING	
R	21	1	**7W-7038**	6	NOZZLE AS-FUEL VALVE (EACH INCLUDES)	
	22	1	**9L-9098**	1	SEAL-CARBON STOP (3/8 IN OD)	
	23	1	**7W-4486**	1	WASHER	
	24	1	**8T-0659**	1	WASHER-SEAL	
M	25	1	**9X-2836**	1	SCREW-BUTTON HEAD	

M-METRIC PART
R-REMFG PART MAY BE AVAILABLE
Y-SEPARATE ILLUSTRATION

113-5341 LINES GP-FUEL INJECTION *(contd.)* i00903824

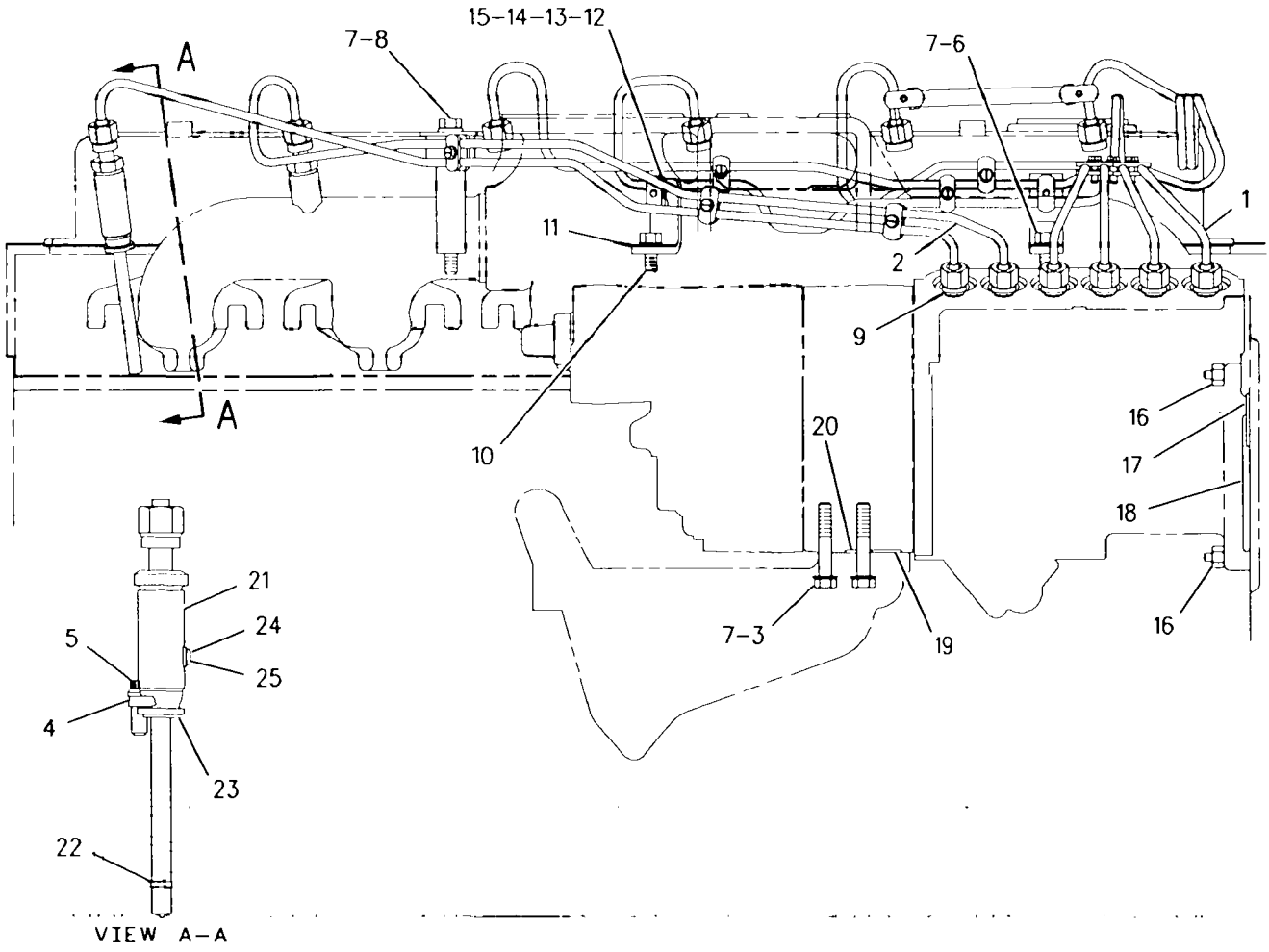

GRAPHIC #1 g00454629

128-7984 PROTECTION GP-FUEL SYSTEM

PIN 2YN1-UP; 3ZN1-UP; 4MN1-UP; 5LN1-UP; 6JN1-UP;
7KN1-UP; 8LN1-UP; 9PN1-UP. S/N 6NC1-UP; 08Z93150-99999
PART OF 108-1078, 8Q-1761, 8Q-1762, 8Q-1763 ENGINE AR

SMCS-1251, 1264 i01000020

NOTE	REF NO	GRAPHIC REF	PART NUMBER	QTY	PART NAME 1 2 3 4 5 6 (PRODUCT LEVEL)	SEE PAGE
	1	1	128-7796	1	BOLT-TAMPERPROOF (1/4-20 X 3.75 IN)	
	2	1	128-7794	1	BOLT-TAMPERPROOF (1/4-20 X 1.125 IN)	

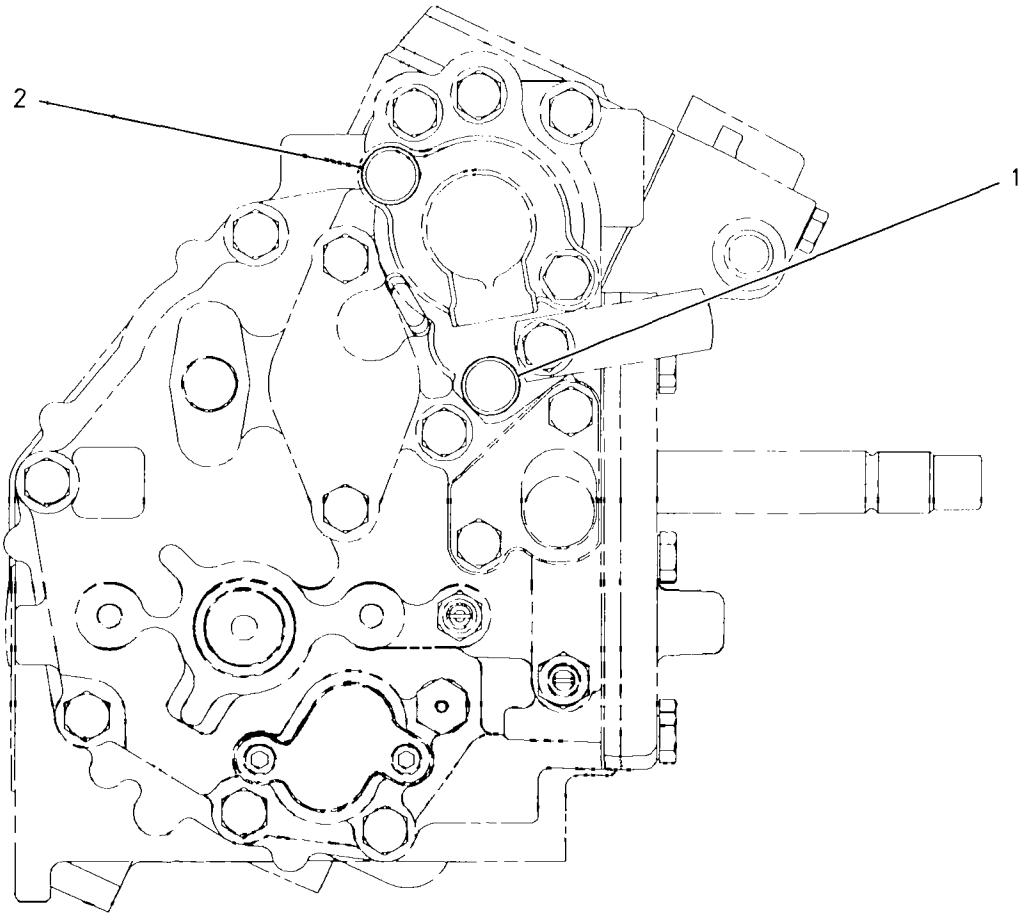

END VIEW

GRAPHIC #1 g00379842

2W-4160 PUMP & MTG GP-FUEL TRANSFER

PIN 2YN1-UP; 3ZN1-UP; 4MN1-UP; 5LN1-UP; 6JN1-UP; 7KN1-UP; 8LN1-UP; 9PN1-UP. S/N 6NC1-UP; 08Z93150-99999 PART OF 108-1078, 8Q-1761, 8Q-1762, 8Q-1763 ENGINE AR

SMCS-1255, 1256 i00843985

NOTE	REF NO	GRAPHIC REF	PART NUMBER	QTY	PART NAME 1 2 3 4 5 6 (PRODUCT LEVEL)	SEE PAGE
	1	1	**4F-7957**	1	BOLT (1/4-20X.875IN)	
YR	2	1	**1W-1695**	1	PUMP GP-FUEL TRANSFER	158
	3	1	**4B-9365**	1	BOLT (1/4-20X3IN)	
C	4	1	**4J-8997**	1	SEAL-O-RING (28.17MM ID)	
C	5	1	**5P-0537**	2	WASHER (2MM THK)	

C-CHANGE FROM PREVIOUS TYPE
R-REMFG PART MAY BE AVAILABLE
Y-SEPARATE ILLUSTRATION

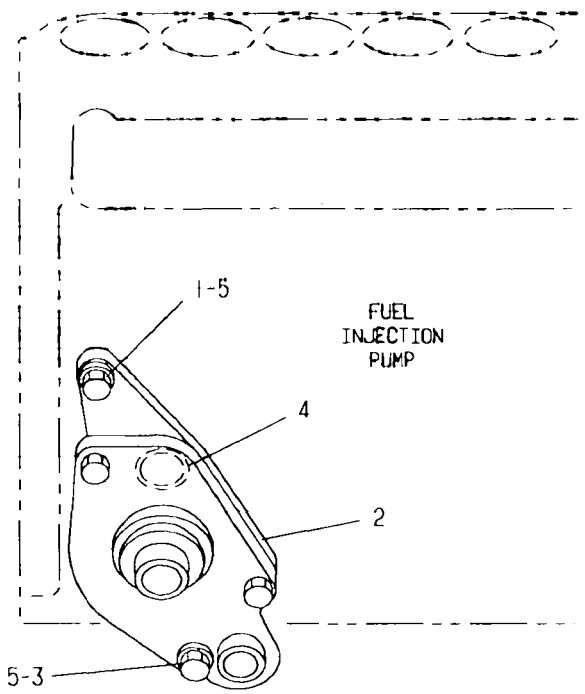

GRAPHIC #1 g00108230

4P-9827 PUMP GP-FUEL INJECTION

PIN 2YN1-UP; 3ZN1-UP; 4MN1-UP; 5LN1-UP; 6JN1-UP;
7KN1-UP; 8LN1-UP; 9PN1-UP. S/N 6NC1-UP; 08Z93150-99999
PART OF 111-3769 PUMP GP-FUEL INJECTION

SMCS-1251, 1253, 1272, 1281, 1290, 1292, 1299 i00124522

NOTE	REF NO	GRAPHIC REF	PART NUMBER	QTY	PART NAME 1 2 3 4 5 6 (PRODUCT LEVEL)	SEE PAGE
	1	1	7W-1927	1	RING-RETAINER	
	2	1	8N-1415	1	SPRING-CHECK	
	3	1	6I-1327	1	BONNET-VALVE	
	4	1	1W-6987	1	VALVE AS-CHECK	
	5	1	4P-9830	1	PLUNGER AS	
	6	1	7C-5278	1	BOLT-GEAR	
	7	1	7N-1066	1	WASHER-RETAINER	
	8	1	7C-9966	1	INSERT	

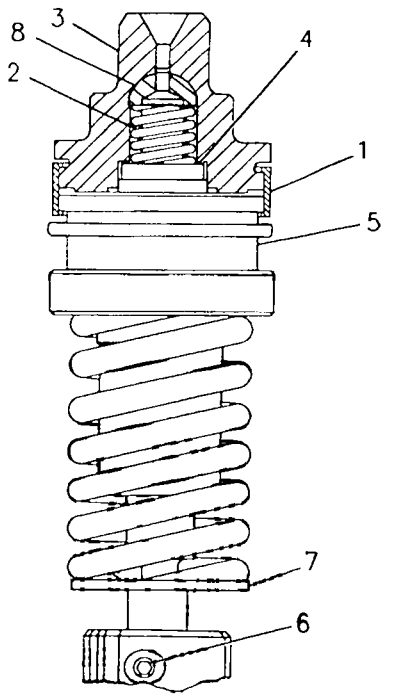

GRAPHIC #1 g00108467

FUEL SYSTEM

111-3769 PUMP GP-FUEL INJECTION

PIN 2YN1-UP; 3ZN1-UP; 4MN1-UP; 5LN1-UP; 6JN1-UP;
7KN1-UP; 8LN1-UP; 9PN1-UP. S/N 6NC1-UP; 08Z93150-99999
PART OF 111-3768 PUMP GP-GOV & FUEL INJ

SMCS-1251, 1253, 1272, 1281, 1290, 1292, 1299 i00746337

NOTE	REF NO	GRAPHIC REF	PART NUMBER	QTY	PART NAME 1 2 3 4 5 6 (PRODUCT LEVEL)	SEE PAGE
	1	1	9S-4180	2	PLUG-O-RING (5/16-24 THD)	
	2	1	4J-7533	2	SEAL-O-RING (6.07MM ID)	
	3	1	1W-3286	1	RACK-REGULATOR	
Y	4	1	4P-9827	6	PUMP GP-FUEL INJECTION	154
	5	1	8N-5117	6	BUSHING-TERMINAL	
	6	1	114-8718	6	SEAL-O-RING (26.64MM ID)	
	7	1	4W-6869	6	SPACER-FUEL PUMP	
	8	1	150-3724	1	GASKET-TIMING	
	9	1	7N-8421	1	RING-RETAINING	
	10	1	8N-2487	1	WASHER-THRUST	
	11	1	4P-9832	6	LIFTER AS	
	12	1	0S-1615	4	BOLT (1/4-20X.75IN)	
	13	1	7N-1047	1	COVER-TIMING	
	14	1	111-3770	1	CAMSHAFT AS	
		1	111-3771	1	CAMSHAFT-FUEL PUMP	
	15	1	8N-2510	1	SHAFT-WEIGHT CARRIER	
	16	1	7N-7264	4	WEIGHT-GOVERNOR	
	17	1	9Y-7037	4	BOLT	
	18	1	1S-5440	4	DOWEL	
	19	1	7E-3986	1	CARRIER-WEIGHT	
	20	1	7N-7166	2	RACE-THRUST BEARING	
	21	1	7L-3326	1	BEARING-THRUST	
	22	1	4N-9019	1	DOWEL	
	23	1	4P-9840	1	HOUSING AS	
	24	1	1S-1953	1	BEARING-RACK	
	25	1	1W-3285	1	BEARING-RACK	
	26	1	6I-0979	6	DOWEL	
	27	1	7N-7970	1	BEARING-SLEEVE	
	28	1	4P-9828	1	BEARING-SLEEVE	
	29	1	4P-8480	6	PIN-PUMP GUIDE	

Y-SEPARATE ILLUSTRATION

111-3769 PUMP GP-FUEL INJECTION *(contd.)* i00746337

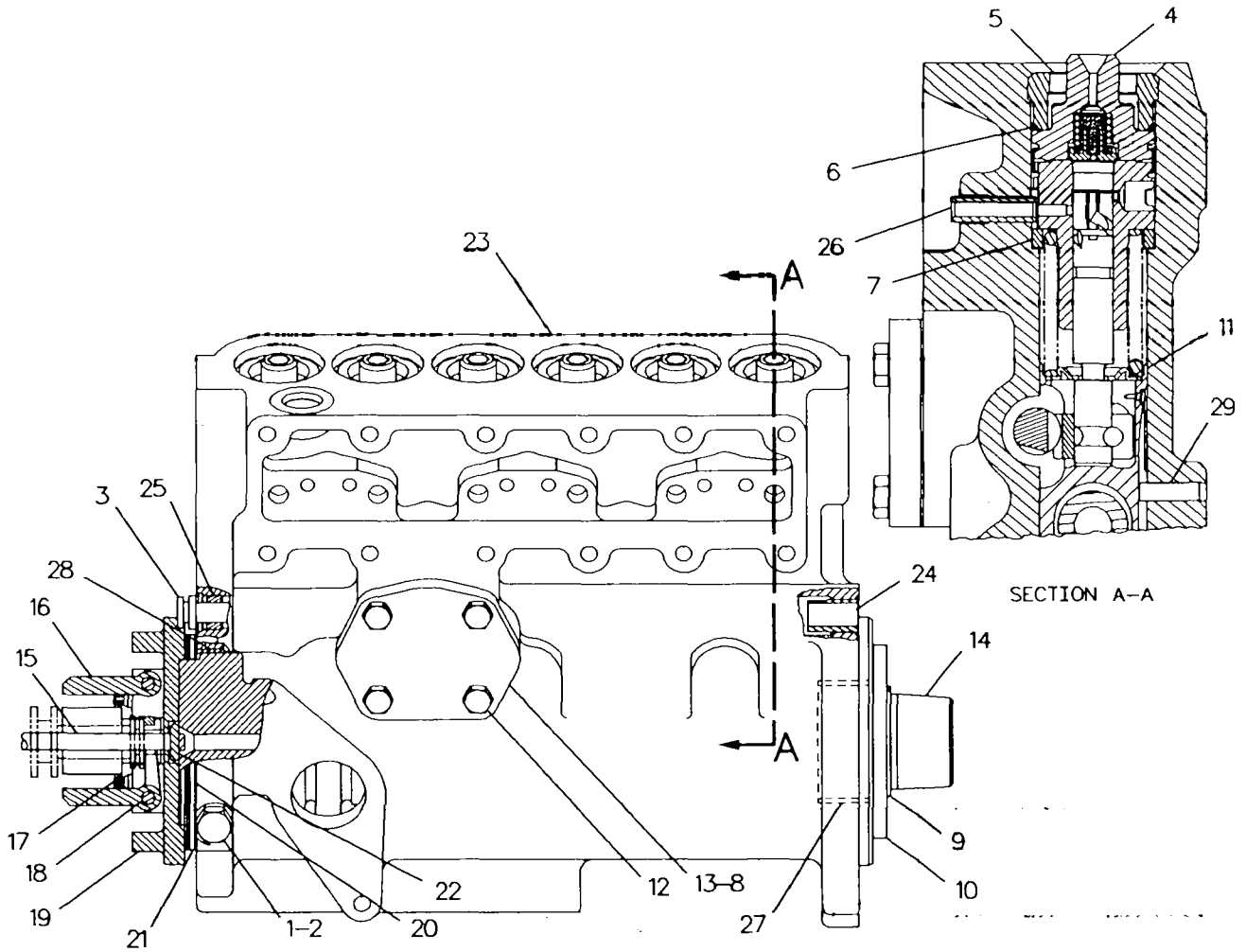

GRAPHIC #1 g00108461

1W-1695 PUMP GP-FUEL TRANSFER

PIN 2YN1-UP; 3ZN1-UP; 4MN1-UP; 5LN1-UP; 6JN1-UP;
7KN1-UP; 8LN1-UP; 9PN1-UP. S/N 08Z93150-99999
PART OF 2W-4160 PUMP & MTG GP-FUEL TRANSFER

SMCS-1255, 1256 i00126835

NOTE	REF NO	GRAPHIC REF	PART NUMBER	QTY	PART NAME 1 2 3 4 5 6 (PRODUCT LEVEL)	SEE PAGE
	1	1	1W-1698	1	HOUSING-TRANSFER PUMP	
	2	1	1W-1699	1	COVER	
	3	1	1W-5912	1	GUIDE & TAPPET AS	
		1	7N-8821	1	RING-RETAINING	
	4	1	6J-2419	1	SEAL-O-RING (36.17MM ID)	
	5	1	7E-2464	3	VALVE AS	
	6	1	3D-2824	1	SEAL-O-RING (23.47MM ID)	
	7	1	6F-6672	1	SEAL-O-RING (17.12MM ID)	
	8	1	3D-2898	1	SEAL-O-RING	
	9	1	5P-8215	1	SEAL-O-RING (39.34MM ID)	
	10	1	7W-0134	1	SPRING-PUMP	
	11	1	8N-2637	1	WASHER	
	12	1	7E-3667	1	SPACER	
	13	1	8N-2641	1	SLEEVE	
	14	1	1W-1669	1	PISTON	
	15	1	0S-1615	2	BOLT (1/4-20X.75IN)	
	16	1	6D-8498	2	SCREW-HEAD	
	17	1	8N-2640	1	COVER	
	18	1	7E-4656	1	RETAINER	

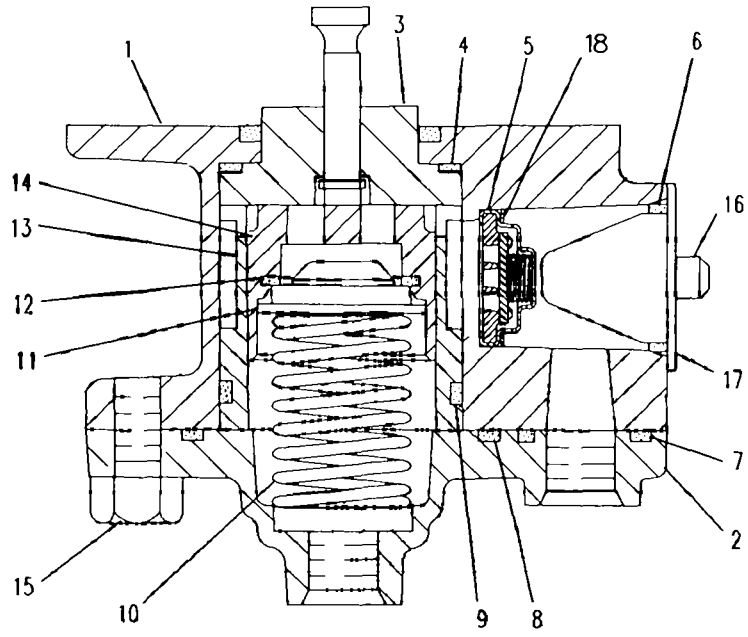

GRAPHIC #1 g00108374

111-3768 PUMP GP-GOV & FUEL INJ

PIN 2YN1-UP; 3ZN1-UP; 4MN1-UP; 5LN1-UP; 6JN1-UP;
7KN1-UP; 8LN1-UP; 9PN1-UP. S/N 6NC1-UP; 08Z93150-99999
PART OF 108-1078, 8Q-1761, 8Q-1762, 8Q-1763 ENGINE AR

SMCS-1251, 1253, 1255, 1256, 1264, 1272, 1281, 1286,
1287, 1289, 1292, 1299, 1908 i00574792

NOTE	REF NO	GRAPHIC REF	PART NUMBER	QTY	PART NAME 1 2 3 4 5 6 (PRODUCT LEVEL)	SEE PAGE
	1	1	**2D-6392**	1	SEAL-O-RING (6.07MM ID)	
	2	1	**033-5879**	1	SEAL-O-RING (11.12MM ID)	
	3	1	**8J-8343**	1	SEAL-O-RING (6.02MM ID)	
	4	1	**5H-6552**	1	SETSCREW-SOCKET (31.75MM LG)	
Y	5	1	*111-5162*	1	CONTROL GP-FUEL RATIO	130
	6	1	**4W-5735**	1	LEVER AS-PIVOT	
	7	1	**6V-6835**	1	SETSCREW-SOCKET	
	8	1	**8L-5832**	1	NUT-HEX (10-32 THD)	
	9	1	**4W-5734**	1	LEVER AS	
		1	**6V-6835**	1	SETSCREW-SOCKET	
		1	**8L-5832**	1	NUT-HEX (10-32 THD)	
Y	10	1	*2W-2410*	1	GOVERNOR GP	138
	11	1	**7N-8768**	1	GASKET	
	12	1	**3J-1907**	1	SEAL-O-RING (11.89MM ID)	
Y	13	1	*111-3769*	1	PUMP GP-FUEL INJECTION	156
	14	1	**6V-5894**	2	BOLT	
Y	15	1	*7C-8993*	1	FASTENER GP-FUEL INJ PUMP	132
	16	1	**7N-2176**	1	PIN-DETENT	
	17	1	**7N-1052**	1	DOWEL	
	18	1	**8N-3094**	1	SPRING-DETENT	
Y	19	1	*1W-8668*	1	TORQUE CONTROL GP	163
	20	1	**8N-5784**	1	DEFLECTOR-PULSE	
	21	1	**8L-9790**	1	SPRING-GOVERNOR	
	22	1	**8N-3088**	1	SHAFT AS-THROTTLE	
	23	1	**2W-5448**	1	COVER	
		1	**7E-6785**	1	GASKET	
	24	1	**7N-9907**	1	COVER	
		1	**7N-9554**	1	GASKET	
	25	1	**8M-8515**	1	SEAL-O-RING (32.99MM ID)	
	26	1	**5P-6620**	1	SEAL-O-RING (14MM ID)	
	27	1	**8L-5832**	1	NUT-HEX (10-32 THD)	
	28	1	**5P-0537**	2	WASHER (2MM THK)	
	29	1	**8N-6680**	1	SCREEN AS	

Y-SEPARATE ILLUSTRATION

111-3768 PUMP GP-GOV & FUEL INJ *(contd.)* i00574792

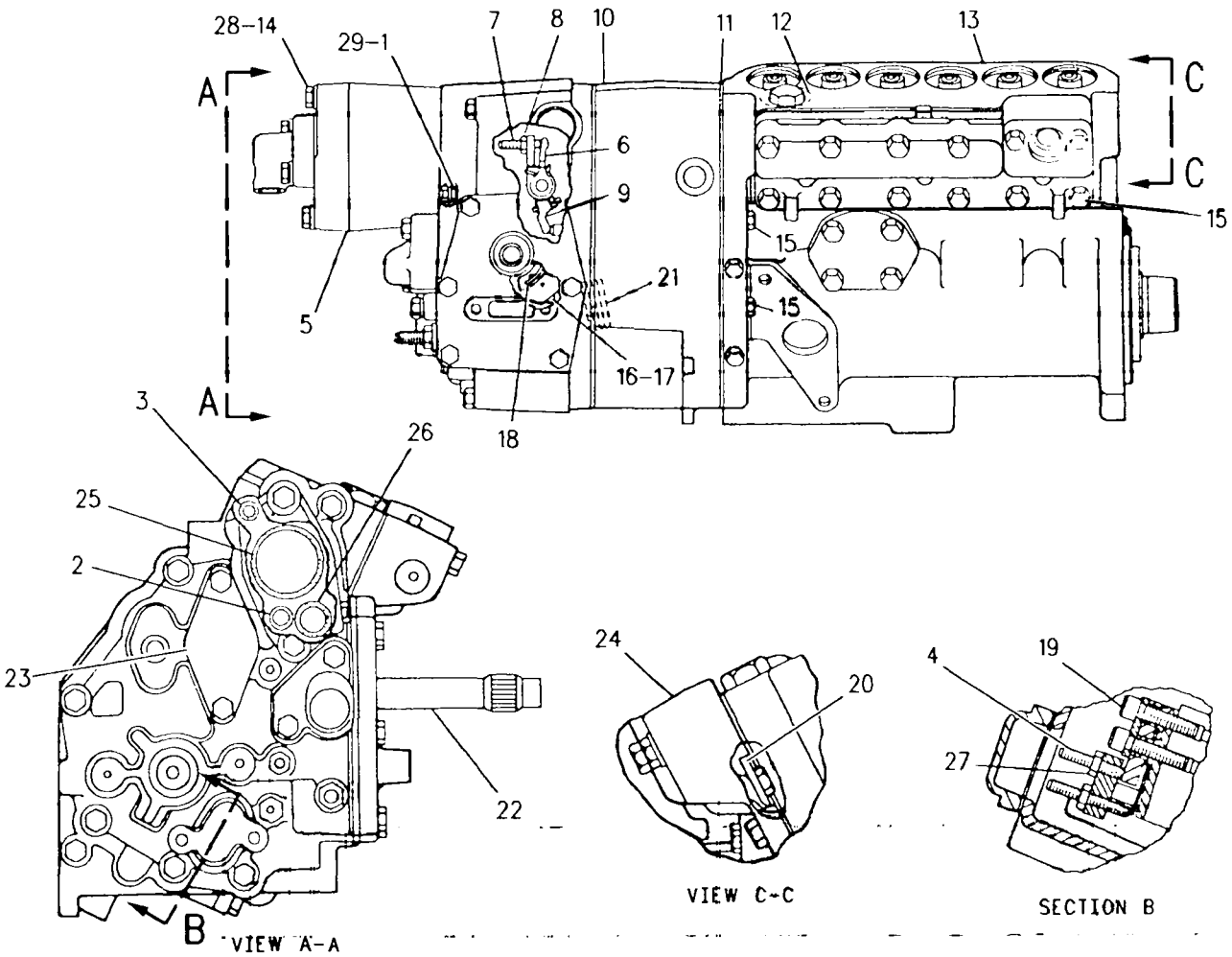

GRAPHIC #1 g00253668

FUEL SYSTEM

129-2166 SEAL GP

PIN 2YN1-UP; 3ZN1-UP; 4MN1-UP; 5LN1-UP; 6JN1-UP; 7KN1-UP; 8LN1-UP; 9PN1-UP
PART OF 128-4092 DISPOSAL AR

SMCS-1250 i00689157

NOTE	REF NO	GRAPHIC REF	PART NUMBER	QTY	PART NAME 1 2 3 4 5 6 (PRODUCT LEVEL)	SEE PAGE
E	1	1	5P-7211		SEAL (2.4CM)	
E-ORDER BY THE CENTIMETER						

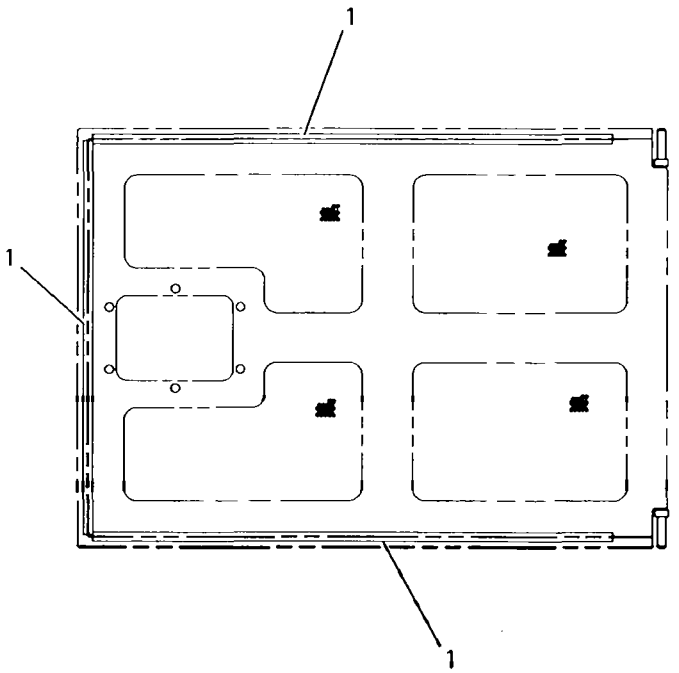

GRAPHIC #1 g00292169

1W-8668 TORQUE CONTROL GP

PIN 2YN1-UP; 3ZN1-UP; 4MN1-UP; 5LN1-UP; 6JN1-UP; 7KN1-UP; 8LN1-UP; 9PN1-UP. S/N 6NC1-UP; 08Z93150-99999
PART OF 111-3768 PUMP GP-GOV & FUEL INJ

SMCS-1257 i00128477

NOTE	REF NO	GRAPHIC REF	PART NUMBER	QTY	PART NAME 1 2 3 4 5 6 (PRODUCT LEVEL)	SEE PAGE
C	1	1	6L-5897	2	BOLT (1/4-20X7/8IN)	
C	2	1	7W-5700	1	CONTACT	
C	3	1	2W-7234	1	BAR-LOAD STOP (4.0MM THK)	
C	4	1	7N-1796	1	SPACER (1.549MM THK)	
	5	1	1P-6452	1	INSULATOR	
	6	1	2P-2685	1	SPACER (.635MM THK)	
	7	1	8M-9062	1	RETAINER-SPRING (3.05MM THK)	
	8	1	8N-7520	1	SPRING-TORQUE (.559MM THK)	

C-CHANGE FROM PREVIOUS TYPE

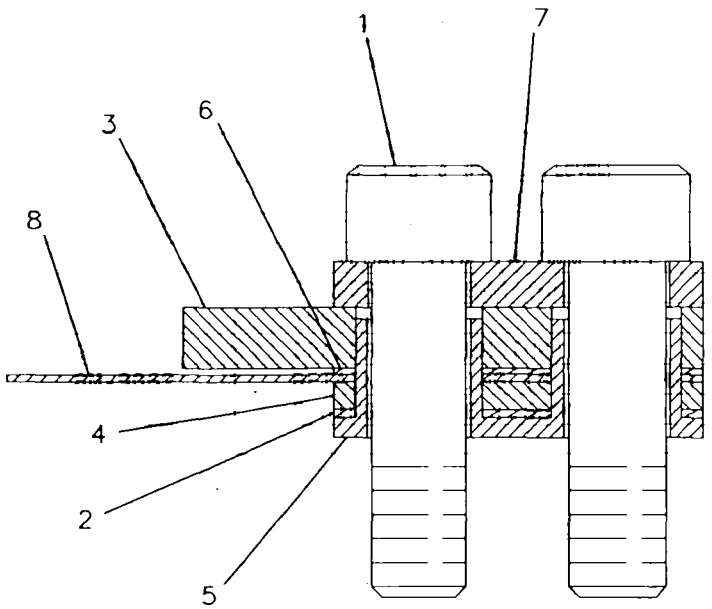

GRAPHIC #1 g00108408

ELECTRICAL AND STARTING SYSTEM

131-0704 ALTERNATOR AR-CHARGING

PIN 2YN1-UP; 3ZN1-UP; 4MN1-UP; 5LN1-UP; 6JN1-UP; 7KN1-UP; 8LN1-UP; 9PN1-UP
24 VOLT, 75 AMPERE
PART OF 128-7274, 129-2161, 129-2162, 129-2163 DISPOSAL AR

SMCS-1405 **i00701181**

NOTE	PART NUMBER	QTY	PART NAME 1 2 3 4 5 6 (PRODUCT LEVEL)	SEE PAGE
YR	*3E-7577*	1	ALTERNATOR GP-CHARGING	166
	4M-5282	1	BOLT (1/4-20X1.50IN)	
	4P-7581	1	CLIP (10.5MM ID)	
	9G-8661	1	SPACER	
	7K-1181	1	STRAP-CABLE (4.00IN DIA)	
	5P-4115	1	WASHER (2MM THK)	
	1Q-2807	1	WIRE AS	

R-REMFG PART MAY BE AVAILABLE
Y-SEPARATE ILLUSTRATION

ELECTRICAL AND STARTING SYSTEM

3E-7577 ALTERNATOR GP-CHARGING*R

PIN 2YN1-UP; 3ZN1-UP; 4MN1-UP; 5LN1-UP; 6JN1-UP; 7KN1-UP; 8LN1-UP; 9PN1-UP
24 VOLT, 75 AMP
PART OF 131-0704 ALTERNATOR AR-CHARGING

SMCS-1405, 1410, 1425 i00914983

NOTE	REF NO	GRAPHIC REF	PART NUMBER	QTY	PART NAME 1 2 3 4 5 6 (PRODUCT LEVEL)	SEE PAGE
	1	1	9S-2011	1	SCREW-MACHINE	
	2	1	1H-3244	1	LOCKWASHER (NO.14)	
	3	1	2K-4821	1	LOCKNUT (5/8-18 THD)	
	4	1	7F-7621	1	WASHER	
	5	1	9S-2260	1	PLATE-COVER	
	6	1	9S-2255	1	COVER	
	7	1	9S-2262	1	GASKET	
	8	1	9S-2544	6	SCREW-HEX HEAD	
	9	1	9B-7233	10	LOCKWASHER (NO.8)	
	10	1	9S-2437	5	SCREW-TAPPING	
	11	1	8F-1434	5	LOCKWASHER (0.51MM THK)	
	12	1	5P-3418	1	BEARING-ROLLER	
	13	1	5P-3419	1	RACE-BEARING INNER	
	14	1	9S-2396	1	BUSHING-TERMINAL	
	15	1	9S-2393	3	DIODE-NEGATIVE	
	16	1	9N-0943	1	PLUG-BEARING WELL	
	17	1	9F-2247	1	PLUG-PIPE	
J	18	1	9S-2292	1	HEAT SINK AS	
	19	1	100-6656	1	DIODE AS-ALTERNATOR	
	20	1	9S-9830	4	SCREW-FORMING	
	21	1	8C-9660	4	WASHER (0.8MM THK)	
	22	1	9S-2300	4	INSULATOR	
	23	1	9S-2301	1	INSULATION	
	24	1	9S-2248	1	COIL & SUPPORT AS	
	25	1	9N-3388	3	LOCKSCREW	
	26	1	3T-6354	1	REGULATOR AS	
	27	1	7N-9023	1	SCREW AS	
	28	1	6N-1872	2	SCREW AS	
	29	1	4B-2043	4	NUT (8-32 THD)	
	30	1	100-6657	1	PLATE-ALTERNATOR	
	31	1	9S-2302	1	ROTOR AS	
	32	1	9S-2005	1	GROMMET	
	33	1	2L-8075	3	TERMINAL (HORN)	
	34	1	100-6658	1	WIRE AS-ALTERNATOR	
	35	1	9S-2389	1	STUD AS	
	36	1	9L-6770	1	CAP	
	37	1	2P-5616	1	FRAME-DRIVE END	
	38	1	9S-2390	1	RETAINER	
	39	1	9X-2500	4	SCREW-HEX FLANGE	
	40	1	9S-2009	4	SCREW-HEAD	
	41	1	100-6532	1	COLLAR-ALTERNATOR	
	42	1	5P-7807	1	BALL BEARING	
	43	1	100-6531	1	FAN-ALTERNATOR	
	44	1	9S-3451	1	STATOR AS	
	45	1	9S-2006	1	INSULATOR	
	46	1	9S-2005	1	GROMMET	
	47	1	9S-2014	3	CLIP	
					AVAILABLE REPAIR KIT(S):	
			9S-2013	1	KIT-RELAY TERMINAL (INCLUDES BUSHING, O-RING & HARDWARE)	
			9S-2012	1	KIT-OUTPUT TERMINAL (INCLUDES GASKETS,TERMINALS, & HARDWARE)	
J			9S-2290	3	KIT-DIODE JUNCTION STUD (INCLUDES INSULATOR & STUD)	

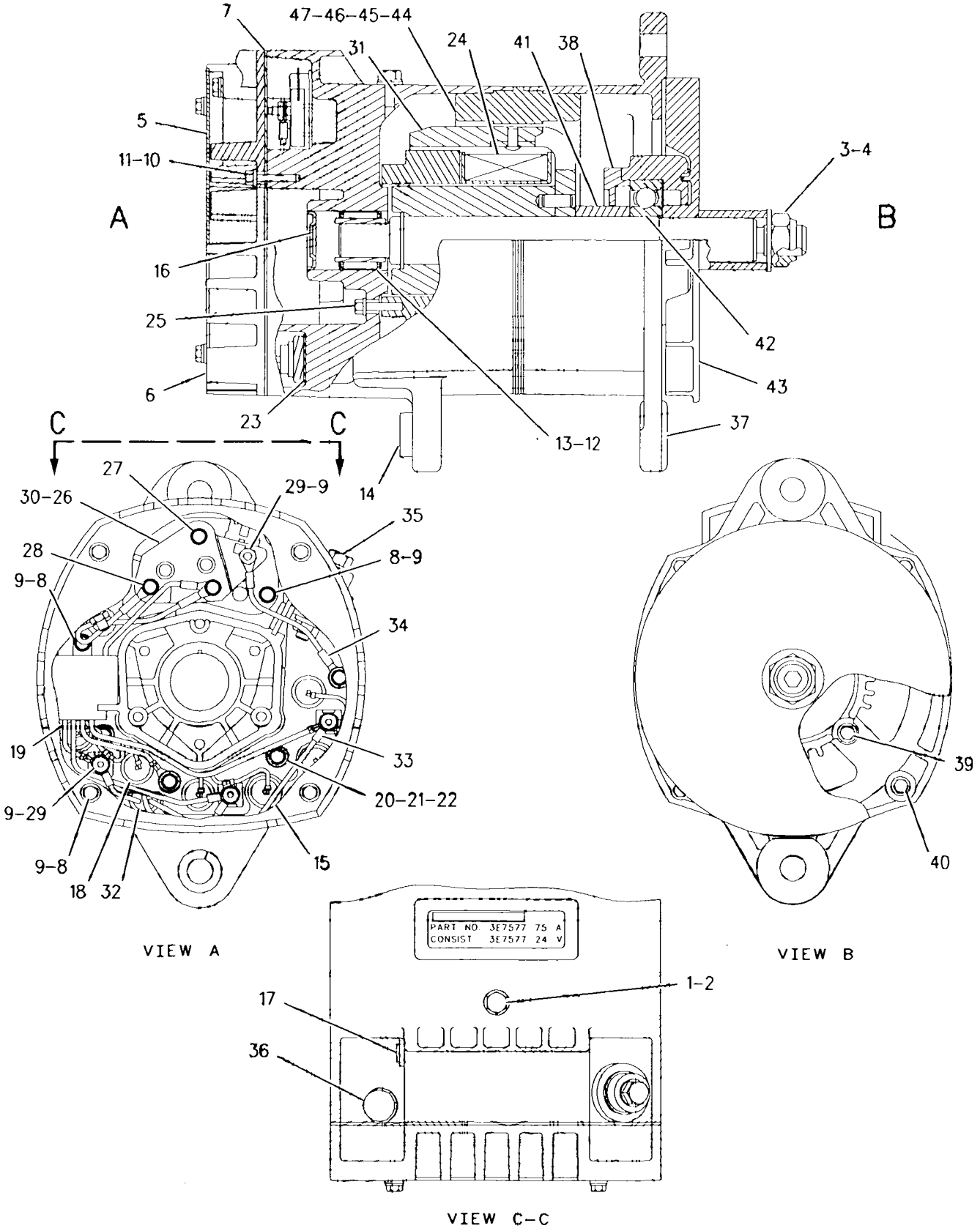

GRAPHIC #1 g00467174

133-8979 CONTROL GP-EMS ELECTRONIC

PIN 2YN1-UP; 4MN1-UP; 6JN1-UP; 8LN1-UP
LIGHT EMITTING DIODE DISPLAY
PART OF 142-1654 PANEL GP-INSTRUMENT

SMCS-7490 i00803402

NOTE	REF NO	GRAPHIC REF	PART NUMBER	QTY	PART NAME 1 2 3 4 5 6 (PRODUCT LEVEL)	SEE PAGE
	1	1	8L-8413	1	STRAP-CABLE (1.12IN DIA)	
	2	1	3E-3365	1	WEDGE	
	3	1	102-8802	1	KIT-RECEPTACLE	
	4	1	8T-8729	2	PIN-CONNECTOR	

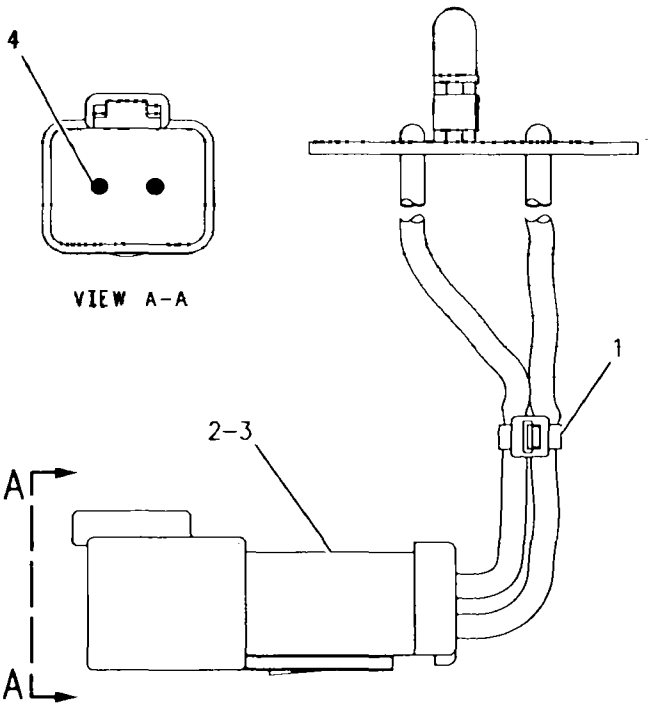

GRAPHIC #1 g00263739

ELECTRICAL AND STARTING SYSTEM

3E-6389 LAMP GP-DOME

PIN 2YN1-UP; 3ZN1-UP; 4MN1-UP; 5LN1-UP; 6JN1-UP; 7KN1-UP; 8LN1-UP; 9PN1-UP
24 VOLT. WITH SWITCH
PART OF 115-2331 LINER GP-CAB

SMCS-1429 i00910382

NOTE	REF NO	GRAPHIC REF	PART NUMBER	QTY	PART NAME 1 2 3 4 5 6 (PRODUCT LEVEL)	SEE PAGE
	1	1	7N-9943	1	LAMP	
	2	1	102-8803	1	KIT-RECEPTACLE	
					(INCLUDES WEDGE & RECEPTACLE AS)	
		1	3E-3371	1	WEDGE-RECEPTACLE LOCK	
		1	8T-8729	3	PIN-CONNECTOR	
	3	1	7T-0020	1	LENS	

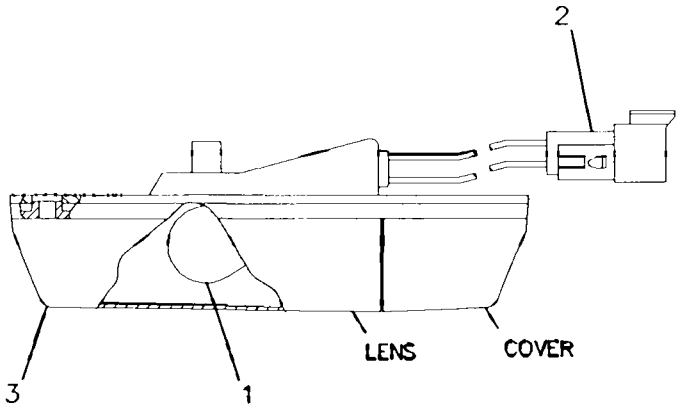

GRAPHIC #1 g00316573

106-8964 LAMP GP-FLOOD

PIN 2YN1-UP; 3ZN1-UP; 4MN1-UP; 5LN1-UP; 6JN1-UP; 7KN1-UP; 8LN1-UP; 9PN1-UP
24 VOLT. SUSPENDED
PART OF 126-8867, 126-8870 LIGHTING AR, 114-5992 LIGHTING GP-AUXILIARY

SMCS-1434 i00706119

NOTE	REF NO	GRAPHIC REF	PART NUMBER	QTY	PART NAME 1 2 3 4 5 6 (PRODUCT LEVEL)	SEE PAGE
	1	1	107-5851	4	SCREW	
	2	1	107-5853	1	LENS AS-FLOOD	
		1	107-5852	1	SEAL	
M	3	1	8T-0337	2	SCREW-MACHINE (M4X0.7X12MM)	
	4	1	107-5854	1	BODY AS-LAMP	
	5	1	9X-3463	1	LAMP (24 VOLT)	

M-METRIC PART

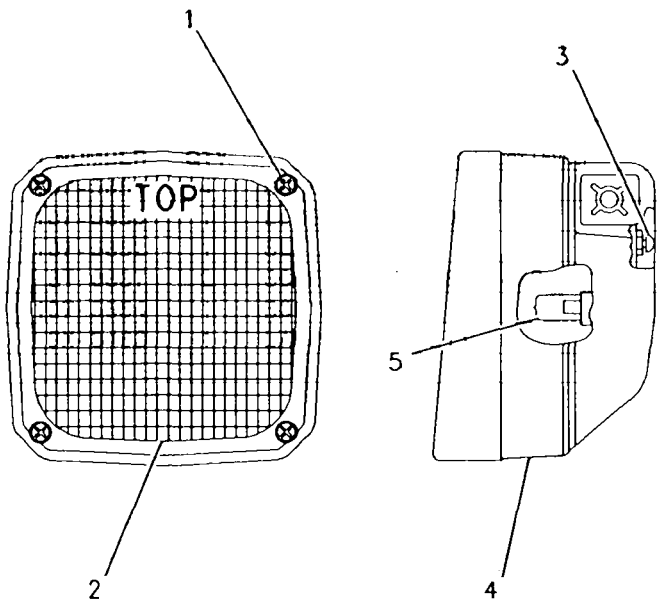

GRAPHIC #1 g00273968

107-6689 LAMP GP-FLOOD

PIN 2YN1-UP; 3ZN1-UP; 4MN1-UP; 5LN1-UP; 6JN1-UP; 7KN1-UP; 8LN1-UP; 9PN1-UP
24 VOLT. VERTICAL
PART OF 126-8867, 126-8868 LIGHTING AR

SMCS-1434 i00111739

NOTE	REF NO	GRAPHIC REF	PART NUMBER	QTY	PART NAME 1 2 3 4 5 6 (PRODUCT LEVEL)	SEE PAGE
	1	1	107-5851	4	SCREW	
	2	1	107-5853	1	LENS AS-FLOOD	
		1	107-5852	1	SEAL	
	3	1	107-5854	1	BODY AS-LAMP	
M		1	8T-0337	2	SCREW-MACHINE	
	4	1	9X-3463	1	LAMP	

M-METRIC PART

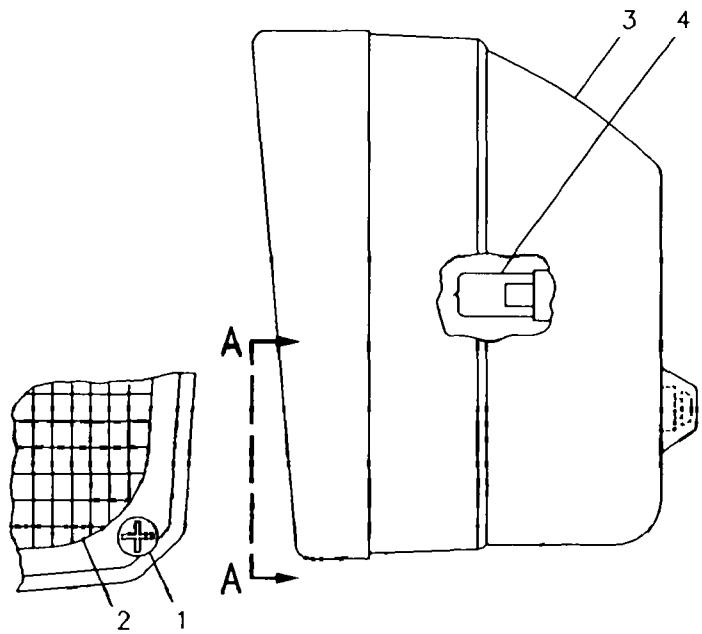

VIEW A-A

GRAPHIC #1 g00084818

133-6335 LAMP GP-FLOOD

PIN 2YN1-UP; 3ZN1-UP; 4MN1-UP; 5LN1-UP; 6JN1-UP; 7KN1-UP; 8LN1-UP; 9PN1-UP
24 VOLT. SUSPENDED
PART OF 148-6352 LIGHTING AR

SMCS-1434 i00730894

NOTE	REF NO	GRAPHIC REF	PART NUMBER	QTY	PART NAME 1 2 3 4 5 6 (PRODUCT LEVEL)	SEE PAGE
	1	1	107-5851	4	SCREW	
	2	1	107-5853	1	LENS AS-FLOOD	
	3	1	107-5852	1	SEAL	
	4	1	139-8660	1	BODY AS-LAMP	
	5	1	9X-3463	1	LAMP (24 VOLT)	
	6	1	8T-8729	2	PIN-CONNECTOR	
	7	1	3E-3365	1	WEDGE	
	8	1	102-8802	1	KIT-RECEPTACLE (INCLUDES WEDGE & RECEPTACLE AS)	

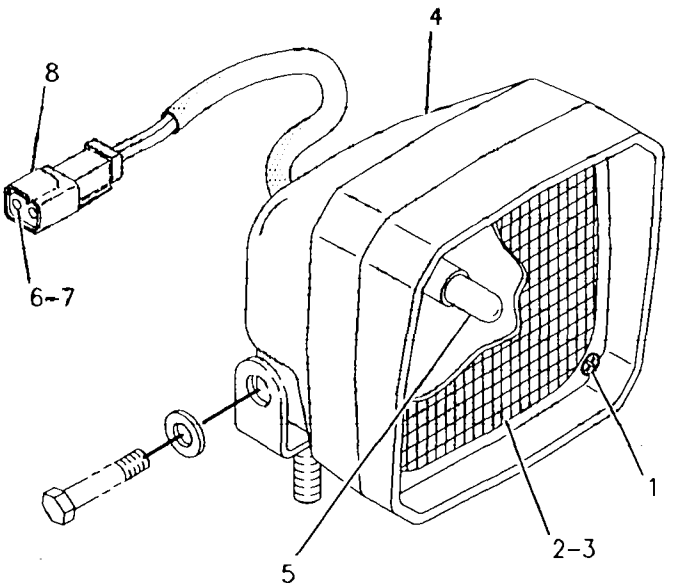

GRAPHIC #1 g00272797

ELECTRICAL AND STARTING SYSTEM

133-6336 LAMP GP-FLOOD

PIN 2YN1-UP; 3ZN1-UP; 4MN1-UP; 5LN1-UP; 6JN1-UP; 7KN1-UP; 8LN1-UP; 9PN1-UP
24 VOLT. VERTICAL
PART OF 148-6352 LIGHTING AR

SMCS-1434 i00708460

NOTE	REF NO	GRAPHIC REF	PART NUMBER	QTY	PART NAME 1 2 3 4 5 6 (PRODUCT LEVEL)	SEE PAGE
	1	1	107-5851	4	SCREW	
	2	1	107-5853	1	LENS AS-FLOOD	
	3	1	107-5852	1	SEAL	
	4	1	139-8660	1	BODY AS-LAMP	
	5	1	9X-3463	1	LAMP (24 VOLT)	
	6	1	102-8802	1	KIT-RECEPTACLE (INCLUDES WEDGE & RECEPTACLE AS)	
	7	1	8T-8729	2	PIN-CONNECTOR	
	8	1	3E-3365	1	WEDGE	

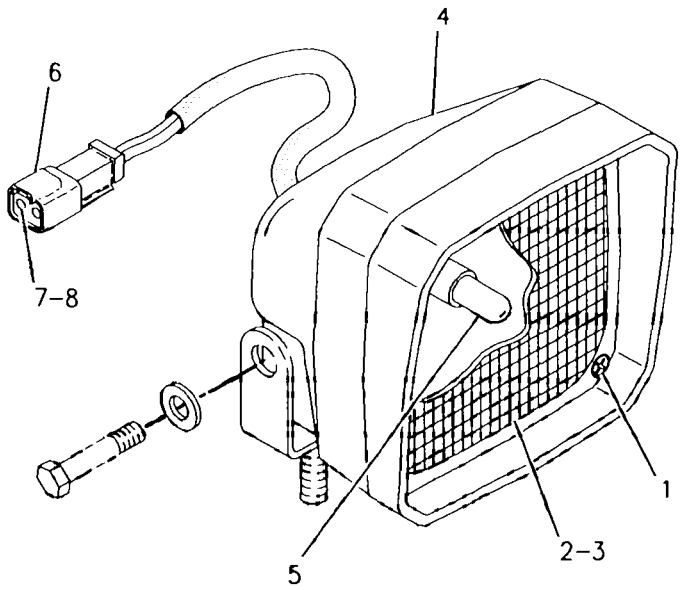

GRAPHIC #1 g00258483

147-0319 LAMP GP-FLOOD

PIN 2YN1-UP; 3ZN1-UP; 4MN1-UP; 5LN1-UP; 6JN1-UP; 7KN1-UP; 8LN1-UP; 9PN1-UP
24 VOLT, SUSPENDED
PART OF 126-8870 LIGHTING AR, 125-2001 LIGHTING GP-FLOOD

SMCS-1434 i00898999

NOTE	REF NO	GRAPHIC REF	PART NUMBER	QTY	PART NAME 1 2 3 4 5 6 (PRODUCT LEVEL)	SEE PAGE
	1	1	9X-3463	1	LAMP	
	2	1	158-0250	1	BODY AS-LAMP	
	3	1	158-0248	1	LENS AS-FLOOD	
	4	1	158-0252	1	BEZEL	
	5	1	158-0251	2	CLAMP	

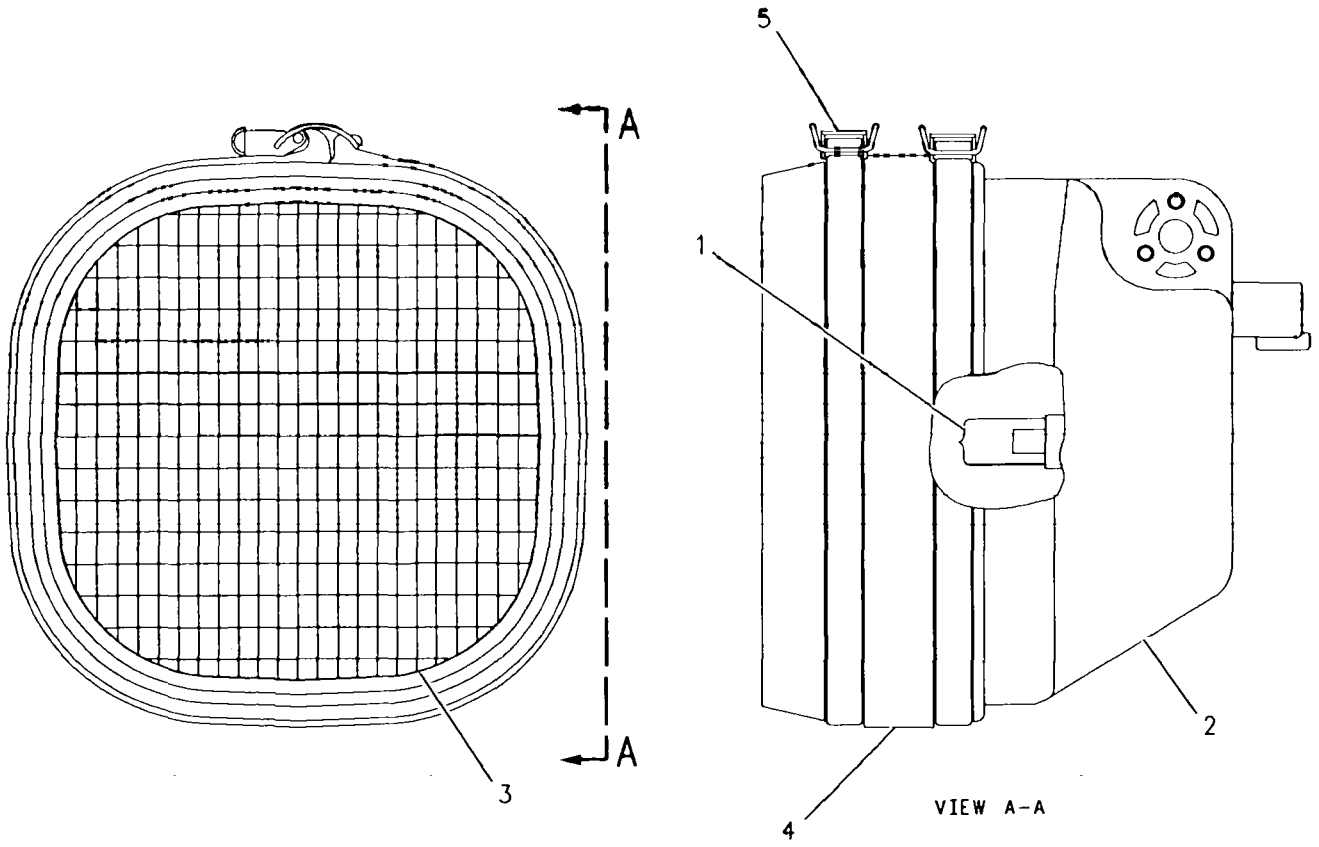

GRAPHIC #1 g00458549

ELECTRICAL AND STARTING SYSTEM

126-8867 LIGHTING AR–CUSTOM

PIN 2YN1-UP; 3ZN1-UP; 4MN1-UP; 5LN1-UP; 6JN1-UP; 7KN1-UP; 8LN1-UP; 9PN1-UP

SMCS-1429 i01009183

NOTE	REF NO	GRAPHIC REF	PART NUMBER	QTY	PART NAME 1 2 3 4 5 6 (PRODUCT LEVEL)	SEE PAGE
	1	1	7X-0365	4	BOLT (3/4-10X1.50IN)	
	2	1	7X-0564	4	WASHER-HARD (3MM THK)	
Y	3	1	*106-8964*	2	LAMP GP-FLOOD	171
	4	1	126-8874	2	HARNESS AS	
	5	1	8T-9399	2	BOLT (3/4-10X2.25IN)	
	6	1	8T-4994	2	WASHER (5MM THK)	
	7	1	1Q-3064	1	GUARD AS-RH	
		1	1F-0750	4	NUT-WELD (3/8-16 THD)	
		1	7T-1099	2	LINK	
B	8	1	109-9955	1	PLATE AS	
	9	1	9X-6772	14	STRAP-CABLE	
	10	1	5P-9085	2	CLIP (7.94MM ID)	
	11	1	111-8314	4	BRACKET AS	
					(EACH INCLUDES)	
		1	1F-0750	1	NUT-WELD (3/8-16 THD)	
	12	1	5M-3062	8	BOLT (3/8-16X.75IN)	
	13	1	5P-1075	12	WASHER-HARD (3MM THK)	
	14	1	5P-2955	4	BOLT (5/16-18X2.50IN)	
	15	1	8T-4224	8	WASHER-HARD (2MM THK)	
	16	1	6V-8189	4	NUT (5/16-18 THD)	
Y	17	1	*114-5992*	4	LIGHTING GP-AUXILIARY	186
B	18	1	5G-6401	2	BOSS	
	19	1	110-0092	1	BRACKET	
	20	1	5P-8522	4	GROMMET	
	21	1	4L-6454	14	BOLT (3/8-16X1.0IN)	
	22	1	8T-4896	2	WASHER-HARD (2.5MM THK)	
	23	1	126-8873	2	HARNESS AS	
	24	1	109-9957	1	BRACKET	
	25	1	1Q-3061	1	GUARD AS-LH	
		1	1F-0750	4	NUT-WELD (3/8-16 THD)	
		1	7T-1099	2	LINK	
	26	1	8M-0456	1	FUSE (20 AMP)	
	27	1	8M-8948	1	FUSE (15 AMP)	
	28	1	126-8876	1	FILM-PANEL	
	29	1	104-6339	2	GUARD AS	
					(EACH INCLUDES)	
		1	7T-1099	4	LINK	
B	30	1	111-6798	1	PLATE AS	
		1	7T-1099	3	LINK	
	31	1	6V-8801	4	NUT (3/8-16 THD)	
	32	1	4D-7794	4	CLIP (10.0MM ID)	
	33	1	6K-4935	4	BRACKET	
	34	1	6K-4934	4	CLIP	
Y	35	1	*107-6689*	2	LAMP GP-FLOOD	172

B-USE AS REQUIRED
Y-SEPARATE ILLUSTRATION

126-8867 LIGHTING AR *(contd.)*

i01009183

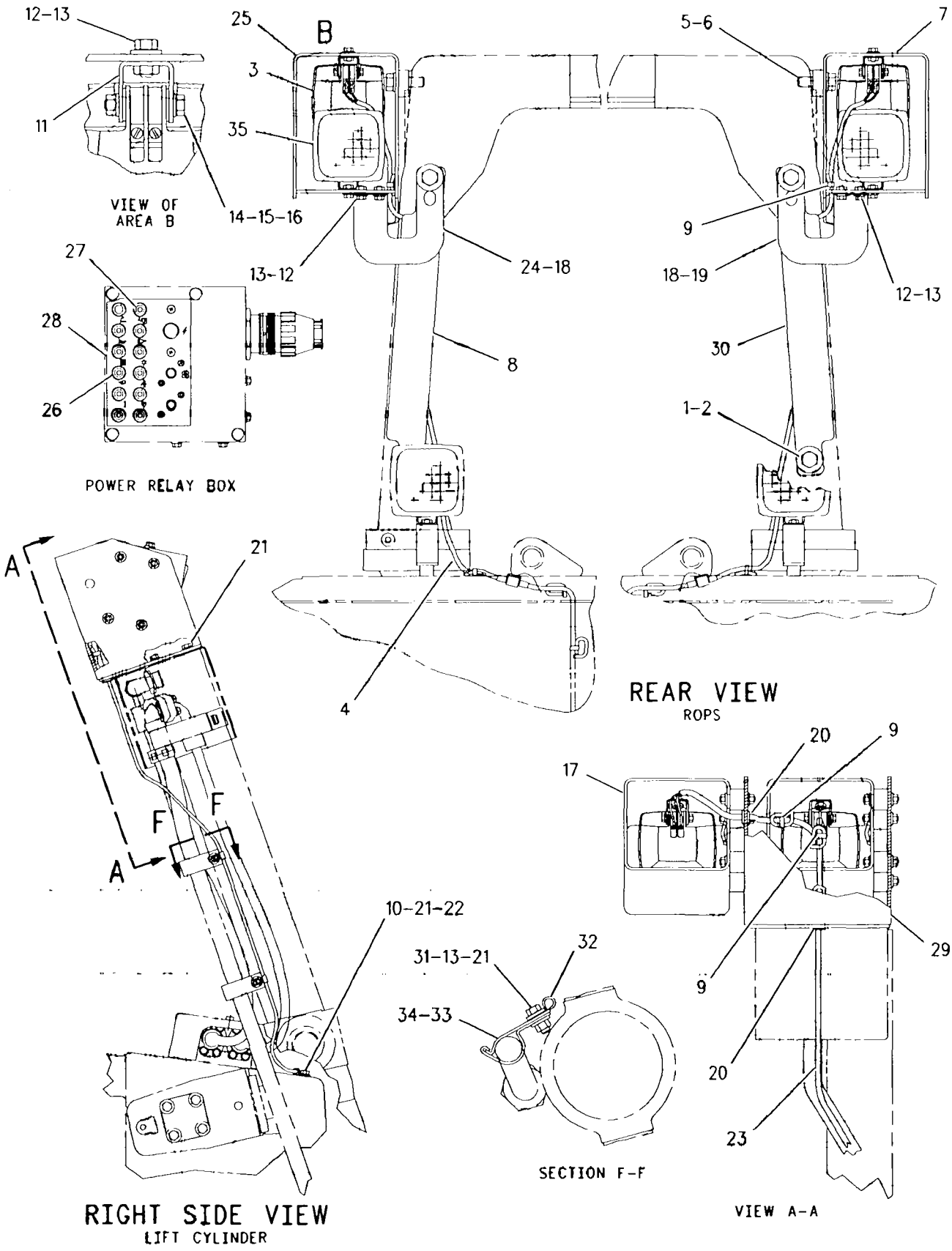

GRAPHIC #1

g00284909

ELECTRICAL AND STARTING SYSTEM

126-8868 LIGHTING AR–CUSTOM

PIN 2YN1-UP; 3ZN1-UP; 4MN1-UP; 5LN1-UP; 6JN1-UP; 7KN1-UP; 8LN1-UP; 9PN1-UP

SMCS-1429 **i01009252**

NOTE	REF NO	GRAPHIC REF	PART NUMBER	QTY	PART NAME 1 2 3 4 5 6 (PRODUCT LEVEL)	SEE PAGE
	1	1	**126-8874**	2	HARNESS AS	
	2	1	**111-8314**	2	BRACKET AS	
					(EACH INCLUDES)	
		1	**1F-0750**	1	NUT-WELD (3/8-16 THD)	
	3	1	**5M-3062**	2	BOLT (3/8-16X.75IN)	
	4	1	**5P-1075**	2	WASHER-HARD (3MM THK)	
	5	1	**5P-2955**	2	BOLT (5/16-18X2.50IN)	
	6	1	**8T-4224**	4	WASHER-HARD (2MM THK)	
	7	1	**6V-8189**	2	NUT (5/16-18 THD)	
Y	8	1	*107-6689*	2	LAMP GP-FLOOD	172
Y	9	1	*114-5992*	2	LIGHTING GP-AUXILIARY	186
	10	1	**9X-6772**	2	STRAP-CABLE	
	11	1	**5P-8522**	2	GROMMET	
	12	1	**126-8873**	2	HARNESS AS	
	13	1	**126-8876**	1	FILM-PANEL	
	14	1	**8M-0456**	1	FUSE (20 AMP)	
	15	1	**8M-8948**	1	FUSE (15 AMP)	

Y-SEPARATE ILLUSTRATION

126-8868 LIGHTING AR *(contd.)* i01009252

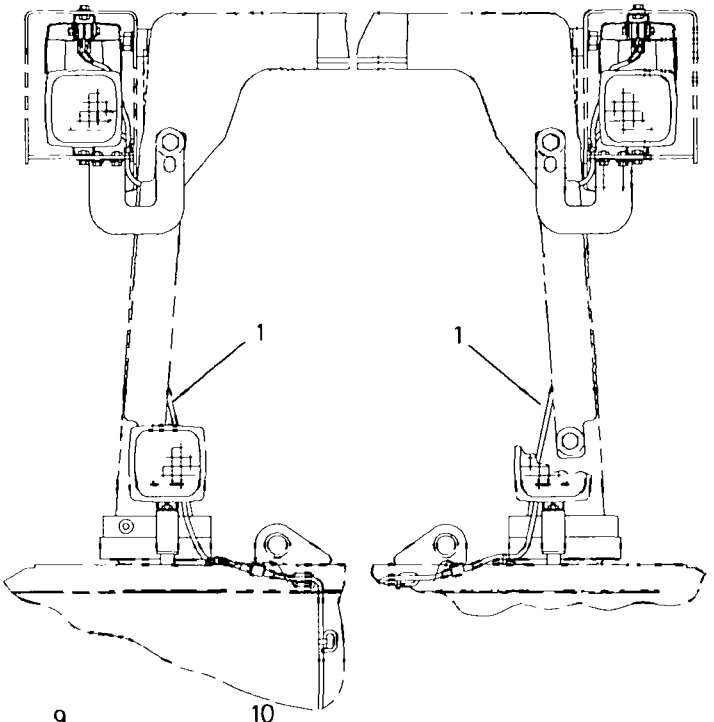

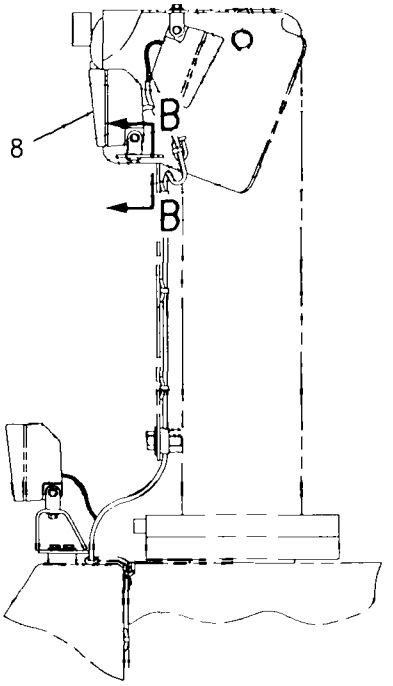

RIGHT SIDE VIEW
(ROPS)

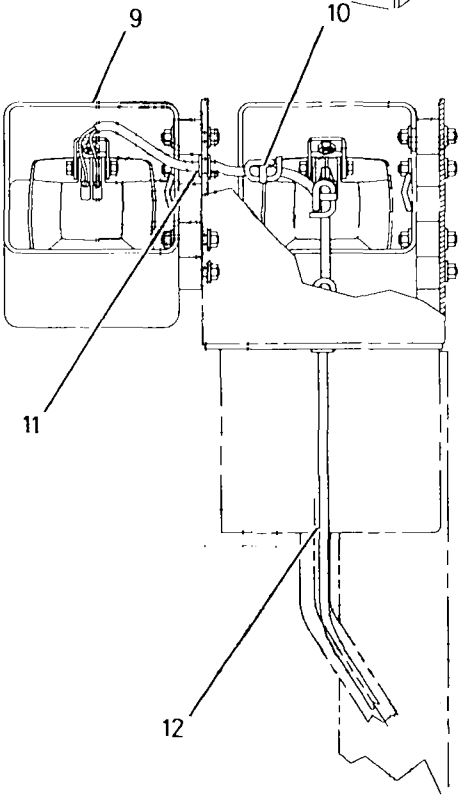

VIEW A-A

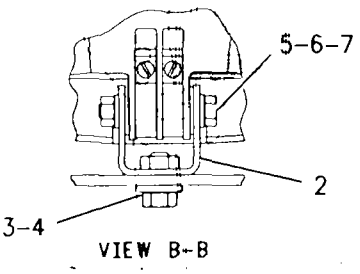

VIEW B-B

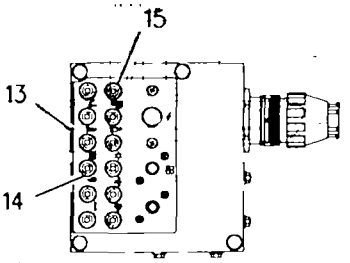

L.H. VIEW
POWER RELAY BOX

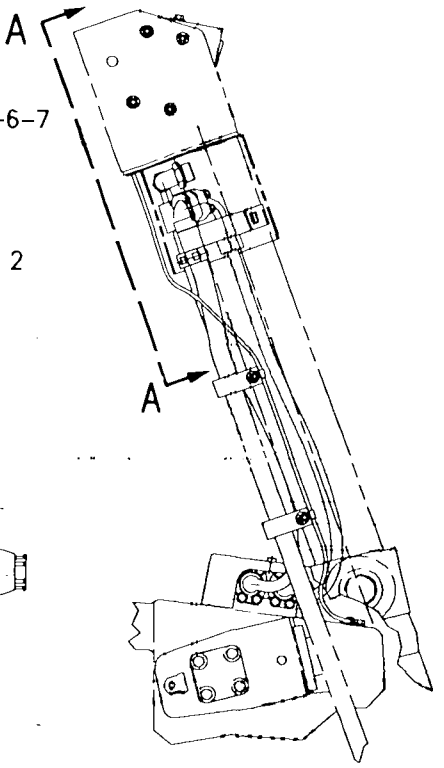

RIGHT SIDE VIEW
LIFT CYLINDERS

GRAPHIC #1

g00285042

126-8870 LIGHTING AR

PIN 2YN1-UP; 3ZN1-UP; 4MN1-UP; 5LN1-UP; 6JN1-UP; 7KN1-UP; 8LN1-UP; 9PN1-UP
WASTE DISPOSAL ARRANGEMENT
PART OF 128-4092 DISPOSAL AR
TYPE 1

SMCS-1429 i00599624

NOTE	REF NO	GRAPHIC REF	PART NUMBER	QTY	PART NAME 1 2 3 4 5 6 (PRODUCT LEVEL)	SEE PAGE
	1	1	7X-0365	4	BOLT (3/4-10X1.50IN)	
B	2	1	7X-0564	4	WASHER-HARD (3MM THK)	
B	3	1	5G-6401	2	BOSS	
	4	1	126-8872	2	HARNESS AS	
	5	1	8T-9399	2	BOLT (3/4-10X2.25IN)	
	6	1	8T-4994	2	WASHER (5MM THK)	
	7	1	1Q-3064	1	GUARD AS-RH	
		1	1F-0750	4	NUT-WELD (3/8-16 THD)	
		1	7T-1099	2	LINK	
	8	1	109-9957	1	BRACKET	
	9	1	9X-6772	12	STRAP-CABLE	
	10	1	5P-9085	2	CLIP (7.94MM ID)	
	11	1	111-8314	2	BRACKET AS	
		1	1F-0750	1	NUT-WELD (3/8-16 THD)	
		1	115-0617	1	BRACKET	
	12	1	5M-3062	6	BOLT (3/8-16X.750IN)	
	13	1	5P-2955	2	BOLT (5/16-18X2.50IN)	
	14	1	8T-4224	4	WASHER-HARD (2MM THK)	
	15	1	6V-8189	2	NUT (5/16-18 THD)	
Y	16	1	*114-5992*	2	LIGHTING GP-AUXILIARY	186
	17	1	6V-8801	4	NUT (3/8-16 THD)	
	18	1	5P-1075	10	WASHER-HARD (3MM THK)	
	19	1	4L-6454	14	BOLT (3/8-16X1.0IN)	
	20	1	8T-4896	2	WASHER-HARD (2.5MM THK)	
	21	1	104-6339	2	GUARD AS	
		1	7T-1099	4	LINK	
	22	1	126-8875	2	HARNESS AS	
Y	23	1	*106-8964*	2	LAMP GP-FLOOD	171
	24	1	1Q-3061	1	GUARD AS-LH	
		1	1F-0750	4	NUT-WELD (3/8-16 THD)	
		1	7T-1099	2	LINK	
B	25	1	109-9955	1	PLATE AS	
		1	7T-1099	3	LINK	
	26	1	5P-8522	2	GROMMET	
B	27	1	8T-8924	4	BOLT (3/4-10X2.50IN)	
B	28	1	7X-0369	4	BOLT (3/4-10X3.25IN)	
	29	1	110-0092	1	BRACKET	
B	30	1	111-6798	1	PLATE AS	
		1	7T-1099	3	LINK	
	31	1	6K-4935	4	BRACKET	
	32	1	6K-4934	4	CLIP	
	33	1	4D-7794	4	CLIP (10.0MM ID)	

B-USE AS REQUIRED
Y-SEPARATE ILLUSTRATION

126-8870 **LIGHTING AR** *(contd.)* i00599624

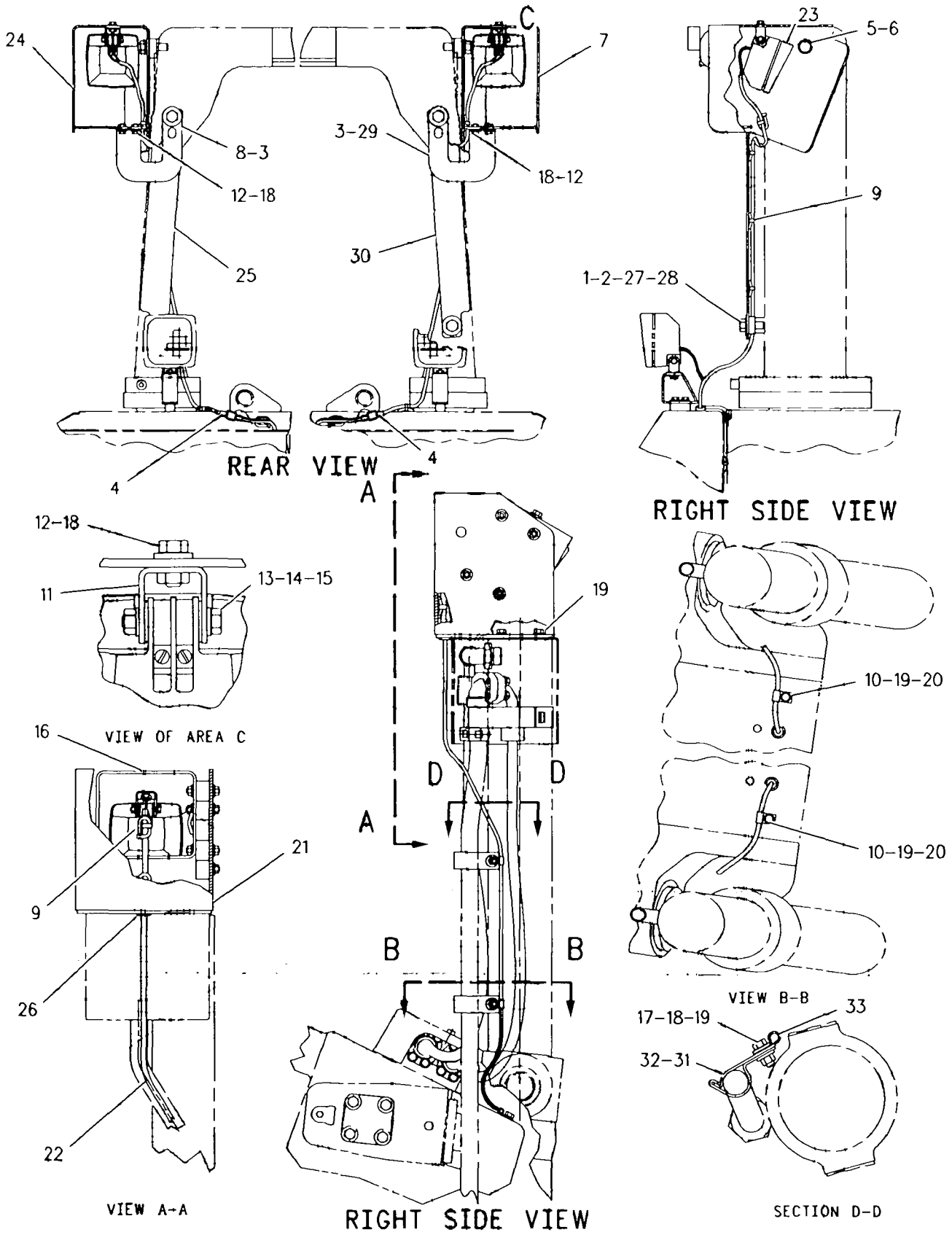

GRAPHIC #1 g00264066

126-8870 LIGHTING AR

PIN 2YN1-UP; 3ZN1-UP; 4MN1-UP; 5LN1-UP; 6JN1-UP; 7KN1-UP; 8LN1-UP; 9PN1-UP
WASTE DISPOSAL ARRANGEMENT
PART OF 128-4092 DISPOSAL AR
TYPE 2

SMCS-1429 i00958681

NOTE	REF NO	GRAPHIC REF	PART NUMBER	QTY	PART NAME 1 2 3 4 5 6 (PRODUCT LEVEL)	SEE PAGE
	1	1	7X-0365	4	BOLT (3/4-10X1.50IN)	
B	2	1	7X-0564	4	WASHER-HARD (3MM THK)	
B	3	1	5G-6401	2	BOSS	
C	4	1	151-6175	2	HARNESS AS	
	5	1	8T-9399	2	BOLT (3/4-10X2.25IN)	
	6	1	8T-4994	2	WASHER (5MM THK)	
	7	1	1Q-3064	1	GUARD AS-RH	
		1	1F-0750	4	NUT-WELD (3/8-16 THD)	
		1	7T-1099	2	LINK	
	8	1	109-9957	1	BRACKET	
	9	1	9X-6772	12	STRAP-CABLE	
	10	1	5P-9085	2	CLIP	
	11	1	111-8314	2	BRACKET AS	
		1	1F-0750	1	NUT-WELD (3/8-16 THD)	
		1	115-0617	1	BRACKET	
	12	1	5M-3062	6	BOLT (3/8-16X.75IN)	
	13	1	5P-2955	2	BOLT (5/16-18X2.50IN)	
	14	1	8T-4224	4	WASHER-HARD (2MM THK)	
	15	1	6V-8189	2	NUT (5/16-18 THD)	
CY	16	1	*125-2001*	2	LIGHTING GP-FLOOD	187
	17	1	6V-8801	4	NUT (3/8-16 THD)	
	18	1	5P-1075	10	WASHER-HARD (3MM THK)	
	19	1	4L-6454	14	BOLT (3/8-16X1.0IN)	
	20	1	8T-4896	2	WASHER-HARD (2.5MM THK)	
	21	1	104-6339	2	GUARD AS	
		1	7T-1099	4	LINK	
C	22	1	151-6176	2	HARNESS AS	
CY	23	1	*147-0319*	2	LAMP GP-FLOOD	175
	24	1	1Q-3061	1	GUARD AS-LH	
		1	1F-0750	4	NUT-WELD (3/8-16 THD)	
		1	7T-1099	2	LINK	
B	25	1	109-9955	1	PLATE AS	
		1	7T-1099	3	LINK	
	26	1	5P-8522	2	GROMMET	
B	27	1	8T-8924	4	BOLT (3/4-10X2.50IN)	
B	28	1	7X-0369	4	BOLT (3/4-10X3.25IN)	
	29	1	110-0092	1	BRACKET	
B	30	1	111-6798	1	PLATE AS	
		1	7T-1099	3	LINK	
	31	1	6K-4935	4	BRACKET	
	32	1	6K-4934	4	CLIP	
	33	1	4D-7794	4	CLIP (10.0MM ID)	

B-USE AS REQUIRED
C-CHANGE FROM PREVIOUS TYPE
Y-SEPARATE ILLUSTRATION

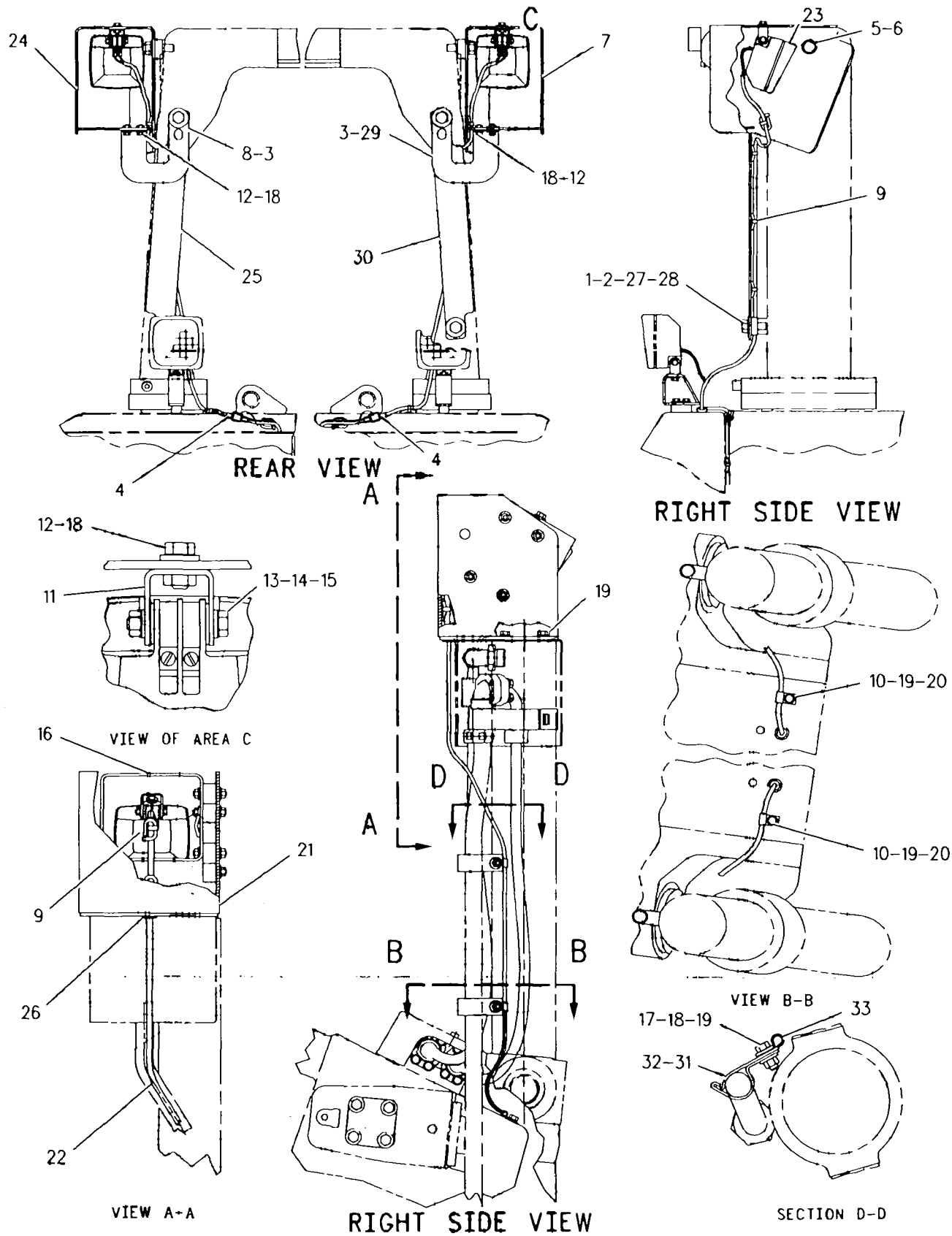

GRAPHIC #1

g00264066

ELECTRICAL AND STARTING SYSTEM

148-6352 LIGHTING AR-CUSTOM

PIN 2YN1-UP; 3ZN1-UP; 4MN1-UP; 5LN1-UP; 6JN1-UP; 7KN1-UP; 8LN1-UP; 9PN1-UP

SMCS-1429 i01009608

NOTE	REF NO	GRAPHIC REF	PART NUMBER	QTY	PART NAME 1 2 3 4 5 6 (PRODUCT LEVEL)	SEE PAGE
	1	1	111-6798	1	PLATE AS	
		1	7T-1099	3	LINK	
	2	1	109-9955	1	PLATE AS	
		1	7T-1099	3	LINK	
	3	1	148-8954	2	HARNESS AS	
	4	1	7X-0365	4	BOLT (3/4-10X1.50IN)	
	5	1	7X-0564	4	WASHER-HARD (3MM THK)	
	6	1	5G-6401	2	BOSS	
	7	1	7K-1181	16	STRAP-CABLE (4.00IN DIA)	
	8	1	111-8314	8	BRACKET AS	
	9	1	5P-2955	8	BOLT (5/16-18X2.50IN)	
	10	1	8T-4224	16	WASHER-HARD (2MM THK)	
	11	1	6V-8189	8	NUT (5/16-18 THD)	
	12	1	5M-3062	8	BOLT (3/8-16X.75IN)	
	13	1	8T-4896	12	WASHER-HARD (2.5MM THK)	
Y	14	1	149-1454	1	SWEEP AS	548
	15	1	148-8955	2	HARNESS AS	
Y	16	1	133-6336	6	LAMP GP-FLOOD	174
	17	1	9W-4361	8	MOUNT	
	18	1	5P-1075	10	WASHER-HARD (3MM THK)	
	19	1	6V-8801	8	NUT (3/8-16 THD)	
	20	1	114-2368	2	GUARD AS	
					(EACH INCLUDES)	
		1	7T-1099	1	LINK	
Y	21	1	133-6335	2	LAMP GP-FLOOD	173
	22	1	5P-9085	2	CLIP (7.94MM ID)	
	23	1	4L-6454	2	BOLT (3/8-16X1.0IN)	
	24	1	8T-8924	4	BOLT (3/4-10X2.50IN)	
	25	1	7X-0369	4	BOLT (3/4-10X3.25IN)	
	26	1	8E-1928	2	BRACKET AS	
	27	1	5S-7379	4	BOLT (3/8-16X.875IN)	
	28	1	6H-4005	2	GROMMET	
	29	1	8M-8948	1	FUSE (15 AMP)	
	30	1	126-8876	1	FILM-PANEL	
	31	1	8M-0456	1	FUSE (20 AMP)	

Y-SEPARATE ILLUSTRATION

148-6352 LIGHTING AR *(contd.)*

i01009608

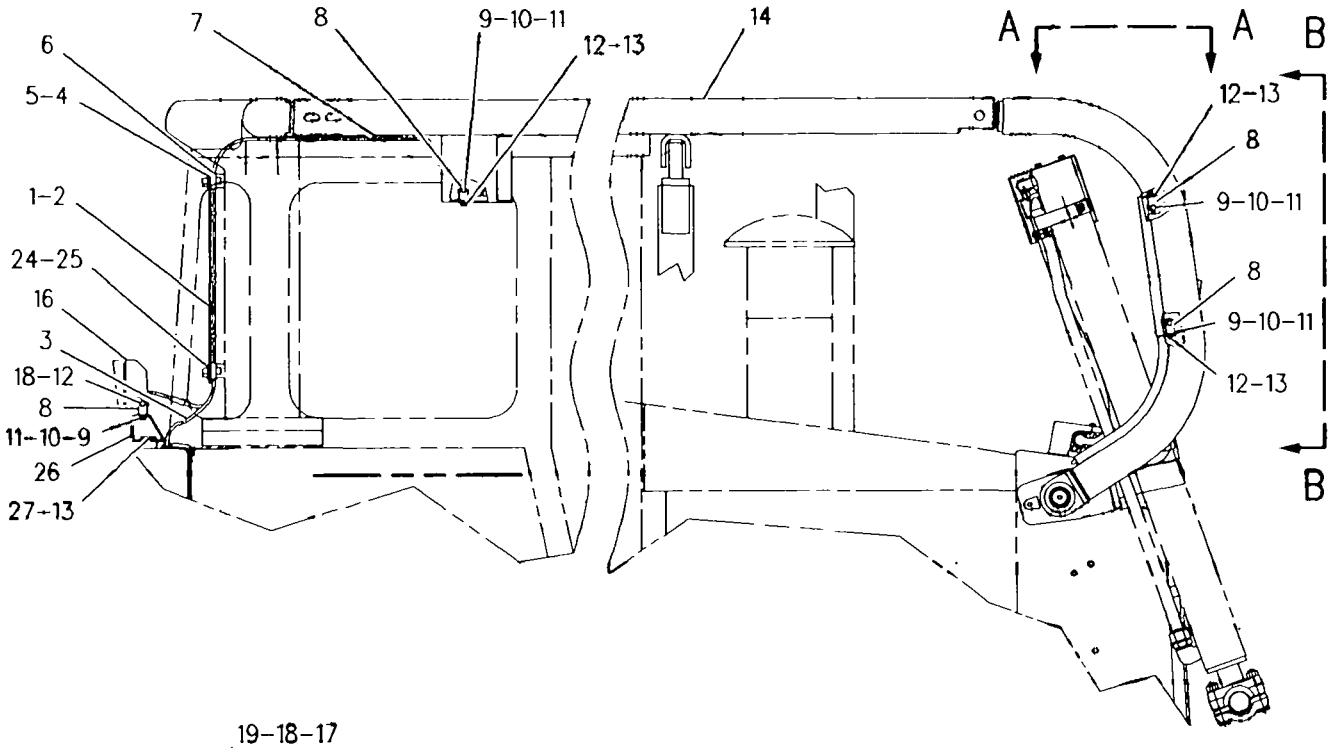

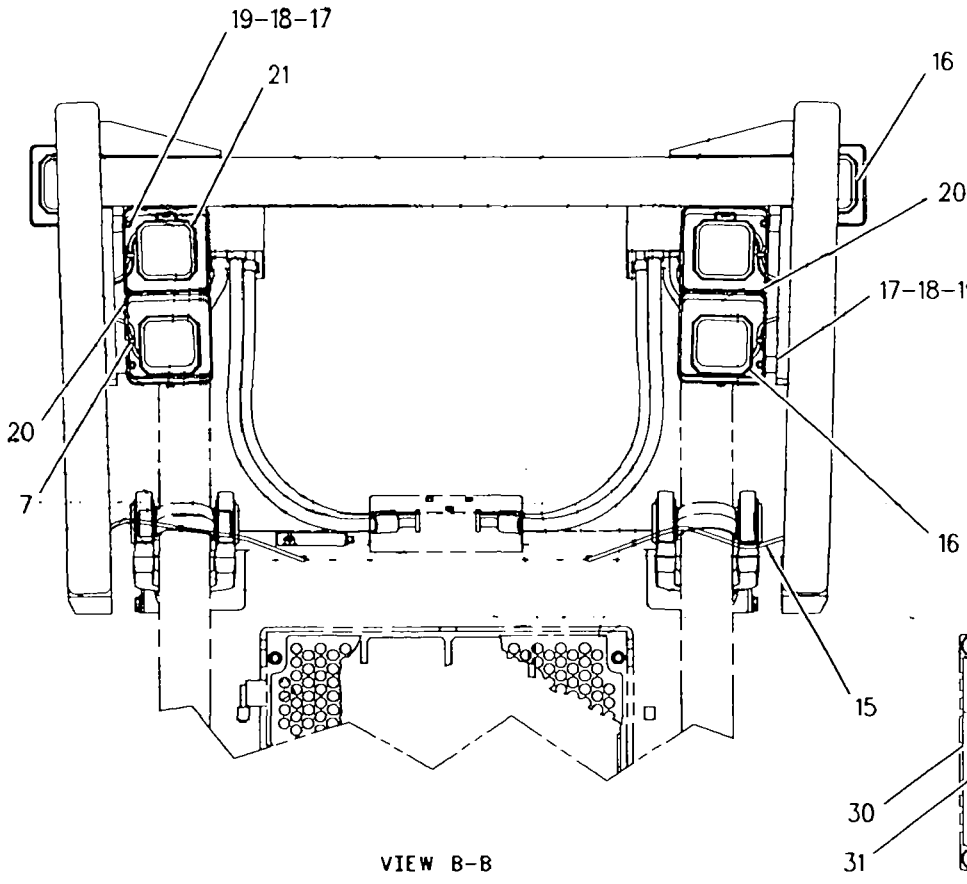

VIEW B-B

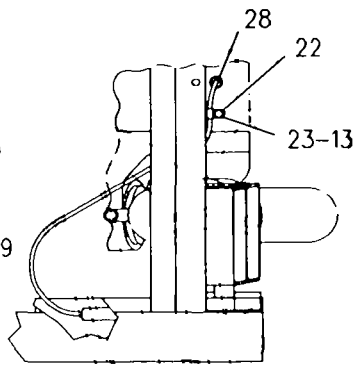

VIEW A-A

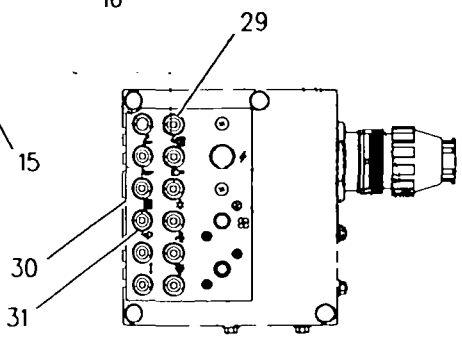

POWER RELAY BOX

GRAPHIC #1

g00288021

ELECTRICAL AND STARTING SYSTEM

114-5992 LIGHTING GP-AUXILIARY

PIN 2YN1-UP; 3ZN1-UP; 4MN1-UP; 5LN1-UP; 6JN1-UP; 7KN1-UP; 8LN1-UP; 9PN1-UP
PART OF 126-8867, 126-8868, 126-8870 LIGHTING AR

SMCS-1429 **i01024284**

NOTE	REF NO	GRAPHIC REF	PART NUMBER	QTY	PART NAME 1 2 3 4 5 6 (PRODUCT LEVEL)	SEE PAGE
	1	1	**114-2368**	1	GUARD AS	
		1	**7T-1099**	1	LINK	
B	2	1	**6V-8801**	8	NUT (3/8-16 THD)	
	3	1	**5P-1075**	8	WASHER-HARD (3MM THK)	
	4	1	**9W-4361**	4	MOUNT	
Y	5	1	*106-8964*	1	LAMP GP-FLOOD	171
	6	1	**5P-2955**	1	BOLT (5/16-18X2.50IN)	
	7	1	**5M-3062**	1	BOLT (3/8-16X.75IN)	
	8	1	**8T-4896**	1	WASHER-HARD (2.5MM THK)	
	9	1	**111-8314**	1	BRACKET AS	
		1	**9F-2978**	1	NUT-WELD (3/8-16 THD)	
	10	1	**6V-8189**	1	NUT (5/16-18 THD)	
	11	1	**8T-4224**	2	WASHER-HARD (2MM THK)	

B-USE AS REQUIRED
Y-SEPARATE ILLUSTRATION

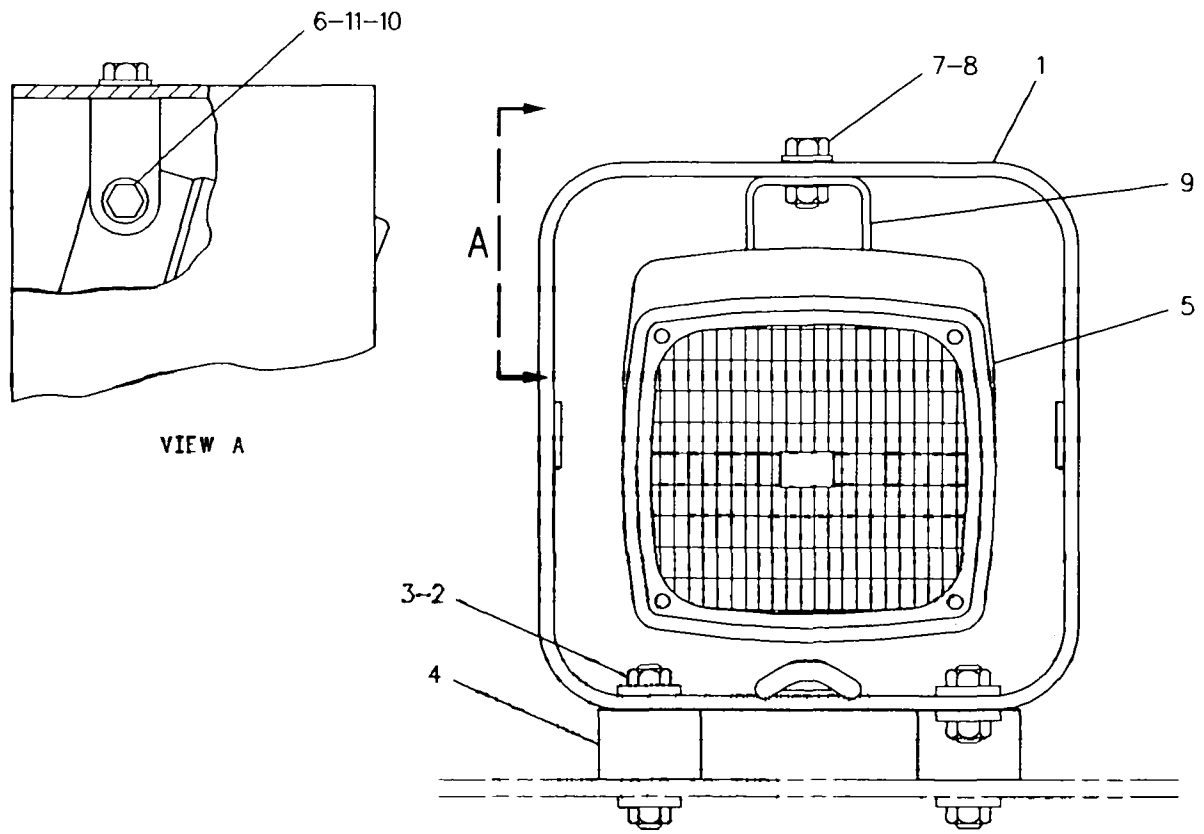

GRAPHIC #1 g00240196

ELECTRICAL AND STARTING SYSTEM

125-2001 LIGHTING GP-FLOOD

PIN 2YN1-UP; 3ZN1-UP; 4MN1-UP; 5LN1-UP; 6JN1-UP; 7KN1-UP; 8LN1-UP; 9PN1-UP
PART OF 126-8870 LIGHTING AR

SMCS-1429 **i00958775**

NOTE	REF NO	GRAPHIC REF	PART NUMBER	QTY	PART NAME 1 2 3 4 5 6 (PRODUCT LEVEL)	SEE PAGE
	1	1	**9W-4361**	4	MOUNT	
	2	1	**111-8314**	1	BRACKET AS	
	3	1	**1F-0750**	1	NUT-WELD (3/8-16 THD)	
Y	4	1	**147-0319**	1	LAMP GP-FLOOD	175
	5	1	**5M-3062**	1	BOLT (3/8-16X.75IN)	
	6	1	**5P-1075**	9	WASHER-HARD (3MM THK)	
	7	1	**5P-2955**	1	BOLT (5/16-18X2.50IN)	
	8	1	**6V-8189**	1	NUT (5/16-18 THD)	
	9	1	**6V-8801**	8	NUT (3/8-16 THD)	
	10	1	**8T-4224**	2	WASHER-HARD (2MM THK)	
	11	1	**114-2368**	1	GUARD AS	
		1	**7T-1099**	1	LINK	

Y-SEPARATE ILLUSTRATION

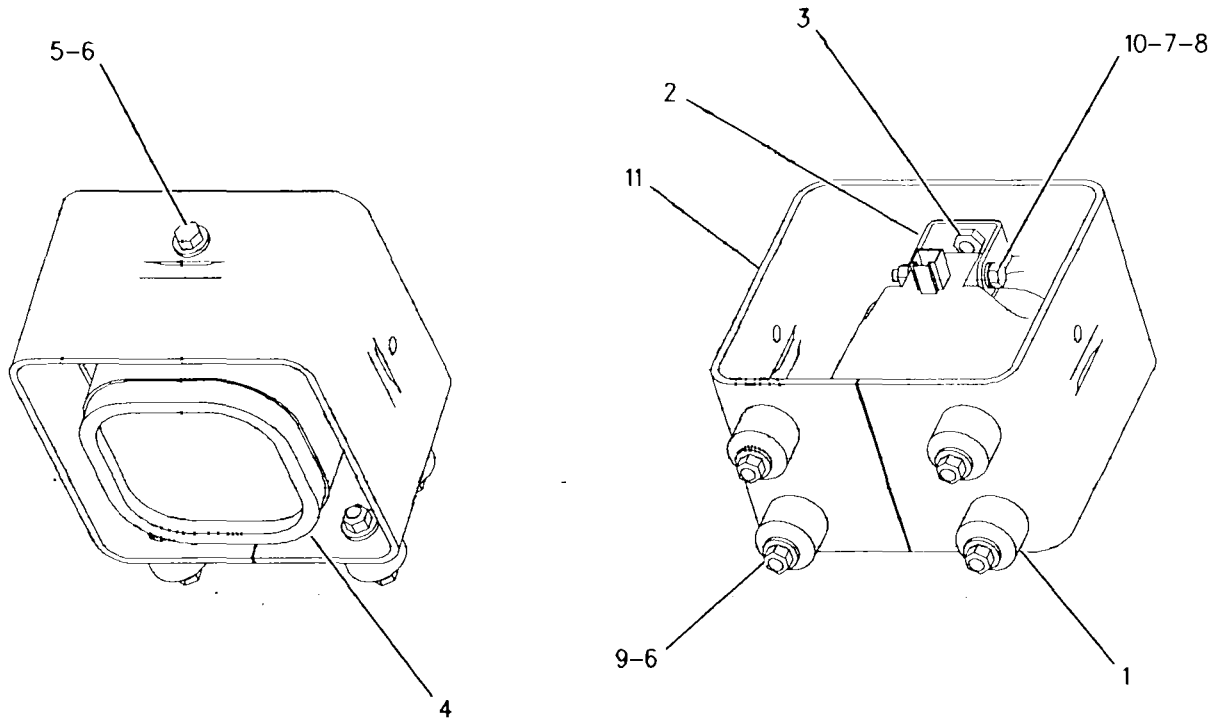

GRAPHIC #1 g00438569

ELECTRICAL AND STARTING SYSTEM

128-3172 MOTOR GP-ELECTRIC—CUSTOM*R

PIN 2YN1-UP; 3ZN1-UP; 4MN1-UP; 5LN1-UP; 6JN1-UP; 7KN1-UP; 8LN1-UP; 9PN1-UP
PART OF 128-3157 PRELUBE & FAST FILL OIL AR, 128-3156 PRELUBE AR-ENGINE

SMCS-1603 i00604349

NOTE	REF NO	GRAPHIC REF	PART NUMBER	QTY	PART NAME 1 2 3 4 5 6 (PRODUCT LEVEL)	SEE PAGE
	1	1	6V-8188	3	NUT (1/2-13 THD)	
	2	1	7X-0562	3	WASHER-HARD (0.8MM THK)	
	3	1	4B-2049	2	NUT (10-32 THD)	
	4	1	8T-0328	2	WASHER-HARD (1MM THK)	
	5	1	8F-1434	2	LOCKWASHER (5MM ID)	
	6	1	8T-4205	4	WASHER-HARD (2MM THK)	
	7	1	5S-7349	4	BOLT (1/4-20X0.5IN)	
	8	1	9X-9511	1	SOLENOID AS	
	9	1	111-9863	1	COVER-STARTER	
	10	1	111-9865	1	GASKET-STARTING MOTOR	
	11	1	3T-3422	1	WIRE AS	
		1	2L-8066	1	TERMINAL (10 GA)	
		1	2L-8071	1	TERMINAL (10 GA)	
BD		1	5P-5621		WIRE (12 GA) (3DM)	
	12	1	4M-1827	1	RETAINER-SPRING	
	13	1	8T-8566	1	TERMINAL AS	
	14	1	8H-0707	4	BOLT (1/4-20X0.9IN)	
	15	1	9M-7609	1	SPRING	
	16	1	7T-3271	1	CONNECTOR	
	17	1	8T-8569	1	INSULATOR-TERMINAL	
	18	1	7T-3451	1	INSULATOR-TERMINAL	
	19	1	7T-3278	1	HOLDER AS-BRUSH	
	20	1	7T-3277	1	COIL AS-FIELD	
	21	1	7T-3454	1	INSULATOR	
	22	1	3F-0379	8	SCREW-POLE SHOE	
	23	1	8H-1141	4	SHOE-POLE	
	24	1	140-7437	1	ARMATURE AS-STARTER	
	25	1	7T-3270	1	PLUNGER AS	
	26	1	3E-7775	1	HOUSING AS	
	27	1	6N-3827	1	DRIVE AS-MOTOR	
	28	1	036-9823	5	BOLT	
	29	1	3T-3434	6	PLUG (12.7MM OD SPHERE)	
	30	1	7X-3373	6	BOLT (5/16-18X.88IN)	
	31	1	7T-3974	1	HOUSING AS-DRIVE	
	32	1	2H-3429	2	RING-RETAINING	
	33	1	4M-1831	1	PLUG-LEVER HOUSING	
	34	1	7L-2894	1	GASKET	
	35	1	036-9821	1	WASHER	
	36	1	7T-3269	1	BOOT	
	37	1	4M-1828	1	RETAINER-SPRING	
	38	1	140-7436	1	HOUSING AS-STARTER	
					AVAILABLE REPAIR KIT(S):	
			8C-3655	1	KIT-BRUSH (STARTER BRUSH KIT) (INCLUDES SPRINGS, BRUSH ASSEMBLIES & SCREWS)	
			7T-3267	1	KIT-BUSHING (STARTER BUSHING KIT)	
			7T-3268	1	KIT-LEVER (STARTER LEVER KIT) (INCLUDES RETAINER, LEVER ASSEMBLIES, NUT & SEALS)	
			8T-9884	1	KIT-INSULATOR (STARTER INSULATOR KIT) (INCLUDES BUSHING & INSULATORS)	
			117-0610	1	KIT-BEARING (STARTER BEARING KIT) (INCLUDES THRUST WASHERS AND THRUST BEARING)	
			111-9866	1	GEAR KIT-STARTING MOTOR (STARTER GEAR KIT) (INCLUDES GEARS)	

B-USE AS REQUIRED
D-ORDER BY THE METER

128-3172 MOTOR GP-ELECTRIC *(contd.)* i00604349

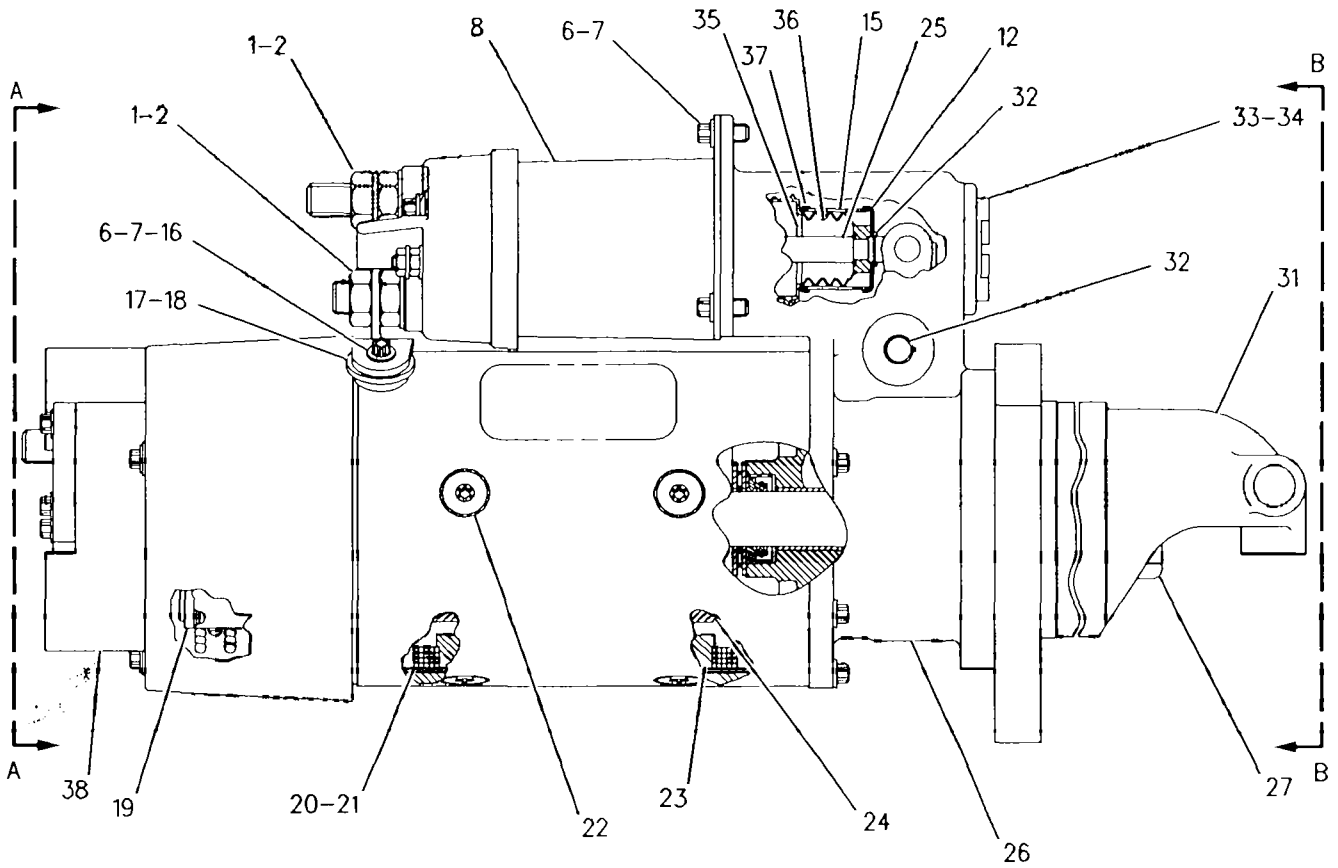

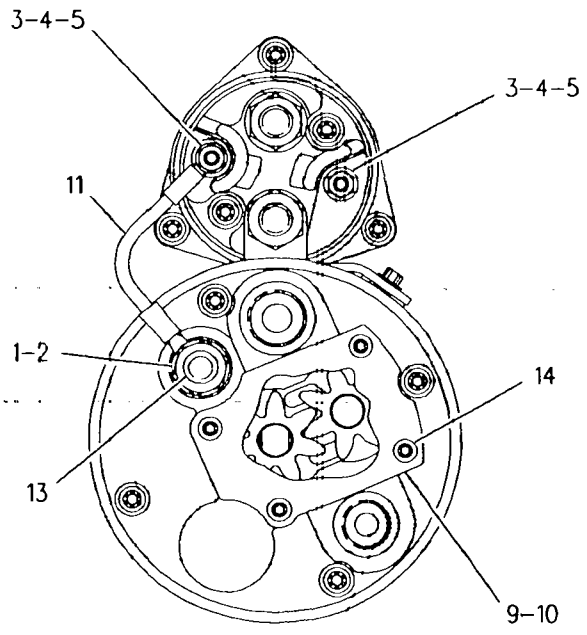

VIEW A-A

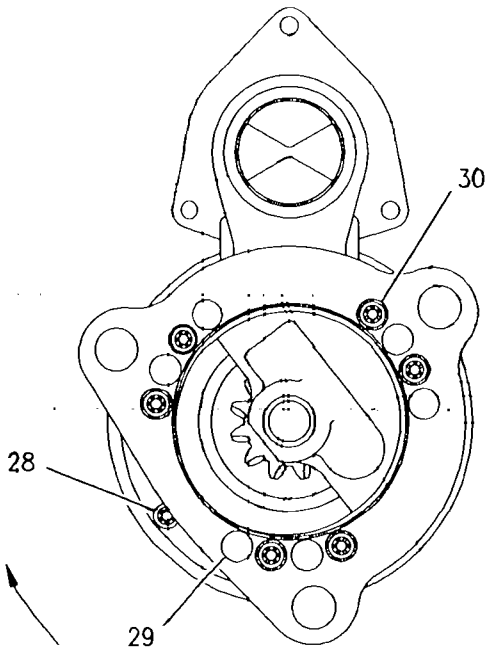

VIEW B-B

GRAPHIC #1 g00267833

ELECTRICAL AND STARTING SYSTEM

2W-0176 MOUNTING GP-ALTERNATOR

PIN 2YN1-UP; 3ZN1-UP; 4MN1-UP; 5LN1-UP; 6JN1-UP; 7KN1-UP; 8LN1-UP; 9PN1-UP. S/N 6NC1-UP; 08Z93150-99999
PART OF 108-1078, 8Q-1761, 8Q-1762, 8Q-1763 ENGINE AR

SMCS-1405 **i00687323**

NOTE	REF NO	GRAPHIC REF	PART NUMBER	QTY	PART NAME 1 2 3 4 5 6 (PRODUCT LEVEL)	SEE PAGE
C	1	1	0T-0055	1	BOLT (3/8-16X4.25IN)	
C	2	1	9S-8752	3	NUT-FULL (3/8-16 THD)	
C	3	1	1W-4972	1	BRACKET	
C	4	1	5M-2894	4	WASHER (2.5MM THK)	
C	5	1	8S-9191	2	BOLT (3/8-16X4IN)	
B	6	1	0T-0065	1	BOLT (3/8-16X3.5IN)	
B	7	1	8S-9191	1	BOLT (3/8-16X4IN)	
B	8	1	9S-8752	1	NUT-FULL (3/8-16 THD)	
B	9	1	5M-2894	1	WASHER (2.5MM THK)	
	10	1	0S-1619	1	BOLT (3/8-16X3IN)	

B-USE AS REQUIRED
C-CHANGE FROM PREVIOUS TYPE

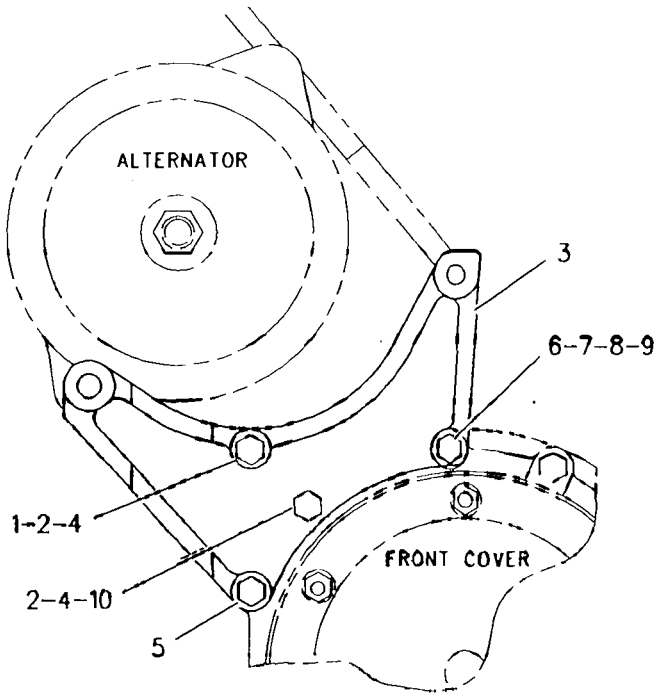

GRAPHIC #1 g00263978

3E-8680 SWITCH AS-HANDLE

PIN 5LN1-UP

PART OF 161-1176 LINKAGE GP-IMPLEMENT

SMCS-1435 i01025974

NOTE	REF NO	GRAPHIC REF	PART NUMBER	QTY	PART NAME 1 2 3 4 5 6 (PRODUCT LEVEL)	SEE PAGE
	1	1	2S-6218	2	SCREW-MACHINE	
		1	3L-8187	2	LOCKWASHER (#6 INT)	
	2	1	6V-1965	1	SWITCH & COVER AS (SINGLE/DUAL TILT)	
	3	1	6V-1966	1	SWITCH AS (PITCH CONTROL)	
BD	4	1	8T-6342		TUBE	
	5	1	7T-3810	1	LEVER	
	6	1	7N-7782	1	HOUSING-PLUG (1 PIN, 2 SOCKET)	
	7	1	7N-7780	1	PIN-CONNECTOR (BLADE)	
	8	1	7N-7779	2	SOCKET	

B-USE AS REQUIRED
D-ORDER BY THE METER

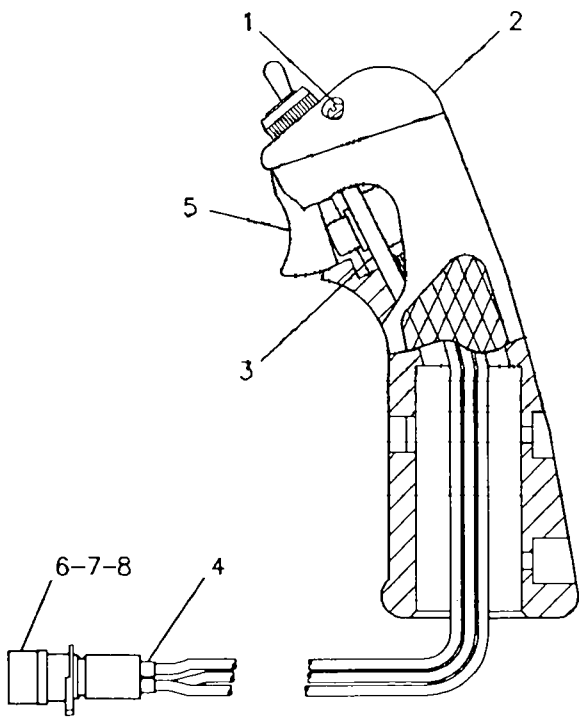

GRAPHIC #1 g00230829

9G-7641 SWITCH GP-START

PIN 2YN1-UP; 4MN1-UP; 6JN1-UP; 8LN1-UP

PART OF 142-1654 PANEL GP-INSTRUMENT

SMCS-1416 **i01017742**

NOTE	REF NO	GRAPHIC REF	PART NUMBER	QTY	PART NAME 1 2 3 4 5 6 (PRODUCT LEVEL)	SEE PAGE
	1	1	6V-8362	4	SCREW-MACHINE (8-32X.31IN)	
	2	1	9B-7233	4	LOCKWASHER (NO.8)	
	3	1	7T-6799	1	NUT-MOUNTING	
5P8500 KEY IS REQUIRED E-ORDER BY THE CENTIMETER						

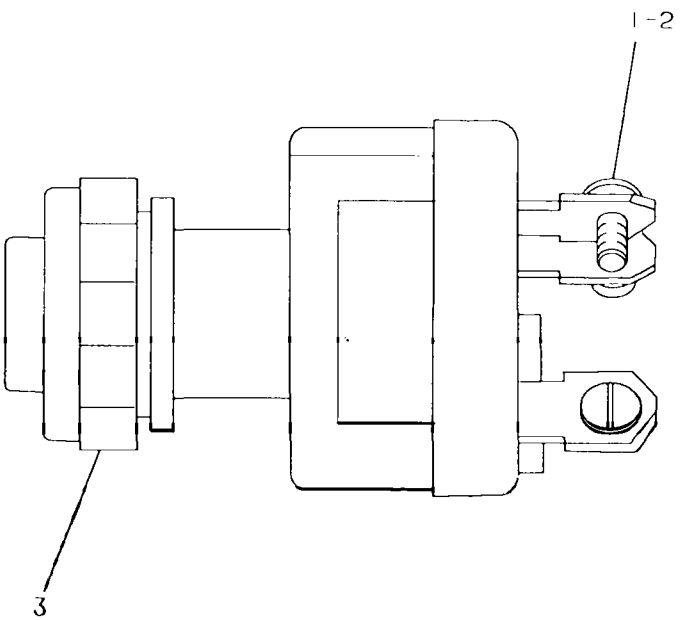

GRAPHIC #1 g00081868

POWER TRAIN

108-6983 CASE & PARTS GP-PLANETARY

S/N 1GY1-UP

PART OF 116-4652 TRANSMISSION AR

SMCS-3064 i00903806

NOTE	REF NO	GRAPHIC REF	PART NUMBER	QTY	PART NAME 1 2 3 4 5 6 (PRODUCT LEVEL)	SEE PAGE
	1	1	9S-6130	3	PLUG-O-RING (1-5/8-12 THD)	
	2	1	2S-4078	3	SEAL-O-RING (37.46MM ID)	
	3	1	108-7748	1	COVER-TRANSMISSION CASE	
		1	3T-9922	1	GASKET-COVER	
	4	1	9S-4190	1	PLUG-O-RING (7/16-20 THD)	
		1	2M-9780	1	SEAL-O-RING (19.18MM ID)	
	5	1	3J-1907	1	SEAL-O-RING (11.89MM ID)	
	6	1	6V-0852	1	CAP-DUST	
	7	1	6V-3965	1	NIPPLE AS	
	8	1	8M-2530	4	BOLT-12 POINT HEAD (1/2-13X1.25IN)	
	9	1	4H-5440	1	COVER-PUMP INLET	
		1	3S-7781	1	GASKET	
	10	1	5D-0353	4	BOLT-LOCKING (3/8-16X1IN)	
	11	1	9G-8615	1	COVER	
		1	8P-0058	1	GASKET-COVER	
	12	1	030-8535	12	BOLT-LOCKING (3/8-16X.875IN)	
	13	2	108-7747	1	COVER-TRANSMISSION	
	14	2	9M-9647	3	SEAL (40.64MM ID)	
	15	2	5P-8998	1	NIPPLE	
	16	2	9S-7710	1	ELBOW-FLARED	
	17	2	7T-8875	1	TUBE AS	
	18	2	5K-9988	1	TEE-INVERTED FLARED	
	19	2	7T-9133	1	CASE AS	
	20	2	4B-9785	1	BALL	
	21	2	0L-1156	1	PIN	
	22	2	1A-0646	1	DOWEL	
	23	2	3F-3442	2	DOWEL (49MM OAL)	
		2	4B-9782	1	BALL (9.52MM)	
	24	2	7T-8876	1	TUBE AS	
	25	2	5K-9246	1	CONNECTOR-FLARED	
	26	2	9W-5334	1	TUBE AS	
	27	2	031-0218	1	BOLT-LOCKING	
	28	2	9P-1475	1	SLEEVE	
	29	2	7J-8611	1	ELBOW (1/4-18 NPTF THD)	
	30	2	0S-1585	21	BOLT (1/2-13X1.50IN)	
		2	5P-8245	21	WASHER (3MM THK)	
	31	2	5P-4057	1	SEAL-O-RING	
	32	2	8M-5661	1	SEAL-O-RING (47.22MM ID)	
	33	2	8S-9130	1	SCREEN-SUCTION	
	34	2	8M-4432	2	SEAL-O-RING	
	35	2	5K-5120	1	STRIP	
	36	2	9W-4159	1	TUBE AS	
	37	2	8H-1603	1	CLIP (9.52MM ID)	
	38	2	0T-0102	1	BOLT (3/8-16X0.625IN)	
		2	5M-2894	1	WASHER (2.5MM THK)	
	39	2	6K-8498	1	TEE-FLARED	
	40	2	6V-0484	1	ADAPTER-O-RING	
	41	2	3J-1907	2	SEAL-O-RING (11.89MM ID)	
	42	2	6V-0852	1	CAP-DUST	
		2	6V-3965	1	NIPPLE AS	

108-6983 CASE & PARTS GP-PLANETARY *(contd.)* i00903806

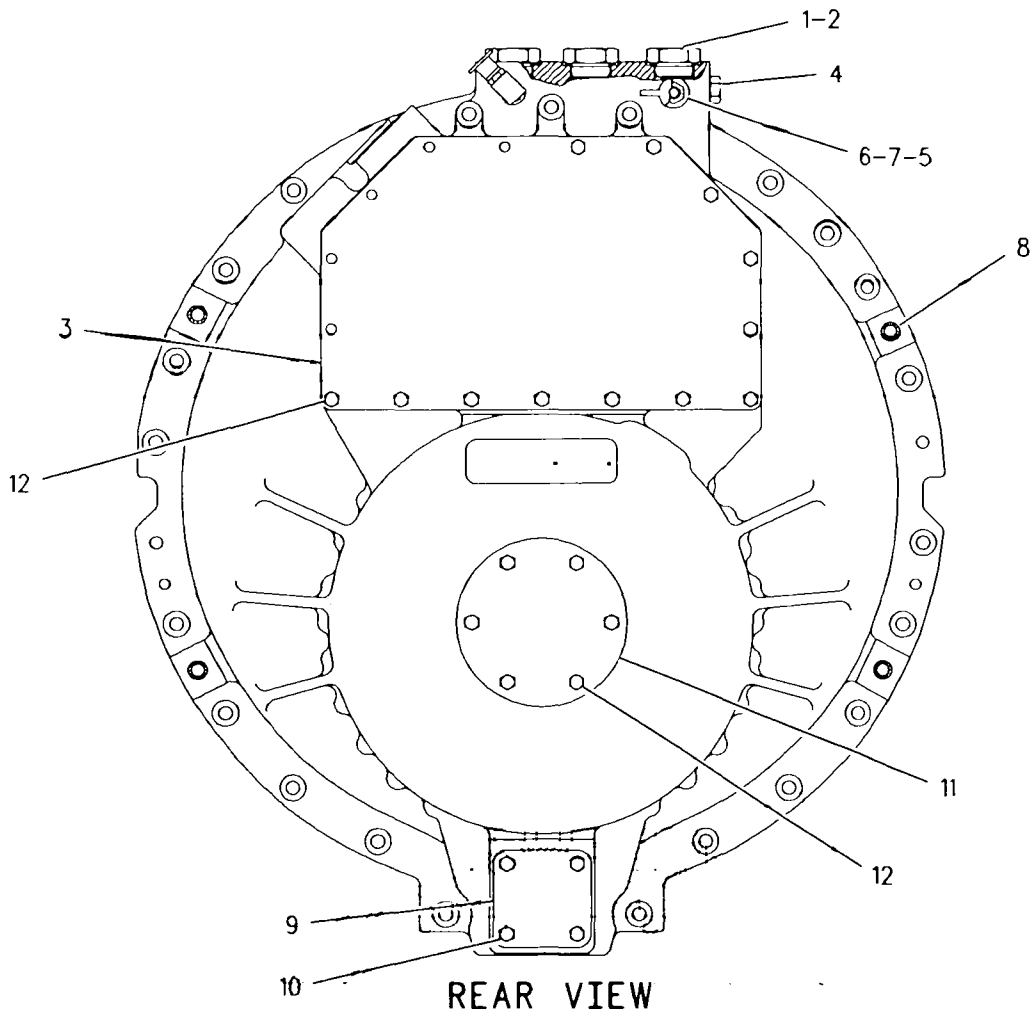

GRAPHIC #1 g00263603

108-6983 CASE & PARTS GP-PLANETARY *(contd.)* i00903806

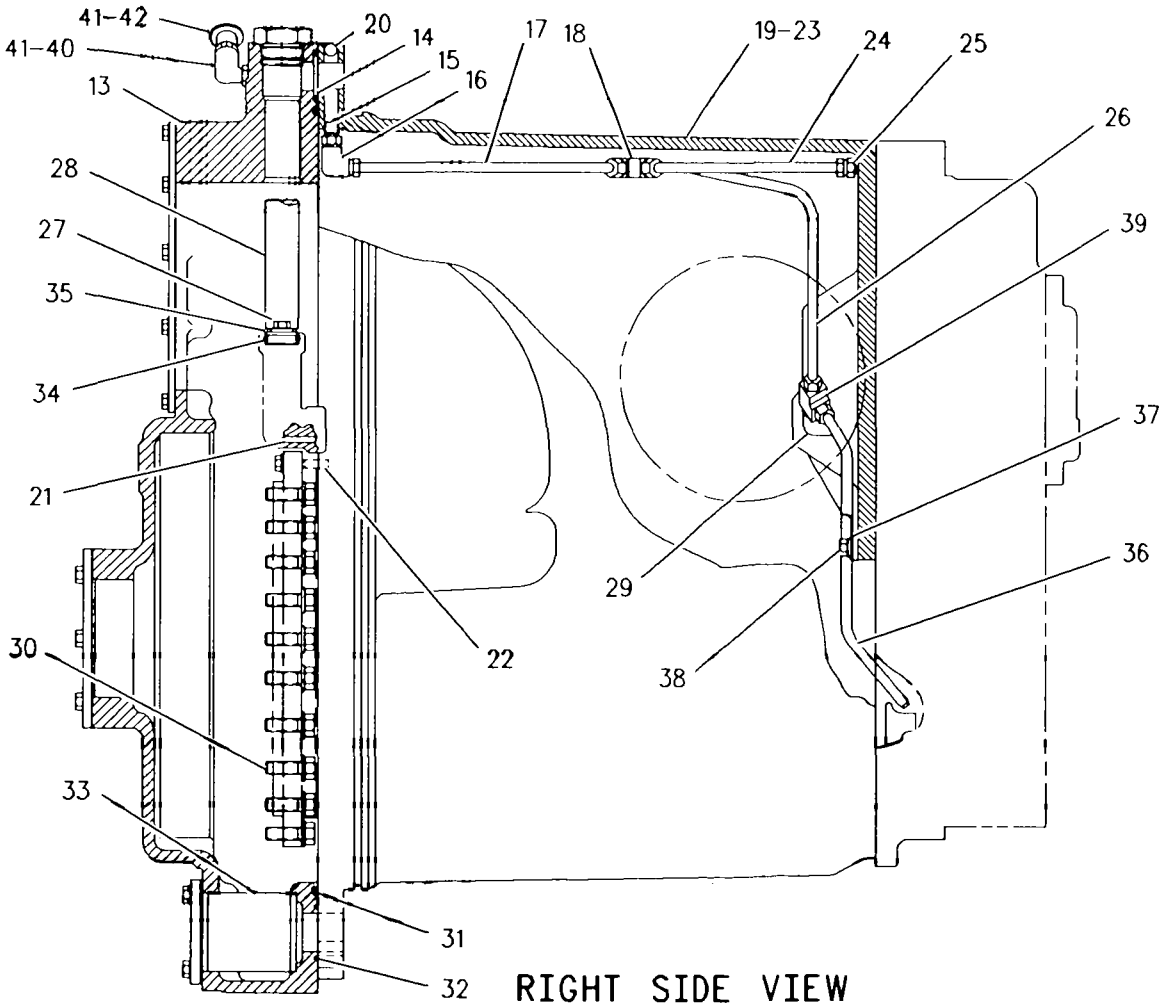

RIGHT SIDE VIEW

GRAPHIC #2

g00457816

108-7011 CONTROL GP-TRANSMISSION HYD

S/N 1GY1-UP

PART OF 116-4652 TRANSMISSION AR

TYPE 1

SMCS-3073 i00691162

NOTE	REF NO	GRAPHIC REF	PART NUMBER	QTY	PART NAME 1 2 3 4 5 6 (PRODUCT LEVEL)	SEE PAGE
Y	1	1	*109-4365*	1	VALVE GP-RELIEF	393
	2	1	**0S-0509**	3	BOLT (3/8-16X.75IN)	
	3	1	**031-0218**	2	BOLT-LOCKING (3/8-16X.5IN)	
	4	1	**5K-5120**	2	STRIP	
	5	1	**0T-0065**	3	BOLT (3/8-16X3.5IN)	
	6	1	**8M-4432**	4	SEAL-O-RING (26.57MM ID)	
	7	1	**0S-1594**	2	BOLT (3/8-16X1IN)	
	8	1	**104-6730**	1	GASKET	
	9	1	**104-6729**	1	RETAINER	
	10	1	**2H-3932**	2	SEAL (28.17MM ID)	
	11	1	**142-8076**	1	HARNESS AS	
	12	1	**0S-1619**	4	BOLT (3/8-16X3IN)	
	13	1	**5M-2894**	10	WASHER (2.5MM THK)	
Y	14	1	*118-1336*	5	VALVE GP-MODULATING	245
	15	1	**110-4282**	1	CLIP AS-CONNECTING	
	16	1	**9M-1974**	10	WASHER-HARD (2MM THK)	
	17	1	**1D-4540**	10	BOLT (5/16-18X2.75IN)	
	18	1	**124-5332**	1	ELBOW	
	19	1	**110-2836**	2	SLEEVE	
	20	1	**144-7871**	1	HARNESS AS	
	21	1	**110-4278**	1	CLIP AS-CONNECTING	

Y-SEPARATE ILLUSTRATION

108-7011 CONTROL GP-TRANSMISSION HYD *(contd.)* i00691162

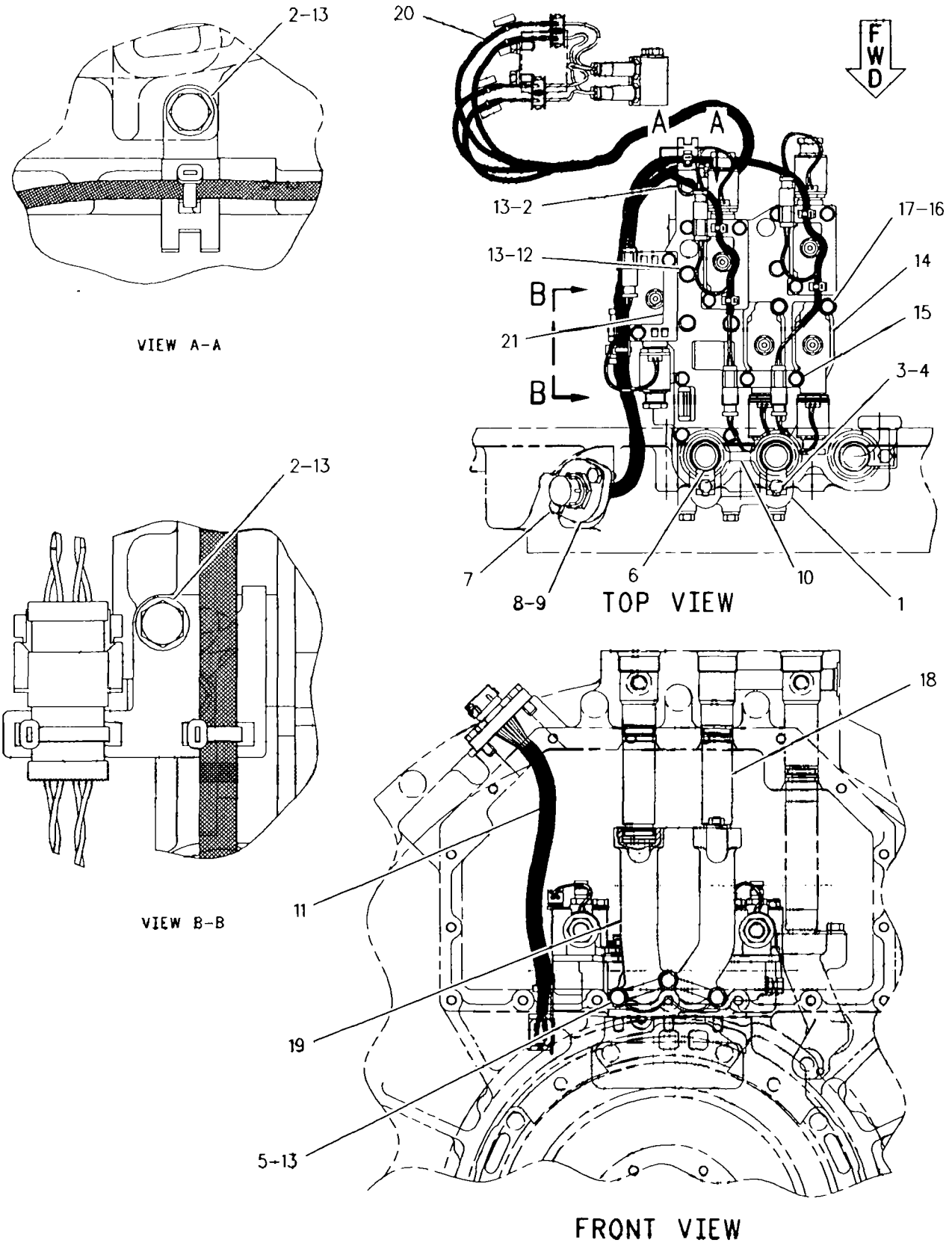

GRAPHIC #1 g00297362

108-7011 CONTROL GP-TRANSMISSION HYD

S/N 1GY1-UP

PART OF 116-4652 TRANSMISSION AR

TYPE 2

SMCS-3073 i00903809

NOTE	REF NO	GRAPHIC REF	PART NUMBER	QTY	PART NAME 1 2 3 4 5 6 (PRODUCT LEVEL)	SEE PAGE
Y	1	1	*109-4365*	1	VALVE GP-RELIEF	393
	2	1	**0S-0509**	3	BOLT	
	3	1	**031-0218**	2	BOLT-LOCKING (3/8-16X.5IN)	
	4	1	**5K-5120**	2	STRIP	
	5	1	**0T-0065**	3	BOLT (3/8-16X3.5IN)	
	6	1	**8M-4432**	4	SEAL-O-RING (26.57MM ID)	
	7	1	**0S-1594**	2	BOLT	
	8	1	**104-6730**	1	GASKET	
	9	1	**104-6729**	1	RETAINER	
	10	1	**2H-3932**	2	SEAL (28.17MM ID)	
	11	1	**142-8076**	1	HARNESS AS	
	12	1	**0S-1619**	4	BOLT	
	13	1	**5M-2894**	10	WASHER (2.5MM THK)	
CY	14	1	**159-0931**	5	VALVE GP-MODULATING	247
	15	1	**110-4282**	1	CLIP AS-CONNECTING	
	16	1	**9M-1974**	10	WASHER-HARD (2MM THK)	
	17	1	**1D-4540**	10	BOLT (5/16-18X2.75IN)	
	18	1	**124-5332**	1	ELBOW	
	19	1	**110-2836**	2	SLEEVE	
	20	1	**144-7871**	1	HARNESS AS	
	21	1	**110-4278**	1	CLIP AS-CONNECTING	

C-CHANGE FROM PREVIOUS TYPE
Y-SEPARATE ILLUSTRATION

108-7011 CONTROL GP-TRANSMISSION HYD *(contd.)* i00903809

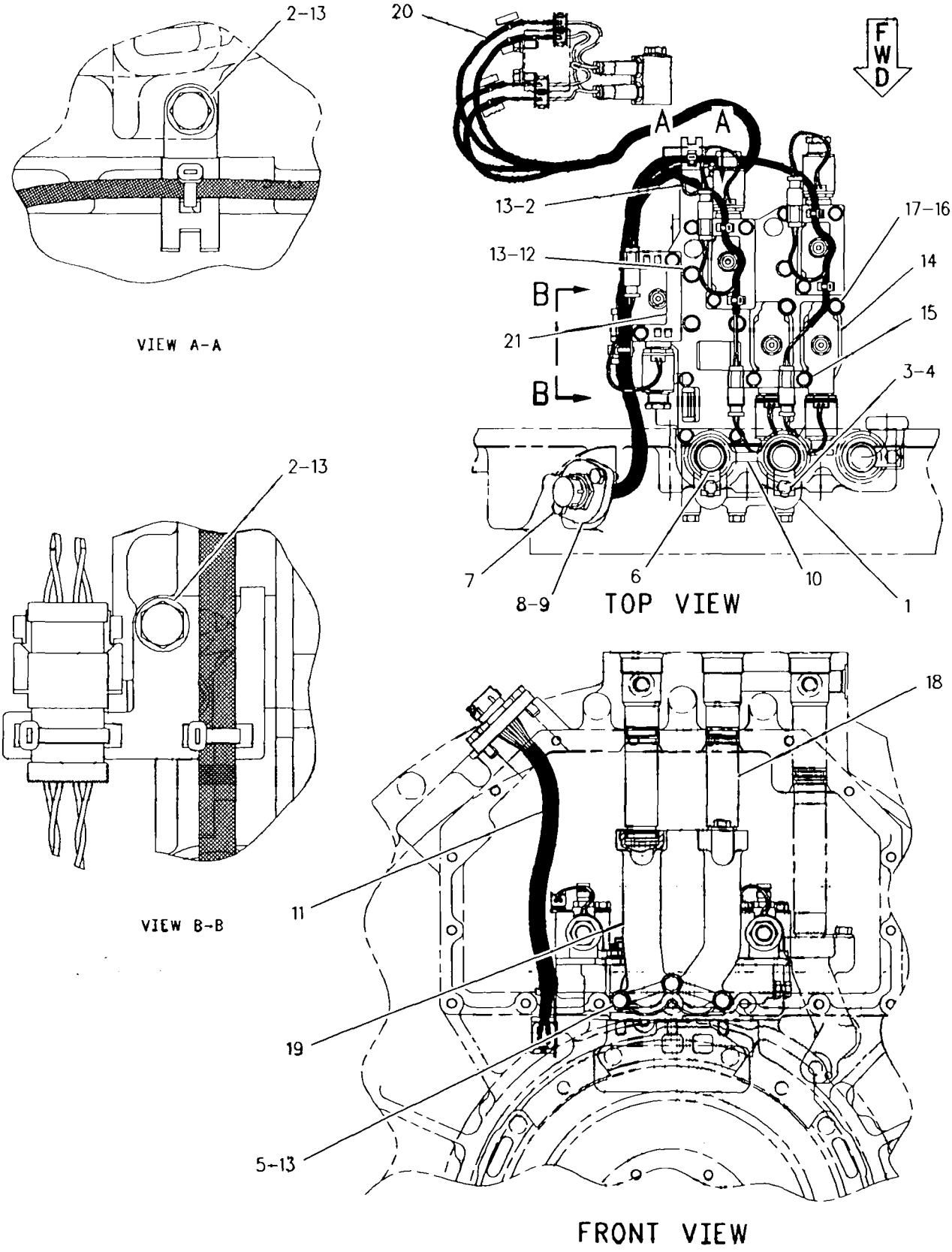

GRAPHIC #1 g00297362

POWER TRAIN

1Q-2274 FINAL DRIVE GP

PIN 8LN1-UP; 9PN1-UP

PART OF 134-2922 GUARD AR-FINAL DRIVE

SMCS-3259, 3278, 4050, 4054, 4055, 4056, 4066, 4074, 4075, 4084, 4091, 4092, 4093, 4094

i00586109

NOTE	REF NO	GRAPHIC REF	PART NUMBER	QTY	PART NAME 1 2 3 4 5 6 (PRODUCT LEVEL)	SEE PAGE
	1	1,2	8C-6913	26	WASHER-HARD (4MM THK)	
	2	1,2	6V-0329	1	CONE-ROLLER BEARING	
	3	1,2	6V-0330	1	CUP-ROLLER BEARING	
	4	1,2	9G-9181	1	RETAINER	
	5	1,2	8G-8844	1	LOCKRING	
	6	1,2	9G-8639	1	GEAR (94 TEETH)	
	7	1,2	8T-9399	33	BOLT (3/4-10X2.25IN)	
	8	1,2	8T-4994	33	WASHER (5MM THK)	
	9	1,2	9G-8638	3	GEAR (40 TEETH)	
	10	1,2	1B-3978	6	CUP-ROLLER BEARING	
	11	1,2	1B-3980	6	CONE-ROLLER BEARING	
	12	1,2	9G-9183	3	SHAFT	
	13	1,2	7X-0346	3	BOLT (5/8-11X2IN)	
	14	1,2	8T-8919	2	BOLT (1/2-13X1.75IN)	
	15	1,2	2P-3696	3	RETAINER	
	16	1,2	2B-0947	10	BOLT (1/2-13X2.25IN)	
	17	1,2	4L-6454	3	BOLT (3/8-16X1.0IN)	
	18	1,2	8T-4896	3	WASHER-HARD (2.5MM THK)	
	19	1,2	8G-8845	1	COVER	
	20	1,2	2R-0098	1	SEAL-O-RING	
Y	21	1,2	*8E-9041*	1	SEGMENT GP-SPROCKET	243
	22	1,2	1P-9005	1	SEAL-O-RING	
	23	1,2	2S-4078	1	SEAL-O-RING (37.46MM ID)	
	24	1,2	6V-0439	1	PLUG	
	25	1,2	9G-9175	1	CARRIER	
	26	1,2	9S-4185	1	PLUG-O-RING (3/4-16 THD)	
	27	1,2	3K-0360	1	SEAL-O-RING (16.36MM ID)	
	28	1,2	9H-3360	1	SEAL-O-RING	
	29	1,2	8E-2748	1	HUB-REACTION	
	30	1,2	9X-7671	1	SEAL-LIP	
	31	1,2	6V-0327	1	CUP-ROLLER BEARING	
	32	1,2	6V-0328	1	CONE-ROLLER BEARING	
	33	1,2	8T-4223	2	WASHER-HARD (3MM THK)	
	34	1,2	1D-4628	26	BOLT (7/8-9X3.25IN)	
	35	1,2	1Q-2266	1	HUB AS	
	36	1,2	6Y-5024	1	GUARD-DUO-CONE SEAL	
	37	1,2	6Y-0860	1	SEAL GP-DUO-CONE	
	38	1,2	1Q-2267	1	SPINDLE AS	
	39	1,2	1Q-2252	1	GUARD-CONE SEAL	

Y-SEPARATE ILLUSTRATION

1Q-2274 FINAL DRIVE GP *(contd.)* i00586109

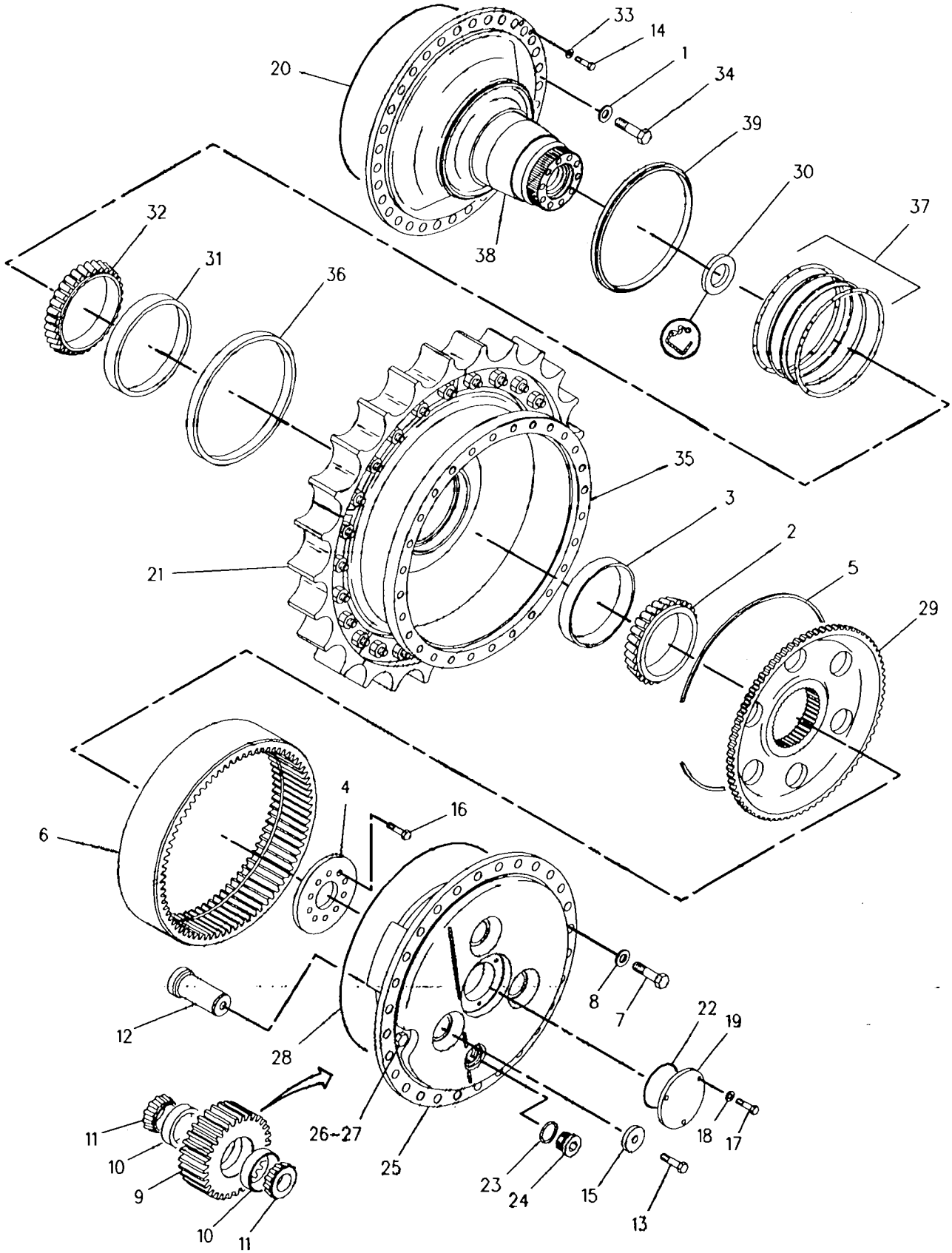

GRAPHIC #1 g00264778

1Q-2274 FINAL DRIVE GP *(contd.)* i00586109

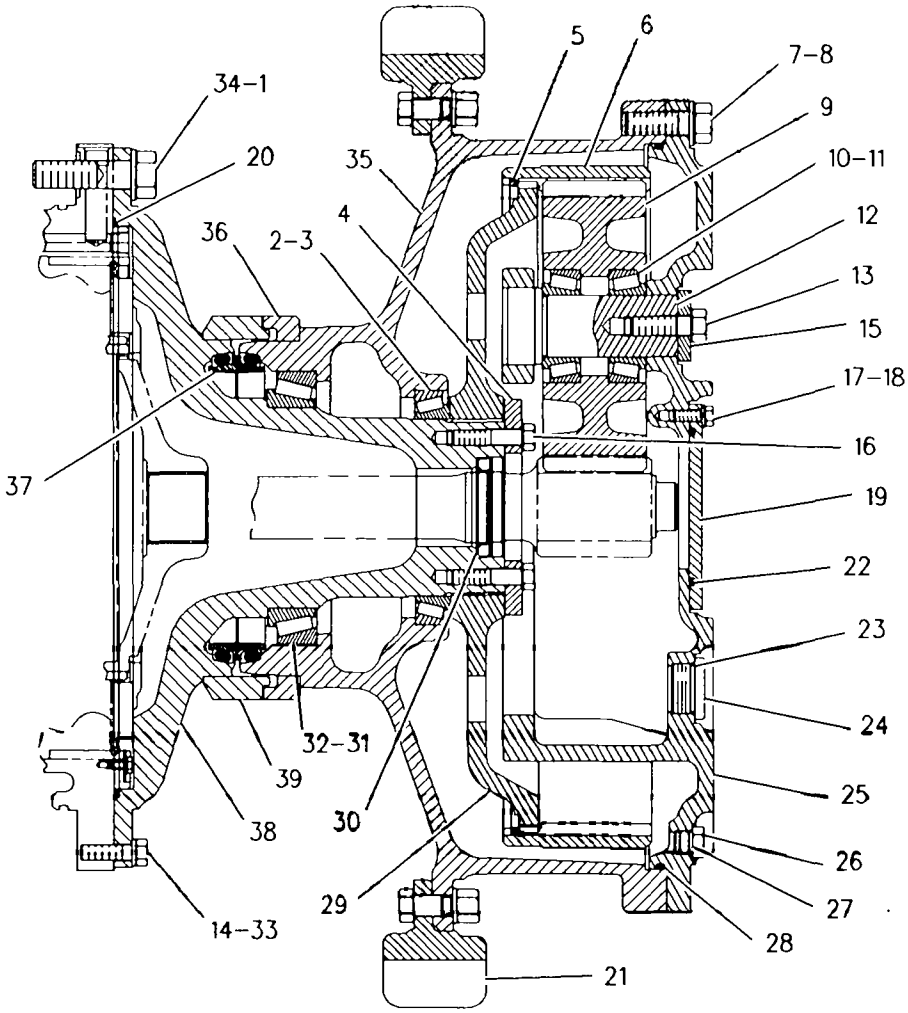

GRAPHIC #2 g00264779

POWER TRAIN

1Q-2275 FINAL DRIVE GP

PIN 2YN1-UP; 3ZN1-UP; 4MN1-UP; 5LN1-UP; 6JN1-UP; 7KN1-UP
PART OF 129-2162 DISPOSAL AR, 134-2921 GUARD AR-FINAL DRIVE

SMCS-3259, 3278, 4050, 4054, 4055, 4056, 4066, 4074, 4075, 4084, 4091, 4092, 4093, 4094

i00575849

NOTE	REF NO	GRAPHIC REF	PART NUMBER	QTY	PART NAME 1 2 3 4 5 6 (PRODUCT LEVEL)	SEE PAGE
	1	1,2	8C-6913	26	WASHER-HARD (4MM THK)	
	2	1,2	6V-0329	1	CONE-ROLLER BEARING	
	3	1,2	6V-0330	1	CUP-ROLLER BEARING	
	4	1,2	9G-9181	1	RETAINER	
	5	1,2	8G-8844	1	LOCKRING	
	6	1,2	9G-8639	1	GEAR (94 TEETH)	
	7	1,2	8T-9399	33	BOLT (3/4-10X2.25IN)	
	8	1,2	8T-4994	33	WASHER (5MM THK)	
	9	1,2	9G-8638	3	GEAR (40 TEETH)	
	10	1,2	1B-3978	6	CUP-ROLLER BEARING	
	11	1,2	1B-3980	6	CONE-ROLLER BEARING	
	12	1,2	9G-9183	3	SHAFT	
	13	1,2	7X-0346	3	BOLT (5/8-11X2IN)	
	14	1,2	8T-8919	2	BOLT (1/2-13X1.75IN)	
	15	1,2	2P-3696	3	RETAINER	
	16	1,2	2B-0947	10	BOLT (1/2-13X2.25IN)	
	17	1,2	4L-6454	3	BOLT (3/8-16X1.0IN)	
	18	1,2	8T-4896	3	WASHER-HARD (2.5MM THK)	
	19	1,2	8G-8845	1	COVER	
	20	1,2	2R-0098	1	SEAL-O-RING	
Y	21	1,2	*8E-9041*	1	SEGMENT GP-SPROCKET	243
	22	1,2	1P-9005	1	SEAL-O-RING	
	23	1,2	2S-4078	1	SEAL-O-RING (37.46MM ID)	
	24	1,2	6V-0439	1	PLUG	
	25	1,2	9G-9175	1	CARRIER	
	26	1,2	9S-4185	1	PLUG-O-RING (3/4-16 THD)	
	27	1,2	3K-0360	1	SEAL-O-RING (16.36MM ID)	
	28	1,2	9H-3360	1	SEAL-O-RING	
	29	1,2	8E-2748	1	HUB-REACTION	
	30	1,2	9X-7671	1	SEAL-LIP	
	31	1,2	6V-0327	1	CUP-ROLLER BEARING	
	32	1,2	6V-0328	1	CONE-ROLLER BEARING	
	33	1,2	8T-4223	2	WASHER-HARD (3MM THK)	
	34	1,2	1D-4628	26	BOLT (7/8-9X3.25IN)	
	35	1,2	1Q-2266	1	HUB AS	
	36	1,2	6Y-5024	1	GUARD-DUO-CONE SEAL	
	37	1,2	6Y-0860	1	SEAL GP-DUO-CONE	
	38	1,2	1M-9011	2	RING-SEALING	
	39	1,2	1Q-2265	1	SPINDLE AS	
	40	1,2	1Q-2252	1	GUARD-CONE SEAL	

Y-SEPARATE ILLUSTRATION

1Q-2275 FINAL DRIVE GP *(contd.)*

i00575849

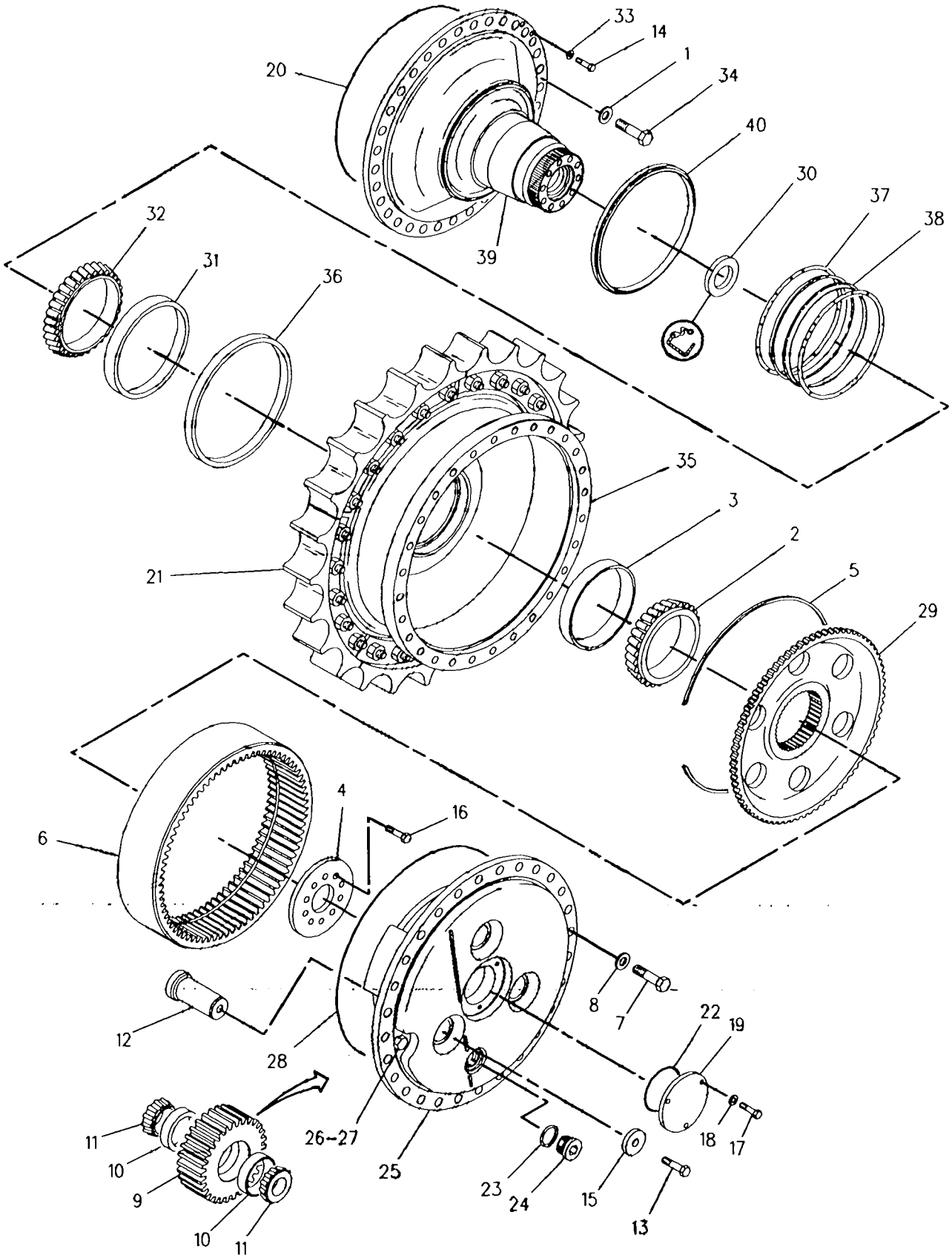

GRAPHIC #1

g00263762

1Q-2275 FINAL DRIVE GP *(contd.)* i00575849

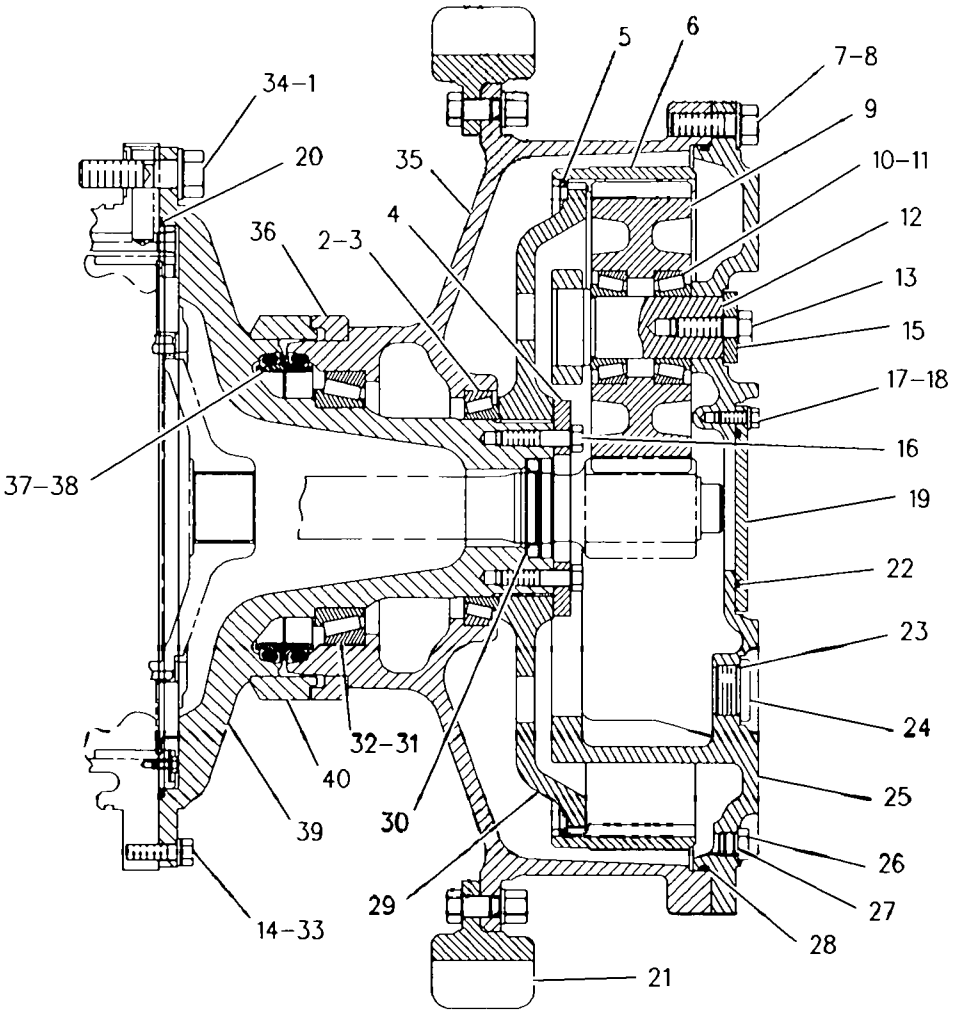

GRAPHIC #2 g00263763

POWER TRAIN

1Q-4303 FINAL DRIVE GP–CUSTOM

PIN 8LN1-UP; 9PN1-UP
LGP
PART OF 122-6838 GUARD AR-FINAL DRIVE

SMCS-3259, 3278, 4050, 4054, 4055, 4056, 4066, 4074, 4075, 4084, 4091, 4092, 4093, 4094

i01020882

NOTE	REF NO	GRAPHIC REF	PART NUMBER	QTY	PART NAME 1 2 3 4 5 6 (PRODUCT LEVEL)	SEE PAGE
	1	1	1Q-2266	1	HUB AS	
		1	6Y-5024	1	GUARD-DUO-CONE SEAL	
	2	1	6V-0329	1	CONE-ROLLER BEARING	
	3	1	6V-0330	1	CUP-ROLLER BEARING	
	4	1	9G-9181	1	RETAINER	
	5	1	8G-8844	1	LOCKRING	
	6	1	9G-8639	1	GEAR (94 TEETH)	
	7	1	8T-9399	33	BOLT (3/4-10X2.25IN)	
	8	1	8T-4994	33	WASHER (5MM THK)	
	9	1	9G-8638	3	GEAR (40 TEETH)	
	10	1	1B-3978	6	CUP-ROLLER BEARING	
	11	1	1B-3980	6	CONE-ROLLER BEARING	
	12	1	9G-9183	3	SHAFT	
	13	1	7X-0346	3	BOLT (5/8-11X2IN)	
	14	1	109-7397	1	SPINDLE AS	
		1	109-7399	1	GUARD	
	15	1	2P-3696	3	RETAINER	
	16	1	2B-0947	10	BOLT (1/2-13X2.25IN)	
	17	1	4L-6454	3	BOLT (3/8-16X1.0IN)	
	18	1	8T-4896	3	WASHER-HARD (2.5MM THK)	
	19	1	8G-8845	1	COVER	
	20	1	2R-0098	1	SEAL-O-RING	
Y	21	1	*8E-9041*	1	SEGMENT GP-SPROCKET	243
	22	1	1P-9005	1	SEAL-O-RING	
	23	1	2S-4078	1	SEAL-O-RING (37.46MM ID)	
	24	1	6V-0439	1	PLUG-MAGNETIC	
	25	1	9G-9175	1	CARRIER	
	26	1	9S-4185	1	PLUG-O-RING (3/4-16 THD)	
	27	1	3K-0360	1	SEAL-O-RING (16.36MM ID)	
	28	1	9H-3360	1	SEAL-O-RING	
	29	1	8E-2748	1	HUB-REACTION	
	30	1	9X-7671	1	SEAL-LIP	
	31	1	6V-0327	1	CUP-ROLLER BEARING	
	32	1	6V-0328	1	CONE-ROLLER BEARING	
	33	1	6Y-0860	1	SEAL GP-DUO-CONE	
	34	1	1D-4628	26	BOLT (7/8-9X3.25IN)	
	35	1	8C-6913	26	WASHER-HARD (4MM THK)	
	36	1	8T-8919	2	BOLT (1/2-13X1.75IN)	
	37	1	8T-4223	2	WASHER-HARD (3MM THK)	
	38	1	109-7400	2	PLATE	
	39	1	109-7398	1	SEAL	
	40	1	1L-0509	10	BOLT (3/8-16X.74IN)	

Y-SEPARATE ILLUSTRATION

1Q-4303 FINAL DRIVE GP *(contd.)* i01020882

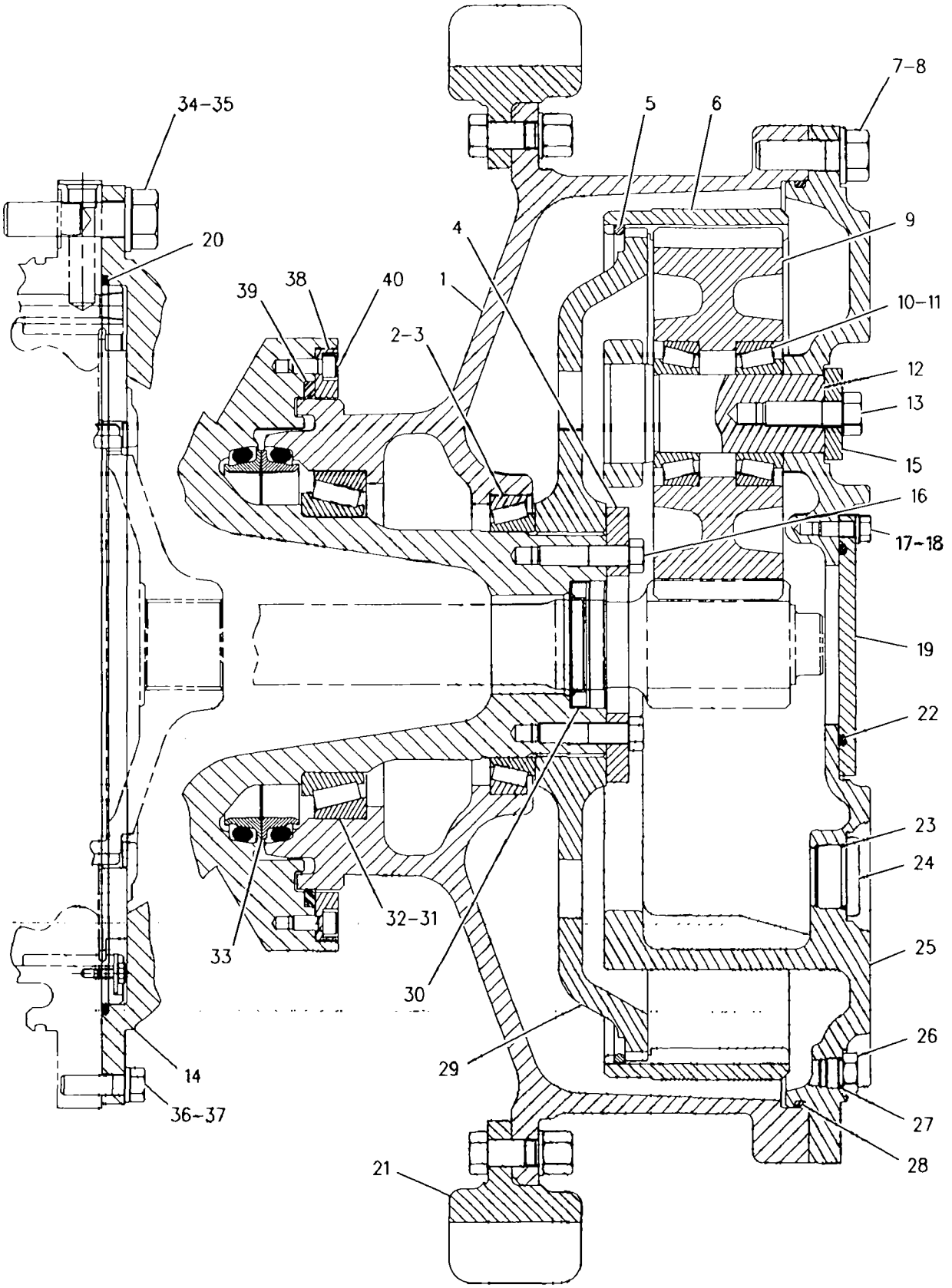

GRAPHIC #1 g00294632

POWER TRAIN

1Q-4304 FINAL DRIVE GP–CUSTOM

PIN 2YN1-UP; 3ZN1-UP; 4MN1-UP; 5LN1-UP; 6JN1-UP; 7KN1-UP

PART OF 122-6839 GUARD AR-FINAL DRIVE

SMCS-3259, 3278, 4050, 4054, 4055, 4056, 4066, 4074, 4075, 4084, 4091, 4092, 4093, 4094

i01014248

NOTE	REF NO	GRAPHIC REF	PART NUMBER	QTY	PART NAME 1 2 3 4 5 6 (PRODUCT LEVEL)	SEE PAGE
	1	1	1Q-2266	1	HUB AS	
		1	6Y-5024	1	GUARD-DUO-CONE SEAL	
	2	1	6V-0329	1	CONE-ROLLER BEARING	
	3	1	6V-0330	1	CUP-ROLLER BEARING	
	4	1	9G-9181	1	RETAINER	
	5	1	8G-8844	1	LOCKRING	
	6	1	9G-8639	1	GEAR (94 TEETH)	
	7	1	8T-9399	33	BOLT (3/4-10X2.25IN)	
	8	1	8T-4994	33	WASHER (5MM THK)	
	9	1	9G-8638	3	GEAR (40 TEETH)	
	10	1	1B-3978	6	CUP-ROLLER BEARING	
	11	1	1B-3980	6	CONE-ROLLER BEARING	
	12	1	9G-9183	3	SHAFT	
	13	1	7X-0346	3	BOLT (5/8-11X2IN)	
	14	1	109-7396	1	SPINDLE AS	
		1	109-7399	1	GUARD	
	15	1	2P-3696	3	RETAINER	
	16	1	2B-0947	10	BOLT (1/2-13X2.25IN)	
	17	1	4L-6454	3	BOLT (3/8-16X1.0IN)	
	18	1	8T-4896	3	WASHER-HARD (2.5MM THK)	
	19	1	8G-8845	1	COVER	
	20	1	2R-0098	1	SEAL-O-RING	
Y	21	1	*8E-9041*	1	SEGMENT GP-SPROCKET	243
	22	1	1P-9005	1	SEAL-O-RING	
	23	1	2S-4078	1	SEAL-O-RING (37.46MM ID)	
	24	1	6V-0439	1	PLUG-MAGNETIC	
	25	1	9G-9175	1	CARRIER	
	26	1	9S-4185	1	PLUG-O-RING (3/4-16 THD)	
	27	1	3K-0360	1	SEAL-O-RING (16.36MM ID)	
	28	1	9H-3360	1	SEAL-O-RING	
	29	1	8E-2748	1	HUB-REACTION	
	30	1	9X-7671	1	SEAL-LIP	
	31	1	6V-0327	1	CUP-ROLLER BEARING	
	32	1	6V-0328	1	CONE-ROLLER BEARING	
	33	1	6Y-0860	1	SEAL GP-DUO-CONE	
	34	1	1D-4628	26	BOLT (7/8-9X3.25IN)	
	35	1	8C-6913	26	WASHER-HARD (4MM THK)	
	36	1	8T-8919	2	BOLT (1/2-13X1.75IN)	
	37	1	8T-4223	2	WASHER-HARD (3MM THK)	
	38	1	109-7400	2	PLATE	
	39	1	109-7398	1	SEAL	
	40	1	1L-0509	10	BOLT (3/8-16X.74IN)	

Y-SEPARATE ILLUSTRATION

1Q-4304 FINAL DRIVE GP *(contd.)* i01014248

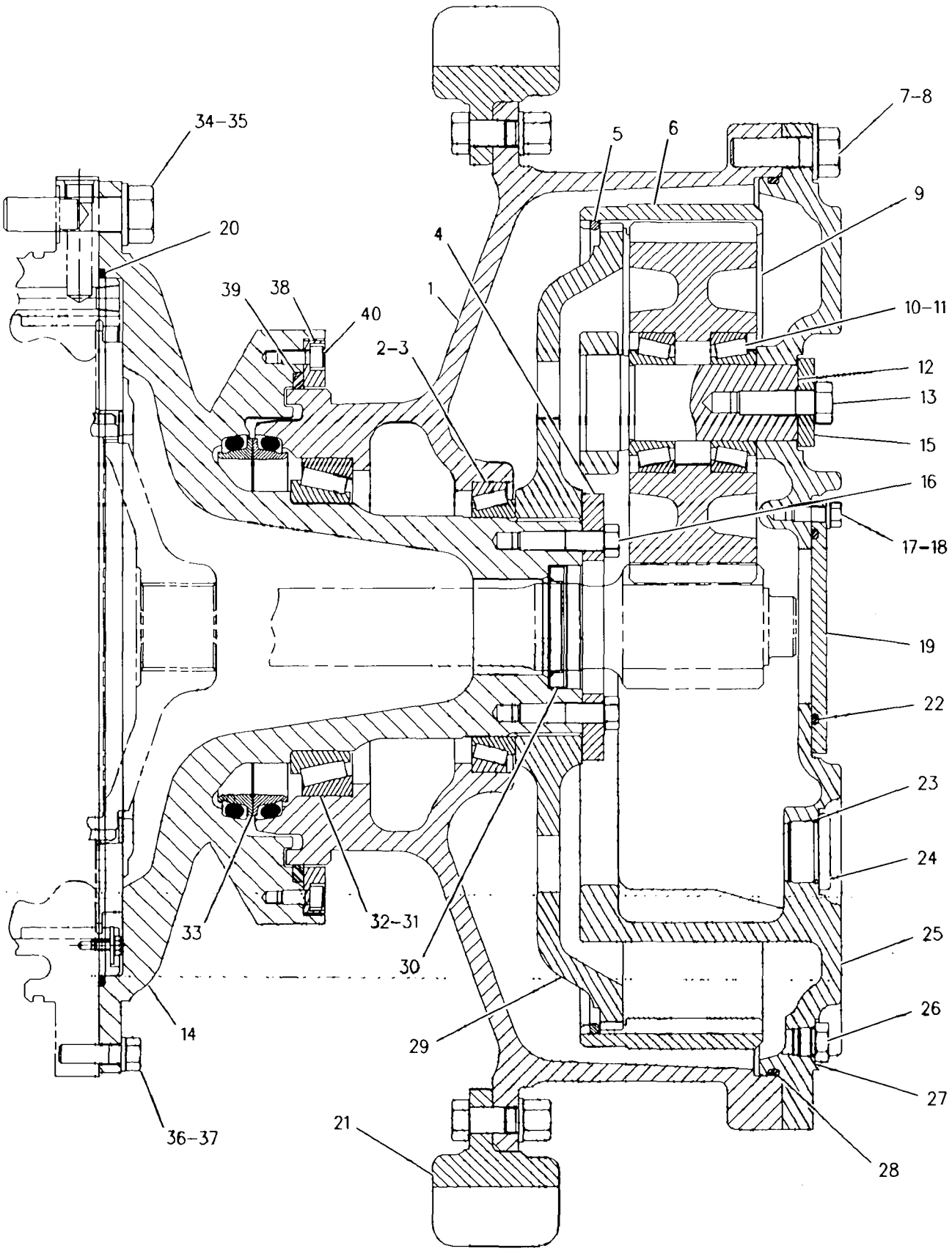

GRAPHIC #1 g00294633

7G-5532 FINAL DRIVE GP–2 REQUIRED

PIN 4MN1-UP

PART OF 122-6158 FINAL DRIVE GP

SMCS-3259, 3278, 4050, 4054, 4055, 4056, 4066, 4074, 4075, 4084, 4091, 4092, 4093, 4094

i01010481

NOTE	REF NO	GRAPHIC REF	PART NUMBER	QTY	PART NAME 1 2 3 4 5 6 (PRODUCT LEVEL)	SEE PAGE
	1	1	9G-9180	1	HUB-SPROCKET	
	2	1	6V-0329	1	CONE-ROLLER BEARING	
	3	1	6V-0330	1	CUP-ROLLER BEARING	
	4	1	9G-9181	1	RETAINER	
	5	1	8G-8844	1	LOCKRING	
	6	1	9G-8639	1	GEAR (94 TEETH)	
C	7	1	8T-9399	33	BOLT (3/4-10X2.25IN)	
C	8	1	8T-4994	33	WASHER (5MM THK)	
	9	1	9G-8638	3	GEAR (40 TEETH)	
	10	1	1B-3978	6	CUP-ROLLER BEARING	
	11	1	1B-3980	6	CONE-ROLLER BEARING	
	12	1	9G-9183	3	SHAFT	
C	13	1	7X-0346	3	BOLT (5/8-11X2IN)	
R	14	1	9G-9178	1	SPINDLE	
	15	1	2P-3696	3	RETAINER	
	16	1	2B-0947	10	BOLT (1/2-13X2.25IN)	
C	17	1	4L-6454	3	BOLT (3/8-16X1.0IN)	
C	18	1	8T-4896	3	WASHER-HARD (2.5MM THK)	
	19	1	8G-8845	1	COVER	
	20	1	6V-0328	1	CONE-ROLLER BEARING	
Y	21	1	7G-7212	1	SEGMENT GP-SPROCKET	242
	22	1	1P-9005	1	SEAL-O-RING	
	23	1	2S-4078	1	SEAL-O-RING (37.46MM ID)	
	24	1	6V-0439	1	PLUG-MAGNETIC	
	25	1	9G-9175	1	CARRIER	
	26	1	9S-4185	1	PLUG-O-RING (3/4-16 THD)	
	27	1	3K-0360	1	SEAL-O-RING (16.36MM ID)	
	28	1	9H-3360	1	SEAL-O-RING	
	29	1	9G-8640	1	HUB-REACTION	
C	30	1	7X-4777	1	SEAL-LIP	
	31	1	6V-0327	1	CUP-ROLLER BEARING	
C	32	1	6Y-0860	1	SEAL GP-DUO-CONE	
		1	1M-9011	2	RING-SEALING	
C	33	1	8E-1632	1	PLATE	

C-CHANGE FROM PREVIOUS TYPE
R-REMFG PART MAY BE AVAILABLE
Y-SEPARATE ILLUSTRATION

7G-5532 FINAL DRIVE GP *(contd.)*

i01010481

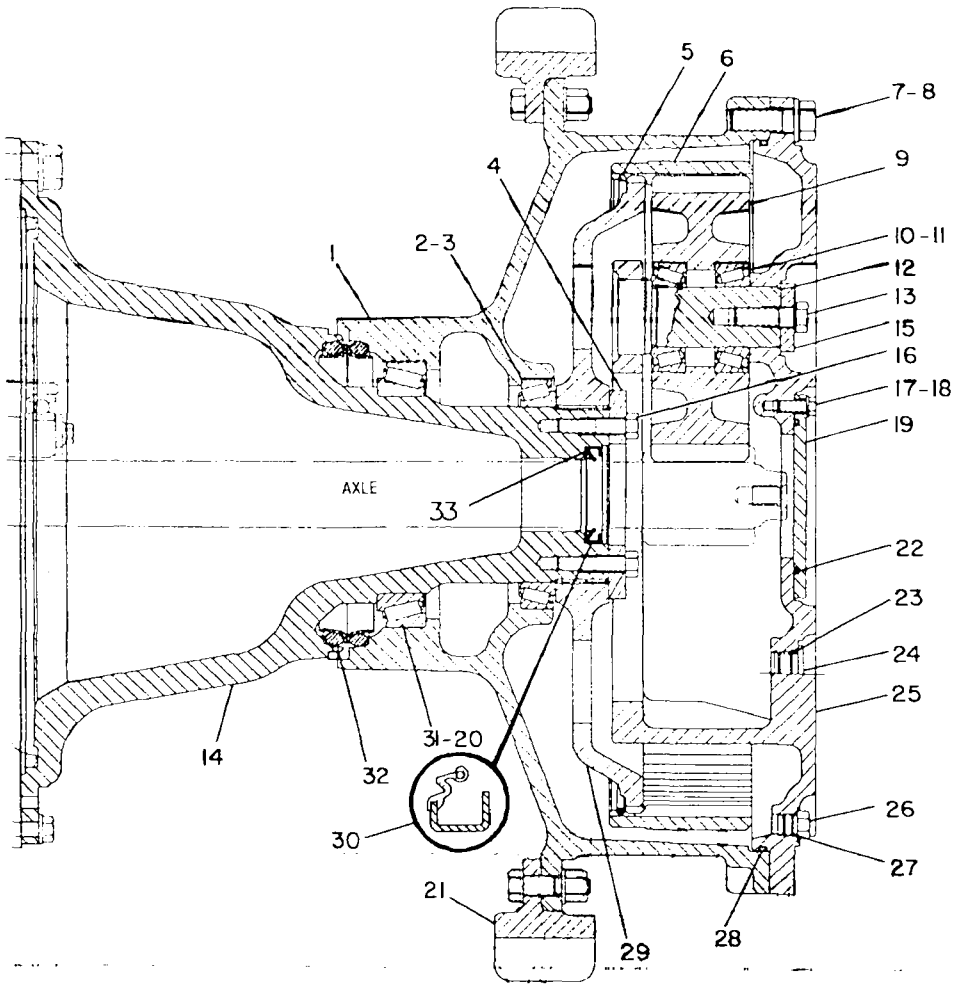

GRAPHIC #1

g00206638

122-6158 FINAL DRIVE GP

PIN 4MN1-UP
INTERMEDIATE GAUGE
PART OF 151-6170 GAUGE AR-TRACK

SMCS-3259, 3278, 4050, 4054, 4055, 4056, 4066, 4074, 4075, 4084, 4091, 4092, 4093, 4094

i00689106

NOTE	REF NO	GRAPHIC REF	PART NUMBER	QTY	PART NAME 1 2 3 4 5 6 (PRODUCT LEVEL)	SEE PAGE
Y	1	1	7G-5532	1	FINAL DRIVE GP	214
	2	1	106-3687	1	SPACER	
	3	1	8T-8915	3	BOLT (3/8-16X3.25IN)	
	4	1	8T-4896	3	WASHER-HARD (2.5MM THK)	
	5	1	8S-9089	2	BOLT (1/2-13X4.5IN)	
	6	1	2R-0098	1	SEAL-O-RING	

Y-SEPARATE ILLUSTRATION

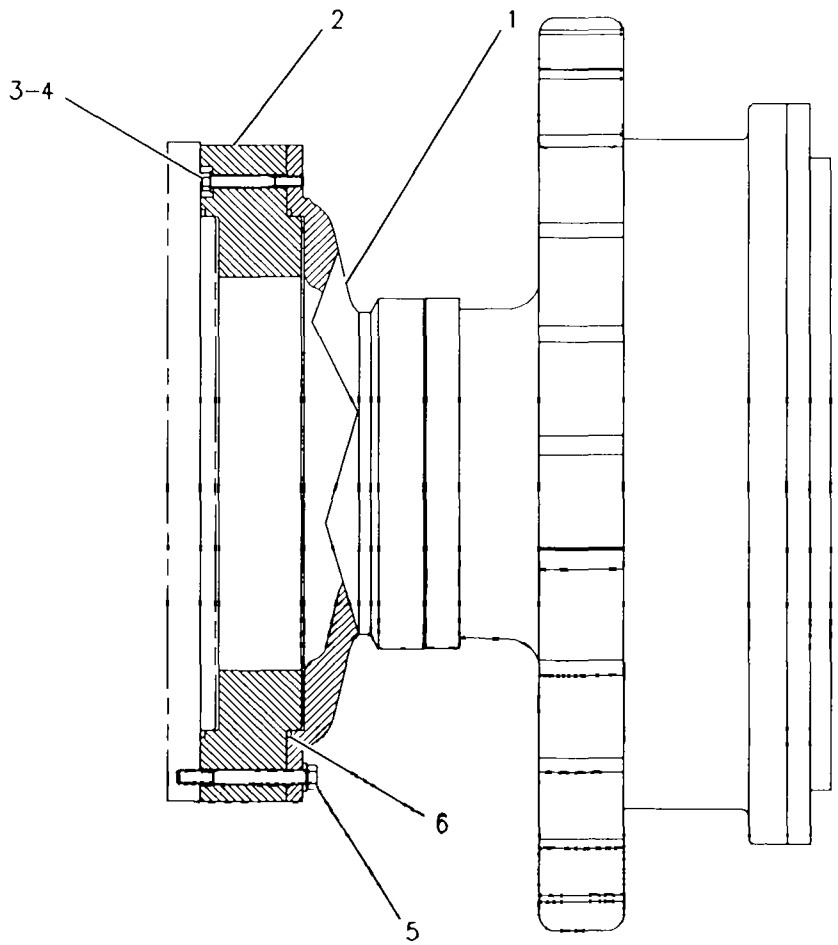

GRAPHIC #1

g00264058

138-1850 FINAL DRIVE GP

PIN 2YN1-UP; 3ZN1-UP; 4MN1-UP; 5LN1-UP
PART OF 134-2921 GUARD AR-FINAL DRIVE

SMCS-3259, 3278, 4050, 4054, 4055, 4056, 4066, 4074, 4075, 4084, 4091, 4092, 4093, 4094

i00575018

NOTE	REF NO	GRAPHIC REF	PART NUMBER	QTY	PART NAME 1 2 3 4 5 6 (PRODUCT LEVEL)	SEE PAGE
	1	1,2	8T-4224	16	WASHER-HARD (2MM THK)	
	2	1,2	6V-0329	1	CONE-ROLLER BEARING	
	3	1,2	6V-0330	1	CUP-ROLLER BEARING	
	4	1,2	9G-9181	1	RETAINER	
	5	1,2	8G-8844	1	LOCKRING	
	6	1,2	9G-8639	1	GEAR (94 TEETH)	
	7	1,2	8T-9399	33	BOLT (3/4-10X2.25IN)	
	8	1,2	8T-4994	33	WASHER (5MM THK)	
	9	1,2	9G-8638	3	GEAR (40 TEETH)	
	10	1,2	1B-3978	6	CUP-ROLLER BEARING	
	11	1,2	1B-3980	6	CONE-ROLLER BEARING	
	12	1,2	9G-9183	3	SHAFT	
	13	1,2	7X-0346	3	BOLT (5/8-11X2IN)	
	14	1,2	8C-6561	16	BOLT (5/16-18X1.375IN)	
	15	1,2	2P-3696	3	RETAINER	
	16	1,2	2B-0947	10	BOLT (1/2-13X2.25IN)	
	17	1,2	4L-6454	3	BOLT (3/8-16X1.0IN)	
	18	1,2	8T-4896	3	WASHER-HARD (2.5MM THK)	
	19	1,2	8G-8845	1	COVER	
	20	1,2	2R-0098	1	SEAL-O-RING	
Y	21	1,2	*8E-9041*	1	SEGMENT GP-SPROCKET	243
	22	1,2	1P-9005	1	SEAL-O-RING	
	23	1,2	2S-4078	1	SEAL-O-RING (37.46MM ID)	
	24	1,2	6V-0439	1	PLUG	
	25	1,2	9G-9175	1	CARRIER	
	26	1,2	9S-4185	1	PLUG-O-RING (3/4-16 THD)	
	27	1,2	3K-0360	1	SEAL-O-RING (16.36MM ID)	
	28	1,2	9H-3360	1	SEAL-O-RING	
	29	1,2	8E-2748	1	HUB-REACTION	
	30	1,2	9X-7671	1	SEAL-LIP	
	31	1,2	6V-0327	1	CUP-ROLLER BEARING	
	32	1,2	6V-0328	1	CONE-ROLLER BEARING	
	33	1,2	128-0307	2	PLATE	
	34	1,2	1D-4628	26	BOLT (7/8-9X3.25IN)	
	35	1,2	8C-6913	26	WASHER-HARD (4MM THK)	
	36	1,2	8T-8919	2	BOLT (1/2-13X1.75IN)	
	37	1,2	8T-4223	2	WASHER-HARD (3MM THK)	
	38	1,2	128-0308	2	SEAL-PACKING	
	39	1,2	138-1853	1	HUB AS	
	40	1,2	134-3056	1	GUARD-DUO-CONE SEAL	
	41	1,2	138-1851	1	SPINDLE AS	
	42	1,2	134-3053	1	GUARD-DUO-CONE SEAL	
	43	1,2	6Y-0860	1	SEAL GP-DUO-CONE	
	44	1,2	1M-9011	2	RING-SEALING	

Y-SEPARATE ILLUSTRATION

138-1850 FINAL DRIVE GP (contd.) i00575018

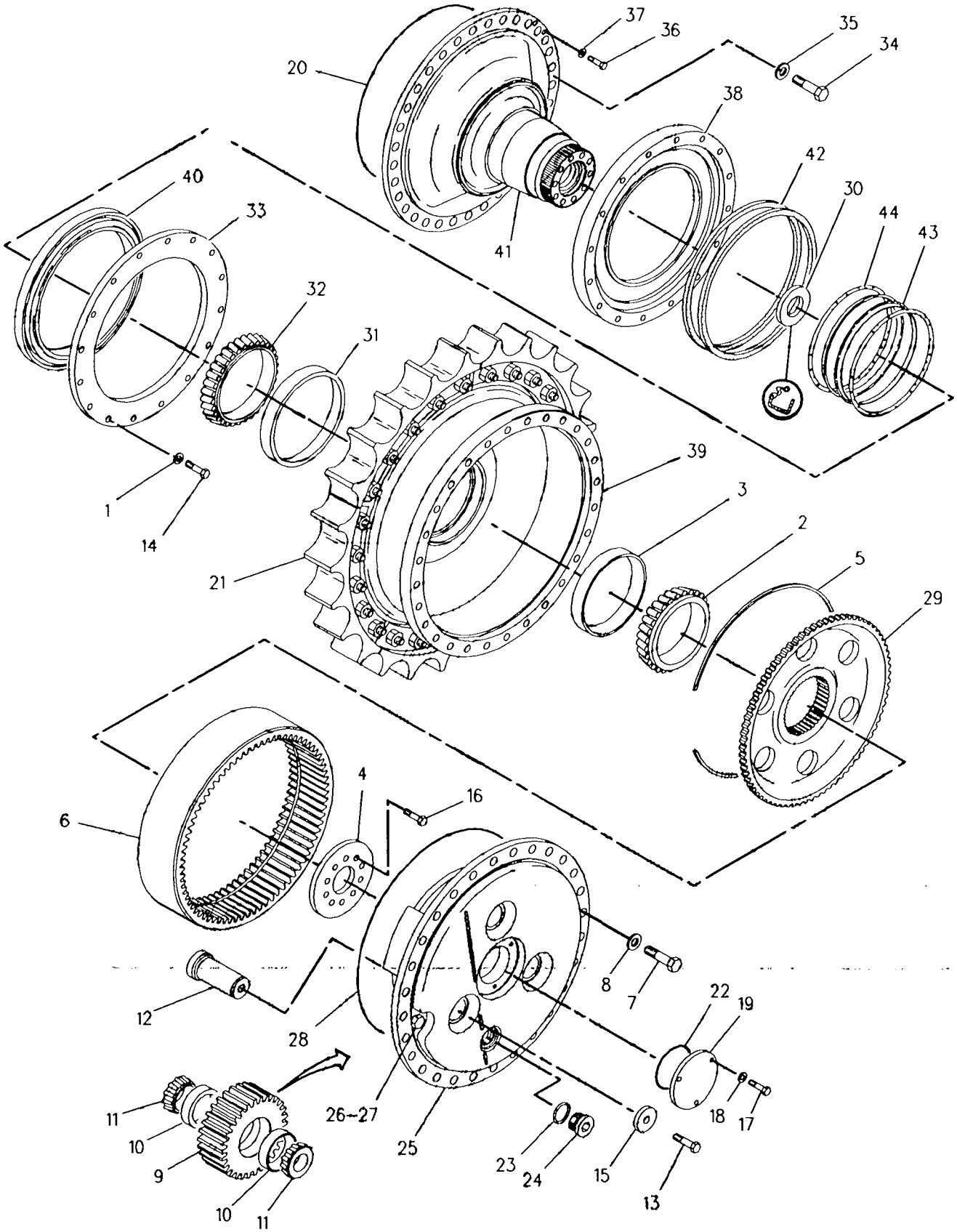

GRAPHIC #1 g00263749

138-1850 FINAL DRIVE GP (contd.) i00575018

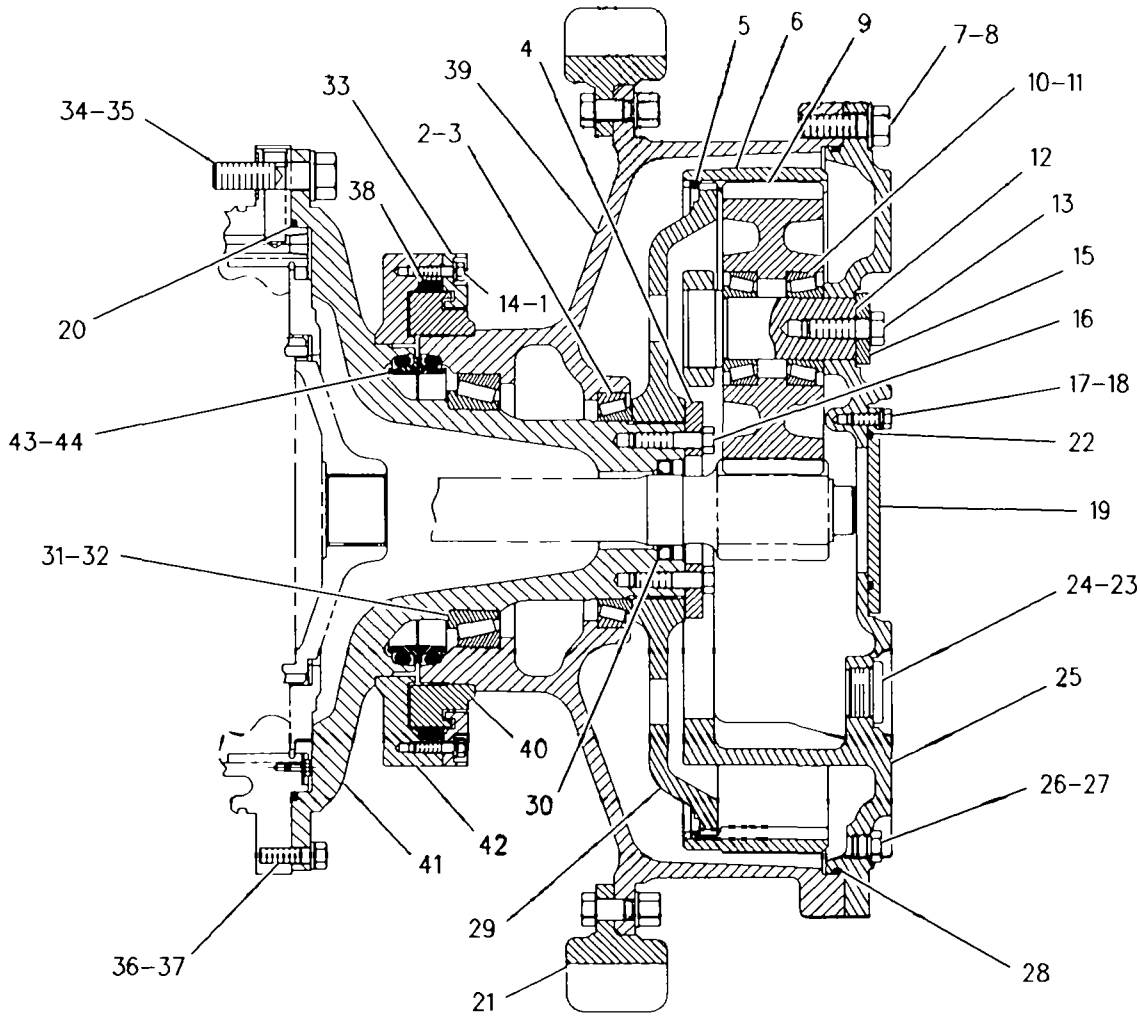

GRAPHIC #2 g00263750

POWER TRAIN

138-1856 FINAL DRIVE GP

PIN 8LN1-UP; 9PN1-UP

PART OF 134-2922 GUARD AR-FINAL DRIVE

SMCS-3259, 3278, 4050, 4054, 4055, 4056, 4066, 4074, 4075, 4084, 4091, 4092, 4093, 4094

i00601262

NOTE	REF NO	GRAPHIC REF	PART NUMBER	QTY	PART NAME 1 2 3 4 5 6 (PRODUCT LEVEL)	SEE PAGE
	1	1,2	8T-4224	16	WASHER-HARD (2MM THK)	
	2	1,2	6V-0329	1	CONE-ROLLER BEARING	
	3	1,2	6V-0330	1	CUP-ROLLER BEARING	
	4	1,2	9G-9181	1	RETAINER	
	5	1,2	8G-8844	1	LOCKRING	
	6	1,2	9G-8639	1	GEAR (94 TEETH)	
	7	1,2	8T-9399	33	BOLT (3/4-10X2.25IN)	
	8	1,2	8T-4994	33	WASHER (5MM THK)	
	9	1,2	9G-8638	3	GEAR (40 TEETH)	
	10	1,2	1B-3978	6	CUP-ROLLER BEARING	
	11	1,2	1B-3980	6	CONE-ROLLER BEARING	
	12	1,2	9G-9183	3	SHAFT	
	13	1,2	7X-0346	3	BOLT (5/8-11X2IN)	
	14	1,2	8C-6561	16	BOLT (5/16-18X1.375IN)	
	15	1,2	2P-3696	3	RETAINER	
	16	1,2	2B-0947	10	BOLT (1/2-13X2.25IN)	
	17	1,2	4L-6454	3	BOLT (3/8-16X1.0IN)	
	18	1,2	8T-4896	3	WASHER-HARD (2.5MM THK)	
	19	1,2	8G-8845	1	COVER	
	20	1,2	2R-0098	1	SEAL-O-RING	
Y	21	1,2	*8E-9041*	1	SEGMENT GP-SPROCKET	243
	22	1,2	1P-9005	1	SEAL-O-RING	
	23	1,2	2S-4078	1	SEAL-O-RING (37.46MM ID)	
	24	1,2	6V-0439	1	PLUG	
	25	1,2	9G-9175	1	CARRIER	
	26	1,2	9S-4185	1	PLUG-O-RING (3/4-16 THD)	
	27	1,2	3K-0360	1	SEAL-O-RING (16.36MM ID)	
	28	1,2	9H-3360	1	SEAL-O-RING	
	29	1,2	8E-2748	1	HUB-REACTION	
	30	1,2	9X-7671	1	SEAL-LIP	
	31	1,2	6V-0327	1	CUP-ROLLER BEARING	
	32	1,2	6V-0328	1	CONE-ROLLER BEARING	
	33	1,2	128-0307	2	PLATE	
	34	1,2	1D-4628	26	BOLT (7/8-9X3.25IN)	
	35	1,2	8C-6913	26	WASHER-HARD (4MM THK)	
	36	1,2	8T-8919	2	BOLT (1/2-13X1.75IN)	
	37	1,2	8T-4223	2	WASHER-HARD (3MM THK)	
	38	1,2	128-0308	2	SEAL-PACKING	
	39	1,2	138-1853	1	HUB AS	
	40	1,2	134-3056	1	GUARD-DUO-CONE SEAL	
	41	1,2	138-1857	1	SPINDLE AS	
	42	1,2	134-3053	1	GUARD-DUO-CONE SEAL	
	43	1,2	6Y-0860	1	SEAL GP-DUO-CONE	

Y-SEPARATE ILLUSTRATION

138-1856 FINAL DRIVE GP (contd.) i00601262

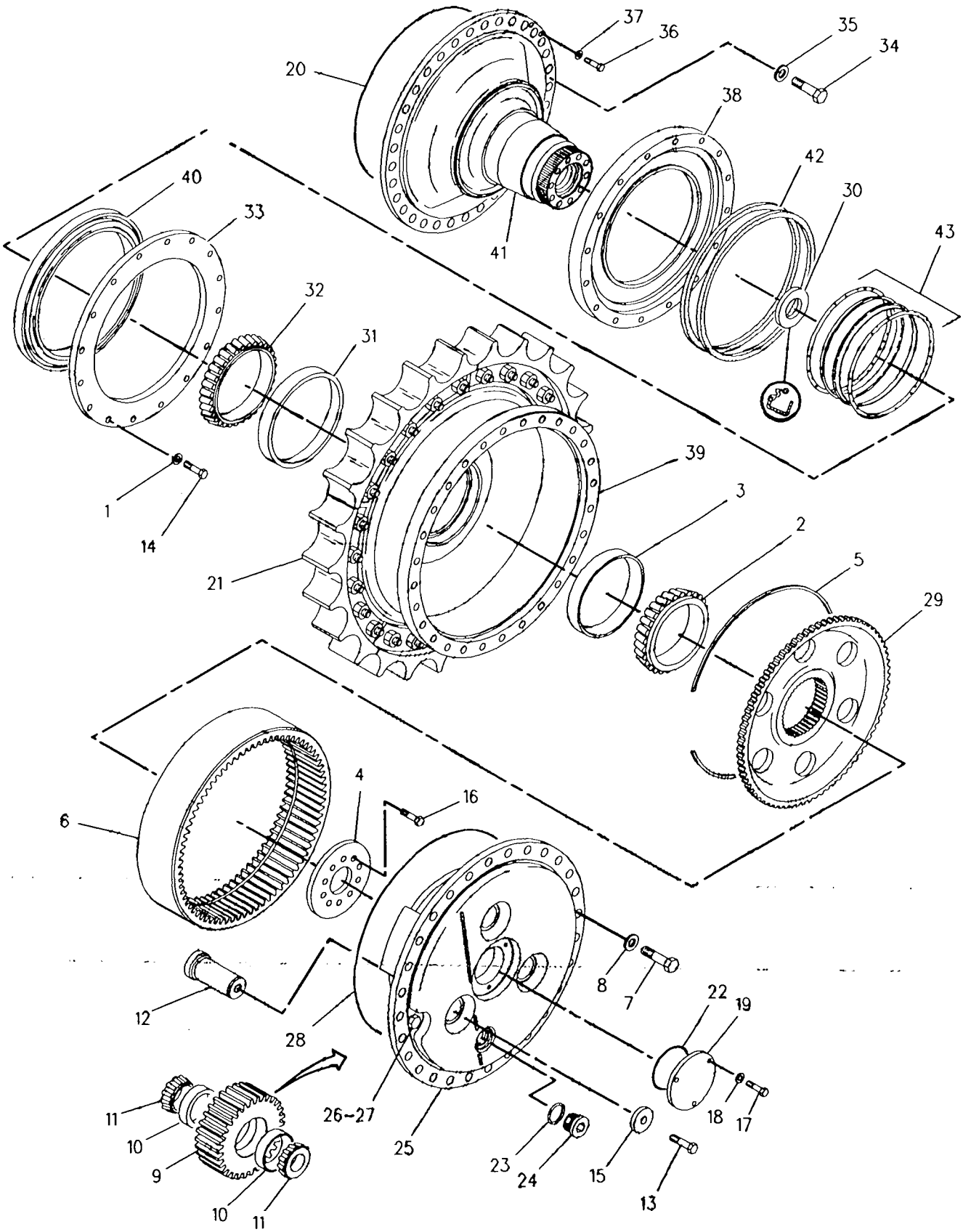

GRAPHIC #1 g00264791

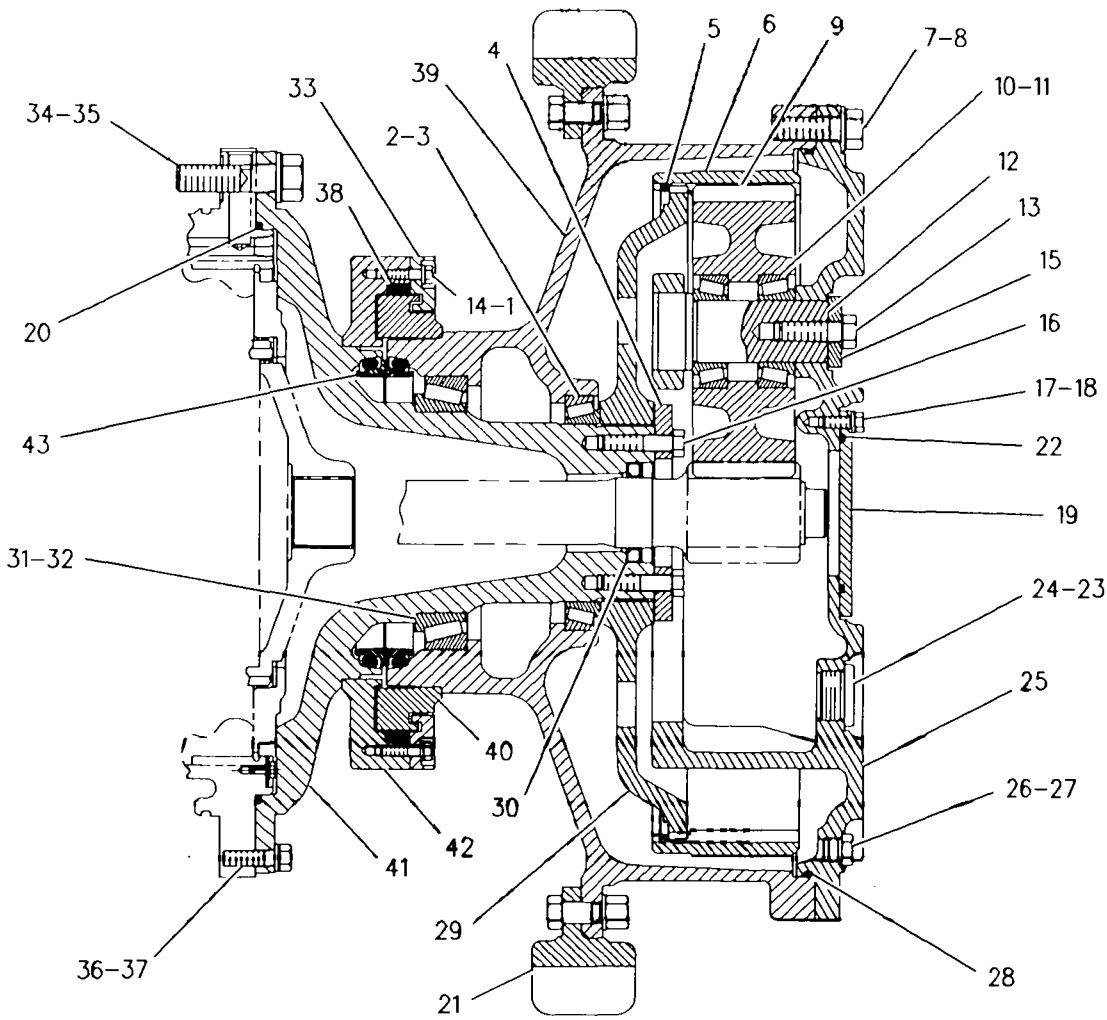

GRAPHIC #2

g00264792

POWER TRAIN

7G-4634 GEAR GP-BEVEL & TRANSFER

S/N 1GY1-UP

PART OF 116-4652 TRANSMISSION AR

SMCS-3011 i00839189

NOTE	REF NO	GRAPHIC REF	PART NUMBER	QTY	PART NAME 1 2 3 4 5 6 (PRODUCT LEVEL)	SEE PAGE
C	1	1	9W-1570	1	CAGE AS-BEARING	
		1	9W-1569	1	PLUG-ORIFICE	
		1	4B-9880	1	BALL	
	2	1	5P-8245	12	WASHER (3MM THK)	
	3	1	7B-3235	12	BOLT (1/2-13X1.375IN)	
	4	1	9P-7072	1	WASHER-TONGUE	
	5	1	6V-2404	1	LOCKWASHER-BEARING	
	6	1	1L-6957	1	LOCKNUT-BEARING	
	7	1	6T-0364	1	RING-RETAINING	
	8	1	2P-8386	1	SPACER-CONE	
	9	1	1S-1860	12	NUT-TRACK	
	10	1	0S-1897	12	BOLT (3/4-16X2.25IN)	
	11	1	7T-9946	1	CAGE-BEARING	
	12	1	9G-0832	1	DOWEL	
	13	1	6J-3473	1	RING-SNAP	
	14	1	4H-0019	1	RACE & ROLLER AS (OUTER)	
		1	5P-7592	1	RACE-ROLLER BEARING (INNER)	
	15	1	7G-6224	1	SHAFT-BEVEL GEAR	
	16	1	9P-1925	1	GEAR-BEVEL (35 TEETH)	
	17	1	1P-3934	2	CUP-ROLLER BEARING	
		1	1P-3935	2	CONE-ROLLER BEARING	
B	18	1	9P-1478	2	SHIM PACK	
	19	2	6S-2828	2	CUP-ROLLER BEARING	
	20	2	6S-2829	2	CONE-ROLLER BEARING	
	21	2	9W-3660	1	PINION-BEVEL (20 TEETH)	
	22	2	7T-3952	1	GEAR-TRANSFER (58 TEETH)	
	23	2	7T-9135	1	CASE AS-TRANSFER	
		2	2D-6642	1	BALL	
	24	2	5P-8247	16	WASHER-HARD (3.5MM THK)	
C	25	2	6I-8507	1	PLATE-RETAINER	
	26	2	0L-1169	12	BOLT (5/8-11X3.75IN)	
	27	2	5P-8245	12	WASHER (3MM THK)	
B	28	2	9P-1922	1	SHIM PACK (INCLUDES 14 SHIMS)	
	29	2	9W-2992	1	CAGE-BEARING	
	30	2	7B-3235	12	BOLT (1/2-13X1.375IN)	
	31	2	3T-6742	1	RETAINER	
	32	2	0S-1569	1	BOLT (5/8-11X4IN)	
	33	2	7T-3951	1	GEAR-TRANSFER (35 TEETH)	
	34	2	8C-3075	1	SEAL-LIP	
C	35	2	6I-8511	1	CAGE-BEARING	
	36	2	7D-1649	2	WASHER (5.0MM THK)	
C	37	2	0S-1591	4	BOLT (3/8-16X1.5IN)	
C	38	2	5M-2894	4	WASHER (2.5MM THK)	
B	39	2	9P-1921	1	SHIM PACK (INCLUDES 11 SHIMS)	
	40	2	7H-7628	1	BEARING	
	41	2	8D-1817	2	CUP-ROLLER BEARING	
		2	8D-1819	2	CONE-BEARING	
	42	2	7T-1474	1	BRACKET-ROLLER (RH)	
		2	7T-1475	1	BRACKET-ROLLER (LH)	
	43	2	1D-4601	4	BOLT (5/8-11X8.5IN)	
	44	2	6T-3853	2	SLEEVE	
	45	2	6T-3852	2	ROLLER	
	46	2	1A-5822	2	BOLT (1/2-13X2.75IN)	

B-USE AS REQUIRED
C-CHANGE FROM PREVIOUS TYPE

7G-4634 GEAR GP-BEVEL & TRANSFER *(contd.)* i00839189

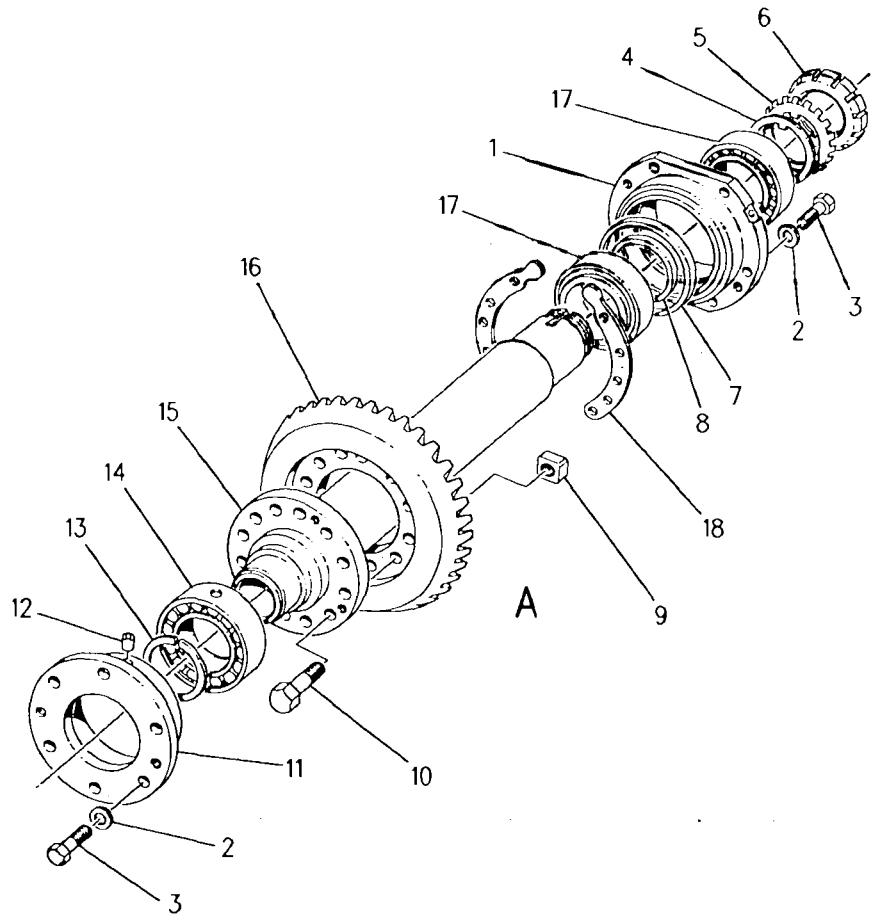

GRAPHIC #1 g00399322

7G-4634 GEAR GP-BEVEL & TRANSFER *(contd.)* i00839189

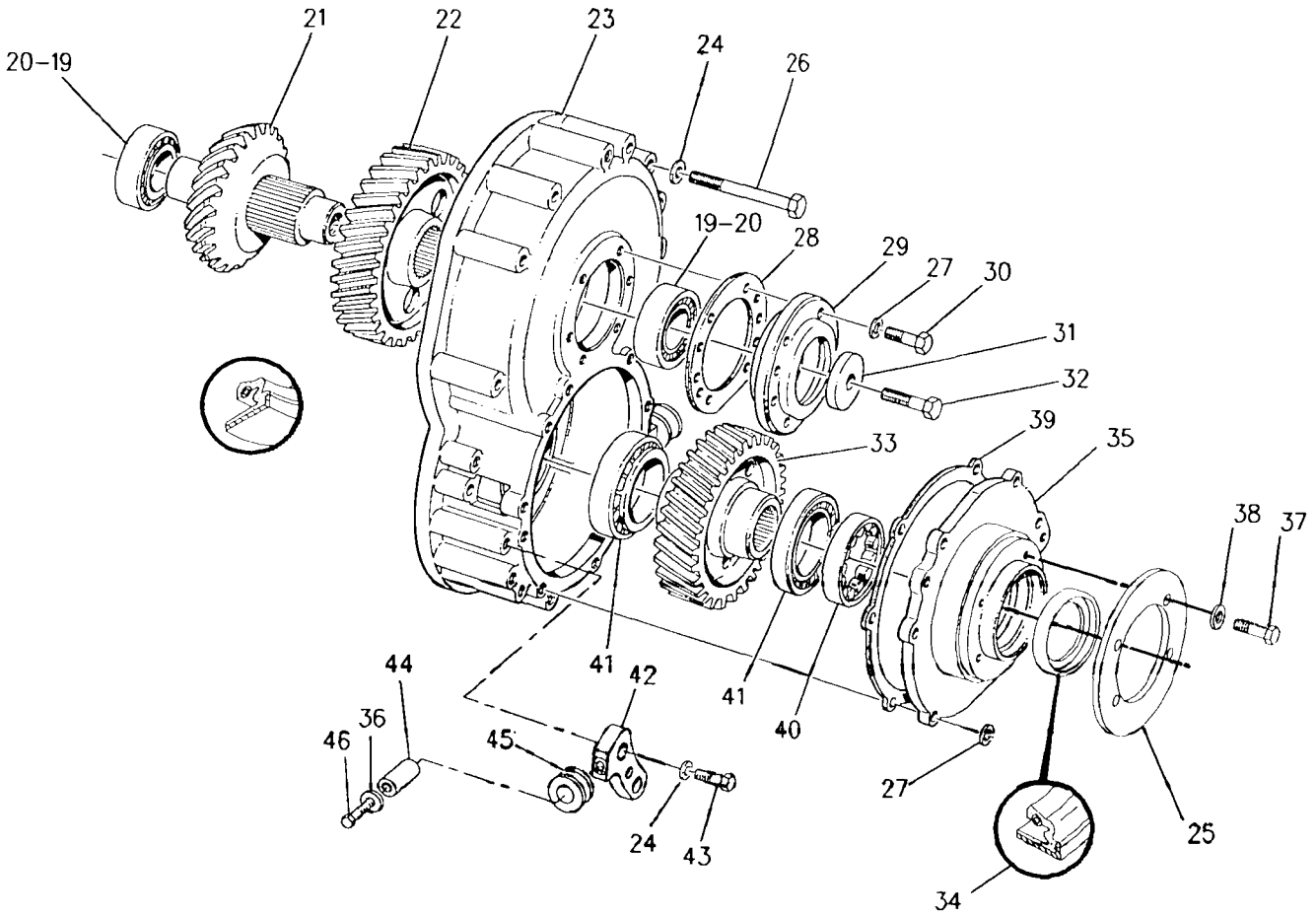

GRAPHIC #2 g00399325

POWER TRAIN

6I-8501 PLANETARY GP-TRANSMISSION

S/N 1GY1-UP

PART OF 116-4652 TRANSMISSION AR

TYPE 1

SMCS-3155, 3160, 3169, 3170, 3187, 3189, 3190, 3304 i00837129

NOTE	REF NO	GRAPHIC REF	PART NUMBER	QTY	PART NAME 1 2 3 4 5 6 (PRODUCT LEVEL)	SEE PAGE
	1	1	061-6711	1	RING-RETAINING	
	2	1	068-8093	2	RING-RETAINING	
	3	1	8H-5352	2	BALL BEARING	
	4	1	8M-5010	2	SEAL (53.57MM ID)	
	5	1	108-7754	1	HOUSING	
	6	1	3F-5022	1	PLUG-CUP	
	7	1	1A-5183	2	BOLT (3/8-16X4.75IN)	
	8	1	9G-0281	1	RING-SEAL	
	9	1	8P-2022	2	RING-SEAL	
	10	1	9G-0280	1	PISTON-CLUTCH	
	11	1	3K-2511	5	DOWEL-REACTION	
	12	1	9P-7390	8	DISC AS-FRICTION	
R	13	1	8P-2051	6	PLATE-CLUTCH	
	14	1	6Y-1602	1	COUPLING (75 TEETH)	
	15	1	108-8853	1	SHAFT AS	
	16	1	3T-4968	1	PLUG-ORIFICE	
	17	1	8P-2053	1	SEAL-RING	
	18	1	6T-7882	3	GEAR (25 TEETH)	
	19	1	3T-4377	2	SEAL-RING	
	20	1	3S-2708	3	PIN-SPRING	
	21	1	9P-8623	3	SHAFT-PLANETARY	
	22	1	8P-2052	1	SEAL-RING	
	23	1	6Y-4819	1	CARRIER-PLANETARY	
	24	1	7T-3950	1	GEAR (83 TEETH)	
	25	1	030-8538	1	BOLT (1/2-13X1.25IN)	
	26	1	5P-8245	1	WASHER (3MM THK)	
	27	1	9W-0645	1	TUBE AS	
	28	1	6Y-4831	1	PLATE AS	
		1	5H-6202	2	PIN	
	29	1	7M-5130	1	PIN	
	30	1	7T-9272	1	GEAR-SUN (34 TEETH)	
	31	1	5M-3038	1	SEAL-O-RING (75.59MM ID)	
	32	1	6V-0473	1	RING-RETAINING	
	33	1	7T-8816	1	BALL BEARING	
	34	1	8E-8304	12	DISC-THRUST	
	35	1	7G-2516	6	GEAR-PLANETARY (24 TEETH)	
	36	1	5M-6126	6	BEARING	
	37	1	8M-5266	1	SEAL-O-RING	
	38	1	112-5585	3	SHAFT-PLANETARY	
	39	1	8P-2047	2	LOCKRING	
	40	1	112-8041	1	CARRIER-PLANETARY	
	41	1	7G-6355	1	GEAR-RING (90/75 TEETH)	
	42	1	7H-7658	10	SPRING	
	43	1	9G-0285	1	PISTON-CLUTCH	
	44	1	9G-0286	1	RING-SEAL	
	45	1	9G-0284	1	HOUSING-CLUTCH	
	46	1	112-4511	3	PIN-SPRING	
	47	1	5D-2989	3	BEARING	
	48	1	8E-8305	6	DISC-THRUST	
	49	2	9P-8614	1	GEAR-RING (90 TEETH)	
	50	2	6Y-5911	5	DISC-FRICTION	
	51	2	6I-8500	3	PLATE-CLUTCH	
	52	2	4M-9592	20	SPRING	
	53	2	8P-9507	1	PISTON-CLUTCH	
	54	2	8P-2022	2	RING-SEAL	

6I-8501 PLANETARY GP-TRANSMISSION (contd.)

i00837129

NOTE	REF NO	GRAPHIC REF	PART NUMBER	QTY	PART NAME 1 2 3 4 5 6 (PRODUCT LEVEL)	SEE PAGE
	55	2	8P-2019	2	RING-SEAL	
	56	2	9P-7757	1	GEAR-SUN (42 TEETH)	
	57	2	061-6711	1	RING-RETAINING	
	58	2	5P-5296	2	RING-RETAINING	
	59	2	9P-8626	1	GEAR-SUN (42 TEETH)	
	60	2	7T-8816	2	BALL BEARING	
	61	2	6V-0473	2	RING-RETAINING	
	62	2	3K-2511	5	DOWEL-REACTION	
	63	2	117-7826	1	HOUSING AS-CLUTCH	
		2	1A-2223	4	DOWEL	
	64	2	8P-1892	1	PISTON-CLUTCH	
	65	2	108-7743	1	SHAFT AS-OUTPUT	
	66	2	3T-8729	1	BEARING-SLEEVE	
	67	2	9G-6744	1	BEARING-SLEEVE	
	68	2	8E-8299	6	DISC-THRUST	
	69	2	8P-1916	3	GEAR-PLANETARY (20 TEETH)	
	70	2	5P-3930	3	BEARING AS-ROLLER	
	71	2	3S-2708	3	PIN-SPRING	
	72	2	9G-0289	3	SHAFT-PLANETARY	
	73	2	8P-2047	1	LOCKRING	
	74	2	7G-7218	1	CARRIER-PLANETARY	
	75	2	7T-9370	1	GEAR-SUN (51 TEETH)	
	76	2	9W-8270	1	GEAR-RING (90 TEETH)	
	77	2	9W-8269	1	PLATE-REACTION	
	78	2	9G-0290	1	HUB-CLUTCH	
	79	2	6Y-5912	4	DISC-FRICTION	
	80	2	8P-1964	3	PLATE-CLUTCH	
	81	2	6V-2478	1	RING-RETAINING	
	82	2	9G-8020	1	PLATE-RETAINER	
	83	2	7G-2343	3	SPRING-DISC	
	84	2	7G-7724	1	PISTON-CLUTCH	
	85	2	8P-2023	1	RING-SEAL	
	86	2	8D-9739	1	SEAL-RING	
	87	2	6I-8510	1	HOUSING AS-CLUTCH	
	88	2	6B-6863	1	PIN-SPRING	
	89	2	6P-7704	1	CARRIER-RING	
	90	2	5P-8194	1	RING-RETAINING	
	91	2	7G-2830	2	RING-SEAL	
	92	2	5M-3038	1	SEAL-O-RING (75.59MM ID)	
	93	2	9M-4355	10	DAMPER-BOLT	
	94	3	108-7742	1	MANIFOLD	
	95	3	5P-8245	10	WASHER (3MM THK)	
	96	3	1M-8657	2	BOLT	
	97	3	5P-5045	1	BALL BEARING	
	98	3	8M-5255	1	SEAL-O-RING (120.24MM ID)	
	99	3	1L-7388	1	RING-RETAINING	
	100	3	4M-2442	8	BOLT	
	101	3	5M-2894	2	WASHER (2.5MM THK)	
	102	3	0L-1352	2	BOLT (3/8-16X3.25IN)	
	103	3	6I-8508	1	GUARD	
	104	3	6I-8503	1	BRACKET AS	
		3	8M-8489	4	DOWEL (12.54MM DIA)	
	105	3	5P-5296	1	RING-RETAINING	
	106	3	108-7757	1	ROTOR	
	107	3	5G-8836	1	RING	
	108	3	108-7749	1	ROTOR	
	109	3	5P-5297	1	RING-RETAINING	
	110	3	3E-8848	4	SENSOR GP-SPEED (EACH INCLUDES)	
	111	3	102-8802	1	KIT-RECEPTACLE (2 PIN)	

6I-8501 PLANETARY GP-TRANSMISSION *(contd.)*

i00837129

NOTE	REF NO	GRAPHIC REF	PART NUMBER	QTY	PART NAME 1 2 3 4 5 6 (PRODUCT LEVEL)	SEE PAGE
	112	3	**3E-3365**	1	WEDGE	
	113	3	**8T-8729**	2	PIN-CONNECTOR	
E	114	3	**9X-1386**		SLEEVE (14CM)	
	115	3	**124-3717**	1	PLATE AS	
	116	3	**8C-3334**	4	RIVET-TUBULAR	
	117	3	**8E-7840**	4	CLIP	

E-ORDER BY THE CENTIMETER
R-REMFG PART MAY BE AVAILABLE

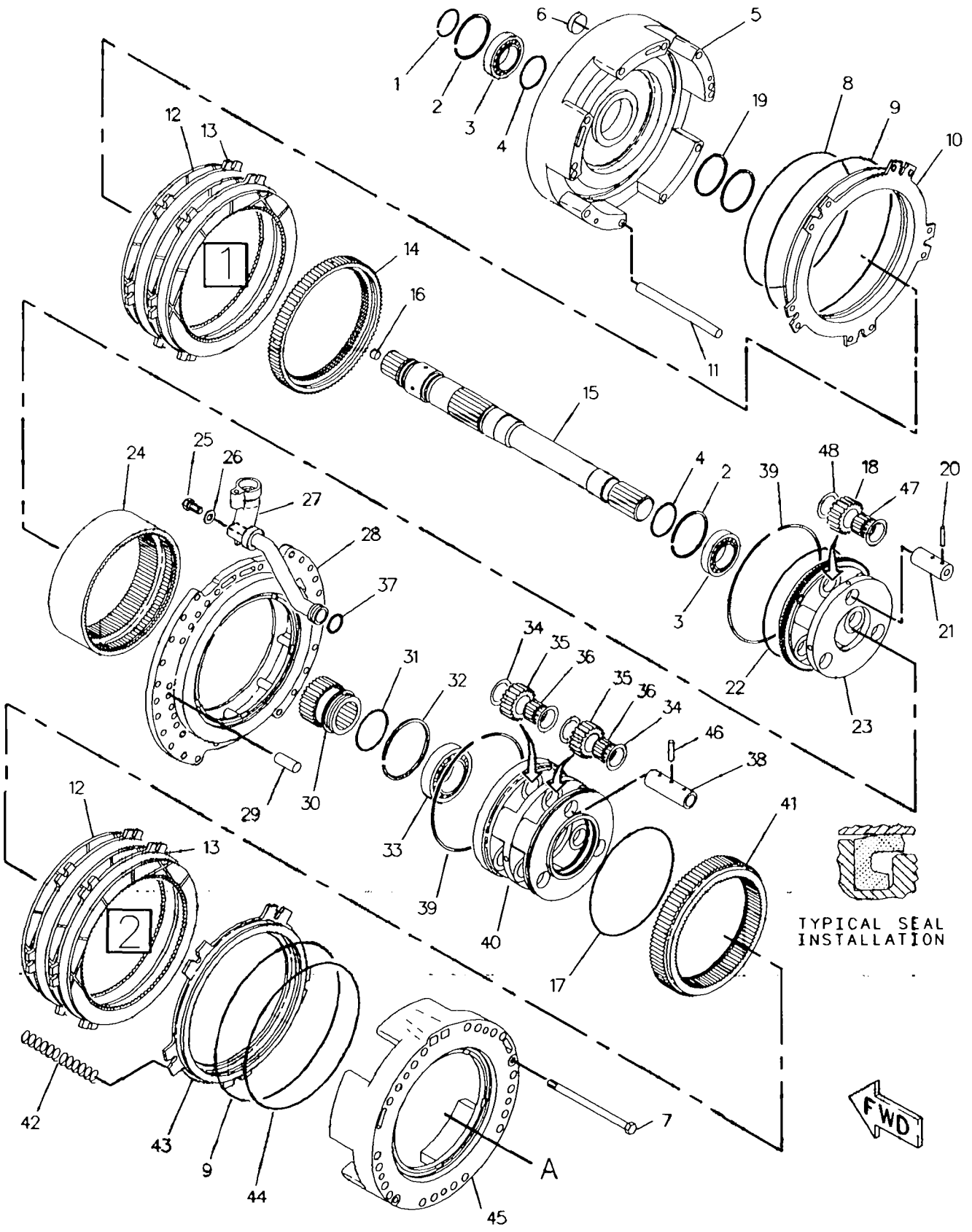

GRAPHIC #1 g00264822

6I-8501 PLANETARY GP-TRANSMISSION (contd.) i00837129

SPEED SELECT	CLUTCH ENGAGE
1-FORWARD	2 & 5
2-FORWARD	2 & 4
3-FORWARD	2 & 3
NEUTRAL	3
1-REVERSE	1 & 5
2-REVERSE	1 & 4
3-REVERSE	1 & 3

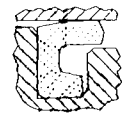

TYPICAL SEAL INSTALLATION

GRAPHIC #2 g00473887

6I-8501 PLANETARY GP-TRANSMISSION *(contd.)* i00837129

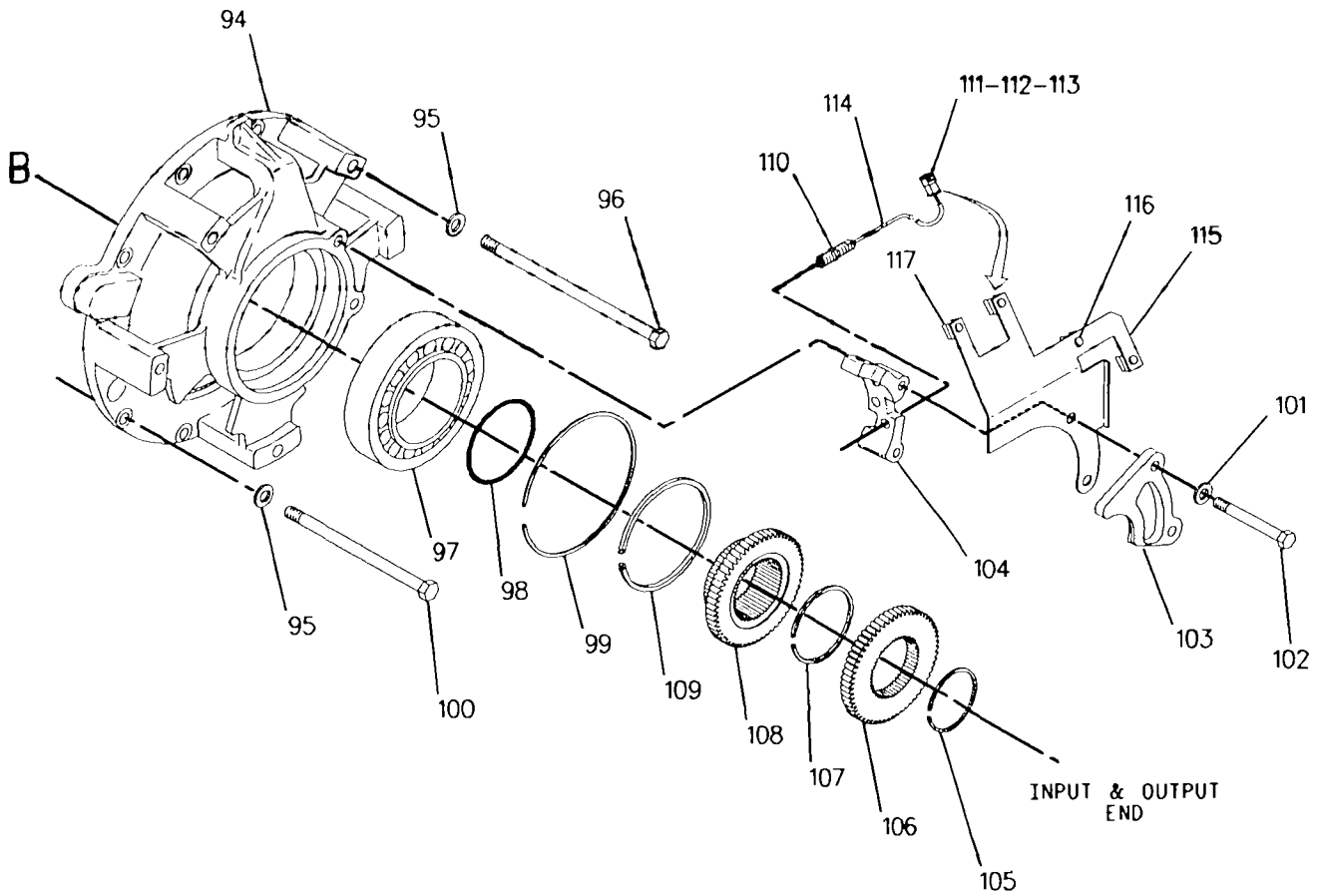

GRAPHIC #3 g00473908

6I-8501 PLANETARY GP-TRANSMISSION

S/N 1GY1-UP
PART OF 116-4652 TRANSMISSION AR
TYPE 2

SMCS-3155, 3160, 3169, 3170, 3187, 3189, 3190, 3304 i00951320

NOTE	REF NO	GRAPHIC REF	PART NUMBER	QTY	PART NAME 1 2 3 4 5 6 (PRODUCT LEVEL)	SEE PAGE
	1	1	061-6711	1	RING-RETAINING	
	2	1	068-8093	2	RING-RETAINING	
	3	1	8H-5352	2	BALL BEARING	
	4	1	8M-5010	2	SEAL (53.57MM ID)	
	5	1	108-7754	1	HOUSING AS	
	6	1	3F-5022	1	PLUG-CUP	
	7	1	1A-5183	2	BOLT (3/8-16X4.75IN)	
	8	1	9G-0281	1	RING-SEAL	
	9	1	8P-2022	2	RING-SEAL	
	10	1	9G-0280	1	PISTON-CLUTCH	
	11	1	3K-2511	5	DOWEL-REACTION	
	12	1	9P-7390	8	DISC AS-FRICTION	
R	13	1	8P-2051	6	PLATE-CLUTCH	
	14	1	6Y-1602	1	COUPLING (75 TEETH)	
	15	1	108-8853	1	SHAFT AS	
	16	1	3T-4968	1	PLUG-ORIFICE	
	17	1	8P-2053	1	SEAL-RING	
	18	1	6T-7882	3	GEAR (25 TEETH)	
	19	1	3T-4377	2	SEAL-RING	
	20	1	3S-2708	3	PIN-SPRING	
	21	1	9P-8623	3	SHAFT-PLANETARY	
C	22	1	131-4091	1	SEAL-RING	
	23	1	6Y-4819	1	CARRIER-PLANETARY	
	24	1	7T-3950	1	GEAR (83 TEETH)	
	25	1	030-8538	1	BOLT (1/2-13X1.25IN)	
	26	1	5P-8245	1	WASHER (3MM THK)	
	27	1	9W-0645	1	TUBE AS	
	28	1	6Y-4831	1	PLATE AS	
		1	7M-5130	1	PIN (SPRING)	
	29	1	5H-6202	2	PIN	
	30	1	7T-9272	1	GEAR-SUN (34 TEETH)	
	31	1	5M-3038	1	SEAL-O-RING (75.59MM ID)	
	32	1	6V-0473	1	RING-RETAINING	
	33	1	7T-8816	1	BALL BEARING	
	34	1	8E-8304	12	DISC-THRUST	
	35	1	7G-2516	6	GEAR-PLANETARY (24 TEETH)	
	36	1	5M-6126	6	BEARING	
	37	1	8M-5266	1	SEAL-O-RING	
	38	1	112-5585	3	SHAFT-PLANETARY	
C	39	1	144-4284	2	LOCKRING	
	40	1	112-8041	1	CARRIER-PLANETARY	
	41	1	7G-6355	1	GEAR-RING (90/75 TEETH)	
	42	1	7H-7658	10	SPRING	
	43	1	9G-0285	1	PISTON-CLUTCH	
	44	1	9G-0286	1	RING-SEAL	
	45	1	9G-0284	1	HOUSING-CLUTCH	
	46	1	112-4511	3	PIN-SPRING	
	47	1	5D-2989	3	BEARING	
	48	1	8E-8305	6	DISC-THRUST	
	49	2	9P-8614	1	GEAR-RING (90 TEETH)	
	50	2	6Y-5911	5	DISC-FRICTION	
	51	2	6I-8500	3	PLATE-CLUTCH	
	52	2	4M-9592	20	SPRING	
	53	2	8P-9507	1	PISTON-CLUTCH	
	54	2	8P-2022	2	RING-SEAL	

6I-8501 PLANETARY GP-TRANSMISSION (contd.)

i00951320

NOTE	REF NO	GRAPHIC REF	PART NUMBER	QTY	PART NAME 1 2 3 4 5 6 (PRODUCT LEVEL)	SEE PAGE
	55	2	8P-2019	2	RING-SEAL	
	56	2	9P-7757	1	GEAR-SUN (42 TEETH)	
	57	2	061-6711	1	RING-RETAINING	
	58	2	5P-5296	2	RING-RETAINING	
	59	2	9P-8626	1	GEAR-SUN (42 TEETH)	
	60	2	7T-8816	2	BALL BEARING	
	61	2	6V-0473	2	RING-RETAINING	
	62	2	3K-2511	5	DOWEL-REACTION	
	63	2	117-7826	1	HOUSING AS-CLUTCH	
		2	1A-2223	4	DOWEL	
	64	2	8P-1892	1	PISTON-CLUTCH	
	65	2	108-7743	1	SHAFT AS-OUTPUT	
	66	2	3T-8729	1	BEARING-SLEEVE	
	67	2	9G-6744	1	BEARING-SLEEVE	
	68	2	8E-8299	6	DISC-THRUST	
	69	2	8P-1916	3	GEAR-PLANETARY (20 TEETH)	
	70	2	5P-3930	3	BEARING AS-ROLLER	
	71	2	3S-2708	3	PIN-SPRING	
	72	2	9G-0289	3	SHAFT-PLANETARY	
C	73	2	144-4284	1	LOCKRING	
	74	2	7G-7218	1	CARRIER-PLANETARY	
	75	2	7T-9370	1	GEAR-SUN (51 TEETH)	
	76	2	9W-8270	1	GEAR-RING (90 TEETH)	
	77	2	9W-8269	1	PLATE-REACTION	
	78	2	9G-0290	1	HUB-CLUTCH	
	79	2	6Y-5912	4	DISC-FRICTION	
	80	2	8P-1964	3	PLATE-CLUTCH	
	81	2	6V-2478	1	RING-RETAINING	
	82	2	9G-8020	1	PLATE-RETAINER	
	83	2	7G-2343	3	SPRING-DISC	
	84	2	7G-7724	1	PISTON-CLUTCH	
	85	2	8P-2023	1	RING-SEAL	
	86	2	8D-9739	1	SEAL-RING	
	87	2	6I-8510	1	HOUSING AS-CLUTCH	
	88	2	6B-6863	1	PIN-SPRING	
	89	2	6P-7704	1	CARRIER-RING	
	90	2	5P-8194	1	RING-RETAINING	
	91	2	7G-2830	2	RING-SEAL	
	92	2	5M-3038	1	SEAL-O-RING (75.59MM ID)	
	93	2	9M-4355	10	DAMPER-BOLT	
C	94	3	144-7878	1	MANIFOLD	
	95	3	5P-8245	10	WASHER (3MM THK)	
	96	3	1M-8657	2	BOLT	
	97	3	5P-5045	1	BALL BEARING	
	98	3	8M-5255	1	SEAL-O-RING (120.24MM ID)	
	99	3	1L-7388	1	RING-RETAINING	
	100	3	4M-2442	8	BOLT	
C	101	3	5M-2894	4	WASHER (2.5MM THK)	
	102	3	0S-1619	2	BOLT (3/8X3.0IN)	
C	103	3	0S-0509	2	BOLT (3/8X.75IN)	
C	104	3	152-1330	1	BRACKET AS	
		3	8M-8489	2	DOWEL (12.54MM DIA)	
	105	3	5P-5296	1	RING-RETAINING	
C	106	3	144-7881	1	ROTOR	
	107	3	5G-8836	1	RING	
	108	3	108-7749	1	ROTOR	
	109	3	5P-5297	1	RING-RETAINING	
	110	3	3E-8848	4	SENSOR GP-SPEED	
					(EACH INCLUDES)	

6I-8501 PLANETARY GP-TRANSMISSION *(contd.)* i00951320

NOTE	REF NO	GRAPHIC REF	PART NUMBER	QTY	PART NAME 1 2 3 4 5 6 (PRODUCT LEVEL)	SEE PAGE
	111	3	**102-8802**	1	KIT-RECEPTACLE (2 PIN) (INCL. RECEPTACLE AS & WEDGE)	
	112	3	**3E-3365**	1	WEDGE	
	113	3	**8T-8729**	2	PIN-CONNECTOR	
BE	114	3	**9X-1386**		SLEEVE	
C	115	3	**144-7874**	1	BRACKET AS	
	116	3	**8C-3334**	2	RIVET-TUBULAR	
	117	3	**8E-7840**	4	CLIP	

B-USE AS REQUIRED
C-CHANGE FROM PREVIOUS TYPE
E-ORDER BY THE CENTIMETER
R-REMFG PART MAY BE AVAILABLE

6I-8501 PLANETARY GP-TRANSMISSION (contd.) i00951320

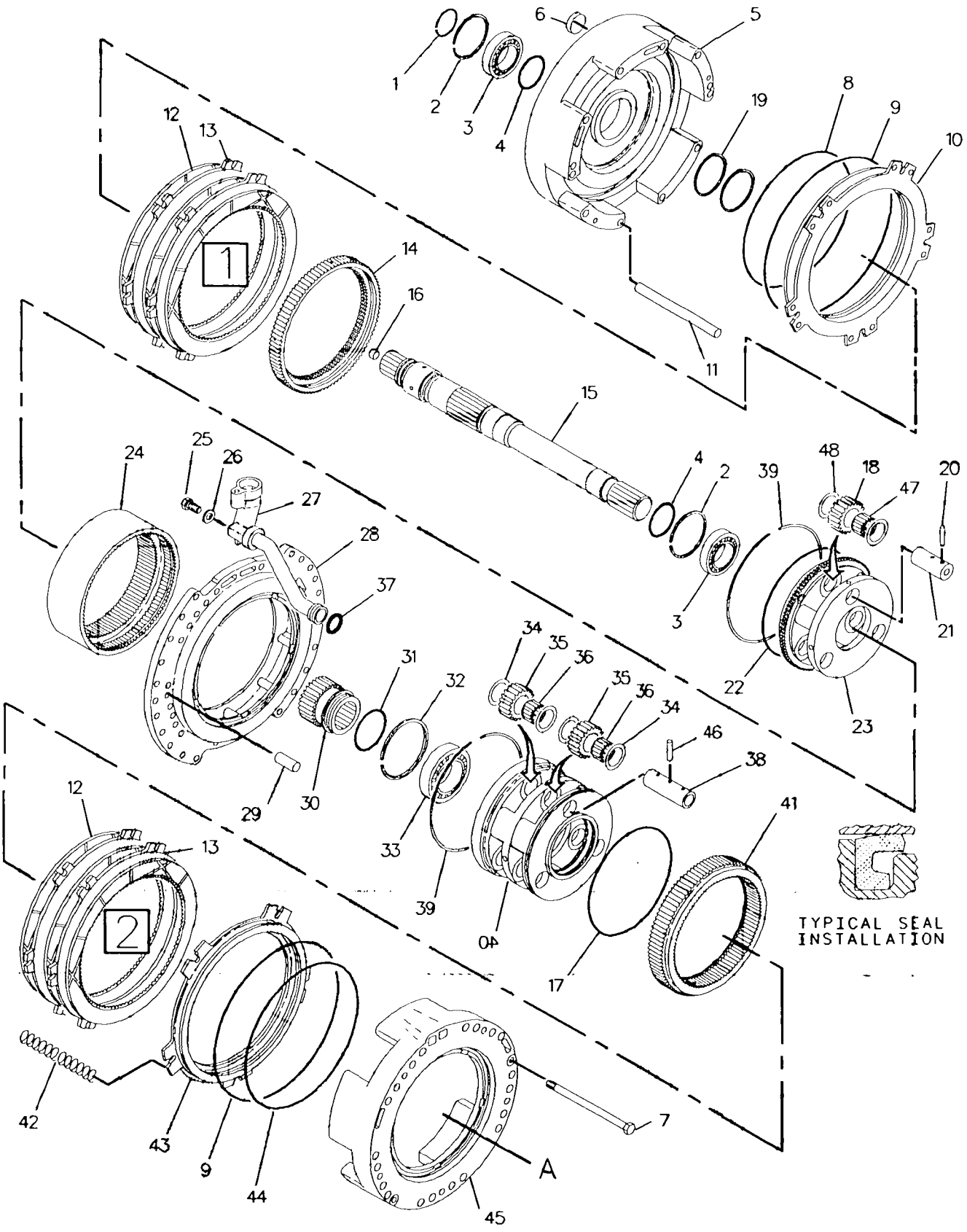

GRAPHIC #1 g00483597

6I-8501 PLANETARY GP-TRANSMISSION *(contd.)* i00951320

SPEED SELECT	CLUTCH ENGAGE
1-FORWARD	2 & 5
2-FORWARD	2 & 4
3-FORWARD	2 & 3
NEUTRAL	3
1-REVERSE	1 & 5
2-REVERSE	1 & 4
3-REVERSE	1 & 3

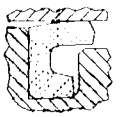

TYPICAL SEAL INSTALLATION

GRAPHIC #2 g00473887

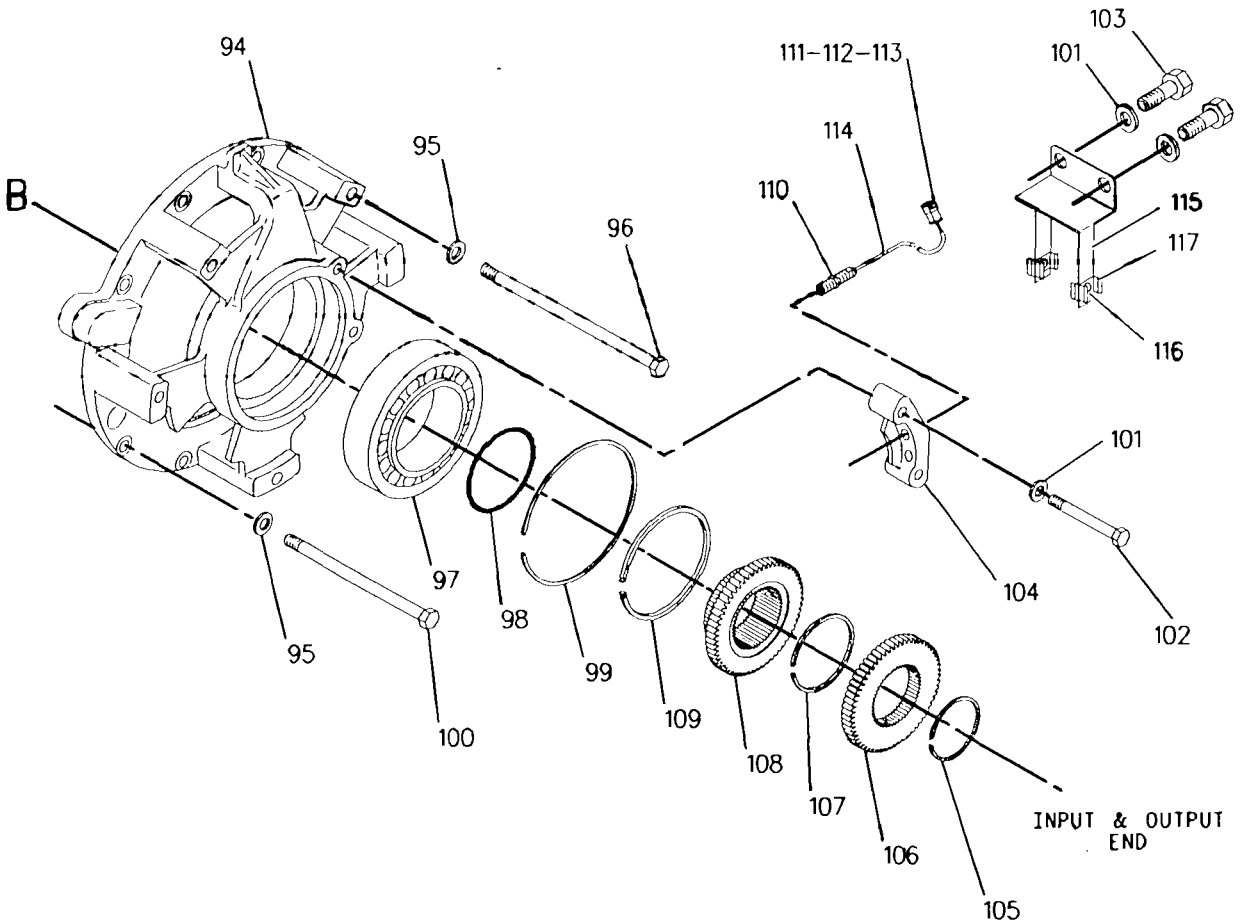

GRAPHIC #3 g00485205

7G-7212 SEGMENT GP-SPROCKET

PIN 4MN1-UP

PART OF 7G-5532 FINAL DRIVE GP

SMCS-4155 i00587346

NOTE	REF NO	GRAPHIC REF	PART NUMBER	QTY	PART NAME 1 2 3 4 5 6 (PRODUCT LEVEL)	SEE PAGE
	1	1	6Y-2931	5	SEGMENT-SPROCKET	
	2	1	2S-5658	25	WASHER-HARD (3.0MM THK)	
	3	1	6V-0937	25	BOLT-SPROCKET	
		1	7H-3607	25	NUT	

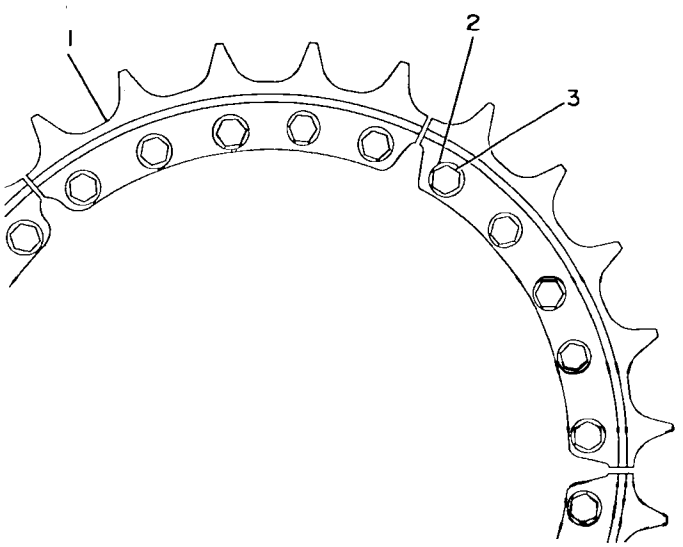

GRAPHIC #1 g00173994

8E-9041 SEGMENT GP-SPROCKET

PIN 2YN1-UP; 3ZN1-UP; 4MN1-UP; 5LN1-UP; 6JN1-UP; 7KN1-UP; 8LN1-UP; 9PN1-UP
PART OF 138-1850, 138-1856, 1Q-2274,
1Q-2275, 1Q-4303, 1Q-4304 FINAL DRIVE GP

SMCS-4155 i00574784

NOTE	REF NO	GRAPHIC REF	PART NUMBER	QTY	PART NAME 1 2 3 4 5 6 (PRODUCT LEVEL)	SEE PAGE
	1	1	102-6677	5	SEGMENT-SPROCKET	
	2	1	6V-0937	25	BOLT-SPROCKET	
	3	1	2S-5658	25	WASHER-HARD (3.0MM THK)	
	4	1	7H-3607	25	NUT	

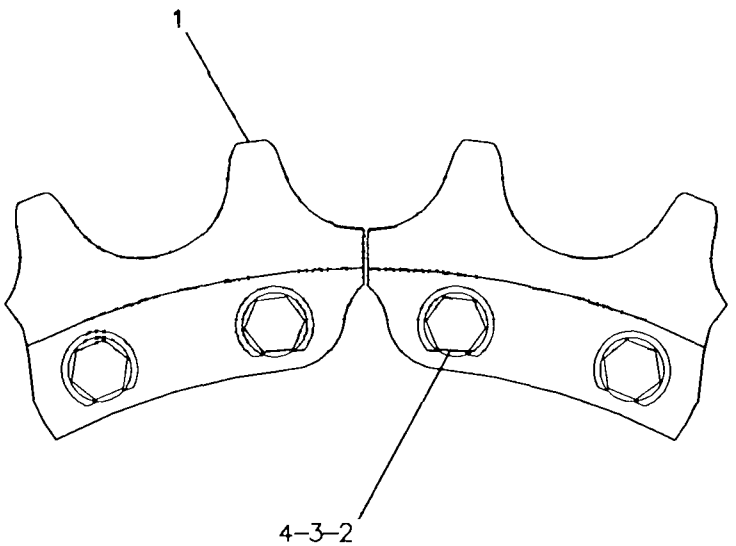

GRAPHIC #1 g00223953

POWER TRAIN

116-4652 TRANSMISSION AR

S/N 1GY1-UP

PART OF 151-6170 GAUGE AR-TRACK

SMCS-3030, 3060, 3160 i00601178

NOTE	PART NUMBER	QTY	PART NAME 1 2 3 4 5 6 (PRODUCT LEVEL)	SEE PAGE
Y	*108-6983*	1	CASE & PARTS GP-PLANETARY	194
Y	*108-7011*	1	CONTROL GP-TRANSMISSION HYD	198
Y	*7G-4634*	1	GEAR GP-BEVEL & TRANSFER	226
Y	*6I-8501*	1	PLANETARY GP	230

Y-SEPARATE ILLUSTRATION

118-1336 VALVE GP-MODULATING

S/N 1GY1-UP

PART OF 108-7011 CONTROL GP-TRANSMISSION HYD

FIELD REPLACEMENT FOR 159-0931–PAGE 247

SMCS-3139 i00843973

NOTE	REF NO	GRAPHIC REF	PART NUMBER	QTY	PART NAME 1 2 3 4 5 6 (PRODUCT LEVEL)	SEE PAGE
	1	1	104-3947	1	LOCKNUT (5/8-11 THD)	
	2	1	122-4974	1	SPACER	
	3	1	114-4380	1	COIL AS	
		1	3E-3362	1	WEDGE-PLUG LOCK	
		1	8T-8730	2	SOCKET-CONNECTOR	
	4	1	102-8807	1	KIT-CONNECTING PLUG	
	5	1	1S-9593	2	STRAP-CABLE (0.62IN DIA)	
Y	6	1	121-0357	1	VALVE GP-MODULATING	246
	7	1	6V-3965	1	NIPPLE AS	
	8	1	3J-1907	1	SEAL-O-RING (11.89MM ID)	

Y-SEPARATE ILLUSTRATION

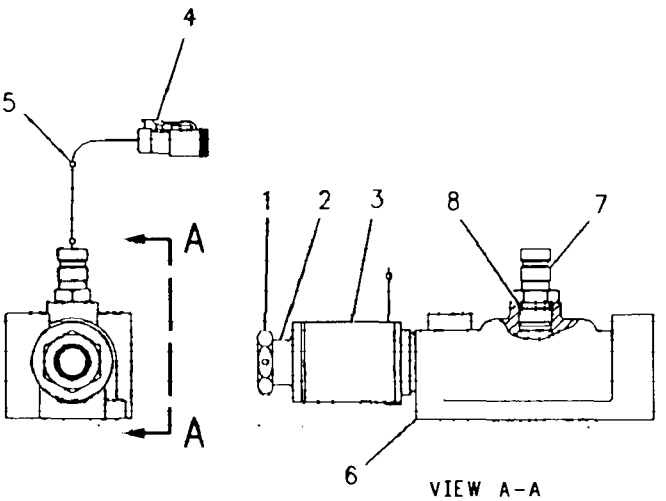

GRAPHIC #1 g00086248

121-0357 VALVE GP-MODULATING

S/N 1GY1-UP

PART OF 118-1336, 159-0931 VALVE GP-MODULATING

SMCS-3139 i00995929

NOTE	REF NO	GRAPHIC REF	PART NUMBER	QTY	PART NAME 1 2 3 4 5 6 (PRODUCT LEVEL)	SEE PAGE
	1	1	8E-3095	1	BODY	
	2	1	112-5282	1	SEAL-O-RING (16.36MM ID)	
	3	1	117-2983	1	SEAL-O-RING	
	4	1	116-1254	1	SPOOL AS	
	5	1	118-3731	1	SPRING	
	6	1	121-0358	1	CARTRIDGE AS	
	7	1	5P-7538	1	BALL	

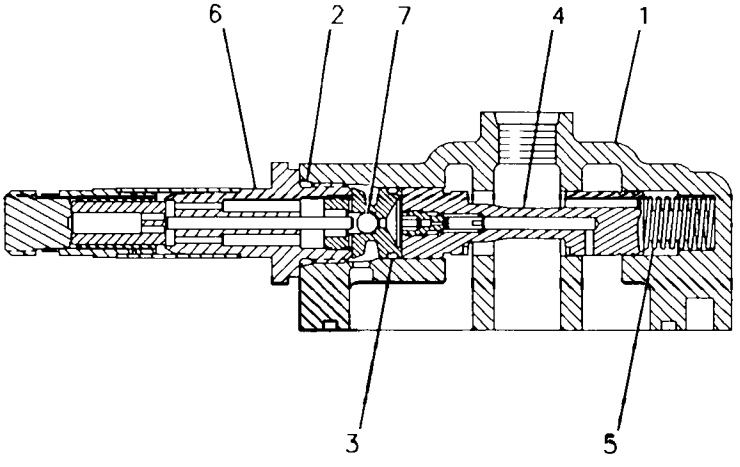

GRAPHIC #1 g00086284

159-0931 VALVE GP-MODULATING

S/N 1GY1-UP

PART OF 108-7011 CONTROL GP-TRANSMISSION HYD

FIELD REPLACEMENT ORDER 118-1336–PAGE 245

SMCS-3139 i00995931

NOTE	REF NO	GRAPHIC REF	PART NUMBER	QTY	PART NAME 1 2 3 4 5 6 (PRODUCT LEVEL)	SEE PAGE
	1	1	104-3947	1	LOCKNUT (5/8-11 THD)	
	2	1	122-4974	1	SPACER	
	3	1	3J-1907	1	SEAL-O-RING (11.89MM ID)	
Y	4	1	121-0357	1	VALVE GP-MODULATING	246
	5	1	6V-3965	1	NIPPLE AS	
	6	1	114-4380		COIL AS	
	7	1	1S-9593	2	STRAP-CABLE (0.62IN DIA)	
	8	1	102-8807	1	KIT-CONNECTING PLUG (2 PIN) (INCL. PLUG AS & WEDGE)	
	9	1	8T-8730	2	SOCKET-CONNECTOR	
	10	1	3E-3362	1	WEDGE-PLUG LOCK	

Y-SEPARATE ILLUSTRATION

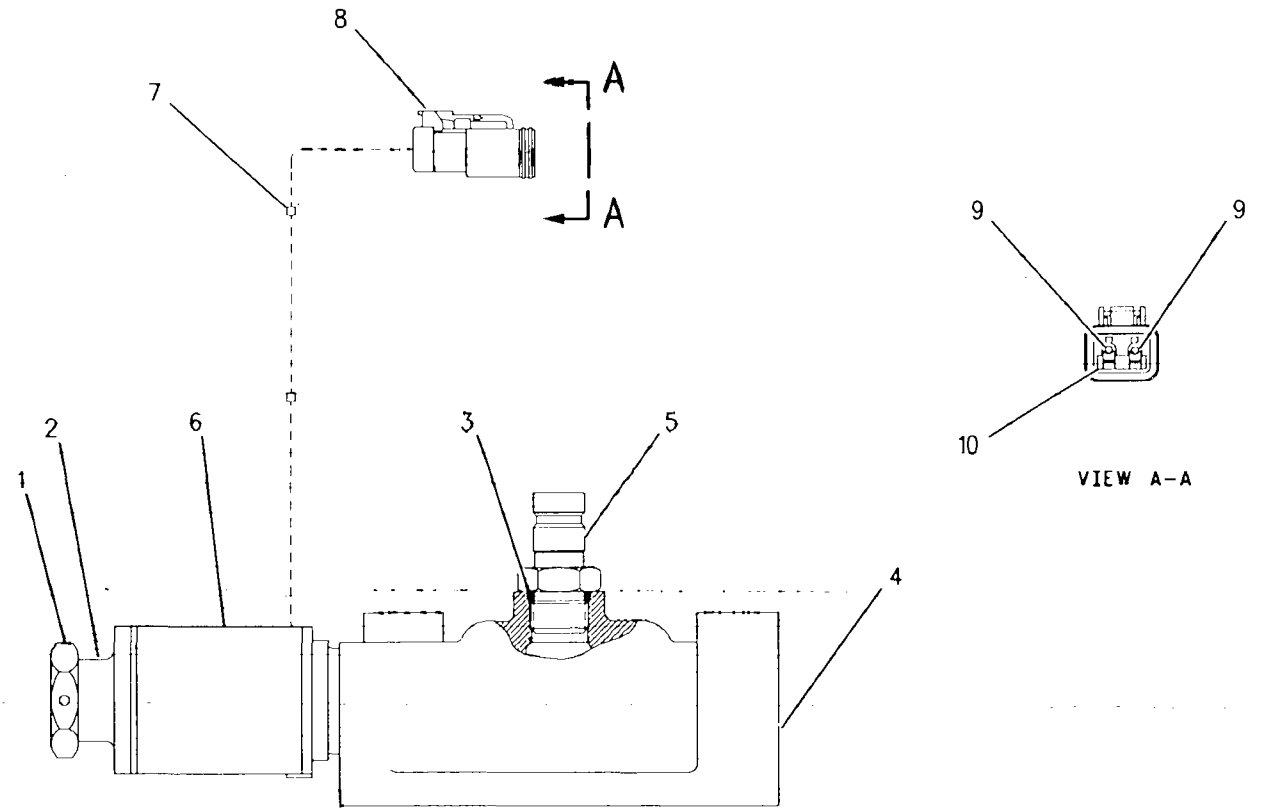

GRAPHIC #1 g00471468

FRAME AND BODY

150-2983 BAR AR-STRIKER-CUSTOM

PIN 4MN1-UP; 5LN1-UP

FOR USE WITH 559 MM (22 IN) MAXIMUM TRACK WIDTH

SMCS-7180 i01003212

NOTE	REF NO	GRAPHIC REF	PART NUMBER	QTY	PART NAME 1 2 3 4 5 6 (PRODUCT LEVEL)	SEE PAGE
	1	1	**147-8546**	1	PLATE AS	
	2	1	**147-8557**	1	FRAME AS-TRACK ROLLER	
		1	*147-8552*	4	PLATE	
	3	1	**147-8553**	1	PLATE AS	
	4	1	**7X-0406**	12	BOLT (1-8X3IN)	
	5	1	**8T-5361**	40	WASHER (5MM THK)	
	6	1	**147-8543**	1	PLATE AS	
	7	1	**147-8556**	1	PLATE AS	
	8	1	**147-8550**	1	PLATE AS	
	9	1	**7X-0402**	28	BOLT (1-8X2IN)	
	10	1	**147-8548**	1	PLATE AS	

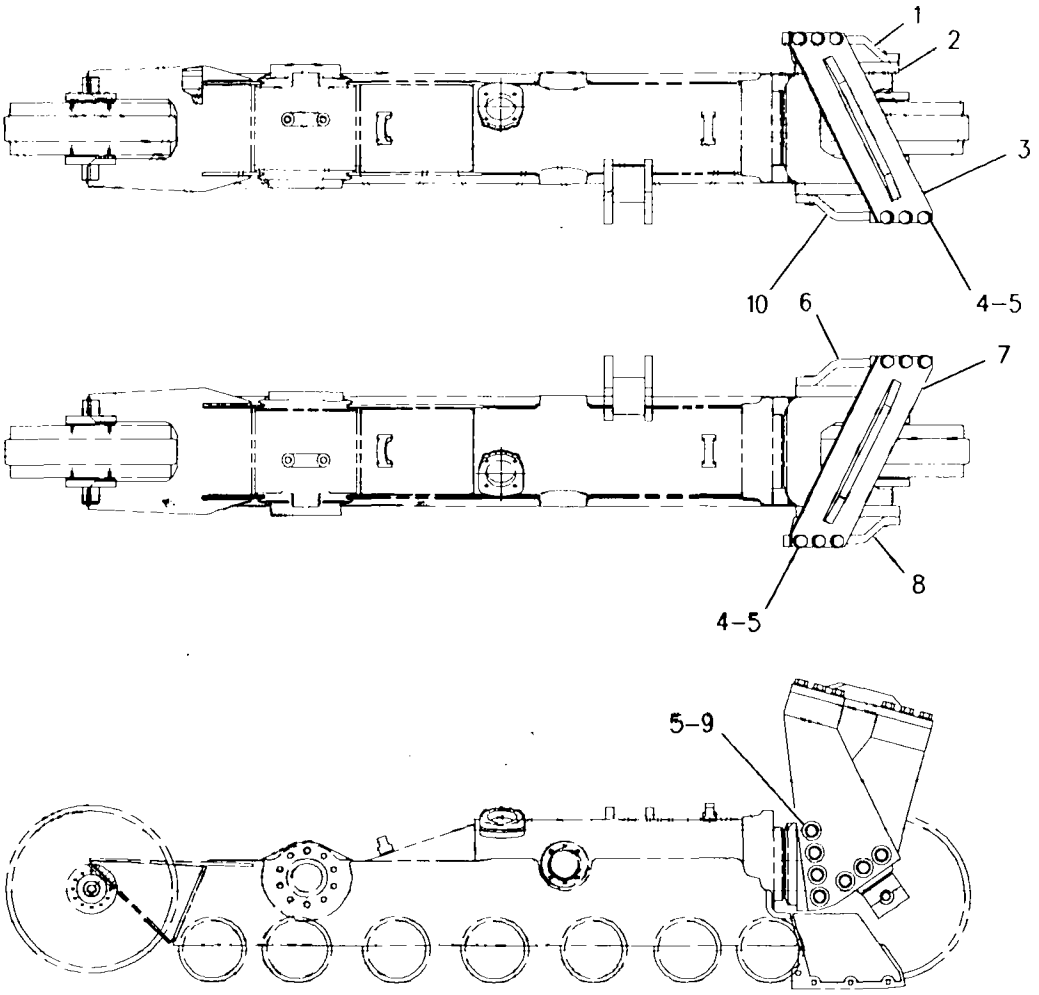

GRAPHIC #1 g00519876

1Q-4191 BAR AS-STRIKER—CUSTOM

PIN 8LN1-UP; 9PN1-UP

LGP

PART OF 1Q-4187 STRIKER GP-REAR

SMCS-7180 i01009875

NOTE	REF NO	GRAPHIC REF	PART NUMBER	QTY	PART NAME 1 2 3 4 5 6 (PRODUCT LEVEL)	SEE PAGE
	1	1	9Z-8224	1	CHANNEL	
	2	1	9Z-9214	2	ROD AS	
	3	1	9Z-8229	2	BAR	
	4	1	8T-1579	1	PAWL	
	5	1	1Q-4190	2	PLATE	
	6	1	1Q-4193	2	PLATE	
	7	1	1Q-4188	1	PLATE	
	8	1	1Q-4195	2	PLATE	
	9	1	1Q-4192	1	PLATE	
	10	1	8T-8919	8	BOLT (1/2-13X1.75IN)	
	11	1	8T-4223	8	WASHER-HARD (3MM THK)	
	12	1	1K-6872	8	LOCKNUT (1/2-13 THD)	
	13	1	1Z-9932	2	HINGE AS	
	14	1	107-2734	1	DOOR AS	
Y	15	1	8Y-6400	1	LATCH AS	284
	16	1	107-2733	1	DOOR AS	
	17	1	1Z-9933	2	HINGE AS	
	18	1	8F-3556	4	SPACER	
	19	1	9Z-8225	2	PLATE	
	20	1	8Z-8226	1	PLATE	
	21	1	1Q-4189	1	PLATE	
	22	1	9B-7237	2	BOLT (3/8-16X1.25IN)	
	23	1	3B-4617	2	COTTER	
	24	1	2K-4973	2	LOCKNUT (3/8-16 THD)	
	25	1	2K-8467	2	PIN-SPRING	
	26	1	1L-4418	2	SPRING-SHUTOFF	
	27	1	5P-1076	2	WASHER-HARD (4MM THK)	
	28	1	8T-9496	2	LOCKNUT (9/16-18 THD)	
	29	1	2Q-5098	1	PLATE	
---	30	1	1P-2841	2	SPACER	
	31	1	9Z-9211	2	PLATE	
	32	1	5M-2894	2	WASHER (2.5MM THK)	

Y-SEPARATE ILLUSTRATION

1Q-4191 BAR AS-STRIKER *(contd.)* i01009875

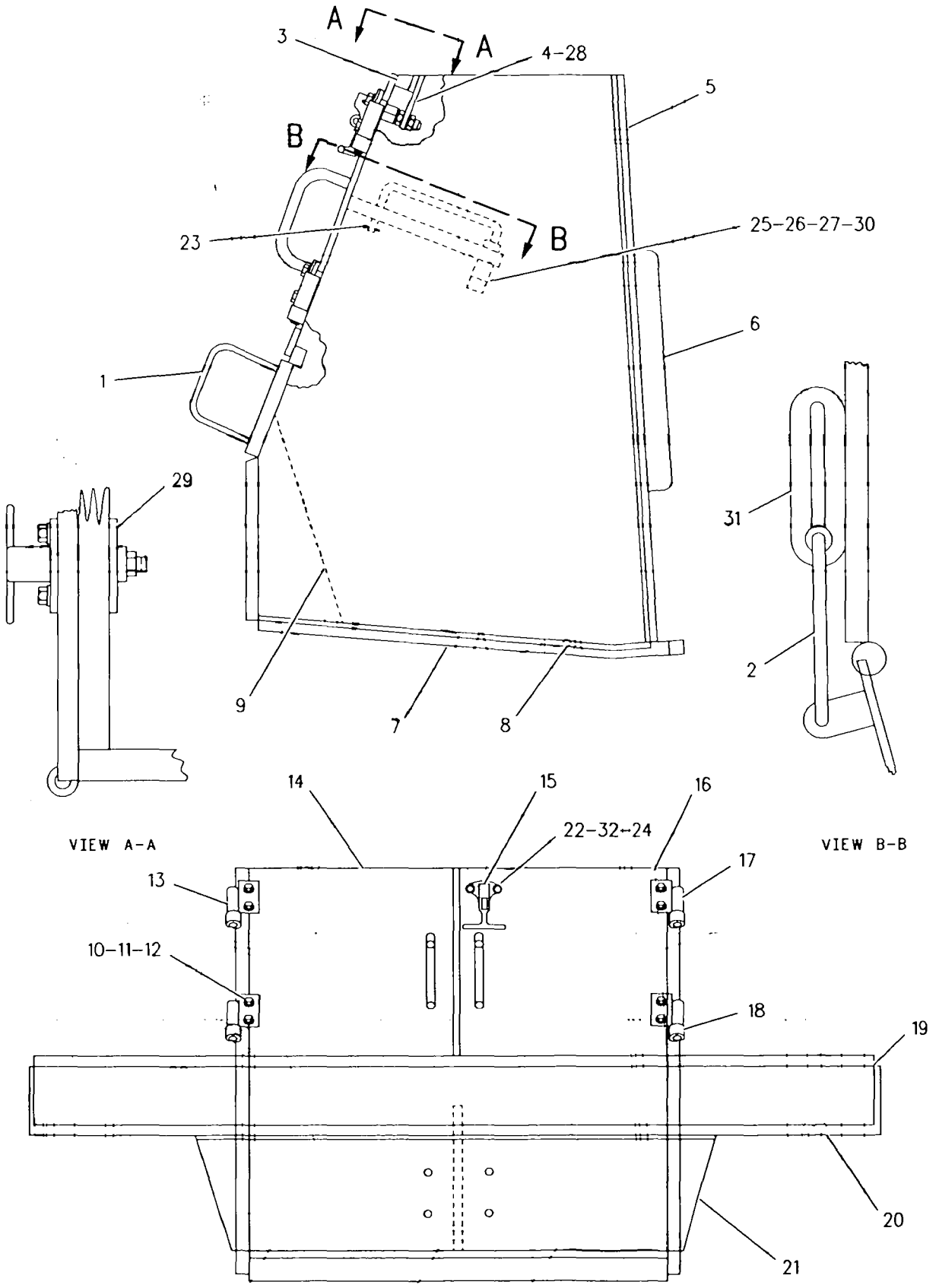

GRAPHIC #1 g00287744

9Z-8222 BAR AS-STRIKER-CUSTOM

PIN 2YN1-UP; 3ZN1-UP; 4MN1-UP; 5LN1-UP
PART OF 1Q-4240, 1Z-0686 STRIKER GP-REAR

SMCS-7180 i01014458

NOTE	REF NO	GRAPHIC REF	PART NUMBER	QTY	PART NAME 1 2 3 4 5 6 (PRODUCT LEVEL)	SEE PAGE
	1	1	9Z-9214	2	ROD AS	
	2	1	8T-1579	1	PAWL	
	3	1	8T-8919	8	BOLT (1/2-13X1.75IN)	
	4	1	8T-4223	8	WASHER-HARD (3MM THK)	
	5	1	1K-6872	8	LOCKNUT (1/2-13 THD)	
	6	1	1Z-9932	2	HINGE AS	
	7	1	9Z-8236	1	DOOR AS	
Y	8	1	8Y-6400	1	LATCH AS	284
	9	1	9Z-8234	1	DOOR AS	
	10	1	1Z-9933	2	HINGE AS	
	11	1	8F-3556	4	SPACER	
	12	1	5S-7382	2	BOLT (3/8-16X34.92)	
	13	1	3B-4617	2	COTTER	
	14	1	2K-4973	2	LOCKNUT (3/8-16 THD)	
	15	1	2K-8467	2	PIN-SPRING	
	16	1	1L-4418	2	SPRING-SHUTOFF	
	17	1	5P-1076	2	WASHER-HARD (4MM THK)	
	18	1	8T-9496	2	LOCKNUT (9/16-18 THD)	
	19	1	1P-2841	2	SPACER	
	20	1	9Z-9211	2	PLATE	
	21	1	8T-4896	2	WASHER-HARD (2.5MM THK)	

Y-SEPARATE ILLUSTRATION

9Z-8222 BAR AS-STRIKER *(contd.)*

i01014458

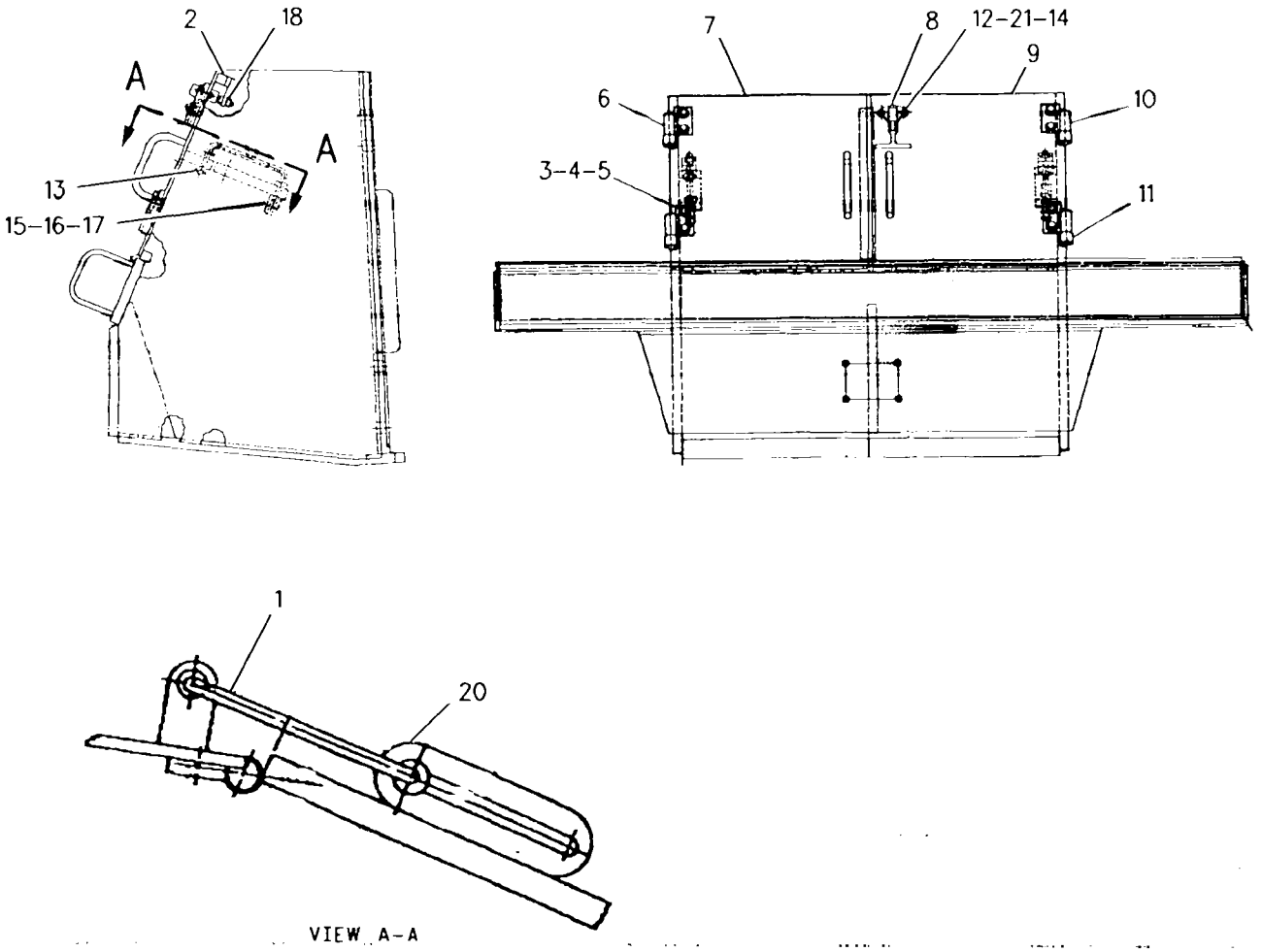

GRAPHIC #1

g00284900

1Z-0982 BAR GP-STRIKER-CUSTOM-REAR

PIN 2YN1-UP; 3ZN1-UP; 4MN1-UP; 5LN1-UP

TRACK ROLLER FRAME MOUNTED

SMCS-7180 i01005875

NOTE	REF NO	GRAPHIC REF	PART NUMBER	QTY	PART NAME 1 2 3 4 5 6 (PRODUCT LEVEL)	SEE PAGE
	1	1	7X-0406	16	BOLT (1-8X3IN)	
	2	1	8T-5361	16	WASHER (5MM THK)	
	3	1	7X-0349	8	BOLT (5/8-11X3IN)	
	4	1	8T-4122	8	WASHER (3.5MM THK)	

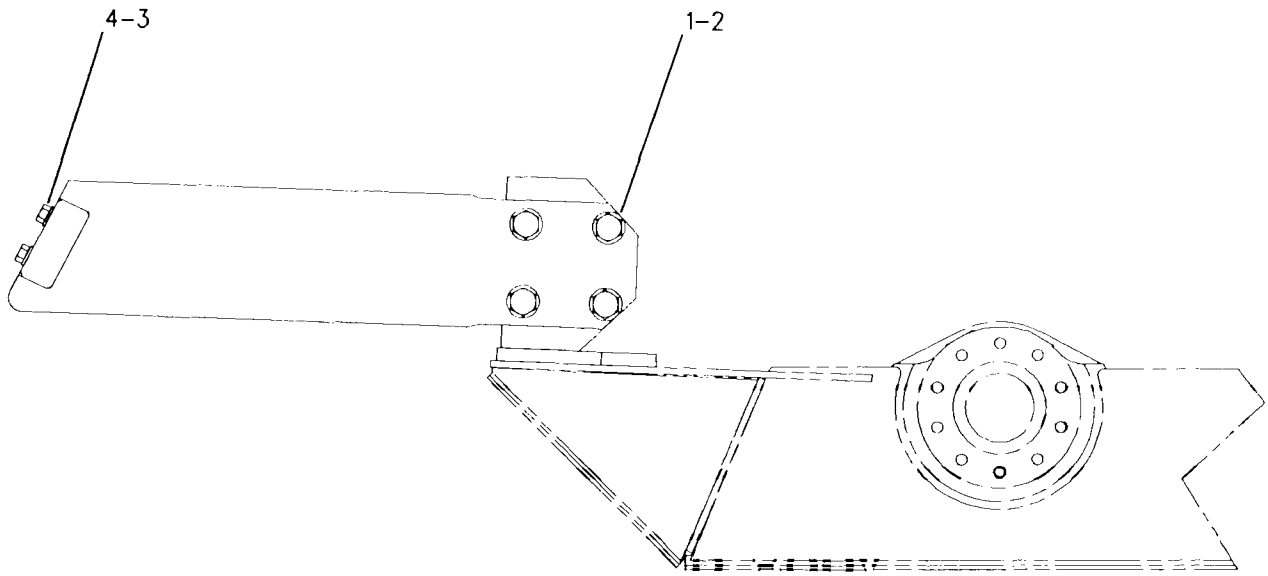

GRAPHIC #1 g00521136

FRAME AND BODY

153-9175 CASE & FRAME AS–CUSTOM

PIN 5LN1-UP

PART OF 156-4550 CASE & FRAME GP

SMCS-7051 **i01005823**

NOTE	REF NO	GRAPHIC REF	PART NUMBER	QTY	PART NAME 1 2 3 4 5 6 (PRODUCT LEVEL)	SEE PAGE
	1	1	**8G-8719**	1	TUBE AS	
	2	1	**8G-5247**	2	SLEEVE (28.1MM OD)	
	3	1	**158-6650**	2	MOUNT AS	
	4	1	**3J-5169**	3	NUT (5/8-11 THD)	
	5	1	**4L-6454**	5	BOLT (3/8-16X1.0IN)	
	6	1	**5K-0461**	1	CLIP	
	7	1	**5P-1075**	5	WASHER-HARD (3MM THK)	
	8	1	**5R-0939**	1	CLIP (TAB)	
	9	1	**5R-0940**	1	CLIP (SLOT)	
	10	1	**8D-3508**	1	BOSS (3/8-16 THD)	
	11	1	**8G-4386**	10	SLEEVE (24.9MM OD)	
Y	12	1	**153-9176**	1	CASE & FRAME AS	258

Y-SEPARATE ILLUSTRATION

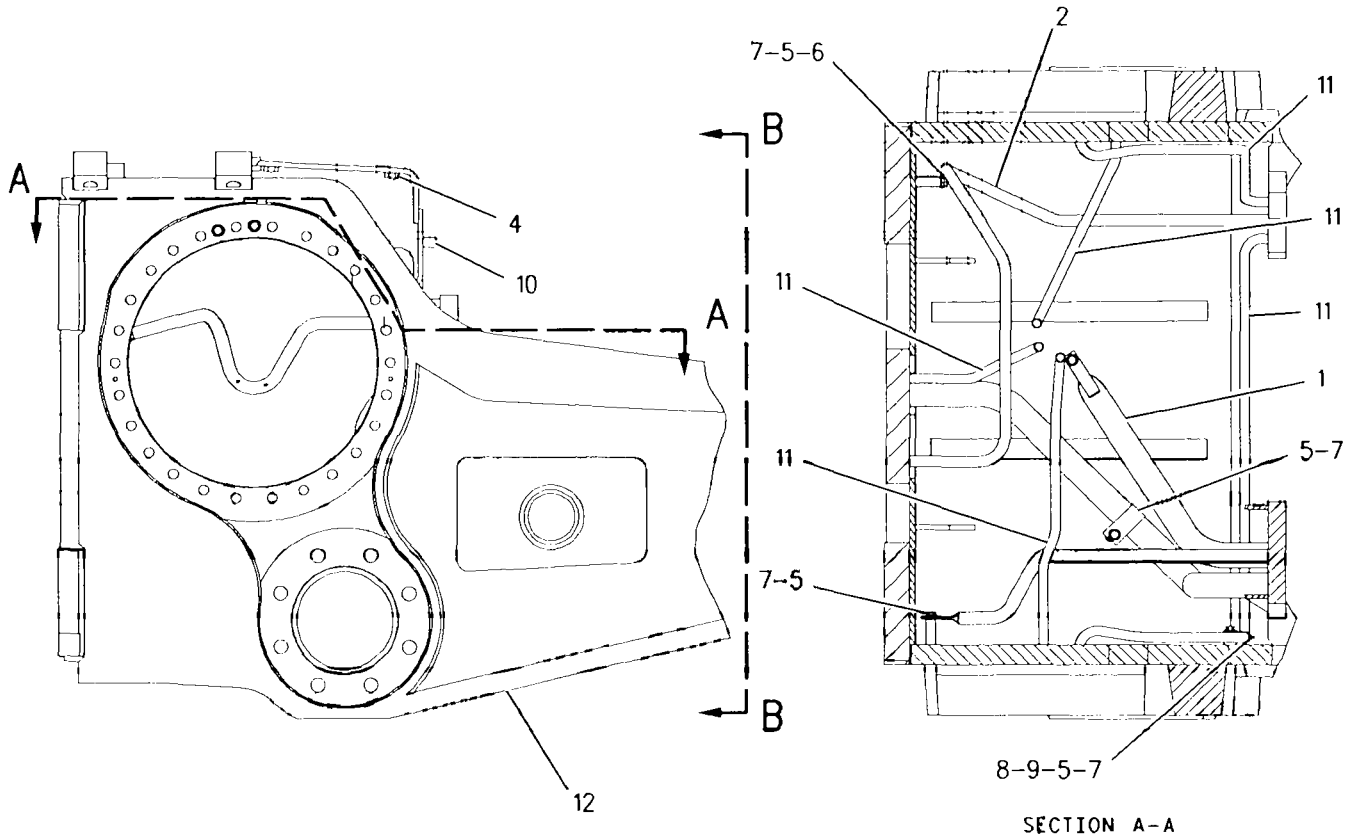

SECTION A-A

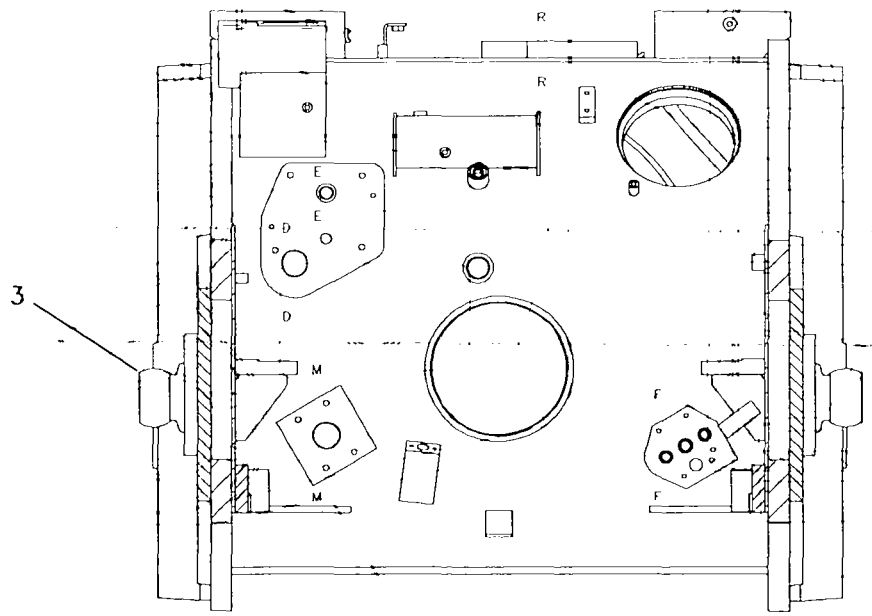

SECTION B-B

GRAPHIC #1 g00521178

FRAME AND BODY

153-9176 CASE & FRAME AS—CUSTOM

PIN 5LN1-UP

PART OF 153-9175 CASE & FRAME AS

SMCS-7051 i01005814

NOTE	REF NO	GRAPHIC REF	PART NUMBER	QTY	PART NAME 1 2 3 4 5 6 (PRODUCT LEVEL)	SEE PAGE
	1	1	**158-6656**	2	GUSSET	
	2	1	**1F-5339**	1	LUG (3/8-16 THD)	
	3	1	**3T-1002**	14	PLATE	
	4	1	**3T-3812**	2	BLOCK	
	5	1	**3W-0677**	4	PLATE	
	6	1	**8J-1196**	2	LUG (3/8-16 THD)	
	7	1	**153-9177**	1	FRAME AS-RH	
	8	1	**153-9178**	1	FRAME AS-LH	
	9	1	**155-3907**	1	GUARD AS	
	10	1	**156-4541**	2	PLATE	
	11	1	**164-4301**	2	PLATE	
	12	1	**1F-0748**	4	NUT-WELD (1/2-13 THD)	
	13	1	**1F-0750**	6	NUT-WELD (3/8-16 THD)	
	14	1	**3R-0451**	1	BOSS (3/8-16 THD)	
	15	1	**7T-1099**	5	LINK	
	16	1	**8D-3508**	17	BOSS (3/8-16 THD)	

153-9176 CASE & FRAME AS *(contd.)* i01005814

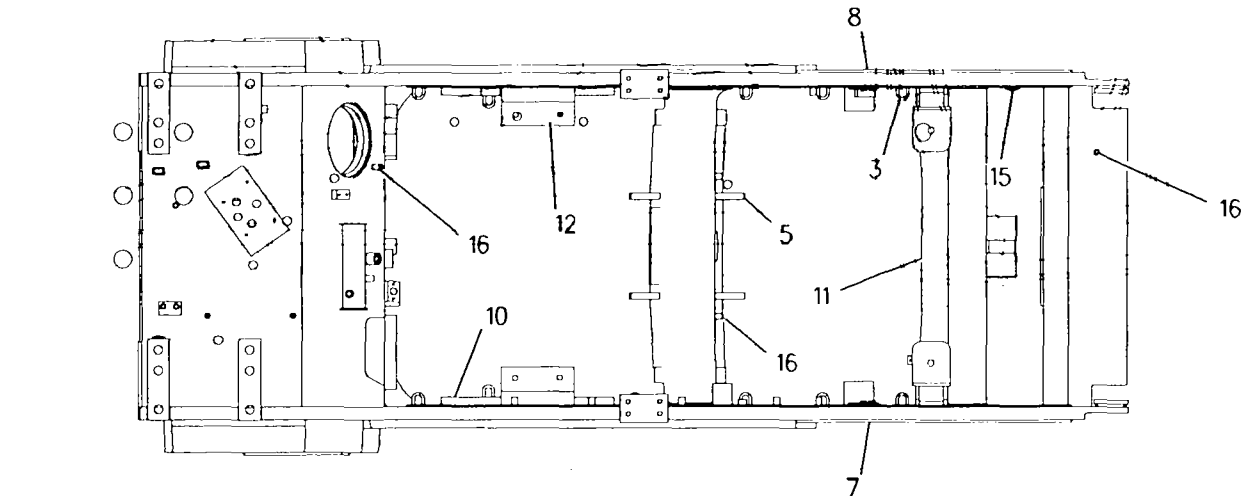

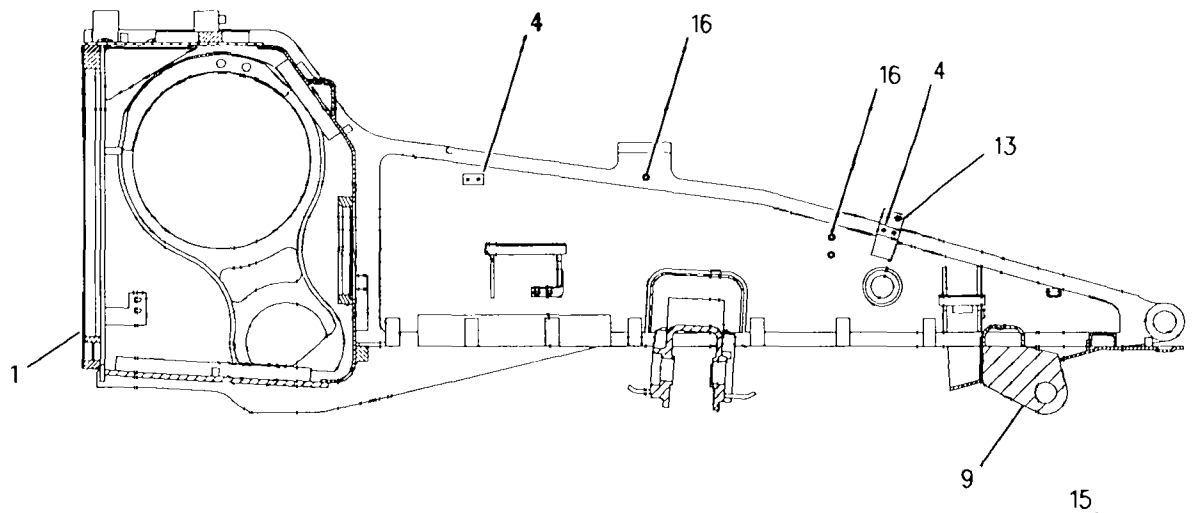

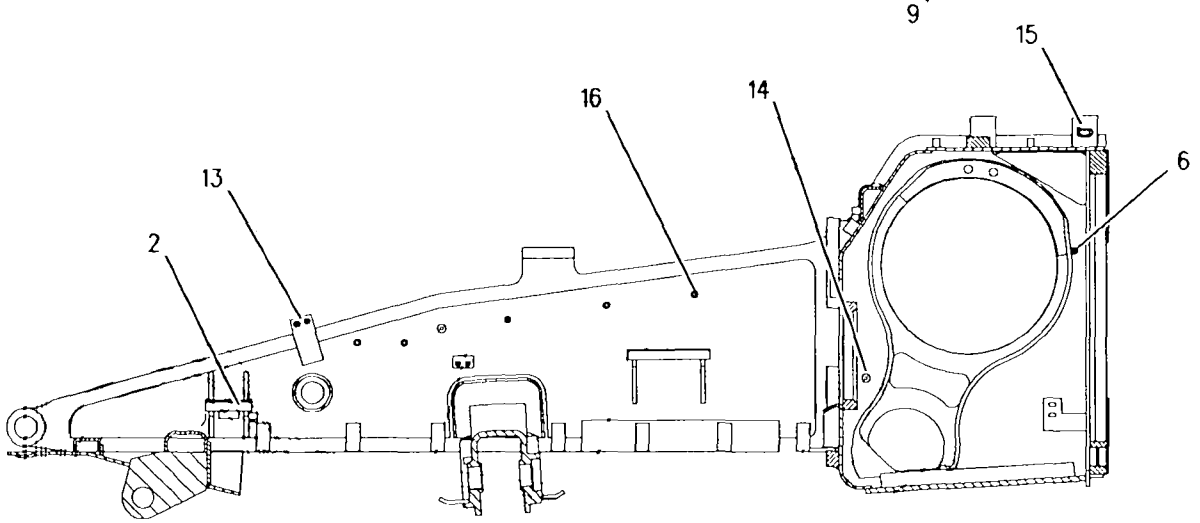

GRAPHIC #1 g00521189

FRAME AND BODY

156-4550 CASE & FRAME GP–CUSTOM

PIN 5LN1-UP

PART OF 156-4542 BULLDOZER AR-PWR ANGLE & TILT

SMCS-7051 i01005843

NOTE	REF NO	GRAPHIC REF	PART NUMBER	QTY	PART NAME 1 2 3 4 5 6 (PRODUCT LEVEL)	SEE PAGE
	1	1	1J-8668	2	STUD-TAPERLOCK	
	2	1	3T-0996	2	BEARING-SLEEVE	
	3	1	3T-0997	2	BEARING-SLEEVE	
	4	1	6F-0711	1	SEAL-O-RING	
	5	1	106-8187	1	PLUG	
Y	6	1	153-9175	1	CASE & FRAME AS	256

Y-SEPARATE ILLUSTRATION

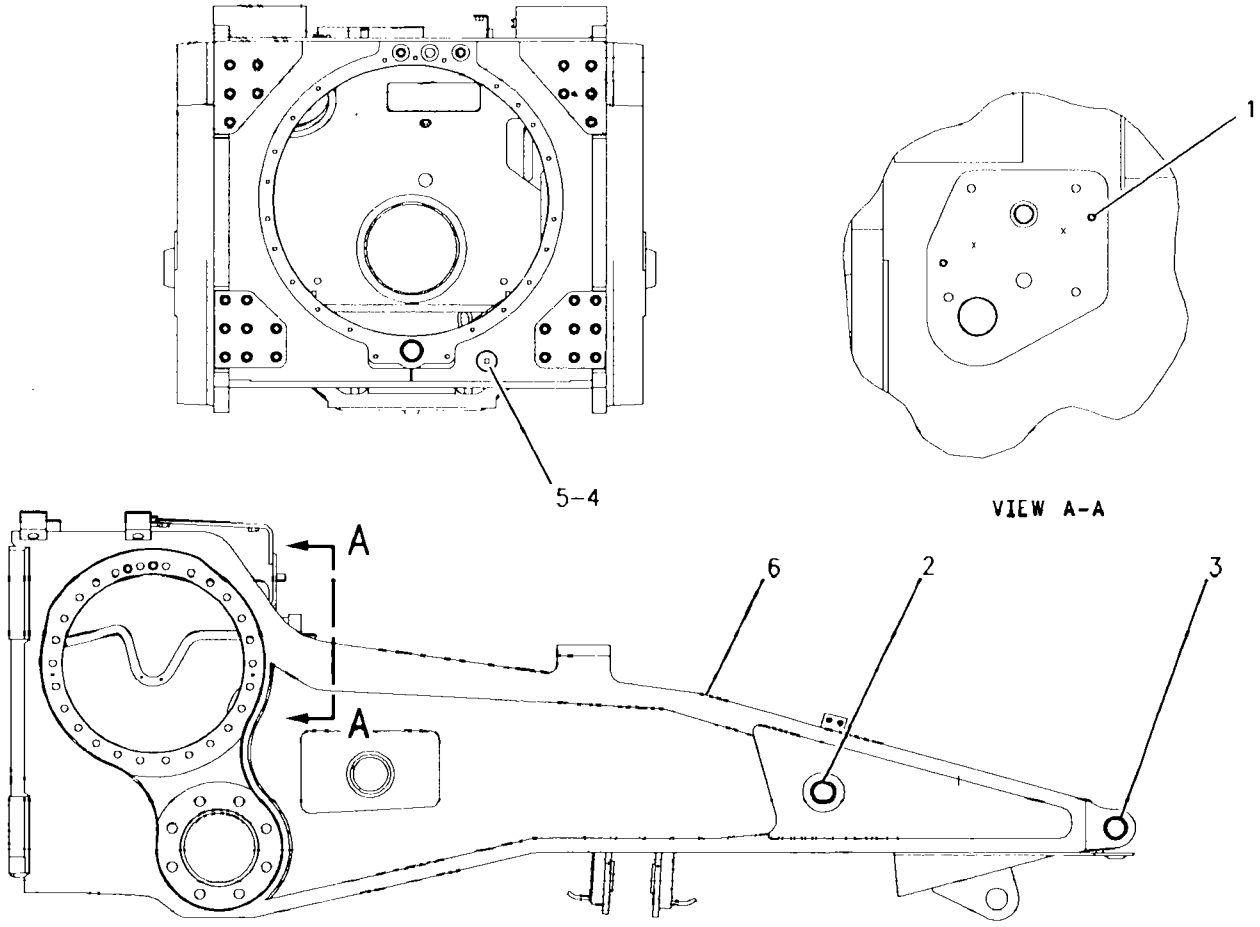

GRAPHIC #1 g00520955

FRAME AND BODY

1Q-4324 COUNTERWEIGHT GP–CUSTOM

PIN 2YN1-UP; 3ZN1-UP; 4MN1-UP; 5LN1-UP; 6JN1-UP; 7KN1-UP; 8LN1-UP; 9PN1-UP

SMCS-7056 **i01009882**

NOTE	REF NO	GRAPHIC REF	PART NUMBER	QTY	PART NAME 1 2 3 4 5 6 (PRODUCT LEVEL)	SEE PAGE
	1	1	1U-0612	2	PIN	
	2	1	7X-0292	2	BOLT (3/8-16X4.50IN)	
	3	1	2K-4973	2	LOCKNUT (3/8-16 THD)	
	4	1	117-5693	2	PLATE	
	5	1	117-5695	1	PLATE	
	6	1	117-5694	1	PLATE	
	7	1	117-5692	2	PLATE	
	8	1	117-5691	2	PLATE	
	9	1	1D-4624	8	BOLT (3/4-10X9IN)	
	10	1	8T-4994	12	WASHER (5MM THK)	
	11	1	5D-3118	8	STUD-TAPERLOCK	
	12	1	6V-8190	8	NUT (1-8 THD)	
	13	1	7X-0427	2	BOLT (1-1/4-7X3.50IN)	
	14	1	7X-0533	2	WASHER-HARD (6MM THK)	
	15	1	8T-9311	4	BOLT (3/4-10X4.50IN)	
	16	1	1U-0301	2	BRACKET AS	
					(EACH INCLUDES)	
		1	2K-6279	1	BOSS	

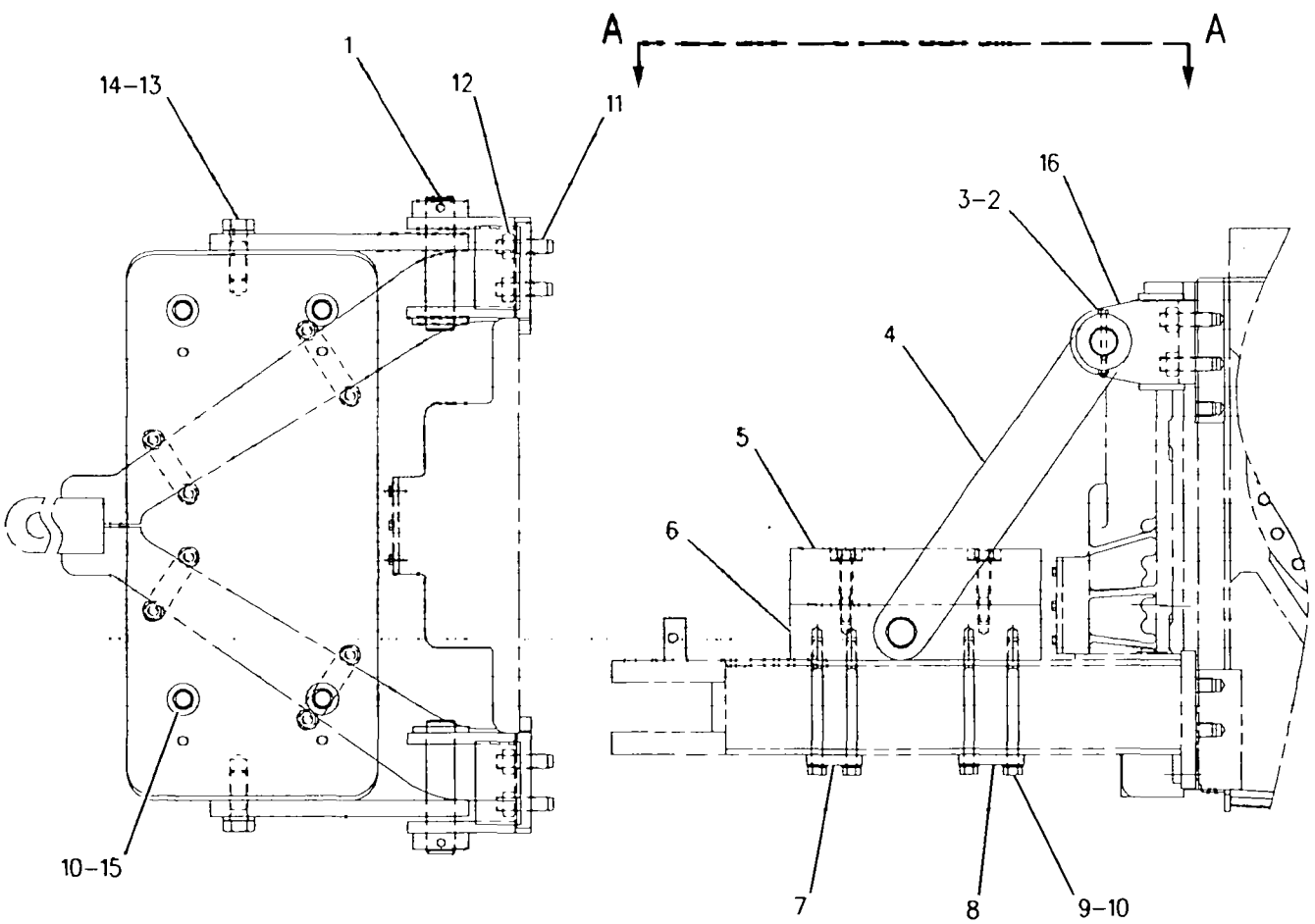

GRAPHIC #1 g00285043

117-9058 COUNTERWEIGHT GP–CUSTOM

PIN 2YN1-UP; 3ZN1-UP; 4MN1-UP; 5LN1-UP; 6JN1-UP; 7KN1-UP; 8LN1-UP; 9PN1-UP

SMCS-7056 i00605185

NOTE	REF NO	GRAPHIC REF	PART NUMBER	QTY	PART NAME 1 2 3 4 5 6 (PRODUCT LEVEL)	SEE PAGE
	1	1	117-5695	1	PLATE	
	2	1	8T-9311	4	BOLT (3/4-10X4.50IN)	
	3	1	8T-4994	4	WASHER (5MM THK)	

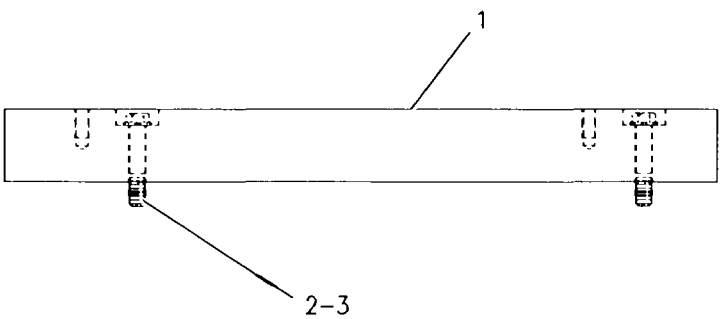

GRAPHIC #1 g00267469

137-0215 FRAME GP-TELESCOPING RECOIL-RH

PIN 4MN1-UP; 5LN1-UP

PART OF 156-4542 BULLDOZER AR-PWR ANGLE & TILT, 151-6170 GAUGE AR-TRACK

SMCS-4151 i00899570

NOTE	REF NO	GRAPHIC REF	PART NUMBER	QTY	PART NAME 1 2 3 4 5 6 (PRODUCT LEVEL)	SEE PAGE
	1	1	3T-2077	1	BEARING	
	2	1	3W-1852	1	RING-RETAINER	
	3	1	9X-4582	1	SEAL AS	
		1	8T-5071	1	GUARD-SEAL	
	4	1	8T-4223	26	WASHER-HARD (3MM THK)	
M	5	1	8T-4136	4	BOLT (M10X1.50X25MM)	
	6	1	108-0156	1	FRAME AS	
		1	4B-4158	4	SCREW-DRIVE	
		1	6V-2226	1	PLATE-WARNING	
	7	1	3T-1162	1	BEARING-SLEEVE	
	8	1	7T-5886	2	DOWEL	
	9	1	137-0216	1	FRAME AS-RH	
	10	1	7T-5886	2	DOWEL	
	11	1	7J-1333	1	BEARING (137.04MM OD)	
	12	1	9U-8482	2	BEARING-SLEEVE	
	13	1	7P-8370	1	BEARING (190.7MM OD)	
	14	1	6I-8737	1	GUARD AS (INNER)	
	15	1	6I-8736	1	GUARD AS (OUTER)	
	16	1	9G-1962	2	HOOK	
	17	1	129-5037	1	GUARD AS-LH	
		1	8E-9776	1	GUARD-LH	
		1	8E-9909	1	PLATE-LH	
	18	1	129-5036	1	GUARD AS-RH	
		1	8E-9775	1	GUARD-RH	
		1	8E-9907	1	PLATE-RH	
Y	19	1	9U-8492	1	TRACK ADJUSTER & RECOIL GP	306
	20	1	5H-6734	1	SEAL-O-RING (113.89MM ID)	
M	21	1	8T-4139	14	BOLT (M12X1.75X30MM)	
	22	1	108-0188	1	STRIP-LH	
	23	1	108-0187	1	STRIP-RH	
	24	1	108-0184	2	STRIP	
	25	1	8E-1212	1	COVER AS	
		1	5P-9891	1	PLATE-WARNING	
		1	7B-3028	4	SCREW-DRIVE (#4X3/16IN)	
M	26	1	8T-4184	12	BOLT (M12X1.75X45MM)	
	27	1	144-5574	2	GUIDE AS (EACH INCLUDES)	
		1	8T-7532	1	FILM-WARNING	
	28	1	1B-5174	2	PLUG-PIPE (3/4-14 NPTF)	
	29	1	8T-4121	4	WASHER (2.5MM THK)	

M-METRIC PART
Y-SEPARATE ILLUSTRATION

137-0215 FRAME GP-TELESCOPING RECOIL *(contd.)* i00899570

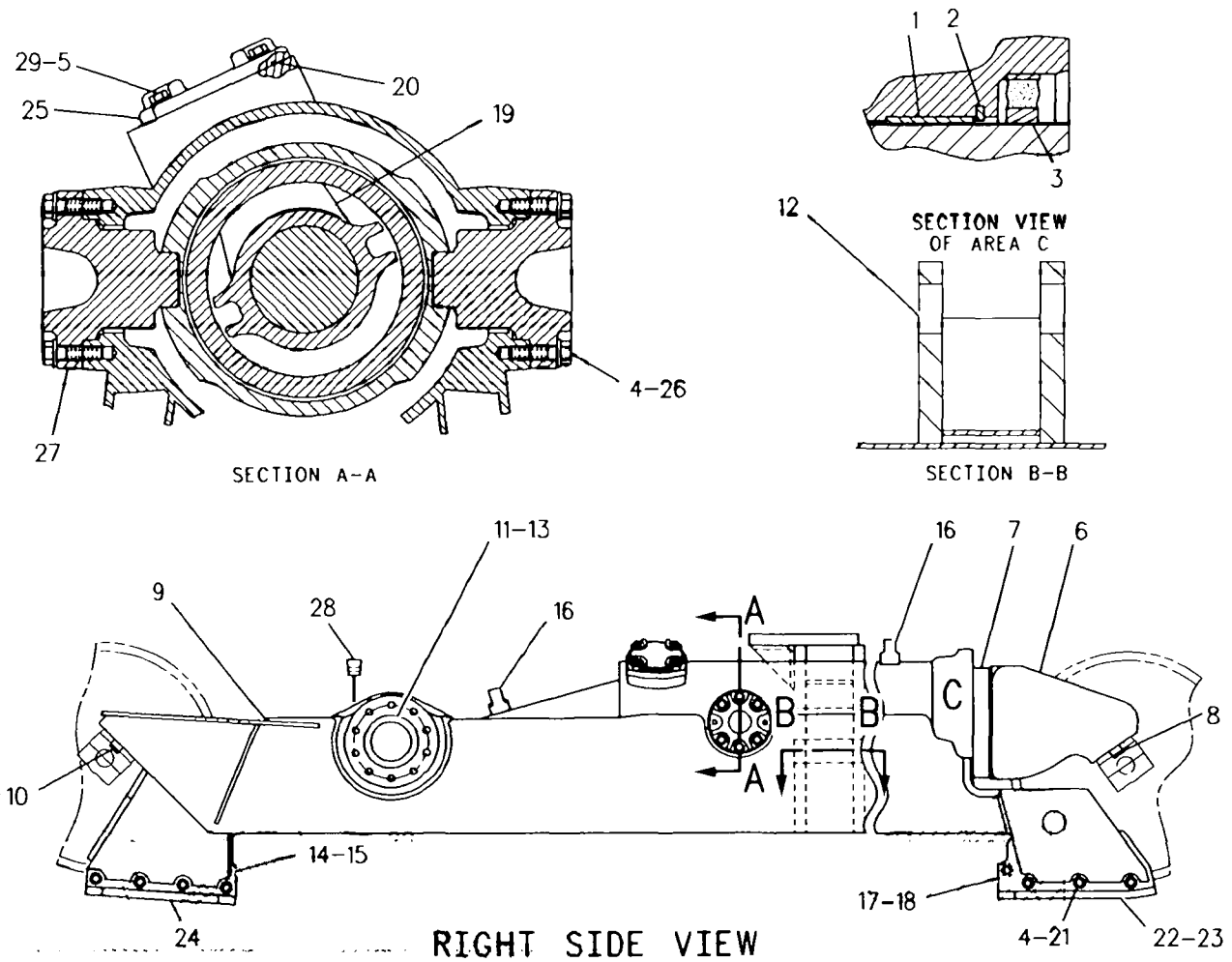

GRAPHIC #1 g00264076

137-0219 FRAME GP-TELESCOPING RECOIL–LH

PIN 4MN1-UP; 5LN1-UP

PART OF 156-4542 BULLDOZER AR-PWR ANGLE & TILT, 151-6170 GAUGE AR-TRACK

SMCS-4151 i00848517

NOTE	REF NO	GRAPHIC REF	PART NUMBER	QTY	PART NAME 1 2 3 4 5 6 (PRODUCT LEVEL)	SEE PAGE
	1	1	3T-2077	1	BEARING	
	2	1	3W-1852	1	RING-RETAINER	
	3	1	9X-4582	1	SEAL AS	
M	4	1	8T-4139	14	BOLT (M12X1.75X30MM)	
	5	1	8T-4223	26	WASHER HARD (3MM THK)	
M	6	1	8T-4136	4	BOLT (M10X1.50X25MM)	
	7	1	108-0156	1	FRAME AS	
		1	4B-4158	4	SCREW-DRIVE	
		1	6V-2226	1	PLATE-WARNING	
	8	1	3T-1162	1	BEARING-SLEEVE	
	9	1	7T-5886	2	DOWEL	
	10	1	8E-1212	1	COVER AS	
		1	5P-9891	1	PLATE-WARNING	
		1	7B-3028	4	SCREW-DRIVE (#4X3/16IN)	
M	11	1	8T-4184	12	BOLT (M12X1.75X45MM)	
	12	1	144-5574	2	GUIDE AS	
					(EACH INCLUDES)	
		1	8T-7532	1	FILM-WARNING	
	13	1	1B-5174	2	PLUG-PIPE (3/4-14 NPTF)	
	14	1	8T-4121	4	WASHER (2.5MM THK)	
Y	15	1	9U-8492	1	TRACK ADJUSTER & RECOIL GP	306
	16	1	5H-6734	1	SEAL-O-RING (113.89MM ID)	
	17	1	108-0187	1	STRIP-RH	
	18	1	108-0188	1	STRIP-LH	
	19	1	137-0220	1	FRAME AS-LH	
		1	9U-8482	2	BEARING-SLEEVE	
	20	1	7P-8370	1	BEARING (190.7MM OD)	
	21	1	7T-5886	2	DOWEL	
	22	1	7J-1333	1	BEARING (137.04MM OD)	
	23	1	6I-8737	1	GUARD AS	
	24	1	6I-8736	1	GUARD AS	
	25	1	129-5037	1	GUARD AS-LH	
	26	1	8E-9909	1	PLATE-LH	
	27	1	129-5036	7	GUARD AS-RH	
	28	1	8E-9907	1	PLATE-RH	
	29	1	9G-1962	2	HOOK	
	30	1	108-0184	2	STRIP	

M-METRIC PART
Y-SEPARATE ILLUSTRATION

137-0219 FRAME GP-TELESCOPING RECOIL *(contd.)* i00848517

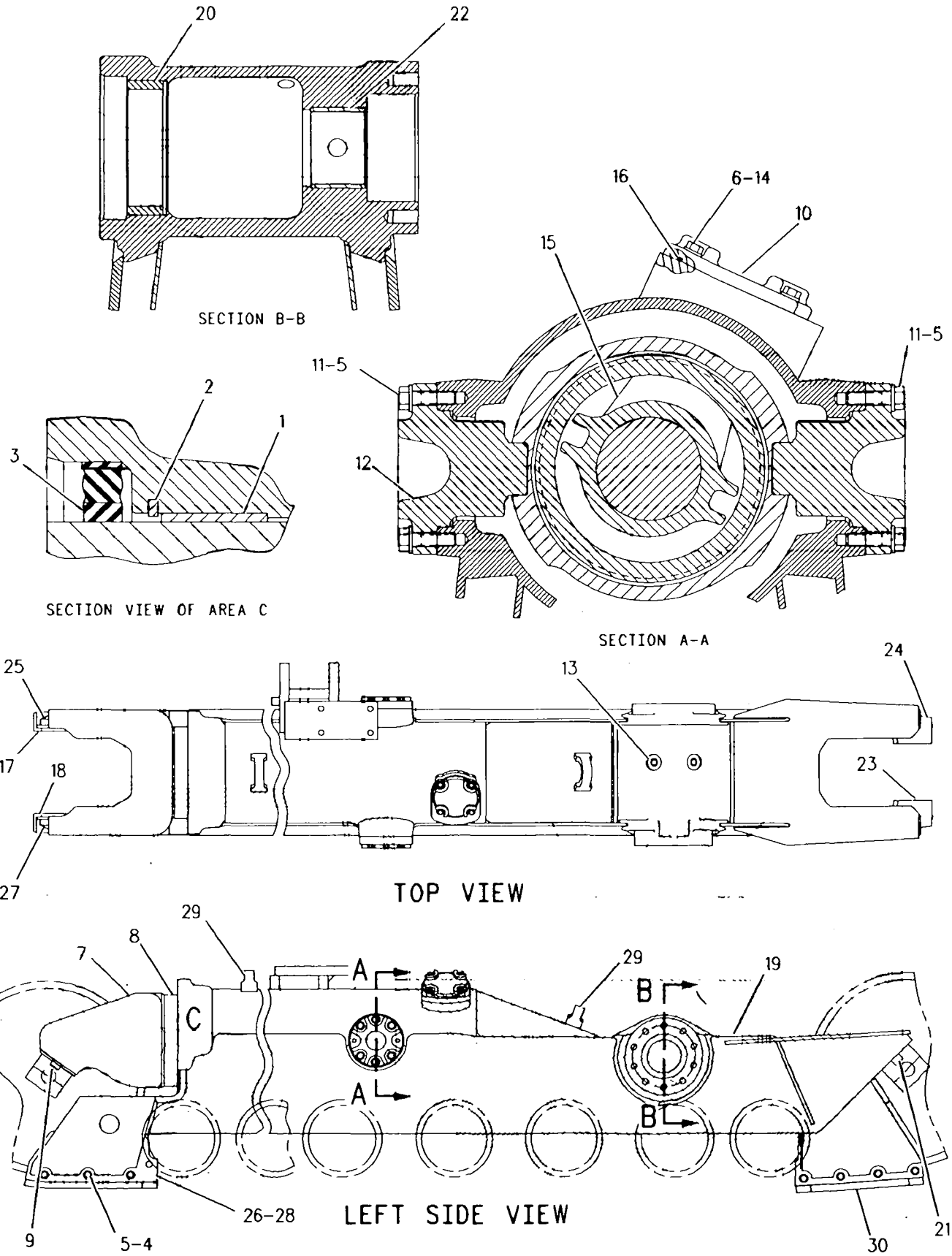

GRAPHIC #1 g00368813

151-6170 GAUGE AR-TRACK–CUSTOM

PIN 4MN1-UP

INTERMEDIATE GAUGE, FINGER TIP CONTROL, EXTENDED LENGTH

SMCS-4151 **i01004870**

NOTE	PART NUMBER	QTY	PART NAME 1 2 3 4 5 6 (PRODUCT LEVEL)	SEE PAGE
Y	**108-1078**	1	ENGINE AR	10
Y	**122-6158**	2	FINAL DRIVE GP	216
Y	*137-0215*	1	FRAME GP-TELESCOPING RECOIL	264
Y	*137-0219*	1	FRAME GP-TELESCOPING RECOIL	266
Y	*151-6171*	1	GAUGE GP	269
Y	**116-4652**	1	TRANSMISSION AR	244

Y-SEPARATE ILLUSTRATION

FRAME AND BODY

151-6171 GAUGE GP–CUSTOM

PIN 4MN1-UP

INTERMEDIATE

PART OF 151-6170 GAUGE AR-TRACK

SMCS-4150 **i01005080**

NOTE	REF NO	GRAPHIC REF	PART NUMBER	QTY	PART NAME 1 2 3 4 5 6 (PRODUCT LEVEL)	SEE PAGE
	1	1	**9S-1322**	52	BOLT (7/8-9X6IN)	
Y	2	1	*137-0283*	1	PIVOT BAR GP	296
	3	1	**133-4798**	2	GEAR-SUN	
	4	1	**106-3685**	1	BAR AS	
		1	**8G-8311**	2	BEARING-SLEEVE	

Y-SEPARATE ILLUSTRATION

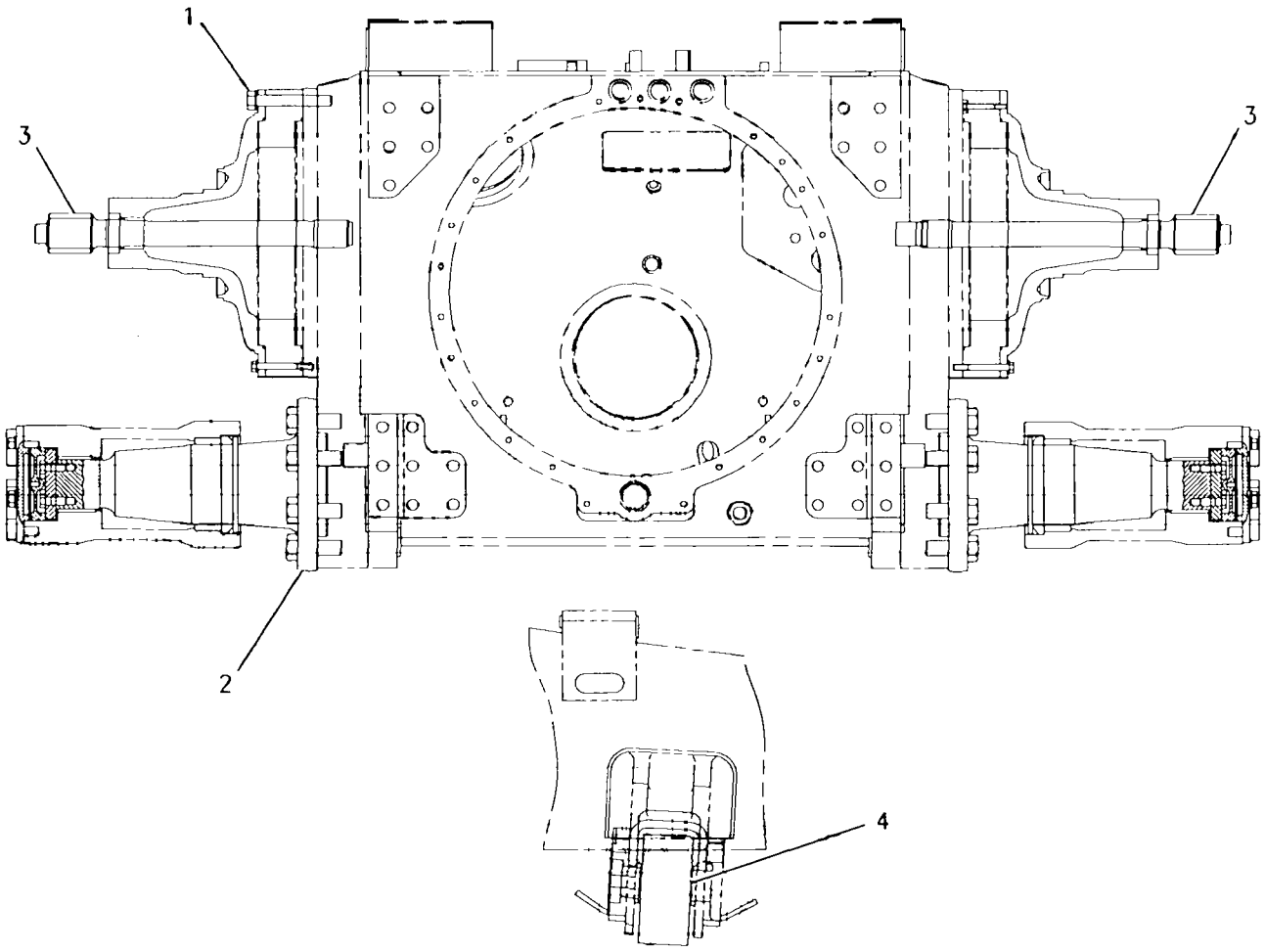

GRAPHIC #1 g00519972

FRAME AND BODY

134-2921 GUARD AR-FINAL DRIVE

PIN 2YN1-UP; 3ZN1-UP; 4MN1-UP; 5LN1-UP
FINAL DRIVE & IDLER SEAL
PART OF 129-2161, 129-2163 DISPOSAL AR

SMCS-7172 **i00848648**

NOTE	PART NUMBER	QTY	PART NAME 1 2 3 4 5 6 (PRODUCT LEVEL)	SEE PAGE
Y	**138-1850**	2	FINAL DRIVE GP	218
Y	**134-3952**	4	IDLER GP-TRACK	283

Y-SEPARATE ILLUSTRATION

134-2922 GUARD AR-FINAL DRIVE

PIN 8LN1-UP; 9PN1-UP
FINAL DRIVE & IDLER SEAL
PART OF 128-7274 DISPOSAL AR

SMCS-7172 i00850724

NOTE	PART NUMBER	QTY	PART NAME 1 2 3 4 5 6 (PRODUCT LEVEL)	SEE PAGE
Y	**1Q-2274**	2	FINAL DRIVE GP	202
			–OR–	
Y	**138-1856**	2	FINAL DRIVE GP	222
Y	*134-2920*	4	IDLER GP-TRACK	282

Y-SEPARATE ILLUSTRATION

FRAME AND BODY

129-2160 GUARD AS-LH

PIN 2YN1-UP; 3ZN1-UP; 4MN1-UP; 5LN1-UP; 6JN1-UP; 7KN1-UP; 8LN1-UP; 9PN1-UP
PART OF 128-4092 DISPOSAL AR

SMCS-7151 i00689131

NOTE	REF NO	GRAPHIC REF	PART NUMBER	QTY	PART NAME 1 2 3 4 5 6 (PRODUCT LEVEL)	SEE PAGE
	1	1	110-8201	1	GUARD AS-LH	
	2	1	1F-0750	2	NUT-WELD (3/8-16 THD)	
	3	1	7G-4928	2	SPACER	
	4	1	8R-8106	1	STRIP	

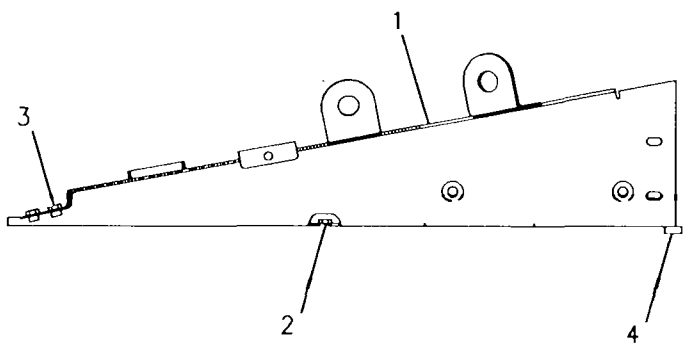

GRAPHIC #1 g00289377

FRAME AND BODY

128-7276 GUARD AS-RADIATOR

PIN 2YN1-UP; 3ZN1-UP; 4MN1-UP; 5LN1-UP; 6JN1-UP; 7KN1-UP; 8LN1-UP; 9PN1-UP
PART OF 128-4092 DISPOSAL AR

SMCS-7155 i00689115

NOTE	REF NO	GRAPHIC REF	PART NUMBER	QTY	PART NAME 1 2 3 4 5 6 (PRODUCT LEVEL)	SEE PAGE
	1	1	8E-9522	2	BEARING-SLEEVE	
	2	1	3T-4308	4	BEARING-SLEEVE	
	3	1	3T-4307	2	BEARING-SLEEVE	
	4	1	3G-6372	2	BEARING-SLEEVE	
	5	1	1M-4584	10	BOSS	
	6	1	8F-9836	2	LUG (3/8-16 THD)	
	7	1	7T-1099	6	LINK	
	8	1	105-1398	1	BAR AS	
	9	1	1F-0750	5	NUT-WELD (3/8-16 THD)	
	10	1	7T-1099	9	LINK	
	11	1	8T-5912	17	NUT-WELD (3/8-16 THD)	
	12	1	3J-5169	2	NUT (5/8-11 THD)	
	13	1	8E-0667	1	DOOR	
	14	1	9B-2052	1	HINGE	

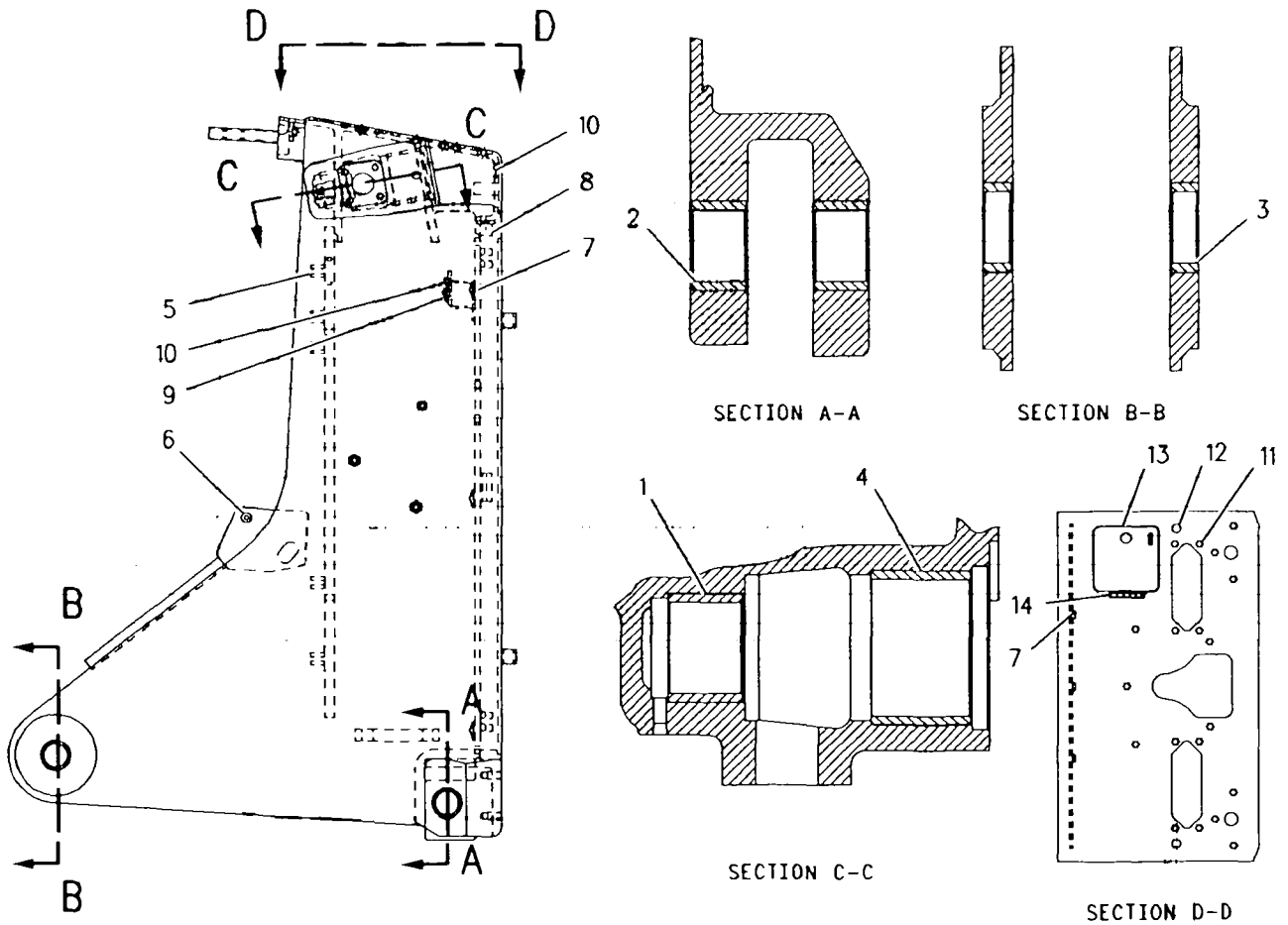

GRAPHIC #1 g00292170

128-7277 GUARD AS

PIN 2YN1-UP; 3ZN1-UP; 4MN1-UP; 5LN1-UP; 6JN1-UP; 7KN1-UP; 8LN1-UP; 9PN1-UP
RADIATOR MODIFICATION
PART OF 128-4092 DISPOSAL AR

SMCS-7155 i00689127

NOTE	REF NO	GRAPHIC REF	PART NUMBER	QTY	PART NAME 1 2 3 4 5 6 (PRODUCT LEVEL)	SEE PAGE
	1	1	**105-1473**	2	PLATE AS	
	2	1	**8T-1578**	2	PAWL	
	3	1	**5P-1076**	8	WASHER-HARD (4MM THK)	
	4	1	**8T-9383**	2	BOLT (1/2-13X0.75IN)	
	5	1	**1Q-2990**	2	BAR	
	6	1	**7X-0618**	2	WASHER-HARD (5.0MM THK)	
Y	7	1	*8Y-6400*	2	LATCH AS	284
	8	1	**5S-7379**	2	BOLT (3/8-16X.875IN)	
	9	1	**5P-1075**	2	WASHER-HARD (3MM THK)	
	10	1	**1Q-1548**	1	GUARD AS	
		1	*1F-0750*	4	NUT-WELD (3/8-16 THD)	
	11	1	**1Q-2986**	2	HINGE AS	
	12	1	**8T-9496**	4	LOCKNUT (9/16-18 THD)	
	13	1	**2K-4973**	4	LOCKNUT (3/8-16 THD)	
	14	1	**8C-4436**	8	BOLT (1/2-13X1.375IN)	
	15	1	**1Q-2987**	2	HINGE AS	
	16	1	**8T-2502**	4	BOLT (3/8-16X1.13IN)	
	17	1	**4V-1718**	2	SPACER	
	18	1	**8T-4896**	4	WASHER-HARD (2.5MM THK)	
	19	1	**105-1393**	1	GRILL AS-RH	
		1	**068-5893**	1	SPACER	
	20	1	**105-1394**	1	GRILL AS-LH	
		1	**068-5893**	1	SPACER	
B	21	1	**1Q-3677**	8	SHIM	

B-USE AS REQUIRED
Y-SEPARATE ILLUSTRATION

128-7277 **GUARD AS** *(contd.)* i00689127

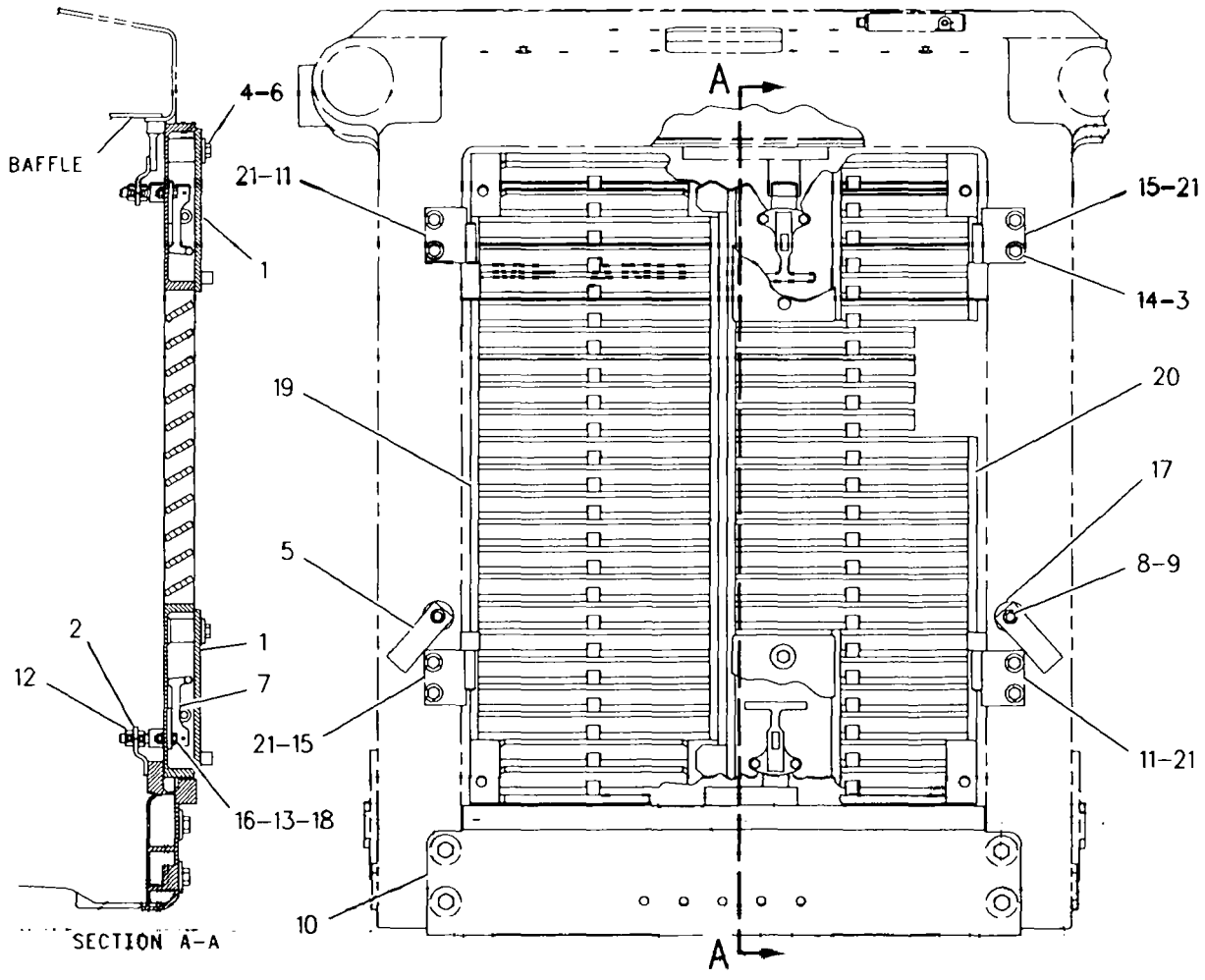

GRAPHIC #1

g00292174

FRAME AND BODY

129-2159 GUARD AS-RH

PIN 2YN1-UP; 3ZN1-UP; 4MN1-UP; 5LN1-UP; 6JN1-UP; 7KN1-UP; 8LN1-UP; 9PN1-UP
PART OF 128-4092 DISPOSAL AR

SMCS-7151 i00689129

NOTE	REF NO	GRAPHIC REF	PART NUMBER	QTY	PART NAME 1 2 3 4 5 6 (PRODUCT LEVEL)	SEE PAGE
	1	1	110-8197	1	GUARD AS-RH	
	2	1	1F-0750	2	NUT-WELD (3/8-16 THD)	
	3	1	7G-4928	2	SPACER	
	4	1	8R-8106	1	STRIP	

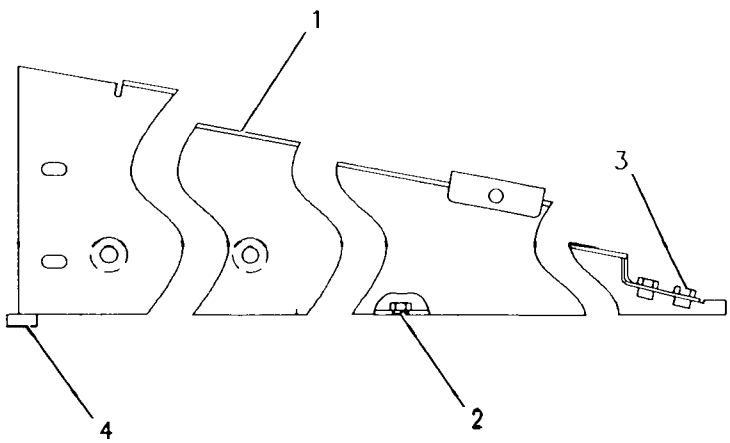

GRAPHIC #1 g00289376

158-6663 GUARD GP-BOTTOM–CUSTOM

PIN 5LN1-UP
HEAVY DUTY
PART OF 156-4542 BULLDOZER AR-PWR ANGLE & TILT

SMCS-7153 i01020064

NOTE	REF NO	GRAPHIC REF	PART NUMBER	QTY	PART NAME 1 2 3 4 5 6 (PRODUCT LEVEL)	SEE PAGE
	1	1	3T-2747	14	RETAINER	
	2	1	3T-2748	1	COVER	
	3	1	116-3332	1	GUARD AS	
	4	1	155-3908	1	GUARD AS	
	5	1	5S-7382	1	BOLT (3/8-16X34.92)	
	6	1	6V-8182	14	NUT (3/4-10 THD)	
	7	1	7X-0582	14	WASHER-HARD (6MM THK)	
	8	1	8T-4896	1	WASHER-HARD (2.5MM THK)	
	9	1	8T-8925	14	BOLT (3/4-10X4.75IN)	

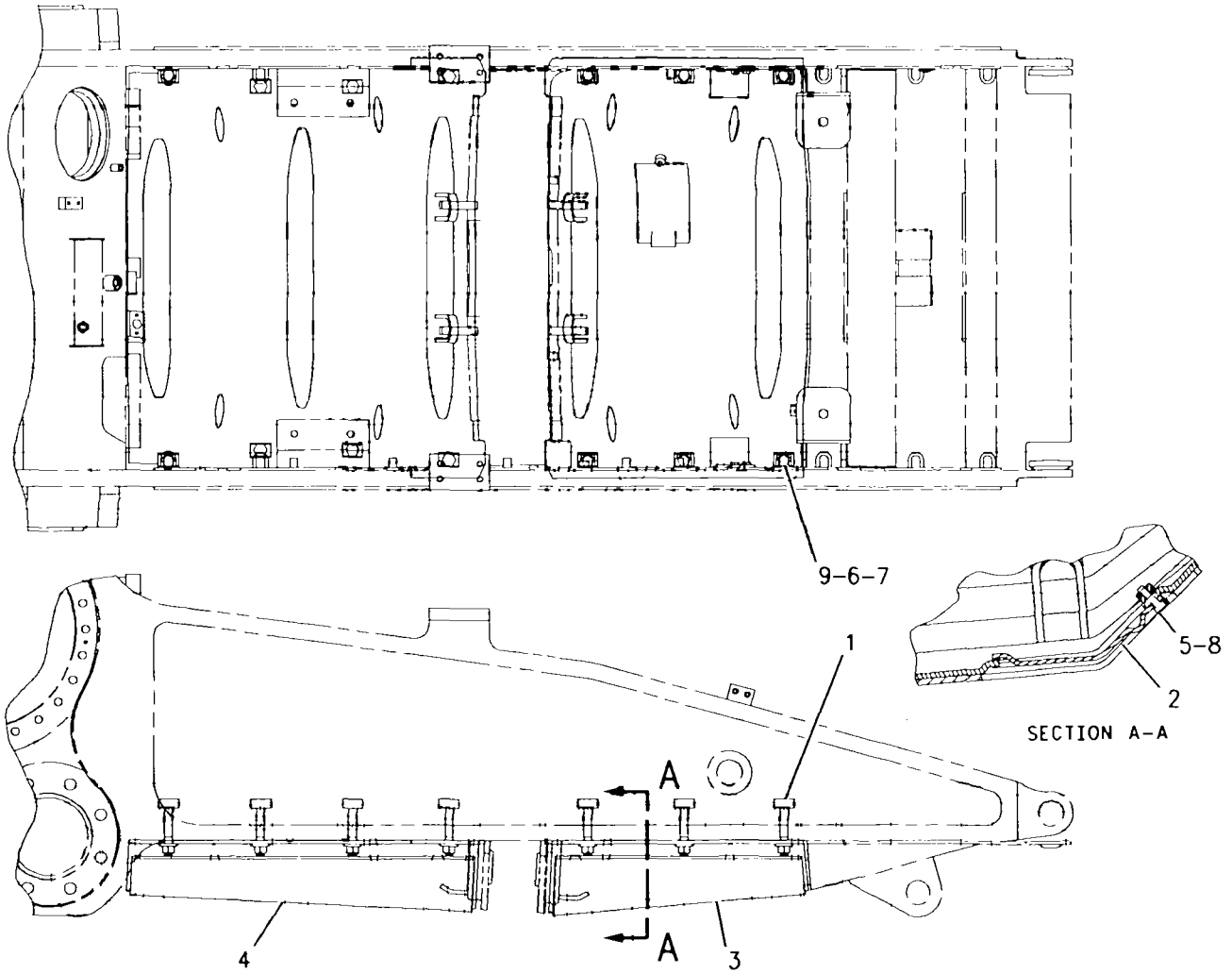

GRAPHIC #1 g00523375

FRAME AND BODY

3W-1356 GUARD GP-TRANSMISSION

PIN 8LN1-UP; 9PN1-UP
PART OF 4Z-0609 RIPPER AR

SMCS-7153 i00574530

NOTE	REF NO	GRAPHIC REF	PART NUMBER	QTY	PART NAME 1 2 3 4 5 6 (PRODUCT LEVEL)	SEE PAGE
	1	1	3W-1357	1	GUARD AS	
	2	1	7X-0400	4	BOLT (1-8X1.50IN)	
	3	1	8T-5361	4	WASHER (5MM THK)	

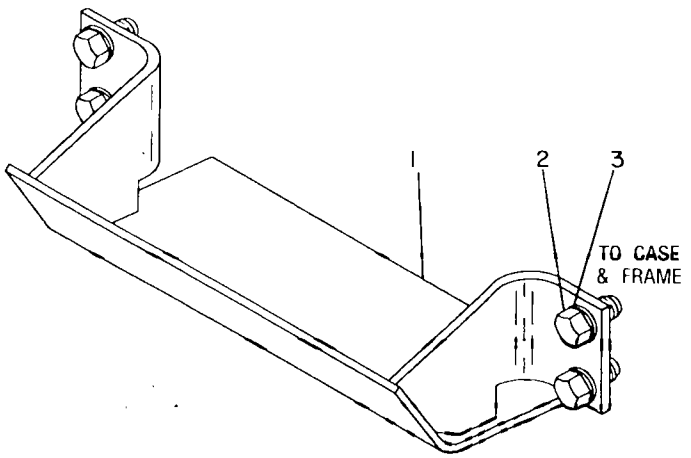

GRAPHIC #1 g00176636

FRAME AND BODY

108-1328 HOOD & GUARD GP

PIN 2YN1-UP; 4MN1-UP; 6JN1-UP; 8LN1-UP
PART OF 142-2498 PLATFORM AR-CAB

SMCS-7251 **i00836576**

NOTE	REF NO	GRAPHIC REF	PART NUMBER	QTY	PART NAME 1 2 3 4 5 6 (PRODUCT LEVEL)	SEE PAGE
	1	1	**110-8349**	1	HOOD AS	
		1	*1F-0750*	13	NUT-WELD (3/8-16 THD)	
		1	**3J-5169**	1	NUT (5/8-11 THD)	
BD	2	1	**5P-7211**		SEAL (2.4CM)	

B-USE AS REQUIRED
D-ORDER BY THE METER

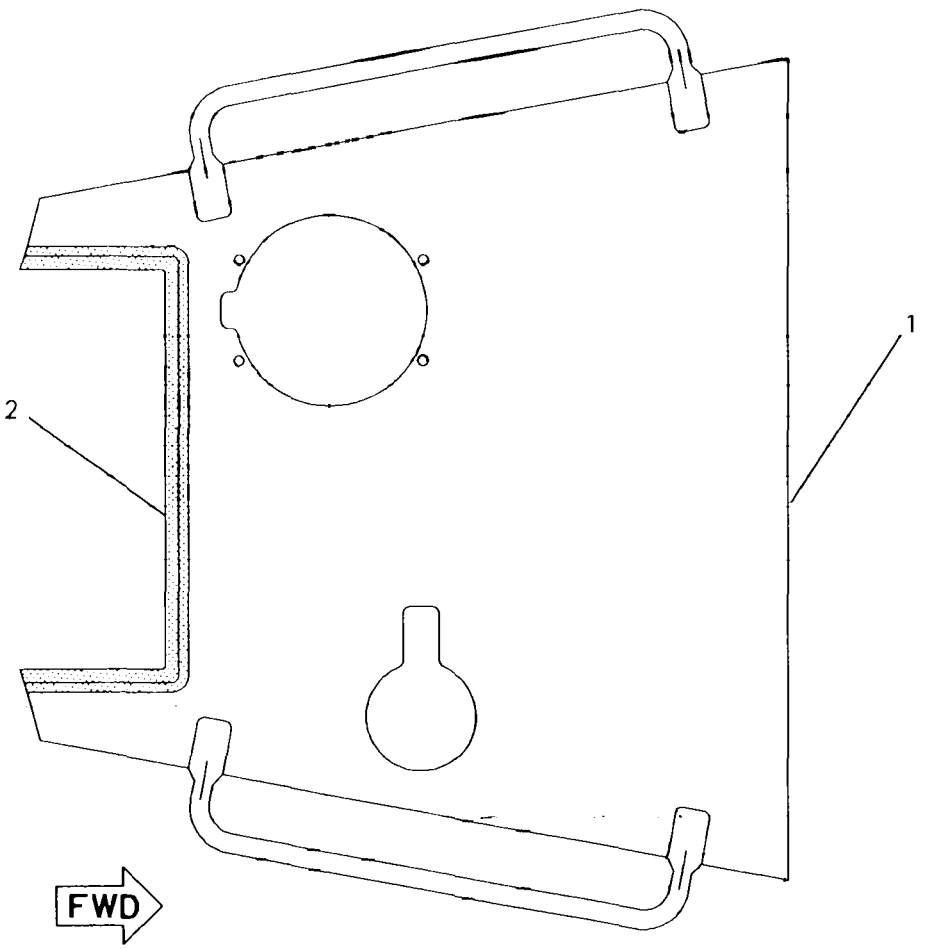

TOP VIEW

GRAPHIC #1 g00254267

134-2920 IDLER GP-TRACK

PIN 6JN1-UP; 7KN1-UP; 8LN1-UP; 9PN1-UP

LGP

PART OF 129-2162 DISPOSAL AR, 134-2922 GUARD AR-FINAL DRIVE

SMCS-4159 i00586084

NOTE	REF NO	GRAPHIC REF	PART NUMBER	QTY	PART NAME 1 2 3 4 5 6 (PRODUCT LEVEL)	SEE PAGE
	1	1	106-7691	2	WASHER-THRUST	
	2	1	8T-6757	4	PLUG-PIPE (1/8-27 NPTF THD)	
	3	1	134-3950	2	RETAINER	
	4	1	1T-0765	24	BOLT (3/8-16X1.00IN)	
	5	1	6T-3220	1	SHAFT-GOVERNOR CONTROL	
	6	1	134-3951	2	GUARD	
	7	1	9W-6649	2	SEAL GP-DUO-CONE	
	8	1	7X-7463	2	RING-RETAINING	
	9	1	6T-4871	2	STABILIZER-SEAL	
	10	1	3B-8489	2	FITTING-GREASE (1/8-27 THD)	
	11	1	2H-3928	2	SEAL-O-RING (107.54MM ID)	
	12	1	7T-8940	1	IDLER & BEARING AS	
	13	1	9P-2245	2	BEARING-SLEEVE	
	14	1	6Y-0473	1	PLUG-CLEAR	
	15	1	9G-5664	1	STOP-RUBBER	

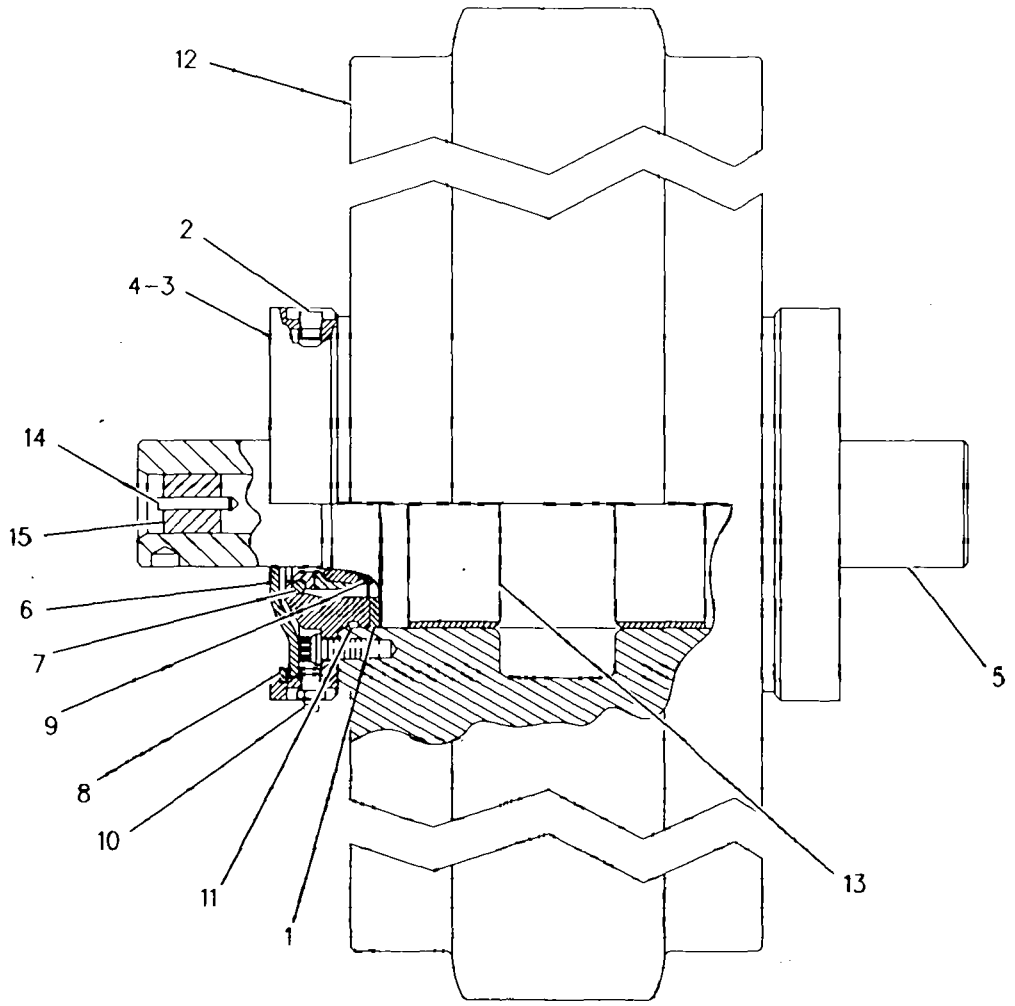

GRAPHIC #1 g00264804

134-3952 IDLER GP-TRACK

PIN 2YN1-UP; 3ZN1-UP; 4MN1-UP; 5LN1-UP
PART OF 134-2921 GUARD AR-FINAL DRIVE

SMCS-4159 i00574979

NOTE	REF NO	GRAPHIC REF	PART NUMBER	QTY	PART NAME 1 2 3 4 5 6 (PRODUCT LEVEL)	SEE PAGE
	1	1	6T-3220	1	SHAFT-GOVERNOR CONTROL	
	2	1	8T-6757	4	PLUG-PIPE (1/8-27 NPTF THD)	
	3	1	134-3950	2	RETAINER	
	4	1	1T-0765	24	BOLT (3/8-16X1.00IN)	
	5	1	106-7691	2	WASHER-THRUST	
	6	1	134-3951	2	GUARD	
	7	1	9W-6649	2	SEAL GP-DUO-CONE	
					(EACH INCLUDES)	
		1	6P-8912	1	RING-SEALING (60.34MM ID)	
		1	6V-2701	1	SEAL-O-RING (72.39MM ID)	
	8	1	7X-7463	2	RING-RETAINING	
	9	1	6T-4871	2	STABILIZER-SEAL	
	10	1	3B-8489	2	FITTING-GREASE (1/8-27 THD)	
	11	1	2H-3928	2	SEAL-O-RING (107.54MM ID)	
	12	1	6T-3217	1	IDLER & BEARING AS	
	13	1	9P-2245	2	BEARING-SLEEVE	
	14	1	6Y-0473	1	PLUG-CLEAR	
	15	1	9G-5664	1	STOP-RUBBER	

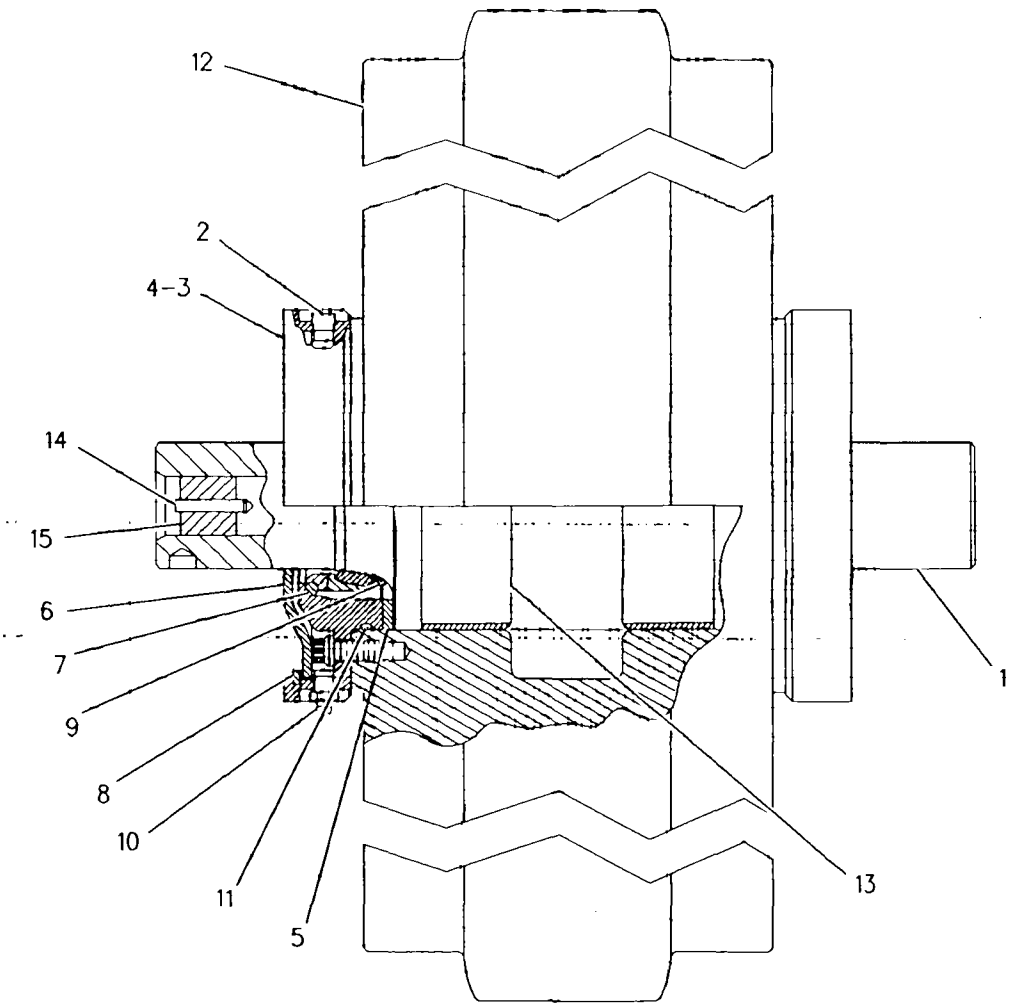

GRAPHIC #1 g00263728

FRAME AND BODY

8Y-6400 LATCH AS

PIN 2YN1-UP; 3ZN1-UP; 4MN1-UP; 5LN1-UP; 6JN1-UP; 7KN1-UP; 8LN1-UP; 9PN1-UP
PART OF 1Q-4191, 9Z-8222 BAR AS-STRIKER, 128-7277 GUARD AS-RADIATOR

SMCS-7251 i00992786

NOTE	REF NO	GRAPHIC REF	PART NUMBER	QTY	PART NAME 1 2 3 4 5 6 (PRODUCT LEVEL)	SEE PAGE
	1	1	7X-0766	1	SPRING-LATCH	
	2	1	8Y-5747	1	BRACKET-MOUNTING	
	3	1	8Y-3998	1	HANDLE-LATCH	
	4	1	8Y-3966	1	WASHER (1.57MM THK)	
	5	1	8Y-8306	1	SHAFT-LATCH	
	6	1	6H-3956	1	PIN	

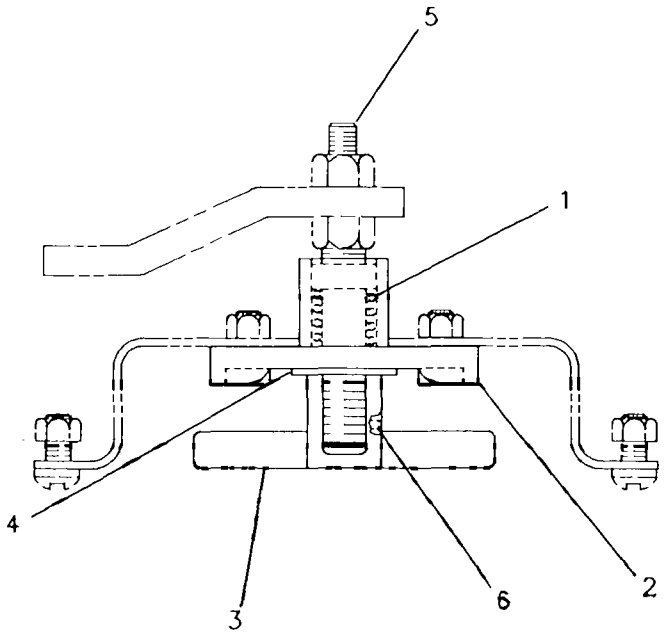

GRAPHIC #1 g00236353

6I-9668 LINK AS-TRACK

PIN 2YN1-UP; 3ZN1-UP
SEALED & LUBRICATED-HEAVY DUTY
PART OF 1Q-4627, 1Q-4725, 1Q-4925, 1Q-4927, 1Q-4937, 1Q-4969 TRACK GP

SMCS-4169, 4171 i00574485

NOTE	REF NO	GRAPHIC REF	PART NUMBER	QTY	PART NAME 1 2 3 4 5 6 (PRODUCT LEVEL)	SEE PAGE
	1	1	8E-7406	38	LINK-TRACK-LH	
	2	1	8E-7405	38	LINK-TRACK-RH	
	3	1	8E-7410	1	LINK-BUSHING END-LH	
	4	1	8E-7409	1	LINK-BUSHING END-RH	
	5	1	8E-7407	1	LINK-PIN END-RH	
	6	1	8E-7408	1	LINK-PIN END-LH	
	7	1	9G-8726	78	RING-THRUST	
	8	1	8E-9644	78	SEAL AS	
	9	1	8E-7222	39	BUSHING-TRACK	
	10	1	8E-7220	39	PIN-TRACK	
	11	1	6Y-0473	39	PLUG-CLEAR	
		1	9G-1642	39	STOPPER-RUBBER	
B	12	1	2P-9863		LUBRICANT	

B-USE AS REQUIRED

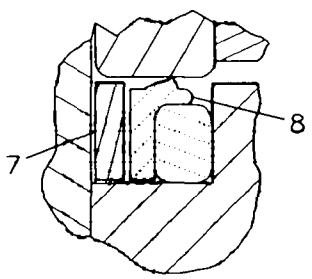

VIEW OF AREA A

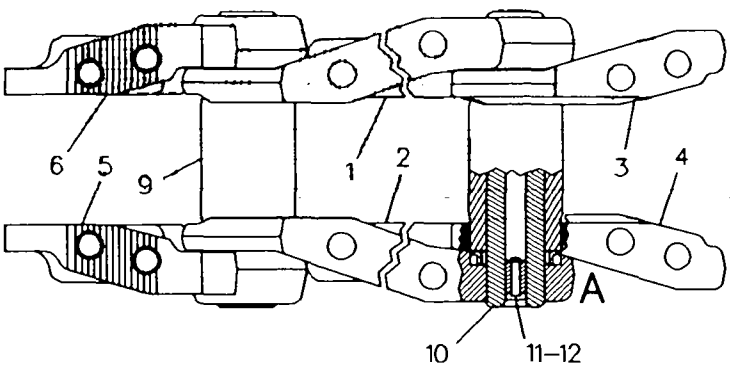

GRAPHIC #1 g00228100

6I-9670 LINK AS-TRACK

PIN 6JN1-UP; 7KN1-UP
SEALED & LUBRICATED-HEAVY DUTY
PART OF 1Q-4655, 1Q-4934, 1Q-4936, 1Q-4938, 1Q-4963 TRACK GP

SMCS-4169, 4171 i00816859

NOTE	REF NO	GRAPHIC REF	PART NUMBER	QTY	PART NAME 1 2 3 4 5 6 (PRODUCT LEVEL)	SEE PAGE
	1	1	6Y-0473	40	PLUG	
	2	1	9G-1642	40	STOPPER-RUBBER	
	3	1	8E-9644	80	SEAL AS	
	4	1	8E-7407	1	LINK-MASTER (RH) (PIN END)	
	5	1	8E-7408	1	LINK-MASTER (LH) (PIN END)	
	6	1	8E-7410	1	LINK-MASTER (LH) (BUSHING END)	
	7	1	8E-7409	1	LINK-MASTER (RH) (BUSHING END)	
	8	1	8E-7220	40	PIN-TRACK	
	9	1	8E-7222	40	BUSHING-TRACK	
	10	1	8E-7406	39	LINK-TRACK-LH	
	11	1	8E-7405	39	LINK-TRACK-RH	
	12	1	152-8071	80	RING-THRUST	

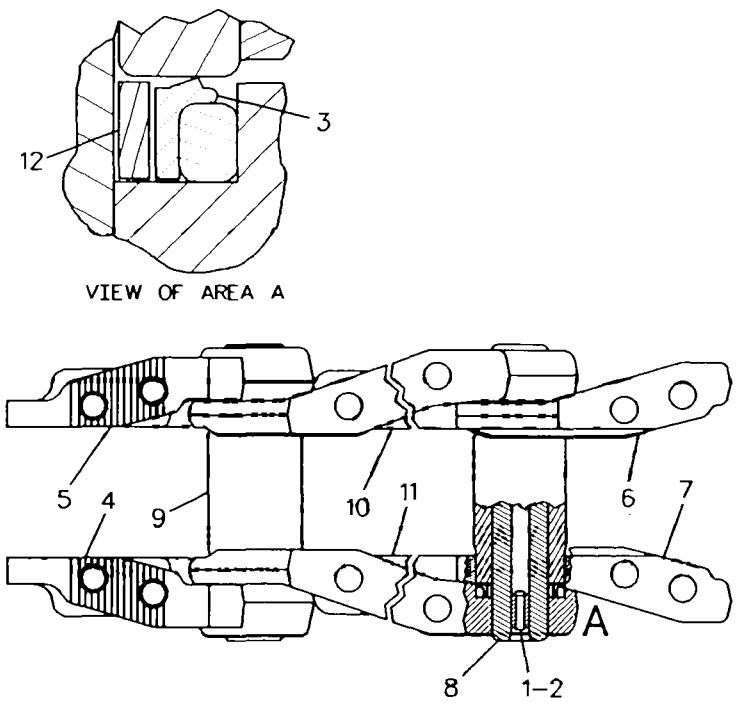

GRAPHIC #1 g00392917

6I-9671 LINK AS-TRACK

PIN 4MN1-UP; 5LN1-UP
SEALED & LUBRICATED-HEAVY DUTY
PART OF 125-5168, 138-5772, 138-5773, 144-7703, 147-0596, 150-7864, 160-4941, 160-4942, 1Q-4734, 1Q-4736, 1Q-4743, 1Q-4764, 1Q-4773 TRACK GP

SMCS-4169, 4171 i00848653

NOTE	REF NO	GRAPHIC REF	PART NUMBER	QTY	PART NAME 1 2 3 4 5 6 (PRODUCT LEVEL)	SEE PAGE
	1	1	6Y-0473	41	PLUG	
	2	1	9G-1642	41	STOPPER-RUBBER	
	3	1	8E-9644	82	SEAL AS	
	4	1	8E-7407	1	LINK-PIN END-RH (MASTER)	
	5	1	8E-7408	1	LINK-PIN END-LH (MASTER)	
	6	1	8E-7410	1	LINK-BUSHING END-LH (MASTER)	
	7	1	8E-7409	1	LINK-BUSHING END-RH (MASTER)	
	8	1	8E-7220	41	PIN-TRACK	
	9	1	8E-7222	41	BUSHING-TRACK	
	10	1	8E-7406	40	LINK-TRACK-LH	
	11	1	8E-7405	40	LINK-TRACK-RH	
	12	1	152-8071	82	RING-THRUST	

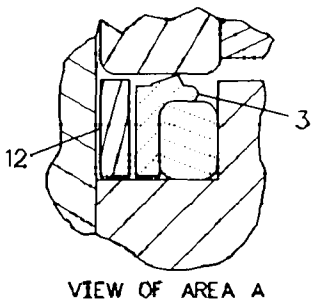

VIEW OF AREA A

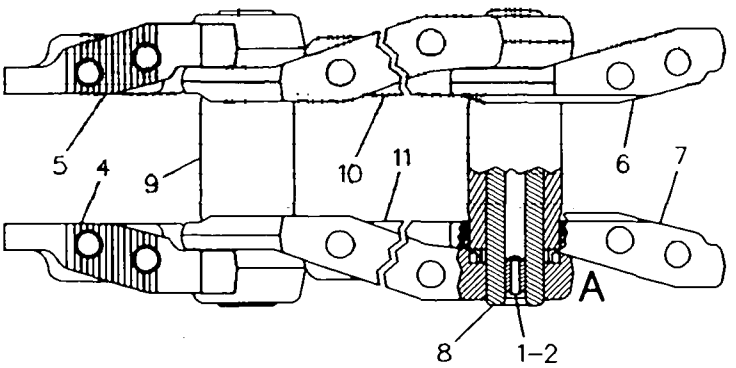

GRAPHIC #1 g00228875

6I-9672 LINK AS-TRACK

PIN 4MN1-UP; 5LN1-UP
SEALED & LUBRICATED
PART OF 144-7706 TRACK GP

SMCS-4169, 4171 i00596489

NOTE	REF NO	GRAPHIC REF	PART NUMBER	QTY	PART NAME 1 2 3 4 5 6 (PRODUCT LEVEL)	SEE PAGE
	1	1	9U-9397	40	JOINT AS-TRACK LINK (LH)	
		1	8E-7406	1	LINK-TRACK-LH	
	2	1	9U-9396	40	JOINT AS-TRACK LINK (RH)	
		1	8E-7405	1	LINK-TRACK-RH	
	3	1	8E-7408	1	LINK-PIN END-LH	
	4	1	8E-7407	1	LINK-PIN END-RH	
	5	1	9U-9399	1	JOINT AS-TRACK LINK (LH)	
		1	8E-7410	1	LINK-BUSHING END-LH	
	6	1	9U-9398	1	JOINT AS-TRACK LINK (RH)	
		1	8E-7409	1	LINK-BUSHING END-RH	
	7	1	9G-8726	164	RING-THRUST	
	8	1	8E-9644	164	SEAL AS	
	9	1	8E-7218	41	BUSHING-TRACK	
	10	1	8E-7221	41	PIN-TRACK	
	11	1	6Y-0473	41	PLUG-CLEAR	
	12	1	9G-1642	41	STOPPER-RUBBER	

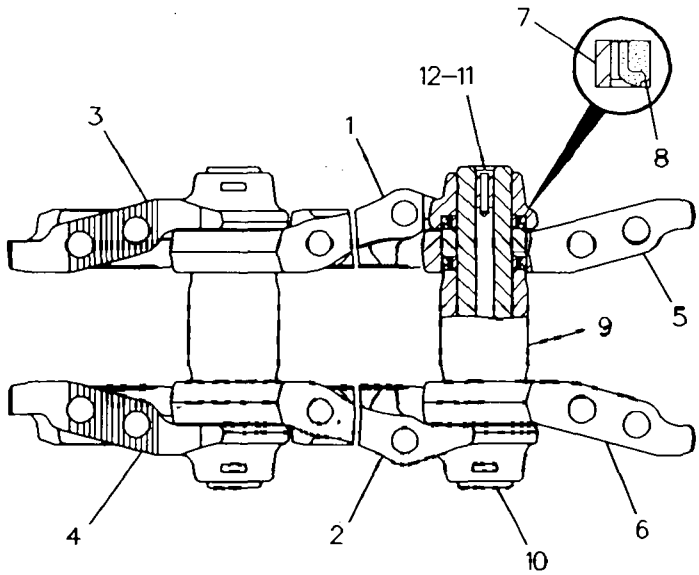

GRAPHIC #1 g00228196

8E-9037 LINK AS-TRACK

PIN 2YN1-UP; 3ZN1-UP; 4MN1-UP; 5LN1-UP; 8LN1-UP; 9PN1-UP
PART OF 106-8233, 1Q-4673, 1Q-4727, 1Q-4741, 1Q-4959, 1Q-4972 TRACK GP

SMCS-4169, 4171 i00907933

NOTE	REF NO	GRAPHIC REF	PART NUMBER	QTY	PART NAME 1 2 3 4 5 6 (PRODUCT LEVEL)	SEE PAGE
	1	1	8E-7410	1	LINK-BUSHING END-LH	
	2	1	8E-7222	45	BUSHING-TRACK	
	3	1	8E-7409	1	LINK-BUSHING END-RH	
	4	1	8E-7405	44	LINK-TRACK-RH	
	5	1	8E-7220	45	PIN-TRACK	
	6	1	8E-9644	90	SEAL AS	
					(EACH INCLUDES)	
		1	103-1072	1	KIT-SEAL	
	7	1	6Y-0473	45	PLUG	
	8	1	9G-1642	45	STOPPER-RUBBER	
	9	1	152-8071	90	RING-THRUST	
	10	1	8E-7407	1	LINK-PIN END-RH (MASTER)	
	11	1	8E-7406	44	LINK-TRACK-LH	
	12	1	8E-7408	1	LINK-PIN END-LH (MASTER)	

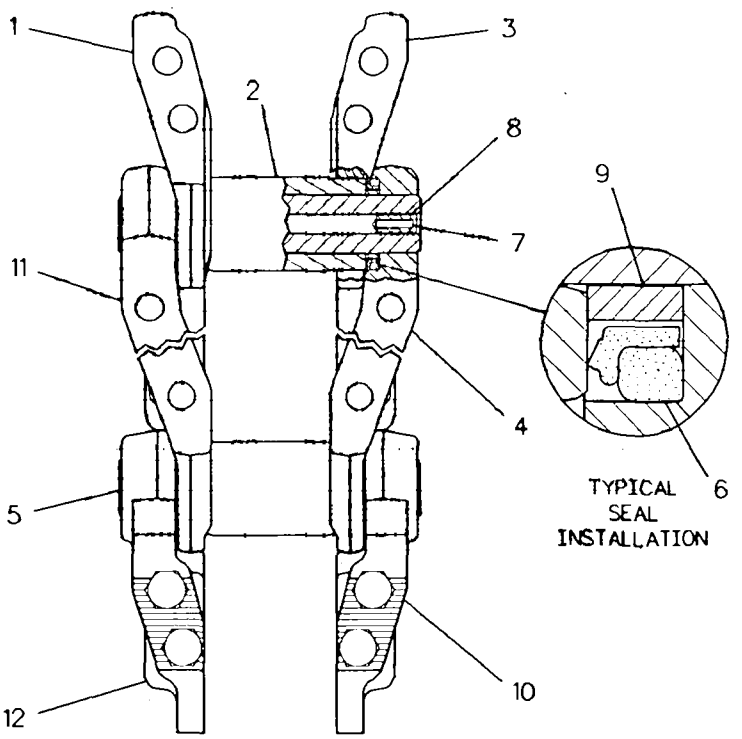

GRAPHIC #1 g00217486

110-6597 LINK AS-TRACK

PIN 6JN1-UP; 7KN1-UP
SEALED & LUBRICATED, ROTATING BUSHING TRACK
PART OF 127-9795 TRACK GP

SMCS-4169, 4171 i01009162

NOTE	REF NO	GRAPHIC REF	PART NUMBER	QTY	PART NAME 1 2 3 4 5 6 (PRODUCT LEVEL)	SEE PAGE
	1	1	8E-7406	39	LINK-TRACK-LH	
	2	1	8E-7405	39	LINK-TRACK-RH	
	3	1	8E-7410	1	LINK-MASTER (LH)	
	4	1	8E-7409	1	LINK-MASTER (RH)	
	5	1	8E-7407	1	LINK-MASTER (RH)	
	6	1	8E-7408	1	LINK-MASTER (LH)	
	7	1	9G-8726	160	RING-THRUST	
	8	1	8E-9644	160	SEAL AS	
	9	1	8E-7218	40	BUSHING-TRACK	
	10	1	8E-7221	40	PIN-TRACK	
	11	1	6Y-0473	40	PLUG	
		1	9G-1642	40	STOPPER-RUBBER	

110-6597 **LINK AS-TRACK** *(contd.)* i01009162

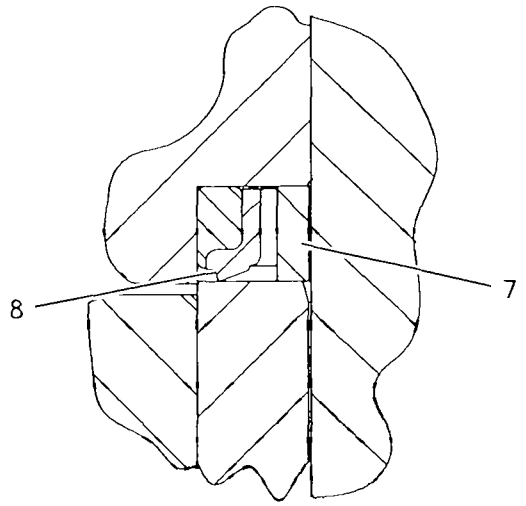

VIEW OF AREA A

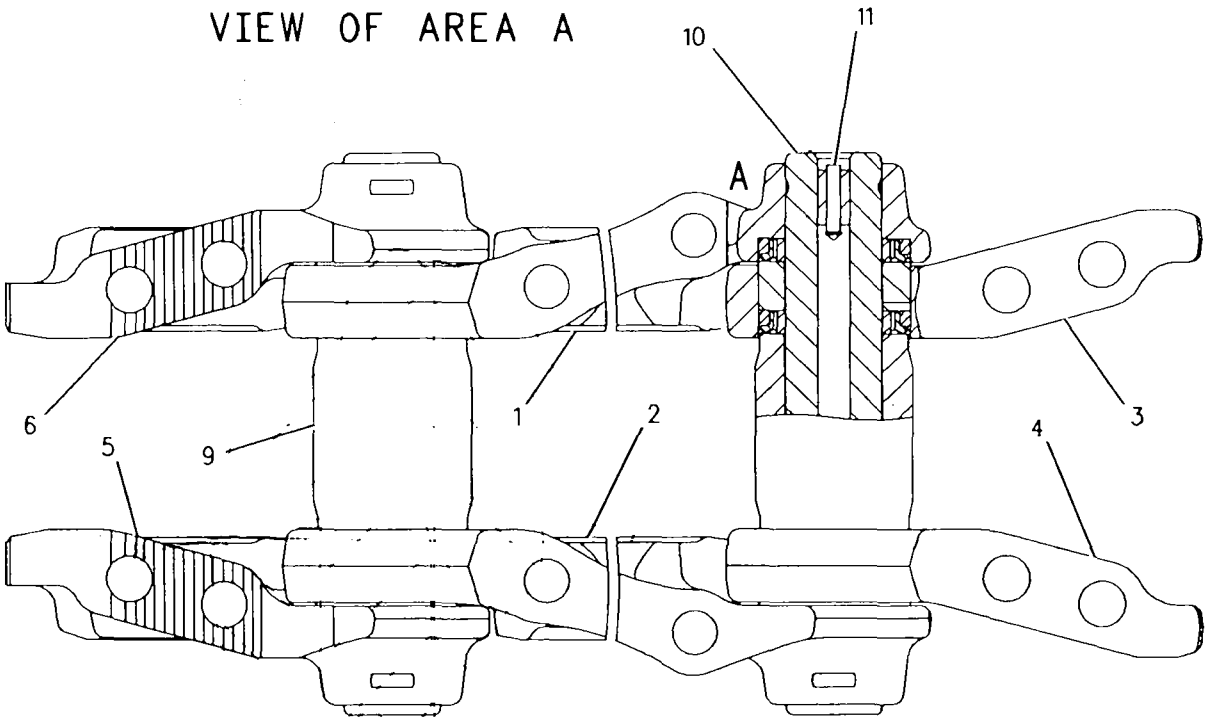

GRAPHIC #1 g00263146

FRAME AND BODY

152-8048 LINK AS-TRACK–CUSTOM

PIN 6JN1-UP; 7KN1-UP
SEALED & LUBRICATED, ROTATING BUSHING TRACK
PART OF 127-9795 TRACK GP

SMCS-4169, 4171 i01009629

NOTE	REF NO	GRAPHIC REF	PART NUMBER	QTY	PART NAME 1 2 3 4 5 6 (PRODUCT LEVEL)	SEE PAGE
	1	1	**152-8092**	39	JOINT AS	
					(EACH INCLUDES)	
		1	**8E-7406**	1	LINK-TRACK-LH	
	2	1	**152-8091**	39	JOINT AS	
					(EACH INCLUDES)	
		1	**8E-7405**	1	LINK-TRACK-RH	
	3	1	**152-8094**	1	JOINT AS (BUSHING END)	
		1	**8E-7410**	1	LINK-MASTER (LH)	
	4	1	**152-8093**	1	JOINT AS (BUSHING END)	
		1	**8E-7409**	1	LINK-MASTER (RH)	
	5	1	**8E-7407**	1	LINK-MASTER (RH)	
	6	1	**8E-7408**	1	LINK-MASTER (LH)	
	7	1	**152-8071**	160	RING-THRUST	
	8	1	**8E-9644**	160	SEAL AS	
	9	1	**152-8062**	40	BUSHING-TRACK	
	10	1	**152-8079**	40	PIN-TRACK	
	11	1	**6Y-0473**	40	PLUG	
		1	**9G-1642**	40	STOPPER-RUBBER	

152-8048 LINK AS-TRACK *(contd.)* i01009629

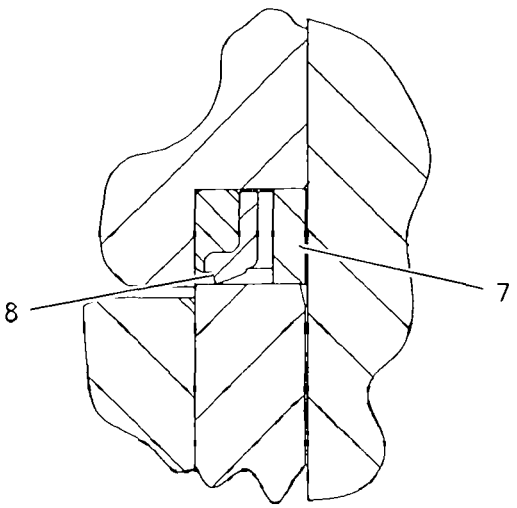

VIEW OF AREA A

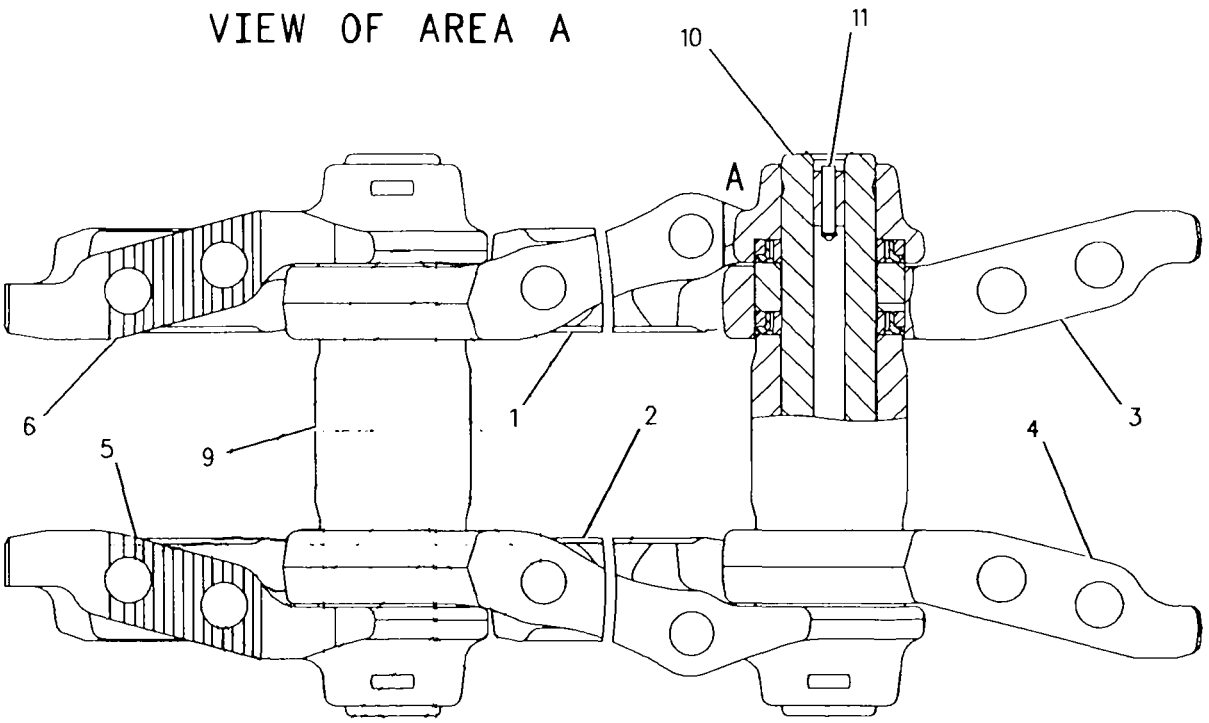

GRAPHIC #1 g00263146

152-8050 LINK AS-TRACK

PIN 4MN1-UP; 5LN1-UP
SEALED & LUBRICATED-ROTATING BUSHING TRACK
PART OF 144-7706 TRACK GP

SMCS-4169, 4171 i00899563

NOTE	REF NO	GRAPHIC REF	PART NUMBER	QTY	PART NAME 1 2 3 4 5 6 (PRODUCT LEVEL)	SEE PAGE
	1	1	152-8091	40	JOINT AS (RH)	
	2	1	152-8092	40	JOINT AS (LH)	
	3	1	152-8093	1	JOINT AS (BUSHING END) (RH)	
	4	1	152-8094	1	JOINT AS (BUSHING END) (LH)	
	5	1	6Y-0473	41	PLUG	
	6	1	9G-1642	41	STOPPER-RUBBER	
	7	1	8E-7407	1	LINK-PIN END-RH	
	8	1	8E-7408	1	LINK-PIN END-LH	
	9	1	8E-9644	164	SEAL AS	
	10	1	152-8071	164	RING-THRUST	
	11	1	152-8079	41	PIN-TRACK	
	12	1	152-8062	41	BUSHING-TRACK	

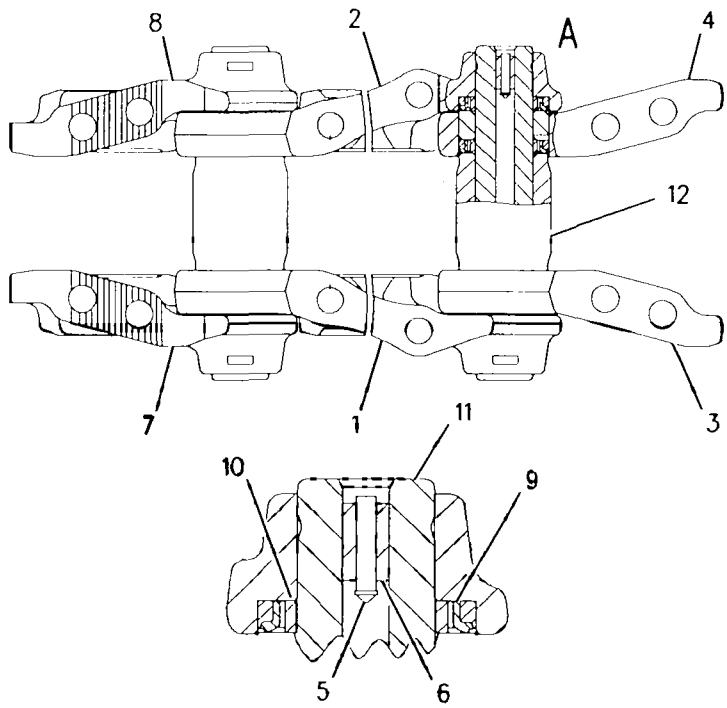

VIEW OF AREA A

GRAPHIC #1 g00400819

6Y-2940 MOUNTING GP-CARRIER ROLLER

PIN 2YN1-UP; 3ZN1-UP; 6JN1-UP; 7KN1-UP

PART OF 141-7926 ROLLER AR-TRACK, 1Z-0967 ROLLER AR-TRACK CARRIER

SMCS-4154 i00587466

NOTE	REF NO	GRAPHIC REF	PART NUMBER	QTY	PART NAME 1 2 3 4 5 6 (PRODUCT LEVEL)	SEE PAGE
	1	1	7X-0371	2	BOLT (3/4-10X3.75IN)	
		1	8T-4994	2	WASHER (5MM THK)	
	2	1	8Y-1388	1	BRACKET AS	
	3	1	7X-0406	4	BOLT (1-8X3IN)	
		1	8T-5361	4	WASHER (5MM THK)	

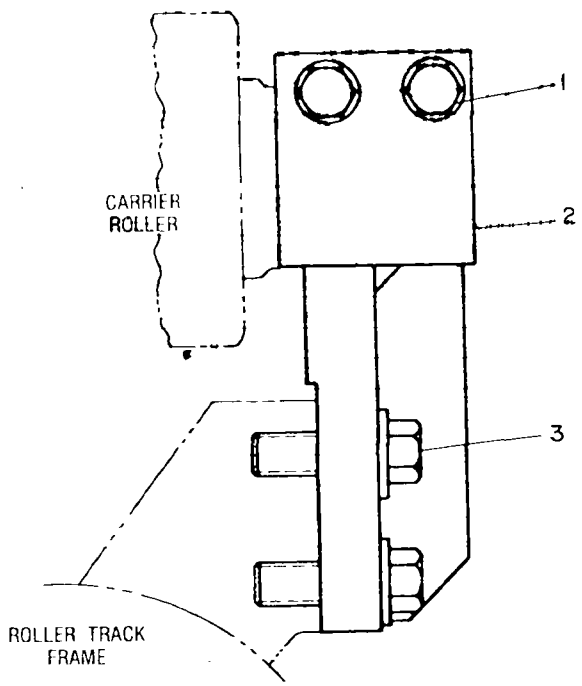

GRAPHIC #1 g00198194

137-0283 PIVOT BAR GP

PIN 4MN1-UP
INTERMEDIATE GAUGE
PART OF 151-6171 GAUGE GP

SMCS-4153 i00599675

NOTE	REF NO	GRAPHIC REF	PART NUMBER	QTY	PART NAME 1 2 3 4 5 6 (PRODUCT LEVEL)	SEE PAGE
	1	1	137-0284	2	SHAFT AS	
					(EACH INCLUDES)	
		1	5G-9841	1	RING	
	2	1	7X-0427	16	BOLT (1-1/4-7X3.50IN)	
	3	1	5G-9842	2	SEAL	
	4	1	5G-9843	2	PLATE	
	5	1	9M-3786	2	SEAL-O-RING (139.06MM ID)	
	6	1	3T-2051	2	COVER	
M	7	1	8T-6430	10	BOLT (M20X2.5X50MM)	
	8	1	8T-4123	10	WASHER-PLATED (3.5MM THK)	
M	9	1	8T-0375	12	BOLT (M16X2.0X45MM)	
	10	1	5G-8993	2	RETAINER	
	11	1	8E-1900	2	WASHER-THRUST	

M-METRIC PART

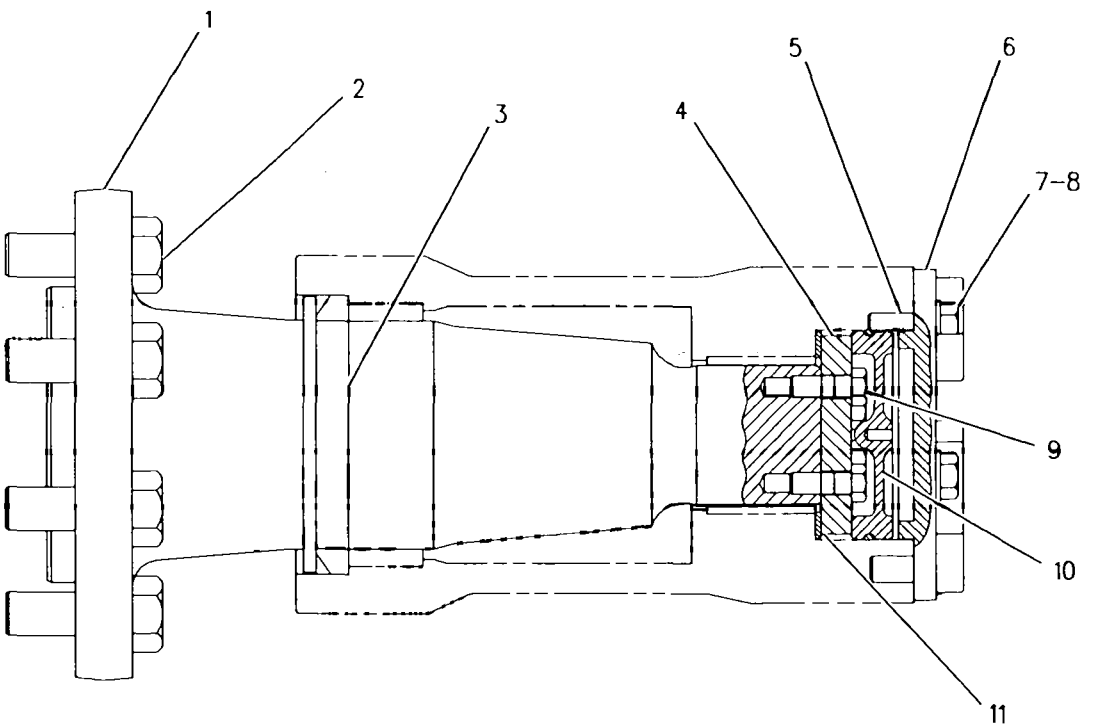

GRAPHIC #1 g00264025

FRAME AND BODY

141-7926 ROLLER AR–CARRIER–CUSTOM

PIN 2YN1-UP; 3ZN1-UP; 6JN1-UP; 7KN1-UP

RETROFIT

SMCS-4180 **i01009541**

NOTE	PART NUMBER	QTY	PART NAME 1 2 3 4 5 6 (PRODUCT LEVEL)	SEE PAGE
Y	*6Y-2940*	2	MOUNTING GP-CARRIER ROLLER	295
Y	**6Y-1781**	2	ROLLER GP-TRACK CARRIER	299
	6Y-9864	1	BLOCK GP	
	6Y-6835	2	PLATE	

Y-SEPARATE ILLUSTRATION

FRAME AND BODY

1Z-0967 ROLLER AR-CARR–CUSTOM

PIN 2YN1-UP; 3ZN1-UP; 6JN1-UP; 7KN1-UP

SMCS-4154 **i01010140**

NOTE	REF NO	GRAPHIC REF	PART NUMBER	QTY	PART NAME 1 2 3 4 5 6 (PRODUCT LEVEL)	SEE PAGE
	1	1	**6Y-6834**	4	BLOCK	
		1	**6Y-6835**	2	PLATE	
Y	2	1	*6Y-2940*	2	MOUNTING GP-CARRIER ROLLER	295
Y	3	1	*6Y-1781*	2	ROLLER GP-TRACK CARRIER	299

Y-SEPARATE ILLUSTRATION

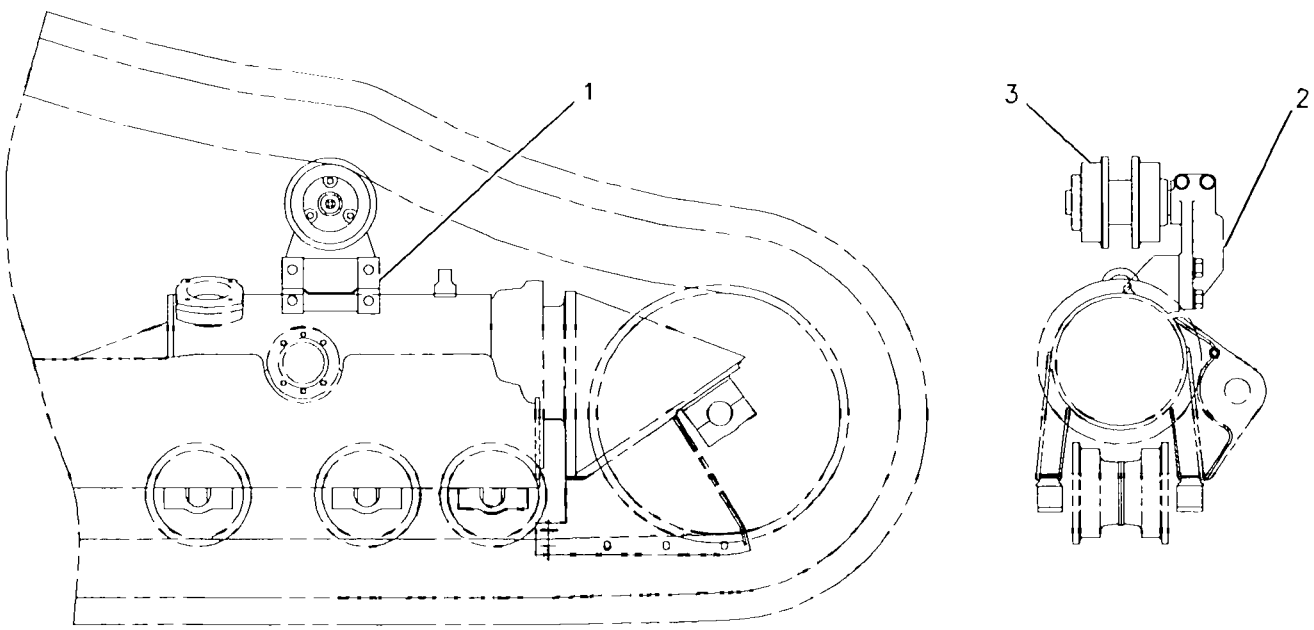

GRAPHIC #1 g00285049

FRAME AND BODY

6Y-1781 ROLLER GP-TRACK CARRIER

PIN 2YN1-UP; 3ZN1-UP; 6JN1-UP; 7KN1-UP

PART OF 141-7926 ROLLER AR-TRACK, 1Z-0967 ROLLER AR-TRACK CARRIER

SMCS-4154 i00893215

NOTE	REF NO	GRAPHIC REF	PART NUMBER	QTY	PART NAME 1 2 3 4 5 6 (PRODUCT LEVEL)	SEE PAGE
	1	1	7H-4574	1	RING	
	2	1	7H-4571	1	COLLAR AS	
	3	1	1M-4291	2	DOWEL	
	4	1	1H-8720	1	SEAL-O-RING	
R	5	1	9W-6647	1	SEAL GP-DUO-CONE	
	6	1	8H-2262	2	RING-TORIC SEAL	
	7	1	126-1347	2	BEARING AS-SPECIAL (EACH INCLUDES)	
	8	1	9S-3582	1	CONE-ROLLER BEARING	
	9	1	9S-3581	1	CUP-ROLLER BEARING	
	10	1	9S-8320	1	ROLLER AS	
	11	1	2P-0347	1	PLUG	
	12	1	1S-8947	1	SEAL-O-RING (17.17MM ID)	
	13	1	0S-1594	3	BOLT	
	14	1	8P-6188	1	PLATE-RETAINER	
	15	1	5M-2043	1	COVER-ROLLER	
	16	1	2H-6338	1	SEAL-O-RING (85.32MM ID)	
	17	1	5K-9107	2	BOLT-LOCKING (3/8-16X0.75IN)	
	18	1	6Y-2043	1	SHAFT-CARRIER ROLLER	

R-REMFG PART MAY BE AVAILABLE

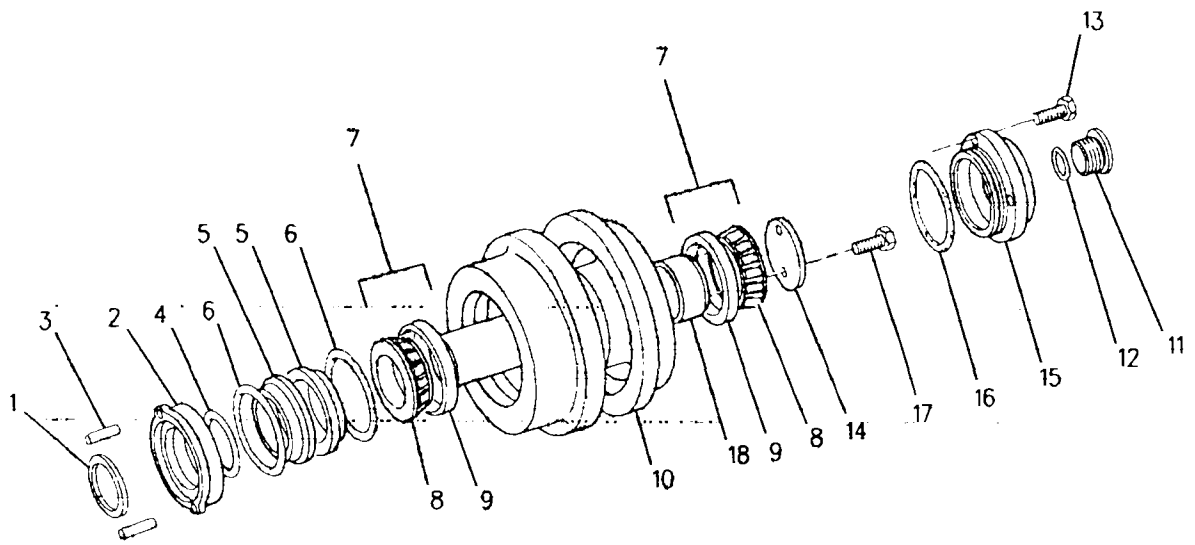

GRAPHIC #1 g00456667

9Z-8146 STRIKER GP–CUSTOM

PIN 2YN1-UP; 3ZN1-UP

FRONT & REAR, WASTE DISPOSAL

CANNOT BE USED WITH RIPPER OR 3W4265 WINCHER UNDERCARRIAGE OPTION

SMCS-4150 i01012300

NOTE	PART NUMBER	QTY	PART NAME 1 2 3 4 5 6 (PRODUCT LEVEL)	SEE PAGE
Y	*1Z-0685*	1	STRIKER GP-FRONT	302
Y	*1Z-0686*	1	STRIKER GP-REAR	305

Y-SEPARATE ILLUSTRATION

1Q-4239 STRIKER GP-FRONT-CUSTOM

PIN 2YN1-UP; 3ZN1-UP; 6JN1-UP; 7KN1-UP
RETROFIT

SMCS-4150 i01009878

NOTE	PART NUMBER	QTY	PART NAME 1 2 3 4 5 6 (PRODUCT LEVEL)	SEE PAGE
	1Q-1547	1	BAR	
	1Q-1546	1	BAR AS	
	7X-0325	5	BOLT (1/2-13X0.75IN)	
	7X-0375	4	BOLT (3/4 X 10 X 5IN)	
	8T-8917	11	BOLT (1/2-13X1.25IN)	
	1Q-1545	2	BRACKET AS	
	1Q-1548	1	GUARD AS	
	1F-0750	4	NUT-WELD (3/8-16 THD)	
	1Q-1544	1	PLATE	
	5P-1076	16	WASHER-HARD (4MM THK)	

1Z-0685 STRIKER GP-FRONT-CUSTOM

PIN 2YN1-UP; 3ZN1-UP; 6JN1-UP; 7KN1-UP
WASTE DISPOSAL
PART OF 9Z-8146 STRIKER GP

SMCS-4150 i01010134

NOTE	REF NO	GRAPHIC REF	PART NUMBER	QTY	PART NAME 1 2 3 4 5 6 (PRODUCT LEVEL)	SEE PAGE
	1	1	1Q-1545	2	BRACKET AS	
	2	1	7X-0375	4	BOLT (3/4 X 10 X 5IN)	
	3	1	1Q-1546	1	BAR AS	
	4	1	8T-8917	11	BOLT (1/2-13X1.25IN)	
	5	1	5P-1076	16	WASHER-HARD (4MM THK)	
	6	1	7X-0325	5	BOLT (1/2-13X0.75IN)	
	7	1	1Q-1544	1	PLATE	
	8	1	1Q-1547	1	BAR	

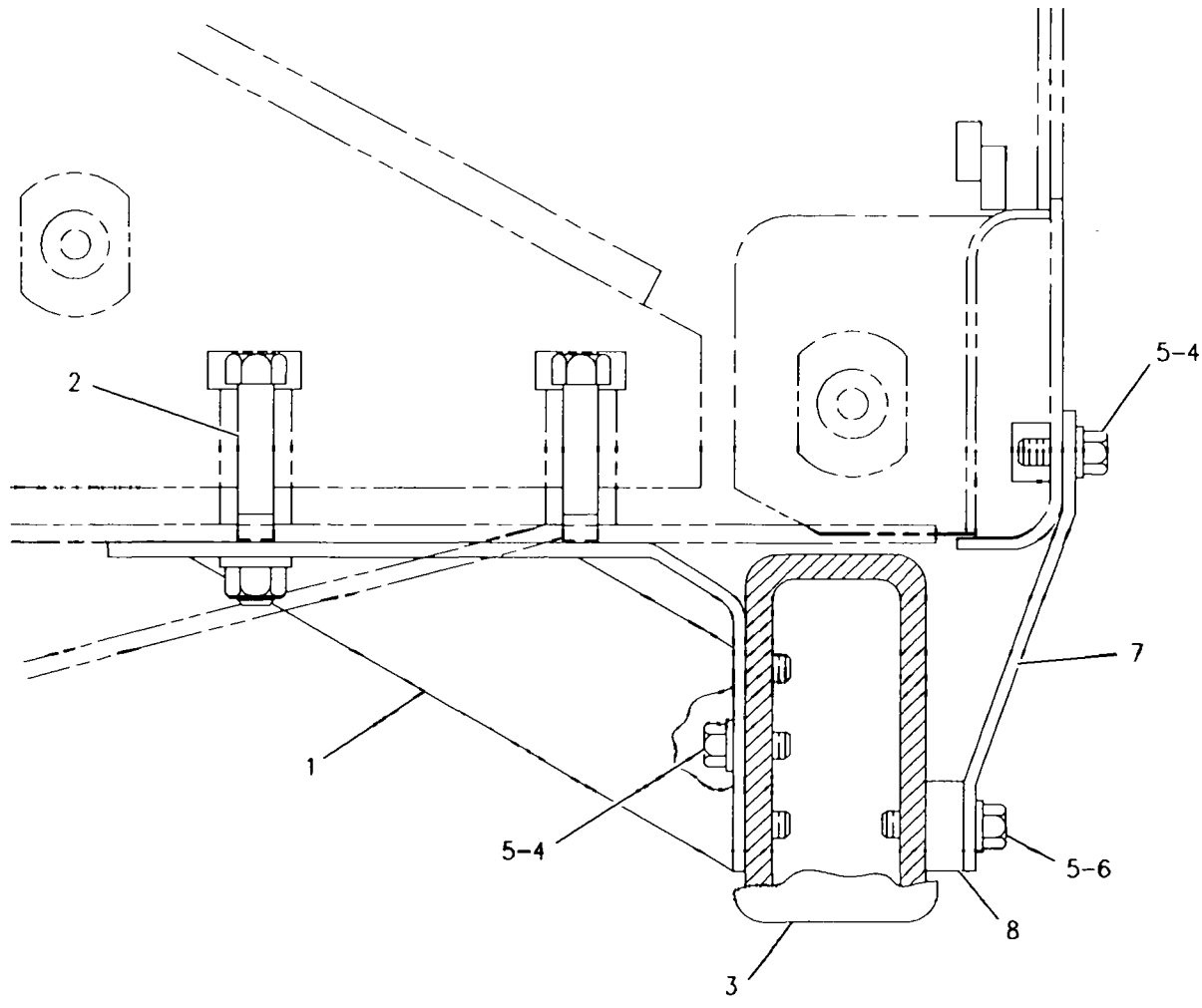

GRAPHIC #1 g00285212

FRAME AND BODY

1Q-4187 STRIKER GP-REAR–CUSTOM

PIN 8LN1-UP; 9PN1-UP

LGP

SMCS-4150 **i01009874**

NOTE	REF NO	GRAPHIC REF	PART NUMBER	QTY	PART NAME 1 2 3 4 5 6 (PRODUCT LEVEL)	SEE PAGE
	1	1	5D-3118	10	STUD-TAPERLOCK	
	2	1	5P-8250	10	WASHER (5.0MM THK)	
	3	1	2J-3507	10	NUT-FULL (1-8 THD)	
Y	4	1	1Q-4191	1	BAR AS-STRIKER	250
	5	1	2P-1535	1	PIN AS	
		1	7F-9546	1	COLLAR	
	6	1	7B-0863	1	LATCH-PIN	
	7	1	7X-0347	1	BOLT (5/8-11X2.25IN)	
	8	1	3K-2889	1	LOCKNUT (5/8-11 THD)	
	9	1	1P-3819	1	BRACKET AS	
		1	1P-1547	1	PLATE-LOCKING	
	10	1	7X-0366	4	BOLT (3/4-10X2IN)	
	11	1	8T-4994	4	WASHER (5MM THK)	

Y-SEPARATE ILLUSTRATION

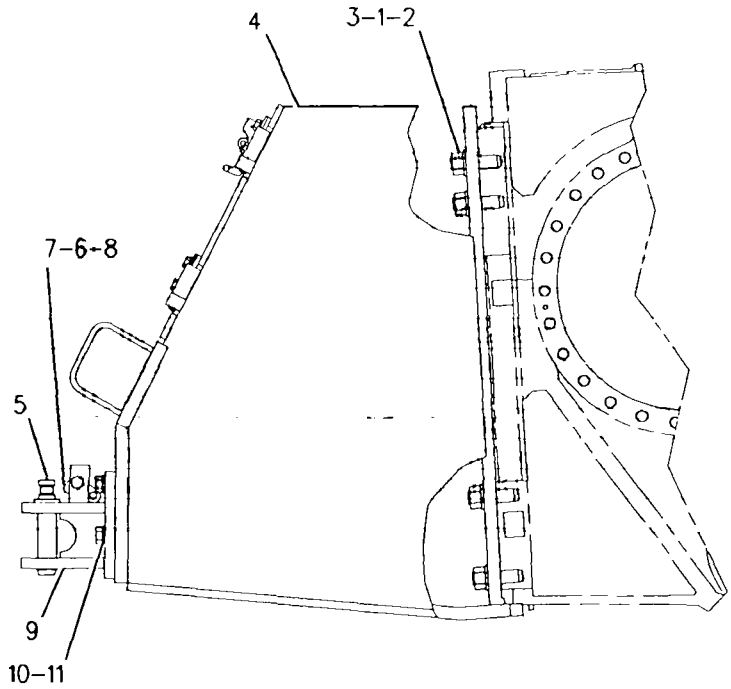

GRAPHIC #1 g00286423

1Q-4240 STRIKER GP-REAR–CUSTOM

PIN 2YN1-UP; 3ZN1-UP; 4MN1-UP; 5LN1-UP
RETROFIT

SMCS-4150 i01009880

NOTE	PART NUMBER	QTY	PART NAME 1 2 3 4 5 6 (PRODUCT LEVEL)	SEE PAGE
Y	*9Z-8222*	1	BAR AS-STRIKER	252
	0L-1178	4	BOLT (3/4-10X2IN)	
	0S-1577	1	BOLT (5/8-18X2.25IN)	
	1P-3819	1	BRACKET AS	
	1P-1547	1	PLATE-LOCKING	
	7B-0863	1	LATCH-PIN	
	2K-4821	1	LOCKNUT (5/8-18 THD)	
	2J-3507	10	NUT-FULL (1-8 THD)	
	2P-1535	1	PIN AS	
	7F-9546	1	COLLAR	
	5D-3118	10	STUD-TAPERLOCK	
	5P-8248	4	WASHER-HARD (3.5MM THK)	
	5P-8250	10	WASHER (5.0MM THK)	

Y-SEPARATE ILLUSTRATION

FRAME AND BODY

1Z-0686 STRIKER GP-REAR

PIN 2YN1-UP; 3ZN1-UP; 4MN1-UP; 5LN1-UP
PART OF 9Z-8146 STRIKER GP

SMCS-4150 i01014259

NOTE	REF NO	GRAPHIC REF	PART NUMBER	QTY	PART NAME 1 2 3 4 5 6 (PRODUCT LEVEL)	SEE PAGE
Y	1	1	*9Z-8222*	1	BAR AS-STRIKER	252
	2	1	**5D-3118**	10	STUD-TAPERLOCK	
	3	1	**2J-3507**	10	NUT-FULL (1-8 THD)	
	4	1	**5P-8250**	10	WASHER (5.0MM THK)	
	5	1	**1P-3819**	1	BRACKET AS	
		1	**1P-1547**	1	PLATE-LOCKING	
	6	1	**2P-1535**	1	PIN AS	
		1	**7F-9546**	1	COLLAR	
	7	1	**7B-0863**	1	LATCH-PIN	
	8	1	**7X-0347**	1	BOLT (5/8-11X2.25IN)	
	9	1	**3K-2889**	1	LOCKNUT (5/8-11 THD)	
	10	1	**7X-0366**	4	BOLT (3/4-10X2IN)	
	11	1	**8T-4994**	4	WASHER (5MM THK)	

Y-SEPARATE ILLUSTRATION

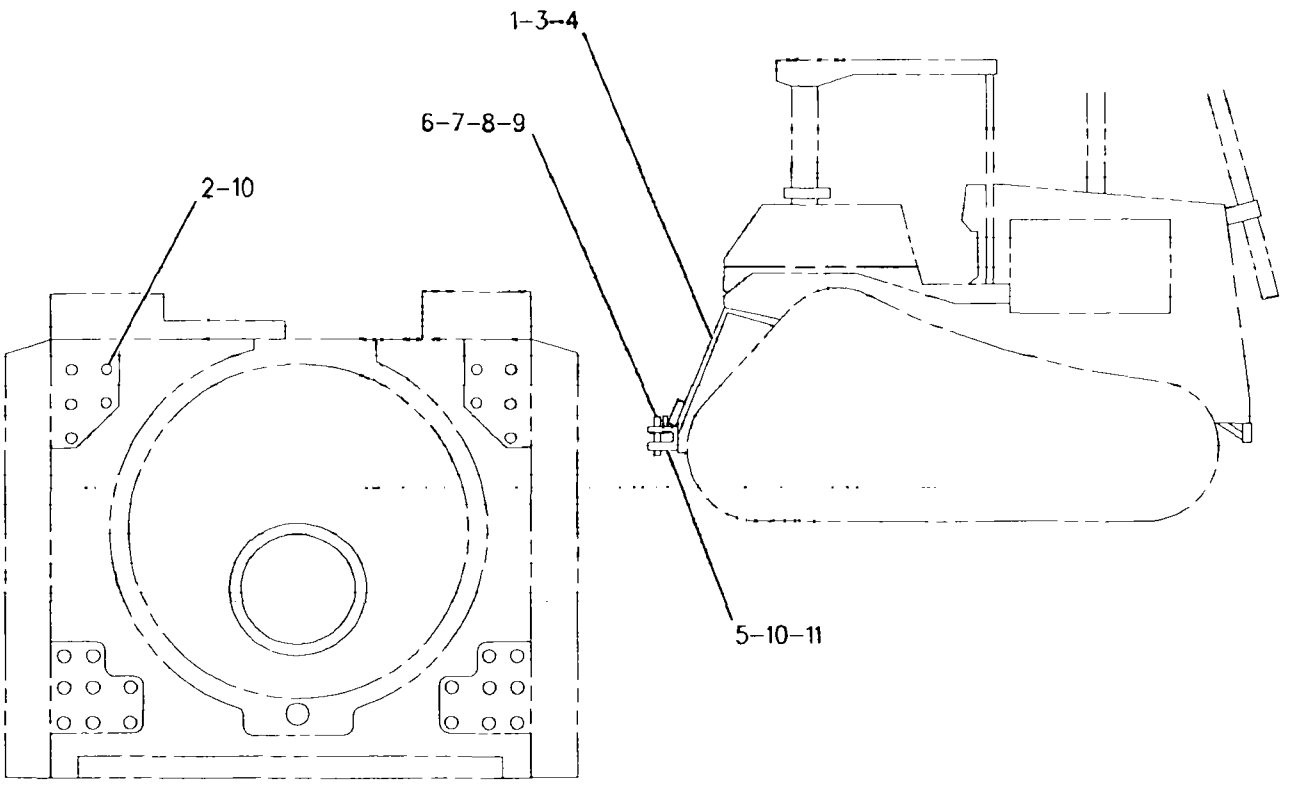

GRAPHIC #1 g00284898

9U-8492 TRACK ADJUSTER & RECOIL GP

PIN 4MN1-UP; 5LN1-UP

PART OF 137-0215, 137-0219 FRAME GP-TELESCOPING RECOIL

SMCS-4157, 4158 i00575962

NOTE	REF NO	GRAPHIC REF	PART NUMBER	QTY	PART NAME 1 2 3 4 5 6 (PRODUCT LEVEL)	SEE PAGE
	1	1	3W-0640	1	PISTON	
C	2	1	108-0200	1	CYLINDER	
	3	1	9S-8010	1	PLUG-O-RING (1 5/8-12 THD)	
	4	1	2S-4078	1	SEAL-O-RING (37.46MM ID)	
CM	5	1	8T-4182	2	BOLT (M10X1.5X45MM)	
C	6	1	8T-4121	2	WASHER (2.5MM THK)	
	7	1	3W-2369	1	PLATE AS	
	8	1	3T-0598	1	TUBE	
	9	1	9U-8790	1	PLATE AS	
	10	1	9U-8491	1	SPRING-RECOIL	
	11	1	6V-8142	1	SEAL-U-CUP	
	12	1	6Y-5799	2	LOCK	
	13	1	2S-5925	1	VALVE (FILL)	
	14	1	2S-5926	1	VALVE (RELIEF)	
CM	15	1	7X-2553	4	BOLT (M16X2.0X40MM)	
C		1	9X-8257	4	WASHER (3.50MM THK)	
	16	1	2J-6274	1	SEAL-O-RING	

C-CHANGE FROM PREVIOUS TYPE
M-METRIC PART

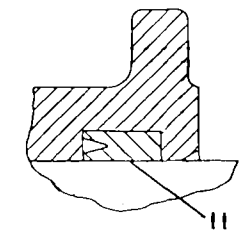

VIEW OF AREA B

RIGHT REAR VIEW

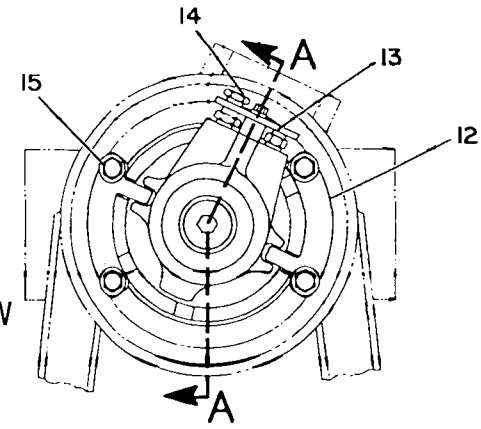

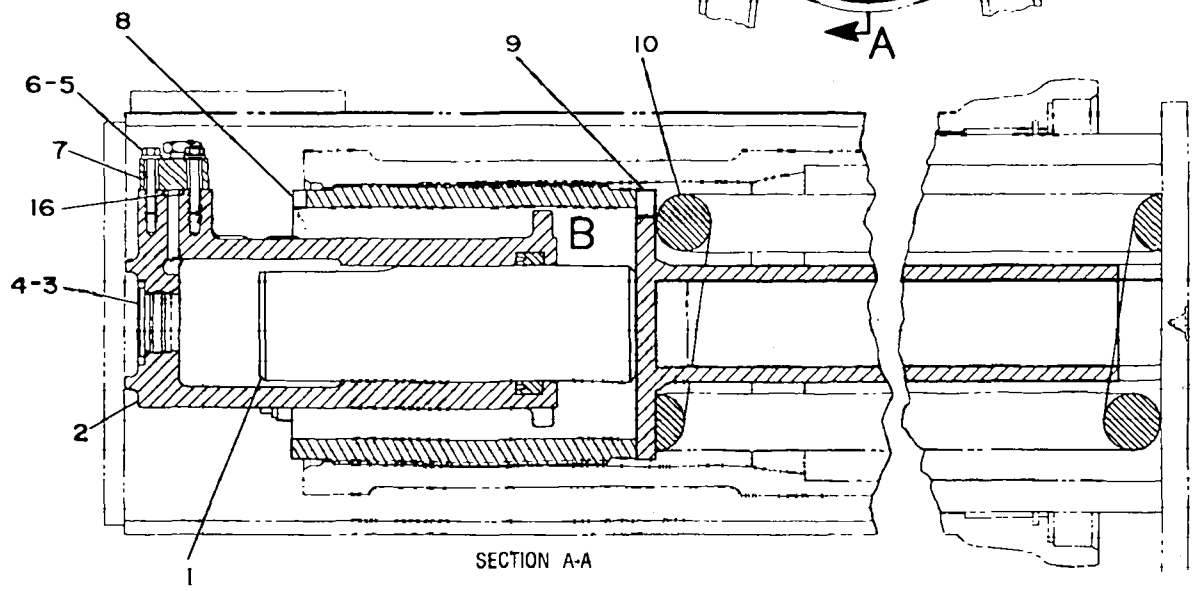

SECTION A-A

GRAPHIC #1 g00207644

1Q-4627 TRACK GP–CUSTOM

PIN 2YN1-UP; 3ZN1-UP
560 MM (22 IN) GROUSER SHOE,
SEALED & LUBRICATED, EXTREME SERVICE, TRAPEZOIDAL

SMCS-4170 i01009884

NOTE	PART NUMBER	QTY	PART NAME 1 2 3 4 5 6 (PRODUCT LEVEL)	SEE PAGE
Y	6I-9668	1	LINK AS-TRACK	285
	6V-1792	152	BOLT-TRACK	
	9S-1838	4	BOLT-TRACK	
	1S-1860	152	NUT-TRACK	
	1Q-4625	38	SHOE-TRACK	
	1Q-4626	1	SHOE-TRACK MASTER	

Y-SEPARATE ILLUSTRATION

1Q-4655 TRACK GP–CUSTOM

PIN 6JN1-UP; 7KN1-UP
560 MM (22 IN) GROUSER SHOE,
SEALED & LUBRICATED, EXTREME SERVICE, TRAPEZOIDAL

SMCS-4170 i01009928

NOTE	PART NUMBER	QTY	PART NAME 1 2 3 4 5 6 (PRODUCT LEVEL)	SEE PAGE
Y	6I-9670	1	LINK AS-TRACK	286
	6V-1792	156	BOLT-TRACK	
	9S-1838	4	BOLT-TRACK	
	1S-1860	156	NUT-TRACK	
	1Q-4625	39	SHOE-TRACK	
	1Q-4626	1	SHOE-TRACK MASTER	

Y-SEPARATE ILLUSTRATION

1Q-4673 TRACK GP–CUSTOM

PIN 2YN1-UP; 3ZN1-UP; 8LN1-UP; 9PN1-UP

SMCS-4170 **i01013382**

NOTE	PART NUMBER	QTY	PART NAME 1 2 3 4 5 6 (PRODUCT LEVEL)	SEE PAGE
Y	**8E-9037**	1	LINK AS-TRACK	289
	6V-1792	176	BOLT-TRACK	
	9S-1838	4	BOLT-TRACK	
	1S-1860	176	NUT-TRACK	
	6Y-6397	1	SHOE-MASTER TRACK	
	1Q-4930	44	SHOE-TRACK	

Y-SEPARATE ILLUSTRATION

1Q-4725 TRACK GP–CUSTOM

PIN 2YN1-UP; 3ZN1-UP
510 MM (20 IN) GROUSER SHOE,
SEALED AND LUBRICATED,EXTREME SERVICE, TRAPEZOIDAL

SMCS-4170 i01009938

NOTE	PART NUMBER	QTY	PART NAME 1 2 3 4 5 6 (PRODUCT LEVEL)	SEE PAGE
Y	**6I-9668**	1	LINK AS-TRACK	285
	6V-1792	152	BOLT-TRACK	
	9S-1838	4	BOLT-TRACK	
	1S-1860	152	NUT-TRACK	
	1Q-4935	38	SHOE-TRACK	
	1Q-4996	1	SHOE-TRACK MASTER	

Y-SEPARATE ILLUSTRATION

1Q-4727 TRACK GP–CUSTOM

PIN 8LN1-UP; 9PN1-UP
915 MM (36 IN) GROUSER SHOE,
SEALED AND LUBRICATED, EXTREME SERVICE, TRAPEZOIDAL

SMCS-4170 i01009943

NOTE	PART NUMBER	QTY	PART NAME 1 2 3 4 5 6 (PRODUCT LEVEL)	SEE PAGE
Y	8E-9037	1	LINK AS-TRACK	289
	6V-1792	176	BOLT-TRACK	
	9S-1838	4	BOLT-TRACK	
	1S-1860	176	NUT-TRACK	
	1Q-4728	44	SHOE-TRACK	
	1Q-4729	1	SHOE-TRACK MASTER	

Y-SEPARATE ILLUSTRATION

1Q-4734 TRACK GP–CUSTOM

PIN 4MN1-UP; 5LN1-UP

610 MM (24 IN) GROUSER SHOE,

SEALED AND LUBRICATED, MODERATE SERVICE, HEAVY DUTY, TRAPEZOIDAL

SMCS-4170 i01009989

NOTE	PART NUMBER	QTY	PART NAME 1 2 3 4 5 6 (PRODUCT LEVEL)	SEE PAGE
Y	**6I-9671**	1	LINK AS-TRACK	287
	6V-1792	160	BOLT-TRACK	
	9S-1838	4	BOLT-TRACK	
	1S-1860	160	NUT-TRACK	
	1Q-4958	40	SHOE-TRACK	
	1Q-4997	1	SHOE-TRACK MASTER	

Y-SEPARATE ILLUSTRATION

1Q-4736 TRACK GP–CUSTOM

PIN 4MN1-UP; 5LN1-UP
760 MM (30 IN) GROUSER SHOE,
SEALED & LUBRICATED, MODERATE SERVICE, HEAVY DUTY

SMCS-4170 i01009992

NOTE	PART NUMBER	QTY	PART NAME 1 2 3 4 5 6 (PRODUCT LEVEL)	SEE PAGE
Y	6I-9671	1	LINK AS-TRACK	287
	6V-1792	160	BOLT-TRACK	
	9S-1838	4	BOLT-TRACK	
	1S-1860	160	NUT-TRACK	
	6Y-6300	1	SHOE-TRACK	
	6Y-8973	40	SHOE-TRACK	

Y-SEPARATE ILLUSTRATION

1Q-4741 TRACK GP–CUSTOM

PIN 8LN1-UP; 9PN1-UP
760 MM (30 IN) GROUSER SHOE,
SEALED AND LUBRICATED, MODERATE SERVICE, TRAPEZOIDAL

SMCS-4170 i01010001

NOTE	PART NUMBER	QTY	PART NAME 1 2 3 4 5 6 (PRODUCT LEVEL)	SEE PAGE
Y	**8E-9037**	1	LINK AS-TRACK	289
	6V-1792	176	BOLT-TRACK	
	9S-1838	4	BOLT-TRACK	
	1S-1860	176	NUT-TRACK	
	1Q-4744	44	SHOE-TRACK	
	1Q-4745	1	SHOE-TRACK MASTE	

Y-SEPARATE ILLUSTRATION

FRAME AND BODY

1Q-4743 TRACK GP–CUSTOM

PIN 4MN1-UP; 5LN1-UP
610 MM (24 IN) GROUSER SHOE,
SEALED AND LUBRICATED, EXTREME SERVICE, HEAVY DUTY

SMCS-4170 i01010049

NOTE	PART NUMBER	QTY	PART NAME 1 2 3 4 5 6 (PRODUCT LEVEL)	SEE PAGE
Y	6I-9671	1	LINK AS-TRACK	287
	6V-1792	160	BOLT-TRACK	
	9S-1838	4	BOLT-TRACK	
	1S-1860	160	NUT-TRACK	
	6Y-6397	1	SHOE-MASTER TRACK	
	1Q-4930	40	SHOE-TRACK	

Y-SEPARATE ILLUSTRATION

1Q-4764 TRACK GP–CUSTOM

PIN 4MN1-UP; 5LN1-UP
510 MM (20 IN) GROUSER SHOE,
SEALED AND LUBRICATED, EXTREME SERVICE, HEAVY DUTY, TRAPEZOIDAL

SMCS-4170 **i01010055**

NOTE	PART NUMBER	QTY	PART NAME 1 2 3 4 5 6 (PRODUCT LEVEL)	SEE PAGE
Y	**6I-9671**	1	LINK AS-TRACK	287
	6V-1792	160	BOLT-TRACK	
	9S-1838	4	BOLT-TRACK	
	1S-1860	160	NUT-TRACK	
	1Q-4935	40	SHOE-TRACK	
	1Q-4996	1	SHOE-TRACK MASTER	

Y-SEPARATE ILLUSTRATION

1Q-4773 TRACK GP-CUSTOM

PIN 4MN1-UP; 5LN1-UP
760 MM (30 IN) GROUSER SHOE,
SEALED AND LUBRICATED, MODERATE SERVICE, HEAVY DUTY, TRAPEZOIDAL

SMCS-4170 i01010059

NOTE	PART NUMBER	QTY	PART NAME 1 2 3 4 5 6 (PRODUCT LEVEL)	SEE PAGE
Y	6I-9671	1	LINK AS-TRACK	287
	6V-1792	160	BOLT-TRACK	
	9S-1838	4	BOLT-TRACK	
	1S-1860	160	NUT-TRACK	
	1Q-4744	40	SHOE-TRACK	
	1Q-4745	1	SHOE-TRACK MASTE	

Y-SEPARATE ILLUSTRATION

FRAME AND BODY

1Q-4925 TRACK GP–CUSTOM

PIN 2YN1-UP; 3ZN1-UP

510 MM (20 IN) GROUSER SHOE, SEALED AND LUBRICATED, MODERATE SERVICE

SMCS-4170 **i01010061**

NOTE	PART NUMBER	QTY	PART NAME 1 2 3 4 5 6 (PRODUCT LEVEL)	SEE PAGE
Y	**6I-9668**	1	LINK AS-TRACK	285
	6V-1792	152	BOLT-TRACK	
	9S-1838	4	BOLT-TRACK	
	1S-1860	152	NUT-TRACK	
	1Q-4924	38	SHOE-TRACK	
	1Q-4994	1	SHOE-TRACK MASTER	

Y-SEPARATE ILLUSTRATION

1Q-4927 TRACK GP–CUSTOM

PIN 2YN1-UP; 3ZN1-UP
560 MM (22 IN) GROUSER SHOE,
SEALED AND LUBRICATED, MODERATE SERVICE, TRAPEZOIDAL

SMCS-4170 i01010066

NOTE	PART NUMBER	QTY	PART NAME 1 2 3 4 5 6 (PRODUCT LEVEL)	SEE PAGE
Y	**6I-9668**	1	LINK AS-TRACK	285
	6V-1792	152	BOLT-TRACK	
	9S-1838	4	BOLT-TRACK	
	1S-1860	152	NUT-TRACK	
	1Q-4926	38	SHOE-TRACK	
	1Q-4995	1	SHOE-TRACK MASTER	

Y-SEPARATE ILLUSTRATION

1Q-4934 TRACK GP–CUSTOM

PIN 6JN1-UP; 7KN1-UP

510 MM (20 IN) GROUSER SHOE, SEALED & LUBRICATED, MODERATE SERVICE

SMCS-4170 i01010071

NOTE	PART NUMBER	QTY	PART NAME 1 2 3 4 5 6 (PRODUCT LEVEL)	SEE PAGE
Y	6I-9670	1	LINK AS-TRACK	286
	6V-1792	156	BOLT-TRACK	
	9S-1838	4	BOLT-TRACK	
	1S-1860	156	NUT-TRACK	
	1Q-4924	39	SHOE-TRACK	
	1Q-4994	1	SHOE-TRACK MASTER	

Y-SEPARATE ILLUSTRATION

1Q-4936 TRACK GP–CUSTOM

PIN 6JN1-UP; 7KN1-UP

510 MM (20 IN) GROUSER SHOE, SEALED & LUBRICATED, EXTREME SERVICE

SMCS-4170 i01010073

NOTE	PART NUMBER	QTY	PART NAME 1 2 3 4 5 6 (PRODUCT LEVEL)	SEE PAGE
Y	6I-9670	1	LINK AS-TRACK	286
	6V-1792	156	BOLT-TRACK	
	9S-1838	4	BOLT-TRACK	
	1S-1860	156	NUT-TRACK	
	1Q-4935	39	SHOE-TRACK	
	1Q-4996	1	SHOE-TRACK MASTER	

Y-SEPARATE ILLUSTRATION

1Q-4937 TRACK GP–CUSTOM

PIN 2YN1-UP; 3ZN1-UP

610 MM (24 IN) GROUSER SHOE, SEALED AND LUBRICATED, EXTREME SERVICE.

ASSEMBLE NUT WITH 4 CORNER RADII AGAINST LINK

SMCS-4170 i01010077

NOTE	PART NUMBER	QTY	PART NAME 1 2 3 4 5 6 (PRODUCT LEVEL)	SEE PAGE
Y	**6I-9668**	1	LINK AS-TRACK	285
	6V-1792	152	BOLT-TRACK	
	9S-1838	4	BOLT-TRACK	
	1S-1860	152	NUT-TRACK	
	6Y-6397	1	SHOE-MASTER TRACK	
	1Q-4930	38	SHOE-TRACK	

Y-SEPARATE ILLUSTRATION

FRAME AND BODY

1Q-4938 TRACK GP–CUSTOM

PIN 6JN1-UP; 7KN1-UP
560 MM (22 IN) GROUSER SHOE,
SEALED & LUBRICATED, MODERATE SERVICE, TRAPEZOIDAL

SMCS-4170 i01010085

NOTE	PART NUMBER	QTY	PART NAME 1 2 3 4 5 6 (PRODUCT LEVEL)	SEE PAGE
Y	6I-9670	1	LINK AS-TRACK	286
	6V-1792	156	BOLT-TRACK	
	9S-1838	4	BOLT-TRACK	
	1S-1860	156	NUT-TRACK	
	1Q-4926	39	SHOE-TRACK	
	1Q-4995	1	SHOE-TRACK MASTER	

Y-SEPARATE ILLUSTRATION

1Q-4959 TRACK GP–CUSTOM

PIN 4MN1-UP; 5LN1-UP; 8LN1-UP; 9PN1-UP
610 MM (24 IN) GROUSER SHOE,
SEALED & LUBRICATED, MODERATE SERVICE, HEAVY DUTY, TRAPEZOIDAL

SMCS-4170 **i01010112**

NOTE	PART NUMBER	QTY	PART NAME 1 2 3 4 5 6 (PRODUCT LEVEL)	SEE PAGE
Y	**8E-9037**	1	LINK AS-TRACK	289
	6V-1792	176	BOLT-TRACK	
	9S-1838	4	BOLT-TRACK	
	1S-1860	176	NUT-TRACK	
	1Q-4958	44	SHOE-TRACK	
	1Q-4997	1	SHOE-TRACK MASTER	

Y-SEPARATE ILLUSTRATION

1Q-4963 TRACK GP–CUSTOM

PIN 6JN1-UP; 7KN1-UP

610 MM (24 IN) GROUSER SHOE, SEALED AND LUBRICATED, EXTREME SERVICE.
ASSEMBLE NUT WITH FOUR CORNER RADII AGAINST LINK

SMCS-4170 i01010115

NOTE	PART NUMBER	QTY	PART NAME 1 2 3 4 5 6 (PRODUCT LEVEL)	SEE PAGE
Y	**6I-9670**	1	LINK AS-TRACK	286
	6V-1792	156	BOLT-TRACK	
	9S-1838	4	BOLT-TRACK	
	1S-1860	156	NUT-TRACK	
	6Y-6397	1	SHOE-MASTER TRACK	
	1Q-4930	39	SHOE-TRACK	

Y-SEPARATE ILLUSTRATION

1Q-4969 TRACK GP–CUSTOM

PIN 2YN1-UP; 3ZN1-UP
610 MM (24 IN) GROUSER SHOE,
SEALED AND LUBRICATED, MODERATE SERVICE, TRAPEZOIDAL

SMCS-4170 i01010118

NOTE	PART NUMBER	QTY	PART NAME 1 2 3 4 5 6 (PRODUCT LEVEL)	SEE PAGE
Y	**6I-9668**	1	LINK AS-TRACK	285
	6V-1792	152	BOLT-TRACK	
	9S-1838	4	BOLT-TRACK	
	1S-1860	152	NUT-TRACK	
	1Q-4958	38	SHOE-TRACK	
	1Q-4997	1	SHOE-TRACK MASTER	

Y-SEPARATE ILLUSTRATION

1Q-4972 TRACK GP–CUSTOM

PIN 8LN1-UP; 9PN1-UP
760 MM (30 IN) GROUSER SHOE,
SEALED AND LUBRICATIED, EXTREME SERVICE, TRAPEZOIDAL

SMCS-4170 i01010120

NOTE	PART NUMBER	QTY	PART NAME 1 2 3 4 5 6 (PRODUCT LEVEL)	SEE PAGE
Y	8E-9037	1	LINK AS-TRACK	289
	6V-1792	176	BOLT-TRACK	
	9S-1838	4	BOLT-TRACK	
	1S-1860	176	NUT-TRACK	
	1Q-4973	44	SHOE-TRACK	
	1Q-4607	1	SHOE-TRACK MASTER	

Y-SEPARATE ILLUSTRATION

106-8233 TRACK GP-CUSTOM

PIN 8LN1-UP; 9PN1-UP

915 MM (36 IN) GROUSER SHOE-QUAD, HEAVY DUTY

SMCS-4170 i01009154

NOTE	REF NO	GRAPHIC REF	PART NUMBER	QTY	PART NAME 1 2 3 4 5 6 (PRODUCT LEVEL)	SEE PAGE
	1	1	1Q-4928	44	SHOE-TRACK	
	2	1	6V-1792	352	BOLT-TRACK	
	3	1	1S-1860	352	NUT-TRACK	
	4	1	9S-1838	8	BOLT-TRACK	
	5	1	8E-7405	44	LINK-TRACK-RH	
	6	1	106-8235	90	BUSHING-TRACK	
	7	1	106-8237	90	PIN-TRACK	
	8	1	8E-7410	1	LINK-MASTER (LH)	
	9	1	8E-7408	1	LINK-MASTER (LH)	
	10	1	8E-7407	1	LINK-MASTER (RH)	
	11	1	8E-7409	1	LINK-MASTER (RH)	
	12	1	8E-7406	44	LINK-TRACK-LH	
Y	13	1	8E-9037	1	LINK AS-TRACK	289
	14	1	1Q-4998	1	SHOE-TRACK MASTER	

Y-SEPARATE ILLUSTRATION

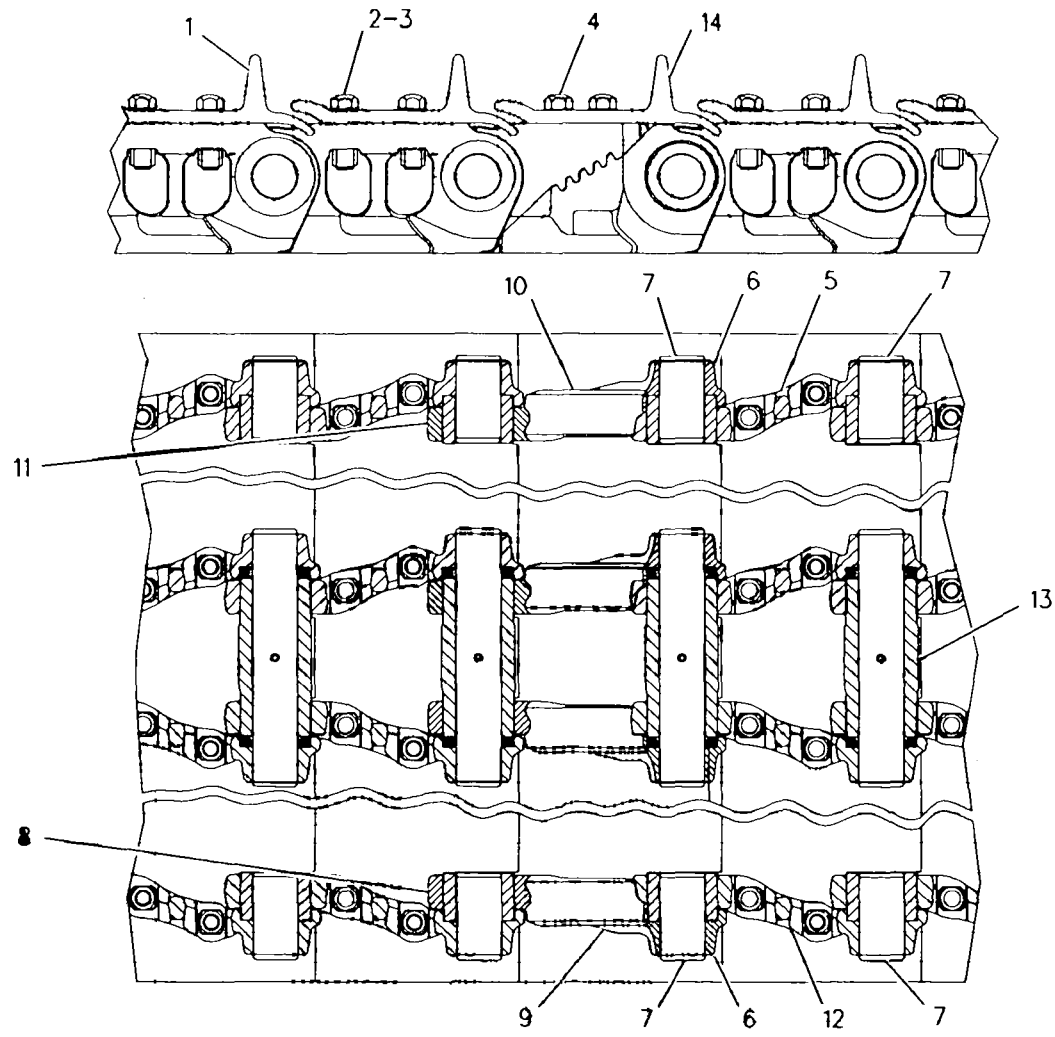

GRAPHIC #1 g00285542

125-5168 TRACK GP–CUSTOM

PIN 4MN1-UP; 5LN1-UP

710 MM (28 IN) GROUSER SHOE, MODERATE SERVICE, HEAVY DUTY

SMCS-4170 i01009176

NOTE	PART NUMBER	QTY	PART NAME 1 2 3 4 5 6 (PRODUCT LEVEL)	SEE PAGE
Y	6I-9671	1	LINK AS-TRACK	287
	9S-1838	4	BOLT-TRACK	
	6V-1792	160	BOLT-TRACK	
	1S-1860	160	NUT-TRACK	
	125-5167	40	SHOE-TRACK	
	125-5163	1	SHOE-TRACK MASTER	

Y-SEPARATE ILLUSTRATION

127-9795 TRACK GP–CUSTOM

PIN 6JN1-UP; 7KN1-UP

610 MM (24 IN) GROUSER SHOE-SEALED & LUBRICATED, MODRATE SERVICE, ROTATING BUSHING TRACK

SMCS-4170 i01009261

NOTE	PART NUMBER	QTY	PART NAME 1 2 3 4 5 6 (PRODUCT LEVEL)	SEE PAGE
Y	110-6597	1	LINK AS-TRACK	290
			-OR-	
Y	152-8048	1	LINK AS-TRACK	292
	6V-1792	156	BOLT-TRACK	
	9S-1838	4	BOLT-TRACK	
	1S-1860	156	NUT-TRACK	
	6Y-6296	1	SHOE-MASTER TRACK	
	6Y-6287	39	SHOE-TRACK	

Y-SEPARATE ILLUSTRATION

138-5772 TRACK GP–CUSTOM

PIN 4MN1-UP; 5LN1-UP
760 MM (30 IN) GROUSER SHOE-SEALED & LUBRICATED,
EXTREME SERVICE, HEAVY DUTY, TRAPEZOIDAL

SMCS-4170 i01009531

NOTE	PART NUMBER	QTY	PART NAME 1 2 3 4 5 6 (PRODUCT LEVEL)	SEE PAGE
Y	6I-9671	1	LINK AS-TRACK	287
	6V-1792	160	BOLT-TRACK	
	9S-1838	4	BOLT-TRACK	
	1S-1860	160	NUT-TRACK	
	1Q-4973	40	SHOE-TRACK	
	1Q-4607	1	SHOE-TRACK MASTER	

Y-SEPARATE ILLUSTRATION

FRAME AND BODY

138-5773 TRACK GP–CUSTOM

PIN 4MN1-UP; 5LN1-UP
760 MM (30 IN) GROUSER SHOE-SEALED &
LUBRICATED, EXTREME SERVICE, HEAVY DUTY

SMCS-4170 i01009532

NOTE	PART NUMBER	QTY	PART NAME 1 2 3 4 5 6 (PRODUCT LEVEL)	SEE PAGE
Y	6I-9671	1	LINK AS-TRACK	287
	9S-1838	4	BOLT-TRACK	
	6V-1792	160	BOLT-TRACK	
	1S-1860	160	NUT-TRACK	
	138-5774	40	SHOE-TRACK	
	6Y-6404	1	SHOE-TRACK MASTER	

Y-SEPARATE ILLUSTRATION

FRAME AND BODY

144-7703 TRACK GP–CUSTOM

PIN 4MN1-UP; 5LN1-UP
560 MM (22 IN) GROUSER SHOE-SEALED &
LUBRICATED, EXTREME SERVICE, TRAPEZOIDAL

SMCS-4170 **i01009545**

NOTE	PART NUMBER	QTY	PART NAME 1 2 3 4 5 6 (PRODUCT LEVEL)	SEE PAGE
Y	**6I-9671**	1	LINK AS-TRACK	287
	6V-1792	160	BOLT-TRACK	
	9S-1838	4	BOLT-TRACK	
	1S-1860	160	NUT-TRACK	
	1Q-4625	40	SHOE-TRACK	
	1Q-4626	1	SHOE-TRACK MASTER	

Y-SEPARATE ILLUSTRATION

144-7706 TRACK GP-CUSTOM

PIN 4MN1-UP; 5LN1-UP
760 MM (30 IN) GROUSER SHOE,
SEALED & LUBRICATED, EXTREME SERVICE, ROTATING BUSHING TRACK

SMCS-4170 i01005868

NOTE	PART NUMBER	QTY	PART NAME 1 2 3 4 5 6 (PRODUCT LEVEL)	SEE PAGE
Y	**152-8050**	1	LINK AS-TRACK	294
			-OR-	
Y	**6I-9672**	1	LINK AS-TRACK	288
	9S-1838	4	BOLT-TRACK	
	6V-1792	160	BOLT-TRACK	
	1S-1860	160	NUT-TRACK	
	138-5774	40	SHOE-TRACK	
	6Y-6404	1	SHOE-TRACK MASTER	

Y-SEPARATE ILLUSTRATION

147-0596 TRACK GP–CUSTOM

PIN 4MN1-UP; 5LN1-UP
560 MM (22 IN) GROUSER SHOE,
SEALED & LUBRICATED, MODERATE SERVICE, TRAPEZOIDAL

SMCS-4170 i01009585

NOTE	PART NUMBER	QTY	PART NAME 1 2 3 4 5 6 (PRODUCT LEVEL)	SEE PAGE
Y	**6I-9671**	1	LINK AS-TRACK	287
	6V-1792	160	BOLT-TRACK	
	9S-1838	4	BOLT-TRACK	
	1S-1860	160	NUT-TRACK	
	1Q-4926	40	SHOE-TRACK	
	1Q-4995	1	SHOE-TRACK MASTER	

Y-SEPARATE ILLUSTRATION

FRAME AND BODY

150-7864 TRACK GP-CUSTOM

PIN 4MN1-UP; 5LN1-UP

610 MM (24 IN) DOUBLE GROUSER SHOE, SEALED & LUBRICATED, TRAPZOIDAL

SMCS-4170 **i01009624**

NOTE	PART NUMBER	QTY	PART NAME 1 2 3 4 5 6 (PRODUCT LEVEL)	SEE PAGE
Y	**6I-9671**	1	LINK AS-TRACK	287
	9S-1838	4	BOLT-TRACK	
	6V-1792	160	BOLT-TRACK	
	1S-1860	160	NUT-TRACK	
	150-7865	40	SHOE-TRACK	
	150-7866	1	SHOE-TRACK MASTER	

Y-SEPARATE ILLUSTRATION

160-4941 TRACK GP–LH–CUSTOM

PIN 5LN1-UP
560 MM (22 IN) GROUSER SHOE,
SEALED & LUBRICATED, MODERATE SERVICE, HEAVY DUTY
PART OF 160-4943 TRACK GP

SMCS-4170 i01013123

NOTE	PART NUMBER	QTY	PART NAME 1 2 3 4 5 6 (PRODUCT LEVEL)	SEE PAGE
Y	6I-9671	1	LINK AS-TRACK	287
	6V-1792	160	BOLT-TRACK	
	9S-1838	4	BOLT-TRACK	
	1S-1860	160	NUT-TRACK	
	160-4939	40	SHOE-TRACK	
	160-5798	1	SHOE-TRACK MASTER	

Y-SEPARATE ILLUSTRATION

160-4942 TRACK GP–RH–CUSTOM

PIN 5LN1-UP
560 MM (22 IN) GROUSER SHOE,
SEALED & LUBRICATED, MODERATE SERVICE, HEAVY DUTY
PART OF 160-4943 TRACK GP

SMCS-4170 i01013170

NOTE	PART NUMBER	QTY	PART NAME 1 2 3 4 5 6 (PRODUCT LEVEL)	SEE PAGE
Y	6I-9671	1	LINK AS-TRACK	287
	6V-1792	160	BOLT-TRACK	
	9S-1838	4	BOLT-TRACK	
	1S-1860	160	NUT-TRACK	
	160-4940	40	SHOE-TRACK	
	160-5799	1	SHOE-TRACK MASTER	

Y-SEPARATE ILLUSTRATION

HYDRAULIC SYSTEM

126-8464 CYLINDER & LINES GP–RH

PIN 4MN1-UP; 5LN1-UP

PART OF 4Z-0647 BULLDOZER AR-ANGLING, 156-4542 BULLDOZER AR-PWR ANGLE & TILT, 139-2633 BULLDOZER AR-SEMI-UNIVERSAL

SMCS-5102 i00679550

NOTE	REF NO	GRAPHIC REF	PART NUMBER	QTY	PART NAME 1 2 3 4 5 6 (PRODUCT LEVEL)	SEE PAGE
	1	1	8T-8987	1	ELBOW-O-RING	
		1	2S-4078	1	SEAL-O-RING (37.46MM ID)	
	2	1	5S-7379	4	BOLT (3/8-16X.875IN)	
	3	1	8T-4896	6	WASHER-HARD (2.5MM THK)	
	4	1	1P-4577	2	FLANGE-HALF	
	5	1	5S-7382	4	BOLT (3/8-16X1.375IN)	
	6	1	8T-2502	1	BOLT (3/8-16X1.13IN)	
	7	1	6V-8801	2	NUT (3/8-16 THD)	
	8	1	9U-9122	1	CLAMP (SLOT)	
	9	1	9U-9121	1	CLAMP (TAB)	
	10	1	9X-8260	1	CONNECTOR-O-RING	
		1	4K-1388	1	SEAL-O-RING (26.59MM ID)	
	11	1	9U-9162	1	TUBE AS	
		1	6V-8400	1	SEAL-O-RING (29.9MM ID)	
I	12	1	128-2570	1	HOSE AS	
I	13	1	128-2569	1	HOSE AS	
	14	1	8S-0023	1	CLIP (SLOT)	
		1	8S-0024	1	CLIP (TAB)	
	15	1	4J-0520	3	SEAL-O-RING (32.92MM ID)	
Y	16	1	*127-8931*	1	CYLINDER GP-LIFT	344
	17	1	7S-8920	1	CLIP (SLOT)	
		1	7S-8921	1	CLIP (TAB)	
	18	1	5P-1075	6	WASHER-HARD (3MM THK)	
	19	1	5K-9090	1	SEAL-O-RING (23.52MM ID)	
	20	1	129-3217	1	GUARD AS	
	21	1	4L-9337	1	BOLT (3/8-16X1.50IN)	

I-SEE HOSE FABRICATION GUIDE
Y-SEPARATE ILLUSTRATION

126-8464 CYLINDER & LINES GP *(contd.)* i00679550

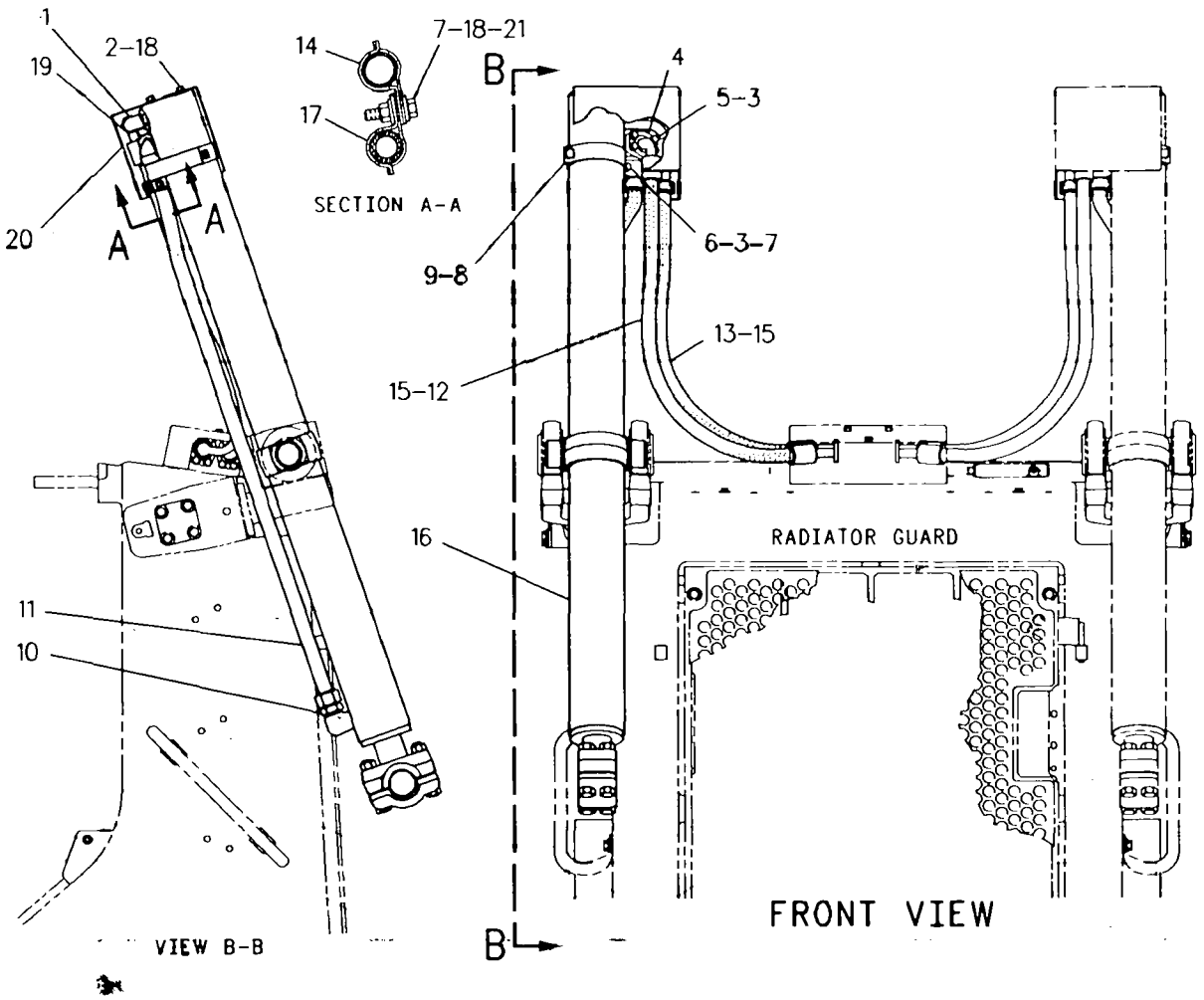

GRAPHIC #1 g00294039

HYDRAULIC SYSTEM

126-8465 CYLINDER & LINES GP-LH

PIN 4MN1-UP; 5LN1-UP

PART OF 4Z-0647 BULLDOZER AR-ANGLING, 156-4542 BULLDOZER AR-PWR ANGLE & TILT, 139-2633 BULLDOZER AR-SEMI-UNIVERSAL

SMCS-5102 i00679553

NOTE	REF NO	GRAPHIC REF	PART NUMBER	QTY	PART NAME 1 2 3 4 5 6 (PRODUCT LEVEL)	SEE PAGE
	1	1	8T-8987	1	ELBOW-O-RING	
	2	1	5S-7379	4	BOLT (3/8-16X.875IN)	
	3	1	8T-4896	6	WASHER-HARD (2.5MM THK)	
	4	1	1P-4577	2	FLANGE-HALF	
	5	1	5S-7382	4	BOLT (3/8-16X1.375IN)	
	6	1	8T-2502	1	BOLT (3/8-16X1.13IN)	
	7	1	6V-8801	2	NUT (3/8-16 THD)	
	8	1	9U-9122	1	CLAMP (SLOT)	
	9	1	9U-9121	1	CLAMP (TAB)	
	10	1	9X-8260	1	CONNECTOR-O-RING	
I	11	1	128-2571	1	HOSE AS	
	12	1	4J-0520	3	SEAL-O-RING (32.92MM ID)	
	13	1	2S-4078	1	SEAL-O-RING (37.46MM ID)	
	14	1	7S-8920	1	CLIP (SLOT)	
	15	1	4K-1388	1	SEAL-O-RING (26.59MM ID)	
	16	1	5K-9090	1	SEAL-O-RING (23.52MM ID)	
	17	1	7S-8921	1	CLIP (TAB)	
	18	1	8S-0023	1	CLIP (SLOT)	
	19	1	8S-0024	1	CLIP (TAB)	
	20	1	5P-1075	6	WASHER-HARD (3MM THK)	
	21	1	4L-9337	1	BOLT (3/8-16X1.50IN)	
	22	1	6V-8400	1	SEAL-O-RING (29.9MM ID)	
Y	23	1	*127-8931*	1	CYLINDER GP-LIFT	344
	24	1	9U-9161	1	TUBE AS	
I	25	1	128-2572	1	HOSE AS	
	26	1	129-3217	1	GUARD AS	

I-SEE HOSE FABRICATION GUIDE
Y-SEPARATE ILLUSTRATION

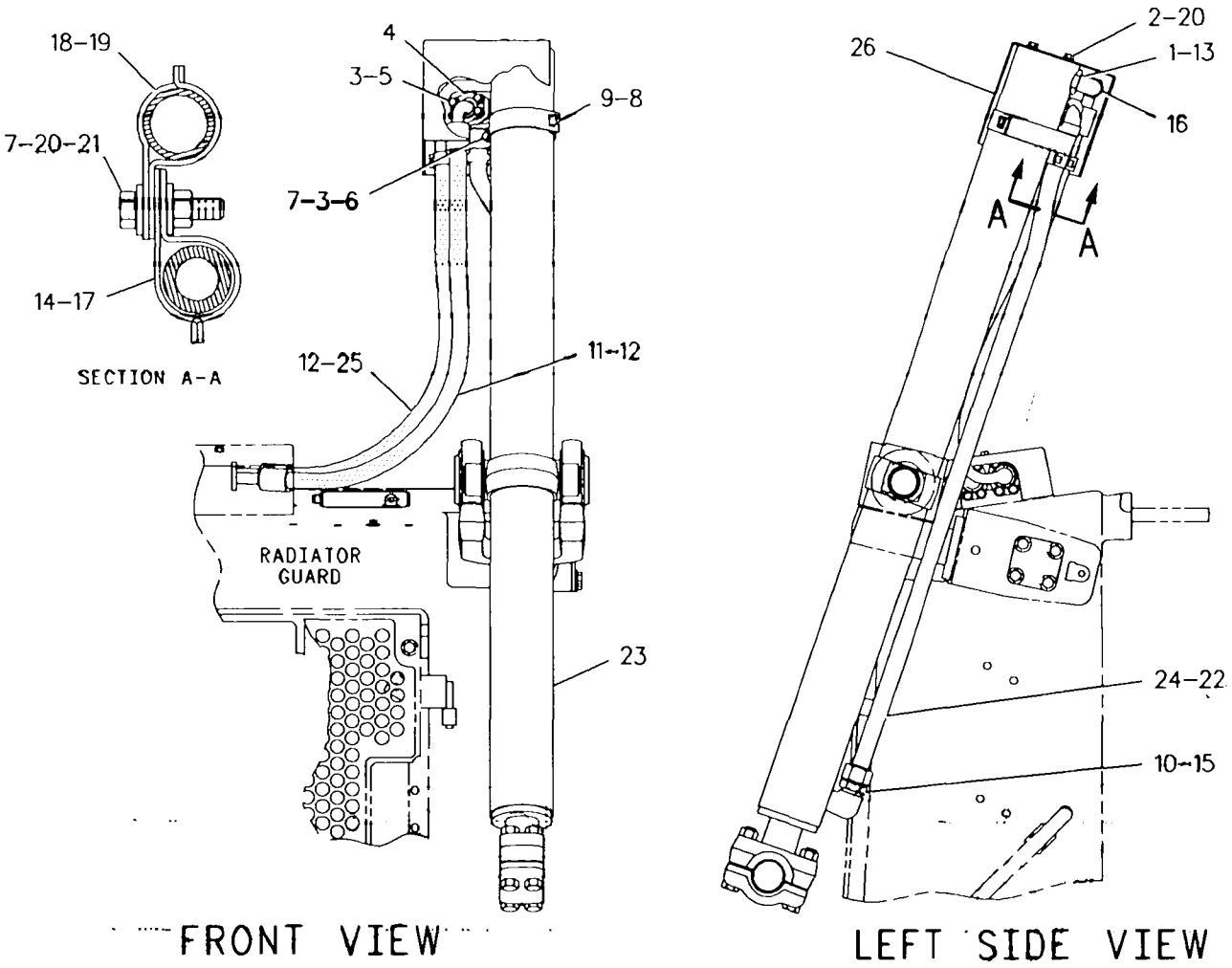

GRAPHIC #1

g00294040

127-8931 CYLINDER GP-LIFT

PIN 4MN1-UP; 5LN1-UP
101.6 MM (4 IN.) BORE X 1262 MM (49.7 IN.) STROKE
PART OF 126-8464, 126-8465 CYLINDER & LINES GP-LIFT

SMCS-5102 i00687120

NOTE	REF NO	GRAPHIC REF	PART NUMBER	QTY	PART NAME 1 2 3 4 5 6 (PRODUCT LEVEL)	SEE PAGE
	1	1	121-3397	1	HEAD	
	2	1	1F-6762	1	BOLT (1 1/2-12X4.5IN)	
	3	1	3G-8742	1	WASHER	
	4	1	1M-1571	1	RING-WEAR	
	5	1	8C-3839	1	SEAL AS	
	6	1	9T-3885	1	PISTON AS	
	7	1	8C-9160	1	SEAL AS	
	8	1	9X-4611	1	SEAL-O-RING (98.02MM ID)	
	9	1	2K-6830	1	RING-BACKUP	
R	10	1	114-4304	1	ROD AS	
B	11	1	8E-9212	16	SHIM (.8MM THK)	
	12	1	4J-0121	1	CAP-BEARING	
	13	1	0S-1756	4	BOLT (3/4-10X4.25IN)	
	14	1	2J-3506	4	NUT-FULL (3/4-10 THD)	
	15	1	8T-0785	1	RING-WEAR	
	16	1	8C-3840	1	SEAL-LIP	
	17	1	5J-0964	1	SEAL-U-CUP	
	18	1	127-8932	1	CYLINDER AS	
	19	1	4J-6374	2	BEARING-SLEEVE	
	20	1	1K-6985	1	RING-RETAINING	

B-USE AS REQUIRED
R-REMFG PART MAY BE AVAILABLE

127-8931 CYLINDER GP-LIFT *(contd.)* i00687120

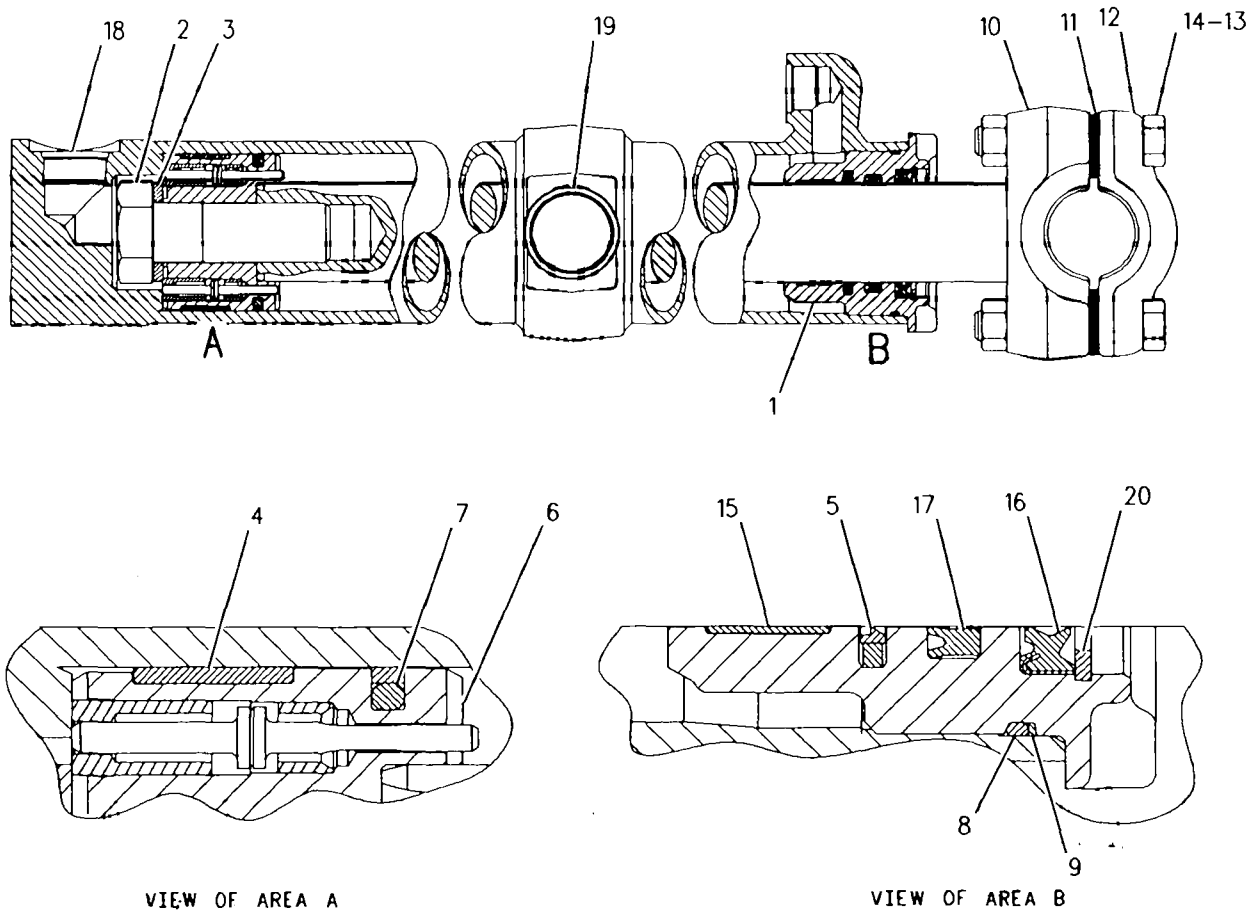

GRAPHIC #1 g00294345

HYDRAULIC SYSTEM

9T-2716 CYLINDER GP-RIPPER LIFT

PIN 8LN1-UP; 9PN1-UP
127 MM (5 IN.) BORE X 362 MM (14.25 IN.) STROKE
PART OF 4Z-0609 RIPPER AR

SMCS-5352 **i00574937**

NOTE	REF NO	GRAPHIC REF	PART NUMBER	QTY	PART NAME 1 2 3 4 5 6 (PRODUCT LEVEL)	SEE PAGE
	1	1	**3G-1753**	1	PISTON	
	2	1	**4J-3420**	1	RING-WEAR	
	3	1	**5J-5020**	1	SEAL AS	
	4	1	**9T-2715**	1	CYLINDER AS	
	5	1	**4K-3128**	2	BEARING-SLEEVE	
C	6	1	**9T-6863**	1	HEAD	
	7	1	**8C-3839**	1	SEAL AS	
	8	1	**5J-0964**	1	SEAL-U-CUP	
	9	1	**8C-3840**	1	SEAL-LIP	
	10	1	**9T-2714**	1	ROD AS	
	11	1	**2K-4507**	1	BEARING-SLEEVE	
	12	1	**1D-4628**	4	BOLT (7/8-9X3.25IN)	
		1	**5P-8249**	4	WASHER (4.0MM THK)	
	13	1	**2K-4096**	1	RING	
	14	1	**5F-3144**	1	SEAL-O-RING (120.24MM ID)	
	15	1	**3G-1757**	1	WASHER	
	16	1	**2J-0564**	1	LOCKNUT	
C	17	1	**8T-5668**	1	RING-WEAR	
	18	1	**1P-4576**	4	FLANGE	
	19	1	**4J-5267**	2	SEAL-O-RING (24.99MM ID)	
	20	1	**5H-4018**	2	COVER	
	21	1	**9B-7237**	8	BOLT (3/8-16X1.25IN)	
		1	**8T-4896**	8	WASHER-HARD (2.5MM THK)	

C-CHANGE FROM PREVIOUS TYPE

9T-2716 CYLINDER GP-RIPPER LIFT *(contd.)* i00574937

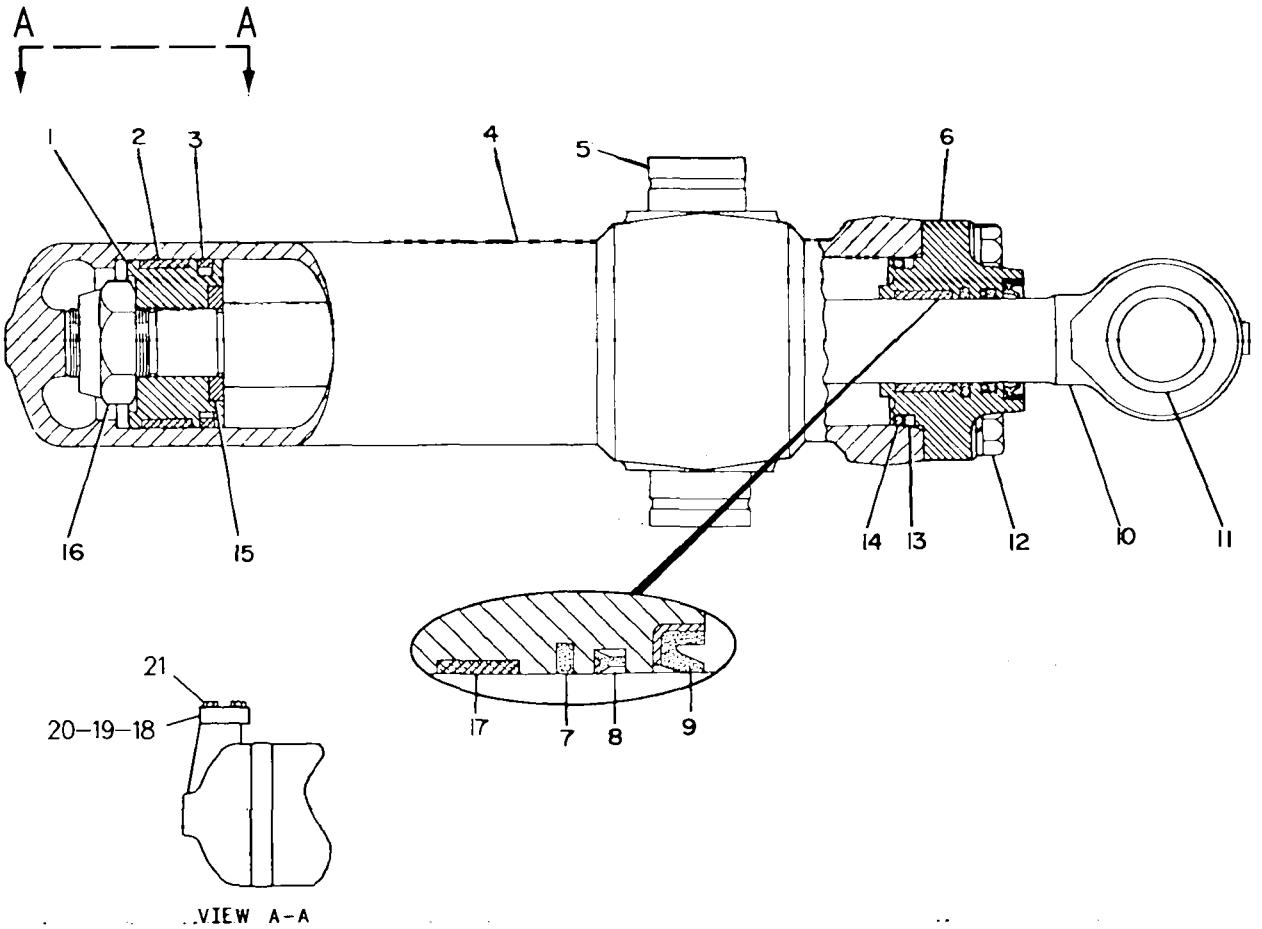

GRAPHIC #1 g00238070

HYDRAULIC SYSTEM

1U-3991 CYLINDER GP-TILT

PIN 4MN1-UP; 5LN1-UP
165.1 MM (6.5 IN) BORE X 127 MM (5 IN) STROKE
PART OF 4Z-9227 PUSH ARM GP

SMCS-5104 i01010125

NOTE	REF NO	GRAPHIC REF	PART NUMBER	QTY	PART NAME 1 2 3 4 5 6 (PRODUCT LEVEL)	SEE PAGE
	1	1	9T-0934	1	CYLINDER AS	
	2	1	2J-8489	1	BEARING	
	3	1	3S-6162	1	WASHER-HARD (6MM THK)	
J	4	1	3J-9703	1	RING-WEAR	
	5	1	4T-0259	1	PISTON	
	6	1	5J-4991	1	SEAL AS	
	7	1	1U-4069	1	ROD AS	
C	8	1	7J-8955	1	RING-BACKUP	
C	9	1	7J-8956	1	SEAL-O-RING (151.77MM ID)	
	10	1	8C-9126	1	SEAL AS	
C	11	1	6E-5527	1	HEAD	
	12	1	1D-4709	4	BOLT (1-8X3IN)	
		1	5P-8250	4	WASHER (5.0MM THK)	
J	13	1	5J-8300	1	SEAL-U-CUP	
	14	1	8C-5218	1	SEAL-LIP	
	15	1	7X-0373	4	BOLT (3/4-10X5.50IN)	
		1	6V-8182	4	NUT (3/4-10 THD)	
	16	1	8J-2880	1	CAP-BEARING	
B	17	1	8E-5703	24	SHIM (0.8MM THK)	
	18	1	9T-0094	1	RING-WEAR	
	19	1	6V-2710	1	BOLT-LOCKING	
C	20	1	8T-8379	1	SEAL-HEAD	
					AVAILABLE REPAIR KIT(S):	
			8T-1408	1	KIT-HYD CYLINDER SEAL (INCL. SEALS, RINGS, AND PARTS MARKED J)	

B-USE AS REQUIRED
C-CHANGE FROM PREVIOUS TYPE

1U-3991 CYLINDER GP-TILT *(contd.)* i01010125

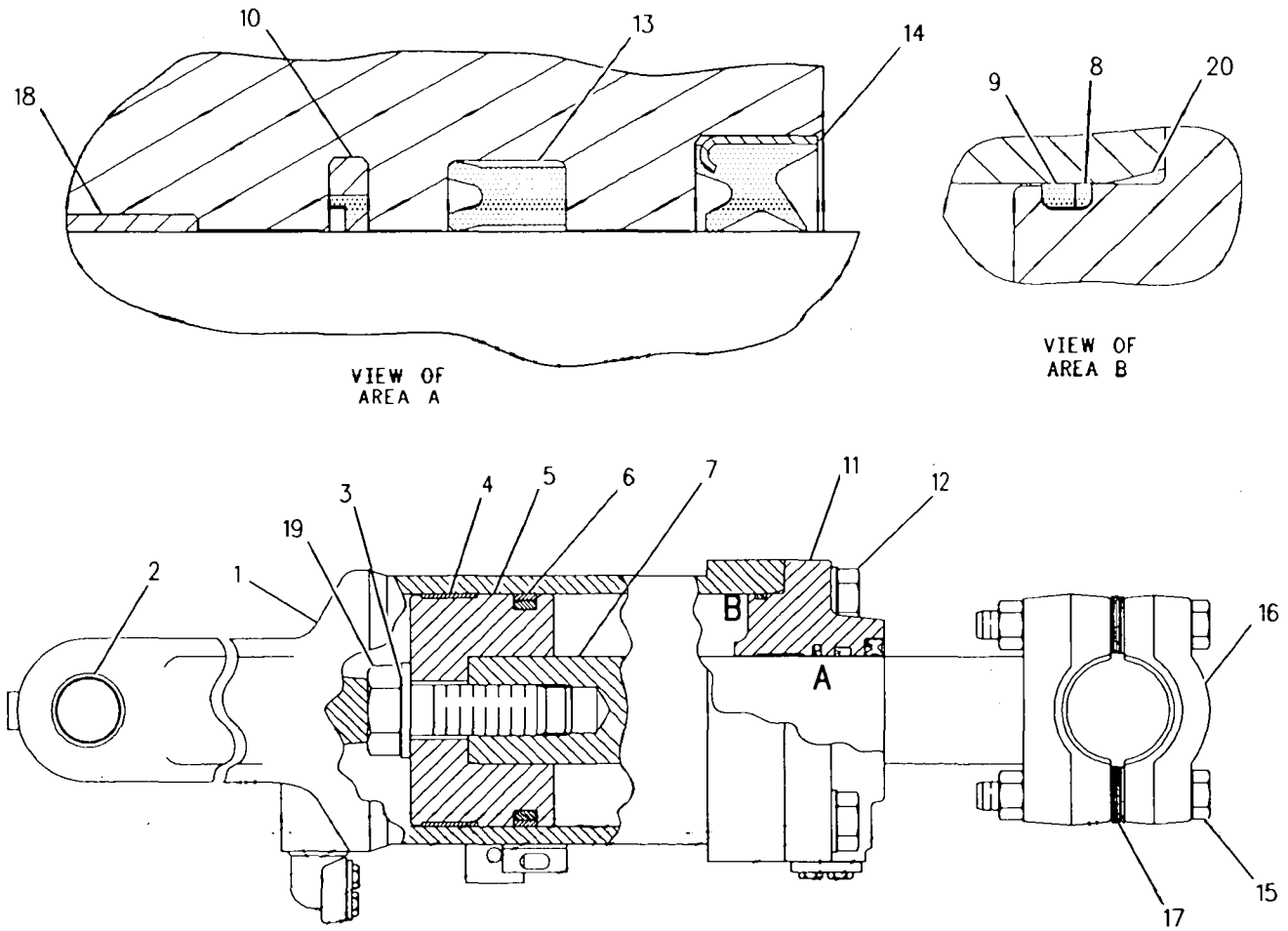

GRAPHIC #1 g00255041

HYDRAULIC SYSTEM

9T-6095 CYLINDER GP-TILT

PIN 4MN1-UP; 5LN1-UP
152 MM (6 IN) BORE X 105 MM (4 IN) STROKE
PART OF 4Z-9453 BRACE GP-BULLDOZER

SMCS-5104 i00574920

NOTE	REF NO	GRAPHIC REF	PART NUMBER	QTY	PART NAME 1 2 3 4 5 6 (PRODUCT LEVEL)	SEE PAGE
R	1	1	**9T-6094**	1	CYLINDER AS	
	2	1	**2J-8489**	1	BEARING	
	3	1	**5J-5731**	1	LOCKNUT	
C	4	1	**132-1249**	1	WASHER	
	5	1	**1J-0708**	1	RING-WEAR	
	6	1	**6E-1205**	1	HEAD	
	7	1	**2K-3258**	1	RING-BACKUP (RUBBER)	
	8	1	**5H-3252**	1	SEAL-O-RING (145.64MM ID)	
R	9	1	**9T-6093**	1	ROD-PISTON	
	10	1	**1D-4627**	4	BOLT (7/8-9X3IN)	
		1	**5P-8249**	4	WASHER (4.0MM THK)	
C	11	1	**118-1170**	1	PISTON AS	
	12	1	**1J-8569**	2	INSERT-PISTON	
	13	1	**8C-3840**	1	SEAL-LIP	
	14	1	**5J-0964**	1	SEAL-U-CUP	
	15	1	**8C-3839**	1	SEAL AS	
	16	1	**8T-5668**	1	RING-WEAR	
C	17	1	**1K-6985**	1	RING-RETAINING	
	18	1	**5J-4989**	1	SEAL AS	

C-CHANGE FROM PREVIOUS TYPE
R-REMFG PART MAY BE AVAILABLE

9T-6095 CYLINDER GP-TILT *(contd.)* i00574920

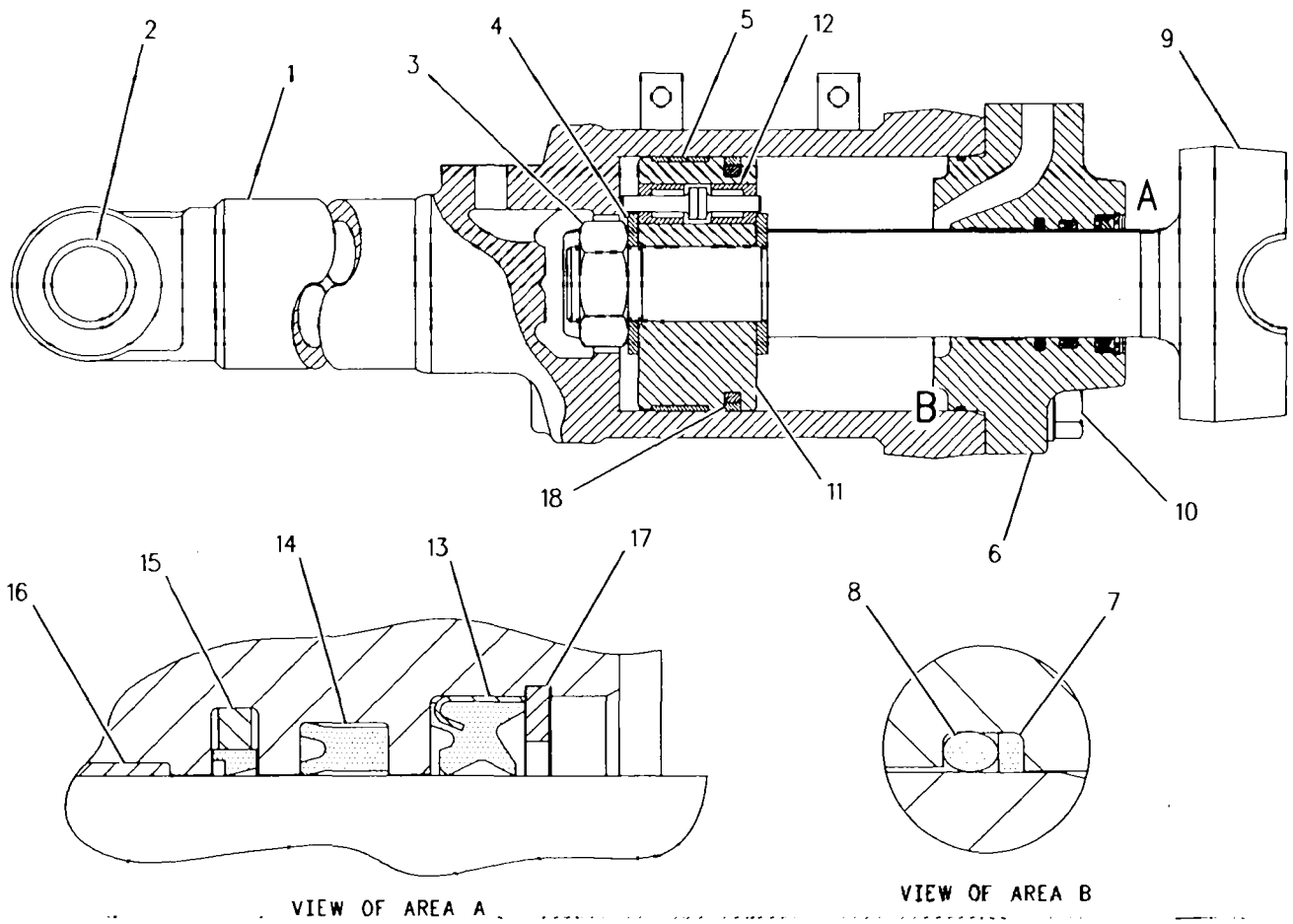

GRAPHIC #1 g00263841

HYDRAULIC SYSTEM

166-4432 CYLINDER GP-TILT–CUSTOM

PIN 5LN1-UP

PART OF 156-4546 BULLDOZER AR-PWR ANGLE & TILT

SMCS-5104 i01020751

NOTE	PART NUMBER	QTY	PART NAME 1 2 3 4 5 6 (PRODUCT LEVEL)	SEE PAGE
	166-4436	1	BUSHING	
	166-9440	1	BUSHING	
	5J-2529	1	INSERT	
	5J-2528	1	PLUNGER	
	2K-2961	1	RING-BACKUP	
	4J-4606	1	RING-WEAR	
	166-9439	1	ROD AS	
	5J-4988	1	SEAL AS	
	8C-3839	1	SEAL AS	
	8C-3840	1	SEAL-LIP	
	2H-9247	1	SEAL-O-RING (132.94MM ID)	
	5J-0964	1	SEAL-U-CUP	

HYDRAULIC SYSTEM

166-9437 CYLINDER GP-TILT–CUSTOM

PIN 5LN1-UP

PART OF 156-4546 BULLDOZER AR-PWR ANGLE & TILT

SMCS-5104 **i01020021**

NOTE	PART NUMBER	QTY	PART NAME 1 2 3 4 5 6 (PRODUCT LEVEL)	SEE PAGE
	166-4436	1	BUSHING	
	166-9440	1	BUSHING	
	2K-2961	1	RING-BACKUP	
	4J-4606	1	RING-WEAR	
	166-9441	1	ROD AS	
	5J-4988	1	SEAL AS	
	8C-3839	1	SEAL AS	
	8C-3840	1	SEAL-LIP	
	2H-9247	1	SEAL-O-RING (132.94MM ID)	
	5J-0964	1	SEAL-U-CUP	

4Z-8919 HOSE AS–CUSTOM*I

PIN 8LN1-UP; 9PN1-UP
PART OF 128-7274 DISPOSAL AR
FOR USE WITH 12.7 MM (.50 IN) ID HOSE

SMCS-5057 i01014269

NOTE	REF NO	GRAPHIC REF	PART NUMBER	QTY	PART NAME 1 2 3 4 5 6 (PRODUCT LEVEL)	SEE PAGE
	1	1	5S-9593	1	STEM AS-COLLET	
	2	1	3S-8606	2	SLEEVE	
BE	3	1	9S-0671		HOSE	
	4	1	9Z-8211	37	SPACER	
	5	1	6V-9949	1	COUPLING AS	

B-USE AS REQUIRED
E-ORDER BY THE CENTIMETER

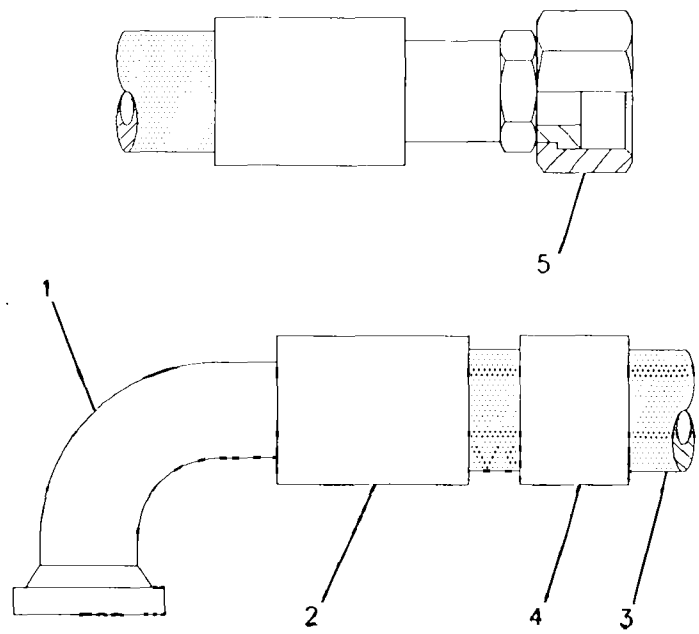

GRAPHIC #1 g00284894

4Z-8920 HOSE AS–CUSTOM*I

PIN 8LN1-UP; 9PN1-UP
PART OF 128-7274 DISPOSAL AR
FOR USE WITH 12.7 MM (.50 IN) ID HOSE

SMCS-5057 i01014276

NOTE	REF NO	GRAPHIC REF	PART NUMBER	QTY	PART NAME 1 2 3 4 5 6 (PRODUCT LEVEL)	SEE PAGE
	1	1	**5S-9638**	1	STEM AS-COLLET	
	2	1	**3S-8606**	2	SLEEVE	
BE	3	1	**9S-0671**		HOSE	
	4	1	**9Z-8211**	38	SPACER	
	5	1	**6V-9949**	1	COUPLING AS	

B-USE AS REQUIRED
E-ORDER BY THE CENTIMETER

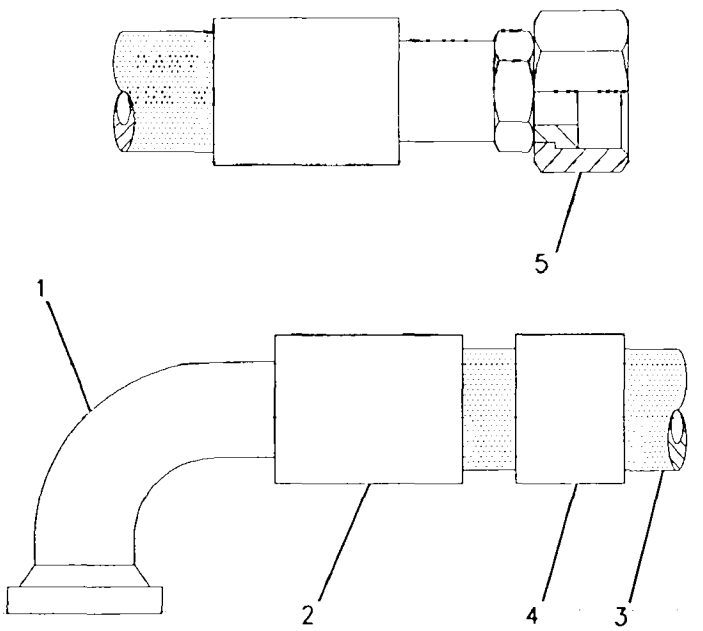

GRAPHIC #1 g00284893

HYDRAULIC SYSTEM

4Z-8954 HOSE AS–CUSTOM*I

PIN 2YN1-UP; 3ZN1-UP; 6JN1-UP; 7KN1-UP
TILT CYLINDER
PART OF 129-2161, 129-2162 DISPOSAL AR

SMCS-5057 **i01010248**

NOTE	REF NO	GRAPHIC REF	PART NUMBER	QTY	PART NAME 1 2 3 4 5 6 (PRODUCT LEVEL)	SEE PAGE
	1	1	8T-3715	1	COUPLING AS-PERMANENT	
E	2	1	9S-0671		HOSE (246CM)	
	3	1	9Z-8211	28	SPACER	
	4	1	6V-9965	1	COUPLING AS	
		1	6V-8554	1	NUT-FACE SEAL (13/16-16 THD)	

E-ORDER BY THE CENTIMETER

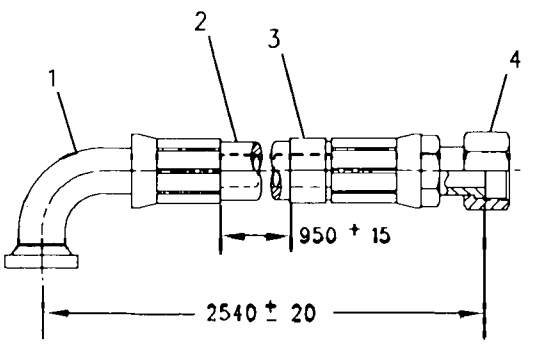

GRAPHIC #1 g00293585

HYDRAULIC SYSTEM

4Z-8955 HOSE AS–CUSTOM*I

PIN 2YN1-UP; 3ZN1-UP; 6JN1-UP; 7KN1-UP
TILT CYLINDER
PART OF 129-2161, 129-2162 DISPOSAL AR

SMCS-5057 **i01010254**

NOTE	REF NO	GRAPHIC REF	PART NUMBER	QTY	PART NAME 1 2 3 4 5 6 (PRODUCT LEVEL)	SEE PAGE
	1	1	**7X-4823**	1	STEM AS	
E	2	1	**9S-0671**		HOSE (249CM)	
	3	1	**9Z-8211**	30	SPACER	
	4	1	**6V-9965**	1	COUPLING AS	
		1	**6V-8554**	1	NUT-FACE SEAL (13/16-16 THD)	

E-ORDER BY THE CENTIMETER

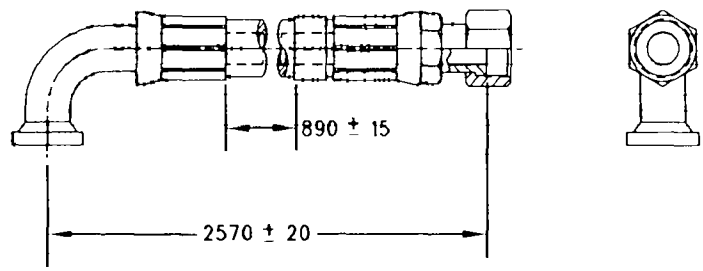

GRAPHIC #1 g00293586

HYDRAULIC SYSTEM

4Z-9463 HOSE AS–CUSTOM

PIN 4MN1-UP; 5LN1-UP
PART OF 4Z-9454 LINES GP-TILT CYLINDER
FOR USE WITH 12.7 MM (.50 IN) ID HOSE

SMCS-5057 i01016368

NOTE	REF NO	GRAPHIC REF	PART NUMBER	QTY	PART NAME 1 2 3 4 5 6 (PRODUCT LEVEL)	SEE PAGE
	1	1	8T-3715	1	COUPLING AS-PERMANENT	
E	2	1	6V-0744		GUARD-HOSE (83CM)	
E	3	1	9S-0671		HOSE (84CM)	
	4	1	8T-3711	1	COUPLING AS-PERMANENT	

E-ORDER BY THE CENTIMETER

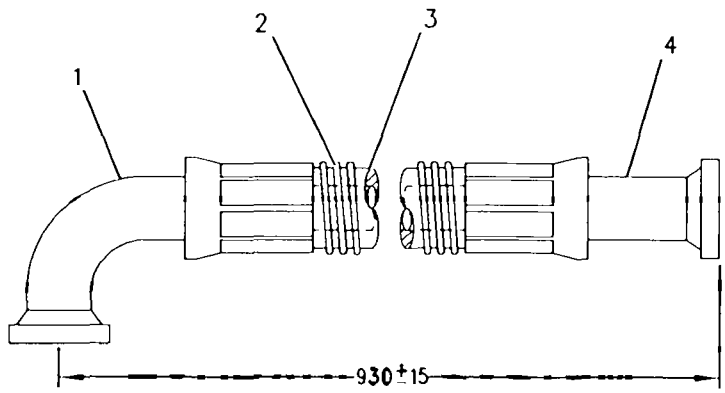

GRAPHIC #1 g00294643

HYDRAULIC SYSTEM

4Z-9464 HOSE AS–CUSTOM

PIN 4MN1-UP; 5LN1-UP
PART OF 4Z-9454 LINES GP-TILT CYLINDER
FOR USE WITH 12.7 MM (.50 IN) ID HOSE

SMCS-5057 i01010447

NOTE	REF NO	GRAPHIC REF	PART NUMBER	QTY	PART NAME 1 2 3 4 5 6 (PRODUCT LEVEL)	SEE PAGE
	1	1	8T-3715	1	COUPLING AS-PERMANENT	
E	2	1	6V-0744		GUARD-HOSE (84 CM)	
E	3	1	9S-0671		HOSE (109 CM)	
	4	1	8T-3711	1	COUPLING AS-PERMANENT	

E-ORDER BY THE CENTIMETER

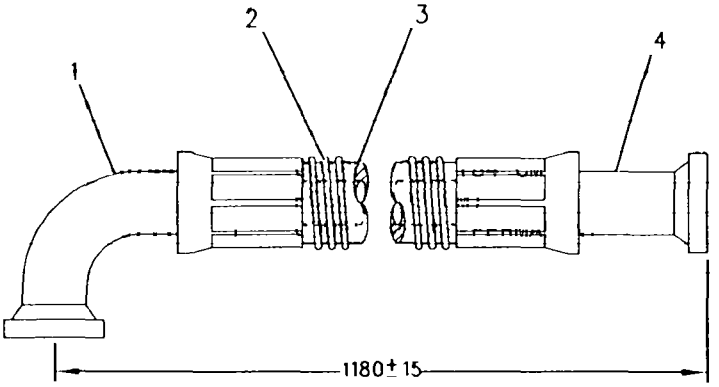

GRAPHIC #1 g00286617

HYDRAULIC SYSTEM

4Z-9465 HOSE AS–CUSTOM

PIN 4MN1-UP; 5LN1-UP
PART OF 4Z-9454 LINES GP-TILT CYLINDER
FOR USE WITH 12.7 MM (.50 IN) ID HOSE

SMCS-5057 i01016371

NOTE	REF NO	GRAPHIC REF	PART NUMBER	QTY	PART NAME 1 2 3 4 5 6 (PRODUCT LEVEL)	SEE PAGE
	1	1	8T-3715	1	COUPLING AS-PERMANENT	
E	2	1	6V-0744		GUARD-HOSE (235CM)	
E	3	1	9S-0671		HOSE (238CM)	
	4	1	6V-9965	1	COUPLING AS	

E-ORDER BY THE CENTIMETER

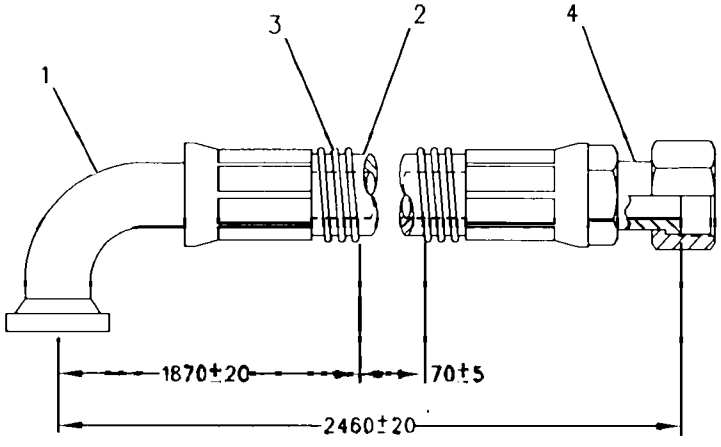

GRAPHIC #1 g00294642

4Z-9466 HOSE AS–CUSTOM

PIN 4MN1-UP; 5LN1-UP
PART OF 4Z-9454 LINES GP-TILT CYLINDER
FOR USE WITH 12.7 MM (.50 IN) ID HOSE

SMCS-5057 **i01016376**

NOTE	REF NO	GRAPHIC REF	PART NUMBER	QTY	PART NAME 1 2 3 4 5 6 (PRODUCT LEVEL)	SEE PAGE
	1	1	**7X-4823**	1	STEM AS	
E	2	1	**9S-0671**		HOSE (238CM)	
E	3	1	**6V-0744**		GUARD-HOSE (235CM)	
	4	1	**6V-9965**	1	COUPLING AS	
		1	**6V-8554**	1	NUT-FACE SEAL (13/16-16 THD)	

E-ORDER BY THE CENTIMETER

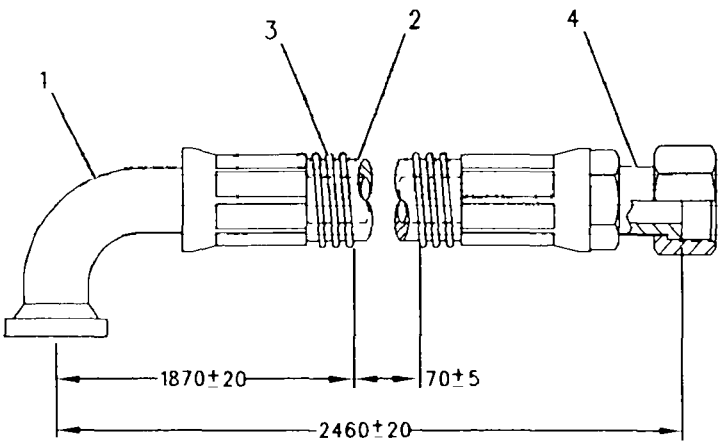

GRAPHIC #1 g00294642

HYDRAULIC SYSTEM

112-1529 HOSE AS–CUSTOM*I

PIN 2YN1-UP; 3ZN1-UP; 4MN1-UP; 5LN1-UP; 6JN1-UP; 7KN1-UP; 8LN1-UP; 9PN1-UP
PART OF 130-8952 OIL CHANGE GP-HIGH SPEED
FOR USE WITH 19.5 MM (.75 IN) ID HOSE

SMCS-5057 i01009167

NOTE	REF NO	GRAPHIC REF	PART NUMBER	QTY	PART NAME 1 2 3 4 5 6 (PRODUCT LEVEL)	SEE PAGE
E	1	1	9S-0247		HOSE (.750IN ID) (168 CM)	
	2	1	6V-9969	2	COUPLING AS	

E-ORDER BY THE CENTIMETER

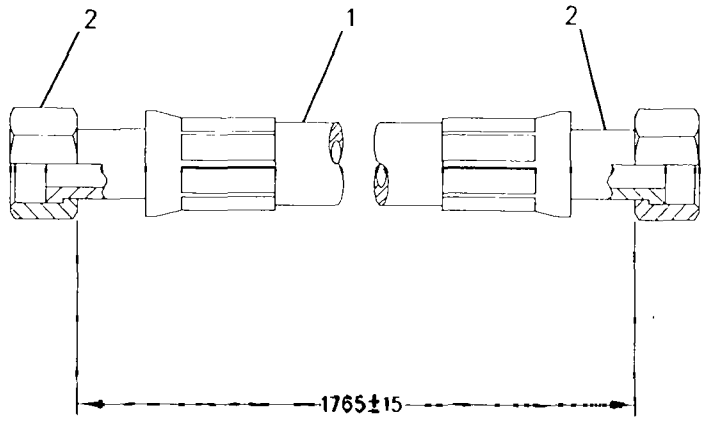

GRAPHIC #1 g00286727

128-3160 HOSE AS–CUSTOM

PIN 2YN1-UP; 3ZN1-UP; 4MN1-UP; 5LN1-UP; 6JN1-UP; 7KN1-UP; 8LN1-UP; 9PN1-UP
PART OF 128-3157 PRELUBE & FAST FILL OIL AR, 128-3156 PRELUBE AR-ENGINE
FOR USE WITH 19.05 MM (.75 IN) ID HOSE

SMCS-5057 i01009371

NOTE	REF NO	GRAPHIC REF	PART NUMBER	QTY	PART NAME 1 2 3 4 5 6 (PRODUCT LEVEL)	SEE PAGE
	1	1	9X-3760	1	COUPLING	
	2	1	9X-3776	1	COUPLING-HOSE	
E	3	1	9X-2352		HOSE (133 CM)	

E-ORDER BY THE CENTIMETER

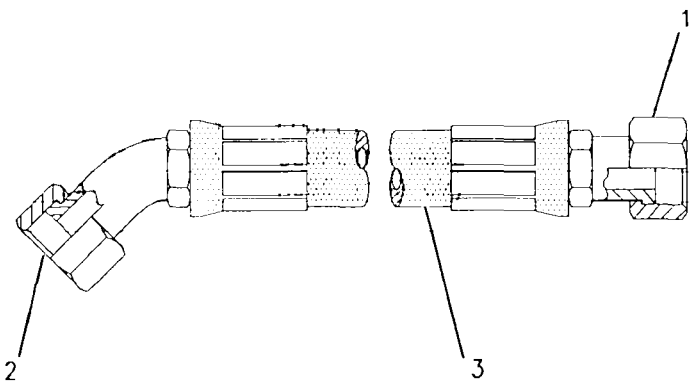

GRAPHIC #1 g00284882

128-3161 HOSE AS–CUSTOM

PIN 2YN1-UP; 3ZN1-UP; 4MN1-UP; 5LN1-UP; 6JN1-UP; 7KN1-UP; 8LN1-UP; 9PN1-UP
ENGINE PRELUBE
PART OF 128-3157 PRELUBE & FAST FILL OIL AR, 128-3156 PRELUBE AR-ENGINE

SMCS-5057 i00604340

NOTE	REF NO	GRAPHIC REF	PART NUMBER	QTY	PART NAME 1 2 3 4 5 6 (PRODUCT LEVEL)	SEE PAGE
	1	1	7X-1449	1	COUPLING-ORIFICE (STRAIGHT)	
	2	1	7X-1447	1	COUPLING-ORIFICE (90 DEG)	
E	3	1	9X-2350	1	HOSE (131CM)	

E-ORDER BY THE CENTIMETER

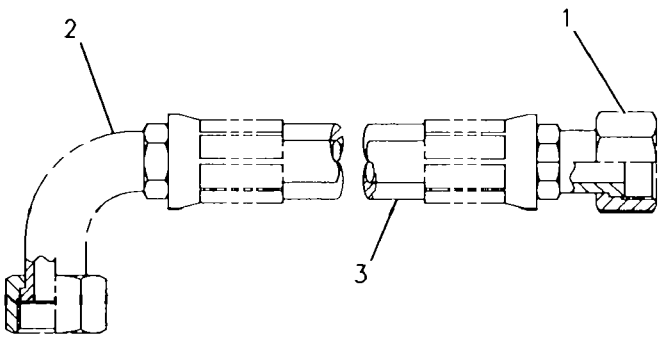

GRAPHIC #1 g00268270

148-9206 HOSE AS-CUSTOM

PIN 5LN1-UP
ORFS
PART OF 156-4547 LINES GP-TILT
FOR USE WITH 9.5 MM ID HOSE

SMCS-5057 i00991178

NOTE	REF NO	GRAPHIC REF	PART NUMBER	QTY	PART NAME 1 2 3 4 5 6 (PRODUCT LEVEL)	SEE PAGE
	1	1	8T-7097	1	COUPLING AS	
E	2	1	6V-1153		HOSE (56CM)	
	3	1	8T-7095	1	COUPLING AS	

E-ORDER BY THE CENTIMETER

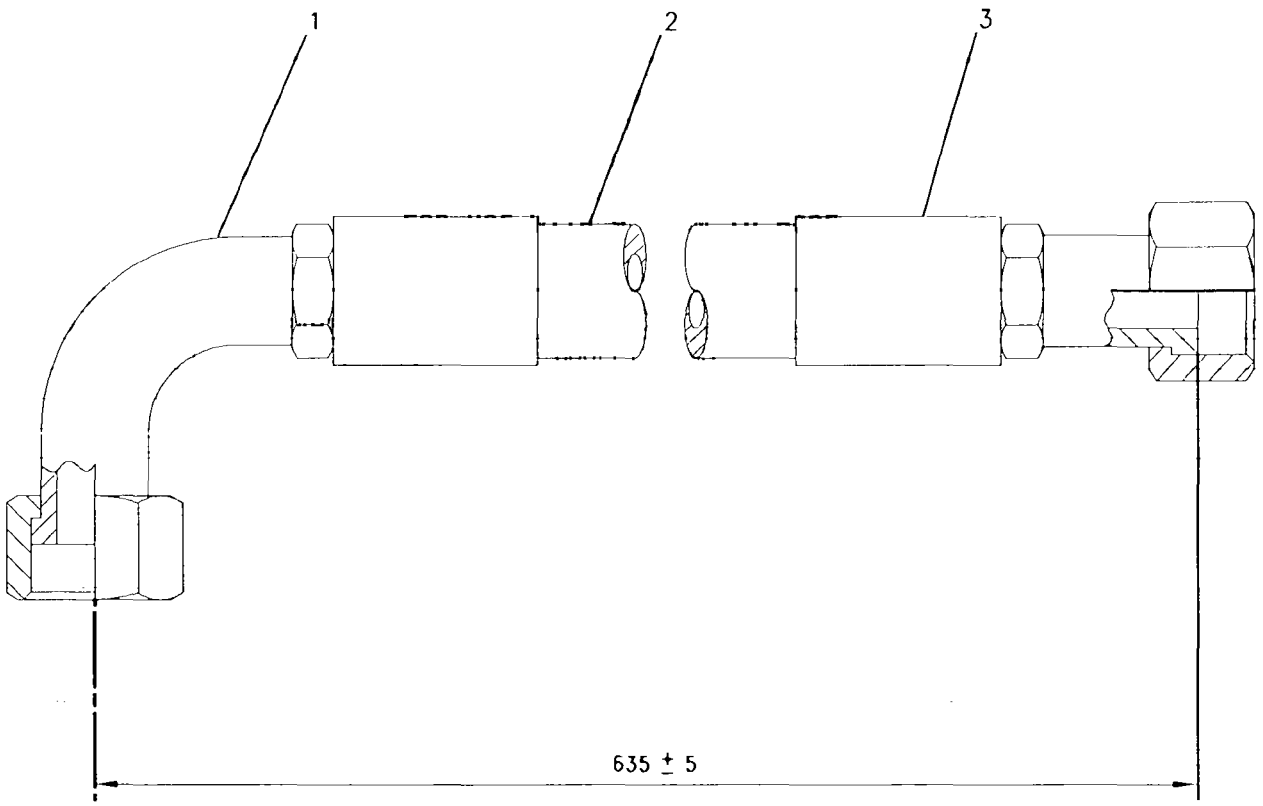

GRAPHIC #1 g00505408

150-7197 HOSE AS-CUSTOM

PIN 2YN1-UP; 4MN1-UP
25.4 MM (1.0 IN) ID HOSE
PART OF 149-8917 COOLER AR-HYDRAULIC OIL

SMCS-5057 i01007517

NOTE	REF NO	GRAPHIC REF	PART NUMBER	QTY	PART NAME 1 2 3 4 5 6 (PRODUCT LEVEL)	SEE PAGE
	1	1	124-2080	1	COUPLING-PERMANENT	
	2	1	124-2104	1	COUPLING-PERMANENT	
E	3	1	122-6873		HOSE-HYDRAULIC (70 CM)	

E-ORDER BY THE CENTIMETER

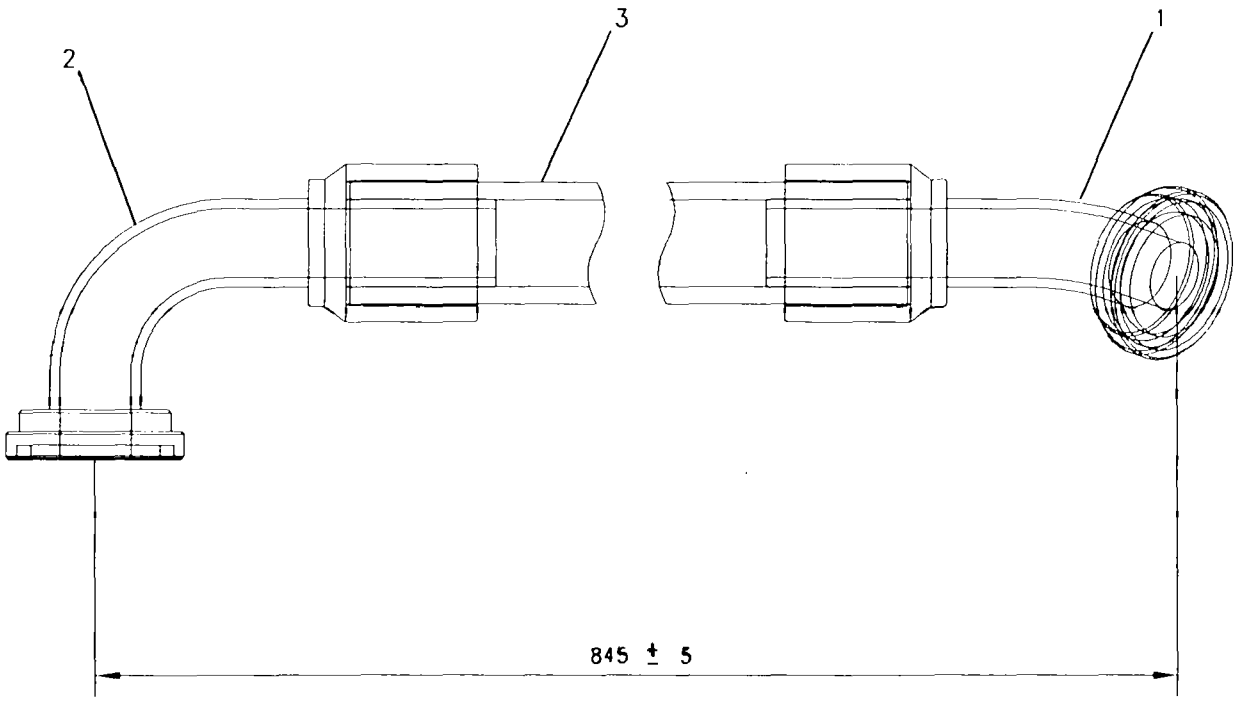

GRAPHIC #1 g00519964

HYDRAULIC SYSTEM

150-7198 HOSE AS–CUSTOM

PIN 2YN1-UP; 4MN1-UP
12.7 MM (.50 IN) ID HOSE
PART OF 149-8917 COOLER AR-HYDRAULIC OIL

SMCS-5057 i01007522

NOTE	REF NO	GRAPHIC REF	PART NUMBER	QTY	PART NAME 1 2 3 4 5 6 (PRODUCT LEVEL)	SEE PAGE
	1	1	124-2117	1	COUPLING-ORIFICE	
	2	1	124-2147	1	COUPLING-ORIFICE	
E	3	1	122-6870		HOSE-HYDRAULIC (305 CM)	

E-ORDER BY THE CENTIMETER

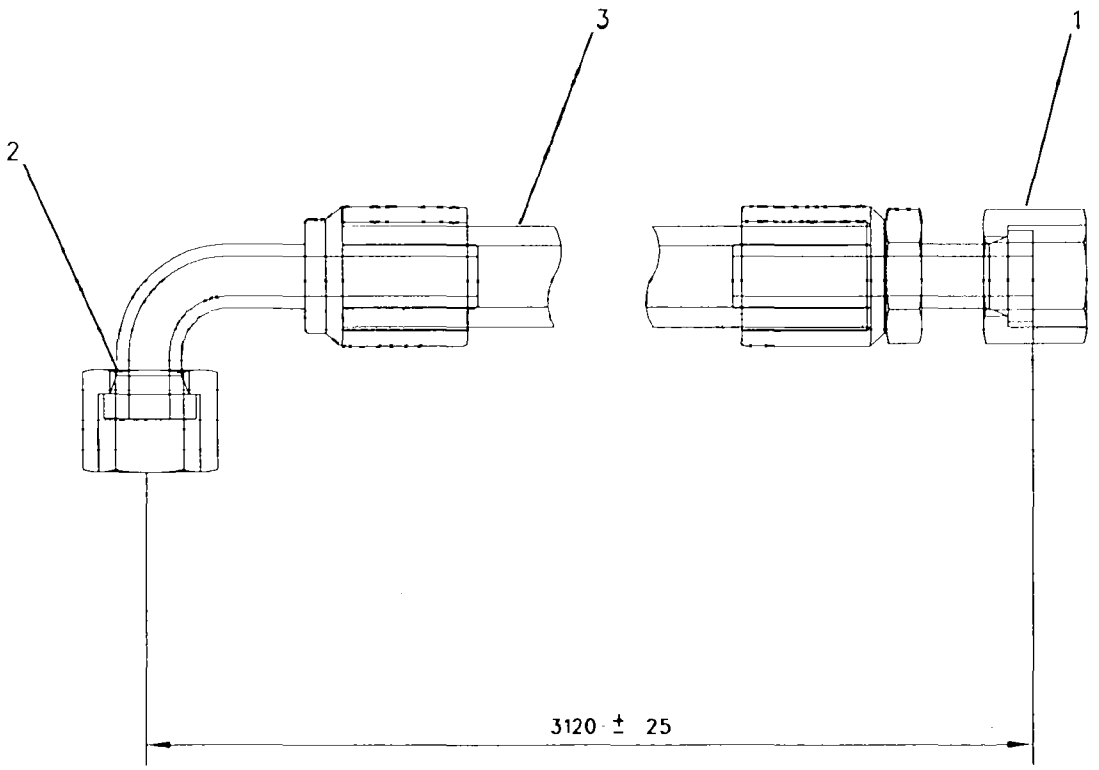

GRAPHIC #1 g00519968

HYDRAULIC SYSTEM

150-7199 HOSE AS–CUSTOM

PIN 2YN1-UP; 4MN1-UP
12.7 MM (.50 IN) ID HOSE
PART OF 149-8917 COOLER AR-HYDRAULIC OIL

SMCS-5057 i01007529

NOTE	REF NO	GRAPHIC REF	PART NUMBER	QTY	PART NAME 1 2 3 4 5 6 (PRODUCT LEVEL)	SEE PAGE
	1	1	124-2117	1	COUPLING-ORIFICE	
	2	1	124-2147	1	COUPLING-ORIFICE	
E	3	1	122-6870		HOSE-HYDRAULIC (284 CM)	

E-ORDER BY THE CENTIMETER

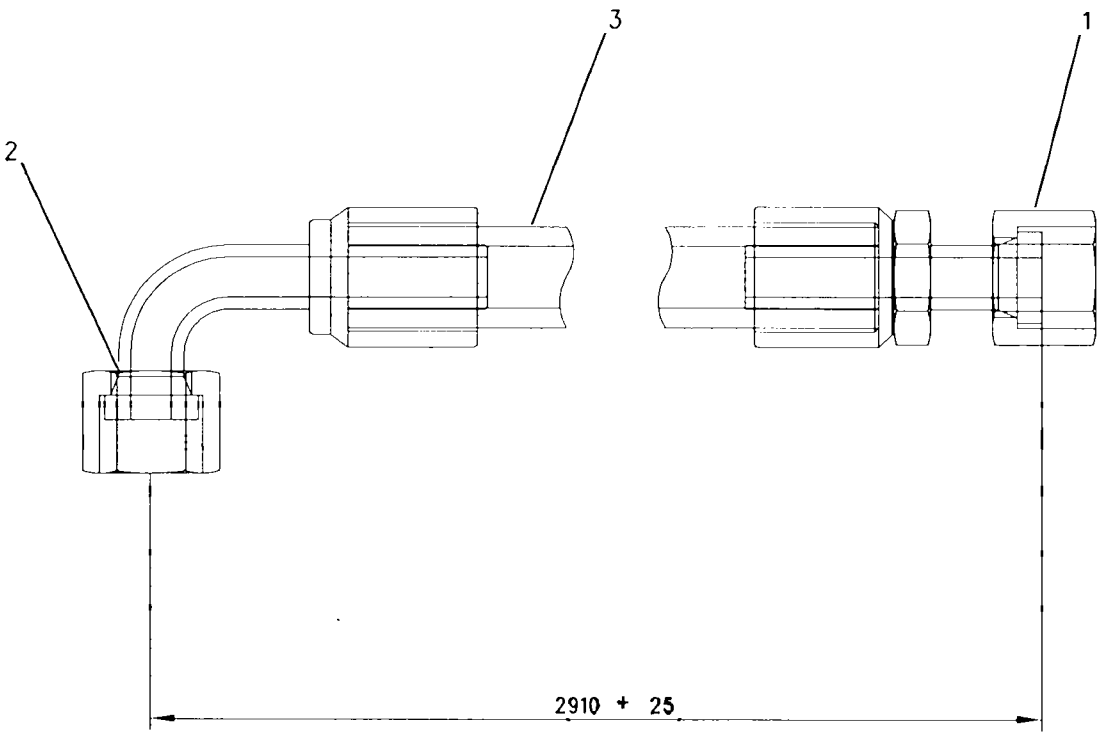

GRAPHIC #1 g00519970

HYDRAULIC SYSTEM

153-0090 HOSE AS–CUSTOM*I

PIN 2YN1-UP; 4MN1-UP

12.7 MM (.50 IN) ID HOSE

PART OF 152-4669 LINES GP-HYDRAULIC OIL COOLER

SMCS-5057 i01007408

NOTE	REF NO	GRAPHIC REF	PART NUMBER	QTY	PART NAME 1 2 3 4 5 6 (PRODUCT LEVEL)	SEE PAGE
	1	1	124-2162	2	COUPLING-ORIFICE	
E	2	1	122-6870		HOSE-HYDRAULIC (66 CM)	

E-ORDER BY THE CENTIMETER

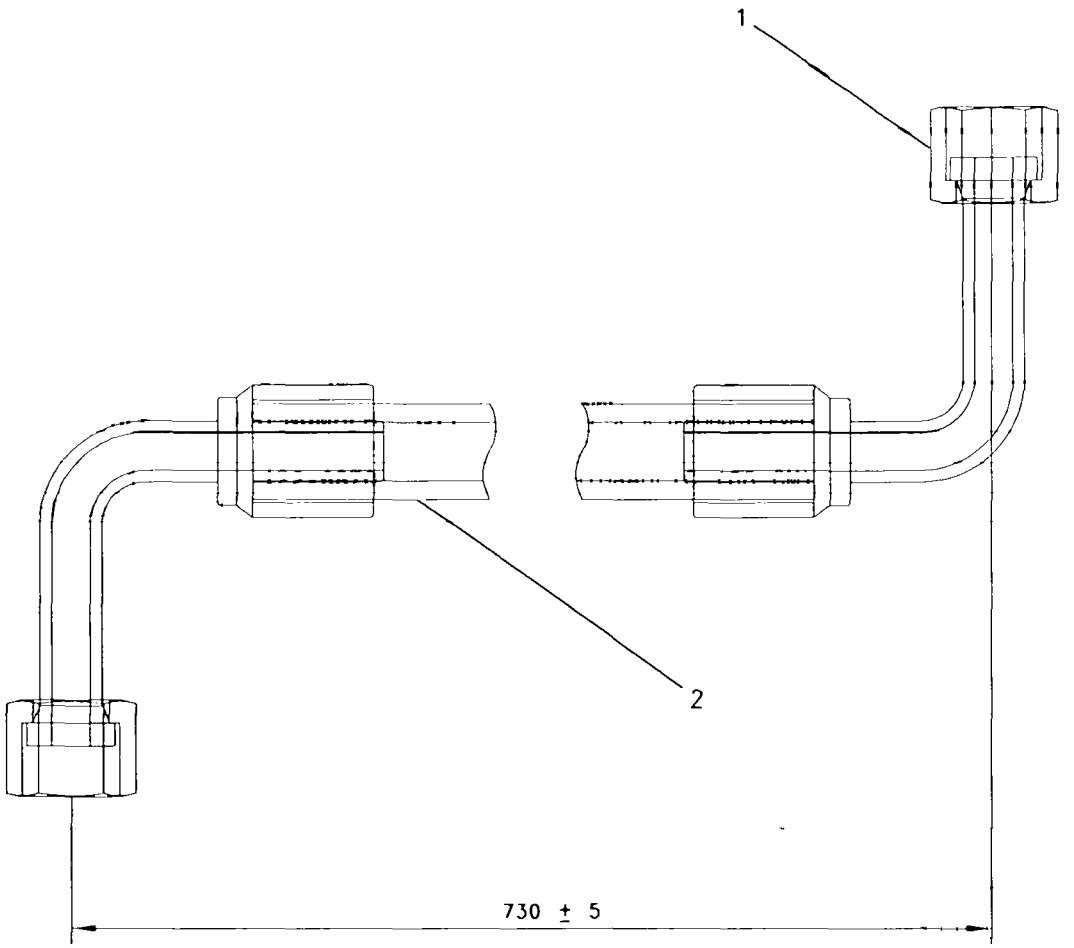

GRAPHIC #1 g00519973

HYDRAULIC SYSTEM

153-0091 HOSE AS–CUSTOM*I

PIN 2YN1-UP; 4MN1-UP
12.7 MM (.50 IN) ID HOSE
PART OF 152-4669 LINES GP-HYDRAULIC OIL COOLER

SMCS-5057 i01007415

NOTE	REF NO	GRAPHIC REF	PART NUMBER	QTY	PART NAME 1 2 3 4 5 6 (PRODUCT LEVEL)	SEE PAGE
	1	1	**124-2147**	1	COUPLING-ORIFICE	
	2	1	**124-2162**	1	COUPLING-ORIFICE	
E	3	1	**122-6870**		HOSE-HYDRAULIC (51 CM)	

E-ORDER BY THE CENTIMETER

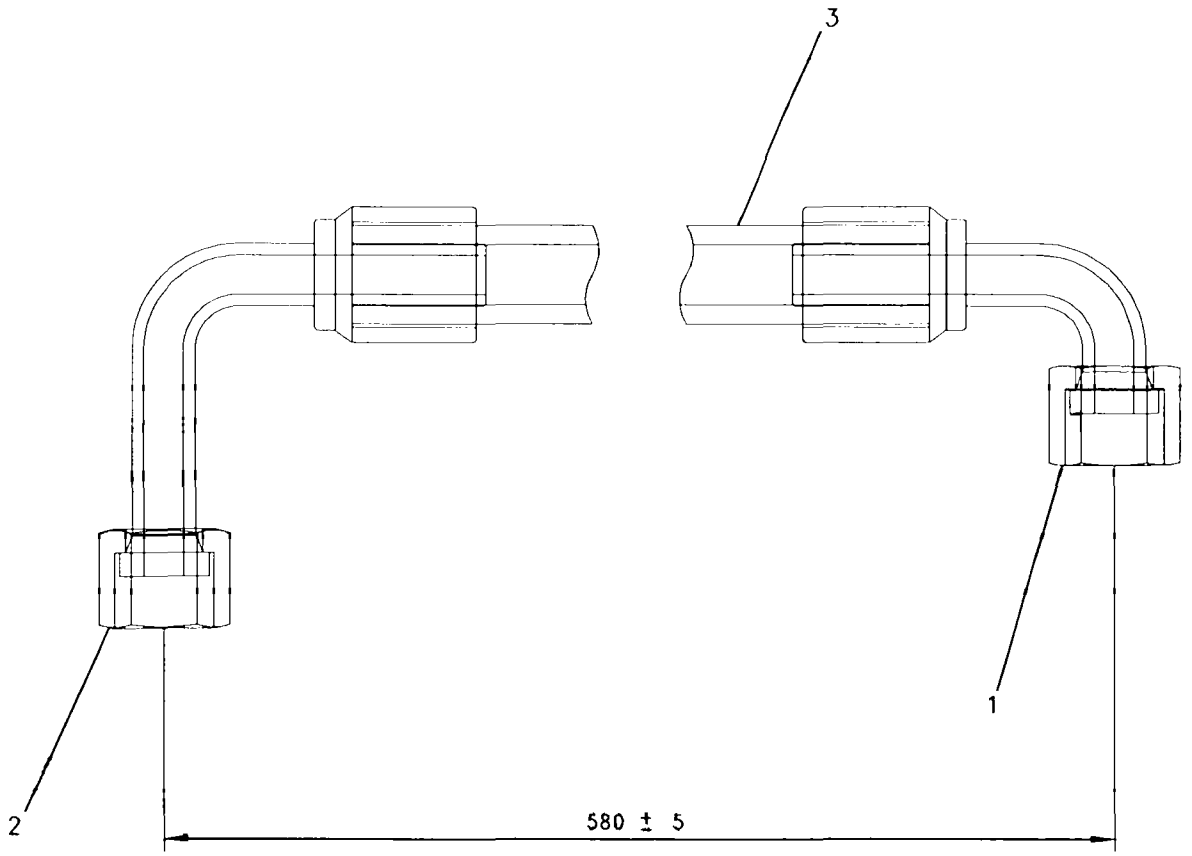

GRAPHIC #1 g00519997

HYDRAULIC SYSTEM

153-0092 HOSE AS–CUSTOM*I

PIN 2YN1-UP; 4MN1-UP
12.7 MM (.50 IN) ID HOSE
PART OF 152-4669 LINES GP-HYDRAULIC OIL COOLER

SMCS-5057 i01007421

NOTE	REF NO	GRAPHIC REF	PART NUMBER	QTY	PART NAME 1 2 3 4 5 6 (PRODUCT LEVEL)	SEE PAGE
	1	1	124-2117	1	COUPLING-ORIFICE	
	2	1	124-2147	1	COUPLING-ORIFICE	
E	3	1	122-6870		HOSE-HYDRAULIC (34 CM)	

E-ORDER BY THE CENTIMETER

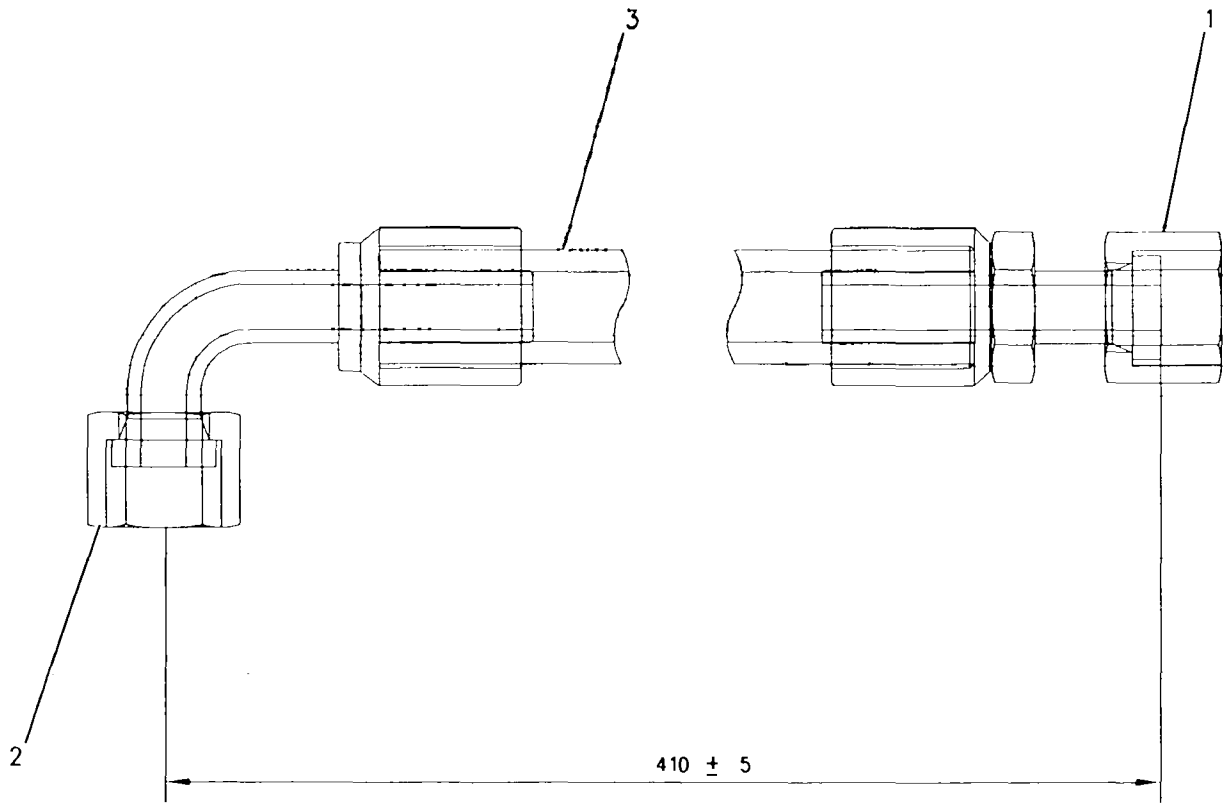

GRAPHIC #1 g00520000

158-6649 HOSE AS–CUSTOM

PIN 5LN1-UP

ORFS, 9.5 MM (.37 IN) ID HOSE

PART OF 156-4547 LINES GP-TILT

SMCS-5057 **i01005237**

NOTE	REF NO	GRAPHIC REF	PART NUMBER	QTY	PART NAME 1 2 3 4 5 6 (PRODUCT LEVEL)	SEE PAGE
	1	1	**6V-9961**	1	COUPLING AS	
		1	**6V-8553**	1	NUT-FACE SEAL	
E	2	1	**2P-5943**		HOSE (361 CM)	
	3	1	**6V-9963**	1	COUPLING AS	
		1	**6V-8553**	1	NUT-FACE SEAL	

E-ORDER BY THE CENTIMETER

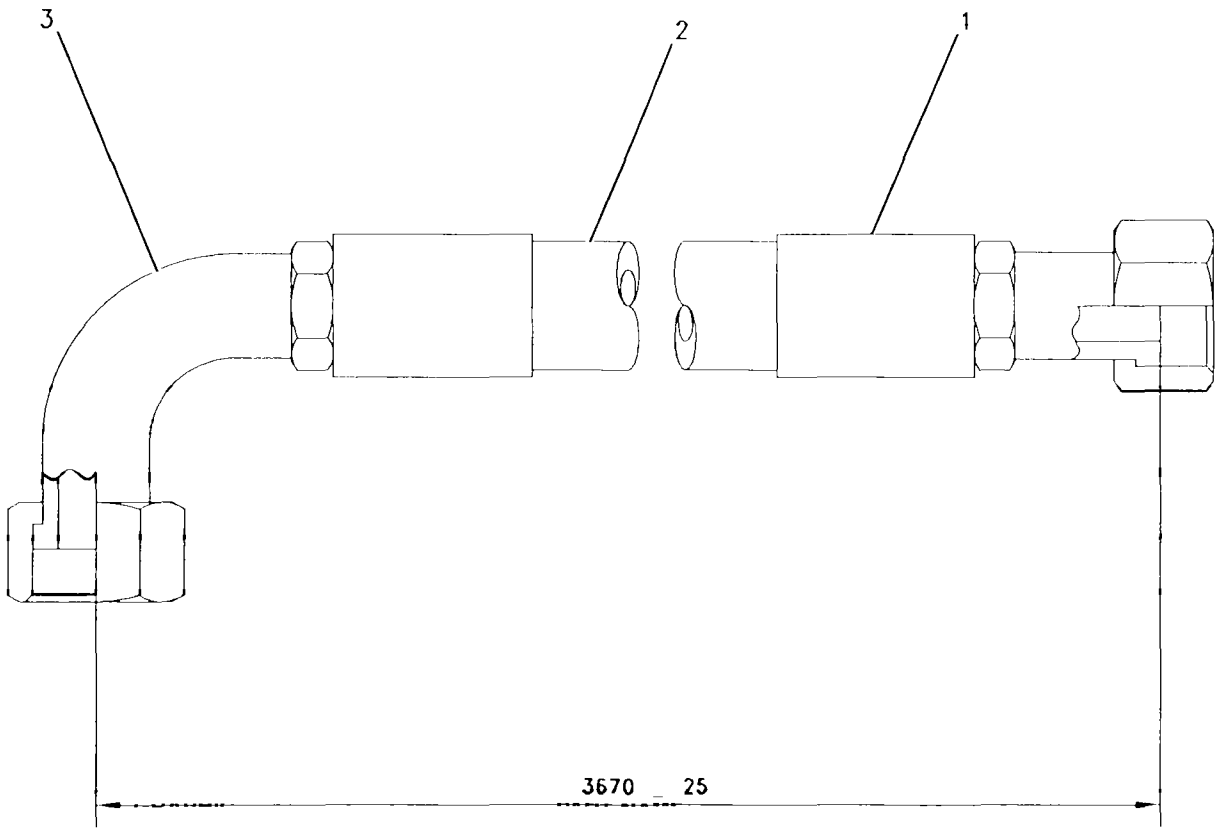

GRAPHIC #1 g00520981

HYDRAULIC SYSTEM

158-6651 HOSE AS–CUSTOM

PIN 5LN1-UP

ORFS, 9.5 MM (.37 IN) ID HOSE

PART OF 156-4547 LINES GP-TILT

SMCS-5057 i01005269

NOTE	REF NO	GRAPHIC REF	PART NUMBER	QTY	PART NAME 1 2 3 4 5 6 (PRODUCT LEVEL)	SEE PAGE
	1	1	124-2116	1	COUPLING-PERMANENT	
E	2	1	5P-9259		HOSE (37 CM)	
	3	1	124-2144	1	COUPLING-PERMANENT	

E-ORDER BY THE CENTIMETER

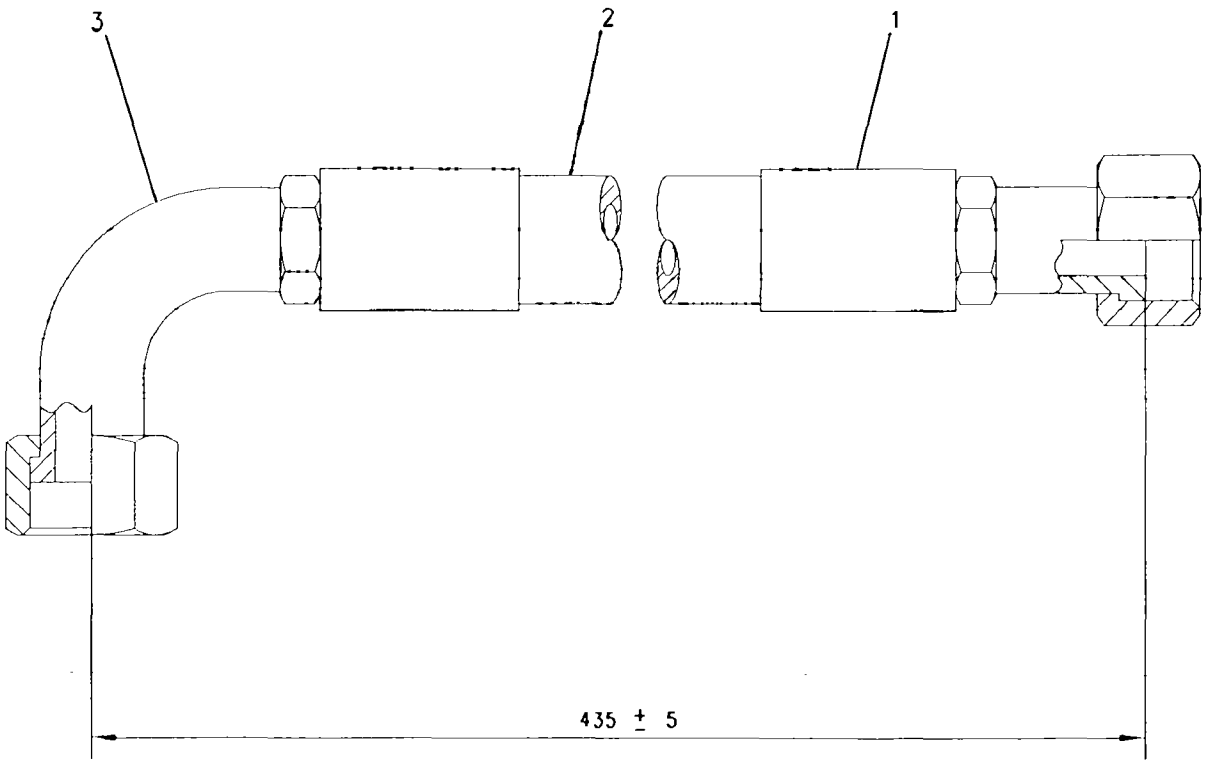

GRAPHIC #1 g00520986

HYDRAULIC SYSTEM

158-6655 HOSE AS–CUSTOM

PIN 5LN1-UP
12.7 MM (.50 IN) ID HOSE
PART OF 156-4547 LINES GP-TILT

SMCS-5057 i01005281

NOTE	REF NO	GRAPHIC REF	PART NUMBER	QTY	PART NAME 1 2 3 4 5 6 (PRODUCT LEVEL)	SEE PAGE
	1	1	**5P-8886**	1	STEM AS	
	2	1	**5S-9616**	1	STEM AS-COLLET	
E	3	1	**9S-0671**		HOSE (441 CM)	
	4	1	**5S-9615**	1	STEM AS-COLLET	
	5	1	**3S-8606**	4	SLEEVE	

E-ORDER BY THE CENTIMETER

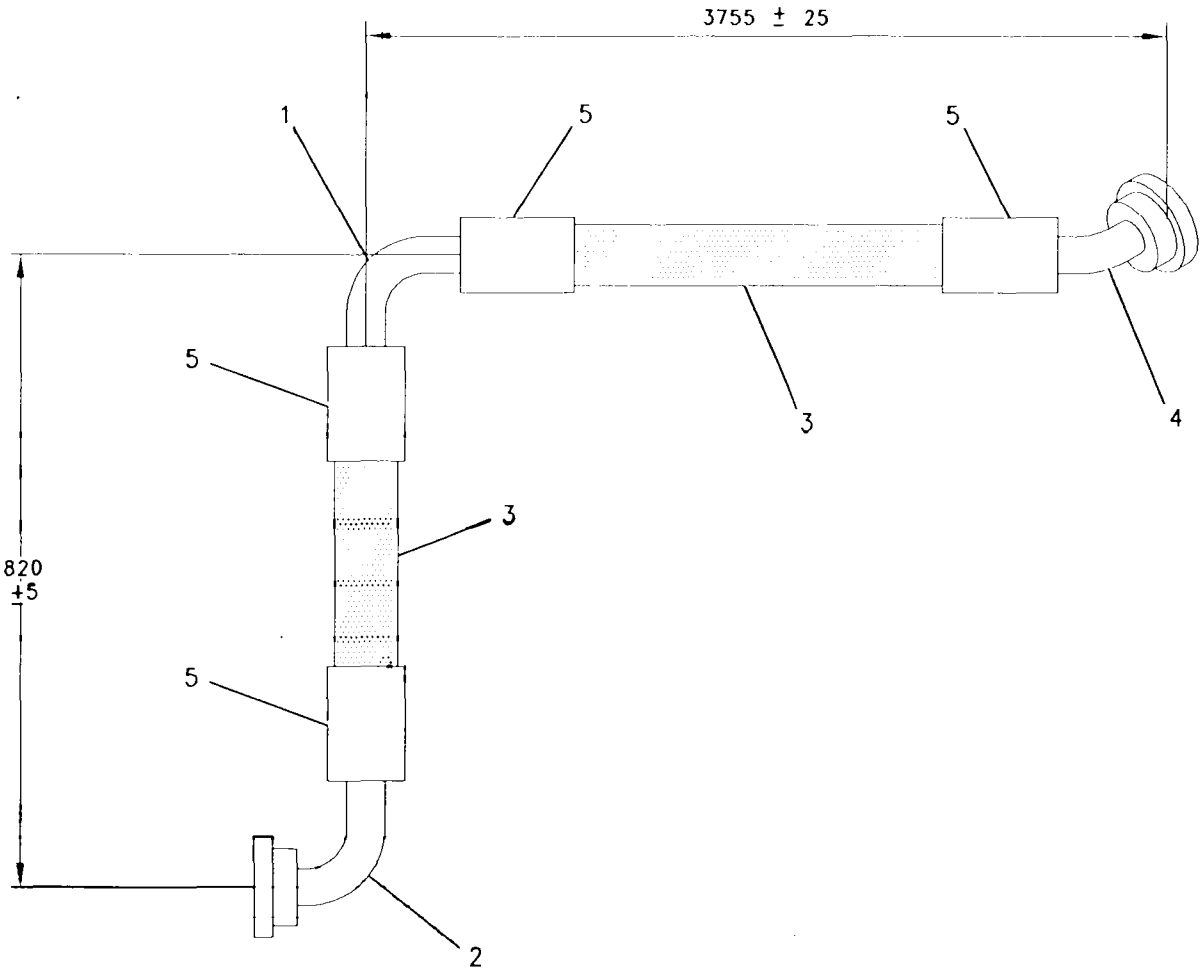

GRAPHIC #1 g00520988

163-7992 HOSE AS-CUSTOM

PIN 5LN1-UP
12.7 MM (.50 IN) ID HOSE
PART OF 156-4547 LINES GP-TILT

SMCS-5057 i01005305

NOTE	REF NO	GRAPHIC REF	PART NUMBER	QTY	PART NAME 1 2 3 4 5 6 (PRODUCT LEVEL)	SEE PAGE
	1	1	5P-8886	1	STEM AS	
	2	1	5S-9616	1	STEM AS-COLLET	
E	3	1	9S-0671		HOSE (450 CM)	
	4	1	5S-9615	1	STEM AS-COLLET	
	5	1	3S-8606	4	SLEEVE	

E-ORDER BY THE CENTIMETER

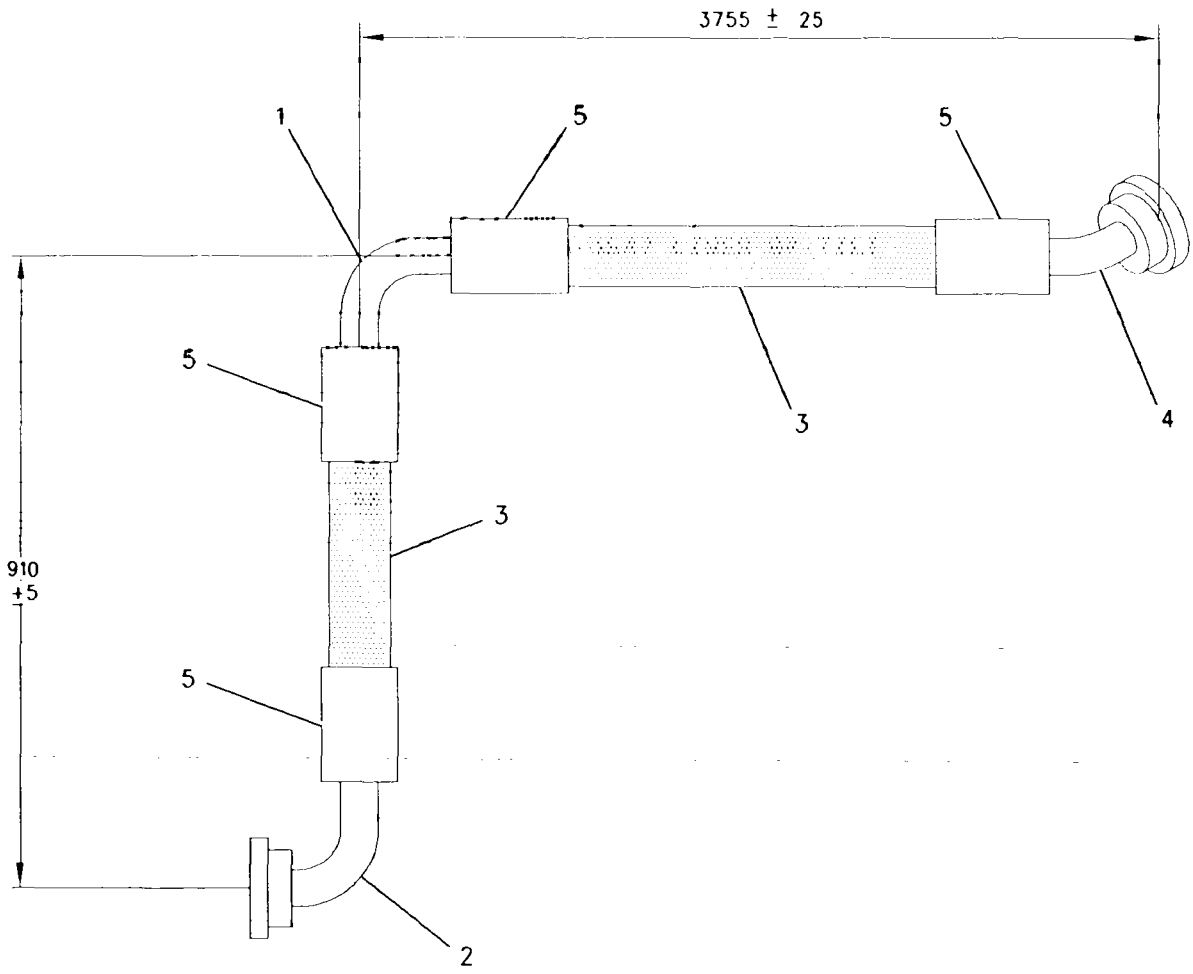

GRAPHIC #1 g00520995

HYDRAULIC SYSTEM

163-7993 HOSE AS–CUSTOM

PIN 5LN1-UP

9.5 MM (.37 IN) ID HOSE

PART OF 156-4547 LINES GP-TILT

SMCS-5057 i01005359

NOTE	REF NO	GRAPHIC REF	PART NUMBER	QTY	PART NAME 1 2 3 4 5 6 (PRODUCT LEVEL)	SEE PAGE
	1	1	**124-2144**	1	COUPLING-PERMANENT	
E	2	1	**5P-9259**		HOSE (354 CM)	———
	3	1	**124-2114**	1	COUPLING-ORIFICE	

E-ORDER BY THE CENTIMETER

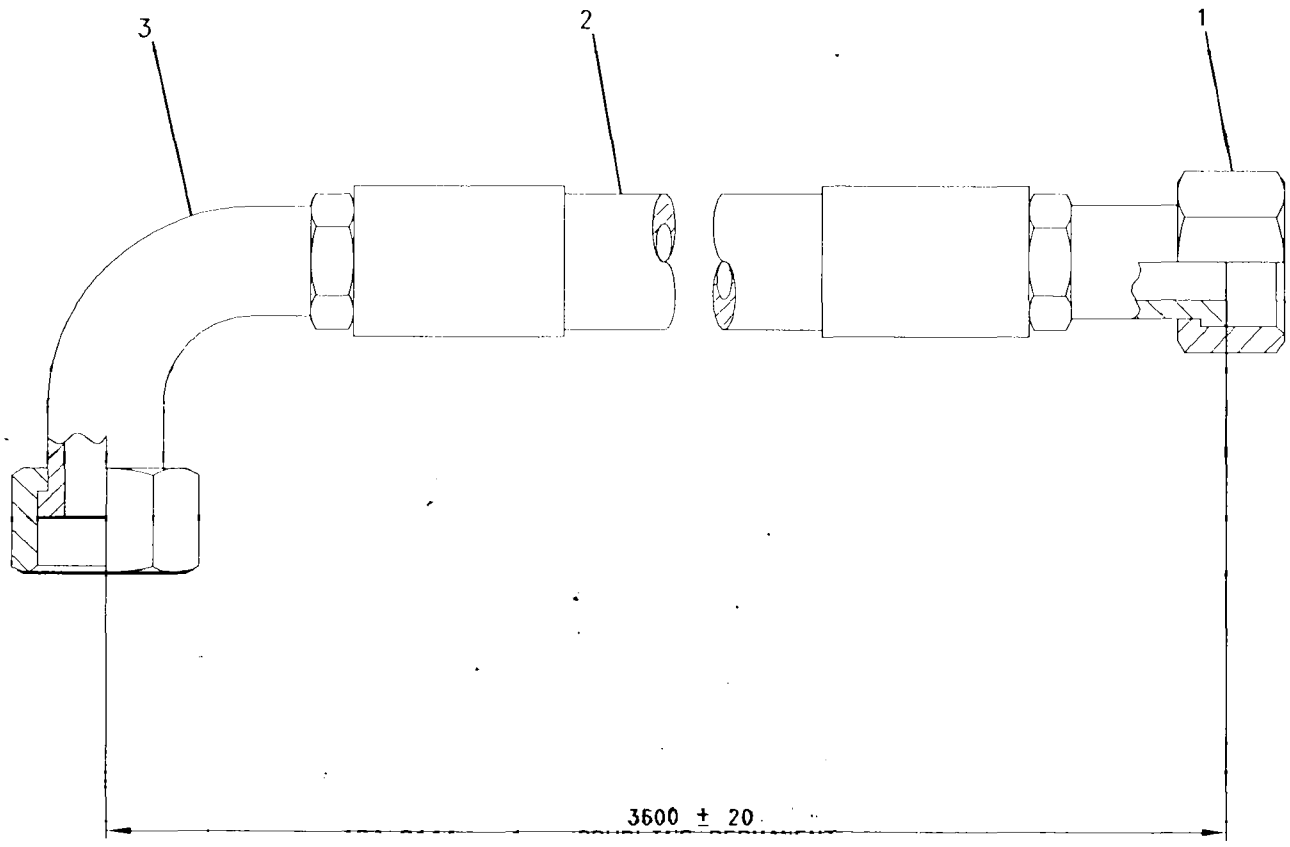

GRAPHIC #1 g00521017

HYDRAULIC SYSTEM

163-7994 HOSE AS–CUSTOM

PIN 5LN1-UP

ORFS, 9.5 MM (.37 IN) ID HOSE

PART OF 156-4547 LINES GP-TILT

SMCS-5057 i01005364

NOTE	REF NO	GRAPHIC REF	PART NUMBER	QTY	PART NAME 1 2 3 4 5 6 (PRODUCT LEVEL)	SEE PAGE
	1	1	**124-2114**	1	COUPLING-ORIFICE	
E	2	1	**122-6869**		HOSE-HYDRAULIC (22 CM)	
	3	1	**124-2144**	1	COUPLING-PERMANENT	

E-ORDER BY THE CENTIMETER

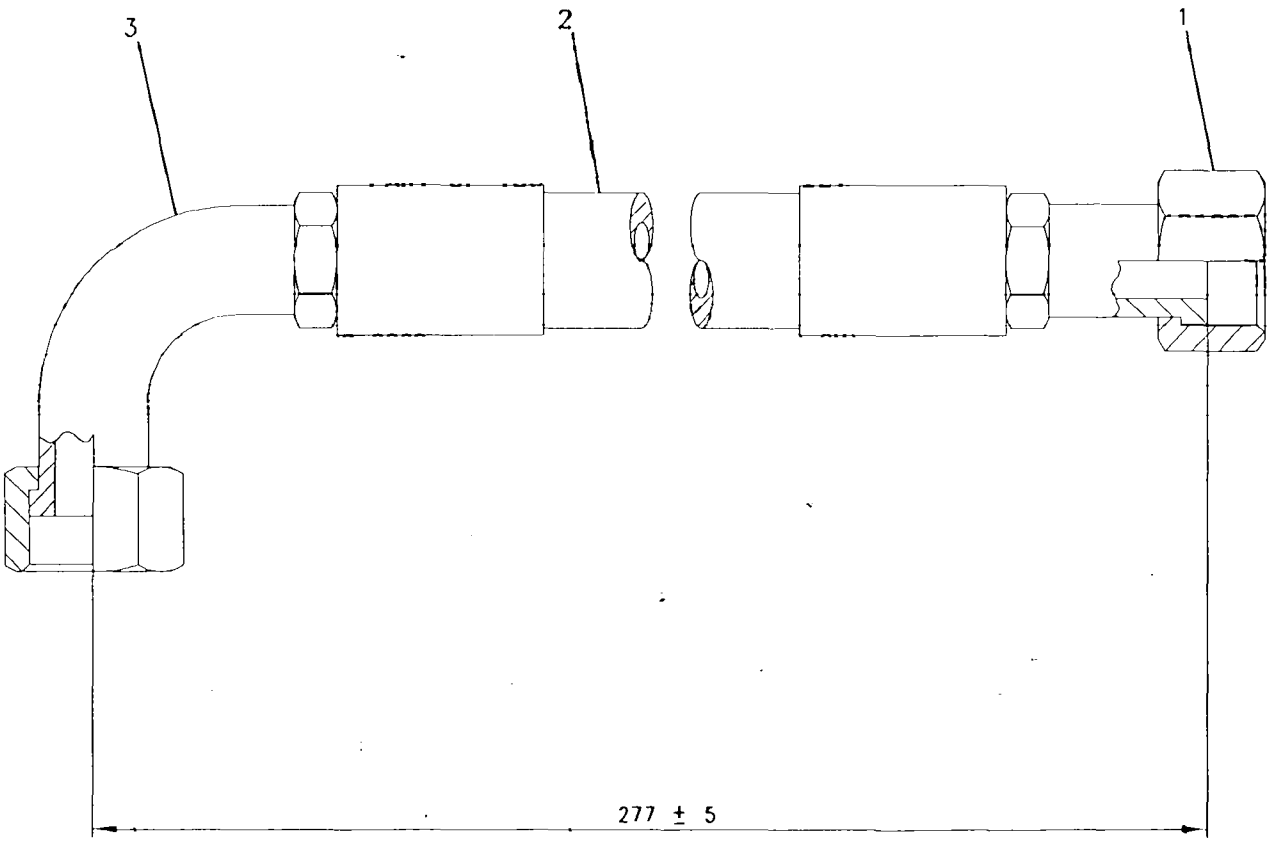

GRAPHIC #1 g00521057

163-7995 HOSE AS-CUSTOM

PIN 5LN1-UP
ORFS, 12.7 MM (.50 IN) ID HOSE
PART OF 156-4547 LINES GP-TILT

SMCS-5057 i01005367

NOTE	REF NO	GRAPHIC REF	PART NUMBER	QTY	PART NAME 1 2 3 4 5 6 (PRODUCT LEVEL)	SEE PAGE
	1	1	6V-9951	1	COUPLING AS	
E	2	1	9S-0671		HOSE (57 CM)	
	3	1	3S-8606	2	SLEEVE	
	4	1	5S-9616	1	STEM AS-COLLET	

E-ORDER BY THE CENTIMETER

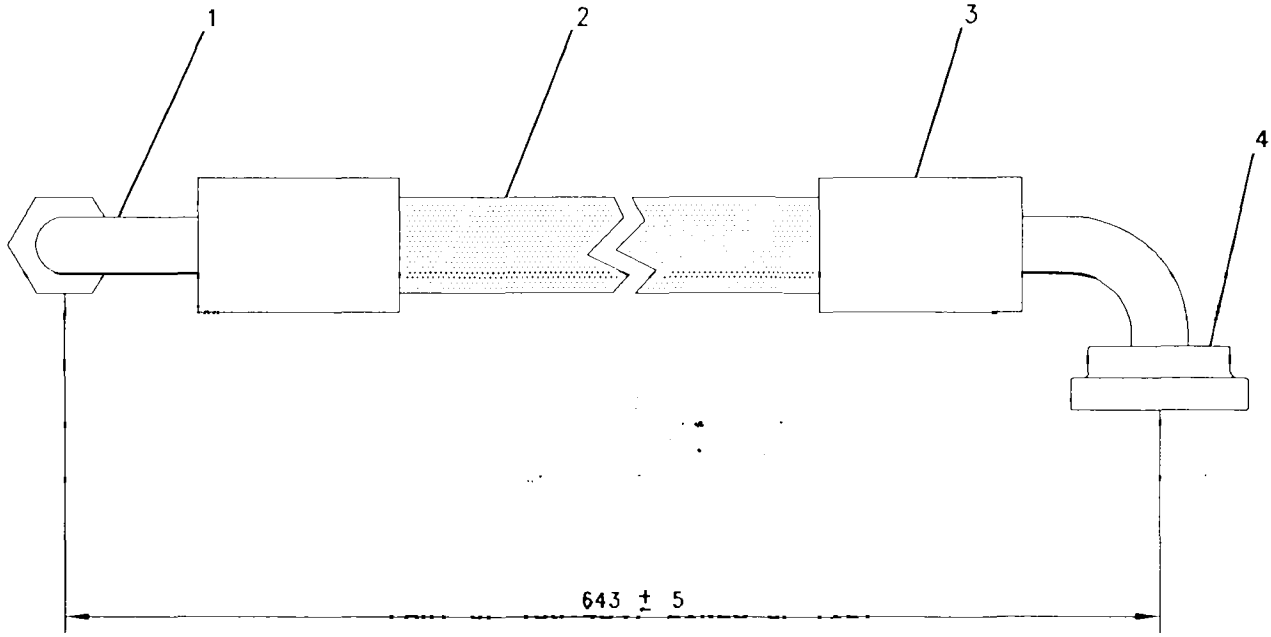

GRAPHIC #1 g00521062

HYDRAULIC SYSTEM

163-7996 HOSE AS–CUSTOM

PIN 5LN1-UP

ORFS, 12.7 MM (.50 IN) ID HOSE

PART OF 156-4547 LINES GP-TILT

SMCS-5057 **i01005372**

NOTE	REF NO	GRAPHIC REF	PART NUMBER	QTY	PART NAME 1 2 3 4 5 6 (PRODUCT LEVEL)	SEE PAGE
	1	1	**6V-9949**	1	COUPLING AS	
	2	1	**3S-8606**	2	SLEEVE	
E	3	1	**9S-0671**		HOSE (30 CM)	
	4	1	**5S-9616**	1	STEM AS-COLLET	

E-ORDER BY THE CENTIMETER

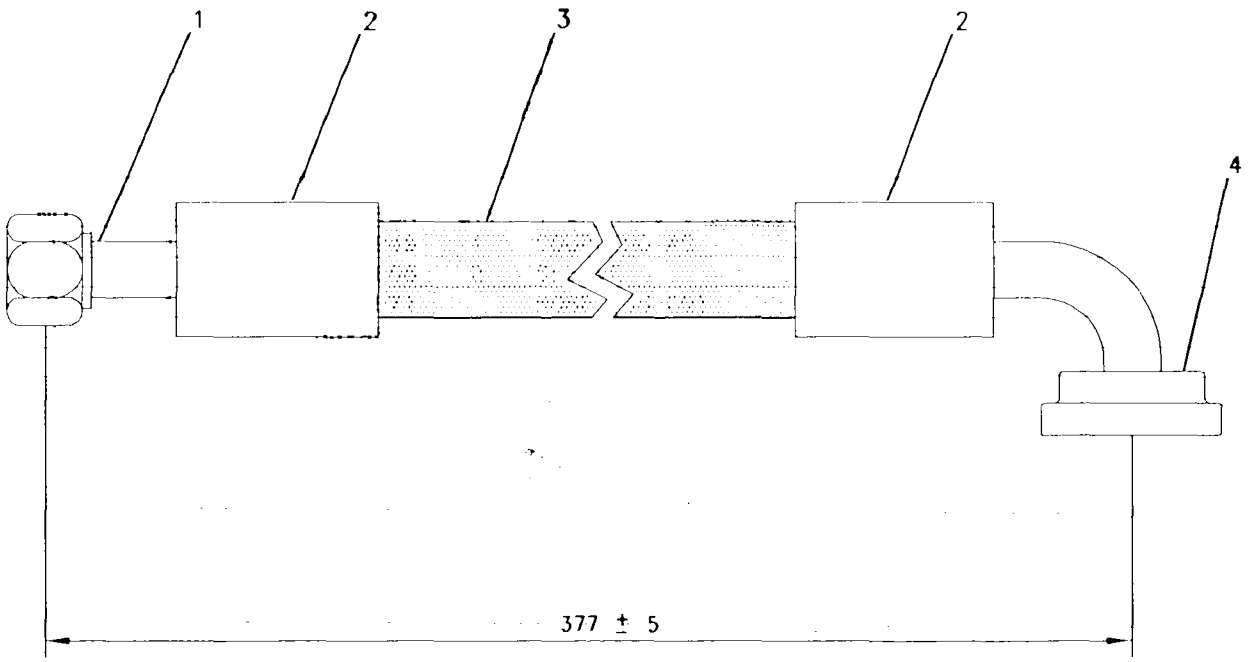

GRAPHIC #1 g00521065

HYDRAULIC SYSTEM

163-7997 HOSE AS–CUSTOM

PIN 5LN1-UP
ORFS, 12.7 MM (.50 IN) ID HOSE
PART OF 156-4547 LINES GP-TILT

SMCS-5057 i01005376

NOTE	REF NO	GRAPHIC REF	PART NUMBER	QTY	PART NAME 1 2 3 4 5 6 (PRODUCT LEVEL)	SEE PAGE
	1	1	**6V-9951**	1	COUPLING AS	
	2	1	**3S-8606**	2	SLEEVE	
E	3	1	**9S-0671**		HOSE (51 CM)	
	4	1	**5S-9616**	1	STEM AS-COLLET	

E-ORDER BY THE CENTIMETER

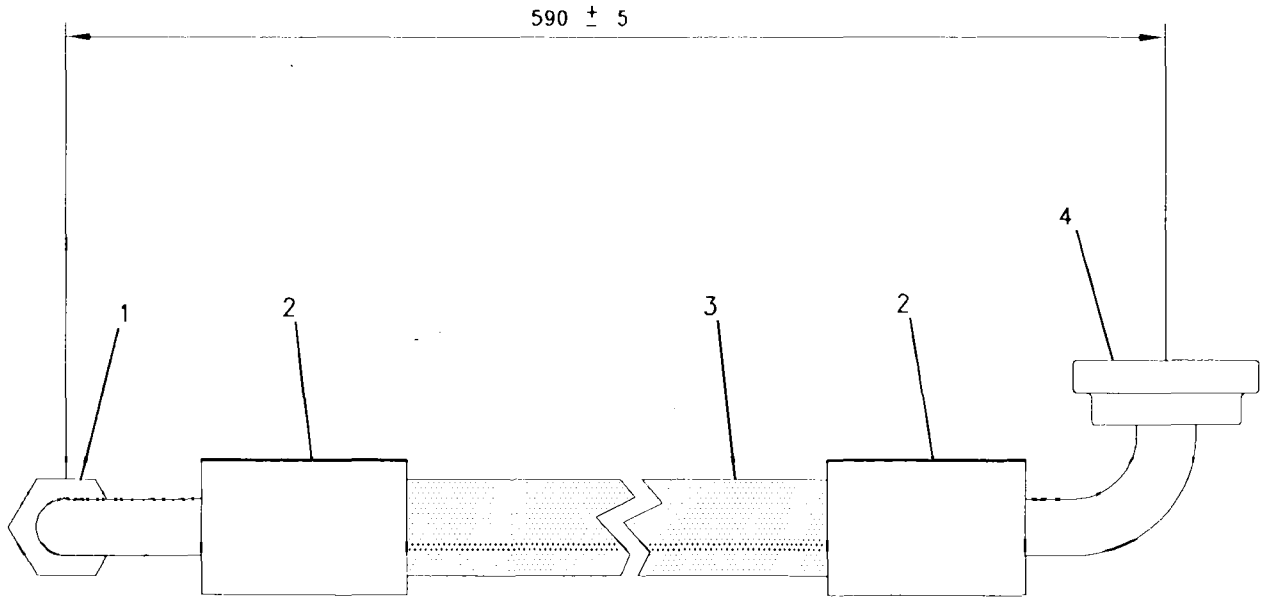

GRAPHIC #1 g00521069

163-7998 HOSE AS-CUSTOM

PIN 5LN1-UP
ORFS, 12.7 MM (.50 IN) ID HOSE
PART OF 156-4547 LINES GP-TILT

SMCS-5057 i01005384

NOTE	REF NO	GRAPHIC REF	PART NUMBER	QTY	PART NAME 1 2 3 4 5 6 (PRODUCT LEVEL)	SEE PAGE
	1	1	6V-9949	1	COUPLING AS	
	2	1	3S-8606	2	SLEEVE	
E	3	1	9S-0671		HOSE (31 CM)	
	4	1	5S-9616	1	STEM AS-COLLET	

E-ORDER BY THE CENTIMETER

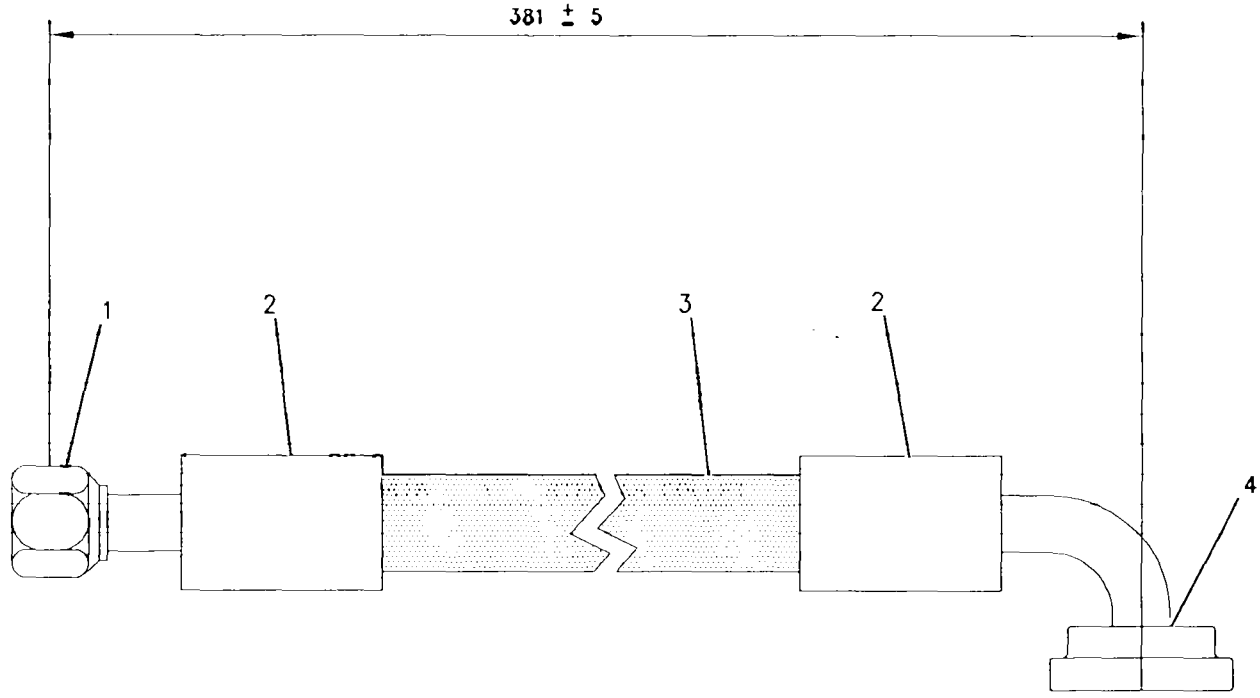

GRAPHIC #1 g00521134

HYDRAULIC SYSTEM

9W-1018 LINES GP-RIPPER

PIN 8LN1-UP; 9PN1-UP
PART OF 4Z-0609 RIPPER AR

SMCS-5057, 5352, 5356 i00576038

NOTE	REF NO	GRAPHIC REF	PART NUMBER	QTY	PART NAME 1 2 3 4 5 6 (PRODUCT LEVEL)	SEE PAGE
	1	1	9W-2392	1	TUBE AS	
	2	1	8T-1887	2	CLIP (SLOT)	
	3	1	8T-1888	2	CLIP (TAB)	
	4	1	8T-2502	2	BOLT (3/8-16X1.13IN)	
	5	1	6V-8801	2	NUT (3/8-16 THD)	
	6	1	8T-2501	2	BOLT (3/8-16X2IN)	
	7	1	9B-7237	2	BOLT (3/8-16X1.25IN)	
	8	1	9M-2904	8	CLAMP-HOSE	
I	9	1	9W-2390	2	HOSE AS	
	10	1	4L-9337	4	BOLT (3/8-16X1.50IN)	
	11	1	8T-4896	12	WASHER-HARD (2.5MM THK)	
	12	1	4J-5267	5	SEAL-O-RING (24.99MM ID)	
	13	1	112-1348	1	SHIELD	
	14	1	112-4368	4	SHIELD	
	15	1	130-1977	8	SHIELD	
	16	1	130-9192	8	GROMMET	

I-SEE HOSE FABRICATION GUIDE

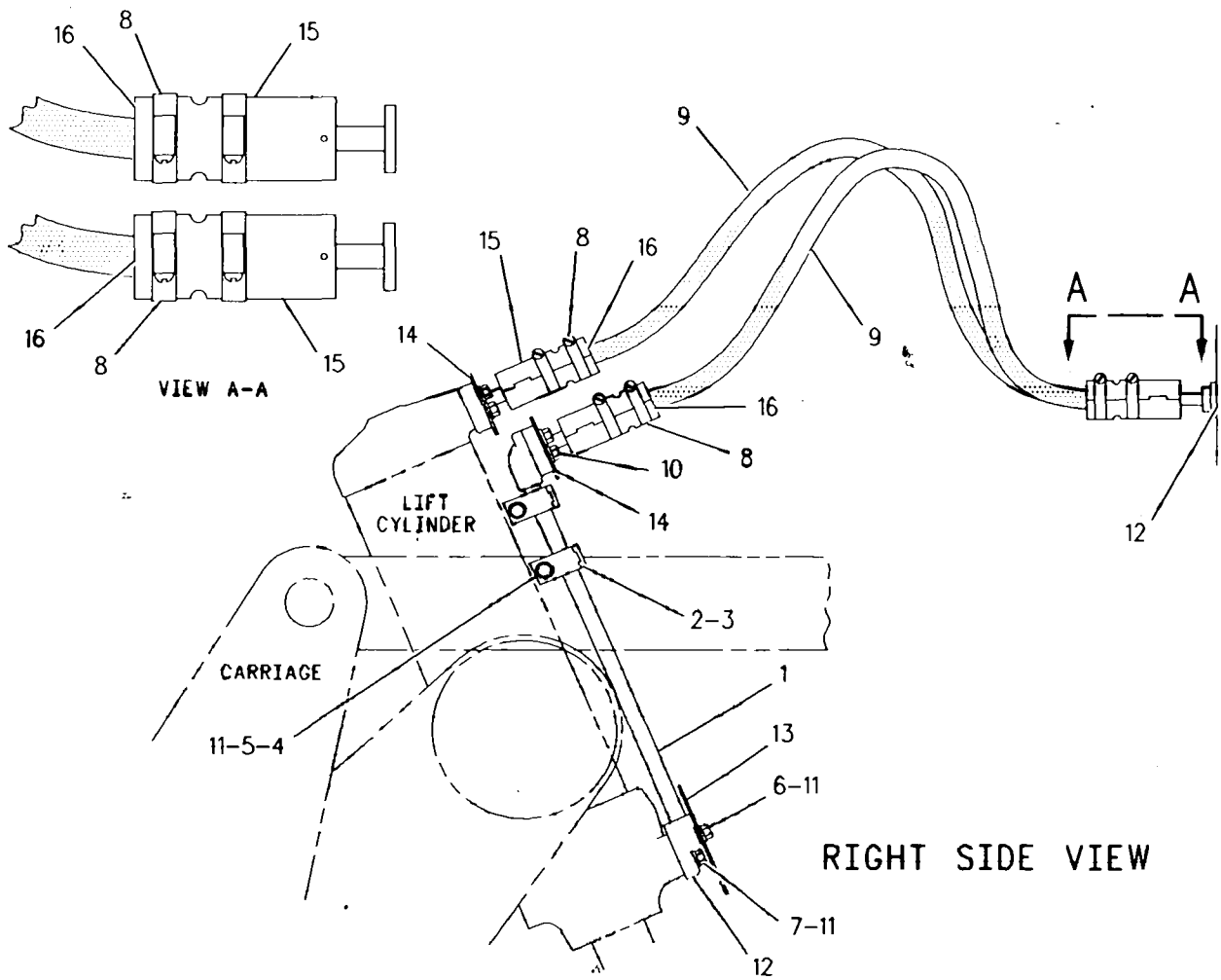

GRAPHIC #1 g00265896

HYDRAULIC SYSTEM

4Z-9225 LINE GP-TILT–CUSTOM

PIN 4MN1-UP; 5LN1-UP

PART OF 139-2633, 4Z-0642 BULLDOZER AR-SEMI-UNIVERSAL

SMCS-5057, 5104 **i01010434**

NOTE	REF NO	GRAPHIC REF	PART NUMBER	QTY	PART NAME 1 2 3 4 5 6 (PRODUCT LEVEL)	SEE PAGE
I	1	1	7T-6931	1	HOSE AS	
	2	1	3Y-5405	2	RUBBER	
I	3	1	7T-6934	1	HOSE AS	
	4	1	6V-9169	2	NUT-BULKHEAD (13/16-16 THD)	
	5	1	4J-5267	4	SEAL-O-RING (24.99MM ID)	
	6	1	4Z-9240	1	HOSE AS	
	7	1	4Z-9241	1	HOSE AS	
	8	1	8T-4223	7	WASHER-HARD (3MM THK)	
	9	1	5P-2228	3	BOLT (1/2X1.0IN)	
	10	1	8T-8917	4	BOLT (1/2-13X1.25IN)	
	11	1	1P-4576	4	FLANGE	
	12	1	6V-8398	4	SEAL-O-RING (12.47MM ID)	
	13	1	5S-7382	8	BOLT (3/8-16X34.92)	
	14	1	8T-4896	8	WASHER-HARD (2.5MM THK)	
	15	1	4T-1563	1	GUARD AS	
	16	1	4T-1564	1	GUARD	
	17	1	6V-8981	2	ELBOW-90 DEGREE BULKHEAD	

I-SEE HOSE FABRICATION GUIDE

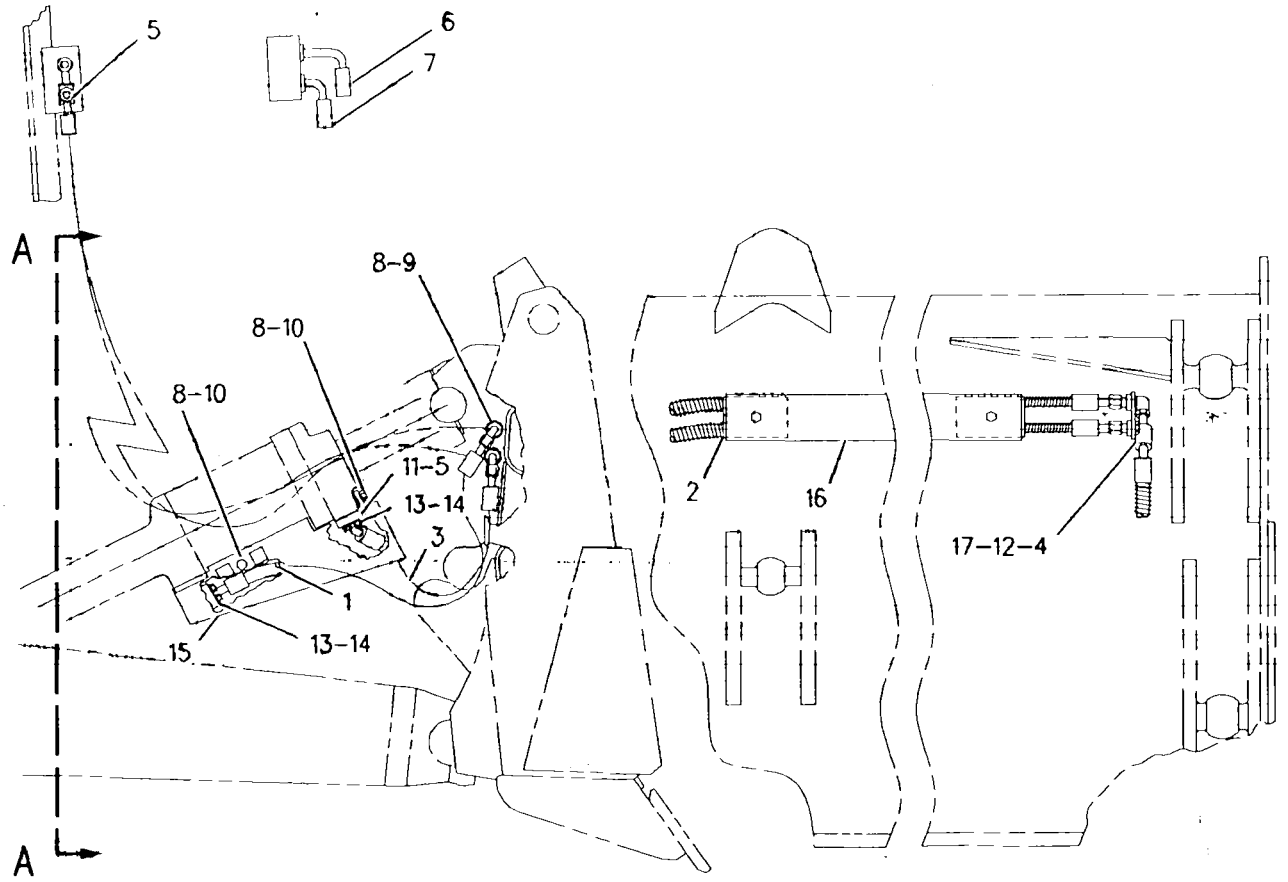

GRAPHIC #1 g00286949

HYDRAULIC SYSTEM

156-4547 LINES GP-TILT-CUSTOM

PIN 5LN1-UP

PART OF 156-4542 BULLDOZER AR-PWR ANGLE & TILT

SMCS-5057, 5104 i01003719

NOTE	PART NUMBER	QTY	PART NAME 1 2 3 4 5 6 (PRODUCT LEVEL)	SEE PAGE
Y	148-9206	1	HOSE AS	365
Y	158-6649	1	HOSE AS	372
Y	158-6651	1	HOSE AS	373
Y	158-6655	1	HOSE AS	374
Y	163-7992	1	HOSE AS	375
Y	163-7993	1	HOSE AS	376
Y	163-7994	1	HOSE AS	377
Y	163-7995	1	HOSE AS	378
Y	163-7996	1	HOSE AS	379
Y	163-7997	1	HOSE AS	380
Y	163-7998	1	HOSE AS	381
Y	1U-2226	1	VALVE GP-SELECTOR & PRESS CONT	394
	5S-7382	48	BOLT (3/8-16X34.92)	
	7X-0264	4	BOLT (1/4-20X2.50IN)	
	7X-0333	2	BOLT (1/2-13X4.75IN)	
	158-6660	2	BOSS	
	6V-9830	4	CAP AS	
	150-4044	1	CONNECTOR AS	
	8T-1779	1	CONNECTOR	
	148-8378	2	ELBOW AS	
	6V-8724	1	ELBOW (9/16-18 THD)	
	1P-4577	12	FLANGE-HALF	
	163-8000	1	GUARD AS	
	158-6648	1	HARNESS AS	
	6V-8188	2	NUT (1/2-13 THD)	
	6V-8398	3	SEAL-O-RING (12.47MM ID)	
	4J-0520	8	SEAL-O-RING (32.92MM ID)	
	3J-1907	4	SEAL-O-RING (11.89MM ID)	
	6V-8397	5	SEAL-O-RING (9.27MM ID)	
	3K-0360	2	SEAL-O-RING (16.36MM ID)	
	6V-8774	1	TEE	
	6V-9837	1	TEE	
	7X-2459	1	TEE	
	6V-8782	1	TEE-FACE SEAL	
	6V-8775	1	TEE-FACE SEAL	
	163-7999	2	VALVE-CROSSOVER	
	8T-4205	8	WASHER-HARD (2MM THK)	
	8T-4223	2	WASHER-HARD (3MM THK)	
	8T-4896	48	WASHER-HARD (2.5MM THK)	

Y-SEPARATE ILLUSTRATION

HYDRAULIC SYSTEM

4Z-9454 LINES GP-TILT CYLINDER–CUSTOM

PIN 4MN1-UP; 5LN1-UP

PART OF 4Z-0647, 4Z-0651 BULLDOZER AR-ANGLING

SMCS-5057, 5104 i01014410

NOTE	REF NO	GRAPHIC REF	PART NUMBER	QTY	PART NAME 1 2 3 4 5 6 (PRODUCT LEVEL)	SEE PAGE
	1	1	6Y-0596	1	GUARD AS-LH	
	2	1	3K-0360	2	SEAL-O-RING (16.36MM ID)	
	3	1	6Y-0597	1	GUARD AS-RH	
	4	1	4L-6454	2	BOLT (3/8-16X1.0IN)	
	5	1	8T-8917	10	BOLT (1/2-13X1.25IN)	
	6	1	8T-4223	16	WASHER-HARD (3MM THK)	
Y	7	1	4Z-9463	2	HOSE AS	358
Y	8	1	4Z-9464	2	HOSE AS	359
	9	1	1P-4576	20	FLANGE	
	10	1	9B-7237	40	BOLT (3/8-16X1.25IN)	
	11	1	8T-4896	48	WASHER-HARD (2.5MM THK)	
Y	12	1	4Z-9465	1	HOSE AS	360
Y	13	1	4Z-9466	1	HOSE AS	361
	14	1	4J-5267	12	SEAL-O-RING (24.99MM ID)	
	15	1	3G-8047	1	GROMMET	
	16	1	3G-8054	1	CLIP (TAB)	
	17	1	3G-8057	1	CLIP (SLOT)	
	18	1	6V-8625	2	ELBOW-90 DEGREE (3/4-16 THD)	
	19	1	2P-6588	2	HEAD-ADAPTER	
	20	1	6V-8398	2	SEAL-O-RING (12.47MM ID)	
	21	1	5S-8766	1	GUARD-LH	
	22	1	5S-8709	1	GUARD-CENTER	
	23	1	5S-8765	1	GUARD-RH	
	24	1	5S-8718	1	TUBE AS	
	25	1	5S-8714	2	TUBE AS	
	26	1	5S-8712	6	BLOCK	
	27	1	5S-7383	6	BOLT (3/8-16X1.75IN)	
	28	1	7X-0325	6	BOLT (1/2-13X0.75IN)	
	29	1	6Y-0625	1	BRACKET AS-LH	
		1	1F-0748	2	NUT-WELD (1/2-13 THD)	
	30	1	6Y-0598	1	BRACKET AS-RH	
		1	1F-0748	2	NUT-WELD (1/2-13 THD)	
	31	1	5P-7464	2	CLIP (SLOT)	
	32	1	5P-7465	2	CLIP (TAB)	
	33	1	6V-1249	2	GROMMET (22.00MM OD)	

Y-SEPARATE ILLUSTRATION

4Z-9454 LINES GP-TILT CYLINDER *(contd.)* i01014410

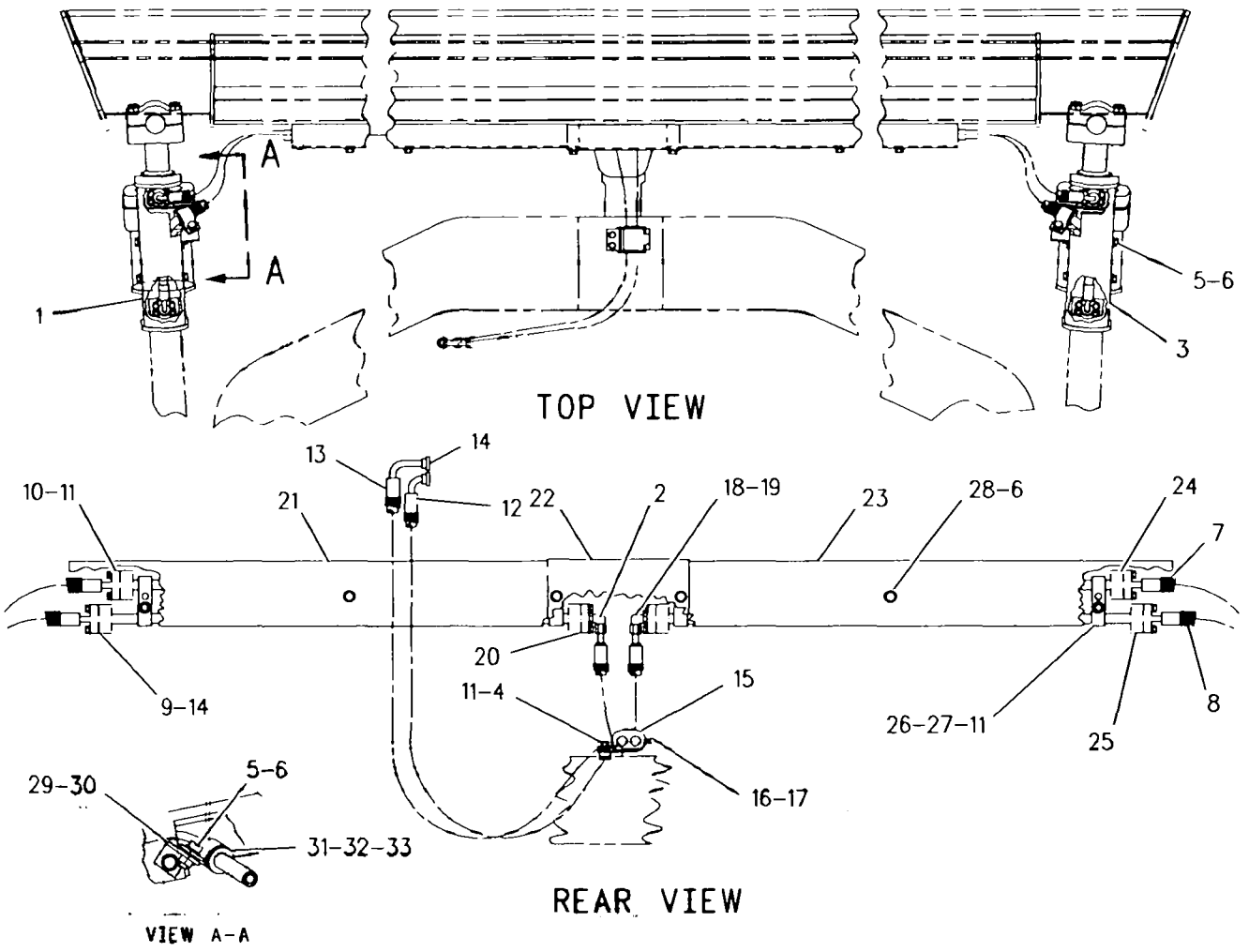

GRAPHIC #1 g00294637

HYDRAULIC SYSTEM

3G-9451 MOUNTING GP-CYLINDER

PIN 4MN1-UP; 5LN1-UP

PART OF 4Z-0647 BULLDOZER AR-ANGLING, 156-4542 BULLDOZER AR-PWR ANGLE & TILT, 139-2633 BULLDOZER AR-SEMI-UNIVERSAL

SMCS-7562 **i00575985**

NOTE	REF NO	GRAPHIC REF	PART NUMBER	QTY	PART NAME 1 2 3 4 5 6 (PRODUCT LEVEL)	SEE PAGE
	1	1	4T-4875	2	PIN	
	2	1	3B-8489	2	FITTING-GREASE (1/8-27 THD)	
C	3	1	5M-3062	2	BOLT (3/8-16X.750IN)	
		1	8T-2561	2	WASHER (5.0MM THK)	
	4	1	7X-0358	8	BOLT (5/8-11X5.50IN)	
	5	1	6Y-2658	2	YOKE	
	6	1	5P-2671	2	SEAL-LIP	
C	7	1	6Y-9280	2	CLAMP (TAB)	
C		1	6Y-9281	2	CLAMP (SLOT)	
C	8	1	5P-8248	2	WASHER-HARD (3.5MM THK)	
C	9	1	8T-4835	2	BOLT (1/2-13X2IN)	
C	10	1	8T-4223	4	WASHER-HARD (3MM THK)	
C	11	1	6V-8188	2	NUT (1/2-13 THD)	
C	12	1	9N-4233	2	STRAP	
	13	1	3G-9405	4	CAP AS	
					(EACH INCLUDES)	
	14	1	3G-9402	1	BEARING-SLEEVE	

C-CHANGE FROM PREVIOUS TYPE

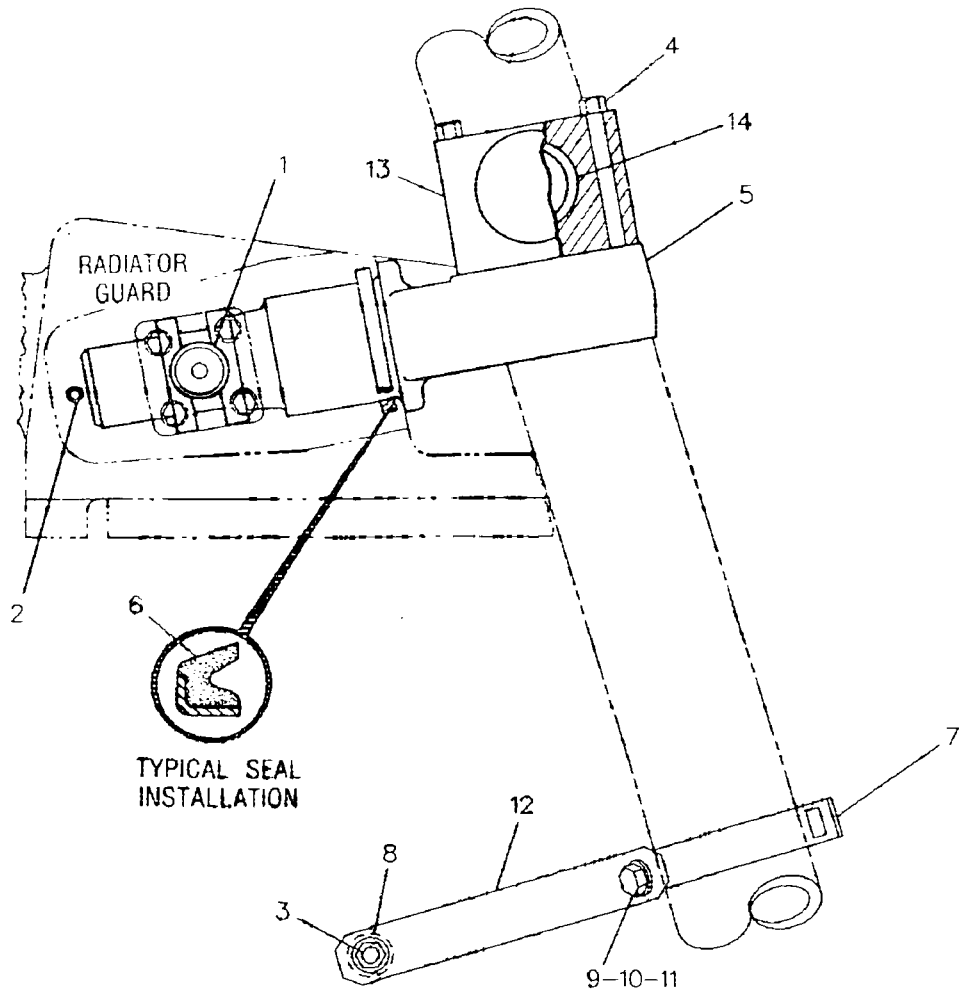

GRAPHIC #1 g00228573

HYDRAULIC SYSTEM

152-4670 PUMP GP-HYDRAULIC–CUSTOM

PIN 2YN1-UP; 4MN1-UP

OIL COOLER

PART OF 149-8916 COOLER AR-HYDRAULIC OIL

SMCS-5073, 5084 i01007283

NOTE	PART NUMBER	QTY	PART NAME 1 2 3 4 5 6 (PRODUCT LEVEL)	SEE PAGE
	2T-0914	1	ADAPTER	
	4L-6454	2	BOLT (3/8-16X1.0IN)	
	8T-9393	2	BOLT (5/8-11X1.50IN)	
	151-2069	1	PUMP GP-GEAR	
	2H-6184	1	SEAL-O-RING (78.97MM ID)	
	4S-5898	1	SEAL-O-RING (126.59MM ID)	
	152-4668	1	SHAFT-ADAPTER	
	8T-4122	2	WASHER (3.5MM THK)	
	8T-4896	2	WASHER-HARD (2.5MM THK)	

HYDRAULIC SYSTEM

9T-5774 VALVE GP-BYPASS

PIN 2YN1-UP; 4MN1-UP

PART OF 152-4669 LINES GP-HYDRAULIC OIL COOLER

SMCS-5076 **i00588770**

NOTE	REF NO	GRAPHIC REF	PART NUMBER	QTY	PART NAME 1 2 3 4 5 6 (PRODUCT LEVEL)	SEE PAGE
	1	1	**4T-6116**	1	BODY-VALVE	
	2	1	**121-9231**	1	GASKET	
	3	1	**9T-8088**	1	VALVE AS	
C	4	1	**9S-4191**	1	PLUG-O-RING (9/16-18 THD) ( )	
C		1	**3J-1907**	1	SEAL-O-RING (11.89MM ID)	

C-CHANGE FROM PREVIOUS TYPE

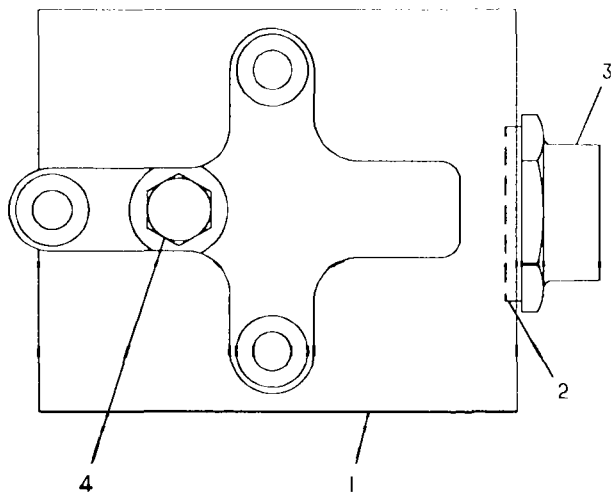

GRAPHIC #1 g00195768

HYDRAULIC SYSTEM

4T-5541 VALVE GP-DIVERTER

PIN 5LN1-UP

PART OF 163-8001 VALVE GP-DIVERTER

SMCS-5066 i00609596

NOTE	REF NO	GRAPHIC REF	PART NUMBER	QTY	PART NAME 1 2 3 4 5 6 (PRODUCT LEVEL)	SEE PAGE
	1	1	**4B-4158**	1	SCREW (DRIVE)	
	2	1	**6J-2419**	1	SEAL-O-RING (36.17MM ID)	
	3	1	**5F-1678**	1	SEAL-O-RING (24.99MM ID)	
Y	4	1	*6T-5859*	1	VALVE GP-SOLENOID	395
	5	1	**9S-9334**	1	PLUG (1 5/16-12 THD)	
	6	1	**7M-8485**	1	SEAL-O-RING (29.74MM ID)	
	7	1	**9S-8001**	1	PLUG-O-RING (5/16-24 THD)	
	8	1	**4J-7533**	1	SEAL-O-RING (6.07MM ID)	
	9	1	**4T-6821**	2	RETAINER	
	10	1	**8J-2095**	1	SPRING	
	11	1	**8C-6876**	4	BOLT (5/16-18X1.625)	
	12	1	**4T-6820**	1	HOUSING-SPRING	
	13	1	**3G-7242**	1	PLUG	

Y-SEPARATE ILLUSTRATION

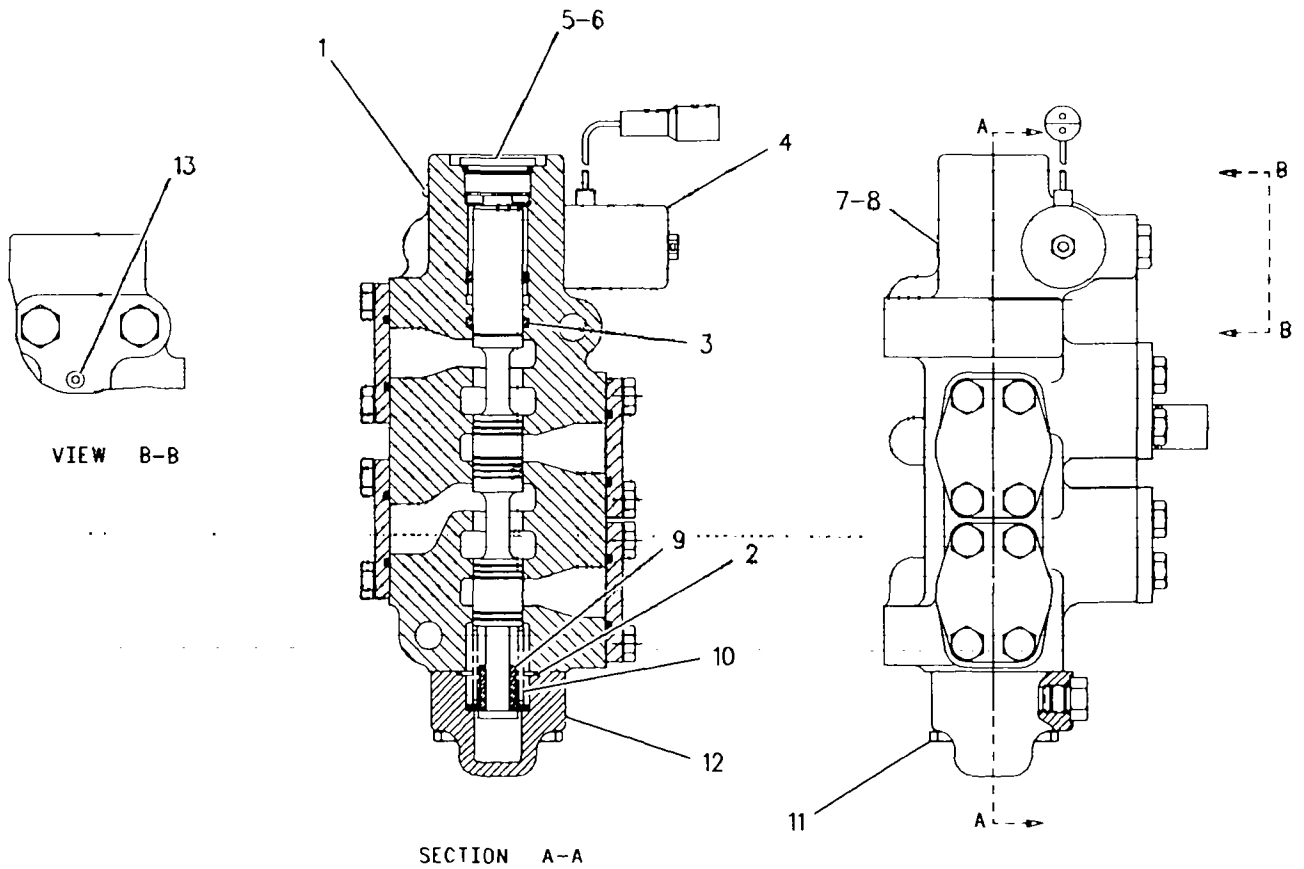

GRAPHIC #1 g00271101

163-8001 VALVE GP-DIVERTER–CUSTOM

PIN 5LN1-UP

PART OF 156-4542 BULLDOZER AR-PWR ANGLE & TILT

SMCS-5066 **i01020040**

NOTE	REF NO	GRAPHIC REF	PART NUMBER	QTY	PART NAME 1 2 3 4 5 6 (PRODUCT LEVEL)	SEE PAGE
	1	1	3E-3365	1	WEDGE	
Y	2	1	4T-5541	1	VALVE GP-DIVERTER	391
	3	1	8T-8729	2	PIN-CONNECTOR	
	4	1	102-8802	1	KIT-RECEPTACLE (2 PIN)	

Y-SEPARATE ILLUSTRATION

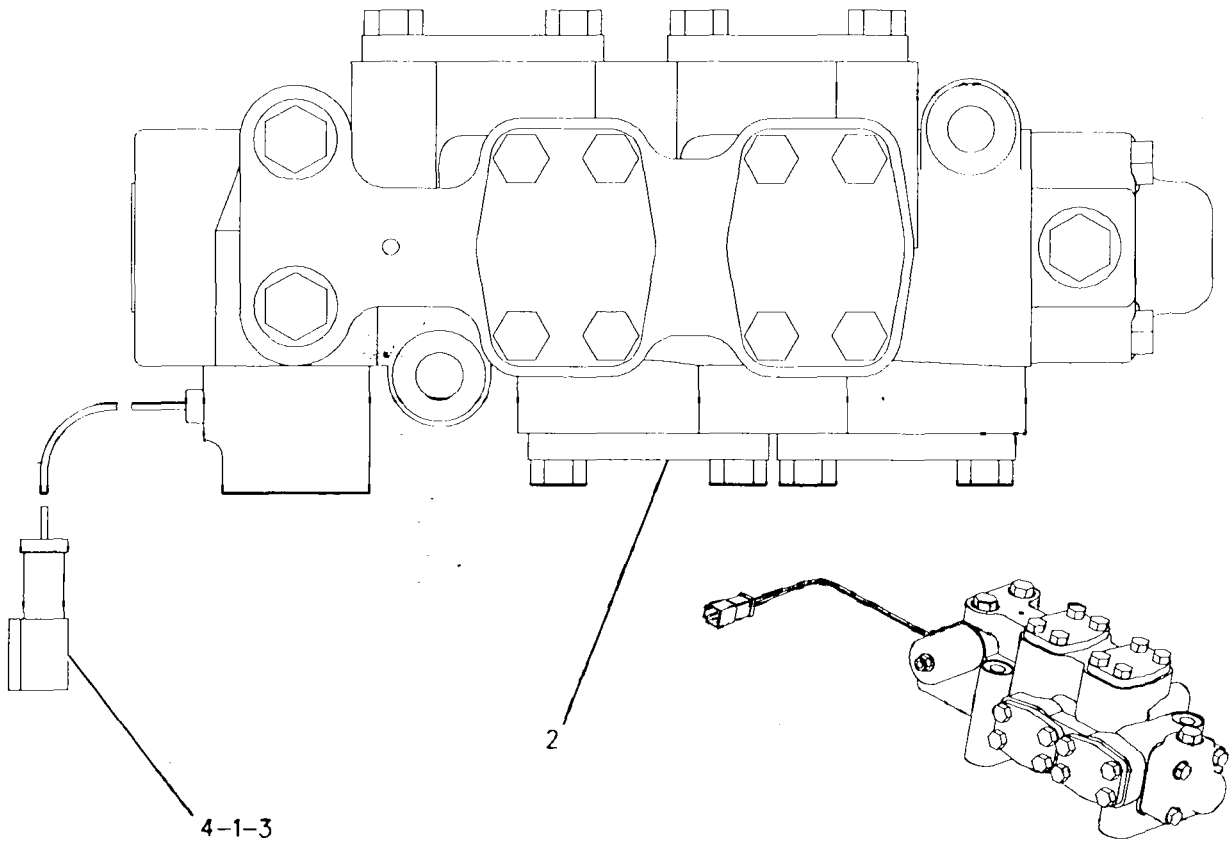

ISO VIEW OF VALVE GP

GRAPHIC #1 g00523377

HYDRAULIC SYSTEM

109-4365 VALVE GP-RELIEF

S/N 1GY1-UP

PART OF 108-7011 CONTROL GP-TRANSMISSION HYD

SMCS-5069, 5117 i00574650

NOTE	REF NO	GRAPHIC REF	PART NUMBER	QTY	PART NAME 1 2 3 4 5 6 (PRODUCT LEVEL)	SEE PAGE
	1	1	108-2096	1	MANIFOLD	
	2	1	106-9214	1	PLATE	
	3	1	2B-2695	6	BOLT (5/16-18X.875IN)	
	4	1	9M-1974	7	WASHER-HARD (2MM THK)	
	5	1	109-3968	1	SPOOL AS-RELIEF	
	6	1	106-9212	1	SPRING	
	7	1	109-3969	1	STOP	
	8	1	4M-5905	1	SCREW-ADJUSTMENT	
	9	1	5B-3180	1	NUT (5/16-18 THD)	
	10	1	6Y-4638	1	PLUG-HEX SOCKET	
	11	1	7M-8485	1	SEAL-O-RING (29.74MM ID)	
	12	1	2M-7041	1	SLUG	

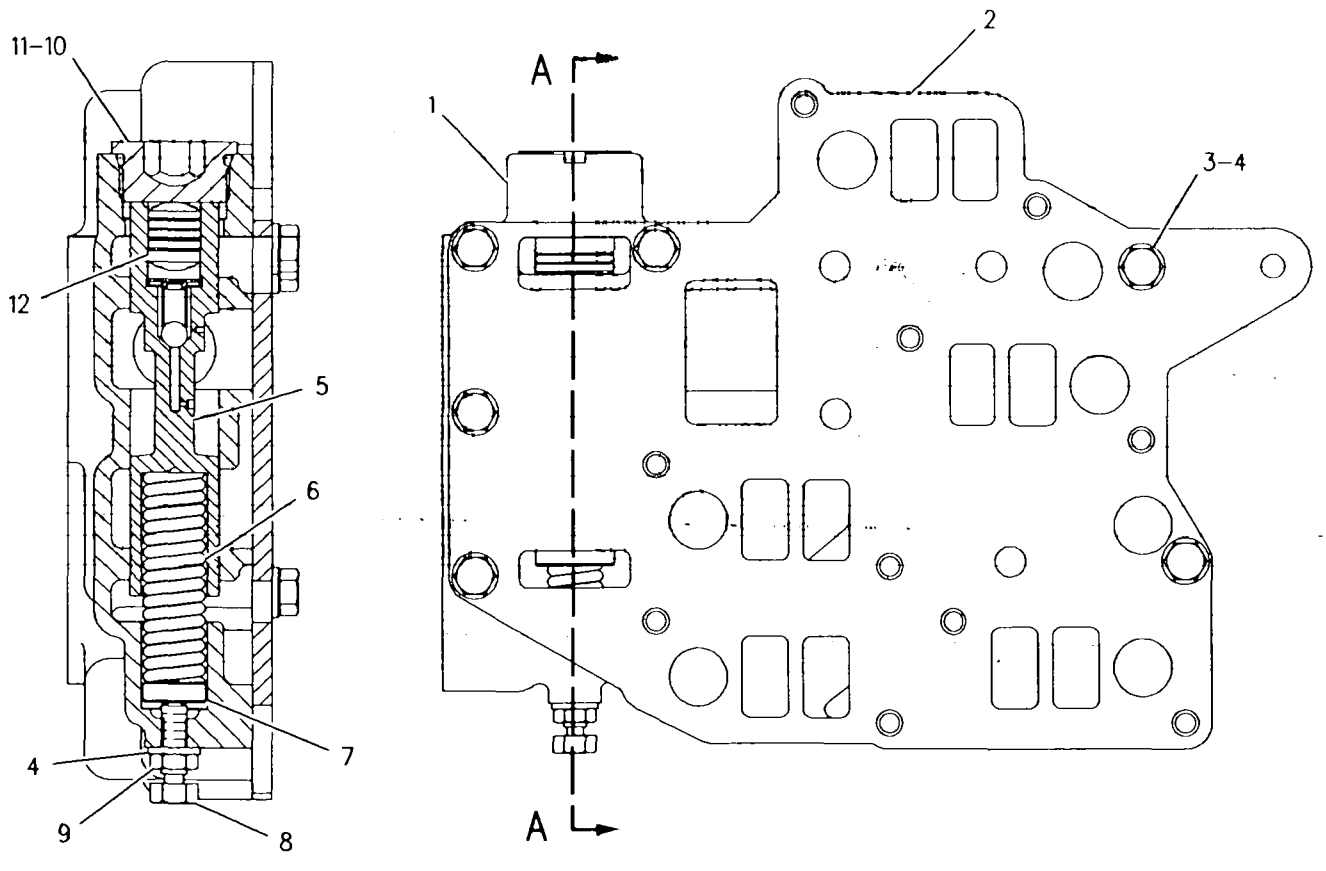

GRAPHIC #1 g00254128

HYDRAULIC SYSTEM

1U-2226 VALVE GP-SELECTOR & PRESS CONT

PIN 5LN1-UP

PART OF 156-4547 LINES GP-TILT

SMCS-5056, 5117 i00103460

NOTE	REF NO	GRAPHIC REF	PART NUMBER	QTY	PART NAME 1 2 3 4 5 6 (PRODUCT LEVEL)	SEE PAGE
	1	1	7S-8553	1	SPRING	
B	2	1	5S-7001	5	SPACER (.91MM THK)	
B		1	5S-7018	3	SPACER (.25MM THK)	
	3	1	6V-2606	2	ADAPTER-STRAIGHT THREAD	
		1	2M-9780	2	SEAL-O-RING (19.18MM ID)	

B-USE AS REQUIRED

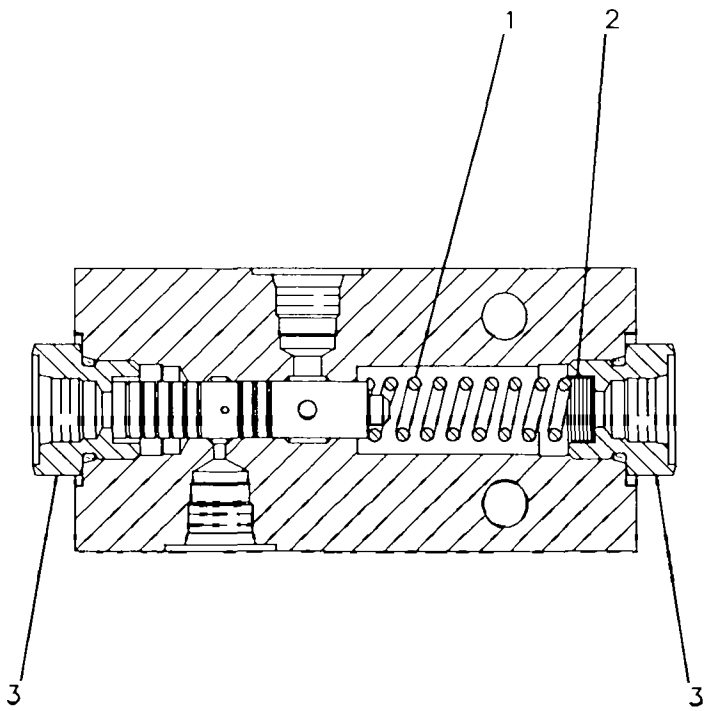

GRAPHIC #1 g00085184

HYDRAULIC SYSTEM

6T-5859 VALVE GP-SOLENOID

PIN 5LN1-UP
24 VOLT
PART OF 4T-5541 VALVE GP-DIVERTER

SMCS-5479 i00112080

NOTE	REF NO	GRAPHIC REF	PART NUMBER	QTY	PART NAME 1 2 3 4 5 6 (PRODUCT LEVEL)	SEE PAGE
C	1	1	6T-8500	1	COIL AS	
	2	1	1S-9593	2	STRAP-CABLE	
	3	1	7N-9737	1	HOUSING-PLUG	
	4	1	7N-7780	1	PIN-CONNECTOR (BLADE)	
	5	1	7N-7779	1	SOCKET	
C	6	1	6T-8084		CARTRIDGE	
	7	1	104-5970	1	LOCKNUT	
		1	4B-4276	1	WASHER (1.6MM THK)	
					AVAILABLE REPAIR KIT(S):	
			8J-9348	1	KIT-SEAL (INCLUDES RINGS & SEALS)	

C-CHANGE FROM PREVIOUS TYPE

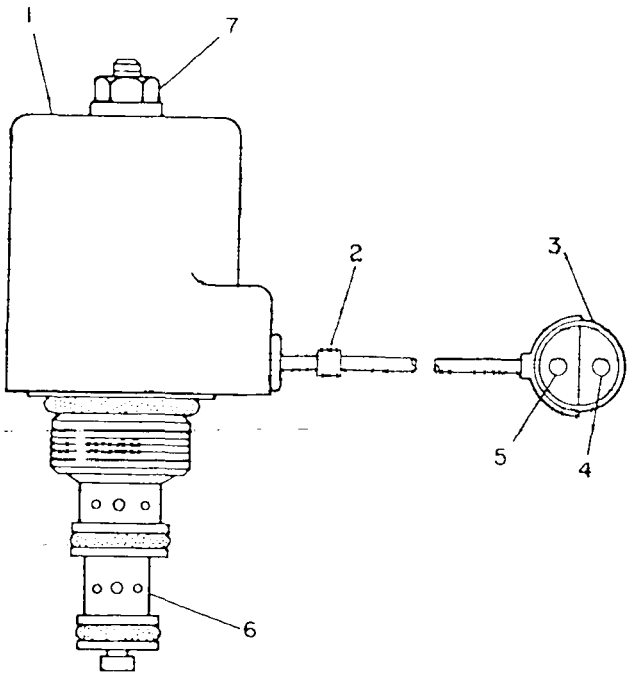

GRAPHIC #1 g00081974

4T-6660 BIT & CUTTING EDGE GP

PIN 8LN1-UP; 9PN1-UP

PART OF 4Z-9142 BLADE & EDGE GP

SMCS-6801, 6804 i00587129

NOTE	REF NO	GRAPHIC REF	PART NUMBER	QTY	PART NAME 1 2 3 4 5 6 (PRODUCT LEVEL)	SEE PAGE
	1	1	4T-4435	1	BIT-END-RH	
		1	4T-4436	1	BIT-END-LH	
	2	1	5J-4773	33	BOLT-PLOW (3/4-10X2.5IN)	
		1	2J-3506	33	NUT-FULL (3/4-10 THD)	
		1	5P-8248	33	WASHER-HARD (3.5MM THK)	
	3	1	4T-6659	3	EDGE-CUTTING	

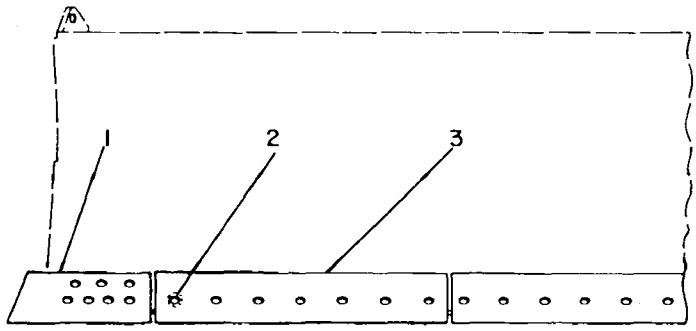

GRAPHIC #1 g00174363

6Y-1744 BIT & CUTTING EDGE GP

PIN 2YN1-UP; 3ZN1-UP; 6JN1-UP; 7KN1-UP
PART OF 4Z-9143 BLADE & EDGE GP

SMCS-6801, 6804 i00574446

NOTE	REF NO	GRAPHIC REF	PART NUMBER	QTY	PART NAME 1 2 3 4 5 6 (PRODUCT LEVEL)	SEE PAGE
	1	1	**9W-8874**	1	BIT-END-RH	
		1	**9W-8875**	1	BIT-END-LH	
	2	1	**5J-4773**	27	BOLT-PLOW (3/4-10X2.5IN)	
		1	**2J-3506**	27	NUT-FULL (3/4-10 THD)	
		1	**5P-8248**	27	WASHER-HARD (3.5MM THK)	
	3	1	**4T-2952**	3	EDGE-CUTTING	

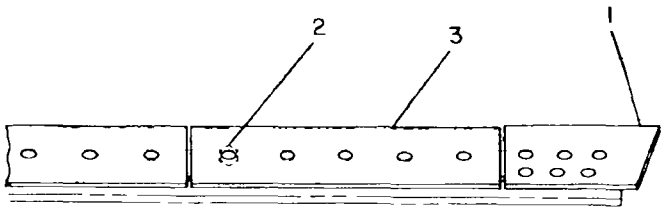

GRAPHIC #1 g00195337

9W-3762 BIT & CUTTING EDGE GP

PIN 2YN1-UP; 3ZN1-UP; 4MN1-UP; 5LN1-UP; 6JN1-UP; 7KN1-UP

PART OF 4Z-9141 BLADE & EDGE GP, 4Z-9158 BLADE & EDGE GP-SEMI-UNIVERSAL

SMCS-6801, 6804 i00576048

NOTE	REF NO	GRAPHIC REF	PART NUMBER	QTY	PART NAME 1 2 3 4 5 6 (PRODUCT LEVEL)	SEE PAGE
C	1	1	9W-8874	1	BIT-END-RH	
C		1	9W-8875	1	BIT-END-LH	
	2	1	9W-1878	2	EDGE-CUTTING	
	3	1	5J-4773	28	BOLT-PLOW (3/4-10X2.5IN)	
		1	5P-8248	28	WASHER-HARD (3.5MM THK)	
		1	2J-3506	28	NUT-FULL (3/4-10 THD)	

C-CHANGE FROM PREVIOUS TYPE

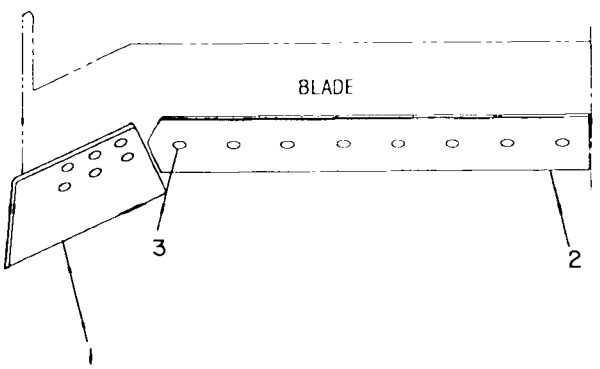

GRAPHIC #1 g00197117

106-0955 BIT & CUTTING EDGE GP–CUSTOM

PIN 4MN1-UP; 5LN1-UP

PART OF 4Z-9229, 4Z-9268 BLADE & EDGE GP-SEMI-UNIVERSAL

SMCS-6801, 6804 i01024890

NOTE	REF NO	GRAPHIC REF	PART NUMBER	QTY	PART NAME 1 2 3 4 5 6 (PRODUCT LEVEL)	SEE PAGE
	1	1	**9W-8874**	1	BIT-END-RH	
	2	1	**9W-8875**	1	BIT-END-LH	
	3	1	**106-0956**	2	EDGE-CUTTING	
	4	1	**5J-4773**	30	BOLT-PLOW (3/4-10X2.5IN)	
	5	1	**5P-8248**	30	WASHER-HARD (3.5MM THK)	
	6	1	**2J-3506**	30	NUT-FULL (3/4-10 THD)	

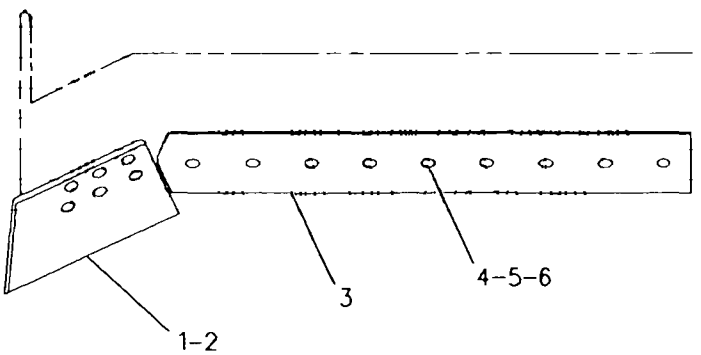

GRAPHIC #1 g00294645

IMPLEMENTS

109-9092 BIT & CUTTING EDGE GP–CUSTOM

PIN 4MN1-UP; 5LN1-UP

PART OF 4Z-9432 BLADE & EDGE GP

SMCS-6801, 6804 i01024892

NOTE	REF NO	GRAPHIC REF	PART NUMBER	QTY	PART NAME 1 2 3 4 5 6 (PRODUCT LEVEL)	SEE PAGE
	1	1	**9W-8875**	1	BIT-END-LH	
	2	1	**9W-8874**	1	BIT-END-RH	
	3	1	**5J-4773**	36	BOLT-PLOW (3/4-10X2.5IN)	
	4	1	**5P-8248**	36	WASHER-HARD (3.5MM THK)	
	5	1	**2J-3506**	36	NUT-FULL (3/4-10 THD)	
	6	1	**109-9093**	4	EDGE-CUTTING	

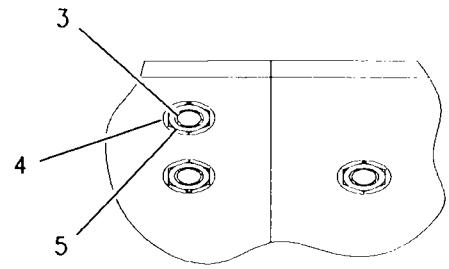

VIEW OF AREA A

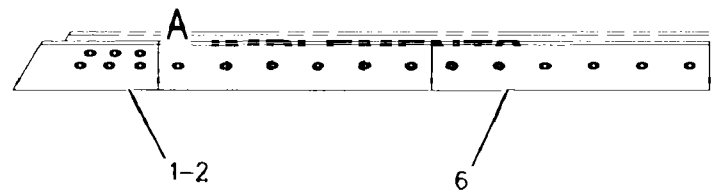

GRAPHIC #1 g00284928

4Z-9141 BLADE & EDGE GP–CUSTOM

PIN 2YN1-UP; 3ZN1-UP; 6JN1-UP; 7KN1-UP

PART OF 4Z-0544 BULLDOZER AR

SMCS-6060 **i01010370**

NOTE	PART NUMBER	QTY	PART NAME 1 2 3 4 5 6 (PRODUCT LEVEL)	SEE PAGE
Y	*9W-3762*	1	BIT & CUTTING EDGE GP	398
Y	*4Z-8817*	1	BLADE AS-SEMI-UNIVERSAL	410

Y-SEPARATE ILLUSTRATION

4Z-9143 BLADE & EDGE GP-CUSTOM

PIN 2YN1-UP; 3ZN1-UP; 6JN1-UP; 7KN1-UP
LANDFILL
PART OF 4Z-0545 BULLDOZER AR

SMCS-6060 i01010429

NOTE	PART NUMBER	QTY	PART NAME 1 2 3 4 5 6 (PRODUCT LEVEL)	SEE PAGE
Y	*6Y-1744*	1	BIT & CUTTING EDGE GP	397
Y	**4Z-8906**	1	BLADE AS-STRAIGHT	417

Y-SEPARATE ILLUSTRATION

4Z-9432 BLADE & EDGE GP–CUSTOM

PIN 4MN1-UP; 5LN1-UP

PART OF 4Z-9431 BLADE GP-ANGLING

SMCS-6060 i01016365

NOTE	REF NO	GRAPHIC REF	PART NUMBER	QTY	PART NAME 1 2 3 4 5 6 (PRODUCT LEVEL)	SEE PAGE
	1	1	4Z-9433	1	BLADE AS	
		1	8P-9770	1	PLATE	
	2	1	5S-8711	6	BLOCK	
	3	1	6Y-7470	1	BRACKET	
Y	4	1	109-9092	1	BIT & CUTTING EDGE GP	400

Y-SEPARATE ILLUSTRATION

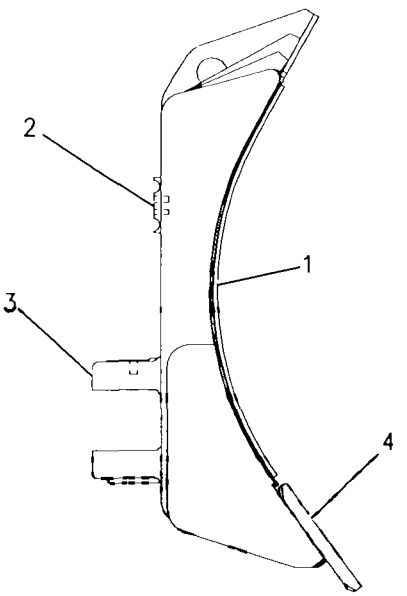

RIGHT SIDE VIEW

GRAPHIC #1 g00284891

4Z-9158 BLADE & EDGE GP-SEMI-UNIVERSAL–CUSTOM

PIN 4MN1-UP; 5LN1-UP
LANDFILL
PART OF 4Z-0592 MODIFICATION AR

SMCS-6060 i01010431

NOTE	PART NUMBER	QTY	PART NAME 1 2 3 4 5 6 (PRODUCT LEVEL)	SEE PAGE
Y	*9W-3762*	1	BIT & CUTTING EDGE GP	398
Y	*4Z-9126*	1	BLADE AS-SEMI-UNIVERSAL	411

Y-SEPARATE ILLUSTRATION

IMPLEMENTS

4Z-9229 BLADE & EDGE GP-SU–CUSTOM

PIN 4MN1-UP; 5LN1-UP

PART OF 4Z-9226 BLADE GP-SEMI-UNIVERSAL

SMCS-6060 **i01010439**

NOTE	PART NUMBER	QTY	PART NAME 1 2 3 4 5 6 (PRODUCT LEVEL)	SEE PAGE
Y	*106-0955*	1	BIT & CUTTING EDGE GP	399
Y	*4Z-9230*	1	BLADE AS-SEMI-UNIVERSAL	412
			-OR-	
Y	*143-0499*	1	BLADE AS-SEMI-UNIVERSAL	416

Y-SEPARATE ILLUSTRATION

IMPLEMENTS

4Z-9268 BLADE & EDGE GP-SEMI-UNIVERSAL–CUSTOM

PIN 4MN1-UP; 5LN1-UP
LANDFILL, WIDE GAGE
PART OF 4Z-0613 BULLDOZER AR

SMCS-6060 i01010445

NOTE	PART NUMBER	QTY	PART NAME 1 2 3 4 5 6 (PRODUCT LEVEL)	SEE PAGE
Y	*106-0955*	1	BIT & CUTTING EDGE GP	399
Y	*4Z-9267*	1	BLADE AS-SEMI-UNIVERSAL	413

Y-SEPARATE ILLUSTRATION

IMPLEMENTS

4T-1763 BLADE AS-CUSTOM

PIN 8LN1-UP; 9PN1-UP

PART OF 4Z-9091 BLADE AS-STRAIGHT

SMCS-6060 **i01013367**

NOTE	REF NO	GRAPHIC REF	PART NUMBER	QTY	PART NAME 1 2 3 4 5 6 (PRODUCT LEVEL)	SEE PAGE
	1	1	**1U-1951**	2	BIT-ROUTER	
	2	1	**1U-0131**	1	SHOE-TRACK-RH	
		1	**1U-0132**	1	SHOE-TRACK-LH	
	3	1	**4T-1496**	1	BRACKET AS-RH	
	4	1	**4T-1498**	1	PLATE-RH	
	5	1	**7J-5131**	1	TRUNNION	
	6	1	**4T-1500**	1	BRACKET AS-LH	
	7	1	**4T-1501**	1	PLATE-LH	
	8	1	**7J-5131**	1	TRUNNION	
	9	1	**4T-1762**	2	BRACKET AS (EACH INCLUDES)	
	10	1	**4T-1504**	1	TRUNNION	
	11	1	**4T-1506**	1	BRACKET AS-RH	
	12	1	**4J-1641**	2	TRUNNION	
	13	1	**4T-1508**	1	PLATE-RH	
	14	1	**4T-1509**	1	BRACKET AS-LH	
	15	1	**4T-1510**	1	PLATE-LH	
	16	1	**1U-1947**	1	SUPPORT	
	17	1	**6J-0499**	3	LUG (1/2-13 THD)	
	18	1	**9W-6381**	1	PLATE	
	19	1	**8P-9770**	1	PLATE (84MMX25MMX3MM)	
	20	1	**4T-1759**	2	DEFLECTOR	

4T-1763 BLADE AS *(contd.)*

i01013367

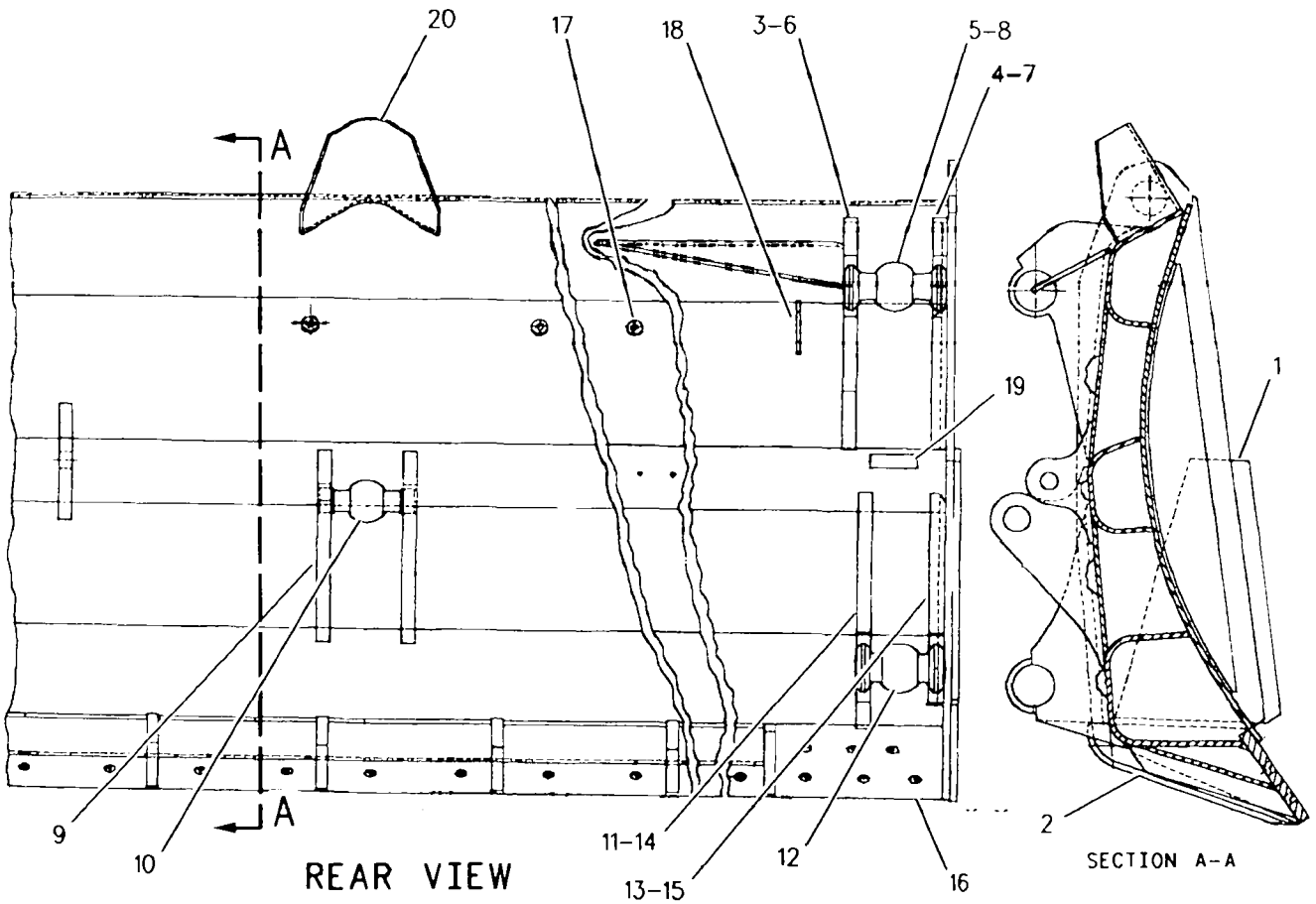

GRAPHIC #1

g00284914

4Z-8817 BLADE AS-SEMI-UNIVERSAL–CUSTOM

PIN 2YN1-UP; 3ZN1-UP; 6JN1-UP; 7KN1-UP
LANDFILL
PART OF 4Z-9141 BLADE & EDGE GP

SMCS-6060 i01010233

NOTE	REF NO	GRAPHIC REF	PART NUMBER	QTY	PART NAME 1 2 3 4 5 6 (PRODUCT LEVEL)	SEE PAGE
	1	1	4Z-8818	1	SCREEN AS	
Y	2	1	8E-5204	1	BLADE AS-SEMI-UNIVERSAL	414
	3	1	4Z-8826	6	STRAP	

Y-SEPARATE ILLUSTRATION

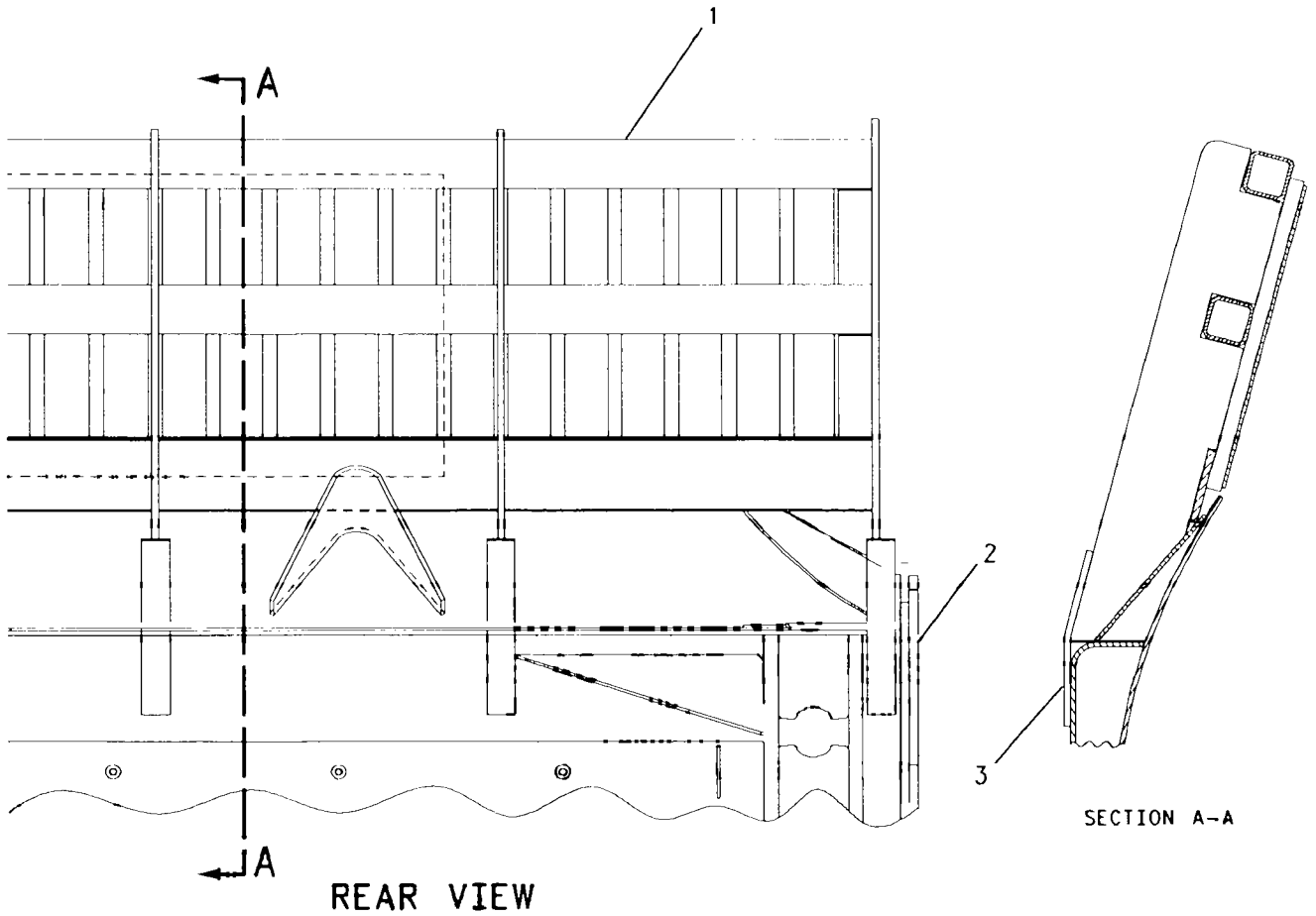

GRAPHIC #1 g00284908

4Z-9126 BLADE AS-SEMI-UNIVERSAL–CUSTOM

PIN 4MN1-UP; 5LN1-UP

LANDFILL

PART OF 4Z-9158 BLADE & EDGE GP-SEMI-UNIVERSAL

SMCS-6060 i01010324

NOTE	REF NO	GRAPHIC REF	PART NUMBER	QTY	PART NAME 1 2 3 4 5 6 (PRODUCT LEVEL)	SEE PAGE
Y	1	1	135-2965	1	BLADE AS-SEMI-UNIVERSAL	415
	2	1	4Z-8826	6	STRAP	

Y-SEPARATE ILLUSTRATION

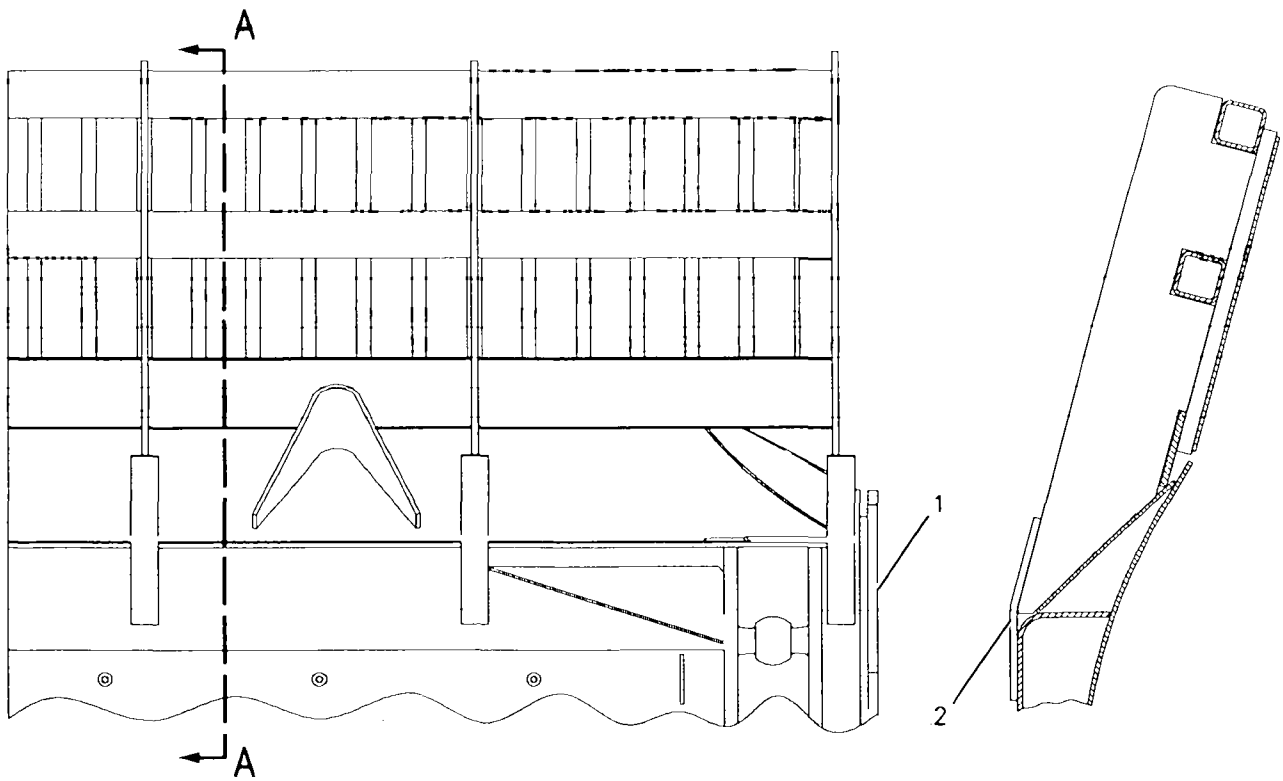

VIEW A-A

GRAPHIC #1 g00284906

4Z-9230 BLADE AS-SEMI-UNIVERSAL–CUSTOM

PIN 4MN1-UP; 5LN1-UP

PART OF 4Z-9229 BLADE & EDGE GP-SEMI-UNIVERSAL,
4Z-9267 BLADE AS-SEMI-UNIVERSAL

SMCS-6060 i01003395

NOTE	REF NO	GRAPHIC REF	PART NUMBER	QTY	PART NAME 1 2 3 4 5 6 (PRODUCT LEVEL)	SEE PAGE
	1	1	1U-0183	2	DEFLECTOR	
	2	1	8P-9770	1	PLATE (84MMX25MMX3MM)	
	3	1	9W-6381	1	PLATE	
	4	1	135-2964	1	BRACKET AS-LH	
		1	7J-5131	1	TRUNNION	
	5	1	135-2966	1	BRACKET AS-RH	
		1	7J-5131	1	TRUNNION	
	6	1	135-3084	2	BRACKET AS (EACH INCLUDES)	
		1	4J-1641	1	TRUNNION	
	7	1	142-9643	2	BRACKET AS (EACH INCLUDES)	
		1	4T-1504	1	TRUNNION	
	8	1	6H-3609	3	BOSS	

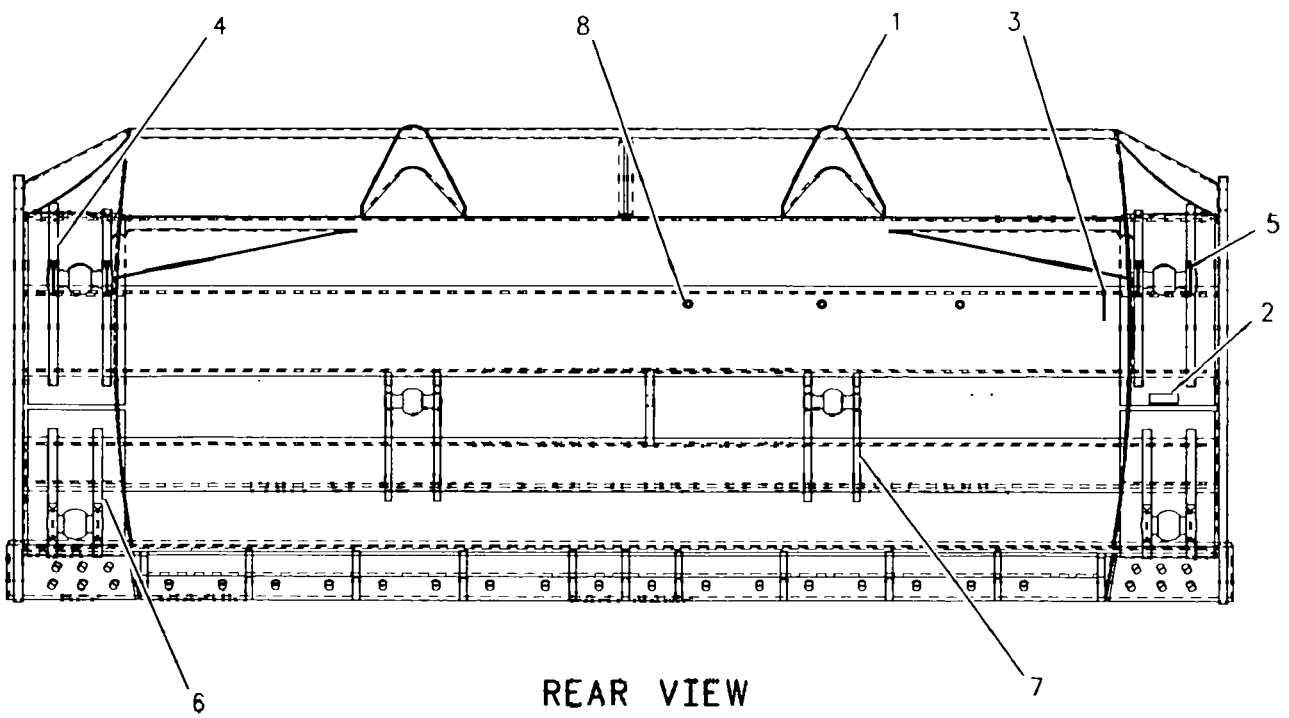

REAR VIEW

GRAPHIC #1 g00294644

4Z-9267 BLADE AS-SEMI-UNIVERSAL–CUSTOM

PIN 4MN1-UP; 5LN1-UP
LANDFILL-WIDE GAGE
PART OF 4Z-9268 BLADE & EDGE GP-SEMI-UNIVERSAL

SMCS-6060 i01014282

NOTE	REF NO	GRAPHIC REF	PART NUMBER	QTY	PART NAME 1 2 3 4 5 6 (PRODUCT LEVEL)	SEE PAGE
Y	1	1	4Z-9230	1	BLADE AS-SEMI-UNIVERSAL	412
	2	1	4Z-9266	1	SCREEN AS	
	3	1	4Z-8826	6	STRAP	

Y-SEPARATE ILLUSTRATION

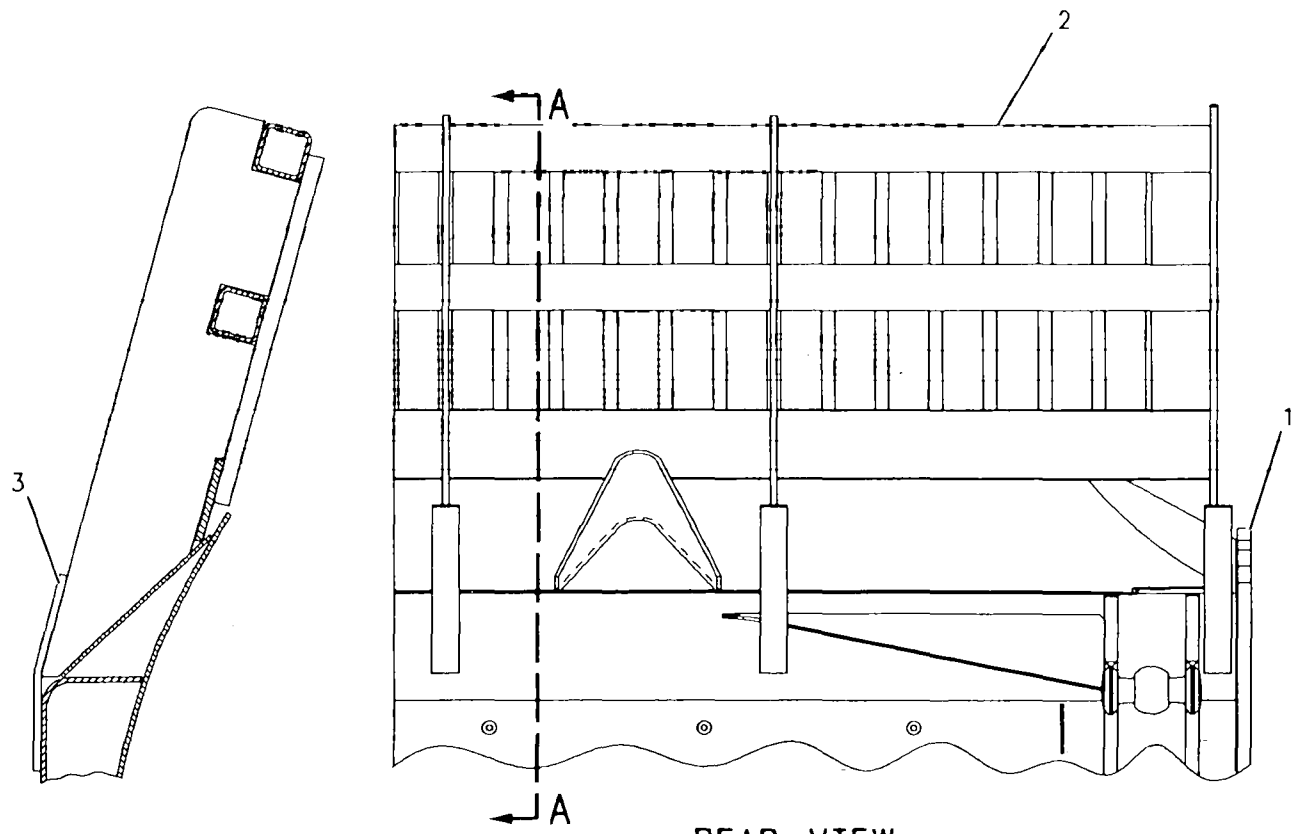

SECTION A-A

REAR VIEW

GRAPHIC #1 g00294635

8E-5204 BLADE AS-SEMI-UNIVERSAL

PIN 2YN1-UP; 3ZN1-UP; 6JN1-UP; 7KN1-UP
PART OF 4Z-8817 BLADE AS-SEMI-UNIVERSAL

SMCS-6060 i00679658

NOTE	REF NO	GRAPHIC REF	PART NUMBER	QTY	PART NAME 1 2 3 4 5 6 (PRODUCT LEVEL)	SEE PAGE
	1	1	6H-3609	3	BOSS	
	2	1	1U-0183	2	DEFLECTOR	
	3	1	8P-9770	1	PLATE (84MM X 25MM X 3MM)	
	4	1	9W-6381	1	PLATE	
	5	1	8E-5188	2	BRACKET AS	
					(EACH INCLUDES)	
	6	1	7J-5131	1	TRUNNION	
	7	1	6Y-1387	1	PLATE	
	8	1	8E-5190	2	BRACKET AS	
					(EACH INCLUDES)	
	9	1	4T-1504	1	TRUNNION	
	10	1	6Y-1390	1	SUPPORT	
	11	1	8E-5194	1	BRACKET	
	12	1	8E-5192	2	BRACKET AS	
					(EACH INCLUDES)	
	13	1	4J-1641	1	TRUNNION	

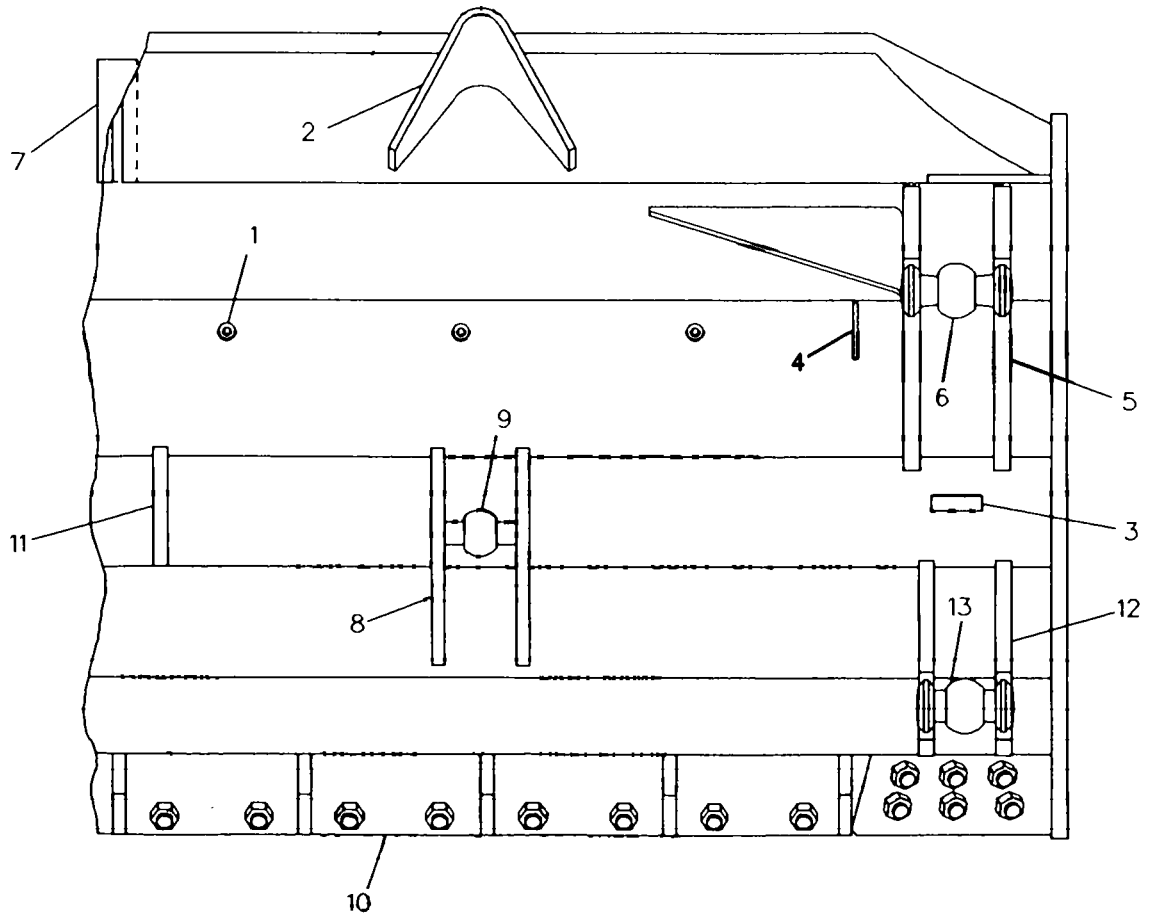

GRAPHIC #1 g00222050

135-2965 BLADE AS-SEMI-UNIVERSAL

PIN 4MN1-UP; 5LN1-UP

PART OF 4Z-9126 BLADE AS-SEMI-UNIVERSAL

SMCS-6060 i00899581

NOTE	REF NO	GRAPHIC REF	PART NUMBER	QTY	PART NAME 1 2 3 4 5 6 (PRODUCT LEVEL)	SEE PAGE
	1	1	142-9643	2	BRACKET AS	
					(EACH INCLUDES)	
	2	1	4T-1504	1	TRUNNION	
	3	1	135-2966	1	BRACKET AS-RH	
	4	1	7J-5131	1	TRUNNION	
	5	1	135-3084	2	BRACKET AS	
					(EACH INCLUDES)	
	6	1	4J-1641	1	TRUNNION	
	7	1	6Y-1390	1	SUPPORT	
	8	1	6H-3609	3	BOSS (1/2-13 THD)	
	9	1	1U-0183	2	DEFLECTOR	
	10	1	8P-9770	1	PLATE	
	11	1	9W-6381	1	PLATE	
	12	1	142-2328	1	BRACKET	
	13	1	135-2964	1	BRACKET AS-LH	
	14	1	7J-5131	1	TRUNNION	

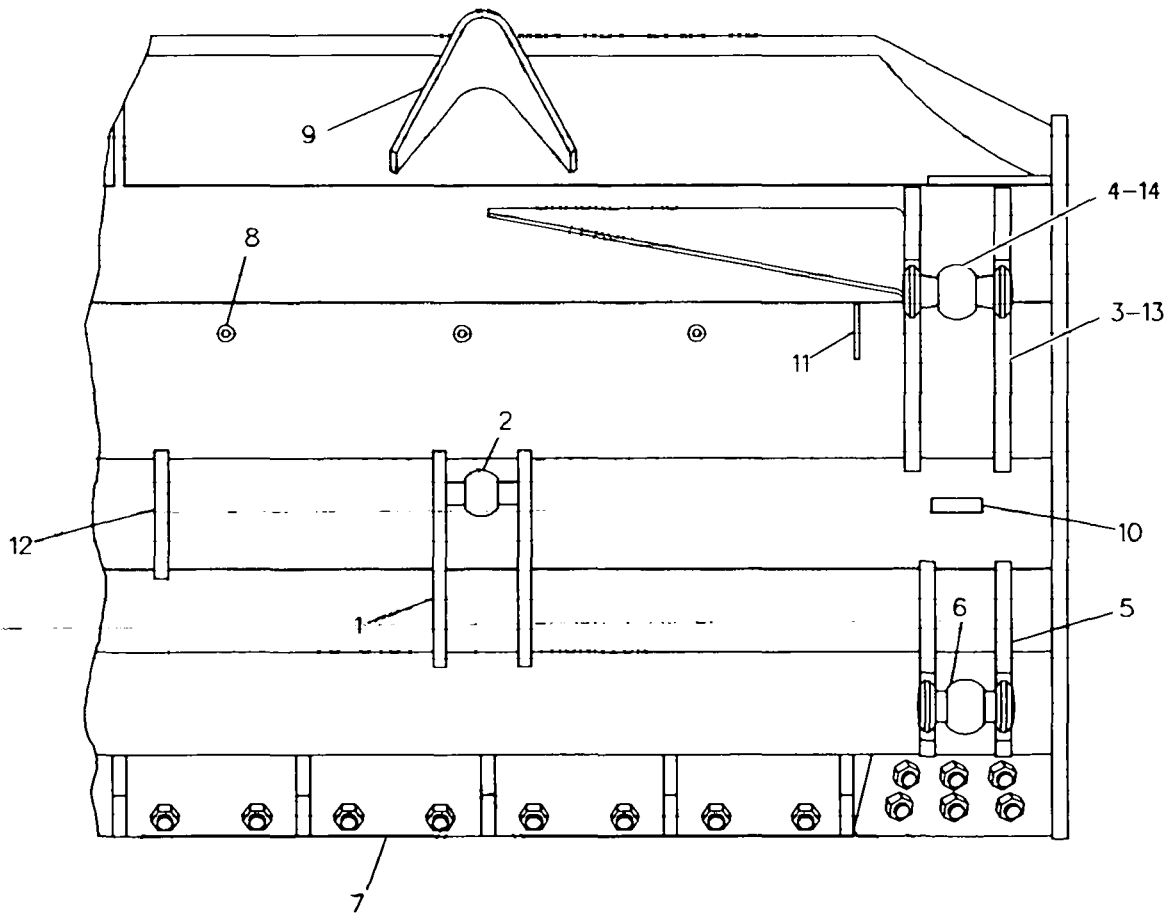

GRAPHIC #1 g00264888

IMPLEMENTS

143-0499 BLADE AS-SEMI-UNIVERSAL

PIN 4MN1-UP; 5LN1-UP

CUSTOM

PART OF 4Z-9229 BLADE & EDGE GP-SEMI-UNIVERSAL

SMCS-6060 i01003427

NOTE	REF NO	GRAPHIC REF	PART NUMBER	QTY	PART NAME 1 2 3 4 5 6 (PRODUCT LEVEL)	SEE PAGE
	1	1	1U-0183	2	DEFLECTOR	
	2	1	8P-9770	1	PLATE (84MMX25MMX3MM)	
	3	1	9W-6381	1	PLATE	
	4	1	135-2964	1	BRACKET AS-LH	
		1	7J-5131	1	TRUNNION	
	5	1	135-2966	1	BRACKET AS-RH	
		1	7J-5131	1	TRUNNION	
	6	1	135-3084	2	BRACKET AS (EACH INCLUDES)	
		1	4J-1641	1	TRUNNION	
	7	1	142-9643	2	BRACKET AS (EACH INCLUDES)	
		1	4T-1504	1	TRUNNION	
	8	1	6H-3609	3	BOSS	

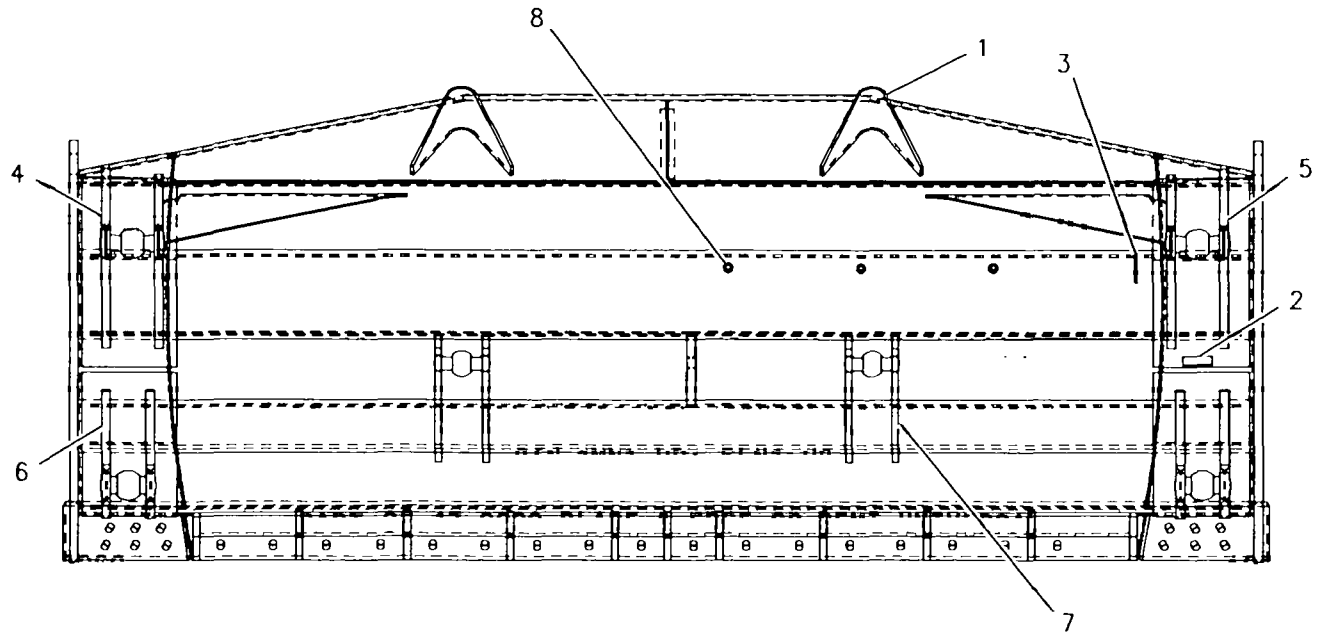

REAR VIEW

GRAPHIC #1 g00294646

4Z-8906 BLADE AS-STRAIGHT–CUSTOM

PIN 2YN1-UP; 3ZN1-UP; 6JN1-UP; 7KN1-UP

LANDFILL

PART OF 4Z-9143 BLADE & EDGE GP

SMCS-6051, 6060 i01010241

NOTE	REF NO	GRAPHIC REF	PART NUMBER	QTY	PART NAME 1 2 3 4 5 6 (PRODUCT LEVEL)	SEE PAGE
Y	1	1	8E-5187	1	BLADE AS-STRAIGHT	419
	2	1	4Z-8826	4	STRAP	

Y-SEPARATE ILLUSTRATION

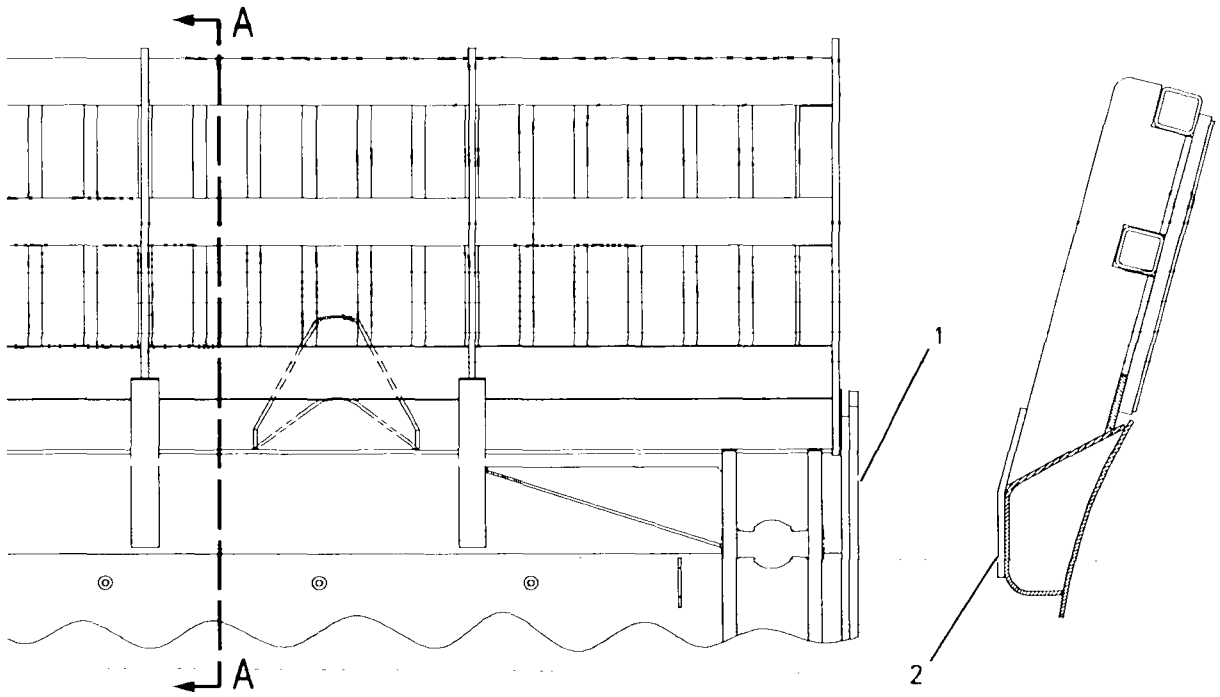

REAR VIEW

SECTION A-A

GRAPHIC #1 g00284910

4Z-9091 BLADE AS-STRAIGHT–CUSTOM

PIN 8LN1-UP; 9PN1-UP
LGP, LANDFILL
PART OF 4Z-9142 BLADE & EDGE GP

SMCS-6051, 6060 i01010317

NOTE	PART NUMBER	QTY	PART NAME 1 2 3 4 5 6 (PRODUCT LEVEL)	SEE PAGE
Y	**4T-1763**	1	BLADE AS	408
	4Z-9095	3	BAR	
	4Z-9094	2	PLATE-SUPPORT	
	4Z-9096	1	SCREEN AS	

Y-SEPARATE ILLUSTRATION

8E-5187 BLADE AS-STRAIGHT

PIN 2YN1-UP; 3ZN1-UP; 6JN1-UP; 7KN1-UP
PART OF 4Z-8906 BLADE AS-STRAIGHT

SMCS-6051, 6060 i00679656

NOTE	REF NO	GRAPHIC REF	PART NUMBER	QTY	PART NAME 1 2 3 4 5 6 (PRODUCT LEVEL)	SEE PAGE
	1	1	9W-6381	1	PLATE	
	2	1	8E-5188	2	BRACKET AS	
					(EACH INCLUDES)	
		1	7J-5131	1	TRUNNION	
	3	1	8P-9770	1	PLATE (84MM X 25MM X 3MM)	
	4	1	8E-5192	2	BRACKET AS	
					(EACH INCLUDES)	
		1	4J-1641	1	TRUNNION	
	5	1	8E-5190	2	BRACKET AS	
					(EACH INCLUDES)	
		1	4T-1504	1	TRUNNION	
	6	1	8E-5194	1	BRACKET	
	7	1	6H-3609	3	BOSS	
	8	1	1U-0183	2	DEFLECTOR	

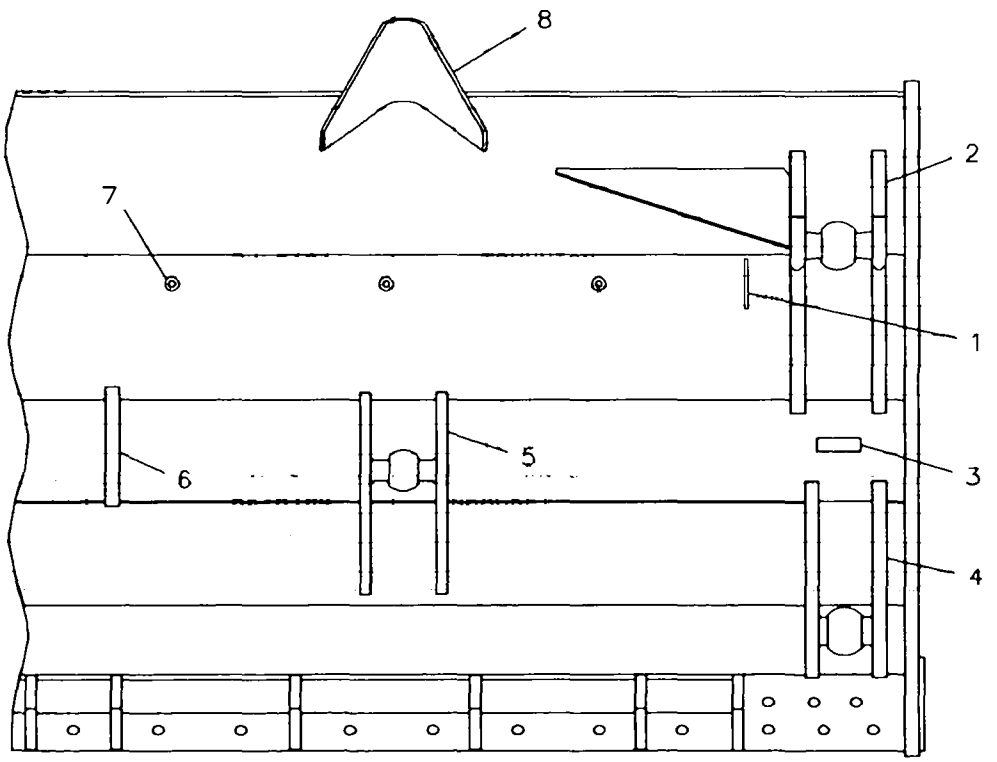

GRAPHIC #1 g00223922

4Z-9431 BLADE GP–CUSTOM

PIN 4MN1-UP; 5LN1-UP

PART OF 4Z-0647, 4Z-0651 BULLDOZER AR-ANGLING

SMCS-6052, 6060 i01014367

NOTE	REF NO	GRAPHIC REF	PART NUMBER	QTY	PART NAME 1 2 3 4 5 6 (PRODUCT LEVEL)	SEE PAGE
	1	1	**4J-9118**	1	RETAINER	
	2	1	**4T-6151**	4	TRUNNION	
Y	3	1	*4Z-9432*	1	BLADE & EDGE GP	404
	4	1	**6Y-6751**	1	PIN	
	5	1	**7X-0344**	1	BOLT (5/8-11X1.375IN)	
	6	1	**8T-9399**	16	BOLT (3/4-10X2.25IN)	

Y-SEPARATE ILLUSTRATION

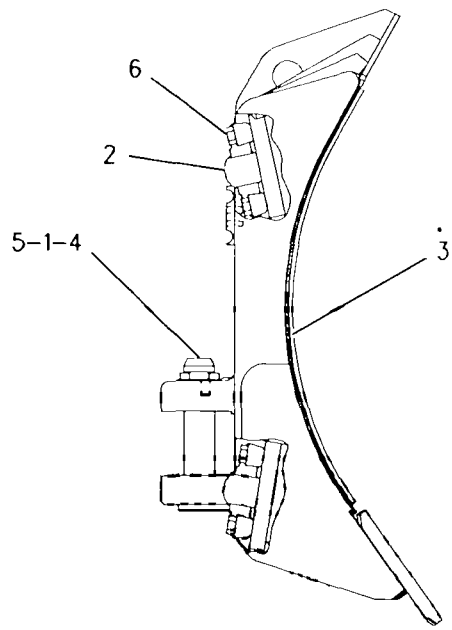

RIGHT SIDE VIEW

GRAPHIC #1 g00284926

4Z-9226 BLADE GP-SEMI-UNIVERSAL–CUSTOM

PIN 4MN1-UP; 5LN1-UP

PART OF 139-2633, 4Z-0642 BULLDOZER AR-SEMI-UNIVERSAL

SMCS-6060, 6078 i01010436

NOTE	REF NO	GRAPHIC REF	PART NUMBER	QTY	PART NAME 1 2 3 4 5 6 (PRODUCT LEVEL)	SEE PAGE
Y	1	1	4Z-9229	1	BLADE & EDGE GP-SU	406
	2	1	4T-1481	1	LINK AS	
	3	1	8H-8898	2	PIN	
	4	1	3B-4632	2	COTTER	

Y-SEPARATE ILLUSTRATION

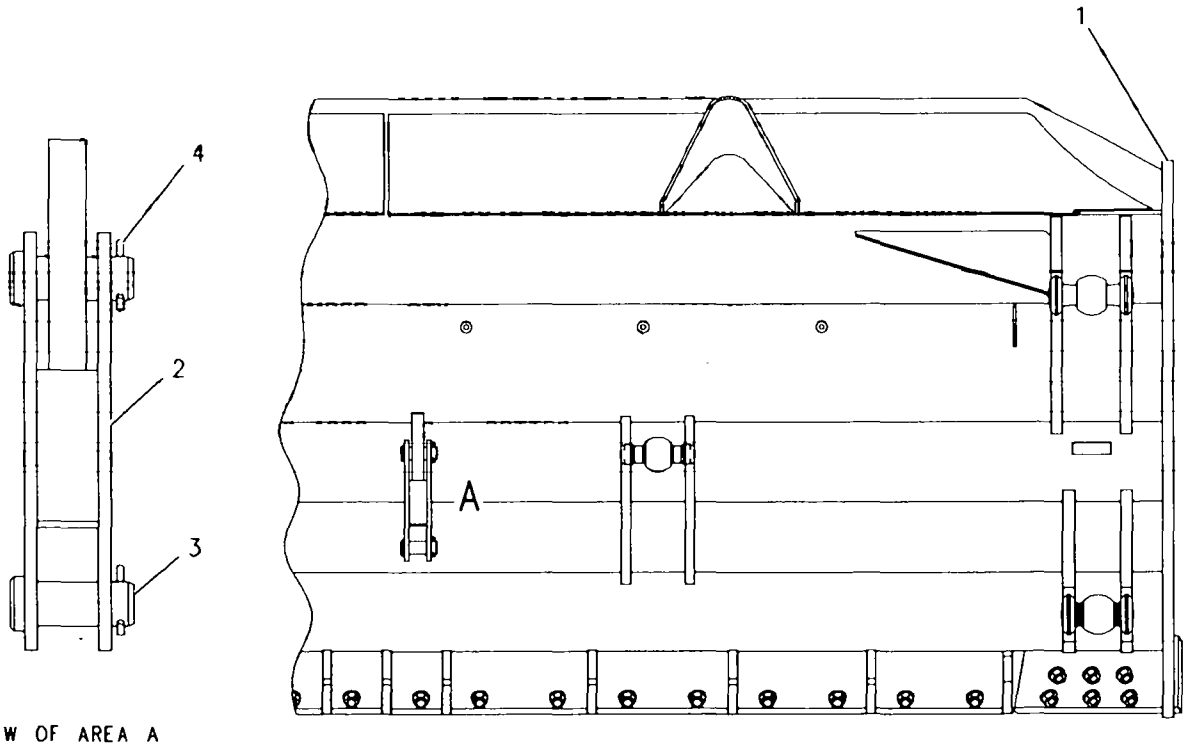

VIEW OF AREA A

REAR VIEW

GRAPHIC #1 g00294649

4Z-9453 BRACE GP-CUSTOM

PIN 4MN1-UP; 5LN1-UP

PART OF 4Z-0647, 4Z-0651 BULLDOZER AR-ANGLING

SMCS-6074 **i01013370**

NOTE	REF NO	GRAPHIC REF	PART NUMBER	QTY	PART NAME 1 2 3 4 5 6 (PRODUCT LEVEL)	SEE PAGE
	1	1	**1U-1176**	2	PIN	
	2	1	**3B-4627**	2	COTTER	
	3	1	**3J-1770**	2	LOCKPIN	
	4	1	**3J-6559**	4	CAP-BEARING	
	5	1	**3J-6573**	2	SCREW-ADJUSTMENT	
	6	1	**4F-0255**	2	PIN	
	7	1	**4F-1252**	2	PIN	
	8	1	**4T-5495**	2	STUD-BALL	
	9	1	**4Z-9456**	1	ARM AS RH	
		1	**4Z-9457**	1	ARM AS LH	
					(EACH ARM AS INCL)	
		1	**3Y-3866**	1	NUT	
		1	**4B-4098**	1	PLUG-CUP	
		1	**1K-4455**	12	BAR	
		1	**4Z-9461**	1	BRACKET-LH	
		1	**4Z-9462**	1	BRACKET-RH	
B		1	**8E-5701**	28	SHIM (.03IN THK)	
		1	**9W-0588**	1	BEARING	
	10	1	**6F-3183**	2	CAP-BEARING	
B	11	1	**8E-5701**	52	SHIM (.03IN THK)	
B	12	1	**8E-9212**	104	SHIM (.8MM THK)	
Y	13	1	**9T-6095**	2	CYLINDER GP-TILT	350
	14	1	**7X-0368**	4	BOLT (3/4-10X3IN)	
	15	1	**7X-0370**	8	BOLT (3/4-10X3.5OIN)	
	16	1	**8C-8842**	8	BOLT (3/4-10X4.0IN)	

B-USE AS REQUIRED
Y-SEPARATE ILLUSTRATION

4Z-9453 BRACE GP *(contd.)* i01013370

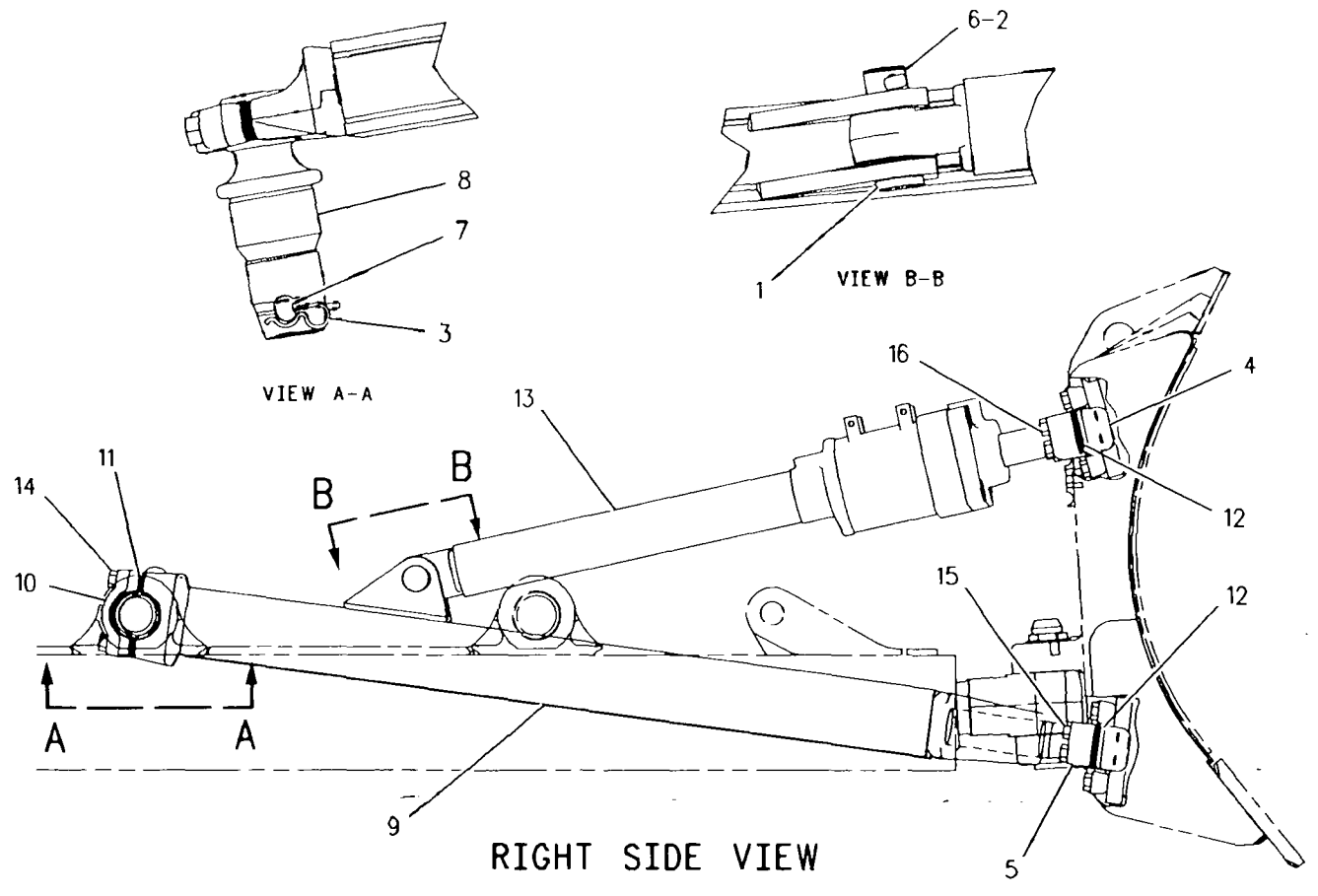

GRAPHIC #1 g00294636

IMPLEMENTS

4Z-0647 BULLDOZER AR-ANGLING–CUSTOM

PIN 5LN1-UP

EXTENDED LENGTH

SMCS-6050, 6052 **i01010189**

NOTE	PART NUMBER	QTY	PART NAME 1 2 3 4 5 6 (PRODUCT LEVEL)	SEE PAGE
Y	*4Z-9431*	1	BLADE GP	420
Y	*4Z-9453*	1	BRACE GP	426
Y	*126-8465*	1	CYLINDER & LINES GP-LIFT	342
Y	*126-8464*	1	CYLINDER & LINES GP-LIFT	340
Y	*4Z-9443*	1	C-FRAME GP	439
Y	*4Z-9454*	1	LINES GP-TILT CYLINDER	386
Y	*3G-9451*	1	MOUNTING GP-CYLINDER	388
Y	*4Z-9412*	1	TRUNNION GP	451

Y-SEPARATE ILLUSTRATION

IMPLEMENTS

4Z-0651 BULLDOZER AR-ANGLING–CUSTOM

PIN 4MN1-UP; 5LN1-UP

BASIC, EXTENDED LENGTH, INTERMEDIATE GAGE TRACK

SMCS-6050, 6052 **i01010197**

NOTE	PART NUMBER	QTY	PART NAME 1 2 3 4 5 6 (PRODUCT LEVEL)	SEE PAGE
Y	*4Z-9431*	1	BLADE GP	420
Y	*4Z-9453*	1	BRACE GP	426
Y	*4Z-9443*	1	C-FRAME GP	439
Y	*4Z-9454*	1	LINES GP-TILT CYLINDER	386
Y	*4Z-9412*	1	TRUNNION GP	451

Y-SEPARATE ILLUSTRATION

156-4542 BULLDOZER AR-PWR ANGLE & TILT–CUSTOM

PIN 5LN1-UP

SMCS-6050 **i01020788**

NOTE	PART NUMBER	QTY	PART NAME 1 2 3 4 5 6 (PRODUCT LEVEL)	SEE PAGE
Y	*156-4546*	1	BULLDOZER AR-PWR ANGLE & TILT	435
Y	*156-4550*	1	CASE & FRAME GP	260
Y	*126-8464*	1	CYLINDER & LINES GP-LIFT	340
Y	*126-8465*	1	CYLINDER & LINES GP-LIFT	342
Y	*137-0215*	1	FRAME GP-TELESCOPING RECOIL	264
Y	*137-0219*	1	FRAME GP-TELESCOPING RECOIL	266
Y	*158-6663*	1	GUARD GP-BOTTOM	279
Y	*156-4547*	1	LINES GP-TILT	384
Y	*161-1176*	1	LINKAGE GP-IMPLEMENT	440
Y	*3G-9451*	1	MOUNTING GP-CYLINDER	388
Y	*163-8001*	1	VALVE GP-DIVERTER	392
	156-4545	1	C-FRAME AR	
	156-4548	1	GRILL AS	
	160-5830	1	GUARD AS	
	3G-6372	2	BEARING-SLEEVE	
	3T-4307	2	BEARING-SLEEVE	
	3T-4308	4	BEARING-SLEEVE	
	8E-9522	2	BEARING-SLEEVE	
	1F-0750	5	NUT-WELD (3/8-16 THD)	
	3J-5169	2	NUT (5/8-11 THD)	
	7T-1099	6	LINK	
	8F-9836	4	LUG (3/8-16 THD)	
	8T-5912	13	NUT-WELD (3/8-16 THD)	
	1M-4584	10	BOSS	
	8T-5911	4	NUT-WELD (1/2-13 THD)	

Y-SEPARATE ILLUSTRATION

156-4546 BULLDOZER AR-PWR ANGLE & TILT–CUSTOM

PIN 5LN1-UP

PART OF 156-4542 BULLDOZER AR-PWR ANGLE & TILT

SMCS-6050 **i01024894**

NOTE	PART NUMBER	QTY	PART NAME 1 2 3 4 5 6 (PRODUCT LEVEL)	SEE PAGE
Y	*166-4432*	2	CYLINDER GP-TILT	352
Y	*166-9437*	1	CYLINDER GP-TILT	353
	9W-8875	1	BIT-END-LH	
	9W-8874	1	BIT-END-RH	
	166-4436	10	BUSHING	
	109-9093	1	EDGE-CUTTING	
	166-4433	1	LINK-STABILIZER	
	166-4435	10	PIN	
	166-9438	2	RING-SPLIT	
	166-4437	10	SHIM	
	166-4434	16	SPACER-RUBBER	

Y-SEPARATE ILLUSTRATION

IMPLEMENTS

4Z-0642 BULLDOZER AR-SEMI-UNIVERSAL–CUSTOM

PIN 4MN1-UP; 5LN1-UP

FOR USE WITH XL WIDE GAGE MACHINES

SMCS-6050, 6078 **i01010184**

NOTE	PART NUMBER	QTY	PART NAME 1 2 3 4 5 6 (PRODUCT LEVEL)	SEE PAGE
Y	*4Z-9226*	1	BLADE GP-SEMI-UNIVERSAL	421
Y	*4Z-9225*	1	LINE GP-TILT	383
Y	*4Z-9227*	1	PUSH ARM GP	442
Y	*4Z-9412*	1	TRUNNION GP	451

Y-SEPARATE ILLUSTRATION

139-2633 BULLDOZER AR-SEMI-UNIVERSAL–CUSTOM

PIN 4MN1-UP; 5LN1-UP

FOR USE WITH XL WIDE GAGE MACHINES

SMCS-6050, 6078 **i01009540**

NOTE	PART NUMBER	QTY	PART NAME 1 2 3 4 5 6 (PRODUCT LEVEL)	SEE PAGE
Y	*4Z-9226*	1	BLADE GP-SEMI-UNIVERSAL	421
Y	*126-8464*	1	CYLINDER & LINES GP-LIFT	340
Y	*126-8465*	1	CYLINDER & LINES GP-LIFT	342
Y	*4Z-9225*	1	LINE GP-TILT	383
Y	*3G-9451*	1	MOUNTING GP-CYLINDER	388
Y	*4Z-9227*	1	PUSH ARM GP	442
Y	*4Z-9412*	1	TRUNNION GP	451

Y-SEPARATE ILLUSTRATION

4Z-9444 C-FRAME AS–CUSTOM

PIN 4MN1-UP; 5LN1-UP

PART OF 4Z-9443 C-FRAME GP

SMCS-6063 i01014405

NOTE	REF NO	GRAPHIC REF	PART NUMBER	QTY	PART NAME 1 2 3 4 5 6 (PRODUCT LEVEL)	SEE PAGE
	1	1	9W-9000	1	ADAPTER AS	
		1	5M-6214	1	PLUG-PIPE (1/8-27 THD)	
		1	8E-5486	2	BEARING-SLEEVE	
	2	1	4Z-9467	2	PLATE	
	3	1	4Z-9468	2	PLATE	
	4	1	6F-2904	2	BEARING	
	5	1	6I-8410	1	BRACKET AS-RH	
		1	6I-8411	1	BRACKET AS-LH	
					(EACH BRACKET AS INCL)	
		1	4J-2414	2	TRUNNION	
	6	1	8P-9770	1	PLATE (84MMX25MMX3MM)	
	7	1	9V-0321	1	BLOCK	
	8	1	9W-4897	6	BRACKET AS	
					(EACH INCLUDES)	
		1	8F-4387	2	PLATE	
	9	1	9W-5375	2	BAR	

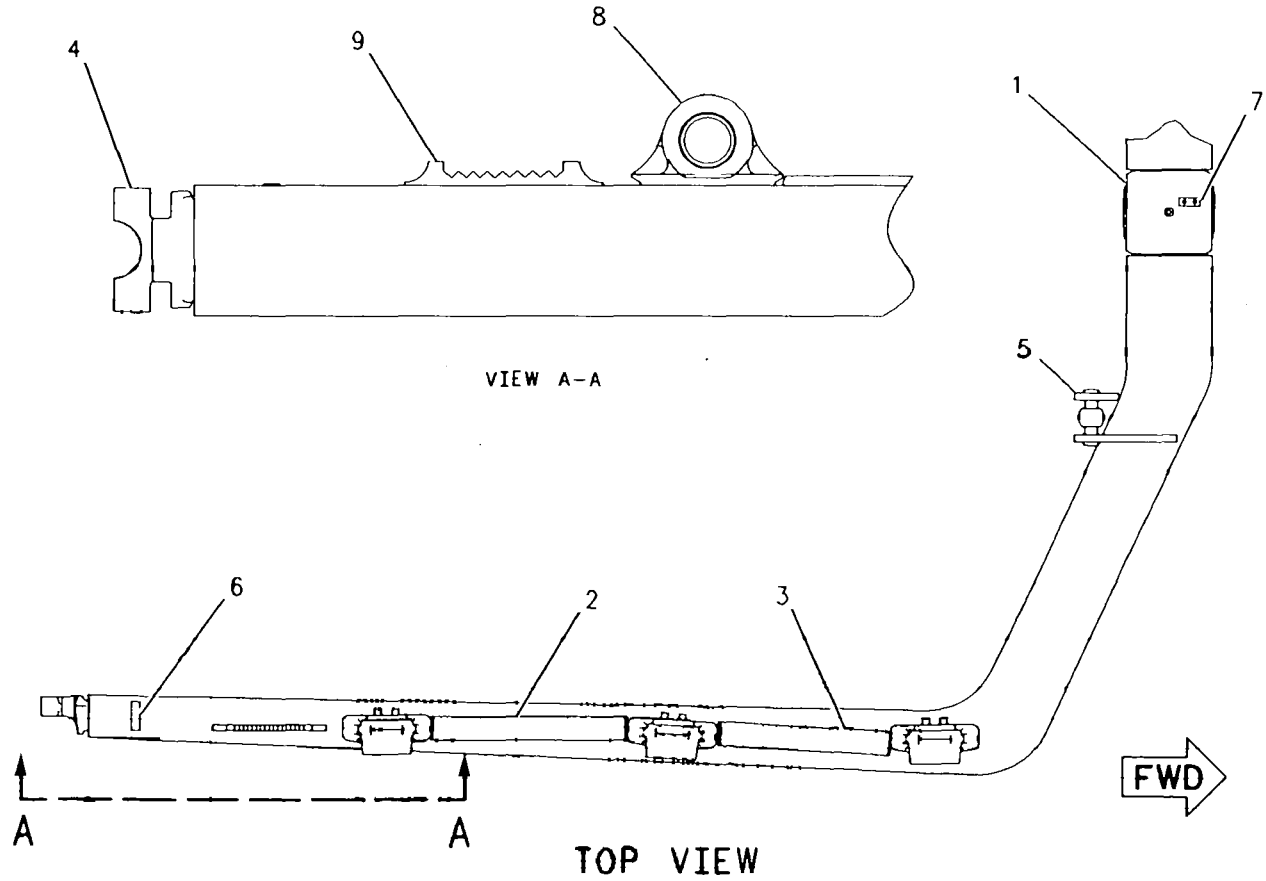

GRAPHIC #1 g00285242

4Z-9443 C-FRAME GP–CUSTOM

PIN 4MN1-UP; 5LN1-UP

PART OF 4Z-0647, 4Z-0651 BULLDOZER AR-ANGLING

SMCS-6063 i01013368

NOTE	REF NO	GRAPHIC REF	PART NUMBER	QTY	PART NAME 1 2 3 4 5 6 (PRODUCT LEVEL)	SEE PAGE
	1	1	1U-0725	1	RETAINER	
	2	1	4F-1204	4	NUT	
B	3	1	4T-4866	52	SHIM (0.8MM THK)	
Y	4	1	4Z-9444	1	C-FRAME AS	438
	5	1	6F-2905	2	CAP-BEARING	
	6	1	6Y-7471	1	PIN-PIVOT	
	7	1	7X-0444	4	BOLT (1-8X6.5IN)	
	8	1	8T-5361	4	WASHER (5MM THK)	
	9	1	8T-9398	2	BOLT (3/4-10X1.75IN)	

B-USE AS REQUIRED
Y-SEPARATE ILLUSTRATION

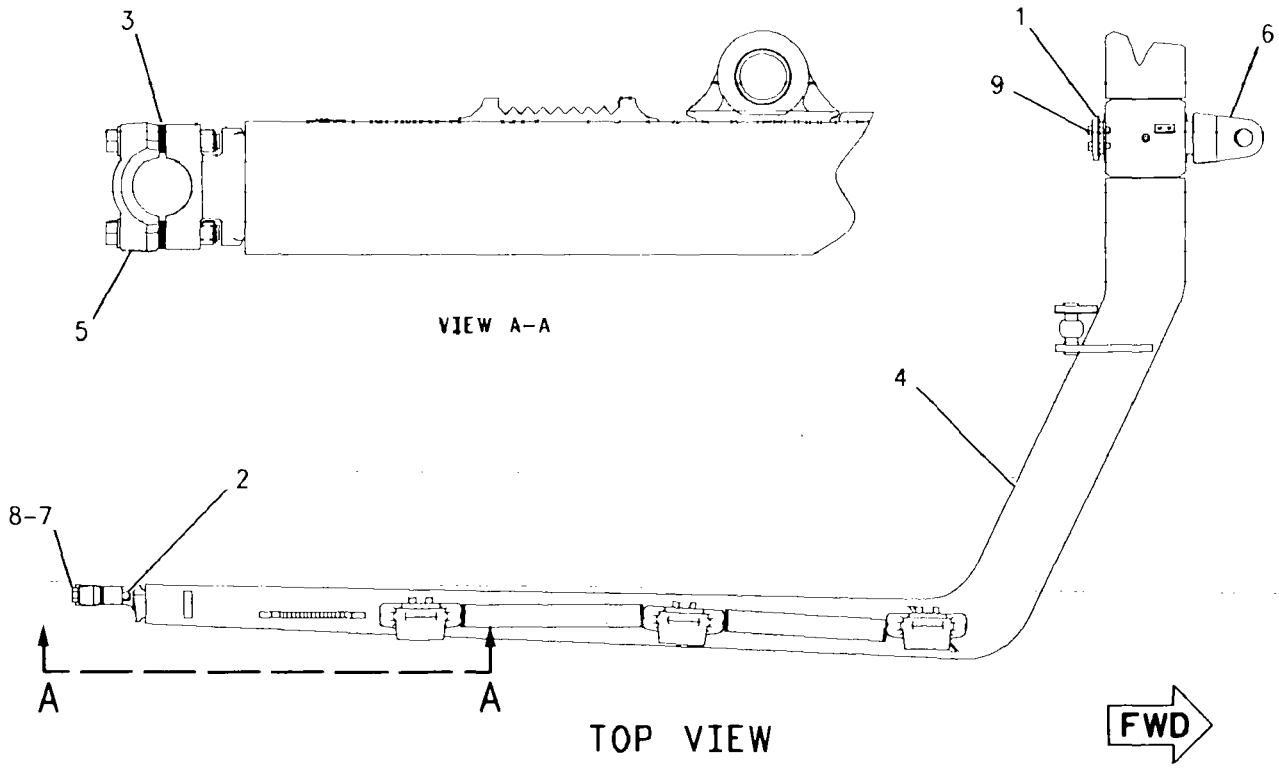

GRAPHIC #1 g00284929

161-1176 LINKAGE GP-IMPLEMENT-CUSTOM

PIN 5LN1-UP
DUAL TILT
PART OF 156-4542 BULLDOZER AR-PWR ANGLE & TILT

SMCS-5063 i01020029

NOTE	REF NO	GRAPHIC REF	PART NUMBER	QTY	PART NAME 1 2 3 4 5 6 (PRODUCT LEVEL)	SEE PAGE
Y	1	1	3E-8680	1	SWITCH AS-HANDLE	191
	2	1	3V-1965	1	ADAPTER	
	3	1	161-1175	1	HARNESS AS	
	4	1	7K-1181	3	STRAP-CABLE (4.00IN DIA)	
D	5	1	5P-6003		TUBE (.1M)	
	6	1	9X-2270	1	FILM-INSTRUCTION	
	7	1	7X-0448	1	NUT (5/8-11 THD)	
	8	1	150-2985	1	LEVER AS	

D-ORDER BY THE METER
Y-SEPARATE ILLUSTRATION

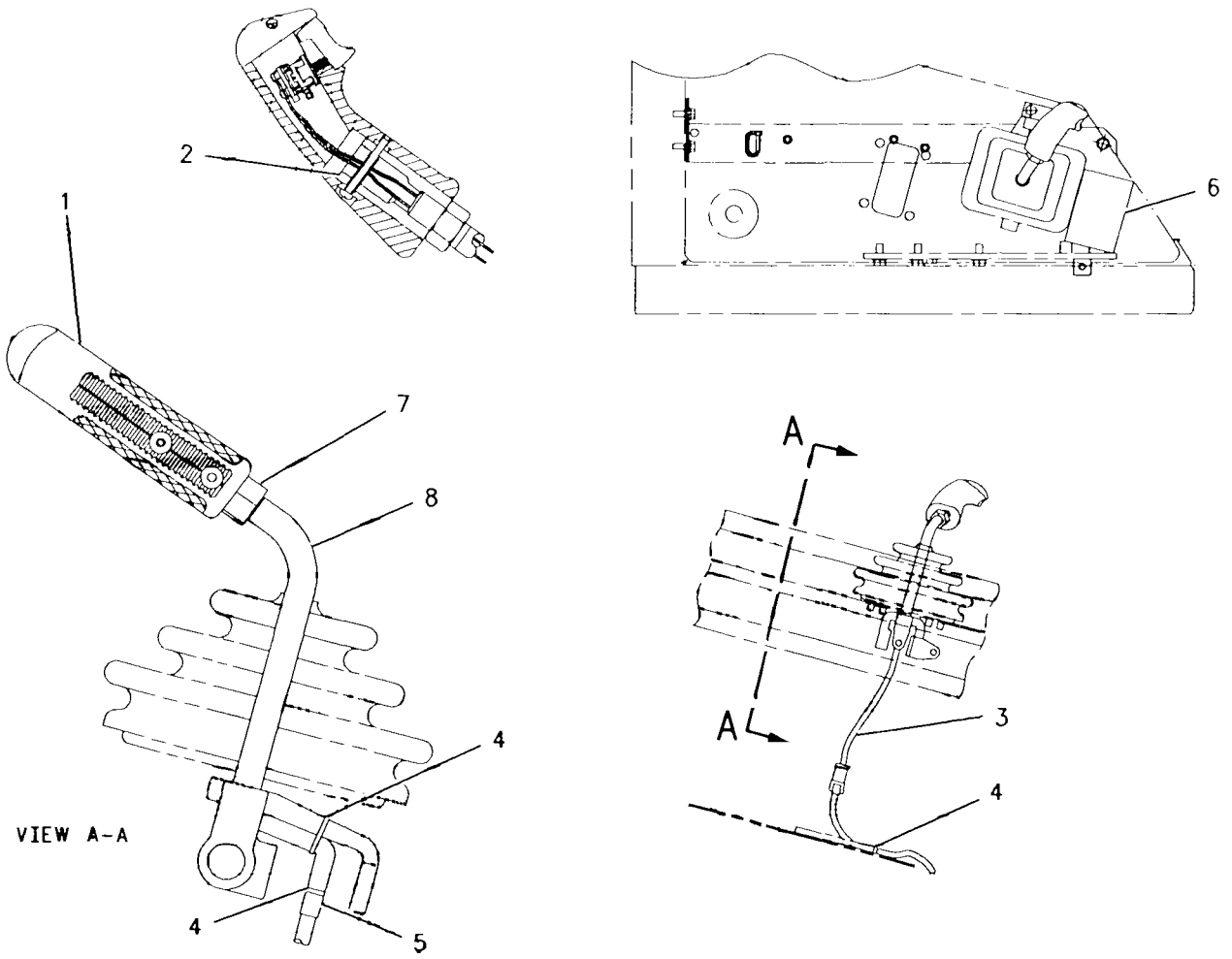

GRAPHIC #1 g00523371

9W-0610 MOUNTING GP-RIPPER

PIN 8LN1-UP; 9PN1-UP
PART OF 4Z-0609 RIPPER AR

SMCS-6165, 6324 i00575999

NOTE	REF NO	GRAPHIC REF	PART NUMBER	QTY	PART NAME 1 2 3 4 5 6 (PRODUCT LEVEL)	SEE PAGE
	1	1	9W-0609	4	SPACER	
	2	1	1U-0301	2	BRACKET AS	
	3	1	1U-0612	2	PIN	
	4	1	7X-0292	2	BOLT (3/8-16X4.50IN)	
		1	2K-4973	2	LOCKNUT (3/8-16 THD)	
	5	1	1K-6872	2	LOCKNUT (1/2-13 THD)	
	6	1	5D-3118	20	STUD-TAPERLOCK	
	7	1	7X-0335	2	BOLT (1/2-13X5.25IN)	
	8	1	1U-0300	1	BRACKET AS (RH)	
		1	7T-1975	1	BRACKET AS (LH)	
	9	1	1U-0159	2	PIN	
B	10	1	9N-4449	12	SPACER (1.5MM THK)	
	11	1	6V-8190	20	NUT (1-8 THD)	
B	12	1	9N-4450	4	SPACER (5MM THK)	

B-USE AS REQUIRED

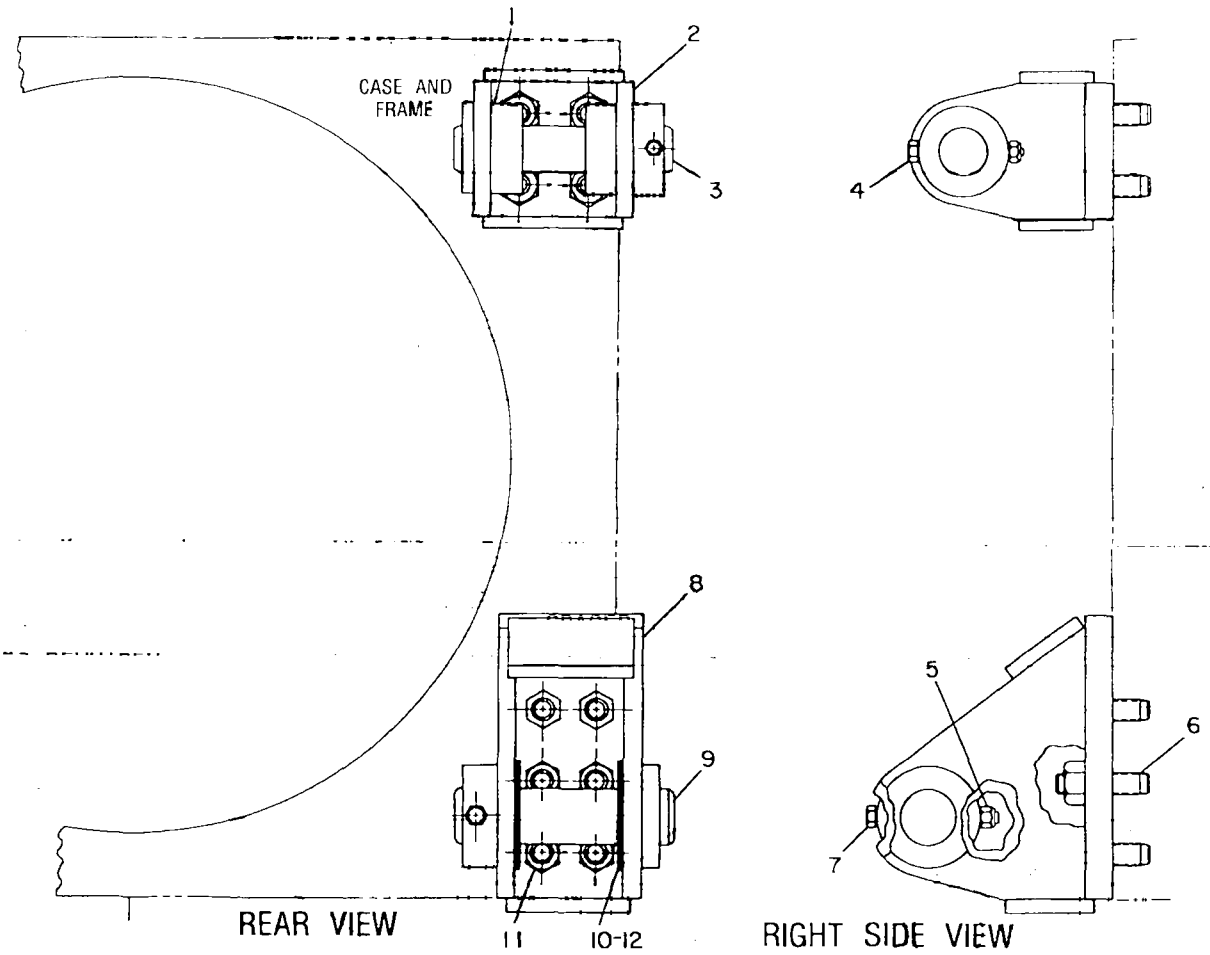

GRAPHIC #1 g00182031

IMPLEMENTS

4Z-9227 PUSH ARM GP-CUSTOM

PIN 4MN1-UP; 5LN1-UP

PART OF 139-2633, 4Z-0642 BULLDOZER AR-SEMI-UNIVERSAL

SMCS-6061 i01003431

NOTE	REF NO	GRAPHIC REF	PART NUMBER	QTY	PART NAME 1 2 3 4 5 6 (PRODUCT LEVEL)	SEE PAGE
	1	1	124-9672	1	BRACE AS-TILT	
		1	8E-5703	14	SHIM (0.8MM THK)	
	2	1	8E-2887	1	YOKE	
	3	1	7X-0582	6	WASHER-HARD (6MM THK)	
B	4	1	4T-4866	52	SHIM (0.8MM THK)	
B	5	1	8E-5703	78	SHIM (0.8MM THK)	
	6	1	160-6305	2	CAP-BEARING	
	7	1	8J-2880	3	CAP-BEARING	
	8	1	4Z-9242	1	PUSH ARM AS-RH	
		1	1K-4455	16	BAR	
	9	1	1U-2533	1	BAR	
	10	1	4T-0732	1	BRACKET	
	11	1	8P-9770	1	PLATE (84MMX25MMX3MM)	
	12	1	9W-2579	2	PLATE	
	13	1	9W-2580	1	BEARING	
	14	1	9W-9165	1	BEARING	
	15	1	4Z-9243	1	PUSH ARM AS-LH	
		1	1K-4455	16	BAR	
	16	1	1U-2533	1	BAR	
	17	1	4T-0780	1	TRUNNION	
	18	1	8P-9770	1	PLATE (84MMX25MMX3MM)	
	19	1	9W-2580	1	BEARING	
	20	1	9W-9165	1	BEARING	
	21	1	124-9666	1	BRACKET	
	22	1	3F-6185	2	PIN	
	23	1	4F-0255	2	PIN	
	24	1	3B-4627	2	COTTER	
	25	1	4T-1520	1	CAGE AS	
		1	1U-0085	1	CAGE-BEARING	
Y	26	1	1U-3991	1	CYLINDER GP-TILT	348
	27	1	7X-0444	4	BOLT (1-8X6.5IN)	
	28	1	4F-1204	4	NUT	
	29	1	7X-0373	4	BOLT (3/4-10X5.50IN)	
	30	1	6V-8182	10	NUT (3/4-10 THD)	
	31	1	7X-0375	8	BOLT (3/4 X 10 X 5IN)	
	32	1	4F-2710	8	NUT	
	33	1	7X-0372	6	BOLT (3/4 X 10 X 4.25IN)	
	34	1	8T-4994	6	WASHER (5MM THK)	
	35	1	8T-5361	4	WASHER (5MM THK)	

B-USE AS REQUIRED
Y-SEPARATE ILLUSTRATION

4Z-9227 PUSH ARM GP *(contd.)*

i01003431

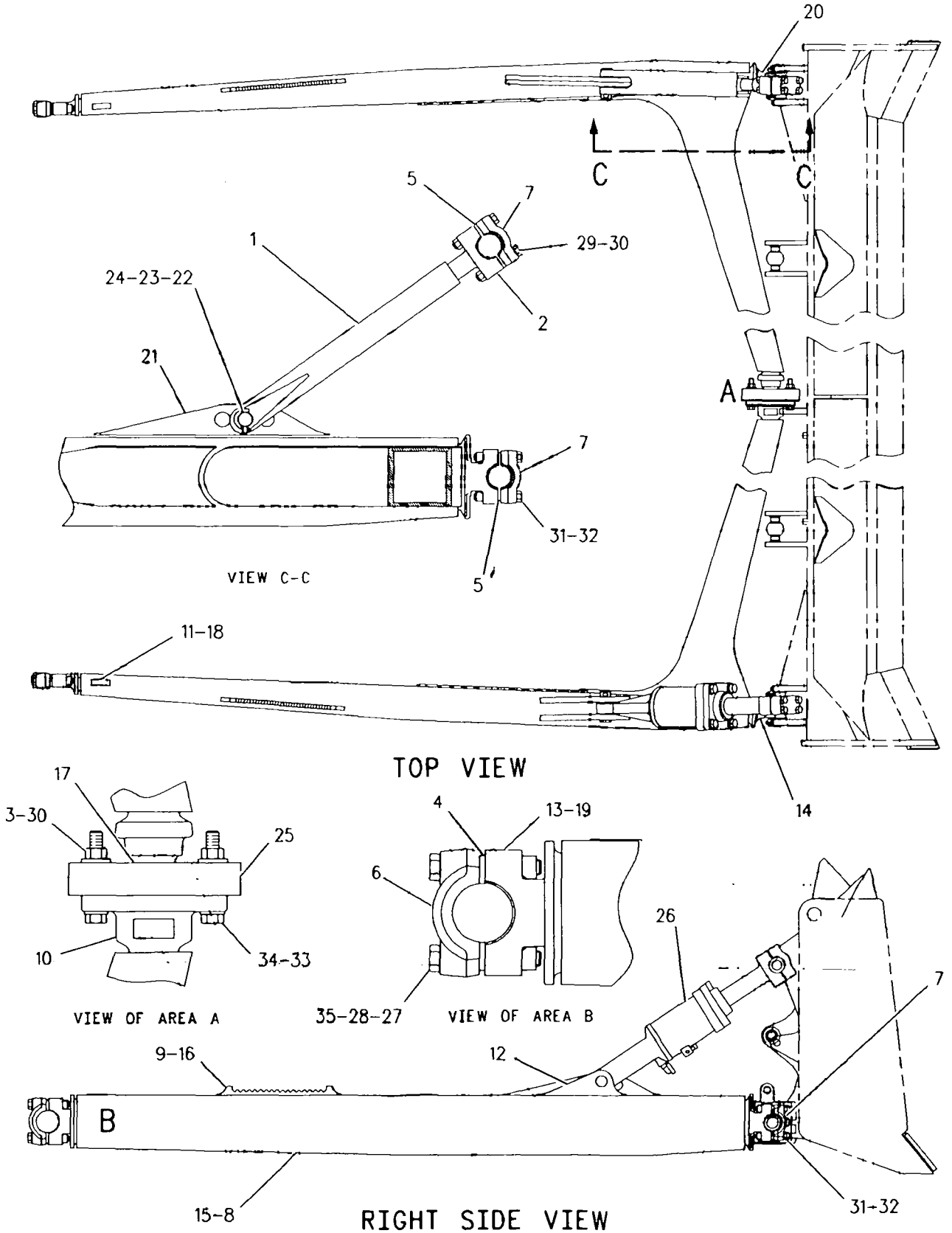

GRAPHIC #1

g00294648

145-2347 RAKE GP–CUSTOM

PIN 2YN1-UP

ROCK & ROOT

SMCS-6055 **i01009576**

NOTE	PART NUMBER	QTY	PART NAME 1 2 3 4 5 6 (PRODUCT LEVEL)	SEE PAGE
	1D-4622	20	BOLT (3/4-10X8IN)	
	3B-2968	10	BOLT (3/4-10X3.5IN)	
	7X-0417	20	BOLT (1-8X9IN)	
	1K-6870	10	LOCKNUT (3/4-10 THD)	
	145-2443	10	TIP-WEAR	
	5P-8250	20	WASHER (5.0MM THK)	
	5P-8248	20	WASHER-HARD (3.5MM THK)	

4Z-0609 RIPPER AR-LGP–CUSTOM

PIN 8LN1-UP; 9PN1-UP

SMCS-6312, 6316 **i01010170**

NOTE	PART NUMBER	QTY	PART NAME 1 2 3 4 5 6 (PRODUCT LEVEL)	SEE PAGE
Y	**9T-2716**	1	CYLINDER GP-RIPPER LIFT	346
Y	*3W-1356*	1	GUARD GP-TRANSMISSION	280
Y	*9W-1018*	1	LINES GP-RIPPER	382
Y	*9W-0610*	1	MOUNTING GP-RIPPER	441
Y	*9W-1017*	1	RIPPER GP	448
	6V-2435	1	FILM-INSTRUCTION	

Y-SEPARATE ILLUSTRATION

9W-1017 RIPPER GP

PIN 8LN1-UP; 9PN1-UP

PART OF 4Z-0609 RIPPER AR

SMCS-6311, 6312, 6315, 6316, 6325 i00703293

NOTE	REF NO	GRAPHIC REF	PART NUMBER	QTY	PART NAME 1 2 3 4 5 6 (PRODUCT LEVEL)	SEE PAGE
	1	1	**9W-0201**	1	CARRIAGE AS	
		1	**9W-0513**	2	PLATE AS	
	2	1	**2K-4309**	1	REINFORCEMENT-RH	
		1	**2K-4310**	1	REINFORCEMENT-LH	
	3	1	**9W-0553**	1	PLATE AS	
	4	1	**9J-9598**	2	PIN	
	5	1	**7X-0292**	2	BOLT (3/8-16X4.50IN)	
		1	**2K-4973**	2	LOCKNUT (3/8-16 THD)	
	6	1	**8T-9389**	8	BOLT (1/2-13X2.75IN)	
	7	1	**6V-8188**	8	NUT (1/2-13 THD)	
	8	1	**9W-0873**	2	LINK AS	
					(EACH INCLUDES)	
	9	1	**9W-0876**	2	BEARING-SLEEVE	
	10	1	**3B-8489**	11	FITTING-GREASE (1/8-27 THD)	
	11	1	**4K-3004**	2	BEARING-TRUNNION SUPPLEMENTARY	
	12	1	**3K-8510**	1	PIN	
	13	1	**5C-6565**	2	BOLT (1/2-13X1.25IN)	
	14	1	**2K-0703**	1	BAR	
	15	1	**9W-1119**	1	LINK AS-LOWER	
	16	1	**9W-0099**	4	BEARING-SLEEVE	
	17	1	**1U-0159**	2	PIN	
	18	1	**7X-0340**	2	BOLT (1/2-13X6.5IN)	
Y	19	1	*9J-8926*	1	TOOTH GP-RIPPER	450
	20	1	**8T-4223**	18	WASHER-HARD (3MM THK)	
	21	1	**1K-6872**	2	LOCKNUT (1/2-13 THD)	

Y-SEPARATE ILLUSTRATION

9W-1017 **RIPPER GP** *(contd.)* i00703293

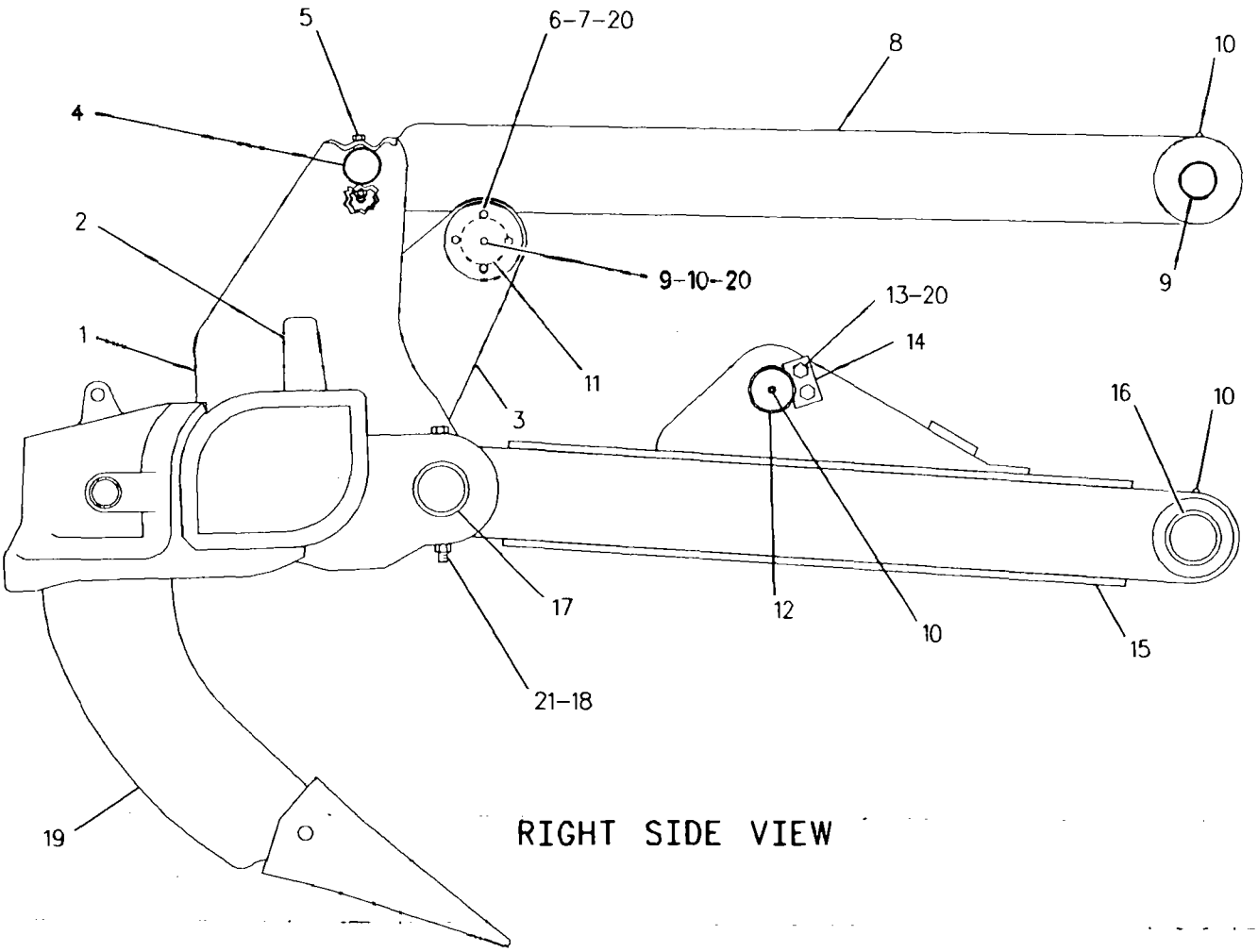

RIGHT SIDE VIEW

GRAPHIC #1 g00289318

9J-8926 TOOTH GP-RIPPER

PIN 8LN1-UP; 9PN1-UP
PART OF 9W-1017 RIPPER GP

SMCS-6808, 6810 i00574943

NOTE	REF NO	GRAPHIC REF	PART NUMBER	QTY	PART NAME 1 2 3 4 5 6 (PRODUCT LEVEL)	SEE PAGE
	1	1	3B-5325	2	COTTER	
	2	1	8J-2190	1	PIN	
	3	1	9J-8923	1	SHANK-RIPPER	
	4	1	8E-6358	1	PIN-G.E.T.	
	5	1	6Y-0352	1	TIP-RIPPER	
	6	1	1U-2405	1	RETAINER	

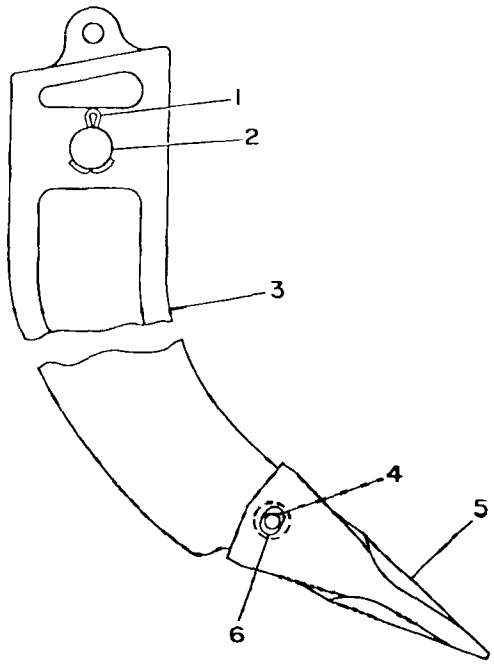

GRAPHIC #1 g00174183

4Z-9412 TRUNNION GP–CUSTOM

PIN 4MN1-UP; 5LN1-UP

PART OF 4Z-0647, 4Z-0651 BULLDOZER AR-ANGLING, 139-2633, 4Z-0642 BULLDOZER AR-SEMI-UNIVERSAL

SMCS-6069 i01014348

NOTE	REF NO	GRAPHIC REF	PART NUMBER	QTY	PART NAME 1 2 3 4 5 6 (PRODUCT LEVEL)	SEE PAGE
	1	1	1U-4103	2	TRUNNION	
	2	1	4Z-9228	2	PLATE	
M	3	1	8C-8478	20	BOLT (M20X2.5X140MM)	
	4	1	8T-4123	20	WASHER-PLATED (3.5MM THK)	

M-METRIC PART

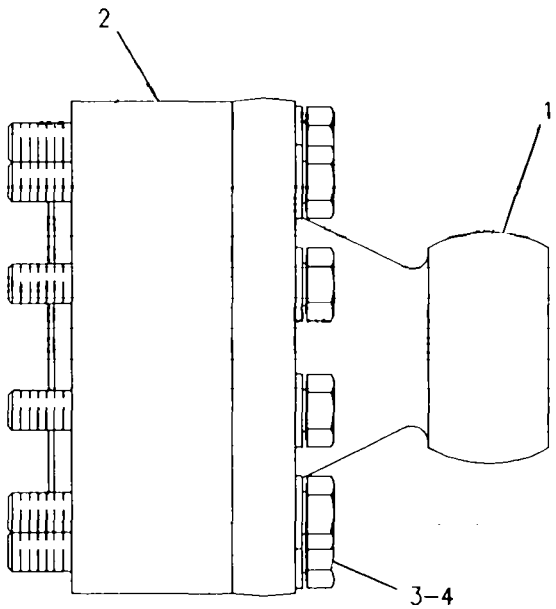

GRAPHIC #1 g00294647

OPERATOR STATION

137-4932 AIR CONDITIONER AR–CUSTOM

PIN 2YN1-UP; 3ZN1-UP; 4MN1-UP; 5LN1-UP; 6JN1-UP; 7KN1-UP; 8LN1-UP; 9PN1-UP
ROPS MOUNTED RETROFIT

SMCS-7320 i01008844

NOTE	REF NO	GRAPHIC REF	PART NUMBER	QTY	PART NAME 1 2 3 4 5 6 (PRODUCT LEVEL)	SEE PAGE
	1	1	7K-1181	3	STRAP-CABLE (4.00IN DIA)	
	2	1	9X-7378	1	SEAL-O-RING (8.92MM ID)	
	3	1	114-5333	1	SWITCH AS-PRESSURE	
		1	102-8802	1	KIT-RECEPTACLE (2 PIN)	
		1	3E-3365	1	WEDGE	
		1	8T-8729	2	PIN-CONNECTOR	
	4	1	106-8704	1	SUPPRESSOR AS-ARC	
	5	1	4P-8134	1	CLIP	
	6	1	6V-8801	2	NUT (3/8-16 THD)	
	7	1	8T-4896	4	WASHER-HARD (2.5MM THK)	
	8	1	9B-7237	1	BOLT (3/8-16X1.25IN)	
	9	1	4L-6454	3	BOLT (3/8-16X1.0IN)	
	10	1	8R-3393	1	STRAP	
	11	1	109-1634	1	CLIP (TAB)	
	12	1	109-1633	1	CLIP (SLOT)	
	13	1	9X-7381	2	SEAL-O-RING (10.82MM ID)	
	14	1	9X-7380	1	SEAL-O-RING (7.65MM ID)	
I	15	1	109-4044	1	HOSE AS	
I	16	1	110-8834	1	HOSE AS	
	17	1	5C-6565	2	BOLT (1/2-13X1.25IN)	
	18	1	8T-4223	1	WASHER-HARD (3MM THK)	
	19	1	7C-4353	1	CLIP (17.53MM ID)	
	20	1	4K-8302	1	CLIP (15.88MM ID)	
	21	1	8T-2561	1	WASHER (5MM THK)	
	22	1	3E-4054	1	FITTING AS-AIR CONDITIONER	
		1	3E-4051	1	CAP-SEAL	
		1	3E-4057	1	VALVE AS-AIR CONDITIONER	
	23	1	9X-7383	2	SEAL-O-RING (17.17MM ID)	
	24	1	1P-6356	1	PLATE	
M	25	1	8T-6466	1	BOLT (M10X1.50X60MM)	
	26	1	5P-1075	1	WASHER-HARD (3MM THK)	
	27	1	3E-4067	1	FITTING AS-COMPRESSOR	
		1	3E-4052	1	CAP-SEAL	
		1	3E-4058	1	VALVE AS-AIR CONDITIONER	
	28	1	101-8789	1	ACCUMULATOR-REFRIGERANT	
BD	29	1	6V-2495		SEAL	
	30	1	9X-7383	2	SEAL-O-RING (17.17MM ID)	
I	31	1	108-6541	1	HOSE AS	
	32	1	9X-7382	1	SEAL-O-RING (14.00MM ID)	
I	33	1	125-5725	1	HOSE AS	
I	34	1	114-0929	1	HOSE AS	
FY		1	101-1759	1	COMPRESSOR GP-REFRIGERANT	475
F		1	5I-8333	1	BRACKET	
F		1	8M-2773	1	CLIP (17.46MM ID)	
F		1	8X-6319	1	CLAMP	
F		1	114-0068	1	PLATE-INSTRUCTION	
F		1	116-6202	2	BOOT	
D	35	2	5P-6129		TUBE (.36M)	
D	36	2	5P-6129		TUBE (.2M)	
D	37	2	5P-6129		TUBE (.135M)	
D	38	2	5P-6129		TUBE (.7M)	
	39	2	8C-5682	1	TEE	
	40	2	7T-9426	1	GROMMET	
	41	2	6V-2372	1	ELBOW-BARBED	
	42	2	7C-4353	1	CLIP (17.53MM ID)	
	43	2	5C-6565	1	BOLT (1/2-13X1.25IN)	

NOTE	REF NO	GRAPHIC REF	PART NUMBER	QTY	PART NAME 1 2 3 4 5 6 (PRODUCT LEVEL)	SEE PAGE
	44	2	8T-4223	1	WASHER-HARD (3MM THK)	
	45	2	4K-8302	1	CLIP (15.88MM ID)	
	46	2	9X-7383	4	SEAL-O-RING (17.17MM ID)	
	47	2	7K-3176	2	COUPLING	
	48	2	5P-3948	2	COUPLING-SEALING	
	49	2	6V-8801	1	NUT (3/8-16 THD)	
	50	2	8T-4896	3	WASHER-HARD (2.5MM THK)	
	51	2	5M-3062	2	BOLT (3/8-16X.75IN)	
	52	2	6D-1641	1	CLIP (25.0MM ID)	
	53	2	7T-9793	1	VALVE (CHECK)	
	54	2	108-6538	1	BAR	
	55	2	9X-7380	2	SEAL-O-RING (7.65MM ID)	
	56	2	103-6100	2	COUPLER-QUICK	
	57	2	3E-3535	1	DRYER-IN-LINE REFRIGERANT	
I	58	2	108-6544	1	HOSE AS	
	59	2	7T-8895	1	GROMMET	
	60	2	3S-2093	2	STRAP-CABLE (1.75IN DIA)	
	61	2	9X-7381	1	SEAL-O-RING (10.82MM ID)	
	62	2	9X-7382	1	SEAL-O-RING (14.00MM ID)	
	63	2	7T-8894	1	GROMMET	
	64	2	4L-6454	2	BOLT (3/8-16X1.0IN)	
	65	2	6K-8178	1	CLIP (15.88MM ID)	
	66	2	5P-1075	1	WASHER-HARD (3MM THK)	
	67	2	4D-7733	3	CLIP	
	68	2	7S-1912	1	CLIP (20.62MM ID)	
I	69	2	125-5727	1	HOSE AS	
	70	2	6V-1228	2	CLIP (10.3MM ID)	
	71	2	6D-4246	2	CLIP (19.05MM ID)	
	72	3	109-5485	1	SUPPORT AS	
		3	6J-1323	2	LUG	
		3	9F-6445	6	NUT (1/4-20 THD)	
	73	3	109-4042	1	HARNESS AS	
	74	3	124-5785	1	HARNESS AS	
	75	3	7K-1181	6	STRAP-CABLE (4.00IN DIA)	
	76	3	109-5498	1	SCREEN AS	
	77	3	8T-9364	6	BOLT (1/4-20X.625IN)	
	78	3	8T-4205	6	WASHER-HARD (2MM THK)	
Y	79	3	103-9527	1	CONDENSER GP-REFRIGERANT	482
	80	3	8D-0983	4	MOUNTING	
	81	3	8E-7185	4	PLATE-IDENTIFICATION	
	82	3	7X-0447	4	NUT (7/16-14 THD)	
	83	3	7X-0311	4	BOLT (7/16-14X2.25IN)	
	84	3	8T-5360	8	WASHER (2.5MM THK)	
	85	3	9N-4224	2	PLATE	
M	86	3	8T-4139	4	BOLT (M12X1.75X30MM)	
	87	3	7X-0366	2	BOLT (3/4-10X2IN)	
	88	3	8T-4994	2	WASHER (5MM THK)	
	89	3	4P-7428	2	CLIP	
	90	3	4P-7429	2	CLIP	
	91	3	2D-2751	1	GROMMET	
	92	3	5P-2566	3	BOLT (1/2-13X1.50IN)	
	93	3	8T-4223	3	WASHER-HARD (3MM THK)	
	94	3	2V-0936	2	WASHER	
	95	3	109-5491	3	PLATE	
	96	3	6H-3609	1	BOSS	
B	97	4	6K-9555	1	GROMMET	
BD	98	4	5P-5643		SEAL	
	99	4	109-6406	1	COIL AS	
	100	4	3E-5464	1	SWITCH AS-THERMOSTAT	
	101	4	6L-7159	2	SCREW-MACHINE (8-32X.313 IN)	

OPERATOR STATION

137-4932 AIR CONDITIONER AR *(contd.)* i01008844

NOTE	REF NO	GRAPHIC REF	PART NUMBER	QTY	PART NAME 1 2 3 4 5 6 (PRODUCT LEVEL)	SEE PAGE
M	102	4	**8T-4191**	2	BOLT (M10X1.50X16MM)	
	103	4	**2V-1937**	1	GROMMET	
	104	4	**5P-1075**	1	WASHER-HARD (3MM THK)	
	105	4	**1V-3113**	1	CLIP	
	106	4	**2A-3211**	1	WASHER (0.8MM THICK)	
	107	4	**7S-4346**	1	SCREW-MACHINE	
BD	108	4	**5P-5992**		HOSE (.1M)	
B	109	4	**2V-1937**	1	GROMMET	
	110	5	**4L-9337**	6	BOLT (3/8-16X1.5IN)	
	111	5	**7W-4973**	1	BRACKET	
	112	5	**5S-7383**	2	BOLT (3/8-16X1.75IN)	
	113	5	**8T-9389**	1	BOLT (1/2-13X2.75IN)	
	114	5	**6V-8188**	2	NUT (1/2-13 THD)	
	115	5	**7W-4974**	2	PLATE	
	116	5	**6V-4432**	1	BOLT (1/2-13X4IN)	
	117	5	**8T-4223**	3	WASHER-HARD (3MM THK)	
	118	5	**8F-0492**	1	SPACER (15.88MM THK)	
	119	5	**8T-4896**	13	WASHER-HARD (2.5MM THK)	
	120	5	**6V-8801**	6	NUT (3/8-16 THD)	
	121	5	**8T-4835**	1	BOLT (1/2X2.0 IN)	
	122	5	**7W-4978**	1	NUT AS	
		5	**1F-0750**	1	NUT-WELD (3/8-16 THD)	
	123	5	**8T-2502**	1	BOLT (3/8-16X1.125IN)	
	124	5	**7C-8434**	1	BRACKET	
	125	5	**4Y-5911**	1	STRAP	
	126	5	**1P-9744**	1	V-BELT	

B-USE AS REQUIRED
D-ORDER BY THE METER
F-NOT SHOWN
I-SEE HOSE FABRICATION GUIDE
M-METRIC PART
Y-SEPARATE ILLUSTRATION

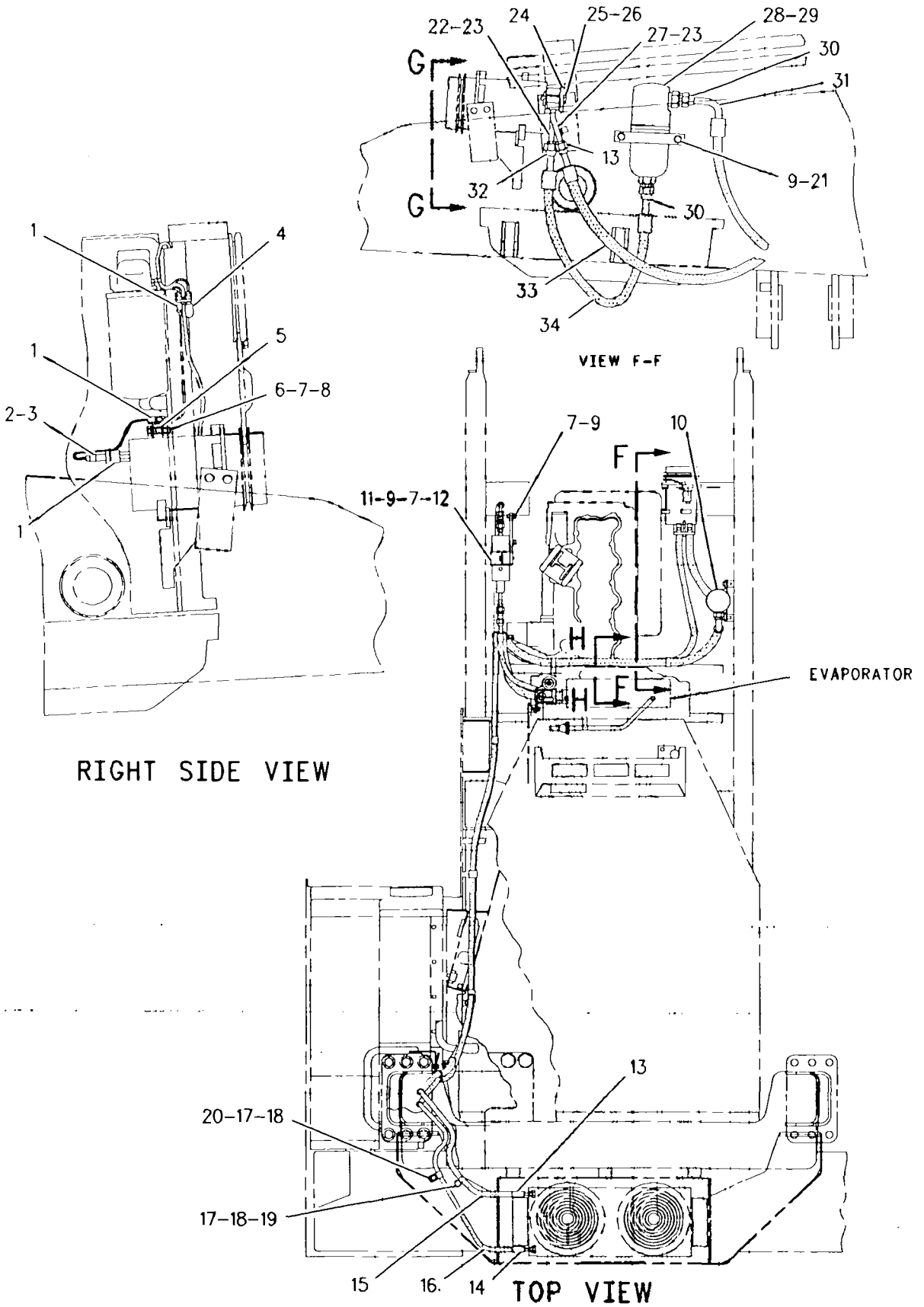

GRAPHIC #1

g00519278

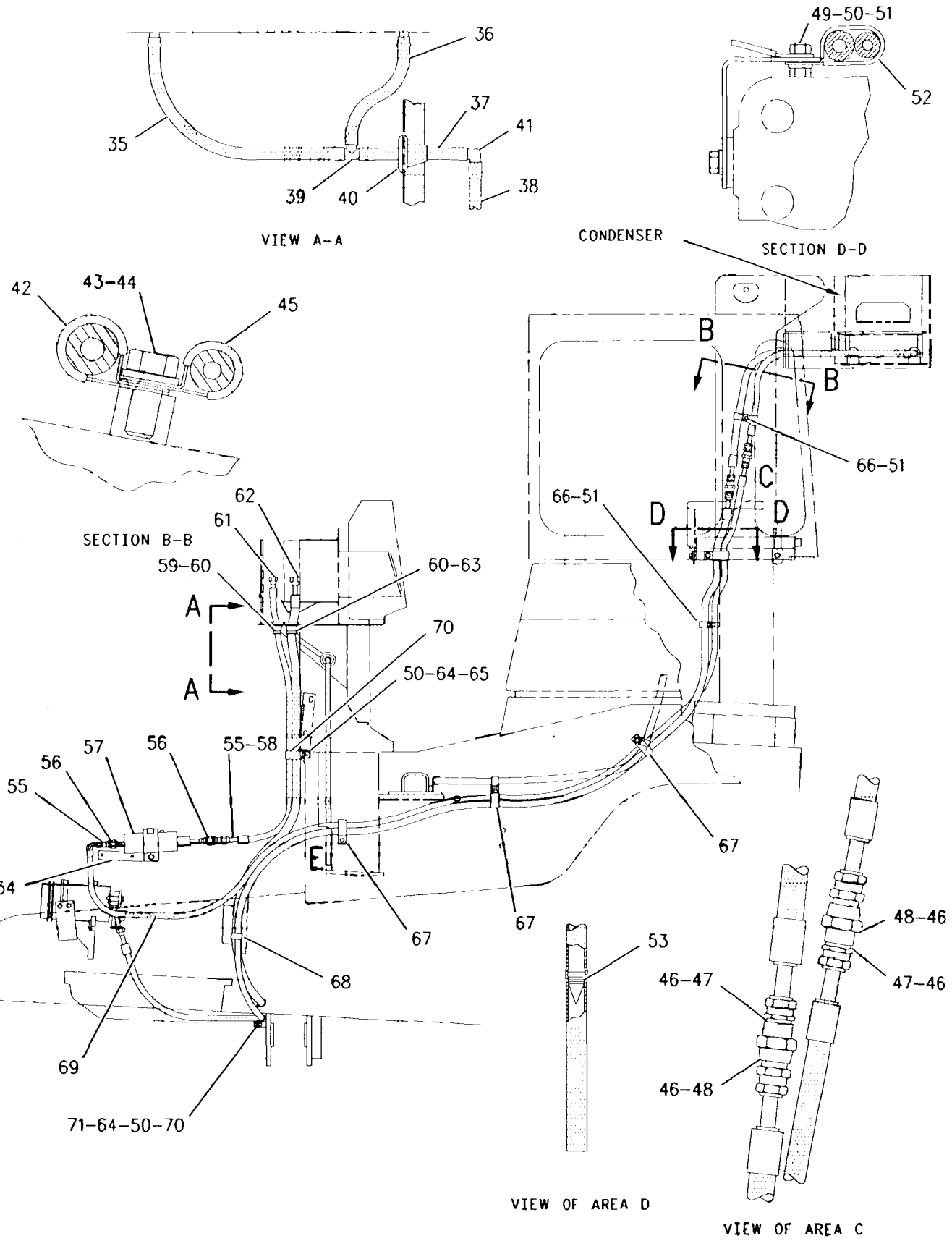

GRAPHIC #2 g00519279

137-4932 AIR CONDITIONER AR *(contd.)* i01008844

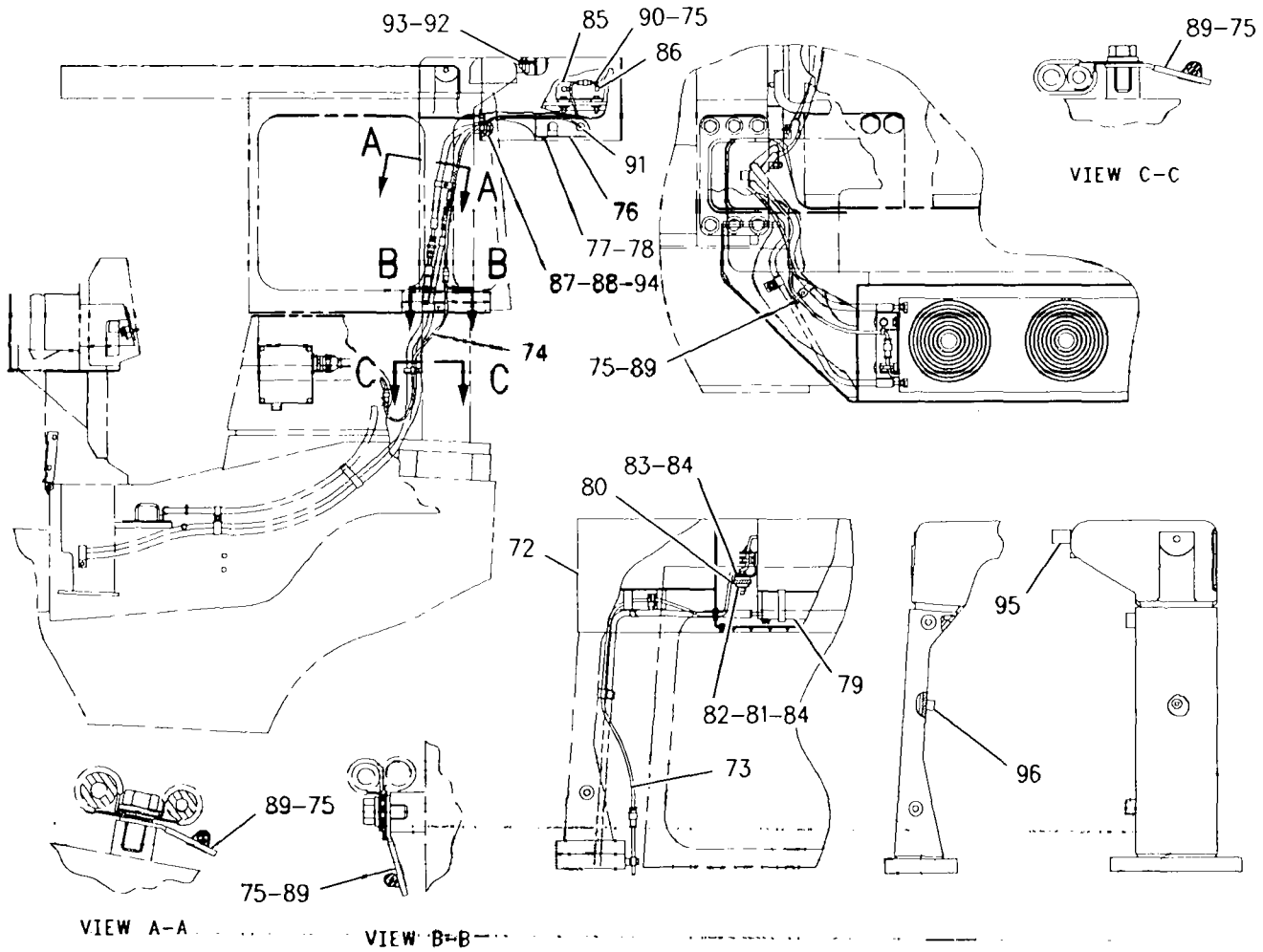

GRAPHIC #3 g00519280

137-4932 AIR CONDITIONER AR *(contd.)* i01008844

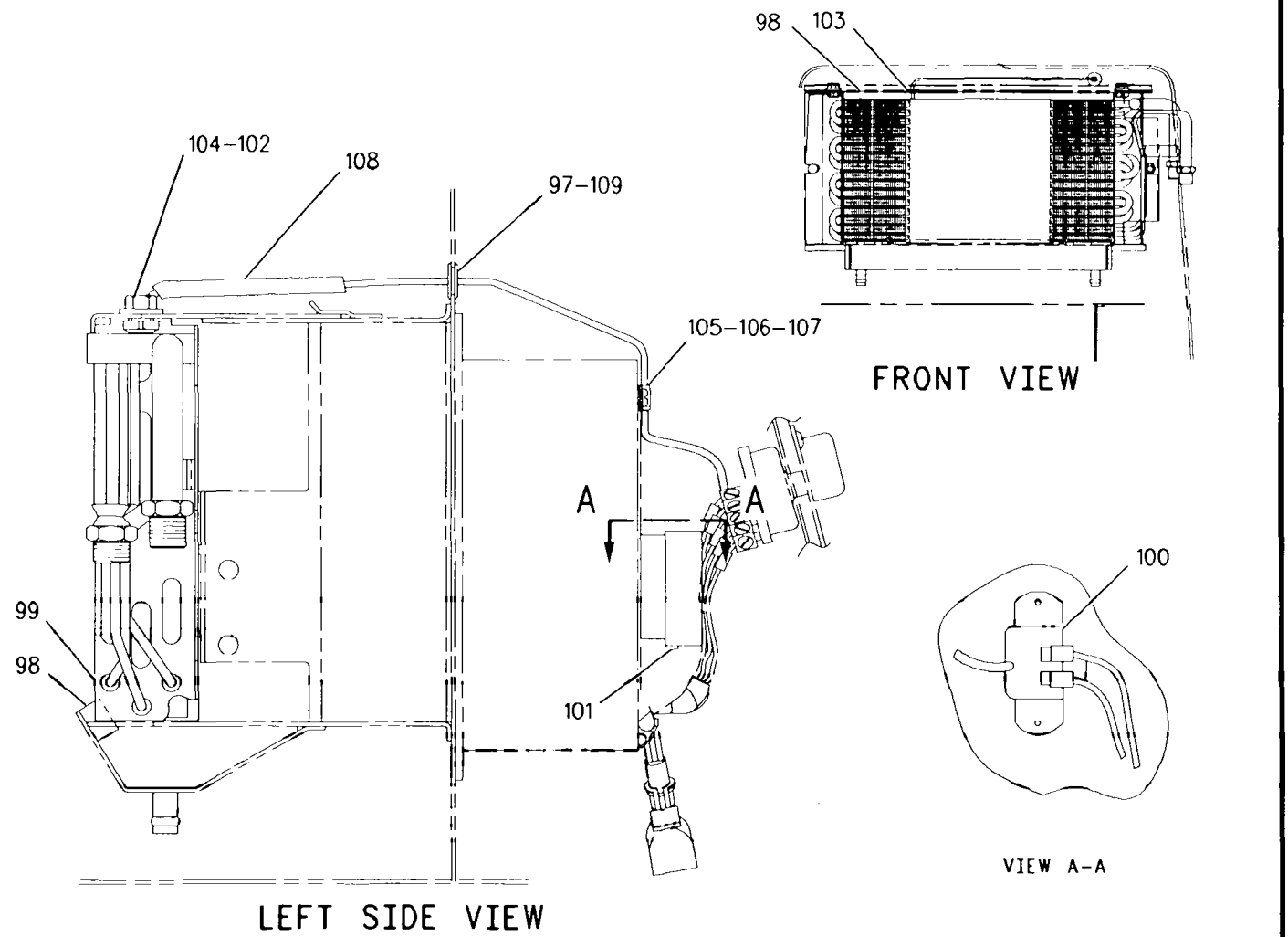

GRAPHIC #4 g00519281

137-4932 AIR CONDITIONER AR *(contd.)* i01008844

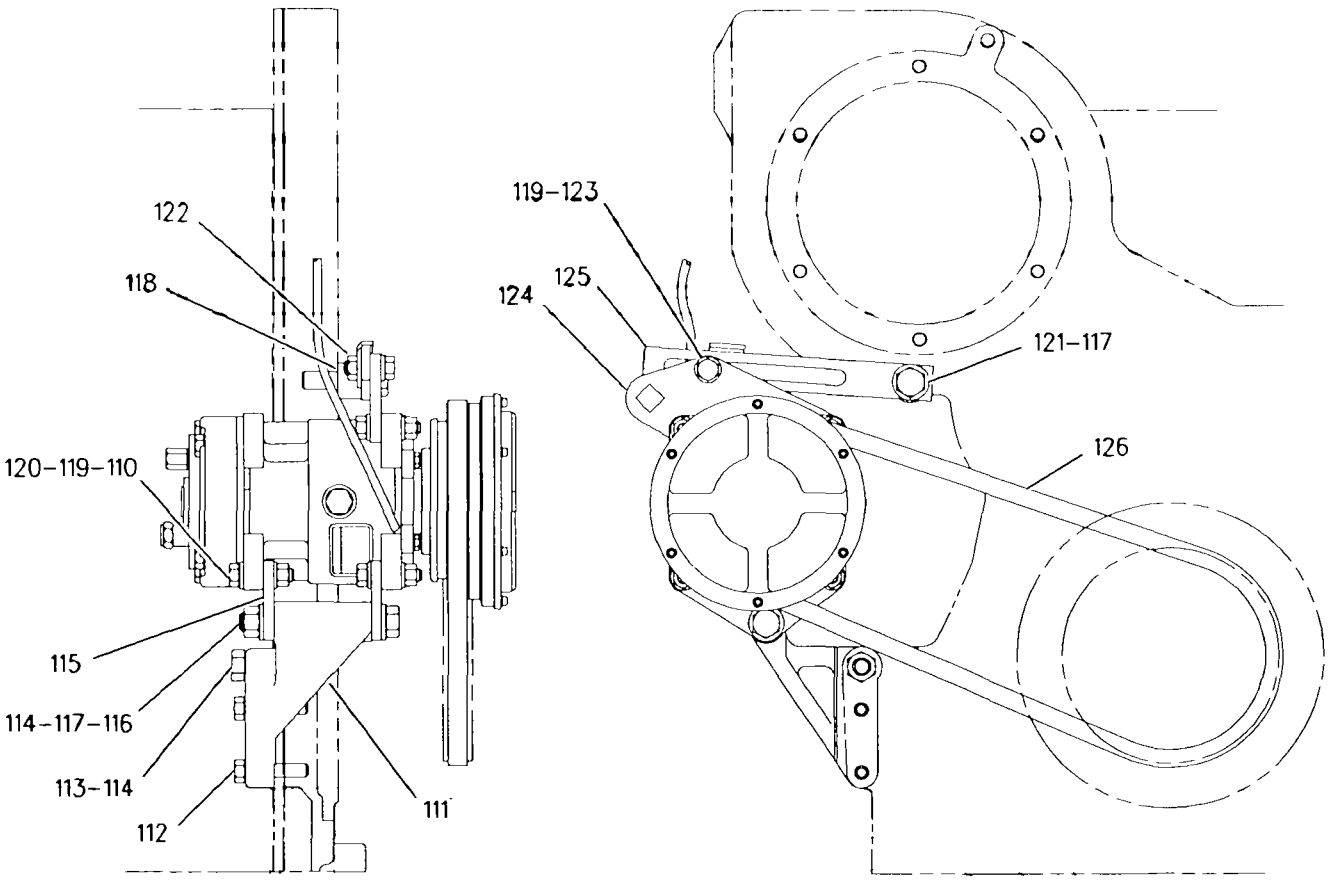

GRAPHIC #5 g00519282

OPERATOR STATION

109-5762 BLOWER GP

PIN 2YN1-UP; 3ZN1-UP; 4MN1-UP; 5LN1-UP; 6JN1-UP; 7KN1-UP; 8LN1-UP; 9PN1-UP
PART OF 141-7422 PRESSURIZER GP-CAB

SMCS-7316 i00574669

NOTE	REF NO	GRAPHIC REF	PART NUMBER	QTY	PART NAME 1 2 3 4 5 6 (PRODUCT LEVEL)	SEE PAGE
	1	1	109-6405	1	PLATE AS	
	2	1	118-5194	1	WHEEL-BLOWER	
	3	1	7G-0942	2	PLATE-ORIFICE	
	4	1	3E-6386	1	MOTOR AS	
		1	9G-0398	1	KIT-MOTOR BRUSH (INCLUDES BRUSH CAPS & BRUSHES)	
	5	1	102-8802	2	KIT-RECEPTACLE (EACH INCLUDES WEDGE & RECEPTACLE AS)	
	6	1	9W-0852	2	PIN-CONNECTOR	
	7	1	3E-3365	1	WEDGE	
	8	1	9G-1182	2	BRACKET	
	9	1	2G-0415	2	BRACKET	
	10	1	4B-4274	4	WASHER (1.2MM THK)	
	11	1	1M-1230	4	NUT & LOCK AS	
	12	1	4D-6624	2	WASHER-RUBBER	
	13	1	5P-4115	6	WASHER (2MM THK)	
	14	1	8T-4896	1	WASHER-HARD (2.5MM THK)	
	15	1	5P-8167	1	BOLT (3/8-16X.625IN)	
	16	1	5P-9085	1	CLIP (7.94MM ID)	
	17	1	3S-2093	1	STRAP-CABLE (1.75IN DIA)	
	18	1	111-7198	1	HARNESS AS	
	19	1	6T-0385	1	GASKET	
	20	1	5P-8441	1	GROMMET	
	21	1	6D-4246	2	CLIP (19.05MM ID)	
	22	1	9G-1950	1	RESISTOR	
	23	1	6V-3320	1	SCREW-MACHINE (1/4-20X7.50IN)	
	24	1	6T-6708	2	WASHER (4.1MM THK)	
	25	1	3E-9865	7	LOCKNUT (1/4-20 THD)	
	26	1	6V-1668	2	WASHER (3MM THK)	
	27	1	3E-6387	1	MOTOR AS	
	28	1	102-8807	1	KIT-CONNECTING PLUG	
	29	1	9W-0844	2	SOCKET-CONNECTION	
	30	1	3E-3361	1	PLUG AS-CONNECTOR	
		1	102-8807	1	KIT-CONNECTING PLUG (INCLUDES WEDGE & PLUG AS)	
		1	102-8812	1	SEAL-INTERFACE	
	31	1	3E-3362	1	WEDGE-PLUG LOCK	
	32	1	9G-0398	1	KIT-MOTOR BRUSH (INCLUDES BRUSH CAPS & BRUSHES)	
	33	1	118-5195	1	WHEEL-BLOWER	

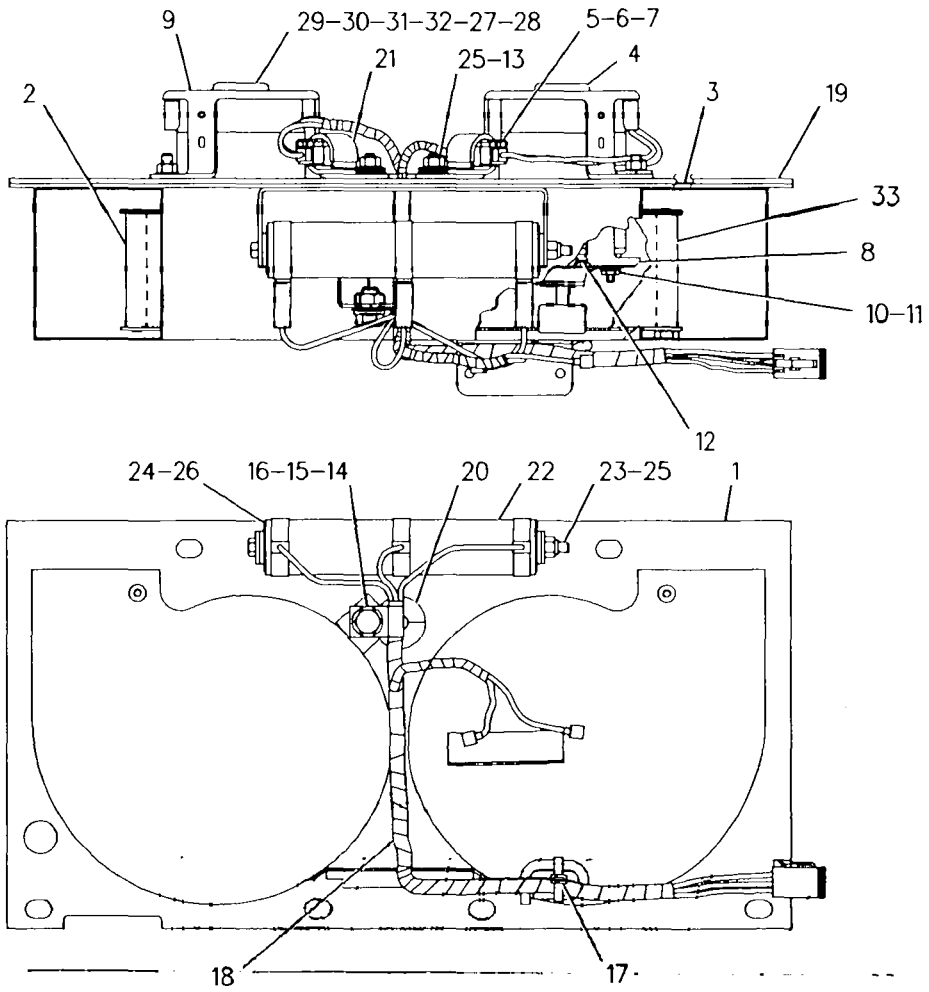

GRAPHIC #1 g00261971

OPERATOR STATION

112-6632 BOTTLE GP-WINDOW WASHER

PIN 2YN1-UP; 3ZN1-UP; 4MN1-UP; 5LN1-UP; 6JN1-UP; 7KN1-UP; 8LN1-UP; 9PN1-UP
PART OF 139-1115, 158-6657 CAB AR
TYPE 1

SMCS-7306 i00959757

NOTE	REF NO	GRAPHIC REF	PART NUMBER	QTY	PART NAME 1 2 3 4 5 6 (PRODUCT LEVEL)	SEE PAGE
	1	1	8T-9364	4	BOLT (1/4-20X.625IN)	
	2	1	8T-4205	4	WASHER-HARD (2MM THK)	
Y	3	1	*137-8687*	1	BOTTLE GP-WINDOW WASHER	464
E	4	1	5P-5992	2	HOSE (120CM EACH)	
E	5	1	5P-5992	2	HOSE (105CM EACH)	
	6	1	109-9781	1	HARNESS AS	
BE	7	1	7X-7929		TAPE	
BE	8	1	7X-7928		TAPE	
BD	9	1	6V-5817		CONDUIT-FLEXIBLE (25.4MM ID)	
BE	10	1	7X-7930		TAPE	
	11	1	112-3261	1	GROMMET	
	12	1	3V-3263	4	CONNECTOR	
BE	13	1	7X-7927		TAPE	

B-USE AS REQUIRED
D-ORDER BY THE METER
E-ORDER BY THE CENTIMETER
Y-SEPARATE ILLUSTRATION

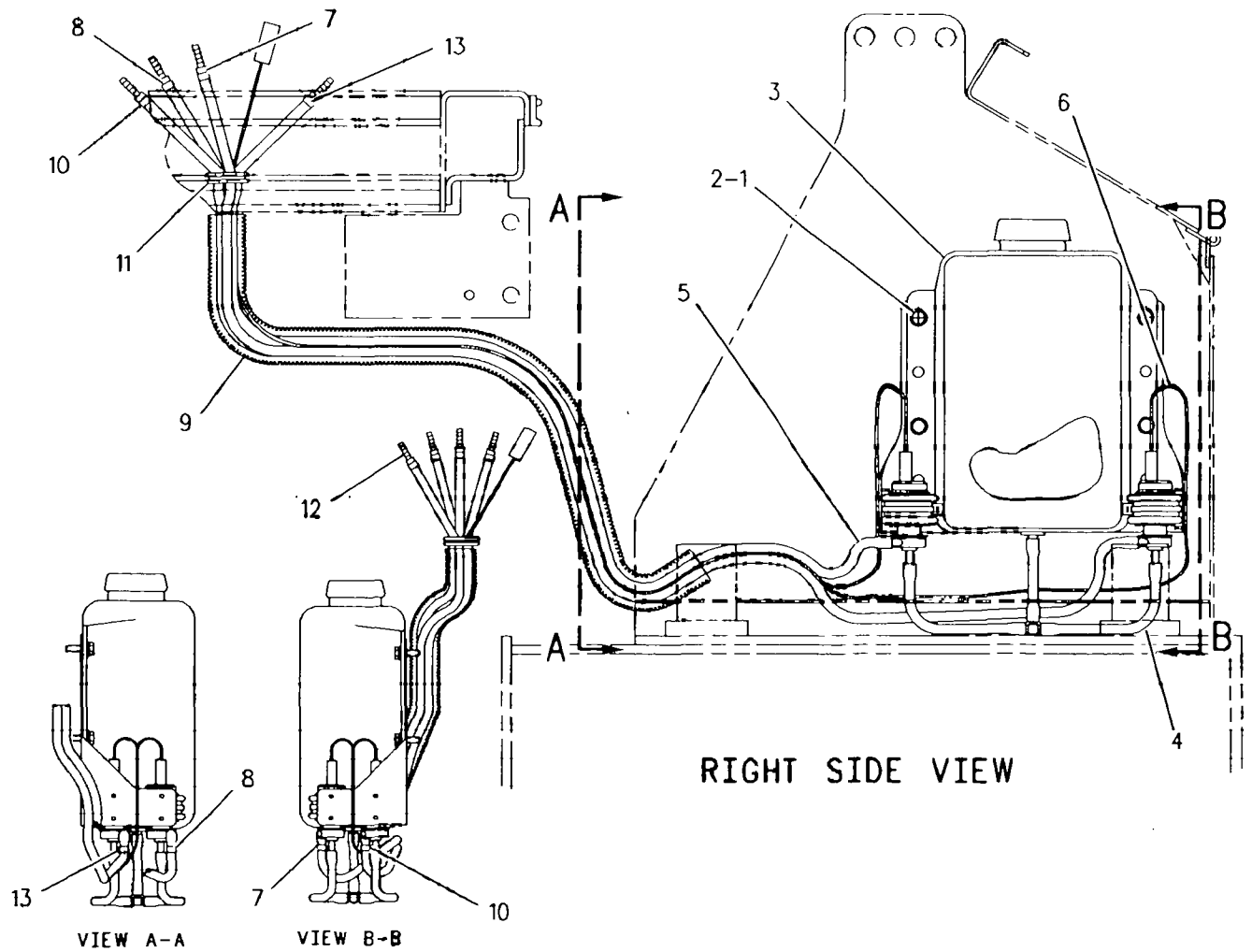

GRAPHIC #1 g00295121

OPERATOR STATION

112-6632 BOTTLE GP-WINDOW WASHER

PIN 2YN1-UP; 3ZN1-UP; 4MN1-UP; 5LN1-UP; 6JN1-UP; 7KN1-UP; 8LN1-UP; 9PN1-UP
PART OF 139-1115, 158-6657 CAB AR
TYPE 2

SMCS-7306 i00959763

NOTE	REF NO	GRAPHIC REF	PART NUMBER	QTY	PART NAME 1 2 3 4 5 6 (PRODUCT LEVEL)	SEE PAGE
C	1	1	8T-4896	2	WASHER-HARD (2.5MM THK)	
Y	2	1	137-8687	1	BOTTLE GP-WINDOW WASHER	464
C	3	1	150-9046	1	HARNESS AS	
BE	4	1	7X-7929		TAPE	
BE	5	1	7X-7930		TAPE	
CE	6	1	144-0195		HOSE (68CM)	
CE	7	1	144-0195		HOSE (59CM)	
BE	8	1	7X-7928		TAPE	
BE	9	1	7X-7927		TAPE	
C	10	1	5P-4115	1	WASHER (2MM THK)	
C	11	1	5M-3062	2	BOLT (3/8-16X.75IN)	
C	12	1	3S-2093	1	STRAP-CABLE (1.75IN DIA)	
C	13	1	8T-5383	4	VALVE AS-CHECK	
C	14	1	4P-8134	1	CLIP	
C	15	1	5S-7349	1	BOLT (1/4-20X0.5IN)	

B-USE AS REQUIRED
C-CHANGE FROM PREVIOUS TYPE
E-ORDER BY THE CENTIMETER
Y-SEPARATE ILLUSTRATION

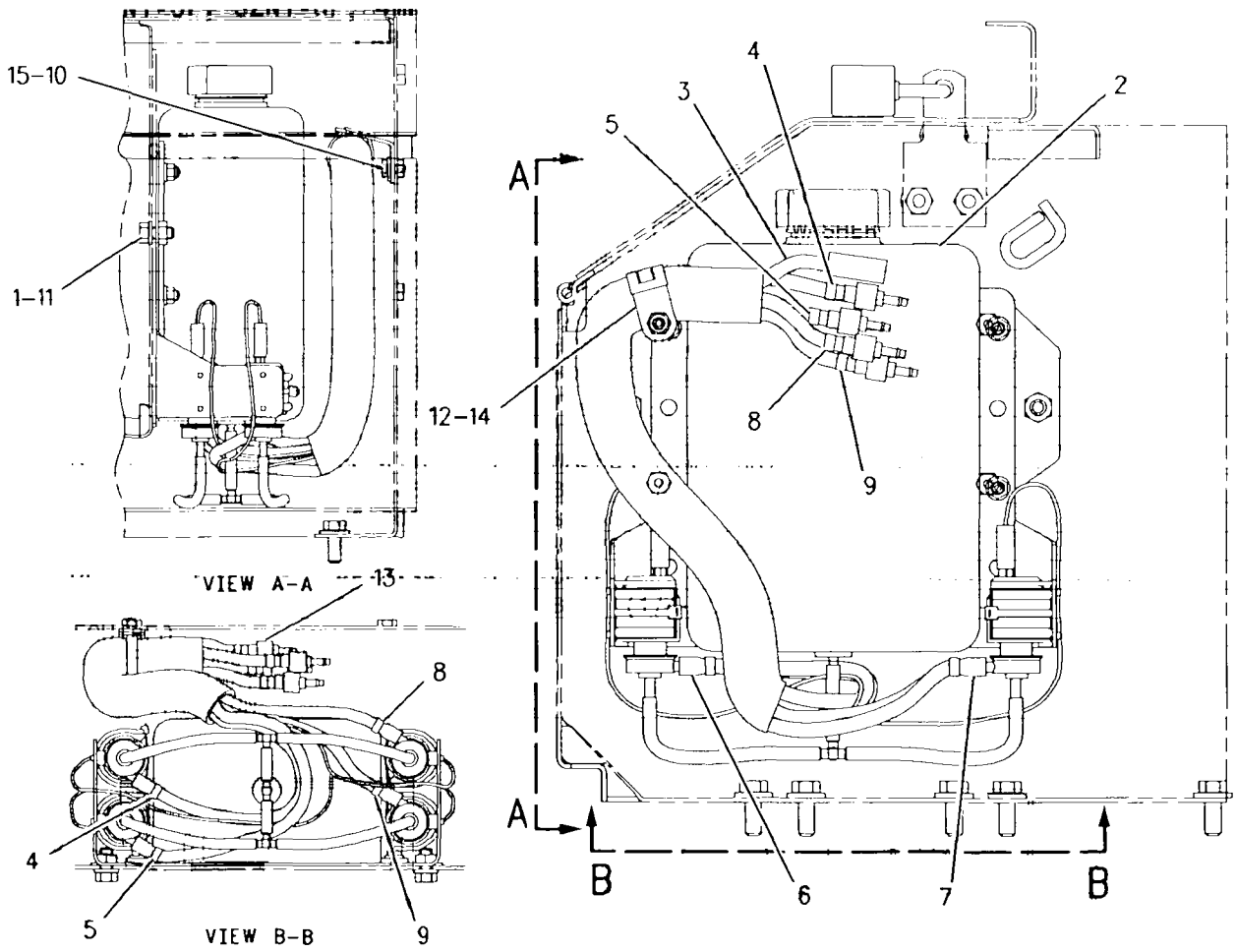

GRAPHIC #1 g00484953

OPERATOR STATION

137-8687 BOTTLE GP-WINDOW WASHER

PIN 2YN1-UP; 3ZN1-UP; 4MN1-UP; 5LN1-UP; 6JN1-UP; 7KN1-UP; 8LN1-UP; 9PN1-UP
PART OF 112-6632 BOTTLE GP-WINDOW WASHER
TYPE 1

SMCS-7306 i00949569

NOTE	REF NO	GRAPHIC REF	PART NUMBER	QTY	PART NAME 1 2 3 4 5 6 (PRODUCT LEVEL)	SEE PAGE
	1	1	6K-9632	3	TEE	
	2	1	7K-1181	6	STRAP-CABLE (4.00IN DIA)	
	3	1	7T-8891	4	PUMP AS-WASHER	
	4	1	8E-8292	1	CAP-VENTED	
	5	1	9M-5731	8	RIVET-POP	
	6	1	114-4513	4	BRACKET-PUMP	
	7	1	137-8685	1	PLATE	
	8	1	137-8689	1	BOTTLE-WASHER	
D	9	1	5P-5992	4	HOSE (.135M EACH)	
D	10	1	5P-5992	2	HOSE (.025M EACH)	
D	11	1	5P-5992	1	HOSE (.050M)	

D-ORDER BY THE METER

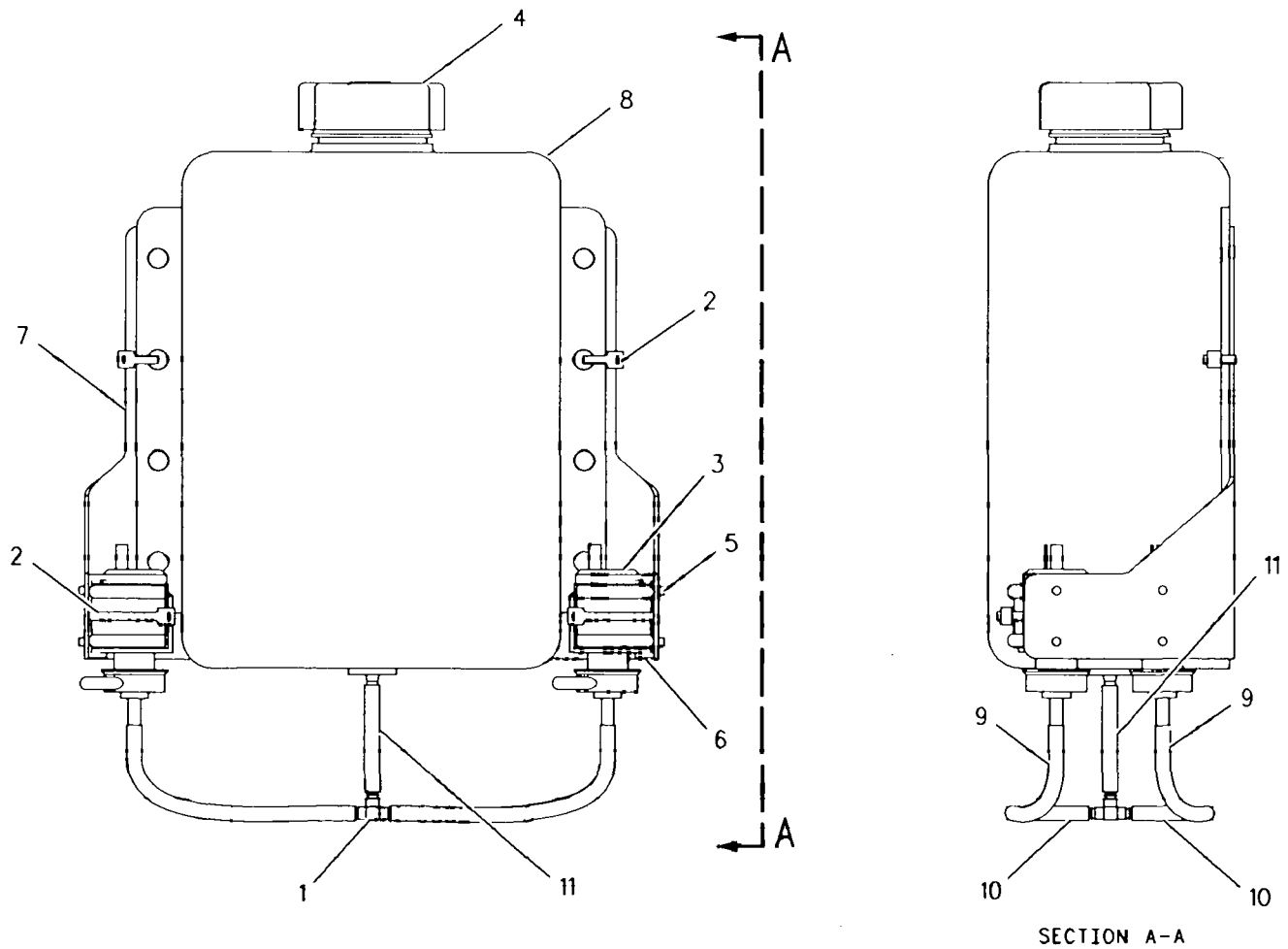

SECTION A-A

GRAPHIC #1

g00264016

OPERATOR STATION

137-8687 BOTTLE GP-WINDOW WASHER

PIN 2YN1-UP; 3ZN1-UP; 4MN1-UP; 5LN1-UP; 6JN1-UP; 7KN1-UP; 8LN1-UP; 9PN1-UP
PART OF 112-6632 BOTTLE GP-WINDOW WASHER
TYPE 2

SMCS-7306 i00949606

NOTE	REF NO	GRAPHIC REF	PART NUMBER	QTY	PART NAME 1 2 3 4 5 6 (PRODUCT LEVEL)	SEE PAGE
C	1	1	3E-9865	4	LOCKNUT (1/4-20 THD)	
	2	1	6K-9632	3	TEE	
C	3	1	7K-1181	4	STRAP-CABLE (4.00IN DIA)	
	4	1	7T-8891	4	PUMP AS-WASHER	
	5	1	8E-8292	1	CAP-VENTED	
	6	1	9M-5731	8	RIVET-POP	
	7	1	114-4513	4	BRACKET-PUMP	
	8	1	137-8689	1	BOTTLE-WASHER	
C	9	1	150-5410	1	PLATE AS	
		1	1F-0750	2	NUT-WELD (3/8-16 THD)	
		1	3P-3604	4	STUD-WELD (1/4-20X.620IN OAL)	
C	10	1	8T-4205	4	WASHER-HARD (2MM THK)	
CE	11	1	144-0195		HOSE (5.0CM)	
CE	12	1	144-0195	2	HOSE (2.5CM)	
CE	13	1	144-0195	4	HOSE (13.5CM)	

C-CHANGE FROM PREVIOUS TYPE
E-ORDER BY THE CENTIMETER

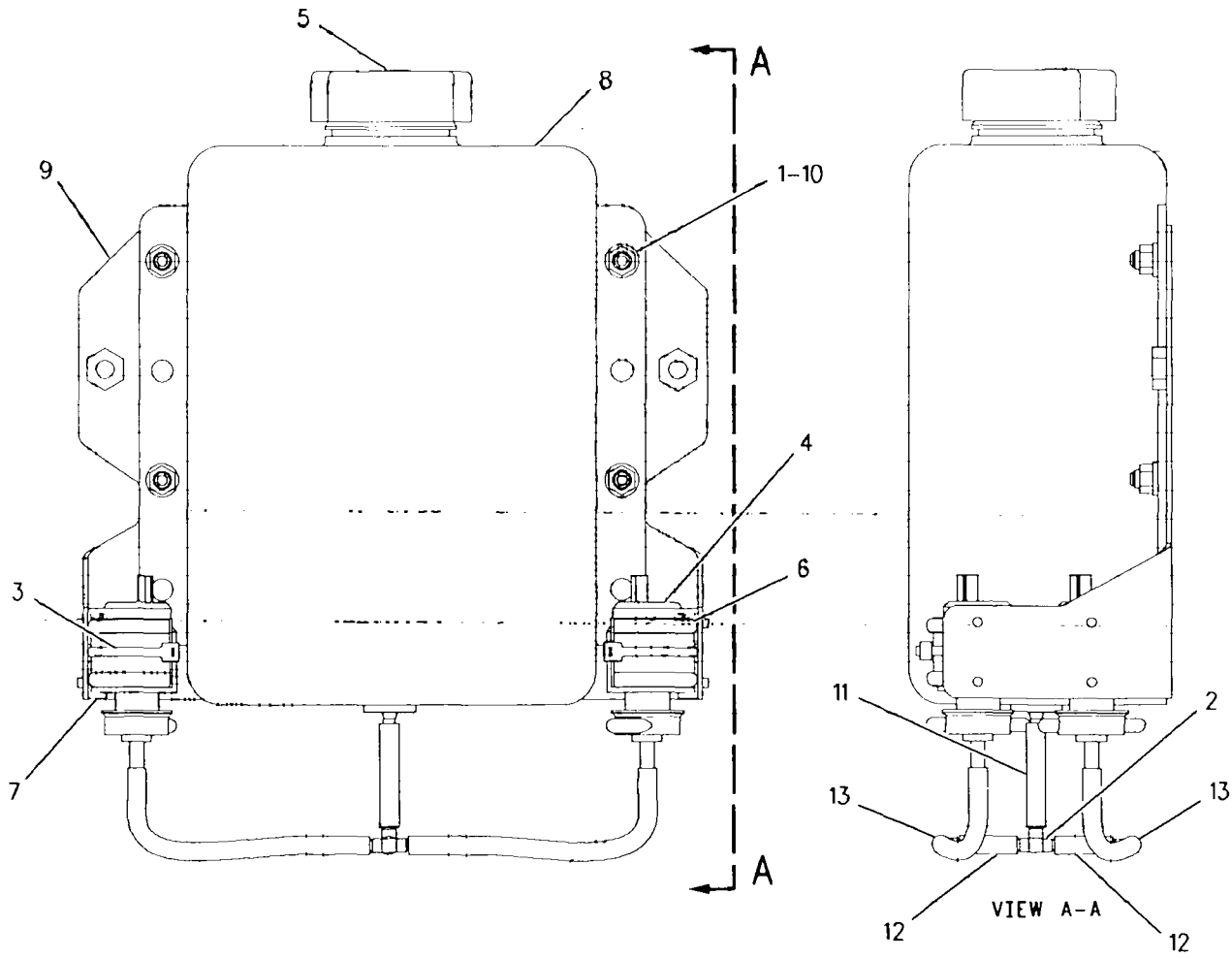

GRAPHIC #1 g00485006

OPERATOR STATION

105-9655 CAB AR

PIN 2YN1-UP; 3ZN1-UP; 4MN1-UP; 5LN1-UP; 6JN1-UP; 7KN1-UP; 8LN1-UP; 9PN1-UP
PART OF 139-1115, 158-6657 CAB AR

SMCS-7301, 7325, 7335 **i00770238**

NOTE	PART NUMBER	QTY	PART NAME 1 2 3 4 5 6 (PRODUCT LEVEL)	SEE PAGE
Y	*105-9656*	1	CAB GP	470
Y	*105-9657*	1	INSTALLATION GP-RADIO	500
Y	*105-9658*	1	LINER GP-CAB	502
Y	*105-9659*	1	MIRROR GP-REAR VIEW	506
Y	*105-9660*	1	WASHER GP-WINDOW	550
Y	*105-9661*	1	WIPER GP-WINDOW	572

Y-SEPARATE ILLUSTRATION

OPERATOR STATION

139-1115 CAB AR–RETROFIT–CUSTOM

PIN 3ZN1-UP; 5LN1-UP; 7KN1-UP; 9PN1-UP

SMCS-7301, 7325, 7335 i01009538

NOTE	PART NUMBER	QTY	PART NAME 1 2 3 4 5 6 (PRODUCT LEVEL)	SEE PAGE
Y	*112-6632*	1	BOTTLE GP-WINDOW WASHER	462
Y	*105-9655*	1	CAB AR	466
Y	*105-9662*	1	COVER GP-CONSOLE	486
Y	*108-1335*	1	HANDHOLD GP	494
Y	*108-2675*	1	HEATER GP-CAB	496
Y	*108-1333*	1	LINES GP-HEATER	505
Y	*105-9665*	1	MOUNTING GP-CAB	512
Y	*141-7422*	1	PRESSURIZER GP-CAB	526
Y	*7G-7999*	1	ROPS GP	527
	114-8963	1	CABLE AS	
	111-3937	1	FILM-PANEL	
	110-6109	2	KNOB-CONTROL	
	7D-6922	12	LOCKNUT (6-32 THD)	
	8Y-6388	2	LOUVER AS	
	8Y-6390	4	LOUVER AS	
	131-8494	1	PLATE	
	119-6613	1	PLATE-EROPS	
	119-6614	1	PLATE-FOPS	
	9N-1995	4	RIVET-POP	
	124-7630	12	SCREW-FLAT HEAD	
	6P-3236	1	SWITCH AS-ROTARY	
	6V-8362	5	SCREW-MACHINE (8-32X.31IN)	
	9B-7233	5	LOCKWASHER (NO.8)	

Y-SEPARATE ILLUSTRATION

OPERATOR STATION

158-6657 CAB AR–CUSTOM–RETROFIT

PIN 2YN1-UP; 4MN1-UP; 6JN1-UP; 8LN1-UP

FOR USE WITH CUSTOM ATTACHMENT PLATFORM AR (O-ROPS) (CAB READY)

SMCS-7301, 7325, 7335 **i01003078**

NOTE	PART NUMBER	QTY	PART NAME 1 2 3 4 5 6 (PRODUCT LEVEL)	SEE PAGE
Y	*105-9655*	1	CAB AR	466
Y	*129-2008*	1	COVER GP-CONSOLE	490
Y	*108-2675*	1	HEATER GP-CAB	496
Y	*108-1333*	1	LINES GP-HEATER	505
Y	*105-9665*	1	MOUNTING GP-CAB	512
Y	*141-7422*	1	PRESSURIZER GP-CAB	526
Y	*7G-7999*	1	ROPS GP	527
Y	*112-6632*	1	BOTTLE GP-WINDOW WASHER	462
	114-8963	1	CABLE AS	
	111-3937	1	FILM-PANEL	
	110-6109	2	KNOB-CONTROL	
	7D-6922	12	LOCKNUT (6-32 THD)	
	8Y-6388	2	LOUVER AS	
	151-5715	4	LOUVER AS	
	119-6613	1	PLATE-EROPS	
	119-6614	1	PLATE-FOPS	
	9N-1995	4	RIVET-POP	
	124-7630	12	SCREW-FLAT HEAD	
	6P-3236	1	SWITCH AS-ROTARY	
	6V-8362	5	SCREW-MACHINE (8-32X.31IN)	
	9B-7233	5	LOCKWASHER (NO.8)	

Y-SEPARATE ILLUSTRATION

OPERATOR STATION

105-9656 CAB GP

PIN 2YN1-UP; 3ZN1-UP; 4MN1-UP; 5LN1-UP; 6JN1-UP; 7KN1-UP; 8LN1-UP; 9PN1-UP
PART OF 105-9655 CAB AR

SMCS-7301, 7325, 7335 i00887775

NOTE	REF NO	GRAPHIC REF	PART NUMBER	QTY	PART NAME 1 2 3 4 5 6 (PRODUCT LEVEL)	SEE PAGE
	1	1	7G-2454	1	GLASS	
BD	2	1	5P-6605		SEAL	
	3	1	125-8254	1	GLASS	
	4	1	8T-3561	1	PLATE-IDENTIFICATION	
		1	9N-1995	2	RIVET-POP	
	5	1	9G-1127	1	GLASS	
	6	1	106-5637	1	CAB AS	
Y	7	1	8E-5114	1	WINDOW AS-SLIDING	559
	8	1	120-8439	1	DOOR AS-LH	
	9	1	7X-7729	12	WASHER (3MM THK)	
M		1	8T-4136	12	BOLT (M10X1.50X25MM)	
	10	1	5M-8500	2	KNOB	
	11	1	1B-8735	2	KEY-WOODRUFF	
		1	118-0693	2	ROD	
	12	1	4K-3533	2	WASHER (17.5MM OD)	
	13	1	113-7371	1	BRACKET-RH	
		1	113-7377	1	BRACKET-LH	
	14	1	5G-8655	2	LEVER	
	15	1	6I-9386	2	BRACKET AS	
		1	7P-7610	2	PLATE	
	16	1	4M-6425	2	BOLT (5/16-18X1IN)	
	17	1	8T-9043	2	BOLT (5/16-18X.875IN)	
BD	18	1	5P-5643		SEAL	
	19	1	6V-8189	2	NUT (5/16-18 THD)	
	20	1	8C-3442	2	SPRING-COIL	
	21	1	9D-9736	2	BUMPER	
BD	22	1	8T-6936		SEAL	
BD	23	1	5P-7483		SEAL	
Y	24	2	8E-5112	1	WINDOW AS-SLIDING	557
BD	25	2	5P-6605		SEAL	
Y	26	2	8E-5113	1	WINDOW AS-SLIDING	558
	27	2	5P-1076	1	WASHER-HARD (4MM THK)	
M	28	2	8T-4171	2	BOLT (M6X1.0X12MM)	
	29	2	125-8254	1	GLASS	
	30	2	120-8440	1	DOOR AS-RH	
	31	2	9G-1127	1	GLASS	
	32	2	108-5473	1	LINKAGE AS (RH)	
		2	108-5475	1	LINKAGE AS (LH)	
B	33	2	8T-0318	8	SHIM (0.8MM THK)	
	34	2	109-9828	1	LATCH AS-ROTARY (RH)	
		2	109-9829	1	LATCH AS-ROTARY (LH)	
M	35	2	8T-4181	8	BOLT (M6X1X20MM)	
	36	2	8Y-8304	2	STRIKER AS-LATCH (EACH INCLUDES)	
		2	8T-4158	1	WASHER	
M	37	2	8C-3210	14	BOLT (M6X1X16MM)	
	38	2	6V-7636	2	PIN AS-SPRING	
	39	2	108-5470	2	HANDLE AS	
BD	40	2	5P-7483		SEAL	
BD	41	2	5P-5930		SEAL	
	42	2	7X-0623	12	WASHER	
M		2	8T-4136	12	BOLT (M10X1.50X25MM)	
BD	43	2	8T-6936		SEAL	
	44	2	5P-4115	2	WASHER (2MM THK)	
	45	2	139-1061	1	PLATE	
M	46	2	8T-4192	1	BOLT (M12X1.75X25MM)	

NOTE	REF NO	GRAPHIC REF	PART NUMBER	QTY	PART NAME 1 2 3 4 5 6 (PRODUCT LEVEL)	SEE PAGE
BE	47	2	103-2543		SEAL	

B-USE AS REQUIRED
D-ORDER BY THE METER
E-ORDER BY THE CENTIMETER
M-METRIC PART
Y-SEPARATE ILLUSTRATION

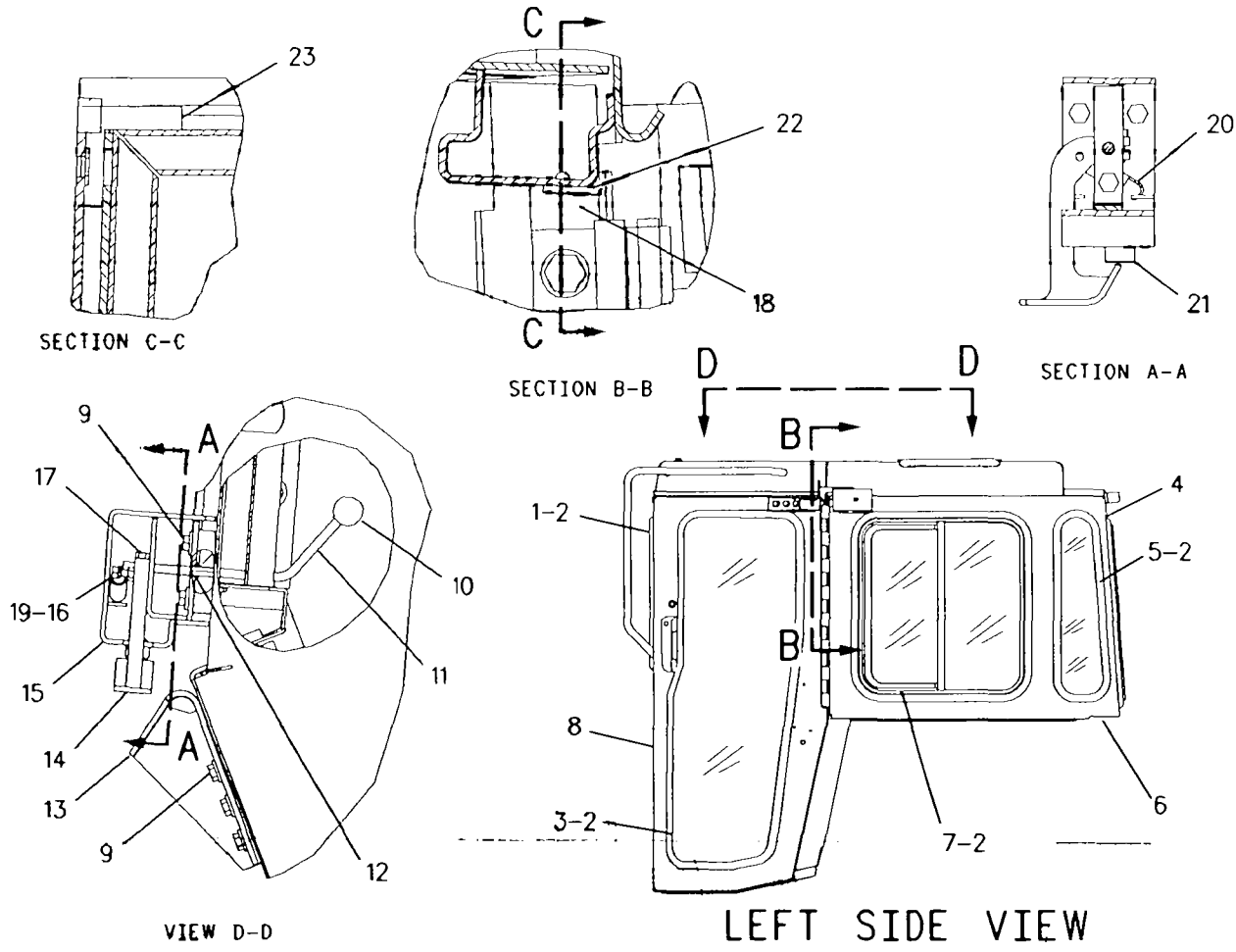

GRAPHIC #1

g00399357

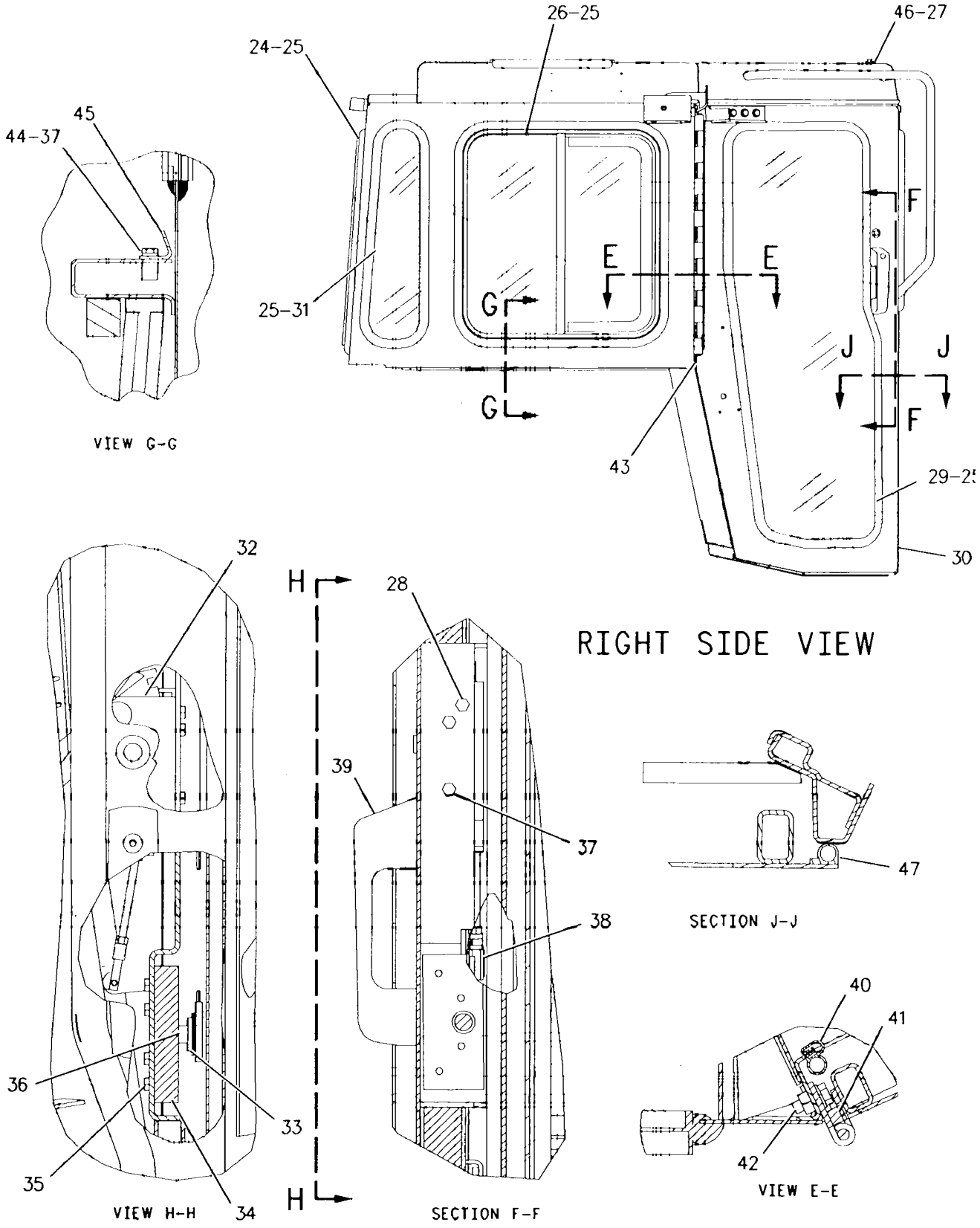

GRAPHIC #2

g00468532

OPERATOR STATION

3E-1906 COMPRESSOR GP-REFRIGERANT

PIN 2YN1-UP; 3ZN1-UP; 4MN1-UP; 5LN1-UP; 6JN1-UP; 7KN1-UP; 8LN1-UP; 9PN1-UP
FIELD REPLACEMENT FOR 134-3997–PAGE 476
TYPE 1

SMCS-1802 **i00926370**

NOTE	REF NO	GRAPHIC REF	PART NUMBER	QTY	PART NAME 1 2 3 4 5 6 (PRODUCT LEVEL)	SEE PAGE
C	1	1	**134-3998**	1	COIL AS-24 VOLT	
		1	**3E-3365**	1	WEDGE	
		1	**9W-0852**	2	PIN-CONNECTOR	
		1	**102-8802**	1	KIT-RECEPTACLE (2 PIN)	
Y	2	1	**134-3997**	1	COMPRESSOR GP-REFRIGERANT	476

C-CHANGE FROM PREVIOUS TYPE
Y-SEPARATE ILLUSTRATION

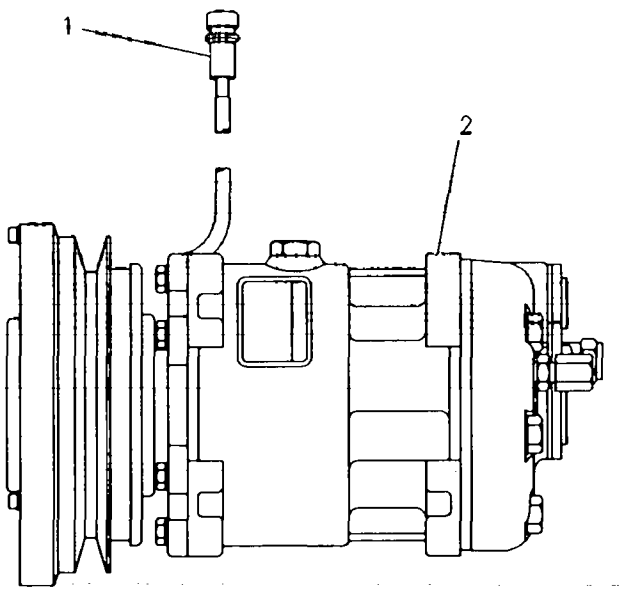

GRAPHIC #1 g00087586

OPERATOR STATION

3E-1906 COMPRESSOR GP-REFRIGERANT

PIN 2YN1-UP; 3ZN1-UP; 4MN1-UP; 5LN1-UP; 6JN1-UP; 7KN1-UP; 8LN1-UP; 9PN1-UP

FIELD REPLACEMENT FOR 134-3997–PAGE 476

TYPE 2

SMCS-1802 i00926372

NOTE	REF NO	GRAPHIC REF	PART NUMBER	QTY	PART NAME 1 2 3 4 5 6 (PRODUCT LEVEL)	SEE PAGE
C	1	1	7T-4532	1	PLUG AS	
C	2	1	9X-7385	2	SEAL-O-RING (20.22MM ID)	

C-CHANGE FROM PREVIOUS TYPE

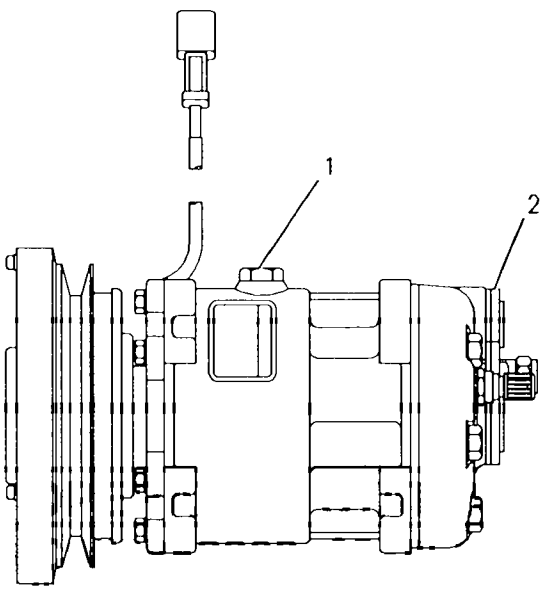

GRAPHIC #1 g00273360

OPERATOR STATION

101-1759 COMPRESSOR GP-REFRIGERANT

PIN 2YN1-UP; 3ZN1-UP; 4MN1-UP; 5LN1-UP; 6JN1-UP; 7KN1-UP; 8LN1-UP; 9PN1-UP
PART OF 137-4932 AIR CONDITIONER AR

SMCS-1802 **i01009741**

NOTE	PART NUMBER	QTY	PART NAME 1 2 3 4 5 6 (PRODUCT LEVEL)	SEE PAGE
Y	*134-3997*	1	COMPRESSOR GP-REFRIGERANT	476

Y-SEPARATE ILLUSTRATION

OPERATOR STATION

134-3997 COMPRESSOR GP-REFRIGERANT

PIN 2YN1-UP; 3ZN1-UP; 4MN1-UP; 5LN1-UP; 6JN1-UP; 7KN1-UP; 8LN1-UP; 9PN1-UP
PART OF 101-1759 COMPRESSOR GP-REFRIGERANT
FIELD REPLACEMENT ORDER 3E-1906–PAGE 473, 142-2387 HARNESS AS

SMCS-1802 i01026700

NOTE	REF NO	GRAPHIC REF	PART NUMBER	QTY	PART NAME 1 2 3 4 5 6 (PRODUCT LEVEL)	SEE PAGE
	1	1	3E-3658	1	COMPRESSOR AS	
	2	1	7T-4532	1	PLUG AS	
	3	1	9X-7385	2	SEAL-O-RING (20.22MM ID)	

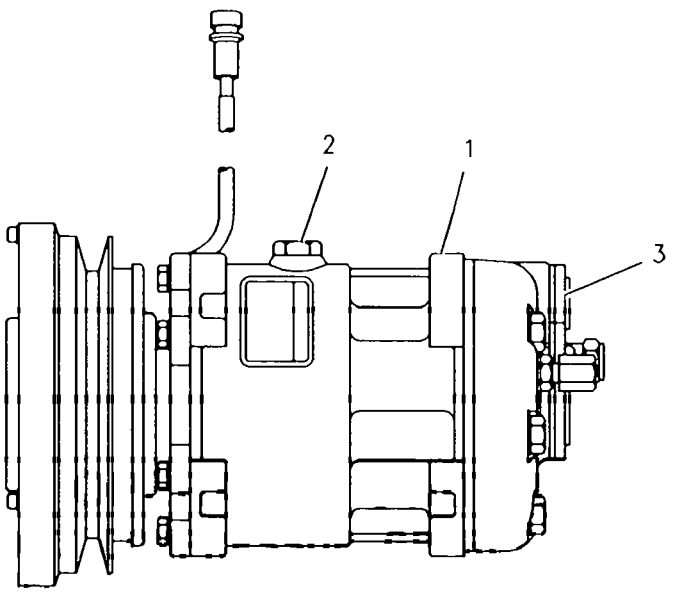

GRAPHIC #1 g00278844

OPERATOR STATION

108-1327 CONDENSER & MTG GP-REFRIGERANT

PIN 2YN1-UP; 3ZN1-UP; 4MN1-UP; 5LN1-UP; 6JN1-UP; 7KN1-UP; 8LN1-UP; 9PN1-UP
ROPS MOUNTED
PART OF 131-8469 CONDENSER AR-REFRIGERANT

SMCS-1805 **i01014226**

NOTE	REF NO	GRAPHIC REF	PART NUMBER	QTY	PART NAME 1 2 3 4 5 6 (PRODUCT LEVEL)	SEE PAGE
	1	1	**109-5485**	1	SUPPORT AS	
		1	**6J-1323**	2	LUG	
		1	**9F-6445**	6	NUT (1/4-20 THD)	
	2	1	**109-4042**	1	HARNESS AS	
	3	1	**124-5785**	1	HARNESS AS	
	4	1	**7K-1181**	6	STRAP-CABLE (4.00IN DIA)	
	5	1	**109-5498**	1	SCREEN AS	
	6	1	**8T-9364**	6	BOLT (1/4-20X.625IN)	
	7	1	**8T-4205**	6	WASHER-HARD (2MM THK)	
Y	8	1	**103-9527**	1	CONDENSER GP-REFRIGERANT	482
	9	1	**8D-0983**	4	MOUNTING	
	10	1	**8D-7185**	4	WASHER (0.12IN THK)	
	11	1	**7X-0447**	4	NUT (7/16-14 THD)	
	12	1	**7X-0311**	4	BOLT (7/16-14X2.25IN)	
	13	1	**8T-5360**	8	WASHER (2.5MM THK)	
	14	1	**9N-4224**	2	PLATE	
M	15	1	**8T-4139**	4	BOLT (M12X1.75X30MM)	
	16	1	**7X-0366**	2	BOLT (3/4-10X2IN)	
	17	1	**8T-4994**	2	WASHER (5MM THK)	
	18	1	**4P-7428**	4	CLIP	
	19	1	**4P-7429**	2	CLIP	
	20	1	**2D-2751**	1	GROMMET	
	21	1	**5P-2566**	3	BOLT (1/2-13X1.50IN)	
	22	1	**8T-4223**	3	WASHER-HARD (3MM THK)	
	23	1	**2V-0936**	2	WASHER	

M-METRIC PART
Y-SEPARATE ILLUSTRATION

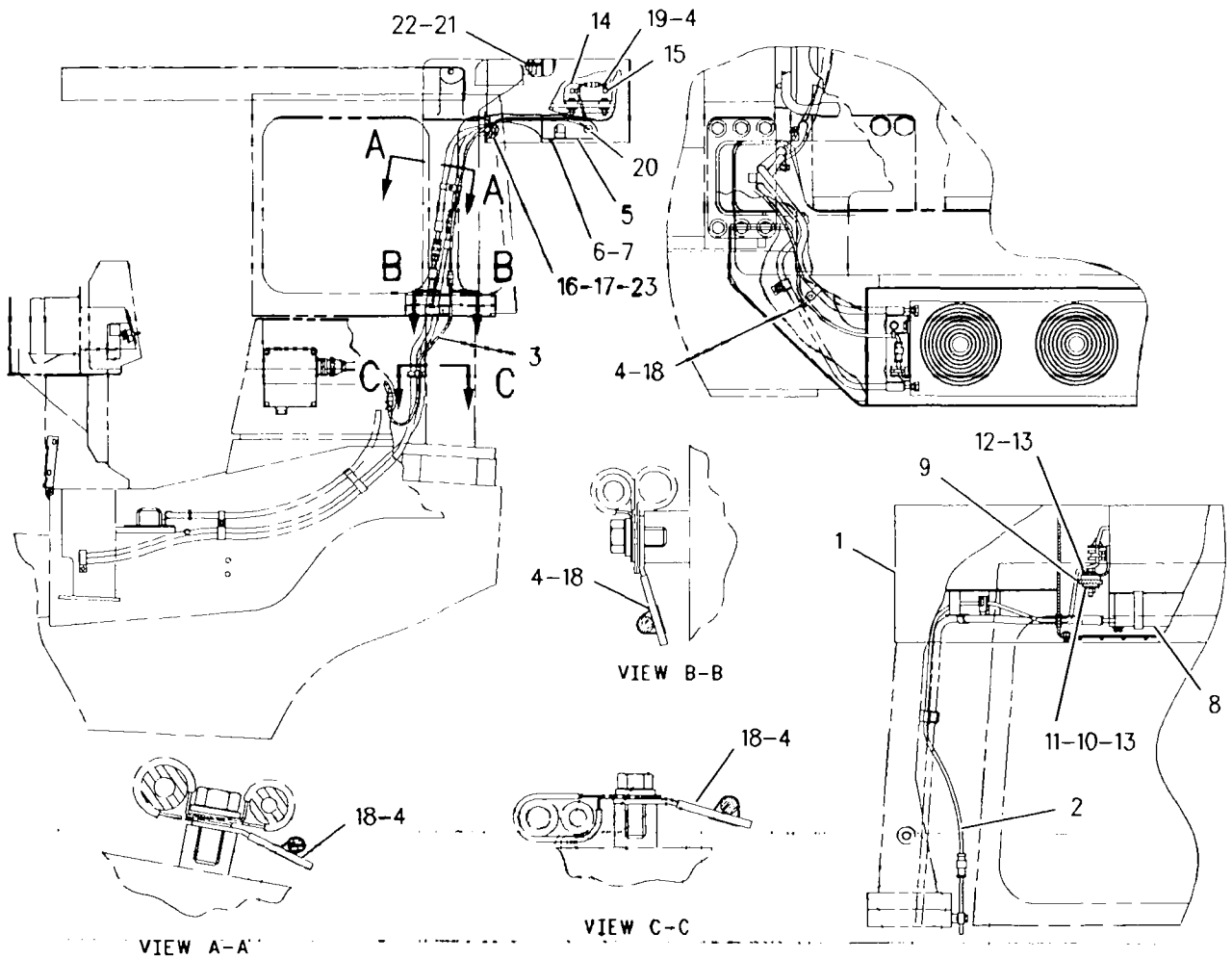

GRAPHIC #1

g00284895

OPERATOR STATION

131-8469 CONDENSER AR-REFRIGERANT–CUSTOM

PIN 2YN1-UP; 3ZN1-UP; 4MN1-UP; 5LN1-UP; 6JN1-UP; 7KN1-UP; 8LN1-UP; 9PN1-UP
FOR USE WITH R134A AIR CONDITIONING AND ROPS

SMCS-1805 **i01009528**

NOTE	PART NUMBER	QTY	PART NAME 1 2 3 4 5 6 (PRODUCT LEVEL)	SEE PAGE
Y	*108-1327*	1	CONDENSER & MTG GP-REFRIGERANT	478
	5C-6565	3	BOLT (1/2-13X1.25IN)	
	5M-3062	2	BOLT (3/8-16X.75IN)	
	6T-6221	2	BOSS	
	6H-3609	2	BOSS	
	4K-8302	3	CLIP (15.88MM ID)	
	4D-7733	4	CLIP	
	6V-1228	2	CLIP (10.3MM ID)	
	8M-2773	1	CLIP (17.46MM ID)	
	7S-1912	1	CLIP (20.62MM ID)	
	7C-4353	2	CLIP (17.53MM ID)	
	7K-3176	2	COUPLING	
	5P-3948	2	COUPLING-SEALING	
	3E-4067	1	FITTING AS-COMPRESSOR	
I	**125-5725**	1	HOSE AS	
I	**110-8834**	1	HOSE AS	
I	**109-4044**	1	HOSE AS	
I	**125-5727**	1	HOSE AS	
	109-5491	3	PLATE	
	114-0083	1	PLATE-INSTRUCTION	
	9X-7380	2	SEAL-O-RING (7.65MM ID)	
	9X-7383	4	SEAL-O-RING (17.17MM ID)	
	9X-7385	1	SEAL-O-RING (20.22MM ID)	
	9X-7381	2	SEAL-O-RING (10.82MM ID)	
	8L-8413	1	STRAP-CABLE (1.12IN DIA)	
	8T-4223	3	WASHER-HARD (3MM THK)	

I-SEE HOSE FABRICATION GUIDE
Y-SEPARATE ILLUSTRATION

OPERATOR STATION

103-9527 CONDENSER GP-REFRIGERANT

PIN 2YN1-UP; 3ZN1-UP; 4MN1-UP; 5LN1-UP; 6JN1-UP; 7KN1-UP; 8LN1-UP; 9PN1-UP
PART OF 137-4932 AIR CONDITIONER AR,
108-1327 CONDENSER & MTG GP-REFRIGERANT

SMCS-1805 i00974833

NOTE	REF NO	GRAPHIC REF	PART NUMBER	QTY	PART NAME 1 2 3 4 5 6 (PRODUCT LEVEL)	SEE PAGE
	1	1	9X-3451	1	CASE AS	
M		1	5C-9553	2	BOLT (M6X1.0X16MM)	
M		1	8T-3490	12	NUT-WELD (M10X1.5 THD)	
		1	9G-9151	3	CLIP (10.20MM ID)	
M		1	8T-5413	2	STUD-WELD (M10X1.5X25MM OAL)	
		1	7T-1099	6	LINK	
M		1	8T-3597	12	NUT-WELD (M12X1.75 THD)	
M		1	8T-3994	2	STUD-WELD (M6X1.6G THD)	
M	2	1	8T-4137	8	BOLT (M10X1.50X20MM)	
	3	1	8T-4121	8	WASHER (2.5MM THK)	
	4	1	9X-3452	2	GUARD AS-FAN	
M	5	1	5C-2890	1	NUT (M6X1.00 THD)	
	6	1	8T-4205	1	WASHER-HARD (2MM THK)	
	7	1	2L-1224	1	CAP-AIR CONDITIONER VALVE (7/16X20 THD)	
	8	1	142-8620	2	FAN AS (4 BLADES)	
	9	1	3E-5239	1	RELAY AS (24 VOLT)	
	10	1	123-8329	1	HARNESS AS	
	11	1	6D-4246	2	CLIP	
	12	1	106-2721	2	MOTOR AS-CCW	
					(EACH INCLUDES)	
		1	3E-3365	1	WEDGE	
		1	9W-0852	2	PIN-CONNECTOR	
		1	102-8802	1	KIT-RECEPTACLE (2 PIN) (INCLUDES RECEPTACLE & WEDGE)	
	13	1	9X-3439	1	COIL-CONDENSER	
	14	1	127-9083	2	PLATE	
M	15	1	8T-4198	4	BOLT (M10X1.50X100MM)	
M	16	1	8T-4133	4	NUT (M10X1.50 THD)	
	17	1	5P-8438	1	GROMMET	
	18	1	7T-5868	4	CLAMP AS	
	19	1	3S-2093	7	STRAP-CABLE (1.75IN DIA)	
	20	1	9X-4292	4	TUBE	
	21	1	8T-4223	12	WASHER-HARD (3MM THK)	
	22	1	2D-2751	1	GROMMET	
	23	1	8C-3756	1	FILM-IDENTIFICATION	
M	24	1	8T-4192	12	BOLT (M12X1.75X25MM)	
	25	1	5P-1075	8	WASHER-HARD (3MM THK)	
	26	1	6V-5749	1	PLUG-BUTTON	
BD	27	1	5P-5673		SEAL (9.52MM WIDE)	
BD	28	1	5P-5924		SEAL (38.1MM WIDE)	

B-USE AS REQUIRED
D-ORDER BY THE METER
M-METRIC PART

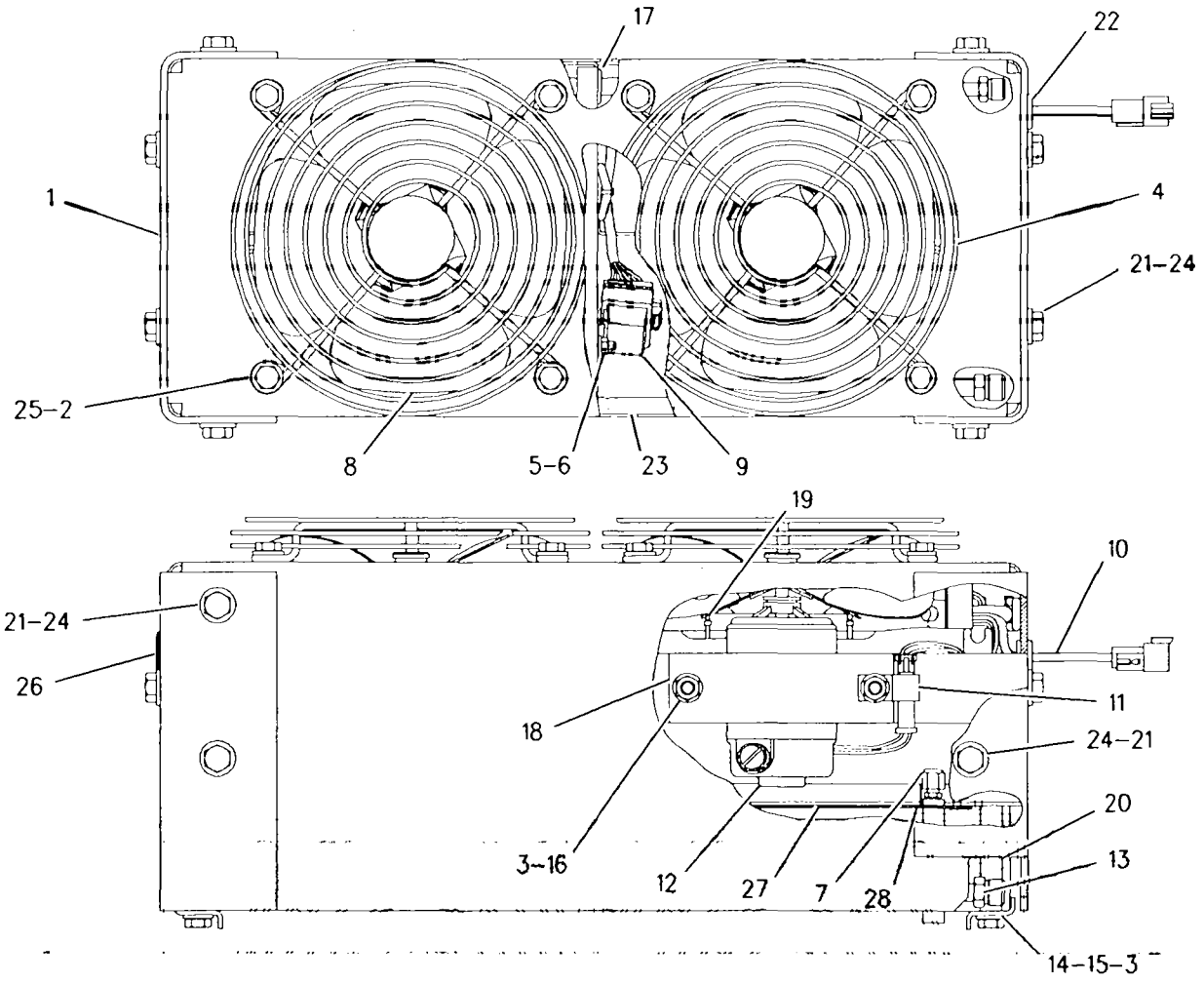

GRAPHIC #1 g00467673

OPERATOR STATION

125-3401 CONTROL GP-DISPLAY ELECTRONIC

PIN 2YN1-UP; 4MN1-UP; 6JN1-UP; 8LN1-UP
LIGHT EMITTING DIODE DISPLAY
PART OF 142-1654 PANEL GP-INSTRUMENT

SMCS-7603 i00867352

NOTE	REF NO	GRAPHIC REF	PART NUMBER	QTY	PART NAME 1 2 3 4 5 6 (PRODUCT LEVEL)	SEE PAGE
Z	1	1		1	BOARD AS	
	2	1	102-8804	1	KIT-RECEPTACLE	
	3	1	3E-3377	1	WEDGE-RECEPTACLE LOCK	
	4	1	8T-8729	4	PIN-CONNECTOR	
	5	1	8L-8413	1	STRAP-CABLE (1.12IN DIA)	

Z-NOT SERVICED SEPARATELY

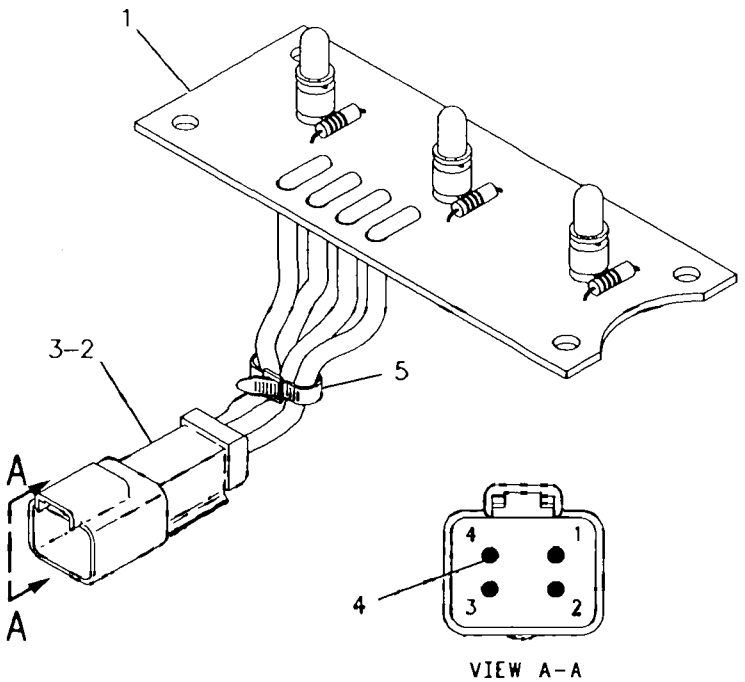

GRAPHIC #1 g00252614

OPERATOR STATION

105-9662 COVER GP-CONSOLE

PIN 3ZN1-UP; 5LN1-UP; 7KN1-UP; 9PN1-UP
PART OF 139-1115 CAB AR
TYPE 1

SMCS-5258 i00687067

NOTE	REF NO	GRAPHIC REF	PART NUMBER	QTY	PART NAME 1 2 3 4 5 6 (PRODUCT LEVEL)	SEE PAGE
	1	1	6Y-0206	4	RETAINER	
	2	1	7D-6922	6	LOCKNUT (6-32 THD)	
	3	1	7G-4824	2	STRAP (FEMALE)	
	4	1	8E-7791	2	STRAP (MALE)	
	5	1	8Y-5746	1	ASHTRAY	
	6	1	8Y-6388	2	LOUVER AS	
	7	1	8Y-6390	1	LOUVER AS	
	8	1	9W-0335	1	LIGHTER AS-CIGAR	
	9	1	109-3590	1	PLATE	
	10	1	138-9275	1	SHROUD AS	
		1	133-1619	1	LINER-FOAM	
		1	133-1620	1	LINER-FOAM	
M	11	1	9X-2046	1	SCREW-TRUSS HEAD (M6X1X35MM)	
	12	1	112-8051	1	FLOOR MAT	
	13	1	112-8053	1	FLOOR MAT	
	14	1	112-9052	1	PANEL-SOUND SUPPRESSION	
	15	1	112-9054	1	PANEL	
	16	1	113-9521	1	PANEL-ACOUSTICAL	
	17	1	142-0817	1	COVER	
	18	1	111-5147	6	SCREW-MACHINE (6-32 X .625IN)	
	19	1	137-7497	1	COVER AS	
	20	1	125-5587	1	PANEL	
	21	1	8T-4224	8	WASHER-HARD (2MM THK)	
M	22	1	9X-2043	14	SCREW-TRUSS HEAD (M6X1X14MM)	
M	23	1	8T-4200	4	BOLT (M8X1.25X16MM)	
	24	1	8P-8540	2	GROMMET (9.52MM ID)	
M	25	1	9X-2045	2	SCREW-TRUSS HEAD (M6X1X20MM)	
	26	1	114-6658	16	WASHER (1.00MM THK)	
	27	1	137-4149	1	COVER	
	28	1	142-0818	1	COVER	
E	29	1	124-3243		SEAL (56 CM)	
	30	1	111-7094	1	COVER AS	
		1	114-9125	1	HOLDER	
	31	1	137-7500	1	PANEL	
	32	1	5M-2894	8	WASHER (2.5MM THK)	
		1	6J-0488	4	SCREW-HEAD (3/8-16X.875IN)	

E-ORDER BY THE CENTIMETER
M-METRIC PART

105-9662 COVER GP-CONSOLE *(contd.)* i00687067

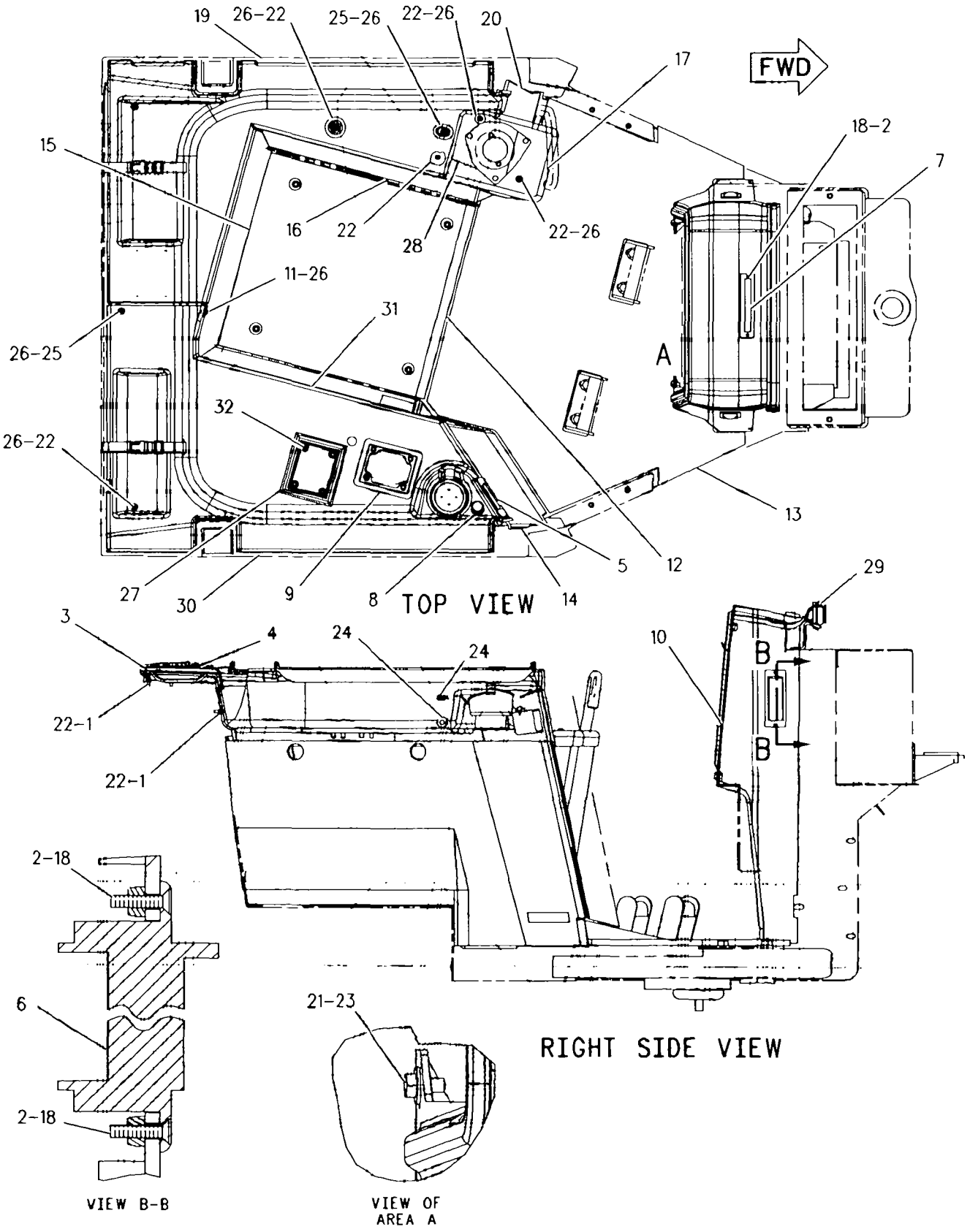

GRAPHIC #1 g00294341

OPERATOR STATION

105-9662 COVER GP-CONSOLE

PIN 3ZN1-UP; 5LN1-UP; 7KN1-UP; 9PN1-UP
PART OF 139-1115 CAB AR
TYPE 2

SMCS-5258 i01003553

NOTE	REF NO	GRAPHIC REF	PART NUMBER	QTY	PART NAME 1 2 3 4 5 6 (PRODUCT LEVEL)	SEE PAGE
	1	1	6Y-0206	4	RETAINER	
	2	1	7D-6922	6	LOCKNUT (6-32 THD)	
	3	1	7G-4824	2	STRAP (FEMALE)	
	4	1	8E-7791	2	STRAP (MALE)	
	5	1	8Y-5746	1	ASHTRAY	
	6	1	8Y-6388	2	LOUVER AS	
	7	1	8Y-6390	1	LOUVER AS	
	8	1	9W-0335	1	LIGHTER AS	
	9	1	109-3590	1	PLATE	
C	10	1	145-6008	1	SHROUD AS	
		1	133-1619	1	LINER-FOAM	
		1	133-1620	1	LINER-FOAM	
M	11	1	9X-2046	1	SCREW-TRUSS HEAD (M6X1X35MM)	
	12	1	112-8051	1	FLOOR MAT	
	13	1	112-8053	1	FLOOR MAT	
C	14	1	143-8260	1	PANEL-ACOUSTICAL	
C	15	1	143-8263	1	PANEL	
C	16	1	143-8264	1	PANEL-ACOUSTICAL	
C	17	1	145-6017	1	COVER	
	18	1	111-5147	6	SCREW-MACHINE (6-32 X .625IN)	
C	19	1	145-6014	1	COVER AS	
C	20	1	143-8265	1	PANEL	
C	21	1	5P-4116	2	WASHER (2MM THK)	
M	22	1	9X-2043	14	SCREW-TRUSS HEAD (M6X1X14MM)	
M	23	1	8T-4200	4	BOLT (M8X1.25X16MM)	
	24	1	8P-8540	2	GROMMET (9.52MM ID)	
M	25	1	9X-2045	2	SCREW-TRUSS HEAD (M6X1X20MM)	
C	26	1	114-6658	6	WASHER (1.00MM THK)	
C	27	1	145-6016	1	COVER	
C	28	1	145-6018	1	COVER	
E	29	1	124-3243		SEAL (56 CM)	
C	30	1	145-6010	1	COVER AS	
		1	114-9125	1	HOLDER	
	31	1	137-7500	1	PANEL	
C	32	1	5M-2894	4	WASHER (2.5MM THK)	
		1	6J-0488	4	SCREW-HEAD (3/8-16X.875IN)	
C	33	1	9N-0869	2	WASHER (2MM THK)	

C-CHANGE FROM PREVIOUS TYPE
E-ORDER BY THE CENTIMETER
M-METRIC PART

105-9662 COVER GP-CONSOLE *(contd.)* i01003553

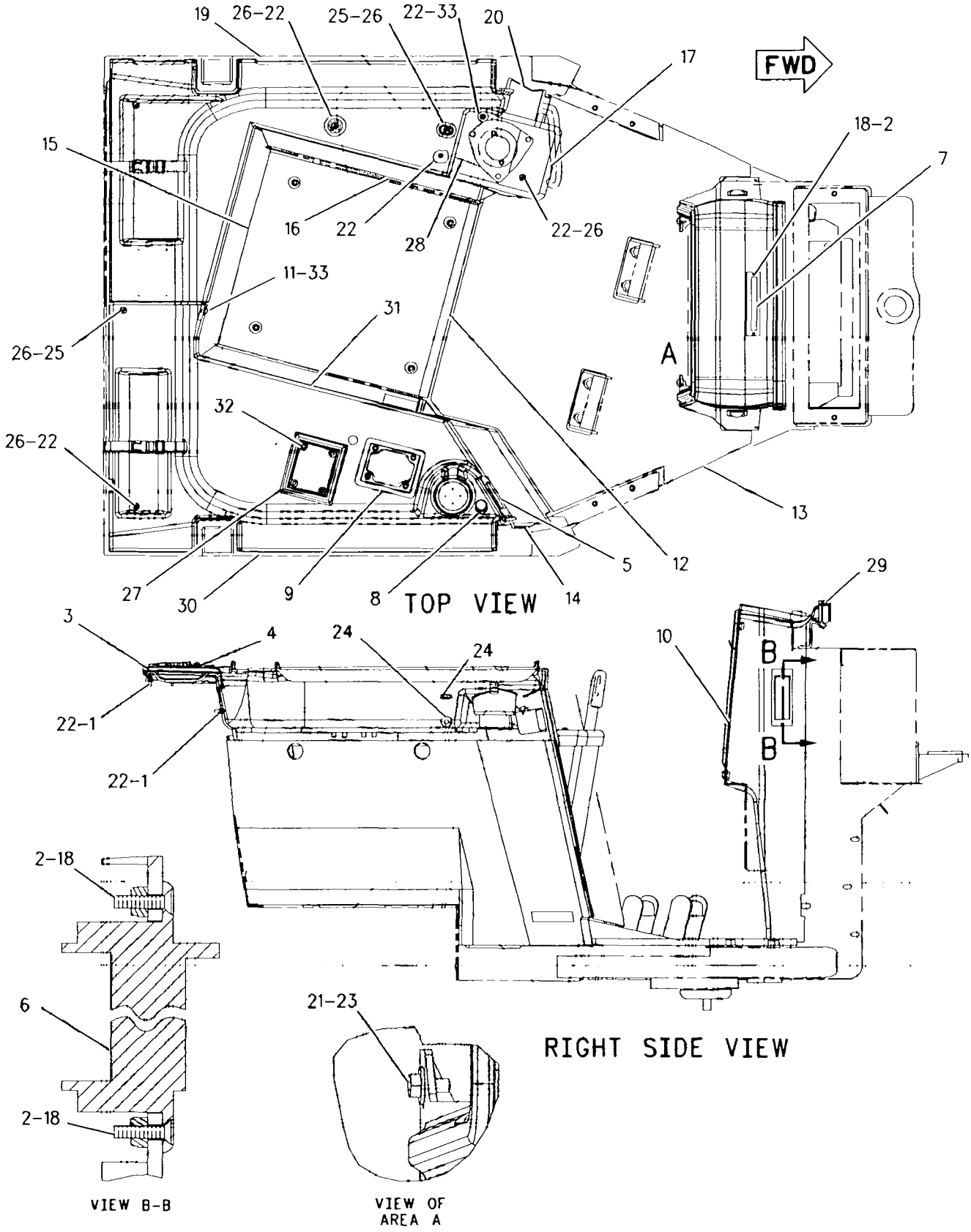

GRAPHIC #1 g00514802

OPERATOR STATION

129-2008 COVER GP-CONSOLE

PIN 2YN1-UP; 4MN1-UP; 6JN1-UP; 8LN1-UP

PART OF 158-6657 CAB AR

SMCS-5258 **i00950232**

NOTE	REF NO	GRAPHIC REF	PART NUMBER	QTY	PART NAME 1 2 3 4 5 6 (PRODUCT LEVEL)	SEE PAGE
	1	1	6Y-0206	4	RETAINER	
	2	1	7D-6922	6	LOCKNUT (6-32 THD)	
	3	1	7G-4824	2	STRAP	
	4	1	8E-7791	2	STRAP	
	5	1	8Y-5746	1	ASHTRAY	
	6	1	8Y-6388	2	LOUVER AS	
	7	1	8Y-6390	1	LOUVER AS	
	8	1	9W-0335	1	LIGHTER AS-CIGAR	
	9	1	109-3590	1	PLATE	
	10	1	6J-0488	4	SCREW-HEAD (3/8-16X.875IN)	
		1	5M-2894	4	WASHER (2.5MM THK)	
	11	1	112-8051	1	FLOOR MAT	
	12	1	112-8053	1	FLOOR MAT	
	13	1	143-8260	1	PANEL-ACOUSTICAL	
	14	1	143-8261	1	PANEL-ACOUSTICAL	
	15	1	143-8263	1	PANEL	
	16	1	9X-2038	5	WASHER (2MM THK)	
	17	1	111-5147	6	SCREW-MACHINE (6-32 X .625IN)	
	18	1	145-6016	1	COVER	
M	19	1	9X-2046	1	SCREW-TRUSS HEAD (M6X1X35MM)	
	20	1	145-6008	1	SHROUD AS	
		1	133-1620	1	LINER-FOAM	
		1	133-1619	1	LINER-FOAM	
	21	1	8P-8540	2	GROMMET (9.52MM ID)	
	22	1	5P-4116	4	WASHER (2MM THK)	
M	23	1	9X-2043	12	SCREW-TRUSS HEAD (M6X1X14MM)	
M	24	1	9X-2045	1	SCREW-TRUSS HEAD (M6X1X20MM)	
M	25	1	8T-4200	4	BOLT (M8X1.25X16MM)	
E	26	1	124-3243		SEAL (56 CM)	
	27	1	145-6010	1	COVER AS	
		1	114-9125	1	HOLDER	
	28	1	137-7500	1	PANEL	
	29	1	145-6012	1	COVER AS	
	30	1	137-7502	1	PANEL	
	31	1	137-7503	1	PANEL	
	32	1	9N-0869	1	WASHER (2MM THK)	

E-ORDER BY THE CENTIMETER
M-METRIC PART

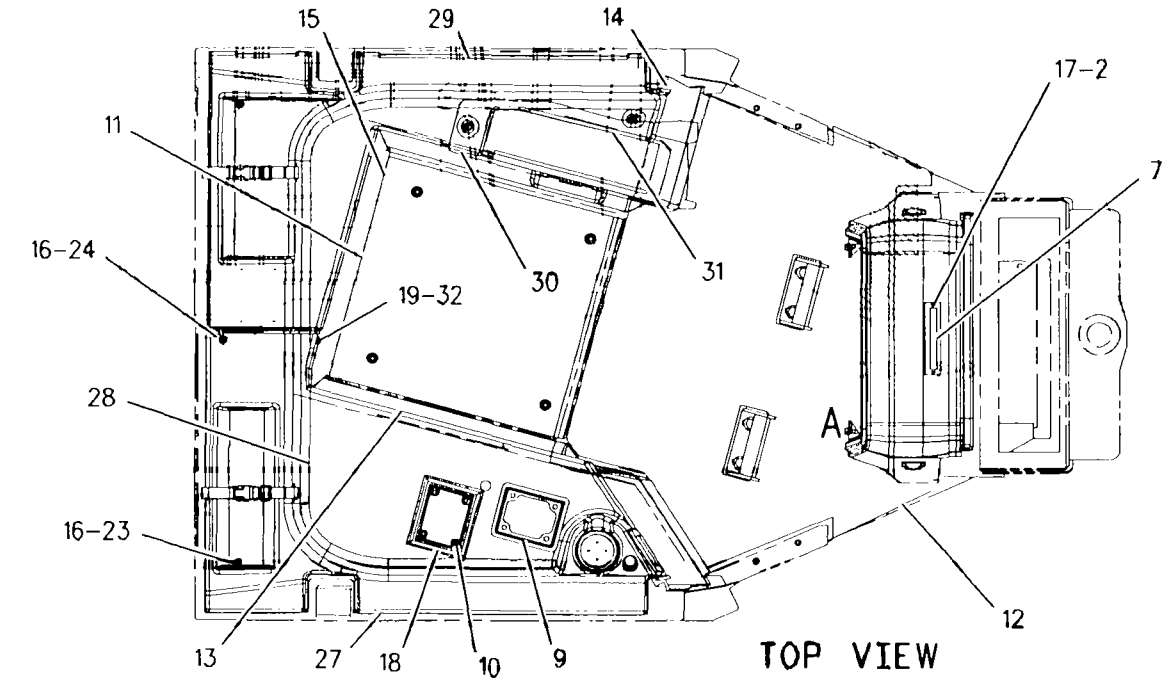

TOP VIEW

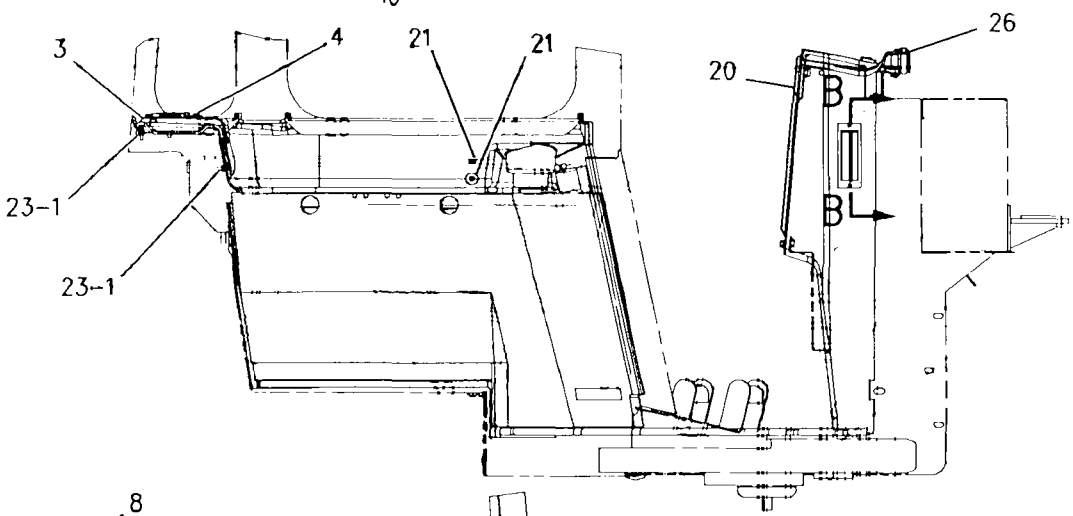

RIGHT SIDE VIEW

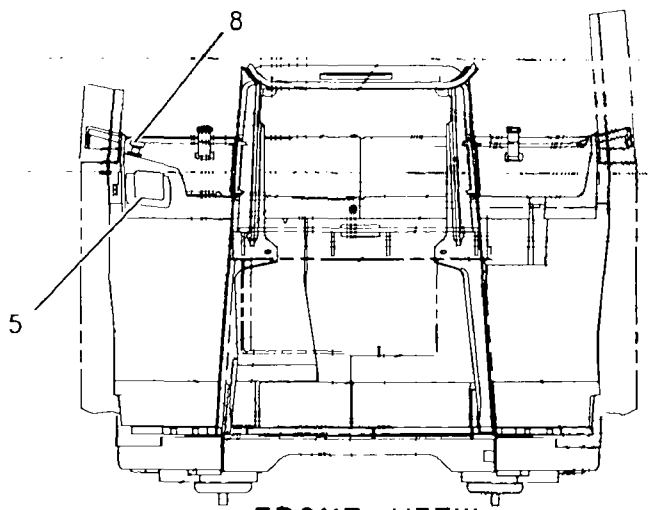

FRONT VIEW

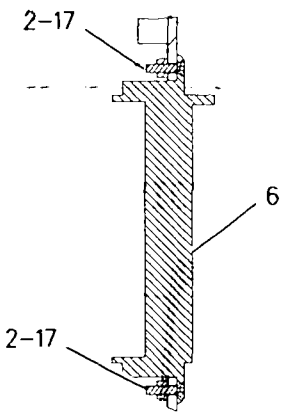

SECTION B-B

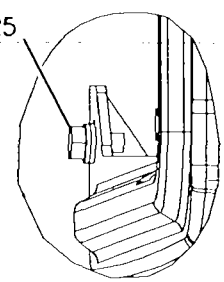

VIEW OF AREA A

GRAPHIC #1

g00486677

OPERATOR STATION

8Y-5874 EXTENSION GP-BACKREST

PIN 2YN1-UP; 3ZN1-UP; 4MN1-UP; 5LN1-UP; 6JN1-UP; 7KN1-UP; 8LN1-UP; 9PN1-UP
PART OF 125-6224 SEAT GP

SMCS-7312 **i01020540**

NOTE	REF NO	GRAPHIC REF	PART NUMBER	QTY	PART NAME 1 2 3 4 5 6 (PRODUCT LEVEL)	SEE PAGE
	1	1	8Y-5877	1	PAN AS-EXTENSION	
J	2	1	8Y-5947	2	FASTENER	
JZ	3	1		1	CUSHION AS	
					AVAILABLE REPAIR KIT(S):	
J			8Y-5943	1	KIT-CUSHION	

J-REPAIR KIT MARKED J INCLUDES PART(S) MARKED J
Z-NOT SERVICED SEPARATELY

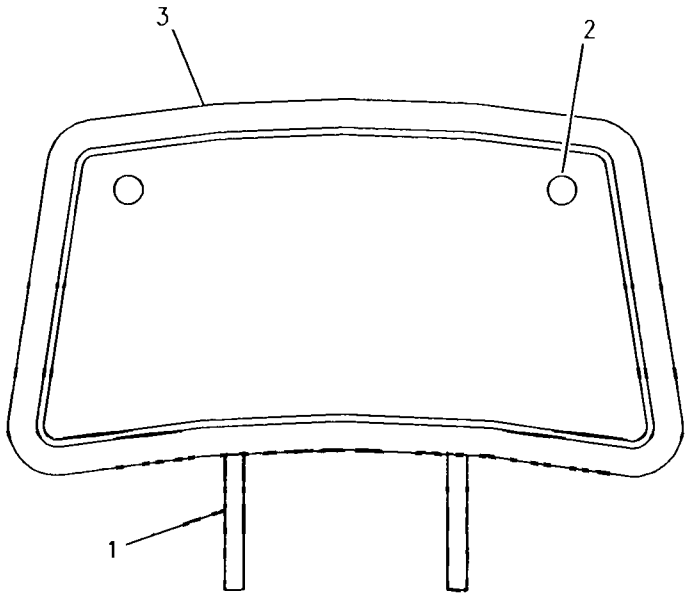

GRAPHIC #1 g00524121

OPERATOR STATION

1Z-0742 HANDHOLD AR

PIN 2YN1-UP; 3ZN1-UP; 4MN1-UP; 5LN1-UP; 6JN1-UP; 7KN1-UP; 8LN1-UP; 9PN1-UP
HEAVY DUTY
PART OF 128-4092 DISPOSAL AR

SMCS-7256 i00575944

NOTE	REF NO	GRAPHIC REF	PART NUMBER	QTY	PART NAME 1 2 3 4 5 6 (PRODUCT LEVEL)	SEE PAGE
	1	1	**104-5944**	2	HANDLE AS	
	2	1	**8T-8919**	4	BOLT (1/2-13X1.75IN)	
	3	1	**1Q-2423**	2	HANDLE AS	
	4	1	**5P-2424**	4	BOLT (1/2-13X2.25IN)	

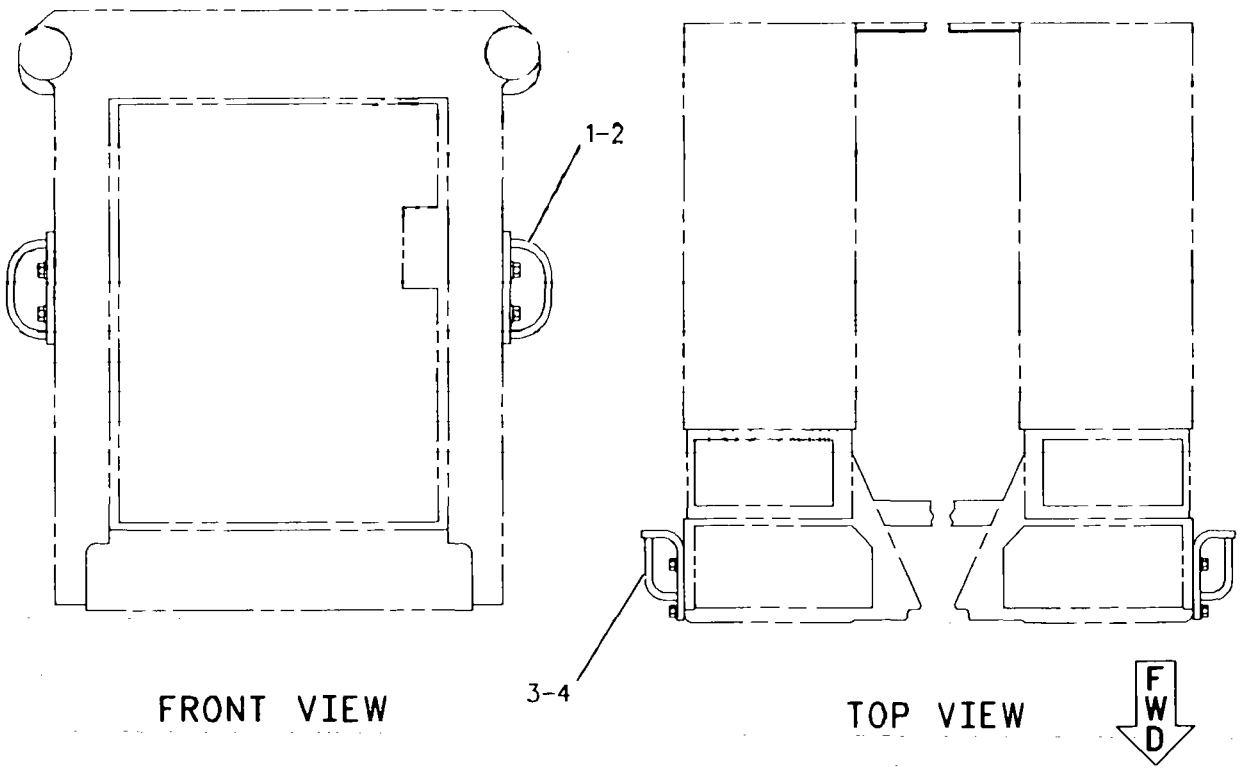

GRAPHIC #1 g00263699

OPERATOR STATION

108-1335 HANDHOLD GP

PIN 3ZN1-UP; 5LN1-UP; 7KN1-UP; 9PN1-UP
PART OF 139-1115 CAB AR

SMCS-7256 i00574151

NOTE	REF NO	GRAPHIC REF	PART NUMBER	QTY	PART NAME 1 2 3 4 5 6 (PRODUCT LEVEL)	SEE PAGE
	1	1	**9W-5343**	2	HANDHOLD	
	2	1	**5P-1076**	4	WASHER-HARD (4MM THK)	
M	3	1	**8T-4183**	4	BOLT (M12X1.75X40MM)	

M-METRIC PART

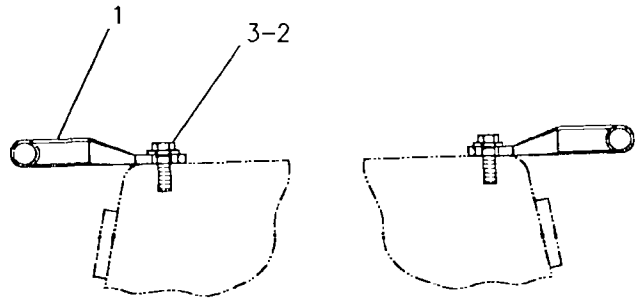

REAR VIEW

GRAPHIC #1 g00254256

OPERATOR STATION

108-2675 HEATER GP-CAB

PIN 2YN1-UP; 3ZN1-UP; 4MN1-UP; 5LN1-UP; 6JN1-UP; 7KN1-UP; 8LN1-UP; 9PN1-UP
PART OF 139-1115, 158-6657 CAB AR

SMCS-7304 **i00850631**

NOTE	REF NO	GRAPHIC REF	PART NUMBER	QTY	PART NAME 1 2 3 4 5 6 (PRODUCT LEVEL)	SEE PAGE
E	1	1	**5P-0767**		HOSE (15.88MM ID)	
	2	1	**109-5761**	1	COIL AS-HEATER	
	3	1	**5D-1026**	2	CLAMP-HOSE	
	4	1	**8T-4121**	5	WASHER (2.5MM THK)	
M	5	1	**8T-4133**	1	NUT (M10X1.50 THD)	
M	6	1	**8T-4137**	4	BOLT (M10X1.50X20MM)	
	7	1	**6T-5617**	1	PLATE	
	8	1	**141-4123**	1	PLATE	
	9	1	**9X-2185**	4	SCREW	
BD	10	1	**5P-5643**		SEAL	
BD	11	1	**5P-5639**		SEAL	
	12	1	**7T-6299**	1	GROMMET	
	13	1	**134-9602**	1	VALVE AS-WATER	
	14	1	**2M-1444**	1	SCREW-TAPPING	
	15	1	**3E-1841**	1	LEVER	
	16	1	**8Y-5737**	1	CLIP (COMPRESSION)	
	17	1	**037-4426**	1	RETAINER	
	18	1	**102-0341**	1	CLIP	

B-USE AS REQUIRED
D-ORDER BY THE METER
E-ORDER BY THE CENTIMETER
M-METRIC PART

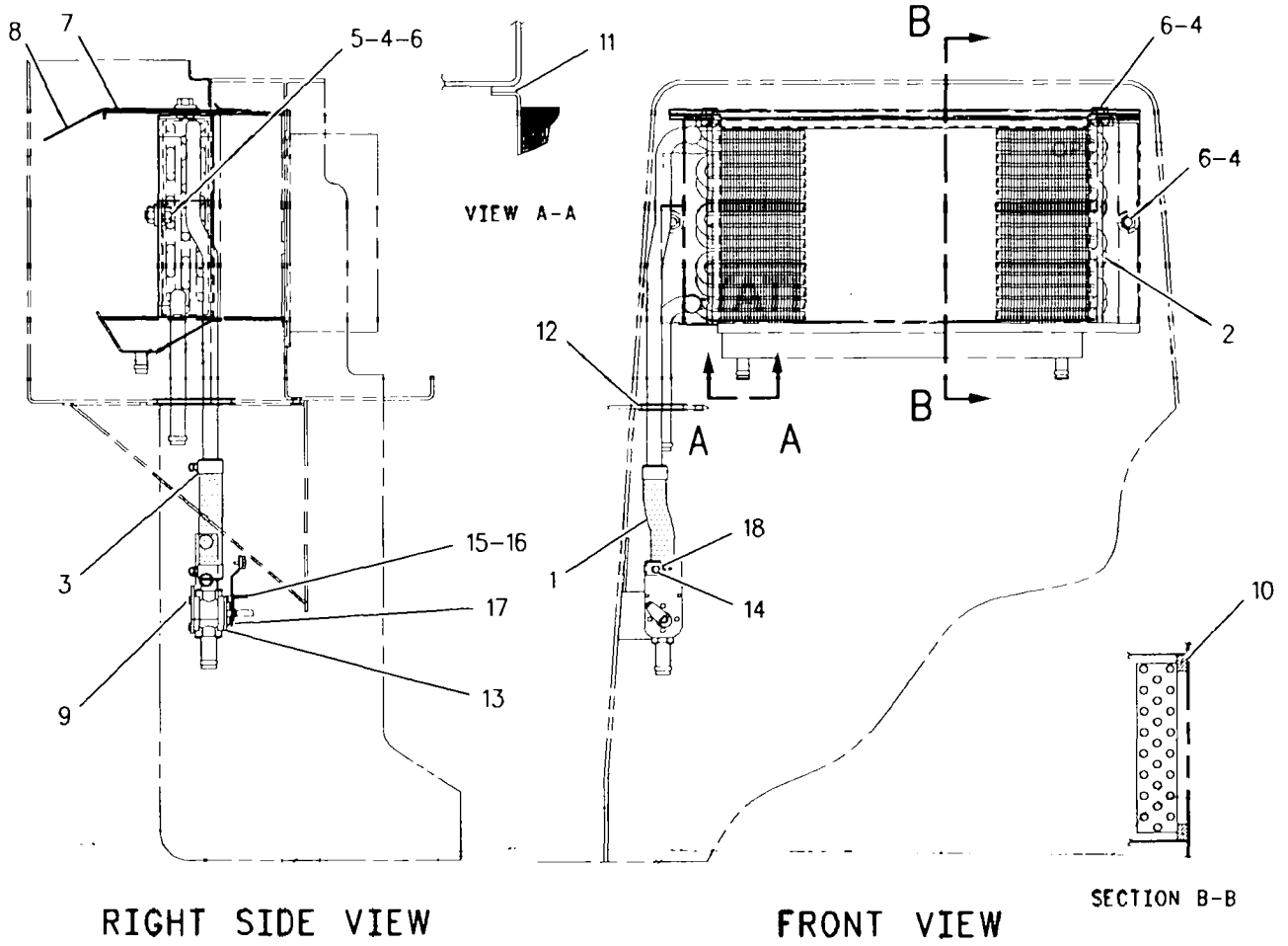

GRAPHIC #1 g00411640

OPERATOR STATION

128-3158 INDICATOR AR–CUSTOM

PIN 2YN1-UP; 3ZN1-UP; 4MN1-UP; 5LN1-UP; 6JN1-UP; 7KN1-UP; 8LN1-UP; 9PN1-UP

PART OF 130-8942, 130-8943 PRECLEANER AR

SMCS-7450 **i00950306**

NOTE	REF NO	GRAPHIC REF	PART NUMBER	QTY	PART NAME 1 2 3 4 5 6 (PRODUCT LEVEL)	SEE PAGE
	1	1	**5M-3062**	1	BOLT (3/8-16X.75IN)	
	2	1	**8T-4896**	1	WASHER-HARD (2.5MM THK)	
	3	1	**6V-8801**	1	NUT (3/8-16 THD)	
	4	1	**3B-6487**	2	COUPLING	
	5	1	**5P-6315**	1	ELBOW-FLARELESS	
	6	1	**5P-6313**	2	NUT-FLARELESS	
	7	1	**5P-6314**	2	SLEEVE-FLARELESS	
	8	1	**6V-7555**	1	STRAP-CABLE	
	9	1	**3B-6552**	1	ELBOW	
	10	1	**128-3159**	1	PIPE AS	
	11	1	**8N-2694**	1	INDICATOR-AIR FILTER SERVICE	
	12	1	**5P-7907**	1	CONNECTOR	
BD	13	1	**5P-5630**		TUBE (.18M)	
B	14	1	**7K-1181**	5	STRAP-CABLE (4.00IN DIA)	
	15	1	**148-1494**	1	SHROUD AS	
		1	**133-1619**	1	LINER-FOAM	
		1	**133-1620**	1	LINER-FOAM	
	16	1	**9G-2673**	1	GROMMET	

B-USE AS REQUIRED
D-ORDER BY THE METER

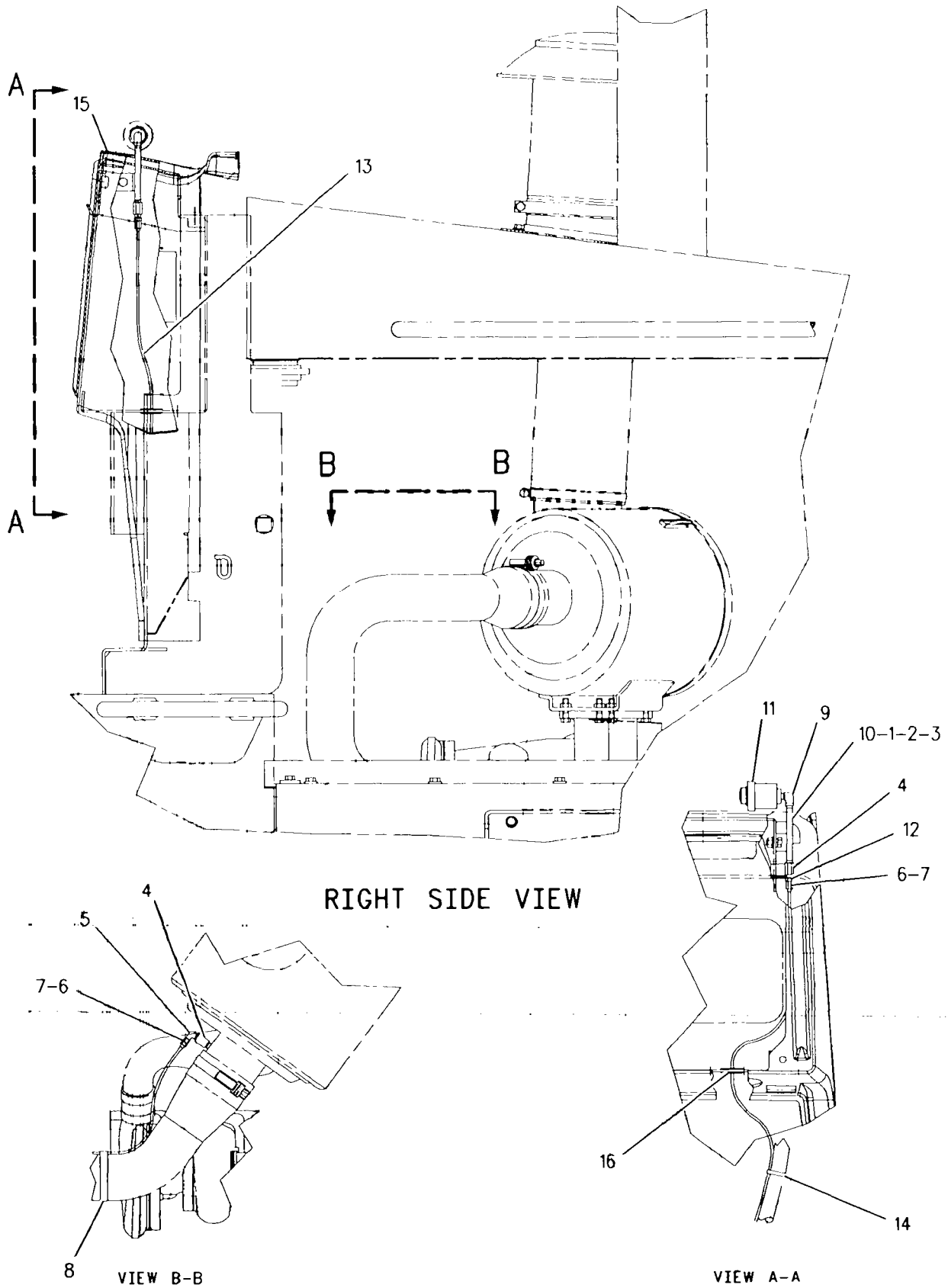

GRAPHIC .#1 g00486308

OPERATOR STATION

105-9657 INSTALLATION GP-RADIO

PIN 2YN1-UP; 3ZN1-UP; 4MN1-UP; 5LN1-UP; 6JN1-UP; 7KN1-UP; 8LN1-UP; 9PN1-UP

PART OF 105-9655 CAB AR

SMCS-7338 i00573236

NOTE	REF NO	GRAPHIC REF	PART NUMBER	QTY	PART NAME 1 2 3 4 5 6 (PRODUCT LEVEL)	SEE PAGE
	1	1	108-3138	1	BRACKET AS	
	2	1	6Y-7385	1	BRACKET	
M	3	1	8T-4171	1	BOLT (M6X1.0X12MM)	
	4	1	9X-8256	1	WASHER (2MM THK)	
	5	1	8E-1118	1	ANTENNA AS	
	6	1	9U-8263	1	COVER	
	7	1	9U-8746	1	CABLE AS-COAXIAL	
	8	1	6V-7646	4	WASHER-HARD (2MM THK)	
M	9	1	5C-2890	4	NUT (M6X1.00 THD)	
	10	1	3E-6601	2	FILM-NOTICE	
	11	1	9X-8717	1	FILM-NOTICE	
	12	1	4N-9915	4	GROMMET AS	
	13	1	3E-4356	4	WASHER-HARD (6MM THK)	
	14	1	8K-1433	1	GROMMET	

M-METRIC PART

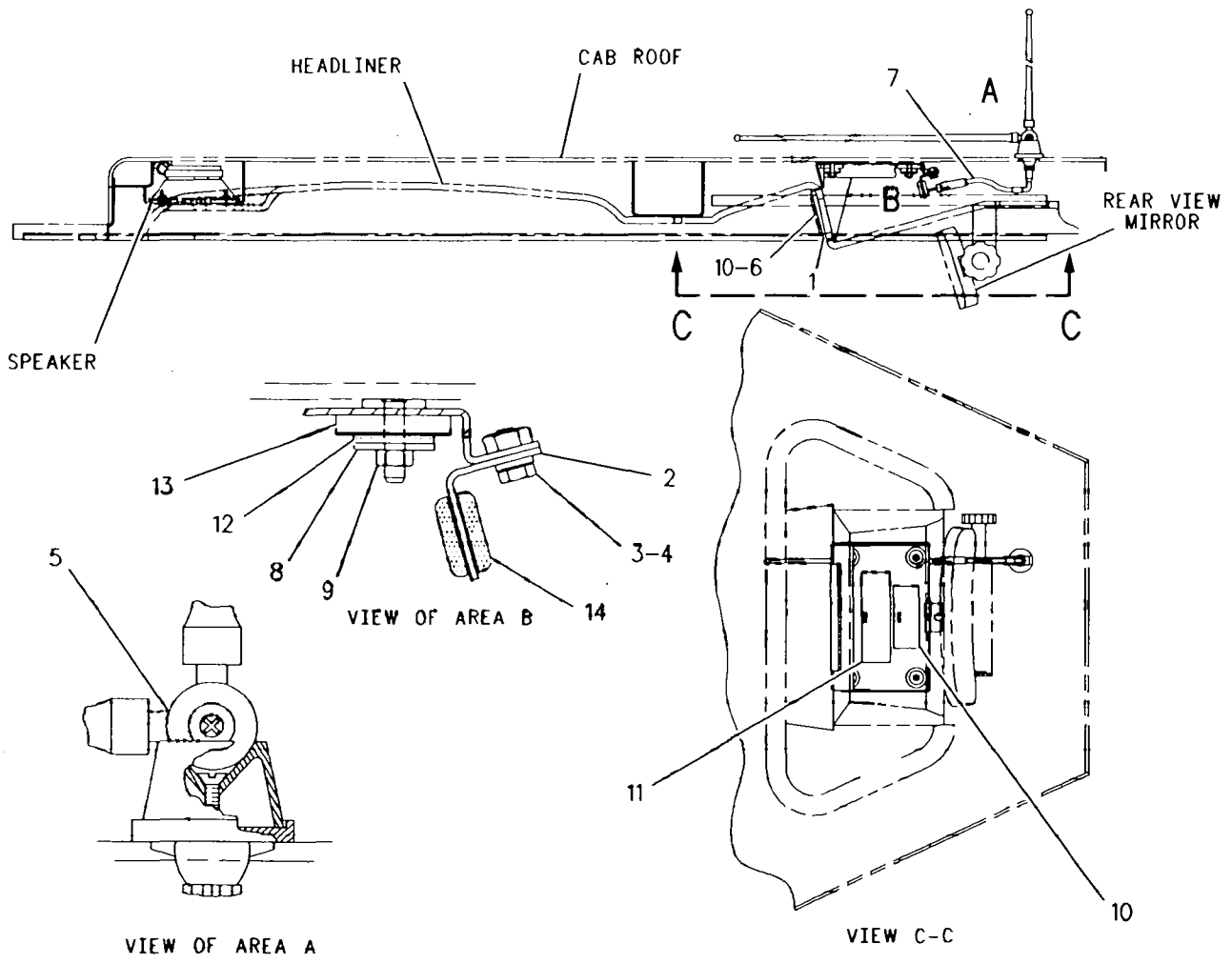

GRAPHIC #1 g00254211

OPERATOR STATION

105-9658 LINER GP-CAB

PIN 2YN1-UP; 3ZN1-UP; 4MN1-UP; 5LN1-UP; 6JN1-UP; 7KN1-UP; 8LN1-UP; 9PN1-UP

PART OF 105-9655 CAB AR

SMCS-7329 **i00848659**

NOTE	REF NO	GRAPHIC REF	PART NUMBER	QTY	PART NAME 1 2 3 4 5 6 (PRODUCT LEVEL)	SEE PAGE
M	1	1	**8T-4181**	2	BOLT (M6X1X20MM)	
	2	1	**6V-8928**	1	HOOK-COAT	
	3	1	**110-7571**	1	COVER-DOOR-RH	
	4	1	**110-7572**	1	COVER-DOOR-LH	
	5	1	**110-8152**	2	HANDLE AS-PULL	
	6	1	**153-9047**	2	TRIM-POST	
	7	1	**114-9139**	1	COVER-FRONT	
	8	1	**114-9140**	1	COVER AS	
	9	1	**153-9045**	1	COVER-POST (RH)	
Y	10	1	**115-2331**	1	LINER GP-CAB	504
	11	1	**131-5176**	1	PLATE	
M	12	1	**123-4950**	10	SCREW-PAN HEAD	
	13	1	**126-3492**	1	HANDLE AS	
	14	1	**9X-8267**	2	WASHER (2.0MM THK)	
M	15	1	**6V-5683**	4	BOLT (M6X1X16MM)	
M	16	1	**6V-8225**	2	NUT (M6X1 THD)	
M	17	1	**9X-2043**	2	SCREW-TRUSS HEAD (M6X1X14MM)	
M	18	1	**9X-2045**	1	SCREW-TRUSS HEAD (M6X1X20MM)	
	19	1	**153-9046**	1	COVER-POST LH	
	20	1	**137-8708**	1	PLATE	
	21	1	**131-5171**	3	CLIP	

M-METRIC PART
Y-SEPARATE ILLUSTRATION

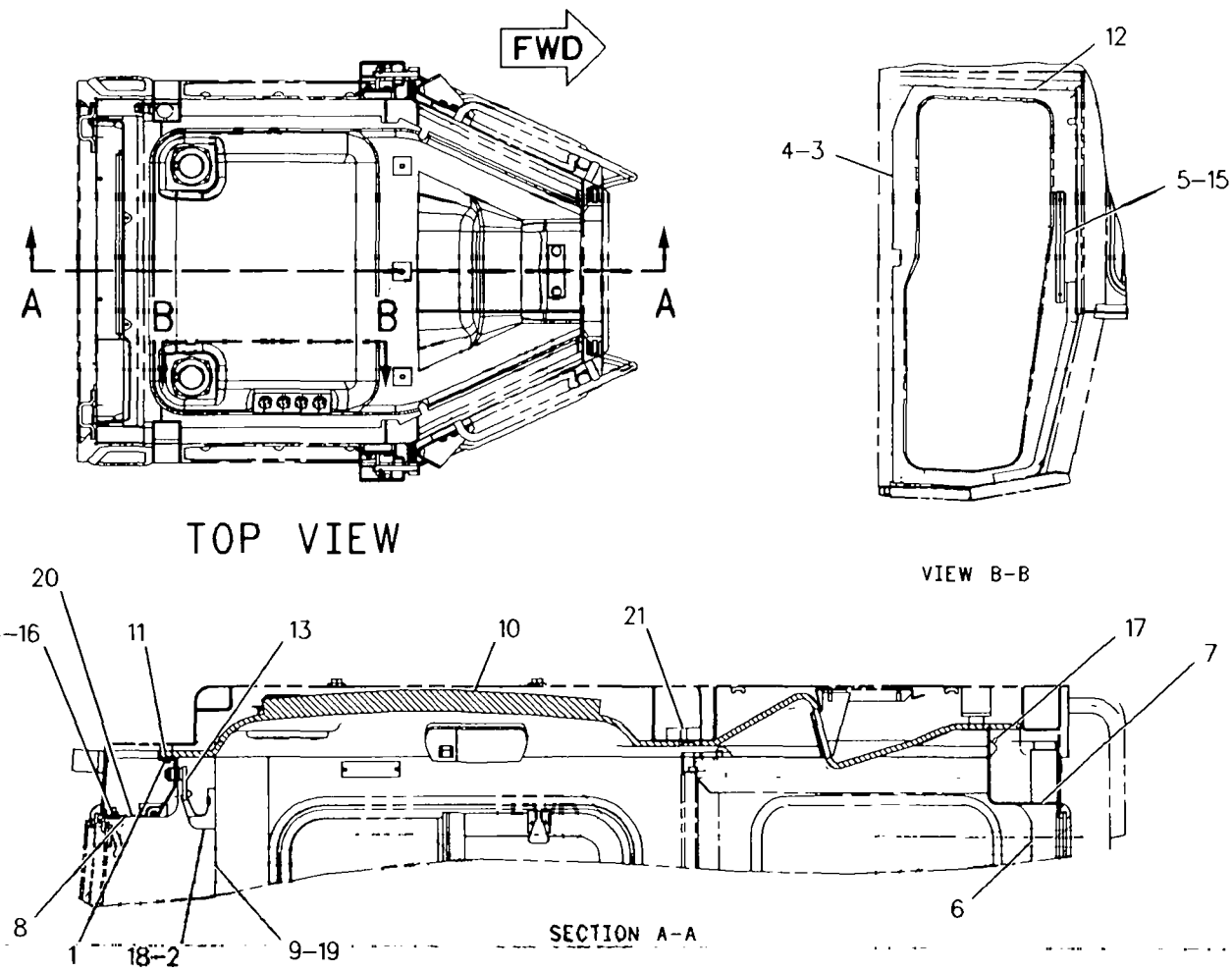

GRAPHIC #1 g00264046

OPERATOR STATION

115-2331 LINER GP-CAB

PIN 2YN1-UP; 3ZN1-UP; 4MN1-UP; 5LN1-UP; 6JN1-UP; 7KN1-UP; 8LN1-UP; 9PN1-UP
PART OF 105-9658 LINER GP-CAB

SMCS-7329 **i00837458**

NOTE	REF NO	GRAPHIC REF	PART NUMBER	QTY	PART NAME 1 2 3 4 5 6 (PRODUCT LEVEL)	SEE PAGE
	1	1	2N-3162	8	SCREW-MACHINE (10-24X1.25IN)	
Y	2	1	3E-6389	1	LAMP GP-DOME	170
	3	1	3T-6655	4	SWITCH AS-ROTARY (WIPER/WASHER)	
					(EACH INCLUDES)	
		1	7T-9302	1	KNOB-WIPER SWITCH	
	4	1	4B-2047	8	NUT (10-24 THD)	
	5	1	6T-7695	2	SPEAKER AS-RADIO	
	6	1	6V-7978	3	SCREW-MACHINE (10-32X0.375IN)	
	7	1	9U-9942	1	FILM-IDENTIFICATION	
	8	1	101-3055	2	COVER-SPEAKER	
	9	1	109-7955	1	HARNESS AS	
	10	1	117-5059	1	HEADLINER	
	11	1	131-5137	1	PLUG	
M	12	1	7Y-7388	4	SCREW-BUTTON HEAD (M5X0.8X12MM)	
	13	1	8T-4752	4	NUT	
	14	1	145-9031	1	PLATE	

M-METRIC PART
Y-SEPARATE ILLUSTRATION

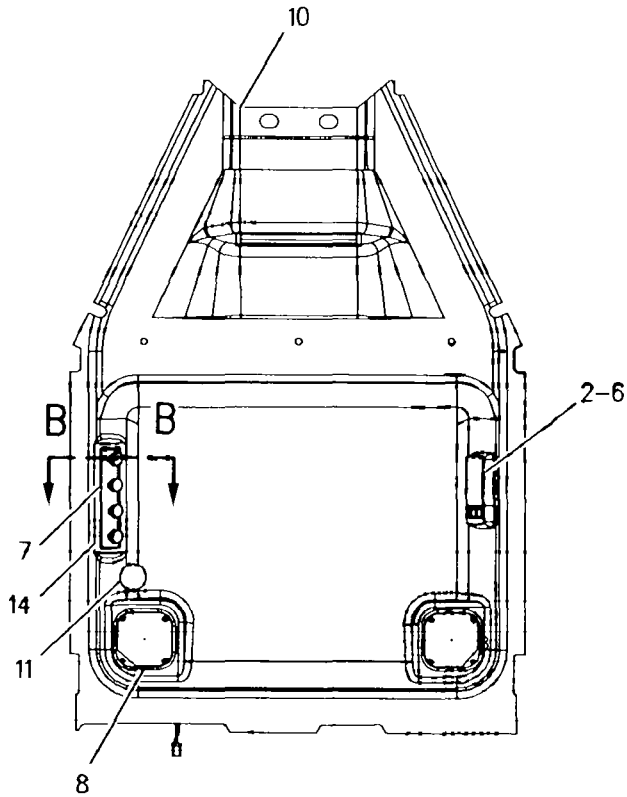

VIEW A-A

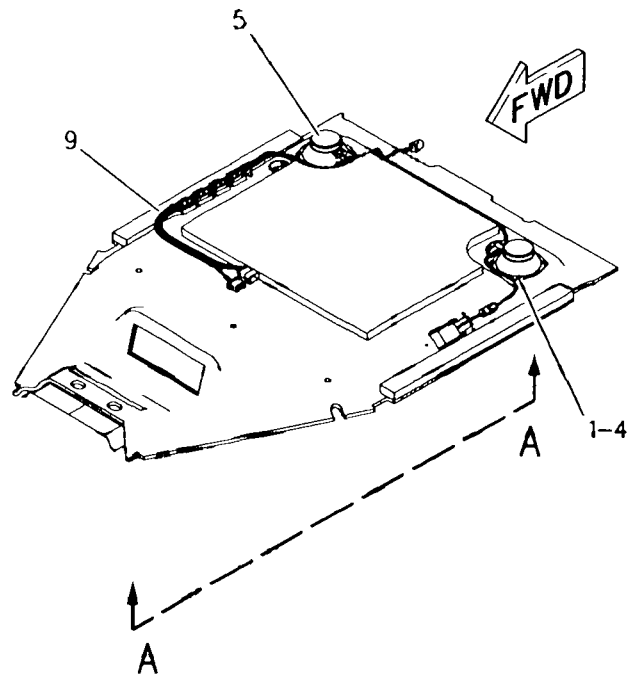

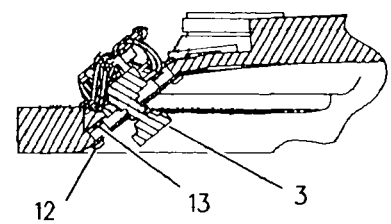

SECTION B-B

GRAPHIC #1 g00295098

OPERATOR STATION

108-1333 LINES GP-HEATER

PIN 2YN1-UP; 3ZN1-UP; 4MN1-UP; 5LN1-UP; 6JN1-UP; 7KN1-UP; 8LN1-UP; 9PN1-UP
PART OF 139-1115, 158-6657 CAB AR

SMCS-7304 **i00884024**

NOTE	REF NO	GRAPHIC REF	PART NUMBER	QTY	PART NAME 1 2 3 4 5 6 (PRODUCT LEVEL)	SEE PAGE
	1	1	2V-9923	1	SPACER	
	2	1	5D-1026	4	CLAMP-HOSE	
	3	1	6B-1628	1	BUSHING-TERMINAL	
	4	1	6B-4661	1	BUSHING-REDUCER	
	5	1	6D-4636	2	CLIP (23.81MM ID)	
	6	1	8F-8151	2	VALVE-DRAIN	
	7	1	9M-5501	2	ELBOW-STREET	
	8	1	8T-4896	2	WASHER-HARD (2.5MM THK)	
	9	1	5M-3062	1	BOLT (3/8-16X.750IN)	
	10	1	8T-9101	1	BOLT (3/8-16X2.75IN)	
E	11	1	5P-0767		HOSE (15.88MM ID) (118CM)	
E	12	1	5P-0767		HOSE (15.88MM ID) (76.5CM)	

E-ORDER BY THE CENTIMETER

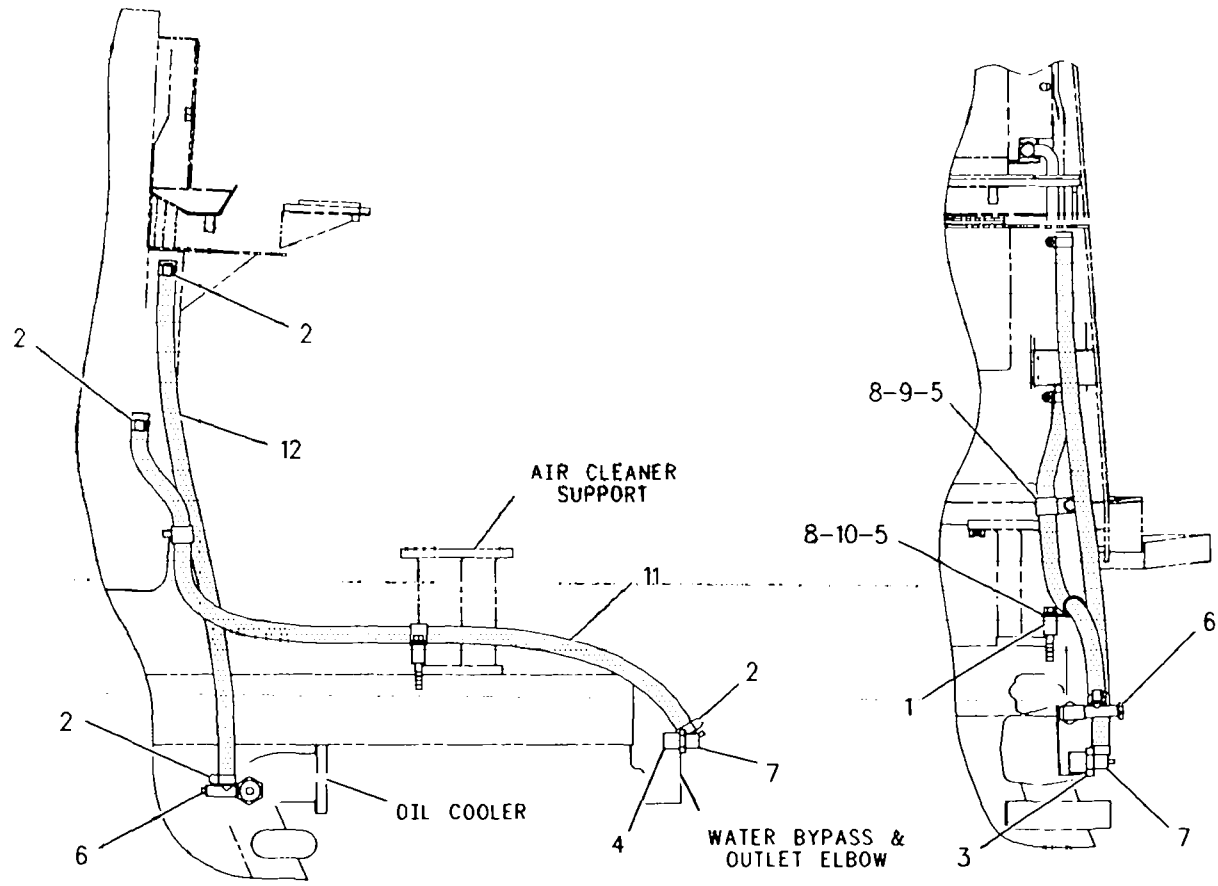

RIGHT SIDE VIEW FRONT VIEW

GRAPHIC #1 g00254269

OPERATOR STATION

105-9659 MIRROR GP-REAR VIEW

PIN 2YN1-UP; 3ZN1-UP; 4MN1-UP; 5LN1-UP; 6JN1-UP; 7KN1-UP; 8LN1-UP; 9PN1-UP
PART OF 105-9655 CAB AR

SMCS-7319 i00775915

NOTE	REF NO	GRAPHIC REF	PART NUMBER	QTY	PART NAME 1 2 3 4 5 6 (PRODUCT LEVEL)	SEE PAGE
	1	1	9P-9388	1	KNOB	
	2	1	5P-6874	1	MIRROR	
	3	1	5K-9179	1	BOLT-ROUND HEAD	
	4	1	6Y-5113	1	BRACKET	
	5	1	8T-4121	2	WASHER (2.5MM THK)	
M	6	1	8T-4195	2	BOLT (M10X1.50X30MM)	

M-METRIC PART

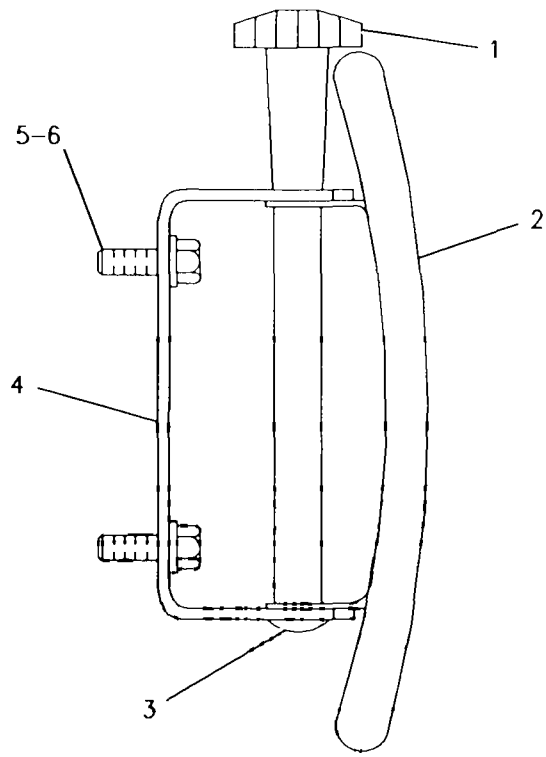

GRAPHIC #1 g00254288

OPERATOR STATION

100-5895 MODULE GP-QUAD GAUGE

PIN 2YN1-UP; 4MN1-UP; 6JN1-UP; 8LN1-UP

PART OF 142-1654 PANEL GP-INSTRUMENT

SMCS-7450, 7451 i01024751

NOTE	REF NO	GRAPHIC REF	PART NUMBER	QTY	PART NAME 1 2 3 4 5 6 (PRODUCT LEVEL)	SEE PAGE
	1	1	102-8805	1	KIT-RECEPTACLE (6 PIN)	
					(INCLUDES WEDGE & PART MARKED J)	
	2	1	8T-8729	6	PIN-CONNECTOR	
J	3	1	3E-3383	1	WEDGE-RECEPTACLE LOCK	

J-INCLUDED IN 1028805 RECEPTACLE KIT

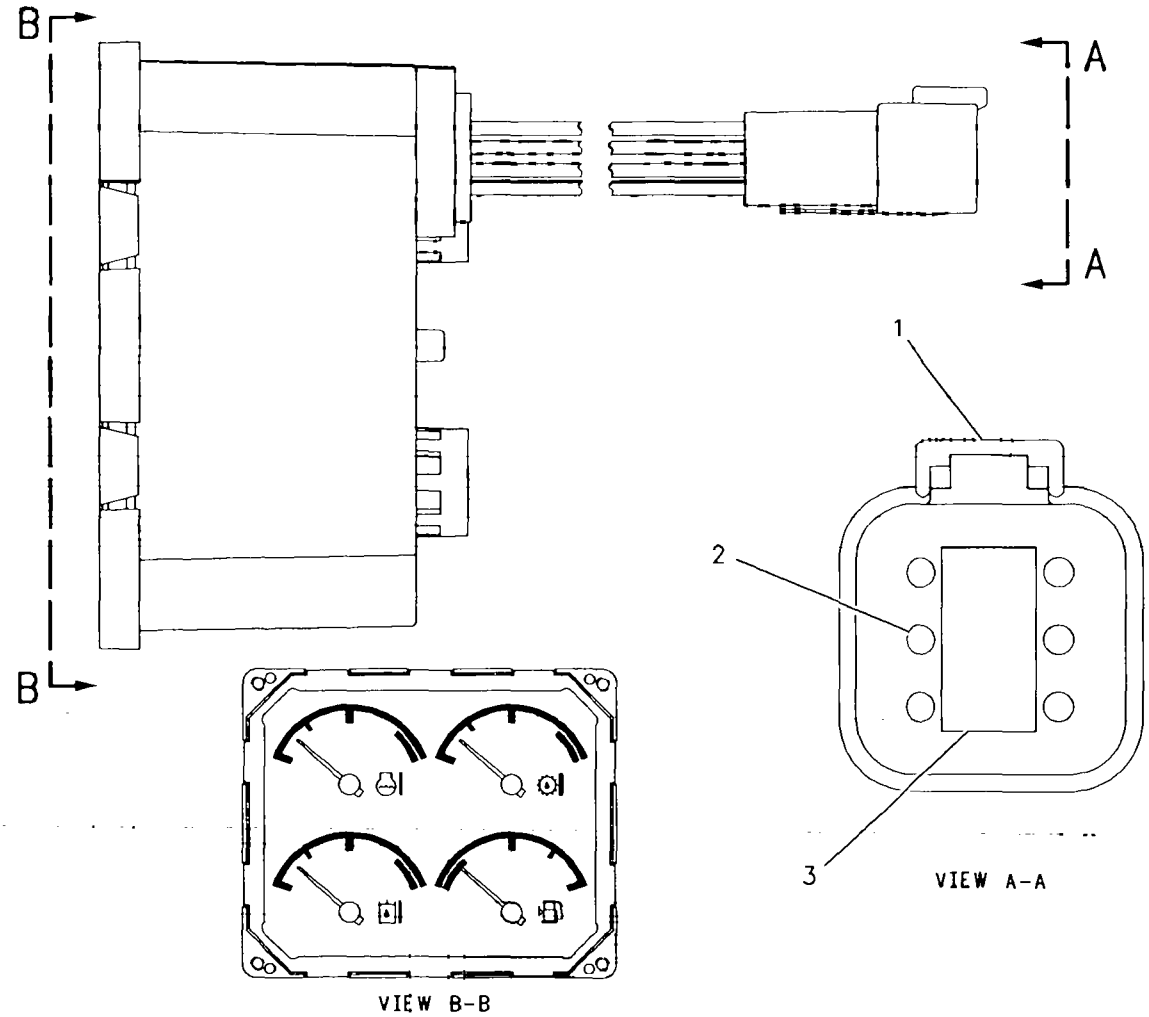

GRAPHIC #1 g00121830

OPERATOR STATION

119-0098 WIPER GP

PIN 2YN1-UP; 3ZN1-UP; 4MN1-UP; 5LN1-UP; 6JN1-UP; 7KN1-UP; 8LN1-UP; 9PN1-UP
24 VOLT
PART OF 105-9661 WIPER GP-WINDOW
FIELD REPLACEMENT ORDER 147-7979–PAGE 511

SMCS-7305 i00573267

NOTE	REF NO	GRAPHIC REF	PART NUMBER	QTY	PART NAME 1 2 3 4 5 6 (PRODUCT LEVEL)	SEE PAGE
M	1	1	5C-7261	1	NUT (M8X1.25 THD)	
	2	1	3F-9556	1	LOCKWASHER (8.4MM ID)	
	3	1	102-8805	1	KIT-RECEPTACLE	
	4	1	8T-8737	1	PLUG-SEAL	
	5	1	8T-8729	5	PIN-CONNECTOR	

M-METRIC PART

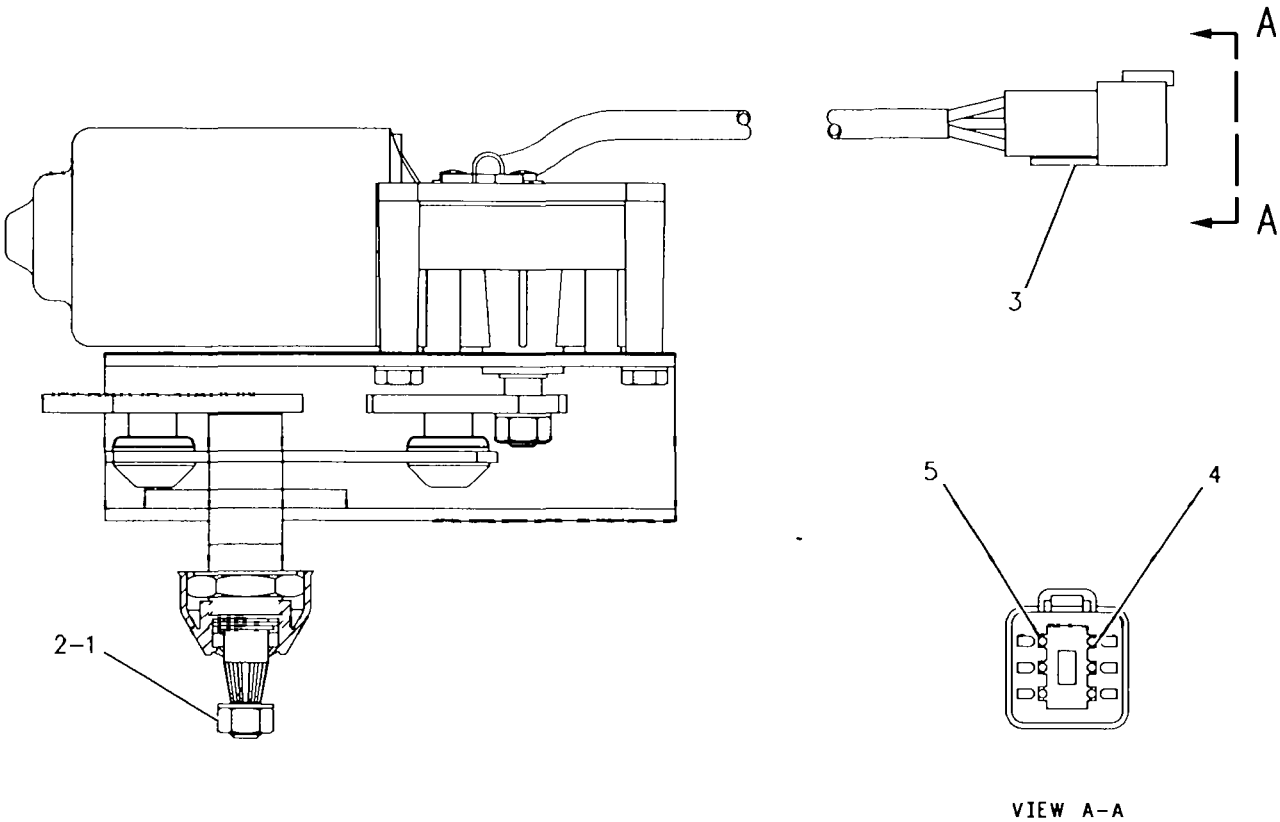

VIEW A-A

GRAPHIC #1 g00263976

OPERATOR STATION

134-0392 MOTOR GP-WINDOW WIPER

PIN 2YN1-UP; 3ZN1-UP; 4MN1-UP; 5LN1-UP; 6JN1-UP; 7KN1-UP; 8LN1-UP; 9PN1-UP

24 VOLT

PART OF 105-9661 WIPER GP-WINDOW

FIELD REPLACEMENT ORDER 147-7976–PAGE 510

SMCS-7305 i00852914

NOTE	REF NO	GRAPHIC REF	PART NUMBER	QTY	PART NAME 1 2 3 4 5 6 (PRODUCT LEVEL)	SEE PAGE
M	1	1	5C-7261	1	NUT (M8X1.25 THD)	
	2	1	3F-9556	1	LOCKWASHER (8.4MM ID)	
	3	1	102-8805	1	KIT-RECEPTACLE	
	4	1	8T-8737	1	PLUG-SEAL	
	5	1	8T-8729	5	PIN-CONNECTOR	

M-METRIC PART

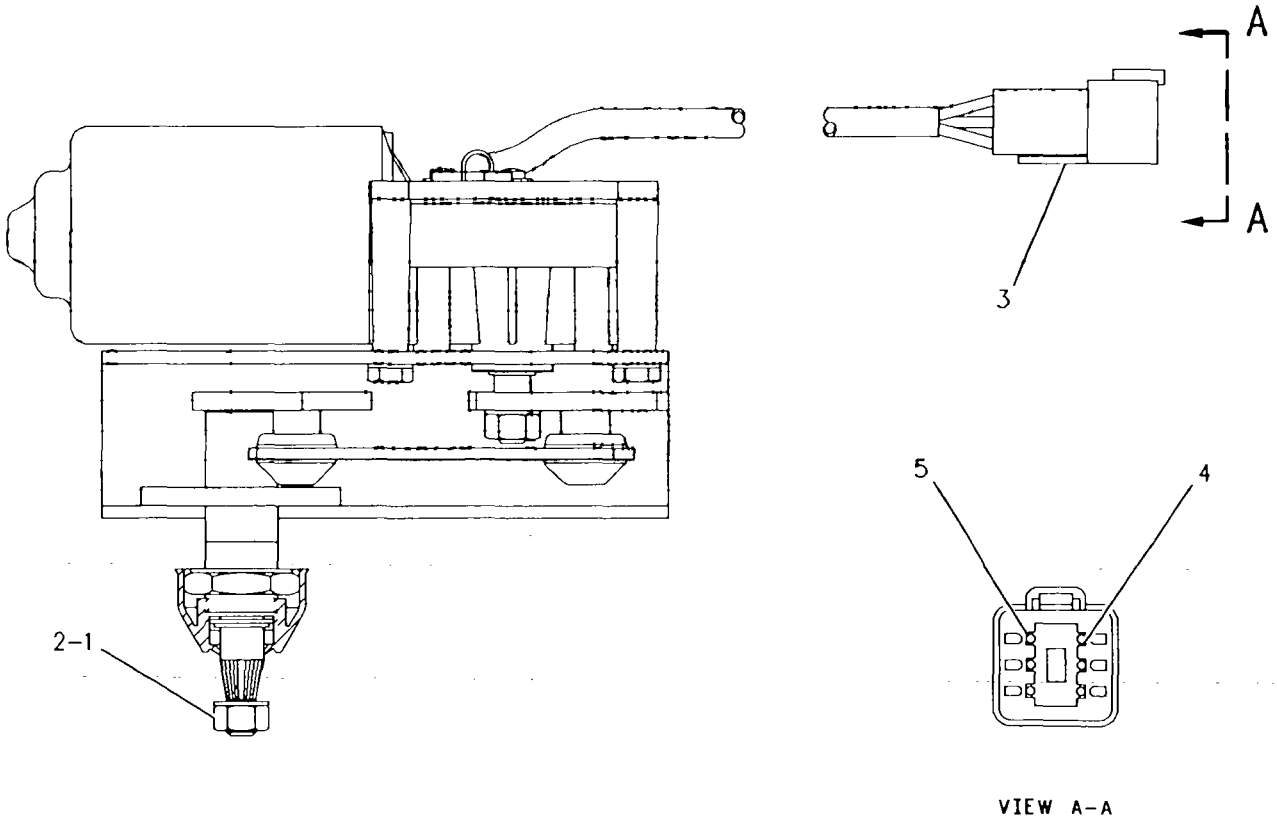

GRAPHIC #1 g00263797

OPERATOR STATION

147-7976 MOTOR GP-WINDOW WIPER

PIN 2YN1-UP; 3ZN1-UP; 4MN1-UP; 5LN1-UP; 6JN1-UP; 7KN1-UP; 8LN1-UP; 9PN1-UP
PART OF 105-9661 WIPER GP-WINDOW
FIELD REPLACEMENT FOR 134-0392–PAGE 509

SMCS-7305 **i00862285**

NOTE	REF NO	GRAPHIC REF	PART NUMBER	QTY	PART NAME 1 2 3 4 5 6 (PRODUCT LEVEL)	SEE PAGE
M	1	1	**5C-7261**	1	NUT (M8X1.25 THD)	
	2	1	**3F-9556**	1	LOCKWASHER (8.4MM ID)	
	3	1	**102-8805**	1	KIT-RECEPTACLE (INCLUDES RECEPTACLE AND WEDGE)	
	4	1	**9G-3695**	1	PLUG-SEAL	
	5	1	**8T-8729**	5	PIN-CONNECTOR	

M-METRIC PART

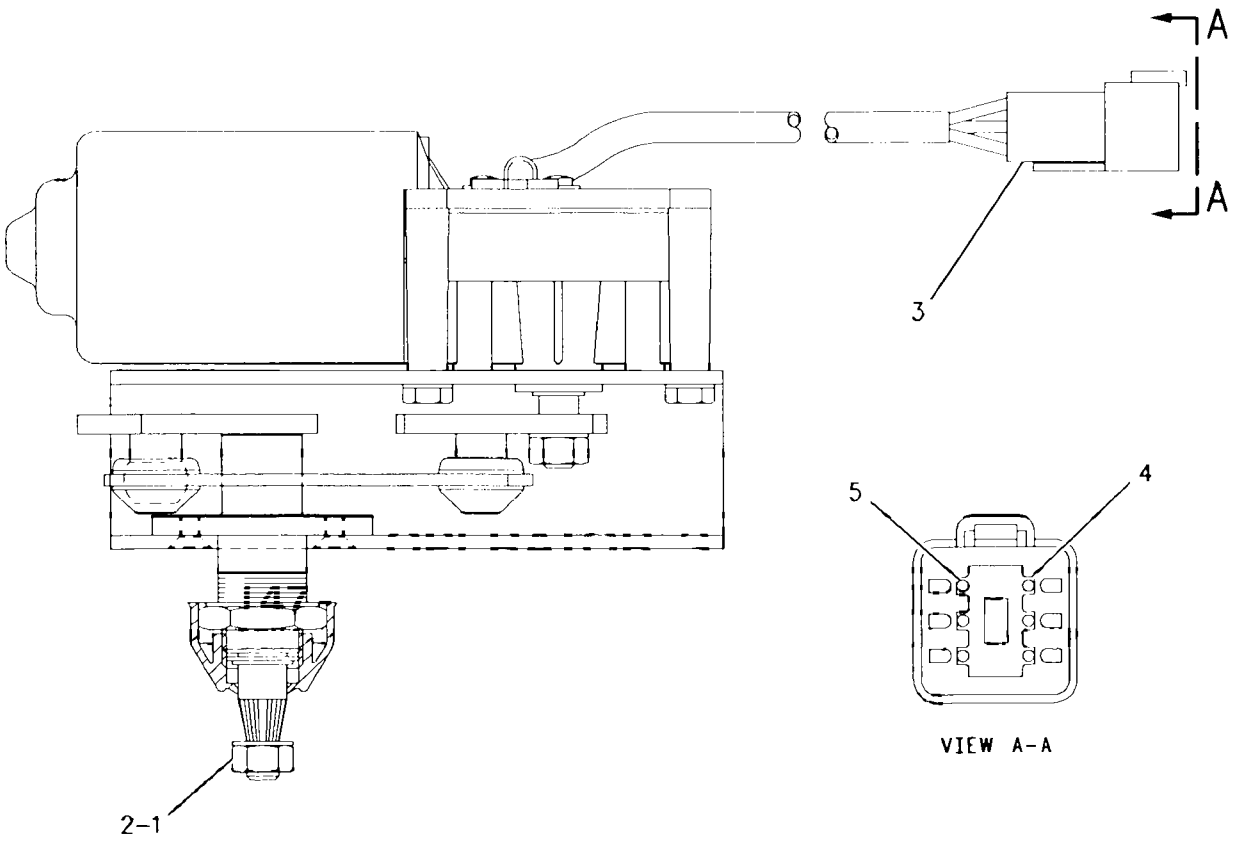

GRAPHIC #1 g00462703

OPERATOR STATION

147-7979 MOTOR GP-WINDOW WIPER

PIN 2YN1-UP; 3ZN1-UP; 4MN1-UP; 5LN1-UP; 6JN1-UP; 7KN1-UP; 8LN1-UP; 9PN1-UP
24 VOLT
PART OF 105-9661 WIPER GP-WINDOW
FIELD REPLACEMENT FOR 119-0098–PAGE 508

SMCS-7305 **i00836385**

NOTE	REF NO	GRAPHIC REF	PART NUMBER	QTY	PART NAME 1 2 3 4 5 6 (PRODUCT LEVEL)	SEE PAGE
M	1	1	5C-7261	1	NUT (M8X1.25 THD)	
	2	1	3F-9556	1	LOCKWASHER (8.4MM ID)	
	3	1	102-8805	1	KIT-RECEPTACLE (INCL. RECEPTACLE & WEDGE)	
	4	1	9G-3695	1	PLUG-SEAL	
	5	1	8T-8729	5	PIN-CONNECTOR	

M-METRIC PART

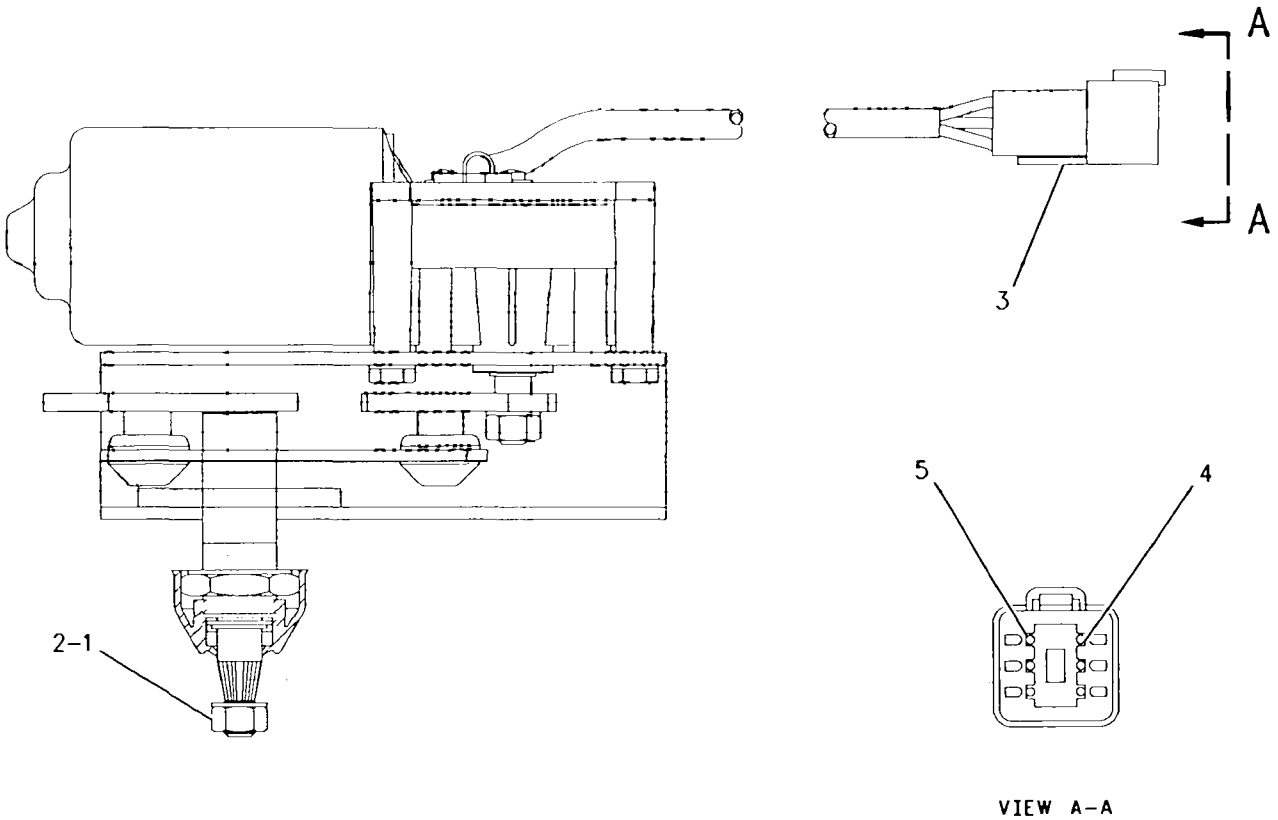

VIEW A–A

GRAPHIC #1 g00464037

OPERATOR STATION

105-9665 MOUNTING GP-CAB

PIN 2YN1-UP; 3ZN1-UP; 4MN1-UP; 5LN1-UP; 6JN1-UP; 7KN1-UP; 8LN1-UP; 9PN1-UP
PART OF 139-1115, 158-6657 CAB AR

SMCS-7266, 7301 i00690504

NOTE	REF NO	GRAPHIC REF	PART NUMBER	QTY	PART NAME 1 2 3 4 5 6 (PRODUCT LEVEL)	SEE PAGE
	1	1	9G-0986	1	SEAL	
	2	1	9G-0983	2	SEAL	
D	3	1	5P-7514		SEAL (.21M)	
	4	1	9G-0990	1	SEAL	
	5	1	113-6033	1	ANGLE	
	6	1	9X-2508	4	BOLT-12 POINT HEAD (1/2-13X1.25IN)	
	7	1	7X-3392	31	WASHER-HARD (3MM THK)	
	8	1	3E-6918	3	BOLT	
	9	1	5S-7379	8	BOLT (3/8-16X.875IN)	
	10	1	5P-1075	8	WASHER-HARD (3MM THK)	
D	11	1	5P-7513		SEAL (.42M)	
	12	1	6V-8801	2	NUT (3/8-16 THD)	
	13	1	3E-4044	2	PLUG	
	14	1	8E-3303	2	STRIP	
	15	1	7X-7470	12	BOLT-12 POINT HEAD	
	16	1	8C-3448	2	BOLT	
	17	1	8T-2561	4	WASHER (5MM THK)	

D-ORDER BY THE METER

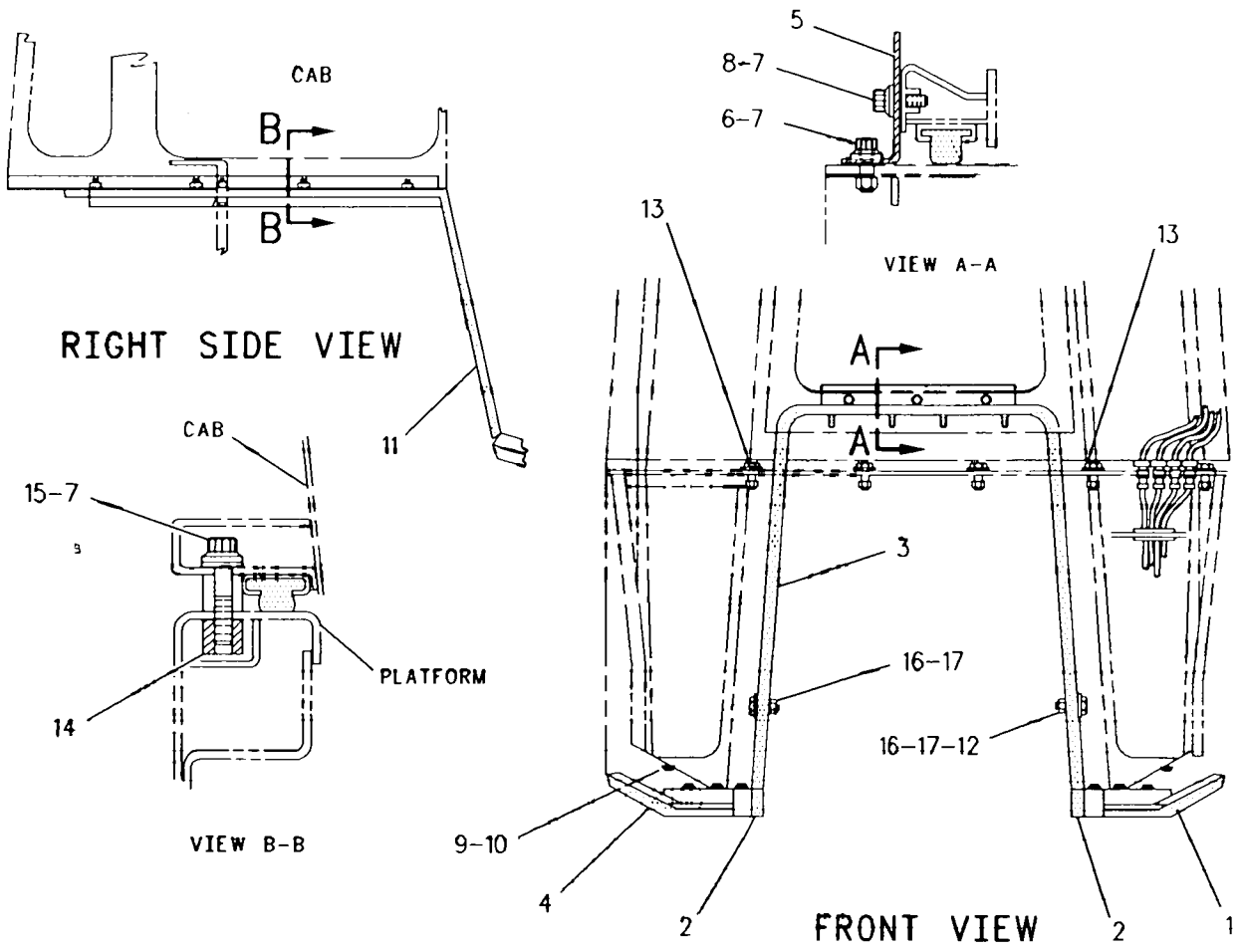

GRAPHIC #1 g00297248

OPERATOR STATION

8Y-5992 PAN GP-SEAT

PIN 2YN1-UP; 3ZN1-UP; 4MN1-UP; 5LN1-UP; 6JN1-UP; 7KN1-UP; 8LN1-UP; 9PN1-UP
PART OF 8Y-5986 SEAT GP-SUSPENSION

SMCS-7312 **i01024966**

NOTE	REF NO	GRAPHIC REF	PART NUMBER	QTY	PART NAME 1 2 3 4 5 6 (PRODUCT LEVEL)	SEE PAGE
	1	1	**8Y-5892**	1	PAN AS-SEAT	
JL	2	1	**3K-4897**	4	PIN-SPRING	
N	3	1	**9M-5733**	1	RIVET-POP (4.78MM DIA)	
N	4	1	**6V-2456**	2	RING-RETAINING	
JZ	5	1		1	ROD AS	
JLZ	6	1		2	SPRING	
LZ	7	1		1	ROD AS	
LZ	8	1		1	BUSHING	
NZ	9	1		1	BRACKET	
NZ	10	1		1	CABLE AS	
NZ	11	1		1	PIN	
NZ	12	1		1	ADJUSTER AS	
					AVAILABLE REPAIR KIT(S):	
			8Y-5995	1	KIT-SEAT TILT	
					(INCLUDES BUSHING, LOCKPIN & PARTS MARKED J)	
			8Y-5998	1	KIT-BACK TILT	
					(INCLUDES BUSHING & PARTS MARKED L)	
			8Y-5999	1	KIT-ADJUSTER	
					(INCLUDES PARTS MARKED N)	

J-INCLUDED IN 8Y-5995 SEAT TILT KIT
L-INCLUDED IN 8Y-5998 BACK TILT KIT
N-INCLUDED IN 8Y-5999 ADJUSTER KIT
Z-NOT SERVICED SEPARATELY

8Y-5992 **PAN GP-SEAT** *(contd.)* i01024966

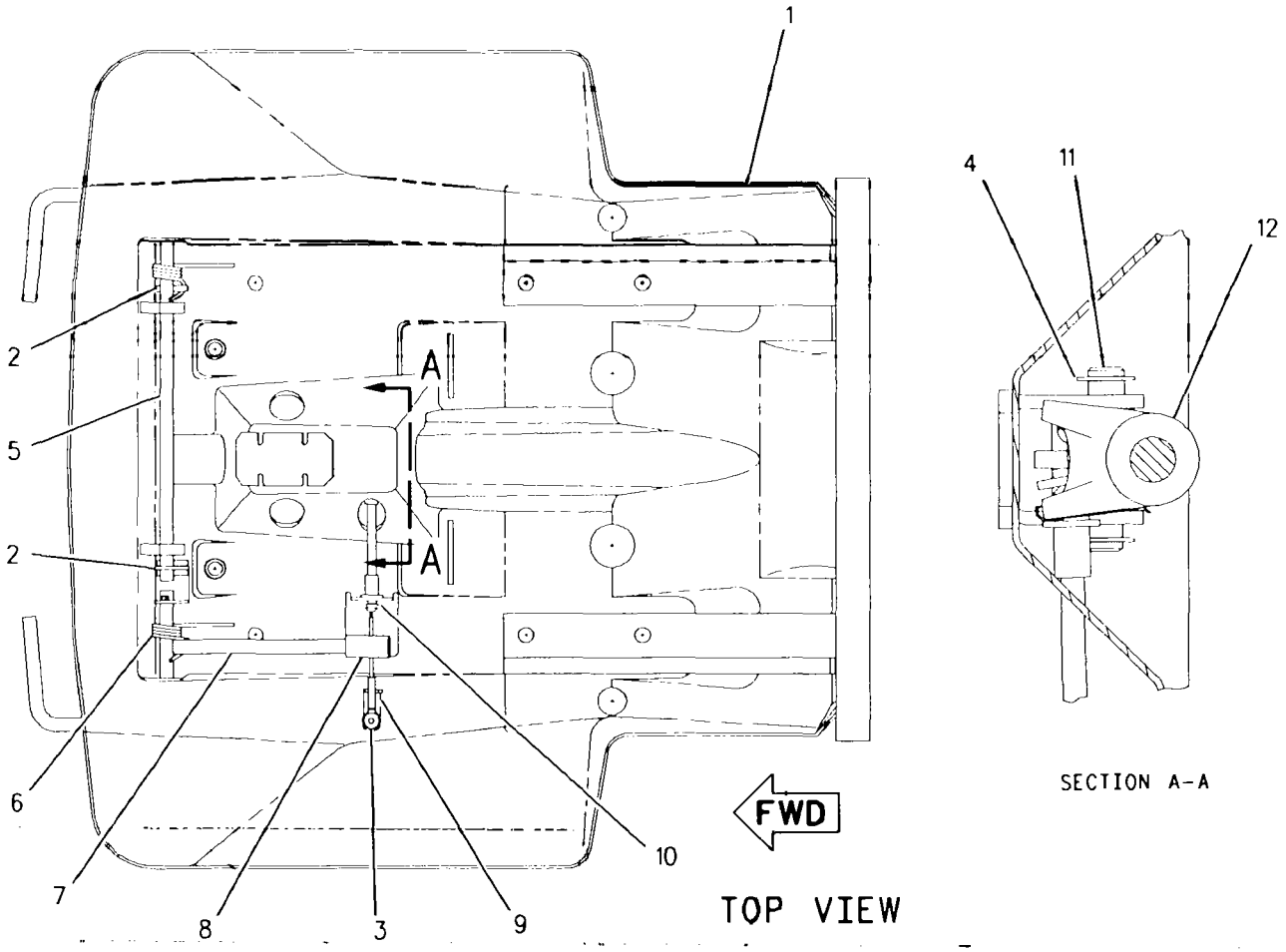

GRAPHIC #1 g00527029

OPERATOR STATION

142-1654 INSTRUMENT GP-ROPS–CUSTOM

PIN 2YN1-UP; 4MN1-UP; 6JN1-UP; 8LN1-UP
O-ROPS, CAB READY
PART OF 142-2498 PLATFORM AR-CAB

SMCS-7450, 7451 — i00899018

NOTE	REF NO	GRAPHIC REF	PART NUMBER	QTY	PART NAME 1 2 3 4 5 6 (PRODUCT LEVEL)	SEE PAGE
	1	1	2P-4339	1	NUT-JAM (7/16-20 THD)	
	2	1	3S-2093	3	STRAP-CABLE (1.75IN DIA)	
	3	1	135-2172	1	PLATE	
	4	1	134-7255	1	FILM-IDENTIFICATION	
	5	1	7F-6998	1	LOCKWASHER	
	6	1	7N-5876	2	LAMP-MINIATURE (28 VOLT)	
Y	7	1	*133-8979*	1	CONTROL GP-EMS ELECTRONIC (LED)	169
	8	1	128-6157	1	PLATE	
Y	9	1	*9G-7641*	1	SWITCH GP-START	192
	10	1	9X-6772	3	STRAP-CABLE	
	11	1	133-9405	1	SWITCH AS (AUTO SHIFT)	
		1	3E-3371	1	WEDGE-RECEPTACLE LOCK	
		1	3K-0835	1	NUT	
		1	6F-0253	1	LOCKWASHER	
		1	8T-8729	3	PIN-CONNECTOR	
		1	102-8803	1	KIT-RECEPTACLE	
	12	1	100-5567	1	BEZEL	
Y	13	1	*100-5895*	1	MODULE GP-QUAD GAUGE ELEK	507
	14	1	106-8701	1	PLATE	
	15	1	107-1964	4	SCREW-PAN HEAD (#6-19X.5IN)	
	16	1	109-7189	1	SWITCH AS-ROTARY (LIGHTS)	
		1	6V-8376	7	SCREW-MACHINE (8-32X.25IN)	
		1	9B-7233	7	LOCKWASHER (NO.8)	
	17	1	110-6109	1	KNOB-CONTROL	
	18	1	8C-6354	1	CAP-RECEPTACLE	
	19	1	112-0788	1	FILM-PANEL	
	20	1	136-2087	1	HARNESS AS	
	21	1	116-6203	1	RESISTOR AS	
		1	102-8802	1	KIT-RECEPTACLE (2 PIN)	
		1	3E-3365	1	WEDGE	
		1	8T-8729	2	PIN-CONNECTOR	
	22	1	116-7879	1	PLATE AS	
		1	4P-8134	1	CLIP	
		1	7T-1099	2	LINK	
	23	1	1F-0750	3	NUT-WELD (3/8-16 THD)	
	24	1	117-9920	1	PANEL-DASH	
	25	1	122-7127	10	NUT	
	26	1	123-0304	1	INDICATOR AS (ACTION)	
		1	115-1748	1	LAMP-MINIATURE (24V)	
		1	123-0306	1	SOCKET AS	
	27	1	123-9294	3	LAMP-MINIATURE	
	28	1	3S-9557	6	SCREW-PAN HEAD	
	29	1	125-0469	1	FILM-IDENTIFICATION	
	30	1	125-0470	1	FILM-IDENTIFICATION	
	31	1	125-0741	1	PANEL-DASH	
Y	32	1	*125-3401*	1	CONTROL GP-DISPLAY ELECTRONIC	484
	33	1	157-3570	1	CONTROL GP-EMS ELECTRONIC	
	34	1	133-9405	1	SWITCH AS (START AID)	
		1	3E-3371	1	WEDGE-RECEPTACLE LOCK	
		1	3K-0835	1	NUT	
		1	6F-0253	1	LOCKWASHER	
		1	8T-8729	3	PIN-CONNECTOR	
		1	102-8803	1	KIT-RECEPTACLE	
	35	1	4P-8134	1	CLIP	
	36	1	5M-3062	2	BOLT	

142-1654 INSTRUMENT GP-ROPS *(contd.)*

i00899018

NOTE	REF NO	GRAPHIC REF	PART NUMBER	QTY	PART NAME 1 2 3 4 5 6 (PRODUCT LEVEL)	SEE PAGE
	37	1	5P-1075	2	WASHER-HARD (3MM THK)	
M	38	1	7Y-7256	4	SCREW-TRUSS HEAD (M4X0.7X35MM)	
M	39	1	8T-4171	3	BOLT (M6X1.0X12MM)	
	40	1	133-9405	1	SWITCH AS (AUTO KICKDOWN)	
		1	3E-3371	1	WEDGE-RECEPTACLE LOCK	
		1	3K-0835	1	NUT	
		1	6F-0253	1	LOCKWASHER	
		1	8T-8729	3	PIN-CONNECTOR	
		1	102-8803	1	KIT-RECEPTACLE	
	41	1	116-7964	2	MOUNT	
	42	1	133-9405	1	SWITCH AS (VIDEO INDICATOR DIAL)	
		1	3E-3371	1	WEDGE-RECEPTACLE LOCK	
		1	3K-0835	1	NUT	
		1	6F-0253	1	LOCKWASHER	
		1	8T-8729	3	PIN-CONNECTOR	
		1	102-8803	1	KIT-RECEPTACLE	
	43	1	130-7495	1	FILM-MONITOR (SMART EMS)	
	44	1	8T-4205	1	WASHER-HARD (2MM THK)	

M-METRIC PART
Y-SEPARATE ILLUSTRATION

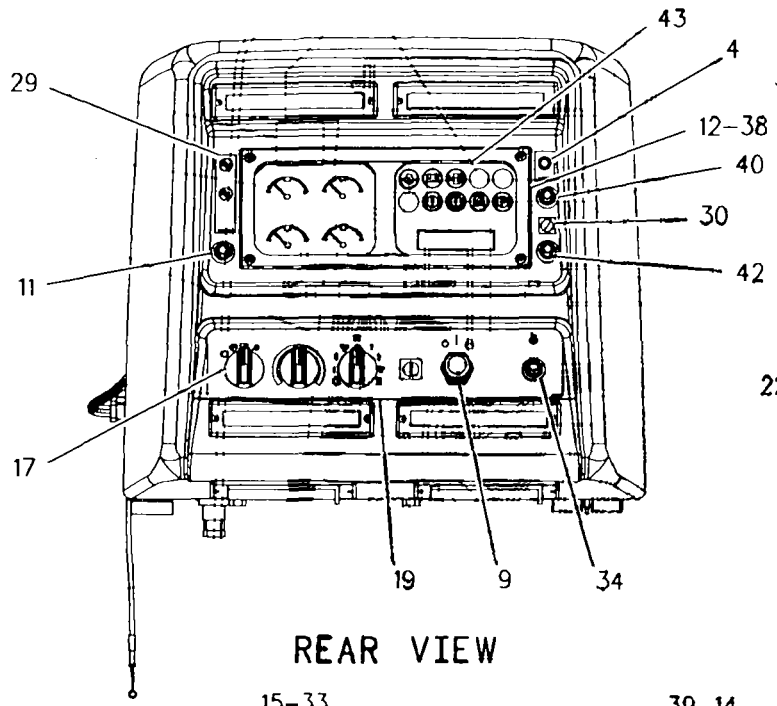

REAR VIEW

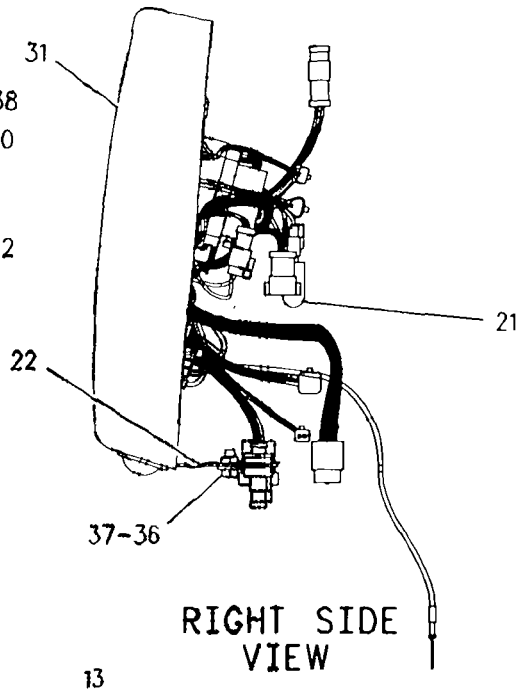

RIGHT SIDE VIEW

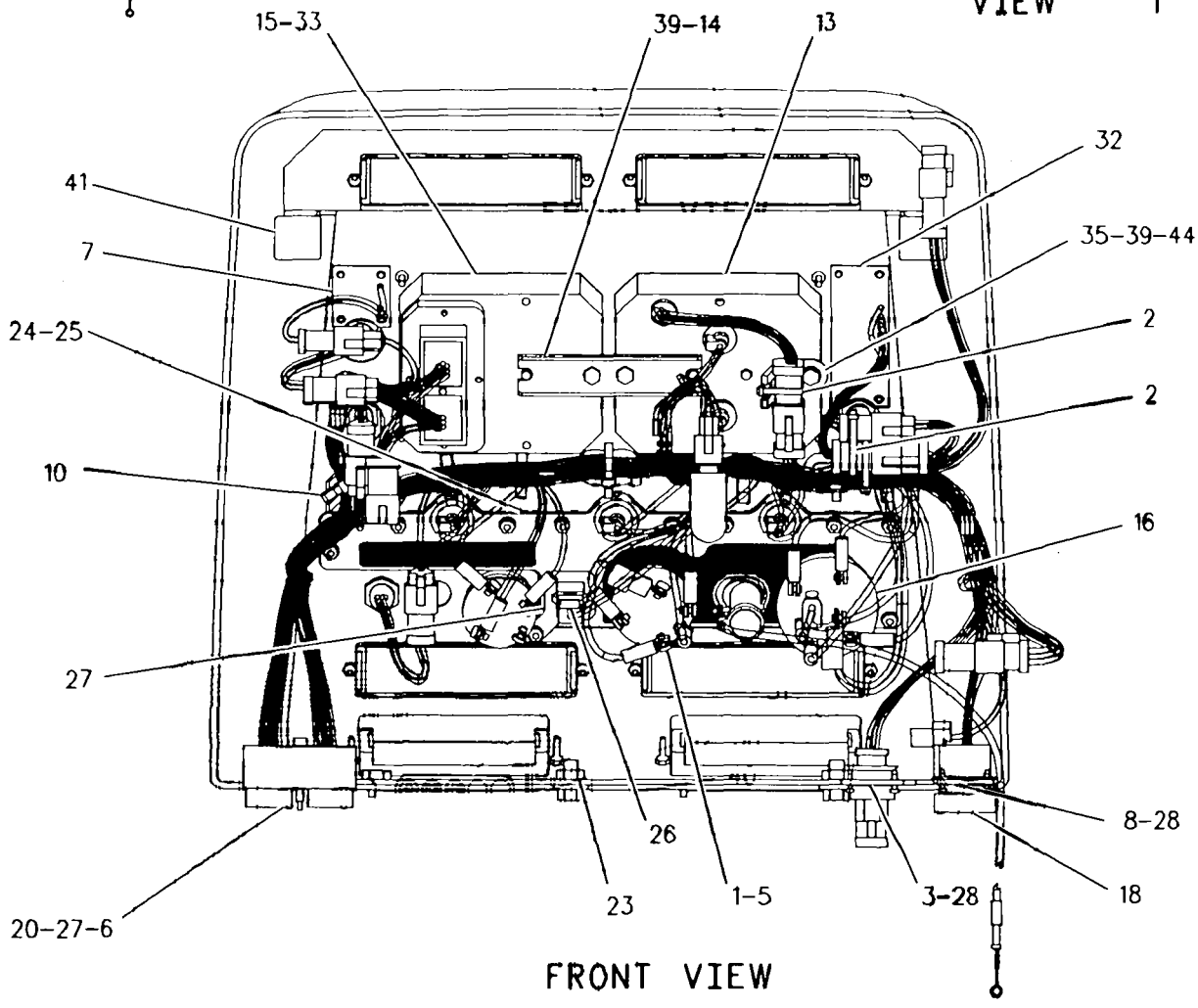

FRONT VIEW

GRAPHIC #1

g00272570

OPERATOR STATION

142-2498 PLATFORM AR–CUSTOM

PIN 2YN1-UP; 4MN1-UP; 6JN1-UP; 8LN1-UP

CAB READY

SMCS-7301 **i01003531**

NOTE	REF NO	GRAPHIC REF	PART NUMBER	QTY	PART NAME 1 2 3 4 5 6 (PRODUCT LEVEL)	SEE PAGE
	1	1	139-5200	1	PLATE	
	2	1	140-6732	1	GASKET	
	3	1	5M-3062	16	BOLT (3/8-16X.75IN)	
	4	1	5P-1075	16	WASHER-HARD (3MM THK)	
	5	1	6T-4556	1	COVER	
	6	1	6T-4557	1	GASKET	
	7	1	6T-5067	1	LINER	
Y	8	1	*108-1328*	1	HOOD & GUARD GP	281
	9	1	140-7696	1	COVER AS	
		1	5P-8244	2	WASHER (2.5MM THK)	
Y	10	1	*105-9666*	1	PLATFORM GP-CAB	524
Y	11	1	*142-1654*	1	INSTRUMENT GP-ROPS	516
	12	1	145-9134	1	FLOOR MAT	
	13	1	3T-3635	2	HANDHOLD	
	14	1	131-8494	1	PLATE	
	15	1	8E-3303	2	STRIP	
	16	1	5P-2228	12	BOLT (1/2X1.0IN)	
	17	1	5P-1076	10	WASHER-HARD (4MM THK)	
	18	1	8E-8382	1	PLATE AS	
		1	4F-9101	4	LUG (1/4-20 THD)	
	19	1	4M-5283	4	BOLT (1/4-20X0.625IN)	
	20	1	5P-4115	4	WASHER (2MM THK)	
	21	1	7G-4823	1	STRAP	
	22	1	4B-4276	2	WASHER (1.6MM THK)	
	23	1	2D-6235	2	LOCKNUT (1/4-20 THD)	
	24	1	7G-4824	1	STRAP	
	25	1	7T-0786	1	RETAINER AS	
	26	1	6V-1790	3	PLUG-BUTTON	
	27	1	6P-2216	6	CAP-PUSH ON	
	28	1	117-8863	1	LINER	
	29	1	127-1046	1	LINER	
	30	1	7X-2501	3	BOLT (1/4X1.25 IN)	
	31	1	7X-0603	3	WASHER-HARD (2.5MM THK)	
	32	1	8T-4205	3	WASHER-HARD (2MM THK)	
	33	1	3L-0594	3	SPACER	
	34	1	127-1045	1	LINER	
	35	1	127-1043	1	LINER	
	36	1	127-1044	1	LINER	
	37	1	140-6731	1	PLATE AS	
	38	1	140-6733	1	GASKET	
	39	1	030-8838	6	SCREW (6-32X1.0IN)	
	40	1	7D-6922	6	LOCKNUT (6-32 THD)	
	41	1	8T-2895	1	LOCK AS-CYLINDER	
		1	7F-9223	1	LOCKWASHER (0.91MM THK)	
		1	8T-5004	1	SCREW-MACHINE (1/4-28X0.375IN)	
	42	1	139-5201	1	PLATE	
	43	1	140-6736	1	GASKET	
	44	1	140-6730	1	PLATE AS	
	45	1	139-5202	1	PLATE	
	46	1	140-6734	1	GASKET	
	47	1	141-2241	1	PLATE AS	
	48	1	6P-6926	2	SCREW-KNURLED	
	49	1	8T-9384	2	BOLT (1/2-13X.875IN)	
	50	1	8T-4223	2	WASHER-HARD (3MM THK)	
	51	1	141-8984	1	BRACKET AS	
		1	1F-0748	1	NUT-WELD (1/2-13 THD)	

142-2498 PLATFORM AR *(contd.)*

i01003531

NOTE	REF NO	GRAPHIC REF	PART NUMBER	QTY	PART NAME 1 2 3 4 5 6 (PRODUCT LEVEL)	SEE PAGE
	52	1	7T-6299	1	GROMMET	
	53	1	5P-0998	2	PLUG-SEAL	
M	54	1	8T-4189	4	BOLT (M8X1.25X20MM)	
	55	1	4Y-4281	1	PLUG	
	56	1	5P-4116	4	WASHER (2MM THK)	

M-METRIC PART
Y-SEPARATE ILLUSTRATION

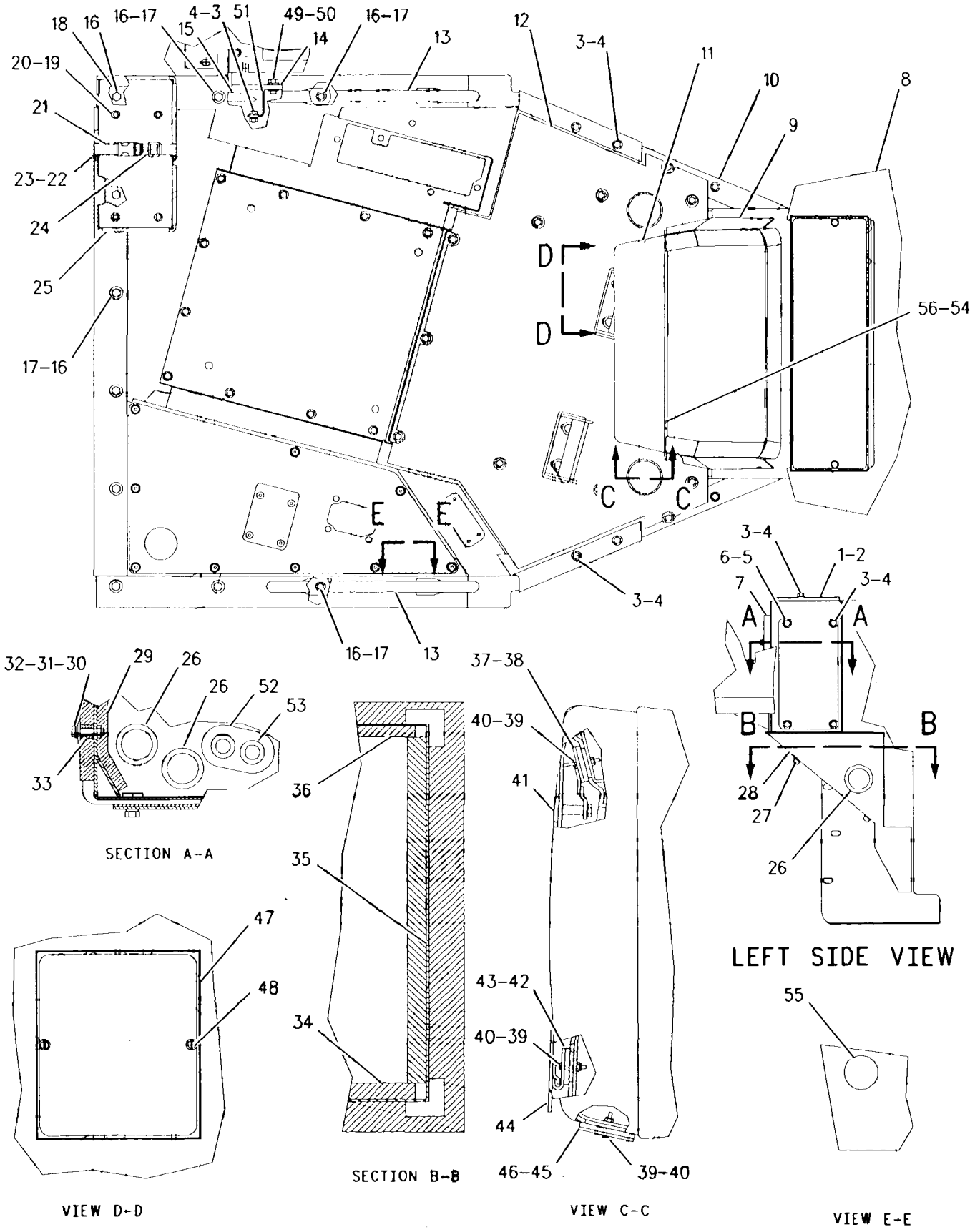

GRAPHIC #1 g00284883

OPERATOR STATION

105-9666 PLATFORM GP-CAB

PIN 2YN1-UP; 4MN1-UP; 6JN1-UP; 8LN1-UP

ENCLOSED ROPS

PART OF 142-2498 PLATFORM AR-CAB

SMCS-7253 **i00899300**

NOTE	REF NO	GRAPHIC REF	PART NUMBER	QTY	PART NAME 1 2 3 4 5 6 (PRODUCT LEVEL)	SEE PAGE
	1	1	**3E-4898**	4	SLEEVE	
	2	1	**3T-3462**	4	PLATE	
	3	1	**6J-0488**	21	SCREW-HEAD (3/8-16X.875IN)	
	4	1	**8E-9299**	1	PLATE	
	5	1	**8T-4943**	1	PLUG	
	6	1	**135-1609**	2	SUPPORT AS-FOOT	
	7	1	**107-8772**	1	PLATFORM AS	
	8	1	**108-9638**	1	PLATE AS	
	9	1	**109-0532**	1	COVER AS	
	10	1	**140-9829**	1	FLOORPLATE AS	
	11	1	**117-8131**	8	MOUNT	
	12	1	**140-8618**	1	PLATE	
	13	1	**5P-1075**	38	WASHER-HARD (3MM THK)	
	14	1	**5P-1076**	4	WASHER-HARD (4MM THK)	
	15	1	**7X-0582**	4	WASHER-HARD (6MM THK)	
	16	1	**5M-3062**	21	BOLT (3/8-16X.75IN)	
	17	1	**5C-6565**	4	BOLT (1/2-13X1.25IN)	
	18	1	**7X-0373**	4	BOLT (3/4-10X5.50IN)	
	19	1	**135-6269**	1	COVER	
	20	1	**141-2408**	1	FLOORPLATE AS	
	21	1	**117-9966**	2	PLUG	
	22	1	**8T-4896**	4	WASHER-HARD (2.5MM THK)	

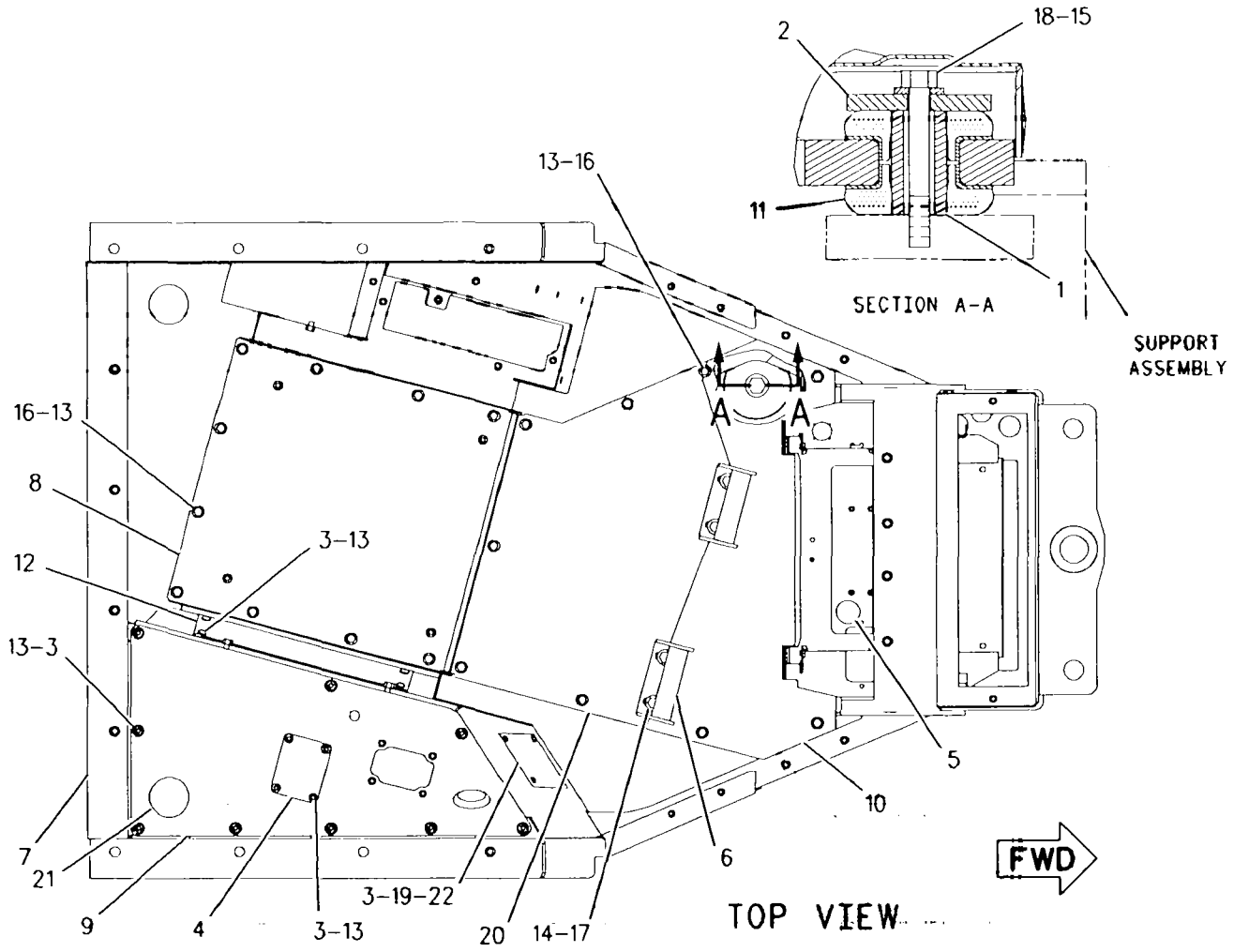

GRAPHIC #1

g00467339

OPERATOR STATION

141-7422 PRESSURIZER GP-CAB–CUSTOM

PIN 2YN1-UP; 3ZN1-UP; 4MN1-UP; 5LN1-UP; 6JN1-UP; 7KN1-UP; 8LN1-UP; 9PN1-UP

PART OF 139-1115, 158-6657 CAB AR

SMCS-7311 i00603184

NOTE	REF NO	GRAPHIC REF	PART NUMBER	QTY	PART NAME 1 2 3 4 5 6 (PRODUCT LEVEL)	SEE PAGE
	1	1	**3H-6660**	2	PIN-SPRING	
	2	1	**6T-0988**	1	FILTER (CAB FRESH AIR)	
	3	1	**6T-5068**	1	FILTER AS (CAB REC AIR)	
	4	1	**9W-7033**	2	KNOB AS	
					(EACH INCLUDES)	
		1	**8T-7566**	1	PIN-SPRING	
Y	5	1	*109-5762*	1	BLOWER GP	460
	6	1	**111-4482**	1	COVER AS	
	7	1	**127-1048**	1	LINER	
	8	1	**5P-1075**	10	WASHER-HARD (3MM THK)	
	9	1	**5M-3062**	10	BOLT (3/8-16X.75OIN)	

Y-SEPARATE ILLUSTRATION

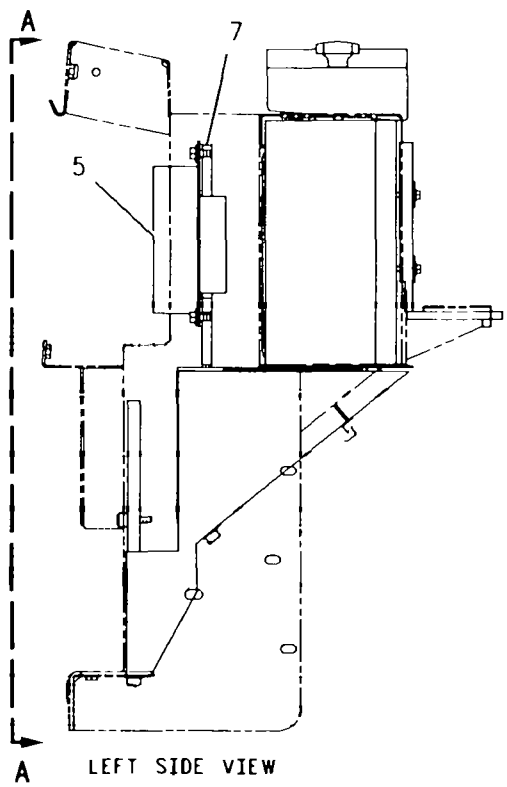

LEFT SIDE VIEW

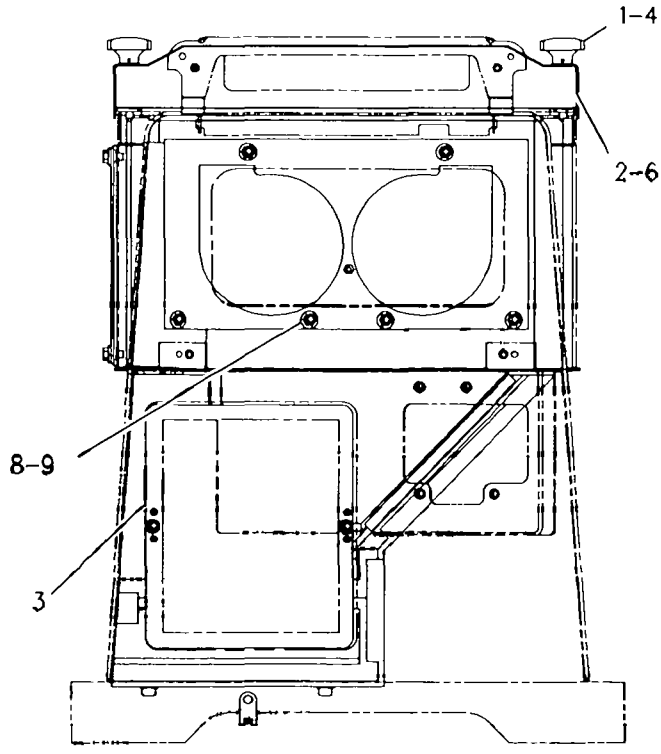

VIEW A-A

GRAPHIC #1 g00272936

OPERATOR STATION

7G-7999 ROPS GP

PIN 2YN1-UP; 3ZN1-UP; 4MN1-UP; 5LN1-UP; 6JN1-UP; 7KN1-UP; 8LN1-UP; 9PN1-UP
PART OF 139-1115, 158-6657 CAB AR

SMCS-7323, 7325 i00973670

NOTE	REF NO	GRAPHIC REF	PART NUMBER	QTY	PART NAME 1 2 3 4 5 6 (PRODUCT LEVEL)	SEE PAGE
	1	1	3W-9322	1	ROPS AS	
	2	1	7X-0407	12	BOLT (1-8X3.25IN)	
	3	1	7X-0576	12	WASHER-HARD (44.5MM OD)	

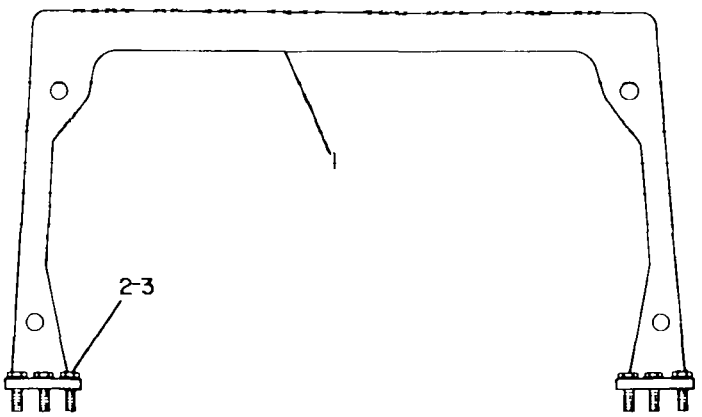

GRAPHIC #1 g00207528

OPERATOR STATION

122-4617 SEAT BELT GP

PIN 2YN1-UP; 3ZN1-UP; 4MN1-UP; 5LN1-UP; 6JN1-UP; 7KN1-UP; 8LN1-UP; 9PN1-UP
RETRACTABLE
PART OF 125-6224 SEAT GP

SMCS-7327 i00107444

NOTE	REF NO	GRAPHIC REF	PART NUMBER	QTY	PART NAME 1 2 3 4 5 6 (PRODUCT LEVEL)	SEE PAGE
	1	1	4D-6432	1	LOCKNUT (7/16-20 THD)	
	2	1	8T-5360	1	WASHER (2.5MM THK)	
	3	1	8Y-5953	1	BOLT-HEX (7/16-20X1.5IN)	
	4	1	1A-4350	1	BOLT (7/16-20X1.75IN)	

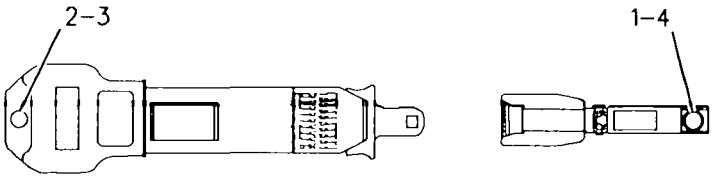

GRAPHIC #1 g00086974

OPERATOR STATION

156-1148 SEAT BELT GP

PIN 2YN1-UP; 3ZN1-UP; 4MN1-UP; 5LN1-UP; 6JN1-UP; 7KN1-UP; 8LN1-UP; 9PN1-UP
RETRACTABLE
PART OF 125-6224 SEAT GP

SMCS-7327 i00838761

NOTE	REF NO	GRAPHIC REF	PART NUMBER	QTY	PART NAME 1 2 3 4 5 6 (PRODUCT LEVEL)	SEE PAGE
	1	1	8Y-5953	1	BOLT-HEX (7/16-20X1.5IN)	
	2	1	8T-5360	1	WASHER (2.5MM THK)	
	3	1	1A-4350	1	BOLT (7/16-20X1.75IN)	
	4	1	4D-6432	1	LOCKNUT (7/16-20 THD)	

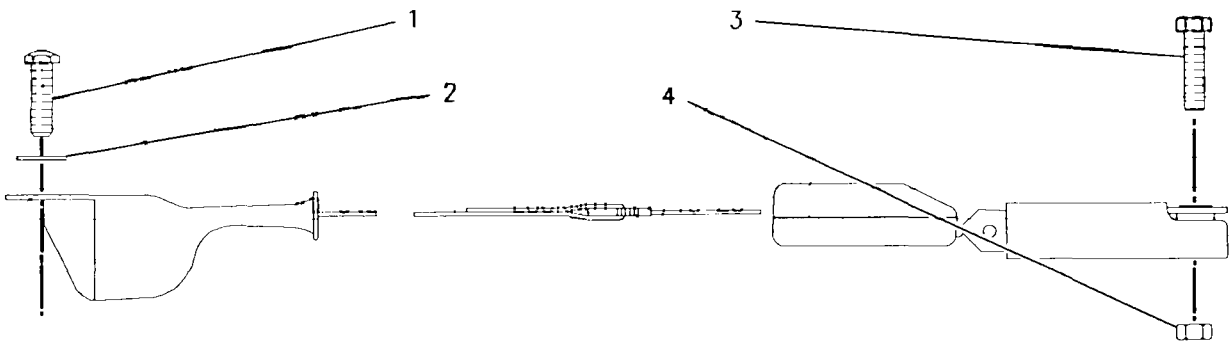

GRAPHIC #1 g00409697

OPERATOR STATION

125-6224 SEAT GP

PIN 2YN1-UP; 3ZN1-UP; 4MN1-UP; 5LN1-UP; 6JN1-UP; 7KN1-UP; 8LN1-UP; 9PN1-UP
FABRIC-LUMBAR
PART OF 131-8422 SEAT GP-SUSPENSION
TYPE 1

SMCS-7312 i01024754

NOTE	REF NO	GRAPHIC REF	PART NUMBER	QTY	PART NAME 1 2 3 4 5 6 (PRODUCT LEVEL)	SEE PAGE
Y	1	1	**8Y-5874**	1	EXTENSION GP-BACKREST	492
Y	2	1	**8Y-5986**	1	SEAT GP-SUSPENSION	534
CY	3	1	**122-4617**	1	SEAT BELT GP	528

C-CHANGE FROM PREVIOUS TYPE
Y-SEPARATE ILLUSTRATION

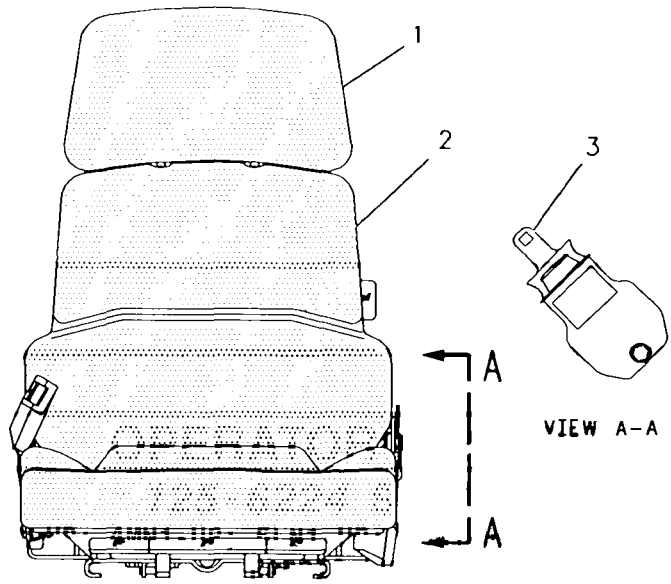

FRONT VIEW

GRAPHIC #1 g00268035

125-6224 SEAT GP

PIN 2YN1-UP; 3ZN1-UP; 4MN1-UP; 5LN1-UP; 6JN1-UP; 7KN1-UP; 8LN1-UP; 9PN1-UP
FABRIC-LUMBAR
PART OF 131-8422 SEAT GP-SUSPENSION
TYPE 2

SMCS-7312 **i01005082**

NOTE	REF NO	GRAPHIC REF	PART NUMBER	QTY	PART NAME 1 2 3 4 5 6 (PRODUCT LEVEL)	SEE PAGE
Y	1	1	**8Y-5874**	1	EXTENSION GP-BACKREST	492
Y	2	1	**8Y-5986**	1	SEAT GP-SUSPENSION	534
CY	3	1	**156-1148**	1	SEAT BELT GP	529

C-CHANGE FROM PREVIOUS TYPE
Y-SEPARATE ILLUSTRATION

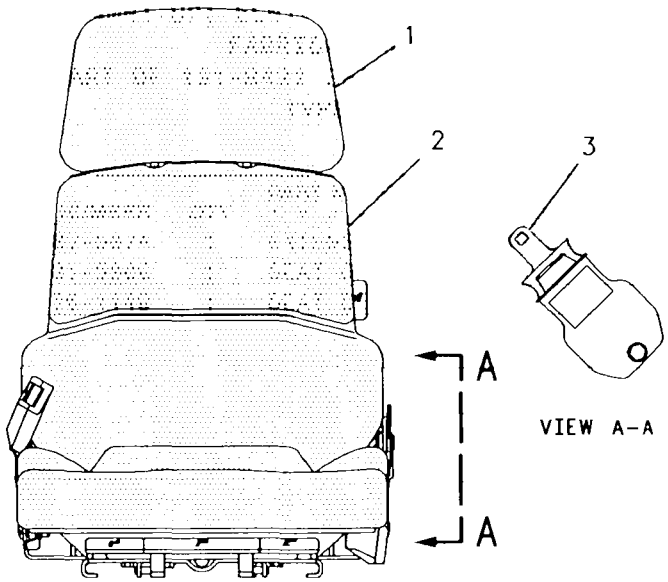

FRONT VIEW

GRAPHIC #1 g00268035

OPERATOR STATION

133-4001 SEAT GP–CUSTOM

PIN 2YN1-UP; 3ZN1-UP; 4MN1-UP; 5LN1-UP; 6JN1-UP; 7KN1-UP; 8LN1-UP; 9PN1-UP

AIR SUSPENSION

SMCS-7312 **i00899626**

NOTE	REF NO	GRAPHIC REF	PART NUMBER	QTY	PART NAME 1 2 3 4 5 6 (PRODUCT LEVEL)	SEE PAGE
Y	1	1	*131-8422*	1	SEAT GP-SUSPENSION	537
	2	1	**141-7868**	1	PLATE AS	
		1	**1F-0750**	1	NUT-WELD (3/8-16 THD)	
	3	1	**158-6652**	1	HARNESS AS	
	4	1	**2D-2751**	1	GROMMET	
	5	1	**7K-1181**	5	STRAP-CABLE (4.00IN DIA)	

Y-SEPARATE ILLUSTRATION

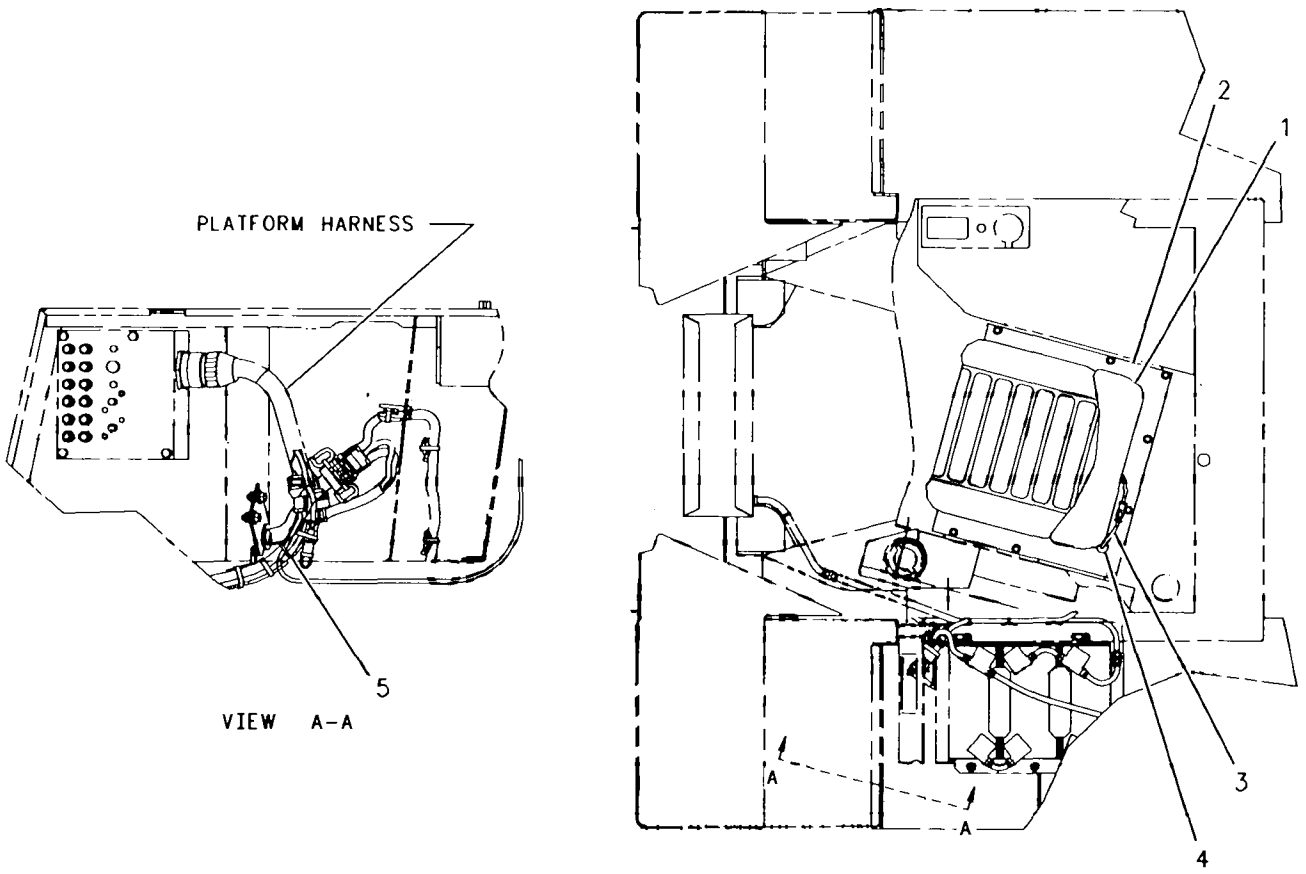

GRAPHIC #1 g00272562

OPERATOR STATION

8Y-5986 SEAT GP-SUSPENSION

PIN 2YN1-UP; 3ZN1-UP; 4MN1-UP; 5LN1-UP; 6JN1-UP; 7KN1-UP; 8LN1-UP; 9PN1-UP

FABRIC-LUMBAR

PART OF 125-6224 SEAT GP

SMCS-7321, 7324, 7336 i01004918

NOTE	REF NO	GRAPHIC REF	PART NUMBER	QTY	PART NAME 1 2 3 4 5 6 (PRODUCT LEVEL)	SEE PAGE
JN	1	1	8Y-5947	4	FASTENER	
Y	2	1	8Y-5992	1	PAN GP-SEAT	514
L	3	1	113-0899	10	SCREW-FLAT HEAD (6-20X.5IN)	
J	4	1	9L-7469	2	LOCKPIN	
	5	1	5P-7076	2	BOLT-12 POINT HEAD (7/16-20X1.25IN)	
					-OR-	
		1	7B-7525	2	BOLT-SOCKET HEAD (7/16-14X1.25IN)	
	6	1	2K-4973	6	LOCKNUT (3/8-16 THD)	
	7	1	8Y-5929	1	PLATE AS-SLIDE	
		1	4K-9097	6	NUT-WELD (5/16-18 THD)	
	8	1	8Y-5930	1	BAR AS-SLIDE	
	9	1	8Y-5931	1	BAR AS-LATCH	
	10	1	8S-7803	2	RING-RETAINING	
	11	1	8Y-5932	1	LATCH AS	
	12	1	8Y-5936	1	SPRING	
	13	1	095-0878	1	PIN-SPRING	
	14	1	8Y-5981	2	BUSHING-BACKREST	
	15	1	8Y-5928	2	SPRING	
	16	1	2B-2695	4	BOLT (5/16-18X.875IN)	
	17	1	8Y-5937	1	BRACKET AS-RH	
	18	1	8Y-5938	1	BRACKET AS-LH	
	19	1	7U-4898	6	SCREW (3/8-16X0.75IN)	
	20	1	1C-0569	2	BOLT (5/16-18X.5IN)	
	21	1	8Y-5979	1	PIN	
	22	1	6V-2456	2	RING-RETAINING	
	23	1	8Y-6834	1	SPRING-LH	
	24	1	8Y-6833	1	SPRING-RH	
C	25	1	108-8421	1	PAN AS-SEAT	
	26	1	8Y-5903	2	CAM	
	27	1	8Y-6006	1	LID AS	
	28	1	8Y-6010	1	LANYARD	
A		1	5P-7958		SLEEVE-CABLE SPLICE	
C	29	1	4S-8287	8	RIVET-POP (6MM DIA)	
	30	1	8Y-5972	1	LATCH	
	31	1	9M-5733	2	RIVET-POP (4.78MM DIA)	
	32	1	3E-4336	1	STUD-BALL	
	33	1	3E-4335	1	CLIP	
BE	34	1	3E-6575		SEAL	
	35	1	8F-1462	1	WASHER-PLATED	
	36	1	2F-7306	1	SCREW-MACHINE (6-32X.25IN)	
	37	1	3E-4362	2	PIN-SPRING	
C	38	1	108-8423	1	SHAFT AS-LUMBAR	
C	39	1	108-8424	1	PAN-LUMBAR	
B	40	1	061-8803	4	SHIM (1.52MM THK)	
C	41	1	108-8426	1	CUSHION AS-BACK	
	42	1	8Y-6051	2	SPACER (14.24MM THK)	
LZ	43	1		1	KNOB-SEAT TILT (LOWER)	
LZ	44	1		1	KNOB-SEAT TILT (UPPER)	
LZ	45	1		1	KNOB-SLIDE (LOWER)	
LZ	46	1		1	KNOB-SLIDE (UPPER)	
LZ	47	1		1	KNOB-BACK TILT (UPPER)	
LZ	48	1		1	KNOB-BACK TILT (LOWER)	
NZ	49	1		1	CUSHION AS-SEAT	
JZ	50	1		1	PAN AS	

8Y-5986 SEAT GP-SUSPENSION *(contd.)* i01004918

NOTE	REF NO	GRAPHIC REF	PART NUMBER	QTY	PART NAME 1 2 3 4 5 6 (PRODUCT LEVEL)	SEE PAGE
					AVAILABLE REPAIR KIT(S):	
			8Y-6933	1	KIT-TILT PAN	
					(INCLUDES PARTS MARKED J)	
			112-4577	1	KIT-SEAT KNOB	
					(INCLUDES PARTS MARKED L)	
			8Y-5891	1	KIT-SEAT CUSHION	
					(INCLUDES PARTS MARKED N)	

A-NOT PART OF THIS GROUP
B-USE AS REQUIRED
C-CHANGE FROM PREVIOUS TYPE
E-ORDER BY THE CENTIMETER
J-INCLUDED IN 8Y-6933 TILT PAN KIT
L-INCLUDED IN 112-4577 SEAT KNOB KIT
N-INCLUDED IN 8Y-5891 SEAT CUSHION KIT
Y-SEPARATE ILLUSTRATION
Z-NOT SERVICED SEPARATELY

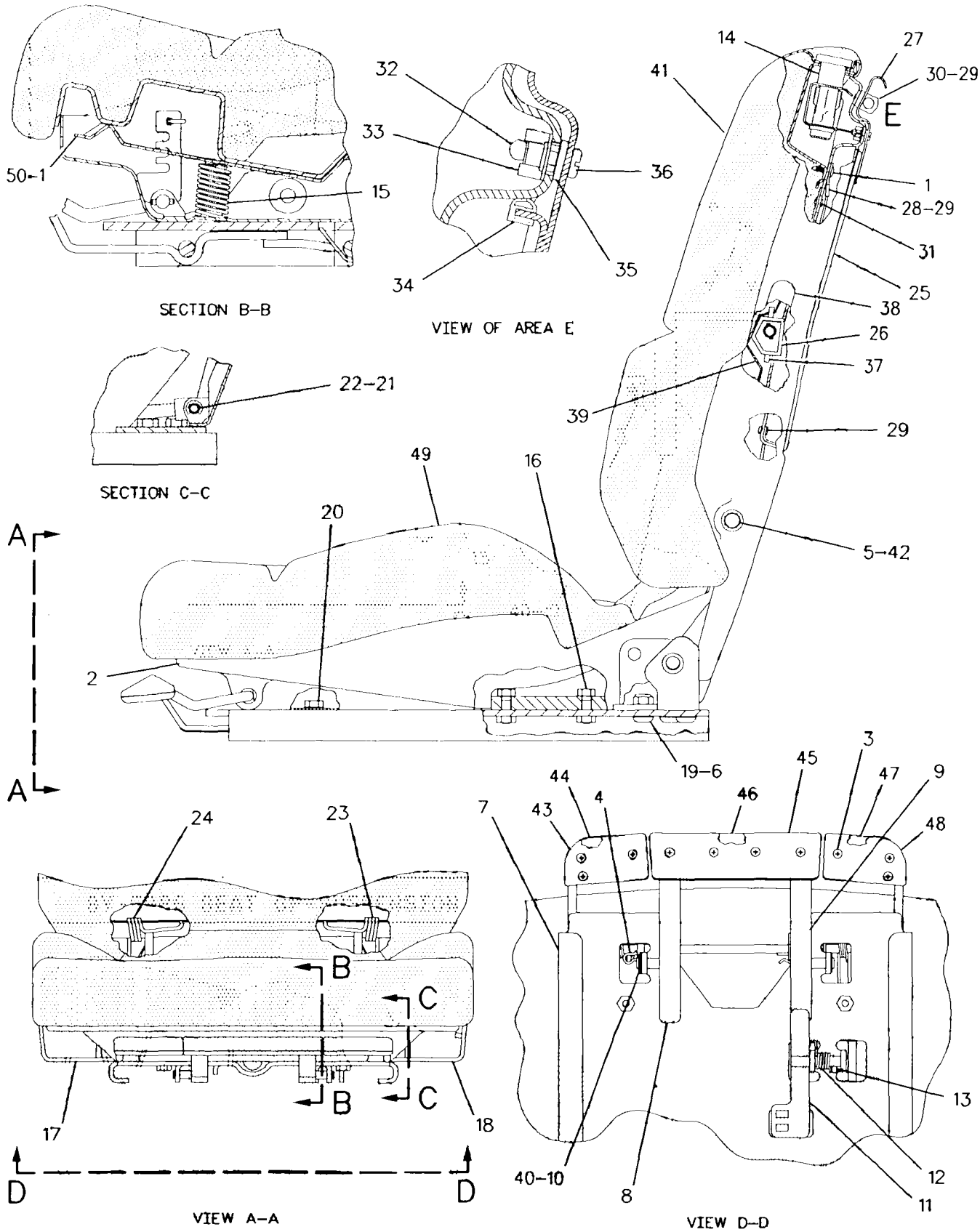

GRAPHIC #1 g00515073

OPERATOR STATION

131-8422 SEAT GP-SUSPENSION

PIN 2YN1-UP; 3ZN1-UP; 4MN1-UP; 5LN1-UP; 6JN1-UP; 7KN1-UP; 8LN1-UP; 9PN1-UP
PART OF 133-4001 SEAT GP
TYPE 1

SMCS-7321, 7324, 7336 **i01005166**

NOTE	REF NO	GRAPHIC REF	PART NUMBER	QTY	PART NAME 1 2 3 4 5 6 (PRODUCT LEVEL)	SEE PAGE
Y	1	1	**125-6224**	1	SEAT GP	530
Y	2	1	*117-7607*	1	SUSPENSION GP-SEAT	540
J	3	1	**4F-4879**	1	BOLT (3/8-16X.5IN)	
ZJ	4	1		4	BLOCK-SLIDER	
					AVAILABLE REPAIR KIT(S):	
			8Y-5889	1	KIT-SLIDER BLOCK (INCLUDES PARTS MARKED J)	

J-INCLUDED IN 8Y-5889 SLIDER BLOCK KIT
Y-SEPARATE ILLUSTRATION
Z-NOT SERVICED SEPARATELY

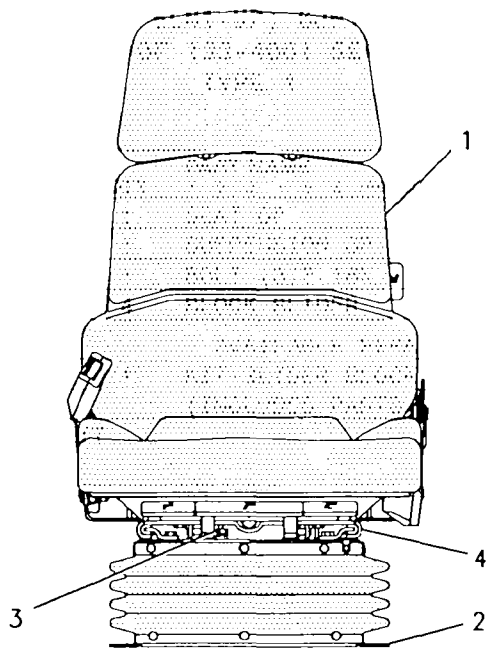

FRONT VIEW

GRAPHIC #1 g00259477

OPERATOR STATION

131-8422 SEAT GP-SUSPENSION

PIN 2YN1-UP; 3ZN1-UP; 4MN1-UP; 5LN1-UP; 6JN1-UP; 7KN1-UP; 8LN1-UP; 9PN1-UP
PART OF 133-4001 SEAT GP
TYPE 2

SMCS-7321, 7324, 7336 i01005171

NOTE	REF NO	GRAPHIC REF	PART NUMBER	QTY	PART NAME 1 2 3 4 5 6 (PRODUCT LEVEL)	SEE PAGE
Y	1	1	**125-6224**	1	SEAT GP	530
CY	2	1	**149-2404**	1	SUSPENSION GP-SEAT	544
J	3	1	**4F-4879**	1	BOLT (3/8-16X.5IN)	
JZ	4	1		4	BLOCK-SLIDER	
					AVAILABLE REPAIR KIT(S):	
C			**149-4745**	1	KIT-SLIDER BLOCK (INCLUDES PARTS MARKED J)	

C-CHANGE FROM PREVIOUS TYPE
J-INCLUDED IN 149-4745 SLIDER BLOCK KIT
Y-SEPARATE ILLUSTRATION
Z-NOT SERVICED SEPARATELY

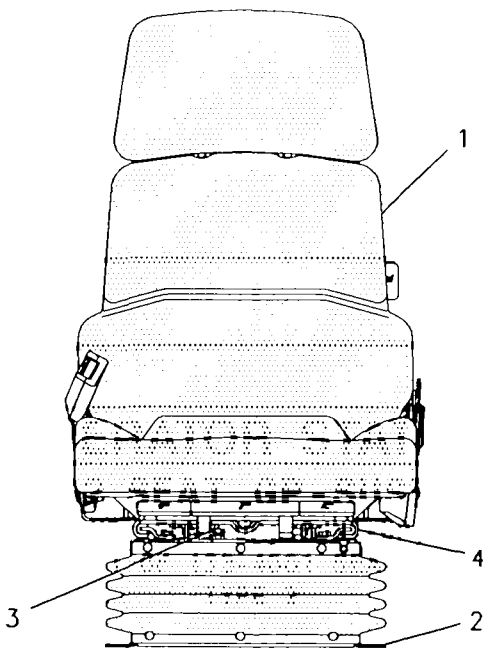

FRONT VIEW

GRAPHIC #1 g00259477

OPERATOR STATION

117-7607 SUSPENSION GP-SEAT

PIN 2YN1-UP; 3ZN1-UP; 4MN1-UP; 5LN1-UP; 6JN1-UP; 7KN1-UP; 8LN1-UP; 9PN1-UP
PART OF 131-8422 SEAT GP-SUSPENSION
FIELD REPLACEMENT ORDER 149-2404–PAGE 544

SMCS-7324 i01005221

NOTE	REF NO	GRAPHIC REF	PART NUMBER	QTY	PART NAME 1 2 3 4 5 6 (PRODUCT LEVEL)	SEE PAGE
	1	1	6K-0806	1	STRAP-CABLE	
	2	1	102-6317	4	BUMPER	
	3	2	8Y-6917	1	BOOT	
	4	1,2	123-8157	2	SHAFT	
	5	1,2	2K-4973	4	LOCKNUT (3/8-16 THD)	
	6	2	4V-8556	1	BOLT (3/8-16X2.34IN)	
	7	2	8Y-6922	1	HOUSING AS	
	8	1	5P-8167	1	BOLT (3/8-16X.625IN)	
	9	2	8M-3267	1	SCREW-HEX SOCKET	
	10	1	8T-2501	2	BOLT (3/8-16X2.0IN)	
	11	1	3H-5841	1	BOLT (3/8-16X1.0IN)	
	12	1	123-9131	1	ABSORBER-SHOCK	
	13	1,2	1B-4430	4	NUT-JAM (1/2-20 THD)	
	14	1,2	3J-4818	4	LOCKWASHER (1/2IN)	
	15	1	4B-4278	3	WASHER (1.6MM THK)	
	16	1	4V-7884	2	BEARING	
	17	1	5M-3062	2	BOLT (3/8-16X.75IN)	
	18	1	128-0613	1	KIT-TETHER	
					(INCLUDES 2 TETHERS)	
	19	1	128-0686	2	SPACER (27.8MM THK)	
	20	1	8L-8413	5	STRAP-CABLE (1.12IN DIA)	
	21	2	124-7128	1	BUSHING-RELIEF	
BE	22	2	5R-7545		TUBE-NYLON	
	23	1	148-3749	1	SCISSORS AS	
	24	1	9M-0164	1	CLAMP-HOSE	
	25	2	102-8802	1	KIT-RECEPTACLE (2 PIN)	
					(INCLUDES WEDGE & RECEPTACLE AS)	
JZ	26	2		1	AIR SPRING	
JZ	27	2		1	FITTING	
LZ	28	2		1	COMPRESSOR	
NZ	29	1		1	HOUSING	
NZ	30	1		1	BRACKET	
PZ	31	2		30	CLIP	
QZ	32	1		4	ROLLER	
QZ	33	1		4	BEARING	
SZ	34	2		1	WIRE HARNESS	
SZ	35	2		1	LOCKRING	
SZ	36	2		1	LOCKWASHER	
SZ	37	2		1	NUT	
					AVAILABLE REPAIR KIT(S):	
			124-6329	1	KIT-AIR SPRING	
					(INCLUDES PARTS MARKED J)	
			123-9144	1	KIT-COMPRESSOR	
					(INCLUDES HOSE CLAMP, 2 AIR TUBES, 2 TIE WRAPS & PART MARKED L)	
			123-8223	1	KIT-HOUSING	
					(INCLUDES TIE WRAP & PARTS MARKED N)	
			8Y-6928	1	KIT-FASTENER	
					(INCLUDES PARTS MARKED P)	
			123-9128	1	KIT-ROLLER	
					(INCLUDES TIE WRAP & PARTS MARKED Q)	
			123-8266	1	KIT-WIRING HARNESS	
					(INCLUDES 5-TIE WRAPS & PARTS MARKED S)	

117-7607 SUSPENSION GP-SEAT *(contd.)* i01005221

B-USE AS REQUIRED
E-ORDER BY THE CENTIMETER
J-INCLUDED IN 124-6329 AIR SPRING KIT
L-INCLUDED IN 123-9144 COMPRESSOR KIT
N-INCLUDED IN 123-8223 HOUSING KIT
P-INCLUDED IN 8Y-6928 FASTENER KIT
Q-INCLUDED IN 123-9128 ROLLER KIT
S-INCLUDED IN 123-8266 WIRING HARNESS KIT
Z-NOT SERVICED SEPARATELY

117-7607 SUSPENSION GP-SEAT *(contd.)* i01005221

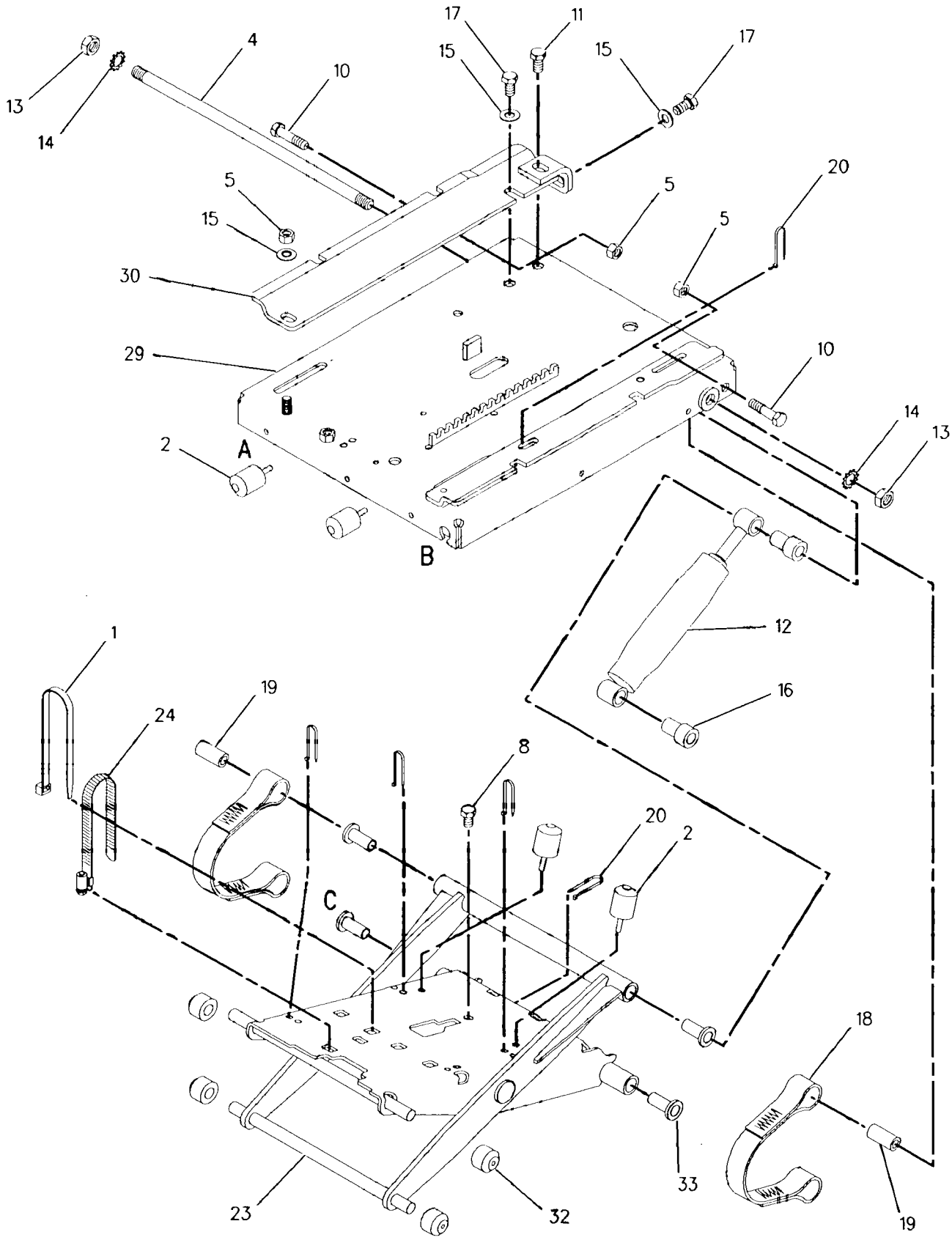

GRAPHIC #1 g00324462

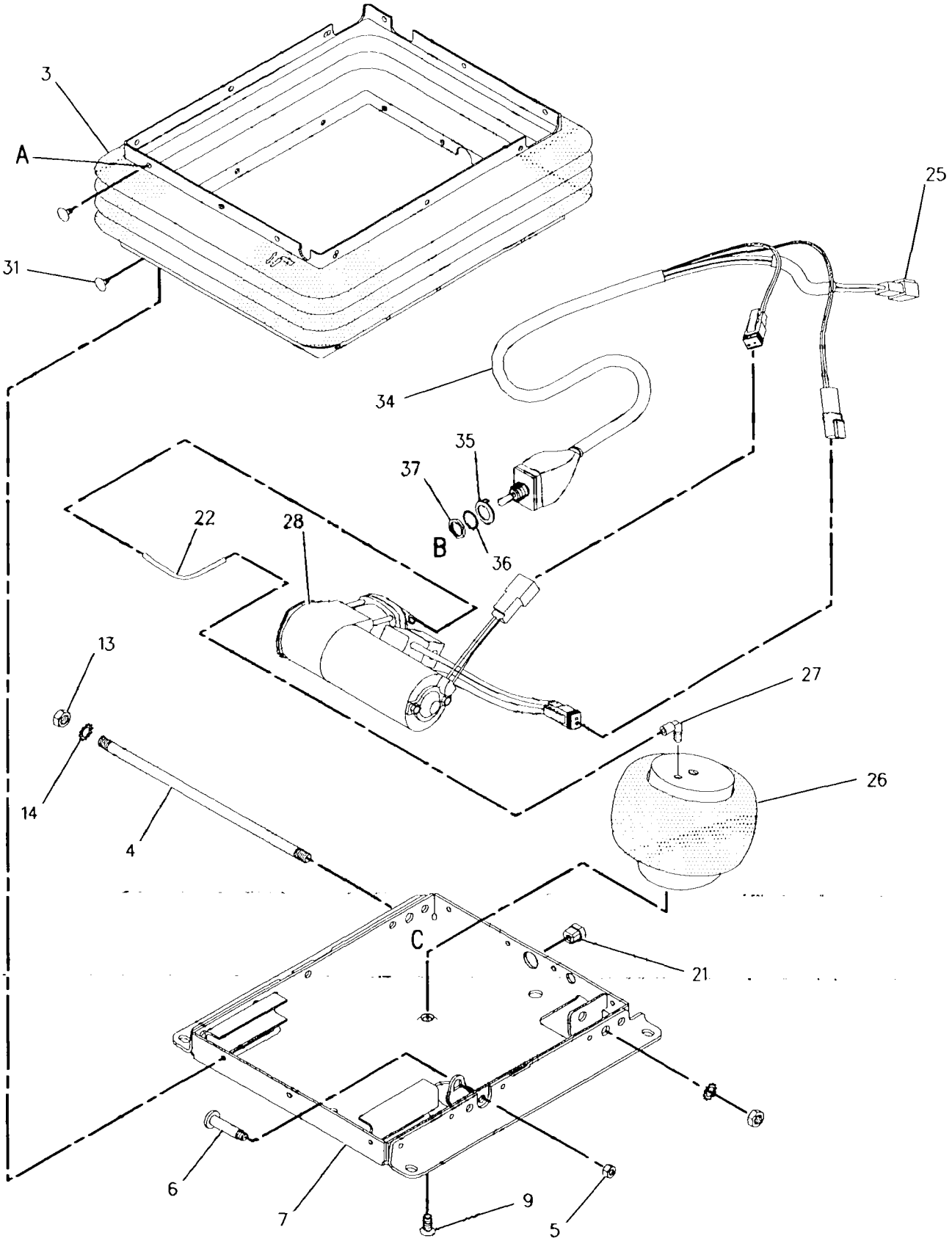

GRAPHIC #2 g00324463

OPERATOR STATION

149-2404 SUSPENSION GP-SEAT

PIN 2YN1-UP; 3ZN1-UP; 4MN1-UP; 5LN1-UP; 6JN1-UP; 7KN1-UP; 8LN1-UP; 9PN1-UP
PART OF 131-8422 SEAT GP-SUSPENSION
FIELD REPLACEMENT FOR 117-7607—PAGE 540

SMCS-7324 i01005239

NOTE	REF NO	GRAPHIC REF	PART NUMBER	QTY	PART NAME 1 2 3 4 5 6 (PRODUCT LEVEL)	SEE PAGE
	1	1	6K-0806	1	STRAP-CABLE	
	2	1	102-6317	4	BUMPER	
	3	2	8Y-6917	1	BOOT	
	4	1,2	123-8157	2	SHAFT	
	5	1,2	2K-4973	4	LOCKNUT (3/8-16 THD)	
	6	2	4V-8556	1	BOLT (3/8-16X2.34IN)	
	7	2	8Y-6922	1	HOUSING AS	
	8	1	5P-8167	1	BOLT (3/8-16X.625IN)	
	9	2	8M-3267	1	SCREW-HEX SOCKET	
	10	1	8T-2501	2	BOLT (3/8-16X2.0IN)	
	11	1	3H-5841	1	BOLT (3/8-16X1.0IN)	
	12	1	123-9131	1	ABSORBER-SHOCK	
	13	1,2	1B-4430	4	NUT-JAM (1/2-20 THD)	
	14	1,2	3J-4818	4	LOCKWASHER (1/2IN)	
	15	1	153-0088	3	WASHER-HARD (1.6MM THK)	
	16	1	4V-7884	2	BEARING	
	17	1	5M-3062	2	BOLT (3/8-16X.75IN)	
	18	1	128-0613	1	KIT-TETHER (INCLUDES 2 TETHERS)	
	19	1	128-0686	2	SPACER (27.8MM THK)	
	20	1	8L-8413	5	STRAP-CABLE (1.12IN DIA)	
	21	2	124-7128	1	BUSHING-RELIEF	
BE	22	2	147-6541		TUBE	
	23	1	148-3749	1	SCISSORS AS	
	24	1	9M-0164	1	CLAMP-HOSE	
	25	2	147-6523	1	COMPRESSOR	
	26	1	145-0326	1	FILM-INSTRUCTION	
	27	2	147-4549	2	FITTING-ELBOW	
	28	2	147-6522	1	SPRING-AIR	
JZ	29	1		1	HOUSING	
JZ	30	1		1	BRACKET	
LZ	31	2		30	CLIP	
NZ	32	1		4	BEARING	
NZ	33	1		4	ROLLER	
PZ	34	2		1	WIRE HARNESS	
PZ	35	2		1	LOCKRING	
PZ	36	2		4	LOCKWASHER	
PZ	37	2		1	NUT	
B	38	1	160-7765	1	WASHER	
B	39	1	160-7766	3	WASHER	
B	40	1	160-7767	8	WASHER	
					AVAILABLE REPAIR KIT(S):	
			123-8223	1	KIT-HOUSING (INCLUDES TIE WRAP & PARTS MARKED J)	
			8Y-6928	1	KIT-FASTENER (INCLUDES PART MARKED L)	
			123-9128	1	KIT-ROLLER (INCLUDES TIE WRAP & PARTS MARKED N)	
			123-8266	1	KIT-WIRING HARNESS (INCLUDES 5-TIE WRAPS & PARTS MARKED P)	

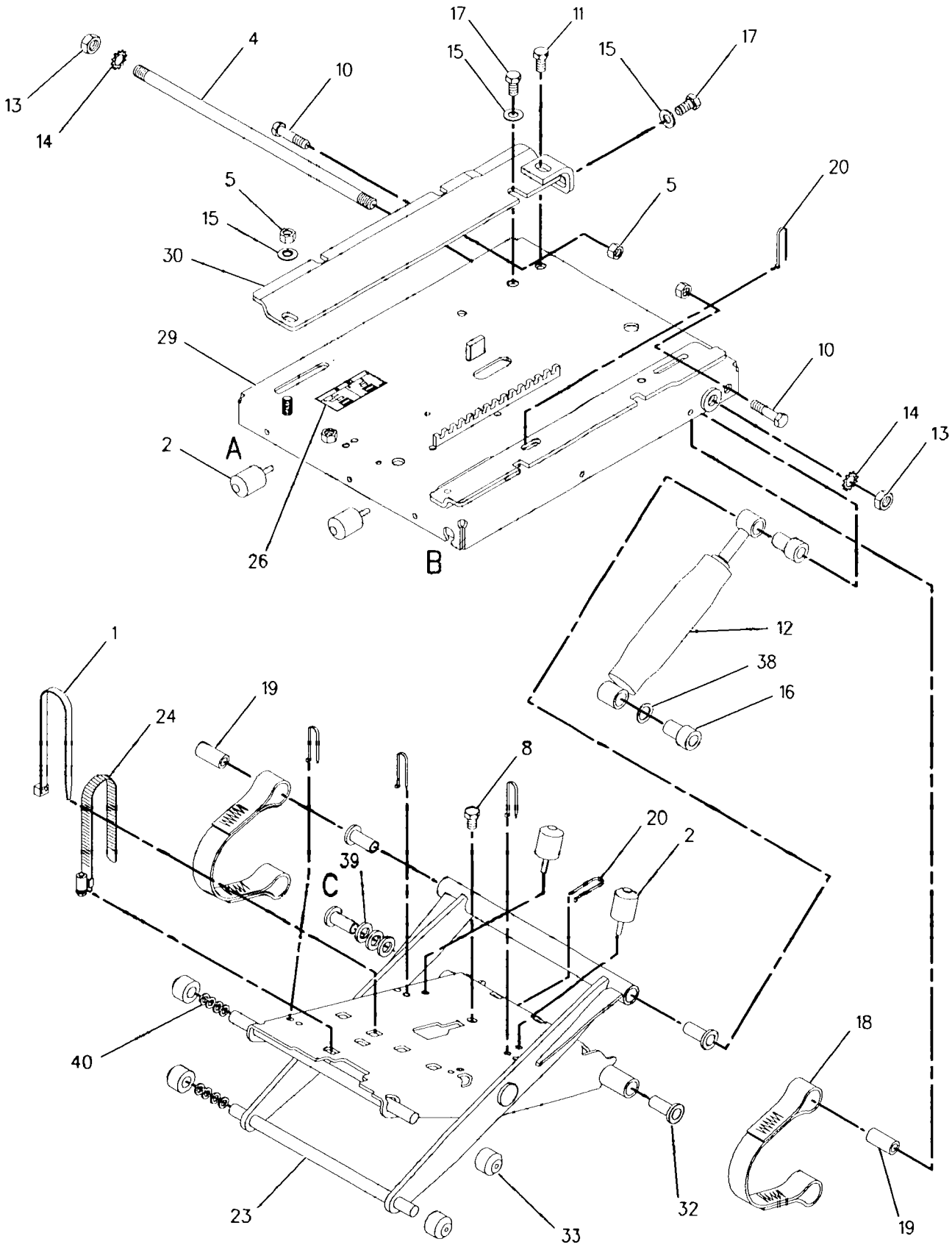

GRAPHIC #1 g00442846

149-2404 SUSPENSION GP-SEAT *(contd.)* i01005239

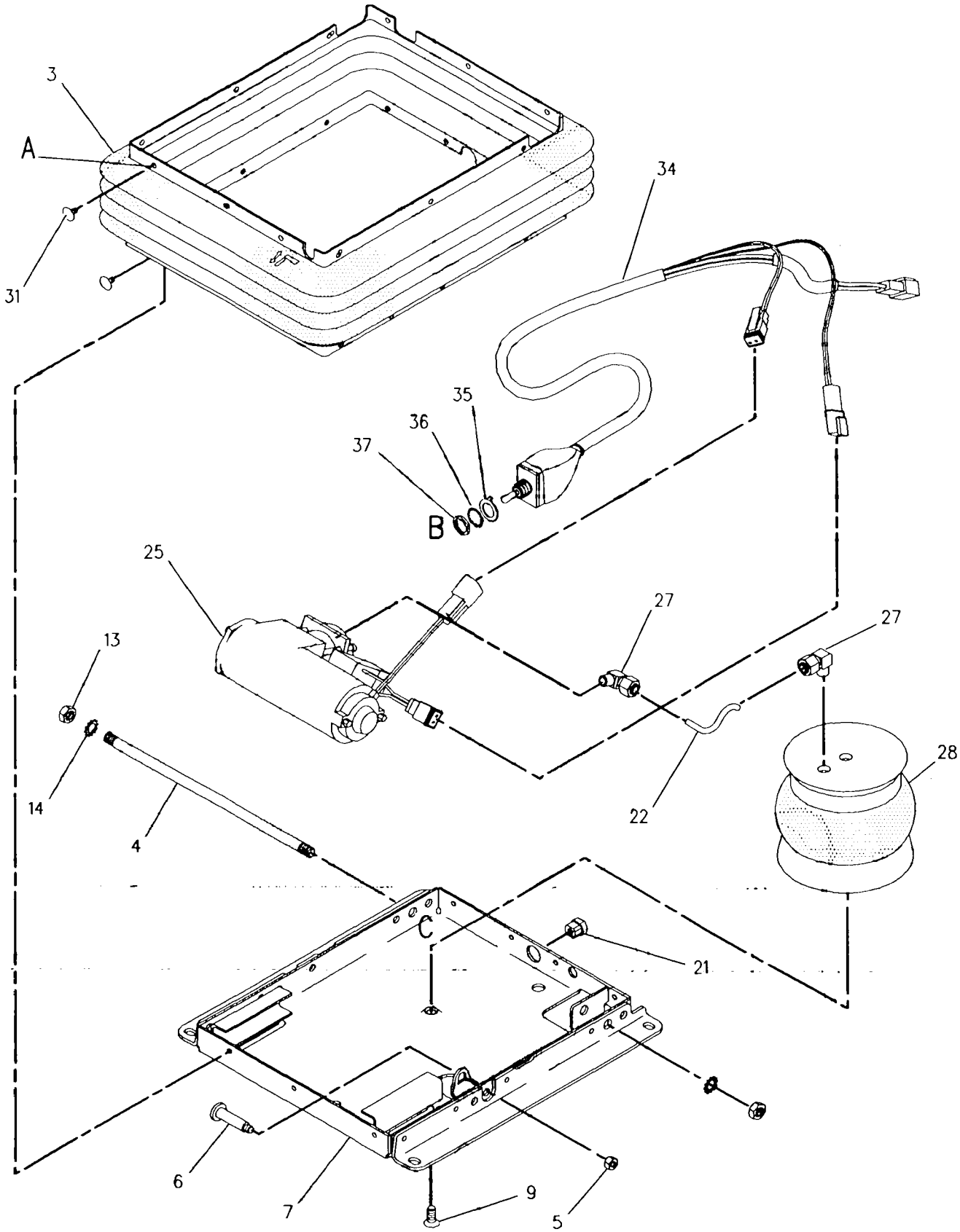

GRAPHIC #2 g00326283

OPERATOR STATION

149-1454 SWEEP AS–CUSTOM

PIN 2YN1-UP; 3ZN1-UP; 4MN1-UP; 5LN1-UP; 6JN1-UP; 7KN1-UP; 8LN1-UP; 9PN1-UP
PART OF 148-6352 LIGHTING AR

SMCS-7301 i01013371

NOTE	REF NO	GRAPHIC REF	PART NUMBER	QTY	PART NAME 1 2 3 4 5 6 (PRODUCT LEVEL)	SEE PAGE
	1	1	1P-2772	4	SPACER	
	2	1	3W-6528	2	TUBE AS	
	3	1	5G-9963	2	PLATE AS	
	4	1	8P-5244	4	WASHER	
	5	1	9S-5187	2	MOUNTING	
	6	1	148-6346	1	GUARD AS	
		1	7T-1099	2	LINK	
		1	9V-8540	2	BAR	
		1	3W-5669	1	TUBE	
		1	9S-5183	2	BRACKET	
	7	1	148-6347	1	GUARD AS	
	8	1	6K-3632	2	LOCKNUT (1-8 THD)	
	9	1	8C-8844	2	BOLT (1-8X5IN)	

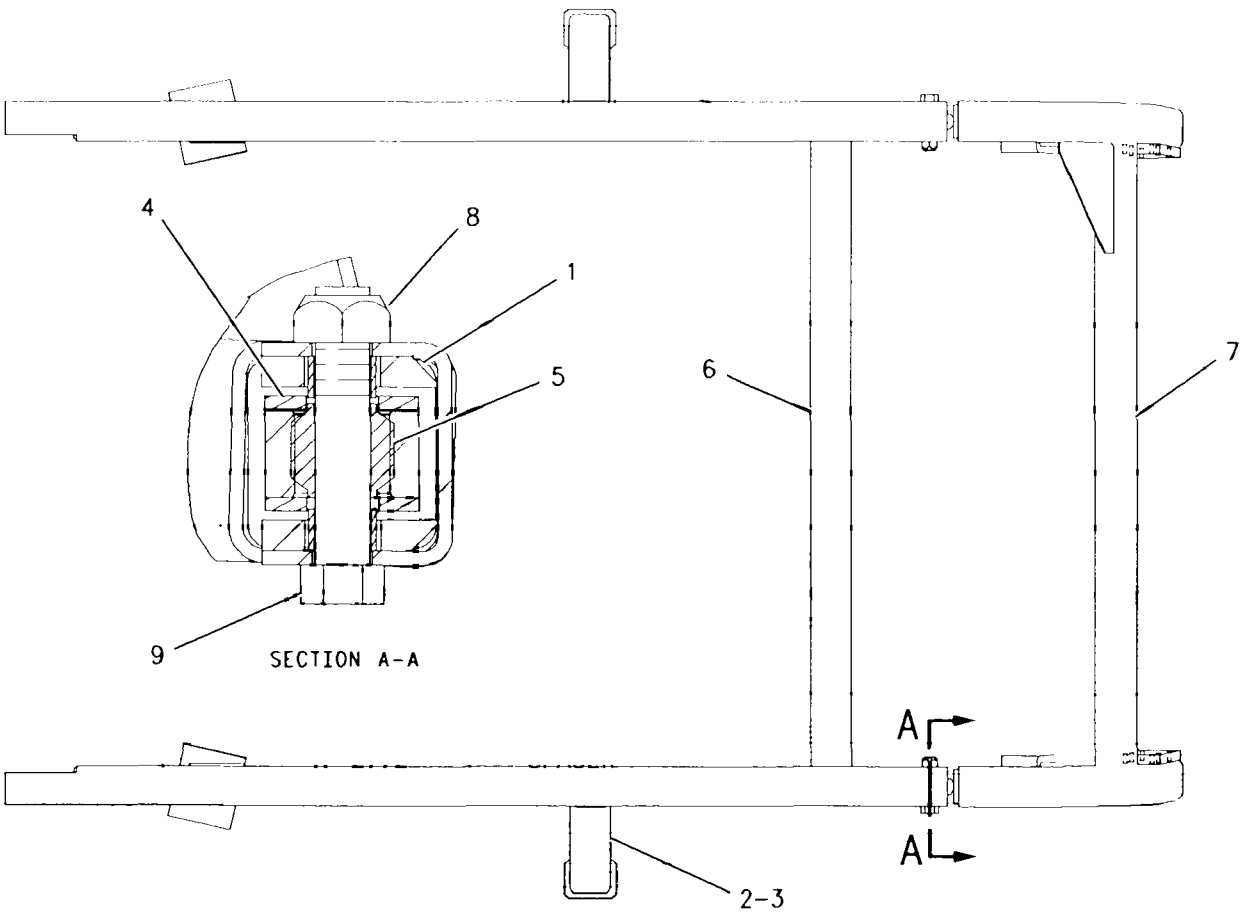

GRAPHIC #1 g00284884

OPERATOR STATION

105-9660 WASHER GP-WINDSHIELD

PIN 2YN1-UP; 3ZN1-UP; 4MN1-UP; 5LN1-UP; 6JN1-UP; 7KN1-UP; 8LN1-UP; 9PN1-UP

PART OF 105-9655 CAB AR

SMCS-7306 **i00710450**

NOTE	REF NO	GRAPHIC REF	PART NUMBER	QTY	PART NAME 1 2 3 4 5 6 (PRODUCT LEVEL)	SEE PAGE
	1	1	**9P-2369**	4	JET AS-WASHER	
	2	1	**3H-9348**	4	BOSS	
	3	1	**8T-8737**	1	PLUG-SEAL	
BD	4	1	**5P-5644**		TRIM	
B	5	1	**6V-5818**		CONDUIT-FLEXIBLE (19.1MM ID) (.75IN ID)	
BE	6	1	**7X-7927**		TAPE (A FRONT WINDOW)	
BE	7	1	**7X-7928**		TAPE (B LH DOOR WINDOW)	
BE	8	1	**7X-7929**		TAPE (C RH DOOR WINDOW)	
BE	9	1	**7X-7930**		TAPE (D REAR WINDOW)	
	10	1	**3E-3380**	1	WEDGE-PLUG LOCK	
	11	1	**145-7328**	2	ELBOW-HOSE	
	12	1	**102-8810**	1	KIT-CONNECTING PLUG	
		1	**102-8815**	1	SEAL-INTERFACE	
		1	**102-8805**	1	KIT-RECEPTACLE	
D	13	1	**5P-5992**		HOSE	
D	14	2	**5P-5992**		HOSE (3M)	
	15	2	**3S-2093**	7	STRAP-CABLE (1.75IN DIA)	
	16	2	**109-7954**	1	HARNESS AS	
M	17	2	**8T-4133**	1	NUT (M10X1.50 THD)	
		2	**8T-4896**	1	WASHER-HARD (2.5MM THK)	
	18	2	**8E-1123**	5	CLIP	
BD	19	2	**5P-5644**		TRIM	
D	20	2	**5P-5992**		HOSE (3M)	
D	21	2	**5P-5992**		HOSE (4M)	
D	22	2	**5P-5992**		HOSE (2M)	
	23	2	**7Y-3281**	1	GROMMET	

B-USE AS REQUIRED
D-ORDER BY THE METER
E-ORDER BY THE CENTIMETER
M-METRIC PART

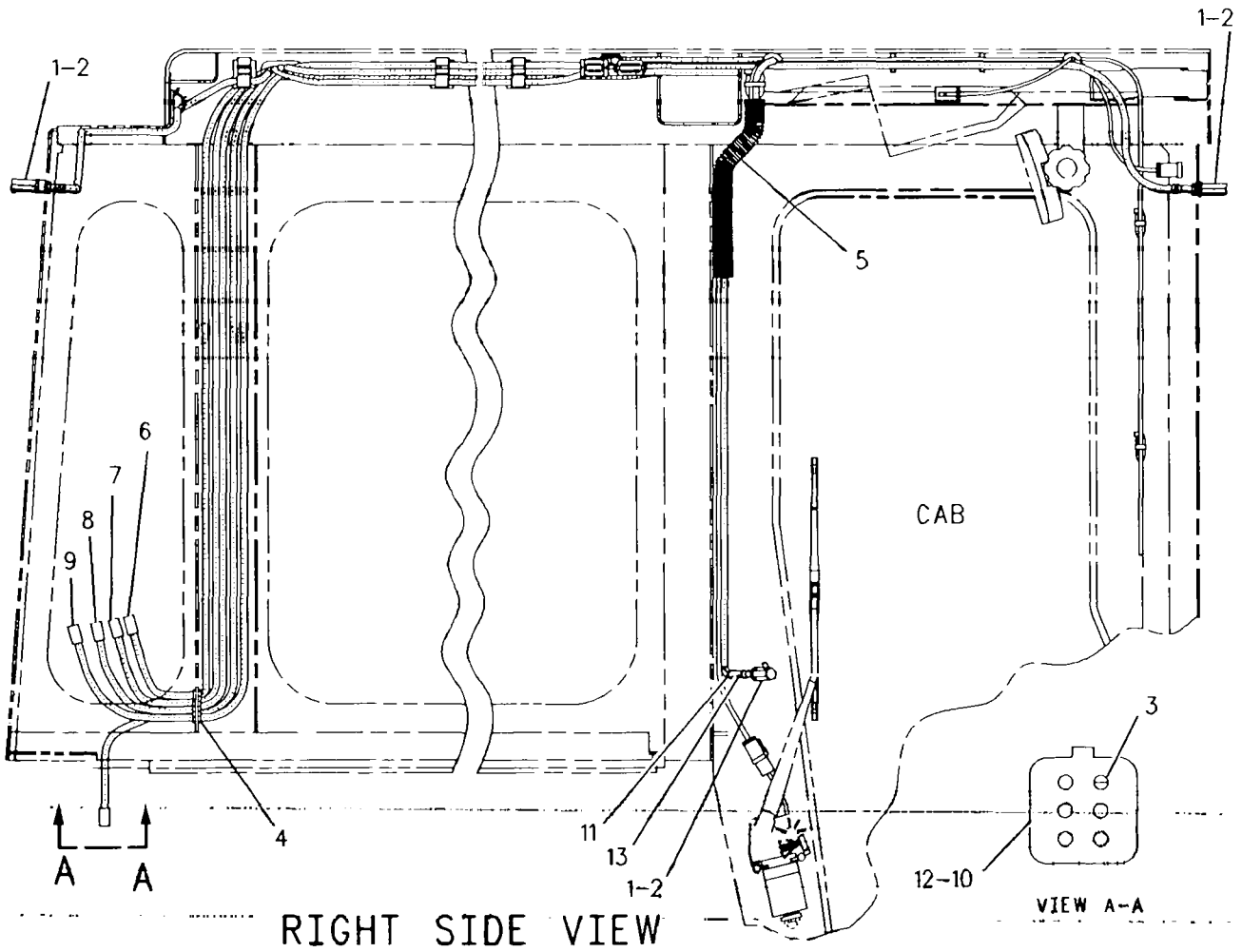

RIGHT SIDE VIEW

GRAPHIC #1 g00289379

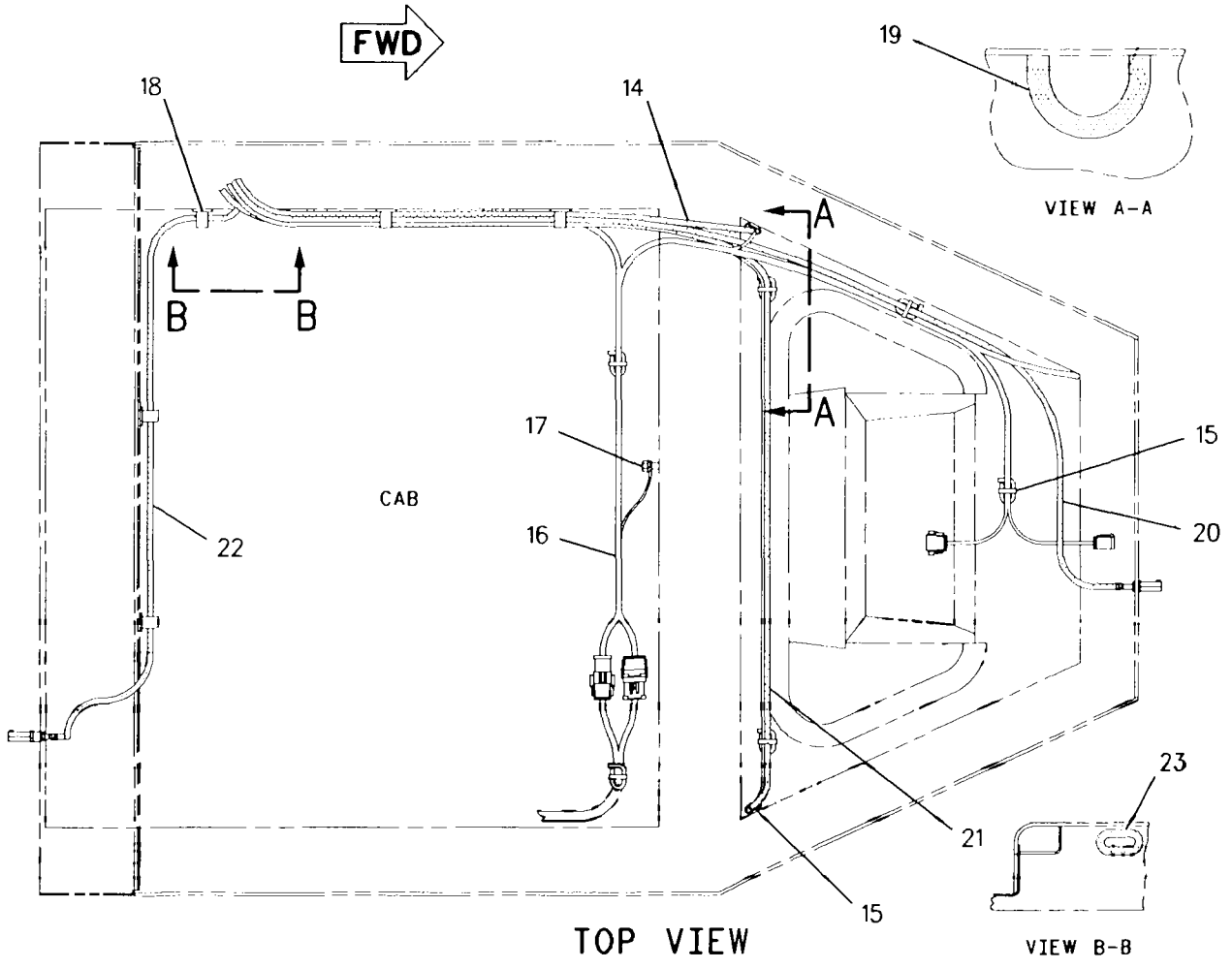

GRAPHIC #2 g00310523

OPERATOR STATION

105-9660 WASHER GP-WINDOW

PIN 2YN1-UP; 4MN1-UP; 5LN1-UP; 6JN1-UP; 7KN1-UP; 8LN1-UP; 9PN1-UP

PART OF 105-9655 CAB AR

SMCS-7306 **i00965977**

NOTE	REF NO	GRAPHIC REF	PART NUMBER	QTY	PART NAME 1 2 3 4 5 6 (PRODUCT LEVEL)	SEE PAGE
	1	1	**9P-2369**	4	JET AS-WASHER	
	2	1	**3H-9348**	4	BOSS	
	3	1	**8T-8737**	1	PLUG-SEAL	
	4	1	**9N-1995**	4	RIVET-POP	
B	5	1	**6V-5818**		CONDUIT-FLEXIBLE (19.1MM ID) (.75IN ID)	
BE	6	1	**7X-7927**		TAPE (A FRONT WINDOW)	
BE	7	1	**7X-7928**		TAPE (B LH DOOR WINDOW)	
BE	8	1	**7X-7929**		TAPE (C RH DOOR WINDOW)	
BE	9	1	**7X-7930**		TAPE (D REAR WINDOW)	
	10	1	**3E-3380**	1	WEDGE-PLUG LOCK	
	11	1	**145-7328**	2	ELBOW-HOSE	
	12	1	**102-8810**	1	KIT-CONNECTING PLUG	
		1	**102-8815**	1	SEAL-INTERFACE	
		1	**102-8805**	1	KIT-RECEPTACLE	
E	13	1	**144-0195**		HOSE (.2CM)	
E	14	2	**144-0195**		HOSE (350CM)	
	15	2	**3S-2093**	8	STRAP-CABLE (1.75IN DIA)	
	16	2	**162-1613**	1	HARNESS AS	
M	17	2	**8T-4133**	1	NUT (M10X1.50 THD)	
		2	**8T-4896**	1	WASHER-HARD (2.5MM THK)	
	18	2	**8E-1123**	9	CLIP	
	19	1	**8E-6856**	1	COVER	
E	20	2	**144-0195**		HOSE (350CM)	
E	21	2	**144-0195**		HOSE (450CM)	
E	22	2	**144-0195**		HOSE (250CM)	
	23	2	**7Y-3281**	3	GROMMET	
E	24	1,2	**7X-7702**		CONDUIT-FLEXIBLE (83CM)	

B-USE AS REQUIRED
E-ORDER BY THE CENTIMETER
M-METRIC PART

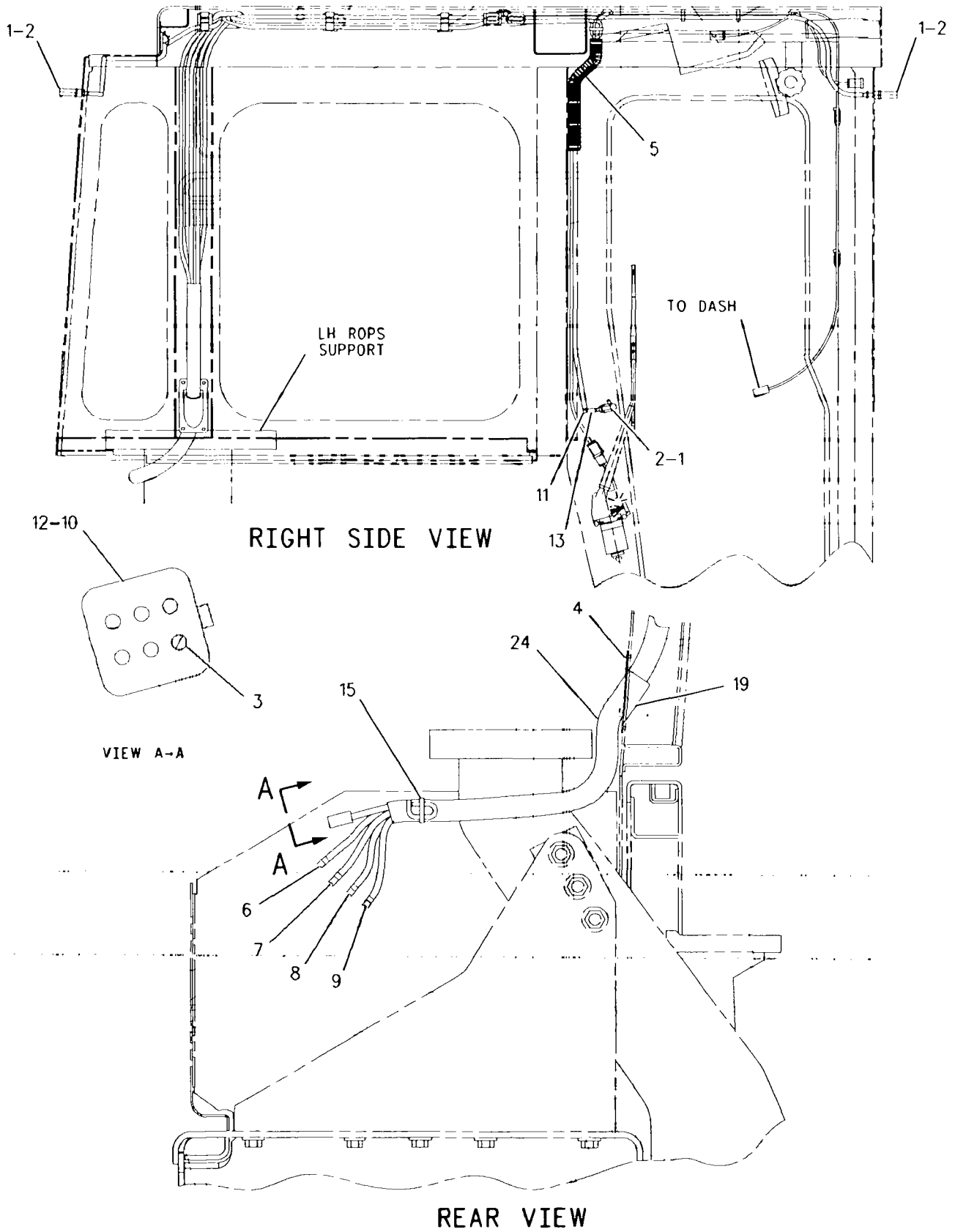

GRAPHIC #1

g00475239

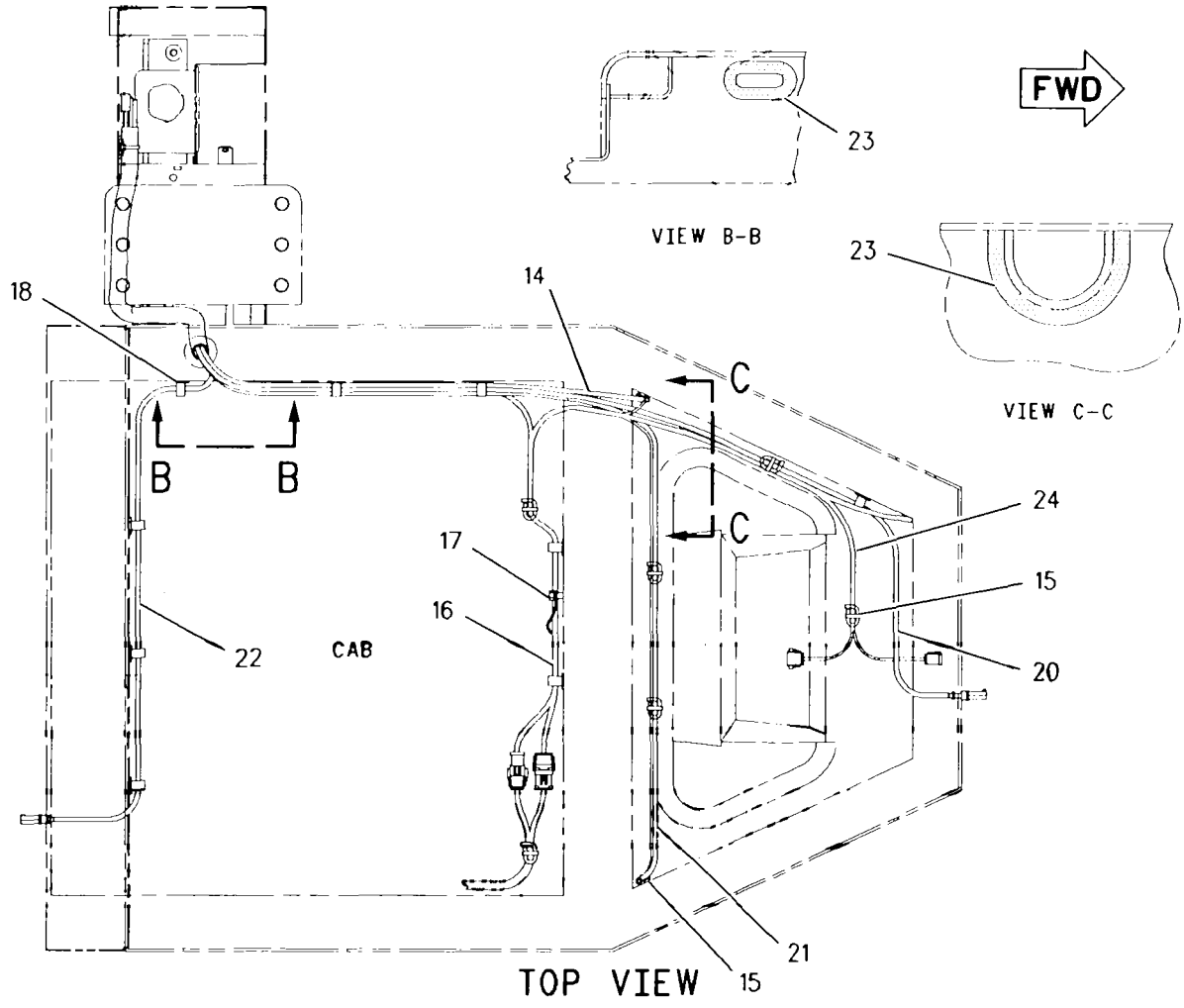

GRAPHIC #2

g00475240

OPERATOR STATION

8E-5112 WINDOW AS-SLIDING–REAR

PIN 2YN1-UP; 3ZN1-UP; 4MN1-UP; 5LN1-UP; 6JN1-UP; 7KN1-UP; 8LN1-UP; 9PN1-UP
PART OF 105-9656 CAB GP

SMCS-7310 **i01010491**

NOTE	PART NUMBER	QTY	PART NAME 1 2 3 4 5 6 (PRODUCT LEVEL)	SEE PAGE
Y	*6T-5008*	1	WINDOW GP-CAB	561
			-OR-	
Y	*9N-4369*	1	WINDOW GP-CAB	571

Y-SEPARATE ILLUSTRATION

OPERATOR STATION

8E-5113 WINDOW AS-SLIDING–RH

PIN 2YN1-UP; 3ZN1-UP; 4MN1-UP; 5LN1-UP; 6JN1-UP; 7KN1-UP; 8LN1-UP; 9PN1-UP
PART OF 105-9656 CAB GP

SMCS-7310 **i01005884**

NOTE	PART NUMBER	QTY	PART NAME 1 2 3 4 5 6 (PRODUCT LEVEL)	SEE PAGE
Y	*6T-8402*	1	WINDOW GP-CAB	562
			–OR–	
Y	*8E-3446*	1	WINDOW GP-CAB	566

Y-SEPARATE ILLUSTRATION

OPERATOR STATION

8E-5114 WINDOW AS-SLIDING–LH

PIN 2YN1-UP; 3ZN1-UP; 4MN1-UP; 5LN1-UP; 6JN1-UP; 7KN1-UP; 8LN1-UP; 9PN1-UP
PART OF 105-9656 CAB GP

SMCS-7310 i01005885

NOTE	PART NUMBER	QTY	PART NAME 1 2 3 4 5 6 (PRODUCT LEVEL)	SEE PAGE
Y	*6T-8403*	1	WINDOW GP-CAB	563
			–OR–	
Y	*8E-3447*	1	WINDOW GP-CAB	567

Y-SEPARATE ILLUSTRATION

OPERATOR STATION

6T-5005 WINDOW GP–REAR

PIN 2YN1-UP; 3ZN1-UP; 4MN1-UP; 5LN1-UP; 6JN1-UP; 7KN1-UP; 8LN1-UP; 9PN1-UP

PART OF 6T-5008 WINDOW GP-CAB

SMCS-7310 **i00572248**

NOTE	REF NO	GRAPHIC REF	PART NUMBER	QTY	PART NAME 1 2 3 4 5 6 (PRODUCT LEVEL)	SEE PAGE
	1	1	3T-1121	1	LOCK AS	
	2	1	2H-6622	2	SCREW-MACHINE	
	3	1	9P-7860	1	LOCK AS	
	4	1	9P-7859	2	SCREW	
BD	5	1	5P-5680		SEAL (.61M)	
EB	6	1	9X-6268		TAPE	
BD	7	1	6V-5833		SEAL (.64M)	
BD	8	1	5P-8918		SEAL (1.4M)	
	9	1	8Y-6447	1	GLASS (TINTED)	
BE	10	1	8Y-6839		SEAL (63.5CM)	
BD	11	1	5P-5680		SEAL (1.3 M)	
	12	1	117-5676	1	SLIDE	
	13	1	124-9775	1	SLIDE	

B-USE AS REQUIRED
D-ORDER BY THE METER
E-ORDER BY THE CENTIMETER

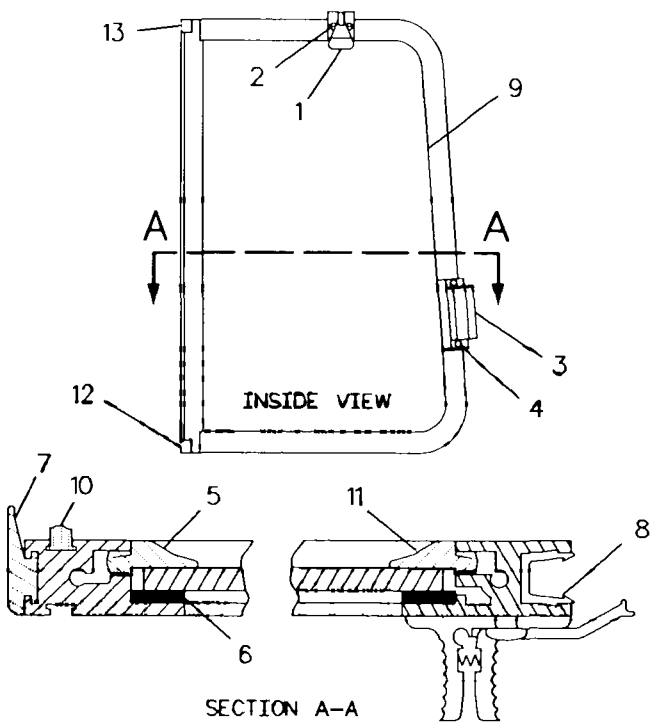

GRAPHIC #1 g00257563

OPERATOR STATION

6T-5008 WINDOW GP-CAB–REAR

PIN 2YN1-UP; 3ZN1-UP; 4MN1-UP; 5LN1-UP; 6JN1-UP; 7KN1-UP; 8LN1-UP; 9PN1-UP

SLIDING

PART OF 8E-5112 WINDOW AS-SLIDING

SMCS-7310 **i00572252**

NOTE	REF NO	GRAPHIC REF	PART NUMBER	QTY	PART NAME 1 2 3 4 5 6 (PRODUCT LEVEL)	SEE PAGE
Y	1	1	*6T-5005*	1	WINDOW GP	560
	2	1	**9P-7855**	1	GLASS (TINTED)	
D	3	1	**5P-5680**		SEAL (3M)	
EB	4	1	**9X-6268**		TAPE	
D	5	1	**6V-5833**		SEAL (1M)	
DB	6	1	**8T-0687**		FILLER	
E	7	1	**8Y-6839**		SEAL (64CM)	

B-USE AS REQUIRED
D-ORDER BY THE METER
E-ORDER BY THE CENTIMETER
Y-SEPARATE ILLUSTRATION

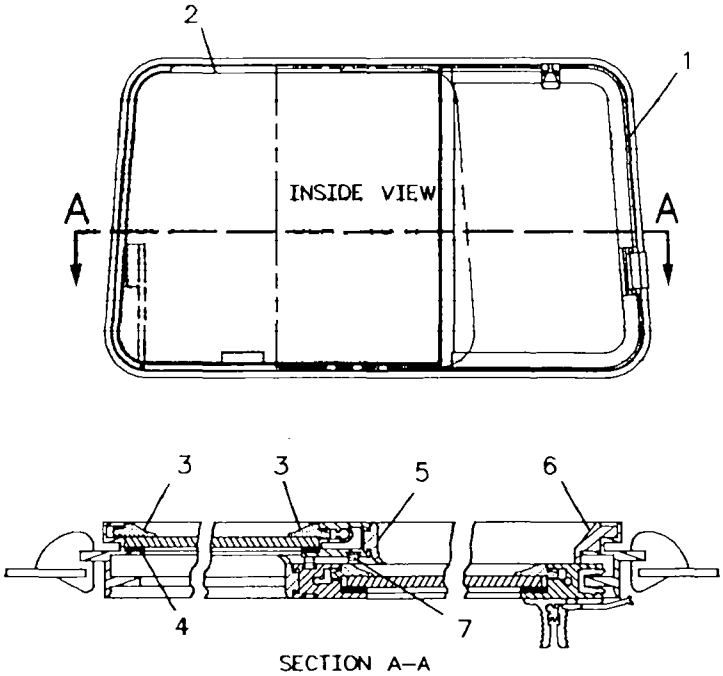

SECTION A–A

GRAPHIC #1 g00246891

OPERATOR STATION

6T-8402 WINDOW GP–RH

PIN 2YN1-UP; 3ZN1-UP; 4MN1-UP; 5LN1-UP; 6JN1-UP; 7KN1-UP; 8LN1-UP; 9PN1-UP
SLIDING
PART OF 8E-5113 WINDOW AS-SLIDING

SMCS-7310 **i00738969**

NOTE	REF NO	GRAPHIC REF	PART NUMBER	QTY	PART NAME 1 2 3 4 5 6 (PRODUCT LEVEL)	SEE PAGE
Y	1	1	*7T-1068*	1	WINDOW GP-CAB	564
	2	1	**7T-1330**	1	GLASS (TINTED)	
D	3	1	**5P-5680**		SEAL (1.14M)	
DB	4	1	**8T-0687**		FILLER	
EB	5	1	**9X-6268**		TAPE	
D	6	1	**6V-5833**		SEAL (.64M)	
E	7	1	**8Y-6839**		SEAL (64 CM)	
D	8	1	**5P-5680**		SEAL (.66M)	

B-USE AS REQUIRED
D-ORDER BY THE METER
E-ORDER BY THE CENTIMETER
Y-SEPARATE ILLUSTRATION

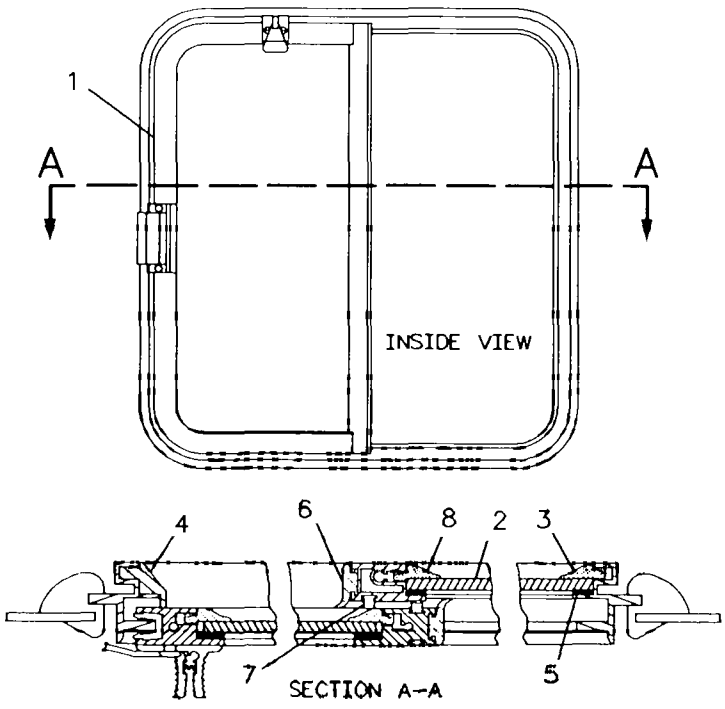

GRAPHIC #1 g00330572

OPERATOR STATION

6T-8403 WINDOW GP-CAB–LH

PIN 2YN1-UP; 3ZN1-UP; 4MN1-UP; 5LN1-UP; 6JN1-UP; 7KN1-UP; 8LN1-UP; 9PN1-UP

SLIDING

PART OF 8E-5114 WINDOW AS-SLIDING

SMCS-7310 **i00947050**

NOTE	REF NO	GRAPHIC REF	PART NUMBER	QTY	PART NAME 1 2 3 4 5 6 (PRODUCT LEVEL)	SEE PAGE
	1	1	7T-1330	1	GLASS (TINTED)	
Y	2	1	7T-1069	1	WINDOW GP-CAB	565
DB	3	1	8T-0687		FILLER	
D	4	1	6V-5833		SEAL (.64M)	
EB	5	1	9X-6268		TAPE	
D	6	1	5P-5680		SEAL (1.14M)	
E	7	1	8Y-6839		SEAL (64CM)	
D	8	1	5P-5680		SEAL (.66M)	

B-USE AS REQUIRED
D-ORDER BY THE METER
E-ORDER BY THE CENTIMETER
Y-SEPARATE ILLUSTRATION

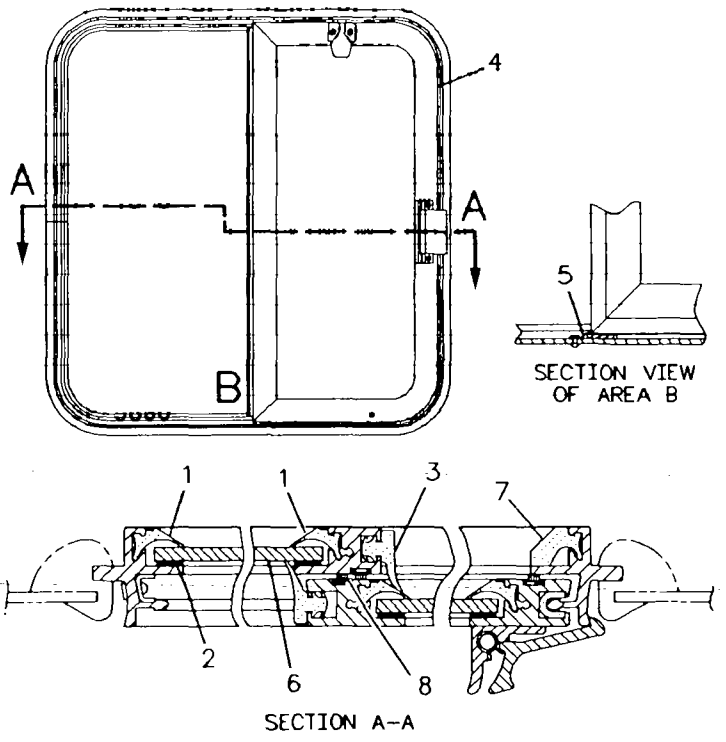

GRAPHIC #1 g00330573

OPERATOR STATION

7T-1068 WINDOW GP–RH

PIN 2YN1-UP; 3ZN1-UP; 4MN1-UP; 5LN1-UP; 6JN1-UP; 7KN1-UP; 8LN1-UP; 9PN1-UP

PART OF 6T-8402 WINDOW GP-CAB

SMCS-7310 **i00570968**

NOTE	REF NO	GRAPHIC REF	PART NUMBER	QTY	PART NAME 1 2 3 4 5 6 (PRODUCT LEVEL)	SEE PAGE
	1	1	**3T-1121**	1	LOCK AS	
	2	1	**2H-6622**	2	SCREW-MACHINE	
	3	1	**9P-7860**	1	LOCK AS	
	4	1	**9P-7859**	2	SCREW	
BD	5	1	**5P-5680**		SEAL (.61M)	
EB	6	1	**9X-6268**		TAPE	
BD	7	1	**6V-5833**		SEAL (.64M)	
BD	8	1	**5P-8918**		SEAL (1.2M)	
BD	9	1	**8Y-6448**	1	GLASS	
BE	10	1	**8Y-6839**		SEAL (64CM)	
BD	11	1	**5P-5680**		SEAL (1.1M)	
	12	1	**124-9774**	1	SLIDE	
	13	1	**117-5677**	1	SLIDE	

B-USE AS REQUIRED
D-ORDER BY THE METER
E-ORDER BY THE CENTIMETER

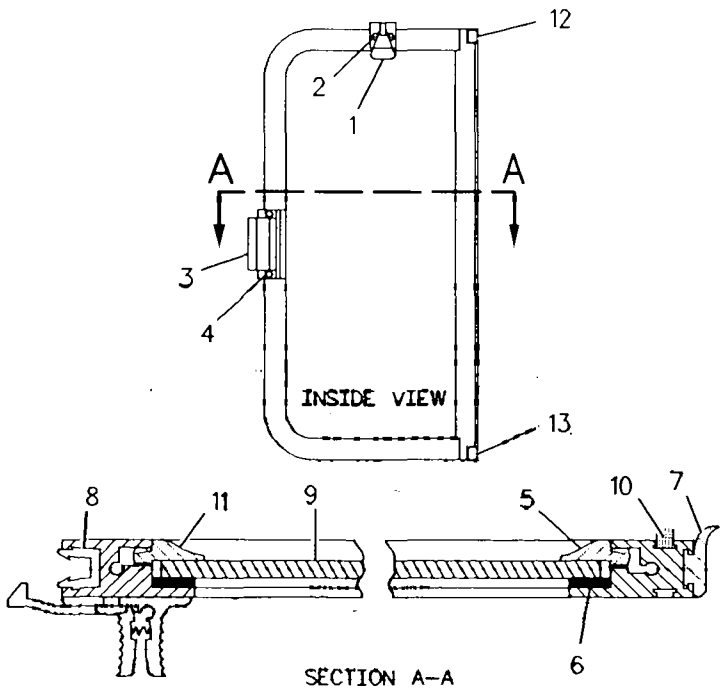

GRAPHIC #1 g00257169

OPERATOR STATION

7T-1069 WINDOW GP-CAB—LH

PIN 2YN1-UP; 3ZN1-UP; 4MN1-UP; 5LN1-UP; 6JN1-UP; 7KN1-UP; 8LN1-UP; 9PN1-UP
PART OF 6T-8403 WINDOW GP-CAB

SMCS-7310 i00731432

NOTE	REF NO	GRAPHIC REF	PART NUMBER	QTY	PART NAME 1 2 3 4 5 6 (PRODUCT LEVEL)	SEE PAGE
	1	1	3T-1121	1	LOCK AS	
	2	1	2H-6622	2	SCREW-MACHINE	
	3	1	9P-7860	1	LOCK AS	
	4	1	9P-7859	2	SCREW	
D	5	1	5P-5680		SEAL (.61M)	
EB	6	1	9X-6268		TAPE	
D	7	1	6V-5833		SEAL (.64M)	
D	8	1	5P-8918		SEAL (1.2M)	
	9	1	8Y-6448	1	GLASS	
E	10	1	8Y-6839		SEAL (64CM)	
D	11	1	5P-5680		SEAL (1.1M)	
	12	1	124-9774	1	SLIDE	
	13	1	117-5677	1	SLIDE	

B-USE AS REQUIRED
D-ORDER BY THE METER
E-ORDER BY THE CENTIMETER

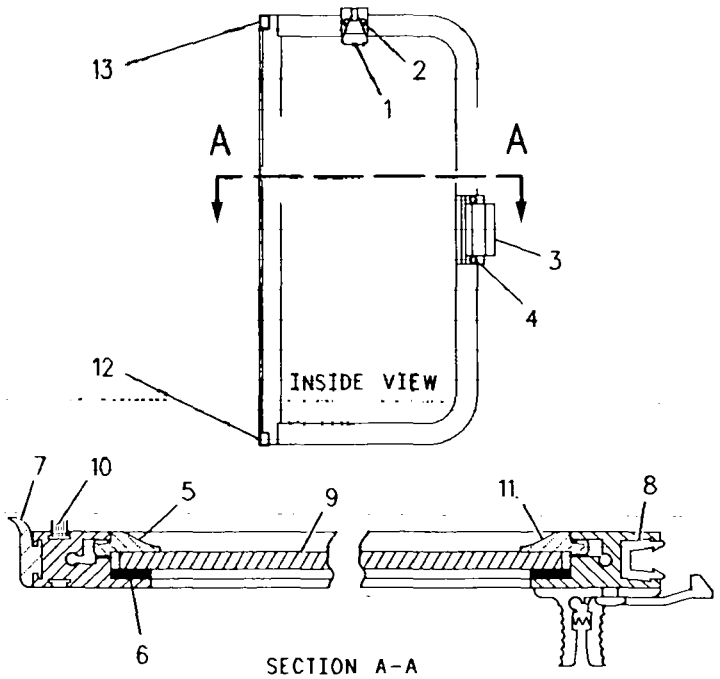

GRAPHIC #1 g00326280

OPERATOR STATION

8E-3446 WINDOW GP-CAB-RH

PIN 2YN1-UP; 3ZN1-UP; 4MN1-UP; 5LN1-UP; 6JN1-UP; 7KN1-UP; 8LN1-UP; 9PN1-UP

SLIDING

PART OF 8E-5113 WINDOW AS-SLIDING

SMCS-7310 **i00677613**

NOTE	REF NO	GRAPHIC REF	PART NUMBER	QTY	PART NAME 1 2 3 4 5 6 (PRODUCT LEVEL)	SEE PAGE
E	1	1	8Y-6423		SEAL (65 CM)	
EB	2	1	8Y-6459		TAPE-BUTYL	
	3	1	8Y-6430	1	SEAL-WINDOW	
Y	4	1	8Y-6433	1	WINDOW GP	569
	5	1	8Y-6462	1	KIT-LEAF SPRING (INCLS SPRING AS & RIVET)	
	6	1	8Y-6432	1	GLASS-FIXED-RH (TINTED)	
E	7	1	8Y-6424		SEAL (122 CM)	
E	8	1	8Y-6423		SEAL (130 CM)	
E	9	1	8Y-6910		WEATHERSTRIP (68 CM)	

B-USE AS REQUIRED
E-ORDER BY THE CENTIMETER
Y-SEPARATE ILLUSTRATION

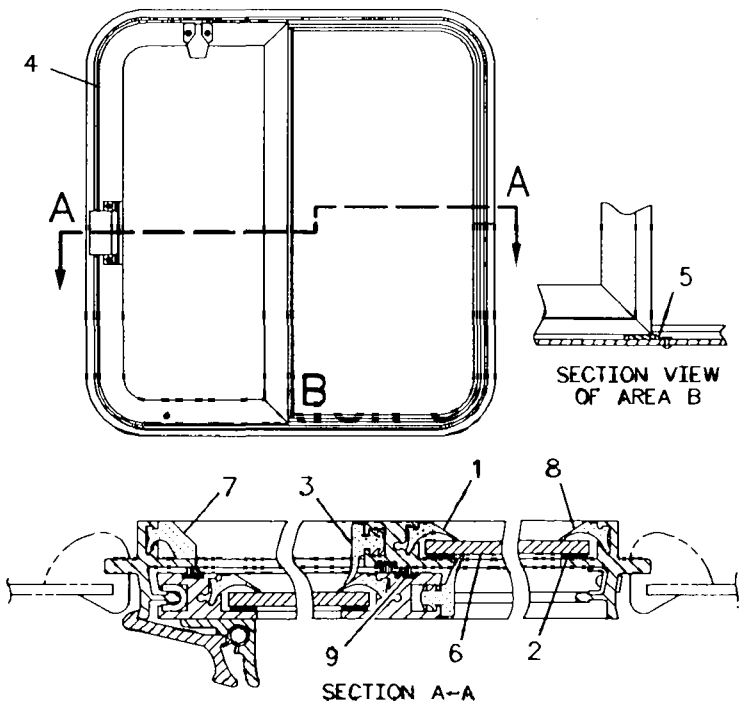

GRAPHIC #1 g00288281

OPERATOR STATION

8E-3447 WINDOW GP–LH

PIN 2YN1-UP; 3ZN1-UP; 4MN1-UP; 5LN1-UP; 6JN1-UP; 7KN1-UP; 8LN1-UP; 9PN1-UP
SLIDING
PART OF 8E-5114 WINDOW AS-SLIDING

SMCS-7310 **i00734821**

NOTE	REF NO	GRAPHIC REF	PART NUMBER	QTY	PART NAME 1 2 3 4 5 6 (PRODUCT LEVEL)	SEE PAGE
E	1	1	8Y-6423		SEAL (130CM)	
BE	2	1	8Y-6459		TAPE-BUTYL	
	3	1	8Y-6430	1	SEAL-WINDOW	
Y	4	1	*8Y-6420*	1	WINDOW GP	568
	5	1	8Y-6462	1	KIT-LEAF SPRING (INCLS SPRING AS & RIVET)	
	6	1	8Y-6419	1	GLASS-FIXED-LH (TINTED)	
E	7	1	8Y-6424		SEAL (122CM)	
BE	8	1	8Y-6910		WEATHERSTRIP	
E	9	1	8Y-6423		SEAL (65CM)	

B-USE AS REQUIRED
E-ORDER BY THE CENTIMETER
Y-SEPARATE ILLUSTRATION

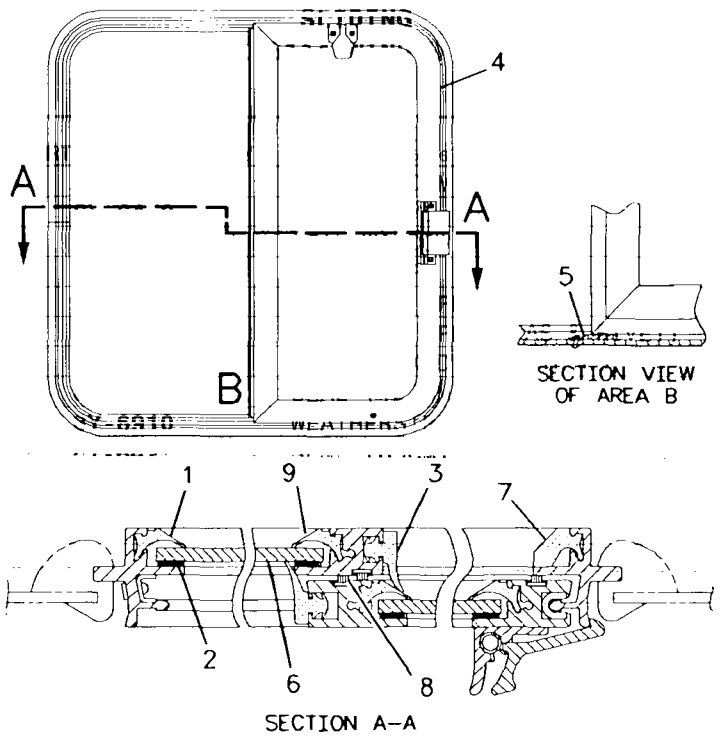

GRAPHIC #1 g00328003

OPERATOR STATION

8Y-6420 WINDOW GP-LH

PIN 2YN1-UP; 3ZN1-UP; 4MN1-UP; 5LN1-UP; 6JN1-UP; 7KN1-UP; 8LN1-UP; 9PN1-UP
PART OF 8E-3447 WINDOW GP-CAB

SMCS-7310 i00734823

NOTE	REF NO	GRAPHIC REF	PART NUMBER	QTY	PART NAME 1 2 3 4 5 6 (PRODUCT LEVEL)	SEE PAGE
	1	1	8Y-6454	1	KIT-CATCH (INCLUDES CATCH AS 2 SCREWS)	
M	2	1	084-4111	2	SCREW-PAN HEAD	
	3	1	8Y-6455	1	KIT-CATCH (INCLUDES CATCH AS 2 SCREWS)	
M	4	1	8T-4777	2	SCREW-MACHINE (M5X0.8X12MM)	
	5	1	8Y-6460	1	KIT-RUNNER GUIDE (INCLUDES GUIDE & SCREW)	
M	6	1	6V-2312	2	SCREW-MACHINE (M6X1X25MM)	
	7	1	8Y-6461	1	KIT-RUNNER GUIDE (INCLUDES GUIDE & SCREW)	
E	8	1	8Y-6423		SEAL (59CM)	
	9	1	8Y-6430	1	SEAL-WINDOW	
BE	10	1	8Y-6459		TAPE-BUTYL	
E	11	1	8Y-6423		SEAL (125CM)	
	12	1	8Y-6422	1	GLASS-SLIDER (TINTED)	
BE	13	1	8Y-6910		WEATHERSTRIP	

B-USE AS REQUIRED
E-ORDER BY THE CENTIMETER
M-METRIC PART

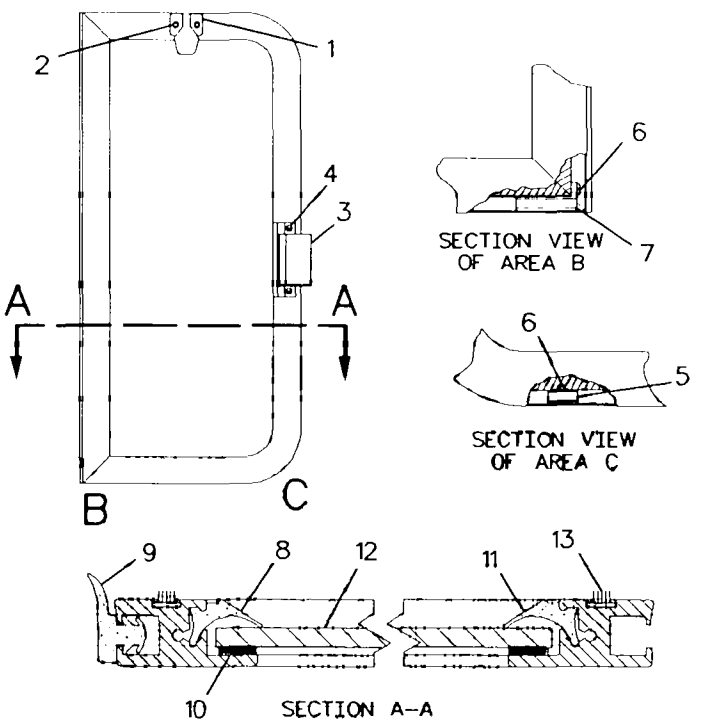

GRAPHIC #1 g00328004

OPERATOR STATION

8Y-6433 WINDOW GP-CAB-RH

PIN 2YN1-UP; 3ZN1-UP; 4MN1-UP; 5LN1-UP; 6JN1-UP; 7KN1-UP; 8LN1-UP; 9PN1-UP
PART OF 8E-3446 WINDOW GP-CAB

SMCS-7310 i00747027

NOTE	REF NO	GRAPHIC REF	PART NUMBER	QTY	PART NAME 1 2 3 4 5 6 (PRODUCT LEVEL)	SEE PAGE
	1	1	8Y-6454	1	KIT-CATCH (INCLUDES CATCH AS & 2 SCREWS)	
M	2	1	084-4111	2	SCREW-PAN HEAD	
	3	1	8Y-6455	1	KIT-CATCH (INCLUDES CATCH AS & 2 SCREWS)	
M	4	1	8T-4777	2	SCREW-MACHINE (M5X0.8X12MM)	
	5	1	8Y-6460	1	KIT-RUNNER GUIDE (INCLUDES GUIDE & SCREW)	
M	6	1	6V-2312	2	SCREW-MACHINE (M6X1X25MM)	
	7	1	8Y-6461	1	KIT-RUNNER GUIDE (INCL GUIDE & SCREW)	
E	8	1	8Y-6423		SEAL (125CM)	
	9	1	8Y-6430	1	SEAL-WINDOW	
BE	10	1	8Y-6459		TAPE-BUTYL	
E	11	1	8Y-6423		SEAL (59CM)	
	12	1	8Y-6431	1	GLASS-SLIDER-RH (TINTED)	
BE	13	1	8Y-6910		WEATHERSTRIP	

B-USE AS REQUIRED
E-ORDER BY THE CENTIMETER
M-METRIC PART

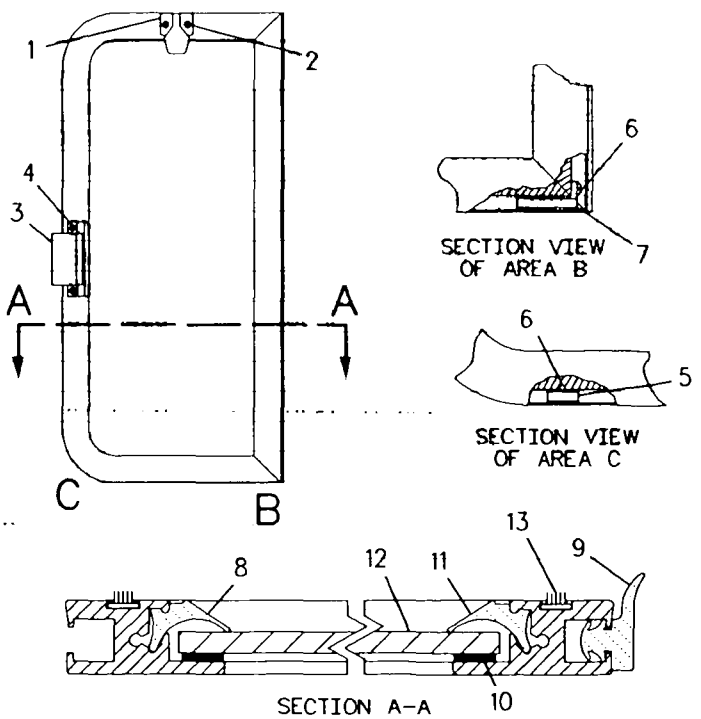

GRAPHIC #1 g00326281

OPERATOR STATION

8Y-6446 WINDOW GP–REAR

PIN 2YN1-UP; 3ZN1-UP; 4MN1-UP; 5LN1-UP; 6JN1-UP; 7KN1-UP; 8LN1-UP; 9PN1-UP
PART OF 9N-4369 WINDOW GP-CAB

SMCS-7310 i00691669

NOTE	REF NO	GRAPHIC REF	PART NUMBER	QTY	PART NAME 1 2 3 4 5 6 (PRODUCT LEVEL)	SEE PAGE
	1	1	8Y-6454	1	KIT-CATCH	
M	2	1	084-4111	2	SCREW-PAN HEAD	
	3	1	8Y-6455	1	KIT-CATCH (2 SCREWS)	
M	4	1	8T-4777	2	SCREW-MACHINE (M5X0.8X12MM)	
	5	1	8Y-6460	1	KIT-RUNNER GUIDE	
M	6	1	6V-2312	1	SCREW-MACHINE (M6X1X25MM)	
	7	1	8Y-6461	1	KIT-RUNNER GUIDE	
M	8	1	6V-2312	1	SCREW-MACHINE (M6X1X25MM)	
	9	1	8Y-6430	1	SEAL-WINDOW	
EB	10	1	8Y-6459		TAPE-BUTYL	
EB	11	1	8Y-6423		SEAL	
	12	1	8Y-6443	1	GLASS-REAR SLIDER (TINTED)	
EB	13	1	8Y-6910		WEATHERSTRIP	

B-USE AS REQUIRED
E-ORDER BY THE CENTIMETER
M-METRIC PART

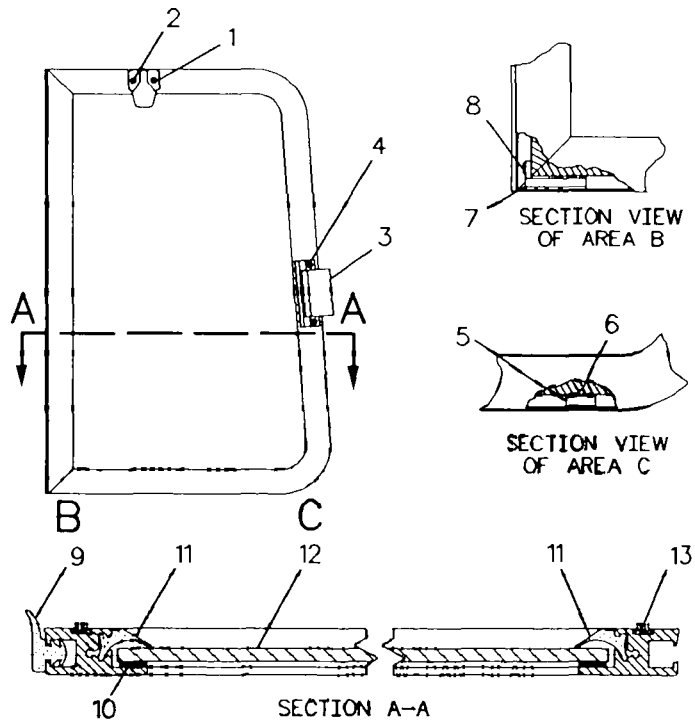

GRAPHIC #1 g00288279

OPERATOR STATION

9N-4369 WINDOW GP-CAB-REAR

PIN 2YN1-UP; 3ZN1-UP; 4MN1-UP; 5LN1-UP; 6JN1-UP; 7KN1-UP; 8LN1-UP; 9PN1-UP
SLIDING
PART OF 8E-5112 WINDOW AS-SLIDING

SMCS-7310 i00677653

NOTE	REF NO	GRAPHIC REF	PART NUMBER	QTY	PART NAME 1 2 3 4 5 6 (PRODUCT LEVEL)	SEE PAGE
E	1	1	8Y-6423		SEAL (200 CM)	
EB	2	1	8Y-6459		TAPE-BUTYL	
	3	1	8Y-6430	1	SEAL-WINDOW	
Y	4	1	*8Y-6446*	1	WINDOW GP	570
	5	1	8Y-6463	1	KIT-STOP RAIL	
M	6	1	8C-4982	1	BOLT-SOCKET HEAD (M4X0.7X20MM)	
	7	1	8Y-6428	1	STOP-RUBBER	
	8	1	8Y-6429	1	CLIP	
	9	1	8Y-6462	1	KIT-LEAF SPRING (INCLS SPRING AS & RIVET)	
	10	1	8Y-6445	1	GLASS-FIXED REAR (TINTED)	
E	11	1	8Y-6424		SEAL (115 CM)	
E	12	1	8Y-6423		SEAL (65 CM)	
E	13	1	8Y-6910		WEATHERSTRIP (68 CM)	

B-USE AS REQUIRED
E-ORDER BY THE CENTIMETER
M-METRIC PART
Y-SEPARATE ILLUSTRATION

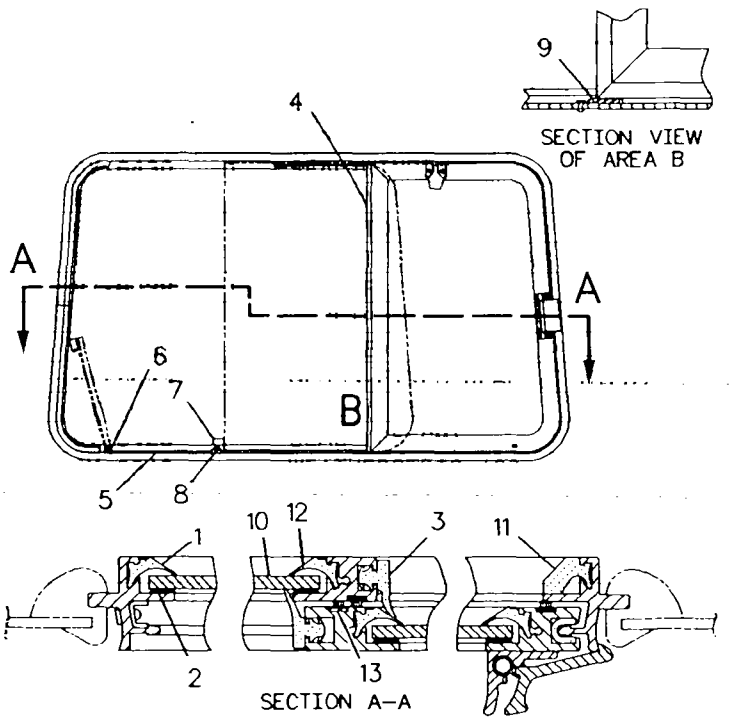

GRAPHIC #1 g00287928

OPERATOR STATION

105-9661 WIPER GP

PIN 2YN1-UP; 3ZN1-UP; 4MN1-UP; 5LN1-UP; 6JN1-UP; 7KN1-UP; 8LN1-UP; 9PN1-UP
PART OF 105-9655 CAB AR
TYPE 1

SMCS-7305 **i00678816**

NOTE	REF NO	GRAPHIC REF	PART NUMBER	QTY	PART NAME 1 2 3 4 5 6 (PRODUCT LEVEL)	SEE PAGE
Y	1	1	*134-0392*	1	WIPER GP-WINDSHIELD	509
	2	1	**6V-5850**	1	ARM AS-WIPER	
	3	1	**6V-5851**	2	BLADE AS-WIPER	
	4	1	**6V-5849**	2	BLADE AS-WIPER	
	5	1	**6V-8657**	1	ARM AS-WIPER (RH)	
	6	1	**117-1882**	1	MOTOR AS (LH)	
	7	1	**117-1881**	1	MOTOR AS (RH)	
	8	1	**6V-8658**	1	ARM AS-WIPER (LH)	
	9	1	**7T-8361**	2	SPACER (23MM THK)	
	10	1	**8V-5455**	1	BOSS	
M	11	1	**6V-7357**	2	BOLT (M6X1MM THD)	
	12	1	**6N-7523**	2	WASHER (1.57MM THK)	
Y	13	1	*6V-6561*	1	WIPER PIVOT GP	576
Y	14	1	*119-0098*	1	WIPER GP	508
	15	1	**6V-8659**	1	ARM AS-WIPER	

M-METRIC PART
Y-SEPARATE ILLUSTRATION

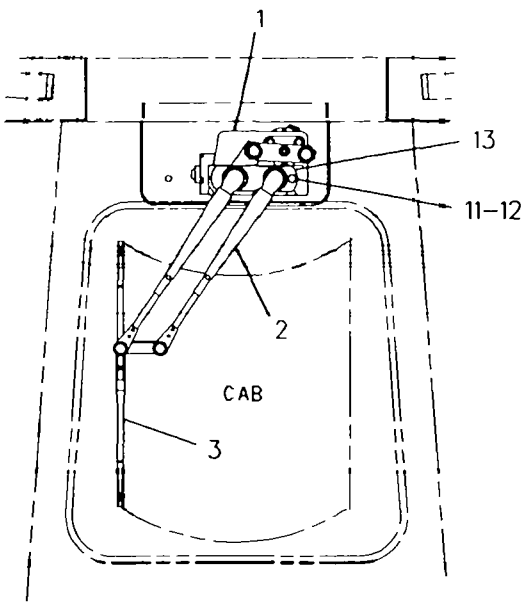

FRONT VIEW

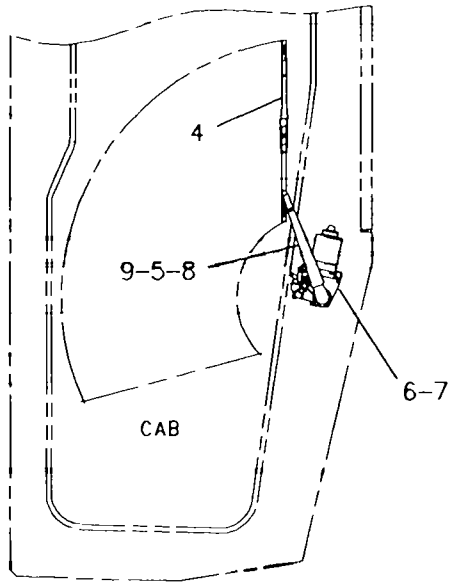

LEFT SIDE VIEW

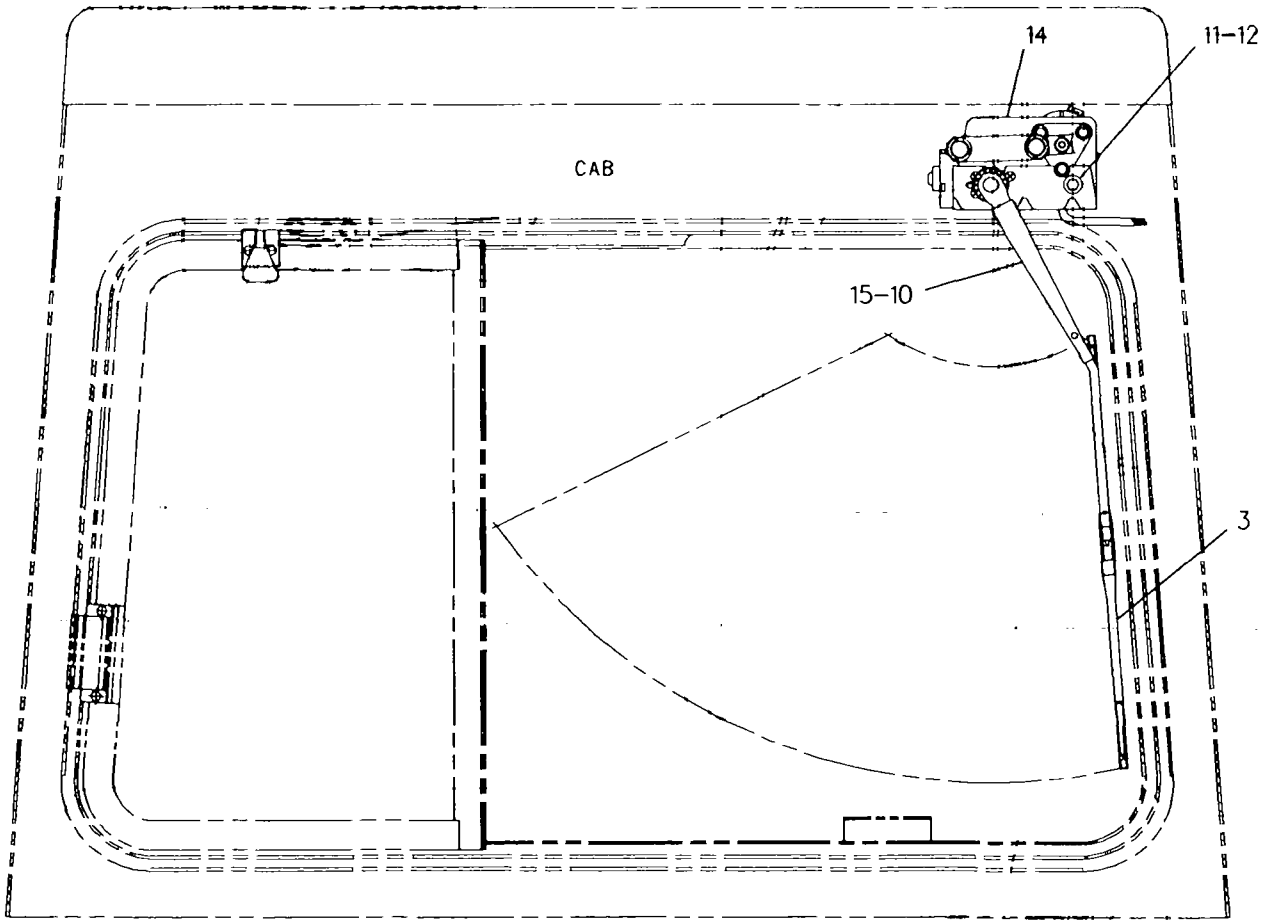

REAR VIEW

GRAPHIC #1

g00289393

OPERATOR STATION

105-9661 WIPER GP-WINDOW

PIN 2YN1-UP; 3ZN1-UP; 4MN1-UP; 5LN1-UP; 6JN1-UP; 7KN1-UP; 8LN1-UP; 9PN1-UP
PART OF 105-9655 CAB AR
TYPE 2

SMCS-7305 **i00948403**

NOTE	REF NO	GRAPHIC REF	PART NUMBER	QTY	PART NAME 1 2 3 4 5 6 (PRODUCT LEVEL)	SEE PAGE
Y	1	1	*147-7976*	1	MOTOR GP-WINDOW WIPER	510
	2	1	**6V-5850**	1	ARM AS-WIPER	
	3	1	**6V-5851**	2	BLADE AS-WIPER	
	4	1	**6V-5849**	2	BLADE AS-WIPER	
	5	1	**6V-8657**	1	ARM AS-WIPER (RH)	
	6	1	**117-1882**	1	MOTOR AS (LH)	
	7	1	**117-1881**	1	MOTOR AS (RH)	
	8	1	**6V-8658**	1	ARM AS-WIPER (LH)	
	9	1	**7T-8361**	2	SPACER (23MM THK)	
	10	1	**8V-5455**	1	BOSS	
M	11	1	**6V-7357**	2	BOLT (M6X1MM THD)	
	12	1	**6N-7523**	2	WASHER (1.57MM THK)	
Y	13	1	*6V-6561*	1	WIPER PIVOT GP	576
Y	14	1	*147-7979*	1	MOTOR GP-WINDOW WIPER	511
	15	1	**6V-8659**	1	ARM AS-WIPER	

M-METRIC PART
Y-SEPARATE ILLUSTRATION

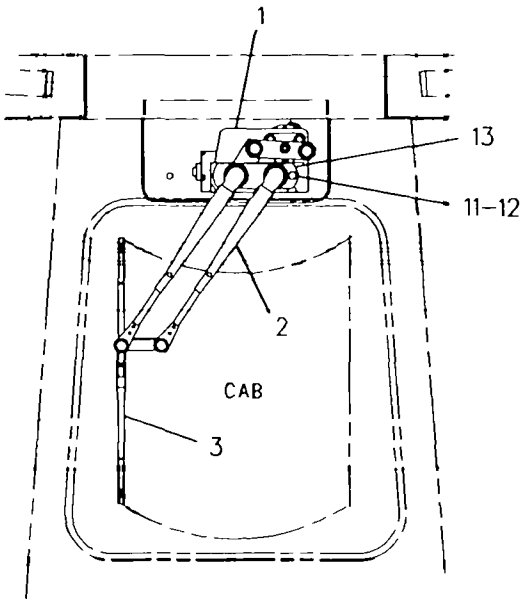

FRONT VIEW

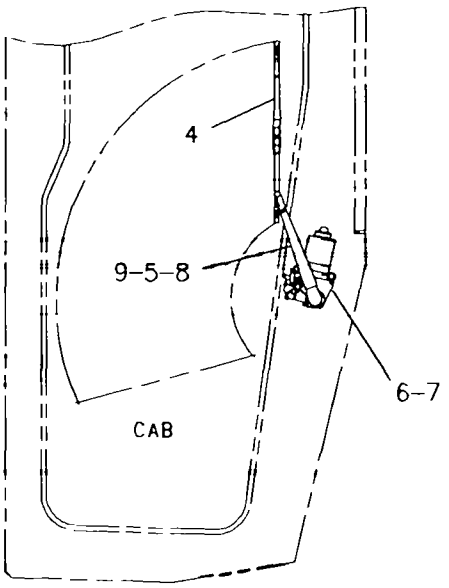

LEFT SIDE VIEW

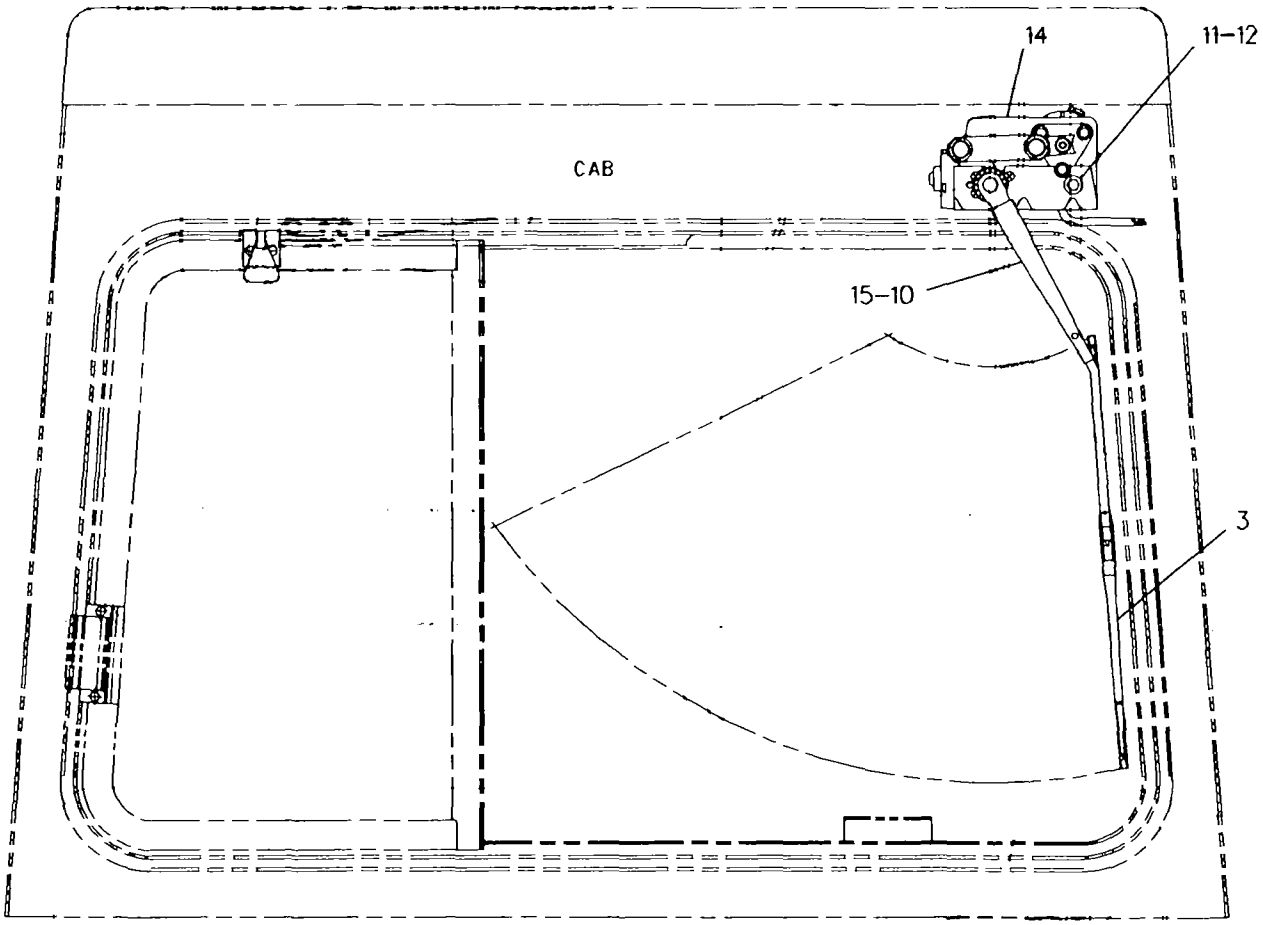

REAR VIEW

GRAPHIC #1

g00289393

OPERATOR STATION

6V-6561 WIPER PIVOT GP

PIN 2YN1-UP; 3ZN1-UP; 4MN1-UP; 5LN1-UP; 6JN1-UP; 7KN1-UP; 8LN1-UP; 9PN1-UP

PART OF 105-9661 WIPER GP-WINDOW

SMCS-7305 **i01011513**

NOTE	REF NO	GRAPHIC REF	PART NUMBER	QTY	PART NAME 1 2 3 4 5 6 (PRODUCT LEVEL)	SEE PAGE
	1	1	**6V-6207**	1	SHAFT AS-PIVOT	
	2	1	**6V-6209**	1	CAP	
M	3	1	**6V-6889**	1	NUT (M8X1.25 THD)	
	4	1	**6A-9718**	1	WASHER	
	5	1	**6V-6210**	1	GASKET-SHAFT	

M-METRIC PART

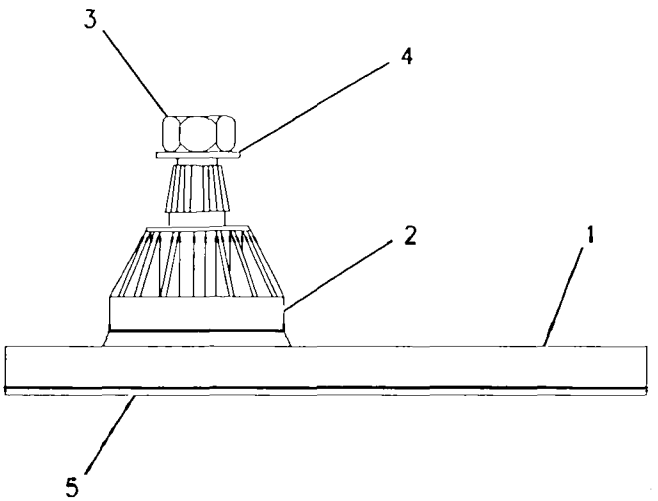

GRAPHIC #1 g00316575

PART NUMBER INDEX

Part	Page
0	
0L-0364	50
0L-1156	194
0L-1169	226
0L-1178	304
0L-1329	41
0L-1351	12
	70
	73
	79
	84
	88
0L-1352	28
	231
0L-2070	27
	50
	52
	54
	70
	148
	150
0S-0509	11
	198
	200
	237
0S-1566	13
0S-1569	226
0S-1571	48
	50
0S-1577	304
0S-1585	194
0S-1587	32
0S-1588	49
	70
	72
	133
0S-1590	65
	66
	80
	103
0S-1591	28
	108
	150
	226
0S-1594	30
	31
	50
	54
	84
	88
	198
	200
	299
0S-1595	73
0S-1614	132
0S-1615	142
	156
	158
0S-1616	138
0S-1617	14
	52
	54
	123
0S-1618	30
	45
	46
	52
0S-1619	65
	72
	80
	190
	198
	200
	237
0S-1748	30
0S-1756	344
0S-1897	226
0S-2307	82
	124
0S-2318	29
0T-0055	86
	87
	150
	190
0T-0065	64
	80
	190
	198
	200
0T-0102	50
	194
0T-0573	28
1	
1A-0646	194
1A-1135	30
1A-1460	31
	73
1A-2029	50
	52
	54
	70
	108
	110
	113
1A-2223	231
	237
1A-4350	528
	529
1A-5183	230
	236
1A-5822	226
1A-9252	116
	117
	118
1B-2790	46
	54
	134
1B-2886	73
1B-3978	202
	206
	210
	212
	214
	218
	222
1B-3980	202
	206
	210
	212
	214
	218
	222
1B-4430	540
	544
1B-5174	81
	264
	266
1B-7709	26
	43
1B-8709	64
1B-8735	470
1B-9575	70
1C-0569	534
1C-2251	27
1D-4540	70
	198
	200
1D-4595	26
1D-4601	226
1D-4622	445
1D-4624	261
1D-4627	350
1D-4628	202
	206
	210
	212
	218
	222
	346
1D-4709	348
1D-4716	54
1D-4717	48
	49
1F-0748	94
	258
	386
	520
1F-0750	56
	58
	60
	62
	68
	74
	92
	94
	120
	121
	122
	176
	178
	180
	182
	187
	258
	274
	275
	276
	278
	281
	301
	434
	454
	465
	516
	532
1F-1006	64
1F-2417	96
1F-5339	258
1F-6762	344
1H-3244	166
1H-7666	110
1H-8720	299
1J-0708	350
1J-8569	350
1J-8668	260
1J-9671	135
1K-4455	426
	442
1K-6870	445
1K-6872	250
	252
	441
	448
1K-6985	84
	88
	344
	350
1L-0509	210
	212
1L-3769	135
1L-4418	250
	252
1L-5072	43
1L-5081	50
1L-6957	226
1L-7388	231
	237
1M-1230	460
1M-1571	344
1M-4291	299
1M-4584	275
	434
1M-7643	105
1M-8657	231
	237
1M-9011	206
	214
	218
1N-3800	138
1N-3802	138
1N-4406	8
	9
	10
	▶11
1P-0436	134
1P-0451	125
	126
1P-1367	45
	46
1P-1547	303
	304
	305
1P-2497	138
1P-2772	548
1P-2841	250
	252
1P-3709	78

▶ PRIMARY REFERENCE

PART NUMBER INDEX

Part	Page
1P-3819	303
	304
	305
1P-3934	226
1P-3935	226
1P-4244	8
	9
	10
	▶47
1P-4278	92
	98
1P-4576	346
	383
	386
1P-4577	340
	342
	384
1P-4578	68
1P-4908	78
1P-6356	452
1P-6452	163
1P-7346	66
1P-9005	202
	206
	210
	212
	214
	218
	222
1P-9744	454
1P-9956	37
1Q-1544	301
	302
1Q-1545	301
	302
1Q-1546	301
	302
1Q-1547	301
	302
1Q-1548	276
	301
1Q-2252	202
	206
1Q-2265	206
1Q-2266	202
	206
	210
	212
1Q-2267	202
1Q-2274	▶202
	273
1Q-2275	4
	▶206
1Q-2423	493
1Q-2807	164
1Q-2986	276
1Q-2987	276
1Q-2990	276
1Q-3061	176
	180
	182
1Q-3064	176
	180
	182
1Q-3249	60
	62
1Q-3613	77
1Q-3677	276
1Q-4187	▶303
1Q-4188	250
1Q-4189	250
1Q-4190	250
1Q-4191	▶250
	303
1Q-4192	250
1Q-4193	250
1Q-4195	250
1Q-4239	▶301
1Q-4240	▶304
1Q-4303	▶210
	270
1Q-4304	▶212
	271
1Q-4324	▶261
1Q-4607	327
	331
1Q-4625	307
	308
	333
1Q-4626	307
	308
	333
1Q-4627	▶307
1Q-4655	▶308
1Q-4673	▶309
1Q-4725	▶310
1Q-4727	▶311
1Q-4728	311
1Q-4729	311
1Q-4734	▶312
1Q-4736	▶313
1Q-4741	▶314
1Q-4743	▶315
1Q-4744	314
	317
1Q-4745	314
	317
1Q-4764	▶316
1Q-4773	▶317
1Q-4924	318
	320
1Q-4925	▶318
1Q-4926	319
	323
	335
1Q-4927	▶319
1Q-4928	328
1Q-4930	309
	315
	322
	325
1Q-4934	▶320
1Q-4935	310
	316
	321
1Q-4936	▶321
1Q-4937	▶322
1Q-4938	▶323
1Q-4958	312
	324
	326
1Q-4959	▶324
1Q-4963	▶325
1Q-4969	▶326
1Q-4972	▶327
1Q-4973	327
	331
1Q-4994	318
	320
1Q-4995	319
	323
	335
1Q-4996	310
	316
	321
1Q-4997	312
	324
	326
1Q-4998	328
1Q-5764	56
1Q-5767	56
1R-0739	72
1R-0750	136
1S-0994	68
	78
1S-1860	226
	307
	308
	309
	310
	311
	312
	313
	314
	315
	316
	317
	318
	319
	320
	321
	322
	323
	324
	325
	326
	327
	328
	329
	330
	331
	332
	333
	334
	335
	336
	337
	338
1S-1953	156
1S-5440	156
1S-8947	299
1S-9540	18
1S-9543	37
1S-9593	245
	247
	395
1T-0414	76
1T-0416	76
	148
	150
1T-0765	70
	76
	123
	282
	283
1U-0085	442
1U-0131	408
1U-0132	408
1U-0159	441
	448
1U-0183	412
	414
	415
	416
	419
1U-0300	441
1U-0301	261
	441
1U-0612	261
	441
1U-0725	439
1U-1176	426
1U-1947	408
1U-1951	408
1U-2226	384
	▶394
1U-2405	450
1U-2533	442
1U-3991	▶348
	442
1U-4089	348
1U-4103	451
1U-8846	32
1V-3113	454
1W-0613	101
1W-1154	7
	8
	9
	10
	▶32
1W-1669	158
1W-1690	8
	9
	10
	▶133
1W-1695	153
	▶158
1W-1698	158
1W-1699	158
1W-3088	113
1W-3089	109
1W-3218	8
	9
	▶104
1W-3285	156
1W-3286	156
1W-3853	79
	82
1W-3854	52
1W-3900	34

▶ PRIMARY REFERENCE

PART NUMBER INDEX

Part	Page
1W-4098	138
1W-4243	138
1W-4486	10
	▶105
1W-4542	13
1W-4619	84
1W-4737	31
1W-4738	31
1W-4740	31
1W-4741	31
1W-4744	31
1W-4746	31
1W-4795	102
	127
	128
1W-4855	73
1W-4938	29
1W-4972	190
1W-5300	20
	22
1W-5527	52
1W-5686	133
	▶134
1W-5912	158
1W-6351	134
	▶135
1W-6523	138
1W-6588	7
	8
	9
	10
	▶37
1W-6629	142
1W-6987	154
1W-7110	34
1W-7816	34
1W-7831	8
	9
	10
	▶24
1W-8668	160
	▶163
1W-9167	143
	145
	150
1W-9168	143
	144
	145
	146
1W-9169	143
	144
	145
	146
	150
1Y-7452	92
1Z-0685	300
	▶302
1Z-0686	300
	▶305
1Z-0742	1
	▶493
1Z-0967	▶298
1Z-0982	▶254
1Z-9932	250
	252
1Z-9933	250
	252
2	
2A-1162	32
2A-3211	48
	454
2A-3541	70
2A-3798	12
2A-4429	20
	22
2A-5546	130
2B-0858	45
2B-0947	202
	206
	210
	212
	214
	218
	222
2B-2404	108
	110
2B-2694	64
2B-2695	393
	534
2D-2751	453
	478
	482
	532
2D-6235	520
2D-6392	160
2D-6642	226
2F-2290	139
2F-7306	534
2G-0415	460
2H-3429	135
	188
2H-3755	108
2H-3928	282
	283
2H-3932	148
	198
	200
2H-3934	148
	150
2H-6184	389
2H-6338	299
2H-6622	560
	564
	565
2H-9247	352
	353
2J-0157	135
2J-0564	346
2J-3506	344
	396
	397
	398
	399
	400
	424
2J-3507	303
	304
	305
2J-6274	306
2J-8489	348
	350
2K-0400	116
	117
	118
2K-0703	448
2K-2961	352
	353
2K-3258	350
2K-4096	346
2K-4309	448
2K-4310	448
2K-4507	346
2K-4821	166
	304
2K-4973	101
	103
	250
	252
	261
	276
	441
	448
	534
	540
	544
2K-6279	261
2K-6830	344
2K-8467	250
	252
2L-1224	482
2L-8066	188
2L-8071	188
2L-8075	166
2M-1444	496
2M-5407	50
2M-7041	393
2M-7819	138
2M-9780	60
	62
	68
	78
	133
	194
	394
2N-0828	138
2N-1287	108
	110
2N-2765	109
2N-2766	104
	105
	109
	125
	126
2N-3162	504
2P-0220	13
2P-0347	299
2P-1168	30
2P-1170	64
2P-1279	82
2P-1286	56
2P-1293	56
	58
	60
2P-1487	41
2P-1535	303
	304
	305
2P-1692	41
2P-1738	36
2P-1739	50
2P-1781	64
2P-2537	45
	46
2P-2685	163
2P-2697	49
2P-2717	48
2P-2720	48
2P-3200	150
2P-3696	202
	206
	210
	212
	214
	218
	222
2P-4339	516
2P-5616	166
2P-5943	372
2P-6105	7
	8
	9
	10
	▶50
2P-6132	80
2P-6152	7
	8
	9
	10
	▶36
2P-6224	7
	8
	9
	10
	▶39
2P-6528	8
	9
	10
	▶13
2P-6588	386
2P-8386	226
2P-8746	65
2P-8862	110
2P-9556	138
2P-9863	285
2Q-3370	77
2Q-3371	76
2Q-3386	76
2Q-3398	77
2Q-5098	250
2R-0098	202
	206
	210
	212
	216
	218
	222
2S-0042	34
2S-0736	26

▶ PRIMARY REFERENCE

PART NUMBER INDEX

Part	Page
	43
2S-0795	73
2S-1541	50
2S-4078	194
	202
	206
	210
	212
	214
	218
	222
	306
	340
	342
2S-5658	16
	242
	243
2S-5925	306
2S-5926	306
2S-6160	105
2S-6218	191
2S-6692	30
2S-7383	132
2T-0914	389
2T-2310	82
2V-0936	453
	478
2V-1937	454
2V-9923	505
2W-0176	7
	8
	9
	10
	▶190
2W-0994	101
2W-1086	14
2W-1605	7
	8
	9
	10
	▶142
2W-2216	138
2W-2271	▶70
	72
2W-2272	8
	9
	10
	▶72
2W-2410	▶138
	160
2W-4160	7
	8
	9
	10
	▶153
2W-4561	72
2W-5240	70
2W-5448	160
2W-6091	37
2W-6102	139
2W-6103	138
2W-6104	138
2W-6134	16
2W-6440	112
2W-6681	45
2W-6779	7
	8
	9
	10
	▶80
2W-7234	163
2W-7255	84
2W-7263	145
2W-7264	145
2W-7400	139
2W-8951	25
	▶42
2W-9162	47
2W-9305	139
2W-9315	130
2W-9316	130
3	
3B-0623	20
	22
3B-0645	46
3B-1915	13
	28
	36
	48
	49
	60
	62
	65
	72
3B-2968	445
3B-4617	250
	252
3B-4627	426
	442
3B-4632	421
3B-5325	450
3B-6487	498
3B-6552	101
	498
3B-8428	84
	88
3B-8489	282
	283
	388
	448
3D-2824	56
	58
	60
	62
	158
3D-2834	78
3D-2898	158
3D-8317	139
3E-1841	496
3E-1906	▶473
	▶474
3E-3361	460
3E-3362	77
	245
	247
	460
3E-3365	60
	62
	169
	173
	174
	232
	238
	392
	452
	460
	473
	482
	516
3E-3371	170
	516
	517
3E-3377	484
3E-3380	550
	554
3E-3383	507
3E-3535	453
3E-3658	476
3E-4044	512
3E-4051	452
3E-4052	452
3E-4054	452
3E-4057	452
3E-4058	452
3E-4067	452
	480
3E-4335	534
3E-4336	534
3E-4356	500
3E-4362	534
3E-4374	116
	117
	118
3E-4898	524
3E-5239	482
3E-5464	453
3E-6386	460
3E-6387	460
3E-6389	▶170
	504
3E-6575	534
3E-6601	500
3E-6760	130
3E-6914	27
3E-6918	512
3E-7430	36
3E-7577	164
	▶166
3E-7775	188
3E-8680	▶191
	440
3E-8848	231
	237
3E-9865	460
	465
3F-0379	188
3F-3442	194
3F-5022	230
	236
3F-6185	442
3F-9556	508
	509
	510
	511
3G-1753	346
3G-1757	346
3G-3835	138
3G-6372	275
	434
3G-7242	391
3G-8047	386
3G-8054	78
	386
3G-8057	78
	386
3G-8742	344
3G-9402	388
3G-9405	388
3G-9451	▶388
	432
	434
	437
3H-3243	47
3H-5841	540
	544
3H-6660	526
3H-9348	550
	554
3J-1770	426
3J-1907	32
	136
	142
	160
	194
	245
	247
	384
	390
3J-4818	540
	544
3J-5169	120
	121
	122
	256
	275
	281
	434
3J-5390	81
3J-6559	426
3J-6573	426
3J-7352	108
	110
3J-7354	32
	46
	52
	54
	108
	110
	138
	142
3J-9703	348
3K-0360	32
	52
	54
	60
	62
	68
	78

▶ PRIMARY REFERENCE

PART NUMBER INDEX

Part	Page
	202
	206
	210
	212
	214
	218
	222
	384
	386
3K-0835	516
	517
3K-2511	230
	231
	236
	237
3K-2889	303
	305
3K-4897	514
3K-5733	139
3K-8460	43
3K-8510	448
3L-0594	520
3L-8187	191
3M-7045	56
	58
	60
	62
3P-0009	138
3P-1896	20
	22
3P-2404	60
	62
	78
3P-3604	465
3R-0451	258
3S-2093	453
	460
	463
	482
	516
	550
	554
3S-2708	230
	231
	236
	237
3S-2713	13
	43
	148
	150
3S-5496	18
	20
	22
3S-6162	348
3S-7781	194
3S-8313	20
	22
3S-8606	354
	355
	374
	375
	378
	379
	380
	381
3S-9557	516
3T-0598	306
3T-0996	260
3T-0997	260
3T-1002	258
3T-1121	560
	564
	565
3T-1162	264
	266
3T-2051	296
3T-2077	264
	266
3T-2747	279
3T-2748	279
3T-3422	188
3T-3434	188
3T-3462	524
3T-3635	520
3T-3812	258
3T-4307	275
	434
3T-4308	275
	434
3T-4377	230
	236
3T-4968	230
	236
3T-6354	166
3T-6655	504
3T-6742	226
3T-8729	231
	237
3T-9922	194
3V-1965	440
3V-2431	123
3V-3263	462
3V-9244	68
3W-0640	306
3W-0677	258
3W-1356	▶280
	446
3W-1357	280
3W-1852	264
	266
3W-2369	306
3W-2764	68
3W-5669	548
3W-6528	548
3W-9322	527
3W-9669	124
3Y-3866	426
3Y-5405	383
3Y-7829	68

4

4B-1284	76
4B-2043	166
4B-2047	145
	504
4B-2049	188
4B-3388	54
	110
4B-3938	12
	18
4B-4043	32
4B-4098	426
4B-4158	264
	266
	391
4B-4274	143
	145
	146
	150
	460
4B-4276	395
	520
4B-4278	540
4B-4910	43
4B-5387	18
4B-9365	153
4B-9782	18
	64
	194
4B-9785	194
4B-9880	64
	226
4D-6432	528
	529
4D-6624	460
4D-6716	92
4D-7733	453
	480
4D-7794	176
	180
	182
4E-1303	78
4F-0255	426
	442
4F-1204	439
	442
4F-1252	426
4F-2710	442
4F-4879	76
	537
	538
4F-6024	31
	138
4F-7957	132
	153
4F-9101	520
4H-0019	226
4H-5440	194
4H-7869	60
	62
4J-0121	344
4J-0520	340
	342
4J-1641	408
	412
	414
	415
	416
	419
4J-2414	438
4J-3420	346
4J-4606	352
	353
4J-5267	346
	382
	383
	386
4J-6374	344
4J-7533	156
	391
4J-8997	153
4J-9118	420
4K-1388	340
	342
4K-3004	448
4K-3128	346
4K-3533	470
4K-5175	76
4K-8302	452
	453
	480
4K-9097	123
	534
4L-3641	50
4L-6454	60
	62
	68
	78
	92
	98
	114
	115
	176
	180
	182
	184
	202
	206
	210
	212
	214
	218
	222
	256
	386
	389
	452
	453
4L-7412	60
	62
4L-8337	108
4L-9337	92
	340
	342
	382
	454
4L-9564	47
4M-1827	188
4M-1828	188
4M-1831	188
4M-2442	231
	237
4M-5282	164
4M-5283	520
4M-5317	60
	62
4M-5905	393
4M-6425	92

▶ PRIMARY REFERENCE

PART NUMBER INDEX

Part	Page
	124
	148
	470
4M-6480	52
	54
4M-8303	142
4M-9592	230
	236
4N-0260	139
4N-0432	139
4N-1230	31
4N-1761	132
4N-2953	138
4N-3732	64
4N-5353	65
4N-5484	138
4N-5485	138
4N-5834	84
	88
4N-6045	48
4N-6404	139
4N-6406	138
4N-6407	138
4N-7820	36
4N-9019	156
4N-9216	108
	110
4N-9915	500
4P-0854	92
4P-2578	150
4P-2942	11
4P-3306	105
4P-3546	64
4P-5524	100
4P-7274	130
4P-7275	130
4P-7305	15
4P-7306	15
4P-7428	453
	478
4P-7429	453
	478
4P-7581	164
4P-7826	30
4P-7827	15
4P-7828	30
4P-7830	66
4P-8134	124
	452
	463
	516
4P-8480	156
4P-9330	▶143
	150
4P-9331	▶144
	150
4P-9381	143
4P-9382	143
4P-9385	144
4P-9386	144
4P-9827	▶154
	156
4P-9828	156
4P-9830	154
4P-9832	156
4P-9840	156
4P-9856	8
	9
	10
	▶15
4P-9857	15
4S-5898	389
4S-8287	534
4S-9191	84
	88
4T-0259	348
4T-0732	442
4T-0780	442
4T-1481	421
4T-1496	408
4T-1498	408
4T-1500	408
4T-1501	408
4T-1504	408
	412
	414
	415
	416
	419
4T-1506	408
4T-1508	408
4T-1509	408
4T-1510	408
4T-1520	442
4T-1563	383
4T-1564	383
4T-1759	408
4T-1762	408
4T-1763	▶408
	418
4T-2952	397
4T-4435	396
	424
4T-4436	396
	424
4T-4866	439
	442
4T-4875	388
4T-5495	426
4T-5541	▶391
	392
4T-6116	390
4T-6151	420
4T-6659	396
4T-6660	▶396
	402
4T-6820	391
4T-6821	391
4V-1718	276
4V-7884	540
	544
4V-8556	540
	544
4W-0452	39
4W-0924	130
4W-0950	108
4W-0952	109
4W-1512	52
	54
4W-2321	64
4W-2322	64
4W-2357	92
4W-2446	24
4W-4187	48
4W-4188	49
4W-4189	49
4W-4485	48
4W-5538	109
4W-5734	160
4W-5735	160
4W-5738	15
4W-5739	37
4W-6868	138
4W-6869	156
4W-7629	142
4Y-4281	521
4Y-5911	454
4Z-0544	▶428
4Z-0545	▶429
4Z-0583	▶430
4Z-0592	▶6
4Z-0609	▶446
4Z-0613	▶431
4Z-0642	▶436
4Z-0647	▶432
4Z-0651	▶433
4Z-8817	401
	▶410
4Z-8818	410
4Z-8826	410
	411
	413
	417
4Z-8906	403
	▶417
4Z-8919	2
	▶354
4Z-8920	2
	▶355
4Z-8954	3
	4
	▶356
4Z-8955	3
	4
	▶357
4Z-9091	402
	▶418
4Z-9094	418
4Z-9095	418
4Z-9096	418
4Z-9126	405
	▶411
4Z-9141	▶401
	428
4Z-9142	▶402
	430
4Z-9143	▶403
	429
4Z-9158	6
	▶405
4Z-9225	▶383
	436
	437
4Z-9226	▶421
	436
	437
4Z-9227	436
	437
	▶442
4Z-9228	451
4Z-9229	▶406
	421
4Z-9230	406
	▶412
	413
4Z-9240	383
4Z-9241	383
4Z-9242	442
4Z-9243	442
4Z-9266	413
4Z-9267	407
	▶413
4Z-9268	▶407
	431
4Z-9412	432
	433
	436
	437
	▶451
4Z-9431	▶420
	432
	433
4Z-9432	▶404
	420
4Z-9433	404
4Z-9443	432
	433
	▶439
4Z-9444	▶438
	439
4Z-9453	▶426
	432
	433
4Z-9454	▶386
	432
	433
4Z-9456	426
4Z-9457	426
4Z-9461	426
4Z-9462	426
4Z-9463	▶358
	386
4Z-9464	▶359
	386
4Z-9465	▶360
	386
4Z-9466	▶361
	386
4Z-9467	438
4Z-9468	438
5B-3180	393
5B-7652	18
5B-9079	30
5B-9603	26
5C-2890	482
	500
5C-6565	448

5

▶ PRIMARY REFERENCE

PART NUMBER INDEX

Part	Page
	452
	480
	524
5C-7261	508
	509
	510
	511
5C-9553	482
5D-0353	194
5D-1026	496
	505
5D-2989	230
	236
5D-3118	261
	303
	304
	305
	441
5F-0304	32
5F-1678	391
5F-3106	13
	32
	86
	87
5F-3144	346
5F-7054	148
5F-9144	138
5G-6401	176
	180
	182
	184
5G-8655	470
5G-8836	231
	237
5G-8993	296
5G-9841	296
5G-9842	296
5G-9843	296
5G-9963	548
5H-2671	15
5H-3124	56
5H-3204	50
5H-3252	350
5H-4018	346
5H-4279	52
	54
5H-6202	230
	236
5H-6552	160
5H-6734	264
	266
5H-7704	109
5I-8333	452
5J-0964	344
	346
	350
	352
	353
5J-2528	352
5J-2529	352
5J-4773	396
	397
	398
	399
	400
	424
5J-4988	352
	353
5J-4989	350
5J-4991	348
5J-5020	346
5J-5731	350
5J-8300	348
5K-0461	256
5K-0906	124
5K-5068	101
5K-5120	194
	198
	200
5K-9090	340
	342
5K-9107	299
5K-9179	506
5K-9243	49
5K-9246	194
5K-9988	194
5L-8854	109
5M-2043	299
5M-2894	12
	13
	27
	28
	30
	48
	49
	50
	52
	54
	65
	70
	72
	73
	79
	84
	86
	87
	88
	103
	105
	133
	148
	150
	190
	194
	198
	200
	226
	231
	237
	250
	486
	488
	490
5M-3038	230
	231
	236
	237
5M-3062	78
	101
	176
	178
	180
	182
	184
	186
	187
	388
	453
	463
	480
	498
	505
	516
	520
	524
	526
	540
	544
5M-4606	43
5M-6126	230
	236
5M-6213	50
	52
	54
	81
5M-6214	12
	34
	136
	438
5M-8500	470
5N-8780	36
5P-0537	130
	134
	136
	138
	142
	153
	160
5P-0597	103
	108
	110
5P-0598	109
5P-0767	496
	505
5P-0998	521
5P-1075	60
	62
	68
	78
	92
	94
	98
	109
	113
	176
	178
	180
	182
	184
	186
	187
	256
	276
	340
	342
5P-1076	250
	252
	276
	301
	302
	470
	494
	520
	524
5P-1251	98
5P-1263	109
5P-1465	98
5P-2228	383
	520
5P-2424	493
5P-2566	78
	453
	478
5P-2671	388
5P-2817	103
5P-2955	176
	178
	180
	182
	184
	186
	187
5P-3272	138
5P-3418	166
5P-3419	166
5P-3860	101
5P-3930	231
	237
5P-3931	126
5P-3948	453
	480
5P-4057	194
5P-4115	164
	460
	463
	470
	520
5P-4116	92
	123
	124
	488
	490
	521
5P-4289	136
5P-4443	49
5P-4448	49
5P-4653	82
5P-4939	143
	144
	145
	146

► **PRIMARY REFERENCE**

PART NUMBER INDEX

Part	Page
5P-5045	231
	237
5P-5296	231
	237
5P-5297	231
	237
5P-5621	188
5P-5630	498
5P-5639	496
5P-5643	453
	470
	496
5P-5644	550
5P-5673	482
5P-5680	560
	561
	562
	563
	564
	565
5P-5777	78
5P-5924	482
5P-5930	470
5P-5992	454
	462
	464
	550
5P-6003	440
5P-6129	452
5P-6313	498
5P-6314	498
5P-6315	498
5P-6605	470
5P-6620	160
5P-6718	150
5P-6874	506
5P-6945	130
	138
5P-7076	534
5P-7211	162
	281
5P-7213	123
5P-7464	386
5P-7465	386
5P-7466	56
5P-7467	56
5P-7483	470
5P-7513	512
5P-7514	512
5P-7538	246
5P-7592	226
5P-7807	166
5P-7907	498
5P-7958	534
5P-8112	56
5P-8118	70
5P-8167	460
	540
	544
5P-8194	231
	237
5P-8210	130
5P-8215	158
5P-8244	520
5P-8245	40
	73
	194
	226
	230
	231
	236
	237
5P-8247	13
	32
	226
5P-8248	304
	388
	396
	397
	398
	399
	400
	445
5P-8249	346
	350
5P-8250	303
	304
	305
	348
	445
5P-8438	482
5P-8441	460
5P-8522	176
	178
	180
	182
5P-8886	374
	375
5P-8918	560
	564
	565
5P-8998	60
	62
	194
5P-9085	176
	180
	182
	184
	460
5P-9259	373
	376
5P-9757	138
5P-9891	264
	266
5R-0939	256
5R-0940	256
5R-4787	94
5R-7545	540
5S-0003	52
5S-5879	43
5S-5917	43
5S-5918	44
5S-6051	70
5S-6348	37
5S-6670	16
5S-6735	108
	110
5S-6750	37
5S-7001	394
5S-7018	394
5S-7349	76
	77
	188
	463
5S-7379	68
	78
	82
	109
	113
	184
	276
	340
	342
	512
5S-7382	78
	101
	113
	252
	279
	340
	342
	383
	384
5S-7383	68
	82
	386
	454
5S-8055	12
5S-8462	18
5S-8709	386
5S-8711	404
5S-8712	386
5S-8714	386
5S-8718	386
5S-8765	386
5S-8766	386
5S-9593	354
5S-9615	374
	375
5S-9616	374
	375
	378
	379
	380
	381
5S-9638	355
5S-9948	38
	460
	482
6D-4636	505
6D-8498	158
6E-1205	350
6E-5527	348
6F-0253	516
	517
6F-0711	260
6F-2904	438
6F-2905	439
6F-3183	426
6F-6672	158
6F-7062	18
	73
6H-0192	34
6H-0853	78
6H-1717	24
6H-3609	412
	414
	415
	416
	419
	453
	480
6H-3956	284
6H-3957	84
	88
6H-4005	184
6H-9691	138
6I-0341	145
6I-0342	145
6I-0343	145
6I-0344	146
6I-0345	146
6I-0346	146
6I-0357	▶145
	148
6I-0358	▶146
	148
6I-0979	156
6I-1327	154
6I-1345	64
6I-1346	▶64
	66
6I-2003	138
6I-2004	138
6I-2431	90
	91
	94
6I-2435	90
	91
	94
6I-2501	100
	▶106
6I-2502	100
	▶107
6I-2566	▶100
	101
6I-4464	100
6I-8410	438
6I-8411	438
6I-8500	230
	236
6I-8501	▶230

6

Part	Page
6A-9718	576
6B-0041	70
6B-1628	505
6B-4198	132
	136
6B-4594	92
6B-4661	505
6B-6863	231
	237
6B-7469	105
6D-1641	453
6D-3897	138
6D-4244	60
	62
6D-4246	453

▶ PRIMARY REFERENCE

PART NUMBER INDEX

Part	Page
	▶236
	244
6I-8503	231
6I-8507	226
6I-8508	231
6I-8510	231
	237
6I-8511	226
6I-8736	264
	266
6I-8737	264
	266
6I-9380	116
	117
	118
6I-9386	470
6I-9668	▶285
	307
	310
	318
	319
	322
	326
6I-9670	▶286
	308
	320
	321
	323
	325
6I-9671	▶287
	312
	313
	315
	316
	317
	329
	331
	332
	333
	335
	336
	337
	338
6I-9672	▶288
	334
6J-0488	486
	488
	490
	524
6J-0499	408
6J-1323	453
	478
6J-2419	158
	391
6J-3473	226
6K-0806	98
	540
	544
6K-3632	548
6K-4934	176
	180
	182
6K-4935	176
	180
	182
6K-6967	108
6K-8178	124
	453
6K-8498	194
6K-9555	453
6K-9632	464
	465
6L-3921	77
6L-5897	138
	163
6L-7159	453
6L-8562	112
6N-0009	109
6N-0164	10
	▶111
6N-0511	110
6N-1036	64
6N-1872	166
6N-2985	48
6N-3504	138
6N-3827	188
6N-4414	134
6N-6033	52
	54
6N-7174	20
	22
6N-7523	572
	574
6N-7887	13
6N-8003	16
6N-8326	7
	8
	9
	10
	▶35
6N-9915	20
6P-2216	520
6P-3236	467
	468
6P-6926	520
6P-7704	231
	237
6P-8912	283
6S-2828	226
6S-2829	226
6T-0364	226
6T-0385	460
6T-0988	526
6T-3217	283
6T-3220	282
	283
6T-3852	226
6T-3853	226
6T-4556	520
6T-4557	520
6T-4871	282
	283
6T-5005	▶560
	561
6T-5008	557
	▶561
6T-5067	520
6T-5068	526
6T-5617	496
6T-5859	391
	▶395
6T-6221	480
6T-6708	460
6T-7695	504
6T-7882	230
	236
6T-8084	395
6T-8402	558
	▶562
6T-8403	559
	▶563
6T-8500	395
6V-0327	202
	206
	210
	212
	214
	218
	222
6V-0328	202
	206
	210
	212
	214
	218
	222
6V-0329	202
	206
	210
	212
	214
	218
	222
6V-0330	202
	206
	210
	212
	214
	218
	222
6V-0439	202
	206
	210
	212
	214
	218
	222
6V-0473	230
	231
	236
	237
6V-0484	194
6V-0744	358
	359
	360
	361
6V-0852	194
6V-0937	242
	243
6V-0974	78
6V-1153	365
6V-1228	453
	480
6V-1249	386
6V-1426	105
6V-1427	105
6V-1525	104
6V-1668	460
6V-1790	520
6V-1792	307
	308
	309
	310
	311
	312
	313
	314
	315
	316
	317
	318
	319
	320
	321
	322
	323
	324
	325
	326
	327
	328
	329
	330
	331
	332
	333
	334
	335
	336
	337
	338
6V-1965	191
6V-1966	191
6V-1999	35
6V-2226	264
	266
6V-2312	568
	569
	570
6V-2372	452
6V-2404	226
6V-2435	446
6V-2456	514
	534
6V-2478	231
	237
6V-2495	452
6V-2606	394
6V-2701	283
6V-2710	348
6V-2712	124
6V-3320	460
6V-3508	43
6V-3965	194
	245
	247
6V-4432	454
6V-5044	123
	124
6V-5683	502

▶ PRIMARY REFERENCE

PART NUMBER INDEX

Part	Page
6V-5749	482
6V-5817	462
6V-5818	550
	554
6V-5833	560
	561
	562
	563
	564
	565
6V-5849	572
	574
6V-5850	572
	574
6V-5851	572
	574
6V-5894	160
6V-6207	576
6V-6209	576
6V-6210	576
6V-6561	572
	574
	▶576
6V-6835	160
6V-6889	576
6V-6921	148
	150
6V-7357	572
	574
6V-7555	498
6V-7636	470
6V-7646	500
6V-7978	504
6V-8142	306
6V-8182	279
	348
	442
6V-8183	116
	117
	118
6V-8188	77
	188
	384
	388
	448
	454
6V-8189	124
	176
	178
	180
	182
	184
	186
	187
	470
6V-8190	261
	441
6V-8225	502
6V-8362	192
	467
	468
6V-8376	516
6V-8397	82
	384
6V-8398	60
	62
	68
	78
	383
	384
	386
6V-8400	340
	342
6V-8553	372
6V-8554	356
	357
	361
6V-8625	68
	78
	386
6V-8637	56
6V-8638	68
6V-8639	60
	62
6V-8640	60
	62
6V-8657	572
	574
6V-8658	572
	574
6V-8659	572
	574
6V-8721	78
6V-8724	384
6V-8774	384
6V-8775	384
6V-8777	60
6V-8782	78
	384
6V-8801	27
	60
	62
	68
	78
	82
	113
	176
	180
	182
	184
	186
	187
	340
	342
	382
	452
	453
	454
	498
	512
6V-8918	124
6V-8928	502
6V-8981	383
6V-8995	78
6V-9002	68
	78
6V-9004	56
	58
6V-9007	62
	78
6V-9169	78
	383
6V-9182	78
6V-9746	56
	58
	60
	62
	78
6V-9830	384
6V-9837	384
6V-9850	82
6V-9906	88
6V-9949	354
	355
	379
	381
6V-9951	378
	380
6V-9961	372
6V-9963	372
6V-9965	356
	357
	360
	361
6V-9969	362
6Y-0206	486
	488
	490
6Y-0352	450
6Y-0473	282
	283
	285
	286
	287
	288
	289
	290
	292
	294
6Y-0596	386
6Y-0597	386
6Y-0598	386
6Y-0625	386
6Y-0860	202
	206
	210
	212
	214
	218
	222
6Y-1387	414
6Y-1390	414
	415
6Y-1602	230
	236
6Y-1744	▶397
	403
6Y-1781	297
	298
	▶299
6Y-2043	299
6Y-2658	388
6Y-2931	242
6Y-2940	▶295
	297
	298
6Y-3954	68
6Y-4638	393
6Y-4819	230
	236
6Y-4831	230
	236
6Y-5024	202
	206
	210
	212
6Y-5113	506
6Y-5799	306
6Y-5827	78
6Y-5911	230
	236
6Y-5912	231
	237
6Y-6287	330
6Y-6296	330
6Y-6300	313
6Y-6397	309
	315
	322
	325
6Y-6404	332
	334
6Y-6751	420
6Y-6834	298
6Y-6835	297
	298
6Y-7385	500
6Y-7470	404
6Y-7471	439
6Y-8973	313
6Y-9280	388
6Y-9281	388
6Y-9864	297
7	
7B-0192	60
	62
7B-0863	303
	304
	305
7B-2742	134
7B-3028	264
	266
7B-3235	40
	73
	226
7B-5163	38
7B-7525	534
7C-0282	31
7C-0502	8
	9
	10
	▶31
7C-1112	31
7C-2214	123
7C-4353	452
	480
7C-5278	154
7C-5589	113

▶ PRIMARY REFERENCE

PART NUMBER INDEX

Part	Page	Part	Page	Part	Page	Part	Page
7C-5590	113	7E-4892	138		266	7N-6550	▶16
7C-5887	145	7E-5346	135	7J-5131	408		18
7C-5993	124		139		412	7N-7166	156
7C-6444	113	7E-5788	145		414	7N-7264	156
7C-6445	103	7E-6047	37		415	7N-7270	139
7C-7011	43	7E-6785	160		416	7N-7271	138
7C-7013	▶43	7E-8529	123		419	7N-7779	191
	44	7E-8530	146	7J-8611	194		395
7C-7614	143	7E-9028	146	7J-8955	348	7N-7780	191
7C-8282	109	7E-9074	148	7J-8956	348		395
7C-8283	109	7E-9094	145	7K-1181	60	7N-7782	191
7C-8284	108	7E-9095	145		62	7N-7970	156
7C-8434	454	7E-9452	145		164	7N-7998	18
7C-8641	52	7F-6998	516		184	7N-8018	20
7C-8642	52	7F-7590	50		440		22
7C-8645	79	7F-7621	166		452	7N-8026	7
7C-8646	82	7F-9223	520		453		8
7C-8658	124	7F-9311	79		464		9
7C-8659	124	7F-9546	303		465		10
7C-8665	7		304		478		▶44
	8		305		498	7N-8374	13
	9	7G-0942	460		532		32
	▶79	7G-2343	231	7K-3176	453	7N-8421	156
7C-8666	7		237		480	7N-8768	160
	8	7G-2454	470	7L-2894	188	7N-8775	138
	9	7G-2516	230	7L-3195	125	7N-8780	138
	▶52		236	7L-3326	156	7N-8785	139
7C-8667	112	7G-2830	231	7L-6443	126	7N-8821	139
7C-8669	7		237	7M-4046	18		158
	8	7G-4634	▶226	7M-5130	230	7N-8876	10
	9		244		236		▶20
	▶112	7G-4823	520	7M-7219	138	7N-9023	166
7C-8672	7	7G-4824	486	7M-8485	78	7N-9035	130
	8		488		98	7N-9062	130
	9		490		391	7N-9146	29
	▶108		520		393	7N-9149	25
7C-8787	108	7G-4928	56	7M-9831	145	7N-9519	136
7C-8993	▶132		58	7N-0165	70	7N-9520	136
	160		60	7N-0172	81	7N-9536	8
7C-9335	8		274	7N-0200	80		9
	9		278	7N-0550	43		10
	10	7G-5186	92	7N-1047	156		▶26
	▶49	7G-5532	▶214	7N-1052	160	7N-9554	160
7C-9336	8		216	7N-1066	154	7N-9737	395
	9	7G-6224	226	7N-1342	8	7N-9805	37
	10	7G-6355	230		9	7N-9907	160
	▶48		236		10	7N-9943	170
7C-9532	127	7G-7212	214		▶12	7P-7610	470
	128		▶242	7N-1796	163	7P-8370	264
7C-9538	127	7G-7218	231	7N-2171	139		266
	128		237	7N-2172	139	7S-1912	453
7C-9966	154	7G-7724	231	7N-2176	160		480
7D-1649	226		237	7N-2594	138	7S-2204	11
7D-6922	467	7G-7999	467		139	7S-3161	44
	468		468	7N-2729	8	7S-3224	16
	486		▶527		9	7S-4346	454
	488	7H-3607	242		10	7S-7144	20
	490		243		▶29		22
	520	7H-4571	299	7N-2731	8	7S-8553	394
7E-1356	145	7H-4574	299		9	7S-8920	340
7E-2464	158	7H-7628	226		10		342
7E-2964	49	7H-7658	230		▶73	7S-8921	340
7E-3667	158		236	7N-2994	30		342
7E-3986	156	7H-9678	135	7N-3486	111	7S-9323	135
7E-4656	158	7J-1333	264	7N-5876	516	7T-0020	170

▶ PRIMARY REFERENCE

PART NUMBER INDEX

Part	Page
7T-0786	520
7T-1068	562
	▶564
7T-1069	563
	▶565
7T-1099	176
	180
	182
	184
	186
	187
	258
	275
	434
	482
	516
	548
7T-1330	562
	563
7T-1474	226
7T-1475	226
7T-1975	441
7T-3267	188
7T-3268	188
7T-3269	188
7T-3270	188
7T-3271	188
7T-3277	188
7T-3278	188
7T-3451	188
7T-3454	188
7T-3810	191
7T-3950	230
	236
7T-3951	226
7T-3952	226
7T-3974	188
7T-4532	474
	476
7T-5868	482
7T-5886	264
	266
7T-6299	496
	521
7T-6799	192
7T-6931	383
7T-6934	383
7T-8361	572
	574
7T-8816	230
	231
	236
	237
7T-8875	194
7T-8876	194
7T-8891	464
	465
7T-8894	453
7T-8895	453
7T-8940	282
7T-9133	194
7T-9135	226
7T-9272	230
	236
7T-9302	504
7T-9370	231
	237
7T-9426	452
7T-9793	453
7T-9946	226
7U-4898	534
7V-8532	68
7W-0134	158
7W-0250	138
7W-1927	154
7W-2015	130
7W-2826	130
7W-2828	130
7W-4272	139
7W-4472	112
7W-4486	148
	150
7W-4973	454
7W-4974	454
7W-4978	454
7W-5156	8
	9
	10
	▶136
7W-5220	136
7W-5700	163
7W-7038	148
	150
7W-9020	50
7X-0264	384
7X-0288	68
7X-0290	78
7X-0292	261
	441
	448
7X-0311	453
	478
7X-0313	68
7X-0325	301
	302
	386
7X-0328	94
7X-0333	384
7X-0335	441
7X-0340	448
7X-0344	420
7X-0345	68
7X-0346	202
	206
	210
	212
	214
	218
	222
7X-0347	78
	303
	305
7X-0349	254
7X-0358	388
7X-0365	176
	180
	182
	184
7X-0366	303
	305
	453
	478
7X-0368	426
7X-0369	180
	182
	184
7X-0370	426
7X-0371	295
7X-0372	442
7X-0373	348
	442
	524
7X-0375	301
	302
	442
7X-0400	280
7X-0402	248
7X-0406	248
	254
	295
7X-0407	527
7X-0417	445
7X-0427	261
	296
7X-0444	439
	442
7X-0447	453
	478
7X-0448	440
7X-0533	261
7X-0562	188
7X-0564	176
	180
	182
	184
7X-0576	527
7X-0582	279
	442
	524
7X-0603	520
7X-0618	276
7X-0623	470
7X-0766	284
7X-1447	364
7X-1449	364
7X-2459	384
7X-2501	520
7X-2553	306
7X-3373	188
7X-3392	512
7X-4777	214
7X-4823	357
	361
7X-7463	282
	283
7X-7470	512
7X-7702	554
7X-7729	470
7X-7731	70
7X-7927	462
	463
	550
	554
7X-7928	462
	463
	550
	554
7X-7929	462
	463
	550
	554
7X-7930	462
	463
	550
	554
7Y-3281	550
	554
7Y-7256	517
7Y-7388	504

8

Part	Page
8A-8563	110
8B-2377	132
8B-6349	18
8C-3075	226
8C-3121	92
8C-3210	470
8C-3334	232
	238
8C-3442	470
8C-3445	46
8C-3446	46
8C-3448	512
8C-3655	188
8C-3681	98
8C-3756	482
8C-3839	344
	346
	350
	352
	353
8C-3840	344
	346
	350
	352
	353
8C-4436	276
8C-4982	571
8C-5210	84
8C-5218	348
8C-5682	452
8C-6354	516
8C-6561	218
	222
8C-6872	60
	62
8C-6876	391
8C-6913	202
	206
	210
	212
	218
	222
8C-6920	78
8C-8478	451
8C-8842	426
8C-8844	548
8C-9126	348
8C-9160	344

▶ PRIMARY REFERENCE

PART NUMBER INDEX

Part	Page
8C-9660	166
8D-0983	453
	478
8D-1817	226
8D-1819	226
8D-3508	256
	258
8D-5054	35
8D-7185	478
8D-9558	48
8D-9739	231
	237
8E-0667	275
8E-1118	500
8E-1123	550
	554
8E-1212	264
	266
8E-1632	214
8E-1900	296
8E-1928	184
8E-2748	202
	206
	210
	212
	218
	222
8E-2887	442
8E-3095	246
8E-3303	512
	520
8E-3446	558
	▶566
8E-3447	559
	▶567
8E-5112	470
	▶557
8E-5113	470
	▶558
8E-5114	470
	▶559
8E-5187	417
	▶419
8E-5188	414
	419
8E-5190	414
	419
8E-5192	414
	419
8E-5194	414
	419
8E-5204	410
	▶414
8E-5486	438
8E-5701	426
8E-5703	348
	442
8E-6358	450
8E-6856	554
8E-7185	453
8E-7218	288
	290
8E-7220	285
	286
	287
8E-7221	288
	290
8E-7222	285
	286
	287
	289
8E-7405	285
	286
	287
	288
	289
	290
	292
	328
8E-7406	285
	286
	287
	288
	289
	290
	292
	328
8E-7407	285
	286
	287
	288
	289
	290
	292
	294
8E-7408	285
	286
	287
	288
	289
	290
	292
	294
	328
8E-7409	285
	286
	287
	288
	289
	290
	292
	328
8E-7410	285
	286
	287
	288
	289
	290
	292
	328
8E-7791	486
	488
	490
8E-7840	232
	238
8E-8292	464
	465
8E-8299	231
	237
8E-8304	230
	236
8E-8305	230
	236
8E-8382	520
8E-9037	▶289
	309
	311
	314
	324
	327
	328
8E-9041	202
	206
	210
	212
	218
	222
	▶243
8E-9212	344
	426
8E-9299	524
8E-9522	275
	434
8E-9644	285
	286
	287
8E-9775	264
8E-9776	264
8E-9907	264
	266
8E-9909	264
	266
8F-0492	454
8F-1434	166
	188
8F-1462	534
8F-3556	250
	252
8F-4387	438
8F-4610	130
8F-8151	92
	505
8F-8178	132
8F-9836	94
	275
	434
8G-4386	256
8G-5247	256
8G-8311	269
8G-8719	256
8G-8844	202
	206
	210
	212
	214
	218
	222
8G-8845	202
	206
	210
	212
	214
	218
	222
8H-0707	188
8H-1141	188
8H-1603	194
8H-2262	299
8H-2778	135
8H-2807	135
8H-2810	135
8H-3710	127
	128
8H-5352	230
	236
8H-8898	421
8H-9204	148
	150
8H-9788	54
8H-9789	84
	88
8J-1196	258
8J-2095	391
8J-2190	450
8J-2880	348
	442
8J-8343	160
8J-9348	395
8K-1207	18
8K-1433	500
8L-5832	138
	160
8L-8413	169
	480
	484
	540
	544
8L-8662	12
8L-9790	160
8M-0456	176
	178
	184
8M-0505	54
8M-0904	50
8M-2530	194
8M-2773	452
	480
8M-3182	45
	46
8M-3267	12
	540
	544
8M-4432	194
	198
	200
8M-4448	43
8M-4986	68
8M-5010	230
	236
8M-5248	52
	54
8M-5253	52
	54

▶ PRIMARY REFERENCE

PART NUMBER INDEX

Part	Page
8M-5255	231
	237
8M-5266	230
	236
8M-5661	194
8M-6744	48
8M-7145	104
8M-8489	231
	237
8M-8515	160
8M-8948	76
	176
	178
	184
8M-9024	13
8M-9062	163
8M-9307	18
	73
8M-9315	31
	32
8N-0105	41
8N-0107	7
	8
	9
	10
	▶41
8N-0109	34
8N-0110	34
8N-0246	8
	9
	▶22
8N-0303	7
	8
	9
	10
	▶34
8N-0803	135
8N-0872	8
	9
	10
	▶27
8N-1149	52
	54
8N-1415	154
8N-1721	37
8N-1849	37
8N-1978	1
8N-2487	156
8N-2488	138
8N-2495	138
8N-2499	139
8N-2501	139
8N-2503	138
8N-2505	138
8N-2507	138
8N-2510	156
8N-2637	158
8N-2640	158
8N-2641	158
8N-2694	498
8N-3087	139
8N-3088	160
8N-3094	160
8N-3168	139
8N-3214	108
	110
8N-3251	43
8N-3256	138
8N-3258	138
8N-3259	138
8N-3325	43
8N-3327	43
8N-4110	18
8N-4112	80
	▶81
8N-4406	68
8N-4422	7
	8
	9
	10
	▶14
8N-4960	30
8N-5117	156
8N-5132	148
	150
8N-5286	8
	9
	10
	▶18
8N-5763	130
8N-5764	130
8N-5765	130
8N-5784	160
8N-5928	84
	88
8N-5929	84
	88
8N-6184	36
8N-6680	160
8N-6849	36
8N-6854	36
	56
	58
	60
	62
8N-6985	45
8N-6986	45
8N-7315	50
8N-7318	50
8N-7520	163
8N-8221	37
8N-8222	37
8N-8223	37
8N-8225	15
8N-8226	15
8N-8227	15
8N-8228	15
8N-8229	15
8N-8721	35
8N-8846	96
8P-0058	194
8P-1892	231
	237
8P-1916	231
	237
8P-1964	231
	237
8P-2019	231
	237
8P-2022	230
	236
8P-2023	231
	237
8P-2047	230
	231
8P-2051	230
	236
8P-2052	230
8P-2053	230
	236
8P-5244	548
8P-6188	299
8P-8540	486
	488
	490
8P-9507	230
	236
8P-9770	404
	408
	412
	414
	415
	416
	419
	438
	442
8Q-0704	▶25
	74
8Q-1530	74
8Q-1757	7
	8
	9
	▶125
8Q-1758	7
	8
	9
	▶148
8Q-1761	▶7
	116
8Q-1762	▶8
	117
8Q-1763	▶9
	118
8Q-1768	▶116
	120
8Q-1769	▶117
	122
8Q-1770	▶118
	121
8Q-1771	116
	117
	118
	▶119
8Q-1772	▶101
	119
8Q-1773	▶113
	119
8Q-1774	▶103
	119
8Q-1775	▶109
	119
8Q-1776	▶82
	119
8Q-1777	119
	▶124
8Q-1778	▶98
	119
8Q-1787	96
8Q-1788	▶90
8Q-1789	▶91
8Q-1842	7
	8
	9
	▶123
8Q-1911	74
8Q-1992	▶74
8R-3393	452
8R-8106	274
	278
8S-0023	340
	342
8S-0024	340
	342
8S-0493	64
8S-0948	78
8S-1326	49
8S-1491	11
8S-1499	43
8S-1965	36
8S-2384	1
8S-4304	73
8S-6511	64
8S-6783	103
8S-6814	138
8S-7803	534
8S-8874	50
8S-9089	216
8S-9130	194
8S-9191	133
	190
8T-0318	470
8T-0328	138
	188
8T-0337	171
	172
8T-0375	296
8T-0659	148
	150
8T-0687	561
	562
	563
8T-0785	344
8T-1408	348
8T-1578	276
8T-1579	250
	252
8T-1779	384
8T-1887	382
8T-1888	382
8T-2501	68
	382
	540
	544

▶ PRIMARY REFERENCE

PART NUMBER INDEX

Part	Page
8T-2502	68
	78
	276
	340
	342
	382
	454
8T-2561	388
	452
	512
8T-2895	520
8T-3490	482
8T-3561	470
8T-3597	482
8T-3711	358
	359
8T-3715	356
	358
	359
	360
8T-3994	482
8T-4121	264
	266
	306
	482
	496
	506
8T-4122	68
	254
	389
8T-4123	296
	451
8T-4133	482
	496
	550
	554
8T-4136	264
	266
	470
8T-4137	482
	496
8T-4139	264
	266
	453
	478
8T-4149	78
8T-4158	470
8T-4171	470
	500
	517
8T-4181	470
	502
8T-4182	306
8T-4183	494
8T-4184	264
	266
8T-4189	521
8T-4191	454
8T-4192	470
	482
8T-4195	506
8T-4198	482
8T-4200	486
	488
	490
8T-4205	60
	62
	188
	384
	453
	462
	465
	478
	482
	517
	520
8T-4223	78
	92
	202
	206
	210
	212
	218
	222
	250
	252
	264
	266
	383
	384
	386
	388
	448
	452
	453
	454
	478
	480
	482
	520
8T-4224	148
	176
	178
	180
	182
	184
	186
	187
	218
	222
	486
8T-4752	504
8T-4777	568
	569
	570
8T-4835	388
	454
8T-4896	60
	62
	68
	78
	82
	101
	114
	115
	176
	180
	182
	184
	186
	202
	206
	210
	212
	214
	216
	218
	222
	252
	276
	279
	340
	342
	346
	382
	383
	384
	386
	389
	452
	453
	454
	460
	463
	498
	505
	524
	550
	554
8T-4943	524
8T-4984	80
8T-4994	176
	180
	182
	202
	206
	210
	212
	214
	218
	222
	261
	262
	295
	303
	305
	442
	453
	478
8T-5004	520
8T-5071	264
8T-5360	68
	453
	478
	528
	529
8T-5361	248
	254
	280
	295
	439
	442
8T-5373	56
	58
	60
8T-5383	463
8T-5413	482
8T-5668	346
	350
8T-5911	434
8T-5912	275
	434
8T-6342	191
8T-6430	296
8T-6466	452
8T-6757	15
	282
	283
8T-6761	70
8T-6762	18
	20
	22
	46
8T-6763	18
	20
	22
8T-6764	18
8T-6765	18
	32
	84
	88
8T-6767	70
8T-6936	470
8T-7095	365
8T-7097	365
8T-7532	264
	266
8T-7566	526
8T-8379	348
8T-8566	188
8T-8569	188
8T-8729	60
	62
	169
	170
	173
	174
	232
	238
	392
	452
	484
	507
	508
	509
	510
	511
	516
	517
8T-8730	77
	245
	247
8T-8737	508
	509
	550
	554
8T-8915	216
8T-8916	68
8T-8917	92
	301

► **PRIMARY REFERENCE**

PART NUMBER INDEX

Part	Page
	302
	383
	386
8T-8919	202
	206
	210
	212
	218
	222
	250
	252
	493
8T-8924	180
	182
	184
8T-8925	279
8T-8987	340
	342
8T-9043	470
8T-9101	505
8T-9311	261
	262
8T-9364	453
	462
	478
8T-9367	60
	62
8T-9377	56
8T-9383	276
8T-9384	520
8T-9389	448
	454
8T-9393	389
8T-9398	439
8T-9399	176
	180
	182
	202
	206
	210
	212
	214
	218
	222
	420
8T-9496	250
	252
	276
8T-9884	188
8V-5455	572
	574
8W-0184	82
8W-0237	56
	58
8W-0327	56
	58
	60
	62
8W-3214	56
	58
	60
8X-6319	452
8Y-1388	295
8Y-3966	284
8Y-3998	284
8Y-5737	496
8Y-5746	486
	488
	490
8Y-5747	284
8Y-5874	▶492
	530
	531
8Y-5877	492
8Y-5889	537
8Y-5891	535
8Y-5892	514
8Y-5903	534
8Y-5928	534
8Y-5929	534
8Y-5930	534
8Y-5931	534
8Y-5932	534
8Y-5936	534
8Y-5937	534
8Y-5938	534
8Y-5943	492
8Y-5947	492
	534
8Y-5953	528
	529
8Y-5972	534
8Y-5979	534
8Y-5981	534
8Y-5986	530
	531
	▶534
8Y-5992	▶514
	534
8Y-5995	514
8Y-5998	514
8Y-5999	514
8Y-6006	534
8Y-6010	534
8Y-6051	534
8Y-6388	467
	468
	486
	488
	490
8Y-6390	467
	486
	488
	490
8Y-6400	250
	252
	276
	▶284
8Y-6419	567
8Y-6420	567
	▶568
8Y-6422	568
8Y-6423	566
	567
	568
	569
	570
	571
8Y-6424	566
	567
	571
8Y-6428	571
8Y-6429	571
8Y-6430	566
	567
	568
	569
	570
	571
8Y-6431	569
8Y-6432	566
8Y-6433	566
	▶569
8Y-6443	570
8Y-6445	571
8Y-6446	▶570
	571
8Y-6447	560
8Y-6448	564
	565
8Y-6454	568
	569
	570
8Y-6455	568
	569
	570
8Y-6459	566
	567
	568
	569
	570
8Y-6460	568
	569
	570
8Y-6461	568
	569
	570
8Y-6462	566
	567
	571
8Y-6463	571
8Y-6833	534
8Y-6834	534
8Y-6839	560
	561
	562
	563
	564
	565
8Y-6910	566
	567
	568
	569
	570
	571
8Y-6917	540
	544
8Y-6922	540
	544
8Y-6928	540
	544
8Y-6933	535
8Y-8304	470
8Y-8306	284
8Z-8226	250
9	
9B-2052	275
9B-7233	166
	192
	467
	468
	516
9B-7237	68
	92
	94
	250
	346
	382
	386
	452
9D-9736	470
9F-2247	166
9F-2978	186
9F-6445	453
	478
9F-6580	148
9G-0280	230
	236
9G-0281	230
	236
9G-0284	230
	236
9G-0285	230
	236
9G-0286	230
	236
9G-0289	231
	237
9G-0290	231
	237
9G-0398	460
9G-0832	226
9G-0983	512
9G-0986	512
9G-0990	512
9G-1127	470
9G-1182	460
9G-1642	285
	286
	287
	288
	289
	290
	292
	294
9G-1950	460
9G-1962	264
	266
9G-2673	498
9G-3695	510
	511
9G-5664	282
	283
9G-6744	231
	237
9G-7641	▶192
	516

▶ PRIMARY REFERENCE

PART NUMBER INDEX

Part	Page
9G-8020	231
	237
9G-8615	194
9G-8638	202
	206
	210
	212
	214
	218
	222
9G-8639	202
	206
	210
	212
	214
	218
	222
9G-8640	214
9G-8661	164
9G-8726	285
	288
	290
9G-9151	482
9G-9175	202
	206
	210
	212
	214
	218
	222
9G-9178	214
9G-9180	214
9G-9181	202
	206
	210
	212
	214
	218
	222
9G-9183	202
	206
	210
	212
	214
	218
	222
9H-1113	43
9H-3360	202
	206
	210
	212
	214
	218
	222
9J-8923	450
9J-8926	448
	▶450
9J-9598	448
9K-7290	76
9L-1658	104
9L-2295	126
9L-6770	166
9L-7469	534
9L-9098	148
	150
9L-9159	145
9M-0164	540
	544
9M-1974	14
	45
	46
	52
	54
	64
	70
	108
	110
	134
	198
	200
	393
9M-2341	135
9M-2904	382
9M-3786	296
9M-4355	231
	237
9M-4849	52
	54
9M-4972	78
9M-5501	505
9M-5731	464
	465
9M-5733	514
	534
9M-6527	104
9M-6590	123
9M-7609	188
9M-9647	194
9M-9886	43
9N-0869	47
	488
	490
9N-0943	166
9N-1754	130
9N-1995	467
	468
	470
	554
9N-3388	143
	144
	145
	146
	150
	166
9N-4224	453
	478
9N-4233	388
9N-4369	557
	▶571
9N-4449	441
9N-4450	441
9N-5769	13
9P-1475	194
9P-1478	226
9P-1921	226
9P-1922	226
9P-1925	226
9P-2245	282
	283
9P-2369	550
	554
9P-7072	226
9P-7390	230
	236
9P-7757	231
	237
9P-7855	561
9P-7859	560
	564
	565
9P-7860	560
	564
	565
9P-8614	230
	236
9P-8623	230
	236
9P-8626	231
	237
9P-9388	506
9Q-3735	123
9S-0247	362
9S-0671	354
	355
	356
	357
	358
	359
	360
	361
	374
	375
	378
	379
	380
	381
9S-1274	101
9S-1322	269
9S-1350	79
	82
9S-1838	307
	308
	309
	310
	311
	312
	313
	314
	315
	316
	317
	318
	319
	320
	321
	322
	323
	324
	325
	326
	327
	328
	329
	330
	331
	332
	333
	334
	335
	336
	337
	338
9S-2005	166
9S-2006	166
9S-2009	166
9S-2011	166
9S-2012	166
9S-2013	166
9S-2014	166
9S-2248	166
9S-2255	166
9S-2260	166
9S-2262	166
9S-2290	166
9S-2291	167
9S-2292	166
9S-2300	166
9S-2301	166
9S-2302	166
9S-2389	166
9S-2390	166
9S-2393	166
9S-2396	166
9S-2437	166
9S-2544	166
9S-2592	101
9S-3029	37
9S-3451	166
9S-3581	299
9S-3582	299
9S-4167	136
9S-4180	156
9S-4182	32
9S-4185	32
	52
	54
	202
	206
	210
	212
	214
	218
	222
9S-4190	194
9S-4191	32
	132
	136
	390
9S-4497	94
9S-5183	548
9S-5187	548
9S-6130	194
9S-6758	101
9S-7148	103
9S-7710	194
9S-8001	391
9S-8002	52
	54
9S-8003	135
9S-8005	32

▶ PRIMARY REFERENCE

PART NUMBER INDEX

Part	Page
9S-8010	306
9S-8320	299
9S-8748	130
9S-8752	190
9S-9334	391
9S-9830	166
9T-0094	348
9T-0934	348
9T-2714	346
9T-2715	346
9T-2716	▶346
	446
9T-3885	344
9T-5774	78
	▶390
9T-6093	350
9T-6094	350
9T-6095	▶350
	426
9T-6863	346
9T-8088	390
9U-8263	500
9U-8482	264
	266
9U-8491	306
9U-8492	264
	266
	▶306
9U-8746	500
9U-8790	306
9U-9121	340
	342
9U-9122	340
	342
9U-9161	342
9U-9162	340
9U-9396	288
9U-9397	288
9U-9398	288
9U-9399	288
9U-9942	504
9V-0321	438
9V-8540	548
9W-0099	448
9W-0201	448
9W-0335	486
	488
	490
9W-0513	448
9W-0553	448
9W-0588	426
9W-0609	441
9W-0610	▶441
	446
9W-0645	230
	236
9W-0844	460
9W-0852	460
	473
	482
9W-0873	448
9W-0876	448
9W-1017	446
	▶448
9W-1018	▶382
9W-1119	446
9W-1569	448
9W-1570	226
9W-1878	226
9W-2390	398
9W-2392	382
9W-2579	382
9W-2580	442
9W-2992	442
9W-3660	226
9W-3762	226
	▶398
	401
9W-4159	405
9W-4361	194
	184
	186
	187
9W-4897	438
9W-5334	194
9W-5343	494
9W-5375	438
9W-6381	408
	412
	414
	415
	416
	419
9W-6647	299
9W-6649	282
	283
9W-7033	526
9W-8269	231
	237
9W-8270	231
	237
9W-8874	397
	398
	399
	400
	435
9W-8875	397
	398
	399
	400
	435
9W-9000	438
9W-9165	442
9X-1386	232
	238
9X-2038	490
9X-2043	486
	488
	490
	502
9X-2045	486
	488
	490
	502
9X-2046	486
	488
	490
9X-2185	496
9X-2270	440
9X-2350	364
9X-2352	363
9X-2500	166
9X-2508	512
9X-2836	148
	150
9X-3439	482
9X-3451	482
9X-3452	482
9X-3463	171
	172
	173
	174
	175
9X-3760	363
9X-3776	363
9X-4292	482
9X-4582	264
	266
9X-4611	344
9X-6268	560
	561
	562
	563
	564
	565
9X-6458	84
	88
9X-6772	176
	178
	180
	182
	516
9X-7378	452
9X-7380	452
	453
	480
9X-7381	452
	453
	480
9X-7382	452
	453
9X-7383	452
	453
	480
9X-7385	474
	476
	480
9X-7671	202
	206
	210
	212
	218
	222
9X-8256	500
9X-8257	306
9X-8260	340
	342
9X-8267	502
9X-8717	500
9X-9511	188
9Y-0066	8
	9
	10
	▶28
9Y-0629	28
9Y-0630	28
9Y-1798	20
	22
9Y-1979	111
	112
9Y-3595	54
9Y-4701	138
9Y-5725	54
9Y-5726	54
9Y-5727	10
	▶54
9Y-6859	46
9Y-6860	46
9Y-7037	156
9Y-7149	46
9Y-7524	143
9Y-8088	130
9Y-9236	98
9Y-9895	39
9Z-8146	▶300
9Z-8211	354
	355
	356
	357
9Z-8212	2
	3
	4
	5
9Z-8213	2
	3
	4
	5
9Z-8222	▶252
	304
	305
9Z-8224	250
9Z-8225	250
9Z-8229	250
9Z-8234	252
9Z-8236	252
9Z-9211	250
	252
9Z-9214	250
	252

0

Part	Page
003-2143	92
003-9514	92
004-5703	98
019-1209	76
030-7946	142
030-7947	136
	142
030-7948	52
030-8194	133
030-8535	194
030-8538	230
	236
030-8838	520
031-0216	138
031-0218	194
	198
	200
031-1119	96

▶ PRIMARY REFERENCE

PART NUMBER INDEX

Part	Page
032-1267	79
033-0820	98
033-5879	160
033-8248	98
036-9821	188
036-9823	188
037-4426	496
037-4685	60
	62
061-6711	230
	231
	236
	237
061-8803	534
061-9458	150
068-5893	276
068-8093	230
	236
084-4111	568
	569
	570
095-0878	534
1	
100-3652	15
100-4336	68
	78
100-5567	516
100-5895	▶507
	516
100-5985	70
100-6531	166
100-6532	166
100-6656	166
100-6657	166
100-6658	166
100-7860	22
101-1759	452
	▶475
101-2850	100
101-3055	504
101-8789	452
102-0341	496
102-6317	540
	544
102-6677	243
102-8636	30
102-8802	60
	62
	169
	173
	174
	231
	238
	392
	452
	460
	473
	482
	516
	540
102-8803	170
	516
	517
102-8804	484
102-8805	507
	508
	509
	510
	511
	550
	554
102-8807	77
	245
	247
	460
102-8810	550
	554
102-8812	460
102-8815	550
	554
103-1072	289
103-2454	22
103-2543	471
103-6100	453
103-9527	453
	478
	▶482
104-3947	245
	247
104-4253	143
104-4254	143
104-5512	16
104-5518	16
104-5527	16
104-5530	16
104-5944	493
104-5970	395
104-6339	176
	180
	182
104-6729	198
	200
104-6730	198
	200
105-1393	276
105-1394	276
105-1398	275
105-1473	276
105-9152	60
	62
105-9655	▶466
	467
	468
105-9656	466
	▶470
105-9657	466
	▶500
105-9658	466
	▶502
105-9659	466
	▶506
105-9660	466
	▶550
	▶554
105-9661	466
	▶572
	▶574
105-9662	467
	▶486
	▶488
105-9665	467
	468
	▶512
105-9666	520
	▶524
105-9772	30
106-0955	▶399
	406
	407
106-0956	399
106-1793	105
106-2721	482
106-3685	269
106-3687	216
106-4572	92
106-5637	470
106-6493	130
106-7691	282
	283
106-8187	260
106-8233	▶328
106-8235	328
106-8237	328
106-8701	516
106-8704	452
106-8957	7
	8
	9
	10
	▶65
106-8958	65
	▶66
106-8964	▶171
	176
	180
	186
106-9212	393
106-9214	393
107-0265	20
	22
107-0268	20
	22
107-1964	516
107-2206	30
107-2733	250
107-2734	250
107-5851	171
	172
	173
	174
107-5852	171
	172
	173
	174
107-5853	171
	172
	173
	174
107-5854	171
	172
107-6689	▶172
	176
	178
107-7856	60
107-8772	524
108-0084	67
	▶92
108-0156	264
	266
108-0184	264
	266
108-0187	264
	266
108-0188	264
	266
108-0200	306
108-1078	▶10
	268
108-1327	▶478
	480
108-1328	▶281
	520
108-1333	467
	468
	▶505
108-1335	467
	▶494
108-2096	393
108-2675	467
	468
	▶496
108-3138	500
108-5470	470
108-5473	470
108-5475	470
108-6013	5
108-6014	5
108-6538	453
108-6541	452
108-6544	453
108-6983	▶194
	244
108-7011	▶198
	▶200
	244
108-7742	231
108-7743	231
	237
108-7747	194
108-7748	194
108-7749	231
	237
108-7754	230
	236
108-7757	231
108-8089	56
108-8421	534
108-8423	534
108-8424	534
108-8426	534
108-8853	230
	236
108-9638	524
109-0532	524
109-1633	452
109-1634	452
109-3590	486
	488

▶ PRIMARY REFERENCE

PART NUMBER INDEX

Part	Page
	490
109-3622	90
109-3968	393
109-3969	393
109-4042	453
	478
109-4044	452
	480
109-4365	198
	200
	▶393
109-4848	38
109-5176	7
	8
	9
	10
	▶38
109-5485	453
	478
109-5491	453
	480
109-5498	453
	478
109-5761	496
109-5762	▶460
	526
109-5876	94
109-6405	460
109-6406	453
109-7189	516
109-7396	212
109-7397	210
109-7398	210
	212
109-7399	210
	212
109-7400	210
	212
109-7954	550
109-7955	504
109-9092	▶400
	404
109-9093	400
	435
109-9781	462
109-9828	470
109-9829	470
109-9955	176
	180
	182
	184
109-9957	176
	180
	182
110-0018	110
110-0092	176
	180
	182
110-2445	98
110-2836	198
	200
110-2908	116
	117
	118
110-4278	198
110-4282	198
	200
110-5800	16
110-6095	92
	▶94
110-6105	94
110-6107	94
110-6109	467
	468
	516
110-6132	92
110-6133	92
110-6134	92
110-6136	92
110-6138	92
110-6139	92
110-6597	▶290
	330
110-7571	502
110-7572	502
110-8152	502
110-8197	278
110-8201	274
110-8318	56
110-8319	56
110-8349	281
110-8834	452
	480
111-3768	7
	8
	9
	10
	▶160
111-3769	▶156
	160
111-3770	156
111-3771	156
111-3937	467
	468
111-4482	526
111-5147	486
	488
	490
111-5162	▶130
	160
111-6798	176
	180
	182
	184
111-7094	486
111-7198	460
111-8001	8
	9
	10
	▶30
111-8015	20
	22
111-8314	176
	178
	180
	182
	184
	186
	187
111-9560	77
111-9863	188
111-9865	188
111-9866	188
112-0788	516
112-1155	76
112-1348	382
112-1529	56
	▶362
112-1646	68
112-3261	462
112-4368	382
112-4511	230
	236
112-4577	535
112-5282	246
112-5585	230
	236
112-6632	▶462
	▶463
	467
	468
112-8041	230
	236
112-8051	486
	488
	490
112-8053	486
	488
	490
112-8569	78
112-8571	78
112-8573	78
112-9052	486
112-9054	486
113-0899	534
113-3376	98
113-5340	10
	▶126
113-5341	10
	▶150
113-5368	10
	▶110
113-6033	512
113-7371	470
113-7377	470
113-7919	126
	▶127
113-8315	127
113-8316	127
	128
113-8317	127
	128
113-9521	486
113-9536	94
114-0068	452
114-0083	480
114-0929	452
114-2368	184
	186
	187
114-2687	50
114-4304	344
114-4380	245
	247
114-4513	464
	465
114-4992	76
114-5333	452
114-5992	176
	178
	180
	▶186
114-6658	486
	488
114-8718	156
114-8963	467
	468
114-9125	486
	488
	490
114-9139	502
114-9140	502
115-0617	180
	182
115-1748	516
115-2331	502
	▶504
115-3358	130
115-4965	▶422
115-5864	▶102
	128
115-7550	18
115-7559	84
	88
115-7560	▶84
	86
116-1254	246
116-2659	114
	115
116-3332	279
116-4652	▶244
	268
116-6202	452
116-6203	516
116-7556	7
	8
	9
	10
	▶86
	▶87
116-7879	516
116-7964	517
117-0610	188
117-1881	572
	574
117-1882	572
	574
117-2983	246
117-5059	504
117-5676	560
117-5677	564
	565
117-5691	261
117-5692	261
117-5693	261
117-5694	261
117-5695	261
	262
117-7607	537

▶ PRIMARY REFERENCE

PART NUMBER INDEX

Part	Page
	▶540
117-7826	231
	237
117-8131	524
117-8863	520
117-9058	▶262
117-9920	516
117-9966	524
118-0693	470
118-1170	350
118-1336	198
	▶245
118-3731	246
118-5194	460
118-5195	460
118-6633	68
118-9163	84
119-0098	▶508
	572
119-6613	467
	468
119-6614	467
	468
120-6608	32
120-6852	78
120-8439	470
120-8440	470
121-0357	245
	▶246
	247
121-0358	246
121-3397	344
121-9231	390
122-4617	▶528
	530
122-4974	245
	247
122-6158	▶216
	268
122-6838	▶270
122-6839	▶271
122-6869	377
122-6870	367
	368
	369
	370
	371
122-6873	366
122-7127	516
122-9405	144
123-0304	516
123-0306	516
123-4950	502
123-8157	540
	544
123-8223	540
	544
123-8266	540
	544
123-8329	482
123-9128	540
	544
123-9131	540
	544
123-9144	540
123-9294	516
124-2080	366
124-2104	366
124-2114	376
	377
124-2116	373
124-2117	367
	368
	371
124-2144	373
	376
	377
124-2147	367
	368
	370
	371
124-2162	369
	370
124-3243	486
	488
	490
124-3717	232
124-5332	198
	200
124-5785	453
	478
124-6329	540
124-7128	540
	544
124-7505	91
124-7630	467
	468
124-9666	442
124-9672	442
124-9774	564
	565
124-9775	560
125-0469	516
125-0470	516
125-0473	60
	62
125-0741	516
125-2001	182
	▶187
125-3401	▶484
	516
125-5163	329
125-5167	329
125-5168	▶329
125-5587	486
125-5725	452
	480
125-5727	453
	480
125-6224	▶530
	▶531
	537
	538
125-6743	94
125-8254	470
126-1347	299
126-1601	76
126-1602	76
126-2741	76
126-2869	76
126-3492	502
126-5144	76
126-6232	76
126-7975	120
	121
	122
126-8464	▶340
	432
	434
	437
126-8465	▶342
	432
	434
	437
126-8867	▶176
126-8868	▶178
126-8870	1
	▶180
	▶182
126-8872	180
126-8873	176
	178
126-8874	176
	178
126-8875	180
126-8876	176
	178
	184
127-1043	520
127-1044	520
127-1045	520
127-1046	520
127-1048	526
127-1622	76
127-5537	73
127-8931	340
	342
	▶344
127-8932	344
127-9083	482
127-9795	▶330
128-0307	218
	222
128-0308	218
	222
128-0613	540
	544
128-0686	540
	544
128-2569	340
128-2570	340
128-2571	342
128-2572	342
128-3153	60
	62
128-3156	▶62
128-3157	▶60
128-3158	114
	115
	▶498
128-3159	498
128-3160	60
	62
	▶363
128-3161	60
	62
	▶364
128-3172	60
	62
	▶188
128-4092	▶1
	2
	3
	4
	5
128-6157	516
128-7273	2
	3
	4
	5
128-7274	▶2
128-7276	1
	▶275
128-7277	1
	▶276
128-7794	152
128-7796	152
128-7984	7
	8
	9
	10
	▶152
129-0357	36
129-0359	37
129-2008	468
	▶490
129-2159	1
	▶278
129-2160	1
	▶274
129-2161	▶3
129-2162	▶4
129-2163	▶5
129-2166	1
	▶162
129-3217	340
	342
129-4534	125
	▶128
129-5036	264
	266
129-5037	264
	266
130-1433	68
130-1977	382
130-3280	114
	115
130-7495	517
130-8942	▶114
130-8943	▶115
130-8951	56
	58
	60
130-8952	▶56
130-9192	382
131-0692	▶58
131-0694	120
	121
	122

▶ PRIMARY REFERENCE

PART NUMBER INDEX

Part	Page
131-0696	▶120
131-0698	▶121
131-0699	▶122
131-0704	2
	3
	4
	5
	▶164
131-4091	236
131-5137	504
131-5171	502
131-5176	502
131-6645	80
131-7736	40
131-8422	532
	▶537
	▶538
131-8469	▶480
131-8494	467
	520
132-1249	350
133-1247	14
133-1619	486
	488
	490
	498
133-1620	486
	488
	490
	498
133-4001	▶532
133-4798	269
133-6335	▶173
	184
133-6336	▶174
	184
133-8979	▶169
	516
133-9405	516
	517
134-0392	▶509
	572
134-0641	105
134-2300	▶76
134-2920	4
	273
	▶282
134-2921	3
	5
	▶272
134-2922	2
	▶273
134-3053	218
	222
134-3056	218
	222
134-3950	282
	283
134-3951	282
	283
134-3952	272
	▶283
134-3997	473
	475
	▶476
134-3998	473
134-7255	516
134-7422	84
134-9602	496
135-1609	524
135-2172	516
135-2964	412
	415
	416
135-2965	411
	▶415
135-2966	412
	415
	416
135-3084	412
	415
	416
135-6269	524
136-2087	516
136-4843	92
136-4844	92
137-0215	▶264
	268
	434
137-0216	264
137-0219	▶266
	268
	434
137-0220	266
137-0283	269
	▶296
137-0284	296
137-2082	76
137-3556	76
137-4149	486
137-4932	▶452
137-7497	486
137-7500	486
	488
	490
137-7502	490
137-7503	490
137-8685	464
137-8687	462
	463
	▶464
	▶465
137-8689	464
	465
137-8708	502
138-1850	▶218
	272
138-1851	218
138-1853	218
	222
138-1856	▶222
	273
138-1857	222
138-5772	▶331
138-5773	▶332
138-5774	332
	334
138-9275	486
139-1061	470
139-1115	▶467
139-2633	▶437
139-5200	520
139-5201	520
139-5202	520
139-8660	173
	174
140-3107	60
	62
140-3108	60
	62
140-6370	▶96
	98
140-6730	520
140-6731	520
140-6732	520
140-6733	520
140-6734	520
140-6736	520
140-7436	188
140-7437	188
140-7696	520
140-8618	524
140-9829	524
141-2241	520
141-2408	524
141-4123	496
141-7422	467
	468
	▶526
141-7868	532
141-7926	▶297
141-8984	520
142-0817	486
142-0818	486
142-1654	▶516
	520
142-2328	415
142-2498	▶520
142-7071	114
142-8076	198
	200
142-8620	482
142-9643	412
	415
	416
143-0499	406
	▶416
143-1221	115
143-4777	▶444
143-8260	488
	490
143-8261	490
143-8263	488
	490
143-8264	488
143-8265	488
144-0195	463
	465
	554
144-4284	236
	237
144-5574	264
	266
144-7703	▶333
144-7706	▶334
144-7871	198
	200
144-7874	238
144-7878	237
144-7881	237
145-0326	544
145-2347	▶445
145-2443	445
145-6008	488
	490
145-6010	488
	490
145-6012	490
145-6014	488
145-6016	488
	490
145-6017	488
145-6018	488
145-7328	550
	554
145-9031	504
145-9134	520
147-0319	▶175
	182
	187
147-0596	▶335
147-1459	60
147-1460	60
	62
147-4549	544
147-6522	544
147-6523	544
147-6541	544
147-7976	▶510
	574
147-7979	▶511
	574
147-8543	248
147-8546	248
147-8548	248
147-8550	248
147-8552	248
147-8553	248
147-8556	248
147-8557	248
148-1494	498
148-3749	540
	544
148-6346	548
148-6347	548
148-6352	▶184
148-7425	20
	22
148-7455	20
	22
148-8378	384
148-8954	184
148-8955	184
148-9206	▶365
	384
149-0791	88
149-1454	184
	▶548
149-2404	538
	▶544

▶ PRIMARY REFERENCE

PART NUMBER INDEX

Part	Page
149-4745	538
149-8916	▶67
149-8917	▶68
150-2983	▶248
150-2984	78
150-2985	440
150-3658	▶423
150-3724	156
150-3728	138
150-3730	139
150-4044	384
150-5410	465
150-7197	68
	▶366
150-7198	68
	▶367
150-7199	68
	▶368
150-7864	**▶336**
150-7865	336
150-7866	336
150-9046	463
151-0129	94
151-0130	**94**
151-0131	94
151-0132	**94**
151-0437	▶424
151-2069	389
151-4552	130
151-5715	468
151-6170	▶268
151-6171	268
	▶269
151-6175	182
151-6176	182
152-1330	237
152-4668	389
152-4669	67
	▶78
152-4670	67
	▶389
152-6440	68
152-6441	68
152-6442	68
152-6443	68
152-6444	68
152-6445	68
152-8048	▶292
	330
152-8050	▶294
	334
152-8062	292
	294
152-8071	286
	287
	289
	292
	294
152-8079	292
	294
152-8091	292
	294
152-8092	292
	294
152-8093	292
	294
152-8094	292
	294
153-0088	544
153-0090	78
	▶369
153-0091	78
	▶370
153-0092	78
	▶371
153-1277	114
153-9045	502
153-9046	502
153-9047	502
153-9175	▶256
	260
153-9176	256
	▶258
153-9177	**258**
153-9178	258
154-2379	114
	115
154-3945	88
154-4196	**77**
154-4482	**88**
154-8277	**76**
154-8279	76
154-8288	77
154-8312	77
154-8314	77
154-8317	77
154-8318	77
154-8326	77
154-8327	76
154-8342	76
154-8345	77
154-8351	76
154-8372	77
154-8373	77
154-8374	76
154-8377	76
154-8382	76
154-8390	76
154-8391	76
154-8392	77
154-8759	76
154-8795	76
154-8804	76
154-8806	76
154-8813	76
154-8818	76
154-8820	76
154-8826	76
154-8828	77
154-8837	77
154-9259	76
154-9291	88
155-0066	87
	▶88
155-3907	258
155-3908	279
155-8758	88
156-1148	▶529
	531
156-3875	76
156-3878	77
156-3881	76
156-3884	76
156-3888	76
156-3890	77
156-3892	76
156-4541	258
156-4542	▶434
156-4545	434
156-4546	434
	▶435
156-4547	▶384
	434
156-4548	434
156-4550	▶260
	434
156-6342	76
157-3570	516
157-6010	**92**
157-6013	92
157-6021	92
157-6023	92
158-0248	175
158-0250	**175**
158-0251	175
158-0252	**175**
158-6648	384
158-6649	▶372
	384
158-6650	256
158-6651	▶373
	384
158-6652	532
158-6655	▶374
	384
158-6656	258
158-6657	▶468
158-6660	384
158-6663	▶279
	434
159-0931	200
	▶247
159-7278	77
159-7281	77
159-7282	77
159-7283	77
159-7284	77
159-7285	77
159-7286	77
159-7287	77
159-7288	77
159-7289	77
159-7291	77
159-7294	77
159-7295	77
159-9811	76
160-4939	337
160-4940	338
160-4941	▶337
	339
160-4942	▶338
	339
160-4943	▶339
160-5798	337
160-5799	338
160-5830	434
160-6305	442
160-7765	544
160-7766	544
160-7767	544
161-1175	440
161-1176	434
	▶440
161-1178	62
162-1613	554
163-0270	76
163-7992	▶375
	384
163-7993	▶376
	384
163-7994	▶377
	384
163-7995	▶378
	384
163-7996	▶379
	384
163-7997	**▶380**
	384
163-7998	**▶381**
	384
163-7999	**384**
163-8000	384
163-8001	▶392
	434
164-4301	258
165-2344	77
165-2348	77
165-2441	76
165-2442	77
165-4434	76
165-4436	76
165-6036	77
165-6558	76
166-4432	▶352
	435
166-4433	435
166-4434	435
166-4435	435
166-4436	352
	353
	435
166-4437	435
166-9437	▶353
	435
166-9438	435
166-9439	352
166-9440	352
	353
166-9441	353

▶ PRIMARY REFERENCE