SEBP7202
February 2014

RUTHZIL TRATOR COMERCIAL DE PEÇAS LTDA 11 97083-6812 ROLANDO CITRANGULO

Parts Manual

D6R TRACK-TYPE TRACTOR
STD, XL

EMM1-Up (Machine)
JEN1-Up (Machine)
TXD1-Up (Engine)
MJY1-Up (Transmission)
MS31-Up (Ripper)
T3J1-Up (Torque Converter)
RTH1-Up (Blade)

Powered By C9 Engine

Product and Dealer Information

Note: For product identification plate locations, see the section “Product Identification Information” in the Operation and Maintenance Manual.

Delivery Date: _____

Product Information

Model: _____

Product Identification Number: _____

Engine Serial Number: _____

Transmission Serial Number: _____

Generator Serial Number: _____

Attachment Serial Numbers: _____

Attachment Information: _____

Customer Equipment Number: _____

Dealer Equipment Number: _____

Dealer Information

Name: _____ Branch: _____

Address: _____

_____

_____

	Dealer Contact	Phone Number	Hours
Sales:	_____	_____	_____
Parts:	_____	_____	_____
Service:	_____	_____	_____

MEMORANDA

TABLE OF CONTENTS

NAME	PAGE
GENERAL INFORMATION	**A5**
REPAIR ALTERNATIVES	**A8**
SUPPLEMENTAL COOLANT ADDITIVES	A9
MAINTENANCE PARTS	**A10**
INDEX	**A13**
MACHINE ARRANGEMENT	**1**
CHASSIS AR	1
COMMON AR	1
INSTALLATION AR	2
OPTION AR-COUNTERWEIGHT	2
ENGINE ARRANGEMENT	**3**
ENGINE AR	3
ENGINE AR-COMPLETE	4
ENGINE AR-CORE	6
INSTALLATION AR-ENGINE	6
BASIC ENGINE	**7**
CAMSHAFT GP	7
COVER GP-CYLINDER BLOCK	8
COVER GP-FRONT HOUSING	9
COVER GP-VALVE MECHANISM	11
CRANKSHAFT GP	12
CYLINDER BLOCK AS	13
CYLINDER BLOCK GP	15
CYLINDER HEAD AS	18
CYLINDER HEAD GP	20
DAMPER GP	23
DRAIN GP-ENGINE OIL	24
DRIVE GP-FAN	25
FASTENER GP-CYLINDER HEAD	27
FASTENER GP-DAMPER & PULLEY	28
FASTENER GP-FRONT COVER	29
FASTENER GP-VALVE COVER	30
FASTENER GP-VALVE COVER BASE	31
FLYWHEEL GP	32
GEAR GP-FRONT	33
GEAR GP-REAR	35
HOUSING AS-FLYWHEEL	36
HOUSING GP-FLYWHEEL	37
HOUSING GP-FRONT	39
KIT-ENGINE GASKET	40
KIT-FRONT COVER GASKET	41
KIT-REAR COVER GASKET	41
LIFTING GP-ENGINE	42
MOUNTING GP-ALTERNATOR	43
MOUNTING GP-ENGINE	44
MOUNTING GP-FAN DRIVE	45
PAN GP-OIL	46
PISTON & ROD GP	47
PLUG GP-ENGINE	48
PULLEY GP-CRANKSHAFT	49
PULLEY GP-FAN & ALT DRIVE	50
ROCKER ARM GP	54
SEAL GP-CRANKSHAFT	56
SUPPORT GP-ENGINE	58
TRUNNION GP-ENGINE	59
VALVE MECHANISM GP	60
YOKE GP	62
LUBRICATION SYSTEM	**63**
FILLER GP-ENGINE OIL	63
FILTER GP-ENGINE OIL	64
FUMES DISPOSAL GP	67
GAUGE GP-OIL LEVEL (DIPSTICK)	69
LINES GP-ENGINE OIL	70
LINES GP-TURBOCHARGER OIL	71
PUMP GP-ENGINE OIL	73
VALVE GP-FLUID SAMPLING	74
COOLING SYSTEM	**75**
COOLER GP-ENGINE OIL	75
FAN GP-BLOWER	76
HOUSING & REGULATOR GP	78
KIT-OIL COOLER & LINES GASKET	79
LINES GP-WATER	80
PUMP GP-WATER	82
RADIATOR GP	85
SUPPORT GP-RADIATOR	89
TANK GP-COOLANT	91
AIR INLET AND EXHAUST SYSTEM	**94**
AFTERCOOLER GP-AIR	94
AIR CLEANER AR	95
AIR CLEANER GP	96
DUST EJECTOR GP	99
ELBOW GP-AIR INLET	100
KIT-TURBOCHARGER GASKET	102
LINES GP-AIR	103
MANIFOLD GP-EXHAUST	107
MUFFLER GP	108
PRECLEANER GP	109
SHIELD GP-EXHAUST	113
TURBOCHARGER GP	114
FUEL SYSTEM	**116**
FILTER & LINES GP-FUEL	116
FILTER GP-WATER SEP & FUEL	118
INJECTOR GP-FUEL	119
LINES GP-FUEL	120
PUMP & MTG GP-UNIT INJ HYD	127
PUMP GP-FUEL INJECTION	129
PUMP GP-FUEL PRIMING	130
REGULATOR GP-FUEL PRESSURE	131
TANK GP-FUEL	132

TABLE OF CONTENTS

NAME	PAGE
ELECTRICAL AND STARTING SYSTEM	134
ALARM GP	134
ALTERNATOR GP-CHARGING	135
BATTERY & WIRING GP	140
CONTROL & MTG GP-ENGINE ELEK	149
CONTROL GP-COMMUNICATION	150
CONTROL GP-ENGINE ELECTRONIC	151
CONTROL GP-UNPROGRAMMED	152
CONVERTER GP-ELECTRICAL	154
ELECTRONICS GP-COMMUNICATION	155
GRADE CONTROL AR	155
HARNESS AS-ENGINE	156
HEATER GP-JACKET WATER	157
INSTALLATION GP-COMMUNICATION	159
LAMP GP-DOME	172
LAMP GP-FLOOD	173
LIGHTING GP-FLOOD	177
MOUNTING GP-WIRING	197
MOUNTING GP	198
PANEL GP-FUSE	199
PLATE AS-BRUSH	201
RADIO GP-COMMUNICATION	202
SENSOR GP-ENGINE	203
SENSOR GP-POSITION	204
SENSOR GP-PRESSURE	205
SENSOR GP-SPEED	210
SENSOR GP-TEMPERATURE	211
STARTING AID GP-ETHER	214
STARTING MOTOR GP-ELECTRIC	215
SWITCH GP-BYPASS	222
SWITCH GP-DISCONNECT	223
SWITCH GP-MAGNETIC	224
SWITCH GP-PUSH BUTTON	226
VALVE GP-ETHER STARTING	227
WIRING GP-BOX	228
WIRING GP-ELECTRONIC CONTROL	230
WIRING GP-ENGINE	235
WIRING GP-GRADE CONTROL	238
WIRING GP-PLATFORM	243
POWER TRAIN	**248**
AXLE GP	248
BASE GP-OIL FILTER	249
BRAKE & DIFFERENTIAL DRIVE GP	250
BRAKE & PLANETARY GP	254
CASE & PARTS GP-PLANETARY	256
CASE GP-TRANSMISSION	258
CONTROL GP-STEERING & XMSN	259
CONTROL GP-TRANSMISSION HYD	267
COOLER GP-TRANSMISSION OIL	269
COUPLING & GUARD GP	271
COUPLING GP-PUMP	272
DRAIN GP-ECOLOGY	273
DRIVE AR-FINAL	276
DRIVE GP-FINAL	277
DRIVE GP-PUMP	281
FILTER GP-OIL	282
GEAR GP-BEVEL & TRANSFER	283
LINES GP-POWER TRAIN OIL	286
MOUNTING GP-FINAL DRIVE	291
MOUNTING GP-TRANSMISSION	292
PLANETARY GP-TRANSMISSION	293
POWER TRAIN AR	297
PUMP GP-GEAR	298
SCREEN GP-MAGNETIC	301
SEGMENT GP-SPROCKET	302
SHAFT GP-DRIVE	303
TORQUE CONVERTER & HOUSING GP	304
TORQUE CONVERTER GP	307
TRANSMISSION AR	311
UNIVERSAL JOINT GP	312
VALVE GP-PRIORITY	313
VALVE GP-RELIEF	314
VALVE GP-SELECTOR & PRESS CONT	315
VALVE GP-TRANSMISSION CONTROL	317
FRAME AND BODY	**318**
BOX GP-BATTERY	318
CASE & FRAME GP	323
COUNTERWEIGHT GP	324
COVER GP-BATTERY	327
COVER GP-RADIATOR	328
DRAWBAR GP	330
ENCLOSURE GP-ENGINE	331
ENCLOSURE GP-ELECTRICAL	335
ENCLOSURE GP-ENGINE	336
ENCLOSURE GP-HYDRAULIC TANK	341
FENDER GP	342
GRID GP-SAND BLAST ERODING	345
GRILL GP-RADIATOR	346
GUARD GP-BOTTOM	348
GUARD GP-FINAL DRIVE	351
GUARD GP-FUEL TANK	352
GUARD GP-RADIATOR	360
GUARD GP-REAR	361
GUARD GP-TRANSMISSION	363
HANDHOLD GP	364
SWEEP GP	365
UNDERCARRIAGE	**370**
BAR GP-EQUALIZER	370
CAP GP-TRACK IDLER	373

TABLE OF CONTENTS

NAME	PAGE
FRAME GP-TELESCOPING RECOIL	375
FRAME GP-TRACK ROLLER	389
GUARD GP-TRACK GUIDE	391
GUARD GP-TRACK ROLLER	393
IDLER GP-TRACK	396
LINK AS-TRACK	398
LINK AS-TRACK BOX	401
MOUNTING GP-CARRIER ROLLER	403
PIVOT BAR GP	404
ROLLER AR-TRACK CARRIER	405
ROLLER GP-TRACK CARRIER	406
ROLLER GP-TRACK-DOUBLE FLANGE	407
ROLLER GP-TRACK-SINGLE FLANGE	411
SCRAPER GP-IDLER	415
TRACK ADJUSTER & RECOIL GP	416
TRACK AR	418
TRACK GP	426
UNDERCARRIAGE AR	434
STEERING AND BRAKING SYSTEM	**438**
VALVE GP-BRAKE CONTROL	438
HYDRAULIC SYSTEM	**440**
ACCUMULATOR GP-PILOT OIL	440
ADAPTER GP-MOTOR	442
COOLER GP-HYDRAULIC OIL	443
CYLINDER & LINES GP-LIFT	444
CYLINDER GP-BULLDOZER LIFT	448
CYLINDER GP-RIPPER	451
CYLINDER GP-TILT	452
HYDRAULIC AR	456
LINES GP-LIFT CYLINDER	458
LINES GP-PILOT	460
LINES GP-PUMP	474
LINES GP-RIPPER	478
LINES GP-TILT CYLINDER	481
MANIFOLD GP-CONTROL	491
MANIFOLD GP-VALVE	492
MOTOR GP-PISTON	493
MOUNTING GP-CYLINDER	494
MOUNTING GP-VALVE	496
PLATE GP-MOUNTING	498
PUMP & MOUNTING GP	499
PUMP GP-PISTON	500
ROTATING GP-MOTOR	503
TANK & MTG GP-HYDRAULIC	505
TANK GP-HYDRAULIC	506
VALVE & MOUNTING GP	509
VALVE & MTG GP-BULLDOZER	510
VALVE & MTG GP-COUNTERBALANCE	511
VALVE GP-BANK 3	512
VALVE GP-BANK 4	514
VALVE GP-CHECK	516
VALVE GP-CONTROL	517
VALVE GP-COUNTERBALANCE	527
VALVE GP-PILOT	528
VALVE GP-PILOT CARTRIDGE	534
VALVE GP-PRESSURE REDUCING	536
VALVE GP-PUMP CONTROL	537
VALVE GP-QUICK-DROP	539
VALVE GP-RELIEF	542
VALVE GP-SHUTTLE	547
VALVE GP-SOLENOID	548
IMPLEMENTS	**550**
BRACE GP-BULLDOZER	550
C-FRAME AS	552
C-FRAME GP	553
INSTALLATION AR-BULLDOZER	555
OPTION AR-BULLDOZER	556
INSTALLATION AR-BULLDOZER	559
PUSH ARM GP	560
TRUNNION GP-BULLDOZER	564
OPERATOR STATION	**565**
ADJUSTER GP-SEAT	565
AIR CONDITIONER GP	566
ARM GP-WINDOW WIPER	567
BLOWER GP-CAB	568
CAB AR	570
CAB GP	572
CANOPY AR	579
COMPRESSOR GP-REFRIGERANT	580
CONDENSER & MTG GP-REFRIGERANT	583
CONDENSER GP-REFRIGERANT	586
CONTROL GP-GOVERNOR & BRAKE	588
CONTROL GP-HANDLE	591
CONTROL GP-PILOT OPERATED HYD	593
COVER GP-CAB	597
COVER GP-CONSOLE	599
DOOR GP-STORAGE	602
GUARD GP-WINDOW	603
HANDHOLD GP	605
HEATER GP-CAB	608
HOUSING GP-SEAT SUSPENSION	609
INSTALLATION GP-RADIO	611
INSTRUMENT GP	612
KIT-SEAT AIR COMPRESSOR	615
KNOB GP	616
LINER GP-CAB	617
LINES GP-AIR CONDITIONER	621
LINES GP-HEATER	629
MIRROR GP-REAR VIEW	631
MOTOR GP-WINDOW WIPER	633
MOUNTING GP-BRACKET	637
MOUNTING GP-CAB	638

TABLE OF CONTENTS

NAME	PAGE
MOUNTING GP-MONITOR	639
MOUNTING GP-PLATFORM	641
MOUNTING GP-ROPS	642
PAN GP-BACKREST	643
PANEL GP-INSTRUMENT	646
PLATFORM AR	649
PLATFORM GP	650
PLATFORM GP-OPERATOR	651
PRESSURIZER GP-CAB	660
RECLINER GP-SEAT	662
ROD GP	663
ROPS GP	664
ROPS GP-OPEN	668
SCREEN GP-PROTECTION	670
SCREEN GP	673
SCREEN GP-PROTECTION	674
SEAT & MOUNTING GP	677
SEAT BELT GP	679
SEAT GP	680
SEAT GP-SUSPENSION	688
SUSPENSION GP-SEAT	691
TANK GP-WINDOW WASHER	695
WASHER GP-WINDOW	698
WINDOW GP-CAB	700
WIPER GP-WINDOW	704
WORK TOOLS	**706**
BLADE & EDGE GP-ANGLING	706
BLADE AS	708
BLADE AS-ANGLING	709
EDGE GP-BIT & CUTTING	711
MOUNTING GP-RIPPER	713
RIPPER AR	714
RIPPER GP	715
TOOTH GP-RIPPER	717
SERVICE EQUIPMENT AND SUPPLIES	719
FILM GP	719
KIT-GASKET	721
PLATE & FILM GP	722
PART NUMBER INDEX	**B1**

1. MACHINE IDENTIFICATION

Cat machines are identified by Product Identification Numbers (PIN). Some components included in a machine may be identified by Serial Numbers (S/N). Typical components that will be serialized include engines, transmissions, bulldozers, and rippers. The machine and engine are further identified by arrangement numbers and in some cases modification numbers. These numbers are shown on the product identification plate(s) and on the master plate in the operator's compartment.

Cat dealers need all of these numbers to determine accurate parts identification.

Effective First Quarter 2001 the Cat Product Identification Number (PIN) changed from 8 to 17 characters. In an effort to provide uniform equipment identification, Caterpillar and other construction equipment manufacturers are moving to comply with the latest version of the product identification numbering standard. Non-road machine PINs are defined by ISO 10261. The new PIN format will apply to all Cat machines and generator sets. The PIN plates and frame marking will display the 17 character PIN. The new format will look like the following:

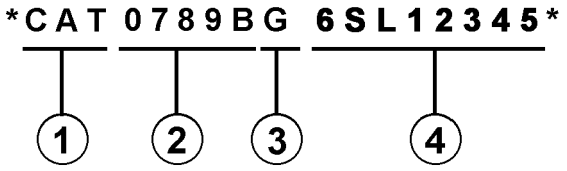

Where:

1. Caterpillar's World Manufacturing Code (characters 1-3)

2. Machine Descriptor (characters 4-8)

3. Check Character (character 9)

4. Machine Indicator Section (MIS) or Product Sequence Number (characters 10-17). These were previously referred to as the Serial Number.

Machines and generator sets produced before First Quarter 2001 will maintain their 8 character PIN format.

Components such as engines, transmissions, axles, etc. and work tools will continue to use an 8 character Serial Number (S/N).

2. ORDERING PARTS

⚠ WARNING

When replacement parts are required for this product Caterpillar recommends using Caterpillar replacement parts or parts with equivalent specifications including, but not limited to, physical dimensions, type, strength and material.

Failure to heed this warning can lead to premature failures, product damage, personal injury or death.

Quality Cat replacement parts are available from Cat dealers throughout the world. Their parts inventories are up to date and include all parts normally required to protect your investment in Cat machines. Dealers may offer repair kits or remanufactured parts to allow selection of the most effective repair alternative for a particular situation. When ordering parts, your order should specify the quantity, part number, part name, and the serial number/product identification number of the machine for which the parts are needed.

3. PARTS MANUAL ORGANIZATION

Product information in this manual is presented as "information elements" that represent all of the components for the specific model. Engine Arrangement and Seat Group are examples of information elements. The information elements are organized alphabetically by part name and secondarily by part number within each major section of the manual.

4. TABLE OF CONTENTS

A table of contents (TOC) is found at the beginning of the manual. The TOC lists each section of the manual with a complete list of all information elements organized as they appear in the manual. Page numbers are provided for quick reference to detailed parts identification illustrations and serviceable consist lists.

5. MAINTENANCE PARTS INDEX

The Maintenance Parts Index, located near the beginning of the manual, references most frequently used maintenance part numbers, providing description, quantity, usage and page number. This information is organized alphabetically by part description.

6. INDEX

The index located near the front of the manual is an alphabetical listing of all information elements included in the manual. Page numbers are provided for quick reference to detailed parts identification illustrations and serviceable consist lists.

7. PART NUMBER INDEX

A numerical index listing all part numbers and the corresponding page number(s) appears at the back of the manual.

8. CAPTIONS

Captions located at the beginning of each information element identify the part number and part name along with additional descriptive information. PIN and S/N information found in each caption should be used to select correct information for a specific machine. Field replacement options, identification of optional attachment components, and where used ("part of") information is also provided.

The first line of a caption is shown in larger type font to indicate the beginning of an information element. Captions for additional pages that may be required to illustrate an information element will be shown in standard type font and will include the term *(contd.)* .

9. NON-SERVICED PARTS

In some instances it is necessary to display non-serviced parts that are a link to a lower level serviceable consist lists. These non-serviced part numbers are shown in *italic* type indicating that they are not available.

10. PARTS LIST REFERENCE NUMBERS

Numbers shown in the Ref No column correspond to numbers used in the associated graphic(s). An alphabetic suffix may be added to a reference number to identify lower level consist items. Numbers shown in the Graphic Ref column refer to the graphic number identifier displayed in the lower left corner of each illustration. The Graphic Ref number may be used in combination with the item Ref No to determine the correct part number. There may be intentional omission of a Ref No in a consist list as information is updated to reflect the latest serviceable part numbers.

11. INDENTED PART NAMES

When a part name is indented in a parts list, it is part of (included in) the group or assembly under which it is indented.

12. ILLUSTRATION REFERENCE LETTERS

When necessary, illustrations contain reference letters (A, B, C etc.) that are intended to track lines and harnesses from one point to another. They are also used to show where to reconnect illustrations that have been separated.

13. ABBREVIATIONS AND SYMBOLS

O.D. – Outside Diameter
I.D. – Inside Diameter
A – Not Part Of This Group
B – Use As Required
C – Change From Previous Type
D – Order By The Meter
E – Order By The Centimeter
F – Not Shown
G – Order By The Inch
I – Refer To Hydraulic Information System
M – Metric Part
R – Remfg Part May Be Available
Y – Separate Illustration
Z – Not Serviced Separately

14. DESCRIPTION OF TYPE CHANGES

Type - A type is defined as any configuration change that requires an additional Information Element for an Arrangement, Group, or Assembly. If serial number breaks for types are not available, a type # (Type 1, Type 2, etc.) will be displayed in the caption. These "type" changes are identified with a "C" note (change from previous type) in the Parts List. Only the "types" that apply to this Parts Manual will be included. Additional types may exist causing "C" notes to appear on an Information Element when no other types are shown.

15.<END>

This symbol indicates the end of an information element.

NOTE:

Continuing improvement and advancement of product design may cause changes to your machine which may not be included in this publication. Whenever a question arises regarding your Cat product or this publication, please consult your Cat dealer for the latest available information.

FRAME AND BODY

8E-3299 PLATFORM GP-CAB

PIN 38K1-99999

8MS-7253 100090751

NOTE	REF NO	GRAPHIC REF	PART NUMBER	QTY	PART NAME (1 2 3 4 5 6 PRODUCT LEVEL)	SEE PAGE
	1	1	3T-3963	1	PLATE AS	
	2	1	5H-3962	25	BOLT (3/8-16X.750IN)	
	3	1	6P-1075	41	WASHER-HARD (3MM THK)	
	4	1	9P-1444	2	SUPPORT AS-FOOT	
	5	1	5P-2229	12	BOLT (1/2-13X1IN)	
		1	9x-[illegible]	12	WASHER-HARD (4MM THK)	
	6	1	9E-8134	1	COVER AS-LH	
		1	9P-2979	6	NUT-WELD (3/8-16 THD)	
		1	1P-9189	1	CLIP	
	7	1	7S-2411	4	COVER	
	8	1	5J-0468	19	SCREW-HEAD (3/8-16X.87SIN)	
	9	1	[illegible]074	1	COVER	
		1	9E-89[illegible]	1	GASKET	
	10	1	9E-3248	1	[illegible]	
		1	9E-3250	1	GASKET	
	11	1	3T-3930	1	HANDHOLD	
	12	1	9E-8878	1	COVER AS	
		1	9P-2979	6	NUT-WELD (3/8-16 THD)	
		1	9E-8979	1	GASKET	
	13	1	7T-0131	1	FLOORPLATE AS	
		1	1F-0748	4	NUT-WELD (1/2-13 THD)	
	14	1	7V-8067	1	PLUG-BUTTON	
	15	1	7T-0136	1	PLATE AS	
		1	9P-2979	5	NUT-WELD (3/8-16 THD)	
	16	1	7T-5066	1	COVER	
		1	7T-0779	1	GASKET	
	17	1	3T-3951	1	PLATE AS	
	18	1	9T-9364	4	BOLT (1/4-20X.62SIN)	
M		1	9T-4236	4	WASHER-HARD (2MM THK)	
	19	1	6I-9464	1	FLOOR MAT	
	20	1	9E-8946	1	MODULE AS-OPERATOR	
	21	1	3T-3934	1	HANDHOLD	
	22	1	9P-8571	2	PLUG	
	23	2	9T-9364	4	BOLT (1/4-20X.62SIN)	
M		2	9T-4236	4	WASHER-HARD (2MM THK)	
	24	2	5H-3962	17	BOLT (3/8-16X.750IN)	
	25	2	6P-1078	21	WASHER-HARD (9MM THK)	
	26	2	7T-0136	1	SEAL	
	27	2	7X-0378	2	BOLT (3/4-10X5IN)	
		2	7X-0682	2	WASHER-HARD (6MM THK)	
	28	2	3T-3482	2	PLATE	
	29	2	3T-8290	1	PLATE AS	
		2	7S-4828	6	SPACER	
	30	2	3T-8281	1	SEAL	
	31	2	7S-8017	1	GASKET	
	32	2	7S-8016	1	COVER AS	
		2	2R-2376	2	WASHER	
		2	6P-8626	2	SCREW-KNURLED	
	33	2	9W-3429	1	COVER	
	34	2	8E-9697	1	COVER	
	35	2	9D-3091	8	SCREW-SOCKET HEAD	
	36	2	9W-3142	8	MOUNTING	
	37	2	9W-9527	2	PLATE	
	38	2	7X-0390	2	BOLT (7/8-9X6IN)	
		2	7X-0672	2	WASHER-HARD	
	39	2	4L-6454	4	BOLT (3/8-16X1.0IN)	
	40	2	3T-4788	1	COVER	

12 FRAME AND BODY 1 of 4 SELP4570-01

FRAME AND BODY

8E-3299 PLATFORM GP-CAB (contd.)

100090751

NOTE	REF NO	GRAPHIC REF	PART NUMBER	QTY	PART NAME (1 2 3 4 5 6 PRODUCT LEVEL)	SEE PAGE
	41	2	8E-2515	1	COVER	
	42	2	7T-0134	1	PLATE	
	43	2	7T-0128	1	GASKET	
	44	2	7S-8724	1	GASKET	
	45	2	7S-8723	1	COVER	
	46	2	6V-1960	2	PLUG-BUTTON	

M-METRIC PART

SELP4570-01 2 of 4 FRAME AND BODY 13

FRAME AND BODY

8E-3299 PLATFORM GP-CAB (contd.)

100090751

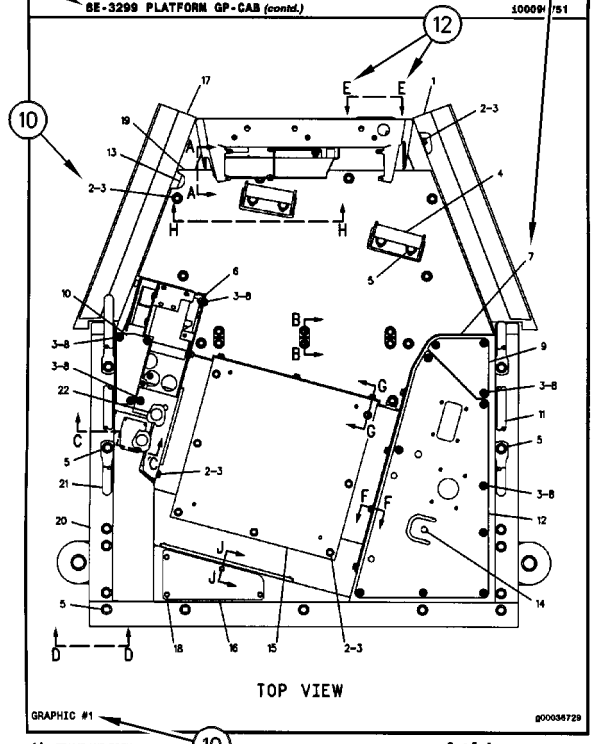

14 FRAME AND BODY 3 of 4 SELP4570-01

FRAME AND BODY

8E-3299 PLATFORM GP-CAB (contd.)

100090751

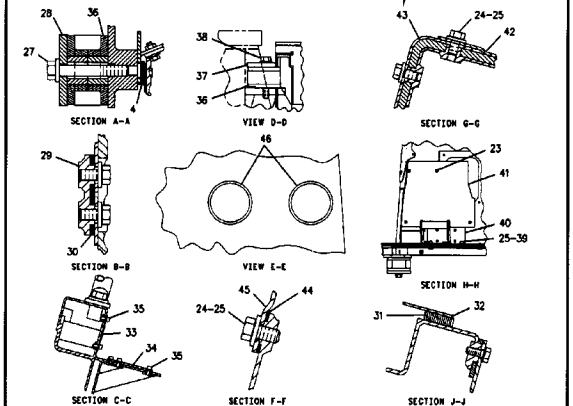

SELP4570-01 4 of 4 FRAME AND BODY 15

REMANUFACTURED COMPONENTS

As an option when making repairs consider Cat Remanufactured Components. Components that are available through the Cat Remanufactured Program are identified three ways in the parts book:

- with the letter R in the note field of the parts list
- with an R* at the beginning of the first line of the caption
- with an *R at the end of the first line of the caption

Typical components included in the Remanufacturing Program include:

ALTERNATORS
CONNECTING RODS
CRANKSHAFTS - UNDERSIZE
CRANKSHAFTS - UPGRADE TO NEW
CYLINDER HEADS
ELECTRONIC CONTROL MODULES (ECM)
ELECTRONIC SENSORS
FUEL INJECTORS
FUEL NOZZLES
FUEL PUMPS
GOVERNORS
OIL PUMPS
PISTONS
SHORT BLOCKS
STARTERS
TURBOCHARGERS - COMPLETE
TURBOCHARGER CARTRIDGES
WATER PUMPS

Cat Remanufactured engines for many engine arrangements are also available.

SUPPLEMENTAL COOLANT ADDITIVES

CUSTOMER BENEFITS:

Protects against cavitation, foam, erosion, corrosion, and scale buildup in cooling systems.

- Provides measured coolant conditioner.

DESCRIPTION:

Additives deplete from the coolant with normal operation. For this reason, Supplemental Coolant Additives (SCA) must be added to all heavy duty coolants at regular intervals. In addition, when not using a fully formulated, pre-charged antifreeze, like Cat DEAC, an initial charge of SCA must be added to the cooling system. The amount of SCA added to the system is dependent on the capacity of the system.

The SCA for initial fill is provided as a liquid. SCA's for maintenance intervals are available in liquid form and as a spin-on element. (No Spin-on available for 3600 Family of Engines)

NOTE:

The amount of SCA added at initial fill is not the same as the amount added at maintenance intervals.

The coolant additive elements can be used with any ethylene or propylene glycol type antifreeze which meets ASTM D4985 or ASTM D5345 Specifications.

NOTE:

For use with standard heavy duty coolant only, not for use with Extended Life Coolant.

PARTS NEEDED:

Cooling System Capacity		Liquid SCA at Initial Fill	Liquid SCA at Maintenance*	Spin-on SCA Maintenance Element*
Liters	Gallons			
22-30	(6-8)	3P-2044 (1)	6V-3542 (1)	111-2370 (1)
30-38	(8-10)	3P-2044 (1) 6V-3542 (1)	111-2372 (1)	111-2369 (1)
38-49	(10-13)	3P-2044 (1) 8T-1589 (1)	111-2372 (1)	111-2369 (1)
49-64	(13-17)	3P-2044 (2)	8T-1589 (1)	9N-3368 (1)
64-83	(17-22)	3P-2044 (2) 8T-1589 (1)	111-2372 (1) 6V-3542 (1)	111-2371 (1)
83-114	(22-30)	3P-2044 (3) 8T-1589 (1)	3P-2044 (1)	9N-3718 (1)
114-163	(30-43)	3P-2044 (5)	3P-2044 (1) 6V-3542 (1)	111-2371 (2)
163-242	(43-64)	3P-2044 (8)	3P-2044 (2)	9N-3718 (2)

** Normal maintenance period is 250 hrs. See your Operation and Maintenance Manual for complete coolant maintenance instructions.*

( ) Indicates quantity required.

MAINTENANCE PARTS

DESCRIPTION	PART NUMBER	QTY	WHERE USED	PAGE
AIR INLET AND EXHAUST SYSTEM				
FILTER ELEMENT AS-AIR (PRIMARY, STANDARD EFFICIENCY)	6I-2501	1	AIR CLEANER GP	96
FILTER ELEMENT AS-AIR (SECONDARY)	6I-2502	1	AIR CLEANER GP	96
BASIC ENGINE				
BELT-SERPENTINE (ALTERNATOR)	241-4981	1	PULLEY GP-FAN & ALT DRIVE	50
		1	PULLEY GP-FAN & ALT DRIVE	52
BREATHER AS (CRANKCASE)	204-4444	1	COVER GP-VALVE MECHANISM	11
	240-0041	1	COVER GP-CYLINDER BLOCK	8
FILTER ELEMENT-BREATHER (CRANKCASE)	185-3159	1	COVER GP-VALVE MECHANISM	11
PLUG-DRAIN (ENGINE OIL PAN)	126-1683	1	DRAIN GP-ENGINE OIL	24
V-BELT SET (INCLUDES 3-BELTS, FAN DRIVE)	7C-2500	1	PULLEY GP-FAN & ALT DRIVE	50
V-BELT SET (INCLUDES 3-BELTS) (FAN DRIVE)	216-7877	1	PULLEY GP-FAN & ALT DRIVE	52
COOLING SYSTEM				
CAP AS-RADIATOR	294-3342	1	TANK GP-COOLANT	91
GASKET (WATER REGULATOR HOUSING)	191-4457	1	HOUSING & REGULATOR GP	78
HOSE-RADIATOR	187-3961	1	LINES GP-WATER	80
REGULATOR-TEMPERATURE (92-DEG C) (WATER, COOLANT)	248-5513	1	HOUSING & REGULATOR GP	78
SEAL-LIP TYPE (WATER TEMPERATURE REGULATOR)	3S-9643	1	HOUSING & REGULATOR GP	78
ELECTRICAL AND STARTING SYSTEM				
BATTERY GP (12-VOLT, MAINTENANCE FREE, WET)	115-2422	2	BATTERY & WIRING GP	145
	153-5710	2	BATTERY & WIRING GP	147
CAP AS-FILLER (BATTERY)	123-1373	6	BATTERY & WIRING GP	145
		6	BATTERY & WIRING GP	147
CIRCUIT BREAKER AS (15-AMPERE) (BLOWER)	6T-3643	1	PANEL GP-FUSE	199
FILTER (ETHER START)	358-4889	1	VALVE GP-ETHER STARTING	227
FUSE (10-AMPERE)	9W-1442	7	PANEL GP-FUSE	199
FUSE (15-AMPERE)	9W-1441	15	PANEL GP-FUSE	199
FUSE (20-AMPERE)	9W-1446	2	PANEL GP-FUSE	199
KEY (BATTERY DISCONNECT)	8H-5306	1	SWITCH GP-DISCONNECT	223
LAMP (24-VOLT) (DOME LIGHT)	7N-9943	1	LAMP GP-DOME	172
LAMP-HALOGEN (24-VOLT, 70-WATT)	351-9918	1	LAMP GP-FLOOD	173
		1	LAMP GP-FLOOD	174
		1	LAMP GP-FLOOD	175
		1	LAMP GP-FLOOD	176

MAINTENANCE PARTS

DESCRIPTION	PART NUMBER	QTY	WHERE USED	PAGE
FRAME AND BODY				
PLUG-DRAIN (TRANSMISSION CASE)	106-8187	1	CASE & FRAME GP	323
SCREEN	415-1462	2	GUARD GP-REAR	362
FUEL SYSTEM				
CAP AS-FUEL (LOCKABLE, VENTED) (TANK)	349-7059	1	TANK GP-FUEL	133
FILTER AS-WATER SEP & FUEL (PRIMARY)	326-1644	1	FILTER GP-WATER SEP & FUEL	118
FILTER-FUEL (ADVANCED EFFICIENCY)	1R-0762	1	FILTER & LINES GP-FUEL	116
STRAINER-FUEL (TANK)	9P-7121	1	TANK GP-FUEL	133
HYDRAULIC SYSTEM				
CAP-FILLER (HYDRAULIC TANK)	7H-1447	1	TANK GP-HYDRAULIC	506
FILTER ELEMENT AS-OIL (ADVANCED EFFICIENCY)	1R-0777	2	TANK GP-HYDRAULIC	506
FILTER ELEMENT AS-OIL (FIRE RESISTANT FLUID)	104-6931	2	TANK GP-HYDRAULIC	506
PLUG-DRAIN (HYDRAULIC TANK)	9J-7031	1	TANK GP-HYDRAULIC	506
SCREEN (IMPLEMENT PILOT OIL)	6E-5066	1	MANIFOLD GP-CONTROL	491
SCREEN AS (HYDRAULIC TANK)	3G-3267	2	TANK GP-HYDRAULIC	506
STRAINER AS-OIL (HYDRAULIC TANK FILL)	5D-7927	1	TANK GP-HYDRAULIC	506
LUBRICATION SYSTEM				
CAP AS-FILLER (ENGINE OIL)	6N-2985	1	FILLER GP-ENGINE OIL	63
FILTER-ENGINE OIL (ADVANCED EFFICIENCY)	1R-1808	1	FILTER GP-ENGINE OIL	64
OPERATOR STATION				
BLADE AS-WIPER (350-MM) (DOOR, RH, LH)	6V-5849	2	WIPER GP-WINDOW	704
BLADE AS-WIPER (400-MM) (FRONT)	6V-5851	1	WIPER GP-WINDOW	704
BLADE AS-WIPER (450-MM) (REAR)	125-8175	1	WIPER GP-WINDOW	704
CAP-VENTED (WINDOW WASHER TANK)	322-4964	1	TANK GP-WINDOW WASHER	695
DRYER-REFRIGERANT (IN-LINE)	257-3226	1	LINES GP-AIR CONDITIONER	621
		1	LINES GP-AIR CONDITIONER	625
FILTER ELEMENT-CAB AIR (AIR RECIRCULATION)	6T-5068	1	PRESSURIZER GP-CAB	660
FILTER ELEMENT-CAB AIR (STANDARD EFFICIENCY)	6T-0988	1	PRESSURIZER GP-CAB	660
FILTER ELEMENT-CAB AIR (ULTRA HIGH EFFICIENCY)	175-2831	1	PRESSURIZER GP-CAB	660
LAMP (24-VOLT)	123-9294	2	PANEL GP-INSTRUMENT	646

MAINTENANCE PARTS

DESCRIPTION	PART NUMBER	QTY	WHERE USED	PAGE
LAMP (24-VOLT) (PANEL)	123-9294	2	INSTRUMENT GP	612
SCREEN AS (AIR CONDITIONER)	109-5498	1	CONDENSER & MTG GP-REFRIGERANT	584
SCREEN AS (PROTECTION)	387-3580	1	SCREEN GP-PROTECTION	671
SCREEN AS-PROTECTION (REAR)	322-7221	1	SCREEN GP-PROTECTION	670
SEAT BELT GP (RETRACTABLE, 3-IN)	222-0345	1	SEAT GP	682
		1	SEAT GP	686
V-BELT (REFRIGERANT COMPRESSOR)	216-0349	1	COMPRESSOR GP-REFRIGERANT	581
POWER TRAIN				
BREATHER AS (POWER TRAIN OIL)	9G-5127	1	LINES GP-POWER TRAIN OIL	286
FILTER ELEMENT AS-OIL (ADVANCED EFFICIENCY)	328-3655	1	FILTER GP-OIL	282
PLUG-DRAIN (TORQUE CONVERTER)	321-8665	1	DRAIN GP-ECOLOGY	274
PLUG-MAGNETIC (FINAL DRIVE, OIL FILL)	6V-0439	1	DRIVE GP-FINAL	277
		1	DRIVE GP-FINAL	279
SCREEN AS (TORQUE CONVERTER SCAVENGE)	3T-6471	1	LINES GP-POWER TRAIN OIL	286
SCREEN-SUCTION (POWER TRAIN)	4S-8598	1	SCREEN GP-MAGNETIC	301
SCREEN-SUCTION (TRANSMISSION SCAVENGE)	8S-9130	1	CASE & PARTS GP-PLANETARY	256
SERVICE EQUIPMENT AND SUPPLIES				
GASKET (WATER REGULATOR HOUSING)	191-4457	1	KIT-GASKET	721
GASKET (WATER TEMPERATURE REGULATOR)	219-2340	1	KIT-GASKET	721
SEAL-LIP TYPE (WATER TEMPERATURE REGULATOR)	3S-9643	1	KIT-GASKET	721

INDEX

NAME PAGE

A

ACCUMULATOR GP-PILOT OIL–CHARGED 441
ACCUMULATOR GP-PILOT OIL–UNCHARGED 440
ACCUMULATOR-REFRIGERANT 621, 625
ADAPTER GP-MOTOR 442
ADJUSTER GP-SEAT 565
AFTERCOOLER GP-AIR 94
AIR CLEANER AR 95
AIR CLEANER GP 96, 97, 98
AIR CONDITIONER GP 566
ALARM GP 134
ALTERNATOR GP-CHARGING 135, 136, 138
ALTERNATOR GP-CHARGING (24-VOLT, 150-AMPERE) 136
ARM AS-WINDOW WIPER (DOOR, LH) 704
ARM AS-WINDOW WIPER (DOOR, RH) 704
ARM GP-WINDOW WIPER 567
ARM GP-WINDOW WIPER (FRONT) 704
ATOMIZER GP-ETHER 214
AXLE GP 248

B

BAR GP-EQUALIZER 370, 372
BASE GP-OIL FILTER 249
BASE GP-VALVE COVER 11
BATTERY & WIRING GP 140, 145
BATTERY & WIRING GP–HEAVY-DUTY 147
BATTERY GP (12-VOLT, MAINTENANCE FREE, WET) 145, 147
BELT-SERPENTINE (ALTERNATOR) 50, 52
BLADE & EDGE GP-ANGLING 706
BLADE & EDGE GP-ANGLING–LAND CLEARING 707
BLADE AS-ANGLING 709, 710
BLADE AS-WIPER (350-MM) (DOOR, RH, LH) 704
BLADE AS-WIPER (400-MM) (FRONT) 704
BLADE AS-WIPER (450-MM) (REAR) 704
BLADE AS–ANGLING 708
BLOWER GP-CAB 568
BOX GP-BATTERY 318, 320, 321, 322
BRACE GP-BULLDOZER 550
BRAKE & DIFFERENTIAL DRIVE GP 250

NAME PAGE

BRAKE & PLANETARY GP 254
BREATHER AS (CRANKCASE) 8, 11
BREATHER AS (POWER TRAIN OIL) 286

C

C-FRAME AS 552
C-FRAME GP 553, 554
CAB AR 570, 571
CAB AR–ROPS, A/C 570, 571
CAB GP 572
CAB GP–COLD WEATHER 575
CAMSHAFT GP 7
CANOPY AR 579
CANOPY AR–WOOD CHIP 579
CAP AS-FILLER (BATTERY) 145, 147
CAP AS-FILLER (ENGINE OIL) 63
CAP AS-FUEL (LOCKABLE, VENTED) (TANK) 133
CAP AS-RADIATOR 91
CAP GP-TRACK IDLER 373
CAP GP-TRACK IDLER–SYSTEMONE 374
CAP-FILLER (HYDRAULIC TANK) 506
CAP-VENTED (WINDOW WASHER TANK) 695
CASE & FRAME GP 323
CASE & PARTS GP-PLANETARY 256
CASE GP-TRANSMISSION 258
CHASSIS AR 1
CIRCUIT BREAKER AS (15-AMPERE) (BLOWER) 199
COMMON AR 1, 2
COMPRESSOR GP-REFRIGERANT 580, 581
CONDENSER & MTG GP-REFRIGERANT 583
CONDENSER & MTG GP-REFRIGERANT–ROPS 584
CONDENSER GP-REFRIGERANT–WITH FANS 586
CONTROL & MTG GP-ENGINE ELEK 149
CONTROL GP-COMMUNICATION–PRODUCT LINK 321SR 150
CONTROL GP-COMMUNICATION–PRODUCT LINK 522 150
CONTROL GP-COMMUNICATION–PRODUCT LINK CELLULAR, CHINA 150
CONTROL GP-ENGINE ELECTRONIC 151
CONTROL GP-GOVERNOR & BRAKE 588
CONTROL GP-HANDLE 591, 592
CONTROL GP-PILOT OPERATED HYD 593, 594, 595, 596

INDEX

NAME PAGE

CONTROL GP-STEERING & XMSN. 259
263
265
CONTROL GP-TRANSMISSION HYD 267
CONTROL GP-UNPROGRAMMED 238
CONTROL GP-UNPROGRAMMED (PRODUCT LINK 300) 155
CONTROL GP-UNPROGRAMMED–PRODUCT LINK 522. 152
CONTROL GP-UNPROGRAMMED–PRODUCT LINK 522, CHINA 153
CONVERTER GP-ELECTRICAL. 154
COOLER GP-ENGINE OIL 75
COOLER GP-HYDRAULIC OIL 443
COOLER GP-TRANSMISSION OIL. 269
CORE AS-AFTERCOOLER 94
CORE AS-OIL COOLER 443
CORE AS-OIL COOLER (ENGINE) 75
CORE AS-OIL COOLER (TRANSMISSION) 269
CORE AS-RADIATOR (LH). 87
CORE AS-RADIATOR (RH). 87
COUNTERWEIGHT GP 324
326
COUPLING & GUARD GP 271
COUPLING GP-PUMP 272
COVER GP-BATTERY 327
COVER GP-CAB 597
598
COVER GP-CONSOLE. 599
600
COVER GP-CYLINDER BLOCK. 8
COVER GP-FRONT HOUSING 10
COVER GP-FRONT HOUSING–ACCESSORY DRIVE 9
COVER GP-RADIATOR 328
329
COVER GP-VALVE MECHANISM. 11
CRANKSHAFT GP. 12
CYLINDER & LINES GP-LIFT–LH. 446
CYLINDER & LINES GP-LIFT–RH 444
CYLINDER BLOCK AS. 13
CYLINDER BLOCK GP 15
17
CYLINDER GP-BULLDOZER LIFT 448
450
CYLINDER GP-RIPPER–LIFT 451
CYLINDER GP-TILT 452
454
CYLINDER HEAD AS. 18
CYLINDER HEAD GP. 20
22

D

DAMPER GP. 23
DOOR GP-STORAGE. 602
DRAIN GP-ECOLOGY. 273
274
DRAIN GP-ENGINE OIL. 24
DRAWBAR GP 330
DRIVE AR-FINAL 276
DRIVE AR-FINAL–COLD WEATHER 276
DRIVE GP-FAN 25
26
DRIVE GP-FINAL. 277
DRIVE GP-FINAL–COLD WEATHER 279
DRIVE GP-PUMP. 281
DRYER-REFRIGERANT (IN-LINE). 621
625
DUST EJECTOR GP 99

E

EDGE GP-BIT & CUTTING. 711
712
ELBOW GP-AIR INLET 100
ELECTRONICS GP-COMMUNICATION–PRODUCT LINK 300 155
ENCLOSURE GP-ELECTRICAL. 335
ENCLOSURE GP-ENGINE 335
336
338
ENCLOSURE GP-ENGINE–LH. 333
ENCLOSURE GP-ENGINE–RH. 331
ENCLOSURE GP-ENGINE–WOOD CHIP 340
ENCLOSURE GP-HYDRAULIC TANK 341
ENGINE AR. 3
ENGINE AR-COMPLETE 4
5
ENGINE AR-CORE 6
EXTENSION GP-BACKREST (CLOTH) 682
EXTENSION GP-BACKREST (VINYL) 686

F

FAN GP-BLOWER. 76
FAN GP-BLOWER–REVERSING 77
FASTENER GP-CYLINDER HEAD 27
FASTENER GP-DAMPER & PULLEY 28
FASTENER GP-FRONT COVER. 29
FASTENER GP-VALVE COVER 30
FASTENER GP-VALVE COVER BASE 31
FENDER GP 344
FENDER GP–LH 342
FENDER GP–RH 343
FILLER GP-ENGINE OIL. 63
FILM GP. 719
720
FILM-IDENTIFICATION (CAT). 153
FILM-IDENTIFICATION (CIRCUIT BREAKER) . . . 199
FILM-IDENTIFICATION (HYDRAULIC ACCUMULATOR) 441
FILM-IDENTIFICATION (INSTRUMENT PANEL) 613
FILM-IDENTIFICATION (JOYSTICK) (GRADE CONTROL). 240
FILM-IDENTIFICATION (POWER RECEPTACLE, 12-VOLT) 733
734

INDEX

NAME PAGE

FILM-IDENTIFICATION (ROUND RED REFLECTIVE) . . . 727, 731
FILM-IDENTIFICATION (WATER HEATER) . . . 157
FILM-IDENTIFICATION (WINDOW WIPER CONTROLS) . . . 617
FILM-INFORMATION (24-VOLT HEATER) . . . 586
FILM-INFORMATION (DRAWBAR, READ OMM) . . . 330
FILM-INFORMATION (EXTENDED LIFE COOLANT) . . . 725, 729
FILM-INFORMATION (PRODUCT LINK, READ OMM) . . . 159, 161, 163, 165, 167, 170
FILM-INSTRUCTION (BATTERY DISCONNECT) . . . 731
FILM-INSTRUCTION (BULLDOZER CONTROL) . . . 733, 734
FILM-INSTRUCTION (KEY START SWITCH) . . . 612
FILM-INSTRUCTION (READ OMM, STEERING) . . . 733, 734
FILM-INSTRUCTION (RIPPER CONTROL) . . . 594, 596
FILM-INSTRUCTION (SEAT ADJUSTMENT) . . . 691, 693
FILM-WARNING (HIGH PRESSURE CYLINDER) . . . 440
FILM-WARNING (JUMP START, READ OMM, INTL) . . . 727
FILM-WARNING (NO WELD, NO DRILL, READ OMM) . . . 725, 727, 731, 733
FILM-WARNING (PRODUCT LINK RADIO, INTL) . . . 163, 165, 167
FILM-WARNING (PRODUCT LINK RADIO, U. S.) . . . 159, 161, 170
FILM-WARNING (RECOIL SPRING) . . . 375, 377, 379, 381, 384, 386
FILTER (ETHER START) . . . 227
FILTER & LINES GP-FUEL . . . 116
FILTER AS-WATER SEP & FUEL (PRIMARY) . . . 118
FILTER ELEMENT AS-AIR (PRIMARY, STANDARD EFFICIENCY) . . . 96
FILTER ELEMENT AS-AIR (SECONDARY) . . . 96
FILTER ELEMENT AS-OIL (ADVANCED EFFICIENCY) . . . 282, 506
FILTER ELEMENT AS-OIL (FIRE RESISTANT FLUID) . . . 506
FILTER ELEMENT-BREATHER (CRANKCASE) . . . 11
FILTER ELEMENT-CAB AIR (AIR RECIRCULATION) . . . 660
FILTER ELEMENT-CAB AIR (STANDARD EFFICIENCY) . . . 660
FILTER ELEMENT-CAB AIR (ULTRA HIGH EFFICIENCY) . . . 660
FILTER GP-ENGINE OIL . . . 64
FILTER GP-OIL . . . 282
FILTER GP-WATER SEP & FUEL . . . 118
FILTER-ENGINE OIL (ADVANCED EFFICIENCY) . . . 64
FILTER-FUEL (ADVANCED EFFICIENCY) . . . 116
FINAL DRIVE AR . . . 276
FINAL DRIVE GP . . . 277, 279
FLOOR MAT . . . 597, 598
FLYWHEEL GP . . . 32
FRAME GP-TELESCOPING RECOIL–HEAVY-DUTY, LH . . . 375
FRAME GP-TELESCOPING RECOIL–HEAVY-DUTY, RH . . . 377
FRAME GP-TELESCOPING RECOIL–LH . . . 379, 383, 384, 388
FRAME GP-TELESCOPING RECOIL–RH . . . 381, 386
FRAME GP-TRACK ROLLER (FRONT) . . . 388, 390
FRAME GP-TRACK ROLLER–RH . . . 389, 390
FUMES DISPOSAL GP . . . 68
FUMES DISPOSAL GP–CRANKCASE . . . 67
FUSE (10-AMPERE) . . . 199
FUSE (15-AMPERE) . . . 199
FUSE (20-AMPERE) . . . 199

G

GASKET (WATER REGULATOR HOUSING) . . . 78, 721
GASKET (WATER TEMPERATURE REGULATOR) . . . 721
GAUGE AS-OIL LEVEL (POWER TRAIN) . . . 286
GAUGE GP-OIL LEVEL (DIPSTICK)–ENGINE . . . 69
GAUGE-SIGHT (HYDRAULIC TANK) . . . 506
GAUGE-SIGHT (WATER TANK) . . . 92
GEAR GP-BEVEL & TRANSFER . . . 283
GEAR GP-FRONT . . . 33
GEAR GP-REAR . . . 35

INDEX

NAME	PAGE
GRADE CONTROL AR	155
GRID GP-SAND BLAST ERODING	345
GRILL GP-RADIATOR	346
GRILL GP-RADIATOR–HEAVY-DUTY	347
GUARD GP-BOTTOM	348
	349
GUARD GP-FINAL DRIVE	351
GUARD GP-FUEL TANK	352
	353
	354
	355
	356
	358
GUARD GP-FUEL TANK–WOOD CHIP	358
GUARD GP-RADIATOR	360
GUARD GP-REAR	362
GUARD GP-REAR–TRANSMISSION	361
GUARD GP-TILT CYLINDER	555
	556
	557
GUARD GP-TRACK GUIDE	391
GUARD GP-TRACK GUIDE–SYSTEMONE	392
GUARD GP-TRACK ROLLER–HEAVY-DUTY	393
	395
GUARD GP-TRACK ROLLER–SYSTEMONE	394
GUARD GP-TRANSMISSION	363
GUARD GP-WINDOW	603

H

NAME	PAGE
HANDHOLD GP	364
	605
	607
HANDHOLD GP–HEAVY-DUTY	606
HARNESS AS-CHASSIS	239
HARNESS AS-CHASSIS (FUEL TANK)	140
HARNESS AS-CHASSIS (RADIATOR GUARD)	140
HARNESS AS-CONSOLE	244
HARNESS AS-CONTROL	238
HARNESS AS-DASH	612
	646
HARNESS AS-ENGINE	156
	235
HARNESS AS-ENGINE (ELECTRONIC CONTROL MODULE)	230
HARNESS AS-HEATER & AIR COND	586
HARNESS AS-LIGHTING (CYLINDER)	177
	179
HARNESS AS-LIGHTING (CYLINDER)	181
	183
HARNESS AS-LIGHTING (CYLINDER)	185
	187
HARNESS AS-LIGHTING (CYLINDER)	189
	191
HARNESS AS-LIGHTING (FLOODLIGHT) (REAR)	177
	179
	181
	183
HARNESS AS-LIGHTING (FLOODLIGHTS, FRONT)	193
	195
HARNESS AS-LIGHTING (FLOODLIGHTS, REAR)	193
	195
HARNESS AS-LIGHTING (REAR ROPS, FUEL TANK)	185
	187
	189
	191
HARNESS AS-MONITOR (ADVISOR)	640
HARNESS AS-MONITOR (GPS)	640
HARNESS AS-MOTOR	568
HARNESS AS-PANEL (FUSE BLOCK)	228
HARNESS AS-PLATFORM	243
HARNESS AS-POWER	154
HARNESS AS-SENSOR (HOOD)	140
HARNESS AS-SENSOR (INPUT)	238
HARNESS AS-SENSOR (OUTPUT)	238
HARNESS AS-SOLENOID (AUTOMATIC LUBRICATION)	122
HARNESS AS-SWITCH	621
HARNESS AS-VALVE (SEAT AIR COMPRESSOR)	693
HARNESS AS-WIRING (AIR CONDITIONER COMPRESSOR)	621
	625
HARNESS AS-WIRING (COMMUNICATION RADIO)	165
	167
	170
HARNESS AS-WIRING (CRANK WITHOUT INJECT)	235
HARNESS AS-WIRING (CYLINDER, LH)	239
HARNESS AS-WIRING (CYLINDER, RH)	239
HARNESS AS-WIRING (FENDER, RH)	460
	464
	467
	470
HARNESS AS-WIRING (FUEL PRESSURE)	125
HARNESS AS-WIRING (GPS)	238
HARNESS AS-WIRING (LIGHT BAR)	238
HARNESS AS-WIRING (PRODUCT LINK)	159
	161
	163
HARNESS AS-WIRING (RADIATOR GUARD)	239
HARNESS AS-WIRING (WINDOW WASHER)	695
HEATER GP-CAB	608
HEATER GP-JACKET WATER	157
HOSE-RADIATOR	80
HOUSING & REGULATOR GP–WATER TEMPERATURE REGULATOR	78
HOUSING AS-FLYWHEEL	36
HOUSING GP-FILTER	282
HOUSING GP-FLYWHEEL	37
HOUSING GP-FRONT	39
HOUSING GP-SEAT SUSPENSION	609
HYDRAULIC AR	456
HYDRAULIC AR–BULLDOZER, RIPPER	456
HYDRAULIC AR–GRADE CONTROL	457

INDEX

NAME PAGE

I

IDLER GP-TRACK–HEAVY-DUTY 396
IDLER GP-TRACK–SYSTEMONE 397
INJECTOR GP-FUEL. 119
INSTALLATION AR 2
INSTALLATION AR-BULLDOZER. 555
559
INSTALLATION AR-ENGINE 6
INSTALLATION GP-COMMUNICATION–PRODUCT LINK. 169
INSTALLATION GP-COMMUNICATION–PRODUCT LINK 321SR. 161
163
INSTALLATION GP-COMMUNICATION–PRODUCT LINK 522 159
165
170
INSTALLATION GP-COMMUNICATION–PRODUCT LINK 522, CHINA. 167
INSTALLATION GP-RADIO 611
INSTRUMENT GP 612

K

KEY (BATTERY DISCONNECT) 223
KIT-ENGINE GASKET. 40
KIT-ENGINE GASKET–CENTRAL, LOWER STRUCTURE. 40
KIT-FRONT COVER GASKET 41
KIT-GASKET–SINGLE CYLINDER HEAD 721
KIT-OIL COOLER & LINES GASKET. 79
KIT-REAR COVER GASKET. 41
KIT-SEAT AIR COMPRESSOR 615
KIT-TURBOCHARGER GASKET 102
KNOB GP–RIPPER 616

L

LAMP (24-VOLT) 646
LAMP (24-VOLT) (DOME LIGHT) 172
LAMP (24-VOLT) (PANEL) 612
LAMP GP-DOME–WITH SWITCH 172
LAMP GP-FLOOD 173
174
175
176
LAMP-HALOGEN (24-VOLT, 70-WATT) 173
174
175
176
LIFTING GP-ENGINE 42
LIGHTING GP-FLOOD–CYLINDER, FUEL TANK. 179
181
183
LIGHTING GP-FLOOD–CYLINDER, FUEL TANK, ROPS 185
187
189
191
LIGHTING GP-FLOOD–FUEL TANK 177
LIGHTING GP-FLOOD–FUEL TANK, SWEEPS. 193
LIGHTING GP-FLOOD–SWEEPS 195
LINER GP-CAB. 617
619
LINES GP-AIR 103
LINES GP-AIR CONDITIONER. 628
LINES GP-AIR CONDITIONER–ROPS MOUNTED 621
LINES GP-AIR CONDITIONER–UNDER HOOD 625
LINES GP-AIR–ATAAC 104
LINES GP-ENGINE OIL 70
LINES GP-FUEL. 120
125
LINES GP-FUEL–WITH HEATER. 122
LINES GP-HEATER. 629
LINES GP-LIFT CYLINDER. 458
LINES GP-PILOT–BULLDOZER 460
470
LINES GP-PILOT–GRADE CONTROL 467
LINES GP-PILOT–IMPLEMENT 464
LINES GP-POWER TRAIN OIL 286
LINES GP-PUMP 474
LINES GP-RIPPER 478
479
LINES GP-TILT CYLINDER. 481
483
485
487
489
LINES GP-TURBOCHARGER OIL. 71
LINES GP-WATER. 80
LINK AS-TRACK BOX–LINK BOX, SYSTEMONE. 401
LINK AS-TRACK BOX–SYSTEMONE, OFFSET 402
LINK AS-TRACK–HEAVY-DUTY. 399
400
LINK AS-TRACK–SYSTEMONE, OFFSET. 398
LITERATURE GP 1
LOCK GP 646

M

MANIFOLD GP-CONTROL. 491
MANIFOLD GP-EXHAUST 107
MANIFOLD GP-VALVE 492
MIRROR GP-REAR VIEW 631
632
MODULE GP-DISPLAY (INSTRUMENT CLUSTER) 612
646
MOTOR GP-ELECTRIC (CONDENSER FAN) . . . 586

INDEX

NAME PAGE

MOTOR GP-PISTON–STEERING. 493
MOTOR GP-WINDOW WIPER 633
634
635
MOTOR GP-WINDOW WIPER (FRONT). 704
MOTOR GP-WINDOW WIPER–REAR 636
MOUNTING GP-ALTERNATOR 43
MOUNTING GP-BRACKET 637
MOUNTING GP-CAB. 638
MOUNTING GP-CARRIER ROLLER. 403
MOUNTING GP-CYLINDER. 494
MOUNTING GP-ENGINE 44
MOUNTING GP-FAN DRIVE. 45
MOUNTING GP-FINAL DRIVE 291
MOUNTING GP-MONITOR–GRADE CONTROL 639
640
MOUNTING GP-PLATFORM 641
MOUNTING GP-RIPPER 713
MOUNTING GP-ROPS 642
MOUNTING GP-TRANSMISSION. 292
MOUNTING GP-VALVE–IMPLEMENT, STEERING 496
497
MOUNTING GP-WIRING–RH, LH 197
MOUNTING GP–RH, LH 198
MUFFLER GP 108

O

OPTION AR-BULLDOZER 556
557
558
OPTION AR-COUNTERWEIGHT 2
ORIFICE AS-AIR CONDITIONER 621
625

P

PADLOCK GP. 120
122
265
320
321
PAN GP-BACKREST. 643
644
645
PAN GP-OIL–ENGINE. 46
PANEL GP-FUSE. 199
PANEL GP-INSTRUMENT–OPEN ROPS. 646
PISTON & ROD GP 47
PIVOT BAR GP 404
PLANETARY GP-TRANSMISSION. 293
PLATE & FILM GP 722
724
PLATE & FILM GP–CAB 727
733
PLATE & FILM GP–CANOPY. 725
734
PLATE & FILM GP–COLD WEATHER. 729
731
PLATE & FILM GP–RIPPER. 723
PLATE AS-BRUSH 201
PLATE AS-IDENTIFICATION (SERIAL NUMBER) (BLADE) 706
707
PLATE GP-MOUNTING 498
PLATE-IDENTIFICATION (SEQUENCE). 575
PLATE-SERIAL NUMBER (BLADE). 706
707
PLATE-SERIAL NUMBER (ENGINE) 729
731
PLATE-SERIAL NUMBER (RIPPER). 723
PLATE-SERIAL NUMBER (TRANSMISSION) 256
PLATE-WARNING (HIGH PRESSURE CYLINDER) 375
377
379
381
384
386
PLATE-WARNING (RECOIL SPRING) 375
377
383
388
389
390
PLATFORM AR 649
PLATFORM AR–WOOD CHIP 649
PLATFORM GP 650
PLATFORM GP-OPERATOR. 651
PLATFORM GP-OPERATOR–OPEN ROPS 654
657
PLUG GP-ENGINE 48
PLUG-DRAIN (ENGINE OIL PAN). 24
PLUG-DRAIN (HYDRAULIC TANK). 506
PLUG-DRAIN (TORQUE CONVERTER) 274
PLUG-DRAIN (TRANSMISSION CASE). 323
PLUG-MAGNETIC (FINAL DRIVE, OIL FILL). . . . 277
279
POWER TRAIN AR. 297
PRECLEANER GP–TURBINE. 111
PRECLEANER GP–WITH SCREEN 109
PRESSURIZER GP-CAB 660
PULLEY GP-CRANKSHAFT 49
PULLEY GP-FAN & ALT DRIVE. 50
52
PUMP & MOUNTING GP 499
PUMP & MTG GP-UNIT INJ HYD 127
PUMP GP-ENGINE OIL. 73
PUMP GP-FUEL INJECTION 129
PUMP GP-FUEL PRIMING 130
PUMP GP-GEAR 298
299
PUMP GP-PISTON–IMPLEMENT, STEERING . . . 500
PUMP GP-UNIT INJECTOR HYD 127
PUMP GP-WATER. 82
83
84
PUSH ARM GP 562

INDEX

NAME PAGE

PUSH ARM GP–SEMI-UNIVERSAL BULLDOZER 560

R

RADIATOR GP 85 87
RADIO GP-COMMUNICATION–PRODUCT LINK 121SR 202
RECLINER GP-SEAT 662
REGULATOR GP-FUEL PRESSURE 131
REGULATOR-TEMPERATURE (92-DEG C) (WATER, COOLANT) 78
RELAY AS (24-VOLT) 612 646
RELAY AS (24-VOLT) (CONDENSER FAN MOTOR) 586
RELAY AS (24-VOLT) (WINCH, BLADE FLOAT DETENT) 243
RIPPER AR 714
RIPPER GP 715
ROCKER ARM GP–EXHAUST 54
ROCKER ARM GP–INLET 55
ROD GP 663
ROLLER AR-TRACK CARRIER 405
ROLLER GP-TRACK CARRIER 406
ROLLER GP-TRACK-DOUBLE FLANGE 407 408 409 410
ROLLER GP-TRACK-SINGLE FLANGE 411 413
ROLLER GP-TRACK-SINGLE FLANGE–SYSTEMONE 412 414
ROPS GP 664 667
ROPS GP-OPEN 668
ROPS GP–WOOD CHIP 665
ROTATING GP-MOTOR 503

S

SCRAPER GP-IDLER 415
SCREEN 362
SCREEN (IMPLEMENT PILOT OIL) 491
SCREEN AS (AIR CONDITIONER) 584
SCREEN AS (HYDRAULIC TANK) 506
SCREEN AS (PROTECTION) 671
SCREEN AS (TORQUE CONVERTER SCAVENGE) 286
SCREEN AS-PROTECTION (REAR) 670
SCREEN GP 673
SCREEN GP-MAGNETIC 301
SCREEN GP-MAGNETIC (POWER TRAIN) 301
SCREEN GP-PROTECTION 670 674 676
SCREEN GP-PROTECTION–REAR 672
SCREEN GP-PROTECTION–RH, LH 675
SCREEN GP-PROTECTION–ROPS, A/C 671
SCREEN-SUCTION (POWER TRAIN) 301
SCREEN-SUCTION (TRANSMISSION SCAVENGE) 256
SEAL GP-CRANKSHAFT 56 57
SEAL GP-DUO-CONE 277 396
SEAL-CRANKSHAFT (FRONT) 41
SEAL-CRANKSHAFT (FRONT) 56
SEAL-LIP TYPE (WATER TEMPERATURE REGULATOR) 78 721
SEAT & MOUNTING GP 677 678
SEAT BELT GP 679
SEAT BELT GP (RETRACTABLE, 3-IN) 682 686
SEAT GP-SUSPENSION–CLOTH 689
SEAT GP-SUSPENSION–CLOTH, AIR 690
SEAT GP-SUSPENSION–VINYL 688
SEAT GP–CLOTH 680 682 687
SEAT GP–VINYL 684 686
SEGMENT GP-SPROCKET 302
SENDER AS-FUEL LEVEL 132
SENSOR AS-PRESSURE (ENGINE OIL) 203
SENSOR AS-TEMPERATURE 212 213
SENSOR GP-ENGINE 6 203
SENSOR GP-POSITION 204
SENSOR GP-POSITION (ROTARY) (DECELERATOR PEDAL) 588
SENSOR GP-PRESSURE 125 205 206 207 208 209 238
SENSOR GP-PRESSURE (AIR INLET MANIFOLD) 203
SENSOR GP-PRESSURE (ATMOSPHERIC) 203
SENSOR GP-PRESSURE (INJECTION ACTUATION) 203
SENSOR GP-SPEED 210
SENSOR GP-TEMPERATURE 211 212 213
SHAFT GP-DRIVE 303
SHIELD GP-EXHAUST 113
SOFTWARE GP-COMMUNICATION 155
SOFTWARE GP-COMMUNICATION (PRODUCT LINK 522, CHINA) 150
SOFTWARE GP-COMMUNICATION (PRODUCT LINK 522) 150
SOFTWARE GP-ELECTRONIC 152

INDEX

NAME	PAGE
SOFTWARE GP-ENG RATINGS ELEK	153
SOFTWARE GP-MACHINE (PRODUCT LINK 121SR)	202
SOLENOID AS-STARTING MOTOR (24-VOLT)	219
STARTING AID GP-ETHER	214
STARTING MOTOR GP-ELECTRIC	215 217 218 219
STRAINER AS-OIL (HYDRAULIC TANK FILL)	506
STRAINER-FUEL (TANK)	133
SUPPORT GP-ENGINE	58
SUPPORT GP-RADIATOR–LOWER	89
SUSPENSION GP-SEAT	691
SUSPENSION GP-SEAT–AIR	693
SWEEP GP	365 367 368
SWITCH AS (BACKUP ALARM)	259
SWITCH AS (NEUTRAL START)	259
SWITCH AS-PRESSURE (HIGH, LOW) (REFRIGERANT)	621 625
SWITCH AS-PUSH BUTTON (IMPLEMENT)	592
SWITCH AS-ROCKER (24-VOLT) (AIR CONDITIONER)	613
SWITCH AS-ROCKER (24-VOLT) (FLOODLIGHTS, REAR)	612
SWITCH AS-ROCKER (24-VOLT) (FLOODLIGHTS)	646
SWITCH AS-ROCKER (24-VOLT) (HYDRAULIC LOCKOUT)	243
SWITCH AS-ROCKER (24-VOLT) (THROTTLE)	243
SWITCH AS-ROTARY (BLOWER FAN SPEED)	612
SWITCH AS-ROTARY (DOOR, LH)	617
SWITCH AS-ROTARY (DOOR, RH)	617
SWITCH AS-ROTARY (FRONT)	617
SWITCH AS-ROTARY (LIGHT SWITCH)	646
SWITCH AS-ROTARY (LIGHTS)	612
SWITCH AS-ROTARY (REAR)	617
SWITCH AS-START (KEY)	612 646
SWITCH GP-BYPASS	222
SWITCH GP-DISCONNECT–BATTERY	223
SWITCH GP-MAGNETIC	224 225
SWITCH GP-PUSH BUTTON	226

T

NAME	PAGE
TANK & MTG GP-HYDRAULIC	505
TANK GP-COOLANT	91 92
TANK GP-FUEL	132 133
TANK GP-HYDRAULIC	506
TANK GP-WINDOW WASHER	695 697
TOOTH GP-RIPPER	717
TOOTH GP-RIPPER–CURVED	718
TORQUE CONVERTER & HOUSING GP	304 306
TORQUE CONVERTER GP	307 309
TRACK ADJUSTER & RECOIL GP	416
TRACK AR–HEAVY-DUTY	419 420 421 423 424 425
TRACK AR–SYSTEMONE	418 422
TRACK GP–2-REQUIRED, HEAVY-DUTY	426 428 429 430 433
TRACK GP–2-REQUIRED, SYSTEMONE	427 431
TRACK GP–HEAVY-DUTY	432
TRANSMISSION AR	311
TRUNNION GP-BULLDOZER	564
TRUNNION GP-ENGINE	59
TURBOCHARGER GP	114 115

U

NAME	PAGE
UNDERCARRIAGE AR	434
UNDERCARRIAGE AR–HEAVY-DUTY	434 435 436
UNDERCARRIAGE AR–SYSTEMONE	437
UNIVERSAL JOINT GP	312

V

NAME	PAGE
V-BELT (REFRIGERANT COMPRESSOR)	581
V-BELT SET (INCLUDES 3-BELTS, FAN DRIVE)	50
V-BELT SET (INCLUDES 3-BELTS) (FAN DRIVE)	52
VALVE & MOUNTING GP	509
VALVE & MTG GP-BULLDOZER–GRADE CONTROL	510
VALVE & MTG GP-COUNTERBALANCE	511
VALVE AS-PRESSURE RELIEF (REFRIGERANT COMPRESSOR)	580
VALVE AS-SOLENOID	548
VALVE GP-BANK 3–IMPLEMENT, STEERING	512
VALVE GP-BANK 4–IMPLEMENT, STEERING	514
VALVE GP-BRAKE (PILOT SHUTOFF)	263

INDEX

NAME PAGE

VALVE GP-BRAKE CONTROL. 438
VALVE GP-CHECK 516
VALVE GP-CHECK (PILOT PRESSURE SUPPLY). 491
VALVE GP-CONTROL–BULLDOZER LIFT 519
VALVE GP-CONTROL–BULLDOZER TILT 522
VALVE GP-CONTROL–RIPPER 524
VALVE GP-CONTROL–STEERING 517
VALVE GP-COUNTERBALANCE 527
VALVE GP-ETHER STARTING 227
VALVE GP-FLOW CONTROL. 517
VALVE GP-FLUID SAMPLING (HYDRAULIC OIL) 461
VALVE GP-FLUID SAMPLING (PILOT OIL) 468
472
VALVE GP-FLUID SAMPLING (POWER TRAIN OIL) 465
VALVE GP-FLUID SAMPLING–ENGINE OIL 74
VALVE GP-PILOT CARTRIDGE. 534
535
VALVE GP-PILOT–BULLDOZER 530
532
VALVE GP-PILOT–RIPPER 528
VALVE GP-PRESSURE REDUCING 536
VALVE GP-PRIORITY. 313
VALVE GP-PUMP CONTROL–PRESSURE, FLOW COMPENSATOR 537
VALVE GP-QUICK-DROP 539
540
VALVE GP-RELIEF 314
542
543
544
545
546
VALVE GP-RELIEF (PILOT OIL PRESSURE) . . . 519
522
524
VALVE GP-SELECTOR & PRESS CONT. 315
VALVE GP-SHUTOFF (CAB HEATER) 629
VALVE GP-SHUTTLE 467
470
517
519
522
524
547
VALVE GP-SOLENOID 548
549
VALVE GP-SOLENOID (BLADE CONTROL) 510
VALVE GP-SOLENOID (HYDRAULIC LOCKOUT) 491
510
VALVE GP-TRANSMISSION CONTROL 317
VALVE MECHANISM GP. 60
61
VALVE-BREAKER RELIEF 505

NAME PAGE

W

WASHER GP-WINDOW 698
WINDOW GP-CAB–LH 703
WINDOW GP-CAB–RH. 702
WINDOW GP-CAB–SLIDING, LH. 701
WINDOW GP-CAB–SLIDING, RH 700
WIPER GP-WINDOW 704
WIRING GP-BOX. 228
WIRING GP-ELECTRONIC CONTROL. 230
233
WIRING GP-ENGINE. 235
WIRING GP-GRADE CONTROL 238
WIRING GP-PLATFORM 243

Y

YOKE GP. 62

MEMORANDA

MACHINE ARRANGEMENT

389-3221 CHASSIS AR

S/N: EMM1-UP

PART OF 389-3211 COMMON AR

SMCS-7000 **i05640296**

NOTE	PART NUMBER	QTY	PART NAME 1 2 3 4 5 6 (PRODUCT LEVEL)	SEE PAGE
Y	*389-3305*	1	BATTERY & WIRING GP	140
Y	*337-3492*	1	CASE & FRAME GP	323
Y	*386-1154*	1	ENCLOSURE GP-HYDRAULIC TANK	341
Y	*321-6075*	1	FILM GP	719
Y	*389-3303*	1	GUARD GP-RADIATOR	360
Y	*208-8699*	1	MOUNTING GP-ROPS	642
Y	*386-1153*	1	TANK GP-FUEL	132
	6V-1970	1	LITERATURE GP	
	5P-7958	1	SLEEVE-CABLE SPLICE	
	5P-8500	2	KEY	

Y - SEPARATE ILLUSTRATION

<END>

389-3222 CHASSIS AR

S/N: JEN1-UP

PART OF 389-3212 COMMON AR

SMCS-7000 **i05640297**

NOTE	PART NUMBER	QTY	PART NAME 1 2 3 4 5 6 (PRODUCT LEVEL)	SEE PAGE
Y	*389-3305*	1	BATTERY & WIRING GP	140
Y	*337-3492*	1	CASE & FRAME GP	323
Y	*386-1154*	1	ENCLOSURE GP-HYDRAULIC TANK	341
Y	*323-6771*	1	FILM GP	720
Y	*389-3303*	1	GUARD GP-RADIATOR	360
Y	*208-8699*	1	MOUNTING GP-ROPS	642
Y	*386-1153*	1	TANK GP-FUEL	132
	6V-1970	1	LITERATURE GP	
	5P-7958	1	SLEEVE-CABLE SPLICE	
	5P-8500	2	KEY	

Y - SEPARATE ILLUSTRATION

<END>

389-3211 COMMON AR

S/N: EMM1-UP

SMCS-7000 **i05636030**

NOTE	PART NUMBER	QTY	PART NAME 1 2 3 4 5 6 (PRODUCT LEVEL)	SEE PAGE
Y	*389-3221*	1	CHASSIS AR	1
Y	*389-3214*	1	HYDRAULIC AR	456
Y	*389-3215*	1	INSTALLATION AR-ENGINE	6
Y	*389-3209*	1	POWER TRAIN AR	297

Y - SEPARATE ILLUSTRATION

<END>

MACHINE ARRANGEMENT

389-3212 COMMON AR

S/N: JEN1-UP

SMCS-7000 **i05636049**

NOTE	PART NUMBER	QTY	PART NAME 1 2 3 4 5 6 (PRODUCT LEVEL)	SEE PAGE
Y	*389-3222*	1	CHASSIS AR	1
Y	*389-3214*	1	HYDRAULIC AR	456
Y	*389-3215*	1	INSTALLATION AR-ENGINE	6
Y	*389-3209*	1	POWER TRAIN AR	297

Y - SEPARATE ILLUSTRATION

<END>

389-3265 INSTALLATION AR

S/N: EMM1-UP; JEN1-UP

AN ATTACHMENT

SMCS-7000 **i05625174**

NOTE	PART NUMBER	QTY	PART NAME 1 2 3 4 5 6 (PRODUCT LEVEL)	SEE PAGE
Y	*168-8377*	1	LINES GP-AIR	103
Y	*372-6363*	1	LINES GP-WATER	80
Y	*168-8382*	1	MUFFLER GP	108
Y	*375-2982*	1	RADIATOR GP	85
Y	*237-2737*	1	SHIELD GP-EXHAUST	113
Y	*372-6364*	1	TANK GP-COOLANT	92

Y - SEPARATE ILLUSTRATION

<END>

354-3552 OPTION AR-COUNTERWEIGHT

S/N: EMM1-UP; JEN1-UP

AN ATTACHMENT

SMCS-7000 **i05501496**

NOTE	PART NUMBER	QTY	PART NAME 1 2 3 4 5 6 (PRODUCT LEVEL)	SEE PAGE
Y	*1Q-4324*	1	COUNTERWEIGHT GP	324
Y	*3W-6866*	1	DRAWBAR GP	330

Y - SEPARATE ILLUSTRATION

<END>

ENGINE ARRANGEMENT

387-8600 ENGINE AR

S/N: TXD1-UP

PART OF 387-8581 ENGINE AR-COMPLETE

AN ATTACHMENT

SMCS-1000 **i05643876**

NOTE	PART NUMBER	QTY	PART NAME 1 2 3 4 5 6 (PRODUCT LEVEL)	SEE PAGE
Y	*387-8619*	1	ENGINE AR-CORE	6
Y	*385-1747*	1	PLATE & FILM GP	724
	362-3267	1	ELECTRONICS GP-ENGINE RATINGS	

Y - SEPARATE ILLUSTRATION

<END>

387-8601 ENGINE AR

S/N: TXD1-UP

PART OF 387-8582 ENGINE AR-COMPLETE

AN ATTACHMENT

SMCS-1000 **i05555291**

NOTE	PART NUMBER	QTY	PART NAME 1 2 3 4 5 6 (PRODUCT LEVEL)	SEE PAGE
Y	*387-8619*	1	ENGINE AR-CORE	6
Y	*385-1747*	1	PLATE & FILM GP	724
	321-7851	1	ELECTRONICS GP-ENGINE RATINGS	

Y - SEPARATE ILLUSTRATION

<END>

ENGINE ARRANGEMENT

387-8581 ENGINE AR-COMPLETE

S/N: TXD1-UP

AN ATTACHMENT

SMCS-1000 **i05150096**

NOTE	PART NUMBER	QTY	PART NAME 1 2 3 4 5 6 (PRODUCT LEVEL)	SEE PAGE
Y	*246-9365*	1	CONTROL & MTG GP-ENGINE ELEK	149
Y	*188-3826*	1	COOLER GP-ENGINE OIL	75
Y	*238-1116*	1	COOLER GP-TRANSMISSION OIL	269
Y	*246-0605*	1	COVER GP-CYLINDER BLOCK	8
Y	*118-1727*	1	COVER GP-FRONT HOUSING (ACCESSORY DRIVE)	9
Y	*217-8669*	1	COVER GP-FRONT HOUSING	10
Y	*222-1783*	1	COVER GP-VALVE MECHANISM	11
Y	*211-8041*	1	DAMPER GP	23
Y	*4P-2102*	1	DRAIN GP-ENGINE OIL	24
Y	*246-0599*	1	DRIVE GP-PUMP	281
Y	*246-0596*	1	ELBOW GP-AIR INLET	100
Y	*387-8600*	1	ENGINE AR	3
Y	*222-2409*	1	FASTENER GP-DAMPER & PULLEY	28
Y	*219-8681*	1	FASTENER GP-FRONT COVER	29
Y	*236-7315*	1	FASTENER GP-VALVE COVER	30
Y	*233-0423*	1	FASTENER GP-VALVE COVER BASE	31
Y	*389-8270*	1	FILLER GP-ENGINE OIL	63
Y	*183-2097*	1	FILTER GP-ENGINE OIL	64
Y	*241-3718*	1	FLYWHEEL GP	32
Y	*241-3719*	1	FUMES DISPOSAL GP	68
Y	*246-0601*	1	GAUGE GP-OIL LEVEL (DIPSTICK)	69
Y	*175-6260*	1	GEAR GP-REAR	35
Y	*165-4461*	1	HOUSING & REGULATOR GP	78
Y	*219-8666*	1	HOUSING GP-FLYWHEEL	37
Y	*245-3262*	1	HOUSING GP-FRONT	39
Y	*166-1784*	1	LIFTING GP-ENGINE	42
Y	*198-1319*	1	LINES GP-ENGINE OIL	70
Y	*397-5040*	1	LINES GP-FUEL	125
Y	*266-9810*	1	LINES GP-TURBOCHARGER OIL	71
Y	*165-4445*	1	MANIFOLD GP-EXHAUST	107
Y	*246-0600*	1	MOUNTING GP-ALTERNATOR	43
Y	*246-0598*	1	MOUNTING GP-FAN DRIVE	45
Y	*165-4459*	1	PAN GP-OIL	46
Y	*252-1567*	1	PLUG GP-ENGINE	48
Y	*246-0602*	1	PULLEY GP-CRANKSHAFT	49
Y	*189-9306*	1	SEAL GP-CRANKSHAFT	56
Y	*166-1790*	1	SUPPORT GP-ENGINE	58
Y	*166-1792*	1	TRUNNION GP-ENGINE	59
Y	*262-5901*	1	TURBOCHARGER GP	115
Y	*198-0921*	1	VALVE GP-FLUID SAMPLING	74
Y	*235-8203*	1	WIRING GP-ELECTRONIC CONTROL	230

Y - SEPARATE ILLUSTRATION

<END>

ENGINE ARRANGEMENT

387-8582 ENGINE AR-COMPLETE

S/N: TXD1-UP

AN ATTACHMENT

SMCS-1000 **i05517427**

NOTE	PART NUMBER	QTY	PART NAME 1 2 3 4 5 6 (PRODUCT LEVEL)	SEE PAGE
Y	*246-9365*	1	CONTROL & MTG GP-ENGINE ELEK	149
Y	*188-3826*	1	COOLER GP-ENGINE OIL	75
Y	*238-1116*	1	COOLER GP-TRANSMISSION OIL	269
Y	*246-0605*	1	COVER GP-CYLINDER BLOCK	8
Y	*118-1727*	1	COVER GP-FRONT HOUSING (ACCESSORY DRIVE)	9
Y	*217-8669*	1	COVER GP-FRONT HOUSING	10
Y	*222-1783*	1	COVER GP-VALVE MECHANISM	11
Y	*211-8041*	1	DAMPER GP	23
Y	*4P-2102*	1	DRAIN GP-ENGINE OIL	24
Y	*246-0599*	1	DRIVE GP-PUMP	281
Y	*246-0596*	1	ELBOW GP-AIR INLET	100
Y	*387-8601*	1	ENGINE AR	3
Y	*222-2409*	1	FASTENER GP-DAMPER & PULLEY	28
Y	*219-8681*	1	FASTENER GP-FRONT COVER	29
Y	*236-7315*	1	FASTENER GP-VALVE COVER	30
Y	*233-0423*	1	FASTENER GP-VALVE COVER BASE	31
Y	*389-8270*	1	FILLER GP-ENGINE OIL	63
Y	*183-2097*	1	FILTER GP-ENGINE OIL	64
Y	*241-3718*	1	FLYWHEEL GP	32
Y	*241-3719*	1	FUMES DISPOSAL GP	68
Y	*246-0601*	1	GAUGE GP-OIL LEVEL (DIPSTICK) (ENGINE)	69
Y	*175-6260*	1	GEAR GP-REAR	35
Y	*165-4461*	1	HOUSING & REGULATOR GP (WATER TEMPERATURE REGULATOR)	78
Y	*219-8666*	1	HOUSING GP-FLYWHEEL	37
Y	*245-3262*	1	HOUSING GP-FRONT	39
Y	*166-1784*	1	LIFTING GP-ENGINE	42
Y	*198-1319*	1	LINES GP-ENGINE OIL	70
Y	*397-5040*	1	LINES GP-FUEL	125
Y	*266-9810*	1	LINES GP-TURBOCHARGER OIL	71
Y	*165-4445*	1	MANIFOLD GP-EXHAUST	107
Y	*246-0600*	1	MOUNTING GP-ALTERNATOR	43
Y	*246-0598*	1	MOUNTING GP-FAN DRIVE	45
Y	*165-4459*	1	PAN GP-OIL	46
Y	*252-1567*	1	PLUG GP-ENGINE	48
Y	*246-0602*	1	PULLEY GP-CRANKSHAFT	49
Y	*189-9306*	1	SEAL GP-CRANKSHAFT	56
Y	*166-1790*	1	SUPPORT GP-ENGINE	58
Y	*166-1792*	1	TRUNNION GP-ENGINE	59
Y	*262-5901*	1	TURBOCHARGER GP	115
Y	*198-0921*	1	VALVE GP-FLUID SAMPLING	74
Y	*235-8203*	1	WIRING GP-ELECTRONIC CONTROL	230
			S/N: TXD1-890	
Y	*330-6019*	1	WIRING GP-ELECTRONIC CONTROL	233
			S/N: TXD891-UP	
			PLEASE USE THE GASKET KIT LINK IN SIS OR CONTACT YOUR LOCAL DEALER FOR THE LATEST GASKET KIT INFORMATION	

Y - SEPARATE ILLUSTRATION

<END>

ENGINE ARRANGEMENT

387-8619 ENGINE AR-CORE

S/N: TXD1-UP
PART OF 387-8600, 387-8601 ENGINE AR
AN ATTACHMENT

SMCS-1000 **i05564336**

NOTE	PART NUMBER	QTY	PART NAME 1 2 3 4 5 6 (PRODUCT LEVEL)	SEE PAGE
Y	*242-0674*	1	CAMSHAFT GP	7
Y	*164-6148*	1	CRANKSHAFT GP	12
Y	*161-3406*	1	CYLINDER BLOCK GP	15
Y	*384-5590*	1	CYLINDER HEAD GP	22
Y	*205-1321*	1	GEAR GP-FRONT	33
YR	*265-1400*	6	PISTON & ROD GP	47
Y	*387-8622*	1	PUMP & MTG GP-UNIT INJ HYD	127
Y	*195-8098*	1	PUMP GP-ENGINE OIL	73
Y	*267-9715*	6	PUMP GP-FUEL INJECTION	129
Y	*211-1812*	1	PUMP GP-WATER	82
Y	*231-1978*	1	SENSOR GP-ENGINE	203
Y	*242-0447*	1	VALVE MECHANISM GP	61

R - REMFG PART MAY BE AVAILABLE
Y - SEPARATE ILLUSTRATION

<END>

389-3215 INSTALLATION AR-ENGINE

S/N: EMM1-UP; JEN1-UP
PART OF 389-3211, 389-3212 COMMON AR

SMCS-1000 **i05640293**

NOTE	PART NUMBER	QTY	PART NAME 1 2 3 4 5 6 (PRODUCT LEVEL)	SEE PAGE
Y	*331-4938*	1	AFTERCOOLER GP-AIR (ATAAC)	94
Y	*375-3124*	1	COOLER GP-HYDRAULIC OIL	443
Y	*215-3251*	1	DRIVE GP-FAN	25
Y	*393-7367*	1	FILTER & LINES GP-FUEL	116
Y	*230-5585*	1	FUMES DISPOSAL GP (CRANKCASE)	67
Y	*251-4553*	1	LINES GP-AIR (ATAAC)	104
Y	*223-0556*	1	MOUNTING GP-ENGINE	44
Y	*317-6576*	1	WIRING GP-ENGINE	235
Y	*224-2693*	1	YOKE GP	62

Y - SEPARATE ILLUSTRATION

<END>

242-0674 CAMSHAFT GP

S/N: TXD1-UP
PART OF 387-8619 ENGINE AR-CORE
AN ATTACHMENT

SMCS-1210 **i05555589**

NOTE	REF NO	GRAPHIC REF	PART NUMBER	QTY	PART NAME 1 2 3 4 5 6 (PRODUCT LEVEL)	SEE PAGE
	1	1	**107-7694**	1	PLATE-THRUST	
R	2	1	**242-0673**	1	CAMSHAFT AS	
	2A	1	**1B-8705**	1	KEY-WOODRUFF	
	2B	1	**224-3247**	1	GEAR (100-TEETH)	
M	3		**6V-3940**	2	BOLT (M8X1.25X25-MM)	

M - METRIC PART
R - REMFG PART MAY BE AVAILABLE

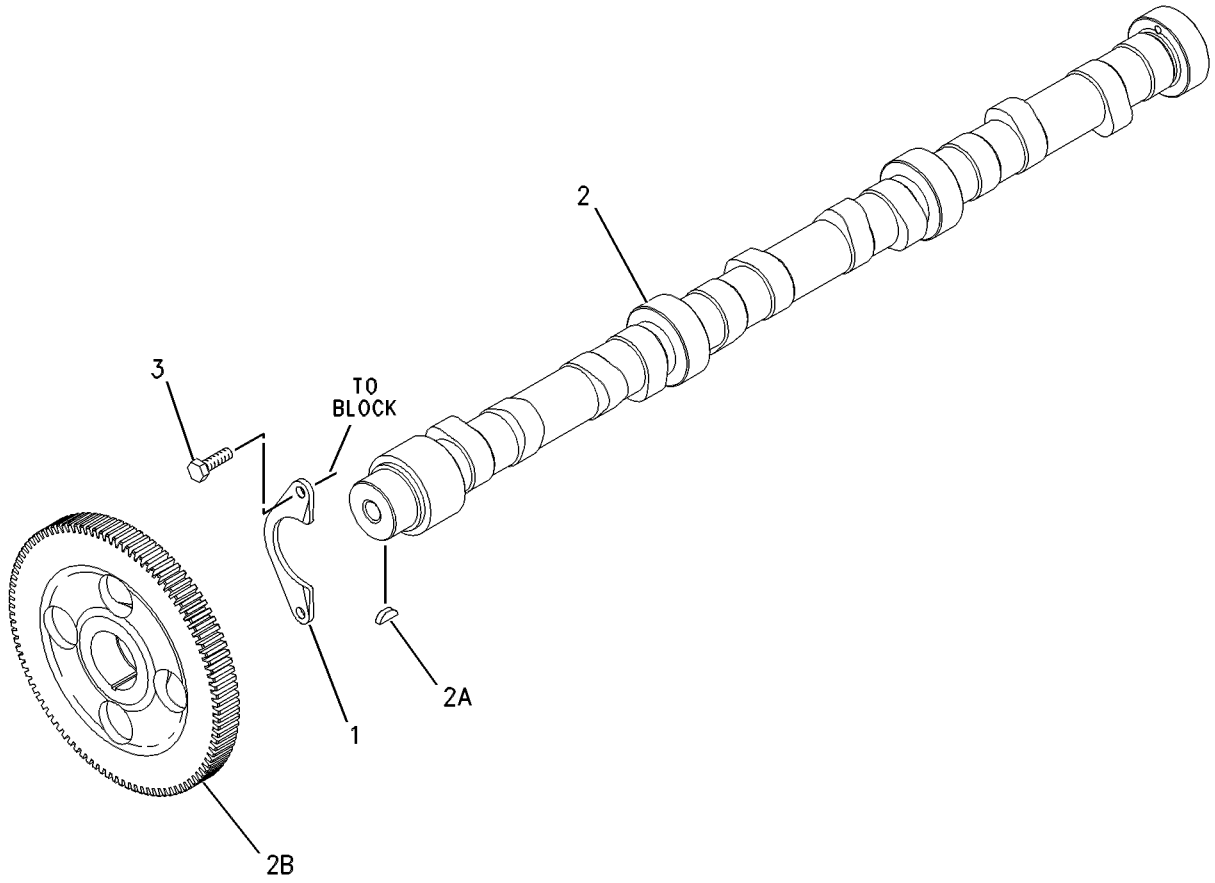

GRAPHIC #1 **<END>** g00626400

246-0605 COVER GP-CYLINDER BLOCK

S/N: TXD1-UP

PART OF 387-8581, 387-8582 ENGINE AR-COMPLETE

AN ATTACHMENT

SMCS-1201 **i05555236**

NOTE	REF NO	GRAPHIC REF	PART NUMBER	QTY	PART NAME 1 2 3 4 5 6 (PRODUCT LEVEL)	SEE PAGE
	1	1	**205-5285**	1	GASKET	
	2	1	**215-4441**	1	COVER	
	3	1	**240-0041**	1	BREATHER AS (CRANKCASE)	
M	4	1	**3E-8005**	1	BOLT (M8X1.25X160-MM)	
M	5	1	**6V-3918**	2	BOLT (M8X1.25X50-MM)	
M	6	1	**6V-3940**	9	BOLT (M8X1.25X25-MM)	
	7	1	**9F-4446**	1	SEAL-O-RING (CRANKCASE BREATHER)	
	8	1	**9M-1974**	11	WASHER-HARD (8.8X16X2-MM THK)	
	9	1	**5N-4185**	1	WASHER-SPECIAL	
	10	1	**9N-6377**	1	CAP	

M - METRIC PART

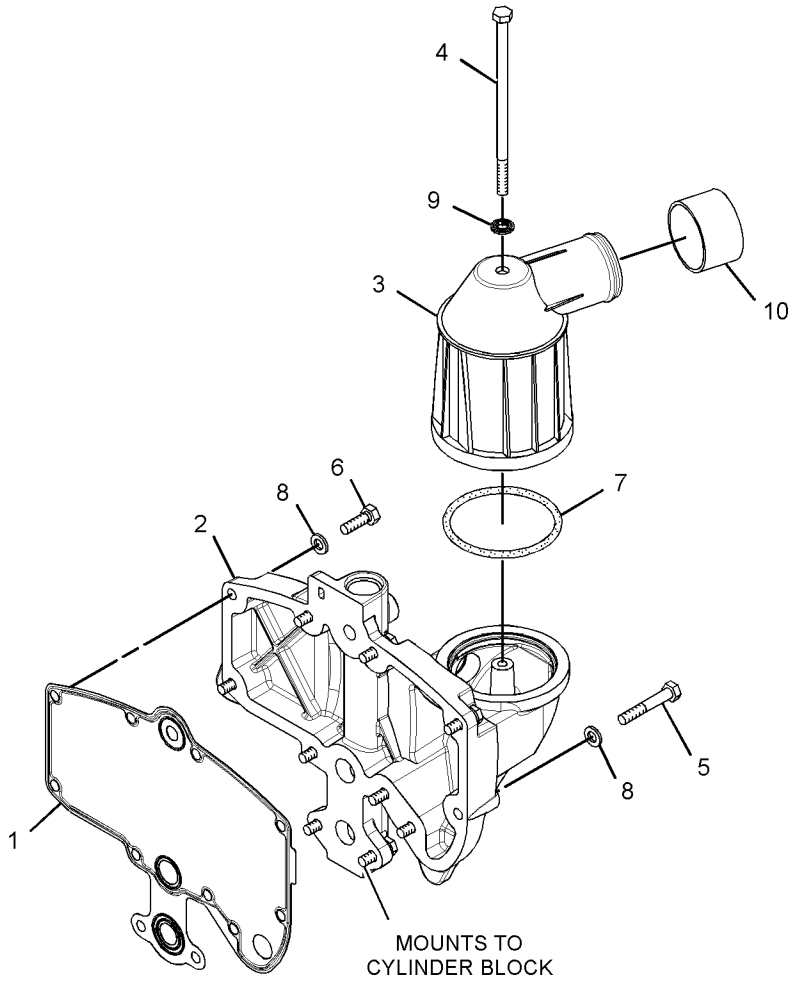

GRAPHIC #1 **<END>** g03027936

118-1727 COVER GP-FRONT HOUSING—ACCESSORY DRIVE

S/N: TXD1-UP

REQUIRED ON ENGINES WITHOUT FACTORY INSTALLED AIR COMPRESSOR

PART OF 387-8581, 387-8582 ENGINE AR-COMPLETE

AN ATTACHMENT

SMCS-1151, 1166 **i05555239**

NOTE	REF NO	GRAPHIC REF	PART NUMBER	QTY	PART NAME 1 2 3 4 5 6 (PRODUCT LEVEL)	SEE PAGE
	1	1	**5P-8245**	4	WASHER-HARD (13.5X25.5X3-MM THK)	
M	2	1	**6V-5696**	2	BOLT (M12X1.75X80-MM)	
	3	1	**4W-2026**	1	COVER	
	4	1	**135-9819**	1	SEAL-INTEGRAL	
M	5	1	**6V-8149**	2	NUT (M12X1.75-THD)	

M - METRIC PART

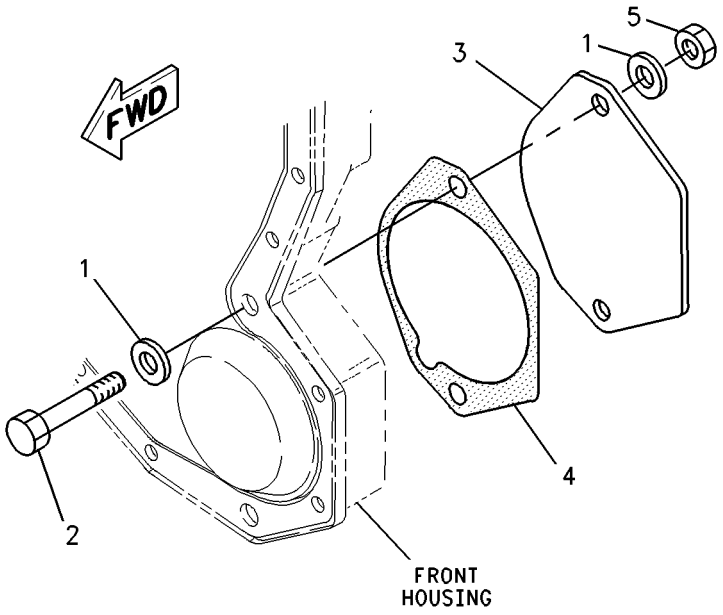

GRAPHIC #1 **<END>** g00897312

217-8669 COVER GP-FRONT HOUSING

S/N: TXD1-UP

PART OF 387-8581, 387-8582 ENGINE AR-COMPLETE

AN ATTACHMENT

SMCS-1151, 1166

i05555246

NOTE	REF NO	GRAPHIC REF	PART NUMBER	QTY	PART NAME 1 2 3 4 5 6 (PRODUCT LEVEL)	SEE PAGE
	1	1	**209-0760**	1	COVER AS-FRONT	
	1A	1	**126-1757**	2	WASHER (10.85X19.3X1.27-MM THK)	
	1B	1	**136-0822**	2	STUD	
	2	1	**209-0762**	1	GASKET AS	

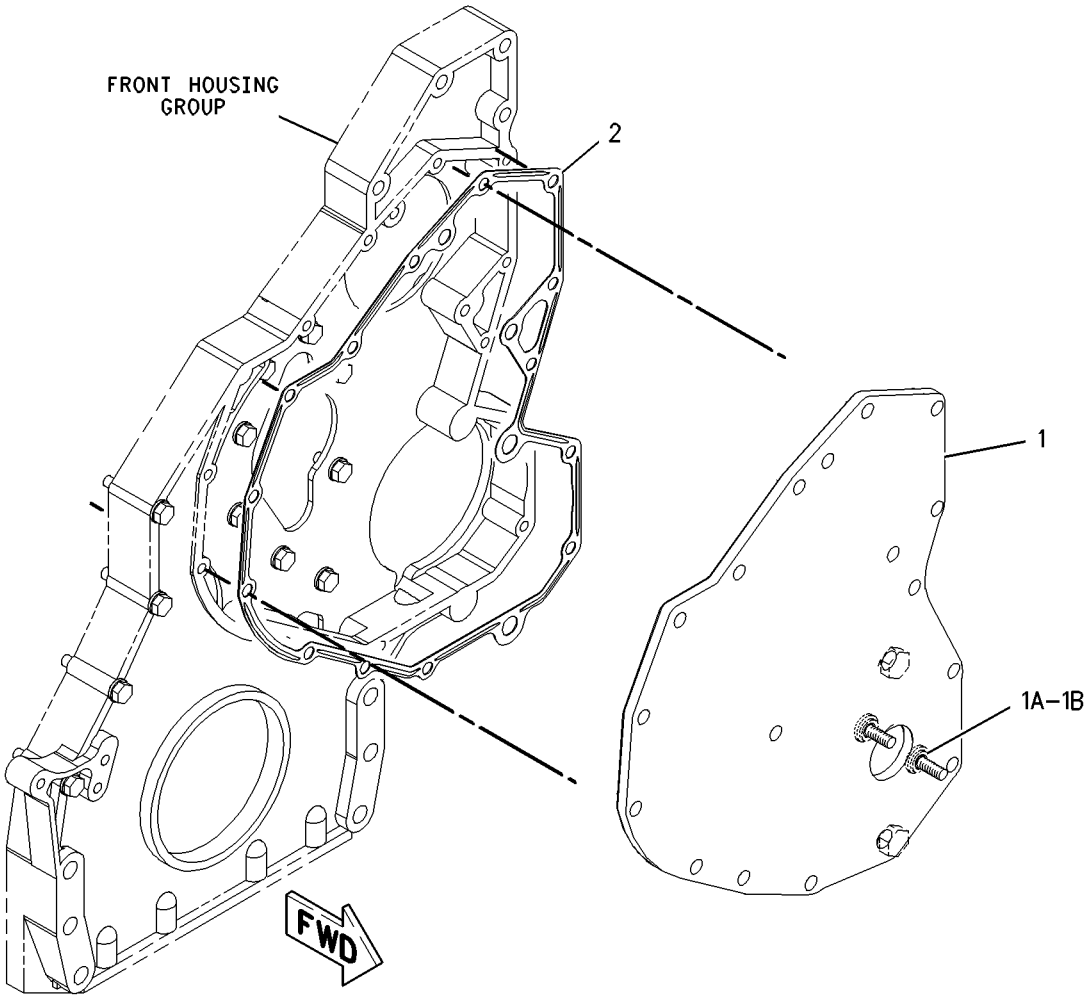

GRAPHIC #1

<END>

g00849279

222-1783 COVER GP-VALVE MECHANISM

S/N: TXD1-UP

PART OF 387-8581, 387-8582 ENGINE AR-COMPLETE

AN ATTACHMENT

SMCS-1107 **i05555253**

NOTE	REF NO	GRAPHIC REF	PART NUMBER	QTY	PART NAME 1 2 3 4 5 6 (PRODUCT LEVEL)	SEE PAGE
	1	1	**358-7876**	11	SLEEVE-SPACER	
	2	1	**358-7872**	1	COVER GP-VALVE MECHANISM	
	2A	1	**285-4106**	1	SEAL-VALVE COVER	
	3	1	**353-6988**	1	BASE GP-VALVE COVER	
	3A	1	**268-3490**	1	SEAL-VALVE COVER	
	4	1	**204-4444**	1	BREATHER AS (CRANKCASE)	
		1	**160-0526**	1	SEAL-O-RING	
		1	**185-3159**	1	FILTER ELEMENT-BREATHER (CRANKCASE)	
		1	**341-0979**	1	SEAL-O-RING	

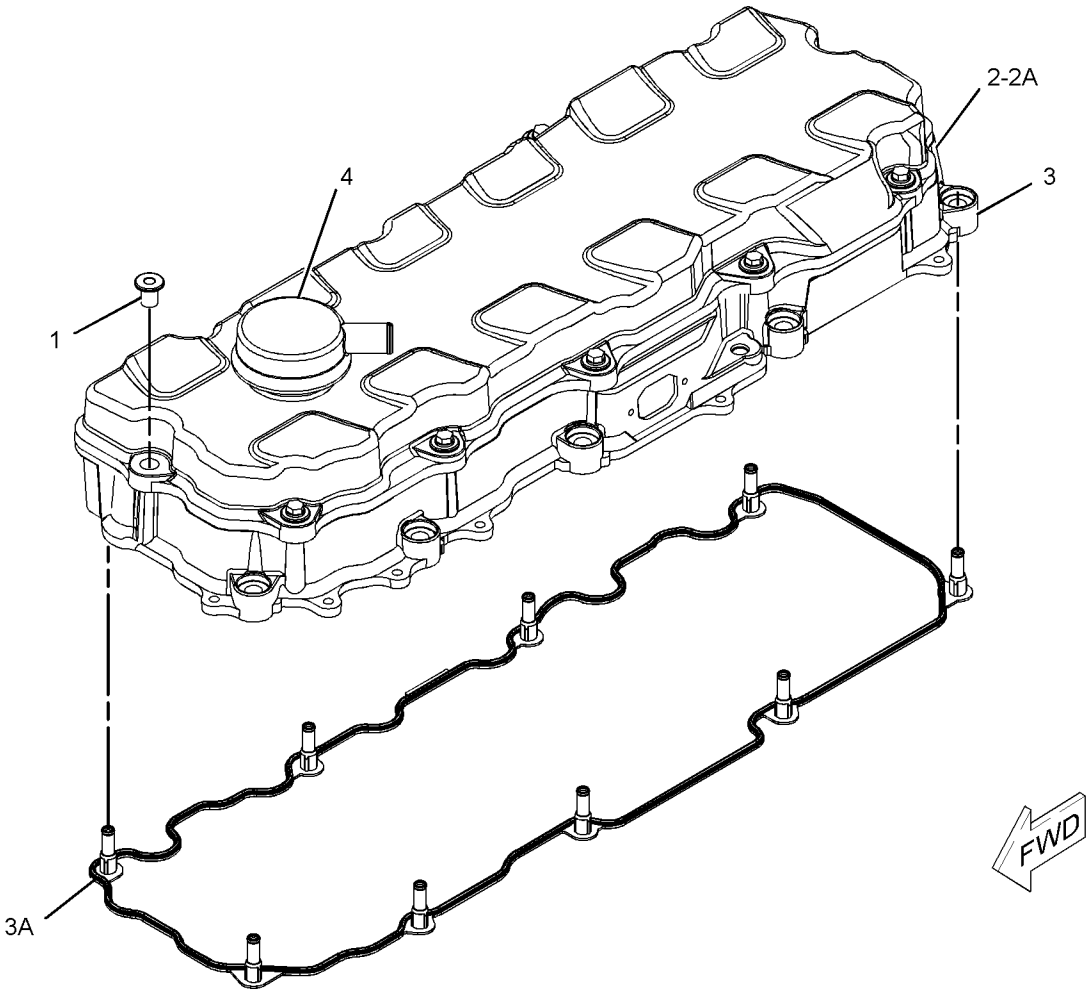

GRAPHIC #1 **<END>** g01304662

164-6148 CRANKSHAFT GP

S/N: TXD1-UP
PART OF 387-8619 ENGINE AR-CORE
AN ATTACHMENT

SMCS-1202 **i05555590**

NOTE	REF NO	GRAPHIC REF	PART NUMBER	QTY	PART NAME 1 2 3 4 5 6 (PRODUCT LEVEL)	SEE PAGE
J	1	1	**151-2939**	7	BEARING-MAIN (STANDARD)	
AB			**282-1771**	7	BEARING-MAIN (0.25-MM US)	
AB			**282-1772**	7	BEARING-MAIN (0.51-MM US)	
R	2	1	**261-1544**	1	CRANKSHAFT AS	
	2A	1	**1B-8705**	1	KEY-WOODRUFF	
	2B	1	**2W-8147**	1	GEAR (50-TEETH)	
	2C	1	**9Y-0810**	1	SLEEVE-WEAR	
J	3	1	**246-3150**	2	PLATE-THRUST	
					AVAILABLE REPAIR KIT(S):	
AJ			**243-6716**		KIT-BEARING (STANDARD)	
					(INCLUDES A COMPLETE SET OF MAIN BEARINGS AND THRUST PLATES)	

A - NOT PART OF THIS GROUP
B - USE AS REQUIRED
J - KIT MARKED J INCLUDES PARTS MARKED J
R - REMFG PART MAY BE AVAILABLE

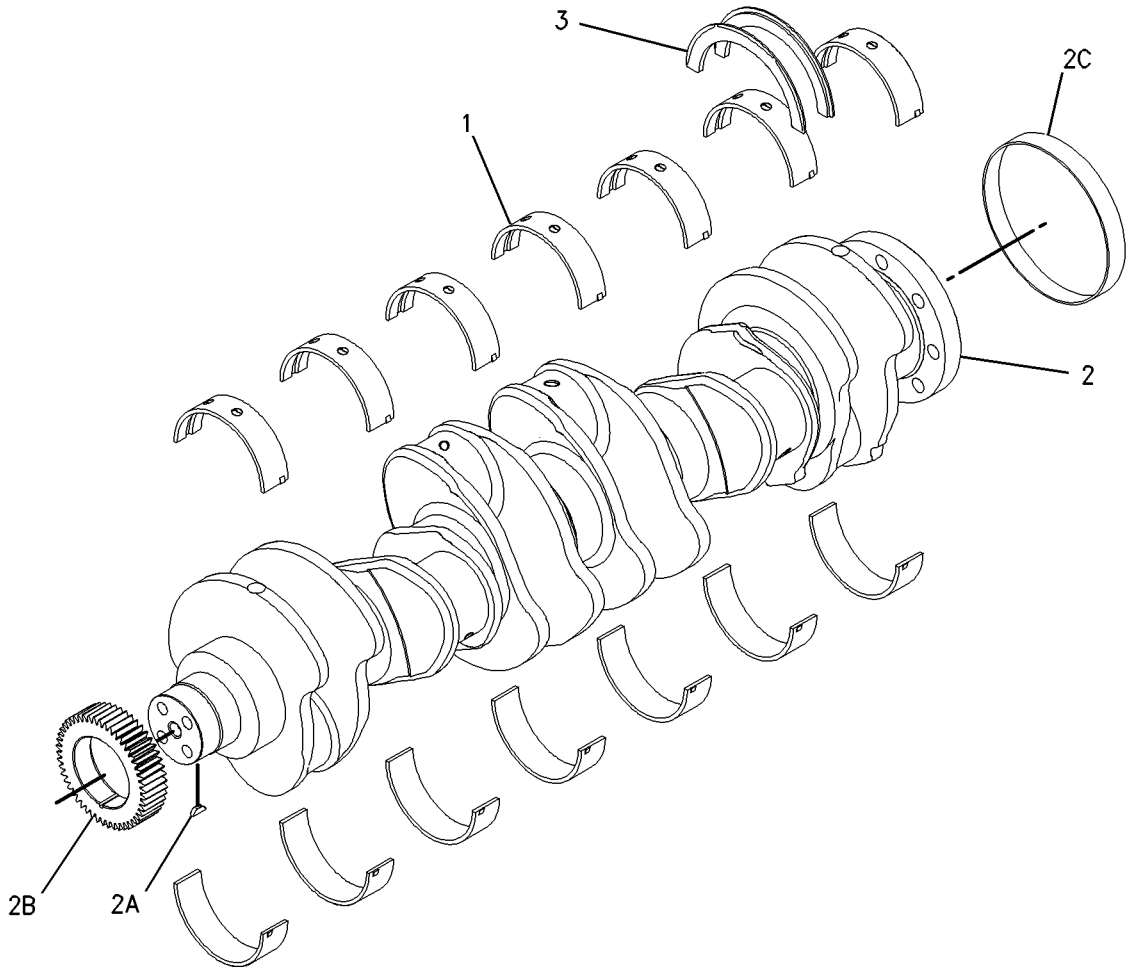

GRAPHIC #1 **<END>** g00789955

325-3915 CYLINDER BLOCK AS*R

S/N: TXD1-UP

PART OF 220-1952 CYLINDER BLOCK GP

AN ATTACHMENT

SMCS-1201 **i05643885**

NOTE	REF NO	GRAPHIC REF	PART NUMBER	QTY	PART NAME 1 2 3 4 5 6 (PRODUCT LEVEL)	SEE PAGE
	1	1	**0L-1026**	2	PLUG-CUP	
	2	1	**3B-0623**	2	PLUG-CUP	
	3	1	**4F-5695**	4	PLUG-CUP	
M	4	1	**175-0454**	14	BOLT (M16X2X160-MM)	
	5	1	**203-5805**	2	BUSHING	
	6	1	**203-6090**	1	BUSHING	
	7	1	**212-7002**	7	CAP-BEARING	
	8	1	**216-5586**	1	BUSHING (CAMSHAFT)	
	9	1	**9X-8268**	14	WASHER (17.5X30X3.5-MM THK)	

M - METRIC PART

325-3915 **CYLINDER BLOCK AS (*contd.*)** **i05643885**

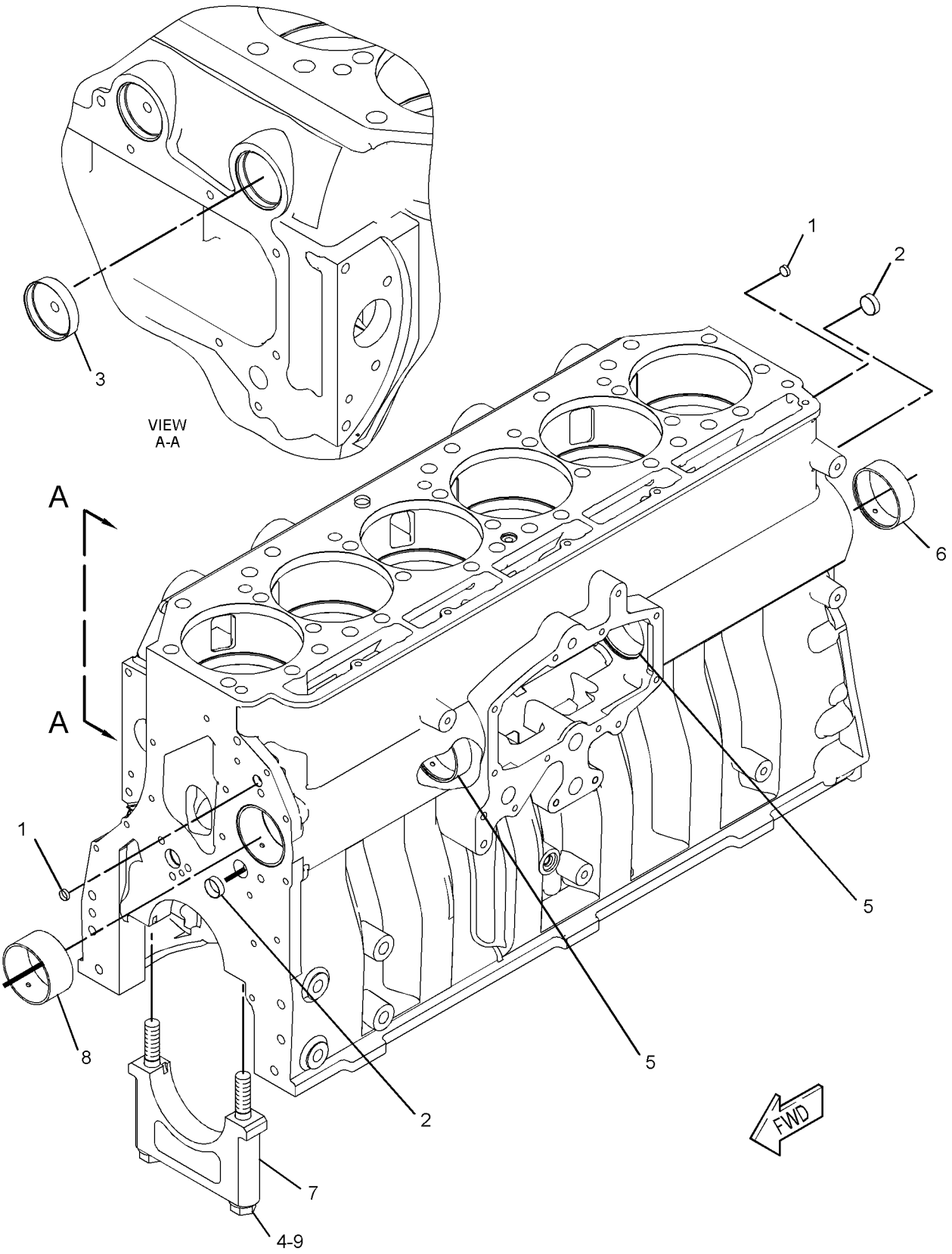

GRAPHIC #1 **<END>** g02073913

161-3406 CYLINDER BLOCK GP

S/N: TXD1-UP

PART OF 387-8619 ENGINE AR-CORE

AN ATTACHMENT

SMCS-1201 **i05555591**

NOTE	REF NO	GRAPHIC REF	PART NUMBER	QTY	PART NAME 1 2 3 4 5 6 (PRODUCT LEVEL)	SEE PAGE
	1	1	**0S-0519**	1	PLUG-CUP	
CY	2	1	*220-1952*	1	CYLINDER BLOCK GP	17
	3	1	**1W-8407**	2	SLEEVE	
	4	1	*396-0393*	1	PLUG AS	
		1	**214-7566**	1	SEAL-O-RING	
		1	**360-3677**	1	PLUG	
	5	1	**4G-4972**	1	SEAL-O-RING	
	6	1	**6V-3538**	2	DOWEL	
	7	1	**7N-5683**	2	DOWEL	

C - CHANGE FROM PREVIOUS TYPE
Y - SEPARATE ILLUSTRATION

161-3406 **CYLINDER BLOCK GP (*contd.*)** **i05555591**

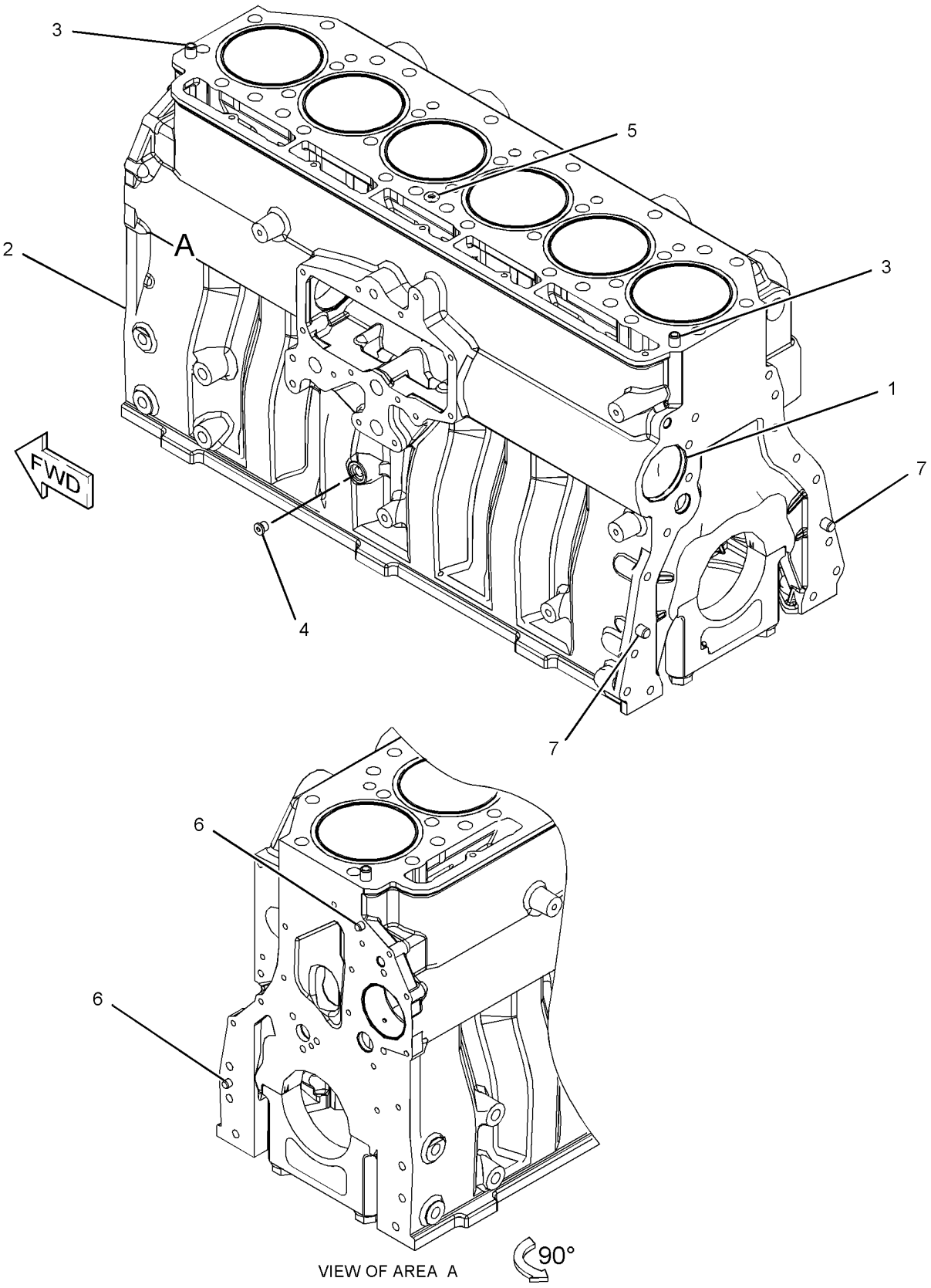

GRAPHIC #1 **<END>** g02727107

220-1952 CYLINDER BLOCK GP

S/N: TXD1-UP
PART OF 161-3406 CYLINDER BLOCK GP
AN ATTACHMENT

SMCS-1201 **i05643882**

NOTE	REF NO	GRAPHIC REF	PART NUMBER	QTY	PART NAME 1 2 3 4 5 6 (PRODUCT LEVEL)	SEE PAGE
	1	1	**167-0024**	6	SEAL-LINER	
	2	1	**385-7276**	6	LINER-CYLINDER BLOCK	
YR	3	1	**325-3915**	1	CYLINDER BLOCK AS	13

R - REMFG PART MAY BE AVAILABLE
Y - SEPARATE ILLUSTRATION

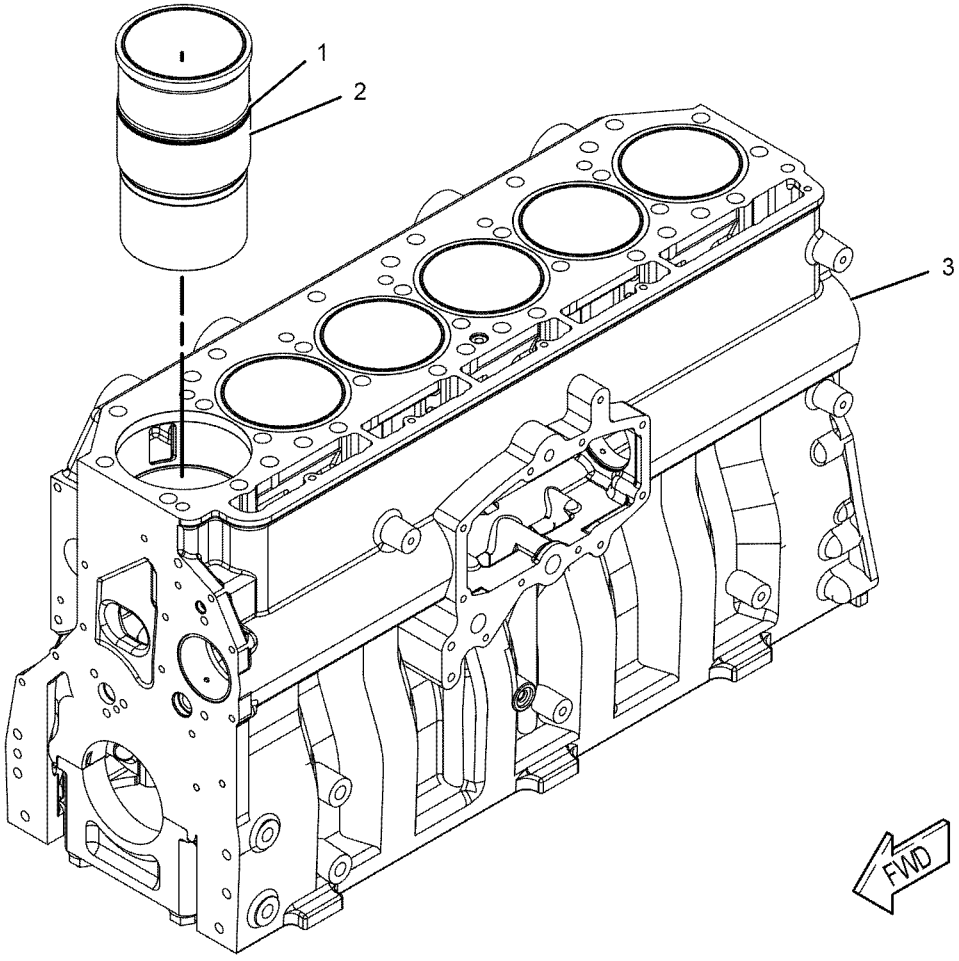

GRAPHIC #1 **<END>** g01032547

332-3619 CYLINDER HEAD AS

S/N: TXD1-UP

PART OF 344-2149 CYLINDER HEAD GP

AN ATTACHMENT

SMCS-1100, 1101

i05643893

NOTE	REF NO	GRAPHIC REF	PART NUMBER	QTY	PART NAME 1 2 3 4 5 6 (PRODUCT LEVEL)	SEE PAGE
	1	1	**6V-7604**	7	PLUG-CUP (MARKED X)	
	2	1	**8M-5860**	18	PLUG-CUP (MARKED Z)	
	3	1	**212-8917**	12	INSERT-VALVE SEAT (EXHAUST) (STANDARD)	
AB		1	**317-7210**		INSERT-VALVE SEAT (0.127-MM OS, EXHAUST)	
AB		1	**317-7211**		INSERT-VALVE SEAT (0.25-MM OS, EXHAUST)	
AB		1	**254-3947**		INSERT-VALVE SEAT (0.508-MM OS, EXHAUST)	
	4	1	**227-1200**	6	SLEEVE-INJECTOR	
	5	1	**241-8388**	12	INSERT-VALVE SEAT (INLET) (STANDARD)	
AB		1	**317-7212**		INSERT-VALVE SEAT (0.127-MM OS, INLET)	
AB		1	**317-7213**		INSERT-VALVE SEAT (0.25-MM OS, INLET)	
AB		1	**254-3946**		INSERT-VALVE SEAT (0.508-MM OS, INLET)	
	6	1	**310-7255**	6	SEAL-O-RING	
	7	1	**310-7257**	6	SEAL-O-RING	

A - NOT PART OF THIS GROUP
B - USE AS REQUIRED

332-3619 **CYLINDER HEAD AS (*contd.*)** **i05643893**

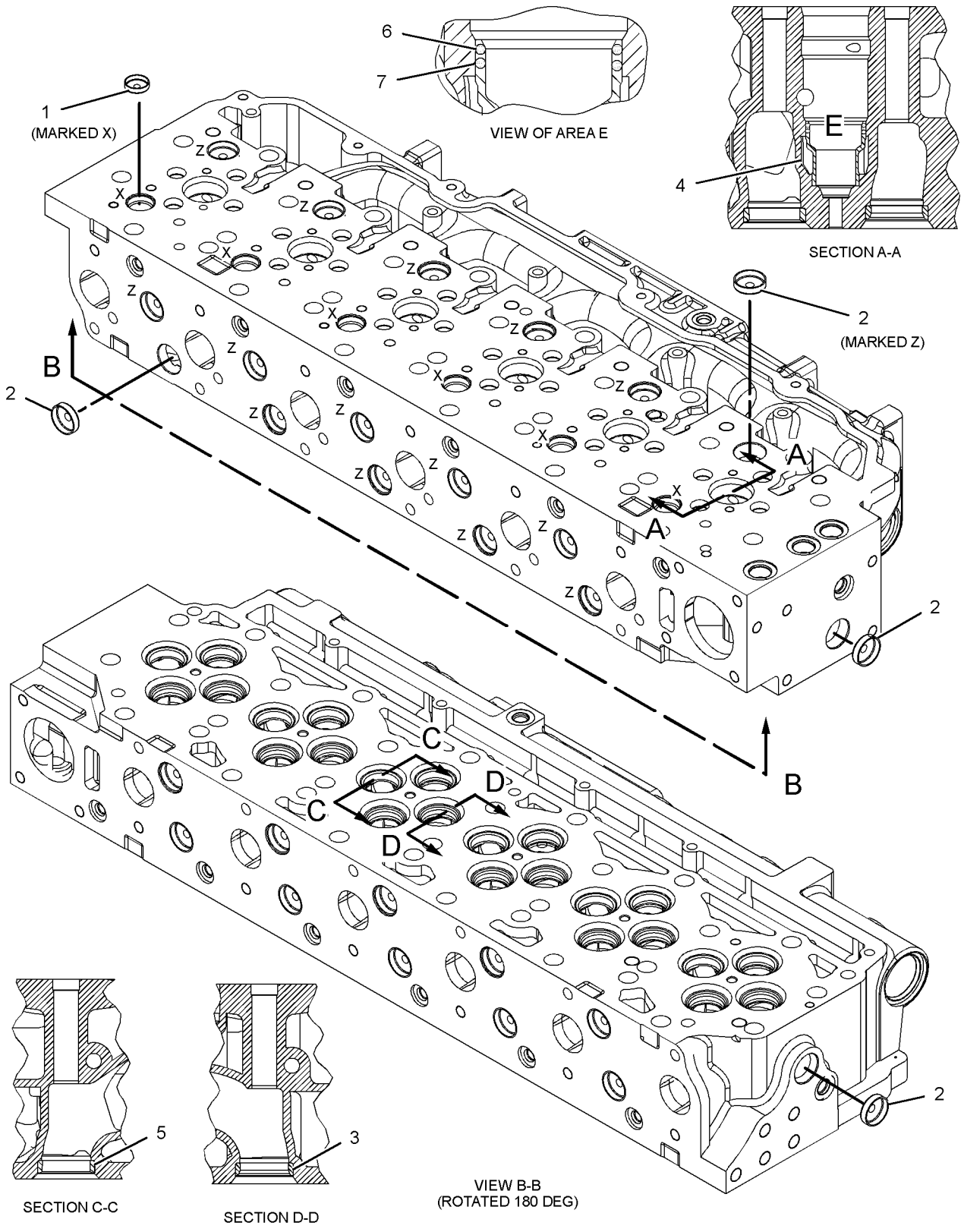

GRAPHIC #1 **<END>** g01414571

344-2149 CYLINDER HEAD GP*R

S/N: TXD1-UP

PART OF 384-5590 CYLINDER HEAD GP

AN ATTACHMENT

SMCS-1100 **i05643886**

NOTE	REF NO	GRAPHIC REF	PART NUMBER	QTY	PART NAME 1 2 3 4 5 6 (PRODUCT LEVEL)	SEE PAGE
	1	1	**1W-2715**	24	LOCK-RETAINER (INLET)	
	2	1	**2A-4429**	24	LOCK-RETAINER (EXHAUST)	
	3	1	**163-2478**	12	SEAL-VALVE STEM (EXHAUST)	
	4	1	**190-6115**	12	SPRING-VALVE (INNER)	
	5	1	**190-6117**	12	SPRING-VALVE (OUTER)	
	6	1	**211-2134**	12	RETAINER (VALVE SPRING)	
	7	1	**217-0609**	6	SEAT-VALVE SPRING	
	8	1	**241-8383**	12	VALVE-EXHAUST	
	9	1	**241-8384**	12	RETAINER (VALVE SPRING)	
	10	1	**241-8386**	12	SPRING-VALVE (INNER)	
	11	1	**241-8385**	12	SPRING-VALVE (OUTER)	
	12	1	**241-8387**	6	SEAT	
	13	1	**241-8390**	12	SEAL-VALVE STEM	
	14	1	**252-7803**	12	VALVE-INLET	
	15	1	**259-5829**	12	GUIDE-VALVE (STANDARD, INTAKE)	
AB		1	**254-3941**		GUIDE-VALVE (0.13-MM OS)	
AB		1	**254-3942**		GUIDE-VALVE (0.5-MM OS)	
	16	1	**260-4856**	12	GUIDE-VALVE (STANDARD, EXHAUST)	
AB		1	**203-3237**		GUIDE-VALVE (0.13-MM OS, EXHAUST)	
AB		1	**203-3238**		GUIDE-VALVE (0.5-MM OS, EXHAUST)	
Y	17	1	*332-3619*	1	CYLINDER HEAD AS	18
	18	1	*319-6237*	2	PLUG AS	
					(EACH INCLUDES)	
		1	**228-7096**	1	SEAL-O-RING	
		1	**271-7442**	1	PLUG	
	19	1	*389-3708*	6	PLUG AS	
					(EACH INCLUDES)	
		1	**214-7568**	1	SEAL-O-RING	
		1	**360-3679**	1	PLUG-CONNECTOR	
	20	1	*396-0405*	2	PLUG AS	
					(EACH INCLUDES)	
		1	**6V-6609**	1	SEAL-O-RING	
		1	**360-3680**	1	PLUG	
	21	1	**8T-6757**	2	PLUG-PIPE	

A - NOT PART OF THIS GROUP
B - USE AS REQUIRED
Y - SEPARATE ILLUSTRATION

344-2149 **CYLINDER HEAD GP (*contd.*)** **i05643886**

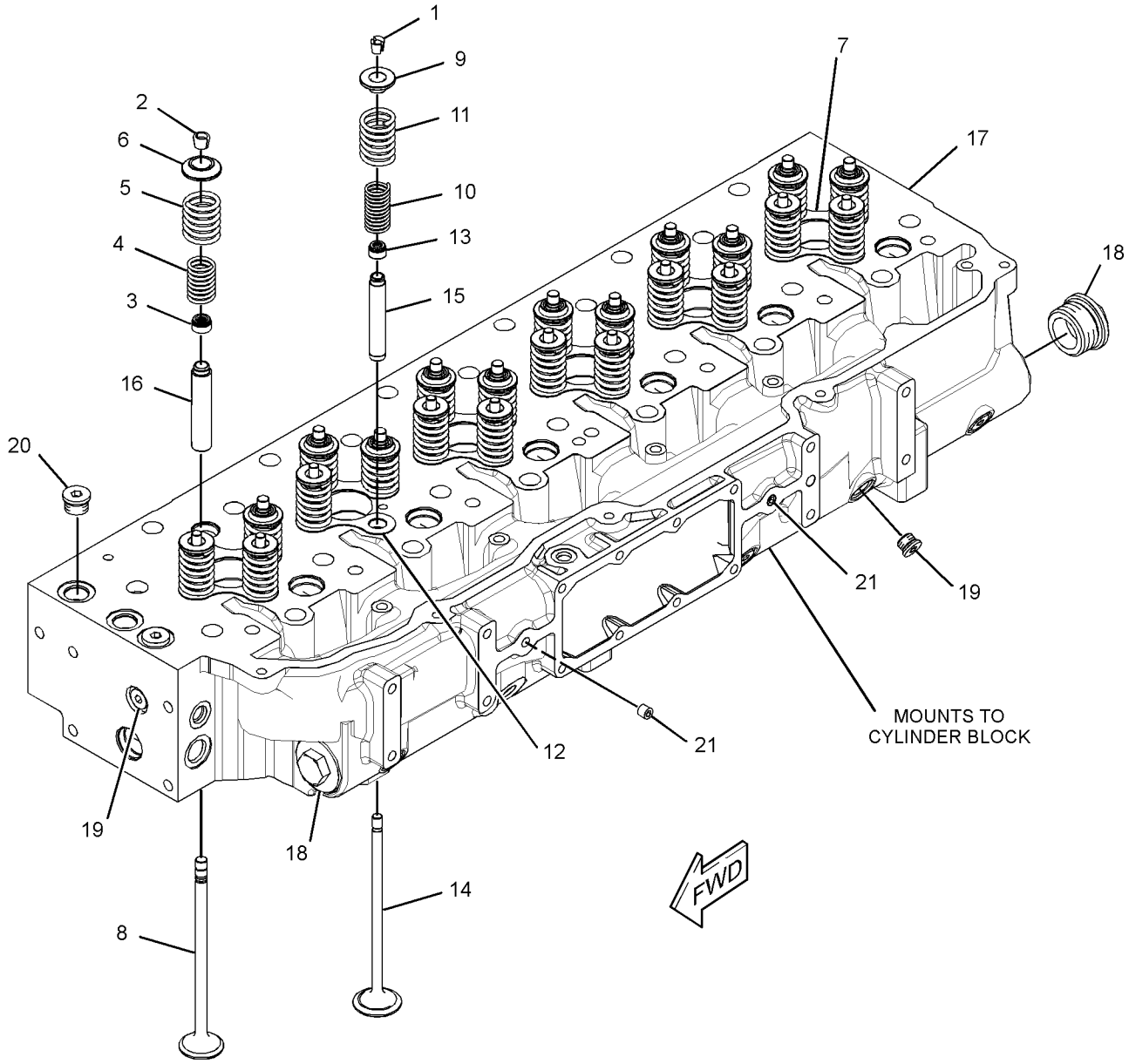

GRAPHIC #1 **<END>** g02236094

384-5590 CYLINDER HEAD GP

S/N: TXD1-UP
PART OF 387-8619 ENGINE AR-CORE
AN ATTACHMENT

SMCS-1100 **i05555592**

NOTE	REF NO	GRAPHIC REF	PART NUMBER	QTY	PART NAME 1 2 3 4 5 6 (PRODUCT LEVEL)	SEE PAGE
	1	1	**2A-3746**	1	PLUG-CUP	
	2	1	**187-1315**	1	GASKET AS	
Y	3	1	*213-4363*	1	FASTENER GP-CYLINDER HEAD	27
YR	4	1	**344-2149**	1	CYLINDER HEAD GP	20

R - REMFG PART MAY BE AVAILABLE
Y - SEPARATE ILLUSTRATION

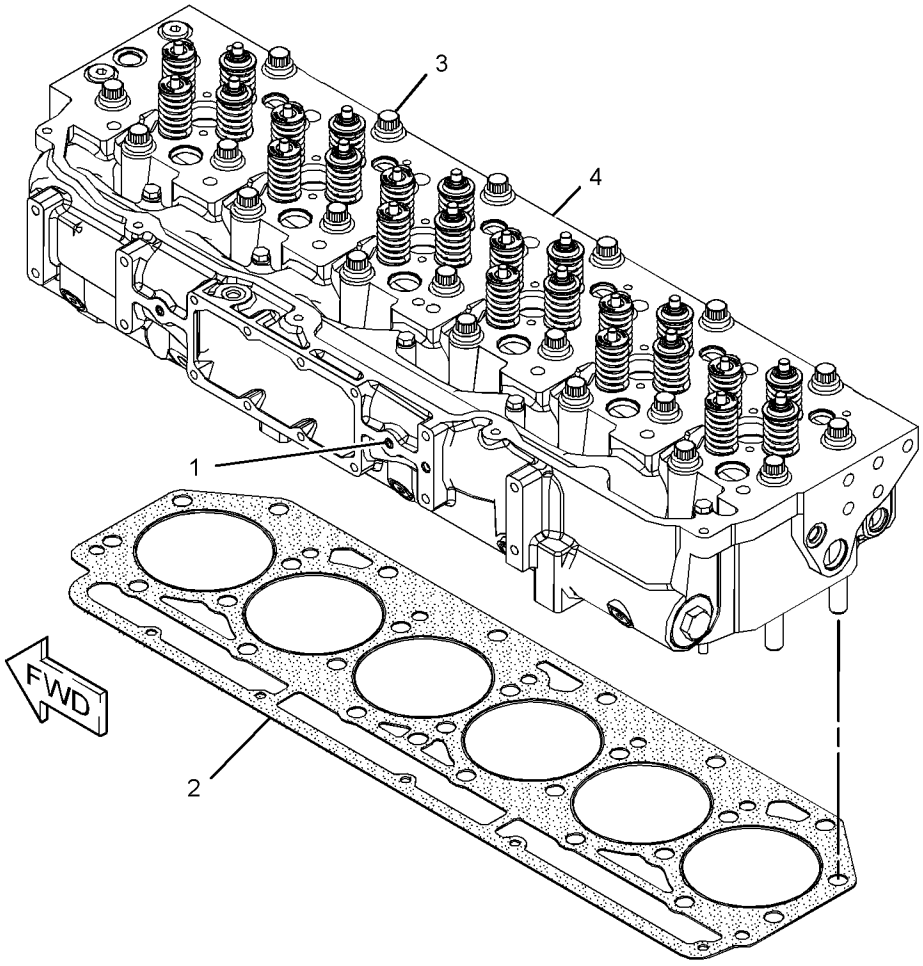

GRAPHIC #1 **<END>** g02802637

211-8041 DAMPER GP

S/N: TXD1-UP
13 INCH
FOR USE WITH CRANK PULLEY GP
PART OF 387-8581, 387-8582 ENGINE AR-COMPLETE
AN ATTACHMENT

SMCS-1205 **i05555262**

NOTE	REF NO	GRAPHIC REF	PART NUMBER	QTY	PART NAME 1 2 3 4 5 6 (PRODUCT LEVEL)	SEE PAGE
	1	1	**208-9619**	1	DAMPER AS-VIBRATION	

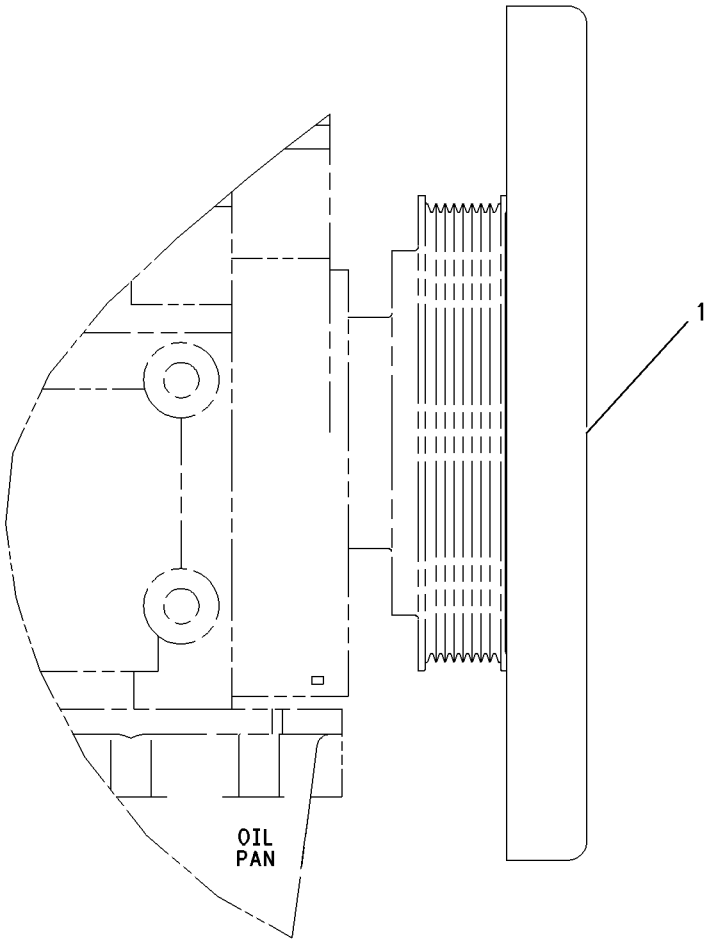

RIGHT SIDE VIEW

GRAPHIC #1 **<END>** g00919128

4P-2102 DRAIN GP-ENGINE OIL

S/N: TXD1-UP

PART OF 387-8581, 387-8582 ENGINE AR-COMPLETE

AN ATTACHMENT

SMCS-1302 **i05555265**

NOTE	REF NO	GRAPHIC REF	PART NUMBER	QTY	PART NAME 1 2 3 4 5 6 (PRODUCT LEVEL)	SEE PAGE
	1	1	**8N-6854**	1	GASKET	
	2	1	**113-5336**	1	ADAPTER AS-DRAIN	
	2A	1	**126-1683**	1	PLUG-DRAIN (ENGINE OIL PAN)	
		1	**8N-6849**	1	ADAPTER-PLUG	
	3	1	**3E-4352**	2	WASHER-HARD (8.8X20.5X2.5-MM THK)	
M	4	1	**6V-5218**	2	BOLT (M8X1.25X35-MM)	

M - METRIC PART

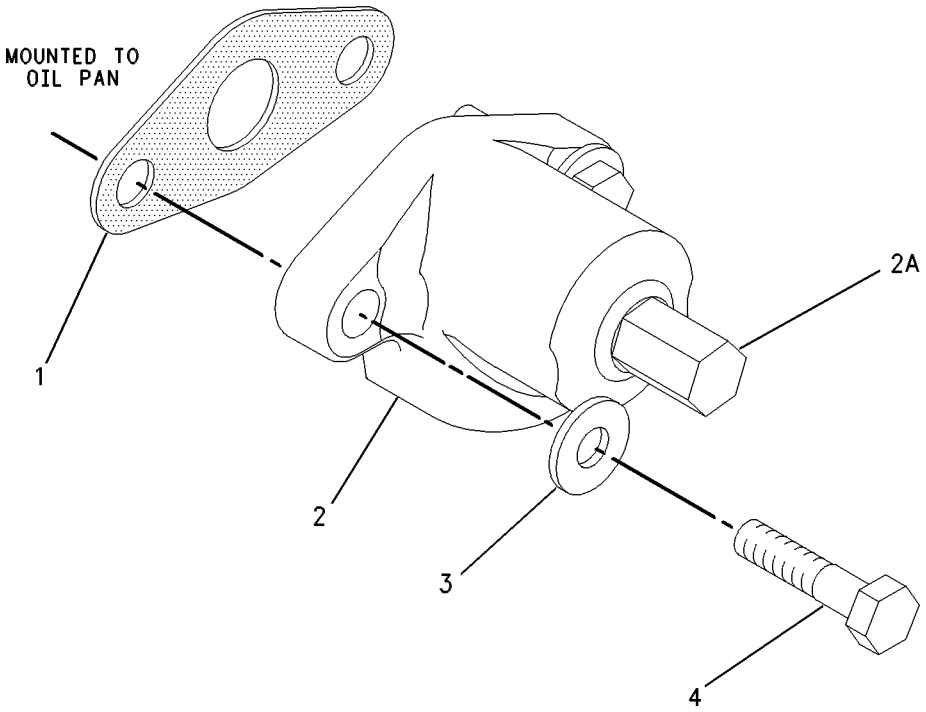

GRAPHIC #1 **<END>** g00659483

215-3251 DRIVE GP-FAN

S/N: EMM1-UP; JEN1-UP

PART OF 389-3215 INSTALLATION AR-ENGINE

SMCS-1359 **i05640416**

NOTE	REF NO	GRAPHIC REF	PART NUMBER	QTY	PART NAME 1 2 3 4 5 6 (PRODUCT LEVEL)	SEE PAGE
Y	1	1	**285-6396**	1	DRIVE GP-FAN	26
M	2	1	**8T-4182**	4	BOLT (M10X1.5X45-MM)	
	3	1	**8T-4121**	4	WASHER-HARD (11X21X2.5-MM THK)	

M - METRIC PART
Y - SEPARATE ILLUSTRATION

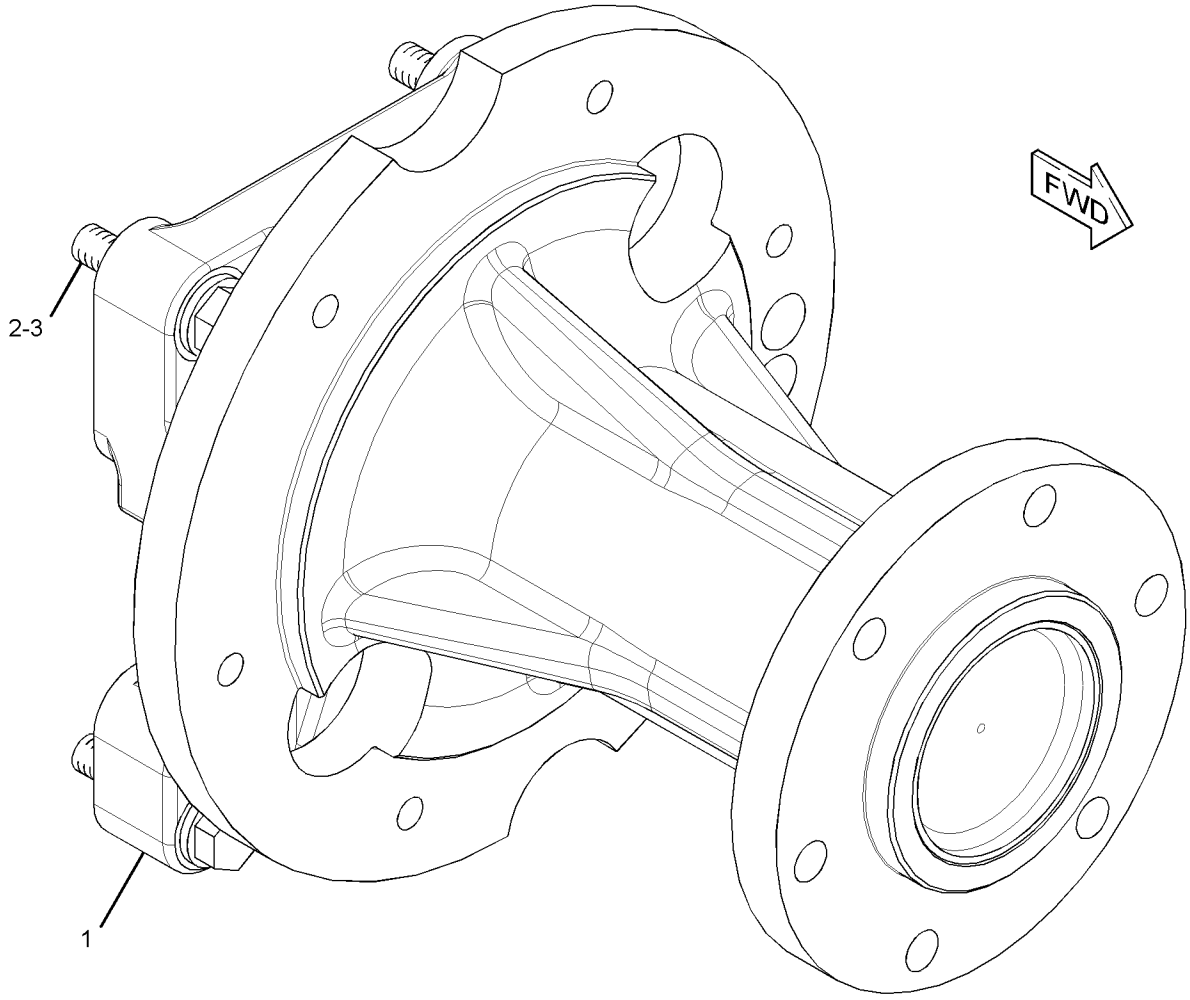

GRAPHIC #1 **<END>** g01659373

285-6396 DRIVE GP-FAN

S/N: EMM1-UP; JEN1-UP

PART OF 215-3251 DRIVE GP-FAN

SMCS-1359 **i05640450**

NOTE	REF NO	GRAPHIC REF	PART NUMBER	QTY	PART NAME 1 2 3 4 5 6 (PRODUCT LEVEL)	SEE PAGE
	1	1	**4B-4098**	1	PLUG-CUP	
	2	1	**4W-1203**	2	CUP-BEARING	
	3	1	**4W-1204**	2	CONE-BEARING	
	4	1	**7C-8634**	1	PLATE	
	5	1	**212-5839**	1	HUB	
	6	1	**212-5844**	1	SPACER (35.3X45.5X93-MM THK)	
	7	1	**285-5093**	1	BRACKET AS	
	8	1	**5S-9062**	1	SPACER (35.032X50.8X15.88-MM THK)	
M	9	1	**6V-7673**	1	BOLT (M12X1.75X50-MM)	
	10	1	**6V-9748**	1	SEAL-LIP TYPE	

M - METRIC PART

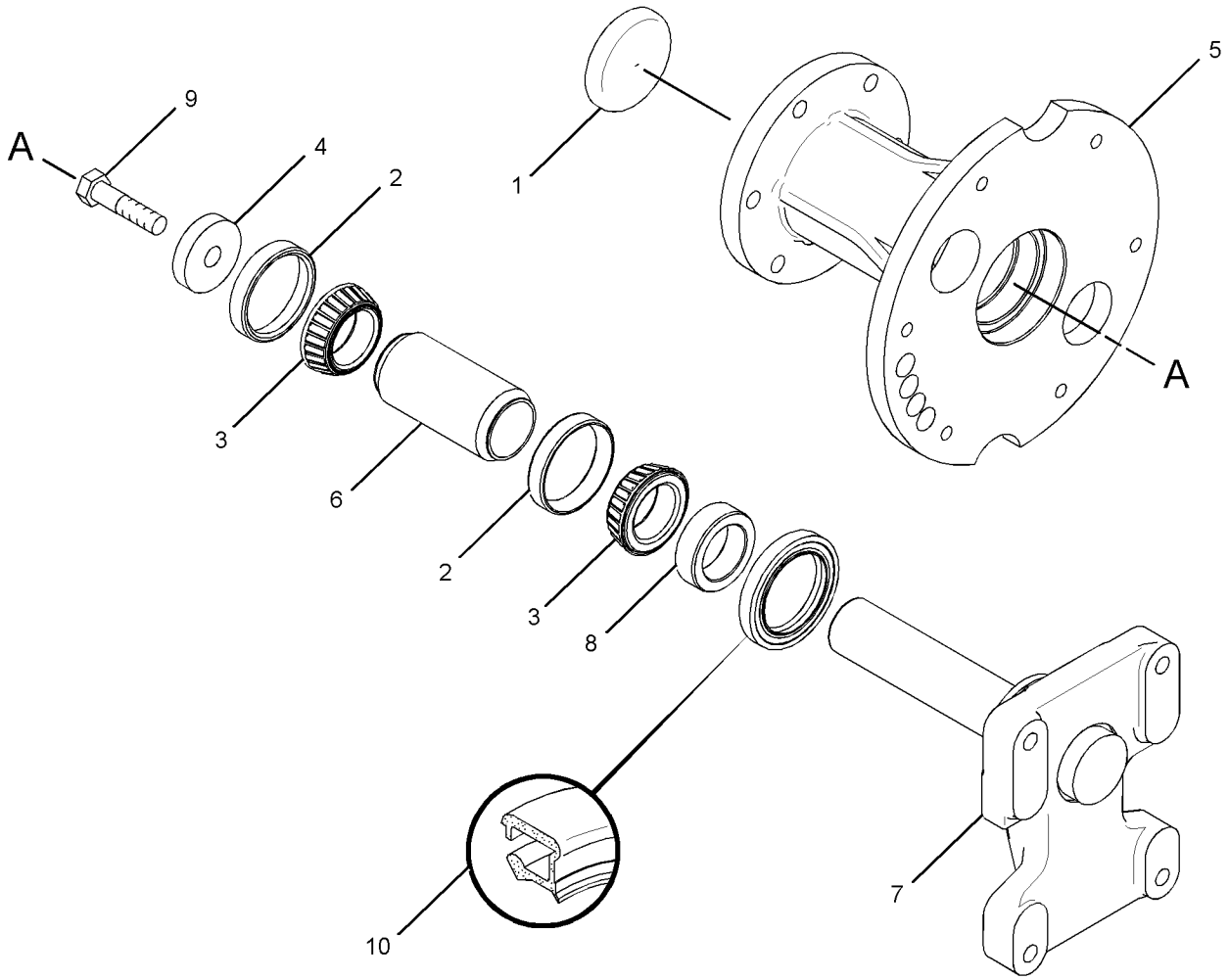

GRAPHIC #1 **<END>** g01316481

213-4363 FASTENER GP-CYLINDER HEAD

S/N: TXD1-UP
PART OF 384-5590 CYLINDER HEAD GP
AN ATTACHMENT

SMCS-1100 **i05643888**

NOTE	REF NO	GRAPHIC REF	PART NUMBER	QTY	PART NAME 1 2 3 4 5 6 (PRODUCT LEVEL)	SEE PAGE
C	1	1	*290-6884*	26	FASTENER GP-CYLINDER HEAD	
					(EACH INCLUDES)	
		1	**9X-8268**	1	WASHER (17.5X30X3.5-MM THK)	
M		1	**263-2915**	1	BOLT-12 POINT HEAD (M16X2X180-MM)	
M	2	1	**8C-4984**	5	BOLT (M8X1.25X150-MM)	
	3	1	**9M-1974**	5	WASHER-HARD (8.8X16X2-MM THK)	

C - CHANGE FROM PREVIOUS TYPE
M - METRIC PART

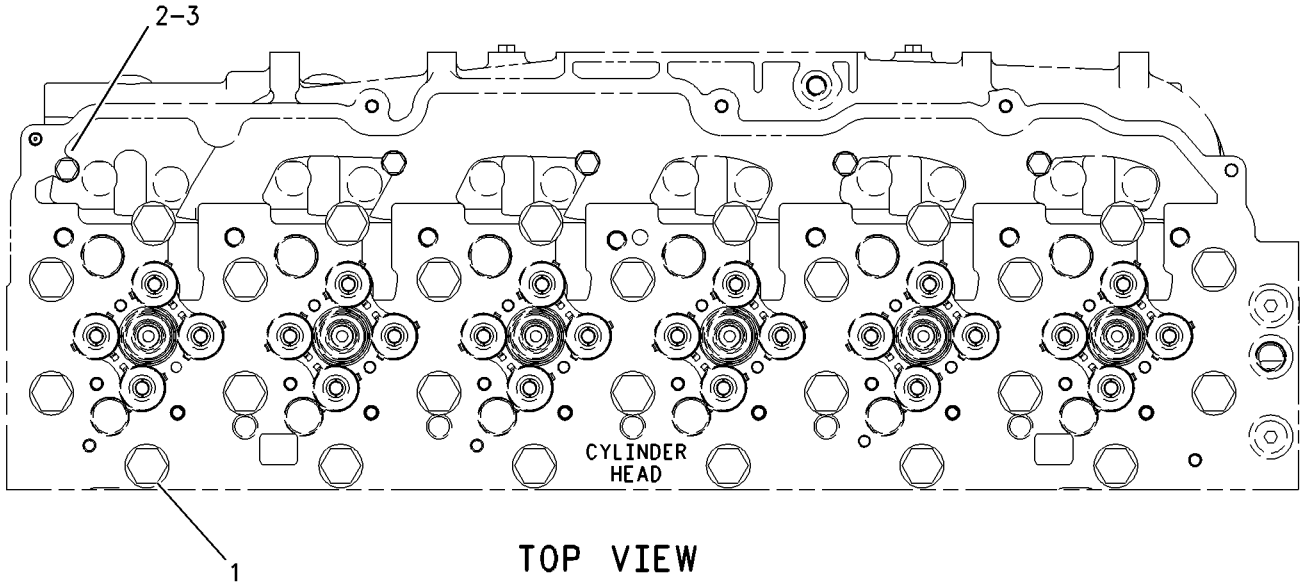

TOP VIEW

GRAPHIC #1 **<END>** g00919169

222-2409 FASTENER GP-DAMPER & PULLEY

S/N: TXD1-UP
PART OF 387-8581, 387-8582 ENGINE AR-COMPLETE
AN ATTACHMENT

SMCS-1205, 7553

i05555310

NOTE	REF NO	GRAPHIC REF	PART NUMBER	QTY	PART NAME 1 2 3 4 5 6 (PRODUCT LEVEL)	SEE PAGE
C	1	1	**228-3621**	1	SPACER (101.5X167X8-MM THK)	
	2	1	**121-3917**	1	SPACER-SPECIAL	
M	3	1	**6V-3822**	8	BOLT (M10X1.5X35-MM)	

C - CHANGE FROM PREVIOUS TYPE
M - METRIC PART

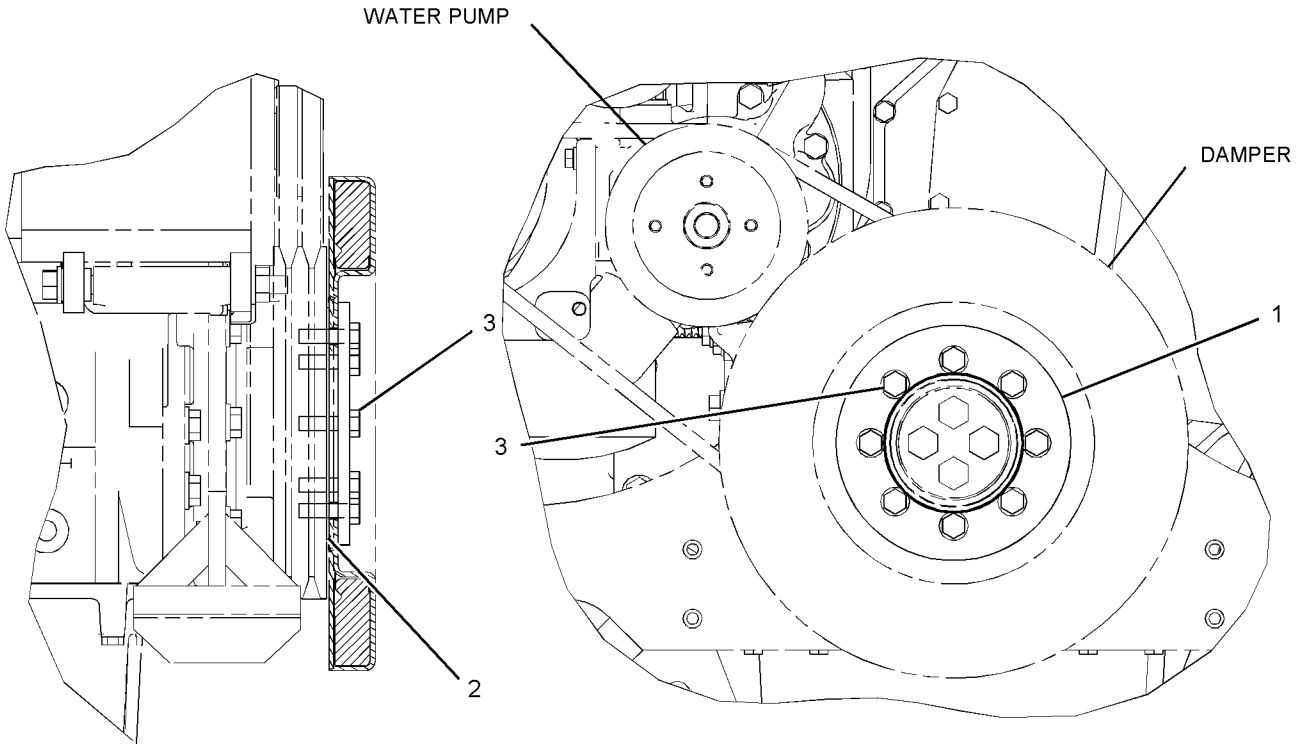

RIGHT SIDE VIEW OF ENGINE

FRONT VIEW OF ENGINE

GRAPHIC #1

<END>

g02728132

219-8681 FASTENER GP-FRONT COVER

S/N: TXD1-UP
PART OF 387-8581, 387-8582 ENGINE AR-COMPLETE
AN ATTACHMENT

SMCS-1151, 1166 **i05555315**

NOTE	REF NO	GRAPHIC REF	PART NUMBER	QTY	PART NAME 1 2 3 4 5 6 (PRODUCT LEVEL)	SEE PAGE
M	1	1	**9X-2099**	6	STUD (M8X1.25X52.75-MM)	
M	2	1	**6V-2317**	6	BOLT (M8X1.25X30-MM)	
M	3	1	**8T-0100**	2	BOLT (M8X1.25X60-MM)	

M - METRIC PART

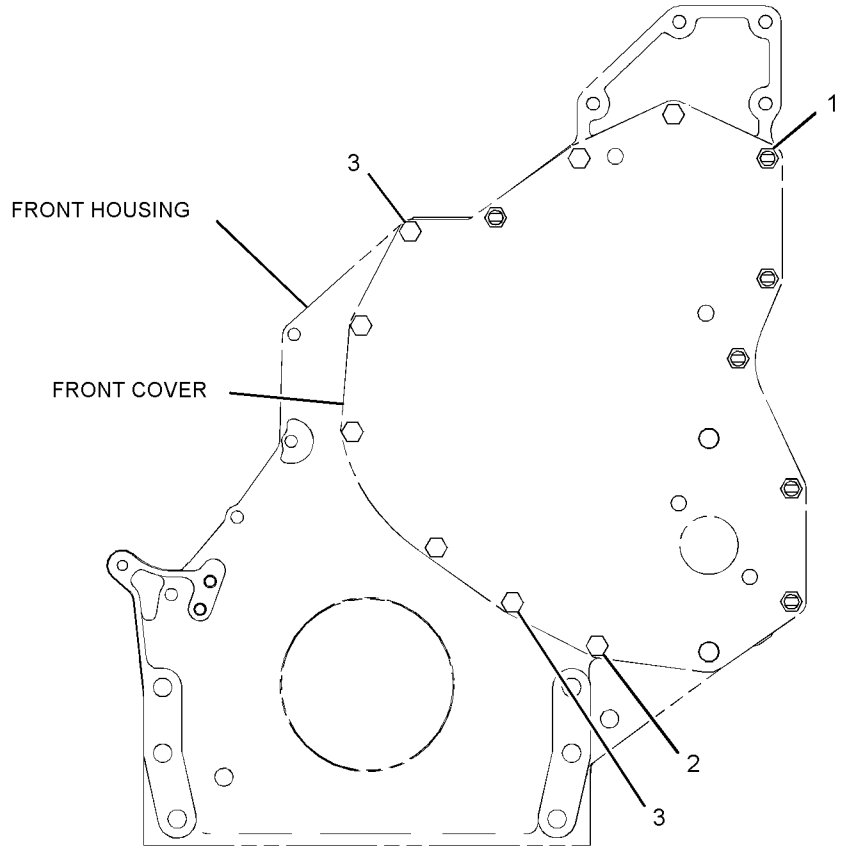

FRONT VIEW

GRAPHIC #1 **<END>** g01146786

236-7315 FASTENER GP-VALVE COVER

S/N: TXD1-UP

PART OF 387-8581, 387-8582 ENGINE AR-COMPLETE

AN ATTACHMENT

SMCS-1107 **i05555329**

NOTE	REF NO	GRAPHIC REF	PART NUMBER	QTY	PART NAME 1 2 3 4 5 6 (PRODUCT LEVEL)	SEE PAGE
M	1	1	**8T-6912**	11	BOLT (M8X1.25X50-MM)	
	2	1	**8T-4224**	11	WASHER-HARD (8.8X16X2-MM THK)	

M - METRIC PART

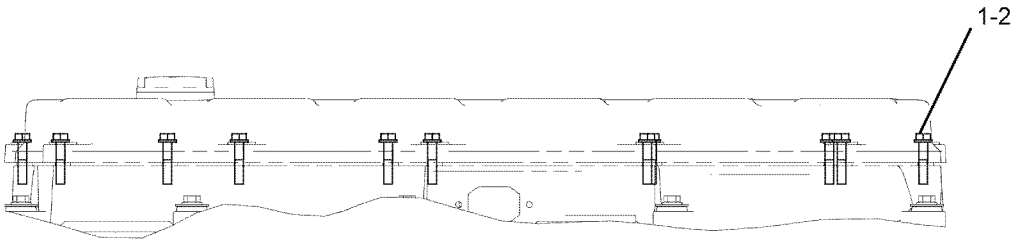

GRAPHIC #1 **<END>** g01013698

233-0423 FASTENER GP-VALVE COVER BASE

S/N: TXD1-UP
PART OF 387-8581, 387-8582 ENGINE AR-COMPLETE
AN ATTACHMENT

SMCS-1120 **i05555352**

NOTE	REF NO	GRAPHIC REF	PART NUMBER	QTY	PART NAME 1 2 3 4 5 6 (PRODUCT LEVEL)	SEE PAGE
C	1	1	**244-4500**	9	SPRING	
CM	2	1	**8T-0100**	9	BOLT (M8X1.25X60-MM)	
C	3	1	**9N-0869**	9	WASHER-HARD (8.8X25.5X2-MM THK)	

C - CHANGE FROM PREVIOUS TYPE
M - METRIC PART

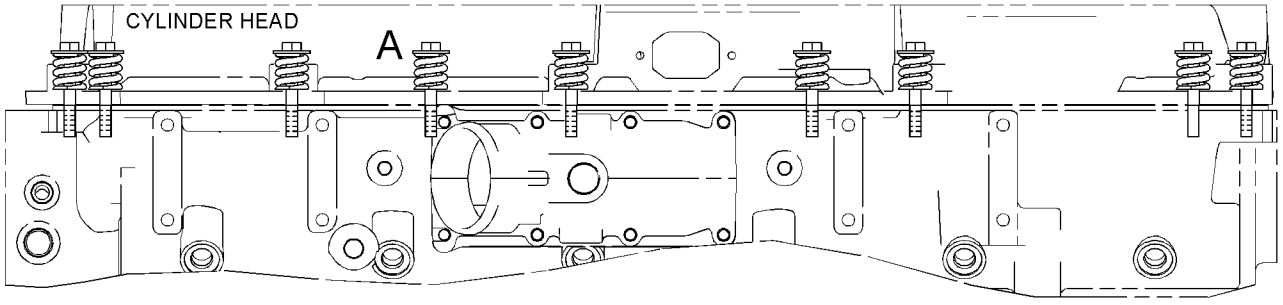

LEFT SIDE VIEW

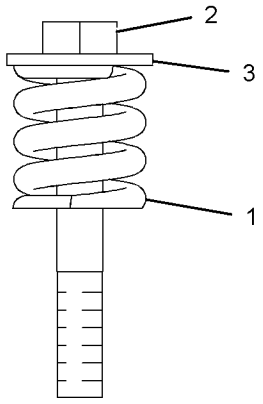

VIEW OF AREA A

GRAPHIC #1 **<END>** g01207018

241-3718 FLYWHEEL GP

S/N: TXD1-UP

PART OF 387-8581, 387-8582 ENGINE AR-COMPLETE

AN ATTACHMENT

SMCS-1156 **i05555390**

NOTE	REF NO	GRAPHIC REF	PART NUMBER	QTY	PART NAME 1 2 3 4 5 6 (PRODUCT LEVEL)	SEE PAGE
M	1	1	**9X-2053**	8	BOLT (M16X2X100-MM)	
	2	1	**237-0229**	1	FLYWHEEL AS	
		1	**4N-2514**	1	GEAR (113-TEETH)	
	3	1	**9X-8268**	8	WASHER (17.5X30X3.5-MM THK)	

M - METRIC PART

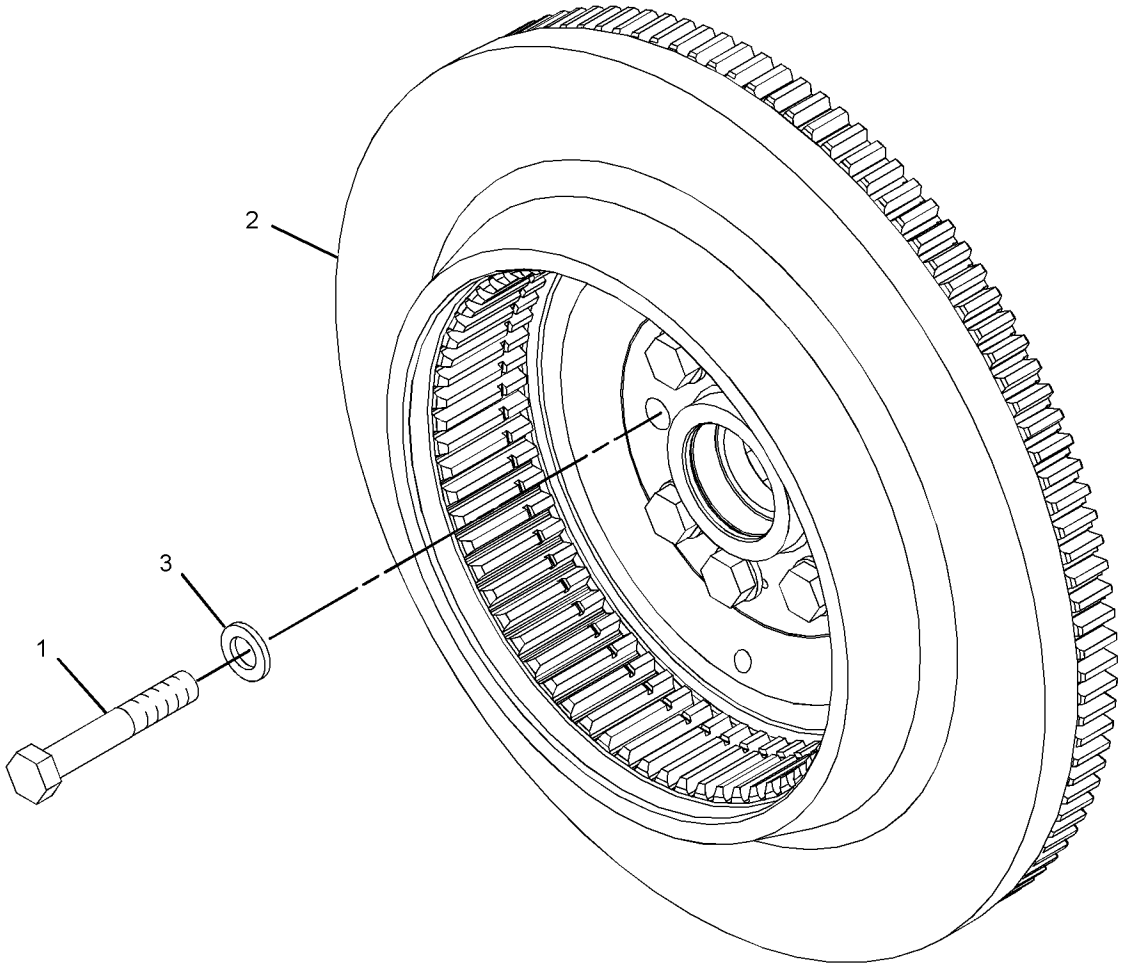

GRAPHIC #1 **<END>** g01205624

205-1321 GEAR GP-FRONT

S/N: TXD1-UP
PART OF 387-8619 ENGINE AR-CORE
AN ATTACHMENT

SMCS-1151, 1162, 1206

i05555609

NOTE	REF NO	GRAPHIC REF	PART NUMBER	QTY	PART NAME 1 2 3 4 5 6 (PRODUCT LEVEL)	SEE PAGE
	1	1	**113-6069**	1	PLATE-THRUST	
	2	1	**115-4219**	1	PLATE-RETAINING	
	3	1	**200-4495**	1	SHAFT-IDLER	
	4	1	**205-1320**	1	GEAR AS-IDLER (50-TEETH)	
	4A	1	**115-4072**	1	BEARING	
M	5	1	**136-4183**	1	BOLT-12 POINT HEAD (M10X1.5X30-MM)	
M	6	1	**6V-5843**	2	BOLT (M10X1.5X45-MM)	

M - METRIC PART

205-1321 **GEAR GP-FRONT (*contd.*)** **i05555609**

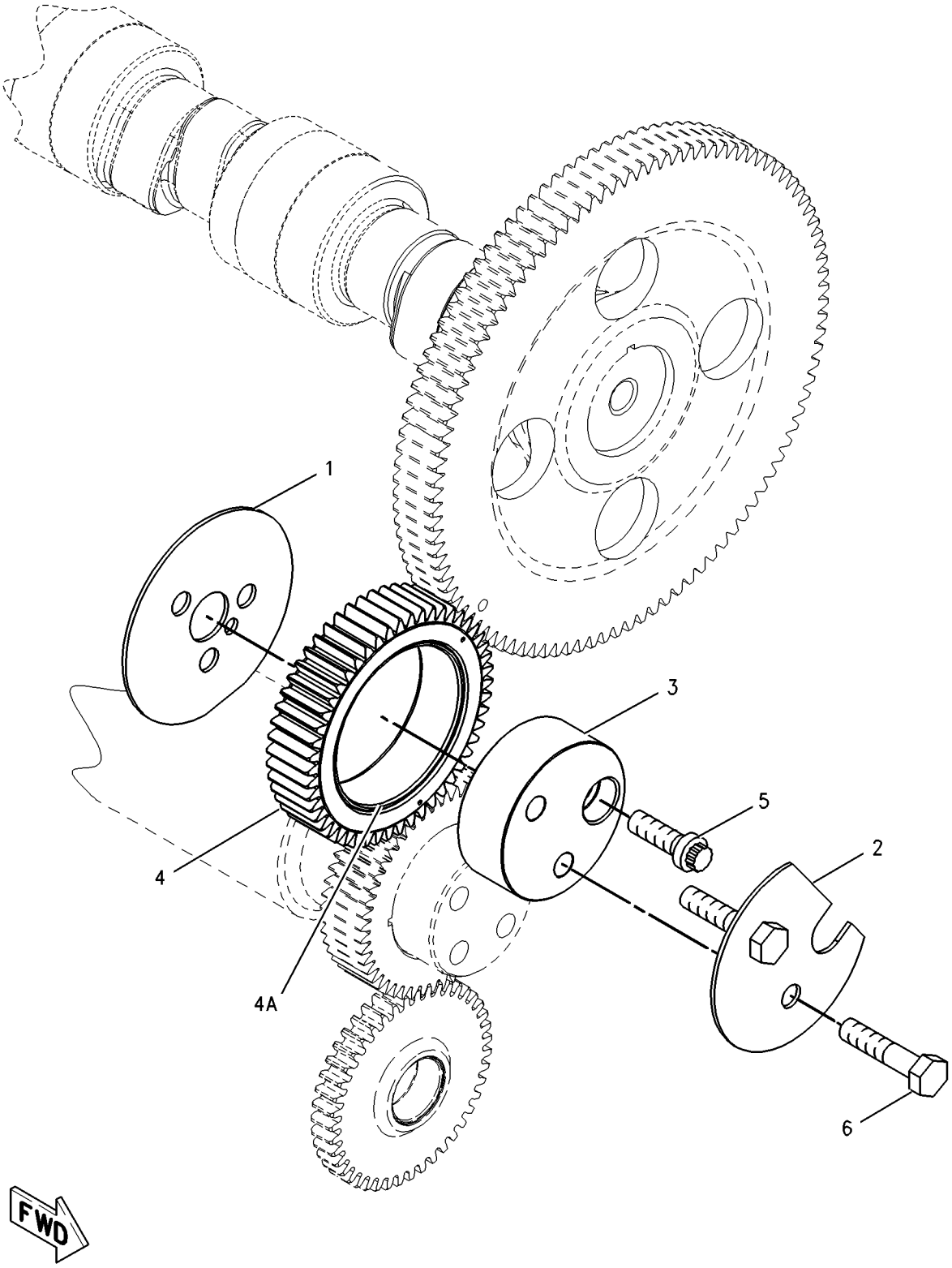

GRAPHIC #1 **<END>** g00870175

175-6260 GEAR GP-REAR

S/N: TXD1-UP
PART OF 387-8581, 387-8582 ENGINE AR-COMPLETE
AN ATTACHMENT

SMCS-1204 **i05555432**

NOTE	REF NO	GRAPHIC REF	PART NUMBER	QTY	PART NAME 1 2 3 4 5 6 (PRODUCT LEVEL)	SEE PAGE
	1	1	**187-8194**	1	GEAR AS-DRIVE (64-TEETH)	
		1	**4F-6024**	1	PIN	
	2	1	**1W-4741**	2	GEAR AS-IDLER (70-TEETH)	
					(EACH INCLUDES)	
		1	**1W-4738**	1	BUSHING	
	3	1	**1W-4746**	2	RETAINER-GEAR	
	4	1	**187-8195**	1	GEAR AS-DRIVE (64-TEETH)	
	4A	1	**4F-6024**	1	PIN	
	5	1	**154-3358**	1	GEAR-ADAPTER (68-TEETH)	
	6	1	**187-8222**	2	ADAPTER AS-PUMP	
					(EACH INCLUDES)	
		1	**160-8184**	1	BUSHING	
	7	1	**4N-1230**	2	SEAL-O-RING	
M	8	1	**6V-1820**	12	BOLT (M10X1.5X30-MM)	
	9	1	**6V-5839**	12	WASHER (11X21X2.5-MM THK)	
M	10	1	**6V-7673**	6	BOLT (M12X1.75X50-MM)	

M - METRIC PART

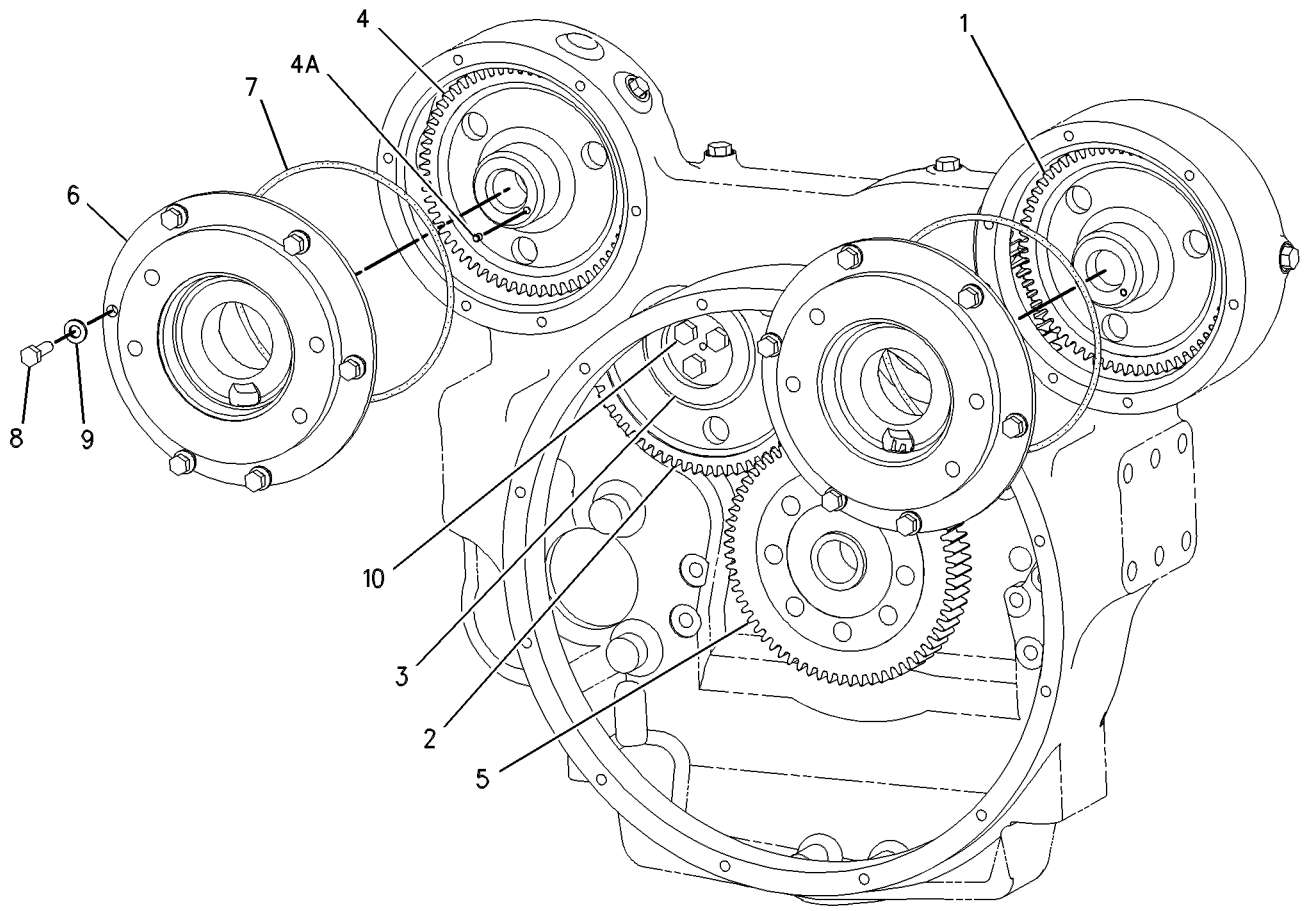

GRAPHIC #1 **<END>** g00639229

221-5461 HOUSING AS-FLYWHEEL

S/N: TXD1-UP

PART OF 219-8666 HOUSING GP-FLYWHEEL

AN ATTACHMENT

SMCS-1157 **i05643923**

NOTE	REF NO	GRAPHIC REF	PART NUMBER	QTY	PART NAME 1 2 3 4 5 6 (PRODUCT LEVEL)	SEE PAGE
	1	1	**2A-1162**	1	GASKET	
	2	1	**5F-0304**	1	PLUG	
	3	1	**316-8663**	1	HOUSING AS-FLYWHEEL	
		1	**229-9281**	1	HOUSING-FLYWHEEL	
	3A	1	**8M-9315**	2	BUSHING	
	4	1	*398-5596*	2	PLUG AS	
					(EACH INCLUDES)	
		1	**360-3680**	1	PLUG	
	4A	1	**238-5080**	1	SEAL-O-RING	
	5	1	*396-0393*	1	PLUG AS	
		1	**360-3677**	1	PLUG	
	5A	1	**214-7566**	1	SEAL-O-RING	
	6	1	*389-3708*	4	PLUG AS	
					(EACH INCLUDES)	
		1	**360-3679**	1	PLUG-CONNECTOR	
	6A	1	**214-7568**	1	SEAL-O-RING	
	7	1	*371-7186*	1	PLUG AS	
		1	**360-3678**	1	PLUG-O-RING	
	7A	1	**214-7567**	1	SEAL-O-RING	

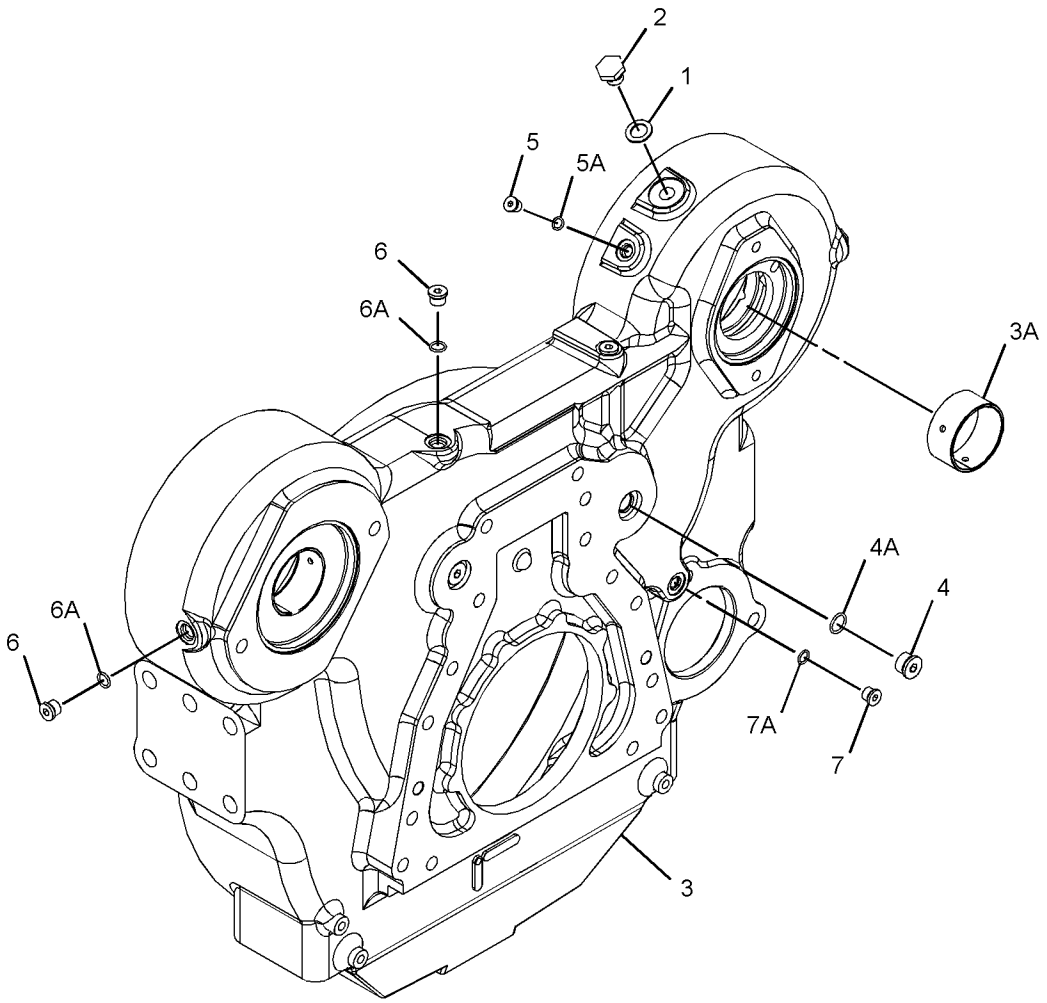

GRAPHIC #1 **<END>** g03368758

219-8666 HOUSING GP-FLYWHEEL

S/N: TXD1-UP

PART OF 387-8581, 387-8582 ENGINE AR-COMPLETE

AN ATTACHMENT

SMCS-1157 **i05555436**

NOTE	REF NO	GRAPHIC REF	PART NUMBER	QTY	PART NAME 1 2 3 4 5 6 (PRODUCT LEVEL)	SEE PAGE
	1	1	**9X-8268**	2	WASHER (17.5X30X3.5-MM THK)	
	2	1	**175-3721**	1	COVER	
Y	3	1	**221-5461**	1	HOUSING AS-FLYWHEEL	36
	4	1	**101-3934**	1	COVER	
	5	1	**4M-0189**	1	SEAL-O-RING	
	6	1	**3F-5792**	1	SEAL-O-RING	
	7	1	**5P-8245**	17	WASHER-HARD (13.5X25.5X3-MM THK)	
M	8	1	**6A-5591**	2	BOLT (M12X1.75X25-MM)	
M	9	1	**6V-5844**	2	BOLT (M16X2X35-MM)	
M	10	1	**6V-8197**	9	BOLT (M12X1.75X40-MM)	
M	11	1	**6V-8336**	6	BOLT (M12X1.75X70-MM)	
BF			**1U-8846**		SEALANT-GASKET (10-ML)	

B - USE AS REQUIRED
F - NOT SHOWN
M - METRIC PART
Y - SEPARATE ILLUSTRATION

219-8666 **HOUSING GP-FLYWHEEL (*contd.*)** **i05555436**

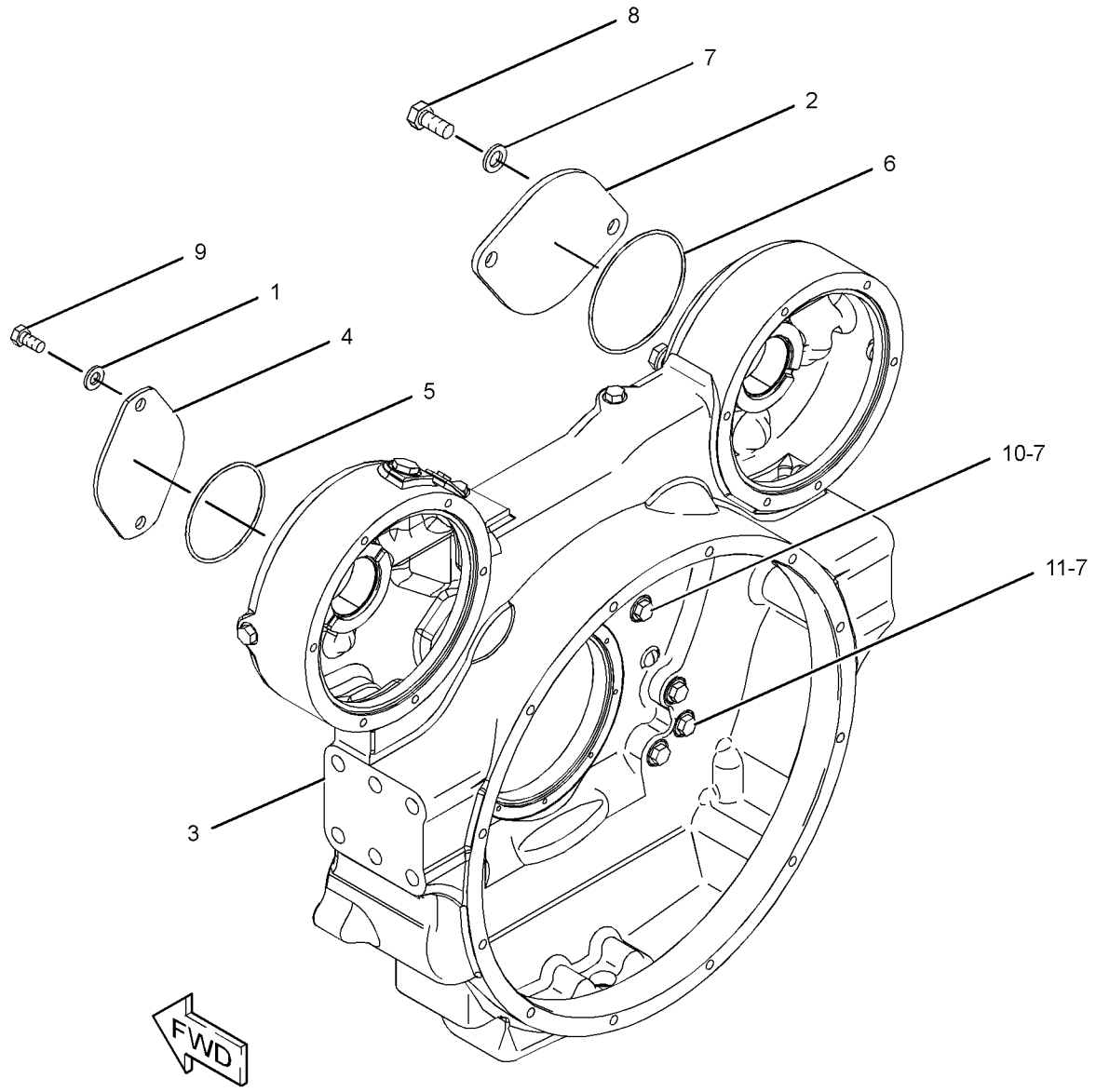

GRAPHIC #1 **<END>** g01208984

245-3262 HOUSING GP-FRONT

S/N: TXD1-UP
PART OF 387-8581, 387-8582 ENGINE AR-COMPLETE
AN ATTACHMENT

SMCS-1151, 1162, 1206

i05567495

NOTE	REF NO	GRAPHIC REF	PART NUMBER	QTY	PART NAME 1 2 3 4 5 6 (PRODUCT LEVEL)	SEE PAGE
	1	1	**245-3261**	1	HOUSING-FRONT	
M	2	1	**6V-3918**	4	BOLT (M8X1.25X50-MM)	
M	3	1	**6V-5217**	8	BOLT (M8X1.25X20-MM)	
	4	1	**9M-1974**	12	WASHER-HARD (8.8X16X2-MM THK)	
B	5	1	**1U-8846**		SEALANT-GASKET	

B - USE AS REQUIRED
M - METRIC PART

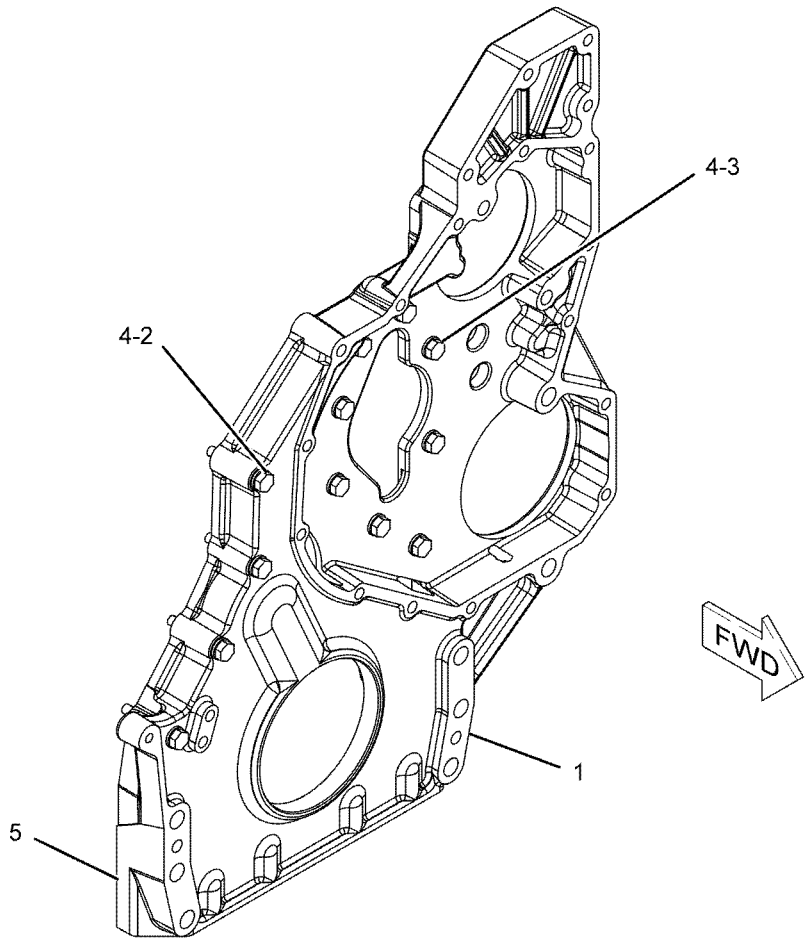

GRAPHIC #1

<END>

g01141811

425-3656 KIT-ENGINE GASKET—CENTRAL, LOWER STRUCTURE

S/N: EMM1-UP; JEN1-UP

REHS7939. KIT CONTAINS THE GASKETS, SEALS AND BENDABLE LOCKS TO REINSTALL THE OIL PAN, INTERNAL OIL PUMP, AND BLOCK COVERS

FIELD INSTALLATION

SMCS-1000, 7555 **i05633829**

NOTE	PART NUMBER	QTY	PART NAME 1 2 3 4 5 6 (PRODUCT LEVEL)	SEE PAGE
	6V-0852	1	CAP-DUST	
	8C-3445	1	CAP-DUST	
	8N-6854	1	GASKET (ENGINE OIL PAN)	
	195-0452	1	GASKET	
	205-5285	1	GASKET	
	190-6114	1	GASKET-OIL PAN	
	5P-7530	2	SEAL-O-RING	
	6V-6609	1	SEAL-O-RING	
	9F-4446	1	SEAL-O-RING	
	033-6034	1	SEAL-O-RING	
	214-7566	2	SEAL-O-RING	
	214-7568	10	SEAL-O-RING	
	228-7089	3	SEAL-O-RING	
	228-7090	2	SEAL-O-RING	
	238-5080	1	SEAL-O-RING	
	238-5081	1	SEAL-O-RING	
	238-5082	2	SEAL-O-RING	
	5N-4185	1	WASHER-SPECIAL	
			FOR A LIST OF RELATED PARTS THAT REQUIRED FOR THE ENGINE REBUILD TO THE KIT CONSIST, PLEASE VISIT	
			HTTPS://DEALER.CAT.COM/RELATED	
			<END>	

428-9317 KIT-ENGINE GASKET

S/N: EMM1-UP; JEN1-UP

CONTAINS THE GASKETS & SEALS TO REINSTALL WATER PUMP & ATTACHING LINES

FOR USE WITH REHS7938, REHS7939, REHS7940, C-9 MACHINE ENGINE

FIELD INSTALLATION

SMCS-1000, 7555 **i05633893**

NOTE	PART NUMBER	QTY	PART NAME 1 2 3 4 5 6 (PRODUCT LEVEL)	SEE PAGE
	200-2258	1	GASKET	
	2M-4453	1	SEAL-O-RING	
	4J-0525	1	SEAL-O-RING	
	5F-8000	1	SEAL-O-RING	
	6V-6609	4	SEAL-O-RING	
	005-8593	1	SEAL-O-RING	
	117-1385	1	SEAL-O-RING	
	147-0182	1	SEAL-O-RING	
	384-9992	1	SEAL-O-RING	
			FOR A LIST OF RELATED PARTS THAT MAY BE REQUIRED FOR THE ENGINE REBUILD IN ADDITION TO THE KIT CONSIST, PLEASE VISIT:	
			HTTPS://DEALER.CAT.COM/RELATED	
			<END>	

423-8979 KIT-FRONT COVER GASKET

S/N: EMM1-UP; JEN1-UP

CONTAINS THE GASKETS, SEALS, & BENDABLE LOCKS TO REINSTALL THE FRONT COVER. THIS KIT DOES NOT INCLUDE THE OIL PAN GASKET

FOR USE WITH 387-8581—PAGE: 4, 387-8582—PAGE: 5

FIELD INSTALLATION

SMCS-1000, 7555 **i05573958**

NOTE	PART NUMBER	QTY	PART NAME 1 2 3 4 5 6 (PRODUCT LEVEL)	SEE PAGE
	4R-9999	1	EXCLUDER-CRANKSHAFT SEAL	
	209-0762	1	GASKET AS	
	245-7339	1	SEAL-CRANKSHAFT (FRONT)	
	135-9819	1	SEAL-INTEGRAL	
	061-9455	1	SEAL-O-RING	
	147-0182	1	SEAL-O-RING	
	214-7568	2	SEAL-O-RING	
	227-5904	1	SEAL-O-RING	
	228-4947	2	SEAL-O-RING	
	228-7089	2	SEAL-O-RING	
	384-9992	1	SEAL-O-RING	
	126-1757	2	WASHER (10.85X19.3X1.27-MM THK)	
			FOR A LIST OF RELATED PARTS THAT REQUIRED FOR THE ENGINE REBUILD TO THE KIT CONSISST, PLEASE VISIT	
			HTTPS://DEALER.CAT.COM/RELATED	

<END>

430-3956 KIT-REAR COVER GASKET

S/N: EMM1-UP; JEN1-UP

REHS7939. CONTAINS GASKETS, SEALS, AND BENDALBE LOCKS TO REINSTALL THE REAR COVER. THIS KIT DOES NOT INCLUDE THE OIL PAN GASKET

FIELD INSTALLATION

SMCS-1000, 7555 **i05634089**

NOTE	PART NUMBER	QTY	PART NAME 1 2 3 4 5 6 (PRODUCT LEVEL)	SEE PAGE
Y	**285-4074**	1	SEAL GP-CRANKSHAFT (REAR)	57
	2A-1162	1	GASKET (DRAIN PLUG)	
	4H-7869	1	GASKET	
	4M-6480	1	GASKET	
	3F-5792	1	SEAL-O-RING	
	4M-0189	1	SEAL-O-RING	
	4N-1230	2	SEAL-O-RING	
	214-7566	1	SEAL-O-RING	
	214-7567	1	SEAL-O-RING	
	214-7568	5	SEAL-O-RING	
	238-5080	2	SEAL-O-RING	
			FOR A LIST OF RELATED PARTS THAT MAY BE REQUIRED FOR THE ENGINE REBUILD IN ADDITION TO THE KIT CONSIST, PLEASE VISIT:	
			HTTPS://DEALER.CAT.COM/RELATED	

Y - SEPARATE ILLUSTRATION

<END>

166-1784 LIFTING GP-ENGINE

S/N: TXD1-UP

PART OF 387-8581, 387-8582 ENGINE AR-COMPLETE

AN ATTACHMENT

SMCS-1122 **i05555438**

NOTE	REF NO	GRAPHIC REF	PART NUMBER	QTY	PART NAME 1 2 3 4 5 6 (PRODUCT LEVEL)	SEE PAGE
	1	1	**188-1017**	1	PLATE-LIFTING	
	2	1	**219-8675**	1	BRACKET AS	
		1	**7T-1099**	3	LINK	
M		1	**159-3042**	5	NUT-WELD (M10X1.5-THD)	
	3	1	**3E-4353**	2	WASHER-HARD (11X25X3-MM THK)	
	4	1	**4P-7428**	2	CLIP	
	5	1	**5P-8245**	6	WASHER-HARD (13.5X25.5X3.0-MM THK)	
M	6	1	**6V-1820**	2	BOLT (M10X1.5X30-MM)	
M	7	1	**6V-5684**	2	BOLT (M12X1.75X45-MM)	
M	8	1	**6V-8197**	2	BOLT (M12X1.75X40-MM)	
M	9	1	**6V-8675**	4	BOLT (M12X1.75X35-MM)	
	10	1	**7D-1649**	4	WASHER-HARD (13.5X32.0X5.0-MM THK)	

M - METRIC PART

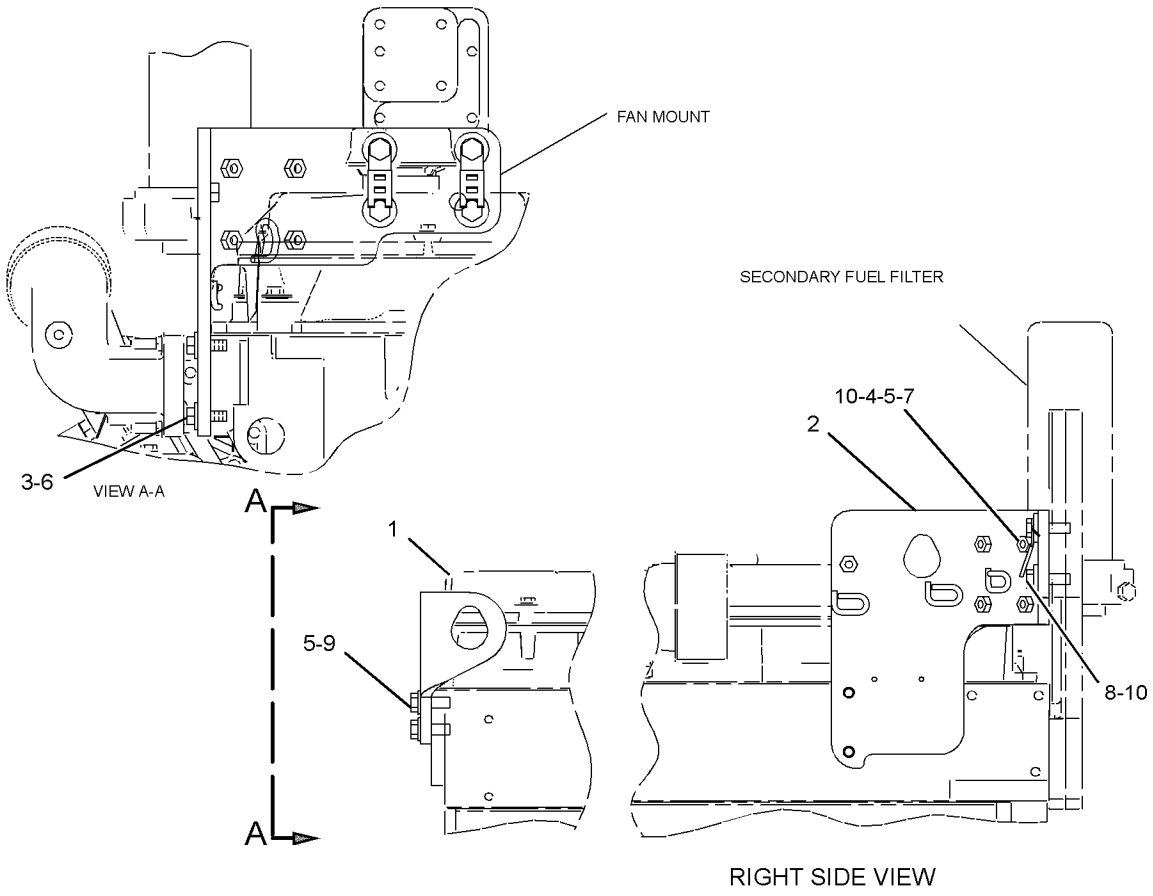

GRAPHIC #1 **<END>** g01304624

246-0600 MOUNTING GP-ALTERNATOR

S/N: TXD1-UP

PART OF 387-8581, 387-8582 ENGINE AR-COMPLETE

AN ATTACHMENT

SMCS-1405 **i05555447**

NOTE	REF NO	GRAPHIC REF	PART NUMBER	QTY	PART NAME 1 2 3 4 5 6 (PRODUCT LEVEL)	SEE PAGE
	1	1	**7W-3872**	2	SLEEVE	
	2	1	**241-8475**	1	BRACKET	
M	3	1	**6V-2317**	4	BOLT (M8X1.25X30-MM)	
	4	1	**9M-1974**	4	WASHER-HARD (8.8X16X2-MM THK)	

M - METRIC PART

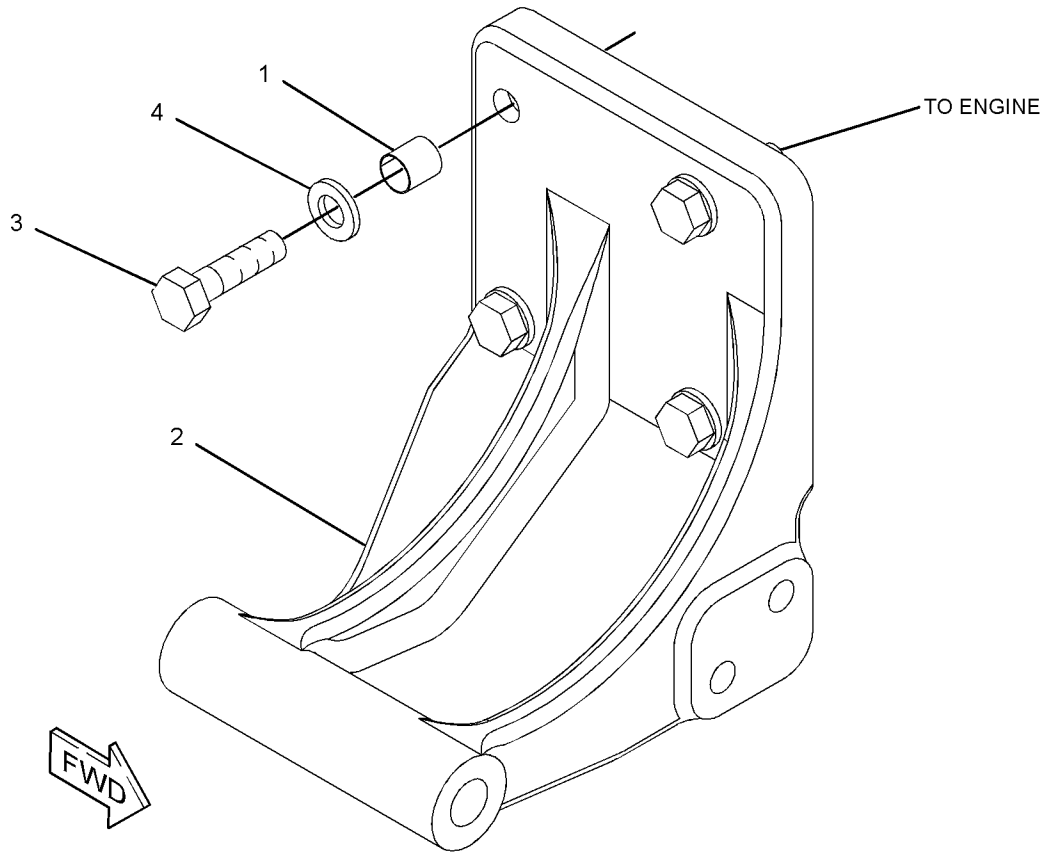

GRAPHIC #1 **<END>** g01206788

223-0556 MOUNTING GP-ENGINE

S/N: EMM1-UP; JEN1-UP

PART OF 389-3215 INSTALLATION AR-ENGINE

SMCS-1152, 1153, 1154

i05640465

NOTE	REF NO	GRAPHIC REF	PART NUMBER	QTY	PART NAME 1 2 3 4 5 6 (PRODUCT LEVEL)	SEE PAGE
	1	1	**7C-3567**	2	MOUNT AS	
	2	1	**183-9374**	2	BLOCK	
	3	1	**224-2695**	2	SUPPORT-ENGINE	
	4	1	**236-8191**	2	CAP-MOUNT	
	5	1	**7X-0515**	4	WASHER-HARD (17X35X5-MM THK)	
	6	1	**8T-4123**	16	WASHER (3.62X5.75X0.375-MM THK)	
M	7	1	**8T-4170**	4	BOLT (M20X2.5X150-MM)	
M	8	1	**8T-4193**	4	BOLT (M16X2X50-MM)	
M	9	1	**8T-6430**	12	BOLT (M20X2.5X50-MM)	

M - METRIC PART

QUANTITIES SHOWN ARE THOSE REQUIRED FOR BOTH LH AND RH SIDES

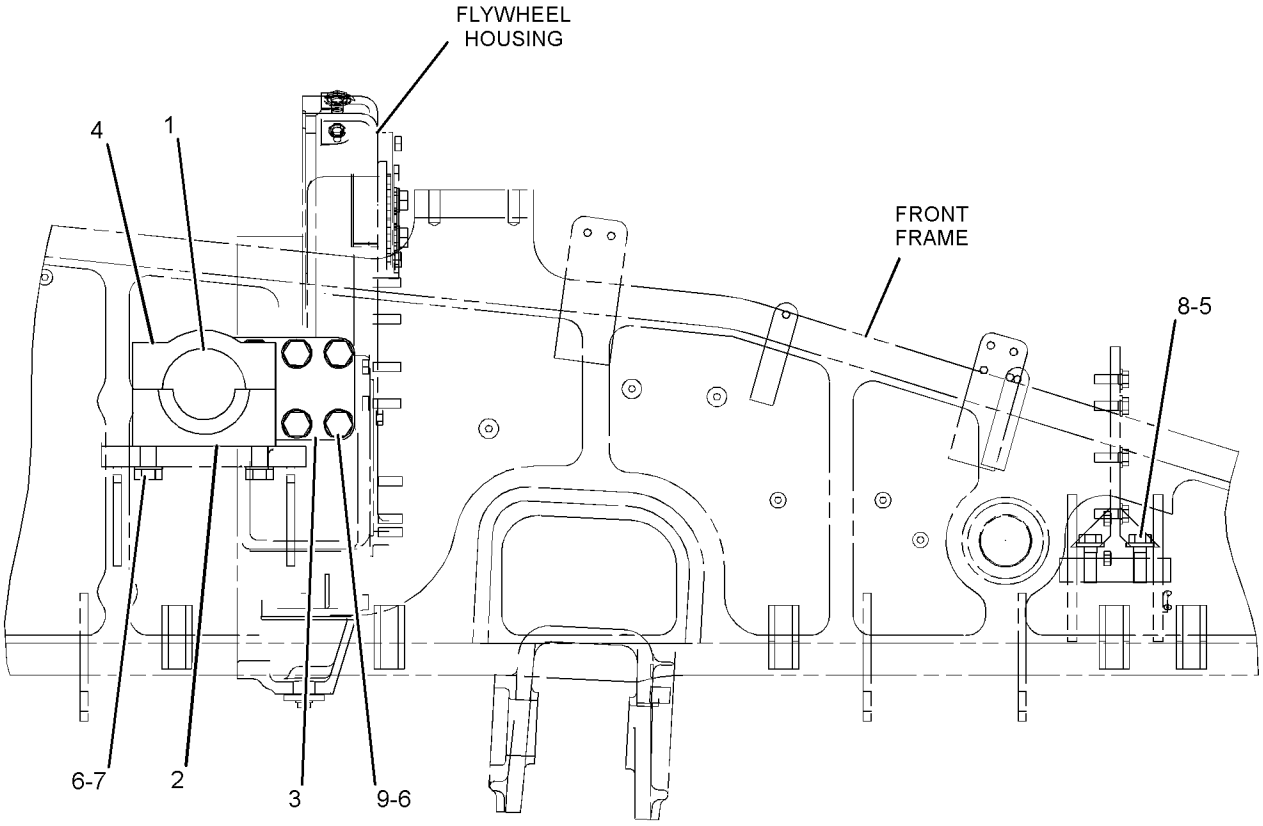

RIGHT SIDE VIEW

GRAPHIC #1

<END>

g01209988

246-0598 MOUNTING GP-FAN DRIVE

S/N: TXD1-UP
PART OF 387-8581, 387-8582 ENGINE AR-COMPLETE
AN ATTACHMENT

SMCS-1359 **i05555449**

NOTE	REF NO	GRAPHIC REF	PART NUMBER	QTY	PART NAME 1 2 3 4 5 6 (PRODUCT LEVEL)	SEE PAGE
	1	1	**241-8474**	1	SUPPORT	
	2	1	**3E-4353**	5	WASHER-HARD (11X25X3-MM THK)	
M	3	1	**6V-5843**	5	BOLT (M10X1.5X45-MM)	

M - METRIC PART

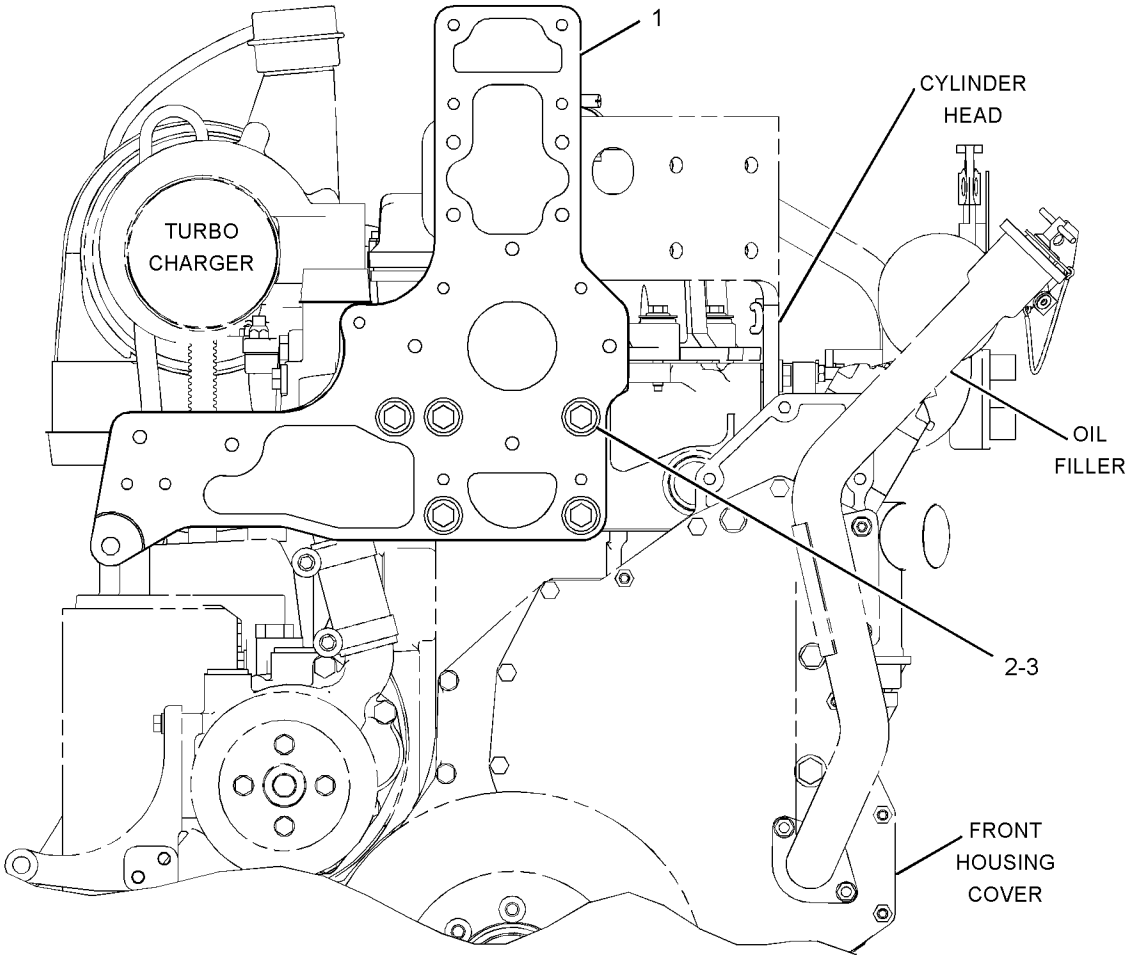

FRONT VIEW

GRAPHIC #1 **<END>** g01206764

165-4459 PAN GP-OIL—ENGINE

S/N: TXD1-UP

PART OF 387-8581, 387-8582 ENGINE AR-COMPLETE

AN ATTACHMENT

SMCS-1302 **i05555450**

NOTE	REF NO	GRAPHIC REF	PART NUMBER	QTY	PART NAME 1 2 3 4 5 6 (PRODUCT LEVEL)	SEE PAGE
B	1	1	**4C-9612**		SEALANT-SILICONE	
	2	1	**190-6114**	1	GASKET-OIL PAN	
	3	1	**174-3847**	1	PAN-OIL	
M	4	1	**6V-3918**	32	BOLT (M8X1.25X50-MM)	
	5	1	**9M-1974**	32	WASHER-HARD (8.8X16X2-MM THK)	

B - USE AS REQUIRED
M - METRIC PART

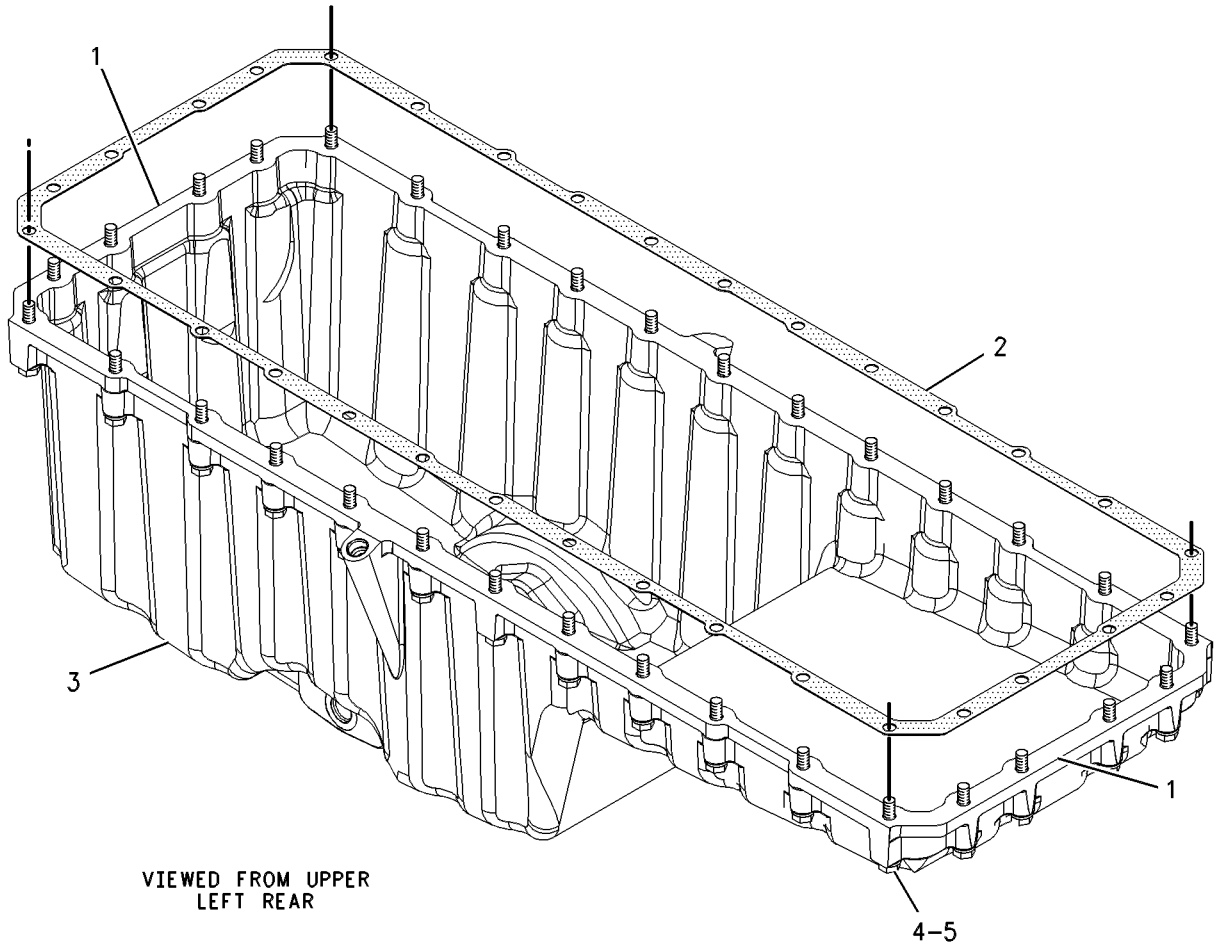

GRAPHIC #1 **<END>** g00637845

265-1400 PISTON & ROD GP*R

S/N: TXD1-UP
16.1:1 COMPRESSION RATIO
PART OF 387-8619 ENGINE AR-CORE
AN ATTACHMENT

SMCS-1225 **i05555622**

NOTE	REF NO	GRAPHIC REF	PART NUMBER	QTY	PART NAME 1 2 3 4 5 6 (PRODUCT LEVEL)	SEE PAGE
	1	1	**213-3190**	1	BEARING (CONNECTING ROD)	
R	2	1	**160-8199**	1	ROD AS	
	2A	1	**160-8194**	1	BEARING (CONNECTING ROD)	
M	2B	1	**160-8197**	2	BOLT	
	3	1	**166-3648**	1	PIN-PISTON	
	4	1	**347-2382**	1	RING-PISTON (OIL CONTROL)	
	5	1	**385-1657**	1	CROWN AS-PISTON	
	6	1	**347-2381**	1	RING-PISTON (INTERMEDIATE)	
	7	1	**197-9367**	1	TUBE AS (PISTON COOLING JET)	
	8	1	**347-2380**	1	RING-PISTON (TOP)	
	9	1	**324-7380**	1	SKIRT-PISTON	
M	10	1	**6V-3940**	1	BOLT (M8X1.25X25-MM)	
	11	1	**7X-2908**	2	RING-RETAINING	

M - METRIC PART
R - REMFG PART MAY BE AVAILABLE

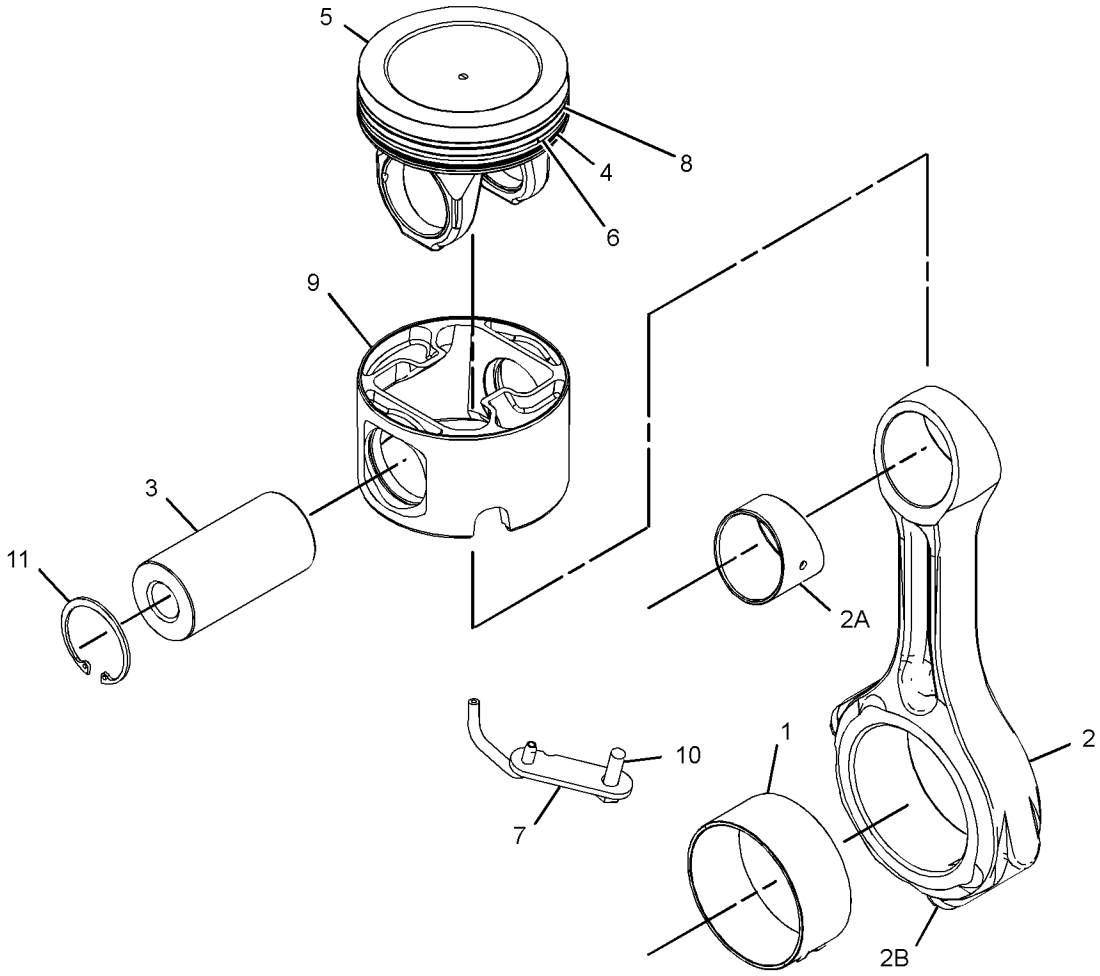

GRAPHIC #1 **<END>** g02511165

252-1567 PLUG GP-ENGINE

S/N: TXD1-UP

PART OF 387-8581, 387-8582 ENGINE AR-COMPLETE

AN ATTACHMENT

SMCS-1000 **i05555451**

NOTE	REF NO	GRAPHIC REF	PART NUMBER	QTY	PART NAME 1 2 3 4 5 6 (PRODUCT LEVEL)	SEE PAGE
	1	1	*389-3709*	1	PLUG AS	
		1	**238-5082**	1	SEAL-O-RING	
		1	**360-3682**	1	PLUG-O-RING	
	2	1	*389-3708*	1	PLUG AS	
		1	**214-7568**	1	SEAL-O-RING	
		1	**360-3679**	1	PLUG-CONNECTOR	
	3	1	*398-5596*	1	PLUG AS	
		1	**238-5080**	1	SEAL-O-RING	
		1	**360-3680**	1	PLUG	

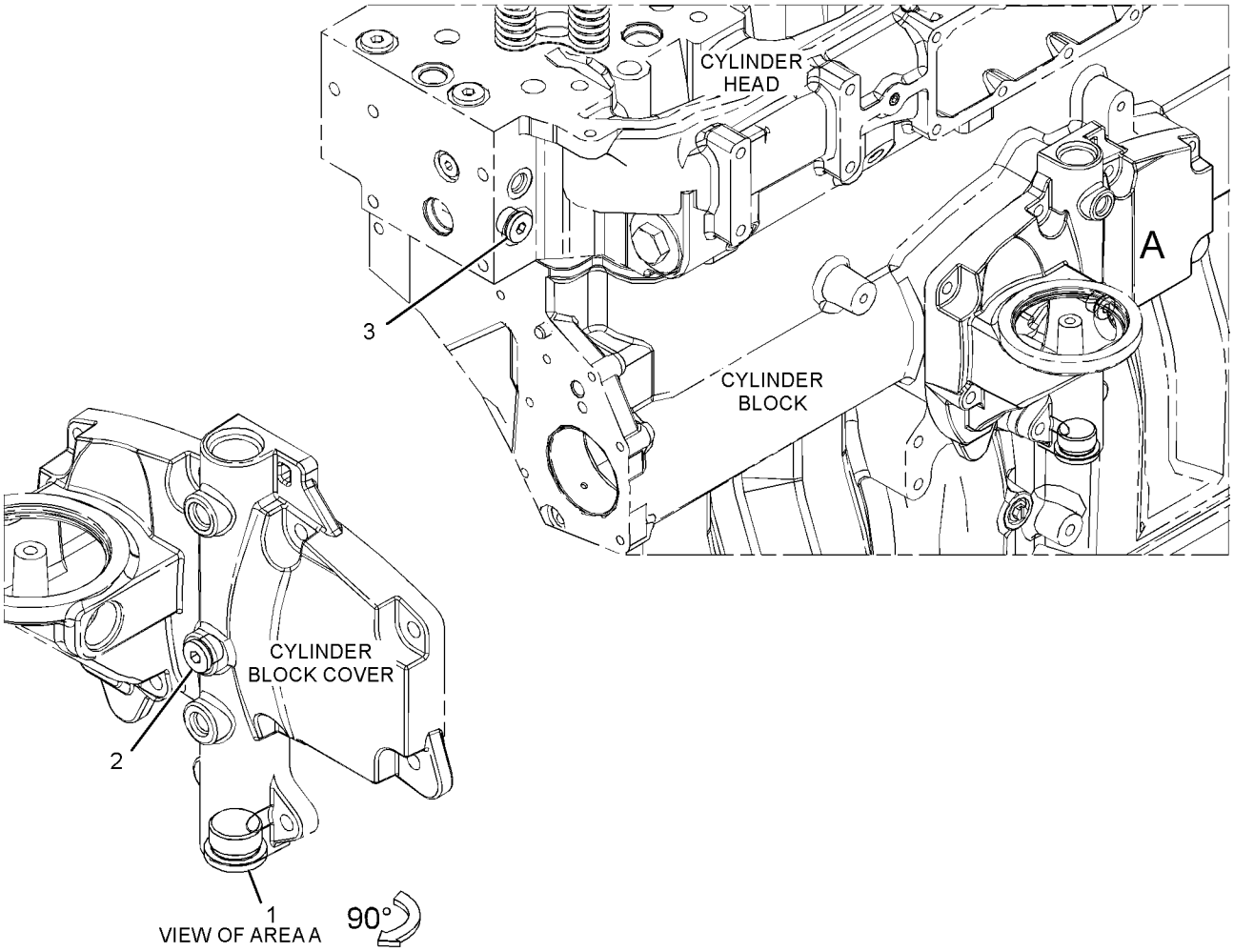

GRAPHIC #1 **<END>** g02163416

246-0602 PULLEY GP-CRANKSHAFT

S/N: TXD1-UP
PART OF 387-8581, 387-8582 ENGINE AR-COMPLETE
AN ATTACHMENT

SMCS-1205 **i05555469**

NOTE	REF NO	GRAPHIC REF	PART NUMBER	QTY	PART NAME 1 2 3 4 5 6 (PRODUCT LEVEL)	SEE PAGE
	1	1	**2W-7381**	1	PLATE-CLAMP	
	2	1	**236-8239**	1	PULLEY-CRANKSHAFT (8-GROOVE)	
M	3	1	**8T-3666**	4	BOLT (M14X2X60-MM)	

M - METRIC PART

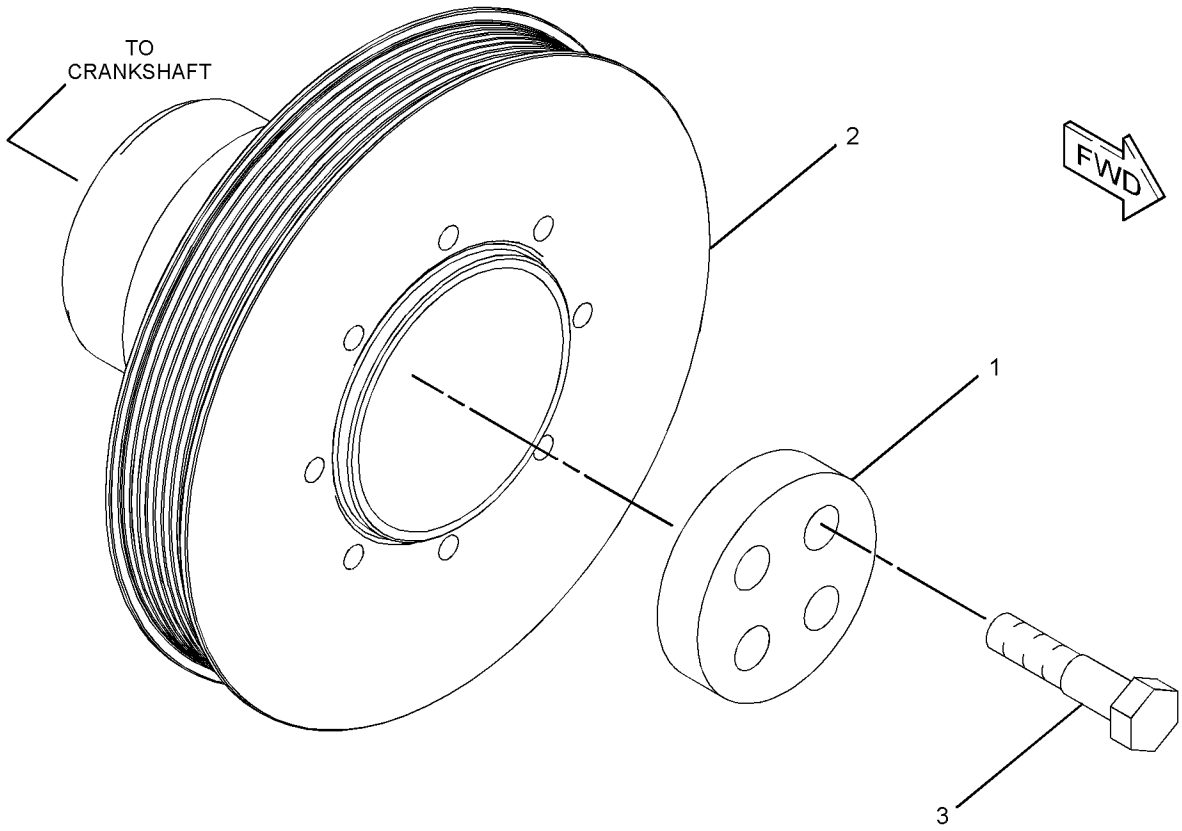

GRAPHIC #1 **<END>** g01206786

340-4083 PULLEY GP-FAN & ALT DRIVE

S/N: EMM1-UP; JEN1-UP

CANNOT BE USED WITH 389-3243—PAGE: 729, 389-3244—PAGE: 731

AN ATTACHMENT

SMCS-1359, 1425

i05674049

NOTE	REF NO	GRAPHIC REF	PART NUMBER	QTY	PART NAME 1 2 3 4 5 6 (PRODUCT LEVEL)	SEE PAGE
	1	1	**1L-8545**	1	SPACER (1X1.25X0.99-IN THK)	
	2	1	**5M-9735**	1	SEAL-LIP TYPE	
	3	1	**6B-1124**	2	BALL BEARING	
	4	1	**7C-8370**	1	CAP-DUST	
	5	1	**123-0790**	1	PULLEY (8-GROOVE)	
	6	1	**185-0838**	1	ROD-ADJUSTMENT	
	7	1	**214-5705**	1	ADAPTER	
	8	1	**215-3296**	1	ARM AS	
		1	**3E-4999**	1	PIN-SPRING	
	9	1	**222-9151**	1	WASHER-HARD (11X32X5-MM THK)	
	10	1	**241-4981**	1	BELT-SERPENTINE (ALTERNATOR)	
	11	1	**267-7507**	1	PULLEY-FAN (3-GROOVE)	
	12	1	**267-7509**	1	PULLEY (3-GROOVE)	
	13	1	**277-9567**	1	PULLEY (3-GROOVE)	
	14	1	**5P-1076**	1	WASHER-HARD (13.5X30X4-MM THK)	
M	15	1	**6V-4248**	1	BOLT (M10X1.5X25-MM)	
	16	1	**7C-2164**	1	BLOCK	
	17	1	**7C-2500**	1	V-BELT SET (INCLUDES 3-BELTS, FAN DRIVE)	
	18	1	**8T-4121**	14	WASHER-HARD (11X21X2.5-MM THK)	
M	19	1	**8T-4186**	7	BOLT (M10X1.5X40-MM)	
M	20	1	**8T-4196**	7	BOLT (M10X1.5X35-MM)	
M	21	1	**8T-4198**	8	BOLT (M10X1.5X100-MM)	
	22	1	**8T-4223**	3	WASHER-HARD (13.5X25.5X3-MM THK)	
M	23	1	**8T-4244**	2	NUT (M12X1.75-THD)	
M	24	1	**8T-4910**	1	BOLT (M12X1.75X60-MM)	
M	25	1	**8T-6868**	1	BOLT (M12X1.75X80-MM)	

M - METRIC PART

340-4083 **PULLEY GP-FAN & ALT DRIVE (*contd.*)** **i05674049**

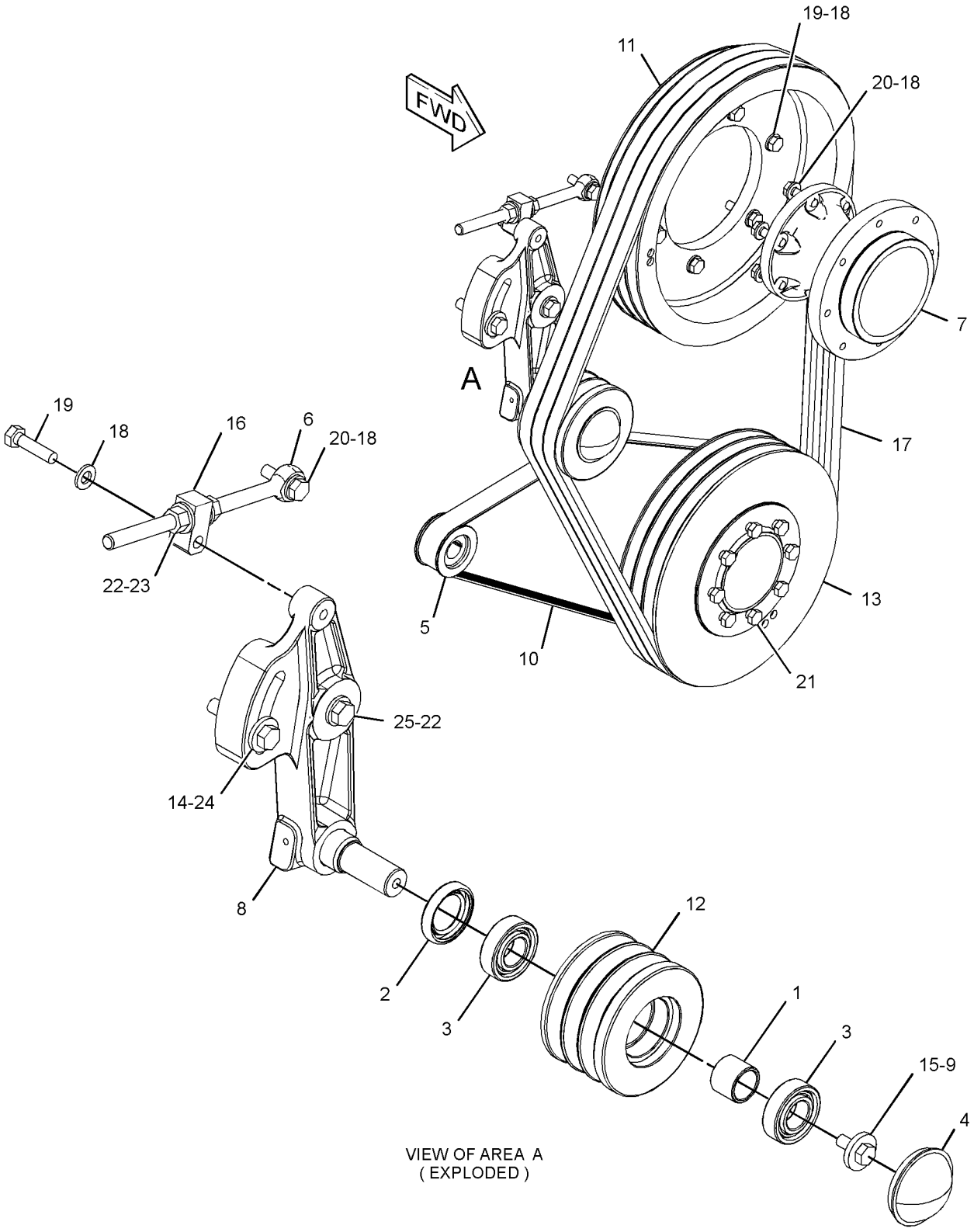

VIEW OF AREA A
(EXPLODED)

GRAPHIC #1 **<END>** g03324693

375-4456 PULLEY GP-FAN & ALT DRIVE

S/N: EMM1-UP; JEN1-UP

AN ATTACHMENT

SMCS-1359, 1425 **i05503040**

NOTE	REF NO	GRAPHIC REF	PART NUMBER	QTY	PART NAME 1 2 3 4 5 6 (PRODUCT LEVEL)	SEE PAGE
	1	1	**1L-8545**	1	SPACER (1X1.25X0.99-IN THK)	
	2	1	**5M-9735**	1	SEAL-LIP TYPE	
	3	1	**6B-1124**	2	BALL BEARING	
	4	1	**7C-8370**	1	CAP-DUST	
	5	1	**123-0790**	1	PULLEY (8-GROOVE)	
	6	1	**185-0838**	1	ROD-ADJUSTMENT	
	7	1	**214-5705**	1	ADAPTER	
	8	1	**215-3296**	1	ARM AS	
		1	**3E-4999**	1	PIN-SPRING	
	9	1	**216-7877**	1	V-BELT SET (INCLUDES 3-BELTS) (FAN DRIVE)	
	10	1	**222-9151**	1	WASHER-HARD (11X32X5-MM THK)	
	11	1	**241-4981**	1	BELT-SERPENTINE (ALTERNATOR)	
	12	1	**262-2031**	1	PULLEY (3-GROOVE)	
	13	1	**267-7507**	1	PULLEY-FAN (3-GROOVE)	
	14	1	**267-7509**	1	PULLEY (3-GROOVE)	
	15	1	**5P-1076**	1	WASHER-HARD (13.5X30X4-MM THK)	
M	16	1	**6V-4248**	1	BOLT (M10X1.5X25-MM)	
	17	1	**7C-2164**	1	BLOCK	
	18	1	**8T-4121**	14	WASHER-HARD (11X21X2.5-MM THK)	
M	19	1	**8T-4186**	7	BOLT (M10X1.5X40-MM)	
M	20	1	**8T-4196**	7	BOLT (M10X1.5X35-MM)	
M	21	1	**8T-4198**	8	BOLT (M10X1.5X100-MM)	
	22	1	**8T-4223**	3	WASHER-HARD (13.5X25.5X3-MM THK)	
M	23	1	**8T-4244**	2	NUT (M12X1.75-THD)	
M	24	1	**8T-4910**	1	BOLT (M12X1.75X60-MM)	
M	25	1	**8T-6868**	1	BOLT (M12X1.75X80-MM)	
	26	1	**129-1938**	1	CARTRIDGE-GREASE	

M - METRIC PART

375-4456 **PULLEY GP-FAN & ALT DRIVE (*contd.*)** **i05503040**

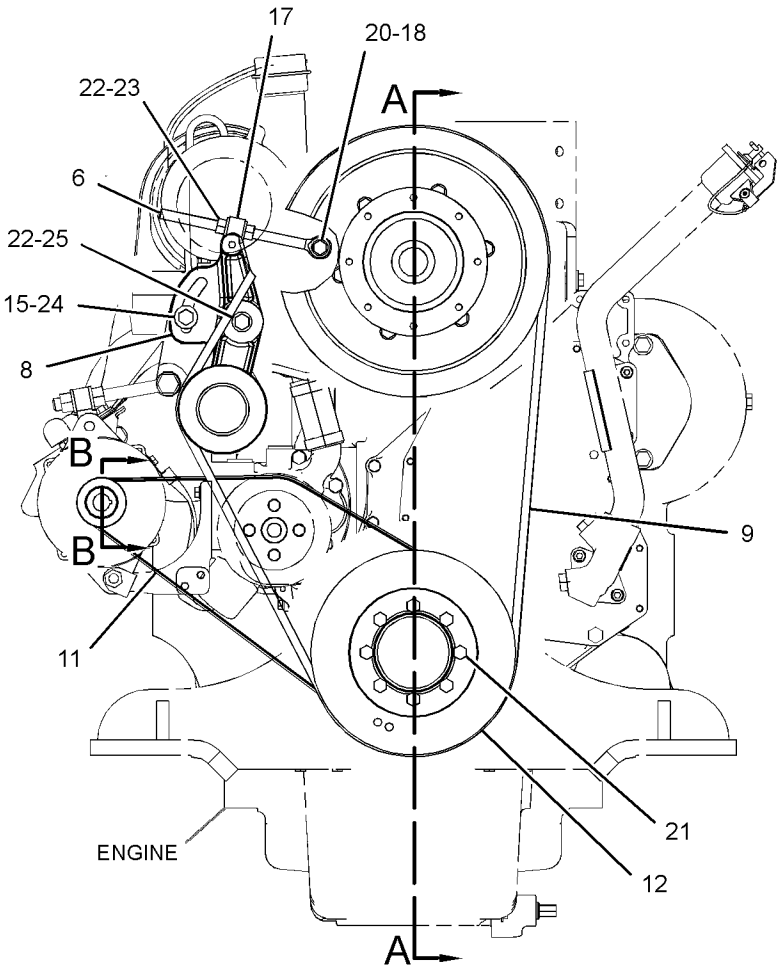

FRONT VIEW

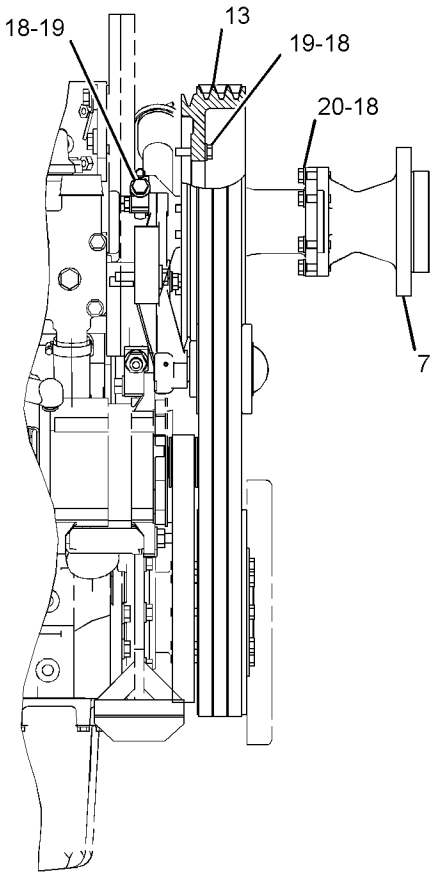

RIGHT SIDE VIEW

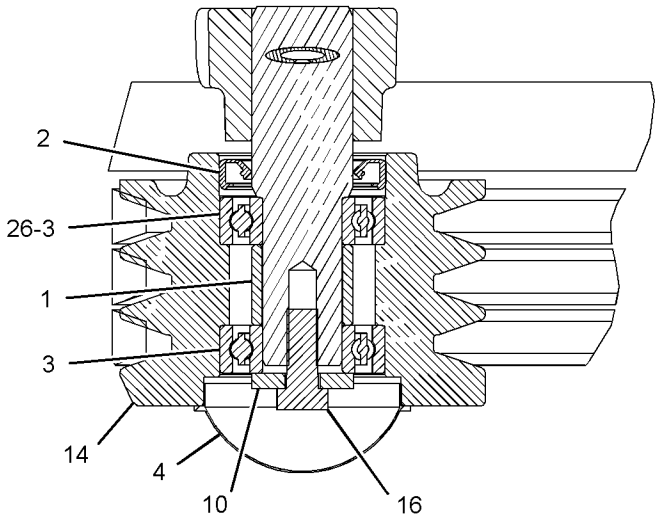

SECTION A-A

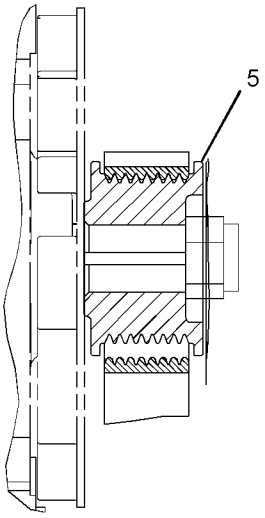

SECTION B-B

GRAPHIC #1 **<END>** g03260176

213-9320 ROCKER ARM GP–EXHAUST

S/N: TXD1-UP

PART OF 212-8926 VALVE MECHANISM GP

AN ATTACHMENT

SMCS-1123 **i05615918**

NOTE	REF NO	GRAPHIC REF	PART NUMBER	QTY	PART NAME 1 2 3 4 5 6 (PRODUCT LEVEL)	SEE PAGE
R	1	1	**163-2447**	1	ROCKER ARM AS	
M	2	1	**260-7524**	1	SCREW-VALVE ADJUSTMENT (M10X1.5-THD)	
M	3	1	**2Y-5829**	1	NUT (M10X1.5-THD)	

M - METRIC PART
R - REMFG PART MAY BE AVAILABLE

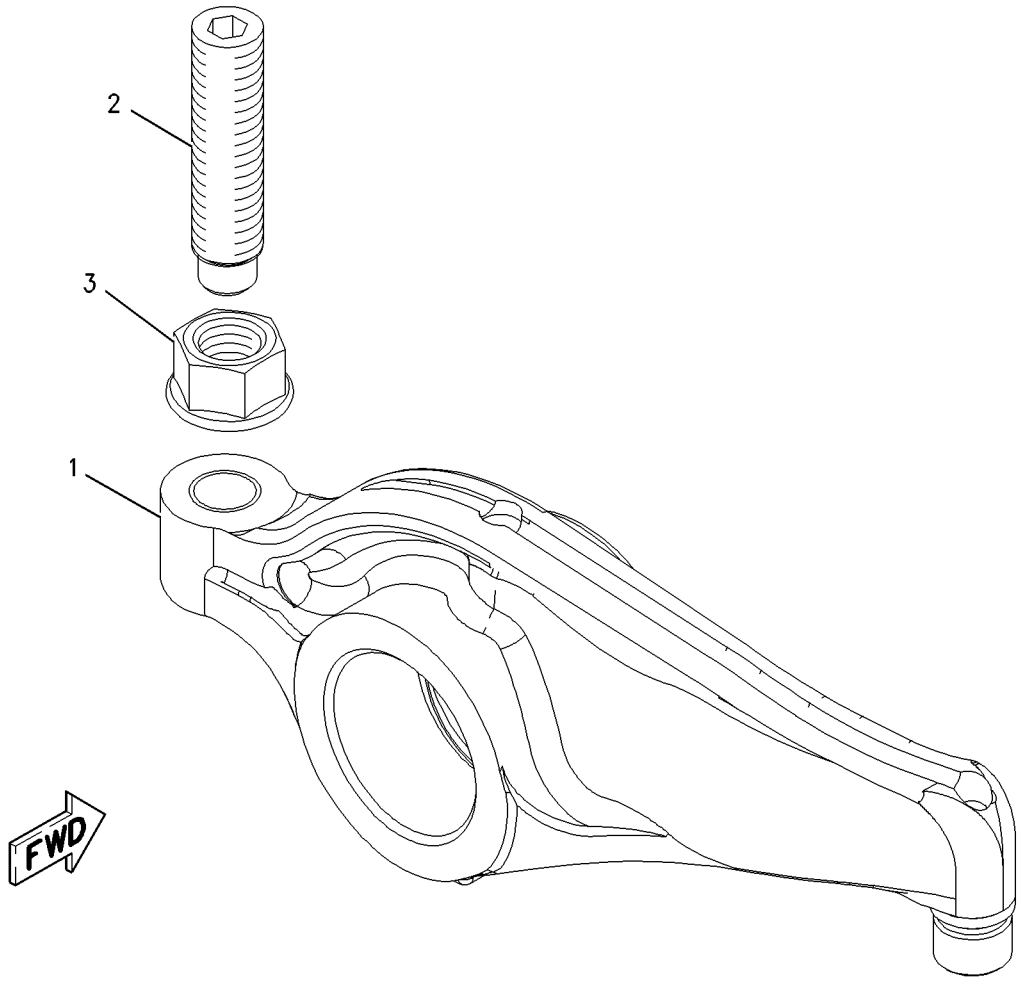

GRAPHIC #1 **<END>** g00848359

242-0329 ROCKER ARM GP–INLET

S/N: TXD1-UP
PART OF 212-8926 VALVE MECHANISM GP
AN ATTACHMENT

SMCS-1123 **i05615922**

NOTE	REF NO	GRAPHIC REF	PART NUMBER	QTY	PART NAME 1 2 3 4 5 6 (PRODUCT LEVEL)	SEE PAGE
M	1	1	**260-7524**	1	SCREW-VALVE ADJUSTMENT (M10X1.5-THD)	
R	2	1	**242-0328**	1	ROCKER ARM AS	
M	3	1	**2Y-5829**	1	NUT (M10X1.5-THD)	

M - METRIC PART
R - REMFG PART MAY BE AVAILABLE

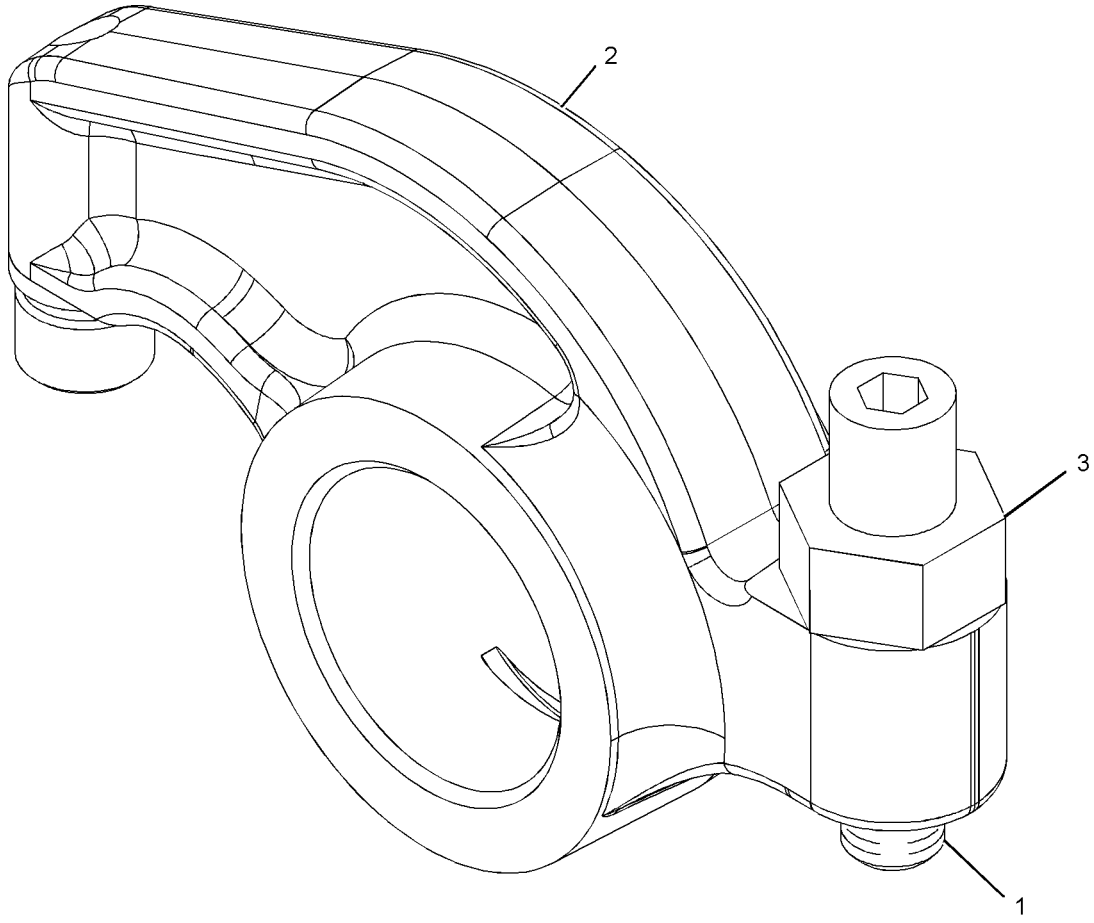

GRAPHIC #1 **<END>** g01056688

189-9306 SEAL GP-CRANKSHAFT

S/N: TXD1-UP
FRONT AND REAR
FOR USE WITH WET FLYWHEEL HOUSING AND FRONT DUST EXCLUDER
PART OF 387-8581, 387-8582 ENGINE AR-COMPLETE
AN ATTACHMENT

SMCS-1160, 1161 **i05555471**

NOTE	REF NO	GRAPHIC REF	PART NUMBER	QTY	PART NAME 1 2 3 4 5 6 (PRODUCT LEVEL)	SEE PAGE
	1	1	**4R-9999**	1	EXCLUDER-CRANKSHAFT SEAL	
M	2	1	**206-3719**	9	BOLT AS	
	3	1	**245-7339**	1	SEAL-CRANKSHAFT (FRONT)	
Y	4	1	**285-4074**	1	SEAL GP-CRANKSHAFT (REAR)	57

M - METRIC PART
Y - SEPARATE ILLUSTRATION

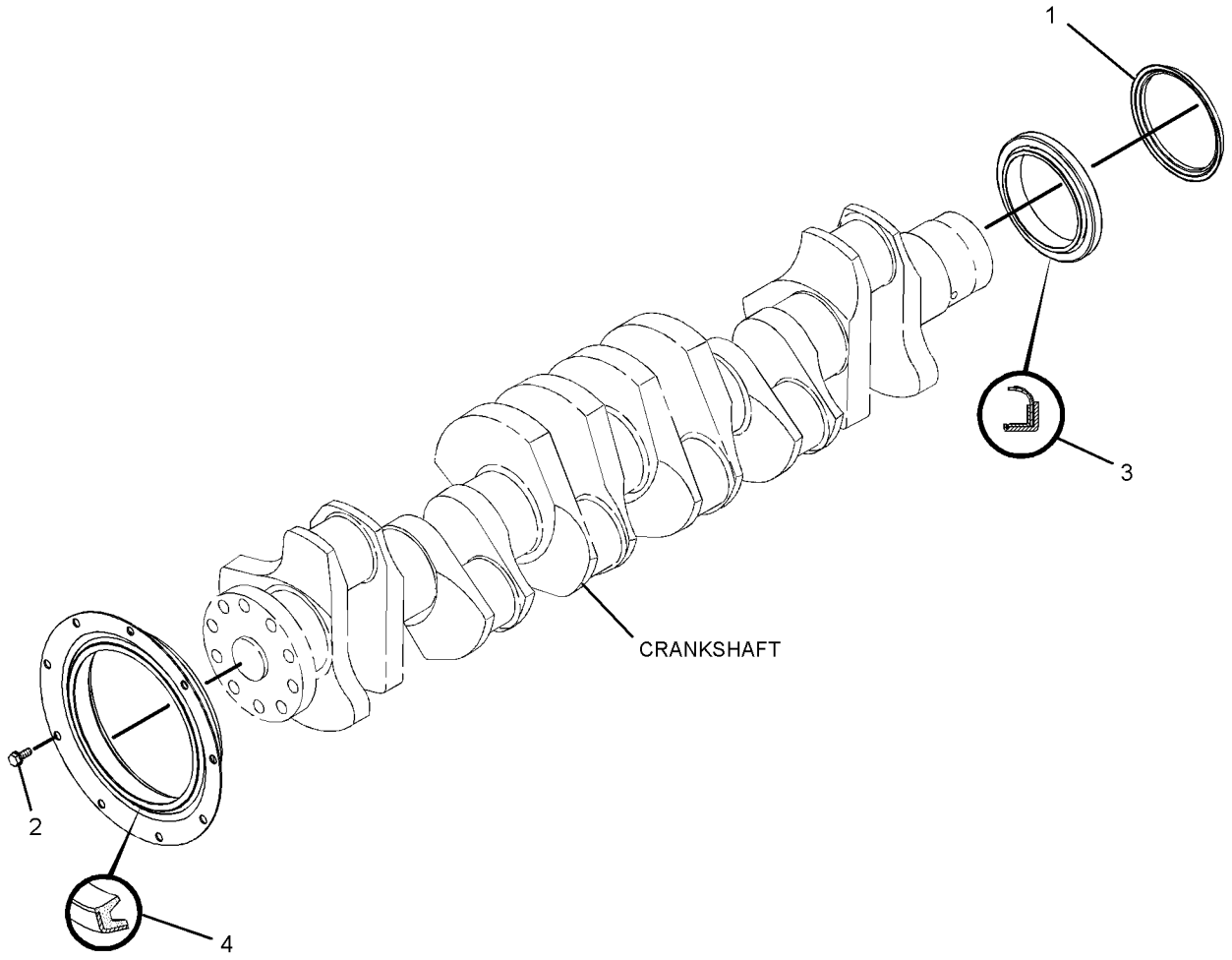

GRAPHIC #1 **<END>** g01439940

285-4074 SEAL GP-CRANKSHAFT

S/N: TXD1-UP; EMM1-UP; JEN1-UP
PART OF 430-3956 KIT-REAR COVER GASKET, 189-9306 SEAL GP-CRANKSHAFT
AN ATTACHMENT

SMCS-1160, 1161

i05634097

NOTE	REF NO	GRAPHIC REF	PART NUMBER	QTY	PART NAME 1 2 3 4 5 6 (PRODUCT LEVEL)	SEE PAGE
					(NO SERVICED PARTS)	

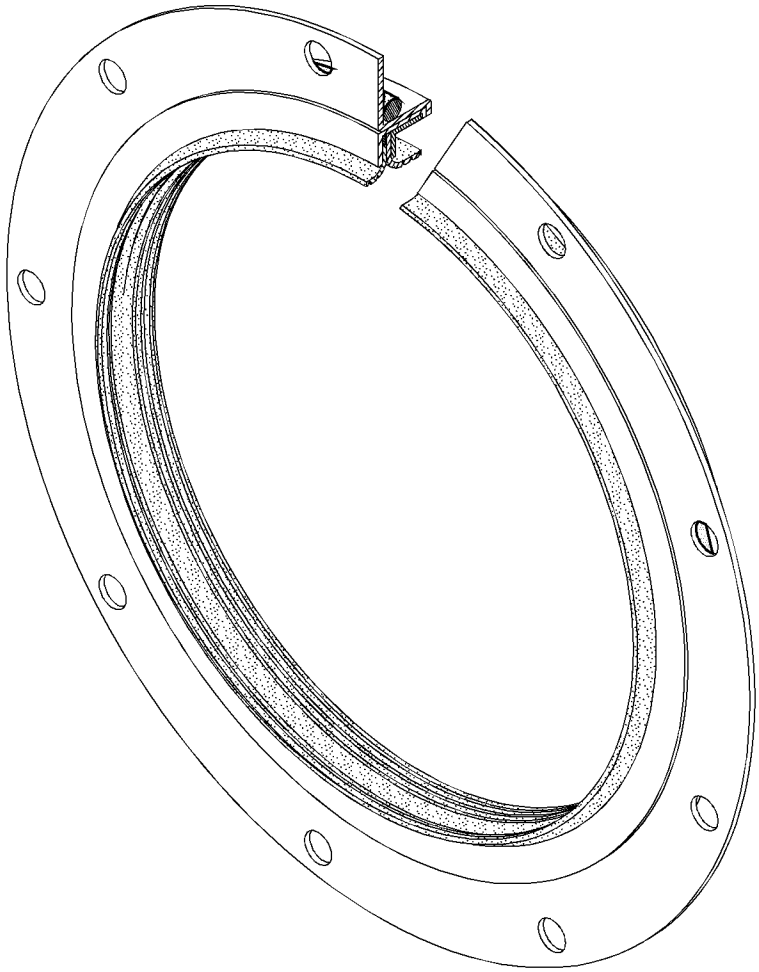

GRAPHIC #1

<END>

g02202493

166-1790 SUPPORT GP-ENGINE

S/N: TXD1-UP
FOR USE WITH FRONT TRUNNION ENGINE SUPPORT
PART OF 387-8581, 387-8582 ENGINE AR-COMPLETE
AN ATTACHMENT

SMCS-1152, 1153, 1154 **i05555472**

NOTE	REF NO	GRAPHIC REF	PART NUMBER	QTY	PART NAME 1 2 3 4 5 6 (PRODUCT LEVEL)	SEE PAGE
	1	1	**169-3899**	1	SUPPORT AS-ENGINE	
M	1A	1	**8T-3490**	4	NUT-WELD (M10X1.5 THD)	
	2	1	**5P-8245**	6	WASHER-HARD (13.5X25.5X3-MM THK)	
M	3	1	**6V-8675**	6	BOLT (M12X1.75X35-MM)	

M - METRIC PART

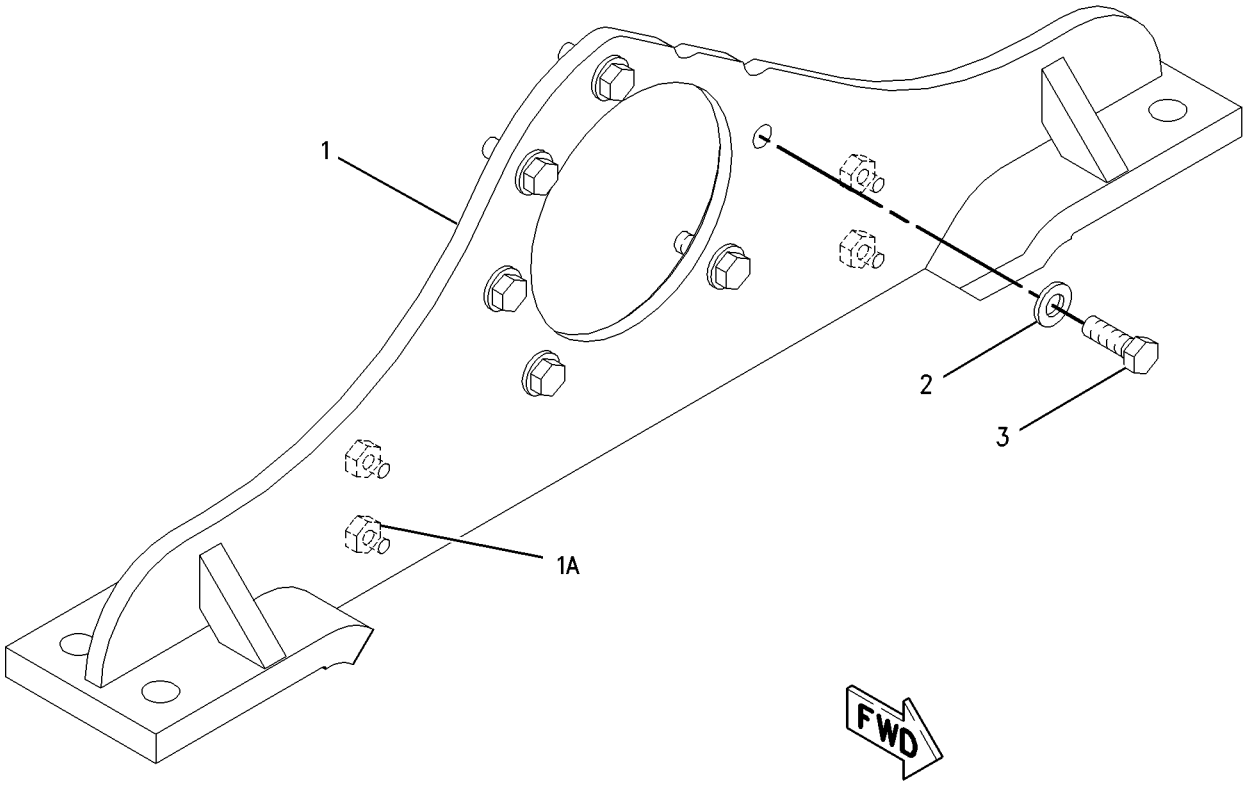

GRAPHIC #1 **<END>** g00852403

166-1792 TRUNNION GP-ENGINE

S/N: TXD1-UP

PART OF 387-8581, 387-8582 ENGINE AR-COMPLETE

AN ATTACHMENT

SMCS-1153 **i05555473**

NOTE	REF NO	GRAPHIC REF	PART NUMBER	QTY	PART NAME 1 2 3 4 5 6 (PRODUCT LEVEL)	SEE PAGE
	1	1	**311-8096**	1	TRUNNION AS	
	2	1	**5P-8245**	6	WASHER-HARD (13.5X25.5X3-MM THK)	
M	3	1	**6V-5696**	6	BOLT (M12X1.75X80-MM)	

M - METRIC PART

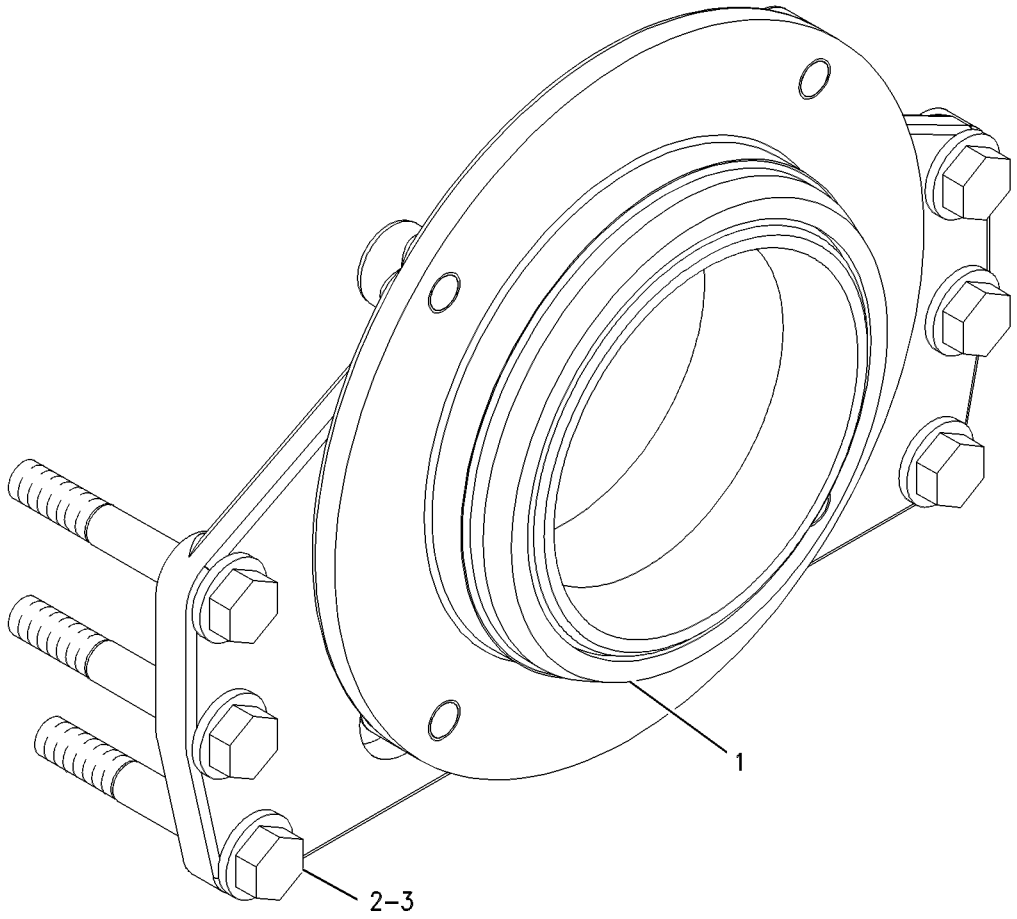

GRAPHIC #1 **<END>** g00644918

212-8926 VALVE MECHANISM GP

S/N: TXD1-UP

PART OF 242-0447 VALVE MECHANISM GP

AN ATTACHMENT

SMCS-1102, 1121, 1123 **i05615914**

NOTE	REF NO	GRAPHIC REF	PART NUMBER	QTY	PART NAME 1 2 3 4 5 6 (PRODUCT LEVEL)	SEE PAGE
	1	1	**163-2445**	1	SHAFT AS-ROCKER ARM	
		1	**8F-6575**	2	PLUG-CUP	
	2	1	**163-2459**	6	SPRING	
	3	1	**164-5669**	2	STAND (END)	
	4	1	**176-5913**	4	STAND (MIDDLE)	
	5	1	**176-5914**	1	STAND (OIL)	
Y	6	1	*213-9320*	6	ROCKER ARM GP (EXHAUST)	54
Y	7	1	*242-0329*	6	ROCKER ARM GP (INLET)	55
	8	1	**5P-8245**	7	WASHER-HARD (13.5X25.5X3-MM THK)	
M	9	1	**8T-0646**	7	BOLT (M12X1.75X110-MM)	

M - METRIC PART
Y - SEPARATE ILLUSTRATION

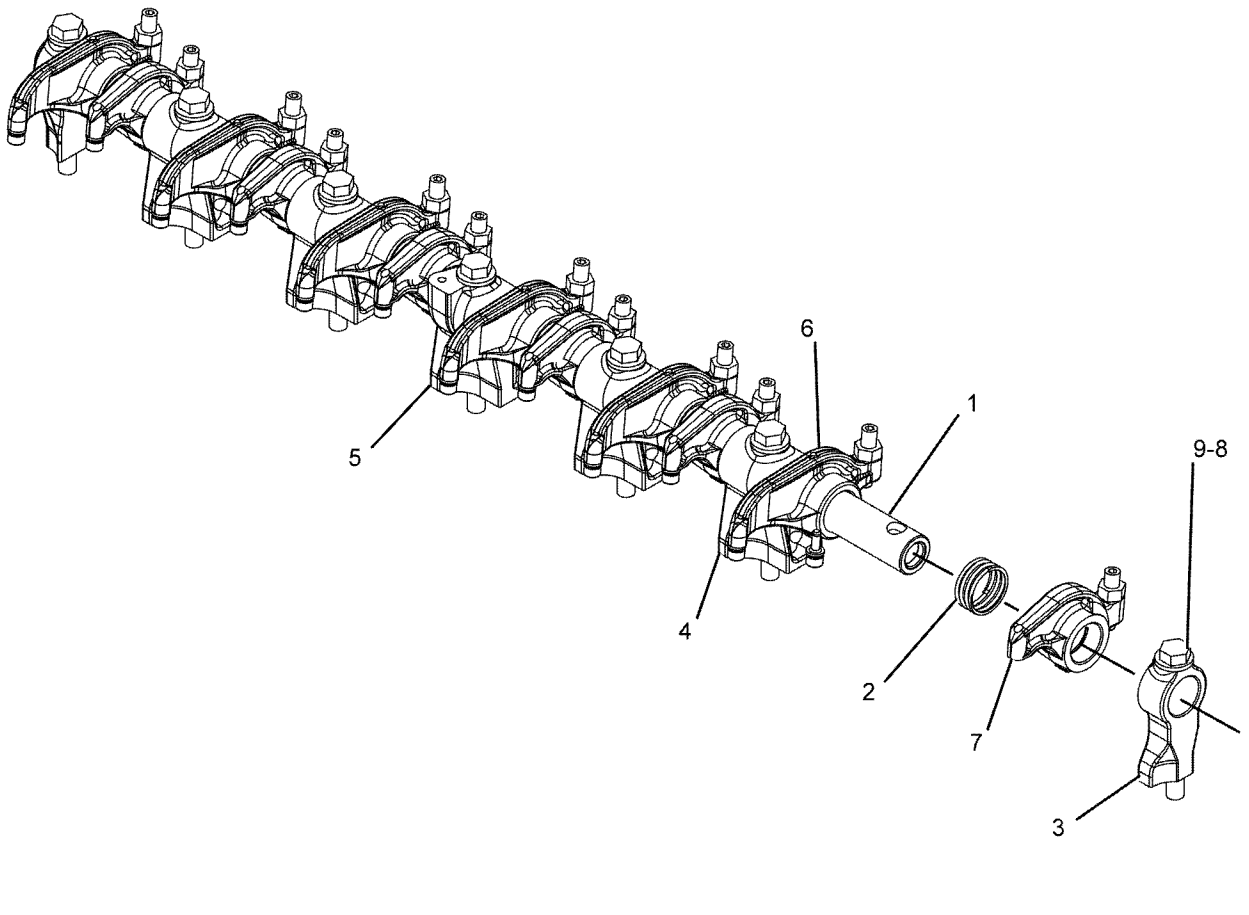

GRAPHIC #1 **<END>** g01069313

242-0447 VALVE MECHANISM GP

S/N: TXD1-UP
PART OF 387-8619 ENGINE AR-CORE
AN ATTACHMENT

SMCS-1102, 1121, 1123 **i05615647**

NOTE	REF NO	GRAPHIC REF	PART NUMBER	QTY	PART NAME 1 2 3 4 5 6 (PRODUCT LEVEL)	SEE PAGE
C	1	1	**453-6003**	12	SPRING-GUIDE	
	2	1	**264-6156**	12	ROD-VALVE PUSH	
C	3	1	**453-5998**	12	LIFTER AS-VALVE	
Y	4	1	*212-8926*	1	VALVE MECHANISM GP	60
	5	1	**244-5891**	6	BRIDGE-VALVE	
	6	1	**255-8674**	6	BRIDGE-VALVE	

C - CHANGE FROM PREVIOUS TYPE
Y - SEPARATE ILLUSTRATION

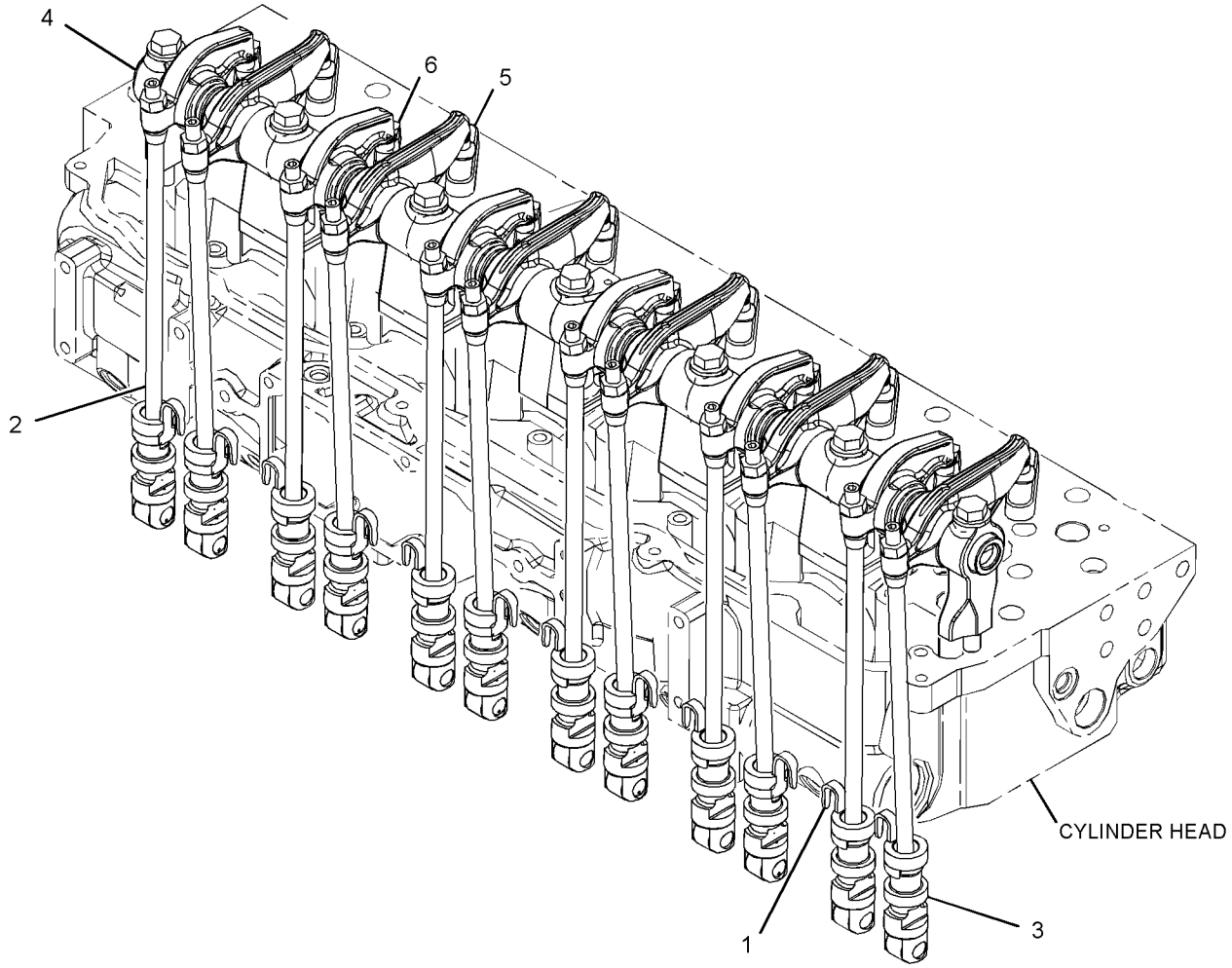

GRAPHIC #1 **<END>** g03348904

224-2693 YOKE GP

S/N: EMM1-UP; JEN1-UP

PART OF 389-3215 INSTALLATION AR-ENGINE

SMCS-3108 **i05640477**

NOTE	REF NO	GRAPHIC REF	PART NUMBER	QTY	PART NAME 1 2 3 4 5 6 (PRODUCT LEVEL)	SEE PAGE
	1	1	**128-3341**	1	COVER	
	2	1	**224-2694**	1	FLANGE	
	3	1	**128-3813**	1	SEAL-LIP TYPE	
	4	1	**1L-4775**	1	RING-RETAINING	
	5	1	**2S-3029**	1	BALL BEARING	
M	6	1	**6V-5844**	2	BOLT (M16X2X35-MM)	
	7	1	**6V-8260**	1	SEAL-O-RING	
	8	1	**9X-8268**	2	WASHER (17.5X30X3.5-MM THK)	

M - METRIC PART

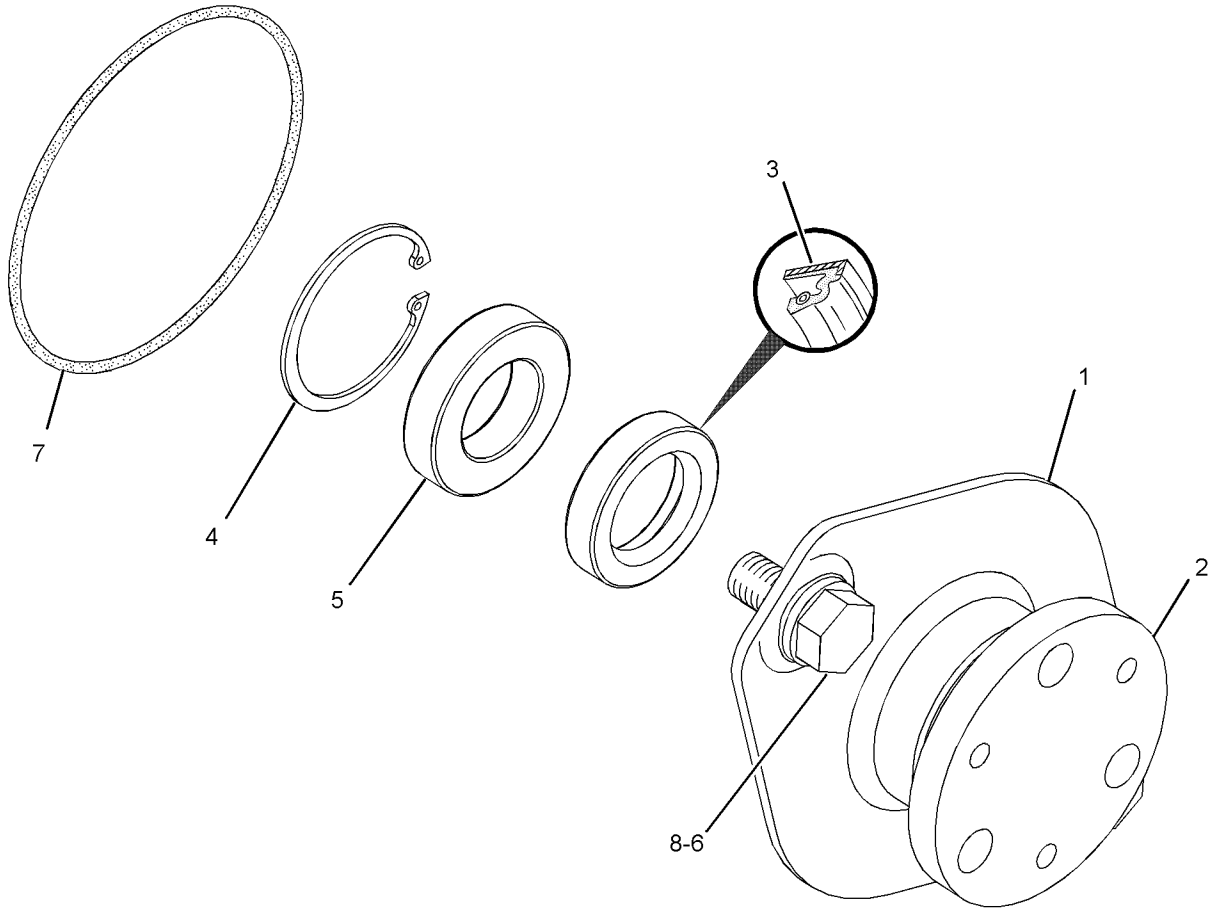

GRAPHIC #1 **<END>** g01210810

389-8270 FILLER GP-ENGINE OIL

S/N: TXD1-UP

PART OF 387-8581, 387-8582 ENGINE AR-COMPLETE

AN ATTACHMENT

SMCS-1316 **i05555369**

NOTE	REF NO	GRAPHIC REF	PART NUMBER	QTY	PART NAME 1 2 3 4 5 6 (PRODUCT LEVEL)	SEE PAGE
	1	1	**206-5887**	1	TUBE AS	
		1	**2P-2717**	1	HASP	
		1	**4N-6045**	1	LUG	
		1	**6N-2985**	1	CAP AS-FILLER (ENGINE OIL)	
	2	1	**061-9455**	1	SEAL-O-RING	
M	3	1	**5P-7970**	4	NUT (M8X1.25-THD)	
	4	1	**9M-1974**	4	WASHER-HARD (8.8X16X2-MM THK)	

M - METRIC PART

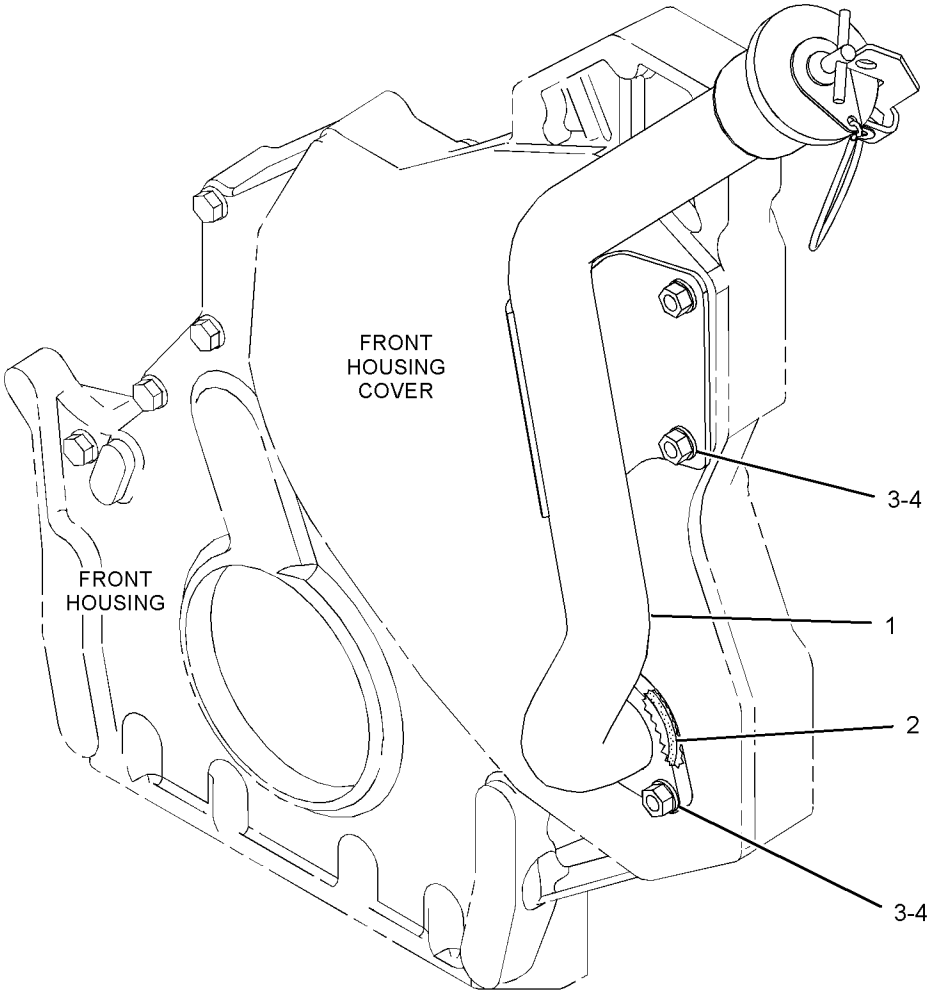

GRAPHIC #1 **<END>** g02841557

183-2097 FILTER GP-ENGINE OIL

S/N: TXD1-UP

PART OF 387-8581, 387-8582 ENGINE AR-COMPLETE

AN ATTACHMENT

SMCS-1306, 1308 **i05555372**

NOTE	REF NO	GRAPHIC REF	PART NUMBER	QTY	PART NAME 1 2 3 4 5 6 (PRODUCT LEVEL)	SEE PAGE
	1	2	**7C-1493**	2	VALVE AS-BYPASS (ENGINE OIL FILTER)	
	2	2	**209-7290**	1	GASKET	
	3	2	*352-6498*	1	TEE AS	
		2	**8T-8902**	1	TEE	
		2	**228-7089**	1	SEAL-O-RING	
C	4	2	**352-8839**	1	BASE AS-OIL FILTER (ENGINE)	
		2	**2P-4304**	1	STUD-HOLLOW	
		2	*347-4428*	4	PLUG AS	
					(EACH INCLUDES)	
		2	**230-5040**	1	PLUG	
		2	**238-5085**	1	SEAL-O-RING	
	5	2	**1R-1808**	1	FILTER-ENGINE OIL (ADVANCED EFFICIENCY)	
	6	2	**242-3864**	2	SPRING	
C	7	2	*398-5596*	1	PLUG AS	
		2	**360-3680**	1	PLUG	
		2	**238-5080**	1	SEAL-O-RING	
C	8	2	*398-5601*	3	PLUG AS	
					(EACH INCLUDES)	
		2	**360-3681**	1	PLUG-O-RING	
		2	**238-5081**	1	SEAL-O-RING	
	9	2	*315-9840*	1	ELBOW AS	
		2	**6V-8077**	1	ELBOW	
		2	**214-7568**	1	SEAL-O-RING	
	10	2	*319-6208*	1	ADAPTER AS	
		2	**5P-9617**	1	ADAPTER	
		2	**214-7568**	1	SEAL-O-RING	
	11	2	**321-8649**	1	VALVE AS-FLUID SAMPLING (ENGINE OIL)	
		2	**8C-3446**	1	VALVE-FLUID SAMPLING (ENGINE OIL)	
		2	**214-7566**	1	SEAL-O-RING	
C	12	2	*329-5511*	1	ELBOW AS	
		2	**6V-8723**	1	ELBOW	
		2	**228-7089**	1	SEAL-O-RING	
		2	**238-5080**	1	SEAL-O-RING	
M	13	1	**6V-5218**	2	BOLT (M8X1.25X35-MM)	
M	14	1	**6V-5219**	8	BOLT (M8X1.25X40-MM)	
M	15	1	**6V-5220**	2	BOLT (M8X1.25X65-MM)	
	16	2	**8C-3445**	1	CAP-DUST	
	17	1	**9M-1974**	12	WASHER-HARD (8.8X16X2-MM THK)	

C - CHANGE FROM PREVIOUS TYPE
M - METRIC PART

183-2097 **FILTER GP-ENGINE OIL (*contd.*)** **i05555372**

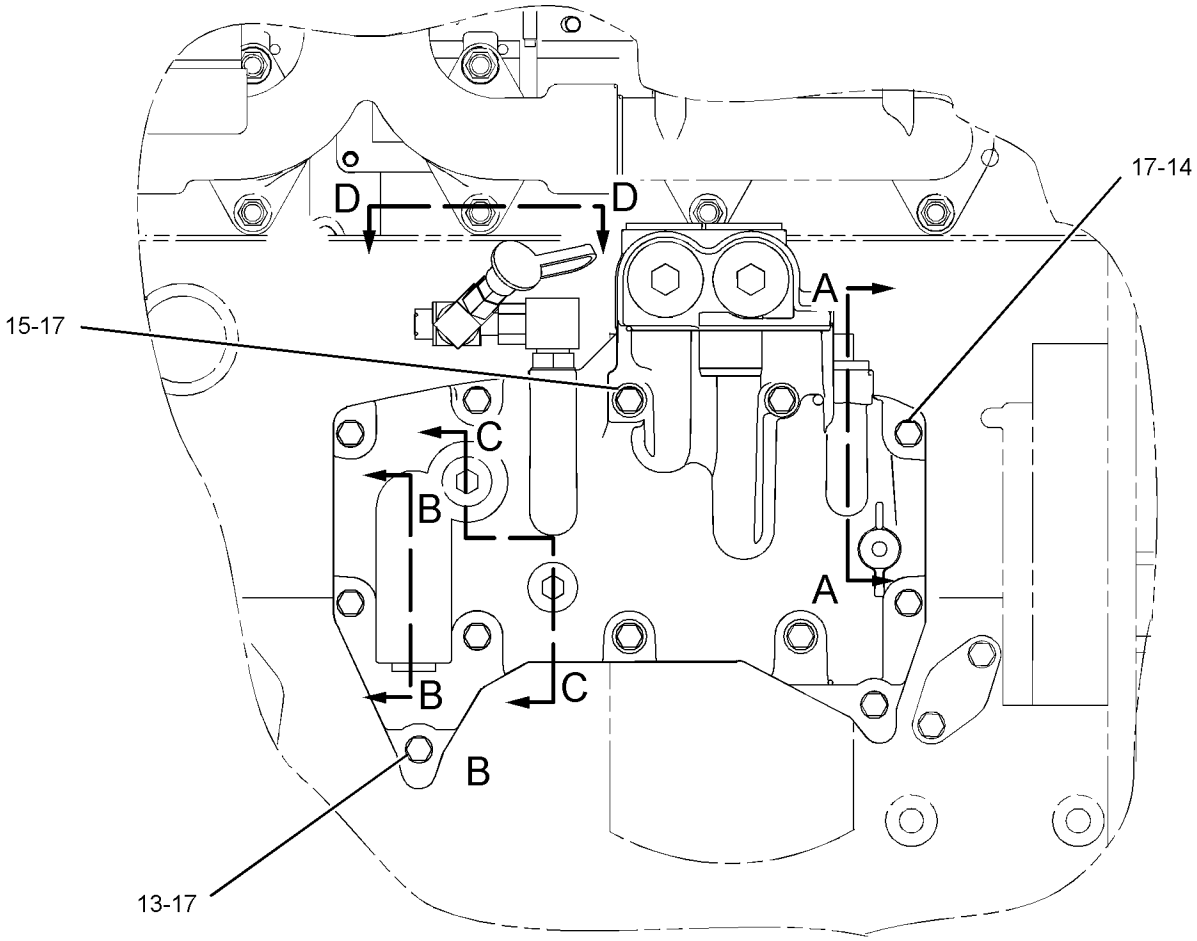

RIGHT SIDE VIEW

GRAPHIC #1 g02750116

183-2097 **FILTER GP-ENGINE OIL (*contd.*)** **i05555372**

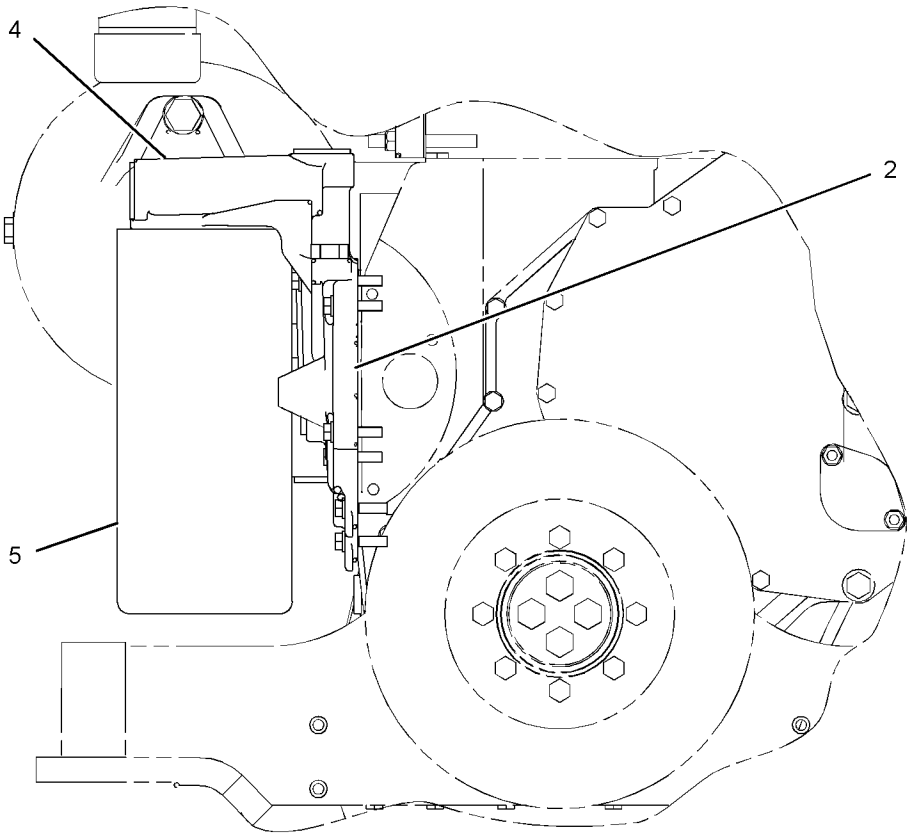

FRONT VIEW

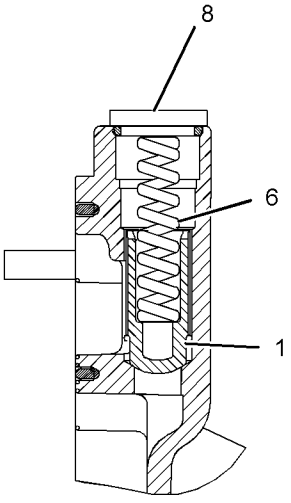

SECTION A-A

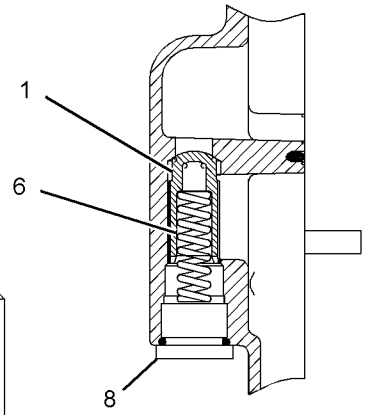

SECTION B-B

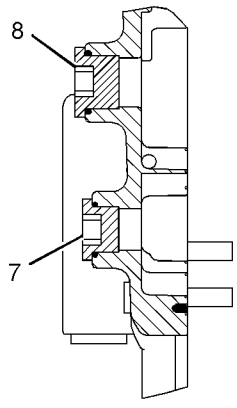

SECTION C-C

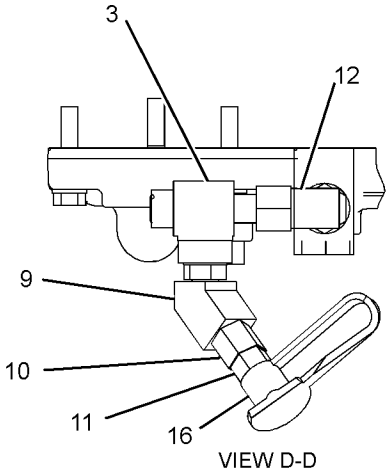

VIEW D-D

GRAPHIC #2 **<END>** g02750118

230-5585 FUMES DISPOSAL GP–CRANKCASE

S/N: EMM1-UP; JEN1-UP

PART OF 389-3215 INSTALLATION AR-ENGINE

SMCS-1317 **i05640483**

NOTE	REF NO	GRAPHIC REF	PART NUMBER	QTY	PART NAME 1 2 3 4 5 6 (PRODUCT LEVEL)	SEE PAGE
	1	1	**2S-3440**	1	CLAMP-HOSE	
	2	1	**9M-0164**	1	CLAMP-HOSE	
	3	1	**184-7211**	2	CLIP	
	4	1	**230-9796**	1	DUCT AS	
	5	1	**6V-1889**	3	CLIP	
	6	1	**8T-4121**	5	WASHER-HARD (11X21X2.5-MM THK)	
M	7	1	**8T-4133**	2	NUT (M10X1.5-THD)	
M	8	1	**8T-4136**	1	BOLT (M10X1.5X25-MM)	
M	9	1	**8T-4195**	1	BOLT (M10X1.5X30-MM)	

M - METRIC PART

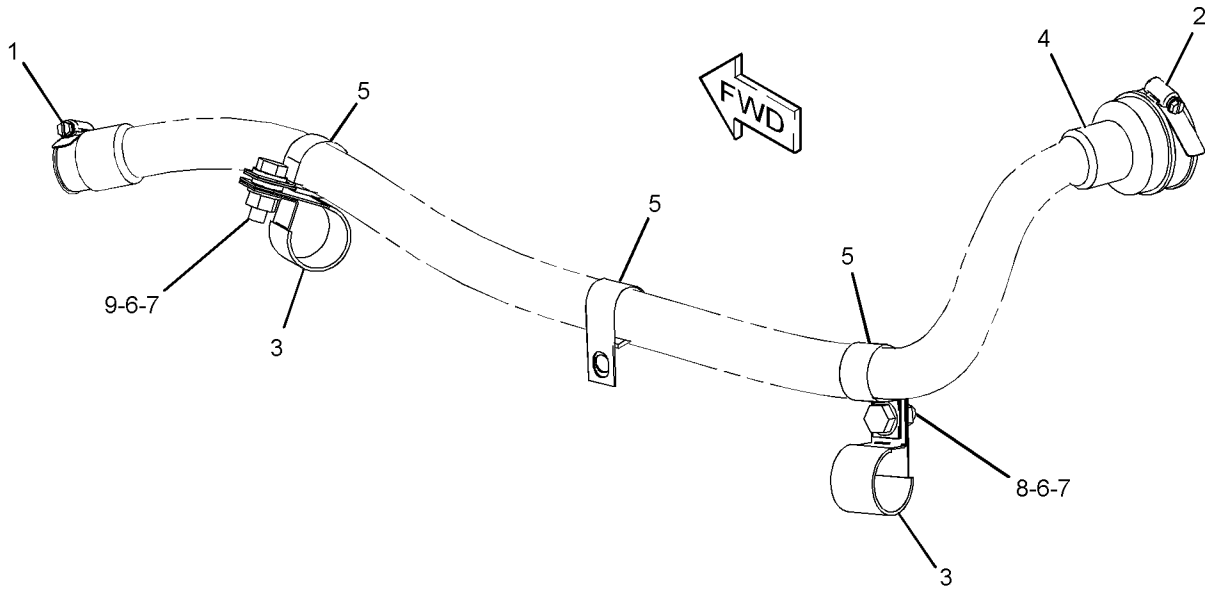

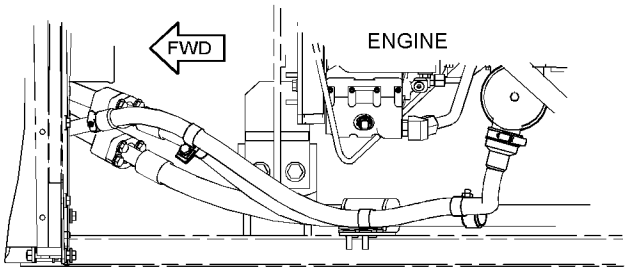

TOP VIEW

GRAPHIC #1 **<END>** g01353930

241-3719 FUMES DISPOSAL GP

S/N: TXD1-UP

PART OF 387-8581, 387-8582 ENGINE AR-COMPLETE

AN ATTACHMENT

SMCS-1317 **i05555409**

NOTE	REF NO	GRAPHIC REF	PART NUMBER	QTY	PART NAME 1 2 3 4 5 6 (PRODUCT LEVEL)	SEE PAGE
	1	1	**9M-7958**	2	CLAMP-HOSE	
	2	1	*384-9220*	1	CONNECTOR AS	
		1	**069-4269**	1	ADAPTER	
		1	**238-5082**	1	SEAL-O-RING	
C	3	1	**295-1771**	1	HOSE-FUMES DISPOSAL (CRANKCASE)	
	4	1	**4D-7388**	1	CLIP	
M	5	1	**6V-4248**	1	BOLT (M10X1.5X25-MM)	
	6	1	**6V-5839**	1	WASHER (11X21X2.5-MM THK)	

C - CHANGE FROM PREVIOUS TYPE
M - METRIC PART

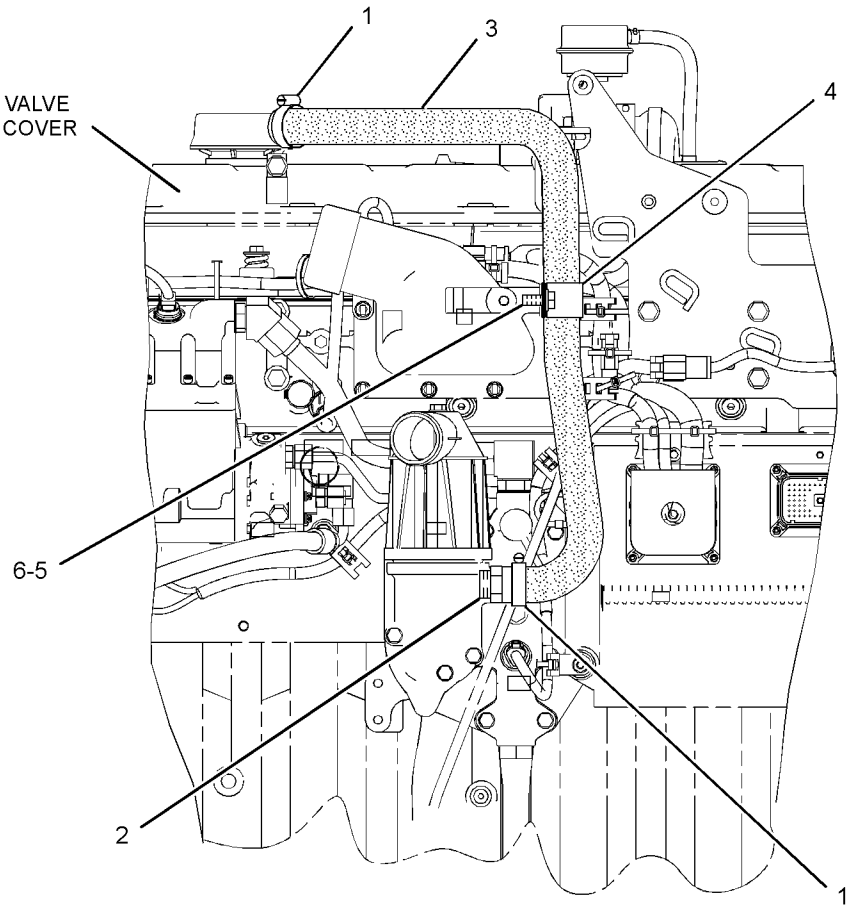

LEFT SIDE VIEW OF ENGINE

GRAPHIC #1 **<END>** g02084753

246-0601 GAUGE GP-OIL LEVEL (DIPSTICK)—ENGINE

S/N: TXD1-UP
PART OF 387-8581, 387-8582 ENGINE AR-COMPLETE
AN ATTACHMENT

SMCS-1326 **i05555414**

NOTE	REF NO	GRAPHIC REF	PART NUMBER	QTY	PART NAME 1 2 3 4 5 6 (PRODUCT LEVEL)	SEE PAGE
	1	1	**261-3162**	1	GAUGE-OIL LEVEL (DIPSTICK) (ENGINE)	
	2	1	**246-7899**	1	TUBE AS	

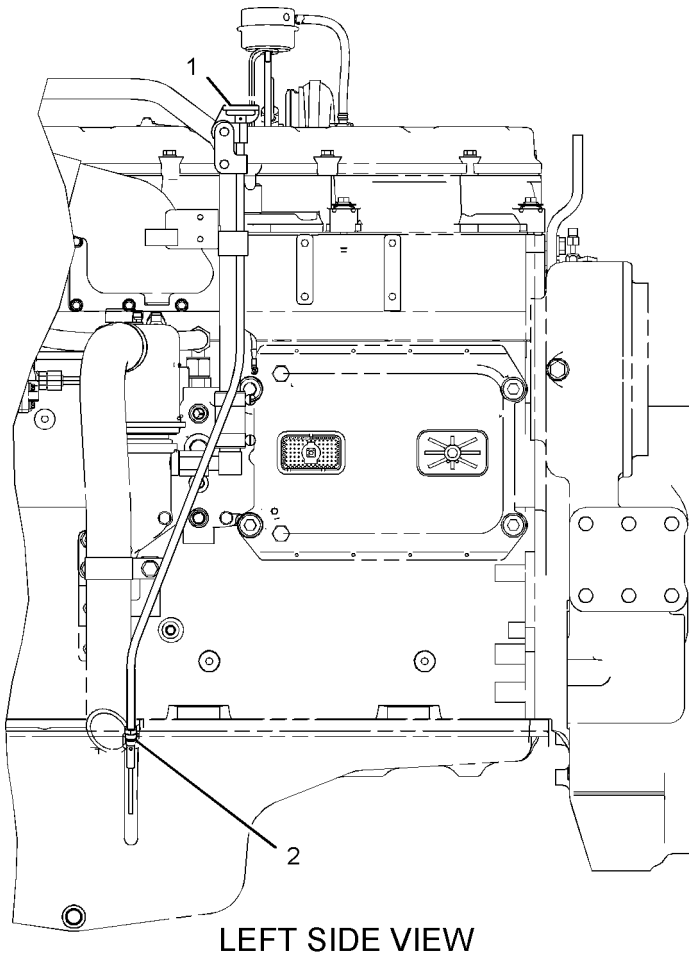

LEFT SIDE VIEW

GRAPHIC #1 **<END>** g01101373

198-1319 LINES GP-ENGINE OIL

S/N: TXD1-UP
FRONT SUMP
PART OF 387-8581, 387-8582 ENGINE AR-COMPLETE
AN ATTACHMENT

SMCS-1307 **i05555440**

NOTE	REF NO	GRAPHIC REF	PART NUMBER	QTY	PART NAME 1 2 3 4 5 6 (PRODUCT LEVEL)	SEE PAGE
	2	1	**207-6087**	1	ELBOW	
	3	1	**195-0452**	1	GASKET	
	4	1	**213-8516**	1	TUBE AS	
	5	1	**033-6032**	1	SEAL-O-RING	
M	7	1	**208-9282**	1	BOLT (M8X1.25X25-MM)	
	8	1	**5P-6436**	1	SEAL-O-RING	
M	9	1	**6V-5217**	2	BOLT (M8X1.25X20-MM)	
M	11	1	**8T-0292**	1	BOLT (M8X1.25X90-MM)	
M	12	1	**6V-3940**	2	BOLT (M8X1.25X25-MM)	
	13	1	**9M-1974**	5	WASHER-HARD (8.8X16X2-MM THK)	

M - METRIC PART

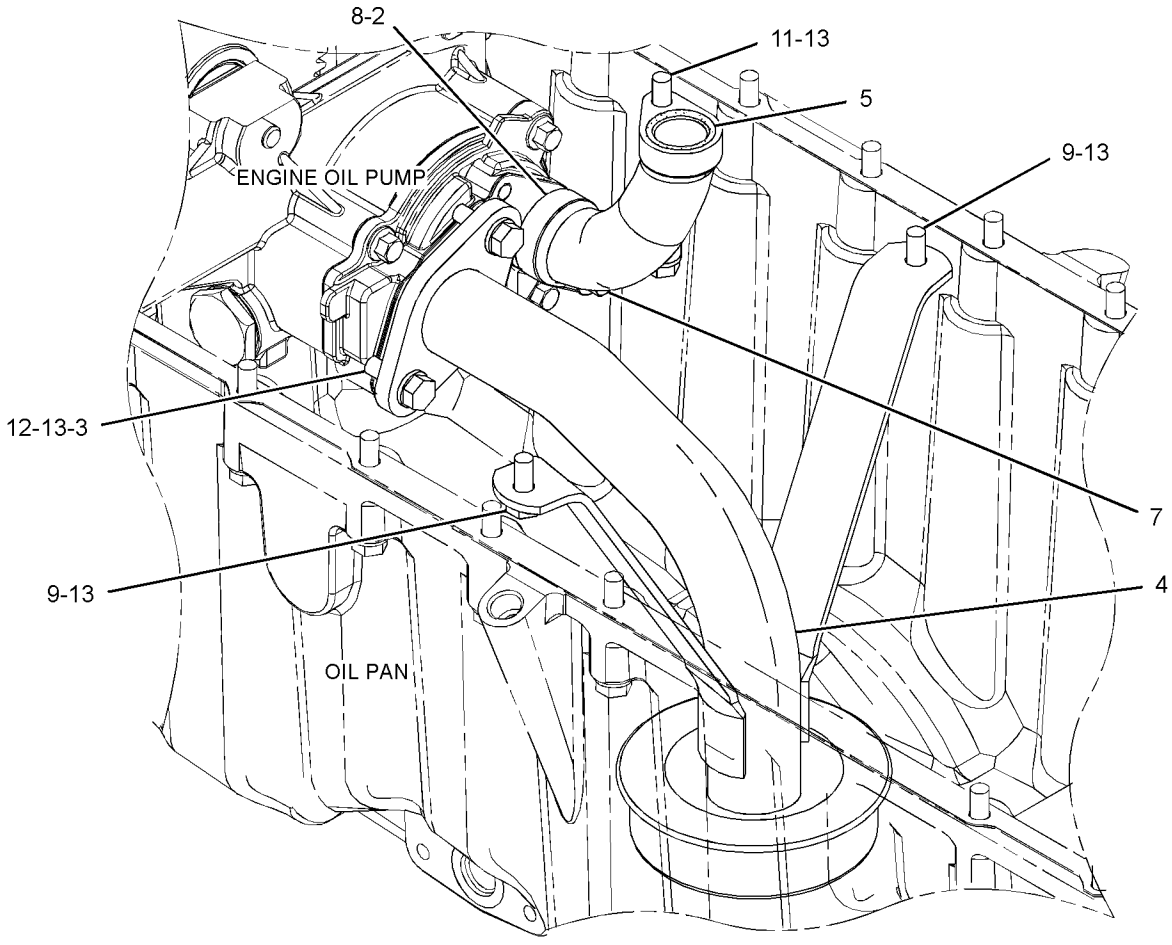

GRAPHIC #1 **<END>** g02798791

266-9810 LINES GP-TURBOCHARGER OIL

S/N: TXD1-UP

PART OF 387-8581, 387-8582 ENGINE AR-COMPLETE

AN ATTACHMENT

SMCS-1052, 1307

i05555443

NOTE	REF NO	GRAPHIC REF	PART NUMBER	QTY	PART NAME 1 2 3 4 5 6 (PRODUCT LEVEL)	SEE PAGE
	1	1	**9N-4685**	1	BLOCK	
	2	1	**167-0168**	1	HOSE AS-OIL SUPPLY	
	3	1	*183-3399*	1	CONNECTOR AS	
		1	**214-7568**	1	SEAL-O-RING	
		1	**6V-8636**	1	CONNECTOR	
		1	**228-7089**	1	SEAL-O-RING	
	4	1	**197-8419**	1	GASKET	
	5	1	**246-6036**	1	HOSE	
	6	1	**257-5858**	1	TUBE AS	
	7	1	**263-3464**	1	TUBE AS	
	8	1	**284-3502**	2	CLAMP-BAND	
	9	1	**124-0174**	1	CLIP	
M	10	1	**2Y-5829**	1	NUT (M10X1.5-THD)	
	11	1	**5P-7530**	1	SEAL-O-RING	
M	12	1	**6V-3940**	2	BOLT (M8X1.25X25-MM)	
M	13	1	**6V-5230**	1	BOLT (M10X1.5X60-MM)	
M	14	1	**6V-5218**	2	BOLT (M8X1.25X35-MM)	
	15	1	**6V-5839**	2	WASHER (11X21X2.5-MM THK)	
	16	1	**1S-0724**	1	CLIP	
	17	1	**9M-1974**	4	WASHER-HARD (8.8X16X2-MM THK)	

M - METRIC PART

266-9810 **LINES GP-TURBOCHARGER OIL (*contd.*)** **i05555443**

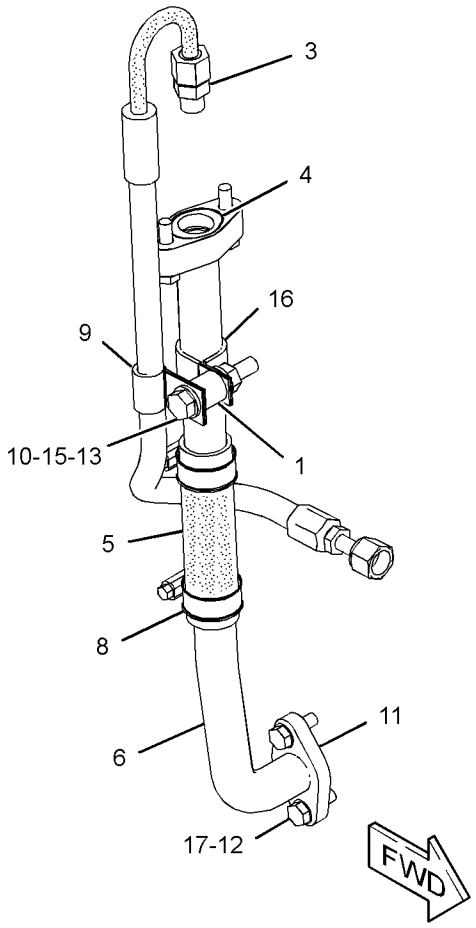

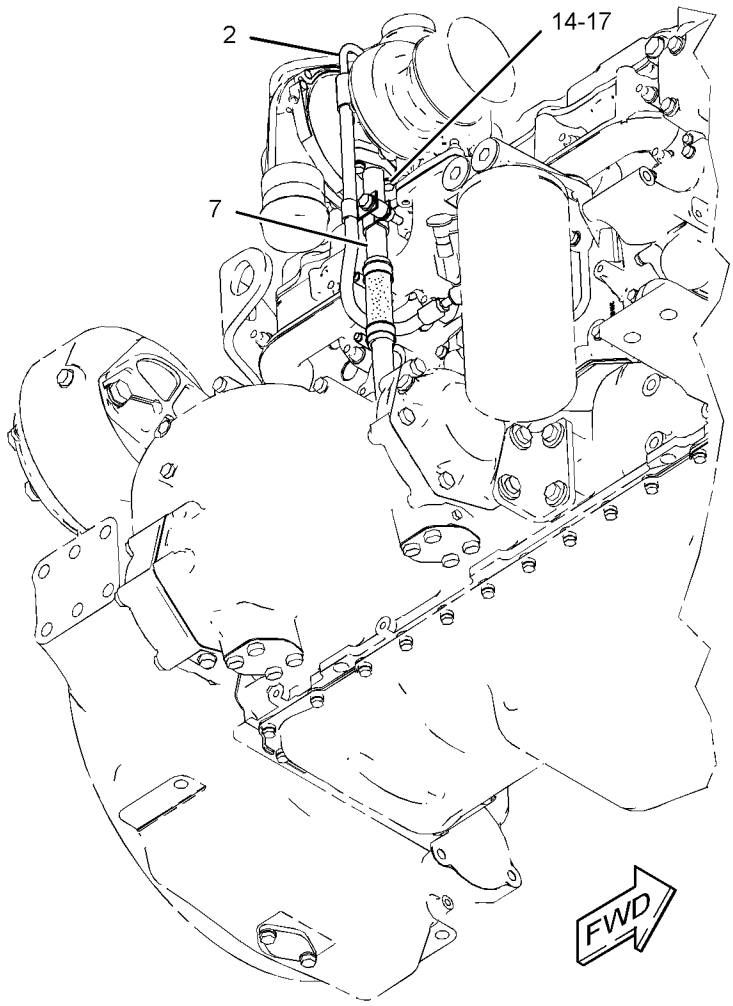

GRAPHIC #1 **<END>** g03254917

195-8098 PUMP GP-ENGINE OIL

S/N: TXD1-UP
PART OF 387-8619 ENGINE AR-CORE
AN ATTACHMENT

SMCS-1304, 1315

i05555625

NOTE	REF NO	GRAPHIC REF	PART NUMBER	QTY	PART NAME 1 2 3 4 5 6 (PRODUCT LEVEL)	SEE PAGE
C	1	1	**396-6022**	1	PUMP GP-GEROTOR	
	1A	1	**221-0144**	1	GEAR AS (60-TEETH)	
M	2	1	**6V-1819**	2	BOLT (M10X1.5X100-MM)	
	3	1	**6V-5839**	2	WASHER (11X21X2.5-MM THK)	

C - CHANGE FROM PREVIOUS TYPE
M - METRIC PART

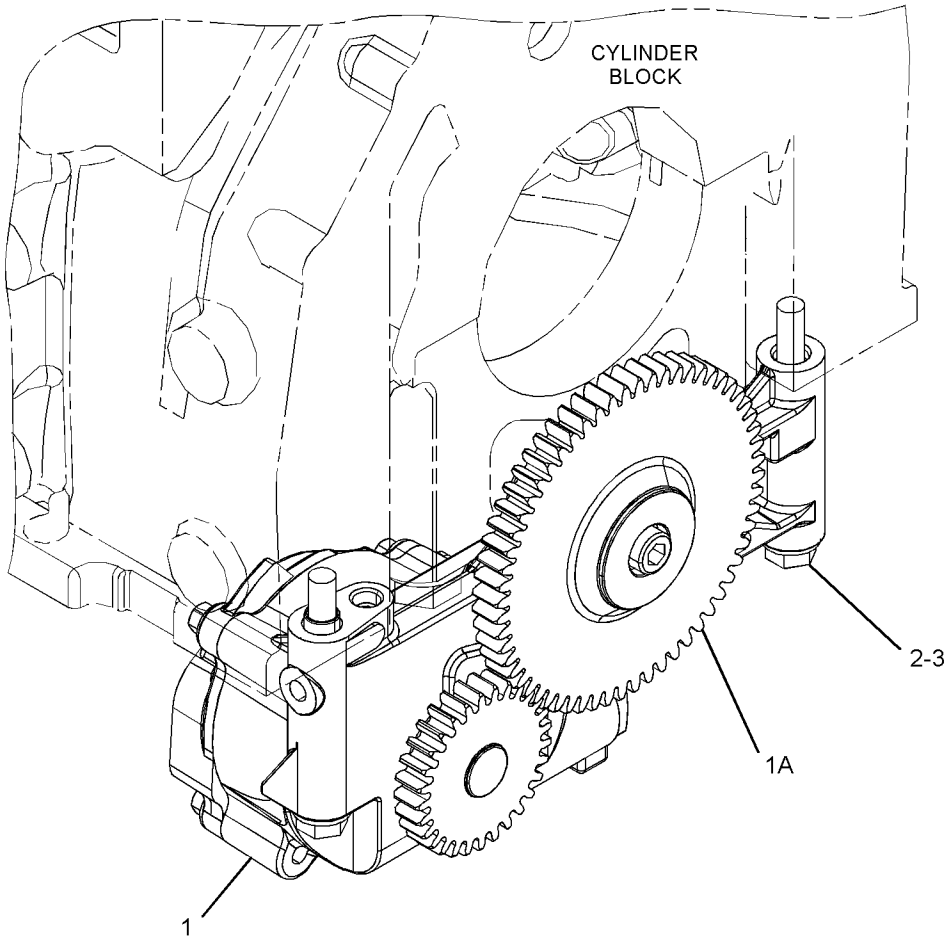

GRAPHIC #1

<END>

g03392480

198-0921 VALVE GP-FLUID SAMPLING—ENGINE OIL

S/N: TXD1-UP

PART OF 387-8581, 387-8582 ENGINE AR-COMPLETE

AN ATTACHMENT

SMCS-7542 **i05555475**

NOTE	REF NO	GRAPHIC REF	PART NUMBER	QTY	PART NAME 1 2 3 4 5 6 (PRODUCT LEVEL)	SEE PAGE
	1	1	**6V-0852**	1	CAP-DUST	
	2	1	*164-5567*	1	COUPLER AS-QUICK DISCONNECT (MALE)	
		1	**6V-3965**	1	FITTING (QUICK DISCONNECT)	
		1	**214-7568**	1	SEAL-O-RING	

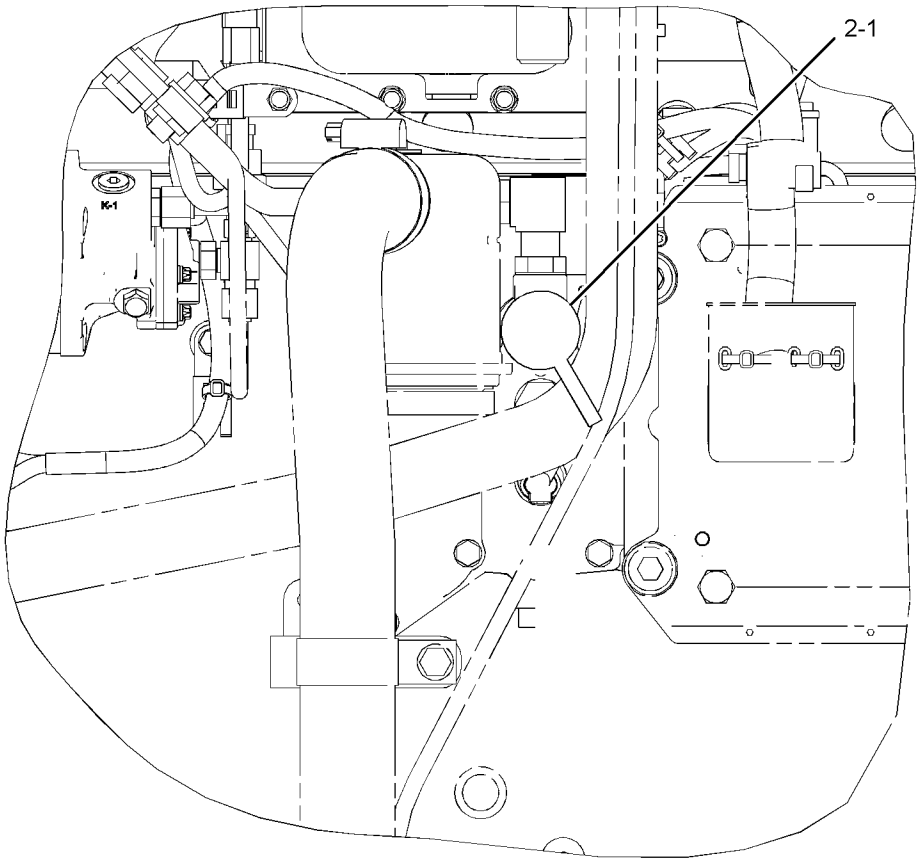

LEFT SIDE VIEW

GRAPHIC #1 **<END>** g03005496

188-3826 COOLER GP-ENGINE OIL

S/N: TXD1-UP
PART OF 387-8581, 387-8582 ENGINE AR-COMPLETE
AN ATTACHMENT

SMCS-1378 **i05555227**

NOTE	REF NO	GRAPHIC REF	PART NUMBER	QTY	PART NAME 1 2 3 4 5 6 (PRODUCT LEVEL)	SEE PAGE
	1	1	**209-7293**	1	GASKET	
CR	2	1	**293-9367**	1	CORE AS-OIL COOLER (ENGINE)	

C - CHANGE FROM PREVIOUS TYPE
R - REMFG PART MAY BE AVAILABLE

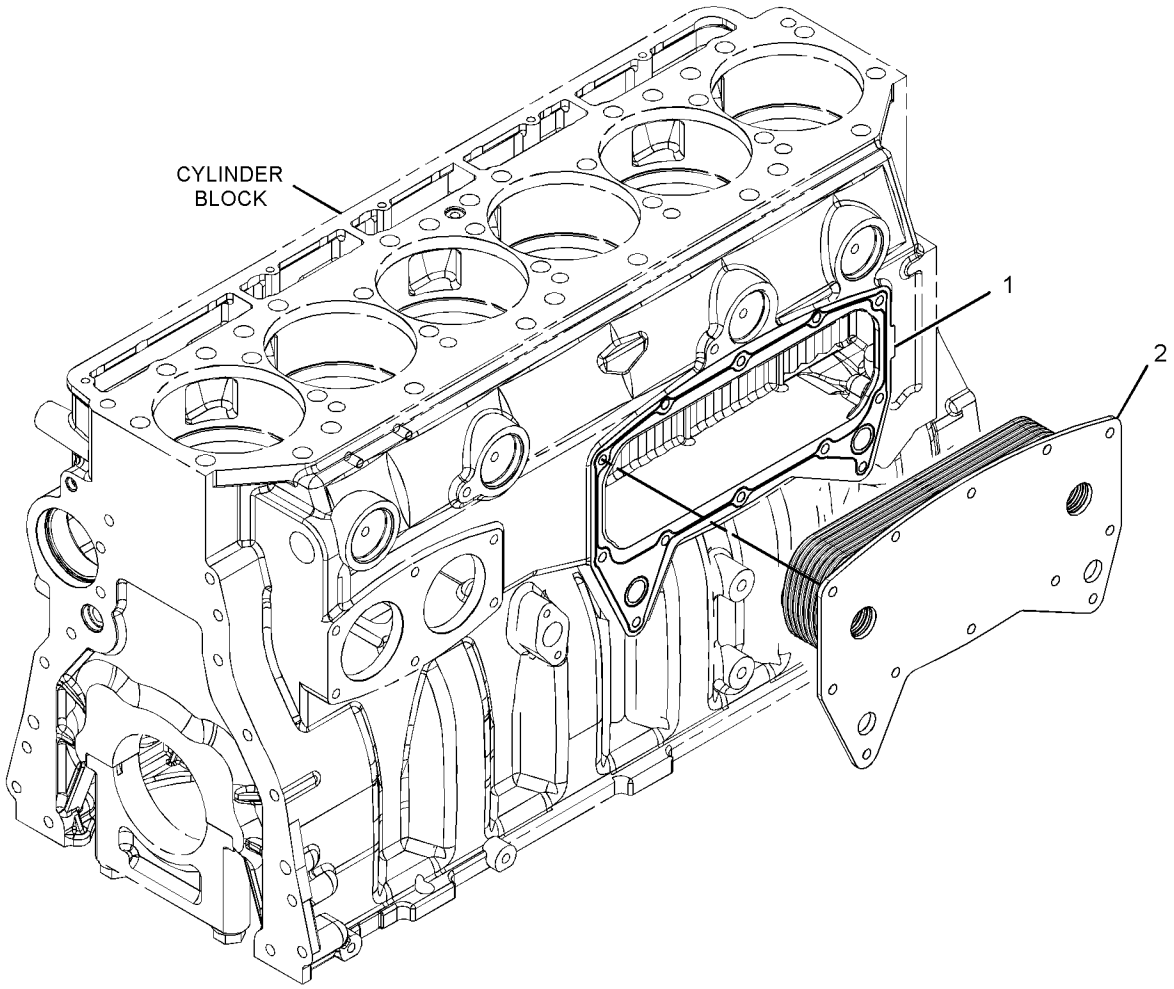

GRAPHIC #1 **<END>** g01419332

339-1488 FAN GP-BLOWER

S/N: EMM1-UP; JEN1-UP

AN ATTACHMENT

SMCS-1356, 1360 **i05501431**

NOTE	REF NO	GRAPHIC REF	PART NUMBER	QTY	PART NAME 1 2 3 4 5 6 (PRODUCT LEVEL)	SEE PAGE
	1	1	**339-1487**	4	GUARD AS-FAN	
	2	1	**358-9211**	1	SPIDER AS-FAN (8-BLADE)	
	3	1	**7X-7729**	12	WASHER (11X25X3-MM THK)	
	4	1	**8T-4121**	8	WASHER-HARD (11X21X2.5-MM THK)	
M	5	1	**8T-4137**	4	BOLT (M10X1.5X20-MM)	
M	6	1	**8T-4196**	20	BOLT (M10X1.5X35-MM)	
	7	1	**8T-4222**	4	WASHER-PLATED (11X32X2.5-MM THK)	

M - METRIC PART

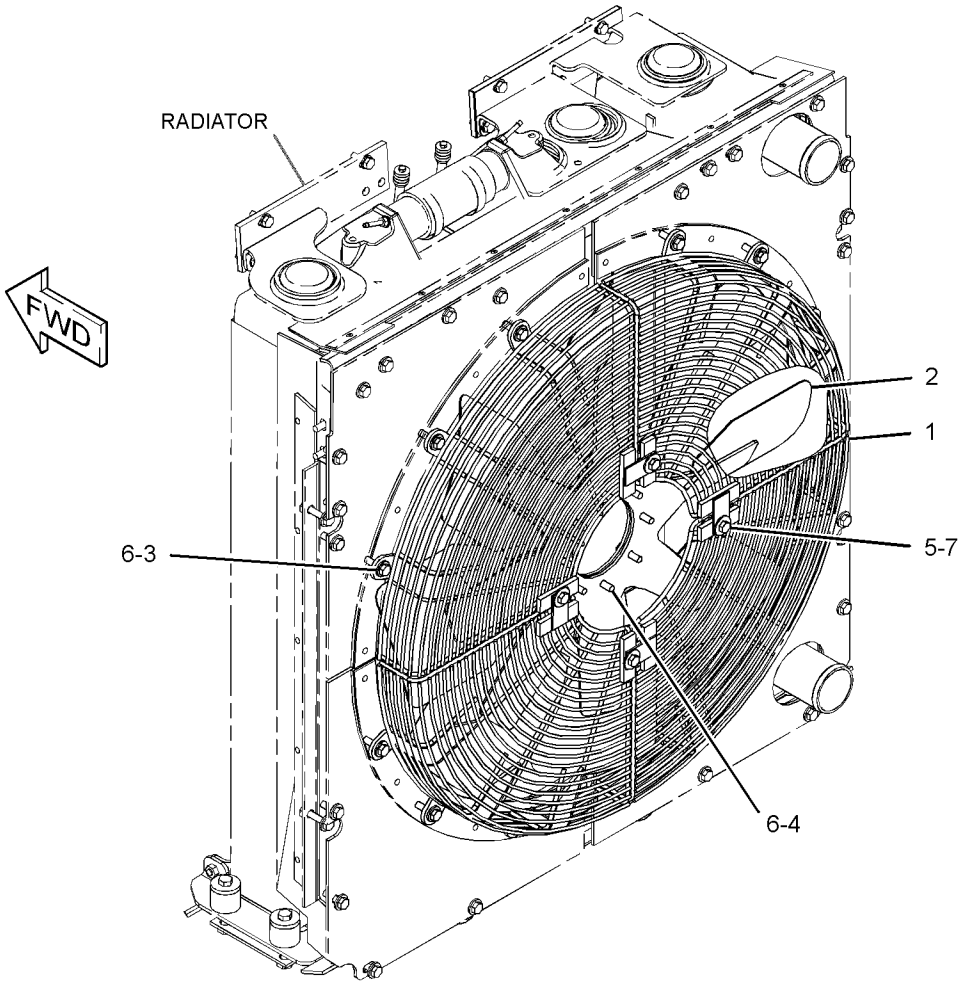

GRAPHIC #1 **<END>** g03257979

389-3260 FAN GP-BLOWER—REVERSING

S/N: EMM1-UP; JEN1-UP

AN ATTACHMENT

SMCS-1356, 1360 **i05674050**

NOTE	REF NO	GRAPHIC REF	PART NUMBER	QTY	PART NAME 1 2 3 4 5 6 (PRODUCT LEVEL)	SEE PAGE
	1	1	**2W-5825**	1	PLATE	
	2	1	**339-1487**	3	GUARD AS-FAN	
	3	1	**358-9213**	1	FAN AS-REVERSIBLE (8-BLADE)	
	4	1	**371-2467**	1	GUARD AS	
	5	1	**7X-7729**	14	WASHER (11X25X3-MM THK)	
	6	1	**8T-4121**	8	WASHER-HARD (11X21X2.5-MM THK)	
M	7	1	**8T-4137**	6	BOLT (M10X1.5X20-MM)	
M	8	1	**8T-4182**	8	BOLT (M10X1.5X45-MM)	
M	9	1	**8T-4196**	12	BOLT (M10X1.5X35-MM)	
	10	1	**8T-4222**	4	WASHER-PLATED (11X32X2.5-MM THK)	

M - METRIC PART

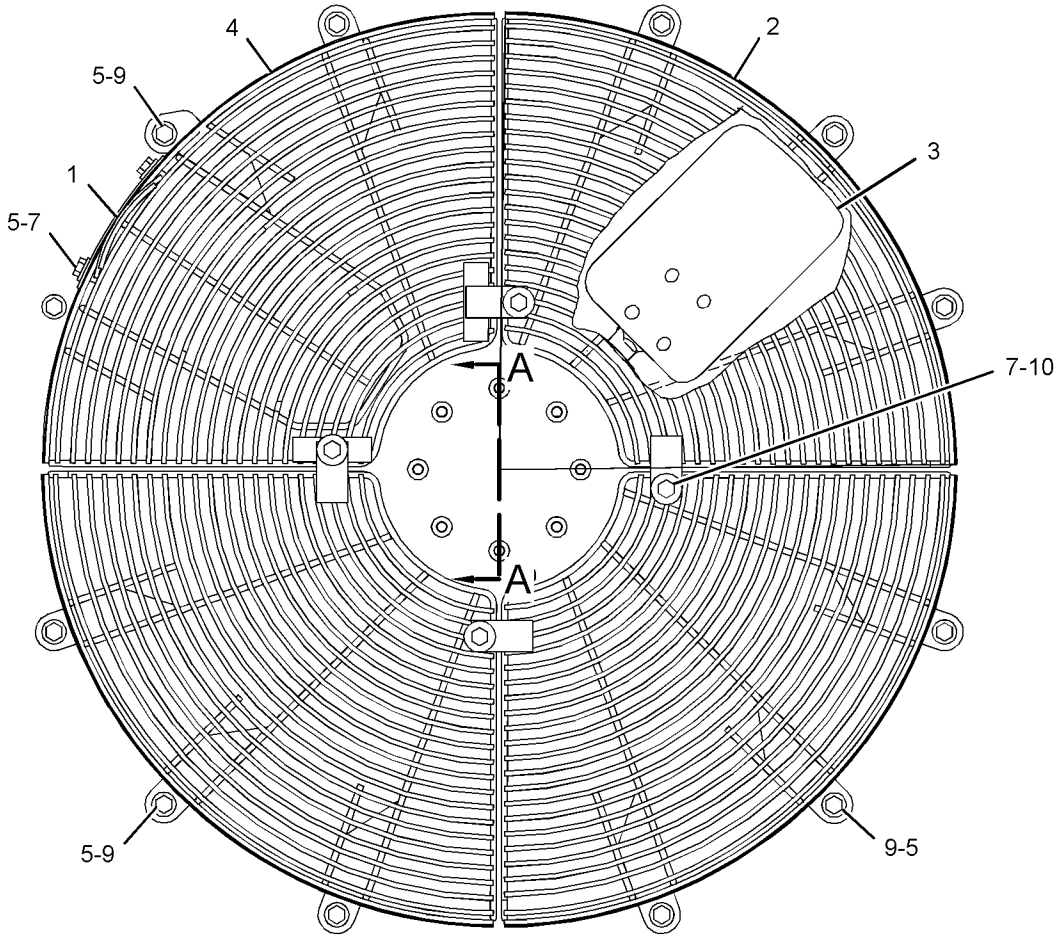

FRONT VIEW

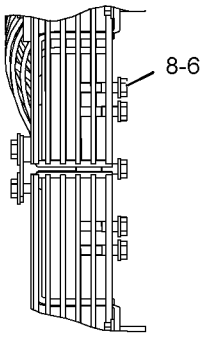

SECTION A-A

GRAPHIC #1 **<END>** g03581648

165-4461 HOUSING & REGULATOR GP–WATER TEMPERATURE REGULATOR

S/N: TXD1-UP

PART OF 387-8581, 387-8582 ENGINE AR-COMPLETE

AN ATTACHMENT

SMCS-1355, 1393 **i05555435**

NOTE	REF NO	GRAPHIC REF	PART NUMBER	QTY	PART NAME 1 2 3 4 5 6 (PRODUCT LEVEL)	SEE PAGE
	1	1	**248-5513**	1	REGULATOR-TEMPERATURE (92-DEG C) (WATER, COOLANT)	
	2	1	**347-3148**	2	CLAMP-BAND	
	3	1	**280-6794**	1	HOSE	
	4	1	**191-4457**	1	GASKET (WATER REGULATOR HOUSING)	
	5	1	**217-5200**	1	HOUSING AS	
	5A	1	**3S-9643**	1	SEAL-LIP TYPE (WATER TEMPERATURE REGULATOR)	
	6	1	*392-0818*	2	PLUG AS	
					(EACH INCLUDES)	
		1	**360-3693**	1	PLUG	
	6A	1	**6V-6609**	1	SEAL-O-RING	
	7	1	**4S-9191**	4	WASHER (12X22.5X5-MM THK)	
M	8	1	**8T-0644**	4	BOLT (M10X1.5X90-MM)	
	9	1	**8T-6762**	1	PLUG-PIPE (1/2-14-THD)	

M - METRIC PART

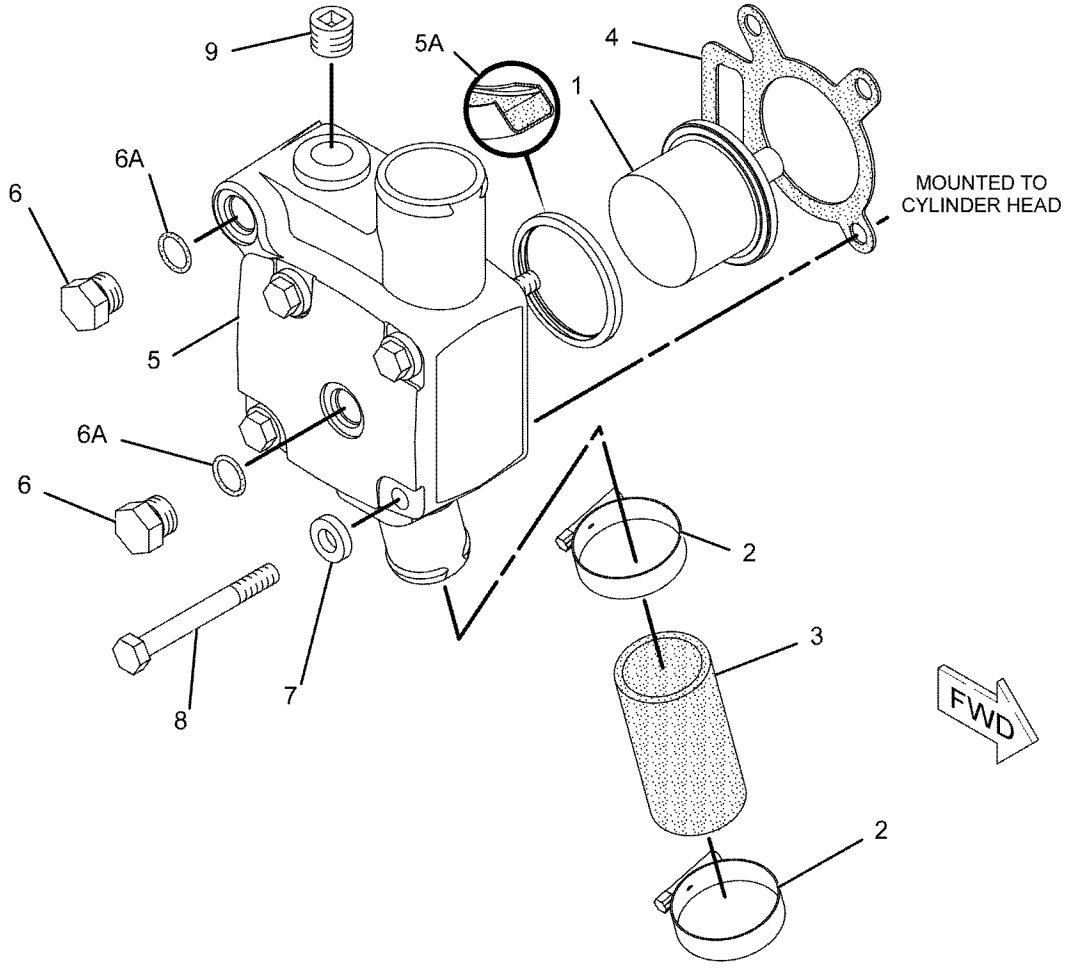

GRAPHIC #1 **<END>** g01142330

423-8980 KIT-OIL COOLER & LINES GASKET

S/N: EMM1-UP; JEN1-UP

CONTAINS THE GASKETS & SEALS TO ASSEMBLE & REINSTALL THE OIL COOLER(S), OIL FILTER BASE & ATTACHING LINES

FOR USE WITH 387-8581—PAGE: 4, 387-8582—PAGE: 5

FIELD INSTALLATION

SMCS-1378, 7555 **i05577824**

NOTE	PART NUMBER	QTY	PART NAME 1 2 3 4 5 6 (PRODUCT LEVEL)	SEE PAGE
	8C-3445	1	CAP-DUST	
	2S-0795	2	GASKET	
	209-7290	1	GASKET (ENGINE OIL FILTER BASE)	
	209-7293	1	GASKET (FRONT COVER, HOUSING)	
	180-3907	1	SEAL-INTEGRAL	
	6V-3250	1	SEAL-O-RING	
	6V-5064	1	SEAL-O-RING	
	6V-6609	1	SEAL-O-RING	
	214-7566	1	SEAL-O-RING	
	214-7568	2	SEAL-O-RING	
	228-7089	2	SEAL-O-RING	
	228-7092	1	SEAL-O-RING	
	238-5080	2	SEAL-O-RING	
	238-5081	3	SEAL-O-RING	
	238-5082	1	SEAL-O-RING	
	238-5085	4	SEAL-O-RING	
			FOR A LIST OF RELATED PARTS THAT REQUIRED FOR THE ENGINE REBUILD TO THE KIT CONSISST, PLEASE VISIT	
			HTTPS://DEALER.CAT.COM/RELATED	

<END>

372-6363 LINES GP-WATER

S/N: EMM1-UP; JEN1-UP
PART OF 389-3265 INSTALLATION AR
AN ATTACHMENT

SMCS-1380 **i05625193**

NOTE	REF NO	GRAPHIC REF	PART NUMBER	QTY	PART NAME 1 2 3 4 5 6 (PRODUCT LEVEL)	SEE PAGE
	1	1	**8T-4984**	6	CLAMP-HOSE	
	2	1	**157-0670**	1	CAP-DUST	
	3	1	**372-6362**	1	HOSE	
	4	1	**185-0845**	1	TUBE AS	
	5	1	**187-3961**	1	HOSE-RADIATOR	
	6	1	**190-7515**	1	BRACKET AS	
M		1	**8T-3490**	1	NUT-WELD (M10X1.5-THD)	
	7	1	**372-6361**	1	HOSE	
	8	1	**219-3305**	1	BRACKET AS	
M		1	**8T-3490**	1	NUT-WELD (M10X1.5-THD)	
	9	1	**254-5524**	1	BRACKET AS	
	10	1	**290-3970**	1	BRACKET AS	
M		1	**8T-3490**	2	NUT-WELD (M10X1.5-THD)	
	11	1	**3E-9867**	2	CLIP (SLOT)	
	12	1	**3E-9868**	2	CLIP (TAB)	
	13	1	**3J-1907**	1	SEAL-O-RING	
	14	1	**3J-7354**	1	SEAL-O-RING	
	15	1	**5P-9617**	1	ADAPTER	
	16	1	**6V-1581**	3	CLIP (SLOT)	
	17	1	**6V-1582**	3	CLIP (TAB)	
	18	1	**7X-7729**	5	WASHER (11X25X3-MM THK)	
	19	1	**8C-3446**	1	VALVE-FLUID SAMPLING (COOLANT)	
	20	1	**8T-4121**	6	WASHER-HARD (11X21X2.5-MM THK)	
M	21	1	**8T-4136**	2	BOLT (M10X1.5X25-MM)	
M	22	1	**8T-4137**	4	BOLT (M10X1.5X20-MM)	
M	23	1	**8T-4195**	5	BOLT (M10X1.5X30-MM)	

M - METRIC PART

372-6363 **LINES GP-WATER (*contd.*)** **i05625193**

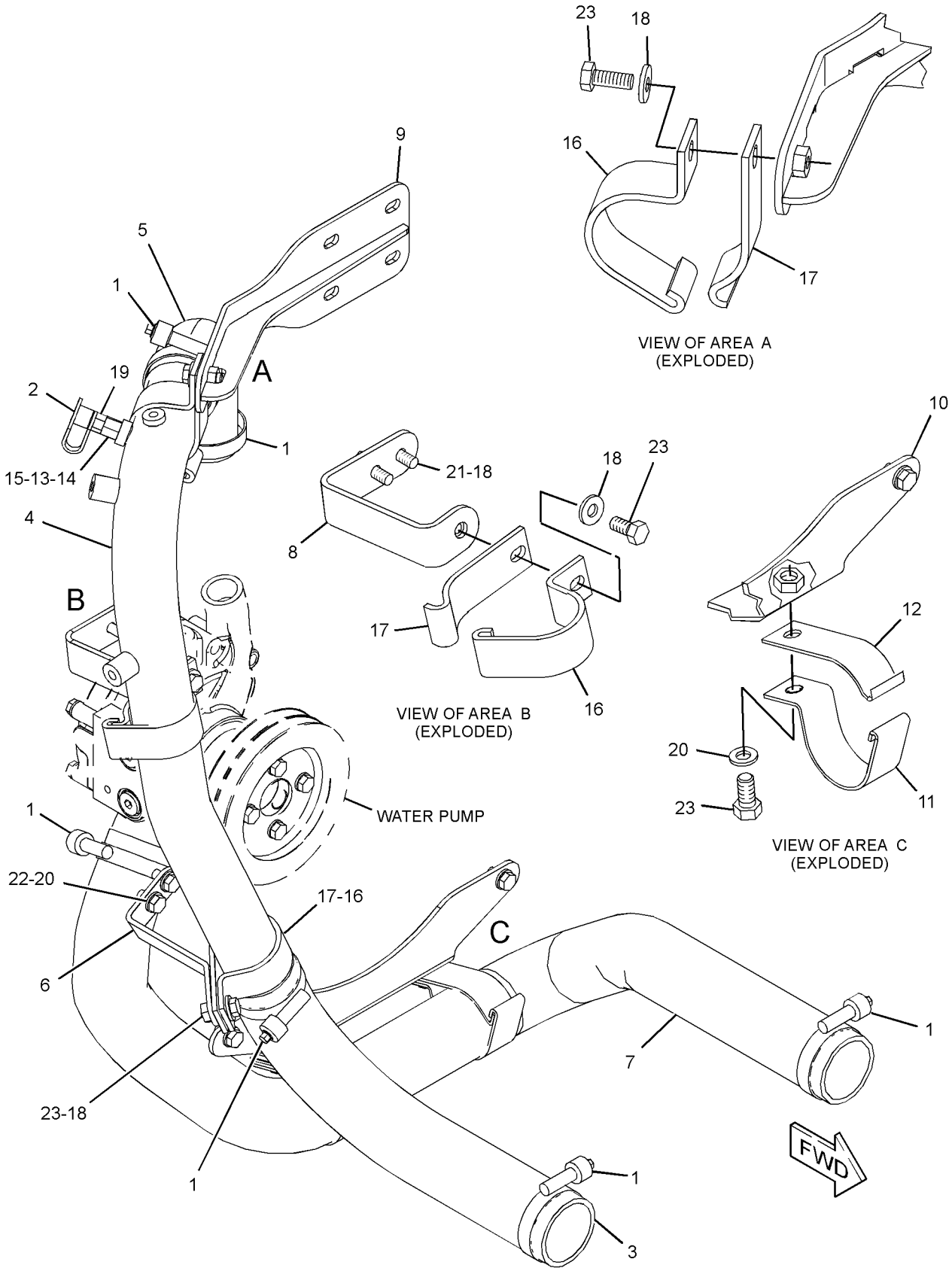

GRAPHIC #1 **<END>** g03259536

211-1812 PUMP GP-WATER

S/N: TXD1-UP
PART OF 387-8619 ENGINE AR-CORE
AN ATTACHMENT

SMCS-1361 **i05555631**

NOTE	REF NO	GRAPHIC REF	PART NUMBER	QTY	PART NAME 1 2 3 4 5 6 (PRODUCT LEVEL)	SEE PAGE
CYR	1	1	*350-2536*	1	PUMP GP-WATER	84
	2	1	**147-0182**	1	SEAL-O-RING	
	3	1	**384-9992**	1	SEAL-O-RING	
M	4	1	**8T-0644**	4	BOLT (M10X1.5X90-MM)	

C - CHANGE FROM PREVIOUS TYPE
M - METRIC PART
R - REMFG PART MAY BE AVAILABLE
Y - SEPARATE ILLUSTRATION

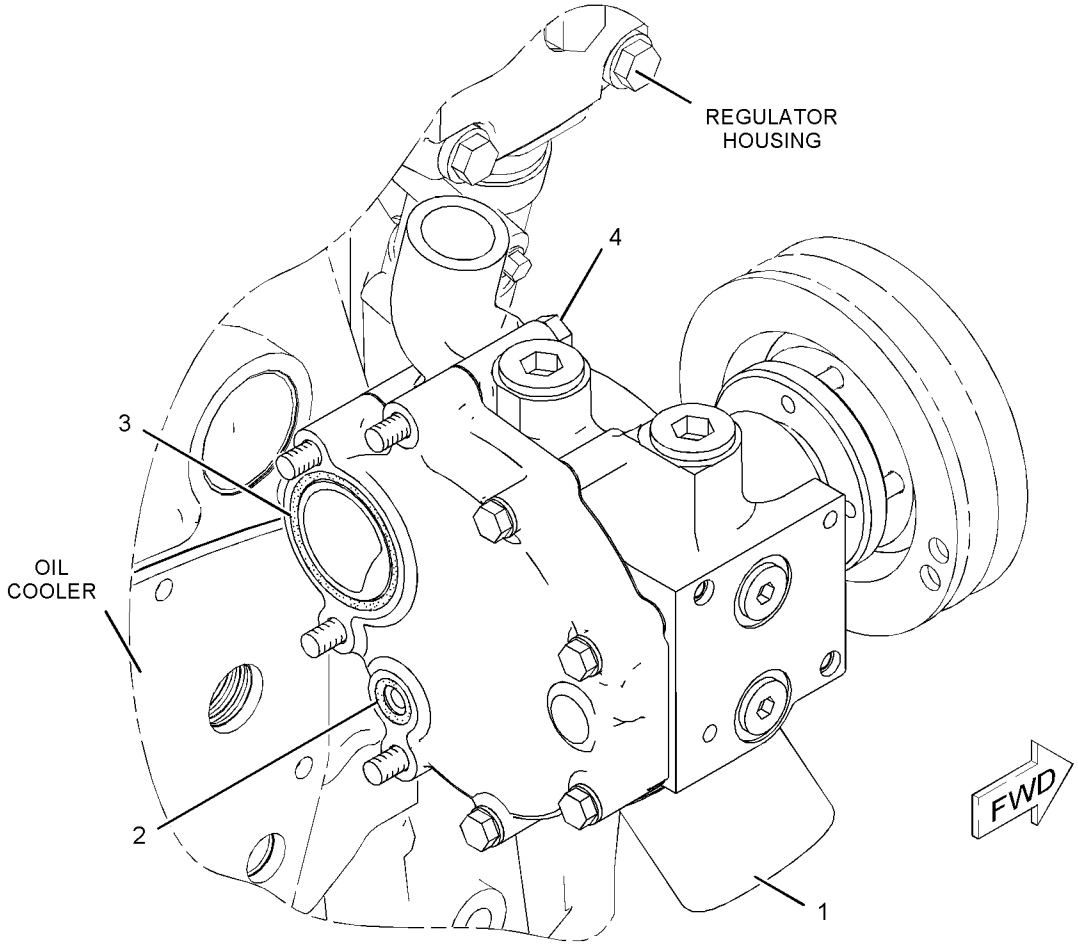

GRAPHIC #1 **<END>** g01038761

349-6123 PUMP GP-WATER

S/N: TXD1-UP
PART OF 350-2536 PUMP GP-WATER
AN ATTACHMENT

SMCS-1361 **i05643899**

NOTE	REF NO	GRAPHIC REF	PART NUMBER	QTY	PART NAME 1 2 3 4 5 6 (PRODUCT LEVEL)	SEE PAGE
	1	1	**350-5417**	1	SEAL-WATER PUMP	
	2	1	**177-1050**	1	SHAFT AS	
	3	1	**177-1056**	1	IMPELLER-PUMP	
	4	1	**209-6692**	1	HUB	
	5	1	**347-3110**	1	HOUSING AS-WATER PUMP	
		1	**177-1058**	1	PLUG	

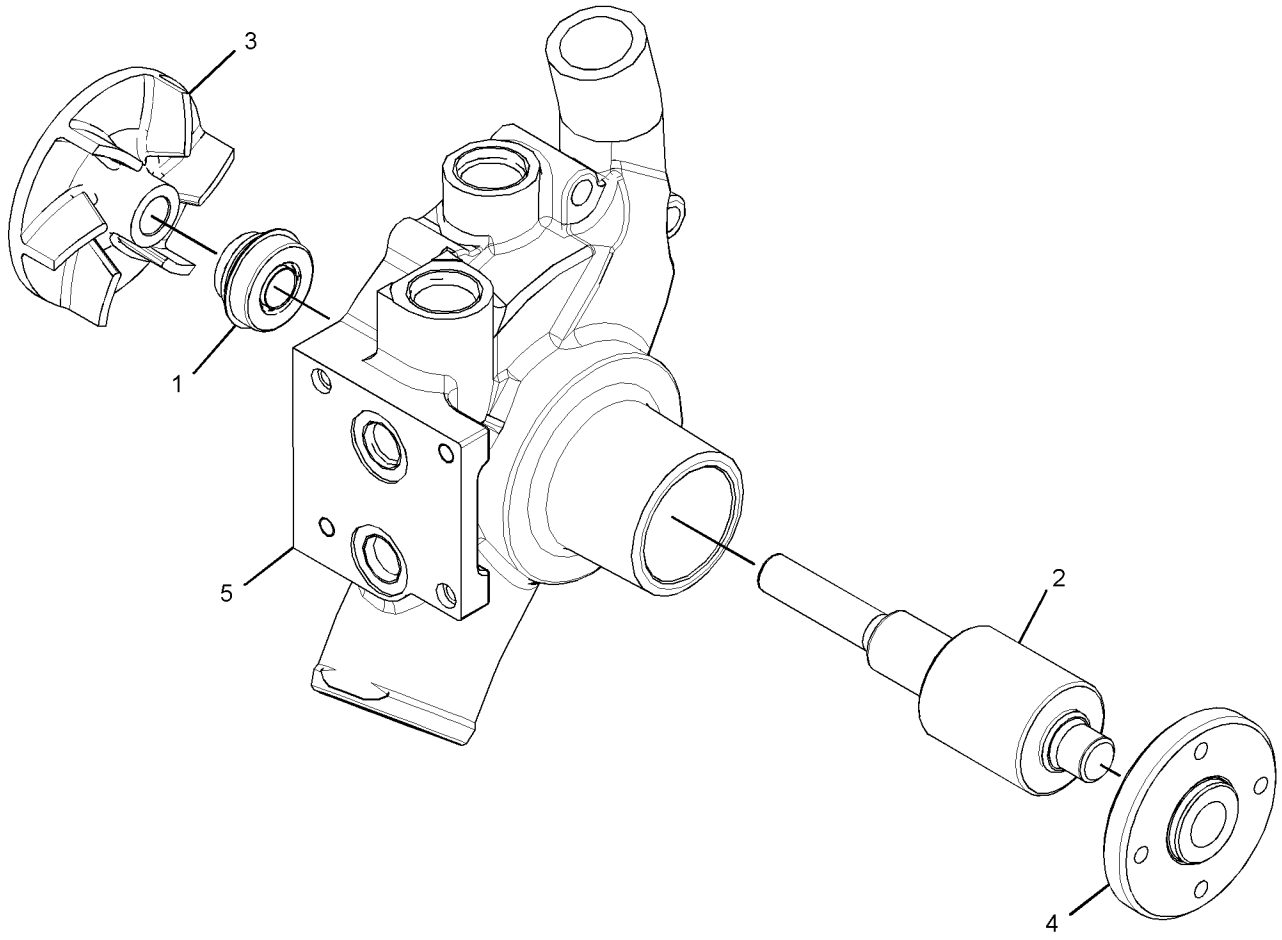

GRAPHIC #1 **<END>** g02064913

350-2536 PUMP GP-WATER*R

S/N: TXD1-UP
PART OF 211-1812 PUMP GP-WATER
AN ATTACHMENT

SMCS-1361 **i05643896**

NOTE	REF NO	GRAPHIC REF	PART NUMBER	QTY	PART NAME 1 2 3 4 5 6 (PRODUCT LEVEL)	SEE PAGE
	1	1	**177-1044**	1	COVER	
	2	1	**183-2931**	4	BOLT AS	
	3	1	**222-3901**	1	GASKET	
Y	4	1	*349-6123*	1	PUMP GP-WATER	83
	5	1	**3D-2824**	1	SEAL-O-RING	
	6	1	**3K-0360**	2	SEAL-O-RING	
	7	1	**9S-8005**	2	PLUG-O-RING	
	8	1	**9S-8008**	1	PLUG	

Y - SEPARATE ILLUSTRATION

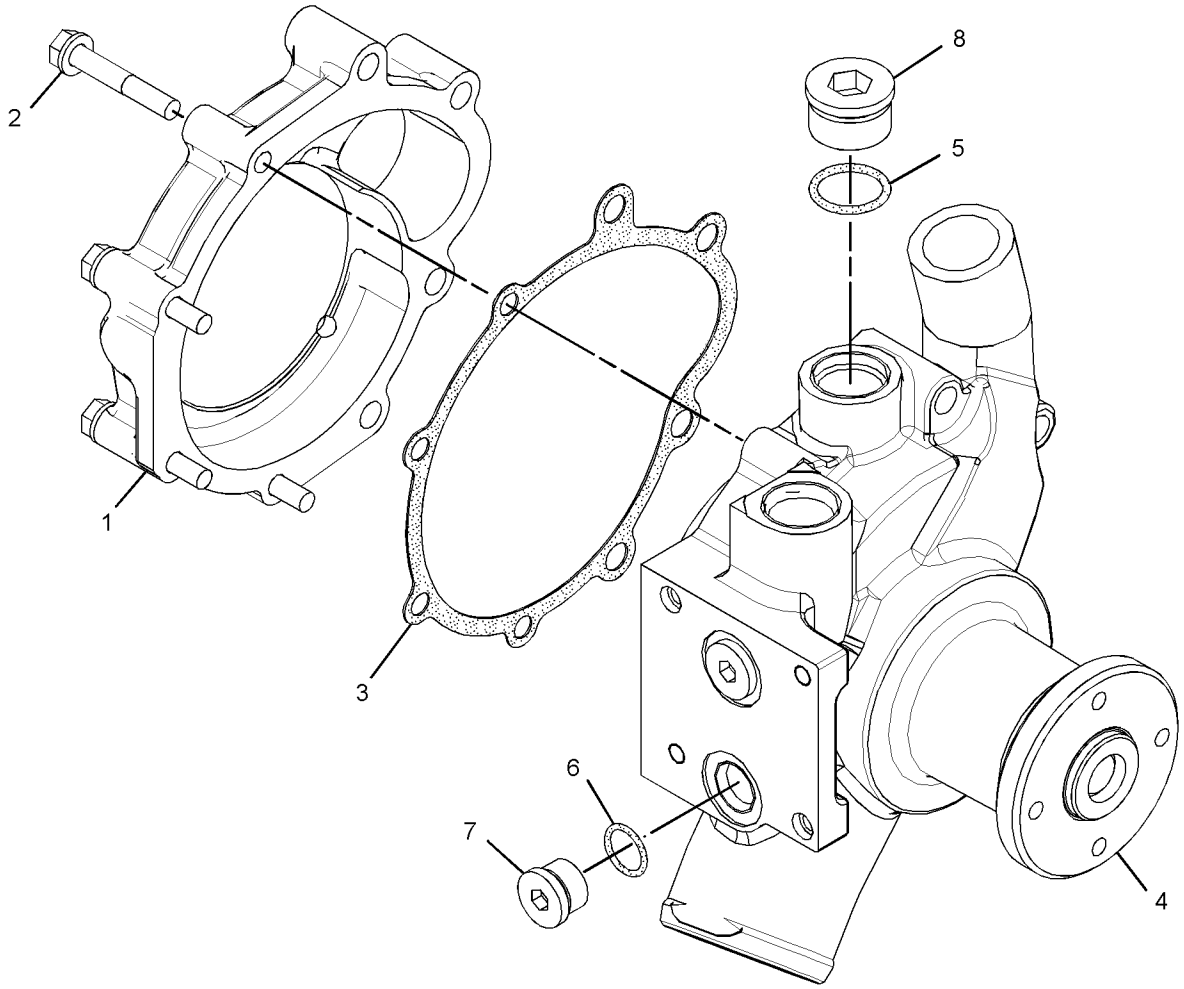

GRAPHIC #1 **<END>** g02064914

375-2982 RADIATOR GP

S/N: EMM1-UP; JEN1-UP
PART OF 389-3265 INSTALLATION AR
AN ATTACHMENT

SMCS-1353 **i05625198**

NOTE	REF NO	GRAPHIC REF	PART NUMBER	QTY	PART NAME 1 2 3 4 5 6 (PRODUCT LEVEL)	SEE PAGE
	1	1	**3S-2093**	1	STRAP-CABLE	
	2	1	**169-3797**	1	BRACKET AS	
	3	1	**180-6695**	1	BAFFLE AS-RADIATOR (SIDE)	
	4	1	**180-6696**	1	BAFFLE AS-RADIATOR (SIDE)	
	5	1	**185-1047**	1	ADAPTER	
	6	1	**227-0835**	1	BAFFLE AS-RADIATOR (BOTTOM)	
	7	1	**227-0836**	1	BAFFLE AS-RADIATOR (BOTTOM)	
	8	1	**339-8715**	1	SHIELD AS-BOTTOM (LH)	
	9	1	**339-8716**	1	SHIELD AS-UPPER (LH)	
	10	1	**339-8717**	1	SHIELD AS-BOTTOM (RH)	
	11	1	**339-8718**	1	SHIELD AS-UPPER (RH)	
	12	1	**358-9384**	1	BRACKET AS	
	13	1	**358-9385**	1	BRACKET AS	
	14	1	**371-7185**	1	VALVE AS-SHUTOFF	
		1	**238-5080**	1	SEAL-O-RING	
	15	1	**372-6369**	1	BAFFLE AS-RADIATOR (TOP)	
	16	1	*384-9223*	1	TEE AS	
		1	**6V-1625**	1	TEE-O-RING	
		1	**214-7568**	1	SEAL-O-RING	
	17	1	*426-4143*	1	ADAPTER AS	
		1	**426-4101**	1	ADAPTER	
		1	**6V-9028**	1	SEAL-O-RING	
	18	1	**438-8213**	1	HOSE	
Y	19	1	*438-8298*	1	RADIATOR GP	87
	20	1	**092-7385**	1	CLIP	
	21	1	**141-1668**	1	CLAMP-HOSE	
	22	1	**159-1503**	2	CLAMP-HOSE	
	23	1	**219-0669**	1	SEAL-O-RING	
	24	1	*351-0276*	1	CONNECTOR AS	
		1	**297-7964**	1	CONNECTOR	
		1	**6V-3250**	1	SEAL-O-RING	
	25	1	**6N-2944**	1	PLUG	
	26	1	**7X-7729**	26	WASHER (11X25X3-MM THK)	
	27	1	**8T-4121**	12	WASHER-HARD (11X21X2.5-MM THK)	
M	28	1	**8T-4136**	12	BOLT (M10X1.5X25-MM)	
M	29	1	**8T-4185**	4	BOLT (M10X1.5X50-MM)	
M	30	1	**8T-4195**	9	BOLT (M10X1.5X30-MM)	
M	31	1	**8T-4196**	13	BOLT (M10X1.5X35-MM)	
E	32	1	**5P-0767**		HOSE (91-CM)	
E	33	1	**195-0601**		SEAL (105-CM)	
E	33A	1	**195-0601**		SEAL (15-CM EACH)	

E - ORDER BY THE CENTIMETER
M - METRIC PART
Y - SEPARATE ILLUSTRATION

375-2982 **RADIATOR GP (*contd.*)** **i05625198**

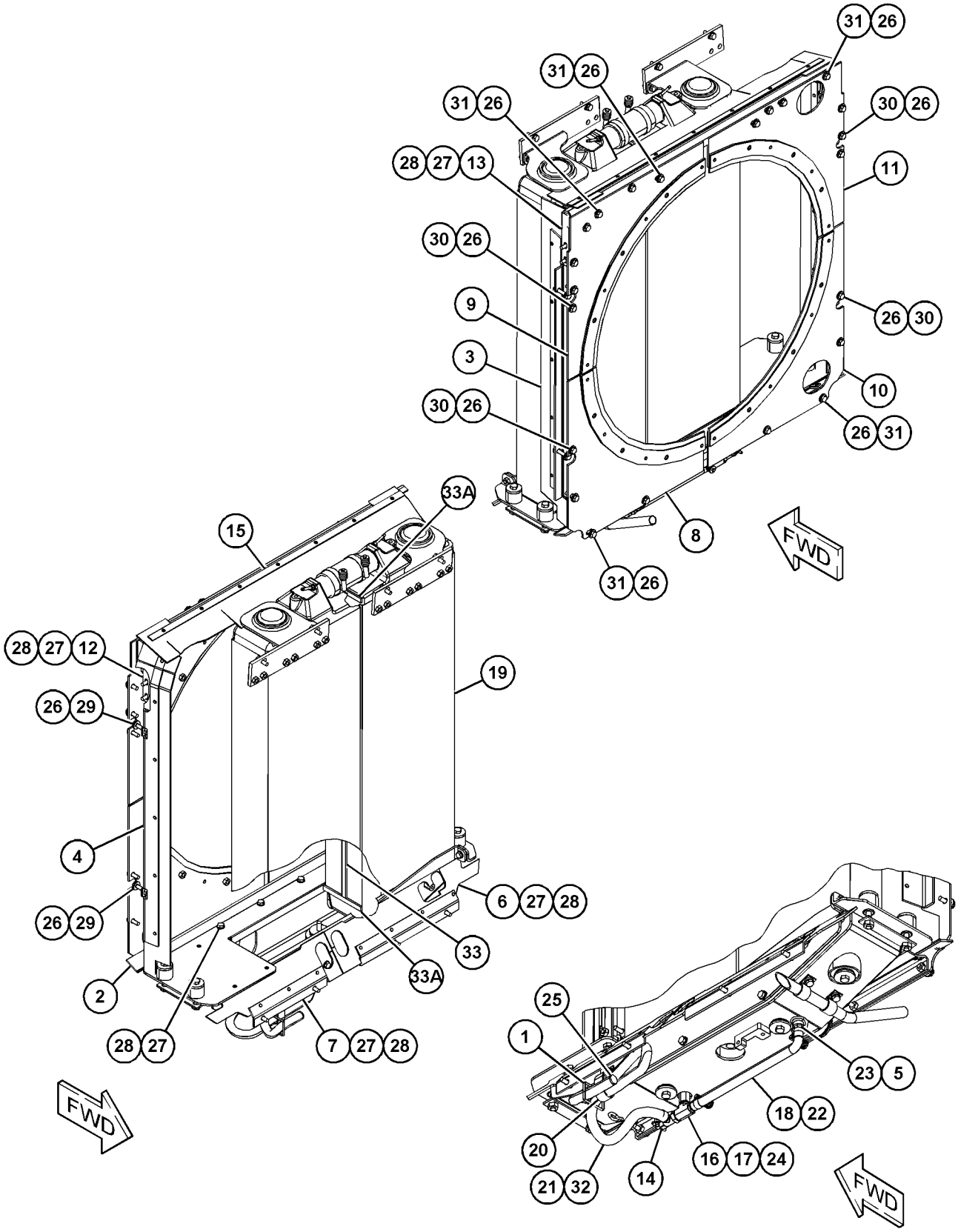

GRAPHIC #1 **<END>** g03581470

438-8298 RADIATOR GP

S/N: EMM1-UP; JEN1-UP
PART OF 375-2982 RADIATOR GP
AN ATTACHMENT

SMCS-1353 **i05625229**

NOTE	REF NO	GRAPHIC REF	PART NUMBER	QTY	PART NAME 1 2 3 4 5 6 (PRODUCT LEVEL)	SEE PAGE
	1	1	**6I-2435**	2	SPACER (80X108X25-MM THK)	
	2	1	**8K-8517**	4	WASHER (0.531X1.75X0.25-IN THK)	
	3	1	**9S-4497**	4	BLOCK-MOUNTING	
	4	1	**169-3796**	2	PLATE AS	
	5	1	**189-5588**	2	PLATE AS	
	6	1	**371-2442**	1	CORE AS-RADIATOR (LH)	
	7	1	**371-2443**	1	CORE AS-RADIATOR (RH)	
	8	1	**372-6383**	1	RETAINER	
	9	1	**372-6384**	1	RETAINER	
	10	1	**372-6387**	1	HOSE	
Y	11	1	*438-8297*	1	SUPPORT GP-RADIATOR	89
	12	1	*337-8767*	2	CONNECTOR AS	
					(EACH INCLUDES)	
		1	**238-5079**	1	SEAL-O-RING	
		1	**337-8766**	1	CONNECTOR	
	13	1	**8T-4121**	10	WASHER-HARD (11X21X2.5-MM THK)	
M	14	1	**8T-4176**	4	BOLT (M12X1.75X90-MM)	
M	15	1	**8T-4195**	10	BOLT (M10X1.5X30-MM)	
	16	1	**8T-4895**	4	WASHER (13.5X50X5-MM THK)	
M	17	1	**8T-4910**	4	BOLT (M12X1.75X60-MM)	
	18	1	**8T-4984**	2	CLAMP-HOSE	

M - METRIC PART
Y - SEPARATE ILLUSTRATION

438-8298 **RADIATOR GP (*contd.*)** **i05625229**

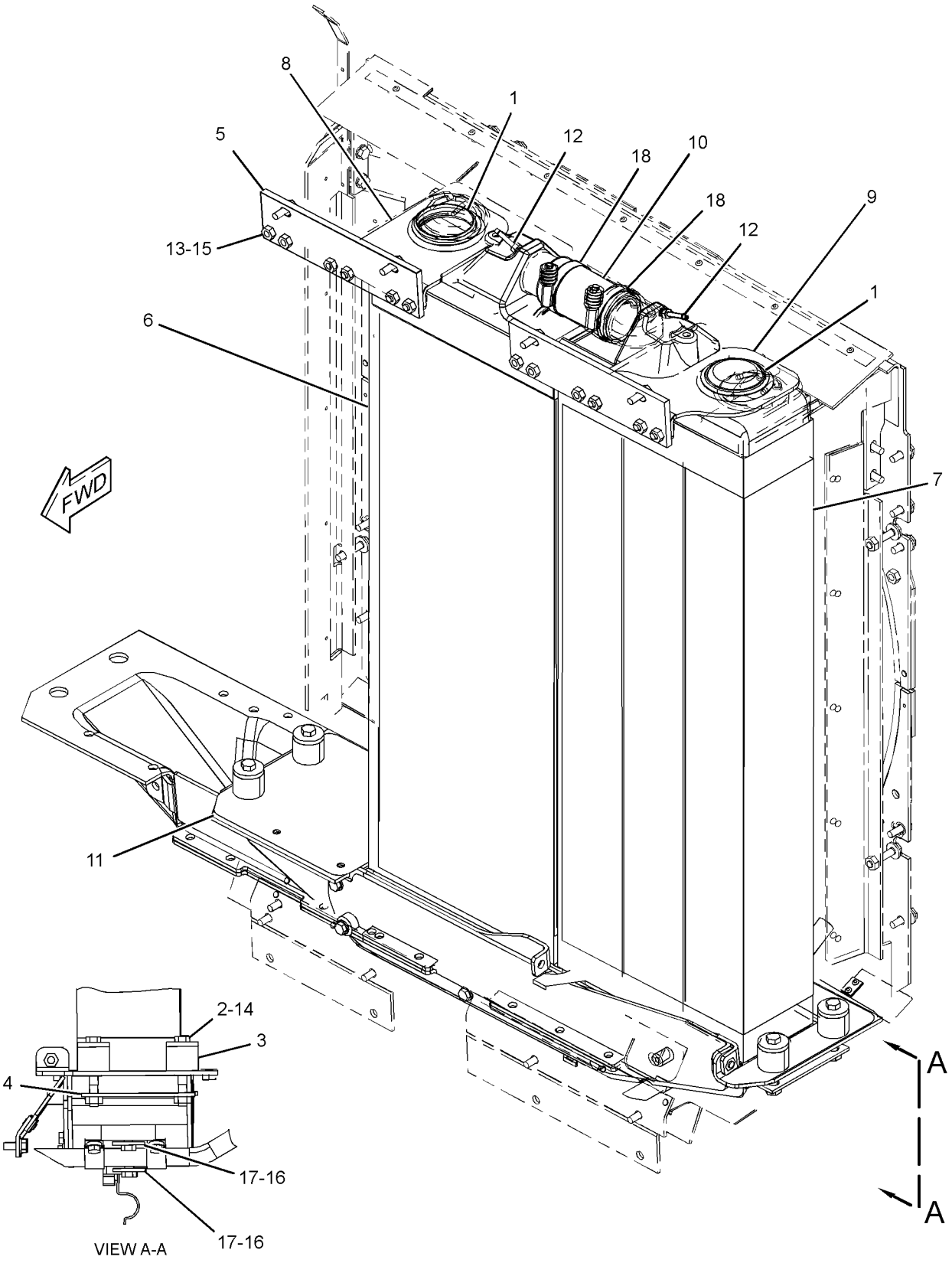

GRAPHIC #1 **<END>** g03553616

438-8297 SUPPORT GP-RADIATOR—LOWER

S/N: EMM1-UP; JEN1-UP
PART OF 438-8298 RADIATOR GP
AN ATTACHMENT

SMCS-1351, 1353

i05625230

NOTE	REF NO	GRAPHIC REF	PART NUMBER	QTY	PART NAME 1 2 3 4 5 6 (PRODUCT LEVEL)	SEE PAGE
	1	1	**3W-2568**	4	MOUNTING	
	2	1	**245-9941**	4	WASHER-HARD (12.2X55.1X3.2-MM THK)	
	3	1	**372-6388**	1	PLATE AS	
	4	1	**372-6389**	1	TUBE	
	5	1	**438-4322**	1	SUPPORT AS	
	6	1	**4S-1962**	2	CLIP	
	7	1	**8T-4121**	5	WASHER-HARD (11X21X2.5-MM THK)	
M	8	1	**8T-4136**	6	BOLT (M10X1.5X25-MM)	
M	9	1	**8T-4186**	1	BOLT (M10X1.5X40-MM)	
	10	1	**8T-7934**	2	WASHER-HARD (11X21X5-MM THK)	
	11	1	**9Y-7595**	1	SPACER (13X30X14-MM THK)	
E	12	1	**122-2358**		SEAL (73-CM)	

E - ORDER BY THE CENTIMETER
M - METRIC PART

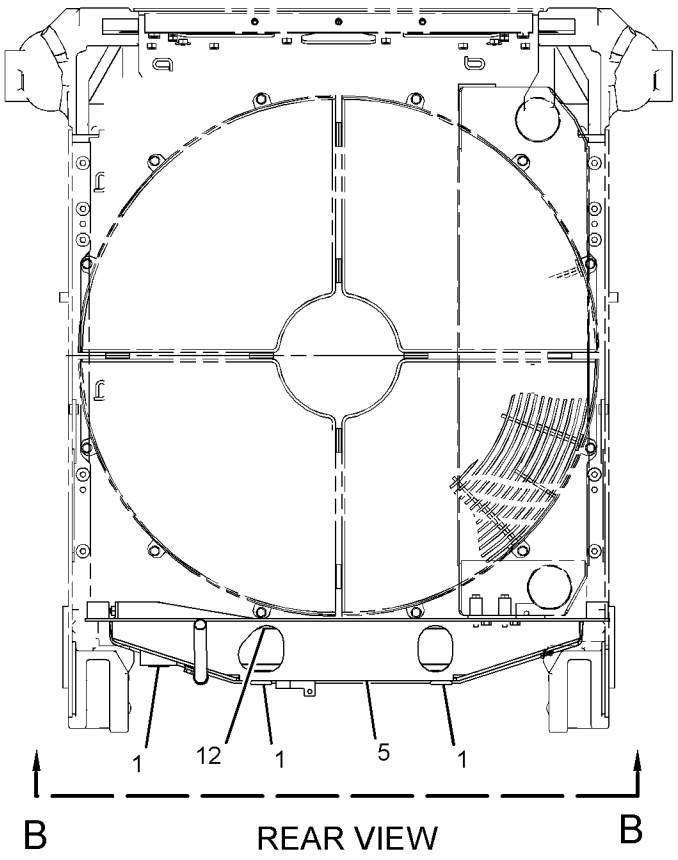

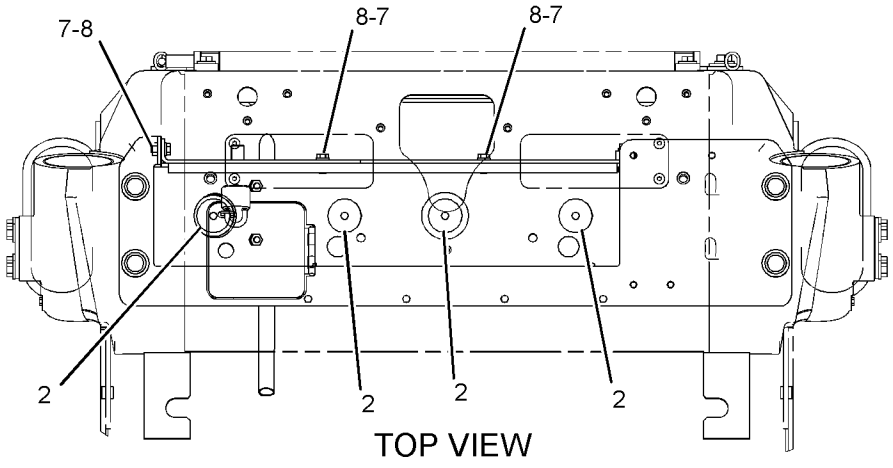

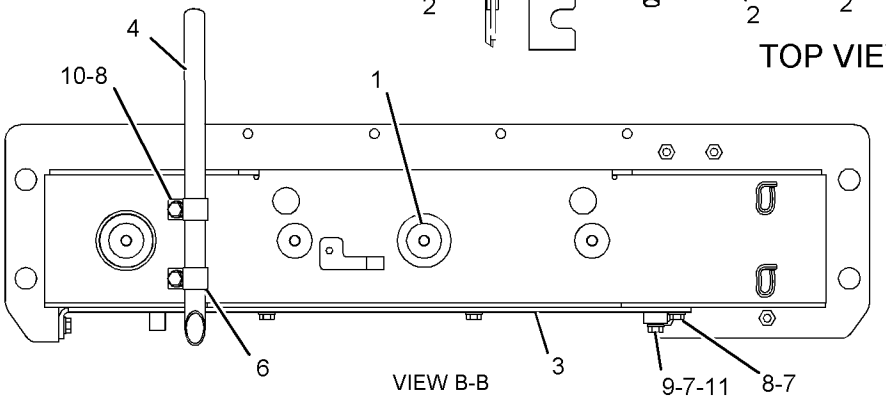

GRAPHIC #1

<END>

g03540596

169-1840 TANK GP-COOLANT

S/N: EMM1-UP; JEN1-UP
PART OF 372-6364 TANK GP-COOLANT
AN ATTACHMENT

SMCS-1377 **i05625196**

NOTE	REF NO	GRAPHIC REF	PART NUMBER	QTY	PART NAME 1 2 3 4 5 6 (PRODUCT LEVEL)	SEE PAGE
	1	1	**294-3342**	1	CAP AS-RADIATOR	
	2	1	**169-1838**	1	TANK AS-EXPANSION	
	2A	1	**3L-5893**	1	TUBE-OVERFLOW	
	2B	1	**8N-8846**	1	NECK-FILLER	

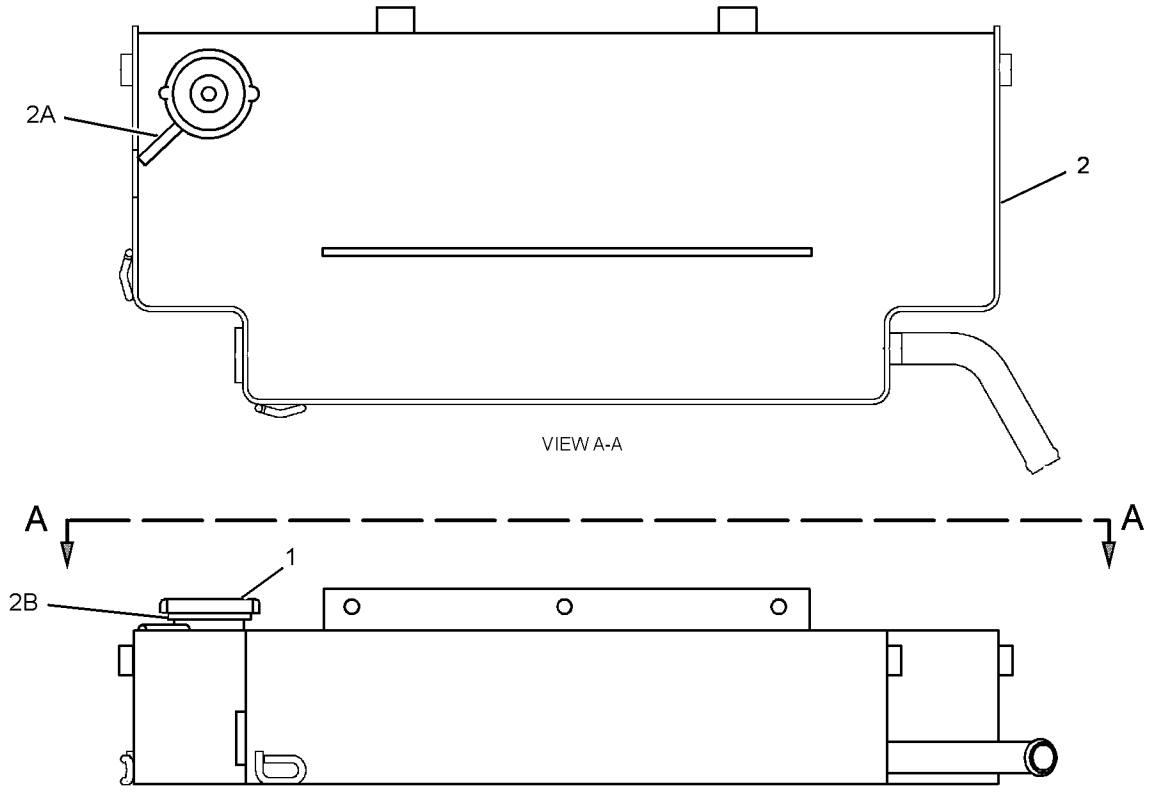

GRAPHIC #1 **<END>** g01676976

372-6364 TANK GP-COOLANT

S/N: EMM1-UP; JEN1-UP
PART OF 389-3265 INSTALLATION AR
AN ATTACHMENT

SMCS-1377 **i05625194**

NOTE	REF NO	GRAPHIC REF	PART NUMBER	QTY	PART NAME 1 2 3 4 5 6 (PRODUCT LEVEL)	SEE PAGE
	1	1	**2V-4868**	1	FITTING	
	2	1	**6V-8245**	1	ELBOW	
	3	1	**8T-1117**	2	CLAMP-HOSE	
Y	4	1	*169-1840*	1	TANK GP-COOLANT	91
	5	1	**169-3826**	1	BRACKET AS	
M		1	**8T-3490**	2	NUT-WELD (M10X1.5-THD)	
	6	1	*188-3034*	2	ELBOW AS	
					(EACH INCLUDES)	
		1	**6V-1355**	1	ELBOW	
		1	**3J-7354**	1	SEAL-O-RING	
	7	1	**196-9858**	1	TEE-SWIVEL	
	8	1	**372-6365**	1	BAFFLE AS-RADIATOR	
		1	**4D-6716**	15	RIVET-POP	
		1	**7G-5186**	2	SPACER (13X19X4.5-MM THK)	
	9	1	**069-4269**	1	ADAPTER	
	10	1	*148-8347*	1	ELBOW AS	
		1	**6V-9007**	1	ELBOW	
		1	**3D-2824**	1	SEAL-O-RING	
		1	**6V-9746**	1	SEAL-O-RING	
	11	1	**1P-4278**	6	CLAMP-HOSE	
	12	1	**3D-2824**	1	SEAL-O-RING	
	13	1	**3J-7354**	1	SEAL-O-RING	
	14	1	**4P-7429**	2	CLIP	
	15	1	**6K-0806**	7	STRAP-CABLE	
	16	1	**7D-7233**	1	CLIP	
	17	1	**7M-8485**	1	SEAL-O-RING	
	18	1	**8L-5008**	1	ELBOW-PIPE	
	19	1	**8T-4121**	8	WASHER-HARD (11X21X2.5-MM THK)	
M	20	1	**8T-4136**	6	BOLT (M10X1.5X25-MM)	
M	21	1	**8T-4196**	2	BOLT (M10X1.5X35-MM)	
	22	1	**9Y-9236**	1	GAUGE-SIGHT (WATER TANK)	
E	23	1	**371-8094**		HOSE (99-CM)	
E	24	1	**5P-1465**		HOSE (63-CM)	
E	24A	1	**5P-1465**		HOSE (45-CM)	
E	24B	1	**5P-1465**		HOSE (21-CM)	
E	25	1	**8C-3681**		HOSE (142-CM)	

E - ORDER BY THE CENTIMETER
M - METRIC PART
Y - SEPARATE ILLUSTRATION

372-6364 **TANK GP-COOLANT (*contd.*)** **i05625194**

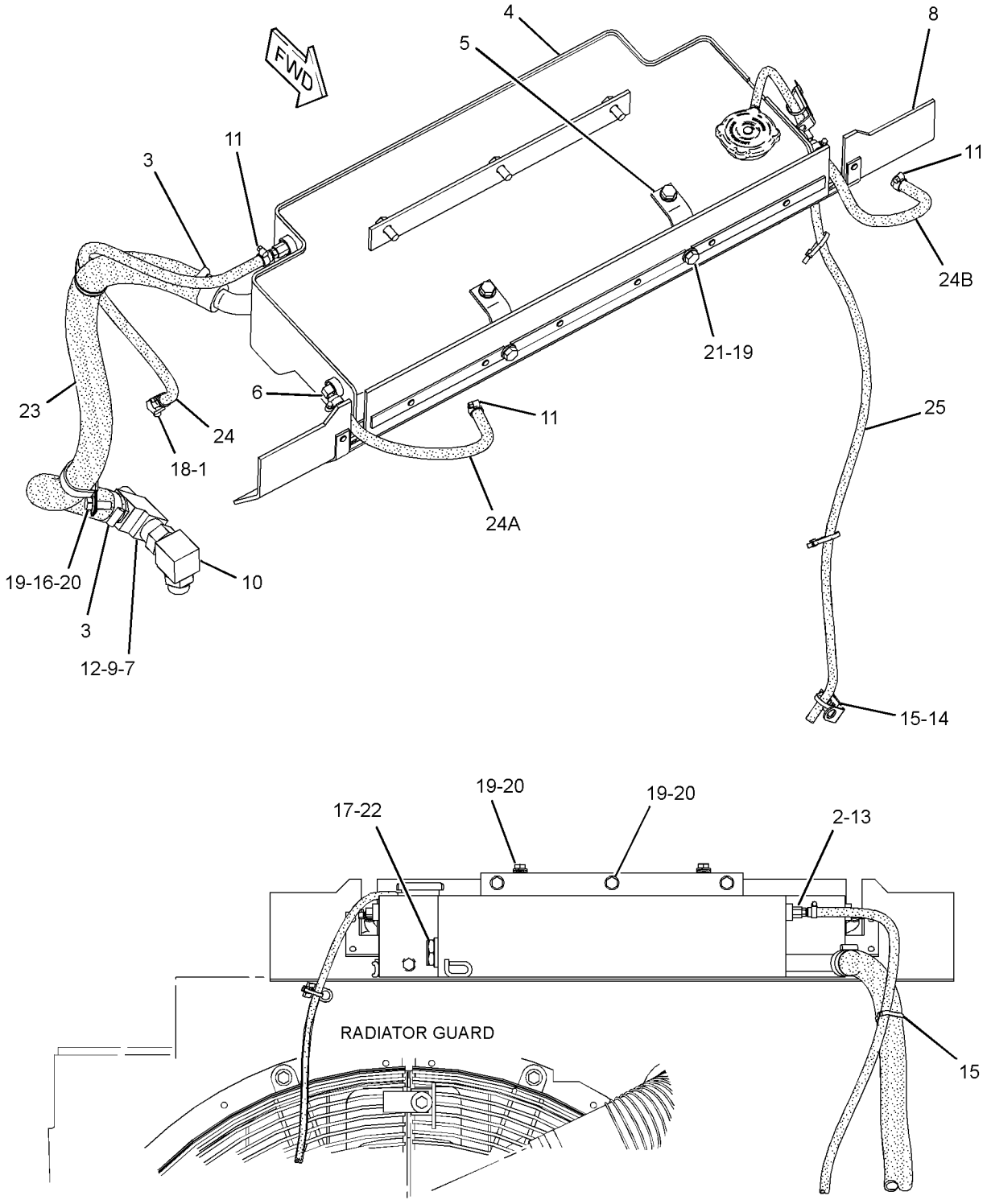

REAR VIEW

GRAPHIC #1 **<END>** g01425098

331-4938 AFTERCOOLER GP-AIR

S/N: EMM1-UP; JEN1-UP

PART OF 389-3215 INSTALLATION AR-ENGINE

SMCS-1063 **i05640691**

NOTE	REF NO	GRAPHIC REF	PART NUMBER	QTY	PART NAME 1 2 3 4 5 6 (PRODUCT LEVEL)	SEE PAGE
	1	1	**6I-2435**	1	SPACER (80X108X25-MM THK)	
	2	1	**331-9864**	1	CORE AS-AFTERCOOLER	
	3	1	**331-9865**	1	BRACKET	
	4	1	**331-9866**	1	MOUNT AS	
	5	1	**361-5188**	1	MOUNT-RUBBER	
	6	1	**8T-4121**	7	WASHER-HARD (11X21X2.5-MM THK)	
M	7	1	**8T-4185**	4	BOLT (M10X1.5X50-MM)	
M	8	1	**8T-4195**	3	BOLT (M10X1.5X30-MM)	
E	9	1	**9X-6383**		SEAL (110-CM)	

E - ORDER BY THE CENTIMETER
M - METRIC PART

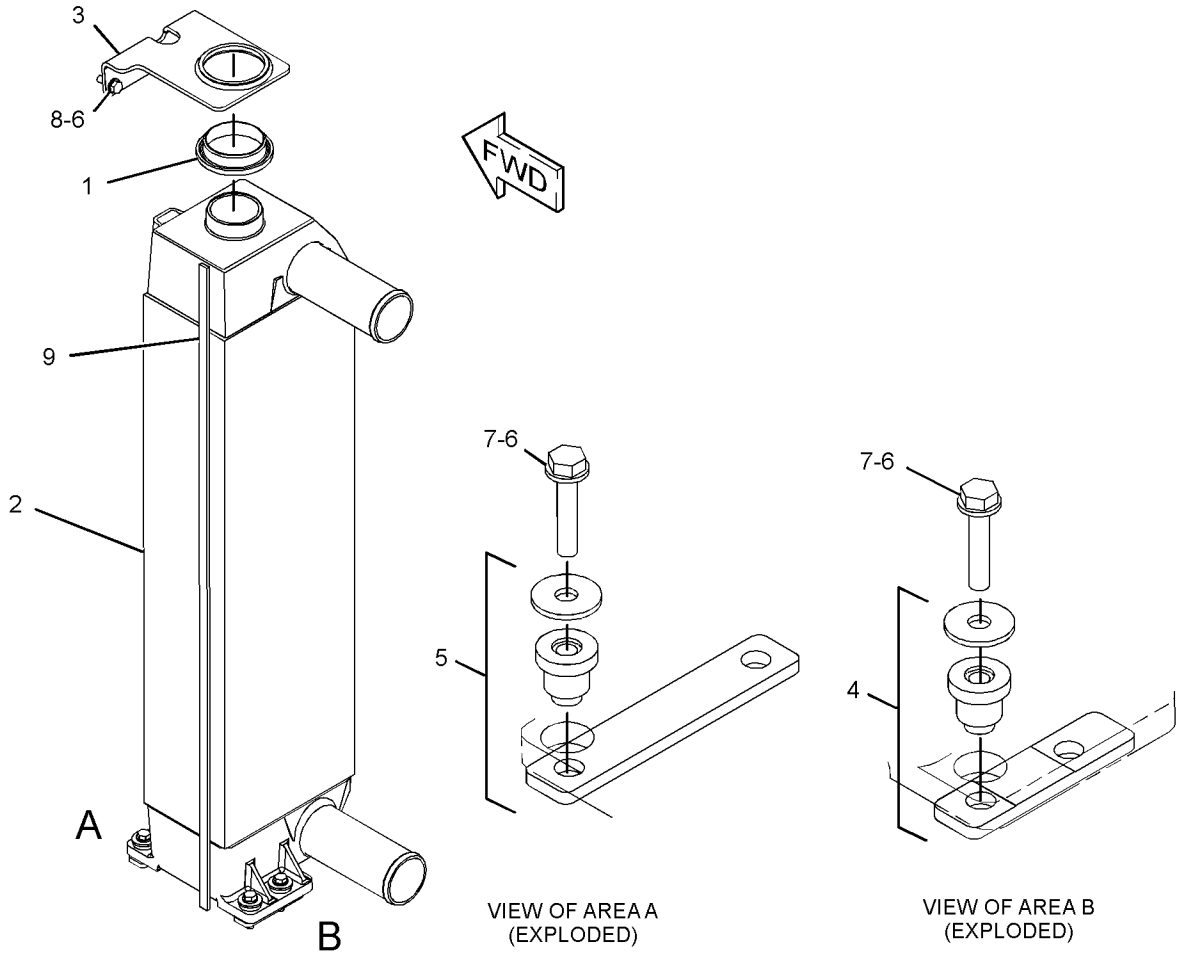

GRAPHIC #1

<END>

g03336780

389-3262 AIR CLEANER AR

S/N: EMM1-UP; JEN1-UP

AN ATTACHMENT

SMCS-1051 **i05625151**

NOTE	PART NUMBER	QTY	PART NAME 1 2 3 4 5 6 (PRODUCT LEVEL)	SEE PAGE
Y	*389-6107*	1	AIR CLEANER GP	97
Y	*188-1018*	1	DUST EJECTOR GP	99

Y - SEPARATE ILLUSTRATION

<END>

389-3263 AIR CLEANER AR

S/N: EMM1-UP; JEN1-UP

AN ATTACHMENT

SMCS-1051 **i05625152**

NOTE	PART NUMBER	QTY	PART NAME 1 2 3 4 5 6 (PRODUCT LEVEL)	SEE PAGE
Y	*389-6108*	1	AIR CLEANER GP	98
Y	*188-1018*	1	DUST EJECTOR GP	99

Y - SEPARATE ILLUSTRATION

<END>

205-8674 AIR CLEANER GP

S/N: EMM1-UP; JEN1-UP

PART OF 389-6107, 389-6108 AIR CLEANER GP, 389-3264 PRECLEANER GP AN ATTACHMENT

SMCS-1051, 1054

i05625169

NOTE	REF NO	GRAPHIC REF	PART NUMBER	QTY	PART NAME 1 2 3 4 5 6 (PRODUCT LEVEL)	SEE PAGE
	1	1	**6I-2501**	1	FILTER ELEMENT AS-AIR (PRIMARY, STANDARD EFFICIENCY)	
	2	1	**6I-2502**	1	FILTER ELEMENT AS-AIR (SECONDARY)	
	3	1	**6I-4464**	1	COVER AS-AIR CLEANER	
		1	**4P-5524**	1	SEAL-O-RING	
	4	1	**8N-4617**	2	KIT-AIR CLEANER CLAMP	
					(EACH INCLUDES CLIP AS & RIVET)	

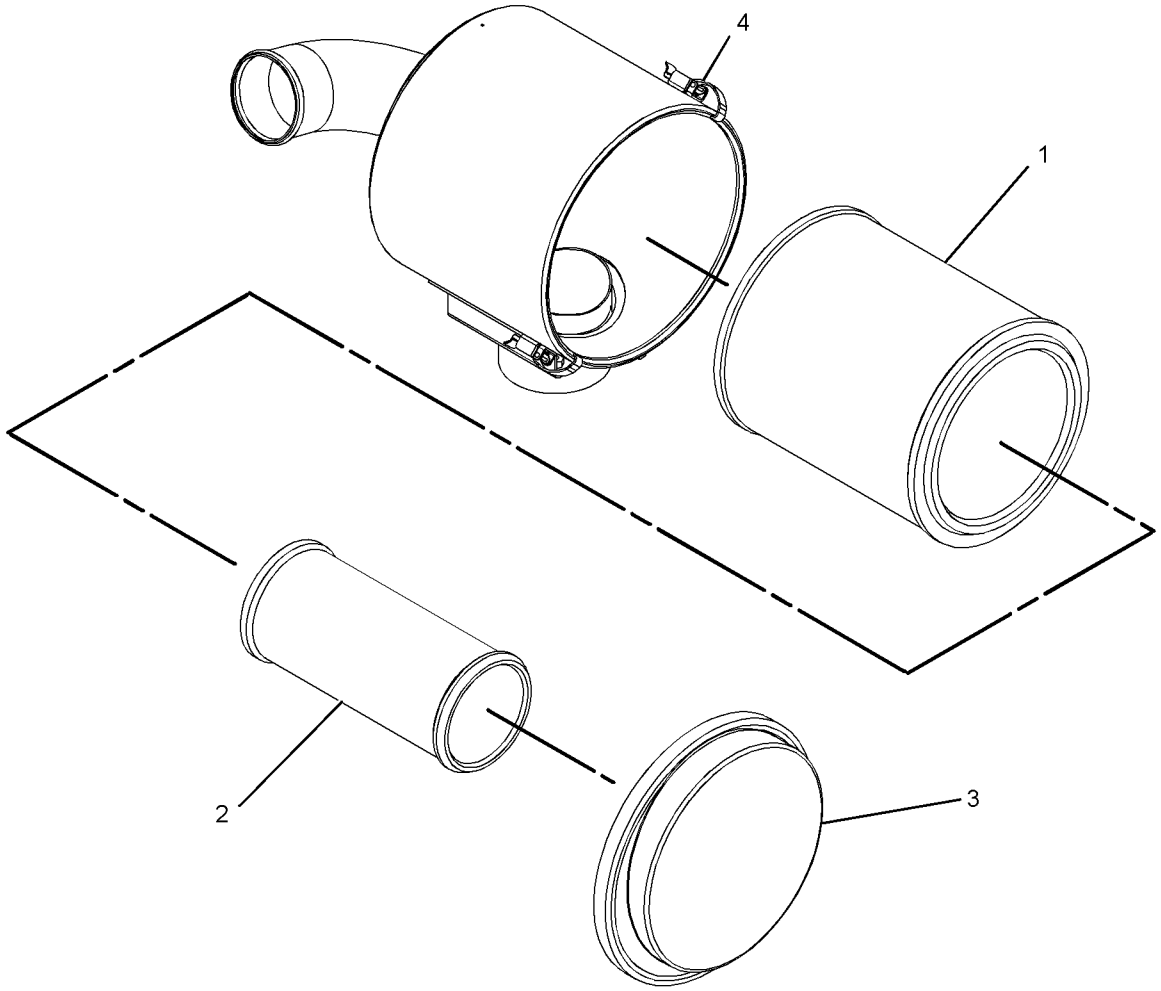

GRAPHIC #1

<END>

g01123031

389-6107 AIR CLEANER GP

S/N: EMM1-UP; JEN1-UP
PART OF 389-3262 AIR CLEANER AR
AN ATTACHMENT

SMCS-1051, 1054 **i05625157**

NOTE	REF NO	GRAPHIC REF	PART NUMBER	QTY	PART NAME 1 2 3 4 5 6 (PRODUCT LEVEL)	SEE PAGE
	1	1	**9S-6758**	1	PRECLEANER AS	
		1	**0S-1591**	1	BOLT (3/8-16X1.5-IN)	
		1	**9S-8752**	1	NUT-FULL (3/8-16-THD)	
Y	2	1	**205-8674**	1	AIR CLEANER GP	96
	3	1	**205-8681**	1	BODY AS (PRECLEANER)	
	4	1	**250-9290**	1	BRACKET AS	
	5	1	**7X-7729**	11	WASHER (11X25X3-MM THK)	
	6	1	**8T-4121**	8	WASHER-HARD (11X21X2.5-MM THK)	
M	7	1	**8T-4133**	2	NUT (M10X1.5-THD)	
M	8	1	**8T-4136**	9	BOLT (M10X1.5X25-MM)	
M	9	1	**8T-4137**	8	BOLT (M10X1.5X20-MM)	

M - METRIC PART
Y - SEPARATE ILLUSTRATION

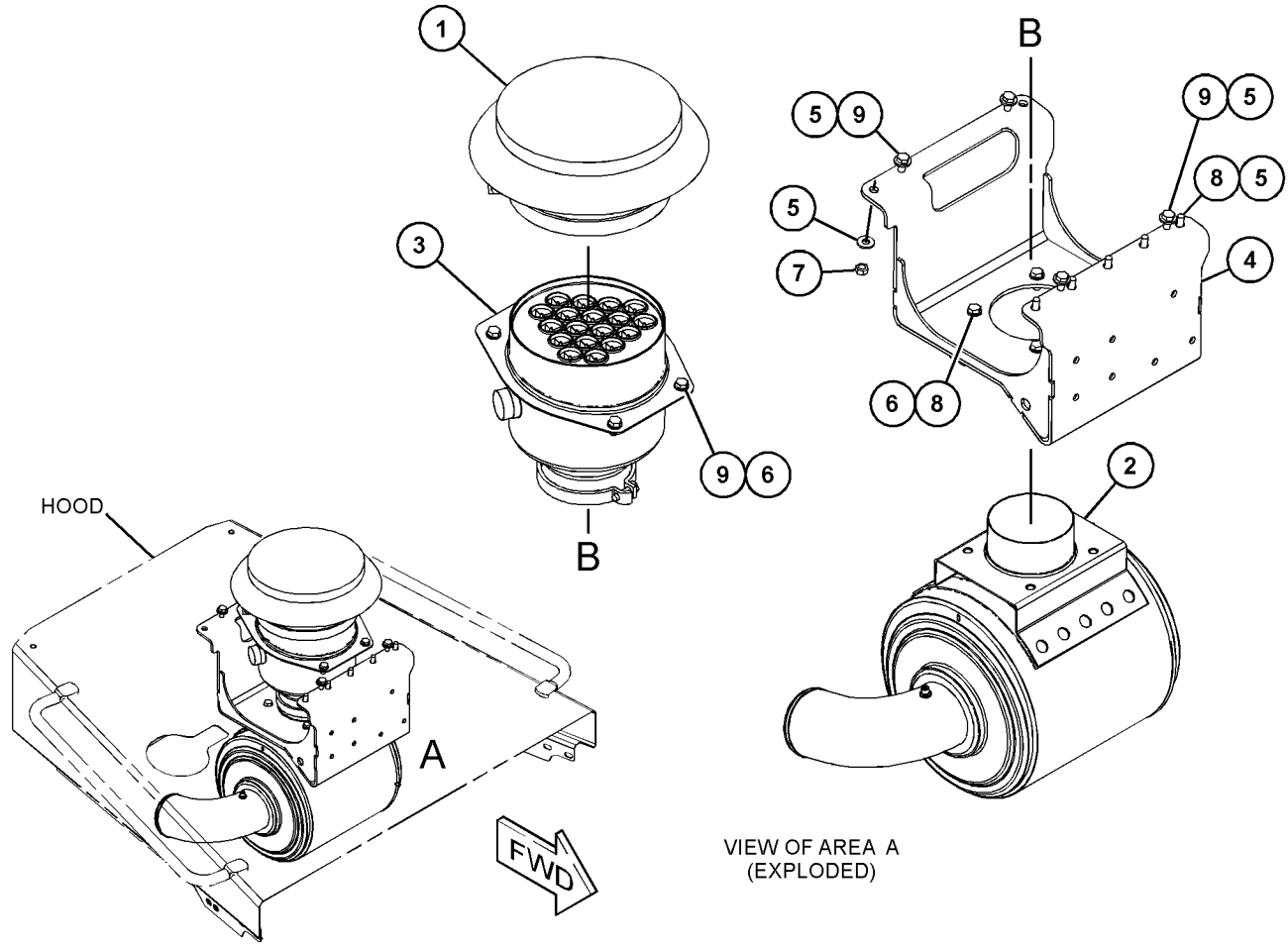

VIEW OF AREA A
(EXPLODED)

GRAPHIC #1 **<END>** g03573237

389-6108 AIR CLEANER GP

S/N: EMM1-UP; JEN1-UP
PART OF 389-3263 AIR CLEANER AR
AN ATTACHMENT

SMCS-1051, 1054

i05625159

NOTE	REF NO	GRAPHIC REF	PART NUMBER	QTY	PART NAME 1 2 3 4 5 6 (PRODUCT LEVEL)	SEE PAGE
	1	1	**7S-9396**	1	PRESCREENER AS	
		1	**0S-1591**	1	BOLT (3/8-16X1.5-IN)	
		1	**6V-8801**	1	NUT (3/8-16-THD)	
Y	2	1	**205-8674**	1	AIR CLEANER GP	96
	3	1	**205-8681**	1	BODY AS (PRECLEANER)	
	4	1	**250-9290**	1	BRACKET AS	
	5	1	**7X-7729**	11	WASHER (11X25X3-MM THK)	
	6	1	**8T-4121**	8	WASHER-HARD (11X21X2.5-MM THK)	
M	7	1	**8T-4133**	2	NUT (M10X1.5-THD)	
M	8	1	**8T-4136**	9	BOLT (M10X1.5X25-MM)	
M	9	1	**8T-4137**	8	BOLT (M10X1.5X20-MM)	

M - METRIC PART
Y - SEPARATE ILLUSTRATION

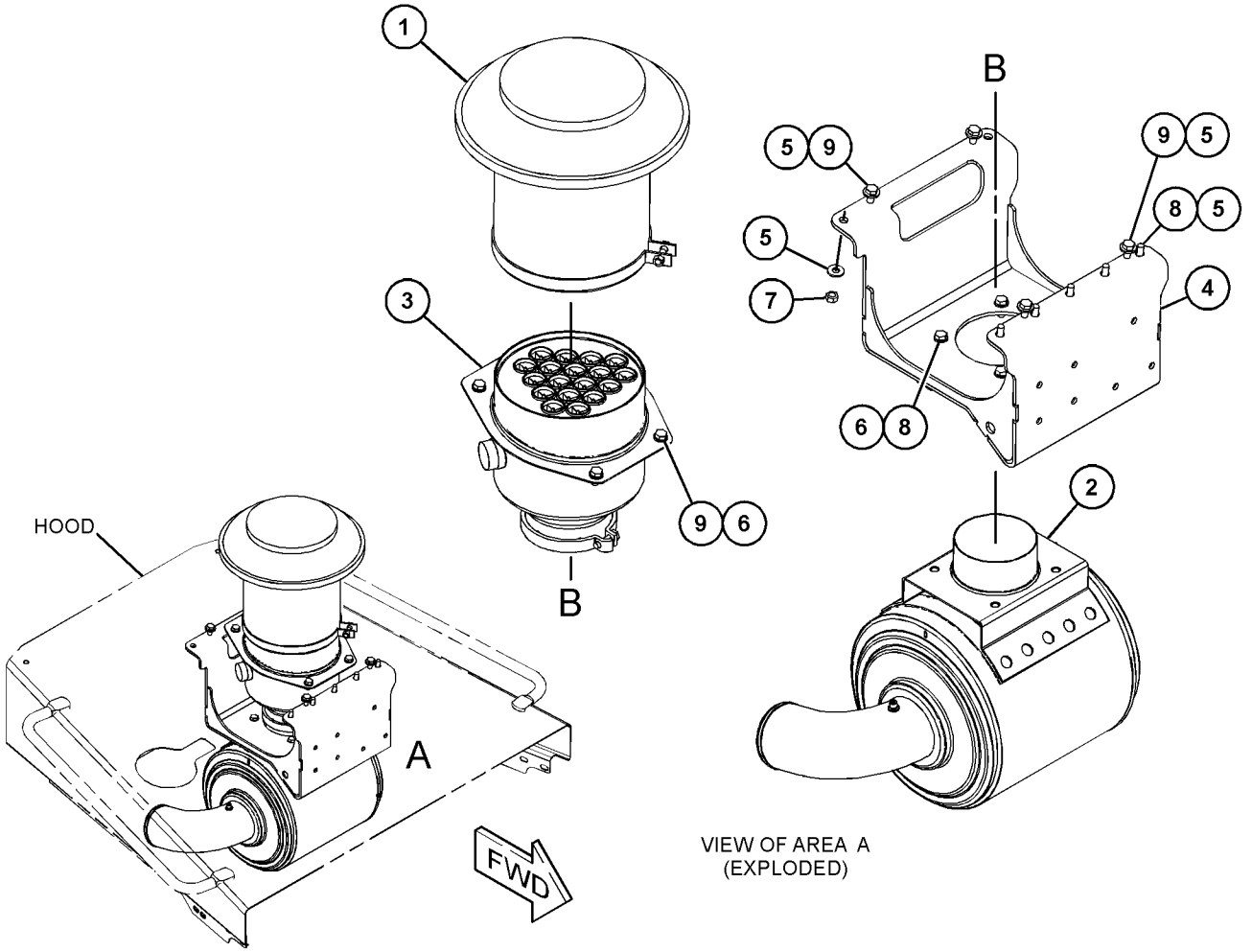

GRAPHIC #1

<END>

g03573238

188-1018 DUST EJECTOR GP

S/N: EMM1-UP; JEN1-UP
PART OF 389-3262, 389-3263 AIR CLEANER AR
AN ATTACHMENT

SMCS-1068 **i05625154**

NOTE	REF NO	GRAPHIC REF	PART NUMBER	QTY	PART NAME 1 2 3 4 5 6 (PRODUCT LEVEL)	SEE PAGE
	1	1	**5P-0597**	2	CLAMP-HOSE	
	2	1	**7W-5838**	1	EJECTOR AS-EXHAUST	
	2A	1	**7E-3870**	1	CLAMP-MUFFLER	
E	3	1	**5P-2817**		HOSE (44-CM)	

E - ORDER BY THE CENTIMETER

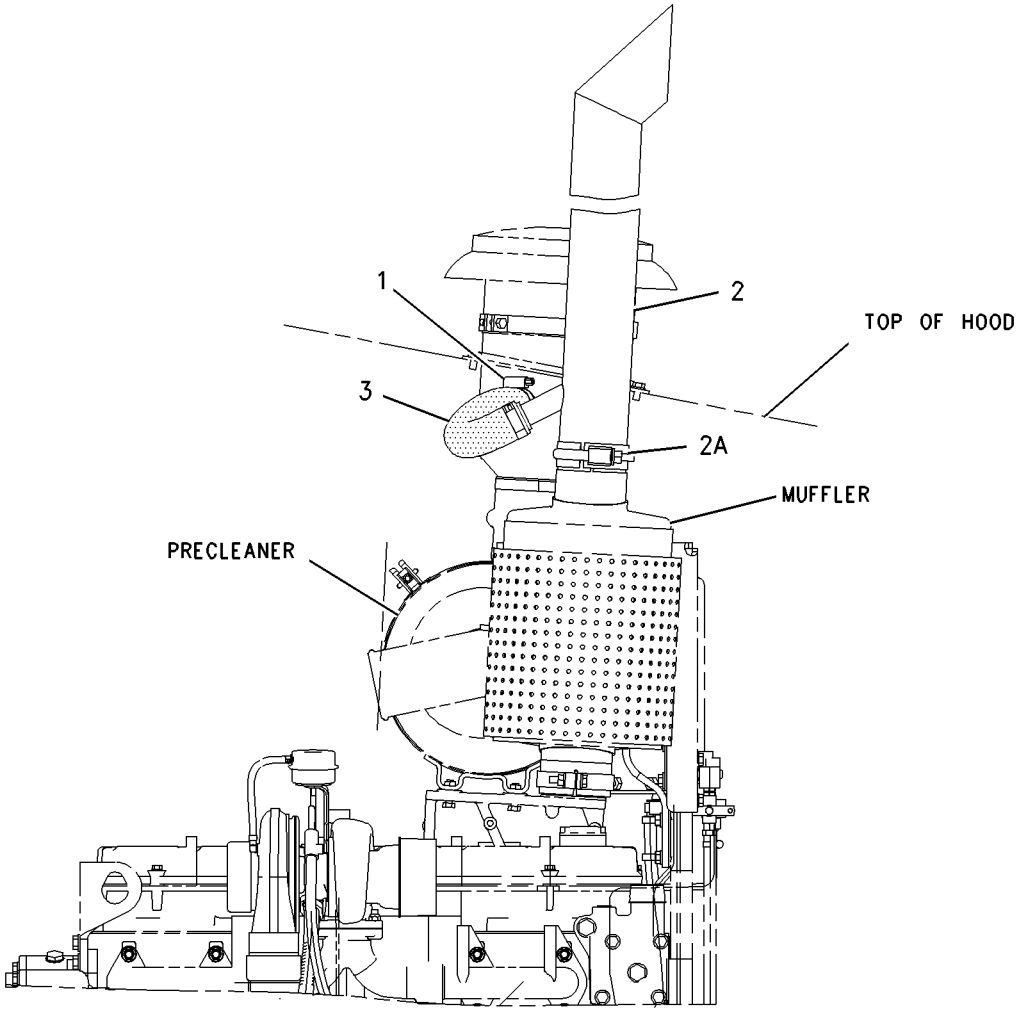

GRAPHIC #1 **<END>** g00739902

246-0596 ELBOW GP-AIR INLET

S/N: TXD1-UP

PART OF 387-8581, 387-8582 ENGINE AR-COMPLETE

AN ATTACHMENT

SMCS-1087 **i05555267**

NOTE	REF NO	GRAPHIC REF	PART NUMBER	QTY	PART NAME 1 2 3 4 5 6 (PRODUCT LEVEL)	SEE PAGE
	1	1	**246-0597**	1	ELBOW-AIR INLET	
	2	1	**162-3148**	8	STUD (M8X1.25X62.75-MM)	
	3	1	**3E-4352**	2	WASHER-HARD (8.8X20.5X2.5-MM THK)	
	4	1	**9M-1974**	6	WASHER-HARD (8.8X16X2-MM THK)	
	5	1	*389-3708*	1	PLUG AS	
		1	**360-3679**	1	PLUG-CONNECTOR	
		1	**214-7568**	1	SEAL-O-RING	
BF			**1U-8846**		SEALANT-GASKET	

B - USE AS REQUIRED
F - NOT SHOWN

246-0596 **ELBOW GP-AIR INLET (*contd.*)** **i05555267**

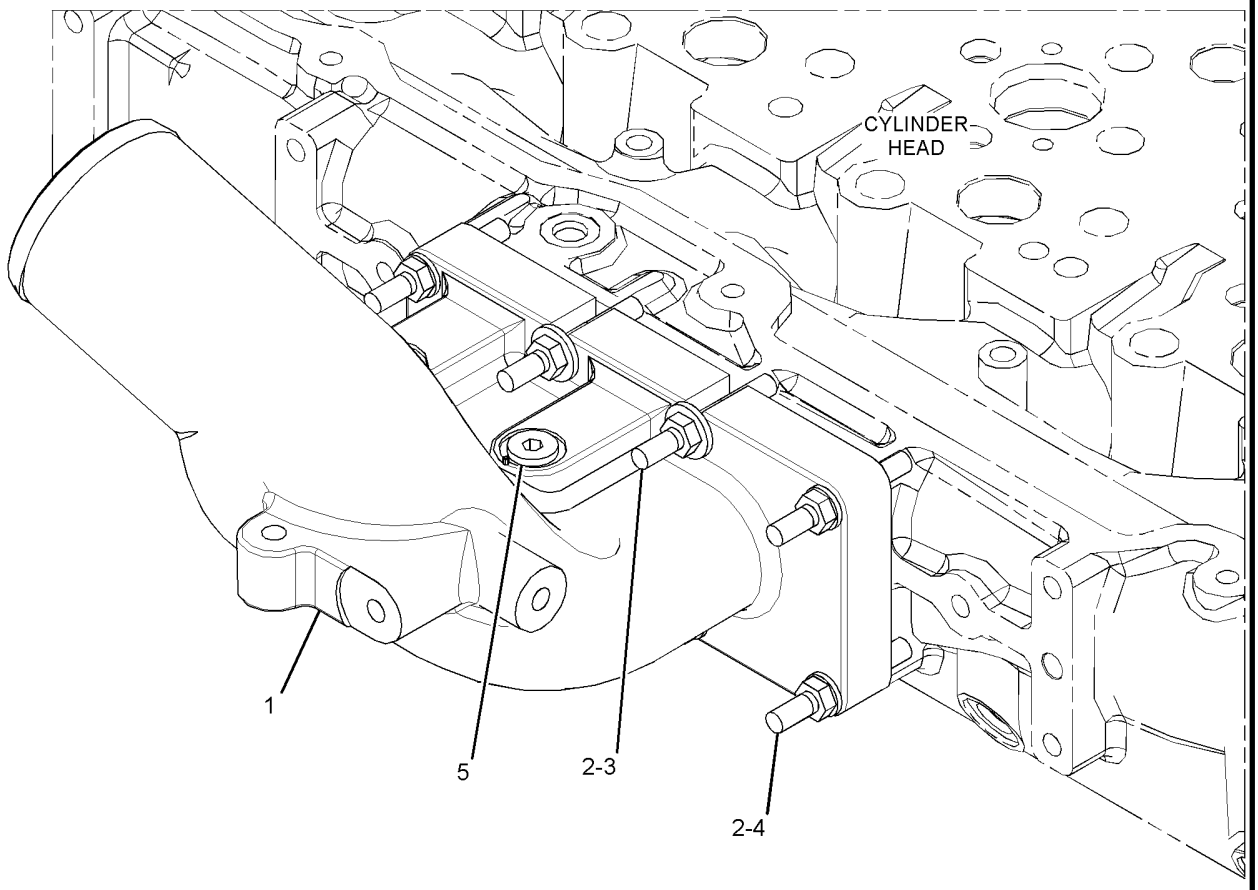

GRAPHIC #1 **<END>** g03282798

427-5967 KIT-TURBOCHARGER GASKET

S/N: EMM1-UP; JEN1-UP

CONTAINS THE GASKETS & SEALS TO REINSTALL THE TURBO(S) & ATTACHING LINES. THE FOLLOWING TURBO MOUNTING HARDWARE WILL BE INCLUDED: BOLTS, NUTS, STUDS, WASHERS, SPACERS. APPLIES TO TURBO KIT PART NUMBERS 317-8751-UP

FOR USE WITH 387-8581—PAGE: 4, 387-8582—PAGE: 5

FIELD INSTALLATION

SMCS-7555 **i05587558**

NOTE	PART NUMBER	QTY	PART NAME 1 2 3 4 5 6 (PRODUCT LEVEL)	SEE PAGE
	7C-7431	1	GASKET (TURBOCHARGER)	
	197-8419	1	GASKET	
M	**3E-8017**	4	LOCKNUT (M10X1.5-THD)	
	5P-7530	1	SEAL-O-RING	
	214-7568	1	SEAL-O-RING	
	228-7089	1	SEAL-O-RING	
	238-5080	2	SEAL-O-RING	
	418-6781	4	STUD-TAPERLOCK (M10X1.5X40-MM)	
			FOR A LIST OF RELATED PARTS THAT REQUIRED FOR THE ENGINE REBUILD TO THE KIT CONSISST, PLEASE VISIT	
			HTTPS://DEALER.CAT.COM/RELATED	

M - METRIC PART

<END>

168-8377 LINES GP-AIR

S/N: EMM1-UP; JEN1-UP
PART OF 389-3265 INSTALLATION AR
AN ATTACHMENT

SMCS-1071 **i05625176**

NOTE	REF NO	GRAPHIC REF	PART NUMBER	QTY	PART NAME 1 2 3 4 5 6 (PRODUCT LEVEL)	SEE PAGE
	1	1	**1W-2431**	1	CLAMP-BAND	
	2	1	**6N-1558**	1	RING-SEAL	
	3	1	**8T-4986**	4	CLAMP-HOSE	
	4	1	**169-3883**	1	COUPLING	
	5	1	**214-1645**	1	ELBOW-EXHAUST	
	6	1	**243-1588**	1	HOSE	
	7	1	**243-1589**	1	HOSE	
	8	1	**243-1590**	1	TUBE	
M	9	1	**6V-4249**	3	BOLT (M10X1.5X50-MM)	
	10	1	**6V-5839**	3	WASHER (11X21X2.5-MM THK)	

M - METRIC PART

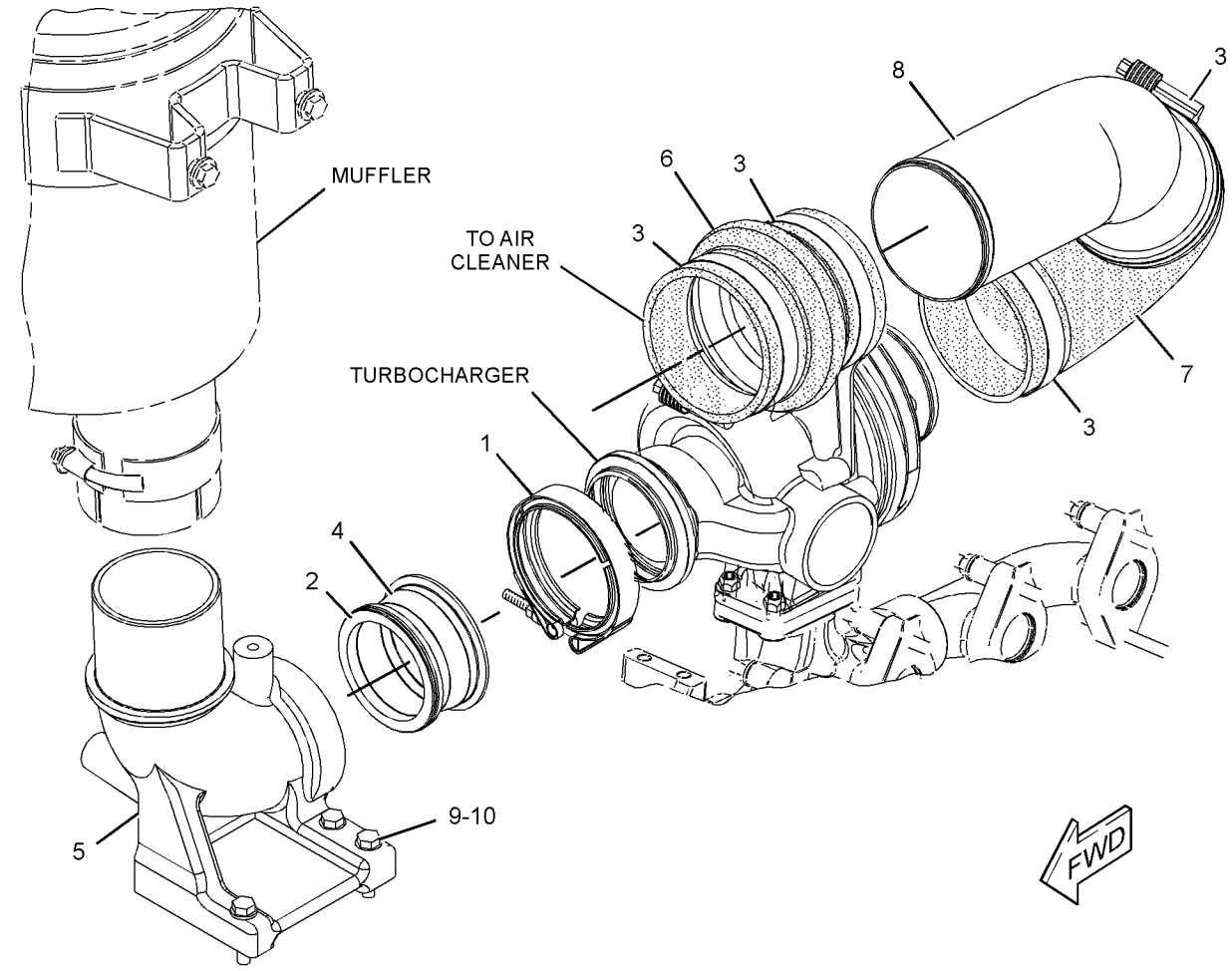

GRAPHIC #1 **<END>** g01151750

251-4553 LINES GP-AIR–ATAAC

S/N: EMM1-UP; JEN1-UP

PART OF 389-3215 INSTALLATION AR-ENGINE

SMCS-1071 **i05640492**

NOTE	REF NO	GRAPHIC REF	PART NUMBER	QTY	PART NAME 1 2 3 4 5 6 (PRODUCT LEVEL)	SEE PAGE
	1	1,2	**144-0367**	16	CLAMP-HOSE	
	2	2	**201-1260**	1	HOSE	
	3	1	**250-6052**	1	HOSE	
	4	1	**250-6053**	1	TUBE AS	
	5	2	**250-6054**	1	TUBE AS	
	6	1	**250-7533**	1	HOSE	
	7	2	**251-0061**	1	BRACKET AS	
	8	1	**251-7214**	2	HOSE	
	9	1,2	**7X-7729**	6	WASHER (11X25X3-MM THK)	
M	10	1	**8T-4133**	2	NUT (M10X1.5-THD)	
M	11	2	**8T-4195**	1	BOLT (M10X1.5X30-MM)	
M	12	2	**8T-4196**	2	BOLT (M10X1.5X35-MM)	
	13	1,2	**9X-2646**	4	CLIP (SLOT)	
	14	1,2	**9X-2647**	4	CLIP (TAB)	
M	15	2	**8T-4186**	1	BOLT (M10X1.5X40-MM)	
	16	1	**177-0581**	1	HOSE	

M - METRIC PART

251-4553 **LINES GP-AIR (*contd.*)** **i05640492**

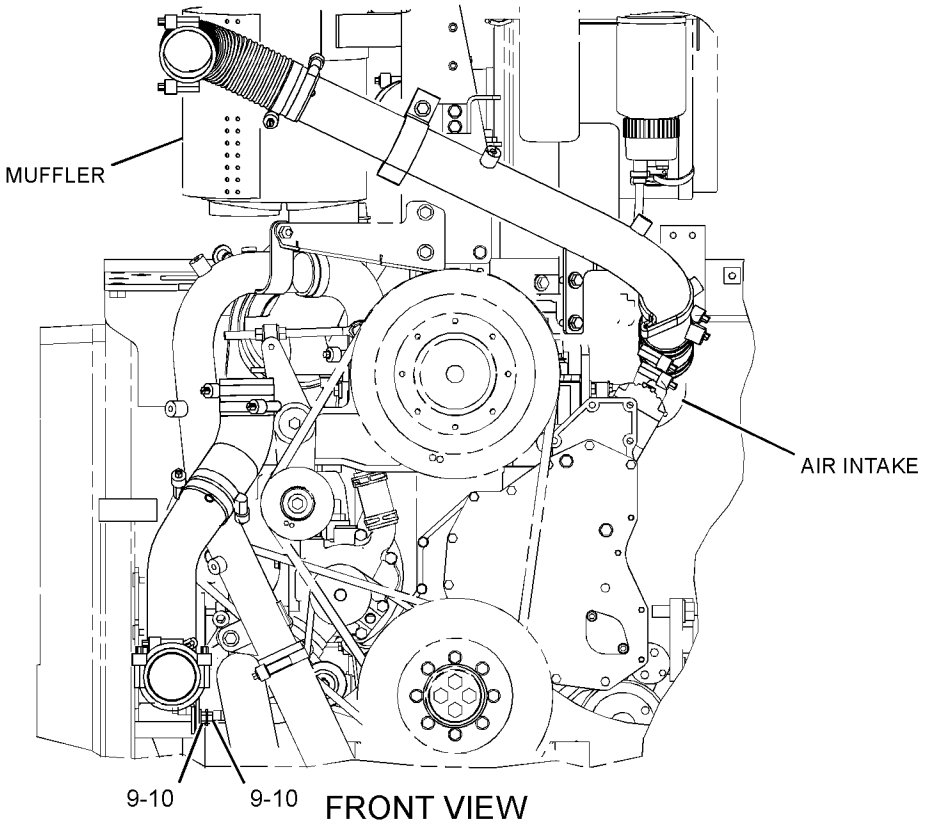

FRONT VIEW

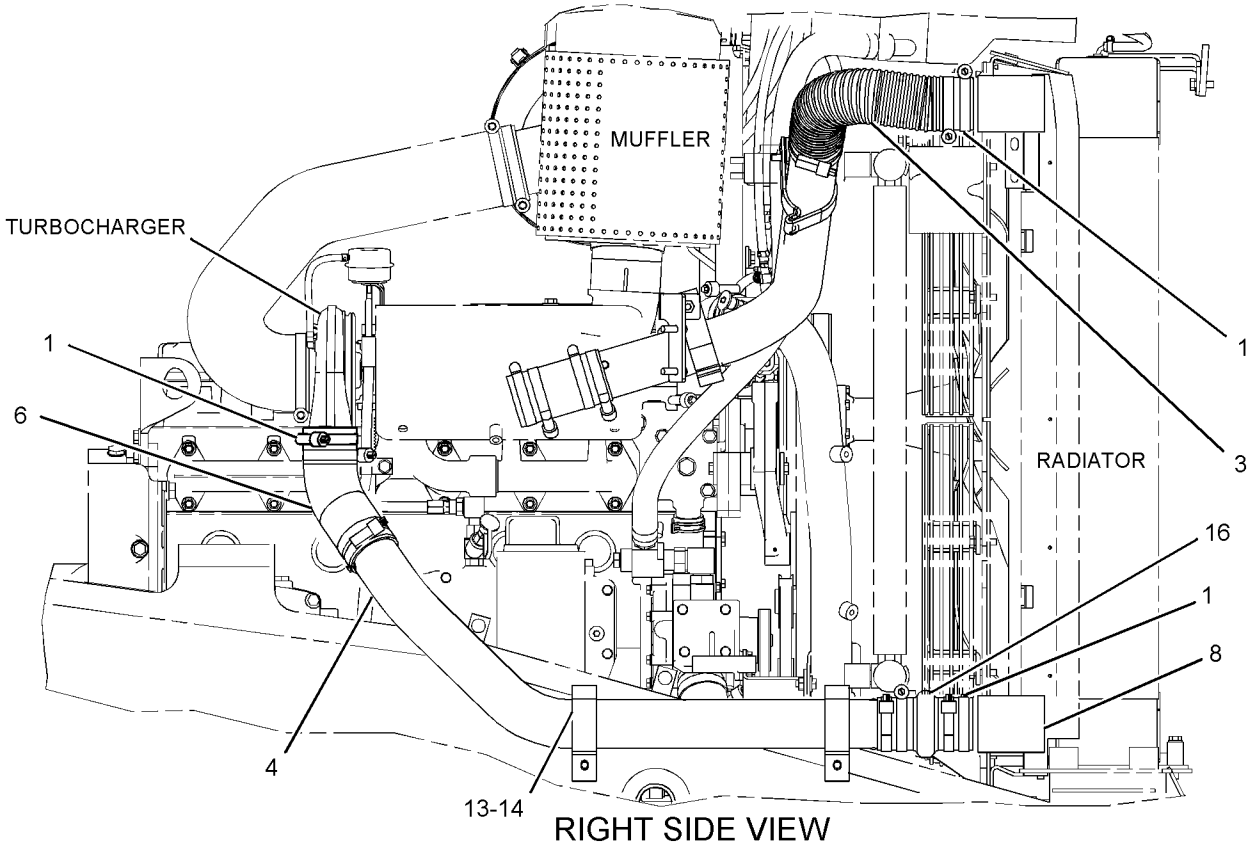

RIGHT SIDE VIEW

GRAPHIC #1 g03353655

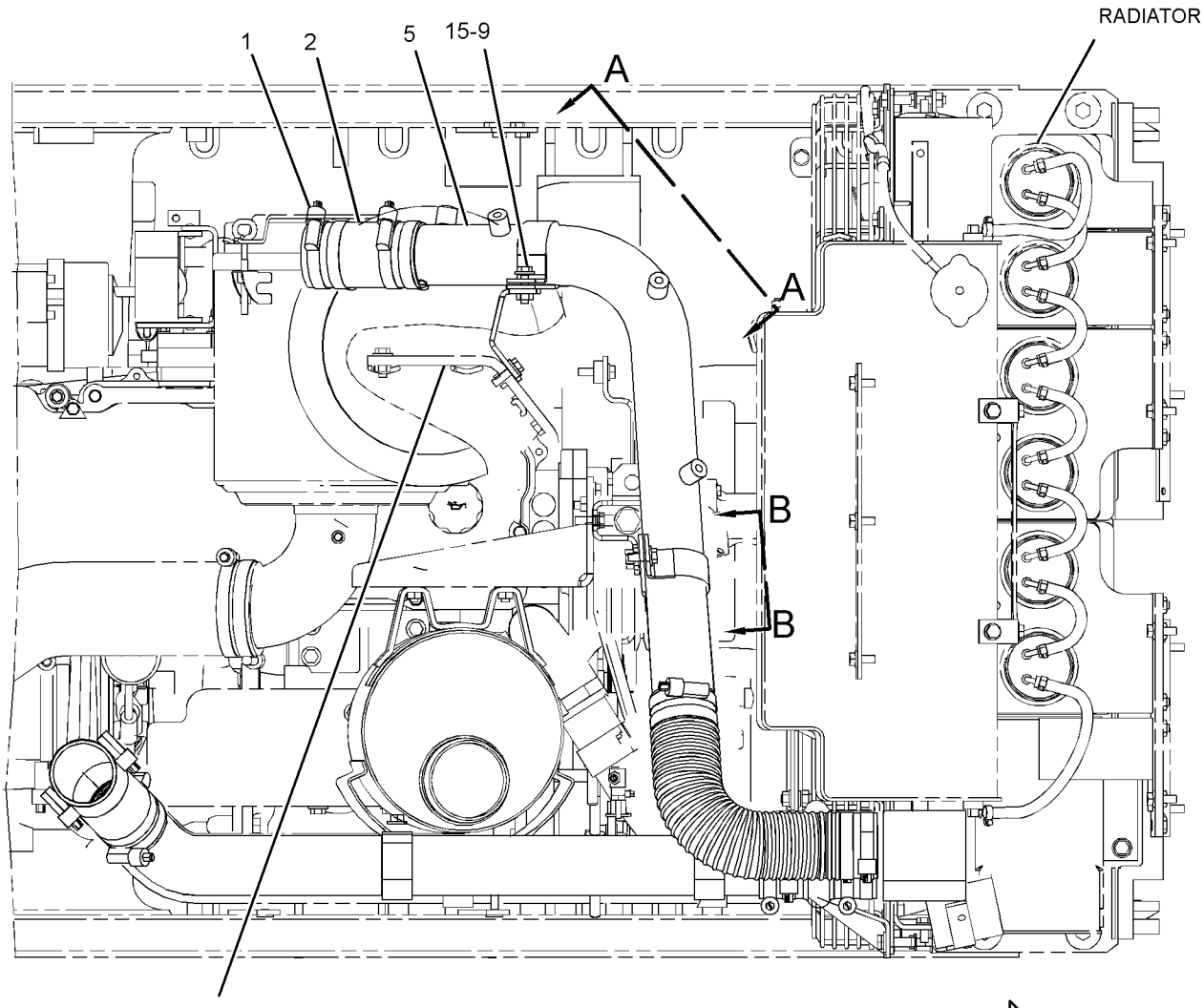

TOP VIEW

FWD

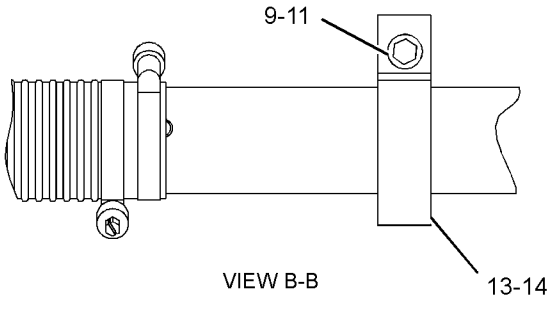

VIEW B-B

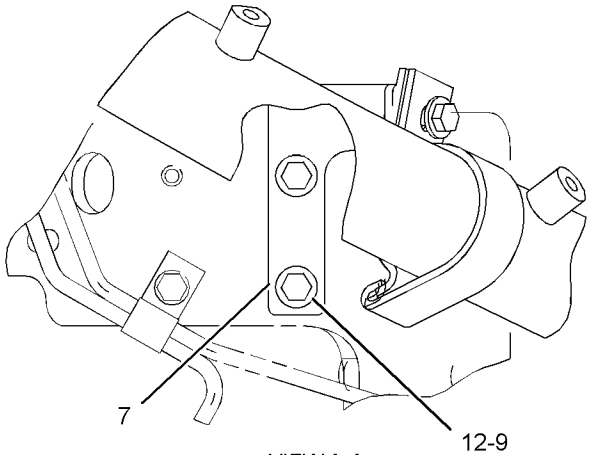

VIEW A-A

GRAPHIC #2 **<END>** g03353656

165-4445 MANIFOLD GP-EXHAUST

S/N: TXD1-UP

PART OF 387-8581, 387-8582 ENGINE AR-COMPLETE

AN ATTACHMENT

SMCS-1059 **i05555446**

NOTE	REF NO	GRAPHIC REF	PART NUMBER	QTY	PART NAME 1 2 3 4 5 6 (PRODUCT LEVEL)	SEE PAGE
M	1	1	**3E-8017**	12	LOCKNUT (M10X1.5-MM THD)	
	2	1	**161-3398**	1	MANIFOLD-EXHAUST	
	3	1	**161-3411**	6	GASKET	
	4	1	**167-0172**	1	MANIFOLD-EXHAUST	
	5	1	**203-7775**	1	MANIFOLD-EXHAUST	
M	6	1	**116-3715**	12	STUD-TAPERLOCK (M10X1.5X85-MM)	
	7	1	**4P-4369**	6	SPACER (12X19X23.5-MM THK)	
	8	1	**6V-5839**	12	WASHER (11X21X2.5-MM THK)	
M	9	1	**8T-7044**	4	STUD-TAPERLOCK (M10X1.5X40-MM)	

M - METRIC PART

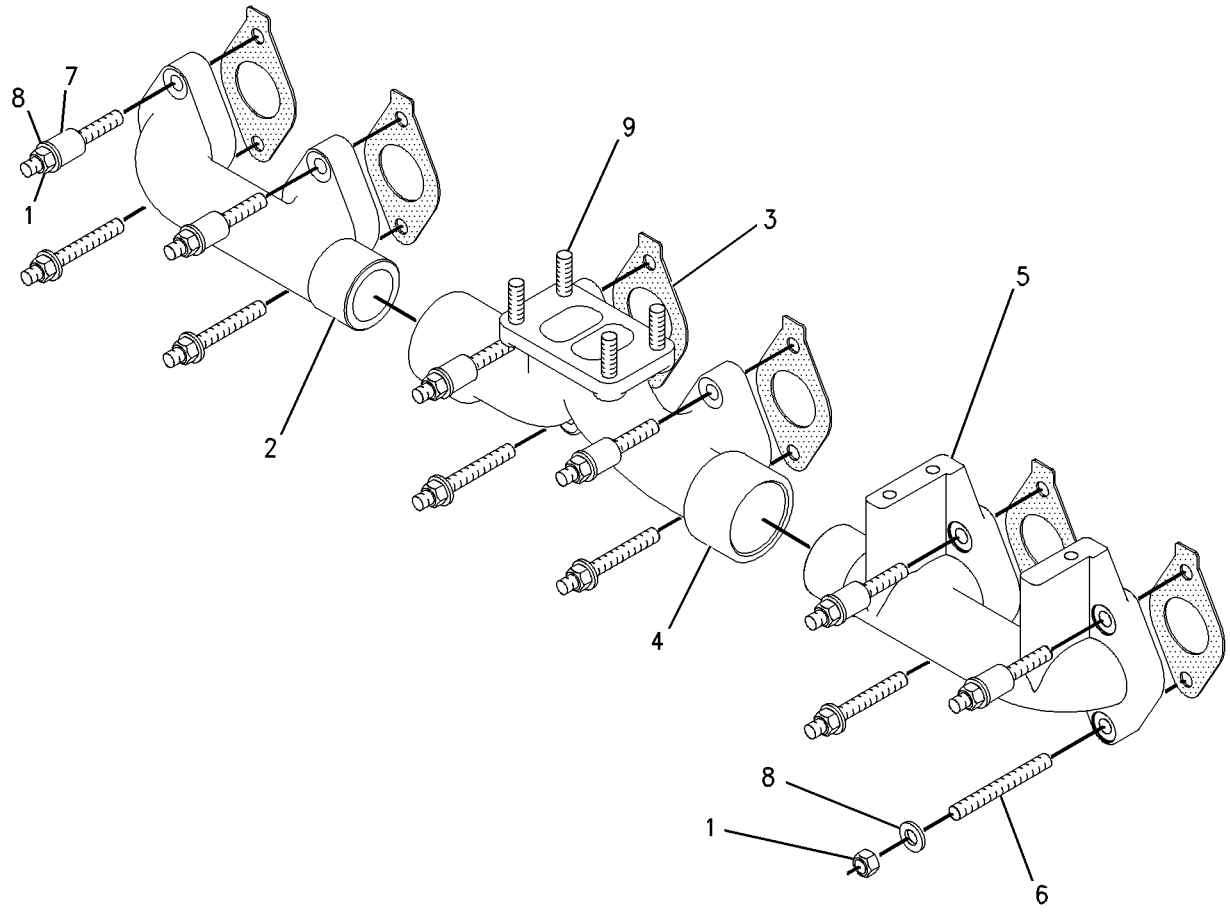

GRAPHIC #1 **<END>** g00741421

168-8382 MUFFLER GP

S/N: EMM1-UP; JEN1-UP
PART OF 389-3265 INSTALLATION AR
AN ATTACHMENT

SMCS-1062 **i05625191**

NOTE	REF NO	GRAPHIC REF	PART NUMBER	QTY	PART NAME 1 2 3 4 5 6 (PRODUCT LEVEL)	SEE PAGE
	1	1	**226-5611**	1	MUFFLER AS	
	1A	1	**7E-3870**	1	CLAMP-MUFFLER	
	2	1	**186-5120**	1	BRACKET AS	
		1	**7T-1099**	3	LINK	
M		1	**8T-3490**	5	NUT-WELD (M10X1.5-THD)	
	3	1	**3E-4353**	2	WASHER-HARD (11X25X3-MM THK)	
M	4	1	**6V-1820**	2	BOLT (M10X1.5X30-MM)	
M	5	1	**8T-4196**	4	BOLT (M10X1.5X35-MM)	
	6	1	**7X-7729**	4	WASHER (11X25X3-MM THK)	

M - METRIC PART

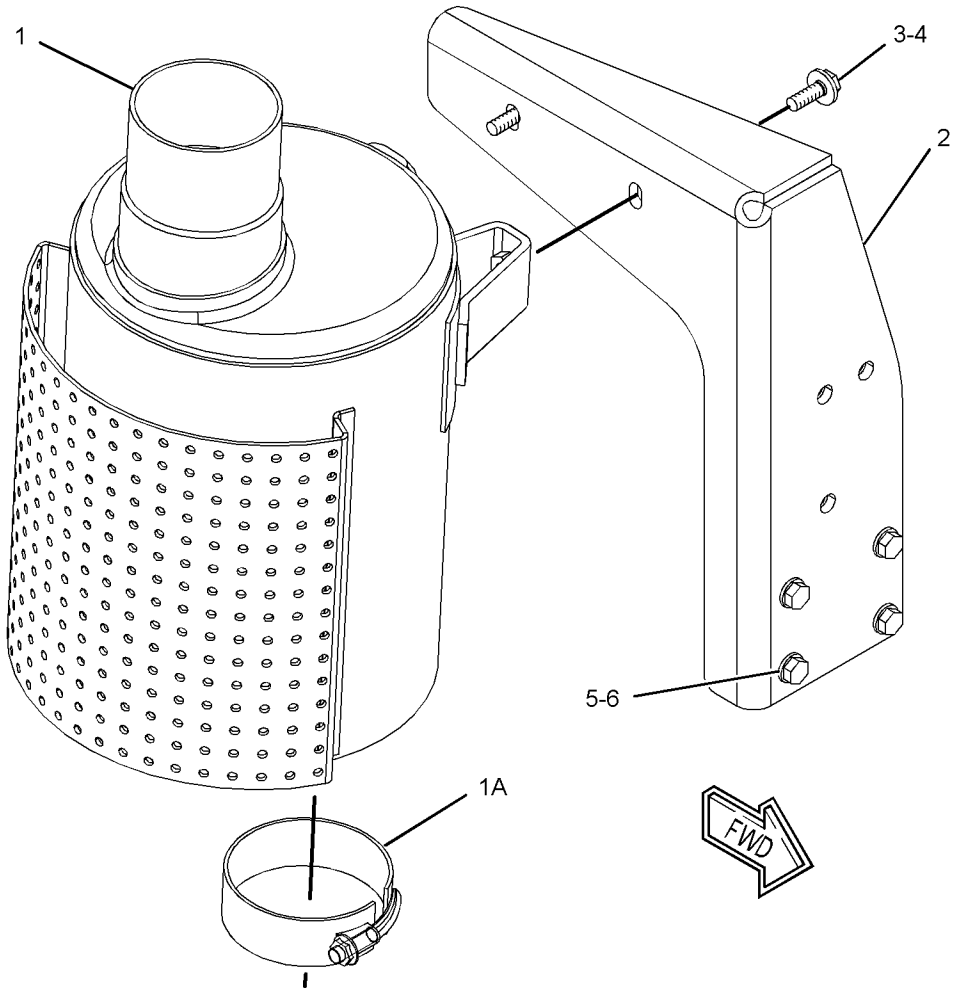

GRAPHIC #1 **<END>** g01228434

237-9251 PRECLEANER GP—WITH SCREEN

S/N: EMM1-UP; JEN1-UP
PART OF 389-3264 PRECLEANER GP
AN ATTACHMENT

SMCS-1055 **i05625173**

NOTE	REF NO	GRAPHIC REF	PART NUMBER	QTY	PART NAME 1 2 3 4 5 6 (PRODUCT LEVEL)	SEE PAGE
	1	1	**130-3280**	1	PRECLEANER AS	
	1A	1	**174-5415**	1	CLAMP	
HZ	2	1		1	PRESCREEN	
	3	1	**145-6669**	6	SCREW-SELF-TAPPING (10X0.75-IN)	
J	4	1	**237-9252**	1	TUBE AS	
J	5	1	**237-9255**	1	TUBE AS	
					AVAILABLE REPAIR KIT(S):	
H			**153-1277**	1	KIT-SCREEN (PRECLEANER)	
					(INCLUDES PRESCREEN, DAMPER, CLAMP, SCREWS, & TUBE)	
J			**237-9254**	1	KIT-PRECLEANER (TURBINE)	
					(INCLUDES VALVE AS, TUBE, CLAMPS, HOSE, TUBE ASSEMBLIES, WASHERS & BOLTS)	

H - PART MARKED H INCLUDED IN KIT MARKED H
J - PART MARKED J INCLUDED IN KIT MARKED J
Z - NOT SERVICED SEPARATELY

237-9251 **PRECLEANER GP (*contd.*)** **i05625173**

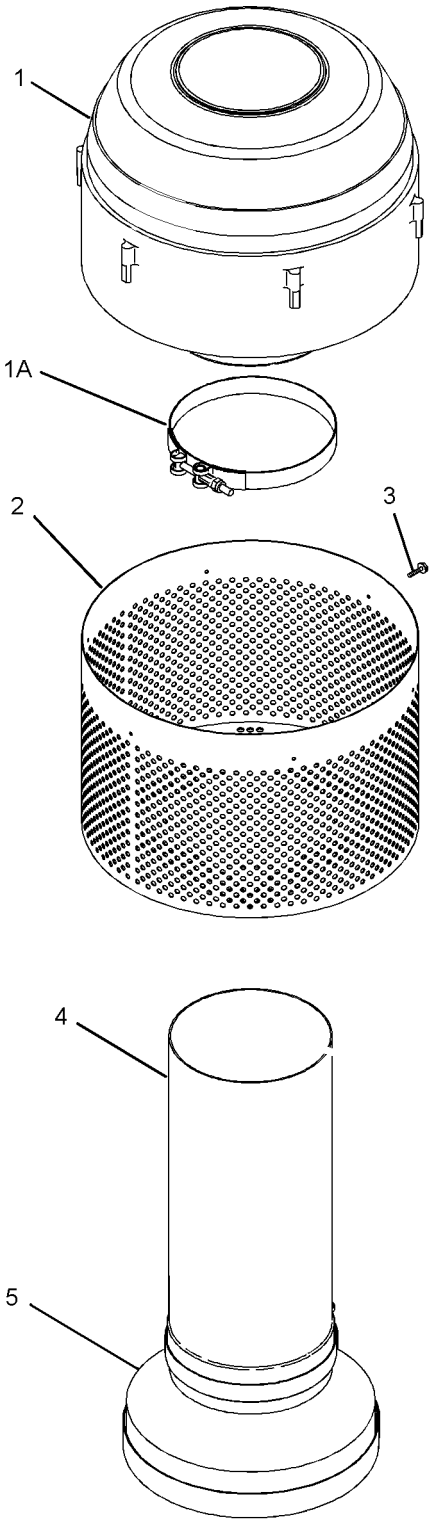

GRAPHIC #1 **<END>** g01146470

389-3264 PRECLEANER GP–TURBINE

S/N: EMM1-UP; JEN1-UP

AN ATTACHMENT

SMCS-1055 **i05674069**

NOTE	REF NO	GRAPHIC REF	PART NUMBER	QTY	PART NAME 1 2 3 4 5 6 (PRODUCT LEVEL)	SEE PAGE
	1	1	**1W-4877**	1	HOSE-REDUCER	
	2	1	**127-8178**	1	VALVE AS-CHECK (EXHAUST)	
	3	1	**193-5116**	1	HOSE	
Y	4	1	**205-8674**	1	AIR CLEANER GP	96
Y	5	1	*237-9251*	1	PRECLEANER GP (WITH SCREEN)	109
	6	1	**241-4354**	1	EJECTOR AS-EXHAUST	
	7	1	**250-9290**	1	BRACKET AS	
	8	1	**256-2941**	1	BASE AS	
	9	1	**308-7112**	1	CLAMP-WIRE	
	10	1	**5P-0599**	1	CLAMP-BAND	
	11	1	**5P-3860**	1	CLAMP-HOSE	
	12	1	**7X-7729**	16	WASHER (11X25X3-MM THK)	
	13	1	**8T-4121**	4	WASHER-HARD (11X21X2.5-MM THK)	
M	14	1	**8T-4133**	2	NUT (M10X1.5-THD)	
M	15	1	**8T-4136**	18	BOLT (M10X1.5X25-MM)	
	16	1	**9M-0164**	4	CLAMP-HOSE	
E	17	1	**5P-2817**		HOSE (34-CM)	

E - ORDER BY THE CENTIMETER
M - METRIC PART
Y - SEPARATE ILLUSTRATION

389-3264 **PRECLEANER GP (*contd.*)** **i05674069**

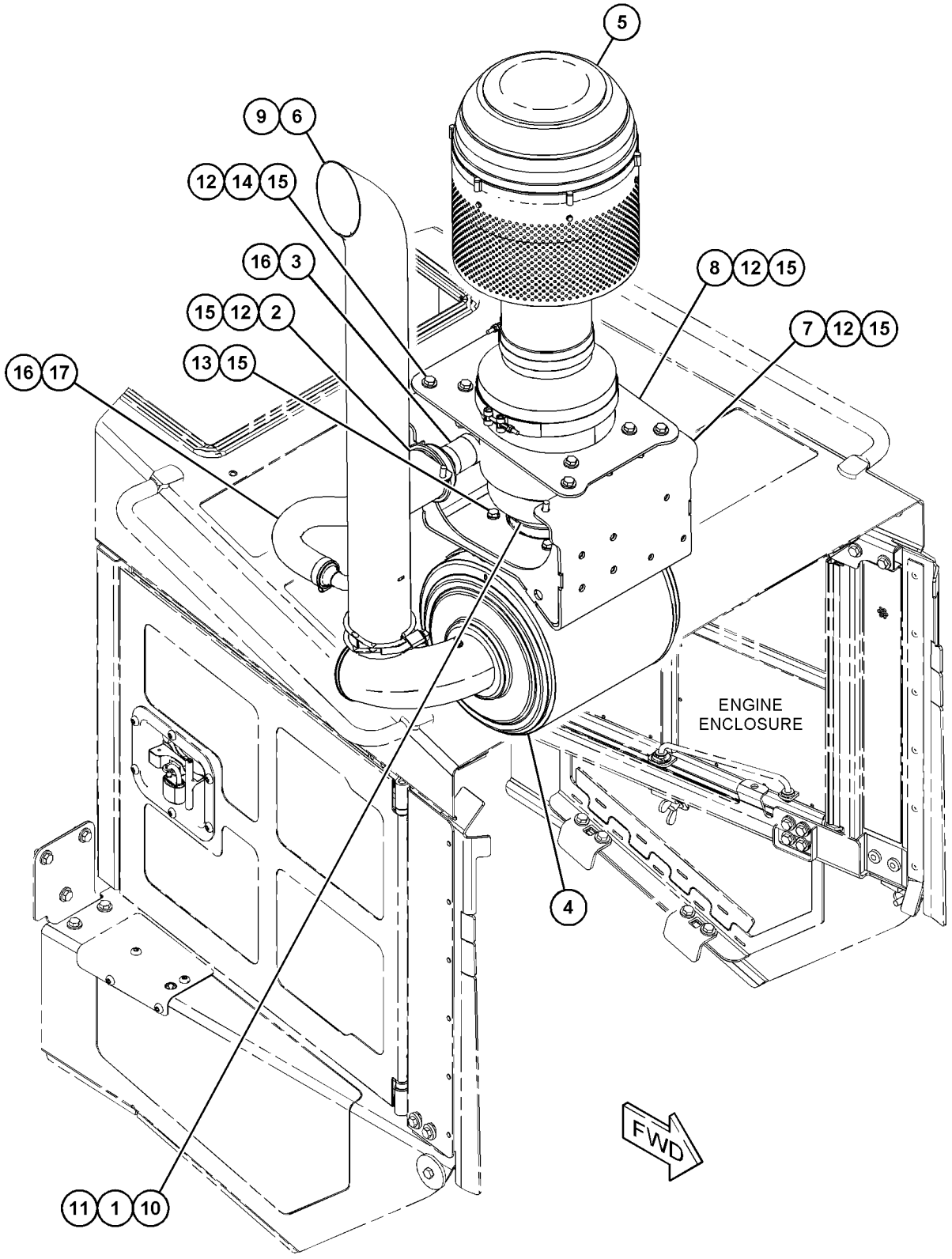

GRAPHIC #1 **<END>** g03575477

237-2737 SHIELD GP-EXHAUST

S/N: EMM1-UP; JEN1-UP
PART OF 389-3265 INSTALLATION AR
AN ATTACHMENT

SMCS-1067 **i05625192**

NOTE	REF NO	GRAPHIC REF	PART NUMBER	QTY	PART NAME 1 2 3 4 5 6 (PRODUCT LEVEL)	SEE PAGE
	1	1	**237-2738**	1	SHIELD AS-EXHAUST	
M		1	**9R-2613**	2	BOSS-WELD (M10X1.5X25-MM)	
	2	1	**7X-7729**	3	WASHER (11X25X3-MM THK)	
M	3	1	**8T-4136**	3	BOLT (M10X1.5X25-MM)	

M - METRIC PART

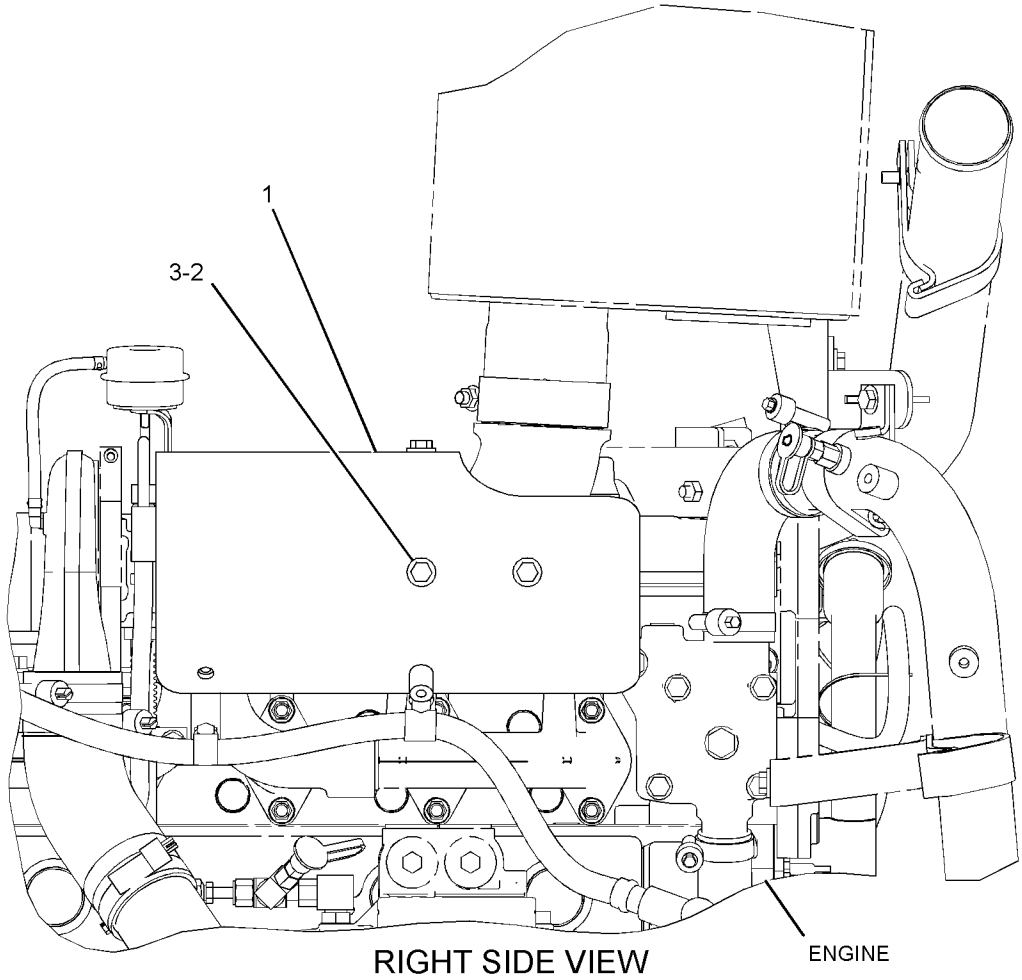

RIGHT SIDE VIEW

GRAPHIC #1 **<END>** g01209236

252-5165 TURBOCHARGER GP*R

S/N: TXD1-UP

PART OF 262-5901 TURBOCHARGER GP

AN ATTACHMENT

SMCS-1052, 1053

i05643946

NOTE	REF NO	GRAPHIC REF	PART NUMBER	QTY	PART NAME 1 2 3 4 5 6 (PRODUCT LEVEL)	SEE PAGE
	1	1	**137-1602**	1	CLAMP AS (TURBINE)	
	2	1	**158-6072**	1	CLAMP AS (COMPRESSOR)	
	3	1	**161-6963**	2	CLAMP	
R	4	1	**262-2870**	1	CARTRIDGE GP-TURBOCHARGER	
E	5	1	**242-3360**		HOSE (25-CM)	

E - ORDER BY THE CENTIMETER
R - REMFG PART MAY BE AVAILABLE

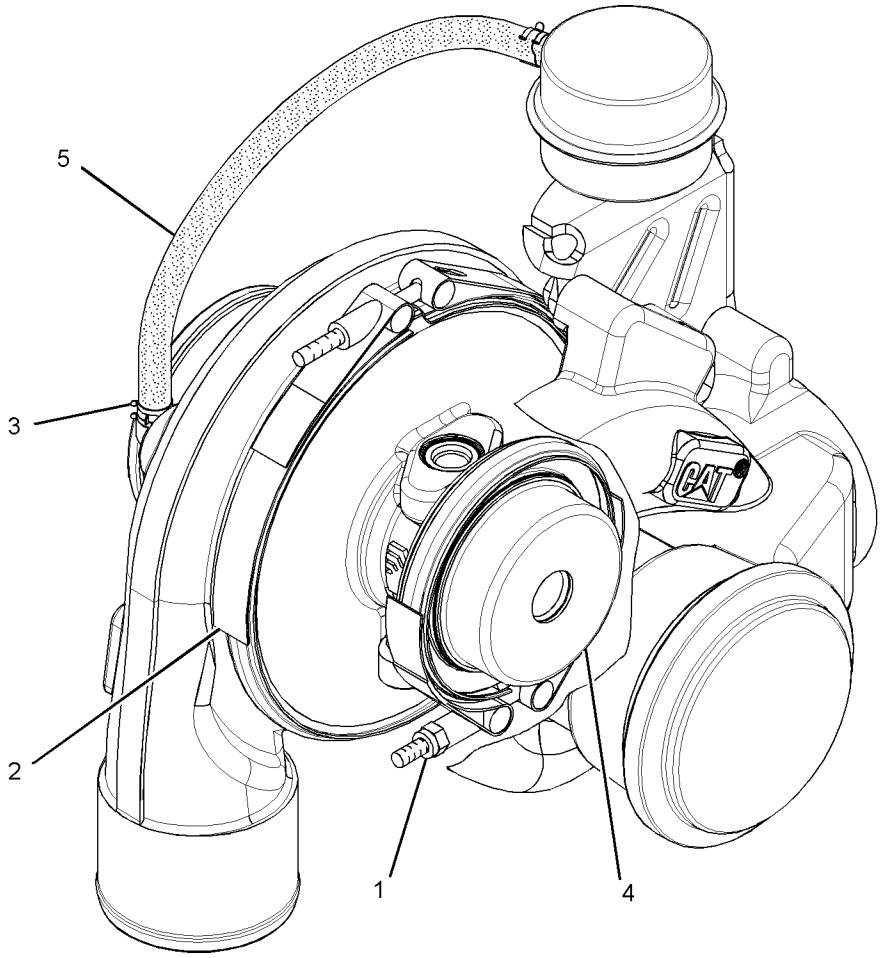

GRAPHIC #1

<END>

g01526440

262-5901 TURBOCHARGER GP

S/N: TXD1-UP
PART OF 387-8581, 387-8582 ENGINE AR-COMPLETE
AN ATTACHMENT

SMCS-1052, 1053

i05555474

NOTE	REF NO	GRAPHIC REF	PART NUMBER	QTY	PART NAME 1 2 3 4 5 6 (PRODUCT LEVEL)	SEE PAGE
	1	1	**7C-7431**	1	GASKET	
YR	2	1	**252-5165**	1	TURBOCHARGER GP	114
M	3	1	**3E-8017**	4	LOCKNUT (M10X1.5-THD)	

M - METRIC PART
R - REMFG PART MAY BE AVAILABLE
Y - SEPARATE ILLUSTRATION

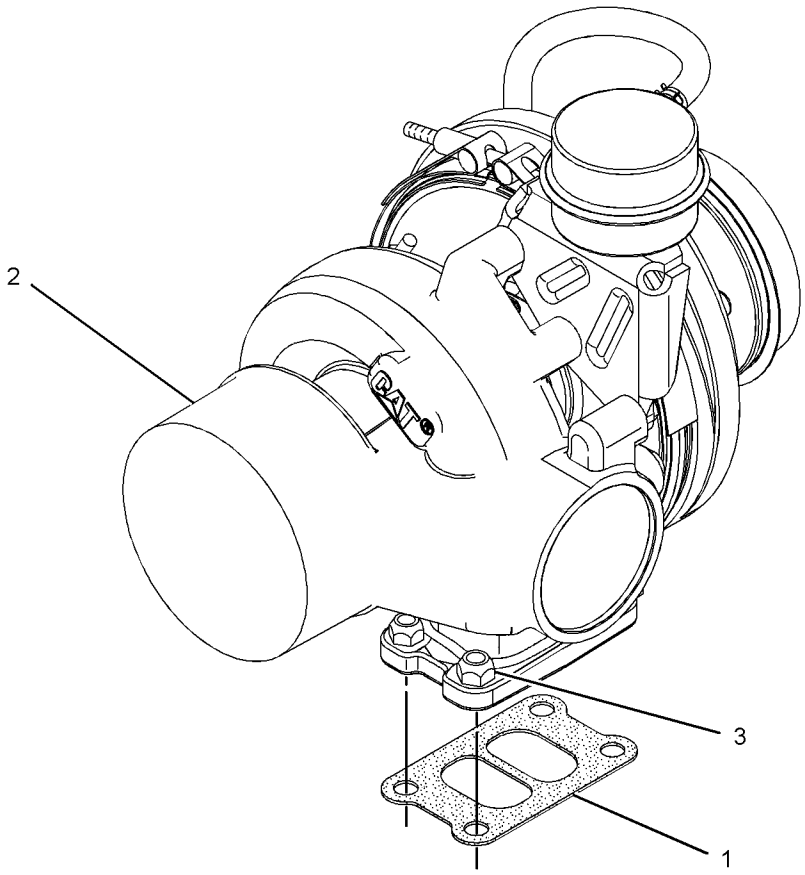

GRAPHIC #1

<END>

g01205748

393-7367 FILTER & LINES GP-FUEL

S/N: EMM1-UP; JEN1-UP

PART OF 389-3215 INSTALLATION AR-ENGINE

SMCS-1261, 1274 **i05640720**

NOTE	REF NO	GRAPHIC REF	PART NUMBER	QTY	PART NAME 1 2 3 4 5 6 (PRODUCT LEVEL)	SEE PAGE
	1	1	**1P-4278**	1	CLAMP-HOSE	
	2	1	**1R-0762**	1	FILTER-FUEL (ADVANCED EFFICIENCY)	
	3	1	**6V-0852**	1	CAP-DUST	
	4	1	**8T-9655**	6	MOUNT-ISOLATION	
	5	1	**174-7599**	1	BASE AS-FUEL FILTER	
		1	**9S-4167**	1	STUD-HOLLOW (1-14X1.47-IN)	
Y	6	1	*174-9570*	1	FILTER GP-WATER SEP & FUEL	118
	7	1	*244-3712*	4	PLUG AS	
					(EACH INCLUDES)	
		1	**9S-4191**	1	PLUG	
		1	**214-7568**	1	SEAL-O-RING	
Y	8	1	**190-8970**	1	PUMP GP-FUEL PRIMING	130
	9	1	**191-1782**	1	SPACER (8.5X12.7X38.2-MM THK)	
	10	1	**191-1783**	2	SPACER (8.5X12.7X87.3-MM THK)	
	11	1	**206-5017**	1	SPACER (11X20X5-MM THK)	
	12	1	*241-6215*	1	ELBOW AS	
		1	**6V-8076**	1	ELBOW	
		1	**3J-1907**	1	SEAL-O-RING	
	13	1	**284-7650**	1	BRACKET AS	
M		1	**8T-3490**	3	NUT-WELD (M10X1.5-THD)	
	14	1	**284-9639**	1	HOSE & TUBE AS	
	15	1	**394-1514**	1	HOSE & TUBE AS	
	16	1	**306-9621**	1	BRACKET AS	
	17	1	**314-2911**	1	BRACKET AS	
	18	1	**100-4336**	2	CLIP	
	19	1	*148-8378*	2	ELBOW AS	
					(EACH INCLUDES)	
		1	**6V-8724**	1	ELBOW	
		1	**3J-1907**	1	SEAL-O-RING	
		1	**6V-8397**	1	SEAL-O-RING	
	20	1	**1S-0994**	2	CLIP	
	22	1	**5P-9297**	2	CLIP	
	23	1	*164-5567*	1	COUPLER AS-QUICK DISCONNECT (MALE)	
		1	**6V-3965**	1	FITTING (QUICK DISCONNECT)	
		1	**214-7568**	1	SEAL-O-RING	
	27	1	*148-8319*	1	CONNECTOR AS	
		1	**6V-8715**	1	CONNECTOR	
		1	**2M-9780**	1	SEAL-O-RING	
		1	**6V-8397**	1	SEAL-O-RING	
	28	1	**7X-0579**	6	WASHER-HARD (8.8X25.5X2-MM THK)	
M	29	1	**7X-2539**	2	BOLT (M8X1.25X110-MM)	
	30	1	**7X-7729**	4	WASHER (11X25X3-MM THK)	
	31	1	**8T-4121**	6	WASHER-HARD (11X21X2.5-MM THK)	
M	32	1	**8T-4136**	3	BOLT (M10X1.5X25-MM)	
M	33	1	**8T-4195**	9	BOLT (M10X1.5X30-MM)	
	34	1	**8T-4896**	2	WASHER-HARD (10.2X18.5X2.5-MM THK)	
M	35	1	**8T-6869**	1	BOLT (M8X1.25X60-MM)	
	36	1	*313-3492*	2	PLUG AS	
		1	**9S-4190**	1	PLUG-O-RING	
		1	**238-5081**	1	SEAL-O-RING	
D	37	1	**5P-5991**		HOSE (0.7-M)	

D - ORDER BY THE METER
M - METRIC PART
Y - SEPARATE ILLUSTRATION

393-7367 **FILTER & LINES GP-FUEL (*contd.*)** **i05640720**

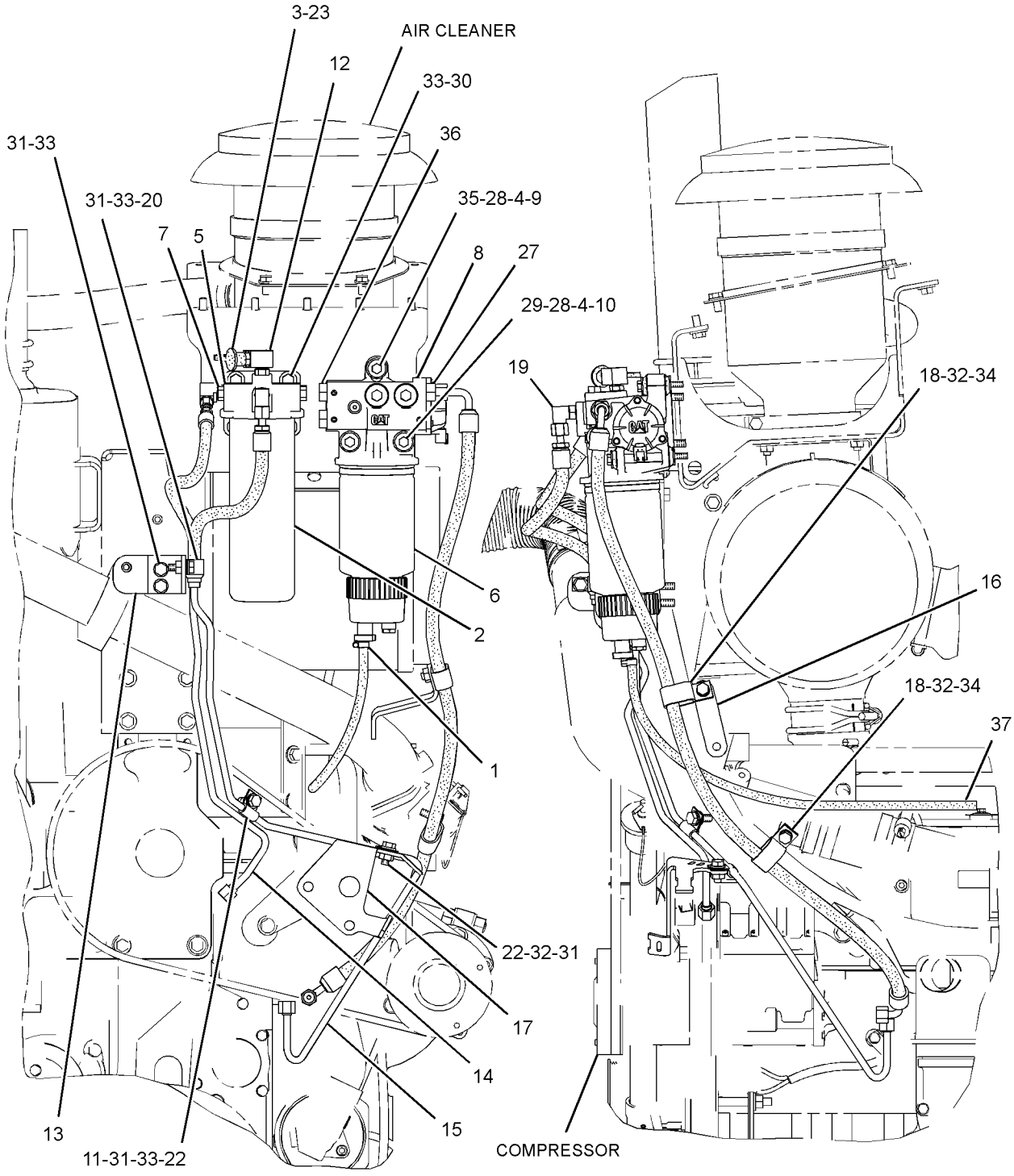

FRONT VIEW OF ENGINE

LEFT SIDE VIEW OF ENGINE

GRAPHIC #1 **<END>** g03255076

174-9570 FILTER GP-WATER SEP & FUEL

S/N: EMM1-UP; JEN1-UP

PART OF 393-7367 FILTER & LINES GP-FUEL

SMCS-1261, 1263 **i05640742**

NOTE	REF NO	GRAPHIC REF	PART NUMBER	QTY	PART NAME 1 2 3 4 5 6 (PRODUCT LEVEL)	SEE PAGE
	1	1	**326-1644**	1	FILTER AS-WATER SEP & FUEL (PRIMARY)	
	1A	1	**220-8678**	1	SEAL-RING (FUEL, WATER SEPARATOR)	
	2	1	**343-5527**	1	BOWL AS	
BJ	2A	1	**3J-1907**	1	SEAL-O-RING	
	2B	1	**5F-9144**	1	SEAL-O-RING	
	2C	1	**8F-7219**	1	SEAL-O-RING	
BJ	2D	1	**9S-8004**	1	PLUG-O-RING (DRAIN)	

B - USE AS REQUIRED
J - PARTS MARKED J ARE USED WITH BOWL ASSEMBLY THAT IS NOT ONE PIECE.

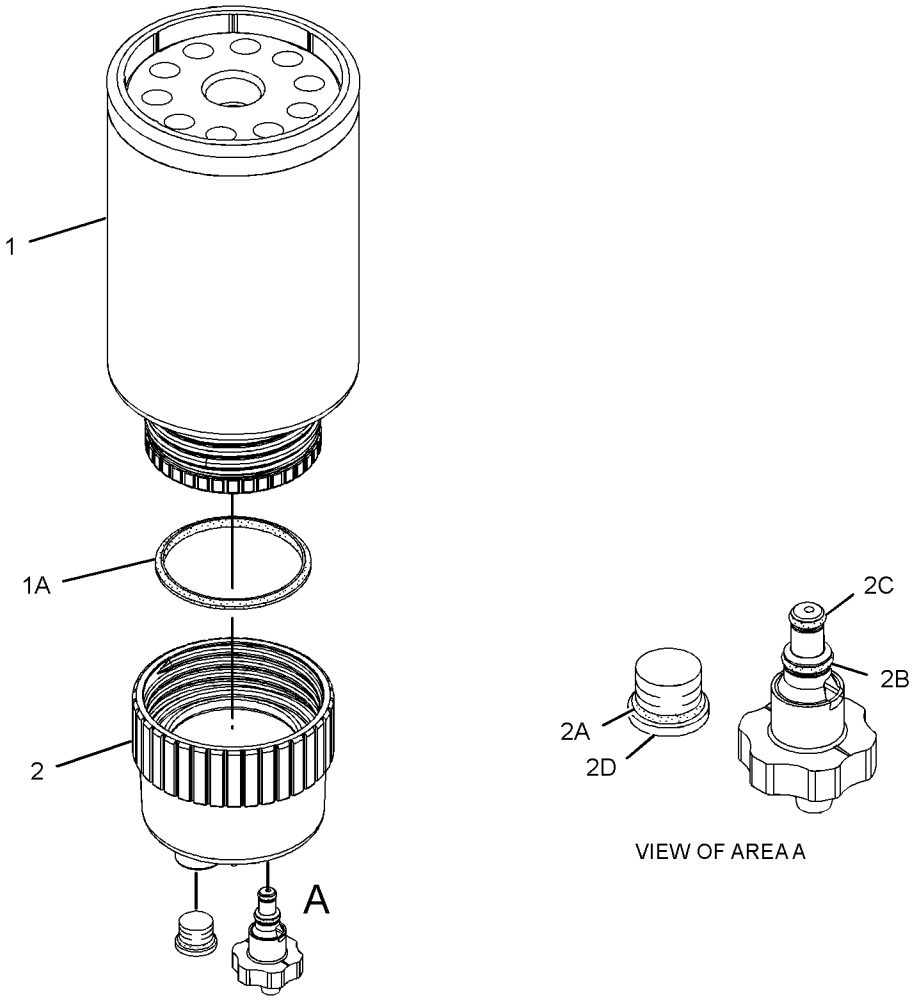

GRAPHIC #1 **<END>** g01960053

387-9434 INJECTOR GP-FUEL*R

S/N: TXD1-UP
PART OF 267-9715 PUMP GP-FUEL INJECTION
AN ATTACHMENT

SMCS-1251, 1254, 1290

i05643894

NOTE	REF NO	GRAPHIC REF	PART NUMBER	QTY	PART NAME 1 2 3 4 5 6 (PRODUCT LEVEL)	SEE PAGE
	1	1	**148-2903**	2	SEAL-O-RING	
	2	1	**109-3207**	1	SEAL-O-RING	
	3	1	**149-5240**	1	RING-BACKUP	
	4	1	**293-0730**	1	RING-BACKUP	

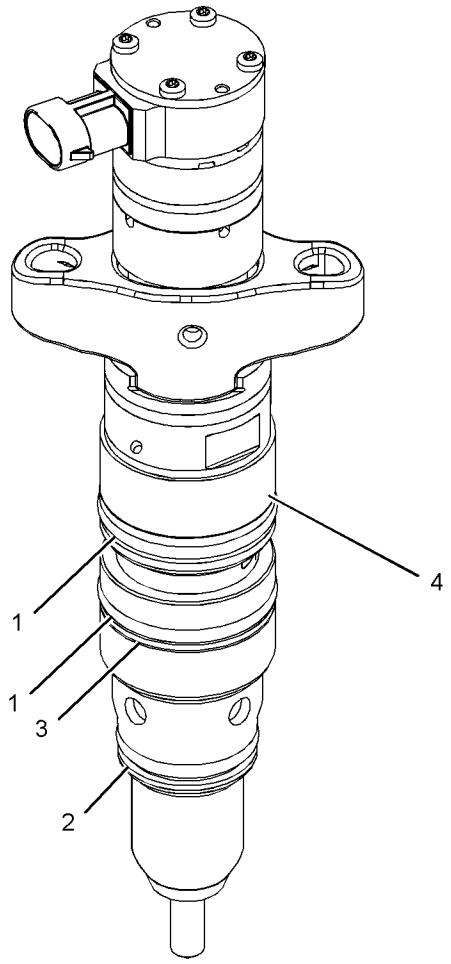

GRAPHIC #1

<END>

g03341832

389-3250 LINES GP-FUEL

S/N: EMM1-UP; JEN1-UP

AN ATTACHMENT

SMCS-1274 **i05612770**

NOTE	REF NO	GRAPHIC REF	PART NUMBER	QTY	PART NAME 1 2 3 4 5 6 (PRODUCT LEVEL)	SEE PAGE
	1	1	**1K-4649**	2	SPACER (0.516X1X1-IN THK)	
	2	1	**1W-3011**	1	SPACER (10.5X22X73.5-MM THK)	
	3	1	**3W-2647**	1	SPACER (13.5X30X10-MM THK)	
	4	1	**5D-1026**	1	CLAMP-BAND	
	5	1	**246-2641**	1	PADLOCK GP	
		1	**5P-8500**	1	KEY	
	6	1	**8T-0119**	2	ELBOW	
	7	1	**8T-6723**	1	VALVE-BALL	
	8	1	**8T-6724**	1	VALVE-BALL	
	9	1	*150-3026*	1	ELBOW AS	
		1	**6V-4292**	1	ELBOW	
		1	**3K-0360**	1	SEAL-O-RING	
	10	1	**226-3492**	1	BRACKET AS	
I	11	1	**230-3615**	1	HOSE AS	
	12	1	**231-1345**	1	BRACKET AS	
I	13	1	**237-0984**	1	HOSE AS	
	14	1	**300-8554**	1	BRACKET AS	
	15	1	**317-6110**	1	BRACKET AS	
I	16	1	**317-9689**	1	HOSE AS	
	17	1	**067-2551**	3	CLIP	
	18	1	**100-4336**	6	CLIP	
M	19	1	**109-3001**	1	STUD-TAPERLOCK (M10X1.5X65-MM)	
	20	1	*148-8364*	1	ELBOW AS	
		1	**6V-8625**	1	ELBOW	
		1	**3K-0360**	1	SEAL-O-RING	
		1	**6V-8398**	1	SEAL-O-RING	
	21	1	*148-8372*	1	ELBOW AS	
		1	**6V-8721**	1	ELBOW	
		1	**2M-9780**	1	SEAL-O-RING	
		1	**6V-8398**	1	SEAL-O-RING	
	22	1	*148-8374*	1	ELBOW AS	
		1	**6V-8723**	1	ELBOW	
		1	**3K-0360**	1	SEAL-O-RING	
		1	**6V-8397**	1	SEAL-O-RING	
	23	1	*164-5570*	1	UNION AS	
		1	**6V-8730**	1	UNION (FACE SEAL)	
		1	**6V-8397**	2	SEAL-O-RING	
	24	1	**1S-0996**	1	CLIP	
	25	1	**3K-0360**	4	SEAL-O-RING	
	26	1	**4D-7735**	1	CLIP	
	27	1	**6D-4246**	2	CLIP	
M	28	1	**7X-2543**	3	BOLT (M10X1.5X120-MM)	
	29	1	**7X-7729**	2	WASHER (11X25X3-MM THK)	
	30	1	**8T-4121**	14	WASHER-HARD (11X21X2.5-MM THK)	
M	31	1	**8T-4133**	3	NUT (M10X1.5-THD)	
M	32	1	**8T-4136**	1	BOLT (M10X1.5X25-MM)	
M	33	1	**8T-4137**	7	BOLT (M10X1.5X20-MM)	
M	34	1	**8T-4182**	2	BOLT (M10X1.5X45-MM)	
M	35	1	**8T-4196**	1	BOLT (M10X1.5X35-MM)	
M	36	1	**8T-4198**	1	BOLT (M10X1.5X100-MM)	
	37	1	**8T-4223**	1	WASHER-HARD (13.5X25.5X3-MM THK)	
	38	1	**8T-4896**	2	WASHER-HARD (10.2X18.5X2.5-MM THK)	
	39	1	**8T-9383**	1	BOLT (1/2-13X0.75-IN)	
G	40	1	**423-1983**		HOSE (41-IN)	

G - ORDER BY THE INCH
I - REFER TO HYDRAULIC INFORMATION SYSTEM
M - METRIC PART

389-3250 **LINES GP-FUEL (*contd.*)** **i05612770**

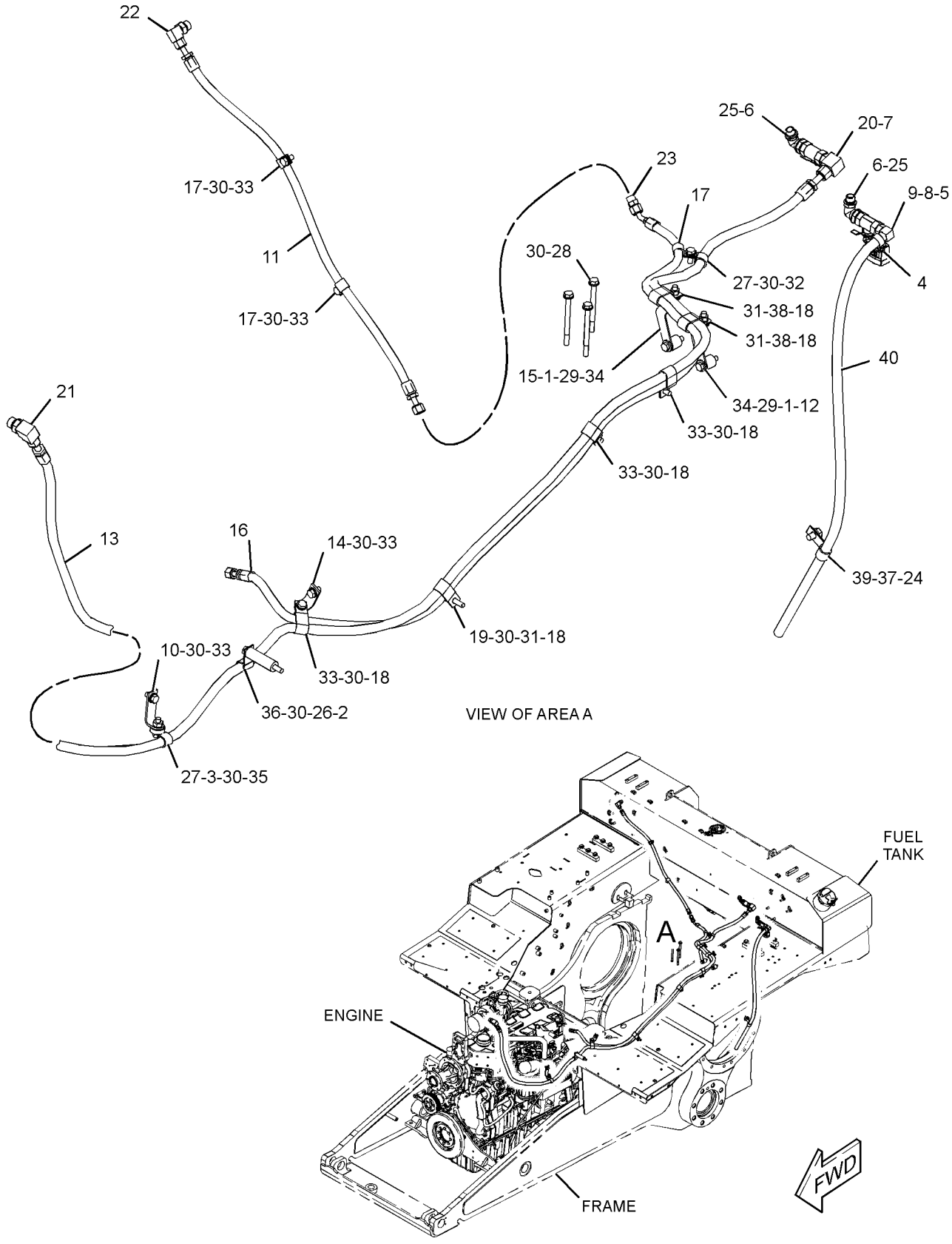

GRAPHIC #1

<END>

g03574617

389-3251 LINES GP-FUEL—WITH HEATER

S/N: EMM1-UP; JEN1-UP

AN ATTACHMENT

SMCS-1274 **i05612772**

NOTE	REF NO	GRAPHIC REF	PART NUMBER	QTY	PART NAME 1 2 3 4 5 6 (PRODUCT LEVEL)	SEE PAGE
	1	1	**1K-4649**	2	SPACER (0.516X1X1-IN THK)	
	2	1	**1W-3011**	1	SPACER (10.5X22X73.5-MM THK)	
	3	1	**3W-2647**	1	SPACER (13.5X30X10-MM THK)	
	4	1	**5D-1026**	1	CLAMP-BAND	
	5	1	**246-2641**	1	PADLOCK GP	
		1	**5P-8500**	1	KEY	
	6	1	**8T-0119**	2	ELBOW	
	7	1	**8T-6723**	1	VALVE-BALL	
	8	1	**8T-6724**	1	VALVE-BALL	
	9	1	*150-3026*	1	ELBOW AS	
		1	**6V-4292**	1	ELBOW	
		1	**3K-0360**	1	SEAL-O-RING	
	10	1	**224-9772**	1	HEATER AS-FUEL	
	11	1	**226-3492**	1	BRACKET AS	
I	12	1	**230-3615**	1	HOSE AS	
	13	1	**231-1345**	1	BRACKET AS	
	14	1	**235-8966**	1	BASE-MOUNTING	
	15	1	**256-1291**	1	HARNESS AS-SOLENOID (AUTOMATIC LUBRICATION)	
		1	**102-8802**	1	KIT-RECEPTACLE (2-PIN)	
					(INCLUDES RECEPTACLE AS & WEDGE)	
		1	**8T-8729**	2	PIN-CONNECTOR (16-GA TO 18-GA)	
		1	**8T-8730**	2	SOCKET-CONNECTOR (16-GA TO 18-GA)	
E		1	**114-8843**		SLEEVE-PLASTIC (40-CM)	
		1	**155-2270**	1	KIT-CONNECTING PLUG (2-PIN)	
					(INCLUDES PLUG AS, WEDGE, & INTERFACE SEAL)	
	16	1	**300-8554**	1	BRACKET AS	
	17	1	**317-6110**	1	BRACKET AS	
I	18	1	**317-9689**	1	HOSE AS	
	19	1	**361-0706**	1	BRACKET AS	
I	20	1	**372-1455**	1	HOSE AS	
I	21	1	**373-1603**	1	HOSE AS	
	22	1	**067-2551**	3	CLIP	
	23	1	**100-4336**	6	CLIP	
M	24	1	**109-3001**	1	STUD-TAPERLOCK (M10X1.5X65-MM)	
	25	1	*148-8358*	1	ELBOW AS	
		1	**6V-8624**	1	ELBOW	
		1	**2M-9780**	1	SEAL-O-RING	
		1	**6V-8398**	1	SEAL-O-RING	
	26	1	*148-8364*	1	ELBOW AS	
		1	**6V-8625**	1	ELBOW	
		1	**3K-0360**	1	SEAL-O-RING	
		1	**6V-8398**	1	SEAL-O-RING	
	27	1	*148-8372*	2	ELBOW AS	
					(EACH INCLUDES)	
		1	**6V-8721**	1	ELBOW	
		1	**2M-9780**	1	SEAL-O-RING	
		1	**6V-8398**	1	SEAL-O-RING	
	28	1	*148-8374*	1	ELBOW AS	
		1	**6V-8723**	1	ELBOW	
		1	**3K-0360**	1	SEAL-O-RING	
		1	**6V-8397**	1	SEAL-O-RING	
M	29	1	**151-6282**	2	BOLT-SOCKET HEAD (M6X1X40-MM)	
	30	1	*164-5570*	1	UNION AS	
		1	**6V-8730**	1	UNION (FACE SEAL)	
		1	**6V-8397**	2	SEAL-O-RING	
M	31	1	**191-8921**	2	BOLT-SOCKET HEAD (M6X1X25-MM)	
	32	1	**1S-0996**	1	CLIP	
	33	1	**3K-0360**	4	SEAL-O-RING	

389-3251 **LINES GP-FUEL (*contd.*)** **i05612772**

NOTE	REF NO	GRAPHIC REF	PART NUMBER	QTY	PART NAME 1 2 3 4 5 6 (PRODUCT LEVEL)	SEE PAGE
	34	1	**3S-2093**	1	STRAP-CABLE	
	35	1	**4D-7735**	1	CLIP	
	36	1	**4P-7581**	1	CLIP	
	37	1	**6D-4246**	2	CLIP	
	38	1	**7K-1181**	1	STRAP-CABLE	
	39	1	**7X-7729**	2	WASHER (11X25X3-MM THK)	
	40	1	**8T-4121**	14	WASHER-HARD (11X21X2.5-MM THK)	
M	41	1	**8T-4133**	3	NUT (M10X1.5-THD)	
M	42	1	**8T-4136**	1	BOLT (M10X1.5X25-MM)	
M	43	1	**8T-4137**	7	BOLT (M10X1.5X20-MM)	
M	44	1	**8T-4182**	2	BOLT (M10X1.5X45-MM)	
M	45	1	**8T-4196**	1	BOLT (M10X1.5X35-MM)	
M	46	1	**8T-4198**	1	BOLT (M10X1.5X100-MM)	
	47	1	**8T-4205**	4	WASHER-HARD (7.2X14.5X2-MM THK)	
	48	1	**8T-4223**	1	WASHER-HARD (13.5X25.5X3-MM THK)	
	49	1	**8T-4896**	2	WASHER-HARD (10.2X18.5X2.5-MM THK)	
M	50	1	**8T-5436**	3	BOLT (M10X1.5X130-MM)	
	51	1	**8T-9383**	1	BOLT (1/2-13X0.75-IN)	
G	52	1	**423-1983**		HOSE (41-IN)	

E - ORDER BY THE CENTIMETER
G - ORDER BY THE INCH
I - REFER TO HYDRAULIC INFORMATION SYSTEM
M - METRIC PART

389-3251 **LINES GP-FUEL (*contd.*)** **i05612772**

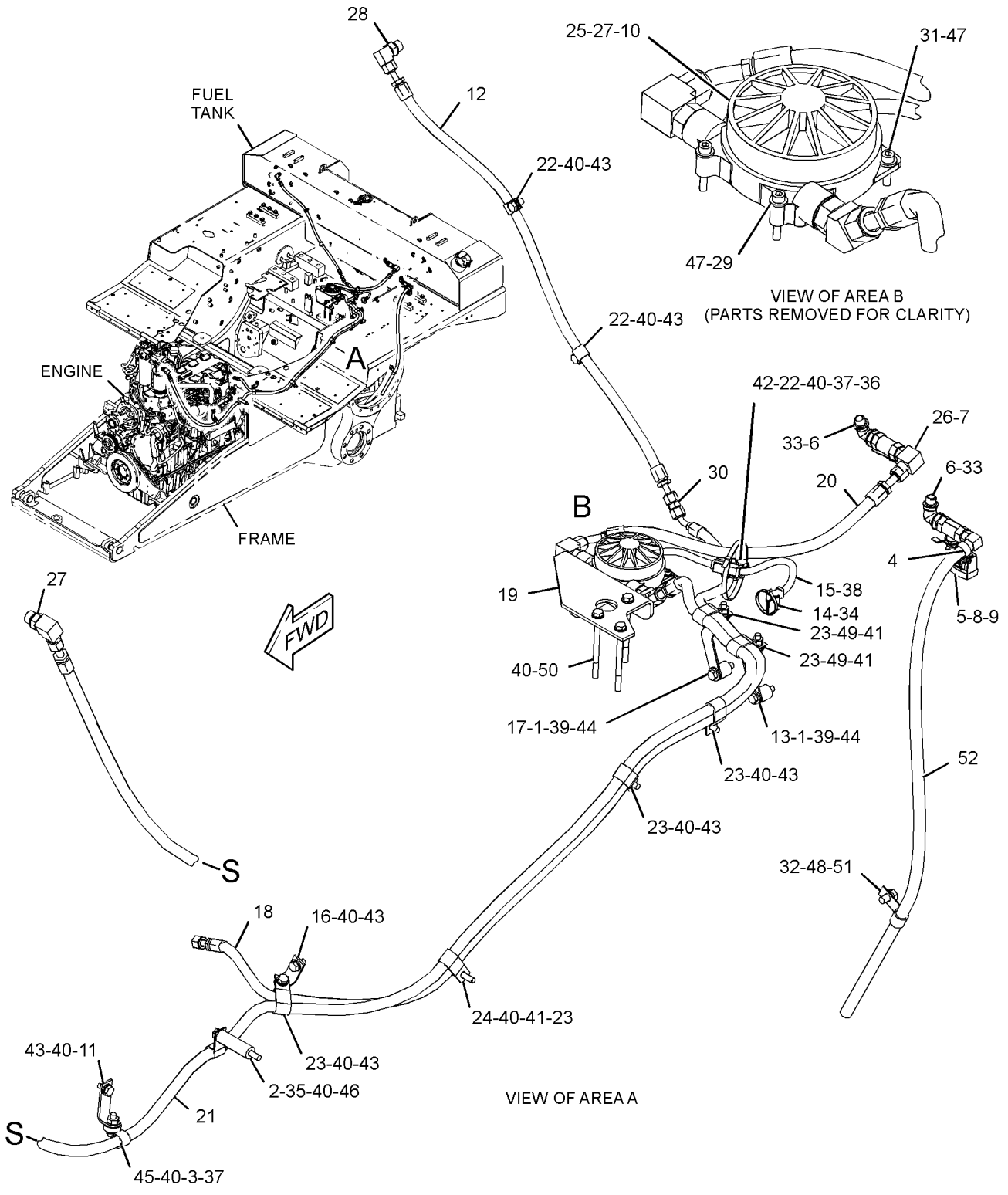

GRAPHIC #1 **<END>** g03581438

397-5040 LINES GP-FUEL

S/N: TXD1-UP

PART OF 387-8581, 387-8582 ENGINE AR-COMPLETE

AN ATTACHMENT

SMCS-1274 **i05555442**

NOTE	REF NO	GRAPHIC REF	PART NUMBER	QTY	PART NAME 1 2 3 4 5 6 (PRODUCT LEVEL)	SEE PAGE
	1	1	**3S-2093**	3	STRAP-CABLE	
	2	1	*175-9106*	1	ELBOW AS	
		1	**6V-9001**	1	ELBOW	
		1	**214-7568**	1	SEAL-O-RING	
		1	**228-7089**	1	SEAL-O-RING	
Y	3	1	**194-6725**	1	SENSOR GP-PRESSURE	206
I	4	1	**224-2228**	1	HOSE AS	
Y	5	1	*232-0343*	1	REGULATOR GP-FUEL PRESSURE	131
	6	1	**263-7731**	1	HARNESS AS-WIRING (FUEL PRESSURE)	
		1	**9X-3401**	6	PIN-CONNECTOR (16-GA TO 18-GA)	
					—OR—	
		1	**126-1767**	6	PIN-CONNECTOR (14-GA TO 16-GA)	
		1	**8T-8737**	5	PLUG-SEAL	
		1	**102-8803**	1	KIT-RECEPTACLE (3-PIN)	
		1	**102-8806**	1	KIT-RECEPTACLE (8-PIN)	
					(EACH RECEPTACLE KIT INCLUDES RECEPTACLE AS & WEDGE)	
	7	1	*295-1803*	1	ELBOW AS	
		1	**214-7568**	1	SEAL-O-RING	
	8	1	*396-0386*	1	CONNECTOR AS	
		1	**214-7568**	1	SEAL-O-RING	
		1	**228-7089**	1	SEAL-O-RING	
		1	**396-0385**	1	CONNECTOR	
	9	1	*183-3399*	1	CONNECTOR AS	
		1	**6V-8636**	1	CONNECTOR	
		1	**214-7568**	1	SEAL-O-RING	
		1	**228-7089**	1	SEAL-O-RING	
	10	1	**1S-0994**	1	CLIP	
	11	1	*250-1424*	1	ELBOW AS	
		1	**6V-8724**	1	ELBOW	
		1	**214-7568**	1	SEAL-O-RING	
		1	**228-7089**	1	SEAL-O-RING	
	12	1	*329-5451*	1	ADAPTER AS	
		1	**9X-0261**	1	ADAPTER	
		1	**214-7566**	1	SEAL-O-RING	
		1	**214-7568**	1	SEAL-O-RING	
	13	1	*330-9750*	1	TEE AS	
		1	**3E-7410**	1	TEE-O-RING	
		1	**214-7568**	1	SEAL-O-RING	
M	14	1	**6V-4248**	1	BOLT (M10X1.5X25-MM)	
	15	1	**6V-5839**	1	WASHER (11X21X2.5-MM THK)	
	16	1	**7K-1181**	1	STRAP-CABLE	
	17	1	**304-9465**	2	STRAP-CABLE	

I - REFER TO HYDRAULIC INFORMATION SYSTEM
M - METRIC PART
Y - SEPARATE ILLUSTRATION

397-5040 **LINES GP-FUEL (*contd.*)** **i05555442**

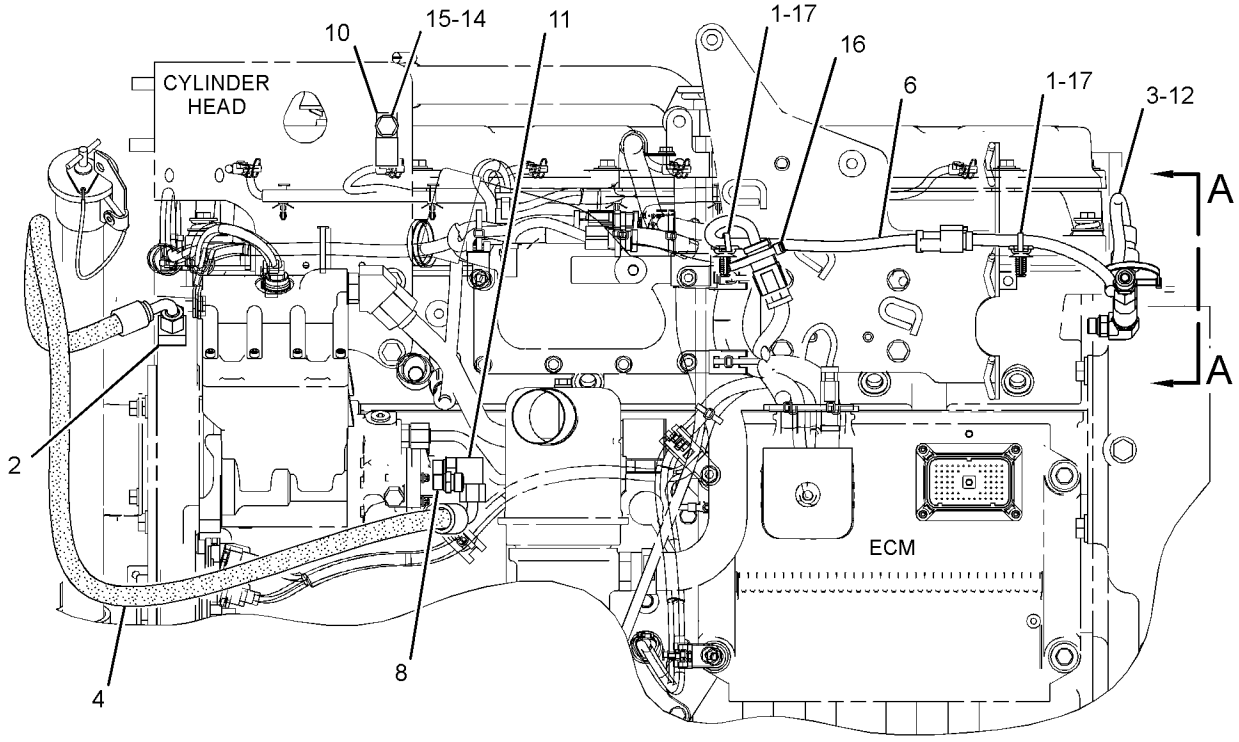

LEFT SIDE VIEW OF ENGINE

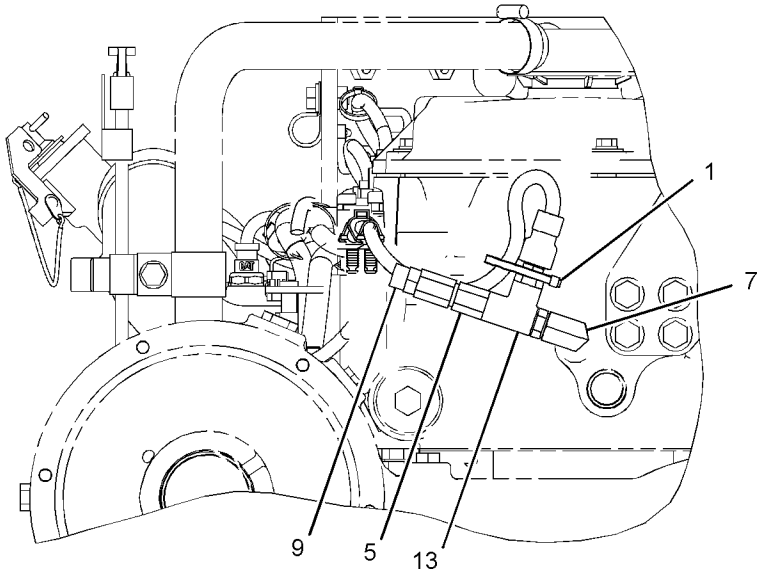

VIEW A-A

GRAPHIC #1 **<END>** g03177466

387-8622 PUMP & MTG GP-UNIT INJ HYD

S/N: TXD1-UP
1.61 GEAR RATIO
FOR USE WITH REHS7902
PART OF 387-8619 ENGINE AR-CORE
AN ATTACHMENT

SMCS-1714 **i05555624**

NOTE	REF NO	GRAPHIC REF	PART NUMBER	QTY	PART NAME 1 2 3 4 5 6 (PRODUCT LEVEL)	SEE PAGE
R	1	1	**384-0678**	1	PUMP GP-UNIT INJECTOR HYD	
	2	1	**387-7154**	1	TUBE AS	
	3	1	**387-7159**	1	TUBE AS	
	4	1	*389-3708*	1	PLUG AS	
		1	**214-7568**	1	SEAL-O-RING	
		1	**360-3679**	1	PLUG-CONNECTOR	
	5	1	*396-0390*	1	ELBOW AS	
		1	**128-6841**	1	ELBOW	
		1	**228-7092**	1	SEAL-O-RING	
		1	**238-5082**	1	SEAL-O-RING	
	6	1	*183-3399*	2	CONNECTOR AS	
					(EACH INCLUDES)	
		1	**6V-8636**	1	CONNECTOR	
		1	**214-7568**	1	SEAL-O-RING	
		1	**228-7089**	1	SEAL-O-RING	
	7	1	**227-5904**	1	SEAL-O-RING	
	8	1	*281-5984*	1	ELBOW AS	
		1	**8T-5389**	1	ELBOW	
		1	**228-7092**	1	SEAL-O-RING	
		1	**238-5081**	1	SEAL-O-RING	
	9	1	**6V-5839**	2	WASHER (11X21X2.5-MM THK)	
M	10	1	**6V-7981**	2	BOLT (M10X1.5X70-MM)	

M - METRIC PART
R - REMFG PART MAY BE AVAILABLE

387-8622 **PUMP & MTG GP-UNIT INJ HYD (*contd.*)** **i05555624**

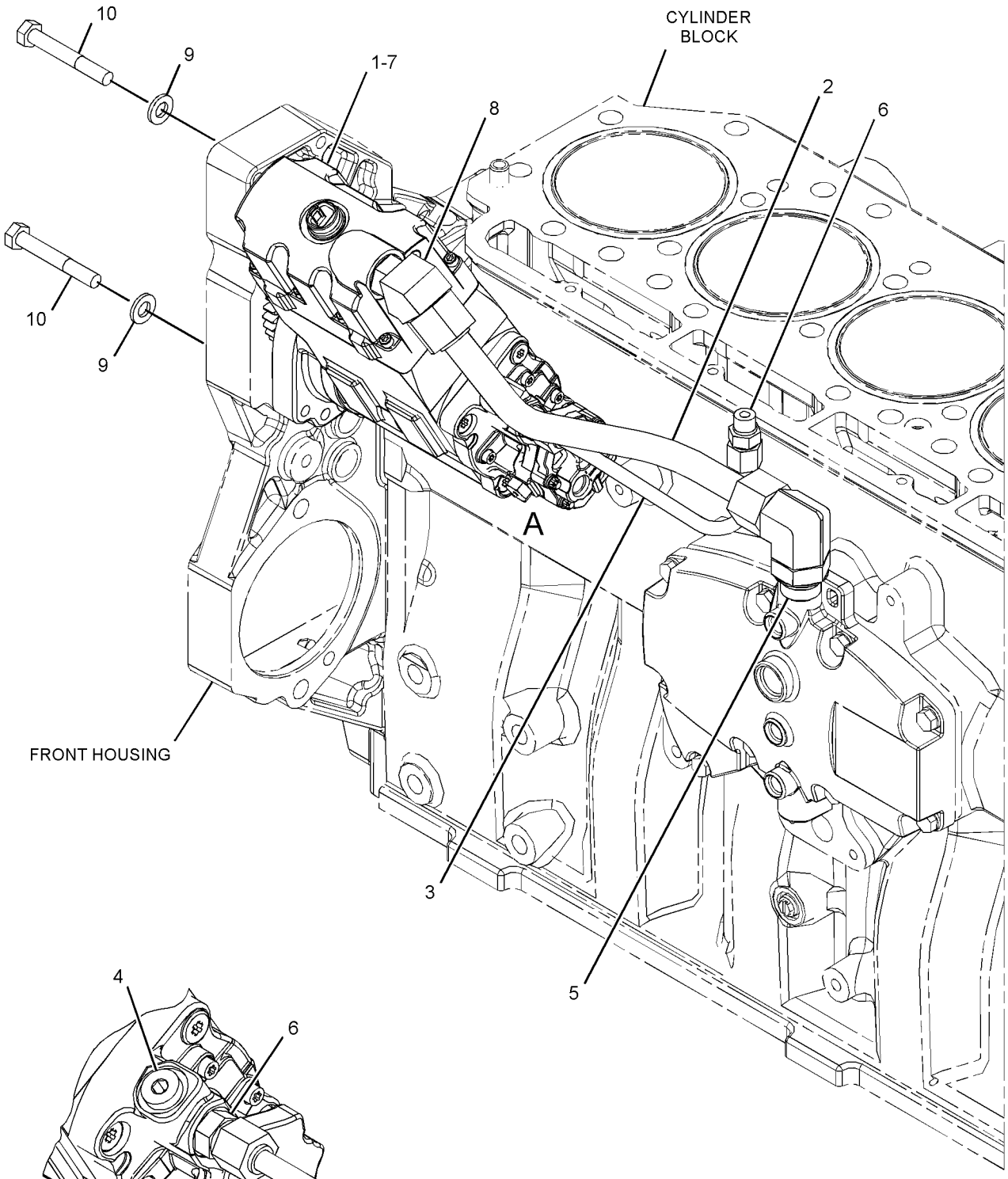

VIEW OF AREA A
(TUBE REMOVED)

GRAPHIC #1 **<END>** g03119658

267-9715 PUMP GP-FUEL INJECTION

S/N: TXD1-UP
PART OF 387-8619 ENGINE AR-CORE
AN ATTACHMENT

SMCS-1251, 1290 **i05555628**

NOTE	REF NO	GRAPHIC REF	PART NUMBER	QTY	PART NAME 1 2 3 4 5 6 (PRODUCT LEVEL)	SEE PAGE
	1	1	**235-9651**	2	BOLT-SOCKET HEAD (M8X1.25X65-MM)	
CYR	2	1	**387-9434**	1	INJECTOR GP-FUEL	119

C - CHANGE FROM PREVIOUS TYPE
R - REMFG PART MAY BE AVAILABLE
Y - SEPARATE ILLUSTRATION

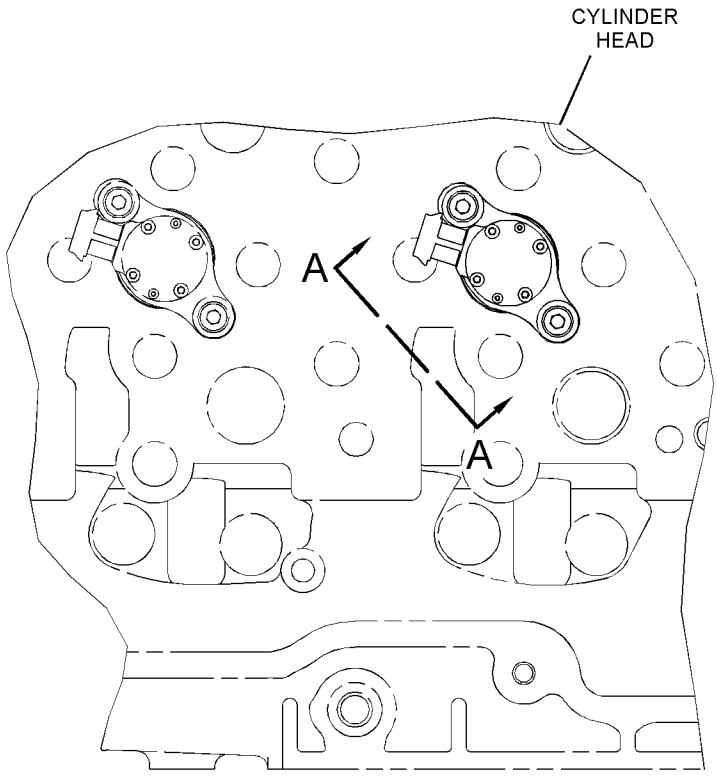

TOP VIEW OF ENGINE

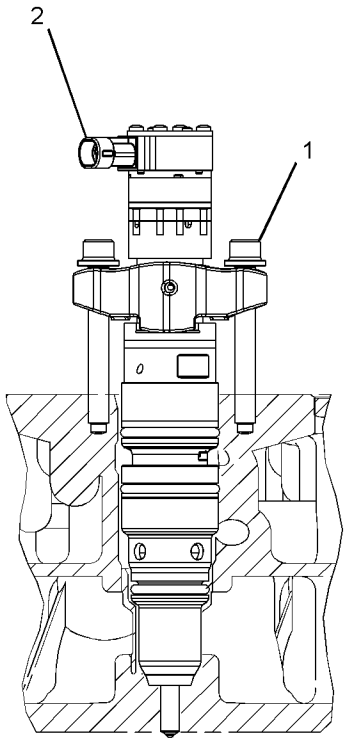

SECTION A-A

GRAPHIC #1 **<END>** g03349097

190-8970 PUMP GP-FUEL PRIMING

S/N: EMM1-UP; JEN1-UP

PART OF 393-7367 FILTER & LINES GP-FUEL

SMCS-1258 **i05289615**

NOTE	REF NO	GRAPHIC REF	PART NUMBER	QTY	PART NAME 1 2 3 4 5 6 (PRODUCT LEVEL)	SEE PAGE
	1	1	**9S-4167**	1	STUD-HOLLOW (1-14X1.47-IN)	
	2	1	**9X-8267**	3	WASHER (6.6X12X2-MM THK)	
	3	1	**162-2220**	2	VALVE-CHECK	
	4	1	**162-2222**	2	SPRING	
	5	1	**165-0187**	2	PIN	
	6	1	**9S-8002**	1	PLUG-O-RING	
M	7	1	**8T-4138**	3	BOLT (M6X1X20-MM)	
	8	1	**6V-4368**	1	SEAL-O-RING	
	9	1	**6D-5801**	2	LOCKNUT (8-32-THD)	
	10	1	**373-4098**	1	CAP-PRIMING PUMP	
	11	1	**173-1016**	2	RING-BACKUP	
	12	1	**179-7400**	2	SEAL (FUEL)	
	13	1	**188-7535**	1	SEAL	
	14	1	**188-7536**	1	SEAL	
	15	1	**188-7537**	2	SEAL	
	16	1	**188-7541**	1	SEAL	
	17	1	**236-6717**	2	SEAL-O-RING	
					PARTS SHOWN IN GRAPHIC(S) WITHOUT A REFERENCE NUMBER ARE NOT SERVICED SEPARATELY	

M - METRIC PART

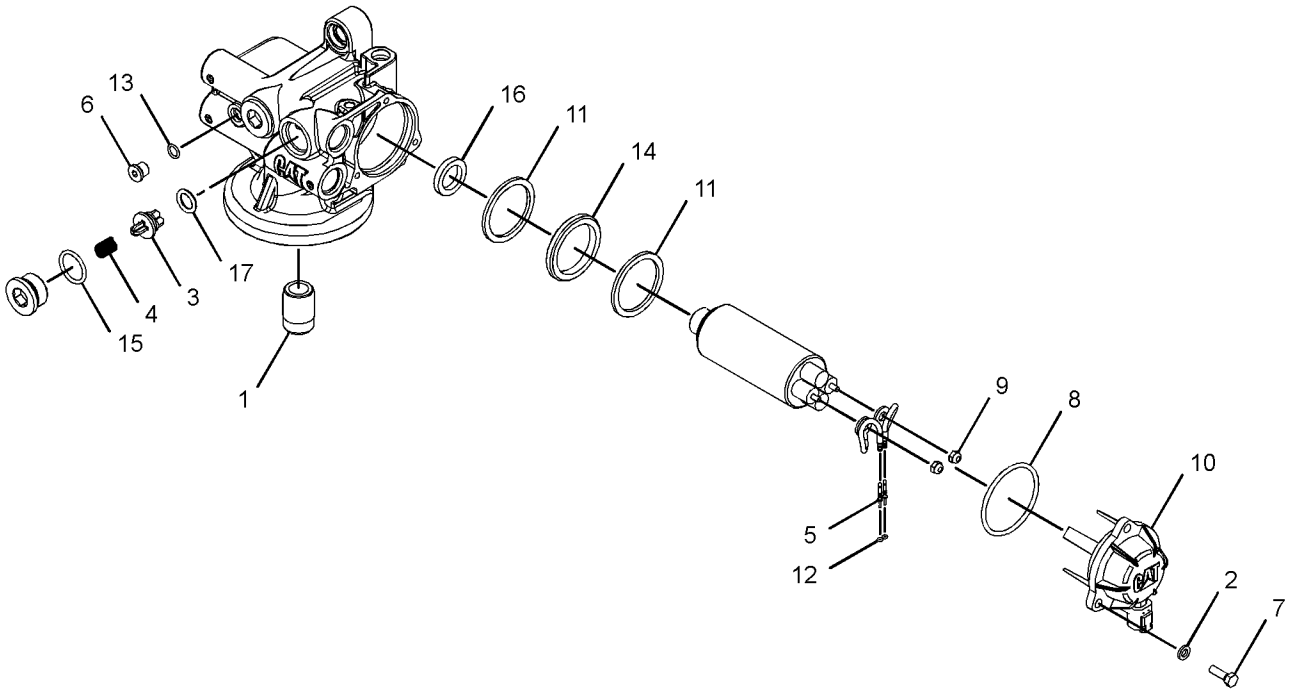

GRAPHIC #1 **<END>** g03040356

232-0343 REGULATOR GP-FUEL PRESSURE

S/N: TXD1-UP
PART OF 397-5040 LINES GP-FUEL
AN ATTACHMENT

SMCS-1270 **i05555693**

NOTE	REF NO	GRAPHIC REF	PART NUMBER	QTY	PART NAME 1 2 3 4 5 6 (PRODUCT LEVEL)	SEE PAGE
	1	1	**214-7568**	1	SEAL-O-RING	
	2	1	**369-6662**	1	REGULATOR AS (FUEL PRESSURE)	

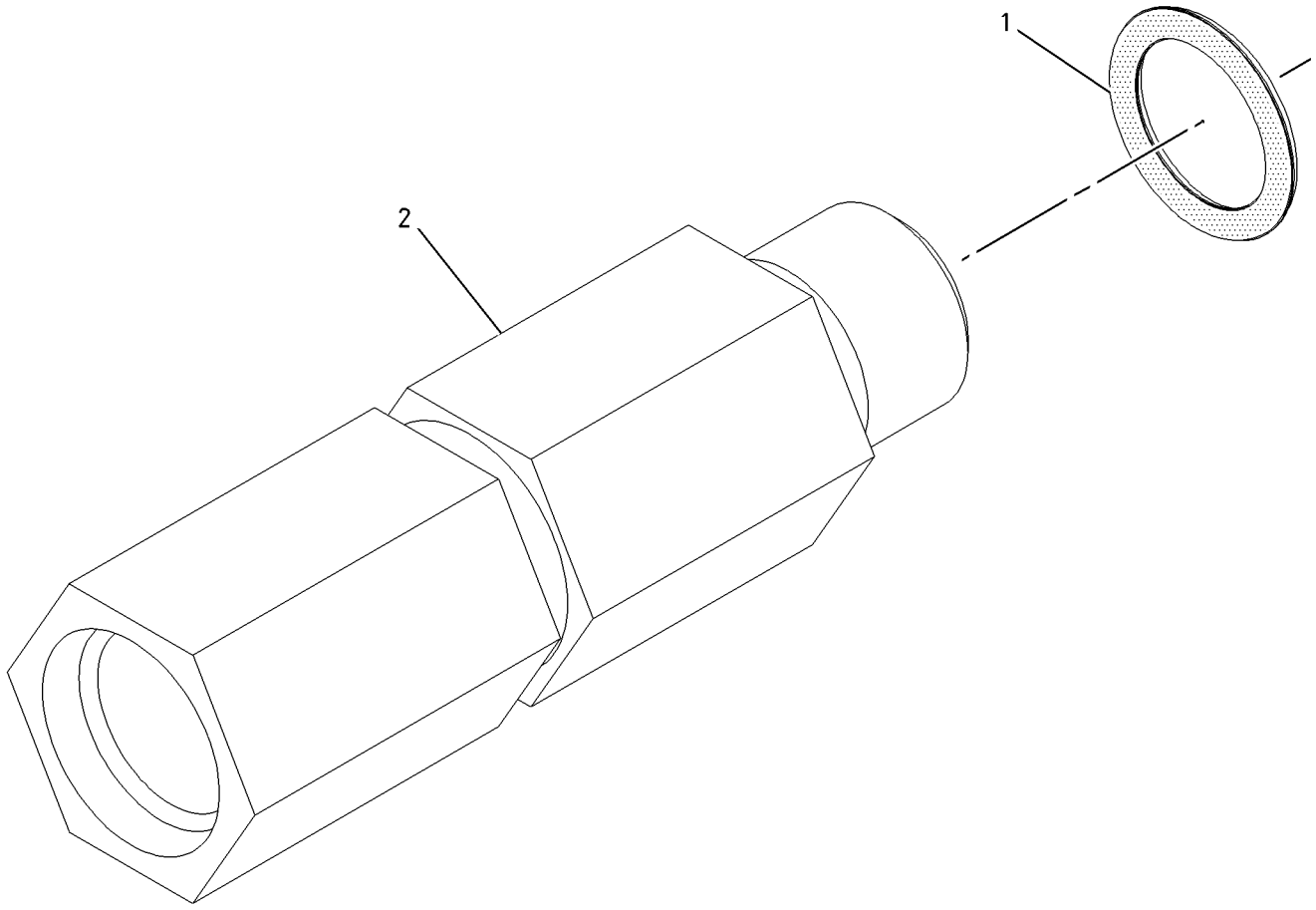

GRAPHIC #1 **<END>** g01004480

386-1153 TANK GP-FUEL

S/N: EMM1-UP; JEN1-UP
425-L (112.3-US GAL)
PART OF 389-3221, 389-3222 CHASSIS AR

SMCS-1273 **i05660418**

NOTE	REF NO	GRAPHIC REF	PART NUMBER	QTY	PART NAME 1 2 3 4 5 6 (PRODUCT LEVEL)	SEE PAGE
	1	1	**8T-5439**	4	WASHER-HARD (21.5X45X6-MM THK)	
	2	1	**6T-1698**	8	MOUNT	
Y	3	1	*387-2586*	1	TANK GP-FUEL	133
	4	1	**241-2501**	4	WASHER (22X82.55X11-MM THK)	
	5	1	**394-0434**	1	SENDER AS-FUEL LEVEL	
		1	**9X-3401**	2	PIN-CONNECTOR (16-GA TO 18-GA)	
		1	**102-8802**	1	KIT-RECEPTACLE (2-PIN)	
					(INCLUDES RECEPTACLE AS & WEDGE)	
M	6	1	**5C-9553**	6	BOLT (M6X1X16-MM)	
	7	1	**363-4122**	1	GASKET	
	8	1	**6N-7523**	6	WASHER (6.48X11.9X1.57-MM THK)	
M	9	1	**7X-2565**	4	BOLT (M20X2.5X100-MM)	
	10	1	**7K-1181**	1	STRAP-CABLE	

M - METRIC PART
Y - SEPARATE ILLUSTRATION

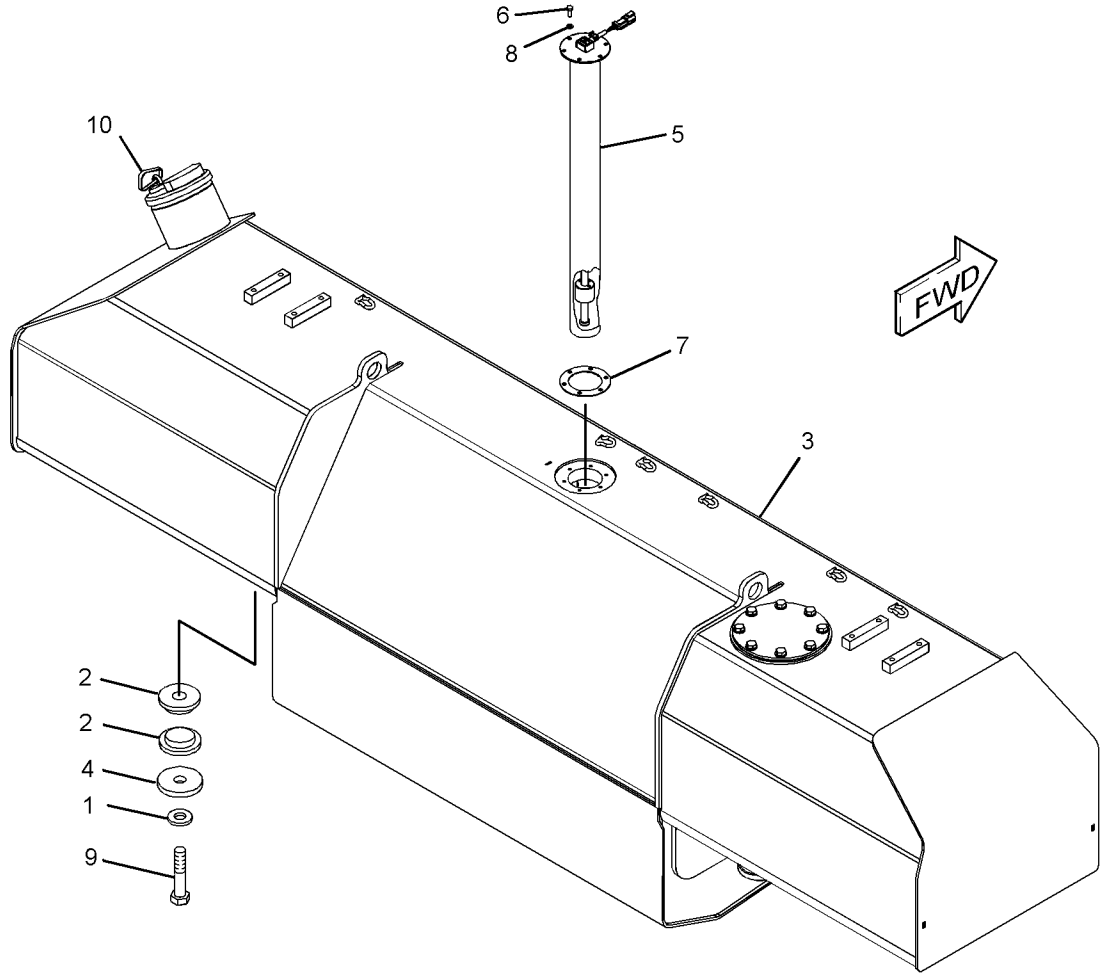

GRAPHIC #1 **<END>** g03553416

387-2586 TANK GP-FUEL

S/N: EMM1-UP; JEN1-UP
425-L (112.3-US GAL)
PART OF 386-1153 TANK GP-FUEL

SMCS-1273 **i05640495**

NOTE	REF NO	GRAPHIC REF	PART NUMBER	QTY	PART NAME 1 2 3 4 5 6 (PRODUCT LEVEL)	SEE PAGE
	1	1	**349-7059**	1	CAP AS-FUEL (LOCKABLE, VENTED) (TANK)	
		1	**350-7735**	1	KIT-CAP FILTER (FUEL TANK)	
					(INCLUDES BREATHERS, SCREWS & WASHERS)	
		1	**9X-8600**	1	SEAL-O-RING	
	2	1	**9P-7121**	1	STRAINER-FUEL (TANK)	
	3	1	**387-2587**	1	TANK AS-FUEL	
M	4	1	**8T-4136**	6	BOLT (M10X1.5X25-MM)	
	5	1	**8T-4121**	6	WASHER-HARD (11X21X2.5-MM THK)	
	6	1	**1H-8128**	1	SEAL-O-RING	
	7	1	**187-1679**	1	COVER	

M - METRIC PART

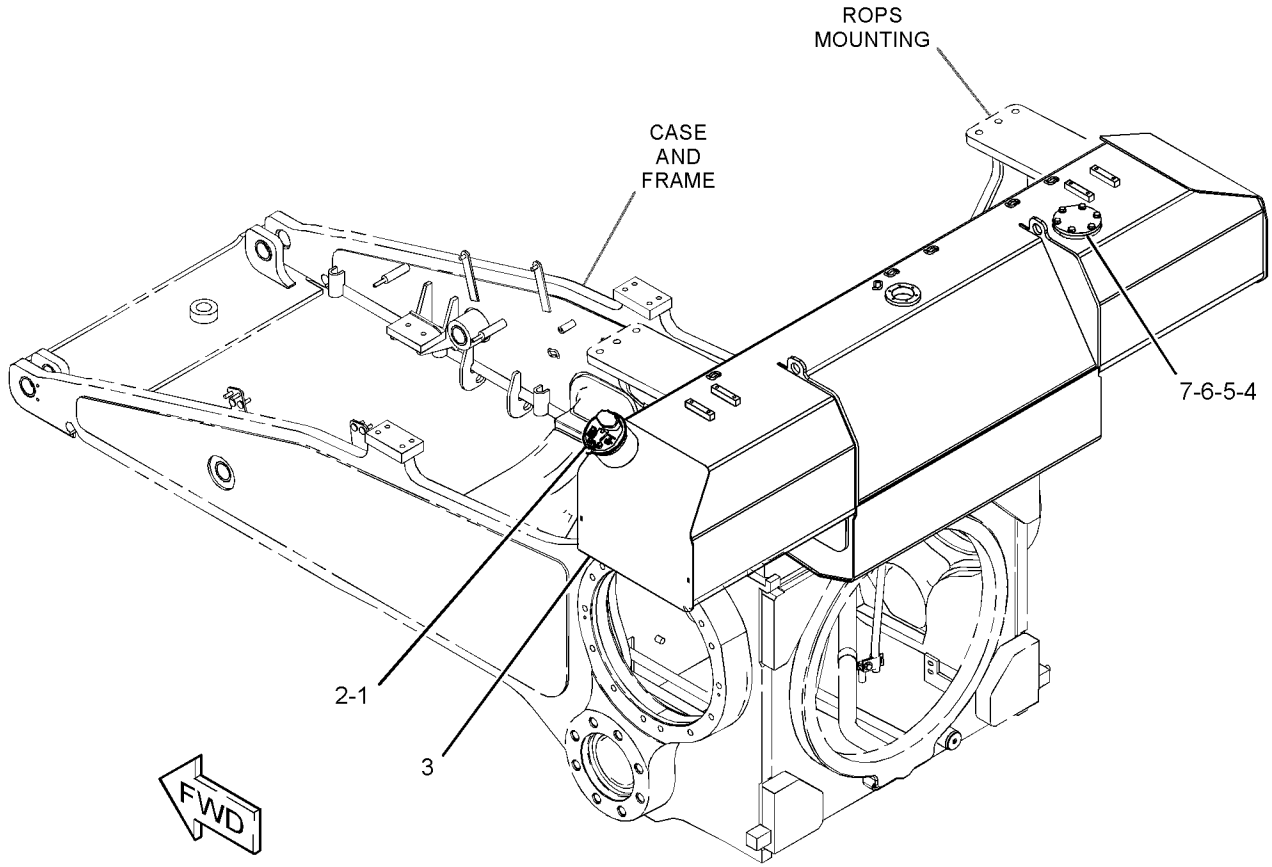

GRAPHIC #1 **<END>** g03539662

3E-6328 ALARM GP

S/N: EMM1-UP; JEN1-UP
24-VOLT
PART OF 317-6565 WIRING GP-PLATFORM
AN ATTACHMENT

SMCS-7400, 7402, 7407 **i05330658**

NOTE	REF NO	GRAPHIC REF	PART NUMBER	QTY	PART NAME 1 2 3 4 5 6 (PRODUCT LEVEL)	SEE PAGE
	1	1	**102-8802**	1	KIT-RECEPTACLE (2-PIN)	
					(INCLUDES RECEPTACLE AS & WEDGE)	
	2	1	**8T-8729**	2	PIN-CONNECTOR (16-GA TO 18-GA)	

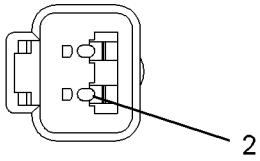

VIEW A–A

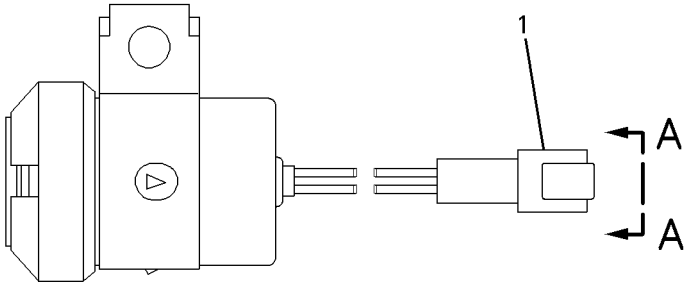

GRAPHIC #1 **<END>** g00697818

366-2756 ALTERNATOR GP-CHARGING

S/N: EMM1-UP; JEN1-UP
24 VOLT. 115 AMPERE
PART OF 436-2854 ALTERNATOR GP-CHARGING
AN ATTACHMENT

SMCS-1405 **i05636179**

NOTE	REF NO	GRAPHIC REF	PART NUMBER	QTY	PART NAME 1 2 3 4 5 6 (PRODUCT LEVEL)	SEE PAGE
					(NO SERVICED PARTS)	

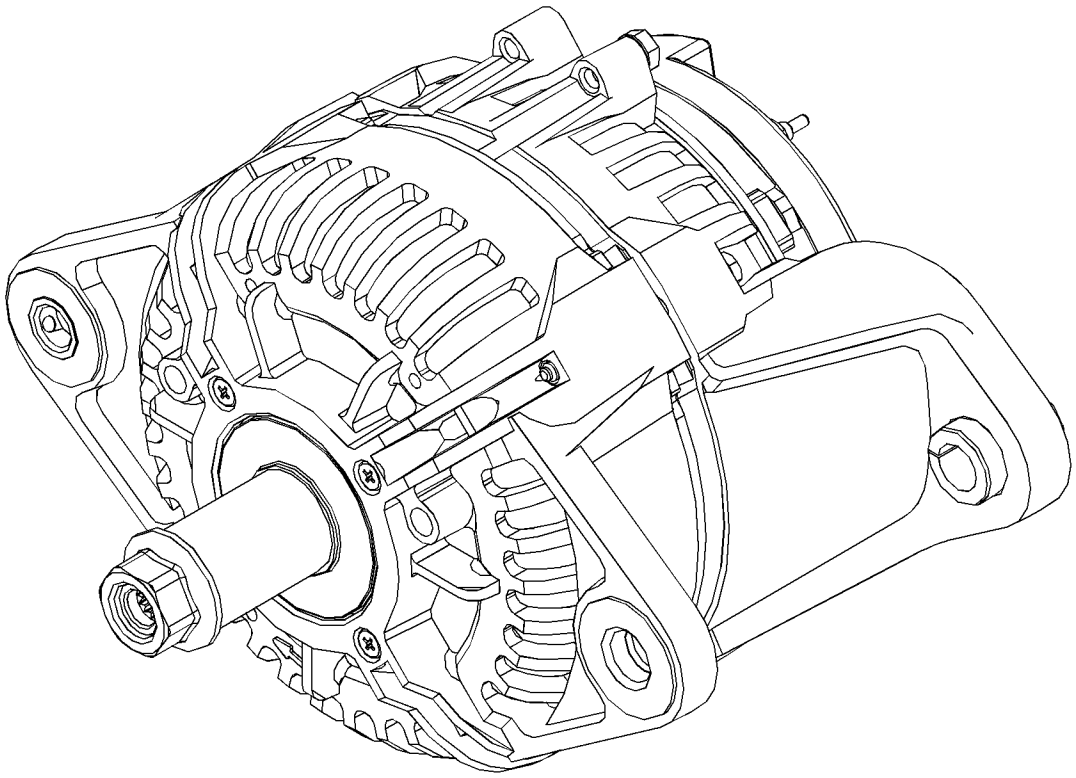

GRAPHIC #1 **<END>** g03401161

389-3259 ALTERNATOR GP-CHARGING

S/N: EMM1-UP; JEN1-UP
24-VOLT, 150-AMPERE
AN ATTACHMENT

SMCS-1405 **i05674070**

NOTE	REF NO	GRAPHIC REF	PART NUMBER	QTY	PART NAME 1 2 3 4 5 6 (PRODUCT LEVEL)	SEE PAGE
	1	1	**7K-1181**	1	STRAP-CABLE	
	2	1	**9S-1240**	1	BRACKET AS	
		1	**1F-0748**	1	NUT-WELD (1/2-13-THD)	
	3	1	**8X-9618**	1	STRAP AS-GROUND	
	4	1	**211-1044**	1	BLOCK	
	5	1	**214-9492**	1	ROD-ADJUSTMENT	
R	6	1	**249-0313**	1	ALTERNATOR GP-CHARGING (24-VOLT, 150-AMPERE)	
	7	1	**292-4906**	1	GUARD AS-ALTERNATOR	
	8	1	**329-5071**	1	BRACKET AS	
M		1	**8T-3490**	2	NUT-WELD (M10X1.5-THD)	
M	9	1	**160-8497**	2	BOLT (M5X0.8X65-MM)	
	10	1	**4L-6454**	2	BOLT (3/8-16X1-IN)	
	11	1	**4P-7581**	1	CLIP	
	12	1	**8T-4896**	2	WASHER-HARD (10.2X18.5X2.5-MM THK)	
	13	1	**7X-0339**	1	BOLT (1/2-13X6.25-IN)	
M	14	1	**8T-0638**	1	BOLT (M5X0.8X50-MM)	
	15	1	**8T-4121**	3	WASHER-HARD (11X21X2.5-MM THK)	
M	16	1	**8T-4132**	2	NUT (M16X2-THD)	
M	17	1	**8T-4137**	1	BOLT (M10X1.5X20-MM)	
M	18	1	**8T-4193**	1	BOLT (M16X2X50-MM)	
	19	1	**8T-4223**	2	WASHER-HARD (13.5X25.5X3-MM THK)	
	20	1	**8T-8919**	1	BOLT (1/2-13X1.75-IN)	
	21	1	**4S-1962**	1	CLIP	
	22	1	**9X-8256**	3	WASHER (6.6X12X2-MM THK)	
	23	1	**9X-8257**	3	WASHER (17.5X30X3.5-MM THK)	
	24	1	**283-8650**	1	WASHER-HARD (10.2X18.5X5-MM THK)	
	25	1	**4M-5281**	1	BOLT (1/4-20X0.75-IN)	
	26	1	**5P-4115**	1	WASHER-HARD (7.2X19X2-MM THK)	
	27	1	**7V-6571**	1	GROMMET	
M	28	1	**8T-4133**	1	NUT (M10X1.5-THD)	
M	29	1	**8T-4136**	1	BOLT (M10X1.5X25-MM)	
	30	1	**9W-8765**	1	PLATE	

M - METRIC PART
R - REMFG PART MAY BE AVAILABLE

389-3259 **ALTERNATOR GP-CHARGING (*contd.*)** **i05674070**

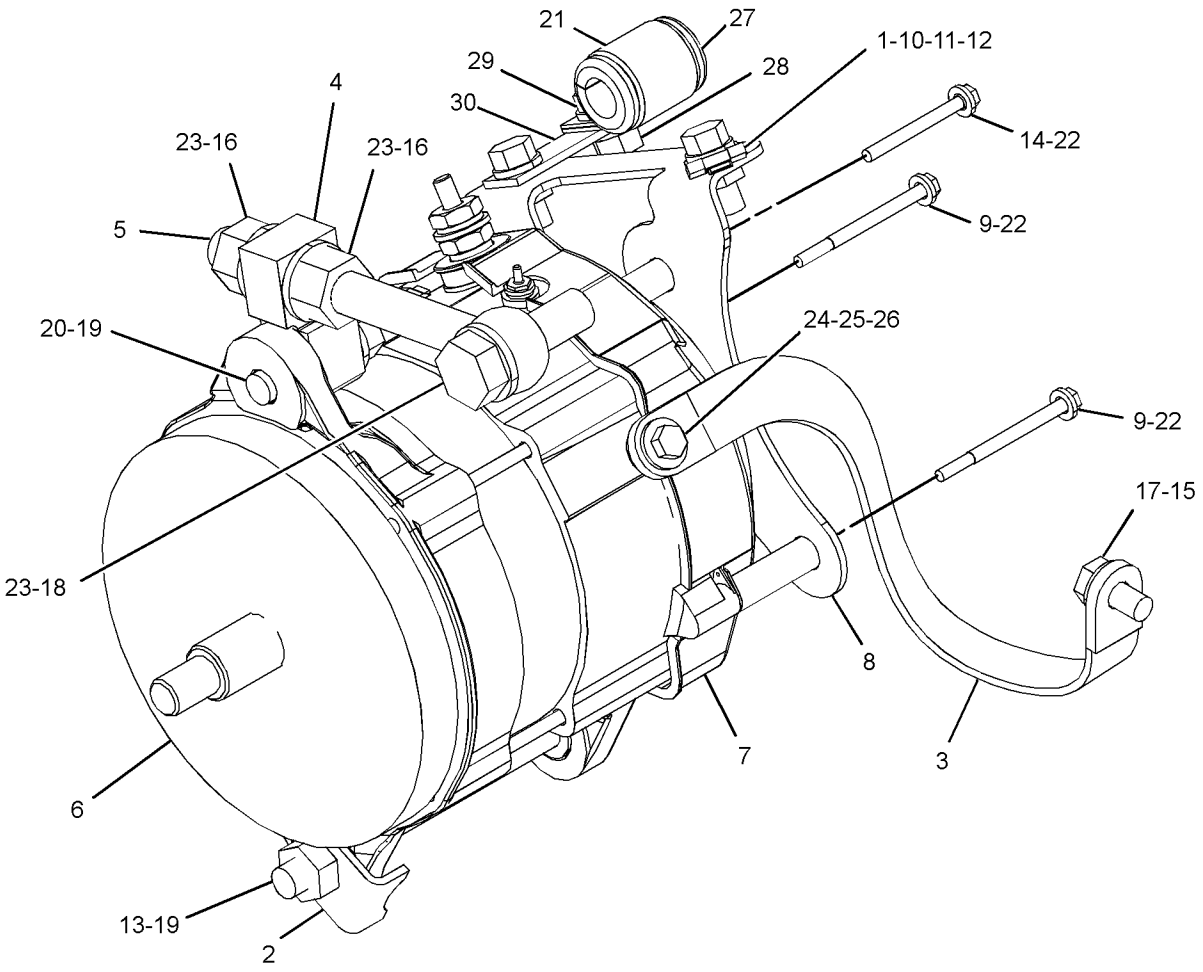

GRAPHIC #1 **<END>** g03507539

436-2854 ALTERNATOR GP-CHARGING

S/N: EMM1-UP; JEN1-UP
24-VOLT, 115-AMPERE
AN ATTACHMENT

SMCS-1405 **i05674094**

NOTE	REF NO	GRAPHIC REF	PART NUMBER	QTY	PART NAME 1 2 3 4 5 6 (PRODUCT LEVEL)	SEE PAGE
	1	1	**8X-9618**	1	STRAP AS-GROUND	
	2	1	**9S-1240**	1	BRACKET AS	
		1	**1F-0748**	1	NUT-WELD (1/2-13-THD)	
	3	1	**211-1044**	1	BLOCK	
	4	1	**214-9492**	1	ROD-ADJUSTMENT	
YR	5	1	**366-2756**	1	ALTERNATOR GP-CHARGING	135
	6	1	**441-9664**	1	BRACKET AS	
M		1	**8T-3490**	2	NUT-WELD (M10X1.5-THD)	
	7	1	**4P-7581**	1	CLIP	
	8	1	**4S-1962**	1	CLIP	
M	9	1	**5C-9553**	1	BOLT (M6X1X16-MM)	
	10	1	**7K-1181**	1	STRAP-CABLE	
	11	1	**7V-6571**	1	GROMMET	
	12	1	**7X-0340**	1	BOLT (1/2-13X6.5-IN)	
	13	1	**8T-4121**	3	WASHER-HARD (11X21X2.5-MM THK)	
M	14	1	**8T-4132**	2	NUT (M16X2-THD)	
M	15	1	**8T-4137**	3	BOLT (M10X1.5X20-MM)	
M	16	1	**8T-4193**	1	BOLT (M16X2X50-MM)	
	17	1	**8T-4223**	2	WASHER-HARD (13.5X25.5X3-MM THK)	
	18	1	**8T-4835**	1	BOLT (1/2-13X2-IN)	
	19	1	**9X-2038**	1	WASHER (7X19X2-MM THK)	
	20	1	**9X-8257**	3	WASHER (17.5X30X3.5-MM THK)	

M - METRIC PART
R - REMFG PART MAY BE AVAILABLE
Y - SEPARATE ILLUSTRATION

436-2854 **ALTERNATOR GP-CHARGING (*contd.*)** **i05674094**

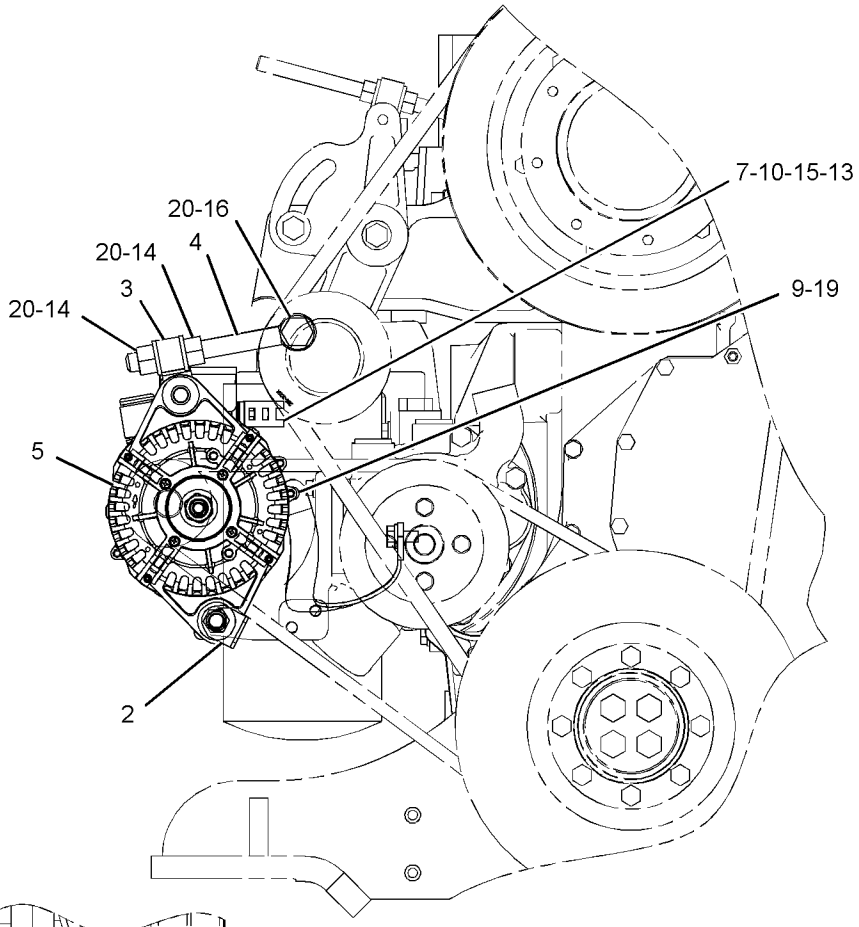

FRONT VIEW OF ENGINE

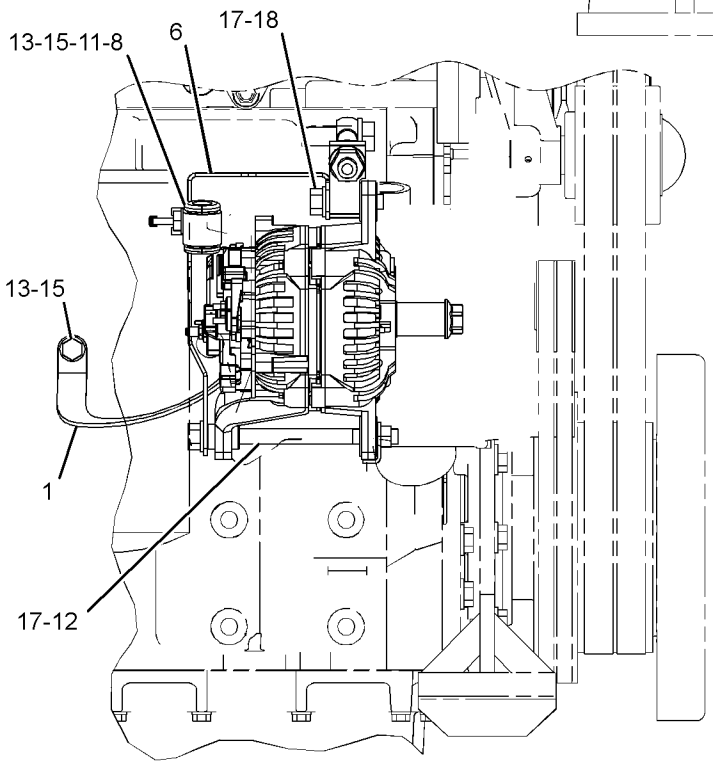

RIGHT SIDE VIEW OF ENGINE

GRAPHIC #1 **<END>** g03582143

389-3305 BATTERY & WIRING GP

S/N: EMM1-UP; JEN1-UP

PART OF 389-3221, 389-3222 CHASSIS AR

SMCS-1401, 1402, 1408 **i05640538**

NOTE	REF NO	GRAPHIC REF	PART NUMBER	QTY	PART NAME 1 2 3 4 5 6 (PRODUCT LEVEL)	SEE PAGE
	1	2	**8T-3518**	4	NUT-FULL (1/2-13-THD)	
Y	2	1	**161-9926**	1	SENSOR GP-PRESSURE (TURBOCHARGER INLET)	205
	3	2	**197-0668**	1	CABLE AS	
		2	**1S-4915**	2	LINER (CONDUIT)	
		2	**5P-0695**	61	CONDUIT	
E		2	**159-8050**		CABLE (00-GA, BLACK) (95-CM)	
		2	**8S-3020**	1	TERMINAL-CABLE (00-GA, 3/8-IN SCREW)	
E		2	**8T-2225**		TUBE-HEAT SHRINK (25.4-MM DIA) (16-CM)	
		2	**9G-0003**	1	COVER AS-TERMINAL (BLACK)	
		2	**8L-8413**	1	STRAP-CABLE	
		2	**8T-9757**	1	TERMINAL AS-BATTERY (NEGATIVE)	
		2	**1M-6119**	1	BOLT (5/16-18X1.375-IN)	
		2	**1M-6120**	1	NUT (5/16-18-THD)	
		2	**299-9092**	1	COVER-TERMINAL (BLACK)	
	4	1	**226-9670**	1	HARNESS AS-CHASSIS (RADIATOR GUARD)	
		1	**102-8803**	1	KIT-RECEPTACLE (3-PIN)	
					(INCLUDES RECEPTACLE AS & WEDGE)	
		1	**3E-3371**	1	WEDGE-RECEPTACLE LOCK (3-PIN)	
		1	**9W-0844**	8	SOCKET-CONNECTOR (14-GA TO 16-GA)	
		1	**9W-0852**	3	PIN-CONNECTOR (14-GA TO 16-GA)	
E		1	**119-3662**		TUBE-HEAT SHRINK (10.85-MM DIA) (7-CM)	
E		1	**125-7874**		TUBE-HEAT SHRINK (5.72-MM DIA) (5-CM)	
E		1	**125-7875**		TUBE-HEAT SHRINK (7.44-MM DIA) (5-CM)	
		1	**155-2270**	4	KIT-CONNECTING PLUG (2-PIN)	
					(EACH PLUG KIT INCLUDES PLUG AS, WEDGE & INTERFACE SEAL)	
		1	**274-3774**	2	CAP-CONNECTOR	
	5	1	**320-5895**	1	HARNESS AS-SENSOR (HOOD)	
		1	**102-8803**	1	KIT-RECEPTACLE (3-PIN)	
		1	**102-8806**	1	KIT-RECEPTACLE (8-PIN)	
					(EACH RECEPTACLE KIT INCLUDES RECEPTACLE AS & WEDGE)	
		1	**3E-3371**	1	WEDGE-RECEPTACLE LOCK (3-PIN)	
		1	**3E-3389**	1	WEDGE-RECEPTACLE LOCK (8-PIN)	
		1	**8T-8737**	3	PLUG-SEAL	
E		1	**114-8843**		SLEEVE-PLASTIC (60-CM)	
		1	**9X-3402**	4	SOCKET-CONNECTOR (16-GA TO 18-GA)	
					—OR—	
		1	**126-1768**	4	SOCKET-CONNECTOR (14-GA TO 16-GA)	
		1	**9X-3401**	8	PIN-CONNECTOR (16-GA TO 18-GA)	
					—OR—	
		1	**126-1767**	8	PIN-CONNECTOR (14-GA TO 16-GA)	
		1	**155-2270**	2	KIT-CONNECTING PLUG (2-PIN)	
					(EACH PLUG KIT INCLUDES PLUG AS, WEDGE & INTERFACE SEAL)	
	6	1	**320-5900**	1	HARNESS AS-CHASSIS (FUEL TANK)	
		1	**155-2260**	1	KIT-CONNECTING PLUG (3-PIN)	
					(INCLUDES PLUG AS, WEDGE & INTERFACE SEAL)	
		1	**102-8803**	3	KIT-RECEPTACLE (3-PIN)	
		1	**102-8804**	3	KIT-RECEPTACLE (4-PIN)	
		1	**102-8801**	2	KIT-RECEPTACLE (12-PIN)	
					(EACH RECEPTACLE KIT INCLUDES RECEPTACLE AS & WEDGE)	
		1	**3E-3371**	1	WEDGE-RECEPTACLE LOCK (3-PIN)	
		1	**8T-8737**	35	PLUG-SEAL	
E		1	**119-3662**		TUBE-HEAT SHRINK (10.85-MM DIA) (26-CM)	
E		1	**125-7875**		TUBE-HEAT SHRINK (7.44-MM DIA) (5-CM)	

389-3305 **BATTERY & WIRING GP (*contd.*)** **i05640538**

NOTE	REF NO	GRAPHIC REF	PART NUMBER	QTY	PART NAME 1 2 3 4 5 6 (PRODUCT LEVEL)	SEE PAGE
		1	**9X-3402**	15	SOCKET-CONNECTOR (16-GA TO 18-GA)	
					—OR—	
		1	**126-1768**	15	SOCKET-CONNECTOR (14-GA TO 16-GA)	
		1	**126-1767**	8	PIN-CONNECTOR (14-GA TO 16-GA)	
		1	**126-1768**	12	SOCKET-CONNECTOR (14-GA TO 16-GA)	
		1	**9X-3401**	20	PIN-CONNECTOR (16-GA TO 18-GA)	
					—OR—	
		1	**126-1767**	20	PIN-CONNECTOR (14-GA TO 16-GA)	
		1	**155-2255**	1	KIT-CONNECTING PLUG (12-PIN)	
		1	**155-2260**	3	KIT-CONNECTING PLUG (3-PIN)	
		1	**155-2270**	2	KIT-CONNECTING PLUG (2-PIN)	
		1	**155-2271**	2	KIT-CONNECTING PLUG (4-PIN)	
					(EACH PLUG KIT INCLUDES PLUG AS, WEDGE & INTERFACE SEAL)	
		1	**155-2258**	1	WEDGE-PLUG LOCK (12-PIN)	
		1	**190-7615**	1	KIT-RECEPTACLE (12-PIN)	
					(INCLUDES RECEPTACLE AS & WEDGE)	
	7	2	**384-4073**	1	CABLE AS	
		2	**1S-4915**	4	LINER (CONDUIT)	
		2	**1S-7251**	1	TERMINAL-CABLE (00-GA, 1/2-IN SCREW)	
E		2	**5P-0695**		CONDUIT (100-CM)	
E		2	**159-8049**		CABLE (00-GA, RED) (141-CM)	
		2	**8N-0869**	2	COVER-TERMINAL (RED)	
		2	**8N-1725**	1	COVER AS-TERMINAL (RED)	
		2	**8L-8413**	1	STRAP-CABLE	
E		2	**8T-2225**		TUBE-HEAT SHRINK (25.4-MM DIA) (16-CM)	
		2	**3S-6049**	1	TERMINAL AS-BATTERY (POSITIVE)	
		2	**1M-6119**	1	BOLT (5/16-18X1.375-IN)	
		2	**1M-6120**	1	NUT (5/16-18-THD)	
		2	**030-1708**	1	TERMINAL-RING	
	8	2	**384-4074**	1	CABLE AS	
		2	**1S-4915**	2	LINER (CONDUIT)	
E		2	**5P-0695**		CONDUIT (80-CM)	
E		2	**8T-2225**		TUBE-HEAT SHRINK (25.4-MM DIA) (16-CM)	
		2	**9X-9825**	1	TERMINAL-CABLE (00-GA, 1/2-IN SCREW)	
E		2	**159-8049**		CABLE (00-GA, RED) (113-CM)	
		2	**276-1786**	1	COVER-TERMINAL (RED)	
	9	1	**091-9035**	1	SPACER (11X25X20-MM THK)	
	10	1	**132-5789**	1	CLIP	
M	11	2	**133-7810**	4	STUD-TAPERLOCK (M10X1.5X45-MM)	
Y	12	1	**145-7028**	1	SENSOR GP-TEMPERATURE (HYDRAULIC OIL)	211
Y	13	1	**158-6632**	1	SWITCH GP-PUSH BUTTON (FUEL PRIMING PUMP)	226
	14	1	**174-7875**	1	HORN AS (24-VOLT, HIGH TONE)	
	15	1	**174-7876**	1	HORN AS (24-VOLT, LOW TONE)	
	16	2	**204-2281**	9	STRAP-CABLE	
	17	2	**1S-0994**	1	CLIP	
	18	2	**1S-1015**	4	CLIP	
	19	1	**220-0230**	1	ALARM AS (BACKUP)	
		1	**102-8802**	1	KIT-RECEPTACLE (2-PIN)	
					(INCLUDES RECEPTACLE AS & WEDGE)	
		1	**8T-8729**	2	PIN-CONNECTOR (16-GA TO 18-GA)	
E		1	**9X-1813**		SLEEVE (29-CM)	
	20	1	**238-0303**	1	KNOB (PRIMING PUMP)	
	21	2	*317-6562*	1	CABLE AS	
		2	**1S-7251**	1	TERMINAL-CABLE (00-GA, 1/2-IN SCREW)	
E		2	**159-8050**		CABLE (00-GA, BLACK) (181-CM)	
		2	**8S-3020**	1	TERMINAL-CABLE (00-GA, 3/8-IN SCREW)	
B		2	**1P-0810**	1	TAPE-ELECTRICAL	
	22	1	**3J-7354**	1	SEAL-O-RING	
	23	2	**4H-1225**	1	WASHER (11X22X6-MM THK)	

389-3305 **BATTERY & WIRING GP (*contd.*)** **i05640538**

NOTE	REF NO	GRAPHIC REF	PART NUMBER	QTY	PART NAME 1 2 3 4 5 6 (PRODUCT LEVEL)	SEE PAGE
	24	1	**4P-7581**	3	CLIP	
	25	1,2	**4P-8134**	2	CLIP	
	26	2	**5G-6505**	1	WASHER (25X38X14-MM THK)	
	27	2	**6D-4247**	1	CLIP	
	28	2	**7F-0560**	4	WASHER (0.516X0.938X0.101-IN THK)	
	29	1	**7J-0204**	1	SEAL-O-RING	
	30	1,2	**7K-1181**	41	STRAP-CABLE	
Y	31	2	**7N-0718**	1	SWITCH GP-DISCONNECT (BATTERY)	223
	32	2	**7P-6682**	1	CABLE AS	
		2	**1S-7251**	2	TERMINAL-CABLE (00-GA, 1/2-IN SCREW)	
E		2	**159-8050**		CABLE (00-GA, BLACK) (40-CM)	
	33	2	**7X-7729**	1	WASHER (11X25X3-MM THK)	
	34	2	**8C-6358**	1	BLOCK AS-JUNCTION (BATTERY)	
		2	**7F-0560**	6	WASHER (0.516X0.938X0.101-IN THK)	
		2	**8T-3518**	6	NUT-FULL (1/2-13-THD)	
	35	1,2	**8T-4121**	13	WASHER-HARD (11X21X2.5-MM THK)	
M	36	2	**8T-4133**	4	NUT (M10X1.5-THD)	
M	37	2	**8T-4136**	1	BOLT (M10X1.5X25-MM)	
M	38	1,2	**8T-4137**	6	BOLT (M10X1.5X20-MM)	
M	39	2	**8T-4195**	2	BOLT (M10X1.5X30-MM)	
M	40	1	**8T-4196**	1	BOLT (M10X1.5X35-MM)	

B - USE AS REQUIRED
E - ORDER BY THE CENTIMETER
M - METRIC PART
Y - SEPARATE ILLUSTRATION

389-3305 **BATTERY & WIRING GP (*contd.*)** **i05640538**

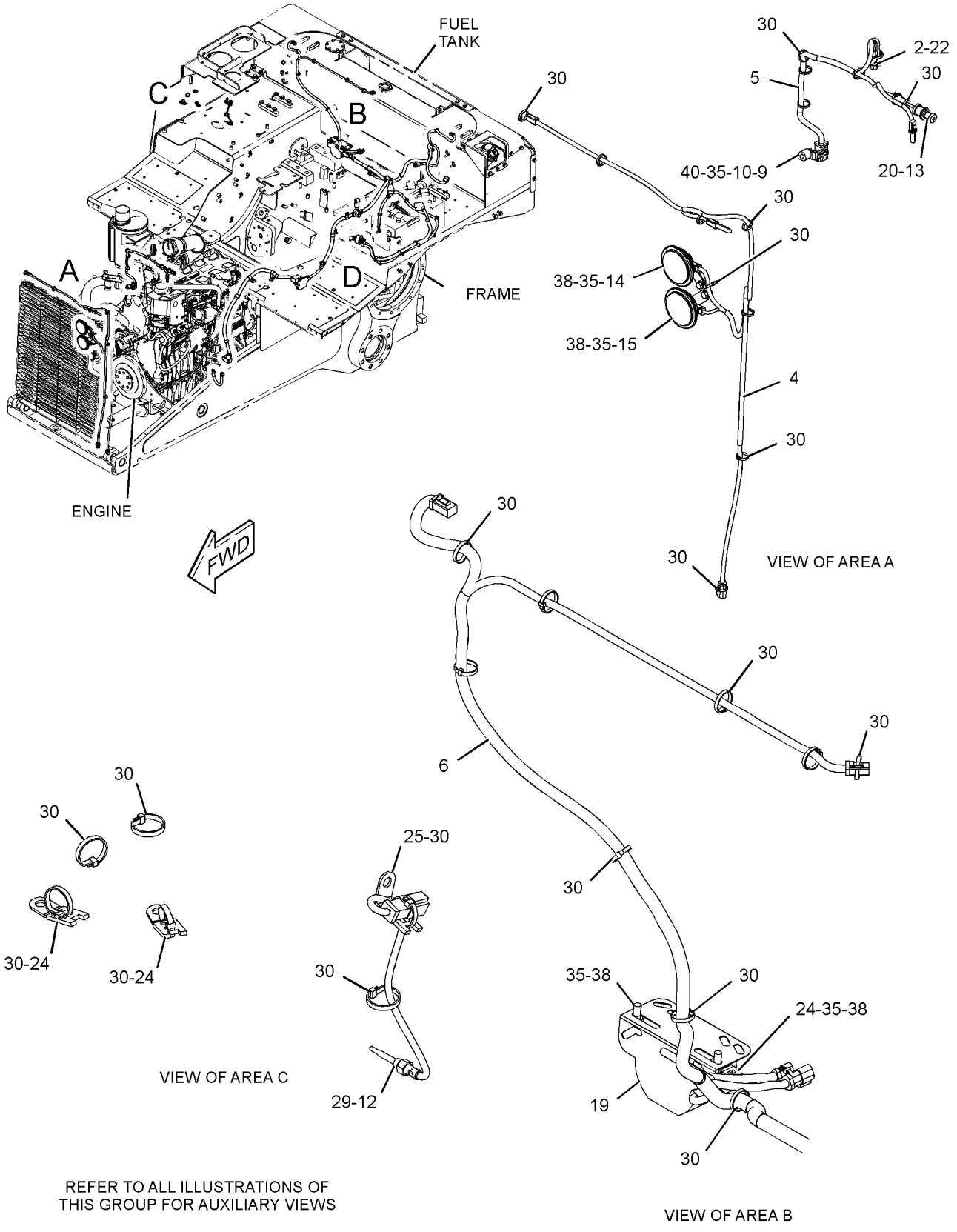

GRAPHIC #1 g03583842

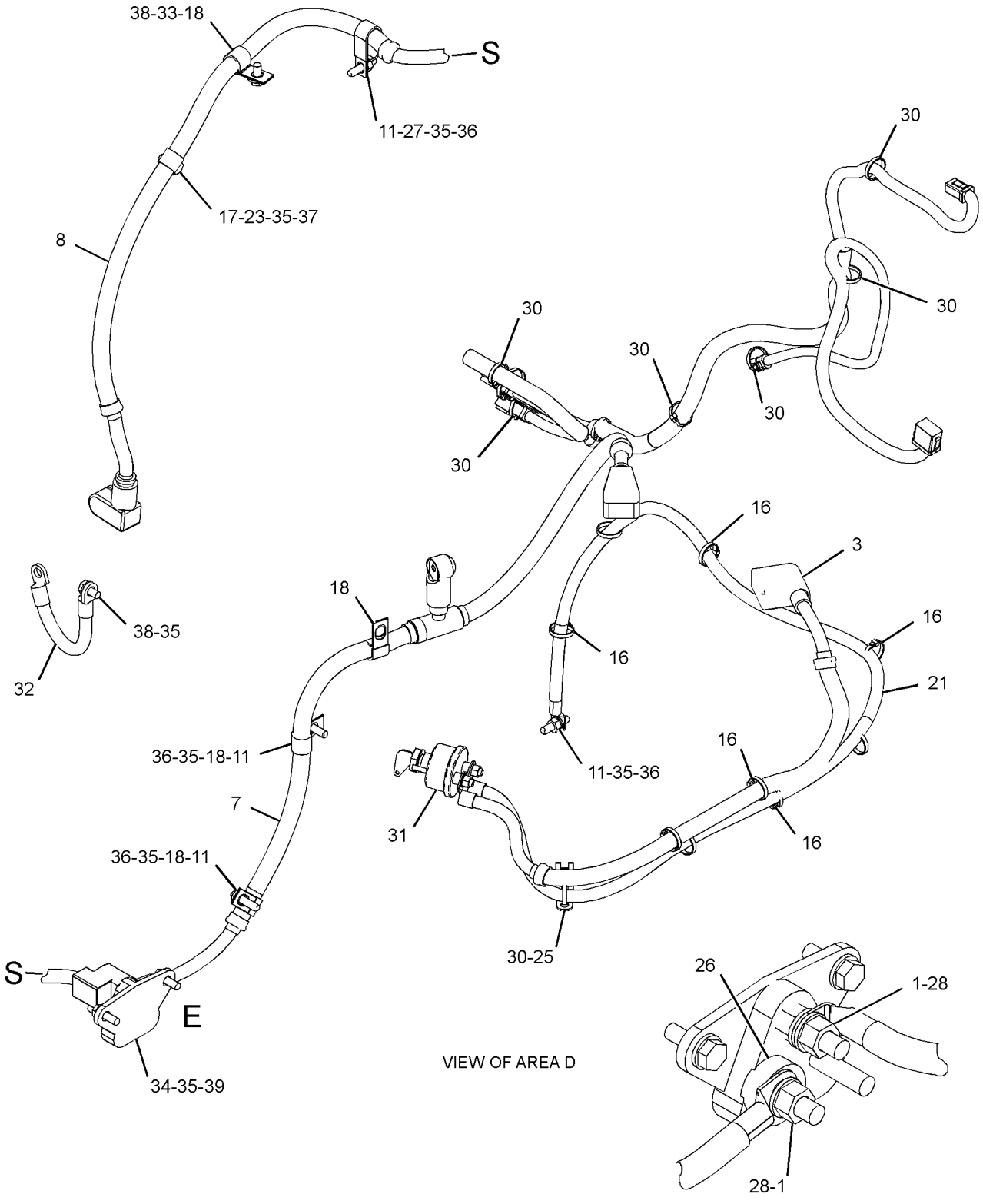

GRAPHIC #2 **<END>** g03583843

389-3307 BATTERY & WIRING GP

S/N: EMM1-UP; JEN1-UP

AN ATTACHMENT

SMCS-1401, 1402, 1408 **i05625231**

NOTE	REF NO	GRAPHIC REF	PART NUMBER	QTY	PART NAME 1 2 3 4 5 6 (PRODUCT LEVEL)	SEE PAGE
Y	1	1	*223-0558*	1	STARTING MOTOR GP-ELECTRIC	218
	2	1	**111-7978**	1	HOLD-DOWN AS	
	3	1	**115-2422**	2	BATTERY GP (12-VOLT, MAINTENANCE FREE, WET)	
					(EACH INCLUDES)	
		1	**123-1373**	6	CAP AS-FILLER (BATTERY)	
	4	1	**128-0314**	1	CABLE AS	
E		1	**159-8049**		CABLE (00-GA, RED) (29-CM)	
		1	**9G-0002**	1	COVER AS-TERMINAL (RED)	
		1	**8L-8413**	1	STRAP-CABLE	
		1	**9G-0005**	1	COVER AS-TERMINAL (BLACK)	
		1	**8L-8413**	1	STRAP-CABLE	
		1	**8C-5918**	1	TERMINAL AS (NEGATIVE)	
		1	**1M-6119**	1	BOLT (5/16-18X1.375-IN)	
		1	**1M-6120**	1	NUT (5/16-18-THD)	
		1	**8T-9756**	1	TERMINAL AS (POSITIVE)	
		1	**1M-6119**	1	BOLT (5/16-18X1.375-IN)	
		1	**1M-6120**	1	NUT (5/16-18-THD)	
	5	1	**240-8317**	1	PLATE AS	
M	6	1	**8T-0722**	6	BOLT-LOCKING (M10X1.5X30-MM)	
	7	1	**8T-4121**	6	WASHER-HARD (11X21X2.5-MM THK)	

E - ORDER BY THE CENTIMETER
M - METRIC PART
Y - SEPARATE ILLUSTRATION

389-3307 **BATTERY & WIRING GP (*contd.*)** **i05625231**

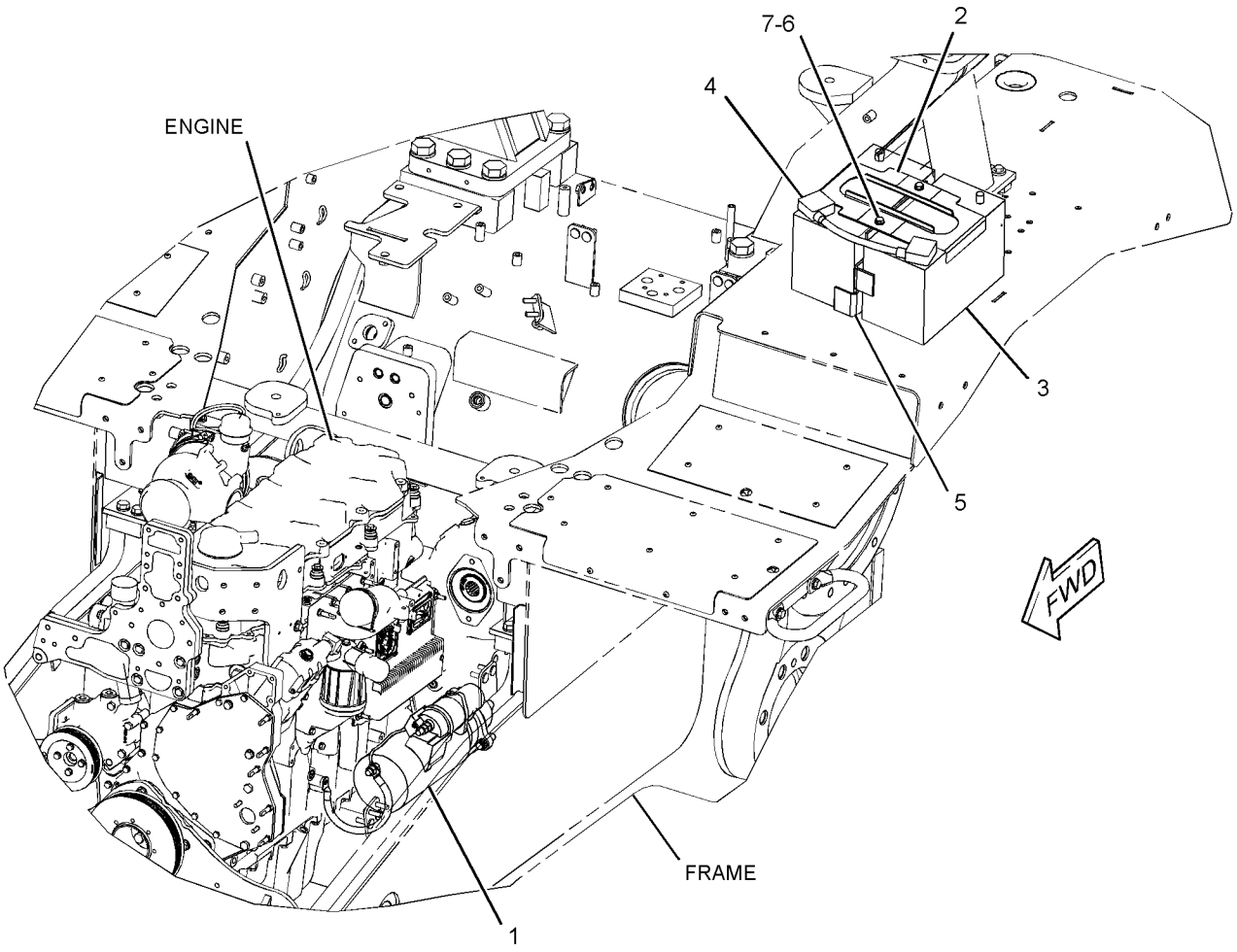

GRAPHIC #1 **<END>** g03574282

389-3308 BATTERY & WIRING GP—HEAVY-DUTY

S/N: EMM1-UP; JEN1-UP

AN ATTACHMENT

SMCS-1401, 1402, 1408 **i05674095**

NOTE	REF NO	GRAPHIC REF	PART NUMBER	QTY	PART NAME 1 2 3 4 5 6 (PRODUCT LEVEL)	SEE PAGE
	1	1	**8V-0622**	1	CABLE AS-BATTERY	
		1	**1M-6120**	2	NUT (5/16-18-THD)	
		1	**1M-6119**	2	BOLT (5/16-18X1.375-IN)	
E		1	**159-8049**		CABLE (00-GA, RED) (16-CM)	
		1	**8C-5917**	1	TERMINAL AS-BATTERY (POSITIVE)	
		1	**8T-9757**	1	TERMINAL AS-BATTERY (NEGATIVE)	
					(EACH TERMINAL AS INCLUDES)	
		1	**1M-6119**	1	BOLT (5/16-18X1.375-IN)	
		1	**1M-6120**	1	NUT (5/16-18-THD)	
		1	**9G-0003**	1	COVER AS-TERMINAL (BLACK)	
		1	**9G-0004**	1	COVER AS-TERMINAL (RED)	
					(EACH COVER AS INCLUDES)	
		1	**8L-8413**	1	STRAP-CABLE	
	2	1	**153-5710**	2	BATTERY GP (12-VOLT, MAINTENANCE FREE, WET)	
					(EACH INCLUDES)	
		1	**123-1373**	6	CAP AS-FILLER (BATTERY)	
	3	1	**153-6281**	1	HOLD-DOWN-BATTERY	
Y	4	1	*209-8423*	1	STARTING MOTOR GP-ELECTRIC	217
	5	1	**240-8321**	1	PLATE AS	
M	6	1	**8T-0722**	6	BOLT-LOCKING (M10X1.5X30-MM)	
	7	1	**8T-4121**	6	WASHER-HARD (11X21X2.5-MM THK)	

E - ORDER BY THE CENTIMETER
M - METRIC PART
Y - SEPARATE ILLUSTRATION

389-3308 **BATTERY & WIRING GP (*contd.*)** **i05674095**

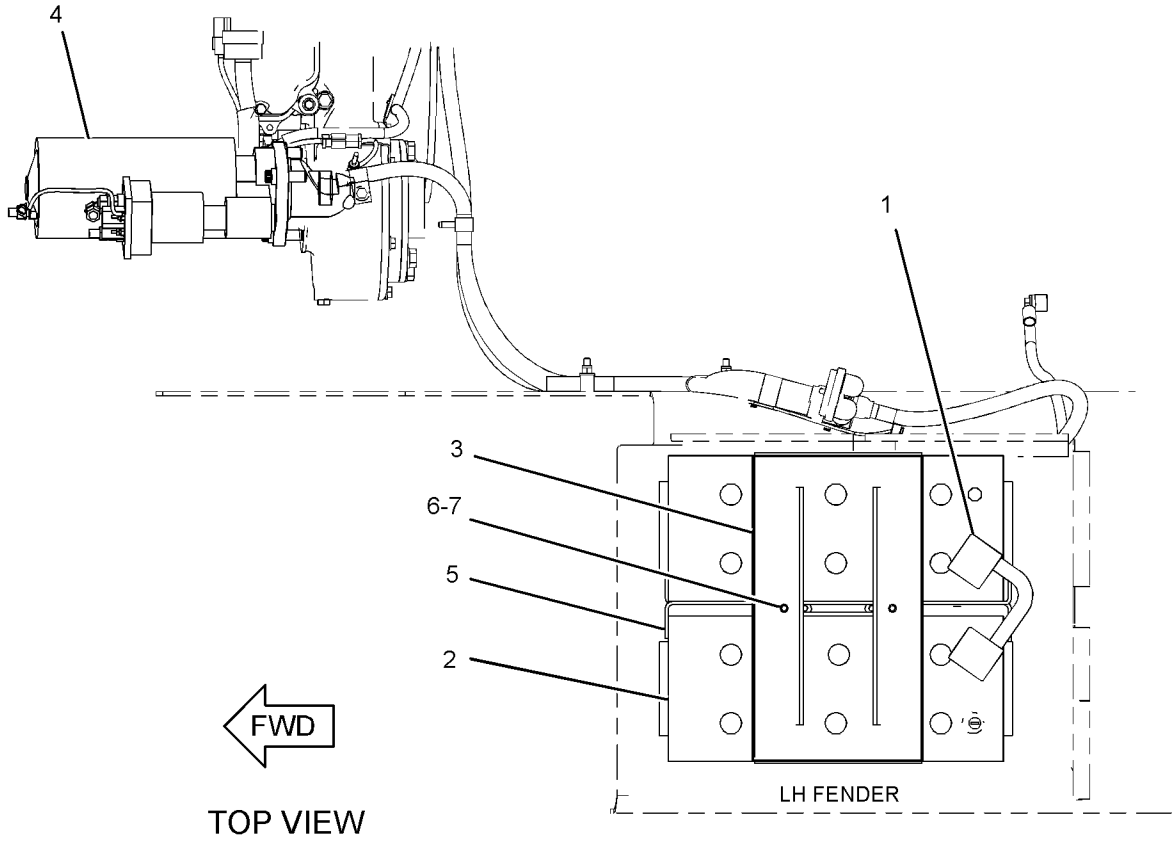

TOP VIEW

GRAPHIC #1 **<END>** g03573779

246-9365 CONTROL & MTG GP-ENGINE ELEK

S/N: TXD1-UP
AIR COOLED
PART OF 387-8581, 387-8582 ENGINE AR-COMPLETE
AN ATTACHMENT

SMCS-1901, 7620 **i05555221**

NOTE	REF NO	GRAPHIC REF	PART NUMBER	QTY	PART NAME 1 2 3 4 5 6 (PRODUCT LEVEL)	SEE PAGE
	1	1	**8T-9655**	8	MOUNT-ISOLATION	
	2	1	**101-3128**	4	SPACER-SPECIAL	
M	3	1	**143-9392**	4	STUD (M8X1.25-THD)	
Y	4	1	*226-7473*	1	CONTROL GP-ENGINE ELECTRONIC	151
	6	1	**233-0891**	1	BRACKET AS	
M		1	**232-1693**	1	BOLT-FLANGE HEAD (M6X1X35-MM)	
	7	1	**9M-1974**	4	WASHER-HARD (8.8X16X2-MM THK)	
	8	1	**9N-0869**	4	WASHER-HARD (8.8X25.5X2-MM THK)	

M - METRIC PART
Y - SEPARATE ILLUSTRATION

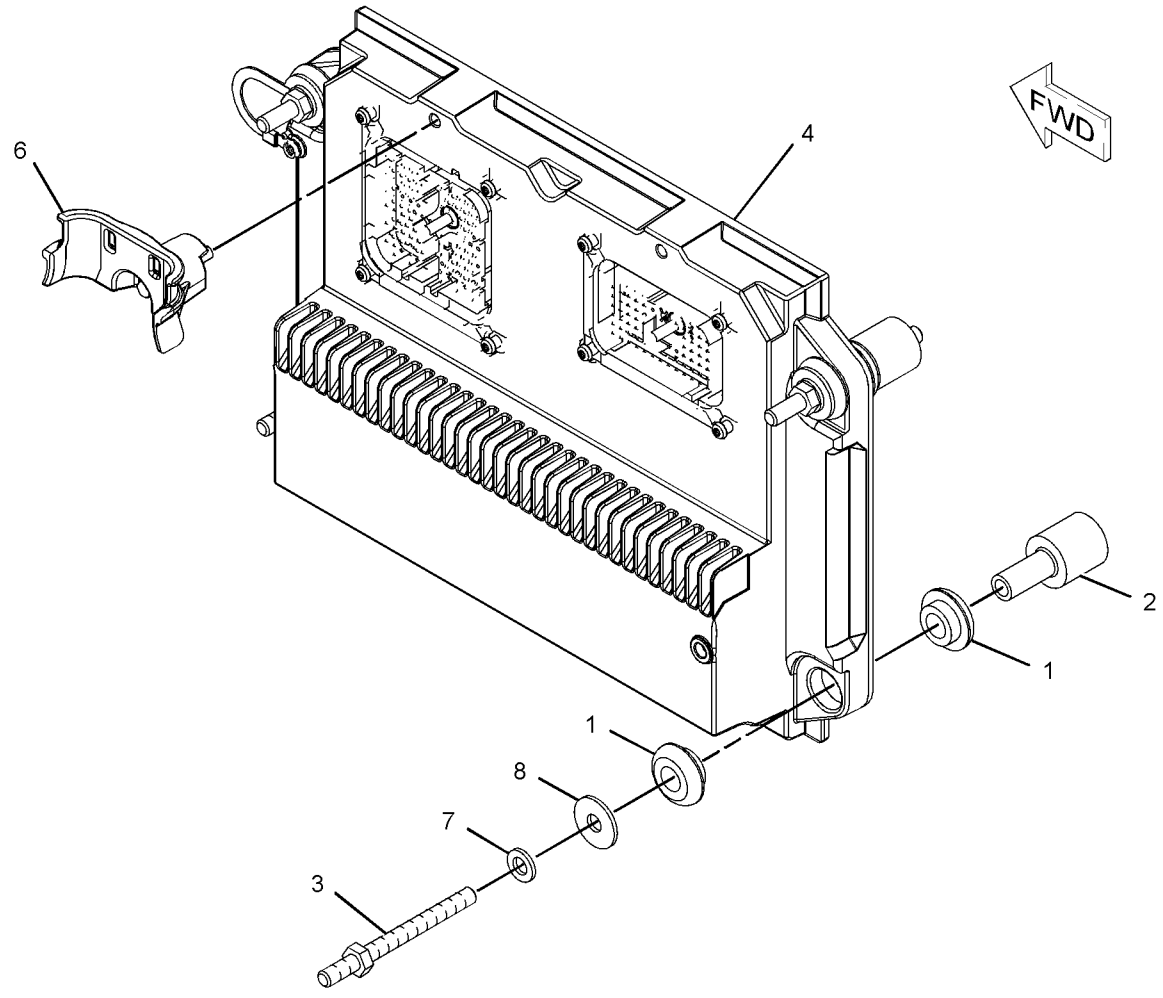

GRAPHIC #1 **<END>** g01131857

344-3393 CONTROL GP-COMMUNICATION–PRODUCT LINK 321SR

S/N: EMM1-UP; JEN1-UP
PART OF 389-6166, 391-1683 INSTALLATION GP-COMMUNICATION
AN ATTACHMENT

SMCS-7610, 7620 **i05631430**

NOTE	PART NUMBER	QTY	PART NAME 1 2 3 4 5 6 (PRODUCT LEVEL)	SEE PAGE
Y	*262-1421*	1	ELECTRONICS GP-COMMUNICATION (PRODUCT LINK 300)	155
Y	**336-3545**	1	RADIO GP-COMMUNICATION (PRODUCT LINK 121SR)	202

Y - SEPARATE ILLUSTRATION

<END>

376-4616 CONTROL GP-COMMUNICATION–PRODUCT LINK CELLULAR, CHINA

S/N: EMM1-UP; JEN1-UP
PART OF 389-6156, 391-1685 INSTALLATION GP-COMMUNICATION
AN ATTACHMENT

SMCS-7610, 7620 **i05629909**

NOTE	PART NUMBER	QTY	PART NAME 1 2 3 4 5 6 (PRODUCT LEVEL)	SEE PAGE
Y	**372-4531**	1	CONTROL GP-UNPROGRAMMED (PRODUCT LINK 522, CHINA)	153
	437-2759	1	SOFTWARE GP-COMMUNICATION (PRODUCT LINK 522, CHINA)	

Y - SEPARATE ILLUSTRATION

<END>

376-6478 CONTROL GP-COMMUNICATION–PRODUCT LINK 522

S/N: EMM1-UP; JEN1-UP
PART OF 391-1684, 393-5519 INSTALLATION GP-COMMUNICATION
AN ATTACHMENT

SMCS-7610, 7620 **i05331686**

NOTE	PART NUMBER	QTY	PART NAME 1 2 3 4 5 6 (PRODUCT LEVEL)	SEE PAGE
Y	**351-8490**	1	CONTROL GP-UNPROGRAMMED (PRODUCT LINK 522)	152
	380-9732	1	SOFTWARE GP-COMMUNICATION (PRODUCT LINK 522)	

Y - SEPARATE ILLUSTRATION

<END>

226-7473 CONTROL GP-ENGINE ELECTRONIC

S/N: TXD1-UP

PART OF 246-9365 CONTROL & MTG GP-ENGINE ELEK

AN ATTACHMENT

SMCS-1901 **i05643874**

NOTE	REF NO	GRAPHIC REF	PART NUMBER	QTY	PART NAME 1 2 3 4 5 6 (PRODUCT LEVEL)	SEE PAGE
	1	1	**372-2905**	1	CONTROL GP-ELECTRONIC (ENGINE)	

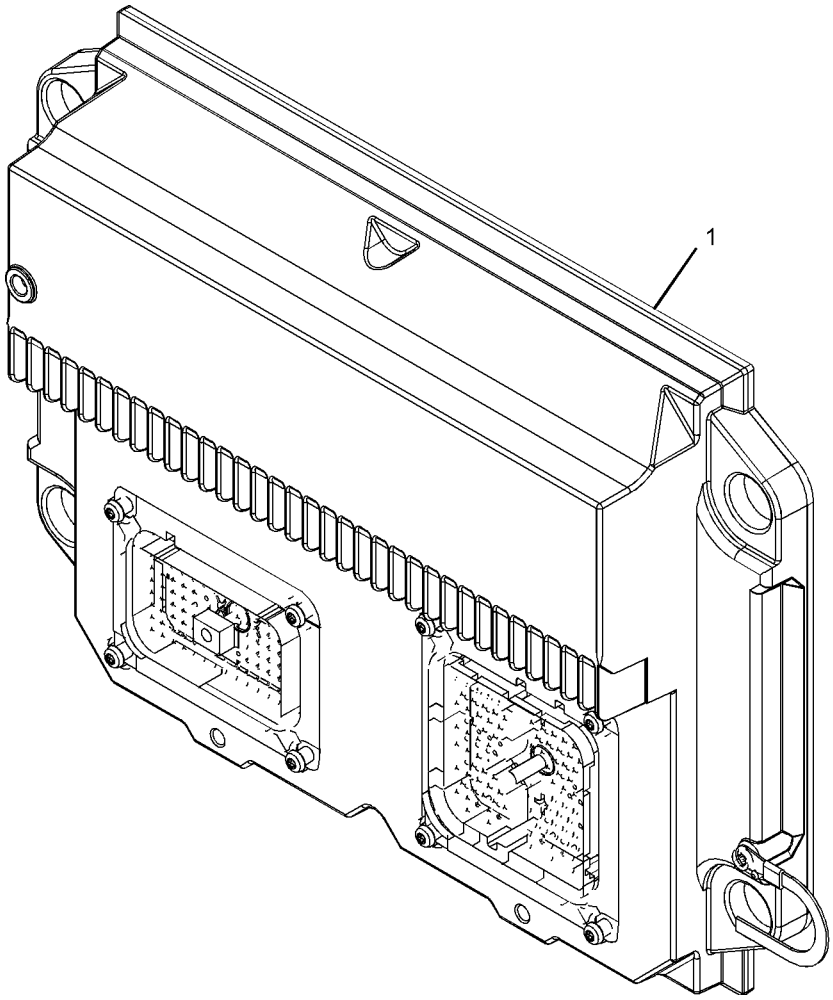

GRAPHIC #1 **<END>** g01101798

351-8490 CONTROL GP-UNPROGRAMMED–PRODUCT LINK 522

S/N: EMM1-UP; JEN1-UP
PART OF 376-6478 CONTROL GP-COMMUNICATION
AN ATTACHMENT

SMCS-7610 **i05331692**

NOTE	REF NO	GRAPHIC REF	PART NUMBER	QTY	PART NAME 1 2 3 4 5 6 (PRODUCT LEVEL)	SEE PAGE
	1	1	**346-7763**	1	COVER AS	
	2	1	**351-8488**	1	CARD-MEMORY (SUBSCRIBER IDENTITY MODULE)	
	3	1	**7X-6315**	1	STRAP AS-GROUND	
	4	1	**342-9022**	4	SCREW-PAN HEAD (M2.5X0.45-THD)	
	5	1	**342-9290**	1	SCREW-PAN HEAD (M4X0.7-THD)	
	6	1	**134-4126**	1	WASHER (4.52X8.28X0.76-MM THK)	
F			**382-5982**	1	SOFTWARE GP-ELECTRONIC	

F - NOT SHOWN

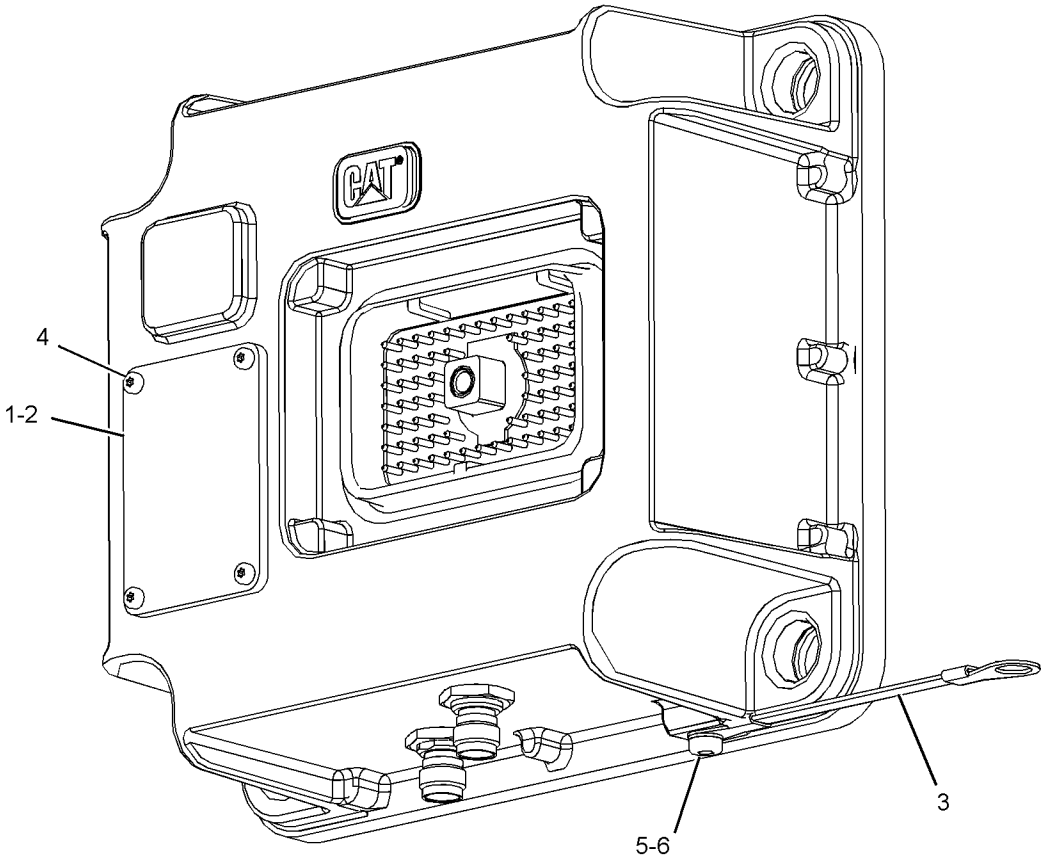

GRAPHIC #1 **<END>** g02330133

372-4531 CONTROL GP-UNPROGRAMMED–PRODUCT LINK 522, CHINA

S/N: EMM1-UP; JEN1-UP
WITH SIM
PART OF 376-4616 CONTROL GP-COMMUNICATION
AN ATTACHMENT

SMCS-7610 **i05629921**

NOTE	REF NO	GRAPHIC REF	PART NUMBER	QTY	PART NAME 1 2 3 4 5 6 (PRODUCT LEVEL)	SEE PAGE
	1	1	**346-7763**	1	COVER AS	
	2	1	**372-4532**	1	CARD-MEMORY (SUBSCRIBER IDENTITY MODULE)	
	3	1	**7X-6315**	1	STRAP AS-GROUND	
	4	1	**342-9022**	4	SCREW-PAN HEAD (M2.5X0.45-THD)	
	5	1	**342-9290**	1	SCREW-PAN HEAD (M4X0.7-THD)	
	6	1	**134-4126**	1	WASHER (4.52X8.28X0.76-MM THK)	
	7	1	**276-4053**	1	FILM-IDENTIFICATION (CAT)	
F			**449-6277**	1	SOFTWARE GP-ENG RATINGS ELEK	

F - NOT SHOWN

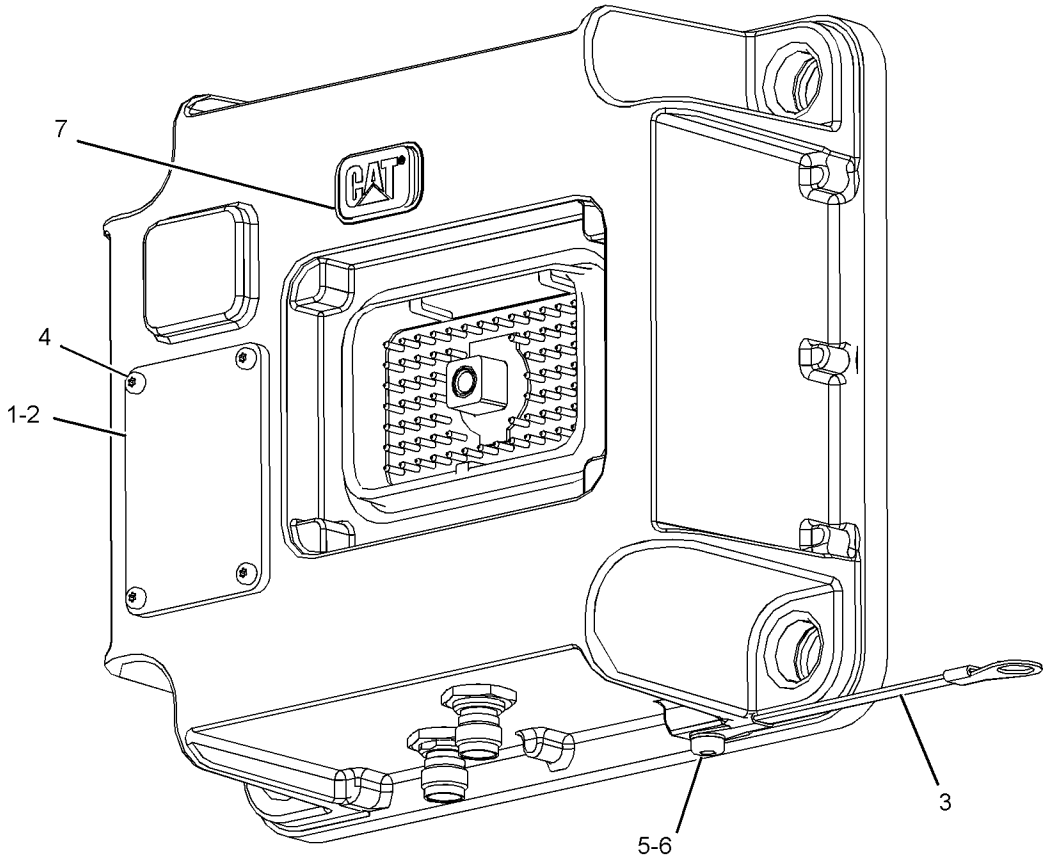

GRAPHIC #1 **<END>** g03009457

389-6165 CONVERTER GP-ELECTRICAL

S/N: EMM1-UP; JEN1-UP
12-VOLT, 20-AMPERE
AN ATTACHMENT

SMCS-1421 **i05674451**

NOTE	REF NO	GRAPHIC REF	PART NUMBER	QTY	PART NAME 1 2 3 4 5 6 (PRODUCT LEVEL)	SEE PAGE
	1	1	**443-6362**	1	CONVERTER-POWER (24-VOLT TO 12-VOLT)	
	2	1	**321-5802**	1	HARNESS AS-POWER	
		1	**8T-8737**	11	PLUG-SEAL	
E		1	**114-8843**		SLEEVE-PLASTIC (80-CM)	
		1	**7T-0094**	10	SOCKET-CONNECTOR (12-GA TO 14-GA)	
E		1	**119-3662**		TUBE-HEAT SHRINK (10.85-MM DIA) (7-CM)	
		1	**126-1768**	1	SOCKET-CONNECTOR (14-GA TO 16-GA)	
					–OR–	
		1	**9X-3402**	1	SOCKET-CONNECTOR (16-GA TO 18-GA)	
		1	**177-9653**	1	KIT-RECEPTACLE (4-PIN)	
					(INCLUDES RECEPTACLE AS & WEDGE)	
		1	**177-9656**	3	KIT-CONNECTING PLUG (4-PIN)	
		1	**155-2274**	2	KIT-CONNECTING PLUG (6-PIN)	
					(EACH PLUG KIT INCLUDES PLUG AS, WEDGE & INTERFACE SEAL)	
	3	1	**7K-1181**	2	STRAP-CABLE	
M	4	1	**8T-0269**	4	BOLT-SOCKET HEAD (M6X1X20-MM)	
	5	1	**9X-8256**	4	WASHER (6.6X12X2-MM THK)	

E - ORDER BY THE CENTIMETER
M - METRIC PART

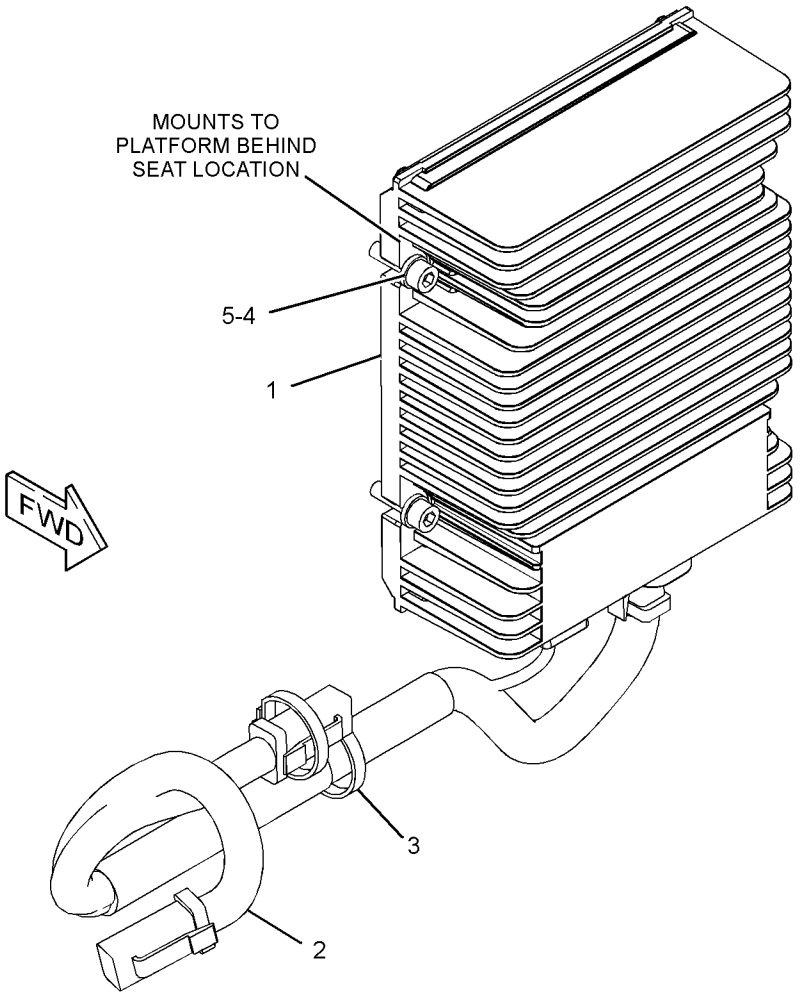

GRAPHIC #1 **<END>** g03460036

262-1421 ELECTRONICS GP-COMMUNICATION—PRODUCT LINK 300

S/N: EMM1-UP; JEN1-UP
PART OF 344-3393 CONTROL GP-COMMUNICATION
AN ATTACHMENT

SMCS-7606, 7610, 7620 **i05631469**

NOTE	PART NUMBER	QTY	PART NAME 1 2 3 4 5 6 (PRODUCT LEVEL)	SEE PAGE
	285-1133		CONTROL GP-UNPROGRAMMED (PRODUCT LINK 300)	
	7X-6315	1	STRAP AS-GROUND	
	101-0852	1	SCREW-PAN HEAD (8-32X0.375-IN)	
	134-4126	1	WASHER (4.52X8.28X0.76-MM THK)	
	445-2631	1	SOFTWARE GP-COMMUNICATION	

<END>

389-6127 GRADE CONTROL AR

S/N: EMM1-UP; JEN1-UP
FOR USE WITH 389-3226—PAGE: 457, 389-3227—PAGE: 457, 389-6148—PAGE: 198, 389-6149—PAGE: 498, 389-6151—PAGE: 670, 389-6152—PAGE: 671
CANNOT BE USED WITH 389-3228—PAGE: 579
AN ATTACHMENT

SMCS-7220 **i05628080**

NOTE	PART NUMBER	QTY	PART NAME 1 2 3 4 5 6 (PRODUCT LEVEL)	SEE PAGE
Y	*389-6155*	1	HANDHOLD GP	607
Y	*317-6566*	1	MOUNTING GP-MONITOR	640
Y	*389-6154*	1	WIRING GP-GRADE CONTROL (CHASSIS)	238

Y - SEPARATE ILLUSTRATION

<END>

323-9140 HARNESS AS-ENGINE

S/N: TXD1-UP

PART OF 330-6019 WIRING GP-ELECTRONIC CONTROL

AN ATTACHMENT

SMCS-1408 **i05644480**

NOTE	PART NUMBER	QTY	PART NAME 1 2 3 4 5 6 (PRODUCT LEVEL)	SEE PAGE
	211-6807	1	COVER-CONNECTOR	
	111-2416	1	PLUG AS-CONNECTOR (2-PIN)	
	100-3320	1	PLUG AS-CONNECTOR (2-PIN)	
			(EACH PLUG AS-CONNECTOR INCLUDES)	
	126-5011	1	SEAL-CONNECTOR	
	155-2265	1	KIT-CONNECTING PLUG (8-PIN)	
	155-2270	3	KIT-CONNECTING PLUG (2-PIN)	
			(EACH PLUG KIT INCLUDES PLUG AS, WEDGE & INTERFACE SEAL)	
	172-6062	1	PLUG AS-CONNECTOR (18-PIN)	
	230-4011	2	PLUG AS-CONNECTOR (2-PIN)	
			(EACH INCLUDES)	
	264-7029	1	SEAL-CONNECTOR	
	237-0227	3	PLUG AS-CONNECTOR (3-PIN)	
	230-4013	1	PLUG AS-CONNECTOR (3-PIN)	
			(EACH PLUG AS INCLUDES)	
	264-7030	1	SEAL-CONNECTOR	
	264-5732	1	PLUG AS-CONNECTOR (120-PIN)	
	288-7324	1	SEAL-CONNECTOR	
	160-8124	1	PLUG AS (2-PIN)	
	8T-8737	2	PLUG-SEAL	
	8T-8737	93	PLUG-SEAL	
E	**317-1204**		SLEEVE (8-CM)	
E	**289-5150**		SLEEVE (112-CM)	
E	**289-5151**		SLEEVE (12-CM)	
	9X-3402	75	SOCKET-CONNECTOR (16-GA TO 18-GA)	
			—OR—	
	126-1768	75	SOCKET-CONNECTOR (14-GA TO 16-GA)	
	305-5362	4	TERMINAL AS (18-GA)	
	1S-9593	2	STRAP-CABLE	
E	**125-7874**		TUBE-HEAT SHRINK (5.72-MM DIA) (40-CM)	

E - ORDER BY THE CENTIMETER

<END>

419-0841 HARNESS AS-ENGINE

S/N: TXD1-UP

PART OF 330-6019 WIRING GP-ELECTRONIC CONTROL

AN ATTACHMENT

SMCS-1408 **i05644482**

NOTE	PART NUMBER	QTY	PART NAME 1 2 3 4 5 6 (PRODUCT LEVEL)	SEE PAGE
	9X-3401	12	PIN-CONNECTOR (16-GA TO 18-GA)	
			—OR—	
	126-1767	12	PIN-CONNECTOR (14-GA TO 16-GA)	
	172-6064	1	WEDGE-RECEPTACLE LOCK	
	191-7823	1	RECEPTACLE AS	
	307-8428	1	GASKET	

<END>

389-6167 HEATER GP-JACKET WATER

S/N: EMM1-UP; JEN1-UP

AN ATTACHMENT

SMCS-1383 **i05631419**

NOTE	REF NO	GRAPHIC REF	PART NUMBER	QTY	PART NAME 1 2 3 4 5 6 (PRODUCT LEVEL)	SEE PAGE
	1	1	**7K-1181**	6	STRAP-CABLE	
	2	1	**6T-3764**	1	ELEMENT AS-JACKET WATER HEATER (240-VOLT, 1500-WATT)	
	3	1	**217-5912**	1	CORD AS	
	4	1	**7M-8485**	1	SEAL-O-RING	
	5	1	**5P-0492**	1	ADAPTER	
	6	1	**4P-7581**	1	CLIP	
	7	1	**214-9389**	1	FILM-IDENTIFICATION (WATER HEATER)	
	8	1	**4P-8134**	1	CLIP	

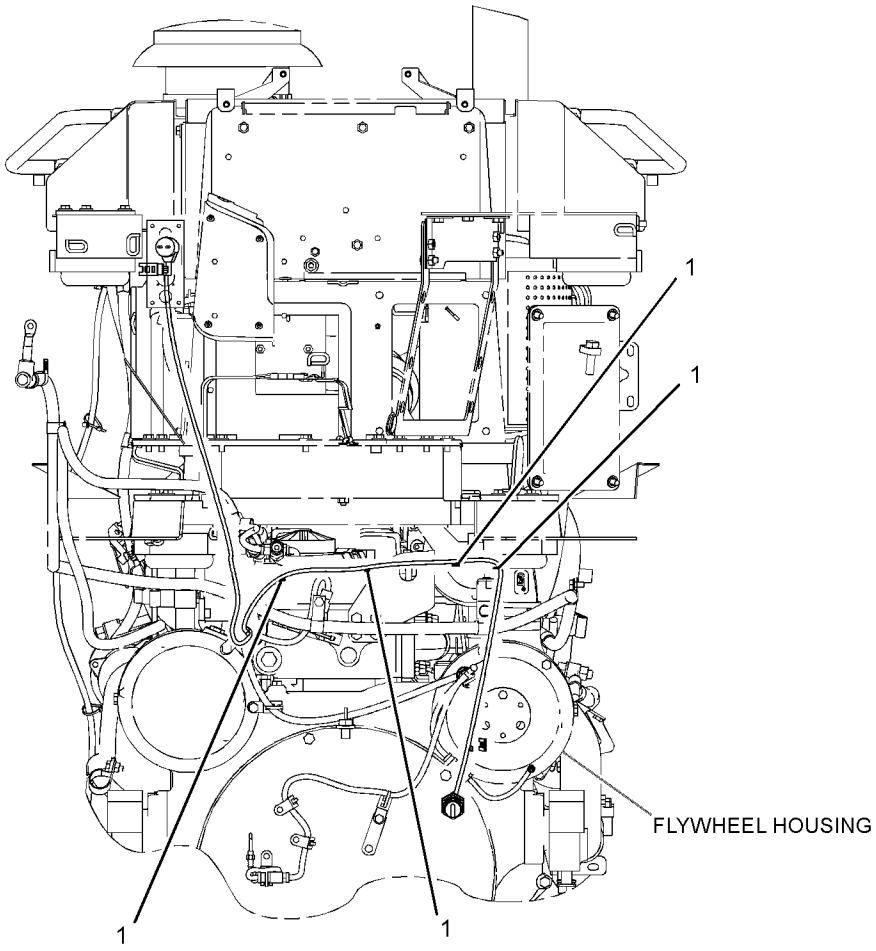

REAR VIEW

GRAPHIC #1 g02986016

389-6167 **HEATER GP-JACKET WATER (*contd.*)** **i05631419**

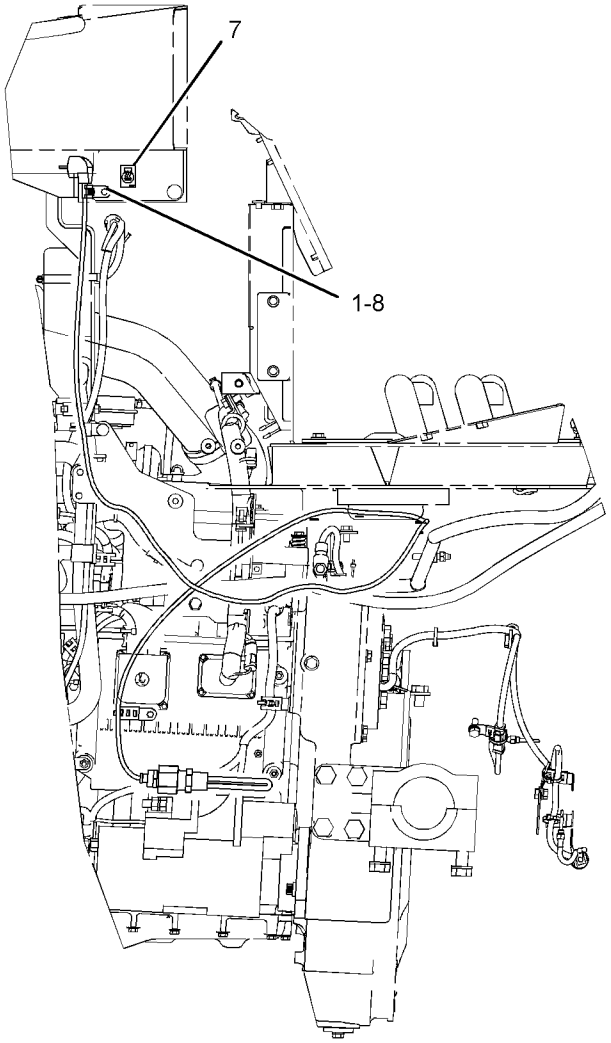

LEFT SIDE VIEW

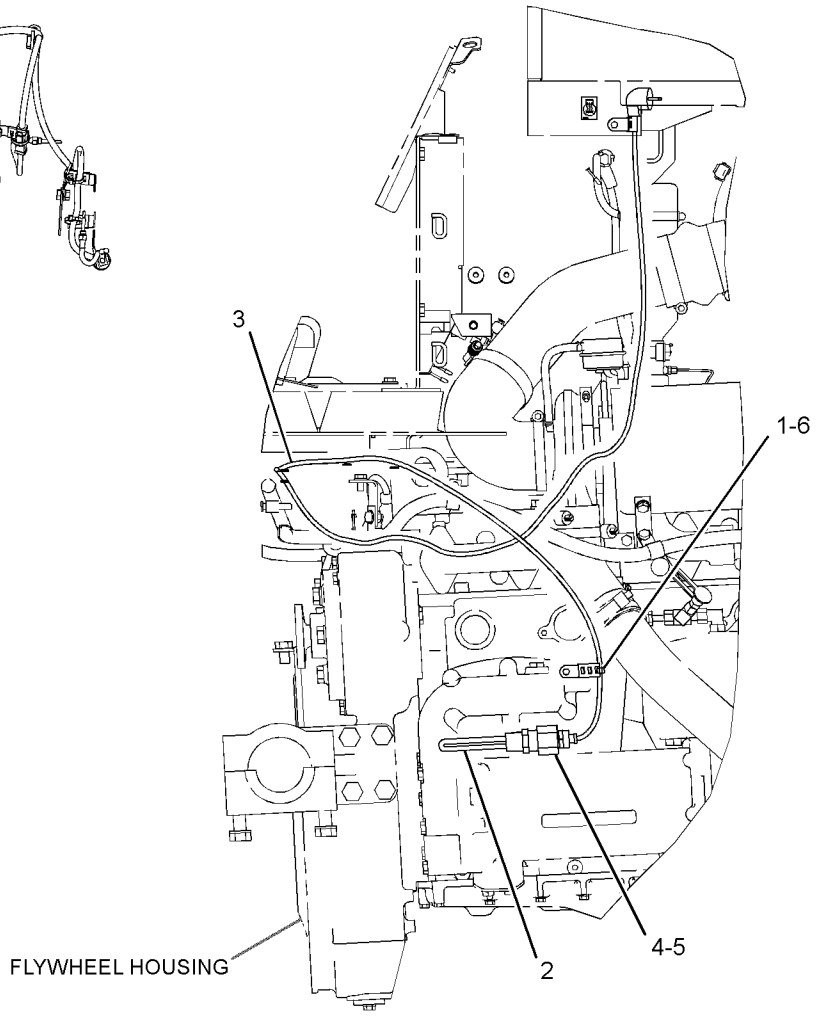

RIGHT SIDE VIEW

GRAPHIC #2 **<END>** g02987536

389-6156 INSTALLATION GP-COMMUNICATION—PRODUCT LINK 522

S/N: EMM1-UP; JEN1-UP

AN ATTACHMENT

SMCS-7606 **i05629893**

NOTE	REF NO	GRAPHIC REF	PART NUMBER	QTY	PART NAME 1 2 3 4 5 6 (PRODUCT LEVEL)	SEE PAGE
	1	1	**8C-5608**	4	SPACER (6.5X9.5X25.4-MM THK)	
	2	1	**230-1340**	1	FILM-WARNING (PRODUCT LINK RADIO, U.S.)	
	3	1	**306-0177**	1	BRACKET	
	4	1	**307-0047**	1	FILM-INFORMATION (PRODUCT LINK, READ OMM)	
	5	1	**320-5898**	1	HARNESS AS-WIRING (PRODUCT LINK)	
		1	**8T-8737**	64	PLUG-SEAL	
		1	**7K-1181**	2	STRAP-CABLE	
		1	**9X-3402**	26	SOCKET-CONNECTOR (16-GA TO 18-GA)	
					—OR—	
		1	**126-1768**	26	SOCKET-CONNECTOR (14-GA TO 16-GA)	
		1	**126-1774**	1	COVER-CONNECTOR	
		1	**155-2255**	1	KIT-CONNECTING PLUG (12-PIN)	
		1	**155-2265**	1	KIT-CONNECTING PLUG (8-PIN)	
					(EACH PLUG KIT INCLUDES PLUG AS, WEDGE, & INTERFACE SEAL)	
		1	**160-7690**	1	PLUG AS-CONNECTOR (70-PIN)	
		1	**159-9322**	1	SEAL-O-RING	
	6	1	**346-9376**	1	ANTENNA AS	
		1	**355-1213**	1	PLUG	
		1	**361-1045**	1	NUT-SPECIAL (5/8-18-THD)	
	7	1	**353-8773**	1	CABLE AS-ANTENNA	
Y	8	1	*376-4616*	1	CONTROL GP-COMMUNICATION (PRODUCT LINK CELLULAR, CHINA)	150
	9	1	**4H-2558**	1	GROMMET	
	10	1	**4P-7581**	2	CLIP	
	11	1	**7K-1181**	18	STRAP-CABLE	
	12	1	**7X-7729**	2	WASHER (11X25X3-MM THK)	
M	13	1	**8C-3210**	2	BOLT (M6X1X16-MM)	
	14	1	**8C-5607**	8	MOUNT-ISOLATION	
M	15	1	**8T-2192**	4	BOLT (M6X1X45-MM)	
M	16	1	**8T-4136**	2	BOLT (M10X1.5X25-MM)	
	17	1	**9D-3769**	2	GROMMET	
	18	1	**9X-6165**	4	WASHER (6.5X22X2.5-MM THK)	
	19	1	**9X-8256**	2	WASHER (6.6X12X2-MM THK)	

M - METRIC PART
Y - SEPARATE ILLUSTRATION

389-6156 **INSTALLATION GP-COMMUNICATION (*contd.*)** **i05629893**

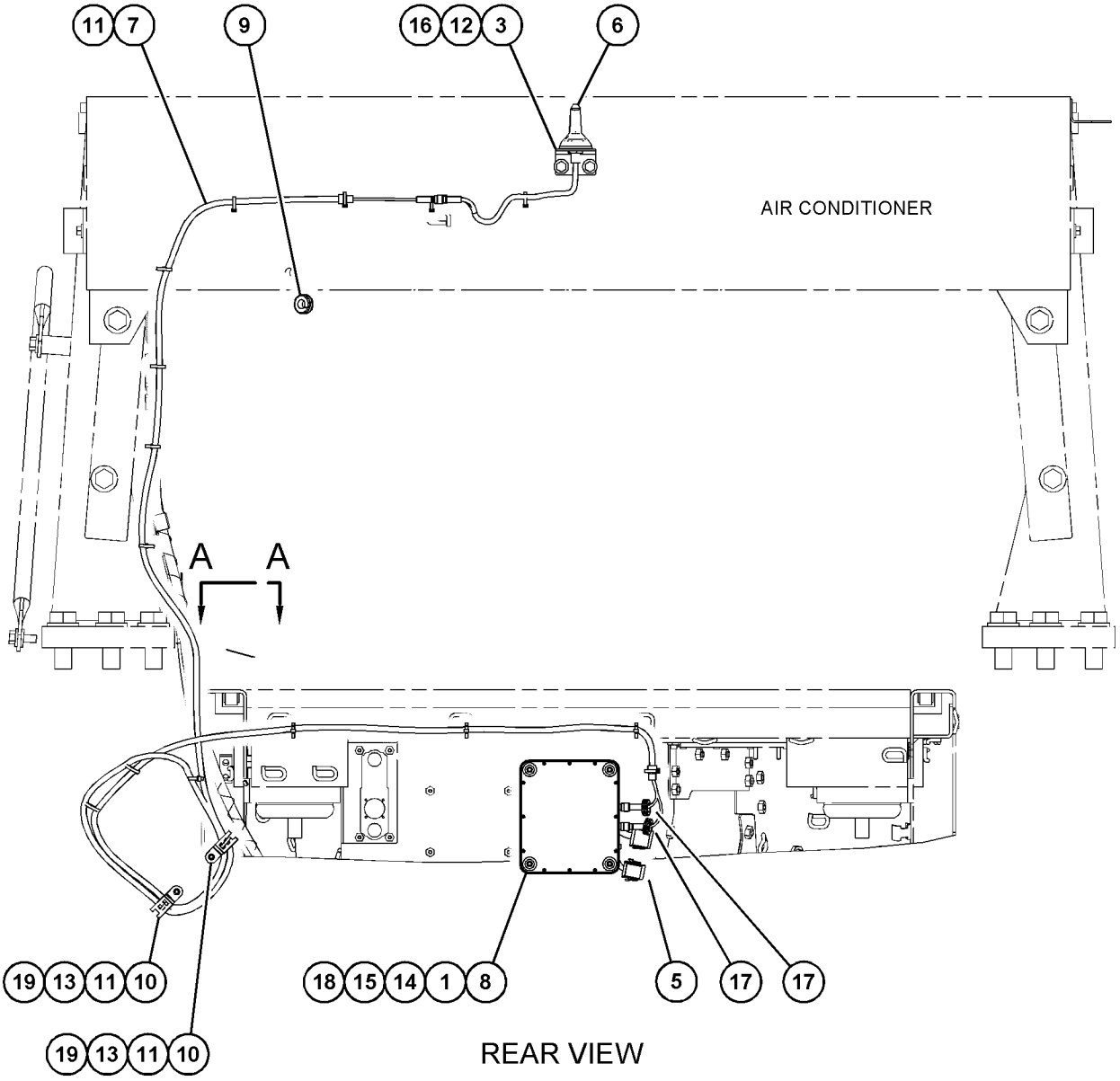

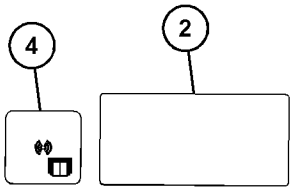

VIEW A-A

GRAPHIC #1

<END>

g03581856

389-6166 INSTALLATION GP-COMMUNICATION–PRODUCT LINK

321SR

S/N: EMM1-UP; JEN1-UP

AN ATTACHMENT

SMCS-7606 **i05631413**

NOTE	REF NO	GRAPHIC REF	PART NUMBER	QTY	PART NAME 1 2 3 4 5 6 (PRODUCT LEVEL)	SEE PAGE
	1	1	**8C-5607**	8	MOUNT-ISOLATION	
	2	1	**8C-5608**	4	SPACER (6.5X9.5X25.4-MM THK)	
B	3	1	**4H-2558**	1	GROMMET	
	4	1	**230-1340**	1	FILM-WARNING (PRODUCT LINK RADIO, U.S.)	
	6	1	**306-0177**	1	BRACKET	
	7	1	**307-0047**	1	FILM-INFORMATION (PRODUCT LINK, READ OMM)	
	8	1	**320-5898**	1	HARNESS AS-WIRING (PRODUCT LINK)	
		1	**155-2255**	1	KIT-CONNECTING PLUG (12-PIN)	
		1	**155-2265**	1	KIT-CONNECTING PLUG (8-PIN)	
					(EACH KIT INCLUDES PLUG AS, WEDGE & INTERFACE SEAL)	
		1	**160-7690**	1	PLUG AS-CONNECTOR (70-PIN)	
		1	**8T-8737**	64	PLUG-SEAL	
		1	**9X-3402**	26	SOCKET-CONNECTOR (16-GA TO 18-GA)	
					–OR–	
		1	**126-1768**	26	SOCKET-CONNECTOR (14-GA TO 16-GA)	
		1	**7K-1181**	2	STRAP-CABLE	
		1	**155-2258**	1	WEDGE-PLUG LOCK (12-PIN)	
		1	**155-2259**	1	WEDGE-PLUG LOCK (8-PIN)	
	9	1	**284-8532**	1	ANTENNA AS (ROOF)	
		1	**301-0589**	1	ANTENNA (FLEXIBLE)	
		1	**355-0598**	1	NUT-SPECIAL	
Y	10	1	*344-3393*	1	CONTROL GP-COMMUNICATION (PRODUCT LINK 321SR)	150
	11	1	**4P-7581**	4	CLIP	
	12	1	**7K-1181**	13	STRAP-CABLE	
	15	1	**7X-7729**	2	WASHER (11X25X3-MM THK)	
M	16	1	**8T-2192**	4	BOLT (M6X1X45-MM)	
M	17	1	**8T-4136**	2	BOLT (M10X1.5X25-MM)	
M	18	1	**8T-4181**	4	BOLT (M6X1X20-MM)	
	20	1	**9X-6165**	4	WASHER (6.5X22X2.5-MM THK)	
	21	1	**9X-8256**	4	WASHER (6.6X12X2-MM THK)	

B - USE AS REQUIRED
M - METRIC PART
Y - SEPARATE ILLUSTRATION

389-6166 **INSTALLATION GP-COMMUNICATION (*contd.*)** **i05631413**

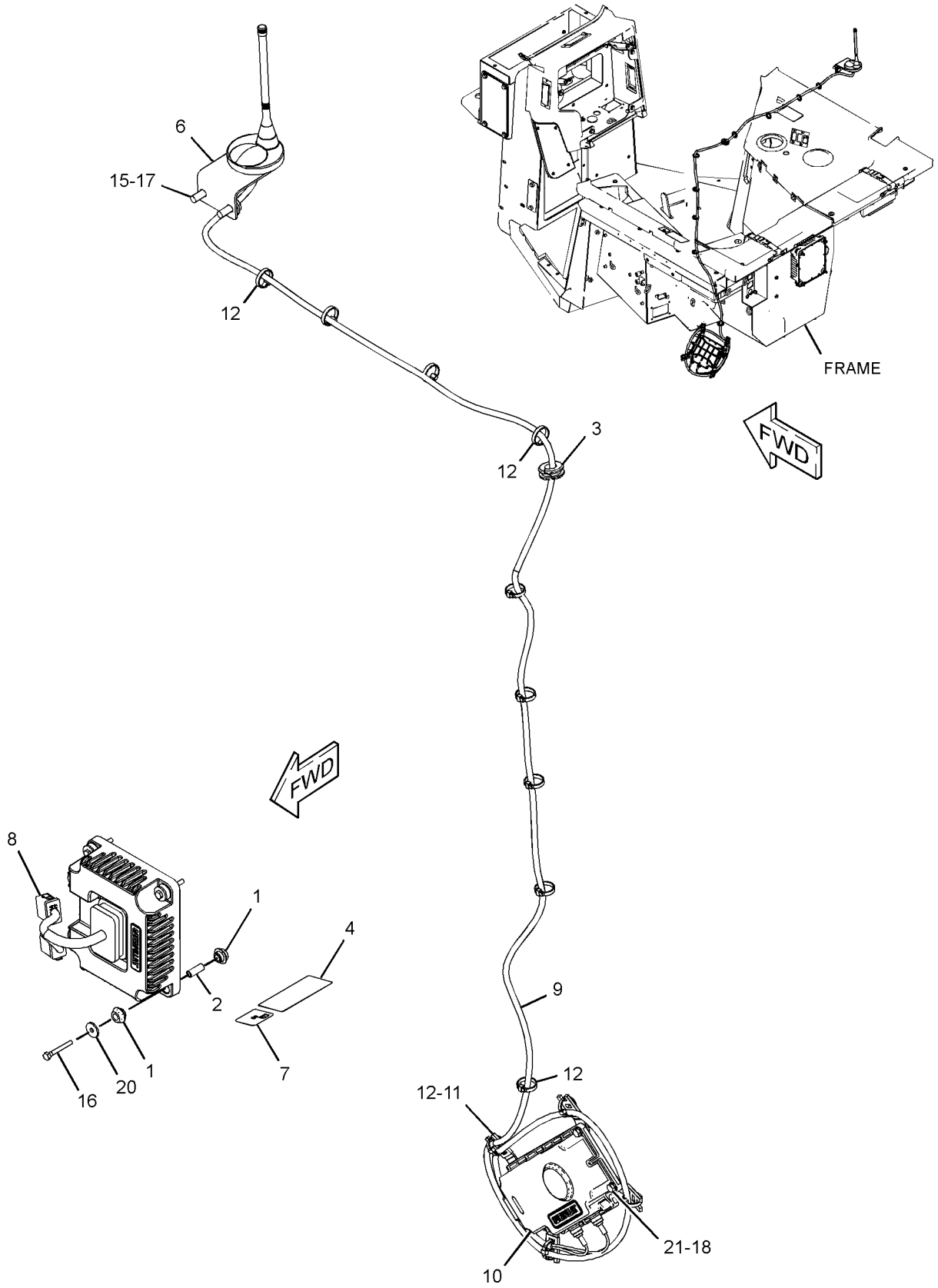

GRAPHIC #1 **<END>** g03581810

391-1683 INSTALLATION GP-COMMUNICATION–PRODUCT LINK

321SR

S/N: EMM1-UP; JEN1-UP

AN ATTACHMENT

SMCS-7606 **i05633258**

NOTE	REF NO	GRAPHIC REF	PART NUMBER	QTY	PART NAME 1 2 3 4 5 6 (PRODUCT LEVEL)	SEE PAGE
	1	1	**8C-5607**	8	MOUNT-ISOLATION	
	2	1	**8C-5608**	4	SPACER (6.5X9.5X25.4-MM THK)	
B	3	1	**4H-2558**	1	GROMMET	
	4	1	**230-1341**	1	FILM-WARNING (PRODUCT LINK RADIO, INTL)	
	6	1	**306-0177**	1	BRACKET	
	7	1	**307-0047**	1	FILM-INFORMATION (PRODUCT LINK, READ OMM)	
	8	1	**320-5898**	1	HARNESS AS-WIRING (PRODUCT LINK)	
		1	**155-2255**	1	KIT-CONNECTING PLUG (12-PIN)	
		1	**155-2265**	1	KIT-CONNECTING PLUG (8-PIN)	
					(EACH KIT INCLUDES PLUG AS, WEDGE & INTERFACE SEAL)	
		1	**160-7690**	1	PLUG AS-CONNECTOR (70-PIN)	
		1	**8T-8737**	64	PLUG-SEAL	
		1	**9X-3402**	26	SOCKET-CONNECTOR (16-GA TO 18-GA)	
					–OR–	
		1	**126-1768**	26	SOCKET-CONNECTOR (14-GA TO 16-GA)	
		1	**7K-1181**	2	STRAP-CABLE	
		1	**155-2258**	1	WEDGE-PLUG LOCK (12-PIN)	
		1	**155-2259**	1	WEDGE-PLUG LOCK (8-PIN)	
	9	1	**284-8532**	1	ANTENNA AS (ROOF)	
		1	**301-0589**	1	ANTENNA (FLEXIBLE)	
		1	**355-0598**	1	NUT-SPECIAL	
Y	10	1	*344-3393*	1	CONTROL GP-COMMUNICATION (PRODUCT LINK 321SR)	150
	11	1	**4P-7581**	4	CLIP	
	12	1	**7K-1181**	13	STRAP-CABLE	
	15	1	**7X-7729**	2	WASHER (11X25X3-MM THK)	
M	16	1	**8C-8451**	4	BOLT (M6X1X40-MM)	
M	17	1	**8T-4136**	2	BOLT (M10X1.5X25-MM)	
M	18	1	**8T-4181**	4	BOLT (M6X1X20-MM)	
	20	1	**9X-6165**	4	WASHER (6.5X22X2.5-MM THK)	
	21	1	**9X-8256**	4	WASHER (6.6X12X2-MM THK)	

B - USE AS REQUIRED
M - METRIC PART
Y - SEPARATE ILLUSTRATION

391-1683 **INSTALLATION GP-COMMUNICATION (*contd.*)** **i05633258**

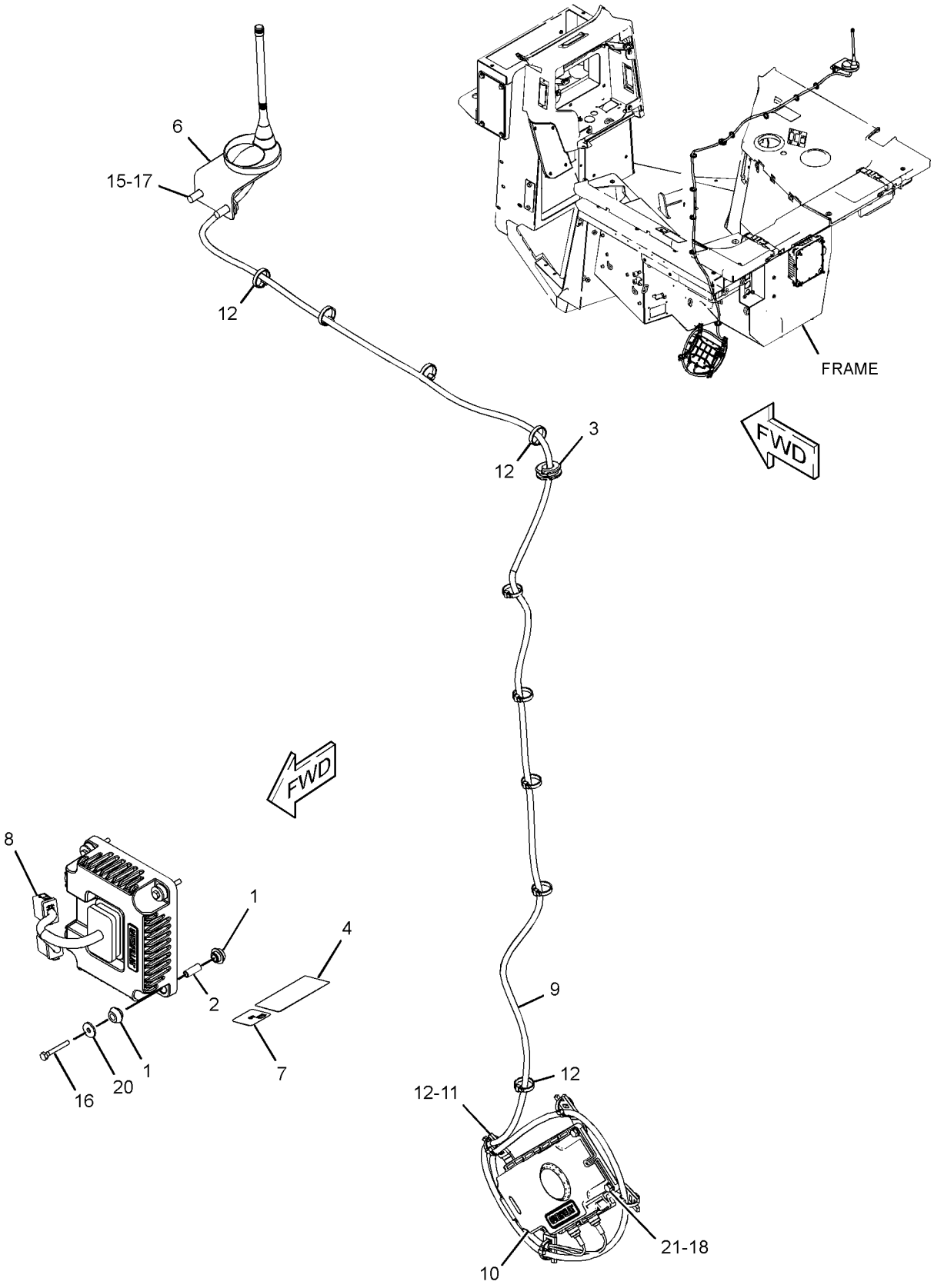

GRAPHIC #1

<END>

g03582184

391-1684 INSTALLATION GP-COMMUNICATION—PRODUCT LINK 522

S/N: EMM1-UP; JEN1-UP

AN ATTACHMENT

SMCS-7606 **i05633256**

NOTE	REF NO	GRAPHIC REF	PART NUMBER	QTY	PART NAME 1 2 3 4 5 6 (PRODUCT LEVEL)	SEE PAGE
	1	1	**230-1341**	1	FILM-WARNING (PRODUCT LINK RADIO, INTL)	
	2	1	**306-0177**	1	BRACKET	
	3	1	**307-0047**	1	FILM-INFORMATION (PRODUCT LINK, READ OMM)	
Y	4	1	*376-6478*	1	CONTROL GP-COMMUNICATION (PRODUCT LINK 522)	150
	5	1	**320-5898**	1	HARNESS AS-WIRING (COMMUNICATION RADIO)	
		1	**8T-8737**	64	PLUG-SEAL	
		1	**7K-1181**	2	STRAP-CABLE	
		1	**9X-3402**	26	SOCKET-CONNECTOR (16-GA TO 18-GA)	
					—OR—	
		1	**126-1768**	26	SOCKET-CONNECTOR (14-GA TO 16-GA)	
		1	**126-1774**	1	COVER-CONNECTOR	
		1	**155-2255**	1	KIT-CONNECTING PLUG (12-PIN)	
		1	**155-2265**	1	KIT-CONNECTING PLUG (8-PIN)	
					(EACH PLUG KIT INCLUDES PLUG AS, WEDGE & INTERFACE SEAL)	
		1	**155-2258**	1	WEDGE-PLUG LOCK (12-PIN)	
		1	**155-2259**	1	WEDGE-PLUG LOCK (8-PIN)	
		1	**160-7690**	1	PLUG AS-CONNECTOR (70-PIN)	
		1	**159-9322**	1	SEAL-O-RING	
	6	1	**346-9376**	1	ANTENNA AS	
		1	**355-1213**	1	PLUG	
		1	**361-1045**	1	NUT-SPECIAL (5/8-18-THD)	
	7	1	**354-0703**	1	CABLE AS-COAXIAL	
B	8	1	**4H-2558**	1	GROMMET	
	9	1	**7K-1181**	15	STRAP-CABLE	
	10	1	**7X-7729**	2	WASHER (11X25X3-MM THK)	
	11	1	**8C-5607**	8	MOUNT-ISOLATION	
	12	1	**8C-5608**	4	SPACER (6.5X9.5X25.4-MM THK)	
M	13	1	**8C-8451**	4	BOLT (M6X1X40-MM)	
M	14	1	**8T-4136**	2	BOLT (M10X1.5X25-MM)	
	15	1	**9D-3769**	2	GROMMET	
	16	1	**9X-6165**	4	WASHER (6.5X22X2.5-MM THK)	

B - USE AS REQUIRED
M - METRIC PART
Y - SEPARATE ILLUSTRATION

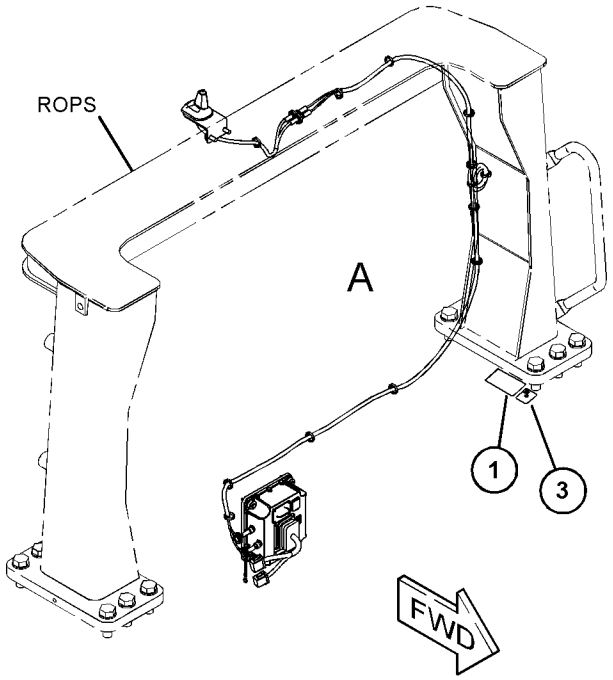

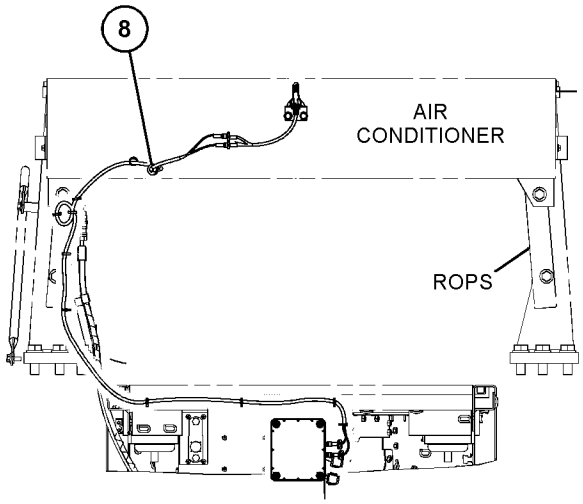

REAR VIEW
(ANTENNA ROUTING FOR ROPS AIR CONDITIONER)

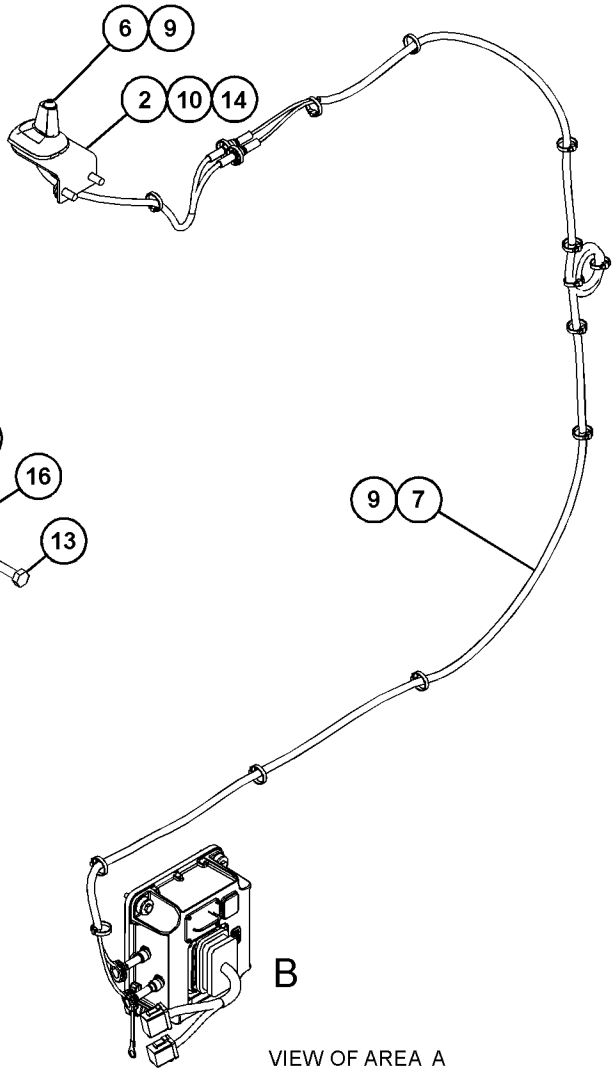

VIEW OF AREA A

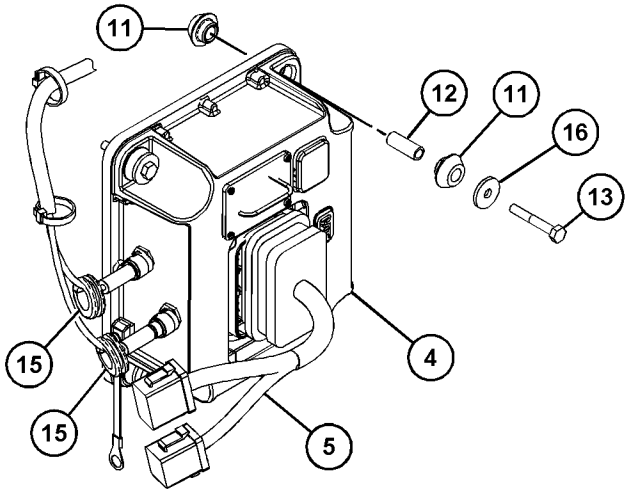

VIEW OF AREA B

GRAPHIC #1 **<END>** g03582076

391-1685 INSTALLATION GP-COMMUNICATION—PRODUCT LINK 522, CHINA

S/N: EMM1-UP; JEN1-UP

AN ATTACHMENT

SMCS-7606 **i05633257**

NOTE	REF NO	GRAPHIC REF	PART NUMBER	QTY	PART NAME 1 2 3 4 5 6 (PRODUCT LEVEL)	SEE PAGE
	1	1	**230-1341**	1	FILM-WARNING (PRODUCT LINK RADIO, INTL)	
	2	1	**306-0177**	1	BRACKET	
	3	1	**307-0047**	1	FILM-INFORMATION (PRODUCT LINK, READ OMM)	
Y	4	1	*376-4616*	1	CONTROL GP-COMMUNICATION (PRODUCT LINK CELLULAR, CHINA)	150
	5	1	**320-5898**	1	HARNESS AS-WIRING (COMMUNICATION RADIO)	
		1	**8T-8737**	64	PLUG-SEAL	
		1	**7K-1181**	2	STRAP-CABLE	
		1	**9X-3402**	26	SOCKET-CONNECTOR (16-GA TO 18-GA)	
					—OR—	
		1	**126-1768**	26	SOCKET-CONNECTOR (14-GA TO 16-GA)	
		1	**126-1774**	1	COVER-CONNECTOR	
		1	**155-2255**	1	KIT-CONNECTING PLUG (12-PIN)	
		1	**155-2265**	1	KIT-CONNECTING PLUG (8-PIN)	
					(EACH PLUG KIT INCLUDES PLUG AS, WEDGE & INTERFACE SEAL)	
		1	**155-2258**	1	WEDGE-PLUG LOCK (12-PIN)	
		1	**155-2259**	1	WEDGE-PLUG LOCK (8-PIN)	
		1	**160-7690**	1	PLUG AS-CONNECTOR (70-PIN)	
		1	**159-9322**	1	SEAL-O-RING	
	6	1	**346-9376**	1	ANTENNA AS	
		1	**355-1213**	1	PLUG	
		1	**361-1045**	1	NUT-SPECIAL (5/8-18-THD)	
	7	1	**354-0703**	1	CABLE AS-COAXIAL	
B	8	1	**4H-2558**	1	GROMMET	
	9	1	**7K-1181**	15	STRAP-CABLE	
	10	1	**7X-7729**	2	WASHER (11X25X3-MM THK)	
	11	1	**8C-5607**	8	MOUNT-ISOLATION	
	12	1	**8C-5608**	4	SPACER (6.5X9.5X25.4-MM THK)	
M	13	1	**8C-8451**	4	BOLT (M6X1X40-MM)	
M	14	1	**8T-4136**	2	BOLT (M10X1.5X25-MM)	
	15	1	**9D-3769**	2	GROMMET	
	16	1	**9X-6165**	4	WASHER (6.5X22X2.5-MM THK)	

B - USE AS REQUIRED
M - METRIC PART
Y - SEPARATE ILLUSTRATION

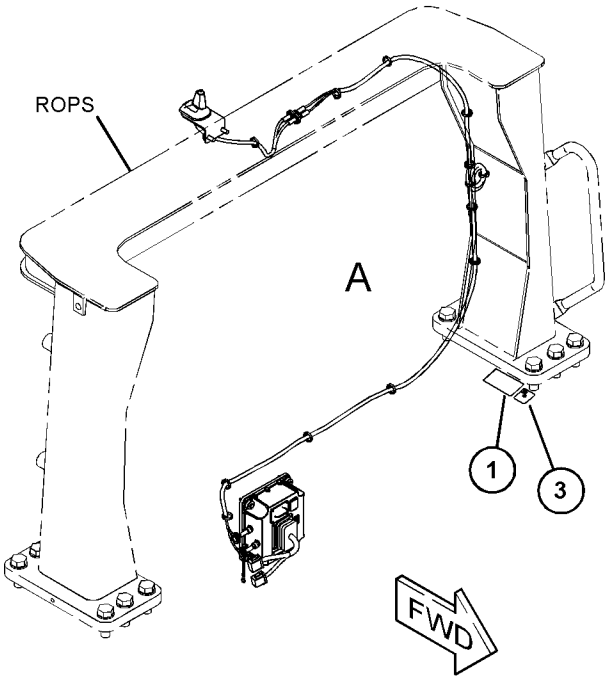

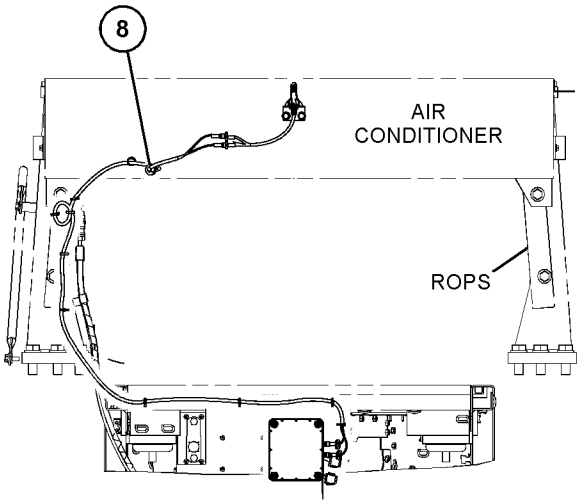

REAR VIEW
(ANTENNA ROUTING FOR ROPS AIR CONDITIONER)

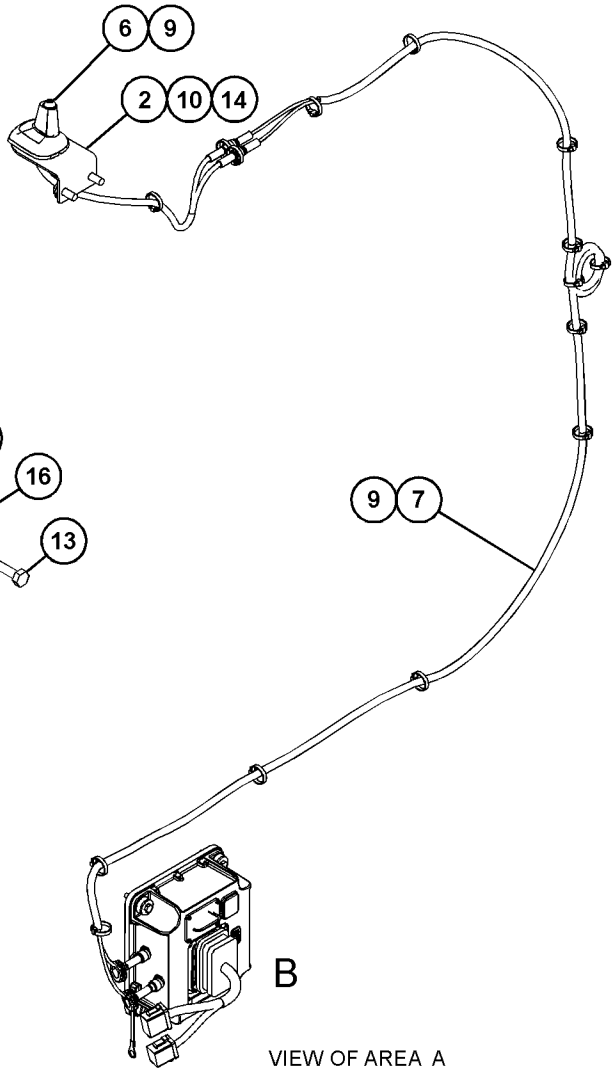

VIEW OF AREA A

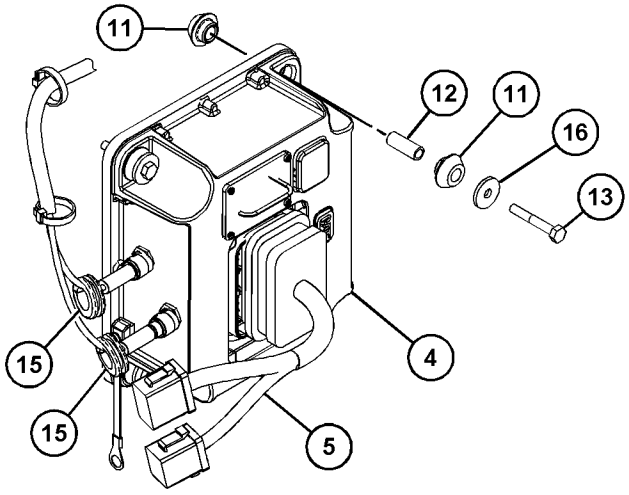

VIEW OF AREA B

GRAPHIC #1 **<END>** g03582076

393-5495 INSTALLATION GP-COMMUNICATION–PRODUCT LINK

S/N: EMM1-UP; JEN1-UP

AN ATTACHMENT

SMCS-7606 **i05633292**

NOTE	REF NO	GRAPHIC REF	PART NUMBER	QTY	PART NAME 1 2 3 4 5 6 (PRODUCT LEVEL)	SEE PAGE
	1	1	**7X-7729**	2	WASHER (11X25X3-MM THK)	
M	2	1	**8T-4136**	2	BOLT (M10X1.5X25-MM)	

M - METRIC PART

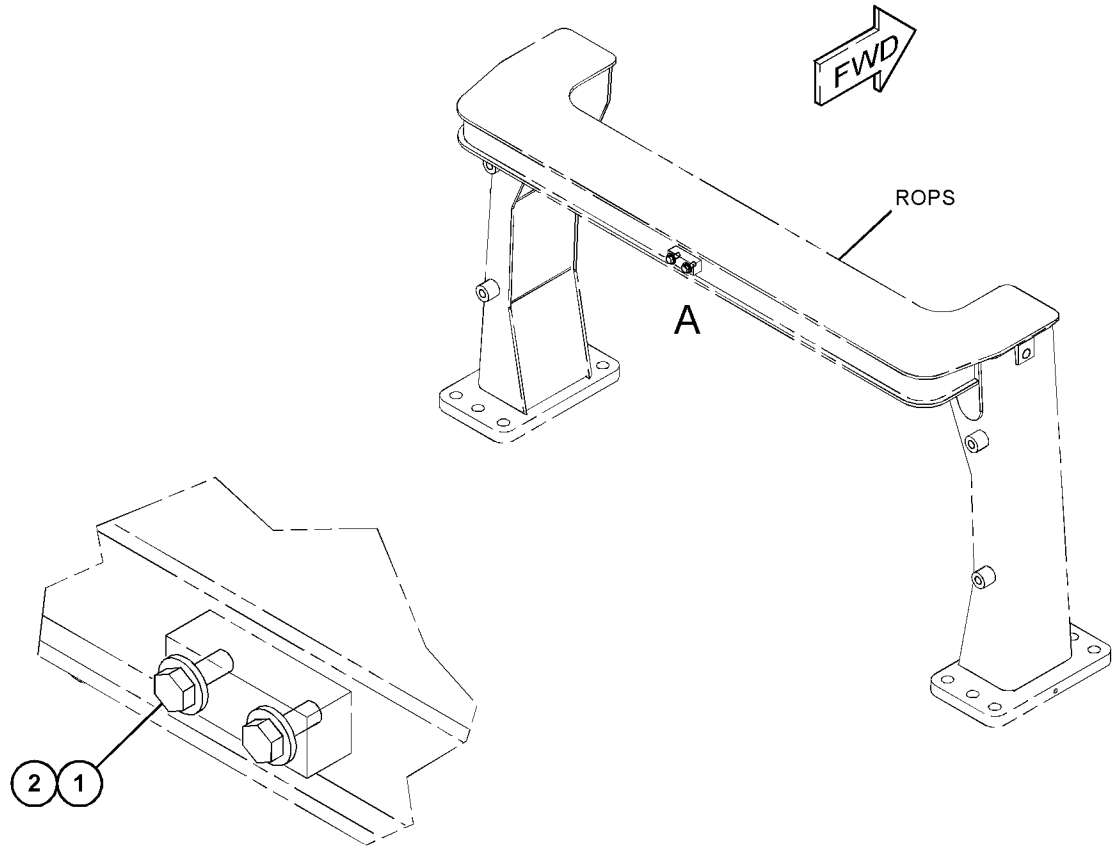

VIEW OF AREA A

GRAPHIC #1 **<END>** g03582080

393-5519 INSTALLATION GP-COMMUNICATION–PRODUCT LINK 522

S/N: EMM1-UP; JEN1-UP

AN ATTACHMENT

SMCS-7606 **i05633254**

NOTE	REF NO	GRAPHIC REF	PART NUMBER	QTY	PART NAME 1 2 3 4 5 6 (PRODUCT LEVEL)	SEE PAGE
	1	1	**8C-5608**	4	SPACER (6.5X9.5X25.4-MM THK)	
	2	1	**230-1340**	1	FILM-WARNING (PRODUCT LINK RADIO, U.S.)	
	3	1	**306-0177**	1	BRACKET	
	4	1	**307-0047**	1	FILM-INFORMATION (PRODUCT LINK, READ OMM)	
	5	1	**320-5898**	1	HARNESS AS-WIRING (COMMUNICATION RADIO)	
		1	**8T-8737**	64	PLUG-SEAL	
		1	**7K-1181**	2	STRAP-CABLE	
		1	**9X-3402**	26	SOCKET-CONNECTOR (16-GA TO 18-GA)	
					–OR–	
		1	**126-1768**	26	SOCKET-CONNECTOR (14-GA TO 16-GA)	
		1	**126-1774**	1	COVER-CONNECTOR	
		1	**155-2255**	1	KIT-CONNECTING PLUG (12-PIN)	
		1	**155-2265**	1	KIT-CONNECTING PLUG (8-PIN)	
					(EACH PLUG KIT INCLUDES PLUG AS, WEDGE & INTERFACE SEAL)	
		1	**155-2258**	1	WEDGE-PLUG LOCK (12-PIN)	
		1	**155-2259**	1	WEDGE-PLUG LOCK (8-PIN)	
		1	**160-7690**	1	PLUG AS-CONNECTOR (70-PIN)	
		1	**159-9322**	1	SEAL-O-RING	
	6	1	**346-9376**	1	ANTENNA AS	
		1	**355-1213**	1	PLUG	
		1	**361-1045**	1	NUT-SPECIAL (5/8-18-THD)	
	7	1	**353-8773**	1	CABLE AS-ANTENNA	
Y	8	1	*376-6478*	1	CONTROL GP-COMMUNICATION (PRODUCT LINK 522)	150
B	9	1	**4H-2558**	1	GROMMET	
	10	1	**4P-7581**	2	CLIP	
	11	1	**7K-1181**	18	STRAP-CABLE	
	12	1	**7X-7729**	2	WASHER (11X25X3-MM THK)	
M	13	1	**8C-3210**	2	BOLT (M6X1X16-MM)	
	14	1	**8C-5607**	8	MOUNT-ISOLATION	
M	15	1	**8T-2192**	4	BOLT (M6X1X45-MM)	
M	16	1	**8T-4136**	2	BOLT (M10X1.5X25-MM)	
	17	1	**9D-3769**	2	GROMMET	
	18	1	**9X-6165**	4	WASHER (6.5X22X2.5-MM THK)	
	19	1	**9X-8256**	2	WASHER (6.6X12X2-MM THK)	

B - USE AS REQUIRED
M - METRIC PART
Y - SEPARATE ILLUSTRATION

393-5519 **INSTALLATION GP-COMMUNICATION (*contd.*)** **i05633254**

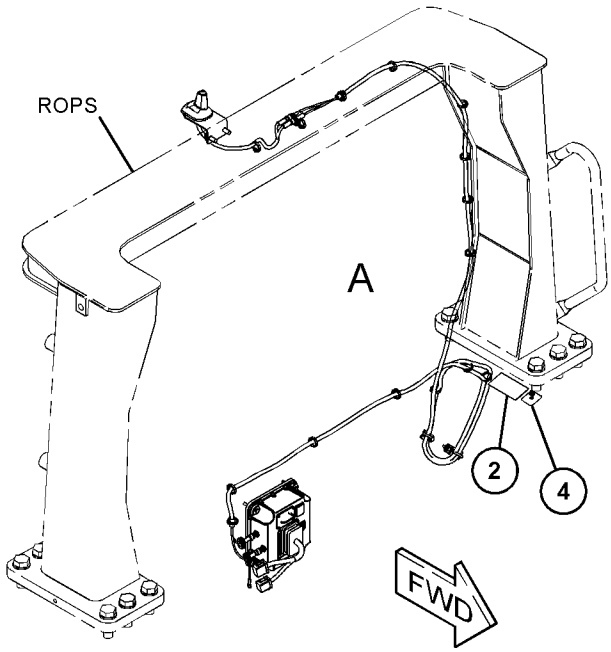

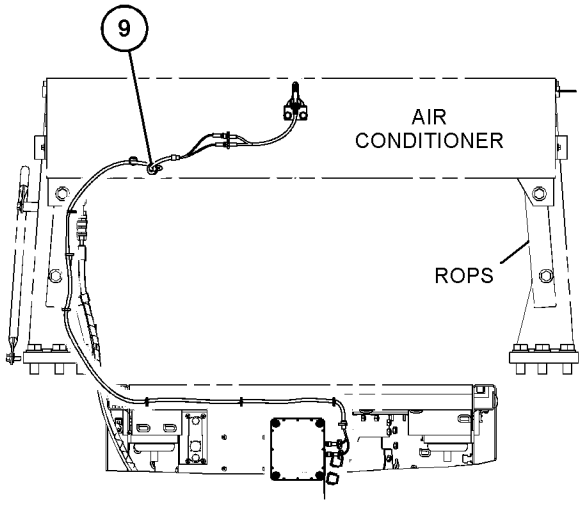

REAR VIEW
(ANTENNA ROUTING FOR ROPS AIR CONDITIONER)

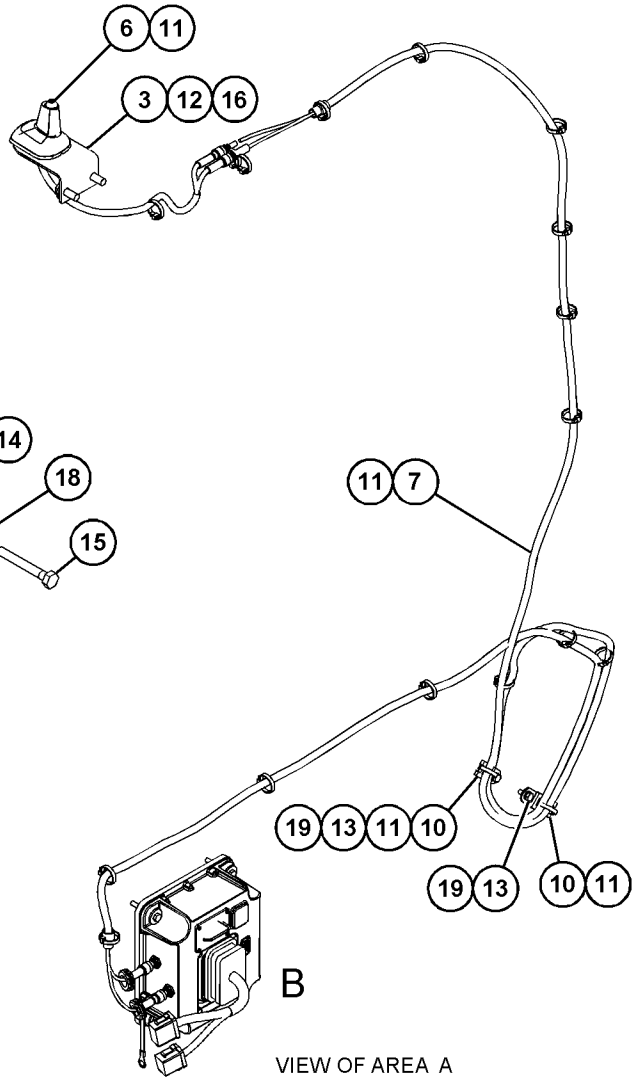

VIEW OF AREA A

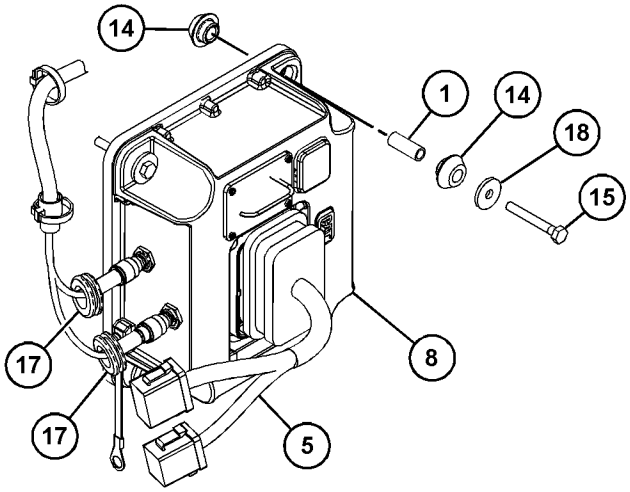

VIEW OF AREA B

GRAPHIC #1 **<END>** g03582079

3E-6389 LAMP GP-DOME–WITH SWITCH

S/N: EMM1-UP; JEN1-UP
24-VOLT
PART OF 317-6561 LINER GP-CAB
AN ATTACHMENT

SMCS-1433 **i05269470**

NOTE	REF NO	GRAPHIC REF	PART NUMBER	QTY	PART NAME 1 2 3 4 5 6 (PRODUCT LEVEL)	SEE PAGE
	1	1	**7N-9943**	1	LAMP (24-VOLT) (DOME LIGHT)	
	2	1	**102-8803**	1	KIT-RECEPTACLE (3-PIN)	
					(INCLUDES RECEPTACLE AS & WEDGE)	
	3	1	**8T-8729**	3	PIN-CONNECTOR (16-GA TO 18-GA)	
	4	1	**7T-0020**	1	LENS-DOME LAMP	

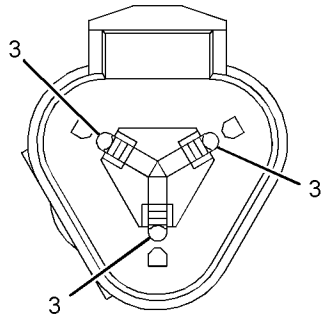

VIEW A-A

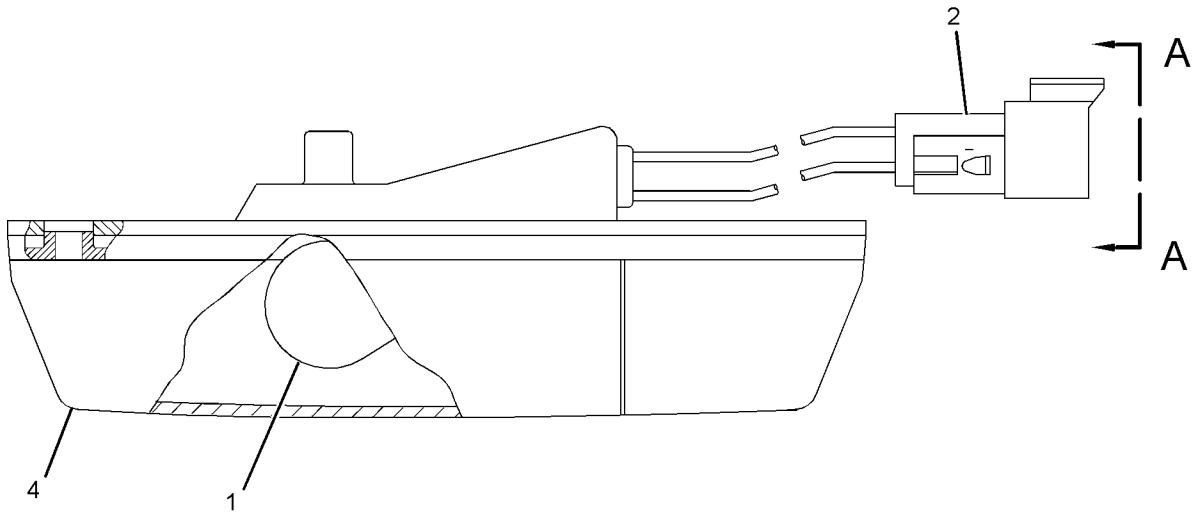

GRAPHIC #1 **<END>** g02646562

219-6485 LAMP GP-FLOOD

S/N: EMM1-UP
24-VOLT, 70-WATT
FIELD REPLACEMENT FOR 272-6641—PAGE: 176

SMCS-1434 **i05640718**

NOTE	REF NO	GRAPHIC REF	PART NUMBER	QTY	PART NAME 1 2 3 4 5 6 (PRODUCT LEVEL)	SEE PAGE
	1	1	**351-9918**	1	LAMP-HALOGEN (24-VOLT, 70-WATT)	
	2	1	**9X-4244**	2	SCREW-SPECIAL (M4X1.79X25-MM)	
	3	1	**175-4291**	1	BRACKET AS	
	4	1	**202-6614**	1	LENS AS (FLOODLIGHT)	
	5	1	**175-4292**	1	BODY AS	
	6	1	**164-7556**	1	BRACKET (LAMP RETAINING)	
	7	1	**247-4285**	1	BOLT (M8X1.25X50-MM)	
M	8	1	**6V-9189**	1	LOCKNUT (M8X1.25-THD)	
	9	1	**8T-4224**	2	WASHER-HARD (8.8X16X2-MM THK)	

M - METRIC PART

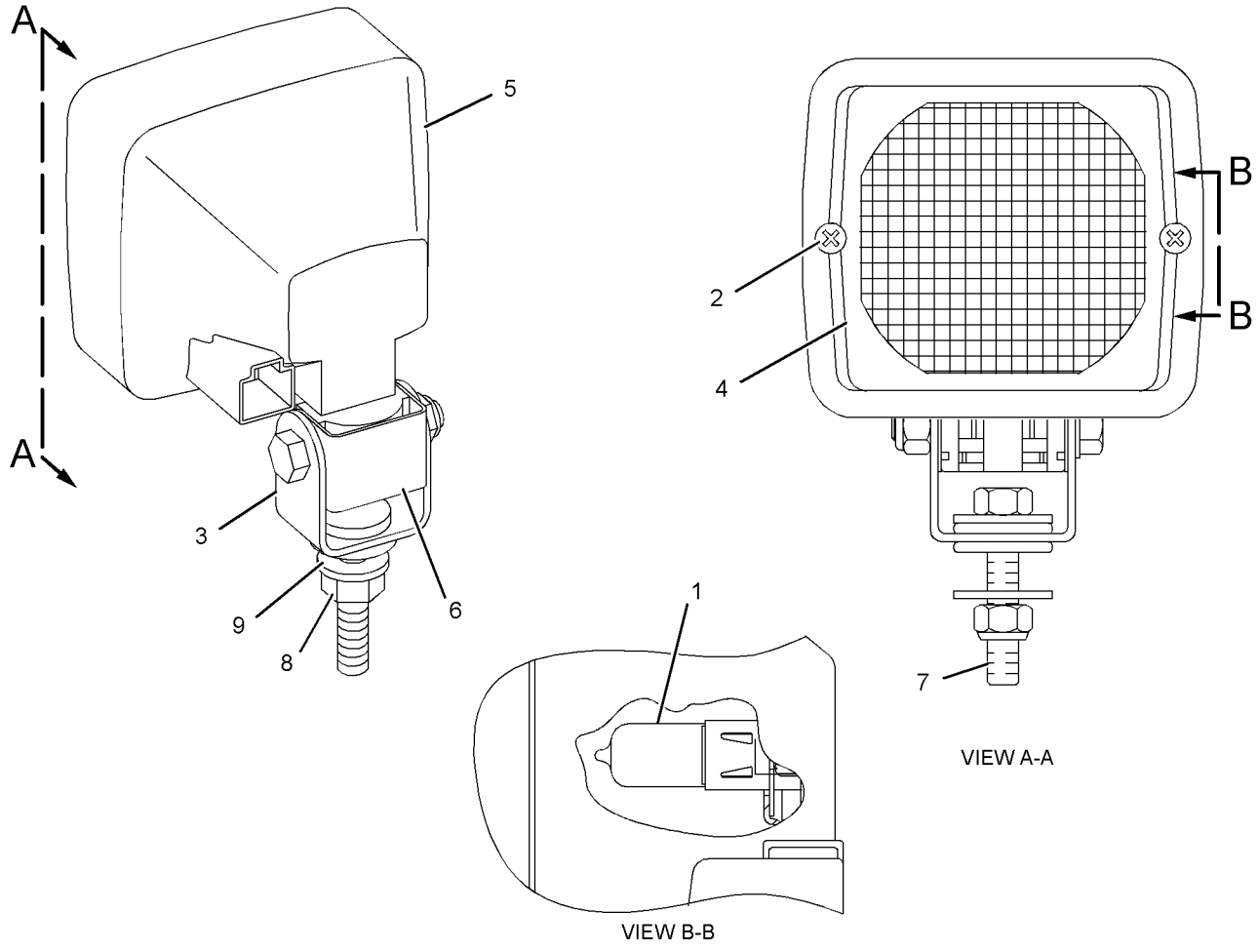

GRAPHIC #1

<END>

g02075738

219-6487 LAMP GP-FLOOD

S/N: EMM1-UP; JEN1-UP
24-VOLT, 70-WATT
FIELD REPLACEMENT FOR 254-8155—PAGE: 175

SMCS-1434 **i05517862**

NOTE	REF NO	GRAPHIC REF	PART NUMBER	QTY	PART NAME 1 2 3 4 5 6 (PRODUCT LEVEL)	SEE PAGE
	1	1	**351-9918**	1	LAMP-HALOGEN (24-VOLT, 70-WATT)	
M	2	1	**8T-6912**	1	BOLT (M8X1.25X50-MM)	
M	3	1	**6V-9189**	1	LOCKNUT (M8X1.25-THD)	
	4	1	**8T-4224**	2	WASHER-HARD (8.8X16X2-MM THK)	
	5	1	**9X-4244**	2	SCREW-SPECIAL (M4X1.79X25-MM)	
	6	1	**175-4291**	1	BRACKET AS	
	7	1	**202-6614**	1	LENS AS (FLOODLIGHT)	
	8	1	**175-4292**	1	BODY AS	
	9	1	**164-7556**	1	BRACKET (LAMP RETAINING)	

M - METRIC PART

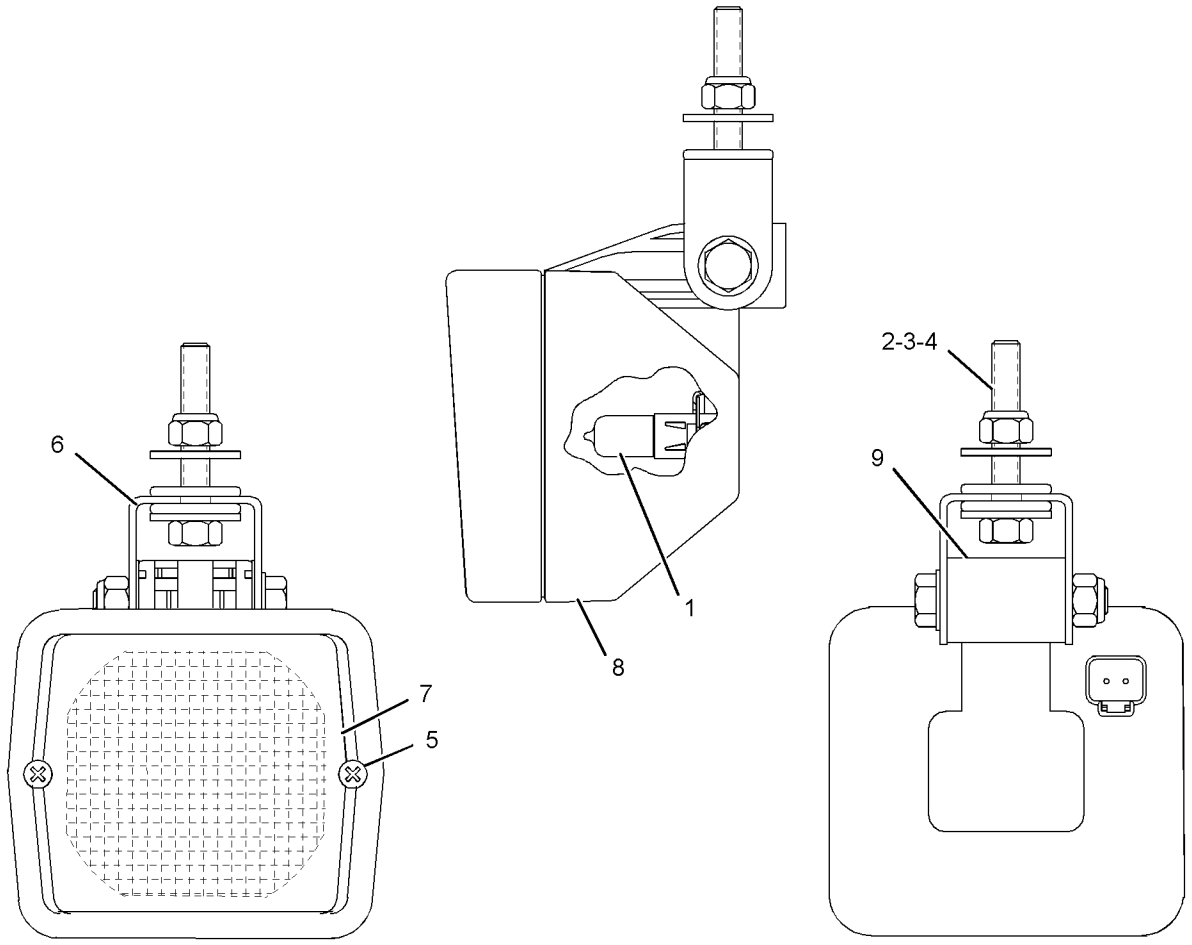

GRAPHIC #1 **<END>** g02167882

254-8155 LAMP GP-FLOOD

S/N: EMM1-UP; JEN1-UP
24-VOLT, 70-WATT
FIELD REPLACEMENT ORDER 219-6487—PAGE: 174
PART OF 329-9110, 389-6098, 389-6099, 389-6100, 389-6101, 389-6102, 389-6103, 389-6104, 389-6105, 389-6106 LIGHTING GP-FLOOD
AN ATTACHMENT

SMCS-1434 **i05501419**

NOTE	REF NO	GRAPHIC REF	PART NUMBER	QTY	PART NAME 1 2 3 4 5 6 (PRODUCT LEVEL)	SEE PAGE
	1	1	**351-9918**	1	LAMP-HALOGEN (24-VOLT, 70-WATT)	
M	2	1	**8T-4154**	1	BOLT (M8X1.25X35-MM)	
M	3	1	**5C-7261**	1	NUT (M8X1.25-THD)	
	4	1	**8T-4224**	2	WASHER-HARD (8.8X16X2-MM THK)	
	5	1	**9X-4244**	2	SCREW-SPECIAL (M4X1.79X25-MM)	
	6	1	**202-6614**	1	LENS AS	
	7	1	**175-4292**	1	BODY AS	
	8	1	**164-7556**	1	BRACKET (LAMP RETAINING)	
	9	1	**175-4291**	1	BRACKET AS	

M - METRIC PART

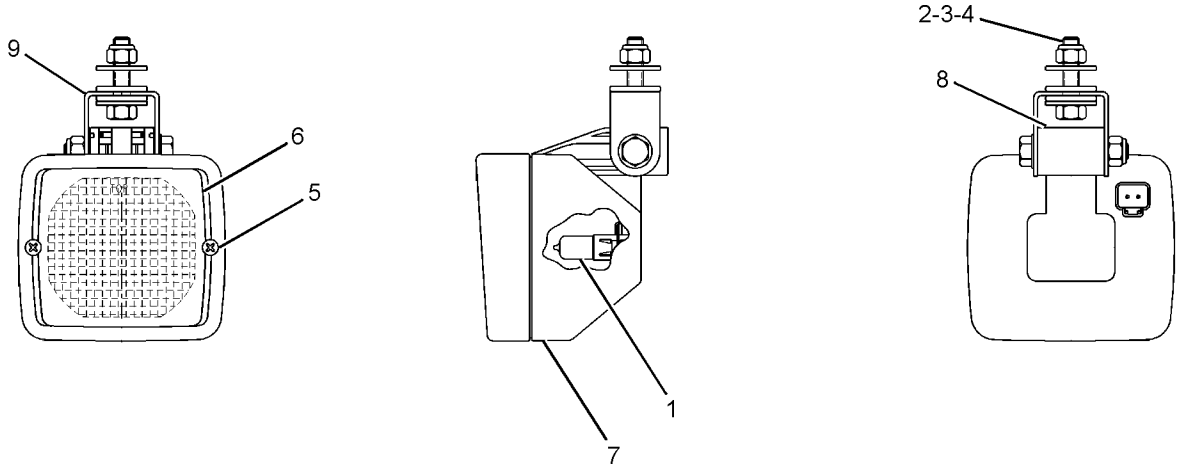

GRAPHIC #1 **<END>** g01205426

272-6641 LAMP GP-FLOOD

S/N: EMM1-UP; JEN1-UP
24-VOLT, 70-WATT
FIELD REPLACEMENT ORDER 219-6485—PAGE: 173
PART OF 389-6105, 389-6106 LIGHTING GP-FLOOD
AN ATTACHMENT

SMCS-1434 **i05626809**

NOTE	REF NO	GRAPHIC REF	PART NUMBER	QTY	PART NAME 1 2 3 4 5 6 (PRODUCT LEVEL)	SEE PAGE
	1	1	**351-9918**	1	LAMP-HALOGEN (24-VOLT, 70-WATT)	
	2	1	**9X-4244**	2	SCREW-SPECIAL (M4X1.79X25-MM)	
	3	1	**202-6614**	1	LENS AS	
	4	1	**175-4292**	1	BODY AS	
	5	1	**164-7556**	1	BRACKET (LAMP RETAINING)	
M	6	1	**8T-7547**	1	BOLT (M8X1.25X30-MM)	
M	7	1	**5C-7261**	1	NUT (M8X1.25-THD)	
	8	1	**8T-4224**	2	WASHER-HARD (8.8X16X2-MM THK)	
	9	1	**175-4291**	1	BRACKET AS	

M - METRIC PART

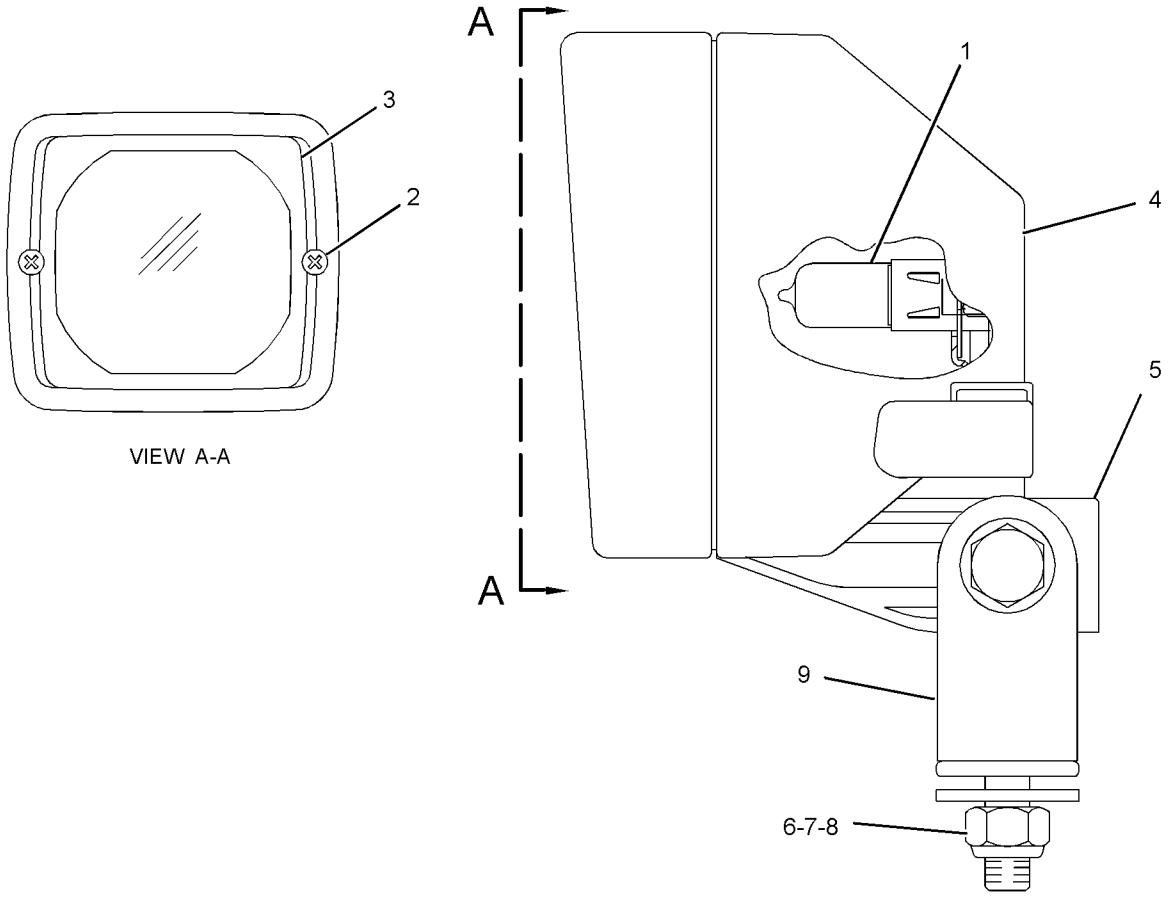

VIEW A-A

GRAPHIC #1 **<END>** g01305640

329-9110 LIGHTING GP-FLOOD—FUEL TANK

S/N: EMM1-UP; JEN1-UP
CYLINDERS
CANNOT BE USED WITH 389-6151—PAGE: 670, 389-6152—PAGE: 671
AN ATTACHMENT

SMCS-1434 **i05674669**

NOTE	REF NO	GRAPHIC REF	PART NUMBER	QTY	PART NAME 1 2 3 4 5 6 (PRODUCT LEVEL)	SEE PAGE
	1	1	**9W-4361**	8	MOUNT-FLEXIBLE	
	2	1	**195-4989**	2	HARNESS AS-LIGHTING (FLOODLIGHT) (REAR)	
					(EACH INCLUDES)	
		1	**102-8804**	1	KIT-RECEPTACLE (4-PIN)	
					(INCLUDES RECEPTACLE AS & WEDGE)	
		1	**8T-8737**	2	PLUG-SEAL	
		1	**126-1767**	2	PIN-CONNECTOR (14-GA TO 16-GA)	
		1	**126-1768**	2	SOCKET-CONNECTOR (14-GA TO 16-GA)	
		1	**155-2270**	1	KIT-CONNECTING PLUG (2-PIN)	
					(INCLUDES PLUG AS, WEDGE, & INTERFACE SEAL)	
	3	1	**384-0071**	4	GUARD AS-LAMP	
					(EACH INCLUDES)	
		1	**383-1730**	1	GUARD	
	4	1	**385-7302**	2	HARNESS AS-LIGHTING (CYLINDER)	
					(EACH INCLUDES)	
		1	**102-8802**	1	KIT-RECEPTACLE (2-PIN)	
					(INCLUDES RECEPTACLE AS & WEDGE)	
E		1	**114-8843**		SLEEVE-PLASTIC (40-CM)	
		1	**126-1767**	2	PIN-CONNECTOR (14-GA TO 16-GA)	
		1	**126-1768**	2	SOCKET-CONNECTOR (14-GA TO 16-GA)	
		1	**155-2270**	1	KIT-CONNECTING PLUG (2-PIN)	
					(INCLUDES PLUG AS, WEDGE, & INTERFACE SEAL)	
Y	5	1	**254-8155**	4	LAMP GP-FLOOD (24-VOLT)	175
	6	1	**4P-7581**	2	CLIP	
	7	1	**5P-1075**	24	WASHER-HARD (10.2X22.5X3-MM THK)	
	8	1	**5P-8522**	2	GROMMET	
	9	1	**5P-9085**	6	CLIP	
	10	1	**6H-4005**	2	GROMMET	
B	11	1	**6K-4934**	4	CLIP (SLOT)	
B	12	1	**6K-4935**	4	CLIP (TAB)	
	13	1	**6V-8801**	16	NUT (3/8-16-THD)	
	14	1	**7K-1181**	14	STRAP-CABLE	
B	15	1	**8T-4121**	4	WASHER-HARD (11X21X2.5-MM THK)	
BM	16	1	**8T-4133**	4	NUT (M10X1.5-THD)	
M	17	1	**8T-4136**	12	BOLT (M10X1.5X25-MM)	

B - USE AS REQUIRED
E - ORDER BY THE CENTIMETER
M - METRIC PART
Y - SEPARATE ILLUSTRATION

329-9110 **LIGHTING GP-FLOOD (*contd.*)** **i05674669**

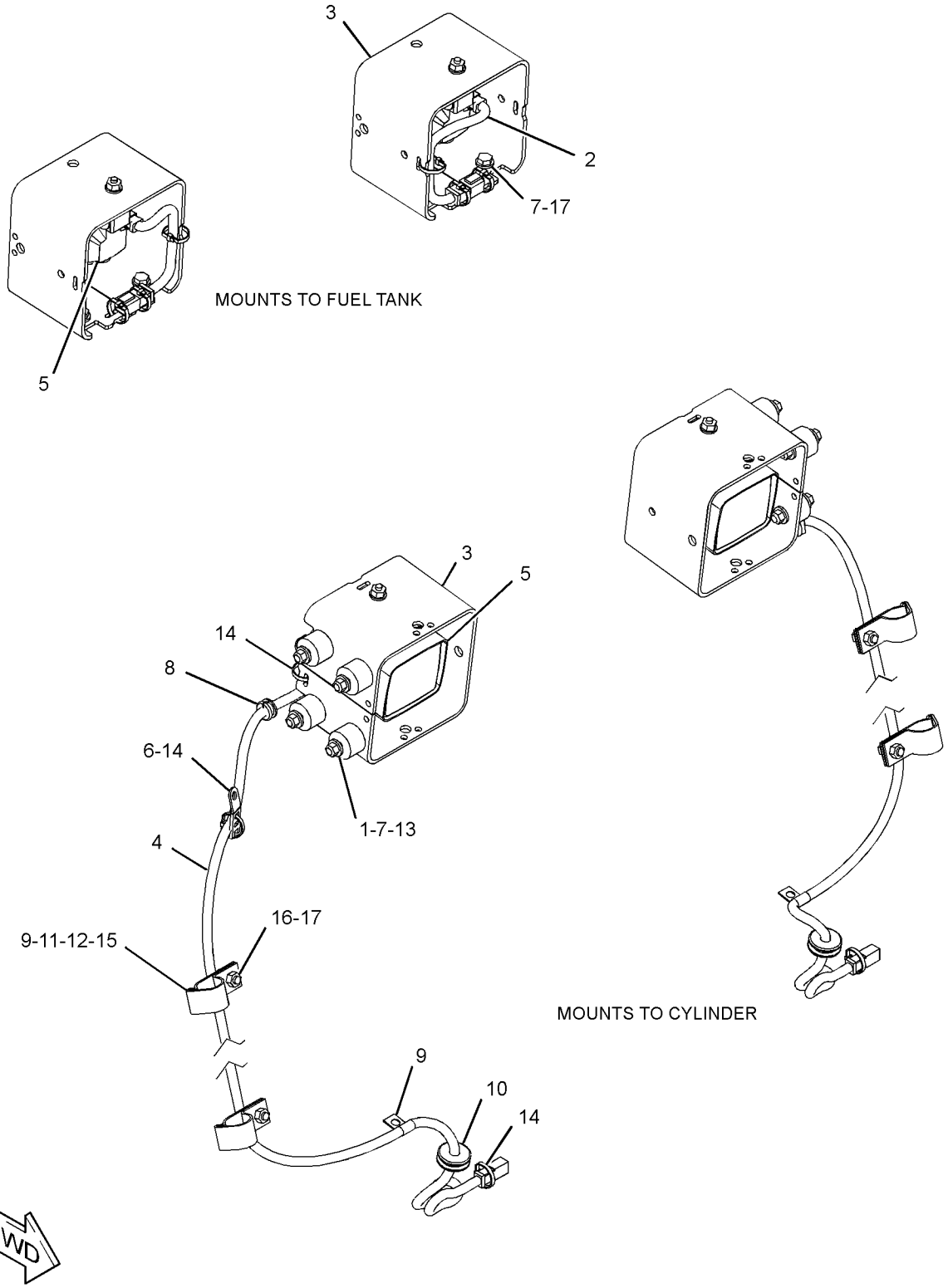

GRAPHIC #1 **<END>** g03309356

389-6098 LIGHTING GP-FLOOD—CYLINDER, FUEL TANK

S/N: EMM1-UP; JEN1-UP
FOR USE WITH 389-6151—PAGE: 670, REAR SCREENS
CANNOT BE USED WITH SWEEPS
AN ATTACHMENT

SMCS-1434 **i05674909**

NOTE	REF NO	GRAPHIC REF	PART NUMBER	QTY	PART NAME 1 2 3 4 5 6 (PRODUCT LEVEL)	SEE PAGE
	1	1	**9W-4361**	8	MOUNT-FLEXIBLE	
	2	1	**195-4989**	2	HARNESS AS-LIGHTING (FLOODLIGHT) (REAR)	
					(EACH INCLUDES)	
		1	**102-8804**	1	KIT-RECEPTACLE (4-PIN)	
					(INCLUDES RECEPTACLE AS & WEDGE)	
		1	**8T-8737**	2	PLUG-SEAL	
		1	**126-1767**	2	PIN-CONNECTOR (14-GA TO 16-GA)	
		1	**126-1768**	2	SOCKET-CONNECTOR (14-GA TO 16-GA)	
		1	**155-2270**	1	KIT-CONNECTING PLUG (2-PIN)	
					(INCLUDES PLUG AS, WEDGE, & INTERFACE SEAL)	
	3	1	**384-0071**	2	GUARD AS-LAMP	
	4	1	**385-7302**	2	HARNESS AS-LIGHTING (CYLINDER)	
					(EACH INCLUDES)	
		1	**102-8802**	1	KIT-RECEPTACLE (2-PIN)	
					(INCLUDES RECEPTACLE AS & WEDGE)	
E		1	**114-8843**		SLEEVE-PLASTIC (40-CM)	
		1	**126-1767**	2	PIN-CONNECTOR (14-GA TO 16-GA)	
		1	**126-1768**	2	SOCKET-CONNECTOR (14-GA TO 16-GA)	
		1	**155-2270**	1	KIT-CONNECTING PLUG (2-PIN)	
					(INCLUDES PLUG AS, WEDGE, & INTERFACE SEAL)	
Y	5	1	*254-8155*	4	LAMP GP-FLOOD (24-VOLT)	175
	6	1	**4P-7581**	2	CLIP	
	7	1	**4P-8134**	2	CLIP	
	8	1	**5P-1075**	16	WASHER-HARD (10.2X22.5X3-MM THK)	
	9	1	**5P-8522**	2	GROMMET	
	10	1	**5P-9085**	6	CLIP	
	11	1	**6H-4005**	2	GROMMET	
	12	1	**6K-4934**	4	CLIP (SLOT)	
	13	1	**6K-4935**	4	CLIP (TAB)	
	14	1	**6V-8801**	16	NUT (3/8-16-THD)	
	15	1	**7K-1181**	10	STRAP-CABLE	
	16	1	**8T-4121**	10	WASHER-HARD (11X21X2.5-MM THK)	
M	17	1	**8T-4133**	4	NUT (M10X1.5-THD)	
M	18	1	**8T-4136**	4	BOLT (M10X1.5X25-MM)	
M	19	1	**8T-4137**	2	BOLT (M10X1.5X20-MM)	

E - ORDER BY THE CENTIMETER
M - METRIC PART
Y - SEPARATE ILLUSTRATION

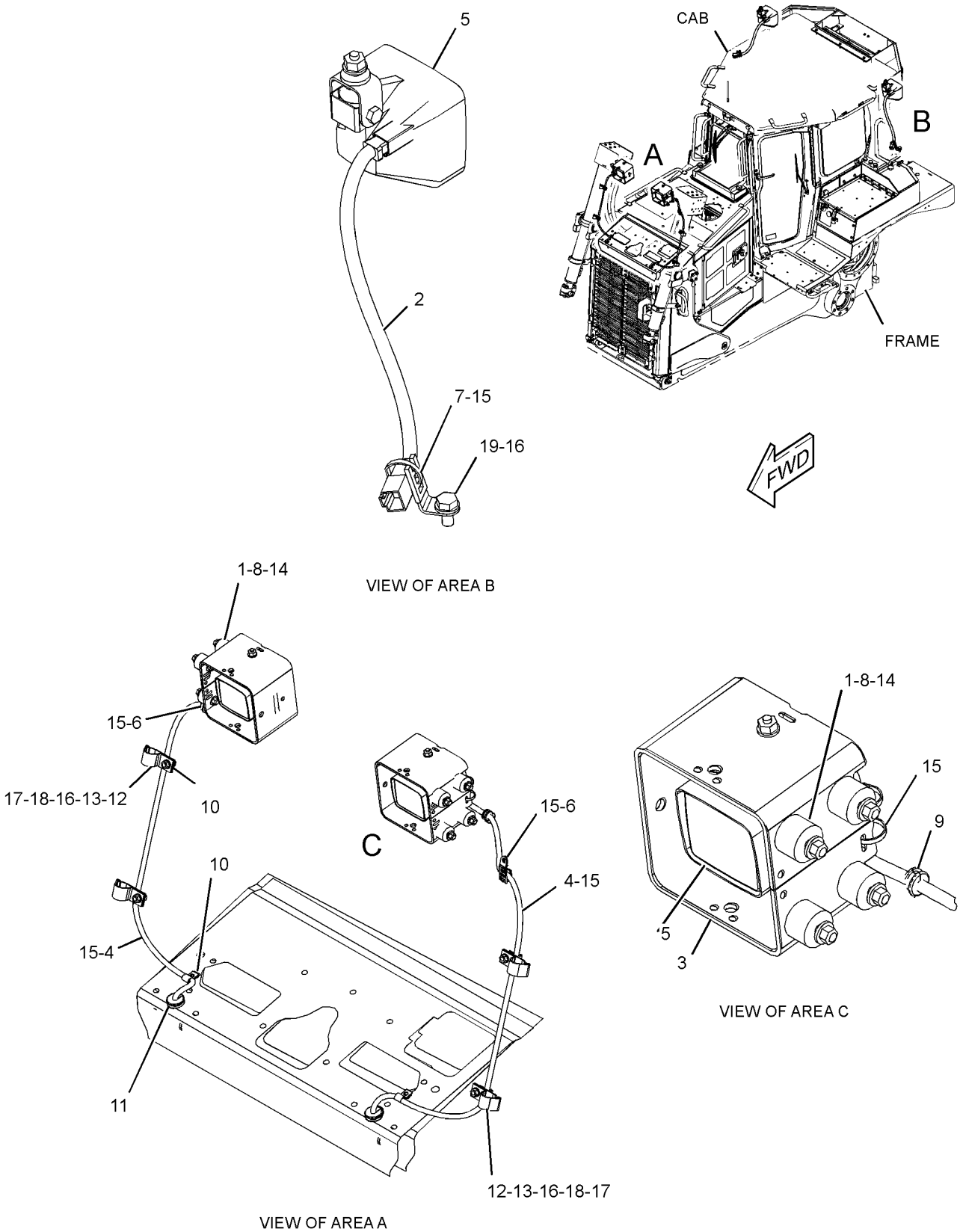

GRAPHIC #1 **<END>** g03583950

389-6099 LIGHTING GP-FLOOD—CYLINDER, FUEL TANK

S/N: EMM1-UP; JEN1-UP

CANNOT BE USED WITH 389-6151—PAGE: 670, 389-6152—PAGE: 671

AN ATTACHMENT

SMCS-1434 **i05674910**

NOTE	REF NO	GRAPHIC REF	PART NUMBER	QTY	PART NAME 1 2 3 4 5 6 (PRODUCT LEVEL)	SEE PAGE
	1	1	**9W-4361**	16	MOUNT-FLEXIBLE	
	2	1	**195-4989**	2	HARNESS AS-LIGHTING (FLOODLIGHT) (REAR)	
					(EACH INCLUDES)	
		1	**102-8804**	1	KIT-RECEPTACLE (4-PIN)	
					(INCLUDES RECEPTACLE AS & WEDGE)	
		1	**8T-8737**	2	PLUG-SEAL	
		1	**126-1767**	2	PIN-CONNECTOR (14-GA TO 16-GA)	
		1	**126-1768**	2	SOCKET-CONNECTOR (14-GA TO 16-GA)	
		1	**155-2270**	1	KIT-CONNECTING PLUG (2-PIN)	
					(INCLUDES PLUG AS, WEDGE, & INTERFACE SEAL)	
	3	1	**384-0071**	6	GUARD AS-LAMP	
	4	1	**385-4292**	2	HARNESS AS-LIGHTING (CYLINDER)	
					(EACH INCLUDES)	
		1	**102-8802**	1	KIT-RECEPTACLE (2-PIN)	
					(INCLUDES RECEPTACLE AS & WEDGE)	
E		1	**114-8843**		SLEEVE-PLASTIC (60-CM)	
E		1	**119-3662**		TUBE-HEAT SHRINK (10.85-MM DIA) (13-CM)	
		1	**126-1767**	2	PIN-CONNECTOR (14-GA TO 16-GA)	
		1	**126-1768**	4	SOCKET-CONNECTOR (14-GA TO 16-GA)	
		1	**155-2270**	2	KIT-CONNECTING PLUG (2-PIN)	
					(EACH INCLUDES PLUG AS, WEDGE, & INTERFACE SEAL)	
Y	5	1	*254-8155*	6	LAMP GP-FLOOD (24-VOLT) (CYLINDER, FUEL TANK)	175
	6	1	**4P-7581**	2	CLIP	
	7	1	**5P-1075**	32	WASHER-HARD (10.2X22.5X3-MM THK)	
	8	1	**5P-8522**	4	GROMMET	
	9	1	**5P-9085**	6	CLIP	
	10	1	**6H-4005**	2	GROMMET	
	11	1	**6K-4934**	4	CLIP (SLOT)	
	12	1	**6K-4935**	4	CLIP (TAB)	
	13	1	**6V-8801**	32	NUT (3/8-16-THD)	
	14	1	**7K-1181**	18	STRAP-CABLE	
	15	1	**8T-4121**	16	WASHER-HARD (11X21X2.5-MM THK)	
M	16	1	**8T-4133**	4	NUT (M10X1.5-THD)	
M	17	1	**8T-4136**	12	BOLT (M10X1.5X25-MM)	

E - ORDER BY THE CENTIMETER
M - METRIC PART
Y - SEPARATE ILLUSTRATION

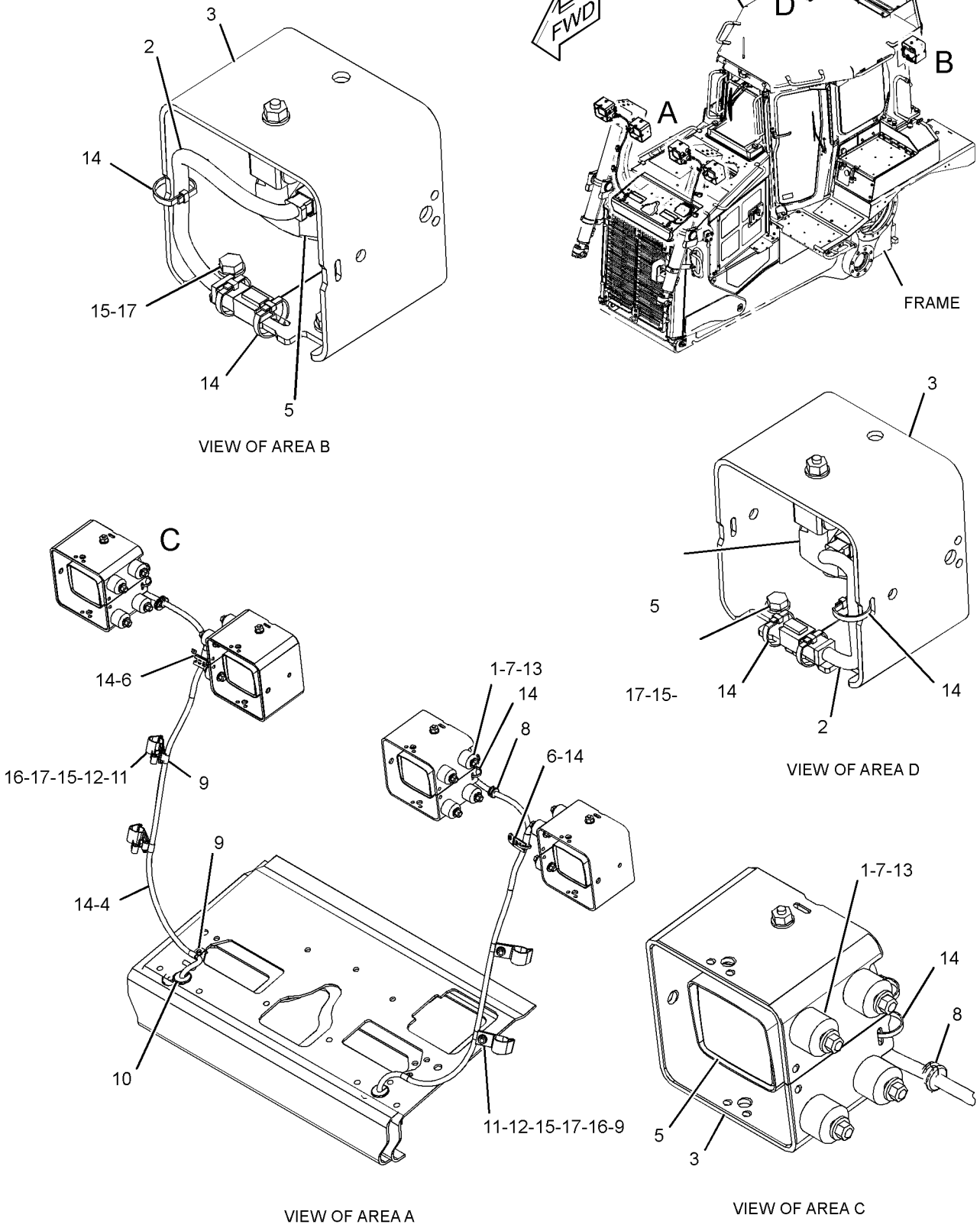

GRAPHIC #1 **<END>** g03583954

389-6100 LIGHTING GP-FLOOD—CYLINDER, FUEL TANK

S/N: EMM1-UP; JEN1-UP
FOR USE WITH 389-6151—PAGE: 670, 389-6152—PAGE: 671, REAR SCREENS
CANNOT BE USED WITH SWEEPS
AN ATTACHMENT

SMCS-1434 **i05626753**

NOTE	REF NO	GRAPHIC REF	PART NUMBER	QTY	PART NAME 1 2 3 4 5 6 (PRODUCT LEVEL)	SEE PAGE
	1	1	**9W-4361**	16	MOUNT-FLEXIBLE	
	2	1	**195-4989**	2	HARNESS AS-LIGHTING (FLOODLIGHT) (REAR)	
					(EACH INCLUDES)	
		1	**102-8804**	1	KIT-RECEPTACLE (4-PIN)	
					(INCLUDES RECEPTACLE AS & WEDGE)	
		1	**8T-8737**	2	PLUG-SEAL	
		1	**126-1767**	2	PIN-CONNECTOR (14-GA TO 16-GA)	
		1	**126-1768**	2	SOCKET-CONNECTOR (14-GA TO 16-GA)	
		1	**155-2270**	1	KIT-CONNECTING PLUG (2-PIN)	
					(INCLUDES PLUG AS, WEDGE, & INTERFACE SEAL)	
	3	1	**384-0071**	4	GUARD AS-LAMP	
	4	1	**385-4292**	2	HARNESS AS-LIGHTING (CYLINDER)	
					(EACH INCLUDES)	
		1	**102-8802**	1	KIT-RECEPTACLE (2-PIN)	
					(INCLUDES RECEPTACLE AS & WEDGE)	
E		1	**114-8843**		SLEEVE-PLASTIC (60-CM)	
E		1	**119-3662**		TUBE-HEAT SHRINK (10.85-MM DIA) (13-CM)	
		1	**126-1767**	2	PIN-CONNECTOR (14-GA TO 16-GA)	
		1	**126-1768**	4	SOCKET-CONNECTOR (14-GA TO 16-GA)	
		1	**155-2270**	2	KIT-CONNECTING PLUG (2-PIN)	
					(EACH INCLUDES PLUG AS, WEDGE, & INTERFACE SEAL)	
Y	5	1	*254-8155*	6	LAMP GP-FLOOD (24-VOLT) (FRONT, REAR)	175
	6	1	**4P-7581**	2	CLIP	
	7	1	**4P-8134**	2	CLIP	
	8	1	**5P-1075**	32	WASHER-HARD (10.2X22.5X3-MM THK)	
	9	1	**5P-8522**	4	GROMMET	
	10	1	**5P-9085**	6	CLIP	
	11	1	**6H-4005**	2	GROMMET	
	12	1	**6K-4934**	4	CLIP (SLOT)	
	13	1	**6K-4935**	4	CLIP (TAB)	
	14	1	**6V-8801**	32	NUT (3/8-16-THD)	
	15	1	**7K-1181**	14	STRAP-CABLE	
	16	1	**8T-4121**	10	WASHER-HARD (11X21X2.5-MM THK)	
M	17	1	**8T-4133**	4	NUT (M10X1.5-THD)	
M	18	1	**8T-4136**	4	BOLT (M10X1.5X25-MM)	
M	19	1	**8T-4137**	2	BOLT (M10X1.5X20-MM)	

E - ORDER BY THE CENTIMETER
M - METRIC PART
Y - SEPARATE ILLUSTRATION

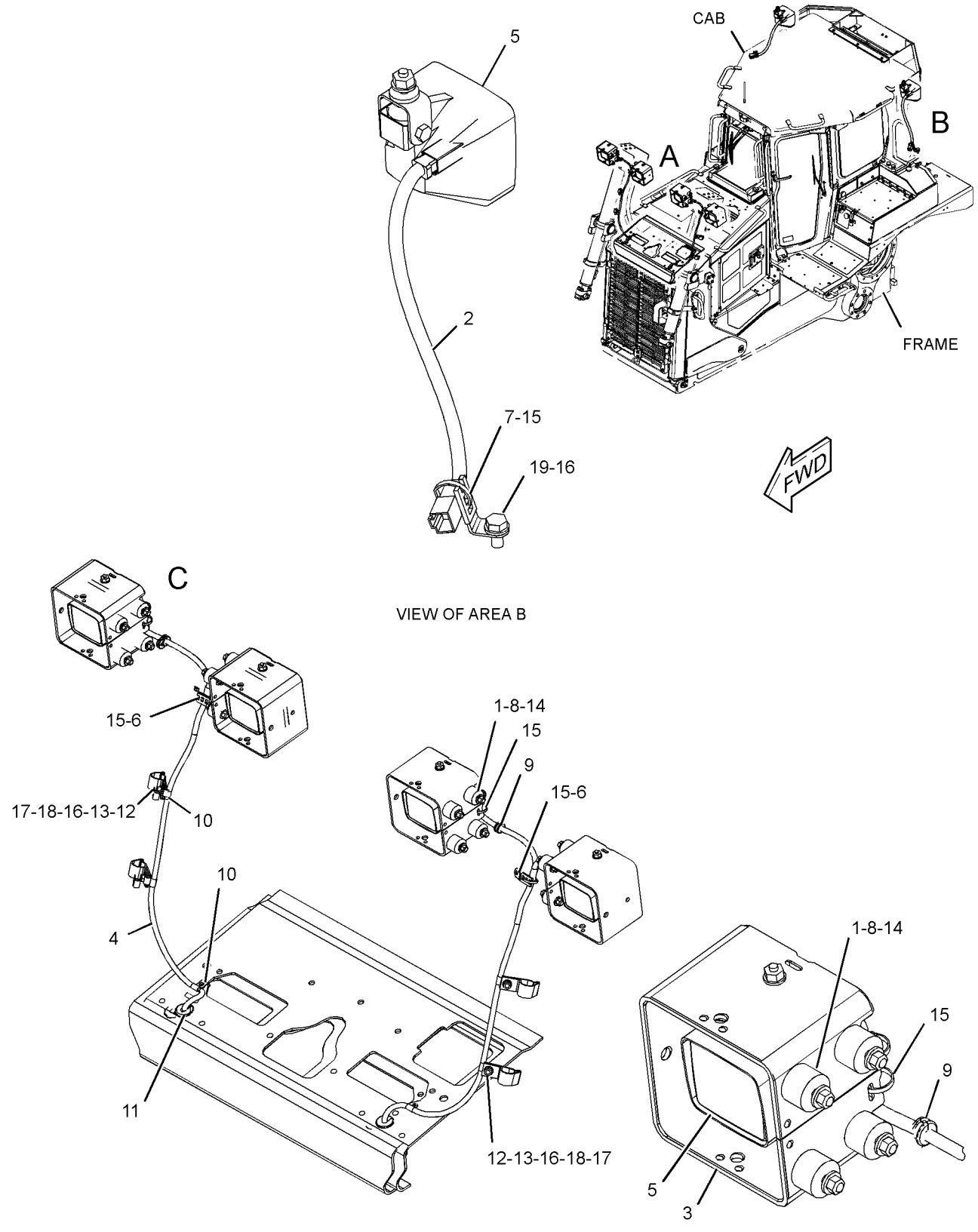

GRAPHIC #1 **<END>** g03583917

389-6101 LIGHTING GP-FLOOD—CYLINDER, FUEL TANK, ROPS

S/N: EMM1-UP; JEN1-UP

FOR USE WITH 389-6148—PAGE: 198, 389-6149—PAGE: 498

CANNOT BE USED WITH 389-6151—PAGE: 670, 389-6152—PAGE: 671, SWEEPS AN ATTACHMENT

SMCS-1434 **i05626754**

NOTE	REF NO	GRAPHIC REF	PART NUMBER	QTY	PART NAME 1 2 3 4 5 6 (PRODUCT LEVEL)	SEE PAGE
	1	1	**9W-4361**	16	MOUNT-FLEXIBLE	
	2	1	**170-3399**	2	BRACKET	
	3	1	**172-4869**	2	BRACKET	
	4	1	**185-9607**	2	HARNESS AS-LIGHTING (REAR ROPS, FUEL TANK)	
					(EACH INCLUDES)	
		1	**102-8804**	1	KIT-RECEPTACLE (4-PIN)	
					(INCLUDES RECEPTACLE AS & WEDGE)	
		1	**126-1767**	4	PIN-CONNECTOR (14-GA TO 16-GA)	
		1	**126-1768**	4	SOCKET-CONNECTOR (14-GA TO 16-GA)	
		1	**155-2270**	2	KIT-CONNECTING PLUG (2-PIN)	
					(EACH INCLUDES PLUG AS, WEDGE, & INTERFACE SEAL)	
	5	1	**383-1730**	2	GUARD	
	6	1	**384-0071**	4	GUARD AS-LAMP	
	7	1	**384-0072**	1	BRACKET AS (RH)	
	8	1	**384-0073**	1	BRACKET AS (LH)	
	9	1	**385-7302**	2	HARNESS AS-LIGHTING (CYLINDER)	
					(EACH INCLUDES)	
		1	**102-8802**	1	KIT-RECEPTACLE (2-PIN)	
					(INCLUDES RECEPTACLE AS & WEDGE)	
E		1	**114-8843**		SLEEVE-PLASTIC (40-CM)	
		1	**126-1767**	2	PIN-CONNECTOR (14-GA TO 16-GA)	
		1	**126-1768**	2	SOCKET-CONNECTOR (14-GA TO 16-GA)	
		1	**155-2270**	1	KIT-CONNECTING PLUG (2-PIN)	
					(INCLUDES PLUG AS, WEDGE, & INTERFACE SEAL)	
Y	11	1	*254-8155*	6	LAMP GP-FLOOD (24-VOLT)	175
	12	1	**4P-7581**	2	CLIP	
	13	1	**5P-1075**	36	WASHER-HARD (10.2X22.5X3-MM THK)	
	14	1	**5P-8522**	2	GROMMET	
	15	1	**5P-9085**	6	CLIP	
	16	1	**5S-7379**	4	BOLT (3/8-16X0.875-IN)	
	17	1	**6H-4005**	4	GROMMET	
	18	1	**6K-4934**	4	CLIP (SLOT)	
	19	1	**6K-4935**	4	CLIP (TAB)	
	20	1	**6V-8801**	32	NUT (3/8-16-THD)	
	21	1	**7K-1181**	24	STRAP-CABLE	
M	22	1	**7X-2489**	2	BOLT (M24X3X100-MM)	
	23	1	**7X-7729**	2	WASHER (11X25X3-MM THK)	
	24	1	**8T-4121**	16	WASHER-HARD (11X21X2.5-MM THK)	
M	25	1	**8T-4133**	4	NUT (M10X1.5-THD)	
M	26	1	**8T-4136**	12	BOLT (M10X1.5X25-MM)	
M	27	1	**8T-4137**	2	BOLT (M10X1.5X20-MM)	
	28	1	**8T-4167**	2	WASHER-HARD (26X44X4-MM THK)	

E - ORDER BY THE CENTIMETER
M - METRIC PART
Y - SEPARATE ILLUSTRATION

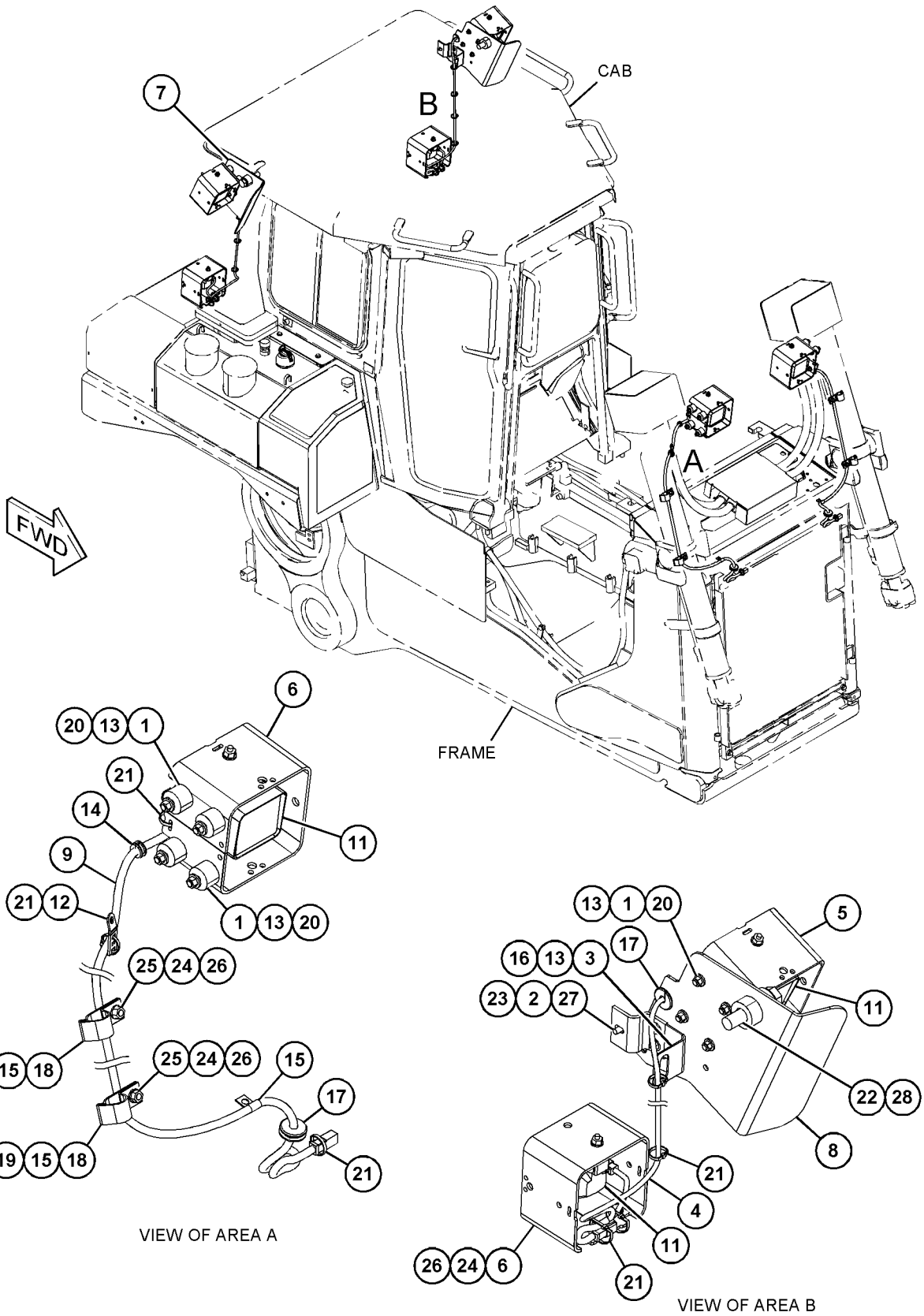

GRAPHIC #1 **<END>** g03579941

389-6102 LIGHTING GP-FLOOD—CYLINDER, FUEL TANK, ROPS

S/N: EMM1-UP; JEN1-UP

FOR USE WITH 389-6151—PAGE: 670, 389-6152—PAGE: 671, REAR SCREENS

CANNOT BE USED WITH SWEEPS

AN ATTACHMENT

SMCS-1434 **i05626756**

NOTE	REF NO	GRAPHIC REF	PART NUMBER	QTY	PART NAME 1 2 3 4 5 6 (PRODUCT LEVEL)	SEE PAGE
	1	1	**9W-4361**	16	MOUNT-FLEXIBLE	
	2	1	**170-3399**	2	BRACKET	
	3	1	**172-4869**	2	BRACKET	
	4	1	**185-9607**	2	HARNESS AS-LIGHTING (REAR ROPS, FUEL TANK)	
					(EACH INCLUDES)	
		1	**102-8804**	1	KIT-RECEPTACLE (4-PIN)	
					(INCLUDES RECEPTACLE AS & WEDGE)	
		1	**126-1767**	4	PIN-CONNECTOR (14-GA TO 16-GA)	
		1	**126-1768**	4	SOCKET-CONNECTOR (14-GA TO 16-GA)	
		1	**155-2270**	2	KIT-CONNECTING PLUG (2-PIN)	
					(EACH INCLUDES PLUG AS, WEDGE, & INTERFACE SEAL)	
	5	1	**383-1730**	2	GUARD	
	6	1	**384-0071**	2	GUARD AS-LAMP	
	7	1	**384-0072**	1	BRACKET AS (RH)	
	8	1	**384-0073**	1	BRACKET AS (LH)	
	9	1	**385-7302**	2	HARNESS AS-LIGHTING (CYLINDER)	
					(EACH INCLUDES)	
		1	**102-8802**	1	KIT-RECEPTACLE (2-PIN)	
					(INCLUDES RECEPTACLE AS & WEDGE)	
E		1	**114-8843**		SLEEVE-PLASTIC (40-CM)	
		1	**126-1767**	2	PIN-CONNECTOR (14-GA TO 16-GA)	
		1	**126-1768**	2	SOCKET-CONNECTOR (14-GA TO 16-GA)	
		1	**155-2270**	1	KIT-CONNECTING PLUG (2-PIN)	
					(INCLUDES PLUG AS, WEDGE, & INTERFACE SEAL)	
Y	11	1	*254-8155*	6	LAMP GP-FLOOD (24-VOLT)	175
	12	1	**4P-7581**	2	CLIP	
	13	1	**4P-8134**	2	CLIP	
	14	1	**5P-1075**	36	WASHER-HARD (10.2X22.5X3-MM THK)	
	15	1	**5P-8522**	2	GROMMET	
	16	1	**5P-9085**	6	CLIP	
	17	1	**5S-7379**	4	BOLT (3/8-16X0.875-IN)	
	18	1	**6H-4005**	4	GROMMET	
	19	1	**6K-4934**	4	CLIP (SLOT)	
	20	1	**6K-4935**	4	CLIP (TAB)	
	21	1	**6V-8801**	32	NUT (3/8-16-THD)	
	22	1	**7K-1181**	20	STRAP-CABLE	
M	23	1	**7X-2489**	2	BOLT (M24X3X100-MM)	
	24	1	**7X-7729**	2	WASHER (11X25X3-MM THK)	
	25	1	**8T-4121**	10	WASHER-HARD (11X21X2.5-MM THK)	
M	26	1	**8T-4133**	4	NUT (M10X1.5-THD)	
M	27	1	**8T-4136**	4	BOLT (M10X1.5X25-MM)	
M	28	1	**8T-4137**	4	BOLT (M10X1.5X20-MM)	
	29	1	**8T-4167**	2	WASHER-HARD (26X44X4-MM THK)	

E - ORDER BY THE CENTIMETER
M - METRIC PART
Y - SEPARATE ILLUSTRATION

389-6102 **LIGHTING GP-FLOOD (*contd.*)** **i05626756**

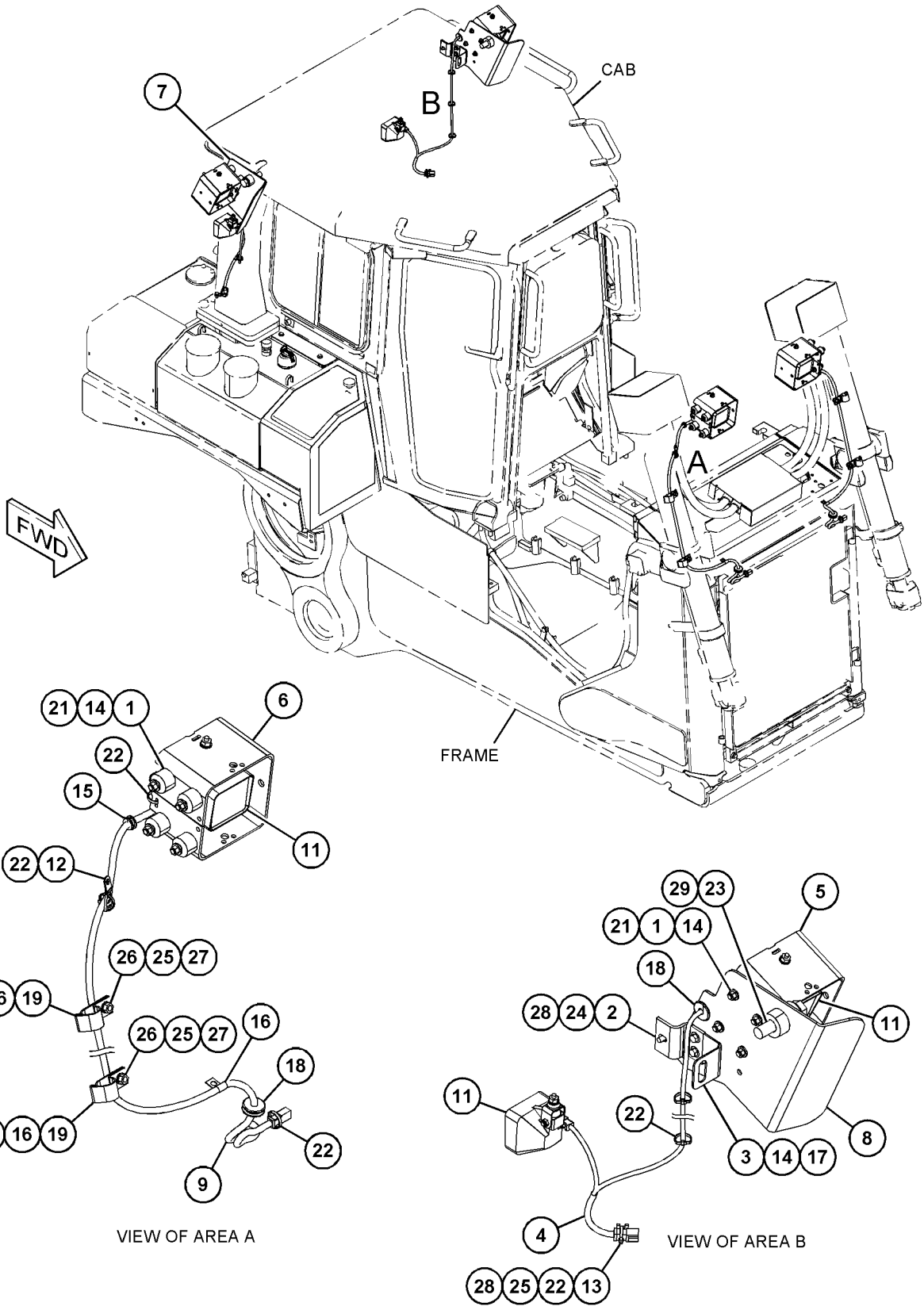

GRAPHIC #1 **<END>** g03579175

389-6103 LIGHTING GP-FLOOD—CYLINDER, FUEL TANK, ROPS

S/N: EMM1-UP; JEN1-UP

FOR USE WITH 389-6148—PAGE: 198, 389-6149—PAGE: 498

CANNOT BE USED WITH 389-6151—PAGE: 670, 389-6152—PAGE: 671, SWEEPS AN ATTACHMENT

SMCS-1434 **i05626757**

NOTE	REF NO	GRAPHIC REF	PART NUMBER	QTY	PART NAME 1 2 3 4 5 6 (PRODUCT LEVEL)	SEE PAGE
	1	1	**9W-4361**	24	MOUNT-FLEXIBLE	
	2	1	**170-3399**	2	BRACKET	
	3	1	**172-4869**	2	BRACKET	
	4	1	**185-9607**	2	HARNESS AS-LIGHTING (REAR ROPS, FUEL TANK)	
					(EACH INCLUDES)	
		1	**102-8804**	1	KIT-RECEPTACLE (4-PIN)	
					(INCLUDES RECEPTACLE AS & WEDGE)	
		1	**126-1767**	4	PIN-CONNECTOR (14-GA TO 16-GA)	
		1	**126-1768**	4	SOCKET-CONNECTOR (14-GA TO 16-GA)	
		1	**155-2270**	2	KIT-CONNECTING PLUG (2-PIN)	
					(EACH INCLUDES PLUG AS, WEDGE, & INTERFACE SEAL)	
	5	1	**383-1730**	2	GUARD	
	6	1	**384-0071**	6	GUARD AS-LAMP	
	7	1	**384-0072**	1	BRACKET AS (RH)	
	8	1	**384-0073**	1	BRACKET AS (LH)	
	9	1	**385-4292**	2	HARNESS AS-LIGHTING (CYLINDER)	
					(EACH INCLUDES)	
		1	**102-8802**	1	KIT-RECEPTACLE (2-PIN)	
					(INCLUDES RECEPTACLE AS & WEDGE)	
E		1	**114-8843**		SLEEVE-PLASTIC (60-CM)	
E		1	**119-3662**		TUBE-HEAT SHRINK (10.85-MM DIA) (13-CM)	
		1	**126-1767**	2	PIN-CONNECTOR (14-GA TO 16-GA)	
		1	**126-1768**	4	SOCKET-CONNECTOR (14-GA TO 16-GA)	
		1	**155-2270**	2	KIT-CONNECTING PLUG (2-PIN)	
					(EACH INCLUDES PLUG AS, WEDGE, & INTERFACE SEAL)	
Y	11	1	*254-8155*	8	LAMP GP-FLOOD (24-VOLT) (ROPS, FUEL TANK, CYLINDER)	175
	12	1	**4P-7581**	2	CLIP	
	13	1	**5P-1075**	52	WASHER-HARD (10.2X22.5X3-MM THK)	
	14	1	**5P-8522**	4	GROMMET	
	15	1	**5P-9085**	6	CLIP	
	16	1	**5S-7379**	4	BOLT (3/8-16X0.875-IN)	
	17	1	**6H-4005**	4	GROMMET	
	18	1	**6K-4934**	4	CLIP (SLOT)	
	19	1	**6K-4935**	4	CLIP (TAB)	
	20	1	**6V-8801**	48	NUT (3/8-16-THD)	
	21	1	**7K-1181**	28	STRAP-CABLE	
M	22	1	**7X-2489**	2	BOLT (M24X3X100-MM)	
	23	1	**7X-7729**	2	WASHER (11X25X3-MM THK)	
	24	1	**8T-4121**	16	WASHER-HARD (11X21X2.5-MM THK)	
M	25	1	**8T-4133**	4	NUT (M10X1.5-THD)	
M	26	1	**8T-4136**	12	BOLT (M10X1.5X25-MM)	
M	27	1	**8T-4137**	2	BOLT (M10X1.5X20-MM)	
	28	1	**8T-4167**	2	WASHER-HARD (26X44X4-MM THK)	

E - ORDER BY THE CENTIMETER
M - METRIC PART
Y - SEPARATE ILLUSTRATION

389-6103 **LIGHTING GP-FLOOD (*contd.*)** **i05626757**

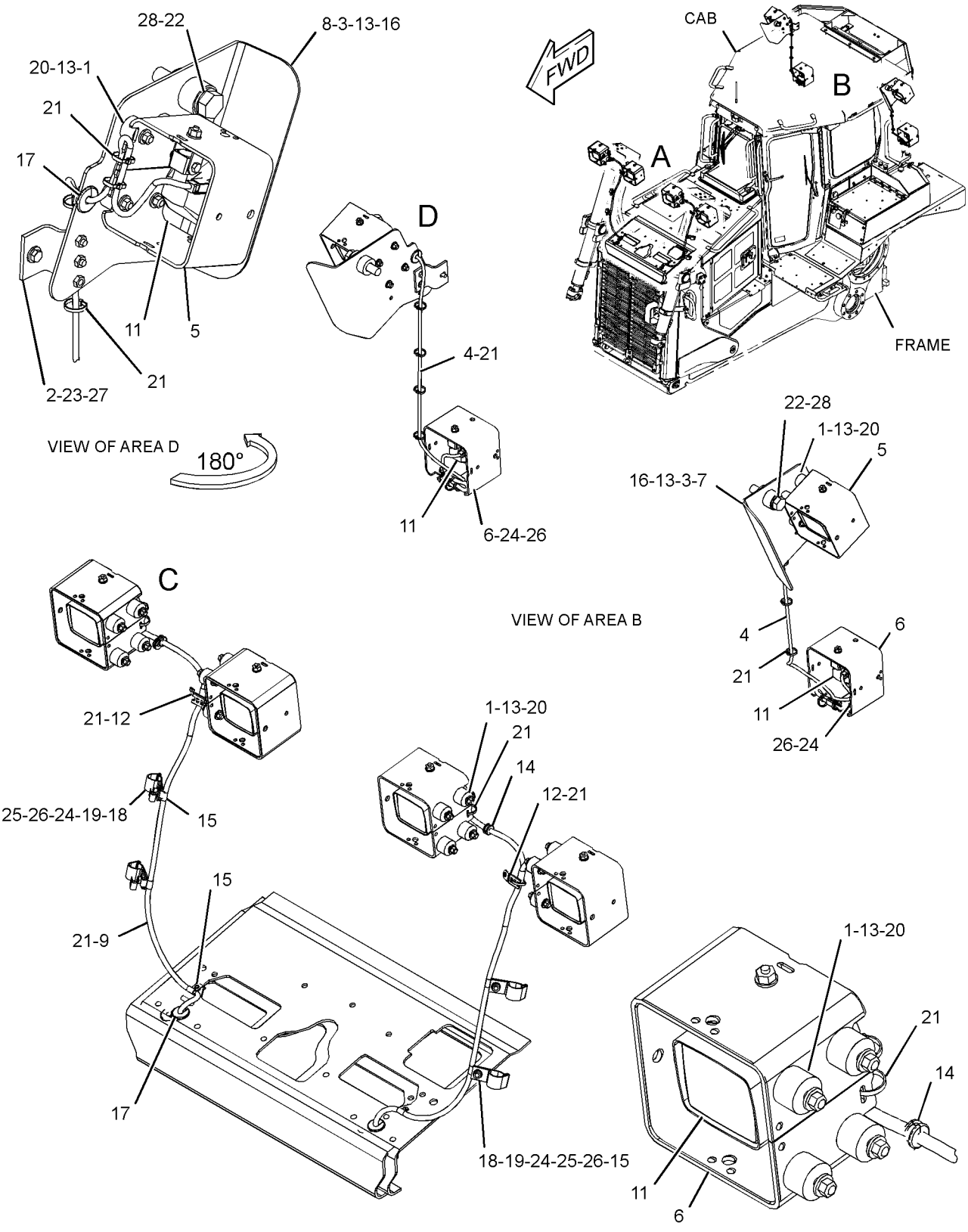

GRAPHIC #1 **<END>** g03583957

389-6104 LIGHTING GP-FLOOD—CYLINDER, FUEL TANK, ROPS

S/N: EMM1-UP; JEN1-UP

FOR USE WITH 389-6151—PAGE: 670, 389-6152—PAGE: 671, REAR SCREENS

CANNOT BE USED WITH SWEEPS

AN ATTACHMENT

SMCS-1434 **i05626758**

NOTE	REF NO	GRAPHIC REF	PART NUMBER	QTY	PART NAME 1 2 3 4 5 6 (PRODUCT LEVEL)	SEE PAGE
	1	1	**9W-4361**	24	MOUNT-FLEXIBLE	
B	2	1	**170-3399**	2	BRACKET	
B	3	1	**172-4869**	2	BRACKET	
	4	1	**185-9607**	2	HARNESS AS-LIGHTING (REAR ROPS, FUEL TANK)	
					(EACH INCLUDES)	
		1	**126-1767**	4	PIN-CONNECTOR (14-GA TO 16-GA)	
		1	**155-2270**	3	KIT-CONNECTING PLUG (2-PIN)	
					(EACH INCLUDES PLUG AS, WEDGE & INTERFACE SEAL)	
		1	**102-8804**	1	KIT-RECEPTACLE (4-PIN)	
					(INCLUDES RECEPTACLE AS & WEDGE)	
		1	**126-1768**	4	SOCKET-CONNECTOR (14-GA TO 16-GA)	
	5	1	**383-1730**	2	GUARD	
	6	1	**384-0071**	4	GUARD AS-LAMP	
					(EACH INCLUDES)	
		1	**383-1730**	1	GUARD	
	7	1	**384-0072**	1	BRACKET AS (RH)	
	8	1	**384-0073**	1	BRACKET AS (LH)	
	9	1	**385-4292**	2	HARNESS AS-LIGHTING (CYLINDER)	
					(EACH INCLUDES)	
		1	**126-1767**	2	PIN-CONNECTOR (14-GA TO 16-GA)	
E		1	**114-8843**		SLEEVE-PLASTIC (60-CM)	
		1	**126-1768**	4	SOCKET-CONNECTOR (14-GA TO 16-GA)	
E		1	**119-3662**		TUBE-HEAT SHRINK (10.85-MM DIA) (13-CM)	
		1	**155-2270**	4	KIT-CONNECTING PLUG (2-PIN)	
					(EACH INCLUDES PLUG AS, WEDGE & INTERFACE SEAL)	
		1	**102-8802**	2	KIT-RECEPTACLE (2-PIN)	
					(EACH INCLUDES RECEPTACLE AS & WEDGE)	
Y	11	1	**254-8155**	8	LAMP GP-FLOOD (24-VOLT)	175
	12	1	**4P-7581**	2	CLIP	
	13	1	**4P-8134**	2	CLIP	
	14	1	**5P-1075**	52	WASHER-HARD (10.2X22.5X3-MM THK)	
	15	1	**5P-8522**	4	GROMMET	
	16	1	**5P-9085**	6	CLIP	
	17	1	**5S-7379**	4	BOLT (3/8-16X0.875-IN)	
	18	1	**6H-4005**	4	GROMMET	
	19	1	**6K-4934**	4	CLIP (SLOT)	
	20	1	**6K-4935**	4	CLIP (TAB)	
	21	1	**6V-8801**	48	NUT (3/8-16-THD)	
	22	1	**7K-1181**	24	STRAP-CABLE	
M	23	1	**7X-2489**	2	BOLT (M24X3X100-MM)	
B	24	1	**7X-7729**	2	WASHER (11X25X3-MM THK)	
	25	1	**8T-4121**	10	WASHER-HARD (11X21X2.5-MM THK)	
M	26	1	**8T-4133**	4	NUT (M10X1.5-THD)	
M	27	1	**8T-4136**	4	BOLT (M10X1.5X25-MM)	
BM	28	1	**8T-4137**	4	BOLT (M10X1.5X20-MM)	
	29	1	**8T-4167**	2	WASHER-HARD (26X44X4-MM THK)	

B - USE AS REQUIRED
E - ORDER BY THE CENTIMETER
M - METRIC PART
Y - SEPARATE ILLUSTRATION

389-6104 **LIGHTING GP-FLOOD (*contd.*)** **i05626758**

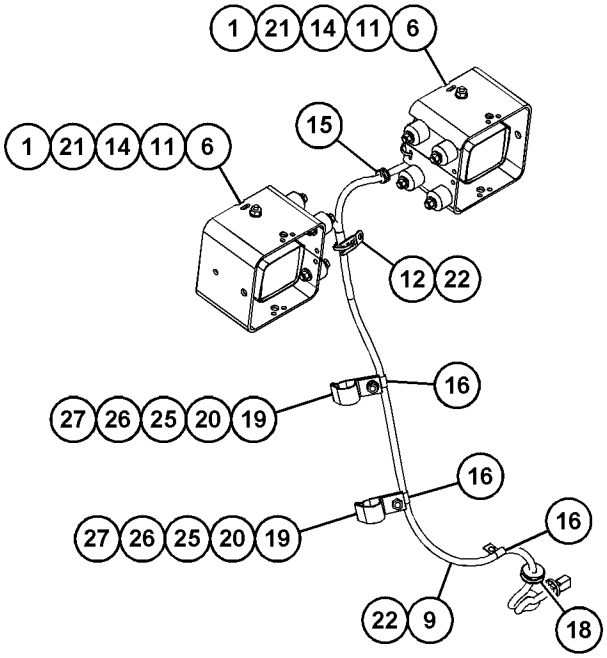

VIEW OF AREA B

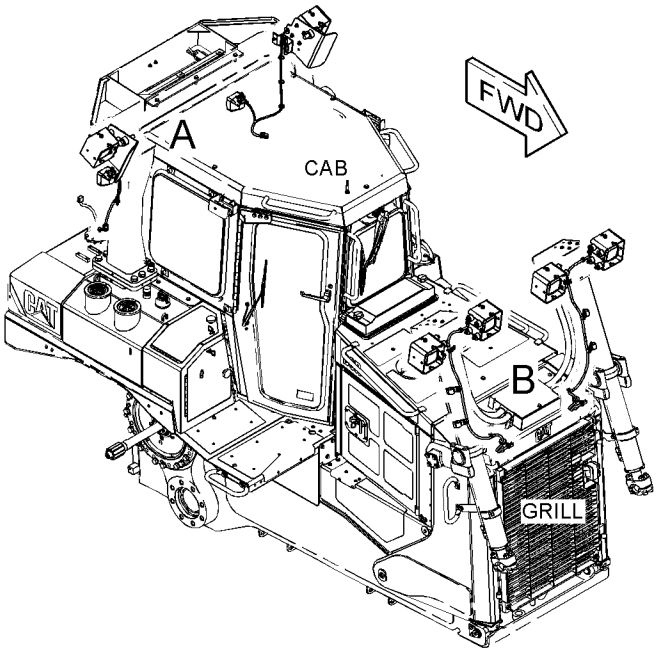

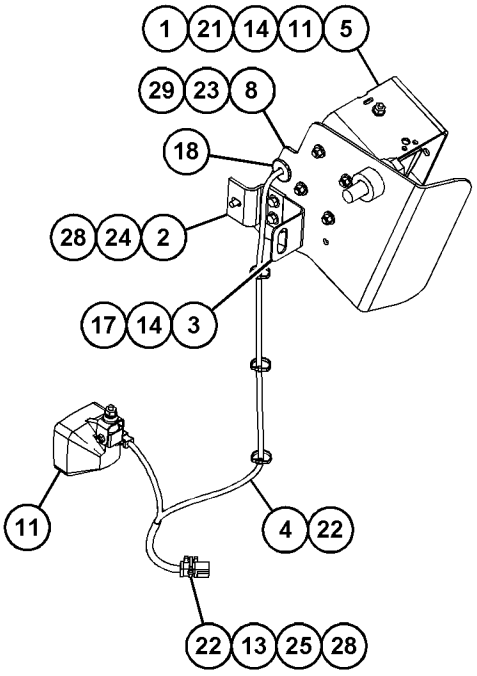

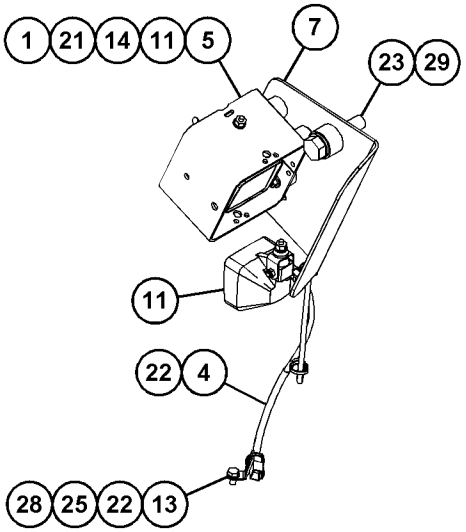

VIEW OF AREA A

GRAPHIC #1 **<END>** g03578477

389-6105 LIGHTING GP-FLOOD—FUEL TANK, SWEEPS

S/N: EMM1-UP; JEN1-UP

FOR USE WITH 389-6148—PAGE: 198, 389-6149—PAGE: 498

CANNOT BE USED WITH 389-6151—PAGE: 670, 389-6152—PAGE: 671

AN ATTACHMENT

SMCS-1434 **i05679919**

NOTE	REF NO	GRAPHIC REF	PART NUMBER	QTY	PART NAME 1 2 3 4 5 6 (PRODUCT LEVEL)	SEE PAGE
	1	1	**9W-4361**	8	MOUNT-FLEXIBLE	
	2	1	**186-0636**	2	HARNESS AS-LIGHTING (FLOODLIGHTS, REAR)	
					(EACH INCLUDES)	
E		1	**114-8843**		SLEEVE-PLASTIC (60-CM)	
		1	**126-1767**	4	PIN-CONNECTOR (14-GA TO 16-GA)	
		1	**126-1768**	4	SOCKET-CONNECTOR (14-GA TO 16-GA)	
		1	**102-8804**	1	KIT-RECEPTACLE (4-PIN)	
					(INCLUDES RECEPTACLE AS & WEDGE)	
		1	**155-2270**	2	KIT-CONNECTING PLUG (2-PIN)	
					(EACH INCLUDES PLUG AS, WEDGE & INTERFACE SEAL)	
Y	3	1	**254-8155**	6	LAMP GP-FLOOD (24-VOLT) (FUEL TANK, SWEEPS)	175
Y	4	1	**272-6641**	2	LAMP GP-FLOOD (24-VOLT) (SWEEPS)	176
	5	1	**337-6811**	2	BRACKET	
	6	1	**356-4254**	2	GUARD AS	
					(EACH INCLUDES)	
M		1	**8T-3490**	2	NUT-WELD (M10X1.5-THD)	
	7	1	**356-4259**	2	GUARD AS-LAMP	
	8	1	**383-1731**	1	GUARD AS-LAMP	
	9	1	**384-0071**	2	GUARD AS-LAMP	
					(EACH INCLUDES)	
		1	**383-1730**	1	GUARD	
	10	1	**439-1583**	2	HARNESS AS-LIGHTING (FLOODLIGHTS, FRONT)	
					(EACH INCLUDES)	
		1	**126-1767**	2	PIN-CONNECTOR (14-GA TO 16-GA)	
		1	**126-1768**	4	SOCKET-CONNECTOR (14-GA TO 16-GA)	
E		1	**119-3662**		TUBE-HEAT SHRINK (10.85-MM DIA) (13-CM)	
		1	**155-2270**	4	KIT-CONNECTING PLUG (2-PIN)	
					(EACH INCLUDES PLUG AS, WEDGE & INTERFACE SEAL)	
		1	**102-8802**	2	KIT-RECEPTACLE (2-PIN)	
					(EACH INCLUDES RECEPTACLE AS & WEDGE)	
	11	1	**4P-7581**	2	CLIP	
	12	1	**5P-1075**	18	WASHER-HARD (10.2X22.5X3-MM THK)	
	13	1	**5P-9085**	2	CLIP	
	14	1	**6H-4005**	2	GROMMET	
	15	1	**6V-8188**	2	NUT (1/2-13-THD)	
	16	1	**6V-8801**	16	NUT (3/8-16-THD)	
	17	1	**7K-1181**	36	STRAP-CABLE	
	18	1	**8T-4121**	12	WASHER-HARD (11X21X2.5-MM THK)	
M	19	1	**8T-4136**	10	BOLT (M10X1.5X25-MM)	
M	20	1	**8T-4137**	4	BOLT (M10X1.5X20-MM)	
	21	1	**8T-4223**	4	WASHER-HARD (13.5X25.5X3-MM THK)	
	22	1	**8T-8917**	2	BOLT (1/2-13X1.25-IN)	

E - ORDER BY THE CENTIMETER
M - METRIC PART
Y - SEPARATE ILLUSTRATION

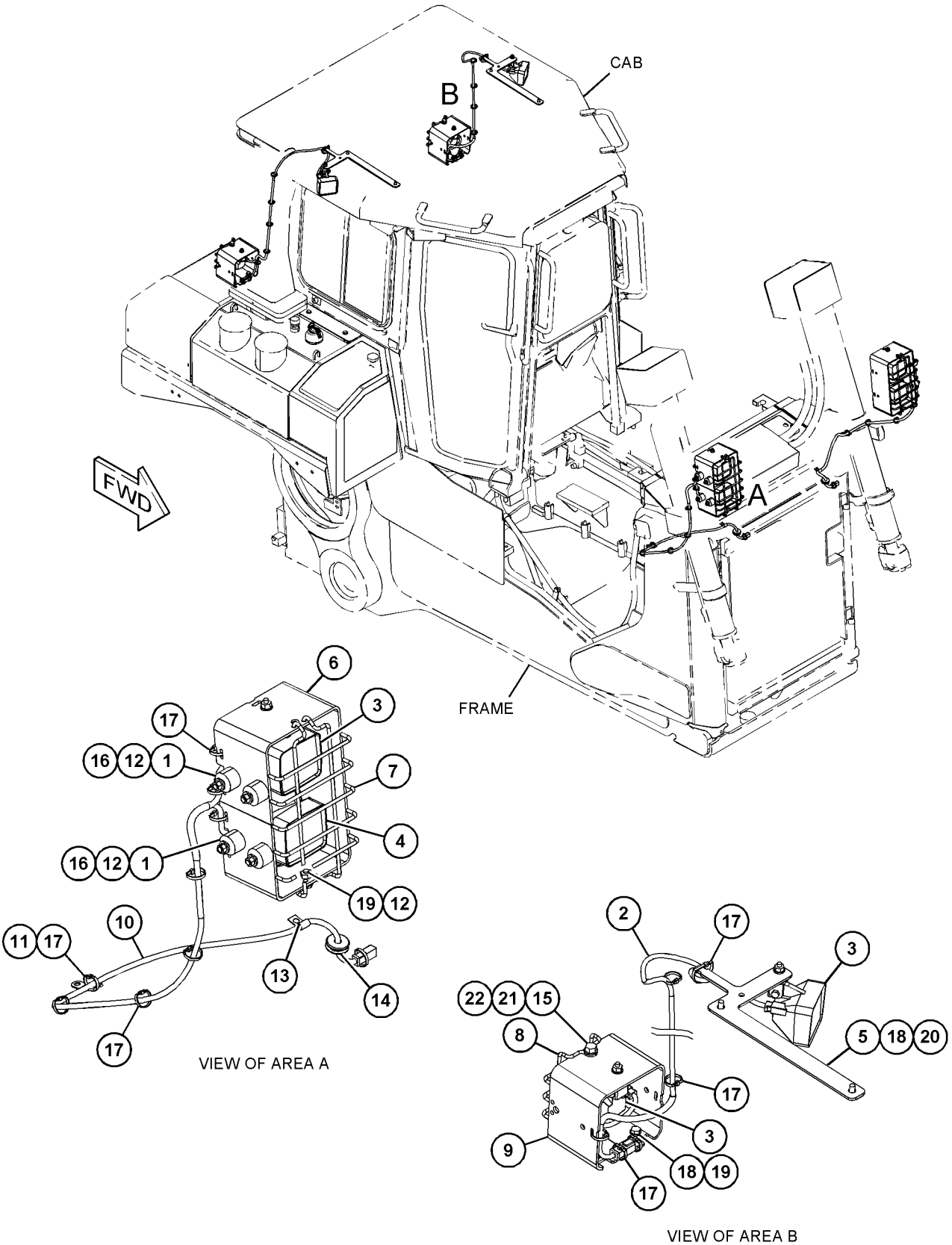

GRAPHIC #1 **<END>** g03583580

389-6106 LIGHTING GP-FLOOD—SWEEPS

S/N: EMM1-UP; JEN1-UP

FOR USE WITH 389-6151—PAGE: 670, 389-6152—PAGE: 671, REAR SCREENS AN ATTACHMENT

SMCS-1434 **i05679920**

NOTE	REF NO	GRAPHIC REF	PART NUMBER	QTY	PART NAME 1 2 3 4 5 6 (PRODUCT LEVEL)	SEE PAGE
	1	1	**9W-4361**	8	MOUNT-FLEXIBLE	
	2	1	**186-0636**	2	HARNESS AS-LIGHTING (FLOODLIGHTS, REAR)	
					(EACH INCLUDES)	
		1	**114-8843**		SLEEVE-PLASTIC (60-CM)	
		1	**126-1767**	4	PIN-CONNECTOR (14-GA TO 16-GA)	
		1	**126-1768**	4	SOCKET-CONNECTOR (14-GA TO 16-GA)	
		1	**102-8804**	1	KIT-RECEPTACLE (4-PIN)	
					(INCLUDES RECEPTACLE AS & WEDGE)	
		1	**155-2270**	2	KIT-CONNECTING PLUG (2-PIN)	
					(EACH INCLUDES PLUG AS, WEDGE & INTERFACE SEAL)	
Y	3	1	**254-8155**	6	LAMP GP-FLOOD (24-VOLT)	175
Y	4	1	**272-6641**	2	LAMP GP-FLOOD (24-VOLT)	176
	5	1	**337-6811**	2	BRACKET	
	6	1	**356-4254**	2	GUARD AS	
					(EACH INCLUDES)	
M		1	**8T-3490**	2	NUT-WELD (M10X1.5-THD)	
	7	1	**356-4259**	2	GUARD AS-LAMP	
					(EACH INCLUDES)	
M		1	**8T-3490**	2	NUT-WELD (M10X1.5-THD)	
	8	1	**439-1583**	2	HARNESS AS-LIGHTING (FLOODLIGHTS, FRONT)	
					(EACH INCLUDES)	
		1	**126-1767**	2	PIN-CONNECTOR (14-GA TO 16-GA)	
		1	**126-1768**	4	SOCKET-CONNECTOR (14-GA TO 16-GA)	
E		1	**119-3662**		TUBE-HEAT SHRINK (10.85-MM DIA) (13-CM)	
		1	**155-2270**	4	KIT-CONNECTING PLUG (2-PIN)	
					(EACH INCLUDES PLUG AS, WEDGE & INTERFACE SEAL)	
		1	**102-8802**	2	KIT-RECEPTACLE (2-PIN)	
					(EACH INCLUDES RECEPTACLE AS & WEDGE)	
	9	1	**4P-7581**	2	CLIP	
	10	1	**4P-8134**	2	CLIP	
	11	1	**5P-1075**	18	WASHER-HARD (10.2X22.5X3-MM THK)	
	12	1	**5P-9085**	2	CLIP	
	13	1	**6H-4005**	2	GROMMET	
	14	1	**6V-8801**	16	NUT (3/8-16-THD)	
	15	1	**7K-1181**	30	STRAP-CABLE	
	16	1	**8T-4121**	6	WASHER-HARD (11X21X2.5-MM THK)	
M	17	1	**8T-4136**	2	BOLT (M10X1.5X25-MM)	
M	18	1	**8T-4137**	6	BOLT (M10X1.5X20-MM)	

E - ORDER BY THE CENTIMETER
M - METRIC PART
Y - SEPARATE ILLUSTRATION

389-6106 **LIGHTING GP-FLOOD (*contd.*)** **i05679920**

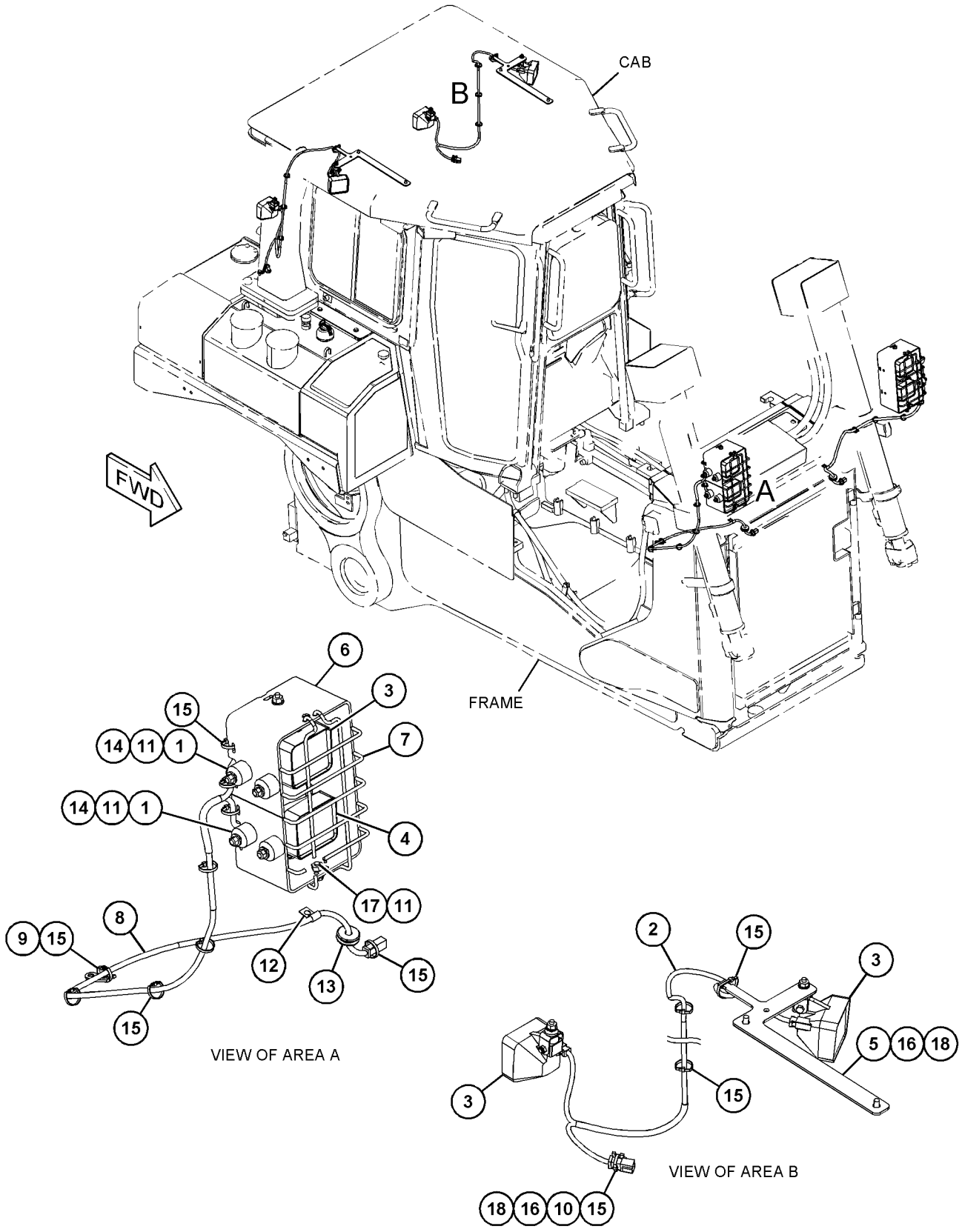

GRAPHIC #1 **<END>** g03581425

389-6147 MOUNTING GP-WIRING—RH, LH

S/N: EMM1-UP; JEN1-UP

FOR USE WITH PRODUCT LINK OR GRADE CONTROL INSTALLATION

AN ATTACHMENT

SMCS-1408 **i05629709**

NOTE	REF NO	GRAPHIC REF	PART NUMBER	QTY	PART NAME 1 2 3 4 5 6 (PRODUCT LEVEL)	SEE PAGE
	1	1	**129-8331**	1	PLATE AS	
	2	1	**8T-5439**	2	WASHER-HARD (21.5X45X6-MM THK)	
M	3	1	**8T-5460**	2	BOLT (M20X2.5X40-MM)	

M - METRIC PART

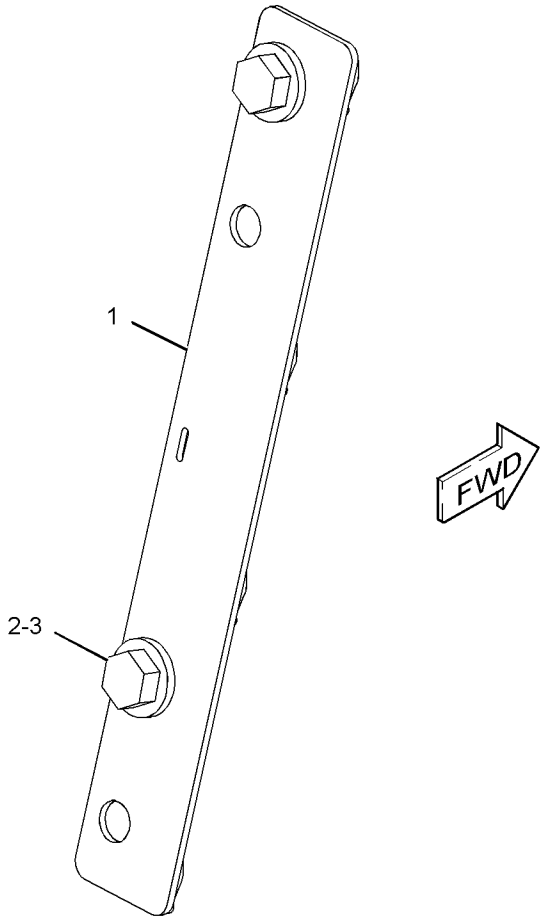

GRAPHIC #1 **<END>** g03581776

389-6148 MOUNTING GP—RH, LH

S/N: EMM1-UP; JEN1-UP
FOR USE WITH ROPS & SWEEPS LIGHTING GROUPS
AN ATTACHMENT

SMCS-1408 **i05629711**

NOTE	REF NO	GRAPHIC REF	PART NUMBER	QTY	PART NAME 1 2 3 4 5 6 (PRODUCT LEVEL)	SEE PAGE
	1	1	**129-8331**	2	PLATE AS	
					(EACH INCLUDES)	
		1	**7T-1099**	4	LINK	
	2	1	**8T-5439**	4	WASHER-HARD (21.5X45X6-MM THK)	
M	3	1	**8T-5460**	4	BOLT (M20X2.5X40-MM)	

M - METRIC PART

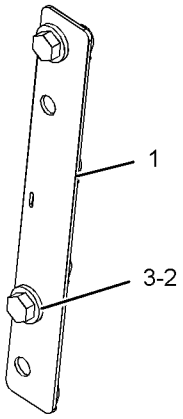



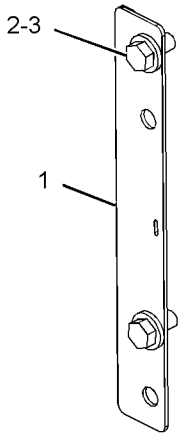

GRAPHIC #1 **<END>** g03581765

384-4072 PANEL GP-FUSE

S/N: EMM1-UP; JEN1-UP
PART OF 317-6565 WIRING GP-PLATFORM
AN ATTACHMENT

SMCS-1417 **i05573671**

NOTE	REF NO	GRAPHIC REF	PART NUMBER	QTY	PART NAME 1 2 3 4 5 6 (PRODUCT LEVEL)	SEE PAGE
	1	1	**7K-1181**	2	STRAP-CABLE	
	2	1	**9W-1441**	15	FUSE (15-AMPERE)	
	3	1	**9W-1442**	7	FUSE (10-AMPERE)	
	4	1	**9W-1446**	2	FUSE (20-AMPERE)	
Y	5	1	**125-1302**	1	SWITCH GP-MAGNETIC (24-VOLT) (START RELAY)	224
	6	1	**237-0050**	1	STRAP	
	7	1	**237-0053**	1	STRAP	
	8	1	**238-2014**	1	WIRE AS	
Y	9	1	**241-8368**	1	SWITCH GP-MAGNETIC (24-VOLT) (MAIN RELAY)	225
	10	1	**248-7959**	1	TERMINAL	
Y	11	1	**322-1359**	1	WIRING GP-BOX (FUSE)	228
	12	1	**365-7843**	1	PANEL AS	
	13	1	**365-7844**	1	CABLE AS	
		1	**283-6447**	1	TERMINAL-RING	
	14	1	**381-3642**	1	FILM-IDENTIFICATION (CIRCUIT BREAKER)	
	15	1	**260-6686**	2	BOLT-SOCKET HEAD (M5X0.8X16-MM)	
M	16	1	**5C-2874**	2	NUT (M5X0.8-THD)	
M	17	1	**5C-2890**	4	NUT (M6X1-THD)	
	18	1	**5P-1075**	2	WASHER-HARD (10.2X22.5X3-MM THK)	
	19	1	**6T-3643**	1	CIRCUIT BREAKER AS (15-AMPERE) (BLOWER)	
		1	**6V-8376**	2	SCREW-MACHINE (8-32X0.25-IN)	
		1	**9B-7233**	2	LOCKWASHER	
	20	1	**6V-5645**	4	SCREW-MACHINE (10-32X0.87-IN)	
	21	1	**6V-8801**	2	NUT (3/8-16-THD)	
	22	1	**7U-4892**	2	SCREW (8-32X0.75-IN)	
	23	1	**8F-1434**	2	LOCKWASHER	
M	24	1	**9X-2042**	4	SCREW-TRUSS HEAD (M6X1X12-MM)	
	25	1	**9X-8256**	4	WASHER (6.6X12X2-MM THK)	

M - METRIC PART
Y - SEPARATE ILLUSTRATION

384-4072 **PANEL GP-FUSE (*contd.*)** **i05573671**

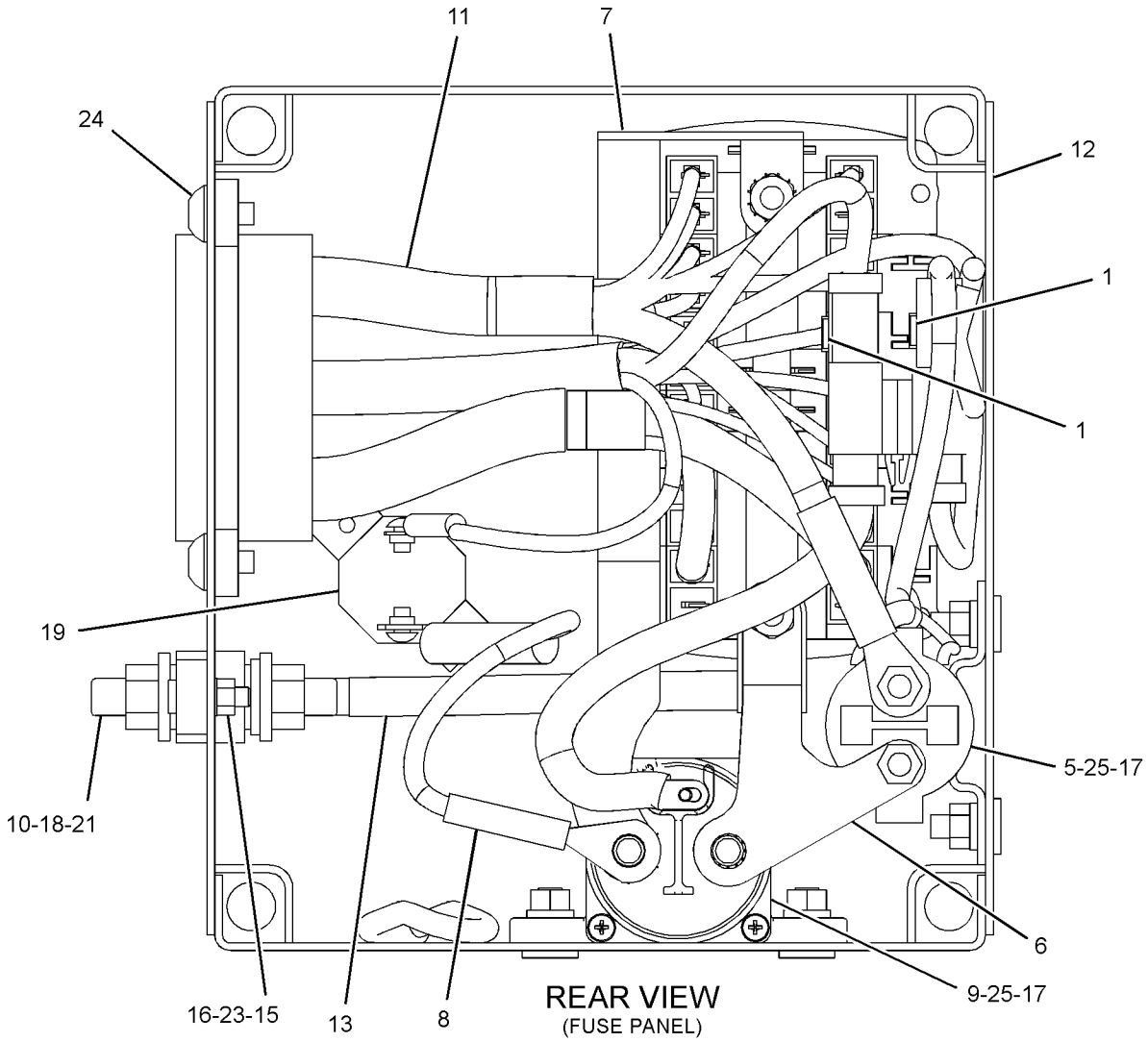

REAR VIEW
(FUSE PANEL)

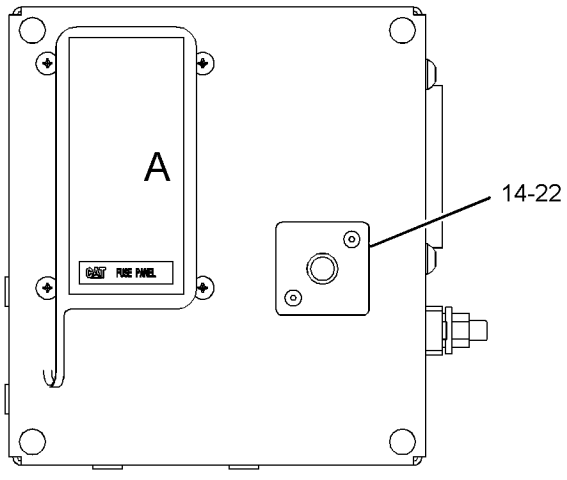

FRONT VIEW
(FUSE PANEL)

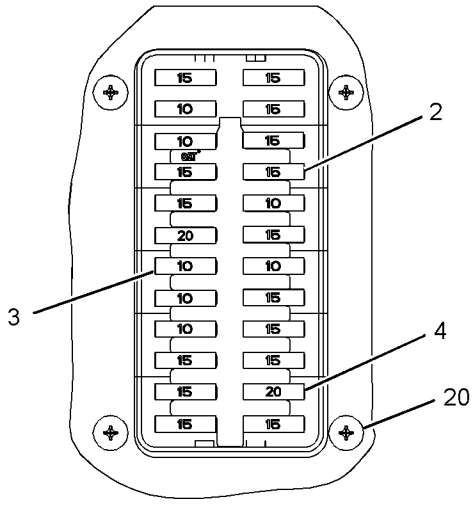

VIEW OF AREA A
(COVER REMOVED)

GRAPHIC #1 **<END>** g03193200

3T-9525 PLATE AS-BRUSH

S/N: EMM1-UP; JEN1-UP
PART OF 338-3454 STARTING MOTOR GP-ELECTRIC
AN ATTACHMENT

SMCS-1453, 4463

i05354315

NOTE	REF NO	GRAPHIC REF	PART NUMBER	QTY	PART NAME 1 2 3 4 5 6 (PRODUCT LEVEL)	SEE PAGE
	1	1	**6T-0372**	1	PLATE	
	2	1	**6T-0371**	1	INSULATOR	
	3	1	**9F-5599**	12	LOCKWASHER	
	4	1	**6T-0363**	6	HOLDER AS-BRUSH	
					(EACH INCLUDES)	
		1	**3T-9494**	1	SPRING	
	5	1	**3T-4709**	3	PLATE	
	6	1	**3T-4710**	3	PLATE	
	7	1	**2L-6679**	3	PLATE-INSULATOR	
	8	1	**7F-3525**	6	WASHER-BUSHING (0.207X0.39X0.09-IN THK)	
	9	1	**5P-6298**	12	SCREW-MACHINE (10-32X0.5-IN)	

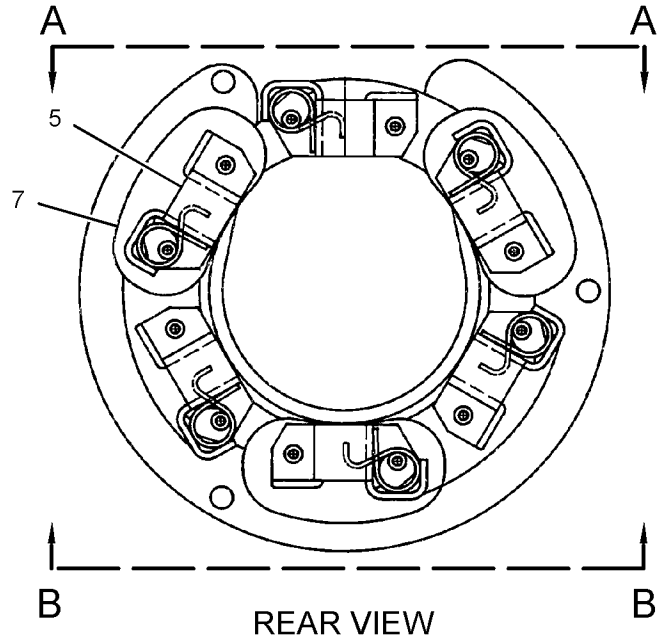

REAR VIEW

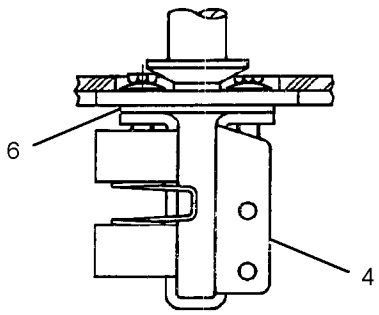

VIEW A-A

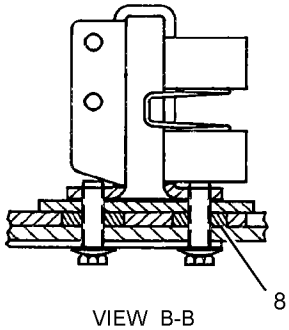

VIEW B-B

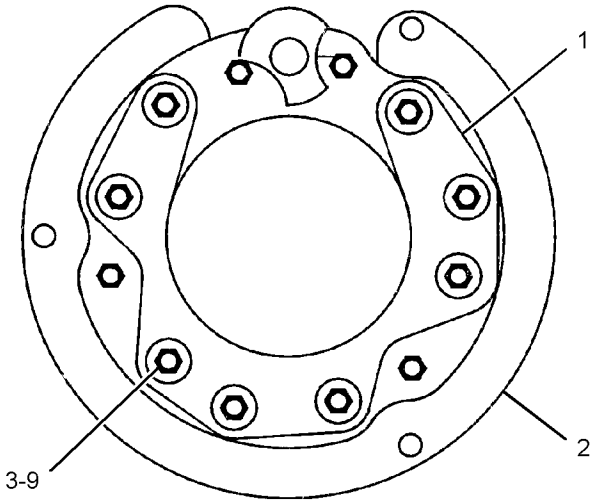

FRONT VIEW

GRAPHIC #1

<END>

g02294074

336-3545 RADIO GP-COMMUNICATION–PRODUCT LINK 121SR

S/N: EMM1-UP; JEN1-UP

PART OF 344-3393 CONTROL GP-COMMUNICATION

AN ATTACHMENT

SMCS-733T **i05429851**

NOTE	PART NUMBER	QTY	PART NAME 1 2 3 4 5 6 (PRODUCT LEVEL)	SEE PAGE
	434-1356	1	SOFTWARE GP-MACHINE (PRODUCT LINK 121SR)	

<END>

231-1978 SENSOR GP-ENGINE

S/N: TXD1-UP
PART OF 387-8619 ENGINE AR-CORE
AN ATTACHMENT

SMCS-1000, 1718, 1906, 1907, 1912, 1917, 1923, 1924, 1925, 1928, 1929, 7400, 7422

i05555632

NOTE	REF NO	GRAPHIC REF	PART NUMBER	QTY	PART NAME 1 2 3 4 5 6 (PRODUCT LEVEL)	SEE PAGE
	1	1	*353-5112*	1	ADAPTER AS	
		1	**9X-0262**	1	ADAPTER	
		1	**214-7566**	2	SEAL-O-RING	
Y	2	1	*274-7395*	1	SENSOR GP-TEMPERATURE (AIR INLET MANIFOLD)	212
Y	3	1	*274-7396*	1	SENSOR GP-TEMPERATURE (WATER, COOLANT)	213
Y	4	1	*197-8393*	1	SENSOR GP-PRESSURE (ATMOSPHERIC)	207
	5	1	**161-1705**	1	SENSOR AS-PRESSURE (ENGINE OIL)	
	6	1	**161-1704**	1	SENSOR GP-PRESSURE (AIR INLET MANIFOLD)	
Y	7	1	*236-6220*	1	SENSOR GP-PRESSURE (INJECTION ACTUATION)	209
Y	8	1	*236-6221*	1	SENSOR GP-SPEED (ENGINE TIMING) (ENGINE TIMING)	210
	9	1	**3E-4352**	1	WASHER-HARD (8.8X20.5X2.5-MM THK)	
M	10	1	**6V-3940**	1	BOLT (M8X1.25X25-MM)	
	11	1	*329-5451*	1	ADAPTER AS	
		1	**9X-0261**	1	ADAPTER	
		1	**214-7566**	1	SEAL-O-RING	
		1	**214-7568**	1	SEAL-O-RING	

M - METRIC PART
Y - SEPARATE ILLUSTRATION

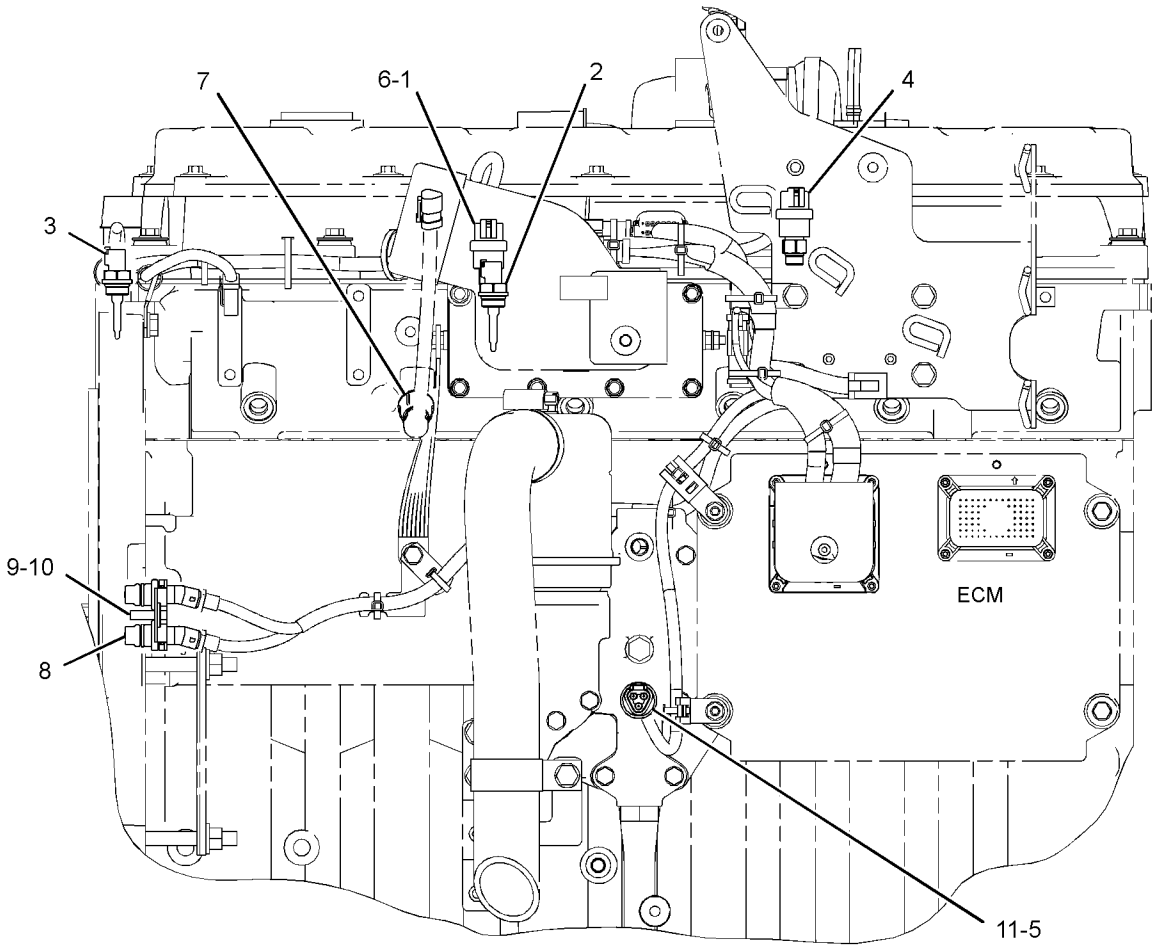

LEFT SIDE VIEW

GRAPHIC #1

<END>

g02847276

266-1467 SENSOR GP-POSITION

S/N: EMM1-UP; JEN1-UP
PART OF 375-4845 CONTROL GP-GOVERNOR & BRAKE
AN ATTACHMENT

SMCS-1905, 1911, 430S

i05575170

NOTE	REF NO	GRAPHIC REF	PART NUMBER	QTY	PART NAME 1 2 3 4 5 6 (PRODUCT LEVEL)	SEE PAGE
	1	1	**9X-3401**	3	PIN-CONNECTOR (16-GA TO 18-GA)	
					–OR–	
		1	**126-1767**	3	PIN-CONNECTOR (14-GA TO 16-GA)	
	2	1	**102-8803**	1	KIT-RECEPTACLE (3-PIN)	
					(INCLUDES RECEPTACLE AS & WEDGE)	
E	3	1	**3E-9375**		CONDUIT (13-CM)	
E - ORDER BY THE CENTIMETER						

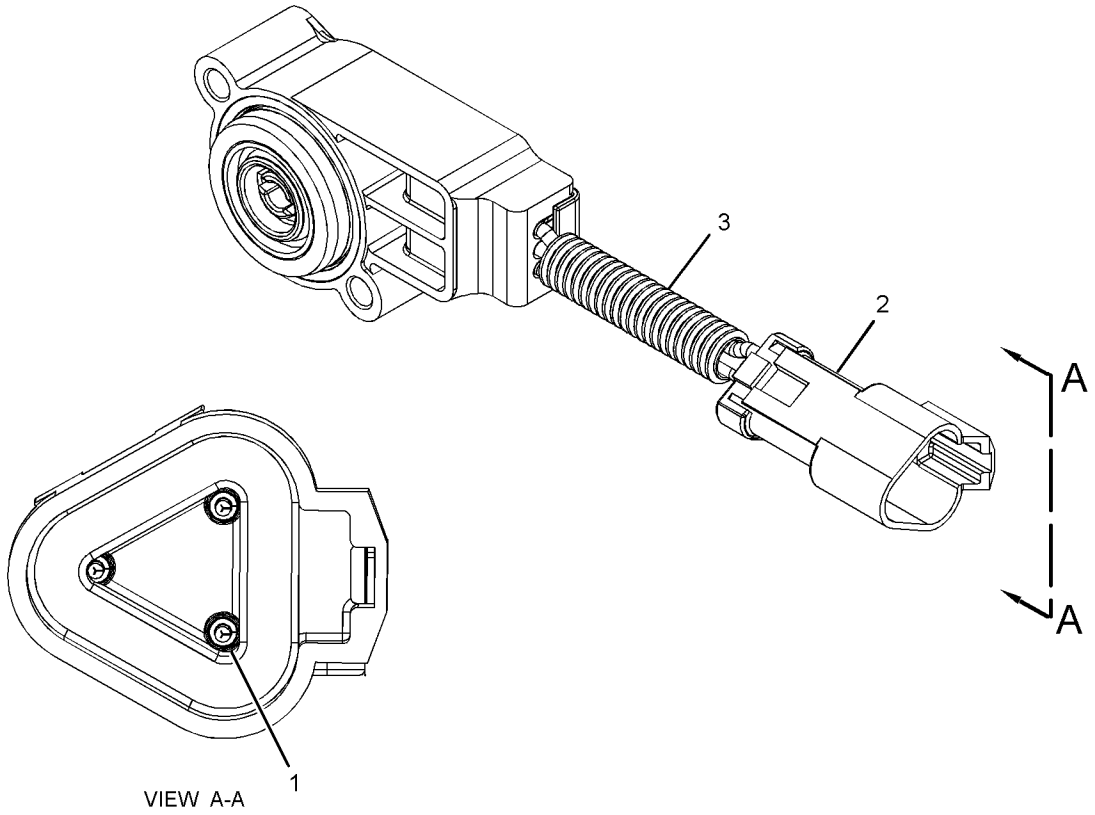

VIEW A-A

GRAPHIC #1

<END>

g03547699

161-9926 SENSOR GP-PRESSURE

S/N: EMM1-UP; JEN1-UP

OPTIONAL FIELD REPLACEMENT ORDER 350-0664 SENSOR GP-PRESSURE, 249-5293 HARNESS AS-SENSOR

PART OF 389-3305 BATTERY & WIRING GP

SMCS-1718, 1916, 1917, 1923, 1924, 1925 **i05640594**

NOTE	REF NO	GRAPHIC REF	PART NUMBER	QTY	PART NAME 1 2 3 4 5 6 (PRODUCT LEVEL)	SEE PAGE
E	1	1	**9X-1813**		SLEEVE (34-CM)	
	2	1	**155-2260**	1	KIT-CONNECTING PLUG (3-PIN)	
					(INCLUDES PLUG AS, WEDGE & INTERFACE SEAL)	
	3	1	**8T-8730**	3	SOCKET-CONNECTOR (16-GA TO 18-GA)	

E - ORDER BY THE CENTIMETER

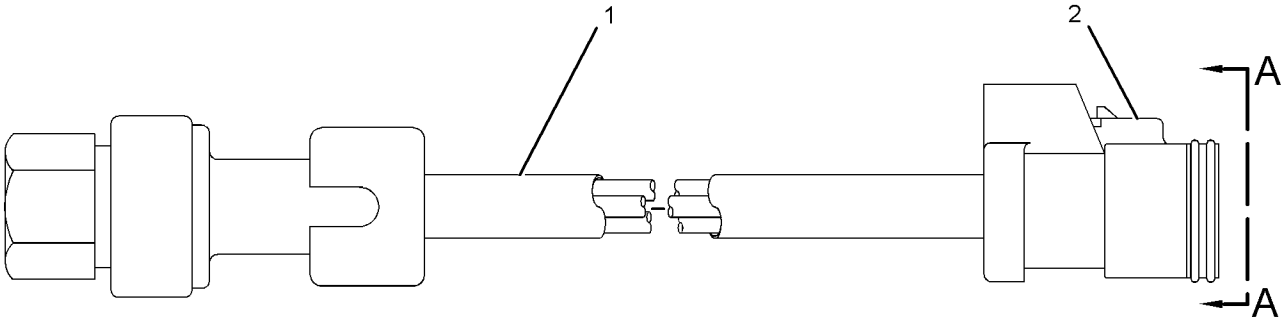

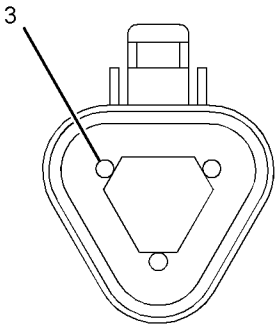

VIEW A-A

GRAPHIC #1 **<END>** g02244736

194-6725 SENSOR GP-PRESSURE

S/N: TXD1-UP
ENGINE OIL
PART OF 397-5040 LINES GP-FUEL
AN ATTACHMENT

SMCS-1718, 1916, 1917, 1923, 1924, 1925 **i05555690**

NOTE	REF NO	GRAPHIC REF	PART NUMBER	QTY	PART NAME 1 2 3 4 5 6 (PRODUCT LEVEL)	SEE PAGE
E	1	1	**9X-1813**		SLEEVE (34-CM)	
	2	1	**155-2260**	1	KIT-CONNECTING PLUG (3-PIN)	
					(INCLUDES PLUG AS, INTERFACE SEAL & WEDGE)	
	3	1	**180-9340**	3	SOCKET-CONNECTOR (14-GA TO 18-GA)	

E - ORDER BY THE CENTIMETER

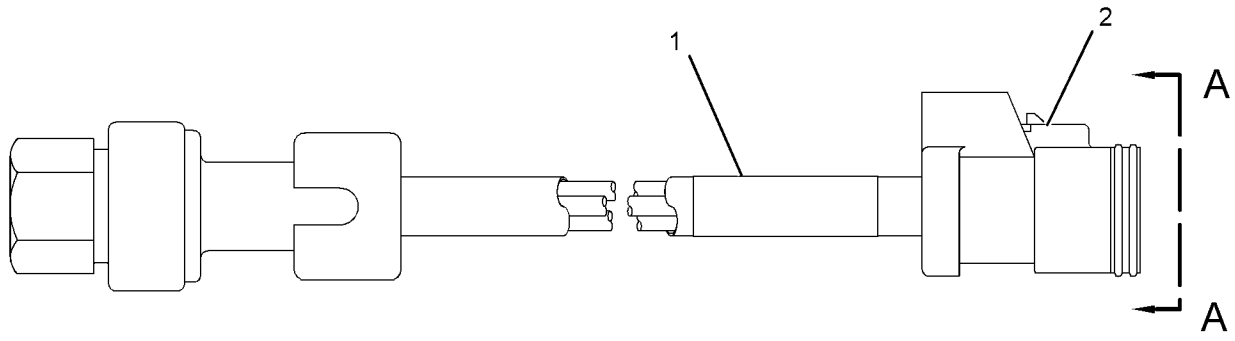

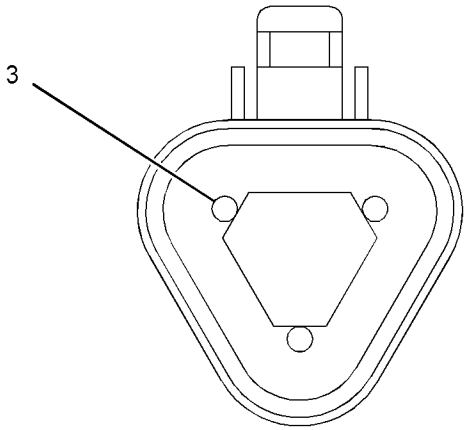

VIEW A-A

GRAPHIC #1 **<END>** g01662003

197-8393 SENSOR GP-PRESSURE

S/N: TXD1-UP
PART OF 231-1978 SENSOR GP-ENGINE
AN ATTACHMENT

SMCS-1718, 1916, 1917, 1923, 1924, 1925 **i05643900**

NOTE	REF NO	GRAPHIC REF	PART NUMBER	QTY	PART NAME 1 2 3 4 5 6 (PRODUCT LEVEL)	SEE PAGE
	1	1	**161-1703**	1	SENSOR GP-PRESSURE	
	2	1	**214-7568**	1	SEAL-O-RING	

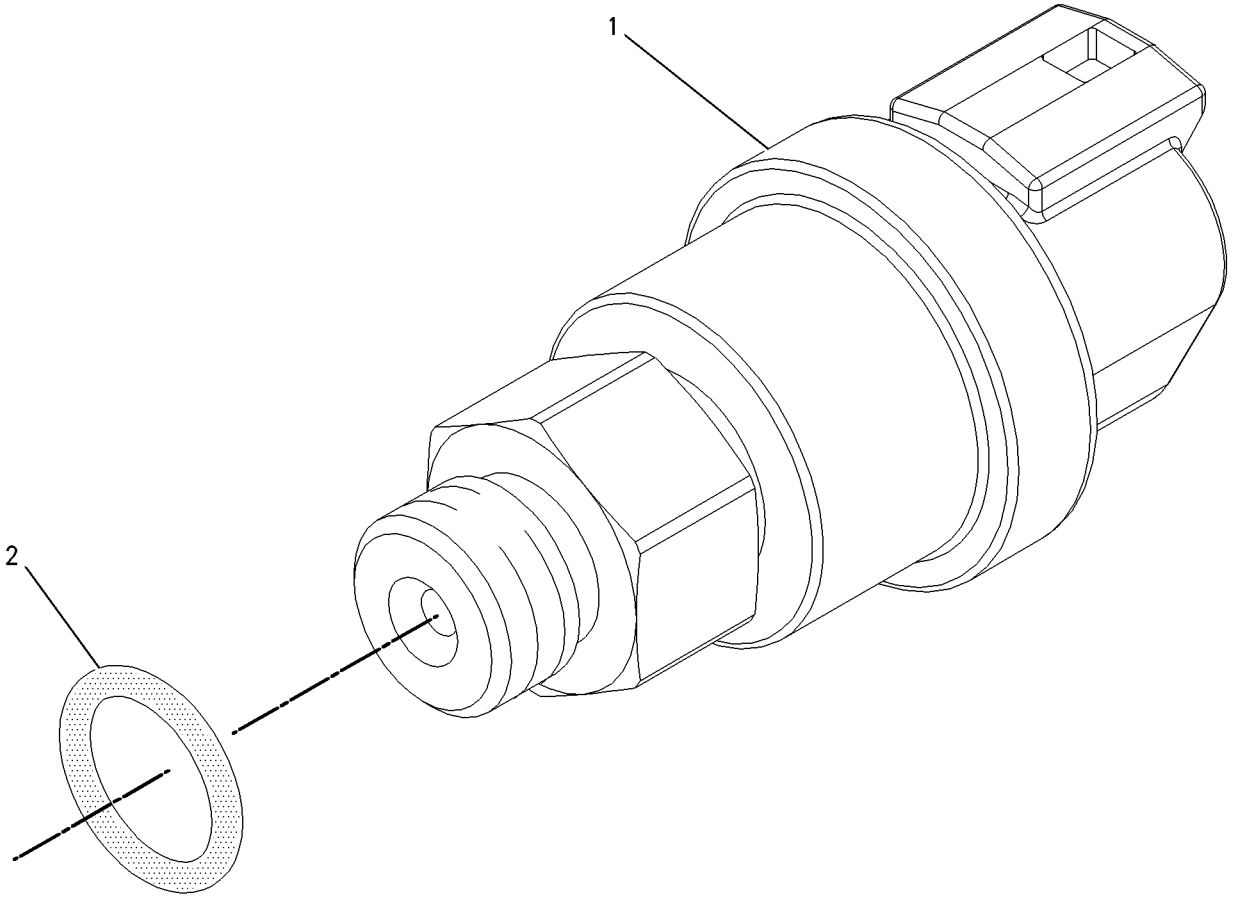

GRAPHIC #1 **<END>** g00855973

224-4536 SENSOR GP-PRESSURE

S/N: TXD1-UP

PART OF 236-6220 SENSOR GP-PRESSURE

AN ATTACHMENT

SMCS-1718, 1916, 1917, 1923, 1924, 1925 **i05643913**

NOTE	REF NO	GRAPHIC REF	PART NUMBER	QTY	PART NAME 1 2 3 4 5 6 (PRODUCT LEVEL)	SEE PAGE
E	1	1	**9X-1813**		SLEEVE (35-CM)	
	2	1	**155-2260**	1	KIT-CONNECTING PLUG (3-PIN)	
					(INCLUDES PLUG AS, WEDGES & INTERFACE SEAL)	
	3	1	**180-9340**	3	SOCKET-CONNECTOR (14-GA TO 18-GA)	

E - ORDER BY THE CENTIMETER

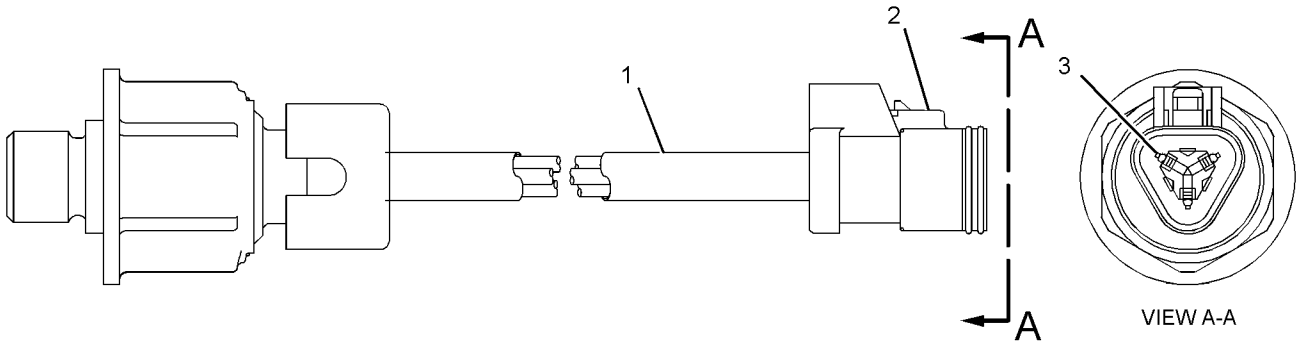

GRAPHIC #1 **<END>** g01684159

236-6220 SENSOR GP-PRESSURE

S/N: TXD1-UP

PART OF 231-1978 SENSOR GP-ENGINE

AN ATTACHMENT

SMCS-1718, 1916, 1917, 1923, 1924, 1925 **i05643901**

NOTE	REF NO	GRAPHIC REF	PART NUMBER	QTY	PART NAME 1 2 3 4 5 6 (PRODUCT LEVEL)	SEE PAGE
	1	1	**214-7567**	1	SEAL-O-RING	
Y	2	1	**224-4536**	1	SENSOR GP-PRESSURE	208

Y - SEPARATE ILLUSTRATION

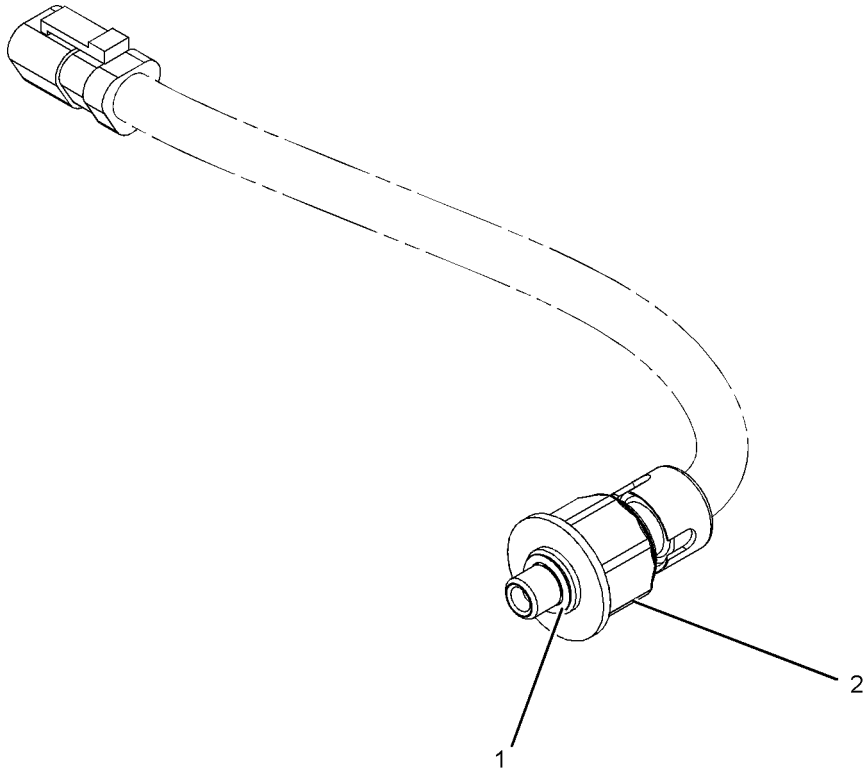

GRAPHIC #1 **<END>** g01054528

236-6221 SENSOR GP-SPEED

S/N: TXD1-UP

PART OF 231-1978 SENSOR GP-ENGINE

AN ATTACHMENT

SMCS-1907 **i05643904**

NOTE	REF NO	GRAPHIC REF	PART NUMBER	QTY	PART NAME 1 2 3 4 5 6 (PRODUCT LEVEL)	SEE PAGE
	1	1	**228-4947**	2	SEAL-O-RING	
	2	1	**245-4630**	1	SENSOR GP-SPEED	

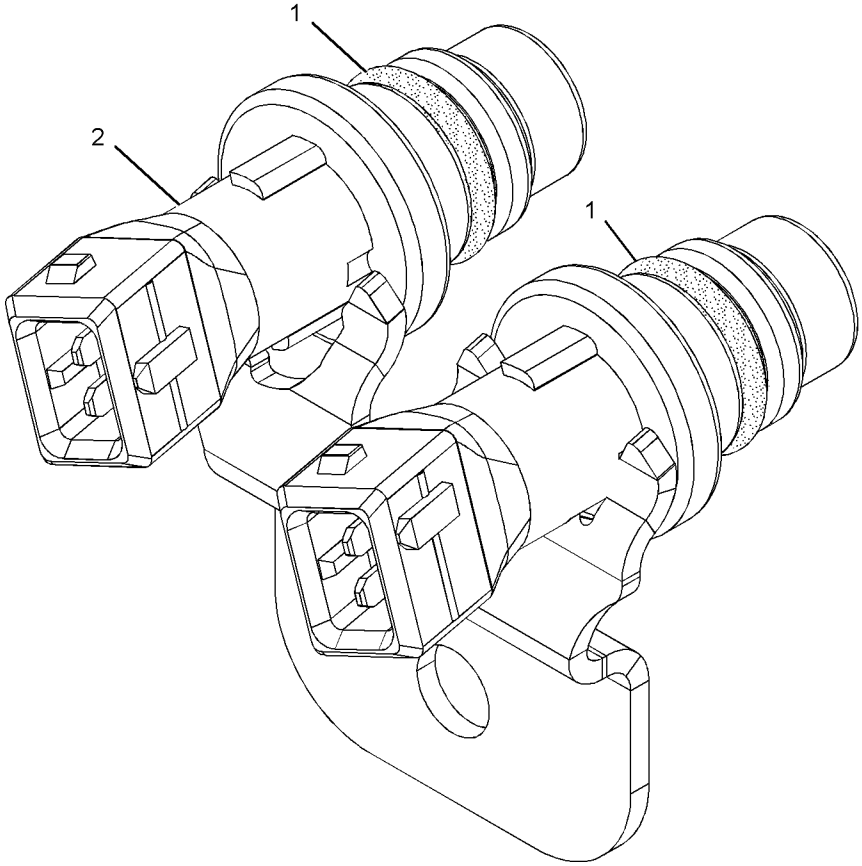

GRAPHIC #1 **<END>** g01013894

145-7028 SENSOR GP-TEMPERATURE

S/N: EMM1-UP; JEN1-UP

PART OF 389-3305 BATTERY & WIRING GP, 317-6576 WIRING GP-ENGINE

SMCS-1906, 1919, 1921, 1922, 1928, 1929 **i05640596**

NOTE	REF NO	GRAPHIC REF	PART NUMBER	QTY	PART NAME 1 2 3 4 5 6 (PRODUCT LEVEL)	SEE PAGE
	1	1	**102-8802**	1	KIT-RECEPTACLE (2-PIN)	
					(INCLUDES RECEPTACLE AS & WEDGE)	
J	2	1	**153-5043**		SLEEVE (2.8-DM)	
	3	1	**8T-8729**	2	PIN-CONNECTOR (16-GA TO 18-GA)	

J - ORDER BY THE DECIMETER

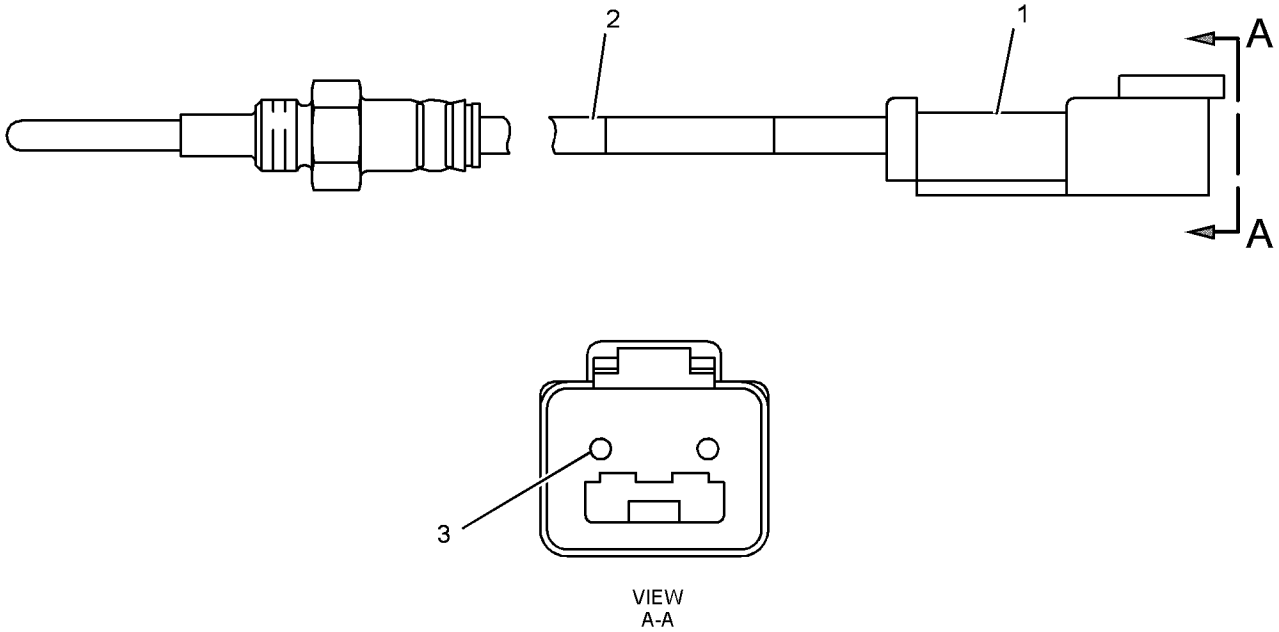

GRAPHIC #1 **<END>** g01740798

274-7395 SENSOR GP-TEMPERATURE

S/N: TXD1-UP

PART OF 231-1978 SENSOR GP-ENGINE

AN ATTACHMENT

SMCS-1906, 1919, 1921, 1922, 1928, 1929 **i05643907**

NOTE	REF NO	GRAPHIC REF	PART NUMBER	QTY	PART NAME 1 2 3 4 5 6 (PRODUCT LEVEL)	SEE PAGE
	1	1	**264-4297**	1	SENSOR AS-TEMPERATURE	
		1	**137-6645**	1	PAD-CONNECTOR	
	2	1	**238-5080**	1	SEAL-O-RING	

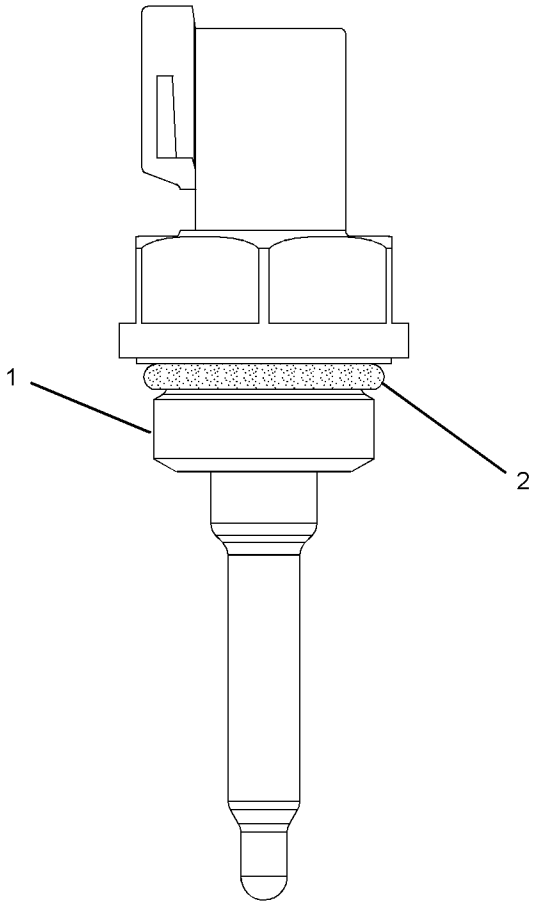

GRAPHIC #1 **<END>** g01353734

274-7396 SENSOR GP-TEMPERATURE

S/N: TXD1-UP
PART OF 231-1978 SENSOR GP-ENGINE
AN ATTACHMENT

SMCS-1906, 1919, 1921, 1922, 1928, 1929 **i05643910**

NOTE	REF NO	GRAPHIC REF	PART NUMBER	QTY	PART NAME 1 2 3 4 5 6 (PRODUCT LEVEL)	SEE PAGE
	1	1	**264-4297**	1	SENSOR AS-TEMPERATURE	
		1	**137-6645**	1	PAD-CONNECTOR	
	2	1	**6V-6609**	1	SEAL-O-RING	

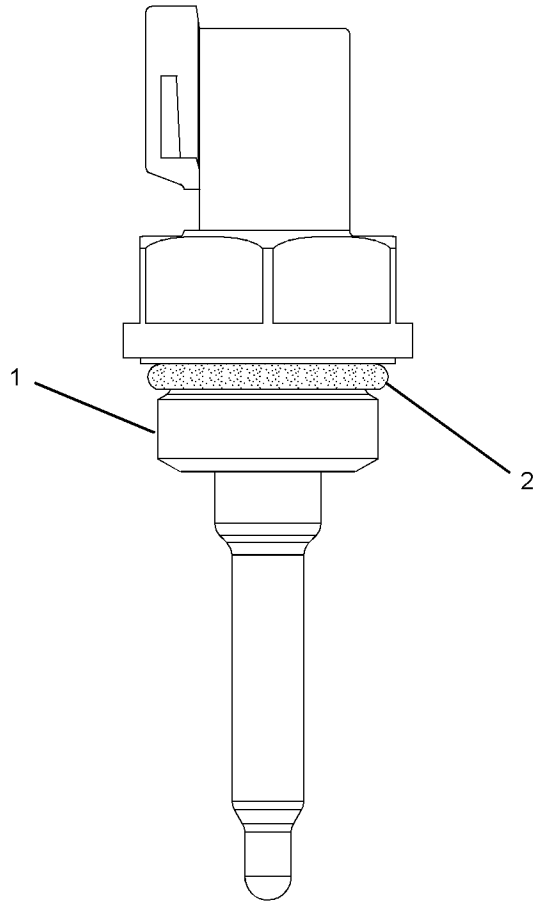

GRAPHIC #1 **<END>** g01353734

263-9012 STARTING AID GP-ETHER

S/N: EMM1-UP; JEN1-UP

AN ATTACHMENT

SMCS-1456 **i05505310**

NOTE	REF NO	GRAPHIC REF	PART NUMBER	QTY	PART NAME 1 2 3 4 5 6 (PRODUCT LEVEL)	SEE PAGE
	1	1	**3Y-2888**	1	CONNECTOR	
	2	1	**7N-2059**	1	CLAMP AS	
Y	3	1	**239-1134**	1	VALVE GP-ETHER STARTING (24-VOLT)	227
	4	1	**241-4194**	1	FITTING AS (CONTROL)	
	5	1	**251-4345**	1	ATOMIZER GP-ETHER	
	6	1	**260-3799**	1	BRACKET AS	
M		1	**8T-3612**	4	NUT-WELD (M8X1.25-THD)	
	7	1	**3J-1907**	1	SEAL-O-RING	
	8	1	**4P-8134**	1	CLIP	
	9	1	**5P-4116**	4	WASHER-HARD (8.8X20.5X2-MM THK)	
	10	1	**7X-7729**	2	WASHER (11X25X3-MM THK)	
M	11	1	**8T-4182**	2	BOLT (M10X1.5X45-MM)	
M	12	1	**8T-4189**	4	BOLT (M8X1.25X20-MM)	
E	13	1	**174-9169**		TUBE (35-CM)	
A		1	**7N-0296**	1	CYLINDER AS-ETHER (MUST BE PROCURED LOCALLY FROM YOUR CATERPILLAR DEALER)	

A - NOT PART OF THIS GROUP
E - ORDER BY THE CENTIMETER
M - METRIC PART
Y - SEPARATE ILLUSTRATION

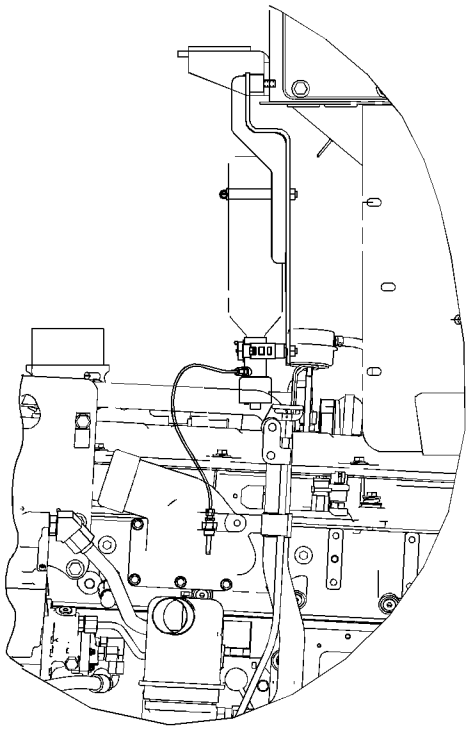

LEFT SIDE VIEW

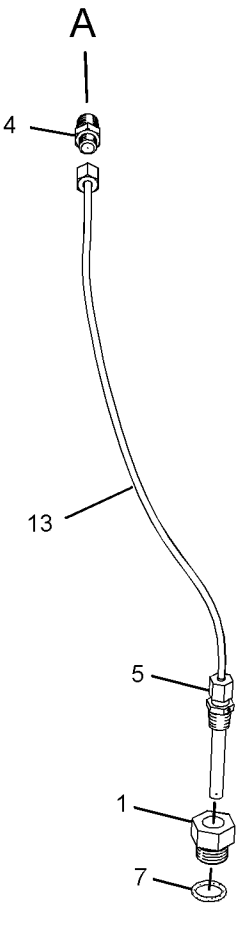

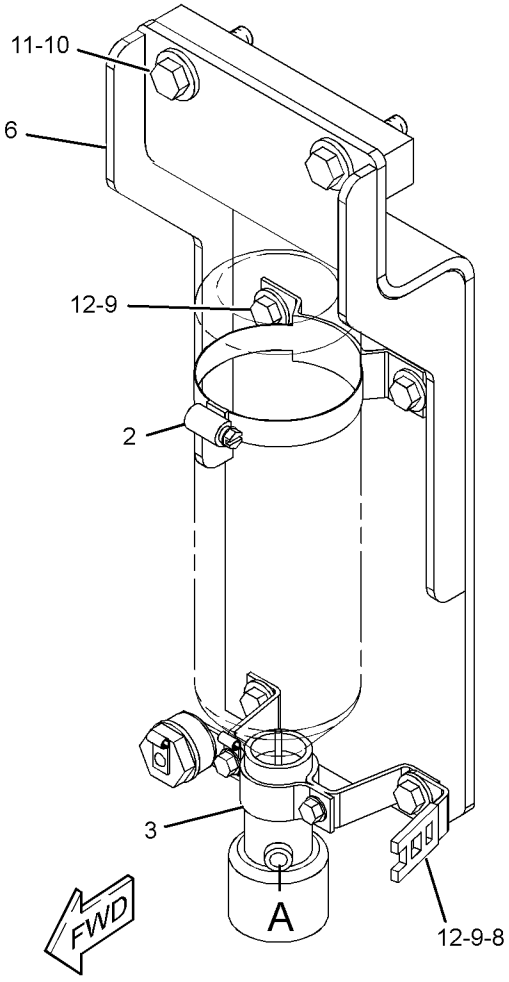

GRAPHIC #1 **<END>** g01318337

207-1556 STARTING MOTOR GP-ELECTRIC*R

S/N: EMM1-UP; JEN1-UP
24-VOLT
PART OF 223-0558 STARTING MOTOR GP-ELECTRIC
AN ATTACHMENT

SMCS-1453 **i05625235**

NOTE	REF NO	GRAPHIC REF	PART NUMBER	QTY	PART NAME 1 2 3 4 5 6 (PRODUCT LEVEL)	SEE PAGE
	1	1	**3T-3434**	6	PLUG	
	2	1	**7T-3279**	1	HOUSING AS	
	3	1	**8T-8566**	1	TERMINAL AS	
	4	1	**6V-8188**	4	NUT (1/2-13-THD)	
	5	1	**7X-0562**	4	WASHER-HARD (13.5X19X0.8-MM THK)	
	6	1	**3T-3422**	1	WIRE AS	
	7	1	**7T-3278**	1	HOLDER AS-BRUSH	
	8	1	**7T-3277**	1	COIL AS-FIELD	
	9	1	**7T-3454**	1	INSULATOR	
	10	1	**283-1107**	1	KIT-CONNECTOR (STARTING MOTOR)	
					(INCLUDES CONNECTORS, BOLT & TERMINAL-STARTER)	
	11	1	**7T-3451**	1	KIT-INSULATOR (TERMINAL)	
					(INCLUDES INSULATORS & GROMMET)	
	12	1	**8T-8569**	1	INSULATOR-TERMINAL	
	13	1	**5S-7349**	4	BOLT (1/4-20X0.5-IN)	
	14	1	**8T-4205**	4	WASHER-HARD (7.2X14.5X2-MM THK)	
	15	1	**8H-1141**	4	SHOE-POLE	
	16	1	**3R-8797**	8	SCREW & WASHER AS (3/8-24X0.72-IN)	
	17	1	**7T-3276**	1	ARMATURE AS (24-VOLT)	
	18	1	**3E-7775**	1	HOUSING AS	
	19	1	**4M-1831**	1	PLUG-LEVER HOUSING	
	20	1	**7L-2894**	1	GASKET	
	21	1	**0S-1597**	5	BOLT (1/4-28X1-IN)	
	22	1	**6N-3826**	1	DRIVE AS-MOTOR	
	23	1	**7T-3974**	1	HOUSING AS-DRIVE	
	24	1	**7X-3373**	6	BOLT (5/16-18X0.88-IN)	
	25	1	**376-4353**	1	KIT-SOLENOID (24-VOLT) (INSULATED)	
					(INCLUDES SOLENOID AS, BOLT, NUTS, COVER & CONNECTORS)	
	26	1	**6V-8378**	3	NUT (10-32-THD)	
	27	1	**8F-1434**	2	LOCKWASHER	
	28	1	**8T-0328**	3	WASHER-HARD (5.5X10X1-MM THK)	
	29	1	**9X-4824**	1	COVER-STARTING MOTOR	
	30	1	**8T-9884**	1	KIT-INSULATOR (STARTING MOTOR)	
					(INCLUDES INSULATORS & BUSHING)	
	31	1	**8C-3655**	1	KIT-BRUSH (STARTING MOTOR)	
					(INCLUDES BRUSHES, SPRINGS, SCREWS, SCREW ASSEMBLIES & SEAL)	
	32	1	**7T-3268**	1	KIT-LEVER (STARTING MOTOR)	
					(INCLUDES LEVER ASSEMBLIES, SEAL, NUT, GASKET & RETAINER)	
					AVAILABLE REPAIR KIT(S):	
			7T-3267	1	KIT-BUSHING (STARTING MOTOR)	
					(INCLUDES BUSHINGS, WICKS, CUPS, SEALS, GASKET, SCREW AS, WASHERS, SPACER & NUT)	

207-1556 **STARTING MOTOR GP-ELECTRIC (*contd.*)** **i05625235**

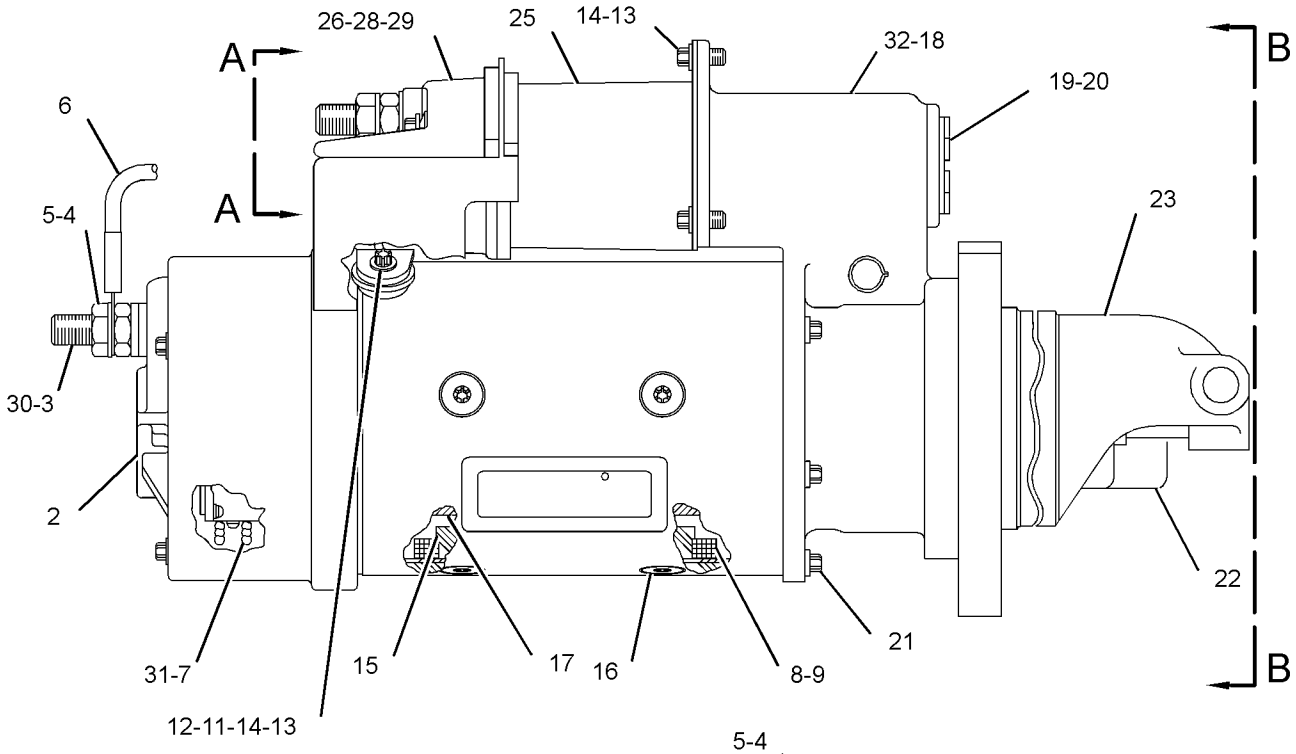

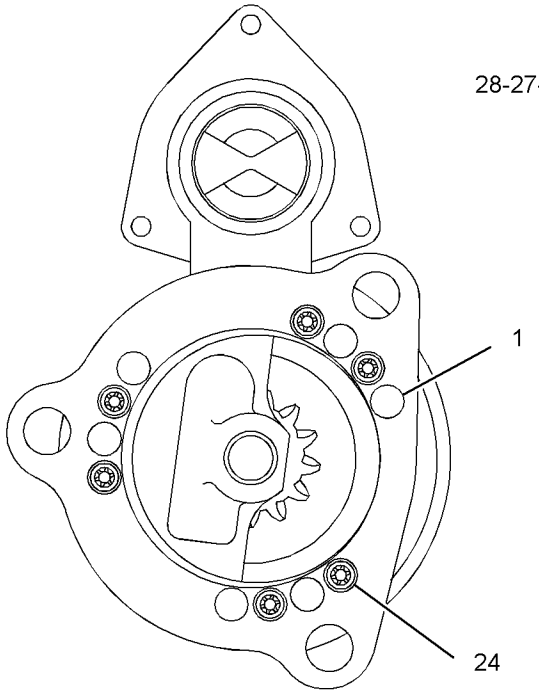

VIEW B-B

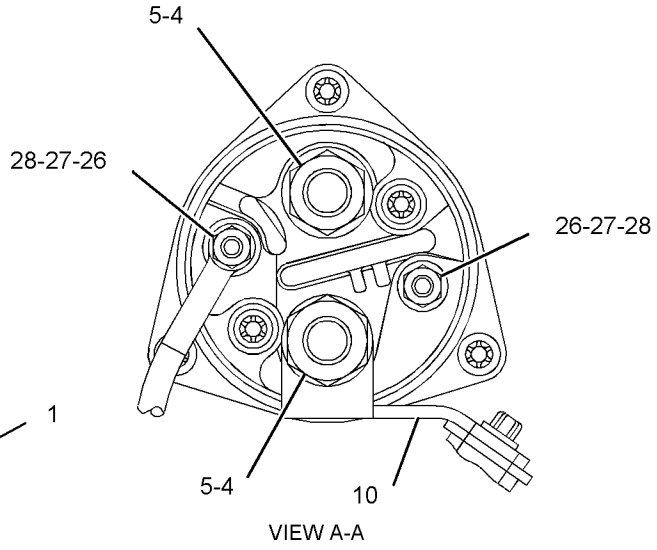

VIEW A-A

GRAPHIC #1 **<END>** g01478692

209-8423 STARTING MOTOR GP-ELECTRIC

S/N: EMM1-UP; JEN1-UP
24-VOLT
PART OF 389-3308 BATTERY & WIRING GP
AN ATTACHMENT

SMCS-1453 **i05625250**

NOTE	REF NO	GRAPHIC REF	PART NUMBER	QTY	PART NAME 1 2 3 4 5 6 (PRODUCT LEVEL)	SEE PAGE
	1	1	**9Y-6089**	1	GASKET	
	2	1	**185-6393**	1	CABLE AS-STARTING MOTOR	
E		1	**5P-0746**		CABLE (0-GA, BLACK) (30-CM)	
		1	**1M-4986**	1	TERMINAL-RING (0-GA, 1/2-IN SCREW)	
		1	**030-1707**	1	TERMINAL-RING (0-GA, 3/8-IN SCREW)	
YR	3	1	**338-3454**	1	STARTING MOTOR GP-ELECTRIC (24-VOLT)	219
	4	1	**220-0771**	3	BOLT-12 POINT HEAD (M16X2X45-MM)	
	5	1	**8T-4121**	1	WASHER-HARD (11X21X2.5-MM THK)	
M	6	1	**8T-4137**	1	BOLT (M10X1.5X20-MM)	

E - ORDER BY THE CENTIMETER
M - METRIC PART
R - REMFG PART MAY BE AVAILABLE
Y - SEPARATE ILLUSTRATION

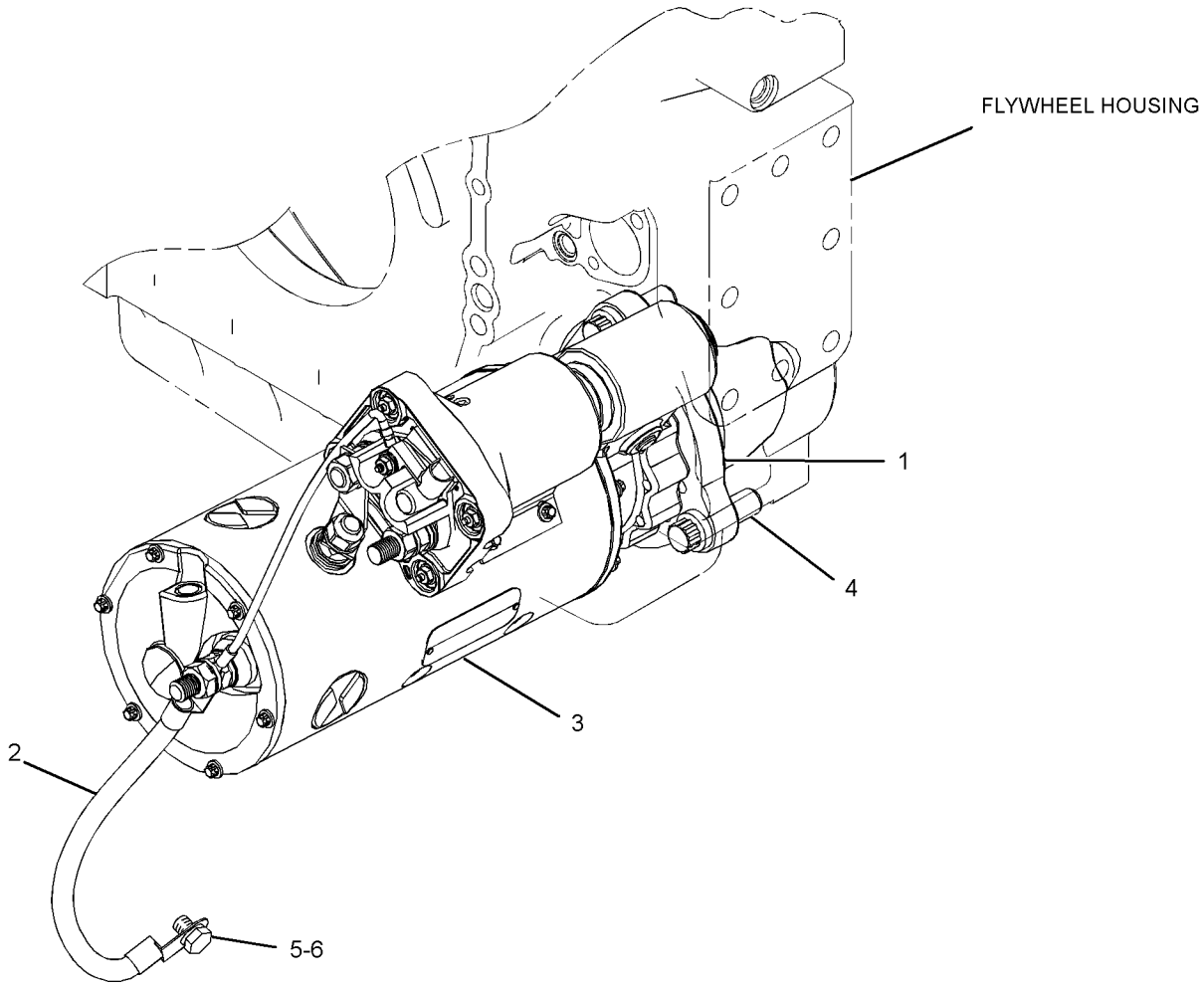

GRAPHIC #1 **<END>** g02915536

223-0558 STARTING MOTOR GP-ELECTRIC

S/N: EMM1-UP; JEN1-UP
24-VOLT
PART OF 389-3307 BATTERY & WIRING GP
AN ATTACHMENT

SMCS-1453 **i05625233**

NOTE	REF NO	GRAPHIC REF	PART NUMBER	QTY	PART NAME 1 2 3 4 5 6 (PRODUCT LEVEL)	SEE PAGE
	1	1	**9Y-6089**	1	GASKET	
	2	1	**8Y-9603**	1	CABLE AS-STARTING MOTOR	
		1	**1S-7251**	1	TERMINAL-CABLE (00-GA, 1/2-IN SCREW)	
		1	**1S-7252**	1	TERMINAL-CABLE (00-GA, 3/8-IN SCREW)	
E		1	**5P-0747**		CABLE (00-GA, BLACK) (28-CM)	
YR	3	1	**207-1556**	1	STARTING MOTOR GP-ELECTRIC (24-VOLT)	215
	4	1	**220-0771**	3	BOLT-12 POINT HEAD (M16X2X45-MM)	
	5	1	**6V-5839**	1	WASHER (11X21X2.5-MM THK)	
M	6	1	**6V-8212**	1	BOLT (M10X1.5X16-MM)	

E - ORDER BY THE CENTIMETER
M - METRIC PART
R - REMFG PART MAY BE AVAILABLE
Y - SEPARATE ILLUSTRATION

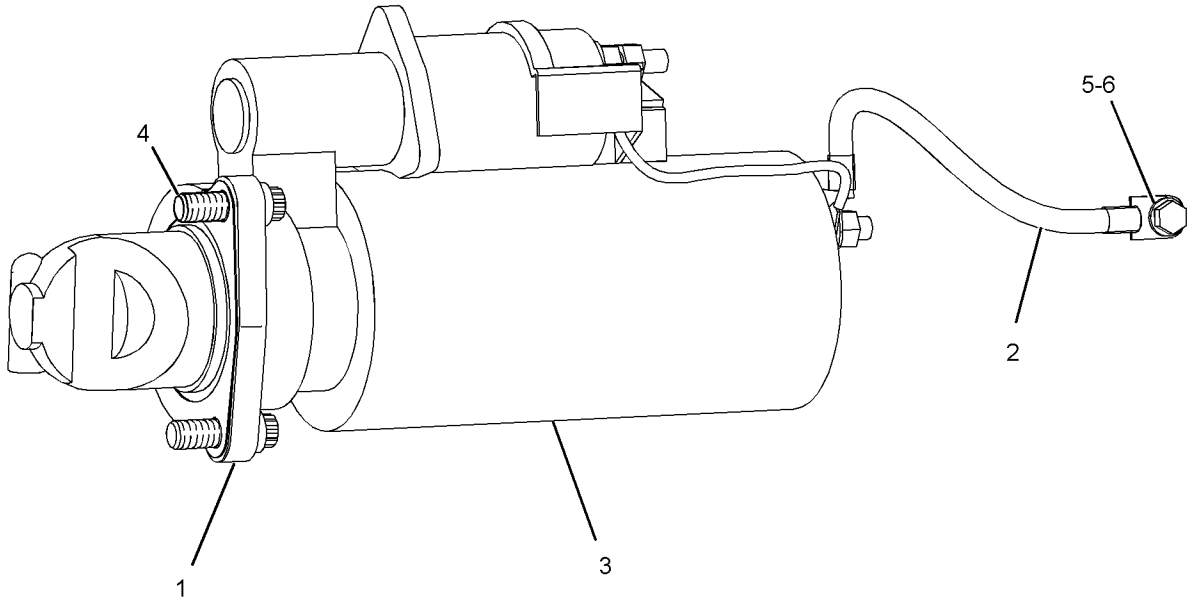

GRAPHIC #1 **<END>** g01206397

338-3454 STARTING MOTOR GP-ELECTRIC*R

S/N: EMM1-UP; JEN1-UP
24-VOLT
PART OF 209-8423 STARTING MOTOR GP-ELECTRIC
AN ATTACHMENT

SMCS-1453 **i05649146**

NOTE	REF NO	GRAPHIC REF	PART NUMBER	QTY	PART NAME 1 2 3 4 5 6 (PRODUCT LEVEL)	SEE PAGE
	1	1	**7M-0326**	1	CONNECTOR	
	2	1	**9H-3757**	2	WASHER (0.516X1X0.094-IN THK)	
	3	1	**1S-7446**	3	SCREW-MACHINE (8-32X0.437-IN)	
	4	1	**8C-9660**	3	WASHER (4.6X7.9X0.8-MM THK)	
	5	1	**9S-2544**	9	SCREW-HEX HEAD (8-32X11.13-MM)	
	6	1	**7M-0327**	1	WASHER-THRUST (17.4X25.4X1.6-MM THK)	
	7	1	**3T-3418**	1	FRAME AS-END	
		1	**3T-3423**	1	CUP	
		1	**3T-3424**	1	PLUG-FELT	
		1	**9G-4101**	1	BUSHING-END	
Y	8	1	**3T-9525**	1	PLATE AS-BRUSH (STARTING MOTOR)	201
	9	1	**1T-0808**	2	WASHER (0.516X0.812X0.09-IN THK)	
	10	1	**3T-3422**	1	WIRE AS	
	11	1	**2J-8163**	2	SEAL-O-RING	
	12	1	**7X-3373**	1	BOLT (5/16-18X0.88-IN)	
	13	1	**3T-3434**	6	PLUG	
	14	1	**5J-5314**	5	BOLT (5/16-18X1.5-IN)	
	15	1	**3L-3380**	1	BUSHING-TERMINAL	
	16	1	**8C-3089**	1	SEAL-O-RING	
	17	1	**4M-1853**	1	LEVER AS-SHIFT	
	18	1	**5M-3034**	1	LOCKNUT (5/16-24-THD)	
	19	1	**7L-2894**	4	GASKET	
	20	1	**4M-1831**	4	PLUG-LEVER HOUSING	
	21	1	**4M-1854**	1	SHAFT-LEVER	
	22	1	**1H-1023**	1	SEAL-O-RING	
	23	1	**2D-6392**	1	SEAL-O-RING	
	24	1	**7T-3974**	1	HOUSING AS-DRIVE	
	25	1	**6N-3826**	1	DRIVE AS-MOTOR	
	26	1	**2H-3429**	1	RING-RETAINING	
	27	1	**6V-1322**	4	BOLT (1/4-20X0.375-IN)	
	28	1	**8T-4205**	4	WASHER-HARD (7.2X14.5X2-MM THK)	
	29	1	**6N-3279**	1	INSULATOR	
	30	1	**0S-1597**	13	BOLT (1/4-28X1-IN)	
	31	1	**1M-9971**	1	SPACER (0.835X1.72X0.188-IN THK)	
	32	1	**1H-2629**	3	STRIP-INSULATION	
	33	1	**7M-0324**	1	COIL AS-FIELD	
	34	1	**3R-8797**	12	SCREW & WASHER AS (3/8-24X0.72-IN)	
	35	1	**7F-3488**	6	SHOE-POLE	
	36	1	**7M-8651**	1	ARMATURE AS	
	37	1	**7M-0325**	1	INSULATOR	
	38	1	**3T-9524**	6	BRUSH AS	
	39	1	**3N-3763**	1	KIT-TERMINAL (STARTING MOTOR) (INCLUDES BUSHINGS & WASHERS)	
	40	1	**338-3453**	1	SOLENOID AS-STARTING MOTOR (24-VOLT)	
	40A	1	**3R-8801**	1	CLAMP	
	42	1	**8F-1434**	2	LOCKWASHER	
	43	1	**6V-8188**	6	NUT (1/2-13-THD)	
	44	1	**7X-0562**	6	WASHER-HARD (13.5X19X0.8-MM THK)	
	45	1	**4B-2049**	6	NUT (10-32-THD)	
	46	1	**8T-0328**	10	WASHER-HARD (5.5X10X1-MM THK)	
	47	1	**3T-9494**	6	SPRING	
	48	1	**3E-7771**	1	HOUSING AS (STARTING MOTOR)	
	49	1	**9G-4101**	1	BUSHING-END	
	50	1	**3T-3424**	3	PLUG-FELT	
	51	1	**3T-3423**	3	CUP	
	52	1	**1M-9968**	1	BUSHING	

338-3454 **STARTING MOTOR GP-ELECTRIC (*contd.*)** **i05649146**

NOTE	REF NO	GRAPHIC REF	PART NUMBER	QTY	PART NAME 1 2 3 4 5 6 (PRODUCT LEVEL)	SEE PAGE
	53	1	**2F-6678**	1	SEAL-LIP TYPE	
	54	1	**4L-2729**	1	WASHER (0.844X1.9X0.188-IN THK)	
	55	1	**4M-1896**	1	BUSHING-TERMINAL	
	56	1	**045-4065**	4	SCREW-MACHINE (10-32X0.75-IN)	
	58	1	**125-6535**	1	COVER-STARTING MOTOR	

Y - SEPARATE ILLUSTRATION

338-3454 **STARTING MOTOR GP-ELECTRIC (*contd.*)** **i05649146**

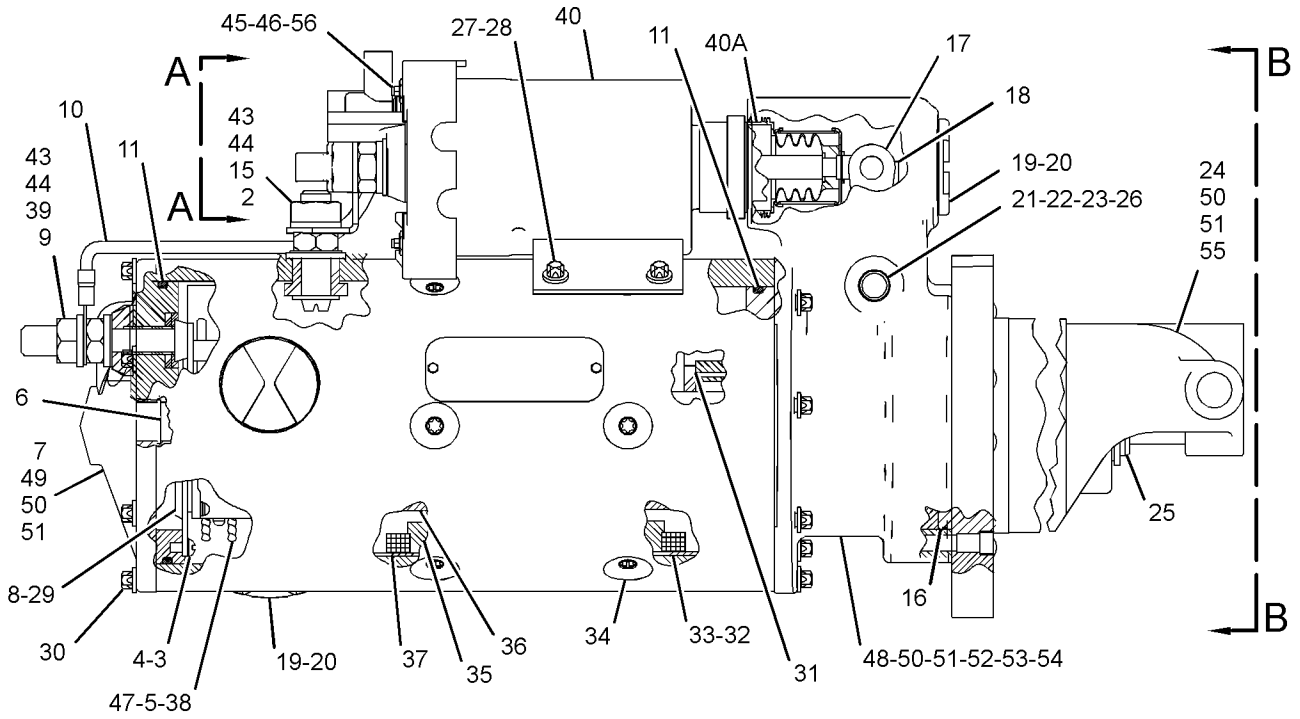

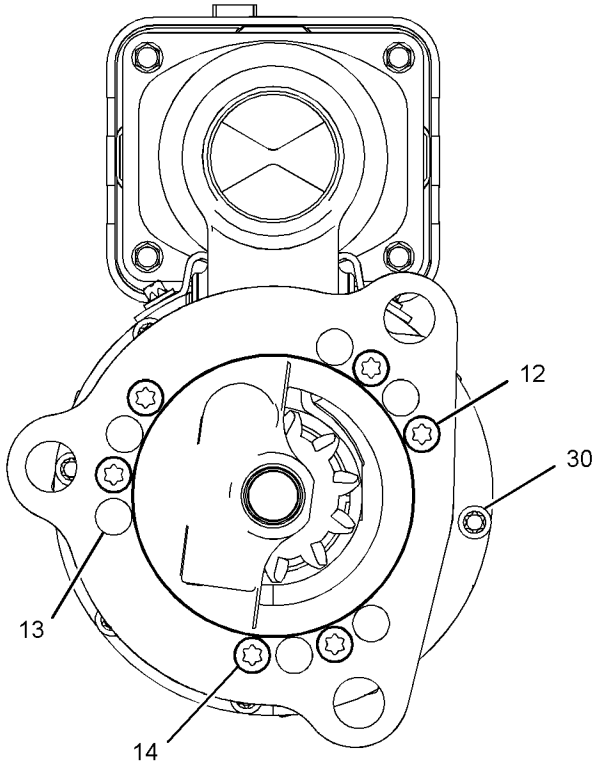

VIEW B-B

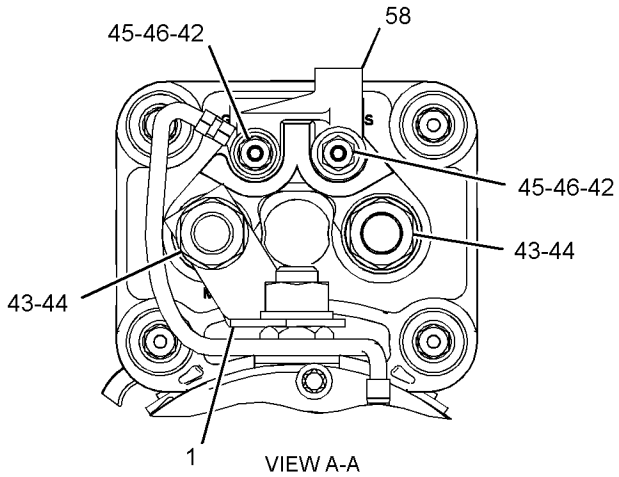

VIEW A-A

GRAPHIC #1 **<END>** g03090296

164-7577 SWITCH GP-BYPASS

S/N: EMM1-UP; JEN1-UP

PART OF 333-9308 BASE GP-OIL FILTER

SMCS-1408, 1435

i05317909

NOTE	REF NO	GRAPHIC REF	PART NUMBER	QTY	PART NAME 1 2 3 4 5 6 (PRODUCT LEVEL)	SEE PAGE
E	1	1	**9X-1813**		SLEEVE (19-CM)	
	2	1	**102-8802**	1	KIT-RECEPTACLE (2-PIN)	
					(INCLUDES RECEPTACLE AS & WEDGE)	
	3	1	**8T-8729**	2	PIN-CONNECTOR (16-GA TO 18-GA)	
	4	1	**3D-2824**	1	SEAL-O-RING	

E - ORDER BY THE CENTIMETER

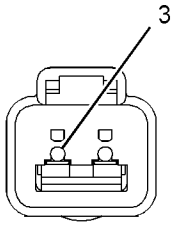

VIEW A-A

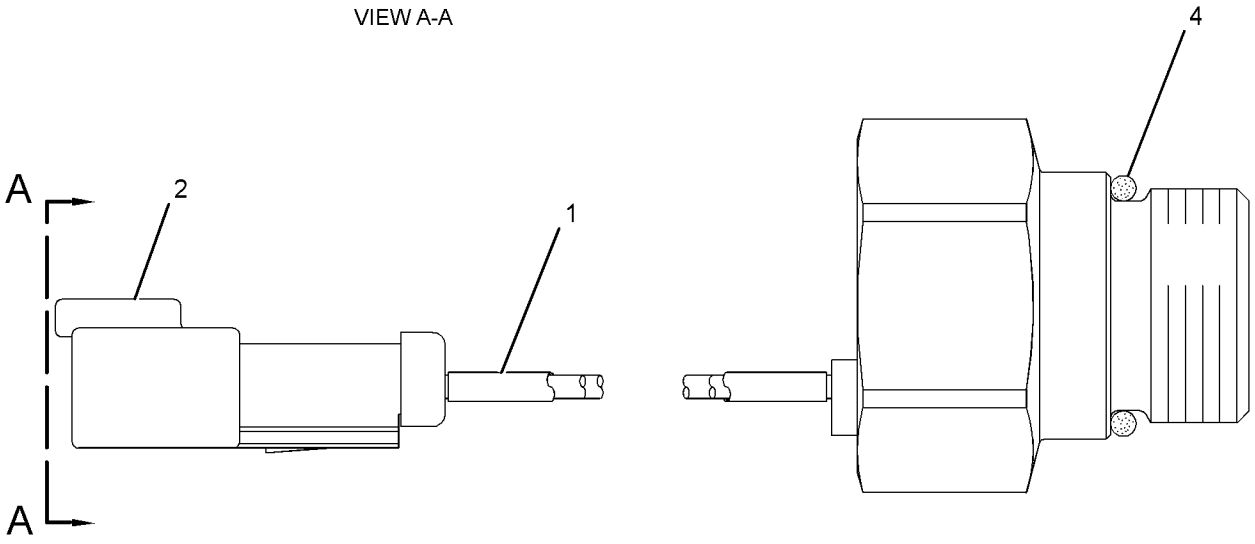

GRAPHIC #1

<END>

g02157795

7N-0718 SWITCH GP-DISCONNECT–BATTERY

S/N: EMM1-UP; JEN1-UP

PART OF 389-3305 BATTERY & WIRING GP

SMCS-1411 **i04921892**

NOTE	REF NO	GRAPHIC REF	PART NUMBER	QTY	PART NAME 1 2 3 4 5 6 (PRODUCT LEVEL)	SEE PAGE
	1	1	**2H-3922**	2	LOCKWASHER	
	2	1	**8H-5303**	1	NUT (3/4-16-THD)	
	3	1	**9F-5644**	2	LOCKWASHER	
	4	1	**6F-7045**	2	NUT-FULL (3/8-24-THD)	
	5	1	**8H-5306**	1	KEY (BATTERY DISCONNECT)	

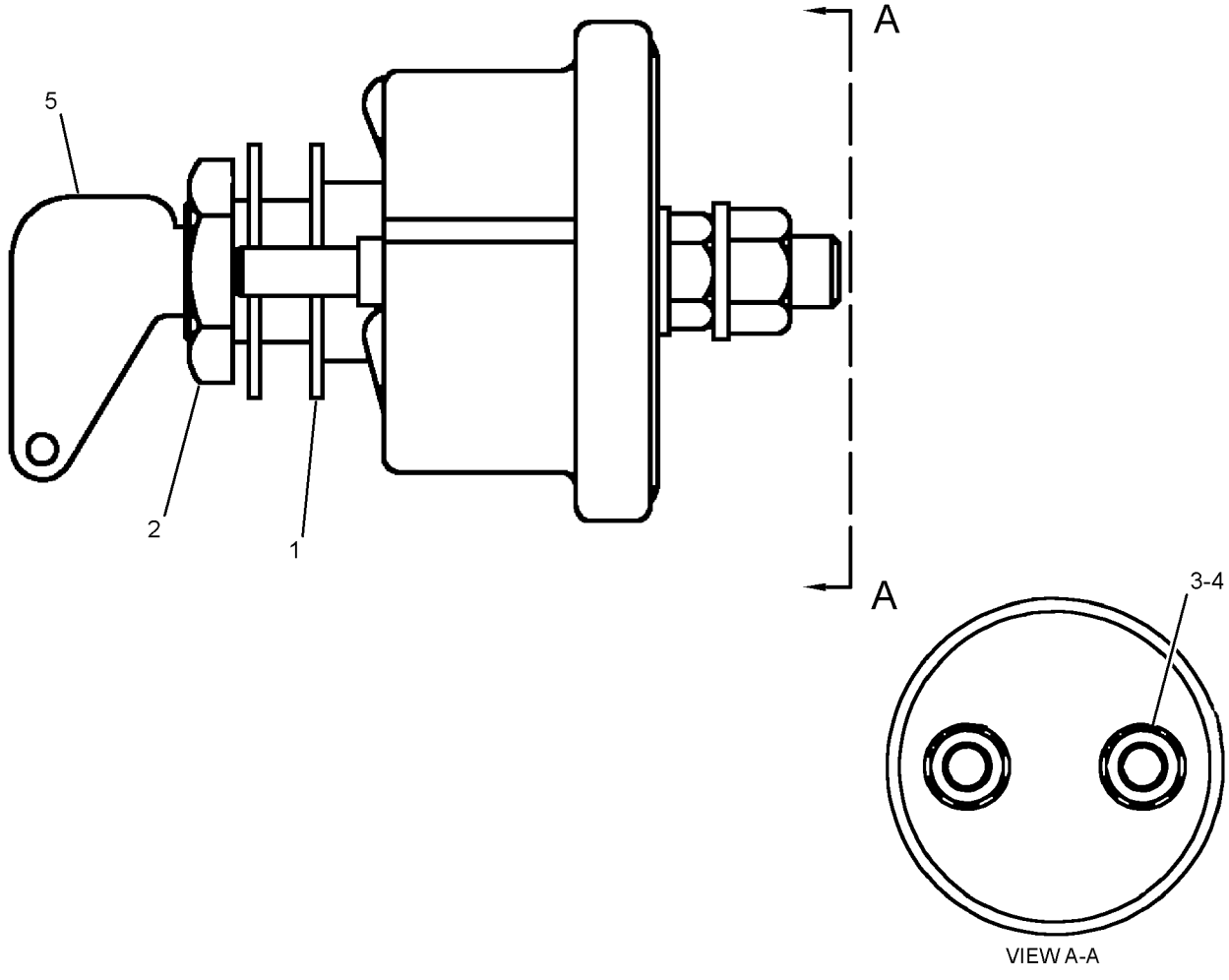

VIEW A-A

GRAPHIC #1 **<END>** g02663120

125-1302 SWITCH GP-MAGNETIC

S/N: EMM1-UP; JEN1-UP
24-VOLT
PART OF 384-4072 PANEL GP-FUSE
AN ATTACHMENT

SMCS-7499 **i05330660**

NOTE	REF NO	GRAPHIC REF	PART NUMBER	QTY	PART NAME 1 2 3 4 5 6 (PRODUCT LEVEL)	SEE PAGE
	1	1	**102-8802**	1	KIT-RECEPTACLE (2-PIN)	
					(INCLUDES RECEPTACLE AS & WEDGE)	
	2	1	**186-3735**	2	PIN-CONNECTOR (16-GA TO 18-GA)	
	3	1	**1H-3338**	2	LOCKWASHER (EXTERNAL TOOTH)	
	4	1	**012-0380**	2	LOCKWASHER	
M	5	1	**5C-2890**	2	NUT (M6X1-THD)	
E	6	1	**9X-1813**		SLEEVE (16-CM)	

E - ORDER BY THE CENTIMETER
M - METRIC PART

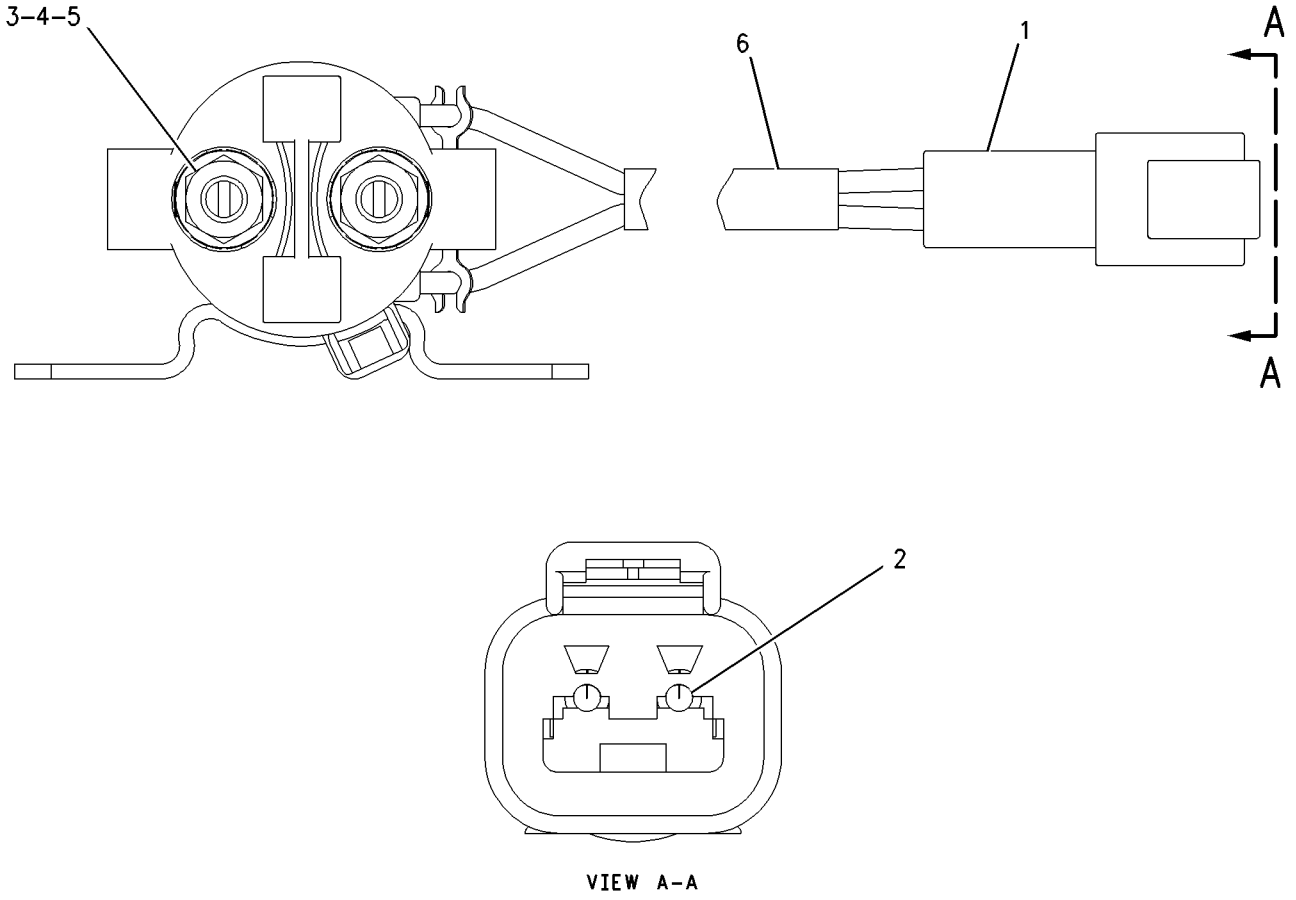

GRAPHIC #1 **<END>** g00988001

241-8368 SWITCH GP-MAGNETIC

S/N: EMM1-UP; JEN1-UP
24-VOLT
PART OF 384-4072 PANEL GP-FUSE
AN ATTACHMENT

SMCS-7499 **i05456657**

NOTE	REF NO	GRAPHIC REF	PART NUMBER	QTY	PART NAME 1 2 3 4 5 6 (PRODUCT LEVEL)	SEE PAGE
	1	1	**155-2270**	1	KIT-CONNECTING PLUG (2-PIN)	
					(INCLUDES PLUG AS, WEDGE & INTERFACE SEAL)	
	2	1	**4F-2294**	2	NUT-JAM (5/16-24-THD)	
	3	1	**8T-8730**	2	SOCKET-CONNECTOR (16-GA TO 18-GA)	

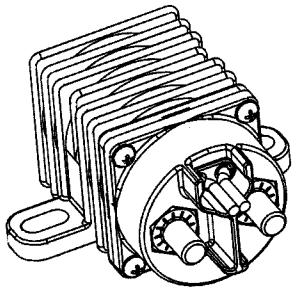

ISOMETRIC VIEW

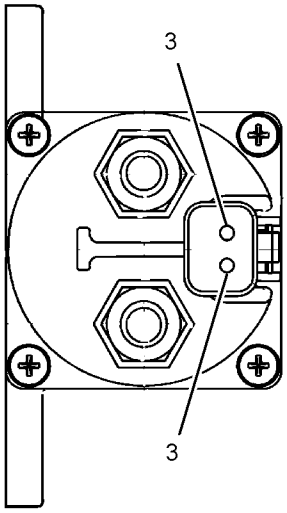

VIEW A-A

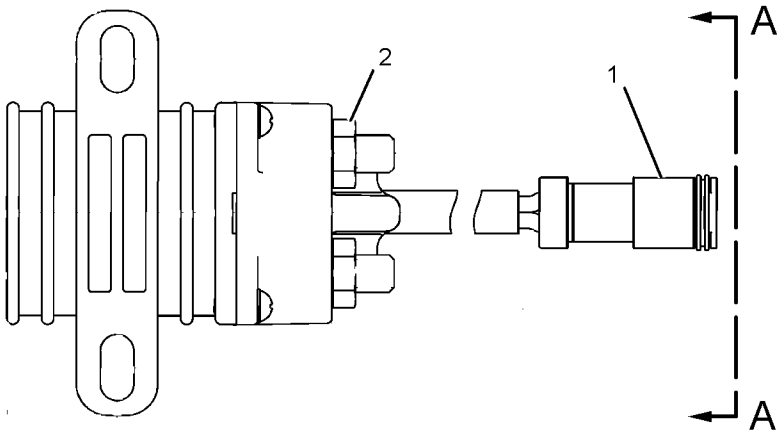

GRAPHIC #1 **<END>** g01077362

158-6632 SWITCH GP-PUSH BUTTON

S/N: EMM1-UP; JEN1-UP
24-VOLT
PART OF 389-3305 BATTERY & WIRING GP, 317-6565 WIRING GP-PLATFORM
ALSO AN ATTACHMENT

SMCS-1435, 7332 **i05330661**

NOTE	REF NO	GRAPHIC REF	PART NUMBER	QTY	PART NAME 1 2 3 4 5 6 (PRODUCT LEVEL)	SEE PAGE
	1	1	**9X-0199**	1	BOOT-SWITCH	
	2	1	**7T-9515**	1	KNOB-HORN	
	3	1	**5L-7200**	1	SCREW (8-32X0.375-IN)	
	4	1	**3B-4501**	1	LOCKWASHER	
	5	1	**6V-8370**	1	NUT-HEX (3/4-32-THD)	
	6	1	**2H-3922**	1	LOCKWASHER	
	7	1	**102-8802**	1	KIT-RECEPTACLE (2-PIN)	
					(INCLUDES RECEPTACLE AS & WEDGE)	
	8	1	**9X-3401**	2	PIN-CONNECTOR (16-GA TO 18-GA)	
	9	1	**3E-3365**	1	WEDGE-RECEPTACLE LOCK (2-PIN)	

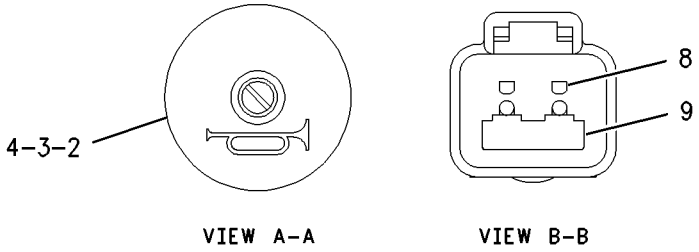

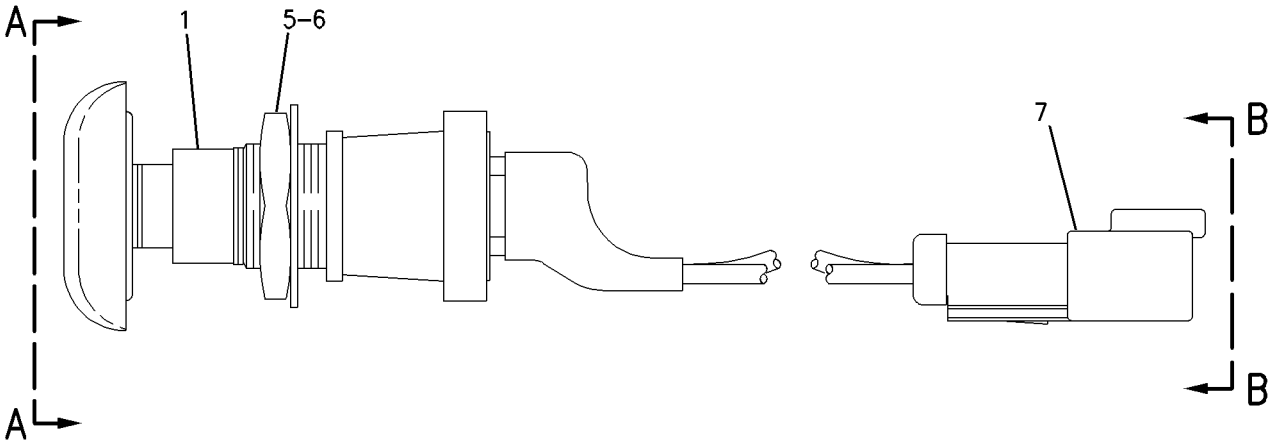

GRAPHIC #1 **<END>** g00942674

239-1134 VALVE GP-ETHER STARTING

S/N: EMM1-UP; JEN1-UP
24-VOLT, CONTINUOUS
PART OF 263-9012 STARTING AID GP-ETHER
AN ATTACHMENT

SMCS-1456 **i05505369**

NOTE	REF NO	GRAPHIC REF	PART NUMBER	QTY	PART NAME 1 2 3 4 5 6 (PRODUCT LEVEL)	SEE PAGE
	1	1	**7N-9801**	1	GASKET	
	2	1	**102-8802**	1	KIT-RECEPTACLE (2-PIN)	
					(INCLUDES RECEPTACLE AS & WEDGE)	
	3	1	**8T-8729**	2	PIN-CONNECTOR (16-GA TO 18-GA)	
	4	1	**358-4889**	1	FILTER (ETHER START)	

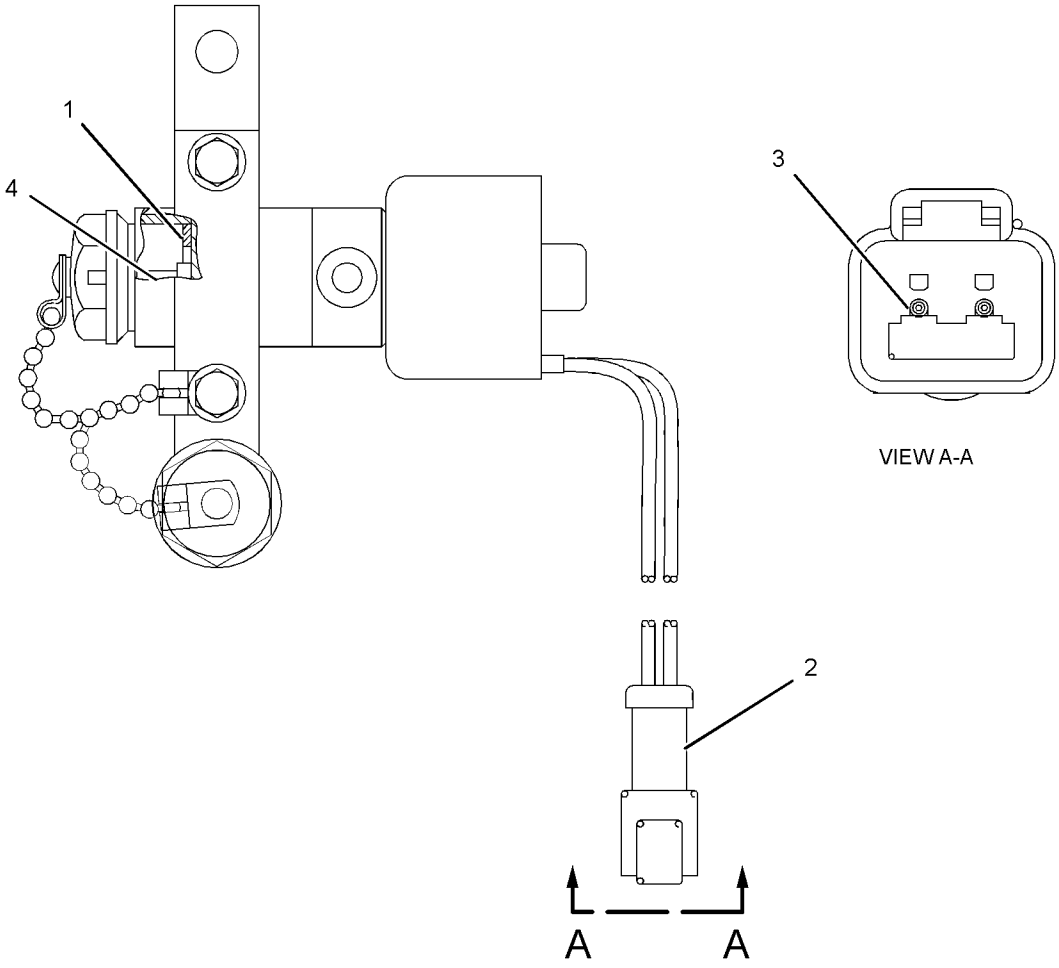

GRAPHIC #1 **<END>** g02138138

322-1359 WIRING GP-BOX

S/N: EMM1-UP; JEN1-UP
PART OF 384-4072 PANEL GP-FUSE
AN ATTACHMENT

SMCS-1408 **i05573690**

NOTE	REF NO	GRAPHIC REF	PART NUMBER	QTY	PART NAME 1 2 3 4 5 6 (PRODUCT LEVEL)	SEE PAGE
	1	1	**225-8553**	1	BLOCK AS-FUSE	
		1	**151-1398**	3	KIT-TERMINAL (LOCK) (FUSE BLOCK)	
					(EACH KIT INCLUDES LOCK)	
		1	**227-0912**	1	BLOCK AS-FUSE	
		1	**1H-3244**	2	LOCKWASHER	
		1	**6V-8185**	2	NUT (1/4-20-THD)	
		1	**8T-4205**	2	WASHER-HARD (7.2X14.5X2-MM THK)	
		1	**180-5737**	1	COVER	
	2	1	*320-5903*	1	HARNESS AS-PANEL (FUSE BLOCK)	
		1	**102-8802**	1	KIT-RECEPTACLE (2-PIN)	
					(INCLUDES RECEPTACLE AS & WEDGE)	
		1	**9G-3695**	37	PLUG-SEAL	
		1	**9W-2032**	3	TERMINAL-BLADE (10-GA TO 12-GA)	
		1	**9W-2033**	12	TERMINAL-BLADE (14-GA TO 16-GA)	
E		1	**119-3662**		TUBE-HEAT SHRINK (10.85-MM DIA) (13-CM)	
		1	**9X-3402**	2	SOCKET-CONNECTOR (16-GA TO 18-GA)	
					-OR-	
		1	**126-1768**	2	SOCKET-CONNECTOR (14-GA TO 16-GA)	
		1	**126-1767**	23	PIN-CONNECTOR (14-GA TO 16-GA)	
		1	**131-1488**	1	TERMINAL AS-RING (6-GA TO 8-GA)	
		1	**2L-8075**	1	TERMINAL-RING (14-GA TO 16-GA, NO. 8 SCREW)	
		1	**9X-3401**	12	PIN-CONNECTOR (16-GA TO 18-GA)	
					-OR-	
		1	**126-1767**	12	PIN-CONNECTOR (14-GA TO 16-GA)	
		1	**155-2270**	1	KIT-CONNECTING PLUG (2-PIN)	
					(INCLUDES PLUG AS, WEDGE & INTERFACE SEAL)	
		1	**214-4208**	1	RECEPTACLE AS-CONNECTOR (70-PIN)	
		1	**230-8792**	5	TERMINAL	

E - ORDER BY THE CENTIMETER

322-1359 **WIRING GP-BOX (*contd.*)** **i05573690**

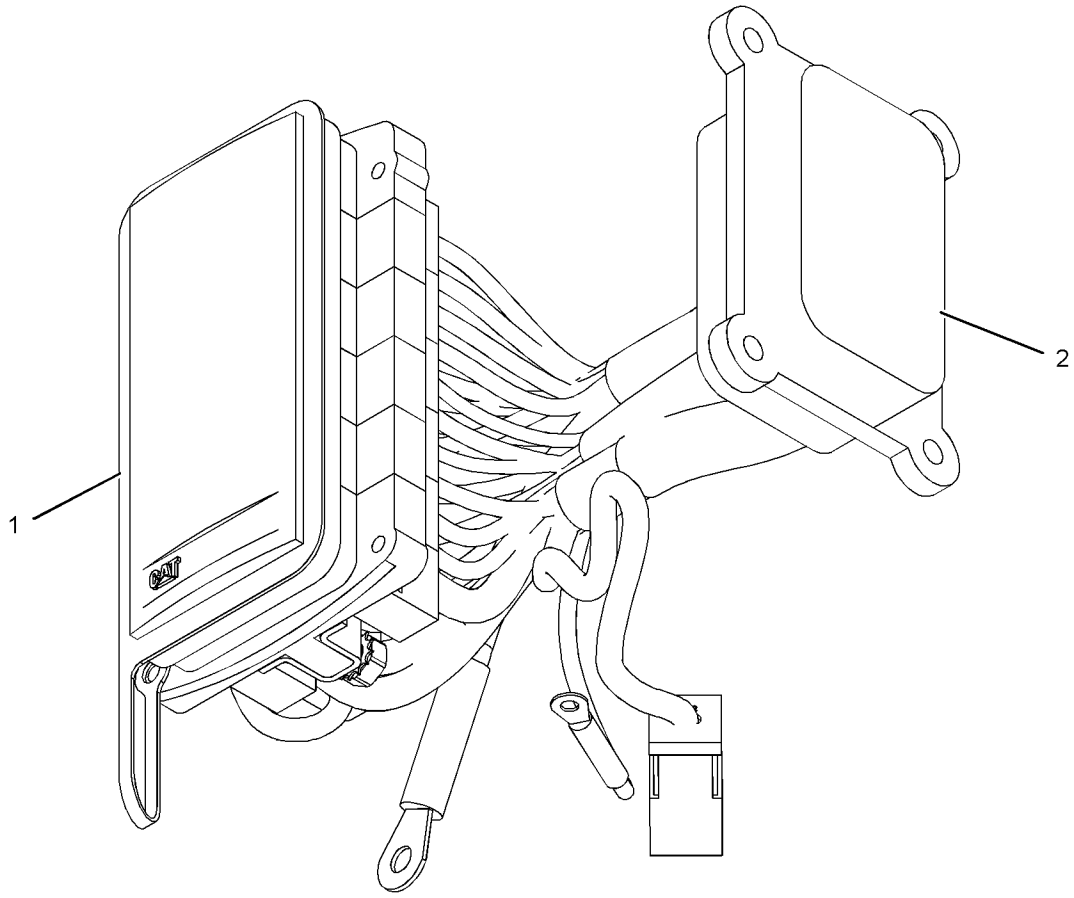

GRAPHIC #1 **<END>** g02189954

235-8203 WIRING GP-ELECTRONIC CONTROL

S/N: TXD1-UP

PART OF 387-8581, 387-8582 ENGINE AR-COMPLETE

AN ATTACHMENT

SMCS-1408, 1900 **i05555476**

NOTE	REF NO	GRAPHIC REF	PART NUMBER	QTY	PART NAME 1 2 3 4 5 6 (PRODUCT LEVEL)	SEE PAGE
	1	1	**3S-2093**	19	STRAP-CABLE	
	2	1	**9M-1974**	6	WASHER-HARD (8.8X16X2-MM THK)	
	3	1	**160-8124**	1	PLUG AS (2-PIN)	
		1	**8T-8737**	2	PLUG-SEAL	
		1	**102-8802**	1	KIT-RECEPTACLE (2-PIN)	
					(INCLUDES RECEPTACLE AS & WEDGE)	
	4	1	**196-9654**	1	BRACKET AS	
		1	**3W-9139**	1	BOSS	
M		1	**6V-9632**	2	NUT-WELD (M6X1-THD)	
		1	**7T-1099**	7	LINK	
M		1	**8T-3490**	1	NUT-WELD (M10X1.5-THD)	
	5	1	**215-3249**	1	HARNESS AS-ENGINE (UNIT INJECTOR)	
		1	**9X-3401**	12	PIN-CONNECTOR (16-GA TO 18-GA)	
					—OR—	
		1	**126-1767**	12	PIN-CONNECTOR (14-GA TO 16-GA)	
		1	**3S-2093**	5	STRAP-CABLE	
		1	**105-1797**	5	MOUNT	
		1	**191-7823**	1	RECEPTACLE AS	
	6	1	**235-8202**	1	HARNESS AS-ENGINE (ELECTRONIC CONTROL MODULE)	
		1	**180-9340**	72	SOCKET-CONNECTOR (14-GA TO 18-GA)	
		1	**305-5362**	4	TERMINAL AS (18-GA)	
		1	**1S-9593**	4	STRAP-CABLE	
		1	**264-5732**	1	PLUG AS-CONNECTOR (120-PIN)	
		1	**288-7324**	1	SEAL-CONNECTOR	
		1	**8T-8737**	95	PLUG-SEAL	
		1	**211-6807**	1	COVER-CONNECTOR	
		1	**9X-3401**	3	PIN-CONNECTOR (16-GA TO 18-GA)	
					—OR—	
		1	**126-1767**	3	PIN-CONNECTOR (14-GA TO 16-GA)	
		1	**100-3320**	1	PLUG AS-CONNECTOR (2-PIN)	
		1	**111-2416**	1	PLUG AS-CONNECTOR (2-PIN)	
					(EACH PLUG AS INCLUDES)	
		1	**126-5011**	1	SEAL-CONNECTOR	
		1	**155-2265**	1	KIT-CONNECTING PLUG (8-PIN)	
		1	**155-2270**	5	KIT-CONNECTING PLUG (2-PIN)	
		1	**155-2260**	3	KIT-CONNECTING PLUG (3-PIN)	
					(EACH PLUG KIT INCLUDES PLUG AS, WEDGE & INTERFACE SEAL)	
		1	**119-3662**		TUBE-HEAT SHRINK (10.85-MM DIA) (33-CM)	
		1	**125-7874**		TUBE-HEAT SHRINK (5.72-MM DIA) (5-CM)	
		1	**125-7875**		TUBE-HEAT SHRINK (7.44-MM DIA) (10-CM)	
		1	**172-6062**	1	PLUG AS-CONNECTOR (18-PIN)	
		1	**102-8802**	1	KIT-RECEPTACLE (2-PIN)	
		1	**102-8803**	1	KIT-RECEPTACLE (3-PIN)	
					(EACH RECEPTACLE KIT INCLUDES RECEPTACLE AS & WEDGE)	
	7	1	**4P-7581**	5	CLIP	
	8	1	**4P-8134**	2	CLIP	
M	9	1	**5P-7970**	5	NUT (M8X1.25-THD)	
	10	1	**6V-4369**	1	CLIP	
M	11	1	**6V-5217**	1	BOLT (M8X1.25X20-MM)	
	12	1	**6V-5839**	5	WASHER (11X21X2.5-MM THK)	
M	13	1	**6V-6317**	4	BOLT (M10X1.5X20-MM)	
M	14	1	**7I-2272**	2	BOLT (M5X0.8X12-MM)	
	15	1	**8T-0328**	2	WASHER-HARD (5.5X10X1-MM THK)	
M	16	1	**8T-4137**	1	BOLT (M10X1.5X20-MM)	

235-8203 **WIRING GP-ELECTRONIC CONTROL (*contd.*)** **i05555476**

NOTE	REF NO	GRAPHIC REF	PART NUMBER	QTY	PART NAME 1 2 3 4 5 6 (PRODUCT LEVEL)	SEE PAGE
	17	1	**8T-4205**	1	WASHER-HARD (7.2X14.5X2-MM THK)	
M	18	1	**8T-5451**	1	BOLT (M6X1X12-MM)	

M - METRIC PART

235-8203 **WIRING GP-ELECTRONIC CONTROL (*contd.*)** **i05555476**

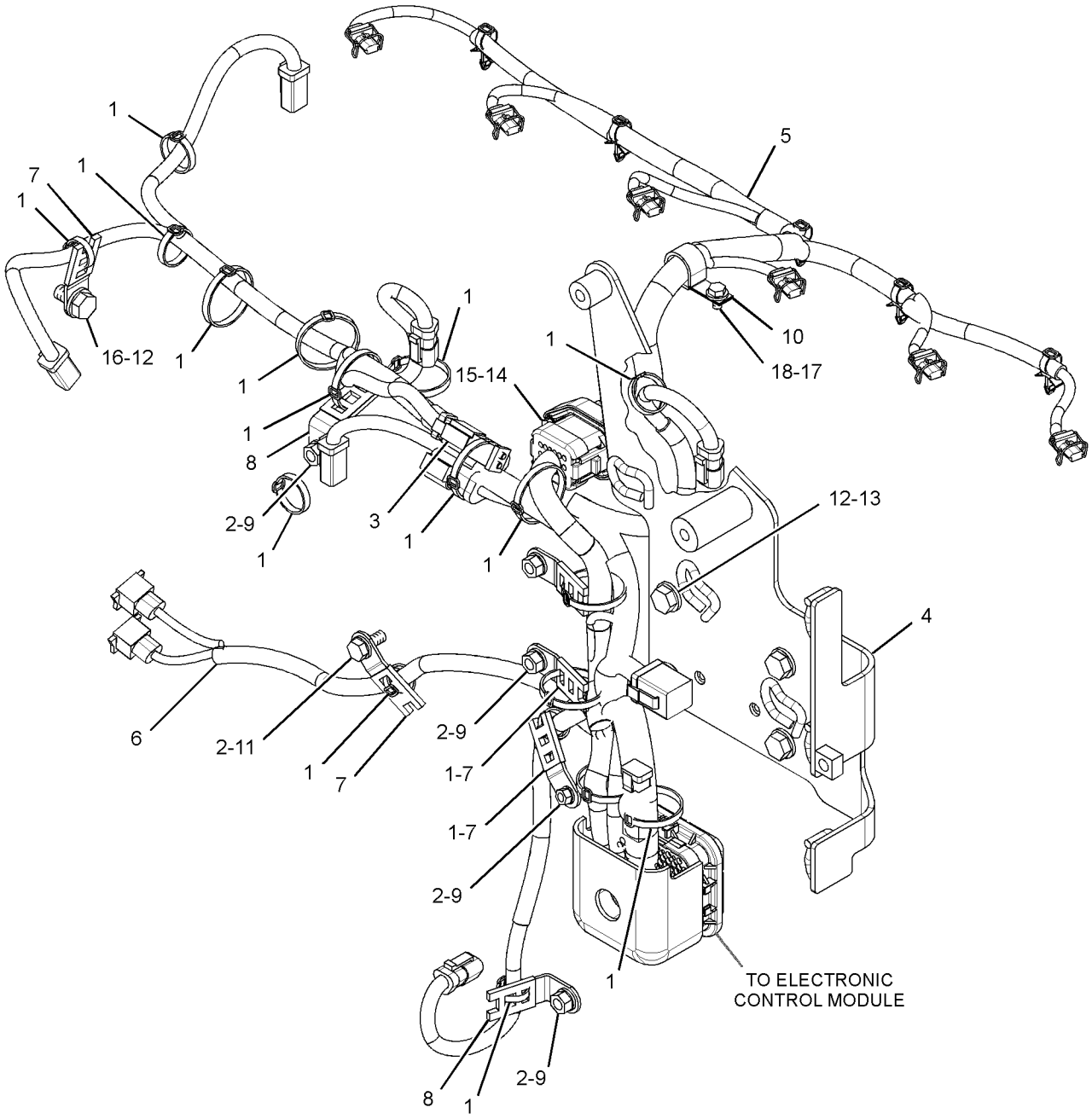

GRAPHIC #1 **<END>** g03025178

330-6019 WIRING GP-ELECTRONIC CONTROL

S/N: TXD1-UP
PART OF 387-8582 ENGINE AR-COMPLETE
AN ATTACHMENT

SMCS-1408, 1900

i05567976

NOTE	REF NO	GRAPHIC REF	PART NUMBER	QTY	PART NAME 1 2 3 4 5 6 (PRODUCT LEVEL)	SEE PAGE
	1	1	**3S-2093**	18	STRAP-CABLE	
	2	1	**196-9654**	1	BRACKET AS	
		1	**3W-9139**	1	BOSS	
M		1	**6V-9632**	2	NUT-WELD (M6X1-THD)	
		1	**7T-1099**	7	LINK	
M		1	**8T-3490**	1	NUT-WELD (M10X1.5-THD)	
Y	3	1	**419-0841**	1	HARNESS AS-ENGINE (UNIT INJECTOR)	156
Y	4	1	**323-9140**	1	HARNESS AS-ENGINE (SPEED SENSOR) (SPEED SENSOR)	156
	5	1	**4P-7581**	5	CLIP	
	6	1	**4P-8134**	2	CLIP	
M	7	1	**5P-7970**	5	NUT (M8X1.25-THD)	
	8	1	**6V-4369**	1	CLIP	
M	9	1	**6V-5217**	1	BOLT (M8X1.25X20-MM)	
	10	1	**6V-5839**	5	WASHER (11X21X2.5-MM THK)	
M	11	1	**6V-6317**	4	BOLT (M10X1.5X20-MM)	
M	12	1	**7I-2272**	2	BOLT (M5X0.8X12-MM)	
	13	1	**8T-0328**	2	WASHER-HARD (5.5X10X1-MM THK)	
M	14	1	**8T-4137**	1	BOLT (M10X1.5X20-MM)	
	15	1	**8T-4205**	1	WASHER-HARD (7.2X14.5X2-MM THK)	
M	16	1	**8T-5451**	1	BOLT (M6X1X12-MM)	
	17	1	**9M-1974**	6	WASHER-HARD (8.8X16X2-MM THK)	
	18	1	**274-3774**	1	CAP-CONNECTOR	
	19	1	**440-0881**	5	BOLT-SOCKET HEAD (M8X1.25-THD)	
	20	1	**439-4571**	5	CLIP	

M - METRIC PART
Y - SEPARATE ILLUSTRATION

330-6019 **WIRING GP-ELECTRONIC CONTROL (*contd.*)** **i05567976**

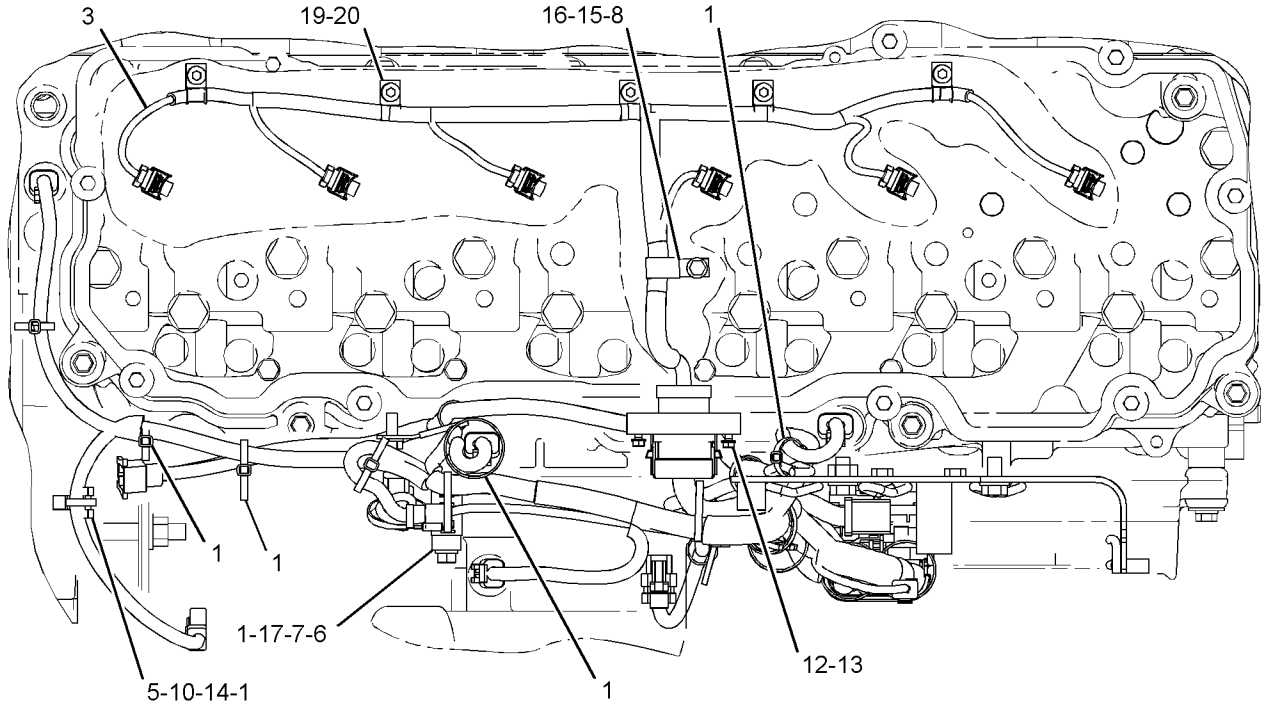

TOP VIEW OF ENGINE

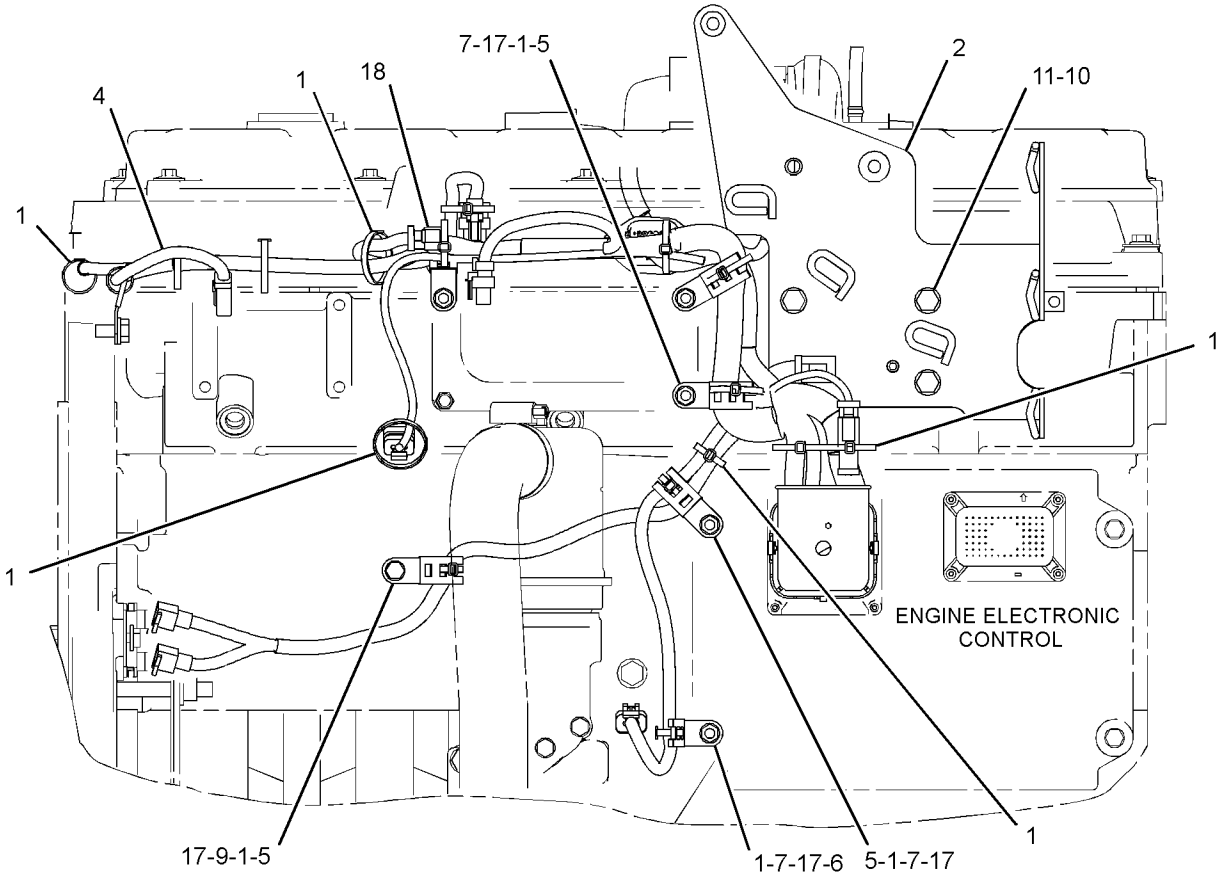

LEFT SIDE VIEW OF ENGINE

GRAPHIC #1 **<END>** g03380734

317-6576 WIRING GP-ENGINE

S/N: EMM1-UP; JEN1-UP

PART OF 389-3215 INSTALLATION AR-ENGINE

SMCS-1000, 1408 **i05640615**

NOTE	REF NO	GRAPHIC REF	PART NUMBER	QTY	PART NAME 1 2 3 4 5 6 (PRODUCT LEVEL)	SEE PAGE
	1	1	**8E-3430**	1	STRIP AS	
		1	**1F-0750**	1	NUT-WELD (3/8-16-THD)	
		1	**8E-3431**	1	PLATE	
	2	1	**8T-3518**	2	NUT-FULL (1/2-13-THD)	
	3	1	**121-2844**	1	HARNESS AS-WIRING (CRANK WITHOUT INJECT)	
		1	**102-8803**	2	KIT-RECEPTACLE (3-PIN)	
					(EACH RECEPTACLE KIT INCLUDES RECEPTACLE AS & WEDGE)	
		1	**3E-3371**	2	WEDGE-RECEPTACLE LOCK (3-PIN)	
		1	**8T-8729**	4	PIN-CONNECTOR (16-GA TO 18-GA)	
		1	**8T-8737**	5	PLUG-SEAL	
		1	**155-2260**	1	KIT-CONNECTING PLUG (3-PIN)	
					(INCLUDES PLUG AS, WEDGE & INTERFACE SEAL)	
	4	1	**124-6998**	1	PLATE	
Y	5	1	**145-7028**	1	SENSOR GP-TEMPERATURE (TRANSMISSION SUMP)	211
Y	5A	1	**145-7028**	1	SENSOR GP-TEMPERATURE (TORQUE CONVERTER OIL)	211
	6	1	**147-3150**	1	ANGLE AS	
M		1	**8T-3490**	1	NUT-WELD (M10X1.5-THD)	
	7	1	**183-4274**	1	BRACKET	
	8	1	**204-2281**	2	STRAP-CABLE	
	9	1	**266-2404**	1	BRACKET AS	
	10	1	**302-3908**	1	SPACER (11X20X30-MM THK)	
	11	1	**320-5890**	1	HARNESS AS-ENGINE	
		1	*361-6052*	1	RESISTOR AS	
		1	**102-8802**	1	KIT-RECEPTACLE (2-PIN)	
					(INCLUDES RECEPTACLE AS & WEDGE)	
		1	**8T-8729**	2	PIN-CONNECTOR (16-GA TO 18-GA)	
		1	**102-8802**	1	KIT-RECEPTACLE (2-PIN)	
					(INCLUDES RECEPTACLE AS & WEDGE)	
		1	**8N-1544**	1	PIN-CONNECTOR (8-GA)	
		1	**8T-8737**	57	PLUG-SEAL	
		1	**110-8769**	1	WIRE AS	
E		1	**114-8843**		SLEEVE-PLASTIC (120-CM)	
E		1	**114-8845**		SLEEVE-PLASTIC (60-CM)	
E		1	**119-3662**		TUBE-HEAT SHRINK (10.85-MM DIA) (20-CM)	
E		1	**125-7874**		TUBE-HEAT SHRINK (5.72-MM DIA) (25-CM)	
E		1	**125-7875**		TUBE-HEAT SHRINK (7.44-MM DIA) (5-CM)	
		1	**9X-3402**	94	SOCKET-CONNECTOR (16-GA TO 18-GA)	
					—OR—	
		1	**126-1768**	94	SOCKET-CONNECTOR (14-GA TO 16-GA)	
		1	**126-1767**	1	PIN-CONNECTOR (14-GA TO 16-GA)	
		1	**126-1768**	16	SOCKET-CONNECTOR (14-GA TO 16-GA)	
		1	**126-1774**	1	COVER-CONNECTOR	
		1	**127-5486**	1	RECEPTACLE AS-CONNECTOR (1-PIN)	
		1	**2L-8049**	1	TERMINAL-RING (6-GA, NO. 10 SCREW)	
					—OR—	
		1	**2L-8057**	1	TERMINAL-RING (8-GA, NO. 10 SCREW)	
		1	**2L-8071**	1	TERMINAL-RING (10-GA TO 12-GA, 1/2-IN SCREW)	
		1	**134-2540**	1	RESISTOR AS-CONNECTION (3-PIN)	
		1	**9X-3401**	1	PIN-CONNECTOR (16-GA TO 18-GA)	
					—OR—	
		1	**126-1767**	1	PIN-CONNECTOR (14-GA TO 16-GA)	
		1	**155-2265**	1	KIT-CONNECTING PLUG (8-PIN)	
		1	**155-2260**	2	KIT-CONNECTING PLUG (3-PIN)	
		1	**155-2270**	5	KIT-CONNECTING PLUG (2-PIN)	
		1	**155-2271**	1	KIT-CONNECTING PLUG (4-PIN)	
		1	**174-0503**	1	KIT-CONNECTING PLUG (3-PIN)	

317-6576 **WIRING GP-ENGINE (*contd.*)** **i05640615**

NOTE	REF NO	GRAPHIC REF	PART NUMBER	QTY	PART NAME 1 2 3 4 5 6 (PRODUCT LEVEL)	SEE PAGE
					(EACH PLUG KIT INCLUDES PLUG AS, WEDGE & INTERFACE SEAL)	
		1	**160-8124**	1	PLUG AS (2-PIN)	
		1	**8T-8737**	2	PLUG-SEAL	
		1	**160-7689**	2	PLUG AS-CONNECTOR (70-PIN)	
					(EACH INCLUDES)	
		1	**159-9322**	1	SEAL-O-RING	
	12	1	**435-8365**	1	CABLE AS	
		1	**1S-4915**	2	LINER (CONDUIT)	
E		1	**5P-0695**		CONDUIT (169-CM)	
E		1	**8T-2225**		TUBE-HEAT SHRINK (25.4-MM DIA) (16-CM)	
		1	**9X-9825**	1	TERMINAL-CABLE (00-GA, 1/2-IN SCREW)	
		1	**030-1705**	1	TERMINAL-CABLE (00-GA, 5/16-IN SCREW)	
E		1	**159-8049**		CABLE (00-GA, RED) (202-CM)	
		1	**276-1786**	1	COVER-TERMINAL (RED)	
		1	**301-0091**	1	COVER-TERMINAL (RED)	
M	13	1	**109-3001**	1	STUD-TAPERLOCK (M10X1.5X65-MM)	
	14	1	**132-5789**	1	CLIP	
	15	1	**144-8344**	1	SPACER (11X19X20-MM THK)	
	16	1	**1S-0994**	2	CLIP	
	17	1	**1S-1015**	1	CLIP	
	18	1	**4P-7429**	2	CLIP	
	19	1	**4P-7581**	8	CLIP	
	20	1	**4P-7582**	1	CLIP	
	21	1	**4P-8134**	5	CLIP	
M	22	1	**5C-7261**	2	NUT (M8X1.25-THD)	
	23	1	**5P-7464**	1	CLIP (SLOT)	
	24	1	**5P-7465**	1	CLIP (TAB)	
M	25	1	**6V-7744**	1	LOCKNUT (M10X1.5-THD)	
	26	1	**7F-0560**	2	WASHER (0.516X0.938X0.101-IN THK)	
	27	1	**7J-0204**	2	SEAL-O-RING	
	28	1	**7K-1181**	45	STRAP-CABLE	
	29	1	**7X-0515**	1	WASHER-HARD (17X35X5-MM THK)	
	30	1	**8S-0948**	2	CLIP	
	31	1	**8T-2920**	1	GROMMET	
	32	1	**8T-4121**	8	WASHER-HARD (11X21X2.5-MM THK)	
M	33	1	**8T-4133**	1	NUT (M10X1.5-THD)	
M	34	1	**8T-4136**	2	BOLT (M10X1.5X25-MM)	
M	35	1	**8T-4137**	6	BOLT (M10X1.5X20-MM)	
M	36	1	**8T-4185**	1	BOLT (M10X1.5X50-MM)	
M	37	1	**8T-4190**	1	BOLT (M16X2X25-MM)	
M	38	1	**8T-4192**	1	BOLT (M12X1.75X25-MM)	
	39	1	**8T-4223**	1	WASHER-HARD (13.5X25.5X3-MM THK)	
	40	1	**8T-4224**	2	WASHER-HARD (8.8X16X2-MM THK)	
	41	1	**8T-4896**	2	WASHER-HARD (10.2X18.5X2.5-MM THK)	
	42	1	**8T-9371**	1	BOLT (3/8-16X0.5-IN)	

E - ORDER BY THE CENTIMETER
M - METRIC PART
Y - SEPARATE ILLUSTRATION

317-6576 **WIRING GP-ENGINE (*contd.*)** **i05640615**

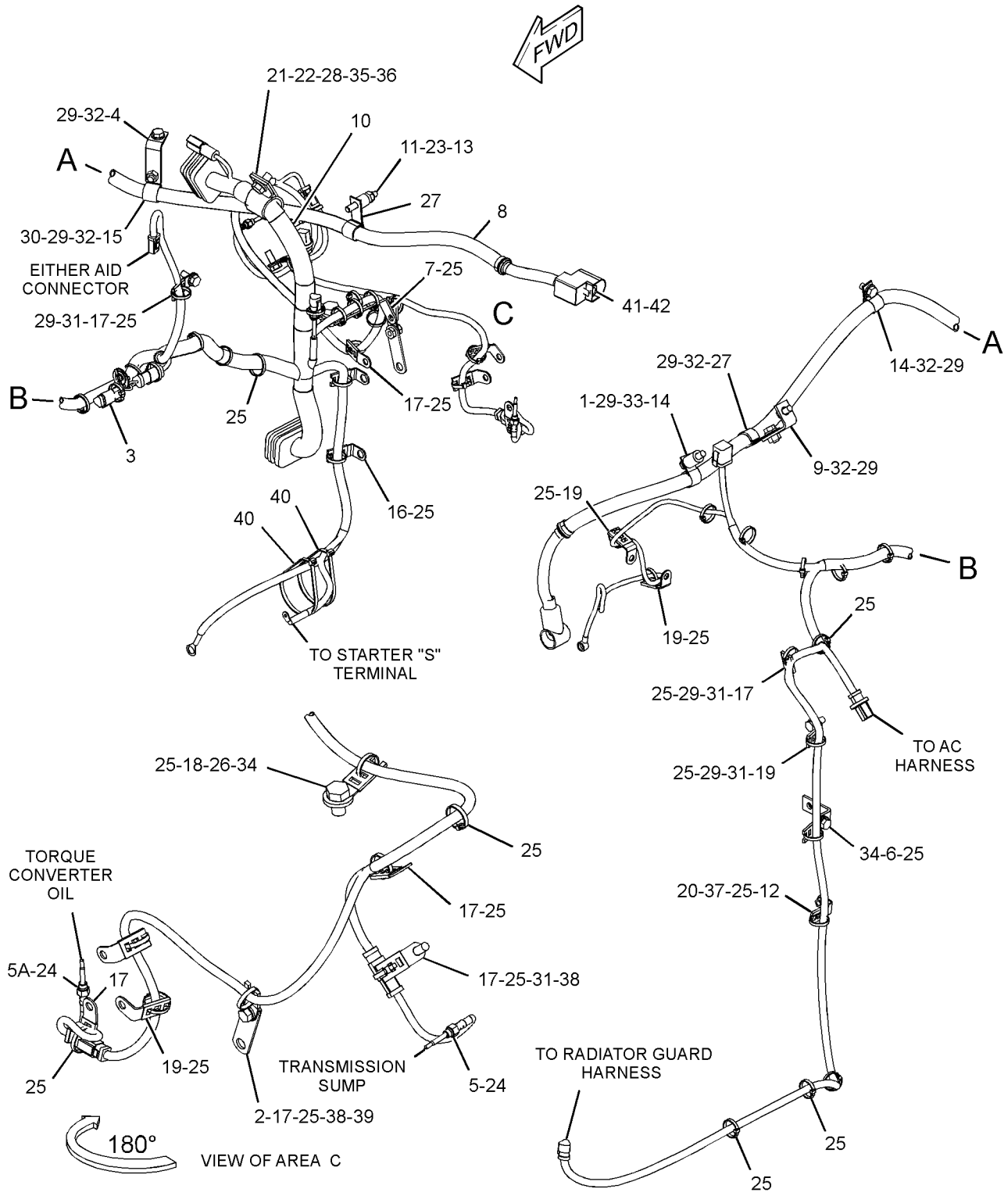

GRAPHIC #1 **<END>** g03584199

389-6154 WIRING GP-GRADE CONTROL

S/N: EMM1-UP; JEN1-UP
PART OF 389-6127 GRADE CONTROL AR
AN ATTACHMENT

SMCS-1408 **i05679918**

NOTE	REF NO	GRAPHIC REF	PART NUMBER	QTY	PART NAME 1 2 3 4 5 6 (PRODUCT LEVEL)	SEE PAGE
	1	2	**6D-3033**	12	SCREW-SOCKET HEAD (4-40X0.5-IN)	
	2	1	**6I-1418**	4	SPACER (8.2X12.7X28.7-MM THK)	
	3	2	**7R-3029**	3	CAP-DUST	
	4	1	**8T-9655**	8	MOUNT-ISOLATION	
	5	2	**132-8487**	3	NUT-RING	
	6	2	**226-9169**	1	MODULE AS-POWER SUPPLY	
	7	2	**236-8826**	3	BOSS (1-1/8-18X0.708-IN)	
	8	2	**240-3469**	1	COVER AS (RH)	
	9	2	**240-3470**	1	COVER AS (LH)	
R	10	1	**304-5687**	1	CONTROL GP-UNPROGRAMMED	
	11	1	**319-3753**	1	HARNESS AS-WIRING (LIGHT BAR)	
		1	**102-8804**	1	KIT-RECEPTACLE (4-PIN)	
					(INCLUDES RECEPTACLE AS & WEDGE)	
		1	**8T-8737**	4	PLUG-SEAL	
E		1	**125-7874**		TUBE-HEAT SHRINK (5.72-MM DIA) (15-CM)	
		1	**9X-3402**	9	SOCKET-CONNECTOR (16-GA TO 18-GA)	
					—OR—	
		1	**126-1768**	9	SOCKET-CONNECTOR (14-GA TO 16-GA)	
		1	**9X-3401**	3	PIN-CONNECTOR (16-GA TO 18-GA)	
					—OR—	
		1	**126-1767**	3	PIN-CONNECTOR (14-GA TO 16-GA)	
		1	**230-5008**	3	PLUG AS-CONNECTOR (4-PIN)	
					(EACH INCLUDES)	
		1	**264-7031**	1	SEAL-CONNECTOR	
	12	1	**319-3758**	1	HARNESS AS-WIRING (GPS)	
		1	**102-8801**	1	KIT-RECEPTACLE (12-PIN)	
					(INCLUDES RECEPTACLE AS & WEDGE)	
		1	**8T-8737**	5	PLUG-SEAL	
E		1	**125-7875**		TUBE-HEAT SHRINK (7.44-MM DIA) (5-CM)	
		1	**126-1767**	2	PIN-CONNECTOR (14-GA TO 16-GA)	
		1	**9X-3401**	5	PIN-CONNECTOR (16-GA TO 18-GA)	
					—OR—	
		1	**126-1767**	5	PIN-CONNECTOR (14-GA TO 16-GA)	
		1	**167-8987**	1	PLUG AS-CONNECTOR (8-PIN)	
		1	**268-3371**	1	CAP AS-CONNECTOR	
	13	2	**320-3065**	1	SENSOR GP-PRESSURE	
	14	1	**320-5902**	1	HARNESS AS-CONTROL	
		1	**8T-8737**	157	PLUG-SEAL	
E		1	**125-7874**		TUBE-HEAT SHRINK (5.72-MM DIA) (5-CM)	
		1	**9X-3402**	51	SOCKET-CONNECTOR (16-GA TO 18-GA)	
					—OR—	
		1	**126-1768**	51	SOCKET-CONNECTOR (14-GA TO 16-GA)	
		1	**126-1768**	2	SOCKET-CONNECTOR (14-GA TO 16-GA)	
		1	**147-1445**	1	PLUG AS-CONNECTOR (70-PIN)	
		1	**147-1446**	1	PLUG AS-CONNECTOR (70-PIN)	
		1	**160-7689**	1	PLUG AS-CONNECTOR (70-PIN)	
					(EACH PLUG AS INCLUDES)	
		1	**159-9322**	1	SEAL-O-RING	
	15	2	**334-9544**	2	BRACKET AS	
	16	2	**334-9545**	2	COVER AS	
	17	2	**349-5766**	4	CLAMP	
	18	2	**354-1681**	1	HARNESS AS-SENSOR (INPUT)	
		2	**8T-8737**	6	PLUG-SEAL	
		2	**9X-3401**	6	PIN-CONNECTOR (16-GA TO 18-GA)	
		2	**230-4010**	1	RECEPTACLE AS-CONNECTOR (12-PIN)	
	19	2	**354-1683**	1	HARNESS AS-SENSOR (OUTPUT)	

389-6154 **WIRING GP-GRADE CONTROL (*contd.*)** **i05679918**

NOTE	REF NO	GRAPHIC REF	PART NUMBER	QTY	PART NAME 1 2 3 4 5 6 (PRODUCT LEVEL)	SEE PAGE
		2	**8T-8737**	4	PLUG-SEAL	
		2	**9X-3402**	8	SOCKET-CONNECTOR (16-GA TO 18-GA)	
		2	**230-4009**	1	PLUG AS-CONNECTOR (12-PIN)	
		2	**264-7034**	1	SEAL-CONNECTOR	
	20	2	**372-0294**	1	HARNESS AS-WIRING (CYLINDER, RH)	
		2	**102-8801**	1	KIT-RECEPTACLE (12-PIN)	
					(INCLUDES RECEPTACLE AS & WEDGE)	
		2	**8T-8737**	3	PLUG-SEAL	
		2	**126-1767**	5	PIN-CONNECTOR (14-GA TO 16-GA)	
		2	**9X-3401**	4	PIN-CONNECTOR (16-GA TO 18-GA)	
					—OR—	
		2	**126-1767**	4	PIN-CONNECTOR (14-GA TO 16-GA)	
B		2	**1P-0810**		TAPE-ELECTRICAL	
		2	**228-3323**	1	CLIP-SPRING	
	21	1	**384-1048**	1	HARNESS AS-CHASSIS	
		1	**102-8806**	1	KIT-RECEPTACLE (8-PIN)	
		1	**102-8801**	1	KIT-RECEPTACLE (12-PIN)	
		1	**190-7615**	1	KIT-RECEPTACLE (12-PIN)	
					(EACH RECEPTACLE KIT INCLUDES RECEPTACLE AS & WEDGE)	
		1	**3E-3389**	1	WEDGE-RECEPTACLE LOCK (8-PIN)	
		1	**8T-8737**	6	PLUG-SEAL	
E		1	**114-8843**		SLEEVE-PLASTIC (100-CM)	
E		1	**119-3662**		TUBE-HEAT SHRINK (10.85-MM DIA) (7-CM)	
		1	**9X-3402**	13	SOCKET-CONNECTOR (16-GA TO 18-GA)	
					—OR—	
		1	**126-1768**	13	SOCKET-CONNECTOR (14-GA TO 16-GA)	
		1	**126-1767**	8	PIN-CONNECTOR (14-GA TO 16-GA)	
		1	**9X-3401**	18	PIN-CONNECTOR (16-GA TO 18-GA)	
					—OR—	
		1	**126-1767**	18	PIN-CONNECTOR (14-GA TO 16-GA)	
		1	**155-2270**	5	KIT-CONNECTING PLUG (2-PIN)	
					(EACH PLUG KIT INCLUDES PLUG AS, WEDGE & INTERFACE SEAL)	
B		1	**1P-0810**		TAPE-ELECTRICAL	
		1	**237-0227**	1	PLUG AS-CONNECTOR (3-PIN)	
		1	**264-7030**	1	SEAL-CONNECTOR	
	22	1	**384-1049**	1	HARNESS AS-WIRING (RADIATOR GUARD)	
		1	**8T-8737**	5	PLUG-SEAL	
E		1	**119-3662**		TUBE-HEAT SHRINK (10.85-MM DIA) (26-CM)	
E		1	**125-7874**		TUBE-HEAT SHRINK (5.72-MM DIA) (50-CM)	
		1	**9X-3402**	18	SOCKET-CONNECTOR (16-GA TO 18-GA)	
					—OR—	
		1	**126-1768**	18	SOCKET-CONNECTOR (14-GA TO 16-GA)	
		1	**126-1768**	15	SOCKET-CONNECTOR (14-GA TO 16-GA)	
		1	**134-2540**	2	RESISTOR AS-CONNECTION (3-PIN)	
		1	**155-2255**	1	KIT-CONNECTING PLUG (12-PIN)	
		1	**155-2257**	1	KIT-CONNECTING PLUG (12-PIN)	
		1	**155-2265**	1	KIT-CONNECTING PLUG (8-PIN)	
		1	**174-0503**	2	KIT-CONNECTING PLUG (3-PIN)	
					(EACH PLUG KIT INCLUDES PLUG AS, WEDGE & INTERFACE SEAL)	
	23	2	**384-1050**	1	HARNESS AS-WIRING (CYLINDER, LH)	
		2	**126-1767**	6	PIN-CONNECTOR (14-GA TO 16-GA)	
		2	**9X-3401**	6	PIN-CONNECTOR (16-GA TO 18-GA)	
					—OR—	
		2	**126-1767**	6	PIN-CONNECTOR (14-GA TO 16-GA)	
B		2	**1P-0810**		TAPE-ELECTRICAL	
		2	**190-7615**	1	KIT-RECEPTACLE (12-PIN)	
		2	**228-3323**	2	CLIP-SPRING	
	24	2	**130-5300**	2	CLIP	
M	25	2	**131-3539**	3	SCREW-FLAT HEAD (M8X1.25X30-MM)	

389-6154 **WIRING GP-GRADE CONTROL (*contd.*)** **i05679918**

NOTE	REF NO	GRAPHIC REF	PART NUMBER	QTY	PART NAME 1 2 3 4 5 6 (PRODUCT LEVEL)	SEE PAGE
	26	2	**1M-4543**	2	GROMMET	
	27	2	**1S-6420**	4	CLIP	
	28	2	**200-6345**	1	MOUNT (DUAL SWIVEL)	
	29	2	**214-7568**	1	SEAL-O-RING	
	30	1	**297-0693**	1	FILM-IDENTIFICATION (JOYSTICK) (GRADE CONTROL)	
	31	2	**302-3908**	1	SPACER (11X20X30-MM THK)	
	32	2	**3E-4352**	10	WASHER-HARD (8.8X20.5X2.5-MM THK)	
	33	2	**4P-0489**	2	SPACER (11X25X26.8-MM THK)	
	34	1,2	**4P-7581**	4	CLIP	
M	35	2	**5C-9553**	4	BOLT (M6X1X16-MM)	
	36	2	**5P-1075**	3	WASHER-HARD (10.2X22.5X3-MM THK)	
	37	1,2	**7K-1181**	43	STRAP-CABLE	
M	38	1	**7X-0818**	4	BOLT (M8X1.25X45-MM)	
	39	2	**8T-4121**	2	WASHER-HARD (11X21X2.5-MM THK)	
M	40	2	**8T-4136**	2	BOLT (M10X1.5X25-MM)	
M	41	2	**8T-4139**	2	BOLT (M12X1.75X30-MM)	
M	42	2	**8T-4185**	3	BOLT (M10X1.5X50-MM)	
M	43	2	**8T-4189**	2	BOLT (M8X1.25X20-MM)	
	44	2	**8T-4223**	2	WASHER-HARD (13.5X25.5X3-MM THK)	
M	45	2	**8T-4908**	8	BOLT (M8X1.25X25-MM)	
	46	1	**9N-0869**	4	WASHER-HARD (8.8X25.5X2-MM THK)	
	47	2	**9X-8256**	4	WASHER (6.6X12X2-MM THK)	

B - USE AS REQUIRED
E - ORDER BY THE CENTIMETER
M - METRIC PART
R - REMFG PART MAY BE AVAILABLE

389-6154 **WIRING GP-GRADE CONTROL (*contd.*)** **i05679918**

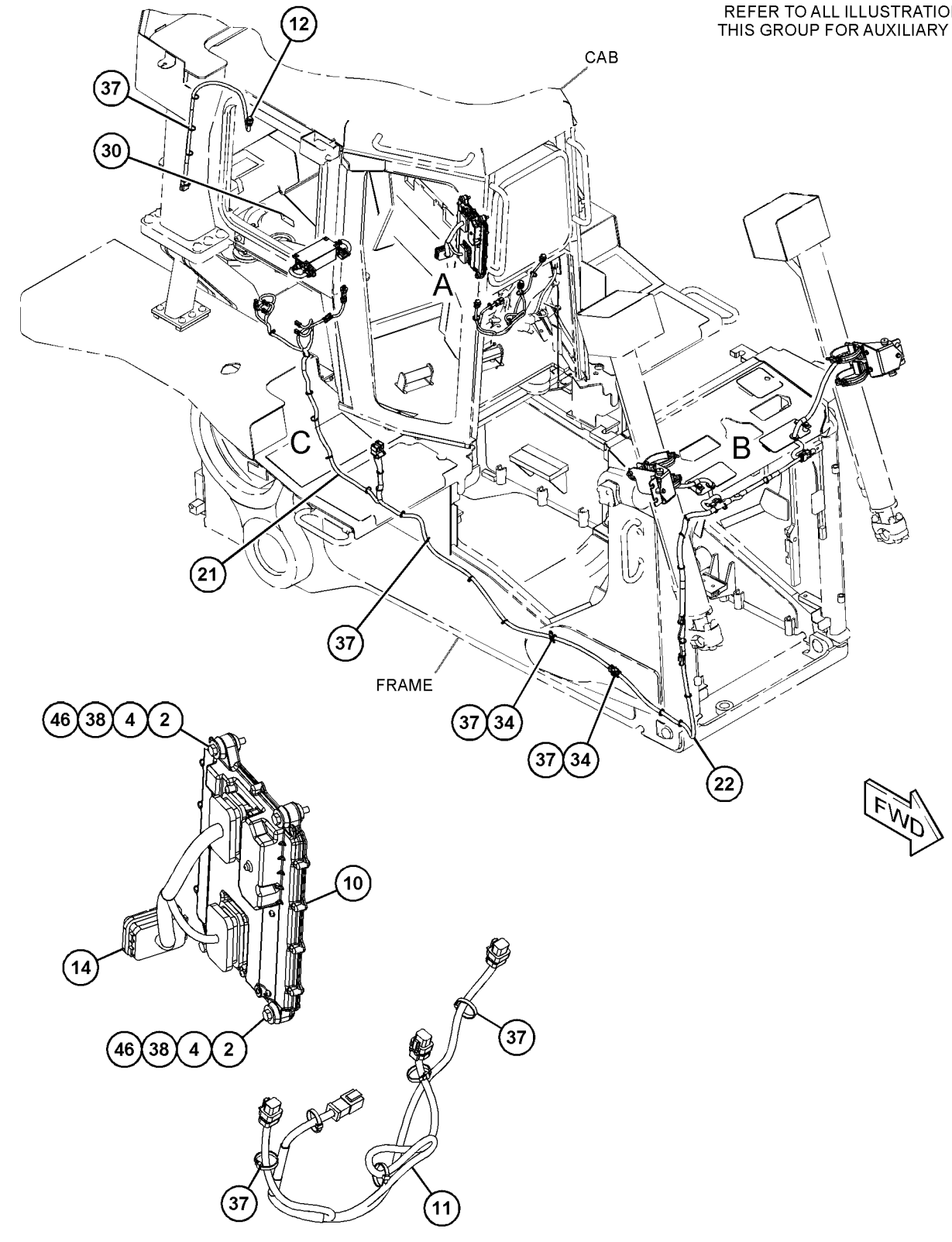

GRAPHIC #1 g03582801

389-6154 **WIRING GP-GRADE CONTROL (*contd.*)** **i05679918**

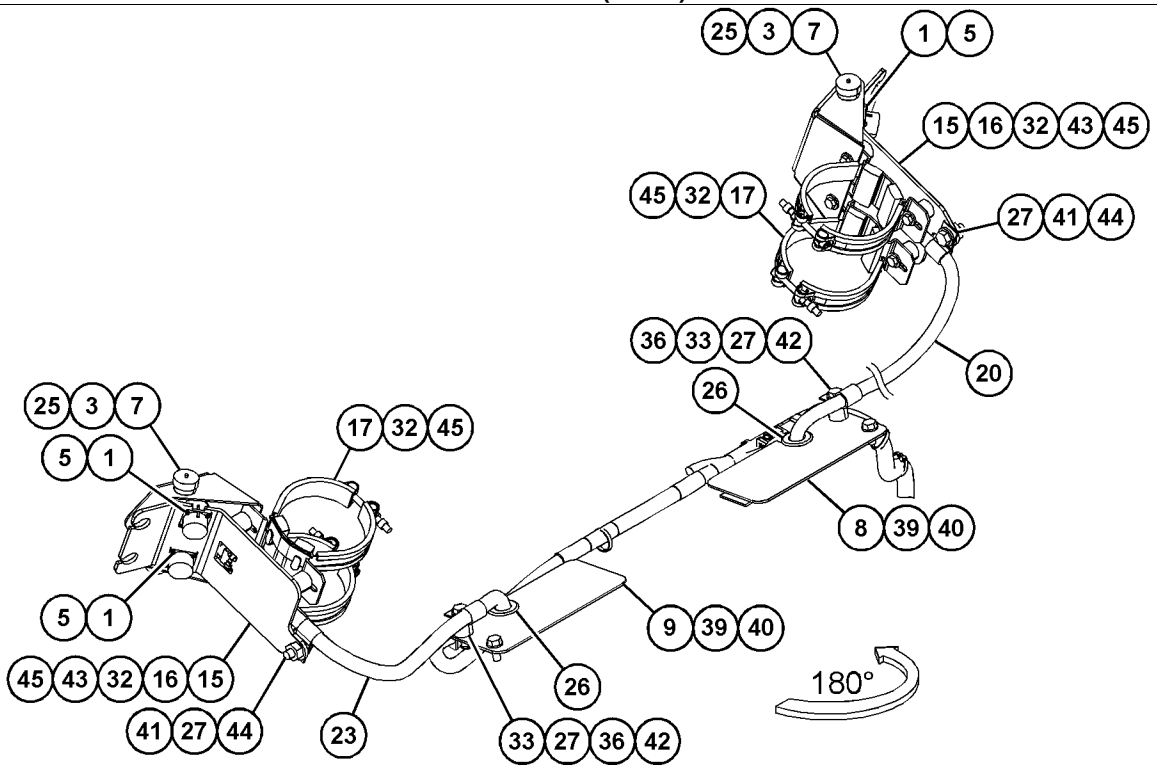

VIEW OF AREA B

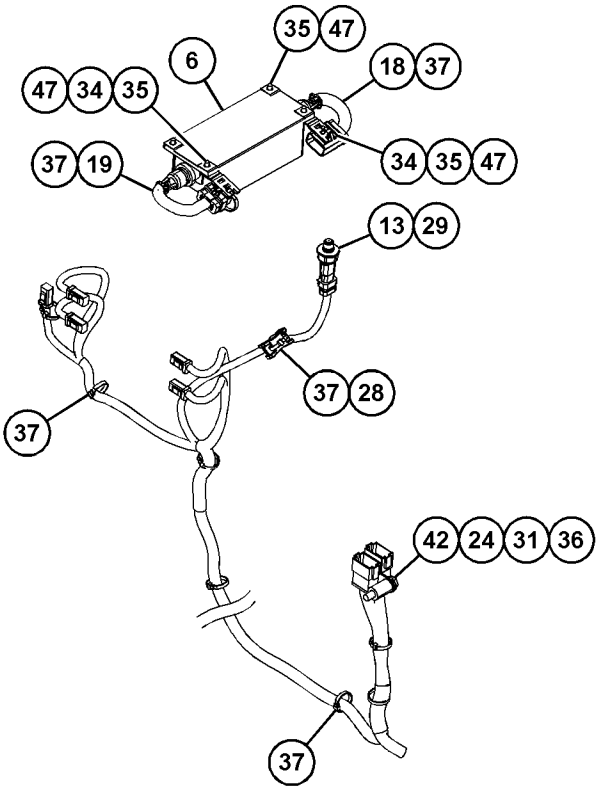

VIEW OF AREA C

GRAPHIC #2 **<END>** g03582803

317-6565 WIRING GP-PLATFORM

S/N: EMM1-UP; JEN1-UP
PART OF 393-0289, 393-0290 CAB AR, 387-0575, 393-0288 PLATFORM AR
AN ATTACHMENT

SMCS-1408 **i05573651**

NOTE	REF NO	GRAPHIC REF	PART NUMBER	QTY	PART NAME 1 2 3 4 5 6 (PRODUCT LEVEL)	SEE PAGE
	1	1	**3E-5239**	1	RELAY AS (24-VOLT) (WINCH, BLADE FLOAT DETENT)	
Y	2	1	**3E-6328**	1	ALARM GP (24-VOLT)	134
	4	2	**117-2311**	2	SOCKET-AUXILIARY POWER (12-VOLT)	
	5	2	**149-9818**	1	PLATE	
Y	6	1	**158-6632**	1	SWITCH GP-PUSH BUTTON (HORN)	226
	8	1	**172-4860**	1	WIRE AS	
	9	1	**202-4327**	1	PULLER-FUSE	
	10	2	**204-8000**	1	MOUNTING-CABLE TIE	
	11	1	**224-9222**	1	BRACKET	
	12	2	**239-3355**	1	GASKET	
	13	2	**239-7392**	1	PLATE AS	
	15	1	**249-5481**	1	SWITCH AS-ROCKER (24-VOLT) (THROTTLE)	
	17	1	**261-7990**	1	GROMMET	
	18	1	**281-3179**	1	BRACKET	
	19	1	**284-3623**	1	SWITCH AS-ROCKER (24-VOLT) (HYDRAULIC LOCKOUT)	
	20	1	**317-6574**	1	PLATE AS	
	22	1	**320-5888**	1	HARNESS AS-PLATFORM	
		1	**102-8802**	3	KIT-RECEPTACLE (2-PIN)	
		1	**102-8804**	1	KIT-RECEPTACLE (4-PIN)	
		1	**102-8805**	1	KIT-RECEPTACLE (6-PIN)	
		1	**166-5229**	1	KIT-RECEPTACLE (12-PIN)	
		1	**190-7615**	1	KIT-RECEPTACLE (12-PIN)	
		1	**194-4254**	1	KIT-RECEPTACLE (8-PIN)	
		1	**265-2106**	1	KIT-RECEPTACLE (4-PIN)	
		1	**102-8801**	3	KIT-RECEPTACLE (12-PIN)	
					(EACH RECEPTACLE KIT INCLUDES RECEPTACLE AS & WEDGE)	
		1	**9X-0196**	2	TERMINAL AS	
		1	**8C-6354**	1	CAP-RECEPTACLE (ET CONNECTOR)	
		1	**8N-1545**	1	SOCKET-CONNECTOR (8-GA)	
		1	**8T-8736**	1	RECEPTACLE-CONNECTOR (9-PIN)	
		1	**8T-8737**	274	PLUG-SEAL	
		1	**9G-3695**	82	PLUG-SEAL	
		1	**9W-1951**	1	RECEPTACLE-CONNECTOR (9-PIN)	
E		1	**114-8843**		SLEEVE-PLASTIC (260-CM)	
		1	**115-3519**	3	PIN-CONNECTOR (12-GA TO 14-GA)	
E		1	**119-3662**		TUBE-HEAT SHRINK (10.85-MM DIA) (46-CM)	
E		1	**125-7874**		TUBE-HEAT SHRINK (5.72-MM DIA) (190-CM)	
E		1	**125-7875**		TUBE-HEAT SHRINK (7.44-MM DIA) (20-CM)	
		1	**9X-3402**	157	SOCKET-CONNECTOR (16-GA TO 18-GA)	
					—OR—	
		1	**126-1768**	157	SOCKET-CONNECTOR (14-GA TO 16-GA)	
		1	**127-5485**	1	PLUG AS-CONNECTOR (1-PIN)	
		1	**2L-8069**	6	TERMINAL-RING (2-GA TO 10-GA, 3/8-IN SCREW)	
		1	**2L-8079**	2	TERMINAL-RING (14-GA TO 16-GA, 3/8-IN SCREW)	
		1	**134-2540**	3	RESISTOR AS-CONNECTION (3-PIN)	
		1	**9X-3401**	131	PIN-CONNECTOR (16-GA TO 18-GA)	
					—OR—	
		1	**126-1767**	131	PIN-CONNECTOR (14-GA TO 16-GA)	
		1	**155-2255**	6	KIT-CONNECTING PLUG (12-PIN)	
		1	**155-2257**	2	KIT-CONNECTING PLUG (12-PIN)	
		1	**155-2260**	2	KIT-CONNECTING PLUG (3-PIN)	
		1	**155-2265**	1	KIT-CONNECTING PLUG (8-PIN)	
		1	**155-2270**	3	KIT-CONNECTING PLUG (2-PIN)	
		1	**155-2271**	2	KIT-CONNECTING PLUG (4-PIN)	
		1	**155-2274**	1	KIT-CONNECTING PLUG (6-PIN)	

317-6565 **WIRING GP-PLATFORM (*contd.*)** **i05573651**

NOTE	REF NO	GRAPHIC REF	PART NUMBER	QTY	PART NAME 1 2 3 4 5 6 (PRODUCT LEVEL)	SEE PAGE
		1	**174-0503**	3	KIT-CONNECTING PLUG (3-PIN)	
		1	**177-9656**	1	KIT-CONNECTING PLUG (4-PIN)	
					(EACH PLUG KIT INCLUDES PLUG AS, WEDGE & INTERFACE SEAL)	
		1	**160-7689**	2	PLUG AS-CONNECTOR (70-PIN)	
					(EACH INCLUDES)	
		1	**159-9322**	1	SEAL-O-RING	
		1	**214-4208**	3	RECEPTACLE AS-CONNECTOR (70-PIN)	
		1	**230-4009**	2	PLUG AS-CONNECTOR (12-PIN)	
					(EACH INCLUDES)	
		1	**264-7034**	1	SEAL-CONNECTOR	
		1	**230-4010**	2	RECEPTACLE AS-CONNECTOR (12-PIN)	
	23	1	**320-5889**	1	HARNESS AS-CONSOLE	
		1	**102-8802**	3	KIT-RECEPTACLE (2-PIN)	
					(EACH INCLUDES RECEPTACLE AS & WEDGE)	
		1	**8T-8737**	9	PLUG-SEAL	
		1	**9X-1054**	1	PLUG AS-CONNECTOR (4-PIN)	
		1	**100-5041**	4	TERMINAL-RECEPTACLE (18-GA TO 20-GA)	
E		1	**114-8843**		SLEEVE-PLASTIC (100-CM)	
E		1	**119-3662**		TUBE-HEAT SHRINK (10.85-MM DIA) (7-CM)	
E		1	**125-7874**		TUBE-HEAT SHRINK (5.72-MM DIA) (15-CM)	
E		1	**125-7875**		TUBE-HEAT SHRINK (7.44-MM DIA) (15-CM)	
		1	**9X-3402**	21	SOCKET-CONNECTOR (16-GA TO 18-GA)	
					—OR—	
		1	**126-1768**	21	SOCKET-CONNECTOR (14-GA TO 16-GA)	
		1	**5P-4571**	2	TERMINAL-BLADE (14-GA TO 16-GA)	
		1	**9X-3401**	2	PIN-CONNECTOR (16-GA TO 18-GA)	
					—OR—	
		1	**126-1767**	2	PIN-CONNECTOR (14-GA TO 16-GA)	
		1	**155-2274**	1	KIT-CONNECTING PLUG (6-PIN)	
		1	**155-2255**	1	KIT-CONNECTING PLUG (12-PIN)	
		1	**155-2270**	4	KIT-CONNECTING PLUG (2-PIN)	
		1	**245-7434**	2	KIT-CONNECTING PLUG (10-PIN)	
					(EACH PLUG KIT INCLUDES PLUG AS, WEDGE & INTERFACE SEAL)	
		1	**185-1860**	15	SEAL-WIRE	
		1	**202-5397**	5	PLUG	
		1	**204-1297**	15	TERMINAL AS-BLADE (18-GA TO 20-GA)	
					(EACH INCLUDES)	
		1	**235-4123**	1	TERMINAL (18-GA TO 20-GA)	
Y	24	2	*384-4072*	1	PANEL GP-FUSE	199
	25	1	**322-2095**	1	BRACKET AS	
	26	2	**339-9514**	1	CAP AS	
D		2	**5P-5677**		WIRE (18-GA, BLACK) (0.3-M)	
		2	**8C-6354**	1	CAP-RECEPTACLE (ET CONNECTOR)	
E		2	**125-7875**		TUBE-HEAT SHRINK (7.44-MM DIA) (3-CM)	
		2	**2L-8077**	1	TERMINAL-RING (14-GA TO 16-GA, 1/4-IN SCREW)	
	27	1	**340-7161**	1	CONVERTER-POWER (24-VOLT TO 12-VOLT)	
M	28	2	**107-3786**	4	BOLT (M4X0.7X12-MM)	
	29	1	**130-5300**	2	CLIP	
	30	1,2	**132-5789**	3	CLIP	
	31	2	**141-4976**	4	SCREW-WASHER HEAD (4-40X0.5-IN)	
M	32	1	**153-8001**	2	BOLT-SOCKET HEAD (M4X0.7X20-MM)	
	33	2	**199-4317**	4	BOLT (M10X1.5X115-MM)	
	34	1,2	**204-2281**	32	STRAP-CABLE	
	35	2	**4B-4863**	2	WASHER (4.7X11X1.2-MM THK)	
M	37	2	**5C-8312**	2	NUT (M4X0.7-THD)	
	38	1,2	**5F-9757**	2	GROMMET	
	39	1,2	**5P-1075**	4	WASHER-HARD (10.2X22.5X3-MM THK)	
	40	1	**6D-4244**	2	CLIP	
	41	1	**7K-1181**	35	STRAP-CABLE	

317-6565 **WIRING GP-PLATFORM (*contd.*)** **i05573651**

NOTE	REF NO	GRAPHIC REF	PART NUMBER	QTY	PART NAME 1 2 3 4 5 6 (PRODUCT LEVEL)	SEE PAGE
	42	1	**8T-0328**	2	WASHER-HARD (5.5X10X1-MM THK)	
M	43	2	**8T-0389**	2	LOCKNUT (M10X1.5-THD)	
	44	1	**8T-2502**	2	BOLT (3/8-16X1.125-IN)	
M	45	1	**9X-2042**	4	SCREW-TRUSS HEAD (M6X1X12-MM)	
	46	1,2	**8T-4121**	14	WASHER-HARD (11X21X2.5-MM THK)	
M	47	1,2	**8T-4137**	8	BOLT (M10X1.5X20-MM)	
M	48	1	**8T-4138**	8	BOLT (M6X1X20-MM)	
M	49	1	**8T-4171**	1	BOLT (M6X1X12-MM)	
M	50	1	**8T-4191**	2	BOLT (M10X1.5X16-MM)	
	53	2	**8T-7934**	1	WASHER-HARD (11X21X5-MM THK)	
M	54	2	**8T-9405**	2	BOLT-SOCKET HEAD (M4X0.7X16-MM)	
	55	1	**9X-8256**	9	WASHER (6.6X12X2-MM THK)	
	56	1	**8T-4896**	2	WASHER-HARD (10.2X18.5X2.5-MM THK)	
	57	1	**4L-6454**	1	BOLT (3/8-16X1-IN)	
	58	1	**5M-3062**	1	BOLT (3/8-16X0.75-IN)	
	59	2	**126-1773**	1	CAP-CONNECTOR	

D - ORDER BY THE METER
E - ORDER BY THE CENTIMETER
M - METRIC PART
Y - SEPARATE ILLUSTRATION

317-6565 **WIRING GP-PLATFORM (*contd.*)** **i05573651**

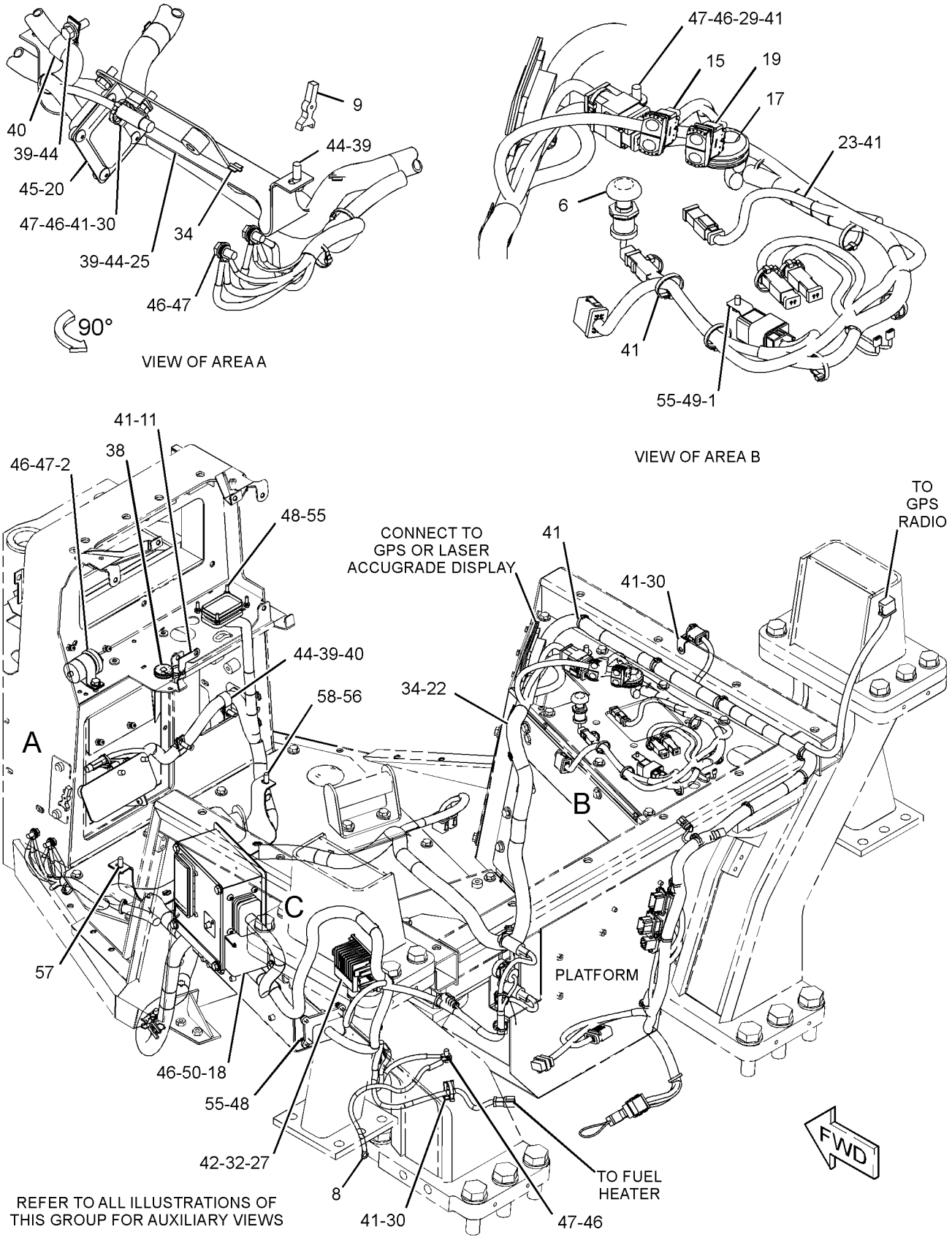

GRAPHIC #1 g03506919

317-6565 **WIRING GP-PLATFORM (*contd.*)** **i05573651**

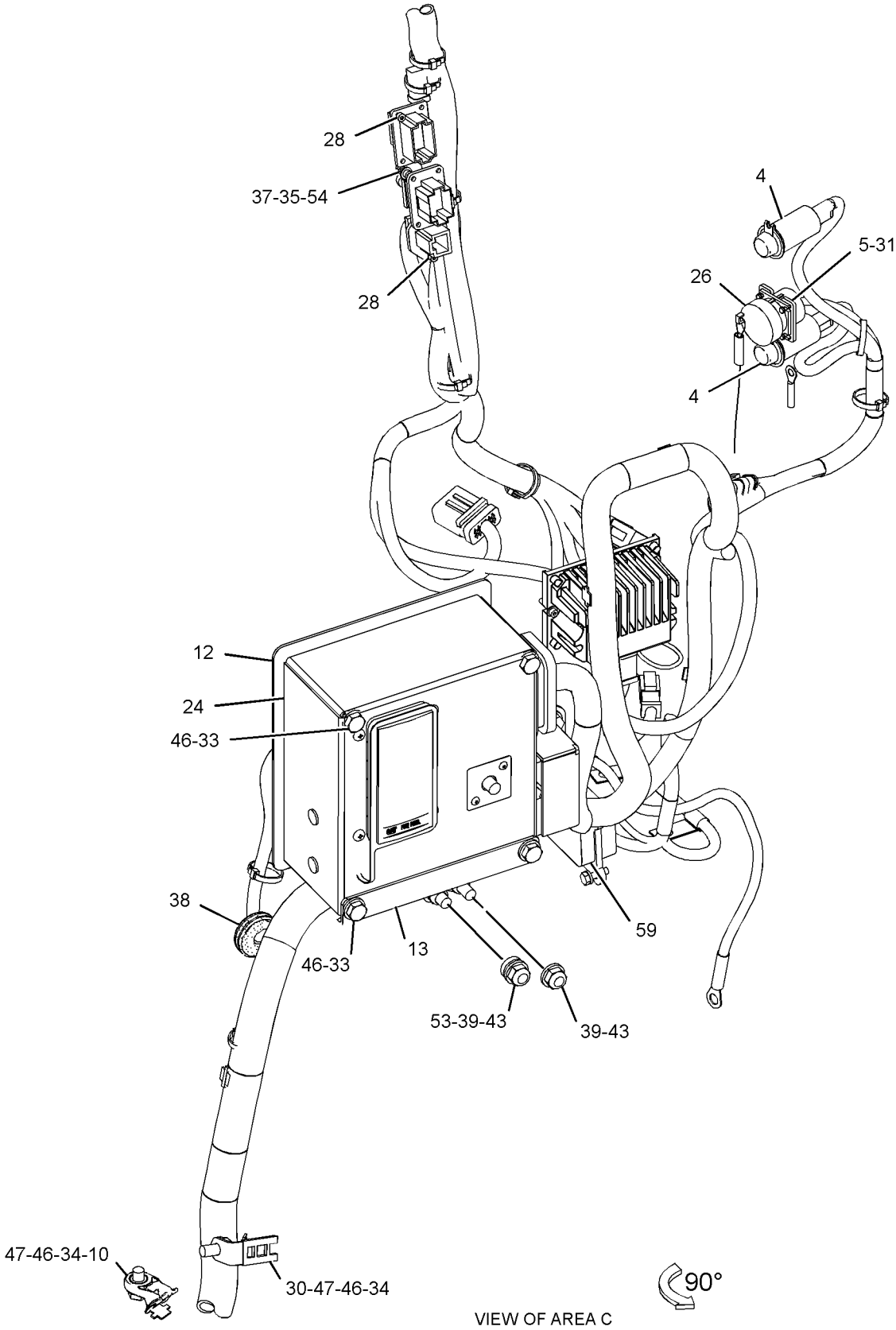

VIEW OF AREA C

GRAPHIC #2 **<END>** g03506921

3W-6550 AXLE GP

S/N: EMM1-UP; JEN1-UP

PART OF 389-3209 POWER TRAIN AR

SMCS-3282 **i05636191**

NOTE	REF NO	GRAPHIC REF	PART NUMBER	QTY	PART NAME 1 2 3 4 5 6 (PRODUCT LEVEL)	SEE PAGE
	1	1	**3W-6551**	1	SHAFT	
	2	1	**3T-5851**	1	SHAFT (FINAL DRIVE, CENTER)	
C	3	1	**9G-8637**	1	GEAR-SUN (11-TEETH)	

C - CHANGE FROM PREVIOUS TYPE

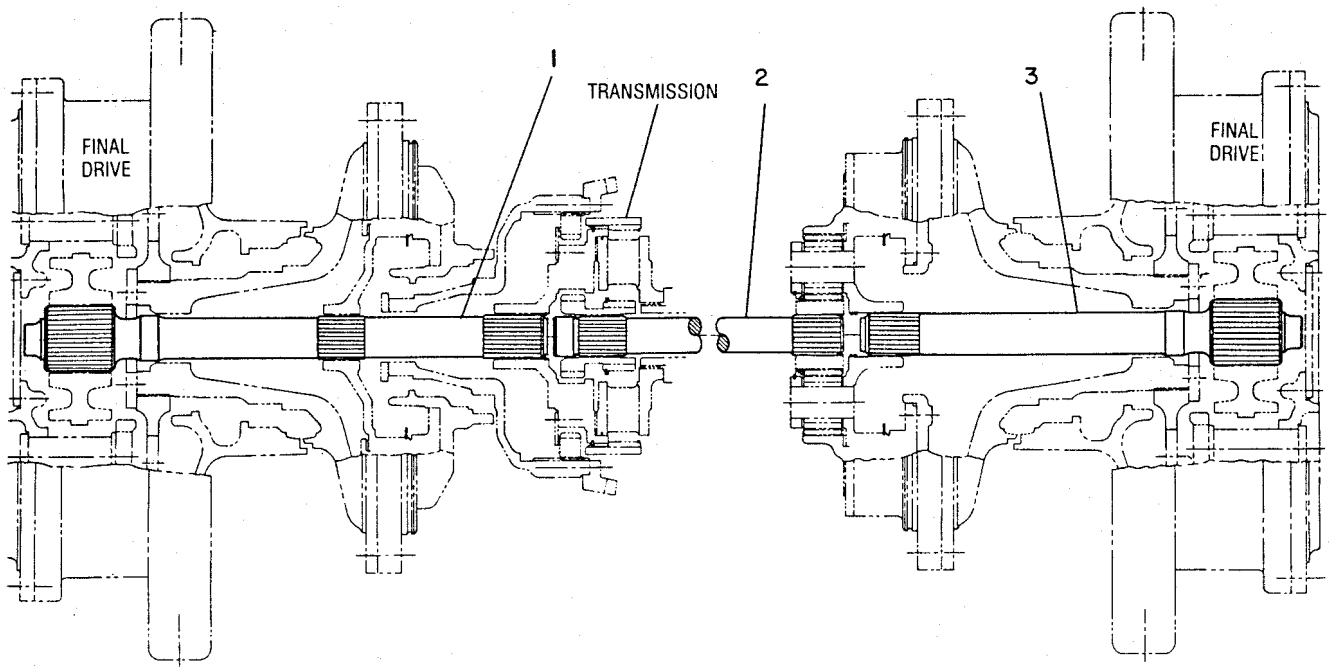

GRAPHIC #1 **<END>** g00188323

333-9308 BASE GP-OIL FILTER

S/N: EMM1-UP; JEN1-UP
INTERNAL BYPASS
PART OF 333-6437 FILTER GP-OIL

SMCS-3004 **i05637510**

NOTE	REF NO	GRAPHIC REF	PART NUMBER	QTY	PART NAME 1 2 3 4 5 6 (PRODUCT LEVEL)	SEE PAGE
	1	1	**3T-9549**	1	ADAPTER	
	2	1	**7G-4998**	1	SPOOL-BYPASS	
Y	3	1	**164-7577**	1	SWITCH GP-BYPASS (POWER TRAIN OIL FILTER)	222
	4	1	**334-2679**	1	SPRING	
	5	1	**334-2680**	1	SPRING	
	6	1	**5P-7815**	1	SEAL-O-RING	
	7	1	**6V-5050**	1	SEAL-O-RING	
	8	1	**9S-8008**	1	PLUG	
					PARTS SHOWN IN GRAPHIC(S) WITHOUT A REFERENCE NUMBER ARE NOT SERVICED SEPARATELY	

Y - SEPARATE ILLUSTRATION

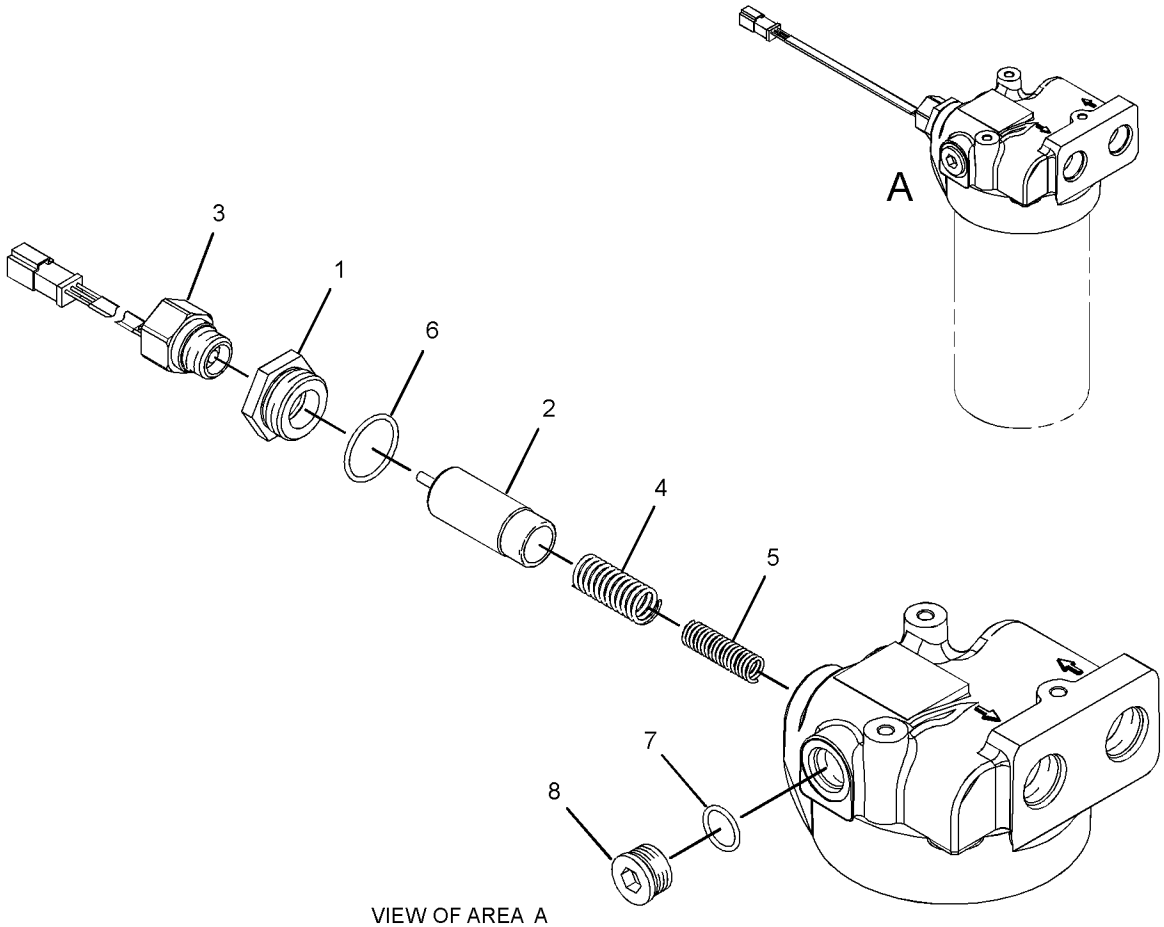

VIEW OF AREA A
(EXPLODED)

GRAPHIC #1 **<END>** g01863853

231-5969 BRAKE & DIFFERENTIAL DRIVE GP

S/N: EMM1-UP; JEN1-UP

PART OF 389-3209 POWER TRAIN AR

SMCS-4131 **i05636595**

NOTE	REF NO	GRAPHIC REF	PART NUMBER	QTY	PART NAME 1 2 3 4 5 6 (PRODUCT LEVEL)	SEE PAGE
	1	1	**2K-5069**	1	CUP-BEARING (TAPERED ROLLER)	
	2	2	**2K-9295**	1	BEARING AS-TAPERED ROLLER	
	3	2	**3B-4124**	1	CUP-BEARING (TAPERED ROLLER)	
	4	1	**3S-2708**	7	PIN-SPRING	
	5	1	**3T-4568**	3	SHAFT-PLANETARY	
	6	1	**292-2016**	1	GEAR AS-SUN (30/24-TEETH)	
	6A	1	**290-9849**	1	RING-RETAINING	
	7	1	**3T-4824**	4	GEAR-PLANETARY (30-TEETH)	
	8	1	**3T-5021**	1	CARRIER-PLANETARY	
	9	1	**3T-5200**	1	CARRIER-PLANETARY	
	10	1	**3T-6963**	1	SEAL-RING	
B	11	2	**3T-9272**	1	SHIM PACK (INCLUDES 8-SHIMS)	
	12	1	**5M-0578**	3	BEARING AS-ROLLER	
	13	1	**5M-7925**	4	BEARING AS-ROLLER	
	14	1	**6I-8724**	1	RING-LOCK	
	15	2	**6P-1735**	1	LOCKWASHER	
	16	2	**6P-1736**	1	WASHER (55.17X76.2X2.67-MM THK)	
	17	1	**6T-0062**	1	PLATE	
	18	1	**6T-0064**	4	SHAFT-PLANETARY	
	19	2	**6T-0850**	2	WASHER-THRUST (255X287.25X2.75-MM THK)	
	20	1	**6V-0855**	1	BEARING AS-TAPERED ROLLER	
		1	**8T-0072**	1	CONE-BEARING	
	21	2	**6V-7646**	3	WASHER-HARD (7.2X25X2-MM THK)	
	22	1	**6Y-0926**	3	GEAR-PLANETARY (23-TEETH)	
	23	1	**6Y-0984**	1	GEAR-RING (75-TEETH)	
	24	2	**6Y-2704**	1	SPRING-DISC	
	25	2	**6Y-9373**	4	DISC-FRICTION	
	26	1	**7G-1596**	1	RING-RETAINING	
	27	2	**7H-4566**	2	CUP-BEARING (TAPERED ROLLER)	
	28	2	**7T-1885**	1	RING	
	29	2	**7T-6994**	3	PLATE-CLUTCH & BRAKE	
	30	1	**7T-8130**	1	RING-RETAINING	
	31	2	**7T-9788**	1	HUB	
	32	2	**214-3573**	1	PISTON	
	33	2	**7T-9837**	1	PLATE	
	34	1	**8E-8307**	6	DISC-THRUST	
	35	1	**8E-8310**	8	DISC-THRUST	
	36	2	**9B-0576**	1	LOCKNUT-BEARING	
	37	1	**9W-1571**	1	SLINGER	
B	38	2	**9W-2853**	1	SHIM PACK (INCLUDES 21-SHIMS)	
	41	1	**9W-6102**	1	GEAR-RING (84-TEETH)	
	42	1	**9W-6103**	1	RING-THRUST	
	43	2	**005-4834**	2	BEARING AS-TAPERED ROLLER	
	44	1	**136-1595**	1	HOUSING-ROTATING	
	45	2	**7T-9832**	1	RETAINER	
	46	2	**216-6371**	1	CARRIER	
	47	2	**217-2293**	1	RETAINER	
	48	1	**226-4462**	1	GEAR-BEVEL (74-TEETH)	
	49	2	**226-4464**	1	PINION-BEVEL (15-TEETH)	
	50	2	**227-2451**	1	HOUSING AS	
	50A	2	**1A-2223**	2	DOWEL	
	50B	2	**5P-8245**	12	WASHER-HARD (13.5X25.5X3-MM THK)	
	50C	2	**1A-1460**	12	BOLT (1/2-13X2-IN)	
	51	1	**030-2135**	4	BOLT-LOCKING (5/16-18X0.625-IN)	
	52	1	**0L-1143**	21	BOLT (3/8-16X2.5-IN)	
	53	2	**0S-1614**	3	BOLT (1/4-20X0.5-IN)	
	54	2	**1A-2029**	6	BOLT (3/8-16X1.125-IN)	
	55	2	**2A-4639**	1	BOLT (3/8-16X1.625-IN)	

231-5969 **BRAKE & DIFFERENTIAL DRIVE GP (*contd.*)** **i05636595**

NOTE	REF NO	GRAPHIC REF	PART NUMBER	QTY	PART NAME 1 2 3 4 5 6 (PRODUCT LEVEL)	SEE PAGE
	56	2	**1A-1460**	6	BOLT (1/2-13X2-IN)	
	57	2	**3K-0360**	2	SEAL-O-RING	
	58	1	**5K-9107**	3	BOLT-LOCKING (3/8-16X0.75-IN)	
	59	2	**5M-2894**	7	WASHER-HARD (10.2X18.5X2.5-MM THK)	
	60	2	**5P-8245**	6	WASHER-HARD (13.5X25.5X3-MM THK)	
	63	2	**6P-5317**	1	RING-SEAL (EXTERNAL)	
	64	2	**7W-6534**	4	PLUG-PIPE	
	66	2	**8M-4438**	1	SEAL-O-RING	
	67	2	**8P-8357**	1	RING-SEAL (INTERNAL)	
	69	1	**9L-9132**	3	WASHER (10.2X25.5X2.5-MM THK)	
	70	2	**9S-8005**	2	PLUG-O-RING	
B	71	1	**1U-8846**		SEALANT-GASKET	

B - USE AS REQUIRED

231-5969 **BRAKE & DIFFERENTIAL DRIVE GP (*contd.*)** **i05636595**

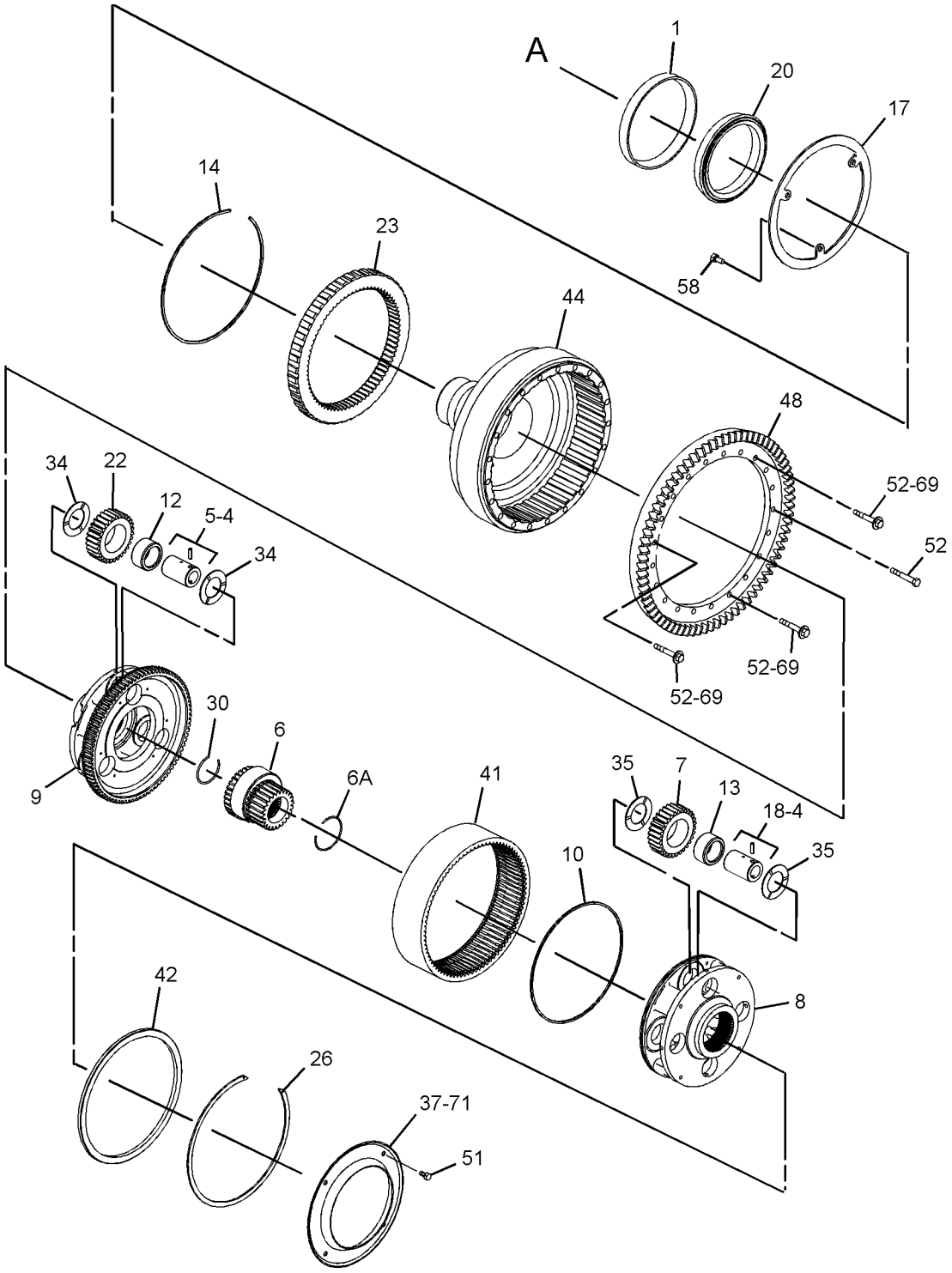

GRAPHIC #1 g01300998

231-5969 **BRAKE & DIFFERENTIAL DRIVE GP (*contd.*)** **i05636595**

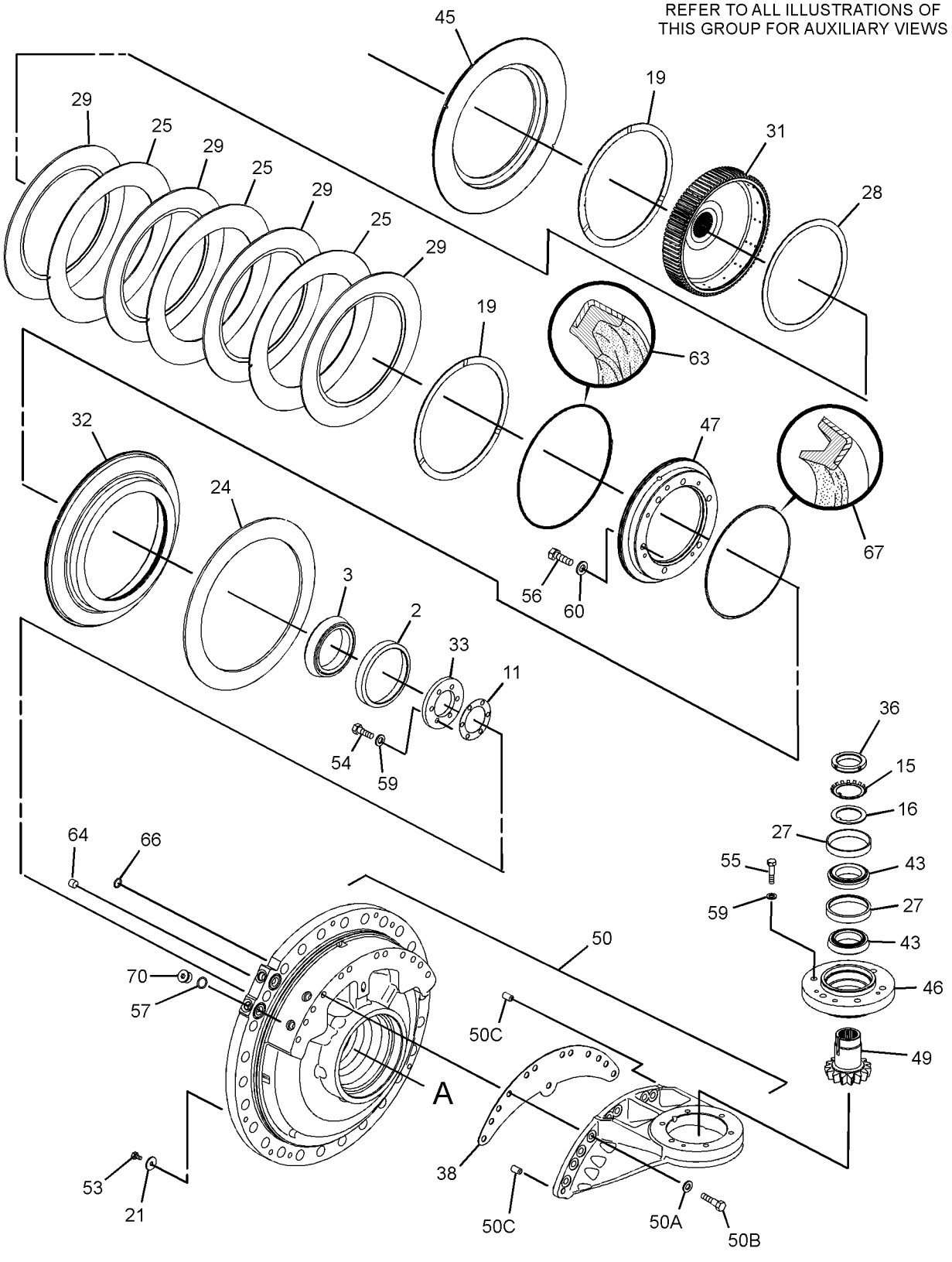

GRAPHIC #2 **<END>** g01301159

231-5990 BRAKE & PLANETARY GP

S/N: EMM1-UP; JEN1-UP

PART OF 389-3209 POWER TRAIN AR

SMCS-4011, 4255 **i05636890**

NOTE	REF NO	GRAPHIC REF	PART NUMBER	QTY	PART NAME 1 2 3 4 5 6 (PRODUCT LEVEL)	SEE PAGE
	1	1	**3S-2708**	3	PIN-SPRING	
	2	1	**3T-5807**	1	SLINGER	
	3	1	**5M-0578**	6	BEARING AS-ROLLER	
	4	1	**6Y-2704**	1	SPRING-DISC	
	5	1	**6Y-9373**	4	DISC-FRICTION	
	6	1	**7T-1885**	1	RING	
	7	1	**7T-6994**	3	PLATE-CLUTCH & BRAKE	
	8	1	**7T-8136**	3	SHAFT-PLANETARY	
	9	1	**7T-9031**	1	GEAR-RING (75-TEETH)	
	10	1	**7T-9837**	1	PLATE	
	11	1	**8E-8307**	6	DISC-THRUST	
	12	1	**9W-7925**	2	BEARING AS-TAPERED ROLLER	
	13	1	**9W-7926**	2	CUP-BEARING	
	14	1	**244-2310**	3	GEAR-PLANETARY (23-TEETH)	
	15	1	**306-0278**	1	GEAR AS-SUN (30-TEETH)	
		1	**3E-4354**	2	BALL	
	16	1	**205-5314**	1	HOUSING	
	17	1	**209-7193**	1	CARRIER	
	18	1	**214-3573**	1	PISTON	
	19	1	**216-4591**	1	RETAINER AS	
		1	**8S-0527**	1	PLUG-CUP	
	20	1	**0S-1585**	12	BOLT (1/2-13X1.5-IN)	
	21	1	**1A-1460**	6	BOLT (1/2-13X2-IN)	
	22	1	**1A-2029**	6	BOLT (3/8-16X1.125-IN)	
	23	1	**1C-0569**	6	BOLT (5/16-18X0.5-IN)	
	24	1	**3K-0360**	2	SEAL-O-RING	
	25	1	**5M-2894**	6	WASHER-HARD (10.2X18.5X2.5-MM THK)	
	26	1	**5P-8245**	18	WASHER-HARD (13.5X25.5X3-MM THK)	
	28	1	**6P-5317**	1	RING-SEAL (EXTERNAL)	
	30	1	**8M-4438**	1	SEAL-O-RING	
	31	1	**8P-8357**	1	RING-SEAL (INTERNAL)	
	32	1	**9S-8005**	2	PLUG-O-RING	
B	33	1	**1U-8846**		SEALANT-GASKET	

B - USE AS REQUIRED

231-5990 **BRAKE & PLANETARY GP (*contd.*)** **i05636890**

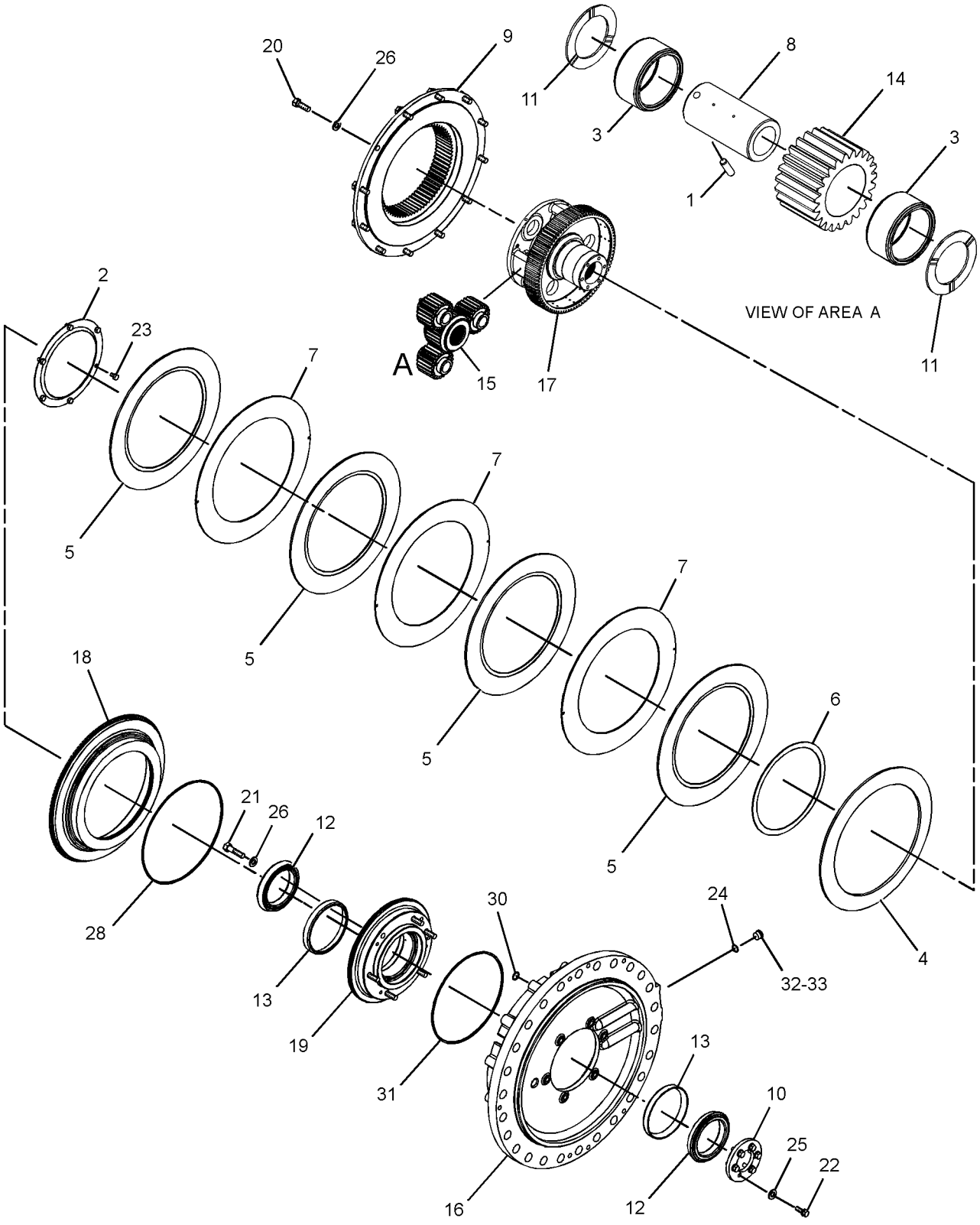

GRAPHIC #1 **<END>** g02185773

315-9961 CASE & PARTS GP-PLANETARY

S/N: MJY1-UP

PART OF 315-9959 TRANSMISSION AR

SMCS-3030, 3064, 3160 **i05636951**

NOTE	REF NO	GRAPHIC REF	PART NUMBER	QTY	PART NAME 1 2 3 4 5 6 (PRODUCT LEVEL)	SEE PAGE
	1	1	**3T-9921**	1	COVER-TRANSMISSION CASE	
	3	1	**5K-9246**	1	CONNECTOR	
	4	1	**5K-9988**	1	TEE-INVERTED FLARED	
	5	1	**6K-8498**	1	TEE-FLARED	
	6	1	**6V-0852**	3	CAP-DUST	
	7	1	**6V-1720**	1	PLATE-SERIAL NUMBER (TRANSMISSION)	
	8	1	**7T-8875**	1	TUBE AS	
	9	1	**7T-8876**	1	TUBE AS	
	10	1	**8S-9130**	1	SCREEN-SUCTION (TRANSMISSION SCAVENGE)	
	11	1	**9G-8615**	1	COVER	
	13	1	**9S-7710**	1	ELBOW-FLARED	
	14	1	**9W-4159**	1	TUBE AS	
	15	1	**9W-5334**	1	TUBE AS	
Y	16	1	**190-2278**	1	CASE GP-TRANSMISSION	258
	17	1	**203-2288**	1	GASKET-COVER	
	18	1	**315-9962**	1	COVER	
	20	1	**0S-1585**	21	BOLT (1/2-13X1.5-IN)	
	21	1	**0T-0102**	1	BOLT (3/8-16X0.625-IN)	
	22	1	*164-5567*	3	COUPLER AS-QUICK DISCONNECT (MALE)	
					(EACH INCLUDES)	
		1	**6V-3965**	1	FITTING (QUICK DISCONNECT)	
		1	**214-7568**	1	SEAL-O-RING	
	23	1	*326-0316*	2	PLUG AS	
					(EACH INCLUDES)	
		1	**9S-6130**	1	PLUG	
		1	**228-7096**	1	SEAL-O-RING	
	24	1	**3S-7781**	1	GASKET	
	25	1	**4H-5440**	1	COVER	
	26	1	**5M-2894**	1	WASHER-HARD (10.2X18.5X2.5-MM THK)	
	27	1	**5P-4057**	1	SEAL-O-RING	
	28	1	**5P-8245**	21	WASHER-HARD (13.5X25.5X3-MM THK)	
	29	1	**5P-8998**	1	FITTING	
	30	1	**7J-8611**	1	ELBOW-PIPE	
	31	1	**7B-1597**	1	CLIP	
	32	1	**8M-2530**	4	BOLT-12 POINT HEAD (1/2-13X1.25-IN)	
	34	1	**061-9455**	1	SEAL-O-RING	
	35	1	**8P-0058**	1	GASKET-COVER	
	36	1	**5P-5846**	3	SEAL-O-RING	
M	37	1	**9X-2125**	22	BOLT-LOCKING (M10X1.5X25-MM)	

M - METRIC PART
Y - SEPARATE ILLUSTRATION

315-9961 **CASE & PARTS GP-PLANETARY (*contd.*)** **i05636951**

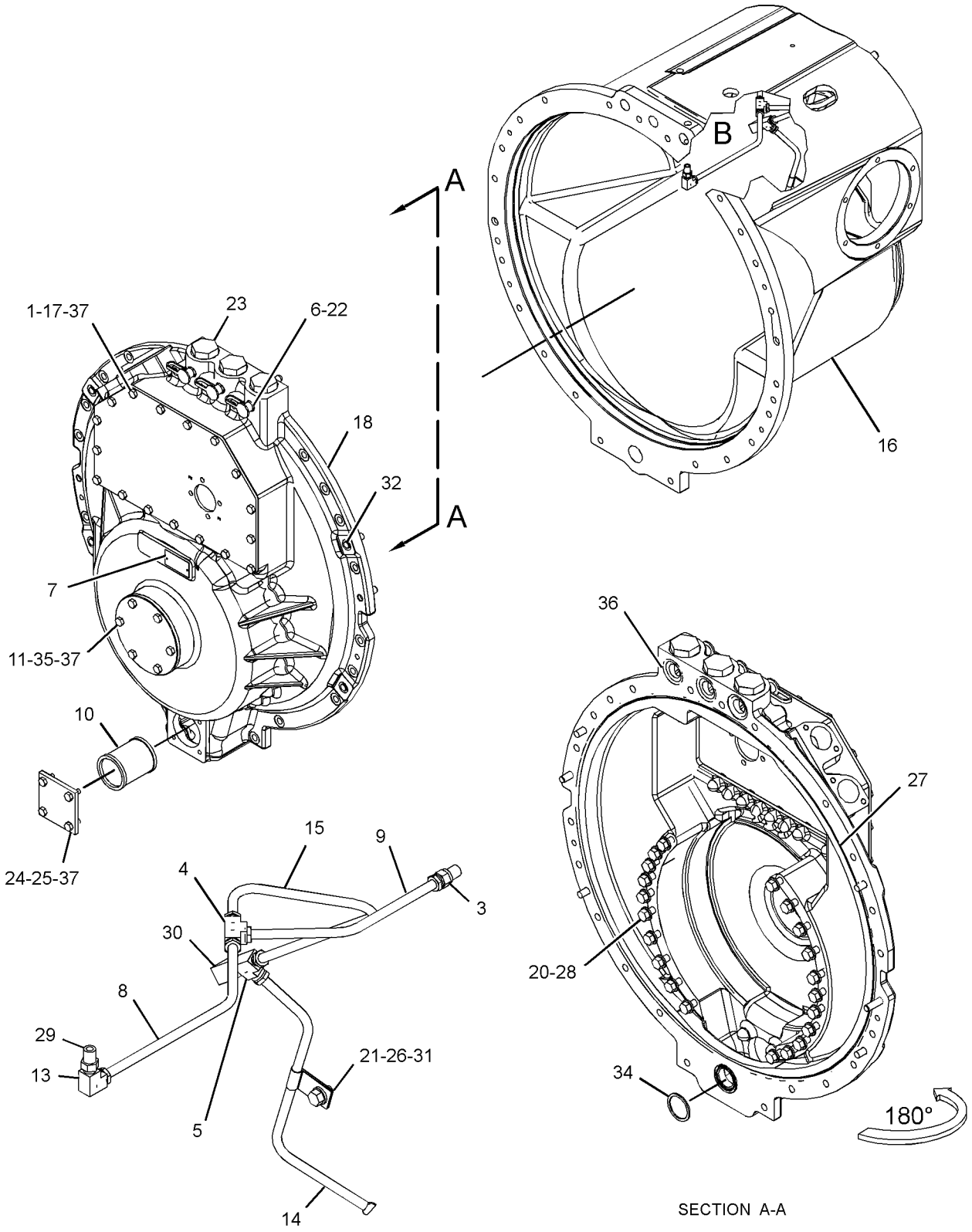

VIEW OF AREA B

SECTION A-A

GRAPHIC #1 **<END>** g02776476

190-2278 CASE GP-TRANSMISSION

S/N: MJY1-UP

PART OF 315-9961 CASE & PARTS GP-PLANETARY

SMCS-3064 **i05319646**

NOTE	REF NO	GRAPHIC REF	PART NUMBER	QTY	PART NAME 1 2 3 4 5 6 (PRODUCT LEVEL)	SEE PAGE
	1	1	**4B-9785**	1	BALL	
	2	1	**1A-2610**	1	DOWEL	
	3	1	**7M-1201**	1	DOWEL	
	4	1	**3F-3442**	2	DOWEL	
	5	1	**4B-9782**	1	BALL	
	6	1	**146-6669**	1	GASKET	
	7	1	**146-6670**	1	COVER	
	8	1	**9X-6458**	6	WASHER-HARD (10.2X22.5X3-MM THK)	
	9	1	**0S-1594**	6	BOLT (3/8-16X1-IN)	
F			**196-8884**	1	BRACKET AS	
			8C-3334	2	RIVET-TUBULAR	
			124-9401	4	CLIP	
F			**0S-1620**	1	BOLT (1/2-13X0.75-IN)	
F			**5P-8245**	1	WASHER-HARD (13.5X25.5X3-MM THK)	

F - NOT SHOWN

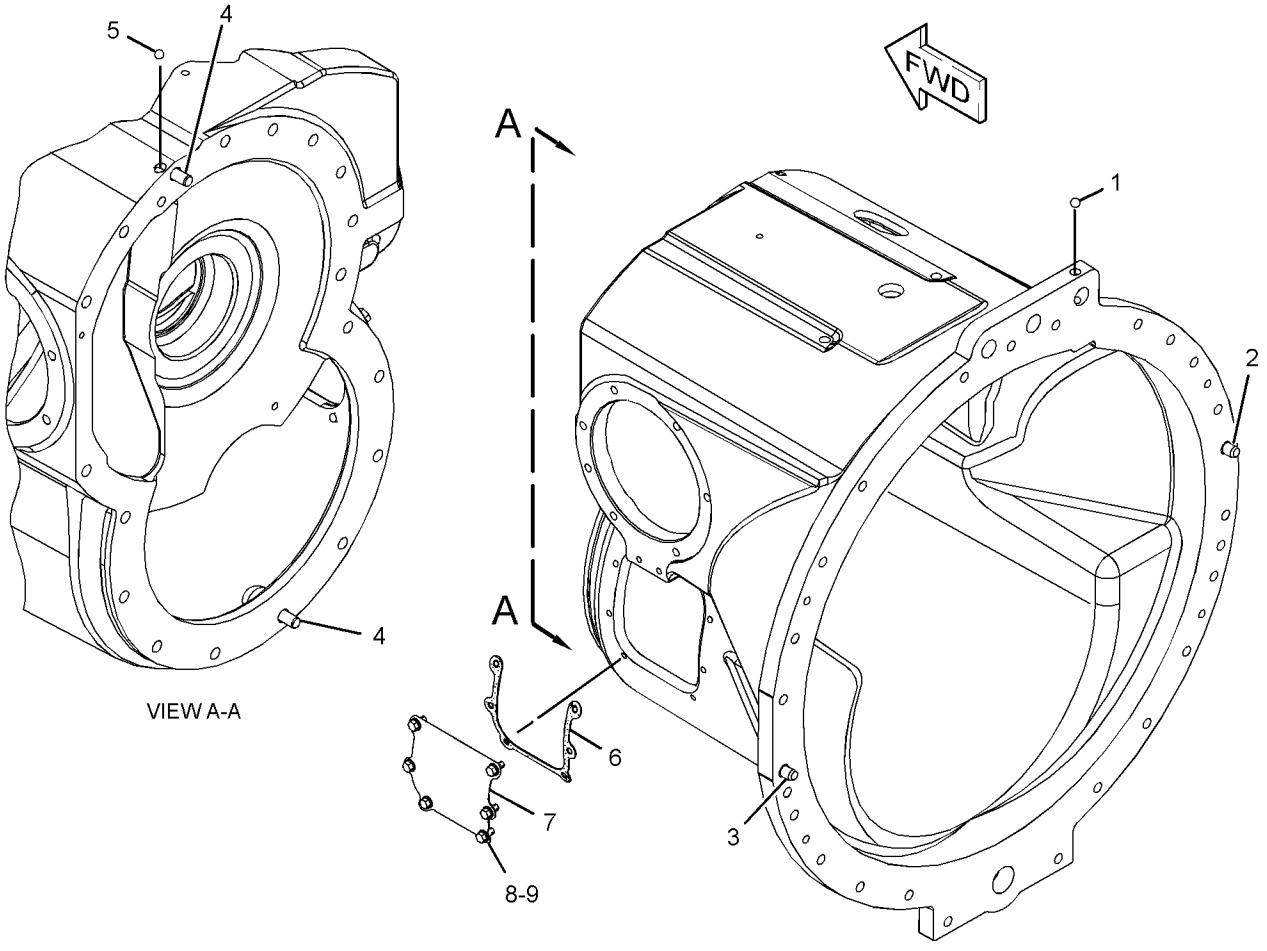

GRAPHIC #1 **<END>** g01857854

371-1767 CONTROL GP-STEERING & XMSN

S/N: EMM1-UP; JEN1-UP

PART OF 375-4844 CONTROL GP-STEERING & XMSN

AN ATTACHMENT

SMCS-4122 **i05575095**

NOTE	REF NO	GRAPHIC REF	PART NUMBER	QTY	PART NAME 1 2 3 4 5 6 (PRODUCT LEVEL)	SEE PAGE
	1	1	**6Y-2782**	1	SHAFT	
	2	1	**6Y-2780**	1	LEVER	
	3	1	**6V-8801**	2	NUT (3/8-16-THD)	
	4	1	**3H-3433**	1	PIN-SPRING	
	5	1	**6Y-2766**	2	WASHER-THRUST	
	6	2	**8S-2195**	3	BEARING-ROLLER	
	7	1	**6Y-2778**	1	SHAFT	
	8	1	**6Y-6850**	1	HANDLE	
	9	1	**6Y-7579**	1	HANDLE AS	
	10	2	**8F-7702**	1	SEAL-LIP TYPE	
	11	1	**5S-7343**	2	WASHER	
	12	1	**4B-1270**	1	SCREW-MACHINE (8-32X0.75-IN)	
	13	1	**8E-9483**	1	COLLAR (6-32-THD)	
	14	1	**8T-2540**	1	BOLT-SOCKET HEAD (6-32-THD)	
	15	1	**6Y-3140**	2	BALL JOINT AS	
	16	1,2	**6V-8187**	3	NUT (1/4-28-THD)	
	17	1	**365-3650**	2	CABLE AS	
	18	1	**8T-4896**	4	WASHER-HARD (10.2X18.5X2.5-MM THK)	
	19	1	**6Y-3141**	1	ROD AS	
	20	1	**6V-8183**	1	NUT-FULL (3/8-24-THD)	
	21	1	**9S-1354**	4	NUT (5/8-18-THD)	
	22	1	**6Y-2841**	2	BALL BEARING	
	23	1,2	**8T-5410**	2	SEAL-LIP TYPE	
	24	1	**2N-3680**	7	SCREW-HEAD (1/4-20X0.75-IN)	
	25	1	**6Y-2773**	1	COVER AS	
	26	1	**6Y-7573**	1	RING	
	27	1	**6B-4541**	2	SCREW-MACHINE	
	28	2	**5L-5711**	1	PIN-SPRING	
	29	2	**8E-0853**	1	BALL JOINT AS	
	30	2	**8E-0852**	1	PIN	
	31	1	**7K-1181**	2	STRAP-CABLE	
	32	1	**6Y-2850**	1	ROD	
	33	1	**7X-0301**	2	BOLT (3/8-16X7-IN)	
	34	1	**6Y-2784**	1	TUBE AS	
	35	1	**6Y-2767**	1	HOUSING	
	36	1	**6Y-2765**	1	HOUSING-LOWER	
	37	1	**5L-2029**	1	BALL BEARING	
	38	1	**6Y-2763**	1	HOUSING-MAIN	
	39	1	**7X-3317**	1	SCREW-HEX SOCKET (5/16-18X0.87-IN)	
	40	1	**101-2868**	1	DOWEL	
	41	1	**6V-3545**	1	BEARING-ROLLER	
	42	1	**6Y-2854**	1	WASHER-THRUST	
	43	1	**6Y-2783**	1	LEVER-BRAKE	
	44	1	**037-7388**	1	KNOB	
	45	1	**6Y-2855**	1	PLATE	
	46	2	**8E-1358**	2	PLATE	
	47	2	**9X-6281**	4	SCREW-MACHINE (4-40X1-IN)	
	48	2	**6Y-2777**	1	GASKET	
	49	2	**6Y-2847**	1	MOUNT	
	50	2	**5F-9144**	2	SEAL-O-RING	
	51	2	**6Y-2846**	1	SPRING	
	52	2	**6Y-2779**	1	LEVER	
	54	2	**287-3838**	1	SWITCH AS (NEUTRAL START)	
	54A	2	**287-3838**	1	SWITCH AS (BACKUP ALARM)	
					(EACH INCLUDES)	
		2	**102-8803**	1	KIT-RECEPTACLE (3-PIN)	
					(INCLUDES RECEPTACLE AS AND WEDGE)	

371-1767 **CONTROL GP-STEERING & XMSN (*contd.*)** **i05575095**

NOTE	REF NO	GRAPHIC REF	PART NUMBER	QTY	PART NAME 1 2 3 4 5 6 (PRODUCT LEVEL)	SEE PAGE
		2	**8T-8729**	3	PIN-CONNECTOR (16-GA TO 18-GA)	
E		2	**114-8843**		SLEEVE-PLASTIC (20-CM)	
	55	2	**108-8174**	2	INSULATION-SWITCH	
	56	2	**8E-1203**	1	LEVER	
	57	1	**4H-1641**	1	PIN-SPRING	
	58	2	**9X-6016**	3	SCREW-HEX SOCKET (8-32X0.875-IN)	
	59	1	**009-3138**	1	NUT-KNURL	
	60	2	**6Y-2848**	1	MOUNT	
	61	2	**4B-9782**	1	BALL	
	62	2	**6V-3832**	1	SEAL-O-RING	
	63	2	**7X-1552**	1	SEAL-V-RING	
	64	2	**6Y-2764**	1	RING	
	65	2	**6Y-7576**	1	PLATE	
	66	2	**6Y-2770**	1	PLATE	
	67	2	**6Y-2781**	1	WASHER-THRUST	
	68	1	**6Y-7577**	1	GASKET	
	69	2	**8S-7048**	1	ROD END	
	70	2	**8T-4205**	1	WASHER-HARD (7.2X14.5X2-MM THK)	
	71	2	**5N-6096**	1	SPRING	
B	72	1	**1P-0810**		TAPE-ELECTRICAL	

B - USE AS REQUIRED
E - ORDER BY THE CENTIMETER

371-1767 **CONTROL GP-STEERING & XMSN (*contd.*)** **i05575095**

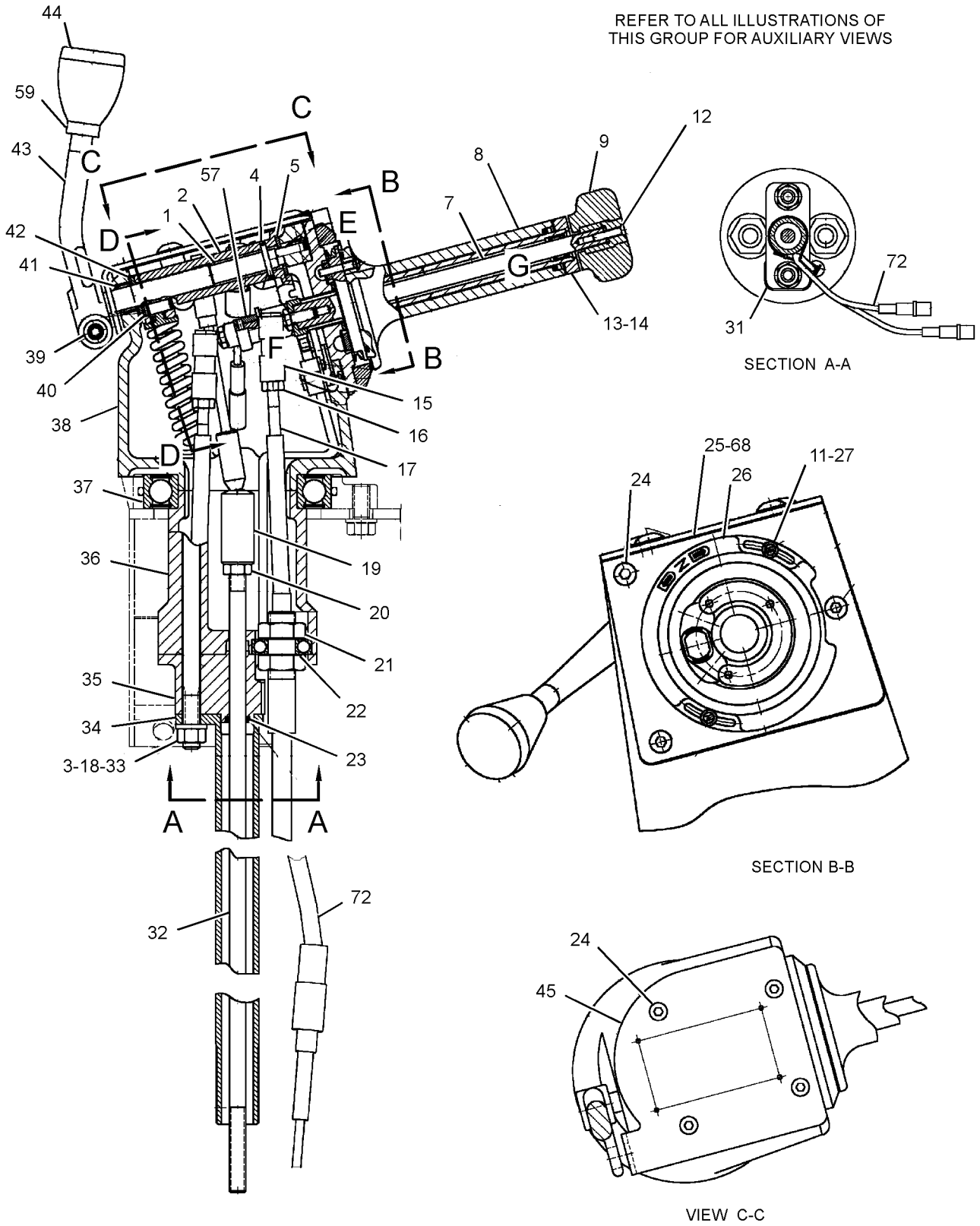

GRAPHIC #1 g02794971

371-1767 **CONTROL GP-STEERING & XMSN (*contd.*)** **i05575095**

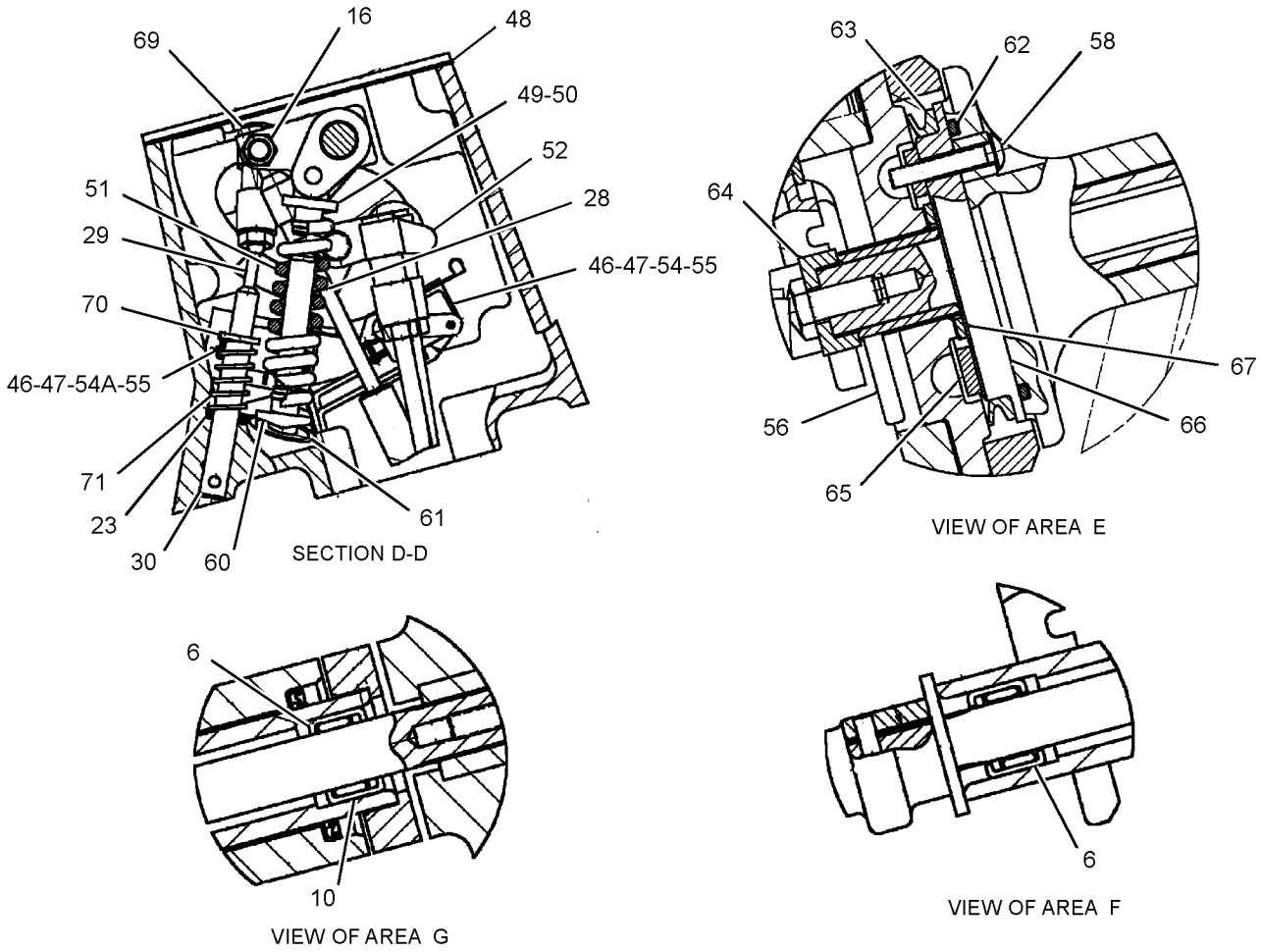

GRAPHIC #2 **<END>** g02794973

374-4176 CONTROL GP-STEERING & XMSN

S/N: EMM1-UP; JEN1-UP

PART OF 389-3209 POWER TRAIN AR

SMCS-4122 **i05637773**

NOTE	REF NO	GRAPHIC REF	PART NUMBER	QTY	PART NAME 1 2 3 4 5 6 (PRODUCT LEVEL)	SEE PAGE
	1	1	**3E-4374**	2	STUD (3/8-24X3.15-IN)	
	2	1	**3T-1078**	1	VALVE GP-BRAKE (PILOT SHUTOFF)	
	3	1	**6G-6396**	1	WASHER	
	4	1	**6V-5791**	1	END AS-ROD	
	5	1	**7P-4190**	2	BEARING-ROLLER	
	6	1	**8E-4525**	1	BOOT	
	7	1	**8T-8932**	1	PIN AS-SPRING	
	8	1	**9G-0715**	2	COVER	
	9	1	**166-9204**	1	SHAFT	
	10	1	**166-9209**	1	BRACKET	
	11	1	**166-9213**	1	ROD	
	12	1	**203-2288**	1	GASKET-COVER	
I	13	1	**285-8893**	1	HOSE AS	
	14	1	**298-7340**	1	LEVER	
	15	1	**313-9374**	1	LINK AS	
I	16	1	**317-4178**	1	HOSE AS	
	17	1	**319-1676**	1	LEVER	
I	19	1	**323-1450**	1	HOSE AS	
	20	1	**365-0447**	1	BRACKET	
	21	1	*148-8365*	2	ELBOW AS	
					(EACH INCLUDES)	
		1	**3J-1907**	1	SEAL-O-RING	
		1	**6V-8398**	1	SEAL-O-RING	
		1	**8T-6876**	1	ELBOW	
	22	1	*150-4043*	3	CONNECTOR AS	
					(EACH INCLUDES)	
		1	**3J-1907**	1	SEAL-O-RING	
		1	**6V-8398**	1	SEAL-O-RING	
		1	**6V-9873**	1	CONNECTOR	
	23	1	**1B-0676**	1	PIN	
	24	1	**1B-8706**	2	KEY-WOODRUFF	
	25	1	**1M-1341**	2	END-YOKE ROD	
	26	1	**2J-4672**	1	GASKET	
	27	1	**3B-4615**	3	PIN-COTTER	
	28	1	**4S-5719**	1	SPACER (10.31X25X12.7-MM THK)	
	29	1	**5P-6438**	1	END-YOKE ROD	
	30	1	**6V-8183**	2	NUT-FULL (3/8-24-THD)	
	31	1	**6V-8187**	2	NUT (1/4-28-THD)	
	32	1	**7X-7729**	3	WASHER (11X25X3-MM THK)	
	33	1	**8M-5661**	2	SEAL-O-RING	
	34	1	**8S-0948**	1	CLIP	
M	35	1	**8T-0722**	5	BOLT-LOCKING (M10X1.5X30-MM)	
	36	1	**8T-4121**	10	WASHER-HARD (11X21X2.5-MM THK)	
M	37	1	**8T-4195**	8	BOLT (M10X1.5X30-MM)	
M	38	1	**8T-4196**	2	BOLT (M10X1.5X35-MM)	
	39	1	**8T-4224**	2	WASHER-HARD (8.8X16X2-MM THK)	
	40	1	**8T-4896**	2	WASHER-HARD (10.2X18.5X2.5-MM THK)	
	41	1	**8T-4994**	2	WASHER-HARD (20X36.5X3.5-MM THK)	
M	42	1	**8T-6912**	2	BOLT (M8X1.25X50-MM)	
	43	1	**9M-4995**	1	CLIP	
	44	1	**9S-1354**	2	NUT (5/8-18-THD)	
	45	1	**1J-4384**	2	PIN-CLEVIS	
	46	1	**3B-4611**	2	PIN-COTTER	

I - REFER TO HYDRAULIC INFORMATION SYSTEM
M - METRIC PART

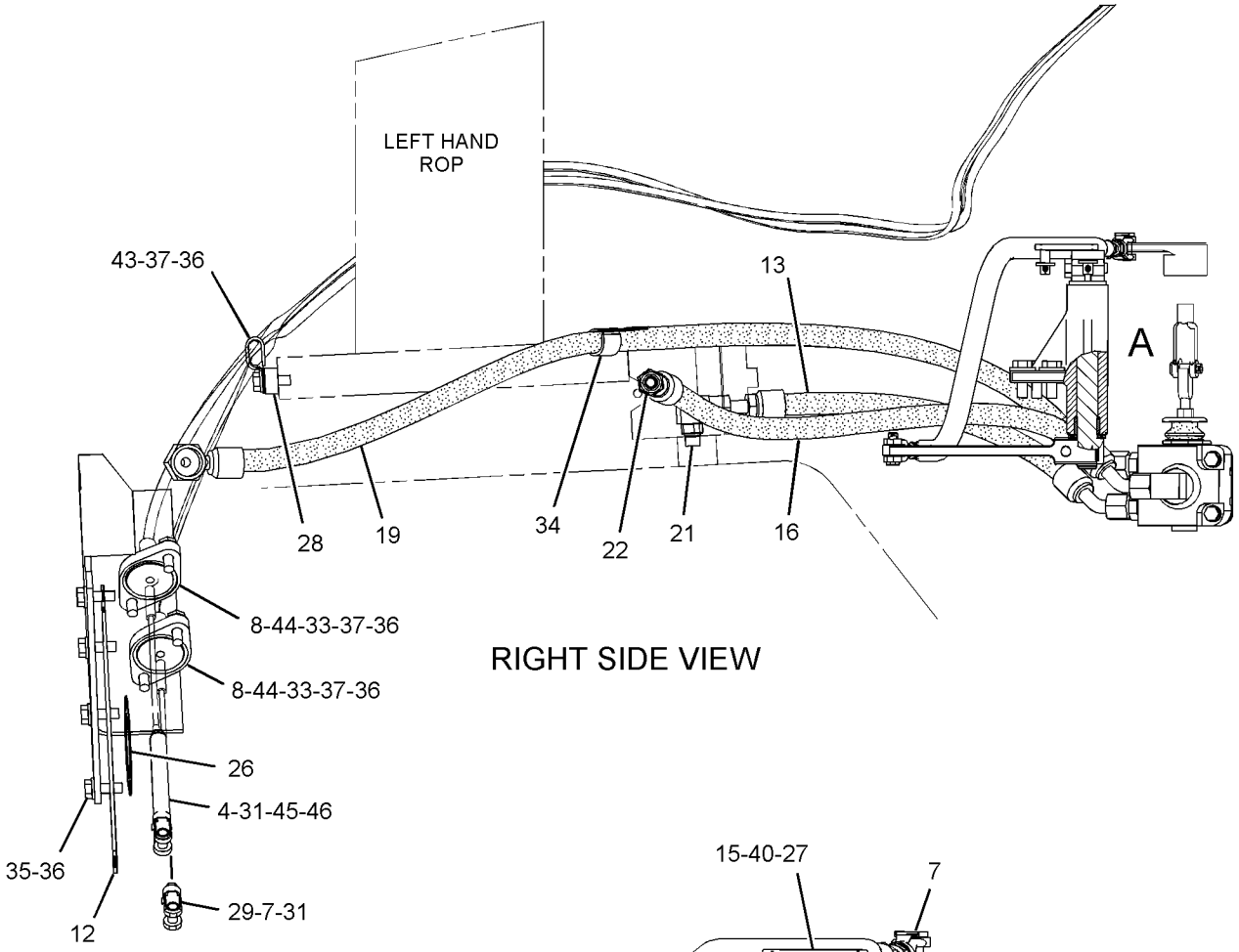

RIGHT SIDE VIEW

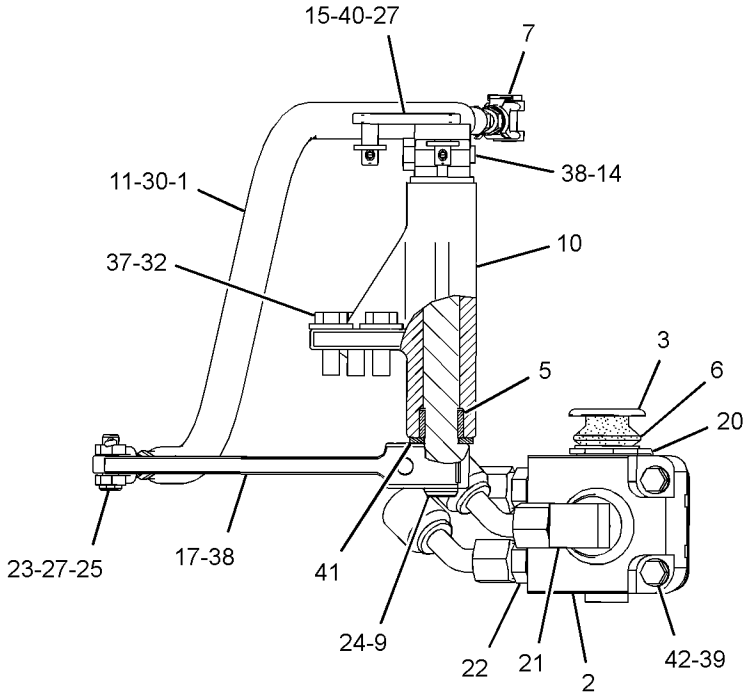

VIEW OF AREA A

GRAPHIC #1 **<END>** g03580716

375-4844 CONTROL GP-STEERING & XMSN

S/N: EMM1-UP; JEN1-UP

PART OF 393-0289, 393-0290 CAB AR, 387-0575, 393-0288 PLATFORM AR

AN ATTACHMENT

SMCS-4122 **i05575092**

NOTE	REF NO	GRAPHIC REF	PART NUMBER	QTY	PART NAME 1 2 3 4 5 6 (PRODUCT LEVEL)	SEE PAGE
	1	1	**5D-3546**	1	COLLAR	
	2	1	**246-2641**	1	PADLOCK GP	
					(EACH INCLUDES)	
		1	**5P-8500**	1	KEY	
	3	1	**6T-8387**	1	BEARING	
	4	1	**6T-8388**	2	FLANGE	
	5	1	**6Y-2851**	1	ROD-EYE	
	6	1	**7K-1181**	1	STRAP-CABLE	
	7	1	**8E-2935**	1	HOUSING-BEARING	
	8	1	**9G-0742**	2	BOOT	
	9	1	**136-6093**	1	SEAL	
	10	1	**143-6871**	1	SPACER (26.93X31.75X58-MM THK)	
	11	1	**161-3964**	1	COVER AS	
	12	1	**166-9212**	1	LEVER	
	13	1	**317-4616**	1	CONSOLE AS	
					(EACH INCLUDES)	
M		1	**6V-9632**	3	NUT-WELD (M6X1-THD)	
M		1	**8T-3490**	7	NUT-WELD (M10X1.5-THD)	
	14	1	**365-0446**	1	BRACKET AS	
Y	15	1	*371-1767*	1	CONTROL GP-STEERING & XMSN	259
	16	1	**030-8537**	1	BOLT-LOCKING (3/8-16X1.5-IN)	
	17	1	**131-5879**	2	WASHER (11X32X3-MM THK)	
	18	1	**1A-9252**	1	END-ADJUSTMENT ROD	
	19	1	**1B-0676**	1	PIN	
	20	1	**3B-4615**	1	PIN-COTTER	
	21	1	**4L-6454**	1	BOLT (3/8-16X1-IN)	
	22	1	**5P-1075**	2	WASHER-HARD (10.2X22.5X3-MM THK)	
	23	1	**5S-7379**	4	BOLT (3/8-16X0.875-IN)	
	24	1	**6V-8801**	1	NUT (3/8-16-THD)	
	25	1	**7X-0575**	1	WASHER-HARD (10.2X22.5X5-MM THK)	
	26	1	**7X-0608**	1	WASHER-HARD (10.2X16X2-MM THK)	
	27	1	**7X-7729**	15	WASHER (11X25X3-MM THK)	
M	28	1	**8T-4137**	15	BOLT (M10X1.5X20-MM)	
M	29	1	**8T-4195**	2	BOLT (M10X1.5X30-MM)	
	30	1	**8T-4896**	2	WASHER-HARD (10.2X18.5X2.5-MM THK)	
	31	1	**9L-7712**	1	NUT (3/8-24-THD)	

M - METRIC PART
Y - SEPARATE ILLUSTRATION

375-4844 **CONTROL GP-STEERING & XMSN (*contd.*)** **i05575092**

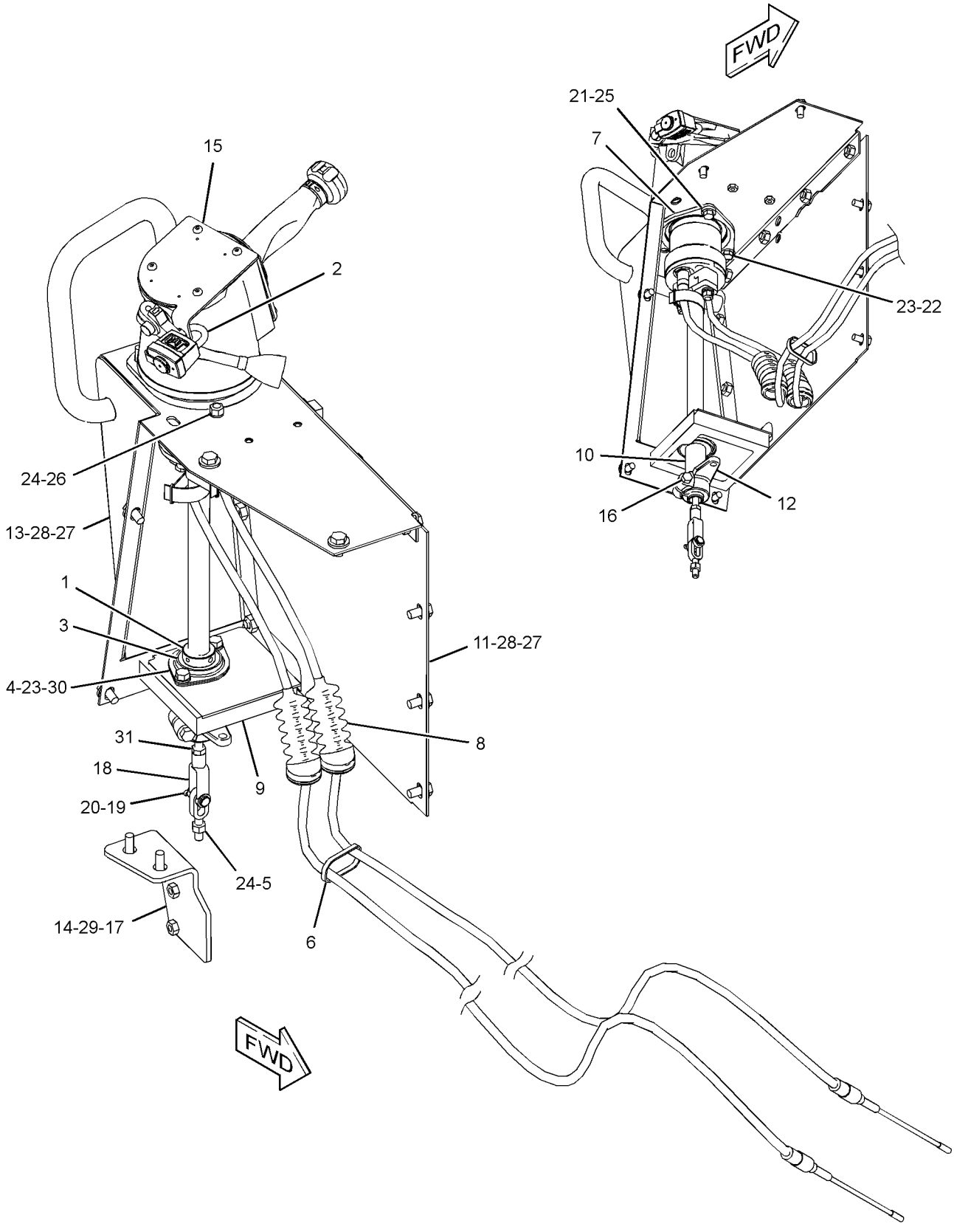

GRAPHIC #1 **<END>** g03270360

315-9964 CONTROL GP-TRANSMISSION HYD

S/N: MJY1-UP

PART OF 315-9959 TRANSMISSION AR

SMCS-3073, 3167 **i05636969**

NOTE	REF NO	GRAPHIC REF	PART NUMBER	QTY	PART NAME 1 2 3 4 5 6 (PRODUCT LEVEL)	SEE PAGE
	1	1	**3T-4403**	2	SPRING	
	2	1	**6S-6646**	2	PIN-COTTER	
	3	1	**9G-2459**	1	SLEEVE	
	4	1	**9G-2460**	1	SLEEVE	
	5	1	**9G-2461**	1	ADAPTER	
	6	1	**9P-1480**	2	SLEEVE	
	7	1	**9P-5977**	2	LEVER AS	
					(EACH INCLUDES)	
		1	**2H-3429**	2	RING-RETAINING	
		1	**8H-8175**	1	BUSHING	
		1	**9P-6217**	1	DOWEL	
Y	8	1	**315-9965**	1	VALVE GP-PRIORITY (LUBRICATION DISTRIBUTION)	313
Y	9	1	**315-9966**	1	VALVE GP-TRANSMISSION CONTROL	317
	10	1	**0L-1351**	4	BOLT (3/8-16X0.875-IN)	
	11	1	**1D-4539**	4	BOLT (5/16-18X2.5-IN)	
	12	1	*244-3712*	2	PLUG AS	
					(EACH INCLUDES)	
		1	**9S-4191**	1	PLUG	
		1	**214-7568**	1	SEAL-O-RING	
	13	1	**2J-4672**	1	GASKET	
	14	1	**4H-1394**	6	WASHER (19.4X34.9X1.2-MM THK)	
	15	1	**5F-4899**	4	BOLT (3/8-16X5.5-IN)	
	16	1	**5M-2894**	4	WASHER-HARD (10.2X18.5X2.5-MM THK)	
	17	1	**6V-4365**	4	SEAL-O-RING	
	18	1	**8M-4432**	4	SEAL-O-RING	
	19	1	**8M-4986**	2	SEAL-O-RING	
	20	1	**9M-1974**	4	WASHER-HARD (8.8X16X2-MM THK)	

Y - SEPARATE ILLUSTRATION

315-9964 **CONTROL GP-TRANSMISSION HYD (*contd.*)** **i05636969**

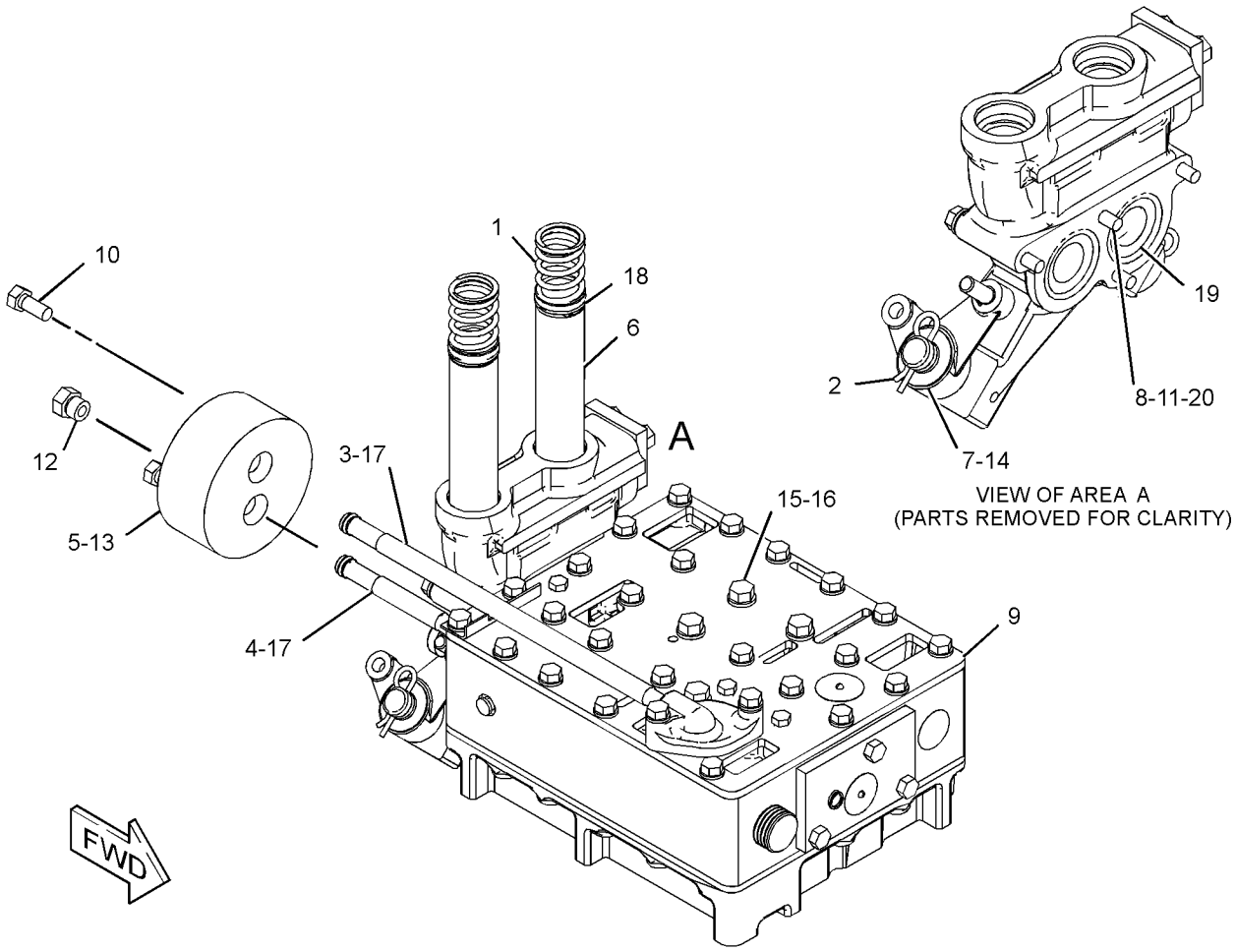

GRAPHIC #1 **<END>** g02177231

238-1116 COOLER GP-TRANSMISSION OIL

S/N: TXD1-UP

PART OF 387-8581, 387-8582 ENGINE AR-COMPLETE

AN ATTACHMENT

SMCS-1375 **i05567490**

NOTE	REF NO	GRAPHIC REF	PART NUMBER	QTY	PART NAME 1 2 3 4 5 6 (PRODUCT LEVEL)	SEE PAGE
	1	1	**2S-0795**	2	GASKET	
	2	1	**6F-7062**	1	WASHER (12.7X19.05X1.83-MM THK)	
	3	1	**8M-9307**	1	PLUG (TRANSMISSION OIL COOLER)	
	4	1	**8S-4304**	1	BONNET-XMSN OIL COOLER	
	5	1	**180-3907**	1	SEAL-INTEGRAL	
R	6	1	**187-3523**	1	CORE AS-OIL COOLER (TRANSMISSION)	
	6A	1	**8T-6764**	1	PLUG-PIPE (1/8-27-THD)	
	7	1	**198-3462**	1	DIVERTER	
	8	1	**238-1117**	1	BONNET	
	9	1	*392-0818*	1	PLUG AS	
		1	**6V-6609**	1	SEAL-O-RING	
		1	**360-3693**	1	PLUG	
	10	1	**348-5792**	1	BRACKET	
	11	1	*398-5599*	1	PLUG AS	
		1	**6V-3250**	1	SEAL-O-RING	
		1	**360-3692**	1	PLUG	
	12	1	*398-5614*	1	PLUG AS	
		1	**6V-5064**	1	SEAL-O-RING	
		1	**360-3684**	1	PLUG-O-RING	
M	15	1	**6V-3668**	4	BOLT (M12X1.75X30-MM)	
M	16	1	**6V-3823**	2	BOLT (M12X1.75X60-MM)	
M	17	1	**6V-5696**	6	BOLT (M12X1.75X80-MM)	
M	18	1	**6V-8675**	1	BOLT (M12X1.75X35-MM)	
	19	1	**7D-1649**	3	WASHER-HARD (13.5X32X5-MM THK)	
M	20	1	**7X-2543**	2	BOLT (M10X1.5X120-MM)	
	22	1	**8T-6761**	1	PLUG-PIPE (1-11-1/2 NPT THD)	
M	23	1	**8T-6854**	4	BOLT (M10X1.5X200-MM)	

M - METRIC PART
R - REMFG PART MAY BE AVAILABLE

238-1116 **COOLER GP-TRANSMISSION OIL (*contd.*)** **i05567490**

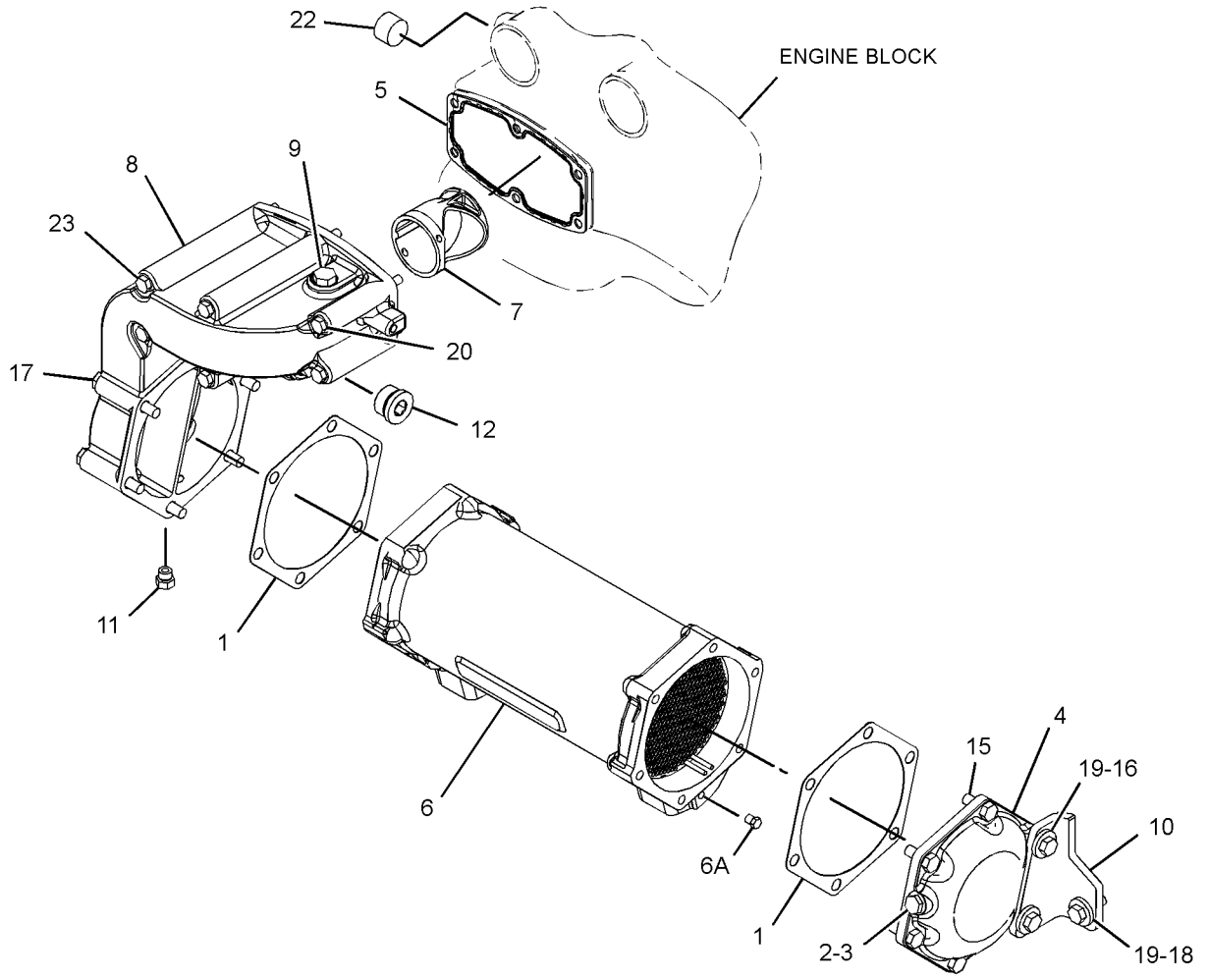

GRAPHIC #1 **<END>** g03316537

225-1506 COUPLING & GUARD GP

S/N: EMM1-UP; JEN1-UP

PART OF 389-3209 POWER TRAIN AR

SMCS-3279 **i05636293**

NOTE	REF NO	GRAPHIC REF	PART NUMBER	QTY	PART NAME 1 2 3 4 5 6 (PRODUCT LEVEL)	SEE PAGE
Y	1	1	*227-0924*	1	COUPLING GP-PUMP	272
	2	1	**284-0638**	1	GUARD AS	
	3	1	**284-0639**	1	BRACKET AS	
	4	1	**8T-4222**	4	WASHER-PLATED (11X32X2.5-MM THK)	
M	5	1	**8T-4195**	4	BOLT (M10X1.5X30-MM)	

M - METRIC PART
Y - SEPARATE ILLUSTRATION

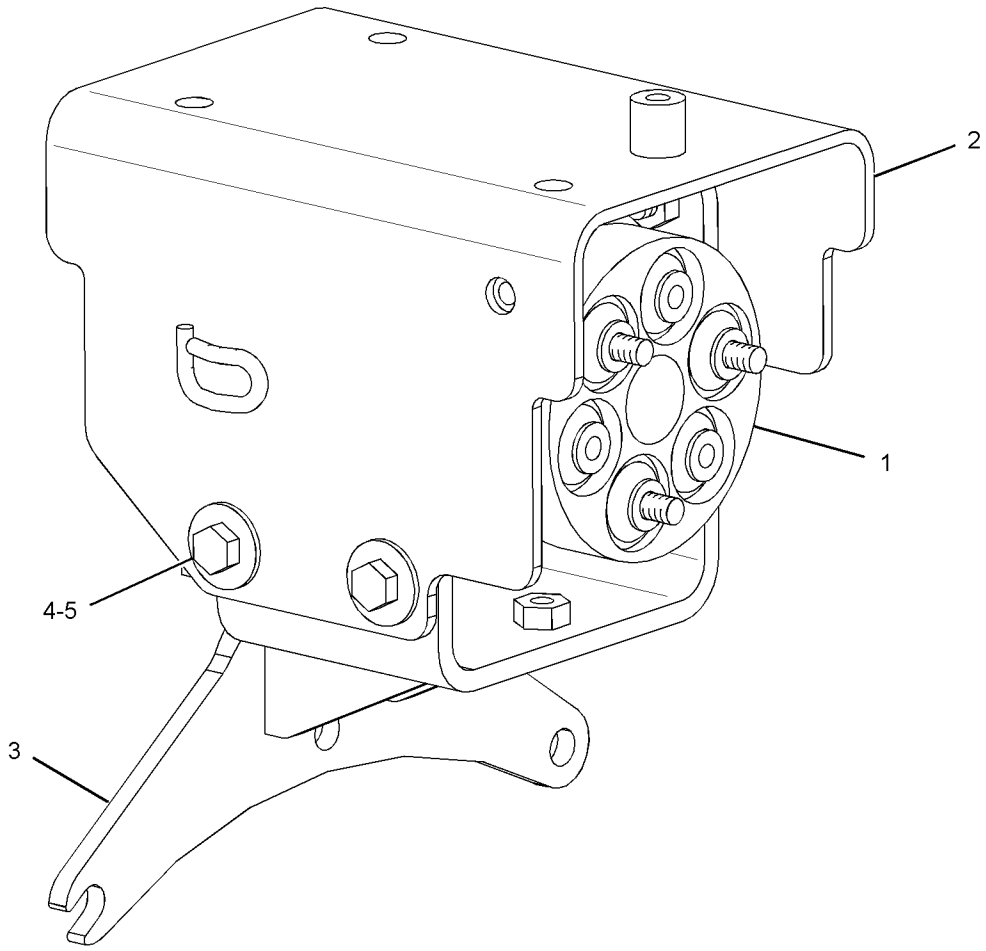

GRAPHIC #1 **<END>** g01362253

227-0924 COUPLING GP-PUMP

S/N: EMM1-UP; JEN1-UP

PART OF 225-1506 COUPLING & GUARD GP

SMCS-5062 **i05636428**

NOTE	REF NO	GRAPHIC REF	PART NUMBER	QTY	PART NAME 1 2 3 4 5 6 (PRODUCT LEVEL)	SEE PAGE
	1	1	**198-1883**	1	TUBE AS	
	2	1	**211-9087**	2	COUPLING AS	
	3	1	**8T-4121**	12	WASHER-HARD (11X21X2.5-MM THK)	
M	4	1	**8T-4182**	6	BOLT (M10X1.5X45-MM)	
M	5	1	**8T-4185**	6	BOLT (M10X1.5X50-MM)	

M - METRIC PART

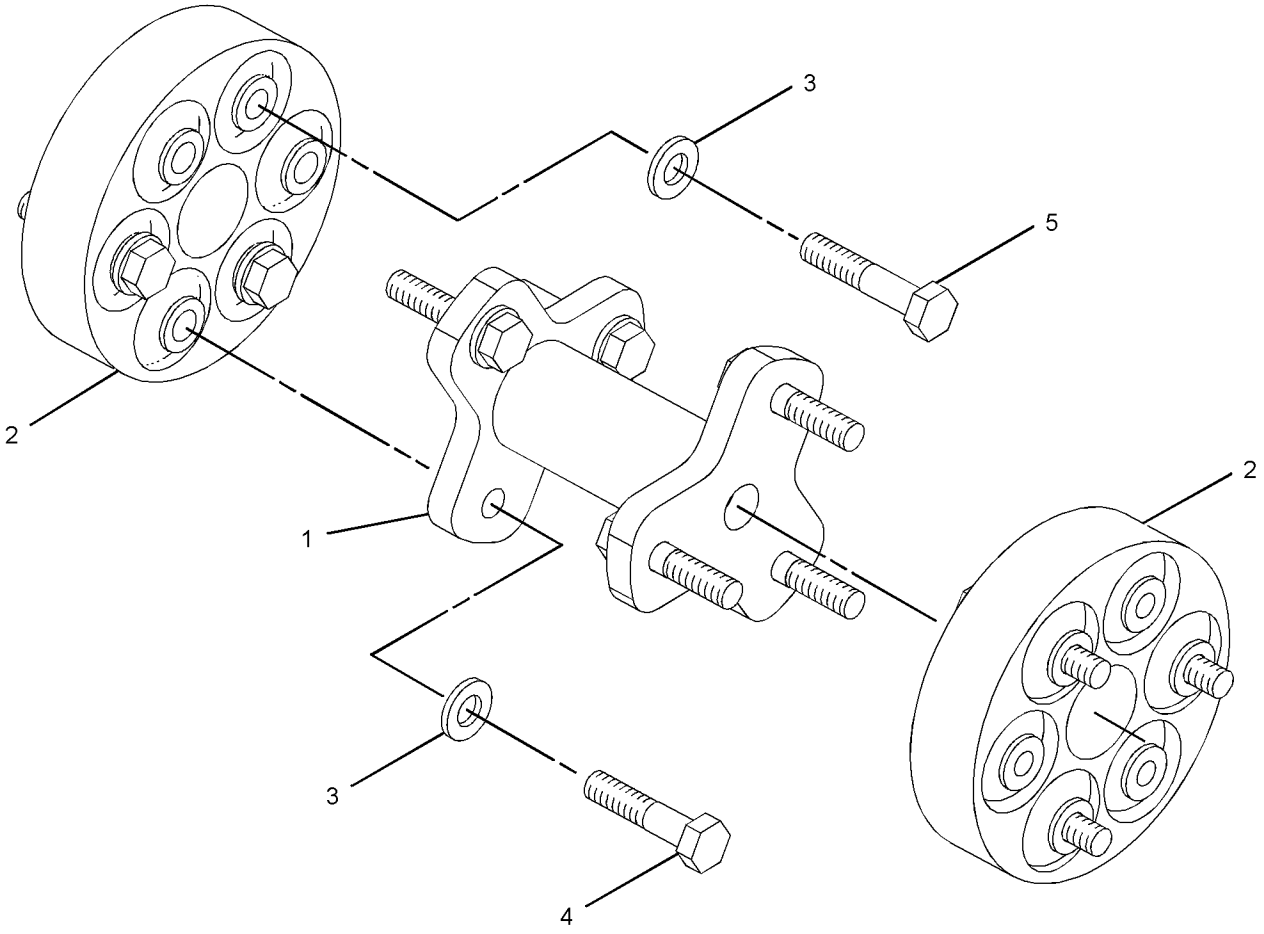

GRAPHIC #1 **<END>** g01208311

106-4150 DRAIN GP-ECOLOGY

S/N: EMM1-UP; JEN1-UP
PART OF 389-6164 DRAIN GP-ECOLOGY
AN ATTACHMENT

SMCS-3100 **i05319645**

NOTE	REF NO	GRAPHIC REF	PART NUMBER	QTY	PART NAME 1 2 3 4 5 6 (PRODUCT LEVEL)	SEE PAGE
	1	1	**4N-3808**	1	PIN-SPRING	
	2	1	**5P-9658**	1	SEAL-O-RING	

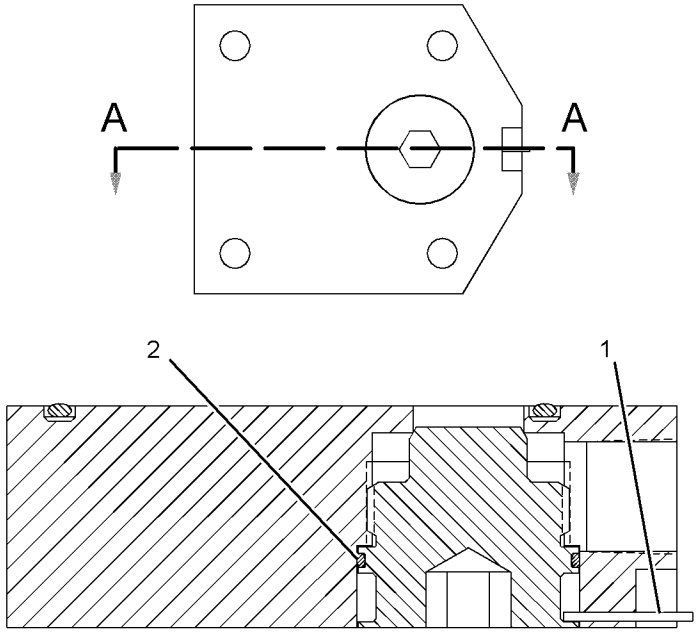

SECTION A-A

GRAPHIC #1 **<END>** g02350745

389-6164 DRAIN GP-ECOLOGY

S/N: EMM1-UP; JEN1-UP

AN ATTACHMENT

SMCS-3100 **i05631411**

NOTE	REF NO	GRAPHIC REF	PART NUMBER	QTY	PART NAME 1 2 3 4 5 6 (PRODUCT LEVEL)	SEE PAGE
M	1	1	**8T-4185**	4	BOLT (M10X1.5X50-MM)	
	2	1	**321-8667**	1	ADAPTER GP-PLUG	
		1	**321-8666**	1	ADAPTER	
		1	**6V-1322**	1	BOLT (1/4-20X0.375-IN)	
		1	**321-8665**	1	PLUG-DRAIN (TORQUE CONVERTER)	
		1	**109-9549**	1	SPACER (0.13-MM THK)	
Y	3	1	**106-4150**	1	DRAIN GP-ECOLOGY (TRANSMISSION CASE)	273
	4	1	**2B-0858**	1	PLUG-PIPE (HYDRAULIC TANK OIL DRAIN)	
	4A	1	**2B-0858**	1	PLUG-PIPE (TORQUE CONVERTER)	
	5	1	**2H-3931**	1	SEAL-O-RING	
	6	1	**8H-9818**	1	GASKET	
M	7	1	**8T-4136**	2	BOLT (M10X1.5X25-MM)	

M - METRIC PART
Y - SEPARATE ILLUSTRATION

389-6164 **DRAIN GP-ECOLOGY (*contd.*)** **i05631411**

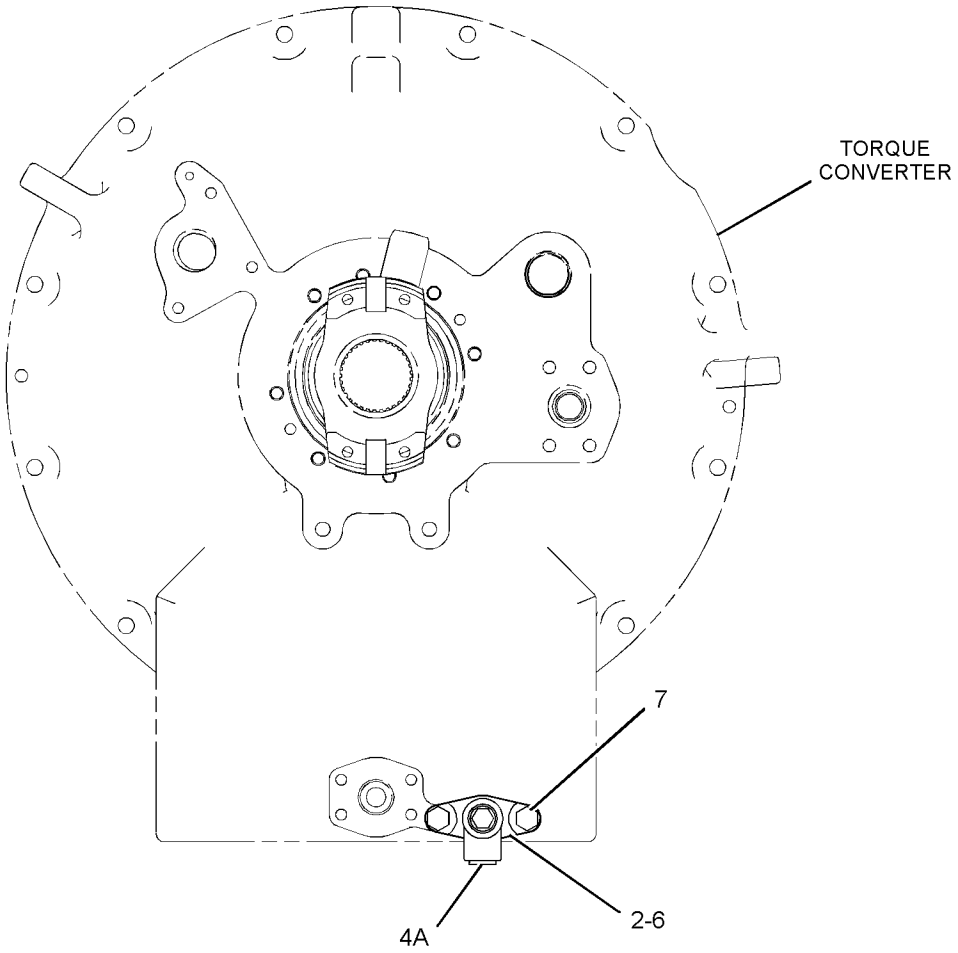

FRONT VIEW

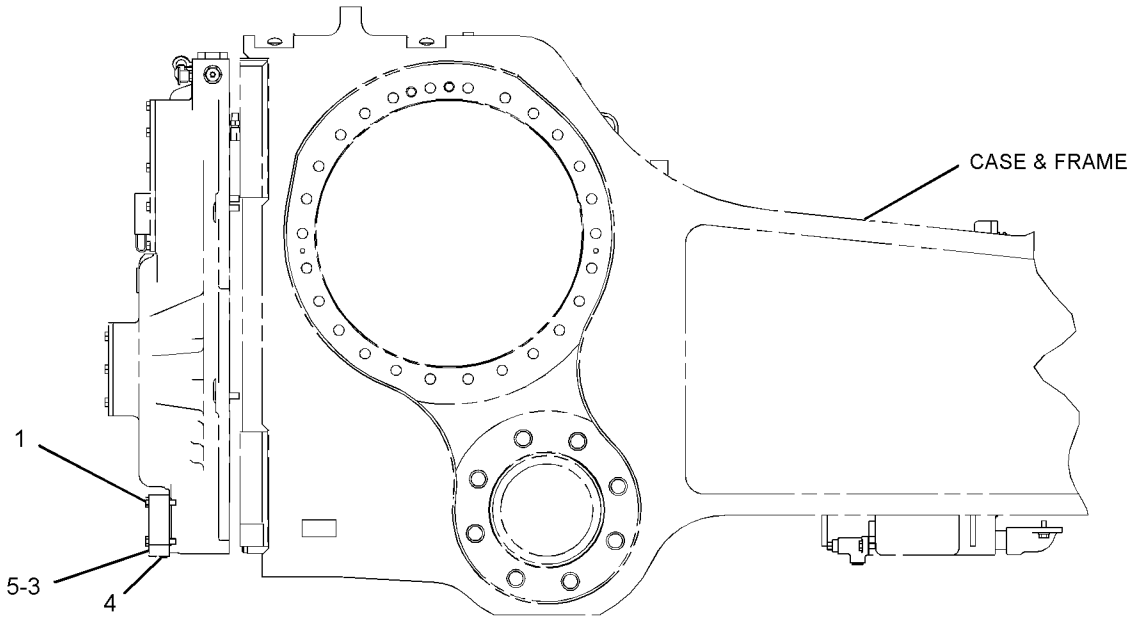

RIGHT SIDE VIEW

GRAPHIC #1 **<END>** g03578222

389-3252 DRIVE AR-FINAL

S/N: EMM1-UP; JEN1-UP
AN ATTACHMENT

SMCS-4050 **i05612824**

NOTE	PART NUMBER	QTY	PART NAME 1 2 3 4 5 6 (PRODUCT LEVEL)	SEE PAGE
Y	**260-6650**	2	DRIVE GP-FINAL	277

Y - SEPARATE ILLUSTRATION

<END>

389-3254 DRIVE AR-FINAL—COLD WEATHER

S/N: EMM1-UP; JEN1-UP
EXTREME TEMPERATURE
AN ATTACHMENT

SMCS-4050 **i05612825**

NOTE	PART NUMBER	QTY	PART NAME 1 2 3 4 5 6 (PRODUCT LEVEL)	SEE PAGE
Y	*260-6653*	2	DRIVE GP-FINAL	279

Y - SEPARATE ILLUSTRATION

<END>

260-6650 DRIVE GP-FINAL

S/N: EMM1-UP; JEN1-UP
PART OF 389-3252 DRIVE AR-FINAL
AN ATTACHMENT

SMCS-4050 **i05612790**

NOTE	REF NO	GRAPHIC REF	PART NUMBER	QTY	PART NAME 1 2 3 4 5 6 (PRODUCT LEVEL)	SEE PAGE
	1	1	**343-6237**	6	BEARING	
	2	1	**1P-9005**	1	SEAL-O-RING	
	3	1	**2P-3696**	3	RETAINER	
	4	1	**2S-4078**	1	SEAL-O-RING	
	5	1	**3K-0360**	1	SEAL-O-RING	
	6	1	**6V-0327**	1	CUP-BEARING (TAPERED ROLLER)	
	7	1	**6V-0328**	1	CONE-BEARING (TAPERED ROLLER)	
	8	1	**6V-0329**	1	CONE-BEARING (TAPERED ROLLER)	
	9	1	**6V-0330**	1	CUP-BEARING (TAPERED ROLLER)	
	10	1	**6V-0439**	1	PLUG-MAGNETIC (FINAL DRIVE, OIL FILL)	
	11	1	**6Y-0859**	1	SEAL GP-DUO-CONE	
	11A	1	**1M-9011**	2	RING-TORIC	
	12	1	**8E-2748**	1	HUB-REACTION	
	13	1	**8G-8844**	1	RING-LOCK	
	14	1	**8G-8845**	1	COVER	
	15	1	**9G-8638**	3	GEAR-PLANETARY (40-TEETH)	
	16	1	**335-6121**	1	GEAR-RING (94-TEETH)	
	17	1	**9G-9175**	1	CARRIER	
	18	1	**9G-9180**	1	HUB-SPROCKET	
	19	1	**9G-9181**	1	RETAINER	
	20	1	**333-9410**	3	SHAFT	
	21	1	**9H-3360**	1	SEAL-O-RING	
	22	1	**269-4739**	1	SEAL-LIP TYPE	
	24	1	**260-6642**	1	SPINDLE	
	25	1	**2B-0947**	10	BOLT (1/2-13X2.25-IN)	
	26	1	**4L-6454**	3	BOLT (3/8-16X1-IN)	
	27	1	**7X-0346**	3	BOLT (5/8-11X2-IN)	
	28	1	**8T-4896**	3	WASHER-HARD (10.2X18.5X2.5-MM THK)	
	29	1	**8T-4994**	33	WASHER-HARD (20X36.5X3.5-MM THK)	
	30	1	**8T-9399**	33	BOLT (3/4-10X2.25-IN)	
	31	1	**9S-4185**	1	PLUG-O-RING (FINAL DRIVE, OIL DRAIN)	
	32	1	**1H-9696**	3	SEAL-O-RING	
					PARTS SHOWN IN GRAPHIC(S) WITHOUT A REFERENCE NUMBER ARE NOT SERVICED SEPARATELY	

260-6650 **DRIVE GP-FINAL (*contd.*)** **i05612790**

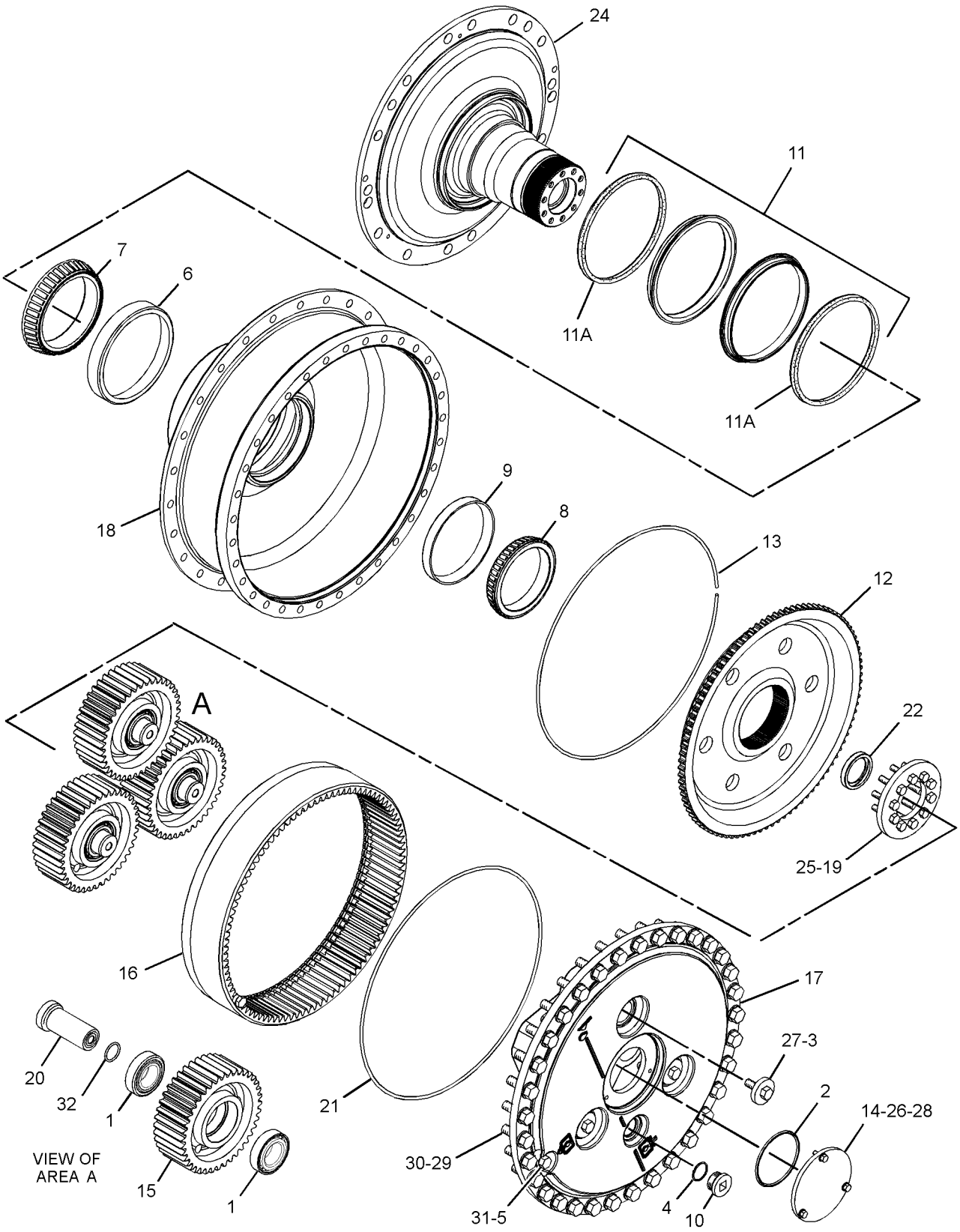

GRAPHIC #1 **<END>** g02271093

260-6653 DRIVE GP-FINAL—COLD WEATHER

S/N: EMM1-UP; JEN1-UP
PART OF 389-3254 DRIVE AR-FINAL
AN ATTACHMENT

SMCS-4050 **i05612809**

NOTE	REF NO	GRAPHIC REF	PART NUMBER	QTY	PART NAME 1 2 3 4 5 6 (PRODUCT LEVEL)	SEE PAGE
	1	1	**343-6237**	6	BEARING	
	2	1	**1P-9005**	1	SEAL-O-RING	
	3	1	**2P-3696**	3	RETAINER	
	4	1	**2R-0098**	1	SEAL-O-RING	
	5	1	**2S-4078**	1	SEAL-O-RING	
	6	1	**3K-0360**	1	SEAL-O-RING	
	7	1	**6V-0327**	1	CUP-BEARING (TAPERED ROLLER)	
	8	1	**6V-0328**	1	CONE-BEARING (TAPERED ROLLER)	
	9	1	**6V-0329**	1	CONE-BEARING (TAPERED ROLLER)	
	10	1	**6V-0330**	1	CUP-BEARING (TAPERED ROLLER)	
	11	1	**6V-0439**	1	PLUG-MAGNETIC (FINAL DRIVE, OIL FILL)	
	12	1	**6Y-6277**	1	SEAL GP-DUO-CONE	
	12A	1	**5P-1606**	2	RING-TORIC	
	13	1	**8E-2748**	1	HUB-REACTION	
	14	1	**8G-8844**	1	RING-LOCK	
	15	1	**8G-8845**	1	COVER	
	16	1	**9G-8638**	3	GEAR-PLANETARY (40-TEETH)	
	17	1	**335-6121**	1	GEAR-RING (94-TEETH)	
	18	1	**9G-9175**	1	CARRIER	
	19	1	**9G-9180**	1	HUB-SPROCKET	
	20	1	**9G-9181**	1	RETAINER	
	21	1	**333-9410**	3	SHAFT	
	22	1	**9H-3360**	1	SEAL-O-RING	
Y	24	1	*188-0908*	1	SEGMENT GP-SPROCKET	302
	25	1	**260-6642**	1	SPINDLE	
	26	1	**2B-0947**	10	BOLT (1/2-13X2.25-IN)	
	27	1	**4L-6454**	3	BOLT (3/8-16X1-IN)	
	28	1	**7X-0346**	3	BOLT (5/8-11X2-IN)	
	29	1	**8T-4223**	2	WASHER-HARD (13.5X25.5X3-MM THK)	
	30	1	**8T-4896**	3	WASHER-HARD (10.2X18.5X2.5-MM THK)	
	31	1	**8T-4994**	33	WASHER-HARD (20X36.5X3.5-MM THK)	
	32	1	**8T-8919**	2	BOLT (1/2-13X1.75-IN)	
	33	1	**8T-9399**	33	BOLT (3/4-10X2.25-IN)	
	34	1	**9S-4185**	1	PLUG-O-RING (FINAL DRIVE, OIL DRAIN)	
	35	1	**269-4739**	1	SEAL-LIP TYPE	
	36	1	**1H-9696**	3	SEAL-O-RING	

PARTS SHOWN IN GRAPHIC(S) WITHOUT A REFERENCE NUMBER ARE NOT SERVICED SEPARATELY

Y - SEPARATE ILLUSTRATION

260-6653 **DRIVE GP-FINAL (*contd.*)** **i05612809**

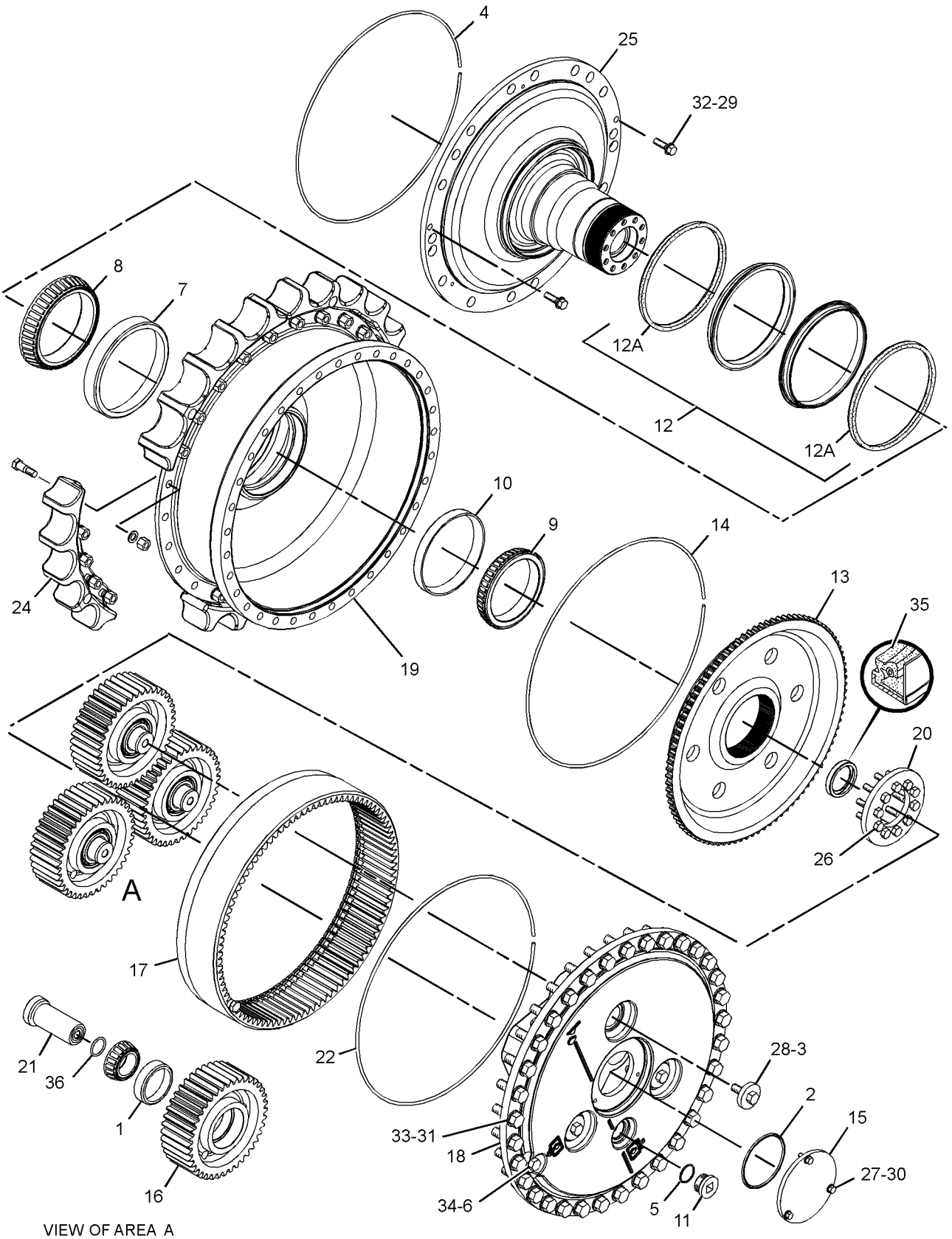

VIEW OF AREA A

GRAPHIC #1 **<END>** g03321173

246-0599 DRIVE GP-PUMP

S/N: TXD1-UP
PART OF 387-8581, 387-8582 ENGINE AR-COMPLETE
AN ATTACHMENT

SMCS-3108 **i05555266**

NOTE	REF NO	GRAPHIC REF	PART NUMBER	QTY	PART NAME 1 2 3 4 5 6 (PRODUCT LEVEL)	SEE PAGE
	1	1	**236-8240**	1	PULLEY (8-GROOVE)	
M	2	1	**6V-2317**	4	BOLT (M8X1.25X30-MM)	
	3	1	**9M-1974**	4	WASHER-HARD (8.8X16X2-MM THK)	

M - METRIC PART

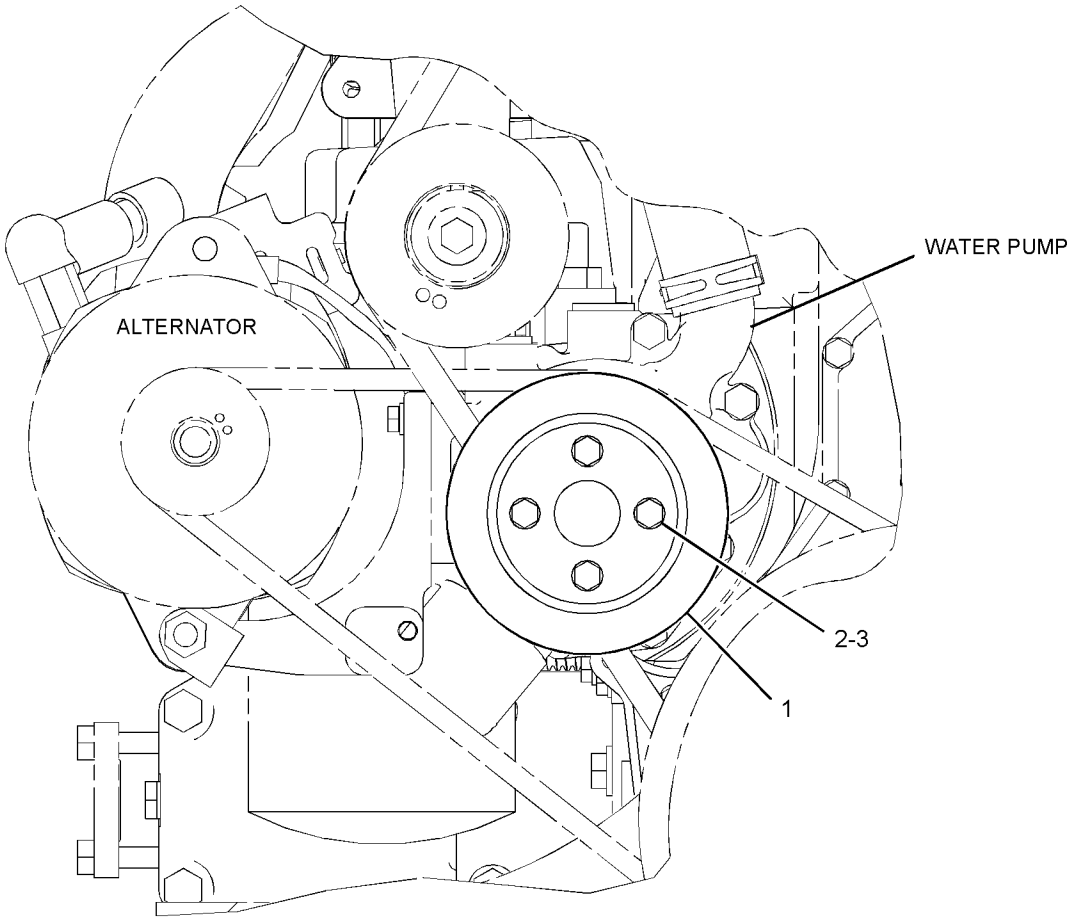

FRONT VIEW

GRAPHIC #1 **<END>** g01205602

333-6437 FILTER GP-OIL

S/N: EMM1-UP; JEN1-UP

PART OF 317-4109 LINES GP-POWER TRAIN OIL

SMCS-3004, 3067 **i05637455**

NOTE	REF NO	GRAPHIC REF	PART NUMBER	QTY	PART NAME 1 2 3 4 5 6 (PRODUCT LEVEL)	SEE PAGE
	1	1	**6V-0852**	1	CAP-DUST	
	2	1	**8C-3447**	1	CAP-DUST	
	3	1	**321-5967**	1	HOUSING GP-FILTER	
		1	**3J-1907**	1	SEAL-O-RING	
		1	**9S-8004**	1	PLUG-O-RING	
	4	1	**328-3655**	1	FILTER ELEMENT AS-OIL (ADVANCED EFFICIENCY)	
Y	5	1	**333-9308**	1	BASE GP-OIL FILTER	249
	6	1	**214-7568**	1	SEAL-O-RING	
	7	1	**6V-5048**	1	SEAL-O-RING	
	8	1	**6V-3965**	1	FITTING (QUICK DISCONNECT)	
	9	1	**8C-3446**	1	VALVE-FLUID SAMPLING	
	10	1	**130-0229**	1	SEAL-O-RING	
	11	1	**8L-2786**	1	SEAL-O-RING	
	12	1	**3P-1932**	1	ADAPTER	

Y - SEPARATE ILLUSTRATION

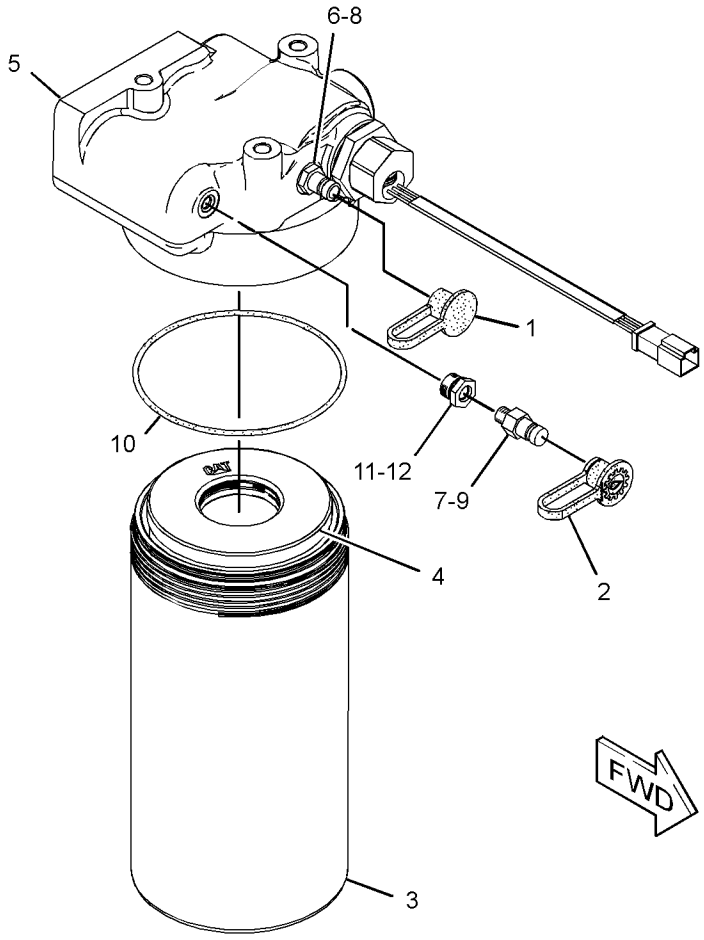

GRAPHIC #1 **<END>** g01888573

166-3485 GEAR GP-BEVEL & TRANSFER

S/N: MJY1-UP

PART OF 315-9959 TRANSMISSION AR

SMCS-3011 **i05636933**

NOTE	REF NO	GRAPHIC REF	PART NUMBER	QTY	PART NAME 1 2 3 4 5 6 (PRODUCT LEVEL)	SEE PAGE
C	1	1	**422-6929**	1	CASE AS	
		1	**2D-6642**	1	BALL	
	2	1	**160-7616**	1	GEAR (50-TEETH)	
B	3	1	**9P-1922**	1	SHIM PACK (INCLUDES 14-SHIMS)	
	4	1	**9W-2992**	1	CAGE-BEARING	
	5	1	**3T-6742**	1	RETAINER	
	6	1	**0S-1569**	1	BOLT (5/8-11X4-IN)	
	7	1	**7H-7628**	1	BEARING	
	8	1	**0S-1591**	4	BOLT (3/8-16X1.5-IN)	
	9	1	**5M-2894**	4	WASHER-HARD (10.2X18.5X2.5-MM THK)	
	10	2	**7D-1649**	2	WASHER-HARD (13.5X32X5-MM THK)	
	11	1	**6I-8507**	1	PLATE-RETAINER	
	12	1	**6I-8511**	1	CAGE-BEARING	
B	13	1	**9P-1921**	1	SHIM PACK (INCLUDES 14-SHIMS)	
	14	1	**216-0273**	1	SEAL-LIP TYPE	
	15	1	**160-7614**	1	GEAR-TRANSFER (44-TEETH)	
	16	1	**8D-1817**	2	CUP-BEARING	
	17	1	**8D-1819**	2	CONE-BEARING	
	18	1	**6S-2829**	2	CONE-BEARING	
	19	1	**6S-2828**	2	CUP-BEARING	
	20	1	**9W-3660**	1	PINION-BEVEL (20-TEETH)	
	21	1,2	**7B-3235**	24	BOLT (1/2-13X1.375-IN)	
	22	1,2	**5P-8245**	24	WASHER-HARD (13.5X25.5X3-MM THK)	
	23	1	**0L-1169**	12	BOLT (5/8-11X3.75-IN)	
	24	1,2	**5P-8247**	16	WASHER-HARD (17X32X3.5-MM THK)	
	25	2	**9W-1570**	1	CAGE AS-BEARING	
		2	**4B-9880**	1	BALL	
		2	**9W-1569**	1	PLUG-ORIFICE	
B	26	2	**9P-1478**	2	SHIM PACK (INCLUDES 14-SHIMS)	
	27	2	**1L-6957**	1	LOCKNUT-BEARING	
	28	2	**6T-0364**	1	RING-RETAINING	
	29	2	**9W-8612**	1	SPACER-BEARING	
	30	2	**1P-3934**	2	CUP-BEARING	
	31	2	**1P-3935**	2	CONE-BEARING	
	32	2	**9W-5150**	1	SHAFT-BEVEL GEAR	
	33	2	**0S-1897**	12	BOLT (3/4-16X2.25-IN)	
	34	2	**1S-1860**	12	NUT-TRACK (3/4-16-THD)	
	35	2	**9P-1925**	1	GEAR-BEVEL (35-TEETH)	
	36	2	**9G-0832**	1	DOWEL	
	37	2	**7T-9946**	1	CAGE-BEARING	
	38	2	**6J-3473**	1	RING-SNAP	
	39	2	**5P-7592**	1	RACE-ROLLER BEARING	
	40	2	**4H-0019**	1	RACE & ROLLER AS	
	41	2	**9P-7072**	1	WASHER (90.6X115X2.5-MM THK)	
	42	2	**6V-2404**	1	LOCKWASHER-BEARING	
	43	2	**7T-1475**	1	BRACKET-ROLLER	
	44	2	**7T-1474**	1	BRACKET-ROLLER	
	45	2	**1D-4601**	4	BOLT (5/8-11X8.5-IN)	
	46	2	**6T-3853**	2	SLEEVE	
	47	2	**6T-3852**	2	ROLLER	
	48	2	**1A-5822**	2	BOLT (1/2-13X2.75-IN)	

B - USE AS REQUIRED
C - CHANGE FROM PREVIOUS TYPE

166-3485 **GEAR GP-BEVEL & TRANSFER (*contd.*)** **i05636933**

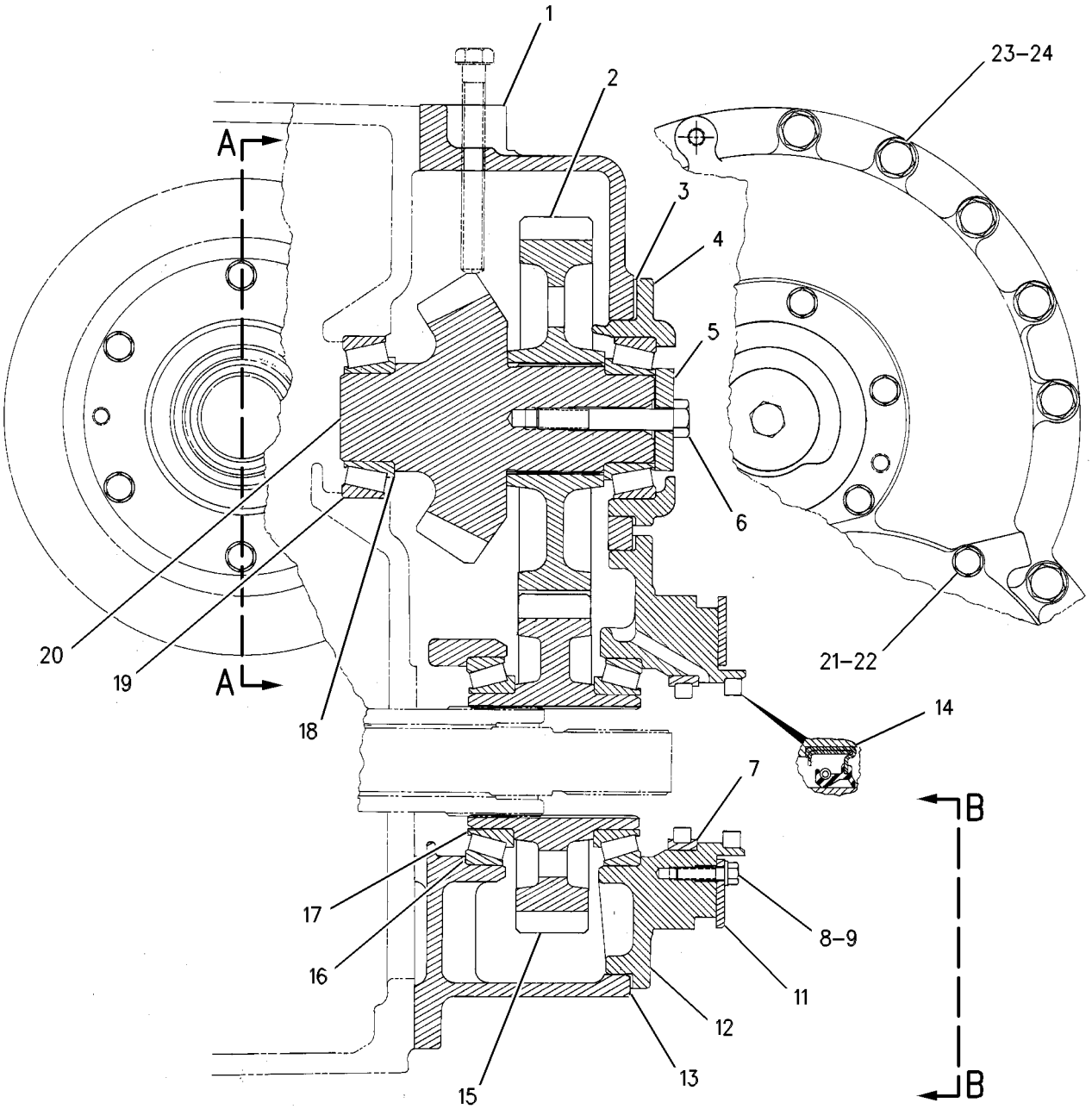

REFER TO ALL ILLUSTRATIONS OF
THIS GROUP FOR AUXILIARY VIEWS

GRAPHIC #1 g00615278

166-3485 **GEAR GP-BEVEL & TRANSFER (*contd.*)** **i05636933**

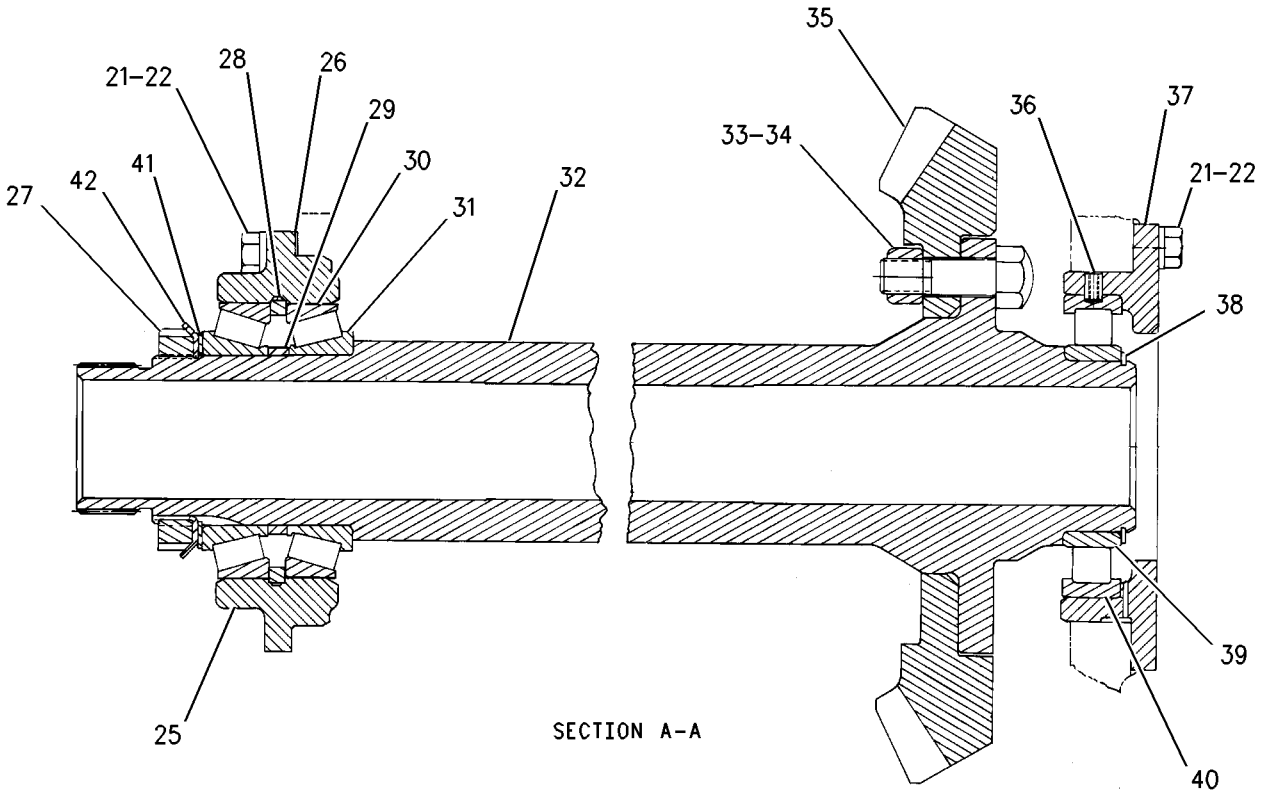

SECTION A-A

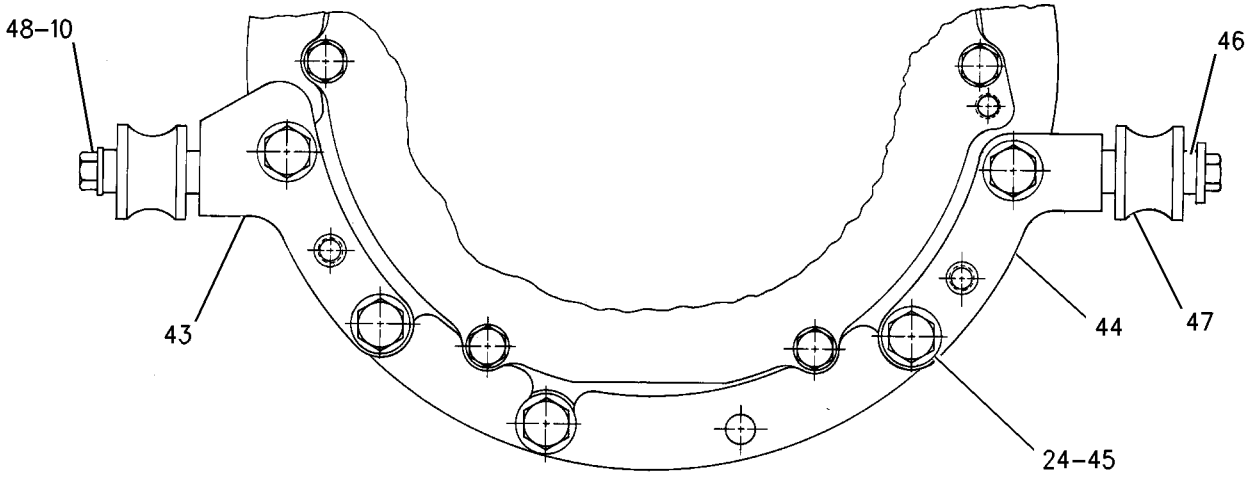

VIEW B-B

GRAPHIC #2 **<END>** g00744115

317-4109 LINES GP-POWER TRAIN OIL

S/N: EMM1-UP; JEN1-UP

PART OF 389-3209 POWER TRAIN AR

SMCS-3016 **i05637137**

NOTE	REF NO	GRAPHIC REF	PART NUMBER	QTY	PART NAME 1 2 3 4 5 6 (PRODUCT LEVEL)	SEE PAGE
	1	2	**3T-5301**	1	TUBE	
	2	2	**3T-5302**	1	FLANGE	
	3	2	**3T-6471**	1	SCREEN AS (TORQUE CONVERTER SCAVENGE)	
		2	**3T-6469**	1	WASHER (19X26X1.6-MM THK)	
I	4	2	**3W-2470**	1	HOSE AS	
	5	1,2	**6V-0852**	3	CAP-DUST	
	6	2	**6V-5387**	1	PLATE-ORIFICE	
	7	2	**7V-8532**	1	SPACER	
	8	2	**8E-7363**	1	PLATE	
	9	1	**9D-7924**	3	MOUNTING AS	
	10	1	**9G-5127**	1	BREATHER AS (POWER TRAIN OIL)	
	11	1	**106-2105**	1	ELBOW	
	12	1	**113-3656**	1	ANGLE	
Y	13	2	**220-1418**	1	VALVE GP-RELIEF (TORQUE CONVERTER OUTLET)	314
Y	14	2	*231-4166*	1	SCREEN GP-MAGNETIC (TRANSMISSION)	301
	15	1	**235-4513**	1	HOSE AS	
	16	1	**235-4514**	1	BRACKET	
	17	1	**235-4515**	1	TUBE AS	
	18	1	**235-4516**	1	TUBE AS	
	19	1	**235-4826**	1	BRACKET AS	
M		1	**8T-3490**	1	NUT-WELD (M10X1.5-THD)	
	20	1	**241-5634**	1	TUBE AS	
	21	1	**241-5635**	1	GAUGE AS-OIL LEVEL (POWER TRAIN)	
	22	1	*260-9187*	3	CONNECTOR AS	
					(EACH INCLUDES)	
		1	**8T-9358**	1	CONNECTOR	
		1	**6V-8397**	1	SEAL-O-RING	
I	23	1	**263-3348**	1	HOSE AS	
I	24	2	**270-3437**	1	HOSE AS	
I	25	1	**270-3438**	1	HOSE AS	
	26	1	**294-2503**	1	HOSE AS	
I	27	1	**317-4118**	1	HOSE AS	
I	28	2	**317-4142**	1	HOSE AS	
I	29	2	**317-4143**	1	HOSE AS	
Y	30	2	*318-0690*	1	PUMP GP-GEAR (POWER TRAIN OIL)	298
I	31	1	**323-1448**	1	HOSE AS	
Y	33	1	*333-6437*	1	FILTER GP-OIL (POWER TRAIN)	282
	34	1	**033-8248**	5	CLIP	
M	35	1	**109-3001**	1	STUD-TAPERLOCK (M10X1.5X65-MM)	
	36	1	**112-9783**	1	ADAPTER	
	37	1	*148-8335*	2	CONNECTOR AS	
					(EACH INCLUDES)	
		1	**6V-8635**	1	CONNECTOR	
		1	**5K-9090**	1	SEAL-O-RING	
		1	**7M-8485**	1	SEAL-O-RING	
	38	1	*148-8336*	1	CONNECTOR AS	
		1	**6V-8636**	1	CONNECTOR	
		1	**3J-1907**	1	SEAL-O-RING	
		1	**6V-8397**	1	SEAL-O-RING	
	39	2	*148-8367*	1	ELBOW AS	
		2	**6V-9850**	1	ELBOW	
		2	**6V-8397**	1	SEAL-O-RING	
	40	2	*148-8368*	1	ELBOW AS	
		2	**6V-8627**	1	ELBOW	
		2	**3J-1907**	1	SEAL-O-RING	
		2	**4J-5477**	1	SEAL-O-RING	
	41	2	*148-8374*	1	ELBOW AS	
		2	**6V-8723**	1	ELBOW	
		2	**3K-0360**	1	SEAL-O-RING	

317-4109 **LINES GP-POWER TRAIN OIL (*contd.*)** **i05637137**

NOTE	REF NO	GRAPHIC REF	PART NUMBER	QTY	PART NAME 1 2 3 4 5 6 (PRODUCT LEVEL)	SEE PAGE
		2	**6V-8397**	1	SEAL-O-RING	
	42	2	*148-8426*	1	TEE AS	
		2	**8T-6696**	1	TEE-O-RING	
		2	**3K-0360**	1	SEAL-O-RING	
		2	**6V-8397**	1	SEAL-O-RING	
		2	**6V-8398**	1	SEAL-O-RING	
	43	2	*150-3065*	1	ELBOW AS	
		2	**6V-0484**	1	ELBOW	
		2	**3J-1907**	1	SEAL-O-RING	
	44	1	*153-6243*	1	TEE AS	
		1	**8T-1120**	1	TEE-O-RING PORT	
		1	**2S-4078**	1	SEAL-O-RING	
		1	**5K-9090**	1	SEAL-O-RING	
		1	**6V-9746**	1	SEAL-O-RING	
	45	2	*153-6252*	1	CONNECTOR AS	
		2	**9X-8408**	1	CONNECTOR	
		2	**6V-8398**	1	SEAL-O-RING	
		2	**7M-8485**	1	SEAL-O-RING	
	46	1,2	*164-5567*	3	COUPLER AS-QUICK DISCONNECT (MALE)	
					(EACH INCLUDES)	
		1,2	**6V-3965**	1	FITTING (QUICK DISCONNECT)	
		1,2	**214-7568**	1	SEAL-O-RING	
	47	1	**180-4362**	2	SEAL-RECTANGULAR	
	48	2	**1H-5728**	1	SEAL-O-RING	
	49	2	**1P-4578**	4	FLANGE-HALF	
	50	2	**1V-7753**	1	SPACER (0.546X0.841X1.75-IN THK)	
	51	2	**2K-8257**	1	SEAL-O-RING	
	52	1	**3G-4214**	4	CLIP (SLOT)	
	53	1	**3G-4218**	4	CLIP (TAB)	
	54	1	**3J-1907**	1	SEAL-O-RING	
	55	1	**3K-0360**	1	SEAL-O-RING	
	56	1	**4J-5477**	1	SEAL-O-RING	
	57	1	**4K-6177**	1	CLIP	
	58	1	**5P-1075**	1	WASHER-HARD (10.2X22.5X3-MM THK)	
	59	2	**5P-7085**	1	SEAL-RECTANGULAR	
	60	1	**5P-7468**	2	CLIP (SLOT)	
	61	1	**5P-7469**	2	CLIP (TAB)	
	62	2	**5P-8215**	2	SEAL-O-RING	
	63	2	**6L-1649**	2	SEAL-O-RING	
	64	2	**6L-5359**	1	SEAL-O-RING	
	65	1	**6V-9168**	3	NUT (11/16-16-THD)	
	66	1	**7D-1649**	2	WASHER-HARD (13.5X32X5-MM THK)	
	67	1	**7G-3832**	1	GROMMET	
	68	1	**7G-3833**	1	CLIP (TAB)	
	69	1	**7G-3834**	1	CLIP (SLOT)	
	70	1	**7S-8920**	1	CLIP (SLOT)	
	71	1	**7S-8921**	1	CLIP (TAB)	
	72	1	**7X-7729**	2	WASHER (11X25X3-MM THK)	
	73	2	**8C-3206**	6	FLANGE-HALF	
	74	1,2	**8M-4986**	6	SEAL-O-RING	
	75	2	**8M-4987**	4	SEAL-O-RING	
	76	2	**8M-5254**	2	SEAL-O-RING	
	77	2	**8M-8157**	1	SEAL-O-RING	
	78	2	**8S-0023**	1	CLIP (SLOT)	
	79	2	**8S-0024**	1	CLIP (TAB)	
	80	1	**8T-1893**	2	CLIP (SLOT)	
	81	1	**8T-1894**	2	CLIP (TAB)	
	82	1,2	**8T-4121**	51	WASHER-HARD (11X21X2.5-MM THK)	
M	83	1,2	**8T-4133**	7	NUT (M10X1.5-THD)	
M	84	1	**8T-4136**	11	BOLT (M10X1.5X25-MM)	
M	85	1	**8T-4137**	1	BOLT (M10X1.5X20-MM)	
M	86	2	**8T-4172**	3	BOLT (M10X1.5X80-MM)	

317-4109 **LINES GP-POWER TRAIN OIL (*contd.*)** **i05637137**

NOTE	REF NO	GRAPHIC REF	PART NUMBER	QTY	PART NAME 1 2 3 4 5 6 (PRODUCT LEVEL)	SEE PAGE
M	87	2	**8T-4182**	8	BOLT (M10X1.5X45-MM)	
M	88	1	**8T-4184**	2	BOLT (M12X1.75X45-MM)	
M	89	2	**8T-4186**	5	BOLT (M10X1.5X40-MM)	
M	90	1	**8T-4195**	4	BOLT (M10X1.5X30-MM)	
M	91	1,2	**8T-4196**	4	BOLT (M10X1.5X35-MM)	
	92	1,2	**8T-4223**	13	WASHER-HARD (13.5X25.5X3-MM THK)	
	93	1	**8T-4226**	6	WASHER-PLATED (10.5X45X3-MM THK)	
M	94	2	**8T-4648**	1	BOLT (M12X1.75X70-MM)	
M	95	2	**8T-4956**	4	BOLT (M12X1.75X35-MM)	
M	96	2	**8T-5005**	8	BOLT (M10X1.5X70-MM)	
M	97	1	**8T-6466**	3	BOLT (M10X1.5X60-MM)	
M	98	1	**8T-6868**	8	BOLT (M12X1.75X80-MM)	
	99	1	**8T-7087**	2	GROMMET (34-MM ID)	
	100	1	**9X-8257**	6	WASHER (17.5X30X3.5-MM THK)	

I - REFER TO HYDRAULIC INFORMATION SYSTEM
M - METRIC PART
Y - SEPARATE ILLUSTRATION

317-4109 **LINES GP-POWER TRAIN OIL (*contd.*)** **i05637137**

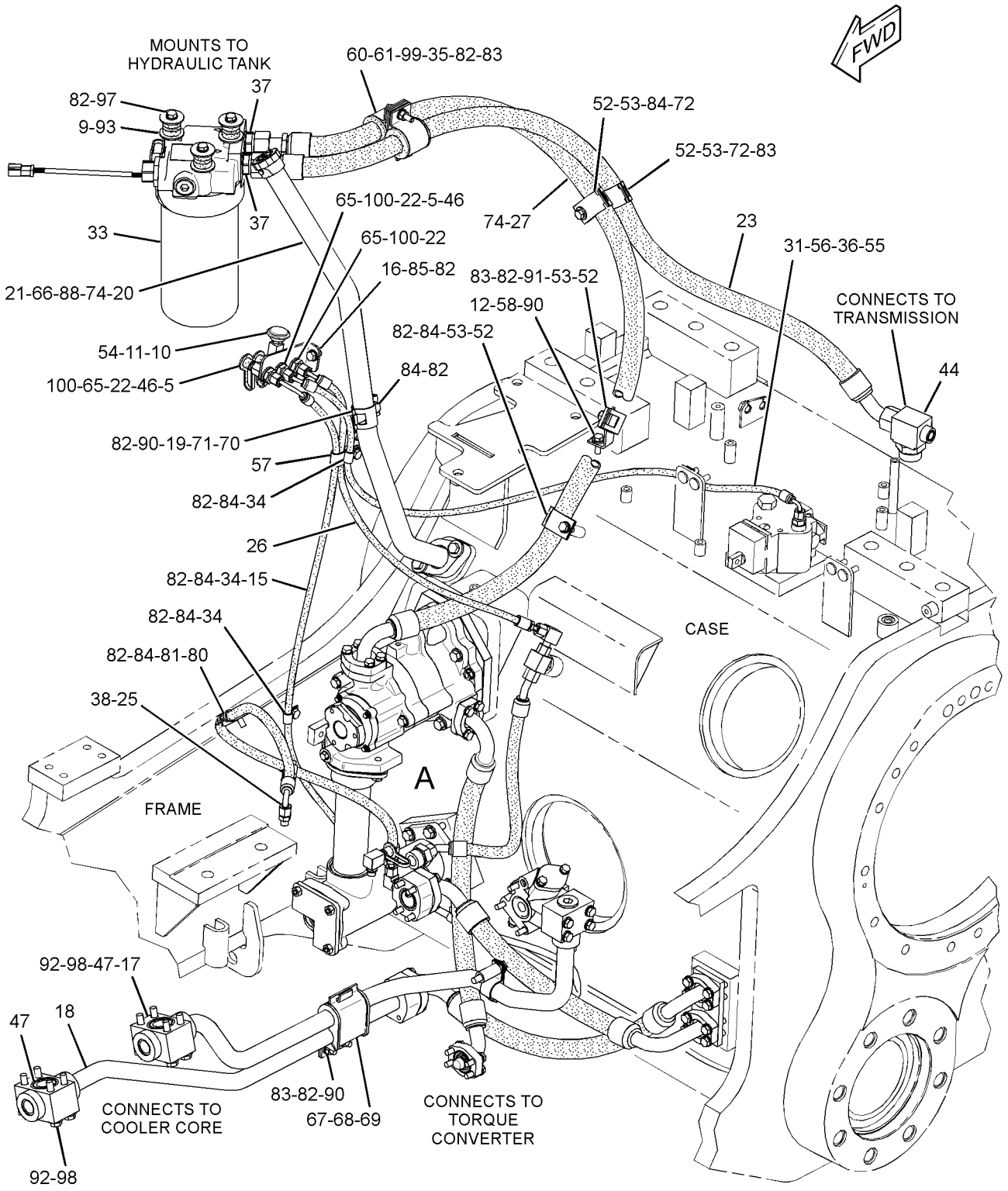

GRAPHIC #1 g02220253

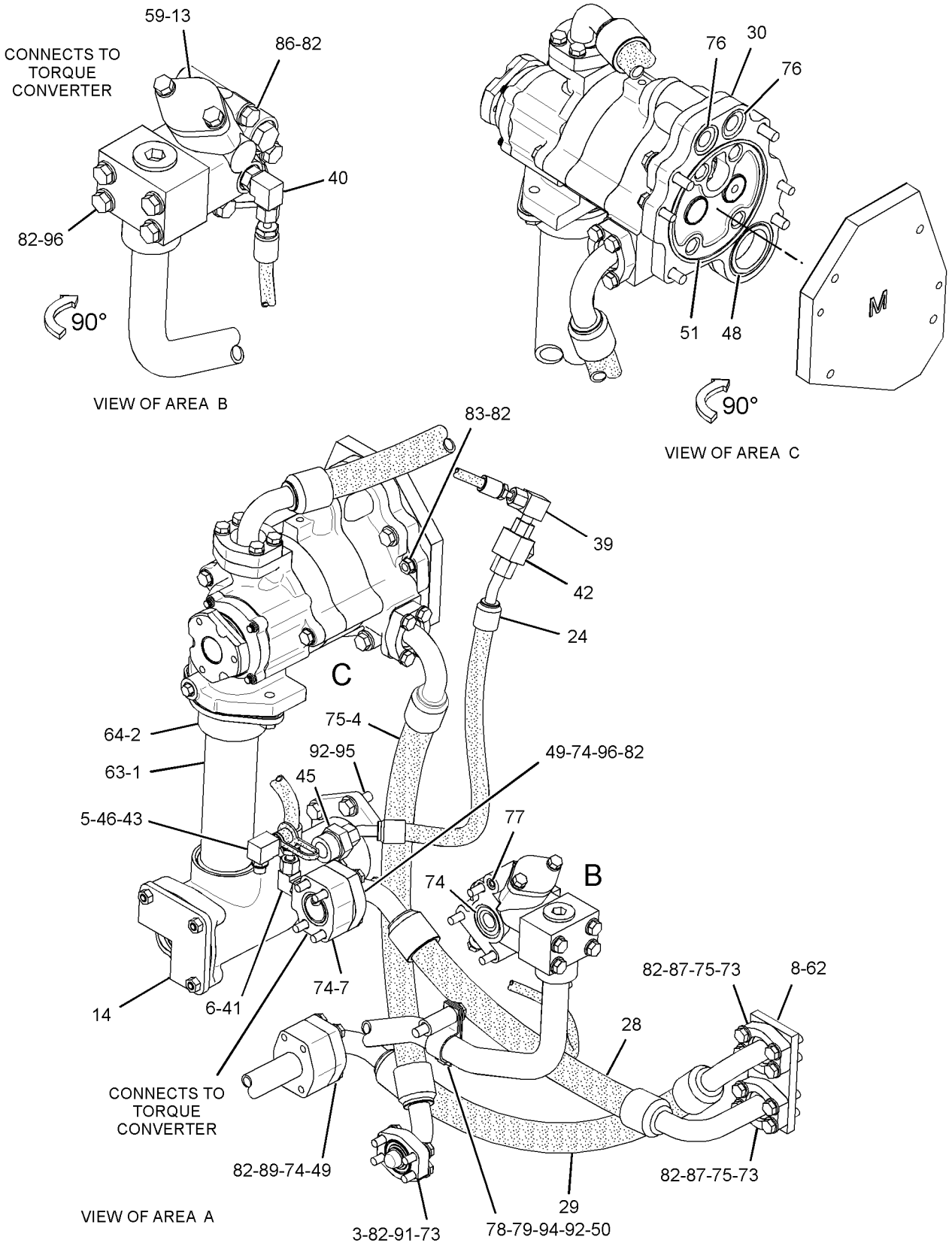

GRAPHIC #2 **<END>** g02205094

259-3119 MOUNTING GP-FINAL DRIVE

S/N: EMM1-UP; JEN1-UP

PART OF 389-3209 POWER TRAIN AR

SMCS-4050 **i05636909**

NOTE	REF NO	GRAPHIC REF	PART NUMBER	QTY	PART NAME 1 2 3 4 5 6 (PRODUCT LEVEL)	SEE PAGE
	1	1	**8D-4771**	2	SEAL-O-RING	
	2	1	**219-4481**	32	BOLT (M22X2.5X85-MM)	
	3	1	**2R-0098**	2	SEAL-O-RING	
	4	1	**6F-6673**	4	SEAL-O-RING	
	5	1	**8C-6913**	32	WASHER-HARD (24X41.5X4-MM THK)	
M	6	1	**8T-4182**	4	BOLT (M10X1.5X45-MM)	
	7	1	**8T-4223**	4	WASHER-HARD (13.5X25.5X3-MM THK)	
	8	1	**8T-8919**	4	BOLT (1/2-13X1.75-IN)	
	9	1	**9X-2027**	4	WASHER (11X18X2-MM THK)	

M - METRIC PART

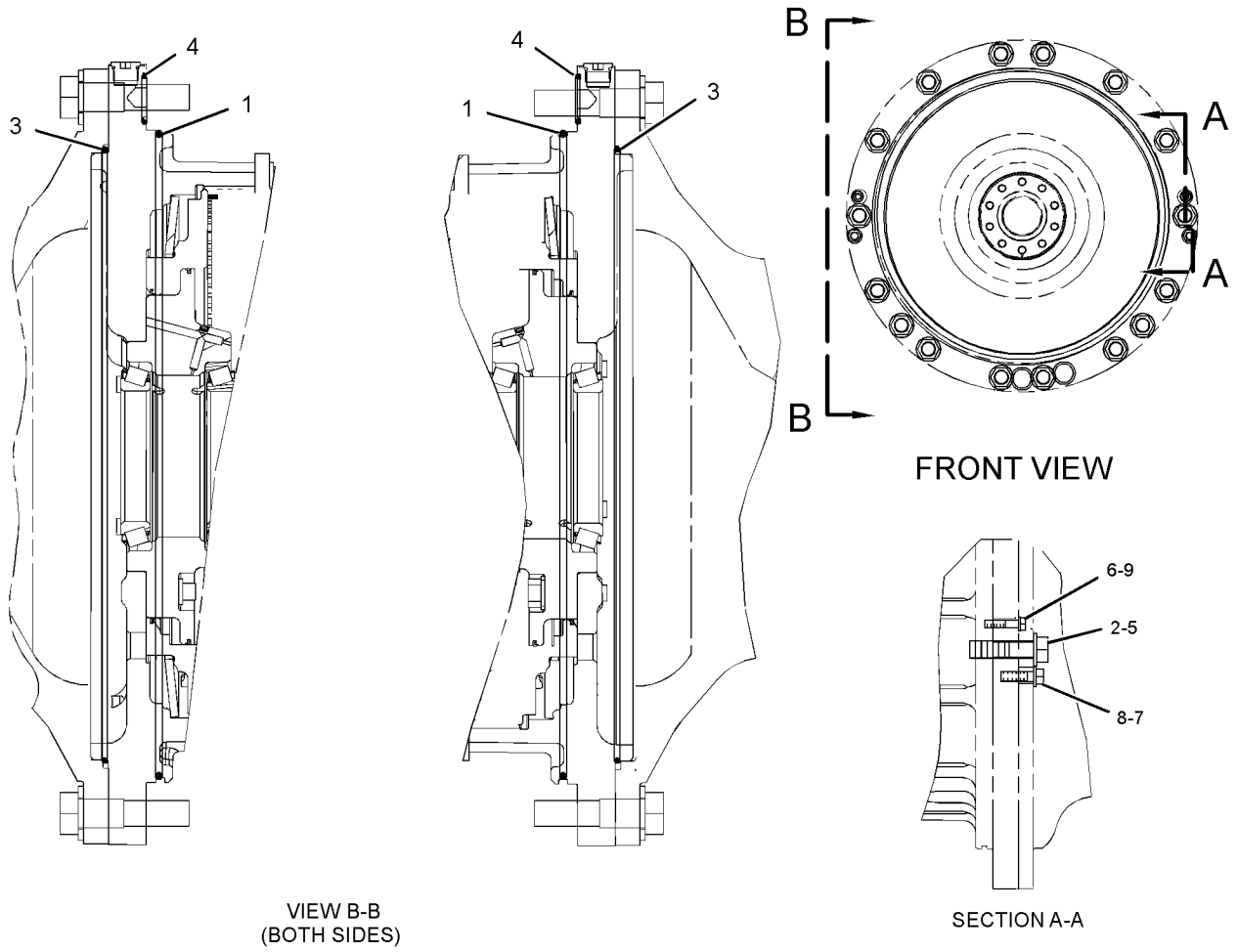

GRAPHIC #1

<END>

g02187413

319-7104 MOUNTING GP-TRANSMISSION

S/N: EMM1-UP; JEN1-UP

PART OF 389-3209 POWER TRAIN AR

SMCS-3082 **i05637770**

NOTE	REF NO	GRAPHIC REF	PART NUMBER	QTY	PART NAME 1 2 3 4 5 6 (PRODUCT LEVEL)	SEE PAGE
	1	1	**8G-9880**	2	TUBE AS	
	2	1	**1M-9011**	1	RING-TORIC	
	3	1	**2D-6506**	1	SEAL-O-RING	
M	4	1	**6V-7744**	4	LOCKNUT (M10X1.5-THD)	
	5	1	**8M-4390**	1	SEAL-O-RING	
	6	1	**8T-4121**	8	WASHER-HARD (11X21X2.5-MM THK)	
M	7	1	**8T-4196**	4	BOLT (M10X1.5X35-MM)	
	8	1	**8T-4223**	22	WASHER-HARD (13.5X25.5X3-MM THK)	
M	9	1	**8T-4648**	19	BOLT (M12X1.75X70-MM)	
M	10	1	**8T-5041**	3	BOLT (M12X1.75X120-MM)	
	11	1	**9M-7002**	3	SEAL-O-RING	

M - METRIC PART

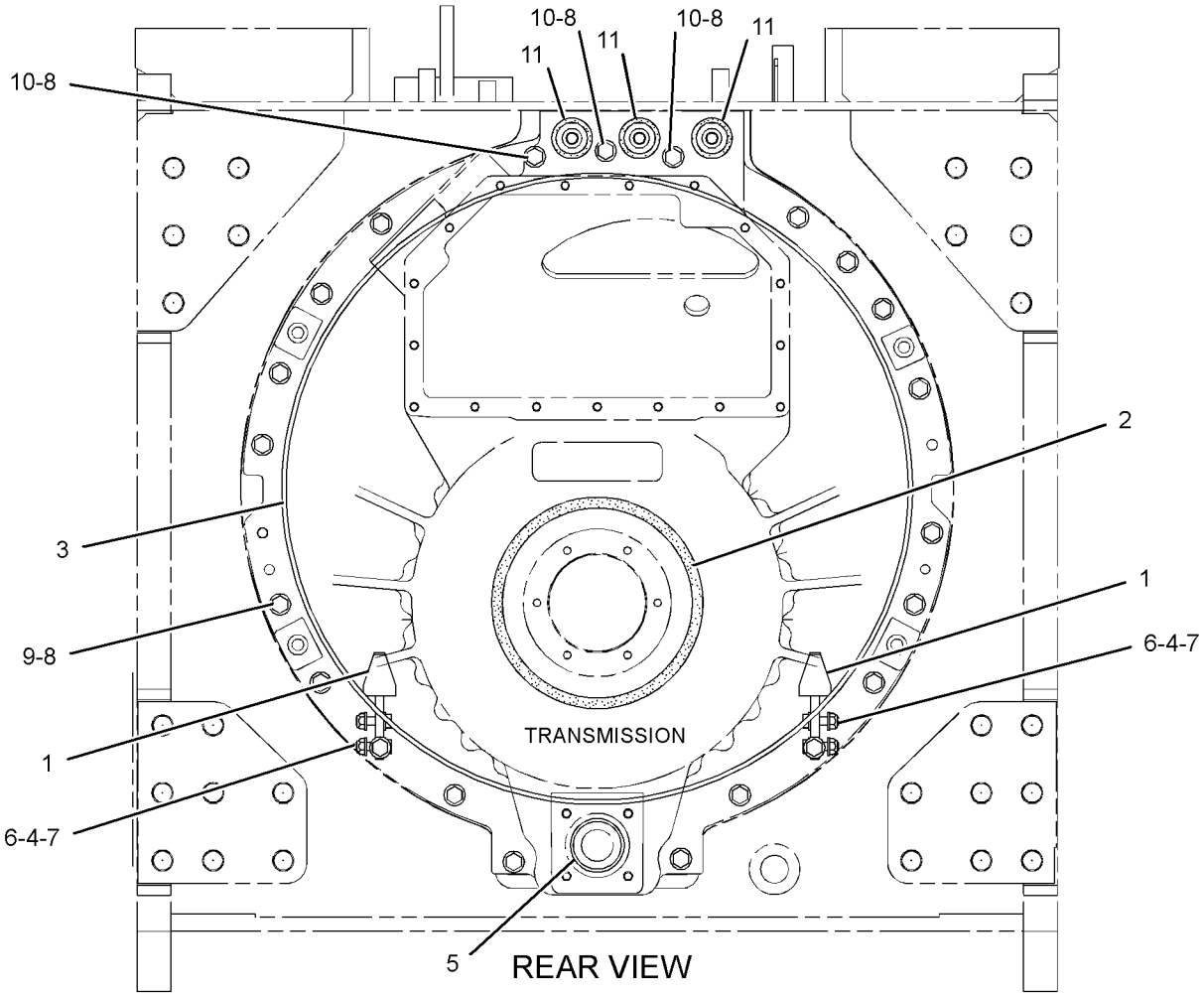

GRAPHIC #1 **<END>** g02178508

315-9960 PLANETARY GP-TRANSMISSION

S/N: MJY1-UP

PART OF 315-9959 TRANSMISSION AR

SMCS-3160 **i05636940**

NOTE	REF NO	GRAPHIC REF	PART NUMBER	QTY	PART NAME 1 2 3 4 5 6 (PRODUCT LEVEL)	SEE PAGE
	1	1	**3T-4377**	2	SEAL-RING	
	2	1,2	**4M-9592**	20	SPRING	
	3	1	**5D-2989**	3	BEARING	
	4	1	**5M-6126**	6	BEARING AS-ROLLER	
	5	2	**5P-3930**	3	BEARING AS-ROLLER	
	6	2	**5P-8194**	1	RING-RETAINING	
R	7	1,2	**6I-8500**	3	PLATE-CLUTCH	
	8	1	**6T-7882**	3	GEAR-PLANETARY (25-TEETH)	
	9	1,2	**6V-0473**	3	RING-RETAINING	
	10	2	**6V-2478**	1	RING-RETAINING	
	11	1	**6Y-1602**	1	COUPLING	
	12	1	**6Y-4819**	1	CARRIER-PLANETARY	
	13	1	**6Y-4831**	1	PLATE AS	
		1	**5H-6202**	2	PIN	
		1	**7M-5130**	1	PIN-SPRING	
	14	1	**7G-2516**	6	GEAR-PLANETARY (24-TEETH)	
	15	2	**7G-2830**	2	RING-SEAL	
	16	1	**7G-6355**	1	GEAR-RING (90-TEETH)	
	17	2	**7G-7218**	1	CARRIER-PLANETARY	
	18	2	**7G-7724**	1	PISTON-CLUTCH	
	19	1	**7H-7658**	10	SPRING	
	20	1	**7T-3950**	1	GEAR (83-TEETH)	
	21	1	**7T-9272**	1	GEAR-SUN (34-TEETH)	
	22	2	**7T-9370**	1	GEAR-SUN (51-TEETH)	
	23	2	**8E-8299**	6	DISC-THRUST	
	24	1	**8E-8304**	12	DISC-THRUST	
	25	1	**8E-8305**	6	DISC-THRUST	
	26	2	**8P-1892**	1	PISTON-CLUTCH	
	27	2	**8P-1916**	3	GEAR-PLANETARY (20-TEETH)	
R	28	2	**8P-1964**	2	PLATE-CLUTCH	
R	29	1	**8P-2051**	6	PLATE-CLUTCH	
	30	1	**8P-2053**	1	SEAL-RING	
	31	1	**8P-9507**	1	PISTON-CLUTCH	
	32	1	**9G-0280**	1	PISTON-CLUTCH	
	33	1	**9G-0284**	1	HOUSING-CLUTCH	
	34	1	**9G-0285**	1	PISTON-CLUTCH	
	35	2	**9G-0289**	3	SHAFT-PLANETARY	
	36	2	**9G-0290**	1	HUB-CLUTCH	
	37	2	**9G-8020**	1	PLATE-RETAINER	
	38	1	**9M-4355**	10	DAMPER-BOLT	
	39	1	**9P-7390**	8	DISC AS-FRICTION	
	40	1	**9P-7757**	1	GEAR-SUN (42-TEETH)	
	41	1	**9P-8614**	1	GEAR-RING (90-TEETH)	
	42	1	**9P-8623**	3	SHAFT-PLANETARY	
	43	1	**9P-8626**	1	GEAR-SUN (42-TEETH)	
	44	2	**9U-9550**	1	PLATE-CLUTCH	
	45	1	**348-8603**	1	TUBE AS	
	46	2	**9W-8270**	1	GEAR-RING (90-TEETH)	
	47	2	**105-8183**	1	HOUSING AS	
		2	**6B-6863**	1	PIN-SPRING	
		2	**6P-7704**	1	CARRIER-RING	
	48	1,2	**109-3196**	1	HOUSING AS	
		1,2	**3F-5022**	1	PLUG-CUP	
	49	1	**112-4511**	3	PIN-SPRING	
	50	1	**112-5585**	3	SHAFT-PLANETARY	
	51	1	**112-8041**	1	CARRIER-PLANETARY	
	52	2	**117-7826**	1	HOUSING AS-CLUTCH	
		2	**1A-2223**	4	DOWEL	

315-9960 **PLANETARY GP-TRANSMISSION (*contd.*)** **i05636940**

NOTE	REF NO	GRAPHIC REF	PART NUMBER	QTY	PART NAME 1 2 3 4 5 6 (PRODUCT LEVEL)	SEE PAGE
	53	1	**131-4091**	1	SEAL-RING	
	54	1	**144-4284**	3	RING-LOCK	
	55	2	**144-7878**	1	MANIFOLD	
	56	1	**231-8855**	1	SHAFT AS-INPUT	
		1	**156-4406**	1	PLUG-PIPE	
	57	1	**234-9994**	1	SHAFT AS-OUTPUT	
	57A	1	**3T-8729**	1	BUSHING	
	57B	1	**9G-6744**	1	BUSHING	
	58	1	**328-4374**	5	DISC-FRICTION	
	59	1,2	**328-4375**	3	DISC-FRICTION	
	60	1	**0S-1585**	2	BOLT (1/2-13X1.5-IN)	
	61	1	**061-6711**	2	RING-RETAINING	
	62	1	**068-8093**	2	RING-RETAINING	
	63	1	**1A-5183**	2	BOLT (3/8-16X4.75-IN)	
	64	2	**1L-7388**	1	RING-RETAINING	
	65	2	**1M-8657**	2	BOLT (1/2-13X15.69-IN)	
	66	1,2	**3K-2511**	10	DOWEL-REACTION	
	67	1	**3S-2708**	6	PIN-SPRING	
	68	2	**4M-2442**	8	BOLT (1/2-13X12.32-IN)	
	69	1	**5M-3038**	2	SEAL-O-RING	
	70	2	**4F-2129**	1	BALL BEARING	
	71	2	**5P-5296**	2	RING-RETAINING	
	72	2	**5P-5297**	1	RING-RETAINING (EXTERNAL)	
	73	1,2	**5P-8245**	12	WASHER-HARD (13.5X25.5X3-MM THK)	
	74	2	**7G-2343**	3	SPRING-DISC	
	75	1,2	**7T-8816**	3	BALL BEARING	
	76	2	**8D-9739**	1	SEAL-RING	
	77	1	**8H-5352**	2	BALL BEARING	
	78	1	**8M-5010**	2	SEAL-O-RING	
	79	2	**8M-5255**	1	SEAL-O-RING	
	80	1	**8M-5266**	1	SEAL-O-RING	
	81	2	**8P-2019**	2	RING-SEAL	
	82	1,2	**8P-2022**	4	RING-SEAL	
	83	2	**8P-2023**	1	RING-SEAL	
	84	1	**9G-0281**	1	RING-SEAL	
	85	1	**9G-0286**	1	RING-SEAL	
	86	1	**346-2134**	1	BRACKET AS	
	87	1	**6V-5185**	1	CLIP (SLOT)	
	88	1	**6V-5186**	1	CLIP (TAB)	
	89	1	**8M-4432**	1	SEAL-O-RING	

R - REMFG PART MAY BE AVAILABLE

315-9960 **PLANETARY GP-TRANSMISSION (*contd.*)** **i05636940**

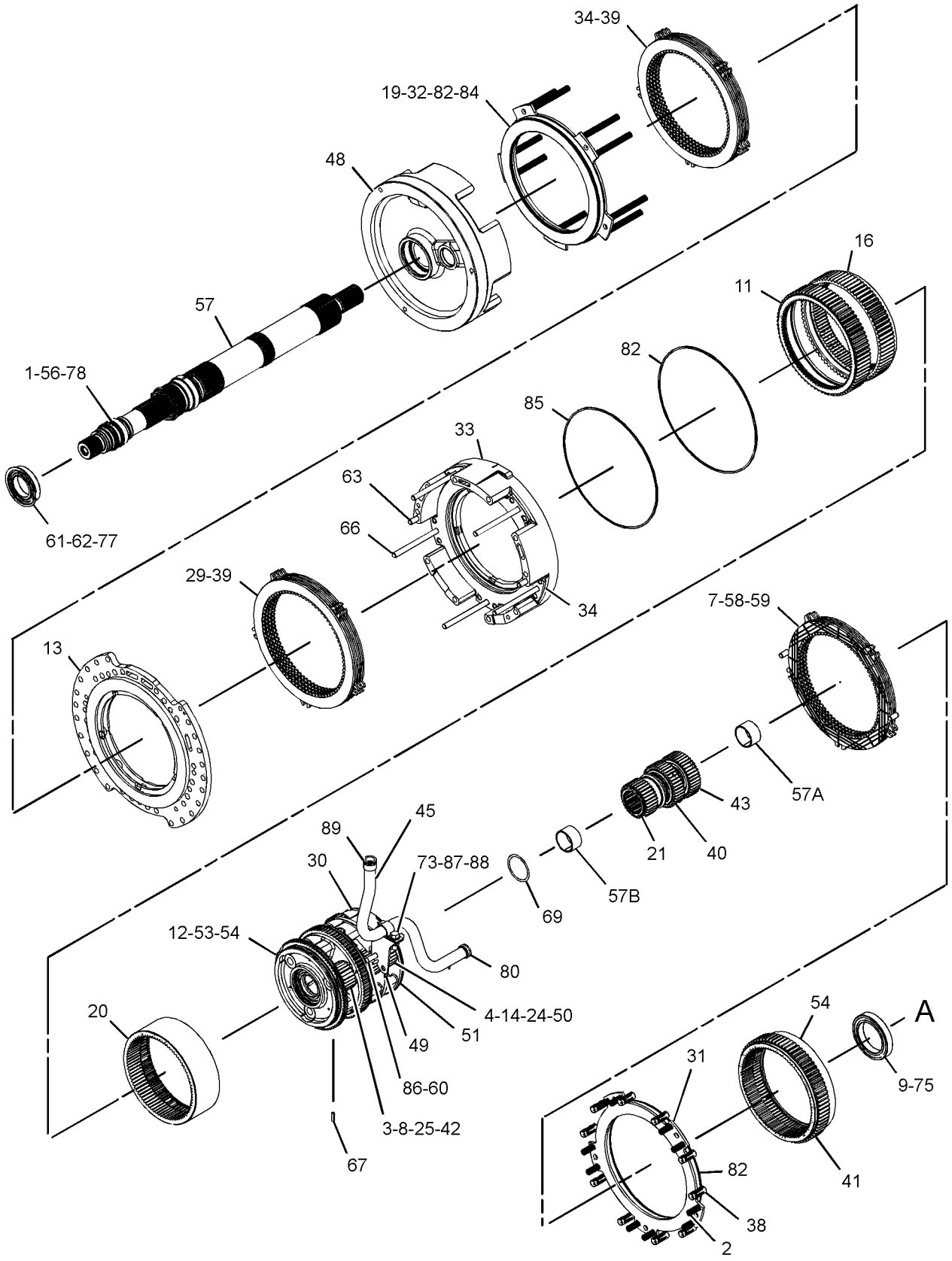

GRAPHIC #1 g03030196

315-9960 **PLANETARY GP-TRANSMISSION (*contd.*)** **i05636940**

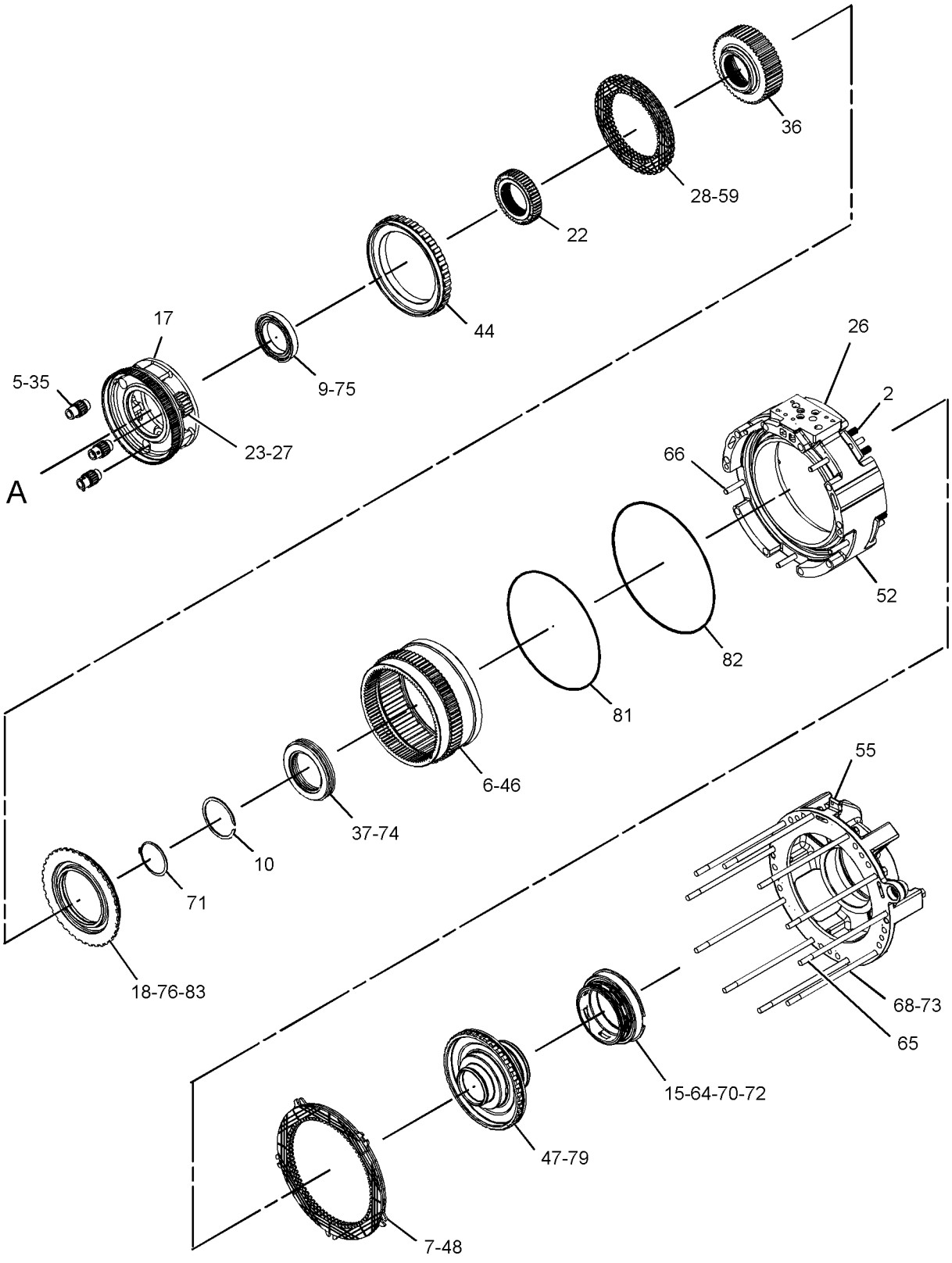

GRAPHIC #2 **<END>** g02174414

389-3209 POWER TRAIN AR

S/N: EMM1-UP; JEN1-UP

PART OF 389-3211, 389-3212 COMMON AR

SMCS-3000, 4000

i05637739

NOTE	PART NUMBER	QTY	PART NAME 1 2 3 4 5 6 (PRODUCT LEVEL)	SEE PAGE
Y	*3W-6550*	1	AXLE GP	248
Y	**231-5969**	1	BRAKE & DIFFERENTIAL DRIVE GP	250
Y	*231-5990*	1	BRAKE & PLANETARY GP	254
Y	*374-4176*	1	CONTROL GP-STEERING & XMSN	263
Y	*225-1506*	1	COUPLING & GUARD GP (POWERSHIFT)	271
Y	*317-4109*	1	LINES GP-POWER TRAIN OIL	286
Y	*259-3119*	1	MOUNTING GP-FINAL DRIVE	291
Y	*319-7104*	1	MOUNTING GP-TRANSMISSION	292
Y	*108-1696*	1	SHAFT GP-DRIVE	303
Y	*317-7052*	1	TORQUE CONVERTER & HOUSING GP	304
Y	*315-9959*	1	TRANSMISSION AR	311
Y	*389-6093*	1	VALVE & MOUNTING GP	509

Y - SEPARATE ILLUSTRATION

<END>

318-0690 PUMP GP-GEAR

S/N: EMM1-UP; JEN1-UP

PART OF 317-4109 LINES GP-POWER TRAIN OIL

SMCS-3066, 3115, 5073 **i05637302**

NOTE	REF NO	GRAPHIC REF	PART NUMBER	QTY	PART NAME 1 2 3 4 5 6 (PRODUCT LEVEL)	SEE PAGE
	1	1	**3T-5356**	1	CAGE-BEARING	
	2	1	**5H-4279**	1	PLUG-CUP	
	3	1	**5P-9439**	1	BALL BEARING	
	5	1	**111-4919**	1	SEAL-LIP TYPE	
	6	1	**212-2301**	1	FLANGE	
Y	7	1	**318-0691**	1	PUMP GP-GEAR	299
	9	1	**1P-4577**	2	FLANGE-HALF	
	10	1	**1P-4578**	2	FLANGE-HALF	
	11	1	**2M-3974**	1	RING-RETAINING	
	12	1	**5M-2894**	10	WASHER-HARD (10.2X18.5X2.5-MM THK)	
	13	1	**5P-8245**	6	WASHER-HARD (13.5X25.5X3-MM THK)	
	14	1	**6H-3977**	1	SEAL-O-RING	
	15	1	**6L-4783**	4	BOLT-12 POINT HEAD (5/16-18X1.25-IN)	
M	16	1	**6V-3822**	8	BOLT (M10X1.5X35-MM)	
M	17	1	**6V-3823**	2	BOLT (M12X1.75X60-MM)	
M	18	1	**6V-8675**	2	BOLT (M12X1.75X35-MM)	
M	19	1	**8T-0372**	2	BOLT (M12X1.75X90-MM)	

M - METRIC PART
Y - SEPARATE ILLUSTRATION

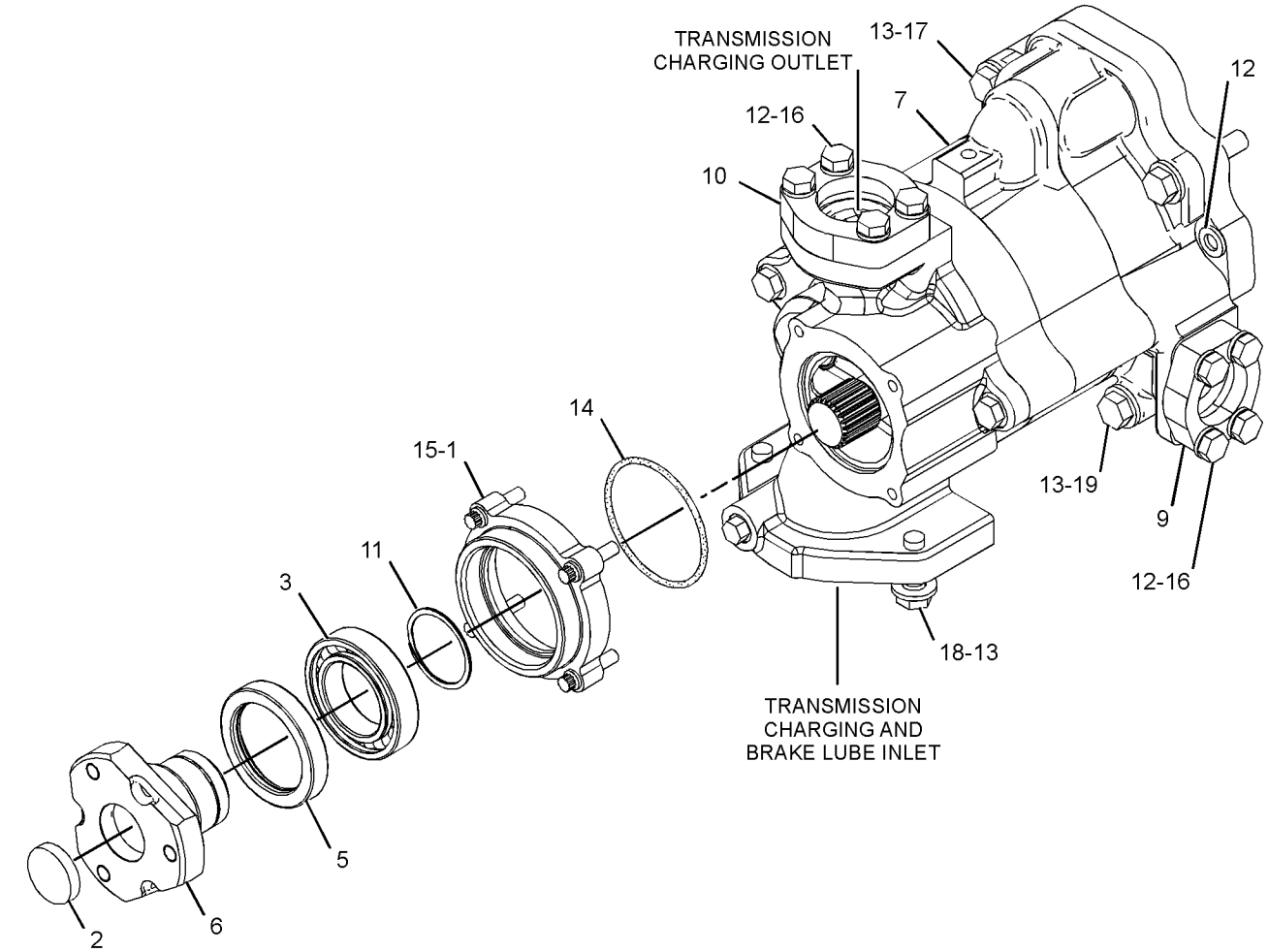

GRAPHIC #1

<END>

g02188214

318-0691 PUMP GP-GEAR

S/N: EMM1-UP; JEN1-UP

PART OF 318-0690 PUMP GP-GEAR

SMCS-3066, 3115, 5073

i05637383

NOTE	REF NO	GRAPHIC REF	PART NUMBER	QTY	PART NAME 1 2 3 4 5 6 (PRODUCT LEVEL)	SEE PAGE
M	1	1	**8C-2926**	2	BOLT (M10X1.5X140-MM)	
	2	1	**9W-9890**	1	COVER AS-PUMP	
	2A	1	**8M-8489**	2	DOWEL	
	2B	1	**9M-4370**	2	BEARING	
	3	1	**318-0692**	1	COVER AS-OIL PUMP	
	3A	1	**131-0167**	2	BUSHING	
	4	1	**318-0694**	1	BODY AS-OIL PUMP	
	4A	1	**8M-8489**	2	DOWEL	
	4B	1	**131-0167**	2	BUSHING	
	5	1	**318-0696**	2	GEAR (12-TEETH)	
	6	1	**318-0697**	1	BODY-OIL PUMP	
	7	1	**318-0698**	1	GEAR AS-OIL PUMP (8-TEETH)	
		1	**2B-9373**	1	KEY-WOODRUFF	
	8	1	**318-0699**	1	GEAR AS-OIL PUMP (8-TEETH)	
		1	**2B-9373**	1	KEY-WOODRUFF	
	9	1	**318-5040**	1	BODY AS-OIL PUMP	
		1	**8M-8489**	4	DOWEL	
	10	1	**318-5042**	2	GEAR (12-TEETH)	
	12	1	**061-9457**	1	SEAL-O-RING	
	13	1	**161-8068**	4	SEAL-O-RING	
	14	1	**1B-8705**	1	KEY-WOODRUFF	
	15	1	**1B-8736**	1	KEY-WOODRUFF	
	16	1	**316-8227**	4	BOLT	
	17	1	**3S-0004**	6	WASHER (0.406X0.728X0.09-IN THK)	
	18	1	**6F-6673**	3	SEAL-O-RING	

M - METRIC PART

318-0691 **PUMP GP-GEAR (*contd.*)** **i05637383**

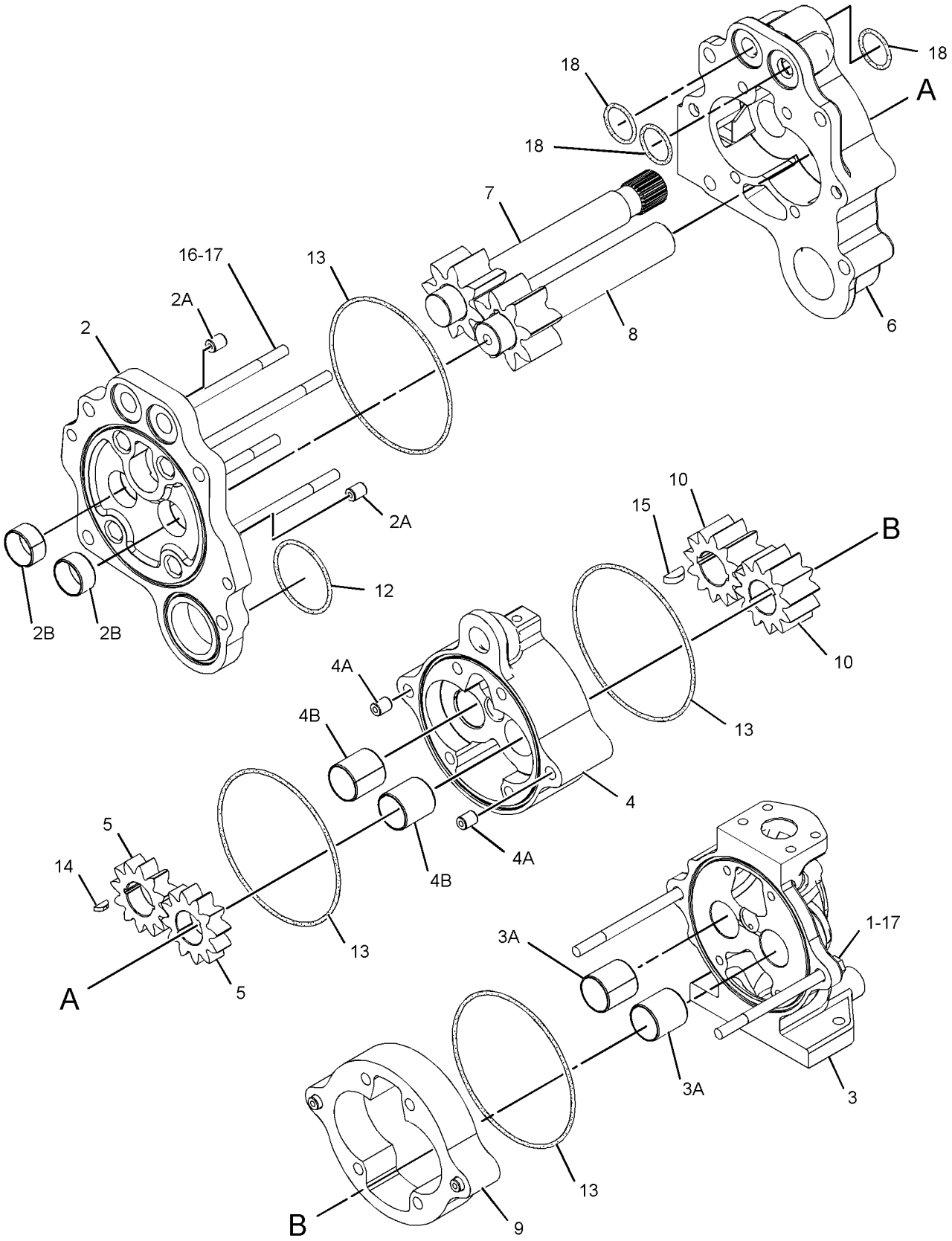

GRAPHIC #1 **<END>** g02192099

231-4166 SCREEN GP-MAGNETIC

S/N: EMM1-UP; JEN1-UP

PART OF 317-4109 LINES GP-POWER TRAIN OIL

SMCS-3067 **i05637231**

NOTE	REF NO	GRAPHIC REF	PART NUMBER	QTY	PART NAME 1 2 3 4 5 6 (PRODUCT LEVEL)	SEE PAGE
	1	1	**3S-3440**	1	WASHER-WAVE (68.1X80.8X0.5-MM THK)	
	2	1	**4S-8598**	1	SCREEN-SUCTION (POWER TRAIN)	
	3	1	**240-8259**	1	SCREEN GP-MAGNETIC (POWER TRAIN)	
		1	**8M-7160**	3	MAGNET	
	4	1	**231-4167**	1	HOUSING AS-SCREEN	
	5	1	**3S-3439**	1	COVER-TOP	
	6	1	**6L-5359**	1	SEAL-O-RING	
	7	1	**6V-5188**	1	SEAL-O-RING	
M	8	1	**8T-4133**	4	NUT (M10X1.5-THD)	

M - METRIC PART

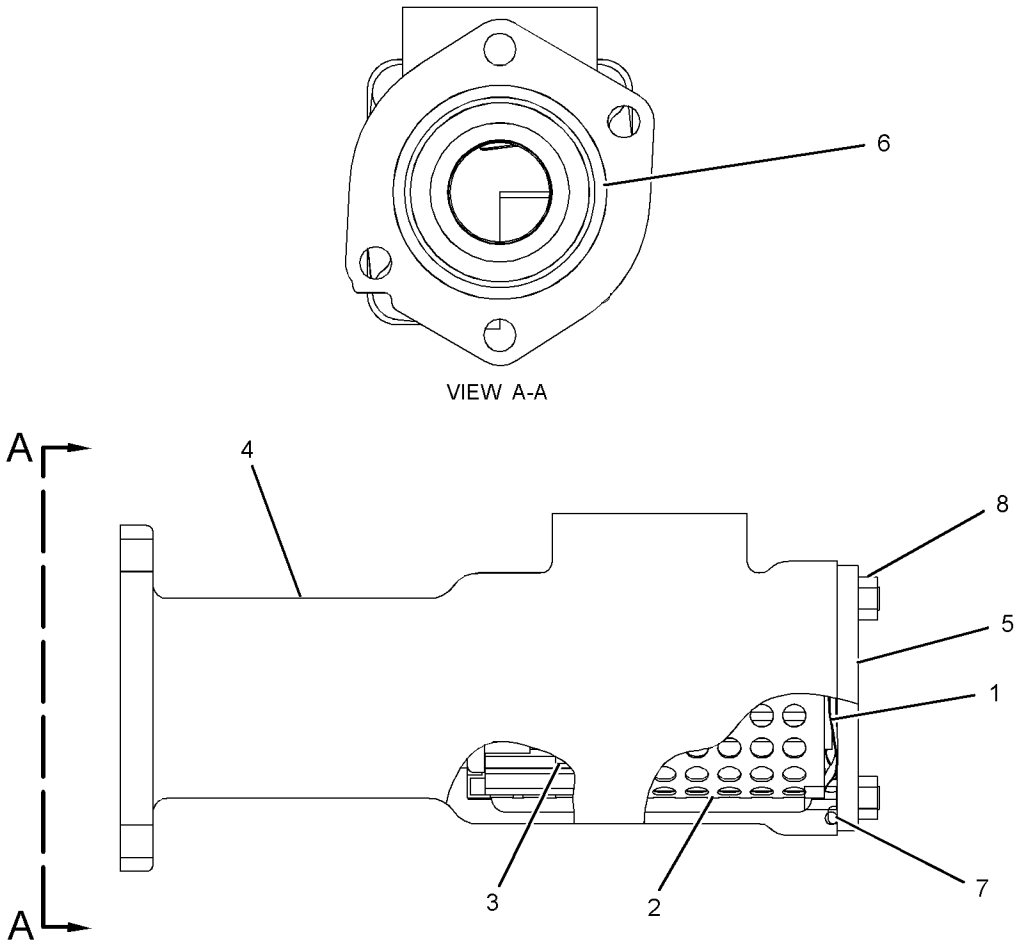

GRAPHIC #1 **<END>** g01209036

188-0908 SEGMENT GP-SPROCKET

S/N: EMM1-UP; JEN1-UP

PART OF 260-6653 DRIVE GP-FINAL, 450-7074, 450-7075, 450-7076, 450-7077, 450-7078, 450-7079, 450-7081, 450-7082 UNDERCARRIAGE AR

AN ATTACHMENT

SMCS-4155 **i05612820**

NOTE	REF NO	GRAPHIC REF	PART NUMBER	QTY	PART NAME 1 2 3 4 5 6 (PRODUCT LEVEL)	SEE PAGE
	1	1	**173-0946**	5	SEGMENT-SPROCKET	
	2	1	**6V-0937**	25	BOLT (5/8-18X2.1-IN)	
	3	1	**2S-5658**	25	WASHER-HARD (17X29X3-MM THK)	
	4	1	**7H-3607**	25	NUT (5/8-18-THD)	

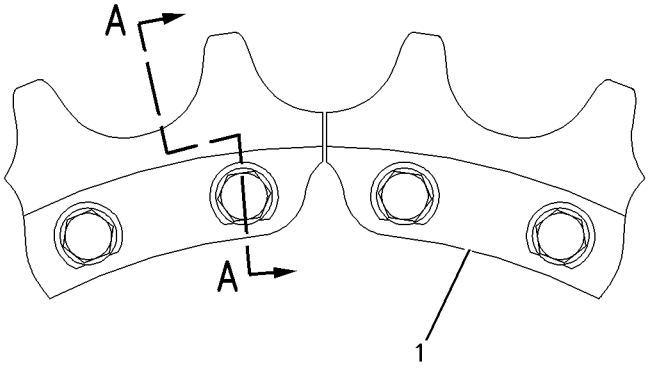

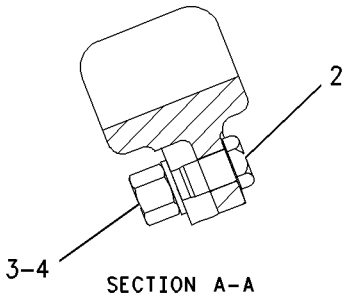

SECTION A–A

GRAPHIC #1 **<END>** g00856173

108-1696 SHAFT GP-DRIVE

S/N: EMM1-UP; JEN1-UP

PART OF 389-3209 POWER TRAIN AR

SMCS-3253 **i05636251**

NOTE	REF NO	GRAPHIC REF	PART NUMBER	QTY	PART NAME 1 2 3 4 5 6 (PRODUCT LEVEL)	SEE PAGE
Y	1	1	**108-2106**	1	UNIVERSAL JOINT GP	312
	2	1	**7X-7477**	8	BOLT (3/8-24X1.75-IN)	
	3	1	**7X-0608**	8	WASHER-HARD (10.2X16X2-MM THK)	
	4	1	**3T-8305**	1	YOKE AS	
		1	**7D-1677**	1	RACE-BEARING INNER	
		1	**8H-2768**	1	PLUG-CUP	

Y - SEPARATE ILLUSTRATION

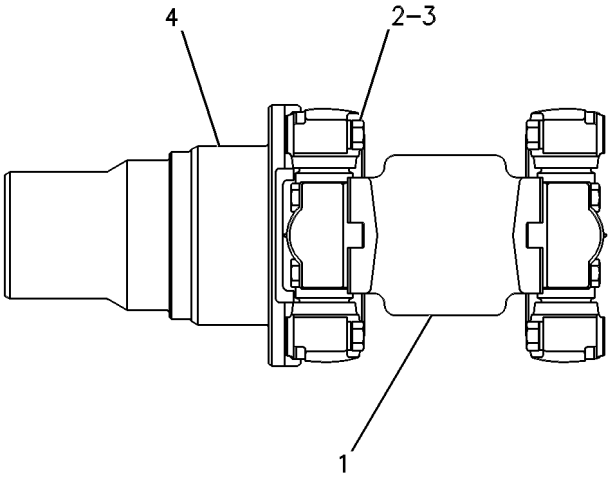

GRAPHIC #1 **<END>** g00254101

317-7052 TORQUE CONVERTER & HOUSING GP

S/N: EMM1-UP; JEN1-UP

PART OF 389-3209 POWER TRAIN AR

SMCS-3101, 3105 **i05637690**

NOTE	REF NO	GRAPHIC REF	PART NUMBER	QTY	PART NAME 1 2 3 4 5 6 (PRODUCT LEVEL)	SEE PAGE
	1	1	**2D-1523**	1	RING-RETAINING	
	4	1	**8S-9008**	1	SLEEVE	
	5	1	**9H-8712**	1	BEARING AS	
	6	1	**9M-1976**	1	RING-RETAINING	
	7	1	**9P-3709**	1	GEAR-SUN (35-TEETH)	
	9	1	**155-5161**	1	SEAL-OIL	
	10	1	**210-4458**	1	ELBOW	
Y	13	1	**453-1091**	1	TORQUE CONVERTER & HOUSING GP	306
	16	1	**165-4854**	2	SEAL-O-RING	
	17	1	**1S-9799**	1	SEAL-O-RING	
	20	1	**8T-4121**	2	WASHER-HARD (11X21X2.5-MM THK)	
M	21	1	**8T-4136**	2	BOLT (M10X1.5X25-MM)	
M	23	1	**8T-4139**	9	BOLT (M12X1.75X30-MM)	
M	25	1	**8T-4183**	3	BOLT (M12X1.75X40-MM)	
	27	1	**8T-4223**	12	WASHER-HARD (13.5X25.5X3-MM THK)	
	28	1	**9H-0846**	1	SEAL-O-RING	

M - METRIC PART
Y - SEPARATE ILLUSTRATION

317-7052 **TORQUE CONVERTER & HOUSING GP (*contd.*)** **i05637690**

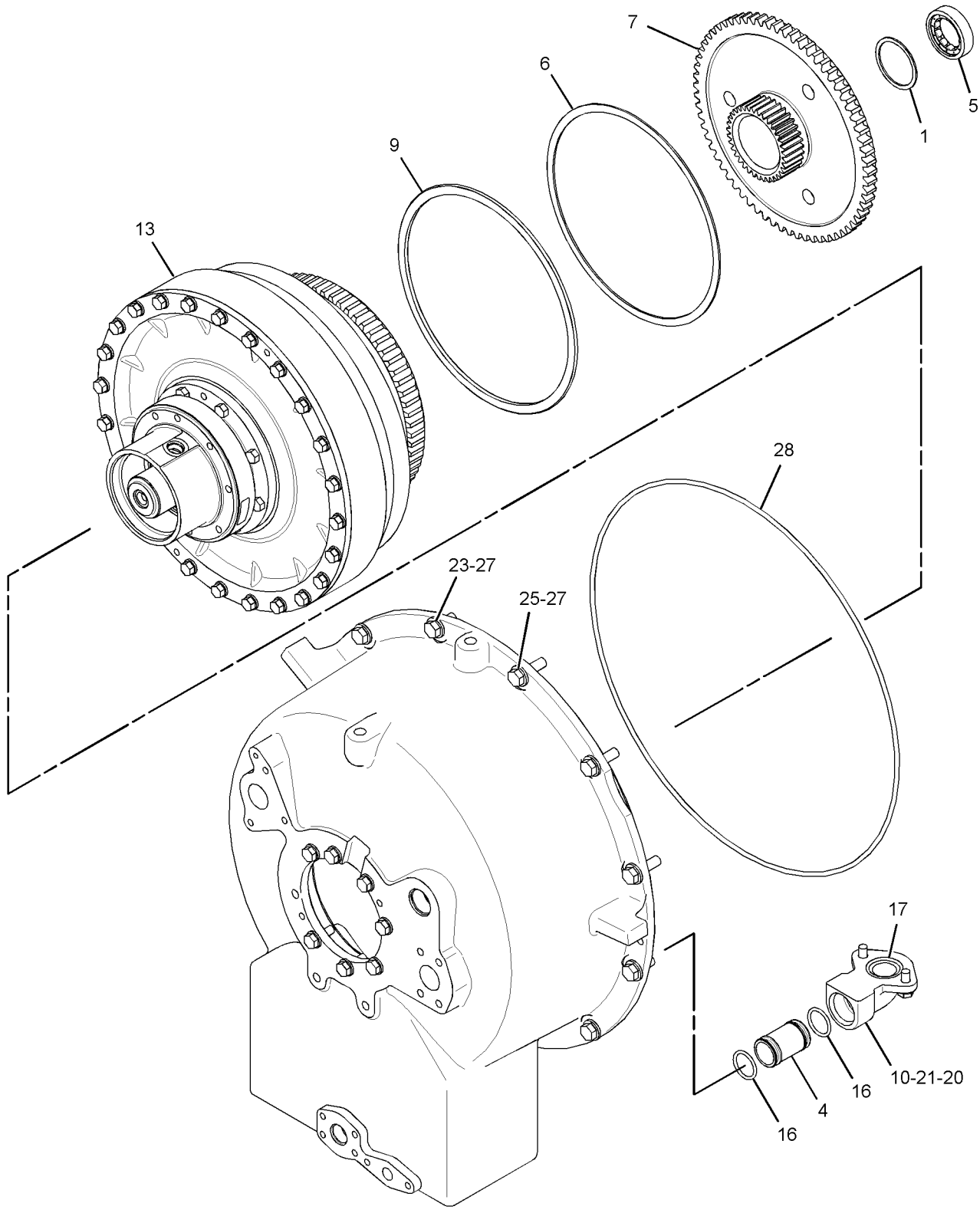

GRAPHIC #1 **<END>** g03581791

453-1091 TORQUE CONVERTER & HOUSING GP

S/N: EMM1-UP; JEN1-UP

PART OF 317-7052 TORQUE CONVERTER & HOUSING GP

SMCS-3101, 3105 **i05637710**

NOTE	REF NO	GRAPHIC REF	PART NUMBER	QTY	PART NAME 1 2 3 4 5 6 (PRODUCT LEVEL)	SEE PAGE
	1	1	**108-6954**	1	YOKE-UNIVERSAL JOINT	
	2	1	**223-3400**	1	HOUSING-TORQUE CONVERTER	
Y	3	1	**317-7051**	1	TORQUE CONVERTER GP (WITH DIVIDER)	309
	4	1	**110-0510**	1	COVER	
	5	1	**136-2216**	1	SEAL-LIP TYPE	
	6	1	**155-5161**	1	SEAL-OIL	
	7	1	**232-6411**	1	RETAINER-SHAFT	
	8	1	**2S-2251**	1	SEAL-O-RING	
	9	1	**3K-0360**	1	SEAL-O-RING	
	10	1	**6F-4718**	1	SEAL-O-RING	
	11	1	**8H-9818**	1	GASKET	
	12	1	**8T-4121**	10	WASHER-HARD (11X21X2.5-MM THK)	
M	13	1	**8T-4137**	2	BOLT (M10X1.5X20-MM)	
M	14	1	**8T-4176**	1	BOLT (M12X1.75X90-MM)	
M	15	1	**8T-4195**	8	BOLT (M10X1.5X30-MM)	
	16	1	**9S-4185**	1	PLUG-O-RING	

M - METRIC PART
Y - SEPARATE ILLUSTRATION

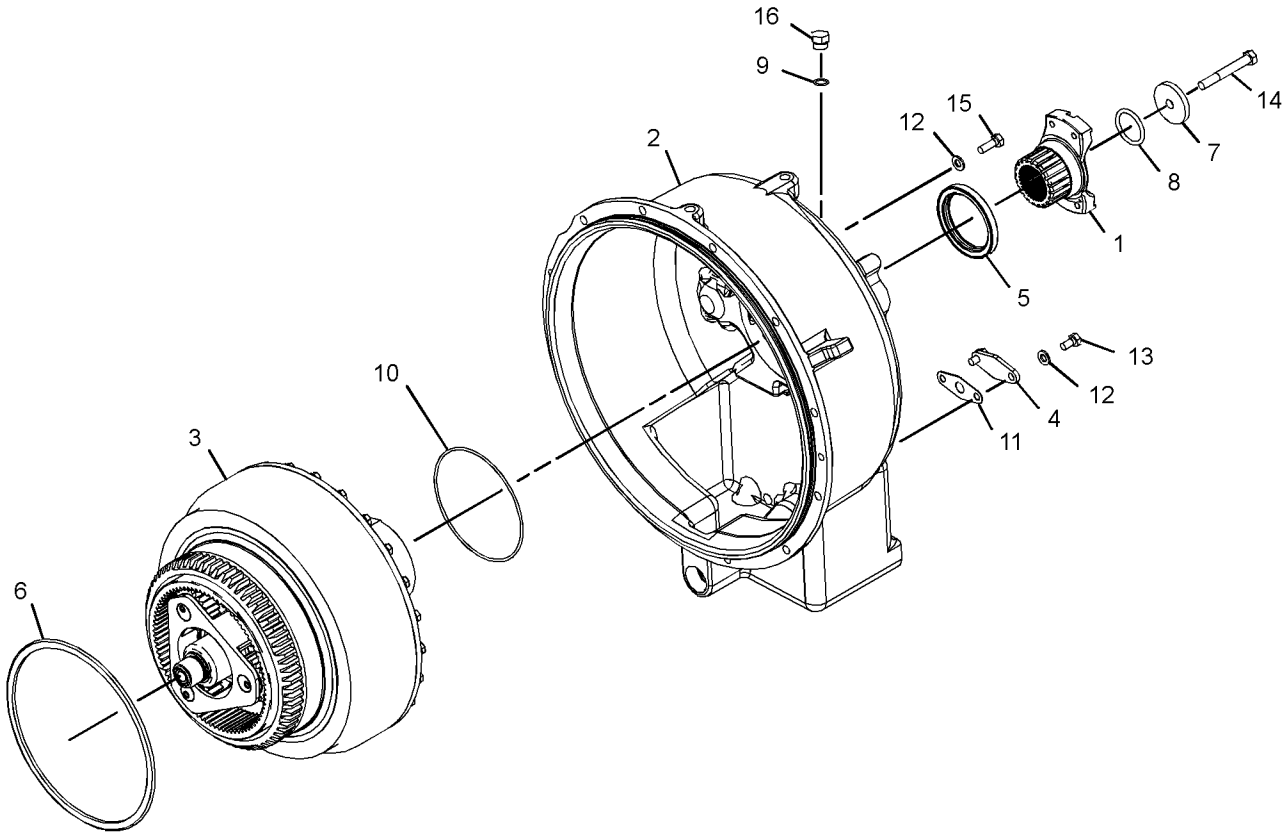

GRAPHIC #1 **<END>** g03582189

1T-2084 TORQUE CONVERTER GP

S/N: T3J1-UP

PART OF 317-7051 TORQUE CONVERTER GP

SMCS-3101 **i05637754**

NOTE	REF NO	GRAPHIC REF	PART NUMBER	QTY	PART NAME 1 2 3 4 5 6 (PRODUCT LEVEL)	SEE PAGE
	1	1	**1T-0097**	1	RING-METAL SEAL	
	2	1	**1T-0438**	1	RETAINER-BEARING	
	3	1	**1T-0446**	6	BOLT (3/8-16X0.75-IN)	
	4	1	**1T-0447**	1	CARRIER-RING	
	5	1	**1T-0599**	1	SPACER (65.1X85X9.52-MM THK)	
	6	1	**1T-1993**	1	WHEEL-TURBINE	
	7	1	**1T-2052**	1	STATOR AS	
	8	1	**1T-2069**	1	CARRIER-BEARING	
	9	1	**1T-2070**	1	RETAINER-BEARING	
	10	1	**1T-2080**	1	HOUSING-ROTATING	
	11	1	**336-2433**	1	CARRIER AS-STATOR	
		1	**4S-8537**	1	DOWEL	
	12	1	**1T-2086**	1	FLANGE AS-OUTPUT	
	12A	1	**1T-0902**	2	BUSHING	
	13	1	**1T-2089**	1	IMPELLER	
	14	1	**304-9651**	1	BALL BEARING	
	15	1	**1T-0069**	1	RING-METAL SEAL	
	16	1	**1A-2029**	24	BOLT (3/8-16X1.125-IN)	
	17	1	**1A-2209**	8	BOLT (3/8-24X1.25-IN)	
	18	1	**1T-0414**	8	BOLT-12 POINT HEAD (5/16-18X1-IN)	
	19	1	**1T-0441**	1	BALL BEARING	
	20	1	**3F-3727**	1	RING-SNAP	
	21	1	**4H-1440**	6	PIN-SPRING	
	22	1	**5B-0582**	1	DOWEL	
	23	1	**5M-2894**	24	WASHER-HARD (10.2X18.5X2.5-MM THK)	

1T-2084 **TORQUE CONVERTER GP (*contd.*)** **i05637754**

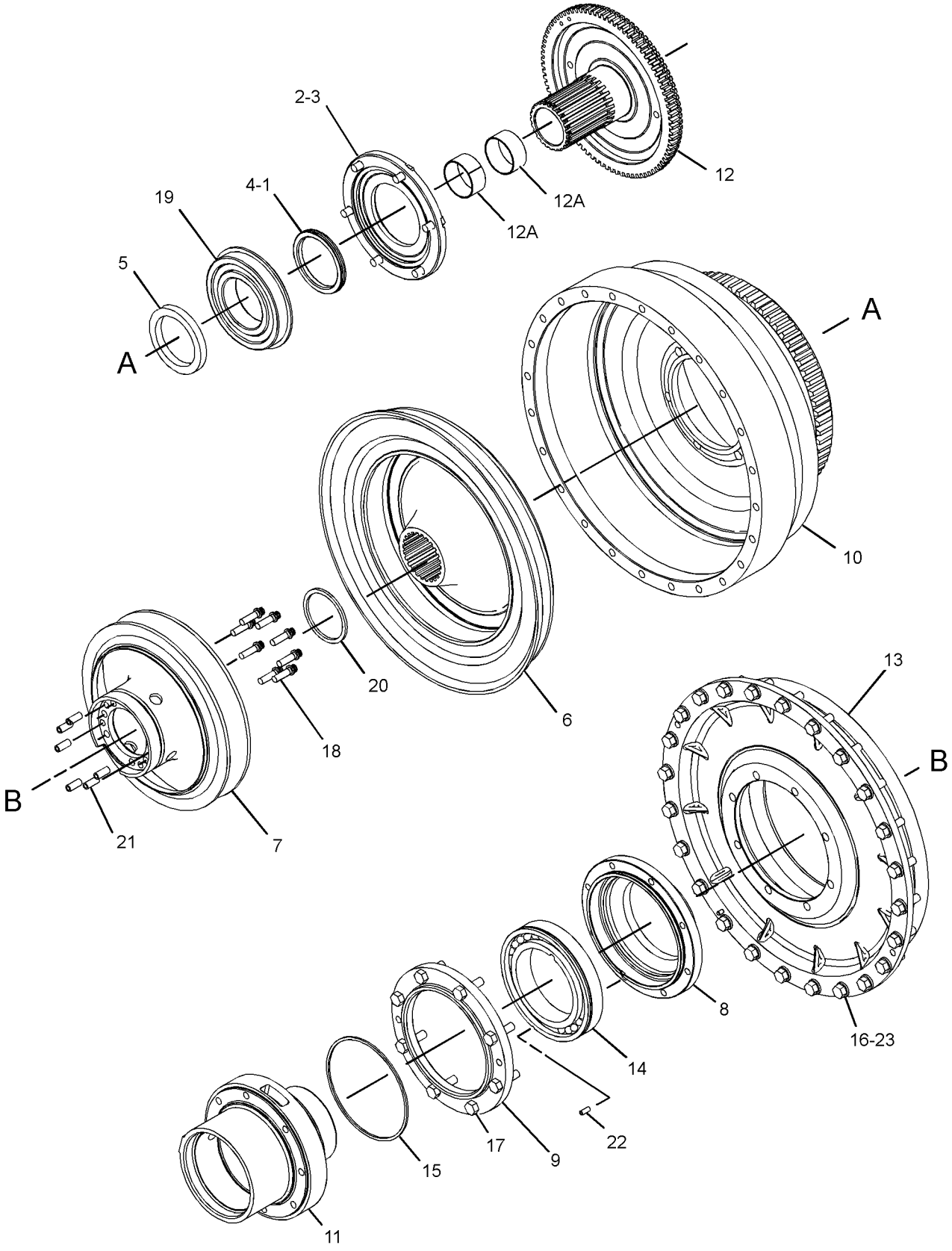

GRAPHIC #1 **<END>** g02176430

317-7051 TORQUE CONVERTER GP

S/N: T3J1-UP

PART OF 453-1091 TORQUE CONVERTER & HOUSING GP

SMCS-3101 **i05637738**

NOTE	REF NO	GRAPHIC REF	PART NUMBER	QTY	PART NAME 1 2 3 4 5 6 (PRODUCT LEVEL)	SEE PAGE
Y	1	1	*1T-2084*	1	TORQUE CONVERTER GP	307
	2	1	**5M-7878**	1	RING-SNAP	
	3	1	**3T-4009**	1	GEAR-RING (82-TEETH)	
	4	1	**3T-4008**	3	GEAR-PLANETARY (23-TEETH)	
	5	1	**5P-3930**	3	BEARING AS-ROLLER	
	6	1	**3T-4011**	3	SHAFT AS-PLANETARY	
					(EACH INCLUDES)	
		1	**2A-3746**	1	PLUG-CUP	
	7	1	**8E-8300**	6	DISC-THRUST	
	8	1	**3S-2708**	3	PIN-SPRING	
	9	1	**5P-7679**	1	RACE-SPECIAL ROLLER BEARING	
	10	1	**6K-3630**	1	RING	
	11	1	**3T-4013**	1	RETAINER-CARRIER	
	12	1	**3T-4007**	1	CARRIER-PLANETARY	
	13	1	**2K-5986**	2	PIN-SPRING	
	14	1	**9M-2008**	1	RING-METAL SEAL	
	15	1	**2D-5658**	1	BALL BEARING	
	16	1	**5J-3964**	1	RING-LOCK	
	17	1	**233-0668**	1	SHAFT AS	
		1	**5J-7386**	1	PLUG-ORIFICE	
	18	1	**6V-4583**	1	RING-RETAINING	

Y - SEPARATE ILLUSTRATION

317-7051 **TORQUE CONVERTER GP (*contd.*)** **i05637738**

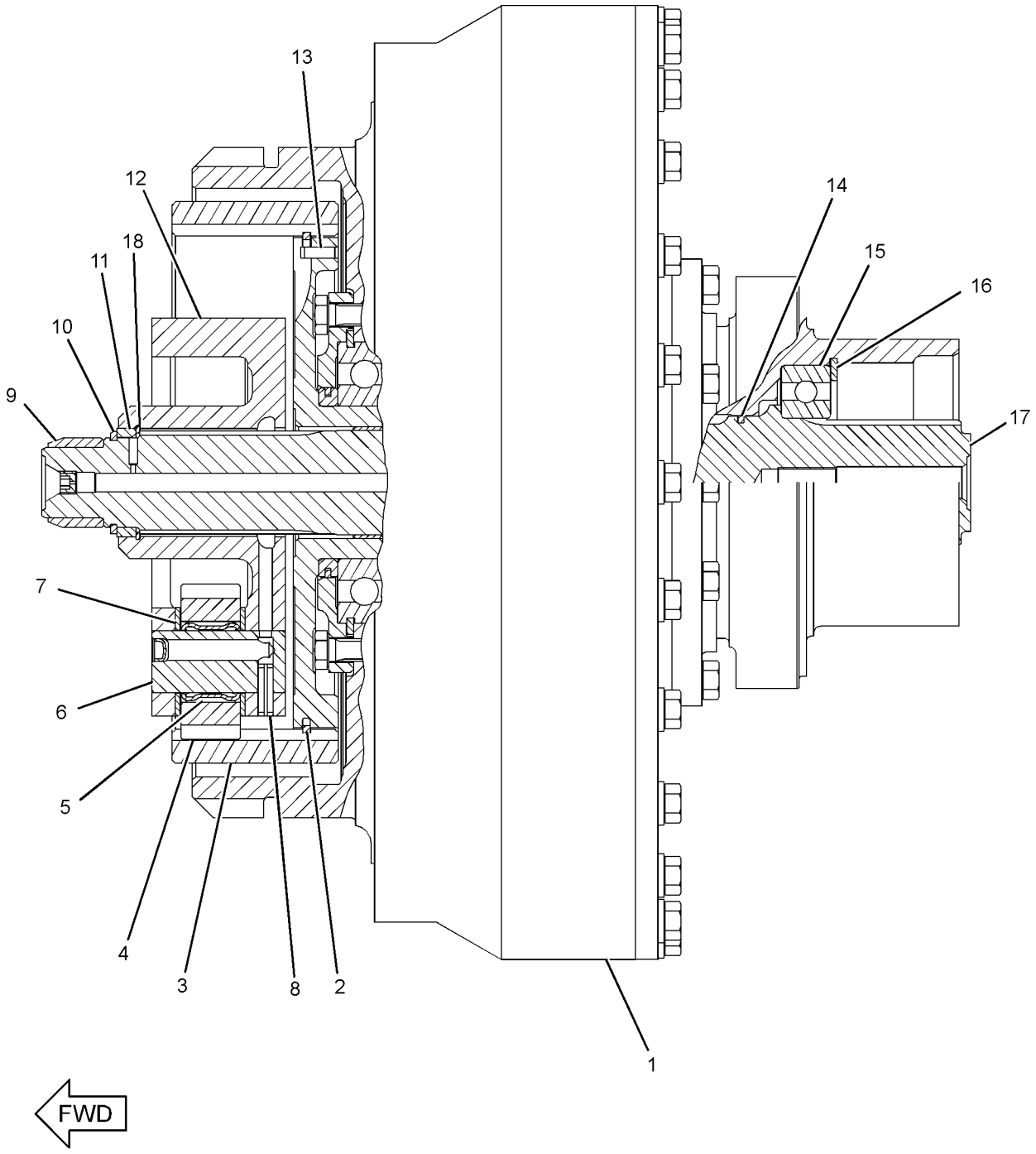

GRAPHIC #1 **<END>** g01209147

315-9959 TRANSMISSION AR

S/N: MJY1-UP

PART OF 389-3209 POWER TRAIN AR

SMCS-3030 **i05636912**

NOTE	REF NO	GRAPHIC REF	PART NUMBER	QTY	PART NAME 1 2 3 4 5 6 (PRODUCT LEVEL)	SEE PAGE
Y	1	1	*166-3485*	1	GEAR GP-BEVEL & TRANSFER	283
Y	2	1	*315-9960*	1	PLANETARY GP-TRANSMISSION	293
Y	3	1	*315-9961*	1	CASE & PARTS GP-PLANETARY	256
Y	4	1	*315-9964*	1	CONTROL GP-TRANSMISSION HYD	267

Y - SEPARATE ILLUSTRATION

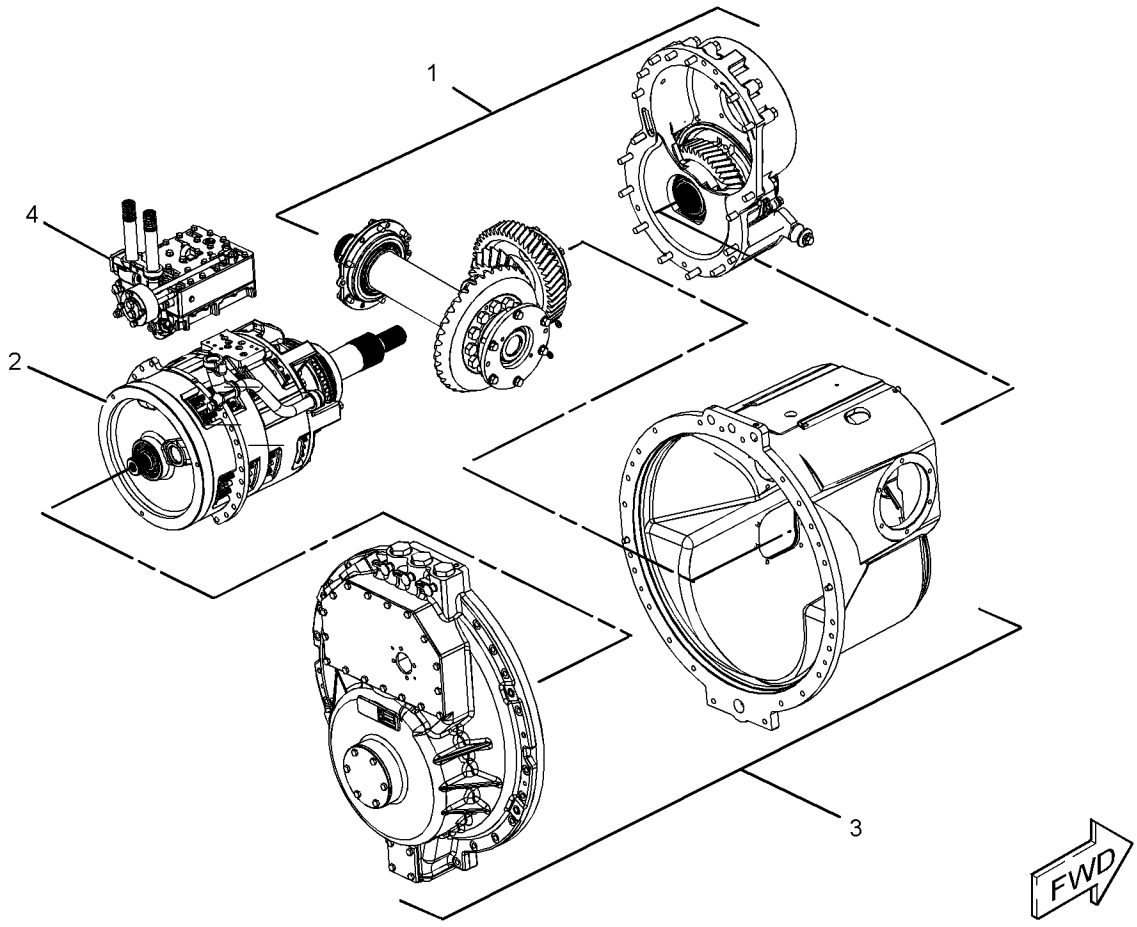

GRAPHIC #1 **<END>** g02178214

108-2106 UNIVERSAL JOINT GP

S/N: EMM1-UP; JEN1-UP

PART OF 108-1696 SHAFT GP-DRIVE

SMCS-3251, 3253

i05636269

NOTE	REF NO	GRAPHIC REF	PART NUMBER	QTY	PART NAME 1 2 3 4 5 6 (PRODUCT LEVEL)	SEE PAGE
	1	1	**3V-2431**	8	WASHER (10.2X16.0X2.0MM THK)	
	2	1	**7G-9555**	2	SPIDER & BEARING AS	
	3	1	**0L-0478**	8	BOLT (3/8-24X1.75 IN)	

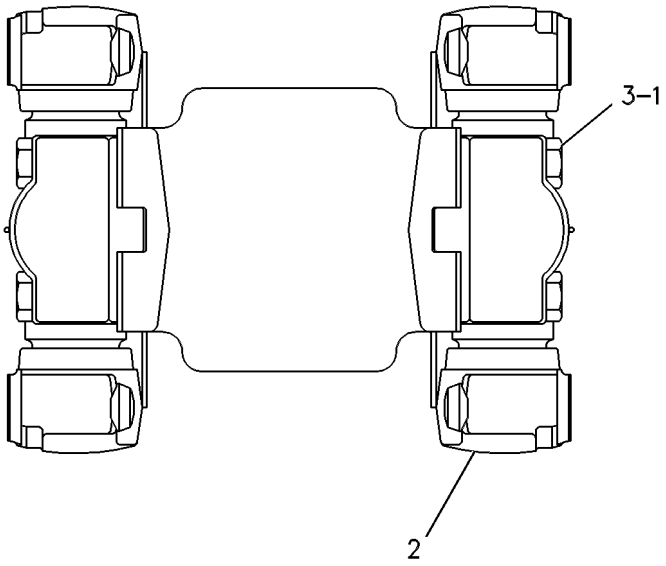

GRAPHIC #1

<END>

g00254100

315-9965 VALVE GP-PRIORITY

S/N: MJY1-UP

PART OF 315-9964 CONTROL GP-TRANSMISSION HYD

SMCS-3180 **i05636989**

NOTE	REF NO	GRAPHIC REF	PART NUMBER	QTY	PART NAME 1 2 3 4 5 6 (PRODUCT LEVEL)	SEE PAGE
	1	1	**2M-7041**	1	SLUG	
	2	1	**5M-9622**	1	SHIM (1.6-MM THK)	
B	3	1	**5M-9624**	6	SHIM (0.25-MM THK)	
	4	1	**5S-4437**	1	SPOOL AS	
		1	**3D-8317**	1	RING-RETAINING	
		1	**4B-9880**	1	BALL	
		1	**4M-2381**	1	SPRING	
		1	**8M-1013**	1	RETAINER	
	5	1	**6T-2307**	1	BODY-VALVE	
	6	1	**4H-4737**	2	PIN-SPRING	
	7	1	**7T-8556**	1	SPRING	
	8	1	**8P-0311**	2	SHAFT	
	9	1	**9S-2792**	1	COVER	
	10	1	**0L-1351**	2	BOLT (3/8-16X0.875-IN)	

B - USE AS REQUIRED

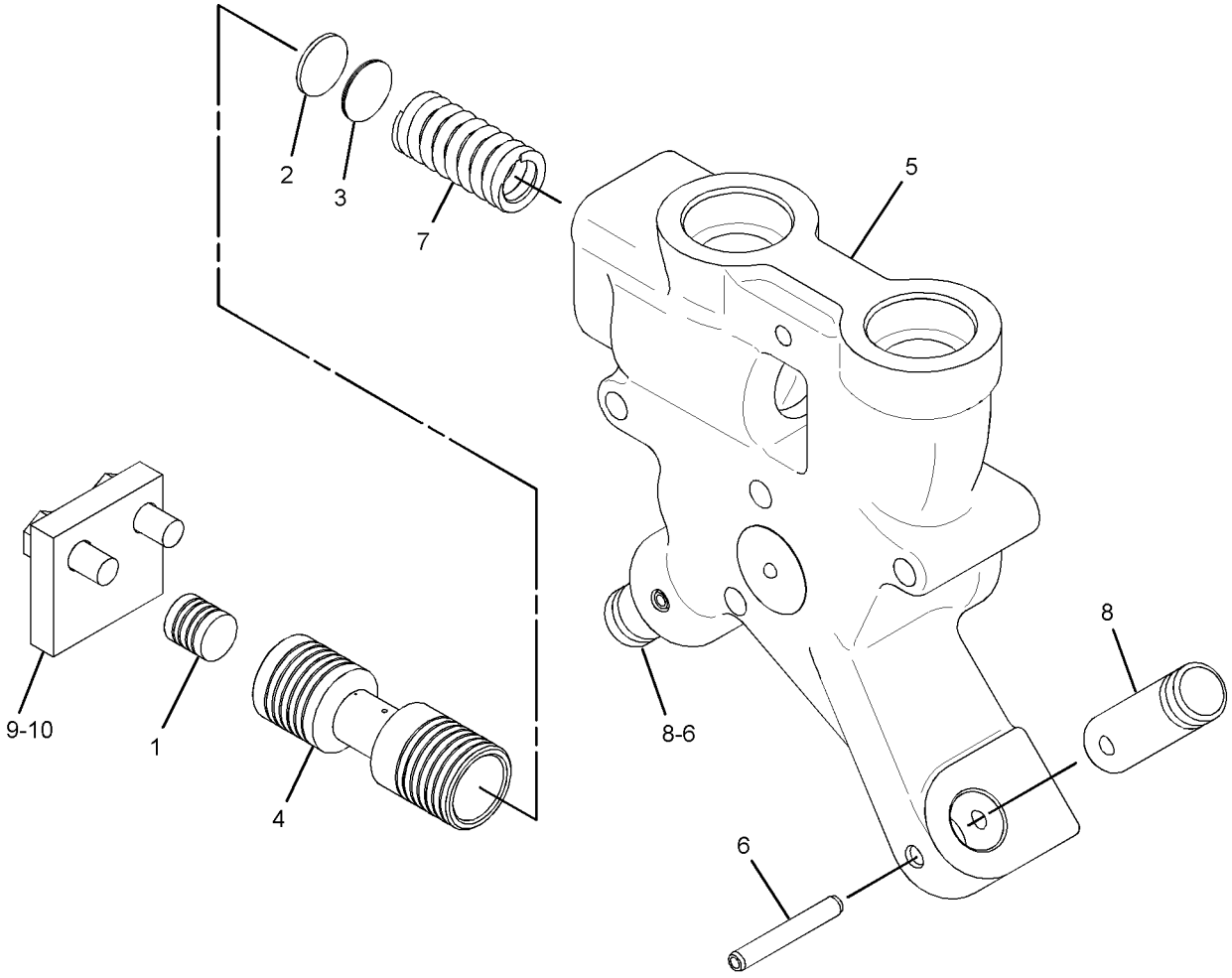

GRAPHIC #1 **<END>** g02178200

220-1418 VALVE GP-RELIEF

S/N: EMM1-UP; JEN1-UP

PART OF 317-4109 LINES GP-POWER TRAIN OIL

SMCS-3133, 3182 **i05637182**

NOTE	REF NO	GRAPHIC REF	PART NUMBER	QTY	PART NAME 1 2 3 4 5 6 (PRODUCT LEVEL)	SEE PAGE
	1	1	**225-6363**	1	HOUSING AS-RELIEF VALVE	
		1	**7M-1377**	1	STOP-VALVE	
	2	1	**4M-8239**	2	COVER	
	3	1	**7M-1296**	1	VALVE-RELIEF	
B	4	1	**5M-9623**	5	SHIM (0.9-MM THK)	
M	5	1	**8T-4136**	4	BOLT (M10X1.5X25-MM)	
	6	1	**9X-2027**	7	WASHER (11X18X2-MM THK)	
	7	1	**7M-1297**	1	SPRING	
	8	1	**8M-4986**	2	SEAL-O-RING	
	11	1	**9W-5595**	1	SPRING	
M	12	1	**8T-4172**	3	BOLT (M10X1.5X80-MM)	

B - USE AS REQUIRED
M - METRIC PART

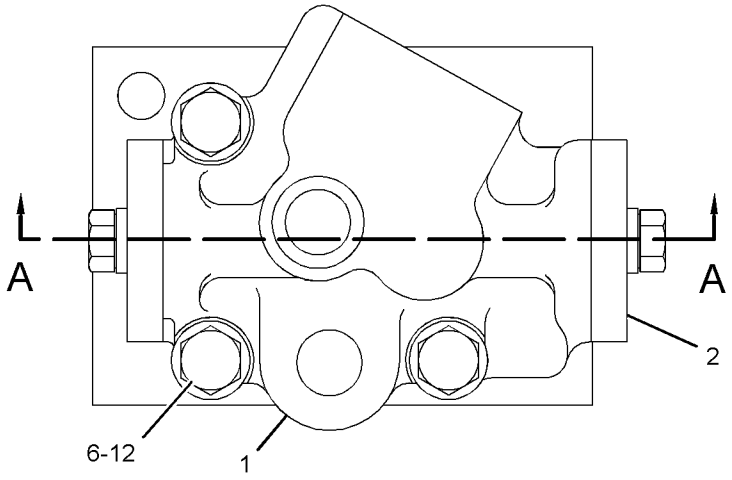

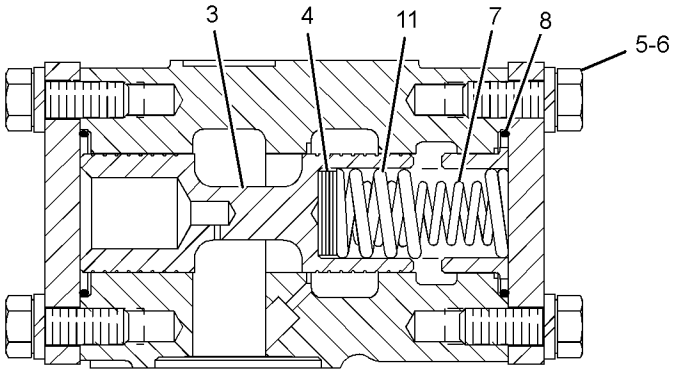

SECTION A-A

GRAPHIC #1 **<END>** g01206826

318-8531 VALVE GP-SELECTOR & PRESS CONT

S/N: MJY1-UP

PART OF 315-9966 VALVE GP-TRANSMISSION CONTROL

SMCS-3083 **i05637017**

NOTE	REF NO	GRAPHIC REF	PART NUMBER	QTY	PART NAME 1 2 3 4 5 6 (PRODUCT LEVEL)	SEE PAGE
	1	1	**6I-9875**	1	BODY AS	
	1A	1	**5H-8985**	4	PIN-SPRING	
	2	1	**6Y-4082**	1	SPOOL-SPEED SELECTOR	
	3	1	**6P-4940**	1	STOP	
	4	1	**9W-5568**	1	SLUG	
	5	1	**9W-5567**	1	SPOOL AS-RELIEF	
	5A	1	**3D-8317**	1	RING-RETAINING	
	5B	1	**8M-1013**	1	RETAINER	
	5C	1	**4M-2381**	1	SPRING	
	5D	1	**4B-9880**	1	BALL	
	6	1	**7G-4842**	1	SPRING (OUTER)	
	7	1	**9P-3041**	1	SPRING (INNER)	
	8	1	**6P-4971**	2	STOP	
	9	1	**6P-4939**	1	PISTON-LOAD	
B	10	1	**5M-9622**	1	SHIM (1.6-MM THK)	
B	11	1	**5M-9623**	1	SHIM (0.9-MM THK)	
B	12	1	**5M-9624**	3	SHIM (0.25-MM THK)	
	13	1	**6F-6673**	2	SEAL-O-RING	
	14	1	**6P-4938**	1	COVER	
	15	1	**6P-9786**	1	RETAINER	
	16	1	**6P-9785**	1	SPRING	
	17	1	**3P-8485**	1	RING-RETAINING	
	18	1	**6Y-3033**	1	SPOOL AS-DIFFERENTIAL	
	19	1	**6P-9783**	1	SPRING (INNER)	
	20	1	**6P-9784**	1	SPRING (OUTER)	
	21	1	**6Y-5500**	1	SPOOL-SELECTOR	
	22	1	**2S-4872**	1	STOP	
	23	1	**3T-4215**	1	SLUG	
	24	1	**3T-3494**	1	SPOOL-RATIO	
	25	1	**8P-6321**	1	DOWEL	
	26	1	**2S-0696**	2	DOWEL	
	27	1	**7G-9476**	1	ORIFICE-PLUG	
	28	1	**9U-8388**	4	DETENT AS	
	29	1	**1P-8116**	4	SEAL-O-RING	
	30	1	**238-5508**	1	PLUG AS-ORIFICE	
		1	**8L-2779**	1	SEAL-O-RING	
	31	1	**1J-5353**	2	PIN-SPRING	
	32	1	**2H-2995**	1	SETSCREW (10-24X0.438-IN)	
	33	1	**2B-2695**	3	BOLT (5/16-18X0.875-IN)	

B - USE AS REQUIRED

318-8531 **VALVE GP-SELECTOR & PRESS CONT (*contd.*)** **i05637017**

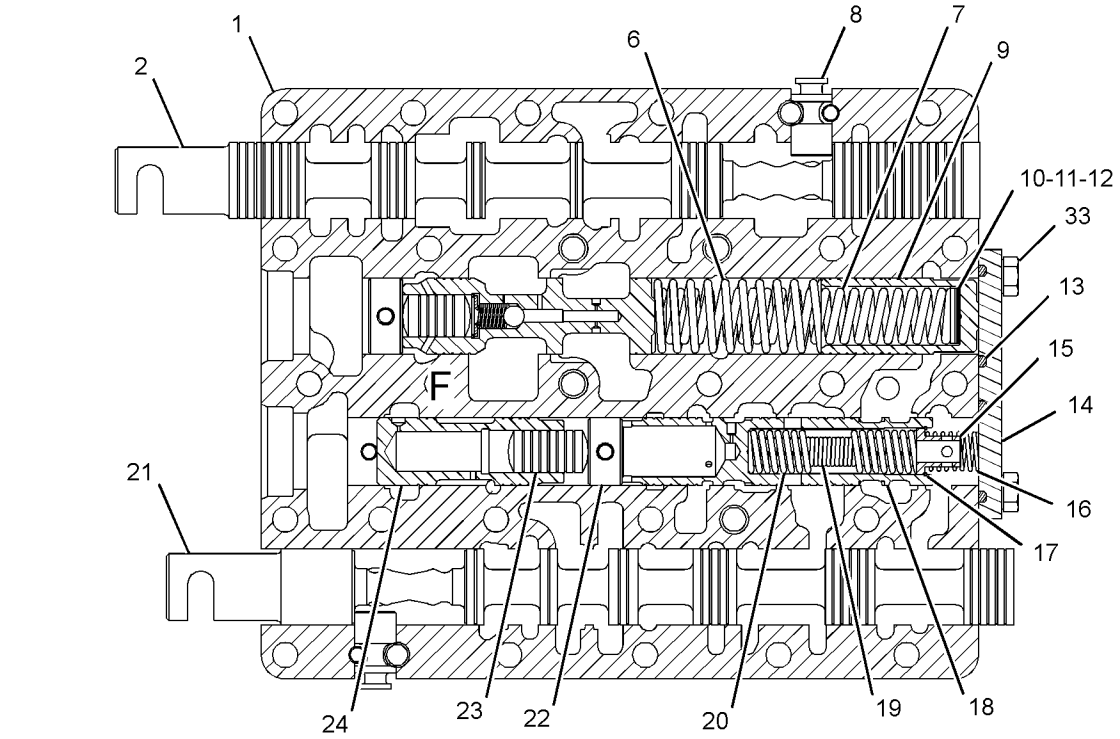

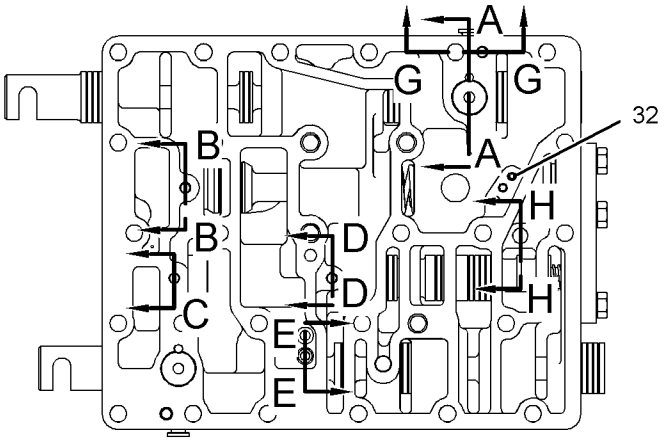

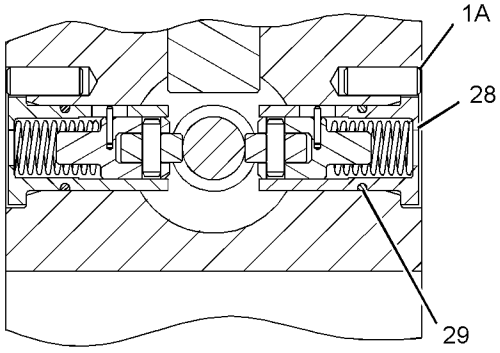

SECTION A-A

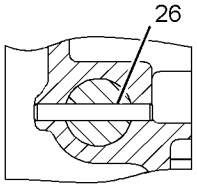

SECTION D-D

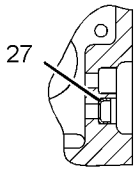

SECTION E-E

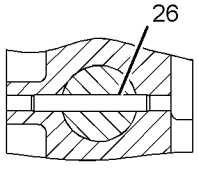

SECTION B-B

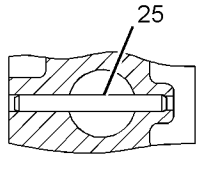

SECTION C

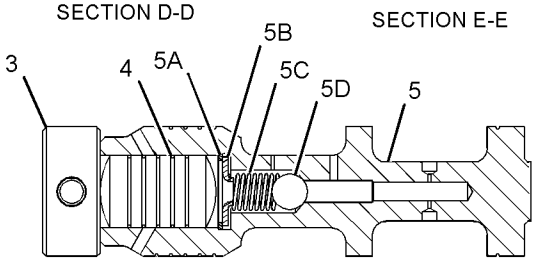

VIEW OF AREA F

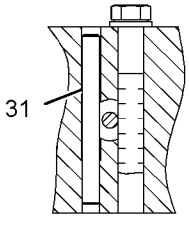

SECTION G-G

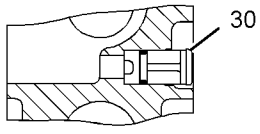

SECTION H-H

GRAPHIC #1 **<END>** g02166425

315-9966 VALVE GP-TRANSMISSION CONTROL

S/N: MJY1-UP

PART OF 315-9964 CONTROL GP-TRANSMISSION HYD

SMCS-3073, 3167

i05636998

NOTE	REF NO	GRAPHIC REF	PART NUMBER	QTY	PART NAME 1 2 3 4 5 6 (PRODUCT LEVEL)	SEE PAGE
	1	1	**6T-8710**	1	MANIFOLD-BOTTOM	
	2	1	**9G-8551**	1	PLATE	
Y	3	1	**318-8531**	1	VALVE GP-SELECTOR & PRESS CONT	315
	4	1	**9P-5928**	1	PLATE	
	5	1	**4B-0831**	24	BOLT (5/16-18X3.75-IN)	
	6	1	**9M-1974**	26	WASHER-HARD (8.8X16X2-MM THK)	
	7	1	**5M-6214**	3	PLUG-PIPE	
	8	1	**9G-2375**	1	ELBOW	
	9	1	**5F-9657**	1	SEAL-O-RING	
	10	1	**3H-3243**	2	BOLT (5/16-18X4.75-IN)	
	11	1	**9W-3330**	1	SUPPORT	

Y - SEPARATE ILLUSTRATION

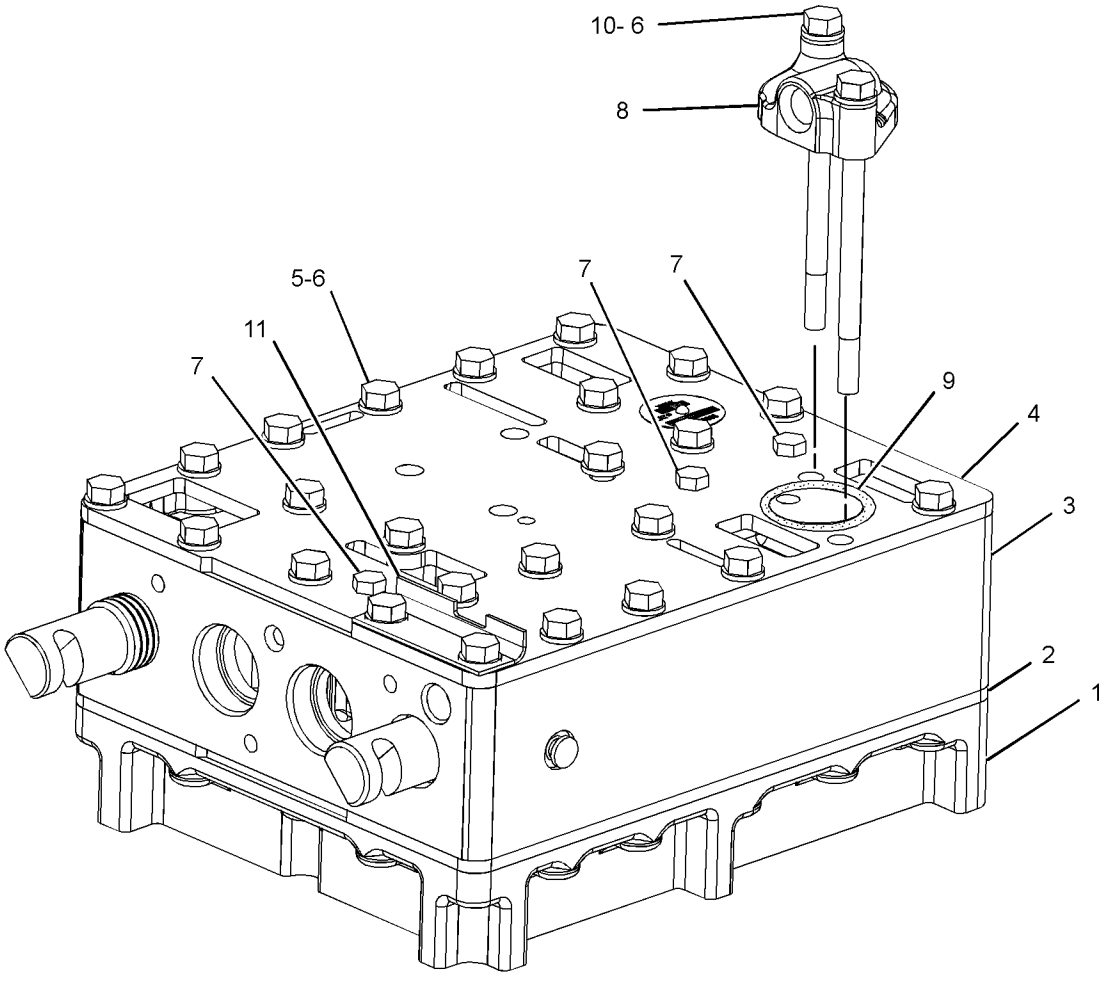

GRAPHIC #1

<END>

g02176652

373-1124 BOX GP-BATTERY

S/N: EMM1-UP; JEN1-UP
PART OF 373-1125 BOX GP-BATTERY
AN ATTACHMENT

SMCS-7257 **i05611263**

NOTE	REF NO	GRAPHIC REF	PART NUMBER	QTY	PART NAME 1 2 3 4 5 6 (PRODUCT LEVEL)	SEE PAGE
	1	1	**162-2480**	9	RIVET	
	2	1	**2M-5795**	1	PIN-CLEVIS	
	3	1	**5V-1496**	1	RETAINER	
	4	1	**6V-9197**	2	LOCK PIN	
	5	1	**6Y-3973**	1	LINK	
	6	1	**9M-3835**	1	LATCH-RUBBER	
	7	1	**141-7596**	1	PLATE	
	8	1	**231-4387**	1	HINGE AS	
	9	1	**372-6196**	1	PLATE	
	10	1	**372-6199**	1	COVER AS	
		1	**8P-0612**	1	BRACKET	
		1	**6K-1049**	1	HINGE	
		1	**1S-6385**	1	LUG	
	11	1	**372-6200**	1	COVER AS	
		1	**9M-3838**	1	BRACKET	
	12	1	**375-6290**	1	COVER AS	
		1	**7T-1099**	8	LINK	
M		1	**8T-3490**	6	NUT-WELD (M10X1.5-THD)	
M		1	**8T-3612**	4	NUT-WELD (M8X1.25-THD)	
	13	1	**7X-7729**	16	WASHER (11X25X3-MM THK)	
M	14	1	**8T-4137**	15	BOLT (M10X1.5X20-MM)	
	15	1	**8T-4222**	2	WASHER-PLATED (11X32X2.5-MM THK)	

M - METRIC PART

373-1124 **BOX GP-BATTERY (*contd.*)** **i05611263**

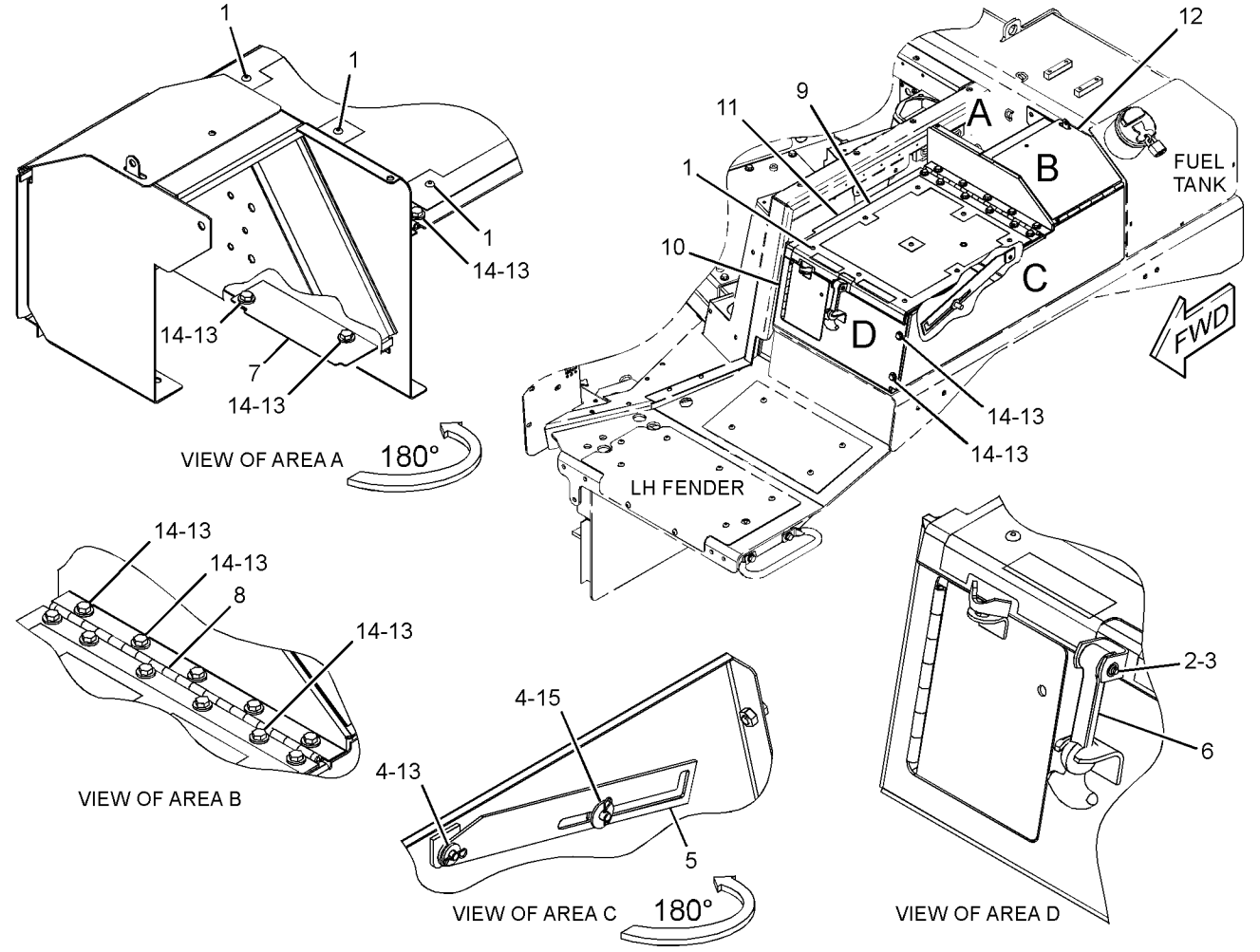

GRAPHIC #1

<END>

g03324851

373-1125 BOX GP-BATTERY

S/N: EMM1-UP; JEN1-UP
PART OF 389-3245, 389-3247 ENCLOSURE GP-ENGINE
AN ATTACHMENT

SMCS-7257 **i05611258**

NOTE	REF NO	GRAPHIC REF	PART NUMBER	QTY	PART NAME 1 2 3 4 5 6 (PRODUCT LEVEL)	SEE PAGE
	1	1	**246-2641**	1	PADLOCK GP	
		1	**5P-8500**	1	KEY	
	2	1	**7K-1181**	1	STRAP-CABLE	
	3	1	**8E-7561**	2	KNOB AS	
					(EACH INCLUDES)	
		1	**7S-2042**	1	STUD (3/8-16X1.5-IN)	
		1	**8E-1205**	1	KNOB	
		1	**8T-7566**	1	PIN-SPRING	
	4	1	**9S-8230**	2	PLATE AS	
					(EACH INCLUDES)	
		1	**1F-0750**	1	NUT-WELD (3/8-16-THD)	
Y	5	1	*373-1124*	1	BOX GP-BATTERY	318
	6	1	**4H-1641**	2	PIN-SPRING	
	7	1	**7X-7729**	8	WASHER (11X25X3-MM THK)	
M	8	1	**8T-4136**	8	BOLT (M10X1.5X25-MM)	

M - METRIC PART
Y - SEPARATE ILLUSTRATION

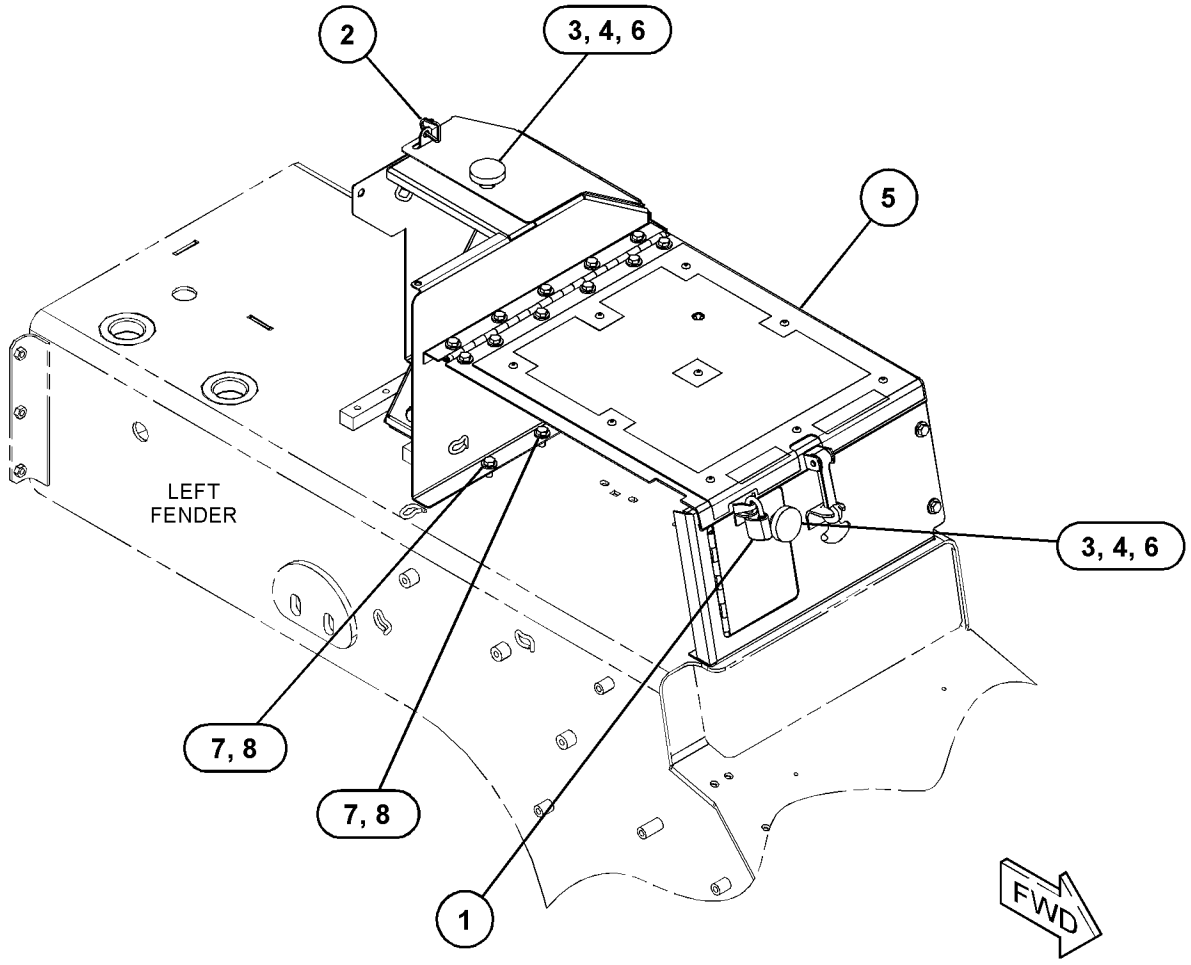

GRAPHIC #1 **<END>** g03281537

415-1472 BOX GP-BATTERY

S/N: EMM1-UP; JEN1-UP
PART OF 425-6994 ENCLOSURE GP-ENGINE
AN ATTACHMENT

SMCS-7257 **i05636469**

NOTE	REF NO	GRAPHIC REF	PART NUMBER	QTY	PART NAME 1 2 3 4 5 6 (PRODUCT LEVEL)	SEE PAGE
	1	1	**246-2641**	1	PADLOCK GP	
		1	**5P-8500**	1	KEY	
	2	1	**7K-1181**	1	STRAP-CABLE	
	3	1	**8E-7561**	2	KNOB AS	
					(EACH INCLUDES)	
		1	**8E-1205**	1	KNOB (DOOR ACCESS)	
		1	**7S-2042**	1	STUD (3/8-16X1.5-IN)	
		1	**8T-7566**	1	PIN-SPRING	
	4	1	**9S-8230**	2	PLATE AS	
					(EACH INCLUDES)	
		1	**1F-0750**	1	NUT-WELD (3/8-16-THD)	
Y	5	1	*415-1473*	1	BOX GP-BATTERY	322
	6	1	**4H-1641**	2	PIN-SPRING	
	7	1	**7X-7729**	8	WASHER (11X25X3-MM THK)	
M	8	1	**8T-4136**	8	BOLT (M10X1.5X25-MM)	

M - METRIC PART
Y - SEPARATE ILLUSTRATION

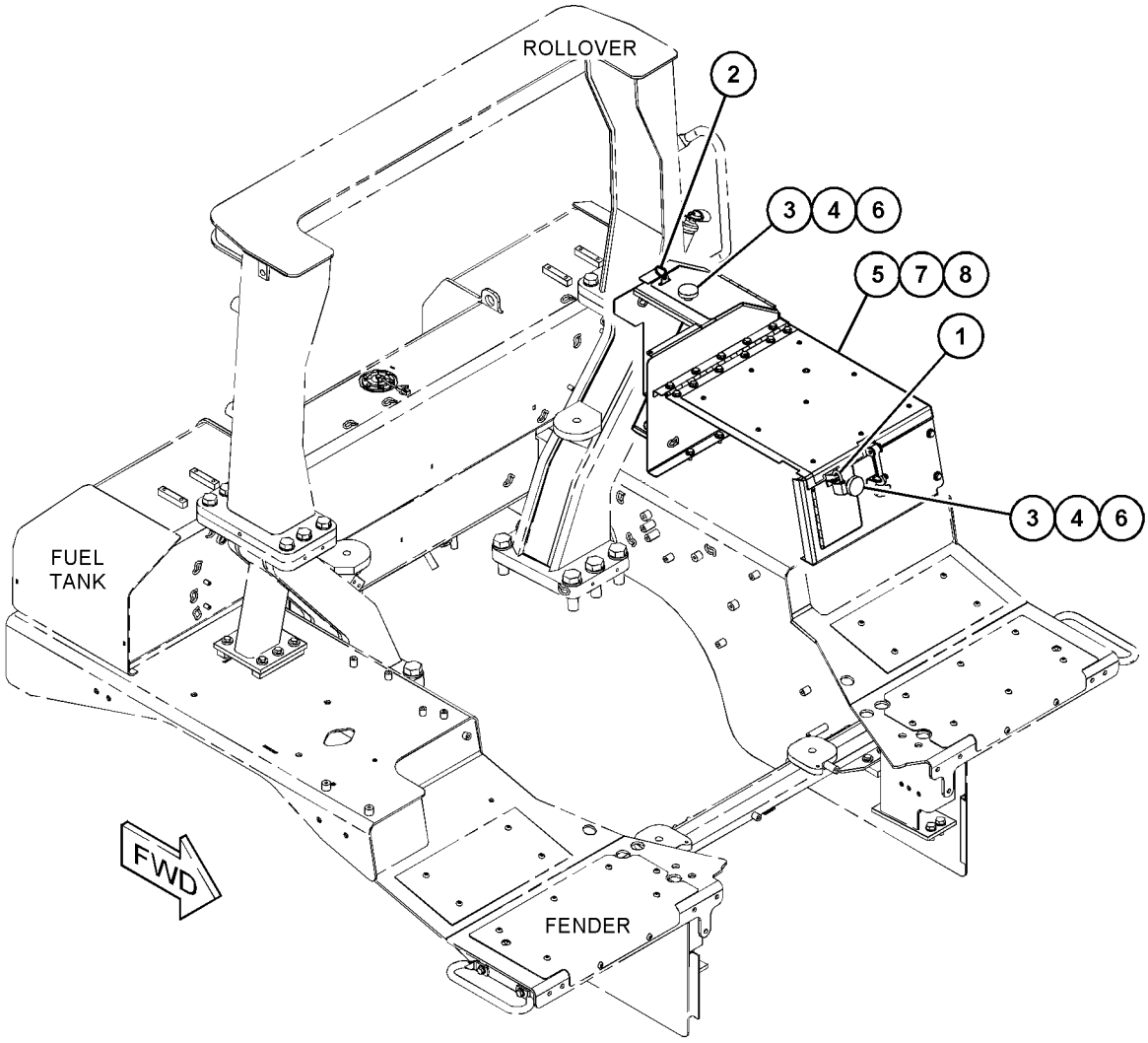

GRAPHIC #1 **<END>** g03395979

415-1473 BOX GP-BATTERY

S/N: EMM1-UP; JEN1-UP
PART OF 415-1472 BOX GP-BATTERY
AN ATTACHMENT

SMCS-7257 **i05633349**

NOTE	REF NO	GRAPHIC REF	PART NUMBER	QTY	PART NAME 1 2 3 4 5 6 (PRODUCT LEVEL)	SEE PAGE
	1	1	**162-2480**	9	RIVET	
	2	1	**2M-5795**	1	PIN-CLEVIS	
	3	1	**5V-1496**	1	RETAINER	
	4	1	**6V-9197**	2	LOCK PIN	
	5	1	**6Y-3973**	1	LINK	
	6	1	**9M-3835**	1	LATCH-RUBBER	
	7	1	**141-7596**	1	PLATE	
	8	1	**231-4387**	1	HINGE AS	
	9	1	**372-6196**	1	PLATE	
	10	1	**372-6199**	1	COVER AS	
		1	**8P-0612**	1	BRACKET	
		1	**6K-1049**	1	HINGE	
		1	**1S-6385**	1	LUG	
	11	1	**372-6200**	1	COVER AS	
		1	**9M-3838**	1	BRACKET	
	12	1	**415-1463**	1	COVER AS	
	13	1	**7X-7729**	16	WASHER (11X25X3-MM THK)	
M	14	1	**8T-4137**	15	BOLT (M10X1.5X20-MM)	
	15	1	**8T-4222**	2	WASHER-PLATED (11X32X2.5-MM THK)	

M - METRIC PART

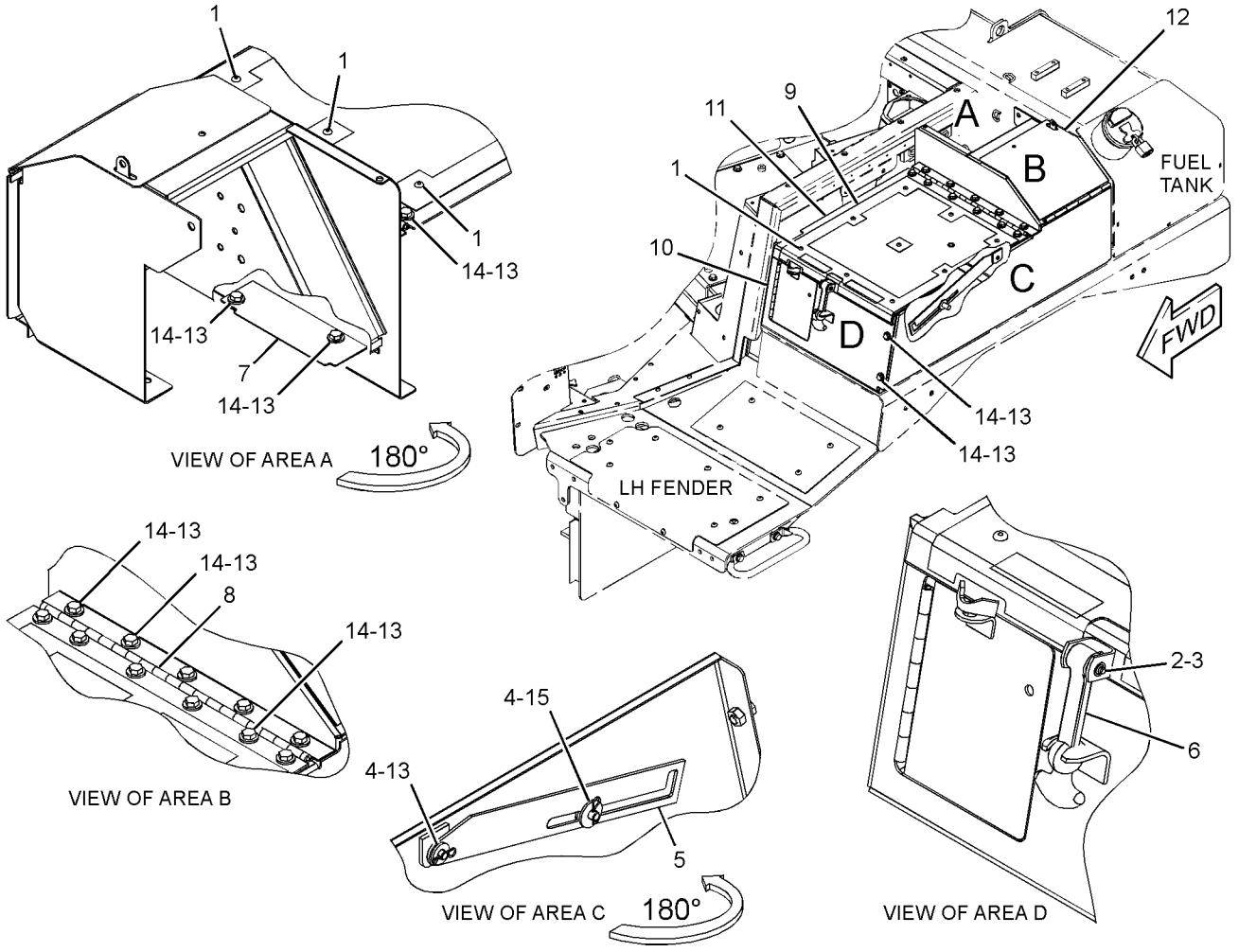

GRAPHIC #1

<END>

g03324851

337-3492 CASE & FRAME GP

S/N: EMM1-UP; JEN1-UP

PART OF 389-3221, 389-3222 CHASSIS AR

SMCS-7051 **i05640464**

NOTE	REF NO	GRAPHIC REF	PART NUMBER	QTY	PART NAME 1 2 3 4 5 6 (PRODUCT LEVEL)	SEE PAGE
M	1	1	**109-3001**	2	STUD-TAPERLOCK (M10X1.5X65-MM)	
	2	1	**106-8186**	1	VALVE AS-DRAIN (ECOLOGY)	
		1	**077-3241**	1	SEAL-O-RING	
	3	1	**106-8187**	1	PLUG-DRAIN (TRANSMISSION CASE)	
	4	1	**337-3493**	1	CASE & FRAME AS	
M	5	1	**264-0168**	2	STUD-TAPERLOCK (M10X1.5X50-MM)	
	6	1	**3T-0996**	2	BUSHING	
	7	1	**6F-0711**	1	SEAL-O-RING	
	8	1	**7B-9665**	1	PLUG	
	9	1	**258-2305**	4	BUSHING	

M - METRIC PART

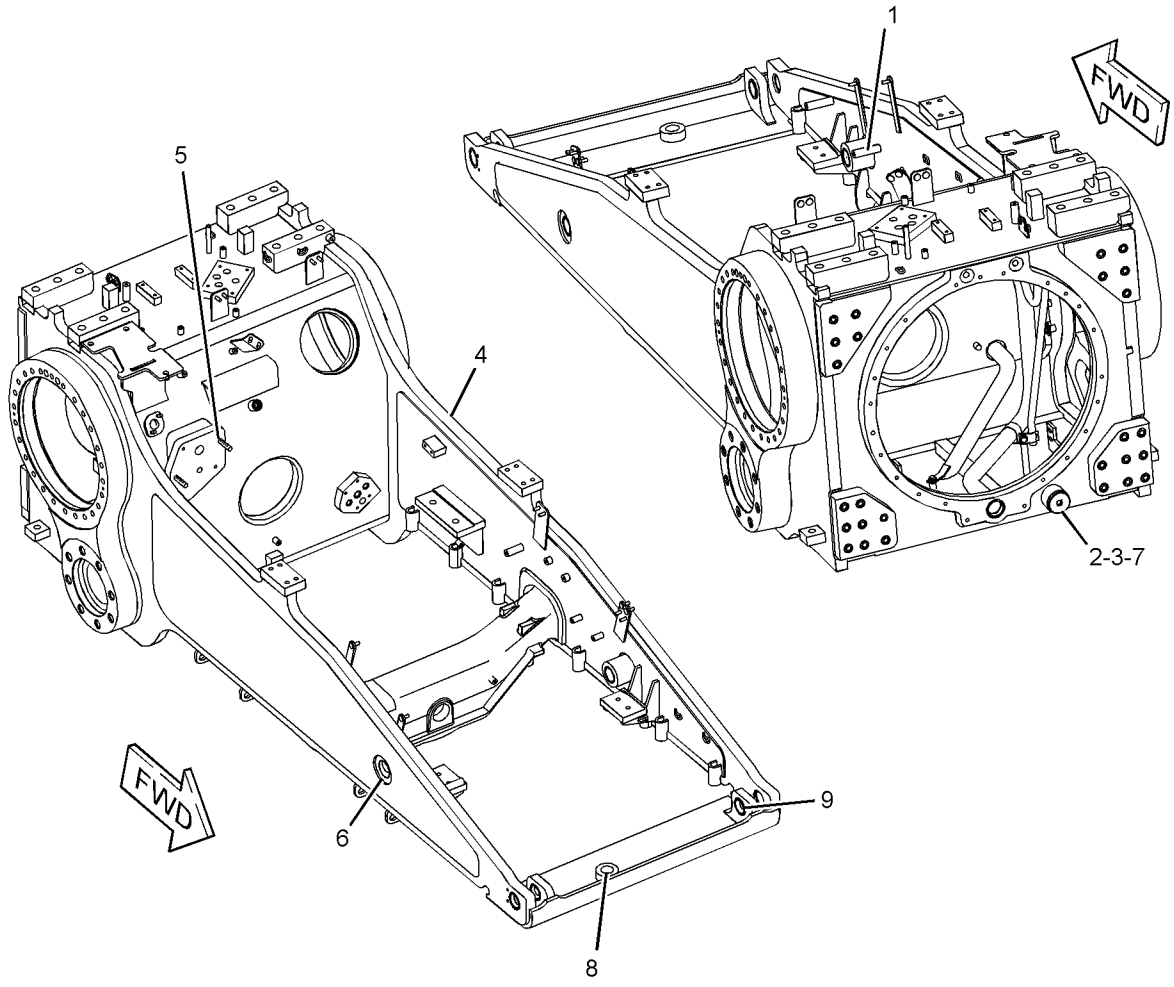

GRAPHIC #1 **<END>** g03506706

1Q-4324 COUNTERWEIGHT GP

S/N: EMM1-UP; JEN1-UP
780-KG
FOR USE WITH 3W-6866—PAGE: 330, 117-9058—PAGE: 326
CANNOT BE USED WITH RIPPER AR, WINCH AR
PART OF 354-3552 OPTION AR-COUNTERWEIGHT
AN ATTACHMENT

SMCS-7056 **i05501512**

NOTE	REF NO	GRAPHIC REF	PART NUMBER	QTY	PART NAME 1 2 3 4 5 6 (PRODUCT LEVEL)	SEE PAGE
	1	1	**1U-0612**	2	PIN	
	2	1	**7X-0292**	2	BOLT (3/8-16X4.50 IN)	
	3	1	**2K-4973**	2	LOCKNUT (3/8-16 THD)	
	4	1	**117-5693**	2	PLATE	
	5	1	**117-5695**	1	PLATE	
	6	1	**117-5694**	1	PLATE	
	7	1	**117-5692**	2	PLATE	
	8	1	**117-5691**	2	PLATE	
	9	1	**1D-4624**	8	BOLT (3/4-10X9 IN)	
	10	1	**8T-4994**	12	WASHER-HARD (20X36.5X3.5MM THK)	
	11	1	**5D-3118**	8	STUD-TAPERLOCK	
	12	1	**6V-8190**	8	NUT (1-8 THD)	
	13	1	**7X-0427**	2	BOLT (1-1/4-7X3.50 IN)	
	14	1	**7X-0533**	2	WASHER-HARD (34X55X6MM THK)	
	15	1	**8T-9311**	4	BOLT (3/4-10X4.50 IN)	
	16	1	**1U-0301**	2	BRACKET AS	
					(EACH INCLUDES)	
		1	**2K-6279**	1	BOSS	

1Q-4324 **COUNTERWEIGHT GP (*contd.*)** **i05501512**

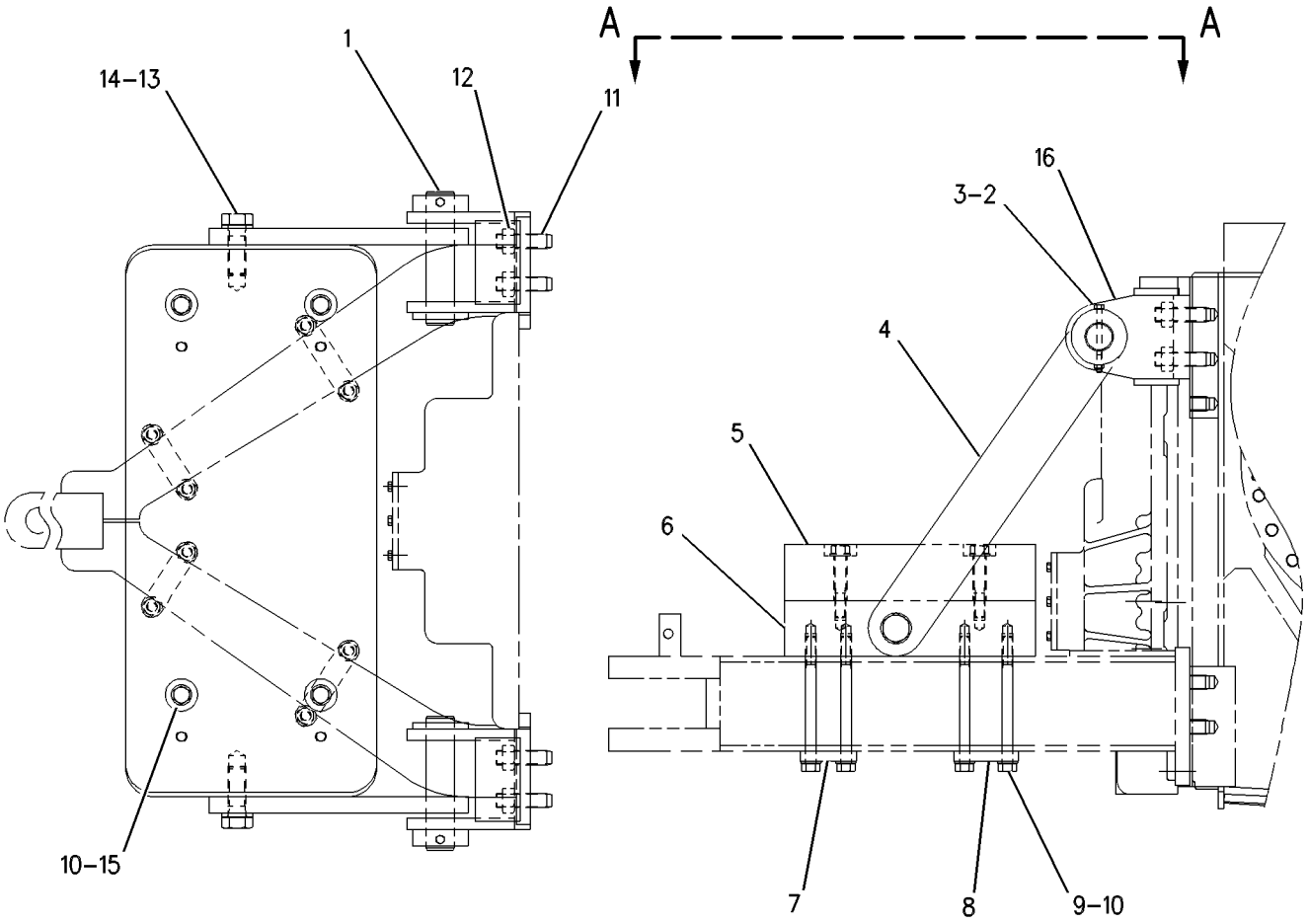

GRAPHIC #1 **<END>** g00285043

117-9058 COUNTERWEIGHT GP

S/N: EMM1-UP; JEN1-UP
341-KG. PROVIDES ADDITIONAL WEIGHT WHEN USED WITH ANOTHER COUNTERWEIGHT GP
FOR USE WITH 1Q-4324—PAGE: 324, 354-3552—PAGE: 2
AN ATTACHMENT

SMCS-7056 **i05499251**

NOTE	REF NO	GRAPHIC REF	PART NUMBER	QTY	PART NAME 1 2 3 4 5 6 (PRODUCT LEVEL)	SEE PAGE
	1	1	**117-5695**	1	PLATE	
	2	1	**8T-9311**	4	BOLT (3/4-10X4.5-IN)	
	3	1	**8T-4994**	4	WASHER-HARD (20X36.5X3.5-MM THK)	

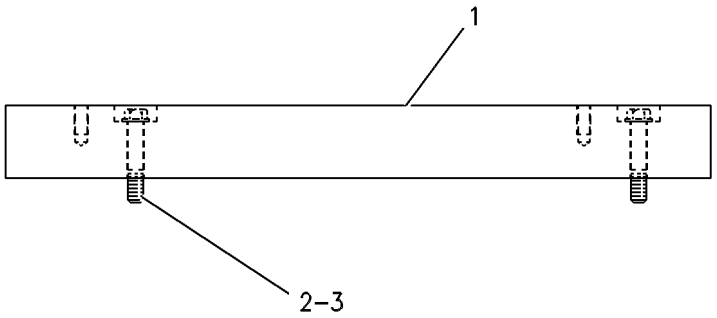

GRAPHIC #1 **<END>** g00267469

375-4848 COVER GP-BATTERY

S/N: EMM1-UP; JEN1-UP
PART OF 393-0289, 393-0290 CAB AR, 387-0575, 393-0288 PLATFORM AR
AN ATTACHMENT

SMCS-1401 **i05575732**

NOTE	REF NO	GRAPHIC REF	PART NUMBER	QTY	PART NAME 1 2 3 4 5 6 (PRODUCT LEVEL)	SEE PAGE
	1	1	**231-4384**	2	BRACKET AS	
	2	1	**255-6406**	1	BRACKET	
Y	3	1	*375-4849*	1	DOOR GP-STORAGE	602
	4	1	**7X-7729**	6	WASHER (11X25X3-MM THK)	
M	5	1	**8T-4136**	4	BOLT (M10X1.5X25-MM)	
M	6	1	**8T-4191**	2	BOLT (M10X1.5X16-MM)	
M	7	1	**8T-4192**	2	BOLT (M12X1.75X25-MM)	
	8	1	**8T-4223**	2	WASHER-HARD (13.5X25.5X3-MM THK)	

M - METRIC PART
Y - SEPARATE ILLUSTRATION

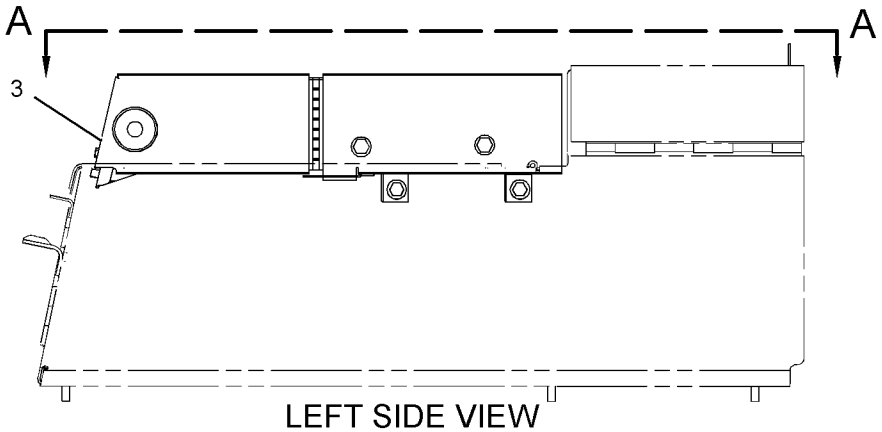

LEFT SIDE VIEW

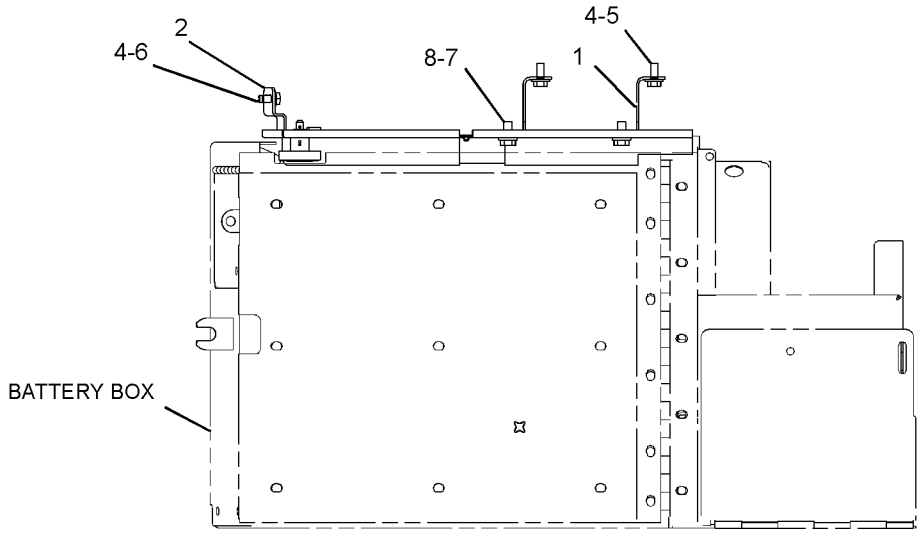

VIEW A-A

GRAPHIC #1 **<END>** g03153419

389-6126 COVER GP-RADIATOR

S/N: EMM1-UP; JEN1-UP

FOR USE WITH 389-3224—PAGE: 456, 389-3225—PAGE: 456

AN ATTACHMENT

SMCS-1353 **i05682716**

NOTE	PART NUMBER	QTY	PART NAME 1 2 3 4 5 6 (PRODUCT LEVEL)	SEE PAGE
Y	*389-6153*	1	COVER GP-RADIATOR	329
Y	*108-1335*	1	HANDHOLD GP	364

Y - SEPARATE ILLUSTRATION

<END>

389-6153 COVER GP-RADIATOR

S/N: EMM1-UP; JEN1-UP
PART OF 389-6126 COVER GP-RADIATOR
AN ATTACHMENT

SMCS-1353 **i05628149**

NOTE	REF NO	GRAPHIC REF	PART NUMBER	QTY	PART NAME 1 2 3 4 5 6 (PRODUCT LEVEL)	SEE PAGE
	1	1	**155-8577**	2	COVER AS	
	2	1	**8T-4121**	4	WASHER-HARD (11X21X2.5-MM THK)	
M	3	1	**8T-4136**	4	BOLT (M10X1.5X25-MM)	

M - METRIC PART

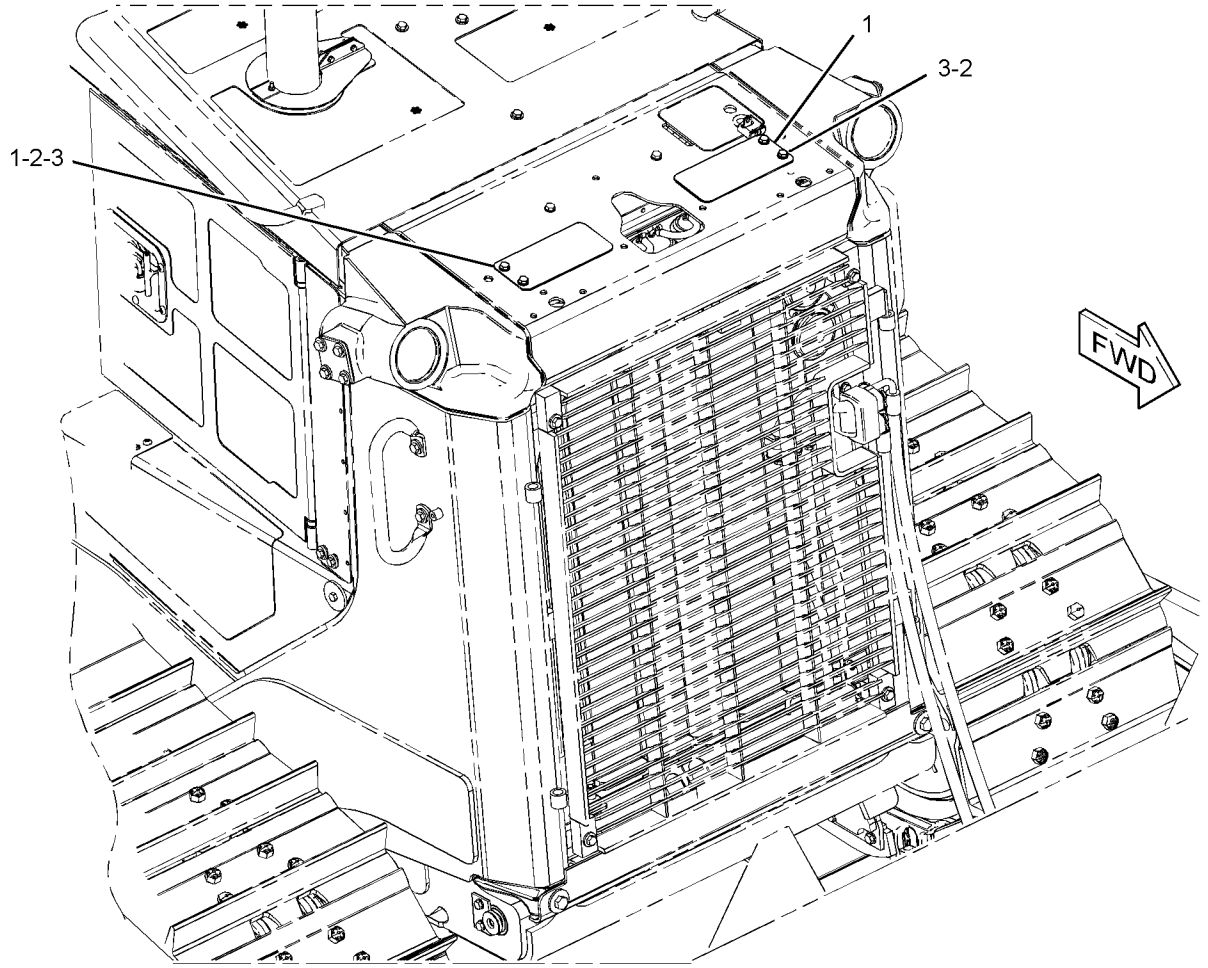

GRAPHIC #1 **<END>** g03583599

3W-6866 DRAWBAR GP

S/N: EMM1-UP; JEN1-UP
FOR USE WITH 1Q-4324—PAGE: 324
CANNOT BE USED WITH RIPPER AR, WINCH AR, STRIKER GP-REAR
PART OF 354-3552 OPTION AR-COUNTERWEIGHT
AN ATTACHMENT

SMCS-7105, 7119 **i05498831**

NOTE	REF NO	GRAPHIC REF	PART NUMBER	QTY	PART NAME 1 2 3 4 5 6 (PRODUCT LEVEL)	SEE PAGE
	1	1	**3W-6867**	1	DRAWBAR AS	
	2	1	**7B-0863**	1	LATCH-PIN	
	3	1	**7F-9547**	1	PIN AS-DRAWBAR	
		1	**7F-9543**	1	COLLAR	
	4	1	**7X-7644**	1	FILM-IDENTIFICATION (TIE-DOWN)	
	5	1	**356-2197**	1	FILM-INFORMATION (DRAWBAR, READ OMM)	
	6	1	**5D-3118**	10	STUD-TAPERLOCK (1-8-THD)	
	7	1	**6V-8190**	10	NUT (1-8-THD)	
M	8	1	**8T-4140**	1	BOLT (M16X2X60-MM)	
M	9	1	**8T-4778**	1	LOCKNUT (M16X2-THD)	
	10	1	**8T-5361**	10	WASHER-HARD (28X49X5-MM THK)	

M - METRIC PART

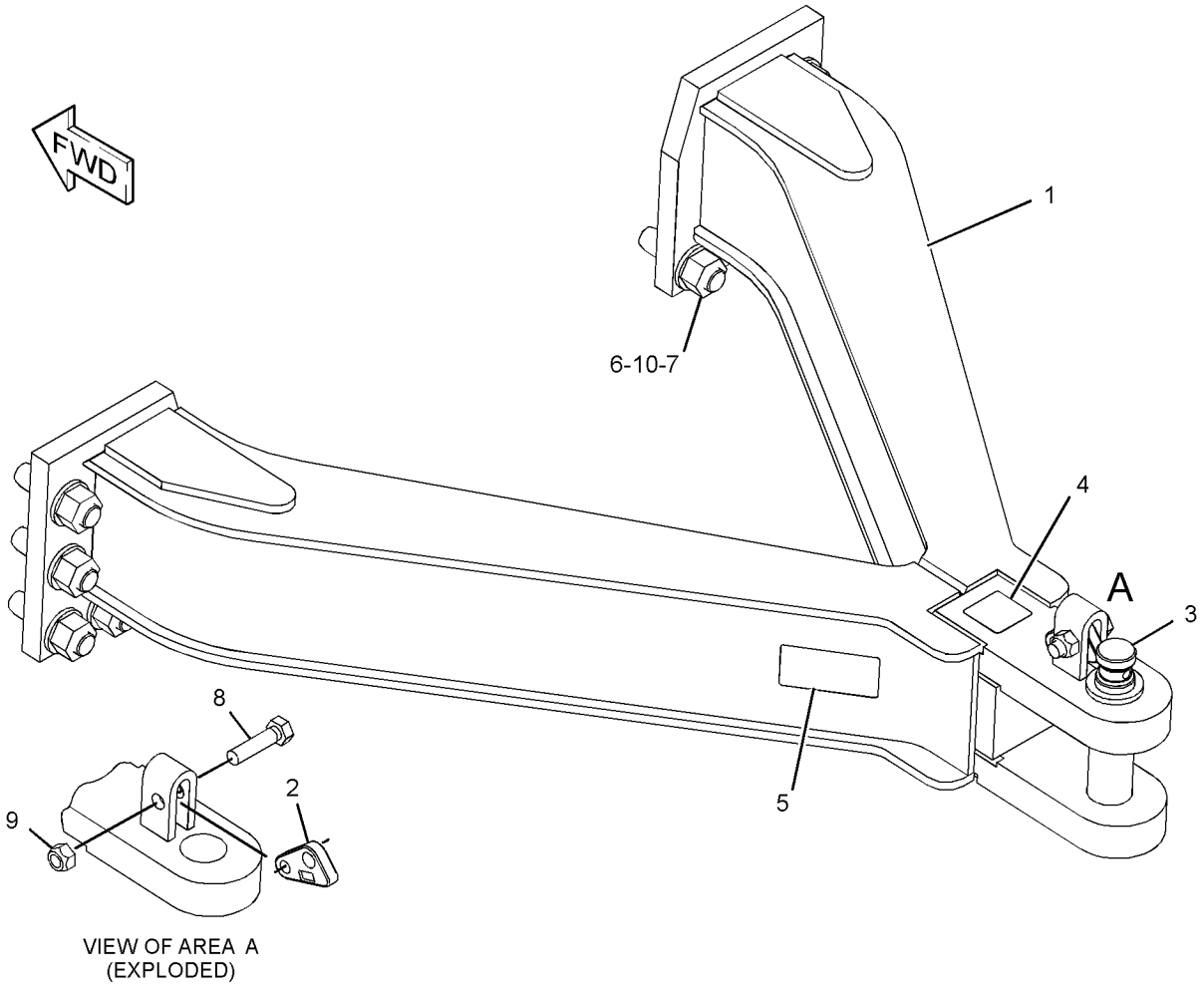

VIEW OF AREA A
(EXPLODED)

GRAPHIC #1 **<END>** g02523758

263-7724 ENCLOSURE GP-ENGINE–RH

S/N: EMM1-UP; JEN1-UP
PART OF 389-3299, 389-3300 ENCLOSURE GP-ENGINE
AN ATTACHMENT

SMCS-7263 **i05611330**

NOTE	REF NO	GRAPHIC REF	PART NUMBER	QTY	PART NAME 1 2 3 4 5 6 (PRODUCT LEVEL)	SEE PAGE
	1	1	**3B-4605**	1	PIN-COTTER	
	2	1	**3V-9399**	1	ROD AS	
		1	**4B-4278**	2	WASHER (10.2X20.5X1.6-MM THK)	
	3	1	**4B-4278**	1	WASHER (10.2X20.5X1.6-MM THK)	
	4	1	**8B-4624**	2	SHIM (0.032-IN THK)	
	5	1	**8T-9496**	2	LOCKNUT (9/16-18-THD)	
	6	1	**8Y-4000**	1	LATCH AS (T-BAR, COMPARTMENT)	
	7	1	**170-7694**	2	HINGE	
	8	1	**227-9304**	1	GUARD AS (RH)	
	9	1	**227-9305**	1	DOOR AS (RH)	
	10	1	**227-9310**	2	BRACKET	
	11	1	**237-2732**	1	PLATE AS (RH)	
	12	1	**261-3156**	1	DOOR AS	
	13	1	**261-3865**	1	TREAD	
	14	1	**262-7661**	1	SUPPORT AS (RH)	
	15	1	**264-6816**	1	BAFFLE AS (RH)	
	16	1	**275-4236**	1	SCREW-WING (M12X1.75X40-MM)	
	17	1	**3B-4610**	1	PIN-COTTER	
	18	1	**3W-9207**	1	GUIDE	
	19	1	**3W-9208**	1	PAWL	
	20	1	**4H-2558**	1	GROMMET	
	21	1	**4M-7470**	1	GROMMET	
M	22	1	**6V-7744**	2	LOCKNUT (M10X1.5-THD)	
	23	1	**7X-7729**	14	WASHER (11X25X3-MM THK)	
M	24	1	**8C-8585**	10	SCREW-BUTTON HEAD (M10X1.5X20-MM)	
	25	1	**8E-4832**	1	STRIKER	
M	26	1	**8T-4133**	2	NUT (M10X1.5-THD)	
M	27	1	**8T-4136**	2	BOLT (M10X1.5X25-MM)	
M	28	1	**8T-4137**	4	BOLT (M10X1.5X20-MM)	
M	29	1	**8T-4196**	2	BOLT (M10X1.5X35-MM)	
	30	1	**9W-8940**	1	PLATE	
D	31	1	**8T-5372**		SEAL (0.3-M)	
D	31A	1	**8T-5372**		SEAL (0.6-M)	
D	31B	1	**8T-5372**		SEAL (0.4-M)	

D - ORDER BY THE METER
M - METRIC PART

263-7724 **ENCLOSURE GP-ENGINE (*contd.*)** **i05611330**

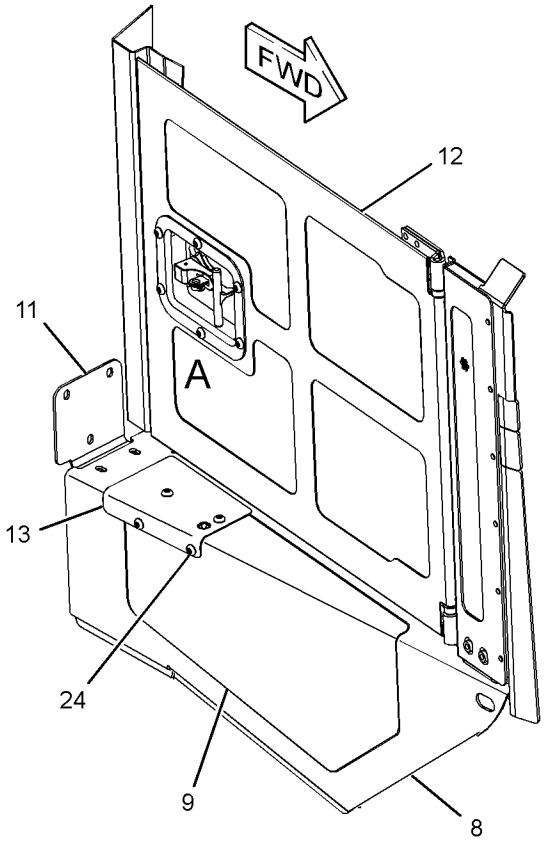

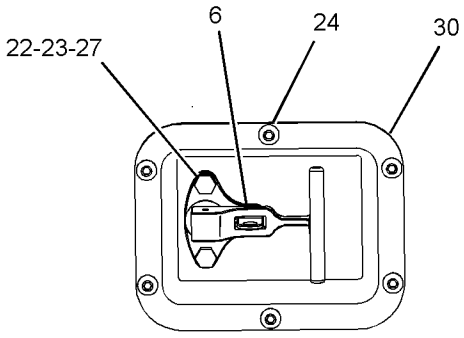

VIEW OF AREA A

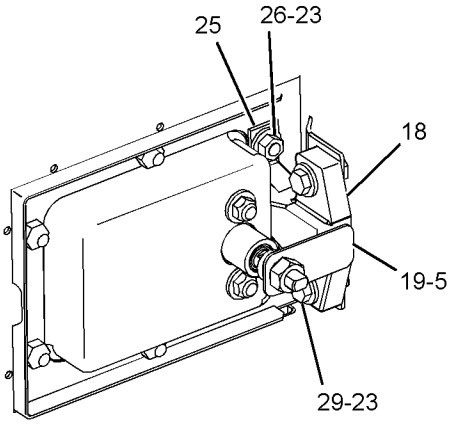

VIEW OF AREA B

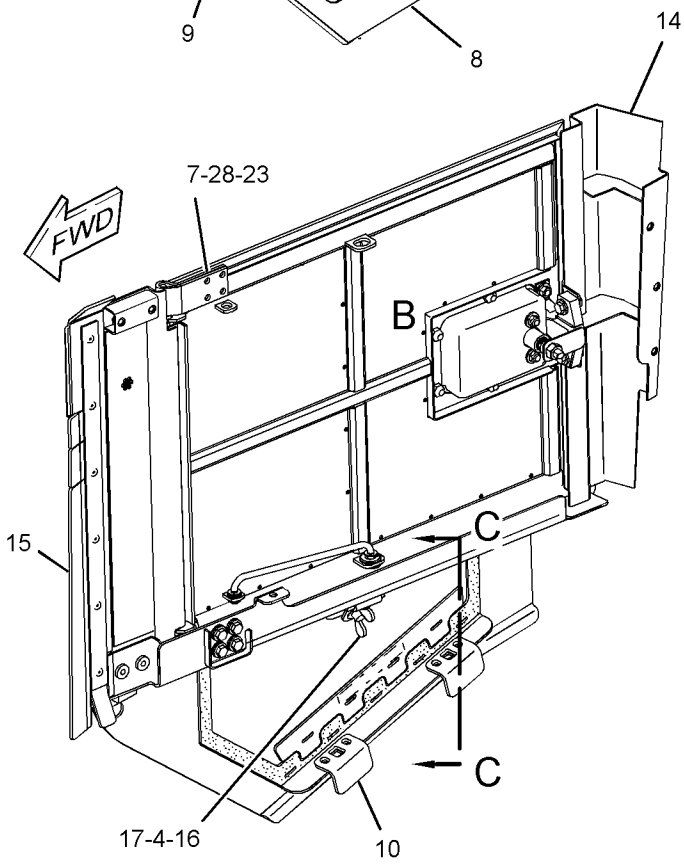

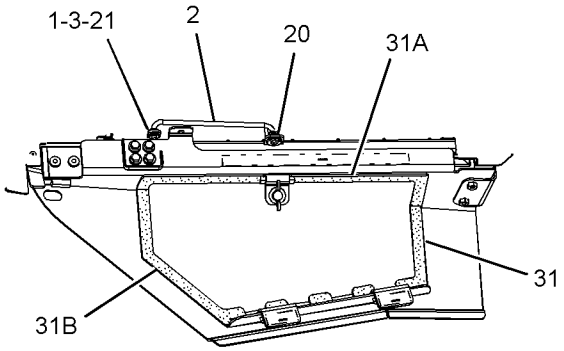

VIEW OF C-C

GRAPHIC #1 **<END>** g01212436

263-7725 ENCLOSURE GP-ENGINE–LH

S/N: EMM1-UP; JEN1-UP
PART OF 389-3299, 389-3300 ENCLOSURE GP-ENGINE
AN ATTACHMENT

SMCS-7263 **i05611336**

NOTE	REF NO	GRAPHIC REF	PART NUMBER	QTY	PART NAME 1 2 3 4 5 6 (PRODUCT LEVEL)	SEE PAGE
	1	1	**3B-4605**	1	PIN-COTTER	
	2	1	**3V-9399**	1	ROD AS	
		1	**4B-4278**	2	WASHER (10.2X20.5X1.6-MM THK)	
	3	1	**4B-4278**	1	WASHER (10.2X20.5X1.6-MM THK)	
	4	1	**8B-4624**	2	SHIM (0.032-IN THK)	
	5	1	**8T-9496**	2	LOCKNUT (9/16-18-THD)	
	6	1	**8Y-4000**	1	LATCH AS (T-BAR, COMPARTMENT)	
	7	1	**170-7694**	2	HINGE	
	8	1	**227-9306**	1	GUARD AS (LH)	
	9	1	**227-9310**	2	BRACKET	
	10	1	**237-2734**	1	PLATE AS (LH)	
	11	1	**261-3156**	1	DOOR AS	
	12	1	**262-7662**	1	SUPPORT AS (LH)	
	13	1	**264-6817**	1	BAFFLE AS (LH)	
	14	1	**275-4236**	1	SCREW-WING (M12X1.75X40-MM)	
	15	1	**3B-4610**	1	PIN-COTTER	
	16	1	**3W-9207**	1	GUIDE	
	17	1	**3W-9208**	1	PAWL	
	18	1	**4H-2558**	1	GROMMET	
	19	1	**4M-7470**	1	GROMMET	
M	20	1	**6V-7744**	2	LOCKNUT (M10X1.5-THD)	
	21	1	**7X-7729**	14	WASHER (11X25X3-MM THK)	
M	22	1	**8C-8585**	6	SCREW-BUTTON HEAD (M10X1.5X20-MM)	
	23	1	**8E-4832**	1	STRIKER	
M	24	1	**8T-4133**	2	NUT (M10X1.5-THD)	
M	25	1	**8T-4136**	2	BOLT (M10X1.5X25-MM)	
M	26	1	**8T-4137**	4	BOLT (M10X1.5X20-MM)	
M	27	1	**8T-4196**	2	BOLT (M10X1.5X35-MM)	
	28	1	**9W-8940**	1	PLATE	
D	29	1	**8T-5372**		SEAL (0.57-M)	
D	29A	1	**8T-5372**		SEAL (0.28-M)	
D	29B	1	**8T-5372**		SEAL (0.36-M)	

D - ORDER BY THE METER
M - METRIC PART

263-7725 **ENCLOSURE GP-ENGINE (*contd.*)** **i05611336**

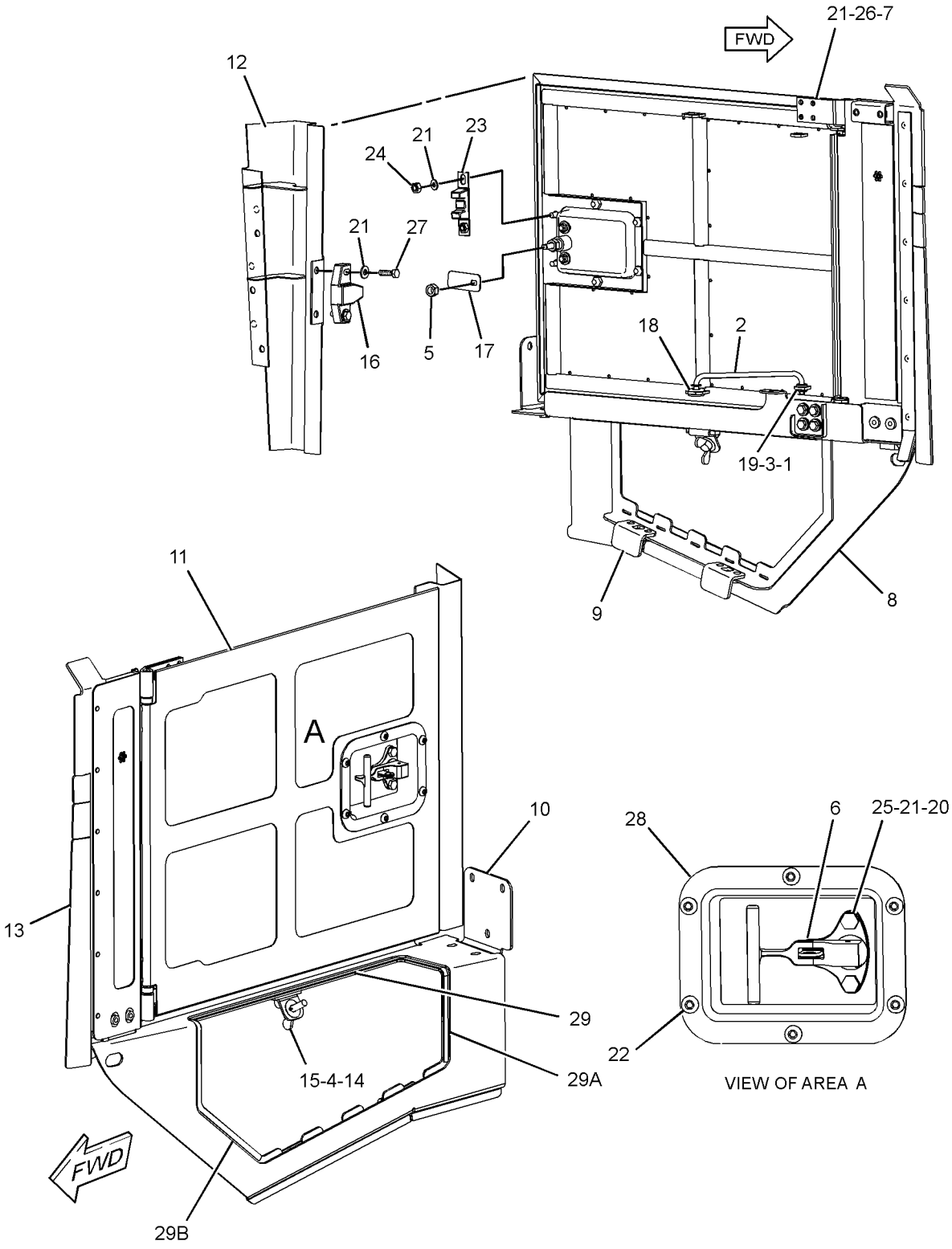

GRAPHIC #1 **<END>** g01209012

389-3245 ENCLOSURE GP-ENGINE

S/N: EMM1-UP; JEN1-UP
CANNOT BE USED WITH 399-9283—PAGE: 356
AN ATTACHMENT

SMCS-7263 **i05611252**

NOTE	PART NUMBER	QTY	PART NAME 1 2 3 4 5 6 (PRODUCT LEVEL)	SEE PAGE
Y	*373-1125*	1	BOX GP-BATTERY	320
Y	*389-3299*	1	ENCLOSURE GP-ENGINE	336
Y	*389-3295*	1	FENDER GP	344
Y	*389-3297*	1	HANDHOLD GP	605

Y - SEPARATE ILLUSTRATION

<END>

389-3247 ENCLOSURE GP-ELECTRICAL

S/N: EMM1-UP; JEN1-UP
CANNOT BE USED WITH 399-9283—PAGE: 356
AN ATTACHMENT

SMCS-7263 **i05611254**

NOTE	PART NUMBER	QTY	PART NAME 1 2 3 4 5 6 (PRODUCT LEVEL)	SEE PAGE
Y	*373-1125*	1	BOX GP-BATTERY	320
Y	*389-3300*	1	ENCLOSURE GP-ENGINE	338
Y	*389-3295*	1	FENDER GP	344
Y	*389-3297*	1	HANDHOLD GP	605

Y - SEPARATE ILLUSTRATION

<END>

389-3299 ENCLOSURE GP-ENGINE

S/N: EMM1-UP; JEN1-UP
PART OF 389-3245, 425-6994 ENCLOSURE GP-ENGINE
AN ATTACHMENT

SMCS-7263 **i05611309**

NOTE	REF NO	GRAPHIC REF	PART NUMBER	QTY	PART NAME 1 2 3 4 5 6 (PRODUCT LEVEL)	SEE PAGE
	1	1	**7K-1181**	2	STRAP-CABLE	
	2	1	**6T-9927**	2	SLIDE	
	3	1	**8G-4014**	2	RETAINER	
	4	1	**9P-3066**	2	MOUNTING	
	5	1	**227-9307**	1	DOOR AS (LH)	
	6	1	**261-3864**	1	TREAD	
Y	7	1	*263-7724*	1	ENCLOSURE GP-ENGINE (RH)	331
Y	8	1	*263-7725*	1	ENCLOSURE GP-ENGINE (LH)	333
	11	1	**318-2727**	1	HOOD AS	
M		1	**8T-3490**	23	NUT-WELD (M10X1.5-THD)	
M		1	**8T-5413**	2	STUD-WELD (M10X1.5X25-MM)	
M		1	**9X-6269**	1	NUT-WELD (M16X2-THD)	
		1	**126-7975**	2	HANDRAIL	
	12	1	**3W-3819**	2	PLATE	
	13	1	**6P-8269**	1	WASHER (20.5X88X6-MM THK)	
M	14	1	**6V-7743**	2	LOCKNUT (M6X1-THD)	
M	15	1	**7X-2555**	1	BOLT (M16X2X80-MM)	
	16	1	**7X-3392**	2	WASHER-HARD (13.5X22.5X3-MM THK)	
	17	1	**7X-7729**	43	WASHER (11X25X3-MM THK)	
M	18	1	**8C-8585**	4	SCREW-BUTTON HEAD (M10X1.5X20-MM)	
	19	1	**8T-2561**	4	WASHER-HARD (10.5X28.5X5-MM THK)	
M	20	1	**8T-4136**	26	BOLT (M10X1.5X25-MM)	
M	21	1	**8T-4137**	23	BOLT (M10X1.5X20-MM)	
M	22	1	**6V-7357**	2	BOLT (M6X1X25-MM)	
	23	1	**8T-4205**	4	WASHER-HARD (7.2X14.5X2-MM THK)	
	24	1	**9X-8257**	1	WASHER (17.5X30X3.5-MM THK)	
	25	1	**9X-8266**	2	WASHER (10.2X63.5X6-MM THK)	
D	27	1	**5P-7211**	1	SEAL (1.1-M)	
D	28	1	**5P-8309**	1	SEAL (0.55-M EACH)	
D	28A	1	**5P-8309**	1	SEAL (2.1-M EACH)	
	29	1	**394-2157**	1	SHIELD AS	
	30	1	**394-2158**	1	SHIELD AS	

D - ORDER BY THE METER
M - METRIC PART
Y - SEPARATE ILLUSTRATION

389-3299 **ENCLOSURE GP-ENGINE (*contd.*)** **i05611309**

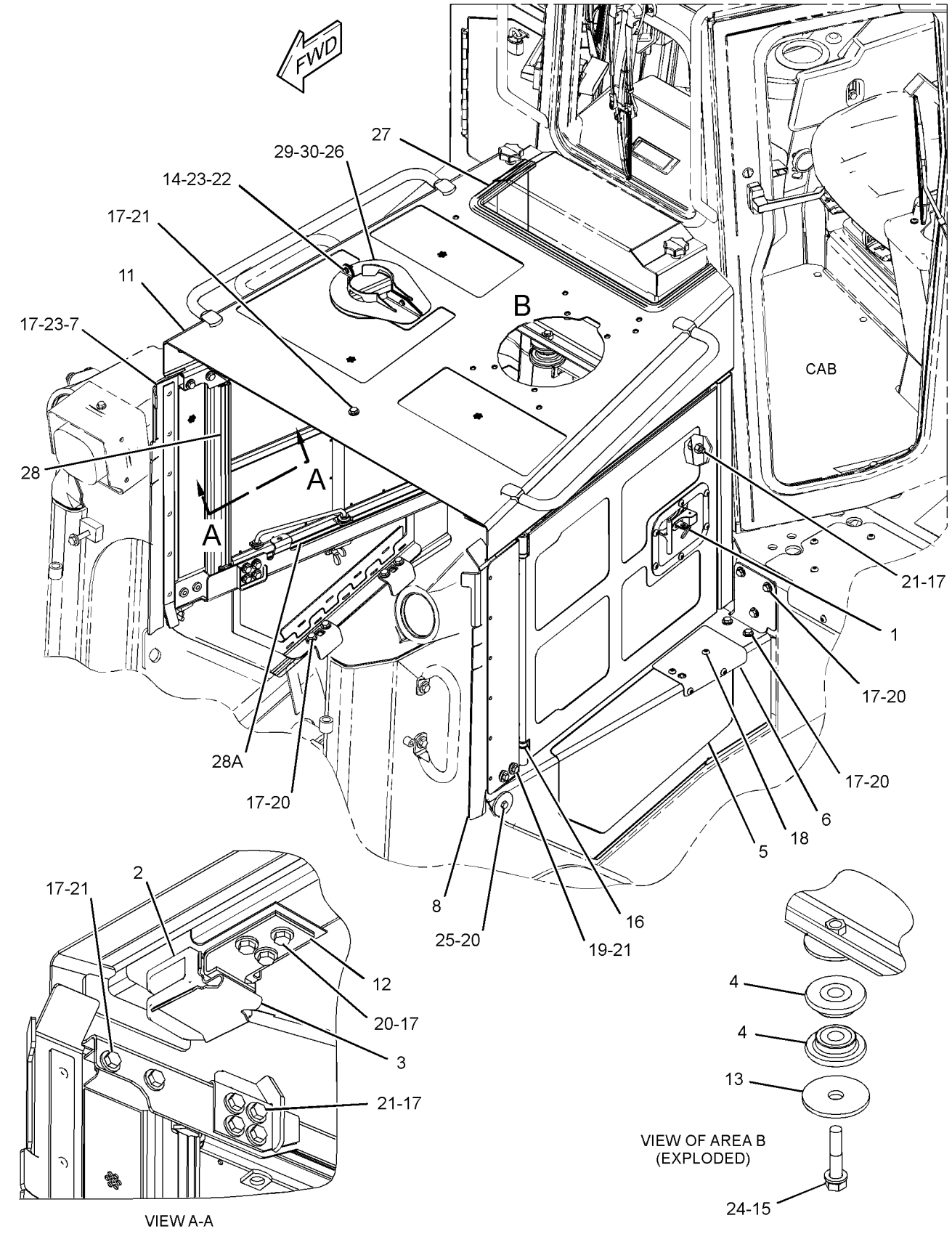

GRAPHIC #1 **<END>** g03566210

389-3300 ENCLOSURE GP-ENGINE

S/N: EMM1-UP; JEN1-UP
PART OF 389-3247 ENCLOSURE GP-ENGINE
AN ATTACHMENT

SMCS-7263 **i05680015**

NOTE	REF NO	GRAPHIC REF	PART NUMBER	QTY	PART NAME 1 2 3 4 5 6 (PRODUCT LEVEL)	SEE PAGE
	1	1	**7K-1181**	2	STRAP-CABLE	
	2	1	**6T-9927**	2	SLIDE	
	3	1	**8G-4014**	2	RETAINER	
	4	1	**9P-3066**	2	MOUNTING	
	5	1	**227-9307**	1	DOOR AS (LH)	
	6	1	**261-3864**	1	TREAD	
Y	7	1	*263-7724*	1	ENCLOSURE GP-ENGINE (RH)	331
Y	8	1	*263-7725*	1	ENCLOSURE GP-ENGINE (LH)	333
	11	1	**358-4689**	1	HOOD AS	
M		1	**8T-3490**	23	NUT-WELD (M10X1.5-THD)	
M		1	**8T-5413**	2	STUD-WELD (M10X1.5X25-MM)	
M		1	**9X-6269**	1	NUT-WELD (M16X2-THD)	
		1	**126-7975**	2	HANDRAIL	
	12	1	**3W-3819**	2	PLATE	
	13	1	**6P-8269**	1	WASHER (20.5X88X6-MM THK)	
M	14	1	**6V-7743**	2	LOCKNUT (M6X1-THD)	
M	15	1	**7X-2555**	1	BOLT (M16X2X80-MM)	
	16	1	**7X-3392**	2	WASHER-HARD (13.5X22.5X3-MM THK)	
	17	1	**7X-7729**	43	WASHER (11X25X3-MM THK)	
M	18	1	**8C-8585**	4	SCREW-BUTTON HEAD (M10X1.5X20-MM)	
	19	1	**8T-2561**	4	WASHER-HARD (10.5X28.5X5-MM THK)	
M	20	1	**8T-4136**	26	BOLT (M10X1.5X25-MM)	
M	21	1	**8T-4137**	23	BOLT (M10X1.5X20-MM)	
M	22	1	**6V-7357**	2	BOLT (M6X1X25-MM)	
	23	1	**8T-4205**	4	WASHER-HARD (7.2X14.5X2-MM THK)	
	24	1	**9X-8257**	1	WASHER (17.5X30X3.5-MM THK)	
	25	1	**9X-8266**	2	WASHER (10.2X63.5X6-MM THK)	
D	27	1	**5P-7211**	1	SEAL (1.1-M)	
D	28	1	**5P-8309**	1	SEAL (0.55-M EACH)	
D	28A	1	**5P-8309**	1	SEAL (2.1-M EACH)	
	29	1	**394-2157**	1	SHIELD AS	
	30	1	**394-2158**	1	SHIELD AS	

D - ORDER BY THE METER
M - METRIC PART
Y - SEPARATE ILLUSTRATION

389-3300 **ENCLOSURE GP-ENGINE (*contd.*)** **i05680015**

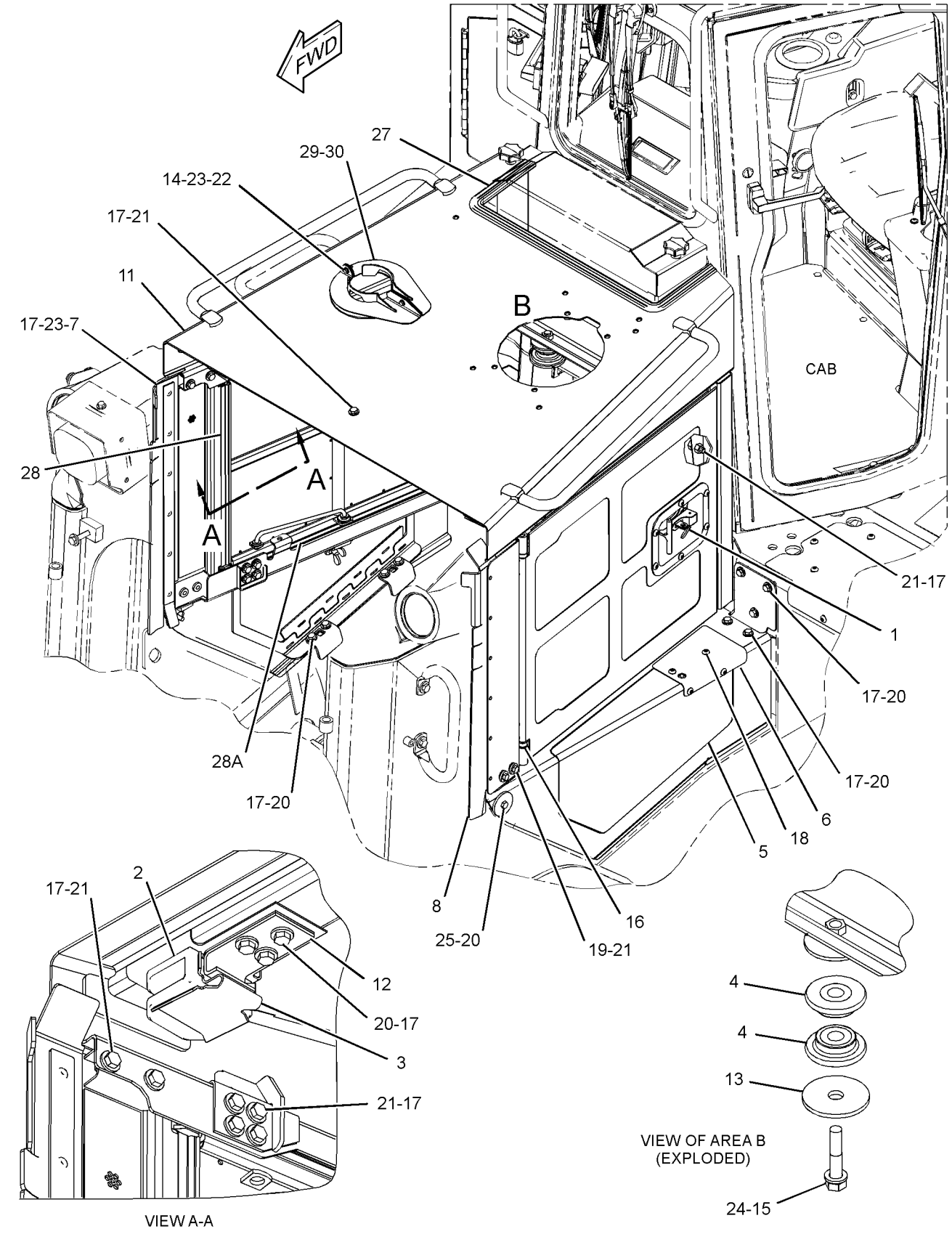

GRAPHIC #1 **<END>** g03606956

425-6994 ENCLOSURE GP-ENGINE—WOOD CHIP

S/N: EMM1-UP; JEN1-UP

AN ATTACHMENT

SMCS-7263 **i05634739**

NOTE	PART NUMBER	QTY	PART NAME 1 2 3 4 5 6 (PRODUCT LEVEL)	SEE PAGE
Y	*415-1472*	1	BOX GP-BATTERY	321
Y	*389-3299*	1	ENCLOSURE GP-ENGINE	336
Y	*389-3295*	1	FENDER GP	344
Y	*389-3298*	1	HANDHOLD GP	606

Y - SEPARATE ILLUSTRATION

<END>

386-1154 ENCLOSURE GP-HYDRAULIC TANK

S/N: EMM1-UP; JEN1-UP

PART OF 389-3221, 389-3222 CHASSIS AR

SMCS-5056 **i05640512**

NOTE	REF NO	GRAPHIC REF	PART NUMBER	QTY	PART NAME 1 2 3 4 5 6 (PRODUCT LEVEL)	SEE PAGE
M	1	1	**8T-4137**	2	BOLT (M10X1.5X20-MM)	
	2	1	**231-4390**	1	COVER AS (DOOR ACCESS)	
		1	**4H-1641**	2	PIN-SPRING	
		1	**8E-7561**	2	KNOB AS (DOOR ACCESS)	
					(EACH INCLUDES)	
		1	**8E-1205**	1	KNOB	
		1	**8T-7566**	1	PIN-SPRING	
		1	**7S-2042**	1	STUD (3/8-16X1.5-IN)	
		1	**9S-8230**	2	PLATE AS	
					(EACH INCLUDES)	
		1	**1F-0750**	1	NUT-WELD (3/8-16-THD)	
	3	1	**241-6498**	1	BRACKET AS	
	4	1	**241-6499**	1	PLATE	
	5	1	**241-6919**	1	BRACKET AS	
M		1	**8T-3490**	1	NUT-WELD (M10X1.5-THD)	
	6	1	**7X-7729**	10	WASHER (11X25X3-MM THK)	
M	7	1	**8T-4136**	8	BOLT (M10X1.5X25-MM)	
	8	1	**7K-1181**	2	STRAP-CABLE	

M - METRIC PART

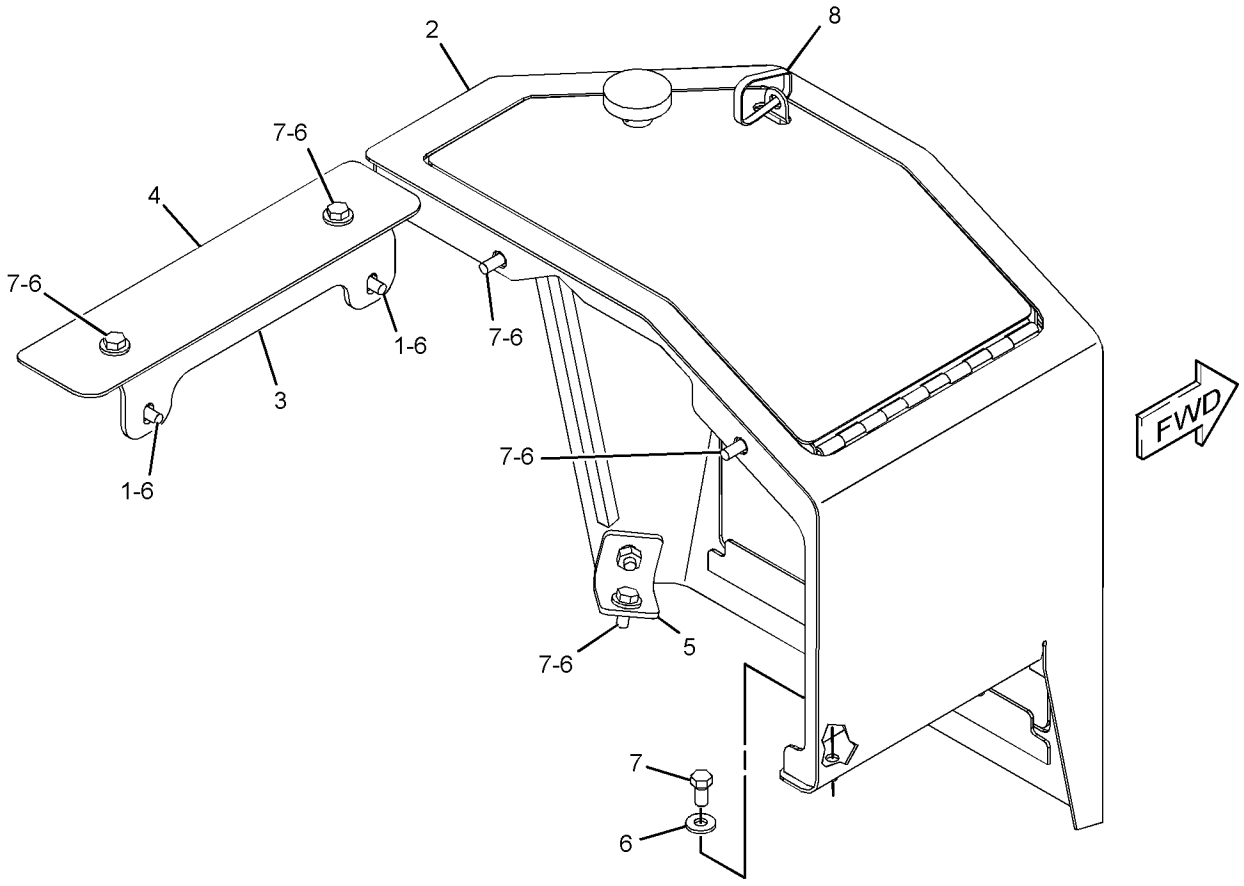

GRAPHIC #1 **<END>** g03261416

377-2661 FENDER GP–LH

S/N: EMM1-UP; JEN1-UP
PART OF 389-3295 FENDER GP
AN ATTACHMENT

SMCS-7252 **i05611291**

NOTE	REF NO	GRAPHIC REF	PART NUMBER	QTY	PART NAME 1 2 3 4 5 6 (PRODUCT LEVEL)	SEE PAGE
	1	1	**162-2480**	13	RIVET	
	2	1	**377-2663**	1	FENDER AS (LH)	
	3	1	**377-2665**	1	PLATE	
	4	1	**377-2667**	1	PLATE	

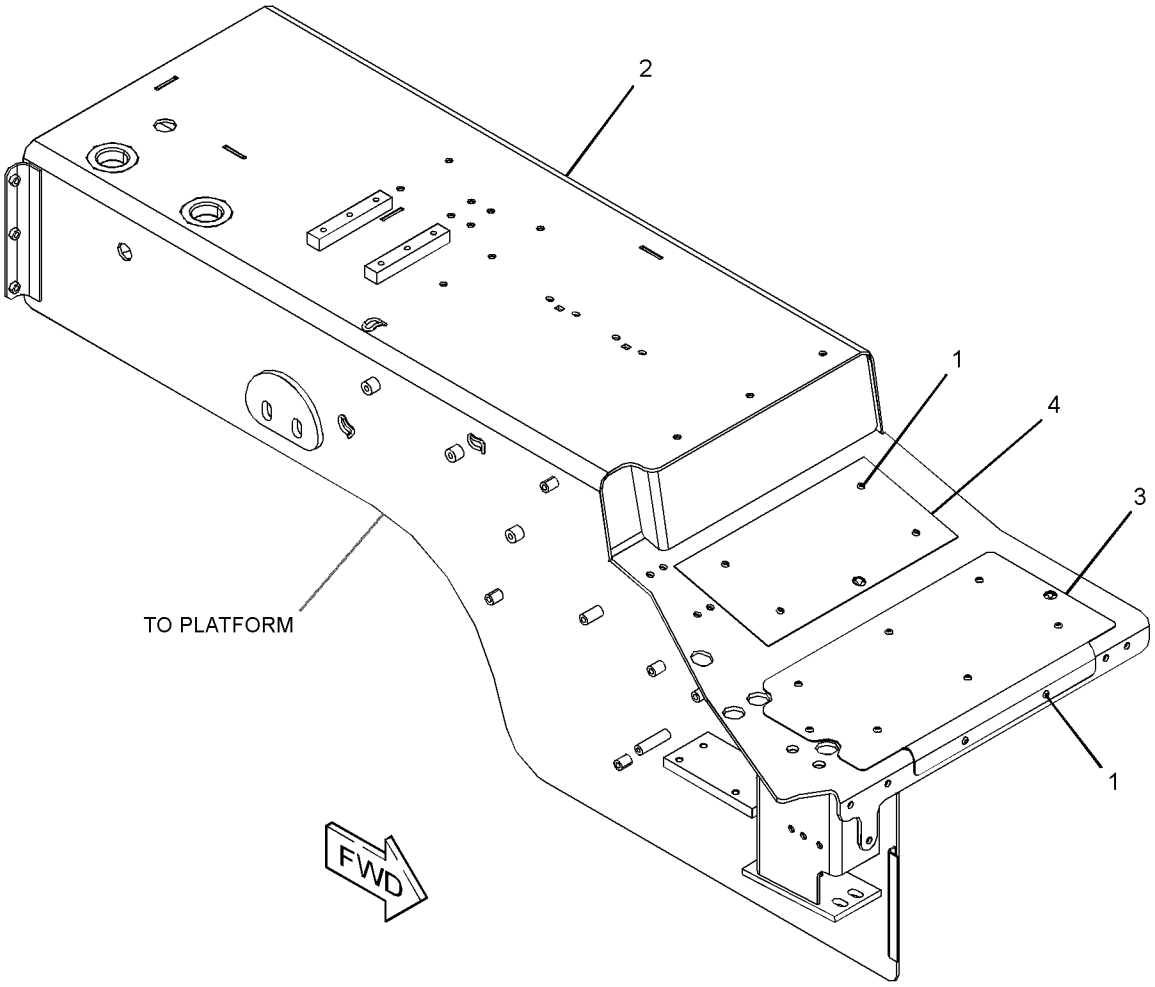

GRAPHIC #1 **<END>** g03261176

377-2662 FENDER GP–RH

S/N: EMM1-UP; JEN1-UP
PART OF 389-3295 FENDER GP
AN ATTACHMENT

SMCS-7252 **i05611292**

NOTE	REF NO	GRAPHIC REF	PART NUMBER	QTY	PART NAME 1 2 3 4 5 6 (PRODUCT LEVEL)	SEE PAGE
	1	1	**162-2480**	13	RIVET	
	2	1	**377-2664**	1	FENDER AS (RH)	
	3	1	**377-2667**	1	PLATE	
	4	1	**377-2669**	1	PLATE	

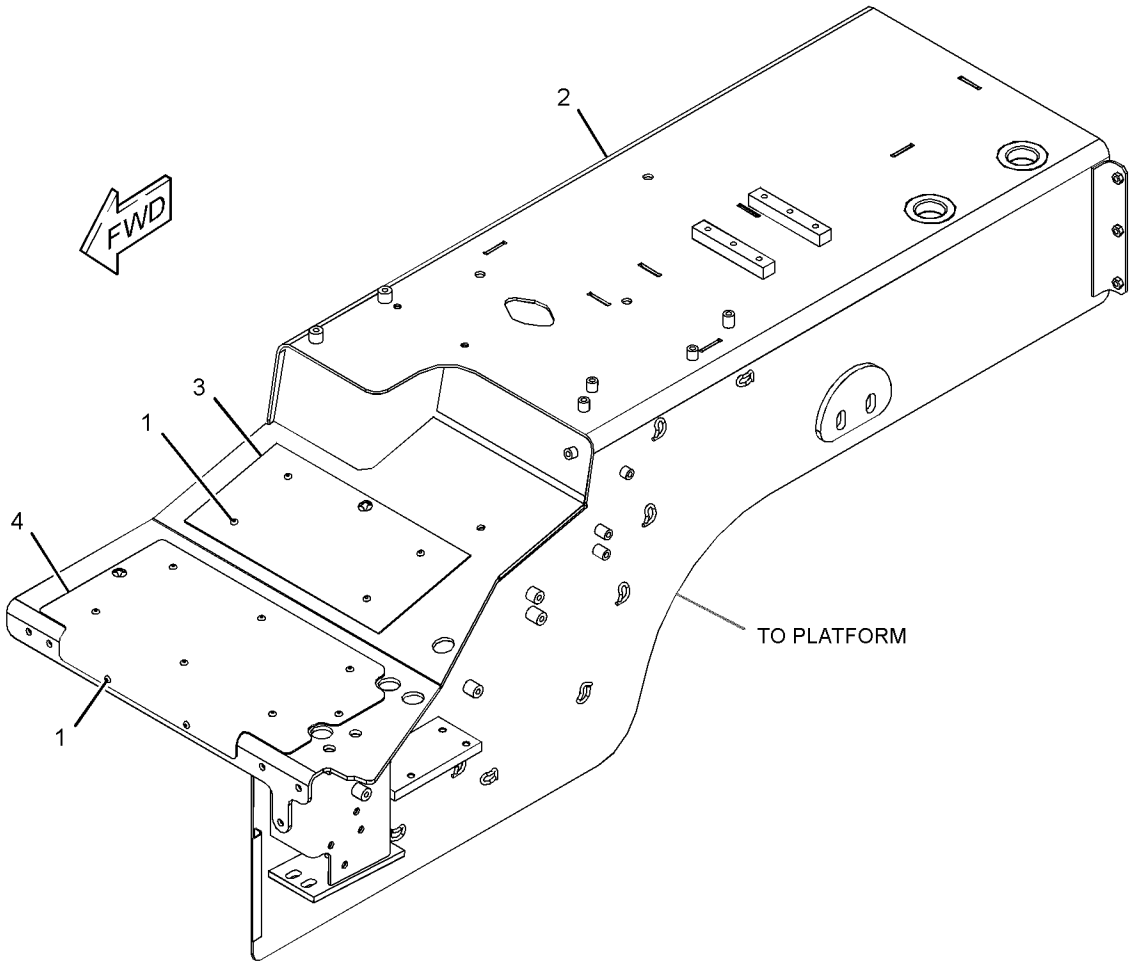

GRAPHIC #1 **<END>** g03261256

389-3295 FENDER GP

S/N: EMM1-UP; JEN1-UP

PART OF 389-3245, 389-3247, 425-6994 ENCLOSURE GP-ENGINE

AN ATTACHMENT

SMCS-7252 **i05611270**

NOTE	REF NO	GRAPHIC REF	PART NUMBER	QTY	PART NAME 1 2 3 4 5 6 (PRODUCT LEVEL)	SEE PAGE
	1	1	**227-6656**	1	SUPPORT AS	
M		1	**8T-3597**	1	NUT-WELD (M12X1.75-THD)	
M		1	**9R-2613**	4	BOSS-WELD (M10X1.5X25-MM)	
M		1	**9R-2672**	5	BOSS-THREADED (M10X1.5-THD)	
Y	2	1	*377-2661*	1	FENDER GP (LH)	342
Y	3	1	*377-2662*	1	FENDER GP (RH)	343
	4	1	**5P-1076**	8	WASHER-HARD (13.5X30X4-MM THK)	
M	5	1	**7X-2553**	8	BOLT (M16X2X40-MM)	
	6	1	**7X-3391**	12	WASHER-HARD (13.5X32X6-MM THK)	
M	7	1	**8T-4183**	20	BOLT (M12X1.75X40-MM)	
M	8	1	**8T-4187**	4	BOLT (M20X2.5X80-MM)	
	9	1	**8T-5439**	4	WASHER-HARD (21.5X45X6-MM THK)	
	10	1	**9X-8257**	8	WASHER (17.5X30X3.5-MM THK)	

M - METRIC PART
Y - SEPARATE ILLUSTRATION

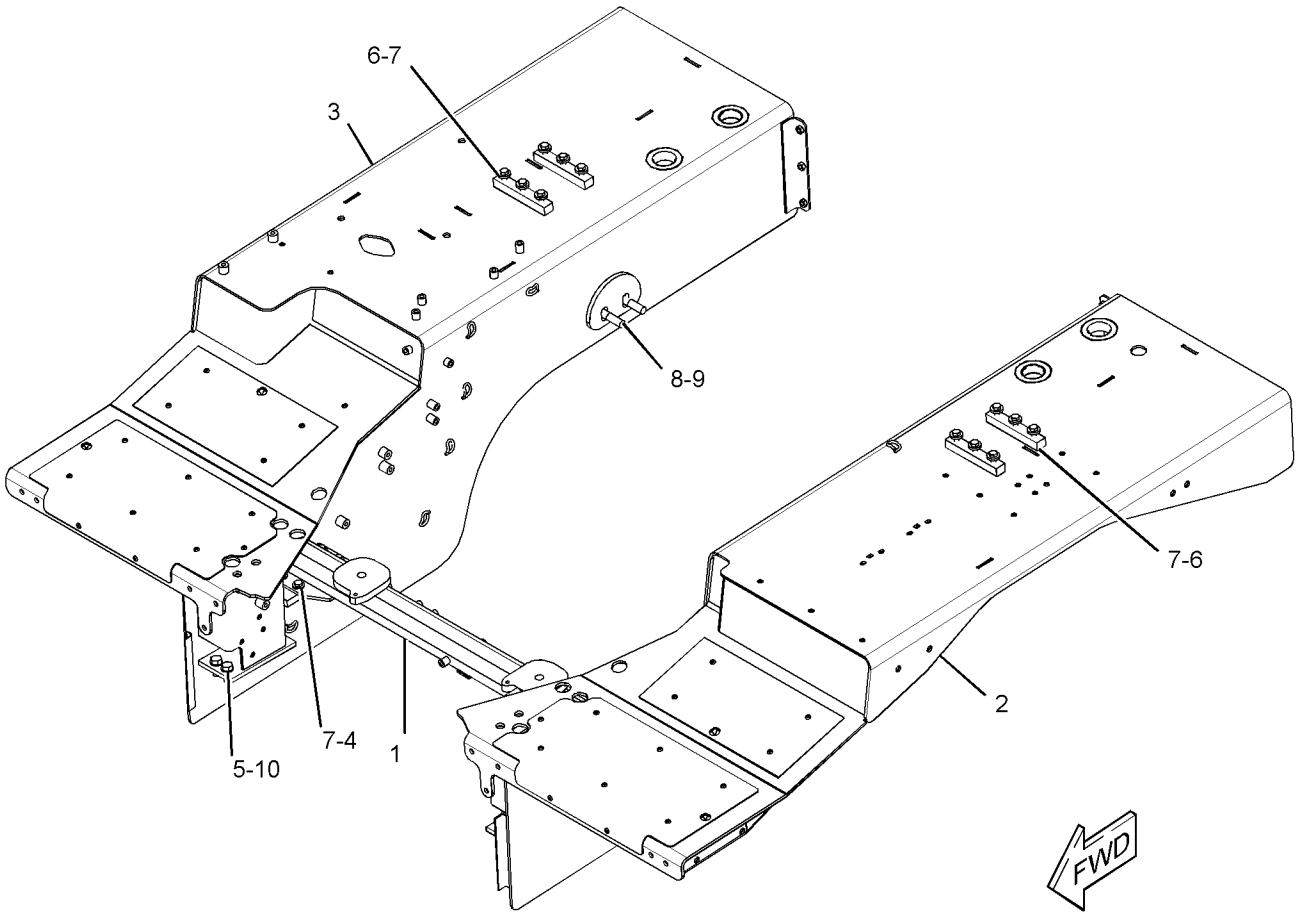

GRAPHIC #1 **<END>** g03566562

358-3217 GRID GP-SAND BLAST ERODING

S/N: EMM1-UP; JEN1-UP

AN ATTACHMENT

SMCS-7179 **i05502713**

NOTE	REF NO	GRAPHIC REF	PART NUMBER	QTY	PART NAME 1 2 3 4 5 6 (PRODUCT LEVEL)	SEE PAGE
	1	1	**180-6693**	4	BRACKET	
	2	1	**358-3216**	1	GRID AS	
	3	1	**7X-7729**	12	WASHER (11X25X3-MM THK)	
M	4	1	**8T-4136**	12	BOLT (M10X1.5X25-MM)	

M - METRIC PART

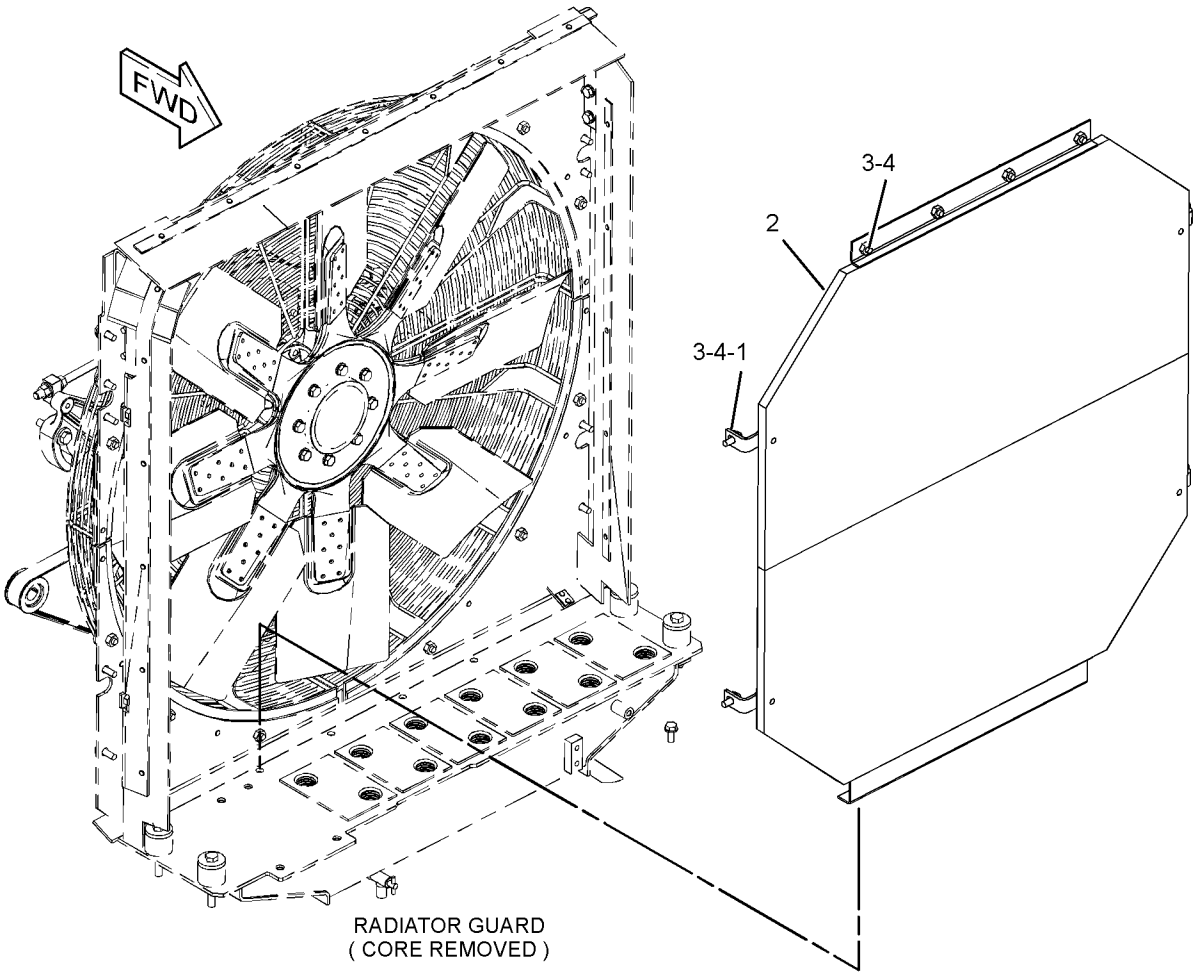

GRAPHIC #1 **<END>** g02361241

389-3239 GRILL GP-RADIATOR

S/N: EMM1-UP; JEN1-UP

AN ATTACHMENT

SMCS-7170 **i05611096**

NOTE	REF NO	GRAPHIC REF	PART NUMBER	QTY	PART NAME 1 2 3 4 5 6 (PRODUCT LEVEL)	SEE PAGE
	1	1	**9W-2822**	1	ROD	
	2	1	**109-4757**	1	GRILL AS	
	3	1	**265-9596**	4	WASHER-HARD (13.5X30X9-MM THK)	
	4	1	**3B-4615**	2	PIN-COTTER	
M	5	1	**8T-4910**	4	BOLT (M12X1.75X60-MM)	

M - METRIC PART

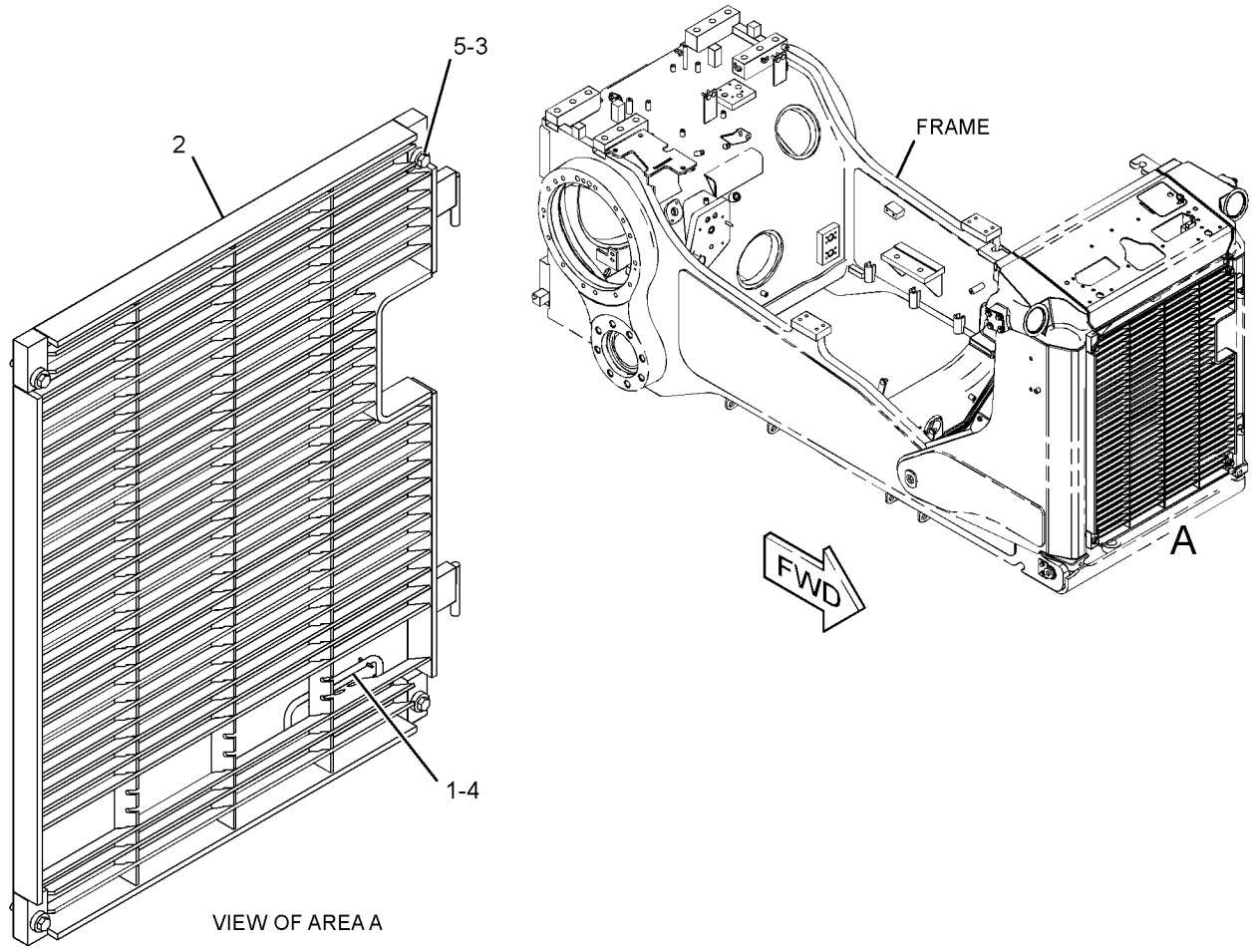

GRAPHIC #1 **<END>** g03565818

389-3240 GRILL GP-RADIATOR—HEAVY-DUTY

S/N: EMM1-UP; JEN1-UP

AN ATTACHMENT

SMCS-7170 **i05680134**

NOTE	REF NO	GRAPHIC REF	PART NUMBER	QTY	PART NAME 1 2 3 4 5 6 (PRODUCT LEVEL)	SEE PAGE
	1	1	**3W-1944**	1	GRILL AS (RH)	
	2	1	**9W-2822**	2	ROD	
	3	1	**398-8005**	1	GRILL AS (LH)	
	4	1	**265-9596**	4	WASHER-HARD (13.5X30X9-MM THK)	
	5	1	**3B-4615**	4	PIN-COTTER	
	6	1	**5P-1076**	4	WASHER-HARD (13.5X30X4-MM THK)	
M	7	1	**8T-4194**	4	BOLT (M12X1.75X50-MM)	
M	8	1	**8T-6868**	4	BOLT (M12X1.75X80-MM)	

M - METRIC PART

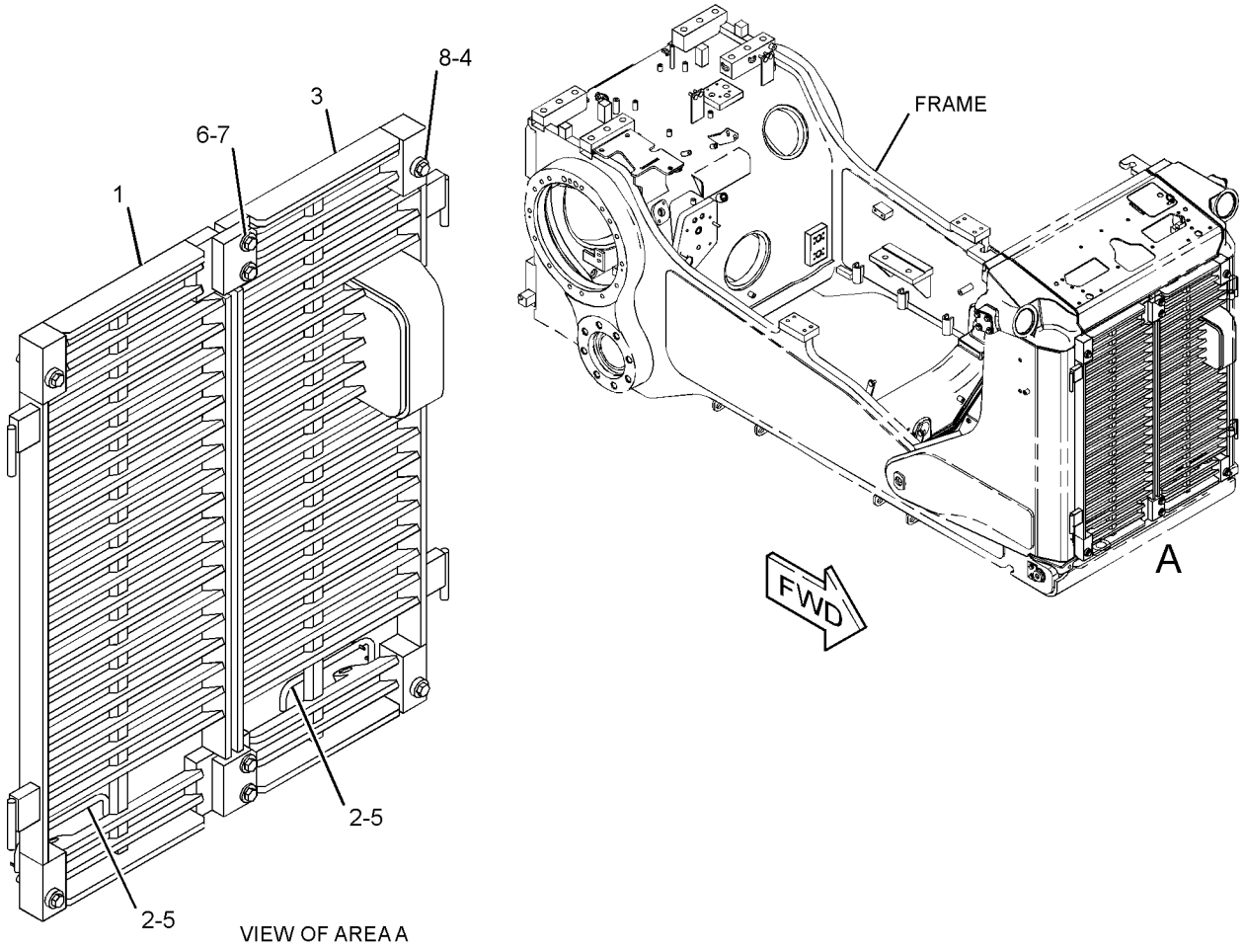

GRAPHIC #1 **<END>** g03565810

389-3232 GUARD GP-BOTTOM

S/N: EMM1-UP; JEN1-UP
AN ATTACHMENT

SMCS-7153 **i05680133**

NOTE	REF NO	GRAPHIC REF	PART NUMBER	QTY	PART NAME 1 2 3 4 5 6 (PRODUCT LEVEL)	SEE PAGE
	1	1	**172-5487**	2	SPACER (17X29X7.5-MM THK)	
	2	1	**217-3655**	14	RETAINER	
	3	1	**227-8802**	1	GUARD AS	
	4	1	**230-7699**	1	GUARD AS	
	5	1	**230-7700**	1	GUARD AS	
	6	1	**310-9455**	1	COVER AS	
	7	1	**378-4721**	1	PLATE AS	
D		1	**5P-5649**		SEAL-BULK (0.76-M)	
		1	**227-3151**	1	PLATE AS	
	8	1	**3B-4629**	4	PIN-COTTER	
	9	1	**3V-9244**	2	WASHER (16.5X50X5-MM THK)	
	10	1	**4J-2036**	4	PIN	
	11	1	**7X-0594**	8	WASHER-HARD (20X38X3-MM THK)	
M	12	1	**7X-2553**	2	BOLT (M16X2X40-MM)	
M	13	1	**8C-8478**	14	BOLT (M20X2.5X140-MM)	
	14	1	**8T-4121**	1	WASHER-HARD (11X21X2.5-MM THK)	
M	15	1	**8T-4131**	14	NUT (M20X2.5-THD)	
M	16	1	**8T-4196**	1	BOLT (M10X1.5X35-MM)	
	17	1	**8T-5439**	14	WASHER-HARD (21.5X45X6-MM THK)	

D - ORDER BY THE METER
M - METRIC PART

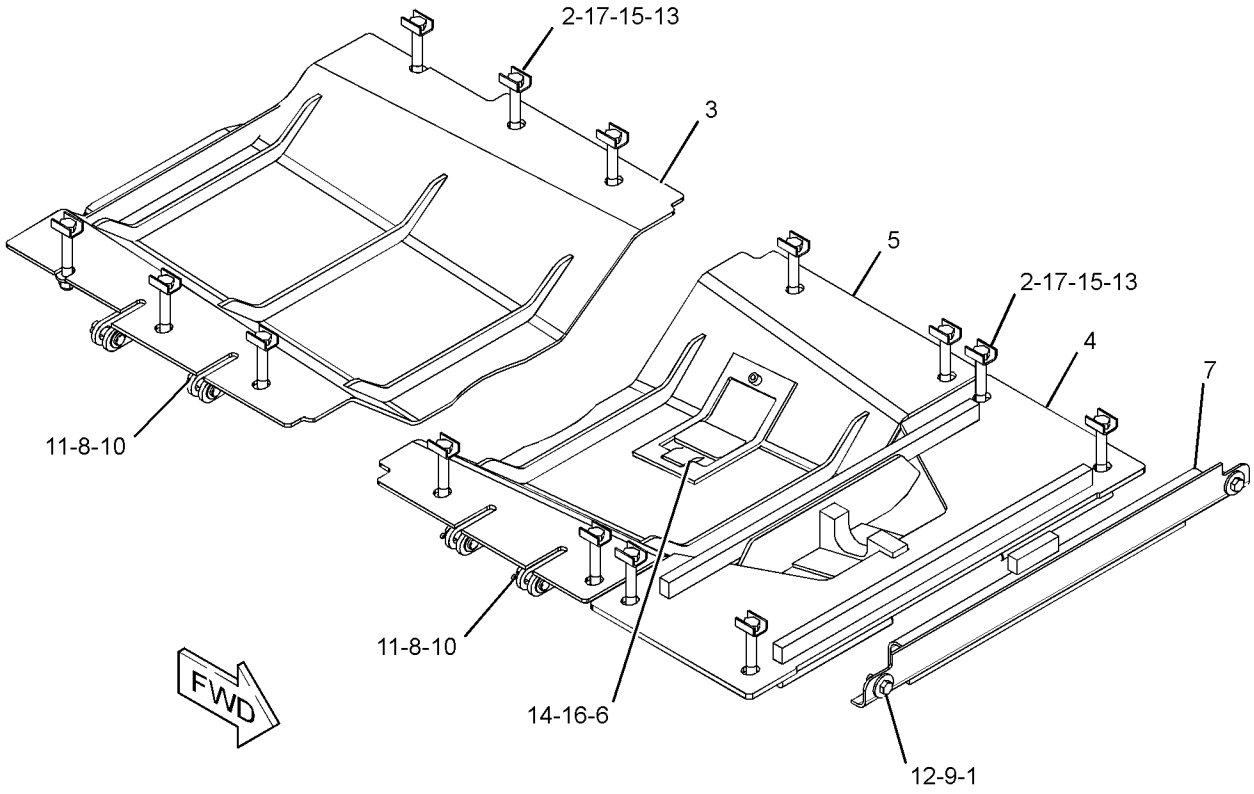

GRAPHIC #1 **<END>** g03565844

389-3233 GUARD GP-BOTTOM

S/N: EMM1-UP; JEN1-UP
EXTREME SERVICE, SEALED
AN ATTACHMENT

SMCS-7153 **i05680145**

NOTE	REF NO	GRAPHIC REF	PART NUMBER	QTY	PART NAME 1 2 3 4 5 6 (PRODUCT LEVEL)	SEE PAGE
	1	1	**217-3655**	14	RETAINER	
	2	1	**258-6948**	1	GUARD AS	
	3	1	**258-6949**	1	GUARD AS	
	4	1	**258-7607**	1	GUARD AS	
	5	1	**260-3208**	1	GUARD AS	
	6	1	**310-9455**	1	COVER AS	
	7	1	**3B-4629**	4	PIN-COTTER	
	8	1	**3V-9244**	2	WASHER (16.5X50X5-MM THK)	
	9	1	**4J-2036**	4	PIN	
	10	1	**7X-0594**	8	WASHER-HARD (20X38X3-MM THK)	
M	11	1	**7X-2553**	2	BOLT (M16X2X40-MM)	
M	12	1	**8C-8478**	14	BOLT (M20X2.5X140-MM)	
	13	1	**8T-4121**	1	WASHER-HARD (11X21X2.5-MM THK)	
	14	1	**8T-4122**	6	WASHER-HARD (17X32X3.5-MM THK)	
M	15	1	**8T-4131**	14	NUT (M20X2.5-THD)	
M	16	1	**8T-4196**	1	BOLT (M10X1.5X35-MM)	
	17	1	**8T-5439**	14	WASHER-HARD (21.5X45X6-MM THK)	
D	18	1	**6V-2499**		SEAL (0.8-M)	
D	19	1	**5P-5755**		SEAL (1.1-M)	
D	20	1	**5P-7483**		SEAL (1.2-M)	
D	20A	1	**5P-7483**		SEAL (0.2-M EACH)	
D	21	1	**5P-7514**		SEAL (1.1-M EACH)	
E	22	1	**9X-8699**		SEAL (100-CM)	

D - ORDER BY THE METER
E - ORDER BY THE CENTIMETER
M - METRIC PART

389-3233 **GUARD GP-BOTTOM (*contd.*)** **i05680145**

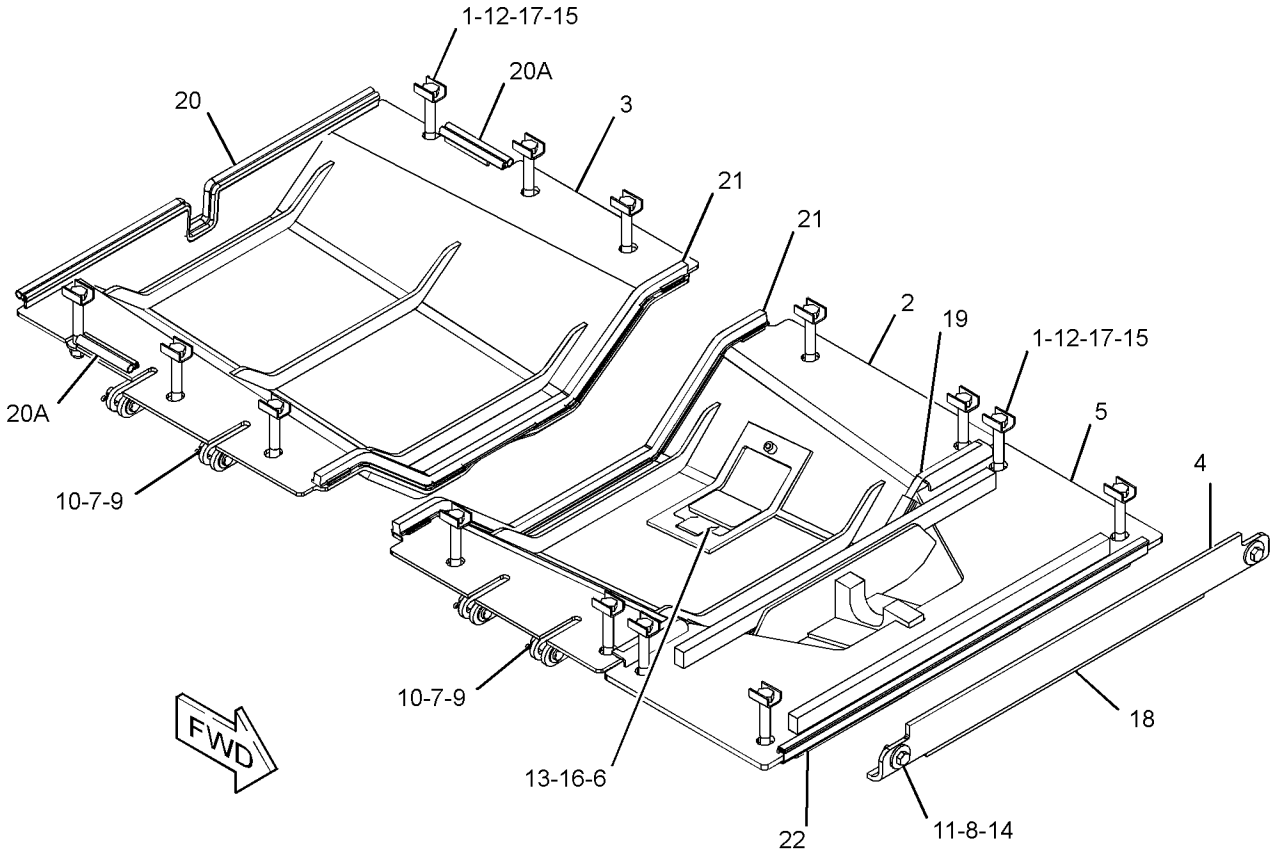

GRAPHIC #1 **<END>** g03565829

246-4759 GUARD GP-FINAL DRIVE

S/N: JEN1-UP

FIELD INSTALLATION

SMCS-7172 **i05505449**

NOTE	REF NO	GRAPHIC REF	PART NUMBER	QTY	PART NAME 1 2 3 4 5 6 (PRODUCT LEVEL)	SEE PAGE
	1	1	**187-9178**	4	GUARD	
	2	1	**188-9040**	4	COVER	
	3	1	**205-0209**	4	SPACER	
	4	1	**205-0254**	8	SPACER	
	5	1	**238-7545**	16	BOLT (M22X2.5X150-MM)	
	6	1	**5M-2894**	16	WASHER-HARD (10.2X18.5X2.5-MM THK)	
	7	1	**8C-6913**	16	WASHER-HARD (24X41.5X4-MM THK)	
	8	1	**9B-7237**	16	BOLT (3/8-16X1.25-IN)	

QUANTITIES SHOWN ARE THOSE REQUIRED FOR BOTH LH AND RH SIDES

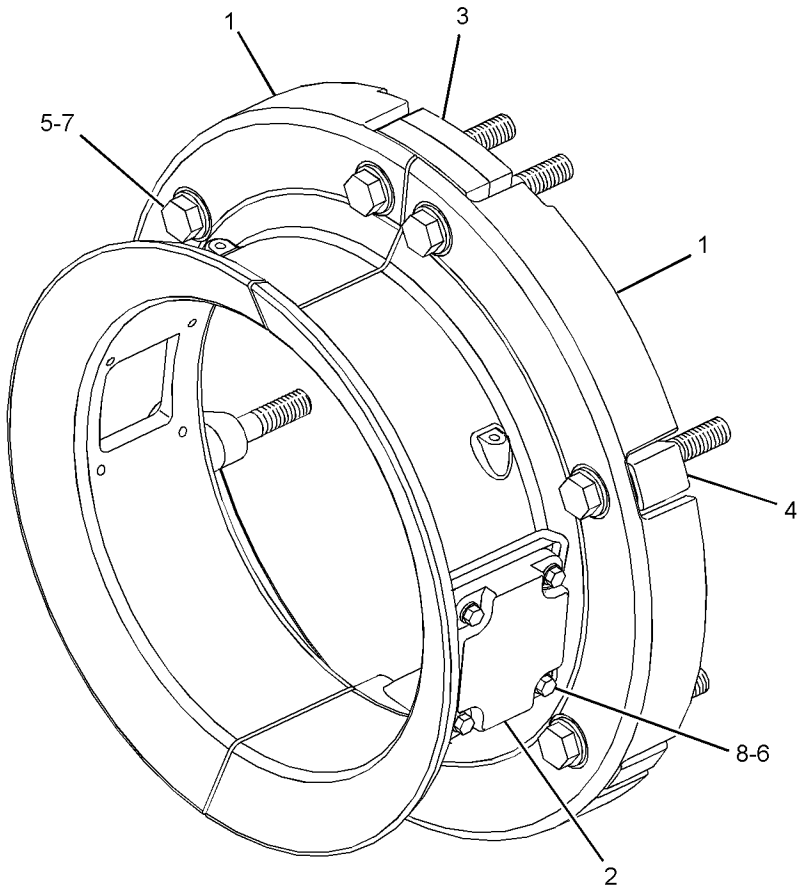

GRAPHIC #1 **<END>** g01208219

389-3235 GUARD GP-FUEL TANK

S/N: EMM1-UP; JEN1-UP
CANNOT BE USED WITH 389-3225–PAGE: 456, 389-3227–PAGE: 457
AN ATTACHMENT

SMCS-1273, 7150

i05600521

NOTE	REF NO	GRAPHIC REF	PART NUMBER	QTY	PART NAME 1 2 3 4 5 6 (PRODUCT LEVEL)	SEE PAGE
	1	1	**106-9361**	1	PLATE	
	2	1	**7X-7729**	6	WASHER (11X25X3-MM THK)	
M	3	1	**8T-4195**	6	BOLT (M10X1.5X30-MM)	

M - METRIC PART

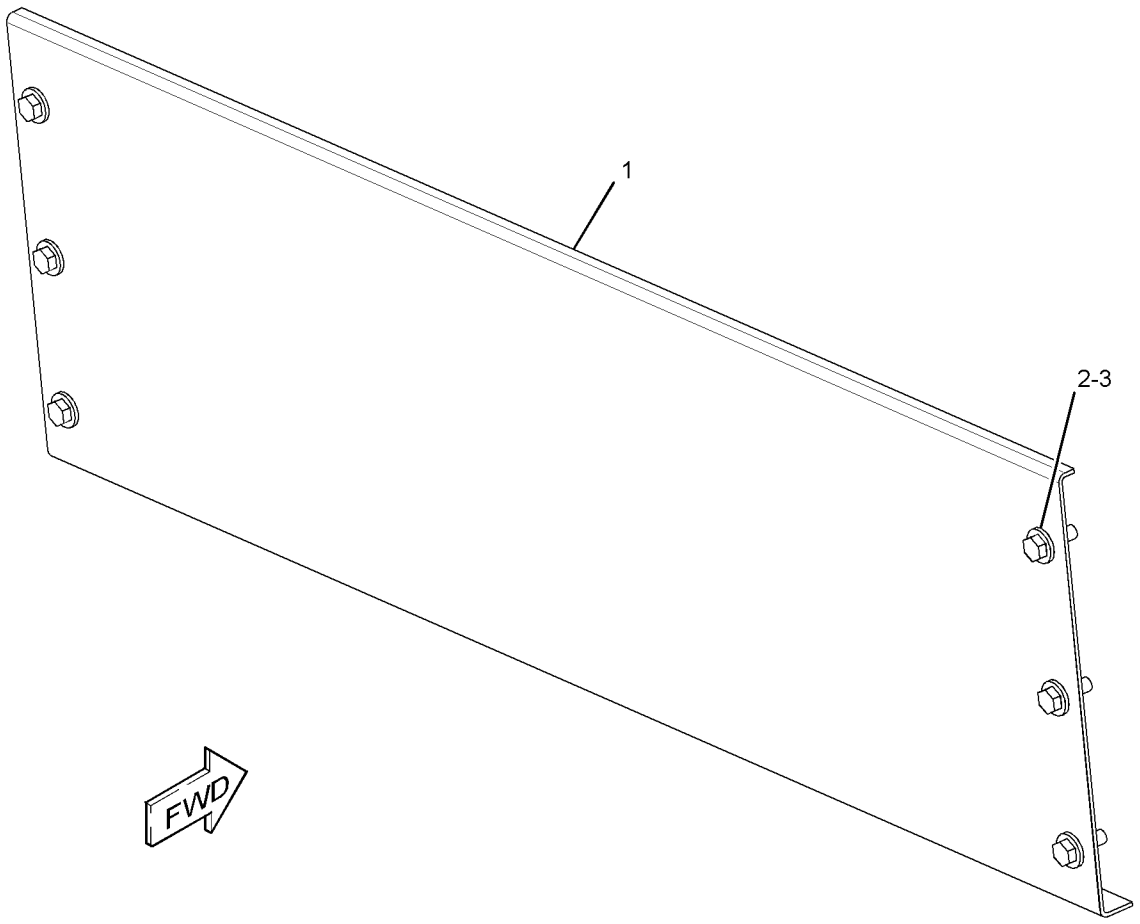

GRAPHIC #1

<END>

g03565827

389-3236 GUARD GP-FUEL TANK

S/N: EMM1-UP; JEN1-UP
FOR USE WITH 389-3225—PAGE: 456, 389-3227—PAGE: 457
AN ATTACHMENT

SMCS-1273, 7150

i05600535

NOTE	REF NO	GRAPHIC REF	PART NUMBER	QTY	PART NAME 1 2 3 4 5 6 (PRODUCT LEVEL)	SEE PAGE
	1	1	**226-8206**	1	GUARD	
	2	1	**7X-7729**	6	WASHER (11X25X3-MM THK)	
M	3	1	**8T-4195**	6	BOLT (M10X1.5X30-MM)	

M - METRIC PART

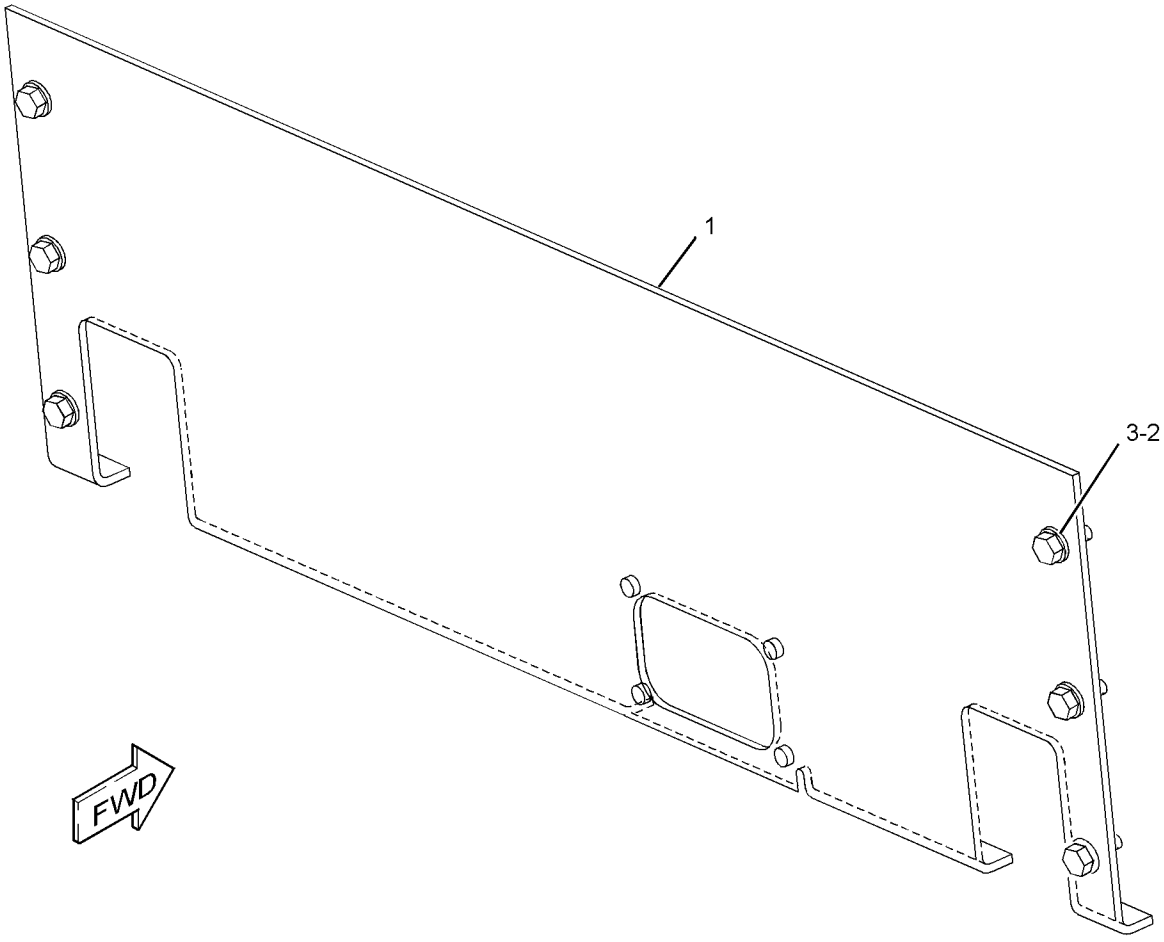

GRAPHIC #1

<END>

g03565802

389-3237 GUARD GP-FUEL TANK

S/N: EMM1-UP; JEN1-UP
CANNOT BE USED WITH 389-3225–PAGE: 456, 389-3227–PAGE: 457
AN ATTACHMENT

SMCS-1273, 7150

i05600579

NOTE	REF NO	GRAPHIC REF	PART NUMBER	QTY	PART NAME 1 2 3 4 5 6 (PRODUCT LEVEL)	SEE PAGE
	1	1	**255-1137**	1	GUARD AS-REAR (RH)	
	2	1	**255-1138**	1	GUARD AS (LH)	
	3	1	**255-1139**	1	GUARD AS (RH)	
	4	1	**256-7780**	1	GUARD AS-REAR (LH)	
	5	1	**256-7782**	1	PLATE	
	6	1	**264-7384**	1	PLATE AS	
	7	1	**5P-1076**	26	WASHER-HARD (13.5X30X4-MM THK)	
	8	1	**7X-7729**	6	WASHER (11X25X3-MM THK)	
M	9	1	**8T-4139**	4	BOLT (M12X1.75X30-MM)	
M	10	1	**8T-4195**	6	BOLT (M10X1.5X30-MM)	
M	11	1	**8T-4956**	16	BOLT (M12X1.75X35-MM)	
M	12	1	**8T-6868**	6	BOLT (M12X1.75X80-MM)	

M - METRIC PART

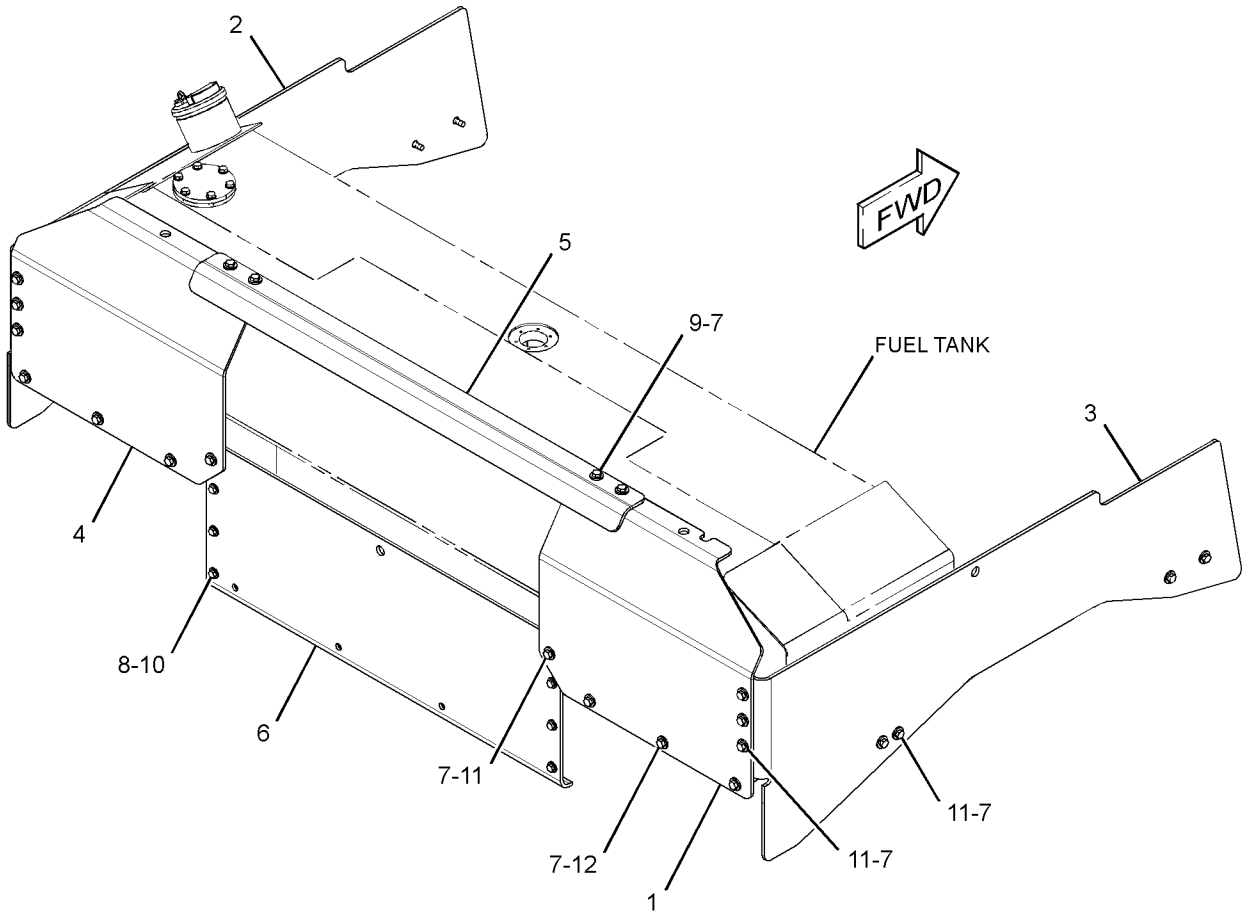

GRAPHIC #1

<END>

g01364735

389-3238 GUARD GP-FUEL TANK

S/N: EMM1-UP; JEN1-UP
FOR USE WITH 389-3225—PAGE: 456, 389-3225—PAGE: 456
AN ATTACHMENT

SMCS-1273, 7150 **i05600528**

NOTE	REF NO	GRAPHIC REF	PART NUMBER	QTY	PART NAME 1 2 3 4 5 6 (PRODUCT LEVEL)	SEE PAGE
	1	1	**255-1137**	1	GUARD AS-REAR (RH)	
	2	1	**255-1138**	1	GUARD AS (LH)	
	3	1	**255-1139**	1	GUARD AS (RH)	
	4	1	**256-7780**	1	GUARD AS-REAR (LH)	
	5	1	**256-7781**	1	GUARD AS-FUEL TANK	
	6	1	**256-7782**	1	PLATE	
	7	1	**5P-1076**	26	WASHER-HARD (13.5X30X4-MM THK)	
	8	1	**7X-7729**	6	WASHER (11X25X3-MM THK)	
M	9	1	**8T-4139**	4	BOLT (M12X1.75X30-MM)	
M	10	1	**8T-4195**	6	BOLT (M10X1.5X30-MM)	
M	11	1	**8T-4956**	16	BOLT (M12X1.75X35-MM)	
M	12	1	**8T-6868**	6	BOLT (M12X1.75X80-MM)	

M - METRIC PART

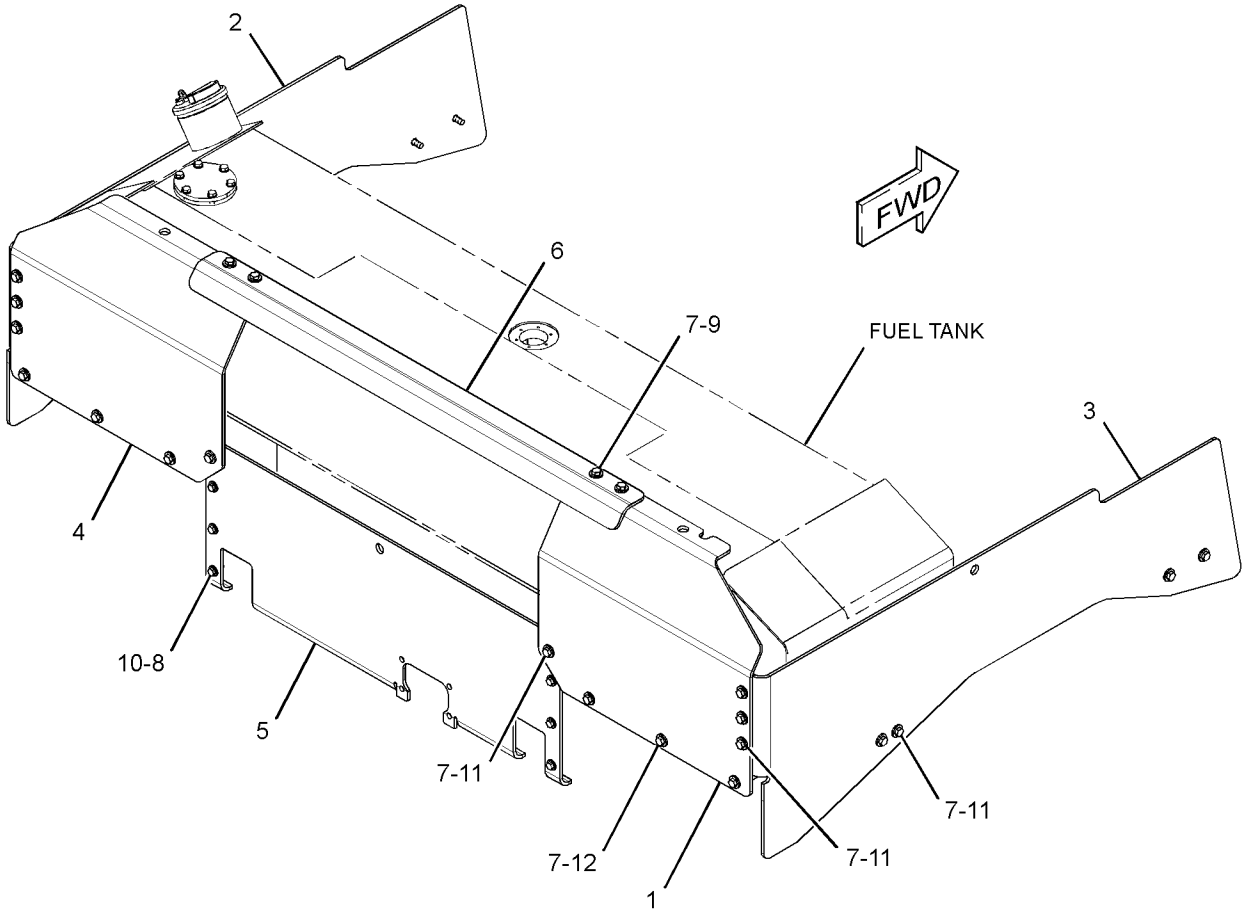

GRAPHIC #1 **<END>** g01364743

399-9283 GUARD GP-FUEL TANK

S/N: EMM1-UP; JEN1-UP
FOR USE WITH 425-6994—PAGE: 340
CANNOT BE USED WITH RIPPER AR, CONTROL AR-HYDRAULIC
AN ATTACHMENT

SMCS-1273, 7150 **i05633336**

NOTE	REF NO	GRAPHIC REF	PART NUMBER	QTY	PART NAME 1 2 3 4 5 6 (PRODUCT LEVEL)	SEE PAGE
	1	1	**256-7782**	1	PLATE	
	2	1	*399-9291*	1	GUARD GP-FUEL TANK	
		1	**399-9292**	1	GUARD AS	
		1	**7X-0550**	6	WASHER-HARD (13.5X32X5-MM THK)	
M		1	**8T-4956**	6	BOLT (M12X1.75X35-MM)	
	3	1	**399-9296**	1	GUARD AS (LH)	
	4	1	**399-9298**	1	GUARD AS (REAR, LH) (REAR, LH)	
	5	1	**399-9300**	1	GUARD AS (RH)	
	6	1	**415-1470**	1	GUARD AS-REAR (RH)	
	7	1	**419-0576**	1	GUARD AS (RH)	
	8		**419-0581**	1	GUARD AS-REAR	
	9	1	**419-1492**	1	PLATE AS	
	10	1	**419-1526**	2	BOSS	
	11	1	**419-1527**	1	BRACKET	
	12	1	**425-6164**	2	PLATE	
	13	1	**425-6165**	1	PLATE	
	14	1	**448-3005**	1	PLATE AS	
	15	1	**7X-0550**	38	WASHER-HARD (13.5X32X5-MM THK)	
	16	1	**7X-7729**	32	WASHER (11X25X3-MM THK)	
M	17	1	**8T-4133**	10	NUT (M10X1.5-THD)	
M	18	1	**8T-4194**	8	BOLT (M12X1.75X50-MM)	
M	19		**8T-4195**	6	BOLT (M10X1.5X30-MM)	
M	20	1	**8T-4196**	14	BOLT (M10X1.5X35-MM)	
M	21	1	**8T-4910**	2	BOLT (M12X1.75X60-MM)	
M	22	1	**8T-4956**	22	BOLT (M12X1.75X35-MM)	
M	23	1	**8T-6868**	6	BOLT (M12X1.75X80-MM)	

M - METRIC PART

399-9283 **GUARD GP-FUEL TANK (*contd.*)** **i05633336**

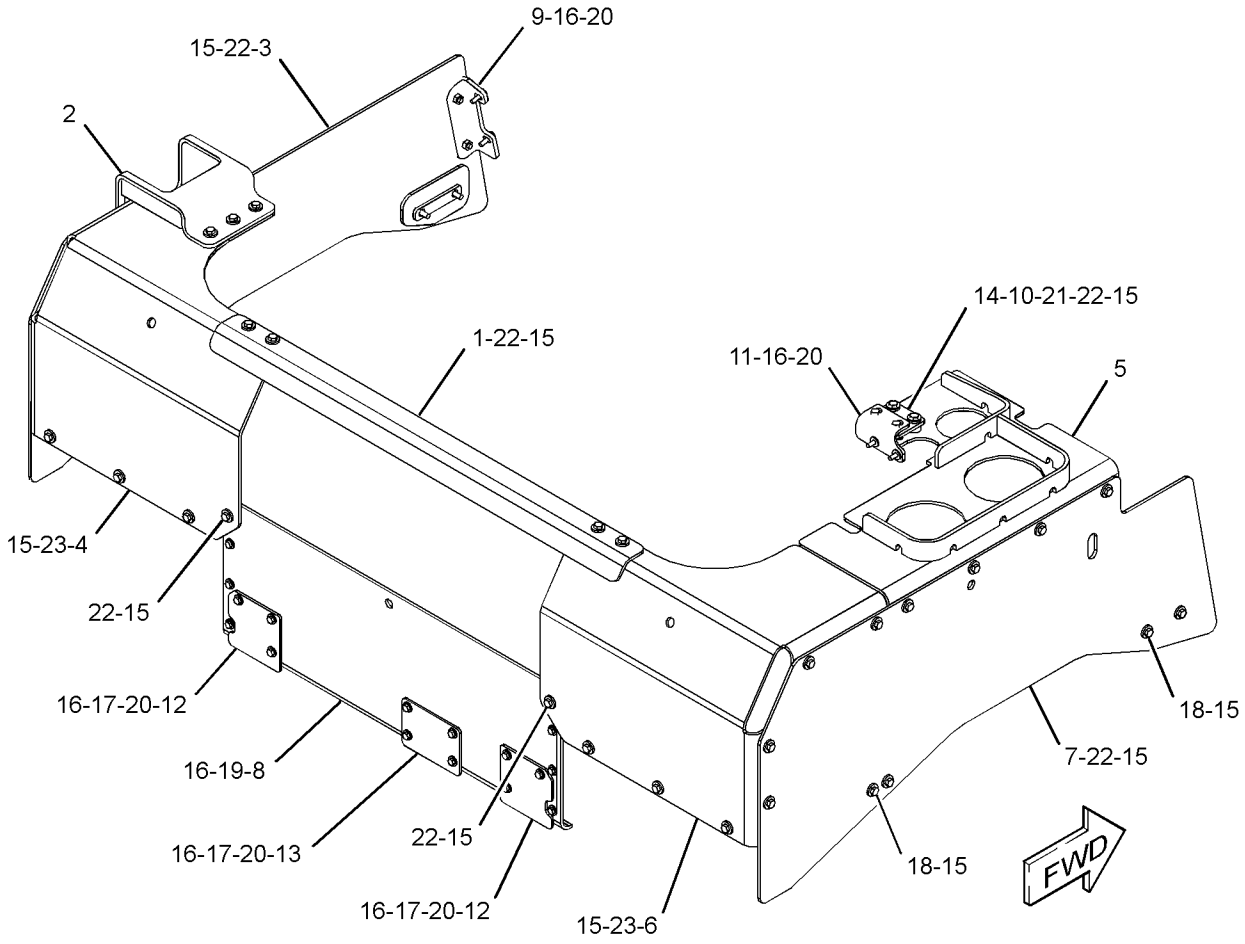

GRAPHIC #1 **<END>** g03582200

426-2698 GUARD GP-FUEL TANK—WOOD CHIP

S/N: EMM1-UP; JEN1-UP
FOR USE WITH 389-3225—PAGE: 456, 389-3227—PAGE: 457
AN ATTACHMENT

SMCS-1273, 7150

i05634811

NOTE	REF NO	GRAPHIC REF	PART NUMBER	QTY	PART NAME 1 2 3 4 5 6 (PRODUCT LEVEL)	SEE PAGE
	1	1	**256-7782**	1	PLATE	
	2	1	*399-9291*	1	GUARD GP-FUEL TANK	
		1	**7X-0550**	6	WASHER-HARD (13.5X32X5-MM THK)	
M		1	**8T-4956**	6	BOLT (M12X1.75X35-MM)	
		1	**399-9292**	1	GUARD AS	
	3	1	**399-9296**	1	GUARD AS (LH)	
	4	1	**399-9298**	1	GUARD AS (REAR, LH)	
	5	1	**399-9300**	1	GUARD AS (RH)	
	6	1	**415-1470**	1	GUARD AS-REAR (RH)	
	7	1	**419-0576**	1	GUARD AS (RH)	
	8	1	**256-7781**	1	GUARD AS-FUEL TANK	
	9	1	**419-1492**	1	PLATE AS	
	10	1	**419-1526**	2	BOSS	
	11	1	**419-1527**	1	BRACKET	
	14	1	**7X-0550**	44	WASHER-HARD (13.5X32X5-MM THK)	
	15	1	**7X-7729**	4	WASHER (11X25X3-MM THK)	
M	17	1	**8T-4194**	8	BOLT (M12X1.75X50-MM)	
M	18	1	**8T-4195**	6	BOLT (M10X1.5X30-MM)	
M	19	1	**8T-4196**	2	BOLT (M10X1.5X35-MM)	
M	20	1	**8T-4648**	2	BOLT (M12X1.75X70-MM)	
M	21	1	**8T-4956**	22	BOLT (M12X1.75X35-MM)	
M	22	1	**8T-6868**	6	BOLT (M12X1.75X80-MM)	

M - METRIC PART

426-2698 **GUARD GP-FUEL TANK (*contd.*)** **i05634811**

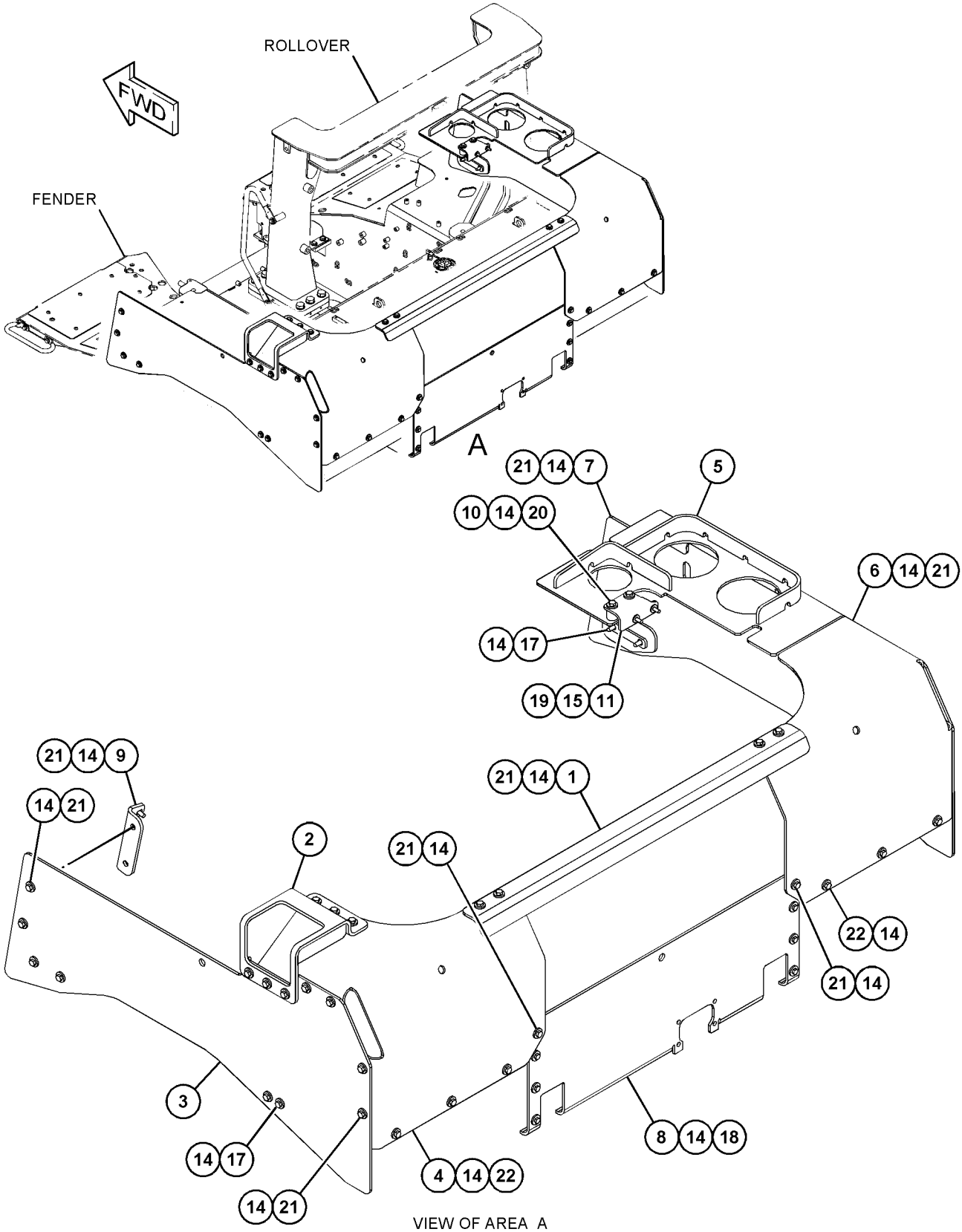

VIEW OF AREA A
(EXPLODED)

GRAPHIC #1

<END>

g03581830

389-3303 GUARD GP-RADIATOR

S/N: EMM1-UP; JEN1-UP

PART OF 389-3221, 389-3222 CHASSIS AR

SMCS-7155 **i05640535**

NOTE	REF NO	GRAPHIC REF	PART NUMBER	QTY	PART NAME 1 2 3 4 5 6 (PRODUCT LEVEL)	SEE PAGE
	1	1	**3W-3742**	2	PLUG	
	2	1	**5G-9973**	2	COVER	
	3	1	**5G-9974**	2	GASKET	
	4	1	**7K-1181**	1	STRAP-CABLE	
	5	1	**160-2351**	2	WASHER-HARD (22X76X6-MM THK)	
	6	1	**170-8592**	2	PIN	
	7	1	**223-1541**	1	GUARD AS-RADIATOR	
	7A	1	**3G-6372**	2	BUSHING	
	7B	1	**8E-9522**	2	BUSHING	
	7C	1	**258-2303**	2	BUSHING	
	7D	1	**258-2307**	2	BUSHING	
	8	1	**227-3149**	2	PIN	
	9	1	**2G-9245**	2	PLATE	
	10	1	**5M-6214**	2	PLUG-PIPE	
	11	1	**5P-1076**	8	WASHER-HARD (13.5X30X4-MM THK)	
M	12	1	**7X-2488**	2	BOLT (M20X2.5X160-MM)	
	13	1	**8T-4121**	4	WASHER-HARD (11X21X2.5-MM THK)	
M	14	1	**8T-4136**	4	BOLT (M10X1.5X25-MM)	
M	15	1	**8T-4139**	8	BOLT (M12X1.75X30-MM)	

M - METRIC PART

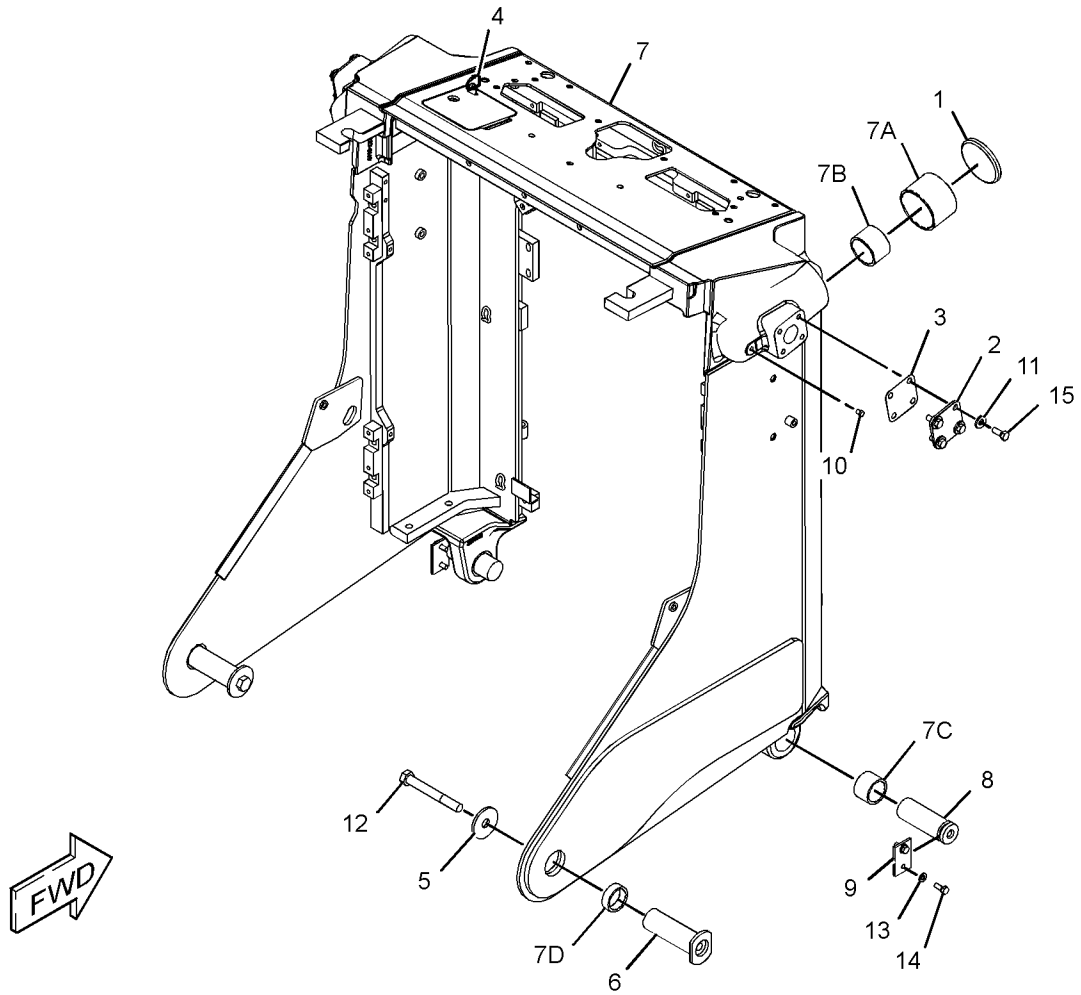

GRAPHIC #1 **<END>** g03582869

378-7921 GUARD GP-REAR–TRANSMISSION

S/N: EMM1-UP; JEN1-UP
HEAVY-DUTY
CANNOT BE USED WITH REAR HYDRAULICS, RIPPER, WINCH, COUNTERWEIGHT, STRIKER BOX AN ATTACHMENT

SMCS-7187 **i05680272**

NOTE	REF NO	GRAPHIC REF	PART NUMBER	QTY	PART NAME 1 2 3 4 5 6 (PRODUCT LEVEL)	SEE PAGE
	1	1	**1K-8850**	1	SPRING	
	2	1	**2P-8514**	4	SPACER (1.062X2X1-IN THK)	
	3	1	**5G-7183**	1	GUARD AS	
		1	**4K-8501**	2	CLIP	
		1	**7G-4262**	1	HINGE	
	4	1	**139-4775**	4	STUD-TAPERLOCK (1-8X4-IN)	
	5	1	**6V-8190**	4	NUT (1-8-THD)	
	6	1	**8T-5361**	4	WASHER-HARD (28X49X5-MM THK)	
M	7	1	**9X-2125**	4	BOLT-LOCKING (M10X1.5X25-MM)	

M - METRIC PART

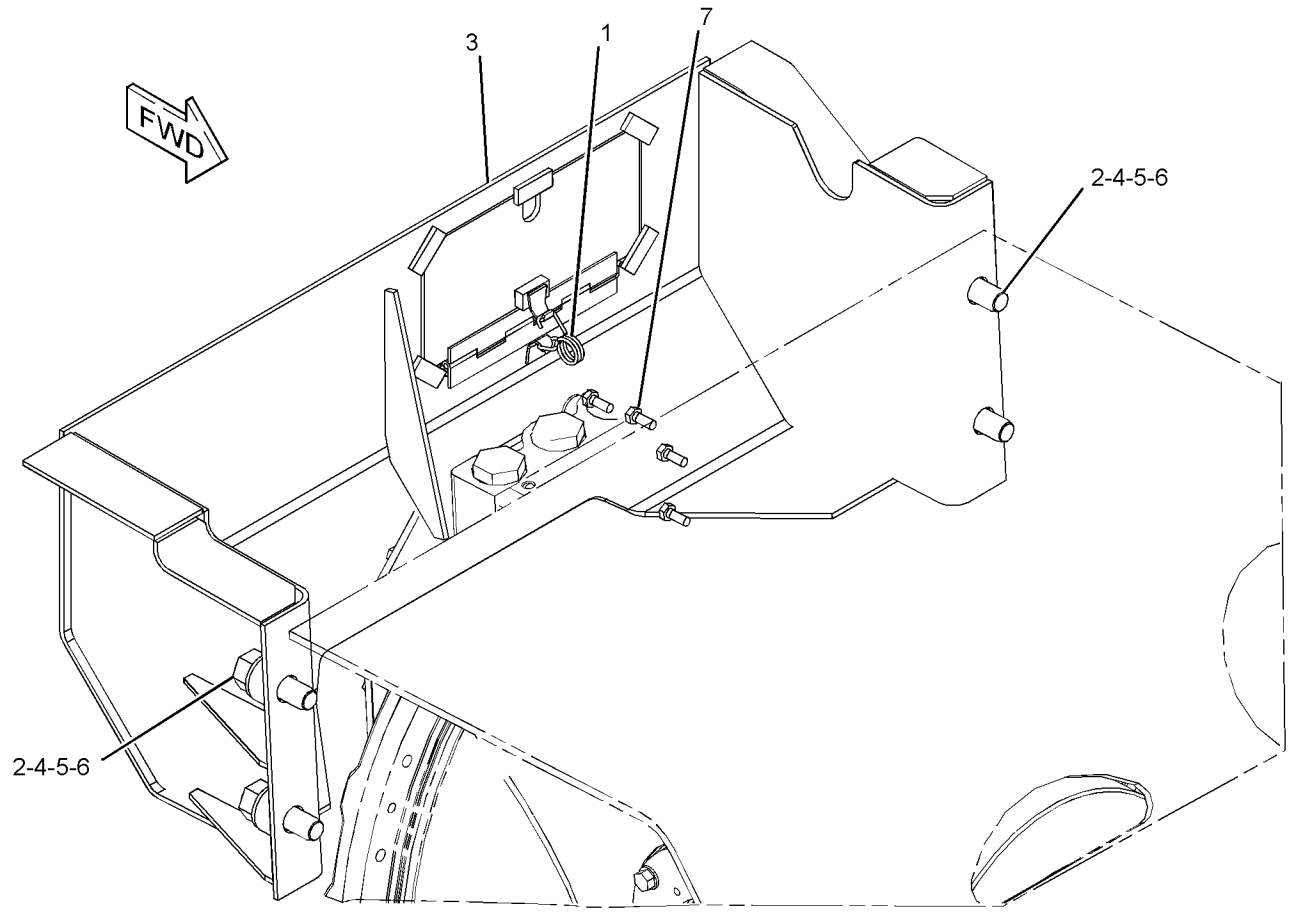

GRAPHIC #1 **<END>** g03256920

415-1461 GUARD GP-REAR

S/N: EMM1-UP; JEN1-UP
PART OF 415-1460 SCREEN GP-PROTECTION
AN ATTACHMENT

SMCS-7187 **i05634390**

NOTE	REF NO	GRAPHIC REF	PART NUMBER	QTY	PART NAME 1 2 3 4 5 6 (PRODUCT LEVEL)	SEE PAGE
	1	1	**415-1452**	1	GUARD AS-REAR	
	2	1	**415-1462**	2	SCREEN	
	3	1	**8T-4121**	24	WASHER-HARD (11X21X2.5-MM THK)	
M	4	1	**8T-4136**	24	BOLT (M10X1.5X25-MM)	

M - METRIC PART

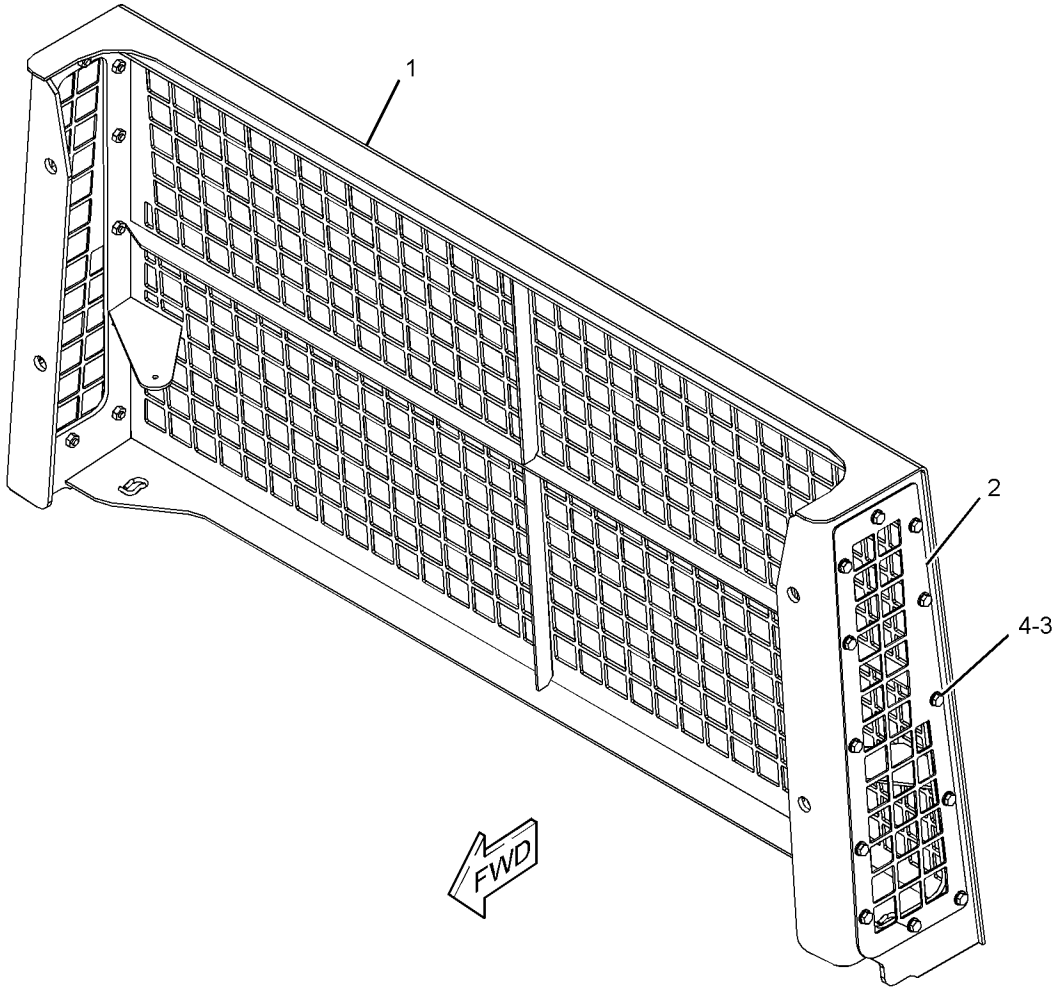

GRAPHIC #1 **<END>** g03402295

3W-1356 GUARD GP-TRANSMISSION

S/N: MS31-UP
PART OF 387-1087 RIPPER AR
AN ATTACHMENT

SMCS-7153 **i05635953**

NOTE	REF NO	GRAPHIC REF	PART NUMBER	QTY	PART NAME 1 2 3 4 5 6 (PRODUCT LEVEL)	SEE PAGE
	1	1	**368-4696**	1	GUARD AS	
	2	1	**7X-0402**	4	BOLT (1-8X2-IN)	
	3	1	**8T-5361**	4	WASHER-HARD (28X49X5-MM THK)	

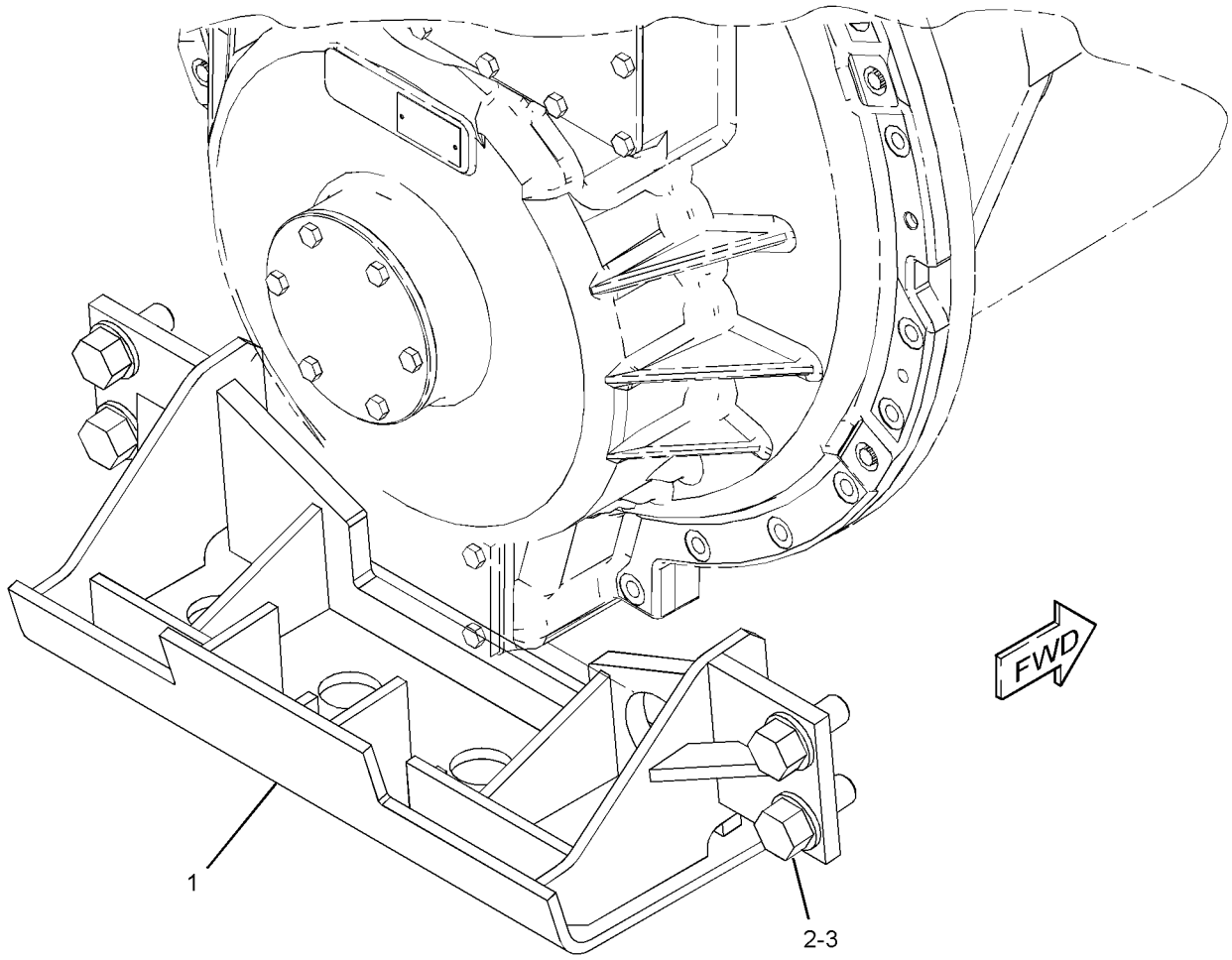

GRAPHIC #1 **<END>** g03072579

108-1335 HANDHOLD GP

S/N: EMM1-UP; JEN1-UP
PART OF 389-6126 COVER GP-RADIATOR
AN ATTACHMENT

SMCS-7256 **i05330759**

NOTE	REF NO	GRAPHIC REF	PART NUMBER	QTY	PART NAME 1 2 3 4 5 6 (PRODUCT LEVEL)	SEE PAGE
	1	1	**9W-5343**	2	HANDHOLD	

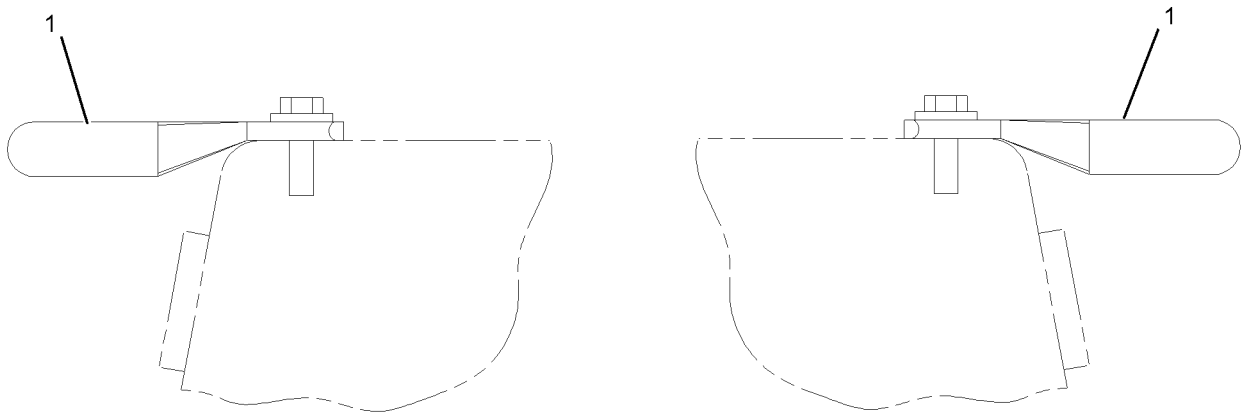

REAR VIEW

GRAPHIC #1 **<END>** g01107680

416-2322 SWEEP GP

S/N: EMM1-UP; JEN1-UP
FOR USE WITH 422-2874—PAGE: 579
AN ATTACHMENT

SMCS-7162 **i05680271**

NOTE	REF NO	GRAPHIC REF	PART NUMBER	QTY	PART NAME 1 2 3 4 5 6 (PRODUCT LEVEL)	SEE PAGE
	1	1	**6T-1698**	8	MOUNT	
	2	1	**325-7930**	1	BRACKET AS	
	3	1	**325-7931**	1	BRACKET AS	
	4	1	**329-9650**	10	PLATE	
	5	1	**329-9651**	2	SPACER	
Y	6	1	*416-2323*	1	SWEEP GP	367
	7	1	**419-1529**	2	SPACER	
	8	1	**421-9161**	2	MOUNT	
	9	1	**198-4781**	4	WASHER-HARD (22X40X10-MM THK)	
	10	1	**419-1504**	1	PLATE	
	11	1	**5P-1076**	12	WASHER-HARD (13.5X30X4-MM THK)	
	12	1	**6K-3632**	4	LOCKNUT (1-8-THD)	
	13	1	**7X-0550**	14	WASHER-HARD (13.5X32X5-MM THK)	
M	14	1	**7X-2454**	2	BOLT (M24X3X110-MM)	
M	15	1	**7X-2549**	8	BOLT (M12X1.75X100-MM)	
	16	1	**7X-7729**	4	WASHER (11X25X3-MM THK)	
	17	1	**8C-8843**	4	BOLT (1-8X4.5-IN)	
	18	1	**8P-5244**	10	WASHER (33.3X69.8X6.35-MM THK)	
M	19	1	**8T-0363**	2	BOLT (M24X3X120-MM)	
	20	1	**8T-4121**	2	WASHER-HARD (11X21X2.5-MM THK)	
	21	1	**8T-4122**	4	WASHER-HARD (17X32X3.5-MM THK)	
M	22	1	**8T-4137**	2	BOLT (M10X1.5X20-MM)	
M	23	1	**8T-4140**	4	BOLT (M16X2X60-MM)	
M	24	1	**8T-4141**	4	BOLT (M20X2.5X70-MM)	
	25	1	**8T-4167**	4	WASHER-HARD (26X44X4-MM THK)	
	26	1	**438-9215**	4	BOLT (M12X1.75X75-MM)	
M	27	1	**8T-4196**	4	BOLT (M10X1.5X35-MM)	
M	28	1	**8T-4956**	14	BOLT (M12X1.75X35-MM)	
	29	1	**8T-7971**	4	WASHER-HARD (13.5X25.5X5-MM THK)	

M - METRIC PART
Y - SEPARATE ILLUSTRATION

416-2322 **SWEEP GP (*contd.*)** **i05680271**

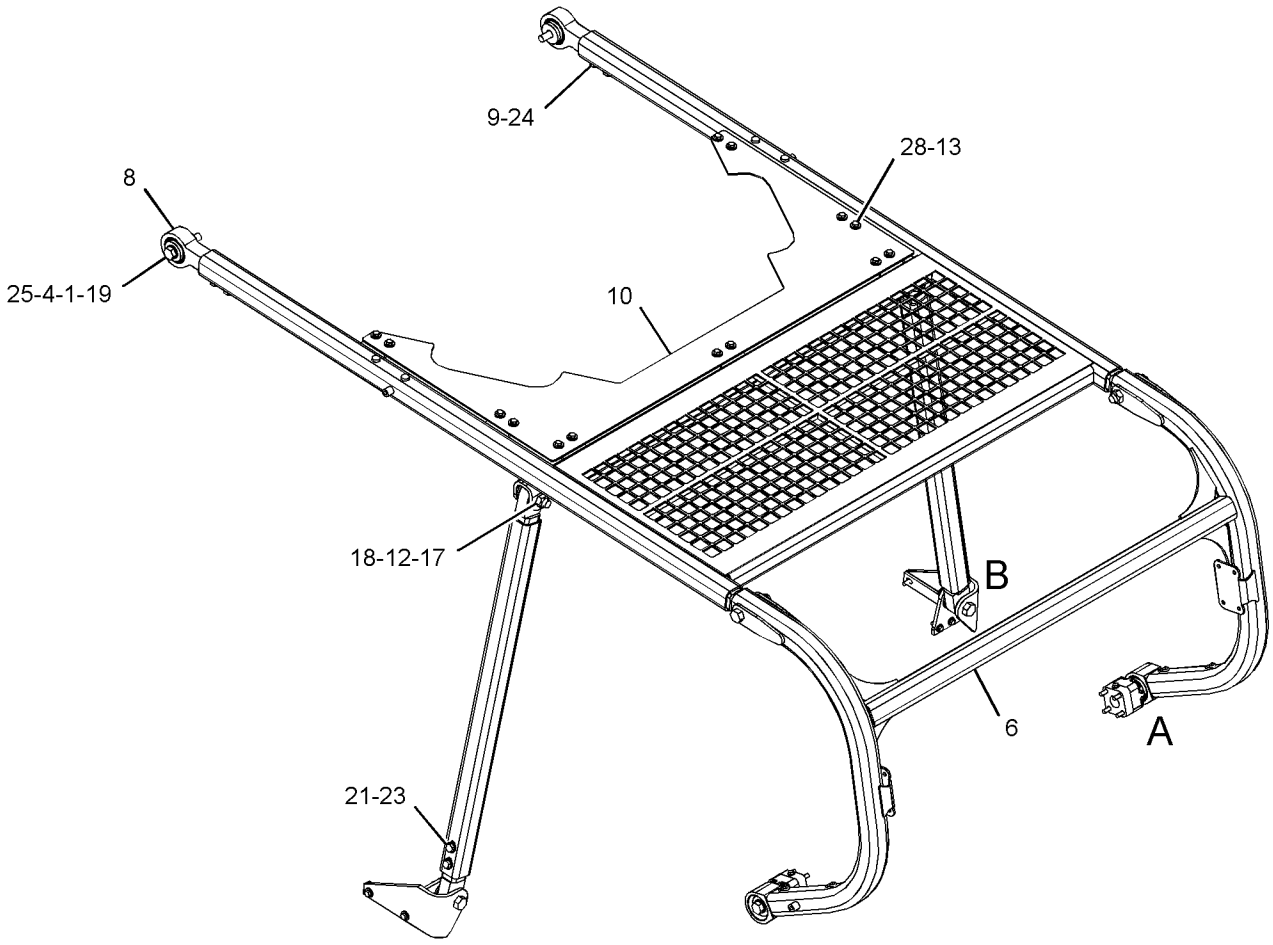

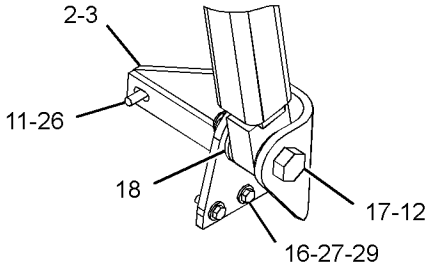

VIEW OF AREA B

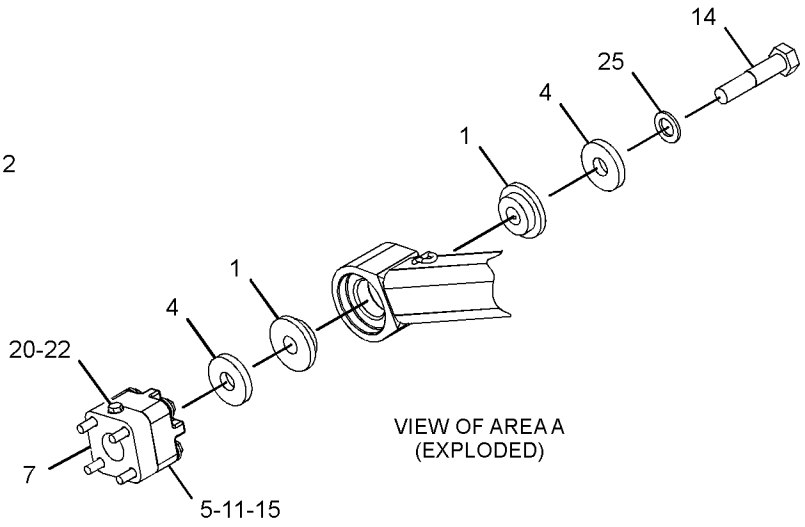

VIEW OF AREA A
(EXPLODED)

GRAPHIC #1 **<END>** g03553256

416-2323 SWEEP GP

S/N: EMM1-UP; JEN1-UP
PART OF 416-2322, 419-1515 SWEEP GP
AN ATTACHMENT

SMCS-7162 **i05633490**

NOTE	REF NO	GRAPHIC REF	PART NUMBER	QTY	PART NAME 1 2 3 4 5 6 (PRODUCT LEVEL)	SEE PAGE
	1	1	**285-5248**	2	PLATE AS	
	2	1	**416-2324**	1	GUARD AS	
	3	1	**416-2330**	1	GUARD AS	
	4	1	**416-2334**	2	TUBE AS	
	5	1	**5H-6629**	4	WASHER (29.4X50.8X3-MM THK)	
	6	1	**6K-3632**	2	LOCKNUT (1-8-THD)	
	7	1	**8C-8844**	2	BOLT (1-8X5-IN)	
	8	1	**8P-5244**	4	WASHER (33.3X69.8X6.35-MM THK)	

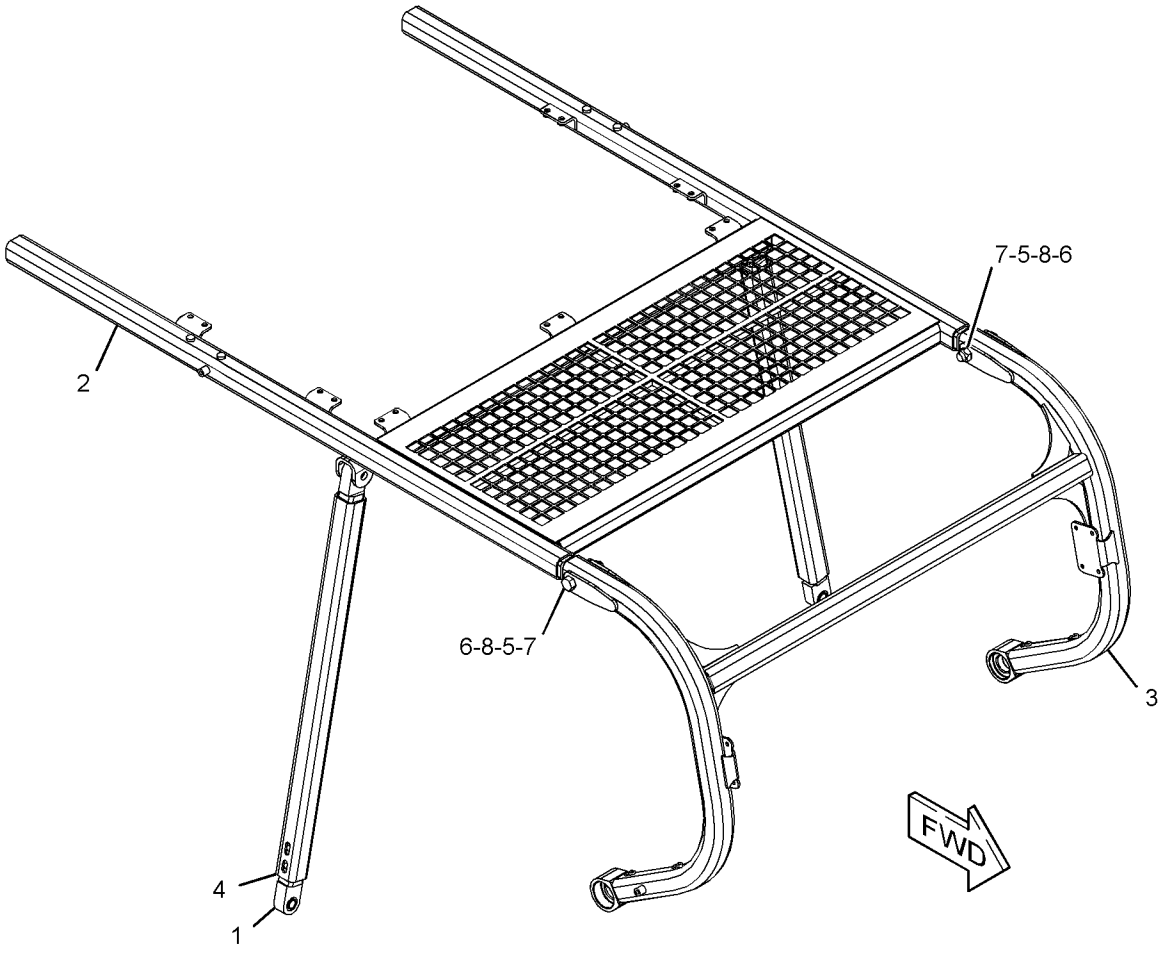

GRAPHIC #1 **<END>** g03338195

419-1515 SWEEP GP

S/N: EMM1-UP; JEN1-UP

AN ATTACHMENT

SMCS-7162 **i05680332**

NOTE	REF NO	GRAPHIC REF	PART NUMBER	QTY	PART NAME 1 2 3 4 5 6 (PRODUCT LEVEL)	SEE PAGE
	1	1	**6T-1698**	8	MOUNT	
	2	1	**325-7930**	1	BRACKET AS	
	3	1	**325-7931**	1	BRACKET AS	
	4	1	**441-5938**	10	PLATE	
	5	1	**329-9651**	2	SPACER	
Y	6	1	*416-2323*	1	SWEEP GP	367
	7	1	**419-1514**	1	PLATE	
	8	1	**419-1529**	2	SPACER	
	9	1	**421-9161**	2	MOUNT	
	10	1	**198-4781**	4	WASHER-HARD (22X40X10-MM THK)	
	11	1	**5P-1076**	12	WASHER-HARD (13.5X30X4-MM THK)	
	12	1	**6K-3632**	4	LOCKNUT (1-8-THD)	
	13	1	**7X-0550**	14	WASHER-HARD (13.5X32X5-MM THK)	
M	14	1	**7X-2454**	2	BOLT (M24X3X110-MM)	
M	15	1	**7X-2549**	8	BOLT (M12X1.75X100-MM)	
	16	1	**7X-7729**	4	WASHER (11X25X3-MM THK)	
	17	1	**8C-8843**	4	BOLT (1-8X4.5-IN)	
	18	1	**8P-5244**	10	WASHER (33.3X69.8X6.35-MM THK)	
M	19	1	**8T-0363**	2	BOLT (M24X3X120-MM)	
	20	1	**8T-4121**	2	WASHER-HARD (11X21X2.5-MM THK)	
	21	1	**8T-4122**	4	WASHER-HARD (17X32X3.5-MM THK)	
M	22	1	**8T-4137**	2	BOLT (M10X1.5X20-MM)	
M	23	1	**8T-4140**	4	BOLT (M16X2X60-MM)	
M	24	1	**8T-4141**	4	BOLT (M20X2.5X70-MM)	
	25	1	**8T-4167**	4	WASHER-HARD (26X44X4-MM THK)	
	26	1	**438-9215**	4	BOLT (M12X1.75X75-MM)	
M	27	1	**8T-4196**	4	BOLT (M10X1.5X35-MM)	
M	28	1	**8T-4956**	14	BOLT (M12X1.75X35-MM)	
	29	1	**8T-7971**	4	WASHER-HARD (13.5X25.5X5-MM THK)	

M - METRIC PART
Y - SEPARATE ILLUSTRATION

419-1515 **SWEEP GP (*contd.*)** **i05680332**

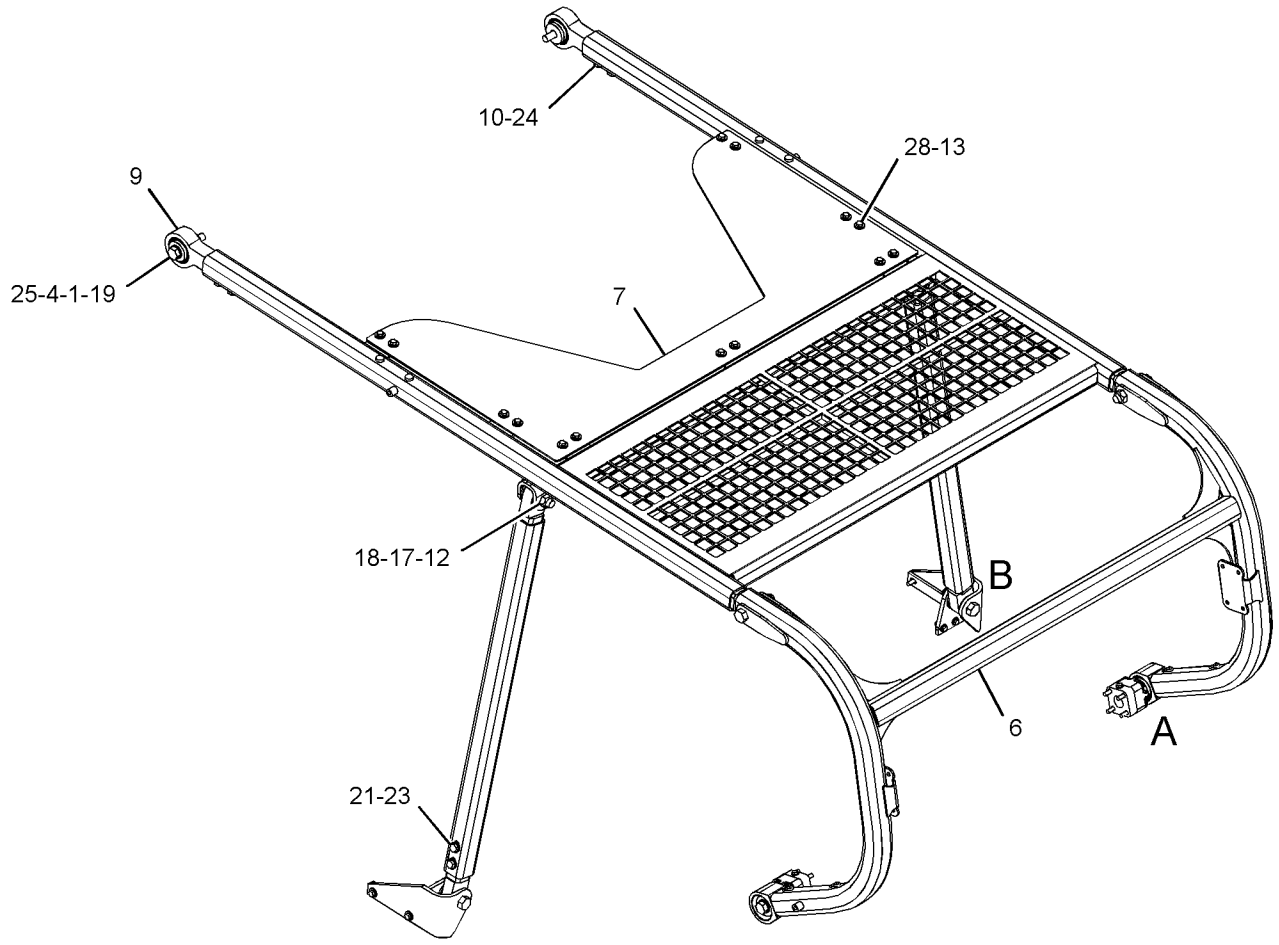

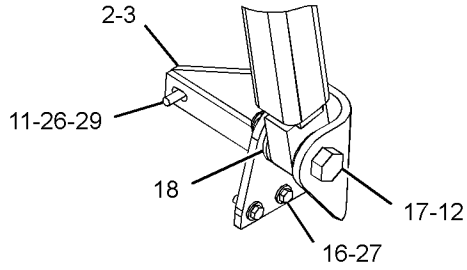

VIEW OF AREA B

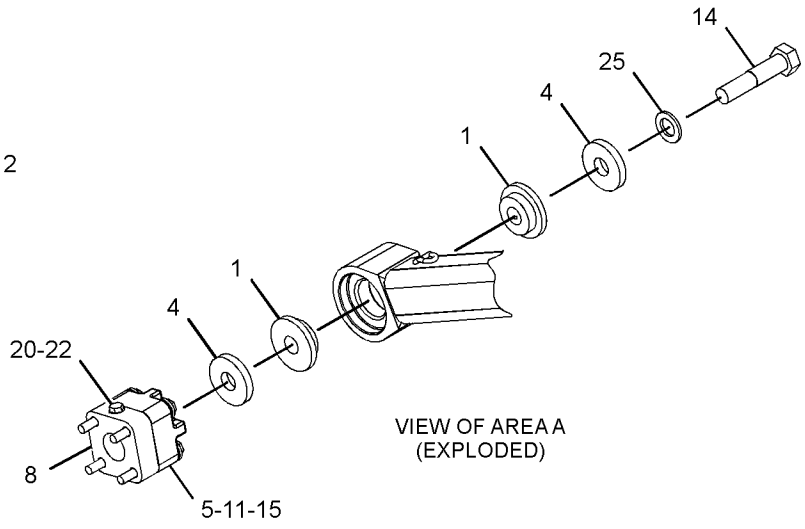

VIEW OF AREA A
(EXPLODED)

GRAPHIC #1 **<END>** g03580724

229-7373 BAR GP-EQUALIZER

S/N: EMM1-UP; JEN1-UP

PART OF 450-7074, 450-7075, 450-7076, 450-7077, 450-7078, 450-7079, 450-7081, 450-7082 UNDERCARRIAGE AR

AN ATTACHMENT

SMCS-7206 **i05633870**

NOTE	REF NO	GRAPHIC REF	PART NUMBER	QTY	PART NAME 1 2 3 4 5 6 (PRODUCT LEVEL)	SEE PAGE
	1	1	**3B-8489**	1	FITTING-GREASE	
	2	1	**3W-9678**	1	SPACER (27.5X55X12-MM THK)	
I	3	1	**5T-4374**	1	HOSE AS	
	4	1	**228-4093**	1	PIN AS	
	5	1	**228-4678**	2	SPACER (71.4X94X7-MM THK)	
YR	6	1	**281-8488**	1	BAR GP-EQUALIZER	372
	7	1	**318-6247**	4	GUARD	
	8	1	**030-7946**	1	ELBOW	
	9	1	**124-0174**	1	CLIP	
	10	1	**3J-7354**	1	SEAL-O-RING	
	11	1	**6V-8237**	8	WASHER (26X44X4-MM THK)	
	12	1	**7V-3715**	1	WASHER (28X85X8-MM THK)	
M	13	1	**7X-0851**	4	NUT (M24X3-THD)	
M	14	1	**7X-2575**	1	BOLT (M24X3X60-MM)	
	15	1	**7X-7729**	1	WASHER (11X25X3-MM THK)	
	16	1	**8L-6557**	1	CONNECTOR	
M	17	1	**8T-0364**	4	BOLT (M24X3X220-MM)	
M	18	1	**8T-4136**	1	BOLT (M10X1.5X25-MM)	

I - REFER TO HYDRAULIC INFORMATION SYSTEM
M - METRIC PART
R - REMFG PART MAY BE AVAILABLE
Y - SEPARATE ILLUSTRATION

229-7373 **BAR GP-EQUALIZER (*contd.*)** **i05633870**

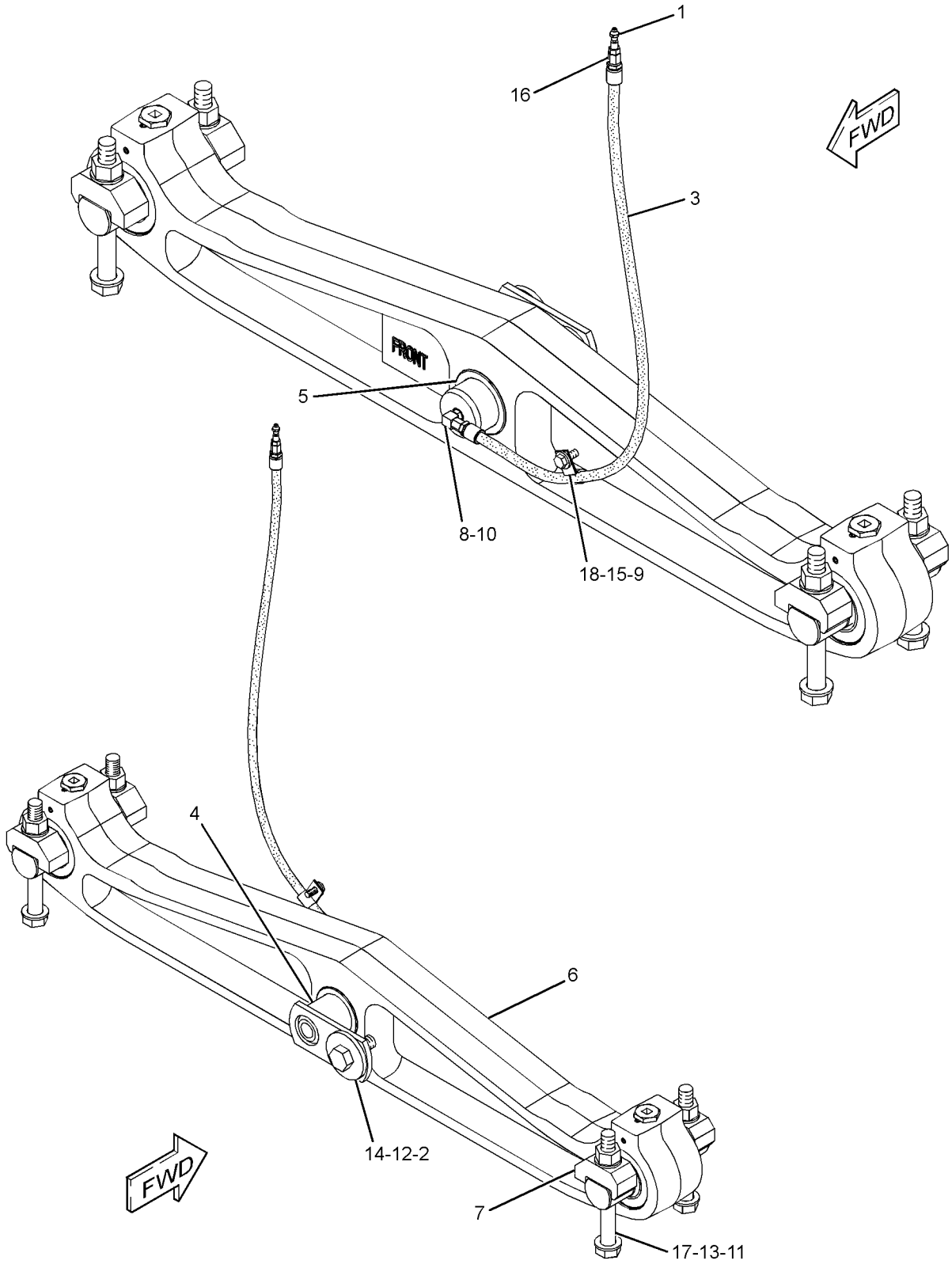

GRAPHIC #1 **<END>** g01210441

281-8488 BAR GP-EQUALIZER*R

S/N: EMM1-UP; JEN1-UP
1880-MM(74-IN) GAUGE
PART OF 229-7373 BAR GP-EQUALIZER
AN ATTACHMENT

SMCS-7206 **i05680333**

NOTE	REF NO	GRAPHIC REF	PART NUMBER	QTY	PART NAME 1 2 3 4 5 6 (PRODUCT LEVEL)	SEE PAGE
	1	1	**3B-8489**	2	FITTING-GREASE	
	2	1	**8G-4189**	2	BEARING-SELF-ALIGNING	
	3	1	**133-5631**	2	PLUG	
	4	1	**139-0566**	4	SEAL AS	
					(EACH INCLUDES)	
		1	**139-0567**	1	RING-SEAL	
	5	1	**229-8352**	2	BUSHING	
	6	1	**229-9323**	2	SEAL-PIN	
Z	7	1		1	BAR-EQUALIZER	
	8	1	**1J-6472**	4	RING-RETAINING	
	9	1	**2F-5326**	8	SETSCREW (3/8-16X0.375-IN)	
	10	1	**5F-1678**	2	SEAL-O-RING	
	11	1	**281-4015**	2	PIN	

Z - NOT SERVICED SEPARATELY

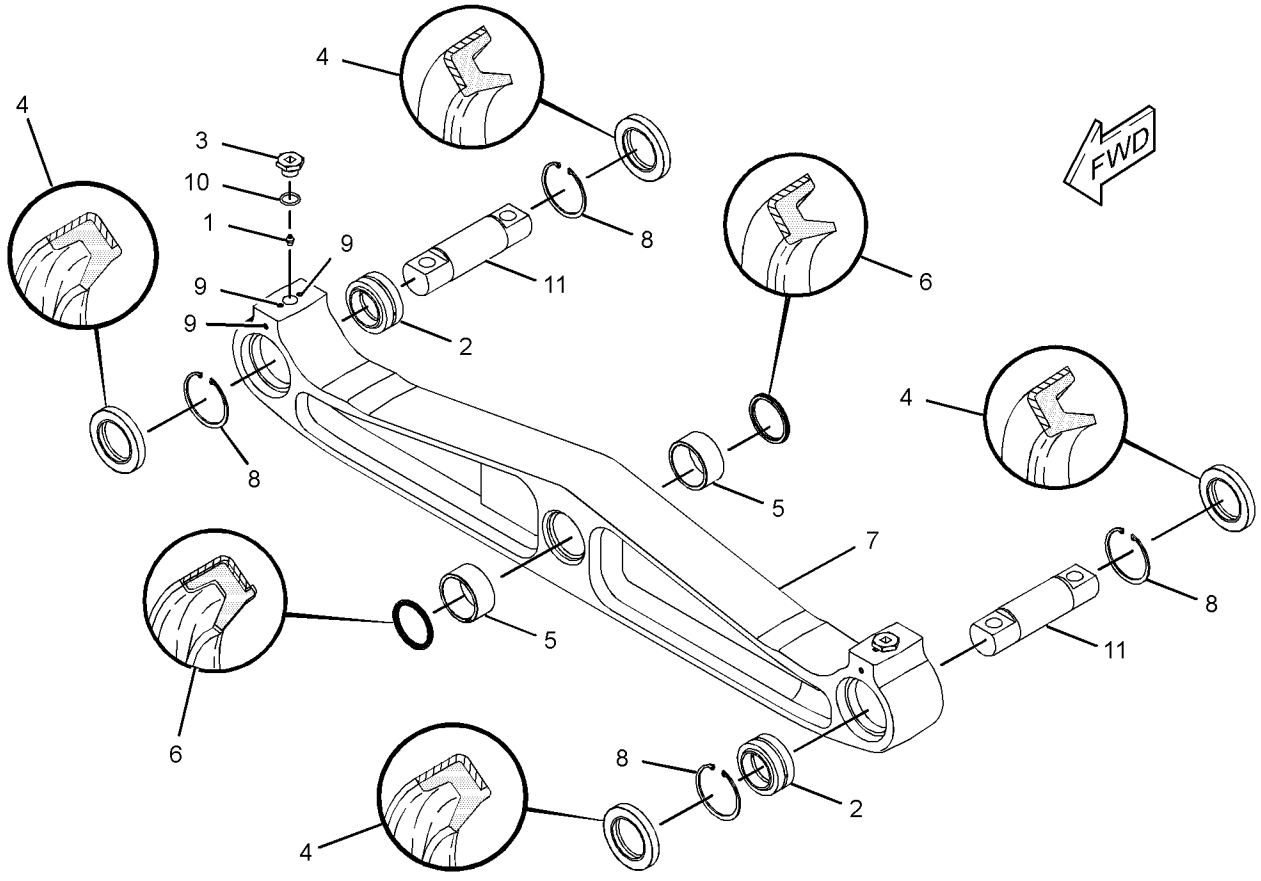

GRAPHIC #1 **<END>** g01210395

108-1091 CAP GP-TRACK IDLER

S/N: EMM1-UP; JEN1-UP

PART OF 450-7074, 450-7075, 450-7076, 450-7077, 450-7078, 450-7079 UNDERCARRIAGE AR AN ATTACHMENT

SMCS-4159 **i05633795**

NOTE	REF NO	GRAPHIC REF	PART NUMBER	QTY	PART NAME 1 2 3 4 5 6 (PRODUCT LEVEL)	SEE PAGE
	1	1	**165-6946**	1	BLOCK-TRACK IDLER	
	2	1	**152-3421**	1	CAP AS-TRACK IDLER	
	2A	1	**1T-0068**	1	PIN-SPRING	
	3	1	**8T-3282**	2	WASHER-HARD (22X35X3.5-MM THK)	
M	4	1	**6V-9167**	2	BOLT (M20X2.5X140-MM)	

M - METRIC PART

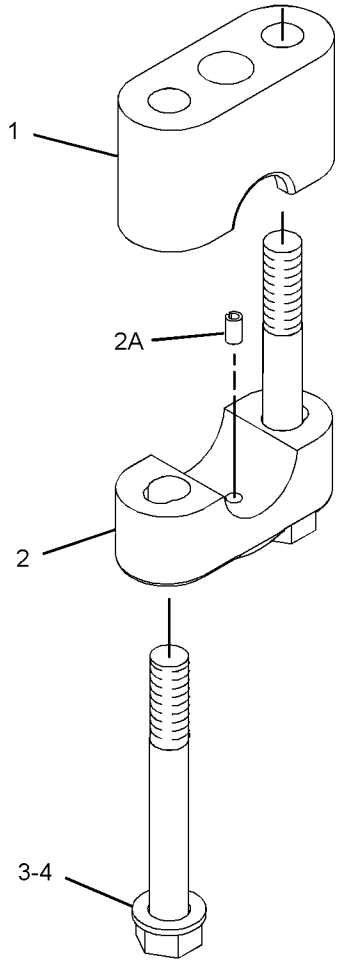

GRAPHIC #1 **<END>** g02175274

267-4746 CAP GP-TRACK IDLER–SYSTEMONE

S/N: JEN1-UP

PART OF 450-7081, 450-7082 UNDERCARRIAGE AR

AN ATTACHMENT

SMCS-4159 **i05641248**

NOTE	REF NO	GRAPHIC REF	PART NUMBER	QTY	PART NAME 1 2 3 4 5 6 (PRODUCT LEVEL)	SEE PAGE
	1	1	**152-3421**	1	CAP AS-TRACK IDLER	
		1	**1T-0068**	1	PIN-SPRING	
	2	1	**165-6946**	1	BLOCK-TRACK IDLER	
	3	1	**153-5044**	2	WASHER-HARD (21.5X45X6-MM THK)	
M	4	1	**8T-0656**	2	BOLT (M20X2.5X150-MM)	

M - METRIC PART

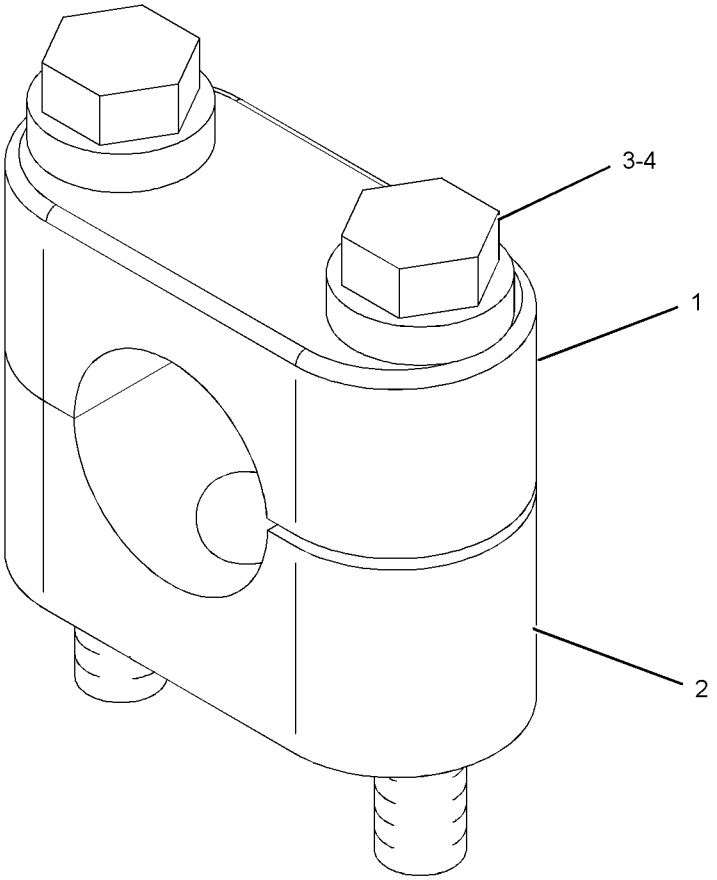

GRAPHIC #1 **<END>** g01145277

450-7089 FRAME GP-TELESCOPING RECOIL—HEAVY-DUTY, LH

S/N: EMM1-UP

PART OF 450-7074, 450-7075, 450-7076 UNDERCARRIAGE AR

AN ATTACHMENT

SMCS-4151 **i05633950**

NOTE	REF NO	GRAPHIC REF	PART NUMBER	QTY	PART NAME 1 2 3 4 5 6 (PRODUCT LEVEL)	SEE PAGE
	1	1	**9X-4582**	1	SEAL AS	
	3	1	**224-4120**	1	FRAME AS (FRONT)	
	3A	1	**4B-4158**	4	SCREW-DRIVE (NO 4X0.25-IN)	
	3B	1	**254-1686**	1	PLATE-WARNING (RECOIL SPRING)	
	3C	1	**3T-1162**	1	BUSHING	
	4	1	**335-2351**	1	FRAME AS (LH)	
	4A	1	**221-3197**	1	BUSHING	
	4B	1	**221-3200**	1	BUSHING	
	5	1	**160-4103**	2	STRIP	
	6	1	**268-9709**	2	GUIDE AS	
					(EACH INCLUDES)	
	6A	1	**241-3720**	1	FILM-WARNING (RECOIL SPRING)	
	7	1	**268-9710**	1	COVER AS	
	7A	1	**7B-3028**	4	SCREW-DRIVE (NO 4X 3/16-IN)	
	7B	1	**8E-1211**	1	COVER	
	7C	1	**253-1346**	1	PLATE-WARNING (HIGH PRESSURE CYLINDER)	
	8	1	**189-3032**	2	STRIP	
	9	1	**1B-5174**	1	PLUG-PIPE	
	10	1	**3T-2077**	1	BEARING	
	11	1	**3W-1852**	1	RING-RETAINING	
	12	1	**5H-6734**	1	SEAL-O-RING	
	13	1	**8T-4223**	28	WASHER-HARD (13.5X25.5X3-MM THK)	
	14	1	**8T-4121**	4	WASHER-HARD (11X21X2.5-MM THK)	
M	15	1	**8T-4136**	4	BOLT (M10X1.5X25-MM)	
M	16	1	**8T-4184**	12	BOLT (M12X1.75X45-MM)	
M	17	1	**8T-4139**	16	BOLT (M12X1.75X30-MM)	
M	18	1	**7X-2572**	4	BOLT (M24X3X35-MM)	
	19	1	**8T-4167**	6	WASHER-HARD (26X44X4-MM THK)	
					PARTS SHOWN IN GRAPHIC(S) WITHOUT A REFERENCE NUMBER ARE NOT SERVICED SEPARATELY	

M - METRIC PART

450-7089 **FRAME GP-TELESCOPING RECOIL (*contd.*)** **i05633950**

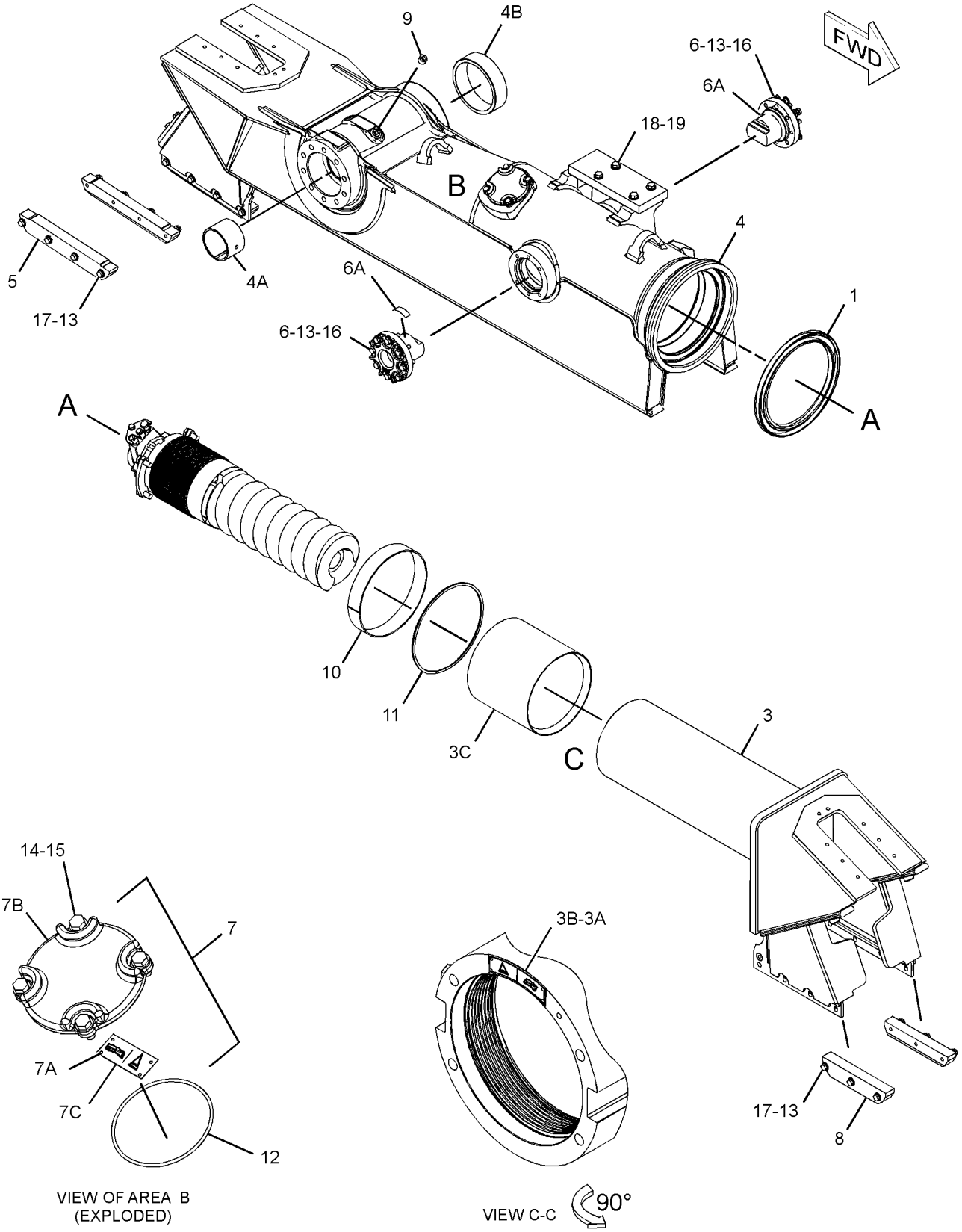

GRAPHIC #1 **<END>** g03580676

450-7090 FRAME GP-TELESCOPING RECOIL—HEAVY-DUTY, RH

S/N: EMM1-UP

PART OF 450-7074, 450-7075, 450-7076 UNDERCARRIAGE AR

AN ATTACHMENT

SMCS-4151 **i05634329**

NOTE	REF NO	GRAPHIC REF	PART NUMBER	QTY	PART NAME 1 2 3 4 5 6 (PRODUCT LEVEL)	SEE PAGE
	1	1	**9X-4582**	1	SEAL AS	
	3	1	**224-4120**	1	FRAME AS (FRONT)	
	3A	1	**4B-4158**	4	SCREW-DRIVE (NO 4X0.25-IN)	
	3B	1	**254-1686**	1	PLATE-WARNING (RECOIL SPRING)	
	3C	1	**3T-1162**	1	BUSHING	
	4	1	**335-2350**	1	FRAME AS (RH)	
	4A	1	**221-3197**	1	BUSHING	
	4B	1	**221-3200**	1	BUSHING	
	5	1	**160-4103**	2	STRIP	
	6	1	**268-9709**	2	GUIDE AS	
					(EACH INCLUDES)	
	6A	1	**241-3720**	1	FILM-WARNING (RECOIL SPRING)	
	7	1	**268-9710**	1	COVER AS	
	7A	1	**7B-3028**	4	SCREW-DRIVE (NO 4X 3/16-IN)	
	7B	1	**8E-1211**	1	COVER	
	7C	1	**253-1346**	1	PLATE-WARNING (HIGH PRESSURE CYLINDER)	
	8	1	**189-3032**	2	STRIP	
	9	1	**1B-5174**	1	PLUG-PIPE	
	10	1	**3T-2077**	1	BEARING	
	11	1	**3W-1852**	1	RING-RETAINING	
	12	1	**5H-6734**	1	SEAL-O-RING	
	13	1	**8T-4223**	28	WASHER-HARD (13.5X25.5X3-MM THK)	
	14	1	**8T-4121**	4	WASHER-HARD (11X21X2.5-MM THK)	
M	15	1	**8T-4136**	4	BOLT (M10X1.5X25-MM)	
M	16	1	**8T-4184**	12	BOLT (M12X1.75X45-MM)	
M	17	1	**8T-4139**	16	BOLT (M12X1.75X30-MM)	
M	18	1	**7X-2572**	4	BOLT (M24X3X35-MM)	
	19	1	**8T-4167**	6	WASHER-HARD (26X44X4-MM THK)	
					PARTS SHOWN IN GRAPHIC(S) WITHOUT A REFERENCE NUMBER ARE NOT SERVICED SEPARATELY	

M - METRIC PART

450-7090 **FRAME GP-TELESCOPING RECOIL (*contd.*)** **i05634329**

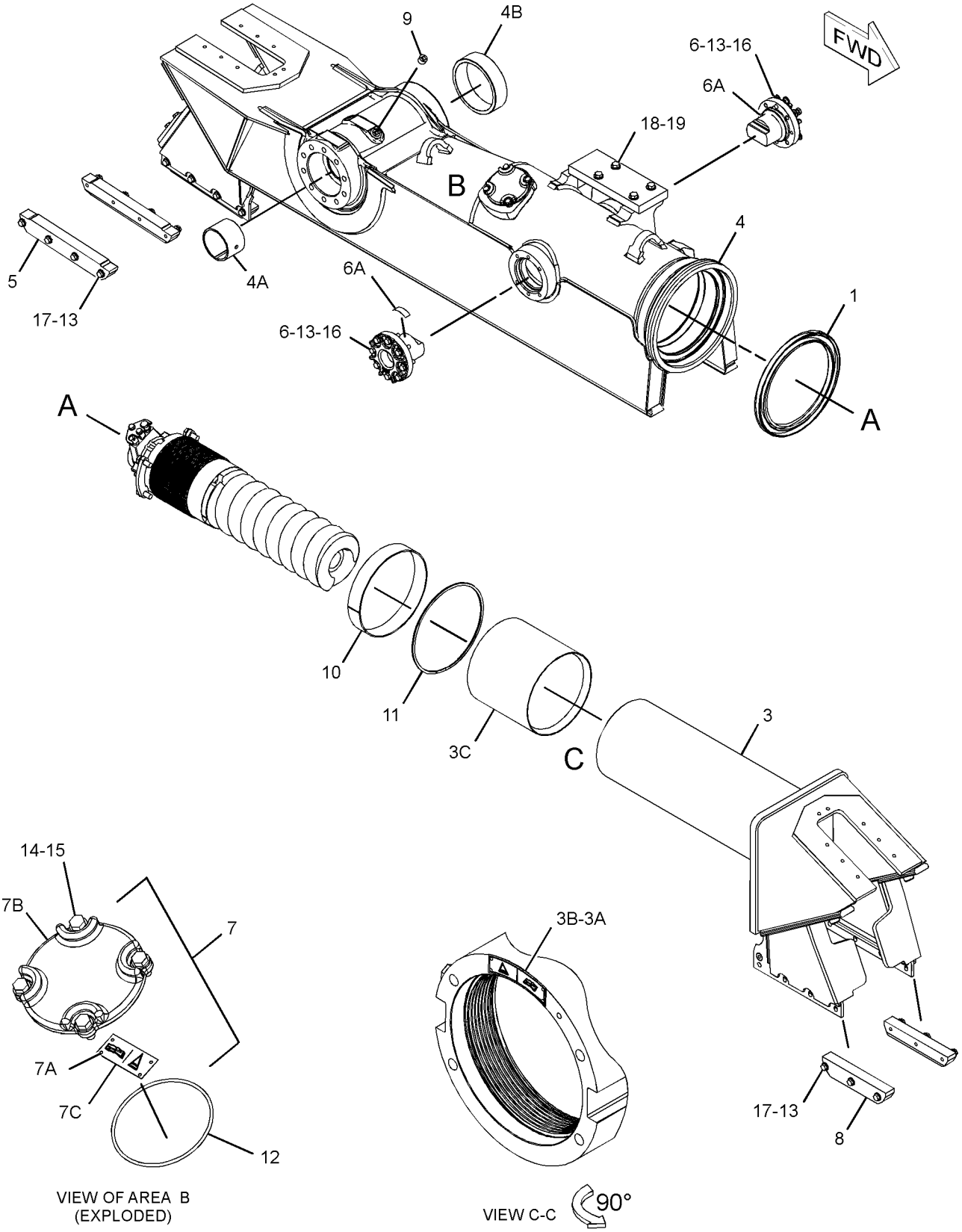

GRAPHIC #1

<END>

g03580676

450-7093 FRAME GP-TELESCOPING RECOIL—LH

S/N: JEN1-UP

PART OF 450-7077, 450-7078, 450-7079 UNDERCARRIAGE AR

AN ATTACHMENT

SMCS-4151 **i05641149**

NOTE	REF NO	GRAPHIC REF	PART NUMBER	QTY	PART NAME 1 2 3 4 5 6 (PRODUCT LEVEL)	SEE PAGE
	1	1	**9X-4582**	1	SEAL AS	
	2	1	**189-3032**	2	STRIP	
	3	1	**268-9709**	2	GUIDE AS	
					(EACH INCLUDES)	
	3A	1	**241-3720**	1	FILM-WARNING (RECOIL SPRING)	
	4	1	**279-2570**	2	STRIP-WEAR	
	5	1	**364-9652**	1	COVER AS	
	5A	1	**7B-3028**	4	SCREW-DRIVE (NO 4X 3/16-IN)	
	5B	1	**253-1346**	1	PLATE-WARNING (HIGH PRESSURE CYLINDER)	
	6	1	**389-2099**	1	FRAME AS (LH)	
	6A	1	**221-3197**	1	BUSHING	
	6B	1	**221-3200**	1	BUSHING	
Y	7	1	*450-7176*	1	FRAME GP-TELESCOPING RECOIL (LH)	383
	8	1	**1B-5174**	1	PLUG-PIPE	
	9	1	**3T-2077**	1	BEARING	
	10	1	**3W-1852**	1	RING-RETAINING	
	11	1	**5H-6734**	1	SEAL-O-RING	
	12	1	**8T-4121**	4	WASHER-HARD (11X21X2.5-MM THK)	
M	13	1	**8T-4136**	4	BOLT (M10X1.5X25-MM)	
M	14	1	**8T-4139**	14	BOLT (M12X1.75X30-MM)	
M	15	1	**8T-4184**	12	BOLT (M12X1.75X45-MM)	
	16	1	**8T-4223**	26	WASHER-HARD (13.5X25.5X3-MM THK)	

M - METRIC PART
Y - SEPARATE ILLUSTRATION

450-7093 **FRAME GP-TELESCOPING RECOIL (*contd.*)** **i05641149**

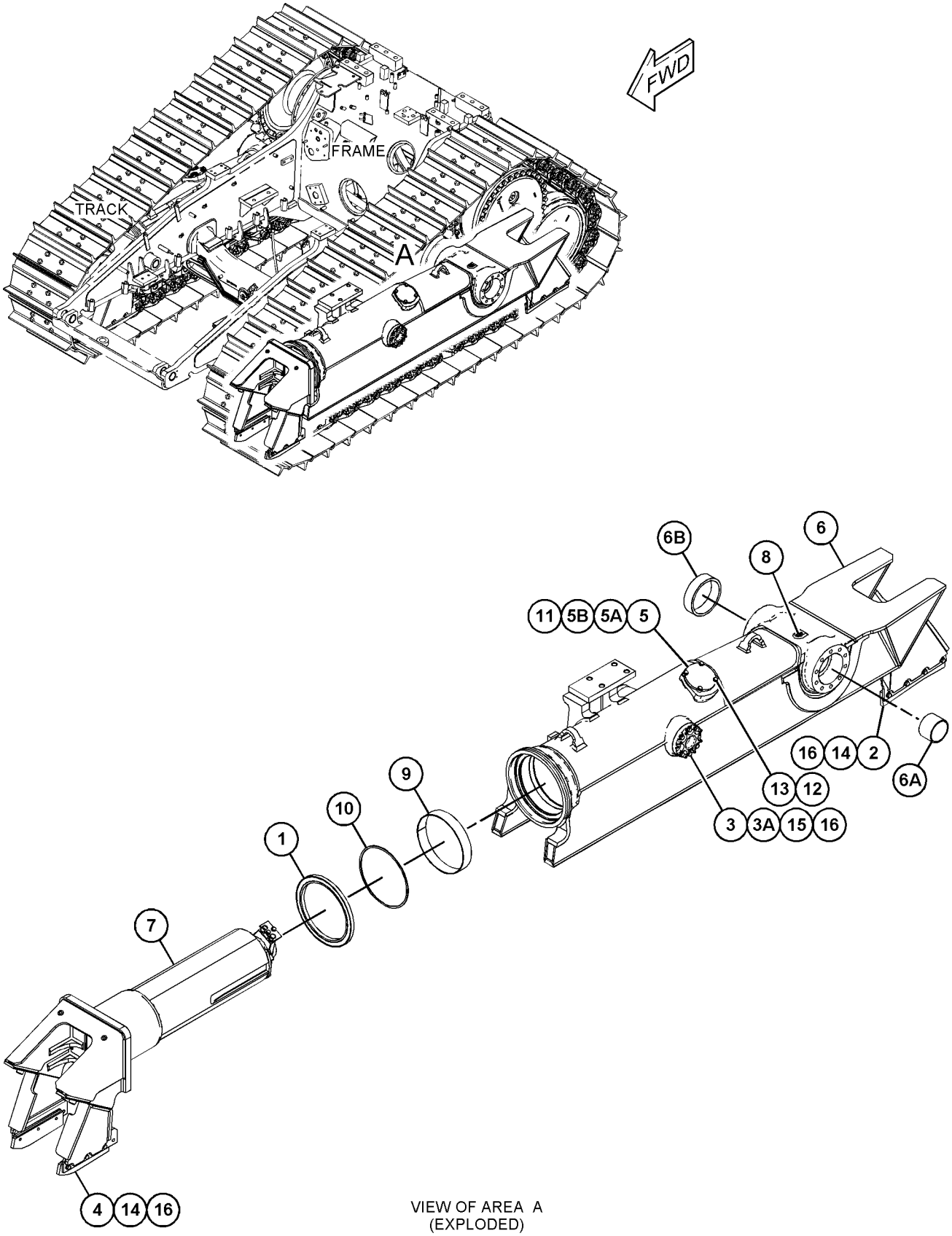

VIEW OF AREA A
(EXPLODED)

GRAPHIC #1

<END>

g03582996

450-7094 FRAME GP-TELESCOPING RECOIL–RH

S/N: JEN1-UP

PART OF 450-7077, 450-7078, 450-7079 UNDERCARRIAGE AR

AN ATTACHMENT

SMCS-4151 **i05641151**

NOTE	REF NO	GRAPHIC REF	PART NUMBER	QTY	PART NAME 1 2 3 4 5 6 (PRODUCT LEVEL)	SEE PAGE
	1	1	**9X-4582**	1	SEAL AS	
	2	1	**189-3032**	2	STRIP	
	3	1	**268-9709**	2	GUIDE AS	
					(EACH INCLUDES)	
	3A	1	**241-3720**	1	FILM-WARNING (RECOIL SPRING)	
	4	1	**279-2570**	2	STRIP-WEAR	
	5	1	**364-9652**	1	COVER AS	
	5A	1	**7B-3028**	4	SCREW-DRIVE (NO 4X 3/16-IN)	
	5B	1	**253-1346**	1	PLATE-WARNING (HIGH PRESSURE CYLINDER)	
	6	1	**389-2098**	1	FRAME AS (RH)	
	6A	1	**221-3197**	1	BUSHING	
	6B	1	**221-3200**	1	BUSHING	
Y	7	1	*450-7177*	1	FRAME GP-TRACK ROLLER (FRONT, RH)	389
	8	1	**1B-5174**	1	PLUG-PIPE	
	9	1	**3T-2077**	1	BEARING	
	10	1	**3W-1852**	1	RING-RETAINING	
	11	1	**5H-6734**	1	SEAL-O-RING	
	12	1	**8T-4121**	4	WASHER-HARD (11X21X2.5-MM THK)	
M	13	1	**8T-4136**	4	BOLT (M10X1.5X25-MM)	
M	14	1	**8T-4139**	14	BOLT (M12X1.75X30-MM)	
M	15	1	**8T-4184**	12	BOLT (M12X1.75X45-MM)	
	16	1	**8T-4223**	26	WASHER-HARD (13.5X25.5X3-MM THK)	

M - METRIC PART
Y - SEPARATE ILLUSTRATION

450-7094 **FRAME GP-TELESCOPING RECOIL (*contd.*)** **i05641151**

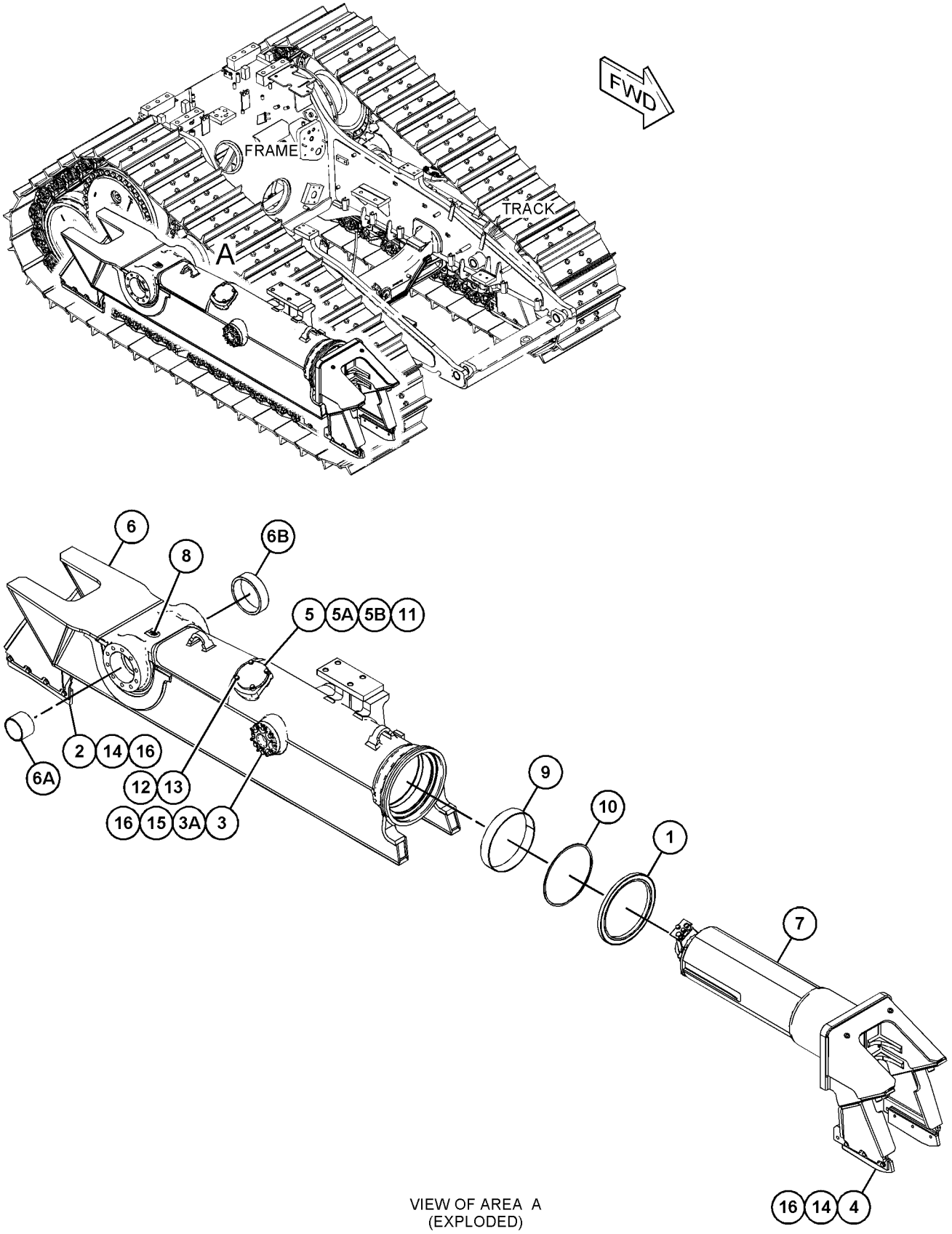

VIEW OF AREA A
(EXPLODED)

GRAPHIC #1

<END>

g03583023

450-7176 FRAME GP-TELESCOPING RECOIL—LH

S/N: JEN1-UP

PART OF 450-7093 FRAME GP-TELESCOPING RECOIL

AN ATTACHMENT

SMCS-4151 **i05641177**

NOTE	REF NO	GRAPHIC REF	PART NUMBER	QTY	PART NAME 1 2 3 4 5 6 (PRODUCT LEVEL)	SEE PAGE
	1	1	**315-7785**	1	FRAME AS (FRONT)	
	1A	1	**3T-1162**	1	BUSHING	
	1B	1	**4B-4158**	4	SCREW-DRIVE (NO 4X0.25-IN)	
	1C	1	**254-1686**	1	PLATE-WARNING (RECOIL SPRING)	
Y	2	1	*315-7786*	1	TRACK ADJUSTER & RECOIL GP	416

Y - SEPARATE ILLUSTRATION

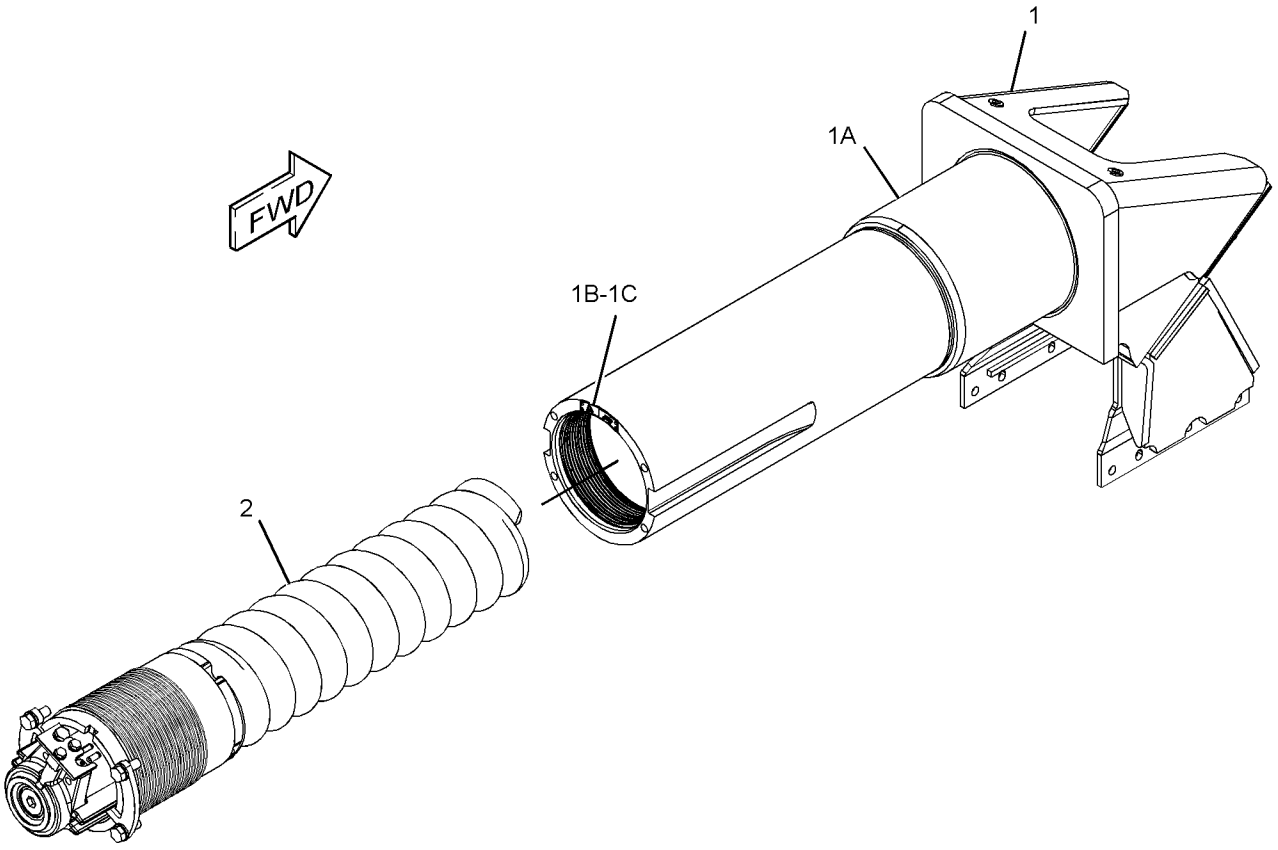

GRAPHIC #1 **<END>** g03583691

450-7178 FRAME GP-TELESCOPING RECOIL—LH

S/N: JEN1-UP

PART OF 450-7081, 450-7082 UNDERCARRIAGE AR

AN ATTACHMENT

SMCS-4151 **i05641523**

NOTE	REF NO	GRAPHIC REF	PART NUMBER	QTY	PART NAME 1 2 3 4 5 6 (PRODUCT LEVEL)	SEE PAGE
	1	1	**9X-4582**	1	SEAL AS	
	2	1	**260-7733**	2	STRIP	
	3	1	**261-3257**	2	STRIP	
	4	1	**268-9709**	2	GUIDE AS	
					(EACH INCLUDES)	
	4A	1	**241-3720**	1	FILM-WARNING (RECOIL SPRING)	
	5	1	**282-4017**	4	PLATE-SCRAPER	
	6	1	**364-9652**	1	COVER AS	
	6A	1	**7B-3028**	4	SCREW-DRIVE (NO 4X 3/16-IN)	
	6B	1	**253-1346**	1	PLATE-WARNING (HIGH PRESSURE CYLINDER)	
	7	1	**389-2089**	1	FRAME AS (LH)	
	7A	1	**221-3197**	1	BUSHING	
	7B	1	**221-3200**	1	BUSHING	
Y	8	1	*450-7180*	1	FRAME GP-TELESCOPING RECOIL	388
	9	1	**1B-5174**	1	PLUG-PIPE	
	10	1	**3T-2077**	1	BEARING	
	11	1	**3W-1852**	1	RING-RETAINING	
	12	1	**5H-6734**	1	SEAL-O-RING	
	13	1	**5P-1076**	12	WASHER-HARD (13.5X30X4-MM THK)	
	14	1	**8T-4121**	4	WASHER-HARD (11X21X2.5-MM THK)	
M	15	1	**8T-4136**	4	BOLT (M10X1.5X25-MM)	
M	16	1	**8T-4184**	12	BOLT (M12X1.75X45-MM)	
M	17	1	**8T-4194**	12	BOLT (M12X1.75X50-MM)	
	18	1	**8T-4223**	26	WASHER-HARD (13.5X25.5X3-MM THK)	
M	19	1	**8T-4956**	14	BOLT (M12X1.75X35-MM)	

M - METRIC PART
Y - SEPARATE ILLUSTRATION

450-7178 **FRAME GP-TELESCOPING RECOIL (*contd.*)** **i05641523**

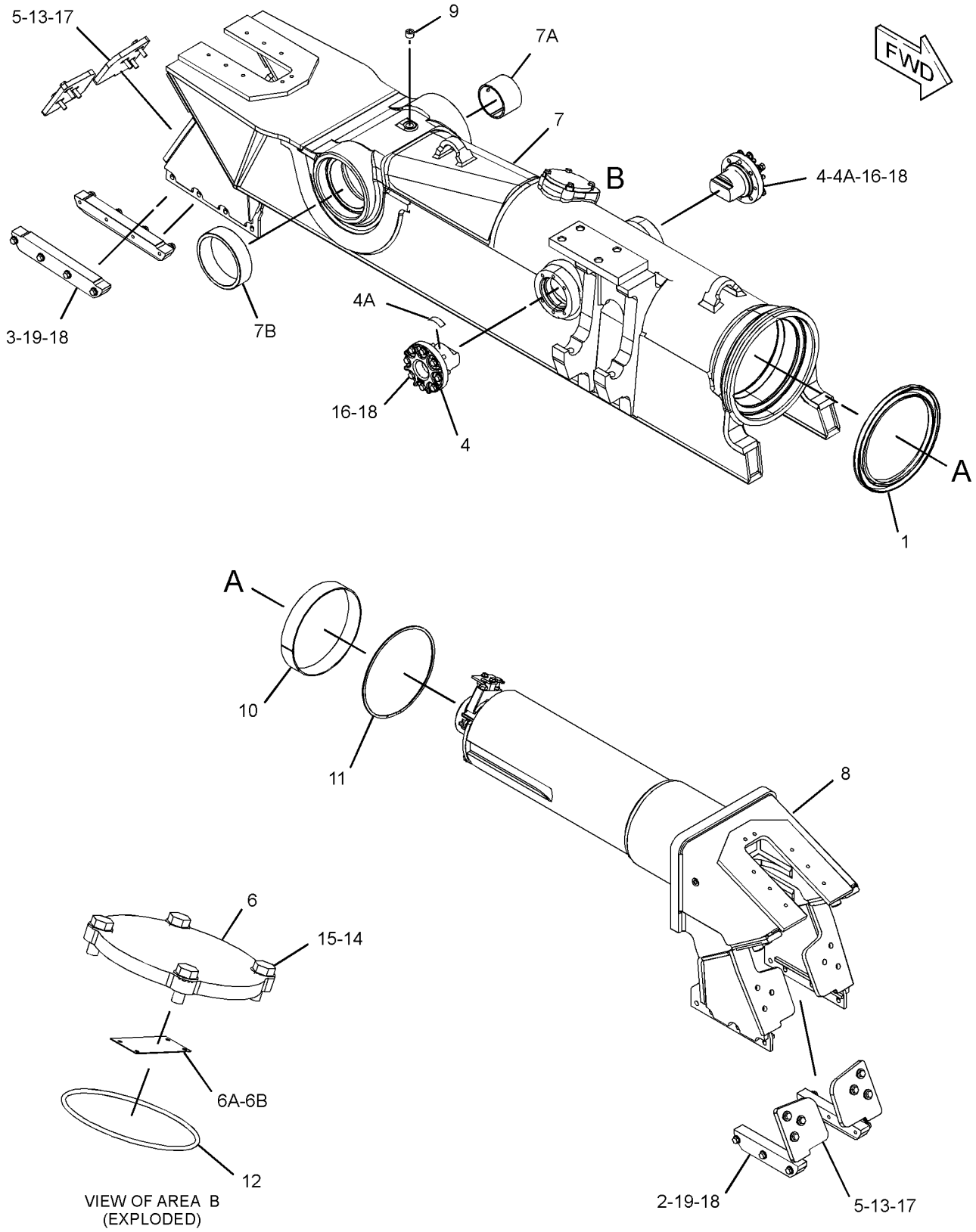

GRAPHIC #1 **<END>** g03583661

450-7179 FRAME GP-TELESCOPING RECOIL—RH

S/N: JEN1-UP

PART OF 450-7081, 450-7082 UNDERCARRIAGE AR

AN ATTACHMENT

SMCS-4151 **i05641539**

NOTE	REF NO	GRAPHIC REF	PART NUMBER	QTY	PART NAME 1 2 3 4 5 6 (PRODUCT LEVEL)	SEE PAGE
	1	1	**9X-4582**	1	SEAL AS	
	2	1	**260-7733**	2	STRIP	
	3	1	**261-3257**	2	STRIP	
	4	1	**268-9709**	2	GUIDE AS	
					(EACH INCLUDES)	
	4A	1	**241-3720**	1	FILM-WARNING (RECOIL SPRING)	
	5	1	**282-4017**	4	PLATE-SCRAPER	
	6	1	**364-9652**	1	COVER AS	
	6A	1	**7B-3028**	4	SCREW-DRIVE (NO 4X 3/16-IN)	
	6B	1	**253-1346**	1	PLATE-WARNING (HIGH PRESSURE CYLINDER)	
	7	1	**389-2088**	1	FRAME AS (RH)	
	7A	1	**221-3197**	1	BUSHING	
	7B	1	**221-3200**	1	BUSHING	
Y	8	1	*450-7181*	1	FRAME GP-FRONT (RH)	390
	9	1	**1B-5174**	1	PLUG-PIPE	
	10	1	**3T-2077**	1	BEARING	
	11	1	**3W-1852**	1	RING-RETAINING	
	12	1	**5H-6734**	1	SEAL-O-RING	
	13	1	**5P-1076**	12	WASHER-HARD (13.5X30X4-MM THK)	
	14	1	**8T-4121**	4	WASHER-HARD (11X21X2.5-MM THK)	
M	15	1	**8T-4136**	4	BOLT (M10X1.5X25-MM)	
M	16	1	**8T-4184**	12	BOLT (M12X1.75X45-MM)	
M	17	1	**8T-4194**	12	BOLT (M12X1.75X50-MM)	
	18	1	**8T-4223**	26	WASHER-HARD (13.5X25.5X3-MM THK)	
M	19	1	**8T-4956**	14	BOLT (M12X1.75X35-MM)	

M - METRIC PART
Y - SEPARATE ILLUSTRATION

450-7179 **FRAME GP-TELESCOPING RECOIL (*contd.*)** **i05641539**

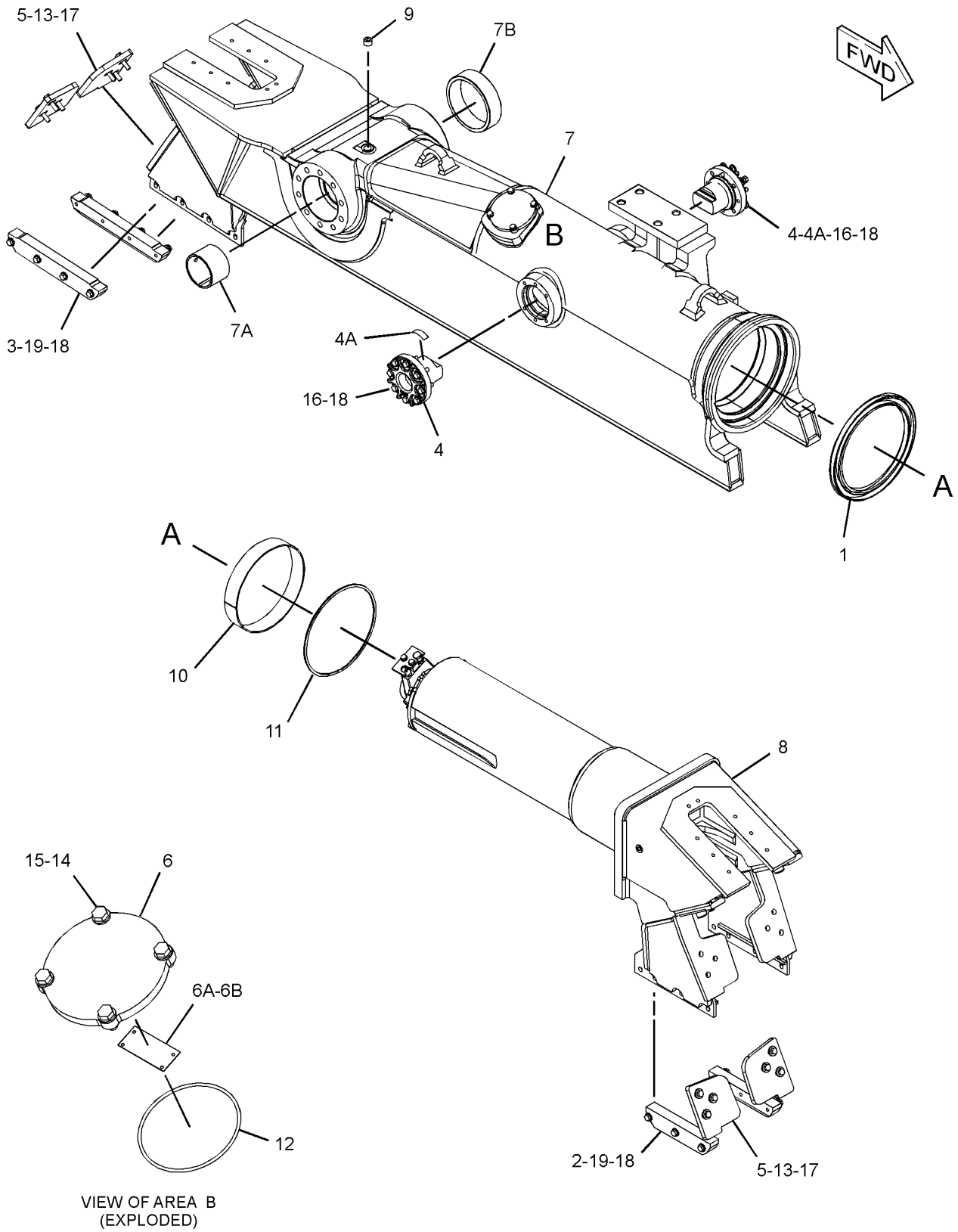

VIEW OF AREA B
(EXPLODED)

GRAPHIC #1 **<END>** g03583210

450-7180 FRAME GP-TELESCOPING RECOIL–LH

S/N: JEN1-UP

PART OF 450-7178 FRAME GP-TELESCOPING RECOIL

AN ATTACHMENT

SMCS-4151 **i05641569**

NOTE	REF NO	GRAPHIC REF	PART NUMBER	QTY	PART NAME 1 2 3 4 5 6 (PRODUCT LEVEL)	SEE PAGE
	1	1	**315-7783**	1	FRAME GP-TRACK ROLLER (FRONT)	
	1A	1	**3T-1162**	1	BUSHING	
	1B	1	**4B-4158**	4	SCREW-DRIVE (NO 4X0.25-IN)	
	1C	1	**254-1686**	1	PLATE-WARNING (RECOIL SPRING)	
Y	2	1	*315-7786*	1	TRACK ADJUSTER & RECOIL GP	416

Y - SEPARATE ILLUSTRATION

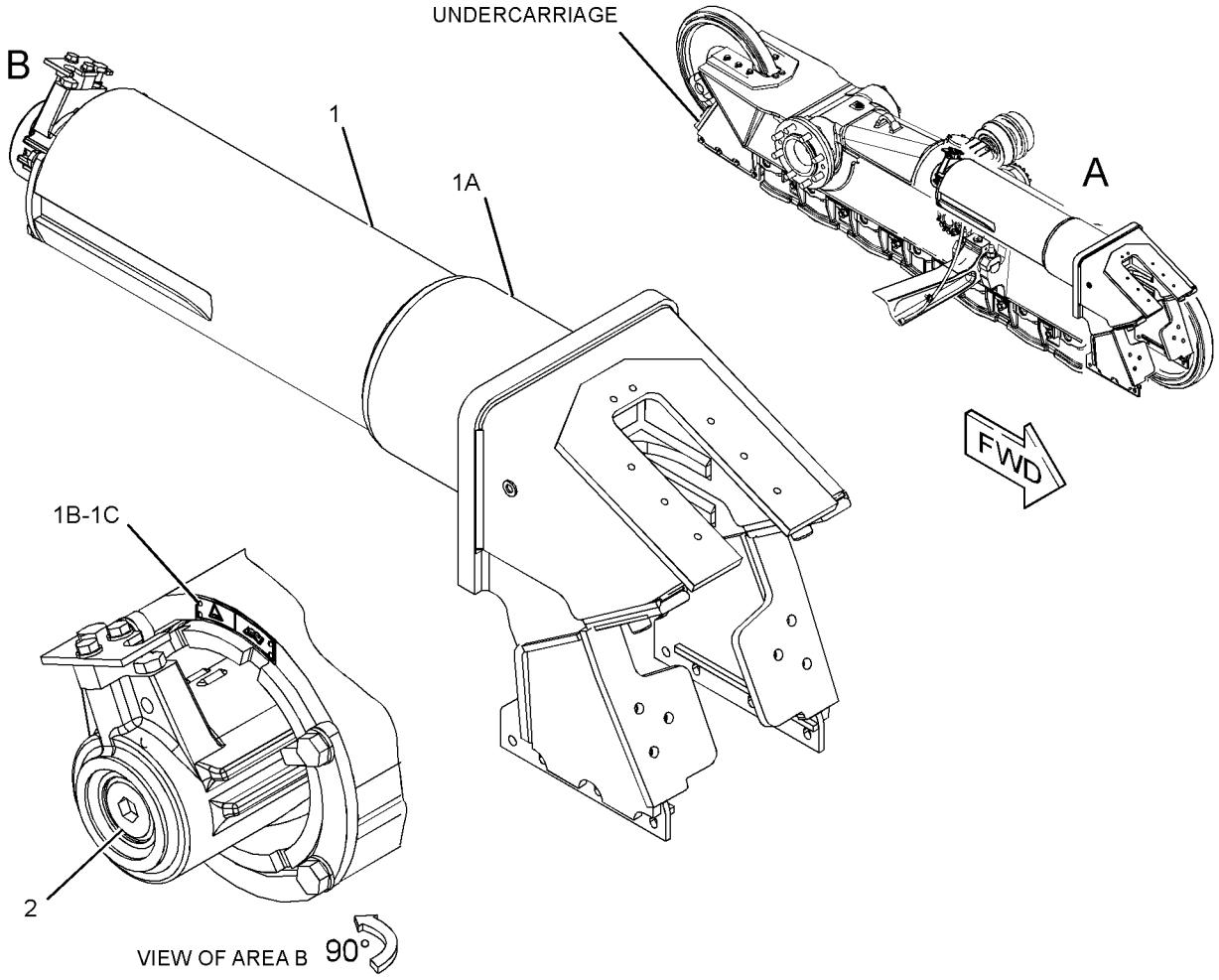

GRAPHIC #1 **<END>** g03584737

450-7177 FRAME GP-TRACK ROLLER–RH

S/N: JEN1-UP

PART OF 450-7094 FRAME GP-TELESCOPING RECOIL

AN ATTACHMENT

SMCS-4151 **i05680334**

NOTE	REF NO	GRAPHIC REF	PART NUMBER	QTY	PART NAME 1 2 3 4 5 6 (PRODUCT LEVEL)	SEE PAGE
	1	1	**315-7785**	1	FRAME AS (FRONT)	
	1A	1	**3T-1162**	1	BUSHING	
	1B	1	**4B-4158**	4	SCREW-DRIVE (NO 4X0.25-IN)	
	1C	1	**254-1686**	1	PLATE-WARNING (RECOIL SPRING)	
Y	2	1	*315-7786*	1	TRACK ADJUSTER & RECOIL GP	416

Y - SEPARATE ILLUSTRATION

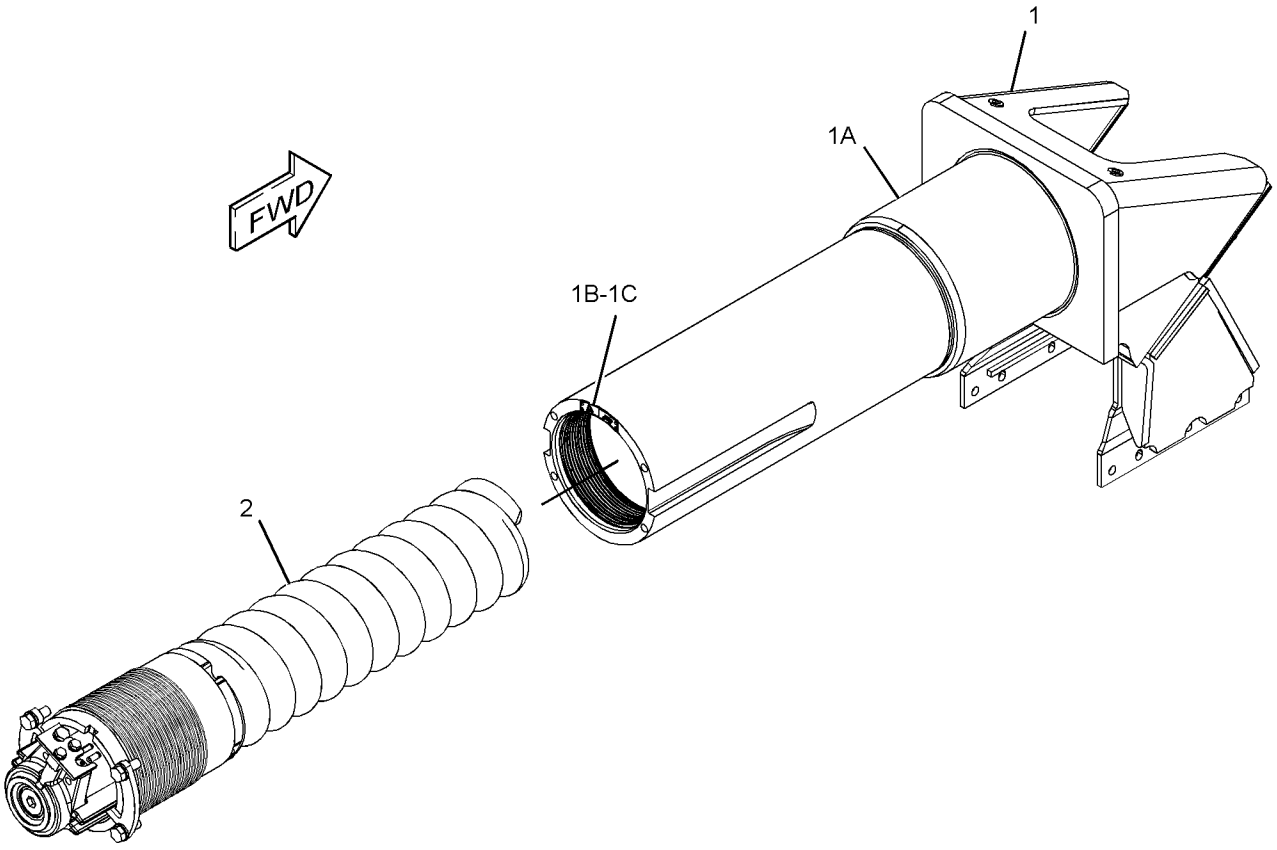

GRAPHIC #1 **<END>** g03583691

450-7181 FRAME GP-TRACK ROLLER–RH

S/N: JEN1-UP

PART OF 450-7179 FRAME GP-TELESCOPING RECOIL

AN ATTACHMENT

SMCS-4151 **i05680335**

NOTE	REF NO	GRAPHIC REF	PART NUMBER	QTY	PART NAME 1 2 3 4 5 6 (PRODUCT LEVEL)	SEE PAGE
	1	1	**315-7783**	1	FRAME GP-TRACK ROLLER (FRONT)	
	1A	1	**3T-1162**	1	BUSHING	
	1B	1	**4B-4158**	4	SCREW-DRIVE (NO 4X0.25-IN)	
	1C	1	**254-1686**	1	PLATE-WARNING (RECOIL SPRING)	
Y	2	1	*315-7786*	1	TRACK ADJUSTER & RECOIL GP	416

Y - SEPARATE ILLUSTRATION

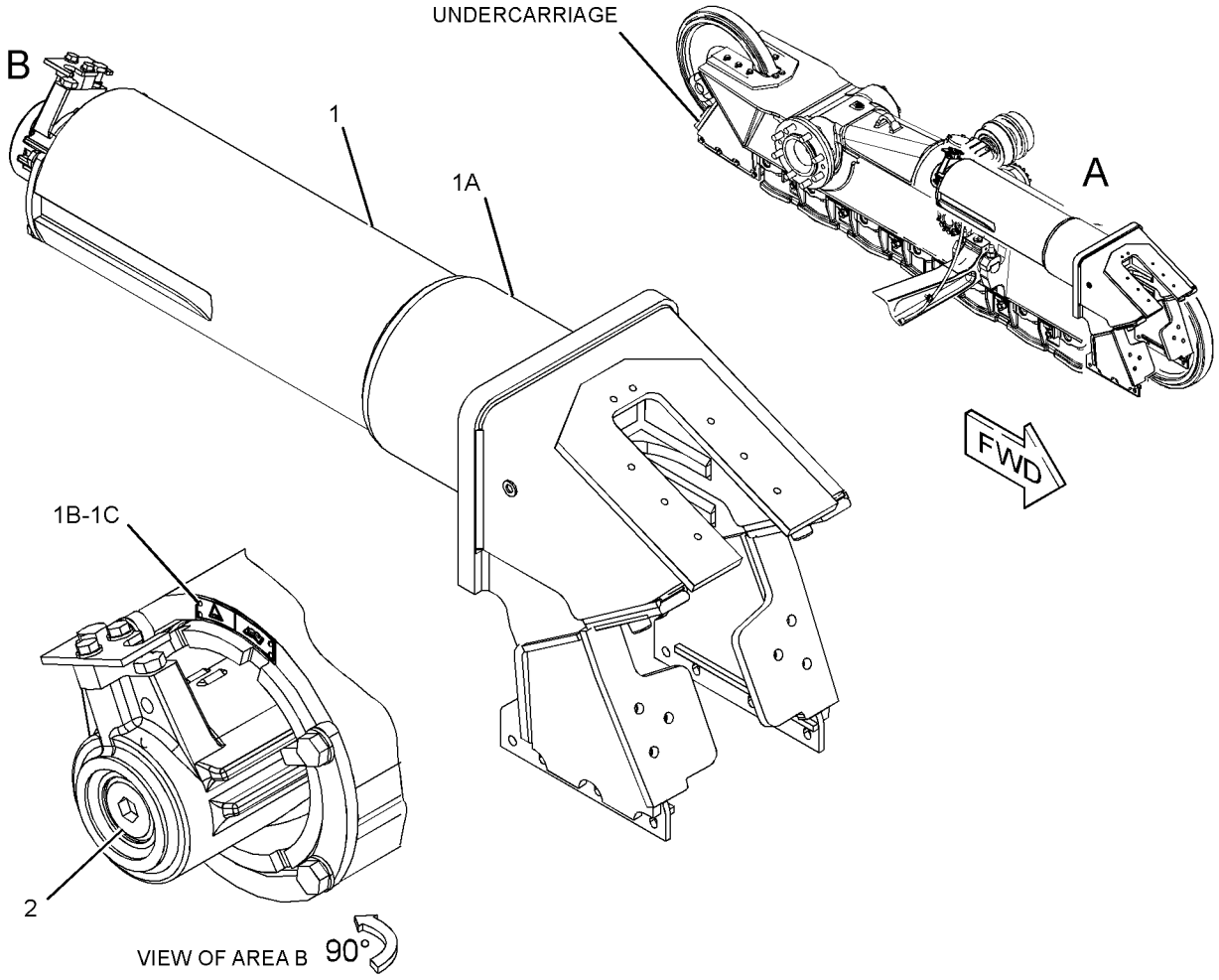

GRAPHIC #1 **<END>** g03584737

164-0406 GUARD GP-TRACK GUIDE

S/N: EMM1-UP; JEN1-UP
PART OF 450-7075, 450-7078 UNDERCARRIAGE AR
AN ATTACHMENT

SMCS-4177 **i05635175**

NOTE	REF NO	GRAPHIC REF	PART NUMBER	QTY	PART NAME 1 2 3 4 5 6 (PRODUCT LEVEL)	SEE PAGE
	1	1	**166-2287**	8	SPACER (22X40X20-MM THK)	
	2	1	**268-5945**	2	GUARD AS	
					(EACH INCLUDES)	
		1	**164-0403**	1	GUARD	
		1	**164-4611**	1	GUARD	
M	3	1	**173-9685**	8	BOLT (M20X2.5X70-MM)	

M - METRIC PART
QUANTITIES SHOWN ARE THOSE REQUIRED FOR BOTH LH AND RH SIDES

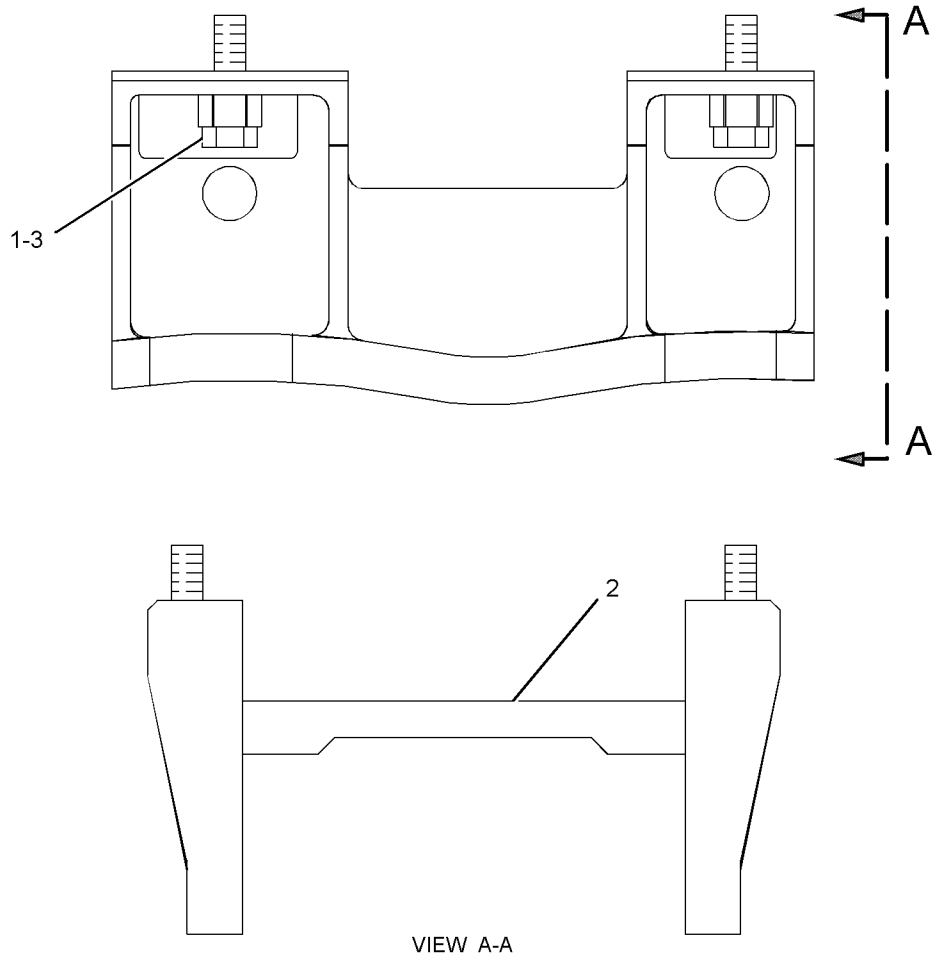

VIEW A-A

GRAPHIC #1 **<END>** g01210245

314-3283 GUARD GP-TRACK GUIDE–SYSTEMONE

S/N: JEN1-UP
PART OF 450-7081 UNDERCARRIAGE AR
AN ATTACHMENT

SMCS-4177 **i05641351**

NOTE	REF NO	GRAPHIC REF	PART NUMBER	QTY	PART NAME 1 2 3 4 5 6 (PRODUCT LEVEL)	SEE PAGE
	1	1	**166-2287**	16	SPACER (22X40X20-MM THK)	
	2	1	**310-4269**	4	GUARD AS	
M	3	1	**173-9685**	16	BOLT (M20X2.5X70-MM)	

M - METRIC PART
QUANTITIES SHOWN ARE THOSE REQUIRED FOR BOTH LH AND RH SIDES

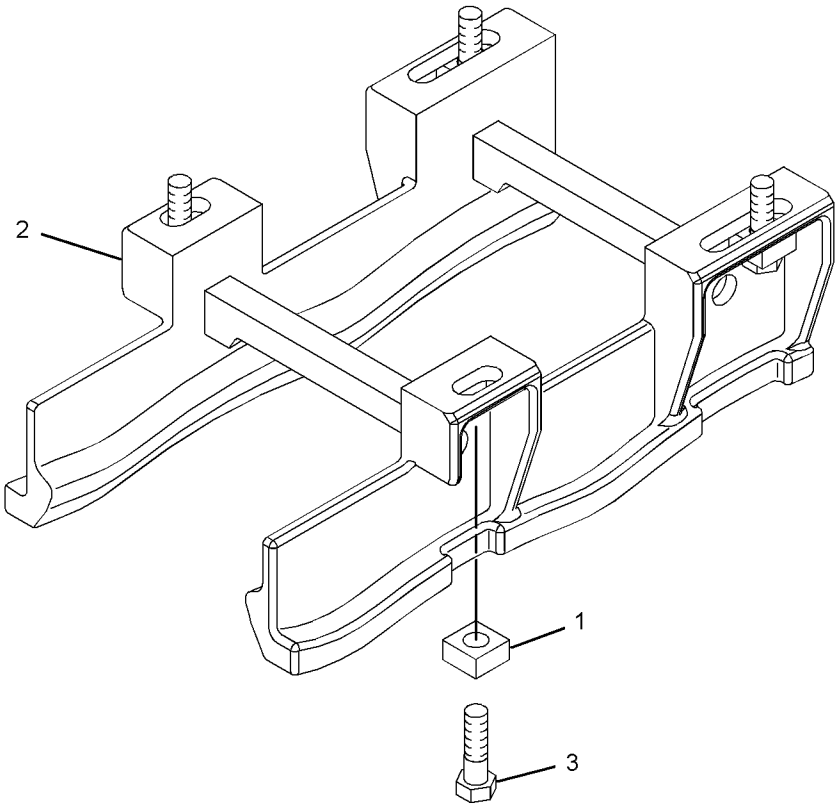

GRAPHIC #1 **<END>** g01410977

134-9429 GUARD GP-TRACK ROLLER–HEAVY-DUTY

S/N: JEN1-UP
PART OF 450-7079 UNDERCARRIAGE AR
AN ATTACHMENT

SMCS-7152 **i05640949**

NOTE	REF NO	GRAPHIC REF	PART NUMBER	QTY	PART NAME 1 2 3 4 5 6 (PRODUCT LEVEL)	SEE PAGE
	1	1	**134-5366**	12	TUBE	
	2	1	**134-5368**	12	ROD	
	3	1	**134-9431**	4	GUARD	
	4	1	**134-9432**	4	GUARD	
	5	1	**166-2287**	24	SPACER (22X40X20-MM THK)	
M	6	1	**7Y-5233**	24	LOCKNUT (M24X3-THD)	
M	7	1	**173-9685**	24	BOLT (M20X2.5X70-MM)	
	8	1	**8T-4167**	24	WASHER-HARD (26X44X4-MM THK)	

M - METRIC PART
QUANTITIES SHOWN ARE THOSE REQUIRED FOR BOTH LH AND RH SIDES

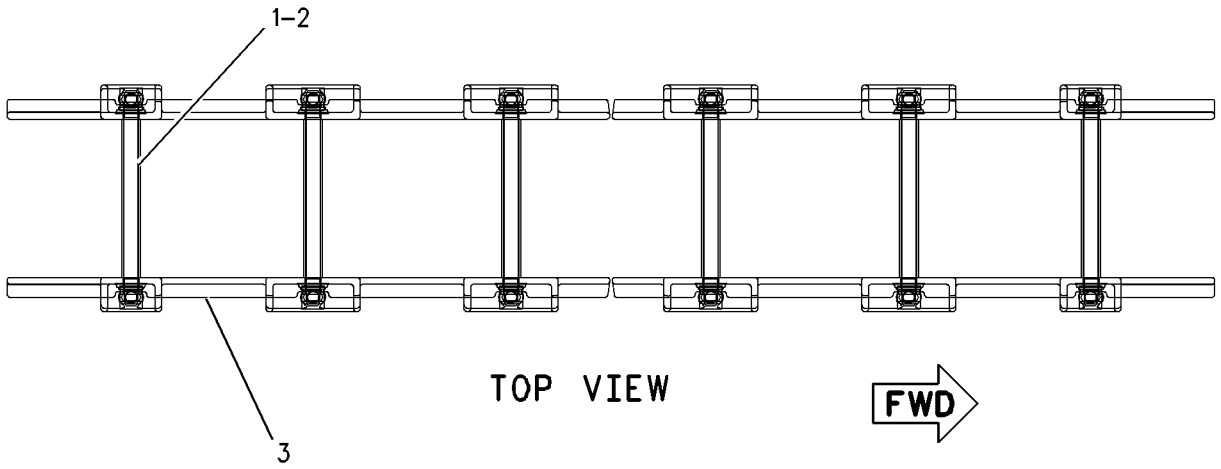

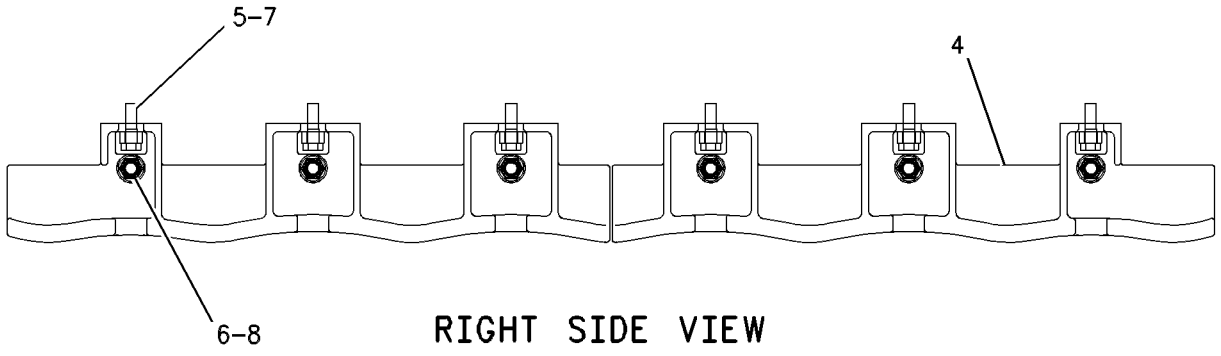

GRAPHIC #1 **<END>** g00603925

378-3790 GUARD GP-TRACK ROLLER–SYSTEMONE

S/N: JEN1-UP
PART OF 450-7082 UNDERCARRIAGE AR
AN ATTACHMENT

SMCS-7152 **i05641411**

NOTE	REF NO	GRAPHIC REF	PART NUMBER	QTY	PART NAME 1 2 3 4 5 6 (PRODUCT LEVEL)	SEE PAGE
	1	1	**134-5366**	12	TUBE	
	2	1	**134-5368**	12	ROD	
	3	1	**166-2287**	24	SPACER (22X40X20-MM THK)	
	4	1	**229-9558**	4	GUARD	
	5	1	**229-9559**	4	GUARD	
M	6	1	**7Y-5233**	24	LOCKNUT (M24X3-THD)	
M	7	1	**173-9685**	24	BOLT (M20X2.5X70-MM)	
	8	1	**8T-4167**	24	WASHER-HARD (26X44X4-MM THK)	

M - METRIC PART

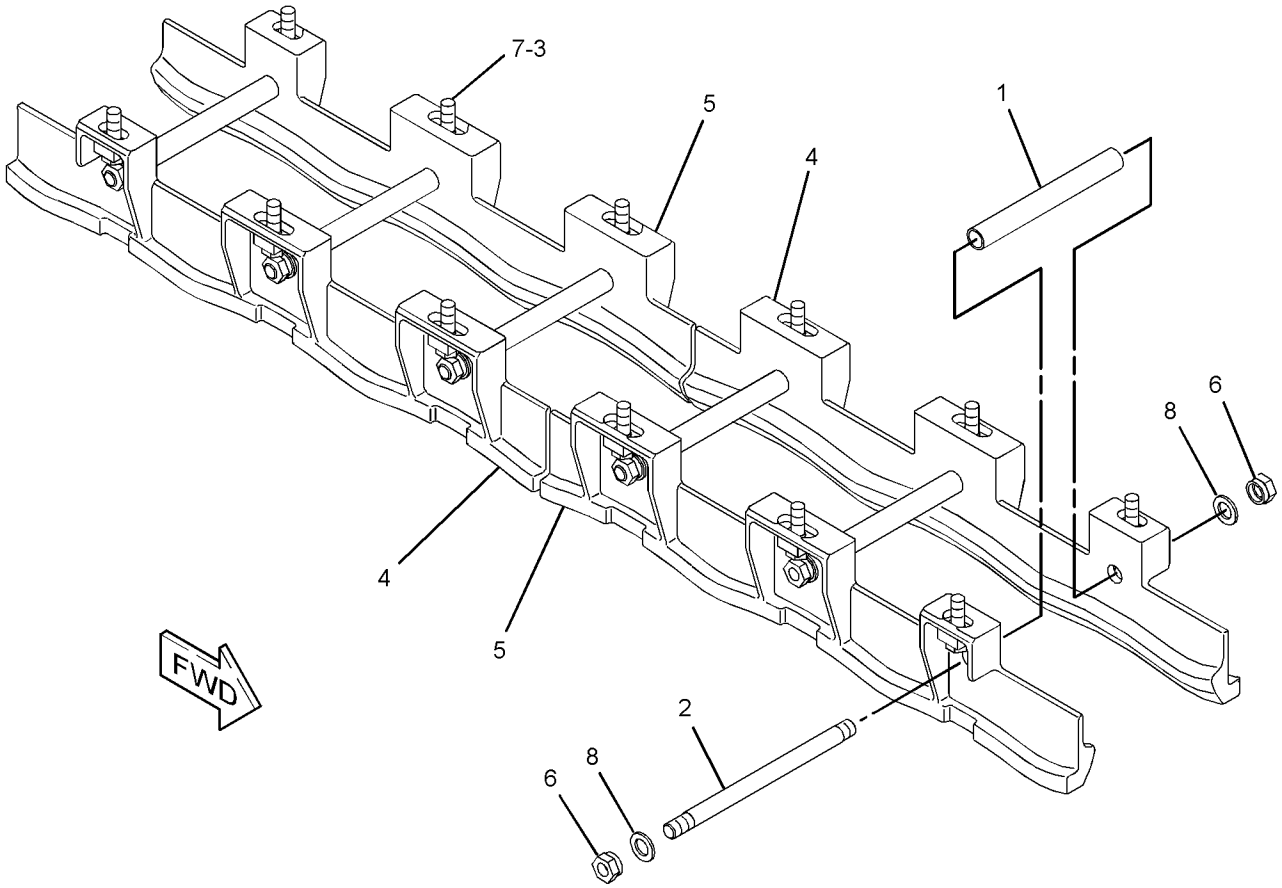

GRAPHIC #1 **<END>** g01165766

389-6120 GUARD GP-TRACK ROLLER–HEAVY-DUTY

S/N: EMM1-UP
FULL LENGTH GUIDES
PART OF 450-7076 UNDERCARRIAGE AR
AN ATTACHMENT

SMCS-7152 **i05635809**

NOTE	REF NO	GRAPHIC REF	PART NUMBER	QTY	PART NAME 1 2 3 4 5 6 (PRODUCT LEVEL)	SEE PAGE
	1	1	**8E-9932**	4	PLATE	
	2	1	**134-5364**	4	GUARD	
	3	1	**134-5365**	4	GUARD	
	4	1	**134-5366**	10	TUBE	
	5	1	**134-5368**	10	ROD	
	6	1	**166-2287**	20	SPACER (22X40X20-MM THK)	
M	7	1	**7Y-5233**	20	LOCKNUT (M24X3-THD)	
M	8	1	**8T-4139**	4	BOLT (M12X1.75X30-MM)	
M	9	1	**8T-4141**	20	BOLT (M20X2.5X70-MM)	
	10	1	**8T-4167**	20	WASHER-HARD (26X44X4-MM THK)	
	11	1	**8T-4223**	4	WASHER-HARD (13.5X25.5X3-MM THK)	
M	12	1	**8T-4956**	4	BOLT (M12X1.75X35-MM)	

M - METRIC PART

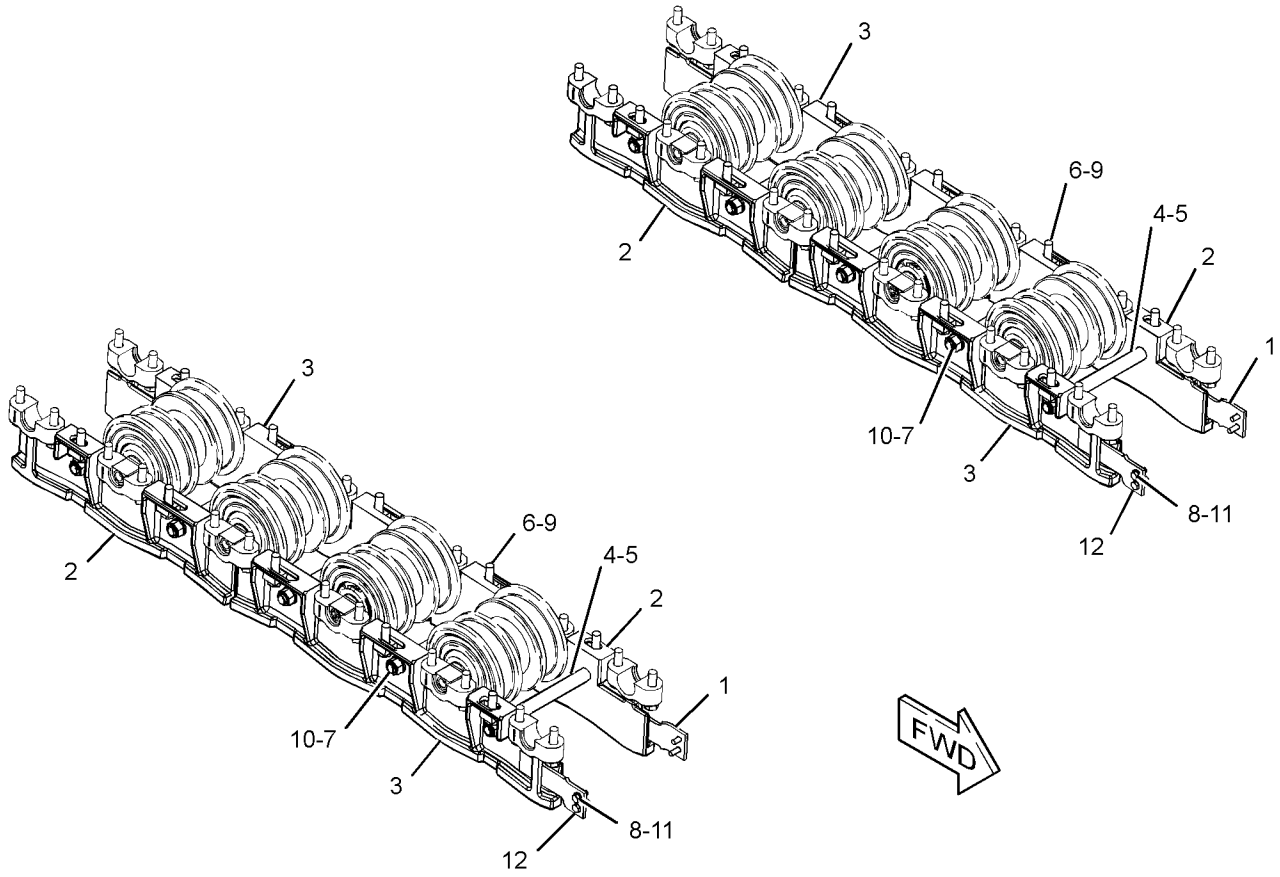

GRAPHIC #1 **<END>** g03581783

202-4304 IDLER GP-TRACK–HEAVY-DUTY

S/N: EMM1-UP; JEN1-UP

PART OF 450-7074, 450-7075, 450-7076, 450-7077, 450-7078, 450-7079 UNDERCARRIAGE AR AN ATTACHMENT

SMCS-4159 **i05633809**

NOTE	REF NO	GRAPHIC REF	PART NUMBER	QTY	PART NAME 1 2 3 4 5 6 (PRODUCT LEVEL)	SEE PAGE
	1	1	**2H-3928**	2	SEAL-O-RING	
	2	1	**202-4303**	1	IDLER & BEARING AS	
		1	**9P-2245**	2	BUSHING	
	3	1	**7J-2036**	2	SEAL-O-RING	
	4	1	**6Y-0473**	1	PLUG-CLEAR	
		1	**9G-5664**	1	STOPPER-RUBBER	
	5	1	**106-7691**	2	WASHER-THRUST (86X113.93X4.52-MM THK)	
	6	1	**107-3945**	2	COLLAR-SEAL	
	7	1	**149-2494**	1	SHAFT-TRACK IDLER	
	8	1	**149-2495**	2	RETAINER	
	9	1	**162-7862**	2	SEAL GP-DUO-CONE	
					(EACH INCLUDES)	
		1	**162-2166**	2	RING-TORIC	
	10	1	**1T-0765**	24	BOLT (3/8-16X1-IN)	
	11	1	**5M-2894**	24	WASHER-HARD (10.2X18.5X2.5-MM THK)	

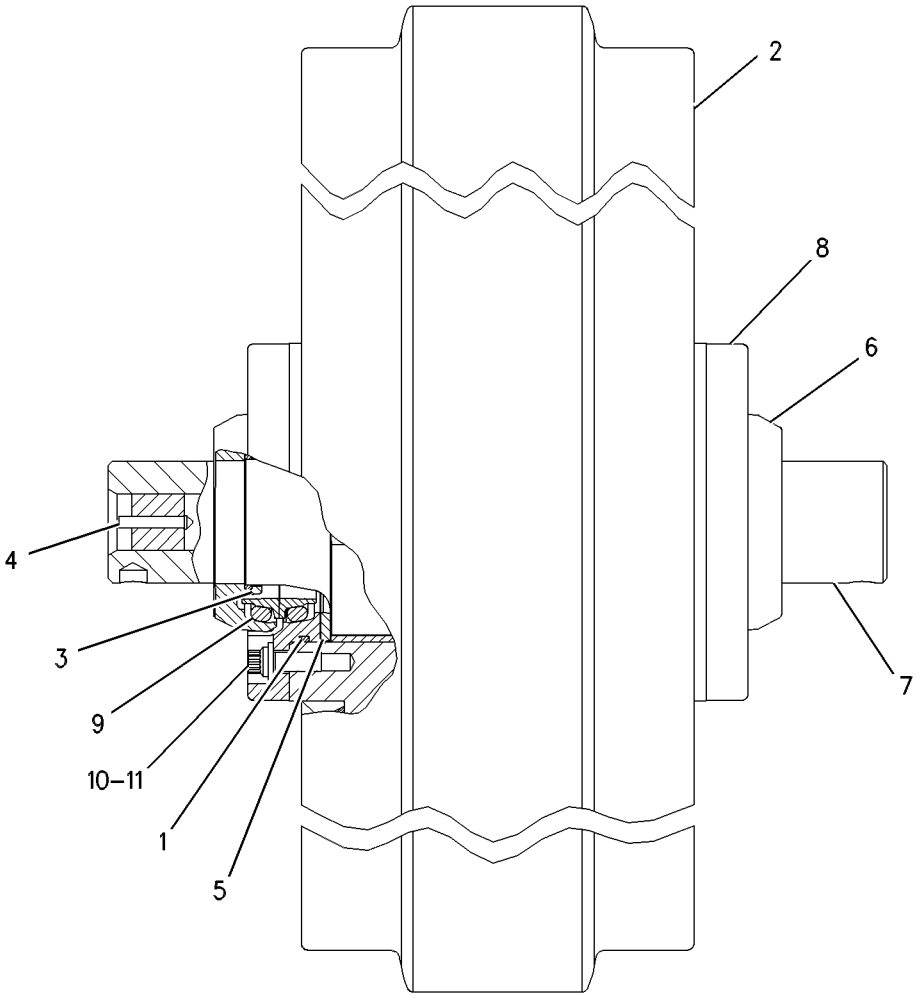

GRAPHIC #1 **<END>** g00579901

323-1170 IDLER GP-TRACK–SYSTEMONE

S/N: JEN1-UP
PART OF 450-7081, 450-7082 UNDERCARRIAGE AR
AN ATTACHMENT

SMCS-4159 **i05641327**

NOTE	REF NO	GRAPHIC REF	PART NUMBER	QTY	PART NAME 1 2 3 4 5 6 (PRODUCT LEVEL)	SEE PAGE
	1	1	**2H-3928**	2	SEAL-O-RING	
	2	1	**7J-2036**	2	SEAL-O-RING	
	3	1	**6Y-0473**	1	PLUG-CLEAR	
	3A	1	**9G-5664**	1	STOPPER-RUBBER	
	4	1	**106-7691**	2	WASHER-THRUST (86X113.93X4.52-MM THK)	
	5	1	**149-2494**	1	SHAFT-TRACK IDLER	
	6	1	**149-2495**	2	RETAINER	
	7	1	**162-7862**	2	SEAL GP-DUO-CONE	
					(EACH INCLUDES)	
	7A	1	**162-2166**	2	RING-TORIC	
	8	1	**323-1171**	1	IDLER & BEARING AS	
	8A	1	**9P-2245**	2	BEARING-SLEEVE	
	9	1	**107-3945**	2	COLLAR-SEAL	
	10	1	**1T-0765**	24	BOLT (3/8-16X1-IN)	
	11	1	**5M-2894**	24	WASHER-HARD (10.2X18.5X2.5-MM THK)	

PARTS SHOWN IN GRAPHIC(S) WITHOUT A REFERENCE NUMBER ARE NOT SERVICED SEPARATELY

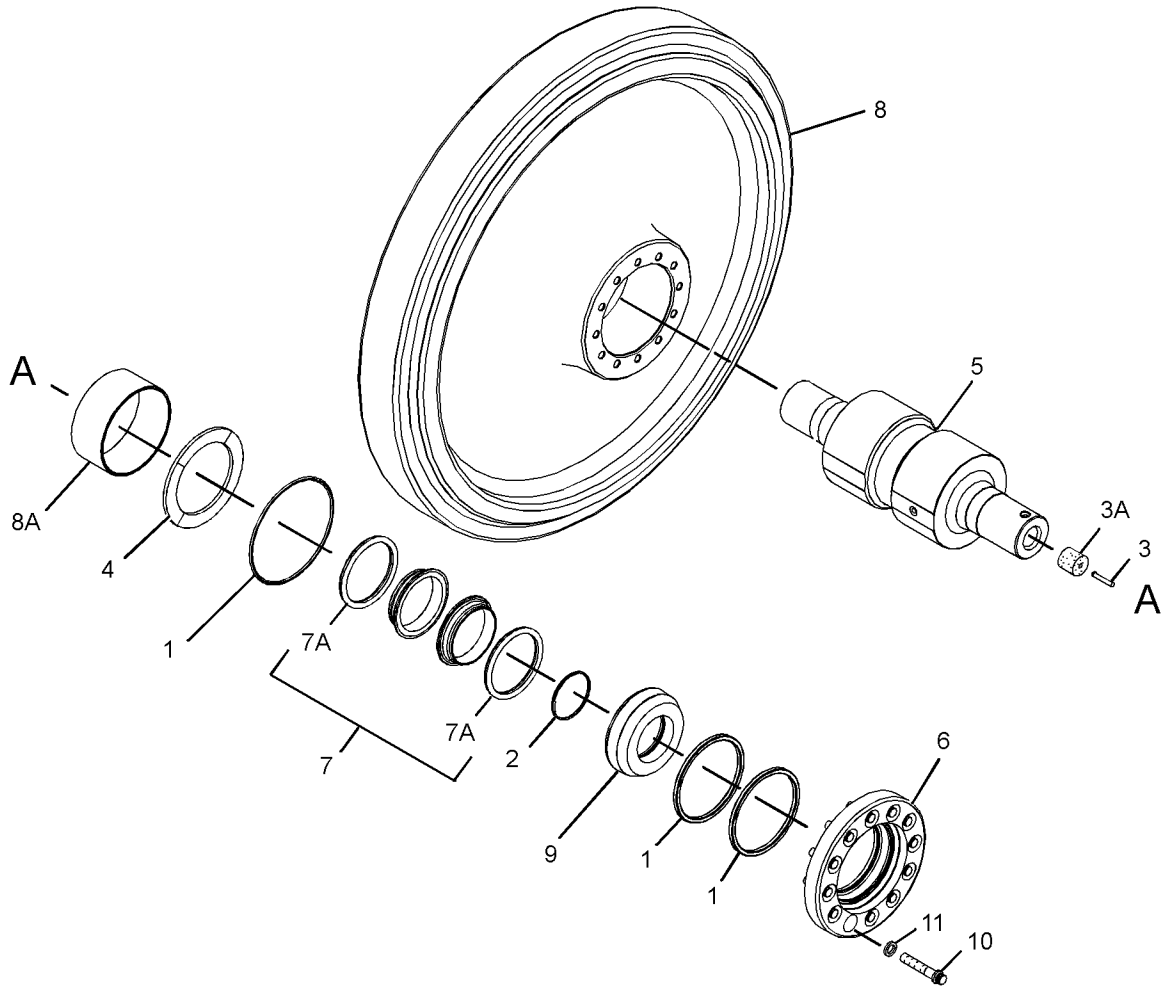

GRAPHIC #1 **<END>** g02025149

351-0958 LINK AS-TRACK–SYSTEMONE, OFFSET

S/N: JEN1-UP
41-JOINTS. SEALED, LUBRICATED
FOR USE WITH SYSTEMONE ROLLERS, GUARDS, GUIDESTRIPS, SHOES
PART OF 385-2666, 385-2679 TRACK GP
AN ATTACHMENT

SMCS-4169, 4171 **i05508631**

NOTE	REF NO	GRAPHIC REF	PART NUMBER	QTY	PART NAME 1 2 3 4 5 6 (PRODUCT LEVEL)	SEE PAGE
	1	1	**234-9699**	38	LINK-TRACK	
Y	2	1	**351-0955**	19	LINK AS-TRACK BOX (LINK BOX)	401
Y	3	1	**351-0956**	1	LINK AS-TRACK BOX (LINK BOX, OFFSET)	402

Y - SEPARATE ILLUSTRATION

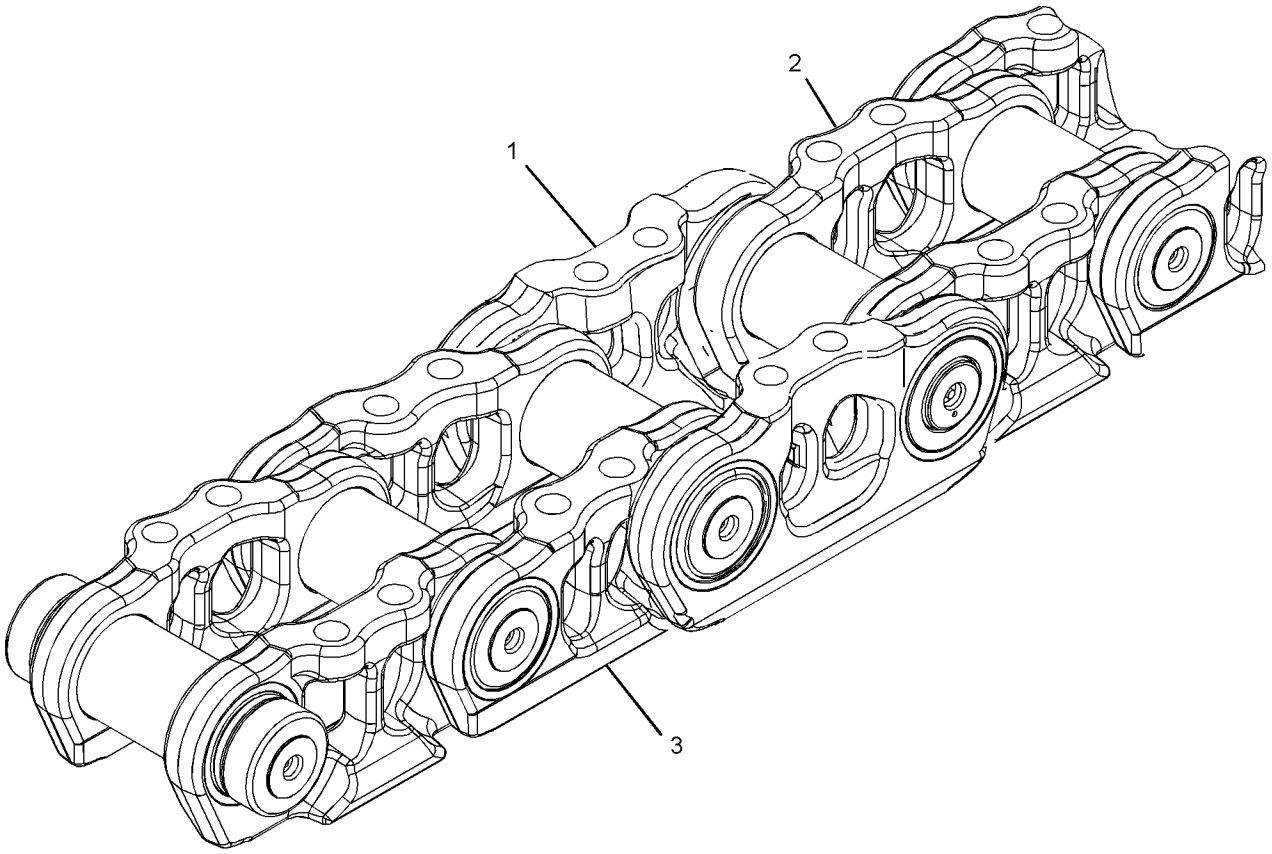

GRAPHIC #1 **<END>** g01793333

424-0842 LINK AS-TRACK–HEAVY-DUTY

S/N: EMM1-UP
39-JOINTS. SEALED, LUBRICATED
FOR USE WITH HEAVY-DUTY ROLLERS, GUARDS, GUIDESTRIPS, CONVENTIONAL IDLERS
PART OF 385-5450, 385-5458, 6I-9641 TRACK GP
AN ATTACHMENT

SMCS-4169, 4171 **i05505893**

NOTE	REF NO	GRAPHIC REF	PART NUMBER	QTY	PART NAME 1 2 3 4 5 6 (PRODUCT LEVEL)	SEE PAGE
	1	1	**378-8242**	38	LINK-TRACK (LH) (LH)	
	2	1	*6Y-1198*	39	STOP AS	
					(EACH INCLUDES)	
		1	**5G-2247**	1	STOPPER-RUBBER	
		1	**6Y-0473**	1	PLUG-CLEAR	
	3	1	**8E-7222**	39	BUSHING-TRACK	
	4	1	**8E-7407**	1	LINK-TRACK MASTER (PIN END, RH)	
	5	1	**8E-7408**	1	LINK-TRACK MASTER (PIN END, LH)	
	6	1	**8E-7409**	1	LINK-TRACK MASTER (BUSHING END, RH)	
	7	1	**8E-7410**	1	LINK-TRACK MASTER (BUSHING END, LH)	
	8	1	**152-8071**	78	RING-THRUST	
	9	1	**160-7820**	39	PIN-TRACK	
	10	1	**207-0544**	78	SEAL AS	
	11	1	**378-8241**	38	LINK-TRACK (RH)	

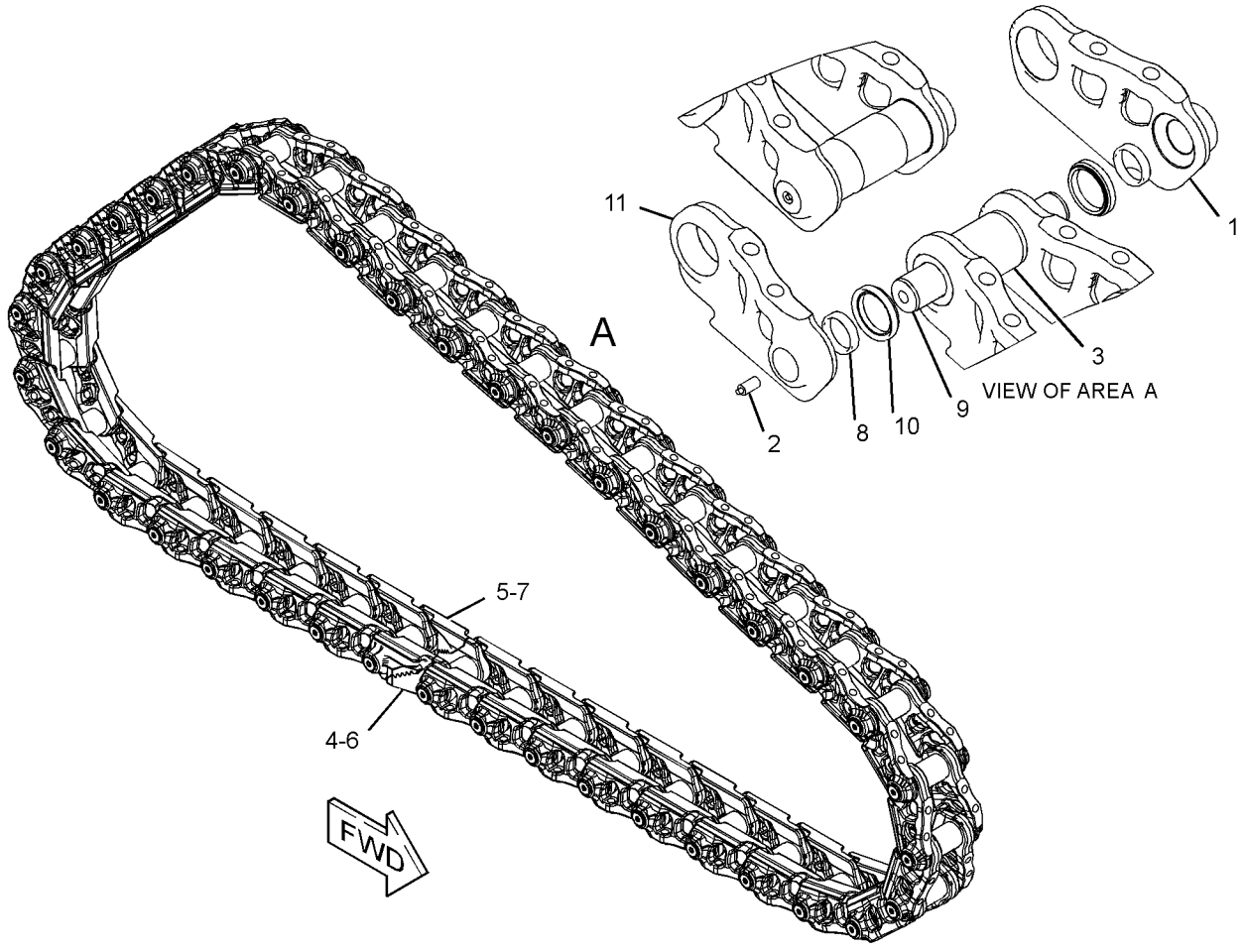

GRAPHIC #1 **<END>** g03381401

424-0844 LINK AS-TRACK–HEAVY-DUTY

S/N: JEN1-UP
41-JOINTS. SEALED, LUBRICATED
FOR USE WITH HEAVY-DUTY ROLLERS, GUARDS, GUIDESTRIPS, CONVENTIONAL IDLERS
PART OF 385-2672, 385-2675, 385-2678 TRACK GP
AN ATTACHMENT

SMCS-4169, 4171 **i05508751**

NOTE	REF NO	GRAPHIC REF	PART NUMBER	QTY	PART NAME 1 2 3 4 5 6 (PRODUCT LEVEL)	SEE PAGE
	1	1	*6Y-1198*	41	STOP AS	
					(EACH INCLUDES)	
	1A	1	**5G-2247**	1	STOPPER-RUBBER	
	1B	1	**6Y-0473**	1	PLUG-CLEAR	
	2	1	**8E-7222**	41	BUSHING-TRACK	
	3	1	**8E-7407**	1	LINK-TRACK MASTER (PIN END, RH)	
	4	1	**8E-7408**	1	LINK-TRACK MASTER (PIN END, LH)	
	5	1	**8E-7409**	1	LINK-TRACK MASTER (BUSHING END, RH)	
	6	1	**8E-7410**	1	LINK-TRACK MASTER (BUSHING END, LH)	
	7	1	**152-8071**	82	RING-THRUST	
	8	1	**160-7820**	41	PIN-TRACK	
	9	1	**207-0544**	82	SEAL AS	
	10	1	**378-8241**	40	LINK-TRACK (RH)	
	11	1	**378-8242**	40	LINK-TRACK (LH)	

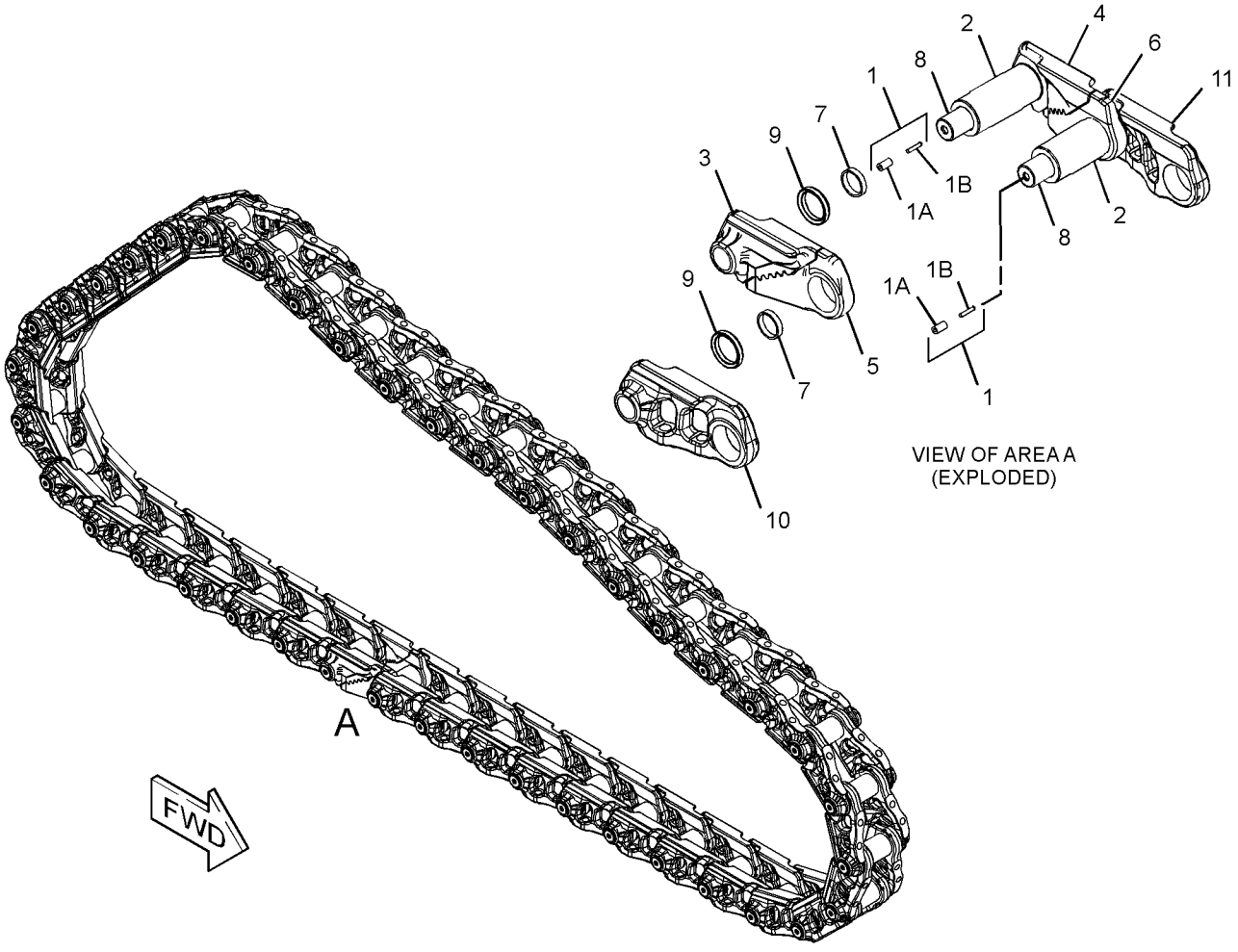

GRAPHIC #1 **<END>** g03338911

351-0955 LINK AS-TRACK BOX—LINK BOX, SYSTEMONE

S/N: JEN1-UP

SEALED, LUBRICATED, FOR FIELD REPLACEMENT OF LINK AS THAT IS MORE THAN 40% WORN, ORDER 351-0963

PART OF 351-0958 LINK AS-TRACK, 351-0956 LINK AS-TRACK BOX AN ATTACHMENT

SMCS-4169 **i05508691**

NOTE	REF NO	GRAPHIC REF	PART NUMBER	QTY	PART NAME 1 2 3 4 5 6 (PRODUCT LEVEL)	SEE PAGE
	1	1	**234-9699**	2	LINK-TRACK	
	2	1	*391-8912*	2	CARTRIDGE AS	
					(EACH INCLUDES)	
		1	**6Y-0473**	2	PLUG-CLEAR	
		1	**9G-1642**	2	STOPPER-RUBBER	

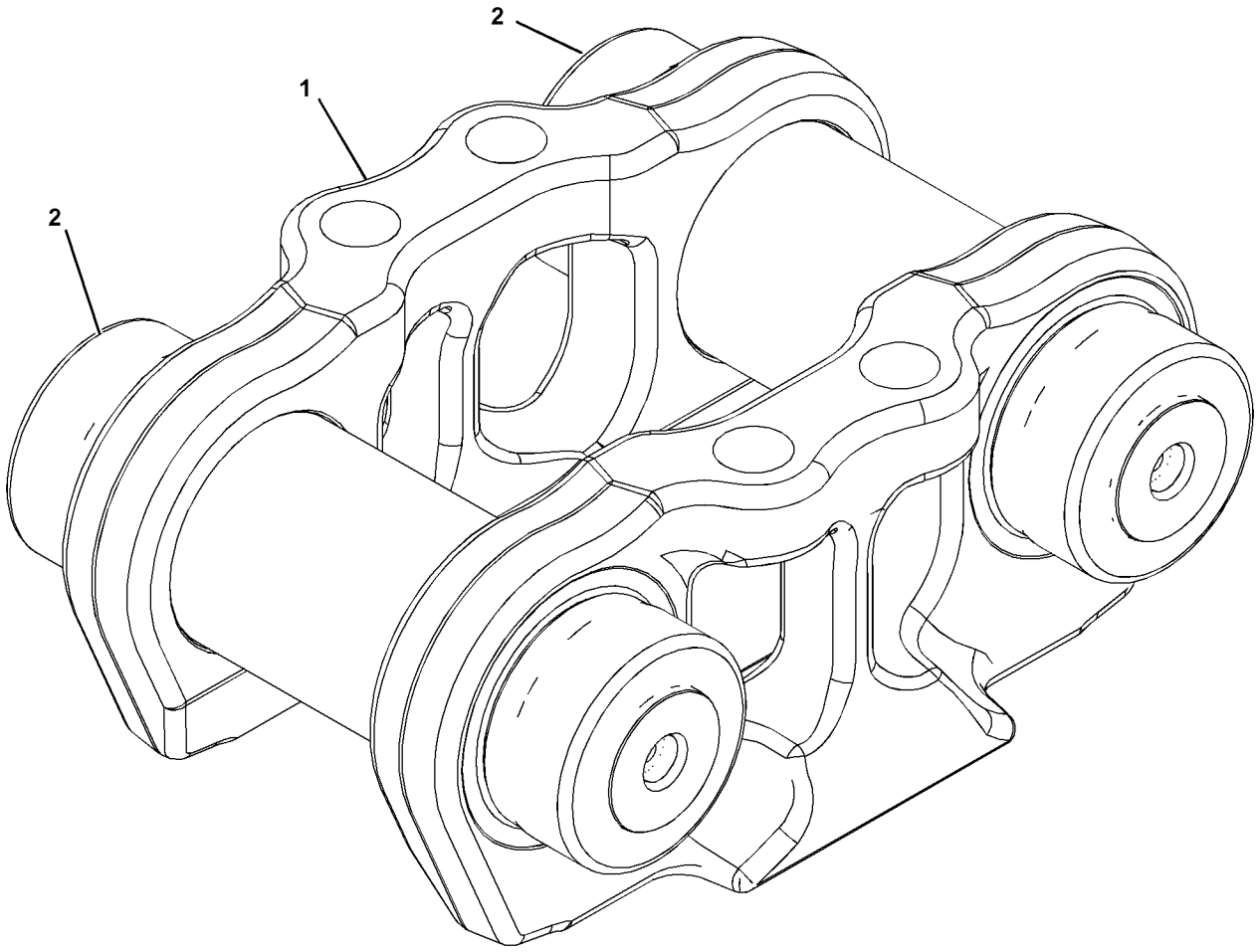

GRAPHIC #1 **<END>** g01378067

351-0956 LINK AS-TRACK BOX—SYSTEMONE, OFFSET

S/N: JEN1-UP
SEALED, LUBRICATED, FOR FIELD REPLACEMENT OF LINK AS THAT IS MORE THAN 40% WORN,
ORDER 351-0964
PART OF 351-0958 LINK AS-TRACK
AN ATTACHMENT

SMCS-4169 **i05508690**

NOTE	REF NO	GRAPHIC REF	PART NUMBER	QTY	PART NAME 1 2 3 4 5 6 (PRODUCT LEVEL)	SEE PAGE
Y	1	1	**351-0955**	1	LINK AS-TRACK BOX	401

PARTS SHOWN IN GRAPHIC(S) WITHOUT A REFERENCE NUMBER ARE NOT SERVICED SEPARATELY

Y - SEPARATE ILLUSTRATION

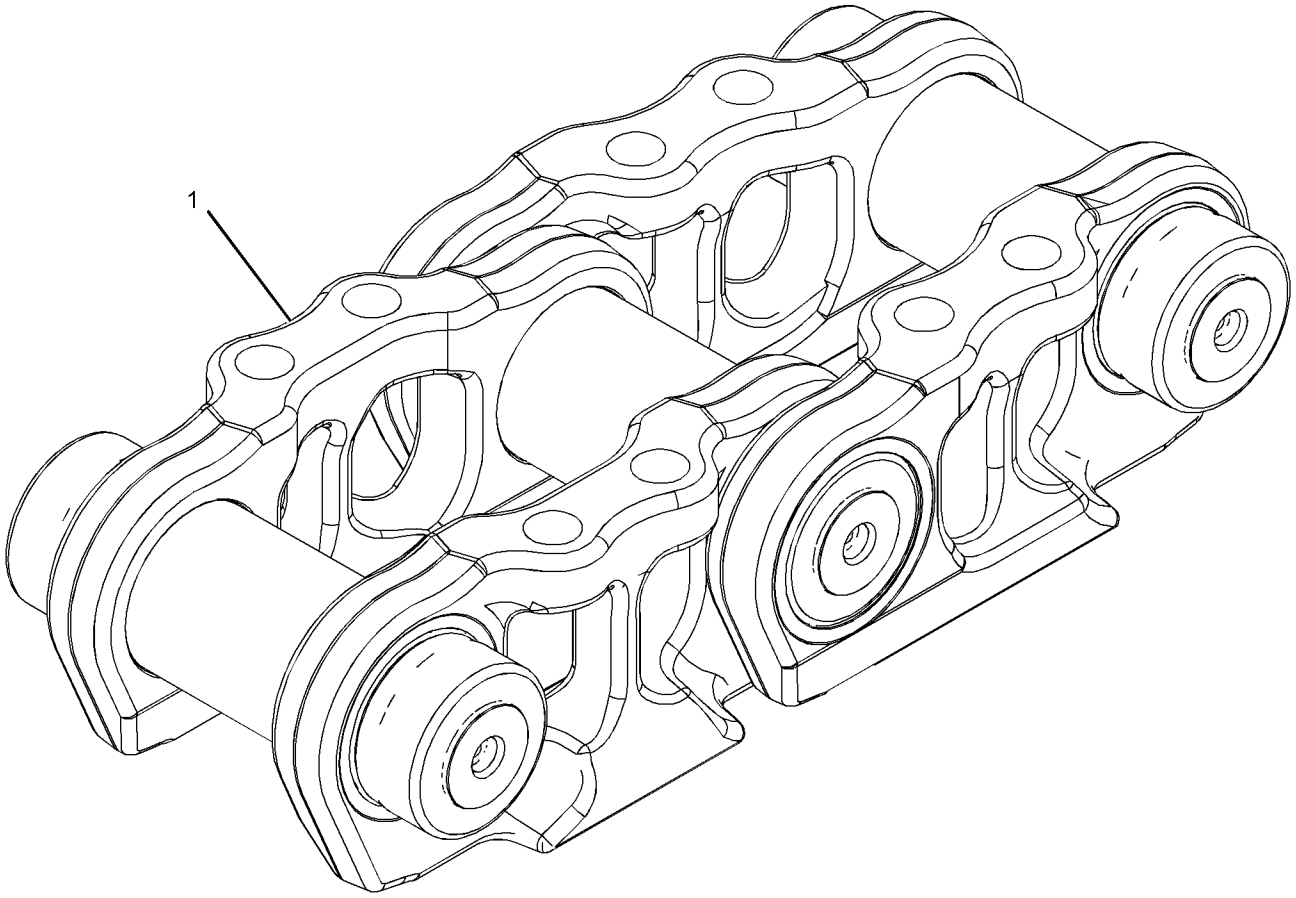

GRAPHIC #1 **<END>** g03340338

169-4368 MOUNTING GP-CARRIER ROLLER

S/N: EMM1-UP; JEN1-UP
PART OF 366-1747 ROLLER AR-TRACK CARRIER, 450-7077, 450-7078, 450-7079, 450-7081, 450-7082 UNDERCARRIAGE AR
AN ATTACHMENT

SMCS-4154 **i05502953**

NOTE	REF NO	GRAPHIC REF	PART NUMBER	QTY	PART NAME 1 2 3 4 5 6 (PRODUCT LEVEL)	SEE PAGE
M	1	1	**7X-2575**	4	BOLT (M24X3X60-MM)	
M	2	1	**8T-4187**	2	BOLT (M20X2.5X80-MM)	
	3	1	**8T-4123**	2	WASHER (3.62X5.75X0.375-MM THK)	
	4	1	**171-0808**	1	BRACKET	
	5	1	**8T-4167**	4	WASHER-HARD (26X44X4-MM THK)	

M - METRIC PART

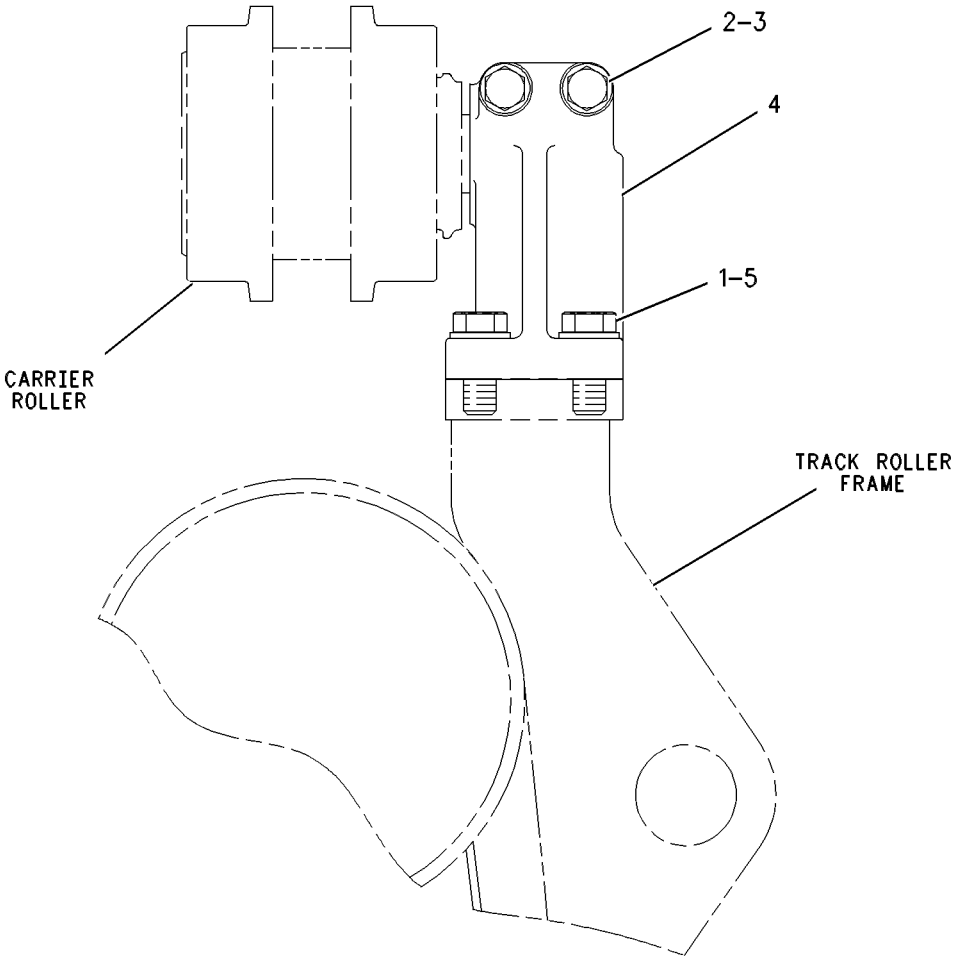

GRAPHIC #1 **<END>** g00607917

223-0647 PIVOT BAR GP

S/N: EMM1-UP; JEN1-UP
1880-MM (74-IN) GAUGE
PART OF 450-7074, 450-7075, 450-7076, 450-7077, 450-7078, 450-7079, 450-7081, 450-7082 UNDERCARRIAGE AR
AN ATTACHMENT

SMCS-4153 **i05633850**

NOTE	REF NO	GRAPHIC REF	PART NUMBER	QTY	PART NAME 1 2 3 4 5 6 (PRODUCT LEVEL)	SEE PAGE
	1	1	**5G-8993**	2	RETAINER	
	2	1	**5G-9842**	2	SEAL	
	3	1	**5G-9843**	2	PLATE	
	4	1	**224-0881**	2	SHAFT AS-PIVOT	
					(EACH INCLUDES)	
		1	**5G-9841**	1	RING	
	5	1	**238-4520**	2	PLATE AS	
M	6	1	**7X-2580**	16	BOLT (M30X3.5X90-MM)	
	7	1	**8E-1900**	2	WASHER-THRUST (112X150X6.35-MM THK)	
M	8	1	**8T-0375**	12	BOLT (M16X2X45-MM)	
	9	1	**8T-4123**	10	WASHER (3.62X5.75X0.375-MM THK)	
M	10	1	**8T-5460**	10	BOLT (M20X2.5X40-MM)	
	11	1	**365-8408**	2	SEAL-D-RING	

M - METRIC PART
QUANTITIES SHOWN ARE THOSE REQUIRED FOR BOTH LH AND RH SIDES

2A 2 5G9842/001 ARRUELA DE ENCOSTO

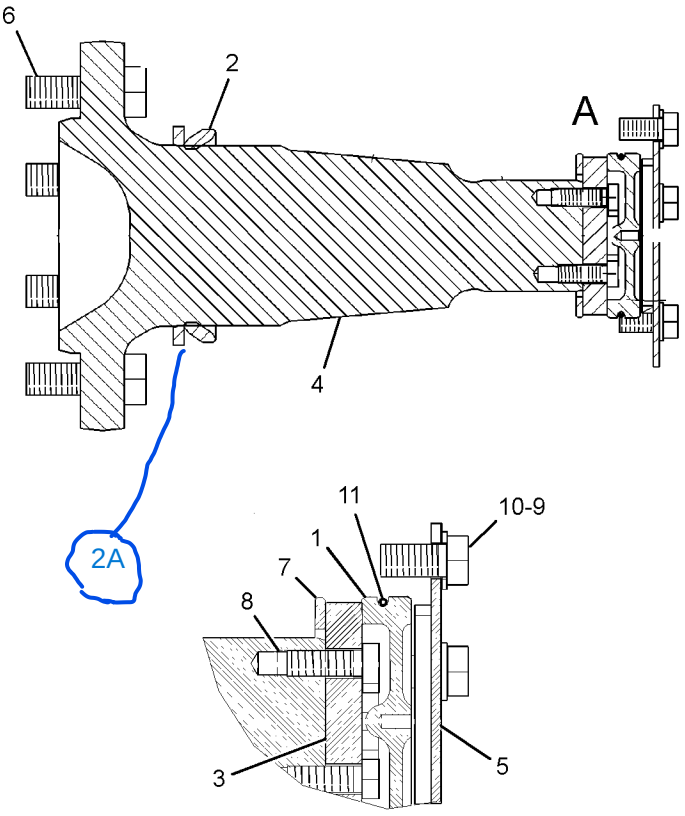

VIEW OF AREA A

GRAPHIC #1 **<END>** g01206580

366-1747 ROLLER AR-TRACK CARRIER

S/N: EMM1-UP

FIELD INSTALLATION

SMCS-4154 **i05502854**

NOTE	REF NO	GRAPHIC REF	PART NUMBER	QTY	PART NAME 1 2 3 4 5 6 (PRODUCT LEVEL)	SEE PAGE
Y	1	1	*169-4368*	2	MOUNTING GP-CARRIER ROLLER	403
Y	2	1	**235-5974**	2	ROLLER GP-TRACK CARRIER	406

Y - SEPARATE ILLUSTRATION

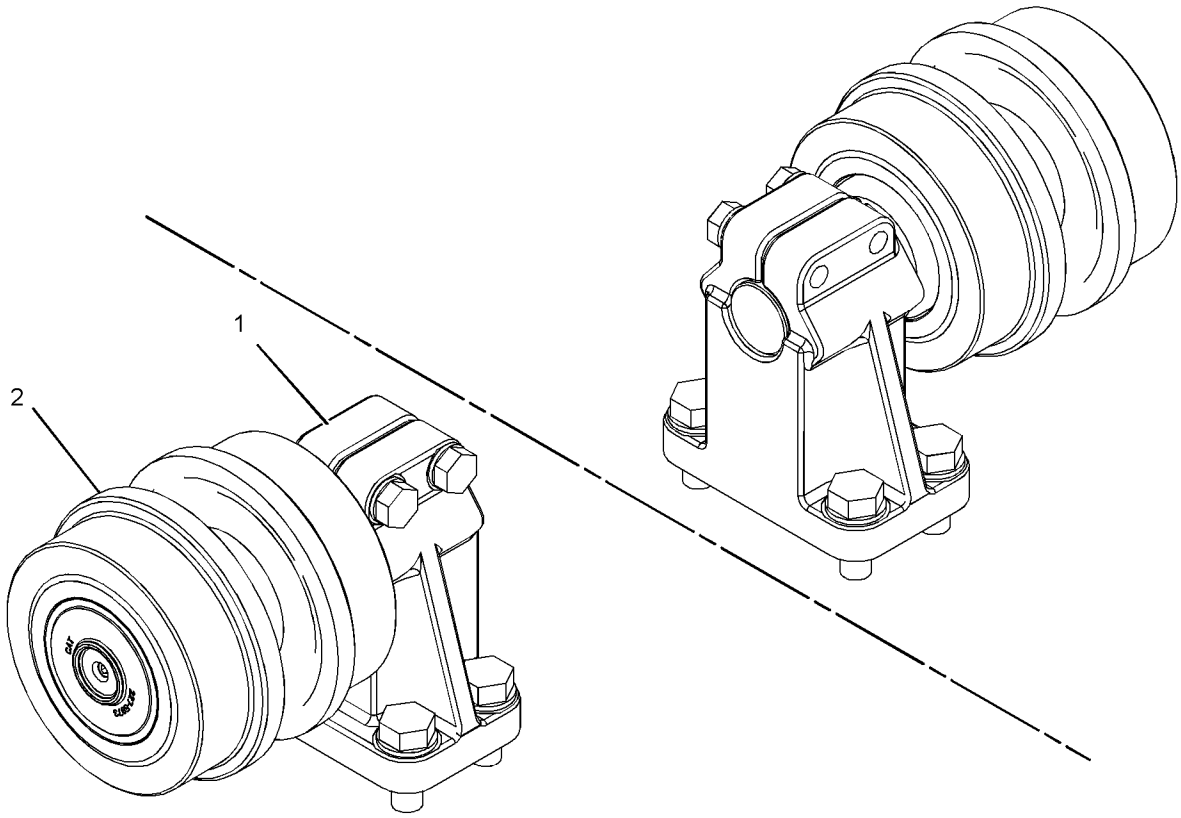

GRAPHIC #1 **<END>** g02227856

235-5974 ROLLER GP-TRACK CARRIER

S/N: EMM1-UP; JEN1-UP

PART OF 366-1747 ROLLER AR-TRACK CARRIER, 450-7077, 450-7078, 450-7079, 450-7081, 450-7082 UNDERCARRIAGE AR

AN ATTACHMENT

SMCS-4154 **i05502876**

NOTE	REF NO	GRAPHIC REF	PART NUMBER	QTY	PART NAME 1 2 3 4 5 6 (PRODUCT LEVEL)	SEE PAGE
					(INDIVIDUAL PARTS ARE NOT SERVICED SEPARATELY)	

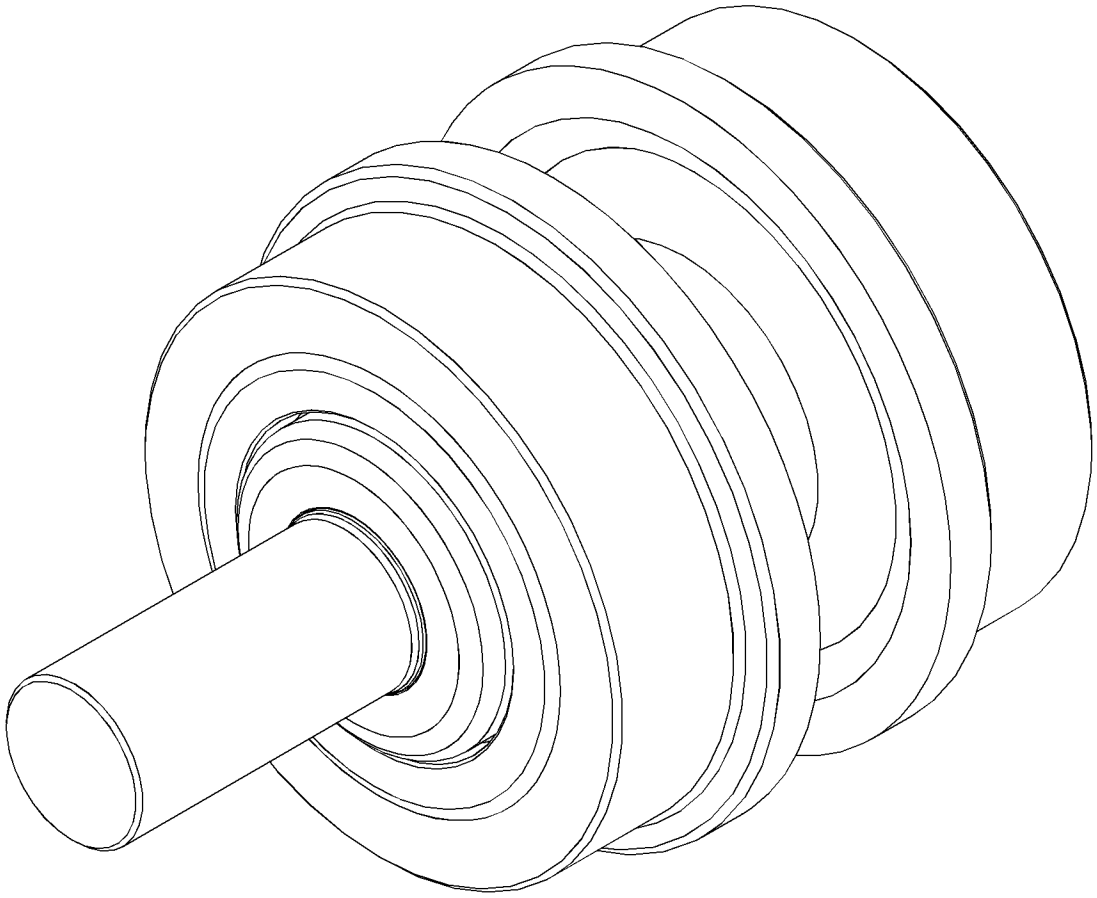

GRAPHIC #1 **<END>** g01395978

125-4176 ROLLER GP-TRACK-DOUBLE FLANGE

S/N: EMM1-UP; JEN1-UP
PART OF 450-7074, 450-7077 UNDERCARRIAGE AR
AN ATTACHMENT

SMCS-4180 **i05634933**

NOTE	REF NO	GRAPHIC REF	PART NUMBER	QTY	PART NAME 1 2 3 4 5 6 (PRODUCT LEVEL)	SEE PAGE
Y	1	1	**288-0935**	1	ROLLER GP-TRACK-DOUBLE FLANGE	408
	2	1	**317-9080**	2	CAP-TRACK ROLLER	
M	3	1	**8T-0360**	4	BOLT (M20X2.5X90-MM)	
	4	1	**8T-3282**	4	WASHER-HARD (22X35X3.5-MM THK)	

M - METRIC PART
Y - SEPARATE ILLUSTRATION

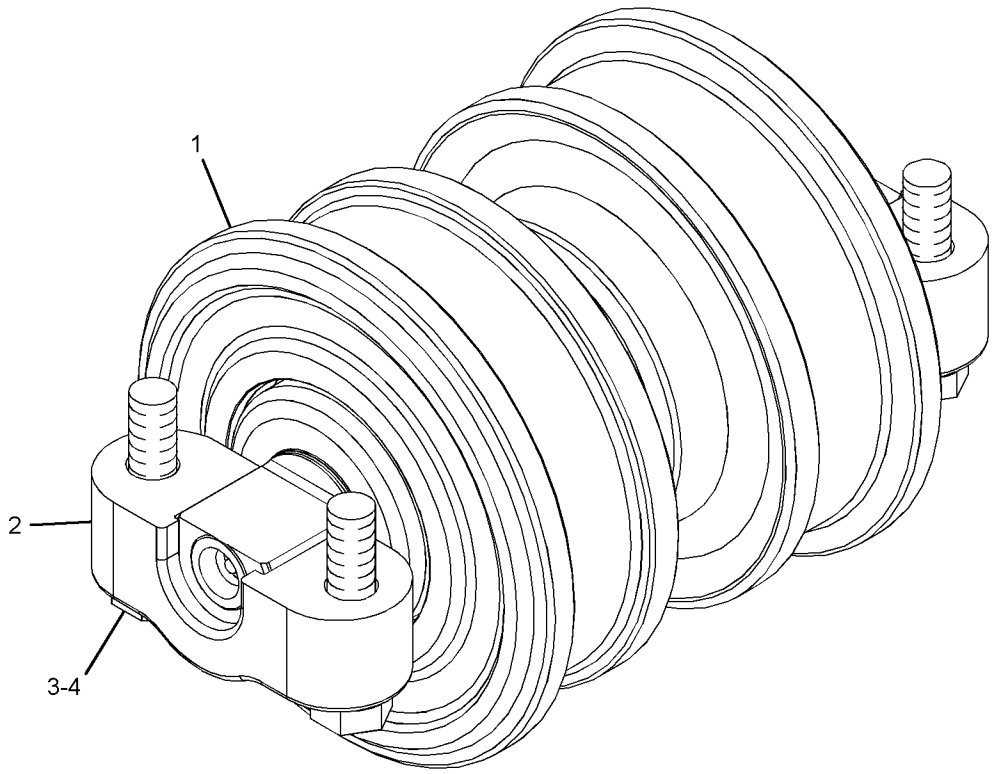

GRAPHIC #1 **<END>** g01425518

288-0935 ROLLER GP-TRACK-DOUBLE FLANGE

S/N: EMM1-UP; JEN1-UP
FOR USE WITH SEALED, LUBRICATED, HEAVY-DUTY, HYBRID, ROTATING BUSHING TRACK
CANNOT BE USED WITH SYSTEMONE TRACK
PART OF 125-4176 ROLLER GP-TRACK-DOUBLE FLANGE
AN ATTACHMENT

SMCS-4180 **i05634935**

NOTE	REF NO	GRAPHIC REF	PART NUMBER	QTY	PART NAME 1 2 3 4 5 6 (PRODUCT LEVEL)	SEE PAGE
					(INDIVIDUAL PARTS ARE NOT SERVICED SEPARATELY)	

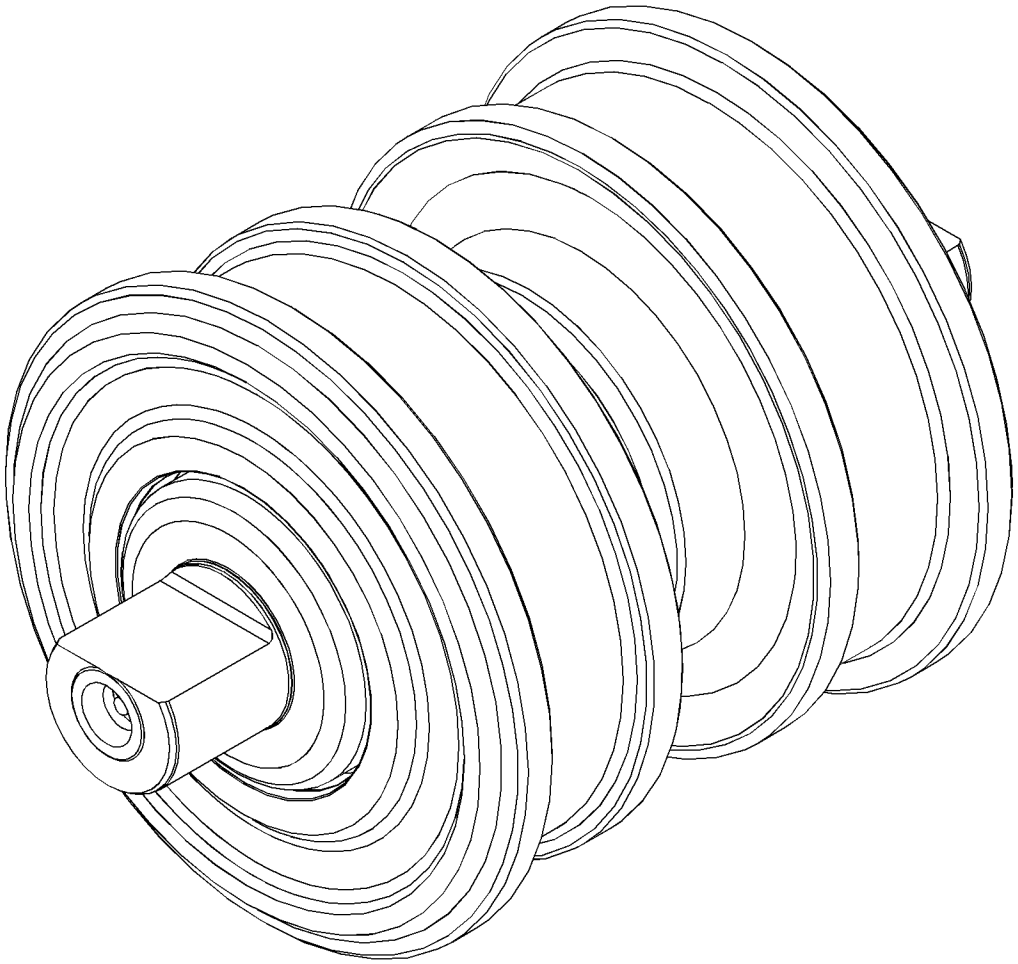

GRAPHIC #1 **<END>** g01395970

288-0936 ROLLER GP-TRACK-DOUBLE FLANGE

S/N: EMM1-UP; JEN1-UP
FOR USE WITH SEALED, LUBRICATED, HEAVY-DUTY, HYBRID, ROTATING BUSHING TRACK
CANNOT BE USED WITH SYSTEMONE TRACK
PART OF 384-3277 ROLLER GP-TRACK-DOUBLE FLANGE
AN ATTACHMENT

SMCS-4180 **i05635230**

NOTE	REF NO	GRAPHIC REF	PART NUMBER	QTY	PART NAME 1 2 3 4 5 6 (PRODUCT LEVEL)	SEE PAGE
					(INDIVIDUAL PARTS ARE NOT SERVICED SEPARATELY)	

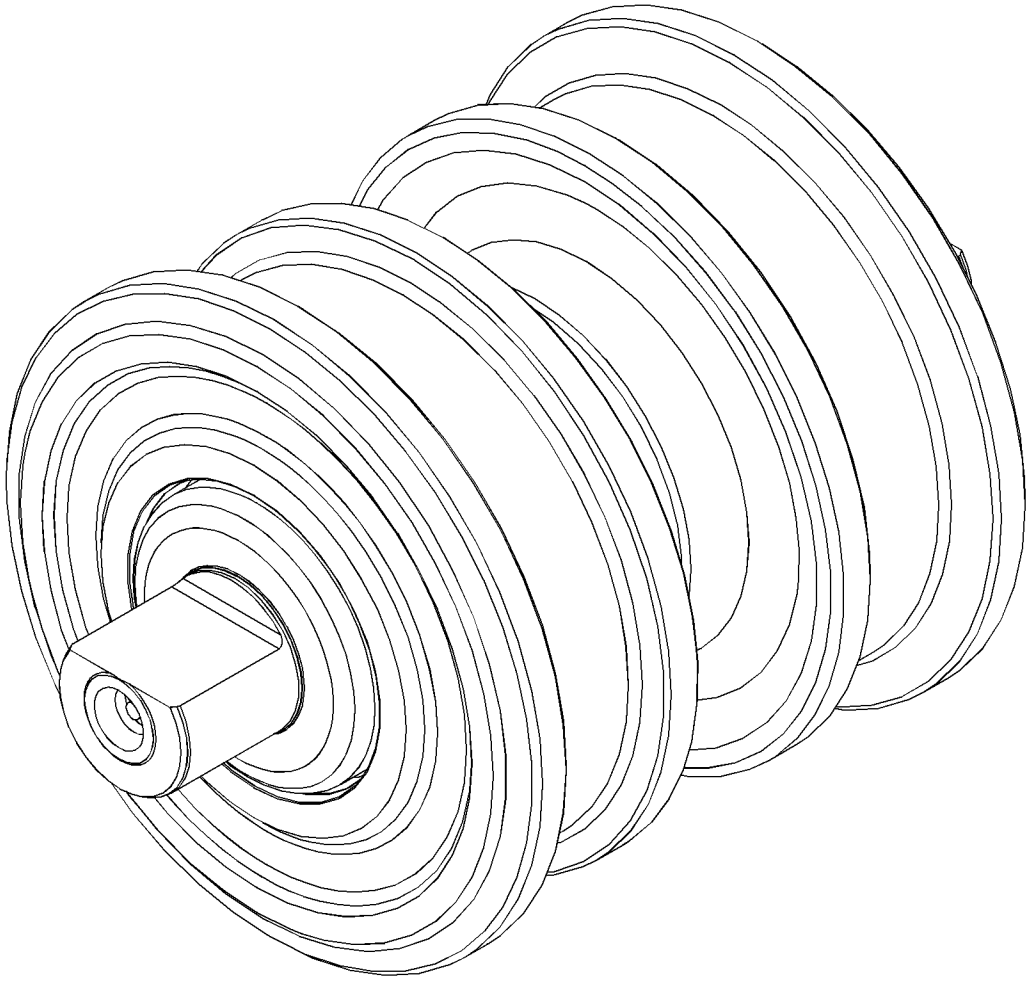

GRAPHIC #1 **<END>** g01395934

384-3277 ROLLER GP-TRACK-DOUBLE FLANGE

S/N: EMM1-UP; JEN1-UP

PART OF 450-7075, 450-7076, 450-7078, 450-7079 UNDERCARRIAGE AR

AN ATTACHMENT

SMCS-4180 **i05635190**

NOTE	REF NO	GRAPHIC REF	PART NUMBER	QTY	PART NAME 1 2 3 4 5 6 (PRODUCT LEVEL)	SEE PAGE
Y	1	1	**288-0936**	1	ROLLER GP-TRACK-DOUBLE FLANGE (TALL)	409
	2	1	**317-9080**	2	CAP-TRACK ROLLER	
M	3	1	**8T-0360**	4	BOLT (M20X2.5X90-MM)	
	4	1	**8T-3282**	4	WASHER-HARD (22X35X3.5-MM THK)	

M - METRIC PART
Y - SEPARATE ILLUSTRATION

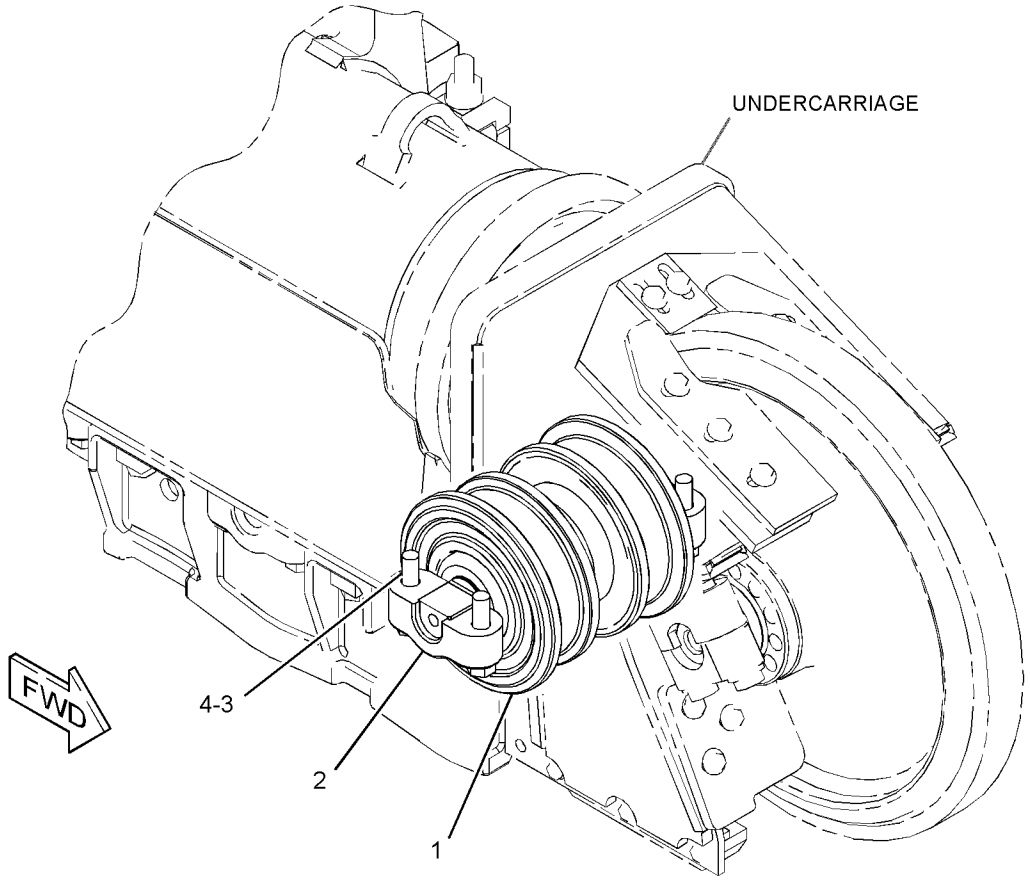

GRAPHIC #1 **<END>** g03320638

125-4175 ROLLER GP-TRACK-SINGLE FLANGE

S/N: EMM1-UP; JEN1-UP

PART OF 450-7074, 450-7075, 450-7076, 450-7077, 450-7078, 450-7079 UNDERCARRIAGE AR AN ATTACHMENT

SMCS-4180 **i05634715**

NOTE	REF NO	GRAPHIC REF	PART NUMBER	QTY	PART NAME 1 2 3 4 5 6 (PRODUCT LEVEL)	SEE PAGE
Y	1	1	**288-0934**	1	ROLLER GP-TRACK-SINGLE FLANGE	413
	2	1	**317-9080**	2	CAP-TRACK ROLLER	
M	3	1	**8T-0360**	4	BOLT (M20X2.5X90-MM)	
	4	1	**8T-3282**	4	WASHER-HARD (22X35X3.5-MM THK)	

M - METRIC PART
Y - SEPARATE ILLUSTRATION

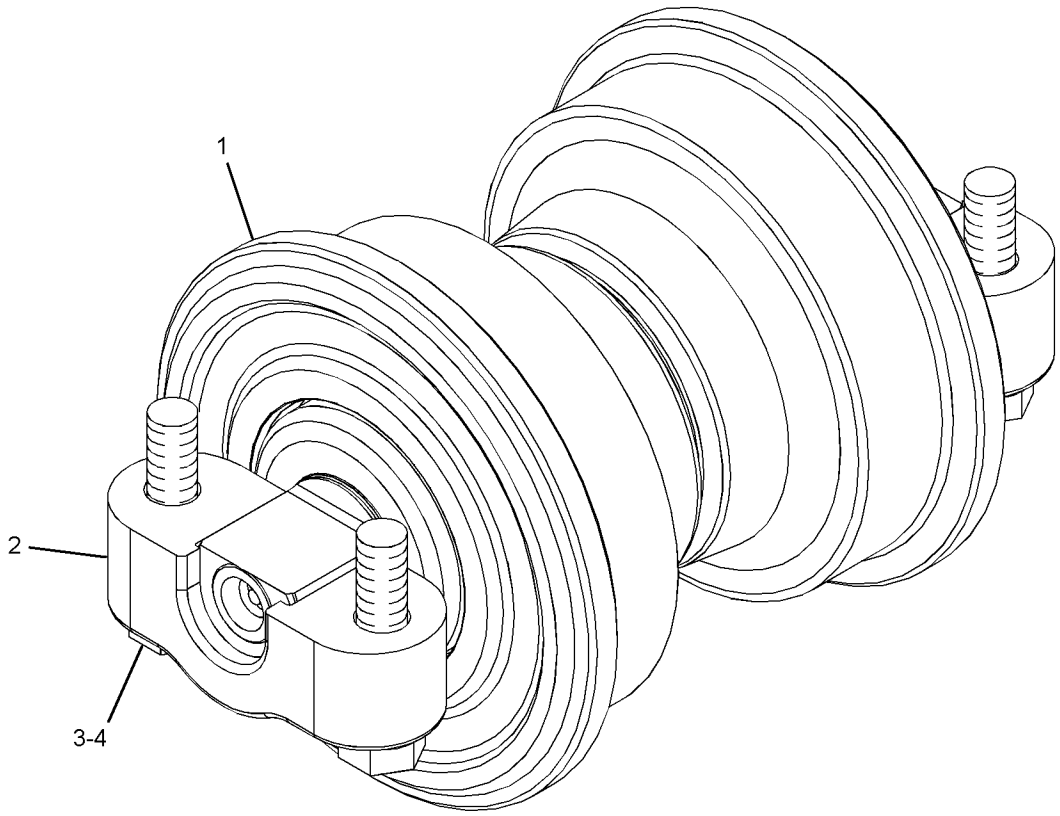

GRAPHIC #1 **<END>** g01425446

235-4157 ROLLER GP-TRACK-SINGLE FLANGE—SYSTEMONE

S/N: JEN1-UP

PART OF 292-2175 ROLLER GP-TRACK-SINGLE FLANGE

AN ATTACHMENT

SMCS-4180 **i05641307**

NOTE	REF NO	GRAPHIC REF	PART NUMBER	QTY	PART NAME 1 2 3 4 5 6 (PRODUCT LEVEL)	SEE PAGE
					(INDIVIDUAL PARTS ARE NOT SERVICED SEPARATELY)	

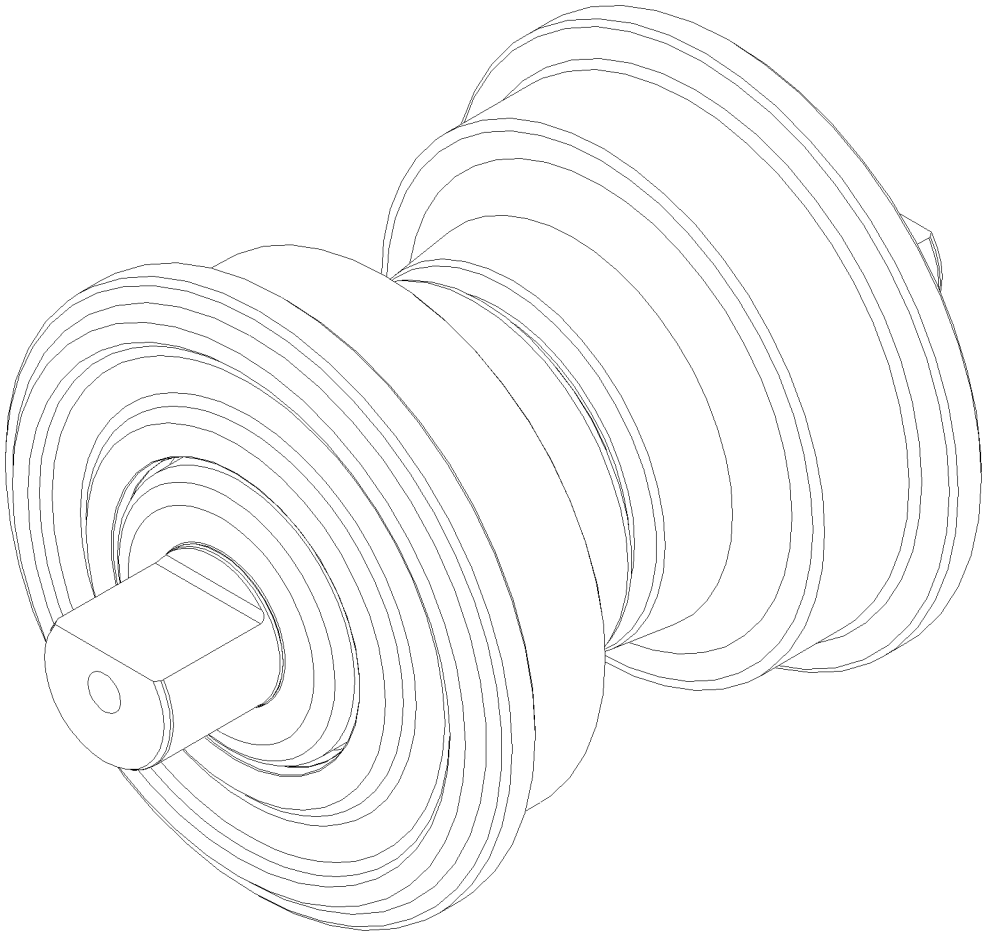

GRAPHIC #1 **<END>** g01395989

288-0934 ROLLER GP-TRACK-SINGLE FLANGE

S/N: EMM1-UP; JEN1-UP
FOR USE WITH SEALED, LUBRICATED, HEAVY-DUTY, HYBRID, & ROTATING BUSHING TRACK
CANNOT BE USED WITH SYSTEMONE TRACK
PART OF 125-4175 ROLLER GP-TRACK-SINGLE FLANGE
AN ATTACHMENT

SMCS-4180 **i05634851**

NOTE	REF NO	GRAPHIC REF	PART NUMBER	QTY	PART NAME 1 2 3 4 5 6 (PRODUCT LEVEL)	SEE PAGE
					(INDIVIDUAL PARTS ARE NOT SERVICED SEPARATELY)	

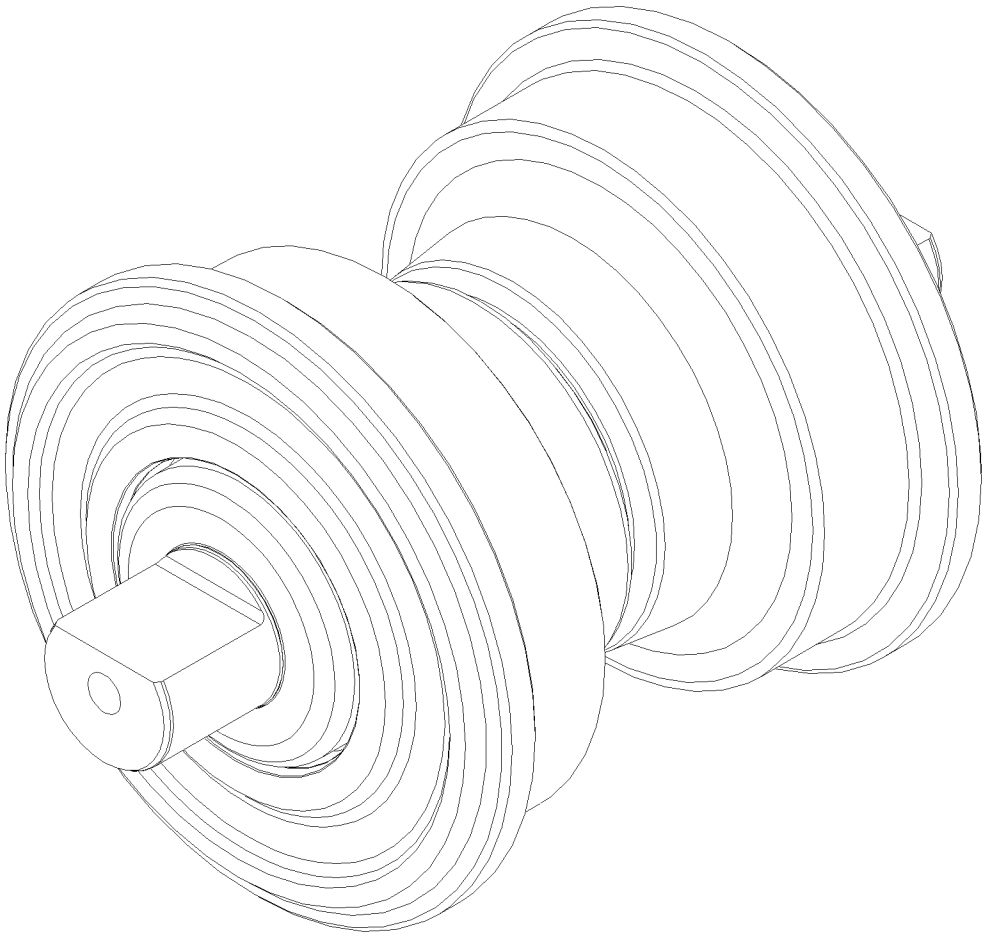

GRAPHIC #1 **<END>** g01395989

292-2175 ROLLER GP-TRACK-SINGLE FLANGE—SYSTEMONE

S/N: JEN1-UP

PART OF 450-7081, 450-7082 UNDERCARRIAGE AR

AN ATTACHMENT

SMCS-4180 **i05641267**

NOTE	REF NO	GRAPHIC REF	PART NUMBER	QTY	PART NAME 1 2 3 4 5 6 (PRODUCT LEVEL)	SEE PAGE
Y	1	1	**235-4157**	1	ROLLER GP-TRACK-SINGLE FLANGE (SYSTEMONE)	412
	2	1	**317-9080**	2	CAP-TRACK ROLLER	
M	3	1	**8T-0360**	4	BOLT (M20X2.5X90-MM)	
	4	1	**8T-3282**	4	WASHER-HARD (22X35X3.5-MM THK)	

M - METRIC PART
Y - SEPARATE ILLUSTRATION

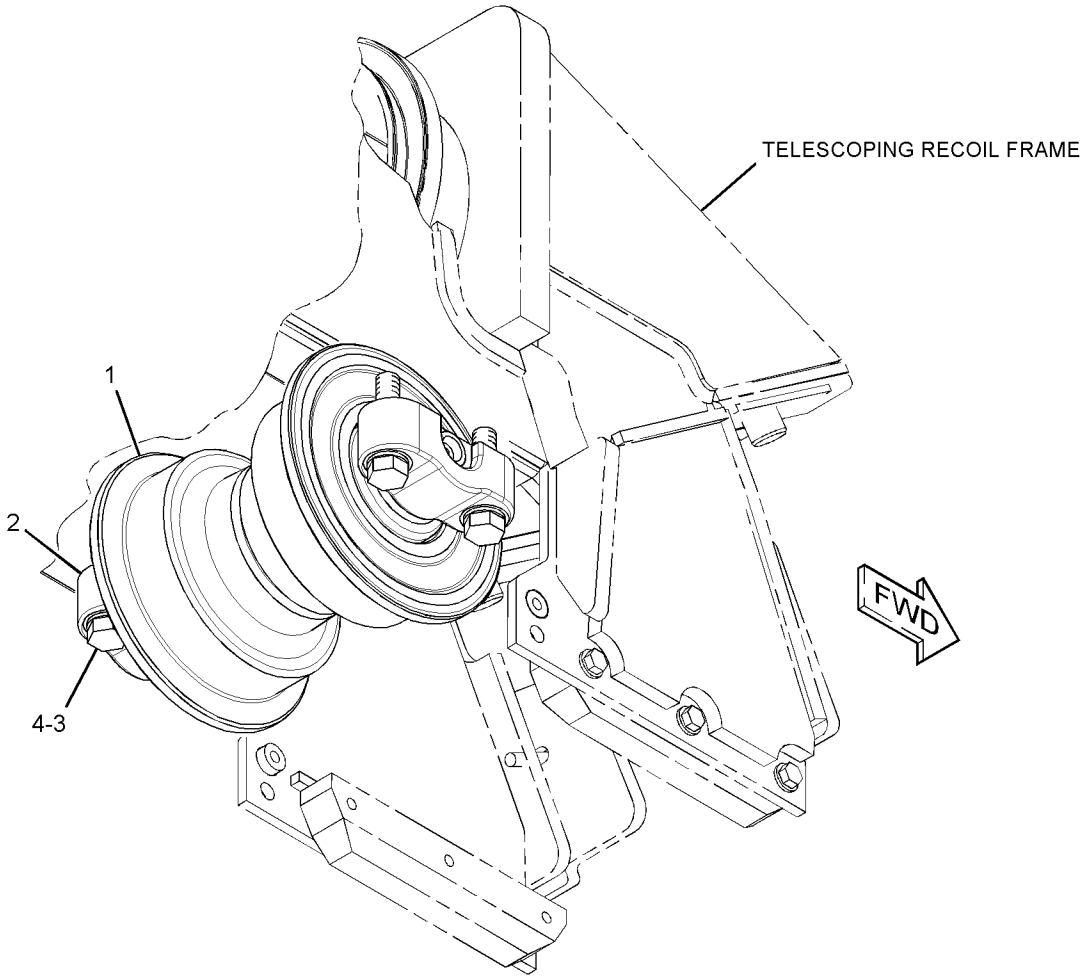

GRAPHIC #1 **<END>** g01432955

238-0451 SCRAPER GP-IDLER

S/N: JEN1-UP

PART OF 450-7081, 450-7082 UNDERCARRIAGE AR

AN ATTACHMENT

SMCS-4152 **i05641237**

NOTE	REF NO	GRAPHIC REF	PART NUMBER	QTY	PART NAME 1 2 3 4 5 6 (PRODUCT LEVEL)	SEE PAGE
	1	1	**355-6555**	4	SCRAPER	
	2	1	**435-3112**	2	SCRAPER	
	3	1	**5P-1076**	16	WASHER-HARD (13.5X30X4-MM THK)	
M	4	1	**8T-4139**	16	BOLT (M12X1.75X30-MM)	

M - METRIC PART

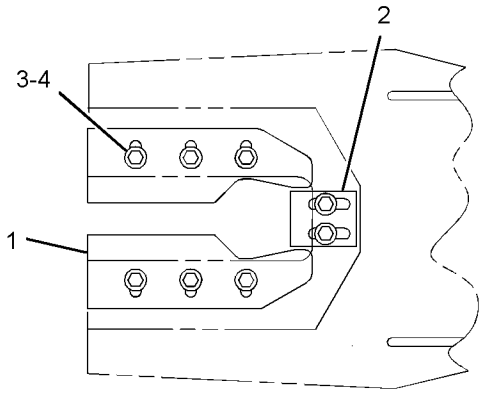

VIEW A-A

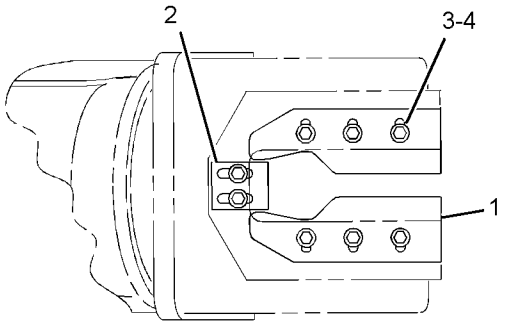

VIEW B-B

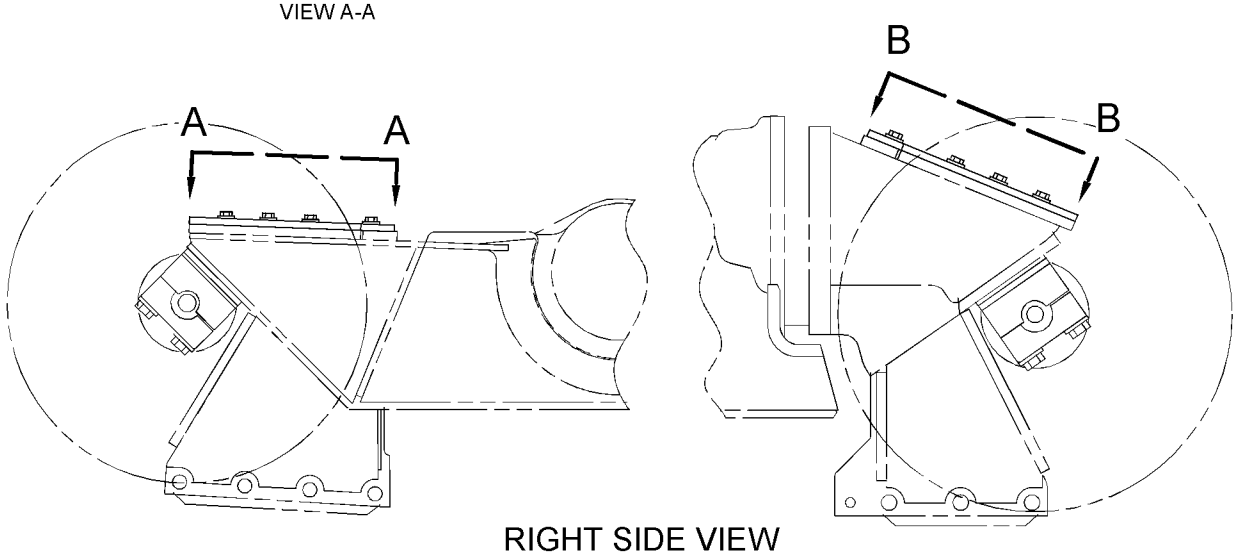

RIGHT SIDE VIEW

GRAPHIC #1 **<END>** g02153671

315-7786 TRACK ADJUSTER & RECOIL GP

S/N: JEN1-UP

PART OF 450-7176, 450-7180 FRAME GP-TELESCOPING RECOIL, 450-7177, 450-7181 FRAME GP-TRACK ROLLER

AN ATTACHMENT

SMCS-4157, 4158

i05641607

NOTE	REF NO	GRAPHIC REF	PART NUMBER	QTY	PART NAME 1 2 3 4 5 6 (PRODUCT LEVEL)	SEE PAGE
	1	1	**2S-5926**	1	VALVE-RELIEF (TRACK TENSION CYLINDER)	
	2	1	**3T-0598**	1	TUBE	
	3	1	**3W-0640**	1	PISTON	
	4	1	**3W-2369**	1	PLATE AS	
	5	1	**6Y-5799**	2	LOCK	
	6	1	**314-7923**	1	CYLINDER	
	7	1	**190-8609**	1	VALVE-FILL (RECOIL SPRING OIL)	
	8	1	**314-2516**	1	PLATE AS	
		1	**3W-0329**	1	PLATE	
	9	1	**314-2518**	1	SPRING	
	10	1	**167-2323**	1	SEAL-U-CUP	
	11	1	**2J-6274**	1	SEAL-O-RING	
	12	1	**2S-4078**	1	SEAL-O-RING	
M	13	1	**7X-2553**	4	BOLT (M16X2X40-MM)	
	14	1	**8T-4121**	2	WASHER-HARD (11X21X2.5-MM THK)	
M	15	1	**8T-4182**	2	BOLT (M10X1.5X45-MM)	
	16	1	**9S-8010**	1	PLUG	
	17	1	**9X-8257**	4	WASHER (17.5X30X3.5-MM THK)	

M - METRIC PART

315-7786 **TRACK ADJUSTER & RECOIL GP (*contd.*)** **i05641607**

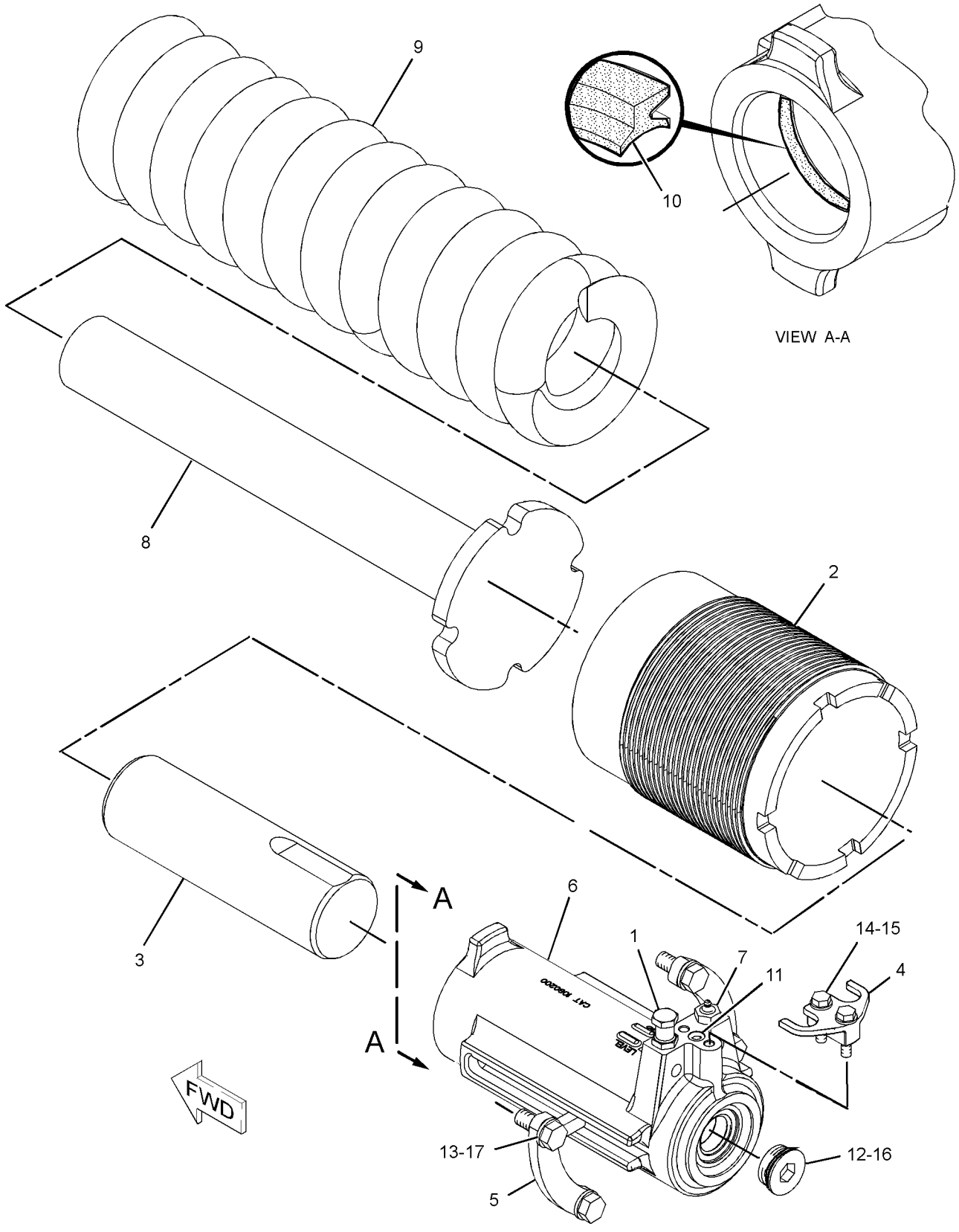

GRAPHIC #1 **<END>** g01960808

384-1713 TRACK AR–SYSTEMONE

S/N: JEN1-UP

560-MM (22-IN) GROUSER SHOE. SEALED, LUBRICATED, EXTREME SERVICE, CLAMP MASTER

FOR USE WITH SYSTEMONE ROLLERS, GUARDS, & GUIDESTRIPS

AN ATTACHMENT

SMCS-4170 **i05508612**

NOTE	REF NO	GRAPHIC REF	PART NUMBER	QTY	PART NAME 1 2 3 4 5 6 (PRODUCT LEVEL)	SEE PAGE
Y	1	1	**385-2666**	2	TRACK GP	427

Y - SEPARATE ILLUSTRATION

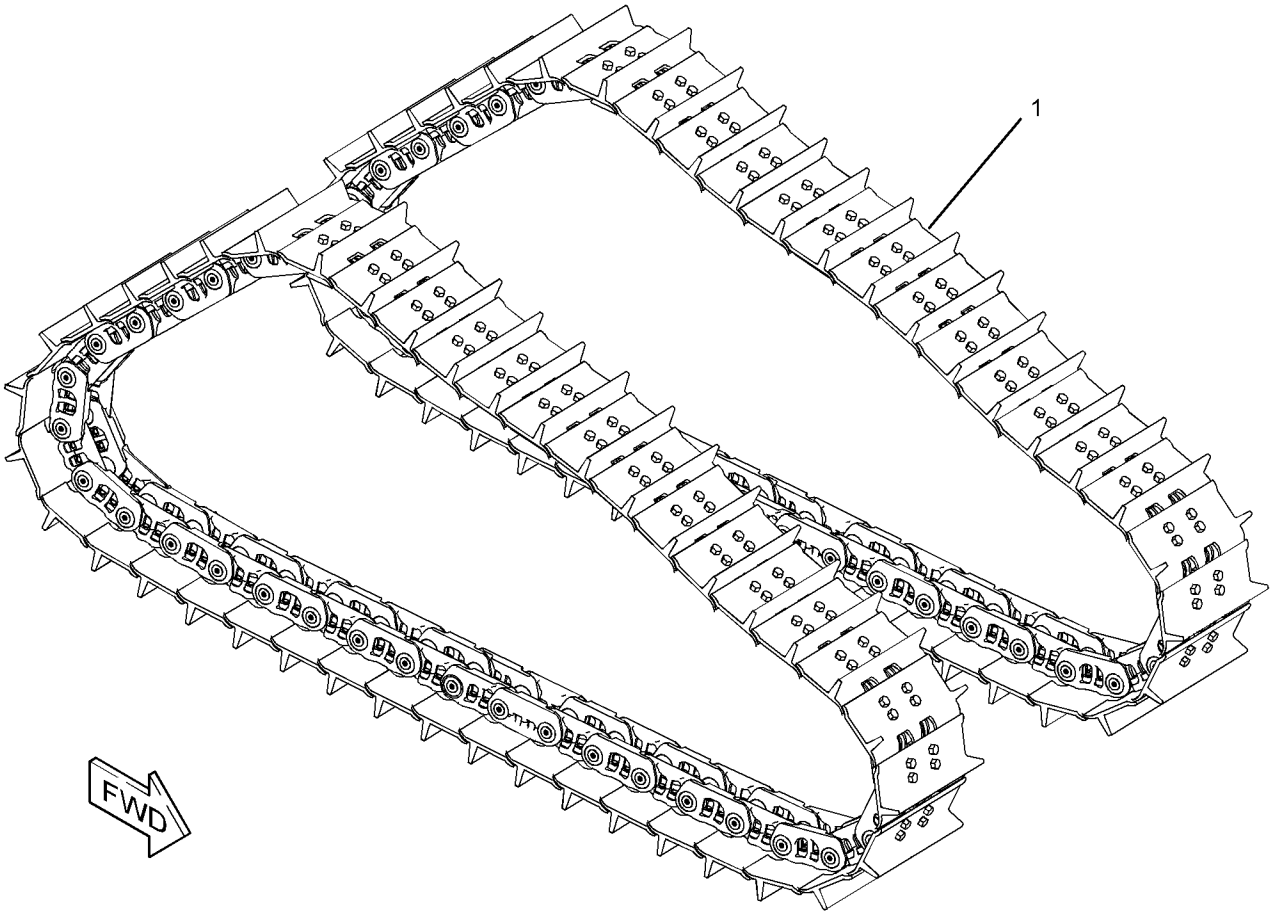

GRAPHIC #1 **<END>** g03353933

385-2689 TRACK AR–HEAVY-DUTY

S/N: JEN1-UP

560-MM (22-IN) GROUSER SHOE. SEALED, LUBRICATED. MODERATE SERVICE
FOR USE WITH HEAVY-DUTY ROLLERS, GUARDS, GUIDESTRIPS, CONVENTIONAL IDLERS
AN ATTACHMENT

SMCS-4170 **i05508730**

NOTE	REF NO	GRAPHIC REF	PART NUMBER	QTY	PART NAME 1 2 3 4 5 6 (PRODUCT LEVEL)	SEE PAGE
Y	1	1	**385-2672**	2	TRACK GP	428

Y - SEPARATE ILLUSTRATION

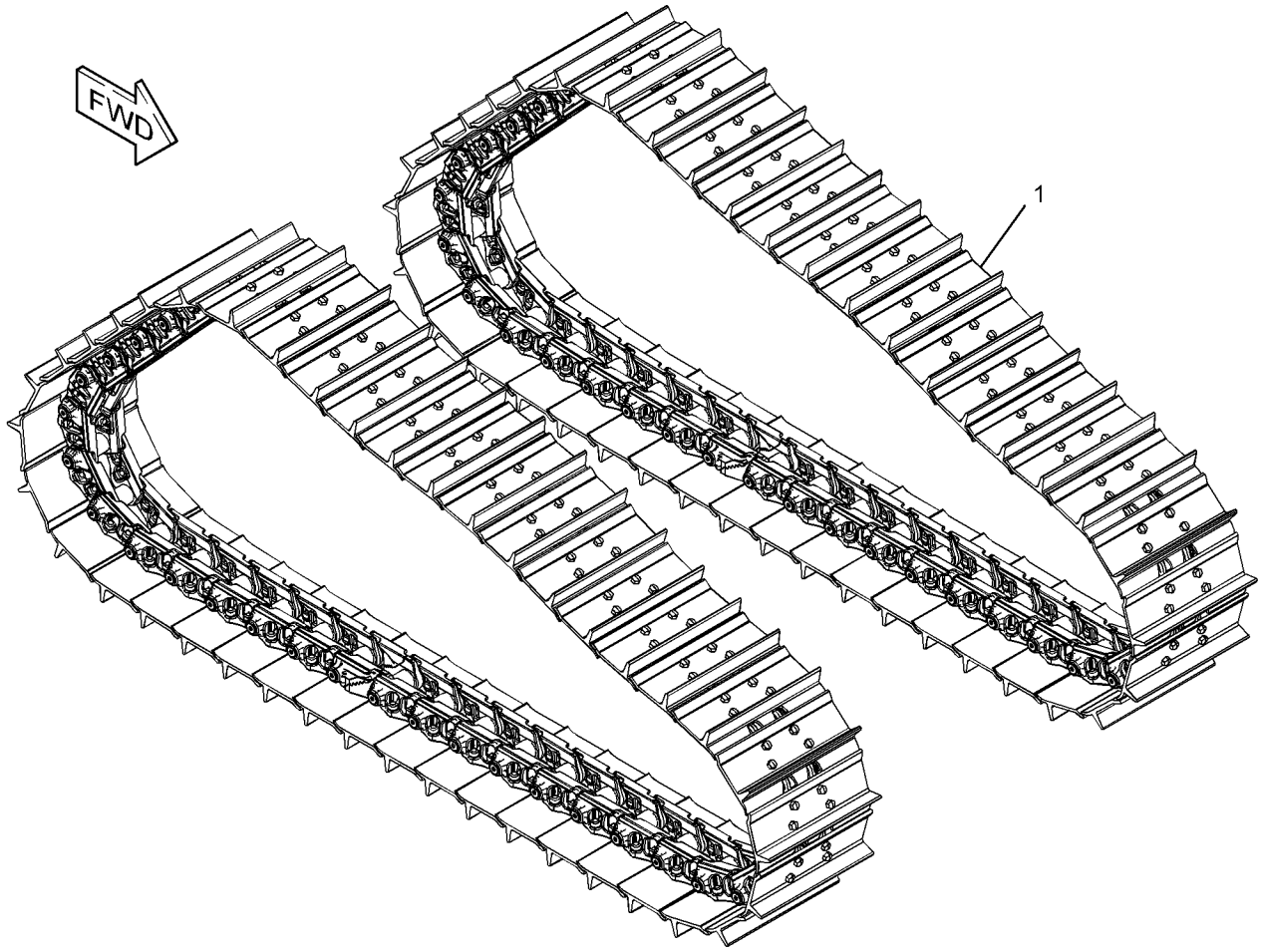

GRAPHIC #1 **<END>** g03327865

385-2691 TRACK AR–HEAVY-DUTY

S/N: JEN1-UP

560-MM (22-IN) GROUSER SHOE. SEALED, LUBRICATED. EXTREME SERVICE

FOR USE WITH HEAVY-DUTY ROLLERS, GUARDS, GUIDESTRIPS, CONVENTIONAL IDLERS

AN ATTACHMENT

SMCS-4170 **i05509342**

NOTE	REF NO	GRAPHIC REF	PART NUMBER	QTY	PART NAME 1 2 3 4 5 6 (PRODUCT LEVEL)	SEE PAGE
Y	1	1	**385-2675**	2	TRACK GP	429

Y - SEPARATE ILLUSTRATION

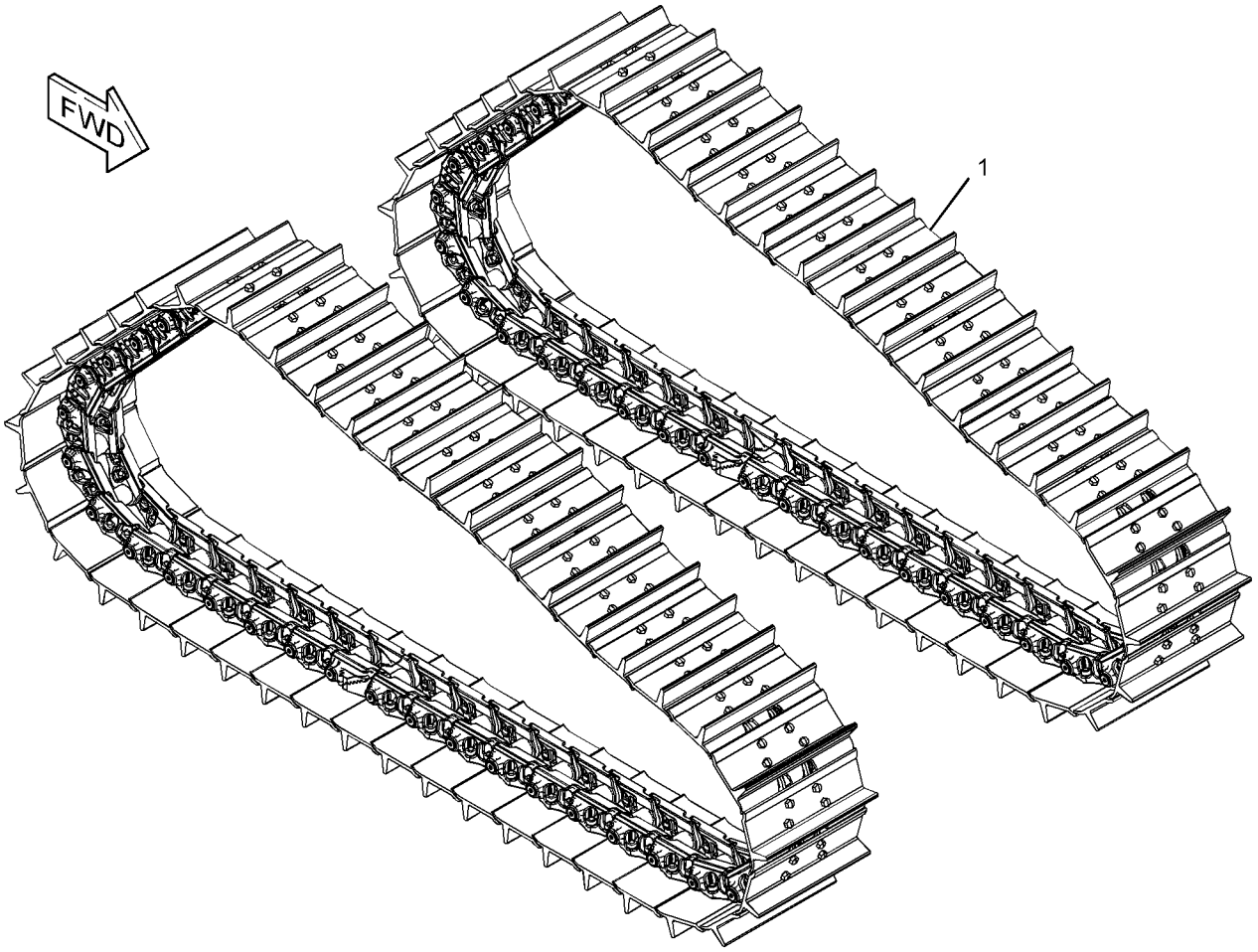

GRAPHIC #1 **<END>** g03327948

385-2694 TRACK AR–HEAVY-DUTY

S/N: JEN1-UP

610-MM (24-IN) GROUSER SHOE. SEALED, LUBRICATED. MODERATE SERVICE
FOR USE WITH HEAVY-DUTY ROLLERS, GUARDS, GUIDESTRIPS, CONVENTIONAL IDLERS
AN ATTACHMENT

SMCS-4170 **i05510989**

NOTE	REF NO	GRAPHIC REF	PART NUMBER	QTY	PART NAME 1 2 3 4 5 6 (PRODUCT LEVEL)	SEE PAGE
Y	1	1	**385-2678**	2	TRACK GP	430

Y - SEPARATE ILLUSTRATION

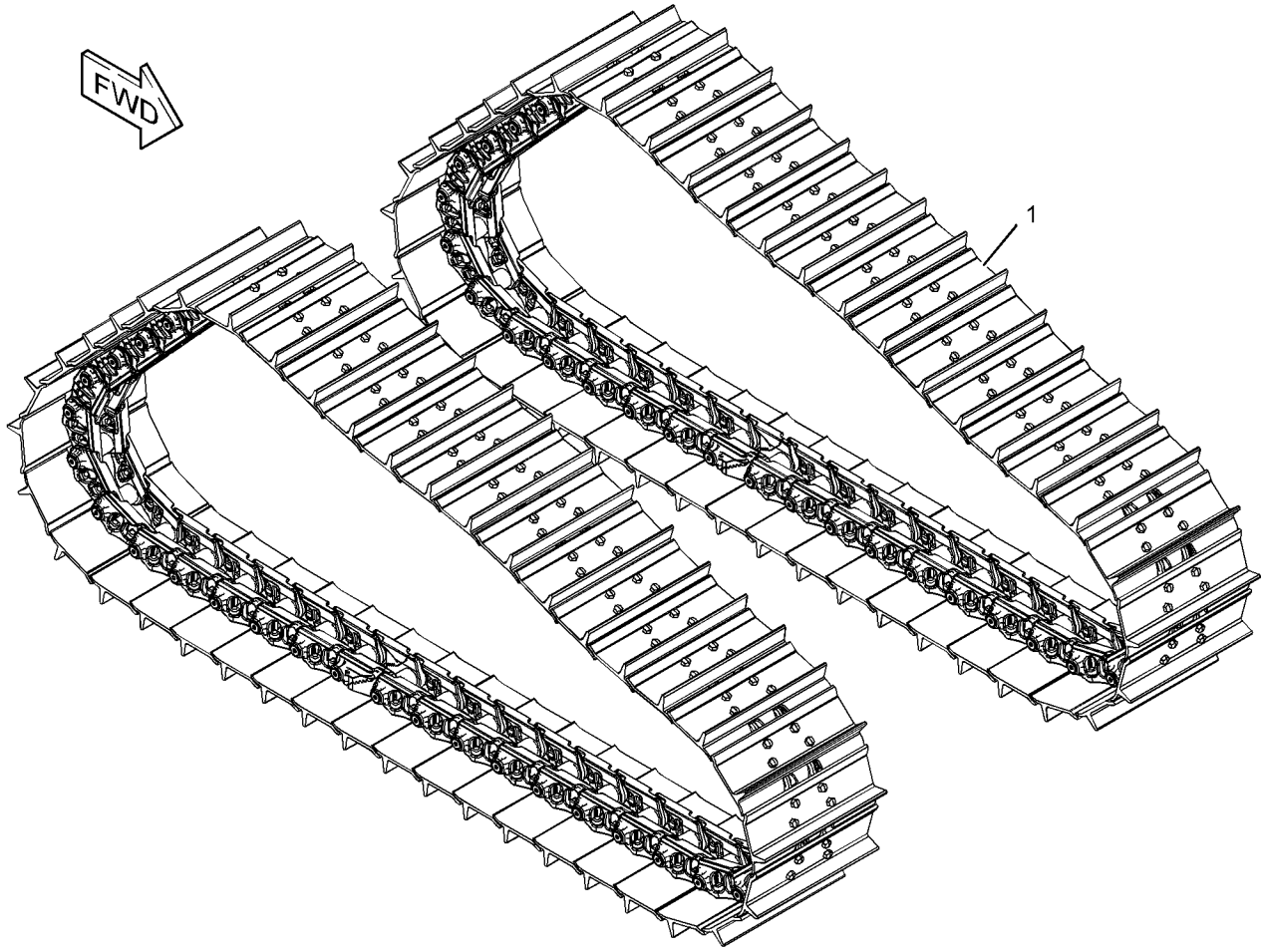

GRAPHIC #1 **<END>** g03327942

385-2695 TRACK AR–SYSTEMONE

S/N: JEN1-UP

610-MM (24-IN) GROUSER SHOE. SEALED, LUBRICATED, EXTREME SERVICE, CLAMP MASTER

FOR USE WITH SYSTEMONE ROLLERS, GUARDS, GUIDESTRIPS

AN ATTACHMENT

SMCS-4170 **i05511169**

NOTE	REF NO	GRAPHIC REF	PART NUMBER	QTY	PART NAME 1 2 3 4 5 6 (PRODUCT LEVEL)	SEE PAGE
Y	1	1	*385-2679*	2	TRACK GP	431

Y - SEPARATE ILLUSTRATION

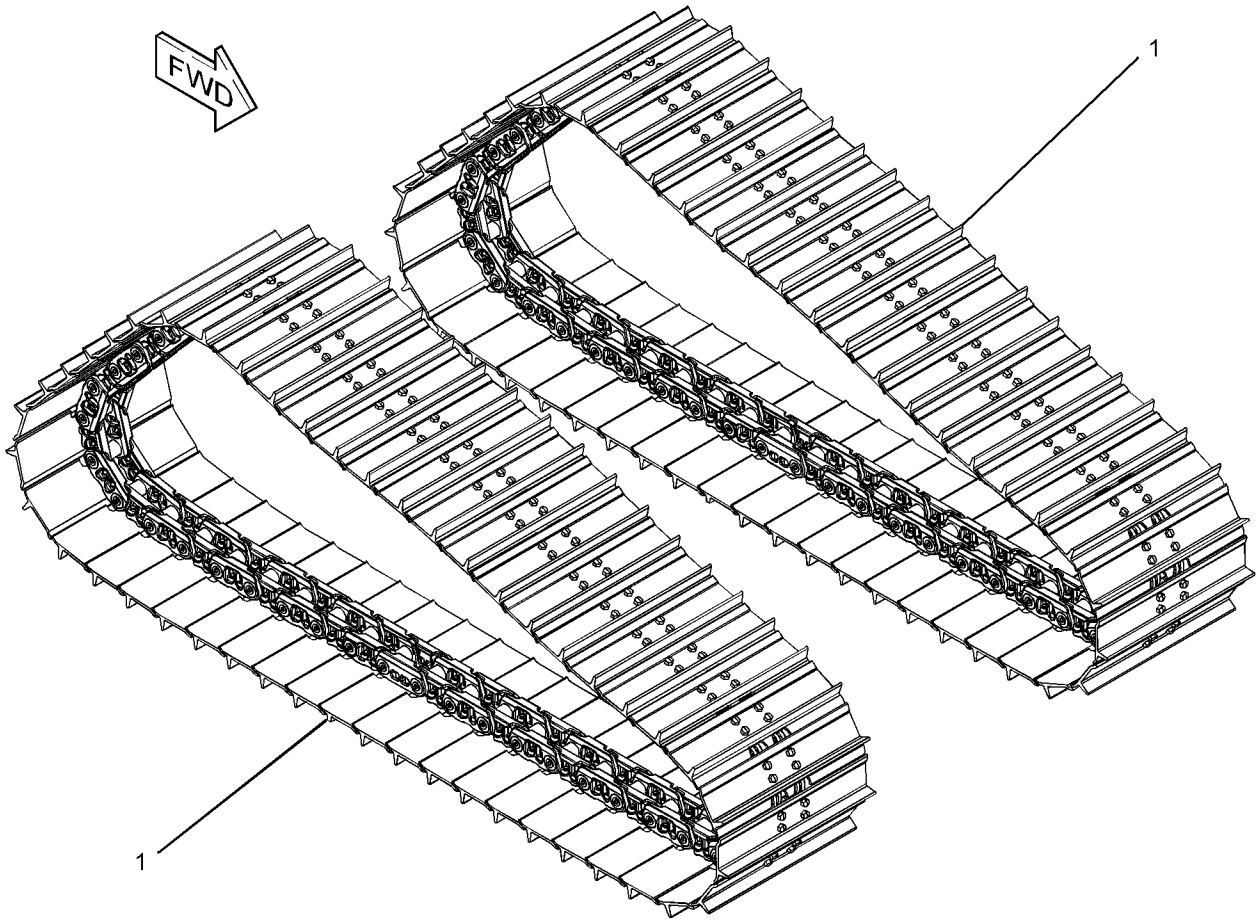

GRAPHIC #1 **<END>** g02812379

385-5447 TRACK AR–HEAVY-DUTY

S/N: EMM1-UP

560-MM (22-IN) GROUSER SHOE. SEALED, LUBRICATED, MODERATE SERVICE
FOR USE WITH HEAVY DUTY ROLLERS, GUARDS, GUIDESTRIPS, CONVENTIONAL IDLERS
AN ATTACHMENT

SMCS-4170 **i05505873**

NOTE	REF NO	GRAPHIC REF	PART NUMBER	QTY	PART NAME 1 2 3 4 5 6 (PRODUCT LEVEL)	SEE PAGE
Y	1	1	**6I-9641**	2	TRACK GP	426

Y - SEPARATE ILLUSTRATION

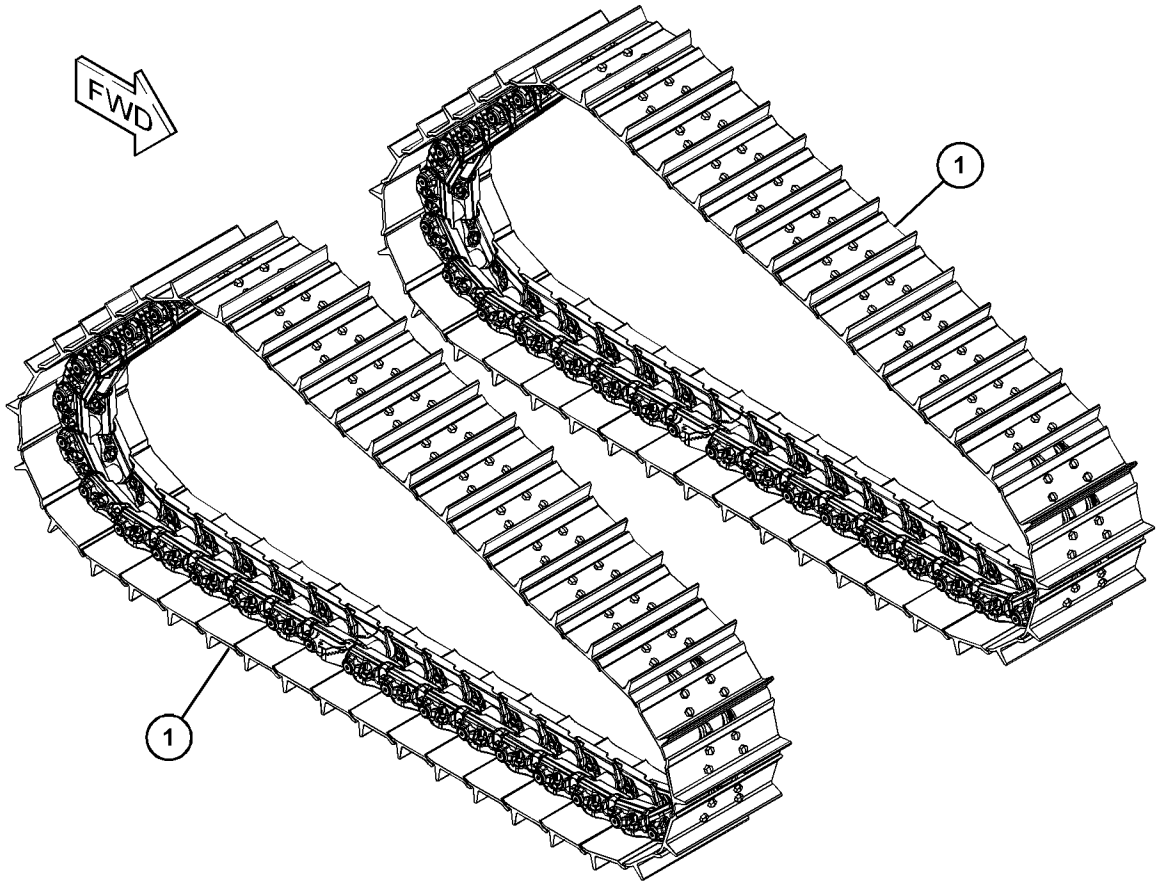

GRAPHIC #1 **<END>** g03531878

385-5459 TRACK AR–HEAVY-DUTY

S/N: EMM1-UP
560-MM (22-IN) GROUSER SHOE. SEALED, LUBRICATED, EXTREME SERVICE
FOR USE WITH HEAVY DUTY ROLLERS, GUARDS, GUIDESTRIPS, CONVENTIONAL IDLERS
AN ATTACHMENT

SMCS-4170 **i05505934**

NOTE	REF NO	GRAPHIC REF	PART NUMBER	QTY	PART NAME 1 2 3 4 5 6 (PRODUCT LEVEL)	SEE PAGE
Y	1	1	**385-5458**	2	TRACK GP	433

Y - SEPARATE ILLUSTRATION

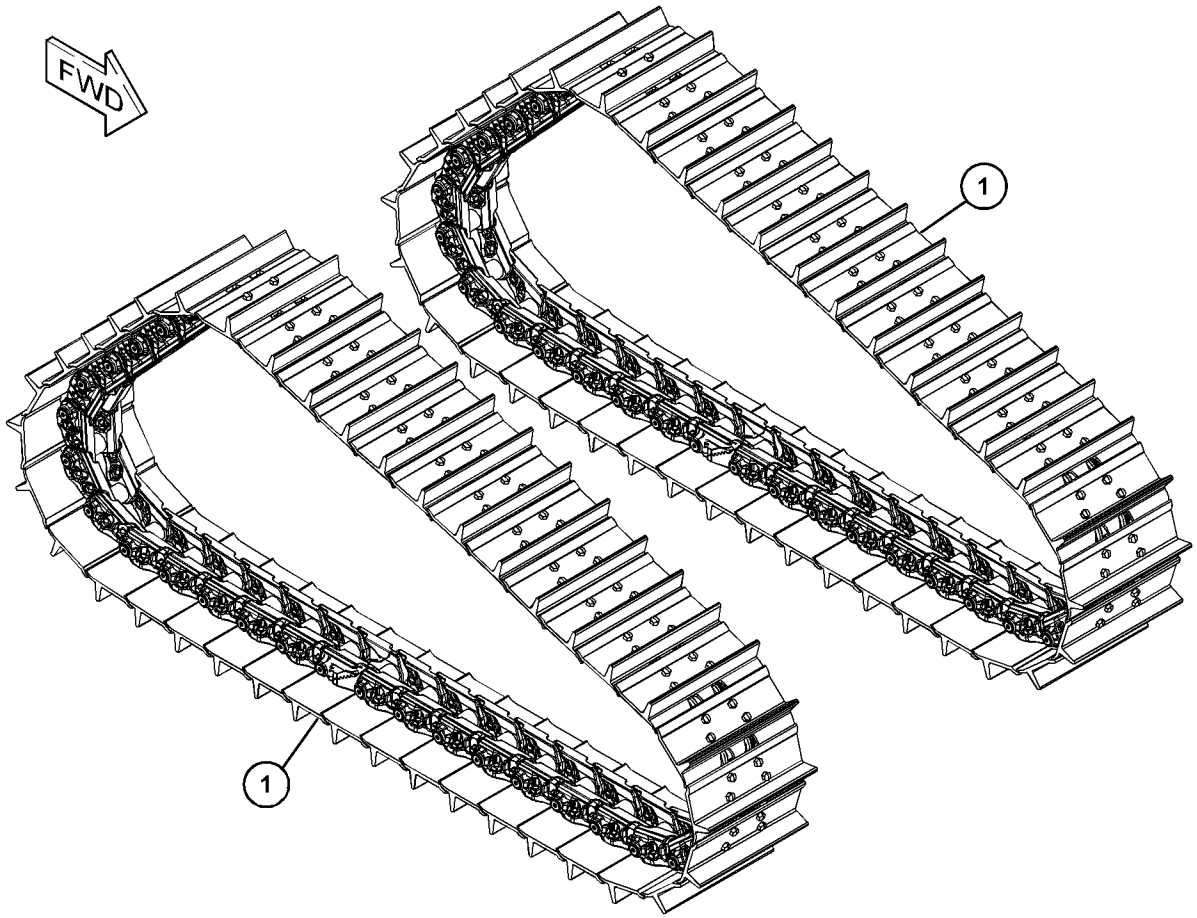

GRAPHIC #1 **<END>** g03532557

385-5462 TRACK AR–HEAVY-DUTY

S/N: EMM1-UP

610-MM (24-IN) GROUSER SHOE. SEALED, LUBRICATED, MODERATE SERVICE
FOR USE WITH HEAVY DUTY ROLLERS, GUARDS, GUIDESTRIPS, CONVENTIONAL IDLERS
AN ATTACHMENT

SMCS-4170 **i05508549**

NOTE	REF NO	GRAPHIC REF	PART NUMBER	QTY	PART NAME 1 2 3 4 5 6 (PRODUCT LEVEL)	SEE PAGE
Y	1	1	*385-5450*	2	TRACK GP	432

Y - SEPARATE ILLUSTRATION

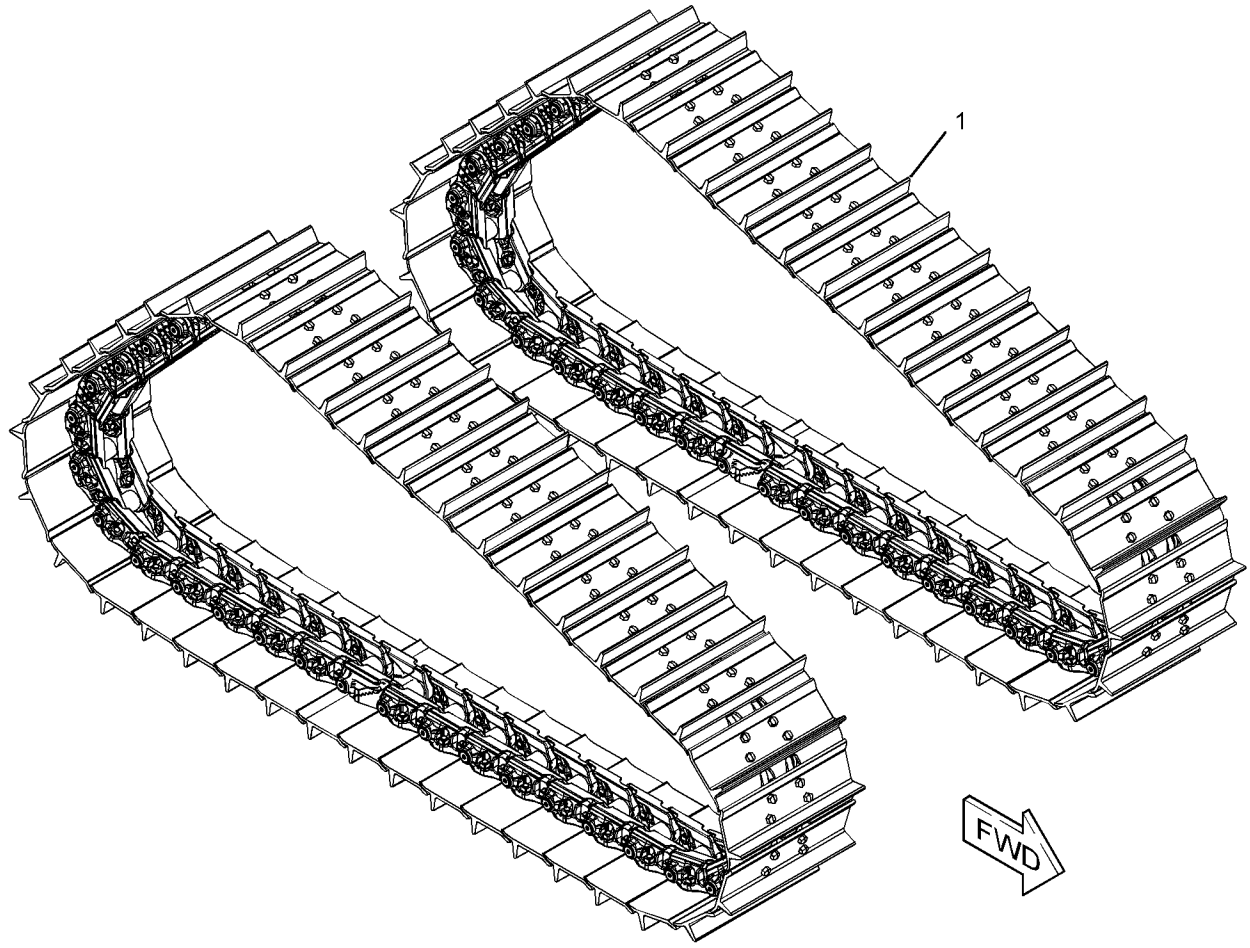

GRAPHIC #1 **<END>** g03535318

6I-9641 TRACK GP–2-REQUIRED, HEAVY-DUTY

S/N: EMM1-UP
560-MM (22-IN) GROUSER SHOE. SEALED, LUBRICATED, MODERATE SERVICE
PART OF 385-5447 TRACK AR
AN ATTACHMENT

SMCS-4170 **i05505877**

NOTE	REF NO	GRAPHIC REF	PART NUMBER	QTY	PART NAME 1 2 3 4 5 6 (PRODUCT LEVEL)	SEE PAGE
Y	1	1	**424-0842**	1	LINK AS-TRACK	399
	2	1	**1S-1860**	152	NUT-TRACK (3/4-16-THD)	
	3	1	**6V-1792**	152	BOLT-TRACK (3/4-16X2.4-IN)	
	4	1	**6Y-6286**	38	SHOE-TRACK	
	5	1	**6Y-6294**	1	SHOE-TRACK MASTER	
	6	1	**9S-1838**	4	BOLT-TRACK MASTER (3/4-16X4.13-IN)	

Y - SEPARATE ILLUSTRATION

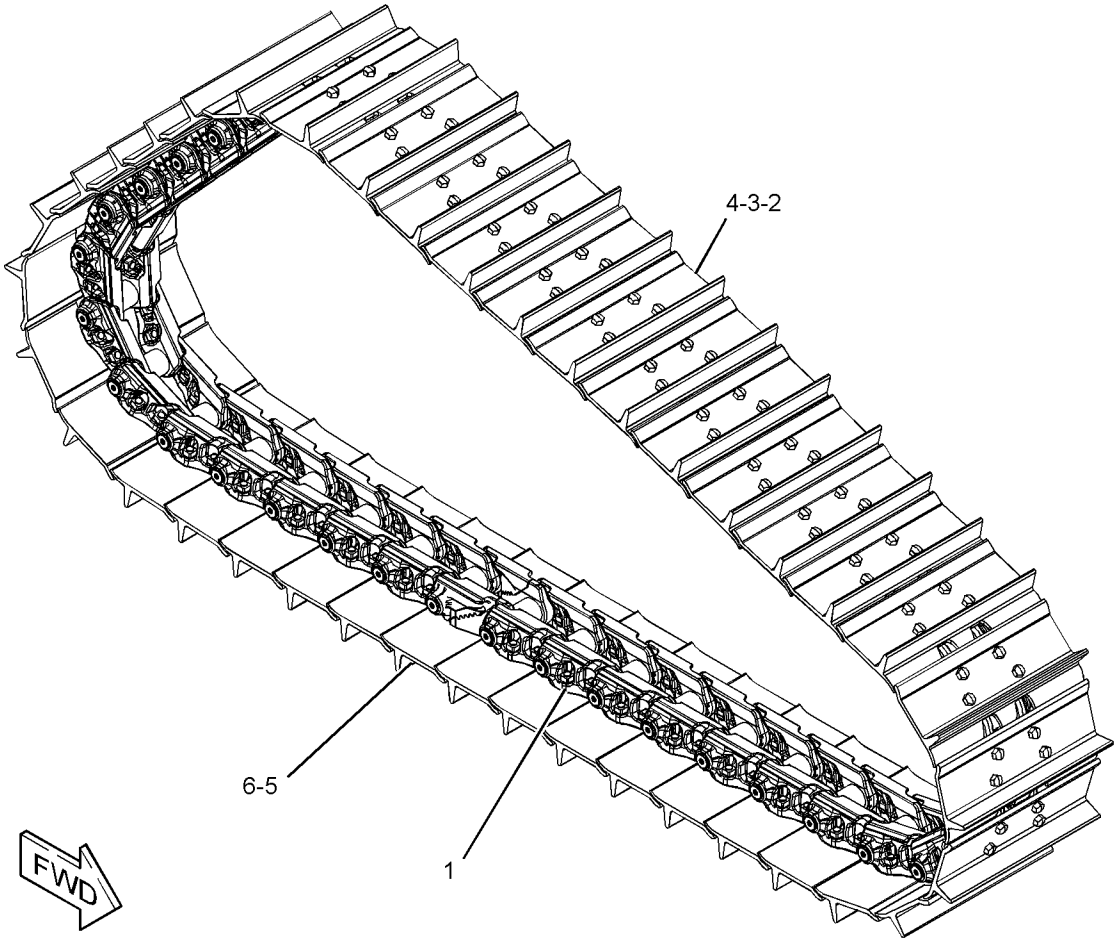

GRAPHIC #1 **<END>** g03422742

385-2666 TRACK GP–2-REQUIRED, SYSTEMONE

S/N: JEN1-UP
560-MM (22-IN) GROUSER SHOE. SEALED, LUBRICATED, EXTREME SERVICE, CLAMP MASTER
FOR USE WITH SYSTEMONE ROLLERS, GUARDS, GUIDESTRIPS
PART OF 384-1713 TRACK AR
AN ATTACHMENT

SMCS-4170 **i05508613**

NOTE	REF NO	GRAPHIC REF	PART NUMBER	QTY	PART NAME 1 2 3 4 5 6 (PRODUCT LEVEL)	SEE PAGE
	1	1	**318-1064**	2	LINK-TRACK MASTER (CLAMP)	
Y	2	1	**351-0958**	1	LINK AS-TRACK (SYSTEMONE)	398
	3	1	**246-5140**	40	SHOE-TRACK	
	4	1	**254-0224**	4	BOLT-TRACK MASTER (M22X1.5X108-MM)	
	5	1	**254-4473**	1	SHOE-TRACK MASTER	
M	6	1	**6Y-9024**	160	BOLT-TRACK (M22X1.5X67-MM)	
M	7	1	**9W-4381**	160	NUT-TRACK (M22X1.5-THD)	

M - METRIC PART
Y - SEPARATE ILLUSTRATION

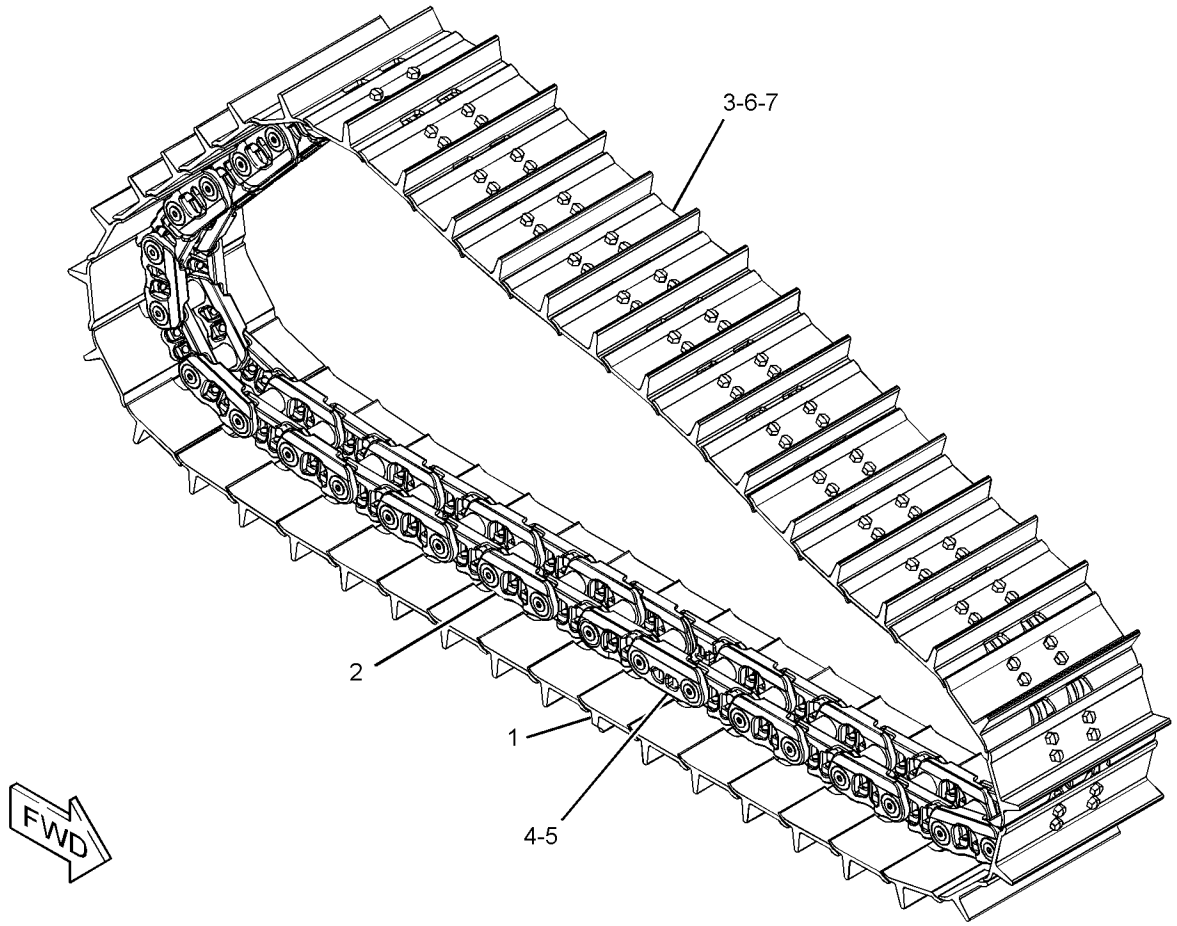

GRAPHIC #1 **<END>** g02923723

385-2672 TRACK GP–2-REQUIRED, HEAVY-DUTY

S/N: JEN1-UP

560-MM (22-IN) SINGLE GROUSER SHOE. SEALED, LUBRICATED, MODERATE SERVICE

FOR USE WITH HEAVY DUTY ROLLERS, GUARDS, GUIDESTRIPS & CONVENTIONAL IDLERS

PART OF 385-2689 TRACK AR

AN ATTACHMENT

SMCS-4170 **i05508742**

NOTE	REF NO	GRAPHIC REF	PART NUMBER	QTY	PART NAME 1 2 3 4 5 6 (PRODUCT LEVEL)	SEE PAGE
Y	1	1	**424-0844**	1	LINK AS-TRACK	400
	2	1	**1S-1860**	160	NUT-TRACK (3/4-16-THD)	
	3	1	**6V-1792**	160	BOLT-TRACK (3/4-16X2.4-IN)	
	4	1	**6Y-6286**	40	SHOE-TRACK	
	5	1	**6Y-6294**	1	SHOE-TRACK MASTER	
	6	1	**9S-1838**	4	BOLT-TRACK MASTER (3/4-16X4.13-IN)	

Y - SEPARATE ILLUSTRATION

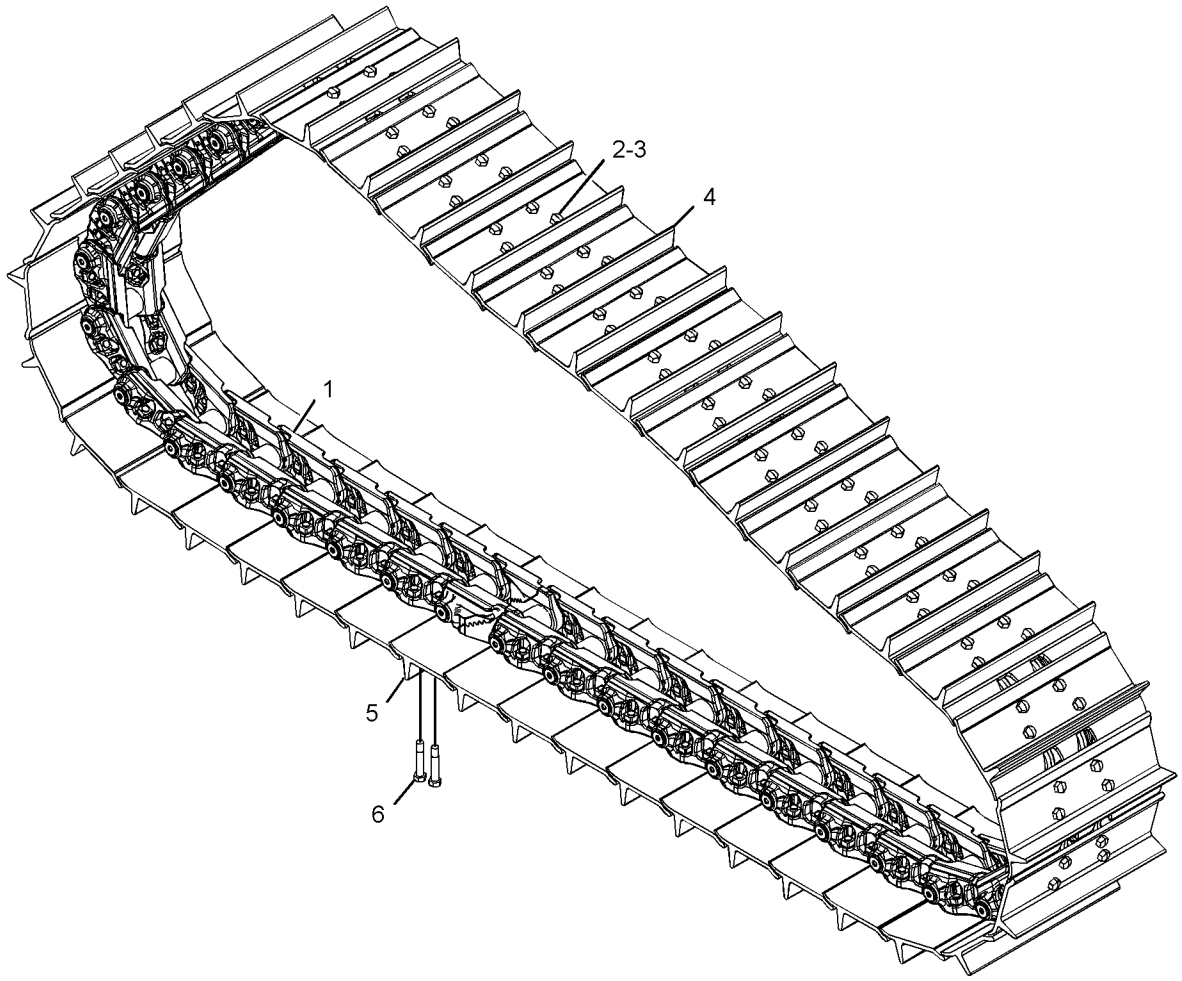

GRAPHIC #1 **<END>** g03360121

385-2675 TRACK GP–2-REQUIRED, HEAVY-DUTY

S/N: JEN1-UP

560-MM (22-IN) SINGLE GROUSER SHOE. SEALED, LUBRICATED, EXTREME SERVICE

FOR USE WITH HEAVY DUTY ROLLERS, GUARDS, GUIDESTRIPS & CONVENTIONAL IDLERS

PART OF 385-2691 TRACK AR

AN ATTACHMENT

SMCS-4170 **i05509391**

NOTE	REF NO	GRAPHIC REF	PART NUMBER	QTY	PART NAME 1 2 3 4 5 6 (PRODUCT LEVEL)	SEE PAGE
Y	1	1	**424-0844**	1	LINK AS-TRACK	400
	2	1	**1S-1860**	160	NUT-TRACK (3/4-16-THD)	
	3	1	**6V-1792**	160	BOLT-TRACK (3/4-16X2.4-IN)	
	4	1	**6Y-6389**	40	SHOE-TRACK	
	5	1	**6Y-6412**	1	SHOE-TRACK MASTER	
	6	1	**9S-1838**	4	BOLT-TRACK MASTER (3/4-16X4.13-IN)	

Y - SEPARATE ILLUSTRATION

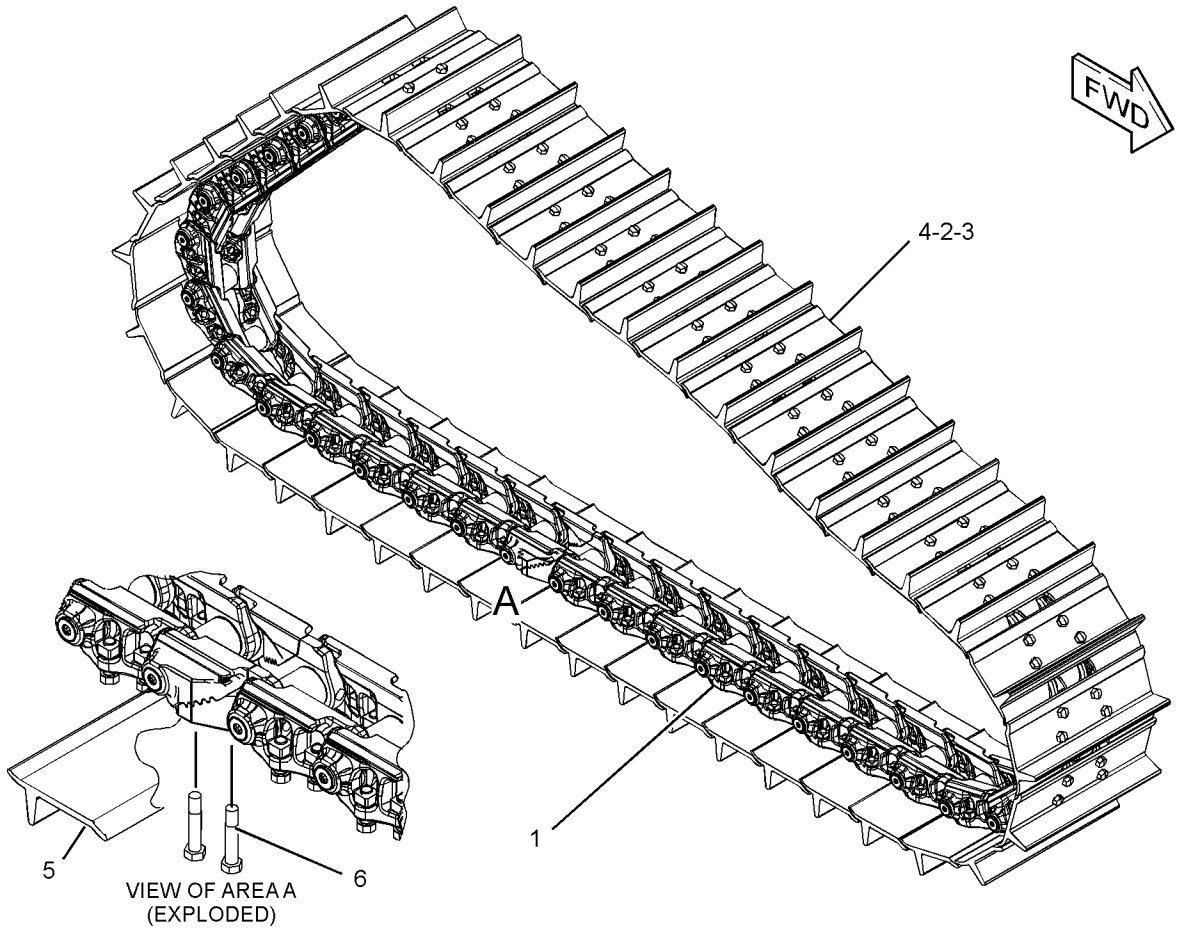

GRAPHIC #1 **<END>** g03359759

385-2678 TRACK GP–2-REQUIRED, HEAVY-DUTY

S/N: JEN1-UP
610-MM (24-IN) GROUSER SHOE. SEALED, LUBRICATED. MODERATE SERVICE
FOR USE WITH HEAVY-DUTY ROLLERS, GUARDS, GUIDESTRIPS, CONVENTIONAL IDLERS
PART OF 385-2694 TRACK AR
AN ATTACHMENT

SMCS-4170 **i05511012**

NOTE	REF NO	GRAPHIC REF	PART NUMBER	QTY	PART NAME 1 2 3 4 5 6 (PRODUCT LEVEL)	SEE PAGE
Y	1	1	**424-0844**	1	LINK AS-TRACK	400
	2	1	**1S-1860**	160	NUT-TRACK (3/4-16-THD)	
	3	1	**6V-1792**	160	BOLT-TRACK (3/4-16X2.4-IN)	
	4	1	**6Y-6287**	40	SHOE-TRACK	
	5	1	**6Y-6296**	1	SHOE-TRACK MASTER	
	6	1	**9S-1838**	4	BOLT-TRACK MASTER (3/4-16X4.13-IN)	

Y - SEPARATE ILLUSTRATION

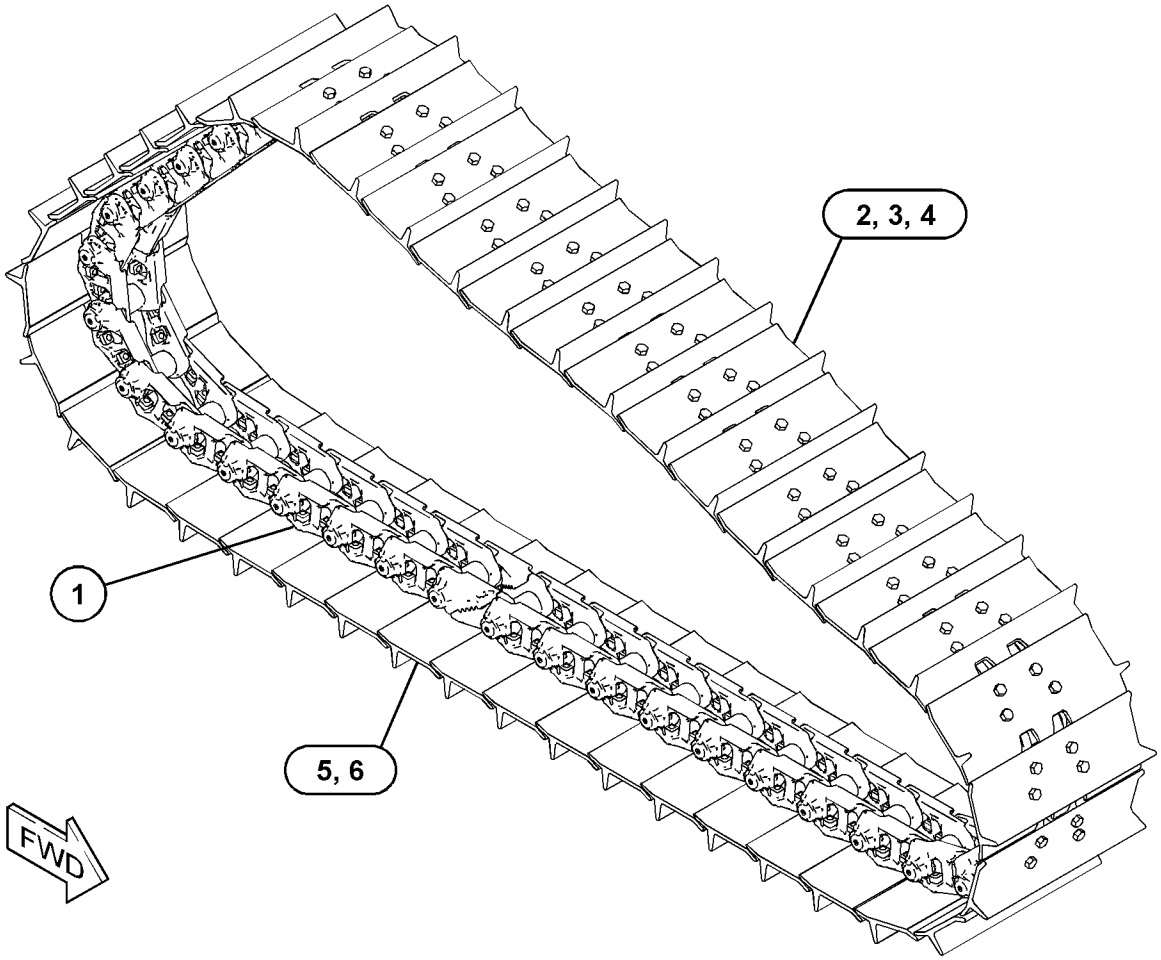

GRAPHIC #1 **<END>** g03304677

385-2679 TRACK GP–2-REQUIRED, SYSTEMONE

S/N: JEN1-UP

610-MM (24-IN) GROUSER SHOE. SEALED, LUBRICATED, EXTREME SERVICE, CLAMP MASTER

FOR USE WITH SYSTEMONE ROLLERS, GUARDS, GUIDESTRIPS

PART OF 385-2695 TRACK AR

AN ATTACHMENT

SMCS-4170 **i05511189**

NOTE	REF NO	GRAPHIC REF	PART NUMBER	QTY	PART NAME 1 2 3 4 5 6 (PRODUCT LEVEL)	SEE PAGE
	1	1	**318-1064**	2	LINK-TRACK MASTER (CLAMP)	
Y	2	1	**351-0958**	1	LINK AS-TRACK	398
	3	1	**246-5203**	40	SHOE-TRACK	
	4	1	**254-0224**	4	BOLT-TRACK MASTER (M22X1.5X108-MM)	
	5	1	**254-4471**	1	SHOE-TRACK MASTER	
M	6	1	**6Y-9024**	160	BOLT-TRACK (M22X1.5X67-MM)	
M	7	1	**9W-4381**	160	NUT-TRACK (M22X1.5-THD)	

M - METRIC PART
Y - SEPARATE ILLUSTRATION

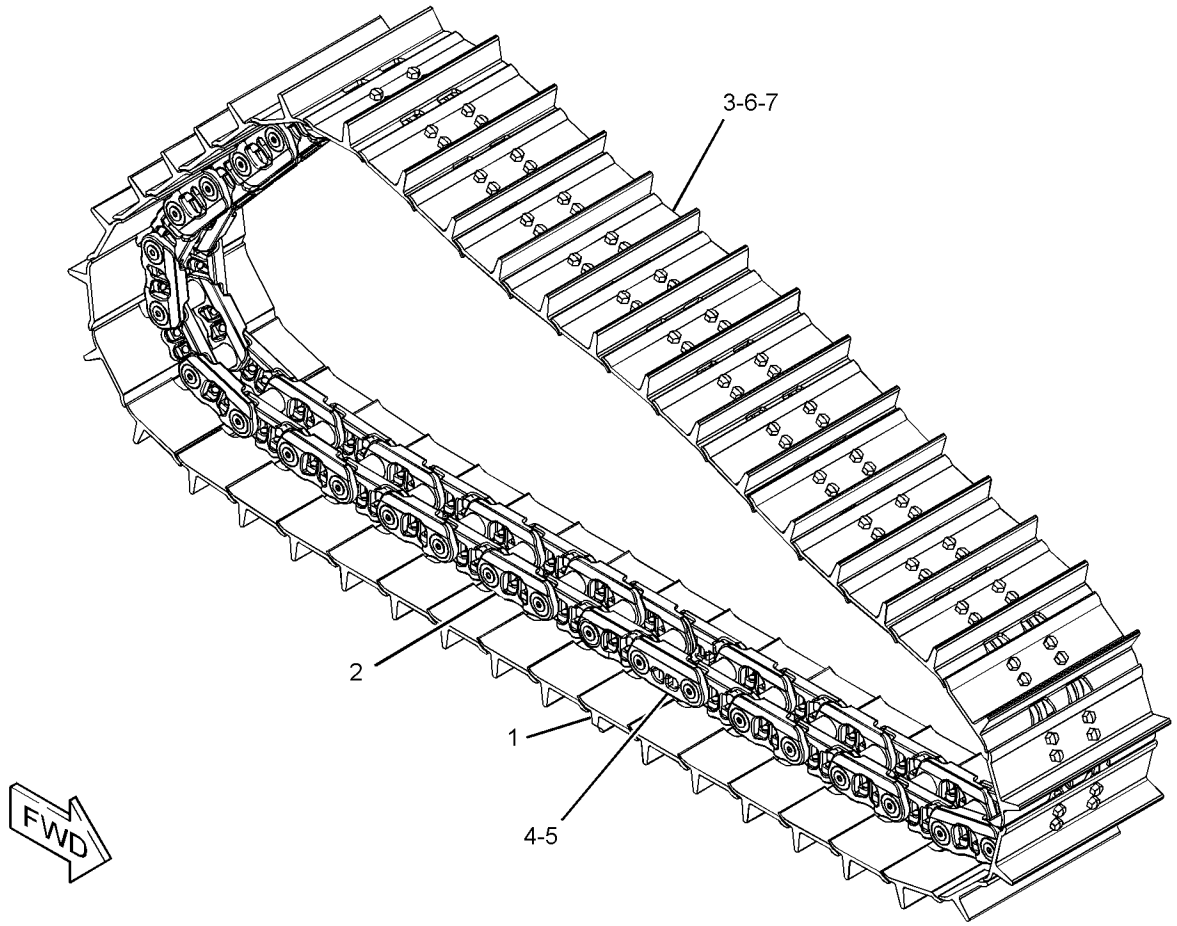

GRAPHIC #1 **<END>** g02923723

385-5450 TRACK GP–HEAVY-DUTY

S/N: EMM1-UP
610-MM (24-IN) GROUSER SHOE. SEALED, LUBRICATED, MODERATE SERVICE
FOR USE WITH HEAVY DUTY ROLLERS, GUARDS, GUIDESTRIPS, CONVENTIONAL IDLERS
PART OF 385-5462 TRACK AR
AN ATTACHMENT

SMCS-4170 **i05508572**

NOTE	REF NO	GRAPHIC REF	PART NUMBER	QTY	PART NAME 1 2 3 4 5 6 (PRODUCT LEVEL)	SEE PAGE
Y	1	1	**424-0842**	1	LINK AS-TRACK (HEAVY-DUTY)	399
	2	1	**1S-1860**	152	NUT-TRACK (3/4-16-THD)	
	3	1	**6V-1792**	152	BOLT-TRACK (3/4-16X2.4-IN)	
	4	1	**6Y-6287**	38	SHOE-TRACK	
	5	1	**6Y-6296**	1	SHOE-TRACK MASTER	
	6	1	**9S-1838**	4	BOLT-TRACK MASTER (3/4-16X4.13-IN)	

Y - SEPARATE ILLUSTRATION

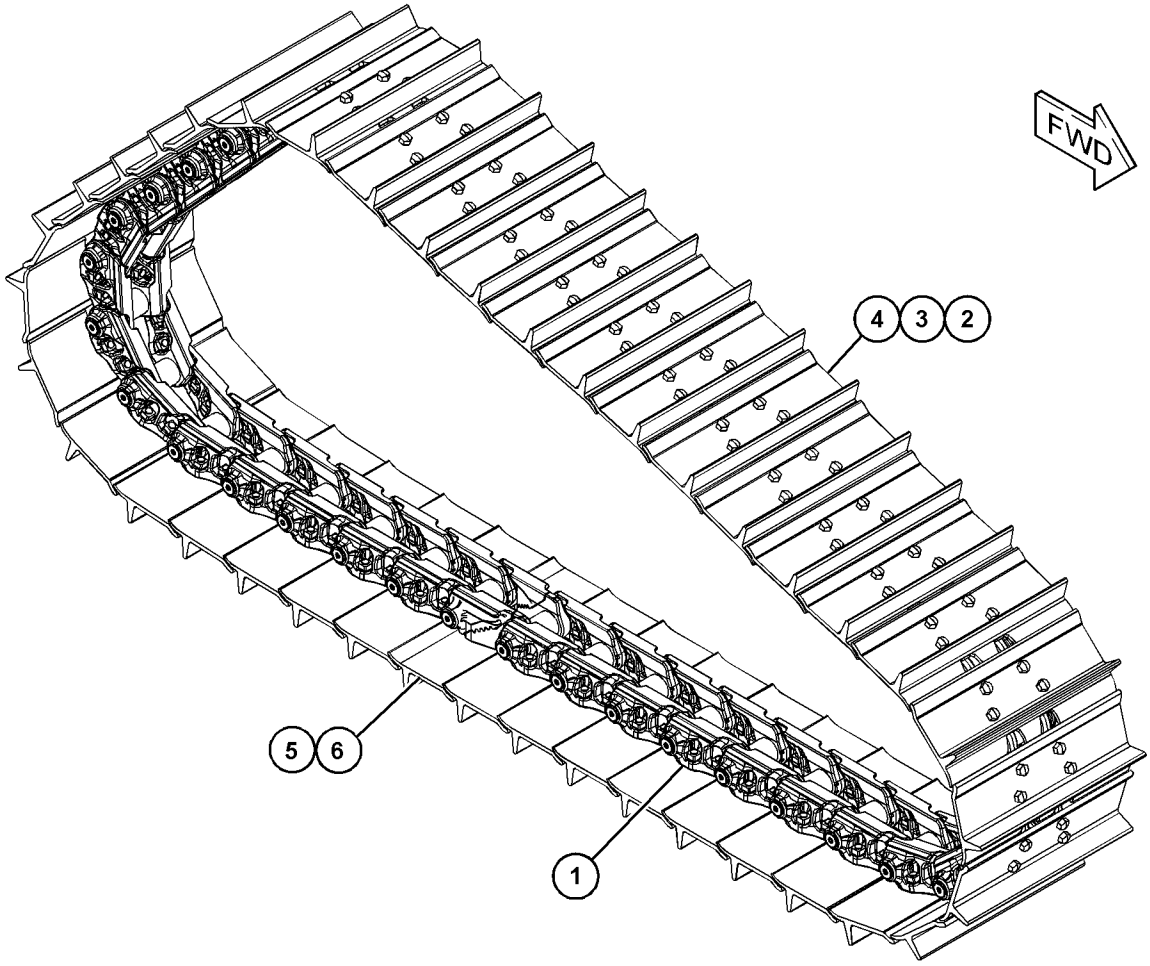

GRAPHIC #1 **<END>** g03533389

385-5458 TRACK GP–2-REQUIRED, HEAVY-DUTY

S/N: EMM1-UP

560-MM (22-IN) GROUSER SHOE. SEALED, LUBRICATED. EXTREME SERVICE

FOR USE WITH HEAVY-DUTY ROLLERS, GUARDS, GUIDESTRIPS, CONVENTIONAL IDLERS

PART OF 385-5459 TRACK AR

AN ATTACHMENT

SMCS-4170 **i05505942**

NOTE	REF NO	GRAPHIC REF	PART NUMBER	QTY	PART NAME 1 2 3 4 5 6 (PRODUCT LEVEL)	SEE PAGE
Y	1	1	**424-0842**	1	LINK AS-TRACK	399
	2	1	**6Y-6412**	1	SHOE-TRACK MASTER	
	3	1	**1S-1860**	152	NUT-TRACK (3/4-16-THD)	
	4	1	**6V-1792**	152	BOLT-TRACK (3/4-16X2.4-IN)	
	5	1	**6Y-6389**	38	SHOE-TRACK	
	6	1	**9S-1838**	4	BOLT-TRACK MASTER (3/4-16X4.13-IN)	

Y - SEPARATE ILLUSTRATION

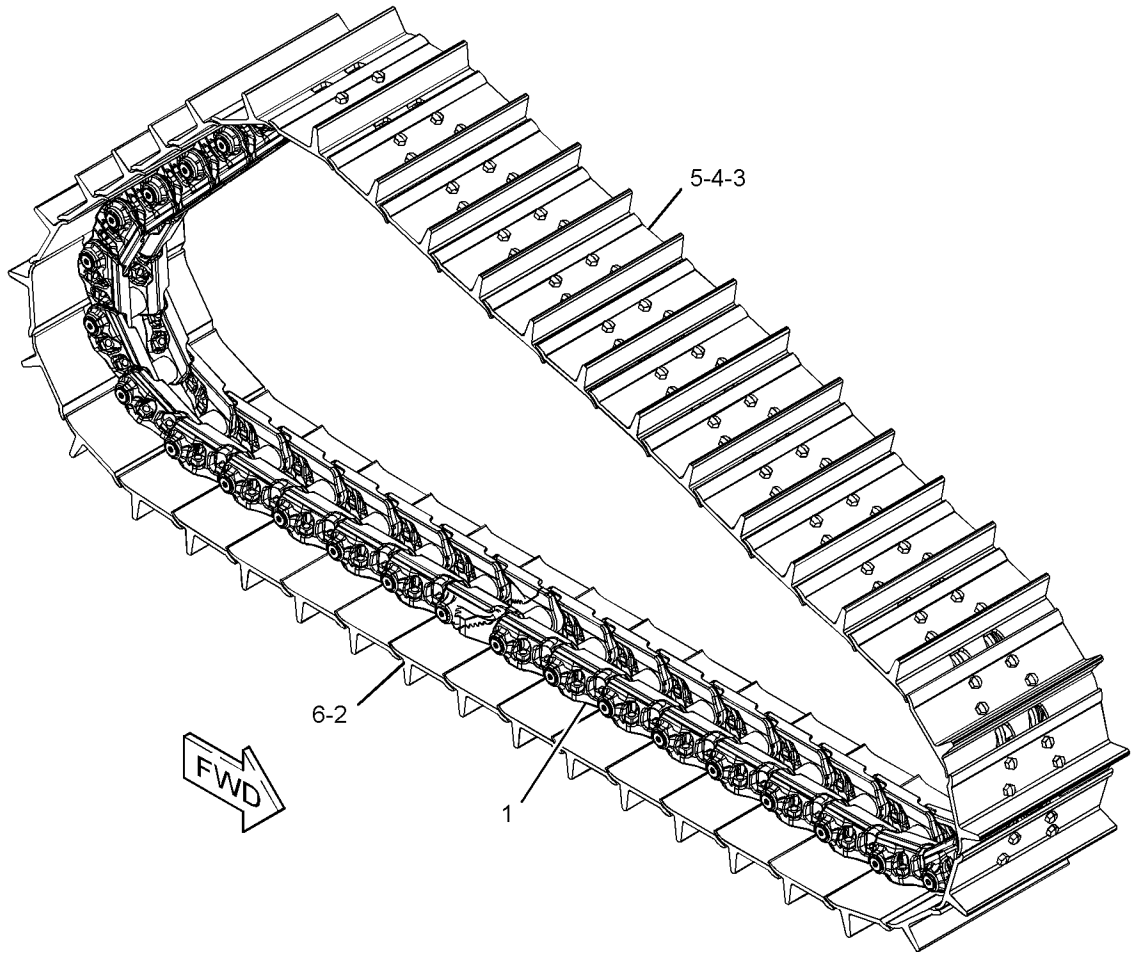

GRAPHIC #1 **<END>** g03381374

450-7074 UNDERCARRIAGE AR

S/N: EMM1-UP
AN ATTACHMENT

SMCS-4150 **i05633929**

NOTE	PART NUMBER	QTY	PART NAME 1 2 3 4 5 6 (PRODUCT LEVEL)	SEE PAGE
Y	*229-7373*	1	BAR GP-EQUALIZER	370
Y	*108-1091*	8	CAP GP-TRACK IDLER	373
Y	*450-7089*	1	FRAME GP-TELESCOPING RECOIL (HEAVY-DUTY, LH)	375
Y	*450-7090*	1	FRAME GP-TELESCOPING RECOIL (HEAVY-DUTY, RH)	377
Y	**202-4304**	4	IDLER GP-TRACK	396
Y	*223-0647*	1	PIVOT BAR GP	404
Y	**125-4176**	4	ROLLER GP-TRACK-DOUBLE FLANGE	407
Y	*125-4175*	8	ROLLER GP-TRACK-SINGLE FLANGE	411
Y	*188-0908*	2	SEGMENT GP-SPROCKET	302
B	**8G-9530**	4	SHIM (8-MM THK)	

B - USE AS REQUIRED
Y - SEPARATE ILLUSTRATION

<END>

450-7075 UNDERCARRIAGE AR–HEAVY-DUTY

S/N: EMM1-UP
MODERATE GUIDES
AN ATTACHMENT

SMCS-4150 **i05635170**

NOTE	PART NUMBER	QTY	PART NAME 1 2 3 4 5 6 (PRODUCT LEVEL)	SEE PAGE
Y	*229-7373*	1	BAR GP-EQUALIZER	370
Y	*108-1091*	8	CAP GP-TRACK IDLER	373
Y	*450-7089*	1	FRAME GP-TELESCOPING RECOIL (HEAVY-DUTY, LH) (HEAVY-DUTY, LH)	375
Y	*450-7090*	1	FRAME GP-TELESCOPING RECOIL (HEAVY-DUTY, RH) (HEAVY-DUTY, RH)	377
Y	*164-0406*	2	GUARD GP-TRACK GUIDE	391
Y	**202-4304**	4	IDLER GP-TRACK	396
Y	*223-0647*	1	PIVOT BAR GP	404
Y	*384-3277*	8	ROLLER GP-TRACK-DOUBLE FLANGE	410
Y	*125-4175*	4	ROLLER GP-TRACK-SINGLE FLANGE	411
Y	*188-0908*	2	SEGMENT GP-SPROCKET	302
B	**8G-9530**	4	SHIM (8-MM THK)	

B - USE AS REQUIRED
Y - SEPARATE ILLUSTRATION

<END>

450-7076 UNDERCARRIAGE AR—HEAVY-DUTY

S/N: EMM1-UP
FULL GUIDES
AN ATTACHMENT

SMCS-4150 **i05635792**

NOTE	PART NUMBER	QTY	PART NAME 1 2 3 4 5 6 (PRODUCT LEVEL)	SEE PAGE
Y	*229-7373*	1	BAR GP-EQUALIZER	370
Y	*108-1091*	8	CAP GP-TRACK IDLER (HEAVY-DUTY)	373
Y	*450-7089*	1	FRAME GP-TELESCOPING RECOIL (HEAVY-DUTY, LH)	375
Y	*450-7090*	1	FRAME GP-TELESCOPING RECOIL (HEAVY-DUTY, RH)	377
Y	*389-6120*	1	GUARD GP-TRACK ROLLER (FULL LENGTH)	395
Y	**202-4304**	4	IDLER GP-TRACK (HEAVY-DUTY)	396
Y	*223-0647*	1	PIVOT BAR GP	404
Y	*384-3277*	8	ROLLER GP-TRACK-DOUBLE FLANGE	410
Y	*125-4175*	4	ROLLER GP-TRACK-SINGLE FLANGE	411
Y	*188-0908*	2	SEGMENT GP-SPROCKET (FINAL DRIVE)	302
B	**8G-9530**	4	SHIM (8-MM THK)	

B - USE AS REQUIRED
Y - SEPARATE ILLUSTRATION

<END>

450-7077 UNDERCARRIAGE AR—HEAVY-DUTY

S/N: JEN1-UP
AN ATTACHMENT

SMCS-4150 **i05649033**

NOTE	PART NUMBER	QTY	PART NAME 1 2 3 4 5 6 (PRODUCT LEVEL)	SEE PAGE
Y	*229-7373*	1	BAR GP-EQUALIZER	370
Y	*108-1091*	8	CAP GP-TRACK IDLER	373
Y	*450-7093*	1	FRAME GP-TELESCOPING RECOIL (LH)	379
Y	*450-7094*	1	FRAME GP-TELESCOPING RECOIL (RH)	381
Y	**202-4304**	4	IDLER GP-TRACK	396
Y	*169-4368*	2	MOUNTING GP-CARRIER ROLLER	403
Y	*223-0647*	1	PIVOT BAR GP	404
Y	**235-5974**	2	ROLLER GP-TRACK CARRIER	406
Y	**125-4176**	6	ROLLER GP-TRACK-DOUBLE FLANGE	407
Y	*125-4175*	8	ROLLER GP-TRACK-SINGLE FLANGE	411
Y	*188-0908*	2	SEGMENT GP-SPROCKET	302
B	**8G-9530**	4	SHIM (8-MM THK)	

B - USE AS REQUIRED
Y - SEPARATE ILLUSTRATION

<END>

450-7078 UNDERCARRIAGE AR—HEAVY-DUTY

S/N: JEN1-UP
MODERATE GUIDES
AN ATTACHMENT

SMCS-4150 **i05641036**

NOTE	PART NUMBER	QTY	PART NAME 1 2 3 4 5 6 (PRODUCT LEVEL)	SEE PAGE
Y	*229-7373*	1	BAR GP-EQUALIZER	370
Y	*108-1091*	8	CAP GP-TRACK IDLER	373
Y	*450-7093*	1	FRAME GP-TELESCOPING RECOIL (LH)	379
Y	*450-7094*	1	FRAME GP-TELESCOPING RECOIL (RH)	381
Y	*164-0406*	2	GUARD GP-TRACK GUIDE	391
Y	**202-4304**	4	IDLER GP-TRACK	396
Y	*169-4368*	2	MOUNTING GP-CARRIER ROLLER	403
Y	*223-0647*	1	PIVOT BAR GP	404
Y	**235-5974**	2	ROLLER GP-TRACK CARRIER	406
Y	**384-3277**	10	ROLLER GP-TRACK-DOUBLE FLANGE	410
Y	*125-4175*	4	ROLLER GP-TRACK-SINGLE FLANGE	411
Y	*188-0908*	2	SEGMENT GP-SPROCKET	302
B	**8G-9530**	4	SHIM (8-MM THK)	

B - USE AS REQUIRED
Y - SEPARATE ILLUSTRATION

<END>

450-7079 UNDERCARRIAGE AR—HEAVY-DUTY

S/N: JEN1-UP
FULL GUIDES
AN ATTACHMENT

SMCS-4150 **i05641048**

NOTE	PART NUMBER	QTY	PART NAME 1 2 3 4 5 6 (PRODUCT LEVEL)	SEE PAGE
Y	*229-7373*	1	BAR GP-EQUALIZER	370
Y	*108-1091*	8	CAP GP-TRACK IDLER	373
Y	*450-7093*	1	FRAME GP-TELESCOPING RECOIL (LH)	379
Y	*450-7094*	1	FRAME GP-TELESCOPING RECOIL (RH)	381
Y	*134-9429*	1	GUARD GP-TRACK ROLLER	393
Y	**202-4304**	4	IDLER GP-TRACK	396
Y	*169-4368*	2	MOUNTING GP-CARRIER ROLLER	403
Y	*223-0647*	1	PIVOT BAR GP	404
Y	**235-5974**	2	ROLLER GP-TRACK CARRIER	406
Y	**384-3277**	10	ROLLER GP-TRACK-DOUBLE FLANGE	410
Y	*125-4175*	4	ROLLER GP-TRACK-SINGLE FLANGE	411
Y	*188-0908*	2	SEGMENT GP-SPROCKET	302
B	**8G-9530**	4	SHIM (8-MM THK)	

B - USE AS REQUIRED
Y - SEPARATE ILLUSTRATION

<END>

450-7081 UNDERCARRIAGE AR—SYSTEMONE

S/N: JEN1-UP
AN ATTACHMENT

SMCS-4150 **i05641073**

NOTE	PART NUMBER	QTY	PART NAME 1 2 3 4 5 6 (PRODUCT LEVEL)	SEE PAGE
Y	*229-7373*	1	BAR GP-EQUALIZER	370
Y	*267-4746*	8	CAP GP-TRACK IDLER (SYSTEMONE)	374
Y	*450-7178*	1	FRAME GP-TELESCOPING RECOIL (LH)	384
Y	*450-7179*	1	FRAME GP-TELESCOPING RECOIL (RH)	386
Y	*314-3283*	1	GUARD GP-TRACK GUIDE (SYSTEMONE)	392
Y	**323-1170**	4	IDLER GP-TRACK (SYSTEMONE)	397
Y	*169-4368*	2	MOUNTING GP-CARRIER ROLLER	403
Y	*223-0647*	1	PIVOT BAR GP	404
Y	**235-5974**	2	ROLLER GP-TRACK CARRIER	406
Y	*292-2175*	14	ROLLER GP-TRACK-SINGLE FLANGE (SYSTEMONE)	414
Y	*238-0451*	2	SCRAPER GP-IDLER	415
Y	*188-0908*	2	SEGMENT GP-SPROCKET	302
B	**156-5342**	4	SHIM (10-MM THK)	
B	**233-4846**	4	SHIM (6-MM THK)	

B - USE AS REQUIRED
Y - SEPARATE ILLUSTRATION

<END>

450-7082 UNDERCARRIAGE AR—SYSTEMONE

S/N: JEN1-UP
FULL GUIDES
AN ATTACHMENT

SMCS-4150 **i05641059**

NOTE	PART NUMBER	QTY	PART NAME 1 2 3 4 5 6 (PRODUCT LEVEL)	SEE PAGE
Y	*229-7373*	1	BAR GP-EQUALIZER	370
Y	*267-4746*	8	CAP GP-TRACK IDLER (SYSTEMONE)	374
Y	*450-7178*	1	FRAME GP-TELESCOPING RECOIL (LH)	384
Y	*450-7179*	1	FRAME GP-TELESCOPING RECOIL (RH)	386
Y	*378-3790*	1	GUARD GP-TRACK ROLLER (SYSTEMONE)	394
Y	**323-1170**	4	IDLER GP-TRACK (SYSTEMONE)	397
Y	*169-4368*	2	MOUNTING GP-CARRIER ROLLER	403
Y	*223-0647*	1	PIVOT BAR GP	404
Y	**235-5974**	2	ROLLER GP-TRACK CARRIER	406
Y	*292-2175*	14	ROLLER GP-TRACK-SINGLE FLANGE (SYSTEMONE)	414
Y	*238-0451*	2	SCRAPER GP-IDLER	415
Y	*188-0908*	2	SEGMENT GP-SPROCKET	302
B	**156-5342**	4	SHIM (10-MM THK)	
B	**233-4846**	4	SHIM (6-MM THK)	

B - USE AS REQUIRED
Y - SEPARATE ILLUSTRATION

<END>

9W-1617 VALVE GP-BRAKE CONTROL

S/N: EMM1-UP; JEN1-UP

PART OF 389-6093 VALVE & MOUNTING GP

SMCS-4265, 4282 **i05637781**

NOTE	REF NO	GRAPHIC REF	PART NUMBER	QTY	PART NAME 1 2 3 4 5 6 (PRODUCT LEVEL)	SEE PAGE
	1	1	**2M-1168**	1	SLUG-VALVE	
C	2	1	**6V-0852**	1	CAP-DUST	
	3	1	**7G-1577**	1	COVER-FLANGE	
	4	1	**9W-1467**	1	SPRING	
	5	1	**9W-1614**	1	SPOOL AS	
		1	**7M-8592**	1	RING-RETAINING	
	5A	1	**9W-1468**	1	SLEEVE	
		1	**8M-4409**	1	RETAINER	
	5B	1	**8M-2538**	1	POPPET	
		1	**5M-9548**	1	SPRING	
	6	1	**9W-1615**	1	COVER	
	7	1	**9W-1616**	1	BODY-BRAKE CONTROL	
	8	1	**9W-3302**	1	PLUNGER	
	9	1	**0L-1351**	2	BOLT (3/8-16X0.875-IN)	
	10	1	**0S-1571**	2	BOLT (3/8-16X1.75-IN)	
C	11	1	*148-8313*	1	ADAPTER AS	
		1	**3K-0360**	1	SEAL-O-RING	
		1	**5P-6944**	1	ADAPTER	
C	12	1	*148-8411*	1	PLUG AS	
		1	**3K-0360**	1	SEAL-O-RING	
		1	**9S-4185**	1	PLUG-O-RING	
C	13	1	**3J-1907**	1	SEAL-O-RING	
B	14	1	**5S-7001**	5	SPACER (7.54X14.15X0.9-MM THK)	
B	15	1	**5S-7018**	4	SPACER (7.54X14.15X0.25-MM THK)	
	16	1	**6V-1604**	1	SEAL-LIP TYPE	
C	17	1	**6V-3965**	1	FITTING (QUICK DISCONNECT)	
	18	1	**8F-3469**	1	SEAL-O-RING	
	19	1	**8M-4435**	1	SEAL-O-RING	
	20	1	**8M-4988**	1	SEAL-O-RING	
	21	1	**8M-5249**	1	SEAL-O-RING	

B - USE AS REQUIRED
C - CHANGE FROM PREVIOUS TYPE

9W-1617 **VALVE GP-BRAKE CONTROL (*contd.*)** **i05637781**

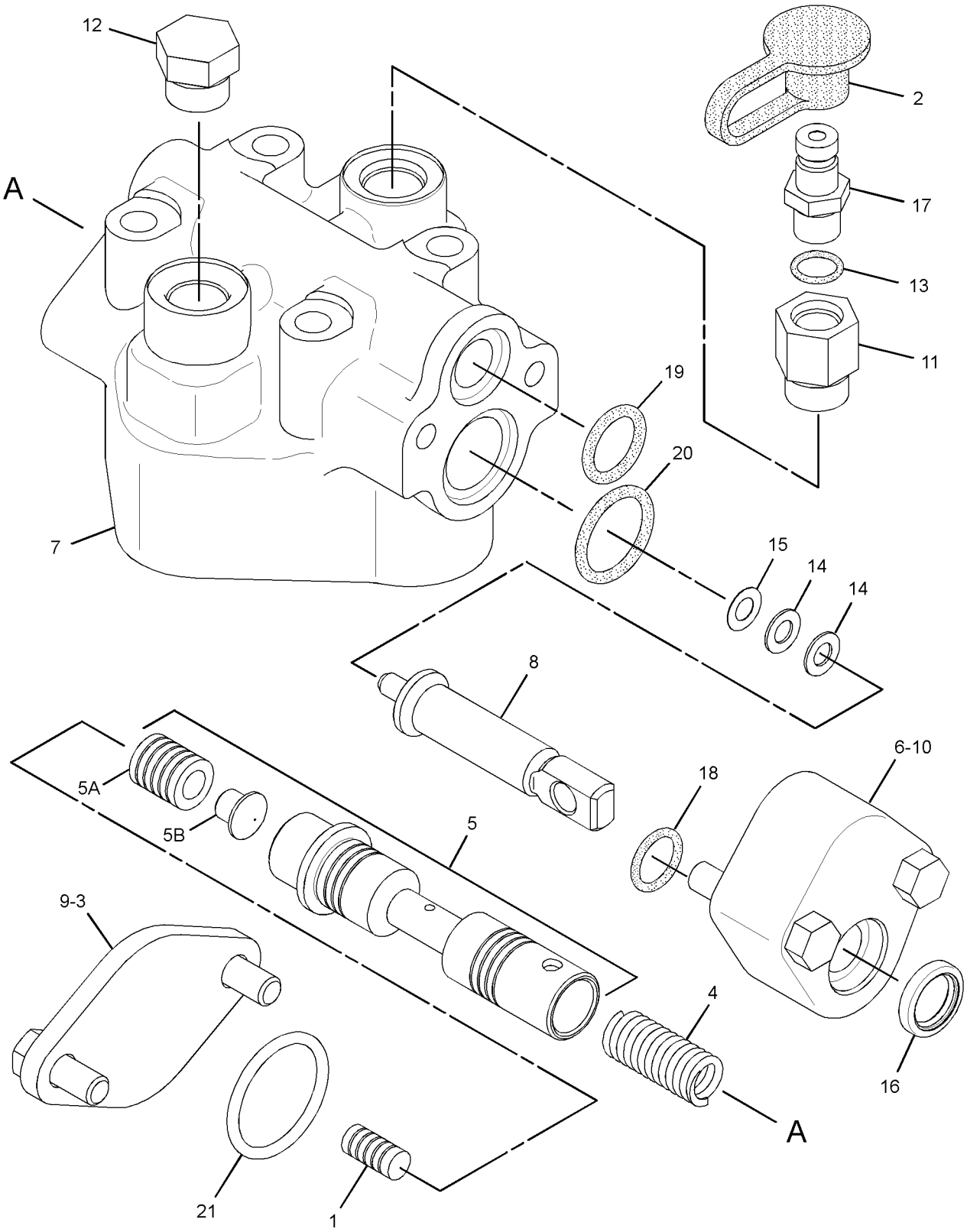

GRAPHIC #1 **<END>** g02994776

179-9387 ACCUMULATOR GP-PILOT OIL–UNCHARGED

S/N: EMM1-UP; JEN1-UP

FIELD REPLACEMENT FOR 200-0750–PAGE: 441

SMCS-5077 **i05561032**

NOTE	REF NO	GRAPHIC REF	PART NUMBER	QTY	PART NAME 1 2 3 4 5 6 (PRODUCT LEVEL)	SEE PAGE
	1	1	**204-8758**	2	FILM-WARNING (HIGH PRESSURE CYLINDER)	

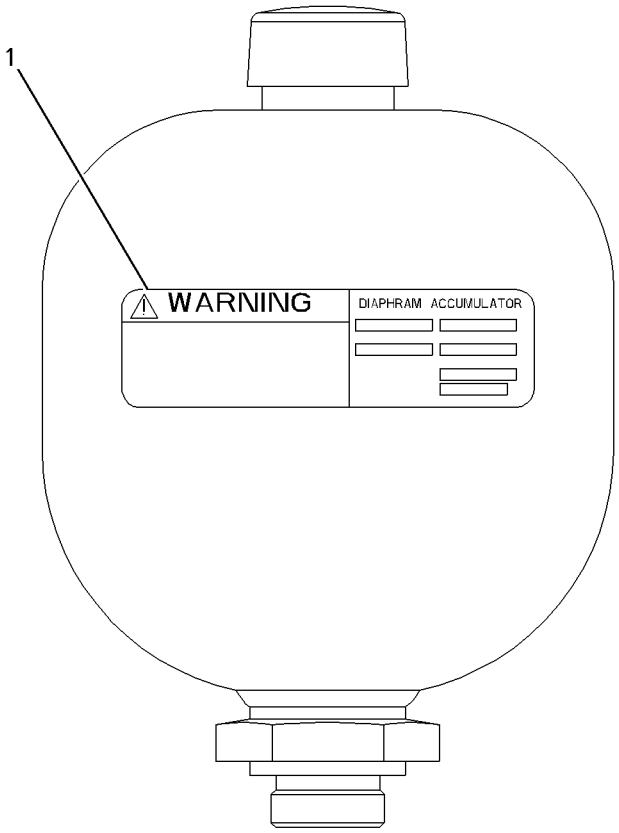

GRAPHIC #1 **<END>** g01004085

200-0750 ACCUMULATOR GP-PILOT OIL–CHARGED

S/N: EMM1-UP; JEN1-UP
FIELD REPLACEMENT ORDER 179-9387–PAGE: 440
PART OF 340-0117, 389-3291, 389-3292, 389-3293 LINES GP-PILOT
AN ATTACHMENT

SMCS-5077 **i05552834**

NOTE	REF NO	GRAPHIC REF	PART NUMBER	QTY	PART NAME 1 2 3 4 5 6 (PRODUCT LEVEL)	SEE PAGE
	1	1	**232-3317**	2	FILM-IDENTIFICATION (HYDRAULIC ACCUMULATOR)	

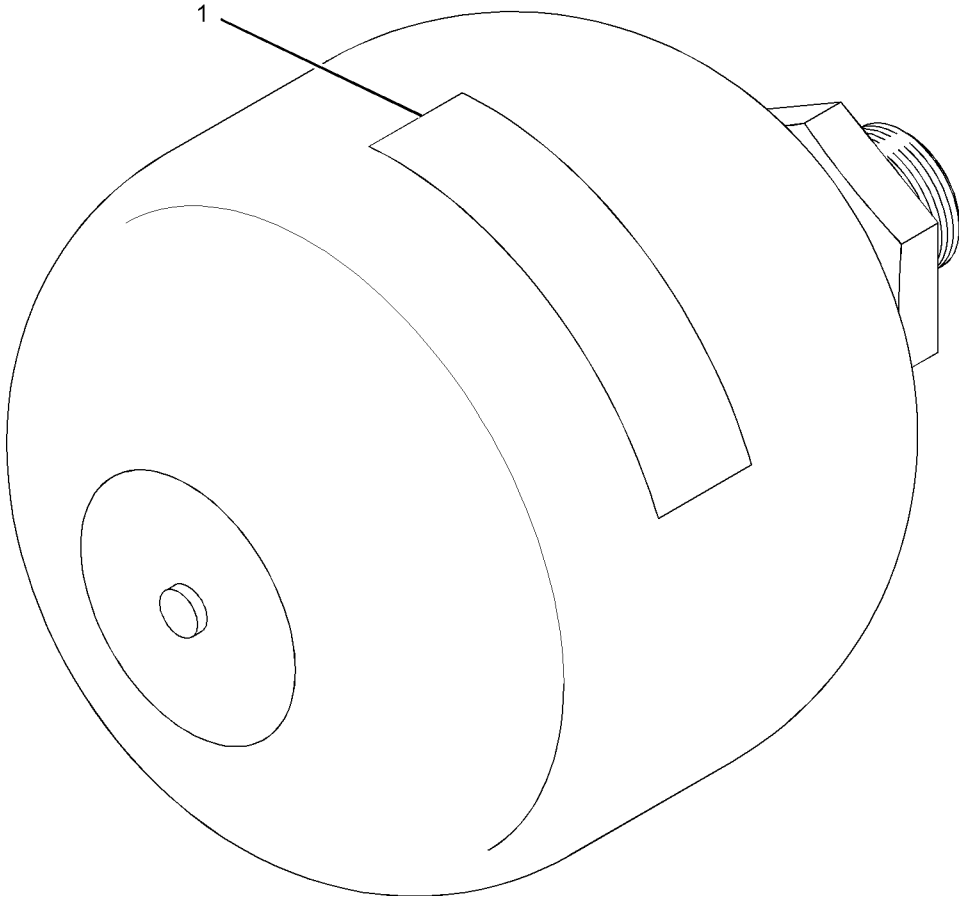

GRAPHIC #1 **<END>** g01034166

229-5421 ADAPTER GP-MOTOR

S/N: EMM1-UP; JEN1-UP

PART OF 389-3214 HYDRAULIC AR

SMCS-5058 **i05640355**

NOTE	REF NO	GRAPHIC REF	PART NUMBER	QTY	PART NAME 1 2 3 4 5 6 (PRODUCT LEVEL)	SEE PAGE
	1	1	**216-8585**	1	ADAPTER (MOTOR)	
	2	1	**3N-0759**	1	RING-SEALING	
	3	1	**7K-6058**	6	BOLT-12 POINT HEAD (1/2-13X2.5-IN)	
	4	1	**8C-6857**	2	BOLT (3/4-10X2.75-IN)	
	5	1	**8T-4994**	2	WASHER-HARD (20X36.5X3.5-MM THK)	
	6	1	**8T-7568**	1	SEAL-O-RING	

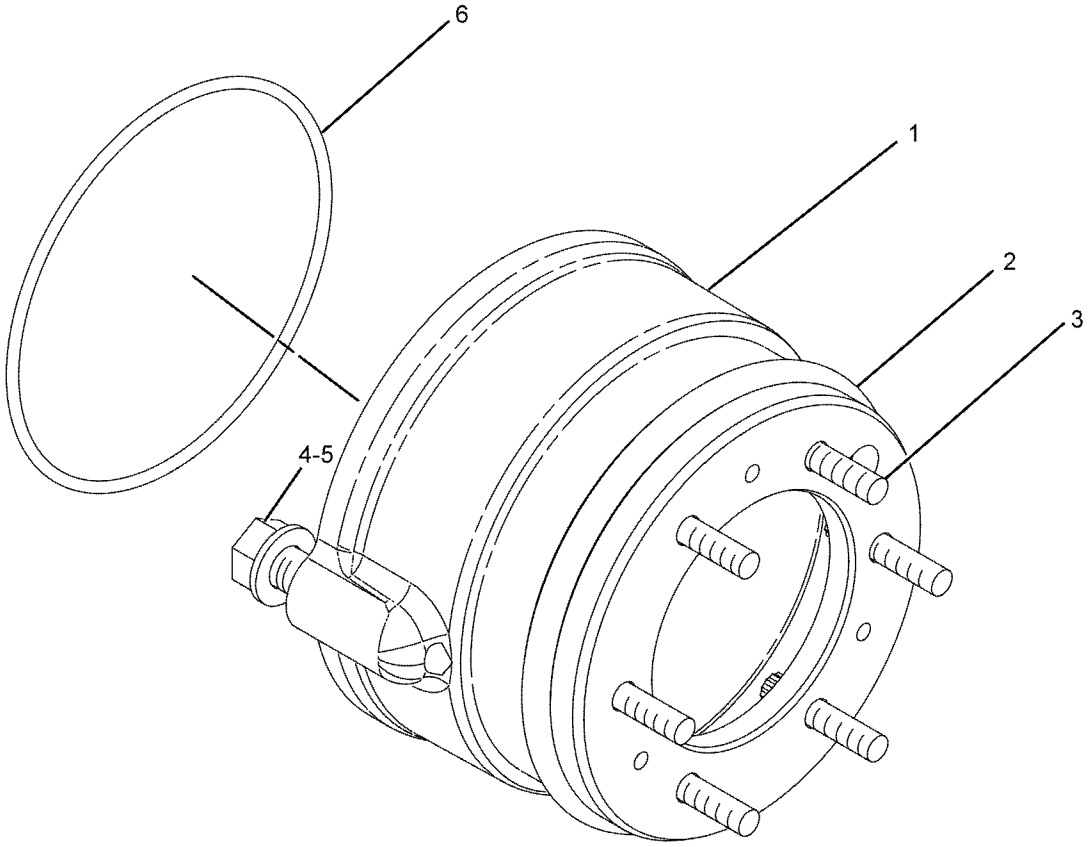

GRAPHIC #1 **<END>** g01126503

375-3124 COOLER GP-HYDRAULIC OIL

S/N: EMM1-UP; JEN1-UP

PART OF 389-3215 INSTALLATION AR-ENGINE

SMCS-1374 **i05660429**

NOTE	REF NO	GRAPHIC REF	PART NUMBER	QTY	PART NAME 1 2 3 4 5 6 (PRODUCT LEVEL)	SEE PAGE
	1	1	**7X-0503**	4	WASHER-HARD (10.2X28.5X5-MM THK)	
	2	1	**169-3821**	1	BRACKET AS	
M		1	**171-2419**	2	STUD-WELD (M10X1.5X35-MM)	
	3	1	**169-3822**	1	BRACKET AS	
M		1	**8T-3490**	2	NUT-WELD (M10X1.5-THD)	
	4	1	**358-1301**	1	CORE AS-OIL COOLER	
		1	**3J-1907**	2	SEAL-O-RING	
		1	**9S-4191**	2	PLUG	
M	5	1	**8T-4133**	2	NUT (M10X1.5-THD)	
M	6	1	**8T-4136**	2	BOLT (M10X1.5X25-MM)	

M - METRIC PART

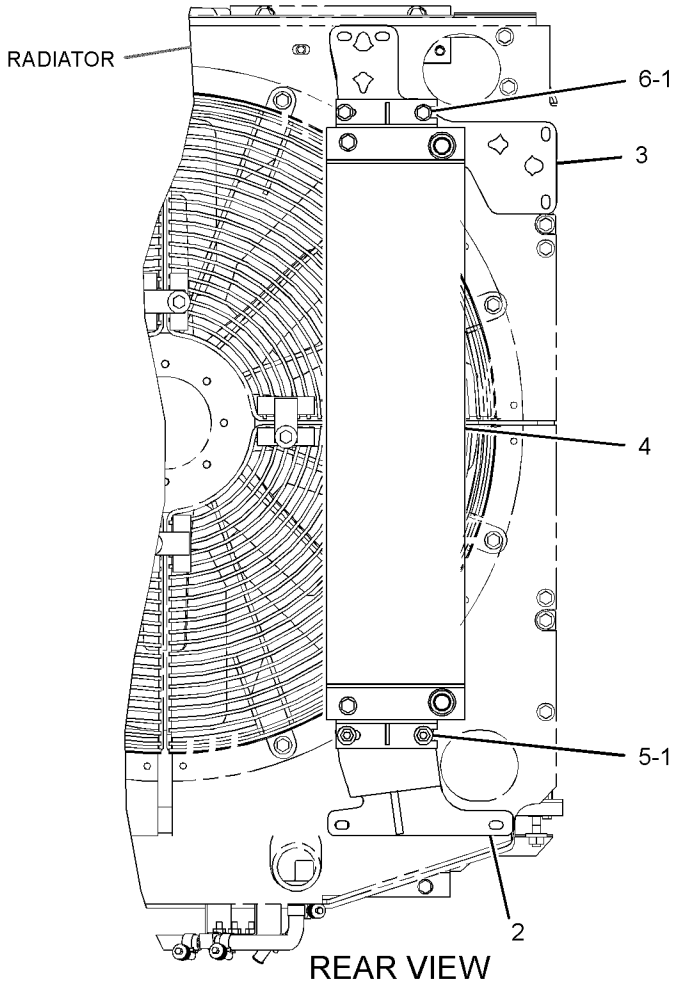

GRAPHIC #1 **<END>** g03257219

362-4539 CYLINDER & LINES GP-LIFT–RH

S/N: EMM1-UP; JEN1-UP

PART OF 389-3214 HYDRAULIC AR

SMCS-5102 **i05640395**

NOTE	REF NO	GRAPHIC REF	PART NUMBER	QTY	PART NAME 1 2 3 4 5 6 (PRODUCT LEVEL)	SEE PAGE
I	1	1	**128-2569**	1	HOSE AS	
I	2	1	**128-2570**	1	HOSE AS	
	3	1	*153-6251*	1	CONNECTOR AS	
		1	**9X-8260**	1	CONNECTOR	
		1	**4K-1388**	1	SEAL-O-RING	
		1	**6V-8400**	1	SEAL-O-RING	
Y	4	1	**417-6242**	1	CYLINDER GP-BULLDOZER LIFT	450
	5	1	**384-4638**	1	GUARD AS	
	6	1	**9U-9121**	1	CLAMP	
	7	1	**9U-9122**	1	CLAMP	
	8	1	**227-4303**	1	TUBE AS	
	9	1	*148-8391*	1	ELBOW AS	
		1	**8T-8987**	1	ELBOW	
		1	**2S-4078**	1	SEAL-O-RING	
		1	**5K-9090**	1	SEAL-O-RING	
	10	1	**4J-0520**	3	SEAL-O-RING	
	11	1	**5P-1075**	12	WASHER-HARD (10.2X22.5X3-MM THK)	
	12	1	**7S-8920**	1	CLIP (SLOT)	
	13	1	**7S-8921**	1	CLIP (TAB)	
	14	1	**8C-3206**	2	FLANGE-HALF	
	15	1	**8S-0023**	1	CLIP (SLOT)	
	16	1	**8S-0024**	1	CLIP (TAB)	
M	17	1	**8T-4133**	2	NUT (M10X1.5-THD)	
M	18	1	**8T-4136**	4	BOLT (M10X1.5X25-MM)	
M	19	1	**8T-4196**	6	BOLT (M10X1.5X35-MM)	

I - REFER TO HYDRAULIC INFORMATION SYSTEM
M - METRIC PART
Y - SEPARATE ILLUSTRATION

362-4539 **CYLINDER & LINES GP-LIFT (*contd.*)** **i05640395**

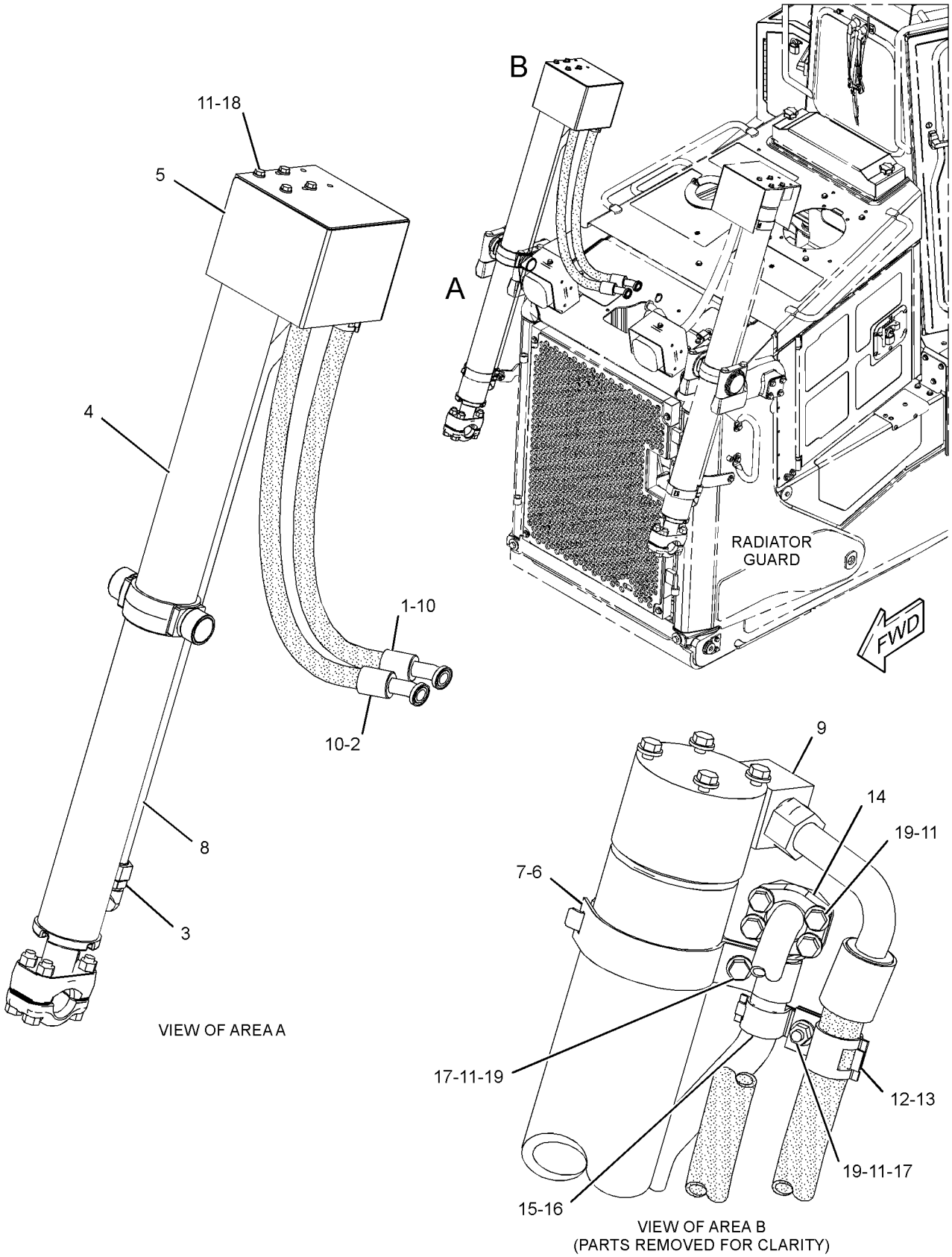

GRAPHIC #1 **<END>** g02193134

362-4544 CYLINDER & LINES GP-LIFT–LH

S/N: EMM1-UP; JEN1-UP

PART OF 389-3214 HYDRAULIC AR

SMCS-5102 **i05640424**

NOTE	REF NO	GRAPHIC REF	PART NUMBER	QTY	PART NAME 1 2 3 4 5 6 (PRODUCT LEVEL)	SEE PAGE
I	1	1	**128-2571**	1	HOSE AS	
	2	1	**9U-9121**	1	CLAMP	
	3	1	**9U-9122**	1	CLAMP	
I	4	1	**128-2572**	1	HOSE AS	
	5	1	**384-4638**	1	GUARD AS	
	6	1	*153-6251*	1	CONNECTOR AS	
		1	**9X-8260**	1	CONNECTOR	
		1	**4K-1388**	1	SEAL-O-RING	
		1	**6V-8400**	1	SEAL-O-RING	
Y	7	1	**417-6242**	1	CYLINDER GP-BULLDOZER LIFT	450
	8	1	**227-4304**	1	TUBE AS	
	9	1	*148-8391*	1	ELBOW AS	
		1	**8T-8987**	1	ELBOW	
		1	**2S-4078**	1	SEAL-O-RING	
		1	**5K-9090**	1	SEAL-O-RING	
	10	1	**4J-0520**	3	SEAL-O-RING	
	11	1	**5P-1075**	12	WASHER-HARD (10.2X22.5X3-MM THK)	
	12	1	**7S-8920**	1	CLIP (SLOT)	
	13	1	**7S-8921**	1	CLIP (TAB)	
	14	1	**8C-3206**	2	FLANGE-HALF	
	15	1	**8S-0023**	1	CLIP (SLOT)	
	16	1	**8S-0024**	1	CLIP (TAB)	
M	17	1	**8T-4133**	2	NUT (M10X1.5-THD)	
M	18	1	**8T-4136**	4	BOLT (M10X1.5X25-MM)	
M	19	1	**8T-4196**	6	BOLT (M10X1.5X35-MM)	

I - REFER TO HYDRAULIC INFORMATION SYSTEM
M - METRIC PART
Y - SEPARATE ILLUSTRATION

362-4544 **CYLINDER & LINES GP-LIFT (*contd.*)** **i05640424**

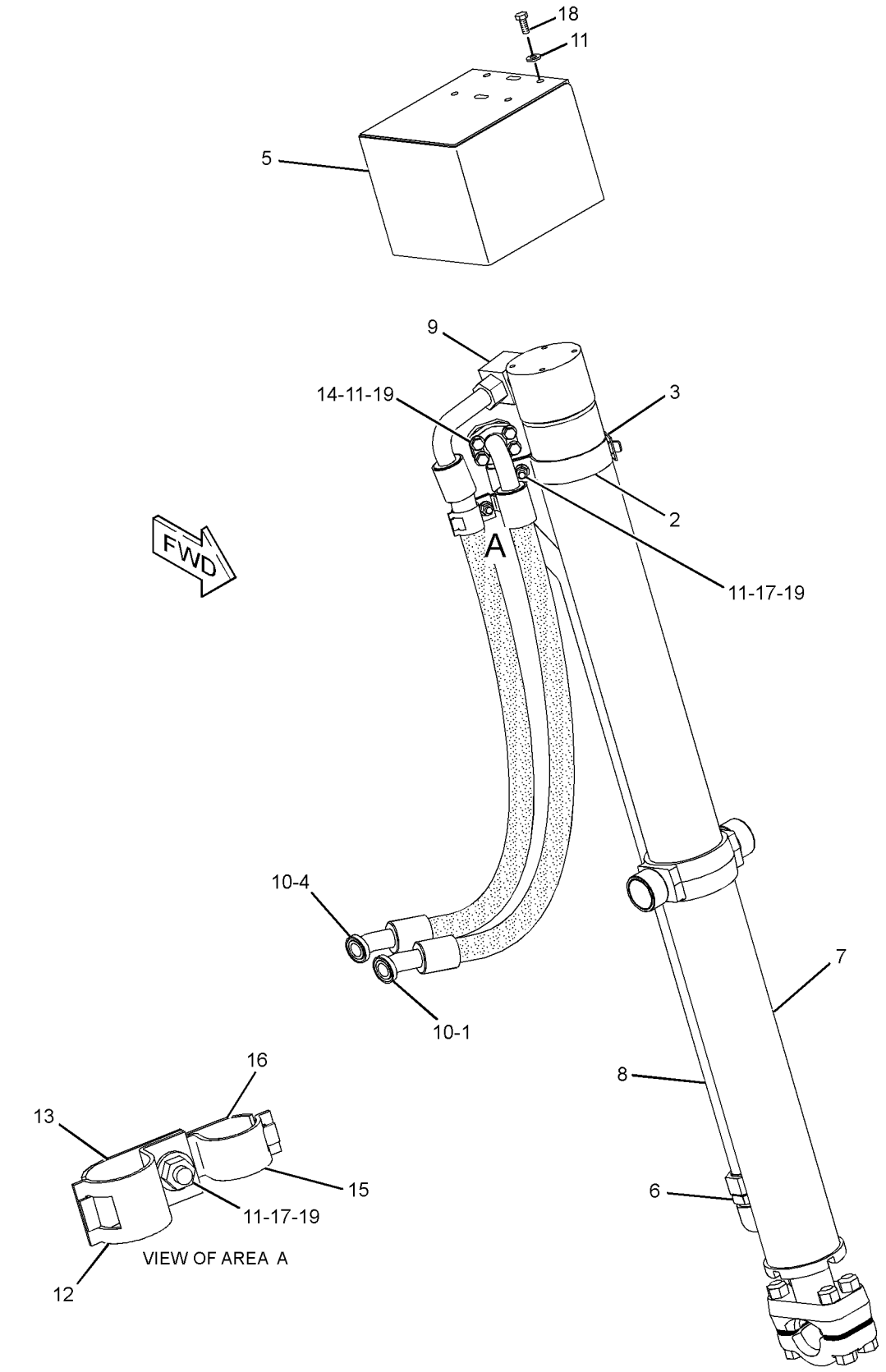

GRAPHIC #1 **<END>** g01209139

227-0844 CYLINDER GP-BULLDOZER LIFT

S/N: EMM1-UP; JEN1-UP
101.6-MM (4-IN) BORE X 1262-MM (49.7-IN) STROKE
PART OF 417-6242 CYLINDER GP-BULLDOZER LIFT

SMCS-5102 **i05640409**

NOTE	REF NO	GRAPHIC REF	PART NUMBER	QTY	PART NAME 1 2 3 4 5 6 (PRODUCT LEVEL)	SEE PAGE
	1	1	**3G-8742**	1	WASHER (39.3X63.5X6-MM THK)	
	2	1	**9T-3885**	1	PISTON AS	
H	2A	1	**8C-9160**	1	SEAL AS	
R	3	1	**364-4115**	1	ROD AS	
	4	1	**172-9981**	1	HEAD	
	5	1	**439-6470**	1	CYLINDER AS-LIFT	
	5A	1	**4J-6374**	2	BUSHING	
	5B	1	**9T-8958**	1	TRUNNION	
H	6	1	**289-2937**	1	SEAL AS-BUFFER	
H	7	1	**289-2948**	1	SEAL-U-CUP	
H	8	1	**175-7900**	1	SEAL-O-RING	
	9	1	**1F-6762**	1	BOLT (1-1/2-12X4.5-IN)	
H	10	1	**1M-1571**	1	RING-WEAR	
H	11	1	**225-3281**	1	SEAL-WIPER	
H	12	1	**2K-6830**	1	RING-BACKUP	
	13	1	**4J-0121**	1	CAP AS-BEARING	
B		1	**8E-9212**	14	SHIM (0.8-MM THK)	
M	14	1	**6V-7742**	4	NUT-FULL (M20X2.5-THD)	
B	15	1	**8E-9212**	26	SHIM (0.8-MM THK)	
M	16	1	**8T-0362**	4	BOLT (M20X2.5X110-MM)	
H	17	1	**8T-0785**	1	RING-WEAR	
					AVAILABLE REPAIR KIT(S):	
H			**229-2626**	1	KIT-SEAL	
					(INCLUDES SEAL AS, SEALS, & RINGS)	

B - USE AS REQUIRED
H - KIT MARKED H SERVICES PARTS MARKED H
M - METRIC PART
R - REMFG PART MAY BE AVAILABLE

227-0844 **CYLINDER GP-BULLDOZER LIFT (*contd.*)** **i05640409**

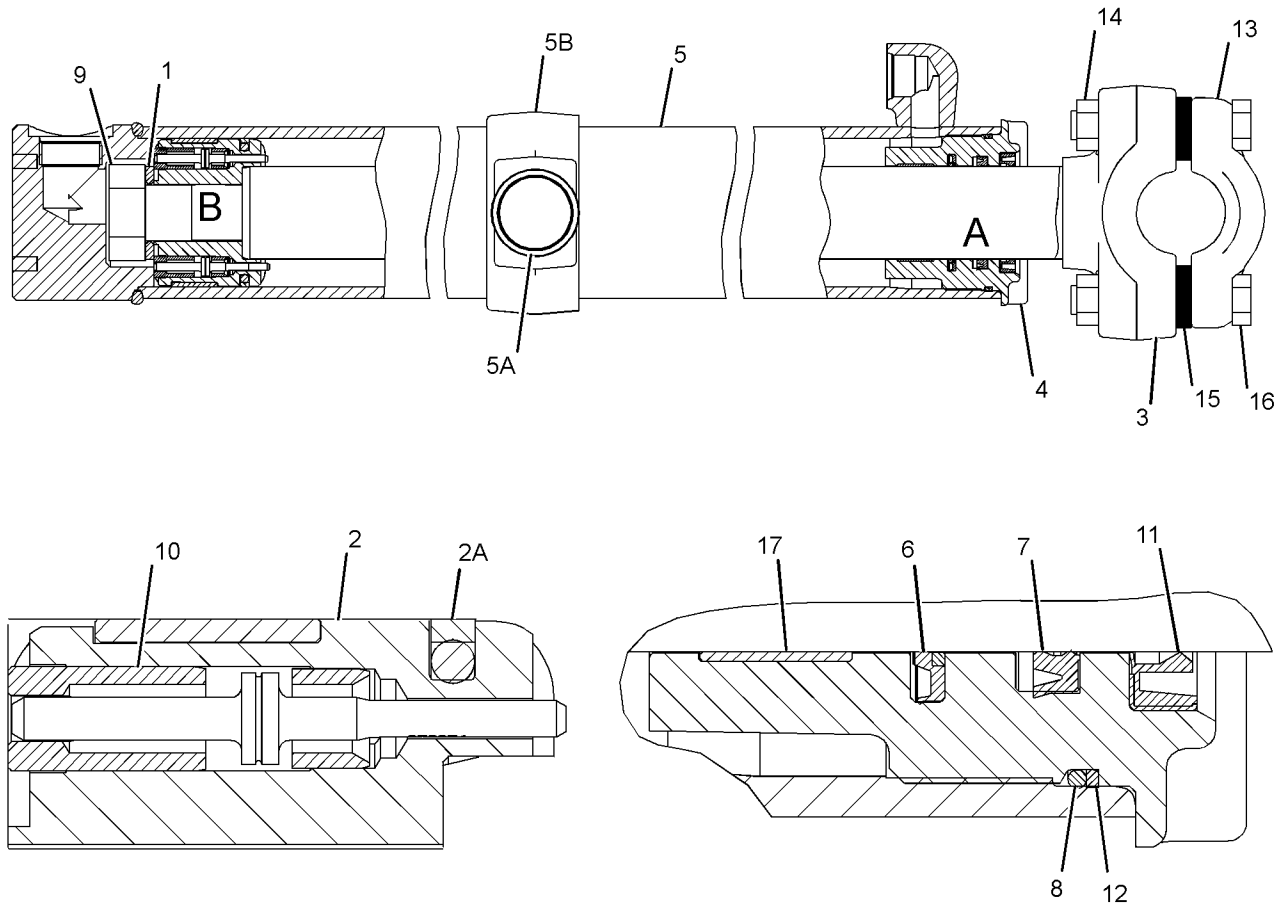

VIEW OF AREA B

VIEW OF AREA A

GRAPHIC #1 **<END>** g03410450

417-6242 CYLINDER GP-BULLDOZER LIFT

S/N: EMM1-UP; JEN1-UP

PART OF 362-4539, 362-4544 CYLINDER & LINES GP-LIFT

SMCS-5102 **i05640398**

NOTE	PART NUMBER	QTY	PART NAME 1 2 3 4 5 6 (PRODUCT LEVEL)	SEE PAGE
Y	**227-0844**	1	CYLINDER GP-BULLDOZER LIFT	448

Y - SEPARATE ILLUSTRATION

<END>

384-5351 CYLINDER GP-RIPPER–LIFT

S/N: MS31-UP
130 MM (5.2-IN) BORE X 405.5 MM (16-IN) STROKE
PART OF 387-1087 RIPPER AR
AN ATTACHMENT

SMCS-5352, 5356 **i05682410**

NOTE	REF NO	GRAPHIC REF	PART NUMBER	QTY	PART NAME 1 2 3 4 5 6 (PRODUCT LEVEL)	SEE PAGE
	1	1	**5J-5731**	1	LOCKNUT (1-3/4-12-THD)	
	2	1	**8C-9200**	1	RING-WEAR	
	3	1	**118-4019**	1	RING	
	4	1	**266-9397**	1	PISTON	
	5	1	**278-2324**	1	SEAL-WIPER	
	6	1	**355-4712**	1	HEAD	
	7	1	**384-8724**	1	CYLINDER AS	
	8	1	**384-8725**	1	ROD AS	
	9	1	**167-2235**	1	SEAL AS-BUFFER	
	10	1	**167-2299**	1	SEAL-U-CUP	
	11	1	**175-7903**	1	SEAL-O-RING	
	12	1	**175-7904**	1	SEAL-O-RING	
	13	1	**2K-4096**	1	RING-BACKUP	
	14	1	**9X-3595**	1	SEAL AS	

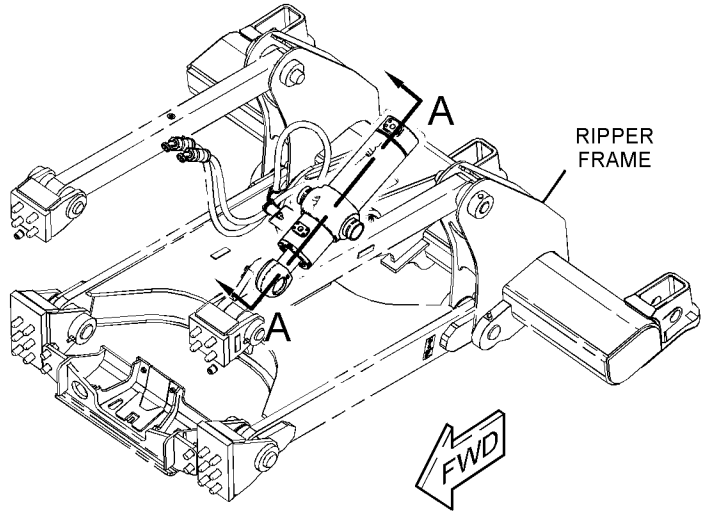

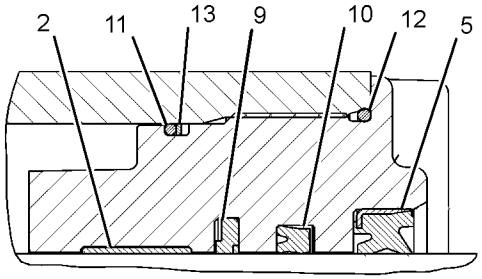

VIEW OF AREA B

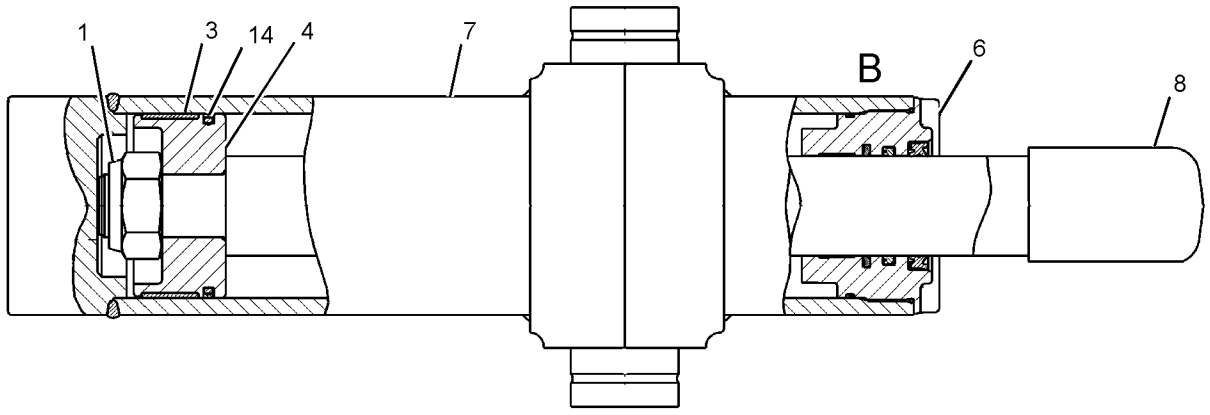

SECTION A-A

GRAPHIC #1 **<END>** g03582269

227-0841 CYLINDER GP-TILT

S/N: EMM1-UP; JEN1-UP
152.4-MM (6-IN) BORE X 108.3-MM (4.3-IN) STROKE
PART OF 251-9814 BRACE GP-BULLDOZER
AN ATTACHMENT

SMCS-5104 **i05628057**

NOTE	REF NO	GRAPHIC REF	PART NUMBER	QTY	PART NAME 1 2 3 4 5 6 (PRODUCT LEVEL)	SEE PAGE
J	1	1	**1J-0708**	1	RING-WEAR	
	2	1	**5J-4989**	1	SEAL AS	
		1	**5J-4418**	1	SEAL	
		1	**5J-4419**	1	RING-EXPANDER	
R	3	1	**9T-6093**	1	ROD-PISTON	
	4	1	**118-1170**	1	PISTON AS	
		1	**1J-8569**	2	INSERT-PISTON	
	5	1	**132-1249**	2	WASHER (44X84X6.35-MM THK)	
	6	1	**230-7887**	1	HEAD AS	
		1	**225-3281**	1	SEAL-WIPER	
	7	1	**230-7892**	1	CYLINDER AS	
		1	**2J-8489**	1	BEARING	
J	8	1	**289-2937**	1	SEAL AS-BUFFER	
J	9	1	**289-2948**	1	SEAL-U-CUP	
M	10	1	**173-9779**	4	BOLT (M24X3X80-MM)	
J	11	1	**225-3281**	1	SEAL-WIPER	
J	12	1	**2K-3258**	1	RING-BACKUP	
J	13	1	**5H-3252**	1	SEAL-O-RING	
	14	1	**5J-5731**	1	LOCKNUT (1-3/4-12-THD)	
	15	1	**6V-8237**	4	WASHER (26X44X4-MM THK)	
J	16	1	**8T-5668**	1	RING-WEAR	
					AVAILABLE REPAIR KIT(S):	
J			**243-0388**	1	KIT-HYDRAULIC CYLINDER	

J - KIT MARKED J SERVICES PARTS MARKED J
M - METRIC PART
R - REMFG PART MAY BE AVAILABLE

227-0841 **CYLINDER GP-TILT (*contd.*)** **i05628057**

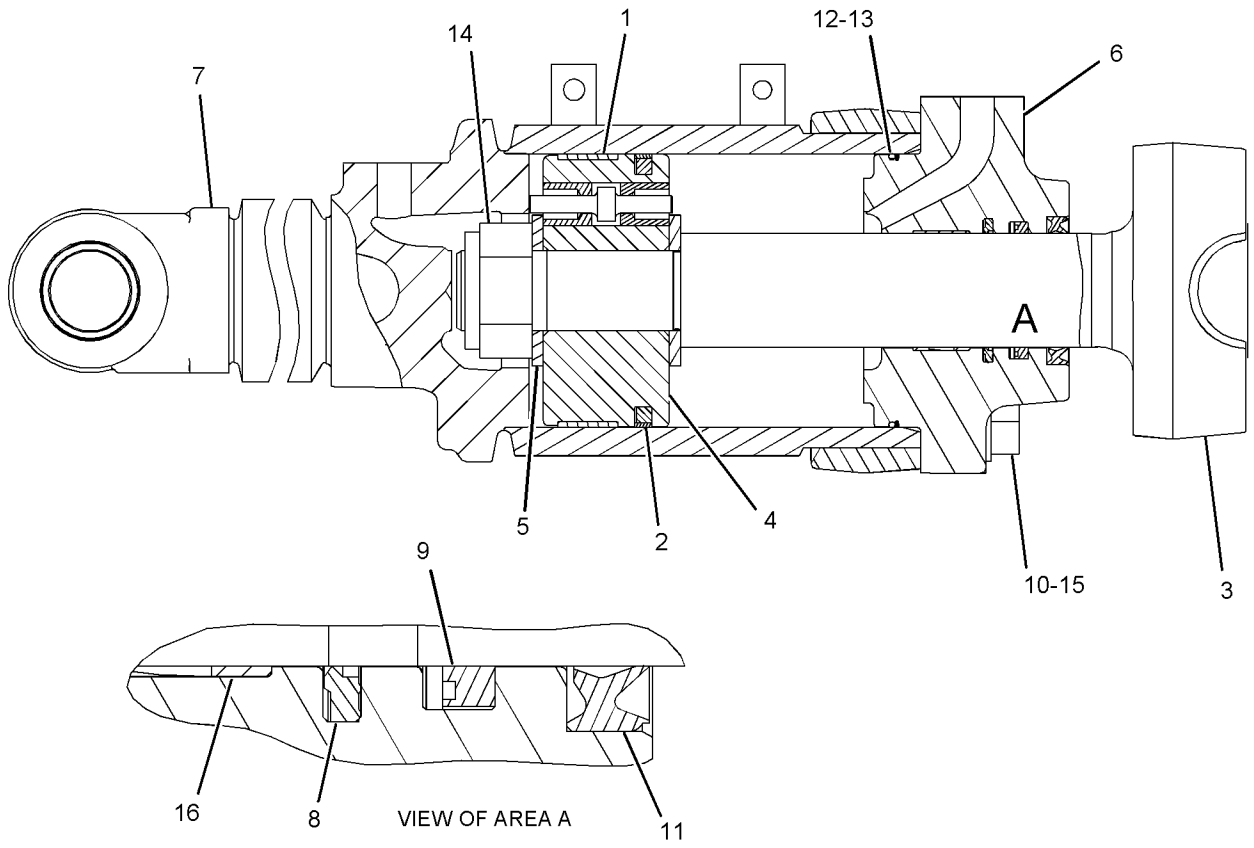

GRAPHIC #1 **<END>** g01207944

367-9478 CYLINDER GP-TILT

S/N: EMM1-UP; JEN1-UP
165.1-MM (6.5-IN) BORE X 128-MM (5-IN) STROKE
PART OF 230-5554, 252-5853 PUSH ARM GP
AN ATTACHMENT

SMCS-5104 **i05627992**

NOTE	REF NO	GRAPHIC REF	PART NUMBER	QTY	PART NAME 1 2 3 4 5 6 (PRODUCT LEVEL)	SEE PAGE
	1	1	**2J-0564**	1	LOCKNUT (2-12-THD)	
	2	1	**5J-4991**	1	SEAL AS	
B	3	1	**8E-5703**	24	SHIM (0.8-MM THK)	
	4	1	**8J-2880**	1	CAP-BEARING	
	5	1	**233-9135**	1	CYLINDER AS	
	5A	1	**2J-8489**	1	BEARING	
	6	1	**233-9138**	1	HEAD-CYLINDER	
	7	1	**312-4247**	1	SEAL-WIPER	
	8	1	**312-4248**	1	SEAL AS-BUFFER	
	9	1	**364-4416**	1	ROD AS	
B		1	**3J-6572**	14	SHIM (0.5-MM THK)	
	10	1	**367-9479**	1	PISTON	
	11	1	**312-4245**	1	SEAL-U-CUP	
	12	1	**3J-9703**	1	RING-WEAR	
M	13	1	**6V-7742**	4	NUT-FULL (M20X2.5-THD)	
M	14	1	**6V-8133**	4	BOLT (M24X3X80-MM)	
	15	1	**6V-8237**	4	WASHER (26X44X4-MM THK)	
M	16	1	**6V-9167**	4	BOLT (M20X2.5X140-MM)	
	17	1	**7J-8955**	1	RING-BACKUP	
	18	1	**7J-8956**	1	SEAL-O-RING	
	19	1	**8T-8379**	1	SEAL-HEAD	
	20	1	**9T-0094**	1	RING-WEAR	

B - USE AS REQUIRED
M - METRIC PART

367-9478 **CYLINDER GP-TILT (*contd.*)** **i05627992**

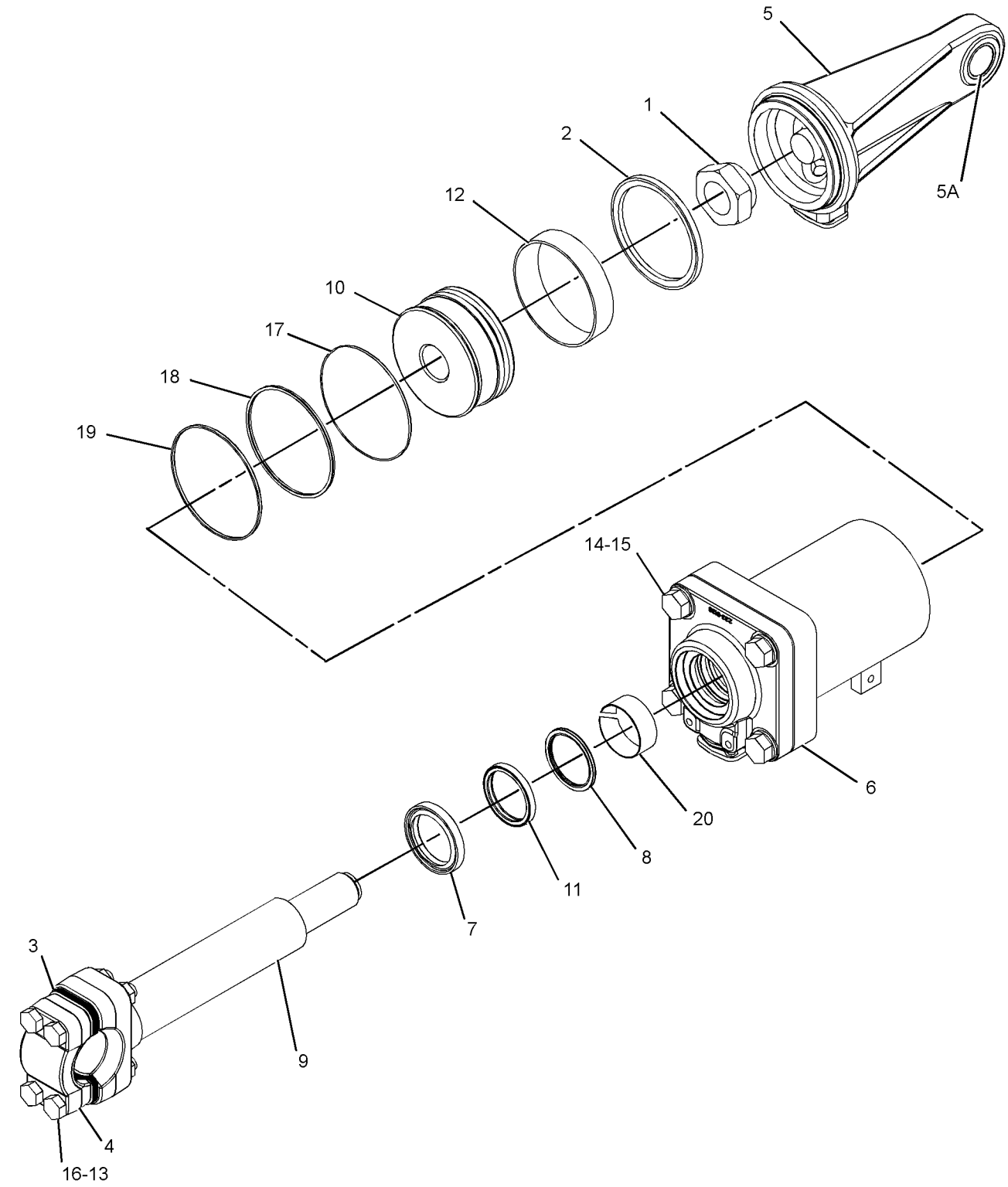

GRAPHIC #1 **<END>** g03243797

389-3214 HYDRAULIC AR

S/N: EMM1-UP; JEN1-UP

PART OF 389-3211, 389-3212 COMMON AR

SMCS-5050 **i05640292**

NOTE	PART NUMBER	QTY	PART NAME 1 2 3 4 5 6 (PRODUCT LEVEL)	SEE PAGE
Y	*229-5421*	1	ADAPTER GP-MOTOR	442
Y	*362-4539*	1	CYLINDER & LINES GP-LIFT (RH)	444
Y	*362-4544*	1	CYLINDER & LINES GP-LIFT (LH)	446
Y	*331-7775*	1	LINES GP-LIFT CYLINDER	458
Y	*317-3942*	1	LINES GP-PUMP	474
Y	*317-4093*	1	LINES GP-TILT CYLINDER	481
YR	**159-7156**	1	MOTOR GP-PISTON (STEERING)	493
Y	*362-4548*	1	MOUNTING GP-CYLINDER	494
Y	*222-1161*	1	PUMP & MOUNTING GP (IMPLEMENT, STEERING)	499
Y	*386-1152*	1	TANK & MTG GP-HYDRAULIC	505
Y	*222-1191*	1	VALVE & MTG GP-COUNTERBALANCE	511
Y	*222-1160*	1	VALVE GP-QUICK-DROP	539

R - REMFG PART MAY BE AVAILABLE
Y - SEPARATE ILLUSTRATION

<END>

389-3224 HYDRAULIC AR

S/N: EMM1-UP; JEN1-UP

CANNOT BE USED WITH 389-6127—PAGE: 155 AN ATTACHMENT

SMCS-5050 **i05552517**

NOTE	PART NUMBER	QTY	PART NAME 1 2 3 4 5 6 (PRODUCT LEVEL)	SEE PAGE
Y	*389-3287*	1	CONTROL GP-PILOT OPERATED HYD	593
Y	*340-0117*	1	LINES GP-PILOT (BULLDOZER)	460
Y	*222-1159*	1	MOUNTING GP-VALVE (IMPLEMENT)	496

Y - SEPARATE ILLUSTRATION

<END>

389-3225 HYDRAULIC AR—BULLDOZER, RIPPER

S/N: EMM1-UP; JEN1-UP

CANNOT BE USED WITH 389-6127—PAGE: 155 AN ATTACHMENT

SMCS-5050 **i05552510**

NOTE	PART NUMBER	QTY	PART NAME 1 2 3 4 5 6 (PRODUCT LEVEL)	SEE PAGE
Y	*389-3288*	1	CONTROL GP-PILOT OPERATED HYD	594
Y	*389-3291*	1	LINES GP-PILOT	464
Y	*389-3294*	1	LINES GP-RIPPER	479
Y	*389-3220*	1	MOUNTING GP-VALVE (IMPLEMENT)	497

Y - SEPARATE ILLUSTRATION

<END>

389-3226 HYDRAULIC AR–GRADE CONTROL

S/N: EMM1-UP; JEN1-UP
WITHOUT REAR HYDRAULICS
FOR USE WITH 389-6127–PAGE: 155
AN ATTACHMENT

SMCS-5050 **i05552519**

NOTE	PART NUMBER	QTY	PART NAME 1 2 3 4 5 6 (PRODUCT LEVEL)	SEE PAGE
Y	*389-3289*	1	CONTROL GP-PILOT OPERATED HYD	595
Y	*389-3292*	1	LINES GP-PILOT (GRADE CONTROL)	467
Y	*222-1159*	1	MOUNTING GP-VALVE (IMPLEMENT)	496

Y - SEPARATE ILLUSTRATION

<END>

389-3227 HYDRAULIC AR–GRADE CONTROL

S/N: EMM1-UP; JEN1-UP
WITH REAR HYDRAULICS
FOR USE WITH 389-6127–PAGE: 155
AN ATTACHMENT

SMCS-5050 **i05552511**

NOTE	PART NUMBER	QTY	PART NAME 1 2 3 4 5 6 (PRODUCT LEVEL)	SEE PAGE
Y	*389-3290*	1	CONTROL GP-PILOT OPERATED HYD	596
Y	*389-3293*	1	LINES GP-PILOT (BULLDOZER)	470
Y	*389-3294*	1	LINES GP-RIPPER	479
Y	*389-3220*	1	MOUNTING GP-VALVE (IMPLEMENT)	497

Y - SEPARATE ILLUSTRATION

<END>

331-7775 LINES GP-LIFT CYLINDER

S/N: EMM1-UP; JEN1-UP

PART OF 389-3214 HYDRAULIC AR

SMCS-5057, 5102 **i05640387**

NOTE	REF NO	GRAPHIC REF	PART NUMBER	QTY	PART NAME 1 2 3 4 5 6 (PRODUCT LEVEL)	SEE PAGE
I	1	1	**195-5918**	2	HOSE AS	
	2	1	**226-7298**	1	TUBE AS	
	3	1	**372-6475**	1	TUBE AS	
M	4	1	**116-3715**	2	STUD-TAPERLOCK (M10X1.5X85-MM)	
	5	1	**1P-3704**	2	SEAL-RECTANGULAR	
	6	1	**4J-0520**	4	SEAL-O-RING	
	7	1	**7G-5984**	4	CLIP (TAB)	
	8	1	**7G-5985**	4	CLIP (SLOT)	
	9	1	**7G-5986**	4	GROMMET	
	10	1	**7X-7729**	10	WASHER (11X25X3-MM THK)	
	11	1	**8C-3206**	4	FLANGE-HALF	
	12	1	**8S-0023**	2	CLIP (SLOT)	
	13	1	**8S-0024**	2	CLIP (TAB)	
	14	1	**8T-4121**	16	WASHER-HARD (11X21X2.5-MM THK)	
M	15	1	**8T-4133**	8	NUT (M10X1.5-THD)	
M	16	1	**8T-4137**	2	BOLT (M10X1.5X20-MM)	
M	17	1	**8T-4185**	8	BOLT (M10X1.5X50-MM)	
M	18	1	**8T-4196**	8	BOLT (M10X1.5X35-MM)	

I - REFER TO HYDRAULIC INFORMATION SYSTEM
M - METRIC PART

331-7775 **LINES GP-LIFT CYLINDER (*contd.*)** **i05640387**

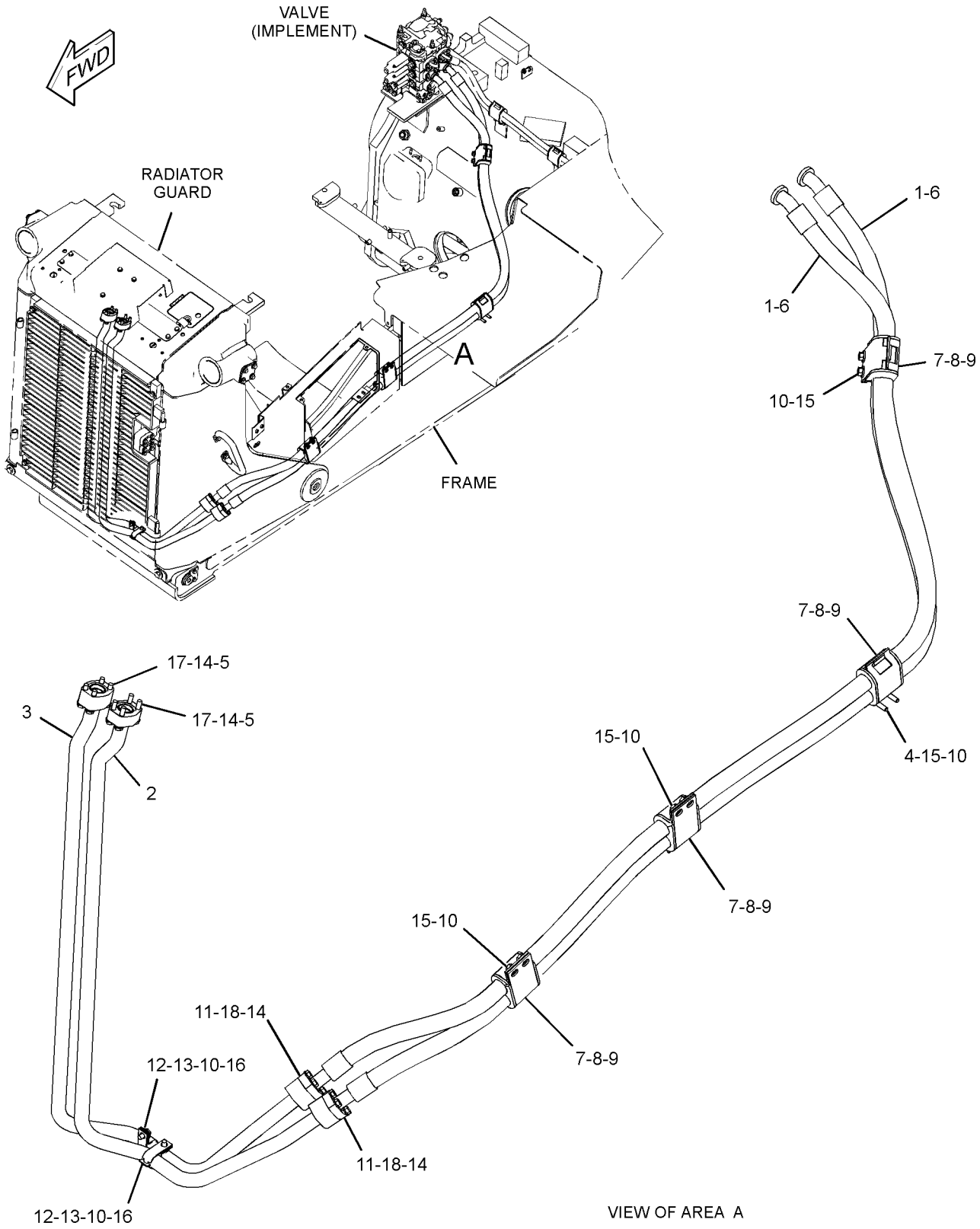

GRAPHIC #1 **<END>** g03312257

340-0117 LINES GP-PILOT–BULLDOZER

S/N: EMM1-UP; JEN1-UP
PART OF 389-3224 HYDRAULIC AR
AN ATTACHMENT

SMCS-5057 **i05552869**

NOTE	REF NO	GRAPHIC REF	PART NUMBER	QTY	PART NAME 1 2 3 4 5 6 (PRODUCT LEVEL)	SEE PAGE
	1	1	**5I-4376**	2	FITTING	
	2	1	**8Y-7452**	1	TEE-O-RING	
Y	3	1	*200-0750*	1	ACCUMULATOR GP-PILOT OIL (CHARGED)	441
	4	1	**226-3493**	1	TUBE AS	
I	5	1	**226-3496**	1	HOSE AS	
I	6	1	**226-3497**	2	HOSE AS	
I	7	1	**226-3498**	1	HOSE AS	
	8	1	**226-3503**	1	HOSE AS	
I	9	1	**226-3504**	1	HOSE AS	
	10	1	**226-3505**	1	HOSE AS	
Y	11	1	**226-4751**	1	MANIFOLD GP-CONTROL (IMPLEMENT PILOT PRESSURE)	491
	12	1	**320-5896**	1	HARNESS AS-WIRING (FENDER, RH)	
		1	**102-8801**	1	KIT-RECEPTACLE (12-PIN)	
					(INCLUDES RECEPTACLE AS & WEDGE)	
		1	**8T-8737**	7	PLUG-SEAL	
E		1	**114-8843**		SLEEVE-PLASTIC (40-CM)	
E		1	**125-7874**		TUBE-HEAT SHRINK (5.72-MM DIA) (5-CM)	
		1	**9X-3402**	6	SOCKET-CONNECTOR (16-GA TO 18-GA)	
					–OR–	
		1	**126-1768**	6	SOCKET-CONNECTOR (14-GA TO 16-GA)	
		1	**9X-3401**	5	PIN-CONNECTOR (16-GA TO 18-GA)	
					–OR–	
		1	**126-1767**	5	PIN-CONNECTOR (14-GA TO 16-GA)	
		1	**155-2270**	3	KIT-CONNECTING PLUG (2-PIN)	
					(EACH INCLUDES PLUG AS, WEDGE, & INTERFACE SEAL)	
I	13	1	**371-9242**	1	HOSE AS	
I	14	1	**371-9243**	1	HOSE AS	
I	15	1	**380-2466**	1	HOSE AS	
I	16	1	**425-3911**	1	HOSE AS	
	17	1	**126-0814**	1	FITTING AS (SWIVEL)	
		1	**6V-0852**	1	CAP-DUST	
	18	1	*148-8305*	1	ADAPTER AS	
		1	**5P-9617**	1	ADAPTER	
		1	**3J-1907**	1	SEAL-O-RING	
	19	1	*148-8316*	1	CONNECTOR AS	
		1	**6V-8647**	1	CONNECTOR	
		1	**3J-7354**	1	SEAL-O-RING	
		1	**4J-5477**	1	SEAL-O-RING	
	20	1	*148-8318*	3	CONNECTOR AS	
					(EACH INCLUDES)	
		1	**6V-8634**	1	CONNECTOR	
		1	**3K-0360**	1	SEAL-O-RING	
		1	**6V-8397**	1	SEAL-O-RING	
	21	1	*148-8325*	3	CONNECTOR AS	
					(EACH INCLUDES)	
		1	**6V-8641**	1	CONNECTOR	
		1	**3J-1907**	1	SEAL-O-RING	
		1	**4J-5477**	1	SEAL-O-RING	
	22	1	*148-8326*	2	CONNECTOR AS	
					(EACH INCLUDES)	
		1	**6V-9872**	1	CONNECTOR	
		1	**3J-7354**	1	SEAL-O-RING	
		1	**6V-8397**	1	SEAL-O-RING	
	23	1	*148-8336*	4	CONNECTOR AS	
					(EACH INCLUDES)	
		1	**6V-8636**	1	CONNECTOR	

340-0117 **LINES GP-PILOT (*contd.*)** **i05552869**

NOTE	REF NO	GRAPHIC REF	PART NUMBER	QTY	PART NAME 1 2 3 4 5 6 (PRODUCT LEVEL)	SEE PAGE
		1	**3J-1907**	1	SEAL-O-RING	
		1	**6V-8397**	1	SEAL-O-RING	
	24	1	*148-8351*	1	ELBOW AS	
		1	**6V-9849**	1	ELBOW	
		1	**4J-5477**	1	SEAL-O-RING	
	25	1	*148-8367*	2	ELBOW AS	
					(EACH INCLUDES)	
		1	**6V-9850**	1	ELBOW	
		1	**6V-8397**	1	SEAL-O-RING	
	26	1	*148-8368*	4	ELBOW AS	
					(EACH INCLUDES)	
		1	**6V-8627**	1	ELBOW	
		1	**3J-1907**	1	SEAL-O-RING	
		1	**4J-5477**	1	SEAL-O-RING	
	27	1	*148-8369*	1	ELBOW AS	
		1	**6V-8628**	1	ELBOW	
		1	**3J-7354**	1	SEAL-O-RING	
		1	**4J-5477**	1	SEAL-O-RING	
	28	1	*148-8371*	1	ELBOW AS	
		1	**8C-8988**	1	ELBOW	
		1	**6V-8397**	1	SEAL-O-RING	
	29	1	*148-8378*	2	ELBOW AS	
					(EACH INCLUDES)	
		1	**6V-8724**	1	ELBOW	
		1	**3J-1907**	1	SEAL-O-RING	
		1	**6V-8397**	1	SEAL-O-RING	
	30	1	*148-8434*	1	TEE AS	
		1	**6V-9843**	1	TEE	
		1	**6V-8397**	2	SEAL-O-RING	
	31	1	*148-8435*	1	TEE AS	
		1	**6V-8781**	1	TEE	
		1	**3J-1907**	1	SEAL-O-RING	
		1	**6V-8397**	2	SEAL-O-RING	
	32	1	*153-6246*	1	TEE AS	
		1	**7X-0820**	1	TEE	
		1	**6V-8397**	3	SEAL-O-RING	
	33	1	*164-5567*	2	COUPLER AS-QUICK DISCONNECT (MALE)	
					(EACH INCLUDES)	
		1	**6V-3965**	1	FITTING (QUICK DISCONNECT)	
		1	**214-7568**	1	SEAL-O-RING	
	34	1	*164-5590*	1	VALVE GP-FLUID SAMPLING (HYDRAULIC OIL)	
		1	**8C-3446**	1	VALVE-FLUID SAMPLING	
		1	**3J-7354**	1	SEAL-O-RING	
	35	1	**3D-2824**	1	SEAL-O-RING	
	36	1	**3J-1907**	1	SEAL-O-RING	
	37	1	**3J-7354**	1	SEAL-O-RING	
	38	1	**4J-0520**	1	SEAL-O-RING	
	39	1	**4J-0522**	1	SEAL-O-RING	
	40	1	**4J-5477**	1	SEAL-O-RING	
	41	1	**5P-1075**	1	WASHER-HARD (10.2X22.5X3-MM THK)	
	42	1	**6V-0852**	2	CAP-DUST	
	43	1	**6V-8076**	1	ELBOW	
	44	1	**6V-9168**	1	NUT (11/16-16-THD)	
	45	1	**6V-9829**	2	CAP AS	
M	46	1	**7X-2535**	2	BOLT (M6X1X60-MM)	
	47	1	**8C-3451**	1	CAP-DUST	
	48	1	**8T-1887**	1	CLIP (SLOT)	
	49	1	**8T-1888**	1	CLIP (TAB)	
M	50	1	**8T-4136**	1	BOLT (M10X1.5X25-MM)	
	51	1	**9X-8256**	2	WASHER (6.6X12X2-MM THK)	
	52	1	**9X-8257**	2	WASHER (17.5X30X3.5-MM THK)	

340-0117 **LINES GP-PILOT (*contd.*)** **i05552869**

NOTE	REF NO	GRAPHIC REF	PART NUMBER	QTY	PART NAME 1 2 3 4 5 6 (PRODUCT LEVEL)	SEE PAGE

E - ORDER BY THE CENTIMETER
I - REFER TO HYDRAULIC INFORMATION SYSTEM
M - METRIC PART
Y - SEPARATE ILLUSTRATION

340-0117 **LINES GP-PILOT (*contd.*)** **i05552869**

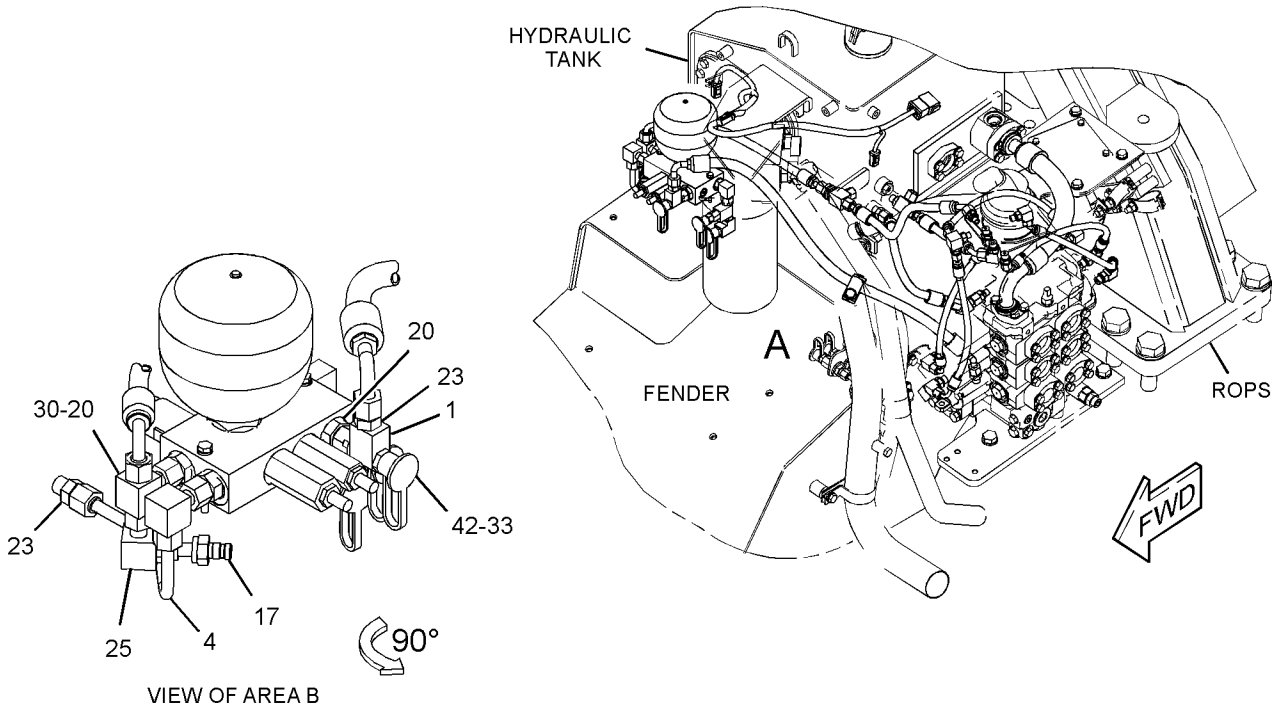

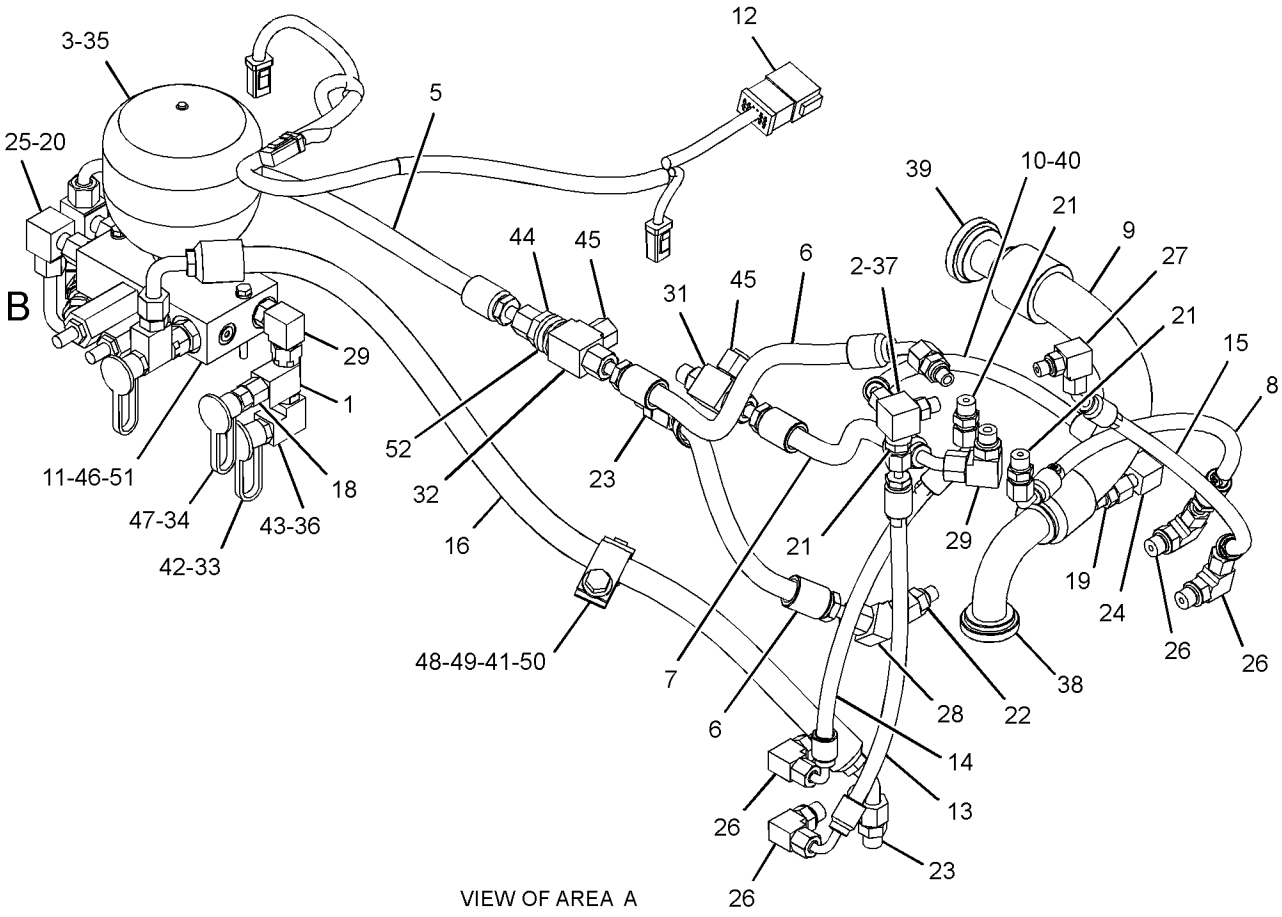

GRAPHIC #1 **<END>** g03537661

389-3291 LINES GP-PILOT–IMPLEMENT

S/N: EMM1-UP; JEN1-UP
PART OF 389-3225 HYDRAULIC AR
AN ATTACHMENT

SMCS-5057 **i05682413**

NOTE	REF NO	GRAPHIC REF	PART NUMBER	QTY	PART NAME 1 2 3 4 5 6 (PRODUCT LEVEL)	SEE PAGE
	1	1	**5I-4376**	2	FITTING	
	2	1	**6V-0852**	2	CAP-DUST	
	3	1	**8C-3451**	1	CAP-DUST	
	4	1	**8Y-7452**	1	TEE-O-RING	
	5	1	**126-0814**	1	FITTING AS (SWIVEL)	
		1	**6V-0852**	1	CAP-DUST	
Y	6	1	*200-0750*	1	ACCUMULATOR GP-PILOT OIL (CHARGED)	441
	7	1	**226-3493**	1	TUBE AS	
I	8	1	**226-3496**	1	HOSE AS	
I	9	1	**226-3497**	2	HOSE AS	
I	10	1	**226-3498**	1	HOSE AS	
	11	1	**226-3503**	1	HOSE AS	
I	12	1	**226-3506**	1	HOSE AS	
I	13	1	**226-3507**	1	HOSE AS	
I	14	1	**226-3508**	1	HOSE AS	
I	15	1	**226-3509**	1	HOSE AS	
I	16	1	**226-3510**	1	HOSE AS	
I	17	1	**226-3511**	1	HOSE AS	
I	18	1	**226-3512**	1	HOSE AS	
Y	19	1	**226-4751**	1	MANIFOLD GP-CONTROL (IMPLEMENT PILOT PRESSURE)	491
	20	1	**320-5896**	1	HARNESS AS-WIRING (FENDER, RH)	
		1	**102-8801**	1	KIT-RECEPTACLE (12-PIN)	
					(INCLUDES RECEPTACLE AS & WEDGE)	
		1	**8T-8737**	7	PLUG-SEAL	
E		1	**114-8843**		SLEEVE-PLASTIC (40-CM)	
E		1	**125-7874**		TUBE-HEAT SHRINK (5.72-MM DIA) (5-CM)	
		1	**9X-3402**	6	SOCKET-CONNECTOR (16-GA TO 18-GA)	
					–OR–	
		1	**126-1768**	6	SOCKET-CONNECTOR (14-GA TO 16-GA)	
		1	**9X-3401**	5	PIN-CONNECTOR (16-GA TO 18-GA)	
					–OR–	
		1	**126-1767**	5	PIN-CONNECTOR (14-GA TO 16-GA)	
		1	**155-2270**	3	KIT-CONNECTING PLUG (2-PIN)	
					(EACH INCLUDES PLUG AS, WEDGE & INTERFACE SEAL)	
I	21	1	**371-9242**	1	HOSE AS	
I	22	1	**371-9243**	1	HOSE AS	
I	23	1	**380-2466**	1	HOSE AS	
	24	1	*148-8305*	1	ADAPTER AS	
		1	**3J-1907**	1	SEAL-O-RING	
		1	**5P-9617**	1	ADAPTER	
	25	1	*148-8316*	1	CONNECTOR AS	
		1	**3J-7354**	1	SEAL-O-RING	
		1	**4J-5477**	1	SEAL-O-RING	
		1	**6V-8647**	1	CONNECTOR	
	26	1	*148-8318*	3	CONNECTOR AS	
					(EACH INCLUDES)	
		1	**3K-0360**	1	SEAL-O-RING	
		1	**6V-8397**	1	SEAL-O-RING	
		1	**6V-8634**	1	CONNECTOR	
	27	1	*148-8325*	4	CONNECTOR AS	
					(EACH INCLUDES)	
		1	**3J-1907**	1	SEAL-O-RING	
		1	**4J-5477**	1	SEAL-O-RING	
		1	**6V-8641**	1	CONNECTOR	
	28	1	*148-8326*	3	CONNECTOR AS	
					(EACH INCLUDES)	

389-3291 **LINES GP-PILOT (*contd.*)** **i05682413**

NOTE	REF NO	GRAPHIC REF	PART NUMBER	QTY	PART NAME 1 2 3 4 5 6 (PRODUCT LEVEL)	SEE PAGE
		1	**3J-7354**	1	SEAL-O-RING	
		1	**6V-8397**	1	SEAL-O-RING	
		1	**6V-9872**	1	CONNECTOR	
	29	1	*148-8336*	3	CONNECTOR AS	
					(EACH INCLUDES)	
		1	**3J-1907**	1	SEAL-O-RING	
		1	**6V-8397**	1	SEAL-O-RING	
		1	**6V-8636**	1	CONNECTOR	
	30	1	*148-8351*	1	ELBOW AS	
		1	**4J-5477**	1	SEAL-O-RING	
		1	**6V-9849**	1	ELBOW	
	31	1	*148-8367*	2	ELBOW AS	
					(EACH INCLUDES)	
		1	**6V-8397**	1	SEAL-O-RING	
		1	**6V-9850**	1	ELBOW	
	32	1	*148-8368*	6	ELBOW AS	
					(EACH INCLUDES)	
		1	**3J-1907**	1	SEAL-O-RING	
		1	**4J-5477**	1	SEAL-O-RING	
		1	**6V-8627**	1	ELBOW	
	33	1	*148-8369*	2	ELBOW AS	
					(EACH INCLUDES)	
		1	**3J-7354**	1	SEAL-O-RING	
		1	**4J-5477**	1	SEAL-O-RING	
		1	**6V-8628**	1	ELBOW	
	34	1	*148-8371*	1	ELBOW AS	
		1	**6V-8397**	1	SEAL-O-RING	
		1	**8C-8988**	1	ELBOW	
	35	1	*148-8378*	4	ELBOW AS	
					(EACH INCLUDES)	
		1	**3J-1907**	1	SEAL-O-RING	
		1	**6V-8397**	1	SEAL-O-RING	
		1	**6V-8724**	1	ELBOW	
	36	1	*148-8434*	1	TEE AS	
		1	**6V-8397**	2	SEAL-O-RING	
		1	**6V-9843**	1	TEE	
	37	1	*148-8435*	1	TEE AS	
		1	**3J-1907**	1	SEAL-O-RING	
		1	**6V-8397**	2	SEAL-O-RING	
		1	**6V-8781**	1	TEE	
	38	1	*153-6246*	1	TEE AS	
		1	**6V-8397**	3	SEAL-O-RING	
		1	**7X-0820**	1	TEE	
	39	1	*164-5567*	2	COUPLER AS-QUICK DISCONNECT (MALE)	
					(EACH INCLUDES)	
		1	**6V-3965**	1	FITTING (QUICK DISCONNECT)	
		1	**214-7568**	1	SEAL-O-RING	
	40	1	*164-5590*	1	VALVE GP-FLUID SAMPLING (POWER TRAIN OIL)	
		1	**3J-7354**	1	SEAL-O-RING	
		1	**8C-3446**	1	VALVE-FLUID SAMPLING	
	41	1	**3D-2824**	1	SEAL-O-RING	
	42	1	**3J-1907**	1	SEAL-O-RING	
	43	1	**3J-7354**	1	SEAL-O-RING	
	44	1	**4J-0520**	1	SEAL-O-RING	
	45	1	**4J-0522**	1	SEAL-O-RING	
	46	1	**4J-5477**	1	SEAL-O-RING	
	47	1	**5P-1075**	2	WASHER-HARD (10.2X22.5X3-MM THK)	
	48	1	**6V-8076**	1	ELBOW	
	49	1	**6V-9168**	1	NUT (11/16-16-THD)	
M	50	1	**7X-2535**	2	BOLT (M6X1X60-MM)	
	51	1	**8T-1887**	3	CLIP (SLOT)	
	52	1	**8T-1888**	3	CLIP (TAB)	
M	53	1	**8T-4136**	2	BOLT (M10X1.5X25-MM)	

389-3291 **LINES GP-PILOT (*contd.*)** **i05682413**

NOTE	REF NO	GRAPHIC REF	PART NUMBER	QTY	PART NAME 1 2 3 4 5 6 (PRODUCT LEVEL)	SEE PAGE
	54	1	**9X-8256**	2	WASHER (6.6X12X2-MM THK)	
	55	1	**9X-8257**	2	WASHER (17.5X30X3.5-MM THK)	

E - ORDER BY THE CENTIMETER
I - REFER TO HYDRAULIC INFORMATION SYSTEM
M - METRIC PART
Y - SEPARATE ILLUSTRATION

NO GRAPHIC AVAILABLE AT TIME OF PUBLICATION

GRAPHIC #1 **<END>** g01269539

389-3292 LINES GP-PILOT–GRADE CONTROL

S/N: EMM1-UP; JEN1-UP
PART OF 389-3226 HYDRAULIC AR
AN ATTACHMENT

SMCS-5057 **i05558852**

NOTE	REF NO	GRAPHIC REF	PART NUMBER	QTY	PART NAME 1 2 3 4 5 6 (PRODUCT LEVEL)	SEE PAGE
	1	1	**5I-4376**	2	FITTING	
	2	1	**6V-0852**	2	CAP-DUST	
	3	1	**8C-3451**	1	CAP-DUST	
	4	1	**8Y-7452**	1	TEE-O-RING	
	5	1	**126-0814**	1	FITTING AS (SWIVEL)	
		1	**6V-0852**	1	CAP-DUST	
Y	6	1	*200-0750*	1	ACCUMULATOR GP-PILOT OIL (CHARGED)	441
	7	1	**226-3493**	1	TUBE AS	
I	8	1	**226-3496**	1	HOSE AS	
I	9	1	**226-3497**	1	HOSE AS	
	10	1	**226-3503**	1	HOSE AS	
I	11	1	**226-3504**	1	HOSE AS	
I	12	1	**226-3512**	1	HOSE AS	
Y	13	1	**226-4751**	1	MANIFOLD GP-CONTROL (IMPLEMENT PILOT PRESSURE)	491
Y	14	1	**234-5126**	1	VALVE & MTG GP-BULLDOZER	510
	15	1	**235-2340**	1	BRACKET	
	16	1	**238-4986**	4	VALVE GP-SHUTTLE	
	17	1	**238-4993**	1	HOSE AS	
	18	1	**263-3912**	1	VALVE	
	19	1	**320-5896**	1	HARNESS AS-WIRING (FENDER, RH)	
		1	**102-8801**	1	KIT-RECEPTACLE (12-PIN)	
					(INCLUDES RECEPTACLE AS & WEDGE)	
		1	**8T-8737**	7	PLUG-SEAL	
E		1	**114-8843**		SLEEVE-PLASTIC (40-CM)	
E		1	**125-7874**		TUBE-HEAT SHRINK (5.72-MM DIA) (5-CM)	
		1	**9X-3402**	6	SOCKET-CONNECTOR (16-GA TO 18-GA)	
					–OR–	
		1	**126-1768**	6	SOCKET-CONNECTOR (14-GA TO 16-GA)	
		1	**9X-3401**	5	PIN-CONNECTOR (16-GA TO 18-GA)	
					–OR–	
		1	**126-1767**	5	PIN-CONNECTOR (14-GA TO 16-GA)	
		1	**155-2270**	3	KIT-CONNECTING PLUG (2-PIN)	
					(EACH INCLUDES PLUG AS, WEDGE & INTERFACE SEAL)	
	20	1	**322-3702**	1	TUBE AS	
	21	1	**322-3703**	1	TUBE AS	
	22	1	**322-3704**	1	TUBE AS	
	23	1	**322-3705**	1	TUBE AS	
	24	1	**322-3706**	1	HOSE AS	
I	25	1	**322-3707**	1	HOSE AS	
I	26	1	**322-3708**	1	HOSE AS	
	27	1	**322-3709**	1	HOSE AS	
	28	1	**322-4852**	1	HOSE AS	
I	29	1	**371-9242**	1	HOSE AS	
I	30	1	**371-9243**	1	HOSE AS	
I	31	1	**380-2466**	1	HOSE AS	
	32	1	*148-8305*	1	ADAPTER AS	
		1	**3J-1907**	1	SEAL-O-RING	
		1	**5P-9617**	1	ADAPTER	
	33	1	*148-8316*	1	CONNECTOR AS	
		1	**3J-7354**	1	SEAL-O-RING	
		1	**4J-5477**	1	SEAL-O-RING	
		1	**6V-8647**	1	CONNECTOR	
	34	1	*148-8318*	3	CONNECTOR AS	
					(EACH INCLUDES)	
		1	**3K-0360**	1	SEAL-O-RING	
		1	**6V-8397**	1	SEAL-O-RING	
		1	**6V-8634**	1	CONNECTOR	

389-3292 **LINES GP-PILOT (*contd.*)** **i05558852**

NOTE	REF NO	GRAPHIC REF	PART NUMBER	QTY	PART NAME 1 2 3 4 5 6 (PRODUCT LEVEL)	SEE PAGE
	35	1	*148-8325*	3	CONNECTOR AS	
					(EACH INCLUDES)	
		1	**3J-1907**	1	SEAL-O-RING	
		1	**4J-5477**	1	SEAL-O-RING	
		1	**6V-8641**	1	CONNECTOR	
	36	1	*148-8326*	2	CONNECTOR AS	
					(EACH INCLUDES)	
		1	**3J-7354**	1	SEAL-O-RING	
		1	**6V-8397**	1	SEAL-O-RING	
		1	**6V-9872**	1	CONNECTOR	
	37	1	*148-8336*	3	CONNECTOR AS	
					(EACH INCLUDES)	
		1	**3J-1907**	1	SEAL-O-RING	
		1	**6V-8397**	1	SEAL-O-RING	
		1	**6V-8636**	1	CONNECTOR	
	38	1	*148-8351*	1	ELBOW AS	
		1	**4J-5477**	1	SEAL-O-RING	
		1	**6V-9849**	1	ELBOW	
	39	1	*148-8361*	4	ELBOW AS	
					(EACH INCLUDES)	
		1	**3J-7354**	1	SEAL-O-RING	
		1	**6V-8397**	1	SEAL-O-RING	
		1	**6V-9200**	1	ELBOW	
	40	1	*148-8367*	3	ELBOW AS	
					(EACH INCLUDES)	
		1	**6V-8397**	1	SEAL-O-RING	
		1	**6V-9850**	1	ELBOW	
	41	1	*148-8369*	1	ELBOW AS	
		1	**3J-7354**	1	SEAL-O-RING	
		1	**4J-5477**	1	SEAL-O-RING	
		1	**6V-8628**	1	ELBOW	
	42	1	*148-8371*	1	ELBOW AS	
		1	**6V-8397**	1	SEAL-O-RING	
		1	**8C-8988**	1	ELBOW	
	43	1	*148-8378*	3	ELBOW AS	
					(EACH INCLUDES)	
		1	**3J-1907**	1	SEAL-O-RING	
		1	**6V-8397**	1	SEAL-O-RING	
		1	**6V-8724**	1	ELBOW	
	44	1	*148-8434*	1	TEE AS	
		1	**6V-8397**	2	SEAL-O-RING	
		1	**6V-9843**	1	TEE	
	45	1	*148-8435*	2	TEE AS	
					(EACH INCLUDES)	
		1	**3J-1907**	1	SEAL-O-RING	
		1	**6V-8397**	2	SEAL-O-RING	
		1	**6V-8781**	1	TEE	
	46	1	*148-8439*	1	TEE AS	
		1	**3J-1907**	1	SEAL-O-RING	
		1	**6V-8397**	2	SEAL-O-RING	
		1	**6V-8774**	1	TEE	
	47	1	*150-4047*	1	ADAPTER AS	
		1	**3J-7354**	1	SEAL-O-RING	
		1	**8T-2353**	1	ADAPTER	
	48	1	*153-6246*	1	TEE AS	
		1	**6V-8397**	3	SEAL-O-RING	
		1	**7X-0820**	1	TEE	
	49	1	*164-5567*	2	COUPLER AS-QUICK DISCONNECT (MALE)	
					(EACH INCLUDES)	
		1	**6V-3965**	1	FITTING (QUICK DISCONNECT)	
		1	**214-7568**	1	SEAL-O-RING	
	50	1	*164-5590*	1	VALVE GP-FLUID SAMPLING (PILOT OIL)	
		1	**3J-7354**	1	SEAL-O-RING	

389-3292 **LINES GP-PILOT (*contd.*)** **i05558852**

NOTE	REF NO	GRAPHIC REF	PART NUMBER	QTY	PART NAME 1 2 3 4 5 6 (PRODUCT LEVEL)	SEE PAGE
		1	**8C-3446**	1	VALVE-FLUID SAMPLING	
	51	1	**3D-2824**	1	SEAL-O-RING	
	52	1	**3J-1907**	6	SEAL-O-RING	
	53	1	**3J-7354**	1	SEAL-O-RING	
	54	1	**4J-0520**	1	SEAL-O-RING	
	55	1	**4J-0522**	1	SEAL-O-RING	
	56	1	**4J-5477**	5	SEAL-O-RING	
	57	1	**5P-1075**	2	WASHER-HARD (10.2X22.5X3-MM THK)	
	58	1	**6V-8076**	1	ELBOW	
	59	1	**6V-8397**	10	SEAL-O-RING	
	60	1	**6V-8934**	4	CONNECTOR	
	61	1	**6V-9168**	1	NUT (11/16-16-THD)	
	62	1	**6V-9829**	2	CAP AS	
M	63	1	**7X-2535**	2	BOLT (M6X1X60-MM)	
	64	1	**8T-1887**	3	CLIP (SLOT)	
	65	1	**8T-1888**	3	CLIP (TAB)	
	66	1	**8T-4121**	2	WASHER-HARD (11X21X2.5-MM THK)	
M	67	1	**8T-4136**	4	BOLT (M10X1.5X25-MM)	
M	68	1	**8T-4192**	2	BOLT (M12X1.75X25-MM)	
	69	1	**8T-4223**	2	WASHER-HARD (13.5X25.5X3-MM THK)	
	70	1	**9X-8256**	2	WASHER (6.6X12X2-MM THK)	
	71	1	**9X-8257**	2	WASHER (17.5X30X3.5-MM THK)	

E - ORDER BY THE CENTIMETER
I - REFER TO HYDRAULIC INFORMATION SYSTEM
M - METRIC PART
Y - SEPARATE ILLUSTRATION

NO GRAPHIC AVAILABLE AT TIME OF PUBLICATION

GRAPHIC #1 **<END>** g01269539

389-3293 LINES GP-PILOT—BULLDOZER

S/N: EMM1-UP; JEN1-UP
PART OF 389-3227 HYDRAULIC AR
AN ATTACHMENT

SMCS-5057 **i05562769**

NOTE	REF NO	GRAPHIC REF	PART NUMBER	QTY	PART NAME 1 2 3 4 5 6 (PRODUCT LEVEL)	SEE PAGE
	1	1	**5I-4376**	2	FITTING	
	2	1	**6V-0852**	2	CAP-DUST	
	3	1	**8C-3451**	1	CAP-DUST	
	4	1	**8Y-7452**	1	TEE-O-RING	
	5	1	**126-0814**	1	FITTING AS (SWIVEL)	
		1	**6V-0852**	1	CAP-DUST	
Y	6	1	*200-0750*	1	ACCUMULATOR GP-PILOT OIL (CHARGED)	441
	7	1	**226-3493**	1	TUBE AS	
I	8	1	**226-3496**	1	HOSE AS	
I	9	1	**226-3497**	1	HOSE AS	
	10	1	**226-3503**	1	HOSE AS	
I	11	1	**226-3506**	1	HOSE AS	
I	12	1	**226-3507**	1	HOSE AS	
I	13	1	**226-3508**	1	HOSE AS	
I	14	1	**226-3510**	1	HOSE AS	
I	15	1	**226-3511**	1	HOSE AS	
I	16	1	**226-3512**	1	HOSE AS	
Y	17	1	**226-4751**	1	MANIFOLD GP-CONTROL (IMPLEMENT PILOT PRESSURE)	491
Y	18	1	**234-5126**	1	VALVE & MTG GP-BULLDOZER	510
	19	1	**235-0523**	1	BRACKET	
	20	1	**238-4986**	4	VALVE GP-SHUTTLE	
	21	1	**238-4993**	1	HOSE AS	
	22	1	**263-3912**	1	VALVE	
	23	1	**320-5896**	1	HARNESS AS-WIRING (FENDER, RH)	
		1	**102-8801**	1	KIT-RECEPTACLE (12-PIN)	
					(INCLUDES RECEPTACLE AS & WEDGE)	
		1	**8T-8737**	7	PLUG-SEAL	
E		1	**114-8843**		SLEEVE-PLASTIC (40-CM)	
E		1	**125-7874**		TUBE-HEAT SHRINK (5.72-MM DIA) (5-CM)	
		1	**9X-3402**	6	SOCKET-CONNECTOR (16-GA TO 18-GA)	
					—OR—	
		1	**126-1768**	6	SOCKET-CONNECTOR (14-GA TO 16-GA)	
		1	**9X-3401**	5	PIN-CONNECTOR (16-GA TO 18-GA)	
					—OR—	
		1	**126-1767**	5	PIN-CONNECTOR (14-GA TO 16-GA)	
		1	**155-2270**	3	KIT-CONNECTING PLUG (2-PIN)	
					(EACH INCLUDES PLUG AS, WEDGE & INTERFACE SEAL)	
	24	1	**322-3702**	1	TUBE AS	
	25	1	**322-3703**	1	TUBE AS	
	26	1	**322-3704**	1	TUBE AS	
	27	1	**322-3705**	1	TUBE AS	
	28	1	**322-3706**	1	HOSE AS	
I	29	1	**322-3707**	1	HOSE AS	
I	30	1	**322-3708**	1	HOSE AS	
	31	1	**322-3709**	1	HOSE AS	
	32	1	**322-4852**	1	HOSE AS	
I	33	1	**371-9242**	1	HOSE AS	
I	34	1	**371-9243**	1	HOSE AS	
I	35	1	**380-2466**	1	HOSE AS	
	36	1	*148-8305*	1	ADAPTER AS	
		1	**3J-1907**	1	SEAL-O-RING	
		1	**5P-9617**	1	ADAPTER	
	37	1	*148-8316*	1	CONNECTOR AS	
		1	**3J-7354**	1	SEAL-O-RING	
		1	**4J-5477**	1	SEAL-O-RING	
		1	**6V-8647**	1	CONNECTOR	
	38	1	*148-8318*	3	CONNECTOR AS	

389-3293 **LINES GP-PILOT (*contd.*)** **i05562769**

NOTE	REF NO	GRAPHIC REF	PART NUMBER	QTY	PART NAME 1 2 3 4 5 6 (PRODUCT LEVEL)	SEE PAGE
					(EACH INCLUDES)	
		1	**3K-0360**	1	SEAL-O-RING	
		1	**6V-8397**	1	SEAL-O-RING	
		1	**6V-8634**	1	CONNECTOR	
	39	1	*148-8325*	4	CONNECTOR AS	
					(EACH INCLUDES)	
		1	**3J-1907**	1	SEAL-O-RING	
		1	**4J-5477**	1	SEAL-O-RING	
		1	**6V-8641**	1	CONNECTOR	
	40	1	*148-8326*	3	CONNECTOR AS	
					(EACH INCLUDES)	
		1	**3J-7354**	1	SEAL-O-RING	
		1	**6V-8397**	1	SEAL-O-RING	
		1	**6V-9872**	1	CONNECTOR	
	41	1	*148-8336*	3	CONNECTOR AS	
					(EACH INCLUDES)	
		1	**3J-1907**	1	SEAL-O-RING	
		1	**6V-8397**	1	SEAL-O-RING	
		1	**6V-8636**	1	CONNECTOR	
	42	1	*148-8351*	1	ELBOW AS	
		1	**4J-5477**	1	SEAL-O-RING	
		1	**6V-9849**	1	ELBOW	
	43	1	*148-8361*	4	ELBOW AS	
					(EACH INCLUDES)	
		1	**3J-7354**	1	SEAL-O-RING	
		1	**6V-8397**	1	SEAL-O-RING	
		1	**6V-9200**	1	ELBOW	
	44	1	*148-8367*	3	ELBOW AS	
					(EACH INCLUDES)	
		1	**6V-8397**	1	SEAL-O-RING	
		1	**6V-9850**	1	ELBOW	
	45	1	*148-8368*	2	ELBOW AS	
					(EACH INCLUDES)	
		1	**3J-1907**	1	SEAL-O-RING	
		1	**4J-5477**	1	SEAL-O-RING	
		1	**6V-8627**	1	ELBOW	
	46	1	*148-8369*	2	ELBOW AS	
					(EACH INCLUDES)	
		1	**3J-7354**	1	SEAL-O-RING	
		1	**4J-5477**	1	SEAL-O-RING	
		1	**6V-8628**	1	ELBOW	
	47	1	*148-8371*	1	ELBOW AS	
		1	**6V-8397**	1	SEAL-O-RING	
		1	**8C-8988**	1	ELBOW	
	48	1	*148-8378*	4	ELBOW AS	
					(EACH INCLUDES)	
		1	**3J-1907**	1	SEAL-O-RING	
		1	**6V-8397**	1	SEAL-O-RING	
		1	**6V-8724**	1	ELBOW	
	49	1	*148-8434*	1	TEE AS	
		1	**6V-8397**	2	SEAL-O-RING	
		1	**6V-9843**	1	TEE	
	50	1	*148-8435*	2	TEE AS	
					(EACH INCLUDES)	
		1	**3J-1907**	1	SEAL-O-RING	
		1	**6V-8397**	2	SEAL-O-RING	
		1	**6V-8781**	1	TEE	
	51	1	*148-8439*	1	TEE AS	
		1	**3J-1907**	1	SEAL-O-RING	
		1	**6V-8397**	2	SEAL-O-RING	
		1	**6V-8774**	1	TEE	
	52	1	*150-4047*	1	ADAPTER AS	
		1	**3J-7354**	1	SEAL-O-RING	

389-3293 **LINES GP-PILOT (*contd.*)** **i05562769**

NOTE	REF NO	GRAPHIC REF	PART NUMBER	QTY	PART NAME 1 2 3 4 5 6 (PRODUCT LEVEL)	SEE PAGE
		1	**8T-2353**	1	ADAPTER	
	53	1	*153-6246*	1	TEE AS	
		1	**6V-8397**	3	SEAL-O-RING	
		1	**7X-0820**	1	TEE	
	54	1	*164-5567*	2	COUPLER AS-QUICK DISCONNECT (MALE)	
					(EACH INCLUDES)	
		1	**6V-3965**	1	FITTING (QUICK DISCONNECT)	
		1	**214-7568**	1	SEAL-O-RING	
	55	1	*164-5590*	1	VALVE GP-FLUID SAMPLING (PILOT OIL)	
		1	**3J-7354**	1	SEAL-O-RING	
		1	**8C-3446**	1	VALVE-FLUID SAMPLING	
	56	1	**3D-2824**	1	SEAL-O-RING	
	57	1	**3J-1907**	6	SEAL-O-RING	
	58	1	**3J-7354**	1	SEAL-O-RING	
	59	1	**4J-0520**	1	SEAL-O-RING	
	60	1	**4J-0522**	1	SEAL-O-RING	
	61	1	**4J-5477**	5	SEAL-O-RING	
	62	1	**5P-1075**	2	WASHER-HARD (10.2X22.5X3-MM THK)	
	63	1	**6V-8076**	1	ELBOW	
	64	1	**6V-8397**	10	SEAL-O-RING	
	65	1	**6V-8934**	4	CONNECTOR	
	66	1	**6V-9168**	1	NUT (11/16-16-THD)	
M	67	1	**7X-2535**	2	BOLT (M6X1X60-MM)	
	68	1	**8T-1887**	3	CLIP (SLOT)	
	69	1	**8T-1888**	3	CLIP (TAB)	
	70	1	**8T-4121**	2	WASHER-HARD (11X21X2.5-MM THK)	
M	71	1	**8T-4136**	4	BOLT (M10X1.5X25-MM)	
M	72	1	**8T-4192**	2	BOLT (M12X1.75X25-MM)	
	73	1	**8T-4223**	2	WASHER-HARD (13.5X25.5X3-MM THK)	
	74	1	**9X-8256**	2	WASHER (6.6X12X2-MM THK)	
	75	1	**9X-8257**	2	WASHER (17.5X30X3.5-MM THK)	

E - ORDER BY THE CENTIMETER
I - REFER TO HYDRAULIC INFORMATION SYSTEM
M - METRIC PART
Y - SEPARATE ILLUSTRATION

389-3293 **LINES GP-PILOT (*contd.*)** **i05562769**

NO GRAPHIC AVAILABLE AT TIME OF PUBLICATION

GRAPHIC #1 **<END>** g01269539

317-3942 LINES GP-PUMP

S/N: EMM1-UP; JEN1-UP

PART OF 389-3214 HYDRAULIC AR

SMCS-5057 **i05640373**

NOTE	REF NO	GRAPHIC REF	PART NUMBER	QTY	PART NAME 1 2 3 4 5 6 (PRODUCT LEVEL)	SEE PAGE
	1	1	**5G-7191**	1	SPRING	
	3	1	**7C-8246**	1	SPACER (10.5X20X24-MM THK)	
	5	1	**5P-1294**		HOSE (69-CM)	
M	6	1	**8T-4186**	1	BOLT (M10X1.5X40-MM)	
	7	1	**8T-4984**	4	CLAMP-HOSE	
	8	2	**8X-1144**	1	CLAMP	
	9	1	**126-0814**	1	FITTING AS (SWIVEL)	
		1	**6V-0852**	1	CAP-DUST	
	10	2	**146-5923**	2	STUD	
I	11	1	**173-4611**	1	HOSE AS	
	13	1,2	**226-6583**	2	BRACKET AS	
	14	1	**226-6584**	1	PLATE AS	
	15	1	**440-1138**	1	TUBE AS	
	16	1	**226-6586**	1	TUBE AS	
I	17	1	**366-5549**	1	HOSE AS	
I	18	1	**366-5550**	1	HOSE AS	
I	19	1	**226-6590**	1	HOSE AS	
I	20	1	**258-0763**	1	HOSE AS	
	21	1	**440-2762**	1	HOSE AS	
I	22	1	**317-3943**	1	HOSE AS	
I	23	1	**317-3945**	1	HOSE AS	
I	24	1	**317-3948**	1	HOSE AS	
I	25	1	**317-3949**	1	HOSE AS	
	26	1	**345-9934**	1	CLIP (TAB)	
	27	1	**345-9935**	1	CLIP (SLOT)	
	28	1	**345-9936**	1	PLATE AS	
	29	2	**134-7317**	1	PLATE	
	30	2	*148-8372*	2	ELBOW AS	
					(EACH INCLUDES)	
		2	**6V-8721**	1	ELBOW	
		2	**2M-9780**	1	SEAL-O-RING	
		2	**6V-8398**	1	SEAL-O-RING	
	31	2	*148-8378*	1	ELBOW AS	
		2	**6V-8724**	1	ELBOW	
		2	**3J-1907**	1	SEAL-O-RING	
		2	**6V-8397**	1	SEAL-O-RING	
C	32	2	*148-8388*	2	ELBOW AS	
					(EACH INCLUDES)	
		2	**6V-8629**	1	ELBOW	
		2	**2M-9780**	1	SEAL-O-RING	
		2	**6V-9746**	1	SEAL-O-RING	
	33	2	*148-8418*	1	REDUCER AS	
		2	**6V-8942**	1	REDUCER-O-RING	
		2	**6V-8398**	1	SEAL-O-RING	
	34	2	*148-8449*	2	TEE AS-SWIVEL	
					(EACH INCLUDES)	
		2	**6V-9839**	1	TEE-SWIVEL	
		2	**6V-9746**	2	SEAL-O-RING	
	35	2	*150-4050*	1	ELBOW AS	
		2	**8T-0788**	1	ELBOW	
		2	**3J-1907**	1	SEAL-O-RING	
	36	1	*153-6244*	1	ELBOW AS	
		1	**8T-5389**	1	ELBOW	
		1	**2M-9780**	1	SEAL-O-RING	
		1	**6V-9746**	1	SEAL-O-RING	
	37	1	*153-6246*	1	TEE AS	
		1	**7X-0820**	1	TEE	
		1	**6V-8397**	3	SEAL-O-RING	
	38	2	*164-5570*	1	UNION AS	

317-3942 **LINES GP-PUMP (*contd.*)** **i05640373**

NOTE	REF NO	GRAPHIC REF	PART NUMBER	QTY	PART NAME 1 2 3 4 5 6 (PRODUCT LEVEL)	SEE PAGE
		2	**6V-8730**	1	UNION (FACE SEAL)	
		2	**6V-8397**	2	SEAL-O-RING	
	40	1	**1P-3702**	2	SEAL-RECTANGULAR	
	41	1	**1P-3703**	4	SEAL-RECTANGULAR	
	44	1	**3P-2404**	1	CLIP	
	45	1	**4J-0520**	1	SEAL-O-RING	
	46	1	**4J-0527**	2	SEAL-O-RING	
	47	1,2	**5P-1075**	14	WASHER-HARD (10.2X22.5X3-MM THK)	
	48	2	**6V-0400**	2	FLANGE-HALF	
	49	1	**6V-1574**	1	GROMMET	
	50	1	**6V-1889**	2	CLIP	
	52	2	**6V-8556**	1	NUT (1-3/16-12-THD)	
	53	1	**6V-9168**	1	NUT (11/16-16-THD)	
	54	2	**6W-6220**	2	SPACER (0.493X0.675X2.55-IN THK)	
M	55	1	**7X-2543**	2	BOLT (M10X1.5X120-MM)	
	56	1	**7X-7729**	8	WASHER (11X25X3-MM THK)	
	57	1,2	**8T-1885**	3	CLIP (SLOT)	
	58	1,2	**8T-1886**	3	CLIP (TAB)	
	59	1,2	**8T-1895**	12	CLIP (SLOT)	
	60	1,2	**8T-1896**	12	CLIP (TAB)	
	61	1	**8T-4121**	2	WASHER-HARD (11X21X2.5-MM THK)	
M	62	1	**8T-4133**	4	NUT (M10X1.5-THD)	
M	63	1	**8T-4136**	3	BOLT (M10X1.5X25-MM)	
M	64	1	**8T-4137**	1	BOLT (M10X1.5X20-MM)	
M	65	1	**8T-4176**	2	BOLT (M12X1.75X90-MM)	
M	66	2	**8T-4183**	2	BOLT (M12X1.75X40-MM)	
M	67	1,2	**8T-4184**	6	BOLT (M12X1.75X45-MM)	
M	68	1	**8T-4185**	1	BOLT (M10X1.5X50-MM)	
M	69	1,2	**8T-4195**	7	BOLT (M10X1.5X30-MM)	
	70	2	**8T-4223**	6	WASHER-HARD (13.5X25.5X3-MM THK)	
M	71	2	**8T-4244**	2	NUT (M12X1.75-THD)	
	72	1,2	**8T-5360**	8	WASHER (12X22.5X2.5-MM THK)	
M	73	2	**8T-6868**	2	BOLT (M12X1.75X80-MM)	
	74	1	**8T-7529**	1	CLIP	
	75	2	**8X-1141**	1	CLAMP	
	76	1	**9X-8257**	2	WASHER (17.5X30X3.5-MM THK)	
	77	1	*201-0782*	1	ELBOW AS	
		1	**2M-9780**	1	SEAL-O-RING	
		1	**6V-9746**	1	SEAL-O-RING	
		1	**201-0781**	1	ELBOW	
	78	1	*168-1969*	1	ADAPTER AS	
		1	**1J-9671**	1	SEAL-O-RING	
		1	**5P-1318**	1	ADAPTER	
	79	1	**6V-3965**	1	FITTING (QUICK DISCONNECT)	
	80	1	**6V-0852**	1	CAP-DUST	
	81	1	**6J-1907**	1	SEAL-O-RING	

C - CHANGE FROM PREVIOUS TYPE
I - REFER TO HYDRAULIC INFORMATION SYSTEM
M - METRIC PART

317-3942 **LINES GP-PUMP (*contd.*)** **i05640373**

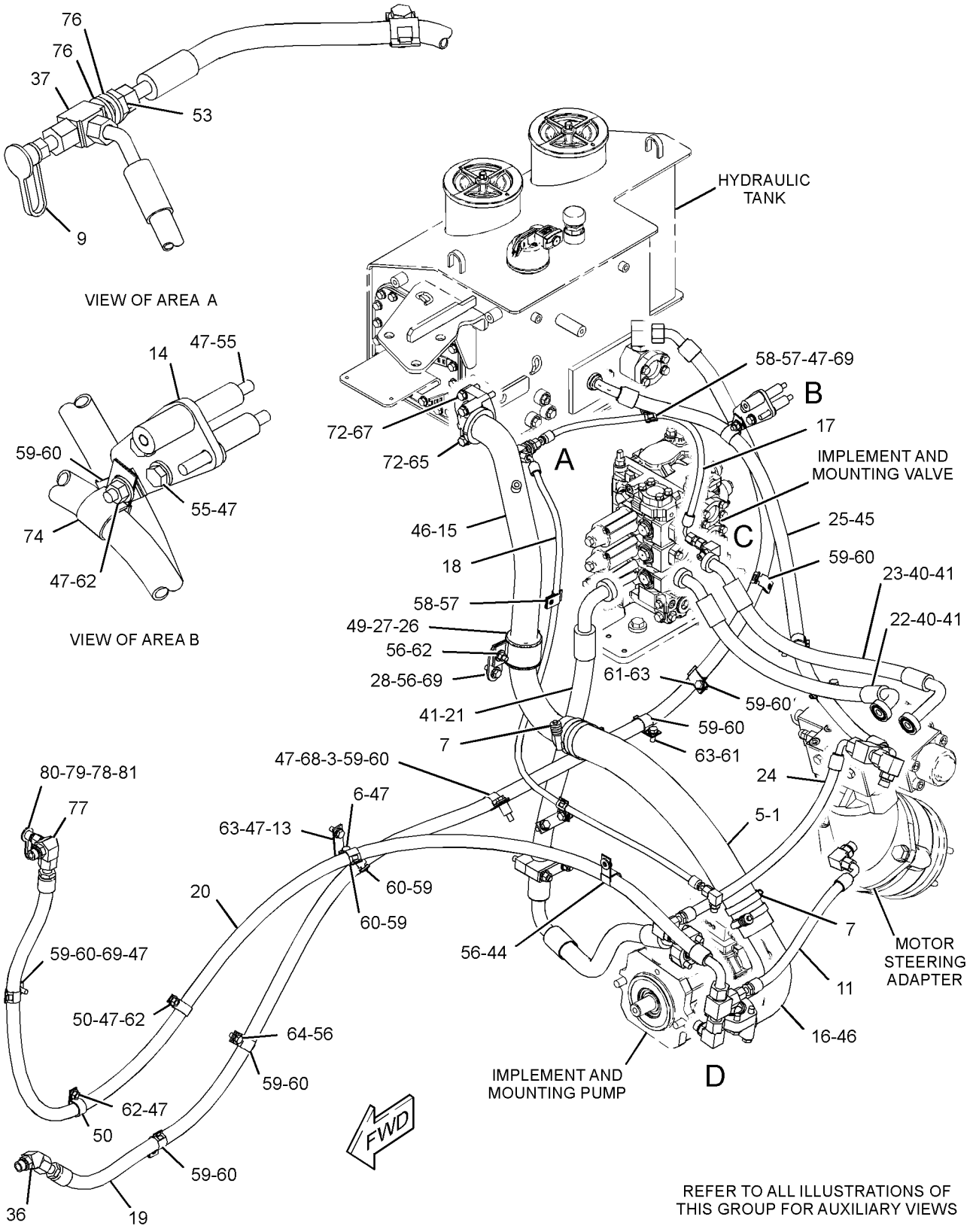

GRAPHIC #1 g03582930

317-3942 **LINES GP-PUMP (*contd.*)** **i05640373**

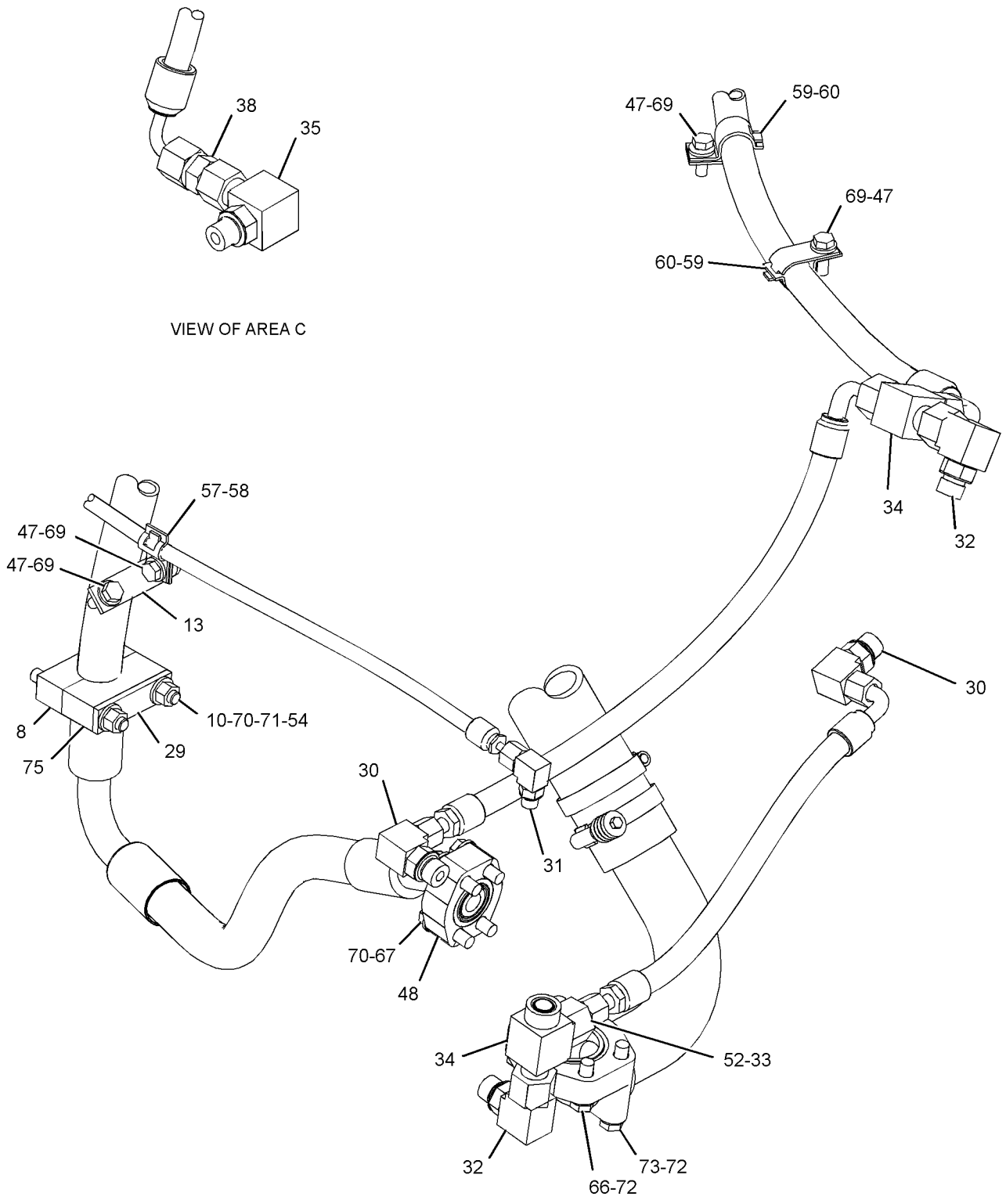

GRAPHIC #2 **<END>** g03582933

387-1759 LINES GP-RIPPER

S/N: MS31-UP
PART OF 387-1087 RIPPER AR
AN ATTACHMENT

SMCS-5057, 5352, 5356 **i05636020**

NOTE	REF NO	GRAPHIC REF	PART NUMBER	QTY	PART NAME 1 2 3 4 5 6 (PRODUCT LEVEL)	SEE PAGE
	1	1	**130-1977**	8	SHIELD	
	2	1	**130-9192**	4	GROMMET	
	3	1	**208-6727**	1	SHIELD	
	4	1	**381-8734**	4	GROMMET	
I	5	1	**392-9664**	1	HOSE AS	
I	6	1	**392-9665**	1	HOSE AS	
	7	1	**433-4027**	1	SHIELD	
	8	1	**4J-5267**	4	SEAL-O-RING	
	9	1	**5P-7464**	2	CLIP (SLOT)	
	10	1	**5P-7465**	2	CLIP (TAB)	
	11	1	**6V-1249**	2	GROMMET (22-MM ID)	
	12	1	**8C-3205**	4	FLANGE-HALF	
	13	1	**8T-4121**	8	WASHER-HARD (11X21X2.5-MM THK)	
M	14	1	**8T-4183**	1	BOLT (M12X1.75X40-MM)	
M	15	1	**8T-4186**	8	BOLT (M10X1.5X40-MM)	
	16	1	**8T-4223**	2	WASHER-HARD (13.5X25.5X3-MM THK)	
M	17	1	**8T-4244**	1	NUT (M12X1.75-THD)	
	18	1	**9M-2904**	8	CLAMP-HOSE	

I - REFER TO HYDRAULIC INFORMATION SYSTEM
M - METRIC PART

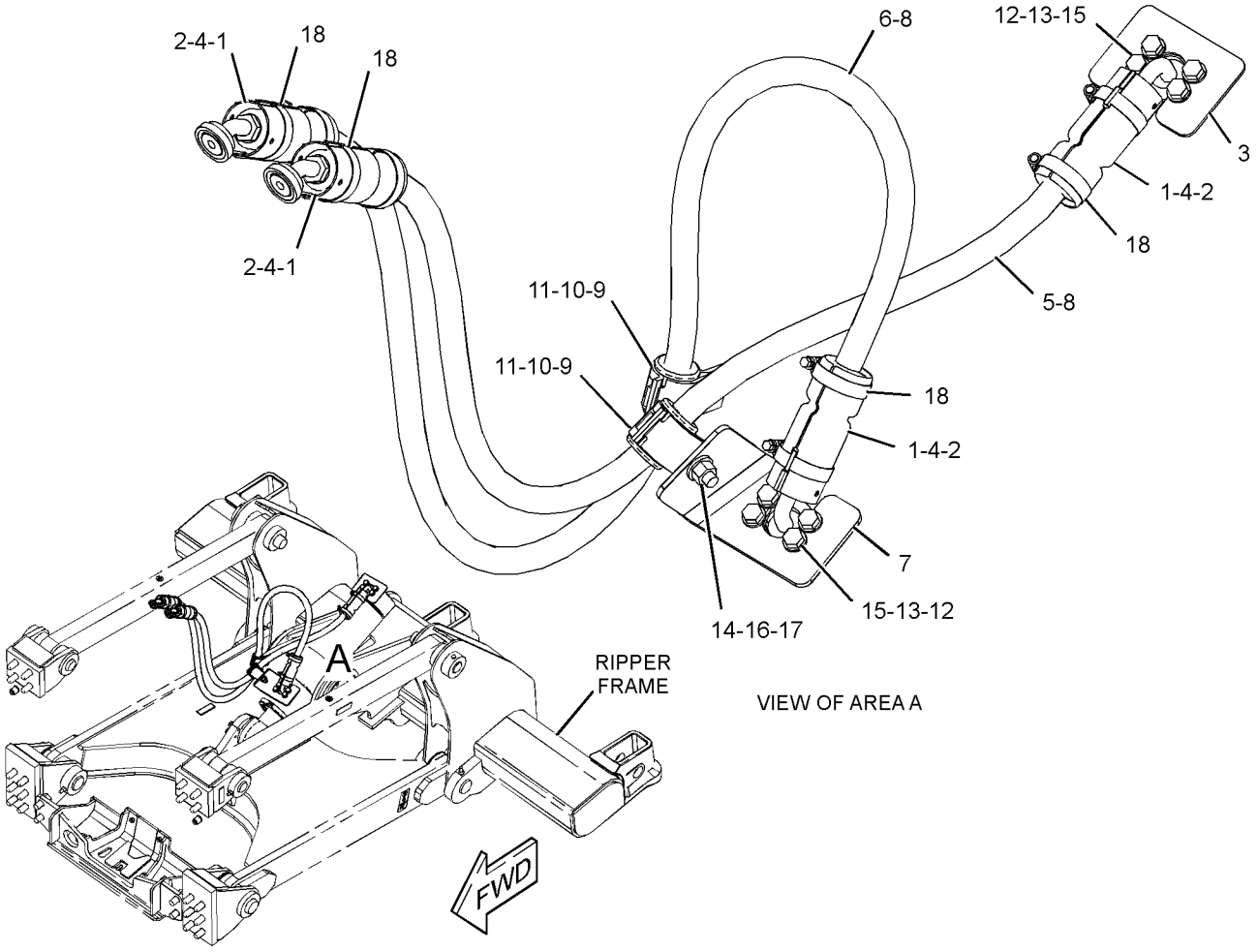

GRAPHIC #1 **<END>** g03582395

389-3294 LINES GP-RIPPER

S/N: EMM1-UP; JEN1-UP
PART OF 389-3225, 389-3227 HYDRAULIC AR
AN ATTACHMENT

SMCS-5057, 5352, 5356

i05561877

NOTE	REF NO	GRAPHIC REF	PART NUMBER	QTY	PART NAME 1 2 3 4 5 6 (PRODUCT LEVEL)	SEE PAGE
	1	1	**217-6887**	1	MANIFOLD	
I	2	1	**226-8234**	1	HOSE AS	
I	3	1	**226-8235**	1	HOSE AS	
	4	1	**4J-0520**	2	SEAL-O-RING	
	5	1	**4J-5267**	2	SEAL-O-RING	
	6	1	**7G-3832**	1	GROMMET	
	7	1	**7G-3833**	1	CLIP (TAB)	
	8	1	**7G-3834**	1	CLIP (SLOT)	
	9	1	**8C-3205**	8	FLANGE-HALF	
	10	1	**8T-4121**	20	WASHER-HARD (11X21X2.5-MM THK)	
M	11	1	**8T-4136**	4	BOLT (M10X1.5X25-MM)	
M	12	1	**8T-4196**	16	BOLT (M10X1.5X35-MM)	
	13	1	**8T-4223**	2	WASHER-HARD (13.5X25.5X3-MM THK)	
M	14	1	**8T-4956**	2	BOLT (M12X1.75X35-MM)	

I - REFER TO HYDRAULIC INFORMATION SYSTEM
M - METRIC PART

389-3294 **LINES GP-RIPPER (*contd.*)** **i05561877**

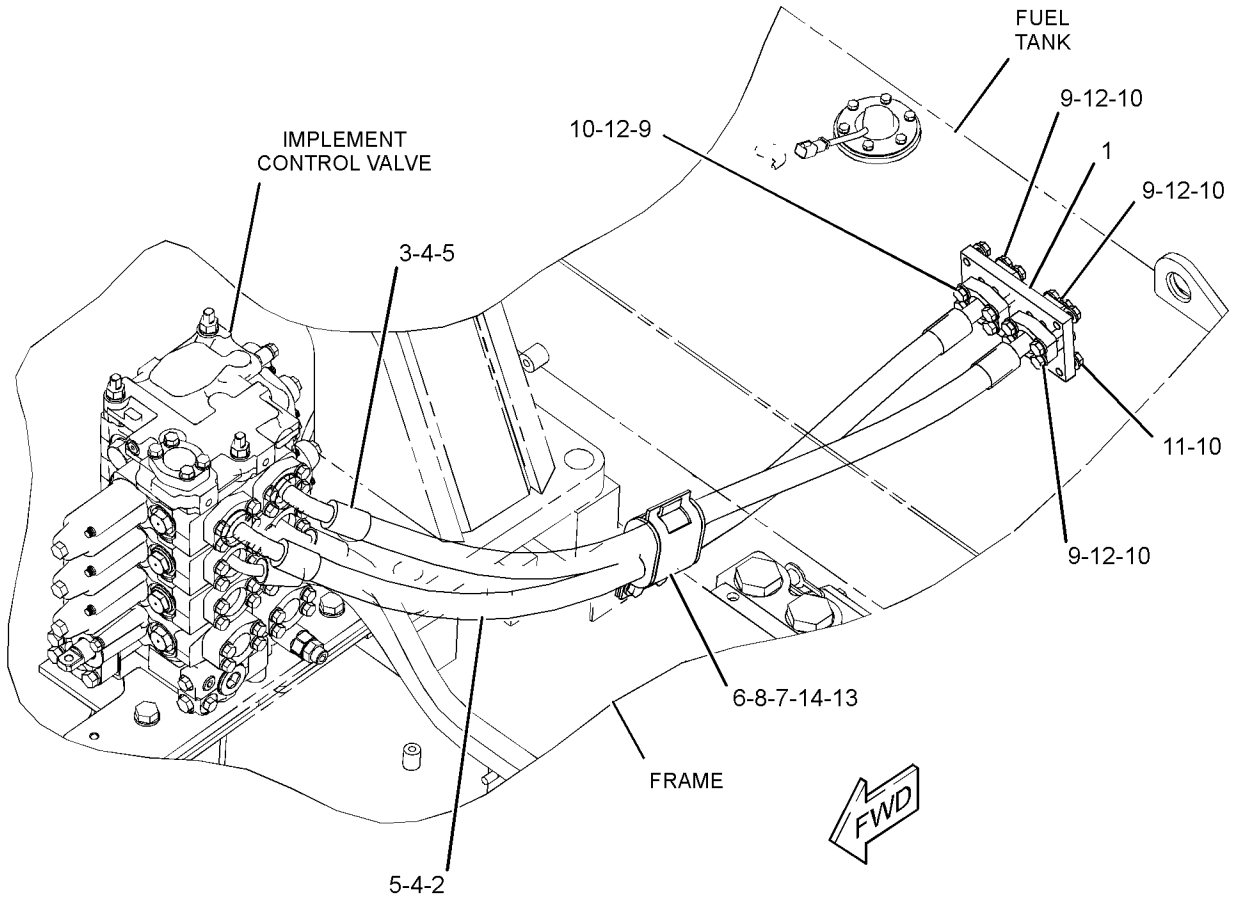

GRAPHIC #1 **<END>** g03533080

317-4093 LINES GP-TILT CYLINDER

S/N: EMM1-UP; JEN1-UP

PART OF 389-3214 HYDRAULIC AR

SMCS-5057, 5104 **i05640385**

NOTE	REF NO	GRAPHIC REF	PART NUMBER	QTY	PART NAME 1 2 3 4 5 6 (PRODUCT LEVEL)	SEE PAGE
	1	1	**1K-5888**	2	SPACER (0.42X0.67X0.63-IN THK)	
	2	1	**226-7810**	1	TUBE AS	
	3	1	**226-7906**	1	MANIFOLD	
	4	1	**226-7924**	1	TUBE AS	
I	5	1	**317-4094**	1	HOSE AS	
I	6	1	**317-4095**	1	HOSE AS	
	7	1	**1P-3703**	2	SEAL-RECTANGULAR	
	8	1	**3G-8047**	4	GROMMET	
	9	1	**3G-8054**	4	CLIP (TAB)	
	10	1	**3G-8057**	4	CLIP (SLOT)	
	11	1	**3H-8683**	4	CLIP	
	12	1	**4J-0520**	2	SEAL-O-RING	
	13	1	**4J-5267**	2	SEAL-O-RING	
	14	1	**5H-4018**	2	COVER	
	15	1	**5P-1075**	13	WASHER-HARD (10.2X22.5X3-MM THK)	
	16	1	**6V-8398**	2	SEAL-O-RING	
	17	1	**8C-3205**	4	FLANGE-HALF	
	18	1	**8T-1887**	2	CLIP (SLOT)	
	19	1	**8T-1888**	2	CLIP (TAB)	
	20	1	**8T-4121**	16	WASHER-HARD (11X21X2.5-MM THK)	
M	21	1	**8T-4133**	6	NUT (M10X1.5-THD)	
M	22	1	**8T-4182**	10	BOLT (M10X1.5X45-MM)	
M	23	1	**8T-4186**	2	BOLT (M10X1.5X40-MM)	
M	24	1	**8T-4195**	2	BOLT (M10X1.5X30-MM)	
M	25	1	**8T-4196**	9	BOLT (M10X1.5X35-MM)	

I - REFER TO HYDRAULIC INFORMATION SYSTEM
M - METRIC PART

317-4093 **LINES GP-TILT CYLINDER (*contd.*)** **i05640385**

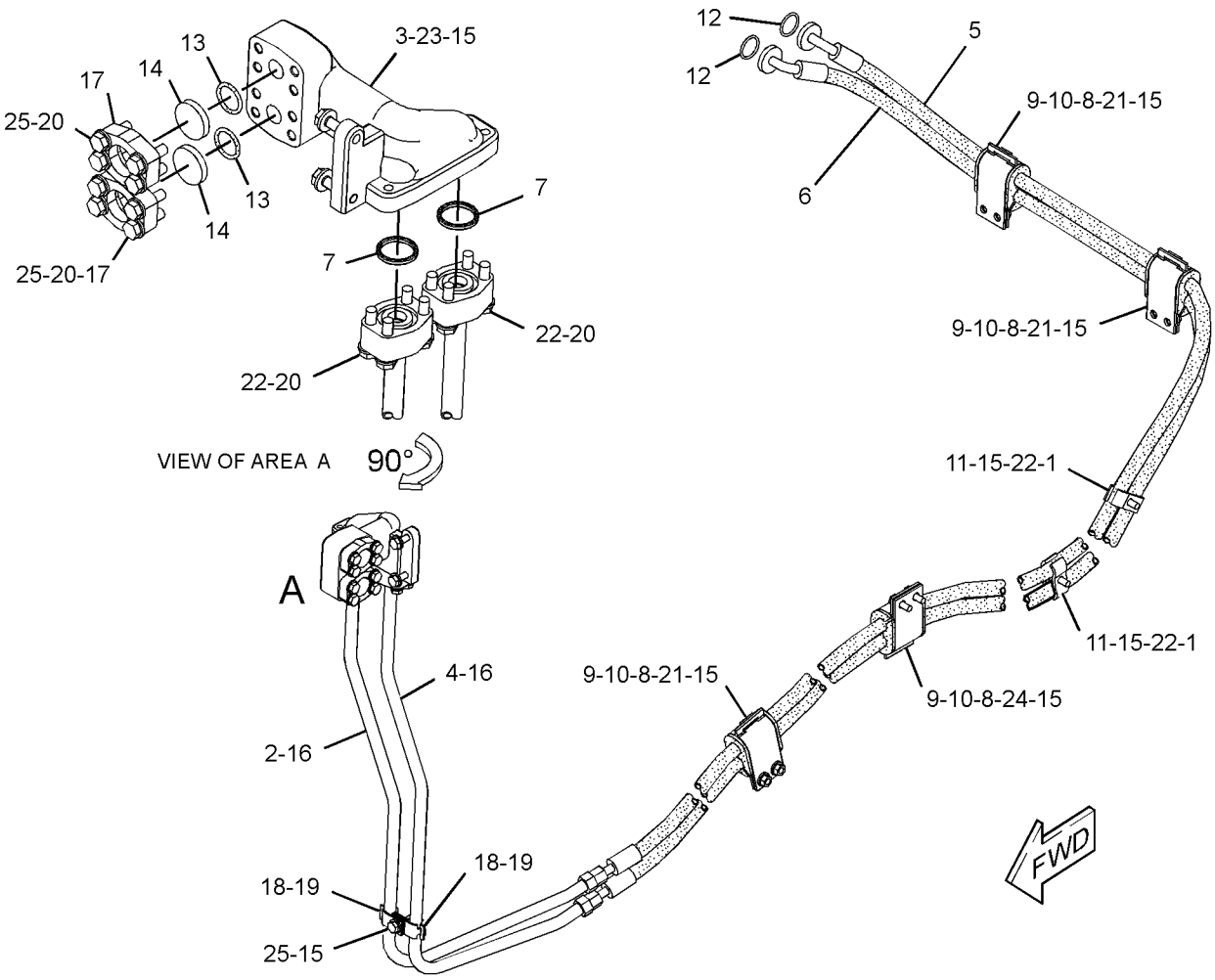

GRAPHIC #1 **<END>** g02178532

389-6159 LINES GP-TILT CYLINDER

S/N: JEN1-UP
PART OF 389-6131 INSTALLATION AR-BULLDOZER
AN ATTACHMENT

SMCS-5057, 5104

i05628073

NOTE	REF NO	GRAPHIC REF	PART NUMBER	QTY	PART NAME 1 2 3 4 5 6 (PRODUCT LEVEL)	SEE PAGE
	1	1	**3Y-5405**	2	RUBBER	
I	2	1	**9Z-8212**	1	HOSE AS	
	3	1	**145-5181**	4	SPACER (13.5X25X12-MM THK)	
I	4	1	**177-7983**	1	HOSE AS	
	5	1	**213-2282**	2	GUARD	
I	6	1	**308-6038**	1	HOSE AS	
I	7	1	**308-6039**	1	HOSE AS	
	8	1	**4J-5267**	4	SEAL-O-RING	
	9	1	**4T-1563**	1	GUARD AS	
	10	1	**6V-8398**	4	SEAL-O-RING	
	11	1	**6V-8981**	2	ELBOW	
	12	1	**6V-9169**	2	NUT (13/16-16-THD)	
	13	1	**8C-3205**	4	FLANGE-HALF	
	14	1	**8T-4121**	8	WASHER-HARD (11X21X2.5-MM THK)	
M	15	1	**8T-4139**	4	BOLT (M12X1.75X30-MM)	
M	16	1	**8T-4196**	8	BOLT (M10X1.5X35-MM)	
	17	1	**8T-4223**	4	WASHER-HARD (13.5X25.5X3-MM THK)	
M	18	1	**8T-4956**	4	BOLT (M12X1.75X35-MM)	

I - REFER TO HYDRAULIC INFORMATION SYSTEM
M - METRIC PART

389-6159 **LINES GP-TILT CYLINDER (*contd.*)** **i05628073**

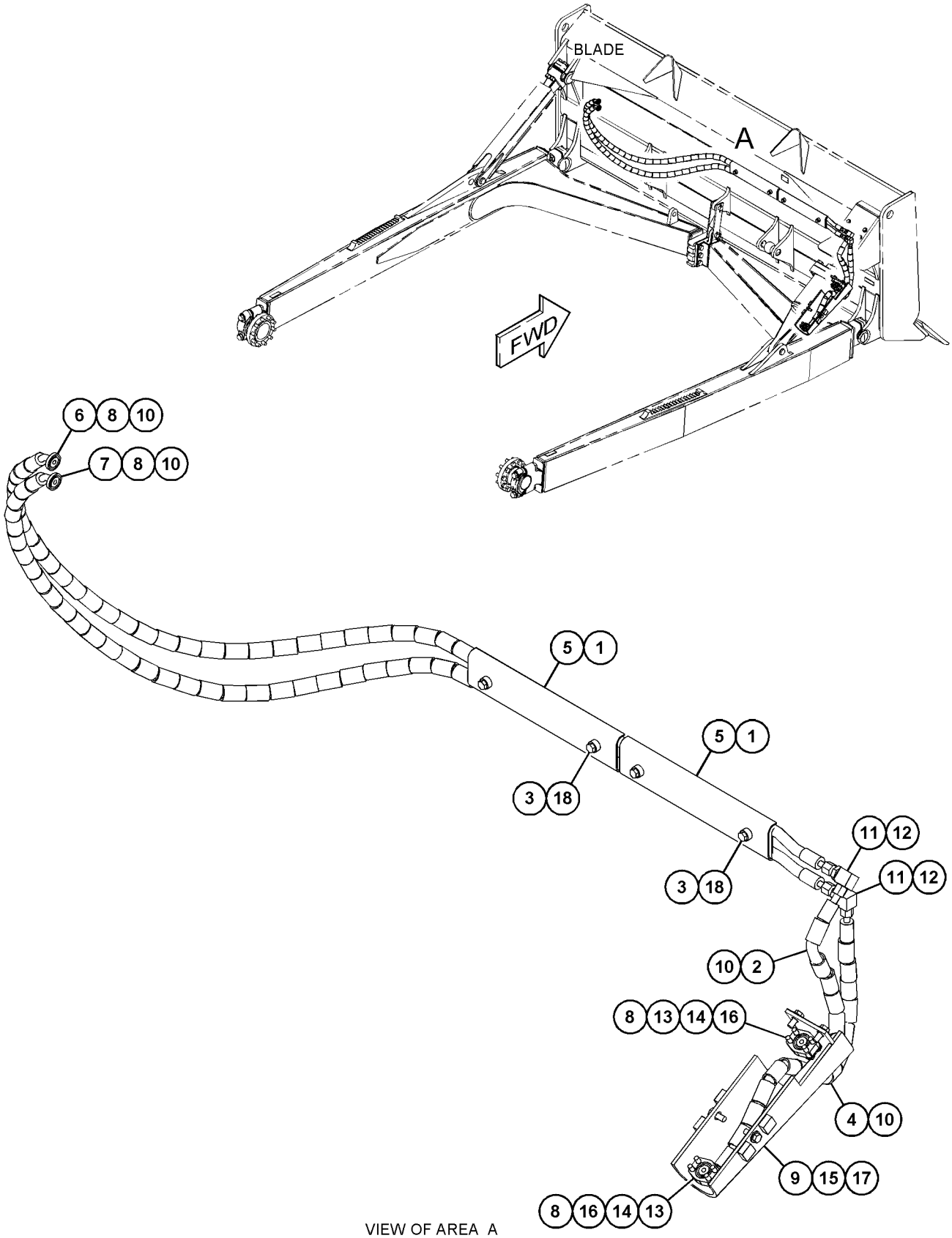

VIEW OF AREA A

GRAPHIC #1

<END>

g03581903

391-2580 LINES GP-TILT CYLINDER

S/N: EMM1-UP

PART OF 389-6128 INSTALLATION AR-BULLDOZER

AN ATTACHMENT

SMCS-5057, 5104 **i05628029**

NOTE	REF NO	GRAPHIC REF	PART NUMBER	QTY	PART NAME 1 2 3 4 5 6 (PRODUCT LEVEL)	SEE PAGE
	1	1	**4T-1563**	1	GUARD AS	
I	2	1	**7T-6934**	1	HOSE AS	
	3	1	**145-5181**	4	SPACER (13.5X25X12-MM THK)	
I	4	1	**168-2599**	1	HOSE AS	
	5	1	**213-2282**	2	GUARD	
I	6	1	**308-6024**	1	HOSE AS	
I	7	1	**308-6025**	1	HOSE AS	
	8	1	**3Y-5405**	2	RUBBER	
	9	1	**4J-5267**	4	SEAL-O-RING	
	10	1	**6V-8398**	4	SEAL-O-RING	
	11	1	**6V-8981**	2	ELBOW	
	12	1	**6V-9169**	2	NUT (13/16-16-THD)	
	13	1	**8C-3205**	4	FLANGE-HALF	
	14	1	**8T-4121**	8	WASHER-HARD (11X21X2.5-MM THK)	
M	15	1	**8T-4139**	4	BOLT (M12X1.75X30-MM)	
M	16	1	**8T-4196**	8	BOLT (M10X1.5X35-MM)	
	17	1	**8T-4223**	4	WASHER-HARD (13.5X25.5X3-MM THK)	
M	18	1	**8T-4956**	4	BOLT (M12X1.75X35-MM)	

I - REFER TO HYDRAULIC INFORMATION SYSTEM
M - METRIC PART

391-2580 **LINES GP-TILT CYLINDER (*contd.*)** **i05628029**

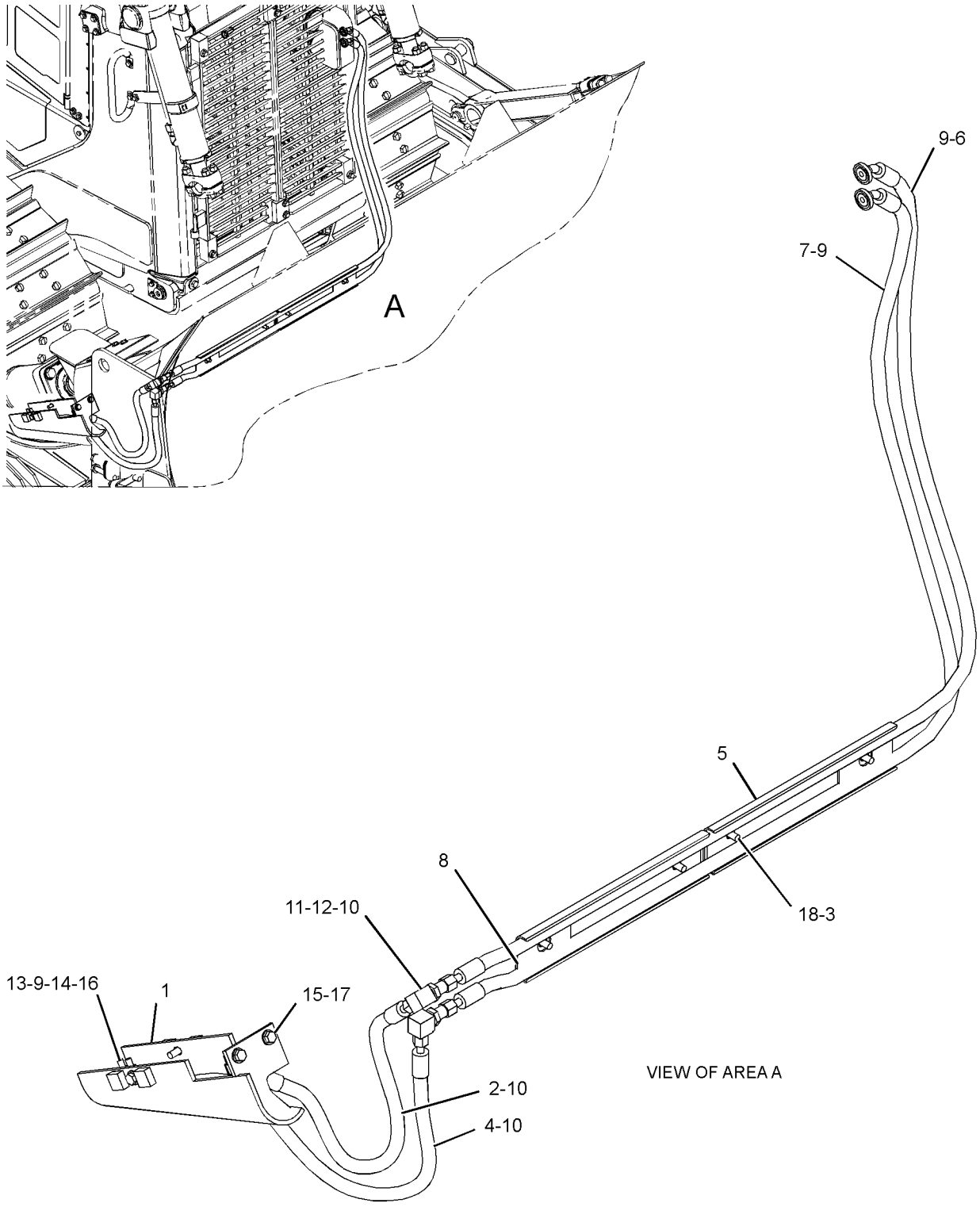

GRAPHIC #1 **<END>** g03579038

391-2581 LINES GP-TILT CYLINDER

S/N: JEN1-UP
PART OF 389-6129 INSTALLATION AR-BULLDOZER
AN ATTACHMENT

SMCS-5057, 5104 **i05628071**

NOTE	REF NO	GRAPHIC REF	PART NUMBER	QTY	PART NAME 1 2 3 4 5 6 (PRODUCT LEVEL)	SEE PAGE
	1	1	**3Y-5405**	2	RUBBER	
I	2	1	**7T-6934**	1	HOSE AS	
	3	1	**145-5181**	4	SPACER (13.5X25X12-MM THK)	
I	4	1	**168-2599**	1	HOSE AS	
	5	1	**213-2282**	2	GUARD	
I	6	1	**308-6022**	1	HOSE AS	
I	7	1	**308-6023**	1	HOSE AS	
	8	1	**4J-5267**	4	SEAL-O-RING	
	9	1	**4T-1563**	1	GUARD AS	
	10	1	**6V-8398**	4	SEAL-O-RING	
	11	1	**6V-8981**	2	ELBOW	
	12	1	**6V-9169**	2	NUT (13/16-16-THD)	
	13	1	**8C-3205**	4	FLANGE-HALF	
	14	1	**8T-4121**	8	WASHER-HARD (11X21X2.5-MM THK)	
M	15	1	**8T-4139**	4	BOLT (M12X1.75X30-MM)	
M	16	1	**8T-4196**	8	BOLT (M10X1.5X35-MM)	
	17	1	**8T-4223**	4	WASHER-HARD (13.5X25.5X3-MM THK)	
M	18	1	**8T-4956**	4	BOLT (M12X1.75X35-MM)	

I - REFER TO HYDRAULIC INFORMATION SYSTEM
M - METRIC PART

391-2581 **LINES GP-TILT CYLINDER (*contd.*)** **i05628071**

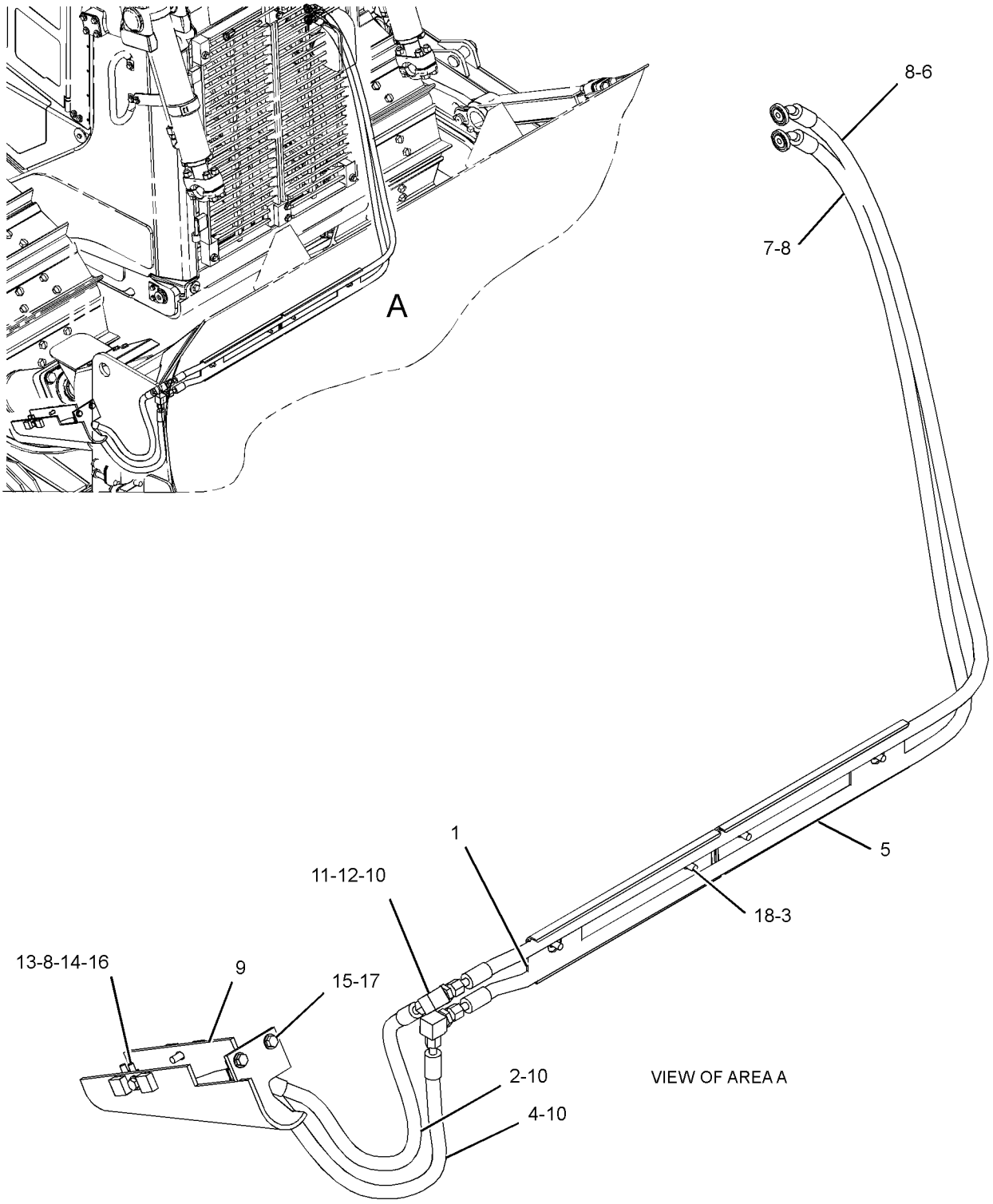

GRAPHIC #1 **<END>** g03580603

391-2583 LINES GP-TILT CYLINDER

S/N: EMM1-UP; JEN1-UP

PART OF 389-6133, 389-6134 INSTALLATION AR-BULLDOZER

AN ATTACHMENT

SMCS-5057, 5104 **i05628072**

NOTE	REF NO	GRAPHIC REF	PART NUMBER	QTY	PART NAME 1 2 3 4 5 6 (PRODUCT LEVEL)	SEE PAGE
	1	1	**2P-6588**	2	HEAD-ADAPTER	
	2	1	**5S-8709**	1	GUARD-CENTER	
	3	1	**5S-8712**	6	BLOCK	
	4	1	**5S-8765**	1	GUARD (RH)	
	5	1	**5S-8766**	1	GUARD (LH)	
	6	1	**6Y-0596**	1	GUARD AS (LH)	
	7	1	**6Y-0597**	1	GUARD AS (RH)	
I	8	1	**9W-9082**	2	HOSE AS	
I	9	1	**9W-9083**	2	HOSE AS	
	10	1	**245-4230**	1	BRACKET AS (RH)	
	11	1	**245-4231**	1	BRACKET AS (LH)	
	12	1	**251-9840**	2	TUBE AS	
	13	1	**251-9841**	1	TUBE AS	
I	14	1	**308-6026**	1	HOSE AS	
I	15	1	**308-6027**	1	HOSE AS	
	16	1	**3G-8047**	1	GROMMET	
	17	1	**3G-8054**	1	CLIP (TAB)	
	18	1	**3G-8057**	1	CLIP (SLOT)	
	19	1	**3K-0360**	2	SEAL-O-RING	
	20	1	**4J-5267**	12	SEAL-O-RING	
	21	1	**5P-7464**	2	CLIP (SLOT)	
	22	1	**5P-7465**	2	CLIP (TAB)	
	23	1	**6V-1249**	2	GROMMET (22-MM ID)	
	24	1	**6V-8398**	2	SEAL-O-RING	
	25	1	**6V-8625**	2	ELBOW	
	26	1	**8C-3205**	20	FLANGE-HALF	
	27	1	**8T-4121**	48	WASHER-HARD (11X21X2.5-MM THK)	
M	28	1	**8T-4139**	10	BOLT (M12X1.75X30-MM)	
M	29	1	**8T-4182**	6	BOLT (M10X1.5X45-MM)	
M	30	1	**8T-4195**	42	BOLT (M10X1.5X30-MM)	
	31	1	**8T-4223**	16	WASHER-HARD (13.5X25.5X3-MM THK)	
M	32	1	**8T-4910**	6	BOLT (M12X1.75X60-MM)	

I - REFER TO HYDRAULIC INFORMATION SYSTEM
M - METRIC PART

391-2583 **LINES GP-TILT CYLINDER (*contd.*)** **i05628072**

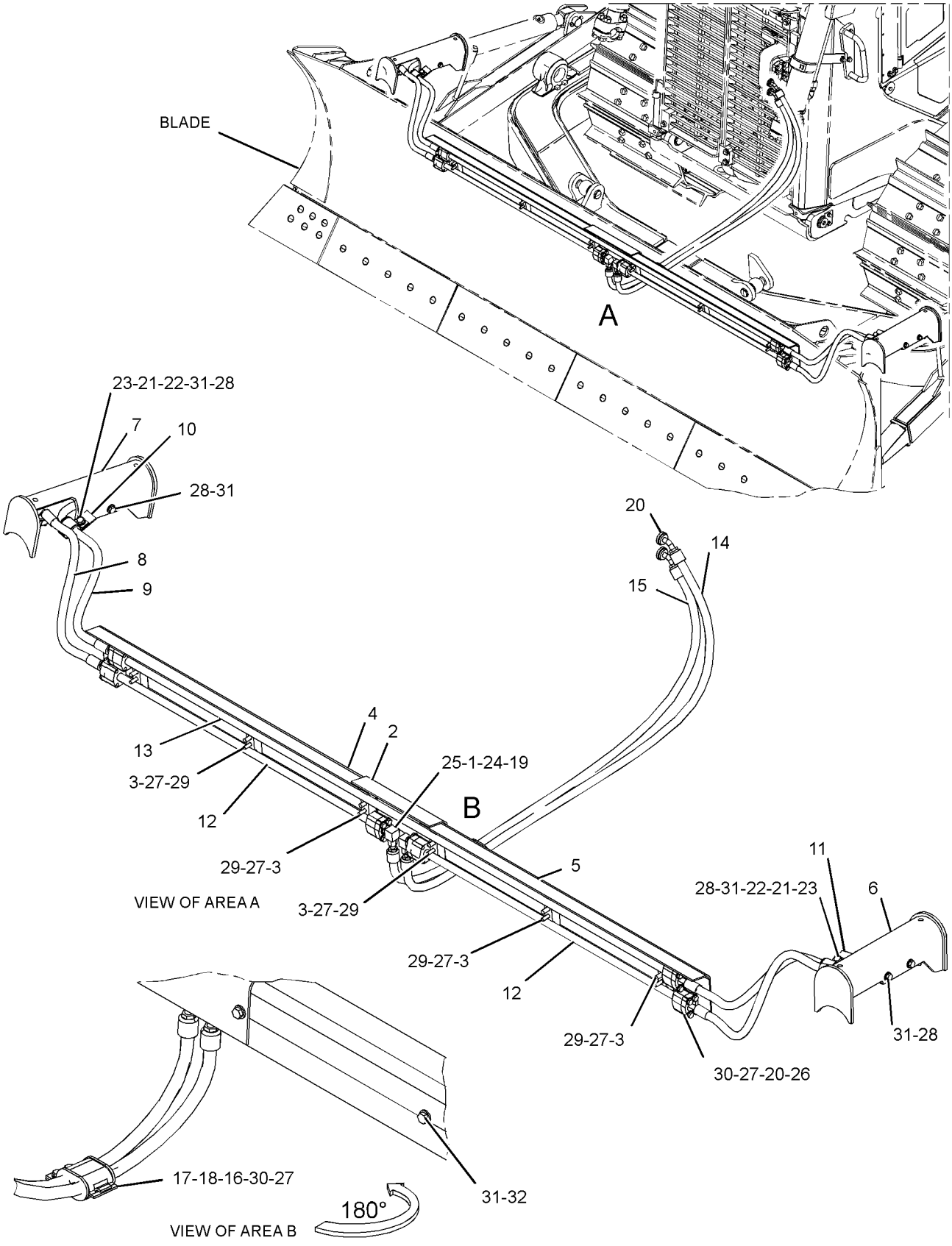

GRAPHIC #1 **<END>** g03581694

226-4751 MANIFOLD GP-CONTROL

S/N: EMM1-UP; JEN1-UP

PART OF 340-0117, 389-3291, 389-3292, 389-3293 LINES GP-PILOT

AN ATTACHMENT

SMCS-5264 **i05552873**

NOTE	REF NO	GRAPHIC REF	PART NUMBER	QTY	PART NAME 1 2 3 4 5 6 (PRODUCT LEVEL)	SEE PAGE
Y	1	1	**158-9956**	1	VALVE GP-CHECK (PILOT PRESSURE SUPPLY)	516
Y	2	1	**170-3357**	1	VALVE GP-PRESSURE REDUCING (IMPLEMENT PILOT OIL)	536
Y	3	1	**225-8026**	1	VALVE GP-RELIEF (IMPLEMENT PILOT OIL)	545
Y	4	1	**201-0950**	1	VALVE GP-SOLENOID (HYDRAULIC LOCKOUT)	548
	5	1	**6E-5066**	1	SCREEN (IMPLEMENT PILOT OIL)	
	6	1	**9S-8002**	1	PLUG-O-RING	
	7	1	**9S-8004**	1	PLUG-O-RING	
	8	1	**3J-7354**	1	SEAL-O-RING	
	9	1	**3J-1907**	1	SEAL-O-RING	

Y - SEPARATE ILLUSTRATION

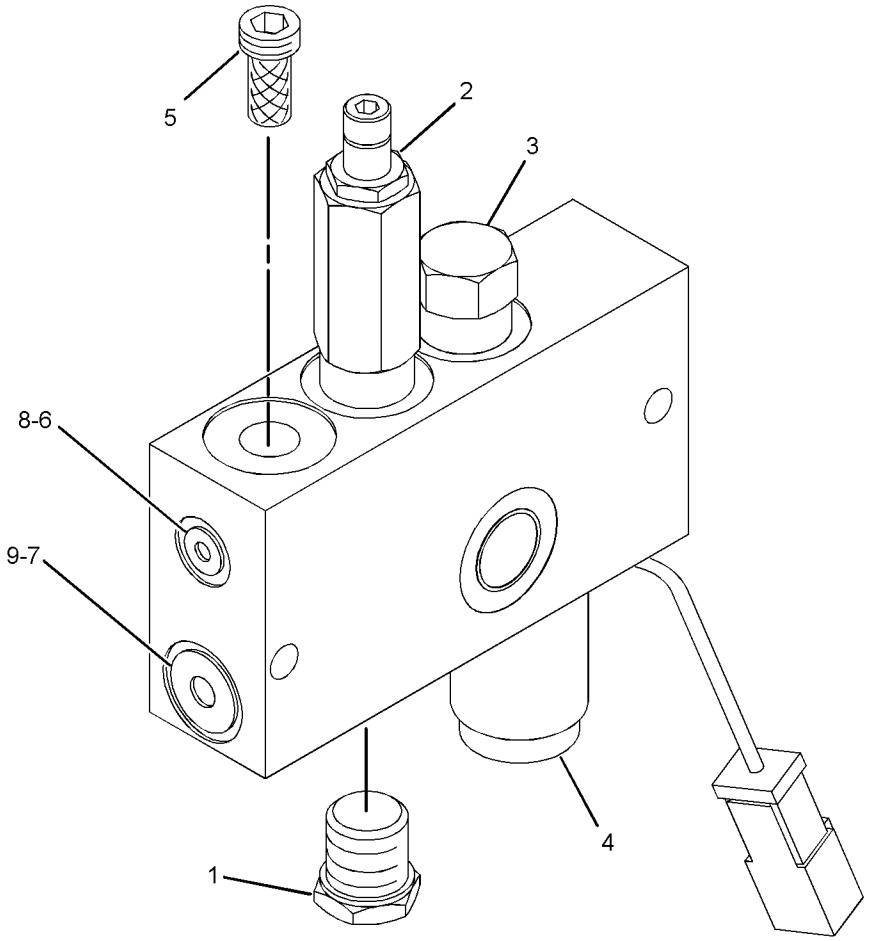

GRAPHIC #1 **<END>** g01205803

235-0401 MANIFOLD GP-VALVE

S/N: EMM1-UP; JEN1-UP
PART OF 224-4936 VALVE GP-BANK 3, 224-4937 VALVE GP-BANK 4
AN ATTACHMENT

SMCS-5264 **i05552591**

NOTE	REF NO	GRAPHIC REF	PART NUMBER	QTY	PART NAME 1 2 3 4 5 6 (PRODUCT LEVEL)	SEE PAGE
	1	1	**6V-0400**	2	FLANGE-HALF	
M	2	1	**8T-4184**	4	BOLT (M12X1.75X45-MM)	
	3	1	**8T-4223**	4	WASHER-HARD (13.5X25.5X3-MM THK)	
Y	4	1	**9T-3541**	1	VALVE GP-RELIEF (MAIN)	542

M - METRIC PART
Y - SEPARATE ILLUSTRATION

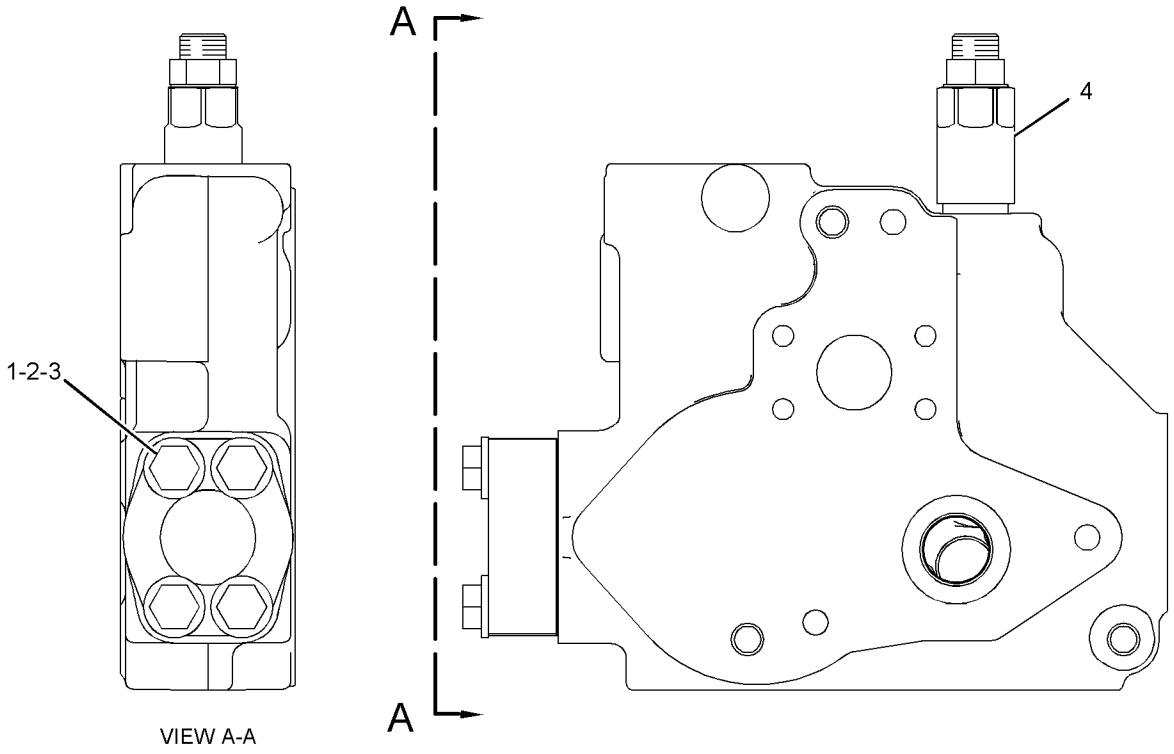

VIEW A-A

GRAPHIC #1 **<END>** g01218600

159-7156 MOTOR GP-PISTON—STEERING*R

S/N: EMM1-UP; JEN1-UP

PART OF 389-3214 HYDRAULIC AR

SMCS-5058 **i05640301**

NOTE	REF NO	GRAPHIC REF	PART NUMBER	QTY	PART NAME 1 2 3 4 5 6 (PRODUCT LEVEL)	SEE PAGE
Y	1	1	*171-6001*	1	ROTATING GP-MOTOR	503
	2	1	**106-1227**	1	HOUSING	
	3	1	**2H-3934**	1	SEAL-O-RING	
	4	1	**9T-4849**	1	HEAD	
	5	1	**8T-4231**	1	DOWEL	
M	6	1	**8T-3957**	6	BOLT-SOCKET HEAD (M12X1.75X30-MM)	

M - METRIC PART
Y - SEPARATE ILLUSTRATION

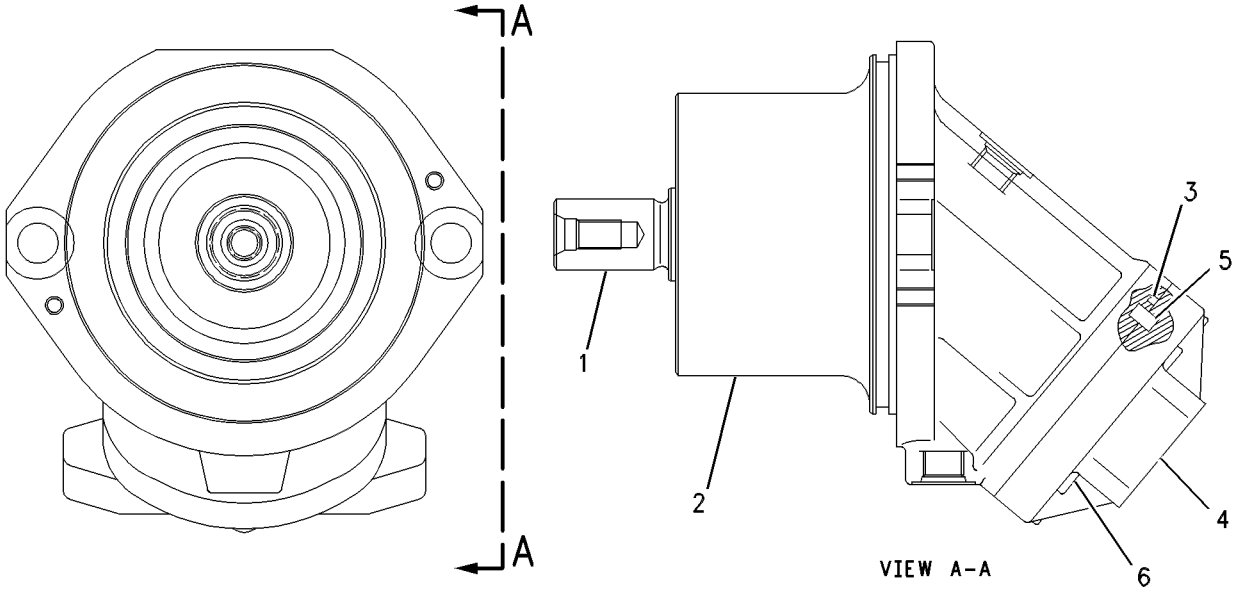

GRAPHIC #1 **<END>** g00592780

362-4548 MOUNTING GP-CYLINDER

S/N: EMM1-UP; JEN1-UP

PART OF 389-3214 HYDRAULIC AR

SMCS-7562 **i05640431**

NOTE	REF NO	GRAPHIC REF	PART NUMBER	QTY	PART NAME 1 2 3 4 5 6 (PRODUCT LEVEL)	SEE PAGE
	1	1	**3B-8489**	2	FITTING-GREASE	
	2	1	**4T-4875**	2	PIN	
	3	1	**5P-2671**	2	SEAL-LIP TYPE	
	4	1	**9J-4782**	2	PROTECTOR	
	5	1	**9N-4233**	2	STRAP	
	6	1	*362-4549*	4	CAP AS	
					(EACH INCLUDES)	
		1	**3G-9405**	1	CAP AS	
	6A	1	**3G-9402**	1	BUSHING	
	7	1	**299-5344**	2	YOKE	
C	8	1	**6Y-9280**	2	CLAMP (TAB)	
C	9	1	**6Y-9281**	2	CLAMP (SLOT)	
	10	1	**5P-1076**	4	WASHER-HARD (13.5X30X4-MM THK)	
M	11	1	**7X-2557**	8	BOLT (M16X2X140-MM)	
C	12	1	**8T-2561**	2	WASHER-HARD (10.5X28.5X5-MM THK)	
C	13	1	**8T-4123**	2	WASHER (3.62X5.75X0.375-MM THK)	
CM	14	1	**8T-4137**	2	BOLT (M10X1.5X20-MM)	
M	15	1	**8T-4183**	2	BOLT (M12X1.75X40-MM)	
M	16	1	**8T-4244**	2	NUT (M12X1.75-THD)	
CD	17	1	**5P-5908**		SEAL (0.35-M EACH)	

C - CHANGE FROM PREVIOUS TYPE
D - ORDER BY THE METER
M - METRIC PART

362-4548 **MOUNTING GP-CYLINDER (*contd.*)** **i05640431**

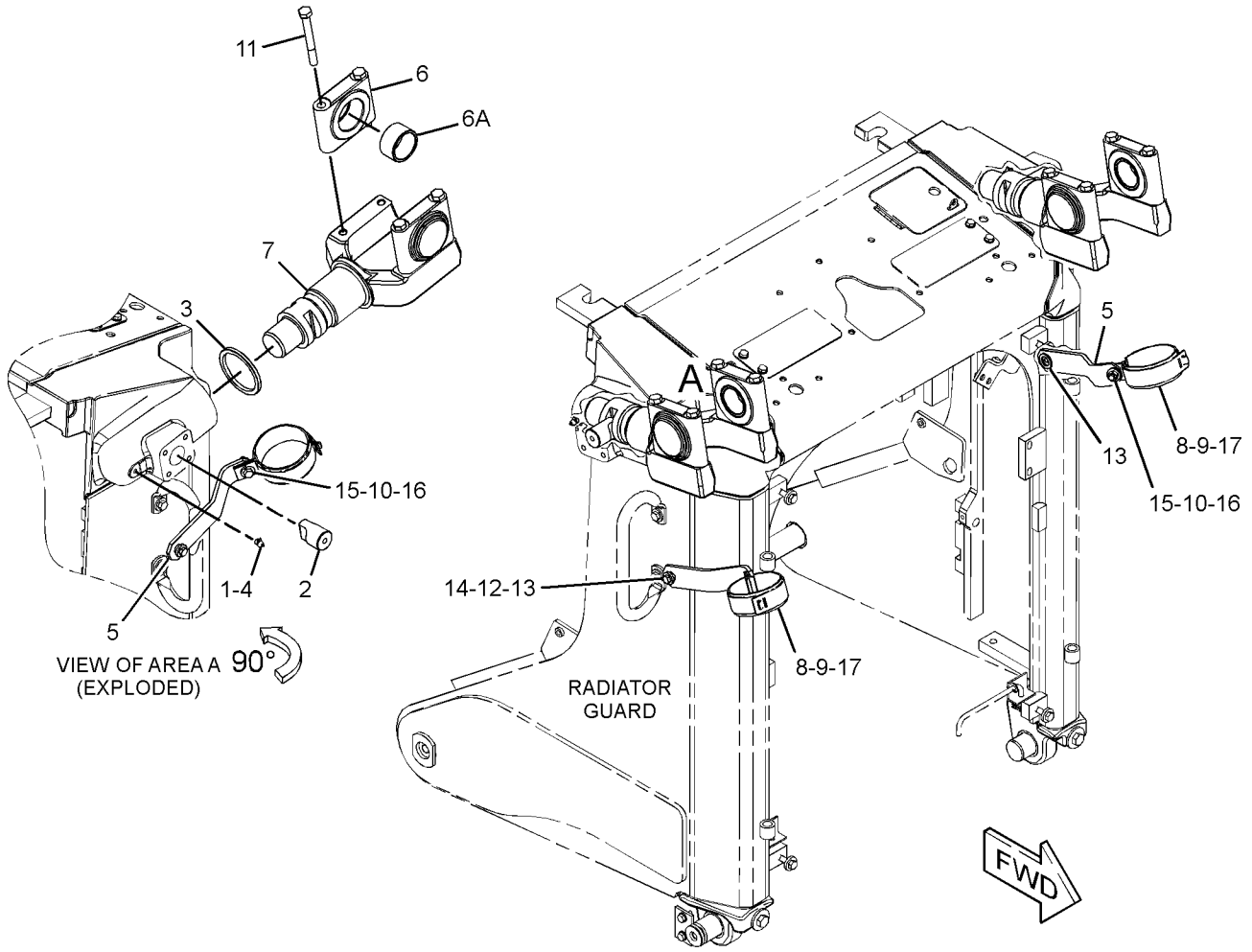

GRAPHIC #1 **<END>** g03324766

222-1159 MOUNTING GP-VALVE–IMPLEMENT, STEERING

S/N: EMM1-UP; JEN1-UP
PART OF 389-3224, 389-3226 HYDRAULIC AR
AN ATTACHMENT

SMCS-5051 **i05552529**

NOTE	REF NO	GRAPHIC REF	PART NUMBER	QTY	PART NAME 1 2 3 4 5 6 (PRODUCT LEVEL)	SEE PAGE
	1	1	**223-3421**	1	PLATE AS	
Y	2	1	**224-4936**	1	VALVE GP-BANK 3 (BULLDOZER, STEERING)	512
M	3	1	**296-7283**	3	BOLT (M16X2X50-MM)	
	4	1	**198-4778**	3	WASHER-HARD (13.5X30X12-MM THK)	
M	5	1	**172-9966**	3	BOLT (M12X1.75X65-MM)	
	6	1	**198-4780**	3	WASHER-HARD (17.5X32X8-MM THK)	

M - METRIC PART
Y - SEPARATE ILLUSTRATION

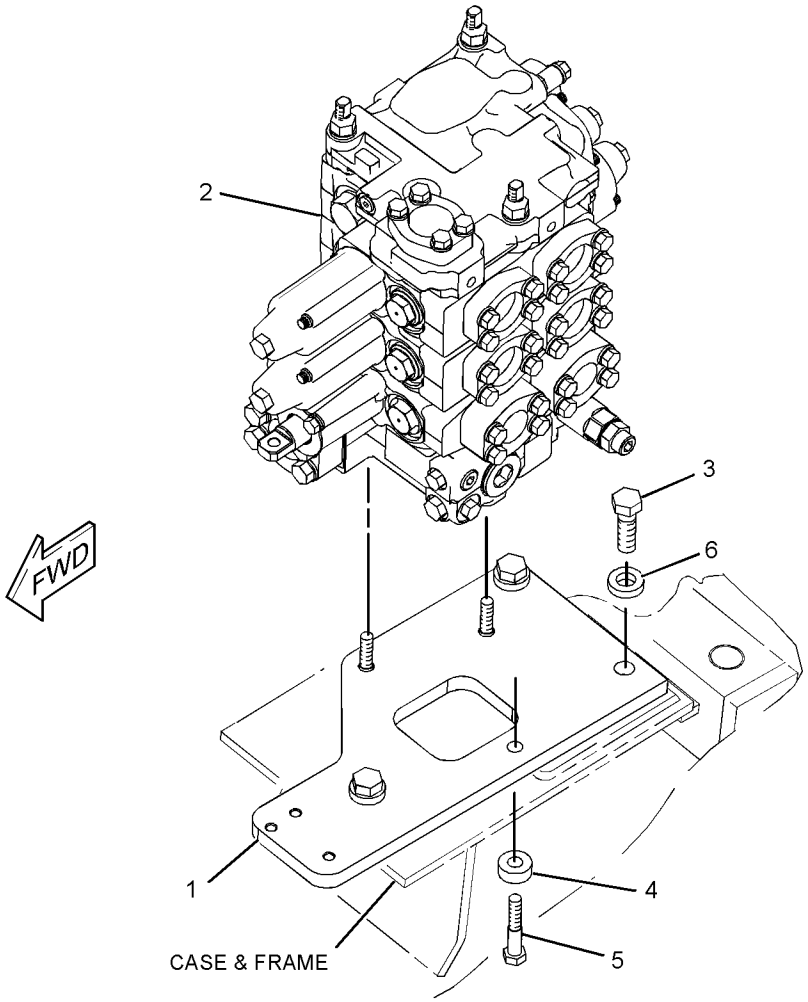

GRAPHIC #1 **<END>** g01505395

389-3220 MOUNTING GP-VALVE–IMPLEMENT, STEERING

S/N: EMM1-UP; JEN1-UP
PART OF 389-3225, 389-3227 HYDRAULIC AR
AN ATTACHMENT

SMCS-5051 **i05561589**

NOTE	REF NO	GRAPHIC REF	PART NUMBER	QTY	PART NAME 1 2 3 4 5 6 (PRODUCT LEVEL)	SEE PAGE
	1	1	**223-3421**	1	PLATE AS	
Y	2	1	**224-4937**	1	VALVE GP-BANK 4 (BULLDOZER, RIPPER, STEERING)	514
M	3	1	**296-7283**	3	BOLT (M16X2X50-MM)	
M	4	1	**172-9966**	3	BOLT (M12X1.75X65-MM)	
	5	1	**198-4778**	3	WASHER-HARD (13.5X30X12-MM THK)	
	6	1	**198-4780**	3	WASHER-HARD (17.5X32X8-MM THK)	

M - METRIC PART
Y - SEPARATE ILLUSTRATION

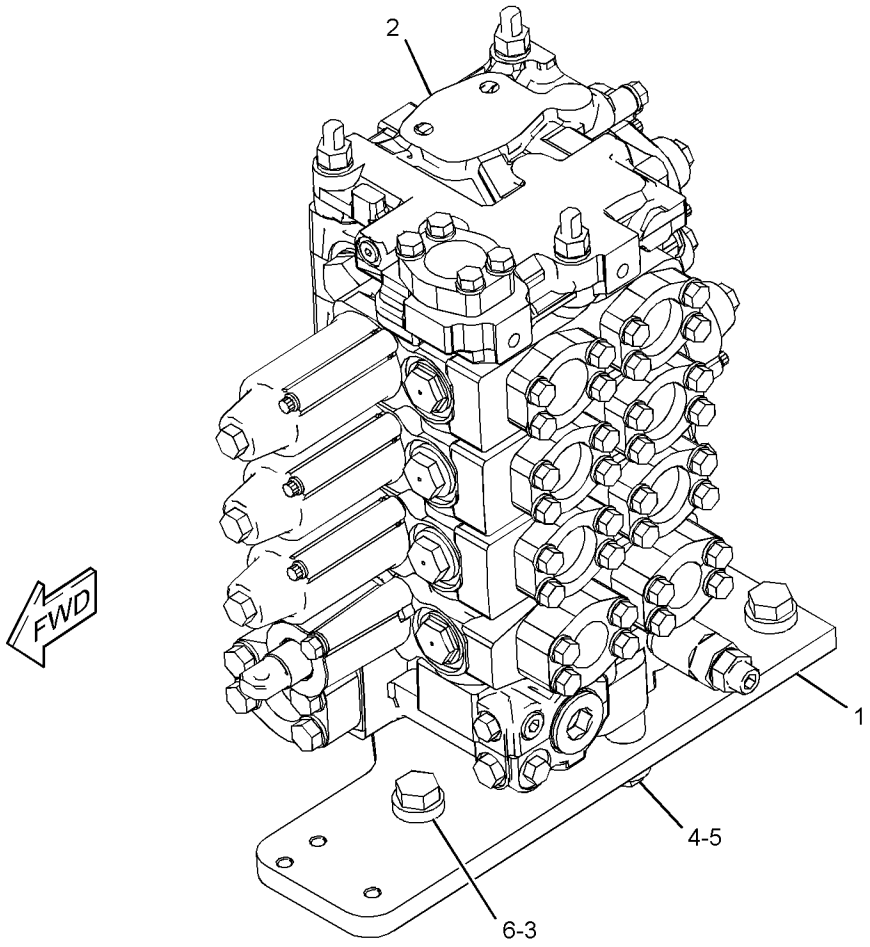

GRAPHIC #1 **<END>** g03533196

389-6149 PLATE GP-MOUNTING

S/N: EMM1-UP; JEN1-UP
FOR USE WITH ROPS & A/C
AN ATTACHMENT

SMCS-5059 **i05682409**

NOTE	REF NO	GRAPHIC REF	PART NUMBER	QTY	PART NAME 1 2 3 4 5 6 (PRODUCT LEVEL)	SEE PAGE
	1	1	**277-5801**	1	PLATE AS	
		1	**7T-1099**	4	LINK	
	2	1	**277-5802**	1	PLATE AS	
		1	**7T-1099**	4	LINK	
M	3	1	**7X-2562**	4	BOLT (M20X2.5X45-MM)	
	4	1	**8T-5439**	4	WASHER-HARD (21.5X45X6-MM THK)	

M - METRIC PART

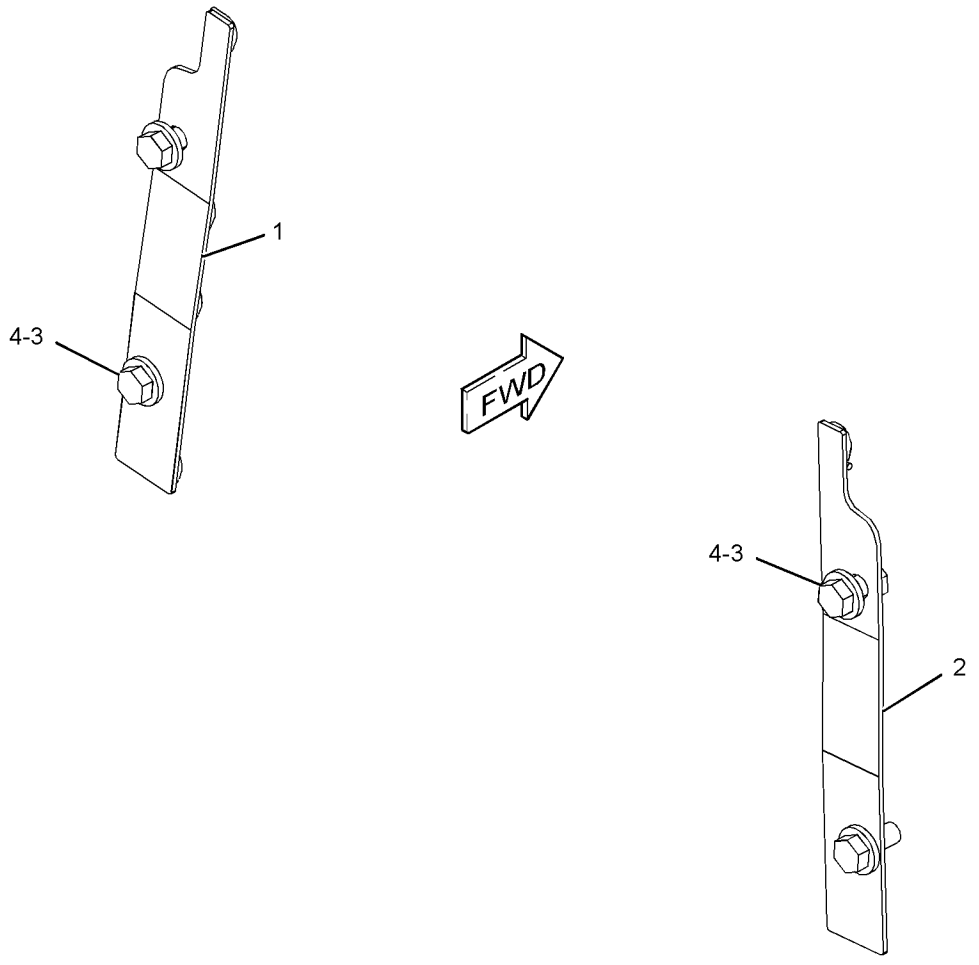

GRAPHIC #1 **<END>** g03582138

222-1161 PUMP & MOUNTING GP

S/N: EMM1-UP; JEN1-UP

PART OF 389-3214 HYDRAULIC AR

SMCS-5084 **i05640314**

NOTE	REF NO	GRAPHIC REF	PART NUMBER	QTY	PART NAME 1 2 3 4 5 6 (PRODUCT LEVEL)	SEE PAGE
Y	1	1	**227-0830**	1	PUMP GP-PISTON (IMPLEMENT, STEERING)	500
	2	1	**4S-5898**	1	SEAL-O-RING	
M	3	1	**8T-7338**	2	BOLT (M16X2X45-MM)	
	4	1	**9X-8257**	2	WASHER (17.5X30X3.5-MM THK)	

M - METRIC PART
Y - SEPARATE ILLUSTRATION

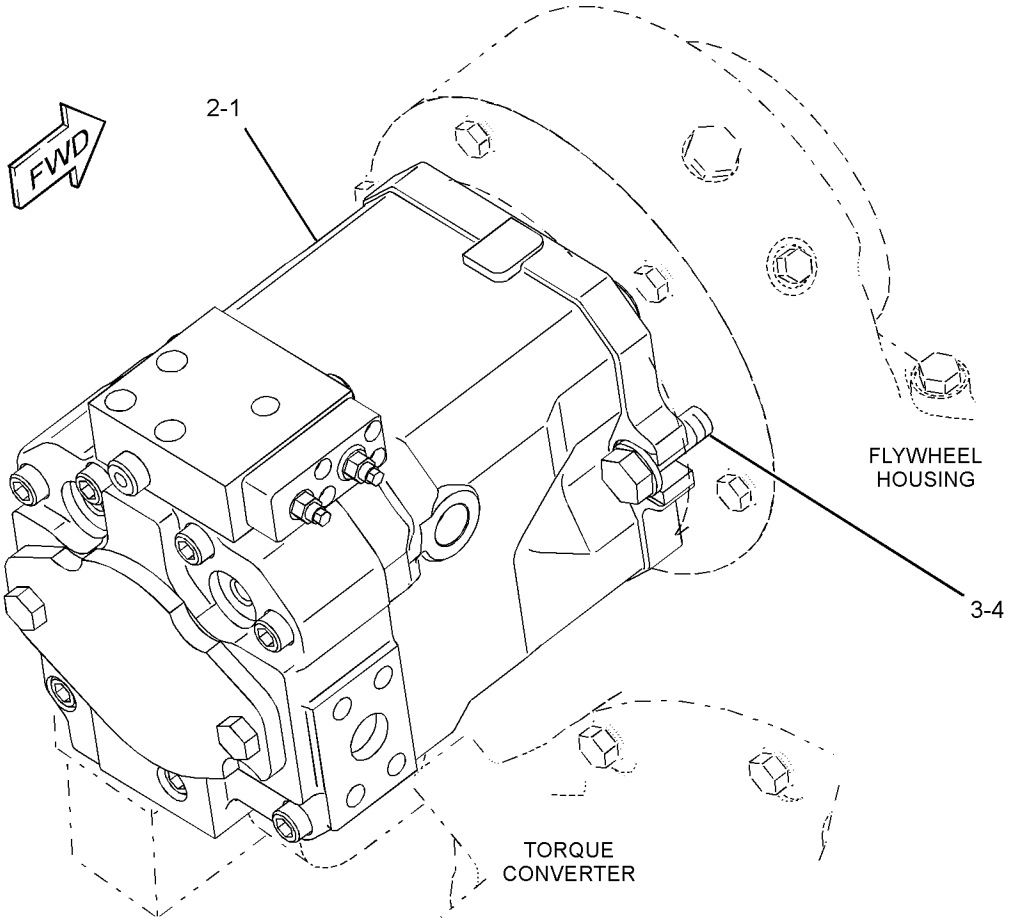

GRAPHIC #1 **<END>** g01206305

227-0830 PUMP GP-PISTON—IMPLEMENT, STEERING*R

S/N: EMM1-UP; JEN1-UP

PART OF 222-1161 PUMP & MOUNTING GP

SMCS-5070 **i05682411**

NOTE	REF NO	GRAPHIC REF	PART NUMBER	QTY	PART NAME 1 2 3 4 5 6 (PRODUCT LEVEL)	SEE PAGE
	1	1	**095-0940**	1	RING-RETAINING	
	2	1	**7X-1553**	1	SEAL-LIP TYPE	
	3	1	**197-0074**	1	HOUSING	
	4	1	**9S-8006**	2	PLUG-O-RING	
	5	1	**2M-9780**	2	SEAL-O-RING	
	6	1	**197-0075**	1	RACE	
	7	1	**197-0076**	1	BEARING	
	8	1	**197-0077**	1	SHAFT	
	9	1	**8U-9480**	2	PIN	
	10	1	**197-0078**	2	BEARING	
	11	1	**131-4647**	1	CRADLE	
	12	1	**121-9915**	3	SLEEVE	
	13	1	**197-0079**	9	PISTON AS	
	14	1	**131-4649**	1	WASHER (61X123X5.5-MM THK)	
	15	1	**197-0080**	1	PLATE	
	16	1	**131-4657**	1	PLATE	
M	17	1	**8U-3297**	4	BOLT (M10X1.5X25-MM)	
	18	1	**286-1674**	1	BARREL	
	19	1	**197-0082**	1	WASHER (39.2X53.8X4-MM THK)	
	20	1	**197-0083**	1	SPRING	
	21	1	**197-0084**	1	RING	
	22	1	**197-0085**	1	SPACER (41X46X19.2-MM THK)	
	23	1	**195-6882**	1	RING	
	24	1	**121-9943**	1	RING	
	25	1	**197-0086**	1	SPACER (47X54X38-MM THK)	
	26	1	**197-0087**	1	RING	
	27	1	**197-0090**	1	PLATE	
	28	1	**101-2862**	2	DOWEL	
	29	1	**197-0088**	1	RING	
	30	1	**197-0089**	1	BEARING	
M	31	1	**6V-5192**	3	BOLT-SOCKET HEAD (M8X1.25X30-MM)	
	32	1	**8C-3131**	2	SEAL-O-RING	
	33	1	**121-9941**	2	RING	
	34	1	**131-4674**	2	PIPE	
	35	1	**131-4675**	1	RING	
	36	1	**131-4676**	1	PISTON	
	37	1	**284-3781**	1	PISTON	
	38	1	**197-0093**	1	RETAINER	
	39	1	**197-0094**	1	SPRING	
	40	1	**288-1199**	1	RETAINER	
	41	1	**284-3782**	1	PISTON	
M	42	1	**9T-4901**	1	NUT (M12X1-THD)	
	43	1	**121-9946**	1	PIN	
M	44	1	**3E-6910**	9	BOLT-SOCKET HEAD (M12X1.75X70-MM)	
	45	1	**117-8765**	1	SEAL-O-RING	
M	46	1	**6A-5591**	2	BOLT (M12X1.75X25-MM)	
	47	1	**195-6932**	1	COVER	
Y	48	1	**227-3021**	1	VALVE GP-PUMP CONTROL (PRESSURE, FLOW COMPENSATOR)	537
	49	1	**268-9076**	1	HOUSING AS	
	50	1	**8U-3875**	1	PLUG	
B	51	1	**5W-7461**	1	SHIM (1.05-MM THK)	
B	52	1	**5W-7462**	1	SHIM (1.1-MM THK)	
B	53	1	**5W-7463**	1	SHIM (1.15-MM THK)	
B	54	1	**5W-7464**	1	SHIM (1.25-MM THK)	
B	55	1	**5W-7465**	1	SHIM (1.5-MM THK)	
B	56	1	**5W-7466**	1	SHIM (1.75-MM THK)	
B	57	1	**131-4654**	1	PLATE (0.05-MM THK)	
B	58	1	**131-4655**	1	PLATE (0.075-MM THK)	

227-0830 **PUMP GP-PISTON (*contd.*)** **i05682411**

NOTE	REF NO	GRAPHIC REF	PART NUMBER	QTY	PART NAME 1 2 3 4 5 6 (PRODUCT LEVEL)	SEE PAGE
B	59	1	**131-4656**	1	PLATE (0.1-MM THK)	
B	60	1	**131-4650**	1	PLATE (0.05-MM THK)	
B	61	1	**131-4651**	1	PLATE (0.075-MM THK)	
B	62	1	**131-4652**	1	PLATE (0.1-MM THK)	
	63	1	**285-5644**	1	RING-RETAINING (PISTON PUMP)	
B	64	1	**333-8564**	2	PLUG AS	
	65	1	**333-8366**	1	SEAL-SHAFT	
					AVAILABLE REPAIR KIT(S):	
B			**199-4193**	1	KIT-SHIM (INCLUDES 21-SHIMS) (PISTON PUMP)	

B - USE AS REQUIRED
M - METRIC PART
Y - SEPARATE ILLUSTRATION

227-0830 **PUMP GP-PISTON (*contd.*)** **i05682411**

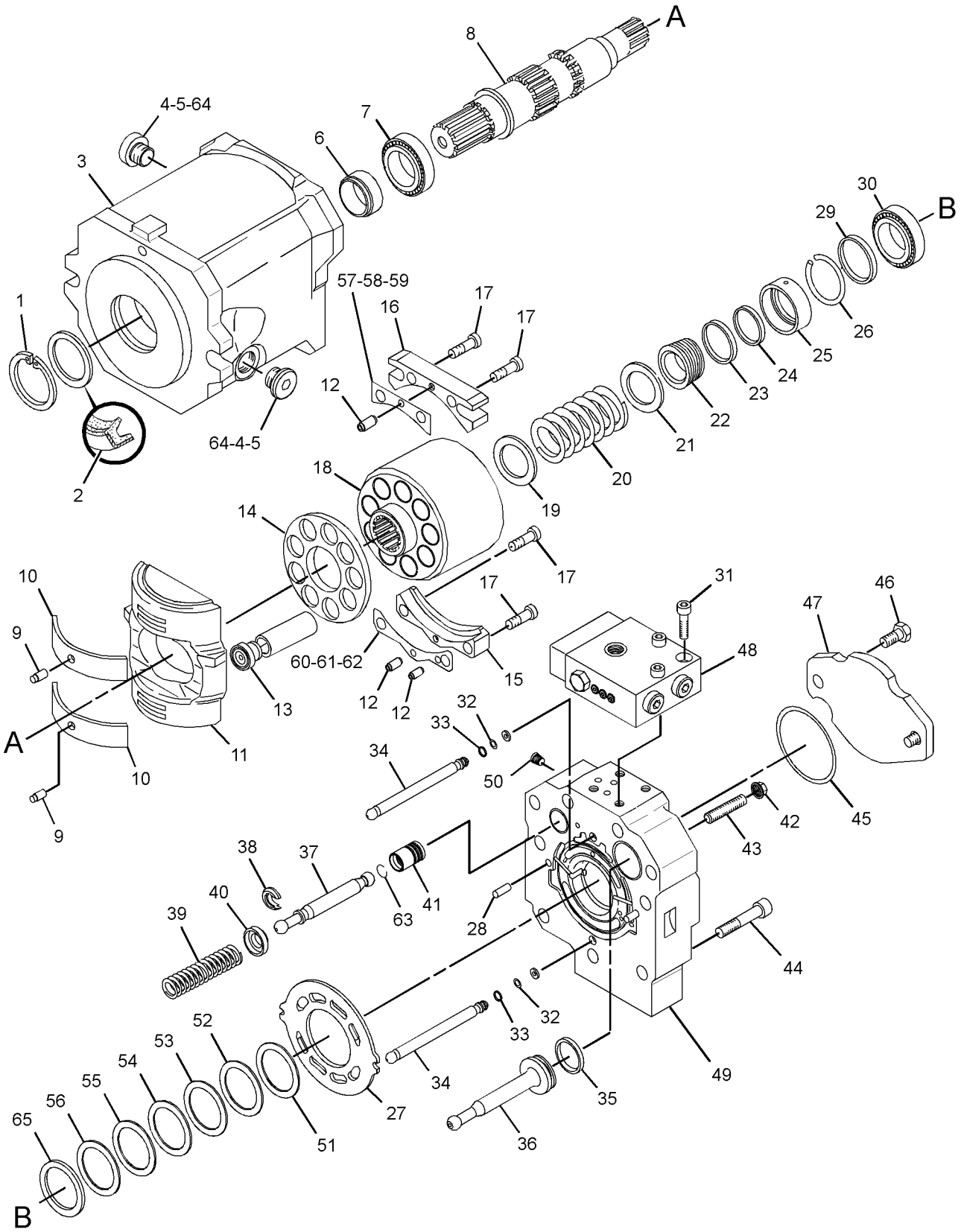

GRAPHIC #1 **<END>** g03026199

171-6001 ROTATING GP-MOTOR

S/N: EMM1-UP; JEN1-UP

PART OF 159-7156 MOTOR GP-PISTON

SMCS-5058 **i05640307**

NOTE	REF NO	GRAPHIC REF	PART NUMBER	QTY	PART NAME 1 2 3 4 5 6 (PRODUCT LEVEL)	SEE PAGE
	1	1	**171-3068**	1	SHAFT-MOTOR	
	2	1	**123-5748**	1	SEAL-SHAFT	
	3	1	**9T-1637**	1	COVER-FRONT	
	4	1	**6V-3326**	1	RING-RETAINING	
	5	1	**2J-8163**	1	SEAL-O-RING	
	6	1	**9T-1576**	1	SHIM (0.1-MM THK)	
	7	1	**9T-1579**	2	SHIM (0.3-MM THK)	
M	8	1	**113-4420**	7	SCREW (M6X20-MM)	
	9	1	**9T-1687**	1	BARREL-CYLINDER	
	10	1	**171-3054**	1	PIN-CENTER	
	11	1	**171-3061**	1	SPRING	
B	12	1	**171-3055**	1	SHIM (4-MM THK)	
B	13	1	**171-3057**	1	SHIM (3.9-MM THK)	
B	14	1	**171-3058**	1	SHIM (3.8-MM THK)	
B	15	1	**171-3059**	1	SHIM (3.7-MM THK)	
B	16	1	**171-3060**	1	SHIM (3.6-MM THK)	
	17	1	**171-5999**	1	PLATE-PORT	
	18	1	**165-6969**	7	PISTON AS	
	19	1	**9T-1642**	1	PLATE-RETAINING	
	20	1	**171-5989**	1	KIT-BEARING	

B - USE AS REQUIRED
M - METRIC PART

171-6001 **ROTATING GP-MOTOR (*contd.*)** **i05640307**

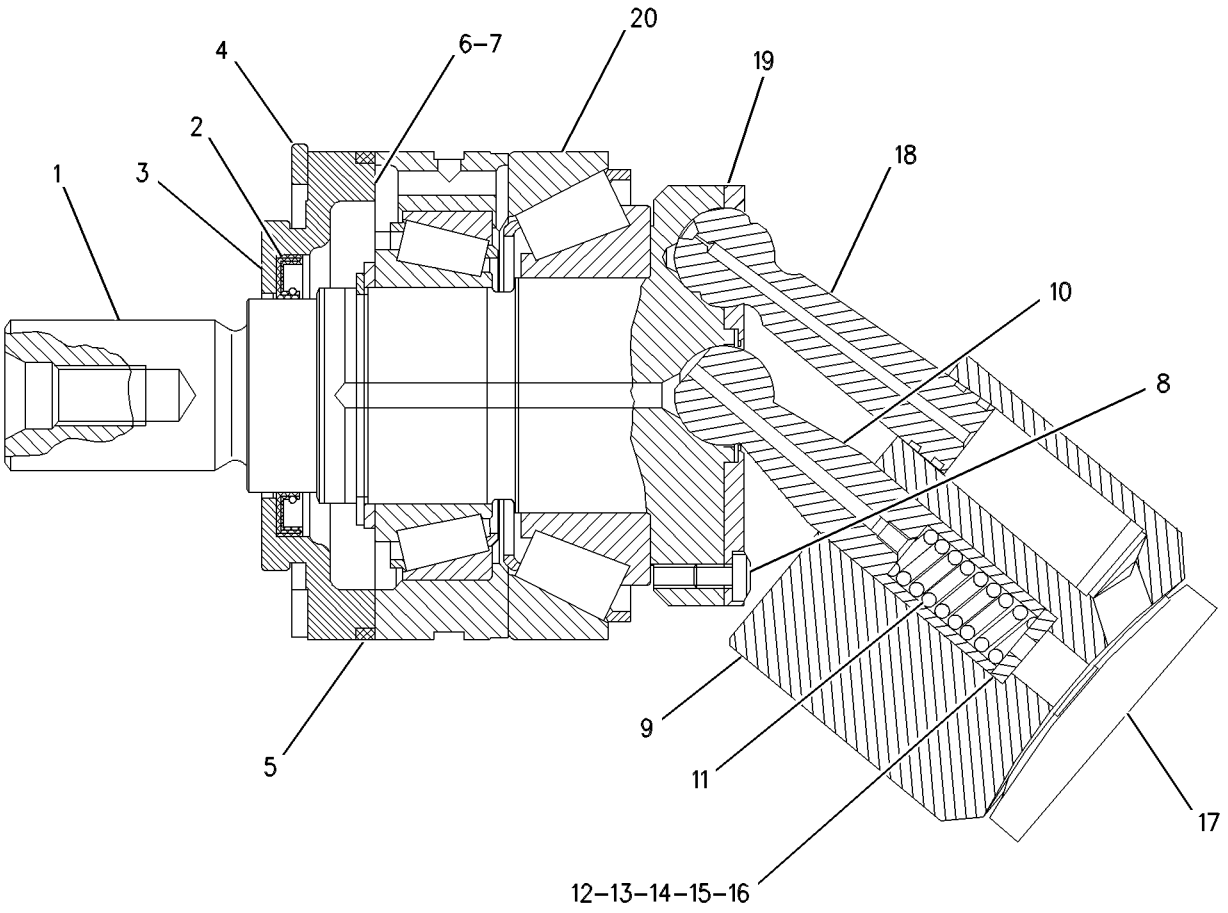

GRAPHIC #1 **<END>** g00592930

386-1152 TANK & MTG GP-HYDRAULIC

S/N: EMM1-UP; JEN1-UP

PART OF 389-3214 HYDRAULIC AR

SMCS-5056 **i05640446**

NOTE	REF NO	GRAPHIC REF	PART NUMBER	QTY	PART NAME 1 2 3 4 5 6 (PRODUCT LEVEL)	SEE PAGE
	1	1	**7K-1181**	1	STRAP-CABLE	
	2	1	**164-3651**	1	ADAPTER	
Y	3	1	*224-4946*	1	TANK GP-HYDRAULIC	506
	4	1	**191-5439**	1	VALVE-BREAKER RELIEF	
	5	1	**3D-2824**	1	SEAL-O-RING	
	6	1	**3J-1907**	1	SEAL-O-RING	
M	7	1	**8T-4779**	3	BOLT (M16X2X35-MM)	
	8	1	**9X-8257**	3	WASHER (17.5X30X3.5-MM THK)	

M - METRIC PART
Y - SEPARATE ILLUSTRATION

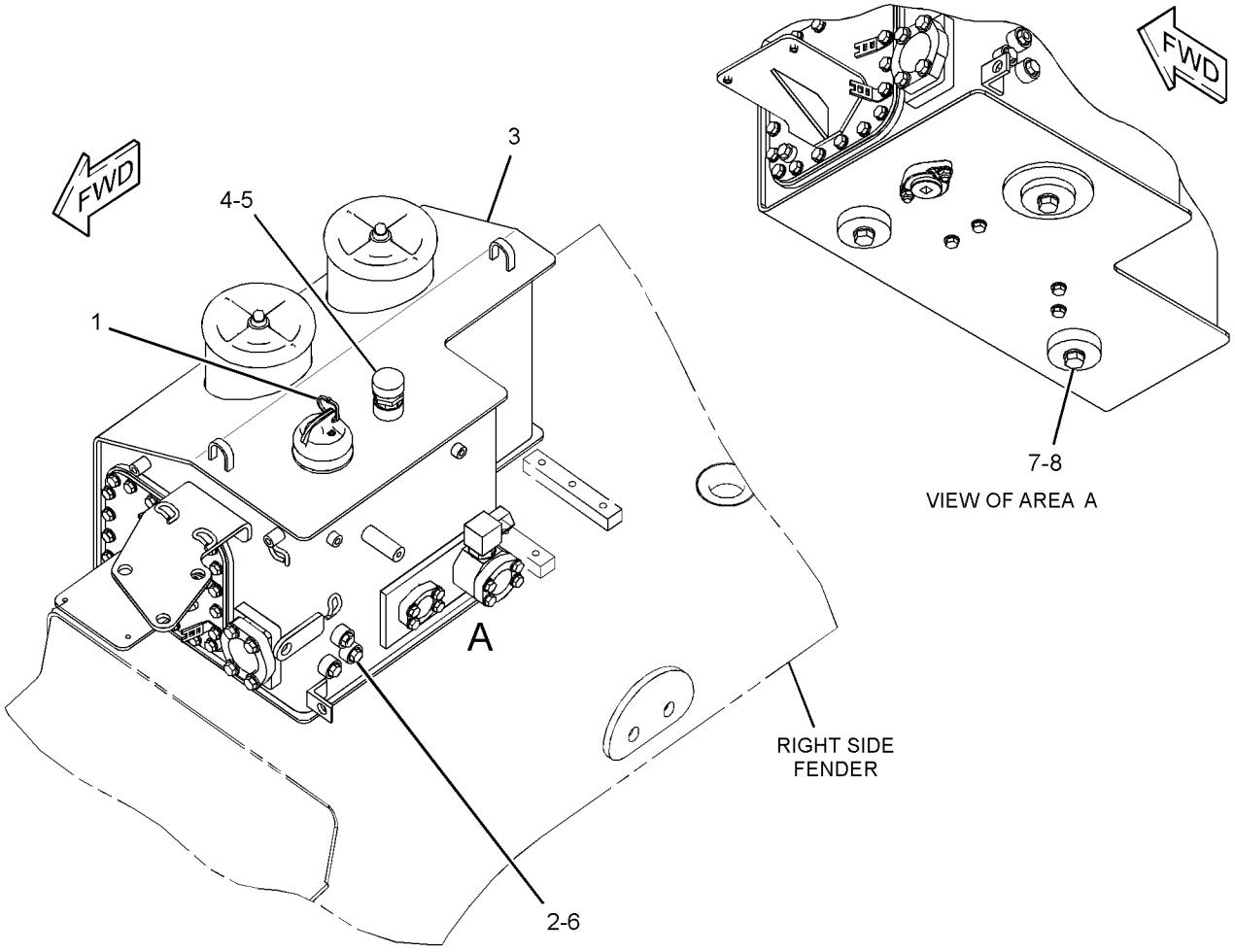

GRAPHIC #1 **<END>** g03253336

224-4946 TANK GP-HYDRAULIC

S/N: EMM1-UP; JEN1-UP
80.5-LITER(21.3-GAL) CAPACITY
PART OF 386-1152 TANK & MTG GP-HYDRAULIC

SMCS-5056 **i05682412**

NOTE	REF NO	GRAPHIC REF	PART NUMBER	QTY	PART NAME 1 2 3 4 5 6 (PRODUCT LEVEL)	SEE PAGE
	1	1	**1U-2827**	1	GUIDE-VALVE	
	2	1	**4J-8251**	1	GROMMET	
	3	1	**4J-8252**	1	GAUGE-SIGHT (HYDRAULIC TANK)	
	4	1	**4T-0521**	2	BOLT (5/8-11X17.1-IN)	
	5	1	**5D-1911**	1	COVER-HYDRAULIC CAP	
	6	1	**5D-7927**	1	STRAINER AS-OIL (HYDRAULIC TANK FILL)	
	7	1	**7B-3039**	1	SPRING	
	8	1	**7H-1447**	1	CAP-FILLER (HYDRAULIC TANK)	
	9	1	**8J-6913**	1	RETAINER-SIGHT GLASS	
	10	1	**8J-8443**	2	SPRING	
	11	1	**8J-8468**	2	VALVE	
	12	1	**8J-8782**	1	BODY-DRAIN VALVE	
	13	1	**8J-8783**	1	VALVE	
	14	1	**8T-3298**	1	SEAL-RECTANGULAR	
	15	1	**9J-2914**	2	SPACER	
	16	1	**9J-7031**	1	PLUG-DRAIN (HYDRAULIC TANK)	
	17	1	**9M-7394**	1	LEVER	
	18	1	**9T-3004**	1	VALVE	
	19	1	**9T-3005**	1	SPRING	
	20	1	**9T-3264**	2	COVER	
	21	1	**9T-7677**	1	RETAINER	
	22	1	**187-9194**	1	PLATE (SIGHT GLASS)	
	23	1	**235-0891**	1	TANK AS-HYDRAULIC	
	24	1	**235-0892**	1	TUBE AS	
	25	1	**235-0893**	1	TUBE AS	
	26	1	**235-0895**	1	COVER AS	
	27	1	**235-0907**	2	BASE-FILTER	
	28	1	**257-9788**	1	GASKET	
	29	1	**268-0066**	1	SPACER	
	30	1	*148-8347*	1	ELBOW AS	
		1	**6V-9007**	1	ELBOW	
		1	**3D-2824**	1	SEAL-O-RING	
		1	**6V-9746**	1	SEAL-O-RING	
	31	1	**154-1580**	1	WASHER-HARD (22X38X6-MM THK)	
	32	1	**1L-5072**	1	DOWEL	
	33	1	**1P-4578**	2	FLANGE-HALF	
	34	1	**1P-4582**	2	FLANGE-HALF	
	35	1	**1R-0777**	2	FILTER ELEMENT AS-OIL (ADVANCED EFFICIENCY)	
					—OR—	
A		1	**104-6931**	2	FILTER ELEMENT AS-OIL (FIRE RESISTANT FLUID)	
M	36	1	**270-9433**	2	BOLT-SOCKET HEAD (M6X1X45-MM)	
	37	1	**2D-4202**	1	PLATE	
	38	1	**2J-7761**	1	RING-RETAINING	
	39	1	**3G-3267**	2	SCREEN AS (HYDRAULIC TANK)	
	40	1	**4F-7389**	2	SEAL-O-RING	
	41	1	**4K-0367**	2	NUT-FULL (5/8-11-THD)	
	42	1	**4P-7581**	1	CLIP	
	43	1	**4P-8134**	2	CLIP	
	44	1	**5F-1678**	4	SEAL-O-RING	
	45	1	**5M-2057**	1	SEAL-O-RING	
	46	1	**6H-9361**	1	RING-RETAINING	
	47	1	**6V-5839**	8	WASHER (11X21X2.5-MM THK)	
M	48	1	**6V-7732**	4	BOLT (M10X1.5X25-MM)	
M	49	1	**6V-7744**	6	LOCKNUT (M10X1.5-THD)	
	50	1	**6V-9633**	2	GASKET	
	51	1	**7D-9749**	1	SEAL-O-RING	
	52	1	**7F-8267**	2	SEAL-O-RING	

224-4946 **TANK GP-HYDRAULIC (*contd.*)** **i05682412**

NOTE	REF NO	GRAPHIC REF	PART NUMBER	QTY	PART NAME 1 2 3 4 5 6 (PRODUCT LEVEL)	SEE PAGE
	53	1	**8C-3206**	2	FLANGE-HALF	
	54	1	**8F-9206**	2	SEAL-O-RING	
	55	1	**8J-8322**	2	RING-RETAINING	
	56	1	**8J-8436**	2	TUBE AS	
	57	1	**8T-2275**	1	BALL	
	58	1	**8T-4121**	34	WASHER-HARD (11X21X2.5-MM THK)	
M	59	1	**8T-4136**	20	BOLT (M10X1.5X25-MM)	
M	60	1	**8T-4172**	4	BOLT (M10X1.5X80-MM)	
M	61	1	**8T-4196**	4	BOLT (M10X1.5X35-MM)	
	62	1	**8T-4223**	4	WASHER-HARD (13.5X25.5X3-MM THK)	
M	63	1	**8T-4956**	4	BOLT (M12X1.75X35-MM)	
	64	1	**9H-6454**	1	GASKET	
M	65	1	**9X-2125**	4	BOLT-LOCKING (M10X1.5X25-MM)	

A - NOT PART OF THIS GROUP
M - METRIC PART

224-4946 **TANK GP-HYDRAULIC (*contd.*)** **i05682412**

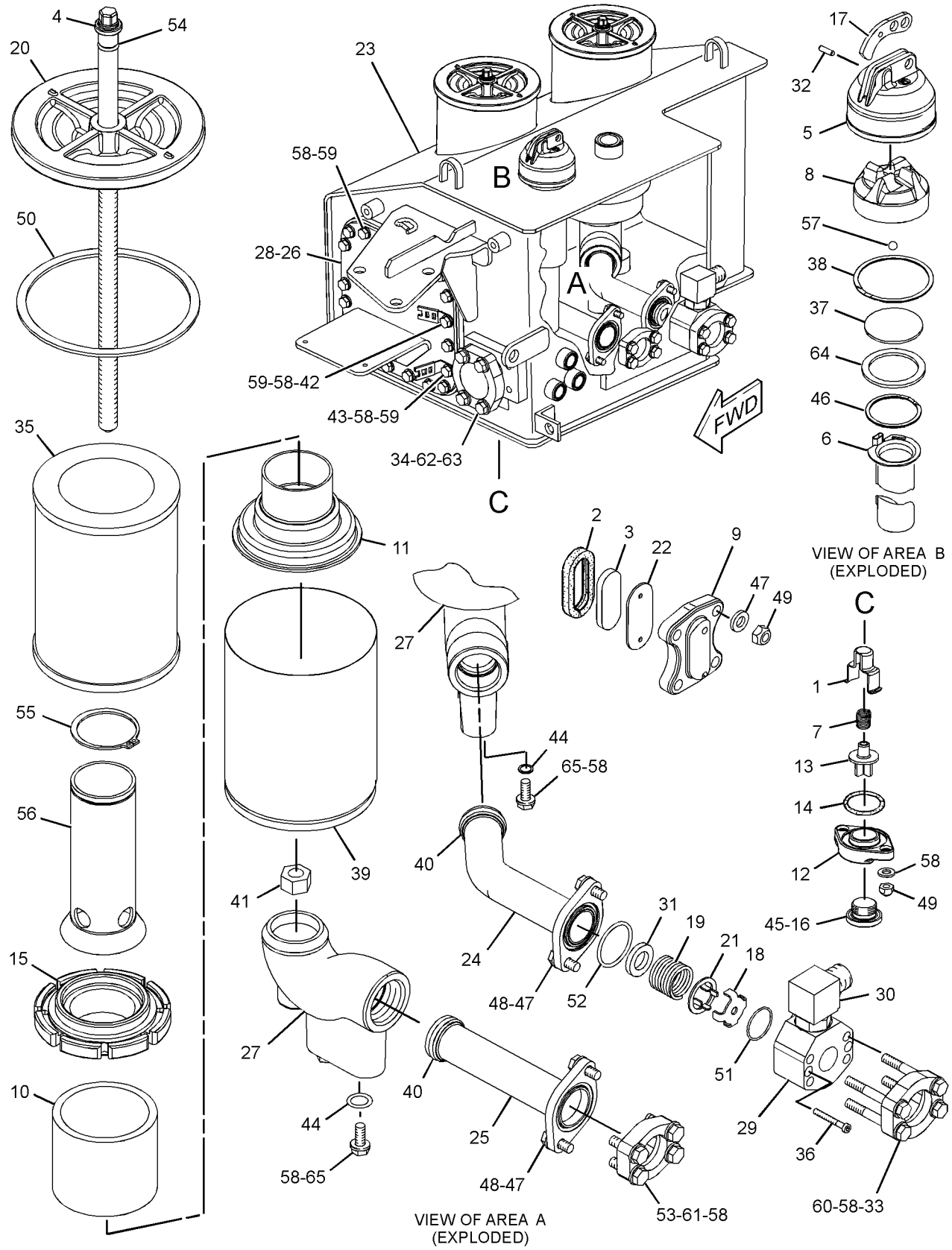

GRAPHIC #1

<END>

g01212472

389-6093 VALVE & MOUNTING GP

S/N: EMM1-UP; JEN1-UP

PART OF 389-3209 POWER TRAIN AR

SMCS-5051 **i05637784**

NOTE	REF NO	GRAPHIC REF	PART NUMBER	QTY	PART NAME 1 2 3 4 5 6 (PRODUCT LEVEL)	SEE PAGE
	1	1	**4S-5719**	3	SPACER (10.31X25X12.7-MM THK)	
	2	1	**8T-8932**	1	PIN AS-SPRING	
Y	3	1	**9W-1617**	1	VALVE GP-BRAKE CONTROL	438
	4	1	**130-1433**	1	SPACER (11X25X17-MM THK)	
	5	1	**148-9920**	2	SEAL-UMBRELLA	
	6	1	**320-2841**	1	CABLE AS	
		1	**6F-0253**	4	LOCKWASHER	
		1	**9X-8257**	4	WASHER (17.5X30X3.5-MM THK)	
M		1	**098-5747**	4	NUT (M16X2-THD)	
	7	1	**320-2842**	1	BRACKET AS	
	8	1	**364-5127**	2	CLEVIS	
	9	1	**1B-0676**	1	PIN	
	10	1	**3B-4615**	1	PIN-COTTER	
M	11	1	**5C-2890**	2	NUT (M6X1-THD)	
M	12	1	**7X-2543**	1	BOLT (M10X1.5X120-MM)	
	13	1	**8M-5254**	3	SEAL-O-RING	
	14	1	**8T-4121**	1	WASHER-HARD (11X21X2.5-MM THK)	

M - METRIC PART
Y - SEPARATE ILLUSTRATION

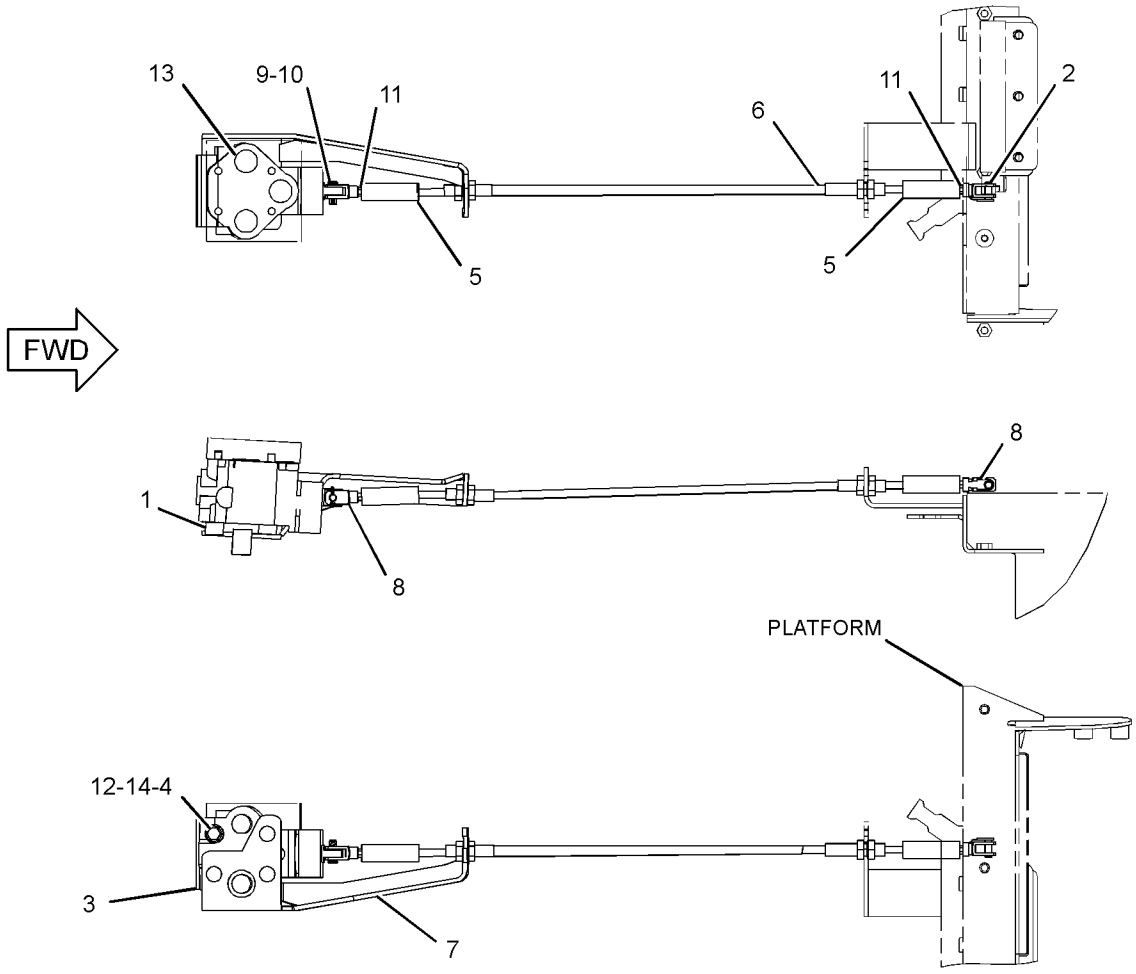

GRAPHIC #1 **<END>** g03581771

234-5126 VALVE & MTG GP-BULLDOZER–GRADE CONTROL

S/N: EMM1-UP; JEN1-UP
24-VOLT
PART OF 389-3292, 389-3293 LINES GP-PILOT
AN ATTACHMENT

SMCS-5051 **i05558953**

NOTE	REF NO	GRAPHIC REF	PART NUMBER	QTY	PART NAME 1 2 3 4 5 6 (PRODUCT LEVEL)	SEE PAGE
Y	1	1	**201-0950**	1	VALVE GP-SOLENOID (HYDRAULIC LOCKOUT)	548
	2	1	**234-5124**	1	MANIFOLD AS	
		1	**148-9359**	9	PLUG	
Y	3	1	**341-9214**	4	VALVE GP-SOLENOID (BLADE CONTROL)	549

Y - SEPARATE ILLUSTRATION

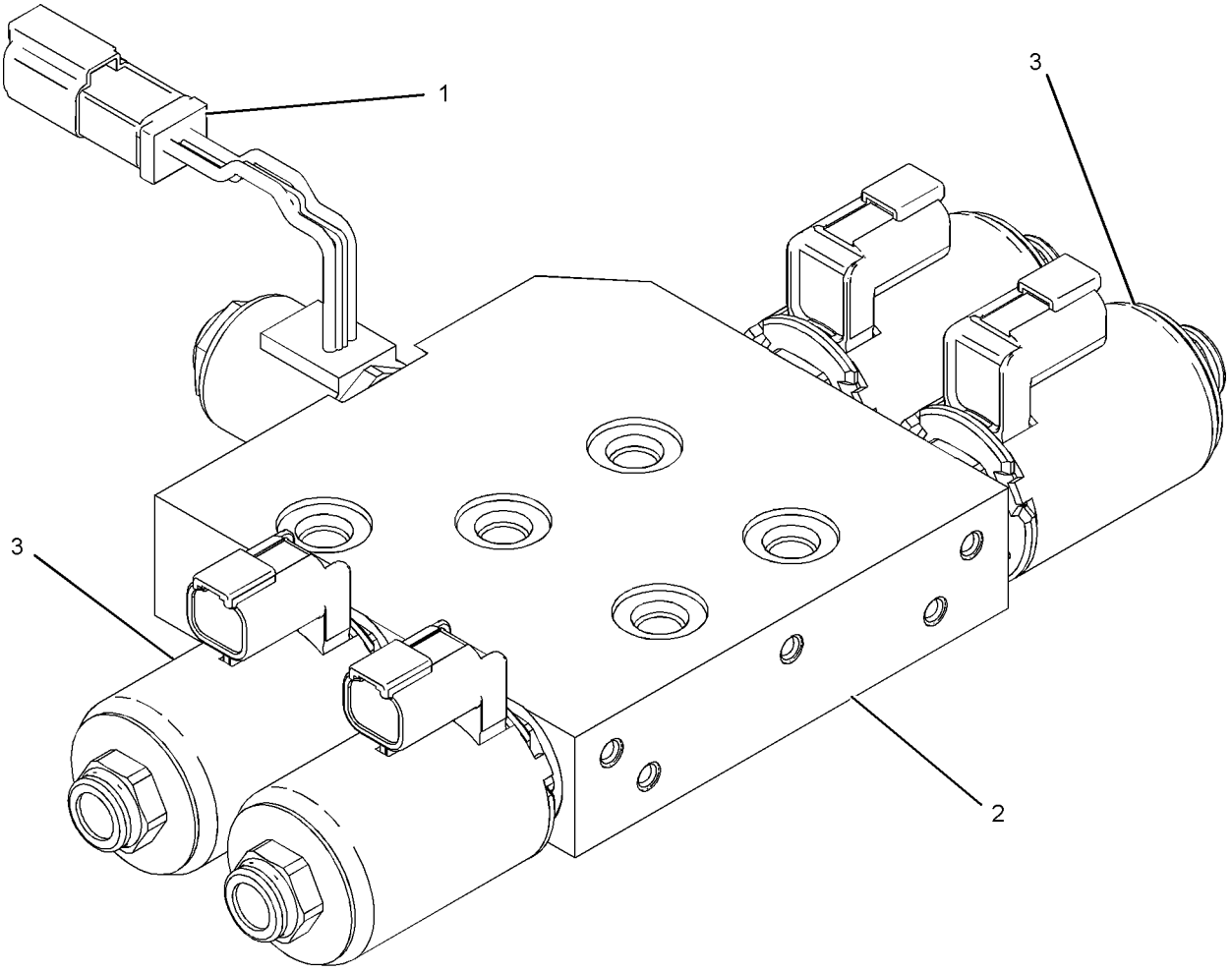

GRAPHIC #1 **<END>** g01072312

222-1191 VALVE & MTG GP-COUNTERBALANCE

S/N: EMM1-UP; JEN1-UP

PART OF 389-3214 HYDRAULIC AR

SMCS-5420 **i05640336**

NOTE	REF NO	GRAPHIC REF	PART NUMBER	QTY	PART NAME 1 2 3 4 5 6 (PRODUCT LEVEL)	SEE PAGE
Y	1	1	**227-0832**	1	VALVE GP-COUNTERBALANCE	527
M	2	1	**160-8493**	6	BOLT-SOCKET HEAD (M14X2X80-MM)	
	3	1	**4J-0520**	2	SEAL-O-RING	
	4	1	**6V-0400**	4	FLANGE-HALF	
M	5	1	**8T-4184**	8	BOLT (M12X1.75X45-MM)	
	6	1	**8T-4223**	8	WASHER-HARD (13.5X25.5X3-MM THK)	

M - METRIC PART
Y - SEPARATE ILLUSTRATION

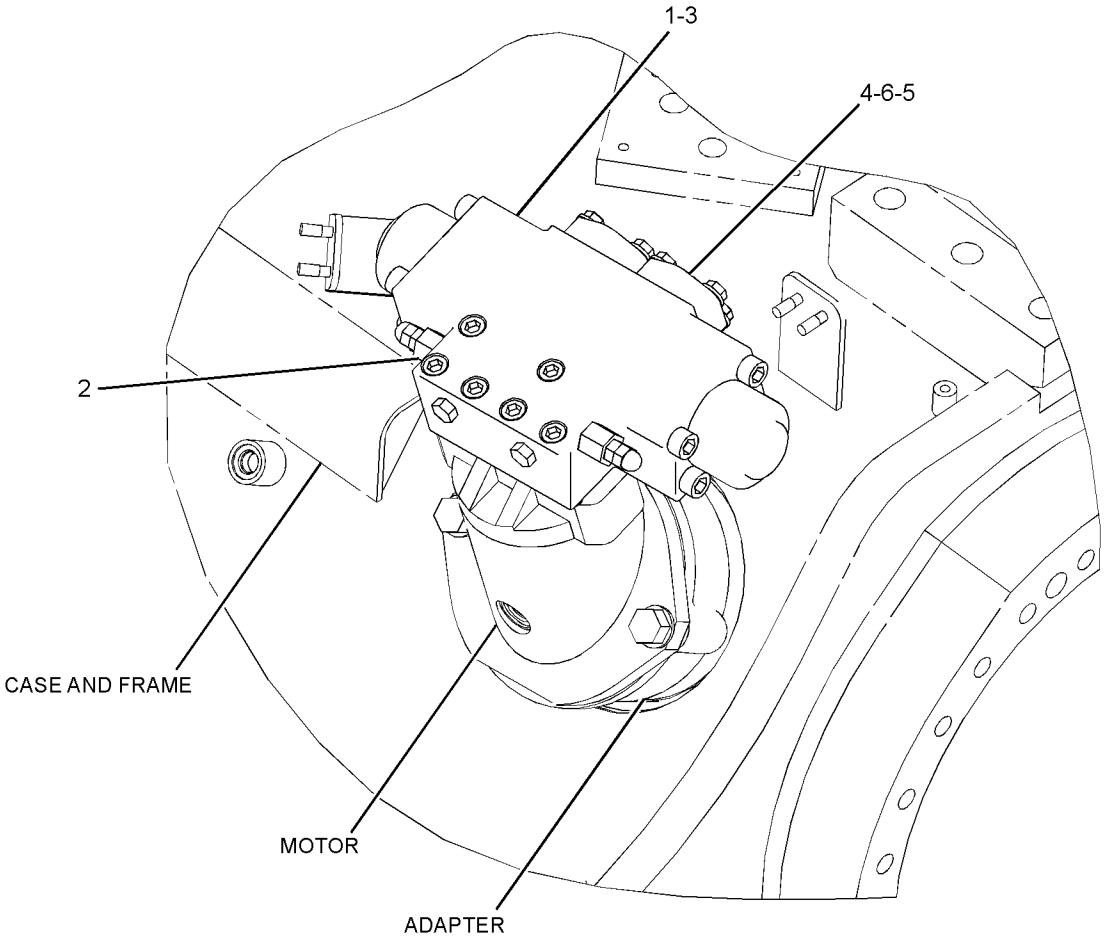

GRAPHIC #1 **<END>** g01206728

224-4936 VALVE GP-BANK 3—IMPLEMENT, STEERING

S/N: EMM1-UP; JEN1-UP
PART OF 222-1159 MOUNTING GP-VALVE
AN ATTACHMENT

SMCS-5051 **i05682571**

NOTE	REF NO	GRAPHIC REF	PART NUMBER	QTY	PART NAME 1 2 3 4 5 6 (PRODUCT LEVEL)	SEE PAGE
	2	1	**6V-8188**	3	NUT (1/2-13-THD)	
	3	1	**164-7677**	3	ROD	
	5	1	**235-0399**	1	COVER	
Y	6	1	**235-0401**	1	MANIFOLD GP-VALVE (INLET)	492
Y	7	1	**235-0402**	1	VALVE GP-CONTROL (STEERING)	517
Y	8	1	**235-0403**	1	VALVE GP-CONTROL (BULLDOZER LIFT)	519
Y	9	1	**235-0404**	1	VALVE GP-CONTROL (BULLDOZER TILT)	522
	10	1	*155-3624*	2	PLUG AS	
					(EACH INCLUDES)	
		1	**9S-4182**	1	PLUG-O-RING	
		1	**3J-7354**	1	SEAL-O-RING	
	11	1	**1P-3702**	1	SEAL-RECTANGULAR	
	12	1	**1P-4578**	2	FLANGE-HALF	
	13	1	*207-7899*	1	PLUG AS	
		1	**9S-4188**	1	PLUG	
		1	**4K-1388**	1	SEAL-O-RING	
	14	1	**4J-0522**	12	SEAL-O-RING	
	15	1	**4J-8997**	3	SEAL-O-RING	
	16	1	**6V-5555**	12	SEAL-O-RING	
	17	1	**8C-3206**	10	FLANGE-HALF	
	18	1	**8T-4121**	32	WASHER-HARD (11X21X2.5-MM THK)	
M	19	1	**8T-4182**	8	BOLT (M10X1.5X45-MM)	
M	20	1	**8T-4196**	24	BOLT (M10X1.5X35-MM)	
	21	1	**8T-4223**	3	WASHER-HARD (13.5X25.5X3-MM THK)	
	22	1	**8T-9403**	4	FLANGE-HALF	

M - METRIC PART
Y - SEPARATE ILLUSTRATION

224-4936 **VALVE GP-BANK 3 (*contd.*)** **i05682571**

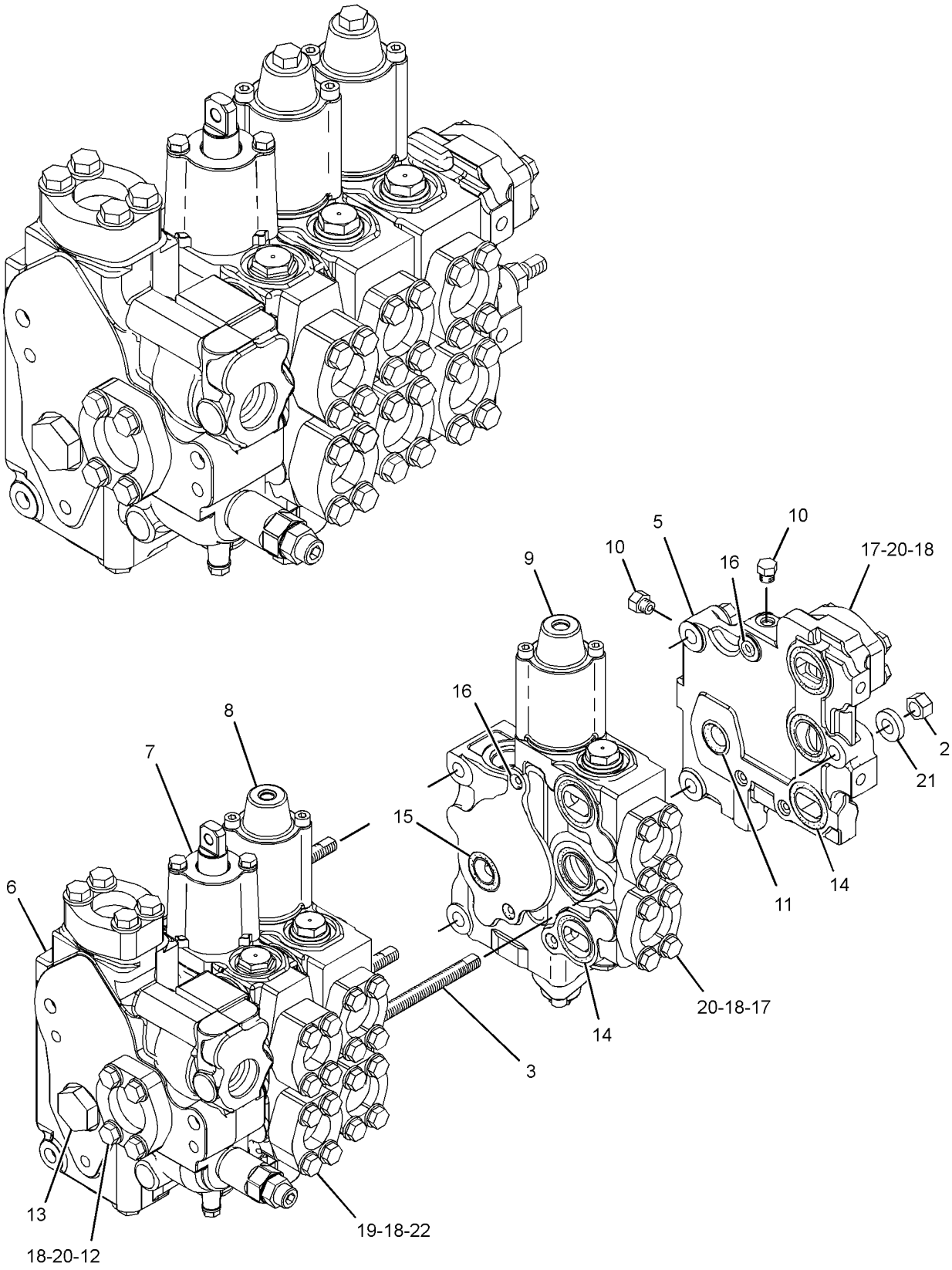

GRAPHIC #1 **<END>** g01213083

224-4937 VALVE GP-BANK 4—IMPLEMENT, STEERING

S/N: EMM1-UP; JEN1-UP
PART OF 389-3220 MOUNTING GP-VALVE
AN ATTACHMENT

SMCS-5051 **i05682570**

NOTE	REF NO	GRAPHIC REF	PART NUMBER	QTY	PART NAME 1 2 3 4 5 6 (PRODUCT LEVEL)	SEE PAGE
	2	1	**164-6174**	3	ROD	
	4	1	**235-0399**	1	COVER	
Y	5	1	**235-0401**	1	MANIFOLD GP-VALVE (INLET)	492
Y	6	1	**235-0402**	1	VALVE GP-CONTROL (STEERING)	517
Y	7	1	**235-0403**	1	VALVE GP-CONTROL (BULLDOZER LIFT)	519
Y	8	1	**235-0404**	1	VALVE GP-CONTROL (BULLDOZER TILT)	522
Y	9	1	**235-0405**	1	VALVE GP-CONTROL (RIPPER LIFT)	524
	10	1	*155-3624*	2	PLUG AS	
					(EACH INCLUDES)	
		1	**9S-4182**	1	PLUG-O-RING	
		1	**3J-7354**	1	SEAL-O-RING	
	11	1	**1P-3702**	1	SEAL-RECTANGULAR	
	12	1	**1P-4578**	2	FLANGE-HALF	
	13	1	*207-7899*	1	PLUG AS	
		1	**4K-1388**	1	SEAL-O-RING	
		1	**9S-4188**	1	PLUG	
	14	1	**4J-0522**	15	SEAL-O-RING	
	15	1	**4J-8997**	4	SEAL-O-RING	
	16	1	**6V-5555**	15	SEAL-O-RING	
	17	1	**6V-8188**	3	NUT (1/2-13-THD)	
	18	1	**8C-3206**	14	FLANGE-HALF	
	19	1	**8T-4121**	40	WASHER-HARD (11X21X2.5-MM THK)	
M	20	1	**8T-4182**	8	BOLT (M10X1.5X45-MM)	
M	21	1	**8T-4196**	32	BOLT (M10X1.5X35-MM)	
	22	1	**8T-4223**	3	WASHER-HARD (13.5X25.5X3-MM THK)	
	23	1	**8T-9403**	4	FLANGE-HALF	

M - METRIC PART
Y - SEPARATE ILLUSTRATION

224-4937 **VALVE GP-BANK 4 (*contd.*)** **i05682570**

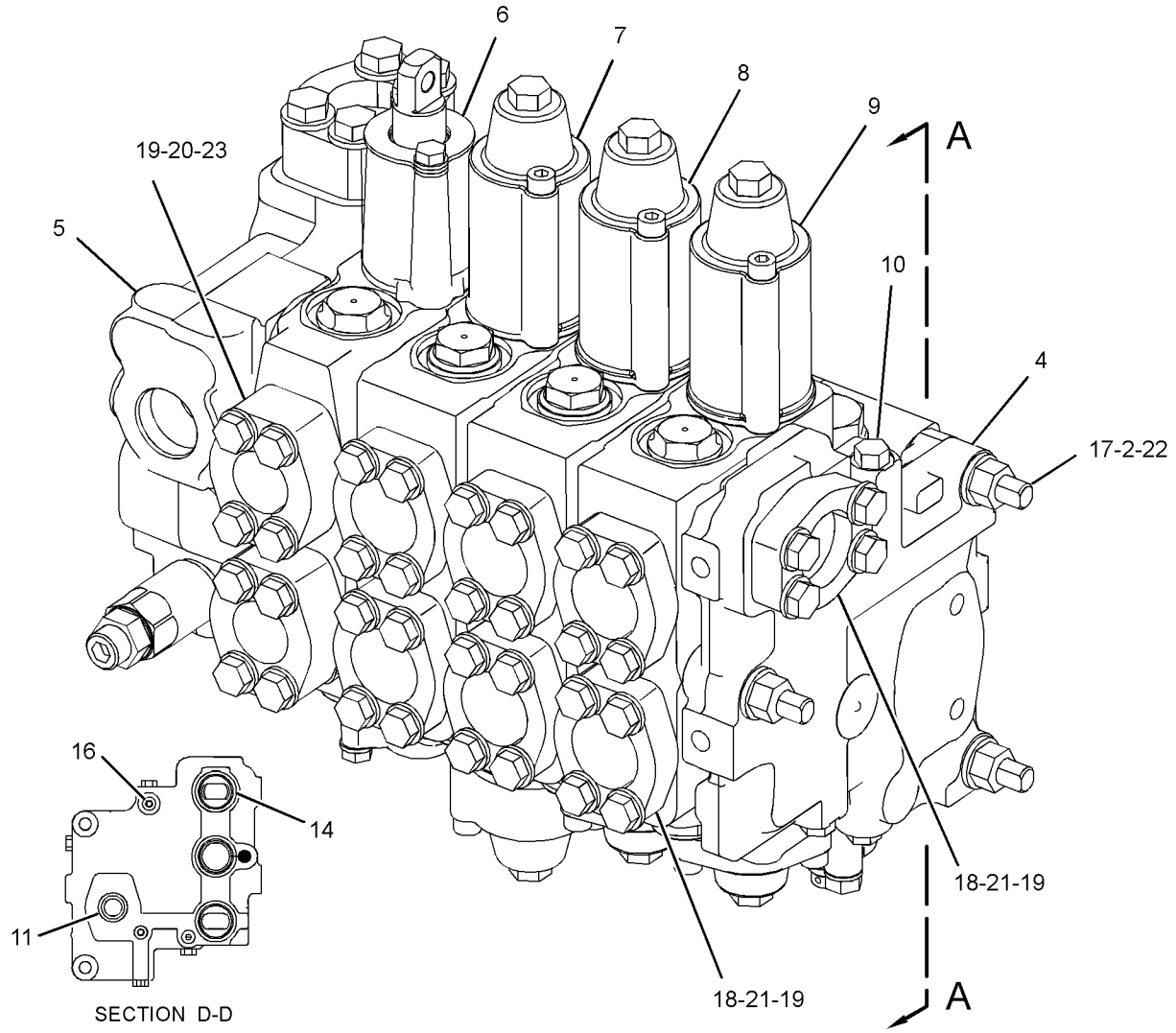

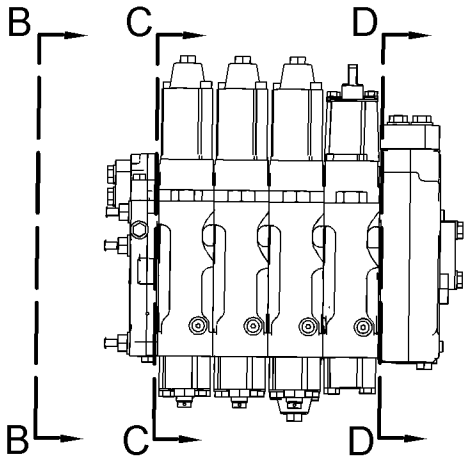

VIEW A-A

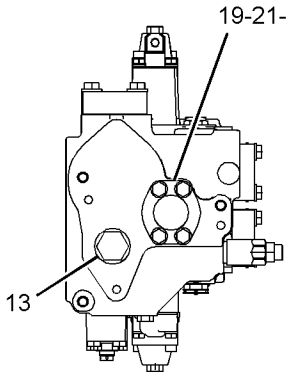

VIEW B-B

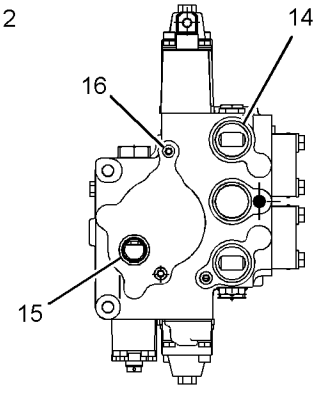

SECTION C-C

GRAPHIC #1 **<END>** g01208575

158-9956 VALVE GP-CHECK

S/N: EMM1-UP; JEN1-UP
PART OF 226-4751 MANIFOLD GP-CONTROL
AN ATTACHMENT

SMCS-5067 **i05552971**

NOTE	REF NO	GRAPHIC REF	PART NUMBER	QTY	PART NAME 1 2 3 4 5 6 (PRODUCT LEVEL)	SEE PAGE
	1	1	**3K-0360**	1	SEAL-O-RING	
	2	1	**161-6154**	1	SEAL-O-RING	
	3	1	**6E-0381**	1	RING-BACKUP	

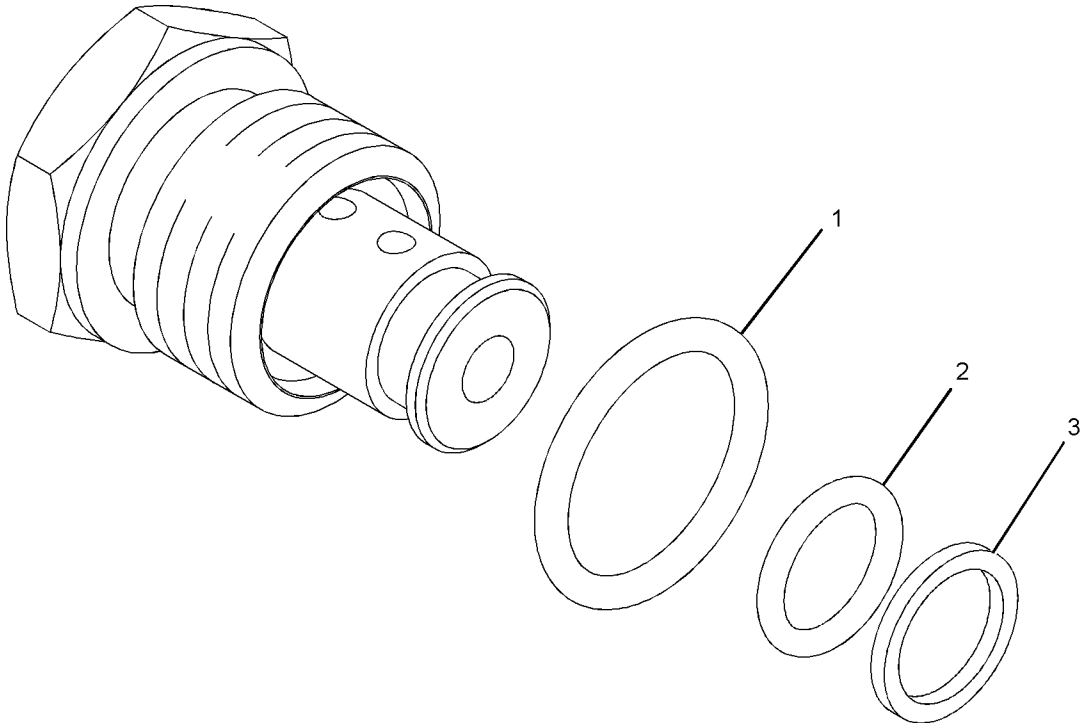

GRAPHIC #1 **<END>** g01016882

235-0402 VALVE GP-CONTROL—STEERING

S/N: EMM1-UP; JEN1-UP
PART OF 224-4936 VALVE GP-BANK 3, 224-4937 VALVE GP-BANK 4
AN ATTACHMENT

SMCS-5051 **i05552593**

NOTE	REF NO	GRAPHIC REF	PART NUMBER	QTY	PART NAME 1 2 3 4 5 6 (PRODUCT LEVEL)	SEE PAGE
	1	1	**2S-2596**	3	SPRING	
B	3	1	**4J-6806**	2	SHIM (1.2-MM THK)	
	4	1	**4T-0993**	2	RETAINER	
	5	1	**4T-1021**	2	RETAINER	
	6	1	**4T-1649**	1	HOUSING	
	7	1	**4T-1850**	1	HOUSING	
Y	8	1	**4T-1860**	1	VALVE GP-SHUTTLE	547
	9	1	**4T-4511**	1	SLEEVE	
	10	1	**366-4972**	1	RING-BACKUP	
	11	1	**6E-0486**	1	VALVE GP-FLOW CONTROL	
	12	1	**6L-9716**	1	PLUG-PIPE	
	13	1	**9T-6316**	1	SPRING	
	14	1	**9T-6688**	1	SPRING	
	15	1	**100-8012**	2	BODY	
	16	1	**107-1177**	1	HOUSING	
	17	1	**107-1179**	1	PLATE-SEAL	
	19	1	**208-5498**	1	SEAL AS	
B	22	1	**256-9637**	2	SHIM (0.61-MM THK)	
M	23	1	**099-3649**	2	BOLT (M8X1.25X40-MM)	
	24	1	**100-8010**	3	VALVE-CHECK	
	25	1	**100-8011**	1	PLUG	
	26	1	*162-6448*	1	PLUG AS	
		1	**1N-5999**	1	PLUG-O-RING	
		1	**7J-0204**	1	SEAL-O-RING	
	27	1	*173-3993*	2	PLUG AS	
					(EACH INCLUDES)	
		1	**9S-8001**	1	PLUG-O-RING	
		1	**4J-7533**	1	SEAL-O-RING	
	28	1	*183-7263*	1	PLUG AS	
		1	**9S-8002**	1	PLUG-O-RING	
		1	**3J-7354**	1	SEAL-O-RING	
	29	1	**2D-0598**	1	SEAL-O-RING	
	30	1	**4K-1388**	2	SEAL-O-RING	
	31	1	**4T-5073**	2	RING-BACKUP	
	32	1	**5M-2057**	1	SEAL-O-RING	
	33	1	**6V-5556**	1	SEAL-O-RING	
	34	1	**7D-9749**	1	SEAL-O-RING	
	35	1	**7J-9933**	2	SEAL-O-RING	
	36	1	**7M-8485**	1	SEAL-O-RING	
M	37	1	**8T-4177**	2	BOLT (M8X1.25X90-MM)	
M	38	1	**8T-4185**	2	BOLT (M10X1.5X50-MM)	
	39	1	**8T-4224**	4	WASHER-HARD (8.8X16X2-MM THK)	

B - USE AS REQUIRED
M - METRIC PART
Y - SEPARATE ILLUSTRATION

235-0402 **VALVE GP-CONTROL (*contd.*)** **i05552593**

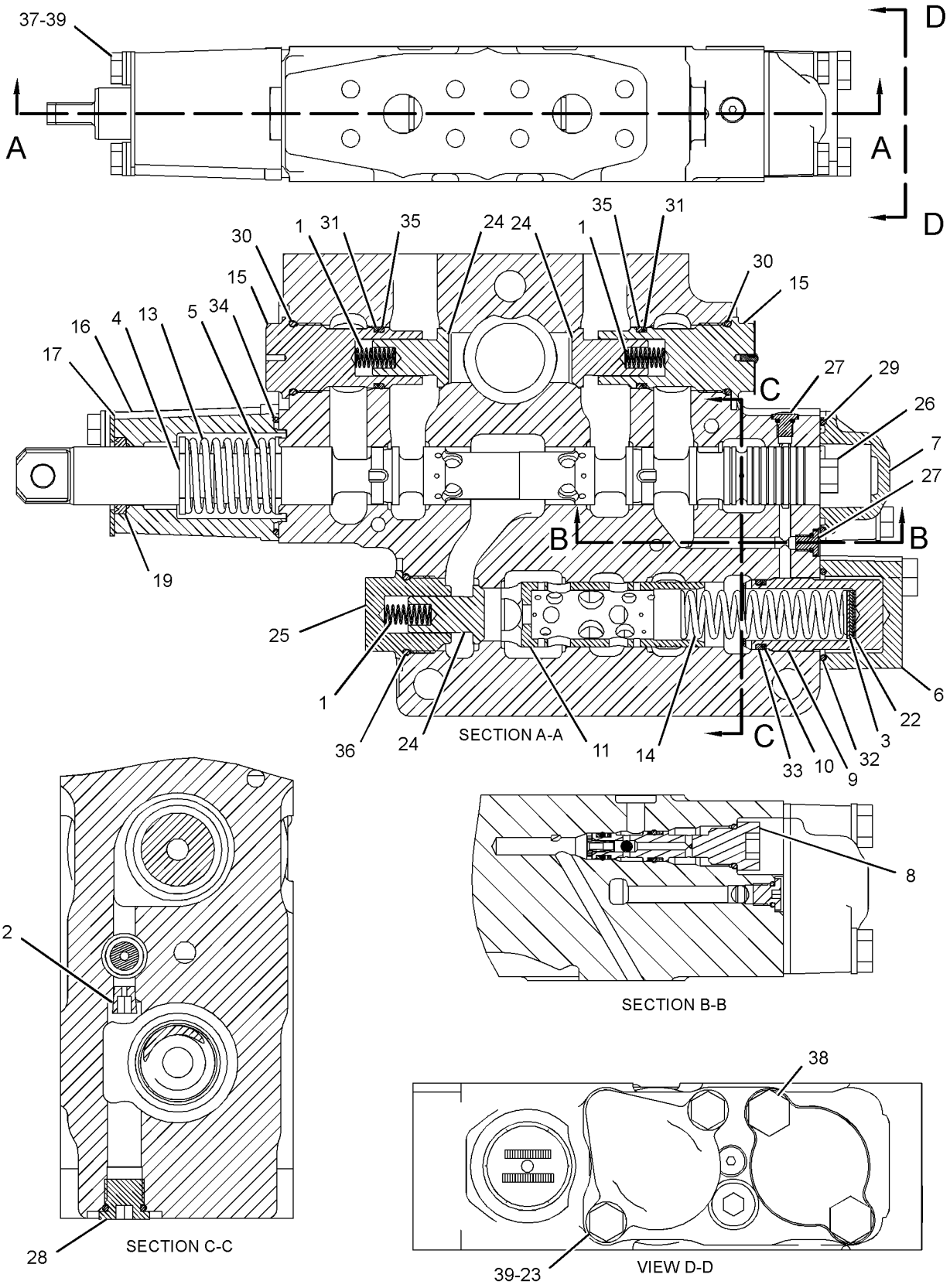

GRAPHIC #1 **<END>** g01218385

235-0403 VALVE GP-CONTROL—BULLDOZER LIFT

S/N: EMM1-UP; JEN1-UP
PART OF 224-4936 VALVE GP-BANK 3, 224-4937 VALVE GP-BANK 4
AN ATTACHMENT

SMCS-5051 **i05552609**

NOTE	REF NO	GRAPHIC REF	PART NUMBER	QTY	PART NAME 1 2 3 4 5 6 (PRODUCT LEVEL)	SEE PAGE
	1	1	**2S-2596**	2	SPRING	
	3	1	**4T-1108**	1	PLUG	
B	4	2	**4T-4628**	5	SHIM (0.5-MM THK)	
	5	1	**4T-5072**	1	RING-BACKUP	
	6	1	**100-8012**	1	BODY	
Y	7	1	**121-6649**	1	VALVE GP-RELIEF (PILOT OIL PRESSURE)	544
	9	2	**153-7067**	1	RETAINER	
	10	1	**153-7549**	1	RETAINER	
	11	2	**153-7550**	1	RETAINER	
	12	1	**153-7553**	1	SPRING	
	13	2	**161-2685**	1	SCREW (3/8-24-THD)	
	14	1	**163-5671**	1	WASHER (17X39X2-MM THK)	
	15	2	**164-0938**	1	SPRING	
	17	2	**170-4001**	1	SPRING	
	18	1	**173-0511**	1	HOUSING	
	19	1	**173-0512**	1	HOUSING	
	20	1	**173-0515**	1	SPACER	
M	23	2	**085-8091**	2	BOLT (M10X1.5X55-MM)	
	24	1	**100-8010**	2	VALVE-CHECK	
	25	1	**100-8011**	1	PLUG	
M	26	1	**102-7365**	2	BOLT-SOCKET HEAD (M8X1.25X100-MM)	
	27	1	**123-9624**	1	SPRING	
	28	1	*173-3993*	2	PLUG AS	
					(EACH INCLUDES)	
		1	**4J-7533**	1	SEAL-O-RING	
		1	**9S-8001**	1	PLUG-O-RING	
	29	2	*183-7263*	1	PLUG AS	
		2	**3J-7354**	1	SEAL-O-RING	
		2	**9S-8002**	1	PLUG-O-RING	
B	30	2	**2J-2866**	3	SHIM (0.12-MM THK)	
	31	1	**4J-5351**	1	SEAL-O-RING	
	32	1	**4K-1388**	2	SEAL-O-RING	
Y	33	2	**4T-1860**	1	VALVE GP-SHUTTLE	547
	34	1	**4T-5073**	2	RING-BACKUP	
	35	1,2	**5K-0227**	2	SEAL-O-RING	
	36	1	**5M-2057**	2	SEAL-O-RING	
	37	1	**6E-1637**	3	SHIM (1-MM THK)	
	38	2	**7J-0204**	1	SEAL-O-RING	
	39	1	**7J-9933**	2	SEAL-O-RING	
	40	1	**7M-8485**	1	SEAL-O-RING	
	41	1	**8J-8462**	2	SHIM (0.254-MM THK)	
	42	2	**9J-8126**	1	PLUG-ORIFICE	
	43	2	**9X-2027**	2	WASHER (11X18X2-MM THK)	
M	44	1	**9X-6154**	2	BOLT-SOCKET HEAD (M8X1.25-THD)	

B - USE AS REQUIRED
M - METRIC PART
Y - SEPARATE ILLUSTRATION

235-0403 **VALVE GP-CONTROL (*contd.*)** **i05552609**

REFER TO ALL ILLUSTRATIONS OF
THIS GROUP FOR AUXILIARY VIEWS

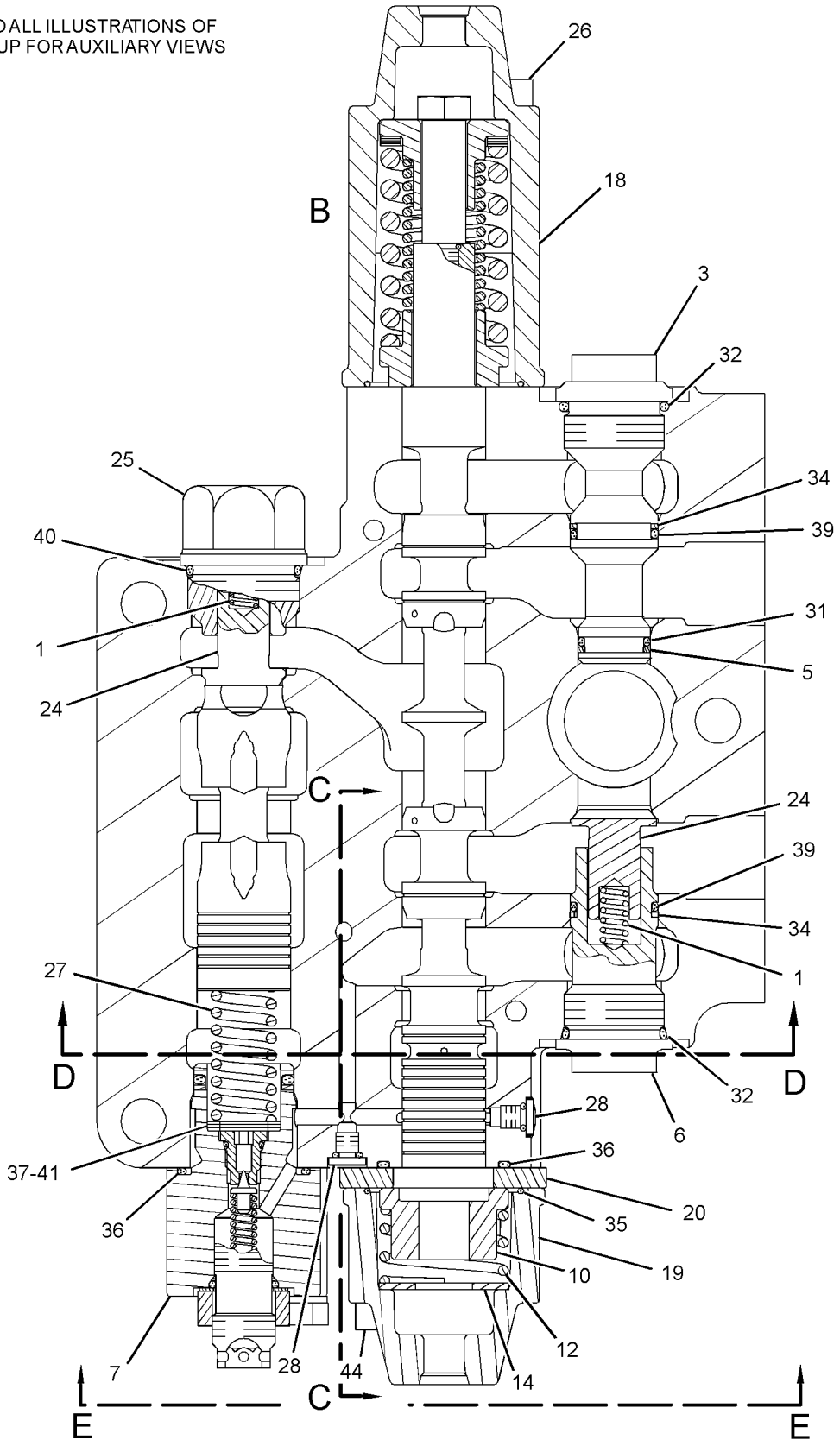

GRAPHIC #1 g01218394

235-0403 **VALVE GP-CONTROL (*contd.*)** **i05552609**

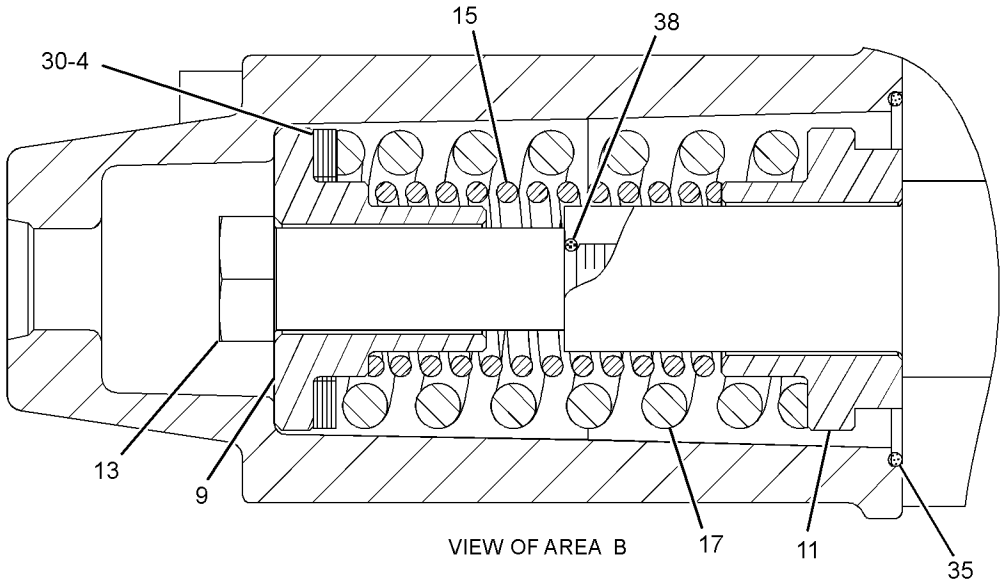

VIEW OF AREA B

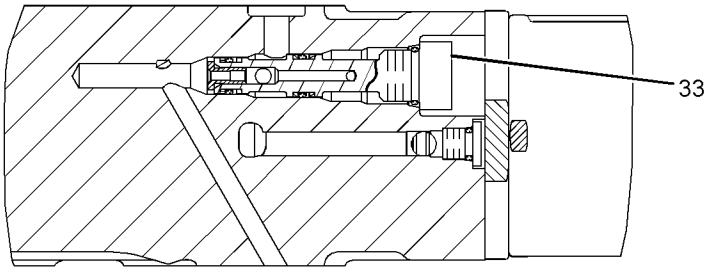

SECTION C-C

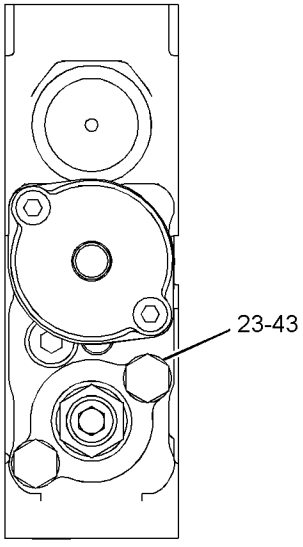

SECTION E-E

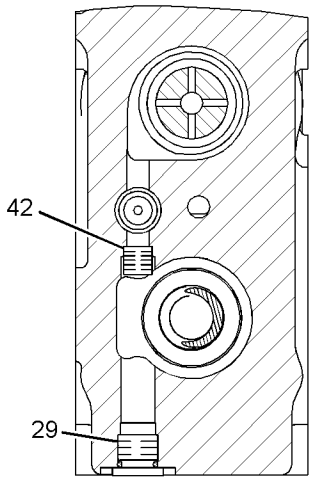

SECTION D-D

GRAPHIC #2 **<END>** g01209850

235-0404 VALVE GP-CONTROL—BULLDOZER TILT

S/N: EMM1-UP; JEN1-UP
PART OF 224-4936 VALVE GP-BANK 3, 224-4937 VALVE GP-BANK 4
AN ATTACHMENT

SMCS-5051 **i05552610**

NOTE	REF NO	GRAPHIC REF	PART NUMBER	QTY	PART NAME 1 2 3 4 5 6 (PRODUCT LEVEL)	SEE PAGE
	1	1	**123-9624**	1	SPRING	
	2	1	**2S-2596**	1	SPRING	
	4	1	**4T-1108**	2	PLUG	
B	5	1	**4T-4628**	6	SHIM (0.5-MM THK)	
	6	1	**4T-4631**	1	SPRING	
Y	7	1	**121-6649**	1	VALVE GP-RELIEF (PILOT OIL PRESSURE)	544
	9	1	**153-6976**	1	SPRING	
	10	1	**153-7067**	1	RETAINER	
	11	1	**153-7551**	1	RETAINER	
	12	1	**161-2684**	1	SCREW (3/8-24X2.48-IN)	
	14	1	**173-0511**	1	HOUSING	
	15	1	**173-0514**	1	COVER	
M	18	1	**085-8091**	2	BOLT (M10X1.5X55-MM)	
	19	1	**100-8010**	1	VALVE-CHECK	
	20	1	**100-8011**	1	PLUG	
M	21	1	**102-7365**	2	BOLT-SOCKET HEAD (M8X1.25X100-MM)	
	22	1	*173-3993*	2	PLUG AS	
					(EACH INCLUDES)	
		1	**9S-8001**	1	PLUG-O-RING	
		1	**4J-7533**	1	SEAL-O-RING	
	23	1	*183-7263*	1	PLUG AS	
		1	**9S-8002**	1	PLUG-O-RING	
		1	**3J-7354**	1	SEAL-O-RING	
B	24	1	**2J-2866**	2	SHIM (0.12-MM THK)	
	25	1	**4J-5351**	2	SEAL-O-RING	
	26	1	**4K-1388**	2	SEAL-O-RING	
Y	27	1	**4T-1860**	1	VALVE GP-SHUTTLE	547
	28	1	**4T-5072**	2	RING-BACKUP	
	29	1	**4T-5073**	2	RING-BACKUP	
	30	1	**5K-0227**	1	SEAL-O-RING	
	31	1	**5M-2057**	2	SEAL-O-RING	
M	32	1	**6V-5192**	2	BOLT-SOCKET HEAD (M8X1.25X30-MM)	
	33	1	**7J-0204**	1	SEAL-O-RING	
	34	1	**7J-9933**	2	SEAL-O-RING	
	35	1	**7M-8485**	1	SEAL-O-RING	
	36	1	**9J-8126**	1	PLUG-ORIFICE	
	37	1	**9X-2027**	2	WASHER (11X18X2-MM THK)	

B - USE AS REQUIRED
M - METRIC PART
Y - SEPARATE ILLUSTRATION

235-0404 **VALVE GP-CONTROL (*contd.*)** **i05552610**

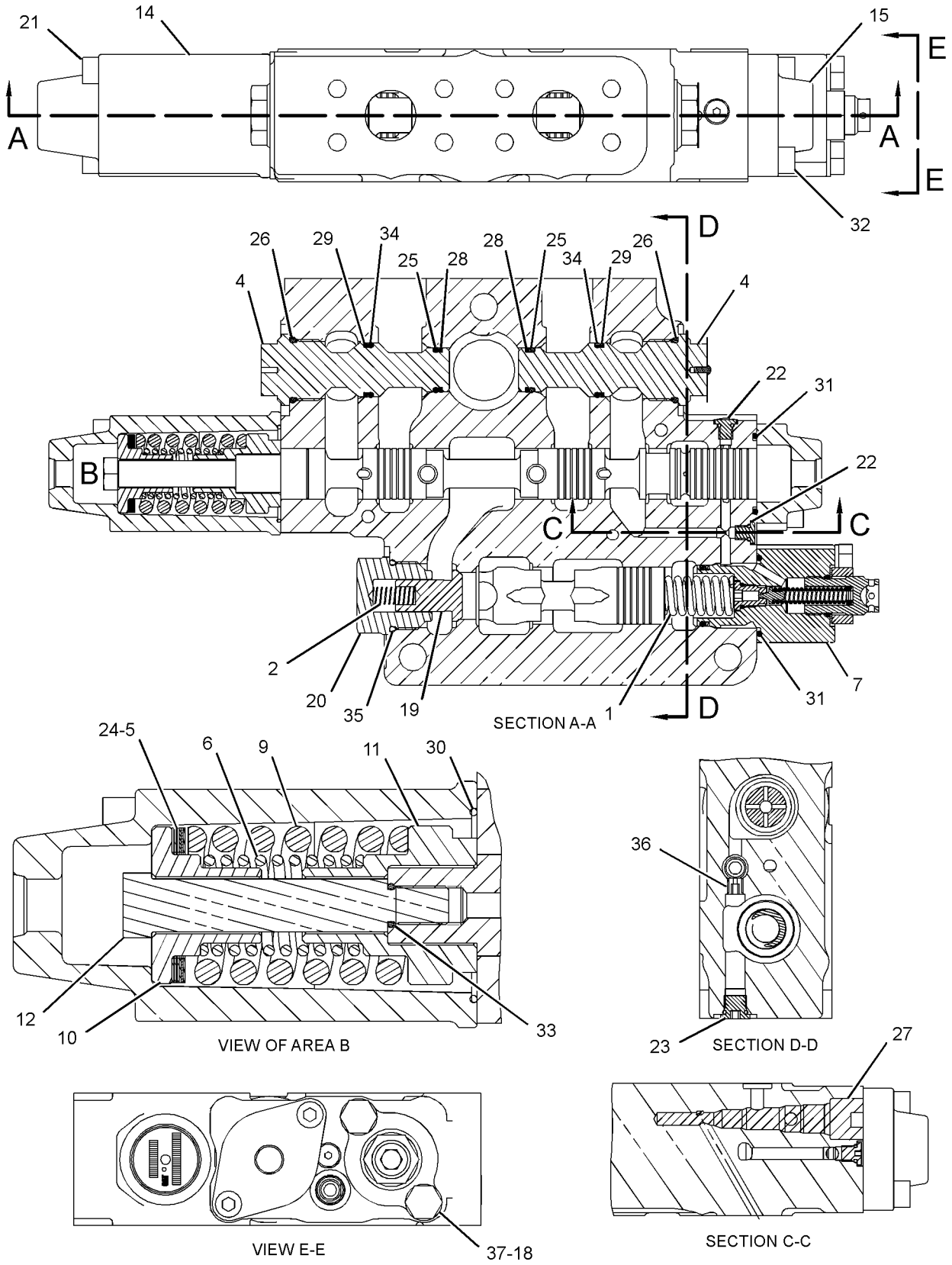

GRAPHIC #1 **<END>** g01218399

235-0405 VALVE GP-CONTROL–RIPPER

S/N: EMM1-UP; JEN1-UP
PART OF 224-4937 VALVE GP-BANK 4
AN ATTACHMENT

SMCS-5051 **i05561509**

NOTE	REF NO	GRAPHIC REF	PART NUMBER	QTY	PART NAME 1 2 3 4 5 6 (PRODUCT LEVEL)	SEE PAGE
	1	1	**2S-2596**	1	SPRING	
	3	1	**4T-1108**	2	PLUG	
B	4	2	**4T-4628**	5	SHIM (0.5-MM THK)	
	5	2	**4T-4631**	1	SPRING	
Y	7	1	**121-6649**	1	VALVE GP-RELIEF (PILOT OIL PRESSURE)	544
	9	2	**153-6976**	1	SPRING	
	10	2	**153-7067**	1	RETAINER	
	11	2	**153-7551**	1	RETAINER	
	12	2	**161-2684**	1	SCREW (3/8-24X2.48-IN)	
	14	1	**173-0511**	1	HOUSING	
	15	1	**173-0514**	1	COVER	
M	18	2	**085-8091**	2	BOLT (M10X1.5X55-MM)	
	19	1	**100-8010**	1	VALVE-CHECK	
	20	1	**100-8011**	1	PLUG	
M	21	1	**102-7365**	2	BOLT-SOCKET HEAD (M8X1.25X100-MM)	
	22	1	**123-9624**	1	SPRING	
	23	1	*173-3993*	2	PLUG AS	
					(EACH INCLUDES)	
		1	**9S-8001**	1	PLUG-O-RING	
		1	**4J-7533**	1	SEAL-O-RING	
	24	2	*183-7263*	1	PLUG AS	
		2	**9S-8002**	1	PLUG-O-RING	
		2	**3J-7354**	1	SEAL-O-RING	
B	25	2	**2J-2866**	2	SHIM (0.12-MM THK)	
	26	1	**4J-5351**	2	SEAL-O-RING	
	27	1	**4K-1388**	2	SEAL-O-RING	
Y	28	2	**4T-1860**	1	VALVE GP-SHUTTLE	547
	29	1	**4T-5072**	2	RING-BACKUP	
	30	1	**4T-5073**	2	RING-BACKUP	
	31	2	**5K-0227**	1	SEAL-O-RING	
	32	1	**5M-2057**	2	SEAL-O-RING	
B	33	1	**6E-1637**	2	SHIM (1-MM THK)	
M	34	1	**6V-5192**	2	BOLT-SOCKET HEAD (M8X1.25X30-MM)	
	35	2	**7J-0204**	1	SEAL-O-RING	
	36	1	**7J-9933**	2	SEAL-O-RING	
	37	1	**7M-8485**	1	SEAL-O-RING	
	38	2	**9J-8126**	1	PLUG-ORIFICE	
	39	2	**9X-2027**	2	WASHER (11X18X2-MM THK)	

B - USE AS REQUIRED
M - METRIC PART
Y - SEPARATE ILLUSTRATION

235-0405 **VALVE GP-CONTROL (*contd.*)** **i05561509**

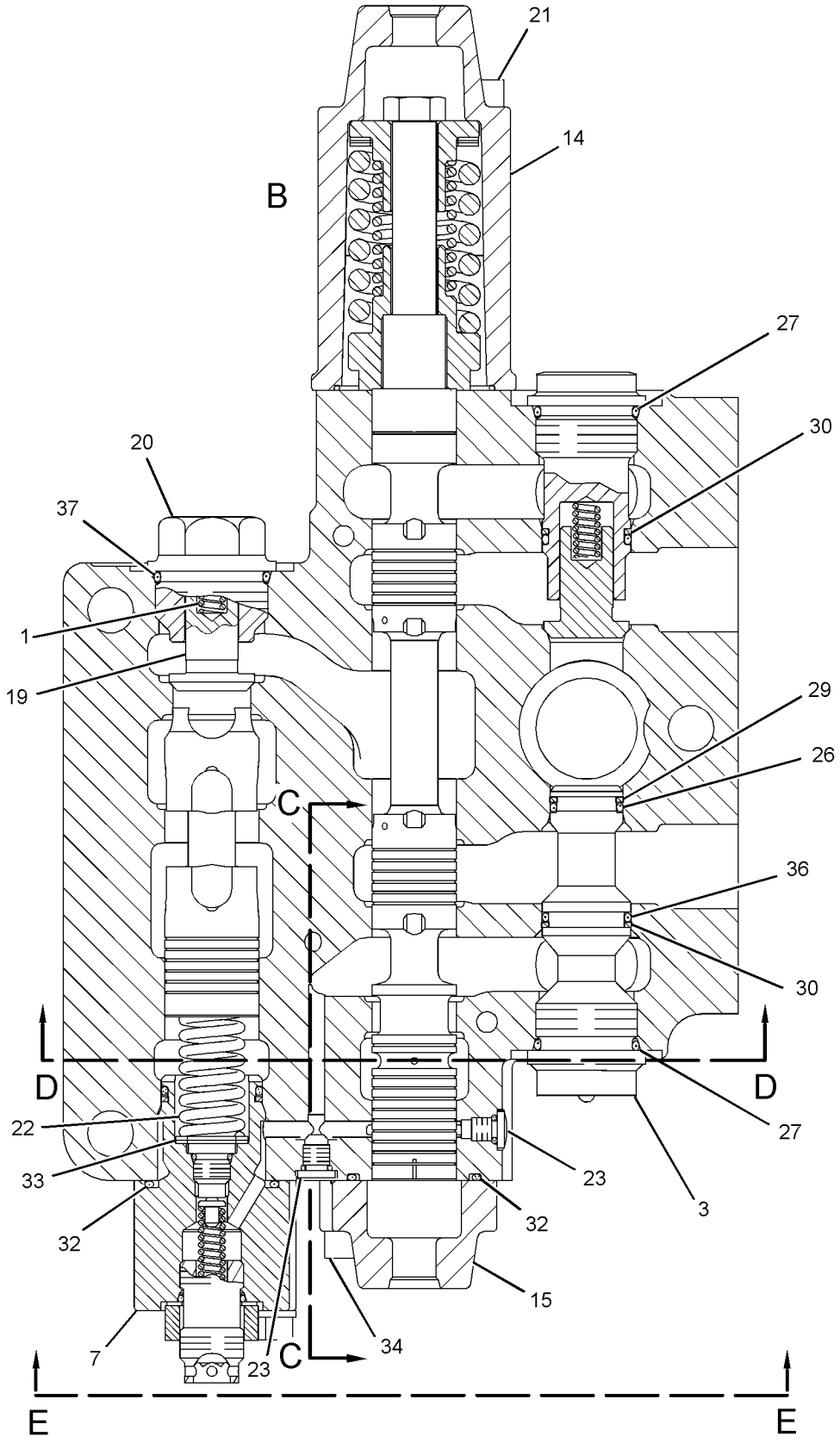

GRAPHIC #1 g01364380

235-0405 **VALVE GP-CONTROL (*contd.*)** **i05561509**

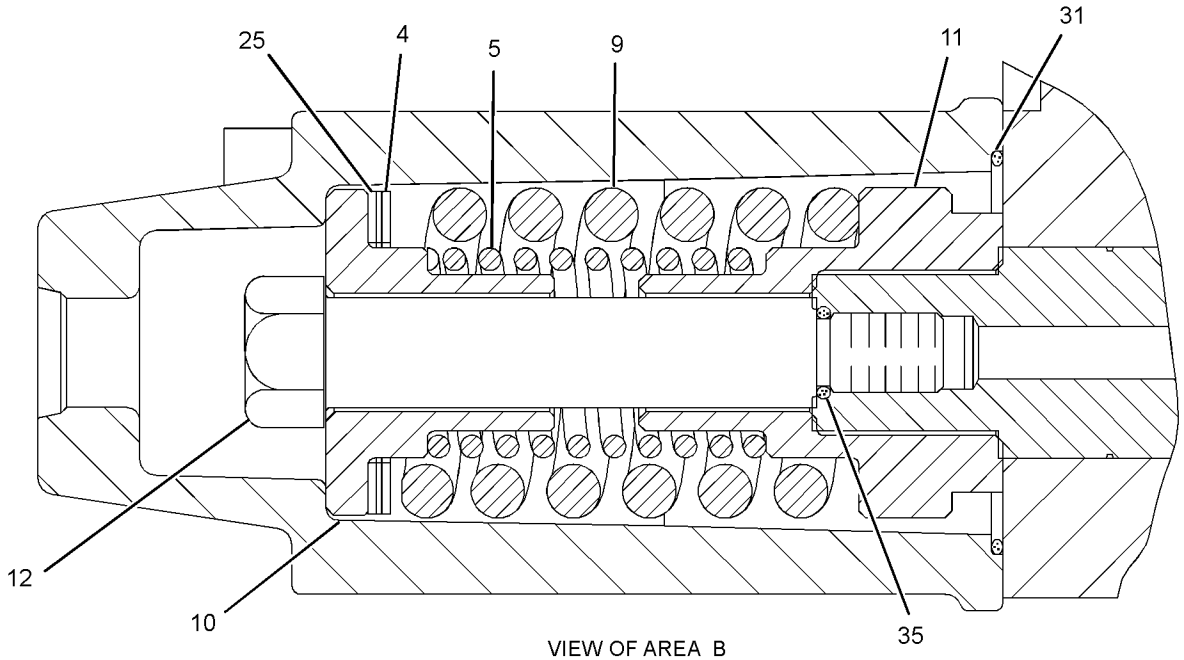

VIEW OF AREA B

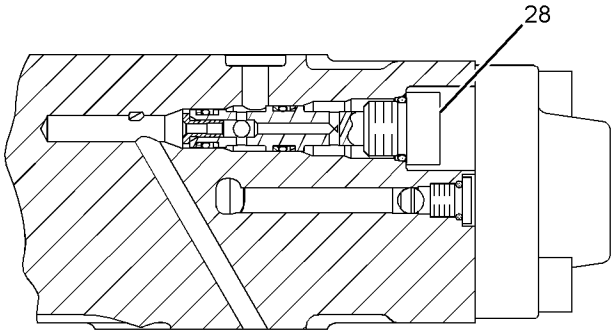

SECTION C-C

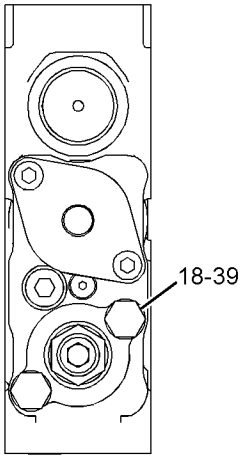

SECTION E-E

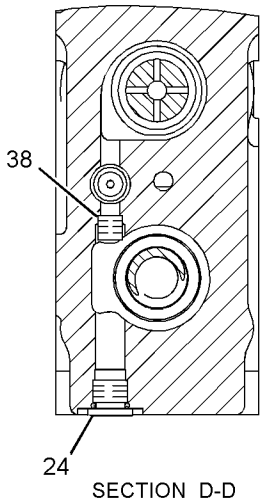

SECTION D-D

GRAPHIC #2 **<END>** g01212475

227-0832 VALVE GP-COUNTERBALANCE

S/N: EMM1-UP; JEN1-UP

PART OF 222-1191 VALVE & MTG GP-COUNTERBALANCE

SMCS-4340 **i05640340**

NOTE	REF NO	GRAPHIC REF	PART NUMBER	QTY	PART NAME 1 2 3 4 5 6 (PRODUCT LEVEL)	SEE PAGE
	1	1	**9T-8571**	2	COVER	
	2	1	**4J-0528**	2	SEAL-O-RING	
	3	1	**9T-5948**	2	RING	
	4	1	**9T-5949**	2	SPRING	
	5	1	**9T-5950**	4	RETAINER	
M	6	1	**8T-1447**	8	BOLT-SOCKET HEAD (M16X2X70-MM)	
	7	1	**9T-8980**	2	RING	
Y	8	1	**9T-5364**	2	VALVE GP-RELIEF (CROSSOVER)	543
	9	1	**5P-6719**	2	PLUG	
	10	1	**3J-1907**	2	SEAL-O-RING	
	11	1	**4J-0522**	2	SEAL-O-RING	

M - METRIC PART
Y - SEPARATE ILLUSTRATION

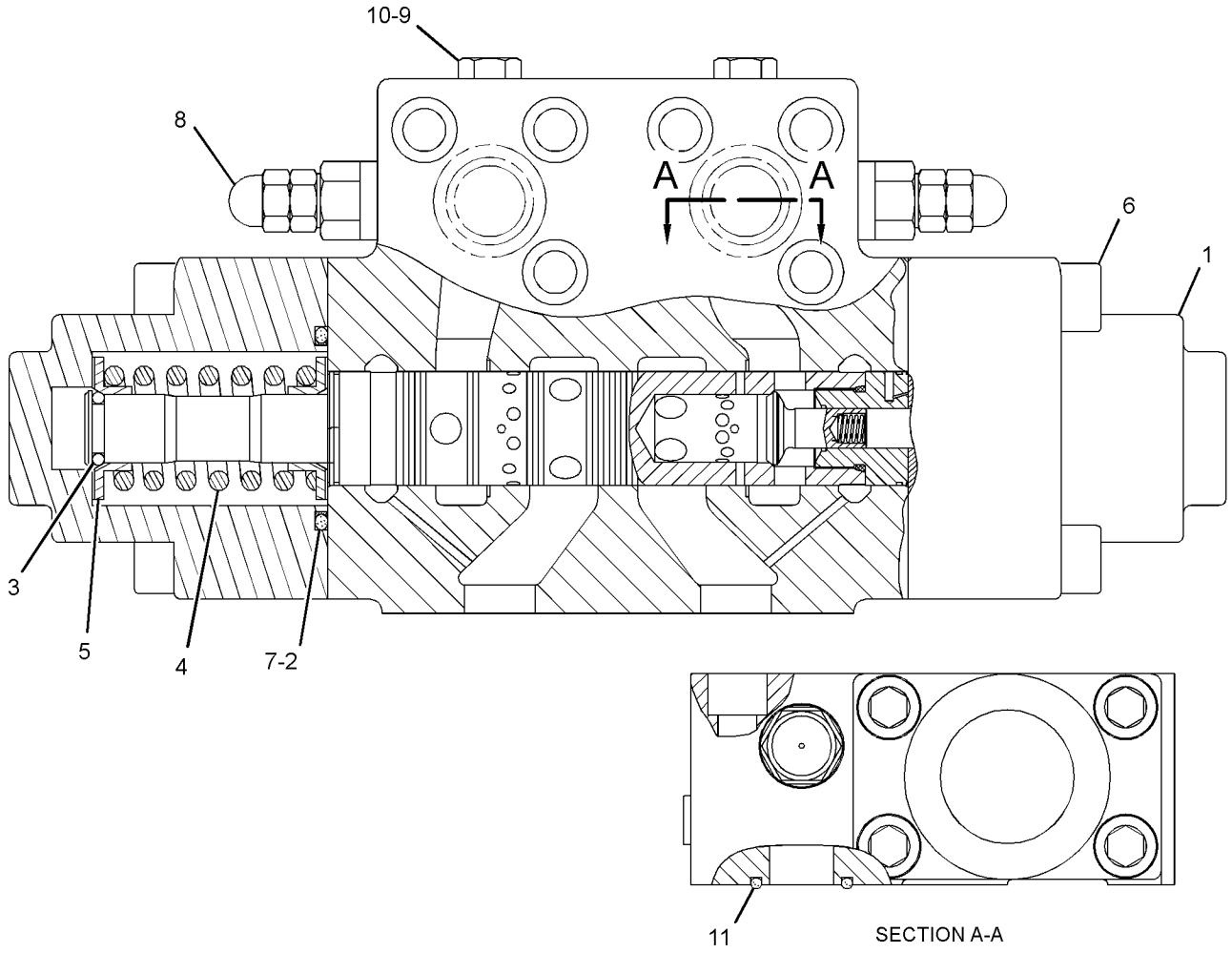

GRAPHIC #1 **<END>** g01208374

167-1177 VALVE GP-PILOT–RIPPER

S/N: EMM1-UP; JEN1-UP
PART OF 389-3288, 389-3290 CONTROL GP-PILOT OPERATED HYD
AN ATTACHMENT

SMCS-5059 **i05562280**

NOTE	REF NO	GRAPHIC REF	PART NUMBER	QTY	PART NAME 1 2 3 4 5 6 (PRODUCT LEVEL)	SEE PAGE
	1	1	*162-0177*	2	PLUG AS	
					(EACH INCLUDES)	
		1	**9S-8004**	1	PLUG-O-RING	
		1	**3J-1907**	1	SEAL-O-RING	
	2	1	**141-4852**	1	BOOT	
	3	1	**145-2334**	1	ADAPTER	
	4	1	**146-8477**	1	BRACKET	
	5	1	**146-8981**	1	PIN	
	6	1	*183-7263*	6	PLUG AS	
					(EACH INCLUDES)	
		1	**9S-8002**	1	PLUG-O-RING	
		1	**3J-7354**	1	SEAL-O-RING	
Y	7	1	**194-5033**	1	VALVE GP-PILOT CARTRIDGE (RIPPER LOWER)	535
Y	7A	1	**194-5033**	1	VALVE GP-PILOT CARTRIDGE (RIPPER LIFT)	535
	8	1	**163-5512**	2	GROMMET	
	9	1	**213-6659**	1	PLATE AS	
M	10	1	**191-8920**	4	BOLT-SOCKET HEAD (M6X1X12-MM)	
	11	1	**033-9139**	2	RING-RETAINING	
M	12	1	**105-3481**	1	BOLT-SOCKET HEAD (M8X1.25X20-MM)	
	13	1	**136-9297**	1	PLATE	
	14	1	**136-9298**	1	RETAINER	
	15	1	**149-5470**	1	PLATE	
	18	1	**7W-2632**	1	WASHER (8.5X16.8X1.6-MM THK)	
	19	1	**8L-2786**	1	SEAL-O-RING	
	20	1	**201-9127**	1	LEVER AS	
	20A	1	**174-1366**	1	PLATE	
	20B	1	**199-6609**	1	SPACER	
	20C	1	**146-8479**	1	SWIVEL	
	20D	1	**146-6315**	2	PIN-ADJUSTMENT	
M	20E	1	**5C-2890**	2	NUT (M6X1-THD)	
	20F	1	**159-8112**	1	LEVER	
	22	1	**180-6152**	1	RETAINER	

M - METRIC PART
Y - SEPARATE ILLUSTRATION

167-1177 **VALVE GP-PILOT (*contd.*)** **i05562280**

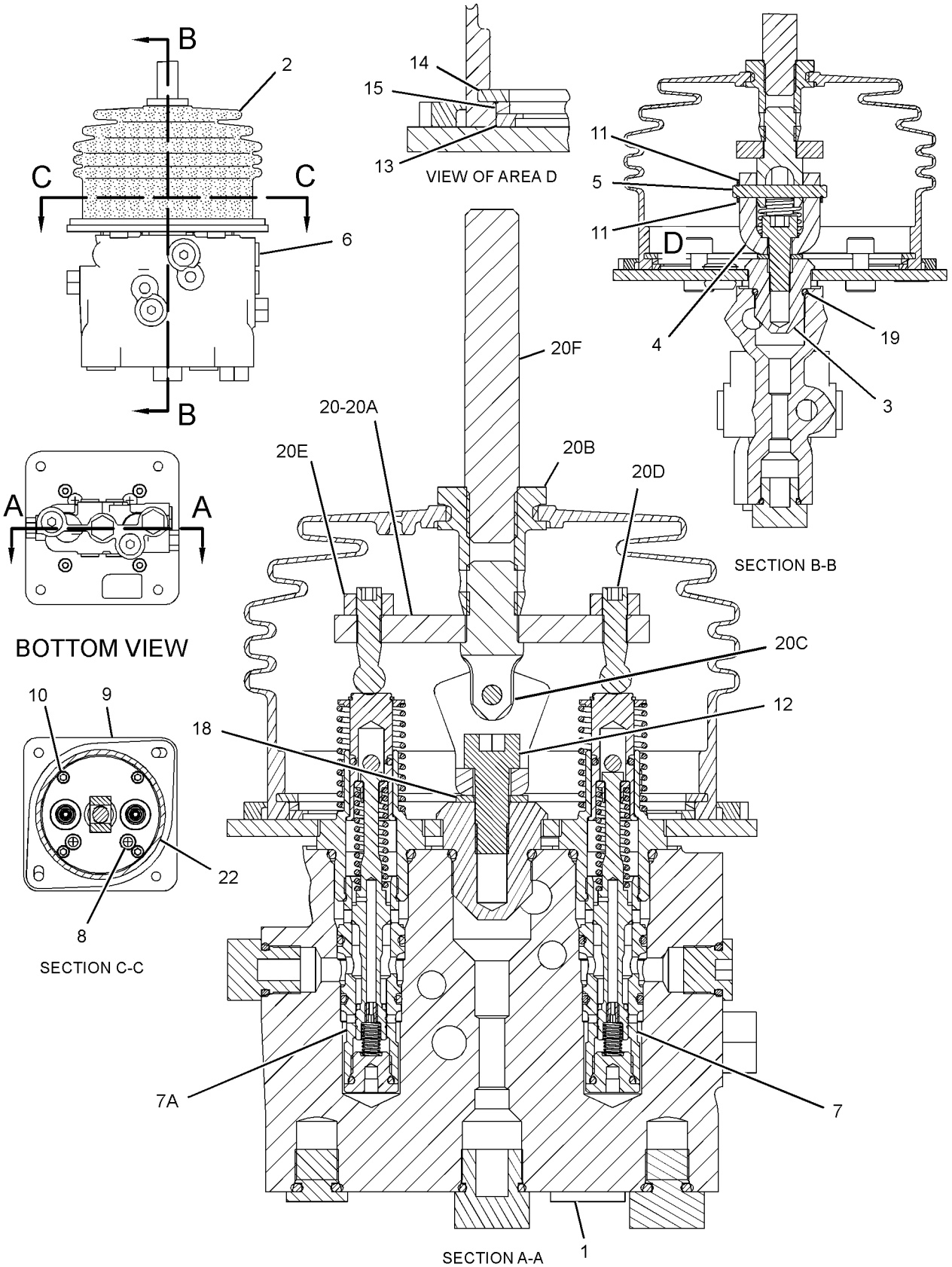

GRAPHIC #1

<END>

g02091293

200-0189 VALVE GP-PILOT–BULLDOZER

S/N: EMM1-UP; JEN1-UP

PART OF 389-3287, 389-3288 CONTROL GP-PILOT OPERATED HYD AN ATTACHMENT

SMCS-5059 **i05558652**

NOTE	REF NO	GRAPHIC REF	PART NUMBER	QTY	PART NAME 1 2 3 4 5 6 (PRODUCT LEVEL)	SEE PAGE
Y	1	1	**194-5033**	1	VALVE GP-PILOT CARTRIDGE (BLADE TILT RIGHT)	535
	2	1	**141-4852**	1	BOOT	
	3	1	**145-2334**	1	ADAPTER	
	4	1	**163-5512**	2	GROMMET	
	5	1	**213-6657**	1	PLATE AS	
	6	1	**180-6152**	1	RETAINER	
Y	7	1	**194-5032**	1	VALVE GP-PILOT CARTRIDGE (BULLDOZER LIFT)	534
Y	8	1	**194-5033**	1	VALVE GP-PILOT CARTRIDGE (BLADE TILT LEFT)	535
	9	1	**196-5515**	1	LEVER AS	
	9A	1	**146-6315**	3	PIN-ADJUSTMENT	
	9B	1	**199-7834**	1	DETENT AS	
		1	**8S-7499**	2	PIN-SPRING	
	9C	1	**146-6317**	1	RETAINER	
	9D	1	**159-3781**	1	SPRING	
M	9E	1	**5C-2890**	3	NUT (M6X1-THD)	
M	9F	1	**191-8920**	2	BOLT-SOCKET HEAD (M6X1X12-MM)	
	10	1	**206-2800**	1	PLATE-DETENT	
	11	1	*162-0177*	3	PLUG AS	
					(EACH INCLUDES)	
		1	**3J-1907**	1	SEAL-O-RING	
		1	**9S-8004**	1	PLUG-O-RING	
	12	1	**200-5003**	8	SHIM (0.25-MM THK)	
	13	1	**136-9297**	1	PLATE	
	14	1	**136-9298**	1	RETAINER	
	15	1	**137-9755**	1	COIL AS-DETENT (24-VOLT)	
D		1	**6V-2689**		TUBE-HEAT SHRINK (6.35-MM DIA) (0.2-M)	
		1	**186-3735**	2	PIN-CONNECTOR (16-GA TO 18-GA)	
	16	1	**149-5470**	1	PLATE	
M	17	1	**191-8921**	4	BOLT-SOCKET HEAD (M6X1X25-MM)	
	18	1	**102-8802**	1	KIT-RECEPTACLE (2-PIN)	
					(INCLUDES RECEPTACLE AS & WEDGE)	
	22	1	**8L-2786**	1	SEAL-O-RING	
	23	1	*183-7263*	5	PLUG AS	
					(EACH INCLUDES)	
		1	**3J-7354**	1	SEAL-O-RING	
		1	**9S-8002**	1	PLUG-O-RING	
Y	24	1	**194-5032**	1	VALVE GP-PILOT CARTRIDGE (BULLDOZER LOWER)	534

D - ORDER BY THE METER
M - METRIC PART
Y - SEPARATE ILLUSTRATION

200-0189 **VALVE GP-PILOT (*contd.*)** **i05558652**

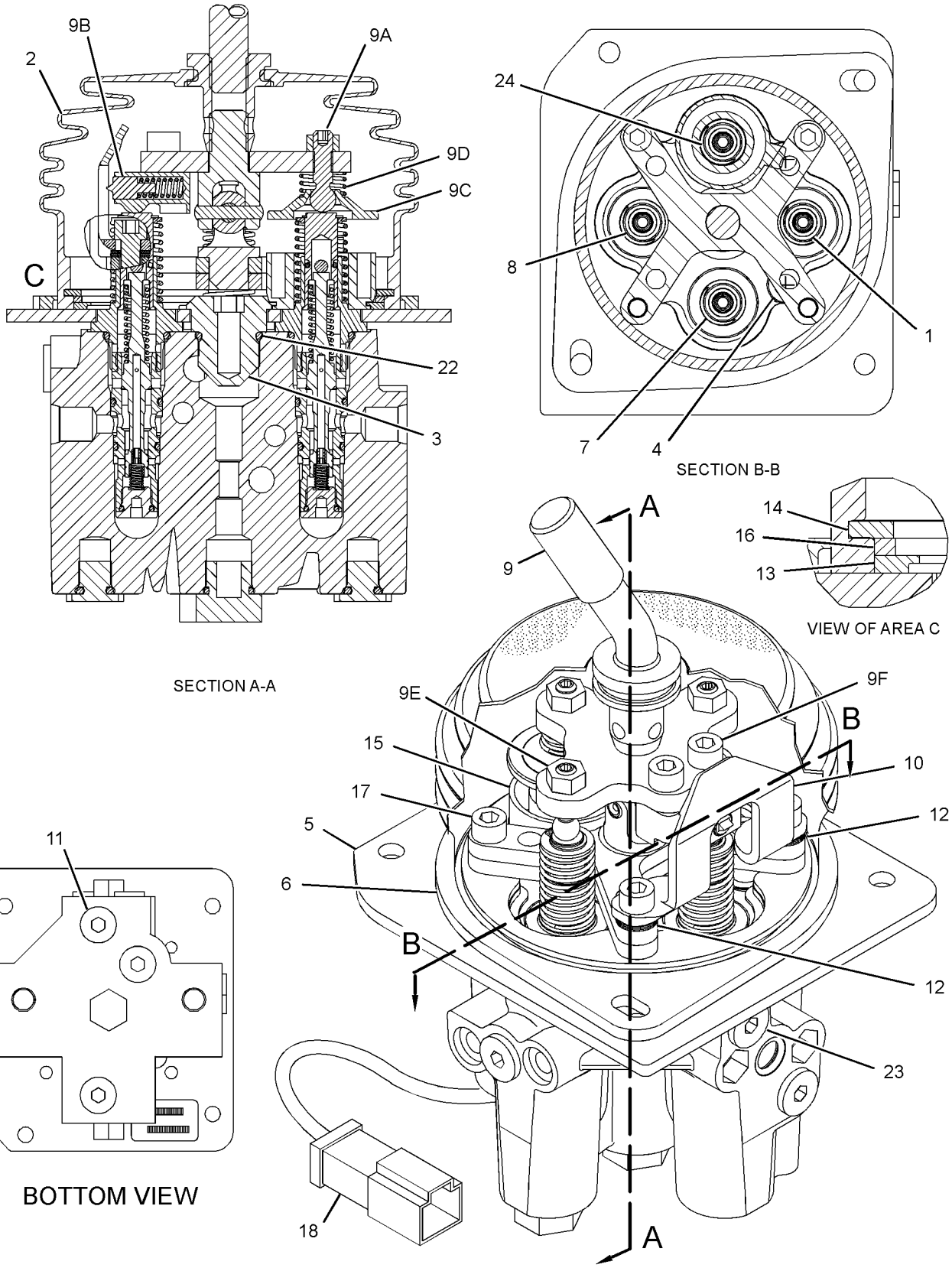

GRAPHIC #1 **<END>** g01946058

322-8631 VALVE GP-PILOT–BULLDOZER

S/N: EMM1-UP; JEN1-UP

PART OF 389-3289, 389-3290 CONTROL GP-PILOT OPERATED HYD AN ATTACHMENT

SMCS-5059 **i05558870**

NOTE	REF NO	GRAPHIC REF	PART NUMBER	QTY	PART NAME 1 2 3 4 5 6 (PRODUCT LEVEL)	SEE PAGE
	1	1	**102-8802**	1	KIT-RECEPTACLE (2-PIN)	
	2	1	**102-8801**	1	KIT-RECEPTACLE (12-PIN)	
					(EACH KIT INCLUDES RECEPTACLE AS & WEDGE)	
	3	1	**8T-8737**	5	PLUG-SEAL	
	4	1	**136-9297**	1	PLATE	
	5	1	**136-9298**	1	RETAINER	
	6	1	**137-9755**	1	COIL AS-DETENT (24-VOLT)	
D		1	**6V-2689**		TUBE-HEAT SHRINK (6.35-MM DIA) (0.2-M)	
		1	**8T-8729**	2	PIN-CONNECTOR (16-GA TO 18-GA)	
	7	1	**141-4852**	1	BOOT	
	8	1	**145-2334**	1	ADAPTER	
	9	1	**149-5470**	1	PLATE	
	10	1	**163-5512**	3	GROMMET	
	11	1	**180-6152**	1	RETAINER	
Y	12	1	**194-5032**	2	VALVE GP-PILOT CARTRIDGE (BULLDOZER LIFT, LOWER)	534
Y	13	1	**194-5033**	2	VALVE GP-PILOT CARTRIDGE (BLADE TILT RIGHT, LEFT)	535
B	14	1	**200-5003**	8	SHIM (0.25-MM THK)	
	15	1	**206-2800**	1	PLATE-DETENT	
	16	1	**213-6657**	1	PLATE AS	
	17	1	**227-8348**	1	LEVER AS	
Y	20	1	**322-9655**	1	CONTROL GP-HANDLE (BULLDOZER CONTROL)	592
	21	1	*162-0177*	3	PLUG AS	
					(EACH INCLUDES)	
		1	**9S-8004**	1	PLUG-O-RING	
		1	**3J-1907**	1	SEAL-O-RING	
	22	1	*183-7263*	5	PLUG AS	
					(EACH INCLUDES)	
		1	**9S-8002**	1	PLUG-O-RING	
		1	**3J-7354**	1	SEAL-O-RING	
M	23	1	**191-8921**	4	BOLT-SOCKET HEAD (M6X1X25-MM)	
	26	1	**4B-9808**	2	SETSCREW (1/4-20X0.5-IN)	
	27	1	**8L-2786**	1	SEAL-O-RING	

B - USE AS REQUIRED
D - ORDER BY THE METER
M - METRIC PART
Y - SEPARATE ILLUSTRATION

322-8631 **VALVE GP-PILOT (*contd.*)** **i05558870**

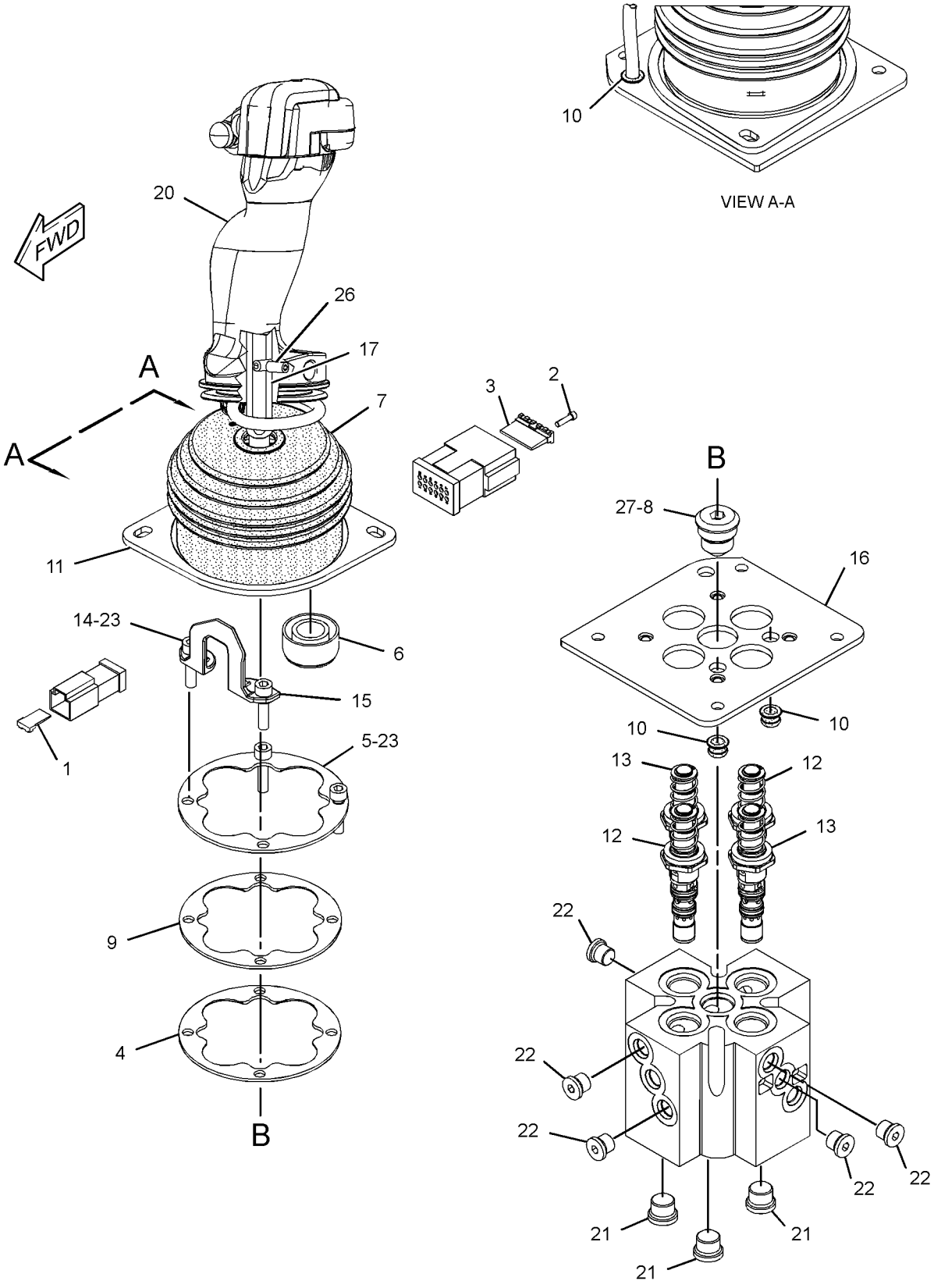

GRAPHIC #1 **<END>** g02203774

194-5032 VALVE GP-PILOT CARTRIDGE

S/N: EMM1-UP; JEN1-UP
PART OF 200-0189, 322-8631 VALVE GP-PILOT
AN ATTACHMENT

SMCS-5059 **i05558743**

NOTE	REF NO	GRAPHIC REF	PART NUMBER	QTY	PART NAME 1 2 3 4 5 6 (PRODUCT LEVEL)	SEE PAGE
	1	1	**3K-0360**	1	SEAL-O-RING	
	2	1	**4K-2039**	1	SEAL-O-RING	
	3	1	**6M-5062**	1	SEAL-O-RING	

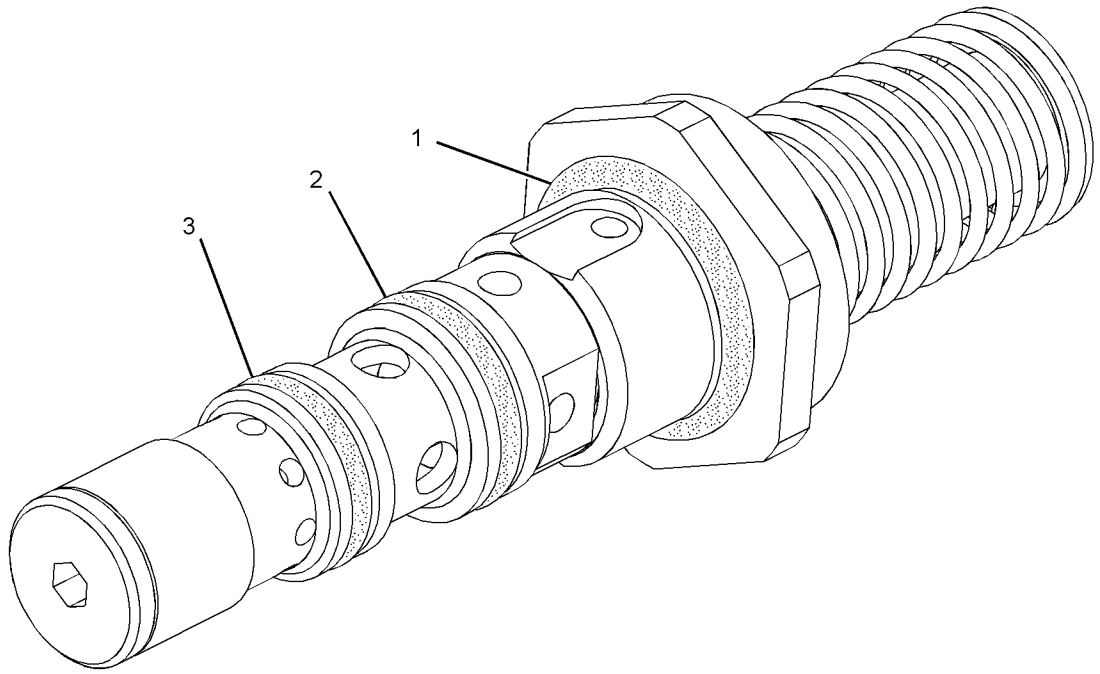

GRAPHIC #1 **<END>** g01218398

194-5033 VALVE GP-PILOT CARTRIDGE

S/N: EMM1-UP; JEN1-UP
PART OF 167-1177, 200-0189, 322-8631 VALVE GP-PILOT
AN ATTACHMENT

SMCS-5059 **i05558750**

NOTE	REF NO	GRAPHIC REF	PART NUMBER	QTY	PART NAME 1 2 3 4 5 6 (PRODUCT LEVEL)	SEE PAGE
	1	1	**3K-0360**	1	SEAL-O-RING	
	2	1	**4K-2039**	1	SEAL-O-RING	
	3	1	**6M-5062**	1	SEAL-O-RING	

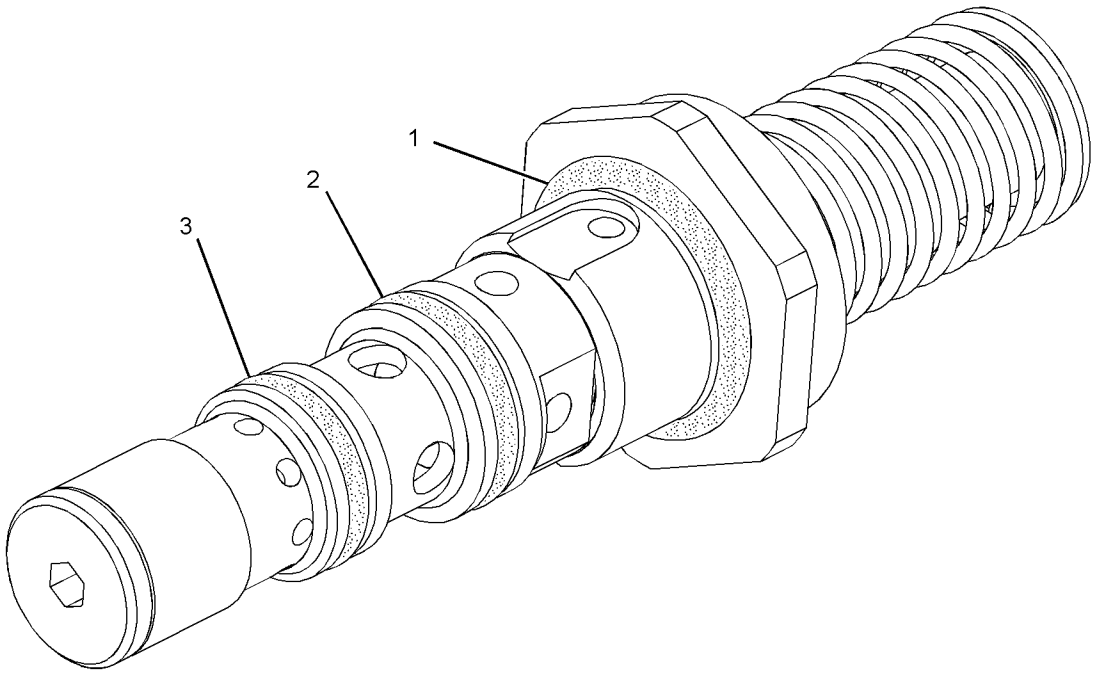

GRAPHIC #1 **<END>** g01218398

170-3357 VALVE GP-PRESSURE REDUCING

S/N: EMM1-UP; JEN1-UP
PART OF 226-4751 MANIFOLD GP-CONTROL
AN ATTACHMENT

SMCS-5117 **i05552989**

NOTE	REF NO	GRAPHIC REF	PART NUMBER	QTY	PART NAME 1 2 3 4 5 6 (PRODUCT LEVEL)	SEE PAGE
	1	1	**3K-0360**	1	SEAL-O-RING	
	2	1	**161-6149**	1	SEAL-O-RING	
	3	1	**095-1750**	1	SEAL-O-RING	
	4	1	**161-6161**	2	RING-BACKUP	
	5	1	**187-0541**	2	RING-BACKUP	

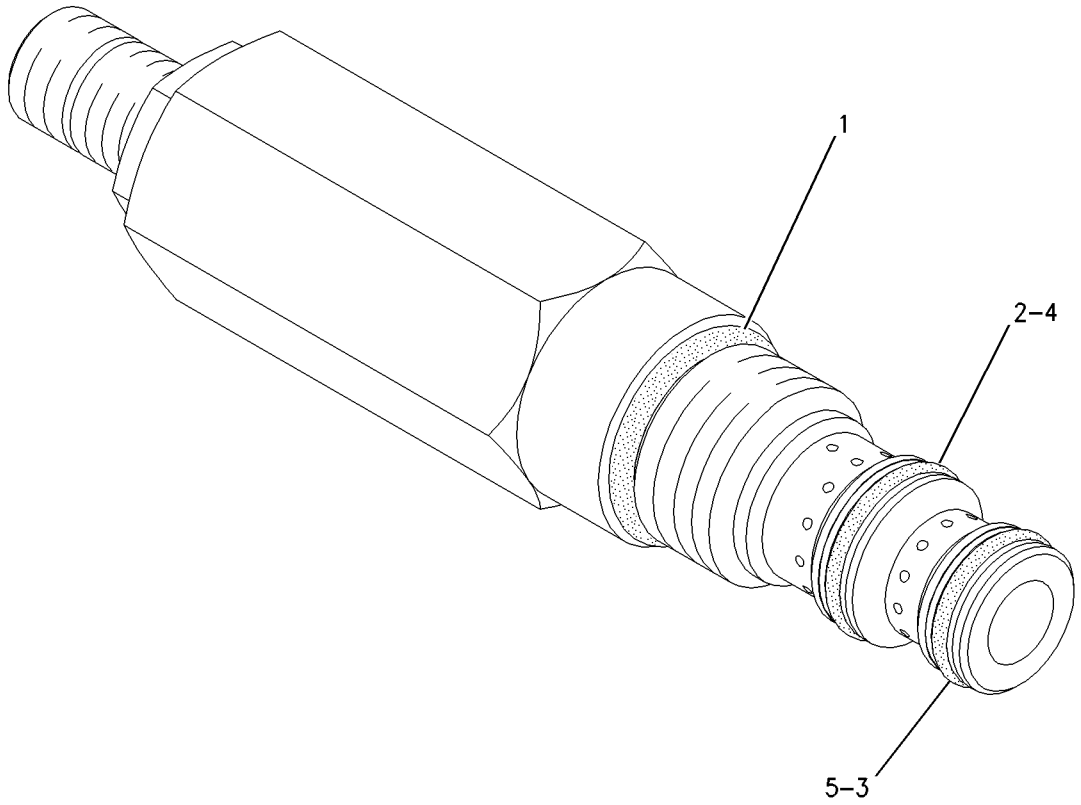

GRAPHIC #1 **<END>** g00777733

227-3021 VALVE GP-PUMP CONTROL—PRESSURE, FLOW COMPENSATOR

S/N: EMM1-UP; JEN1-UP

PART OF 227-0830 PUMP GP-PISTON

SMCS-5455 **i05640333**

NOTE	REF NO	GRAPHIC REF	PART NUMBER	QTY	PART NAME 1 2 3 4 5 6 (PRODUCT LEVEL)	SEE PAGE
J	1	1	**227-3023**	1	HOUSING AS	
M	2	1	**096-3218**	1	SETSCREW-SOCKET (M4X0.7X6-MM)	
	3	1	**195-6944**	2	RETAINER	
	4	1	**9T-4186**	1	SPRING-CONTROL	
	5	1	**195-6947**	1	SPRING	
	6	1	**195-6945**	1	RETAINER	
	7	1	**095-1574**	2	SEAL-O-RING	
	8	1	**195-6948**	2	WASHER (10X13X1-MM THK)	
	9	1	**195-6949**	2	ADJUSTER	
	10	1	**6V-6580**	1	SEAL-O-RING	
	11	1	**8T-9529**	1	SEAL-O-RING	
	12	1	**099-8111**	2	PIN-SPRING	
	13	1	**195-6950**	1	COVER	
MI	14	1	**6C-9048**	2	NUT (M8X1-THD)	
M	15	1	**3T-0849**	4	BOLT-SOCKET HEAD (M6X1X25-MM)	
	16	1	**9T-4143**	1	PISTON-PRESS REGULATOR	
	17	1	**9T-6322**	2	PLUG AS	
					(EACH INCLUDES)	
		1	**8C-3082**	1	SEAL-O-RING	
	18	1	**9S-4191**	2	PLUG	
	19	1	**3J-1907**	2	SEAL-O-RING	
	20	1	**8U-3875**	3	PLUG	
	21	1	**3E-4297**	3	SEAL-O-RING	
	22	1	**9T-5039**	1	PLUG	

I - REFER TO HYDRAULIC INFORMATION SYSTEM
J - PARTS MARKED J IN GRAPHIC INCLUDED IN HOUSING AS
M - METRIC PART

227-3021 **VALVE GP-PUMP CONTROL (*contd.*)** **i05640333**

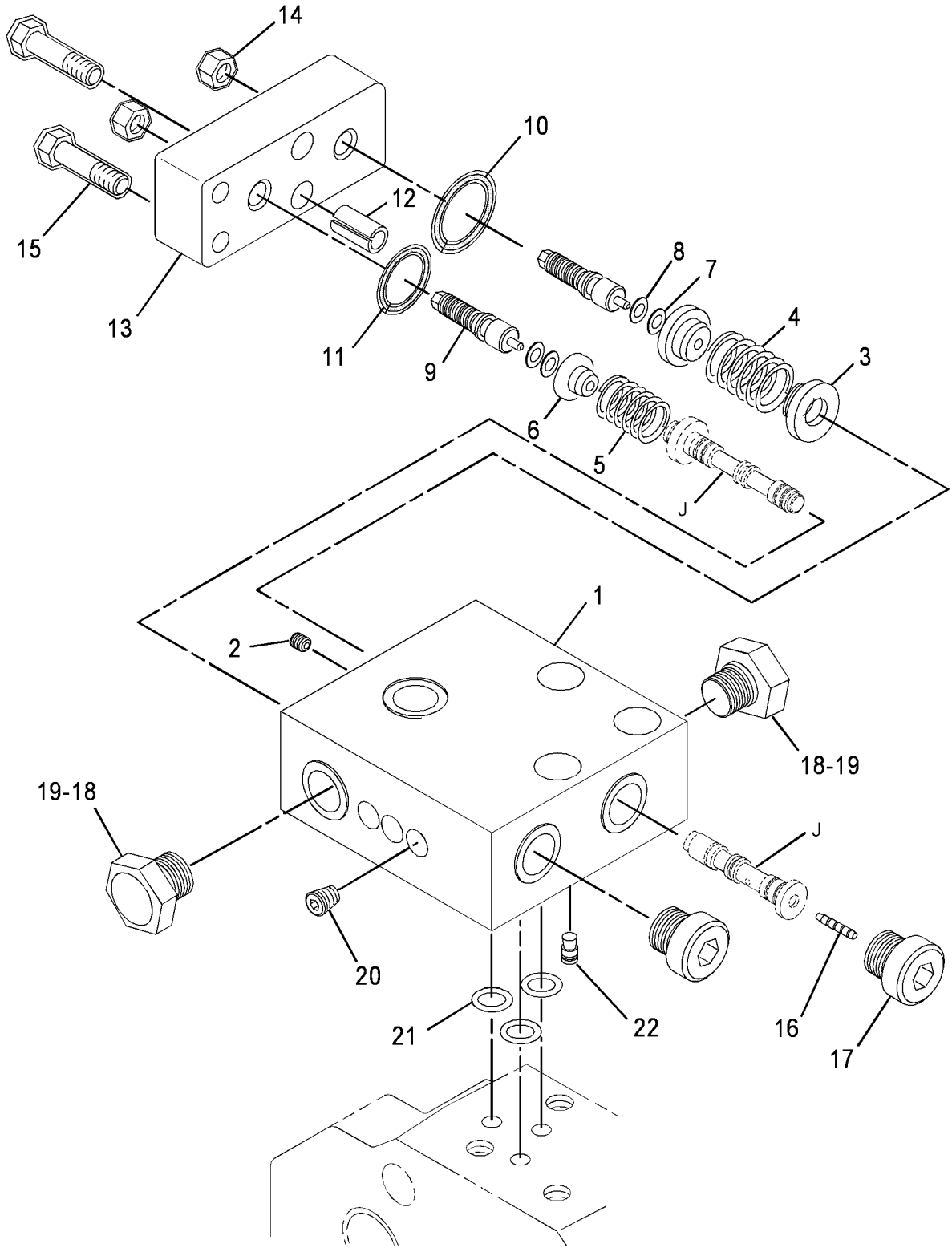

GRAPHIC #1 **<END>** g02088502

222-1160 VALVE GP-QUICK-DROP

S/N: EMM1-UP; JEN1-UP

PART OF 389-3214 HYDRAULIC AR

SMCS-5110 **i05640309**

NOTE	REF NO	GRAPHIC REF	PART NUMBER	QTY	PART NAME 1 2 3 4 5 6 (PRODUCT LEVEL)	SEE PAGE
	1	1	**8E-8434**	1	GUARD	
Y	2	1	**227-0831**	1	VALVE GP-QUICK-DROP	540
	3	1	**5P-1075**	6	WASHER-HARD (10.2X22.5X3-MM THK)	
M	4	1	**8T-4186**	3	BOLT (M10X1.5X40-MM)	
M	5	1	**8T-4191**	3	BOLT (M10X1.5X16-MM)	

M - METRIC PART
Y - SEPARATE ILLUSTRATION

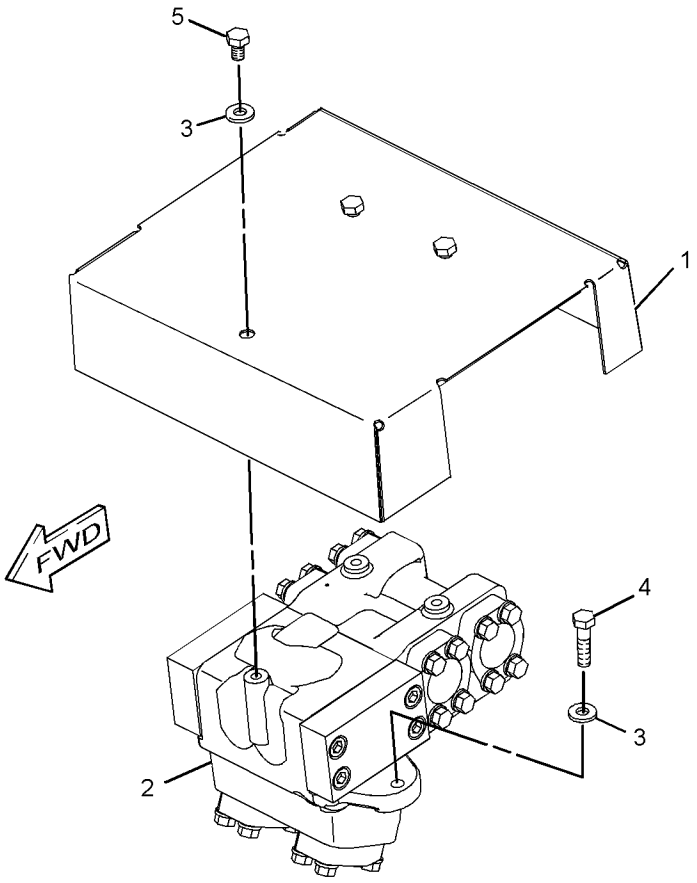

(MOUNTS TO TOP OF RADIATOR GUARD)

GRAPHIC #1 **<END>** g01206278

227-0831 VALVE GP-QUICK-DROP

S/N: EMM1-UP; JEN1-UP

PART OF 222-1160 VALVE GP-QUICK-DROP

SMCS-5110 **i05640310**

NOTE	REF NO	GRAPHIC REF	PART NUMBER	QTY	PART NAME 1 2 3 4 5 6 (PRODUCT LEVEL)	SEE PAGE
	1	1	*3J-3679*	2	PLUG AS	
					(EACH INCLUDES)	
		1	**9S-8003**	1	PLUG	
		1	**1J-9671**	1	SEAL-O-RING	
B	3	1	**4T-4659**	3	SHIM (0.8-MM THK)	
	4	1	**6E-4907**	1	STOP	
	5	1	**9T-9836**	1	SLEEVE-ORIFICE	
B	6	1	**083-7784**	2	SHIM (2-MM THK)	
	7	1	**100-6211**	1	PISTON	
	8	1	**108-1847**	1	SPRING	
Z	9	1		1	STEM AS	
	10	1	**234-3043**	1	COVER	
Z	11	1		1	BODY	
	12	1	**234-3451**	1	COVER	
	14	1	**164-5619**	1	PLUG AS	
		1	**9S-8006**	1	PLUG-O-RING	
		1	**2M-9780**	1	SEAL-O-RING	
	15	1	**1P-3706**	2	SEAL-RECTANGULAR	
	16	1	**3L-3813**	1	PIN	
B	17	1	**4M-6980**	3	SHIM (0.25-MM THK)	
	18	1	**6K-8162**	1	RING-RETAINING	
M	19	1	**6V-8200**	8	BOLT-SOCKET HEAD (M12X1.75X35-MM)	
	20	1	**8C-3206**	12	FLANGE-HALF	
	21	1	**8T-4121**	24	WASHER-HARD (11X21X2.5-MM THK)	
M	22	1	**8T-4196**	24	BOLT (M10X1.5X35-MM)	

B - USE AS REQUIRED
M - METRIC PART
Z - NOT SERVICED SEPARATELY

227-0831 **VALVE GP-QUICK-DROP (*contd.*)** **i05640310**

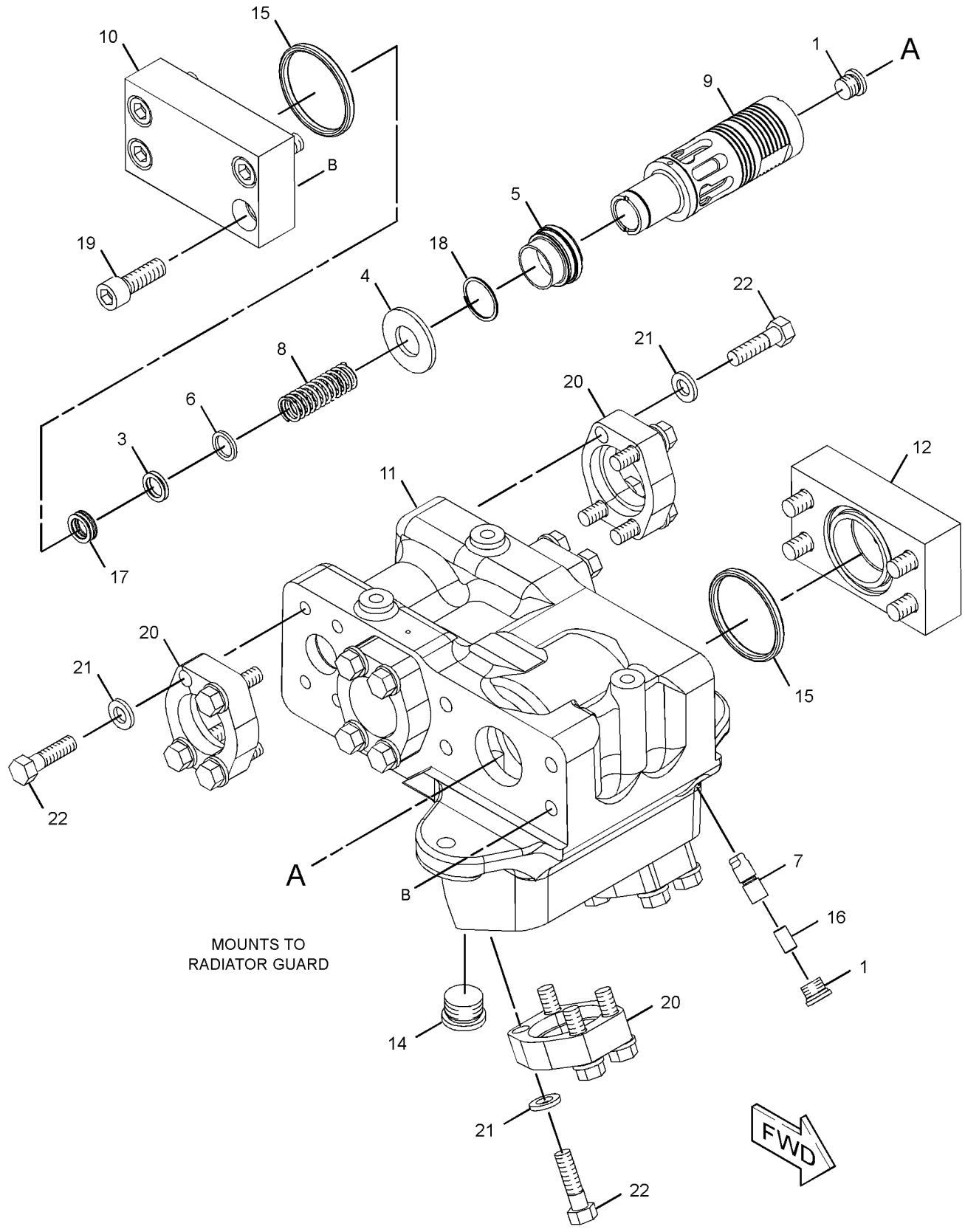

GRAPHIC #1 **<END>** g01210614

9T-3541 VALVE GP-RELIEF

S/N: EMM1-UP; JEN1-UP
DIRECT OPERATED
PART OF 235-0401 MANIFOLD GP-VALVE
AN ATTACHMENT

SMCS-5069, 5117

i05552631

NOTE	REF NO	GRAPHIC REF	PART NUMBER	QTY	PART NAME 1 2 3 4 5 6 (PRODUCT LEVEL)	SEE PAGE
	1	1	**3K-0360**	2	SEAL-O-RING	
	2	1	**4T-4942**	1	SPRING	
	3	1	**7J-9933**	1	SEAL-O-RING	
	4	1	**4T-7571**	1	PLATE	
	5	1	**6J-6439**	1	VALVE-POPPET	
	6	1	**6E-1835**	1	RETAINER AS	
	7	1	**9X-6395**	1	NUT (3/4-16-THD)	

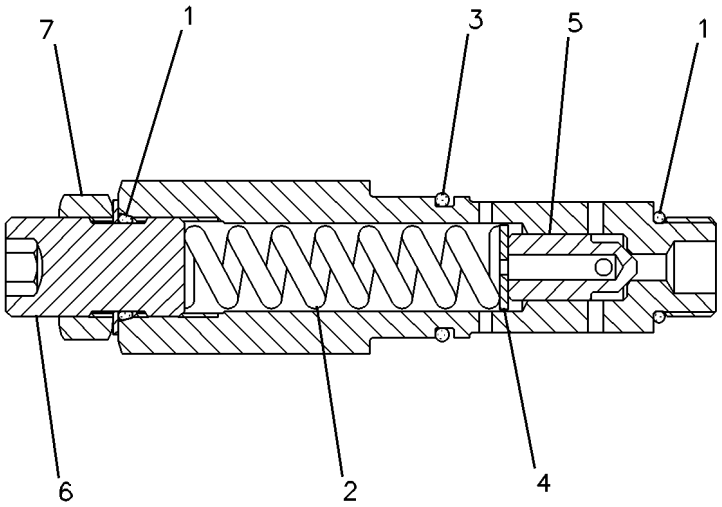

GRAPHIC #1

<END>

g00082770

9T-5364 VALVE GP-RELIEF

S/N: EMM1-UP; JEN1-UP

PART OF 227-0832 VALVE GP-COUNTERBALANCE

SMCS-5069, 5117 **i05640347**

NOTE	REF NO	GRAPHIC REF	PART NUMBER	QTY	PART NAME 1 2 3 4 5 6 (PRODUCT LEVEL)	SEE PAGE
	1	1	**4J-5351**	1	SEAL-O-RING	
	2	1	**6V-5326**	1	SEAL-O-RING	
M	3	1	**9T-6521**	1	NUT	
	4	1	**9T-6522**	1	CAP	
M	5	1	**9T-6523**	1	SCREW	
	6	1	**9T-6827**	1	RING	
	7	1	**9T-6828**	1	RING	
	8	1	**6V-3922**	1	SEAL-O-RING	
	9	1	**6V-5758**	2	SEAL-O-RING	

M - METRIC PART

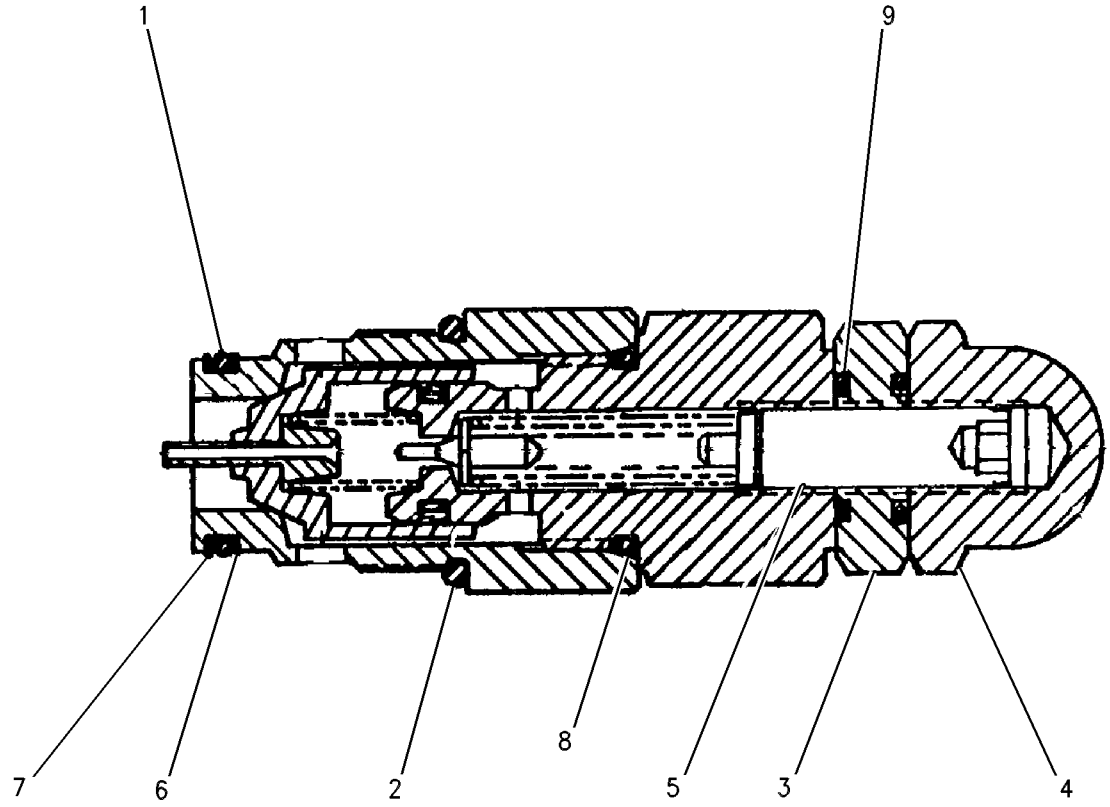

GRAPHIC #1 **<END>** g00595662

121-6649 VALVE GP-RELIEF

S/N: EMM1-UP; JEN1-UP
PART OF 235-0403, 235-0404, 235-0405 VALVE GP-CONTROL
AN ATTACHMENT

SMCS-5069, 5117

i05552641

NOTE	REF NO	GRAPHIC REF	PART NUMBER	QTY	PART NAME 1 2 3 4 5 6 (PRODUCT LEVEL)	SEE PAGE
Y	1	1	*346-3800*	1	VALVE GP-RELIEF	546
	2	1	**366-4972**	1	RING-BACKUP	
	3	1	**6V-5556**	1	SEAL-O-RING	
	4	1	**3K-0360**	1	SEAL-O-RING	
	5	1	**3J-7354**	1	SEAL-O-RING	

Y - SEPARATE ILLUSTRATION

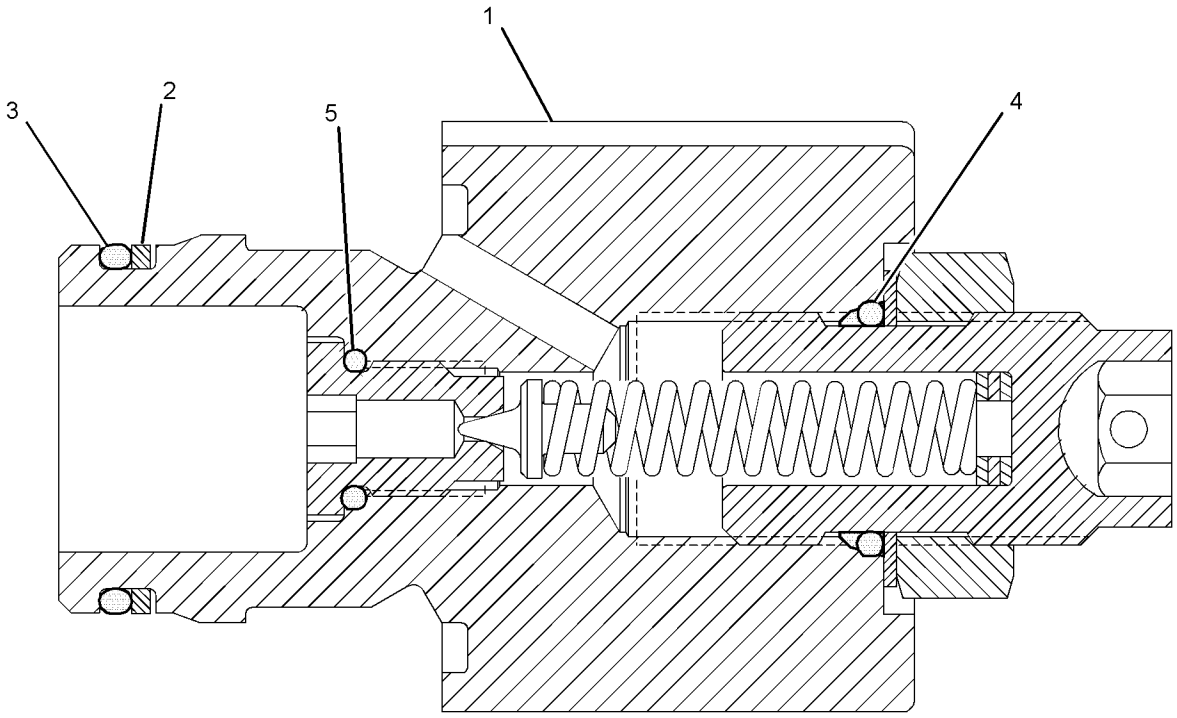

GRAPHIC #1

<END>

g02725208

225-8026 VALVE GP-RELIEF

S/N: EMM1-UP; JEN1-UP
DIRECT OPERATED
PART OF 226-4751 MANIFOLD GP-CONTROL
AN ATTACHMENT

SMCS-5069, 5117 **i05552997**

NOTE	REF NO	GRAPHIC REF	PART NUMBER	QTY	PART NAME 1 2 3 4 5 6 (PRODUCT LEVEL)	SEE PAGE
J	1	1	**161-6149**	1	SEAL-O-RING	
J	2	1	**161-6161**	2	RING-BACKUP	
J	3	1	**2M-9780**	1	SEAL-O-RING	
					AVAILABLE REPAIR KIT(S):	
J			**133-5545**	1	KIT-SEAL (RELIEF VALVE)	
					(INCLUDES O-RING SEALS, BACKUP RING)	

J - KIT MARKED J SERVICES PART(S) MARKED J

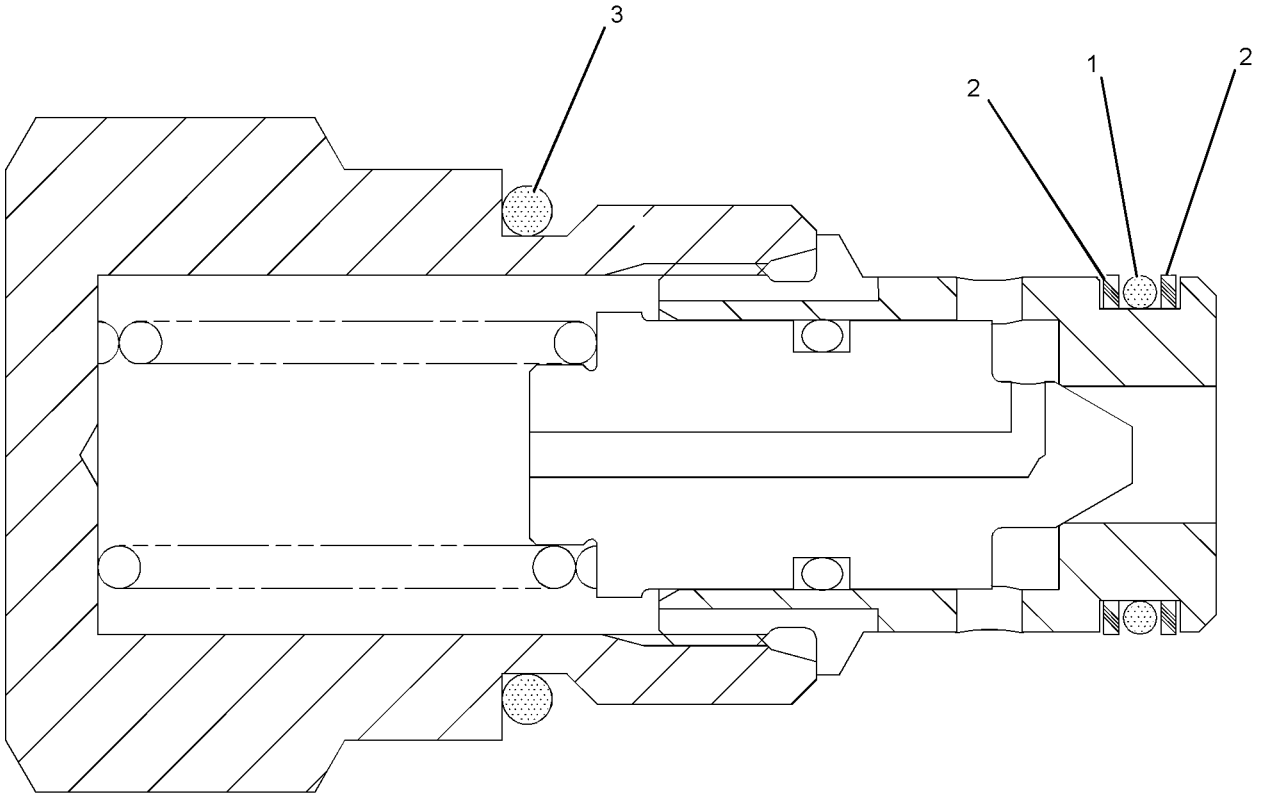

GRAPHIC #1 **<END>** g01019745

346-3800 VALVE GP-RELIEF

S/N: EMM1-UP; JEN1-UP
PART OF 121-6649 VALVE GP-RELIEF
AN ATTACHMENT

SMCS-5069, 5117 **i05552649**

NOTE	REF NO	GRAPHIC REF	PART NUMBER	QTY	PART NAME 1 2 3 4 5 6 (PRODUCT LEVEL)	SEE PAGE
	1	1	**4T-4509**	1	SEAT	
	2	1	**6E-5200**	1	RETAINER AS	
	3	1	**9X-6395**	1	NUT (3/4-16-THD)	
	4	1	**108-5157**	1	VALVE	
	5	1	**6V-5556**	1	SEAL-O-RING	
	6	1	**125-1393**	1	SPRING	
					-OR-	
			4T-1700	1	SPRING	
	7	1	**366-4972**	2	RING-BACKUP	
B	8	1	**096-6166**	1	WASHER-HARD (4.5X9X1-MM THK)	
	9	1	**3J-7354**	1	SEAL-O-RING	
	10	1	**3K-0360**	1	SEAL-O-RING	

B - USE AS REQUIRED

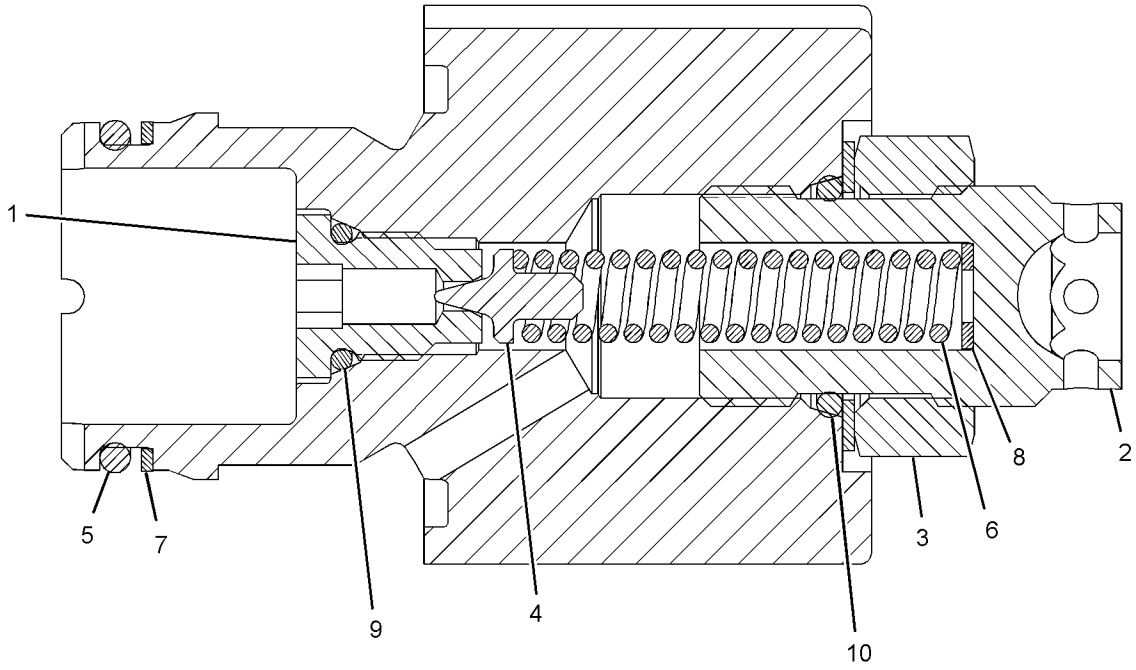

GRAPHIC #1 **<END>** g03325059

4T-1860 VALVE GP-SHUTTLE

S/N: EMM1-UP; JEN1-UP

PART OF 235-0402, 235-0403, 235-0404, 235-0405 VALVE GP-CONTROL

AN ATTACHMENT

SMCS-5079 **i05559540**

NOTE	REF NO	GRAPHIC REF	PART NUMBER	QTY	PART NAME 1 2 3 4 5 6 (PRODUCT LEVEL)	SEE PAGE
	1	1	**147-6605**	2	RING-BACKUP	
	2	1	**1M-6718**	1	BALL	
	3	1	**4T-0928**	1	VALVE	
	4	1	**6V-5324**	1	SEAL-O-RING	
	5	1	**147-6603**	1	SEAL-O-RING	
	6	1	**3J-1907**	1	SEAL-O-RING	
	7	1	**147-6604**	2	RING-BACKUP	

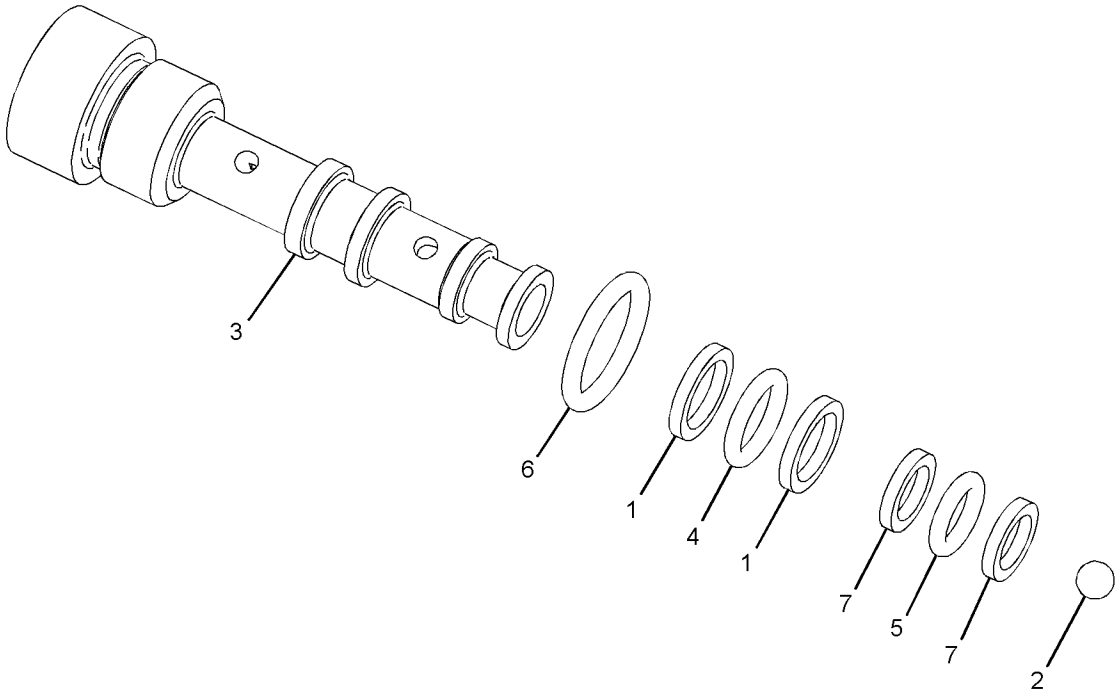

GRAPHIC #1 **<END>** g03523998

201-0950 VALVE GP-SOLENOID

S/N: EMM1-UP; JEN1-UP
24-VOLT. PARKING BRAKE
PART OF 226-4751 MANIFOLD GP-CONTROL, 234-5126 VALVE & MTG GP-BULLDOZER
AN ATTACHMENT

SMCS-5479 **i05552991**

NOTE	REF NO	GRAPHIC REF	PART NUMBER	QTY	PART NAME 1 2 3 4 5 6 (PRODUCT LEVEL)	SEE PAGE
	1	1	**122-1133**	1	COIL AS (24-VOLT)	
		1	**1S-9593**	2	STRAP-CABLE	
		1	**8T-8729**	2	PIN-CONNECTOR (16-GA TO 18-GA)	
		1	**102-8802**	1	KIT-RECEPTACLE (2-PIN)	
					(INCLUDES RECEPTACLE AS & WEDGE)	
	2	1	**156-5970**	1	NUT (1/2-20-THD)	
J	3	1	**171-8772**	1	VALVE AS-SOLENOID	
		1	**156-5970**	1	NUT (1/2-20-THD)	
					AVAILABLE REPAIR KIT(S):	
J			**195-7430**		KIT-SEAL (SOLENOID VALVE)	
					(INCLUDES O-RING SEALS & BACKUP RINGS)	

J - KIT MARKED J SERVICES PART MARKED J

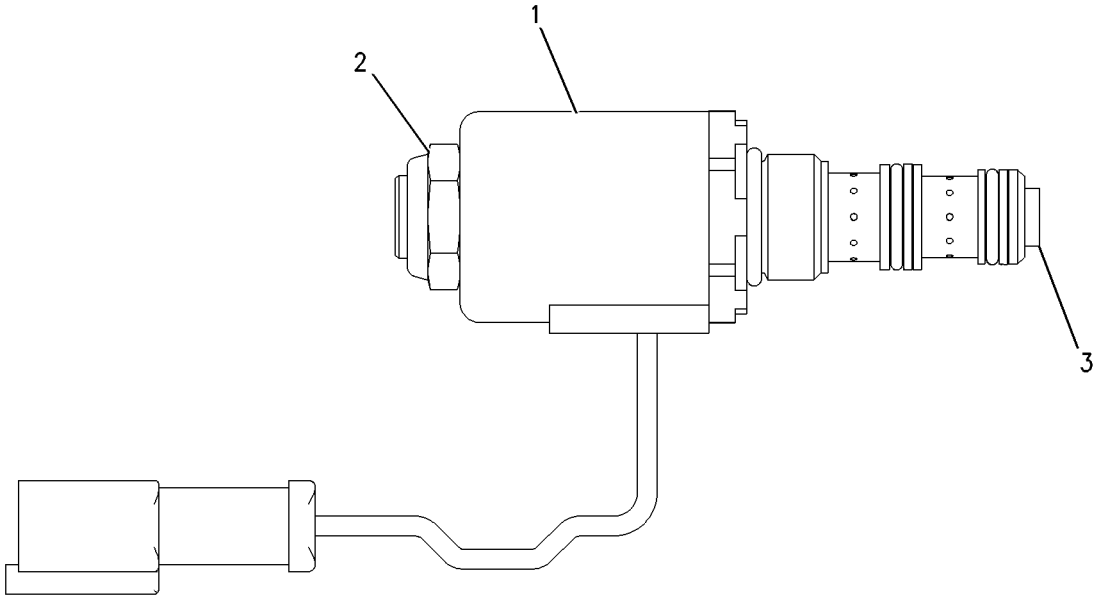

GRAPHIC #1 **<END>** g00888488

341-9214 VALVE GP-SOLENOID

S/N: EMM1-UP; JEN1-UP
PART OF 234-5126 VALVE & MTG GP-BULLDOZER
AN ATTACHMENT

SMCS-5479 **i05558971**

NOTE	REF NO	GRAPHIC REF	PART NUMBER	QTY	PART NAME 1 2 3 4 5 6 (PRODUCT LEVEL)	SEE PAGE
	1	1	**191-9247**	1	WASHER (19.15X31.65X2.36-MM THK)	
	2	1	**198-2914**	1	NUT (3/4-32-THD)	
	3	1	*235-4606*	1	CARTRIDGE AS-VALVE	
		1	**6V-4589**	1	SEAL-O-RING	
		1	**8L-2746**	1	SEAL-O-RING	
		1	**033-6043**	1	SEAL-O-RING	
	4	1	**312-8629**	1	COIL AS (24-VOLT)	
	5	1	**316-1438**	1	CARTRIDGE AS	
		1	**214-7568**	2	SEAL-O-RING	

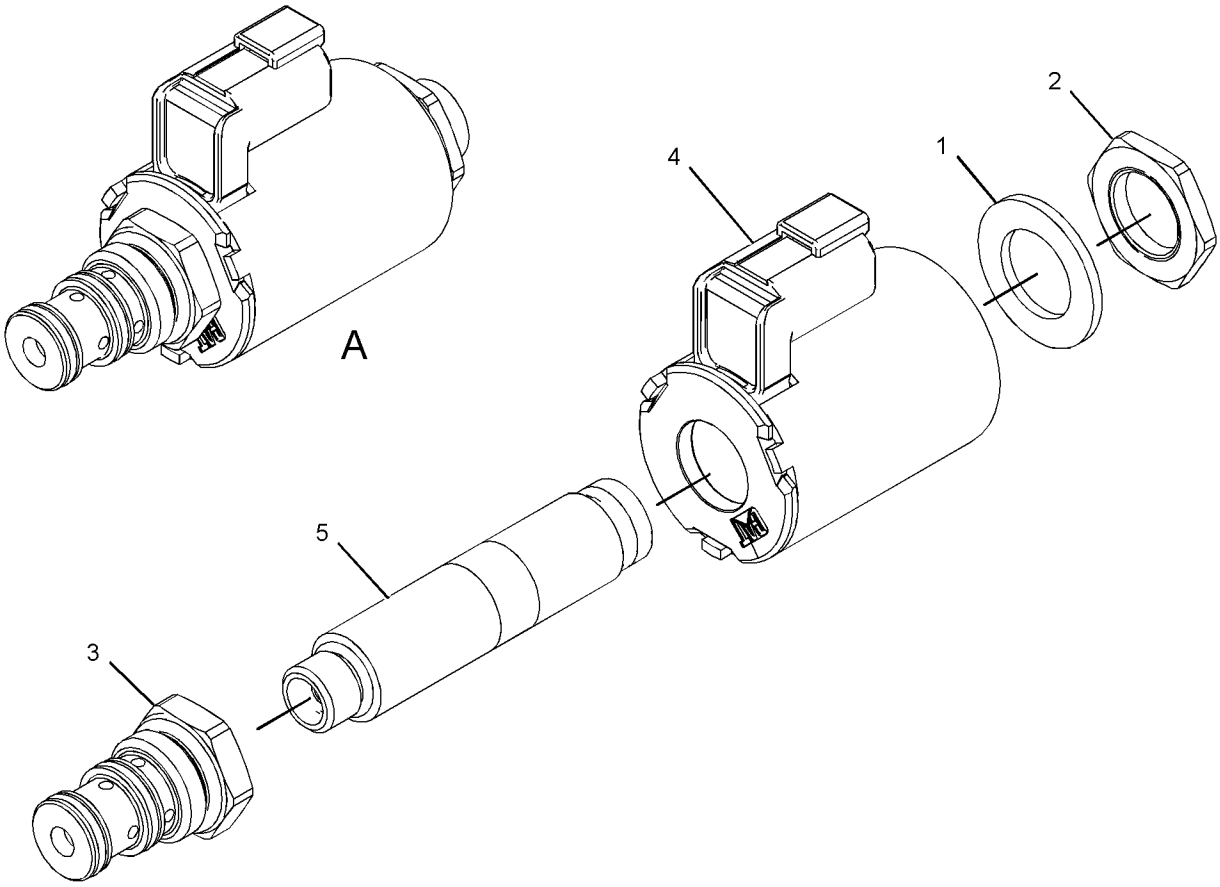

VIEW OF AREA A
(EXPLODED)

GRAPHIC #1 **<END>** g02318642

251-9814 BRACE GP-BULLDOZER

S/N: EMM1-UP; JEN1-UP
PART OF 389-6133, 389-6134 INSTALLATION AR-BULLDOZER
AN ATTACHMENT

SMCS-6074 **i05628050**

NOTE	REF NO	GRAPHIC REF	PART NUMBER	QTY	PART NAME 1 2 3 4 5 6 (PRODUCT LEVEL)	SEE PAGE
	1	1	**1U-1176**	2	PIN	
	2	1	**3B-4626**	2	PIN-COTTER	
	3	1	**3J-6573**	2	SCREW-ADJUSTMENT	
	4	1	**4F-0255**	2	PIN	
	5	1	**4F-1252**	2	PIN	
	6	1	**4T-5495**	2	STUD-BALL	
B	7	1	**8E-5701**	52	SHIM (0.8-MM THK)	
	8	1	**160-6306**	2	CAP-BEARING	
Y	9	1	**227-0841**	2	CYLINDER GP-TILT	452
	10	1	**251-9815**	1	ARM AS (LH)	
	11	1	**251-9816**	1	ARM AS (RH)	
					(EACH ARM ASSEMBLY INCLUDES)	
		1	**1U-1173**	1	BRACKET (RH)	
		1	**1U-1174**	1	BRACKET (LH)	
		1	**1U-1175**	2	PLATE	
		1	**3Y-3866**	1	NUT (2-3/4-8-THD)	
		1	**4B-4098**	1	PLUG-CUP	
		1	**251-9817**	1	BEARING	
	12	1	**251-9828**	4	CAP-BEARING	
B	13	1	**251-9834**	104	SHIM (0.8-MM THK)	
M	14	1	**7X-2564**	8	BOLT (M20X2.5X90-MM)	
	15	1	**8T-4123**	8	WASHER (3.62X5.75X0.375-MM THK)	
M	16	1	**8T-4187**	4	BOLT (M20X2.5X80-MM)	
M	17	1	**8T-6381**	8	BOLT (M20X2.5X120-MM)	
	18	1	**3J-1770**	2	LOCK PIN	

B - USE AS REQUIRED
M - METRIC PART
Y - SEPARATE ILLUSTRATION

251-9814 **BRACE GP-BULLDOZER (*contd.*)** **i05628050**

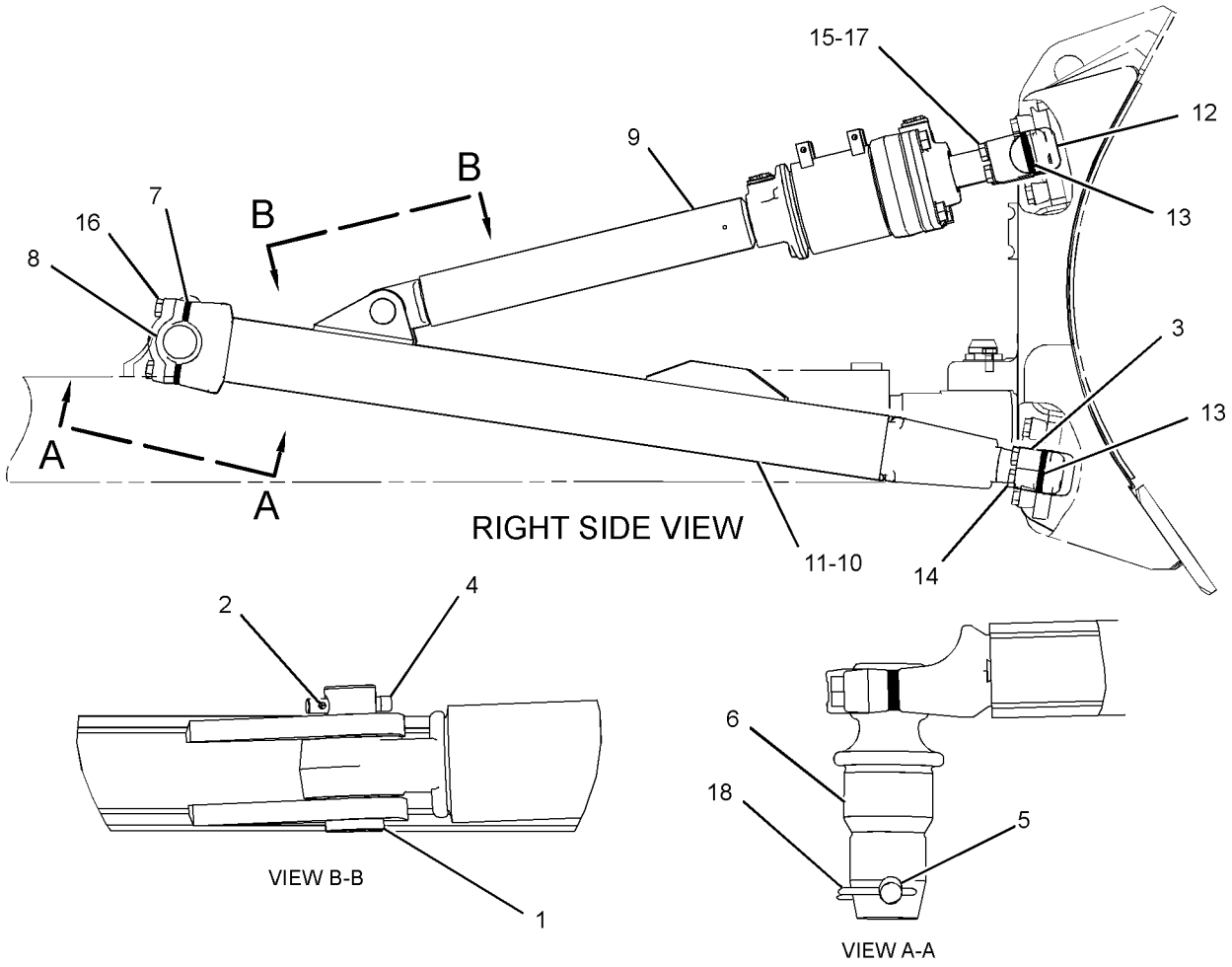

GRAPHIC #1 **<END>** g01262216

255-8952 C-FRAME AS

S/N: EMM1-UP

PART OF 255-8951 C-FRAME GP

AN ATTACHMENT

SMCS-6063 **i05628063**

NOTE	REF NO	GRAPHIC REF	PART NUMBER	QTY	PART NAME 1 2 3 4 5 6 (PRODUCT LEVEL)	SEE PAGE
	1	1	**6J-9187**	1	BRACKET AS (RH)	
	2	1	**6J-9188**	1	BRACKET AS (LH)	
					(EACH BRACKET AS INCLUDES)	
		1	**4J-2414**	1	TRUNNION	
		1	**7J-2595**	2	BRACKET	
	3	1	**8P-9770**	1	PLATE	
	4	1	**9W-4897**	6	BRACKET AS	
					(EACH INCLUDES)	
		1	**3J-2682**	1	BRACKET	
		1	**8F-4387**	2	PLATE	
	5	1	**9W-5375**	2	BAR	
	6	1	**9W-9000**	1	ADAPTER AS	
		1	**5M-6214**	1	PLUG-PIPE	
		1	**8E-5486**	2	BUSHING	
	7	1	**251-9835**	2	BEARING	

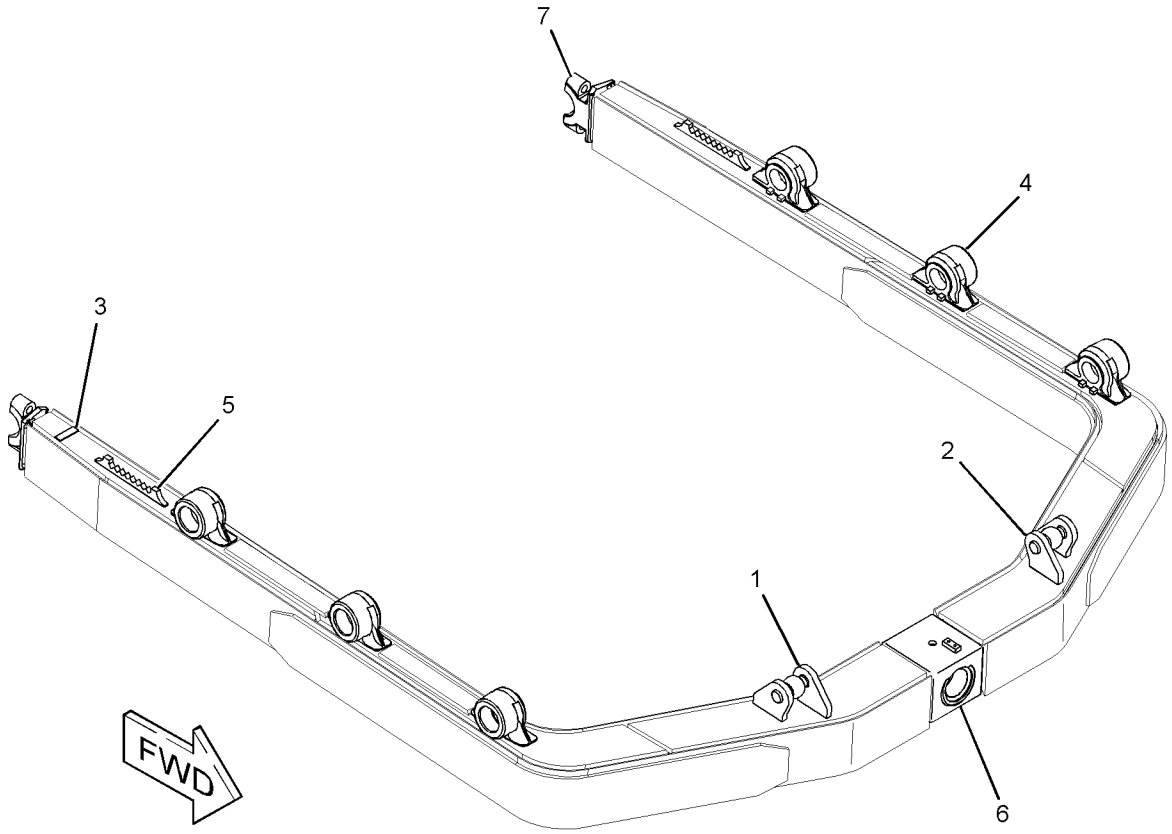

GRAPHIC #1 **<END>** g01207457

251-9830 C-FRAME GP

S/N: JEN1-UP
PART OF 389-6134 INSTALLATION AR-BULLDOZER
AN ATTACHMENT

SMCS-6063 **i05628189**

NOTE	REF NO	GRAPHIC REF	PART NUMBER	QTY	PART NAME 1 2 3 4 5 6 (PRODUCT LEVEL)	SEE PAGE
	1	1	**1U-0725**	1	RETAINER	
B	2	1	**4T-4866**	52	SHIM (0.8-MM THK)	
M	3	1	**251-8203**	4	NUT-SQUARE (M24X3-THD)	
	4	1	**251-9831**	1	C-FRAME AS	
		1	**4J-2414**	1	TRUNNION	
		1	**8E-5486**	2	BEARING-SLEEVE	
		1	**251-9835**	2	BEARING	
	5	1	**251-9832**	1	PIN-PIVOT	
	6	1	**251-9836**	2	CAP-BEARING	
M	7	1	**7X-2562**	2	BOLT (M20X2.5X45-MM)	
M	8	1	**7X-2567**	4	BOLT (M24X3X160-MM)	
	9	1	**8T-4167**	4	WASHER-HARD (26X44X4-MM THK)	

B - USE AS REQUIRED
M - METRIC PART

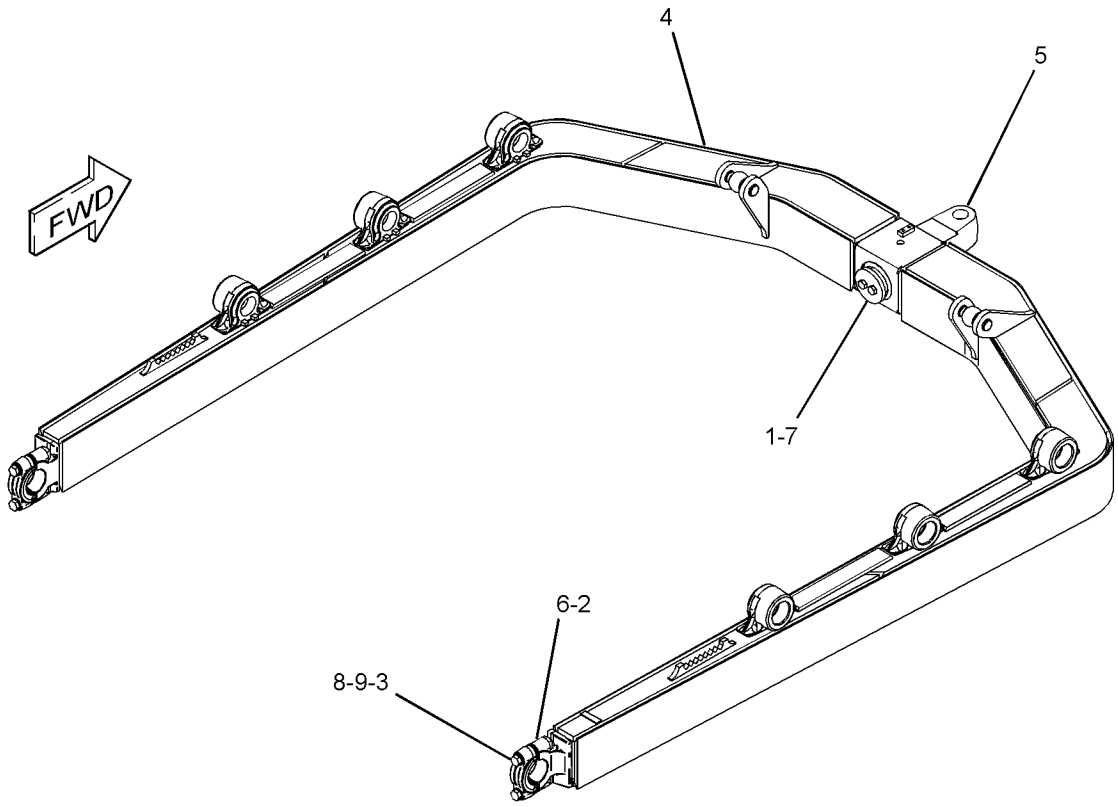

GRAPHIC #1 **<END>** g01212417

255-8951 C-FRAME GP

S/N: EMM1-UP

PART OF 389-6133 INSTALLATION AR-BULLDOZER

AN ATTACHMENT

SMCS-6063 **i05628058**

NOTE	REF NO	GRAPHIC REF	PART NUMBER	QTY	PART NAME 1 2 3 4 5 6 (PRODUCT LEVEL)	SEE PAGE
	1	1	**1U-0725**	1	RETAINER	
M	2	1	**251-8203**	4	NUT-SQUARE (M24X3-THD)	
	3	1	**251-9832**	1	PIN-PIVOT	
	4	1	**251-9836**	2	CAP-BEARING	
Y	5	1	**255-8952**	1	C-FRAME AS	552
M	6	1	**7X-2562**	2	BOLT (M20X2.5X45-MM)	
M	7	1	**7X-2567**	4	BOLT (M24X3X160-MM)	
	8	1	**8T-4167**	4	WASHER-HARD (26X44X4-MM THK)	
B	9	1	**4T-4866**	52	SHIM (0.8-MM THK)	

B - USE AS REQUIRED
M - METRIC PART
Y - SEPARATE ILLUSTRATION

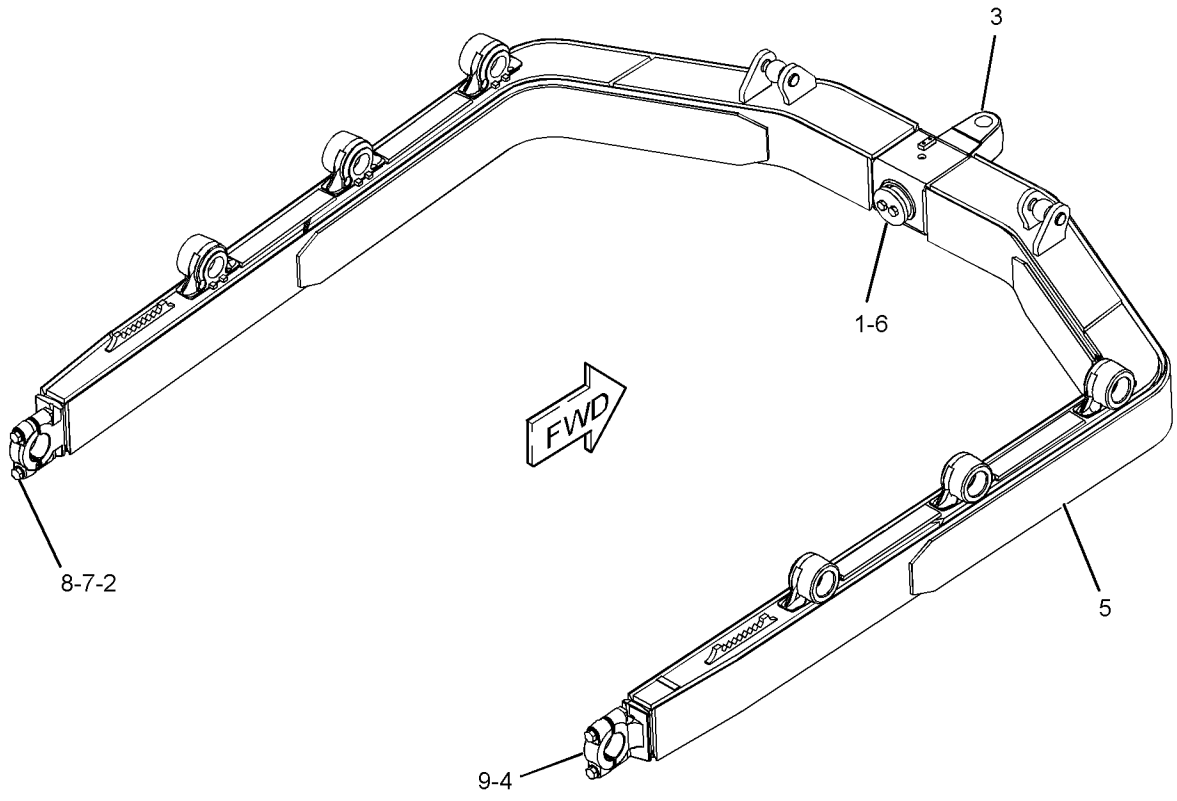

GRAPHIC #1 **<END>** g01207710

389-6128 INSTALLATION AR-BULLDOZER

S/N: EMM1-UP
FOR USE WITH SEMI-UNIVERSAL & STRAIGHT BLADE
AN ATTACHMENT

SMCS-6050 **i05673870**

NOTE	REF NO	GRAPHIC REF	PART NUMBER	QTY	PART NAME 1 2 3 4 5 6 (PRODUCT LEVEL)	SEE PAGE
	1	1	**4T-1481**	1	LINK AS	
Y	2	1	*109-1352*	1	TRUNNION GP-BULLDOZER	564
Y	3	1	*391-2580*	1	LINES GP-TILT CYLINDER	485
Y	4	1	*252-5853*	1	PUSH ARM GP	562
	5	1	**3B-4632**	2	PIN-COTTER	
	6	1	**8H-8898**	2	PIN	
	7	1	*288-3925*	1	GUARD GP-TILT CYLINDER	
M		1	**8T-4192**	1	BOLT (M12X1.75X25-MM)	
		1	**4Y-9398**	1	GUARD AS	
		1	**5P-1076**	4	WASHER-HARD (13.5X30X4-MM THK)	

M - METRIC PART
Y - SEPARATE ILLUSTRATION

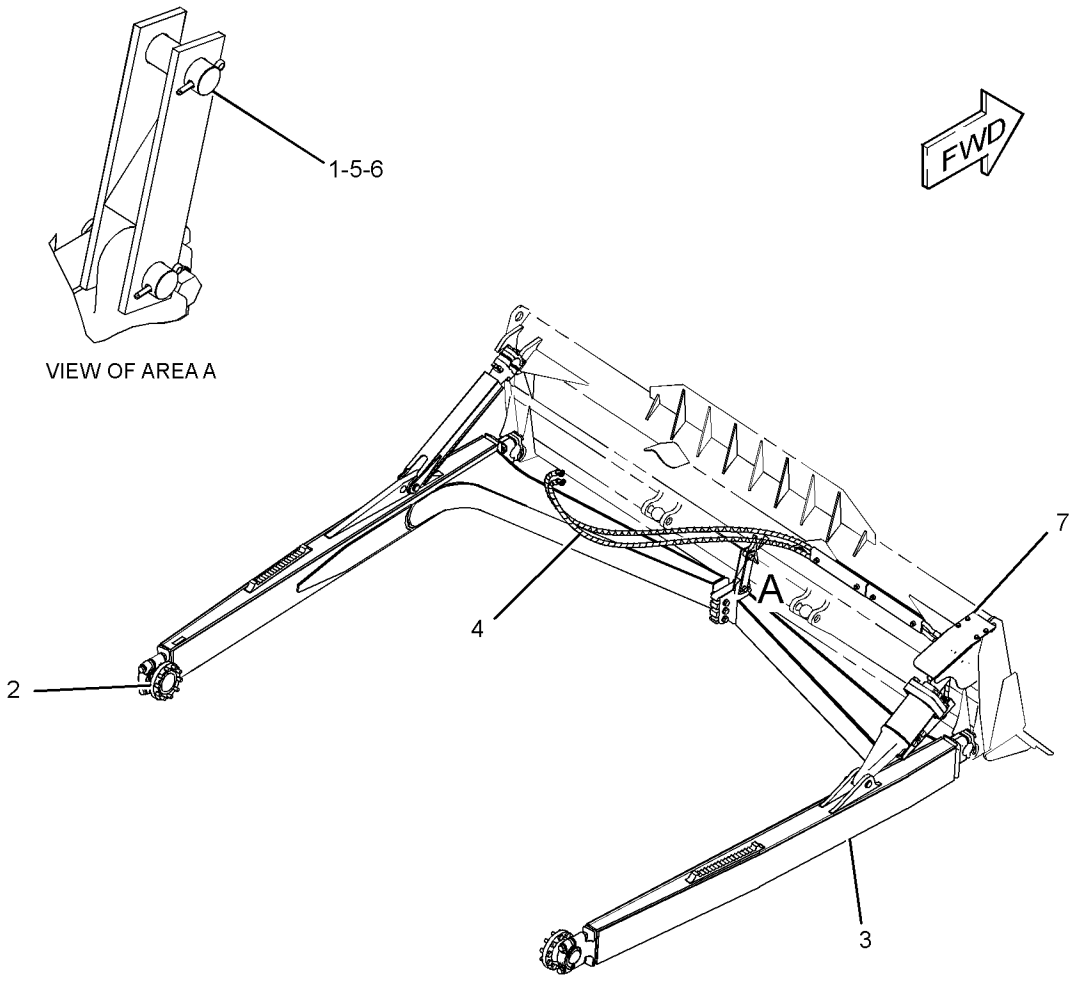

GRAPHIC #1 **<END>** g03177872

389-6129 OPTION AR-BULLDOZER

S/N: JEN1-UP

FOR USE WITH SEMI-UNIVERSAL & STRAIGHT BLADE

AN ATTACHMENT

SMCS-6050 **i05673989**

NOTE	REF NO	GRAPHIC REF	PART NUMBER	QTY	PART NAME 1 2 3 4 5 6 (PRODUCT LEVEL)	SEE PAGE
	1	1	**4T-1481**	1	LINK AS	
Y	2	1	*109-1352*	1	TRUNNION GP-BULLDOZER	564
Y	3	1	*230-5554*	1	PUSH ARM GP	560
	4	1	*288-3925*	1	GUARD GP-TILT CYLINDER	
		1	**4Y-9398**	1	GUARD AS	
		1	**5P-1076**	4	WASHER-HARD (13.5X30X4-MM THK)	
M		1	**8T-4192**	4	BOLT (M12X1.75X25-MM)	
Y	5	1	*391-2581*	1	LINES GP-TILT CYLINDER	487
	6	1	**3B-4632**	2	PIN-COTTER	
	7	1	**8H-8898**	2	PIN	

M - METRIC PART
Y - SEPARATE ILLUSTRATION

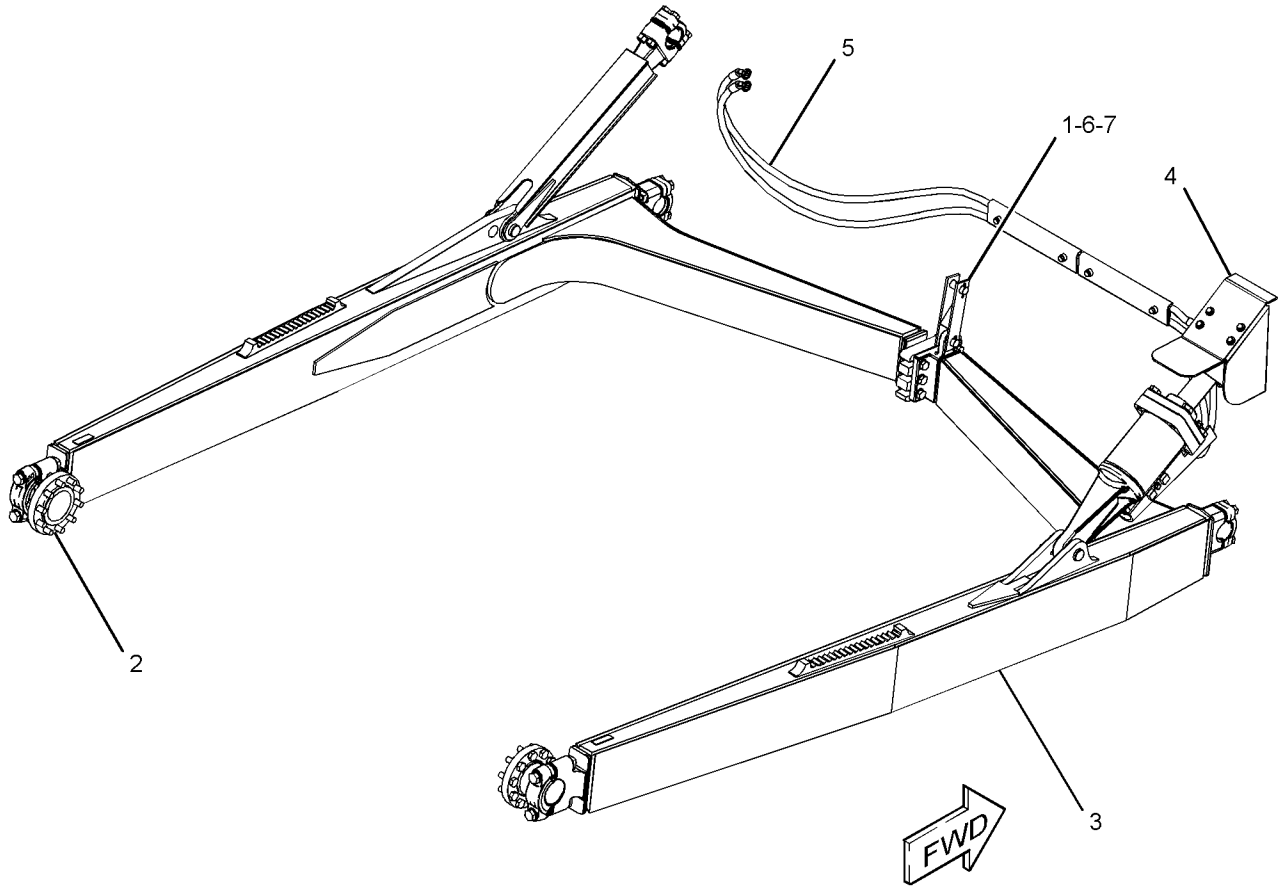

GRAPHIC #1 **<END>** g03579062

389-6131 OPTION AR-BULLDOZER

S/N: JEN1-UP
FOR USE WITH SEMI-UNIVERSAL & STRAIGHT BLADE
AN ATTACHMENT

SMCS-6050 **i05673990**

NOTE	REF NO	GRAPHIC REF	PART NUMBER	QTY	PART NAME 1 2 3 4 5 6 (PRODUCT LEVEL)	SEE PAGE
	1	1	**4T-1481**	1	LINK AS	
Y	2	1	*109-1352*	1	TRUNNION GP-BULLDOZER	564
Y	3	1	*230-5554*	1	PUSH ARM GP (SEMI-UNIVERSAL BULLDOZER)	560
	4	1	*288-3925*	1	GUARD GP-TILT CYLINDER	
		1	**4Y-9398**	1	GUARD AS	
		1	**5P-1076**	4	WASHER-HARD (13.5X30X4-MM THK)	
M		1	**8T-4192**	4	BOLT (M12X1.75X25-MM)	
Y	5	1	*389-6159*	1	LINES GP-TILT CYLINDER	483
	6	1	**3B-4632**	2	PIN-COTTER	
	7	1	**8H-8898**	2	PIN	

M - METRIC PART
Y - SEPARATE ILLUSTRATION

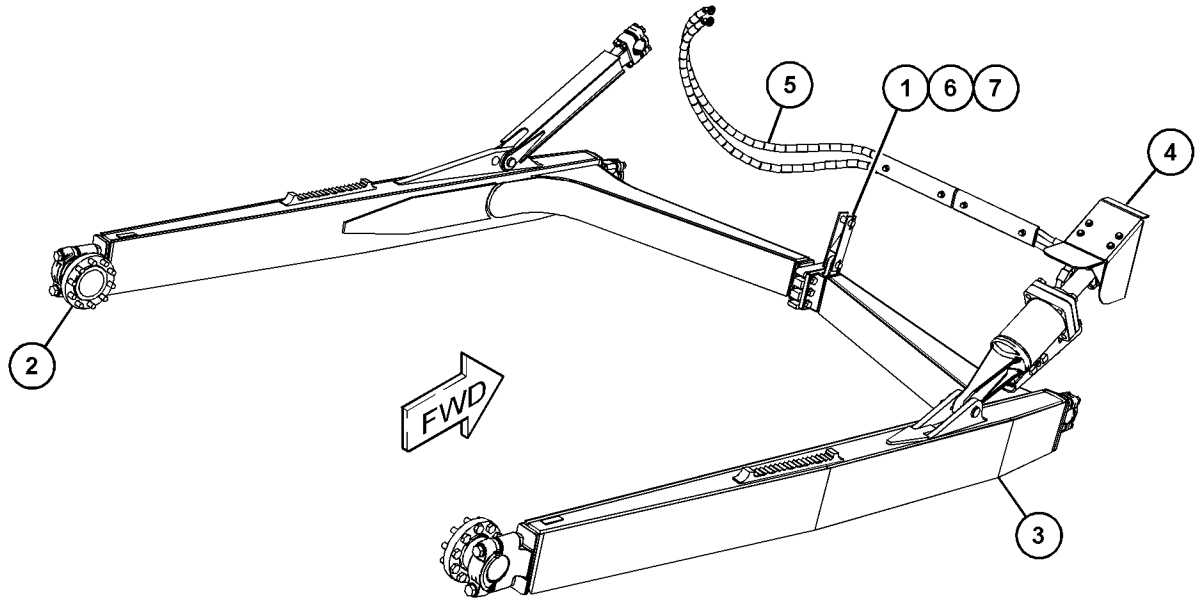

GRAPHIC #1 **<END>** g03578916

389-6133 OPTION AR-BULLDOZER

S/N: EMM1-UP
FOR USE WITH ANGLE BLADE
AN ATTACHMENT

SMCS-6050 **i05674010**

NOTE	REF NO	GRAPHIC REF	PART NUMBER	QTY	PART NAME 1 2 3 4 5 6 (PRODUCT LEVEL)	SEE PAGE
	1	1	**6Y-6751**	1	PIN	
Y	2	1	*109-1352*	1	TRUNNION GP-BULLDOZER	564
Y	3	1	*251-9814*	1	BRACE GP-BULLDOZER (HYDRAULIC TILT)	550
	4	1	**251-9827**	4	TRUNNION	
	5	1	**251-9829**	1	RETAINER	
Y	6	1	*255-8951*	1	C-FRAME GP	554
Y	7	1	*391-2583*	1	LINES GP-TILT CYLINDER	489
M	8	1	**7X-2553**	1	BOLT (M16X2X40-MM)	
M	9	1	**7X-2563**	16	BOLT (M20X2.5X60-MM)	

M - METRIC PART
Y - SEPARATE ILLUSTRATION

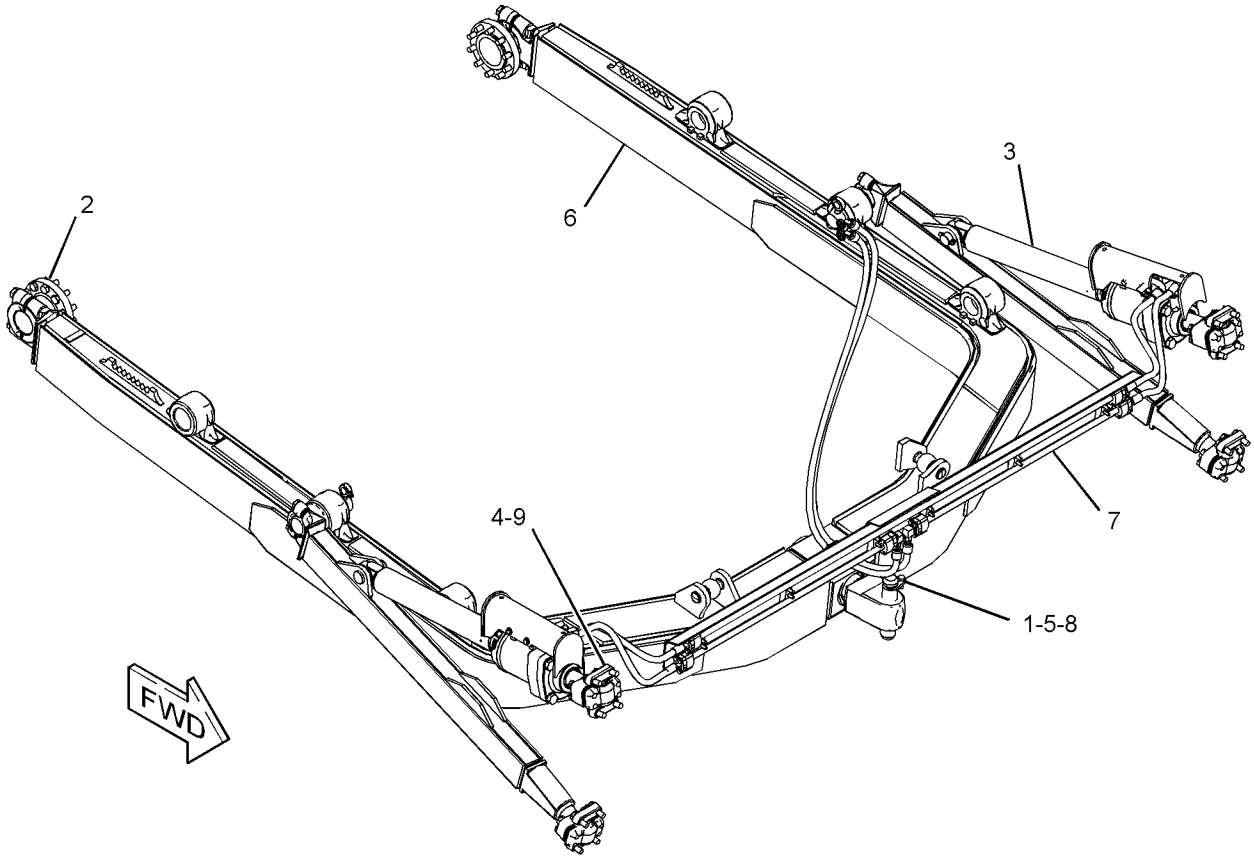

GRAPHIC #1 **<END>** g03579201

389-6134 INSTALLATION AR-BULLDOZER

S/N: JEN1-UP
FOR USE WITH ANGLE BLADE
AN ATTACHMENT

SMCS-6050 **i05682718**

NOTE	REF NO	GRAPHIC REF	PART NUMBER	QTY	PART NAME 1 2 3 4 5 6 (PRODUCT LEVEL)	SEE PAGE
	1	1	**6Y-6751**	1	PIN	
Y	2	1	*109-1352*	1	TRUNNION GP-BULLDOZER	564
Y	3	1	*251-9814*	1	BRACE GP-BULLDOZER (HYDRAULIC TILT)	550
	4	1	**251-9827**	4	TRUNNION	
	5	1	**251-9829**	1	RETAINER	
Y	6	1	*251-9830*	1	C-FRAME GP	553
Y	7	1	*391-2583*	1	LINES GP-TILT CYLINDER	489
M	8	1	**7X-2553**	1	BOLT (M16X2X40-MM)	
M	9	1	**7X-2563**	16	BOLT (M20X2.5X60-MM)	

M - METRIC PART
Y - SEPARATE ILLUSTRATION

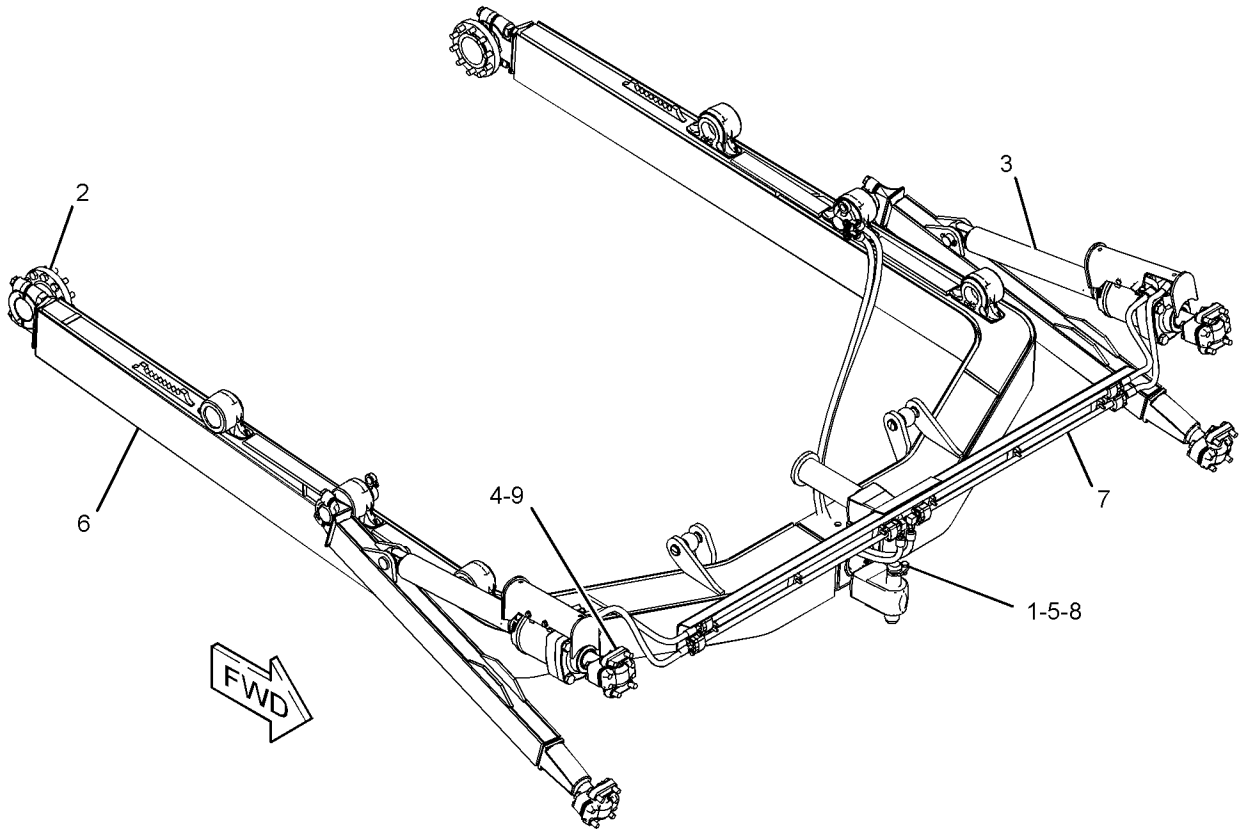

GRAPHIC #1 **<END>** g03581629

230-5554 PUSH ARM GP—SEMI-UNIVERSAL BULLDOZER

S/N: JEN1-UP

PART OF 389-6129, 389-6131 INSTALLATION AR-BULLDOZER

AN ATTACHMENT

SMCS-6061 **i05628044**

NOTE	REF NO	GRAPHIC REF	PART NUMBER	QTY	PART NAME 1 2 3 4 5 6 (PRODUCT LEVEL)	SEE PAGE
	1	1	**282-9090**	2	RETAINER	
	2	1	**4T-1520**	1	CAGE AS	
	2A	1	**6J-5383**	1	BEARING	
B	3	1	**4T-4866**	52	SHIM (0.8-MM THK)	
M	4	1	**7Y-5235**	4	BOLT (M24X3X190-MM)	
B	5	1	**8E-5703**	78	SHIM (0.8-MM THK)	
	6	1	**8J-2880**	3	CAP-BEARING	
	7	1	**124-9672**	1	BRACE AS-TILT	
	8	1	**160-6305**	2	CAP-BEARING	
	9	1	**194-0935**	1	PUSH ARM AS (LH)	
	10	1	**194-0936**	1	PUSH ARM AS (RH)	
Y	11	1	**367-9478**	1	CYLINDER GP-TILT	454
M	12	1	**251-8202**	8	NUT-SQUARE (M20X2.5-THD)	
M	13	1	**251-8203**	4	NUT-SQUARE (M24X3-THD)	
M	14	1	**8T-4779**	2	BOLT (M16X2X35-MM)	
	15	1	**290-8226**	2	PIN	
M	16	1	**7X-2566**	6	BOLT (M20X2.5X110-MM)	
M	17	1	**8C-8478**	12	BOLT (M20X2.5X140-MM)	
	18	1	**8T-4123**	6	WASHER (3.62X5.75X0.375-MM THK)	
M	19	1	**8T-4131**	10	NUT (M20X2.5-THD)	
	20	1	**8T-4167**	4	WASHER-HARD (26X44X4-MM THK)	
	21	1	**8T-5439**	6	WASHER-HARD (21.5X45X6-MM THK)	
	22	1	**9X-8257**	2	WASHER (17.5X30X3.5-MM THK)	

B - USE AS REQUIRED
M - METRIC PART
Y - SEPARATE ILLUSTRATION

230-5554 **PUSH ARM GP (*contd.*)** **i05628044**

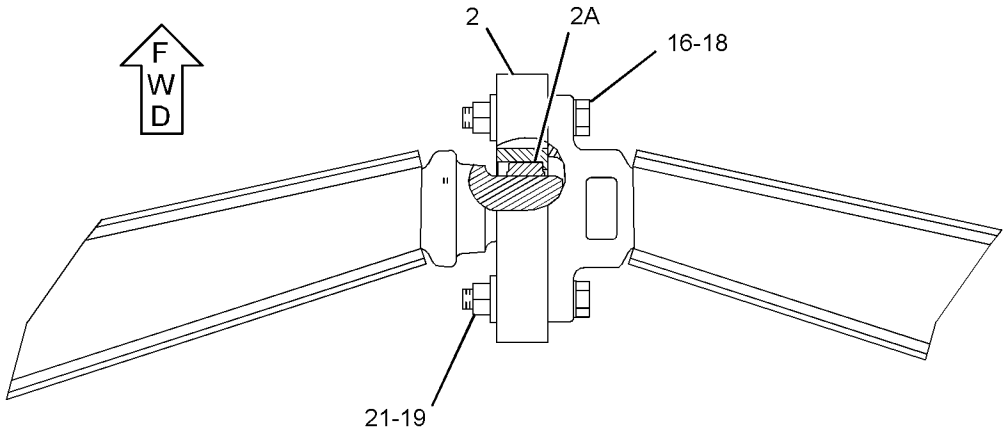

VIEW A-A

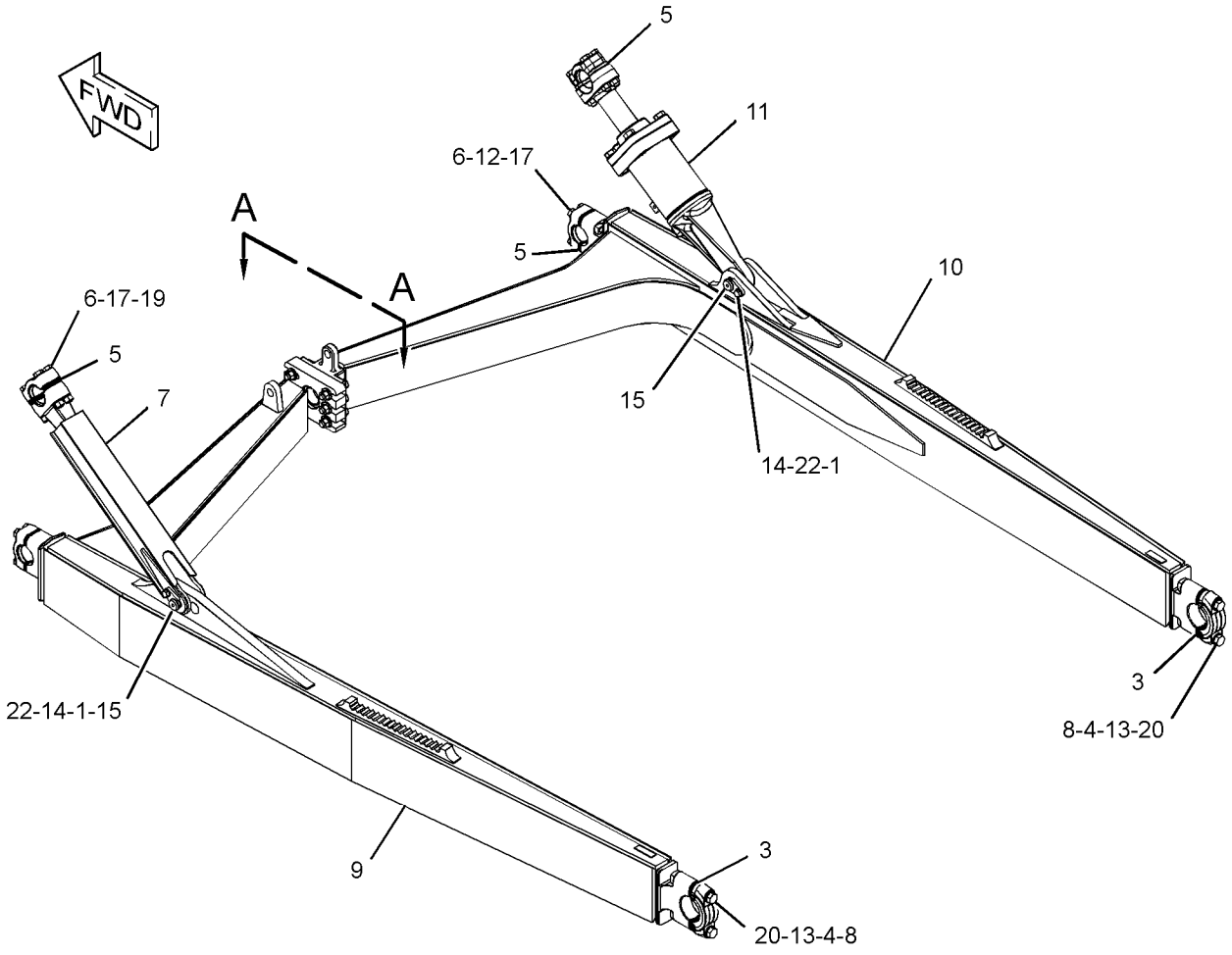

GRAPHIC #1 **<END>** g03317084

252-5853 PUSH ARM GP

S/N: EMM1-UP

PART OF 389-6128 INSTALLATION AR-BULLDOZER

AN ATTACHMENT

SMCS-6061 **i05627952**

NOTE	REF NO	GRAPHIC REF	PART NUMBER	QTY	PART NAME 1 2 3 4 5 6 (PRODUCT LEVEL)	SEE PAGE
	1	1	**4T-1520**	1	CAGE AS	
	1A	1	**6J-5383**	1	BEARING	
B	2	1	**4T-4866**	52	SHIM (0.8-MM THK) (EACH)	
M	3	1	**7Y-5235**	4	BOLT (M24X3X190-MM)	
B	4	1	**8E-5703**	78	SHIM (0.8-MM THK) (EACH)	
	5	1	**8J-2880**	3	CAP-BEARING	
	6	1	**124-9672**	1	BRACE AS-TILT	
	7	1	**160-6305**	2	CAP-BEARING	
Y	8	1	**367-9478**	1	CYLINDER GP-TILT	454
	9	1	**179-6151**	1	PUSH ARM AS (LH)	
	9A	1	**4T-0780**	1	TRUNNION	
	9B	1	**8P-9770**	1	PLATE	
	9C	1	**124-9666**	1	BRACKET	
	9D	1	**179-6152**	1	BEARING	
	9E	1	**179-6153**	1	BEARING	
	9F	1	**209-2152**	1	BAR	
	10	1	**179-6162**	1	PUSH ARM AS (RH)	
	10A	1	**4T-0732**	1	BRACKET	
	10B	1	**8P-9770**	1	PLATE	
	10C	1	**9W-2579**	2	PLATE	
	10D	1	**179-6152**	1	BEARING	
	10E	1	**179-6153**	1	BEARING	
	10F	1	**209-2152**	1	BAR	
M	11	1	**251-8202**	8	NUT-SQUARE (M20X2.5-THD)	
M	12	1	**251-8203**	4	NUT-SQUARE (M24X3-THD)	
	13	1	**290-8226**	2	PIN	
	14	1	**282-9090**	2	RETAINER	
M	15	1	**7X-2566**	6	BOLT (M20X2.5X110-MM)	
M	16	1	**8C-8478**	12	BOLT (M20X2.5X140-MM)	
	17	1	**8T-4123**	6	WASHER (3.62X5.75X0.375-MM THK)	
M	18	1	**8T-4131**	10	NUT (M20X2.5-THD)	
	19	1	**8T-4167**	4	WASHER-HARD (26X44X4-MM THK)	
M	20	1	**8T-4779**	2	BOLT (M16X2X35-MM)	
	21	1	**8T-5439**	6	WASHER-HARD (21.5X45X6-MM THK)	
	22	1	**9X-8257**	2	WASHER (17.5X30X3.5-MM THK)	

B - USE AS REQUIRED
M - METRIC PART
Y - SEPARATE ILLUSTRATION

252-5853 **PUSH ARM GP (*contd.*)** **i05627952**

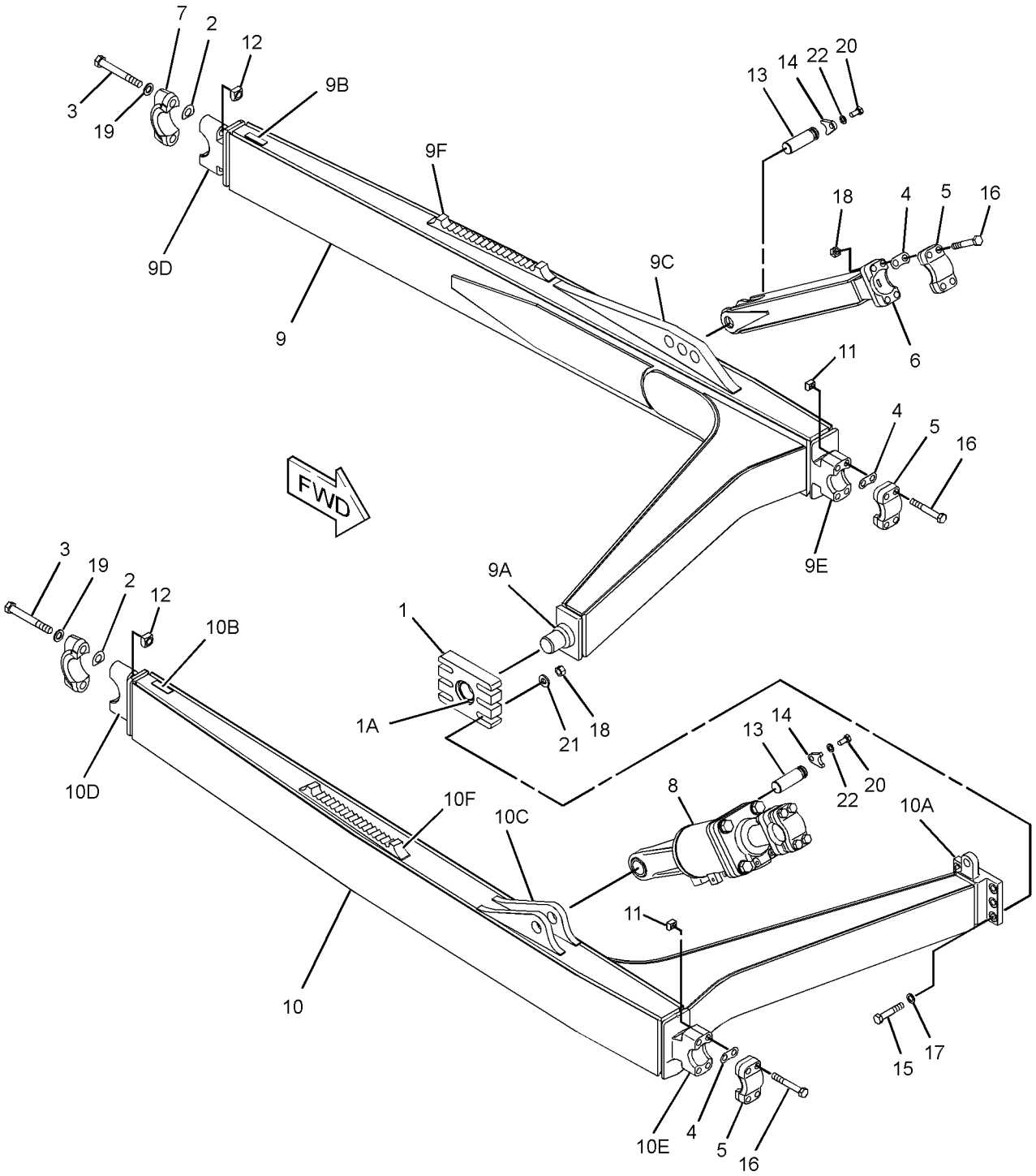

GRAPHIC #1 **<END>** g01225461

109-1352 TRUNNION GP-BULLDOZER

S/N: EMM1-UP; JEN1-UP

PART OF 389-6128, 389-6129, 389-6131, 389-6133, 389-6134 INSTALLATION AR-BULLDOZER AN ATTACHMENT

SMCS-6069 **i05627946**

NOTE	REF NO	GRAPHIC REF	PART NUMBER	QTY	PART NAME 1 2 3 4 5 6 (PRODUCT LEVEL)	SEE PAGE
	1	1	**285-0852**	2	TRUNNION	
M	2	1	**7X-2563**	20	BOLT (M20X2.5X60-MM)	

M - METRIC PART

QUANTITIES SHOWN ARE THOSE REQUIRED FOR BOTH LH AND RH SIDES

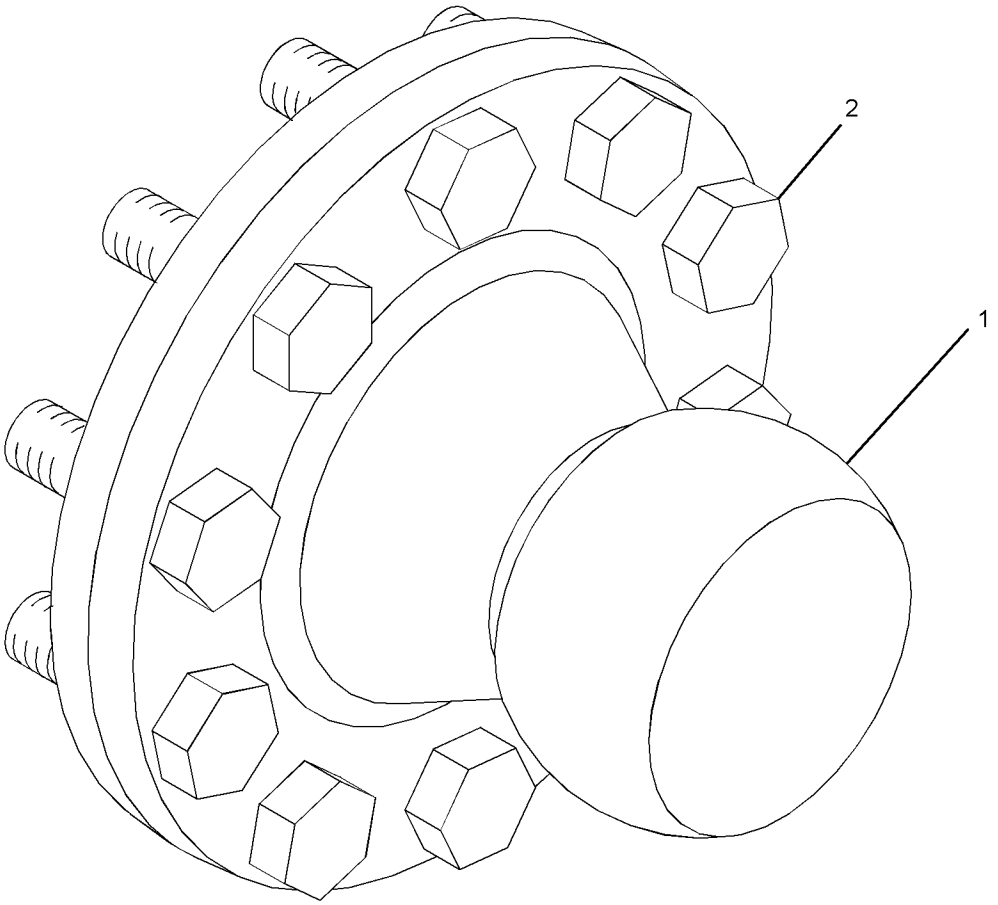

GRAPHIC #1 **<END>** g01360146

173-1028 ADJUSTER GP-SEAT

S/N: EMM1-UP; JEN1-UP
PART OF 178-0603, 180-7304 SEAT GP
AN ATTACHMENT

SMCS-7321 **i05332866**

NOTE	REF NO	GRAPHIC REF	PART NUMBER	QTY	PART NAME 1 2 3 4 5 6 (PRODUCT LEVEL)	SEE PAGE
	1	1	**4V-8256**	4	SPRING	
	2	1	**117-4492**	1	ROD	
	3	1	**136-1544**	1	LATCH AS (LH)	
	4	1	**156-5545**	1	LATCH AS (RH)	
	5	1	**164-4531**	1	ROD	
	6	1	**170-1112**	1	PLATE AS	
	7	1	**170-1114**	1	HANDLE (SLIDE ADJUSTMENT)	
	8	1	**170-1115**	1	HANDLE (TILT ADJUSTMENT)	
	9	1	**132-0338**	2	WASHER-PLASTIC (13X31.7X0.8-MM THK)	
	10	1	**2K-4973**	2	LOCKNUT (3/8-16-THD)	
	11	1	**7X-0608**	2	WASHER-HARD (10.2X16X2-MM THK)	

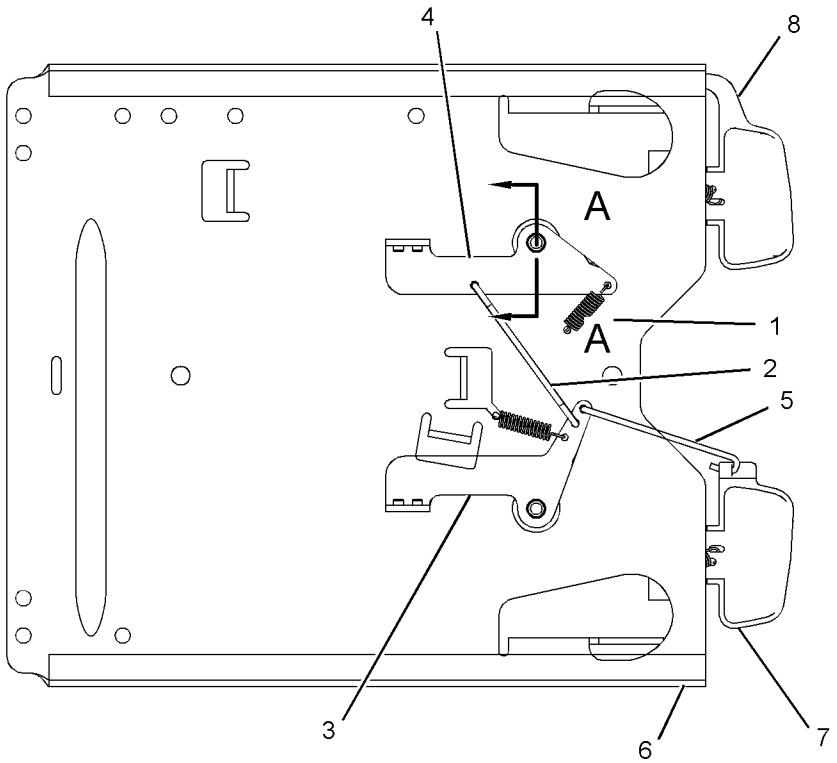

BOTTOM VIEW

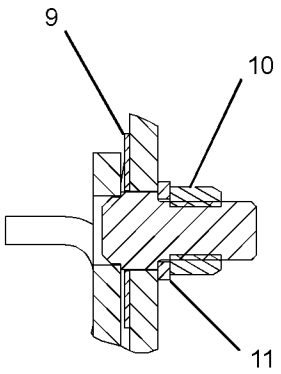

SECTION A-A

GRAPHIC #1 **<END>** g01191495

279-2591 AIR CONDITIONER GP

S/N: EMM1-UP; JEN1-UP
PART OF 393-0289, 393-0290 CAB AR
AN ATTACHMENT

SMCS-7320 **i05596832**

NOTE	REF NO	GRAPHIC REF	PART NUMBER	QTY	PART NAME 1 2 3 4 5 6 (PRODUCT LEVEL)	SEE PAGE
	1	1	**3E-5464**	1	THERMOSTAT (HVAC) (REFRIGERANT)	
	2	1	**109-6406**	1	COIL AS (EVAPORATOR)	
	3	1	**2V-1937**	2	GROMMET	
	4	1	**5P-1075**	2	WASHER-HARD (10.2X22.5X3-MM THK)	
	5	1	**178-3338**	2	SCREW (8-32X0.313-IN)	
	6	1	**8T-4121**	2	WASHER-HARD (11X21X2.5-MM THK)	
M	7	1	**8T-4137**	2	BOLT (M10X1.5X20-MM)	
M	8	1	**8T-4191**	2	BOLT (M10X1.5X16-MM)	
E	9	1	**144-0195**		HOSE (12-CM)	
D	10	1	**5P-5643**		SEAL (0.4-M EACH)	

D - ORDER BY THE METER
E - ORDER BY THE CENTIMETER
M - METRIC PART

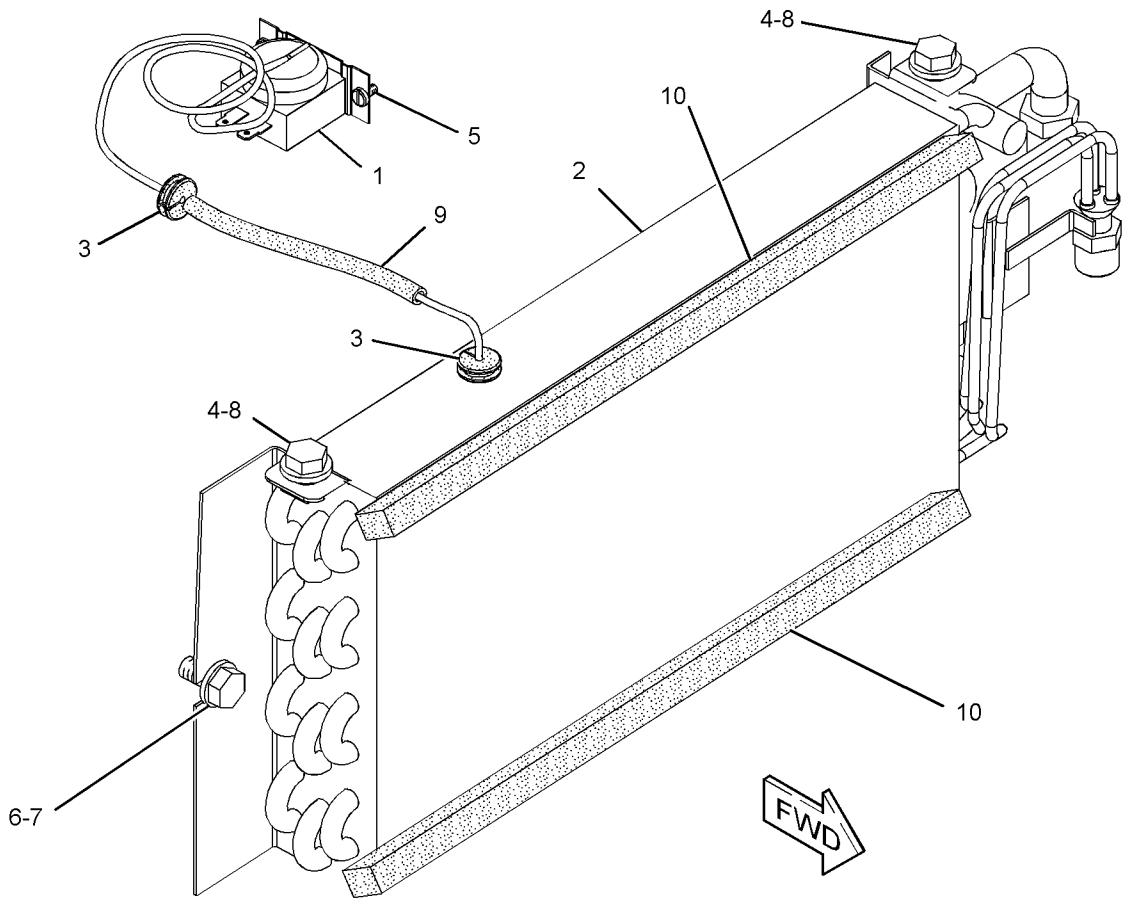

GRAPHIC #1 **<END>** g01232330

293-0754 ARM GP-WINDOW WIPER

S/N: EMM1-UP; JEN1-UP
PART OF 398-8457 WIPER GP-WINDOW
AN ATTACHMENT

SMCS-7305 **i05331115**

NOTE	REF NO	GRAPHIC REF	PART NUMBER	QTY	PART NAME 1 2 3 4 5 6 (PRODUCT LEVEL)	SEE PAGE
	1	1	**305-9192**	1	NOZZLE AS-WASHER	
E	2	1	**194-5171**		HOSE (35-CM)	
					PARTS SHOWN IN GRAPHIC(S) WITHOUT A REFERENCE NUMBER ARE NOT SERVICED SEPARATELY	

E - ORDER BY THE CENTIMETER

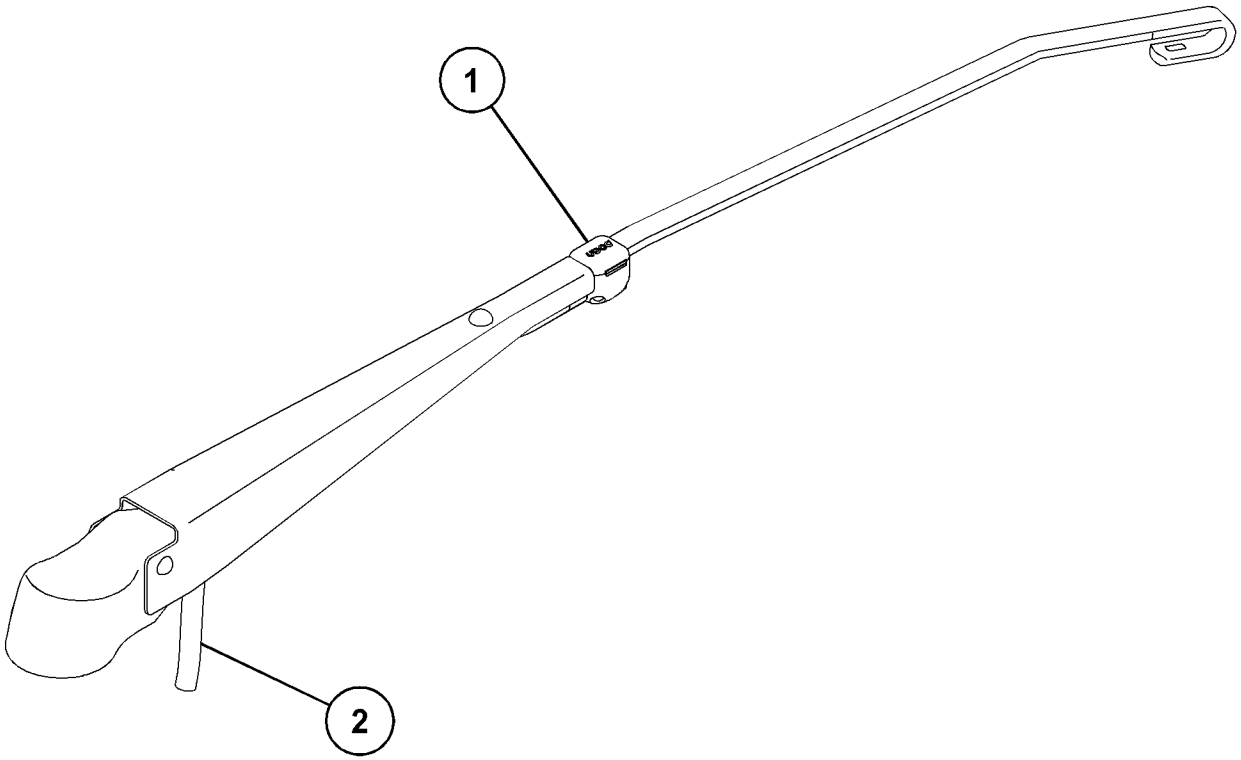

GRAPHIC #1 **<END>** g03312598

230-5388 BLOWER GP-CAB

S/N: EMM1-UP; JEN1-UP
PART OF 230-4700 PRESSURIZER GP-CAB
AN ATTACHMENT

SMCS-7316 **i05596657**

NOTE	REF NO	GRAPHIC REF	PART NUMBER	QTY	PART NAME 1 2 3 4 5 6 (PRODUCT LEVEL)	SEE PAGE
	1	1	**3S-2093**	2	STRAP-CABLE	
	2	1	**229-6635**	1	GASKET	
	3	1	**230-5385**	2	PLATE AS	
	4	1	**237-0934**	1	PLATE AS	
	5	1	**237-0956**	1	PLATE AS	
	6	1	**257-5029**	1	RESISTOR AS	
	7	1	**260-1914**	1	HARNESS AS-MOTOR	
		1	**102-8805**	1	KIT-RECEPTACLE (6-PIN)	
					(INCLUDES RECEPTACLE AS & WEDGE)	
		1	**6T-6505**	2	HOUSING-RECEPTACLE (BLADE, POSITIVE LOCK)	
		1	**6T-6506**	2	TERMINAL-BLADE (14-GA TO 18-GA)	
		1	**9W-0844**	2	SOCKET-CONNECTOR (14-GA TO 16-GA)	
		1	**9W-0852**	6	PIN-CONNECTOR (14-GA TO 16-GA)	
E		1	**125-7875**		TUBE-HEAT SHRINK (7.44-MM DIA) (10-CM)	
B		1	**1P-0810**		TAPE-ELECTRICAL	
		1	**155-2270**	1	KIT-CONNECTING PLUG (2-PIN)	
					(INCLUDES PLUG AS, WEDGE, & INTERFACE SEAL)	
		1	**192-2112**	4	SOCKET-TERMINAL	
	8	1	**438-3170**	1	BLOWER AS	
		1	**102-8802**	1	KIT-RECEPTACLE (2-PIN)	
					(INCLUDES RECEPTACLE AS & WEDGE)	
		1	**9W-0852**	2	PIN-CONNECTOR (14-GA TO 16-GA)	
	9	1	**282-1951**	1	PLATE AS	
	10	1	**282-1952**	1	COVER AS-ACCESS	
	11	1	**282-1953**	1	GUARD (RESISTOR)	
	12	1	**2M-1444**	2	SCREW-TAPPING (8-18X0.3-IN)	
M	13	1	**5C-9553**	2	BOLT (M6X1X16-MM)	
	14	1	**6H-4005**	1	GROMMET	
M	15	1	**6S-8584**	8	SCREW (M4X0.7-THD)	
	16	1	**096-6166**	8	WASHER-HARD (4.5X9X1-MM THK)	
	17	1	**8T-4205**	2	WASHER-HARD (7.2X14.5X2-MM THK)	

B - USE AS REQUIRED
E - ORDER BY THE CENTIMETER
M - METRIC PART

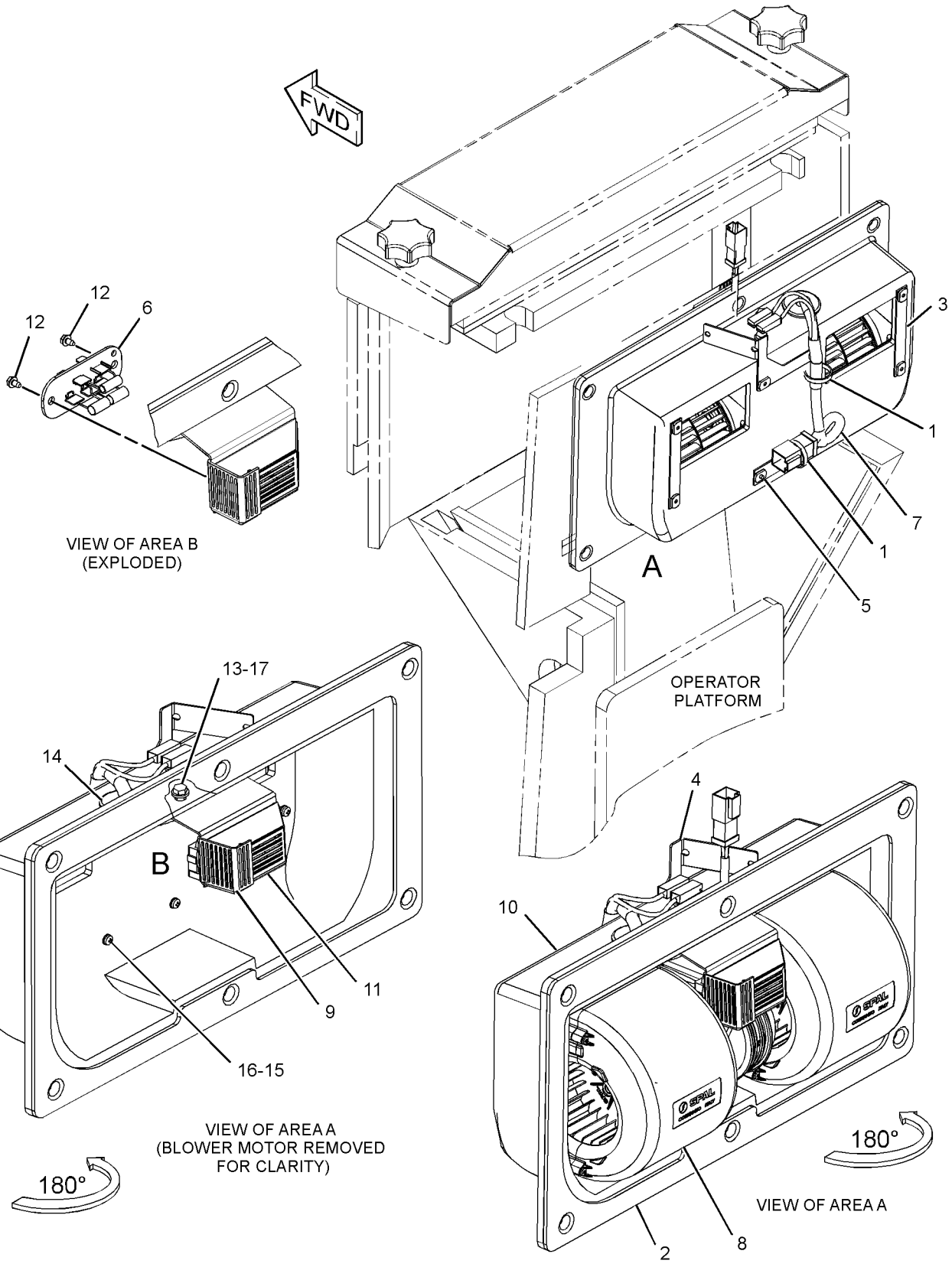

GRAPHIC #1 **<END>** g03531469

OPERATOR STATION

389-3229 CAB AR

S/N: EMM1-UP; JEN1-UP
CANNOT BE USED WITH 389-3241—PAGE: 725, 389-6152—PAGE: 671
AN ATTACHMENT

SMCS-7301 **i05596571**

NOTE	PART NUMBER	QTY	PART NAME 1 2 3 4 5 6 (PRODUCT LEVEL)	SEE PAGE
Y	*393-0290*	1	CAB AR	571
Y	*383-6001*	1	COMPRESSOR GP-REFRIGERANT	581
Y	*168-8783*	1	CONDENSER & MTG GP-REFRIGERANT	583
Y	*374-4179*	1	COVER GP-CAB	597
Y	*382-8681*	1	LINES GP-AIR CONDITIONER	625
Y	*389-3306*	1	LINES GP-HEATER	629
Y	*374-4178*	1	MOUNTING GP-PLATFORM	641
Y	*208-8705*	1	ROPS GP	664
Y	*380-7910*	1	TANK GP-WINDOW WASHER	697

Y - SEPARATE ILLUSTRATION

<END>

389-3230 CAB AR—ROPS, A/C

S/N: EMM1-UP; JEN1-UP
CANNOT BE USED WITH 389-3241—PAGE: 725, 389-6151—PAGE: 670
AN ATTACHMENT

SMCS-7301 **i05596573**

NOTE	PART NUMBER	QTY	PART NAME 1 2 3 4 5 6 (PRODUCT LEVEL)	SEE PAGE
Y	*393-0290*	1	CAB AR	571
Y	*383-6001*	1	COMPRESSOR GP-REFRIGERANT	581
Y	*389-6097*	1	CONDENSER & MTG GP-REFRIGERANT	584
Y	*374-4179*	1	COVER GP-CAB	597
Y	*322-2361*	1	LINES GP-AIR CONDITIONER	621
Y	*389-3306*	1	LINES GP-HEATER	629
Y	*374-4178*	1	MOUNTING GP-PLATFORM	641
Y	*389-6096*	1	ROPS GP	667
Y	*380-7910*	1	TANK GP-WINDOW WASHER	697

Y - SEPARATE ILLUSTRATION

<END>

389-3231 CAB AR—ROPS, A/C

S/N: EMM1-UP; JEN1-UP
DUAL PANE GLASS
CANNOT BE USED WITH 389-3241—PAGE: 725, 389-6151—PAGE: 670
AN ATTACHMENT

SMCS-7301 **i05596576**

NOTE	PART NUMBER	QTY	PART NAME 1 2 3 4 5 6 (PRODUCT LEVEL)	SEE PAGE
Y	*393-0289*	1	CAB AR (ROPS, A/C)	571
Y	*383-6001*	1	COMPRESSOR GP-REFRIGERANT	581
Y	*389-6097*	1	CONDENSER & MTG GP-REFRIGERANT (ROPS)	584
Y	*374-4179*	1	COVER GP-CAB	597
Y	*322-2361*	1	LINES GP-AIR CONDITIONER	621
Y	*389-3306*	1	LINES GP-HEATER	629
Y	*374-4178*	1	MOUNTING GP-PLATFORM	641
Y	*389-6096*	1	ROPS GP	667
Y	*380-7910*	1	TANK GP-WINDOW WASHER	697

Y - SEPARATE ILLUSTRATION

<END>

OPERATOR STATION

393-0289 CAB AR—ROPS, A/C

S/N: EMM1-UP; JEN1-UP
DUAL PANE GLASS
PART OF 389-3231 CAB AR
AN ATTACHMENT

SMCS-7301 **i05596578**

NOTE	PART NUMBER	QTY	PART NAME 1 2 3 4 5 6 (PRODUCT LEVEL)	SEE PAGE
Y	*279-2591*	1	AIR CONDITIONER GP	566
Y	*387-0550*	1	CAB GP	575
Y	*375-4845*	1	CONTROL GP-GOVERNOR & BRAKE	588
Y	*375-4844*	1	CONTROL GP-STEERING & XMSN	265
Y	*375-4848*	1	COVER GP-BATTERY	327
Y	*389-6157*	1	COVER GP-CONSOLE	600
Y	*279-2590*	1	HEATER GP-CAB	608
Y	*375-4873*	1	INSTALLATION GP-RADIO	611
Y	*317-9070*	1	INSTRUMENT GP	612
Y	*323-5697*	1	LINER GP-CAB	619
Y	*387-0546*	1	LINES GP-AIR CONDITIONER	628
Y	*105-9659*	1	MIRROR GP-REAR VIEW (INTERIOR)	632
Y	*169-9637*	1	MOUNTING GP-CAB	638
Y	*389-6158*	1	PLATE & FILM GP	733
Y	*317-4155*	1	PLATFORM GP-OPERATOR (ENCLOSED ROPS)	651
Y	*230-4700*	1	PRESSURIZER GP-CAB	660
Y	*322-1394*	1	WASHER GP-WINDOW	698
Y	*398-8457*	1	WIPER GP-WINDOW	704
Y	*317-6565*	1	WIRING GP-PLATFORM	243

Y - SEPARATE ILLUSTRATION

<END>

393-0290 CAB AR

S/N: EMM1-UP; JEN1-UP
PART OF 389-3229, 389-3230 CAB AR
AN ATTACHMENT

SMCS-7301 **i05596577**

NOTE	PART NUMBER	QTY	PART NAME 1 2 3 4 5 6 (PRODUCT LEVEL)	SEE PAGE
Y	*279-2591*	1	AIR CONDITIONER GP	566
Y	*375-4843*	1	CAB GP	572
Y	*375-4845*	1	CONTROL GP-GOVERNOR & BRAKE	588
Y	*375-4844*	1	CONTROL GP-STEERING & XMSN	265
Y	*375-4848*	1	COVER GP-BATTERY	327
Y	*389-6157*	1	COVER GP-CONSOLE	600
Y	*279-2590*	1	HEATER GP-CAB	608
Y	*375-4873*	1	INSTALLATION GP-RADIO	611
Y	*317-9070*	1	INSTRUMENT GP	612
Y	*323-5697*	1	LINER GP-CAB	619
Y	*387-0546*	1	LINES GP-AIR CONDITIONER	628
Y	*105-9659*	1	MIRROR GP-REAR VIEW (INTERIOR)	632
Y	*169-9637*	1	MOUNTING GP-CAB	638
Y	*389-6158*	1	PLATE & FILM GP	733
Y	*317-4155*	1	PLATFORM GP-OPERATOR (ENCLOSED ROPS)	651
Y	*230-4700*	1	PRESSURIZER GP-CAB	660
Y	*322-1394*	1	WASHER GP-WINDOW	698
Y	*398-8457*	1	WIPER GP-WINDOW	704
Y	*317-6565*	1	WIRING GP-PLATFORM	243

Y - SEPARATE ILLUSTRATION

<END>

OPERATOR STATION

375-4843 CAB GP

S/N: EMM1-UP; JEN1-UP
PART OF 393-0290 CAB AR
AN ATTACHMENT

SMCS-7301 **i05598973**

NOTE	REF NO	GRAPHIC REF	PART NUMBER	QTY	PART NAME 1 2 3 4 5 6 (PRODUCT LEVEL)	SEE PAGE
	1	1	**4Y-9344**	1	GLASS (REAR)	
	2	1	**5G-8655**	2	LEVER	
	3	1	**6I-9386**	2	BRACKET AS	
Y	4	1	*6T-8402*	1	WINDOW GP-CAB (RH)	700
Y	5	1	*6T-8403*	1	WINDOW GP-CAB (LH)	701
	6	1	**6V-2331**	2	HANDLE AS-OUTSIDE	
	7	1	**6V-2375**	2	HANDLE AS-INSIDE	
					(EACH HANDLE AS INCLUDES)	
		1	**6V-6887**	1	KEEPER	
	8	1	**6V-3260**	8	BOLT-SOCKET HEAD (1/4-20X0.75-IN)	
	9	1	**6V-7190**	2	LEVER AS	
					(EACH INCLUDES)	
		1	**6V-8129**	2	SETSCREW-SOCKET	
	10	1	**6V-7636**	4	PIN AS-SPRING	
	11	1	**6V-8073**	2	LINK-CONNECTING	
	12	1	**7G-2454**	1	GLASS (TINTED) (FRONT)	
	13	1	**7X-0623**	12	WASHER (10.5X21X2-MM THK)	
	14	1	**8C-3442**	2	SPRING-COIL	
B	15	1	**8T-0318**	8	SHIM (0.8-MM THK)	
	16	1	**8T-1979**	1	LINKAGE AS (LH)	
	17	1	**8T-1980**	1	LINKAGE AS (RH)	
					(EACH LINKAGE AS INCLUDES)	
		1	**5P-8503**	1	LOCK AS-CYLINDER	
		1	**8T-8914**	1	SEAL-LINKAGE	
	18	1	**8Y-8304**	2	STRIKER AS-LATCH	
					(EACH INCLUDES)	
		1	**8T-4158**	1	WASHER-SPECIAL	
	19	1	**9D-9736**	2	BUMPER	
	20	1	**9G-1127**	2	GLASS (SIDE, RH, LH)	
	21	1	**109-9828**	1	LATCH AS-ROTARY (RH)	
	22	1	**109-9829**	1	LATCH AS-ROTARY (LH)	
	23	1	**125-8254**	2	GLASS (TINTED) (DOOR, RH, LH)	
	24	1	**170-5854**	1	BRACKET (RH)	
	25	1	**170-5855**	1	BRACKET (LH)	
	26	1	**375-4853**	1	DOOR AS (RH)	
	27	1	**375-4860**	1	DOOR AS (LH)	
					(EACH DOOR AS INCLUDES)	
M		1	**6V-9632**	2	NUT-WELD (M6X1-THD)	
		1	**120-4921**	1	HINGE	
	28	1	*375-4870*	1	CAB AS	
M		1	**6V-9632**	9	NUT-WELD (M6X1-THD)	
		1	**7T-1099**	1	LINK	
		1	**233-2719**	2	BRACKET AS	
		1	**233-2720**	2	BRACKET AS	
					(EACH BRACKET AS INCLUDES)	
M		1	**6V-9632**	1	NUT-WELD (M6X1-THD)	
		1	**284-9042**	8	PLATE AS	
					(EACH INCLUDES)	
M		1	**9R-3572**	1	BOSS (M12X1.75X20-MM)	
		1	*380-7894*	1	PLATE AS (RH)	
		1	*380-7895*	1	PLATE AS (LH)	
					(EACH PLATE AS INCLUDES)	
M		1	**8T-3490**	6	NUT-WELD (M10X1.5-THD)	
	29	1	**380-7903**	2	ROD AS	
					(EACH INCLUDES)	
		1	**7X-0608**	1	WASHER-HARD (10.2X16X2-MM THK)	

375-4843 **CAB GP (*contd.*)** **i05598973**

NOTE	REF NO	GRAPHIC REF	PART NUMBER	QTY	PART NAME 1 2 3 4 5 6 (PRODUCT LEVEL)	SEE PAGE
		1	**118-0693**	1	ROD	
	30	1	**1B-8735**	2	KEY-WOODRUFF	
	31	1	**3E-6180**	4	NUT-CLINCH (M10X1.5-THD)	
	32	1	**4K-3533**	4	WASHER (9.7X17.5X1.6-MM THK)	
	33	1	**4M-6425**	2	BOLT (5/16-18X1-IN)	
	34	1	**5M-8500**	2	KNOB	
	35	1	**5P-1076**	5	WASHER-HARD (13.5X30X4-MM THK)	
	36	1	**6V-8189**	2	NUT (5/16-18-THD)	
	37	1	**7X-7729**	12	WASHER (11X25X3-MM THK)	
	38	1	**8T-4121**	4	WASHER-HARD (11X21X2.5-MM THK)	
M	39	1	**8T-4136**	24	BOLT (M10X1.5X25-MM)	
M	40	1	**8T-4181**	8	BOLT (M6X1X20-MM)	
M	41	1	**8T-4183**	5	BOLT (M12X1.75X40-MM)	
M	42	1	**8T-4195**	4	BOLT (M10X1.5X30-MM)	
	43	1	**8T-9043**	2	BOLT (5/16-18X0.875-IN)	
D	44	1	**5P-5926**		SEAL (0.05-M EACH)	
D	45	1	**5P-5931**		SEAL (0.05-M EACH)	
D	46	1	**5P-5755**		SEAL (0.05-M EACH)	
D	47	1	**5P-5643**		SEAL (0.12-M EACH)	
D	48	1	**5P-5930**		SEAL (0.08-M EACH)	
D	48A	1	**5P-5930**		SEAL (0.8-M EACH)	
D	49	1	**5P-7483**		SEAL (1.6-M EACH)	
D	50	1	**6V-3671**		SEAL (0.6-M EACH)	
D	50A	1	**6V-3671**		SEAL (0.7-M EACH)	
D	51	1	**5P-6605**		SEAL (2-M EACH)	
D	51A	1	**5P-6605**		SEAL (3.5-M EACH)	
D	51B	1	**5P-6605**		SEAL (1.7-M EACH)	
D	51C	1	**5P-6605**		SEAL (2.5-M EACH)	

B - USE AS REQUIRED
D - ORDER BY THE METER
M - METRIC PART
Y - SEPARATE ILLUSTRATION

375-4843 **CAB GP** (*contd.*) **i05598973**

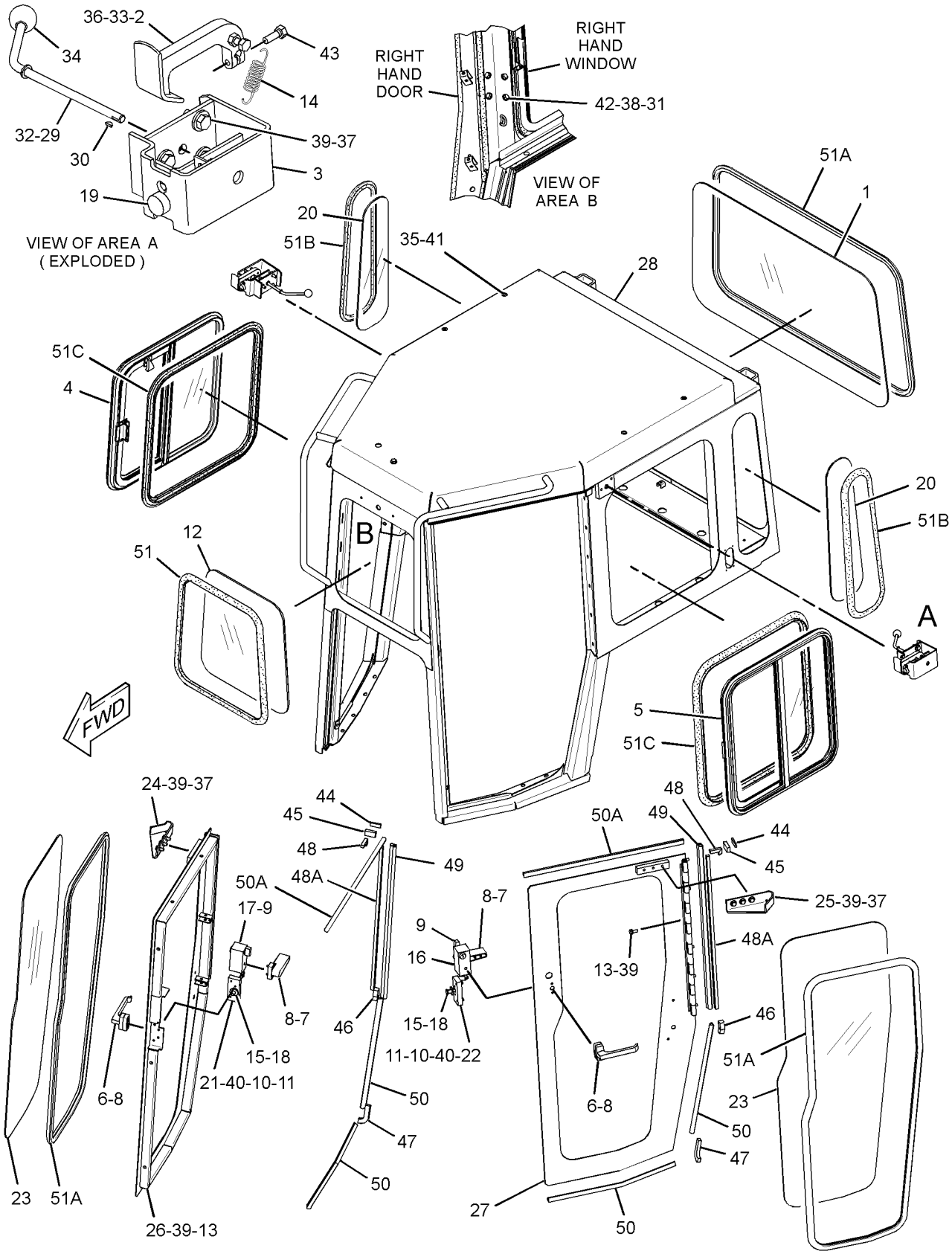

GRAPHIC #1 **<END>** g03359722

OPERATOR STATION

387-0550 CAB GP—COLD WEATHER

S/N: EMM1-UP; JEN1-UP
PART OF 393-0289 CAB AR
AN ATTACHMENT

SMCS-7301 **i05332593**

NOTE	REF NO	GRAPHIC REF	PART NUMBER	QTY	PART NAME 1 2 3 4 5 6 (PRODUCT LEVEL)	SEE PAGE
	1	1	**1Q-2606**	1	WINDOW AS-FRONT	
	2	1,2	**1Q-2645**	2	WINDOW AS-SIDE	
	3	2	**1Q-2648**	1	WINDOW AS-REAR	
M	4	1	**3E-4304**	12	INSERT-THREADED (M6X1-THD)	
	5	1,2	**5G-8655**	2	LEVER	
	6	1,2	**5M-8500**	2	KNOB	
	7	1,2	**6I-9386**	2	BRACKET AS	
	8	1,2	**6V-2331**	2	HANDLE AS-OUTSIDE	
					(EACH INCLUDES)	
		1,2	**6V-6887**	1	KEEPER	
	9	1,2	**6V-2375**	2	HANDLE AS-INSIDE	
	10	1,2	**6V-3260**	8	BOLT-SOCKET HEAD (1/4-20X0.75-IN)	
	11	1,2	**6V-7190**	2	LEVER AS	
					(EACH INCLUDES)	
		1,2	**6V-8129**	2	SETSCREW-SOCKET	
	12	1,2	**6V-7636**	4	PIN AS-SPRING	
	13	1,2	**6V-8073**	2	LINK-CONNECTING	
	14	1,2	**8C-3442**	2	SPRING-COIL	
B	15	1,2	**8T-0318**	8	SHIM (0.8-MM THK)	
	16	2	**8T-1979**	1	LINKAGE AS (LH)	
	17	1	**8T-1980**	1	LINKAGE AS (RH)	
					(EACH LINKAGE AS INCLUDES)	
J		1	**5P-8503**	1	LOCK AS-CYLINDER	
		1	**8T-8914**	1	SEAL-LINKAGE	
	18	1	**8T-3561**	1	PLATE-IDENTIFICATION (SEQUENCE)	
	19	1	**109-9828**	1	LATCH AS-ROTARY	
	20	2	**109-9829**	1	LATCH AS-ROTARY	
	21	2	**136-2227**	1	WINDOW AS-SIDE (LH)	
	22	1	**136-2228**	1	WINDOW AS-SIDE (RH)	
	23	1	**170-5854**	1	BRACKET (RH)	
	24	2	**170-5855**	1	BRACKET (LH)	
	25	1	**211-9050**	1	WINDOW AS-DOOR (RH)	
	26	2	**211-9051**	1	WINDOW AS-DOOR (LH)	
					(EACH WINDOW AS-DOOR INCLUDES)	
		2	**125-8254**	1	GLASS (TINTED)	
	27	1,2	**296-7726**	2	STRIKER AS	
	28	1	**322-0819**	5	INSERT-THREADED (M10X1.5-THD)	
	29	1	**375-4853**	1	DOOR AS (RH)	
	30	2	**375-4860**	1	DOOR AS (LH)	
					(EACH DOOR AS INCLUDES)	
M		2	**6V-9632**	2	NUT-WELD (M6X1-THD)	
		2	**120-4921**	1	HINGE	
	31	1	**375-4870**	1	CAB AS	
	32	1,2	**380-7903**	2	ROD AS	
					(EACH INCLUDES)	
		1,2	**118-0693**	1	ROD	
		1,2	**7X-0608**	1	WASHER-HARD (10.2X16X2-MM THK)	
	33	1,2	**1B-8735**	2	KEY-WOODRUFF	
	34	1,2	**4K-3533**	2	WASHER (9.7X17.5X1.6-MM THK)	
	35	1,2	**4M-6425**	2	BOLT (5/16-18X1-IN)	
	36	1	**5P-1076**	5	WASHER-HARD (13.5X30X4-MM THK)	
	37	1,2	**6V-8189**	2	NUT (5/16-18-THD)	
	38	1	**7X-0578**	12	WASHER-HARD (10.2X32X2.5-MM THK)	
	39	1,2	**7X-7729**	12	WASHER (11X25X3-MM THK)	
	40	1	**8T-4121**	5	WASHER-HARD (11X21X2.5-MM THK)	

387-0550 **CAB GP (*contd.*)** **i05332593**

NOTE	REF NO	GRAPHIC REF	PART NUMBER	QTY	PART NAME 1 2 3 4 5 6 (PRODUCT LEVEL)	SEE PAGE
M	41	1,2	**8T-4136**	24	BOLT (M10X1.5X25-MM)	
M	42	1,2	**8T-4181**	8	BOLT (M6X1X20-MM)	
M	43	1	**8T-4183**	5	BOLT (M12X1.75X40-MM)	
M	44	1	**8T-4195**	5	BOLT (M10X1.5X30-MM)	
	45	1,2	**8T-9043**	2	BOLT (5/16-18X0.875-IN)	
	46	1,2	**9D-9736**	2	BUMPER	
	47	1	**9N-1995**	2	RIVET-POP	
D	48	1	**5P-5643**		SEAL (0.1-M EACH)	
D	49	1	**8T-6936**		SEAL (0.1-M EACH)	
D	50	1	**5P-5930**		SEAL (0.8-M EACH)	
D	50A	1	**5P-5930**		SEAL (0.2-M EACH)	
D	51	1	**5P-7483**		SEAL (1.4-M EACH)	
D	52	1,2	**5P-6605**		SEAL (3.5-M EACH)	
D	52A	1,2	**5P-6605**		SEAL (1.7-M EACH)	
D	52B	1,2	**5P-6605**		SEAL (2.6-M EACH)	
D	52C	1	**5P-6605**		SEAL (2-M)	
D	53	1	**103-2543**		SEAL (3.4-M EACH)	

B - USE AS REQUIRED
D - ORDER BY THE METER
J - REQUIRES CORPORATE KEY
M - METRIC PART

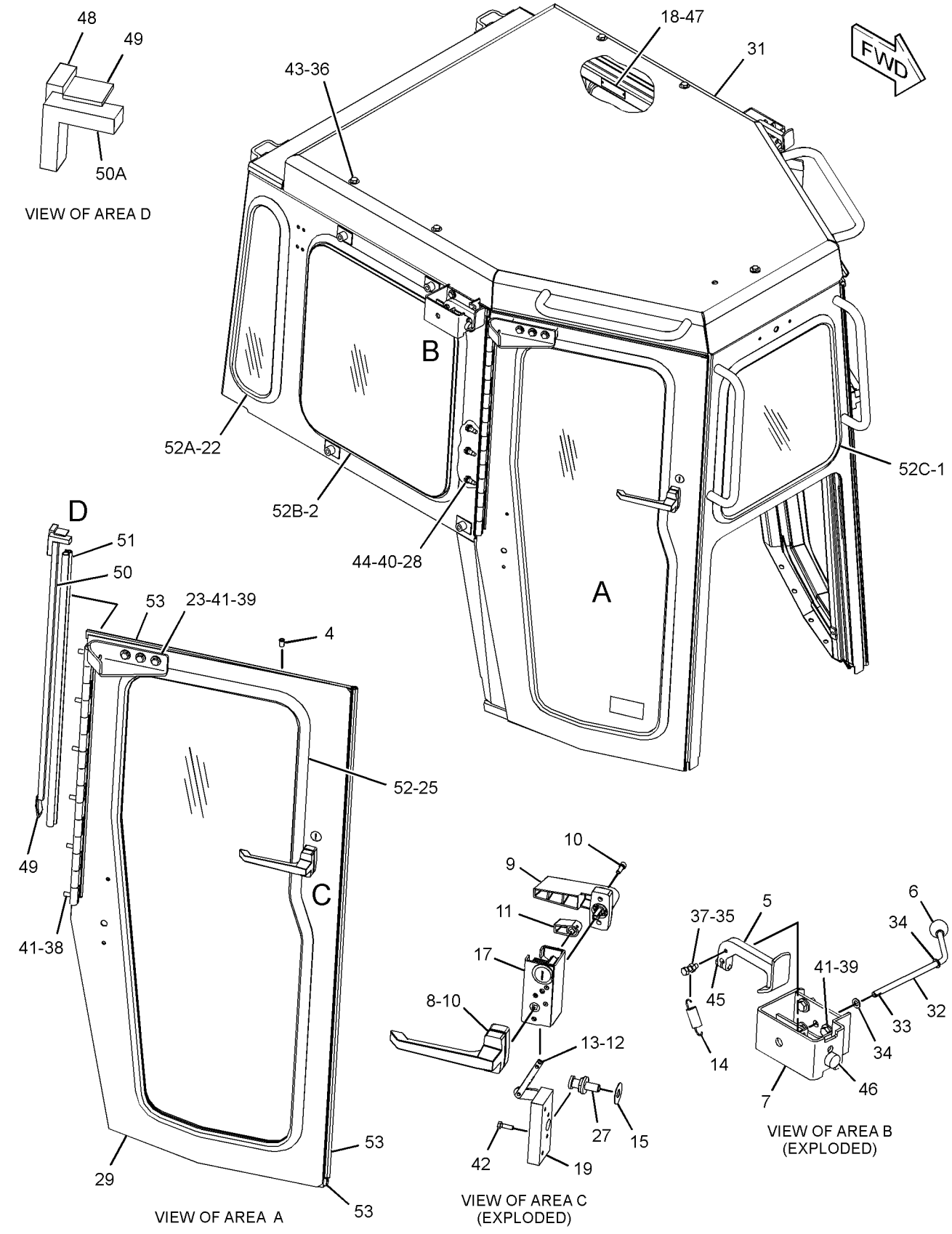

GRAPHIC #1

g03317701

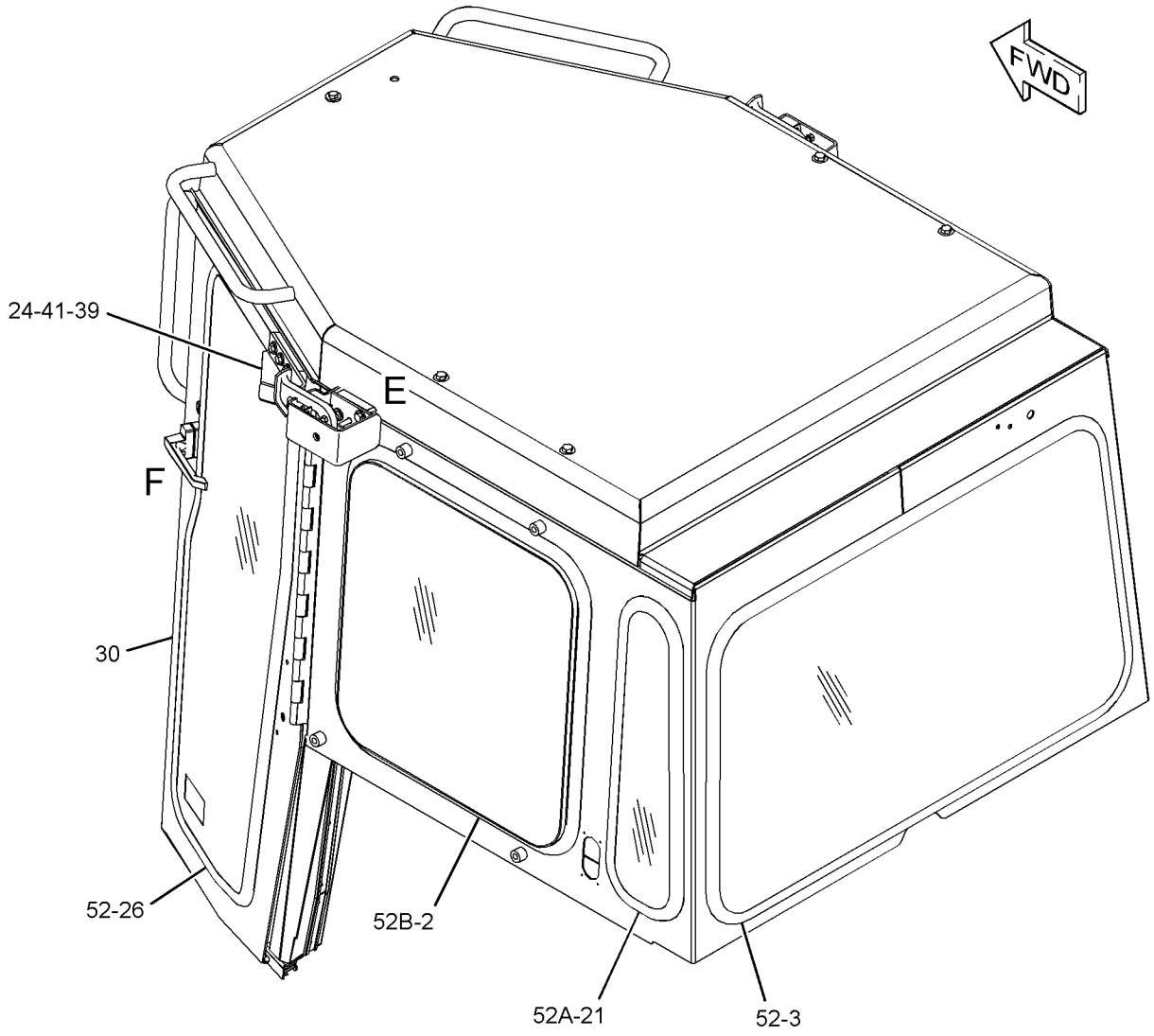

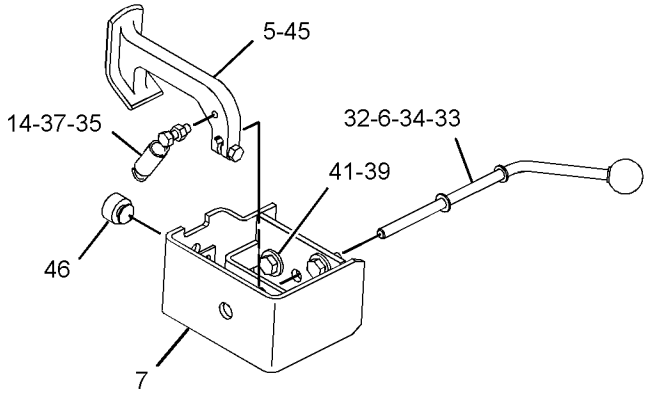

VIEW OF AREA E
(EXPLODED)

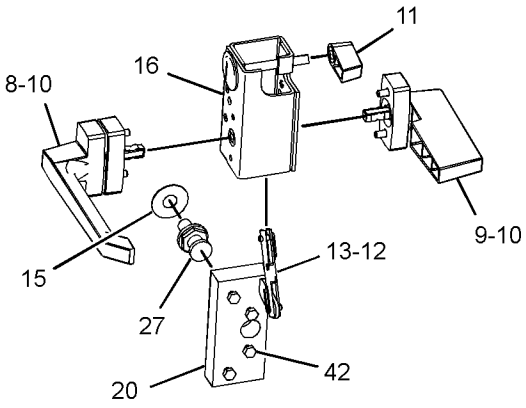

VIEW OF AREA F
(EXPLODED)

GRAPHIC #2 **<END>** g03317705

389-3228 CANOPY AR

S/N: EMM1-UP; JEN1-UP
FOR USE WITH 389-3218–PAGE: 677, 389-3241–PAGE: 725
CANNOT BE USED WITH 389-6127–PAGE: 155, 416-2322–PAGE: 365, 425-6997–PAGE: 676
AN ATTACHMENT

SMCS-7302 **i05573362**

NOTE	PART NUMBER	QTY	PART NAME 1 2 3 4 5 6 (PRODUCT LEVEL)	SEE PAGE
Y	*389-6171*	1	COVER GP-CAB	598
Y	*317-8767*	1	MOUNTING GP-BRACKET	637
Y	*374-4178*	1	MOUNTING GP-PLATFORM	641
Y	*393-0288*	1	PLATFORM AR	649
Y	*208-8706*	1	ROPS GP-OPEN (CANOPY)	668

Y - SEPARATE ILLUSTRATION

<END>

422-2874 CANOPY AR–WOOD CHIP

S/N: EMM1-UP; JEN1-UP
FOR USE WITH 389-3218–PAGE: 677, 389-3241–PAGE: 725, 416-2322–PAGE: 365, 425-6997–PAGE: 676
CANNOT BE USED WITH 389-6127–PAGE: 155
AN ATTACHMENT

SMCS-7302 **i05633649**

NOTE	PART NUMBER	QTY	PART NAME 1 2 3 4 5 6 (PRODUCT LEVEL)	SEE PAGE
Y	*389-6171*	1	COVER GP-CAB	598
Y	*317-8767*	1	MOUNTING GP-BRACKET	637
Y	*374-4178*	1	MOUNTING GP-PLATFORM	641
Y	*387-0575*	1	PLATFORM AR	649
Y	*378-7877*	1	ROPS GP (HEAVY-DUTY, SEALED)	665

Y - SEPARATE ILLUSTRATION

<END>

106-5122 COMPRESSOR GP-REFRIGERANT

S/N: EMM1-UP; JEN1-UP

PART OF 383-6001 COMPRESSOR GP-REFRIGERANT

AN ATTACHMENT

SMCS-1802 **i05596552**

NOTE	REF NO	GRAPHIC REF	PART NUMBER	QTY	PART NAME 1 2 3 4 5 6 (PRODUCT LEVEL)	SEE PAGE
	1	1	**126-1767**	2	PIN-CONNECTOR (14-GA TO 16-GA)	
					—OR—	
		1	**9X-3401**	2	PIN-CONNECTOR (16-GA TO 18-GA)	
	2	1	**314-4018**	1	VALVE AS-PRESSURE RELIEF (REFRIGERANT COMPRESSOR)	
	3	1	**7T-4532**	1	PLUG AS	
	4	1	**9X-7385**	2	SEAL-O-RING	
	5	1	**102-8802**	1	KIT-RECEPTACLE (2-PIN)	
					(INCLUDES RECEPTACLE AS & WEDGE)	

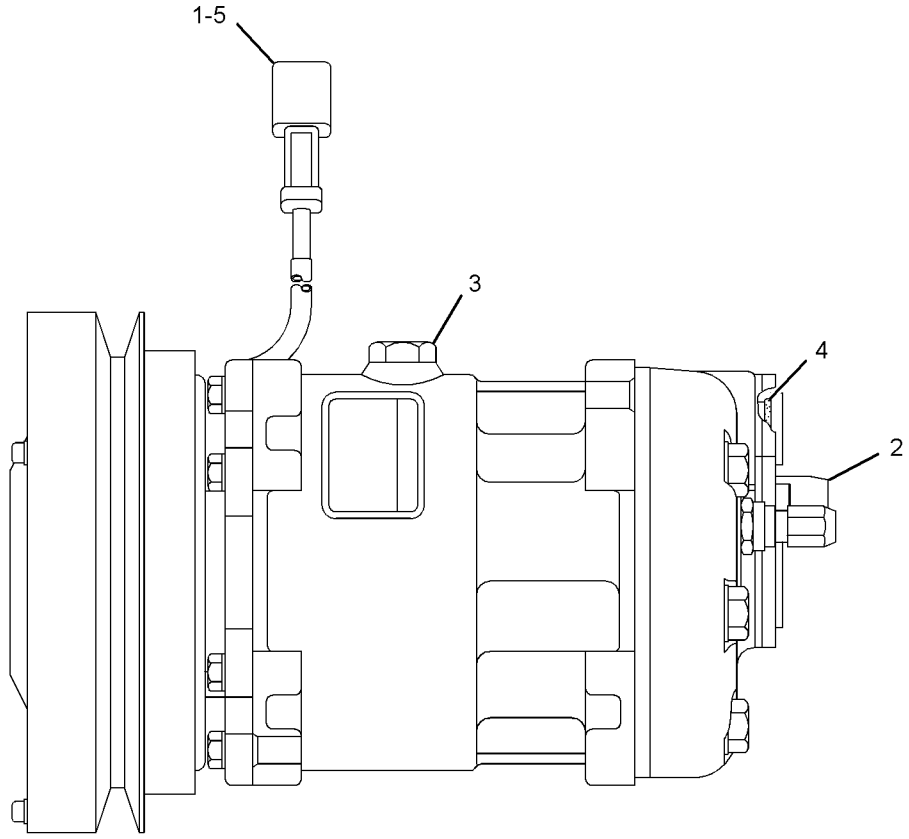

GRAPHIC #1 **<END>** g01951663

383-6001 COMPRESSOR GP-REFRIGERANT

S/N: EMM1-UP; JEN1-UP
PART OF 389-3229, 389-3230, 389-3231 CAB AR
AN ATTACHMENT

SMCS-1802 **i05596531**

NOTE	REF NO	GRAPHIC REF	PART NUMBER	QTY	PART NAME 1 2 3 4 5 6 (PRODUCT LEVEL)	SEE PAGE
M	1	1	**8T-5436**	1	BOLT (M10X1.5X130-MM)	
	2	1	**8S-5383**	1	BLOCK	
Y	3	1	**106-5122**	1	COMPRESSOR GP-REFRIGERANT (AIR CONDITIONER)	580
	4	1	**188-1012**	1	BRACKET	
	5	1	**188-1013**	1	PLATE	
	6	1	**214-9492**	1	ROD-ADJUSTMENT	
	7	1	**216-0349**	1	V-BELT (REFRIGERANT COMPRESSOR)	
M	8	1	**8T-4910**	1	BOLT (M12X1.75X60-MM)	
	9	1	**8T-4121**	10	WASHER-HARD (11X21X2.5-MM THK)	
M	10	1	**8T-4132**	2	NUT (M16X2-THD)	
M	11	1	**8T-4133**	2	NUT (M10X1.5-THD)	
M	12	1	**8T-4182**	1	BOLT (M10X1.5X45-MM)	
M	13	1	**8T-4185**	3	BOLT (M10X1.5X50-MM)	
M	14	1	**8T-4186**	2	BOLT (M10X1.5X40-MM)	
M	15	1	**8T-4193**	1	BOLT (M16X2X50-MM)	
	16	1	**8T-4223**	2	WASHER-HARD (13.5X25.5X3-MM THK)	
M	17	1	**8T-4244**	1	NUT (M12X1.75-THD)	
	18	1	**9X-8257**	3	WASHER (17.5X30X3.5-MM THK)	
M	19	1	**8T-4195**	1	BOLT (M10X1.5X30-MM)	
	20	1	**126-2277**	1	GUARD AS-COMPRESSOR PULLEY	

M - METRIC PART
Y - SEPARATE ILLUSTRATION

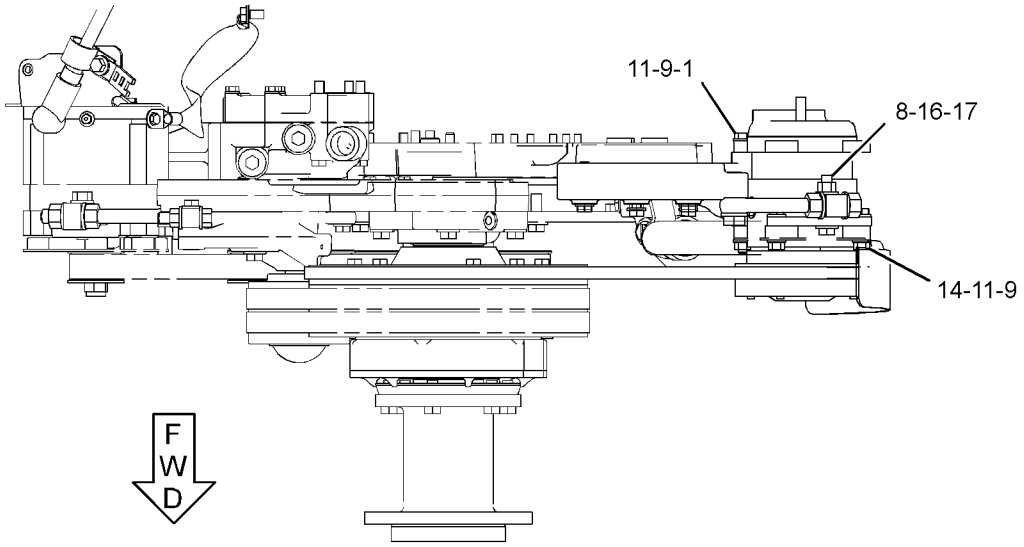

TOP VIEW OF ENGINE

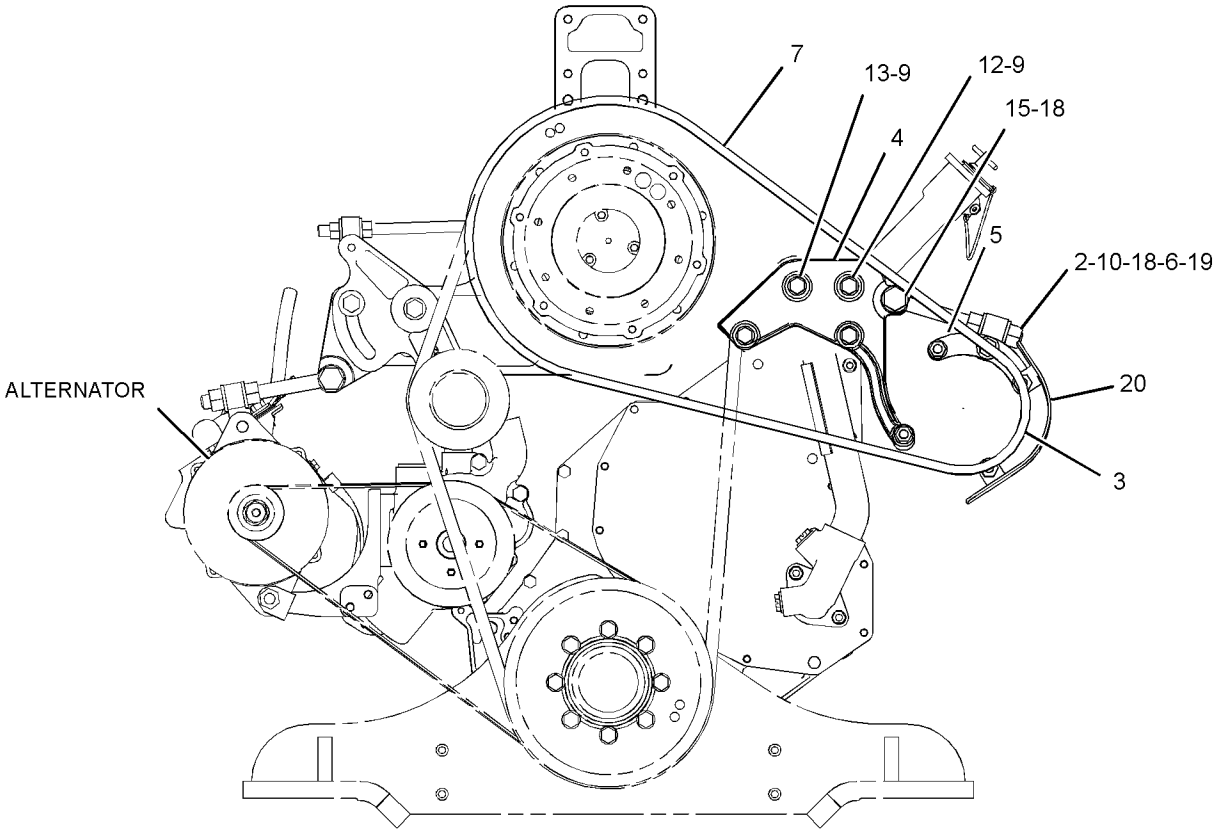

FRONT VIEW OF ENGINE

GRAPHIC #1 **<END>** g03541132

168-8783 CONDENSER & MTG GP-REFRIGERANT

S/N: EMM1-UP; JEN1-UP
PART OF 389-3229 CAB AR
AN ATTACHMENT

SMCS-1805 **i05596414**

NOTE	REF NO	GRAPHIC REF	PART NUMBER	QTY	PART NAME 1 2 3 4 5 6 (PRODUCT LEVEL)	SEE PAGE
	1	1	**6N-8744**	4	MOUNT	
	2	1	**110-3844**	2	BRACKET	
	3	1	**252-4915**	1	COIL AS (AIR CONDITIONER)	
	4	1	**424-0803**	1	BRACKET AS	
	5	1	**232-7586**	1	BRACKET AS	
M	6	1	**8T-4136**	8	BOLT (M10X1.5X25-MM)	
	7	1	**7X-0632**	4	WASHER-HARD (11X36X6-MM THK)	
	8	1	**6K-0806**	1	STRAP-CABLE	
M	9	1	**8T-4133**	4	NUT (M10X1.5-THD)	
	10	1	**8T-4121**	8	WASHER-HARD (11X21X2.5-MM THK)	

M - METRIC PART

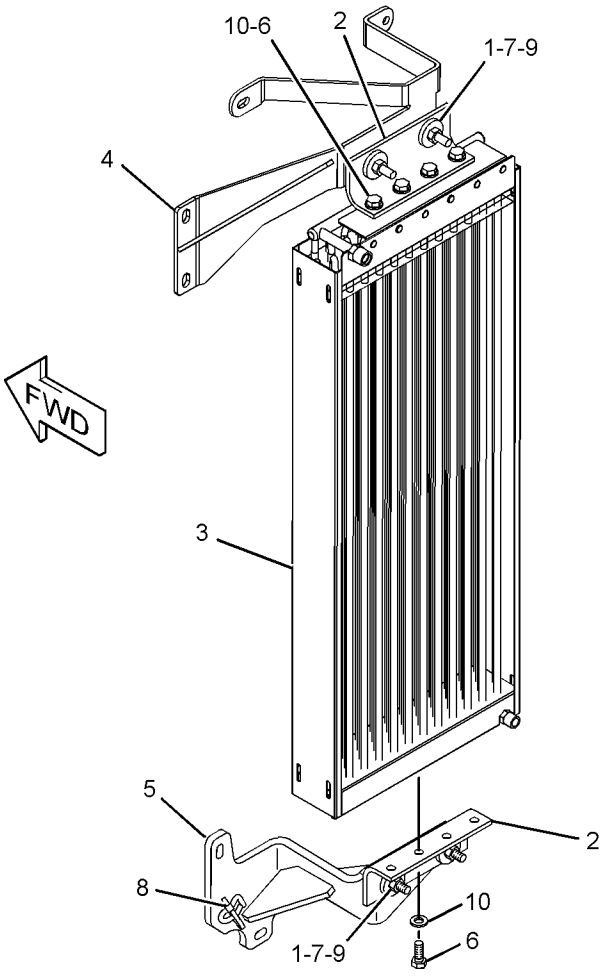

GRAPHIC #1 **<END>** g03345005

389-6097 CONDENSER & MTG GP-REFRIGERANT–ROPS

S/N: EMM1-UP; JEN1-UP
PART OF 389-3230, 389-3231 CAB AR
AN ATTACHMENT

SMCS-1805 **i05596517**

NOTE	REF NO	GRAPHIC REF	PART NUMBER	QTY	PART NAME 1 2 3 4 5 6 (PRODUCT LEVEL)	SEE PAGE
	1	1	**8D-0983**	6	MOUNTING AS-VIBRATION ISOLATOR	
	2	1	**8D-7185**	6	WASHER (11.9X38.1X3-MM THK)	
Y	3	1	**103-9527**	1	CONDENSER GP-REFRIGERANT (WITH FANS)	586
	4	1	**109-5498**	1	SCREEN AS (AIR CONDITIONER)	
	5	1	**172-5989**	2	BRACKET	
	6	1	**263-7805**	1	SUPPORT AS	
	7	1	**1M-4543**	2	GROMMET	
M	8	1	**6V-7357**	6	BOLT (M6X1X25-MM)	
M	9	1	**7X-2563**	2	BOLT (M20X2.5X60-MM)	
	10	1	**7X-7729**	14	WASHER (11X25X3-MM THK)	
	11	1	**7X-7742**	2	WASHER-PULLEY (20.6X63.5X14-MM THK)	
M	12	1	**8T-4133**	6	NUT (M10X1.5-THD)	
M	13	1	**8T-4136**	2	BOLT (M10X1.5X25-MM)	
M	14	1	**8T-4139**	4	BOLT (M12X1.75X30-MM)	
M	15	1	**8T-4194**	3	BOLT (M12X1.75X50-MM)	
	16	1	**8T-4223**	7	WASHER-HARD (13.5X25.5X3-MM THK)	
M	17	1	**8T-6466**	6	BOLT (M10X1.5X60-MM)	
	18	1	**9X-8256**	6	WASHER (6.6X12X2-MM THK)	

M - METRIC PART
Y - SEPARATE ILLUSTRATION

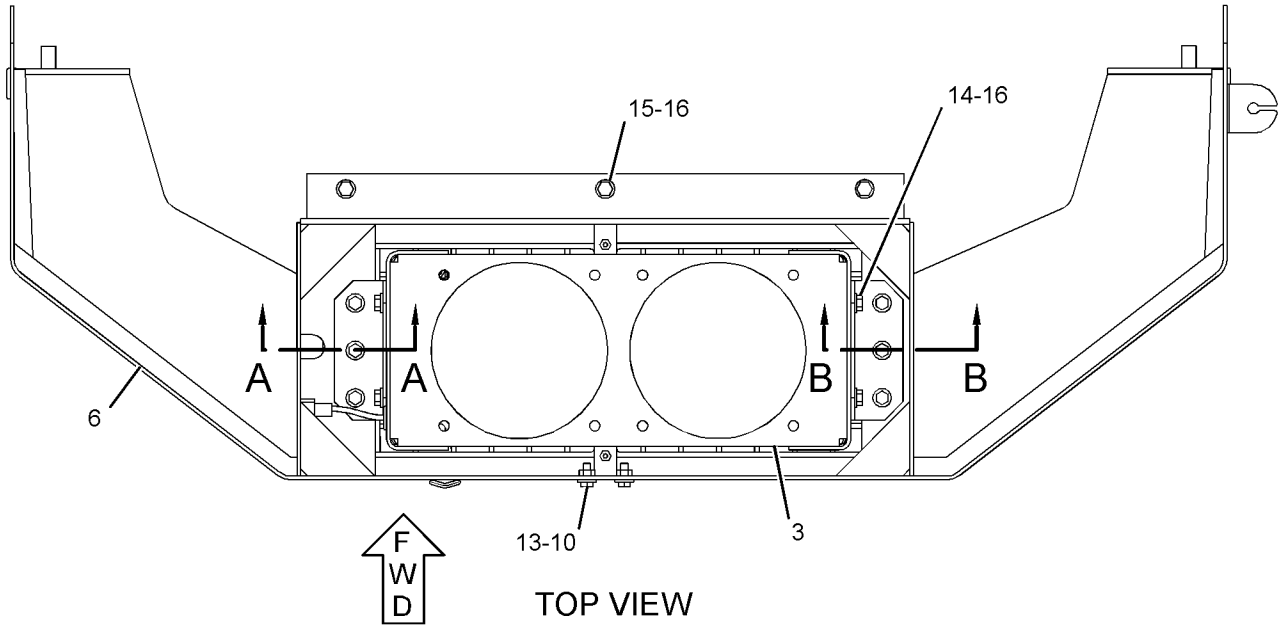

TOP VIEW

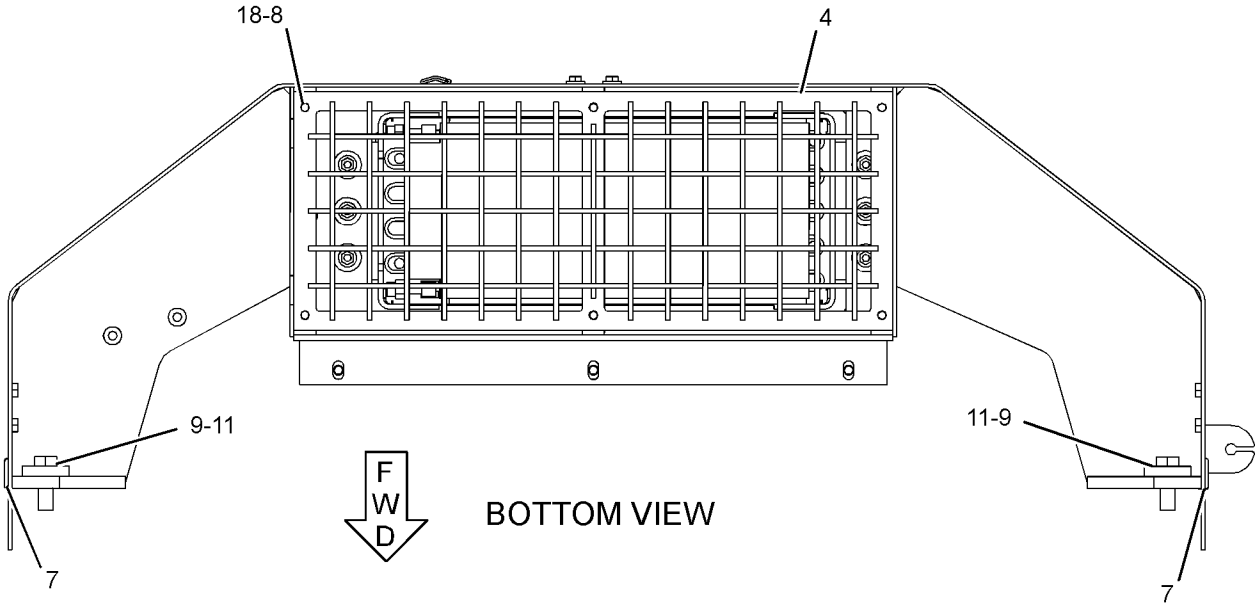

BOTTOM VIEW

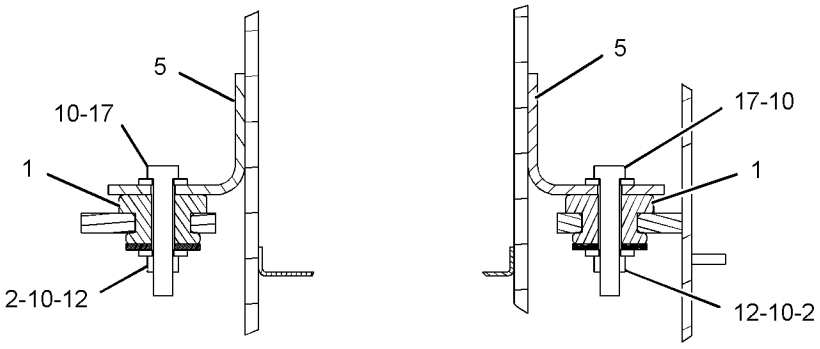

SECTION A-A SECTION B-B

GRAPHIC #1 **<END>** g03565990

103-9527 CONDENSER GP-REFRIGERANT–WITH FANS

S/N: EMM1-UP; JEN1-UP
PART OF 389-6097 CONDENSER & MTG GP-REFRIGERANT
AN ATTACHMENT

SMCS-1805 **i05330359**

NOTE	REF NO	GRAPHIC REF	PART NUMBER	QTY	PART NAME 1 2 3 4 5 6 (PRODUCT LEVEL)	SEE PAGE
	1	1	**3E-5239**	1	RELAY AS (24-VOLT) (CONDENSER FAN MOTOR)	
	2	1	**3S-2093**	7	STRAP-CABLE	
	3	1	**7K-1181**	2	STRAP-CABLE	
	4	1	**7T-5856**	4	CLAMP	
	5	1	**322-4474**	1	FILM-INFORMATION (24-VOLT HEATER)	
	6	1	**344-3037**	2	PLUG	
	7	1	**9X-3452**	2	GUARD AS-FAN	
	8	1	**124-8490**	1	HARNESS AS-HEATER & AIR COND	
		1	**8T-8729**	1	PIN-CONNECTOR (16-GA TO 18-GA)	
		1	**9W-0844**	4	SOCKET-CONNECTOR (14-GA TO 16-GA)	
		1	**9W-0852**	2	PIN-CONNECTOR (14-GA TO 16-GA)	
		1	**9X-1056**	4	TERMINAL-RECEPTACLE (14-GA TO 16-GA)	
		1	**9X-1054**	1	PLUG AS-CONNECTOR (4-PIN)	
		1	**102-8803**	1	KIT-RECEPTACLE (3-PIN)	
					(INCLUDES RECEPTACLE AS & WEDGE)	
		1	**155-2270**	2	KIT-CONNECTING PLUG (2-PIN)	
					(EACH INCLUDES PLUG AS, WEDGE, & INTERFACE SEAL)	
	9	1	**142-8620**	2	FAN AS-CONDENSER (4-BLADE)	
					(EACH INCLUDES)	
		1	**3H-7180**	1	SETSCREW (1/4-28X0.25-IN)	
	10	1	**308-6335**	2	MOTOR GP-ELECTRIC (CONDENSER FAN)	
					(EACH INCLUDES)	
		1	**9W-0852**	2	PIN-CONNECTOR (14-GA TO 16-GA)	
		1	**102-8802**	1	KIT-RECEPTACLE (2-PIN)	
					(INCLUDES RECEPTACLE AS & WEDGE)	
	11	1	**203-2070**	8	MOUNT	
	12	1	**204-9530**	4	TUBE	
	13	1	**216-0805**	1	KIT-COIL (AIR CONDITIONER)	
					(INCLUDES COIL, TUBES, MOUNTS, BOLTS, & WASHERS)	
	14	1	**204-9532**	1	CASE AS	
M		1	**8T-3490**	12	NUT-WELD (M10X1.5-THD)	
M		1	**8T-3597**	12	NUT-WELD (M12X1.75-THD)	
		1	**9G-9151**	2	CLIP	
	15	1	**4P-8134**	2	CLIP	
M	16	1	**5C-2890**	1	NUT (M6X1-THD)	
	17	1	**5P-1075**	8	WASHER-HARD (10.2X22.5X3-MM THK)	
	19	1	**7X-0578**	4	WASHER-HARD (10.2X32X2.5-MM THK)	
	20	1	**8T-4121**	4	WASHER-HARD (11X21X2.5-MM THK)	
M	21	1	**8T-4133**	4	NUT (M10X1.5-THD)	
M	22	1	**8T-4137**	8	BOLT (M10X1.5X20-MM)	
M	23	1	**8T-4192**	12	BOLT (M12X1.75X25-MM)	
	24	1	**8T-4205**	1	WASHER-HARD (7.2X14.5X2-MM THK)	
	25	1	**8T-4223**	12	WASHER-HARD (13.5X25.5X3-MM THK)	
M	26	1	**8T-6685**	4	BOLT (M10X1.5X110-MM)	
D	28	1	**5P-5924**		SEAL (0.1-M EACH)	
D	29	1	**5P-5672**		SEAL (0.6-M EACH)	
D	30	1	**5P-5908**		SEAL (0.2-M EACH)	

D - ORDER BY THE METER
M - METRIC PART

103-9527 **CONDENSER GP-REFRIGERANT (*contd.*)** **i05330359**

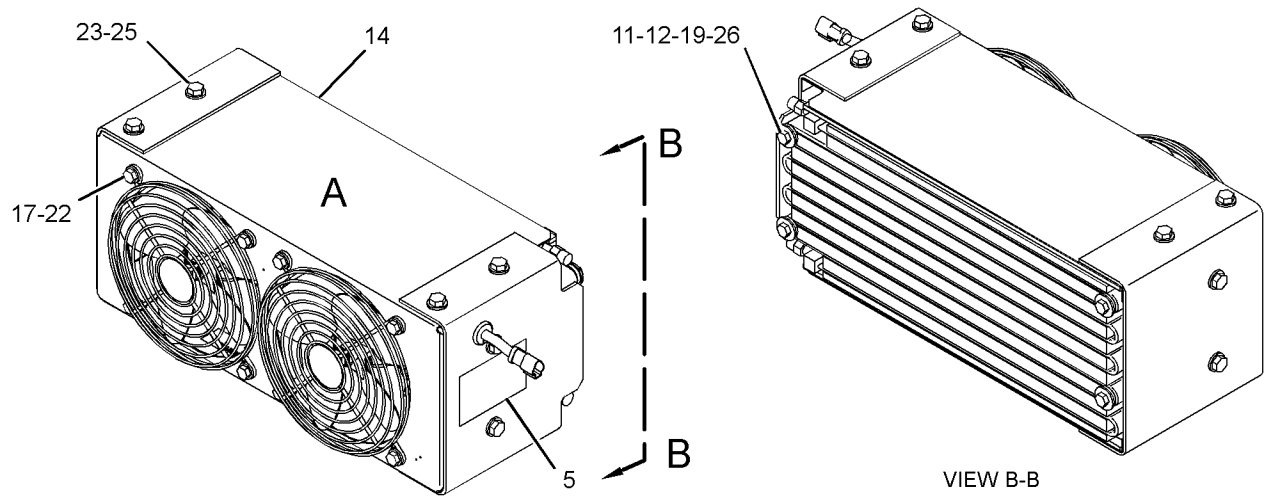

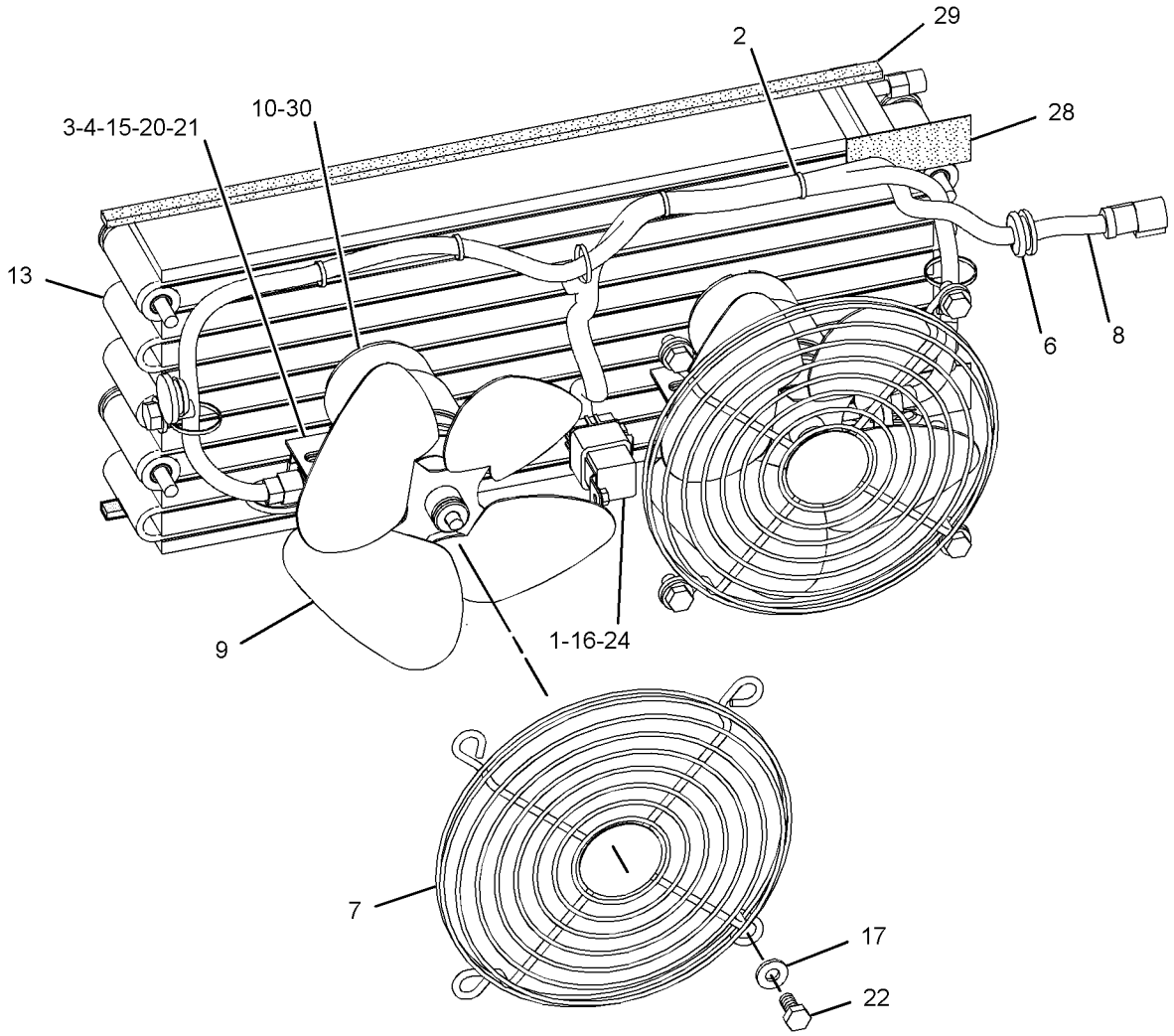

VIEW OF AREA A
(COVER AND MOUNTING HARDWARE REMOVED)

GRAPHIC #1 **<END>** g02177238

375-4845 CONTROL GP-GOVERNOR & BRAKE

S/N: EMM1-UP; JEN1-UP

PART OF 393-0289, 393-0290 CAB AR, 387-0575, 393-0288 PLATFORM AR

AN ATTACHMENT

SMCS-4122 **i05575109**

NOTE	REF NO	GRAPHIC REF	PART NUMBER	QTY	PART NAME 1 2 3 4 5 6 (PRODUCT LEVEL)	SEE PAGE
	1	1	**1B-8706**	3	KEY-WOODRUFF	
	2	1	**1B-8714**	1	KEY-WOODRUFF	
	3	1	**1M-4533**	1	LEVER	
	4	1	**3S-8313**	1	PLUG-CUP	
	5	1	**3W-0556**	1	SHAFT	
	6	1	**7K-1181**	1	STRAP-CABLE	
	7	1	**7P-4190**	4	BEARING-ROLLER	
	8	1	**8T-1177**	2	BEARING-ROLLER	
	9	1	**9G-5211**	1	SPACER (12.95X19.05X9-MM THK)	
	10	1	**9W-2545**	1	BOLT-ANCHOR	
M	11	1	**9X-6615**	2	BOLT (M5X0.8X30-MM)	
	12	1	**110-8379**	1	PEDAL (BRAKE)	
	13	1	**115-8057**	1	SPRING	
	14	1	**160-1431**	1	SHAFT	
	15	1	**160-1434**	1	LEVER	
	16	1	**165-9104**	1	SPACER (6.5X9.5X10-MM THK)	
	17	1	**171-7077**	2	ROD-THREADED	
	18	1	**184-8060**	1	PEDAL (DECELERATOR)	
	19	1	**194-7034**	1	SPRING	
Y	20	1	**266-1467**	1	SENSOR GP-POSITION (ROTARY) (DECELERATOR PEDAL)	204
	21	1	**317-3919**	1	HOUSING AS	
	22	1	**317-3930**	1	BRACKET AS	
	23	1	**317-3931**	1	BRACKET-SUPPORT	
	24	1	**317-3933**	1	LEVER	
	25	1	**317-3934**	1	SHAFT	
Y	26	1	*317-3939*	1	ROD GP	663
	27	1	**318-0157**	1	SHAFT	
	28	1	**318-2717**	1	PAD AS	
M	29	1	**095-1276**	1	SETSCREW-SOCKET	
	30	1	**111-9251**	4	WASHER-HARD (20X35X1.6-MM THK)	
	31	1	**1B-0676**	2	PIN	
	32	1	**1K-6872**	1	LOCKNUT (1/2-13-THD)	
	33	1	**1M-1341**	1	END-YOKE ROD	
	34	1	**2J-6356**	4	RING-RETAINING	
	35	1	**3B-4615**	2	PIN-COTTER	
	36	1	**4B-3611**	1	SETSCREW-SQUARE HEAD (3/8-16X2-IN)	
	37	1	**4L-6496**	1	BOLT (3/8-24X2-IN)	
	38	1	**4L-9337**	1	BOLT (3/8-16X1.5-IN)	
	39	1	**5H-6799**	1	LEVER-GOVERNOR CONTROL	
	40	1	**5P-1076**	3	WASHER-HARD (13.5X30X4-MM THK)	
	41	1	**6V-0894**	1	SEAL-O-RING	
M	42	1	**6V-7357**	1	BOLT (M6X1X25-MM)	
	43	1	**6V-8801**	2	NUT (3/8-16-THD)	
	44	1	**7X-0519**	3	WASHER-HARD (20X33.5X5-MM THK)	
M	45	1	**7Y-7394**	4	SCREW-BUTTON HEAD (M8X1.25X25-MM)	
	46	1	**8F-7702**	4	SEAL-LIP TYPE	
	47	1	**8T-4121**	6	WASHER-HARD (11X21X2.5-MM THK)	
M	48	1	**8T-4133**	4	NUT (M10X1.5-THD)	
M	49	1	**8T-4139**	3	BOLT (M12X1.75X30-MM)	
M	50	1	**8T-4182**	1	BOLT (M10X1.5X45-MM)	
M	51	1	**8T-4186**	1	BOLT (M10X1.5X40-MM)	
M	52	1	**8T-4195**	6	BOLT (M10X1.5X30-MM)	
	53	1	**8T-4205**	2	WASHER-HARD (7.2X14.5X2-MM THK)	
	54	1	**8T-4223**	2	WASHER-HARD (13.5X25.5X3-MM THK)	
	55	1	**8T-4224**	4	WASHER-HARD (8.8X16X2-MM THK)	

375-4845 **CONTROL GP-GOVERNOR & BRAKE (*contd.*)** **i05575109**

NOTE	REF NO	GRAPHIC REF	PART NUMBER	QTY	PART NAME 1 2 3 4 5 6 (PRODUCT LEVEL)	SEE PAGE
	56	1	**9B-7237**	1	BOLT (3/8-16X1.25-IN)	
	57	1	**9L-7712**	1	NUT (3/8-24-THD)	

M - METRIC PART
Y - SEPARATE ILLUSTRATION

375-4845 **CONTROL GP-GOVERNOR & BRAKE (*contd.*)** **i05575109**

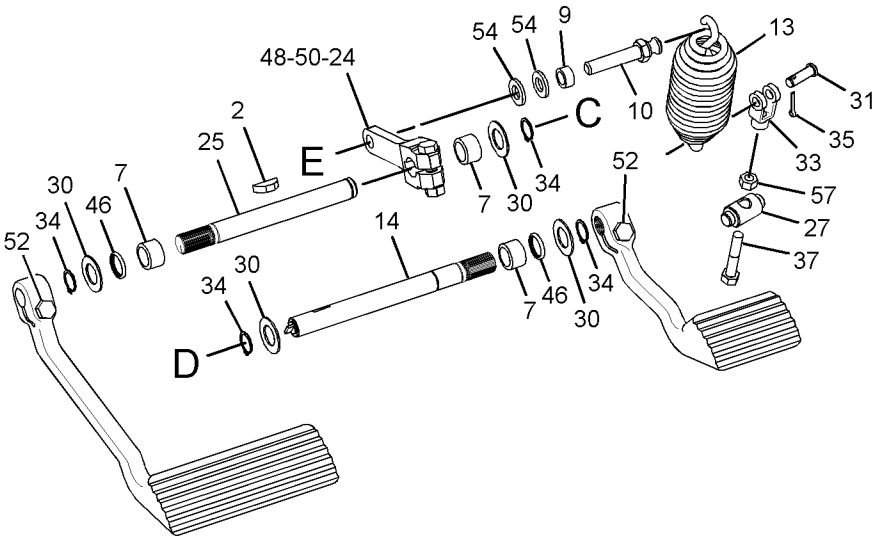

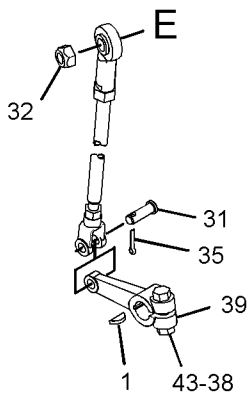

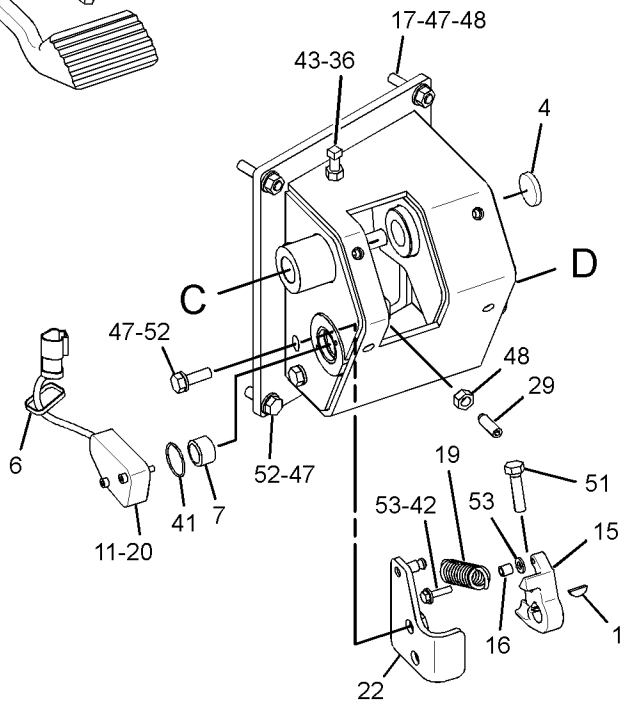

VIEW OF AREA A
(EXPLODED)

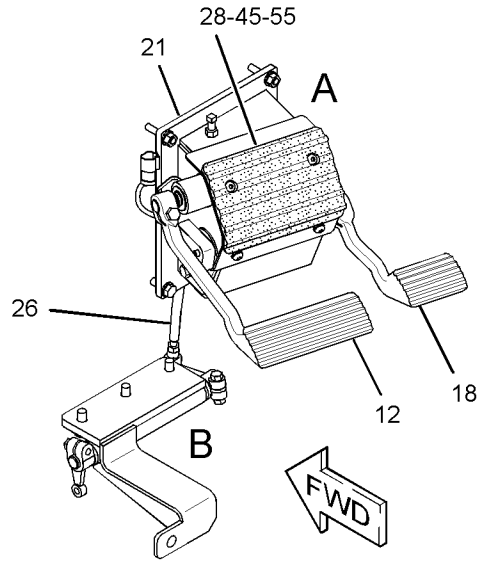

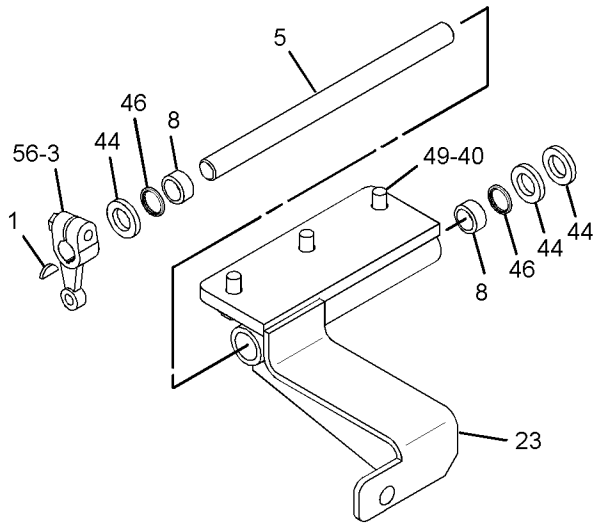

VIEW OF AREA B
(EXPLODED)

GRAPHIC #1 **<END>** g02848689

161-3615 CONTROL GP-HANDLE

S/N: EMM1-UP; JEN1-UP
PART OF 389-3287, 389-3288 CONTROL GP-PILOT OPERATED HYD
AN ATTACHMENT

SMCS-5063, 5705

i05558635

NOTE	REF NO	GRAPHIC REF	PART NUMBER	QTY	PART NAME 1 2 3 4 5 6 (PRODUCT LEVEL)	SEE PAGE
	1	1	**188-1079**	1	CONTROL GP-HANDLE (BULLDOZER)	
	2	1	**4B-9808**	2	SETSCREW (1/4-20X0.5-IN)	

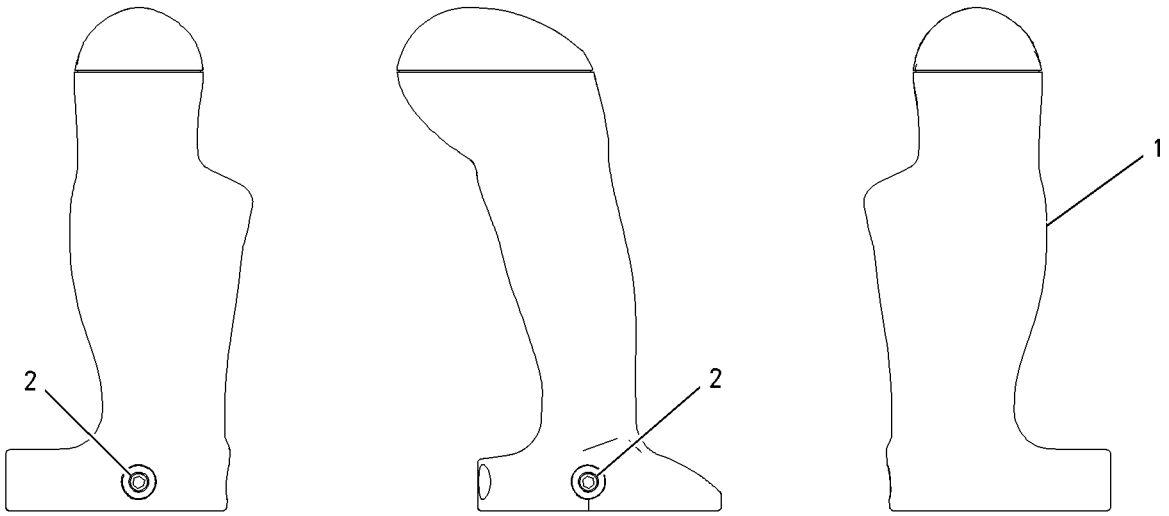

GRAPHIC #1

<END>

g00763645

322-9655 CONTROL GP-HANDLE

S/N: EMM1-UP; JEN1-UP
WITH TRIGGER
PART OF 322-8631 VALVE GP-PILOT
AN ATTACHMENT

SMCS-5063, 5705 **i05558910**

NOTE	REF NO	GRAPHIC REF	PART NUMBER	QTY	PART NAME 1 2 3 4 5 6 (PRODUCT LEVEL)	SEE PAGE
	1	1	**162-8387**	1	LEVER-TRIGGER	
	2	1	**162-8389**	1	PLATE (SWITCH)	
	3	1	**175-4165**	2	SCREW-PAN HEAD (4-20X0.5-IN)	
	4	1	**179-7376**	3	SWITCH AS-PUSH BUTTON (IMPLEMENT)	
					(EACH INCLUDES)	
		1	**162-8378**	1	SWITCH AS-PUSH BUTTON (IMPLEMENT)	
		1	**144-0331**	1	CAP-PUSH BUTTON (YELLOW)	
E		1	**5P-8435**		WIRE (22-GA) (14-CM)	
	5	1	**175-4170**	2	SCREW-PAN HEAD (6-19X1.625-IN)	
	6	1	**9B-1117**	2	LOCKWASHER	
	7	1	**1S-9593**	1	STRAP-CABLE	
	8	1	**8T-8729**	11	PIN-CONNECTOR (16-GA TO 18-GA)	
E	9	1	**218-7136**		SLEEVE (63-CM)	

E - ORDER BY THE CENTIMETER

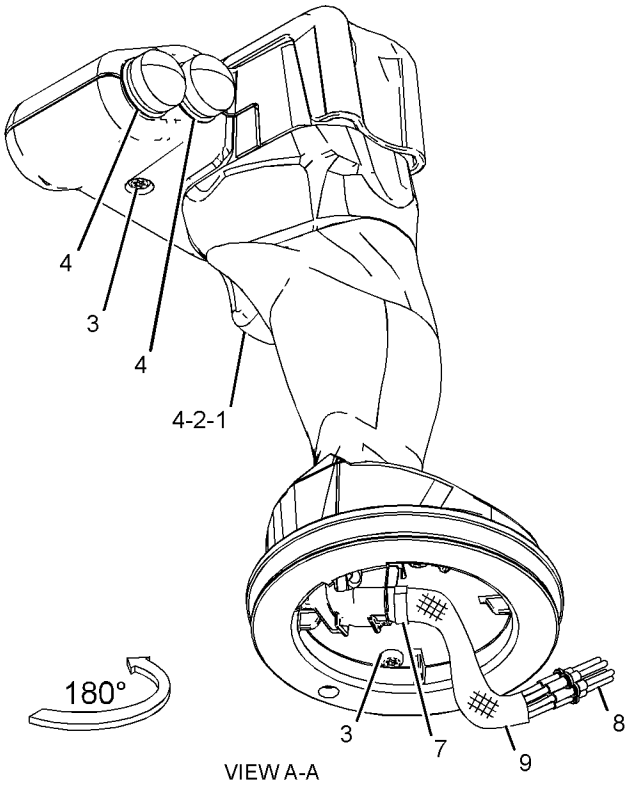

VIEW A-A

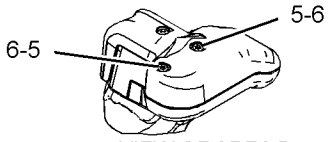

VIEW OF AREA B
(GEOMETRY REMOVED FOR CLARITY)

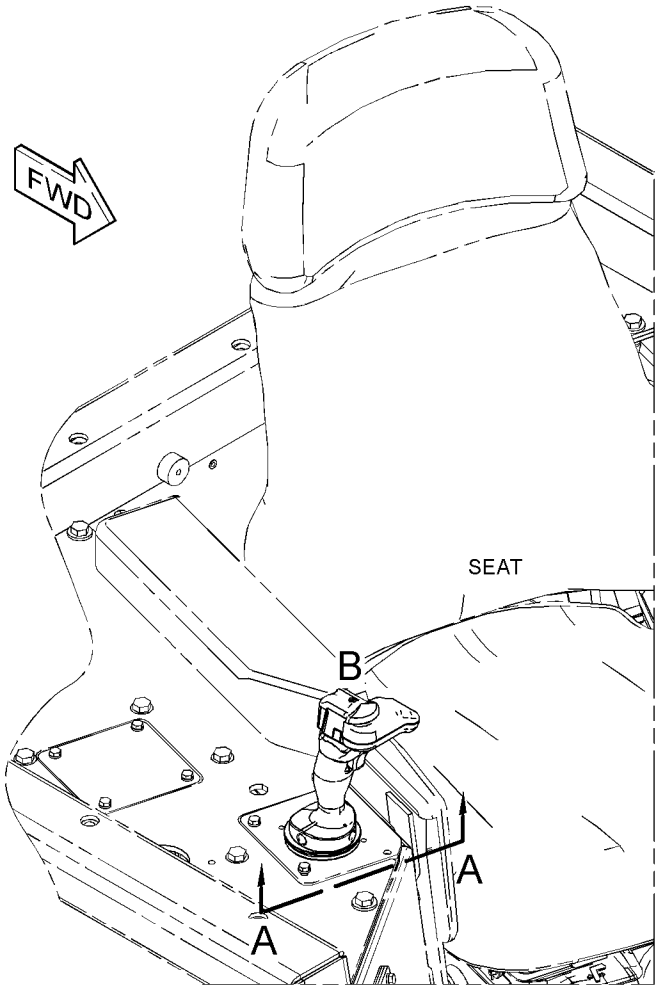

GRAPHIC #1

<END>

g02201655

389-3287 CONTROL GP-PILOT OPERATED HYD

S/N: EMM1-UP; JEN1-UP
PART OF 389-3224 HYDRAULIC AR
AN ATTACHMENT

SMCS-5059, 5063, 5705 **i05558617**

NOTE	REF NO	GRAPHIC REF	PART NUMBER	QTY	PART NAME 1 2 3 4 5 6 (PRODUCT LEVEL)	SEE PAGE
	1	1	**7K-1181**	1	STRAP-CABLE	
	2	1	**160-4702**	1	PLATE	
Y	3	1	*161-3615*	1	CONTROL GP-HANDLE (BULLDOZER)	591
Y	4	1	**200-0189**	1	VALVE GP-PILOT (BULLDOZER CONTROL)	530
	5	1	**211-0220**	1	COVER AS	
	6	1	**223-3313**	1	PLATE AS	
	7	1	**225-4134**	1	GASKET	
	8	1	**225-4135**	1	GASKET	
	9	1	**130-5300**	1	CLIP	
	10	1	**5P-1075**	4	WASHER-HARD (10.2X22.5X3-MM THK)	
M	11	1	**6V-7357**	6	BOLT (M6X1X25-MM)	
	12	1	**8T-4121**	1	WASHER-HARD (11X21X2.5-MM THK)	
M	13	1	**8T-4137**	1	BOLT (M10X1.5X20-MM)	
M	14	1	**8T-4195**	4	BOLT (M10X1.5X30-MM)	
	15	1	**9X-8256**	6	WASHER (6.6X12X2-MM THK)	

M - METRIC PART
Y - SEPARATE ILLUSTRATION

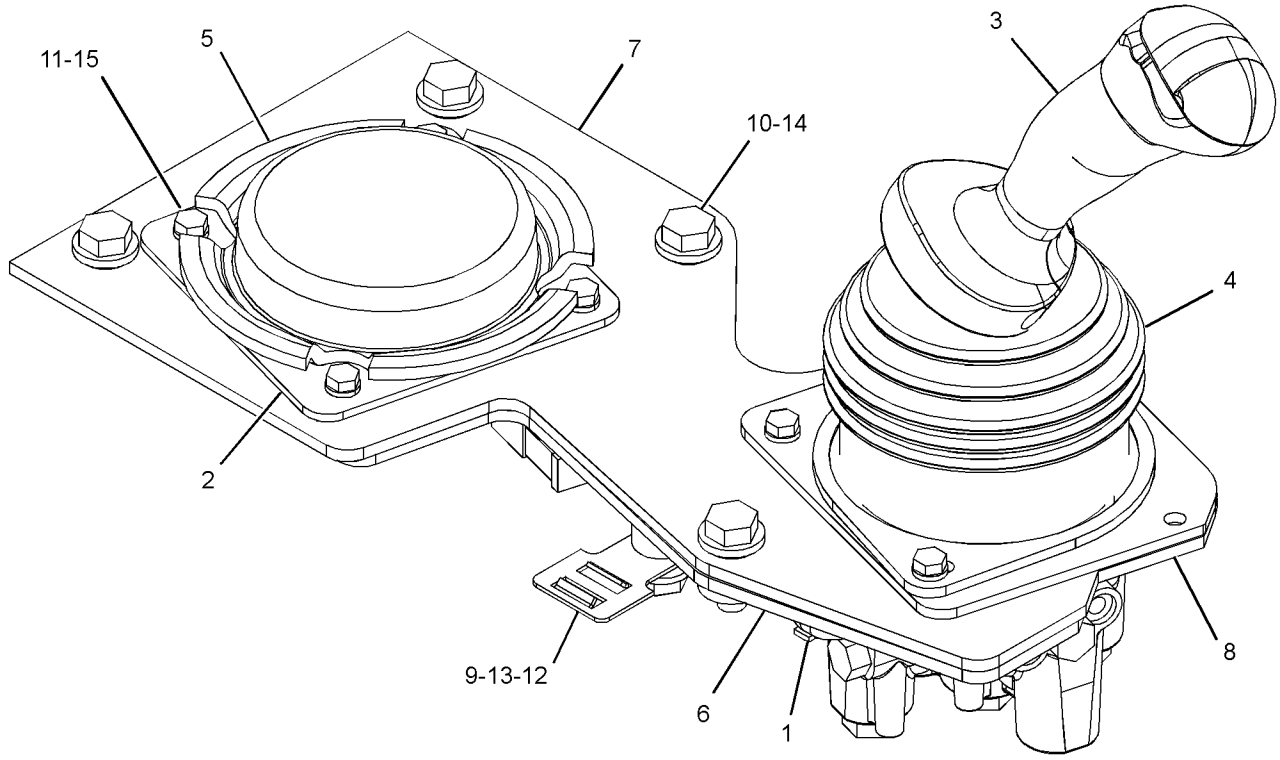

GRAPHIC #1 **<END>** g03533076

OPERATOR STATION

389-3288 CONTROL GP-PILOT OPERATED HYD

S/N: EMM1-UP; JEN1-UP
PART OF 389-3225 HYDRAULIC AR
AN ATTACHMENT

SMCS-5059, 5063, 5705 **i05562298**

NOTE	REF NO	GRAPHIC REF	PART NUMBER	QTY	PART NAME 1 2 3 4 5 6 (PRODUCT LEVEL)	SEE PAGE
	1	1	**7K-1181**	1	STRAP-CABLE	
	2	1	**102-9478**	1	FILM-INSTRUCTION (RIPPER CONTROL)	
Y	3	1	*161-3615*	1	CONTROL GP-HANDLE	591
Y	4	1	*161-3616*	1	KNOB GP (RIPPER)	616
Y	5	1	**167-1177**	1	VALVE GP-PILOT (RIPPER)	528
Y	6	1	**200-0189**	1	VALVE GP-PILOT (BULLDOZER CONTROL)	530
	7	1	**223-3313**	1	PLATE AS	
	8	1	**225-4134**	1	GASKET	
	9	1	**225-4135**	1	GASKET	
	10	1	**130-5300**	1	CLIP	
	11	1	**5P-1075**	4	WASHER-HARD (10.2X22.5X3-MM THK)	
M	12	1	**6V-7357**	6	BOLT (M6X1X25-MM)	
	13	1	**8T-4121**	1	WASHER-HARD (11X21X2.5-MM THK)	
M	14	1	**8T-4137**	1	BOLT (M10X1.5X20-MM)	
M	15	1	**8T-4195**	4	BOLT (M10X1.5X30-MM)	
	16	1	**9X-8256**	6	WASHER (6.6X12X2-MM THK)	

M - METRIC PART
Y - SEPARATE ILLUSTRATION

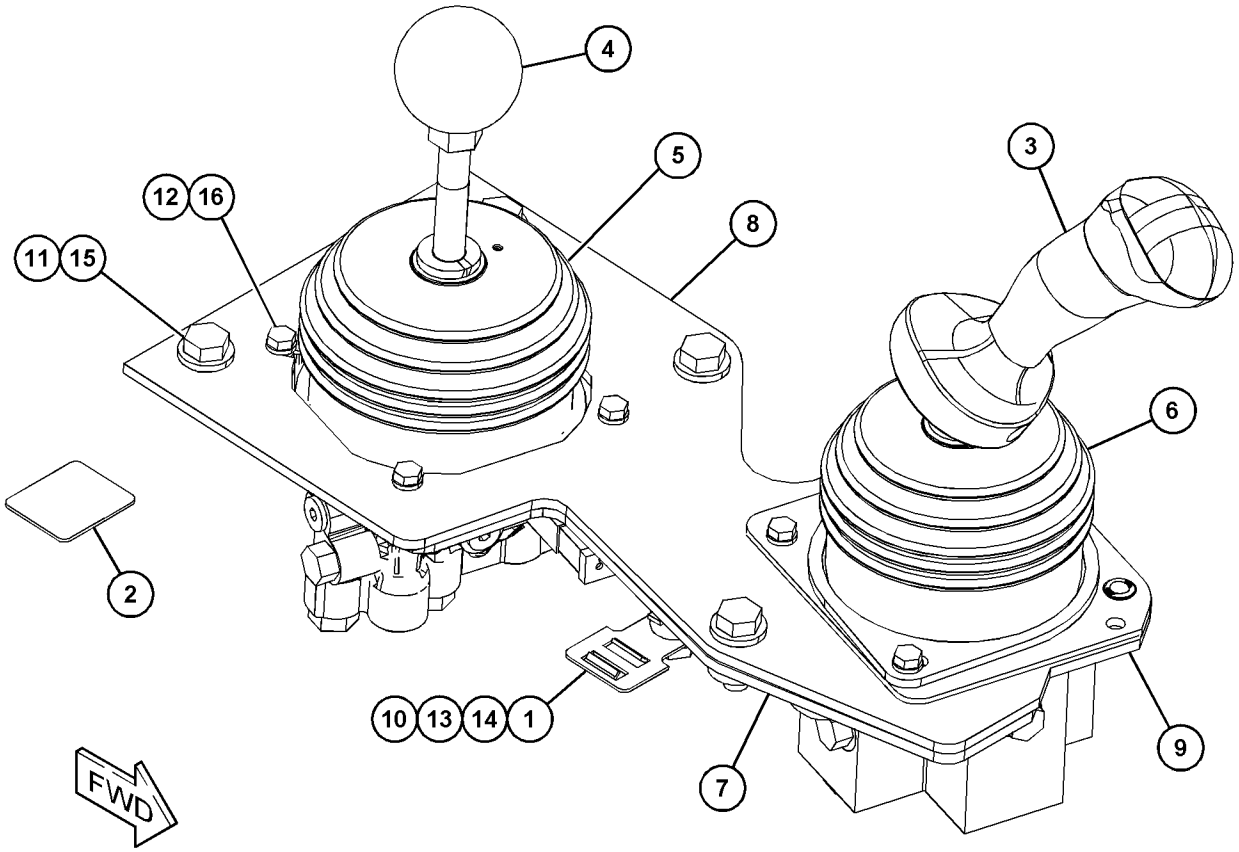

GRAPHIC #1 **<END>** g03532869

389-3289 CONTROL GP-PILOT OPERATED HYD

S/N: EMM1-UP; JEN1-UP
PART OF 389-3226 HYDRAULIC AR
AN ATTACHMENT

SMCS-5059, 5063, 5705 **i05558856**

NOTE	REF NO	GRAPHIC REF	PART NUMBER	QTY	PART NAME 1 2 3 4 5 6 (PRODUCT LEVEL)	SEE PAGE
	1	1	**7K-1181**	1	STRAP-CABLE	
	2	1	**160-4702**	1	PLATE	
	3	1	**211-0220**	1	COVER AS	
	4	1	**223-3313**	1	PLATE AS	
	5	1	**225-4134**	1	GASKET	
	6	1	**225-4135**	1	GASKET	
Y	7	1	**322-8631**	1	VALVE GP-PILOT (BULLDOZER)	532
	8	1	**130-5300**	1	CLIP	
	9	1	**5P-1075**	4	WASHER-HARD (10.2X22.5X3-MM THK)	
M	10	1	**6V-7357**	6	BOLT (M6X1X25-MM)	
	11	1	**8T-4121**	1	WASHER-HARD (11X21X2.5-MM THK)	
M	12	1	**8T-4137**	1	BOLT (M10X1.5X20-MM)	
M	13	1	**8T-4195**	4	BOLT (M10X1.5X30-MM)	
	14	1	**9X-8256**	6	WASHER (6.6X12X2-MM THK)	

M - METRIC PART
Y - SEPARATE ILLUSTRATION

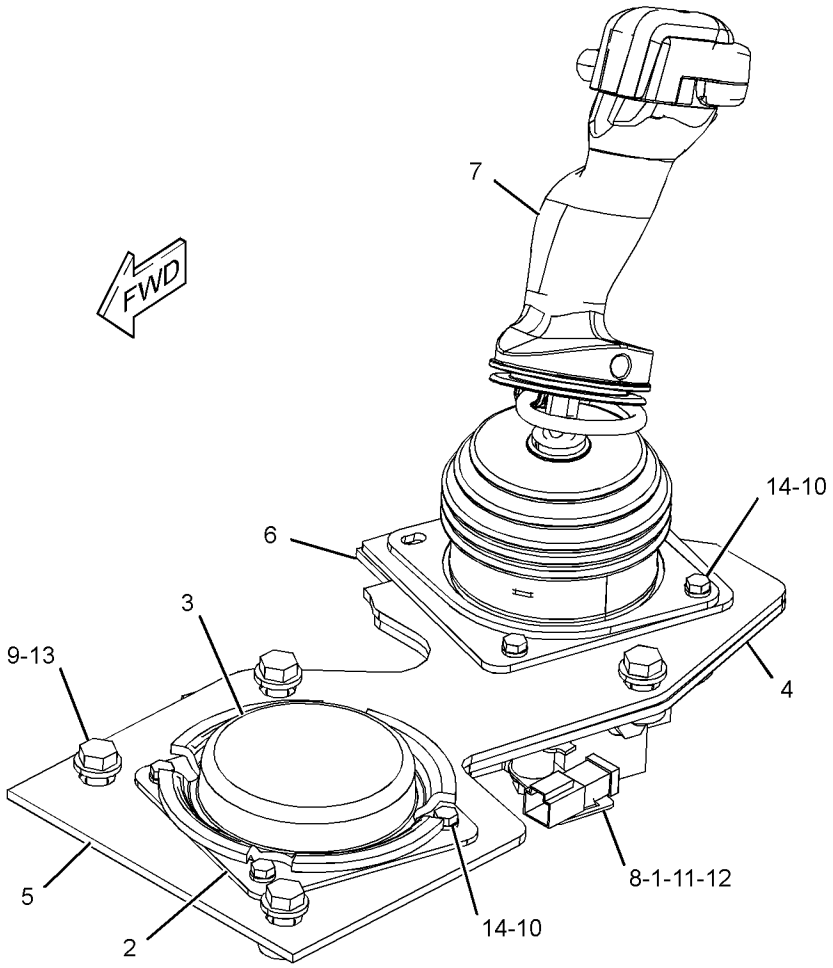

GRAPHIC #1 **<END>** g03533117

389-3290 CONTROL GP-PILOT OPERATED HYD

S/N: EMM1-UP; JEN1-UP
PART OF 389-3227 HYDRAULIC AR
AN ATTACHMENT

SMCS-5059, 5063, 5705 **i05562751**

NOTE	REF NO	GRAPHIC REF	PART NUMBER	QTY	PART NAME 1 2 3 4 5 6 (PRODUCT LEVEL)	SEE PAGE
	1	1	**7K-1181**	1	STRAP-CABLE	
	2	1	**102-9478**	1	FILM-INSTRUCTION (RIPPER CONTROL)	
Y	3	1	*161-3616*	1	KNOB GP (RIPPER)	616
Y	4	1	**167-1177**	1	VALVE GP-PILOT (RIPPER)	528
	5	1	**223-3313**	1	PLATE AS	
	6	1	**225-4134**	1	GASKET	
	7	1	**225-4135**	1	GASKET	
Y	8	1	**322-8631**	1	VALVE GP-PILOT (BULLDOZER)	532
	9	1	**130-5300**	1	CLIP	
	10	1	**5P-1075**	4	WASHER-HARD (10.2X22.5X3-MM THK)	
M	11	1	**6V-7357**	6	BOLT (M6X1X25-MM)	
	12	1	**8T-4121**	1	WASHER-HARD (11X21X2.5-MM THK)	
M	13	1	**8T-4137**	1	BOLT (M10X1.5X20-MM)	
M	14	1	**8T-4195**	4	BOLT (M10X1.5X30-MM)	
	15	1	**9X-8256**	6	WASHER (6.6X12X2-MM THK)	

M - METRIC PART
Y - SEPARATE ILLUSTRATION

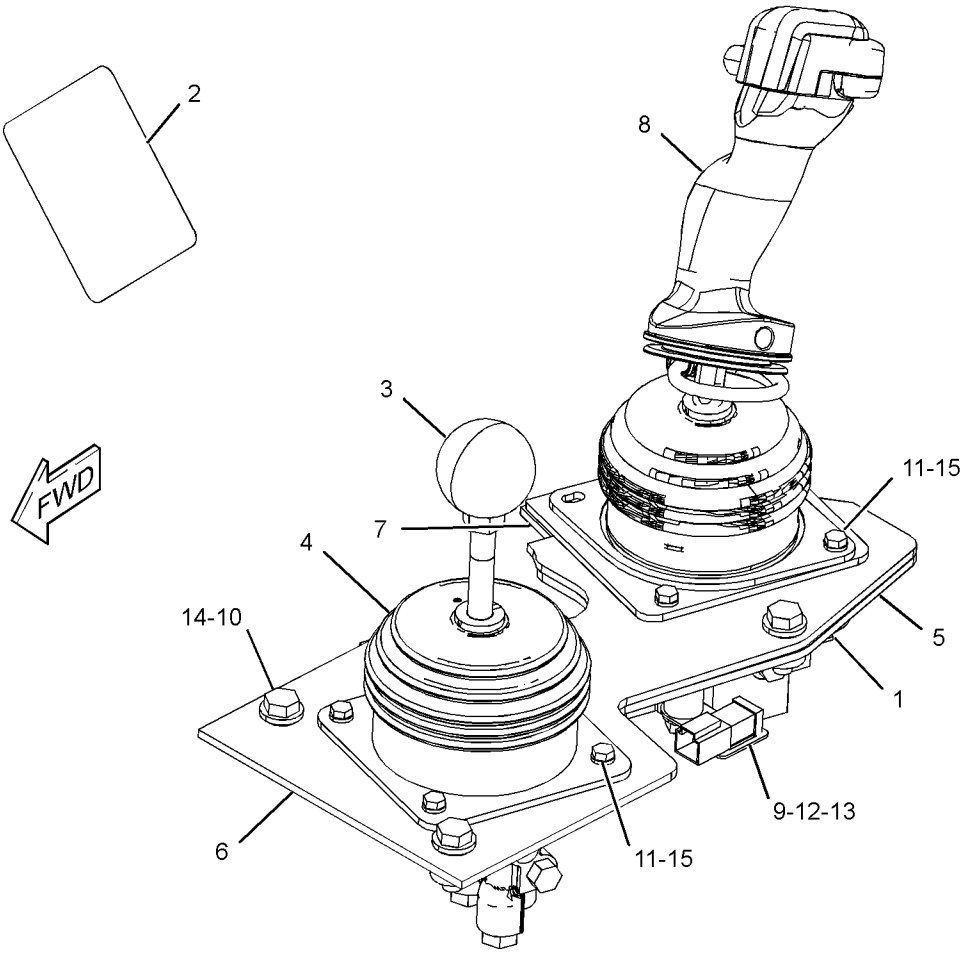

GRAPHIC #1 **<END>** g03533201

374-4179 COVER GP-CAB

S/N: EMM1-UP; JEN1-UP
PART OF 389-3229, 389-3230, 389-3231 CAB AR
AN ATTACHMENT

SMCS-7301 **i05596457**

NOTE	REF NO	GRAPHIC REF	PART NUMBER	QTY	PART NAME 1 2 3 4 5 6 (PRODUCT LEVEL)	SEE PAGE
	1	1	**159-7949**	1	FLOOR MAT	
	2	1	*375-4879*	1	FLOORPLATE AS	
		1	**237-0205**	1	FLOORPLATE AS	
M		1	**8T-3597**	4	NUT-WELD (M12X1.75-THD)	
		1	**241-4342**	1	GASKET	
	3	1	**387-0543**	2	SUPPORT AS	
	4	1	**387-0545**	1	FLOORPLATE AS	
		1	**237-0204**	1	FLOORPLATE AS	
M		1	**8T-3490**	2	NUT-WELD (M10X1.5-THD)	
		1	**241-4344**	1	GASKET	
	5	1	**5P-1076**	4	WASHER-HARD (13.5X30X4-MM THK)	
	6	1	**7X-7729**	13	WASHER (11X25X3-MM THK)	
M	7	1	**8T-4139**	4	BOLT (M12X1.75X30-MM)	
M	8	1	**8T-4195**	11	BOLT (M10X1.5X30-MM)	
M	9	1	**8T-4196**	2	BOLT (M10X1.5X35-MM)	

M - METRIC PART

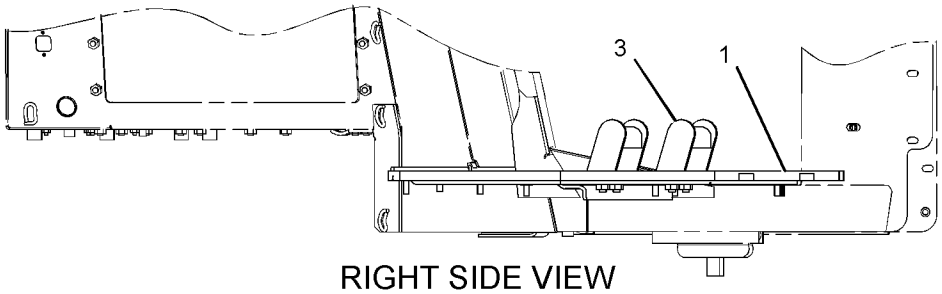

RIGHT SIDE VIEW

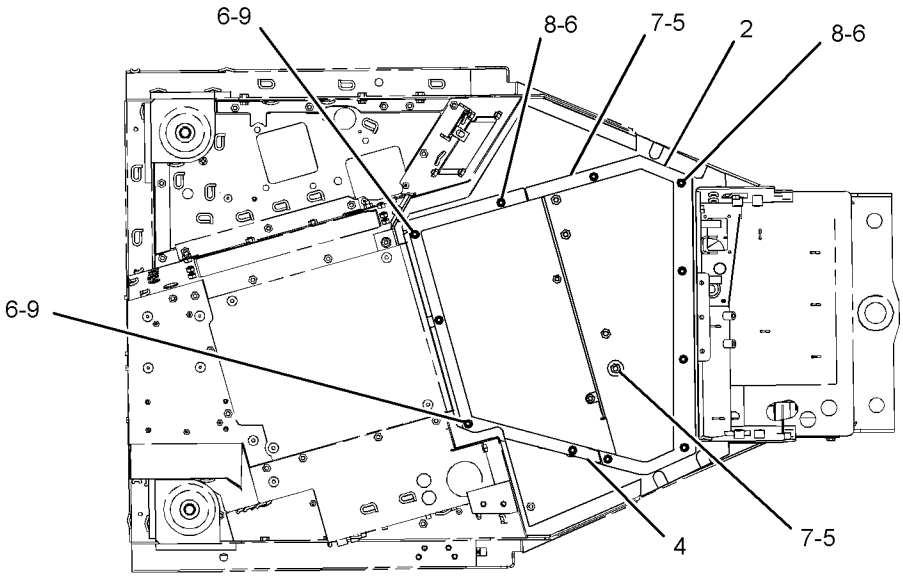

BOTTOM VIEW

GRAPHIC #1 **<END>** g02832440

389-6171 COVER GP-CAB

S/N: EMM1-UP; JEN1-UP
PART OF 389-3228, 422-2874 CANOPY AR
AN ATTACHMENT

SMCS-7301 **i05573515**

NOTE	REF NO	GRAPHIC REF	PART NUMBER	QTY	PART NAME 1 2 3 4 5 6 (PRODUCT LEVEL)	SEE PAGE
	1	1	**185-2076**	2	SUPPORT AS (FOOT)	
	2	1	**261-8619**	1	FLOOR MAT	
	3	1	**375-4878**	1	FLOORPLATE AS	
		1	**237-0204**	1	FLOORPLATE AS	
		1	**241-4344**	1	GASKET	
	4	1	*375-4879*	1	FLOORPLATE AS	
		1	**237-0205**	1	FLOORPLATE AS	
		1	**241-4342**	1	GASKET	
	5	1	**5P-1076**	4	WASHER-HARD (13.5X30X4-MM THK)	
	6	1	**7X-7729**	13	WASHER (11X25X3-MM THK)	
M	7	1	**8T-4139**	4	BOLT (M12X1.75X30-MM)	
M	8	1	**8T-4195**	11	BOLT (M10X1.5X30-MM)	
M	9	1	**8T-4196**	2	BOLT (M10X1.5X35-MM)	

M - METRIC PART

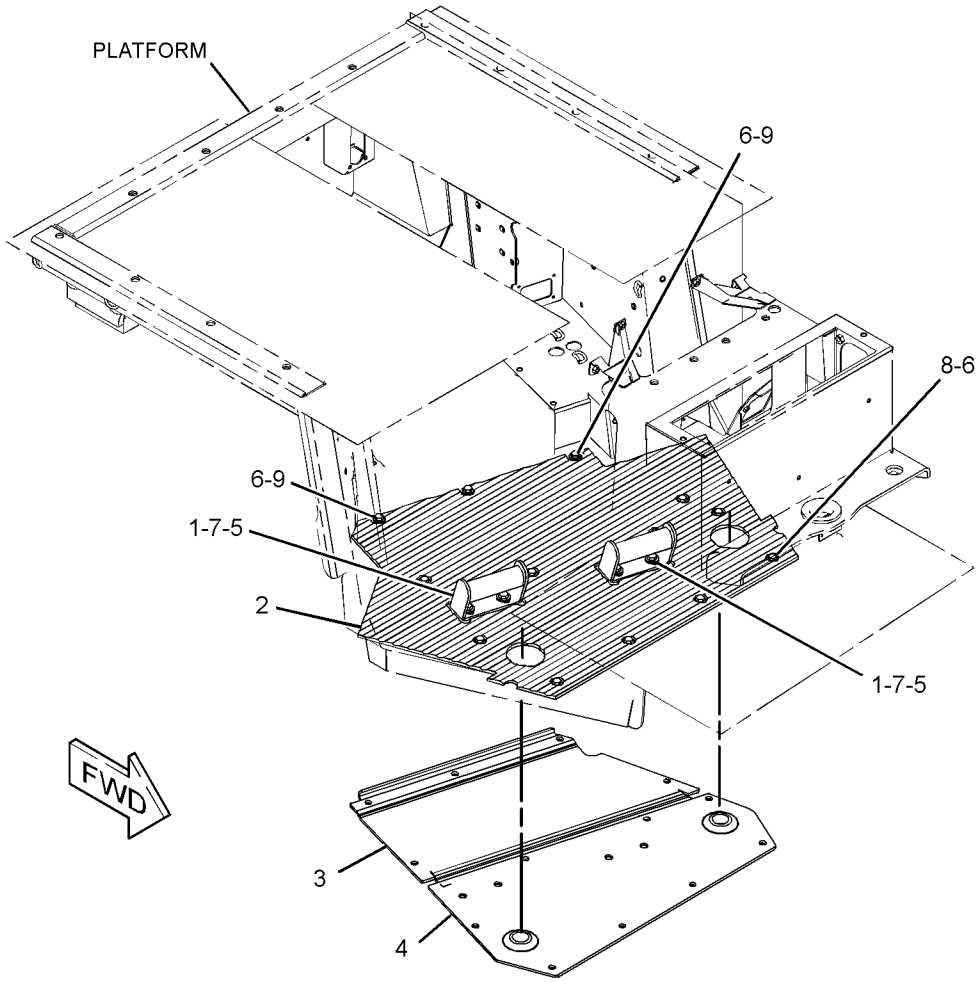

GRAPHIC #1 **<END>** g03316902

336-1846 COVER GP-CONSOLE

S/N: EMM1-UP; JEN1-UP
PART OF 387-0570, 389-6094 PLATFORM GP-OPERATOR
AN ATTACHMENT

SMCS-5258 **i05575915**

NOTE	REF NO	GRAPHIC REF	PART NUMBER	QTY	PART NAME 1 2 3 4 5 6 (PRODUCT LEVEL)	SEE PAGE
	1	1	**193-7377**	2	PANEL	
	2	1	**336-1847**	1	COVER AS	
		1	**5P-8244**	2	WASHER-HARD (12X22.5X2.5-MM THK)	
	3	1	**336-3968**	1	SEAL	
E	4	1	**7X-7877**		STRIP-EDGING (46-CM)	

E - ORDER BY THE CENTIMETER

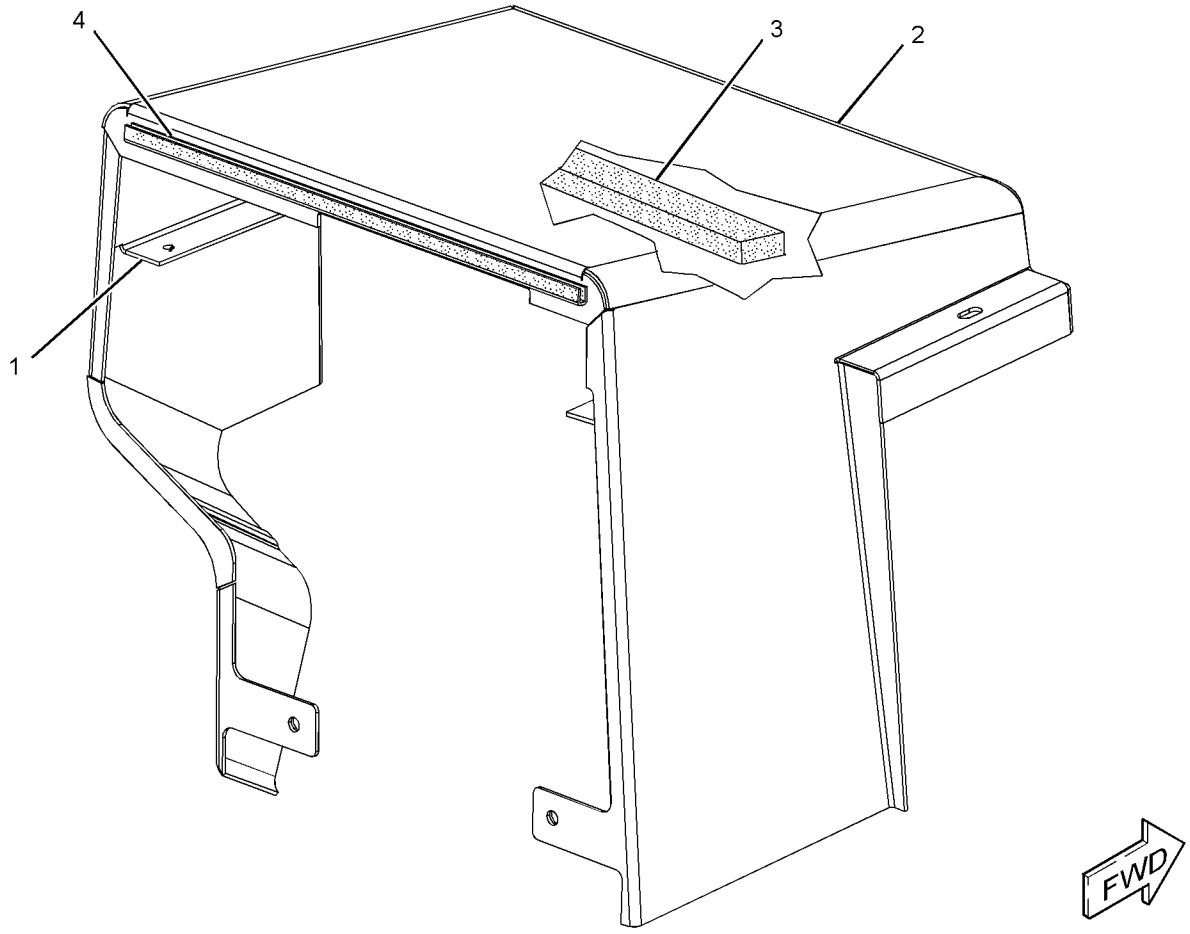

GRAPHIC #1 **<END>** g03066801

389-6157 COVER GP-CONSOLE

S/N: EMM1-UP; JEN1-UP
PART OF 393-0289, 393-0290 CAB AR
AN ATTACHMENT

SMCS-5258 **i05598929**

NOTE	REF NO	GRAPHIC REF	PART NUMBER	QTY	PART NAME 1 2 3 4 5 6 (PRODUCT LEVEL)	SEE PAGE
	1	1	**6Y-0206**	4	RETAINER	
	2	1	**7G-4824**	2	STRAP	
	3	1	**8E-7791**	2	STRAP	
	4	1	**154-5629**	1	ASHTRAY AS	
	5	1	**156-7410**	1	COVER AS	
	6	1	**159-7946**	1	PANEL-ACOUSTICAL	
	7	1	**170-5849**	1	SHROUD AS	
		1	**170-5851**	1	LINER-FOAM	
		1	**170-5852**	1	LINER-FOAM	
		1	**170-5853**	1	LINER-FOAM	
	8	1	**242-8404**	1	PANEL	
	9	1	**317-4156**	1	COVER	
	10	1	**317-4157**	1	COVER	
	11	1	**317-4171**	1	PLATE	
	12	1	**375-4864**	1	PANEL-ACOUSTICAL (LH)	
	13	1	**375-4865**	1	PANEL AS	
	14	1	**375-4866**	1	PANEL-ACOUSTICAL (RH)	
	15	1	**387-0561**	2	BOOT	
	16	1	**387-0562**	1	COVER AS	
		1	**114-9125**	1	HOLDER-CUP	
		1	**241-7918**	2	BLOCK	
	17	1	**422-2152**	3	LOUVER AS	
	18	1	**111-5147**	6	SCREW-MACHINE (6-32X0.625-IN)	
	19	1	**198-9706**	4	SCREW-TRUSS HEAD (M5X0.8X16-MM)	
	20	1	**5P-4116**	4	WASHER-HARD (8.8X20.5X2-MM THK)	
	21	1	**7D-6922**	6	LOCKNUT (6-32-THD)	
M	22	1	**8T-4189**	4	BOLT (M8X1.25X20-MM)	
	23	1	**9N-0869**	3	WASHER-HARD (8.8X25.5X2-MM THK)	
	24	1	**9X-2038**	5	WASHER (7X19X2-MM THK)	
M	25	1	**9X-2043**	9	SCREW-TRUSS HEAD (M6X1X14-MM)	
M	26	1	**9X-2045**	8	SCREW-TRUSS HEAD (M6X1X20-MM)	
E	27	1	**124-3243**		SEAL (56-CM)	

E - ORDER BY THE CENTIMETER
M - METRIC PART

389-6157 **COVER GP-CONSOLE (*contd.*)** **i05598929**

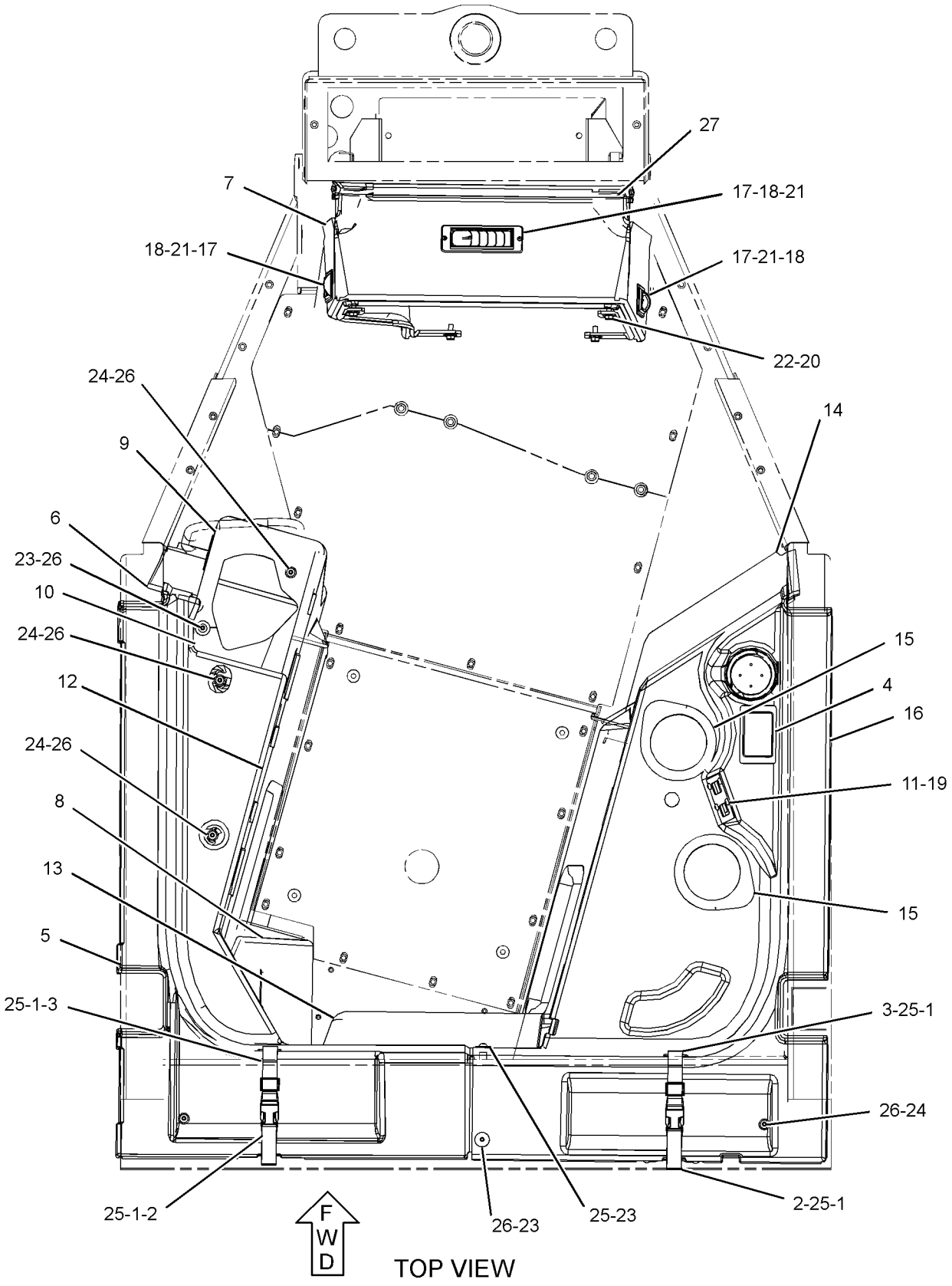

GRAPHIC #1

<END>

g03565882

375-4849 DOOR GP-STORAGE

S/N: EMM1-UP; JEN1-UP
PART OF 375-4848 COVER GP-BATTERY
AN ATTACHMENT

SMCS-7268, 7273 **i05575735**

NOTE	REF NO	GRAPHIC REF	PART NUMBER	QTY	PART NAME 1 2 3 4 5 6 (PRODUCT LEVEL)	SEE PAGE
	1	1	**8E-7561**	1	KNOB AS	
		1	**7S-2042**	1	STUD (3/8-16X1.5-IN)	
		1	**8E-1205**	1	KNOB	
		1	**8T-7566**	1	PIN-SPRING	
	2	1	**9S-8230**	1	PLATE AS	
		1	**1F-0750**	1	NUT-WELD (3/8-16-THD)	
	3	1	**4H-1641**	1	PIN-SPRING	

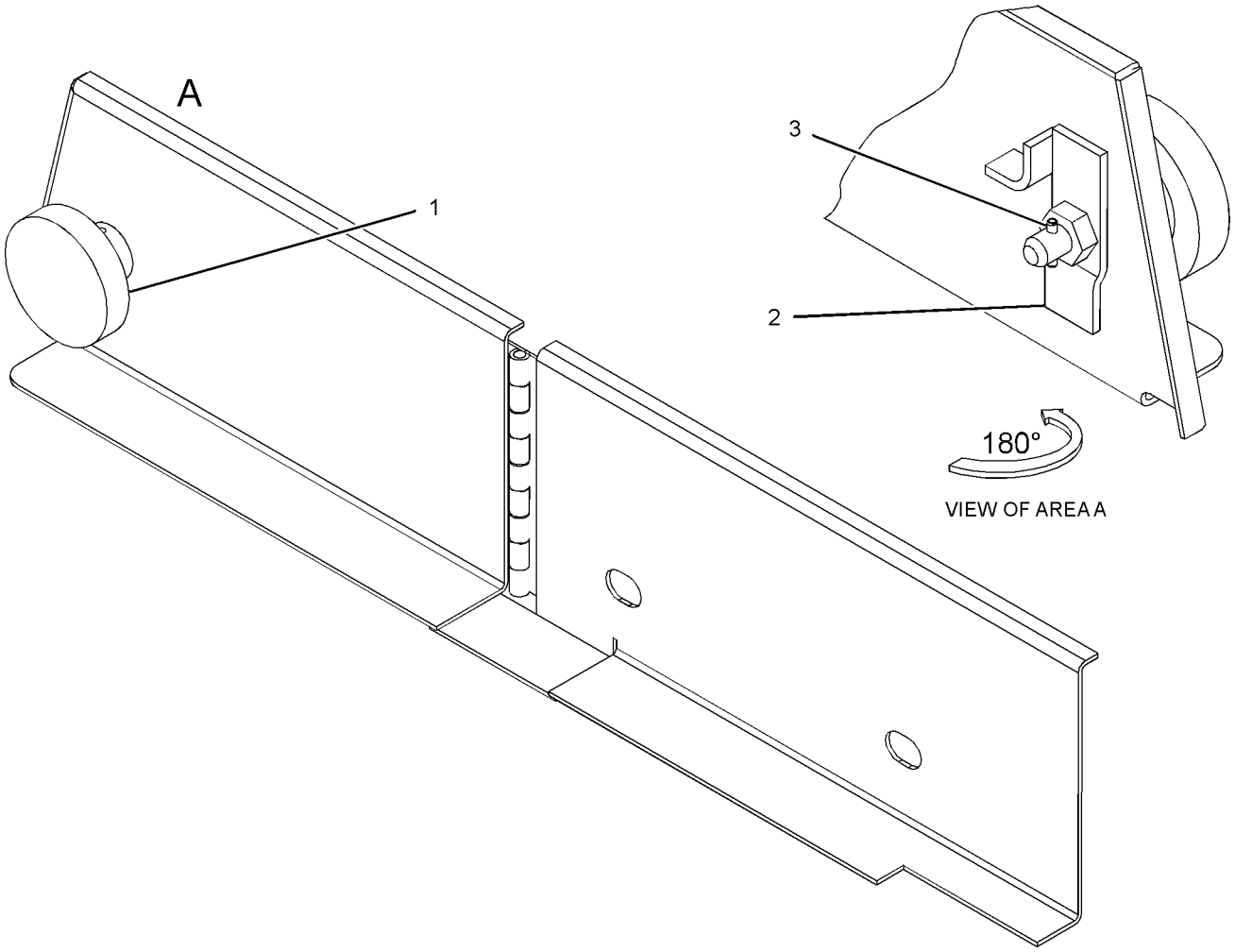

GRAPHIC #1 **<END>** g03156156

387-2153 GUARD GP-WINDOW

S/N: EMM1-UP; JEN1-UP
CANNOT BE USED WITH 389-3228—PAGE: 579, 389-3231—PAGE: 570
AN ATTACHMENT

SMCS-7165 **i05682717**

NOTE	REF NO	GRAPHIC REF	PART NUMBER	QTY	PART NAME 1 2 3 4 5 6 (PRODUCT LEVEL)	SEE PAGE
	1	1	**275-4236**	4	SCREW-WING (M12X1.75X40-MM)	
	2	1	**387-2149**	1	GUARD AS (RH)	
		1	**155-6479**	2	HINGE AS	
	3	1	**387-2150**	1	GUARD AS (LH)	
		1	**155-6479**	2	HINGE AS	
	4	1	**249-2844**	8	WASHER (12.7X31.7X1-MM THK)	
	5	1	**3B-4610**	4	PIN-COTTER	
	6	1	**5P-1076**	4	WASHER-HARD (13.5X30X4-MM THK)	
M	7	1	**8T-4192**	4	BOLT (M12X1.75X25-MM)	

M - METRIC PART

387-2153 **GUARD GP-WINDOW (*contd.*)** **i05682717**

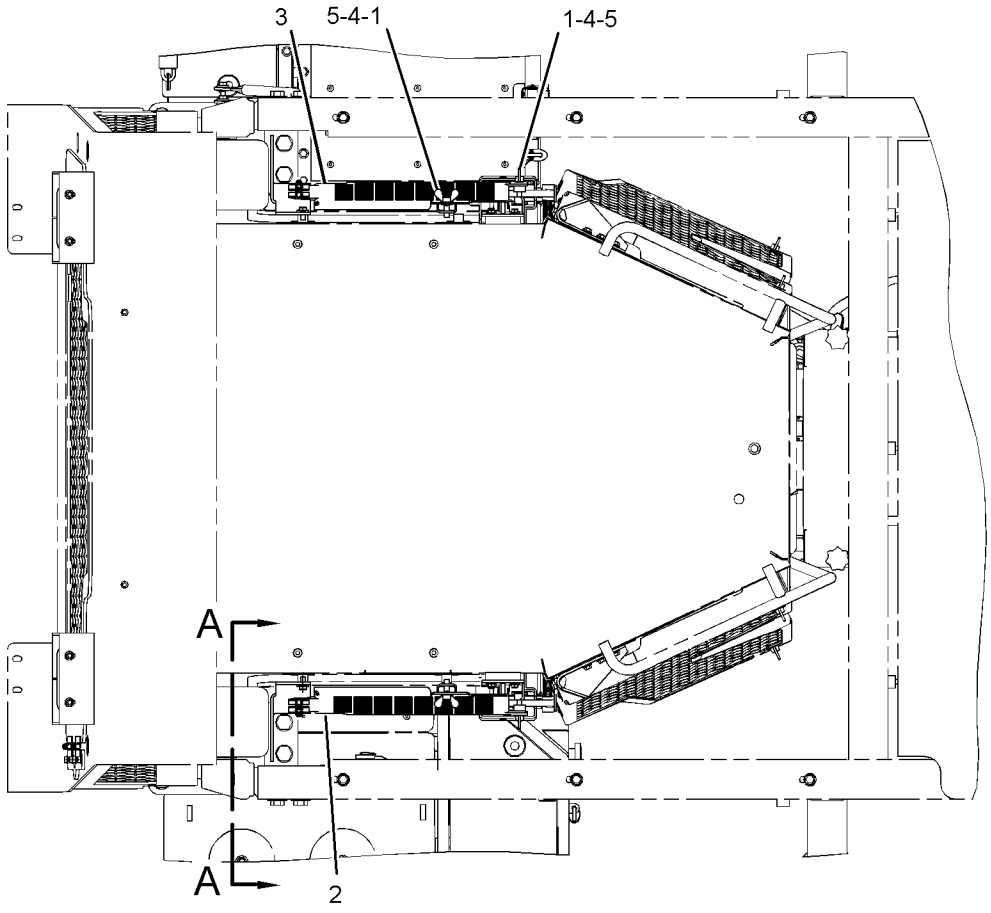

TOP VIEW

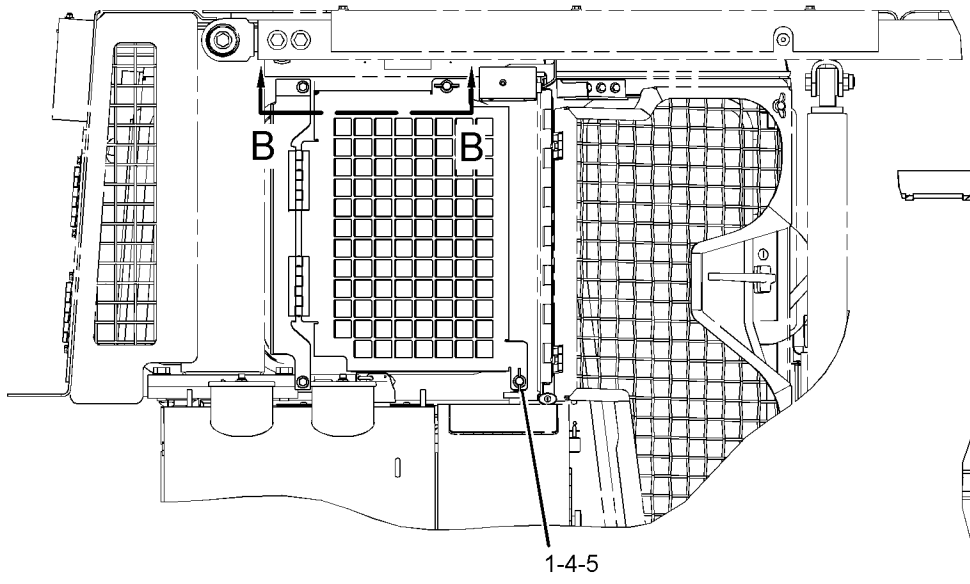

RIGHT SIDE VIEW

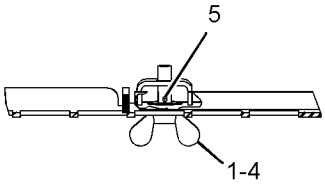

SECTION B-B

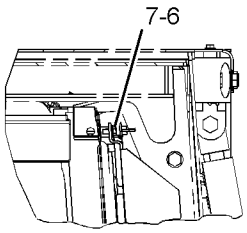

VIEW A-A

GRAPHIC #1 **<END>** g03319000

389-3297 HANDHOLD GP

S/N: EMM1-UP; JEN1-UP
PART OF 389-3245, 389-3247 ENCLOSURE GP-ENGINE
AN ATTACHMENT

SMCS-7256 **i05611289**

NOTE	REF NO	GRAPHIC REF	PART NUMBER	QTY	PART NAME 1 2 3 4 5 6 (PRODUCT LEVEL)	SEE PAGE
	1	1	**3W-3896**	4	HANDHOLD	
	2	1	**5P-1076**	8	WASHER-HARD (13.5X30X4-MM THK)	
M	3	1	**7Y-1727**	4	BOLT (M12X1.75X60-MM)	
M	4	1	**8T-4139**	4	BOLT (M12X1.75X30-MM)	

M - METRIC PART

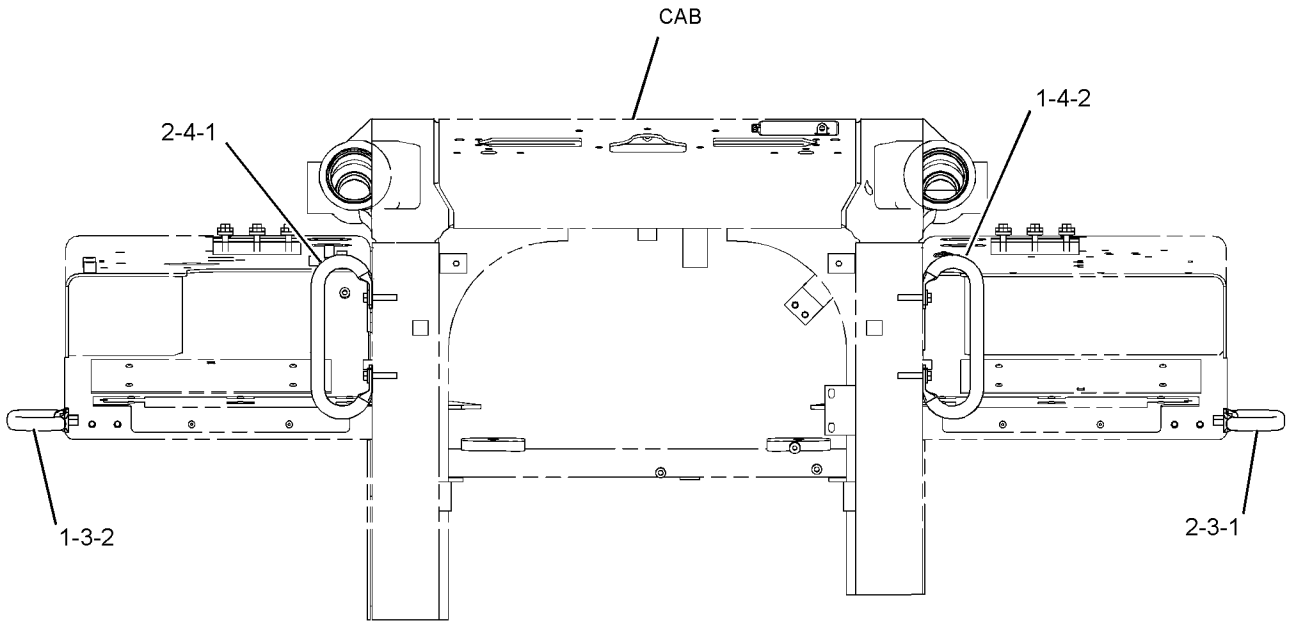

FRONT VIEW

GRAPHIC #1 **<END>** g03566550

OPERATOR STATION

389-3298 HANDHOLD GP—HEAVY-DUTY

S/N: EMM1-UP; JEN1-UP
PART OF 425-6994 ENCLOSURE GP-ENGINE
AN ATTACHMENT

SMCS-7256 **i05660259**

NOTE	REF NO	GRAPHIC REF	PART NUMBER	QTY	PART NAME 1 2 3 4 5 6 (PRODUCT LEVEL)	SEE PAGE
	1	1	**1Q-2423**	2	HANDLE AS (RH, LH)	
	2	1	**288-2507**	1	HANDLE AS (LH)	
	3	1	**288-2508**	1	HANDLE AS (RH)	
M	4	1	**8T-4910**	4	BOLT (M12X1.75X60-MM)	
M	5	1	**8T-4183**	4	BOLT (M12X1.75X40-MM)	
	6	1	**8T-4223**	8	WASHER-HARD (13.5X25.5X3-MM THK)	

M - METRIC PART

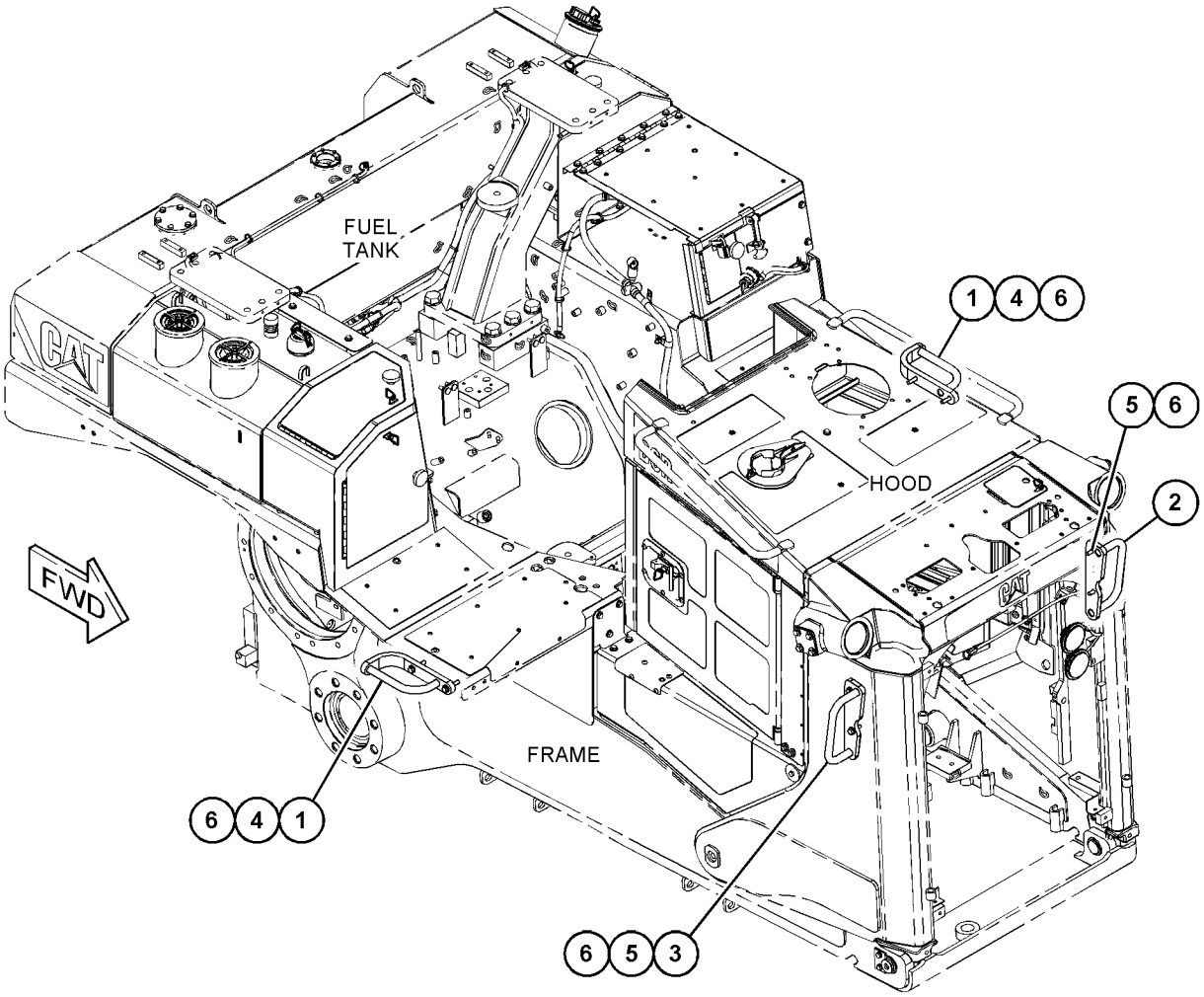

GRAPHIC #1 **<END>** g03581702

389-6155 HANDHOLD GP

S/N: EMM1-UP; JEN1-UP
PART OF 389-6127 GRADE CONTROL AR
AN ATTACHMENT

SMCS-7256 **i05628150**

NOTE	REF NO	GRAPHIC REF	PART NUMBER	QTY	PART NAME 1 2 3 4 5 6 (PRODUCT LEVEL)	SEE PAGE
	1	1	**9W-5343**	1	HANDHOLD	
	2	1	**317-2656**	1	HANDHOLD AS	

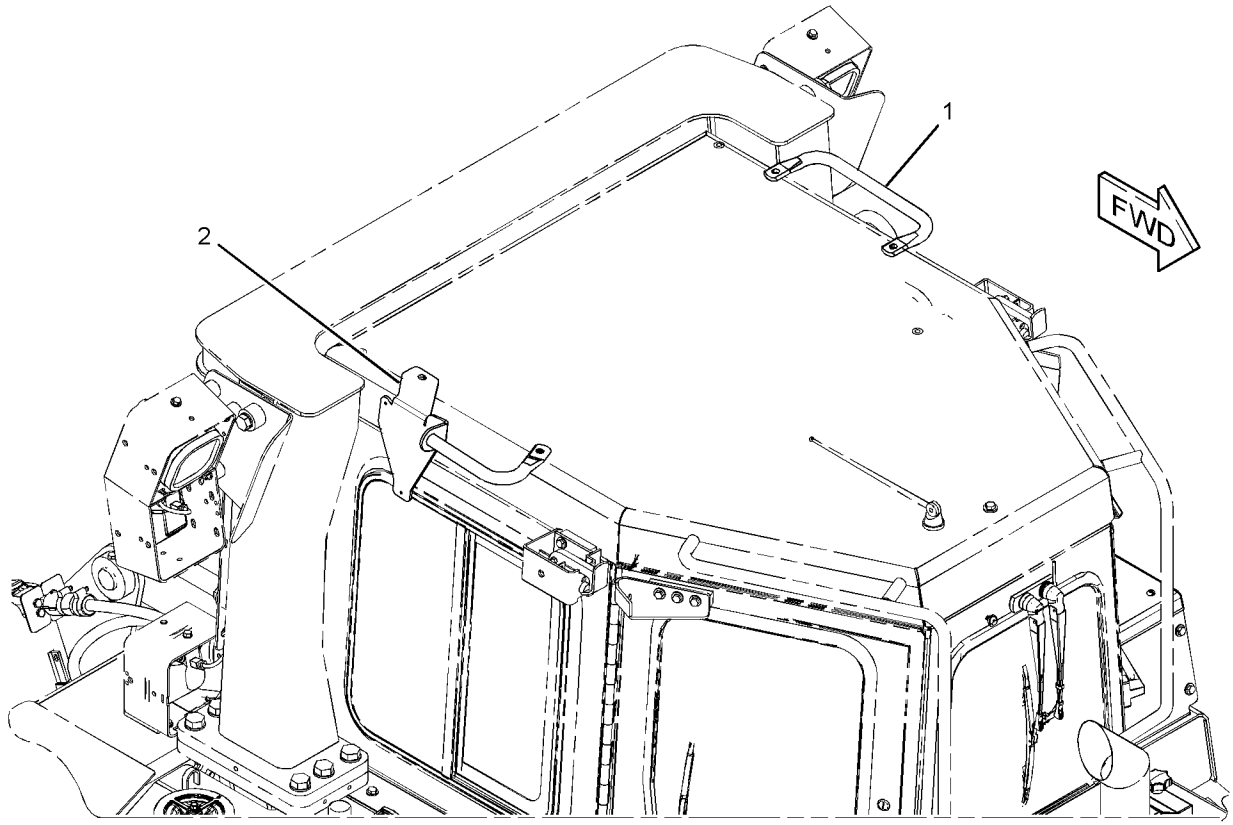

GRAPHIC #1 **<END>** g03583537

279-2590 HEATER GP-CAB

S/N: EMM1-UP; JEN1-UP
PART OF 393-0289, 393-0290 CAB AR
AN ATTACHMENT

SMCS-7304 **i05596797**

NOTE	REF NO	GRAPHIC REF	PART NUMBER	QTY	PART NAME 1 2 3 4 5 6 (PRODUCT LEVEL)	SEE PAGE
	1	1	**5D-1026**	2	CLAMP-BAND	
	2	1	**6T-5617**	1	PLATE	
	3	1	**7T-6299**	1	GROMMET	
	4	1	**9X-2185**	4	SCREW (8-15X0.44-IN)	
	5	1	**109-5761**	1	COIL AS-HEATER	
	6	1	**134-9602**	1	VALVE AS-WATER	
	6A	1	**3E-1841**	1	LEVER	
	6B	1	**6V-6717**	1	SCREW-WASHER HEAD (8-32X9.52-MM)	
	6C	1	**8Y-5737**	1	CLAMP	
	6D	1	**037-4426**	1	RETAINER	
	6E	1	**102-0341**	1	CLIP	
	7	1	**141-4123**	1	PLATE	
	8	1	**8T-4121**	2	WASHER-HARD (11X21X2.5-MM THK)	
M	9	1	**8T-4137**	2	BOLT (M10X1.5X20-MM)	
E	10	1	**5P-0767**		HOSE (12-CM)	
D	11	1	**5P-5639**		SEAL (0.3-M EACH)	
D	12	1	**5P-5643**		SEAL (0.4-M EACH)	

D - ORDER BY THE METER
E - ORDER BY THE CENTIMETER
M - METRIC PART

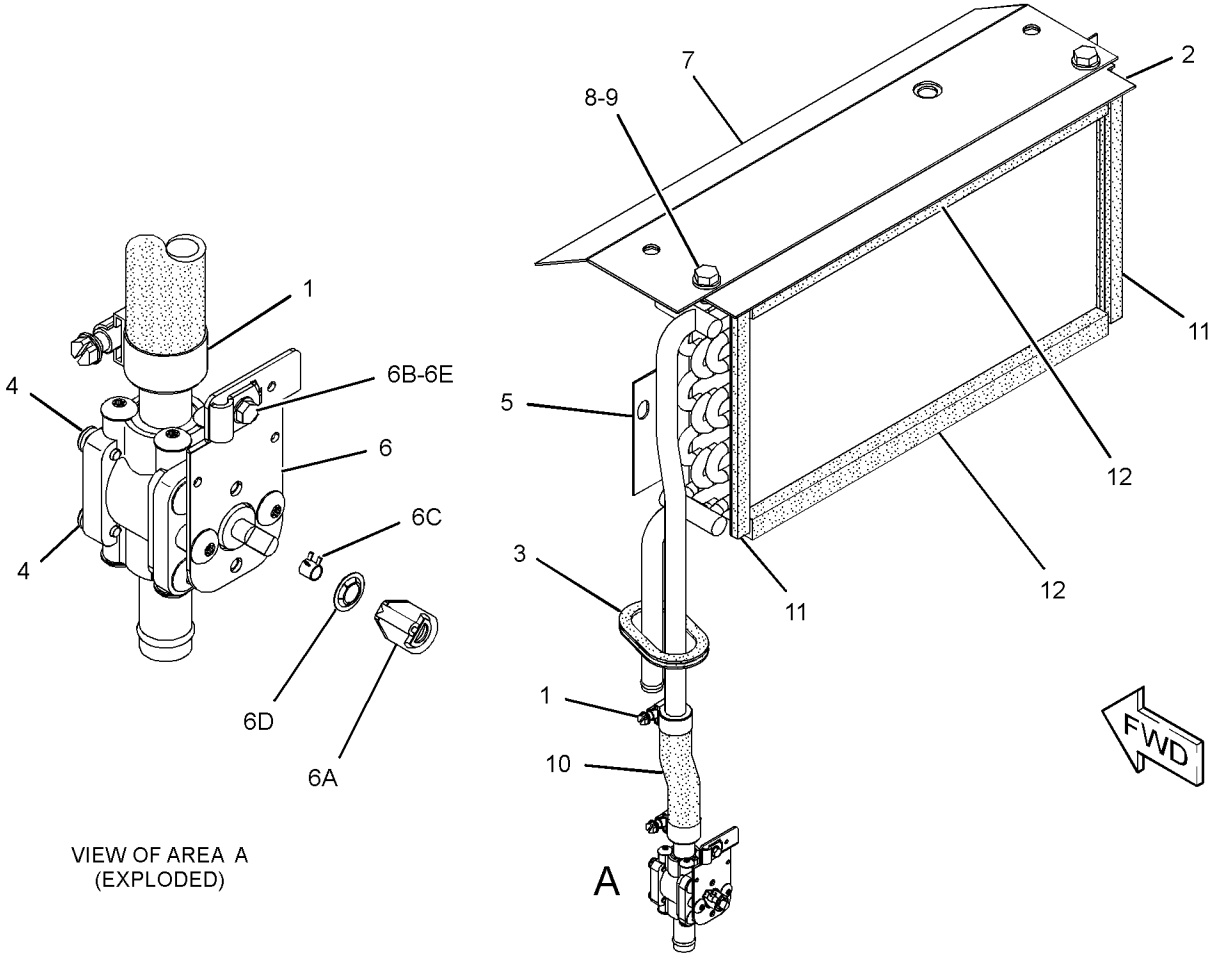

GRAPHIC #1 **<END>** g02174239

174-2231 HOUSING GP-SEAT SUSPENSION

S/N: EMM1-UP; JEN1-UP
PART OF 160-7165 SUSPENSION GP-SEAT
AN ATTACHMENT

SMCS-7321 **i05333520**

NOTE	REF NO	GRAPHIC REF	PART NUMBER	QTY	PART NAME 1 2 3 4 5 6 (PRODUCT LEVEL)	SEE PAGE
	1	1	**1Y-7927**	1	PIN	
	2	1	**2D-6235**	2	LOCKNUT (1/4-20-THD)	
	3	1	**2M-7819**	4	RING-RETAINING	
	4	1	**3D-2975**	2	RING-RETAINING	
	5	1	**4B-5059**	6	WASHER (15X29.5X2.5-MM THK)	
	6	1	**4N-2927**	2	RACE-THRUST BEARING	
	7	1	**5D-4822**	2	RING-RETAINING	
	8	1	**5P-8445**	4	RING-RETAINING	
	9	1	**5V-0770**	2	BOLT-CARRIAGE (1/4-20X0.74-IN)	
	10	1	**7M-7219**	1	BEARING-THRUST	
	11	1	**7V-5191**	2	SPACER (28X10X7.1-MM THK)	
	12	1	**8L-8413**	2	STRAP-CABLE	
	13	1	**8S-7803**	4	RING-RETAINING	
	14	1	**8Y-6041**	1	ARM AS	
	15	1	**8Y-6045**	1	CAM	
	16	1	**8Y-6046**	1	PIN	
	17	1	**8Y-6047**	2	PIN	
	18	1	**8Y-6060**	2	ROLLER	
	19	1	**8Y-6062**	1	LINK-ACTUATOR (RH)	
	20	1	**8Y-6063**	1	LINK-ACTUATOR (LH)	
	21	1	**8Y-6064**	2	ROLLER-SLIDER	
	22	1	**8Y-6066**	1	SPRING	
	23	1	**8Y-6067**	1	SPACER (10.54-MM THK)	
	24	1	**8Y-6068**	1	NUT (3/8X16-THD)	
	25	1	**8Y-6069**	1	ADJUSTER AS	
	26	1	**9X-8918**	3	SCREW-FLAT HEAD (8-32X0.5-IN)	
	27	1	**095-0878**	1	PIN-SPRING	
	28	1	**131-4242**	1	BOLT (3/8-16X5.18-IN)	
	29	1	**131-5167**	1	KNOB AS-ADJUSTMENT (WEIGHT)	
	30	1	**161-5967**	1	SHAFT	
	31	1	**174-2237**	1	FRAME AS-SUSPENSION	
					AVAILABLE REPAIR KIT(S):	
			8Y-5945	1	KIT-SUSPENSION KNOB (HEIGHT ADJUSTMENT)	
					(INCLUDES KNOBS)	
			8Y-6859	1	KIT-SPRING (SUSPENSION SEAT)	
					(INCLUDES SPRINGS, BUSHINGS & RINGS)	
			8Y-6860	1	KIT-SPRING (HEIGHT ADJUSTMENT) (SUSPENSION SEAT)	
					(INCLUDES SPRINGS, BUSHINGS, RODS & SPACERS)	
			100-3224	1	KIT-INDICATOR (WEIGHT ADJUSTMENT) (SUSPENSION SEAT)	
					(INCLUDES TAPE, GUIDE & STRAPS)	
			100-5179	1	KIT-BUMPER (WEIGHT ADJUSTMENT) (SUSPENSION SEAT)	
					(INCLUDES BUMPERS)	
			108-4086	1	KIT-FOLLOWER (SUSPENSION SEAT)	
					(INCLUDES FOLLOWER & PIN)	
			108-4087	1	KIT-FOLLOWER (SUSPENSION SEAT)	
					(INCLUDES FOLLOWER & PIN)	
			108-4103	1	KIT-BEARING (SUSPENSION SEAT)	
					(INCLUDES ROLLER ASSEMBLIES)	

174-2231 **HOUSING GP-SEAT SUSPENSION (*contd.*)** **i05333520**

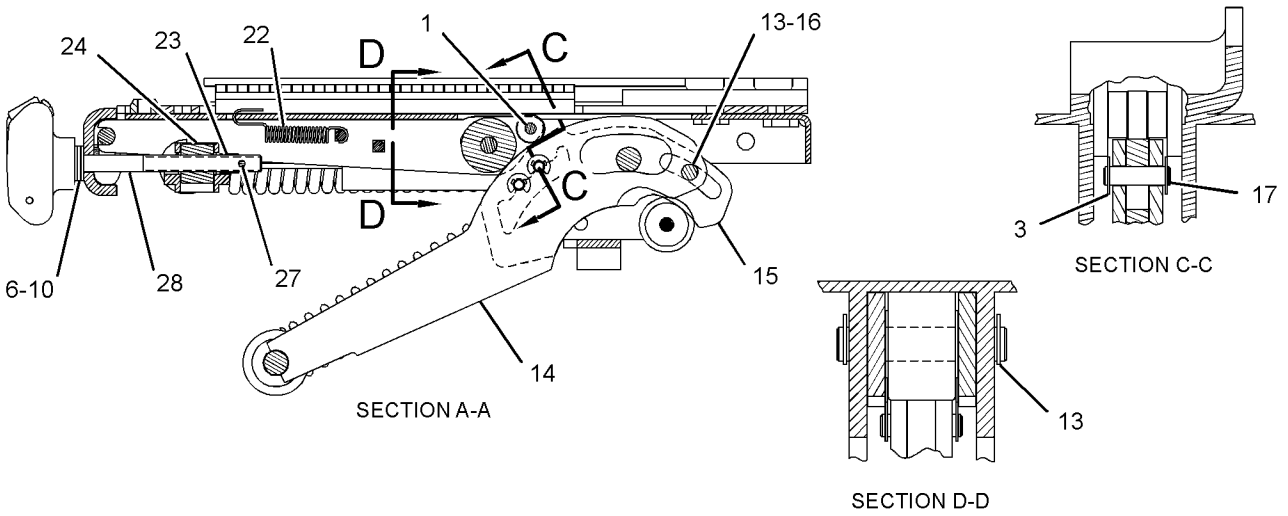

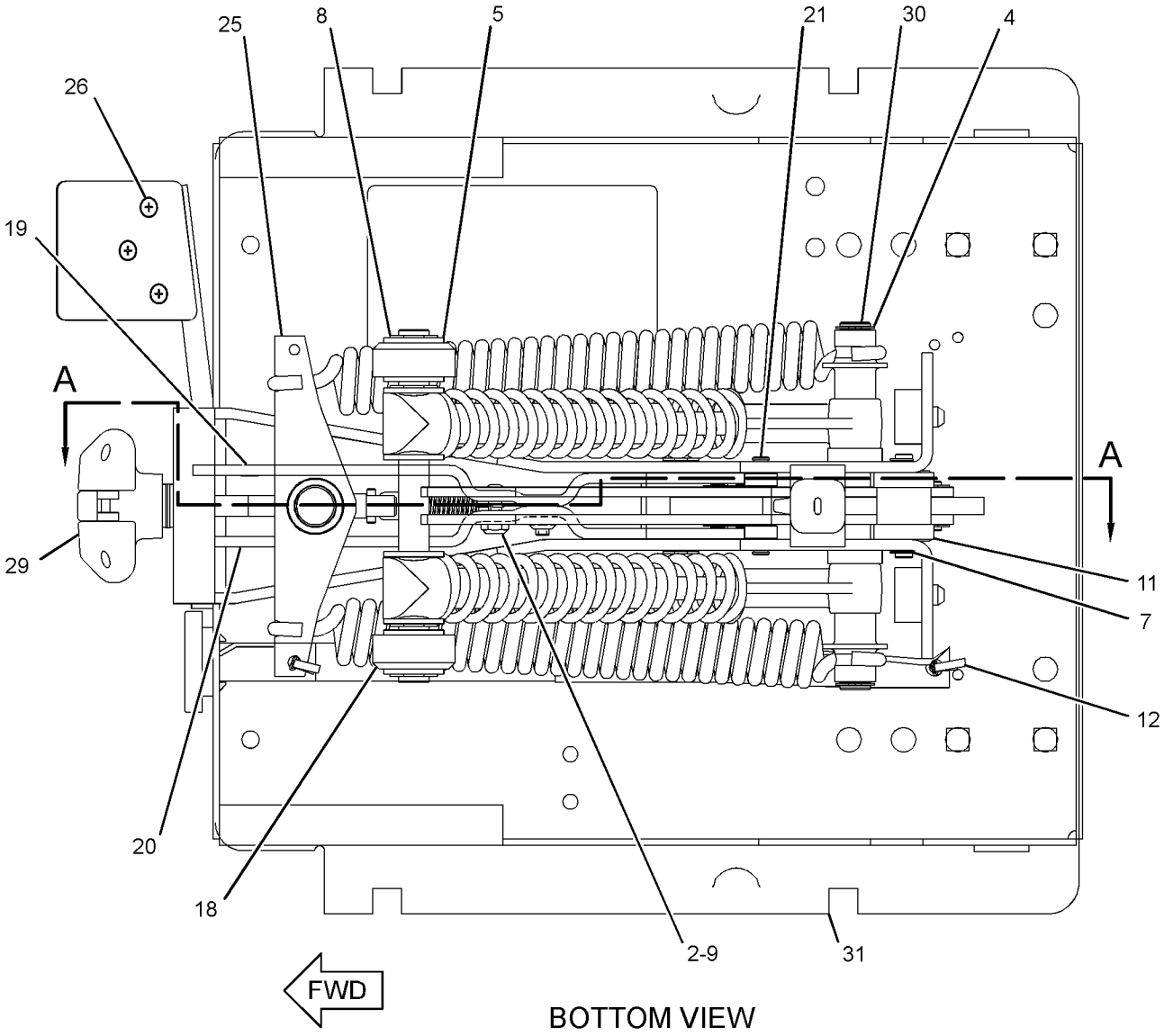

GRAPHIC #1 **<END>** g01923320

375-4873 INSTALLATION GP-RADIO

S/N: EMM1-UP; JEN1-UP
PART OF 393-0289, 393-0290 CAB AR
AN ATTACHMENT

SMCS-7338 **i05332588**

NOTE	REF NO	GRAPHIC REF	PART NUMBER	QTY	PART NAME 1 2 3 4 5 6 (PRODUCT LEVEL)	SEE PAGE
	1	1	**3S-2093**	1	STRAP-CABLE	
	2	1	**9U-8263**	1	COVER	
	3	1	**391-4357**	1	ANTENNA AS	

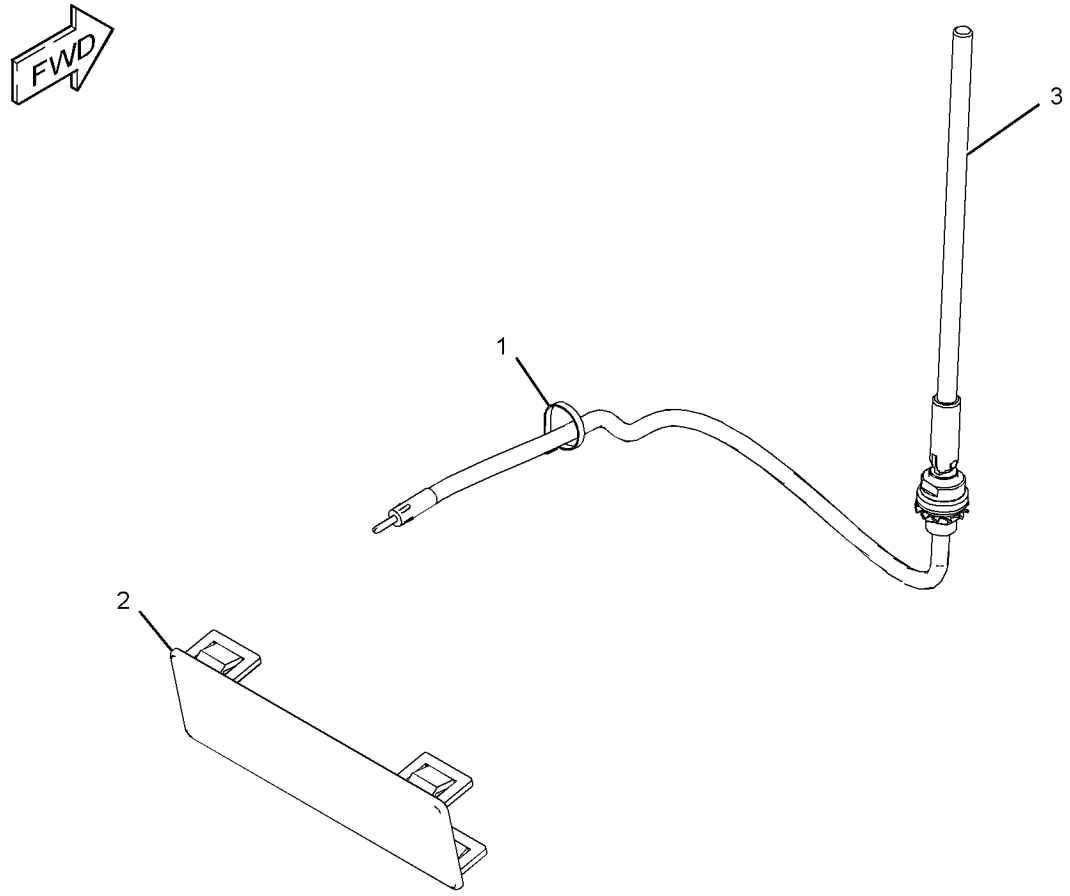

GRAPHIC #1 **<END>** g03298536

OPERATOR STATION

317-9070 INSTRUMENT GP

S/N: EMM1-UP; JEN1-UP
ENCLOSED ROPS
PART OF 393-0289, 393-0290 CAB AR
AN ATTACHMENT

SMCS-7450, 7451 **i05596851**

NOTE	REF NO	GRAPHIC REF	PART NUMBER	QTY	PART NAME 1 2 3 4 5 6 (PRODUCT LEVEL)	SEE PAGE
	1	1	**2P-4339**	1	NUT-JAM (7/16-28-THD)	
	2	1	**3E-5239**	2	RELAY AS (24-VOLT)	
	3	1	**3S-2093**	9	STRAP-CABLE	
	4	1	**7F-6998**	1	LOCKWASHER	
	5	1	**8Y-6388**	2	LOUVER AS-VENT	
	6	1	**083-9527**	2	SPACER (13X20X1.5-MM THK)	
	7	1	**110-6109**	1	KNOB-CONTROL (FAN SPEED)	
	7A	1	**110-6109**	1	KNOB-CONTROL (TEMPERATURE CONTROL)	
	7B	1	**110-6109**	1	KNOB-CONTROL (LIGHT SWITCH)	
	8	1	**110-7887**	1	SWITCH AS-START (KEY)	
		1	**7T-6799**	1	NUT-MOUNTING (1-32-THD)	
		1	**102-8804**	1	KIT-RECEPTACLE (4-PIN)	
					(INCLUDES RECEPTACLE AS & WEDGE)	
		1	**8T-8729**	4	PIN-CONNECTOR (16-GA TO 18-GA)	
	9	1	**122-7127**	18	NUT-SPECIAL (NYLON)	
	10	1	**123-9294**	2	LAMP (24-VOLT) (PANEL)	
	11	1	**157-1361**	1	SWITCH AS-ROTARY (BLOWER FAN SPEED)	
		1	**9W-0852**	6	PIN-CONNECTOR (14-GA TO 16-GA)	
		1	**102-8805**	1	KIT-RECEPTACLE (6-PIN)	
					(INCLUDES RECEPTACLE AS & WEDGE)	
	12	1	**159-9257**	1	PANEL-DASH (LIGHT)	
	13	1	**164-0847**	1	CABLE	
	14	1	**164-8473**	2	LOUVER AS	
	15	1	**170-0260**	1	PLATE	
	16	1	**171-4046**	1	LOUVER AS-VENT	
	17	1	**175-1349**	1	PLATE	
	18	1	**175-3950**	1	SWITCH AS-ROTARY (LIGHTS)	
		1	**9W-0852**	7	PIN-CONNECTOR (14-GA TO 16-GA)	
		1	**102-8806**	1	KIT-RECEPTACLE (8-PIN)	
					(INCLUDES RECEPTACLE AS & WEDGE)	
	19	1	**175-4393**	1	SPACER (11.4X17.5X2-MM THK)	
	20	1	**193-3356**	1	CABLE AS	
	21	1	**193-3359**	1	CONTROL AS (TEMPERATURE)	
		1	**129-1831**	1	CLAMP	
M	22	1	**213-7315**	6	SCREW-TRUSS HEAD (M4X0.7X25-MM)	
	23	1	**218-0651**	1	FILM-INSTRUCTION (KEY START SWITCH)	
	24	1	**293-9123**	1	SWITCH AS-ROCKER (24-VOLT) (FLOODLIGHTS, REAR)	
	25	1	**318-2389**	1	MODULE GP-DISPLAY (INSTRUMENT CLUSTER)	
	26	1	**320-5887**	1	HARNESS AS-DASH	
		1	**102-8803**	1	KIT-RECEPTACLE (3-PIN)	
		1	**102-8804**	1	KIT-RECEPTACLE (4-PIN)	
		1	**102-8805**	3	KIT-RECEPTACLE (6-PIN)	
					(EACH KIT INCLUDES RECEPTACLE AS & WEDGE)	
		1	**3T-3157**	2	TERMINAL-BLADE (16-GA TO 20-GA)	
		1	**3T-3158**	2	SOCKET-LAMP	
		1	**3T-3159**	4	SPRING	
		1	**3T-3278**	2	BOOT	
		1	**6D-4161**	2	CONTACT	
		1	**7X-6222**	1	PLUG AS-CONNECTOR (24-PIN)	
		1	**3E-4367**	1	RING-RETAINING	
M		1	**3E-8558**	1	BOLT (M5X0.8X39.37-MM)	
		1	**9X-3265**	2	SEAL-CONNECTOR (24-PIN)	
		1	**8T-8737**	85	PLUG-SEAL	
		1	**9X-1054**	2	PLUG AS-CONNECTOR (4-PIN)	

317-9070 **INSTRUMENT GP (*contd.*)** **i05596851**

NOTE	REF NO	GRAPHIC REF	PART NUMBER	QTY	PART NAME 1 2 3 4 5 6 (PRODUCT LEVEL)	SEE PAGE
		1	**9X-1056**	2	TERMINAL-RECEPTACLE (14-GA TO 16-GA)	
		1	**100-5041**	6	TERMINAL-RECEPTACLE (18-GA TO 20-GA)	
		1	**114-8843**	20	SLEEVE-PLASTIC	
		1	**125-7874**	30	TUBE-HEAT SHRINK (5.72-MM DIA)	
		1	**125-7875**	15	TUBE-HEAT SHRINK (7.44-MM DIA)	
		1	**9X-3402**	39	SOCKET-CONNECTOR (16-GA TO 18-GA)	
					—OR—	
		1	**126-1768**	39	SOCKET-CONNECTOR (14-GA TO 16-GA)	
		1	**9X-3401**	36	PIN-CONNECTOR (16-GA TO 18-GA)	
					—OR—	
		1	**126-1767**	36	PIN-CONNECTOR (14-GA TO 16-GA)	
		1	**155-2270**	1	KIT-CONNECTING PLUG (2-PIN)	
		1	**155-2271**	1	KIT-CONNECTING PLUG (4-PIN)	
		1	**155-2274**	1	KIT-CONNECTING PLUG (6-PIN)	
		1	**155-2265**	1	KIT-CONNECTING PLUG (8-PIN)	
		1	**155-2260**	1	KIT-CONNECTING PLUG (3-PIN)	
		1	**155-2270**	1	KIT-CONNECTING PLUG (2-PIN)	
		1	**155-2271**	2	KIT-CONNECTING PLUG (4-PIN)	
		1	**155-2274**	3	KIT-CONNECTING PLUG (6-PIN)	
		1	**245-7434**	2	KIT-CONNECTING PLUG (10-PIN)	
					(EACH KIT INCLUDES PLUG AS, WEDGE & INTERFACE SEAL)	
		1	**185-1861**	12	SEAL-WIRE	
		1	**202-5397**	10	PLUG	
		1	**214-4208**	1	RECEPTACLE AS-CONNECTOR (70-PIN)	
	27	1	**323-7443**	1	PANEL AS-INSTRUMENT	
		1	**311-3737**	2	GUIDE	
	28	1	**334-7389**	1	FILM-IDENTIFICATION (INSTRUMENT PANEL)	
	29	1	**104-2091**	12	SCREW-FLAT HEAD (6-20X0.5-IN)	
	30	1	**204-6102**	18	WASHER-HARD (4.45X9.52X1-MM THK)	
	31	1	**216-7352**	2	SCREW-TRUSS HEAD (M8X1.25X30-MM)	
	32	1	**251-1198**	1	SWITCH AS-ROCKER (24-VOLT) (AIR CONDITIONER)	
	33	1	**3E-4352**	2	WASHER-HARD (8.8X20.5X2.5-MM THK)	
	34	1	**3E-6922**	4	SCREW-RECESS FLAT HEAD (6-19X0.5-IN)	
	35	1	**4P-8134**	2	CLIP	
	36	1	**5P-4115**	2	WASHER-HARD (7.2X19X2-MM THK)	
	37	1	**6P-6591**	1	GROMMET	
M	38	1	**6V-8214**	2	BOLT (M6X1X20-MM)	
M	39	1	**7Y-7256**	12	SCREW-TRUSS HEAD (M4X0.7X35-MM)	
M	40	1	**8T-4138**	3	BOLT (M6X1X20-MM)	
M	41	1	**8T-4171**	2	BOLT (M6X1X12-MM)	
	42	1	**8T-4205**	5	WASHER-HARD (7.2X14.5X2-MM THK)	
	43	1	**9D-3769**	2	GROMMET	
M	44	1	**9X-2044**	2	SCREW-TRUSS HEAD (M6X1X16-MM)	
	45	1	**9X-8267**	2	WASHER (6.6X12X2-MM THK)	
	46	1	**387-0577**	12	SEAL	

M - METRIC PART

317-9070 **INSTRUMENT GP (*contd.*)** **i05596851**

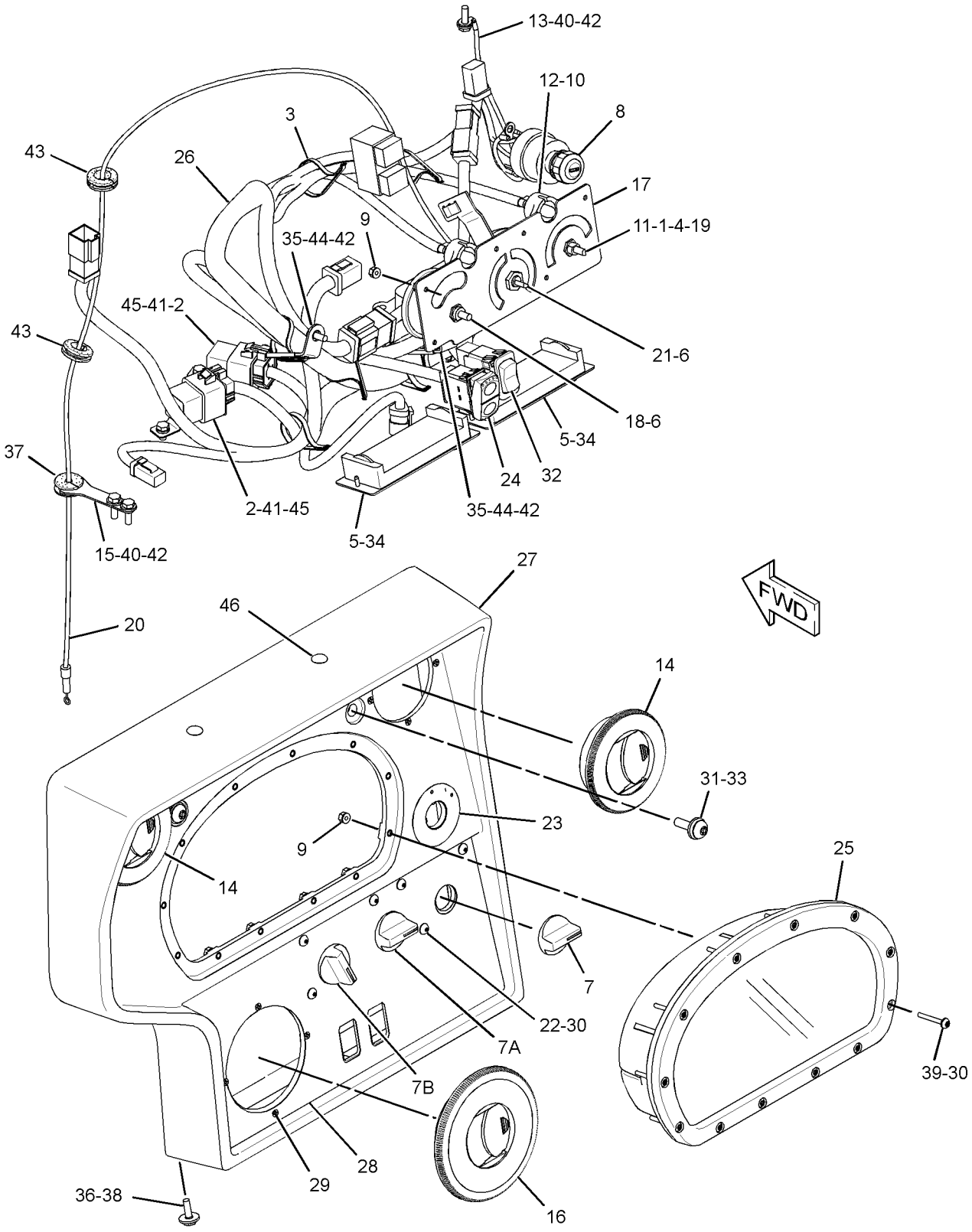

GRAPHIC #1 **<END>** g03429703

397-6405 KIT-SEAT AIR COMPRESSOR

S/N: EMM1-UP; JEN1-UP
PART OF 191-2933 SUSPENSION GP-SEAT
AN ATTACHMENT

SMCS-731K, 7324

i05351198

NOTE	REF NO	GRAPHIC REF	PART NUMBER	QTY	PART NAME 1 2 3 4 5 6 (PRODUCT LEVEL)	SEE PAGE
	1	1	**8L-8413**	1	STRAP-CABLE	
	2	1	**186-5107**	2	SCREW-DRIVE (NO 8-16X1.25-IN)	
	3	1	**370-9894**	1	COMPRESSOR AS	
	4	1	**372-2158**	1	BRACKET-MOUNTING	
	5	1	**387-0314**	1	WIRE AS (16-GA, ORANGE)	
	6	1	**387-0317**	1	WIRE AS (16-GA, BLACK)	

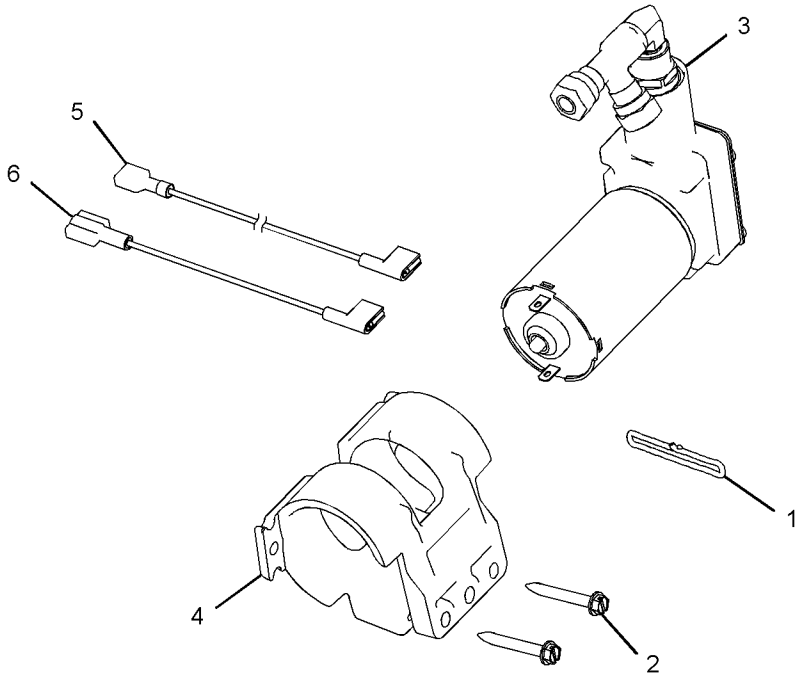

GRAPHIC #1 **<END>** g03341849

161-3616 KNOB GP–RIPPER

S/N: EMM1-UP; JEN1-UP
PART OF 389-3288, 389-3290 CONTROL GP-PILOT OPERATED HYD
AN ATTACHMENT

SMCS-5800 **i05562252**

NOTE	REF NO	GRAPHIC REF	PART NUMBER	QTY	PART NAME 1 2 3 4 5 6 (PRODUCT LEVEL)	SEE PAGE
	1	1	**2A-1736**	1	HANDLE	
	2	1	**7X-3374**	1	NUT-FULL (1/2-20-THD)	

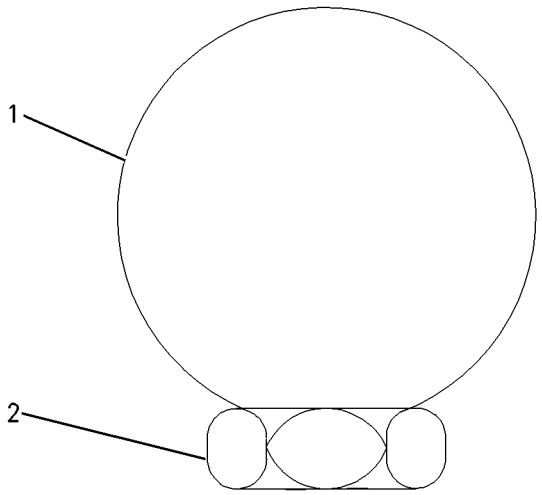

GRAPHIC #1 **<END>** g00763264

317-6561 LINER GP-CAB

S/N: EMM1-UP; JEN1-UP
PART OF 323-5697 LINER GP-CAB
AN ATTACHMENT

SMCS-7329 **i05332404**

NOTE	REF NO	GRAPHIC REF	PART NUMBER	QTY	PART NAME 1 2 3 4 5 6 (PRODUCT LEVEL)	SEE PAGE
Y	1	1	**3E-6389**	1	LAMP GP-DOME (24-VOLT)	172
	2	1	**3S-2093**	11	STRAP-CABLE	
	3	1	**6T-7695**	2	SPEAKER AS-RADIO	
	4	1	**7T-9303**	1	SWITCH AS-ROTARY (REAR)	
	4A	1	**7T-9303**	1	SWITCH AS-ROTARY (DOOR, RH)	
	4B	1	**7T-9303**	1	SWITCH AS-ROTARY (DOOR, LH)	
	4C	1	**7T-9303**	1	SWITCH AS-ROTARY (FRONT)	
		1	**2H-3920**	1	LOCKWASHER	
		1	**6V-8369**	1	NUT (7/16-28-THD)	
	5	1	**8T-4752**	4	NUT (M5X0.8-THD)	
	6	1	**101-3055**	2	COVER-SPEAKER	
	7	1	**110-6109**	1	KNOB-CONTROL (REAR WIPER)	
	7A	1	**110-6109**	1	KNOB-CONTROL (WIPER, RH DOOR)	
	7B	1	**110-6109**	1	KNOB-CONTROL (WIPER, LH DOOR)	
	7C	1	**110-6109**	1	KNOB-CONTROL (FRONT WIPER)	
	8	1	**131-5137**	1	PLUG	
	9	1	**161-1097**	1	LINER-CAB	
	10	1	**161-1099**	1	PLATE	
	11	1	**166-3733**	11	NUT-SPEED (8-32-THD)	
	12	1	**267-8685**	1	FILM-IDENTIFICATION (WINDOW WIPER CONTROLS)	
	13	1	**320-5885**	1	HARNESS AS-CAB	
		1	**102-8801**	1	KIT-RECEPTACLE (12-PIN)	
					(INCLUDES RECEPTACLE AS AND WEDGE)	
		1	**6T-8048**	2	TERMINAL-RECEPTACLE	
		1	**5P-4571**	2	TERMINAL-BLADE (14-GA TO 16-GA)	
		1	**8T-8737**	6	PLUG-SEAL	
		1	**9G-9314**	17	TERMINAL-BLADE (14-GA TO 16-GA)	
E		1	**114-8843**		SLEEVE-PLASTIC (20-CM)	
E		1	**125-7875**		TUBE-HEAT SHRINK (7.44-MM DIA) (5-CM)	
		1	**9X-3402**	16	SOCKET-CONNECTOR (16-GA TO 18-GA)	
		1	**9X-3401**	11	PIN-CONNECTOR (16-GA TO 18-GA)	
		1	**155-2255**	1	KIT-CONNECTING PLUG (12-PIN)	
		1	**155-2260**	1	KIT-CONNECTING PLUG (3-PIN)	
		1	**155-2274**	1	KIT-CONNECTING PLUG (6-PIN)	
					(EACH PLUG KIT INCLUDES PLUG ASSEMBLY, WEDGE & INTERFACE SEAL)	
	14	1	**103-9425**	11	SCREW-MACHINE (8-32X1-IN)	
M	15	1	**7Y-7388**	4	SCREW-BUTTON HEAD (M5X0.8X12-MM)	

E - ORDER BY THE CENTIMETER
M - METRIC PART
Y - SEPARATE ILLUSTRATION

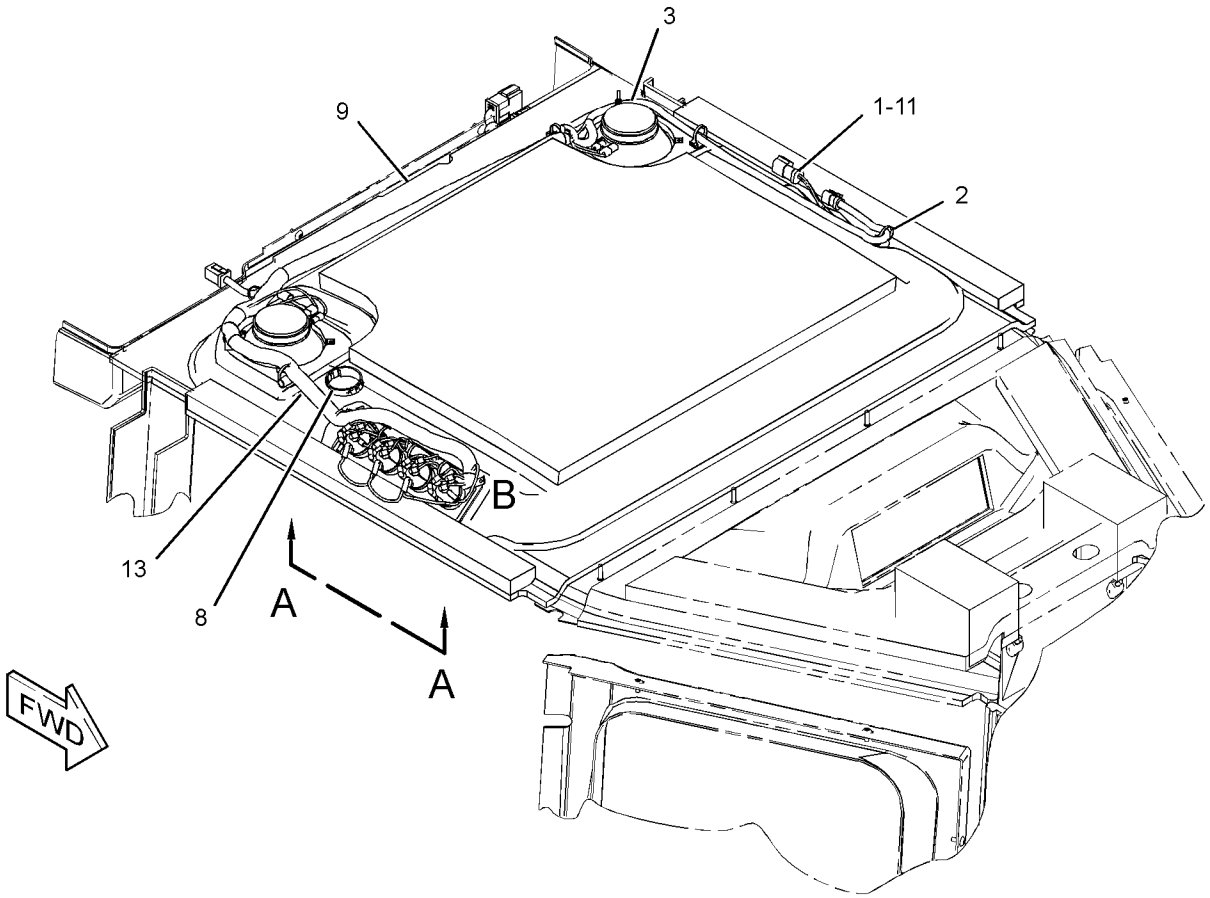

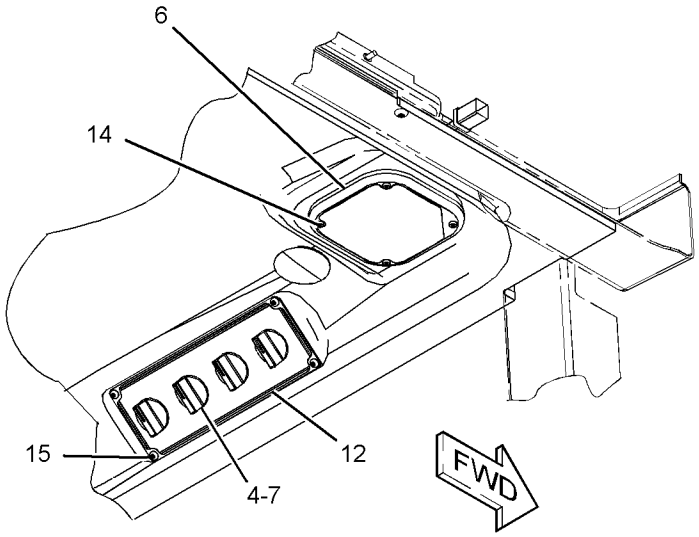

VIEW A-A

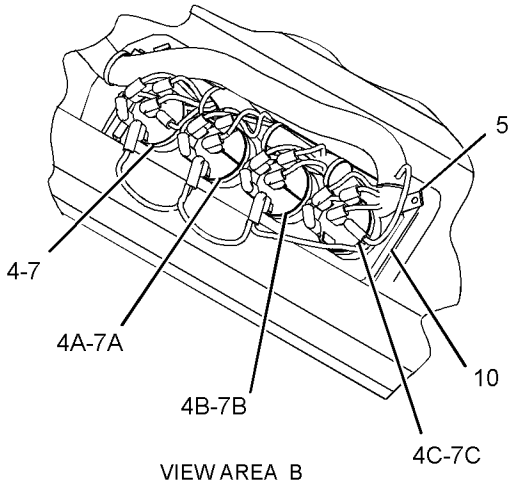

VIEW AREA B

GRAPHIC #1 **<END>** g02182874

323-5697 LINER GP-CAB

S/N: EMM1-UP; JEN1-UP
PART OF 393-0289, 393-0290 CAB AR
AN ATTACHMENT

SMCS-7329 **i05598835**

NOTE	REF NO	GRAPHIC REF	PART NUMBER	QTY	PART NAME 1 2 3 4 5 6 (PRODUCT LEVEL)	SEE PAGE
	1	1	**6V-8928**	1	HOOK-COAT	
	2	1	**110-8152**	2	HANDLE AS-PULL	
	3	1	**158-8906**	2	BLOCK-FOAM	
	4	1	**161-1083**	1	COVER-DOOR (RH)	
	5	1	**161-1084**	1	COVER-DOOR (LH)	
	6	1	**387-0564**	1	COVER-FRONT	
	7	1	**387-0557**	2	TRIM-POST	
	8	1	**387-0563**	1	LINER-CAB	
	9	1	**387-0586**	1	RETAINER	
	10	1	**228-6787**	1	COVER	
Y	11	1	*317-6561*	1	LINER GP-CAB	617
M	12	1	**3E-8020**	4	SCREW-TRUSS HEAD (M6X1X25-MM)	
M	13	1	**6V-5683**	4	BOLT (M6X1X16-MM)	
M	14	1	**9X-2043**	18	SCREW-TRUSS HEAD (M6X1X14-MM)	
M	15	1	**9X-2045**	1	SCREW-TRUSS HEAD (M6X1X20-MM)	

M - METRIC PART
Y - SEPARATE ILLUSTRATION

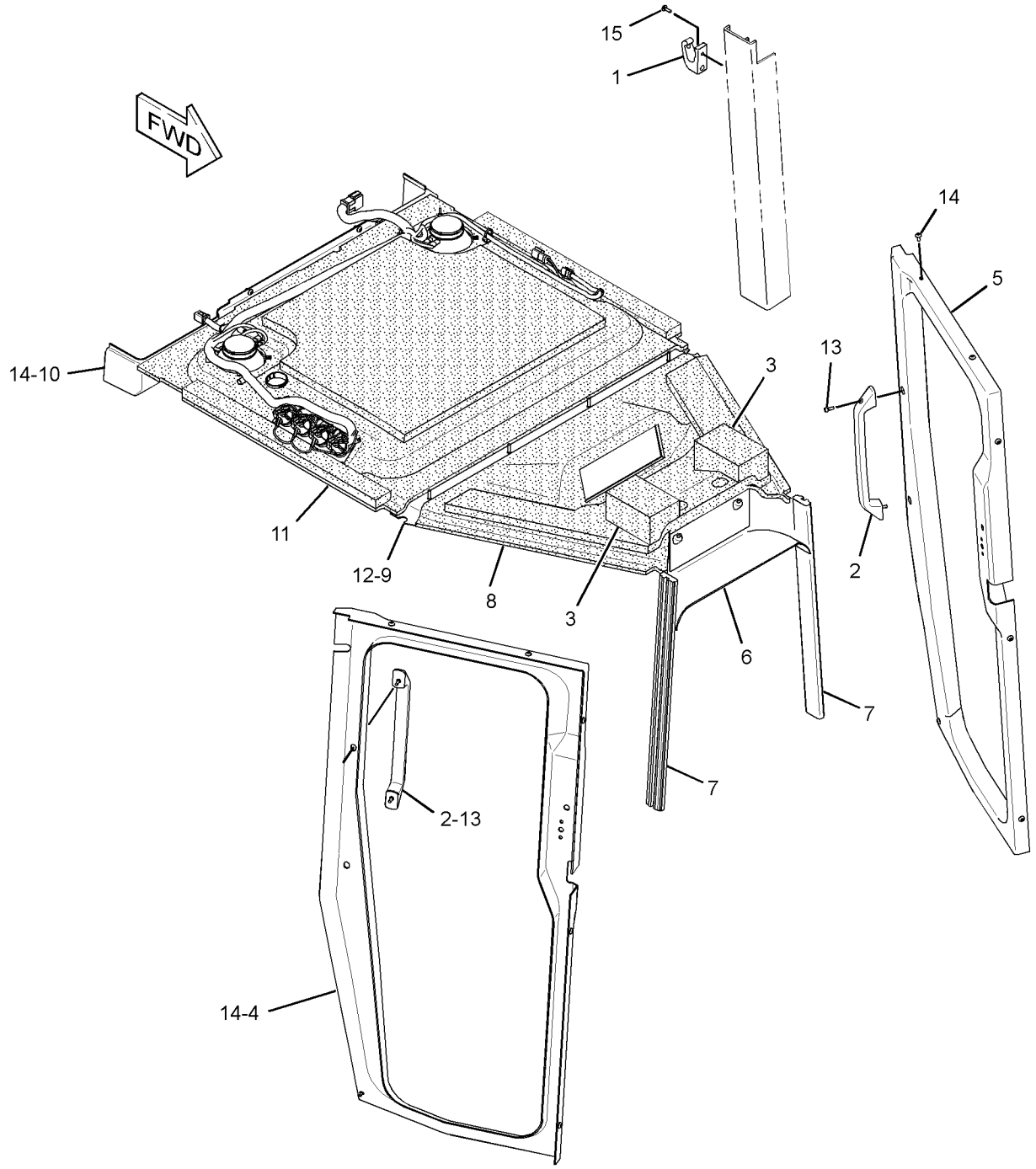

GRAPHIC #1 **<END>** g03295963

322-2361 LINES GP-AIR CONDITIONER—ROPS MOUNTED

S/N: EMM1-UP; JEN1-UP
PART OF 389-3230, 389-3231 CAB AR
AN ATTACHMENT

SMCS-1808 **i05596494**

NOTE	REF NO	GRAPHIC REF	PART NUMBER	QTY	PART NAME 1 2 3 4 5 6 (PRODUCT LEVEL)	SEE PAGE
	1	2	**1P-6356**	1	PLATE	
	2	2	**3S-2093**	5	STRAP-CABLE	
	3	1	**5P-3948**	2	COUPLING AS-REFRIGERANT (SELF-SEALING)	
D	4	2	**6V-2495**		SEAL (0.1-M EACH)	
	5	1	**7K-1181**	6	STRAP-CABLE	
	6	1	**7K-3176**	2	COUPLING AS-REFRIGERANT (SELF-SEALING)	
	7	2	**7T-8894**	1	GROMMET	
	8	2	**7T-9426**	1	GROMMET	
	10	2	**8R-3393**	1	STRAP	
I	12	1	**109-4044**	1	HOSE AS	
I	13	1	**110-8834**	1	HOSE AS	
	14	2	**355-3148**	1	SWITCH AS-PRESSURE (HIGH, LOW) (REFRIGERANT)	
		2	**8T-8729**	2	PIN-CONNECTOR (16-GA TO 18-GA)	
		2	**102-8802**	1	KIT-RECEPTACLE (2-PIN)	
					(INCLUDES RECEPTACLE AS AND WEDGE)	
	16	2	**128-5924**	1	CLAMP	
I	17	1	**350-0044**	1	HOSE AS	
	18	2	**183-4273**	1	HARNESS AS-WIRING (AIR CONDITIONER COMPRESSOR)	
E		2	**114-8843**		SLEEVE-PLASTIC (20-CM)	
E		2	**114-8845**		SLEEVE-PLASTIC (60-CM)	
E		2	**119-3662**		TUBE-HEAT SHRINK (10.85-MM DIA) (13-CM)	
		2	**126-1768**	8	SOCKET-CONNECTOR (14-GA TO 16-GA)	
		2	**155-2270**	4	KIT-CONNECTING PLUG (2-PIN)	
					(EACH PLUG KIT INCLUDES PLUG AS, WEDGE & INTERFACE SEAL)	
	19	2	**186-6189**	1	ACCUMULATOR-REFRIGERANT	
	20	2	**189-3158**	1	SUPPRESSOR-ARC	
	21	1	**224-9222**	1	BRACKET	
I	22	2	**349-3318**	1	HOSE AS	
	23	1	**231-1271**	1	BRACKET AS	
I	24	1	**236-5131**	1	HOSE AS	
I	25	2	**382-8682**	1	HOSE AS	
	26	2	**287-0338**	1	BRACKET AS	
	27	1	**321-5804**	1	HARNESS AS-SWITCH	
		1	**102-8803**	1	KIT-RECEPTACLE (3-PIN)	
					(INCLUDES RECEPTACLE AS AND WEDGE)	
E		1	**114-8843**	1	SLEEVE-PLASTIC (20-CM)	
		1	**9X-3402**	1	SOCKET-CONNECTOR (16-GA TO 18-GA)	
					—OR—	
		1	**126-1768**	3	SOCKET-CONNECTOR (14-GA TO 16-GA)	
		1	**126-1767**	2	PIN-CONNECTOR (14-GA TO 16-GA)	
		1	**9X-3401**	1	PIN-CONNECTOR (16-GA TO 18-GA)	
					—OR—	
		1	**126-1767**	1	PIN-CONNECTOR (14-GA TO 16-GA)	
		1	**155-2260**	1	KIT-CONNECTING PLUG (3-PIN)	
					(INCLUDES PLUG AS, WEDGE & INTERFACE SEAL)	
	28	2	**190-5583**	1	CLIP (SLOT)	
	29	2	**190-5584**	1	CLIP (TAB)	
I	30	2	**382-8683**	1	HOSE AS	
	31	2	**257-3226**	1	DRYER-REFRIGERANT (IN-LINE)	
		2	**189-1707**	1	ORIFICE AS-AIR CONDITIONER	
	32	2	**3E-4080**	1	FITTING AS-AIR CONDITIONER	
		2	**3E-4052**	1	CAP-SEAL (HIGH SIDE CHARGE PORT)	
		2	**3E-4058**	1	VALVE AS (REFRIGERANT, HIGH SIDE)	
	33	2	**3E-4087**	1	FITTING AS-AIR CONDITIONER	
		2	**3E-4051**	1	CAP-SEAL (LOW SIDE CHARGE PORT)	

322-2361 **LINES GP-AIR CONDITIONER (*contd.*)** **i05596494**

NOTE	REF NO	GRAPHIC REF	PART NUMBER	QTY	PART NAME 1 2 3 4 5 6 (PRODUCT LEVEL)	SEE PAGE
		2	**3E-4057**	1	VALVE AS (REFRIGERANT, LOW SIDE)	
	34	1,2	**4D-7733**	6	CLIP	
	35	1	**4H-2558**	1	GROMMET	
	36	1	**4K-8302**	2	CLIP	
	37	1	**4P-7428**	1	CLIP	
	38	1,2	**4P-7429**	3	CLIP	
	40	2	**4P-8134**	2	CLIP	
	41	1	**5P-4295**	2	CLIP	
	42	1	**6D-1641**	1	CLIP	
	43	2	**6K-8178**	1	CLIP	
	44	2	**6V-1228**	1	CLIP	
	47	1,2	**7X-7729**	4	WASHER (11X25X3-MM THK)	
	48	1,2	**8T-4121**	8	WASHER-HARD (11X21X2.5-MM THK)	
M	49	2	**8T-4133**	1	NUT (M10X1.5-THD)	
M	50	1,2	**8T-4136**	5	BOLT (M10X1.5X25-MM)	
M	51	1	**8T-4137**	2	BOLT (M10X1.5X20-MM)	
M	52	1	**8T-4139**	2	BOLT (M12X1.75X30-MM)	
M	53	2	**8T-4196**	3	BOLT (M10X1.5X35-MM)	
	54	1	**8T-4223**	2	WASHER-HARD (13.5X25.5X3-MM THK)	
	55	1	**8T-4896**	1	WASHER-HARD (10.2X18.5X2.5-MM THK)	
M	56	2	**8T-6466**	2	BOLT (M10X1.5X60-MM)	
	57	2	**8V-9708**	1	SPACER (14.3X25.4X35-MM THK)	
	58	2	**9M-8406**	1	CLIP	
	59	2	**9X-7378**	1	SEAL-O-RING	
	60	1,2	**9X-7380**	2	SEAL-O-RING	
	61	1,2	**9X-7381**	4	SEAL-O-RING	
	62	2	**9X-7382**	2	SEAL-O-RING	
	63	1,2	**9X-7383**	6	SEAL-O-RING	
	64	2	**9X-7385**	2	SEAL-O-RING	
	66	2	**6D-4636**	1	CLIP	

D - ORDER BY THE METER
E - ORDER BY THE CENTIMETER
I - REFER TO HYDRAULIC INFORMATION SYSTEM
M - METRIC PART

322-2361 **LINES GP-AIR CONDITIONER (*contd.*)** **i05596494**

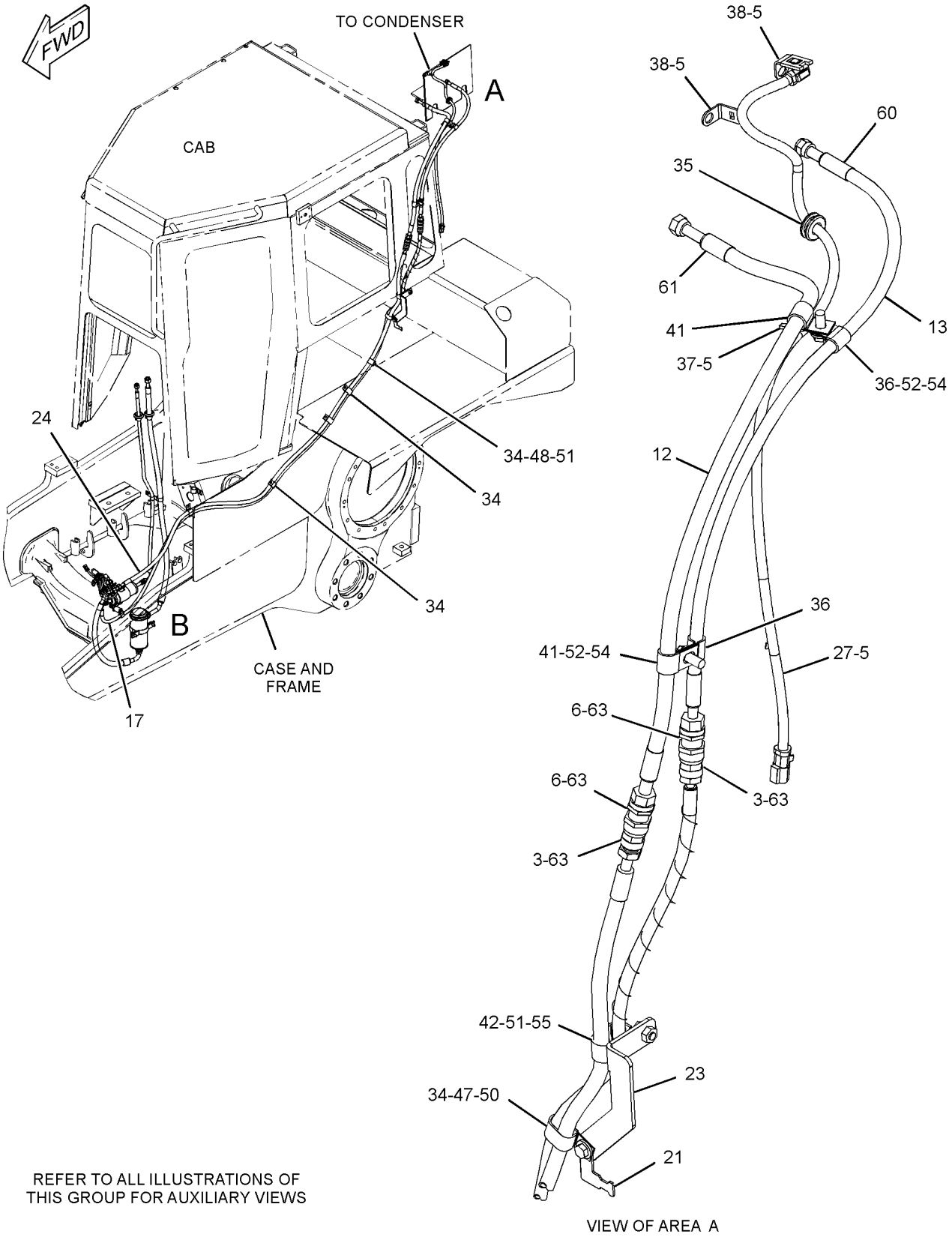

GRAPHIC #1 g03316690

322-2361 **LINES GP-AIR CONDITIONER (*contd.*)** **i05596494**

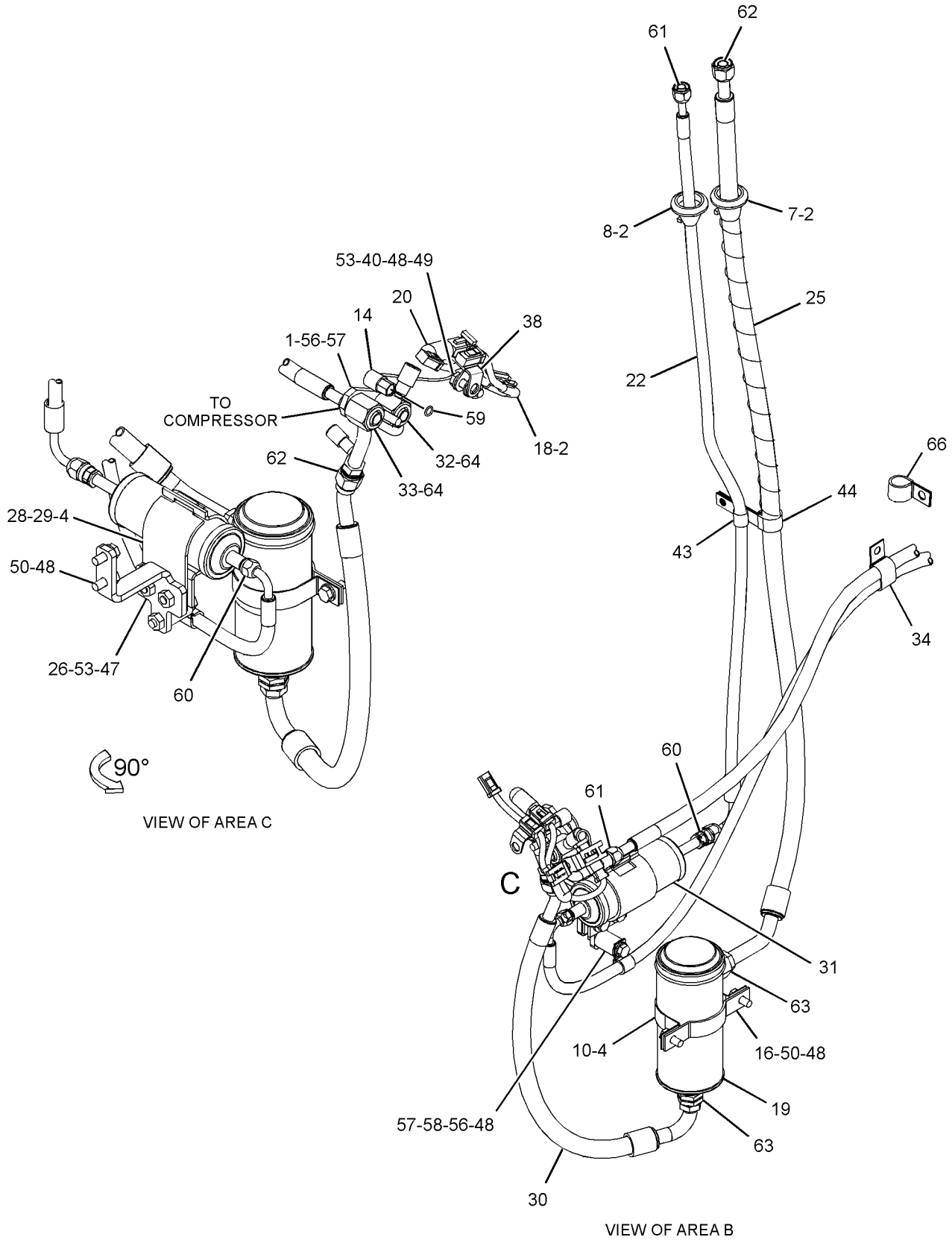

GRAPHIC #2 **<END>** g03316691

382-8681 LINES GP-AIR CONDITIONER—UNDER HOOD

S/N: EMM1-UP; JEN1-UP
PART OF 389-3229 CAB AR
AN ATTACHMENT

SMCS-1808 **i05682912**

NOTE	REF NO	GRAPHIC REF	PART NUMBER	QTY	PART NAME 1 2 3 4 5 6 (PRODUCT LEVEL)	SEE PAGE
	1	1	**1P-6356**	1	PLATE	
	2	1	**257-3226**	1	DRYER-REFRIGERANT (IN-LINE)	
		1	**189-1707**	1	ORIFICE AS-AIR CONDITIONER	
	3	1	**319-7006**	1	BRACKET AS	
D	4	1	**6V-2495**		SEAL (0.1-M EACH)	
	7	1	**8R-3393**	1	STRAP	
	9	1	**355-3148**	1	SWITCH AS-PRESSURE (HIGH, LOW) (REFRIGERANT)	
		1	**102-8802**	1	KIT-RECEPTACLE (2-PIN)	
					(INCLUDES RECEPTACLE AS & WEDGE)	
		1	**8T-8729**	2	PIN-CONNECTOR (16-GA TO 18-GA)	
	11	1	**128-5924**	1	CLAMP	
	12	1	**287-0338**	1	BRACKET AS	
I	13	1	**349-3319**	1	HOSE AS	
I	14	1	**173-9816**	1	HOSE AS	
	15	1	**180-9236**	1	BRACKET AS	
	16	1	**183-4273**	1	HARNESS AS-WIRING (AIR CONDITIONER COMPRESSOR)	
		1	**155-2270**	4	KIT-CONNECTING PLUG (2-PIN)	
					(EACH PLUG KIT INCLUDES PLUG AS, WEDGE & INTERFACE SEAL)	
E		1	**114-8843**		SLEEVE-PLASTIC (20-CM)	
E		1	**114-8845**		SLEEVE-PLASTIC (60-CM)	
		1	**126-1768**	8	SOCKET-CONNECTOR (14-GA TO 16-GA)	
E		1	**119-3662**		TUBE-HEAT SHRINK (10.85-MM DIA) (13-CM)	
	17	1	**186-6189**	1	ACCUMULATOR-REFRIGERANT	
I	18	1	**349-3318**	1	HOSE AS	
I	19	1	**382-8682**	1	HOSE AS	
	20	1	**189-3158**	1	SUPPRESSOR-ARC	
	21	1	**190-5583**	1	CLIP (SLOT)	
	22	1	**190-5584**	1	CLIP (TAB)	
I	23	1	**382-8683**	1	HOSE AS	
	24	1	**3E-4067**	1	FITTING AS-COMPRESSOR	
		1	**3E-4052**	1	CAP-SEAL (HIGH SIDE CHARGE PORT)	
		1	**3E-4058**	1	VALVE AS (REFRIGERANT, HIGH SIDE)	
	25	1	**3E-4087**	1	FITTING AS-AIR CONDITIONER	
		1	**3E-4051**	1	CAP-SEAL (LOW SIDE CHARGE PORT)	
		1	**3E-4057**	1	VALVE AS (REFRIGERANT, LOW SIDE)	
	26	1	**3S-2093**	5	STRAP-CABLE	
	27	1	**3S-8664**	2	CLIP	
	28	1	**4P-8134**	2	CLIP	
M	29	1	**5C-7261**	1	NUT (M8X1.25-THD)	
	30	1	**6K-8178**	1	CLIP	
	31	1	**6V-1228**	1	CLIP	
	33	1	**7T-8894**	1	GROMMET	
	34	1	**7T-8895**	1	GROMMET	
	36	1	**7X-7729**	3	WASHER (11X25X3-MM THK)	
	37	1	**8T-4121**	8	WASHER-HARD (11X21X2.5-MM THK)	
M	38	1	**8T-4133**	1	NUT (M10X1.5-THD)	
M	39	1	**8T-4136**	4	BOLT (M10X1.5X25-MM)	
M	40	1	**8T-4137**	2	BOLT (M10X1.5X20-MM)	
M	41	1	**8T-4182**	1	BOLT (M10X1.5X45-MM)	
M	42	1	**8T-4196**	2	BOLT (M10X1.5X35-MM)	
	43	1	**8T-4224**	1	WASHER-HARD (8.8X16X2-MM THK)	
M	45	1	**8T-6466**	1	BOLT (M10X1.5X60-MM)	
	46	1	**9M-8406**	1	CLIP	
	47	1	**9X-7378**	1	SEAL-O-RING	
	48	1	**9X-7380**	2	SEAL-O-RING	

382-8681 **LINES GP-AIR CONDITIONER (*contd.*)** **i05682912**

NOTE	REF NO	GRAPHIC REF	PART NUMBER	QTY	PART NAME 1 2 3 4 5 6 (PRODUCT LEVEL)	SEE PAGE
	49	1	**9X-7381**	4	SEAL-O-RING	
	50	1	**9X-7382**	2	SEAL-O-RING	
	51	1	**9X-7383**	2	SEAL-O-RING	
	52	1	**9X-7385**	2	SEAL-O-RING	
	54	1	**1P-7009**	1	CLIP	
	55	1	**4P-7429**	1	CLIP	
	56	1	**155-2270**	1	KIT-CONNECTING PLUG (2-PIN)	
					(INCLUDES PLUG AS, WEDGE & INTERFACE SEAL)	
	57	1	**339-8937**	1	CLIP	

D - ORDER BY THE METER
E - ORDER BY THE CENTIMETER
I - REFER TO HYDRAULIC INFORMATION SYSTEM
M - METRIC PART

382-8681 **LINES GP-AIR CONDITIONER (*contd.*)** **i05682912**

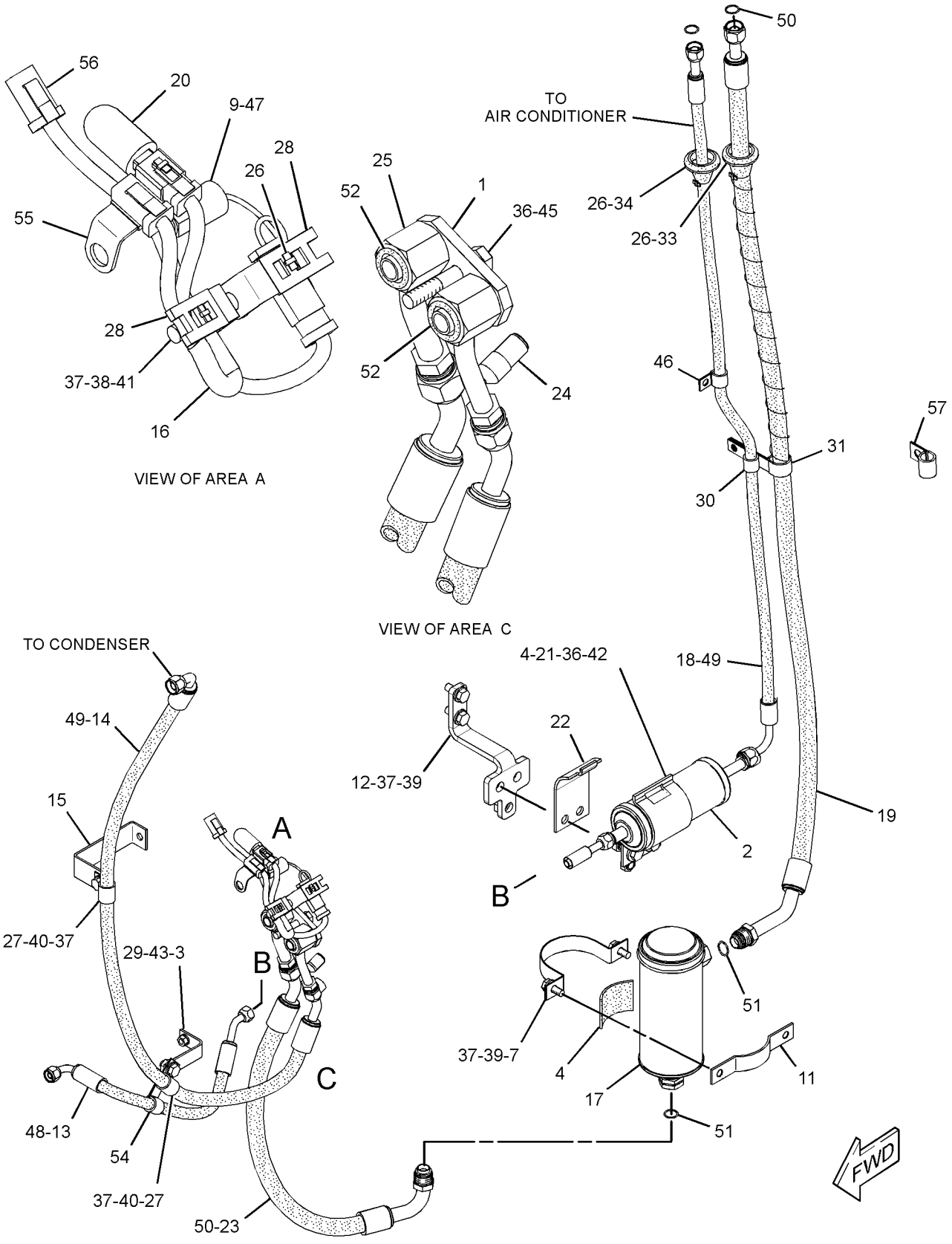

GRAPHIC #1 **<END>** g03317629

387-0546 LINES GP-AIR CONDITIONER

S/N: EMM1-UP; JEN1-UP
PART OF 393-0289, 393-0290 CAB AR
AN ATTACHMENT

SMCS-1808 **i05598854**

NOTE	REF NO	GRAPHIC REF	PART NUMBER	QTY	PART NAME 1 2 3 4 5 6 (PRODUCT LEVEL)	SEE PAGE
	1	1	**7T-9426**	1	GROMMET	
	2	1	**7T-9793**	1	VALVE-CHECK	
	3	1	**8C-5682**	1	TEE	
	4	1	**6V-2372**	1	ELBOW	
D	5	1	**5P-6129**		TUBE (0.4-M)	
D	5A	1	**5P-6129**		TUBE (0.14-M)	
D	5B	1	**5P-6129**		TUBE (0.2-M)	
D	5C	1	**5P-6129**		TUBE (1.2-M)	

D - ORDER BY THE METER

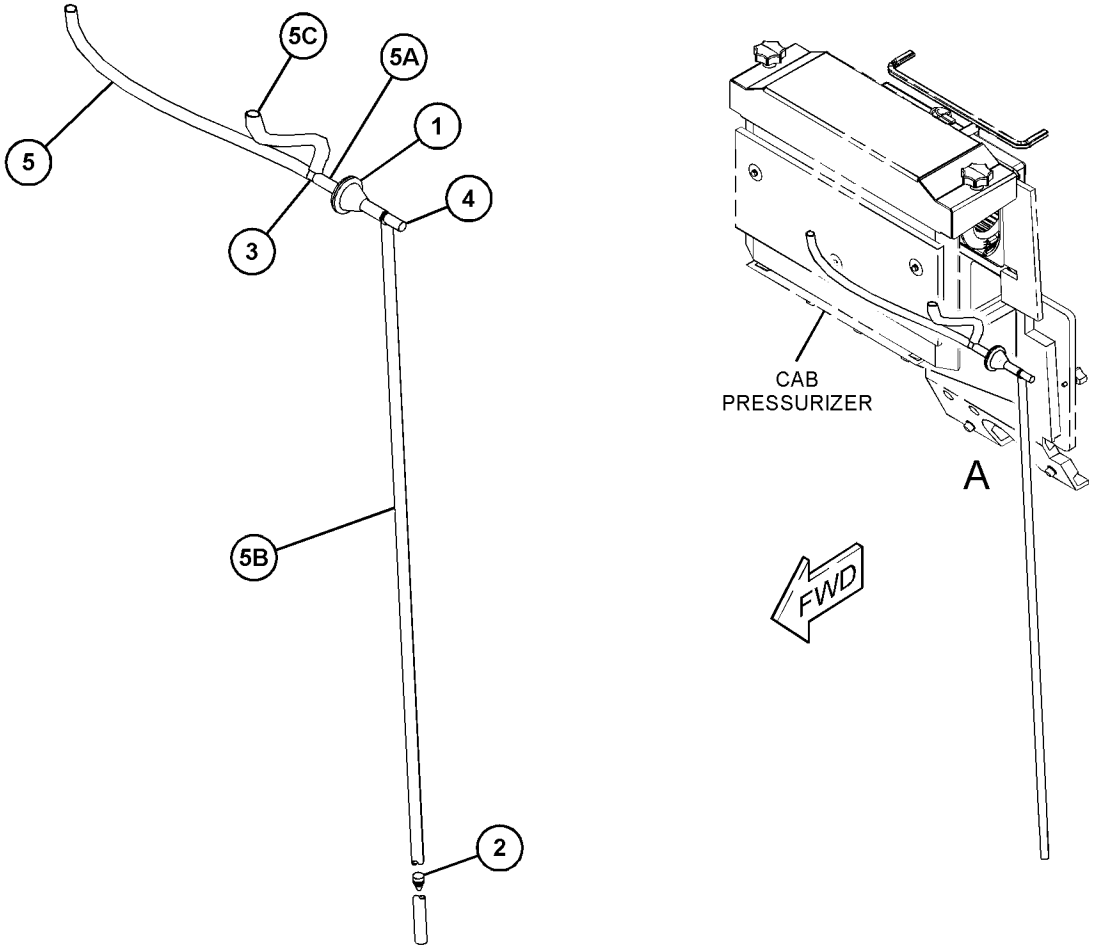

VIEW OF AREA A

GRAPHIC #1 **<END>** g03562957

389-3306 LINES GP-HEATER

S/N: EMM1-UP; JEN1-UP
PART OF 389-3229, 389-3230, 389-3231 CAB AR
AN ATTACHMENT

SMCS-7304 **i05596489**

NOTE	REF NO	GRAPHIC REF	PART NUMBER	QTY	PART NAME 1 2 3 4 5 6 (PRODUCT LEVEL)	SEE PAGE
	1	1	**1W-2860**	1	BRACKET	
	2	1	**7C-8246**	1	SPACER (10.5X20X24-MM THK)	
	3	1	**9G-7101**	1	SPACER (10.5X20X30-MM THK)	
	4	1	*165-2273*	2	VALVE GP-SHUTOFF (CAB HEATER)	
					(EACH INCLUDES)	
		1	**3K-0360**	1	SEAL-O-RING	
		1	**6V-7238**	1	VALVE-SHUTOFF	
	5	1	*194-2903*	1	ELBOW AS	
		1	**3K-0360**	1	SEAL-O-RING	
		1	**8T-0119**	1	ELBOW	
	6	1	**203-2789**	1	BRACKET AS	
M		1	**8T-3490**	1	NUT-WELD (M10X1.5-THD)	
		1	**124-6998**	1	PLATE	
	7	1	**294-5076**	1	PLATE AS	
		1	**8E-3431**	1	PLATE	
M		1	**8T-3490**	1	NUT-WELD (M10X1.5-THD)	
	8	1	**039-8557**	1	WASHER (13X26X6-MM THK)	
	9	1	**137-6722**	1	CLIP	
	10	1	**159-1503**	4	CLAMP-HOSE	
	11	1	**6D-4247**	4	CLIP	
	12	1	**6D-4636**	2	CLIP	
	13	1	**8M-2769**	1	CLIP	
	14	1	**8S-0948**	1	CLIP	
	15	1	**8T-4121**	11	WASHER-HARD (11X21X2.5-MM THK)	
M	16	1	**8T-4133**	1	NUT (M10X1.5-THD)	
M	17	1	**8T-4136**	5	BOLT (M10X1.5X25-MM)	
M	18	1	**8T-4137**	1	BOLT (M10X1.5X20-MM)	
M	19	1	**8T-4182**	1	BOLT (M10X1.5X45-MM)	
M	20	1	**8T-4185**	1	BOLT (M10X1.5X50-MM)	
M	21	1	**8T-4195**	2	BOLT (M10X1.5X30-MM)	
	22	1	**8T-4223**	1	WASHER-HARD (13.5X25.5X3-MM THK)	
M	23	1	**8T-4779**	1	BOLT (M16X2X35-MM)	
M	24	1	**8T-4956**	1	BOLT (M12X1.75X35-MM)	
	25	1	**9X-8257**	1	WASHER (17.5X30X3.5-MM THK)	
E	26	1	**7X-7702**		CONDUIT-FLEXIBLE (23.35-MM ID, SPLIT) (48-CM)	
E	27	1	**5P-0767**		HOSE (234-CM)	
E	27A	1	**5P-0767**		HOSE (300-CM)	

E - ORDER BY THE CENTIMETER
M - METRIC PART

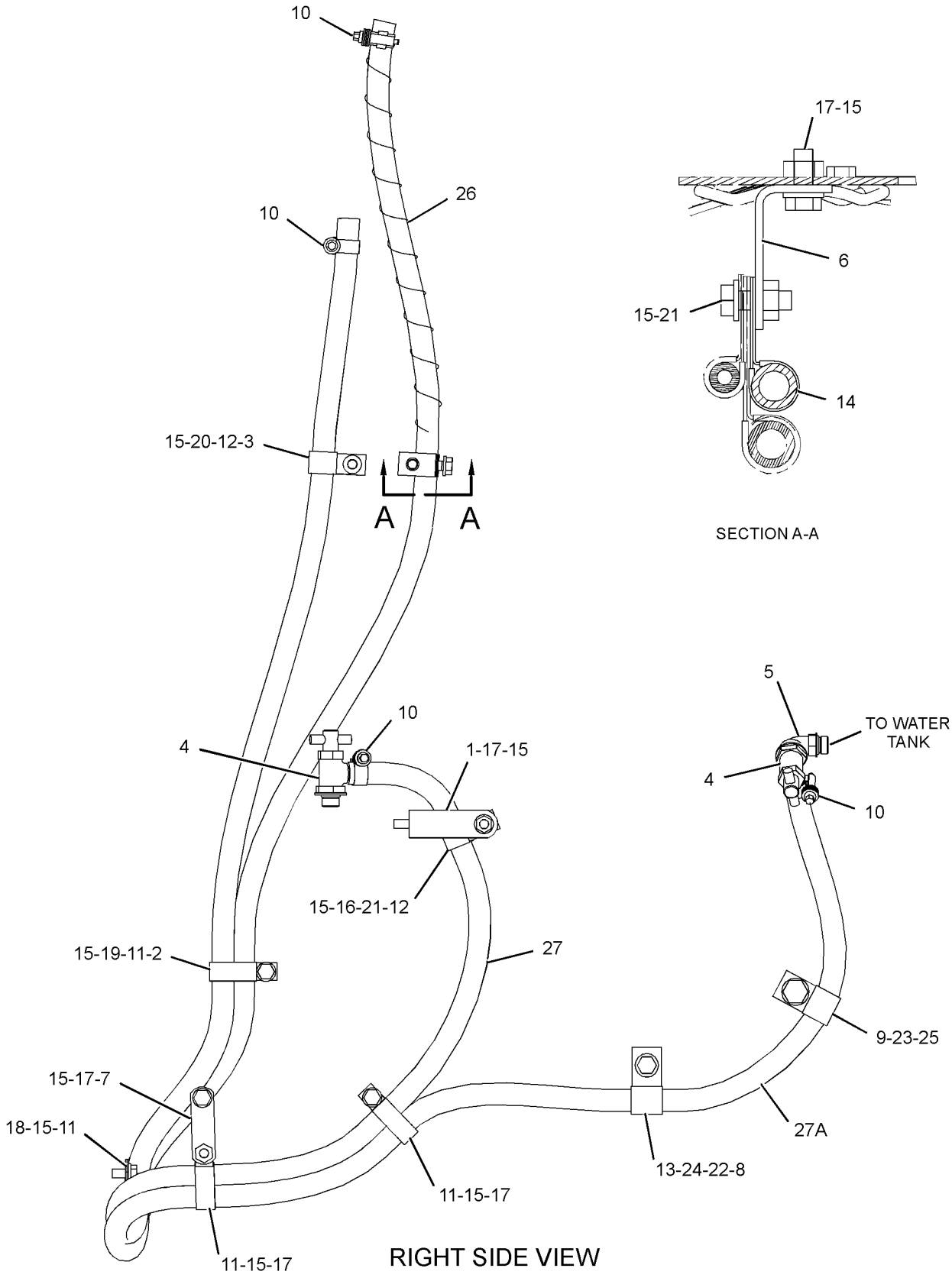

GRAPHIC #1

<END>

g03565963

9P-9392 MIRROR GP-REAR VIEW

S/N: EMM1-UP; JEN1-UP
PART OF 378-7877 ROPS GP, 208-8706 ROPS GP-OPEN
AN ATTACHMENT

SMCS-7319 **i05336742**

NOTE	REF NO	GRAPHIC REF	PART NUMBER	QTY	PART NAME 1 2 3 4 5 6 (PRODUCT LEVEL)	SEE PAGE
	1	1	**5S-7379**	2	BOLT (3/8-16X0.875-IN)	
		1	**5P-1075**	2	WASHER-HARD (10.2X22.5X3-MM THK)	
	2	1	**9P-9390**	1	BRACKET	
	3	1	**9P-9388**	1	KNOB (MIRROR ADJUSTMENT)	
	4	1	**5P-6874**	1	MIRROR (REAR VIEW)	
	5	1	**5K-9179**	1	BOLT-ROUND HEAD (3/8-16X11-IN)	

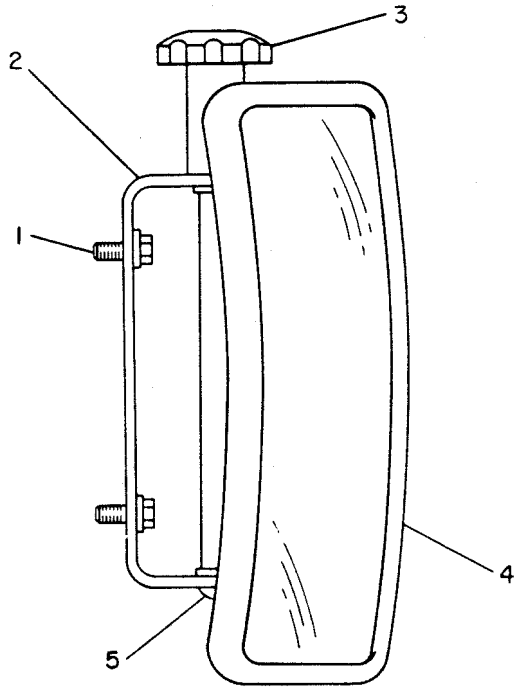

GRAPHIC #1 **<END>** g00143265

105-9659 MIRROR GP-REAR VIEW

S/N: EMM1-UP; JEN1-UP
PART OF 393-0289, 393-0290 CAB AR
AN ATTACHMENT

SMCS-7319 **i05331109**

NOTE	REF NO	GRAPHIC REF	PART NUMBER	QTY	PART NAME 1 2 3 4 5 6 (PRODUCT LEVEL)	SEE PAGE
	1	1	**9P-9388**	1	KNOB (MIRROR ADJUSTMENT)	
	2	1	**5P-6874**	1	MIRROR (REAR VIEW)	
	3	1	**5K-9179**	1	BOLT-ROUND HEAD (3/8-16X11-IN)	
	4	1	**6Y-5113**	1	BRACKET	
	5	1	**8T-4121**	2	WASHER-HARD (11X21X2.5-MM THK)	
M	6	1	**8T-4195**	2	BOLT (M10X1.5X30-MM)	

M - METRIC PART

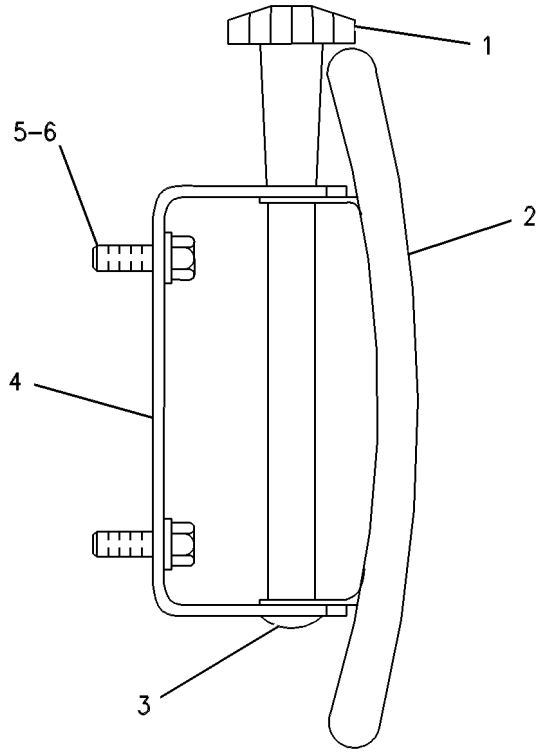

GRAPHIC #1 **<END>** g00254288

322-1494 MOTOR GP-WINDOW WIPER

S/N: EMM1-UP; JEN1-UP
24-VOLT
PART OF 398-8457 WIPER GP-WINDOW
AN ATTACHMENT

SMCS-7305 **i05331116**

NOTE	REF NO	GRAPHIC REF	PART NUMBER	QTY	PART NAME 1 2 3 4 5 6 (PRODUCT LEVEL)	SEE PAGE
	1	1	**102-8805**	1	KIT-RECEPTACLE (6-PIN)	
					(INCLUDES RECEPTACLE AS & WEDGE)	
	2	1	**263-3823**	1	CAP-WIPER	
	3	1	**3F-9556**	1	LOCKWASHER	
M	4	1	**5C-7261**	1	NUT (M8X1.25-THD)	
	5	1	**8T-8729**	5	PIN-CONNECTOR (16-GA TO 18-GA)	
	6	1	**8T-8737**	1	PLUG-SEAL	

M - METRIC PART

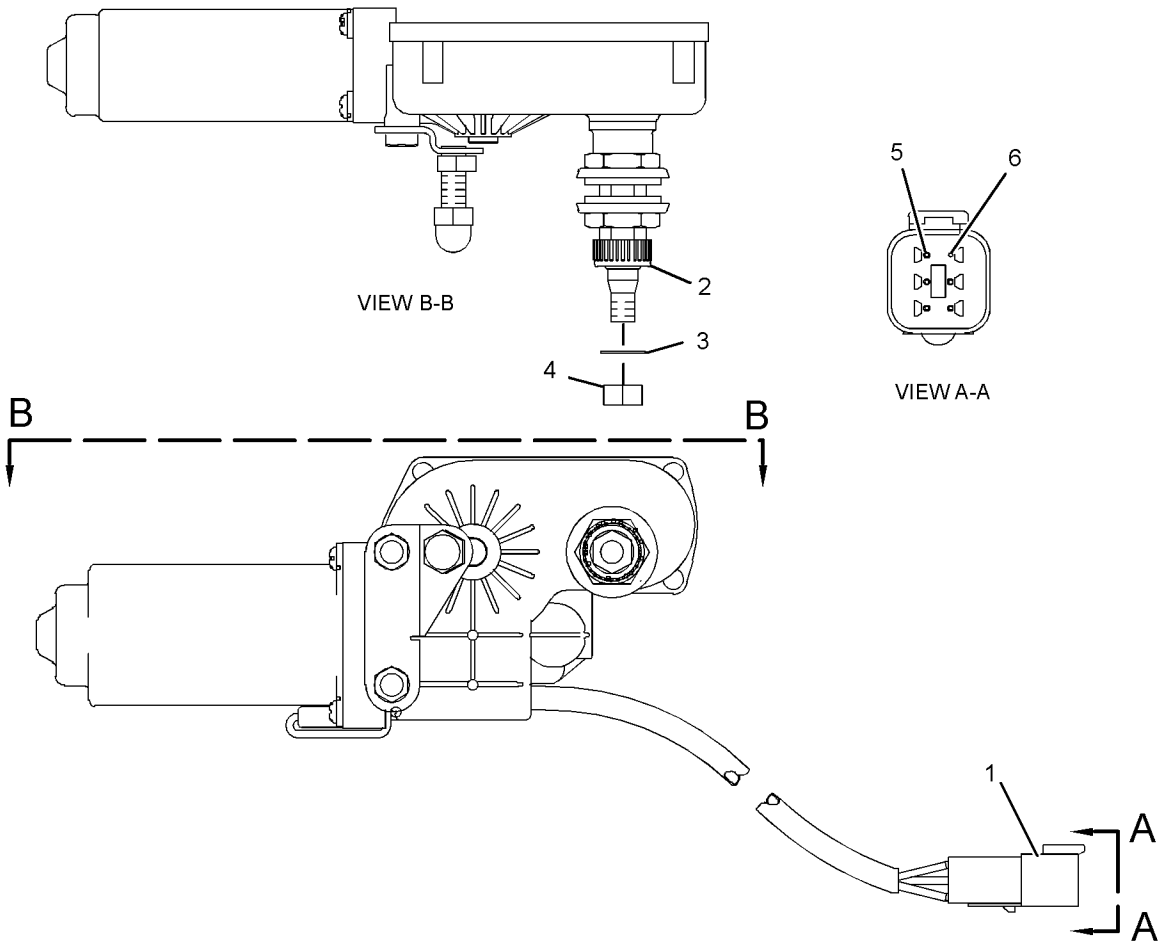

GRAPHIC #1 **<END>** g01887653

330-5013 MOTOR GP-WINDOW WIPER

S/N: EMM1-UP; JEN1-UP
24-VOLT
PART OF 398-8457 WIPER GP-WINDOW
AN ATTACHMENT

SMCS-7305 **i05331117**

NOTE	REF NO	GRAPHIC REF	PART NUMBER	QTY	PART NAME 1 2 3 4 5 6 (PRODUCT LEVEL)	SEE PAGE
	1	1	**102-8805**	1	KIT-RECEPTACLE (6-PIN)	
					(INCLUDES RECEPTACLE AS & WEDGE)	
	2	1	**8T-8729**	5	PIN-CONNECTOR (16-GA TO 18-GA)	
	3	1	**8T-8737**	1	PLUG-SEAL	
M	4	1	**5C-7261**	1	NUT (M8X1.25-THD)	
	5	1	**3F-9556**	1	LOCKWASHER	
	6	1	**263-3823**	1	CAP-WIPER	

M - METRIC PART

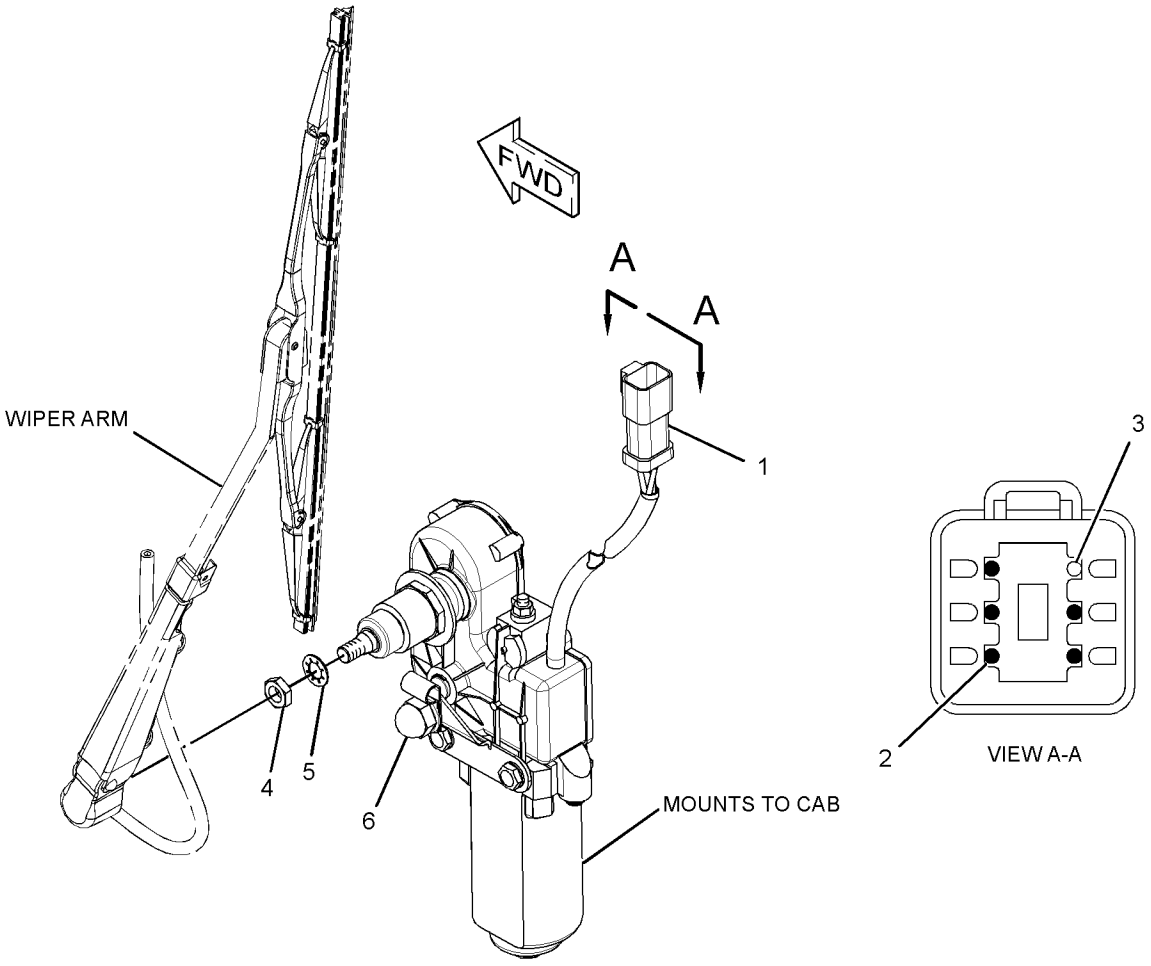

GRAPHIC #1 **<END>** g02052753

330-5014 MOTOR GP-WINDOW WIPER

S/N: EMM1-UP; JEN1-UP
24-VOLT
PART OF 398-8457 WIPER GP-WINDOW
AN ATTACHMENT

SMCS-7305 **i05331120**

NOTE	REF NO	GRAPHIC REF	PART NUMBER	QTY	PART NAME 1 2 3 4 5 6 (PRODUCT LEVEL)	SEE PAGE
	1	1	**8T-8737**	1	PLUG-SEAL	
	2	1	**102-8805**	1	KIT-RECEPTACLE (6-PIN)	
					(INCLUDES RECEPTACLE AS & WEDGE)	
	3	1	**186-3735**	5	PIN-CONNECTOR (16-GA TO 18-GA)	
	4	1	**263-3823**	1	CAP-WIPER	
	5	1	**3F-9556**	1	LOCKWASHER	
M	6	1	**5C-7261**	1	NUT (M8X1.25-THD)	

M - METRIC PART

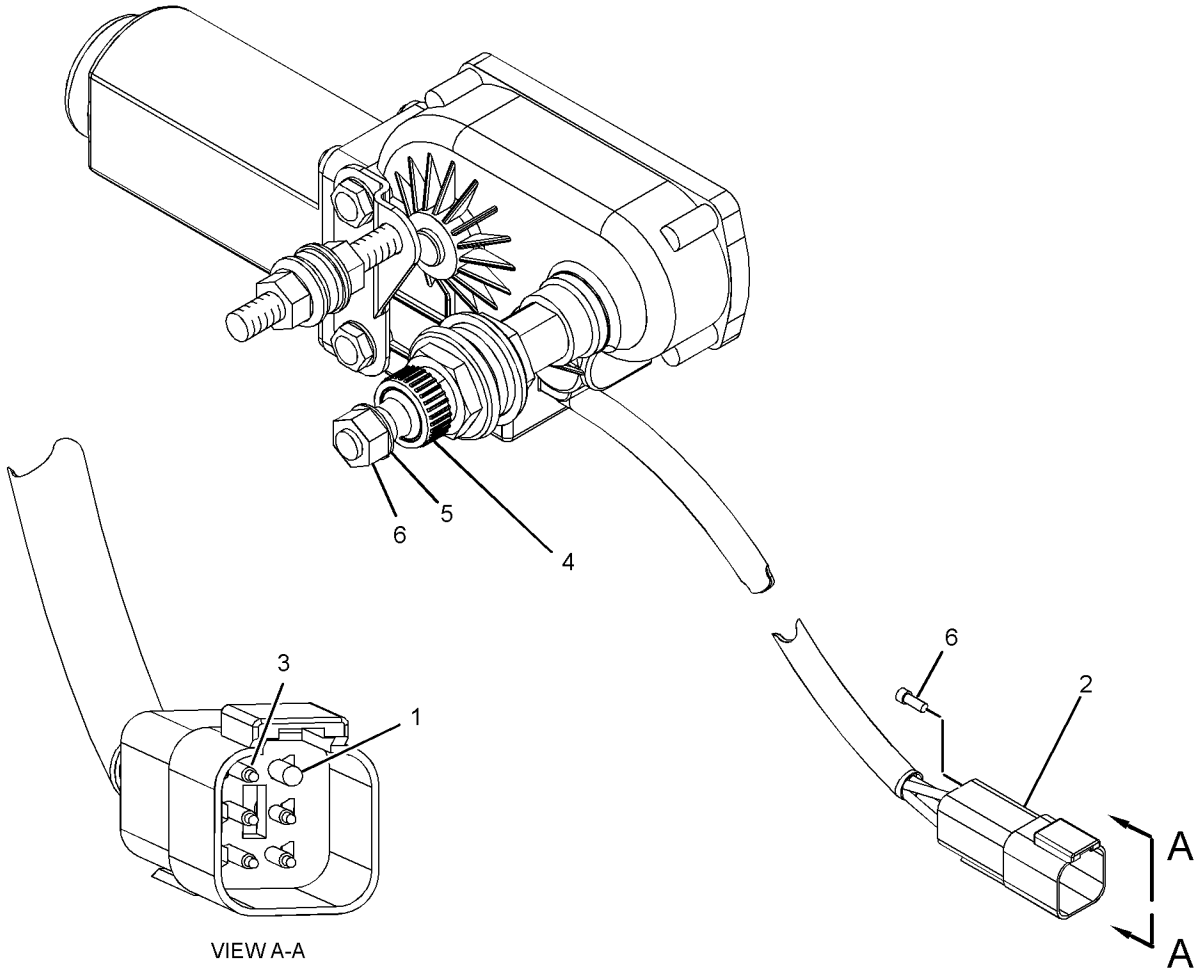

GRAPHIC #1 **<END>** g02029793

330-5017 MOTOR GP-WINDOW WIPER–REAR

S/N: EMM1-UP; JEN1-UP
24-VOLT
PART OF 398-8457 WIPER GP-WINDOW
AN ATTACHMENT

SMCS-7305 **i05331119**

NOTE	REF NO	GRAPHIC REF	PART NUMBER	QTY	PART NAME 1 2 3 4 5 6 (PRODUCT LEVEL)	SEE PAGE
	1	1	**8T-8737**	1	PLUG-SEAL	
	2	1	**102-8805**	1	KIT-RECEPTACLE (6-PIN)	
					(INCLUDES RECEPTACLE AS AND WEDGE)	
	3	1	**8T-8729**	5	PIN-CONNECTOR (16-GA TO 18-GA)	
	4	1	**263-3823**	1	CAP-WIPER	
	5	1	**3F-9556**	1	LOCKWASHER	
M	6	1	**5C-7261**	1	NUT (M8X1.25-THD)	

M - METRIC PART

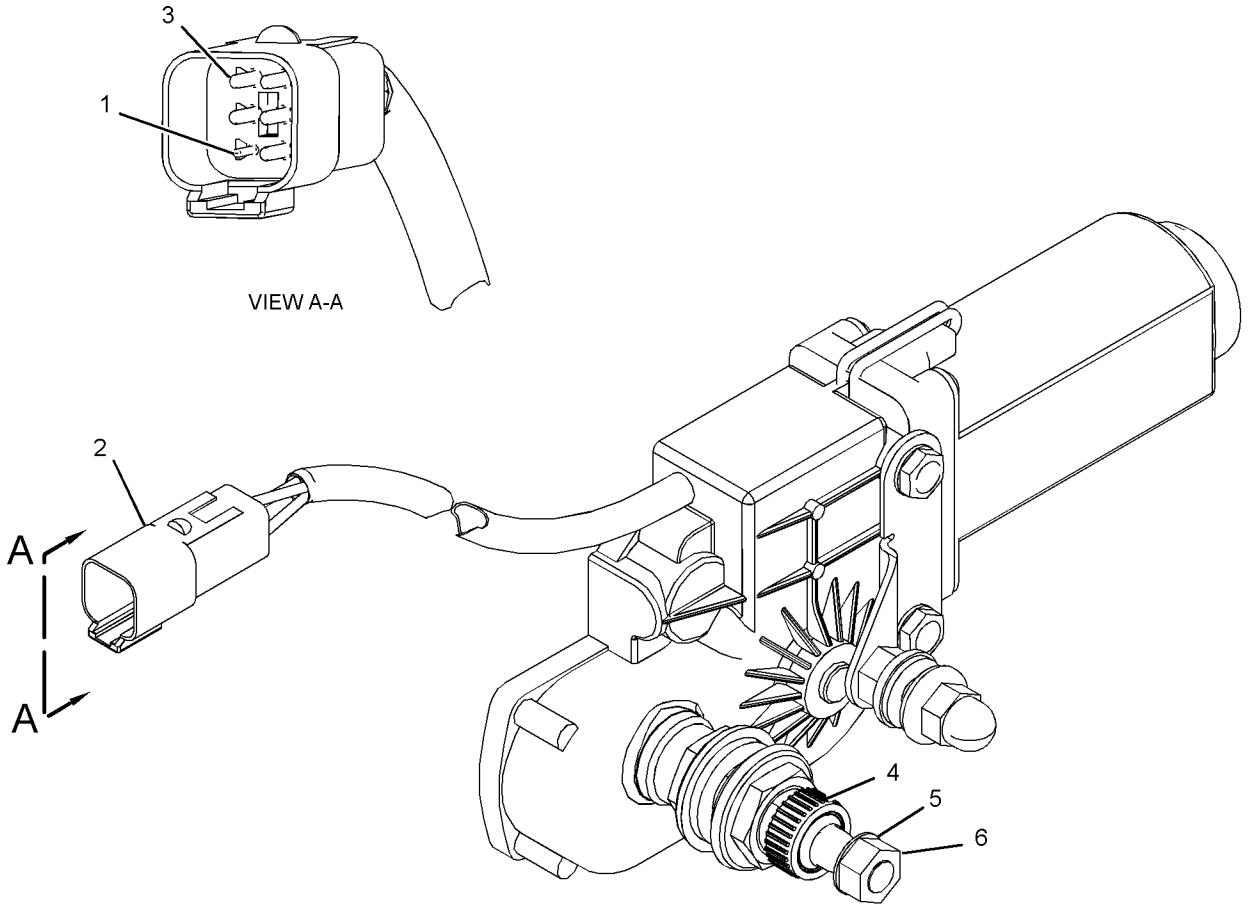

GRAPHIC #1 **<END>** g02153801

317-8767 MOUNTING GP-BRACKET

S/N: EMM1-UP; JEN1-UP
PART OF 389-3228, 422-2874 CANOPY AR
AN ATTACHMENT

SMCS-7604 **i05573427**

NOTE	REF NO	GRAPHIC REF	PART NUMBER	QTY	PART NAME 1 2 3 4 5 6 (PRODUCT LEVEL)	SEE PAGE
	1	1	**8T-4121**	2	WASHER-HARD (11X21X2.5-MM THK)	
M	2	1	**8T-4185**	2	BOLT (M10X1.5X50-MM)	
	3	1	**9R-2216**	2	BOSS	

M - METRIC PART

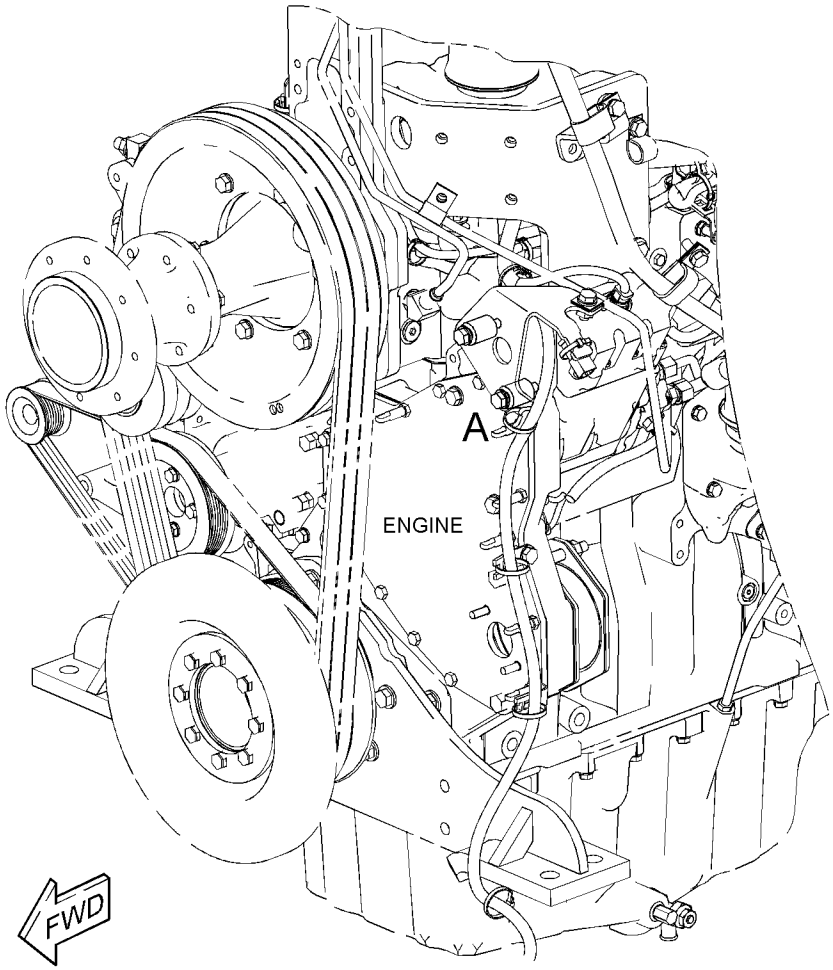

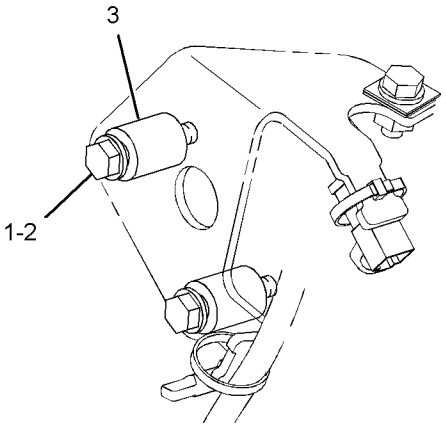

VIEW OF AREA A

GRAPHIC #1 **<END>** g01426620

OPERATOR STATION

169-9637 MOUNTING GP-CAB

S/N: EMM1-UP; JEN1-UP
PART OF 393-0289, 393-0290 CAB AR
AN ATTACHMENT

SMCS-7266, 7301 **i05596613**

NOTE	REF NO	GRAPHIC REF	PART NUMBER	QTY	PART NAME 1 2 3 4 5 6 (PRODUCT LEVEL)	SEE PAGE
	1	1	**9G-0986**	1	SEAL	
	2	1	**9G-0983**	2	SEAL	
D	3	1	**5P-7514**		SEAL (2.1-M)	
	4	1	**9G-0990**	1	SEAL	
	5	1	**113-6033**	1	ANGLE	
M	6	1	**189-5358**	2	BOLT (M10X1.5X60-MM)	
	7	1	**7X-3392**	31	WASHER-HARD (13.5X22.5X3-MM THK)	
	8	1	**171-2438**	7	BOLT-12 POINT HEAD (M12X1.75X30-MM)	
M	9	1	**8T-4136**	8	BOLT (M10X1.5X25-MM)	
	10	1	**7X-7729**	8	WASHER (11X25X3-MM THK)	
D	11	1	**5P-7513**		SEAL (4.2-M)	
	12	1	**277-8990**	2	WASHER-HARD (11X25X3-MM THK)	
M	13	1	**189-6123**	12	BOLT-12 POINT HEAD (M12X1.75X60-MM)	

D - ORDER BY THE METER
M - METRIC PART

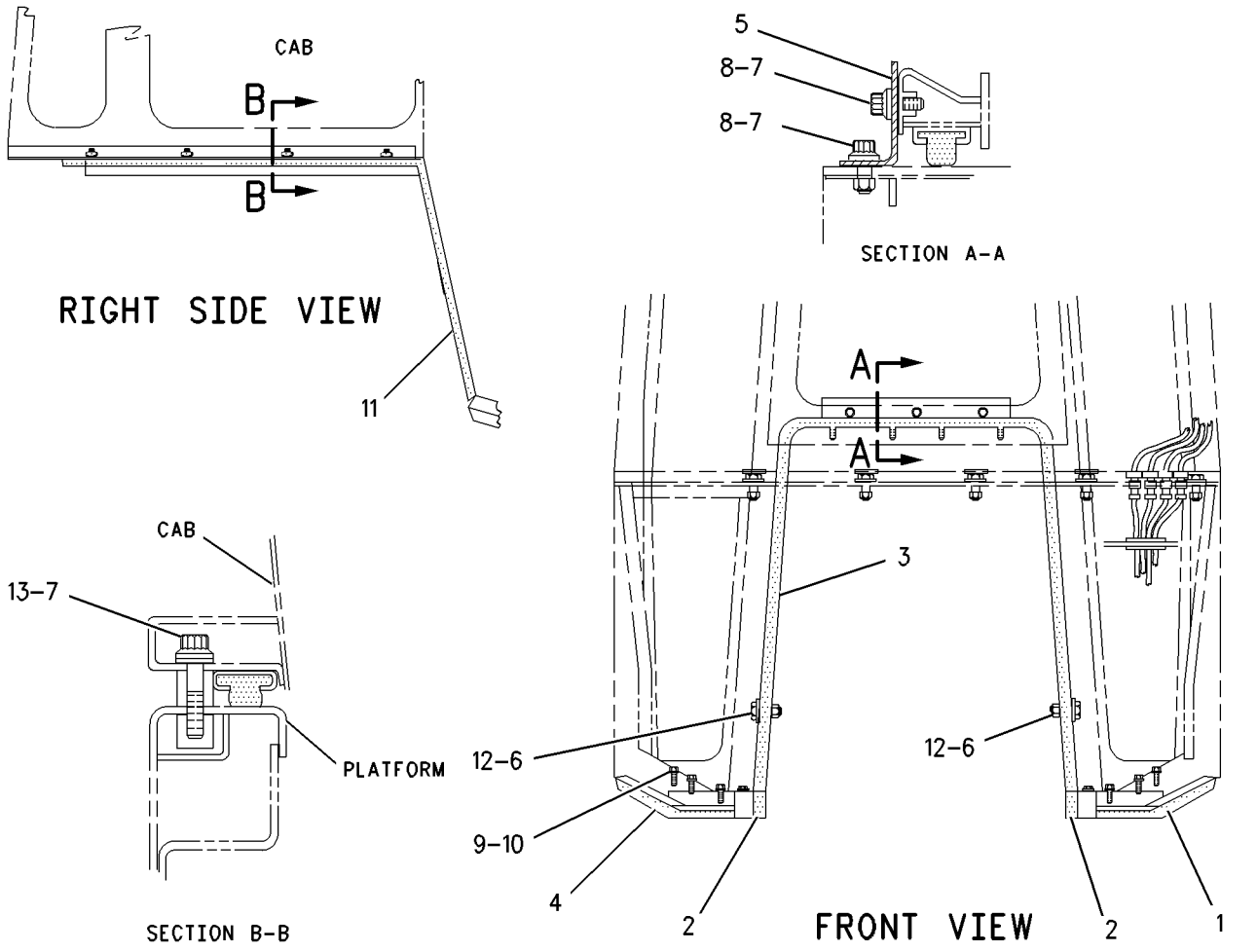

GRAPHIC #1 **<END>** g00722402

296-0612 MOUNTING GP-MONITOR—GRADE CONTROL

S/N: EMM1-UP; JEN1-UP
PART OF 317-6566 MOUNTING GP-MONITOR
AN ATTACHMENT

SMCS-7490 **i05632029**

NOTE	REF NO	GRAPHIC REF	PART NUMBER	QTY	PART NAME 1 2 3 4 5 6 (PRODUCT LEVEL)	SEE PAGE
	1	1	**167-8712**	1	ALARM	
	2	1	**222-9151**	2	WASHER-HARD (11X32X5-MM THK)	
	3	1	**245-8334**	2	KNOB (MOUNTING BRACKET)	
	4	1	**296-0614**	1	BRACKET AS	
	5	1	**296-2861**	1	BRACKET AS	
	6	1	**299-5417**	1	SWIVEL AS	
	7	1	**299-5418**	1	PIVOT AS-LOWER	
	8	1	**300-6142**	1	BRACKET	
M	9	1	**5C-2890**	1	NUT (M6X1-THD)	
M	10	1	**7X-7888**	1	BOLT (M6X1X90-MM)	
M	11	1	**8T-0389**	1	LOCKNUT (M10X1.5-THD)	
	12	1	**8T-4121**	2	WASHER-HARD (11X21X2.5-MM THK)	
M	13	1	**8T-4195**	1	BOLT (M10X1.5X30-MM)	
	14	1	**9X-8256**	2	WASHER (6.6X12X2-MM THK)	

M - METRIC PART

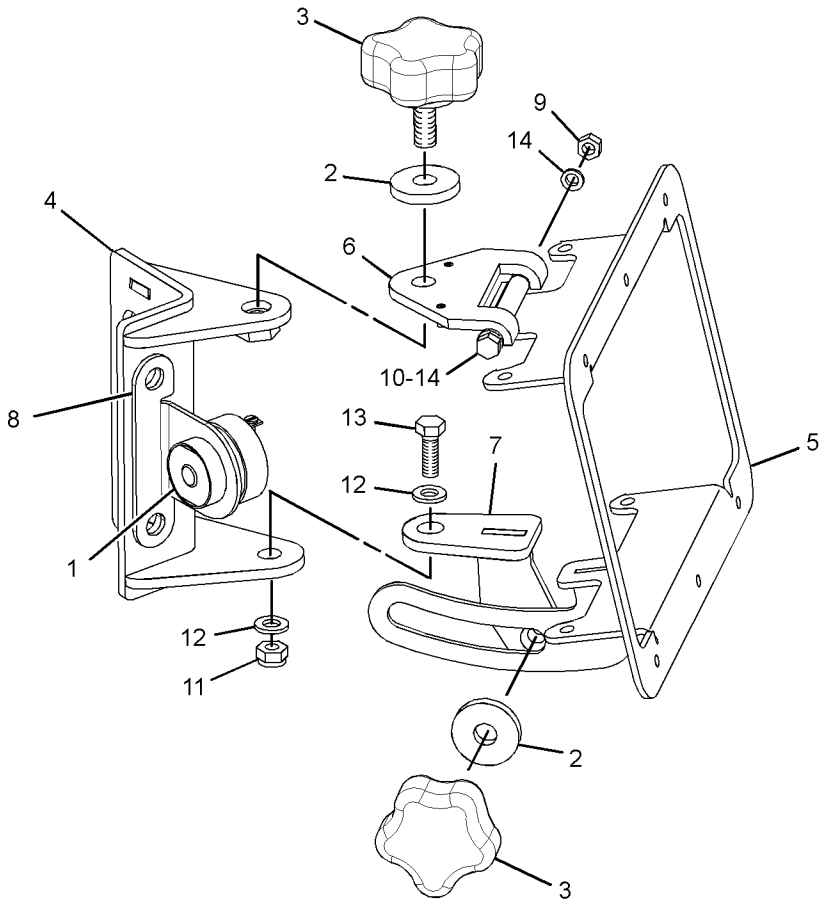

GRAPHIC #1 **<END>** g02225998

OPERATOR STATION

317-6566 MOUNTING GP-MONITOR—GRADE CONTROL

S/N: EMM1-UP; JEN1-UP
PART OF 389-6127 GRADE CONTROL AR
AN ATTACHMENT

SMCS-7490 **i05632019**

NOTE	PART NUMBER	QTY	PART NAME 1 2 3 4 5 6 (PRODUCT LEVEL)	SEE PAGE
Y	*296-0612*	1	MOUNTING GP-MONITOR (GRADE CONTROL)	639
	320-5905	1	HARNESS AS-MONITOR (ADVISOR)	
	8T-8737	115	PLUG-SEAL	
	9X-6772	2	STRAP-CABLE	
E	**125-7874**		TUBE-HEAT SHRINK (5.72-MM DIA) (5-CM)	
E	**125-7875**		TUBE-HEAT SHRINK (7.44-MM DIA) (5-CM)	
	9X-3402	18	SOCKET-CONNECTOR (16-GA TO 18-GA)	
	126-1768	7	SOCKET-CONNECTOR (14-GA TO 16-GA)	
	126-1774	1	COVER-CONNECTOR	
	5P-2766	2	TERMINAL-RING (18-GA TO 22-GA, NO. 6 SCREW)	
	147-1444	1	PLUG AS-CONNECTOR (70-PIN)	
	159-9322	1	SEAL-O-RING	
	160-7689	1	PLUG AS-CONNECTOR (70-PIN)	
	159-9322	1	SEAL-O-RING	
	320-5906	1	HARNESS AS-MONITOR (GPS)	
	8T-8737	57	PLUG-SEAL	
	9X-6772	2	STRAP-CABLE	
E	**119-3662**		TUBE-HEAT SHRINK (10.85-MM DIA) (7-CM)	
E	**125-7875**		TUBE-HEAT SHRINK (7.44-MM DIA) (5-CM)	
	9X-3402	11	SOCKET-CONNECTOR (16-GA TO 18-GA)	
	126-1768	2	SOCKET-CONNECTOR (14-GA TO 16-GA)	
	126-1774	1	COVER-CONNECTOR	
	160-7689	1	PLUG AS-CONNECTOR (70-PIN)	
	159-9322	1	SEAL-O-RING	
	248-5358	1	PLUG AS-CONNECTOR (39-PIN)	
	7K-1181	1	STRAP-CABLE	

E - ORDER BY THE CENTIMETER
Y - SEPARATE ILLUSTRATION

<END>

374-4178 MOUNTING GP-PLATFORM

S/N: EMM1-UP; JEN1-UP
PART OF 389-3229, 389-3230, 389-3231 CAB AR, 389-3228, 422-2874 CANOPY AR
AN ATTACHMENT

SMCS-7253 **i05573489**

NOTE	REF NO	GRAPHIC REF	PART NUMBER	QTY	PART NAME 1 2 3 4 5 6 (PRODUCT LEVEL)	SEE PAGE
	1	1	**117-8131**	8	MOUNT AS	
	2	1	**117-9966**	1	PLUG	
	3	1	**185-3666**	4	SLEEVE	
	4	1	**237-4270**	1	PLATE AS	
	5	1	**241-4348**	1	GASKET	
	6	1	**6T-8714**	4	WASHER-HARD (28X125X12-MM THK)	
	7	1	**7X-7729**	3	WASHER (11X25X3-MM THK)	
M	8	1	**8T-4136**	3	BOLT (M10X1.5X25-MM)	
	9	1	**8T-4167**	4	WASHER-HARD (26X44X4-MM THK)	
M	10	1	**8T-4649**	4	BOLT (M24X3X140-MM)	

M - METRIC PART

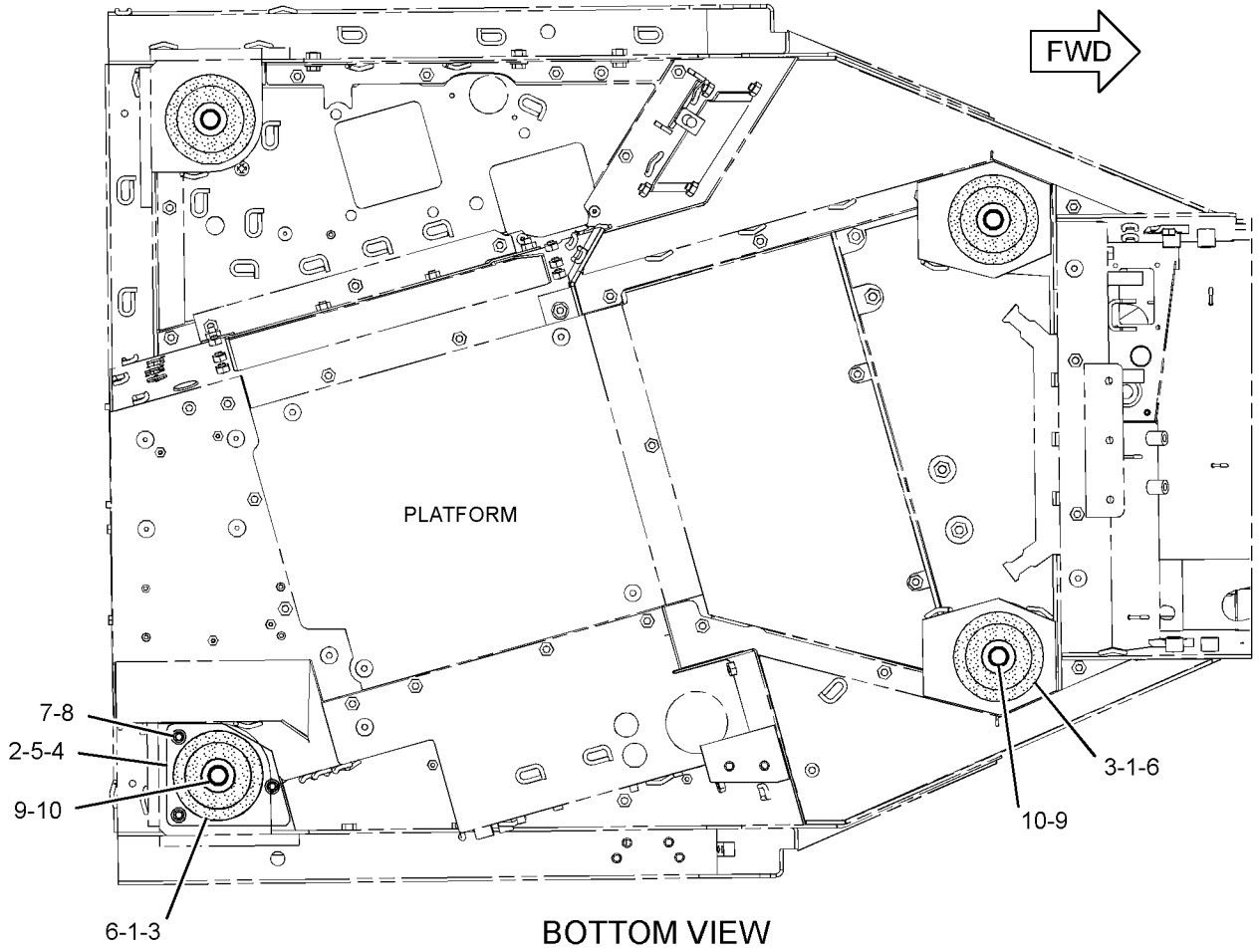

BOTTOM VIEW

GRAPHIC #1 **<END>** g02847060

208-8699 MOUNTING GP-ROPS

S/N: EMM1-UP; JEN1-UP

PART OF 389-3221, 389-3222 CHASSIS AR

SMCS-7266 **i05640451**

NOTE	REF NO	GRAPHIC REF	PART NUMBER	QTY	PART NAME 1 2 3 4 5 6 (PRODUCT LEVEL)	SEE PAGE
	1	1	**350-0014**	1	SUPPORT AS-ROPS (LH)	
	2	1	**350-0015**	1	SUPPORT AS-ROPS (RH)	
M	3	1	**7X-2581**	12	BOLT (M30X3.5X100-MM)	
	4	1	**9X-8258**	12	WASHER (33X56X6-MM THK)	

M - METRIC PART

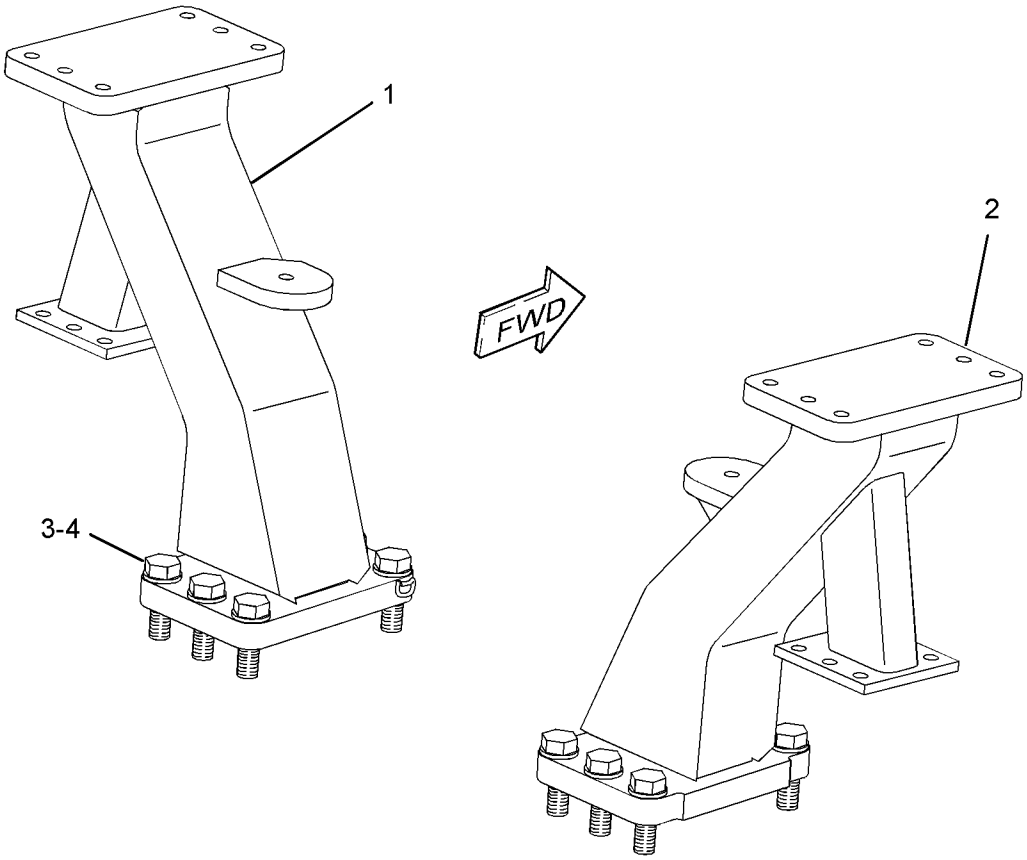

GRAPHIC #1 **<END>** g01205588

292-6402 PAN GP-BACKREST

S/N: EMM1-UP; JEN1-UP
PART OF 292-9237, 292-9238 PAN GP-BACKREST
AN ATTACHMENT

SMCS-7312 **i05333518**

NOTE	REF NO	GRAPHIC REF	PART NUMBER	QTY	PART NAME 1 2 3 4 5 6 (PRODUCT LEVEL)	SEE PAGE
	1	1	**5P-7957**	1	LANYARD	
	2	1	**136-1543**	1	PLATE AS-LUMBAR	
	3	1	**173-2052**	1	RETAINER	
	4	1	**178-7907**	1	HOLDER	
	5	1	**261-5694**	1	PAN AS-BACKREST	
	6	1	**322-3161**	1	SPRING	
	7	1	**4K-9429**	8	RIVET-POP	

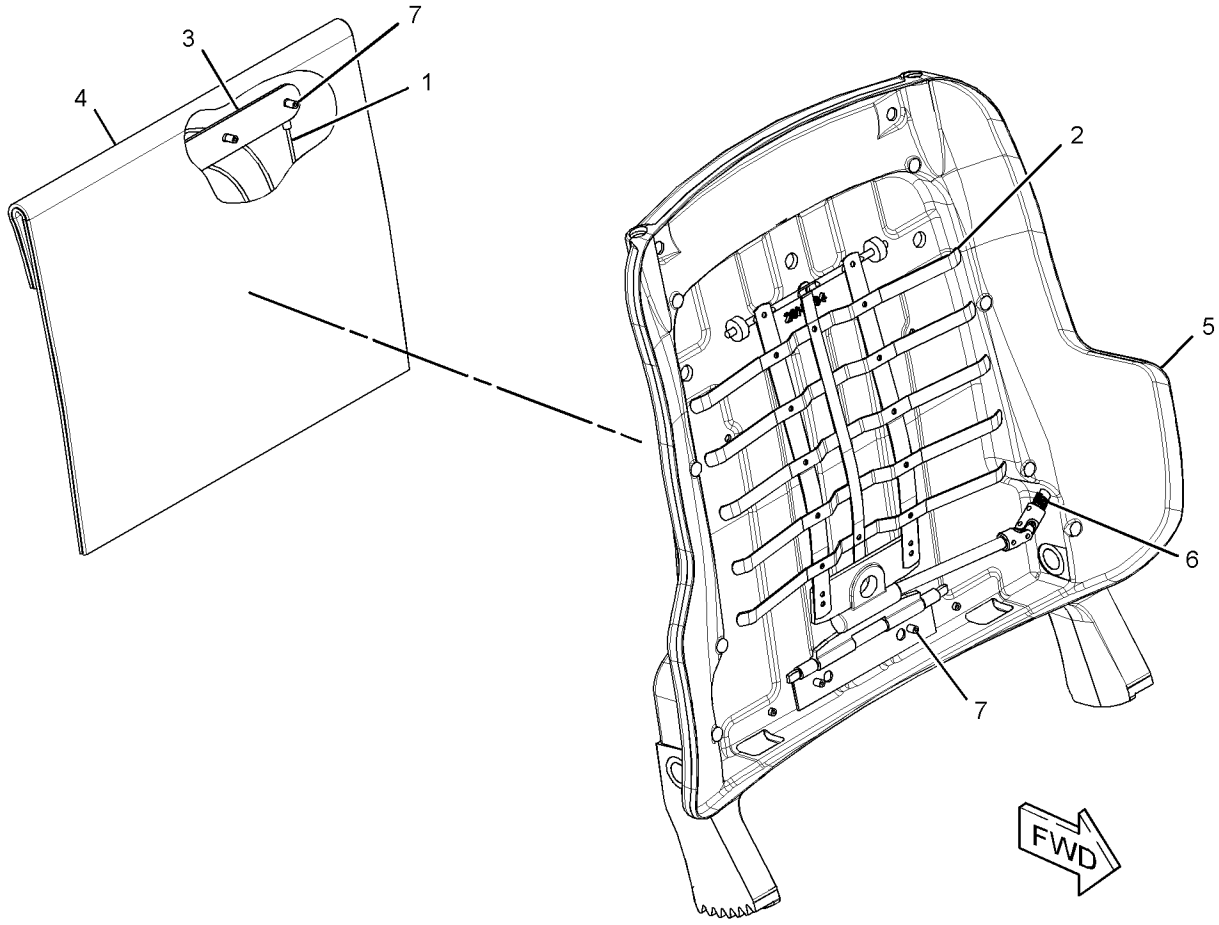

GRAPHIC #1 **<END>** g01577333

292-9237 PAN GP-BACKREST

S/N: EMM1-UP; JEN1-UP
PART OF 178-0603 SEAT GP
AN ATTACHMENT

SMCS-7312 **i05332841**

NOTE	REF NO	GRAPHIC REF	PART NUMBER	QTY	PART NAME 1 2 3 4 5 6 (PRODUCT LEVEL)	SEE PAGE
	1	1	**164-4883**	1	KNOB-LUMBAR	
	2	1	**250-4628**	3	PLUG	
	3	1	**292-6097**	1	CUSHION AS-BACK	
Y	4	1	**292-6402**	1	PAN GP-BACKREST (LUMBAR)	643
	5	1	**5P-0537**	2	WASHER-HARD (7.2X14.5X2-MM THK)	
	6	1	**6V-8969**	2	SCREW-BUTTON HEAD (1/4-20X0.5-IN)	
	7	1	**8T-7566**	1	PIN-SPRING	

Y - SEPARATE ILLUSTRATION

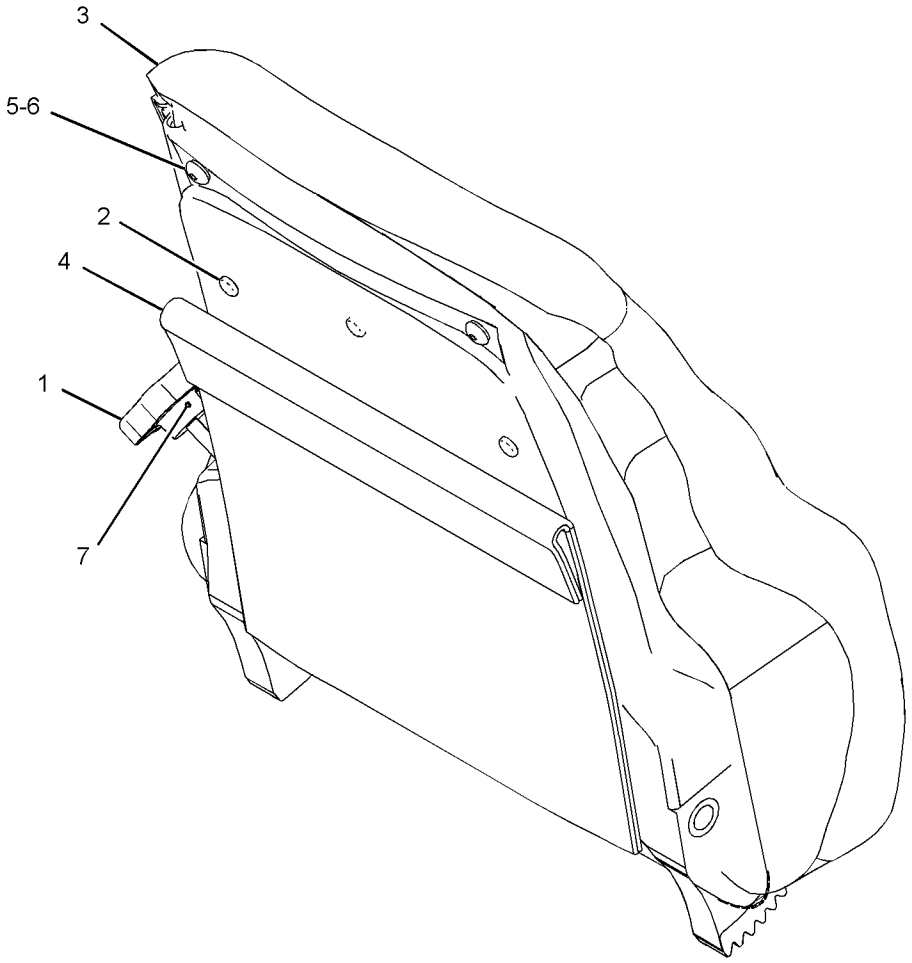

GRAPHIC #1 **<END>** g01336870

292-9238 PAN GP-BACKREST

S/N: EMM1-UP; JEN1-UP
PART OF 180-7304 SEAT GP
AN ATTACHMENT

SMCS-7312 **i05333544**

NOTE	REF NO	GRAPHIC REF	PART NUMBER	QTY	PART NAME 1 2 3 4 5 6 (PRODUCT LEVEL)	SEE PAGE
	1	1	**164-4883**	1	KNOB-LUMBAR	
	2	1	**250-4628**	3	PLUG	
	3	1	**292-6098**	1	CUSHION AS (VINYL)	
Y	4	1	*292-6402*	1	PAN GP-BACKREST (LUMBAR)	643
	5	1	**5P-0537**	2	WASHER-HARD (7.2X14.5X2-MM THK)	
	6	1	**6V-8969**	2	SCREW-BUTTON HEAD (1/4-20X0.5-IN)	
	7	1	**8T-7566**	1	PIN-SPRING	

Y - SEPARATE ILLUSTRATION

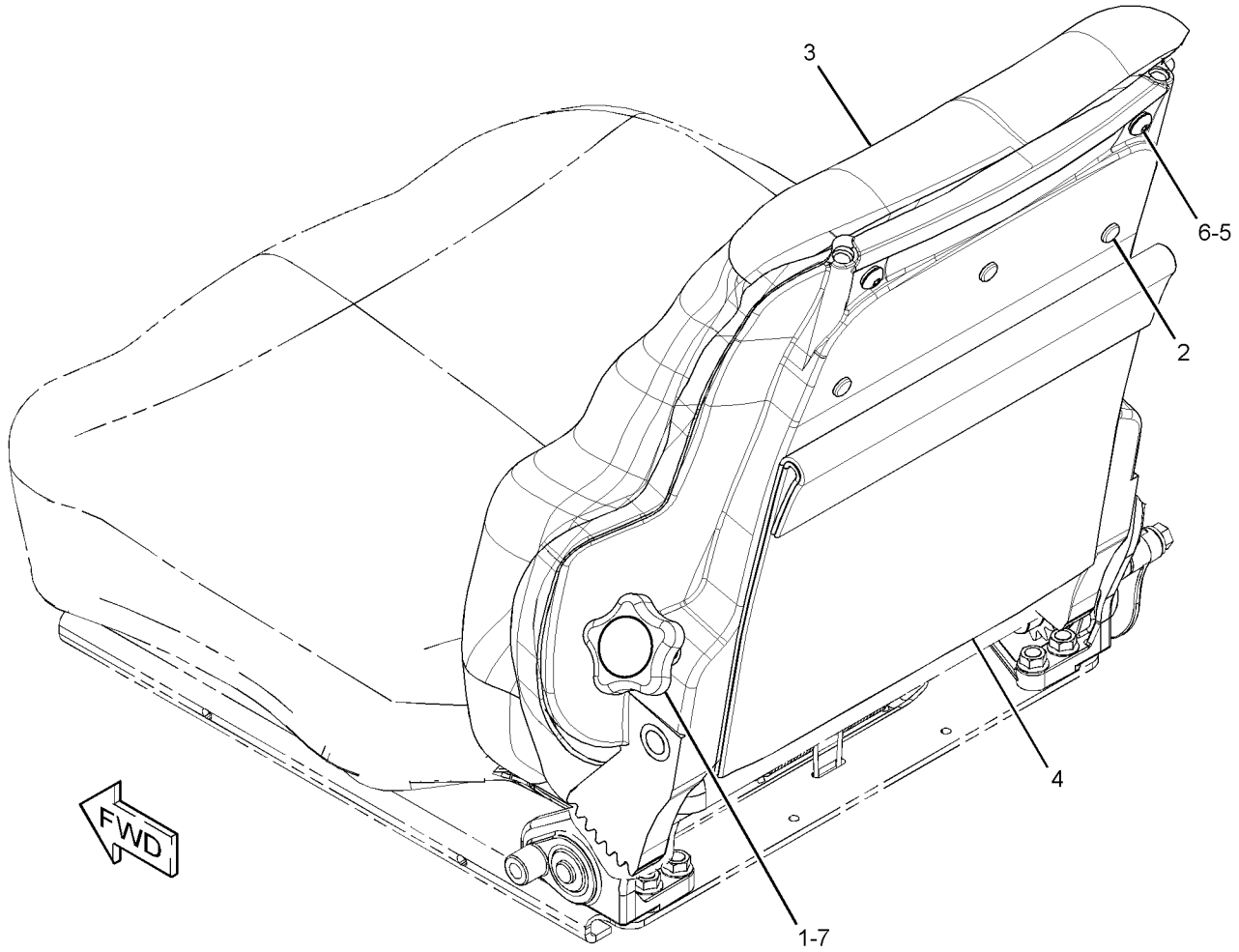

GRAPHIC #1 **<END>** g01341782

OPERATOR STATION

323-9636 PANEL GP-INSTRUMENT—OPEN ROPS

S/N: EMM1-UP; JEN1-UP
PART OF 387-0575, 393-0288 PLATFORM AR
AN ATTACHMENT

SMCS-7450, 7451 **i05575089**

NOTE	REF NO	GRAPHIC REF	PART NUMBER	QTY	PART NAME 1 2 3 4 5 6 (PRODUCT LEVEL)	SEE PAGE
	1	1	**3E-5239**	2	RELAY AS (24-VOLT)	
	2	1	**3S-2093**	9	STRAP-CABLE	
	3	1	**083-9527**	1	SPACER (13X20X1.5-MM THK)	
	4	1	**110-6109**	1	KNOB-CONTROL (LAMP)	
	5	1	**110-7887**	1	SWITCH AS-START (KEY)	
		1	**7T-6799**	1	NUT-MOUNTING (1-32-THD)	
		1	**102-8804**	1	KIT-RECEPTACLE (4-PIN)	
					(INCLUDES RECEPTACLE AS & WEDGE)	
		1	**8T-8729**	4	PIN-CONNECTOR (16-GA TO 18-GA)	
	6	1	**122-7127**	18	NUT-SPECIAL (NYLON)	
	7	1	**123-9294**	2	LAMP (24-VOLT)	
	8	1	**159-9257**	1	PANEL-DASH (LIGHT)	
	9	1	**164-0847**	1	CABLE	
	10	1	**175-1349**	1	PLATE	
	11	1	**175-3950**	1	SWITCH AS-ROTARY (LIGHT SWITCH)	
		1	**9W-0852**	7	PIN-CONNECTOR (14-GA TO 16-GA)	
		1	**102-8806**	1	KIT-RECEPTACLE (8-PIN)	
					(INCLUDES RECEPTACLE AS & WEDGE)	
	12	1	**178-3003**	1	COVER	
M	13	1	**187-7719**	4	SCREW-HEX FLANGE (M5X2.24X14-MM)	
	14	1	**194-1466**	1	CLIP	
	15	1	**293-9123**	1	SWITCH AS-ROCKER (24-VOLT) (FLOODLIGHTS)	
	16	1	**311-3741**	1	GUARD-VANDALISM	
	17	1	**311-3742**	1	PANEL AS	
		1	**311-3737**	2	GUIDE	
	18	1	**311-3744**	1	ROD	
	19	1	*314-3124*	1	LOCK GP	
		1	**226-0293**	1	LOCK AS	
		1	**5P-8500**	1	KEY	
		1	**300-1643**	1	CAM	
	20	1	**318-2389**	1	MODULE GP-DISPLAY (INSTRUMENT CLUSTER)	
	21	1	**320-5887**	1	HARNESS AS-DASH	
		1	**102-8803**	1	KIT-RECEPTACLE (3-PIN)	
		1	**102-8804**	1	KIT-RECEPTACLE (4-PIN)	
		1	**102-8805**	3	KIT-RECEPTACLE (6-PIN)	
					(EACH RECEPTACLE KIT INCLUDES RECEPTACLE AS & WEDGE)	
		1	**3T-3157**	2	TERMINAL-BLADE (16-GA TO 20-GA)	
		1	**3T-3158**	2	SOCKET-LAMP	
		1	**3T-3159**	4	SPRING	
		1	**3T-3278**	2	BOOT	
		1	**6D-4161**	2	CONTACT	
		1	**7X-6222**	1	PLUG AS-CONNECTOR (24-PIN)	
		1	**3E-4367**	1	RING-RETAINING	
M		1	**3E-8558**	1	BOLT (M5X0.8X39.37-MM)	
		1	**9X-3265**	2	SEAL-CONNECTOR (24-PIN)	
		1	**8T-8737**	85	PLUG-SEAL	
		1	**9X-1054**	2	PLUG AS-CONNECTOR (4-PIN)	
		1	**9X-1056**	2	TERMINAL-RECEPTACLE (14-GA TO 16-GA)	
		1	**100-5041**	6	TERMINAL-RECEPTACLE (18-GA TO 20-GA)	
E		1	**114-8843**	1	SLEEVE-PLASTIC (20-CM)	
		1	**125-7874**	30	TUBE-HEAT SHRINK (5.72-MM DIA)	
		1	**125-7875**	15	TUBE-HEAT SHRINK (7.44-MM DIA)	
		1	**9X-3402**	39	SOCKET-CONNECTOR (16-GA TO 18-GA)	
					—OR—	
		1	**126-1768**	39	SOCKET-CONNECTOR (14-GA TO 16-GA)	

323-9636 **PANEL GP-INSTRUMENT (*contd.*)** **i05575089**

NOTE	REF NO	GRAPHIC REF	PART NUMBER	QTY	PART NAME 1 2 3 4 5 6 (PRODUCT LEVEL)	SEE PAGE
		1	**9X-3401**	36	PIN-CONNECTOR (16-GA TO 18-GA)	
					—OR—	
		1	**126-1767**	36	PIN-CONNECTOR (14-GA TO 16-GA)	
		1	**155-2270**	1	KIT-CONNECTING PLUG (2-PIN)	
		1	**155-2271**	2	KIT-CONNECTING PLUG (4-PIN)	
		1	**155-2274**	3	KIT-CONNECTING PLUG (6-PIN)	
		1	**155-2260**	1	KIT-CONNECTING PLUG (3-PIN)	
		1	**155-2265**	1	KIT-CONNECTING PLUG (8-PIN)	
					(EACH PLUG KIT INCLUDES PLUG AS, WEDGE & INTERFACE SEAL)	
		1	**185-1861**	12	SEAL-WIRE	
		1	**202-5397**	10	PLUG	
		1	**204-1297**	9	TERMINAL AS-BLADE (18-GA TO 20-GA)	
		1	**214-4208**	1	RECEPTACLE AS-CONNECTOR (70-PIN)	
		1	**245-7434**	1	KIT-CONNECTING PLUG (10-PIN)	
					(INCLUDES WIRE AS)	
	22	1	**334-7392**	1	FILM-CERTIFICATION (OPS, READ OMM)	
	23	1	**204-6102**	18	WASHER-HARD (4.45X9.52X1-MM THK)	
M	24	1	**213-7315**	6	SCREW-TRUSS HEAD (M4X0.7X25-MM)	
	25	1	**216-7352**	2	SCREW-TRUSS HEAD (M8X1.25X30-MM)	
	27	1	**4P-8134**	2	CLIP	
	28	1	**5P-4115**	2	WASHER-HARD (7.2X19X2-MM THK)	
	29	1	**9X-8256**	5	WASHER (6.6X12X2-MM THK)	
M	30	1	**7Y-7256**	12	SCREW-TRUSS HEAD (M4X0.7X35-MM)	
M	31	1	**8T-0337**	1	SCREW-MACHINE (M4X0.7X12-MM)	
M	32	1	**8T-2659**	1	LOCKNUT (M4X0.7-THD)	
M	33	1	**8T-4138**	3	BOLT (M6X1X20-MM)	
M	34	1	**8T-4171**	2	BOLT (M6X1X12-MM)	
	35	1	**8T-4205**	2	WASHER-HARD (7.2X14.5X2-MM THK)	
M	36	1	**9X-2044**	2	SCREW-TRUSS HEAD (M6X1X16-MM)	

E - ORDER BY THE CENTIMETER
M - METRIC PART

323-9636 **PANEL GP-INSTRUMENT (*contd.*)** **i05575089**

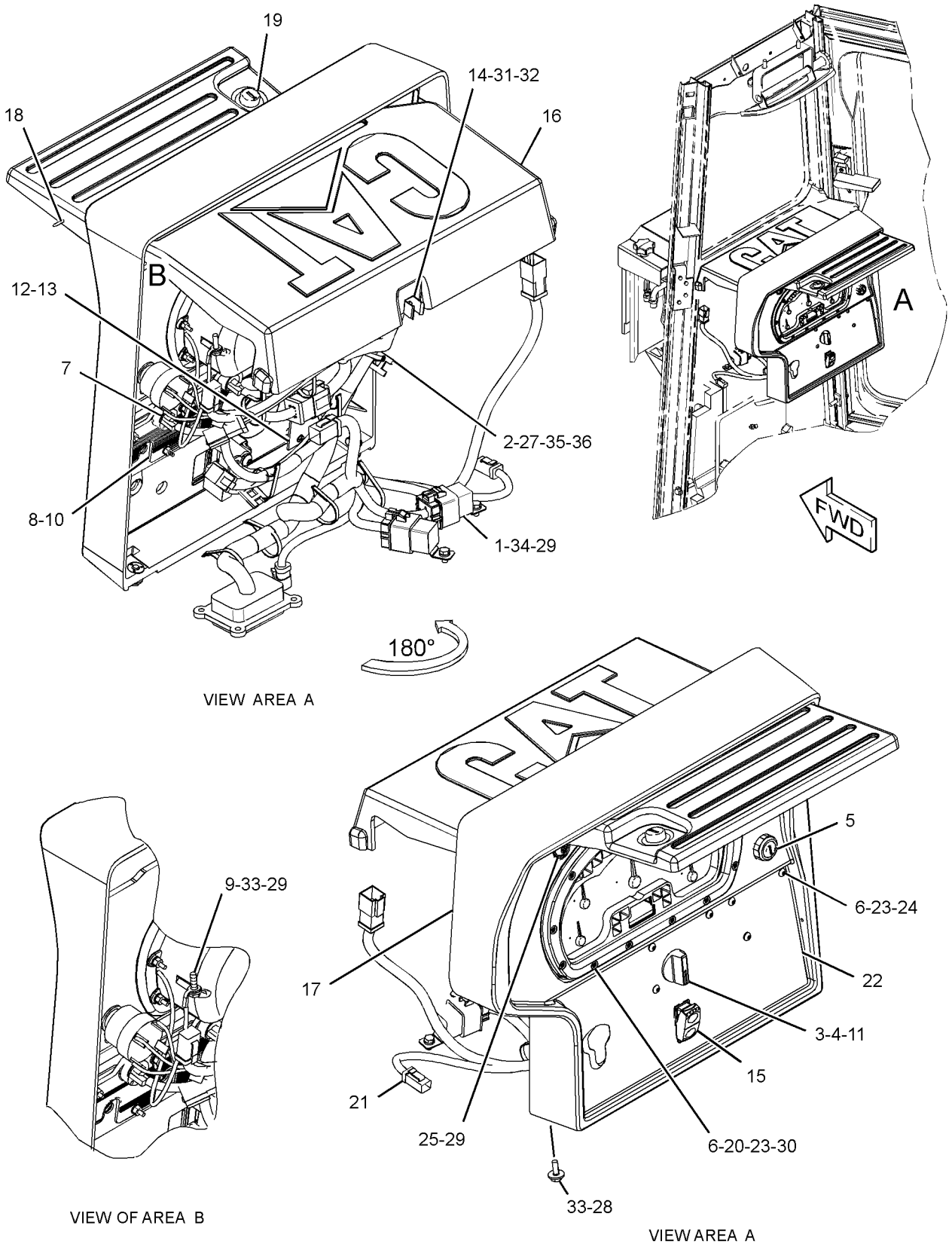

GRAPHIC #1 **<END>** g03015945

387-0575 PLATFORM AR—WOOD CHIP

S/N: EMM1-UP; JEN1-UP
PART OF 422-2874 CANOPY AR
AN ATTACHMENT

SMCS-7253 **i05633652**

NOTE	PART NUMBER	QTY	PART NAME 1 2 3 4 5 6 (PRODUCT LEVEL)	SEE PAGE
Y	*375-4845*	1	CONTROL GP-GOVERNOR & BRAKE	588
Y	*375-4844*	1	CONTROL GP-STEERING & XMSN	265
Y	*375-4848*	1	COVER GP-BATTERY	327
Y	*323-9636*	1	PANEL GP-INSTRUMENT (OPEN ROPS)	646
Y	*389-6172*	1	PLATE & FILM GP	734
Y	*387-0570*	1	PLATFORM GP-OPERATOR (OPEN ROPS)	654
Y	*317-6565*	1	WIRING GP-PLATFORM	243

Y - SEPARATE ILLUSTRATION

<END>

393-0288 PLATFORM AR

S/N: EMM1-UP; JEN1-UP
PART OF 389-3228 CANOPY AR
AN ATTACHMENT

SMCS-7253 **i05573534**

NOTE	PART NUMBER	QTY	PART NAME 1 2 3 4 5 6 (PRODUCT LEVEL)	SEE PAGE
Y	*375-4845*	1	CONTROL GP-GOVERNOR & BRAKE	588
Y	*375-4844*	1	CONTROL GP-STEERING & XMSN	265
Y	*375-4848*	1	COVER GP-BATTERY	327
Y	*323-9636*	1	PANEL GP-INSTRUMENT (OPEN ROPS)	646
Y	*389-6172*	1	PLATE & FILM GP	734
Y	*389-6094*	1	PLATFORM GP-OPERATOR (OPEN ROPS)	657
Y	*317-6565*	1	WIRING GP-PLATFORM	243

Y - SEPARATE ILLUSTRATION

<END>

OPERATOR STATION

317-4158 PLATFORM GP

S/N: EMM1-UP; JEN1-UP

PART OF 317-4155, 387-0570, 389-6094 PLATFORM GP-OPERATOR AN ATTACHMENT

SMCS-7253, 7254 **i05575889**

NOTE	REF NO	GRAPHIC REF	PART NUMBER	QTY	PART NAME 1 2 3 4 5 6 (PRODUCT LEVEL)	SEE PAGE
	1	1	**169-6902**	1	BRACKET AS	
M		1	**8T-3490**	9	NUT-WELD (M10X1.5-THD)	
	2	1	**317-4159**	1	PLATFORM AS	
	3	1	**7X-7729**	2	WASHER (11X25X3-MM THK)	
M	4	1	**8T-4137**	2	BOLT (M10X1.5X20-MM)	

M - METRIC PART

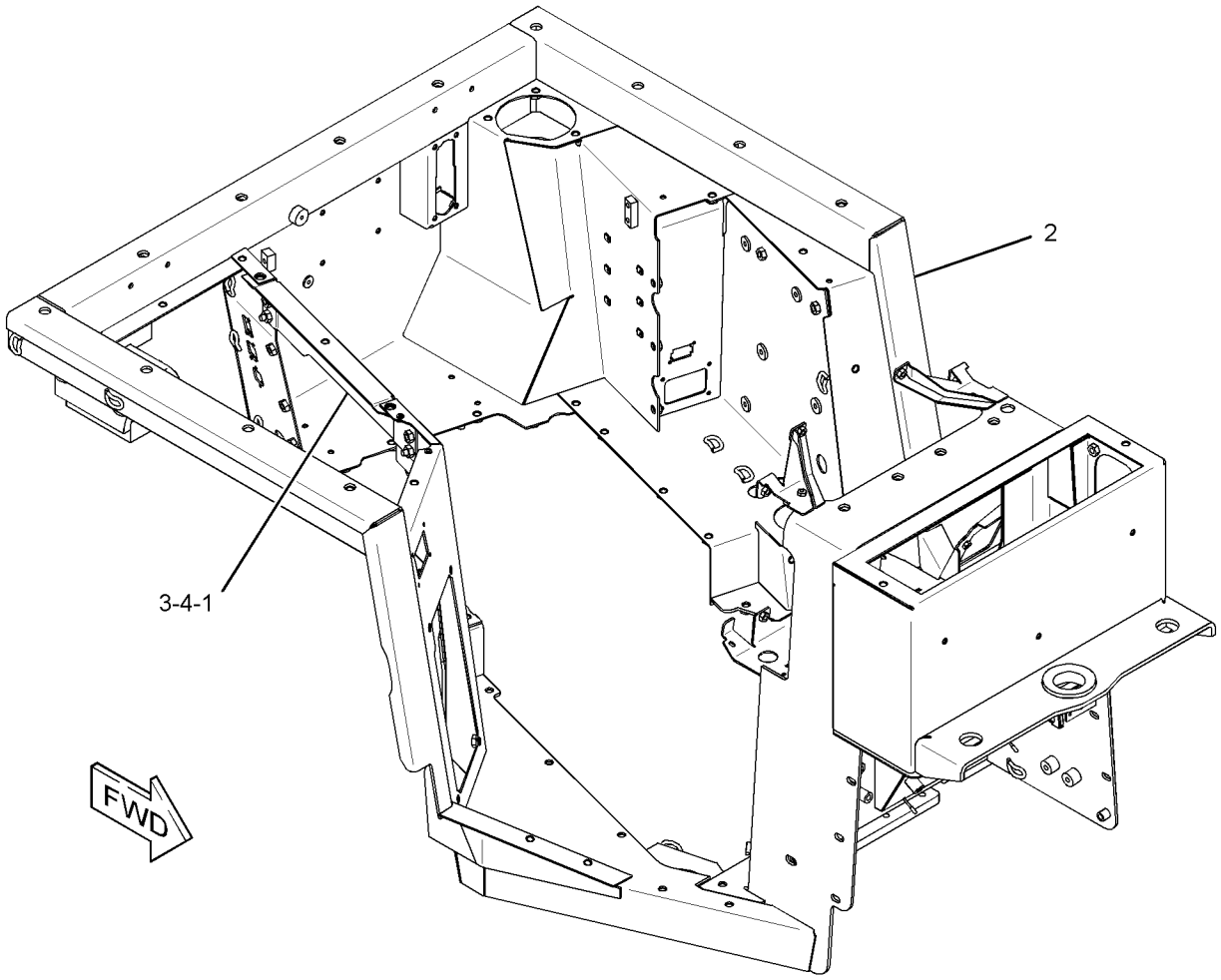

GRAPHIC #1 **<END>** g02194083

317-4155 PLATFORM GP-OPERATOR

S/N: EMM1-UP; JEN1-UP
ENCLOSED ROPS
PART OF 393-0289, 393-0290 CAB AR
AN ATTACHMENT

SMCS-7253 **i05596837**

NOTE	REF NO	GRAPHIC REF	PART NUMBER	QTY	PART NAME 1 2 3 4 5 6 (PRODUCT LEVEL)	SEE PAGE
	1	1,2	**4H-0407**	10	PLUG-PROTECTION	
	2	1	**5P-7509**	1	PLUG-BUTTON	
	3	1	**6T-4556**	1	COVER	
	4	1	**6T-4557**	1	GASKET	
	5	1	**6V-8547**	1	PLUG-BUTTON	
	9	1	**9P-6571**	1	PLUG	
	12	1	**161-3958**	1	GASKET	
	13	2	**164-0758**	1	BOLT (9/16-18X2-IN)	
	14	1	**165-6857**	1	PAD AS-RUBBER	
	15	1	**170-0251**	2	STRIP	
M	16	1	**184-0982**	8	SCREW-PAN HEAD (M6X1X16-MM)	
	19	1	**198-9707**	2	SCREW-TRUSS HEAD (M6X1X35-MM)	
	20	1	**375-4867**	1	COVER AS	
	21	1	**237-4269**	1	PLATE AS	
	28	1	**241-4349**	1	GASKET	
	29	1	**242-8405**	1	BRACKET AS	
	30	1	**242-8407**	1	GASKET	
	31	1	**243-5168**	1	GASKET	
	33	2	**248-8866**	4	CAP	
	34	1	**307-8686**	1	PLUG-BUTTON	
Y	35	1	*317-4158*	1	PLATFORM GP	650
	37	1	**341-7036**	1	PLATE	
	40	1	**7X-7729**	42	WASHER (11X25X3-MM THK)	
M	41	1	**8T-4136**	35	BOLT (M10X1.5X25-MM)	
M	42	1	**8T-4137**	3	BOLT (M10X1.5X20-MM)	
M	46	1	**8T-4196**	4	BOLT (M10X1.5X35-MM)	
M	48	1	**8T-4971**	4	BOLT (M6X1X30-MM)	
	49	1	**9X-8256**	6	WASHER (6.6X12X2-MM THK)	
D	52	2	**5P-9909**		SEAL (0.1-M)	
E	53	1	**3E-3892**		SEAL (31-CM)	
	54	1	**387-0544**	1	COVER AS	
		1	**9X-8256**	4	WASHER (6.6X12X2-MM THK)	
	55	2	**387-0542**	1	COVER AS	
		2	**2G-0391**	2	SCREW	
		2	**131-5492**	2	RETAINER-CAPTIVE	
	56	1	**387-0541**	1	PLATE AS	
	57	1	**387-0540**	1	PLATE AS	
		1	**241-4347**	1	GASKET	
M		1	**8T-3490**	1	NUT-WELD (M10X1.5-THD)	
	58	2	**308-0467**	2	PLUG-RUBBER	

D - ORDER BY THE METER
E - ORDER BY THE CENTIMETER
M - METRIC PART
Y - SEPARATE ILLUSTRATION

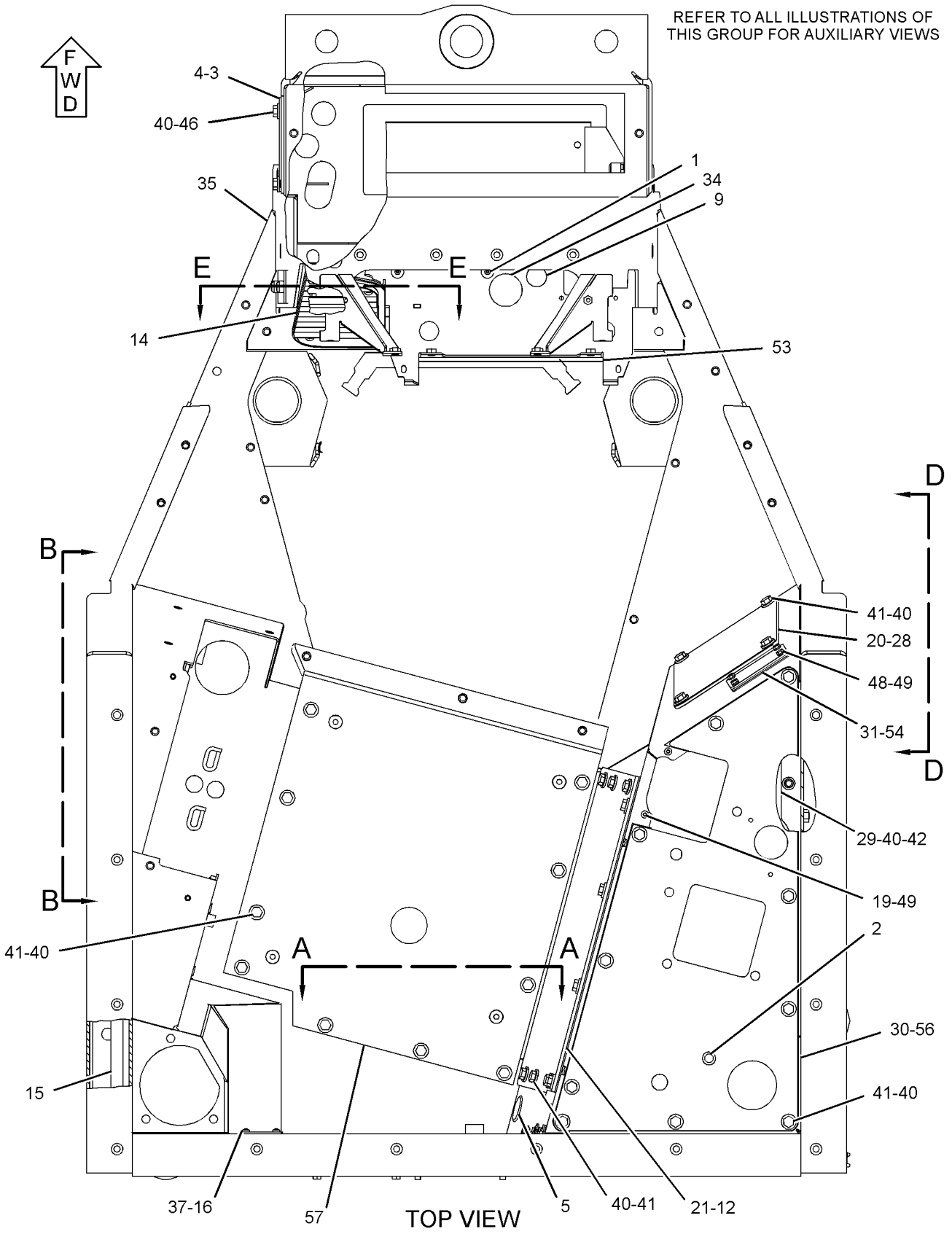

GRAPHIC #1

g03316749

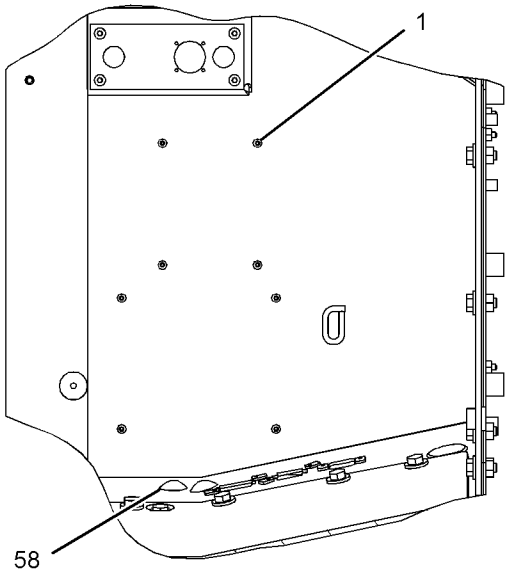

SECTION A-A

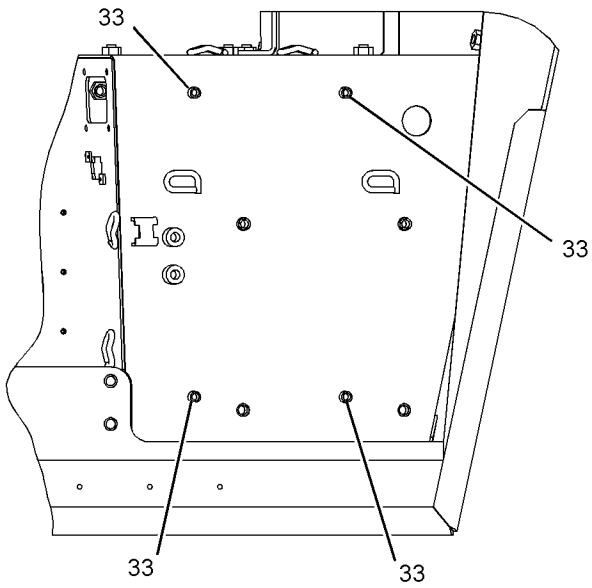

VIEW B-B

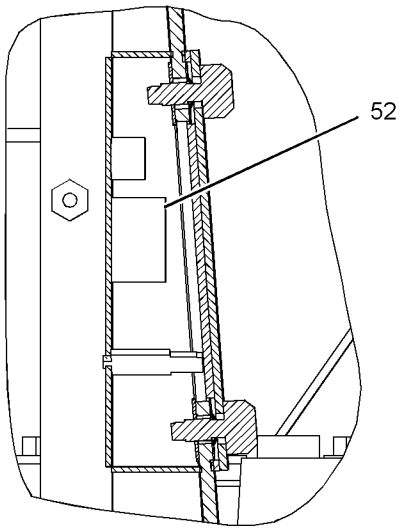

SECTION E-E

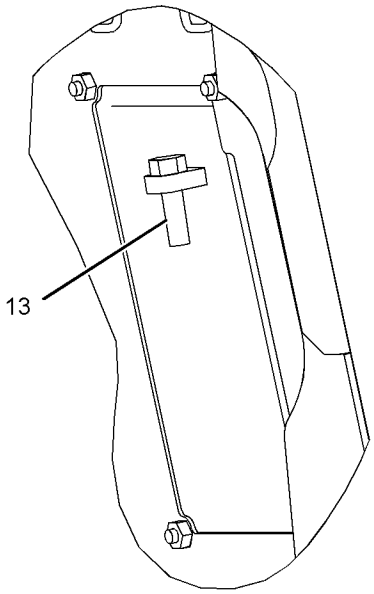

VIEW D-D

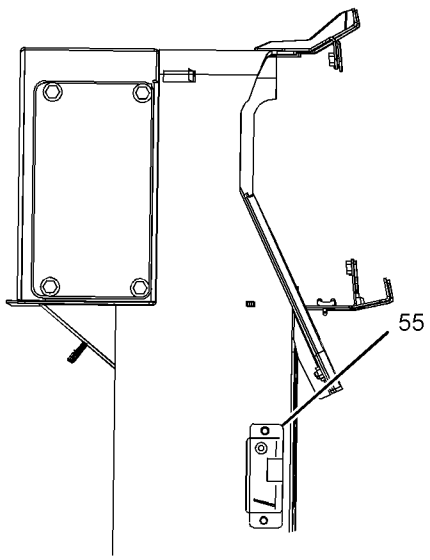

LEFT SIDE VIEW

GRAPHIC #2 **<END>** g03316751

387-0570 PLATFORM GP-OPERATOR—OPEN ROPS

S/N: EMM1-UP; JEN1-UP
PART OF 387-0575 PLATFORM AR
AN ATTACHMENT

SMCS-7253 **i05633691**

NOTE	REF NO	GRAPHIC REF	PART NUMBER	QTY	PART NAME 1 2 3 4 5 6 (PRODUCT LEVEL)	SEE PAGE
	1	2	**4H-0407**	10	PLUG-PROTECTION	
	2	2	**5P-0998**	3	PLUG-SEAL	
	3	2	**5P-7509**	1	PLUG-BUTTON	
	4	2	**6I-9706**	1	RETAINER AS	
M		2	**6V-9632**	4	NUT-WELD (M6X1-THD)	
	5	2	**6T-4556**	1	COVER	
	6	2	**6T-4557**	1	GASKET	
	7	2	**6V-1790**	3	PLUG-BUTTON	
	8	2	**6V-8547**	1	PLUG-BUTTON	
	9	2	**6Y-0206**	2	RETAINER	
	10	2	**6Y-8114**	2	SPACER (13.8X23.75X12.7-MM THK)	
	11	2	**7G-4824**	1	STRAP	
	12	2	**7T-6299**	1	GROMMET	
	13	2	**8E-7791**	1	STRAP	
	14	2	**9P-6571**	1	PLUG	
	15	2	**141-2240**	1	PLATE	
	16	2	**161-3958**	1	GASKET	
	17	2	**164-0758**	1	BOLT (9/16-18X2-IN)	
	18	2	**165-6857**	1	PAD AS-RUBBER	
	19	2	**170-0251**	2	STRIP	
M	20	2	**184-0982**	12	SCREW-PAN HEAD (M6X1X16-MM)	
	21	2	**198-9707**	2	SCREW-TRUSS HEAD (M6X1X35-MM)	
	22	2	**237-4269**	1	PLATE AS	
	23	2	**239-5113**	1	COVER AS	
		2	**2G-0391**	2	SCREW	
		2	**131-5492**	2	RETAINER-CAPTIVE	
	24	2	**241-4346**	1	PLATE AS	
	25	2	**241-4349**	1	GASKET	
	26	2	**241-7917**	1	HOUSING	
	27	2	**242-8405**	1	BRACKET AS	
	28	2	**242-8407**	1	GASKET	
	29	2	**243-5168**	1	GASKET	
	30	2	**248-8866**	4	CAP	
	31	2	**307-8686**	1	PLUG-BUTTON	
	32	2	**308-0467**	2	PLUG-RUBBER	
Y	33	2	*317-4158*	1	PLATFORM GP	650
	34	2	**317-4171**	1	PLATE	
	35	2	**320-8283**	1	PLATE AS	
Y	36	2	*336-1846*	1	COVER GP-CONSOLE	599
	37	2	**341-7036**	1	PLATE	
	38	2	**375-4867**	1	COVER AS	
	39	2	**375-4875**	1	COVER AS	
	40	2	**198-9706**	4	SCREW-TRUSS HEAD (M5X0.8X16-MM)	
	41	2	**5P-1076**	10	WASHER-HARD (13.5X30X4-MM THK)	
	42	2	**5P-4115**	2	WASHER-HARD (7.2X19X2-MM THK)	
	43	2	**5P-4116**	2	WASHER-HARD (8.8X20.5X2-MM THK)	
	44	2	**7X-7729**	52	WASHER (11X25X3-MM THK)	
M	45	2	**8T-4136**	43	BOLT (M10X1.5X25-MM)	
M	46	2	**8T-4137**	5	BOLT (M10X1.5X20-MM)	
M	47	2	**8T-4138**	2	BOLT (M6X1X20-MM)	
M	48	2	**8T-4139**	10	BOLT (M12X1.75X30-MM)	
M	49	2	**8T-4189**	2	BOLT (M8X1.25X20-MM)	
M	50	2	**8T-4194**	2	BOLT (M12X1.75X50-MM)	
M	51	2	**8T-4196**	4	BOLT (M10X1.5X35-MM)	
	52	2	**8T-4223**	2	WASHER-HARD (13.5X25.5X3-MM THK)	
M	53	2	**8T-4971**	4	BOLT (M6X1X30-MM)	
	54	2	**8T-8908**	2	BOLT (1/4-20X1-IN)	

387-0570 **PLATFORM GP-OPERATOR (*contd.*)** **i05633691**

NOTE	REF NO	GRAPHIC REF	PART NUMBER	QTY	PART NAME 1 2 3 4 5 6 (PRODUCT LEVEL)	SEE PAGE
	55	2	**9X-8256**	8	WASHER (6.6X12X2-MM THK)	
D	56	2	**5P-9909**	1	SEAL (0.3-M)	

D - ORDER BY THE METER
M - METRIC PART
Y - SEPARATE ILLUSTRATION

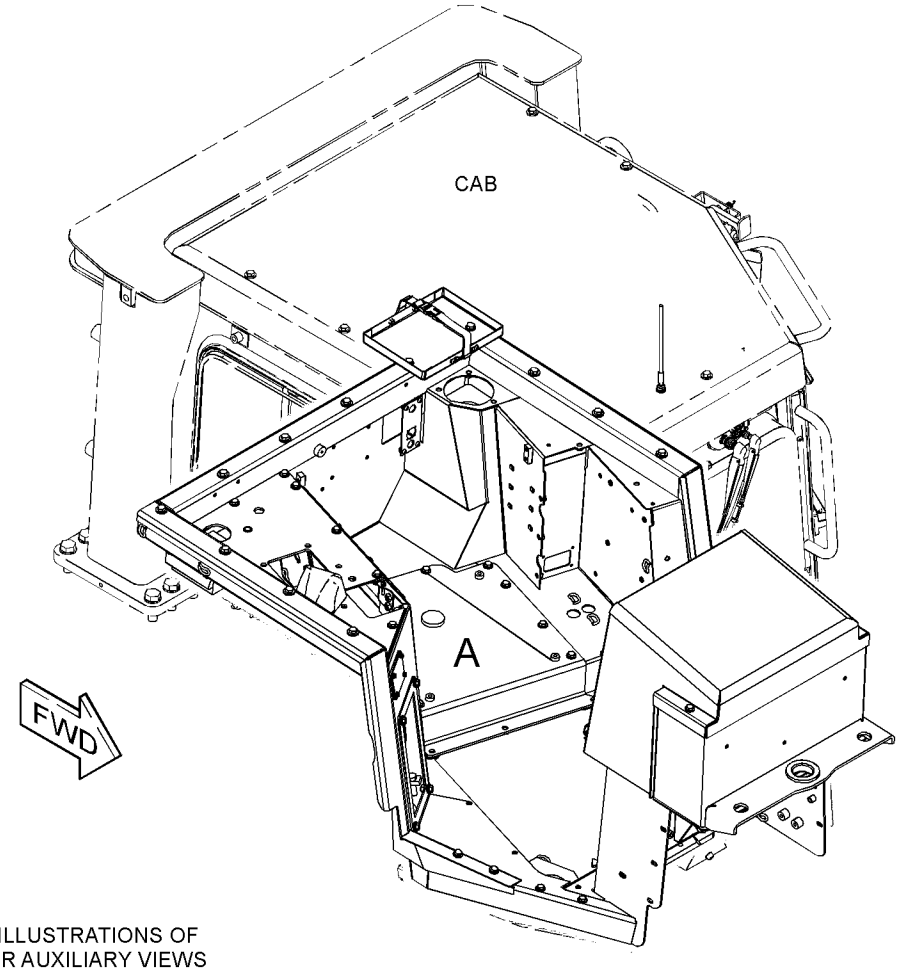

REFER TO ALL ILLUSTRATIONS OF THIS GROUP FOR AUXILIARY VIEWS

GRAPHIC #1 g03581691

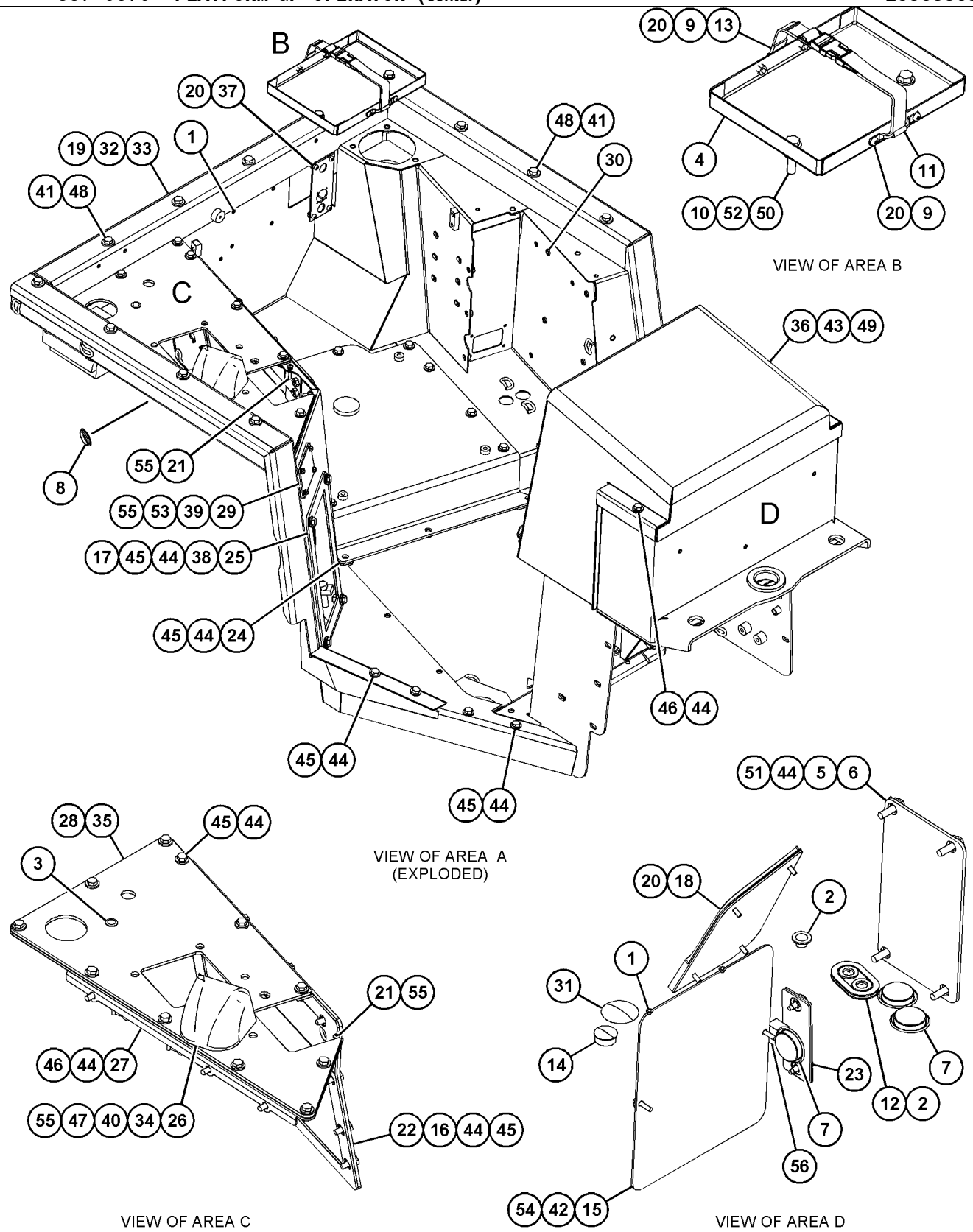

GRAPHIC #2

<END>

g03581692

389-6094 PLATFORM GP-OPERATOR–OPEN ROPS

S/N: EMM1-UP; JEN1-UP
PART OF 393-0288 PLATFORM AR
AN ATTACHMENT

SMCS-7253 **i05575810**

NOTE	REF NO	GRAPHIC REF	PART NUMBER	QTY	PART NAME 1 2 3 4 5 6 (PRODUCT LEVEL)	SEE PAGE
	1	1	**3T-3634**	1	HANDRAIL	
	2	1,2	**4H-0407**	10	PLUG-PROTECTION	
	3	2	**5P-0998**	3	PLUG-SEAL	
	4	1	**5P-7509**	1	PLUG-BUTTON	
	5	2	**6I-9706**	1	RETAINER AS	
M		2	**6V-9632**	4	NUT-WELD (M6X1-THD)	
	6	2	**6T-4556**	1	COVER	
	7	2	**6T-4557**	1	GASKET	
	8	2	**6V-1790**	3	PLUG-BUTTON	
	9	2	**6V-8547**	1	PLUG-BUTTON	
	10	2	**6Y-0206**	2	RETAINER	
	11	2	**6Y-8114**	2	SPACER (13.8X23.75X12.7-MM THK)	
	12	2	**7G-4824**	1	STRAP	
	13	2	**7T-6299**	1	GROMMET	
	14	2	**8E-7791**	1	STRAP	
	15	2	**9P-6571**	1	PLUG	
	16	1	**127-3018**	1	HANDHOLD	
	17	2	**141-2240**	1	PLATE	
	18	2	**161-3958**	1	GASKET	
	19	1	**164-0758**	1	BOLT (9/16-18X2-IN)	
	20	2	**165-6857**	1	PAD AS-RUBBER	
	21	1	**170-0251**	2	STRIP	
M	22	1,2	**184-0982**	12	SCREW-PAN HEAD (M6X1X16-MM)	
	23	1	**198-9707**	2	SCREW-TRUSS HEAD (M6X1X35-MM)	
	24	2	**237-4269**	1	PLATE AS	
	25	2	**239-5113**	1	COVER AS	
		2	**2G-0391**	2	SCREW	
		2	**131-5492**	2	RETAINER-CAPTIVE	
	26	2	**241-4346**	1	PLATE AS	
		2	**241-4347**	1	GASKET	
	27	1	**241-4349**	1	GASKET	
	28	2	**241-7917**	1	HOUSING	
	29	2	**242-8405**	1	BRACKET AS	
M		2	**8T-3490**	3	NUT-WELD (M10X1.5-THD)	
M		2	**9R-2613**	1	BOSS-WELD (M10X1.5X25-MM)	
	30	1	**242-8407**	1	GASKET	
	31	1	**243-5168**	1	GASKET	
	32	1	**248-8866**	4	CAP	
	33	2	**307-8686**	1	PLUG-BUTTON	
	34	2	**308-0467**	2	PLUG-RUBBER	
Y	35	1	*317-4158*	1	PLATFORM GP	650
	36	2	**317-4171**	1	PLATE	
	37	1	**320-8283**	1	PLATE AS	
		1	**091-4537**	1	BOSS-THREADED (M6X1-THD)	
Y	38	1	*336-1846*	1	COVER GP-CONSOLE	599
	39	1	**341-7036**	1	PLATE	
	40	1	**375-4867**	1	COVER AS	
	41	1	**375-4875**	1	COVER AS	
		1	**9X-8256**	4	WASHER (6.6X12X2-MM THK)	
	42	2	**198-9706**	4	SCREW-TRUSS HEAD (M5X0.8X16-MM)	
	43	1	**5P-1076**	10	WASHER-HARD (13.5X30X4-MM THK)	
	44	2	**5P-4115**	2	WASHER-HARD (7.2X19X2-MM THK)	
	45	1	**5P-4116**	2	WASHER-HARD (8.8X20.5X2-MM THK)	
	46	1,2	**7X-7729**	52	WASHER (11X25X3-MM THK)	
M	47	1,2	**8T-4136**	43	BOLT (M10X1.5X25-MM)	
M	48	1,2	**8T-4137**	5	BOLT (M10X1.5X20-MM)	
M	49	2	**8T-4138**	2	BOLT (M6X1X20-MM)	
M	50	1	**8T-4139**	10	BOLT (M12X1.75X30-MM)	

389-6094 **PLATFORM GP-OPERATOR (*contd.*)** **i05575810**

NOTE	REF NO	GRAPHIC REF	PART NUMBER	QTY	PART NAME 1 2 3 4 5 6 (PRODUCT LEVEL)	SEE PAGE
M	51	1	**8T-4189**	2	BOLT (M8X1.25X20-MM)	
M	52	2	**8T-4194**	2	BOLT (M12X1.75X50-MM)	
M	53	2	**8T-4196**	4	BOLT (M10X1.5X35-MM)	
	54	2	**8T-4223**	2	WASHER-HARD (13.5X25.5X3-MM THK)	
M	55	1	**8T-4971**	4	BOLT (M6X1X30-MM)	
	56	2	**8T-8908**	2	BOLT (1/4-20X1-IN)	
	57	1,2	**9X-8256**	8	WASHER (6.6X12X2-MM THK)	
D	58	2	**5P-9909**	1	SEAL (0.1-M)	

D - ORDER BY THE METER
M - METRIC PART
Y - SEPARATE ILLUSTRATION

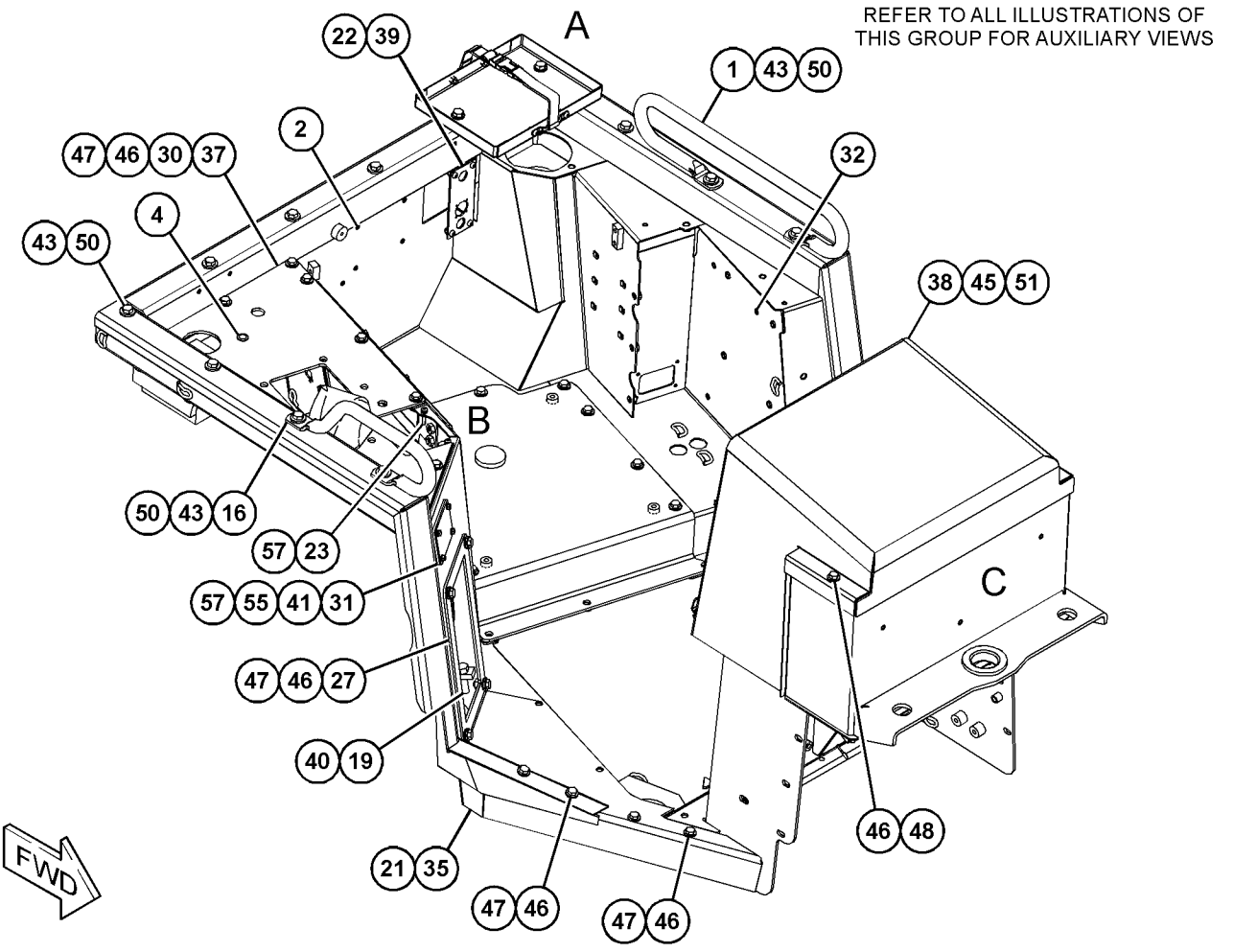

GRAPHIC #1 g03569556

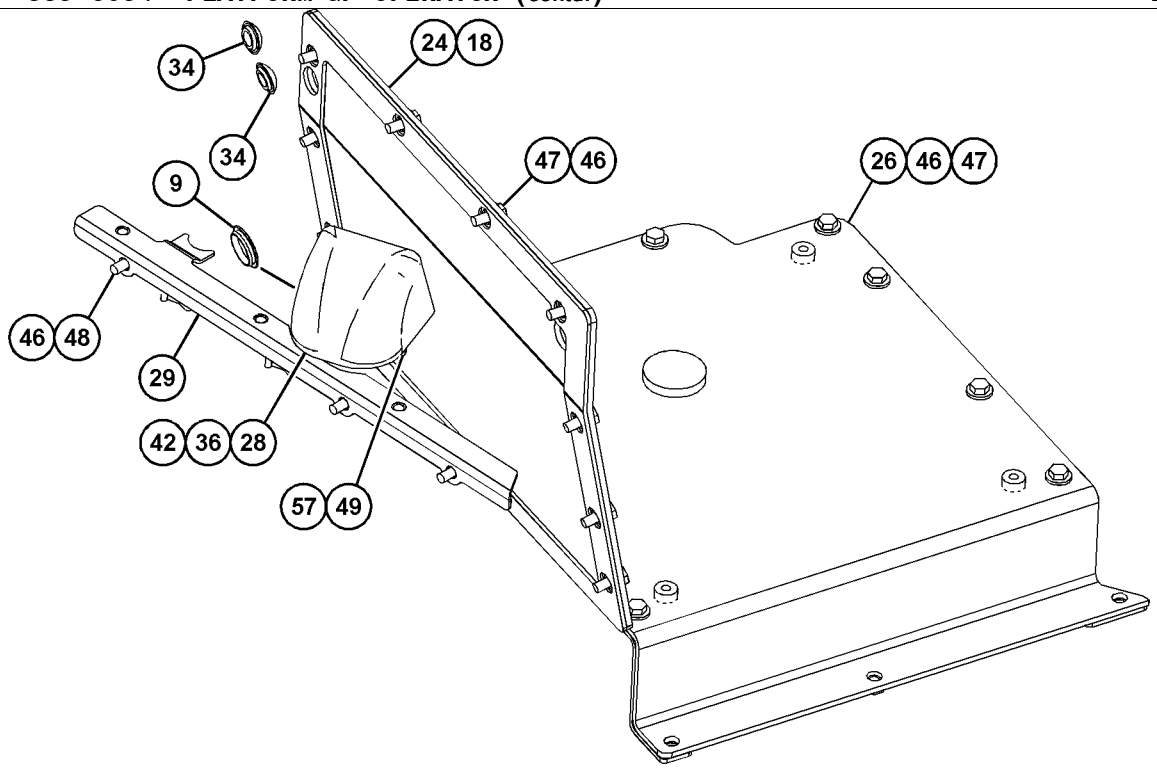

VIEW OF AREA B
(EXPLODED)
(PARTS REMOVED FOR CLARITY)

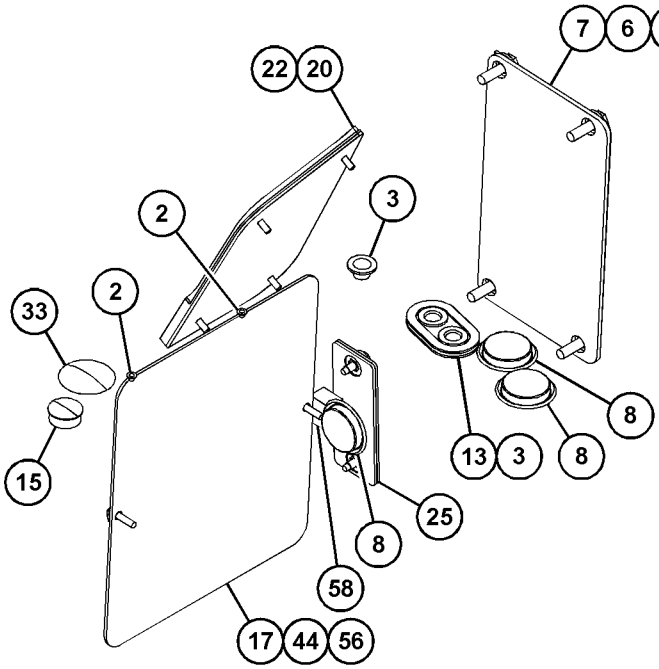

VIEW OF AREA C
(PARTS REMOVED FOR CLARITY)

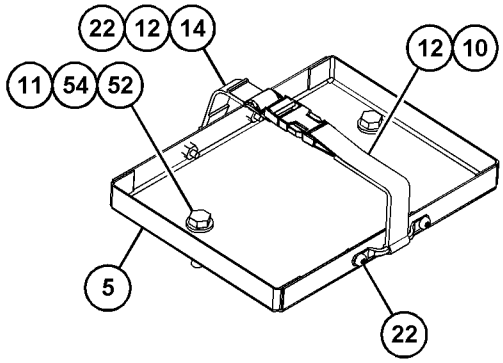

VIEW OF AREA A

GRAPHIC #2 **<END>** g03569557

230-4700 PRESSURIZER GP-CAB

S/N: EMM1-UP; JEN1-UP
PART OF 393-0289, 393-0290 CAB AR
AN ATTACHMENT

SMCS-7311 **i05596638**

NOTE	REF NO	GRAPHIC REF	PART NUMBER	QTY	PART NAME 1 2 3 4 5 6 (PRODUCT LEVEL)	SEE PAGE
	1	1	**3L-0594**	3	SPACER (8.7X15.9X15.9-MM THK)	
	2	1	**3W-6756**	2	KNOB (AIR FILTER COVER)	
	3	1	**6P-2216**	7	CAP	
	4	1	**6T-0988**	1	FILTER ELEMENT-CAB AIR (STANDARD EFFICIENCY)	
					—OR—	
A		1	**175-2831**	1	FILTER ELEMENT-CAB AIR (ULTRA HIGH EFFICIENCY)	
	5	1	**6T-5067**	1	LINER	
	6	1	**6T-5068**	1	FILTER ELEMENT-CAB AIR (AIR RECIRCULATION)	
	7	1	**7D-8431**	2	RING-RETAINING	
	8	1	**371-8881**	1	COVER	
	9	1	**117-8863**	1	LINER	
	10	1	**127-1043**	1	LINER	
	11	1	**127-1044**	1	LINER	
	12	1	**127-1045**	1	LINER	
	13	1	**127-1046**	1	LINER	
	14	1	**127-1048**	1	LINER	
	15	1	**141-4044**	1	PANEL	
	16	1	**224-9072**	2	KNOB (AIR FILTER COVER)	
Y	17	1	**230-5388**	1	BLOWER GP-CAB	568
	18	1	**7X-0603**	3	WASHER-HARD (9.9X35X2.5-MM THK)	
	19	1	**8T-4121**	6	WASHER-HARD (11X21X2.5-MM THK)	
M	20	1	**8T-4136**	6	BOLT (M10X1.5X25-MM)	
M	21	1	**8T-4971**	3	BOLT (M6X1X30-MM)	
	22	1	**9X-8256**	3	WASHER (6.6X12X2-MM THK)	
E	23	1	**7X-7877**		STRIP-EDGING (47-CM)	

A - NOT PART OF THIS GROUP
E - ORDER BY THE CENTIMETER
M - METRIC PART
Y - SEPARATE ILLUSTRATION

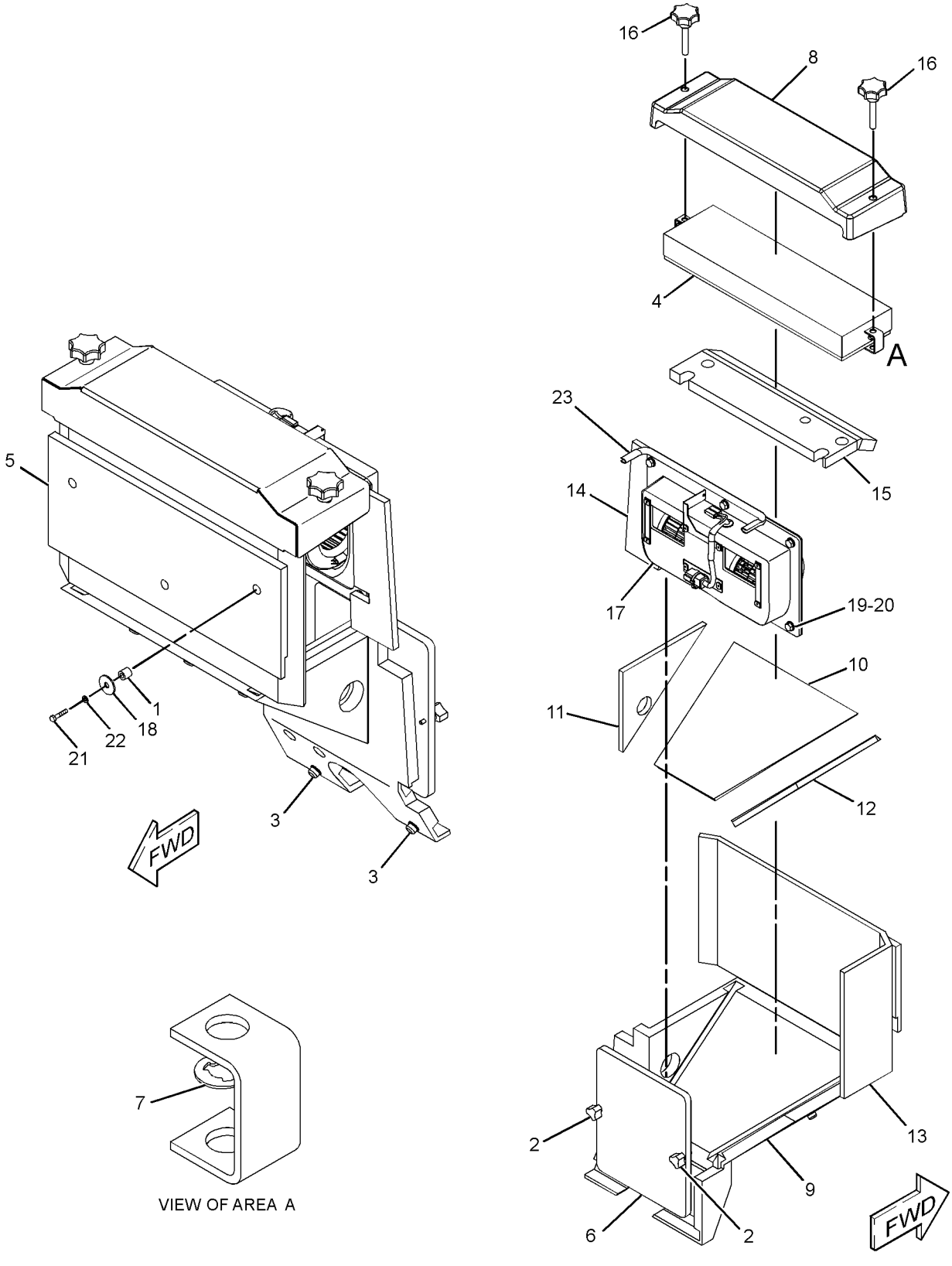

GRAPHIC #1 **<END>** g03046916

210-2270 RECLINER GP-SEAT

S/N: EMM1-UP; JEN1-UP
PART OF 178-0603, 180-7304 SEAT GP
AN ATTACHMENT

SMCS-7312 **i05332867**

NOTE	REF NO	GRAPHIC REF	PART NUMBER	QTY	PART NAME 1 2 3 4 5 6 (PRODUCT LEVEL)	SEE PAGE
	1	1	**177-1862**	1	BRACKET (SEAT BELT) (SEAT BELT)	
	2	1	**210-2262**	1	BRACKET AS	
	3	1	**210-2263**	1	BRACKET AS	
	4	1	**210-2266**	1	GEAR-LOCK (14-TEETH)	
	5	1	**293-2911**	1	SHAFT AS	
		1	**2L-5893**	2	PIN-SPRING	
		1	**170-8590**	1	SPRING	
	6	1	**217-7933**	1	LATCH	
	7	1	**236-5197**	1	SPRING	
	8	1	**031-0214**	1	BOLT-LOCKING (1/4-20X0.5-IN)	
	9	1	**101-2867**	1	WASHER-HARD (7.2X25X2-MM THK)	
	10	1	**4M-6425**	1	BOLT (5/16-18X1-IN)	
	11	1	**5M-2894**	1	WASHER-HARD (10.2X18.5X2.5-MM THK)	
	12	1	**5S-7383**	1	BOLT (3/8-16X1.75-IN)	
	13	1	**8T-4224**	1	WASHER-HARD (8.8X16X2-MM THK)	

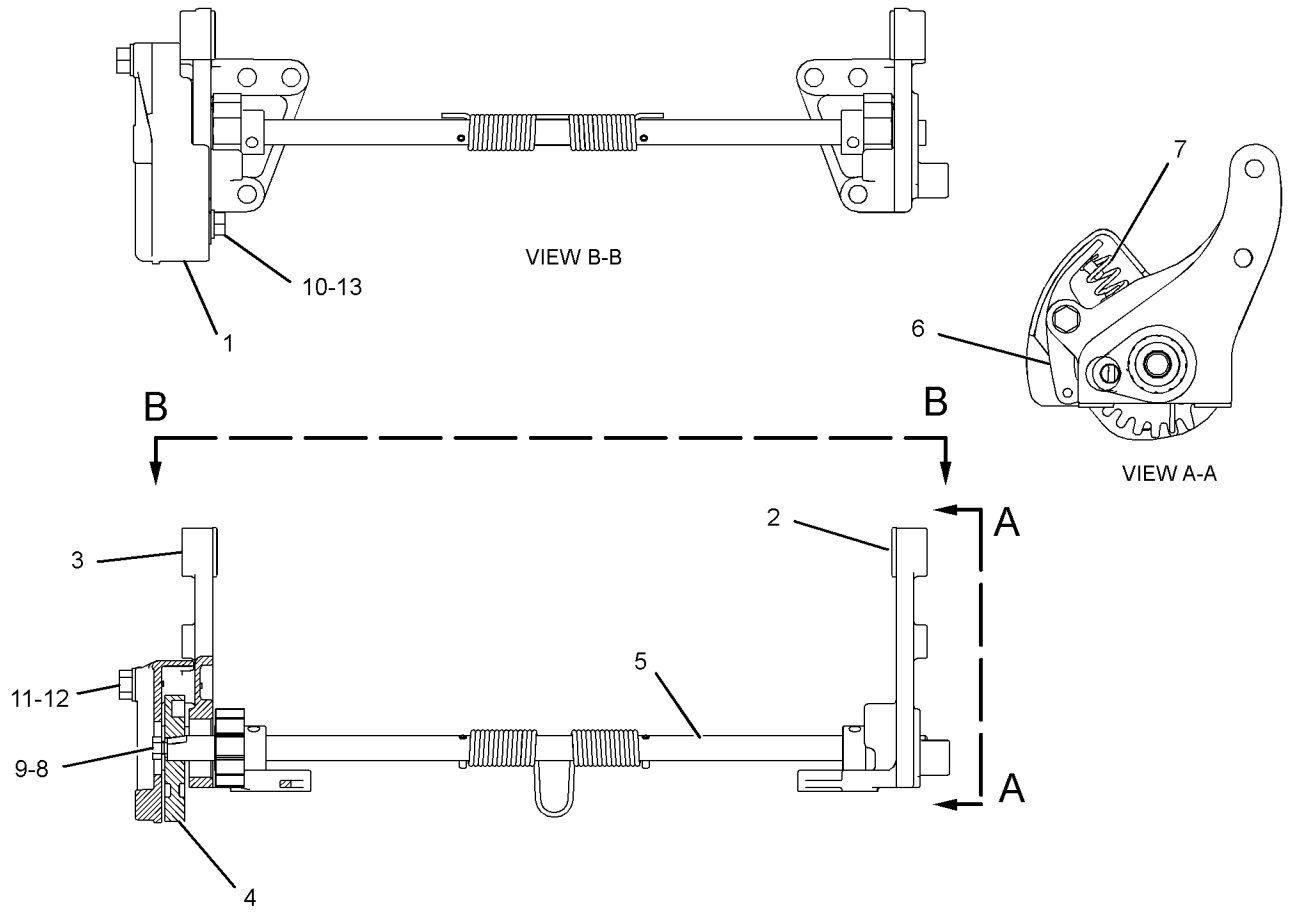

GRAPHIC #1 **<END>** g01296294

317-3939 ROD GP

S/N: EMM1-UP; JEN1-UP
PART OF 375-4845 CONTROL GP-GOVERNOR & BRAKE
AN ATTACHMENT

SMCS-4122 **i05575209**

NOTE	REF NO	GRAPHIC REF	PART NUMBER	QTY	PART NAME 1 2 3 4 5 6 (PRODUCT LEVEL)	SEE PAGE
	1	1	**4D-4065**	1	ROD END	
	2	1	**317-3940**	1	ROD	
	3	1	**1M-1341**	1	END-YOKE ROD	
	4	1	**6B-6684**	1	NUT-FULL (1/2-20-THD)	
	5	1	**6V-8183**	1	NUT-FULL (3/8-24-THD)	

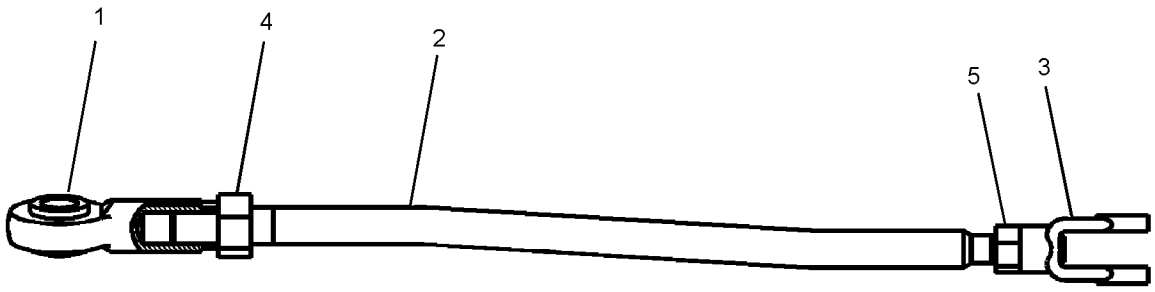

GRAPHIC #1 **<END>** g02830384

OPERATOR STATION

208-8705 ROPS GP

S/N: EMM1-UP; JEN1-UP
PART OF 389-3229 CAB AR
AN ATTACHMENT

SMCS-7177, 7301 **i05596419**

NOTE	REF NO	GRAPHIC REF	PART NUMBER	QTY	PART NAME 1 2 3 4 5 6 (PRODUCT LEVEL)	SEE PAGE
	1	1	**180-6600**	1	HANDRAIL	
	2	1	**338-9252**	1	ROPS AS	
	3	1	**5P-1076**	3	WASHER-HARD (13.5X30X4-MM THK)	
M	4	1	**7X-2576**	12	BOLT (M24X3X70-MM)	
M	5	1	**8T-4139**	2	BOLT (M12X1.75X30-MM)	
	6	1	**8T-4167**	12	WASHER-HARD (26X44X4-MM THK)	

M - METRIC PART

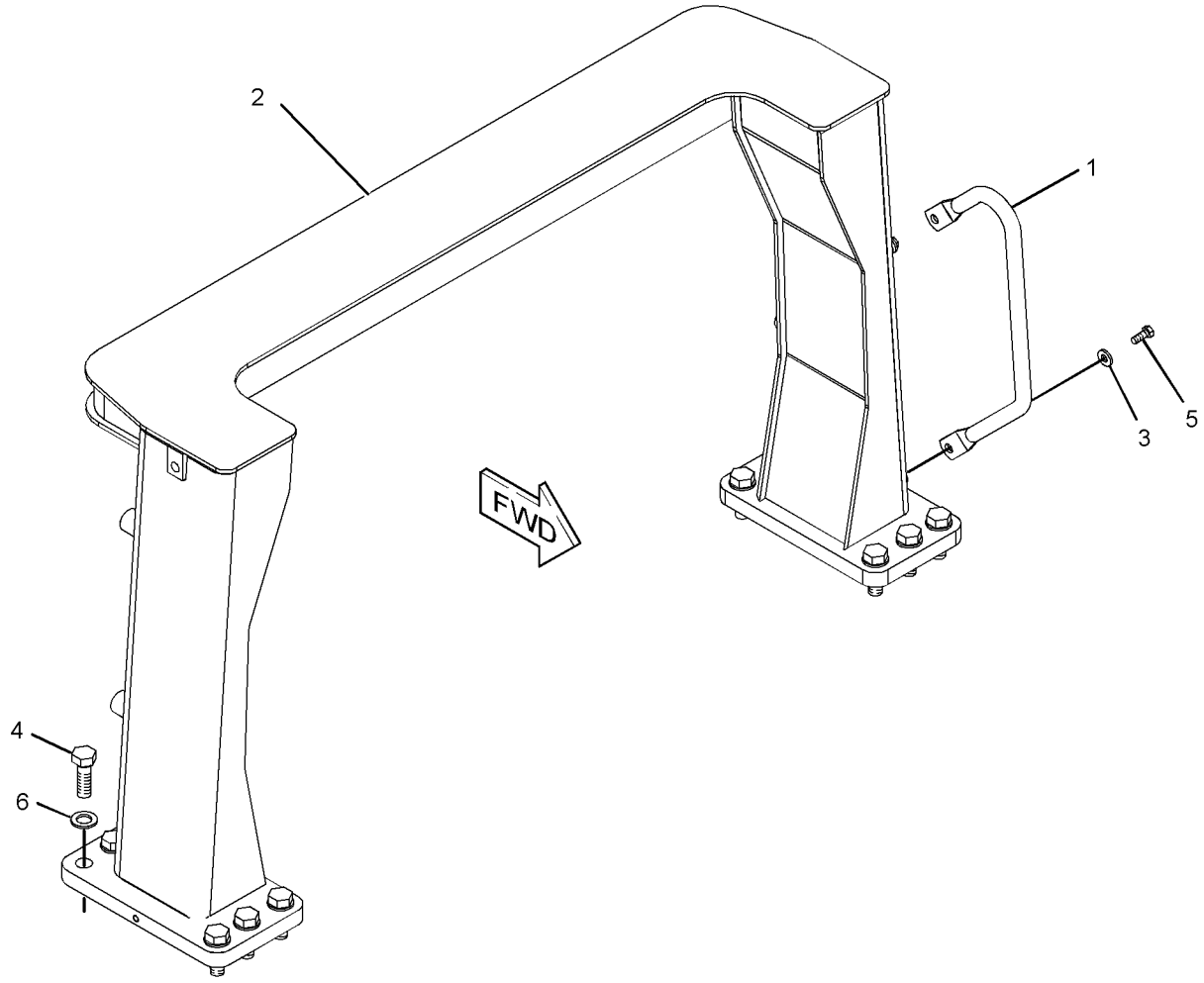

GRAPHIC #1 **<END>** g01205546

OPERATOR STATION

378-7877 ROPS GP—WOOD CHIP

S/N: EMM1-UP; JEN1-UP
PART OF 422-2874 CANOPY AR
AN ATTACHMENT

SMCS-7177, 7301 **i05682911**

NOTE	REF NO	GRAPHIC REF	PART NUMBER	QTY	PART NAME 1 2 3 4 5 6 (PRODUCT LEVEL)	SEE PAGE
	1	1	**1P-2772**	4	SPACER (1.031X1.219X0.75-IN THK)	
	2	1	**9G-0992**	2	HANDRAIL	
Y	3	1	*9P-9392*	1	MIRROR GP-REAR VIEW	631
	4	1	**9S-5187**	2	MOUNTING	
	5	1	**180-6600**	1	HANDRAIL	
	6	1	**198-6574**	14	WASHER (16X75X3.5-MM THK)	
	7	1	**198-6575**	14	BUTTON	
	8	1	**228-4051**	1	TUBE AS	
	9	1	**228-4052**	1	TUBE AS	
	10	1	**263-2601**	1	HEADLINER	
	11	1	**357-7388**	1	ROPS AS	
	12	1	**5P-1076**	7	WASHER-HARD (13.5X30X4-MM THK)	
	13	1	**6K-3632**	2	LOCKNUT (1-8-THD)	
M	14	1	**7X-2563**	4	BOLT (M20X2.5X60-MM)	
M	15	1	**7X-2576**	12	BOLT (M24X3X70-MM)	
	16	1	**8C-8843**	2	BOLT (1-8X4.5-IN)	
	17	1	**8P-5244**	4	WASHER (33.3X69.8X6.35-MM THK)	
	18	1	**8T-4121**	4	WASHER-HARD (11X21X2.5-MM THK)	
	19	1	**8T-4123**	4	WASHER (3.62X5.75X0.375-MM THK)	
M	20	1	**8T-4137**	4	BOLT (M10X1.5X20-MM)	
M	21	1	**8T-4139**	6	BOLT (M12X1.75X30-MM)	
	22	1	**8T-4167**	12	WASHER-HARD (26X44X4-MM THK)	

M - METRIC PART
Y - SEPARATE ILLUSTRATION

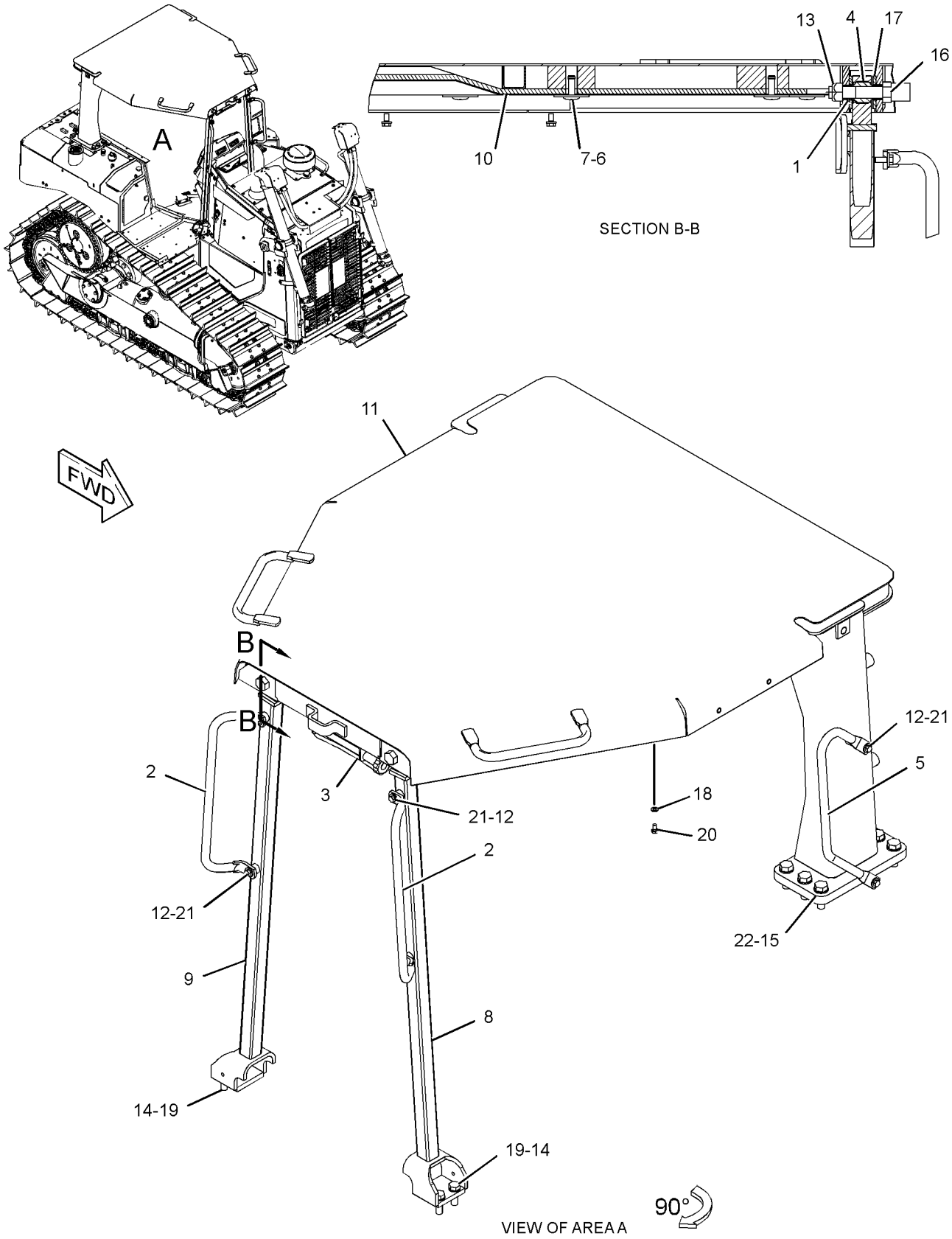

GRAPHIC #1 **<END>** g03329284

OPERATOR STATION

389-6096 ROPS GP

S/N: EMM1-UP; JEN1-UP
PART OF 389-3230, 389-3231 CAB AR
AN ATTACHMENT

SMCS-7177, 7301 **i05596505**

NOTE	REF NO	GRAPHIC REF	PART NUMBER	QTY	PART NAME 1 2 3 4 5 6 (PRODUCT LEVEL)	SEE PAGE
	1	1	**180-6600**	1	HANDRAIL	
	2	1	**338-9253**	1	ROPS AS	
	3	1	**5P-1076**	3	WASHER-HARD (13.5X30X4-MM THK)	
M	4	1	**7X-2576**	12	BOLT (M24X3X70-MM)	
M	5	1	**8T-4139**	2	BOLT (M12X1.75X30-MM)	
	6	1	**8T-4167**	12	WASHER-HARD (26X44X4-MM THK)	

M - METRIC PART

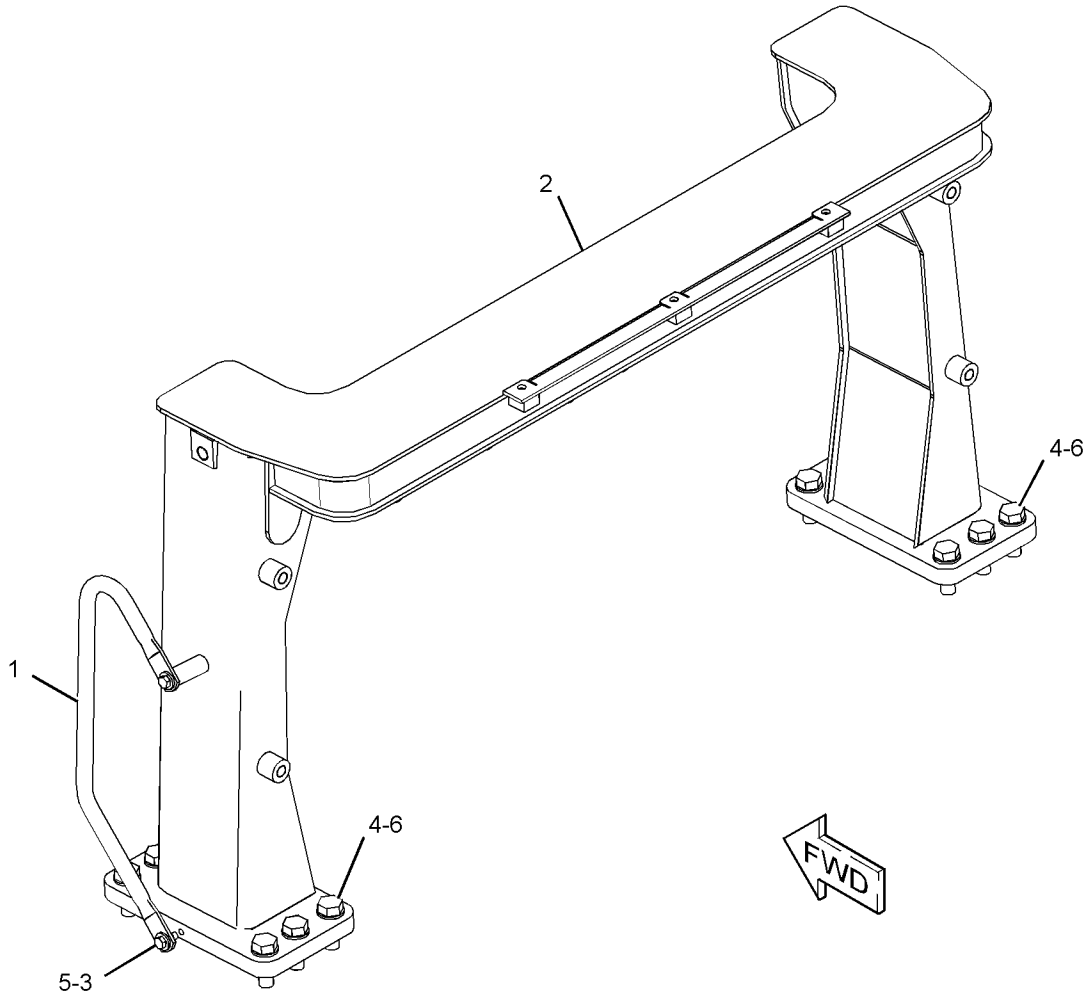

GRAPHIC #1 **<END>** g03566014

OPERATOR STATION

208-8706 ROPS GP-OPEN

S/N: EMM1-UP; JEN1-UP
PART OF 389-3228 CANOPY AR
AN ATTACHMENT

SMCS-7323 **i05573393**

NOTE	REF NO	GRAPHIC REF	PART NUMBER	QTY	PART NAME 1 2 3 4 5 6 (PRODUCT LEVEL)	SEE PAGE
	1	1	**1P-2772**	4	SPACER (1.031X1.219X0.75-IN THK)	
	2	1	**8P-9747**	1	HANDRAIL	
	3	1	**9G-0992**	2	HANDRAIL	
Y	4	1	*9P-9392*	1	MIRROR GP-REAR VIEW	631
	5	1	**9S-5187**	2	MOUNTING	
	6	1	**180-6600**	1	HANDRAIL	
	7	1	**198-6574**	14	WASHER (16X75X3.5-MM THK)	
	8	1	**198-6575**	14	BUTTON	
	9	1	**357-7388**	1	ROPS AS	
	10	1	**228-4051**	1	TUBE AS	
	11	1	**228-4052**	1	TUBE AS	
	12	1	**263-2601**	1	HEADLINER	
	13	1	**5P-1076**	9	WASHER-HARD (13.5X30X4-MM THK)	
	14	1	**6K-3632**	2	LOCKNUT (1-8-THD)	
M	15	1	**7X-2563**	4	BOLT (M20X2.5X60-MM)	
M	16	1	**7X-2576**	12	BOLT (M24X3X70-MM)	
	17	1	**8C-8843**	2	BOLT (1-8X4.5-IN)	
	18	1	**8P-5244**	4	WASHER (33.3X69.8X6.35-MM THK)	
	19	1	**8T-4123**	4	WASHER (3.62X5.75X0.375-MM THK)	
M	20	1	**8T-4139**	8	BOLT (M12X1.75X30-MM)	
	21	1	**8T-4167**	12	WASHER-HARD (26X44X4-MM THK)	

M - METRIC PART
Y - SEPARATE ILLUSTRATION

208-8706 **ROPS GP-OPEN (*contd.*)** **i05573393**

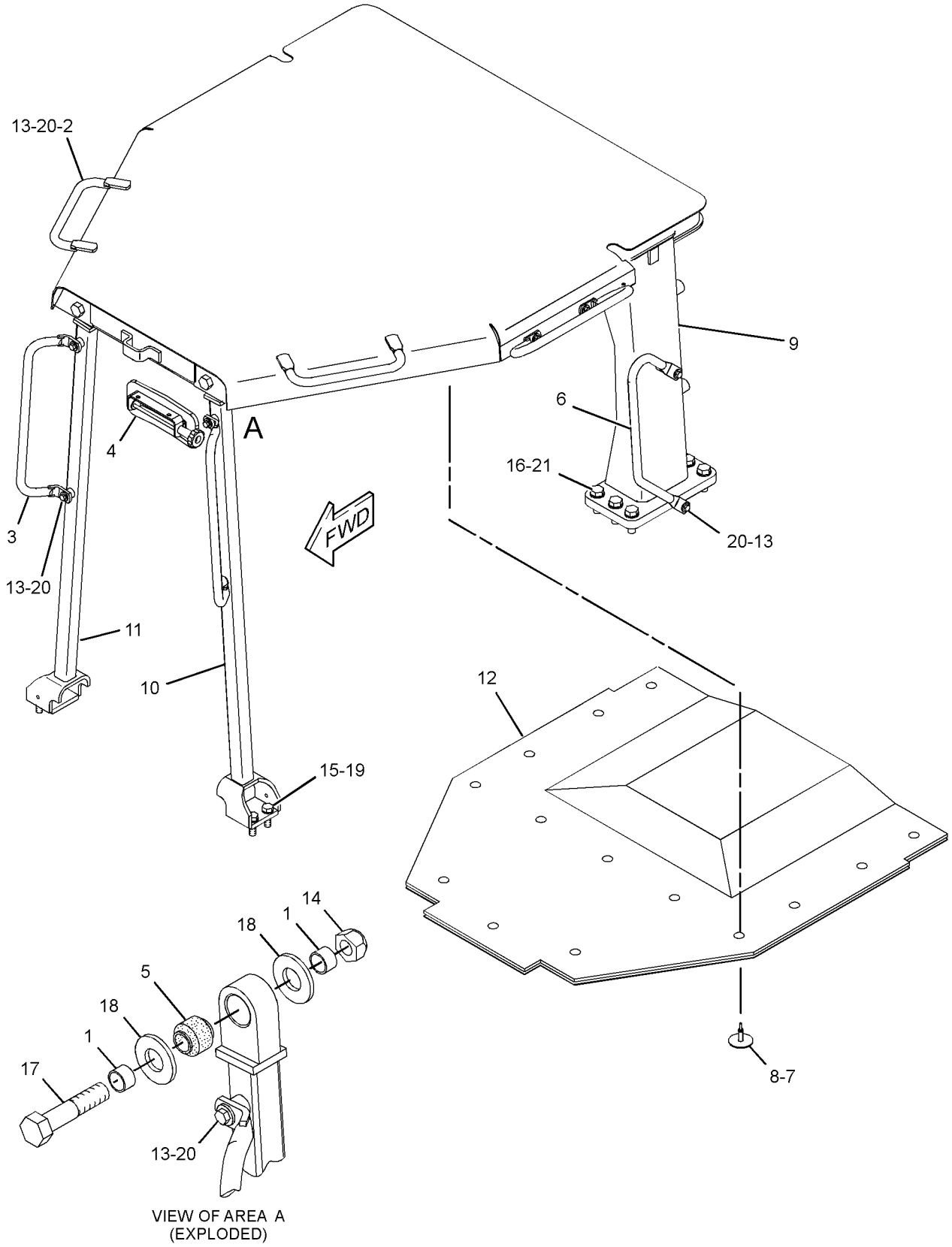

VIEW OF AREA A
(EXPLODED)

GRAPHIC #1 **<END>** g01205598

389-6151 SCREEN GP-PROTECTION

S/N: EMM1-UP; JEN1-UP

CANNOT BE USED WITH 389-3230—PAGE: 570, 389-3231—PAGE: 570, 389-6147—PAGE: 197, 389-6148—PAGE: 198, 389-6152—PAGE: 671, 389-6149—PAGE: 498

AN ATTACHMENT

SMCS-7165 **i05682913**

NOTE	REF NO	GRAPHIC REF	PART NUMBER	QTY	PART NAME 1 2 3 4 5 6 (PRODUCT LEVEL)	SEE PAGE
	1	1	**322-7221**	1	SCREEN AS-PROTECTION (REAR)	
	2	1	**6C-9149**	4	WASHER (22X50X10-MM THK)	
M	3	1	**8T-6430**	4	BOLT (M20X2.5X50-MM)	

M - METRIC PART

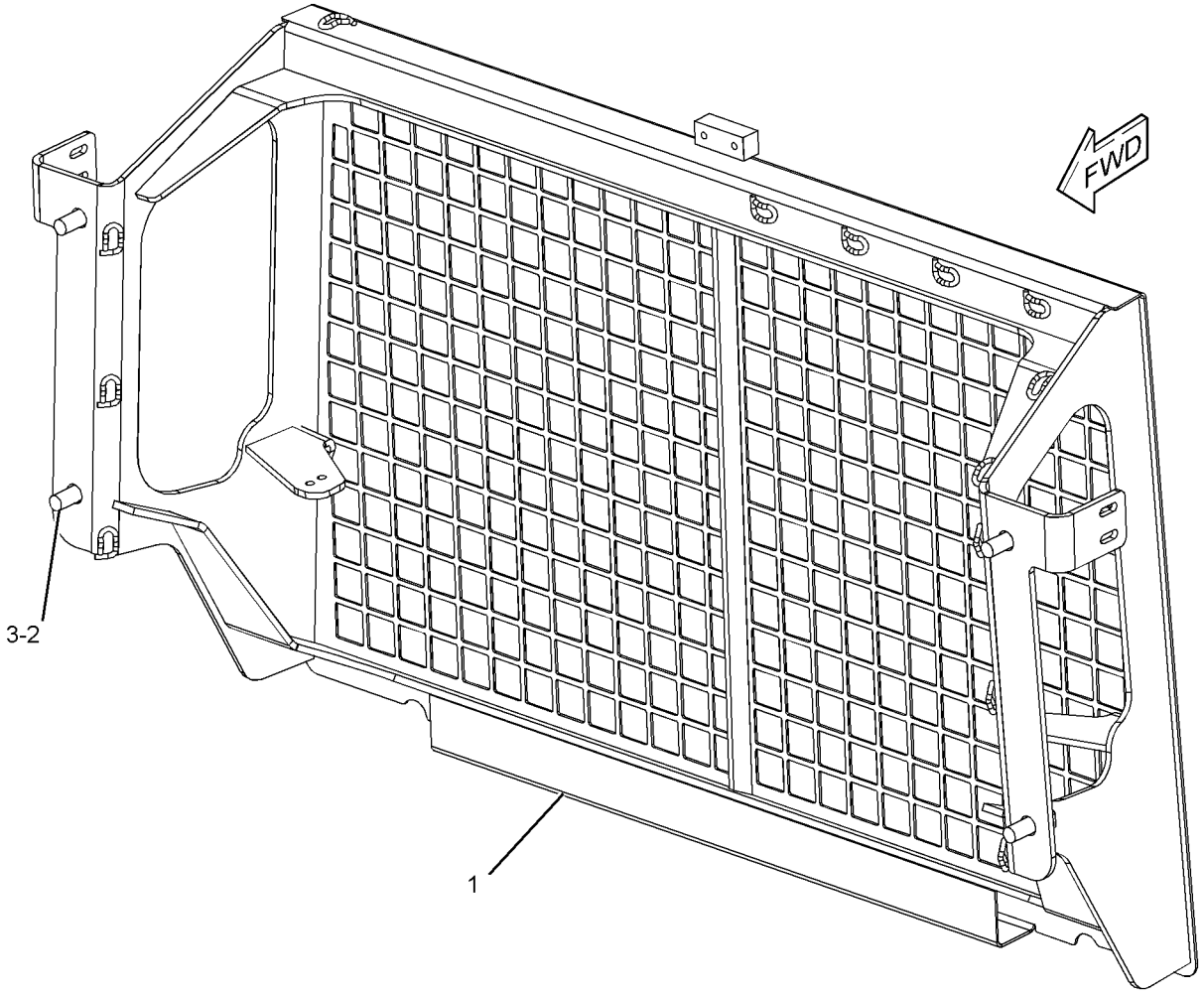

GRAPHIC #1 **<END>** g03316781

389-6152 SCREEN GP-PROTECTION—ROPS, A/C

S/N: EMM1-UP; JEN1-UP

CANNOT BE USED WITH 389-3228—PAGE: 579, 389-3229—PAGE: 570, 389-6147—PAGE: 197, 389-6148—PAGE: 198, 389-6149—PAGE: 498

AN ATTACHMENT

SMCS-7165 **i05682910**

NOTE	REF NO	GRAPHIC REF	PART NUMBER	QTY	PART NAME 1 2 3 4 5 6 (PRODUCT LEVEL)	SEE PAGE
	1	1	**387-3580**	1	SCREEN AS (PROTECTION)	
	2	1	**194-3708**	2	BOSS	
M	3	1	**7X-2566**	4	BOLT (M20X2.5X110-MM)	
M	4	1	**8T-4131**	2	NUT (M20X2.5-THD)	
	5	1	**8T-5439**	6	WASHER-HARD (21.5X45X6-MM THK)	
	6	1	**387-5306**	2	BOSS	

M - METRIC PART

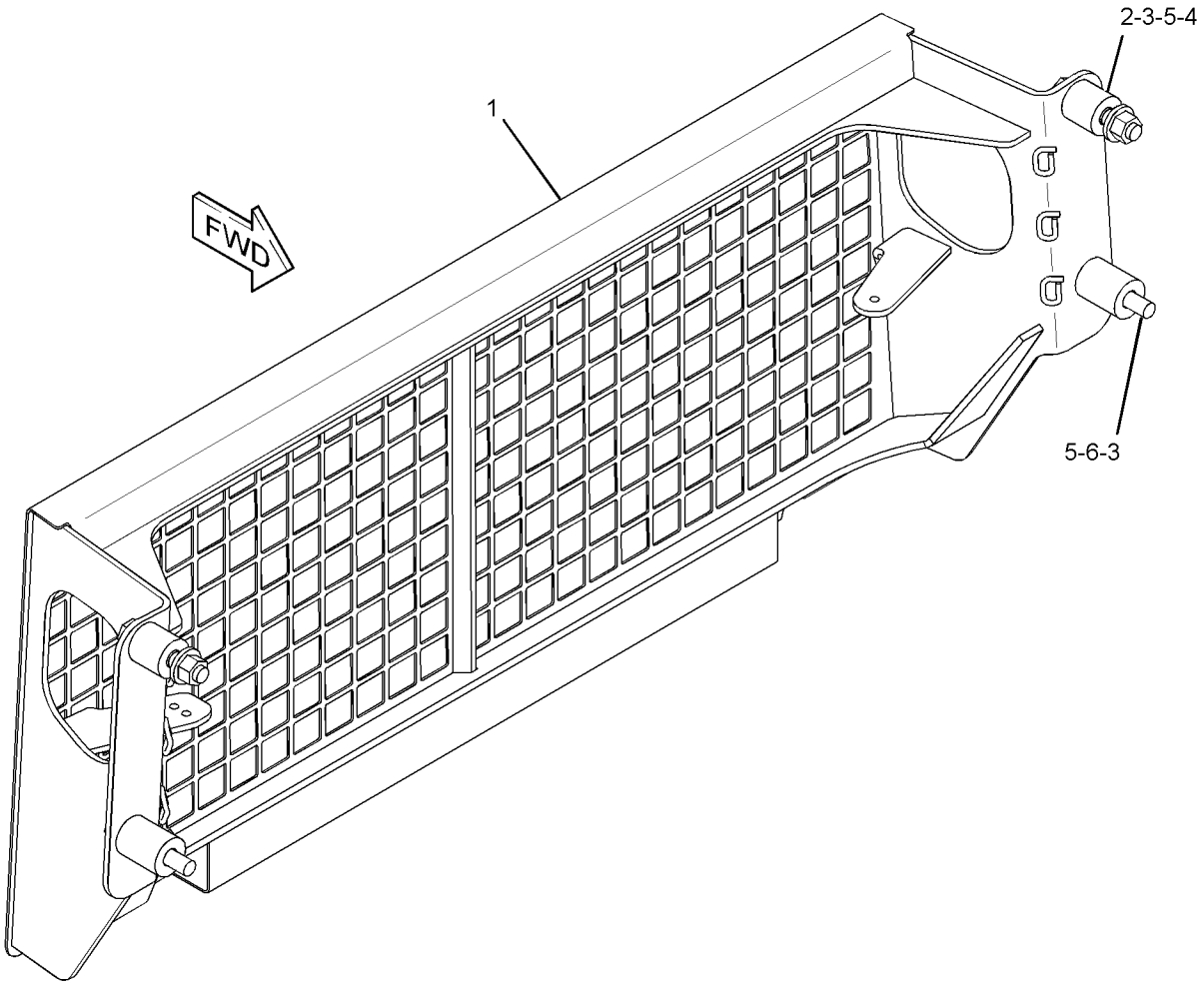

GRAPHIC #1 **<END>** g03074722

415-1460 SCREEN GP-PROTECTION–REAR

S/N: EMM1-UP; JEN1-UP
FOR USE WITH CANOPY AR
PART OF 425-6997 SCREEN GP-PROTECTION
AN ATTACHMENT

SMCS-7165 **i05682909**

NOTE	REF NO	GRAPHIC REF	PART NUMBER	QTY	PART NAME 1 2 3 4 5 6 (PRODUCT LEVEL)	SEE PAGE
Y	1	1	*415-1461*	1	GUARD GP-REAR	362
	2	1	**6C-9149**	4	WASHER (22X50X10-MM THK)	
M	3	1	**8T-6430**	4	BOLT (M20X2.5X50-MM)	

M - METRIC PART
Y - SEPARATE ILLUSTRATION

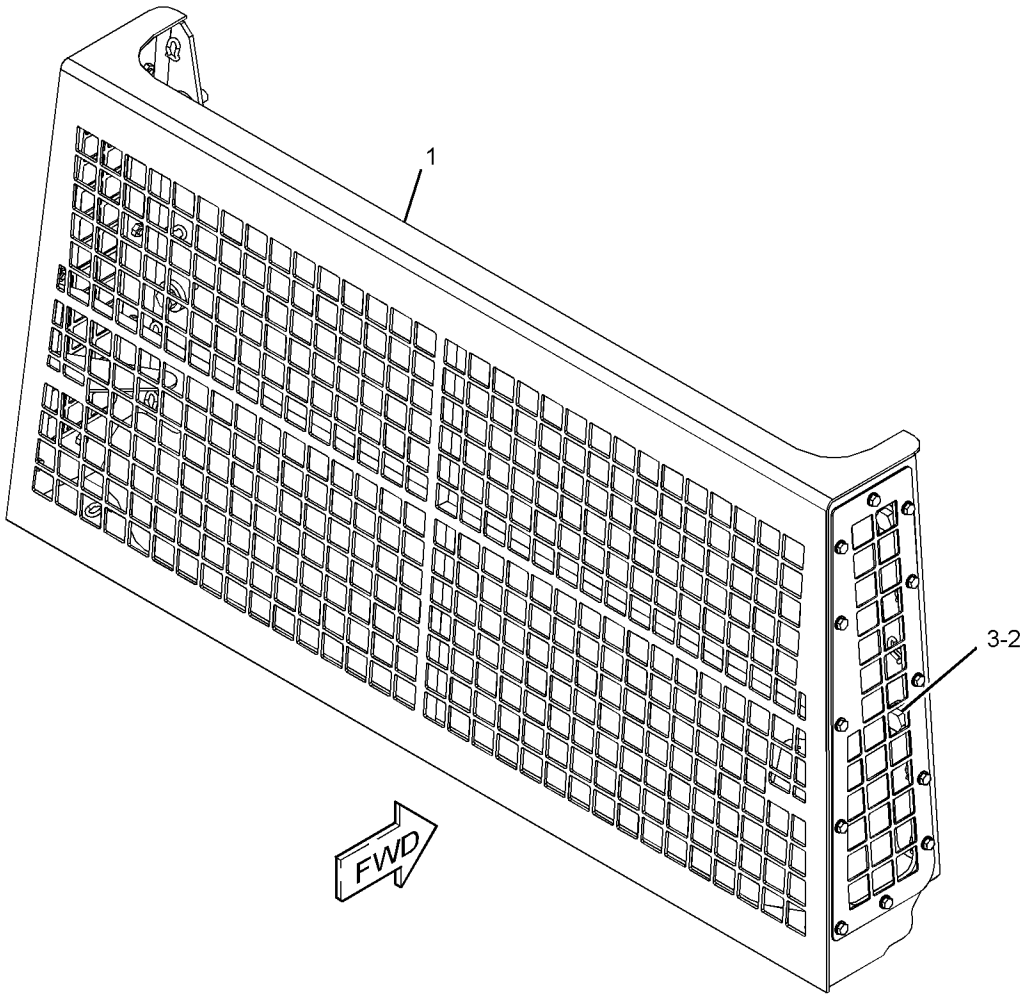

GRAPHIC #1 **<END>** g03392856

419-1501 SCREEN GP

S/N: EMM1-UP; JEN1-UP
RH
PART OF 419-1507 SCREEN GP-PROTECTION
AN ATTACHMENT

SMCS-7165 **i05634489**

NOTE	REF NO	GRAPHIC REF	PART NUMBER	QTY	PART NAME 1 2 3 4 5 6 (PRODUCT LEVEL)	SEE PAGE
	1	1	**9S-5187**	1	MOUNTING	
	2	1	**449-7894**	1	TUBE AS	
	3	1	**415-1440**	1	BRACKET AS	
	4	1	**449-7895**	1	SCREEN AS (RH)	
	5	1	**419-1500**	1	BRACKET AS	
	6	1	**419-1510**	1	PLATE AS	
	7	1	**419-1511**	1	BRACKET AS	
	8	1	**5P-1076**	7	WASHER-HARD (13.5X30X4-MM THK)	
	9	1	**6K-3632**	2	LOCKNUT (1-8-THD)	
	10	1	**7X-7729**	4	WASHER (11X25X3-MM THK)	
	11	1	**8C-8843**	2	BOLT (1-8X4.5-IN)	
	12	1	**8P-5244**	4	WASHER (33.3X69.8X6.35-MM THK)	
	13	1	**8T-4122**	2	WASHER-HARD (17X32X3.5-MM THK)	
M	14	1	**8T-4140**	2	BOLT (M16X2X60-MM)	
M	15	1	**8T-4186**	4	BOLT (M10X1.5X40-MM)	
M	16	1	**8T-4956**	7	BOLT (M12X1.75X35-MM)	
	17	1	**6H-4005**	1	GROMMET	

M - METRIC PART

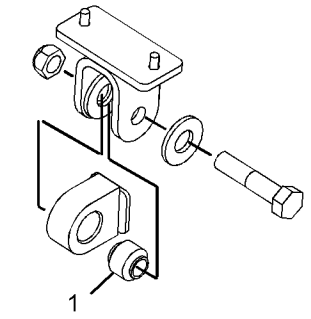

VIEW OF AREA A
(EXPLODED)

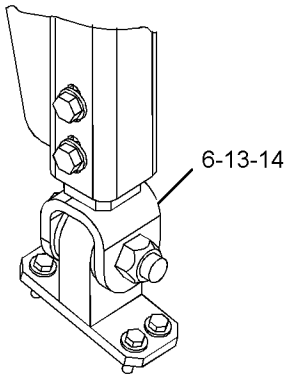

VIEW OF AREA B

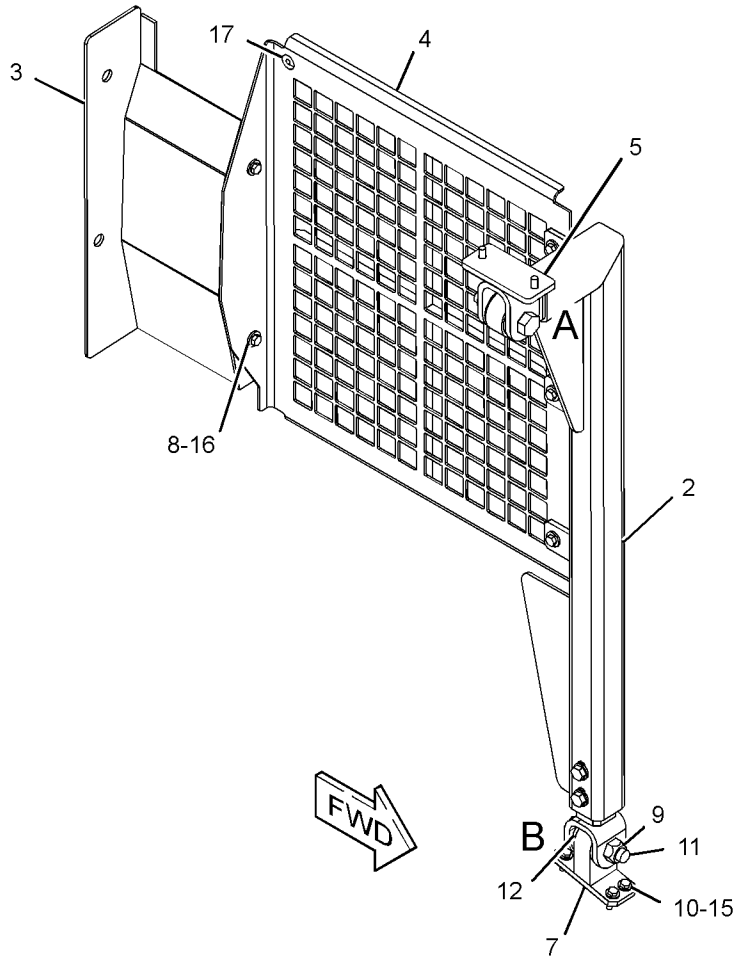

GRAPHIC #1 **<END>** g03548017

419-1502 SCREEN GP-PROTECTION

S/N: EMM1-UP; JEN1-UP
LH
PART OF 419-1507 SCREEN GP-PROTECTION
AN ATTACHMENT

SMCS-7165 **i05683534**

NOTE	REF NO	GRAPHIC REF	PART NUMBER	QTY	PART NAME 1 2 3 4 5 6 (PRODUCT LEVEL)	SEE PAGE
	1	1	**9S-5187**	1	MOUNTING	
	2	1	**415-1433**	1	TUBE AS (LH)	
	3	1	**415-1445**	1	BRACKET AS (LH)	
	4	1	**415-1450**	1	SCREEN AS (LH)	
	5	1	**419-1500**	1	BRACKET AS	
	6	1	**419-1510**	1	PLATE AS	
	7	1	**419-1511**	1	BRACKET AS	
	8	1	**5P-1076**	7	WASHER-HARD (13.5X30X4-MM THK)	
	9	1	**6K-3632**	2	LOCKNUT (1-8-THD)	
	10	1	**7X-7729**	4	WASHER (11X25X3-MM THK)	
	11	1	**8C-8843**	2	BOLT (1-8X4.5-IN)	
	12	1	**8P-5244**	4	WASHER (33.3X69.8X6.35-MM THK)	
	13	1	**8T-4122**	2	WASHER-HARD (17X32X3.5-MM THK)	
M	14	1	**8T-4140**	2	BOLT (M16X2X60-MM)	
M	15	1	**8T-4186**	4	BOLT (M10X1.5X40-MM)	
M	16	1	**8T-4956**	7	BOLT (M12X1.75X35-MM)	
	17	1	**6H-4005**	1	GROMMET	

M - METRIC PART

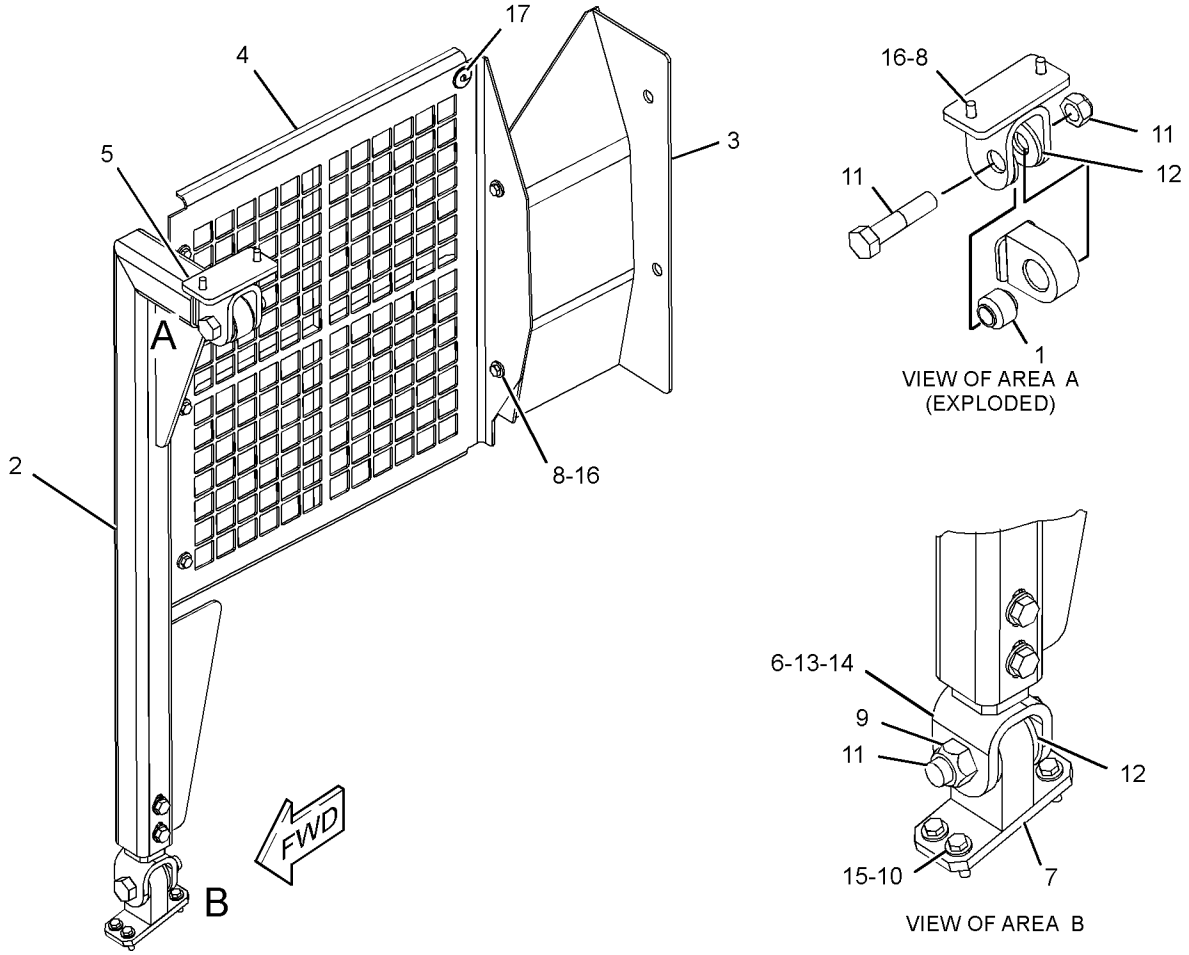

GRAPHIC #1 **<END>** g03588143

419-1507 SCREEN GP-PROTECTION–RH, LH

S/N: EMM1-UP; JEN1-UP
PART OF 425-6997 SCREEN GP-PROTECTION
AN ATTACHMENT

SMCS-7165 **i05634449**

NOTE	REF NO	GRAPHIC REF	PART NUMBER	QTY	PART NAME 1 2 3 4 5 6 (PRODUCT LEVEL)	SEE PAGE
Y	1	1	*419-1501*	1	SCREEN GP (RH)	673
Y	2	1	*419-1502*	1	SCREEN GP (LH)	674

Y - SEPARATE ILLUSTRATION

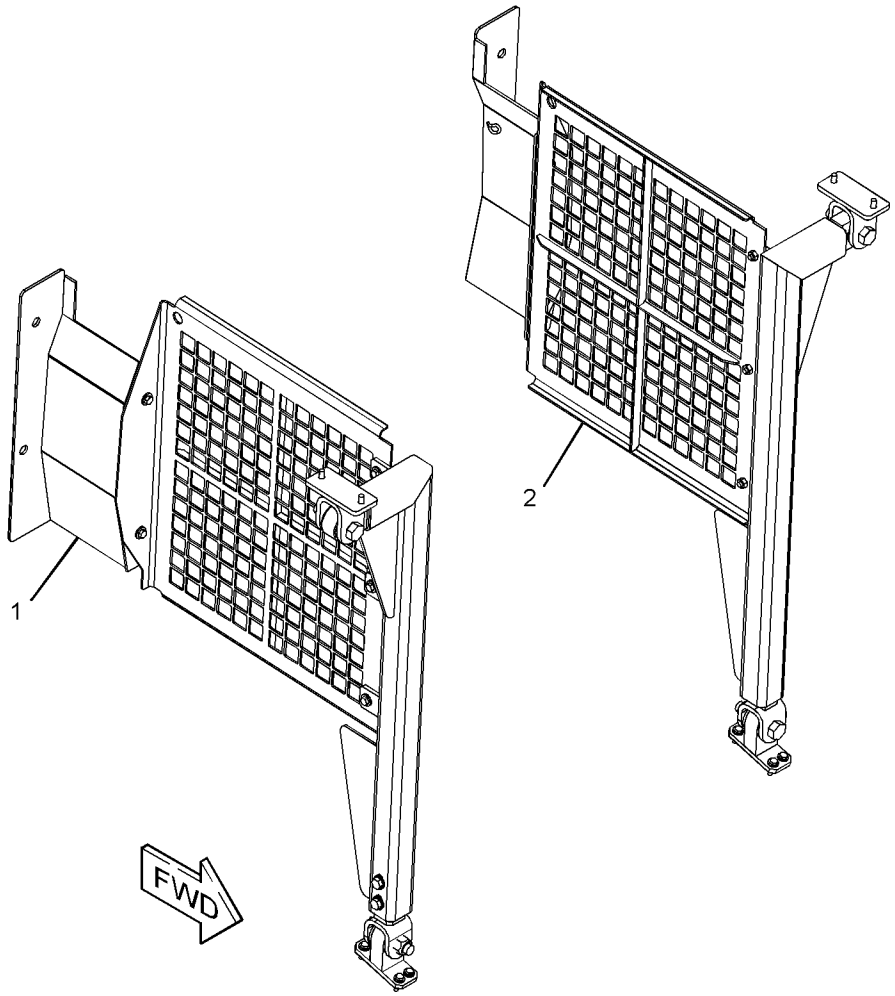

GRAPHIC #1 **<END>** g03402282

OPERATOR STATION

425-6997 SCREEN GP-PROTECTION

S/N: EMM1-UP; JEN1-UP

FOR USE WITH 422-2874—PAGE: 579, 416-2322—PAGE: 365

AN ATTACHMENT

SMCS-7165 **i05634391**

NOTE	PART NUMBER	QTY	PART NAME 1 2 3 4 5 6 (PRODUCT LEVEL)	SEE PAGE
Y	*415-1460*	1	SCREEN GP-PROTECTION (REAR)	672
Y	*419-1507*	1	SCREEN GP-PROTECTION (RH, LH)	675

Y - SEPARATE ILLUSTRATION

<END>

389-3218 SEAT & MOUNTING GP

S/N: EMM1-UP; JEN1-UP
FOR USE WITH CANOPY
AN ATTACHMENT

SMCS-7312 **i05552482**

NOTE	REF NO	GRAPHIC REF	PART NUMBER	QTY	PART NAME 1 2 3 4 5 6 (PRODUCT LEVEL)	SEE PAGE
	1	1	**126-3700**	1	ARMREST AS (RH)	
Y	2	1	**159-2950**	1	SEAT GP-SUSPENSION (VINYL)	688
	3	1	**184-1503**	2	KNOB (ARMREST ADJUSTMENT)	
	4	1	**184-3269**	1	PLATE AS	
	5	1	**184-3270**	1	PLATE AS	
	6	1	**416-0506**	1	ARMREST AS (LH)	
M		1	**6V-9632**	2	NUT-WELD (M6X1-THD)	
	7	1	**5P-1075**	2	WASHER-HARD (10.2X22.5X3-MM THK)	
	8	1	**7X-7729**	6	WASHER (11X25X3-MM THK)	
	9	1	**8T-4121**	2	WASHER-HARD (11X21X2.5-MM THK)	
M	10	1	**8T-4137**	4	BOLT (M10X1.5X20-MM)	
M	11	1	**8T-4196**	2	BOLT (M10X1.5X35-MM)	
	12	1	**8T-7971**	2	WASHER-HARD (13.5X25.5X5-MM THK)	
M	13	1	**9X-2125**	4	BOLT-LOCKING (M10X1.5X25-MM)	

M - METRIC PART
Y - SEPARATE ILLUSTRATION

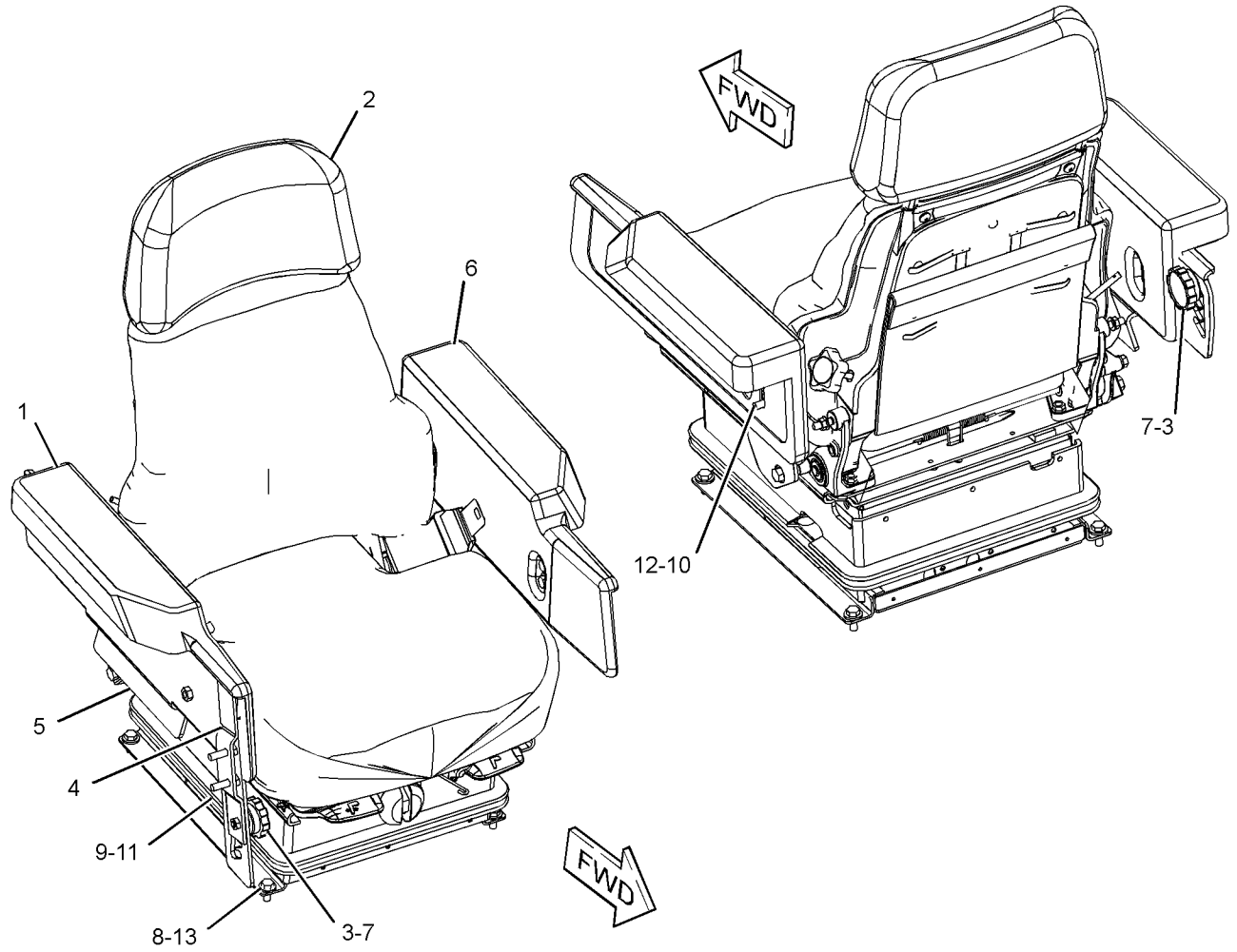

GRAPHIC #1 **<END>** g03535577

OPERATOR STATION

389-3219 SEAT & MOUNTING GP

S/N: EMM1-UP; JEN1-UP

AN ATTACHMENT

SMCS-7312 **i05552486**

NOTE	REF NO	GRAPHIC REF	PART NUMBER	QTY	PART NAME 1 2 3 4 5 6 (PRODUCT LEVEL)	SEE PAGE
	1	1	**126-3700**	1	ARMREST AS (RH)	
	2	1	**184-1503**	2	KNOB (ARMREST ADJUSTMENT)	
	3	1	**184-3269**	1	PLATE AS	
	4	1	**184-3270**	1	PLATE AS	
Y	5	1	**200-3174**	1	SEAT GP-SUSPENSION (CLOTH, AIR)	690
	6	1	**416-0506**	1	ARMREST AS (LH)	
M		1	**6V-9632**	2	NUT-WELD (M6X1-THD)	
	7	1	**5P-1075**	2	WASHER-HARD (10.2X22.5X3-MM THK)	
	8	1	**7X-7729**	6	WASHER (11X25X3-MM THK)	
	9	1	**8T-4121**	2	WASHER-HARD (11X21X2.5-MM THK)	
M	10	1	**8T-4137**	4	BOLT (M10X1.5X20-MM)	
M	11	1	**8T-4196**	2	BOLT (M10X1.5X35-MM)	
	12	1	**8T-7971**	2	WASHER-HARD (13.5X25.5X5-MM THK)	
	13	1	**9V-2818**	1	GROMMET	
M	14	1	**9X-2125**	4	BOLT-LOCKING (M10X1.5X25-MM)	

M - METRIC PART
Y - SEPARATE ILLUSTRATION

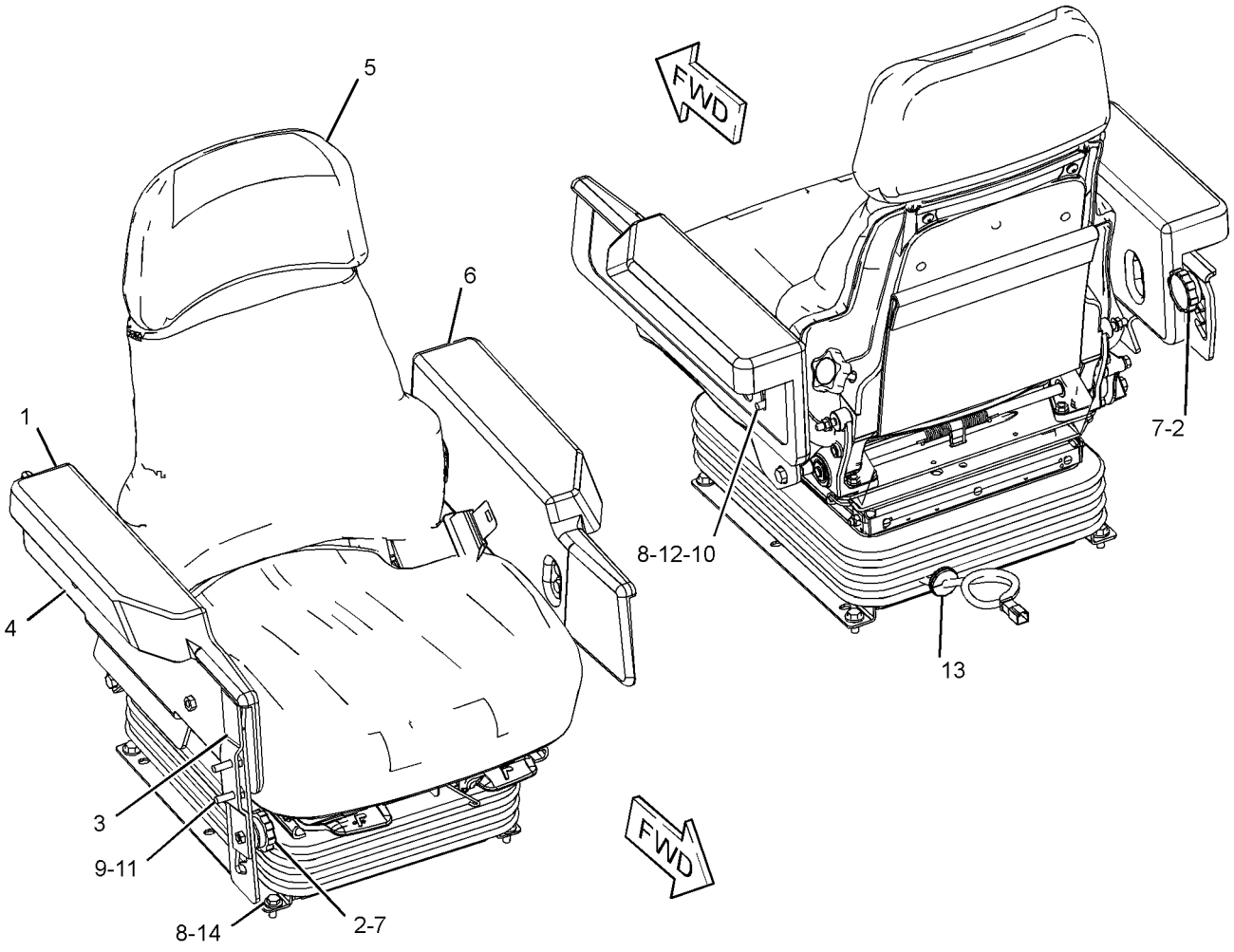

GRAPHIC #1 **<END>** g03535601

222-0345 SEAT BELT GP

S/N: EMM1-UP; JEN1-UP
PART OF 178-0606, 184-6011 SEAT GP
AN ATTACHMENT

SMCS-7327 **i05332838**

NOTE	REF NO	GRAPHIC REF	PART NUMBER	QTY	PART NAME 1 2 3 4 5 6 (PRODUCT LEVEL)	SEE PAGE
F			**0T-0244**	1	BOLT (7/16-20X1.25-IN)	
F			**205-6388**	1	BOLT (7/16-20X1.75-IN)	

F - NOT SHOWN

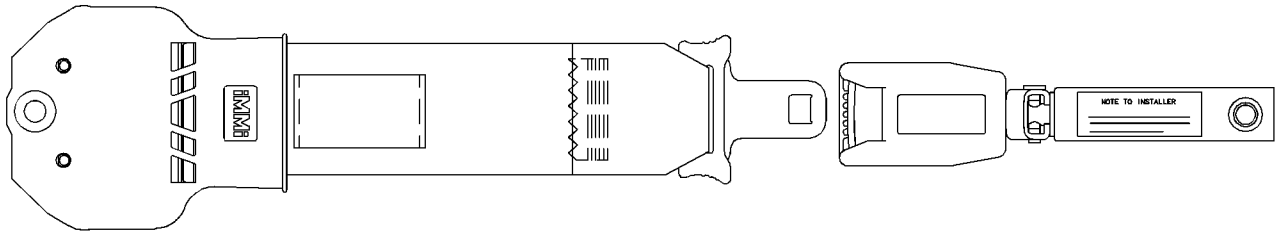

GRAPHIC #1 **<END>** g01196135

178-0603 SEAT GP—CLOTH

S/N: EMM1-UP; JEN1-UP
PART OF 178-0606 SEAT GP
AN ATTACHMENT

SMCS-7312 **i05374498**

NOTE	REF NO	GRAPHIC REF	PART NUMBER	QTY	PART NAME 1 2 3 4 5 6 (PRODUCT LEVEL)	SEE PAGE
	1	1	**218-0861**	1	PAN AS	
		1	**8T-9082**	5	RIVET-POP	
	2	1	**143-1288**	8	LOCKNUT-FLANGE (3/8-16-THD)	
	3	1	**171-1230**	6	SCREW-BUTTON HEAD (3/8-16X1-IN)	
	4	1	**171-6682**	1	BAR	
	5	1	**172-2416**	2	PIN	
Y	6	1	*173-1028*	1	ADJUSTER GP-SEAT	565
	7	1	**177-1863**	2	BOLT-PIVOT (3/8-16X2.89-IN)	
Y	8	1	*210-2270*	1	RECLINER GP-SEAT	662
CY	9	1	*292-9237*	1	PAN GP-BACKREST (CLOTH, LUMBAR)	644
	10	1	**184-2298**	1	ROD	
	11	1	**184-2299**	4	WASHER (7X25.4X2.54-MM THK)	
	12	1	**095-0843**	2	PIN-COTTER	
	13	1	**5V-1496**	2	RETAINER	
	14	1	**6V-7646**	2	WASHER-HARD (7.2X25X2-MM THK)	
	15	1	**8T-0328**	1	WASHER-HARD (5.5X10X1-MM THK)	
	16	1	**8T-4205**	1	WASHER-HARD (7.2X14.5X2-MM THK)	
C	17	1	**294-5042**	2	SPACER (11.1X19.5X9.67-MM THK)	

C - CHANGE FROM PREVIOUS TYPE
Y - SEPARATE ILLUSTRATION

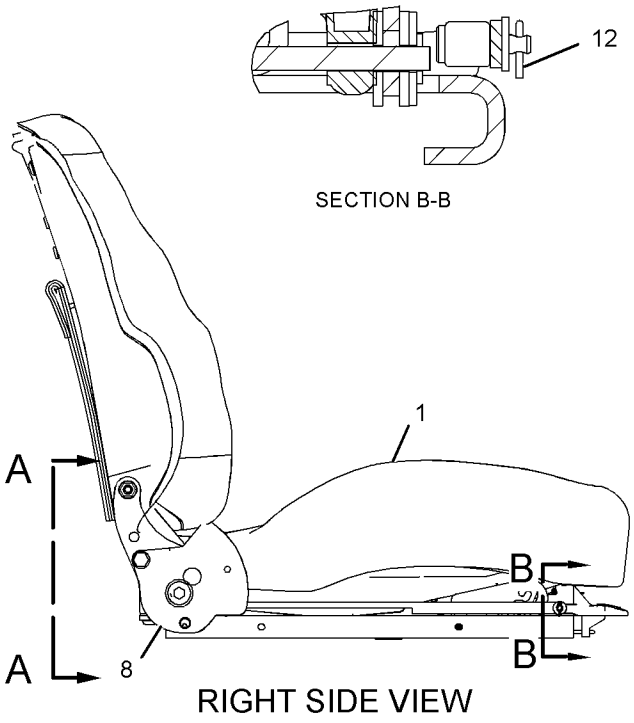

RIGHT SIDE VIEW

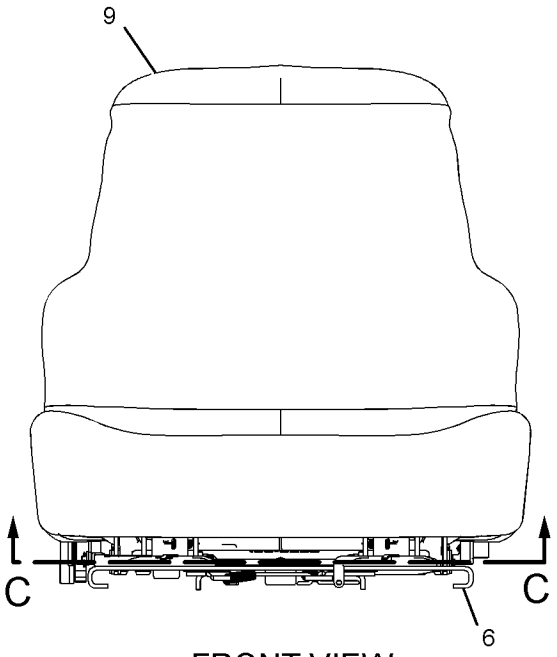

FRONT VIEW

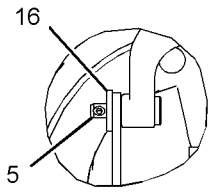

VIEW OF AREA E

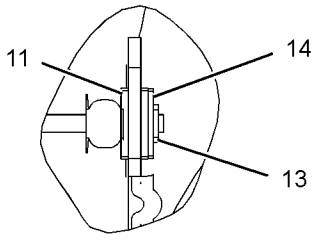

VIEW OF AREA D

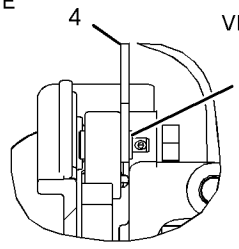

VIEW OF AREA F

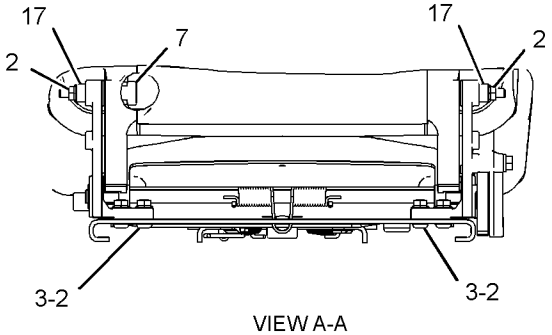

VIEW A-A

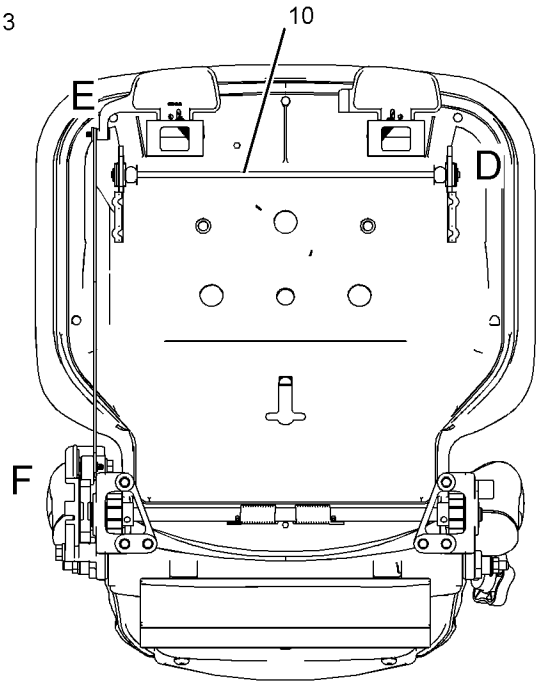

SECTION C-C

GRAPHIC #1 **<END>** g01336990

178-0606 SEAT GP—CLOTH

S/N: EMM1-UP; JEN1-UP
PART OF 160-7186, 200-3174 SEAT GP-SUSPENSION
AN ATTACHMENT

SMCS-7312 **i05332316**

NOTE	REF NO	GRAPHIC REF	PART NUMBER	QTY	PART NAME 1 2 3 4 5 6 (PRODUCT LEVEL)	SEE PAGE
	1	1	**177-4937**	1	SPACER (11.7X19.8X20.3-MM THK)	
Y	2	1	**178-0603**	1	SEAT GP (CLOTH)	680
Y	3	1	**222-0345**	1	SEAT BELT GP (RETRACTABLE, 3-IN)	679
C	4	1	**229-1494**	1	EXTENSION GP-BACKREST (CLOTH)	
		1	**117-4491**	1	ROD	
	5	1	**0T-0244**	1	BOLT (7/16-20X1.25-IN)	
	6	1	**205-6388**	1	BOLT (7/16-20X1.75-IN)	

C - CHANGE FROM PREVIOUS TYPE
Y - SEPARATE ILLUSTRATION

178-0606 **SEAT GP (*contd.*)** **i05332316**

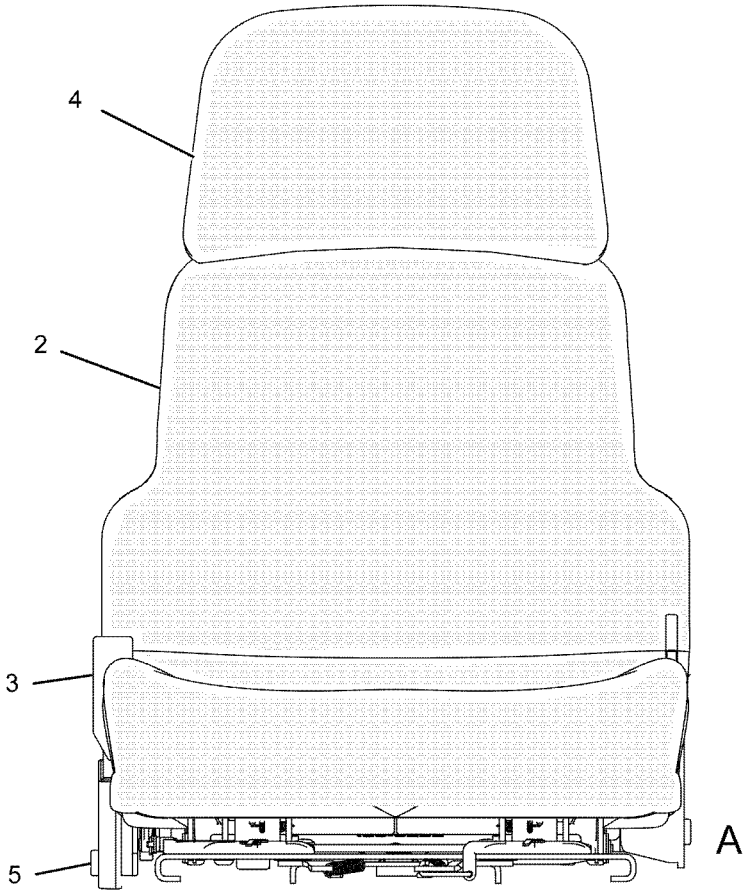

FRONT VIEW

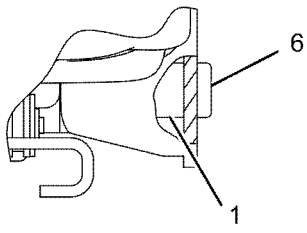

VIEW A

GRAPHIC #1 **<END>** g01084230

180-7304 SEAT GP—VINYL

S/N: EMM1-UP; JEN1-UP
PART OF 184-6011 SEAT GP
AN ATTACHMENT

SMCS-7312 **i05333519**

NOTE	REF NO	GRAPHIC REF	PART NUMBER	QTY	PART NAME 1 2 3 4 5 6 (PRODUCT LEVEL)	SEE PAGE
	1	1	**143-1288**	8	LOCKNUT-FLANGE (3/8-16-THD)	
	2	1	**171-1230**	6	SCREW-BUTTON HEAD (3/8-16X1-IN)	
	3	1	**171-6682**	1	BAR	
	4	1	**172-2416**	2	PIN	
Y	5	1	*173-1028*	1	ADJUSTER GP-SEAT	565
	6	1	**173-3283**	1	PAN AS (VINYL)	
		1	**169-1026**	1	CUSHION AS	
		1	**6K-3273**	5	RIVET-POP	
	7	1	**177-1863**	2	BOLT-PIVOT (3/8-16X2.89-IN)	
CY	8	1	*292-9238*	1	PAN GP-BACKREST (VINYL)	645
	9	1	**184-2298**	1	ROD	
	10	1	**184-2299**	4	WASHER (7X25.4X2.54-MM THK)	
Y	11	1	*210-2270*	1	RECLINER GP-SEAT	662
	12	1	**095-0843**	2	PIN-COTTER	
	13	1	**5V-1496**	2	RETAINER	
	14	1	**6V-7646**	2	WASHER-HARD (7.2X25X2-MM THK)	
	15	1	**8T-0328**	1	WASHER-HARD (5.5X10X1-MM THK)	
	16	1	**8T-4205**	1	WASHER-HARD (7.2X14.5X2-MM THK)	
C	17	1	**294-5042**	2	SPACER (11.1X19.5X9.67-MM THK)	

C - CHANGE FROM PREVIOUS TYPE
Y - SEPARATE ILLUSTRATION

180-7304 **SEAT GP (*contd.*)** **i05333519**

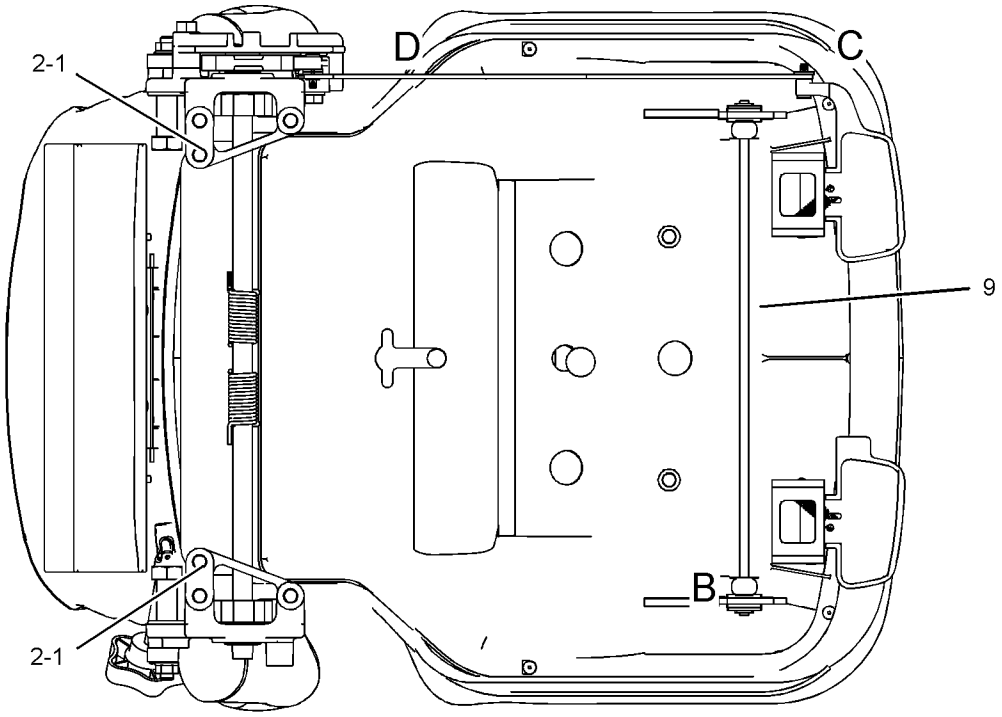

SECTION A-A

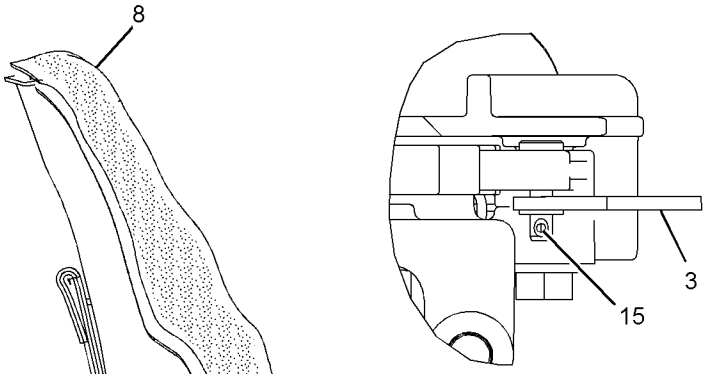

VIEW OF AREA D

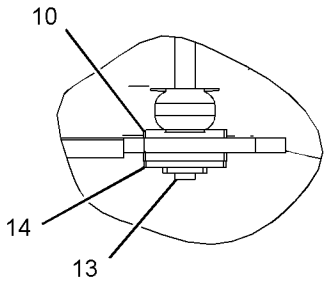

VIEW OF AREA B

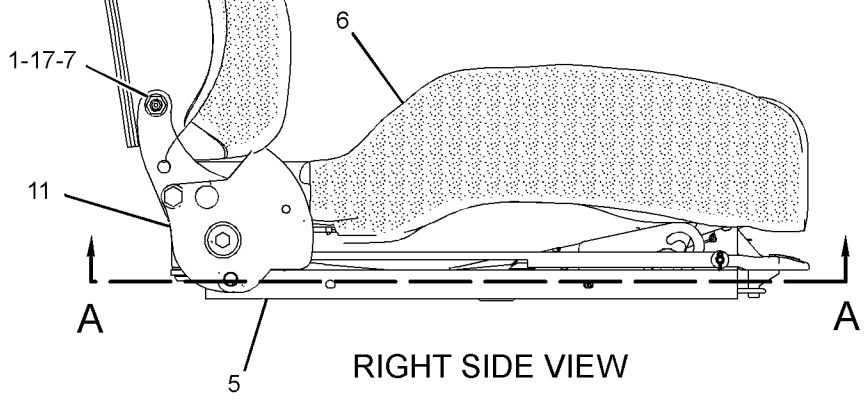

RIGHT SIDE VIEW

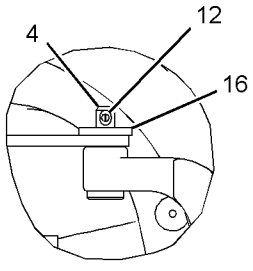

VIEW OF AREA C

GRAPHIC #1 **<END>** g01451635

184-6011 SEAT GP–VINYL

S/N: EMM1-UP; JEN1-UP
PART OF 159-2950 SEAT GP-SUSPENSION
AN ATTACHMENT

SMCS-7312 **i05332283**

NOTE	REF NO	GRAPHIC REF	PART NUMBER	QTY	PART NAME 1 2 3 4 5 6 (PRODUCT LEVEL)	SEE PAGE
	1	1	**173-3083**	1	EXTENSION GP-BACKREST (VINYL)	
		1	**117-4491**	1	ROD	
	2	1	**177-4937**	1	SPACER (11.7X19.8X20.3-MM THK)	
	3	1	**205-6388**	1	BOLT (7/16-20X1.75-IN)	
	4	1	**0T-0244**	1	BOLT (7/16-20X1.25-IN)	
Y	5	1	**180-7304**	1	SEAT GP (VINYL)	684
Y	6	1	**222-0345**	1	SEAT BELT GP (RETRACTABLE, 3-IN)	679

Y - SEPARATE ILLUSTRATION

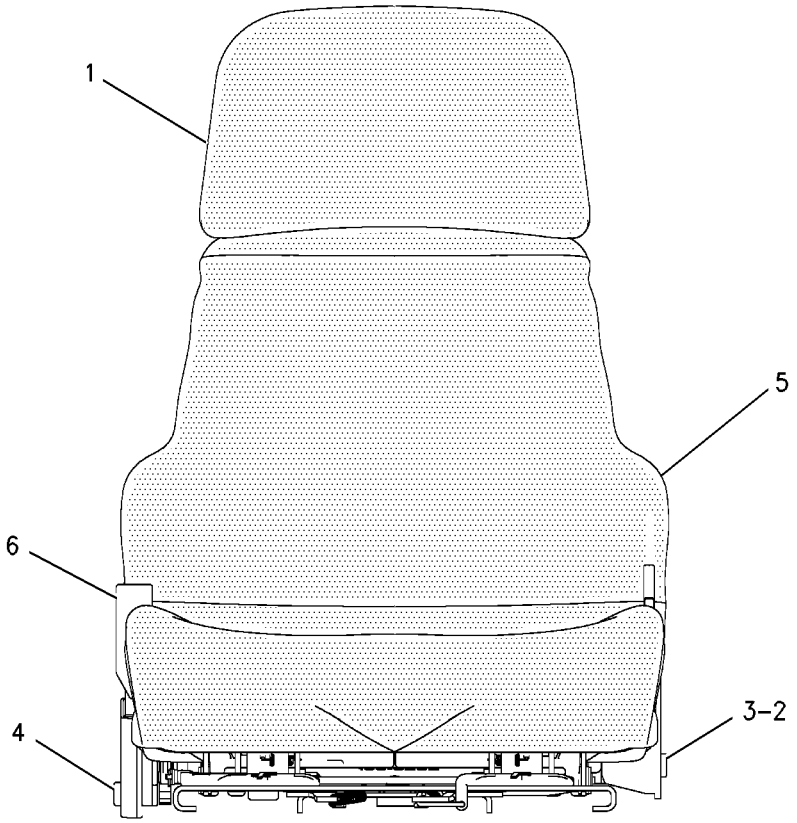

FRONT VIEW

GRAPHIC #1 **<END>** g00683843

223-2205 SEAT GP–CLOTH

S/N: EMM1-UP; JEN1-UP
AN ATTACHMENT

SMCS-7312 **i05499259**

NOTE	REF NO	GRAPHIC REF	PART NUMBER	QTY	PART NAME 1 2 3 4 5 6 (PRODUCT LEVEL)	SEE PAGE
	1	1	**126-3700**	1	ARMREST AS (RH)	
	2	1	**126-3701**	1	ARMREST AS (LH)	
Y	3	1	**160-7186**	1	SEAT GP-SUSPENSION (CLOTH) (CLOTH)	689
	4	1	**184-1503**	2	KNOB (ARMREST ADJUSTMENT)	
	5	1	**184-3269**	1	PLATE AS	
		1	**1F-0750**	1	NUT-WELD (3/8-16-THD)	
	6	1	**184-3270**	1	PLATE AS	
M		1	**8T-3490**	2	NUT-WELD (M10X1.5-THD)	
	7	1	**5P-1075**	2	WASHER-HARD (10.2X22.5X3-MM THK)	
	8	1	**7X-7729**	6	WASHER (11X25X3-MM THK)	
	9	1	**8T-4121**	2	WASHER-HARD (11X21X2.5-MM THK)	
M	10	1	**8T-4137**	4	BOLT (M10X1.5X20-MM)	
M	11	1	**8T-4196**	2	BOLT (M10X1.5X35-MM)	
	12	1	**8T-7971**	2	WASHER-HARD (13.5X25.5X5-MM THK)	
M	13	1	**9X-2125**	4	BOLT-LOCKING (M10X1.5X25-MM)	

M - METRIC PART
Y - SEPARATE ILLUSTRATION

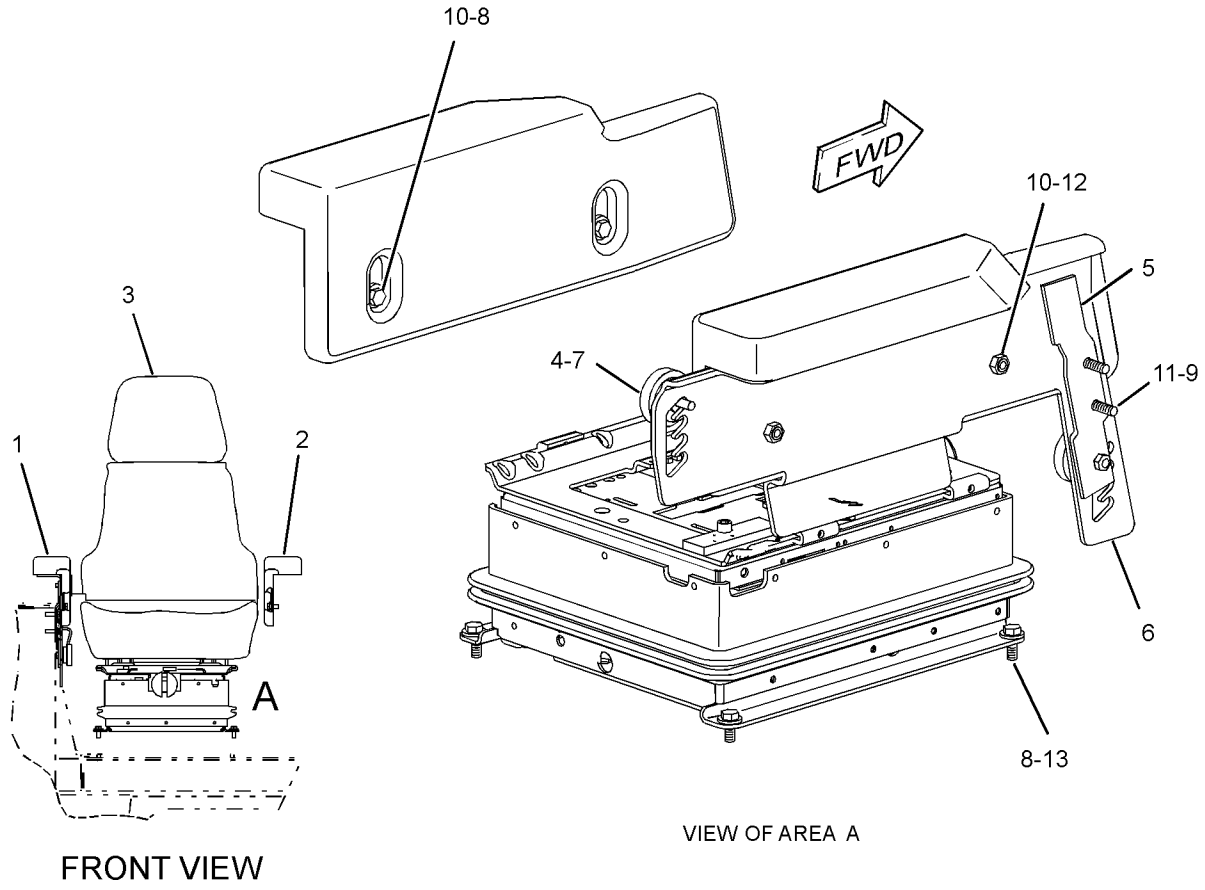

GRAPHIC #1 **<END>** g01206790

159-2950 SEAT GP-SUSPENSION–VINYL

S/N: EMM1-UP; JEN1-UP
PART OF 389-3218 SEAT & MOUNTING GP
AN ATTACHMENT

SMCS-7321, 7324, 7336 **i05332280**

NOTE	REF NO	GRAPHIC REF	PART NUMBER	QTY	PART NAME 1 2 3 4 5 6 (PRODUCT LEVEL)	SEE PAGE
Y	1	1	**160-7165**	1	SUSPENSION GP-SEAT	691
Y	2	1	**184-6011**	1	SEAT GP (VINYL)	686
J	3	1	**173-5787**	4	SETSCREW (1/4-20-THD)	
J	4	1	**4F-4879**	1	BOLT (3/8-16X0.5-IN)	
J	5	1	**203-7703**	2	WASHER-HARD (10.2X22.22X2.38-MM THK)	
					AVAILABLE REPAIR KIT(S):	
J			**173-7035**	1	KIT-SLIDER BLOCK (SUSPENSION SEAT)	
					(INCLUDES SLIDER BLOCKS)	

J - KIT MARKED J SERVICES PARTS MARKED J
Y - SEPARATE ILLUSTRATION

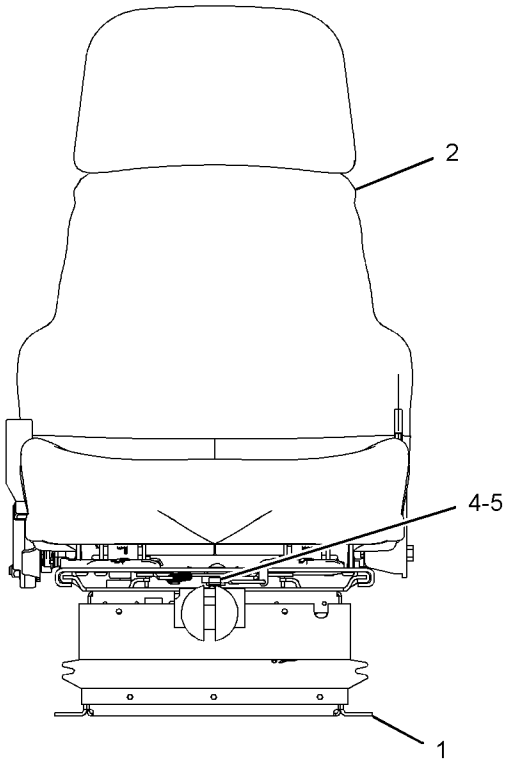

FRONT VIEW

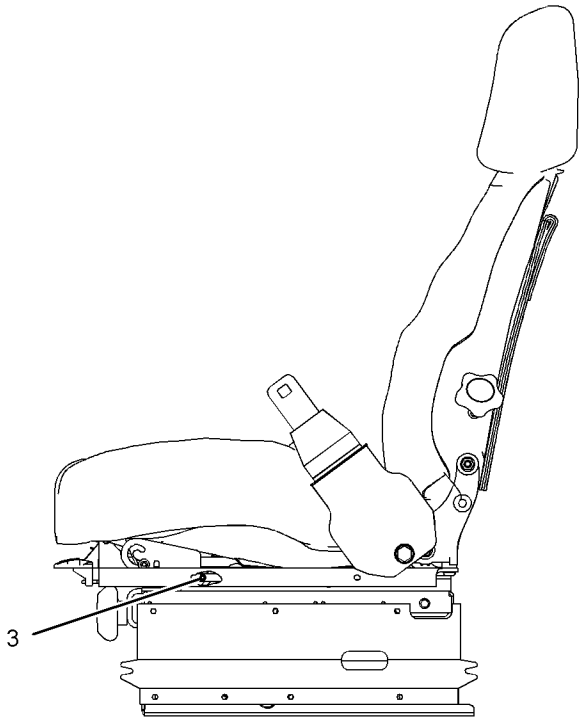

LEFT SIDE VIEW

GRAPHIC #1 **<END>** g01909039

160-7186 SEAT GP-SUSPENSION–CLOTH

S/N: EMM1-UP; JEN1-UP
PART OF 223-2205 SEAT GP
AN ATTACHMENT

SMCS-7321, 7324, 7336 **i05332309**

NOTE	REF NO	GRAPHIC REF	PART NUMBER	QTY	PART NAME 1 2 3 4 5 6 (PRODUCT LEVEL)	SEE PAGE
Y	1	1	**160-7165**	1	SUSPENSION GP-SEAT	691
Y	2	1	**178-0606**	1	SEAT GP (CLOTH)	682
J	3	1	**173-5787**	4	SETSCREW (1/4-20-THD)	
J	4	1	**4F-4879**	1	BOLT (3/8-16X0.5-IN)	
J	5	1	**203-7703**	2	WASHER-HARD (10.2X22.22X2.38-MM THK)	
					AVAILABLE REPAIR KIT(S):	
J			**173-7035**	1	KIT-SLIDER BLOCK (SUSPENSION SEAT)	
					(INCLUDES SLIDER BLOCKS)	

J - (KIT MARKED J SERVICES PARTS MARKED J)
Y - SEPARATE ILLUSTRATION

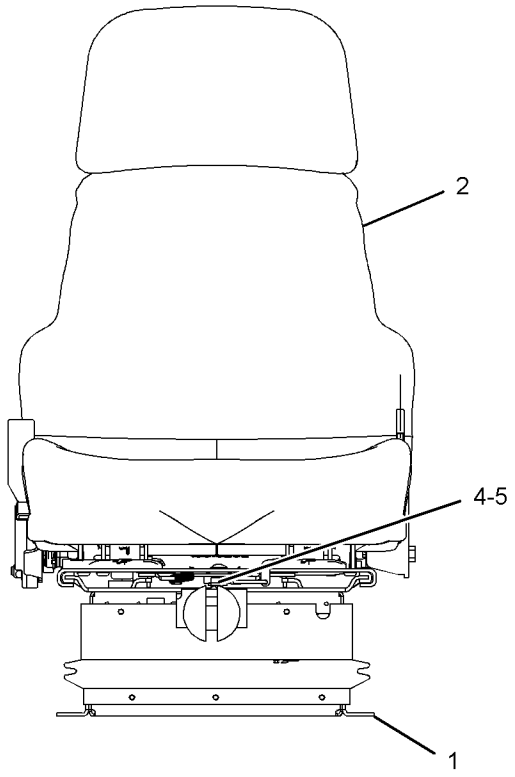

FRONT VIEW

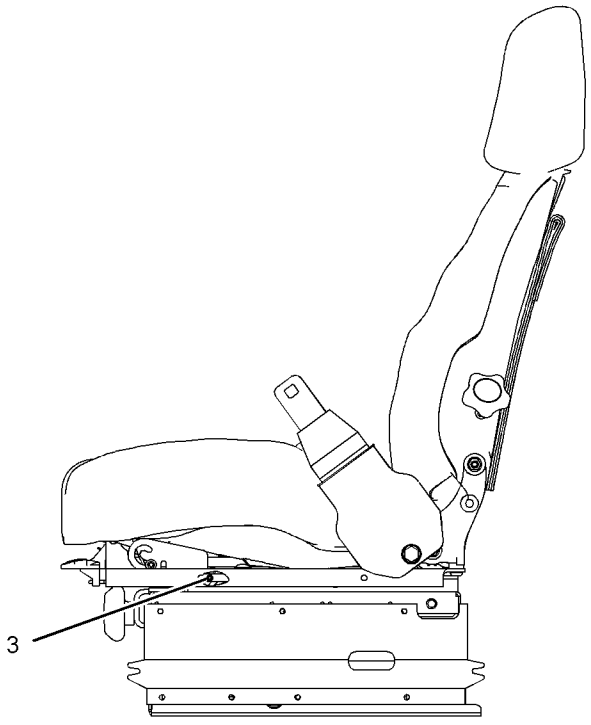

LEFT SIDE VIEW

GRAPHIC #1 **<END>** g01909213

200-3174 SEAT GP-SUSPENSION–CLOTH, AIR

S/N: EMM1-UP; JEN1-UP
PART OF 389-3219 SEAT & MOUNTING GP
AN ATTACHMENT

SMCS-7321, 7324, 7336 **i05351160**

NOTE	REF NO	GRAPHIC REF	PART NUMBER	QTY	PART NAME 1 2 3 4 5 6 (PRODUCT LEVEL)	SEE PAGE
J	1	1	**173-5787**	4	SETSCREW (1/4-20-THD)	
Y	3	1	**178-0606**	1	SEAT GP (CLOTH)	682
Y	4	1	**191-2933**	1	SUSPENSION GP-SEAT (AIR)	693
J	5	1	**203-7703**	2	WASHER-HARD (10.2X22.22X2.38-MM THK)	
J	6	1	**4F-4879**	1	BOLT (3/8-16X0.5-IN)	
					AVAILABLE REPAIR KIT(S):	
J			**173-7035**	1	KIT-SLIDER BLOCK (SUSPENSION SEAT)	

J - KIT MARKED J INCLUDES PARTS MARKED J
Y - SEPARATE ILLUSTRATION

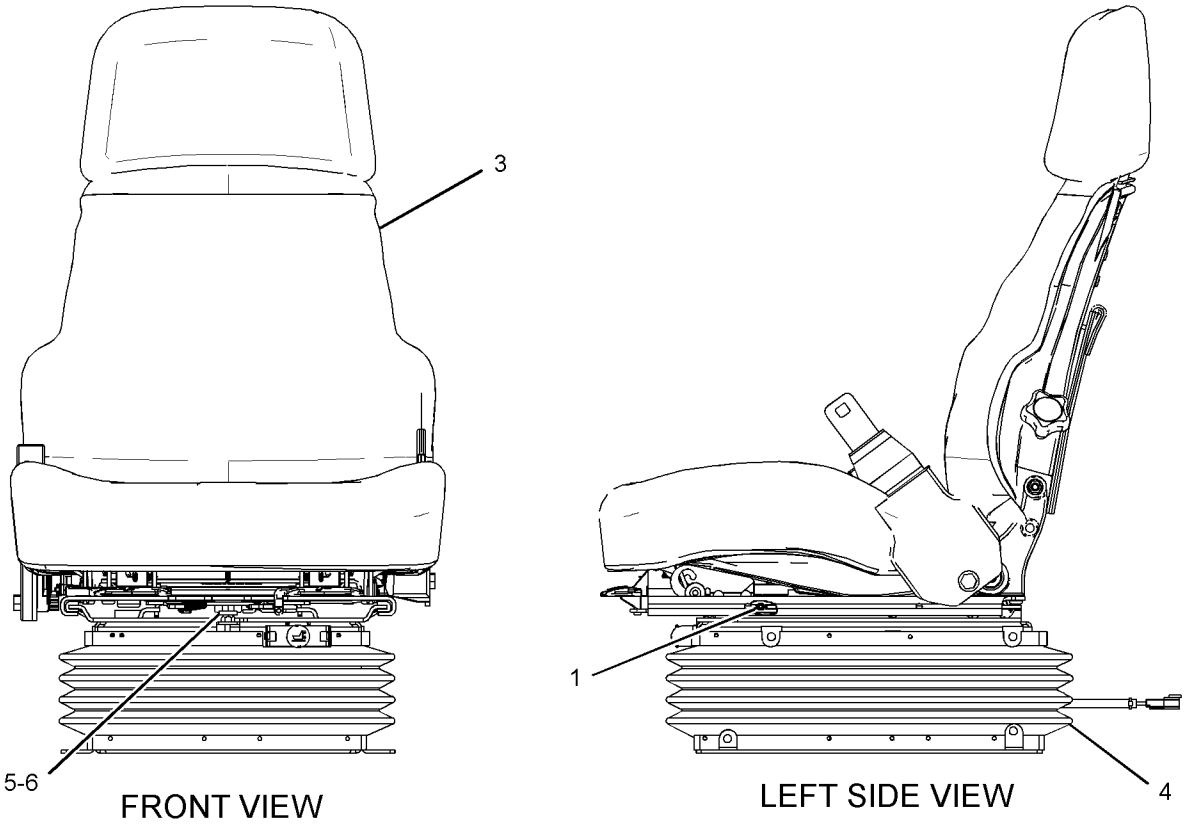

GRAPHIC #1 **<END>** g01608353

160-7165 SUSPENSION GP-SEAT

S/N: EMM1-UP; JEN1-UP
PART OF 159-2950, 160-7186 SEAT GP-SUSPENSION
AN ATTACHMENT

SMCS-7324 **i05332282**

NOTE	REF NO	GRAPHIC REF	PART NUMBER	QTY	PART NAME 1 2 3 4 5 6 (PRODUCT LEVEL)	SEE PAGE
	1	1	**2K-4973**	2	LOCKNUT (3/8-16-THD)	
	2	1	**4V-7884**	2	BEARING	
	3	1	**4V-8577**	4	BEARING	
	4	1	**5V-1497**	1	RETAINER	
	5	1	**8Y-5965**	1	ABSORBER AS-SHOCK	
	6	1	**8Y-6012**	1	ARM AS-SUSPENSION	
	7	1	**8Y-6014**	1	HOUSING AS (LOWER)	
	8	1	**8Y-6024**	2	SHAFT AS	
J	9	1	**101-0003**	20	FASTENER	
J	10	1	**166-6781**	6	FASTENER	
J	11	1	**163-1146**	3	FASTENER	
	12	1	**145-0326**	1	FILM-INSTRUCTION (SEAT ADJUSTMENT)	
	13	1	**169-7380**	1	BOLT-SOCKET HEAD (3/8-16X0.375-IN)	
Y	14	1	**174-2231**	1	HOUSING GP-SEAT SUSPENSION	609
J	15	1	**197-7689**	3	FASTENER	
					AVAILABLE REPAIR KIT(S):	
J			**8Y-5944**	1	KIT-SUSPENSION BOOT (SEAT)	
					(INCLUDES BOOT, RETAINER & FASTENERS)	
			101-4194	1	KIT-TETHER BELT (SUSPENSION SEAT)	
					(INCLUDES 2 BELTS)	
			101-4195	1	KIT-SUSPENSION ROLLER (SUSPENSION SEAT)	
					(INCLUDES 4 ROLLERS)	

J - KIT MARKED J INCLUDES PARTS MARKED J
Y - SEPARATE ILLUSTRATION

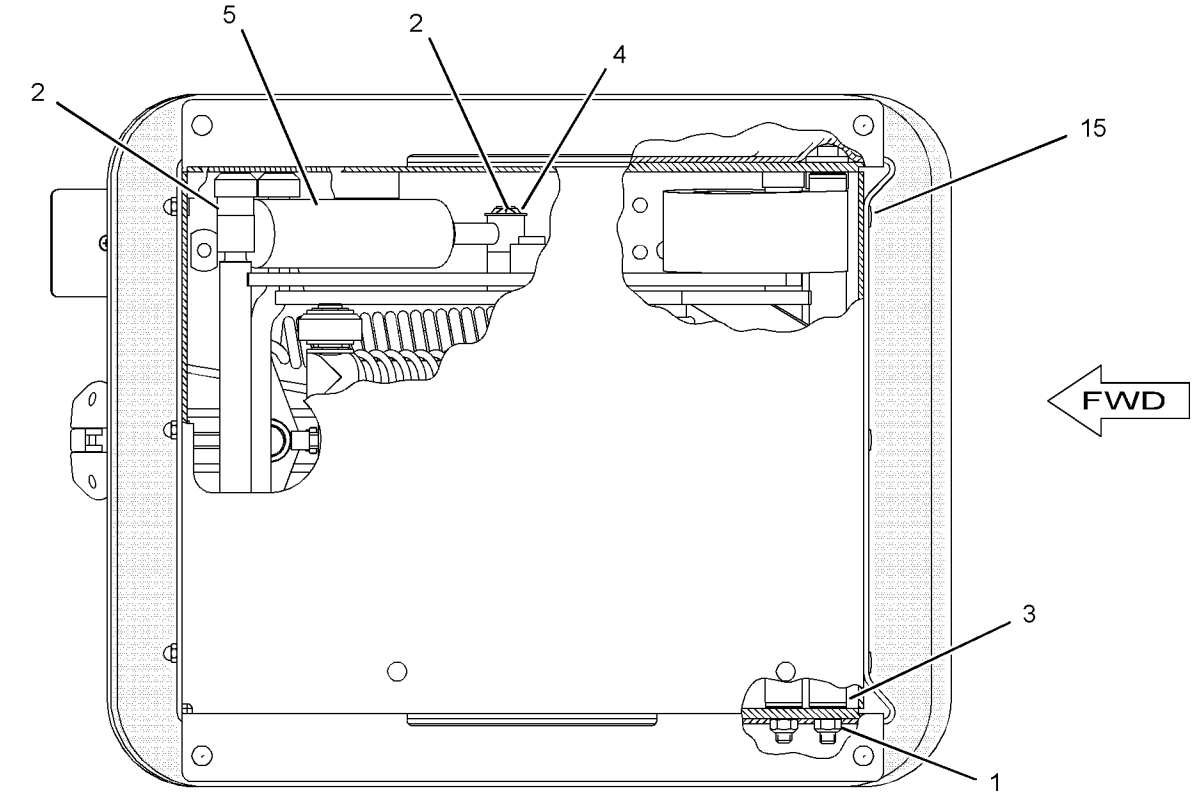

BOTTOM VIEW

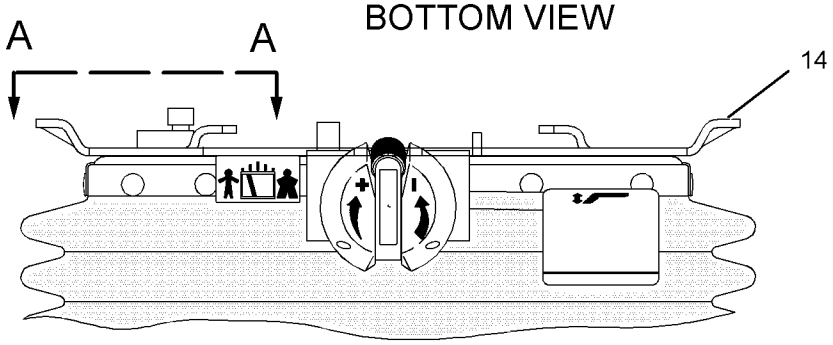

FRONT VIEW

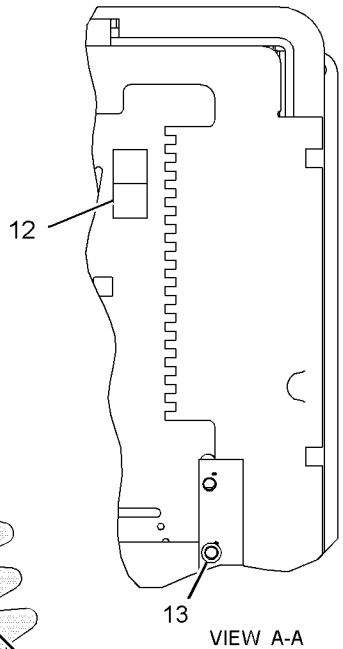

VIEW A-A

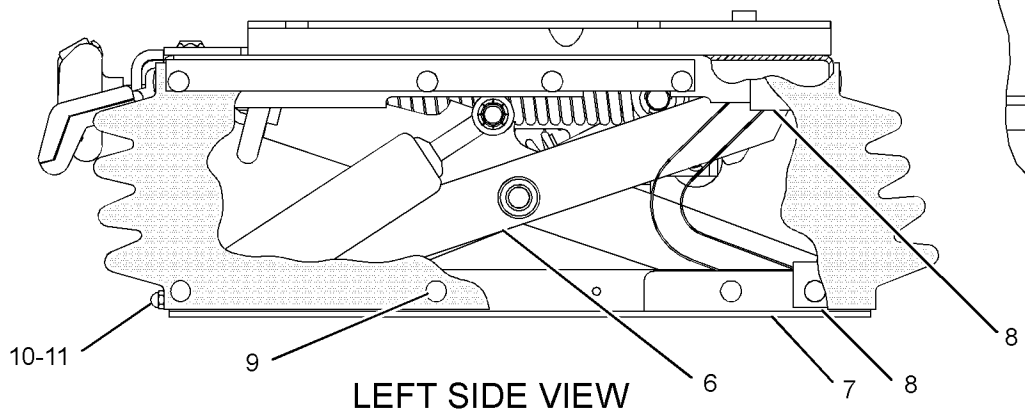

LEFT SIDE VIEW

GRAPHIC #1 **<END>** g01445578

191-2933 SUSPENSION GP-SEAT–AIR

S/N: EMM1-UP; JEN1-UP
PART OF 200-3174 SEAT GP-SUSPENSION
AN ATTACHMENT

SMCS-7324 **i05351166**

NOTE	REF NO	GRAPHIC REF	PART NUMBER	QTY	PART NAME 1 2 3 4 5 6 (PRODUCT LEVEL)	SEE PAGE
	1	1	**3P-9900**	5	WASHER (10.5X30X3-MM THK)	
	2	1	**4B-4278**	2	WASHER (10.2X20.5X1.6-MM THK)	
	3	1	**4V-8577**	12	BEARING	
	4	1	**8L-8413**	1	STRAP-CABLE	
	5	1	**145-0326**	1	FILM-INSTRUCTION (SEAT ADJUSTMENT)	
	6	1	**164-1234**	1	PLATE	
	7	1	**101-0003**	33	FASTENER	
	8	1	**169-7380**	1	BOLT-SOCKET HEAD (3/8-16X0.375-IN)	
	9	1	**186-5107**	2	SCREW-DRIVE (NO 8-16X1.25-IN)	
	10	1	**192-7752**	4	SHAFT AS	
	11	1	**192-7755**	1	HOUSING AS (LOWER)	
	12	1	**192-7760**	1	SHAFT	
	13	1	**192-7767**	1	SCISSORS AS	
	14	1	**192-7783**	1	TOGGLE AS (WIDE)	
	15	1	**192-7787**	1	TOGGLE AS (NARROW)	
	16	1	**192-7790**	1	HOUSING AS (UPPER)	
	17	1	**192-7795**	1	BOOT	
	18	1	**192-7805**	1	HARNESS AS-VALVE (SEAT AIR COMPRESSOR)	
		1	**186-3735**	2	PIN-CONNECTOR (16-GA TO 18-GA)	
		1	**102-8802**	1	KIT-RECEPTACLE (2-PIN)	
					(INCLUDES RECEPTACLE AS & WEDGE)	
E		1	**211-5358**		CONDUIT-FLEXIBLE (64-CM)	
	19	1	**192-7810**	1	SPRING AS-AIR	
		1	**5P-4423**	1	ELBOW	
		1	**163-1135**	1	SPRING	
	20	1	**192-7812**	1	BOLT-SPECIAL	
	21	1	**192-7820**	3	BUMPER	
	22	1	**192-7822**	1	SHAFT	
	23	1	**237-3943**	1	BRACKET	
Y	24	1	**397-6405**	1	KIT-SEAT AIR COMPRESSOR	615
	25	1	**108-4311**	1	SCREW-MACHINE (3/8-16X0.75-IN)	
	26	1	**2K-4973**	8	LOCKNUT (3/8-16-THD)	
	27	1	**3J-4818**	1	LOCKWASHER	
M	28	1	**5C-2890**	3	NUT (M6X1-THD)	
	29	1	**8T-9371**	1	BOLT (3/8-16X0.5-IN)	
E	30	1	**211-5358**		CONDUIT-FLEXIBLE (26.7-CM)	
E	30A	1	**211-5358**		CONDUIT-FLEXIBLE (35.6-CM)	
D	31	1	**5P-6010**		TUBE (0.267-M)	
D	31A	1	**5P-6010**		TUBE (0.356-M)	
					AVAILABLE REPAIR KIT(S):	
			192-7799	1	KIT-AIR VALVE (SUSPENSION SEAT)	
					(INCLUDES KNOB AS, NUT, VALVE, LOCKWASHER & FITTING)	
			192-7848	1	KIT-SHOCK ABSORBER (SUSPENSION SEAT)	
					(INCLUDES LOCKNUT, LOCKWASHER, SHOCK ABSORBER, BEARINGS, WASHER & BOLTS)	
			211-9294	1	KIT-TETHER (SUSPENSION SEAT)	
					(INCLUDES TETHERS)	

D - ORDER BY THE METER
E - ORDER BY THE CENTIMETER
M - METRIC PART
Y - SEPARATE ILLUSTRATION

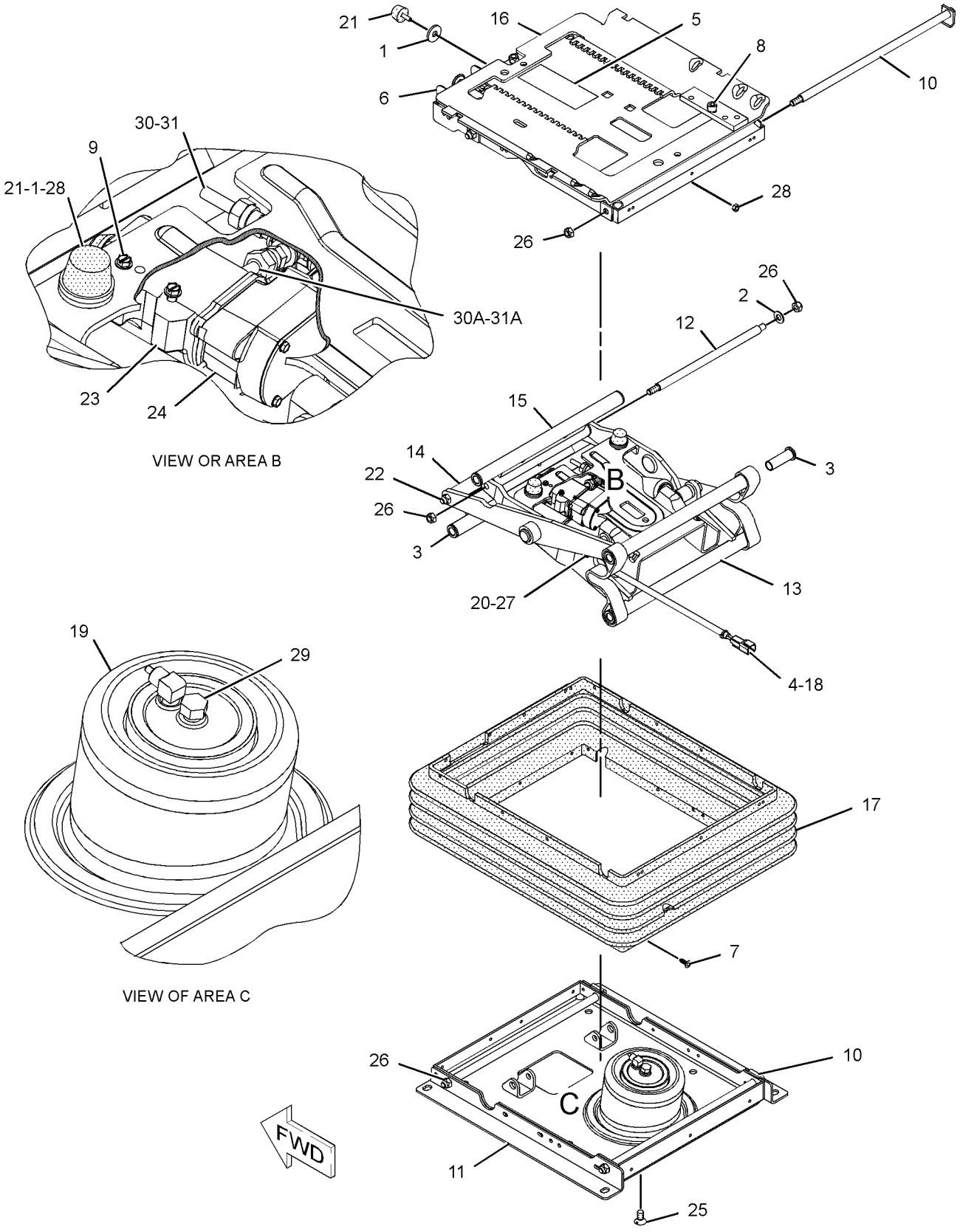

GRAPHIC #1 **<END>** g01197079

169-9649 TANK GP-WINDOW WASHER

S/N: EMM1-UP; JEN1-UP
PART OF 380-7910 TANK GP-WINDOW WASHER
AN ATTACHMENT

SMCS-7306 **i05330424**

NOTE	REF NO	GRAPHIC REF	PART NUMBER	QTY	PART NAME 1 2 3 4 5 6 (PRODUCT LEVEL)	SEE PAGE
	1	1	**3V-3263**	2	CONNECTOR (HOSE)	
	2	1	**186-4857**	1	HARNESS AS-WIRING (WINDOW WASHER)	
		1	**102-8805**	1	KIT-RECEPTACLE (6-PIN)	
					(INCLUDES RECEPTACLE AS & WEDGE)	
		1	**9X-0194**	4	TERMINAL AS	
		1	**5P-4571**	8	TERMINAL-BLADE (14-GA TO 16-GA)	
					—OR—	
		1	**5P-5618**	4	TERMINAL-BLADE (10-GA TO 12-GA)	
		1	**9G-3695**	1	PLUG-SEAL	
E		1	**114-8843**		SLEEVE-PLASTIC (100-CM)	
E		1	**119-3662**		TUBE-HEAT SHRINK (10.85-MM DIA) (7-CM)	
		1	**9X-3401**	5	PIN-CONNECTOR (16-GA TO 18-GA)	
					—OR—	
		1	**126-1767**	5	PIN-CONNECTOR (14-GA TO 16-GA)	
	3	1	**267-8715**	4	GROMMET	
	4	1	**322-4964**	1	CAP-VENTED (WINDOW WASHER TANK)	
	5	1	**322-4965**	4	ANCHOR-TIE	
	6	1	**339-9915**	4	PUMP-WASHER	
	7	1	**340-5693**	2	HOSE-ELBOW	
B	8	1	**3S-2093**	7	STRAP-CABLE	
E	9	1	**144-0195**		HOSE (62-CM EACH)	
E	9A	1	**144-0195**		HOSE (58-CM EACH)	
D	10	1	**6V-5817**		CONDUIT-FLEXIBLE (26.1-MM ID, SPLIT) (0.4-M)	
B	11	1	**7X-7927**		TAPE-IDENTIFICATION (LETTER A)	
B	12	1	**7X-7928**		TAPE-IDENTIFICATION (LETTER B)	
B	13	1	**7X-7929**		TAPE-IDENTIFICATION (LETTER C)	
B	14	1	**7X-7930**		TAPE-IDENTIFICATION (LETTER D)	

B - USE AS REQUIRED
D - ORDER BY THE METER
E - ORDER BY THE CENTIMETER

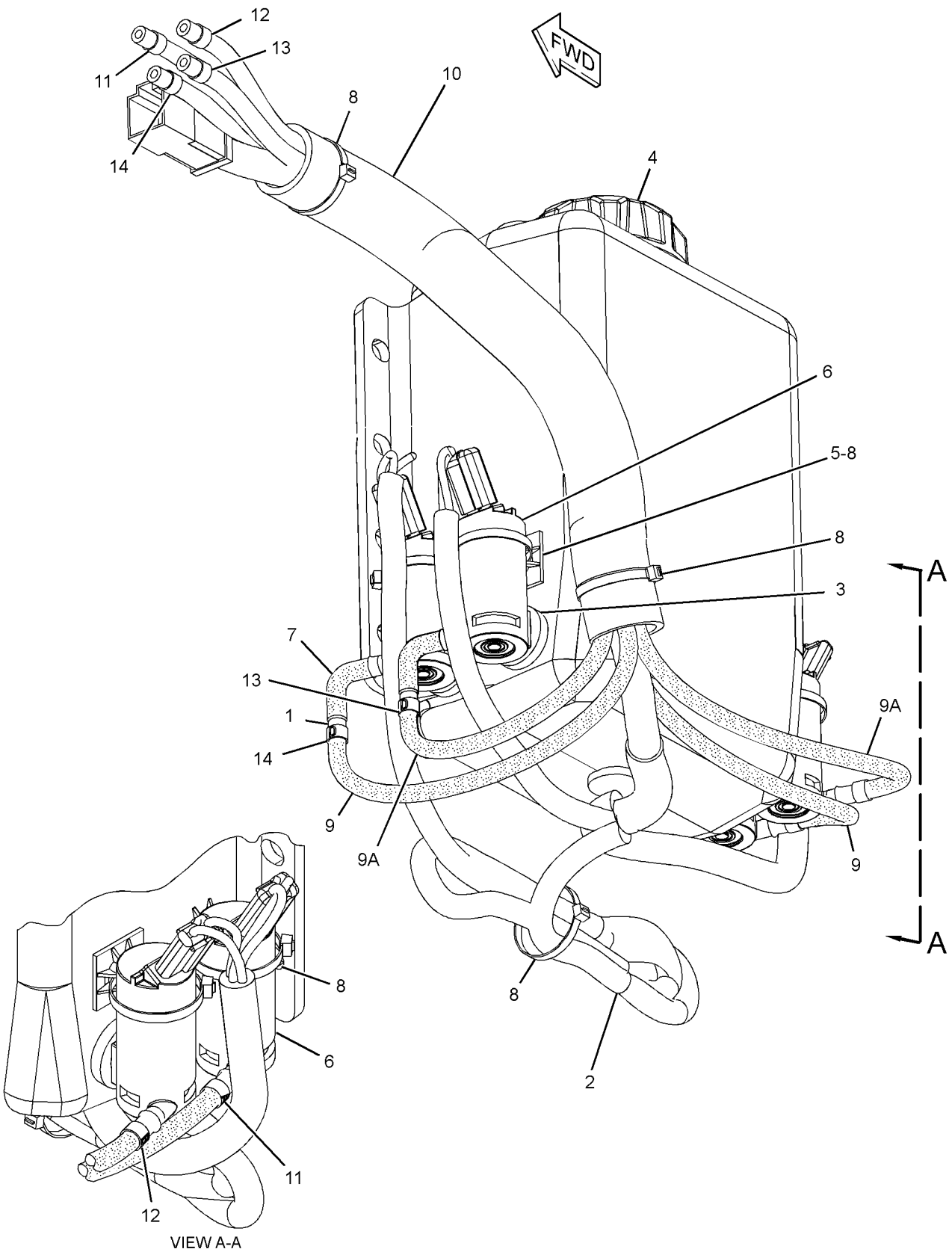

GRAPHIC #1 **<END>** g01830695

380-7910 TANK GP-WINDOW WASHER

S/N: EMM1-UP; JEN1-UP
PART OF 389-3229, 389-3230, 389-3231 CAB AR
AN ATTACHMENT

SMCS-7306 **i05596433**

NOTE	REF NO	GRAPHIC REF	PART NUMBER	QTY	PART NAME 1 2 3 4 5 6 (PRODUCT LEVEL)	SEE PAGE
	1	1	**3S-2093**	1	STRAP-CABLE	
	2	1	**8T-4224**	4	WASHER-HARD (8.8X16X2-MM THK)	
Y	3	1	**169-9649**	1	TANK GP-WINDOW WASHER	695
M	4	1	**8T-4200**	4	BOLT (M8X1.25X16-MM)	

M - METRIC PART
Y - SEPARATE ILLUSTRATION

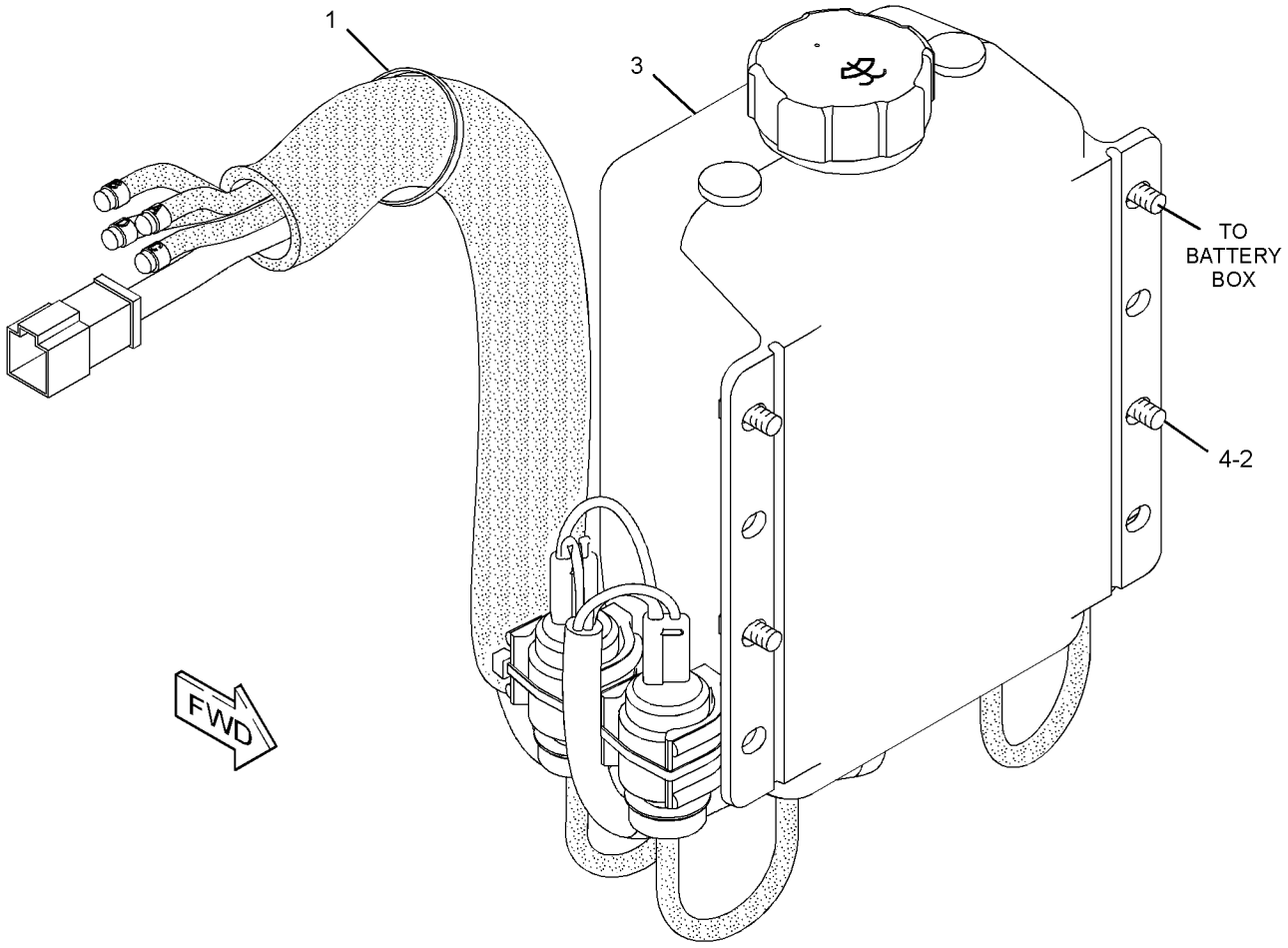

GRAPHIC #1 **<END>** g03316698

322-1394 WASHER GP-WINDOW

S/N: EMM1-UP; JEN1-UP
PART OF 393-0289, 393-0290 CAB AR
AN ATTACHMENT

SMCS-7306 **i05598829**

NOTE	REF NO	GRAPHIC REF	PART NUMBER	QTY	PART NAME 1 2 3 4 5 6 (PRODUCT LEVEL)	SEE PAGE
	1	1	**3S-2093**	19	STRAP-CABLE	
	2	1	**8T-5400**	4	CONNECTOR AS	
	3	1	**145-7328**	2	ELBOW-HOSE	
	4	1	**320-5904**	1	HARNESS AS-WINDOW WIPER	
		1	**102-8801**	1	KIT-RECEPTACLE (12-PIN)	
					(INCLUDES RECEPTACLE AS AND WEDGE)	
		1	**8T-8737**	10	PLUG-SEAL	
E		1	**114-8844**		SLEEVE-PLASTIC (20-CM)	
E		1	**119-3662**		TUBE-HEAT SHRINK (10.85-MM DIA) (13-CM)	
		1	**9X-3402**	42	SOCKET-CONNECTOR (16-GA TO 18-GA)	
					—OR—	
		1	**126-1768**	42	SOCKET-CONNECTOR (14-GA TO 16-GA)	
		1	**126-1768**	1	SOCKET-CONNECTOR (14-GA TO 16-GA)	
		1	**9X-3401**	9	PIN-CONNECTOR (16-GA TO 18-GA)	
					—OR—	
		1	**126-1767**	9	PIN-CONNECTOR (14-GA TO 16-GA)	
		1	**155-2255**	1	KIT-CONNECTING PLUG (12-PIN)	
		1	**155-2265**	1	KIT-CONNECTING PLUG (8-PIN)	
		1	**155-2274**	5	KIT-CONNECTING PLUG (6-PIN)	
					(EACH KIT INCLUDES PLUG AS, WEDGE & INTERFACE SEAL)	
	5	1	**4H-2558**	1	GROMMET	
	6	1	**8E-6856**	1	COVER	
M	7	1	**8T-4133**	1	NUT (M10X1.5-THD)	
	8	1	**8T-4896**	1	WASHER-HARD (10.2X18.5X2.5-MM THK)	
	9	1	**9N-1995**	4	RIVET-POP	
E	10	1	**6V-5818**		CONDUIT-FLEXIBLE (18.62-MM ID, SPLIT) (375-CM EACH)	
E	11	1	**7X-7702**		CONDUIT-FLEXIBLE (23.35-MM ID, SPLIT) (83-CM)	
E	12	1	**144-0195**		HOSE (288-CM)	
E	12A	1	**144-0195**		HOSE (364-CM EACH)	
E	12B	1	**144-0195**		HOSE (440-CM)	
E	12C	1	**144-0195**		HOSE (3-CM EACH)	
E	13	1	**7X-7877**		STRIP-EDGING (5-CM)	
E	13A	1	**7X-7877**		STRIP-EDGING (10-CM EACH)	
E	14	1	**7X-7927**		TAPE-IDENTIFICATION (LETTER A) (6-CM)	
E	15	1	**7X-7928**		TAPE-IDENTIFICATION (LETTER B) (6-CM)	
E	16	1	**7X-7929**		TAPE-IDENTIFICATION (LETTER C) (6-CM)	
E	17	1	**7X-7930**		TAPE-IDENTIFICATION (LETTER D) (6-CM)	
	18	1	**8T-5383**	4	VALVE AS-CHECK (WASHER, WIPER SYSTEM)	

E - ORDER BY THE CENTIMETER
M - METRIC PART

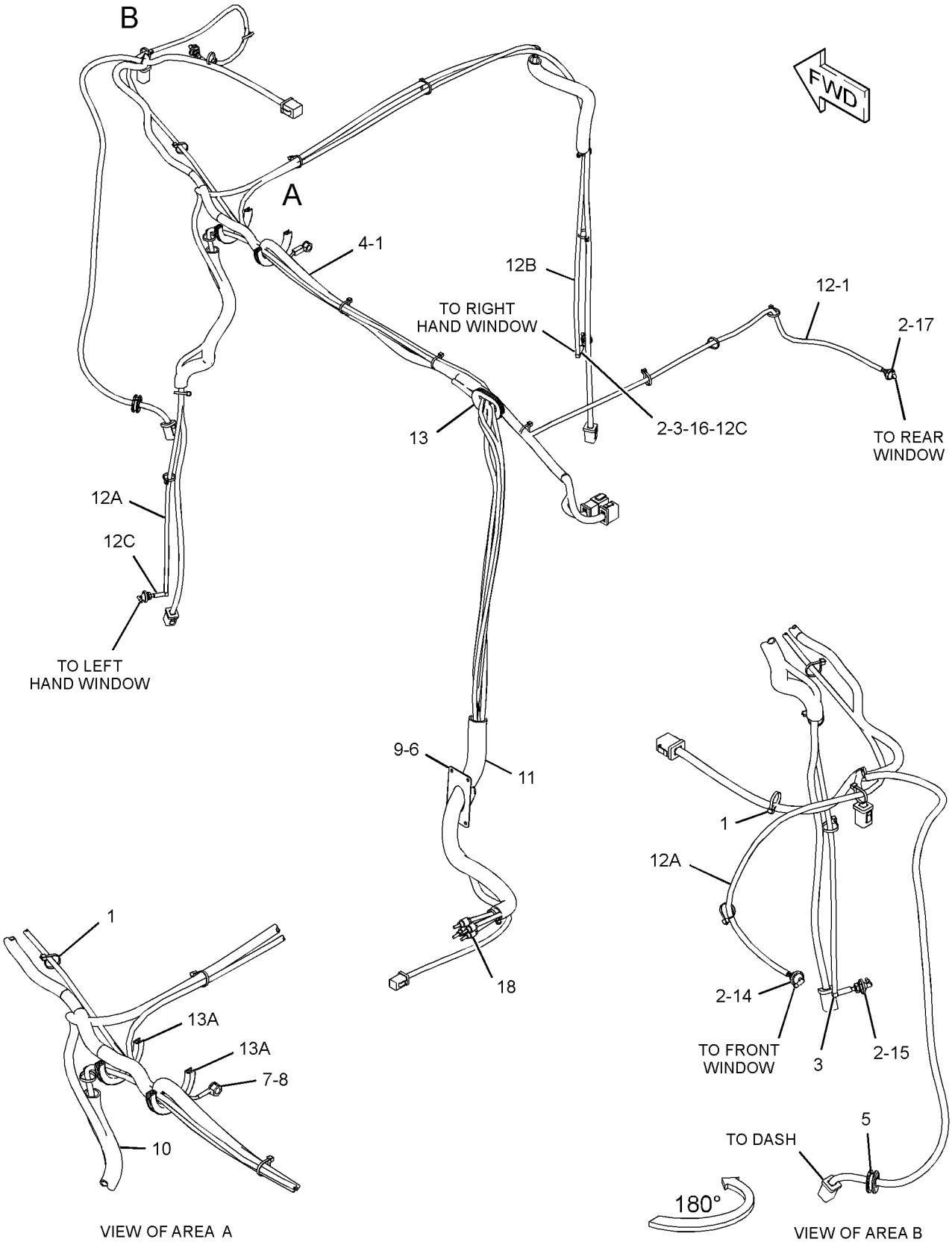

GRAPHIC #1

<END>

g03197776

6T-8402 WINDOW GP-CAB—SLIDING, RH

S/N: EMM1-UP; JEN1-UP
PART OF 375-4843 CAB GP
AN ATTACHMENT

SMCS-7310 **i05331151**

NOTE	REF NO	GRAPHIC REF	PART NUMBER	QTY	PART NAME 1 2 3 4 5 6 (PRODUCT LEVEL)	SEE PAGE
Y	1	1	**7T-1068**	1	WINDOW GP-CAB (RH)	702
	2	1	**7T-1330**	1	GLASS (TINTED) (CAB, RH)	
D	3	1	**5P-5680**		SEAL (1.2-M)	
DB	4	1	**8T-0687**		FILLER	
D	5	1	**5P-5680**		SEAL (0.7-M)	
D	6	1	**6V-5833**		SEAL (0.7M)	
E	7	1	**8Y-6839**		SEAL (64-CM)	

B - USE AS REQUIRED
D - ORDER BY THE METER
E - ORDER BY THE CENTIMETER
Y - SEPARATE ILLUSTRATION

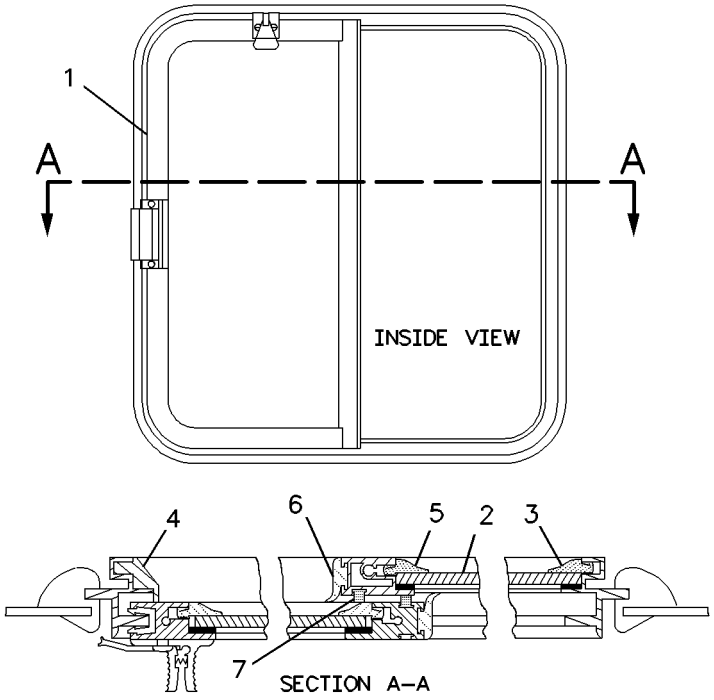

GRAPHIC #1 **<END>** g00844619

6T-8403 WINDOW GP-CAB—SLIDING, LH

S/N: EMM1-UP; JEN1-UP
PART OF 375-4843 CAB GP
AN ATTACHMENT

SMCS-7310 **i05331202**

NOTE	REF NO	GRAPHIC REF	PART NUMBER	QTY	PART NAME 1 2 3 4 5 6 (PRODUCT LEVEL)	SEE PAGE
BD	1	1	**5P-5680**		SEAL	
BD	2	1	**8T-0687**		FILLER	
BD	3	1	**6V-5833**		SEAL	
Y	4	1	**7T-1069**	1	WINDOW GP-CAB (LH)	703
BE	5	1	**8Y-6839**		SEAL	
	6	1	**7T-1330**	1	GLASS (TINTED) (CAB, LH)	

B - USE AS REQUIRED
D - ORDER BY THE METER
E - ORDER BY THE CENTIMETER
Y - SEPARATE ILLUSTRATION

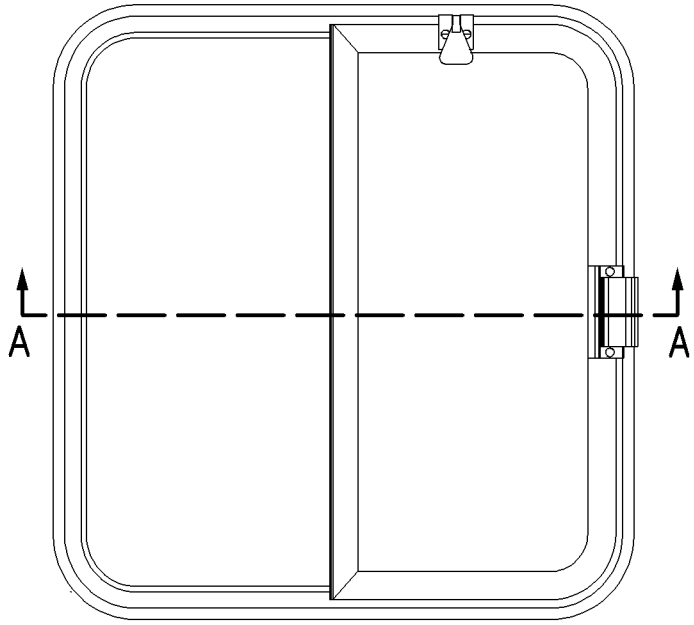

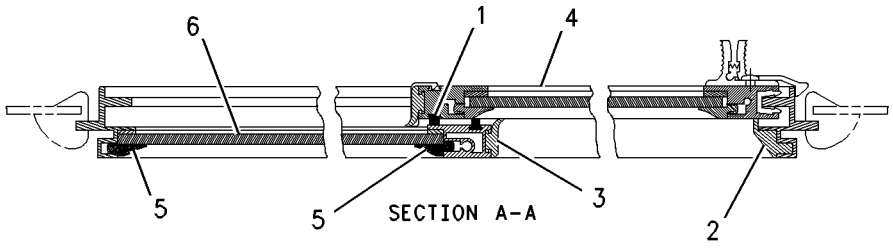

GRAPHIC #1 **<END>** g00842070

7T-1068 WINDOW GP-CAB—RH

S/N: EMM1-UP; JEN1-UP
PART OF 6T-8402 WINDOW GP-CAB
AN ATTACHMENT

SMCS-7310 **i05331152**

NOTE	REF NO	GRAPHIC REF	PART NUMBER	QTY	PART NAME 1 2 3 4 5 6 (PRODUCT LEVEL)	SEE PAGE
	1	1	**3T-1121**	1	LOCK AS	
	2	1	**2H-6622**	2	SCREW-SELF-TAPPING (10-16X0.77-IN)	
	3	1	**9P-7860**	1	LOCK AS	
	4	1	**9P-7859**	2	SCREW-SELF-TAPPING (10-16X0.5-IN)	
BD	5	1	**5P-5680**		SEAL (0.7-M)	
EB	6	1	**9X-6268**		TAPE	
BD	7	1	**6V-5833**		SEAL (0.7-M)	
BD	8	1	**5P-8918**		SEAL (1.2-M)	
BD	9	1	**8Y-6448**	1	GLASS	
BE	10	1	**8Y-6839**		SEAL (64-CM)	
BD	11	1	**5P-5680**		SEAL (1.1-M)	
	12	1	**124-9774**	1	SLIDE	
	13	1	**117-5677**	1	SLIDE	

B - USE AS REQUIRED
D - ORDER BY THE METER
E - ORDER BY THE CENTIMETER

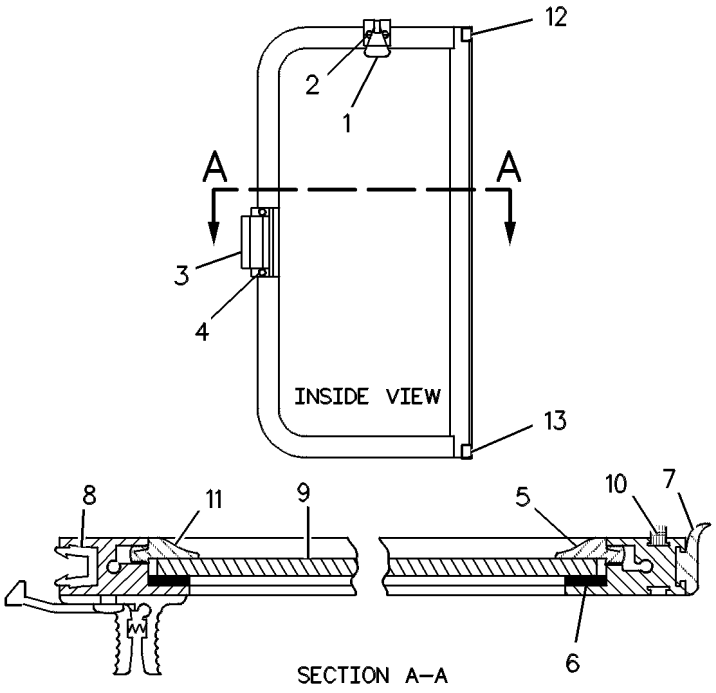

GRAPHIC #1 **<END>** g00257169

7T-1069 WINDOW GP-CAB—LH

S/N: EMM1-UP; JEN1-UP
PART OF 6T-8403 WINDOW GP-CAB
AN ATTACHMENT

SMCS-7310 **i05331185**

NOTE	REF NO	GRAPHIC REF	PART NUMBER	QTY	PART NAME 1 2 3 4 5 6 (PRODUCT LEVEL)	SEE PAGE
	1	1	**3T-1121**	1	LOCK AS	
	2	1	**2H-6622**	2	SCREW-SELF-TAPPING (10-16X0.77-IN)	
	3	1	**9P-7860**	1	LOCK AS	
	4	1	**9P-7859**	2	SCREW-SELF-TAPPING (10-16X0.5-IN)	
D	5	1	**5P-5680**		SEAL (.61M)	
EB	6	1	**9X-6268**		TAPE	
D	7	1	**6V-5833**		SEAL (.64M)	
D	8	1	**5P-8918**		SEAL (1.2M)	
	9	1	**8Y-6448**	1	GLASS	
E	10	1	**8Y-6839**		SEAL (64CM)	
D	11	1	**5P-5680**		SEAL (1.1M)	
	12	1	**124-9774**	1	SLIDE	
	13	1	**117-5677**	1	SLIDE	

B - USE AS REQUIRED
D - ORDER BY THE METER
E - ORDER BY THE CENTIMETER

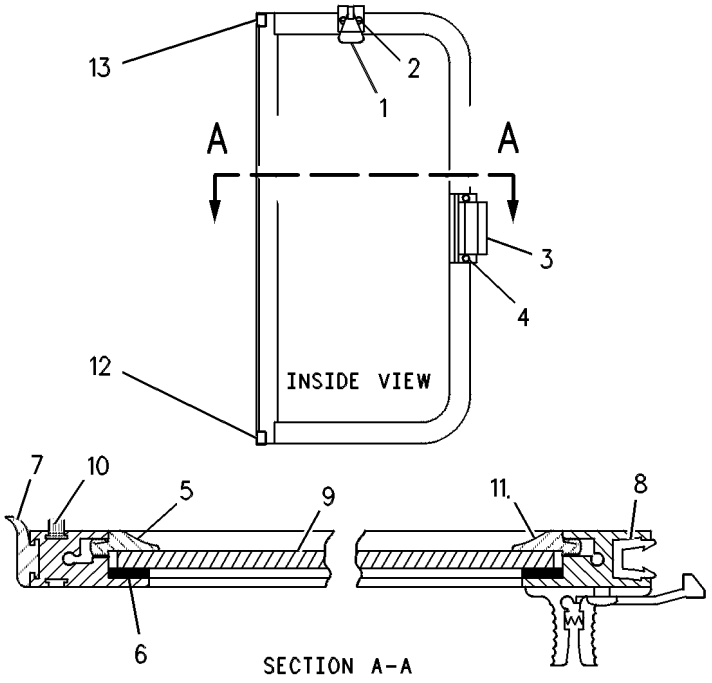

GRAPHIC #1 **<END>** g00326280

398-8457 WIPER GP-WINDOW

S/N: EMM1-UP; JEN1-UP
PART OF 393-0289, 393-0290 CAB AR
AN ATTACHMENT

SMCS-7305 **i05331112**

NOTE	REF NO	GRAPHIC REF	PART NUMBER	QTY	PART NAME 1 2 3 4 5 6 (PRODUCT LEVEL)	SEE PAGE
	1	1	**6V-5849**	2	BLADE AS-WIPER (350-MM) (DOOR, RH, LH)	
					(EACH INCLUDES)	
		1	**8C-5060**	1	KIT-WIPER BLADE (INCLUDES 2-BLADES)	
	2	1	**6V-5851**	1	BLADE AS-WIPER (400-MM) (FRONT)	
	3	1	**125-8175**	1	BLADE AS-WIPER (450-MM) (REAR)	
	4	1	**151-0254**	1	ARM AS-WINDOW WIPER (DOOR, RH)	
E		1	**194-5171**		HOSE (53-CM)	
		1	**305-9192**	1	NOZZLE AS-WASHER	
	5	1	**151-0255**	1	ARM AS-WINDOW WIPER (DOOR, LH)	
E		1	**194-5171**		HOSE (53-CM)	
		1	**305-9192**	1	NOZZLE AS-WASHER	
	6	1	**175-3761**	1	ARM GP-WINDOW WIPER (FRONT)	
		1	**136-3189**	3	CLIP	
		1	**136-3191**	1	NOZZLE AS-WASHER	
E		1	**194-5171**		HOSE (50-CM)	
	7	1	**224-6829**	2	SPACER (17X24.5X17-MM THK)	
Y	8	1	**293-0754**	1	ARM GP-WINDOW WIPER (REAR)	567
Y	9	1	**322-1494**	1	MOTOR GP-WINDOW WIPER (FRONT)	633
Y	10	1	**330-5013**	1	MOTOR GP-WINDOW WIPER (DOOR, LH)	634
Y	11	1	**330-5014**	1	MOTOR GP-WINDOW WIPER (DOOR, RH)	635
Y	12	1	**330-5017**	1	MOTOR GP-WINDOW WIPER (REAR)	636

E - ORDER BY THE CENTIMETER
Y - SEPARATE ILLUSTRATION

398-8457 **WIPER GP-WINDOW (*contd.*)** **i05331112**

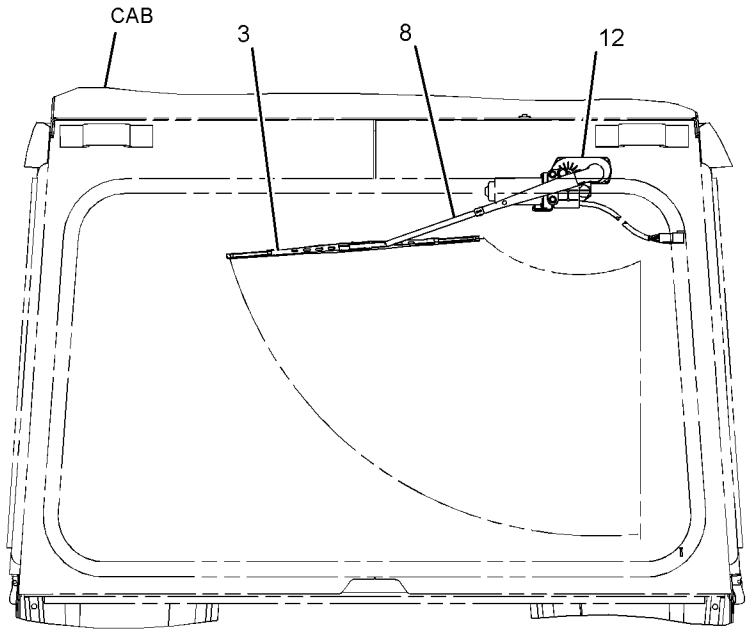

REAR VIEW

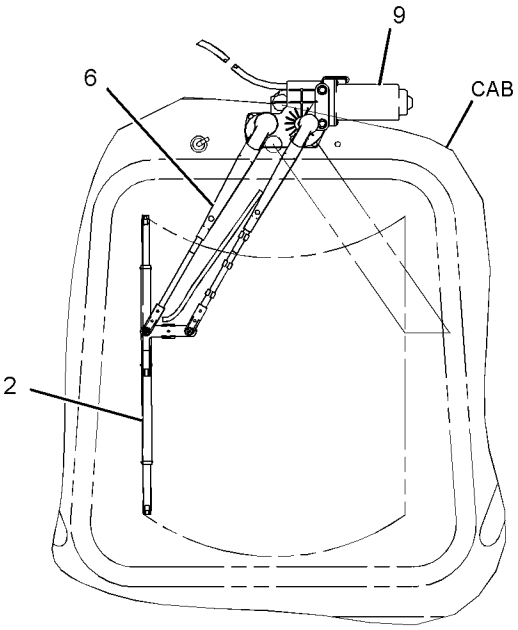

FRONT VIEW

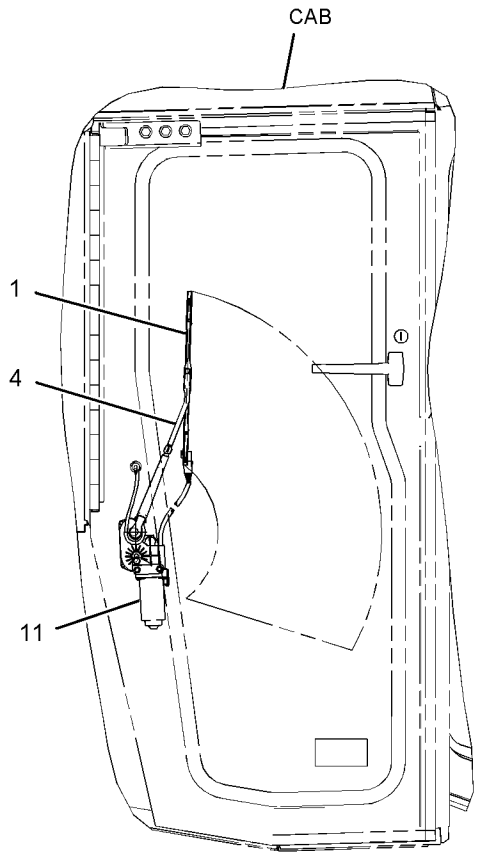

RIGHT SIDE VIEW

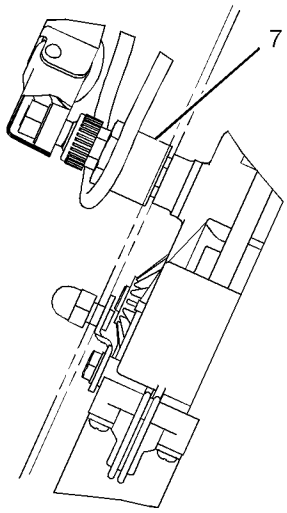

SECTION A-A

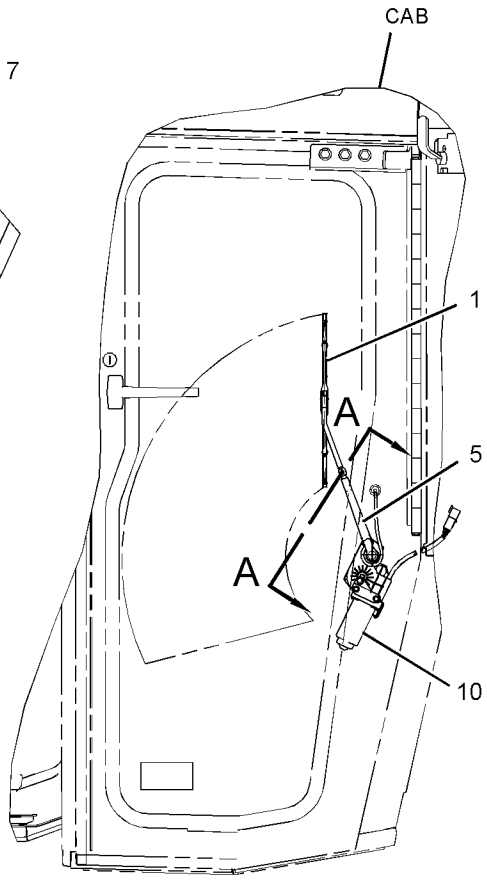

LEFT SIDE VIEW

GRAPHIC #1 **<END>** g03328466

453-3902 BLADE & EDGE GP-ANGLING

S/N: RTH1-UP

AN ATTACHMENT

SMCS-6060 **i05683012**

NOTE	REF NO	GRAPHIC REF	PART NUMBER	QTY	PART NAME 1 2 3 4 5 6 (PRODUCT LEVEL)	SEE PAGE
Y	1	1	*6Y-2039*	1	EDGE GP-BIT & CUTTING (ANGLING)	711
	2	1	**419-0093**	1	PLATE AS-IDENTIFICATION (SERIAL NUMBER) (BLADE)	
		1	**2Y-9790**	1	PLATE-SERIAL NUMBER (BLADE)	
					(FOR CBL USE)	
		1	**8T-7371**	1	PLATE-SERIAL NUMBER (BLADE)	
					(FOR CRTT USE)	
Y	3	1	**251-9820**	1	BLADE AS (ANGLING)	708
	4	1	**4B-4158**	2	SCREW-DRIVE (NO 4X0.25-IN)	

Y - SEPARATE ILLUSTRATION

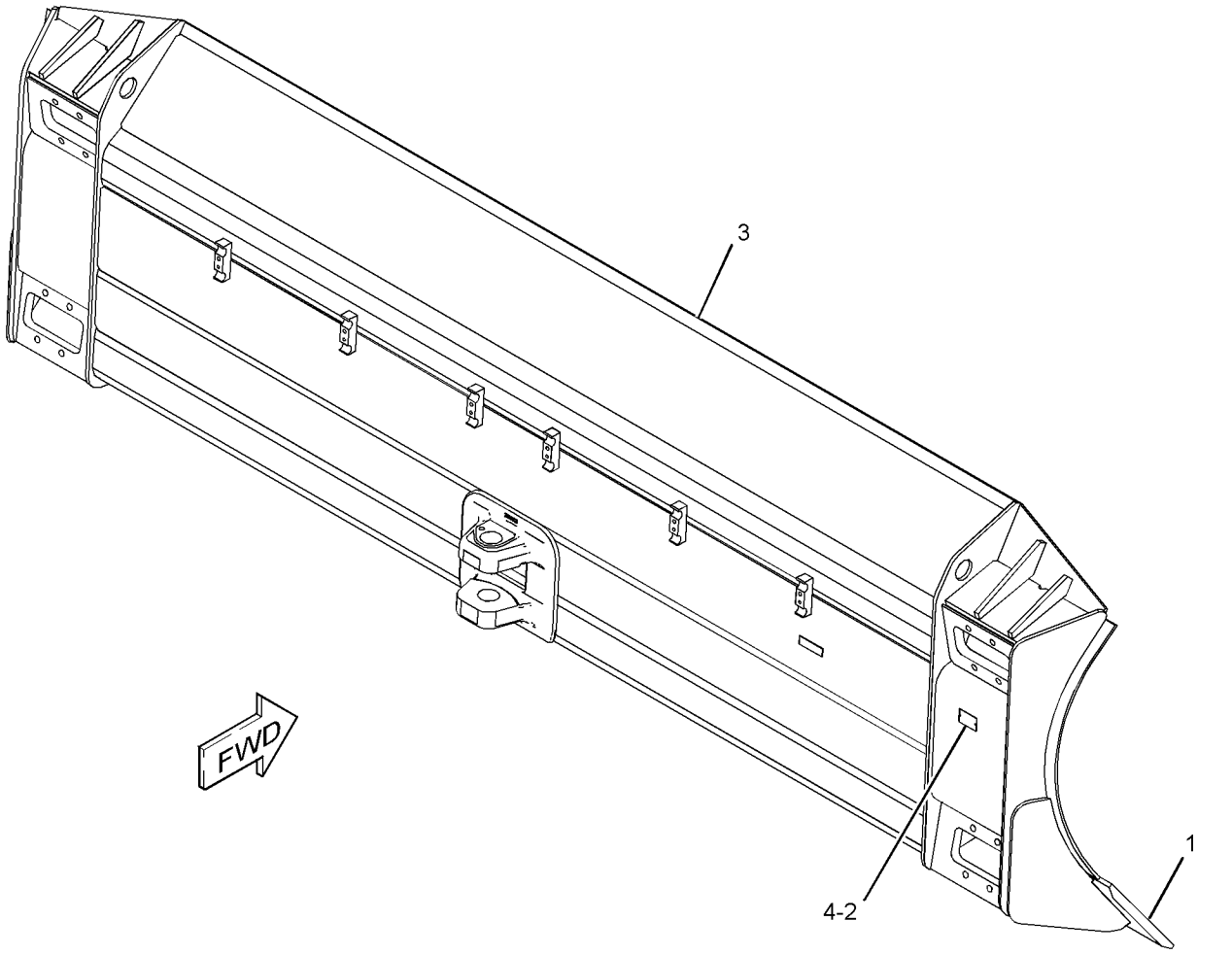

GRAPHIC #1 **<END>** g03581693

453-3903 BLADE & EDGE GP-ANGLING—LAND CLEARING

S/N: RTH1-UP

AN ATTACHMENT

SMCS-6060 **i05643918**

NOTE	REF NO	GRAPHIC REF	PART NUMBER	QTY	PART NAME 1 2 3 4 5 6 (PRODUCT LEVEL)	SEE PAGE
	1	1	**4B-4158**	2	SCREW-DRIVE (NO 4X0.25-IN)	
	2	1	**419-0093**	1	PLATE AS-IDENTIFICATION (SERIAL NUMBER) (BLADE)	
		1	**2Y-9790**	1	PLATE-SERIAL NUMBER (BLADE)	
					(FOR CBL USE)	
		1	**8T-7371**	1	PLATE-SERIAL NUMBER (BLADE)	
					(FOR CRTT USE)	
Y	3	1	**430-7854**	1	BLADE AS-STRAIGHT	710
Y	4	1	*434-6371*	1	EDGE GP-BIT & CUTTING	712

Y - SEPARATE ILLUSTRATION

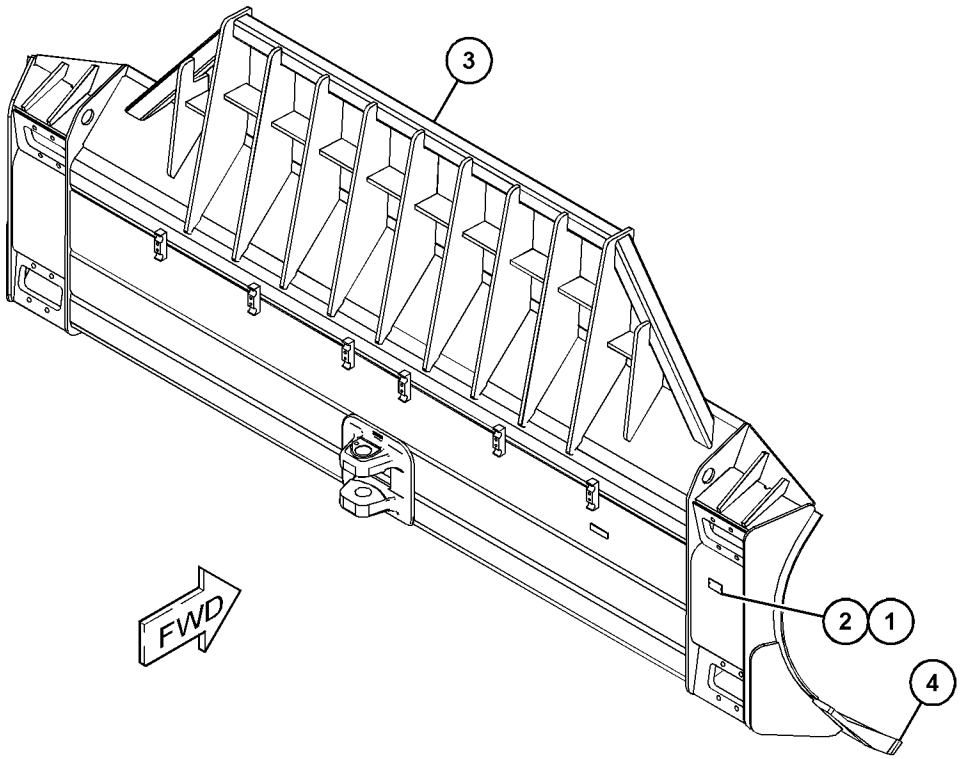

GRAPHIC #1 **<END>** g03582670

251-9820 BLADE AS–ANGLING

S/N: RTH1-UP

PART OF 453-3902 BLADE & EDGE GP-ANGLING

AN ATTACHMENT

SMCS-6060 **i05629249**

NOTE	REF NO	GRAPHIC REF	PART NUMBER	QTY	PART NAME 1 2 3 4 5 6 (PRODUCT LEVEL)	SEE PAGE
	1	1	**251-9821**	1	BRACKET	
	2	1	**8P-9770**	1	PLATE	

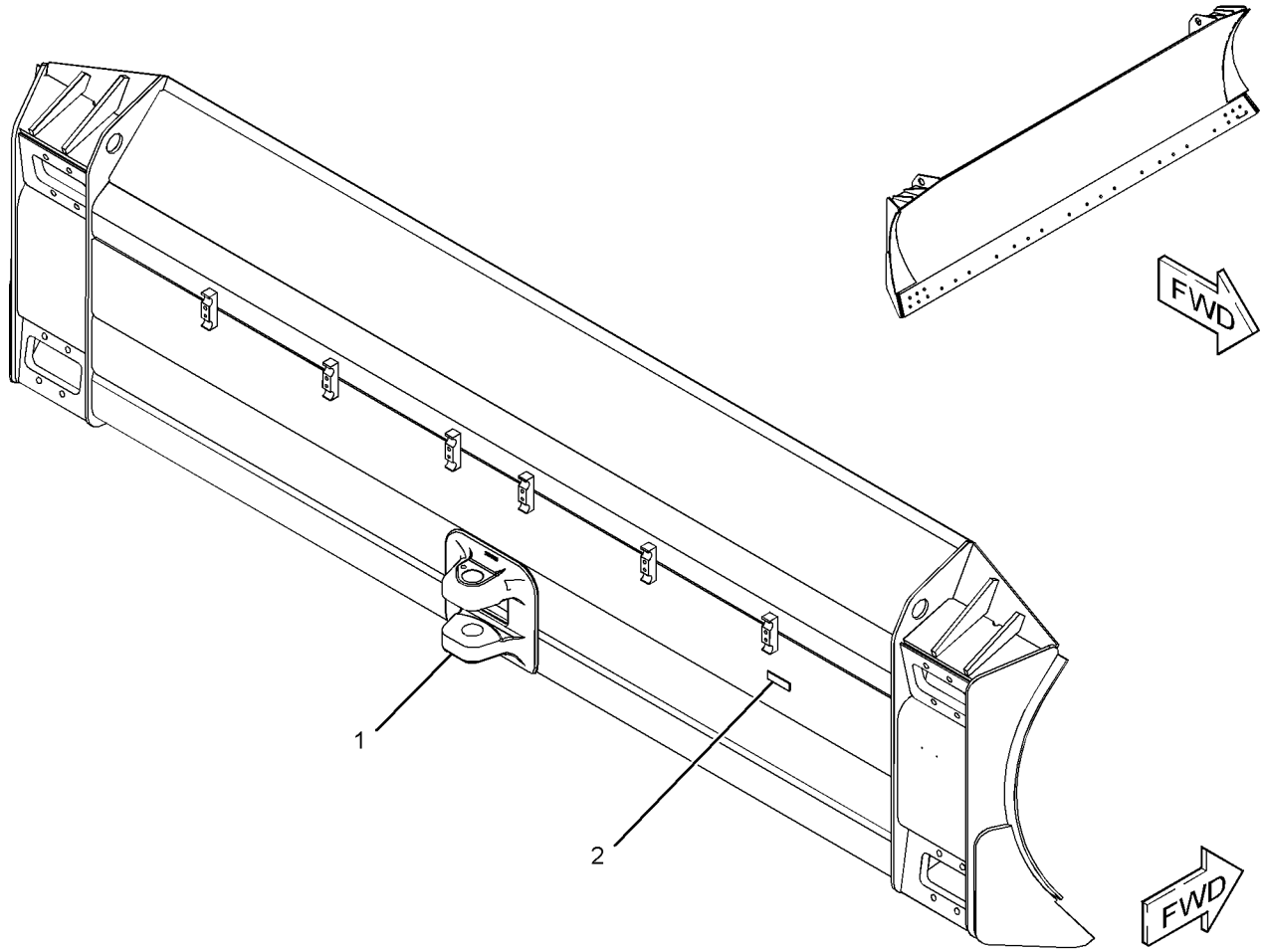

GRAPHIC #1 **<END>** g02319715

364-5488 BLADE AS-ANGLING

S/N: RTH1-UP
PART OF 430-7854 BLADE AS-ANGLING
AN ATTACHMENT

SMCS-6060 **i05644575**

NOTE	REF NO	GRAPHIC REF	PART NUMBER	QTY	PART NAME 1 2 3 4 5 6 (PRODUCT LEVEL)	SEE PAGE
	1	1	**8P-9770**	1	PLATE	
	2	1	**251-9820**	1	BLADE AS	

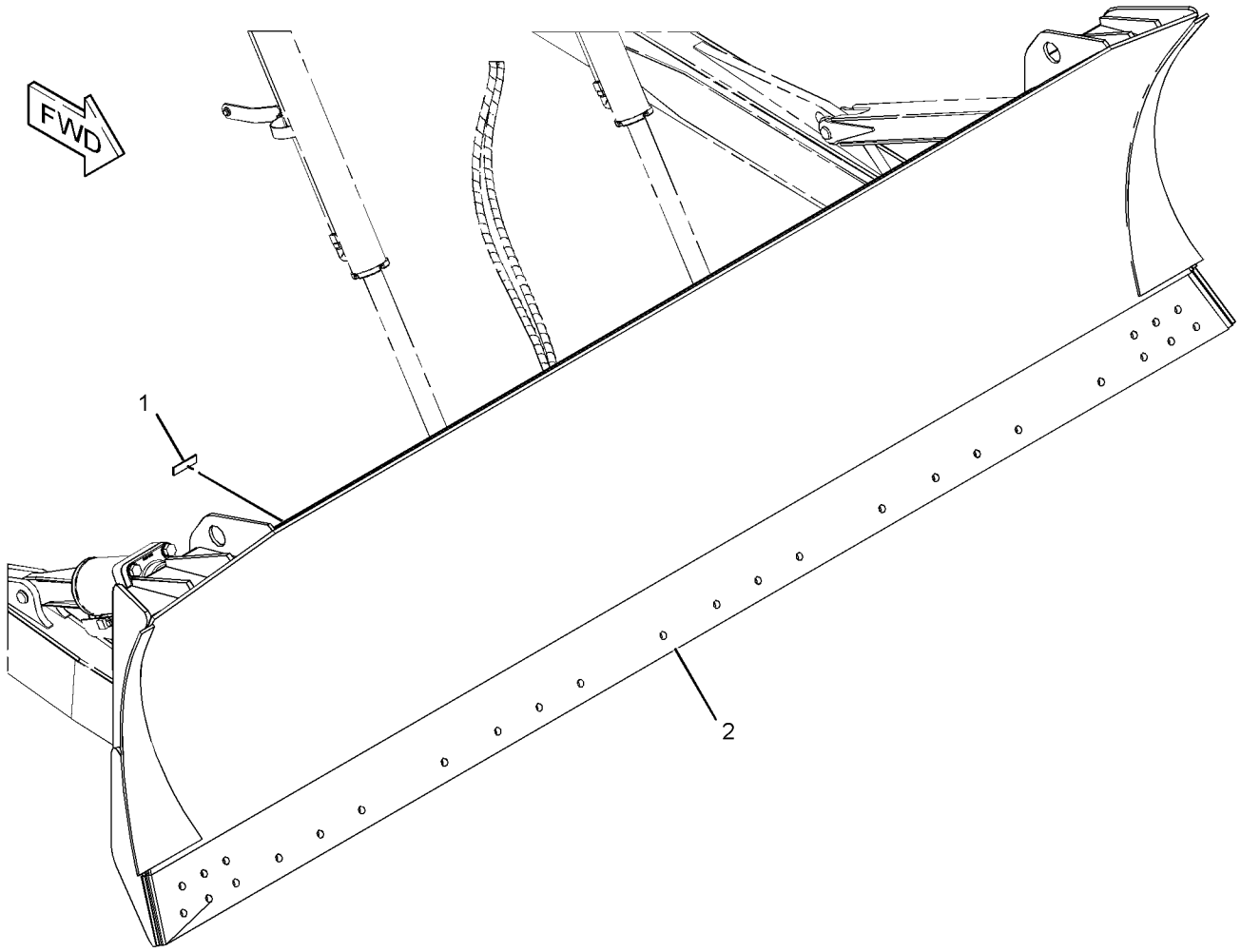

GRAPHIC #1 **<END>** g02196939

430-7854 BLADE AS-ANGLING

S/N: RTH1-UP

PART OF 453-3903 BLADE & EDGE GP-ANGLING

AN ATTACHMENT

SMCS-6060 **i05683011**

NOTE	REF NO	GRAPHIC REF	PART NUMBER	QTY	PART NAME 1 2 3 4 5 6 (PRODUCT LEVEL)	SEE PAGE
Y	1	1	**364-5488**	1	BLADE AS-ANGLING	709

Y - SEPARATE ILLUSTRATION

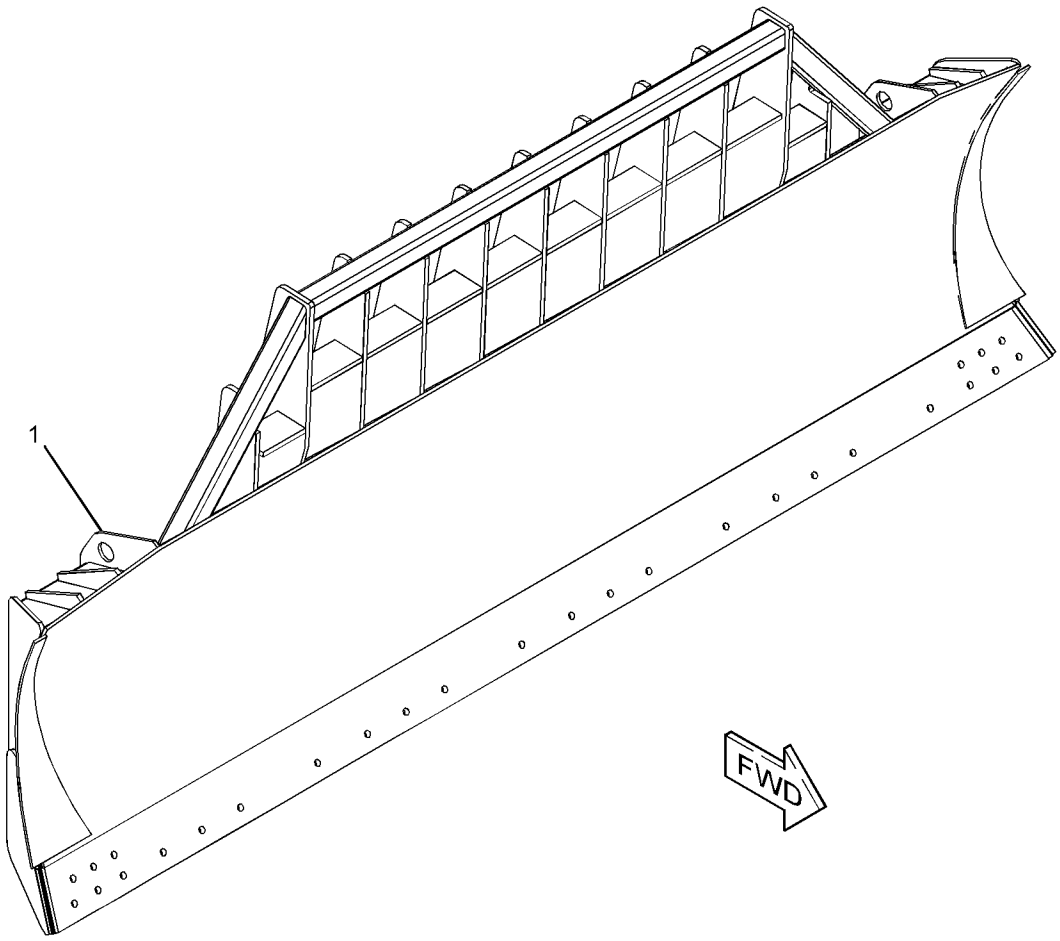

GRAPHIC #1 **<END>** g03582979

6Y-2039 EDGE GP-BIT & CUTTING

S/N: RTH1-UP

PART OF 453-3902 BLADE & EDGE GP-ANGLING

AN ATTACHMENT

SMCS-6801, 6804

i05633596

NOTE	REF NO	GRAPHIC REF	PART NUMBER	QTY	PART NAME 1 2 3 4 5 6 (PRODUCT LEVEL)	SEE PAGE
	1	1	**9W-8874**	1	BIT-END	
		1	**9W-8875**	1	BIT-END	
	2	1	**5J-4773**	32	BOLT-PLOW (3/4-10X2.5 IN)	
		1	**5P-8248**	32	WASHER-HARD (20X36.5X3.5MM THK)	
		1	**2J-3506**	32	NUT-FULL (3/4-10 THD)	
	3	1	**4T-2952**	4	EDGE-CUTTING	

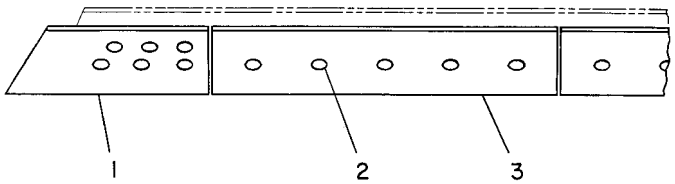

GRAPHIC #1

<END>

g00195495

434-6371 EDGE GP-BIT & CUTTING

S/N: RTH1-UP

PART OF 453-3903 BLADE & EDGE GP-ANGLING

AN ATTACHMENT

SMCS-6801, 6804 **i05643968**

NOTE	REF NO	GRAPHIC REF	PART NUMBER	QTY	PART NAME 1 2 3 4 5 6 (PRODUCT LEVEL)	SEE PAGE
	1	1	**4T-2952**	4	EDGE-CUTTING	
	2	1	**6Y-4410**	1	BIT-END (LH)	
	3	1	**6Y-4411**	1	BIT-END (RH)	
	4	1	**2J-3506**	32	NUT-FULL (3/4-10-THD)	
	5	1	**5J-4773**	32	BOLT-PLOW (3/4-10X2.5-IN)	
	6	1	**5P-8248**	32	WASHER-HARD (20X36.5X3.5-MM THK)	

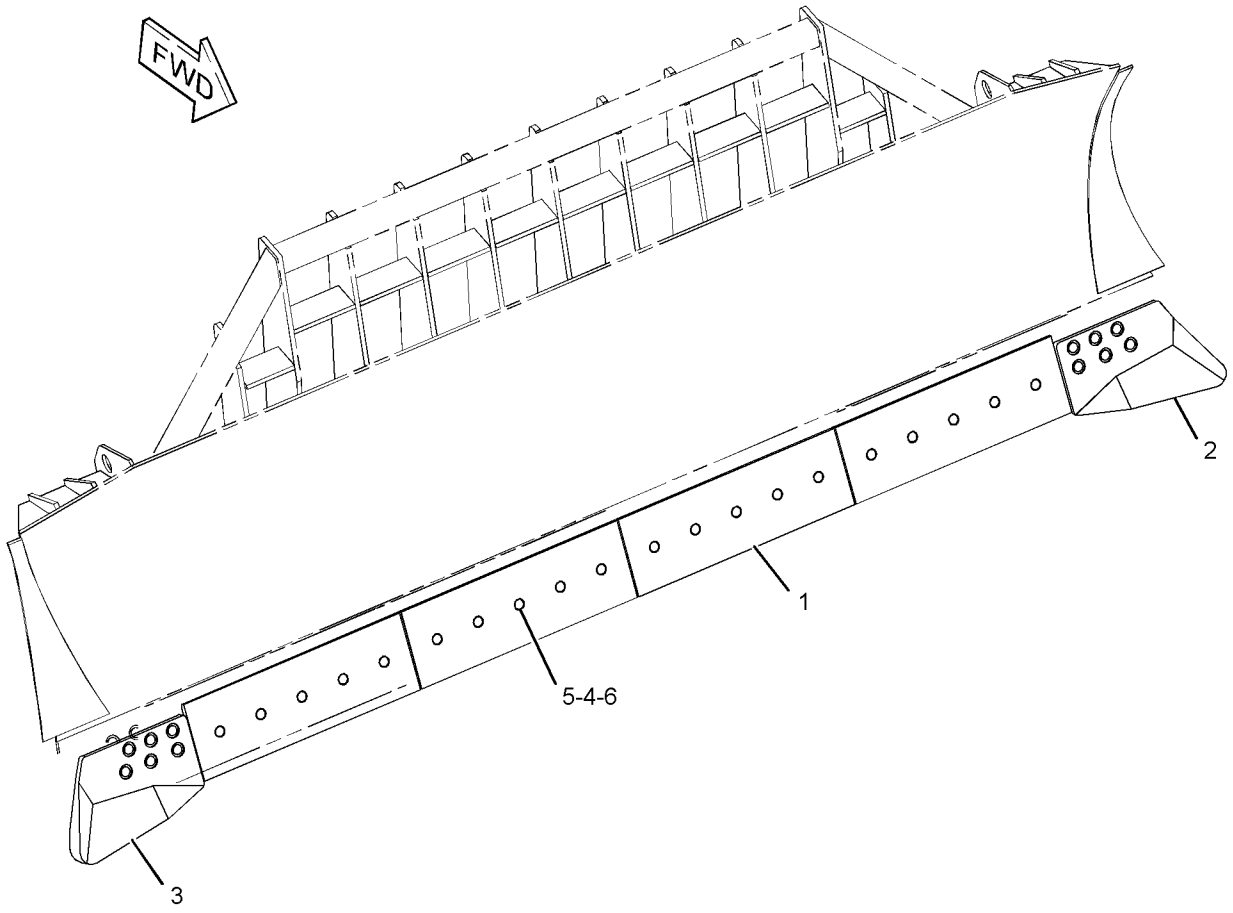

GRAPHIC #1 **<END>** g03582983

391-8222 MOUNTING GP-RIPPER

S/N: MS31-UP
PART OF 387-1087 RIPPER AR
AN ATTACHMENT

SMCS-6165, 6310, 6324

i05636024

NOTE	REF NO	GRAPHIC REF	PART NUMBER	QTY	PART NAME 1 2 3 4 5 6 (PRODUCT LEVEL)	SEE PAGE
	1	1	**1U-0300**	1	BRACKET AS	
	2	1	**1U-0301**	2	BRACKET AS	
	3	1	**7T-1975**	1	BRACKET AS	
B	4	1	**9N-4449**	12	SPACER (68X121X1.5-MM THK)	
B	5	1	**9N-4450**	4	SPACER (68X120X5-MM THK)	
	6	1	**9W-0609**	2	SPACER (53X100X35-MM THK)	
	7	1	**1U-0159**	2	PIN	
	8	1	**1U-0612**	2	PIN	
M	9	1	**6V-7687**	2	LOCKNUT (M12X1.75-THD)	
M	10	1	**6V-7744**	2	LOCKNUT (M10X1.5-THD)	
	11	1	**6V-8190**	20	NUT (1-8-THD)	
M	12	1	**7X-2543**	2	BOLT (M10X1.5X120-MM)	
	13	1	**8T-5361**	20	WASHER-HARD (28X49X5-MM THK)	
M	14	1	**8T-5412**	2	BOLT (M12X1.75X140-MM)	
	15	1	**9M-5854**	20	STUD-TAPERLOCK (1-8-THD)	

B - USE AS REQUIRED
M - METRIC PART

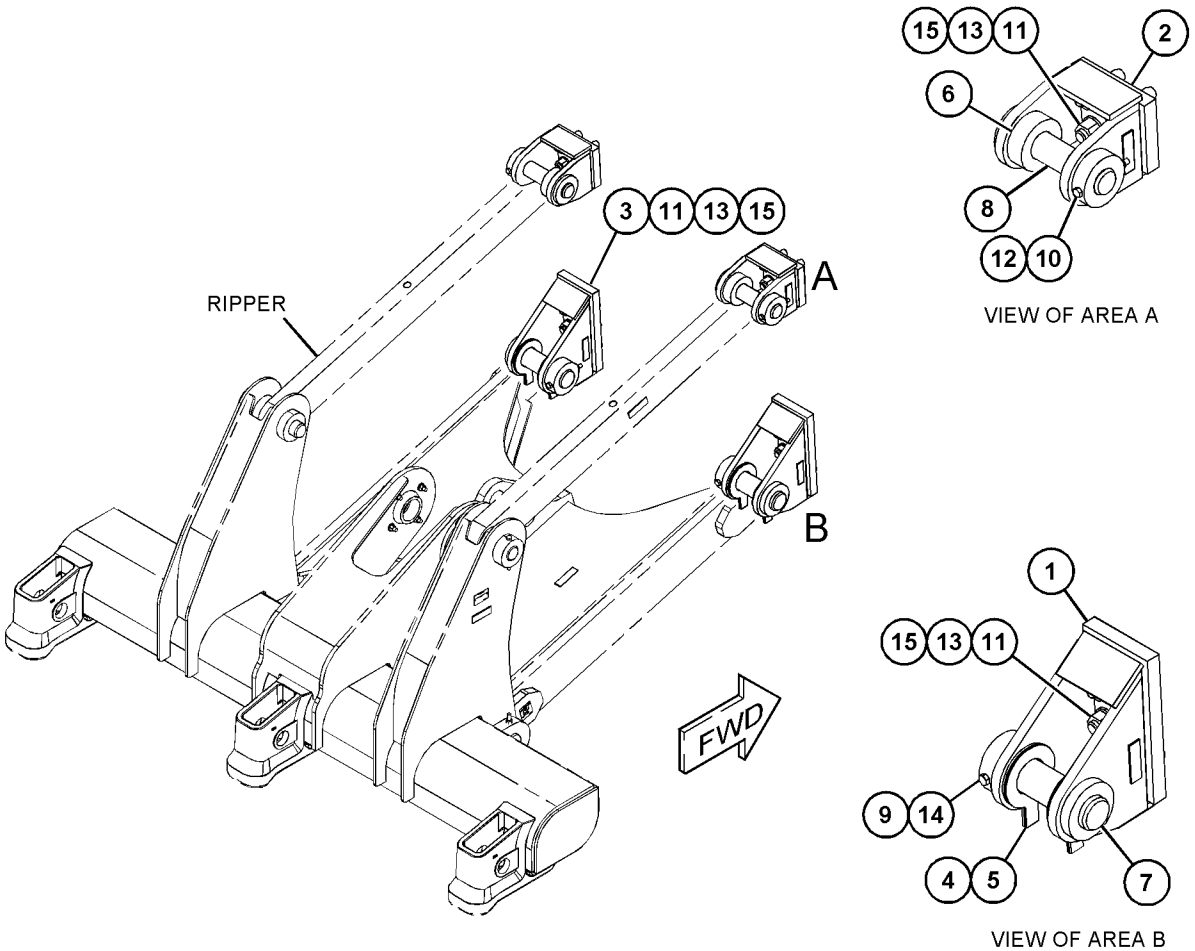

GRAPHIC #1

<END>

g03583107

387-1087 RIPPER AR

S/N: MS31-UP
AN ATTACHMENT

SMCS-6310 **i05635951**

NOTE	REF NO	GRAPHIC REF	PART NUMBER	QTY	PART NAME 1 2 3 4 5 6 (PRODUCT LEVEL)	SEE PAGE
Y	1	1	*3W-1356*	1	GUARD GP-TRANSMISSION	363
	2	1	**7X-1456**	4	PLUG	
Y	3	1	**384-5351**	1	CYLINDER GP-RIPPER	451
Y	4	1	*387-1088*	1	RIPPER GP	715
Y	5	1	*387-1759*	1	LINES GP-RIPPER	478
Y	6	1	*391-8222*	1	MOUNTING GP-RIPPER	713
FY			*381-2594*	1	PLATE & FILM GP	723

F - NOT SHOWN
Y - SEPARATE ILLUSTRATION

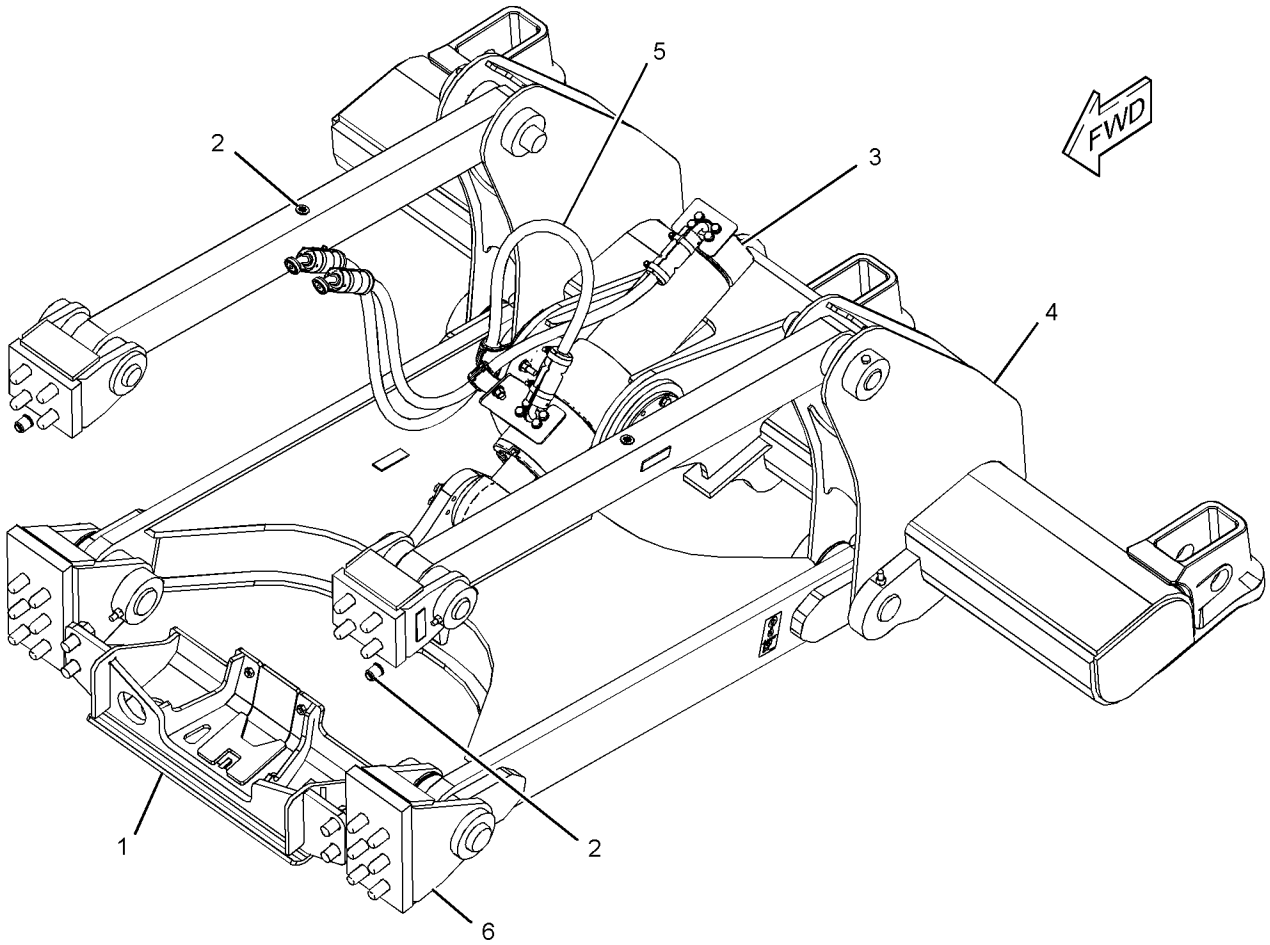

GRAPHIC #1 **<END>** g03582215

387-1088 RIPPER GP

S/N: MS31-UP
PART OF 387-1087 RIPPER AR
AN ATTACHMENT

SMCS-6310, 6325

i05636022

NOTE	REF NO	GRAPHIC REF	PART NUMBER	QTY	PART NAME 1 2 3 4 5 6 (PRODUCT LEVEL)	SEE PAGE
	1	1	**2K-0703**	1	BAR	
	2	1	**3K-8510**	1	PIN	
	3	1	**4K-3004**	2	BEARING-TRUNNION SUPPLEMENTARY	
B	4	1	**9N-4449**	2	SPACER (68X121X1.5-MM THK)	
B	5	1	**9N-4450**	4	SPACER (68X120X5-MM THK)	
	6	1	**387-1089**	1	CARRIAGE AS	
	7	1	**387-1136**	1	FRAME AS	
		1	**3G-2580**	4	BEARING	
	8	1	**433-3272**	2	LINK AS-BEARING	
					(EACH INCLUDES)	
		1	**3G-2579**	2	BEARING	
	9	1	**1U-0159**	2	PIN	
	10	1	**1U-0612**	2	PIN	
	11	1	**329-3356**	8	NUT (M12X1.75-THD)	
	12	1	**3B-8489**	3	FITTING-GREASE	
M	13	1	**6V-7687**	2	LOCKNUT (M12X1.75-THD)	
M	14	1	**6V-7744**	2	LOCKNUT (M10X1.5-THD)	
	15	1	**7K-9203**	8	SEAL-LIP TYPE	
	16	1	**7K-9205**	8	SEAL-LIP TYPE	
M	17	1	**7X-2543**	2	BOLT (M10X1.5X120-MM)	
M	18	1	**8T-4139**	2	BOLT (M12X1.75X30-MM)	
	19	1	**8T-4223**	18	WASHER-HARD (13.5X25.5X3-MM THK)	
M	20	1	**8T-4648**	7	BOLT (M12X1.75X70-MM)	
M	21	1	**8T-6868**	1	BOLT (M12X1.75X80-MM)	
M	22	1	**8T-7929**	2	BOLT (M12X1.75X180-MM)	

B - USE AS REQUIRED
M - METRIC PART

387-1088 **RIPPER GP (*contd.*)** **i05636022**

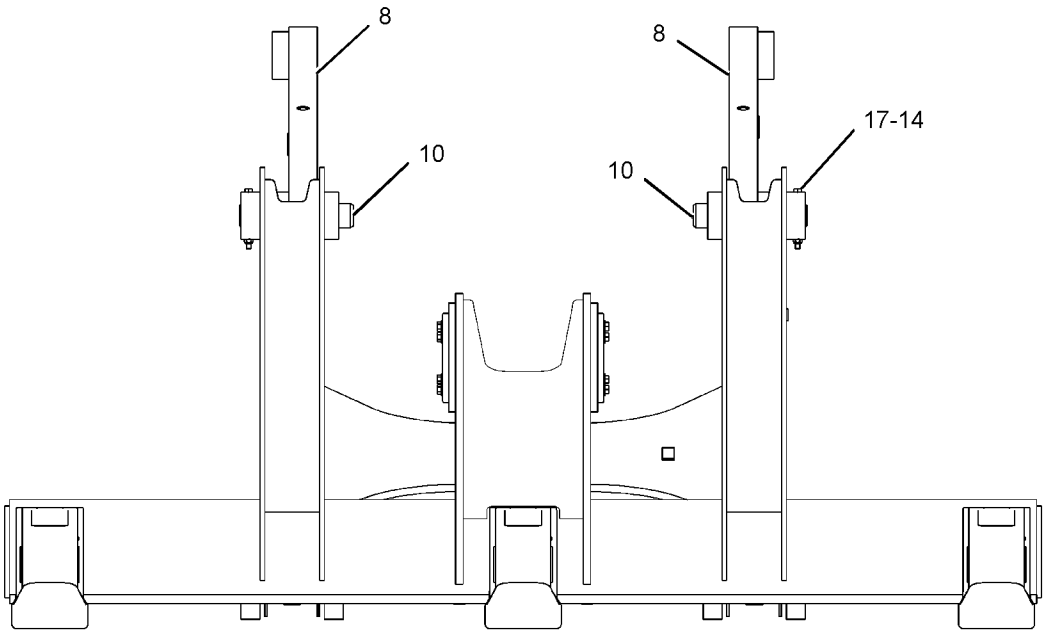

REAR VIEW

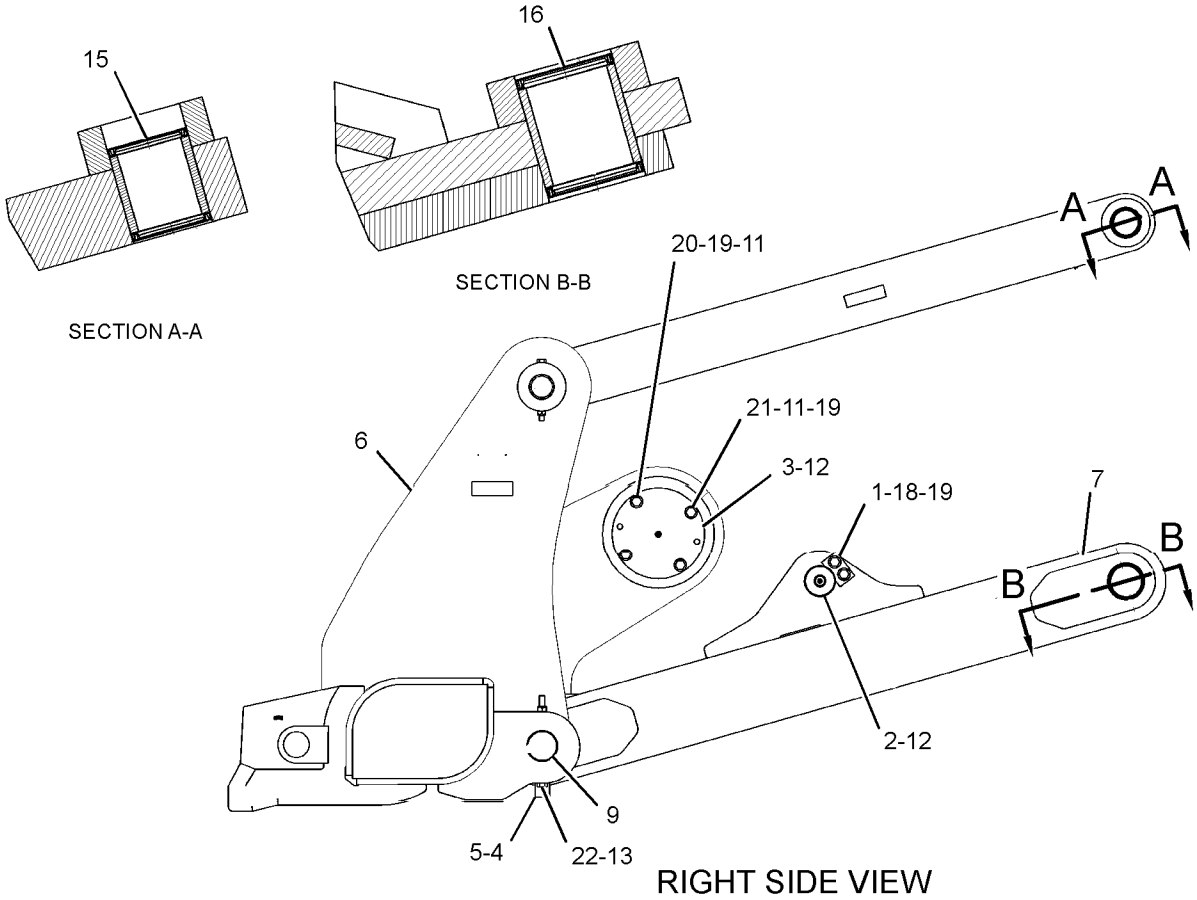

RIGHT SIDE VIEW

GRAPHIC #1 **<END>** g03582328

8J-2189 TOOTH GP-RIPPER

S/N: EMM1-UP; JEN1-UP

AN ATTACHMENT

SMCS-6808, 6810 **i05498884**

NOTE	REF NO	GRAPHIC REF	PART NUMBER	QTY	PART NAME 1 2 3 4 5 6 (PRODUCT LEVEL)	SEE PAGE
	1	1	**3B-5325**	2	PIN-COTTER	
	2	1	**8J-2190**	1	PIN	
	3	1	**9J-3139**	1	SHANK-RIPPER	
	4	1	**114-0358**	1	PIN	
		1	**114-0359**	1	RETAINER AS	
	5	1	**6Y-0359**	1	TIP-RIPPER	

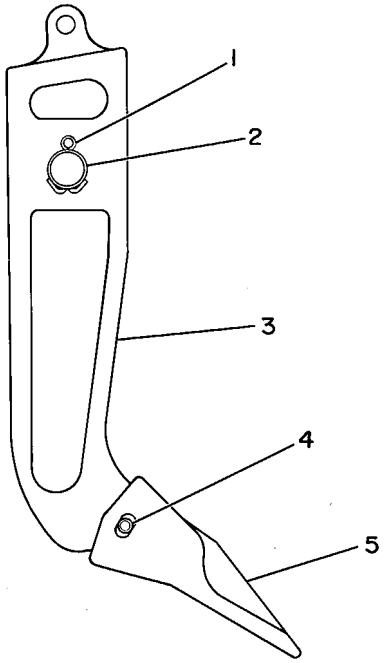

GRAPHIC #1 **<END>** g00081660

9J-8926 TOOTH GP-RIPPER—CURVED

S/N: EMM1-UP; JEN1-UP

AN ATTACHMENT

SMCS-6808, 6810 **i05499220**

NOTE	REF NO	GRAPHIC REF	PART NUMBER	QTY	PART NAME 1 2 3 4 5 6 (PRODUCT LEVEL)	SEE PAGE
	1	1	**3B-5325**	2	PIN-COTTER	
	2	1	**8J-2190**	1	PIN	
	3	1	**9J-8923**	1	SHANK-RIPPER	
	4	1	**114-0358**	1	PIN	
	5	1	**6Y-0352**	1	TIP-RIPPER	
	6	1	**114-0359**	1	RETAINER AS	

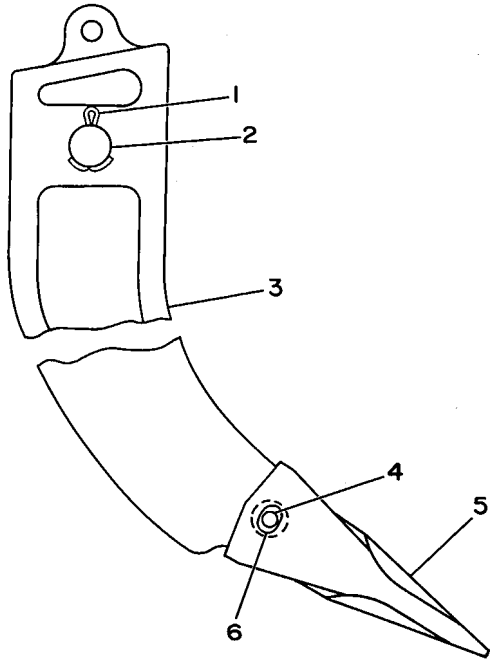

GRAPHIC #1 **<END>** g00174183

321-6075 FILM GP

S/N: EMM1-UP

PART OF 389-3221 CHASSIS AR

SMCS-7000 **i05640598**

NOTE	REF NO	GRAPHIC REF	PART NUMBER	QTY	PART NAME 1 2 3 4 5 6 (PRODUCT LEVEL)	SEE PAGE
	1	1	**340-0092**	1	FILM-IDENTIFICATION (D6R, LH)	
	2	1	**340-0091**	1	FILM-IDENTIFICATION (D6R, RH)	
	3	1	**308-4558**	1	FILM-IDENTIFICATION (CAT, LH)	
	4	1	**308-4559**	1	FILM-IDENTIFICATION (CAT, RH)	
	5	1	**380-1381**	1	FILM-IDENTIFICATION (CAT)	
	6	1	**292-4396**	1	FILM-IDENTIFICATION (CAT, REAR)	

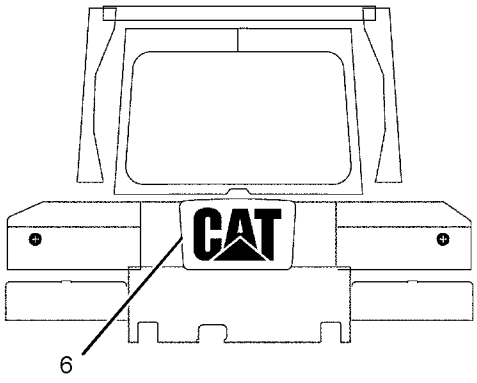

REAR VIEW

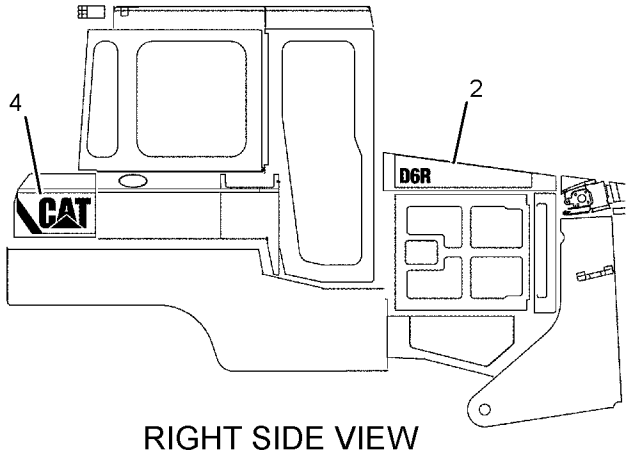

RIGHT SIDE VIEW

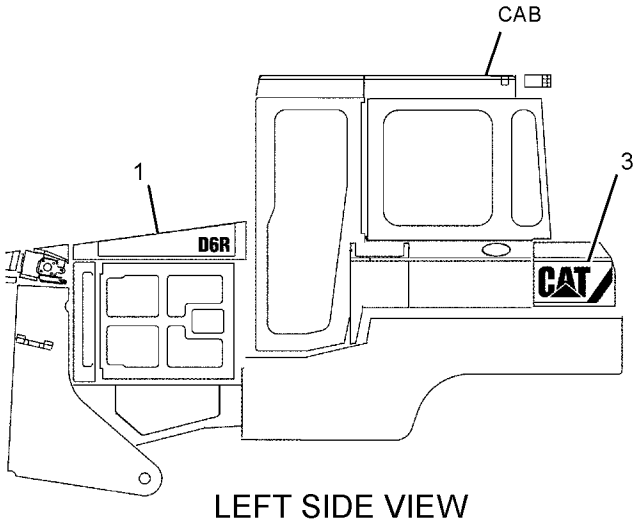

LEFT SIDE VIEW

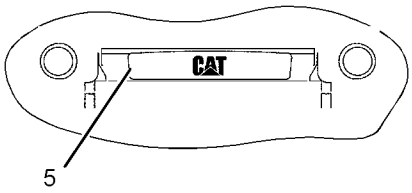

FRONT VIEW

GRAPHIC #1 **<END>** g03126116

SERVICE EQUIPMENT AND SUPPLIES

323-6771 FILM GP

S/N: JEN1-UP

PART OF 389-3222 CHASSIS AR

SMCS-7000 **i05640600**

NOTE	REF NO	GRAPHIC REF	PART NUMBER	QTY	PART NAME 1 2 3 4 5 6 (PRODUCT LEVEL)	SEE PAGE
	1	1	**340-0094**	1	FILM-IDENTIFICATION (D6R XL, LH)	
	2	1	**340-0093**	1	FILM-IDENTIFICATION (D6R XL, RH)	
	3	1	**308-4558**	1	FILM-IDENTIFICATION (CAT, LH)	
	4	1	**308-4559**	1	FILM-IDENTIFICATION (CAT, RH)	
	5	1	**380-1381**	1	FILM-IDENTIFICATION (CAT) (FRONT)	
	6	1	**292-4396**	1	FILM-IDENTIFICATION (CAT, REAR)	

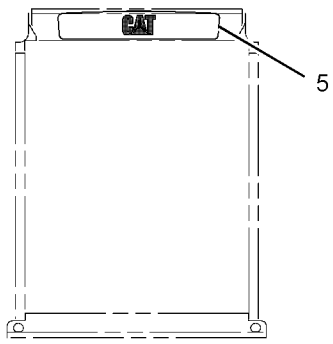

FRONT VIEW

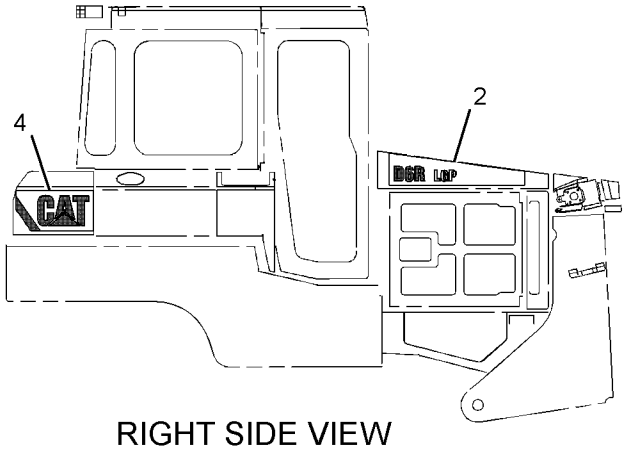

RIGHT SIDE VIEW

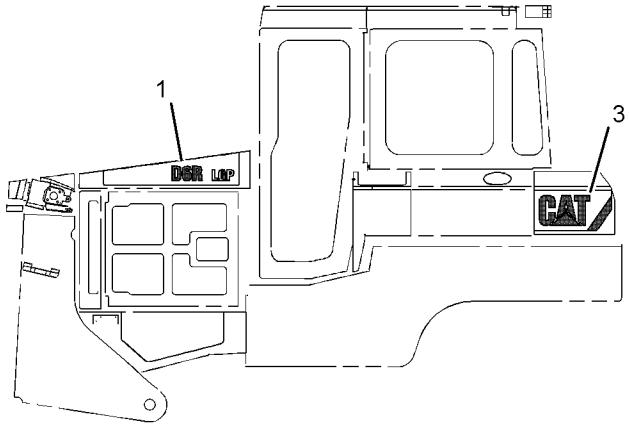

LEFT SIDE VIEW

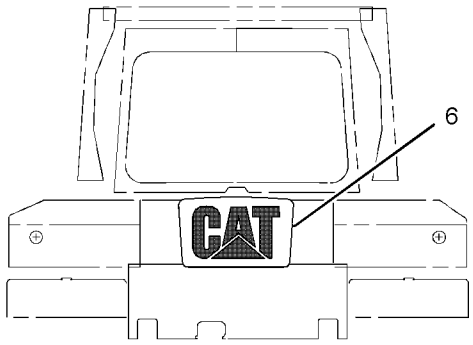

REAR VIEW

GRAPHIC #1 **<END>** g03068337

447-8670 KIT-GASKET—SINGLE CYLINDER HEAD

S/N: EMM1-UP; JEN1-UP

CONTAINS THE GASKETS, SEALS, & BENDABLE LOCKS TO REBUILD & REINSTALL A CYLINDER HEAD. KIT INCLUDES THE TURBO GASKETS , BUT DOES NOT INCLUDE THE FUEL INJECTOR SEALS. ORDER A SINGLE INJECTOR SEAL KIT, AS NEEDED. FOR IN LINE 4 & 6 CYLINDER ENGINES WITH ONE CYLINDER HEAD ONLY. THE FOLLOWING TURBO MOUNTING HARDWARE WILL BE INCLUDED: BOLTS, NUTS, STUDS, WASHERS, SPACERS. APPLIES TO SINGLE CYLINDER HEAD KIT PART NUMBERS 317-8750-UP

FOR USE WITH 387-8581—PAGE: 4, 387-8582—PAGE: 5

FIELD INSTALLATION

SMCS-7555 **i05589212**

NOTE	PART NUMBER	QTY	PART NAME 1 2 3 4 5 6 (PRODUCT LEVEL)	SEE PAGE
	7C-7431	1	GASKET (TURBOCHARGER)	
	161-3411	6	GASKET	
	191-4457	1	GASKET (WATER REGULATOR HOUSING)	
	197-8419	1	GASKET	
	219-2340	1	GASKET (WATER TEMPERATURE REGULATOR)	
	187-1315	1	GASKET AS (CYLINDER HEAD)	
M	**3E-8017**	4	LOCKNUT (M10X1.5-THD)	
	3S-9643	1	SEAL-LIP TYPE (WATER TEMPERATURE REGULATOR)	
	3K-0360	1	SEAL-O-RING	
	4G-4972	1	SEAL-O-RING	
	6V-5063	1	SEAL-O-RING	
	6V-6609	6	SEAL-O-RING	
	214-7566	1	SEAL-O-RING	
	214-7567	1	SEAL-O-RING	
	214-7568	10	SEAL-O-RING	
	228-7089	1	SEAL-O-RING	
	228-7090	1	SEAL-O-RING	
	228-7096	2	SEAL-O-RING	
	238-5080	3	SEAL-O-RING	
	238-5081	1	SEAL-O-RING	
	238-5082	1	SEAL-O-RING	
	310-7255	6	SEAL-O-RING	
	310-7257	6	SEAL-O-RING	
	268-3490	1	SEAL-VALVE COVER	
	285-4106	1	SEAL-VALVE COVER	
	418-6781	4	STUD-TAPERLOCK (M10X1.5X40-MM)	
			FOR A LIST OF RELATED PARTS THAT REQUIRED FOR THE ENGINE REBUILD TO THE KIT CONSISST, PLEASE VISIT	
			HTTPS://DEALER.CAT.COM/RELATED	

M - METRIC PART

<END>

367-9235 PLATE & FILM GP

S/N: EMM1-UP; JEN1-UP
CHINA
AN ATTACHMENT

SMCS-7557, 7563

i05683014

NOTE	REF NO	GRAPHIC REF	PART NUMBER	QTY	PART NAME 1 2 3 4 5 6 (PRODUCT LEVEL)	SEE PAGE
	1	1	**367-5286**	1	PLATE-IDENTIFICATION (MACHINE)	

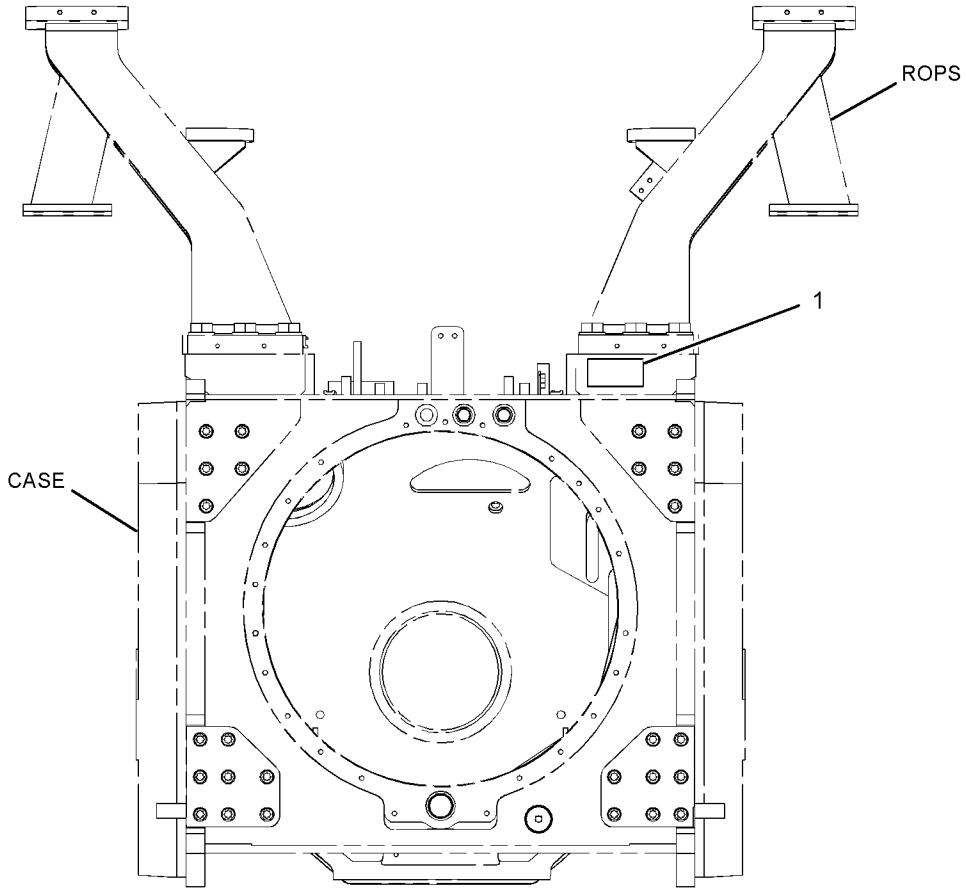

REAR VIEW

GRAPHIC #1

<END>

g03316660

381-2594 PLATE & FILM GP–RIPPER

S/N: MS31-UP
PART OF 387-1087 RIPPER AR
AN ATTACHMENT

SMCS-7557, 7563

i05636021

NOTE	PART NUMBER	QTY	PART NAME 1 2 3 4 5 6 (PRODUCT LEVEL)	SEE PAGE
	7X-3229	2	FILM-IDENTIFICATION (LIFT EYE, TIE-DOWN LOCATION)	
			(ON RIPPER FRAME JUST FORWARD OF PIN JOINT TO RIPPER CARRIAGE, ONE FILM ON LH AND RH SIDE)	
	8M-3494	1	PLATE-SERIAL NUMBER (RIPPER)	
	4B-4158	2	SCREW-DRIVE (NO 4X0.25-IN)	

<END>

385-1747 PLATE & FILM GP

S/N: TXD1-UP
PART OF 387-8600, 387-8601 ENGINE AR
AN ATTACHMENT

SMCS-7557, 7563 **i05555510**

NOTE	REF NO	GRAPHIC REF	PART NUMBER	QTY	PART NAME 1 2 3 4 5 6 (PRODUCT LEVEL)	SEE PAGE
	1	1	**293-9659**	2	FILM-WARNING (UNIVERSAL, READ OMM)	
	2	1	**3N-3469**	1	TAG-INSTRUCTION (ENGINE PRESTART)	
	3	1	**297-8989**	1	PLATE-IDENTIFICATION (CAT C9)	
	4	1	**8L-8413**	1	STRAP-CABLE	
	5	1	**136-9066**	1	FILM-INFORMATION (ENGINE OIL)	

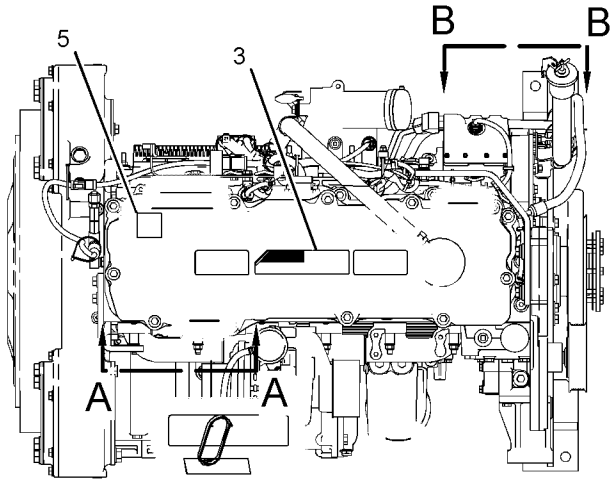

TOP VIEW OF ENGINE

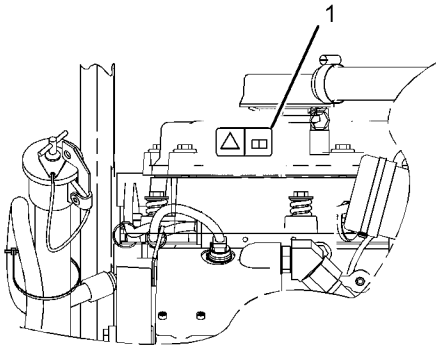

VIEW B-B

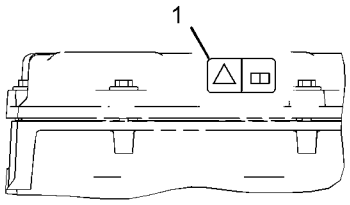

VIEW A-A

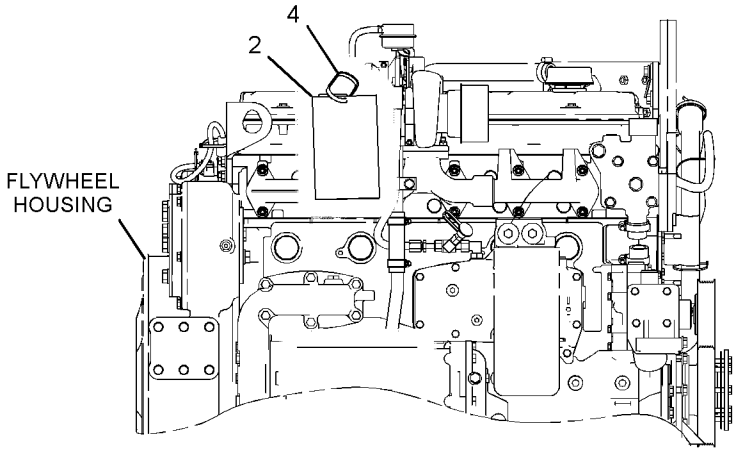

RIGHT SIDE VIEW OF ENGINE

GRAPHIC #1 **<END>** g03508016

389-3241 PLATE & FILM GP–CANOPY

S/N: EMM1-UP; JEN1-UP

AN ATTACHMENT

SMCS-7557, 7563 **i05611093**

NOTE	REF NO	GRAPHIC REF	PART NUMBER	QTY	PART NAME 1 2 3 4 5 6 (PRODUCT LEVEL)	SEE PAGE
	1	1	**7X-3229**	4	FILM-IDENTIFICATION (LIFT EYE, TIE-DOWN LOCATION)	
	2	1	**190-5386**	2	FILM-IDENTIFICATION (ROUND RED REFLECTIVE)	
	3	1	**225-4150**	1	PLATE-SERVICE INFORMATION (MACHINE)	
	4	1	**239-6986**	1	PLATE-SERIAL NUMBER (MACHINE)	
	5	1	**334-3416**	1	FILM-CERTIFICATION (FOPS)	
	6	1	**334-3417**	1	FILM-CERTIFICATION (ROPS)	
	7	1	**134-7258**	1	FILM-INFORMATION (EXTENDED LIFE COOLANT)	
	8	1	**141-1511**	1	FILM-INFORMATION (FUEL FILTER)	
	9	1	**146-6747**	1	FILM-INFORMATION (24-VOLT)	
	11	1	**214-8976**	1	PLATE-IDENTIFICATION (FUEL DRAIN VALVE)	
	12	1	**219-0305**	1	FILM-WARNING (NO WELD, NO DRILL, READ OMM)	
	13	1	**225-0312**	1	FILM-WARNING (JUMP START, READ OMM, INTL)	
	14	1	**225-4257**	1	FILM-WARNING (HOT FLUID UNDER PRESS)	
	15	1	**229-0887**	1	FILM-INFORMATION (AIR CLEANER)	
	18	1	**245-8456**	1	FILM-IDENTIFICATION (FUEL PUMP)	
	19	1	**321-6073**	1	FILM-IDENTIFICATION (FUSE PANEL)	
	20	1	**321-6091**	1	FILM-NOTICE (SHIPPING, LIFTING, TIE-DOWN)	
	21	1	**334-4603**	1	FILM-INFORMATION (HYDO ADVANCED 10)	
	22	1	**335-1035**	1	FILM-INFORMATION (TRANSMISSION FILTER)	
	25	1	**7X-7644**	3	FILM-IDENTIFICATION (TIE-DOWN)	
	26	1	**8T-4999**	1	FILM-INSTRUCTION (BATTERY DISCONNECT)	
	27	1	**9F-6656**	1	RING-RETAINING	
	28	1	**9X-6340**	1	FILM-INSTRUCTION (ENGINE OIL)	

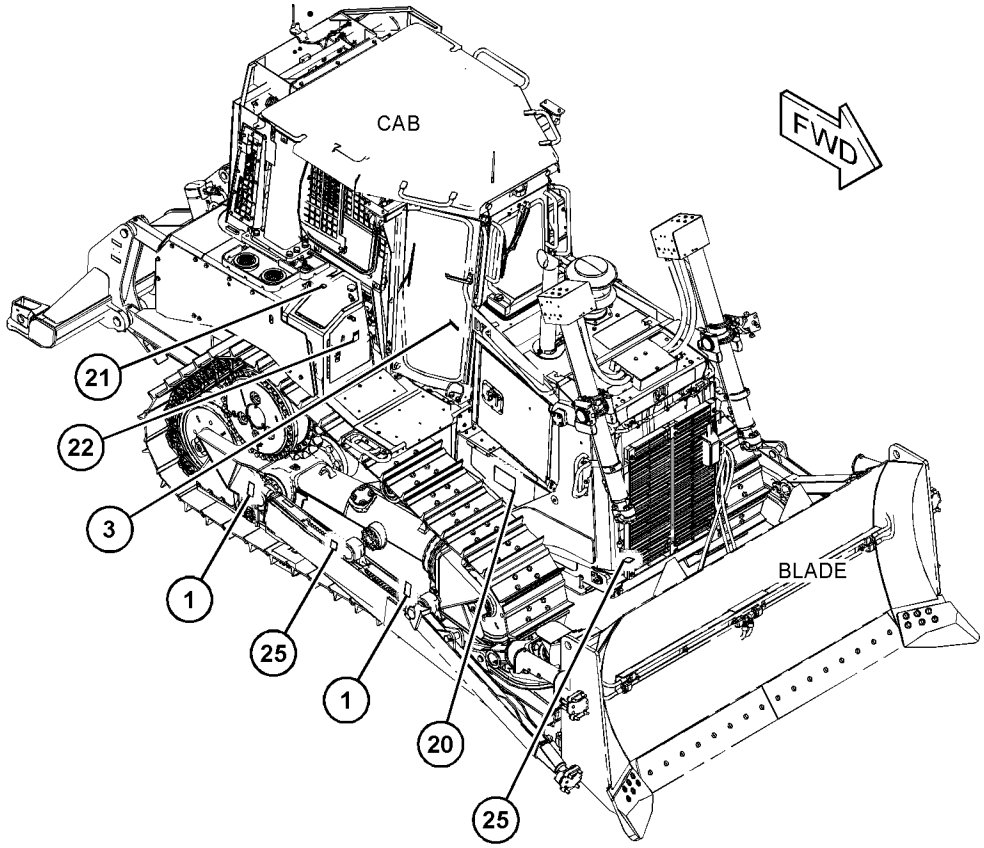

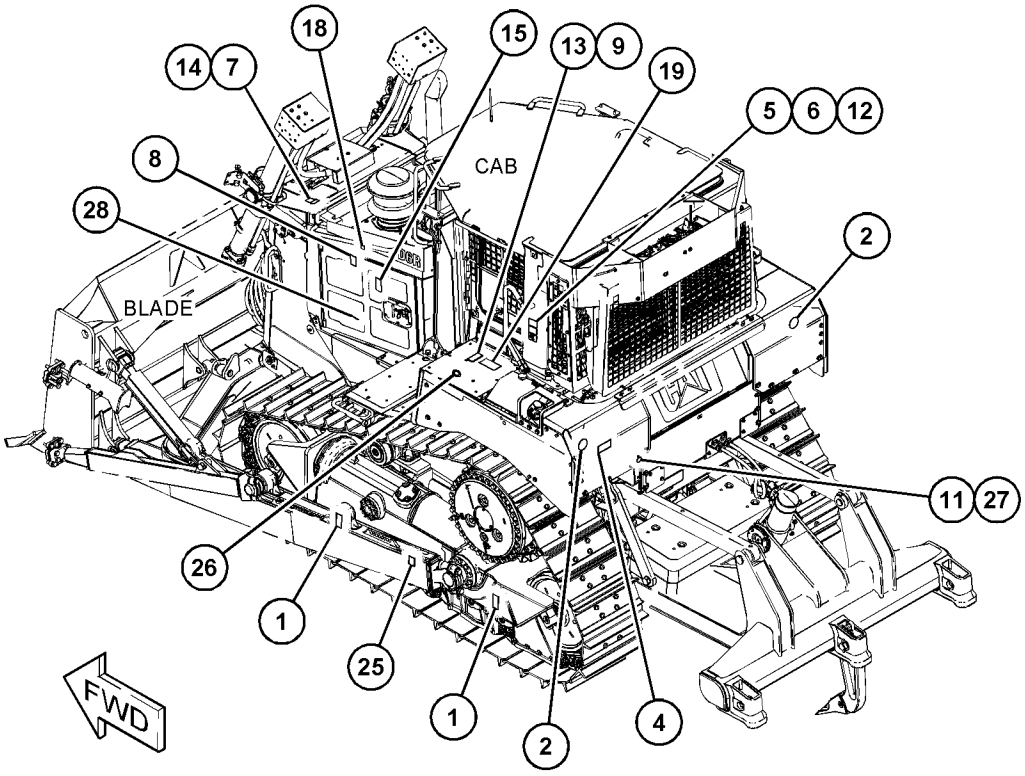

GRAPHIC #1 **<END>** g03569446

389-3242 PLATE & FILM GP–CAB

S/N: EMM1-UP; JEN1-UP

AN ATTACHMENT

SMCS-7557, 7563 **i05683013**

NOTE	PART NUMBER	QTY	PART NAME 1 2 3 4 5 6 (PRODUCT LEVEL)	SEE PAGE
	323-3309	11	CAP	
			4-(FITTED TO BAND CLAMPS IN LINES GP-PUMP)	
			2-(FITTED TO BAND CLAMPS IN TANK GP)	
			1-(FITTED TO BAND CLAMP IN LINES GP-WATER) (ENGINE INSTALLATION AR)	
			2-(FITTED TO BAND CLAMPS IN LINES GP-TURBO)	
			2-(FITTED TO BAND CLAMPS IN LINES GP-WATER) (ENGINE AR)	
	211-8073	7	CAP-PROTECTION	
			2-(FITTED TO BAND CLAMPS IN DISPOSAL GP-FUME)	
			4-(FITTED TO BAND CLAMPS IN LINES GP-HEATER)	
			1-(FITTED TO BAND CLAMP IN LINES GP-FUEL)	
	334-3417	1	FILM-CERTIFICATION (ROPS)	
			(ON ROPS POST)	
	7X-3229	4	FILM-IDENTIFICATION (LIFT EYE, TIE-DOWN LOCATION)	
			WITHOUT RIPPER	
			4-(ON SIDE OF TRACK ROLLER BETWEEN FRONT ROLLER & IDLER & BETWEEN REAR ROLLER & IDLER(2 EACH SIDE))	
			WITH RIPPER	
			4-(ON SIDE OF TRACK ROLLER FRAME BETWEEN FRONT ROLLER & IDLER,ON SIDE OF LOWER RIPPER FRAME BY REAR PIN (2 EACH SIDE))	
	7X-7644	3	FILM-IDENTIFICATION (TIE-DOWN)	
			3-(ON FRONT TOWING EYES)	
	190-5386	2	FILM-IDENTIFICATION (ROUND RED REFLECTIVE)	
			(ON REAR LH & RH SIDE OF MACHINE)	
	245-8456	1	FILM-IDENTIFICATION (FUEL PUMP)	
			(NEXT TO FUEL PRIMING PUMP SWITCH)	
	321-6073	1	FILM-IDENTIFICATION (FUSE PANEL)	
			(VERTICALLY ON REAR BATTERY BOX PANEL)	
	134-7258	1	FILM-INFORMATION (EXTENDED LIFE COOLANT)	
			(RIGHT OF RADIATOR FILL COVER)	
	141-1511	1	FILM-INFORMATION (FUEL FILTER)	
			(ON SECONDARY FUEL FILTER)	
	146-6747	1	FILM-INFORMATION (24-VOLT)	
			(ON BOTTOM OF BATTERY BOX COVER)	
	229-0887	1	FILM-INFORMATION (AIR CLEANER)	
			(CENTER ON EXTERIOR OF AIR CLEANER COVER)	
	334-4603	1	FILM-INFORMATION (HYDO ADVANCED 10)	
			(TANK LIFT HOOK REAR-ADJ TO HYD TANK FILLER SPOUT)	
	335-1035	1	FILM-INFORMATION (TRANSMISSION FILTER)	
			(ON PTO FILTER CANISTER INSIDE ENCLOSURE ON RH FENDER)	
	8T-4999	1	FILM-INSTRUCTION (BATTERY DISCONNECT)	
			(ON FACE OF DISCONNECT SWITCH)	
	9X-6340	1	FILM-INSTRUCTION (ENGINE OIL)	
			(ON ENGINE OIL FILL TUBE)	
	219-0305	1	FILM-WARNING (NO WELD, NO DRILL, READ OMM)	
			(W/ROPS FILM ON LH ROPS POST)	
	225-0312	1	FILM-WARNING (JUMP START, READ OMM, INTL)	
			(ON BOTTOM OF BATTERY BOX COVER)	
	225-4257	1	FILM-WARNING (HOT FLUID UNDER PRESS)	
			(TO RIGHT OF RADIATOR FILL COVER)	
	214-8976	1	PLATE-IDENTIFICATION (FUEL DRAIN VALVE)	

389-3242 **PLATE & FILM GP (*contd.*)** **i05683013**

NOTE	PART NUMBER	QTY	PART NAME 1 2 3 4 5 6 (PRODUCT LEVEL)	SEE PAGE
			(ON FUEL TANK DRAIN VALVE)	
	110-6393	1	PLATE-INSTRUCTION (AIR CONDITIONER)	
			(ON LH SIDE OF DASH 250-MM ABOVE FLOOR & 10-MM IN FRONT OF DASH REAR EDGE)	
	239-6986	1	PLATE-SERIAL NUMBER (MACHINE)	
			(ON ROPS MOUNTING PAD ON TRANSMISSION)	
A	**4W-1413**	1	PLATE-SERIAL NUMBER (ENGINE)	
			(ON LH SIDE OF CYLINDER BLOCK TOWARD TOP & REAR FLAT AREA)	
	225-4150	1	PLATE-SERVICE INFORMATION (MACHINE)	
			(IN LUBRICANT GP-CAB ON TOP OF STRG CONT LENGTHWAYS)	
	9F-6656	1	RING-RETAINING	
			(ON FUEL TANK DRAIN VALVE)	

A - NOT PART OF THIS GROUP

<END>

389-3243 PLATE & FILM GP–COLD WEATHER

S/N: EMM1-UP; JEN1-UP

AN ATTACHMENT

SMCS-7557, 7563 **i05611092**

NOTE	REF NO	GRAPHIC REF	PART NUMBER	QTY	PART NAME 1 2 3 4 5 6 (PRODUCT LEVEL)	SEE PAGE
	1	1	**7X-3229**	4	FILM-IDENTIFICATION (LIFT EYE, TIE-DOWN LOCATION)	
					(WITHOUT RIPPER-ON SIDE OF TRACK ROLLER BETWEEN FRONT ROLLER & IDLER & BETWEEN REAR ROLLER & IDLER)(2 ON EACH SIDE)	
					(WITH RIPPER-ON SIDE OF TRACK ROLLER FRAME BETWEEN FRONT ROLLER & IDLER & ON SIDE OF LOWER RIPPER FRAME BY REAR PIN)(2	
					EACH SIDE)	
	2	1	**110-6393**	1	PLATE-INSTRUCTION (AIR CONDITIONER)	
					(LH SIDE OF DASH 250MM ABOVE FLOOR, 10MM IN FRONT OF DASH REAR EDGE)	
	3	1	**190-5386**	2	FILM-IDENTIFICATION (ROUND RED REFLECTIVE)	
					(ON REAR LH & RH SIDE OF MACHINE)	
	4	1	**225-4150**	1	PLATE-SERVICE INFORMATION (MACHINE)	
					(ON RH SIDE OF BRAKE PEDAL HOUSING)	
	5	1	**239-6986**	1	PLATE-SERIAL NUMBER (MACHINE)	
					(ON ROPS MOUNTING PAD ON TRANSMISSION)	
	6	1	**334-3417**	1	FILM-CERTIFICATION (ROPS)	
					(ON ROPS POST)	
	7	1	**134-7258**	1	FILM-INFORMATION (EXTENDED LIFE COOLANT)	
					(TO RIGHT OF RADIATOR FILL COVER)	
	8	1	**141-1511**	1	FILM-INFORMATION (FUEL FILTER)	
					(ON SECONDARY FUEL FILTER)	
	9	1	**146-6747**	1	FILM-INFORMATION (24-VOLT)	
					(ON BOTTOM OF BATTERY BOX COVER)	
	11	1	**214-8976**	1	PLATE-IDENTIFICATION (FUEL DRAIN VALVE)	
					(ON FUEL TANK DRAIN VALVE)	
	12	1	**219-0305**	1	FILM-WARNING (NO WELD, NO DRILL, READ OMM)	
					(ON LH ROPS POST)	
	13	1	**225-0312**	1	FILM-WARNING (JUMP START, READ OMM, INTL)	
					(ON BOTTOM OF BATTERY BOX COVER)	
	14	1	**225-4257**	1	FILM-WARNING (HOT FLUID UNDER PRESS)	
					(TO RIGHT OF RADIATOR FILL COVER)	
	15	1	**229-0887**	1	FILM-INFORMATION (AIR CLEANER)	
					(CENTER ON EXTERIOR OF AIR CLEANER COVER)	
	18	1	**245-8456**	1	FILM-IDENTIFICATION (FUEL PUMP)	
					(NEXT TO FUEL PRIMING PUMP SWITCH)	
	19	1	**321-6073**	1	FILM-IDENTIFICATION (FUSE PANEL)	
					(VERTICALLY ON REAR OF BATTERY BOX PANEL)	
	21	1	**334-4603**	1	FILM-INFORMATION (HYDO ADVANCED 10)	
					(TANK LIFT HOOK REAR NEXT TO TANK FILLER SPOUT)	
	22	1	**335-1035**	1	FILM-INFORMATION (TRANSMISSION FILTER)	
					(ON PTO FILTER CANISTER INSIDE ENCLOSURE ON RH FENDER)	
	25	1	**7X-7644**	3	FILM-IDENTIFICATION (TIE-DOWN)	
					(ON FRONT TOWING EYE)	
	26	1	**8T-4999**	1	FILM-INSTRUCTION (BATTERY DISCONNECT)	
					(ON FACE OF DISCONNECT SWITCH)	
	27	1	**9F-6656**	1	RING-RETAINING	
					(ON FUEL TANK DRAIN VALVE)	
	28	1	**9X-6340**	1	FILM-INSTRUCTION (ENGINE OIL)	
					(ON ENGINE OIL FILL TUBE)	
AF			**4W-1413**	1	PLATE-SERIAL NUMBER (ENGINE)	
					(ON RH SIDE OF CYLINDER BLCOK	

A - NOT PART OF THIS GROUP
F - NOT SHOWN

389-3243 **PLATE & FILM GP (*contd.*)** **i05611092**

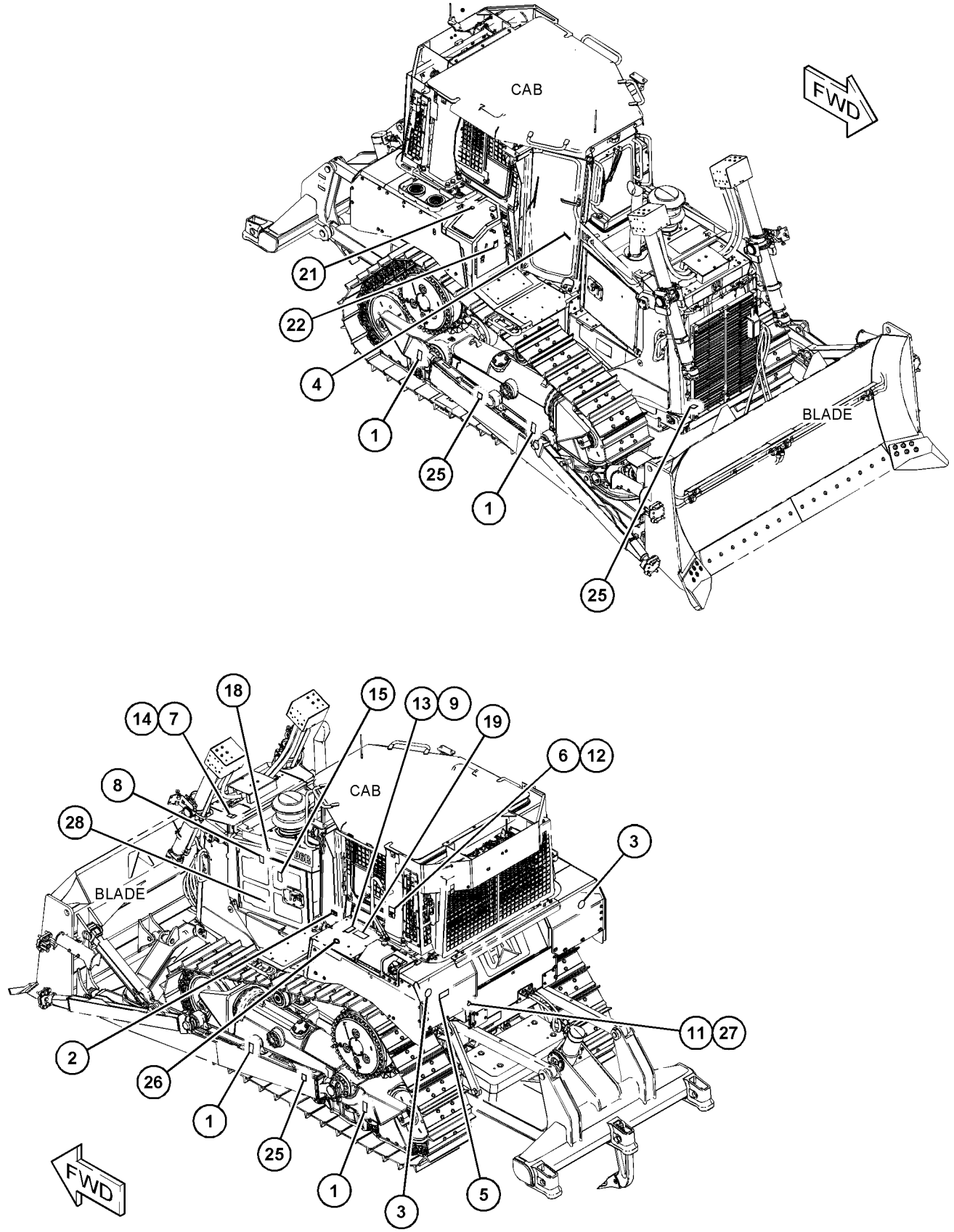

GRAPHIC #1 **<END>** g03569464

SERVICE EQUIPMENT AND SUPPLIES

389-3244 PLATE & FILM GP–COLD WEATHER

S/N: EMM1-UP; JEN1-UP
EXTREME TEMPERATURE
AN ATTACHMENT

SMCS-7557, 7563 **i05609666**

NOTE	PART NUMBER	QTY	PART NAME 1 2 3 4 5 6 (PRODUCT LEVEL)	SEE PAGE
	334-3417	1	FILM-CERTIFICATION (ROPS)	
			(ON ROPS POST)	
	7X-3229	4	FILM-IDENTIFICATION (LIFT EYE, TIE-DOWN LOCATION)	
			WITHOUT RIPPER	
			4-(ON SIDE OF TRACK ROLLER BETWEEN FRONT ROLLER & IDLER & BETWEEN REAR ROLLER & IDLER(2 EACH SIDE))	
			WITH RIPPER	
			4-(ON SIDE OF TRACK ROLLER FRAME BETWEEN FRONT ROLLER & IDLER,ON SIDE OF LOWER RIPPER FRAME BY REAR PIN (2 EACH SIDE))	
	7X-7644	3	FILM-IDENTIFICATION (TIE-DOWN)	
			3-(ON FRONT TOWING EYES)	
	190-5386	2	FILM-IDENTIFICATION (ROUND RED REFLECTIVE)	
			(ON REAR LH & RH SIDE OF MACHINE ON FILM STRIPE)	
	245-8456	1	FILM-IDENTIFICATION (FUEL PUMP)	
			(NEXT TO FUEL PRIMING PUMP SWITCH)	
	321-6073	1	FILM-IDENTIFICATION (FUSE PANEL)	
			(VERTICALLY ON REAR OF BATTERY BOX PANEL)	
	134-7258	1	FILM-INFORMATION (EXTENDED LIFE COOLANT)	
			(TO RIGHT OF RADIATOR FILL COVER)	
	141-1511	1	FILM-INFORMATION (FUEL FILTER)	
			(ON SECONDARY FUEL FILTER)	
	146-6747	1	FILM-INFORMATION (24-VOLT)	
			(ON BOTTOM OF BATTERY BOX COVER)	
	229-0887	1	FILM-INFORMATION (AIR CLEANER)	
			(ON EXTERIOR OF AIR CLEANER COVER)	
	334-4603	1	FILM-INFORMATION (HYDO ADVANCED 10)	
			(TANK LIFT HOOK REAR- ADJ TO HYD TANK FILLER SPOUT)	
	335-1035	1	FILM-INFORMATION (TRANSMISSION FILTER)	
			(ON PTO FILTER CANISTER INSIDE ENCLOSURE ON RH FENDER)	
	8T-4999	1	FILM-INSTRUCTION (BATTERY DISCONNECT)	
			(ON FACE OF BATTERY DISCONNECT SWITCH)	
	9X-6340	1	FILM-INSTRUCTION (ENGINE OIL)	
			(ON ENGINE OIL FILL TUBE)	
	219-0305	1	FILM-WARNING (NO WELD, NO DRILL, READ OMM)	
			(ON LH ROPS POST)	
	225-0312	1	FILM-WARNING (JUMP START, READ OMM, INTL)	
			(ON BOTTOM OF BATTERY BOX COVER)	
	225-4257	1	FILM-WARNING (HOT FLUID UNDER PRESS)	
			(TO RIGHT OF RADIATOR FILL COVER)	
	214-8976	1	PLATE-IDENTIFICATION (FUEL DRAIN VALVE)	
			(ON FUEL TANK DRAIN VALVE)	
	110-6393	1	PLATE-INSTRUCTION (AIR CONDITIONER)	
			(ON LH SIDE OF DASH 250-MM ABOVE FLOOR & 10-MM IN FRONT OF DASH REAR EDGE)	
	239-6986	1	PLATE-SERIAL NUMBER (MACHINE)	
			(ON ROPS MOUNTING PAD ON TRANSMISSION)	
A	**4W-1413**	1	PLATE-SERIAL NUMBER (ENGINE)	
			(ON LH SIDE OF CYLINDER BLOCK TOWARD TOP & REAR FLAT AREA)	
	225-4150	1	PLATE-SERVICE INFORMATION (MACHINE)	

389-3244 **PLATE & FILM GP (*contd.*)** **i05609666**

NOTE	PART NUMBER	QTY	PART NAME 1 2 3 4 5 6 (PRODUCT LEVEL)	SEE PAGE
			(ON RH SIDE OF BRAKE PEDAL HOUSING)	
	9F-6656	1	RING-RETAINING	
			(ON FUEL TANK DRAIN VALVE)	
A - NOT PART OF THIS GROUP				

<END>

389-6158 PLATE & FILM GP–CAB

S/N: EMM1-UP; JEN1-UP
PART OF 393-0289, 393-0290 CAB AR
AN ATTACHMENT

SMCS-7557, 7563

i05683018

NOTE	REF NO	GRAPHIC REF	PART NUMBER	QTY	PART NAME 1 2 3 4 5 6 (PRODUCT LEVEL)	SEE PAGE
	1	1	**102-2913**	1	FILM-INSTRUCTION (BULLDOZER CONTROL)	
	2	1	**169-2876**	2	FILM-IDENTIFICATION (POWER RECEPTACLE, 12-VOLT)	
	3	1	**224-0672**	1	FILM-WARNING (HIGH PRESSURE, READ OMM, INTL)	
	4	1	**241-4167**	1	FILM-INSTRUCTION (READ OMM, STEERING)	
	5	1	**247-6876**	1	FILM-WARNING (DO NOT OPERATE, READ OMM)	
	6	1	**247-6878**	1	FILM-WARNING (SEAT BELT)	
	7	1	**325-5460**	1	FILM-INSTRUCTION (PARKING BRAKE LOCK)	
	8	1	**219-0305**	1	FILM-WARNING (NO WELD, NO DRILL, READ OMM)	
	9	1	**334-3416**	1	FILM-CERTIFICATION (FOPS)	

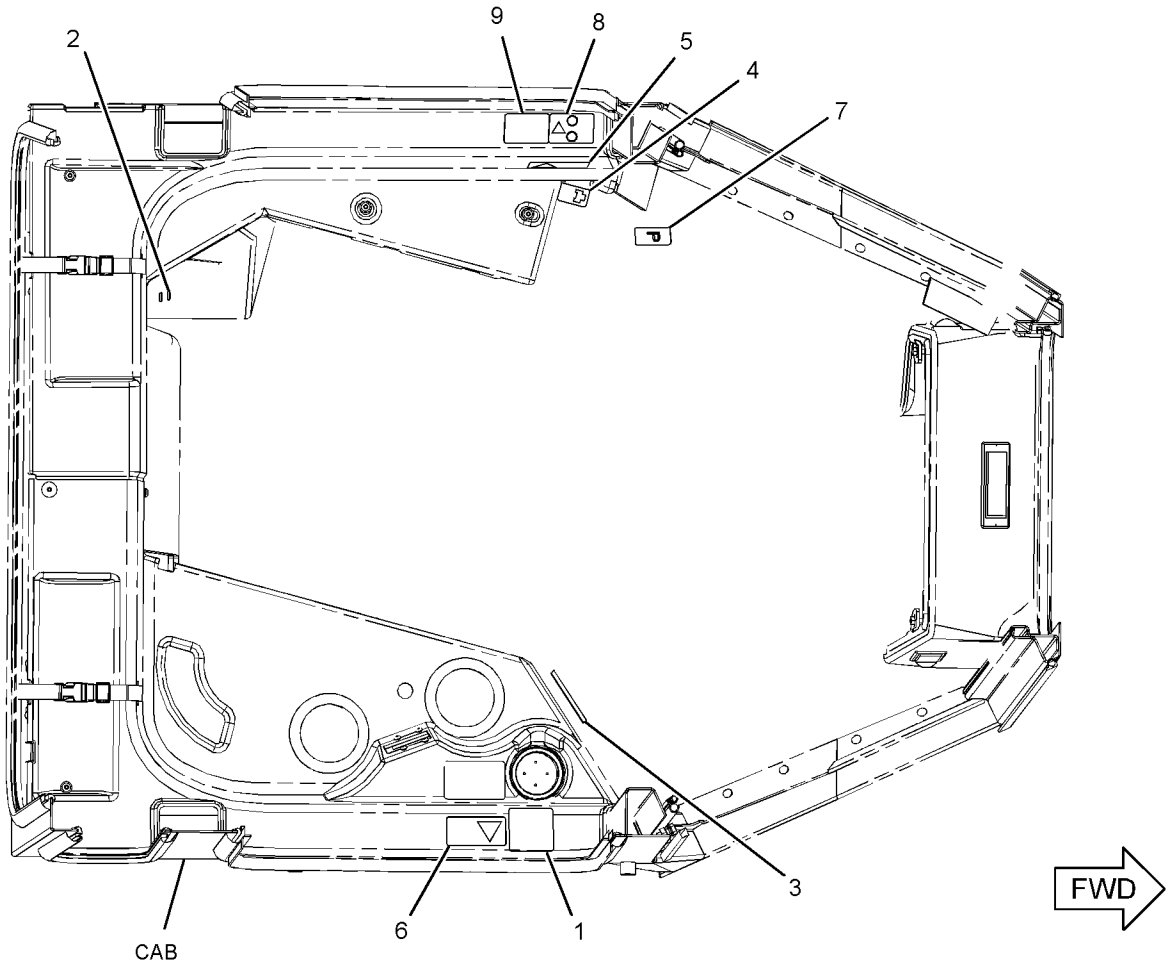

TOP VIEW

GRAPHIC #1

<END>

g03207061

389-6172 PLATE & FILM GP–CANOPY

S/N: EMM1-UP; JEN1-UP
PART OF 387-0575, 393-0288 PLATFORM AR
AN ATTACHMENT

SMCS-7557, 7563

i05683017

NOTE	REF NO	GRAPHIC REF	PART NUMBER	QTY	PART NAME 1 2 3 4 5 6 (PRODUCT LEVEL)	SEE PAGE
	1	1	**102-2913**	1	FILM-INSTRUCTION (BULLDOZER CONTROL)	
	2	1	**169-2876**	2	FILM-IDENTIFICATION (POWER RECEPTACLE, 12-VOLT)	
	3	1	**224-0672**	1	FILM-WARNING (HIGH PRESSURE, READ OMM, INTL)	
	4	1	**241-4167**	1	FILM-INSTRUCTION (READ OMM, STEERING)	
	5	1	**247-6876**	1	FILM-WARNING (DO NOT OPERATE, READ OMM)	
	6	1	**247-6878**	1	FILM-WARNING (SEAT BELT)	
	7	1	**325-5460**	1	FILM-INSTRUCTION (PARKING BRAKE LOCK)	

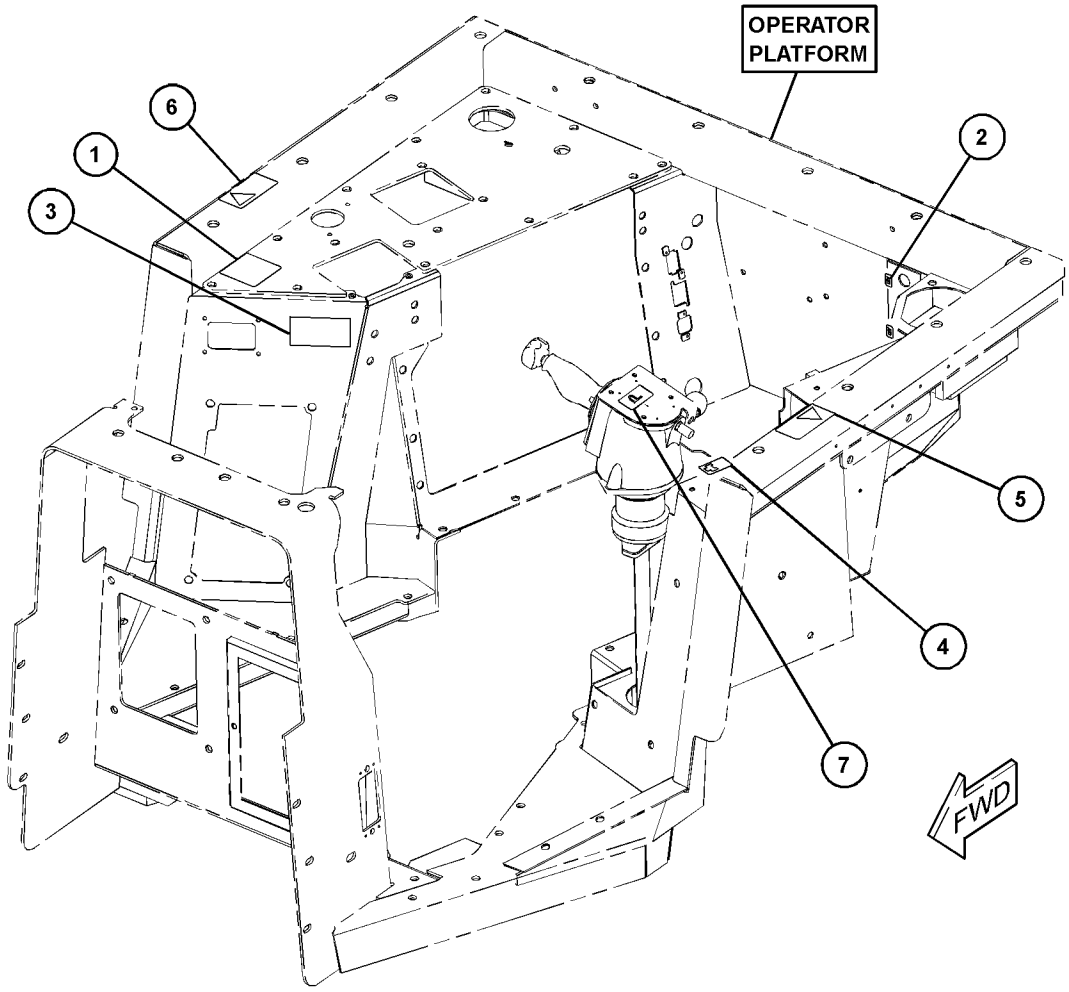

GRAPHIC #1

<END>

g03316692

PART NUMBER INDEX

Part	Page
0	
0L-0478	312
0L-1026	13
0L-1143	250
0L-1169	283
0L-1351	267
	313
	438
0S-0519	15
0S-1569	283
0S-1571	438
0S-1585	254
	256
	294
0S-1591	97
	98
	283
0S-1594	258
0S-1597	215
	219
0S-1614	250
0S-1620	258
0S-1897	283
0T-0102	256
0T-0244	679
	682
	686
1	
1A-1460	250
	251
	254
1A-2029	250
	254
	307
1A-2209	307
1A-2223	250
	293
1A-2610	258
1A-5183	294
1A-5822	283
1A-9252	265
1B-0676	263
	265
	509
	588
1B-5174	375
	377
	379
	381
	384
	386
1B-8705	7
	12
	299
1B-8706	263
	588
1B-8714	588
1B-8735	573
	575
1B-8736	299
1C-0569	254
1D-4539	267
1D-4601	283
1D-4624	324
1F-0748	136
	138
1F-0750	235
	320
	321
	341
	602
	687
1F-6762	448
1H-1023	219
1H-2629	219
1H-3244	228
1H-3338	224
1H-5728	287
1H-8128	133
1H-9696	277
	279
1J-0708	452
1J-4384	263
1J-5353	315
1J-6472	372
1J-8569	452
1J-9671	475
	540
1K-4649	120
	122
1K-5888	481
1K-6872	588
1K-8850	361
1L-4775	62
1L-5072	506
1L-6957	283
1L-7388	294
1L-8545	50
	52
1M-1341	263
	588
	663
1M-1571	448
1M-4533	588
1M-4543	240
	584
1M-4986	217
1M-6119	140
	141
	145
	147
1M-6120	140
	141
	145
	147
1M-6718	547
1M-8657	294
1M-9011	277
	292
1M-9968	219
1M-9971	219
1N-5999	517
1P-0810	141
	239
	260
	568
1P-2772	665
	668
1P-3702	475
	512
	514
1P-3703	475
	481
1P-3704	458
1P-3706	540
1P-3934	283
1P-3935	283
1P-4278	92
	116
1P-4577	298
1P-4578	287
	298
	506
	512
	514
1P-4582	506
1P-6356	621
	625
1P-7009	626
1P-8116	315
1P-9005	277
	279
1Q-2423	606
1Q-2606	575
1Q-2645	575
1Q-2648	575
1Q-4324	2
	324
1R-0762	116
1R-0777	506
1R-1808	64
1S-0724	71
1S-0994	116
	125
	141
	236
1S-0996	120
	122
1S-1015	141
	236
1S-1860	283
	426
	428
	429
	430
	432
	433
1S-4915	140
	141
	236
1S-6385	318
	322
1S-6420	240
1S-7251	141
	142
	218
1S-7252	218
1S-7446	219
1S-9593	156
	230
	548
	592
1S-9799	304
1T-0068	373
	374
1T-0069	307
1T-0097	307
1T-0414	307
1T-0438	307
1T-0441	307
1T-0446	307
1T-0447	307
1T-0599	307
1T-0765	396
	397
1T-0808	219
1T-0902	307
1T-1993	307
1T-2052	307
1T-2069	307
1T-2070	307
1T-2080	307
1T-2084	►307
	309
1T-2086	307
1T-2089	307
1U-0159	713
	715
1U-0300	713
1U-0301	324
	713
1U-0612	324
	713
	715
1U-0725	553
	554
1U-1173	550
1U-1174	550
1U-1175	550
1U-1176	550
1U-2827	506
1U-8846	37
	39
	100
	251
	254
1V-7753	287
1W-2431	103
1W-2715	20
1W-2860	629
1W-3011	120
	122
1W-4738	35
1W-4741	35
1W-4746	35
1W-4877	111
1W-8407	15
1Y-7927	609
2	
2A-1162	36
	41
2A-1736	616
2A-3746	22
	309
2A-4429	20
2A-4639	250
2B-0858	274
2B-0947	277
	279
2B-2695	315
2B-9373	299
2D-0598	517
2D-1523	304
2D-4202	506
2D-5658	309
2D-6235	609
2D-6392	219
2D-6506	292
2D-6642	283
2F-5326	372
2F-6678	220
2G-0391	651
	654
	657
2G-9245	360
2H-2995	315
2H-3429	219
	267
2H-3920	617
2H-3922	223
	226
2H-3928	396
	397
2H-3931	274
2H-3934	493
2H-6622	702
	703

► **PRIMARY REFERENCE**

PART NUMBER INDEX

Part	Page
2J-0564	454
2J-2866	519
	522
	524
2J-3506	711
	712
2J-4672	263
	267
2J-6274	416
2J-6356	588
2J-7761	506
2J-8163	219
	503
2J-8489	452
	454
2K-0703	715
2K-3258	452
2K-4096	451
2K-4973	324
	565
	691
	693
2K-5069	250
2K-5986	309
2K-6279	324
2K-6830	448
2K-8257	287
2K-9295	250
2L-5893	662
2L-6679	201
2L-8049	235
2L-8057	235
2L-8069	243
2L-8071	235
2L-8075	228
2L-8077	244
2L-8079	243
2M-1168	438
2M-1444	568
2M-3974	298
2M-4453	40
2M-5795	318
	322
2M-7041	313
2M-7819	609
2M-9780	116
	120
	122
	474
	475
	500
	540
	545
2N-3680	259
2P-2717	63
2P-3696	277
	279
2P-4304	64
2P-4339	612
2P-6588	489
2P-8514	361
2R-0098	279
	291
2S-0696	315
2S-0795	79
	269
2S-2251	306
2S-2596	517
	519
	522
	524
2S-3029	62
2S-3440	67
2S-4078	277
	279
	287
	416
	444
	446
2S-4872	315
2S-5658	302
2S-5926	416
2V-1937	566
2V-4868	92
2W-5825	77
2W-7381	49
2W-8147	12
2Y-5829	54
	55
	71
2Y-9790	706
	707

3

Part	Page
3B-0623	13
3B-4124	250
3B-4501	226
3B-4605	331
	333
3B-4610	331
	333
	603
3B-4611	263
3B-4615	263
	265
	346
	347
	509
	588
3B-4626	550
3B-4629	348
	349
3B-4632	555
	556
	557
3B-5325	717
	718
3B-8489	370
	372
	494
	715
3D-2824	84
	92
	222
	461
	465
	469
	472
	505
	506
3D-2975	609
3D-8317	313
	315
3E-1841	608
3E-3365	226
3E-3371	140
	235
3E-3389	140
	239
3E-3892	651
3E-4051	621
	625
3E-4052	621
	625
3E-4057	622
	625
3E-4058	621
	625
3E-4067	625
3E-4080	621
3E-4087	621
	625
3E-4297	537
3E-4304	575
3E-4352	24
	100
	203
	240
	613
3E-4353	42
	45
	108
3E-4354	254
3E-4367	612
	646
3E-4374	263
3E-4999	50
	52
3E-5239	243
	586
	612
	646
3E-5464	566
3E-6180	573
3E-6328	▶134
	243
3E-6389	▶172
	617
3E-6910	500
3E-6922	613
3E-7410	125
3E-7771	219
3E-7775	215
3E-8005	8
3E-8017	102
	107
	115
	721
3E-8020	619
3E-8558	612
	646
3E-9375	204
3E-9867	80
3E-9868	80
3F-3442	258
3F-3727	307
3F-5022	293
3F-5792	37
	41
3F-9556	633
	634
	635
	636
3G-2579	715
3G-2580	715
3G-3267	506
3G-4214	287
3G-4218	287
3G-6372	360
3G-8047	481
	489
3G-8054	481
	489
3G-8057	481
	489
3G-8742	448
3G-9402	494
3G-9405	494
3H-3243	317
3H-3433	259
3H-7180	586
3H-8683	481
3J-1770	550
3J-1907	80
	116
	118
	214
	263
	282
	286
	287
	438
	443
	460
	461
	464
	465
	467
	468
	469
	470
	471
	472
	474
	491
	505
	527
	528
	530
	532
	537
	547
3J-2682	552
3J-3679	540
3J-4818	693
3J-6572	454
3J-6573	550
3J-7354	80
	92
	141
	370
	460
	461
	464
	465
	467
	468
	469
	470
	471
	472
	491
	512
	514
	517
	519
	522
	524
	528
	530
	532
	544
	546
3J-9703	454
3K-0360	84
	120
	122
	251
	254
	277
	279
	286
	287

PART NUMBER INDEX

Part	Page
	306
	438
	460
	464
	467
	471
	489
	516
	534
	535
	536
	542
	544
	546
	629
	721
3K-2511	294
3K-8510	715
3L-0594	660
3L-3380	219
3L-3813	540
3L-5893	91
3N-0759	442
3N-3469	724
3N-3763	219
3P-1932	282
3P-2404	475
3P-8485	315
3P-9900	693
3R-8797	215
	219
3R-8801	219
3S-0004	299
3S-2093	85
	123
	125
	230
	233
	568
	586
	611
	612
	617
	621
	625
	646
	695
	697
	698
3S-2708	250
	254
	294
	309
3S-3439	301
3S-3440	301
3S-6049	141
3S-7781	256
3S-8313	588
3S-8664	625
3S-9643	78
	721
3T-0598	416
3T-0849	537
3T-0996	323
3T-1078	263
3T-1121	702
	703
3T-1162	375
	377
	383
	388
	389
	390
3T-2077	375
	377
	379
	381
	384
	386
3T-3157	612
	646
3T-3158	612
	646
3T-3159	612
	646
3T-3278	612
	646
3T-3418	219
3T-3422	215
	219
3T-3423	219
3T-3424	219
3T-3434	215
	219
3T-3494	315
3T-3634	657
3T-4007	309
3T-4008	309
3T-4009	309
3T-4011	309
3T-4013	309
3T-4215	315
3T-4377	293
3T-4403	267
3T-4568	250
3T-4709	201
3T-4710	201
3T-4824	250
3T-5021	250
3T-5200	250
3T-5301	286
3T-5302	286
3T-5356	298
3T-5807	254
3T-5851	248
3T-6469	286
3T-6471	286
3T-6742	283
3T-6963	250
3T-8305	303
3T-8729	294
3T-9272	250
3T-9494	201
	219
3T-9524	219
3T-9525	▶201
	219
3T-9549	249
3T-9921	256
3V-2431	312
3V-3263	695
3V-9244	348
	349
3V-9399	331
	333
3W-0329	416
3W-0556	588
3W-0640	416
3W-1356	▶363
	714
3W-1852	375
	377
	379
	381
	384
	386
3W-1944	347
3W-2369	416
3W-2470	286
3W-2568	89
3W-2647	120
	122
3W-3742	360
3W-3819	336
	338
3W-3896	605
3W-6550	▶248
	297
3W-6551	248
3W-6756	660
3W-6866	2
	330
3W-6867	330
3W-9139	230
	233
3W-9207	331
	333
3W-9208	331
	333
3W-9678	370
3Y-2888	214
3Y-3866	550
3Y-5405	483
	485
	487
4	
4B-0831	317
4B-1270	259
4B-2049	219
4B-3611	588
4B-4098	26
	550
4B-4158	375
	377
	383
	388
	389
	390
	706
	707
	723
4B-4278	331
	333
	693
4B-4863	244
4B-5059	609
4B-9782	258
	260
4B-9785	258
4B-9808	532
	591
4B-9880	283
	313
	315
4C-9612	46
4D-4065	663
4D-6716	92
4D-7388	68
4D-7733	622
4D-7735	120
	123
4F-0255	550
4F-1252	550
4F-2129	294
4F-2294	225
4F-4879	688
	689
	690
4F-5695	13
4F-6024	35
4F-7389	506
4G-4972	15
	721
4H-0019	283
4H-0407	651
	654
	657
4H-1225	141
4H-1394	267
4H-1440	307
4H-1641	260
	320
	321
	341
	602
4H-2558	159
	161
	163
	165
	167
	170
	331
	333
	622
	698
4H-4737	313
4H-5440	256
4H-7869	41
4J-0121	448
4J-0520	444
	446
	458
	461
	465
	469
	472
	475
	479
	481
	511
4J-0522	461
	465
	469
	472
	512
	514
	527
4J-0525	40
4J-0527	475
4J-0528	527
4J-2036	348
	349
4J-2414	552
	553
4J-5267	478
	479
	481
	483
	485
	487
	489
4J-5351	519
	522
	524
	543
4J-5477	286
	287
	460
	461
	464
	465
	467

▶ **PRIMARY REFERENCE**

PART NUMBER INDEX

Part	Page
	468
	469
	470
	471
	472
4J-6374	448
4J-6806	517
4J-7533	517
	519
	522
	524
4J-8251	506
4J-8252	506
4J-8997	512
	514
4K-0367	506
4K-1388	444
	446
	512
	514
	517
	519
	522
	524
4K-2039	534
	535
4K-3004	715
4K-3533	573
	575
4K-6177	287
4K-8302	622
4K-8501	361
4K-9429	643
4L-2729	220
4L-6454	136
	245
	265
	277
	279
4L-6496	588
4L-9337	588
4M-0189	37
	41
4M-1831	215
	219
4M-1853	219
4M-1854	219
4M-1896	220
4M-2381	313
	315
4M-2442	294
4M-5281	136
4M-6425	573
	575
	662
4M-6480	41
4M-6980	540
4M-7470	331
	333
4M-8239	314
4M-9592	293
4N-1230	35
	41
4N-2514	32
4N-2927	609
4N-3808	273
4N-6045	63
4P-0489	240
4P-2102	4
	5
	24
4P-4369	107
4P-5524	96
4P-7428	42
	622
4P-7429	92
	236
	622
	626
4P-7581	123
	136
	138
	142
	157
	159
	161
	163
	170
	177
	179
	181
	183
	185
	187
	189
	191
	193
	195
	230
	233
	236
	240
	506
4P-7582	236
4P-8134	142
	157
	179
	183
	187
	191
	195
	214
	230
	233
	236
	506
	586
	613
	622
	625
	647
4R-9999	41
	56
4S-1962	89
	136
	138
4S-5719	263
	509
4S-5898	499
4S-8537	307
4S-8598	301
4S-9191	78
4T-0521	506
4T-0732	562
4T-0780	562
4T-0928	547
4T-0993	517
4T-1021	517
4T-1108	519
	522
	524
4T-1481	555
	556
	557
4T-1520	560
	562
4T-1563	483
	485
	487
4T-1649	517
4T-1700	546
4T-1850	517
4T-1860	517
	519
	522
	524
	547
4T-2952	711
	712
4T-4509	546
4T-4511	517
4T-4628	519
	522
	524
4T-4631	522
	524
4T-4659	540
4T-4866	553
	554
	560
	562
4T-4875	494
4T-4942	542
4T-5072	519
	522
	524
4T-5073	517
	519
	522
	524
4T-5495	550
4T-7571	542
4V-7884	691
4V-8256	565
4V-8577	691
	693
4W-1203	26
4W-1204	26
4W-1413	728
	729
	731
4W-2026	9
4Y-9344	572
4Y-9398	555
	556
	557
5	
5B-0582	307
5C-2874	199
5C-2890	199
	224
	509
	528
	530
	586
	639
	693
5C-7261	175
	176
	236
	625
	633
	634
	635
	636
5C-8312	244
5C-9553	132
	138
	240
	568
5D-1026	120
	122
	608
5D-1911	506
5D-2989	293
5D-3118	324
	330
5D-3546	265
5D-4822	609
5D-7927	506
5F-0304	36
5F-1678	372
	506
5F-4899	267
5F-8000	40
5F-9144	118
	259
5F-9657	317
5F-9757	244
5G-2247	399
	400
5G-6505	142
5G-7183	361
5G-7191	474
5G-8655	572
	575
5G-8993	404
5G-9841	404
5G-9842	404
5G-9843	404
5G-9973	360
5G-9974	360
5H-3252	452
5H-4018	481
5H-4279	298
5H-6202	293
5H-6629	367
5H-6734	375
	377
	379
	381
	384
	386
5H-6799	588
5H-8985	315
5I-4376	460
	464
	467
	470
5J-3964	309
5J-4418	452
5J-4419	452
5J-4773	711
	712
5J-4989	452
5J-4991	454
5J-5314	219
5J-5731	451
	452
5J-7386	309
5K-0227	519
	522
	524
5K-9090	286
	287
	444
	446
5K-9107	251
5K-9179	631
	632
5K-9246	256
5K-9988	256

PART NUMBER INDEX

Part	Page
5L-2029	259
5L-5711	259
5L-7200	226
5M-0578	250
	254
5M-2057	506
	517
	519
	522
	524
5M-2894	251
	254
	256
	267
	283
	298
	307
	351
	396
	397
	662
5M-3034	219
5M-3038	294
5M-3062	245
5M-6126	293
5M-6214	317
	360
	552
5M-7878	309
5M-7925	250
5M-8500	573
	575
5M-9548	438
5M-9622	313
	315
5M-9623	314
	315
5M-9624	313
	315
5M-9735	50
	52
5N-4185	8
	40
5N-6096	260
5P-0492	157
5P-0537	644
	645
5P-0597	99
5P-0599	111
5P-0695	140
	141
	236
5P-0746	217
5P-0747	218
5P-0767	85
	608
	629
5P-0998	654
	657
5P-1075	177
	179
	181
	183
	185
	187
	189
	191
	193
	195
	199
	240
	244
	265
	287
	444
	446
	461
	465
	469
	472
	475
	481
	539
	566
	586
	593
	594
	595
	596
	631
	677
	678
	687
5P-1076	50
	52
	344
	347
	354
	355
	360
	365
	368
	384
	386
	415
	494
	555
	556
	557
	573
	575
	588
	597
	598
	603
	605
	654
	657
	664
	665
	667
	668
	673
	674
5P-1294	474
5P-1318	475
5P-1465	92
5P-1606	279
5P-2671	494
5P-2766	640
5P-2817	99
	111
5P-3860	111
5P-3930	293
	309
5P-3948	621
5P-4057	256
5P-4115	136
	613
	647
	654
	657
5P-4116	214
	600
	654
	657
5P-4295	622
5P-4423	693
5P-4571	244
	617
	695
5P-5296	294
5P-5297	294
5P-5618	695
5P-5639	608
5P-5643	566
	573
	576
	608
5P-5649	348
5P-5672	586
5P-5677	244
5P-5680	700
	701
	702
	703
5P-5755	349
	573
5P-5846	256
5P-5908	494
	586
5P-5924	586
5P-5926	573
5P-5930	573
	576
5P-5931	573
5P-5991	116
5P-6010	693
5P-6129	628
5P-6298	201
5P-6436	70
5P-6438	263
5P-6605	573
	576
5P-6719	527
5P-6874	631
	632
5P-6944	438
5P-7085	287
5P-7211	336
	338
5P-7464	236
	478
	489
5P-7465	236
	478
	489
5P-7468	287
5P-7469	287
5P-7483	349
	573
	576
5P-7509	651
	654
	657
5P-7513	638
5P-7514	349
	638
5P-7530	40
	71
	102
5P-7592	283
5P-7679	309
5P-7815	249
5P-7957	643
5P-7958	1
5P-7970	63
	230
	233
5P-8194	293
5P-8215	287
5P-8244	599
5P-8245	9
	37
	42
	58
	59
	60
	250
	251
	254
	256
	258
	283
	294
	298
5P-8247	283
5P-8248	711
	712
5P-8309	336
	338
5P-8435	592
5P-8445	609
5P-8500	1
	120
	122
	265
	320
	321
	646
5P-8503	572
	575
5P-8522	177
	179
	181
	183
	185
	187
	189
	191
5P-8918	702
	703
5P-8998	256
5P-9085	177
	179
	181
	183
	185
	187
	189
	191
	193
	195
5P-9297	116
5P-9439	298
5P-9617	64
	80
	460
	464
	467
	470
5P-9658	273
5P-9909	651
	655
	658
5S-4437	313
5S-7001	438
5S-7018	438
5S-7343	259
5S-7349	215
5S-7379	185
	187
	189
	191
	265
	631

► **PRIMARY REFERENCE**

PART NUMBER INDEX

Part	Page
5S-7383	662
5S-8709	489
5S-8712	489
5S-8765	489
5S-8766	489
5S-9062	26
5T-4374	370
5V-0770	609
5V-1496	318
	322
	680
	684
5V-1497	691
5W-7461	500
5W-7462	500
5W-7463	500
5W-7464	500
5W-7465	500
5W-7466	500

6

Part	Page
6A-5591	37
	500
6B-1124	50
	52
6B-4541	259
6B-6684	663
6B-6863	293
6C-9048	537
6C-9149	670
	672
6D-1641	622
6D-3033	238
6D-4161	612
	646
6D-4244	244
6D-4246	120
	123
6D-4247	142
	629
6D-4636	622
	629
6D-5801	130
6E-0381	516
6E-0486	517
6E-1637	519
	524
6E-1835	542
6E-4907	540
6E-5066	491
6E-5200	546
6F-0253	509
6F-0711	323
6F-4718	306
6F-6673	291
	299
	315
6F-7045	223
6F-7062	269
6G-6396	263
6H-3977	298
6H-4005	177
	179
	181
	183
	185
	187
	189
	191
	193
	195
	568
	673
	674
6H-9361	506
6I-1418	238
6I-2435	87
	94
6I-2501	96
6I-2502	96
6I-4464	96
6I-8500	293
6I-8507	283
6I-8511	283
6I-8724	250
6I-9386	572
	575
6I-9641	423
	426
6I-9706	654
	657
6I-9875	315
6J-1907	475
6J-3473	283
6J-5383	560
	562
6J-6439	542
6J-9187	552
6J-9188	552
6K-0806	92
	583
6K-1049	318
	322
6K-3273	684
6K-3630	309
6K-3632	365
	367
	368
	665
	668
	673
	674
6K-4934	177
	179
	181
	183
	185
	187
	189
	191
6K-4935	177
	179
	181
	183
	185
	187
	189
	191
6K-8162	540
6K-8178	622
	625
6K-8498	256
6L-1649	287
6L-4783	298
6L-5359	287
	301
6L-9716	517
6M-5062	534
	535
6N-1558	103
6N-2944	85
6N-2985	63
6N-3279	219
6N-3826	215
	219
6N-7523	132
6N-8744	583
6P-1735	250
6P-1736	250
6P-2216	660
6P-4938	315
6P-4939	315
6P-4940	315
6P-4971	315
6P-5317	251
	254
6P-6591	613
6P-7704	293
6P-8269	336
	338
6P-9783	315
6P-9784	315
6P-9785	315
6P-9786	315
6S-2828	283
6S-2829	283
6S-6646	267
6S-8584	568
6T-0062	250
6T-0064	250
6T-0363	201
6T-0364	283
6T-0371	201
6T-0372	201
6T-0850	250
6T-0988	660
6T-1698	132
	365
	368
6T-2307	313
6T-3643	199
6T-3764	157
6T-3852	283
6T-3853	283
6T-4556	651
	654
	657
6T-4557	651
	654
	657
6T-5067	660
6T-5068	660
6T-5617	608
6T-6505	568
6T-6506	568
6T-7695	617
6T-7882	293
6T-8048	617
6T-8387	265
6T-8388	265
6T-8402	572
	700
6T-8403	572
	701
6T-8710	317
6T-8714	641
6T-9927	336
	338
6V-0327	277
	279
6V-0328	277
	279
6V-0329	277
	279
6V-0330	277
	279
6V-0400	475
	492
	511
6V-0439	277
	279
6V-0473	293
6V-0484	287
6V-0852	40
	74
	116
	256
	282
	286
	438
	460
	461
	464
	467
	470
	474
	475
6V-0855	250
6V-0894	588
6V-0937	302
6V-1228	622
	625
6V-1249	478
	489
6V-1322	219
	274
6V-1355	92
6V-1574	475
6V-1581	80
6V-1582	80
6V-1604	438
6V-1625	85
6V-1720	256
6V-1790	654
	657
6V-1792	426
	428
	429
	430
	432
	433
6V-1819	73
6V-1820	35
	42
	108
6V-1889	67
	475
6V-1970	1
6V-2317	29
	43
	281
6V-2331	572
	575
6V-2372	628
6V-2375	572
	575
6V-2404	283
6V-2478	293
6V-2495	621
	625
6V-2499	349
6V-2689	530
	532
6V-3250	79
	85
	269
6V-3260	572
	575
6V-3326	503
6V-3538	15
6V-3545	259
6V-3668	269
6V-3671	573

PART NUMBER INDEX

Part	Page
6V-3822	28
	298
6V-3823	269
	298
6V-3832	260
6V-3918	8
	39
	46
6V-3922	543
6V-3940	7
	8
	47
	70
	71
	203
6V-3965	74
	116
	256
	282
	287
	438
	461
	465
	468
	472
	475
6V-4248	50
	52
	68
	125
6V-4249	103
6V-4292	120
	122
6V-4365	267
6V-4368	130
6V-4369	230
	233
6V-4583	309
6V-4589	549
6V-5048	282
6V-5050	249
6V-5063	721
6V-5064	79
	269
6V-5185	294
6V-5186	294
6V-5188	301
6V-5192	500
	522
	524
6V-5217	39
	70
	230
	233
6V-5218	24
	64
	71
6V-5219	64
6V-5220	64
6V-5230	71
6V-5324	547
6V-5326	543
6V-5387	286
6V-5555	512
	514
6V-5556	517
	544
	546
6V-5645	199
6V-5683	619
6V-5684	42
6V-5696	9
	59
	269
6V-5758	543
6V-5791	263
6V-5817	695
6V-5818	698
6V-5833	700
	701
	702
	703
6V-5839	35
	68
	71
	73
	103
	107
	125
	127
	218
	230
	233
	506
6V-5843	33
	45
6V-5844	37
	62
6V-5849	704
6V-5851	704
6V-6317	230
	233
6V-6580	537
6V-6609	20
	40
	78
	79
	213
	269
	721
6V-6717	608
6V-6887	572
	575
6V-7190	572
	575
6V-7238	629
6V-7357	336
	338
	584
	588
	593
	594
	595
	596
6V-7604	18
6V-7636	572
	575
6V-7646	250
	680
	684
6V-7673	26
	35
6V-7687	713
	715
6V-7732	506
6V-7742	448
	454
6V-7743	336
	338
6V-7744	236
	292
	331
	333
	506
	713
	715
6V-7981	127
6V-8073	572
	575
6V-8076	116
	461
	465
	469
	472
6V-8077	64
6V-8129	572
	575
6V-8133	454
6V-8149	9
6V-8183	259
	263
	663
6V-8185	228
6V-8187	259
	263
6V-8188	193
	215
	219
	512
	514
6V-8189	573
	575
6V-8190	324
	330
	361
	713
6V-8197	37
	42
6V-8200	540
6V-8212	218
6V-8214	613
6V-8237	370
	452
	454
6V-8245	92
6V-8260	62
6V-8336	37
6V-8369	617
6V-8370	226
6V-8376	199
6V-8378	215
6V-8397	116
	120
	122
	286
	287
	460
	461
	464
	465
	467
	468
	469
	471
	472
	474
	475
6V-8398	120
	122
	263
	287
	474
	481
	483
	485
	487
	489
6V-8400	444
	446
6V-8547	651
	654
	657
6V-8556	475
6V-8624	122
6V-8625	120
	122
	489
6V-8627	286
	461
	465
	471
6V-8628	461
	465
	468
	471
6V-8629	474
6V-8634	460
	464
	467
	471
6V-8635	286
6V-8636	71
	125
	127
	286
	460
	465
	468
	471
6V-8641	460
	464
	468
	471
6V-8647	460
	464
	467
	470
6V-8675	42
	58
	269
	298
6V-8715	116
6V-8721	120
	122
	474
6V-8723	64
	120
	122
	286
6V-8724	116
	125
	461
	465
	468
	471
	474
6V-8730	120
	122
	475
6V-8774	468
	471
6V-8781	461
	465
	468
	471
6V-8801	98
	177
	179
	181
	183
	185
	187
	189
	191
	193
	195

► **PRIMARY REFERENCE**

PART NUMBER INDEX

Part	Page
	199
	259
	265
	588
6V-8928	619
6V-8934	469
	472
6V-8942	474
6V-8969	644
	645
6V-8981	483
	485
	487
6V-9001	125
6V-9007	92
	506
6V-9028	85
6V-9167	373
	454
6V-9168	287
	461
	465
	469
	472
	475
6V-9169	483
	485
	487
6V-9189	173
	174
6V-9197	318
	322
6V-9200	468
	471
6V-9632	230
	233
	265
	572
	575
	654
	657
	677
	678
6V-9633	506
6V-9746	92
	287
	474
	475
	506
6V-9748	26
6V-9829	461
	469
6V-9839	474
6V-9843	461
	465
	468
	471
6V-9849	461
	465
	468
	471
6V-9850	286
	461
	465
	468
	471
6V-9872	460
	465
	468
	471
6V-9873	263
6W-6220	475
6Y-0206	600
	654
	657
6Y-0352	718
6Y-0359	717
6Y-0473	396
	397
	399
	400
	401
6Y-0596	489
6Y-0597	489
6Y-0859	277
6Y-0926	250
6Y-0984	250
6Y-1198	399
	400
6Y-1602	293
6Y-2039	706
	711
6Y-2704	250
	254
6Y-2763	259
6Y-2764	260
6Y-2765	259
6Y-2766	259
6Y-2767	259
6Y-2770	260
6Y-2773	259
6Y-2777	259
6Y-2778	259
6Y-2779	259
6Y-2780	259
6Y-2781	260
6Y-2782	259
6Y-2783	259
6Y-2784	259
6Y-2841	259
6Y-2846	259
6Y-2847	259
6Y-2848	260
6Y-2850	259
6Y-2851	265
6Y-2854	259
6Y-2855	259
6Y-3033	315
6Y-3140	259
6Y-3141	259
6Y-3973	318
	322
6Y-4082	315
6Y-4410	712
6Y-4411	712
6Y-4819	293
6Y-4831	293
6Y-5113	632
6Y-5500	315
6Y-5799	416
6Y-6277	279
6Y-6286	426
	428
6Y-6287	430
	432
6Y-6294	426
	428
6Y-6296	430
	432
6Y-6389	429
	433
6Y-6412	429
	433
6Y-6751	558
	559
6Y-6850	259
6Y-7573	259
6Y-7576	260
6Y-7577	260
6Y-7579	259
6Y-8114	654
	657
6Y-9024	427
	431
6Y-9280	494
6Y-9281	494
6Y-9373	250
	254
7B-0863	330
7B-1597	256
7B-3028	375
	377
	379
	381
	384
	386
7B-3039	506
7B-3235	283
7B-9665	323
7C-1493	64
7C-2164	50
	52
7C-2500	50
7C-3567	44
7C-7431	102
	115
	721
7C-8246	474
	629
7C-8370	50
	52
7C-8634	26
7D-1649	42
	269
	283
	287
7D-1677	303
7D-6922	600
7D-7233	92
7D-8431	660
7D-9749	506
	517
7E-3870	99
	108
7F-0560	142
	236
7F-3488	219
7F-3525	201
7F-6998	612
7F-8267	506
7F-9543	330
7F-9547	330
7G-1577	438
7G-1596	250
7G-2343	294
7G-2454	572
7G-2516	293
7G-2830	293
7G-3832	287
	479
7G-3833	287
	479
7G-3834	287
	479
7G-4262	361
7G-4824	600
	654
	657
7G-4842	315
7G-4998	249
7G-5186	92
7G-5984	458
7G-5985	458
7G-5986	458
7G-6355	293
7G-7218	293
7G-7724	293
7G-9476	315
7G-9555	312
7H-1447	506
7H-3607	302
7H-4566	250
7H-7628	283
7H-7658	293
7I-2272	230
	233
7J-0204	142
	236
	517
	519
	522
	524
7J-2036	396
	397
7J-2595	552
7J-8611	256
7J-8955	454
7J-8956	454
7J-9933	517
	519
	522
	524
	542
7K-1181	123
	125
	132
	136
	138
	142
	154
	157
	159
	161
	163
	165
	167
	170
	177
	179
	181
	183
	185
	187
	189
	191
	193
	195
	199
	236
	240
	244
	259
	265
	320
	321
	336
	338
	341
	360
	505
	586

7

PART NUMBER INDEX

Part	Page
	588
	593
	594
	595
	596
	621
	640
7K-3176	621
7K-6058	442
7K-9203	715
7K-9205	715
7L-2894	215
	219
7M-0324	219
7M-0325	219
7M-0326	219
7M-0327	219
7M-1201	258
7M-1296	314
7M-1297	314
7M-1377	314
7M-5130	293
7M-7219	609
7M-8485	92
	157
	286
	287
	517
	519
	522
	524
7M-8592	438
7M-8651	219
7N-0296	214
7N-0718	142
	223
7N-2059	214
7N-5683	15
7N-9801	227
7N-9943	172
7P-4190	263
	588
7P-6682	142
7R-3029	238
7S-2042	320
	321
	341
	602
7S-8920	287
	444
	446
7S-8921	287
	444
	446
7S-9396	98
7T-0020	172
7T-0094	154
7T-1068	700
	702
7T-1069	701
	703
7T-1099	42
	108
	198
	230
	233
	318
	498
	572
7T-1330	700
	701
7T-1474	283
7T-1475	283
7T-1885	250
	254
7T-1975	713
7T-3267	215
7T-3268	215
7T-3276	215
7T-3277	215
7T-3278	215
7T-3279	215
7T-3451	215
7T-3454	215
7T-3950	293
7T-3974	215
	219
7T-4532	580
7T-5856	586
7T-6299	608
	654
	657
7T-6799	612
	646
7T-6934	485
	487
7T-6994	250
	254
7T-8130	250
7T-8136	254
7T-8556	313
7T-8816	294
7T-8875	256
7T-8876	256
7T-8894	621
	625
7T-8895	625
7T-9031	254
7T-9272	293
7T-9303	617
7T-9370	293
7T-9426	621
	628
7T-9515	226
7T-9788	250
7T-9793	628
7T-9832	250
7T-9837	250
	254
7T-9946	283
7U-4892	199
7V-3715	370
7V-5191	609
7V-6571	136
	138
7V-8532	286
7W-2632	528
7W-3872	43
7W-5838	99
7W-6534	251
7X-0292	324
7X-0301	259
7X-0339	136
7X-0340	138
7X-0346	277
	279
7X-0402	363
7X-0427	324
7X-0503	443
7X-0515	44
	236
7X-0519	588
7X-0533	324
7X-0550	356
	358
	365
	368
7X-0562	215
	219
7X-0575	265
7X-0578	575
	586
7X-0579	116
7X-0594	348
	349
7X-0603	660
7X-0608	265
	303
	565
	572
	575
7X-0623	572
7X-0632	583
7X-0818	240
7X-0820	461
	465
	468
	472
	474
7X-0851	370
7X-1456	714
7X-1552	260
7X-1553	500
7X-2454	365
	368
7X-2488	360
7X-2489	185
	187
	189
	191
7X-2535	461
	465
	469
	472
7X-2539	116
7X-2543	120
	269
	475
	509
	713
	715
7X-2549	365
	368
7X-2553	344
	348
	349
	416
	558
	559
7X-2555	336
	338
7X-2557	494
7X-2562	498
	553
	554
7X-2563	558
	559
	564
	584
	665
	668
7X-2564	550
7X-2565	132
7X-2566	560
	562
	671
7X-2567	553
	554
7X-2572	375
	377
7X-2575	370
	403
7X-2576	664
	665
	667
	668
7X-2580	404
7X-2581	642
7X-2908	47
7X-3229	723
	725
	727
	729
	731
7X-3317	259
7X-3373	215
	219
7X-3374	616
7X-3391	344
7X-3392	336
	338
	638
7X-6222	612
	646
7X-6315	152
	153
	155
7X-7477	303
7X-7644	330
	725
	727
	729
	731
7X-7702	629
	698
7X-7729	76
	77
	80
	85
	97
	98
	104
	108
	111
	113
	116
	120
	123
	142
	159
	161
	163
	165
	167
	169
	170
	185
	187
	189
	191
	214
	263
	265
	287
	318
	320
	321
	322
	327
	331
	333
	336
	338
	341
	345
	352

► **PRIMARY REFERENCE**

PART NUMBER INDEX

Part	Page
	353
	354
	355
	356
	358
	365
	368
	370
	458
	475
	573
	575
	584
	597
	598
	622
	625
	638
	641
	650
	651
	654
	657
	673
	674
	677
	678
	687
7X-7742	584
7X-7877	599
	660
	698
7X-7888	639
7X-7927	695
	698
7X-7928	695
	698
7X-7929	695
	698
7X-7930	695
	698
7Y-1727	605
7Y-5233	393
	394
	395
7Y-5235	560
	562
7Y-7256	613
	647
7Y-7388	617
7Y-7394	588

8

8B-4624	331
	333
8C-2926	299
8C-3082	537
8C-3089	219
8C-3131	500
8C-3205	478
	479
	481
	483
	485
	487
	489
8C-3206	287
	444
	446
	458
	507
	512
	514
	540
8C-3210	159
	170
8C-3334	258
8C-3442	572
	575
8C-3445	40
	64
	79
8C-3446	64
	80
	282
	461
	465
	469
	472
8C-3447	282
8C-3451	461
	464
	467
	470
8C-3655	215
8C-3681	92
8C-4984	27
8C-5060	704
8C-5607	159
	161
	163
	165
	167
	170
8C-5608	159
	161
	163
	165
	167
	170
8C-5682	628
8C-5917	147
8C-5918	145
8C-6354	243
	244
8C-6358	142
8C-6857	442
8C-6913	291
	351
8C-8451	163
	165
	167
8C-8478	348
	349
	560
	562
8C-8585	331
	333
	336
	338
8C-8843	365
	368
	665
	668
	673
	674
8C-8844	367
8C-8988	461
	465
	468
	471
8C-9160	448
8C-9200	451
8C-9660	219
8D-0983	584
8D-1817	283
8D-1819	283
8D-4771	291
8D-7185	584
8D-9739	294
8E-0852	259
8E-0853	259
8E-1203	260
8E-1205	320
	321
	341
	602
8E-1211	375
	377
8E-1358	259
8E-1900	404
8E-2748	277
	279
8E-2935	265
8E-3430	235
8E-3431	235
	629
8E-4525	263
8E-4832	331
	333
8E-5486	552
	553
8E-5701	550
8E-5703	454
	560
	562
8E-6856	698
8E-7222	399
	400
8E-7363	286
8E-7407	399
	400
8E-7408	399
	400
8E-7409	399
	400
8E-7410	399
	400
8E-7561	320
	321
	341
	602
8E-7791	600
	654
	657
8E-8299	293
8E-8300	309
8E-8304	293
8E-8305	293
8E-8307	250
	254
8E-8310	250
8E-8434	539
8E-9212	448
8E-9483	259
8E-9522	360
8E-9932	395
8F-1434	199
	215
	219
8F-3469	438
8F-4387	552
8F-6575	60
8F-7219	118
8F-7702	259
	588
8F-9206	507
8G-4014	336
	338
8G-4189	372
8G-8844	277
	279
8G-8845	277
	279
8G-9530	434
	435
	436
8G-9880	292
8H-1141	215
8H-2768	303
8H-5303	223
8H-5306	223
8H-5352	294
8H-8175	267
8H-8898	555
	556
	557
8H-9818	274
	306
8J-2189	▶717
8J-2190	717
	718
8J-2880	454
	560
	562
8J-6913	506
8J-8322	507
8J-8436	507
8J-8443	506
8J-8462	519
8J-8468	506
8J-8782	506
8J-8783	506
8K-8517	87
8L-2746	549
8L-2779	315
8L-2786	282
	528
	530
	532
8L-5008	92
8L-6557	370
8L-8413	140
	141
	145
	147
	609
	615
	693
	724
8M-1013	313
	315
8M-2530	256
8M-2538	438
8M-2769	629
8M-3494	723
8M-4390	292
8M-4409	438
8M-4432	267
	294
8M-4435	438
8M-4438	251
	254
8M-4986	267
	287
	314
8M-4987	287
8M-4988	438
8M-5010	294
8M-5249	438
8M-5254	287
	509
8M-5255	294

PART NUMBER INDEX

Part	Page
8M-5266	294
8M-5661	263
8M-5860	18
8M-7160	301
8M-8157	287
8M-8489	299
8M-9307	269
8M-9315	36
8N-0869	141
8N-1544	235
8N-1545	243
8N-1725	141
8N-4617	96
8N-6849	24
8N-6854	24
	40
8N-8846	91
8P-0058	256
8P-0311	313
8P-0612	318
	322
8P-1892	293
8P-1916	293
8P-1964	293
8P-2019	294
8P-2022	294
8P-2023	294
8P-2051	293
8P-2053	293
8P-5244	365
	367
	368
	665
	668
	673
	674
8P-6321	315
8P-8357	251
	254
8P-9507	293
8P-9747	668
8P-9770	552
	562
	708
	709
8R-3393	621
	625
8S-0023	287
	444
	446
	458
8S-0024	287
	444
	446
	458
8S-0527	254
8S-0948	236
	263
	629
8S-2195	259
8S-3020	140
	141
8S-4304	269
8S-5383	581
8S-7048	260
8S-7499	530
8S-7803	609
8S-9008	304
8S-9130	256
8T-0072	250
8T-0100	29
	31
8T-0119	120
	122
	629
8T-0269	154
8T-0292	70
8T-0318	572
	575
8T-0328	215
	219
	230
	233
	245
	680
	684
8T-0337	647
8T-0360	407
	410
	411
	414
8T-0362	448
8T-0363	365
	368
8T-0364	370
8T-0372	298
8T-0375	404
8T-0389	245
	639
8T-0638	136
8T-0644	78
	82
8T-0646	60
8T-0656	374
8T-0687	700
	701
8T-0722	145
	147
	263
8T-0785	448
8T-0788	474
8T-1117	92
8T-1120	287
8T-1177	588
8T-1447	527
8T-1885	475
8T-1886	475
8T-1887	461
	465
	469
	472
	481
8T-1888	461
	465
	469
	472
	481
8T-1893	287
8T-1894	287
8T-1895	475
8T-1896	475
8T-1979	572
	575
8T-1980	572
	575
8T-2192	159
	161
	170
8T-2225	140
	141
	236
8T-2275	507
8T-2353	468
	472
8T-2502	245
8T-2540	259
8T-2561	336
	338
	494
8T-2659	647
8T-2920	236
8T-3282	373
	407
	410
	411
	414
8T-3298	506
8T-3490	58
	80
	92
	108
	116
	136
	138
	193
	195
	230
	233
	235
	265
	286
	318
	336
	338
	341
	443
	572
	586
	597
	629
	650
	651
	657
	687
8T-3518	140
	142
	235
8T-3561	575
8T-3597	344
	586
	597
8T-3612	214
	318
8T-3666	49
8T-3957	493
8T-4121	25
	50
	52
	67
	76
	77
	80
	85
	87
	89
	92
	94
	97
	98
	111
	116
	120
	123
	133
	136
	138
	142
	145
	147
	177
	179
	181
	183
	185
	187
	189
	191
	193
	195
	217
	236
	240
	245
	263
	272
	287
	292
	304
	306
	329
	348
	349
	360
	362
	365
	368
	375
	377
	379
	381
	384
	386
	416
	458
	469
	472
	475
	478
	479
	481
	483
	485
	487
	489
	507
	509
	512
	514
	540
	566
	573
	575
	581
	583
	586
	588
	593
	594
	595
	596
	608
	622
	625
	629
	632
	637
	639
	660
	665
	677
	678
	687
8T-4122	349
	365
	368
	673

► **PRIMARY REFERENCE**

PART NUMBER INDEX

Part	Page
	674
8T-4123	44
	403
	404
	494
	550
	560
	562
	665
	668
8T-4131	348
	349
	560
	562
	671
8T-4132	136
	138
	581
8T-4133	67
	97
	98
	104
	111
	120
	123
	136
	142
	177
	179
	181
	183
	185
	187
	189
	191
	236
	287
	301
	331
	333
	356
	443
	444
	446
	458
	475
	481
	581
	583
	584
	586
	588
	622
	625
	629
	698
8T-4136	67
	80
	85
	89
	92
	97
	98
	111
	113
	116
	120
	123
	133
	136
	142
	159
	161
	163
	165
	167
	169
	170
	177
	179
	181
	183
	185
	187
	189
	191
	193
	195
	236
	240
	274
	287
	304
	314
	320
	321
	327
	329
	331
	333
	336
	338
	341
	345
	360
	362
	370
	375
	377
	379
	381
	384
	386
	443
	444
	446
	461
	465
	469
	472
	475
	479
	507
	573
	576
	583
	584
	622
	625
	629
	638
	641
	651
	654
	657
	660
8T-4137	76
	77
	80
	97
	98
	120
	123
	136
	138
	142
	179
	183
	185
	187
	189
	191
	193
	195
	217
	230
	233
	236
	245
	265
	287
	306
	318
	322
	331
	333
	336
	338
	341
	365
	368
	458
	475
	494
	566
	586
	593
	594
	595
	596
	608
	622
	625
	629
	650
	651
	654
	657
	665
	677
	678
	687
8T-4138	130
	245
	613
	647
	654
	657
8T-4139	240
	304
	354
	355
	360
	375
	377
	379
	381
	395
	415
	483
	485
	487
	489
	584
	588
	597
	598
	605
	622
	654
	657
	664
	665
	667
	668
	715
8T-4140	330
	365
	368
	673
	674
8T-4141	365
	368
	395
8T-4154	175
8T-4158	572
8T-4167	185
	187
	189
	191
	365
	368
	375
	377
	393
	394
	395
	403
	553
	554
	560
	562
	641
	664
	665
	667
	668
8T-4170	44
8T-4171	245
	613
	647
8T-4172	287
	314
	507
8T-4176	87
	306
	475
8T-4177	517
8T-4181	161
	163
	573
	576
8T-4182	25
	77
	120
	123
	214
	272
	288
	291
	416
	481
	489
	512
	514
	581
	588
	625
	629
8T-4183	304
	344
	475
	478
	494
	573
	576

PART NUMBER INDEX

Part	Page
	606
8T-4184	288
	375
	377
	379
	381
	384
	386
	475
	492
	511
8T-4185	85
	94
	236
	240
	272
	274
	458
	475
	517
	581
	629
	637
8T-4186	50
	52
	89
	104
	288
	474
	478
	481
	539
	581
	588
	673
	674
8T-4187	344
	403
	550
8T-4189	214
	240
	600
	654
	658
8T-4190	236
8T-4191	245
	327
	539
	566
8T-4192	236
	327
	469
	472
	555
	556
	557
	586
	603
8T-4193	44
	136
	138
	581
8T-4194	347
	356
	358
	384
	386
	584
	654
	658
8T-4195	67
	80
	85
	87
	94
	104
	116
	142
	263
	265
	271
	288
	306
	352
	353
	354
	355
	356
	358
	475
	481
	489
	573
	576
	581
	588
	593
	594
	595
	596
	597
	598
	629
	632
	639
8T-4196	50
	52
	76
	77
	85
	92
	104
	108
	120
	123
	142
	263
	288
	292
	331
	333
	348
	349
	356
	358
	365
	368
	444
	446
	458
	479
	481
	483
	485
	487
	507
	512
	514
	540
	597
	598
	622
	625
	651
	654
	658
	677
	678
	687
8T-4198	50
	52
	120
	123
8T-4200	697
8T-4205	123
	215
	219
	228
	231
	233
	260
	336
	338
	568
	586
	588
	613
	647
	680
	684
8T-4222	76
	77
	271
	318
	322
8T-4223	50
	52
	120
	123
	136
	138
	193
	236
	240
	279
	288
	291
	292
	304
	327
	375
	377
	379
	381
	384
	386
	395
	469
	472
	475
	478
	479
	483
	485
	487
	489
	492
	507
	511
	512
	514
	581
	584
	586
	588
	606
	622
	629
	654
	658
	715
8T-4224	30
	173
	174
	175
	176
	236
	263
	517
	588
	625
	662
	697
8T-4226	288
8T-4231	493
8T-4244	50
	52
	475
	478
	494
	581
8T-4648	288
	292
	358
	715
8T-4649	641
8T-4752	617
8T-4778	330
8T-4779	505
	560
	562
	629
8T-4835	138
8T-4895	87
8T-4896	116
	120
	123
	136
	236
	245
	259
	263
	265
	277
	279
	622
	698
8T-4908	240
8T-4910	50
	52
	87
	346
	356
	489
	581
	606
8T-4956	288
	354
	355
	356
	358
	365
	368
	384
	386
	395
	479
	483
	485
	487
	507
	629
	673
	674
8T-4971	651
	654

► **PRIMARY REFERENCE**

PART NUMBER INDEX

Part	Page
	658
	660
8T-4984	80
	87
	474
8T-4986	103
8T-4994	263
	277
	279
	324
	326
	442
8T-4999	725
	727
	729
	731
8T-5005	288
8T-5041	292
8T-5360	475
8T-5361	330
	361
	363
	713
8T-5372	331
	333
8T-5383	698
8T-5389	127
	474
8T-5400	698
8T-5410	259
8T-5412	713
8T-5413	336
	338
8T-5436	123
	581
8T-5439	132
	197
	198
	344
	348
	349
	498
	560
	562
	671
8T-5451	231
	233
8T-5460	197
	198
	404
8T-5668	452
8T-6381	550
8T-6430	44
	670
	672
8T-6466	288
	584
	622
	625
8T-6685	586
8T-6696	287
8T-6723	120
	122
8T-6724	120
	122
8T-6757	20
8T-6761	269
8T-6762	78
8T-6764	269
8T-6854	269
8T-6868	50
	52
	288
	347
	354
	355
	356
	358
	475
	715
8T-6869	116
8T-6876	263
8T-6912	30
	174
	263
8T-6936	576
8T-7044	107
8T-7087	288
8T-7338	499
8T-7371	706
	707
8T-7529	475
8T-7547	176
8T-7566	320
	321
	341
	602
	644
	645
8T-7568	442
8T-7929	715
8T-7934	89
	245
8T-7971	365
	368
	677
	678
	687
8T-8379	454
8T-8566	215
8T-8569	215
8T-8729	122
	134
	141
	172
	211
	222
	227
	235
	260
	532
	548
	586
	592
	612
	621
	625
	633
	634
	636
	646
8T-8730	122
	205
	225
8T-8736	243
8T-8737	125
	140
	154
	156
	159
	161
	163
	165
	167
	170
	177
	179
	181
	183
	230
	235
	236
	238
	239
	243
	244
	460
	464
	467
	470
	532
	612
	617
	633
	634
	635
	636
	640
	646
	698
8T-8902	64
8T-8908	654
	658
8T-8914	572
	575
8T-8917	193
8T-8919	136
	279
	291
8T-8932	263
	509
8T-8987	444
	446
8T-9043	573
	576
8T-9082	680
8T-9311	324
	326
8T-9358	286
8T-9371	236
	693
8T-9383	120
	123
8T-9399	277
	279
8T-9403	512
	514
8T-9405	245
8T-9496	331
	333
8T-9529	537
8T-9655	116
	149
	238
8T-9756	145
8T-9757	140
	147
8T-9884	215
8U-3297	500
8U-3875	500
	537
8U-9480	500
8V-0622	147
8V-9708	622
8X-1141	475
8X-1144	474
8X-9618	136
	138
8Y-4000	331
	333
8Y-5737	608
8Y-5944	691
8Y-5945	609
8Y-5965	691
8Y-6012	691
8Y-6014	691
8Y-6024	691
8Y-6041	609
8Y-6045	609
8Y-6046	609
8Y-6047	609
8Y-6060	609
8Y-6062	609
8Y-6063	609
8Y-6064	609
8Y-6066	609
8Y-6067	609
8Y-6068	609
8Y-6069	609
8Y-6388	612
8Y-6448	702
	703
8Y-6839	700
	701
	702
	703
8Y-6859	609
8Y-6860	609
8Y-7452	460
	464
	467
	470
8Y-8304	572
8Y-9603	218

9

Part	Page
9B-0576	250
9B-1117	592
9B-7233	199
9B-7237	351
	589
9D-3769	159
	165
	167
	170
	613
9D-7924	286
9D-9736	572
	576
9F-4446	8
	40
9F-5599	201
9F-5644	223
9F-6656	725
	728
	729
	732
9G-0002	145
9G-0003	140
	147
9G-0004	147
9G-0005	145
9G-0280	293
9G-0281	294
9G-0284	293
9G-0285	293
9G-0286	294
9G-0289	293
9G-0290	293
9G-0715	263
9G-0742	265
9G-0832	283
9G-0983	638

PART NUMBER INDEX

Part	Page
9G-0986	638
9G-0990	638
9G-0992	665
	668
9G-1127	572
9G-1642	401
9G-2375	317
9G-2459	267
9G-2460	267
9G-2461	267
9G-3695	228
	243
	695
9G-4101	219
9G-5127	286
9G-5211	588
9G-5664	396
	397
9G-6744	294
9G-7101	629
9G-8020	293
9G-8551	317
9G-8615	256
9G-8637	248
9G-8638	277
	279
9G-9151	586
9G-9175	277
	279
9G-9180	277
	279
9G-9181	277
	279
9G-9314	617
9H-0846	304
9H-3360	277
	279
9H-3757	219
9H-6454	507
9H-8712	304
9J-2914	506
9J-3139	717
9J-4782	494
9J-7031	506
9J-8126	519
	522
	524
9J-8923	718
9J-8926	▶718
9L-7712	265
	589
9L-9132	251
9M-0164	67
	111
9M-1974	8
	27
	39
	43
	46
	63
	64
	70
	71
	100
	149
	230
	233
	267
	281
	317
9M-1976	304
9M-2008	309
9M-2904	478
9M-3835	318
	322
9M-3838	318
	322
9M-4355	293
9M-4370	299
9M-4995	263
9M-5854	713
9M-7002	292
9M-7394	506
9M-7958	68
9M-8406	622
	625
9N-0869	31
	149
	240
	600
9N-1995	576
	698
9N-4233	494
9N-4449	713
	715
9N-4450	713
	715
9N-4685	71
9N-6377	8
9P-1478	283
9P-1480	267
9P-1921	283
9P-1922	283
9P-1925	283
9P-2245	396
	397
9P-3041	315
9P-3066	336
	338
9P-3709	304
9P-5928	317
9P-5977	267
9P-6217	267
9P-6571	651
	654
	657
9P-7072	283
9P-7121	133
9P-7390	293
9P-7757	293
9P-7859	702
	703
9P-7860	702
	703
9P-8614	293
9P-8623	293
9P-8626	293
9P-9388	631
	632
9P-9390	631
9P-9392	▶631
	665
	668
9R-2216	637
9R-2613	113
	344
	657
9R-2672	344
9R-3572	572
9S-1240	136
	138
9S-1354	259
	263
9S-1838	426
	428
	429
	430
	432
	433
9S-2544	219
9S-2792	313
9S-4167	116
	130
9S-4182	512
	514
9S-4185	277
	279
	306
	438
9S-4188	512
	514
9S-4190	116
9S-4191	116
	267
	443
	537
9S-4497	87
9S-5187	665
	668
	673
	674
9S-6130	256
9S-6758	97
9S-7710	256
9S-8001	517
	519
	522
	524
9S-8002	130
	491
	517
	519
	522
	524
	528
	530
	532
9S-8003	540
9S-8004	118
	282
	491
	528
	530
	532
9S-8005	84
	251
	254
9S-8006	500
	540
9S-8008	84
	249
9S-8010	416
9S-8230	320
	321
	341
	602
9S-8752	97
9T-0094	454
9T-1576	503
9T-1579	503
9T-1637	503
9T-1642	503
9T-1687	503
9T-3004	506
9T-3005	506
9T-3264	506
9T-3541	492
	542
9T-3885	448
9T-4143	537
9T-4186	537
9T-4849	493
9T-4901	500
9T-5039	537
9T-5364	527
	543
9T-5948	527
9T-5949	527
9T-5950	527
9T-6093	452
9T-6316	517
9T-6322	537
9T-6521	543
9T-6522	543
9T-6523	543
9T-6688	517
9T-6827	543
9T-6828	543
9T-7677	506
9T-8571	527
9T-8958	448
9T-8980	527
9T-9836	540
9U-8263	611
9U-8388	315
9U-9121	444
	446
9U-9122	444
	446
9U-9550	293
9V-2818	678
9W-0609	713
9W-0844	140
	568
	586
9W-0852	140
	568
	586
	612
	646
9W-1441	199
9W-1442	199
9W-1446	199
9W-1467	438
9W-1468	438
9W-1569	283
9W-1570	283
9W-1571	250
9W-1614	438
9W-1615	438
9W-1616	438
9W-1617	▶438
	509
9W-1951	243
9W-2032	228
9W-2033	228
9W-2545	588
9W-2579	562
9W-2822	346
	347
9W-2853	250
9W-2992	283
9W-3302	438
9W-3330	317
9W-3660	283
9W-4159	256
9W-4361	177
	179
	181
	183
	185
	187
	189
	191
	193
	195

▶ **PRIMARY REFERENCE**

PART NUMBER INDEX

Part	Page
9W-4381	427
	431
9W-4897	552
9W-5150	283
9W-5334	256
9W-5343	364
	607
9W-5375	552
9W-5567	315
9W-5568	315
9W-5595	314
9W-6102	250
9W-6103	250
9W-7925	254
9W-7926	254
9W-8270	293
9W-8612	283
9W-8765	136
9W-8874	711
9W-8875	711
9W-8940	331
	333
9W-9000	552
9W-9082	489
9W-9083	489
9W-9890	299
9X-0194	695
9X-0196	243
9X-0199	226
9X-0261	125
	203
9X-0262	203
9X-1054	244
	586
	612
	646
9X-1056	586
	613
	646
9X-1813	141
	205
	206
	208
	222
	224
9X-2027	291
	314
	519
	522
	524
9X-2038	138
	600
9X-2042	199
	245
9X-2043	600
	619
9X-2044	613
	647
9X-2045	600
	619
9X-2053	32
9X-2099	29
9X-2125	256
	361
	507
	677
	678
	687
9X-2185	608
9X-2646	104
9X-2647	104
9X-3265	612
	646
9X-3401	125
	132
	140
	141
	156
	204
	226
	228
	230
	235
	238
	239
	243
	244
	460
	464
	467
	470
	580
	613
	617
	621
	647
	695
	698
9X-3402	140
	141
	154
	156
	159
	161
	163
	165
	167
	170
	228
	235
	238
	239
	243
	244
	460
	464
	467
	470
	613
	617
	621
	640
	646
	698
9X-3452	586
9X-3595	451
9X-4244	173
	174
	175
	176
9X-4582	375
	377
	379
	381
	384
	386
9X-4824	215
9X-6016	260
9X-6154	519
9X-6165	159
	161
	163
	165
	167
	170
9X-6268	702
	703
9X-6269	336
	338
9X-6281	259
9X-6340	725
	727
	729
	731
9X-6383	94
9X-6395	542
	546
9X-6458	258
9X-6615	588
9X-6772	640
9X-7378	622
	625
9X-7380	622
	625
9X-7381	622
	626
9X-7382	622
	626
9X-7383	622
	626
9X-7385	580
	622
	626
9X-8256	136
	154
	159
	161
	163
	170
	199
	240
	245
	461
	466
	469
	472
	584
	593
	594
	595
	596
	639
	647
	651
	655
	657
	658
	660
9X-8257	136
	138
	288
	336
	338
	344
	416
	461
	466
	469
	472
	475
	499
	505
	509
	560
	562
	581
	629
9X-8258	642
9X-8260	444
	446
9X-8266	336
	338
9X-8267	130
	613
9X-8268	13
	27
	32
	37
	62
9X-8408	287
9X-8600	133
9X-8699	349
9X-8918	609
9X-9825	141
	236
9Y-0810	12
9Y-6089	217
	218
9Y-7595	89
9Y-9236	92
9Z-8212	483

0

Part	Page
005-4834	250
005-8593	40
009-3138	260
012-0380	224
030-1705	236
030-1707	217
030-1708	141
030-2135	250
030-7946	370
030-8537	265
031-0214	662
033-6032	70
033-6034	40
033-6043	549
033-8248	286
033-9139	528
037-4426	608
037-7388	259
039-8557	629
045-4065	220
061-6711	294
061-9455	41
	63
	256
061-9457	299
067-2551	120
	122
068-8093	294
069-4269	68
	92
077-3241	323
083-7784	540
083-9527	612
	646
085-8091	519
	522
	524
091-4537	657
091-9035	141
092-7385	85
095-0843	680
	684
095-0878	609
095-0940	500
095-1276	588
095-1574	537
095-1750	536
096-3218	537
096-6166	546
	568

PART NUMBER INDEX

Part	Page
098-5747	509
099-3649	517
099-8111	537
1	
100-3224	609
100-3320	156
	230
100-4336	116
	120
	122
100-5041	244
	613
	646
100-5179	609
100-6211	540
100-8010	517
	519
	522
	524
100-8011	517
	519
	522
	524
100-8012	517
	519
101-0003	691
	693
101-0852	155
101-2862	500
101-2867	662
101-2868	259
101-3055	617
101-3128	149
101-3934	37
101-4194	691
101-4195	691
102-0341	608
102-2913	733
	734
102-7365	519
	522
	524
102-8801	140
	238
	239
	243
	460
	464
	467
	470
	532
	617
	698
102-8802	122
	132
	134
	141
	177
	179
	181
	183
	185
	187
	189
	191
	193
	195
	211
	222
	224
	226
	227
	228
	230
	235
	243
	244
	530
	532
	548
	568
	580
	586
	621
	625
	693
102-8803	125
	140
	172
	204
	230
	235
	259
	586
	612
	621
	646
102-8804	140
	177
	179
	181
	183
	185
	187
	189
	191
	193
	195
	238
	243
	612
	646
102-8805	243
	568
	612
	633
	634
	635
	636
	646
	695
102-8806	125
	140
	239
	612
	646
102-9478	594
	596
103-2543	576
103-9425	617
103-9527	584
	▶586
104-2091	613
104-6931	506
105-1797	230
105-3481	528
105-8183	293
105-9659	571
	▶632
106-1227	493
106-2105	286
106-4150	▶273
	274
106-5122	▶580
	581
106-7691	396
	397
106-8186	323
106-8187	323
106-9361	352
107-1177	517
107-1179	517
107-3786	244
107-3945	396
	397
107-7694	7
108-1091	▶373
	434
	435
	436
108-1335	328
	▶364
108-1696	297
	▶303
108-1847	540
108-2106	303
	▶312
108-4086	609
108-4087	609
108-4103	609
108-4311	693
108-5157	546
108-6954	306
108-8174	260
109-1352	555
	556
	557
	558
	559
	▶564
109-3001	120
	122
	236
	286
	323
109-3196	293
109-3207	119
109-4044	621
109-4757	346
109-5498	584
109-5761	608
109-6406	566
109-9549	274
109-9828	572
	575
109-9829	572
	575
110-0510	306
110-3844	583
110-6109	612
	617
	646
110-6393	728
	729
	731
110-7887	612
	646
110-8152	619
110-8379	588
110-8769	235
110-8834	621
111-2416	156
	230
111-4919	298
111-5147	600
111-7978	145
111-9251	588
112-4511	293
112-5585	293
112-8041	293
112-9783	286
113-3656	286
113-4420	503
113-5336	24
113-6033	638
113-6069	33
114-0358	717
	718
114-0359	717
	718
114-8843	122
	140
	154
	177
	179
	181
	183
	185
	187
	189
	191
	193
	195
	235
	239
	243
	244
	260
	460
	464
	467
	470
	613
	617
	621
	625
	646
	695
114-8844	698
114-8845	235
	621
	625
114-9125	600
115-2422	145
115-3519	243
115-4072	33
115-4219	33
115-8057	588
116-3715	107
	458
117-1385	40
117-2311	243
117-4491	682
	686
117-4492	565
117-5677	702
	703
117-5691	324
117-5692	324
117-5693	324
117-5694	324
117-5695	324
	326
117-7826	293
117-8131	641
117-8765	500
117-8863	660
117-9058	▶326
117-9966	641
118-0693	573
	575
118-1170	452

► **PRIMARY REFERENCE**

PART NUMBER INDEX

Part	Page
118-1727	4
	5
	▶9
118-4019	451
119-3662	140
	154
	181
	183
	189
	191
	193
	195
	228
	230
	235
	239
	243
	244
	621
	625
	640
	695
	698
120-4921	572
	575
121-2844	235
121-3917	28
121-6649	519
	522
	524
	▶544
121-9915	500
121-9941	500
121-9943	500
121-9946	500
122-1133	548
122-2358	89
122-7127	612
	646
123-0790	50
	52
123-1373	145
	147
123-5748	503
123-9294	612
	646
123-9624	519
	522
	524
124-0174	71
	370
124-3243	600
124-6998	235
	629
124-8490	586
124-9401	258
124-9666	562
124-9672	560
	562
124-9774	702
	703
125-1302	199
	▶224
125-1393	546
125-4175	▶411
	434
	435
	436
125-4176	▶407
	434
	435
125-6535	220
125-7874	140
	156
	230
	235
	238
	239
	243
	244
	460
	464
	467
	470
	613
	640
	646
125-7875	140
	230
	235
	238
	243
	244
	568
	613
	617
	640
	646
125-8175	704
125-8254	572
	575
126-0814	460
	464
	467
	470
	474
126-1683	24
126-1757	10
	41
126-1767	125
	140
	141
	156
	177
	179
	181
	183
	185
	187
	189
	191
	193
	195
	204
	228
	230
	235
	238
	239
	243
	244
	460
	464
	467
	470
	580
	613
	621
	647
	695
	698
126-1768	140
	141
	154
	156
	159
	161
	163
	165
	167
	170
	177
	179
	181
	183
	185
	187
	189
	191
	193
	195
	228
	235
	238
	239
	243
	244
	460
	464
	467
	470
	613
	621
	625
	640
	646
	698
126-1773	245
126-1774	159
	165
	167
	170
	235
	640
126-2277	581
126-3700	677
	678
	687
126-3701	687
126-5011	156
	230
126-7975	336
	338
127-1043	660
127-1044	660
127-1045	660
127-1046	660
127-1048	660
127-3018	657
127-5485	243
127-5486	235
127-8178	111
128-0314	145
128-2569	444
128-2570	444
128-2571	446
128-2572	446
128-3341	62
128-3813	62
128-5924	621
	625
128-6841	127
129-1831	612
129-1938	52
129-8331	197
	198
130-0229	282
130-1433	509
130-1977	478
130-3280	109
130-5300	239
	244
	593
	594
	595
	596
130-9192	478
131-0167	299
131-1488	228
131-3539	239
131-4091	294
131-4242	609
131-4647	500
131-4649	500
131-4650	501
131-4651	501
131-4652	501
131-4654	500
131-4655	500
131-4656	501
131-4657	500
131-4674	500
131-4675	500
131-4676	500
131-5137	617
131-5167	609
131-5492	651
	654
	657
131-5879	265
132-0338	565
132-1249	452
132-5789	141
	236
	244
132-8487	238
133-5545	545
133-5631	372
133-7810	141
134-2540	235
	239
	243
134-4126	152
	153
	155
134-5364	395
134-5365	395
134-5366	393
	394
	395
134-5368	393
	394
	395
134-7258	725
	727
	729
	731
134-7317	474
134-9429	▶393
	436
134-9431	393
134-9432	393
134-9602	608
135-9819	9
	41
136-0822	10
136-1543	643
136-1544	565
136-1595	250
136-2216	306
136-2227	575
136-2228	575
136-3189	704
136-3191	704
136-4183	33
136-6093	265

▶ **PRIMARY REFERENCE**

PART NUMBER INDEX

Part	Page
136-9066	724
136-9297	528
	530
	532
136-9298	528
	530
	532
137-1602	114
137-6645	212
	213
137-6722	629
137-9755	530
	532
139-0566	372
139-0567	372
139-4775	361
141-1511	725
	727
	729
	731
141-1668	85
141-2240	654
	657
141-4044	660
141-4123	608
141-4852	528
	530
	532
141-4976	244
141-7596	318
	322
142-8620	586
143-1288	680
	684
143-6871	265
143-9392	149
144-0195	566
	695
	698
144-0331	592
144-0367	104
144-4284	294
144-7878	294
144-8344	236
145-0326	691
	693
145-2334	528
	530
	532
145-5181	483
	485
	487
145-6669	109
145-7028	141
	►211
	235
145-7328	698
146-5923	474
146-6315	528
	530
146-6317	530
146-6669	258
146-6670	258
146-6747	725
	727
	729
	731
146-8477	528
146-8479	528
146-8981	528
147-0182	40
	41
	82
147-1444	640
147-1445	238
147-1446	238
147-3150	235
147-6603	547
147-6604	547
147-6605	547
148-2903	119
148-8305	460
	464
	467
	470
148-8313	438
148-8316	460
	464
	467
	470
148-8318	460
	464
	467
	470
148-8319	116
148-8325	460
	464
	468
	471
148-8326	460
	464
	468
	471
148-8335	286
148-8336	286
	460
	465
	468
	471
148-8347	92
	506
148-8351	461
	465
	468
	471
148-8358	122
148-8361	468
	471
148-8364	120
	122
148-8365	263
148-8367	286
	461
	465
	468
	471
148-8368	286
	461
	465
	471
148-8369	461
	465
	468
	471
148-8371	461
	465
	468
	471
148-8372	120
	122
	474
148-8374	120
	122
	286
148-8378	116
	461
	465
	468
	471
148-8388	474
148-8391	444
	446
148-8411	438
148-8418	474
148-8426	287
148-8434	461
	465
	468
	471
148-8435	461
	465
	468
	471
148-8439	468
	471
148-8449	474
148-9359	510
148-9920	509
149-2494	396
	397
149-2495	396
	397
149-5240	119
149-5470	528
	530
	532
149-9818	243
150-3026	120
	122
150-3065	287
150-4043	263
150-4047	468
	471
150-4050	474
151-0254	704
151-0255	704
151-1398	228
151-2939	12
151-6282	122
152-3421	373
	374
152-8071	399
	400
153-1277	109
153-5043	211
153-5044	374
153-5710	147
153-6243	287
153-6244	474
153-6246	461
	465
	468
	472
	474
153-6251	444
	446
153-6252	287
153-6281	147
153-6976	522
	524
153-7067	519
	522
	524
153-7549	519
153-7550	519
153-7551	522
	524
153-7553	519
153-8001	244
154-1580	506
154-3358	35
154-5629	600
155-2255	141
	159
	161
	163
	165
	167
	170
	239
	243
	244
	617
	698
155-2257	239
	243
155-2258	141
	161
	163
	165
	167
	170
155-2259	161
	163
	165
	167
	170
155-2260	140
	141
	205
	206
	208
	230
	235
	243
	613
	617
	621
	647
155-2265	156
	159
	161
	163
	165
	167
	170
	230
	235
	239
	243
	613
	647
	698
155-2270	122
	140
	141
	156
	177
	179
	181
	183
	185
	187
	189
	191
	193
	195
	225
	228
	230
	235
	239
	243
	244
	460

► **PRIMARY REFERENCE**

PART NUMBER INDEX

Part	Page
	464
	467
	470
	568
	586
	613
	621
	625
	626
	647
155-2271	141
	235
	243
	613
	647
155-2274	154
	243
	244
	613
	617
	647
	698
155-3624	512
	514
155-5161	304
	306
155-6479	603
155-8577	329
156-4406	294
156-5342	437
156-5545	565
156-5970	548
156-7410	600
157-0670	80
157-1361	612
158-6072	114
158-6632	141
	▶226
	243
158-8906	619
158-9956	491
	▶516
159-1503	85
	629
159-2950	677
	▶688
159-3042	42
159-3781	530
159-7156	456
	▶493
159-7946	600
159-7949	597
159-8049	141
	145
	147
	236
159-8050	140
	141
	142
159-8112	528
159-9257	612
	646
159-9322	159
	165
	167
	170
	236
	238
	244
	640
160-0526	11
160-1431	588
160-1434	588
160-2351	360
160-4103	375
	377
160-4702	593
	595
160-6305	560
	562
160-6306	550
160-7165	688
	689
	▶691
160-7186	687
	▶689
160-7614	283
160-7616	283
160-7689	236
	238
	244
	640
160-7690	159
	161
	163
	165
	167
	170
160-7820	399
	400
160-8124	156
	230
	236
160-8184	35
160-8194	47
160-8197	47
160-8199	47
160-8493	511
160-8497	136
161-1083	619
161-1084	619
161-1097	617
161-1099	617
161-1703	207
161-1704	203
161-1705	203
161-2684	522
	524
161-2685	519
161-3398	107
161-3406	6
	▶15
161-3411	107
	721
161-3615	▶591
	593
	594
161-3616	594
	596
	▶616
161-3958	651
	654
	657
161-3964	265
161-5967	609
161-6149	536
	545
161-6154	516
161-6161	536
	545
161-6963	114
161-8068	299
161-9926	140
	▶205
162-0177	528
	530
	532
162-2166	396
	397
162-2220	130
162-2222	130
162-2480	318
	322
	342
	343
162-3148	100
162-6448	517
162-7862	396
	397
162-8378	592
162-8387	592
162-8389	592
163-1135	693
163-1146	691
163-2445	60
163-2447	54
163-2459	60
163-2478	20
163-5512	528
	530
	532
163-5671	519
164-0403	391
164-0406	▶391
	434
	436
164-0758	651
	654
	657
164-0847	612
	646
164-0938	519
164-1234	693
164-3651	505
164-4531	565
164-4611	391
164-4883	644
	645
164-5567	74
	116
	256
	287
	461
	465
	468
	472
164-5570	120
	122
	474
164-5590	461
	465
	468
	472
164-5619	540
164-5669	60
164-6148	6
	▶12
164-6174	514
164-7556	173
	174
	175
	176
164-7577	▶222
	249
164-7677	512
164-8473	612
165-0187	130
165-2273	629
165-4445	4
	5
	▶107
165-4459	4
	5
	▶46
165-4461	4
	5
	▶78
165-4854	304
165-6857	651
	654
	657
165-6946	373
	374
165-6969	503
165-9104	588
166-1784	4
	5
	▶42
166-1790	4
	5
	▶58
166-1792	4
	5
	▶59
166-2287	391
	392
	393
	394
	395
166-3485	▶283
	311
166-3648	47
166-3733	617
166-5229	243
166-6781	691
166-9204	263
166-9209	263
166-9212	265
166-9213	263
167-0024	17
167-0168	71
167-0172	107
167-1177	▶528
	594
	596
167-2235	451
167-2299	451
167-2323	416
167-8712	639
167-8987	238
168-1969	475
168-2599	485
	487
168-8377	2
	▶103
168-8382	2
	▶108
168-8783	570
	▶583
169-1026	684
169-1838	91
169-1840	▶91
	92
169-2876	733
	734
169-3796	87
169-3797	85
169-3821	443
169-3822	443
169-3826	92
169-3883	103
169-3899	58
169-4368	▶403
	405
	435
	436

PART NUMBER INDEX

Part	Page
	437
169-6902	650
169-7380	691
	693
169-9637	571
	▶638
169-9649	▶695
	697
170-0251	651
	654
	657
170-0260	612
170-1112	565
170-1114	565
170-1115	565
170-3357	491
	▶536
170-3399	185
	187
	189
	191
170-4001	519
170-5849	600
170-5851	600
170-5852	600
170-5853	600
170-5854	572
	575
170-5855	572
	575
170-7694	331
	333
170-8590	662
170-8592	360
171-0808	403
171-1230	680
	684
171-2419	443
171-2438	638
171-3054	503
171-3055	503
171-3057	503
171-3058	503
171-3059	503
171-3060	503
171-3061	503
171-3068	503
171-4046	612
171-5989	503
171-5999	503
171-6001	493
	▶503
171-6682	680
	684
171-7077	588
171-8772	548
172-2416	680
	684
172-4860	243
172-4869	185
	187
	189
	191
172-5487	348
172-5989	584
172-6062	156
	230
172-6064	156
172-9966	496
	497
172-9981	448
173-0511	519
	522
	524
173-0512	519
173-0514	522
	524
173-0515	519
173-0946	302
173-1016	130
173-1028	▶565
	680
	684
173-2052	643
173-3083	686
173-3283	684
173-3993	517
	519
	522
	524
173-4611	474
173-5787	688
	689
	690
173-7035	688
	689
	690
173-9685	391
	392
	393
	394
173-9779	452
173-9816	625
174-0503	235
	239
	244
174-1366	528
174-2231	▶609
	691
174-2237	609
174-3847	46
174-5415	109
174-7599	116
174-7875	141
174-7876	141
174-9169	214
174-9570	116
	▶118
175-0454	13
175-1349	612
	646
175-2831	660
175-3721	37
175-3761	704
175-3950	612
	646
175-4165	592
175-4170	592
175-4291	173
	174
	175
	176
175-4292	173
	174
	175
	176
175-4393	612
175-6260	4
	5
	▶35
175-7900	448
175-7903	451
175-7904	451
175-9106	125
176-5913	60
176-5914	60
177-0581	104
177-1044	84
177-1050	83
177-1056	83
177-1058	83
177-1862	662
177-1863	680
	684
177-4937	682
	686
177-7983	483
177-9653	154
177-9656	154
	244
178-0603	▶680
	682
178-0606	▶682
	689
	690
178-3003	646
178-3338	566
178-7907	643
179-6151	562
179-6152	562
179-6153	562
179-6162	562
179-7376	592
179-7400	130
179-9387	▶440
180-3907	79
	269
180-4362	287
180-5737	228
180-6152	528
	530
	532
180-6600	664
	665
	667
	668
180-6693	345
180-6695	85
180-6696	85
180-7304	▶684
	686
180-9236	625
180-9340	206
	208
	230
183-2097	4
	5
	▶64
183-2931	84
183-3399	71
	125
	127
183-4273	621
	625
183-4274	235
183-7263	517
	519
	522
	524
	528
	530
	532
183-9374	44
184-0982	651
	654
	657
184-1503	677
	678
	687
184-2298	680
	684
184-2299	680
	684
184-3269	677
	678
	687
184-3270	677
	678
	687
184-6011	▶686
	688
184-7211	67
184-8060	588
185-0838	50
	52
185-0845	80
185-1047	85
185-1860	244
185-1861	613
	647
185-2076	598
185-3159	11
185-3666	641
185-6393	217
185-9607	185
	187
	189
	191
186-0636	193
	195
186-3735	224
	530
	635
	693
186-4857	695
186-5107	615
	693
186-5120	108
186-6189	621
	625
187-0541	536
187-1315	22
	721
187-1679	133
187-3523	269
187-3961	80
187-7719	646
187-8194	35
187-8195	35
187-8222	35
187-9178	351
187-9194	506
188-0908	279
	▶302
	434
	435
	436
	437
188-1012	581
188-1013	581
188-1017	42
188-1018	95
	▶99
188-1079	591
188-3034	92
188-3826	4
	5
	▶75
188-7535	130
188-7536	130
188-7537	130
188-7541	130
188-9040	351
189-1707	621
	625
189-3032	375

▶ **PRIMARY REFERENCE**

PART NUMBER INDEX

Part	Page
	377
	379
	381
189-3158	621
	625
189-5358	638
189-5588	87
189-6123	638
189-9306	4
	5
	▶56
190-2278	256
	▶258
190-5386	725
	727
	729
	731
190-5583	621
	625
190-5584	621
	625
190-6114	40
	46
190-6115	20
190-6117	20
190-7515	80
190-7615	141
	239
	243
190-8609	416
190-8970	116
	▶130
191-1782	116
191-1783	116
191-2933	690
	▶693
191-4457	78
	721
191-5439	505
191-7823	156
	230
191-8920	528
	530
191-8921	122
	530
	532
191-9247	549
192-2112	568
192-7752	693
192-7755	693
192-7760	693
192-7767	693
192-7783	693
192-7787	693
192-7790	693
192-7795	693
192-7799	693
192-7805	693
192-7810	693
192-7812	693
192-7820	693
192-7822	693
192-7848	693
193-3356	612
193-3359	612
193-5116	111
193-7377	599
194-0935	560
194-0936	560
194-1466	646
194-2903	629
194-3708	671
194-4254	243
194-5032	530
	532
	▶534
194-5033	528
	530
	532
	▶535
194-5171	567
	704
194-6725	125
	▶206
194-7034	588
195-0452	40
	70
195-0601	85
195-4989	177
	179
	181
	183
195-5918	458
195-6882	500
195-6932	500
195-6944	537
195-6945	537
195-6947	537
195-6948	537
195-6949	537
195-6950	537
195-7430	548
195-8098	6
	▶73
196-5515	530
196-8884	258
196-9654	230
	233
196-9858	92
197-0074	500
197-0075	500
197-0076	500
197-0077	500
197-0078	500
197-0079	500
197-0080	500
197-0082	500
197-0083	500
197-0084	500
197-0085	500
197-0086	500
197-0087	500
197-0088	500
197-0089	500
197-0090	500
197-0093	500
197-0094	500
197-0668	140
197-7689	691
197-8393	203
	▶207
197-8419	71
	102
	721
197-9367	47
198-0921	4
	5
	▶74
198-1319	4
	5
	▶70
198-1883	272
198-2914	549
198-3462	269
198-4778	496
	497
198-4780	496
	497
198-4781	365
	368
198-6574	665
	668
198-6575	665
	668
198-9706	600
	654
	657
198-9707	651
	654
	657
199-4193	501
199-4317	244
199-6609	528
199-7834	530
2	
200-0189	▶530
	593
	594
200-0750	▶441
	460
	464
	467
	470
200-2258	40
200-3174	678
	▶690
200-4495	33
200-5003	530
	532
200-6345	240
201-0781	475
201-0782	475
201-0950	491
	510
	▶548
201-1260	104
201-9127	528
202-4303	396
202-4304	▶396
	434
	435
	436
202-4327	243
202-5397	244
	613
	647
202-6614	173
	174
	175
	176
203-2070	586
203-2288	256
	263
203-2789	629
203-3237	20
203-3238	20
203-5805	13
203-6090	13
203-7703	688
	689
	690
203-7775	107
204-1297	244
	647
204-2281	141
	235
	244
204-4444	11
204-6102	613
	647
204-8000	243
204-8758	440
204-9530	586
204-9532	586
205-0209	351
205-0254	351
205-1320	33
205-1321	6
	▶33
205-5285	8
	40
205-5314	254
205-6388	679
	682
	686
205-8674	▶96
	97
	98
	111
205-8681	97
	98
206-2800	530
	532
206-3719	56
206-5017	116
206-5887	63
207-0544	399
	400
207-1556	▶215
	218
207-6087	70
207-7899	512
	514
208-5498	517
208-6727	478
208-8699	1
	▶642
208-8705	570
	▶664
208-8706	579
	▶668
208-9282	70
208-9619	23
209-0760	10
209-0762	10
	41
209-2152	562
209-6692	83
209-7193	254
209-7290	64
	79
209-7293	75
	79
209-8423	147
	▶217
210-2262	662
210-2263	662
210-2266	662
210-2270	▶662
	680
	684
210-4458	304
211-0220	593
	595
211-1044	136
	138
211-1812	6
	▶82
211-2134	20
211-5358	693
211-6807	156
	230

PART NUMBER INDEX

Part	Page
211-8041	4
	5
	▶23
211-8073	727
211-9050	575
211-9051	575
211-9087	272
211-9294	693
212-2301	298
212-5839	26
212-5844	26
212-7002	13
212-8917	18
212-8926	▶60
	61
213-2282	483
	485
	487
213-3190	47
213-4363	22
	▶27
213-6657	530
	532
213-6659	528
213-7315	612
	647
213-8516	70
213-9320	▶54
	60
214-1645	103
214-3573	250
	254
214-4208	228
	244
	613
	647
214-5705	50
	52
214-7566	15
	36
	40
	41
	64
	79
	125
	203
	721
214-7567	36
	41
	209
	721
214-7568	20
	36
	40
	41
	48
	64
	71
	74
	79
	85
	100
	102
	116
	125
	127
	131
	203
	207
	240
	256
	267
	282
	287
	461
	465
	468
	472
	549
	721
214-8976	725
	727
	729
	731
214-9389	157
214-9492	136
	138
	581
215-3249	230
215-3251	6
	▶25
215-3296	50
	52
215-4441	8
216-0273	283
216-0349	581
216-0805	586
216-4591	254
216-5586	13
216-6371	250
216-7352	613
	647
216-7877	52
216-8585	442
217-0609	20
217-2293	250
217-3655	348
	349
217-5200	78
217-5912	157
217-6887	479
217-7933	662
217-8669	4
	5
	▶10
218-0651	612
218-0861	680
218-7136	592
219-0305	725
	727
	729
	731
	733
219-0669	85
219-2340	721
219-3305	80
219-4481	291
219-6485	▶173
219-6487	▶174
219-8666	4
	5
	▶37
219-8675	42
219-8681	4
	5
	▶29
220-0230	141
220-0771	217
	218
220-1418	286
	▶314
220-1952	15
	▶17
220-8678	118
221-0144	73
221-3197	375
	377
	379
	381
	384
	386
221-3200	375
	377
	379
	381
	384
	386
221-5461	▶36
	37
222-0345	▶679
	682
	686
222-1159	456
	457
	▶496
222-1160	456
	▶539
222-1161	456
	▶499
222-1191	456
	▶511
222-1783	4
	5
	▶11
222-2409	4
	5
	▶28
222-3901	84
222-9151	50
	52
	639
223-0556	6
	▶44
223-0558	145
	▶218
223-0647	▶404
	434
	435
	436
	437
223-1541	360
223-2205	▶687
223-3313	593
	594
	595
	596
223-3400	306
223-3421	496
	497
224-0672	733
	734
224-0881	404
224-2228	125
224-2693	6
	▶62
224-2694	62
224-2695	44
224-3247	7
224-4120	375
	377
224-4536	▶208
	209
224-4936	496
	▶512
224-4937	497
	▶514
224-4946	505
	▶506
224-6829	704
224-9072	660
224-9222	243
	621
224-9772	122
225-0312	725
	727
	729
	731
225-1506	▶271
	297
225-3281	448
	452
225-4134	593
	594
	595
	596
225-4135	593
	594
	595
	596
225-4150	725
	728
	729
	731
225-4257	725
	727
	729
	731
225-6363	314
225-8026	491
	▶545
225-8553	228
226-0293	646
226-3492	120
	122
226-3493	460
	464
	467
	470
226-3496	460
	464
	467
	470
226-3497	460
	464
	467
	470
226-3498	460
	464
226-3503	460
	464
	467
	470
226-3504	460
	467
226-3505	460
226-3506	464
	470
226-3507	464
	470
226-3508	464
	470
226-3509	464
226-3510	464
	470
226-3511	464
	470
226-3512	464
	467
	470
226-4462	250
226-4464	250
226-4751	460
	464
	467
	470
	▶491

▶ **PRIMARY REFERENCE**

PART NUMBER INDEX

Part	Page
226-5611	108
226-6583	474
226-6584	474
226-6586	474
226-6590	474
226-7298	458
226-7473	149
	▶151
226-7810	481
226-7906	481
226-7924	481
226-8206	353
226-8234	479
226-8235	479
226-9169	238
226-9670	140
227-0830	499
	▶500
227-0831	539
	▶540
227-0832	511
	▶527
227-0835	85
227-0836	85
227-0841	▶452
	550
227-0844	▶448
	450
227-0912	228
227-0924	271
	▶272
227-1200	18
227-2451	250
227-3021	500
	▶537
227-3023	537
227-3149	360
227-3151	348
227-4303	444
227-4304	446
227-5904	41
	127
227-6656	344
227-8348	532
227-8802	348
227-9304	331
227-9305	331
227-9306	333
227-9307	336
	338
227-9310	331
	333
228-3323	239
228-3621	28
228-4051	665
	668
228-4052	665
	668
228-4093	370
228-4678	370
228-4947	41
	210
228-6787	619
228-7089	40
	41
	64
	71
	79
	102
	125
	127
	721
228-7090	40
	721
228-7092	79
	127
228-7096	20
	256
	721
229-0887	725
	727
	729
	731
229-1494	682
229-2626	448
229-5421	▶442
	456
229-6635	568
229-7373	▶370
	434
	435
	436
	437
229-8352	372
229-9281	36
229-9323	372
229-9558	394
229-9559	394
230-1340	159
	161
	170
230-1341	163
	165
	167
230-3615	120
	122
230-4009	239
	244
230-4010	238
	244
230-4011	156
230-4013	156
230-4700	571
	▶660
230-5008	238
230-5040	64
230-5385	568
230-5388	▶568
	660
230-5554	556
	557
	▶560
230-5585	6
	▶67
230-7699	348
230-7700	348
230-7887	452
230-7892	452
230-8792	228
230-9796	67
231-1271	621
231-1345	120
	122
231-1978	6
	▶203
231-4166	286
	▶301
231-4167	301
231-4384	327
231-4387	318
	322
231-4390	341
231-5969	▶250
	297
231-5990	▶254
	297
231-8855	294
232-0343	125
	▶131
232-1693	149
232-3317	441
232-6411	306
232-7586	583
233-0423	4
	5
	▶31
233-0668	309
233-0891	149
233-2719	572
233-2720	572
233-4846	437
233-9135	454
233-9138	454
234-3043	540
234-3451	540
234-5124	510
234-5126	467
	470
	▶510
234-9699	398
	401
234-9994	294
235-0399	512
	514
235-0401	▶492
	512
	514
235-0402	512
	514
	▶517
235-0403	512
	514
	▶519
235-0404	512
	514
	▶522
235-0405	514
	▶524
235-0523	470
235-0891	506
235-0892	506
235-0893	506
235-0895	506
235-0907	506
235-2340	467
235-4123	244
235-4157	▶412
	414
235-4513	286
235-4514	286
235-4515	286
235-4516	286
235-4606	549
235-4826	286
235-5974	405
	▶406
	435
	436
	437
235-8202	230
235-8203	4
	5
	▶230
235-8966	122
235-9651	129
236-5131	621
236-5197	662
236-6220	203
	▶209
236-6221	203
	▶210
236-6717	130
236-7315	4
	5
	▶30
236-8191	44
236-8239	49
236-8240	281
236-8826	238
237-0050	199
237-0053	199
237-0204	597
	598
237-0205	597
	598
237-0227	156
	239
237-0229	32
237-0934	568
237-0956	568
237-0984	120
237-2732	331
237-2734	333
237-2737	2
	▶113
237-2738	113
237-3943	693
237-4269	651
	654
	657
237-4270	641
237-9251	▶109
	111
237-9252	109
237-9254	109
237-9255	109
238-0303	141
238-0451	▶415
	437
238-1116	4
	5
	▶269
238-1117	269
238-2014	199
238-4520	404
238-4986	467
	470
238-4993	467
	470
238-5079	87
238-5080	36
	40
	41
	48
	64
	79
	85
	102
	212
	721
238-5081	40
	64
	79
	116
	127
	721
238-5082	40
	48
	68
	79
	127
	721
238-5085	64
	79
238-5508	315
238-7545	351

▶ **PRIMARY REFERENCE**

PART NUMBER INDEX

Part	Page
239-1134	214
	▶227
239-3355	243
239-5113	654
	657
239-6986	725
	728
	729
	731
239-7392	243
240-0041	8
240-3469	238
240-3470	238
240-8259	301
240-8317	145
240-8321	147
241-2501	132
241-3718	4
	5
	▶32
241-3719	4
	5
	▶68
241-3720	375
	377
	379
	381
	384
	386
241-4167	733
	734
241-4194	214
241-4342	597
	598
241-4344	597
	598
241-4346	654
	657
241-4347	651
	657
241-4348	641
241-4349	651
	654
	657
241-4354	111
241-4981	50
	52
241-5634	286
241-5635	286
241-6215	116
241-6498	341
241-6499	341
241-6919	341
241-7917	654
	657
241-7918	600
241-8368	199
	▶225
241-8383	20
241-8384	20
241-8385	20
241-8386	20
241-8387	20
241-8388	18
241-8390	20
241-8474	45
241-8475	43
242-0328	55
242-0329	▶55
	60
242-0447	6
	▶61
242-0673	7
242-0674	6
	▶7
242-3360	114
242-3864	64
242-8404	600
242-8405	651
	654
	657
242-8407	651
	654
	657
243-0388	452
243-1588	103
243-1589	103
243-1590	103
243-5168	651
	654
	657
243-6716	12
244-2310	254
244-3712	116
	267
244-4500	31
244-5891	61
245-3261	39
245-3262	4
	5
	▶39
245-4230	489
245-4231	489
245-4630	210
245-7339	41
	56
245-7434	244
	613
	647
245-8334	639
245-8456	725
	727
	729
	731
245-9941	89
246-0596	4
	5
	▶100
246-0597	100
246-0598	4
	5
	▶45
246-0599	4
	5
	▶281
246-0600	4
	5
	▶43
246-0601	4
	5
	▶69
246-0602	4
	5
	▶49
246-0605	4
	5
	▶8
246-2641	120
	122
	265
	320
	321
246-3150	12
246-4759	▶351
246-5140	427
246-5203	431
246-6036	71
246-7899	69
246-9365	4
	5
	▶149
247-4285	173
247-6876	733
	734
247-6878	733
	734
248-5358	640
248-5513	78
248-7959	199
248-8866	651
	654
	657
249-0313	136
249-2844	603
249-5481	243
250-1424	125
250-4628	644
	645
250-6052	104
250-6053	104
250-6054	104
250-7533	104
250-9290	97
	98
	111
251-0061	104
251-1198	613
251-4345	214
251-4553	6
	▶104
251-7214	104
251-8202	560
	562
251-8203	553
	554
	560
	562
251-9814	▶550
	558
	559
251-9815	550
251-9816	550
251-9817	550
251-9820	706
	▶708
	709
251-9821	708
251-9827	558
	559
251-9828	550
251-9829	558
	559
251-9830	▶553
	559
251-9831	553
251-9832	553
	554
251-9834	550
251-9835	552
	553
251-9836	553
	554
251-9840	489
251-9841	489
252-1567	4
	5
	▶48
252-4915	583
252-5165	▶114
	115
252-5853	555
	▶562
252-7803	20
253-1346	375
	377
	379
	381
	384
	386
254-0224	427
	431
254-1686	375
	377
	383
	388
	389
	390
254-3941	20
254-3942	20
254-3946	18
254-3947	18
254-4471	431
254-4473	427
254-5524	80
254-8155	▶175
	177
	179
	181
	183
	185
	187
	189
	191
	193
	195
255-1137	354
	355
255-1138	354
	355
255-1139	354
	355
255-6406	327
255-8674	61
255-8951	▶554
	558
255-8952	▶552
	554
256-1291	122
256-2941	111
256-7780	354
	355
256-7781	355
	358
256-7782	354
	355
	356
	358
256-9637	517
257-3226	621
	625
257-5029	568
257-5858	71
257-9788	506
258-0763	474
258-2303	360
258-2305	323
258-2307	360
258-6948	349
258-6949	349
258-7607	349
259-3119	▶291
	297
259-5829	20
260-1914	568
260-3208	349
260-3799	214

▶ **PRIMARY REFERENCE**

PART NUMBER INDEX

Part	Page
260-4856	20
260-6642	277
	279
260-6650	276
	▶277
260-6653	276
	▶279
260-6686	199
260-7524	54
	55
260-7733	384
	386
260-9187	286
261-1544	12
261-3156	331
	333
261-3162	69
261-3257	384
	386
261-3864	336
	338
261-3865	331
261-5694	643
261-7990	243
261-8619	598
262-1421	150
	▶155
262-2031	52
262-2870	114
262-5901	4
	5
	▶115
262-7661	331
262-7662	333
263-2601	665
	668
263-2915	27
263-3348	286
263-3464	71
263-3823	633
	634
	635
	636
263-3912	467
	470
263-7724	▶331
	336
	338
263-7725	▶333
	336
	338
263-7731	125
263-7805	584
263-9012	▶214
264-0168	323
264-4297	212
	213
264-5732	156
	230
264-6156	61
264-6816	331
264-6817	333
264-7029	156
264-7030	156
	239
264-7031	238
264-7034	239
	244
264-7384	354
265-1400	6
	▶47
265-2106	243
265-9596	346
	347
266-1467	▶204
	588
266-2404	235
266-9397	451
266-9810	4
	5
	▶71
267-4746	▶374
	437
267-7507	50
	52
267-7509	50
	52
267-8685	617
267-8715	695
267-9715	6
	▶129
268-0066	506
268-3371	238
268-3490	11
	721
268-5945	391
268-9076	500
268-9709	375
	377
	379
	381
	384
	386
268-9710	375
	377
269-4739	277
	279
270-3437	286
270-3438	286
270-9433	506
271-7442	20
272-6641	▶176
	193
	195
274-3774	140
	233
274-7395	203
	▶212
274-7396	203
	▶213
275-4236	331
	333
	603
276-1786	141
	236
276-4053	153
277-5801	498
277-5802	498
277-8990	638
277-9567	50
278-2324	451
279-2570	379
	381
279-2590	571
	▶608
279-2591	▶566
	571
280-6794	78
281-3179	243
281-4015	372
281-5984	127
281-8488	370
	▶372
282-1771	12
282-1772	12
282-1951	568
282-1952	568
282-1953	568
282-4017	384
	386
282-9090	560
	562
283-1107	215
283-6447	199
283-8650	136
284-0638	271
284-0639	271
284-3502	71
284-3623	243
284-3781	500
284-3782	500
284-7650	116
284-8532	161
	163
284-9042	572
284-9639	116
285-0852	564
285-1133	155
285-4074	41
	56
	▶57
285-4106	11
	721
285-5093	26
285-5248	367
285-5644	501
285-6396	25
	▶26
285-8893	263
286-1674	500
287-0338	621
	625
287-3838	259
288-0934	411
	▶413
288-0935	407
	▶408
288-0936	▶409
	410
288-1199	500
288-2507	606
288-2508	606
288-3925	555
	556
	557
288-7324	156
	230
289-2937	448
	452
289-2948	448
	452
289-5150	156
289-5151	156
290-3970	80
290-6884	27
290-8226	560
	562
290-9849	250
292-2016	250
292-2175	▶414
	437
292-4396	719
	720
292-4906	136
292-6097	644
292-6098	645
292-6402	▶643
	644
	645
292-9237	▶644
	680
292-9238	▶645
	684
293-0730	119
293-0754	▶567
	704
293-2911	662
293-9123	612
	646
293-9367	75
293-9659	724
294-2503	286
294-3342	91
294-5042	680
	684
294-5076	629
295-1771	68
295-1803	125
296-0612	▶639
	640
296-0614	639
296-2861	639
296-7283	496
	497
296-7726	575
297-0693	240
297-7964	85
297-8989	724
298-7340	263
299-5344	494
299-5417	639
299-5418	639
299-9092	140

3

Part	Page
300-1643	646
300-6142	639
300-8554	120
	122
301-0091	236
301-0589	161
	163
302-3908	235
	240
304-5687	238
304-9465	125
304-9651	307
305-5362	156
	230
305-9192	567
	704
306-0177	159
	161
	163
	165
	167
	170
306-0278	254
306-9621	116
307-0047	159
	161
	163
	165
	167
	170
307-8428	156
307-8686	651
	654
	657
308-0467	651
	654
	657
308-4558	719

PART NUMBER INDEX

Part	Page
	720
308-4559	719
	720
308-6022	487
308-6023	487
308-6024	485
308-6025	485
308-6026	489
308-6027	489
308-6038	483
308-6039	483
308-6335	586
308-7112	111
310-4269	392
310-7255	18
	721
310-7257	18
	721
310-9455	348
	349
311-3737	613
	646
311-3741	646
311-3742	646
311-3744	646
311-8096	59
312-4245	454
312-4247	454
312-4248	454
312-8629	549
313-3492	116
313-9374	263
314-2516	416
314-2518	416
314-2911	116
314-3124	646
314-3283	▶392
	437
314-4018	580
314-7923	416
315-7783	388
	390
315-7785	383
	389
315-7786	383
	388
	389
	390
	▶416
315-9840	64
315-9959	297
	▶311
315-9960	▶293
	311
315-9961	▶256
	311
315-9962	256
315-9964	▶267
	311
315-9965	267
	▶313
315-9966	267
	▶317
316-1438	549
316-8227	299
316-8663	36
317-1204	156
317-2656	607
317-3919	588
317-3930	588
317-3931	588
317-3933	588
317-3934	588
317-3939	588
	▶663
317-3940	663
317-3942	456
	▶474
317-3943	474
317-3945	474
317-3948	474
317-3949	474
317-4093	456
	▶481
317-4094	481
317-4095	481
317-4109	▶286
	297
317-4118	286
317-4142	286
317-4143	286
317-4155	571
	▶651
317-4156	600
317-4157	600
317-4158	▶650
	651
	654
	657
317-4159	650
317-4171	600
	654
	657
317-4178	263
317-4616	265
317-6110	120
	122
317-6561	▶617
	619
317-6562	141
317-6565	▶243
	571
	649
317-6566	155
	▶640
317-6574	243
317-6576	6
	▶235
317-7051	306
	▶309
317-7052	297
	▶304
317-7210	18
317-7211	18
317-7212	18
317-7213	18
317-8767	579
	▶637
317-9070	571
	▶612
317-9080	407
	410
	411
	414
317-9689	120
	122
318-0157	588
318-0690	286
	▶298
318-0691	298
	▶299
318-0692	299
318-0694	299
318-0696	299
318-0697	299
318-0698	299
318-0699	299
318-1064	427
	431
318-2389	612
	646
318-2717	588
318-2727	336
318-5040	299
318-5042	299
318-6247	370
318-8531	▶315
	317
319-1676	263
319-3753	238
319-3758	238
319-6208	64
319-6237	20
319-7006	625
319-7104	▶292
	297
320-2841	509
320-2842	509
320-3065	238
320-5885	617
320-5887	612
	646
320-5888	243
320-5889	244
320-5890	235
320-5895	140
320-5896	460
	464
	467
	470
320-5898	159
	161
	163
	165
	167
	170
320-5900	140
320-5902	238
320-5903	228
320-5904	698
320-5905	640
320-5906	640
320-8283	654
	657
321-5802	154
321-5804	621
321-5967	282
321-6073	725
	727
	729
	731
321-6075	1
	▶719
321-6091	725
321-7851	3
321-8649	64
321-8665	274
321-8666	274
321-8667	274
322-0819	575
322-1359	199
	▶228
322-1394	571
	▶698
322-1494	▶633
	704
322-2095	244
322-2361	570
	▶621
322-3161	643
322-3702	467
	470
322-3703	467
	470
322-3704	467
	470
322-3705	467
	470
322-3706	467
	470
322-3707	467
	470
322-3708	467
	470
322-3709	467
	470
322-4474	586
322-4852	467
	470
322-4964	695
322-4965	695
322-7221	670
322-8631	▶532
	595
	596
322-9655	532
	▶592
323-1170	▶397
	437
323-1171	397
323-1448	286
323-1450	263
323-3309	727
323-5697	571
	▶619
323-6771	1
	▶720
323-7443	613
323-9140	▶156
	233
323-9636	▶646
	649
324-7380	47
325-3915	▶13
	17
325-5460	733
	734
325-7930	365
	368
325-7931	365
	368
326-0316	256
326-1644	118
328-3655	282
328-4374	294
328-4375	294
329-3356	715
329-5071	136
329-5451	125
	203
329-5511	64
329-9110	▶177
329-9650	365
329-9651	365
	368
330-5013	▶634
	704
330-5014	▶635
	704
330-5017	▶636
	704
330-6019	5
	▶233
330-9750	125
331-4938	6
	▶94

▶ **PRIMARY REFERENCE**

PART NUMBER INDEX

Part	Page
331-7775	456
	▶458
331-9864	94
331-9865	94
331-9866	94
332-3619	▶18
	20
333-6437	▶282
	286
333-8366	501
333-8564	501
333-9308	▶249
	282
333-9410	277
	279
334-2679	249
334-2680	249
334-3416	725
	733
334-3417	725
	727
	729
	731
334-4603	725
	727
	729
	731
334-7389	613
334-7392	647
334-9544	238
334-9545	238
335-1035	725
	727
	729
	731
335-2350	377
335-2351	375
335-6121	277
	279
336-1846	▶599
	654
	657
336-1847	599
336-2433	307
336-3545	150
	▶202
336-3968	599
337-3492	1
	▶323
337-3493	323
337-6811	193
	195
337-8766	87
337-8767	87
338-3453	219
338-3454	217
	▶219
338-9252	664
338-9253	667
339-1487	76
	77
339-1488	▶76
339-8715	85
339-8716	85
339-8717	85
339-8718	85
339-8937	626
339-9514	244
339-9915	695
340-0091	719
340-0092	719
340-0093	720
340-0094	720
340-0117	456
	▶460
340-4083	▶50
340-5693	695
340-7161	244
341-0979	11
341-7036	651
	654
	657
341-9214	510
	▶549
342-9022	152
	153
342-9290	152
	153
343-5527	118
343-6237	277
	279
344-2149	▶20
	22
344-3037	586
344-3393	▶150
	161
	163
345-9934	474
345-9935	474
345-9936	474
346-2134	294
346-3800	544
	▶546
346-7763	152
	153
346-9376	159
	165
	167
	170
347-2380	47
347-2381	47
347-2382	47
347-3110	83
347-3148	78
347-4428	64
348-5792	269
348-8603	293
349-3318	621
	625
349-3319	625
349-5766	238
349-6123	▶83
	84
349-7059	133
350-0014	642
350-0015	642
350-0044	621
350-2536	82
	▶84
350-5417	83
350-7735	133
351-0276	85
351-0955	398
	▶401
	402
351-0956	398
	▶402
351-0958	▶398
	427
	431
351-8488	152
351-8490	150
	▶152
351-9918	173
	174
	175
	176
352-6498	64
352-8839	64
353-5112	203
353-6988	11
353-8773	159
	170
354-0703	165
	167
354-1681	238
354-1683	238
354-3552	▶2
355-0598	161
	163
355-1213	159
	165
	167
	170
355-3148	621
	625
355-4712	451
355-6555	415
356-2197	330
356-4254	193
	195
356-4259	193
	195
357-7388	665
	668
358-1301	443
358-3216	345
358-3217	▶345
358-4689	338
358-4889	227
358-7872	11
358-7876	11
358-9211	76
358-9213	77
358-9384	85
358-9385	85
360-3677	15
	36
360-3678	36
360-3679	20
	36
	48
	100
	127
360-3680	20
	36
	48
	64
360-3681	64
360-3682	48
360-3684	269
360-3692	269
360-3693	78
	269
361-0706	122
361-1045	159
	165
	167
	170
361-5188	94
361-6052	235
362-3267	3
362-4539	▶444
	456
362-4544	▶446
	456
362-4548	456
	▶494
362-4549	494
363-4122	132
364-4115	448
364-4416	454
364-5127	509
364-5488	▶709
	710
364-9652	379
	381
	384
	386
365-0446	265
365-0447	263
365-3650	259
365-7843	199
365-7844	199
365-8408	404
366-1747	▶405
366-2756	▶135
	138
366-4972	517
	544
	546
366-5549	474
366-5550	474
367-5286	722
367-9235	▶722
367-9478	▶454
	560
	562
367-9479	454
368-4696	363
369-6662	131
370-9894	615
371-1767	▶259
	265
371-2442	87
371-2443	87
371-2467	77
371-7185	85
371-7186	36
371-8094	92
371-8881	660
371-9242	460
	464
	467
	470
371-9243	460
	464
	467
	470
372-0294	239
372-1455	122
372-2158	615
372-2905	151
372-4531	150
	▶153
372-4532	153
372-6196	318
	322
372-6199	318
	322
372-6200	318
	322
372-6361	80
372-6362	80
372-6363	2
	▶80
372-6364	2
	▶92
372-6365	92
372-6369	85
372-6383	87
372-6384	87
372-6387	87
372-6388	89
372-6389	89
372-6475	458

PART NUMBER INDEX

Part	Page
373-1124	▶318
	320
373-1125	▶320
	335
373-1603	122
373-4098	130
374-4176	▶263
	297
374-4178	570
	579
	▶641
374-4179	570
	▶597
375-2982	2
	▶85
375-3124	6
	▶443
375-4456	▶52
375-4843	571
	▶572
375-4844	▶265
	571
	649
375-4845	571
	▶588
	649
375-4848	▶327
	571
	649
375-4849	327
	▶602
375-4853	572
	575
375-4860	572
	575
375-4864	600
375-4865	600
375-4866	600
375-4867	651
	654
	657
375-4870	572
	575
375-4873	571
	▶611
375-4875	654
	657
375-4878	598
375-4879	597
	598
375-6290	318
376-4353	215
376-4616	▶150
	159
	167
376-6478	▶150
	165
	170
377-2661	▶342
	344
377-2662	▶343
	344
377-2663	342
377-2664	343
377-2665	342
377-2667	342
	343
377-2669	343
378-3790	▶394
	437
378-4721	348
378-7877	579
	▶665
378-7921	▶361
378-8241	399
	400
378-8242	399
	400
380-1381	719
	720
380-2466	460
	464
	467
	470
380-7894	572
380-7895	572
380-7903	572
	575
380-7910	570
	▶697
380-9732	150
381-2594	714
	▶723
381-3642	199
381-8734	478
382-5982	152
382-8681	570
	▶625
382-8682	621
	625
382-8683	621
	625
383-1730	177
	185
	187
	189
	191
	193
383-1731	193
383-6001	570
	▶581
384-0071	177
	179
	181
	183
	185
	187
	189
	191
	193
384-0072	185
	187
	189
	191
384-0073	185
	187
	189
	191
384-0678	127
384-1048	239
384-1049	239
384-1050	239
384-1713	▶418
384-3277	▶410
	434
	435
	436
384-4072	▶199
	244
384-4073	141
384-4074	141
384-4638	444
	446
384-5351	▶451
	714
384-5590	6
	▶22
384-8724	451
384-8725	451
	714
384-9220	68
384-9223	85
384-9992	40
	41
	82
385-1657	47
385-1747	3
	▶724
385-2666	418
	▶427
385-2672	419
	▶428
385-2675	420
	▶429
385-2678	421
	▶430
385-2679	422
	▶431
385-2689	▶419
385-2691	▶420
385-2694	▶421
385-2695	▶422
385-4292	181
	183
	189
	191
385-5447	▶423
385-5450	425
	▶432
385-5458	424
	▶433
385-5459	▶424
385-5462	▶425
385-7276	17
385-7302	177
	179
	185
	187
386-1152	456
	▶505
386-1153	1
	▶132
386-1154	1
	▶341
387-0314	615
387-0317	615
387-0540	651
387-0541	651
387-0542	651
387-0543	597
387-0544	651
387-0545	597
387-0546	571
	▶628
387-0550	571
	▶575
387-0557	619
387-0561	600
387-0562	600
387-0563	619
387-0564	619
387-0570	649
	▶654
387-0575	579
	▶649
387-0577	613
387-0586	619
387-1087	▶714
387-1088	714
	▶715
387-1089	715
387-1136	715
387-1759	▶478
	714
387-2149	603
387-2150	603
387-2153	▶603
387-2586	132
	▶133
387-2587	133
387-3580	671
387-5306	671
387-7154	127
387-7159	127
387-8581	▶4
387-8582	▶5
387-8600	▶3
	4
387-8601	▶3
	5
387-8619	3
	▶6
387-8622	6
	▶127
387-9434	▶119
	129
389-2088	386
389-2089	384
389-2098	381
389-2099	379
389-3209	1
	2
	▶297
389-3211	▶1
389-3212	▶2
389-3214	1
	2
	▶456
389-3215	1
	2
	▶6
389-3218	▶677
389-3219	▶678
389-3220	456
	457
	▶497
389-3221	▶1
389-3222	▶1
	2
389-3224	▶456
389-3225	▶456
389-3226	▶457
389-3227	▶457
389-3228	▶579
389-3229	▶570
389-3230	▶570
389-3231	▶570
389-3232	▶348
389-3233	▶349
389-3235	▶352
389-3236	▶353
389-3237	▶354
389-3238	▶355
389-3239	▶346
389-3240	▶347
389-3241	▶725
389-3242	▶727
389-3243	▶729
389-3244	▶731
389-3245	▶335
389-3247	▶335
389-3250	▶120
389-3251	▶122
389-3252	▶276
389-3254	▶276
389-3259	▶136

▶ **PRIMARY REFERENCE**

PART NUMBER INDEX

Part	Page
389-3260	▶77
389-3262	▶95
389-3263	▶95
389-3264	▶111
389-3265	▶2
389-3287	456
	▶593
389-3288	456
	▶594
389-3289	457
	▶595
389-3290	457
	▶596
389-3291	456
	▶464
389-3292	457
	▶467
389-3293	457
	▶470
389-3294	456
	457
	▶479
389-3295	335
	340
	▶344
389-3297	335
	▶605
389-3298	340
	▶606
389-3299	335
	▶336
	340
389-3300	335
	▶338
389-3303	1
	▶360
389-3305	1
	▶140
389-3306	570
	▶629
389-3307	▶145
389-3308	▶147
389-3708	20
	36
	48
	100
	127
389-3709	48
389-6093	297
	▶509
389-6094	649
	▶657
389-6096	570
	▶667
389-6097	570
	▶584
389-6098	▶179
389-6099	▶181
389-6100	▶183
389-6101	▶185
389-6102	▶187
389-6103	▶189
389-6104	▶191
389-6105	▶193
389-6106	▶195
389-6107	95
	▶97
389-6108	95
	▶98
389-6120	▶395
	435
389-6126	▶328
389-6127	▶155
389-6128	▶555
389-6129	▶556
389-6131	▶557
389-6133	▶558
389-6134	▶559
389-6147	▶197
389-6148	▶198
389-6149	▶498
389-6151	▶670
389-6152	▶671
389-6153	328
	▶329
389-6154	155
	▶238
389-6155	155
	▶607
389-6156	▶159
389-6157	571
	▶600
389-6158	571
	▶733
389-6159	▶483
	557
389-6164	▶274
389-6165	▶154
389-6166	▶161
389-6167	▶157
389-6171	579
	▶598
389-6172	649
	▶734
389-8270	4
	5
	▶63
391-1683	▶163
391-1684	▶165
391-1685	▶167
391-2580	▶485
	555
391-2581	▶487
	556
391-2583	▶489
	558
	559
391-4357	611
391-8222	▶713
	714
391-8912	401
392-0818	78
	269
392-9664	478
392-9665	478
393-0288	579
	▶649
393-0289	570
	▶571
393-0290	570
	▶571
393-5495	▶169
393-5519	▶170
393-7367	6
	▶116
394-0434	132
394-1514	116
394-2157	336
	338
394-2158	336
	338
396-0385	125
396-0386	125
396-0390	127
396-0393	15
	36
396-0405	20
396-6022	73
397-5040	4
	5
	▶125
397-6405	▶615
	693
398-5596	36
	48
	64
398-5599	269
398-5601	64
398-5614	269
398-8005	347
398-8457	571
	▶704
399-9283	▶356
399-9291	356
	358
399-9292	356
	358
399-9296	356
	358
399-9298	356
	358
399-9300	356
	358
4	
415-1433	674
415-1440	673
415-1445	674
415-1450	674
415-1452	362
415-1460	▶672
	676
415-1461	▶362
	672
415-1462	362
415-1463	322
415-1470	356
	358
415-1472	▶321
	340
415-1473	321
	▶322
416-0506	677
	678
416-2322	▶365
416-2323	365
	▶367
	368
416-2324	367
416-2330	367
416-2334	367
417-6242	444
	446
	▶450
418-6781	102
	721
419-0093	706
	707
419-0576	356
	358
419-0581	356
419-0841	▶156
	233
419-1492	356
	358
419-1500	673
	674
419-1501	▶673
	675
419-1502	▶674
	675
419-1504	365
419-1507	▶675
	676
419-1510	673
	674
419-1511	673
	674
419-1514	368
419-1515	▶368
419-1526	356
	358
419-1527	356
	358
419-1529	365
	368
421-9161	365
	368
422-2152	600
422-2874	▶579
422-6929	283
423-1983	120
	123
423-8979	▶41
423-8980	▶79
424-0803	583
424-0842	▶399
	426
	432
	433
424-0844	▶400
	428
	429
	430
425-3656	▶40
425-3911	460
425-6164	356
425-6165	356
425-6994	▶340
425-6997	▶676
426-2698	▶358
426-4101	85
426-4143	85
427-5967	▶102
428-9317	▶40
430-3956	▶41
430-7854	707
	▶710
433-3272	715
433-4027	478
434-1356	202
434-6371	707
	▶712
435-3112	415
435-8365	236
436-2854	▶138
437-2759	150
438-3170	568
438-4322	89
438-8213	85
438-8297	87
	▶89
438-8298	85
	▶87
438-9215	365
	368
439-1583	193
	195
439-4571	233
439-6470	448
440-0881	233
440-1138	474
440-2762	474

PART NUMBER INDEX

Part	Page	Part	Page	Part	Page	Part	Page
441-5938	368						
441-9664	138						
443-6362	154						
445-2631	155						
447-8670	►721						
448-3005	356						
449-6277	153						
449-7894	673						
449-7895	673						
450-7074	►434						
450-7075	►434						
450-7076	►435						
450-7077	►435						
450-7078	►436						
450-7079	►436						
450-7081	►437						
450-7082	►437						
450-7089	►375						
	434						
	435						
450-7090	►377						
	434						
	435						
450-7093	►379						
	435						
	436						
450-7094	►381						
	435						
	436						
450-7176	379						
	►383						
450-7177	381						
	►389						
450-7178	►384						
	437						
450-7179	►386						
	437						
450-7180	384						
	►388						
450-7181	386						
	►390						
453-1091	304						
	►306						
453-3902	►706						
453-3903	►707						
453-5998	61						
453-6003	61						

► **PRIMARY REFERENCE**

MEMORANDA



©2014 Caterpillar
All Rights Reserved

CAT, CATERPILLAR, their respective logos, “Caterpillar Yellow”, and the POWER EDGE trade dress as well as corporate and product identity used herein, are trademarks of Caterpillar and may not be used without permission.