CATERPILLAR®

SEBP5048-01
August 2010

RUTHZIL TRATOR COMERCIAL DE PEÇAS LTDA 11 97083-6812 ROLANDO CITRANGULO

Parts Manual

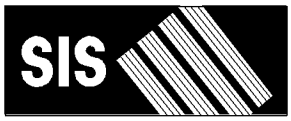

See "General Information" for New Parts Manual Features.

D6R TRACK-TYPE TRACTOR
STD, XL, LGP

S6T1-Up (Machine)
S6X1-Up (Machine)
S6Y1-Up (Machine)
THX19900-Up (Engine)
TYA1-Up (Transmission)
RXE1-Up (Ripper)
EBA1-Up (Torque Converter)
YSA1-Up (Angle Blade)
YLE1-Up (Blade)
YSB1-Up (Blade)
YSC1-Up (Blade)
YXD1-Up (Blade)

Powered By C9 Engine
This Parts Manual is also Available in .PDF Format on Compact Disc (CD-ROM)-Caterpillar Form No. SERP5048–01

Product and Dealer Information

Note: For product identification plate locations, see the section “Product Identification Information” in the Operation and Maintenance Manual.

Delivery Date: _____

Product Information

Model: _____

Product Identification Number: _____

Engine Serial Number: _____

Transmission Serial Number: _____

Generator Serial Number: _____

Attachment Serial Numbers: _____

Attachment Information: _____

Customer Equipment Number: _____

Dealer Equipment Number: _____

Dealer Information

Name: _____ Branch: _____

Address: _____

_____

_____

	Dealer Contact	Phone Number	Hours
Sales:	_____	_____	_____
Parts:	_____	_____	_____
Service:	_____	_____	_____

MEMORANDA

TABLE OF CONTENTS

Name	Page
GENERAL INFORMATION	A5
REPAIR ALTERNATIVES	A8
SUPPLEMENTAL COOLANT ADDITIVES	A9
MAINTENANCE PARTS	A10
INDEX	A13
MACHINE ARRANGEMENT	1
CHASSIS AR	1
COLD WEATHER AR	3
GENERAL AR	4
INSTALLATION AR	5
OPTION AR-MACHINE	6
ENGINE ARRANGEMENT	10
ENGINE AR-COMPLETE	10
ENGINE AR-CORE	12
BASIC ENGINE	14
CAMSHAFT GP	14
COVER GP-CYLINDER BLOCK	15
COVER GP-FRONT HOUSING	16
COVER GP-VALVE MECHANISM	18
CRANKSHAFT GP	19
CYLINDER BLOCK AS	20
CYLINDER BLOCK GP	22
CYLINDER HEAD AS	24
CYLINDER HEAD GP	28
DAMPER GP	34
DRAIN GP-ENGINE OIL	35
DRIVE GP-FAN	36
FASTENER GP-CYLINDER HEAD	38
FASTENER GP-DAMPER & PULLEY	39
FASTENER GP-FRONT COVER	40
FASTENER GP-VALVE COVER	41
FASTENER GP-VALVE COVER BASE	42
FLYWHEEL GP	43
GEAR GP-FRONT	44
GEAR GP-REAR	46
HOUSING AS-FLYWHEEL	47
HOUSING GP-FLYWHEEL	48
HOUSING GP-FRONT	50
LIFTING GP-ENGINE	51
MOUNTING GP-ALTERNATOR	52
MOUNTING GP-ENGINE	53
MOUNTING GP-FAN DRIVE	54
PAN GP-OIL	55
PISTON & ROD GP	56
PLUG GP-ENGINE	57
PULLEY GP-CRANKSHAFT	58
PULLEY GP-FAN & ALT DRIVE	59
ROCKER ARM GP	61
SEAL GP-CRANKSHAFT	63
SUPPORT GP-ENGINE	65
TRUNNION GP-ENGINE	66
VALVE MECHANISM GP	67
YOKE GP	69
LUBRICATION SYSTEM	70
FILLER GP-ENGINE OIL	70
FILTER GP-ENGINE OIL	71
FUMES DISPOSAL GP	74
GAUGE GP-OIL LEVEL (DIPSTICK)	76
LINES GP-ENGINE OIL	77
LINES GP-TURBOCHARGER OIL	78
PUMP GP-ENGINE OIL	79
VALVE GP-FLUID SAMPLING	80
COOLING SYSTEM	81
COOLER GP-ENGINE OIL	81
FAN GP-BLOWER	82
FAN GP-REVERSIBLE	83
LINES GP-WATER	84
PUMP GP-WATER	87
RADIATOR GP	90
TANK GP-COOLANT	93
AIR INLET AND EXHAUST SYSTEM	96
AFTERCOOLER GP-AIR	96
AIR CLEANER GP	97
DUST EJECTOR GP	99
ELBOW GP-AIR INLET	100
LINES GP-AIR	101
MANIFOLD GP-EXHAUST	104
MUFFLER GP	105
PRECLEANER AR	107
PRECLEANER GP	108
PRESCREENER AS	110
SHIELD GP-EXHAUST	111
TURBOCHARGER GP	112
FUEL SYSTEM	114
FILTER & LINES GP-FUEL	114
FILTER GP-WATER SEP & FUEL	116
INJECTOR GP-FUEL	117
LINES GP-FUEL	118
PUMP & MTG GP-UNIT INJ HYD	122
PUMP GP-FUEL INJECTION	124
PUMP GP-UNIT INJECTOR HYD	126
REGULATOR GP-FUEL PRESSURE	128
TANK GP-FUEL	129
ELECTRICAL AND STARTING SYSTEM	131
ALARM GP	131
ALTERNATOR GP-CHARGING	132
BATTERY & WIRING GP	138
CLUTCH GP-ELECTRIC	143

TABLE OF CONTENTS

Name	Page
CONTROL & MTG GP-ENGINE ELEK	144
CONTROL GP-ENGINE ELECTRONIC	145
CONVERTER GP-ELECTRICAL	146
ELECTRONICS GP-COMMUNICATION	147
GRADE CONTROL AR	147
GRADE CONTROL GP	147
HEATER GP-FUEL	148
HEATER GP-JACKET WATER	150
INSTALLATION GP-COMMUNICATION	151
LAMP GP-DOME	153
LAMP GP-FLOOD	154
LIGHTING GP-FLOOD	156
LIGHTING GP-ROPS	162
MOUNTING GP-GRADE CONTROL	164
PANEL GP-FUSE	165
RADIO GP-COMMUNICATION	167
SENSOR GP-ENGINE	168
SENSOR GP-POSITION	169
SENSOR GP-PRESSURE	170
SENSOR GP-SPEED	177
SENSOR GP-TEMPERATURE	178
STARTING AID GP-ETHER	181
STARTING MOTOR GP-ELECTRIC	183
SWITCH GP-BYPASS	190
SWITCH GP-MAGNETIC	191
SWITCH GP-PUSH BUTTON	193
VALVE GP-ETHER STARTING	194
WIRING GP-BOX	195
WIRING GP-ELECTRONIC CONTROL	197
WIRING GP-ENGINE	199
WIRING GP-GRADE CONTROL	202
WIRING GP-PLATFORM	206
POWER TRAIN	211
ACCUMULATOR GP	211
AXLE GP	212
BASE GP-OIL FILTER	214
BRAKE & DIFFERENTIAL DRIVE GP	215
BRAKE & PLANETARY GP	219
CASE & PARTS GP-PLANETARY	221
CASE GP-TRANSMISSION	223
CONTROL GP-STEERING & XMSN	224
CONTROL GP-TRANSMISSION HYD	232
COOLER GP-TRANSMISSION OIL	234
COUPLING & GUARD GP	236
COUPLING GP-PUMP	237
DRAIN GP-ECOLOGY	238
DRIVE GP-FINAL	242
DRIVE GP-PUMP	250
FILTER GP-OIL	251
GEAR GP-BEVEL & TRANSFER	252
LINES GP-POWER TRAIN OIL	255
MOUNTING GP-FINAL DRIVE	260
MOUNTING GP-TRANSMISSION	261
PLANETARY GP-TRANSMISSION	262
POWER TRAIN AR	266
PUMP GP-GEAR	267
SCREEN GP-MAGNETIC	270
SEGMENT GP-SPROCKET	271
SHAFT GP-DRIVE	272
TORQUE CONVERTER & HOUSING GP	273
TORQUE CONVERTER GP	275
TRANSMISSION AR	279
UNIVERSAL JOINT GP	280
VALVE GP-PRIORITY	281
VALVE GP-RELIEF	282
VALVE GP-SELECTOR & PRESS CONT	283
VALVE GP-TRANSMISSION CONTROL	285
FRAME AND BODY	286
BOX GP-BATTERY	286
CASE & FRAME GP	290
COUNTERWEIGHT GP	291
DRAWBAR GP	293
ENCLOSURE GP-ENGINE	294
ENCLOSURE GP-HYDRAULIC TANK	300
FENDER GP	301
GRID GP-SAND BLAST ERODING	304
GRILL GP-RADIATOR	305
GUARD GP-BOTTOM	306
GUARD GP-FUEL TANK	310
GUARD GP-RADIATOR	312
GUARD GP-TRANSMISSION	315
HOOD AS	316
SWEEP AR	317
SWEEP GP	318
UNDERCARRIAGE	320
BAR GP-EQUALIZER	320
CAP GP-TRACK IDLER	326
FRAME GP-TELESCOPING RECOIL	332
GUARD GP-TRACK GUIDE	352
GUARD GP-TRACK ROLLER	355
GUIDING AR-UNDERCARRIAGE	360
IDLER GP-FRONT	361
IDLER GP-TRACK	362
LINK AS-TRACK	365
LINK AS-TRACK BOX	370
MOUNTING GP-CARRIER ROLLER	374
PIVOT BAR GP	375
ROLLER AR-TRACK	377
ROLLER AR-TRACK CARRIER	378
ROLLER GP-TRACK CARRIER	379
ROLLER GP-TRACK-DOUBLE FLANGE	380
ROLLER GP-TRACK-SINGLE FLANGE	383

TABLE OF CONTENTS

Name	Page
SCRAPER GP-IDLER	387
TRACK ADJUSTER & RECOIL GP	388
TRACK GP	392
UNDERCARRIAGE AR	396
STEERING AND BRAKING SYSTEM	399
MOTOR GP-PISTON	399
ROTATING GP-MOTOR	400
VALVE GP-BRAKE CONTROL	402
HYDRAULIC SYSTEM	404
ADAPTER GP-MOTOR	404
CONTROL AR-HYDRAULIC	405
COOLER GP-HYDRAULIC OIL	406
CYLINDER & LINES GP-LIFT	407
CYLINDER GP-BULLDOZER LIFT	415
CYLINDER GP-RIPPER	421
CYLINDER GP-TILT	423
HYDRAULIC AR-2 VALVE	427
LINES GP-LIFT CYLINDER	428
LINES GP-PILOT	430
LINES GP-PUMP	439
LINES GP-RIPPER	443
LINES GP-TILT CYLINDER	446
MANIFOLD GP-CONTROL	453
MANIFOLD GP-VALVE	454
MOUNTING GP-CYLINDER	455
MOUNTING GP-VALVE	456
PUMP & MOUNTING GP	457
PUMP GP-PISTON	458
TANK & MTG GP-HYDRAULIC	461
TANK GP-HYDRAULIC	462
VALVE & MTG GP-BULLDOZER	465
VALVE & MTG GP-COUNTERBALANCE	466
VALVE GP-BANK 3	467
VALVE GP-BANK 4	469
VALVE GP-CHECK	471
VALVE GP-CONTROL	472
VALVE GP-COUNTERBALANCE	482
VALVE GP-PILOT	483
VALVE GP-PILOT CARTRIDGE	489
VALVE GP-PRESSURE REDUCING	491
VALVE GP-PUMP CONTROL	492
VALVE GP-QUICK-DROP	494
VALVE GP-RELIEF	497
VALVE GP-SHUTTLE	501
VALVE GP-SOLENOID	502
IMPLEMENTS	505
BRACE GP-BULLDOZER	505
C-FRAME AS	507
C-FRAME GP	508
PUSH ARM GP	509
TRUNNION GP-BULLDOZER	515
OPERATOR STATION	517
ADJUSTER GP-SEAT	517
AIR CONDITIONER AR	518
AIR CONDITIONER GP	519
BLOWER GP-CAB	520
CAB AR	522
CAB GP	524
CANOPY AR	530
COMPRESSOR GP-REFRIGERANT	531
CONDENSER & MTG GP-REFRIGERANT	534
CONDENSER GP-REFRIGERANT	537
CONTROL GP-GOVERNOR & BRAKE	539
CONTROL GP-HANDLE	542
CONTROL GP-PILOT OPERATED HYD	544
COVER GP-CONSOLE	545
GUARD GP-WINDOW	548
HANDHOLD GP	549
HEATER GP-CAB	550
HOUSING GP-SEAT SUSPENSION	551
INSTALLATION GP-RADIO	553
INSTRUMENT GP	554
KNOB GP	557
LINER GP-CAB	558
LINES GP-AIR CONDITIONER	562
LINES GP-HEATER	569
MIRROR GP-REAR VIEW	571
MOTOR GP-WINDOW WIPER	573
MOUNTING GP-ANTENNA	577
MOUNTING GP-BRACKET	578
MOUNTING GP-CAB	579
MOUNTING GP-MONITOR	580
MOUNTING GP-ROPS	582
PAN GP-BACKREST	583
PANEL GP-INSTRUMENT	586
PLATFORM GP	589
PLATFORM GP-OPERATOR	590
PRESSURIZER GP-CAB	596
RECLINER GP-SEAT	598
ROPS GP	600
ROPS GP-OPEN	601
SCREEN GP-PROTECTION	603
SEAT GP	605
SEAT GP-SUSPENSION	614
SUSPENSION GP-SEAT	618
TANK GP-WINDOW WASHER	622
WASHER GP-WINDOW	625
WINDOW GP-CAB	627
WINDOW GP-SLIDING	636
WIPER GP-WINDOW	637
WIPER PIVOT GP	639
WORK TOOLS	640
BLADE & EDGE GP-ANGLING	640

TABLE OF CONTENTS

Name	Page	Name	Page
BLADE & EDGE GP-SEMI-UNIVERSAL	641		
BLADE & EDGE GP-STRAIGHT	645		
BLADE AS-ANGLING	648		
BLADE AS-SEMI-UNIVERSAL	649		
BLADE AS-STRAIGHT	656		
BLADE GP-STRAIGHT	659		
EDGE GP-BIT & CUTTING	661		
MOUNTING GP-MAST	665		
MOUNTING GP-RIPPER	668		
RIPPER AR	670		
RIPPER GP	671		
TOOTH GP-RIPPER	673		
SERVICE EQUIPMENT AND SUPPLIES	676		
FILM GP	676		
PLATE & FILM GP	680		
PART NUMBER INDEX	B1		

GENERAL INFORMATION

1. MACHINE IDENTIFICATION

Caterpillar machines are identified by Product Identification Numbers (PIN). Some components included in a machine may be identified by Serial Numbers (S/N). Typical components that will be serialized include engines, transmissions, bulldozers, and rippers. The machine and engine are further identified by arrangement numbers and in some cases modification numbers. These numbers are shown on the product identification plate(s) and on the master plate in the operator's compartment.

Caterpillar dealers need all of these numbers to determine accurate parts identification.

SIS *New Feature*

Effective First Quarter 2001 the Caterpillar Product Identification Number (PIN) changed from 8 to 17 characters. In an effort to provide uniform equipment identification, Caterpillar and other construction equipment manufacturers are moving to comply with the latest version of the product identification numbering standard. Non-road machine PINs are defined by ISO 10261. The new PIN format will apply to all Caterpillar machines and generator sets. The PIN plates and frame marking will display the 17 character PIN. The new format will look like the following:

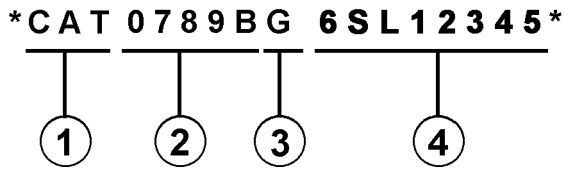

Where:

1. Caterpillar's World Manufacturing Code (characters 1-3)

2. Machine Descriptor (characters 4-8)

3. Check Character (character 9)

4. Machine Indicator Section (MIS) or Product Sequence Number (characters 10-17). These were previously referred to as the Serial Number.

Machines and generator sets produced before First Quarter 2001 will maintain their 8 character PIN format.

Components such as engines, transmissions, axles, etc. and work tools will continue to use an 8 character Serial Number (S/N).

2. ORDERING PARTS

⚠ WARNING

When replacement parts are required for this product Caterpillar recommends using Caterpillar replacement parts or parts with equivalent specifications including, but not limited to, physical dimensions, type, strength and material.

Failure to heed this warning can lead to premature failures, product damage, personal injury or death.

Quality Caterpillar replacement parts are available from Caterpillar dealers throughout the world. Their parts inventories are up to date and include all parts normally required to protect your investment in Caterpillar machines. Dealers may offer repair kits or remanufactured parts to allow selection of the most effective repair alternative for a particular situation. When ordering parts, your order should specify the quantity, part number, part name, and the serial number/product identification number of the machine for which the parts are needed.

3. PARTS MANUAL ORGANIZATION

Product information in this manual is presented as "information elements" that represent all of the components for the specific model. Engine Arrangement and Seat Group are examples of information elements. The information elements are organized alphabetically by part name and secondarily by part number within each major section of the manual.

4. TABLE OF CONTENTS

A table of contents (TOC) is found at the beginning of the manual. The TOC lists each section of the manual with a complete list of all information elements organized as they appear in the manual. Page numbers are provided for quick reference to detailed parts identification illustrations and serviceable consist lists.

5. MAINTENANCE PARTS INDEX

The Maintenance Parts Index, located near the beginning of the manual, references most frequently used maintenance part numbers, providing description, quantity, usage and page number. This information is organized alphabetically by part description.

6. INDEX

The index located near the front of the manual is an alphabetical listing of all information elements included in the manual. Page numbers are provided for quick reference to detailed parts identification illustrations and serviceable consist lists.

7. PART NUMBER INDEX

A numerical index listing all part numbers and the corresponding page number(s) appears at the back of the manual.

8. CAPTIONS

Captions located at the beginning of each information element identify the part number and part name along with additional descriptive information. PIN and S/N information found in each caption should be used to select correct information for a specific machine. Field replacement options, identification of optional attachment components, and where used ("part of") information is also provided.

The first line of a caption is shown in larger type font to indicate the beginning of an information element. Captions for additional pages that may be required to illustrate an information element will be shown in standard type font and will include the term *(contd.)* .

9. NON-SERVICED PARTS

In some instances it is necessary to display non-serviced parts that are a link to a lower level serviceable consist lists. These non-serviced part numbers are shown in *italic* type indicating that they are not available.

10. PARTS LIST REFERENCE NUMBERS

Numbers shown in the Ref No column correspond to numbers used in the associated graphic(s). An alphabetic suffix may be added to a reference number to identify lower level consist items. Numbers shown in the Graphic Ref column refer to the graphic number identifier displayed in the lower left corner of each illustration. The Graphic Ref number may be used in combination with the item Ref No to determine the correct part number. There may be intentional omission of a Ref No in a consist list as information is updated to reflect the latest serviceable part numbers.

11. INDENTED PART NAMES

When a part name is indented in a parts list, it is part of (included in) the group or assembly under which it is indented.

12. ILLUSTRATION REFERENCE LETTERS

When necessary, illustrations contain reference letters (A, B, C etc.) that are intended to track lines and harnesses from one point to another. They are also used to show where to reconnect illustrations that have been separated.

13. ABBREVIATIONS AND SYMBOLS

O.D. – Outside Diameter
I.D. – Inside Diameter
A – Not Part Of This Group
B – Use As Required
C – Change From Previous Type
D – Order By The Meter
E – Order By The Centimeter
F – Not Shown
G – Order By The Inch
I – Refer To Hydraulic Information System
M – Metric Part
R – Remfg Part May Be Available
Y – Separate Illustration
Z – Not Serviced Separately

SIS *New Feature*

14. DESCRIPTION OF TYPE CHANGES

Type - A type is defined as any configuration change that requires an additional Information Element for an Arrangement, Group, or Assembly. If serial number breaks for types are not available, a type # (Type 1, Type 2, etc.) will be displayed in the caption. These "type" changes are identified with a "C" note (change from previous type) in the Parts List. Only the "types" that apply to this Parts Manual will be included. Additional types may exist causing "C" notes to appear on an Information Element when no other types are shown.

15.<END>

This symbol indicates the end of an information element.

NOTE:

Continuing improvement and advancement of product design may cause changes to your machine which may not be included in this publication. Whenever a question arises regarding your Caterpillar product or this publication, please consult your Caterpillar dealer for the latest available information.

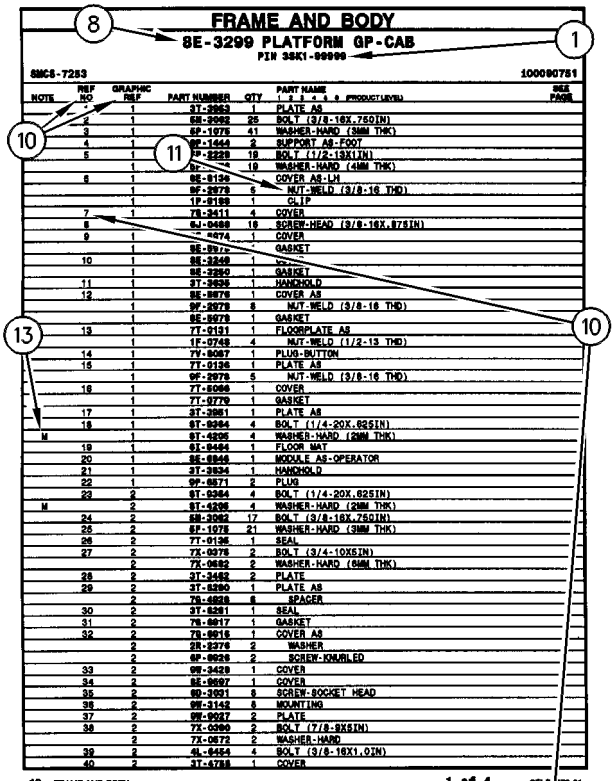

FRAME AND BODY

8E-3299 PLATFORM GP-CAB

PIN 3SK1-09999

SMCS-7253 100090751

NOTE	REF NO	GRAPHIC REF	PART NUMBER	QTY	PART NAME (1 2 3 4 5 6 PRODUCT LEVEL)	SEE PAGE
	*	1	3T-3863	1	PLATE AS	
	2	1	6E-2062	25	BOLT (3/8-16X.750IN)	
	3	1	6P-1076	41	WASHER-HARD (38MM THK)	
	4	1	9P-1644	2	SUPPORT AS-FOOT	
	5	1	7P-2229	18	BOLT (1/2-13X1IN)	
		1	6P-	18	WASHER-HARD (44MM THK)	
	6	1	6E-6136		COVER AS-LH	
		1	9F-2978	6	NUT-WELD (3/8-16 THD)	
		1	1P-0188	1	CLIP	
	7	1	7S-3411	4	COVER	
	8		9J-0488	18	SCREW-HEAD (3/8-16X.875IN)	
	9	1	-4474	1	COVER	
		1	6E-897		GASKET	
	10	1	6E-3249	1		
		1	6E-3250	1	GASKET	
	11	1	3T-3638	1	HANDHOLD	
	12	1	6E-8678	1	COVER AS	
		1	9F-2978	8	NUT-WELD (3/8-16 THD)	
		1	6E-8679	1	GASKET	
	13	1	7T-0131	1	FLOORPLATE AS	
		1	1F-0748	4	NUT-WELD (1/2-13 THD)	
	14	1	7V-8067	1	PLUG-BUTTON	
	15	1	7T-0136	1	PLATE AS	
		1	9F-2978	5	NUT-WELD (3/8-16 THD)	
	16	1	7T-8066	1	COVER	
		1	7T-8779	1	GASKET	
	17	1	3T-3861	1	PLATE AS	
	18	1	6T-8364	4	BOLT (1/4-20X.625IN)	
M		1	9T-4205	4	WASHER-HARD (20MM THK)	
	19	1	6L-8494	1	FLOOR MAT	
	20	1	8E-8846	1	MODULE AS-OPERATOR	
	21	1	3T-3834	1	HANDHOLD	
	22	1	9P-8671	2	PLUG	
	23	2	6T-8364	4	BOLT (1/4-20X.625IN)	
M		2	9T-4205	4	WASHER-HARD (20MM THK)	
	24	2	6E-3062	17	BOLT (3/8-16X.750IN)	
	26	2	6P-1076	21	WASHER-HARD (38MM THK)	
	26	2	7T-0135	1	SEAL	
	27	2	7X-0075	2	BOLT (3/4-10X5IN)	
		2	7X-0682	2	WASHER-HARD (64MM THK)	
	28	2	3T-3462	2	PLATE	
	29	2	3T-8290	1	PLATE AS	
		2	7S-4828	8	SPACER	
	30	2	3T-8281	1	SEAL	
	31	2	7S-8817	1	GASKET	
	32	2	7S-8816	1	COVER AS	
		2	2R-2276	2	WASHER	
		2	6P-8626	2	SCREW-KNURLED	
	33	2	9W-3429	1	COVER	
	34	2	8E-8697	1	COVER	
	35	2	6D-3931	8	SCREW-SOCKET HEAD	
	36	2	9W-3142	8	MOUNTING	
	37	2	9W-8027	2	PLATE	
	38	2	7X-0090	2	BOLT (7/8-9X5IN)	
		2	7X-0672	2	WASHER-HARD	
	39	2	4L-8454	4	BOLT (3/8-16X1.0IN)	
	40	2	3T-4788	1	COVER	

12 FRAME AND BODY 1 of 4 SELP4570-01

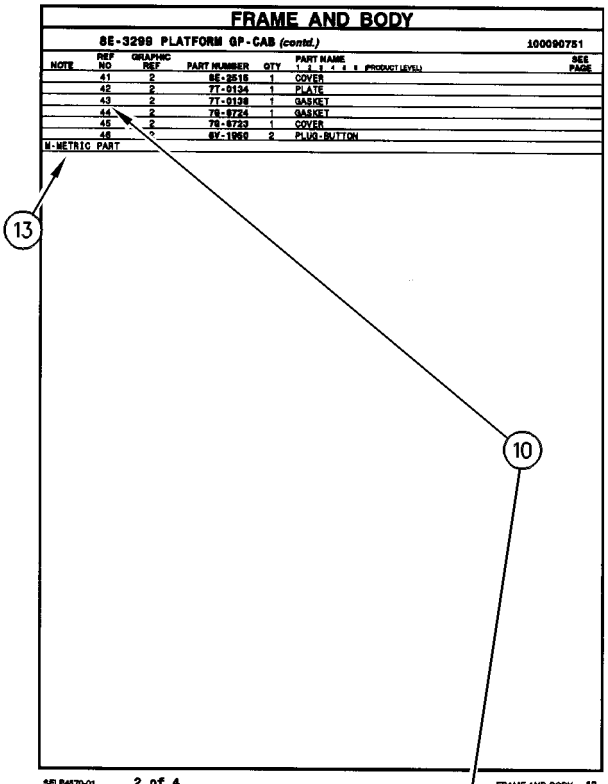

FRAME AND BODY

8E-3299 PLATFORM GP-CAB (contd.) 100090751

NOTE	REF NO	GRAPHIC REF	PART NUMBER	QTY	PART NAME (1 2 3 4 5 6 PRODUCT LEVEL)	SEE PAGE
	41	2	6E-2616	1	COVER	
	42	2	7T-0134	1	PLATE	
	43	2	7T-0138	1	GASKET	
	44	2	7S-8724	1	GASKET	
	45	2	7S-8723	1	COVER	
	46	2	6V-1950	2	PLUG-BUTTON	

M-METRIC PART

SELP4570-01 2 of 4 FRAME AND BODY 13

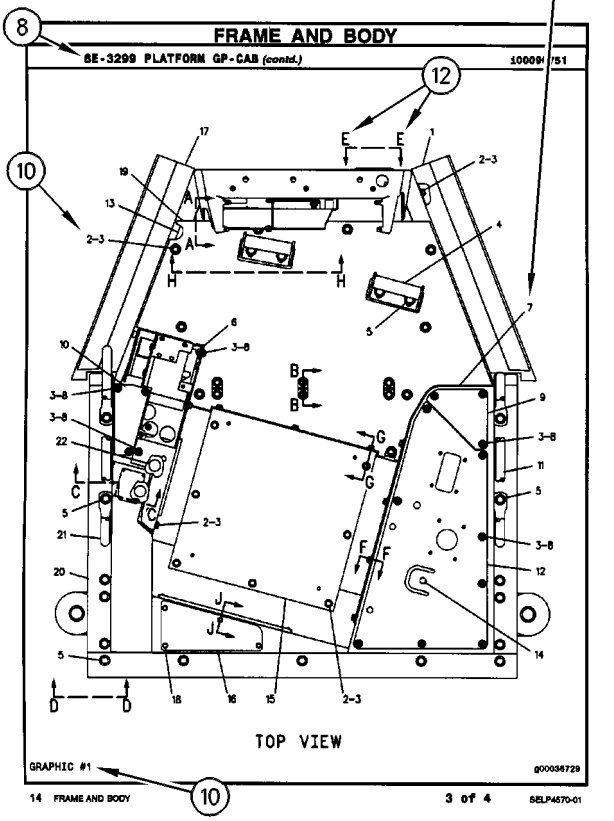

FRAME AND BODY

8E-3299 PLATFORM GP-CAB (contd.) 100090751

TOP VIEW

GRAPHIC #1 g00036729

14 FRAME AND BODY 3 of 4 SELP4570-01

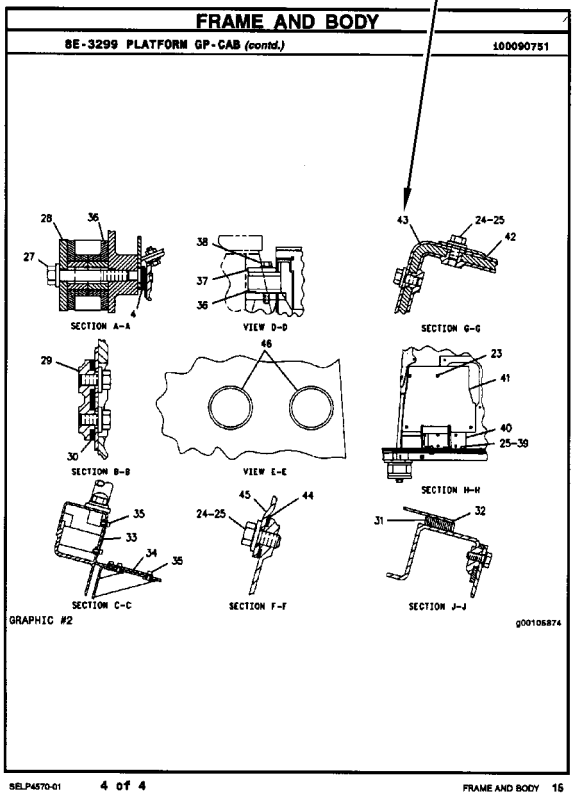

FRAME AND BODY

8E-3299 PLATFORM GP-CAB (contd.) 100090751

SECTION A-A

VIEW D-D

SECTION G-G

SECTION B-B

VIEW E-E

SECTION H-H

SECTION C-C

SECTION F-F

SECTION J-J

GRAPHIC #2 g00105874

SELP4570-01 4 of 4 FRAME AND BODY 16

REPAIR ALTERNATIVES

REMANUFACTURED COMPONENTS

As an option when making repairs consider Caterpillar Remanufactured Components. Components that are available through the Caterpillar Remanufactured Program are identified three ways in the parts book:

- with the letter R in the note field of the parts list
- with an R* at the beginning of the first line of the caption
- with an *R at the end of the first line of the caption

Typical components included in the Remanufacturing Program include:

ALTERNATORS
CONNECTING RODS
CRANKSHAFTS - UNDERSIZE
CRANKSHAFTS - UPGRADE TO NEW
CYLINDER HEADS
ELECTRONIC CONTROL MODULES (ECM)
ELECTRONIC SENSORS
FUEL INJECTORS
FUEL NOZZLES
FUEL PUMPS
GOVERNORS
OIL PUMPS
PISTONS
SHORT BLOCKS
STARTERS
TURBOCHARGERS - COMPLETE
TURBOCHARGER CARTRIDGES
WATER PUMPS

Caterpillar Remanufactured engines for many engine arrangements are also available.

SUPPLEMENTAL COOLANT ADDITIVES

CUSTOMER BENEFITS:

Protects against cavitation, foam, erosion, corrosion, and scale buildup in cooling systems.

- Provides measured coolant conditioner.

DESCRIPTION:

Additives deplete from the coolant with normal operation. For this reason, Supplemental Coolant Additives (SCA) must be added to all heavy duty coolants at regular intervals. In addition, when not using a fully formulated, pre-charged antifreeze, like Caterpillar's DEAC, an initial charge of SCA must be added to the cooling system. The amount of SCA added to the system is dependent on the capacity of the system.

The SCA for initial fill is provided as a liquid. SCA's for maintenance intervals are available in liquid form and as a spin-on element. (No Spin-on available for 3600 Family of Engines)

NOTE:

The amount of SCA added at initial fill is not the same as the amount added at maintenance intervals.

The coolant additive elements can be used with any ethylene or propylene glycol type antifreeze which meets ASTM D4985 or ASTM D5345 Specifications.

NOTE:

For use with standard heavy duty coolant only, not for use with Extended Life Coolant.

PARTS NEEDED:

Cooling System Capacity		Liquid SCA at Initial Fill	Liquid SCA at Maintenance*	Spin-on SCA Maintenance Element*
Liters	Gallons			
22-30	(6-8)	3P-2044 (1)	6V-3542 (1)	111-2370 (1)
30-38	(8-10)	3P-2044 (1) 6V-3542 (1)	111-2372 (1)	111-2369 (1)
38-49	(10-13)	3P-2044 (1) 8T-1589 (1)	111-2372 (1)	111-2369 (1)
49-64	(13-17)	3P-2044 (2)	8T-1589 (1)	9N-3368 (1)
64-83	(17-22)	3P-2044 (2) 8T-1589 (1)	111-2372 (1) 6V-3542 (1)	111-2371 (1)
83-114	(22-30)	3P-2044 (3) 8T-1589 (1)	3P-2044 (1)	9N-3718 (1)
114-163	(30-43)	3P-2044 (5)	3P-2044 (1) 6V-3542 (1)	111-2371 (2)
163-242	(43-64)	3P-2044 (8)	3P-2044 (2)	9N-3718 (2)

** Normal maintenance period is 250 hrs. See your Operation and Maintenance Manual for complete coolant maintenance instructions.*

( ) Indicates quantity required.

MAINTENANCE PARTS

DESCRIPTION	PART NUMBER	QTY	WHERE USED	PAGE
AIR INLET AND EXHAUST SYSTEM				
FILTER ELEMENT AS-AIR (PRIMARY, STANDARD EFFICIENCY)	6I-2501	1	AIR CLEANER GP	97
FILTER ELEMENT AS-AIR (SECONDARY)	6I-2502	1	AIR CLEANER GP	97
BASIC ENGINE				
BELT-SERPENTINE	241-4981	1	PULLEY GP-FAN & ALT DRIVE	59
BREATHER AS (CRANKCASE)	204-4444	1	COVER GP-VALVE MECHANISM	18
	240-0041	1	COVER GP-CYLINDER BLOCK	15
FILTER ELEMENT-BREATHER (CRANKCASE)	185-3159	1	COVER GP-VALVE MECHANISM	18
PLUG-DRAIN (ENGINE OIL PAN)	126-1683	1	DRAIN GP-ENGINE OIL	35
V-BELT SET (INCLUDES 3-BELTS)	6N-7053	1	PULLEY GP-FAN & ALT DRIVE	59
COOLING SYSTEM				
CAP AS-RADIATOR	031-1119	1	TANK GP-COOLANT	93
GASKET (WATER REGULATOR HOUSING)	191-4457	1	LINES GP-WATER	84
HOSE-RADIATOR	187-3961	1	LINES GP-WATER	85
REGULATOR-TEMPERATURE (92-DEG C) (WATER, COOLANT)	248-5513	1	LINES GP-WATER	84
ELECTRICAL AND STARTING SYSTEM				
BATTERY (12-VOLT, 1400-CCA)	153-5710	2	BATTERY & WIRING GP	142
BATTERY (12-VOLT, MAINTENANCE FREE, WET)	9X-3404	2	BATTERY & WIRING GP	140
CIRCUIT BREAKER AS (15-AMPERE) (BLOWER)	6T-3643	1	PANEL GP-FUSE	165
FUSE (10-AMPERE)	9W-1442	7	PANEL GP-FUSE	165
FUSE (15-AMPERE)	9W-1441	15	PANEL GP-FUSE	165
FUSE (175-AMPERE)	239-8107	1	PANEL GP-FUSE	165
		1	WIRING GP-PLATFORM	206
FUSE (20-AMPERE)	9W-1446	2	PANEL GP-FUSE	165
KEY (BATTERY DISCONNECT)	8H-5306	1	BATTERY & WIRING GP	138
LAMP (24-VOLT)	7N-1996	1	WIRING GP-PLATFORM	206
	7N-9943	1	LAMP GP-DOME	153
LAMP AS-INDICATOR (ACTION LIGHT)	170-3461	1	WIRING GP-PLATFORM	206
LAMP-HALOGEN (24-VOLT, 70-WATT)	351-9918	1	LAMP GP-FLOOD	154
		1	LAMP GP-FLOOD	155
FRAME AND BODY				
PLUG-DRAIN (TRANSMISSION CASE)	106-8187	1	CASE & FRAME GP	290
FUEL SYSTEM				
CAP AS-FILLER (FUEL TANK)	7X-7700	1	TANK GP-FUEL	130
FILTER AS-WATER SEP & FUEL (PRIMARY)	326-1644	1	FILTER GP-WATER SEP & FUEL	116
FILTER-FUEL (ADVANCED EFFICIENCY)	1R-0762	1	FILTER & LINES GP-FUEL	114
STRAINER-FUEL	9P-7121	1	TANK GP-FUEL	130

MAINTENANCE PARTS

DESCRIPTION	PART NUMBER	QTY	WHERE USED	PAGE
HYDRAULIC SYSTEM				
CAP-FILLER (HYDRAULIC TANK)	7H-1447	1	TANK GP-HYDRAULIC	462
FILTER ELEMENT AS-OIL (ADVANCED EFFICIENCY)	1R-0777	2	TANK GP-HYDRAULIC	462
FILTER ELEMENT AS-OIL (FIRE RESISTANT FLUID)	104-6931	2	TANK GP-HYDRAULIC	462
FILTER ELEMENT AS-OIL (ULTRA HIGH EFFICIENCY)	139-1537	2	TANK GP-HYDRAULIC	462
PLUG-DRAIN (HYDRAULIC TANK)	9J-7031	1	TANK GP-HYDRAULIC	462
SCREEN (IMPLEMENT PILOT OIL)	6E-5066	1	MANIFOLD GP-CONTROL	453
SCREEN AS (HYDRAULIC TANK)	3G-3267	2	TANK GP-HYDRAULIC	462
STRAINER AS-OIL (HYDRAULIC TANK FILL)	5D-7927	1	TANK GP-HYDRAULIC	462
LUBRICATION SYSTEM				
CAP AS-FILLER (ENGINE OIL)	6N-2985	1	FILLER GP-ENGINE OIL	70
FILTER-ENGINE OIL (ADVANCED EFFICIENCY)	1R-1808	1	FILTER GP-ENGINE OIL	71
OPERATOR STATION				
BLADE AS-WIPER (350-MM) (DOOR, RH, LH)	6V-5849	2	WIPER GP-WINDOW	637
BLADE AS-WIPER (400-MM) (FRONT WINDOW)	6V-5851	1	WIPER GP-WINDOW	637
BLADE AS-WIPER (500-MM) (REAR)	146-6433	1	WIPER GP-WINDOW	637
CAP-VENTED (WINDOW WASHER RESERVOIR)	8E-8292	1	TANK GP-WINDOW WASHER	622
FILTER ELEMENT-CAB AIR (AIR RECIRCULATION)	6T-5068	1	PRESSURIZER GP-CAB	596
FILTER ELEMENT-CAB AIR (STANDARD EFFICIENCY)	6T-0988	1	PRESSURIZER GP-CAB	596
FILTER ELEMENT-CAB AIR (ULTRA HIGH EFFICIENCY)	175-2831	1	PRESSURIZER GP-CAB	596
LAMP (24-VOLT)	123-9294	2	PANEL GP-INSTRUMENT	586
LAMP (24-VOLT) (PANEL)	123-9294	2	INSTRUMENT GP	554
SEAT BELT GP (RETRACTABLE)	222-0345	1	SEAT GP	607
		1	SEAT GP	611
V-BELT (REFRIGERANT COMPRESSOR)	216-0349	1	COMPRESSOR GP-REFRIGERANT	532

MAINTENANCE PARTS

DESCRIPTION	PART NUMBER	QTY	WHERE USED	PAGE
POWER TRAIN				
BREATHER (POWER TRAIN OIL)	9G-5127	1	LINES GP-POWER TRAIN OIL	255
FILTER ELEMENT AS-OIL (ADVANCED EFFICIENCY)	328-3655	1	FILTER GP-OIL	251
GASKET-COVER	8P-0058	1	CASE & PARTS GP-PLANETARY	221
PLUG-DRAIN (TRANSMISSION)	4B-7739	1	DRAIN GP-ECOLOGY	240
PLUG-MAGNETIC (FINAL DRIVE, OIL CHECK, FILL)	6V-0439	1	DRIVE GP-FINAL	242
		1	DRIVE GP-FINAL	244
		1	DRIVE GP-FINAL	246
		1	DRIVE GP-FINAL	248
SCREEN AS (TORQUE CONVERTER SCAVENGE)	3T-6471	1	LINES GP-POWER TRAIN OIL	255
SCREEN GP-MAGNETIC (POWER TRAIN)	240-8259	1	SCREEN GP-MAGNETIC	270
SCREEN-SUCTION (POWER TRAIN)	4S-8598	1	SCREEN GP-MAGNETIC	270
SCREEN-SUCTION (TRANSMISSION SCAVENGE)	8S-9130	1	CASE & PARTS GP-PLANETARY	221

INDEX

Name	Page
A	
ACCUMULATOR GP	211
ACCUMULATOR-REFRIGERANT	562, 565
ADAPTER GP-MOTOR	404
ADJUSTER GP-SEAT	517
AFTERCOOLER GP-AIR–ATAAC	96
AIR CLEANER GP	97, 98
AIR CONDITIONER AR	518
AIR CONDITIONER GP	519
ALARM GP	131
ALTERNATOR GP-CHARGING	132, 134, 136
ALTERNATOR GP-CHARGING (24-VOLT, 150-AMPERE)	136
ATOMIZER GP-ETHER	181
AXLE GP	212, 213
B	
BAR GP-EQUALIZER	320, 322, 324, 325
BASE GP-OIL FILTER	214
BASE GP-VALVE COVER	18
BATTERY & WIRING GP	138
BATTERY & WIRING GP–HEAVY-DUTY	142
BATTERY (12-VOLT, 1400-CCA)	142
BATTERY (12-VOLT, MAINTENANCE FREE, WET)	140
BELT-SERPENTINE	59
BLADE & EDGE GP-ANGLING	640
BLADE & EDGE GP-SEMI-UNIVERSAL	641, 642, 643, 644
BLADE & EDGE GP-STRAIGHT	645, 646, 647
BLADE AS-ANGLING	648
BLADE AS-SEMI-UNIVERSAL	649, 651, 652, 653, 654, 655
BLADE AS-STRAIGHT	656, 657, 658
BLADE AS-WIPER (350-MM) (DOOR, RH, LH)	637
BLADE AS-WIPER (400-MM) (FRONT WINDOW)	637
BLADE AS-WIPER (500-MM) (REAR)	637
BLADE GP-STRAIGHT	659, 660
BLOWER GP-CAB	520
BOX GP-BATTERY	286, 288
BRACE GP-BULLDOZER	505
BRAKE & DIFFERENTIAL DRIVE GP	215
BRAKE & PLANETARY GP	219
BREATHER (POWER TRAIN OIL)	255
BREATHER AS (CRANKCASE)	15, 18
C	
C-FRAME AS	507
C-FRAME GP	508
CAB AR	522
CAB AR–SIDE	523
CAB GP	524, 527
CAMSHAFT GP	14
CANOPY AR	530
CAP AS-FILLER (ENGINE OIL)	70
CAP AS-FILLER (FUEL TANK)	130
CAP AS-RADIATOR	93
CAP GP-TRACK IDLER	326
CAP GP-TRACK IDLER–LH	327, 329
CAP GP-TRACK IDLER–RH	328, 330
CAP GP-TRACK IDLER–SYSTEMONE	331
CAP-FILLER (HYDRAULIC TANK)	462
CAP-VENTED (WINDOW WASHER RESERVOIR)	622
CASE & FRAME GP	290
CASE & PARTS GP-PLANETARY	221
CASE GP-TRANSMISSION	223
CHASSIS AR	1, 2, 3
CIRCUIT BREAKER AS (15-AMPERE) (BLOWER)	165
CLUTCH GP-ELECTRIC	143
COLD WEATHER AR	3
COMPRESSOR GP-REFRIGERANT	531, 532
CONDENSER & MTG GP-REFRIGERANT	534
CONDENSER & MTG GP-REFRIGERANT–ROPS MOUNTED	535
CONDENSER GP-REFRIGERANT	537
CONDENSER GP-REFRIGERANT (IN-LINE)	562, 566

INDEX

Name	Page
CONTROL & MTG GP-ENGINE ELEK	144
CONTROL AR-HYDRAULIC–BULLDOZER, RIPPER	405
CONTROL AR-HYDRAULIC–GRADE CONTROL	405
CONTROL GP-ENGINE ELECTRONIC	145
CONTROL GP-GOVERNOR & BRAKE	539
CONTROL GP-HANDLE–BULLDOZER	542, 543
CONTROL GP-PILOT OPERATED HYD–BULLDOZER	544
CONTROL GP-STEERING & XMSN	224, 228
CONTROL GP-TRANSMISSION HYD	232
CONTROL GP-UNPROGRAMMED (ACCUGRADE)	202
CONTROL GP-UNPROGRAMMED (ENGINE)	145
CONVERTER GP-ELECTRICAL	146
COOLER GP-ENGINE OIL	81
COOLER GP-HYDRAULIC OIL	406
COOLER GP-TRANSMISSION OIL	234
CORE AS	143
CORE AS-AFTERCOOLER	96
CORE AS-HYDRAULIC OIL COOLER	406
CORE AS-OIL COOLER (ENGINE)	81
CORE AS-OIL COOLER (TRANSMISSION)	234
CORE AS-RADIATOR	92
COUNTERWEIGHT GP	291, 292
COUPLING & GUARD GP–POWERSHIFT	236
COUPLING GP-PUMP	237
COVER GP-CONSOLE	545, 547
COVER GP-CYLINDER BLOCK	15
COVER GP-FRONT HOUSING	17
COVER GP-FRONT HOUSING–ACCESSORY DRIVE	16
COVER GP-VALVE MECHANISM	18
CRANKSHAFT GP	19
CYLINDER & LINES GP-LIFT–LH	409, 413
CYLINDER & LINES GP-LIFT–RH	407, 411
CYLINDER BLOCK AS	20
CYLINDER BLOCK GP	22, 23
CYLINDER GP-BULLDOZER LIFT	415, 417
CYLINDER GP-BULLDOZER LIFT–LH–RH	419, 420
CYLINDER GP-RIPPER–LIFT	421
CYLINDER GP-TILT	423, 425
CYLINDER HEAD AS	24, 26
CYLINDER HEAD GP	28, 29, 31, 33

D

Name	Page
DAMPER GP	34
DRAIN GP-ECOLOGY	238, 240
DRAIN GP-ENGINE OIL	35
DRAWBAR GP	293
DRIVE GP-FAN	36, 37
DRIVE GP-FINAL	242, 244, 246, 248
DRIVE GP-PUMP	250
DUST EJECTOR GP	99

E

Name	Page
EDGE GP-BIT & CUTTING	661, 662, 663, 664
ELBOW GP-AIR INLET	100
ELECTRONICS GP-COMMUNICATION–PRODUCT LINK 300	147
ENCLOSURE GP-ENGINE	298
ENCLOSURE GP-ENGINE–LH	296
ENCLOSURE GP-ENGINE–RH	294
ENCLOSURE GP-HYDRAULIC TANK	300
ENGINE AR-COMPLETE	10, 11
ENGINE AR-CORE	12, 13
EXTENSION GP-BACKREST (CLOTH)	607
EXTENSION GP-BACKREST (VINYL)	611

F

Name	Page
FAN GP-BLOWER	82
FAN GP-REVERSIBLE	83
FASTENER GP-CYLINDER HEAD	38
FASTENER GP-DAMPER & PULLEY	39
FASTENER GP-FRONT COVER	40
FASTENER GP-VALVE COVER	41
FASTENER GP-VALVE COVER BASE	42
FENDER GP	303
FENDER GP–LH	302
FENDER GP–RH	301
FILLER GP-ENGINE OIL	70
FILM GP	676

INDEX

Name	Page
	677
	678
FILM GP–TANK GUARD	679
FILM-CIRCUIT BREAKER	165
FILM-IDENTIFICATION (GROUP NO., SEQUENCE NO.)	537
FILM-IDENTIFICATION (INSTRUMENT PANEL)	555
FILM-IDENTIFICATION (JOYSTICK) (BLADE CONTROL)	147
FILM-IDENTIFICATION (POWER RECEPTACLE, 12-VOLT)	680
	681
	683
FILM-IDENTIFICATION (WATER HEATER)	150
FILM-IDENTIFICATION (WINDOW WIPER CONTROLS)	558
FILM-INSTRUCTION (KEY START SWITCH)	554
FILM-INSTRUCTION (RIPPER CONTROL)	405
FILM-INSTRUCTION (SEAT ADJUSTMENT)	618
	620
FILM-NOTICE (RADIO)	553
FILM-WARNING (ACCUM, HIGH PRESS, READ OMM)	211
FILM-WARNING (DO NOT OPERATE, READ OMM)	681
	682
	684
FILM-WARNING (ELECTRICAL SHOCK)	165
FILM-WARNING (HIGH PRESSURE, READ OMM, INTL)	681
	682
	684
FILM-WARNING (NO WELD, NO DRILL, READ OMM)	530
	681
	682
	684
FILM-WARNING (PRODUCT LINK RADIO, U.S.)	151
FILM-WARNING (UNIVERSAL, READ OMM)	566
FILTER & LINES GP-FUEL	114
FILTER AS-WATER SEP & FUEL (PRIMARY)	116
FILTER ELEMENT AS-AIR (PRIMARY, STANDARD EFFICIENCY)	97
FILTER ELEMENT AS-AIR (SECONDARY)	97
FILTER ELEMENT AS-OIL (ADVANCED EFFICIENCY)	251
	462
FILTER ELEMENT AS-OIL (FIRE RESISTANT FLUID)	462
FILTER ELEMENT AS-OIL (ULTRA HIGH EFFICIENCY)	462
FILTER ELEMENT-BREATHER (CRANKCASE)	18
FILTER ELEMENT-CAB AIR (AIR RECIRCULATION)	596
FILTER ELEMENT-CAB AIR (STANDARD EFFICIENCY)	596
FILTER ELEMENT-CAB AIR (ULTRA HIGH EFFICIENCY)	596
FILTER GP-ENGINE OIL	71
FILTER GP-OIL–POWER TRAIN OIL	251
FILTER GP-WATER SEP & FUEL	116
FILTER-ENGINE OIL (ADVANCED EFFICIENCY)	71
FILTER-FUEL (ADVANCED EFFICIENCY)	114
FINAL DRIVE GP	242
	244
	246
	248
FITTING GP	75
FLOOR MAT	590
FLOOR MAT (FRONT)	545
FLOOR MAT (REAR)	545
FLYWHEEL GP	43
FRAME GP-TELESCOPING RECOIL–HEAVY-DUTY, LH	338
	348
FRAME GP-TELESCOPING RECOIL–HEAVY-DUTY, RH	336
	350
FRAME GP-TELESCOPING RECOIL–LH	334
	340
	344
FRAME GP-TELESCOPING RECOIL–RH	332
	342
	346
FUMES DISPOSAL GP	75
FUMES DISPOSAL GP–CRANKCASE	74
FUSE (10-AMPERE)	165
FUSE (15-AMPERE)	165
FUSE (175-AMPERE)	165
	206
FUSE (20-AMPERE)	165

G

GASKET (WATER REGULATOR HOUSING)	84
GASKET-COVER	221
GAUGE AS-OIL LEVEL (POWER TRAIN)	255
GAUGE GP-OIL LEVEL (DIPSTICK)–ENGINE	76
GAUGE-SIGHT (HYDRAULIC TANK)	462
GAUGE-SIGHT (WATER TANK)	94
GEAR GP-BEVEL & TRANSFER	252
GEAR GP-FRONT	44
GEAR GP-REAR	46
GENERAL AR	4
GRADE CONTROL AR–ACCUGRADE	147
GRADE CONTROL GP	147

INDEX

Name	Page
GRID GP-SAND BLAST ERODING	304
GRILL GP-RADIATOR–HEAVY-DUTY	305
GUARD GP-BOTTOM	306
	307
	309
GUARD GP-FUEL TANK	310
	311
GUARD GP-RADIATOR	312
	313
GUARD GP-TRACK GUIDE	352
GUARD GP-TRACK GUIDE–SYSTEMONE	353
	354
GUARD GP-TRACK ROLLER	355
	356
	357
GUARD GP-TRACK ROLLER–SYSTEMONE	358
	359
GUARD GP-TRANSMISSION	315
GUARD GP-WINDOW	548
GUIDING AR-UNDERCARRIAGE	360
	361
GUIDING AR-UNDERCARRIAGE–SYSTEMONE	361

H

HANDHOLD GP	549
HARNESS AS-CHASSIS	202
HARNESS AS-CHASSIS (FUEL TANK)	139
HARNESS AS-CHASSIS (RADIATOR GUARD)	138
HARNESS AS-CONSOLE	207
HARNESS AS-CONTROL	203
HARNESS AS-DASH	203
	554
	586
HARNESS AS-ENGINE	199
HARNESS AS-ENGINE (ELECTRONIC CONTROL MODULE)	197
HARNESS AS-ENGINE (UNIT INJECTOR)	197
HARNESS AS-HEATER & AIR COND	537
HARNESS AS-LIGHTING	162
HARNESS AS-LIGHTING (FLOODLIGHT)	148
HARNESS AS-LIGHTING (FLOODLIGHT) (REAR)	157
HARNESS AS-LIGHTING (FRONT FLOODLIGHTS)	159
HARNESS AS-LIGHTING (REAR FLOODLIGHTS)	159
HARNESS AS-MONITOR (ADVISOR)	581
HARNESS AS-MONITOR (GPS)	581
HARNESS AS-MOTOR	520
HARNESS AS-PANEL (FUSE BLOCK)	195
HARNESS AS-PLATFORM	206
HARNESS AS-POWER	146
HARNESS AS-SENSOR	434
HARNESS AS-SENSOR (HOOD)	139
HARNESS AS-SENSOR (IMPLEMENT PUMP OIL)	203
HARNESS AS-SWITCH	565
HARNESS AS-VALVE (SEAT AIR COMPRESSOR)	620
HARNESS AS-WIRING	151
HARNESS AS-WIRING (AIR CONDITIONER COMPRESSOR)	562
	565
HARNESS AS-WIRING (BULKHEAD)	203
HARNESS AS-WIRING (CRANK WITHOUT INJECT)	199
HARNESS AS-WIRING (FUEL PRESSURE)	118
HARNESS AS-WIRING (GPS)	202
HARNESS AS-WIRING (LIGHT BAR)	202
HARNESS AS-WIRING (RADIATOR GUARD)	203
HARNESS AS-WIRING (WINDOW WASHER)	622
HEATER GP-CAB	550
HEATER GP-FUEL	148
HEATER GP-JACKET WATER	150
HOOD AS	316
HOSE-RADIATOR	85
HOUSING AS-FLYWHEEL	47
HOUSING GP-FILTER	251
HOUSING GP-FLYWHEEL	48
HOUSING GP-FRONT	50
HOUSING GP-SEAT SUSPENSION	551
HYDRAULIC AR-2 VALVE	427

I

IDLER GP-FRONT–SYSTEMONE	361
IDLER GP-TRACK	362
	363
IDLER GP-TRACK–SYSTEMONE	364
INJECTOR GP-FUEL	117
INSTALLATION AR	5
INSTALLATION GP-COMMUNICATION–PRODUCT LINK 321SR	151
INSTALLATION GP-RADIO	553
INSTRUMENT GP	554

K

KEY (BATTERY DISCONNECT)	138
KNOB GP–RIPPER	557

L

LAMP (24-VOLT)	153
	206
	586
LAMP (24-VOLT) (PANEL)	554

INDEX

Name	Page
LAMP AS-INDICATOR (ACTION LIGHT)	206
LAMP GP-DOME	153
LAMP GP-FLOOD	154, 155
LAMP-HALOGEN (24-VOLT, 70-WATT)	154, 155
LIFTING GP-ENGINE	51
LIGHTING GP-FLOOD	156
LIGHTING GP-FLOOD–FUEL TANK, RADIATOR GUARD	157
LIGHTING GP-FLOOD–FUEL TANK, SWEEPS	159
LIGHTING GP-ROPS	162
LINER GP-CAB	558, 560
LINES GP-AIR	101
LINES GP-AIR–ATAAC	102
LINES GP-AIR CONDITIONER–ROPS MOUNTED	565
LINES GP-AIR CONDITIONER–UNDER HOOD	562
LINES GP-ENGINE OIL	77
LINES GP-FUEL	118, 120
LINES GP-HEATER	569
LINES GP-LIFT CYLINDER	428
LINES GP-PILOT	430, 432
LINES GP-PILOT–BULLDOZER	434
LINES GP-POWER TRAIN OIL	255
LINES GP-PUMP	439
LINES GP-RIPPER	443, 444
LINES GP-TILT CYLINDER	446, 447, 448, 449, 451
LINES GP-TURBOCHARGER OIL	78
LINES GP-WATER	85
LINES GP-WATER–WATER TEMPERATURE REGULATOR	84
LINK AS-TRACK	365, 366, 367
LINK AS-TRACK BOX–LINK BOX	370, 372
LINK AS-TRACK BOX–LINK BOX, OFFSET	371, 373
LINK AS-TRACK–SYSTEMONE	368, 369
LITERATURE GP	1, 2, 3
LOCK GP	586

M

Name	Page
MANIFOLD GP-CONTROL	453
MANIFOLD GP-EXHAUST	104
MANIFOLD GP-VALVE	454
MIRROR GP-REAR VIEW	571, 572
MODULE AS-POWER SUPPLY	164
MODULE GP-DISPLAY (INSTRUMENT CLUSTER)	554, 586
MOTOR GP-ELECTRIC (CONDENSER BLOWER MOTOR)	537
MOTOR GP-PISTON–STEERING	399
MOTOR GP-WINDOW WIPER–DOOR, LH	575
MOTOR GP-WINDOW WIPER–DOOR, RH	576
MOTOR GP-WINDOW WIPER–FRONT	573
MOTOR GP-WINDOW WIPER–REAR	574
MOUNTING GP-ALTERNATOR	52
MOUNTING GP-ANTENNA–GRADE CONTROL	577
MOUNTING GP-BRACKET	578
MOUNTING GP-CAB	579
MOUNTING GP-CARRIER ROLLER	374
MOUNTING GP-CYLINDER	455
MOUNTING GP-ENGINE	53
MOUNTING GP-FAN DRIVE	54
MOUNTING GP-FINAL DRIVE	260
MOUNTING GP-GRADE CONTROL	164
MOUNTING GP-MAST–ACCUGRADE	667
MOUNTING GP-MAST–GRADE CONTROL	665, 666
MOUNTING GP-MONITOR–GRADE CONTROL	580, 581
MOUNTING GP-RIPPER	668
MOUNTING GP-ROPS	582
MOUNTING GP-TRANSMISSION	261
MOUNTING GP-VALVE	456
MUFFLER GP	105, 106

O

Name	Page
OPTION AR-MACHINE	6, 7, 8, 9

P

Name	Page
PADLOCK GP	120, 129, 224, 286

INDEX

Name	Page
	298
	300
	313
	461
	530
PAN GP-BACKREST–CLOTH	583
PAN GP-BACKREST–LUMBAR	584
PAN GP-BACKREST–VINYL	585
PAN GP-OIL–ENGINE	55
PANEL GP-FUSE	165
PANEL GP-INSTRUMENT–OPEN ROPS	586
PISTON & ROD GP	56
PIVOT BAR GP	375
	376
PLANETARY GP-TRANSMISSION	262
PLATE & FILM GP	680
	681
	683
PLATE-SERIAL NUMBER (BLADE)	6
	7
	8
	9
PLATE-WARNING (HIGH PRESSURE CYLINDER)	332
	334
	336
	338
	340
	342
	344
	346
	348
	350
PLATE-WARNING (RECOIL SPRING)	332
	334
	336
	338
	340
	342
	344
	346
	348
	350
PLATFORM GP	589
PLATFORM GP-OPERATOR	592
PLATFORM GP-OPERATOR–OPEN ROPS	590
PLUG GP-ENGINE	57
PLUG-DRAIN (ENGINE OIL PAN)	35
PLUG-DRAIN (HYDRAULIC TANK)	462
PLUG-DRAIN (TRANSMISSION CASE)	290
PLUG-DRAIN (TRANSMISSION)	240
PLUG-MAGNETIC (FINAL DRIVE, OIL CHECK, FILL)	242
	244
	246
	248
POWER TRAIN AR	266
PRECLEANER AR–WITH PRESCREEN	107
PRECLEANER GP–WITH PRESCREEN	108
PRESCREENER AS	110
PRESSURIZER GP-CAB	596
PULLEY GP-CRANKSHAFT	58
PULLEY GP-FAN & ALT DRIVE	59
PUMP & MOUNTING GP–IMPLEMENT, STEERING	457
PUMP & MTG GP-UNIT INJ HYD	122
PUMP GP-ENGINE OIL	79
PUMP GP-FUEL INJECTION	124
	125
PUMP GP-FUEL TRANSFER	126
PUMP GP-GEAR–POWER TRAIN OIL	267
	268
PUMP GP-PISTON–IMPLEMENT, STEERING	458
PUMP GP-UNIT INJECTOR HYD	126
PUMP GP-WATER	87
	88
	89
PUSH ARM GP	509
	511
	513

R

RADIATOR GP	90
	92
RADIO GP-COMMUNICATION–PRODUCT LINK 121SR	167
RECLINER GP-SEAT	598
	599
REGULATOR AS-VOLTAGE (24-VOLT) (ALTERNATOR)	134
REGULATOR GP-FUEL PRESSURE	128
REGULATOR-TEMPERATURE (92-DEG C) (WATER, COOLANT)	84
RELAY AS (24-VOLT)	554
	586
RELAY AS (24-VOLT) (CONDENSER FAN MOTOR)	537
RELAY AS (24-VOLT) (WINCH, BLADE FLOAT DETENT)	206
RIPPER AR	670
RIPPER GP	671
ROCKER ARM GP–EXHAUST	61
ROCKER ARM GP–INLET	62
ROLLER AR-TRACK	377
ROLLER AR-TRACK CARRIER	378
ROLLER GP-TRACK CARRIER	379
ROLLER GP-TRACK-DOUBLE FLANGE	380
	381

INDEX

Name	Page
ROLLER GP-TRACK-DOUBLE FLANGE–TALL	382
ROLLER GP-TRACK-SINGLE FLANGE	383, 385
ROLLER GP-TRACK-SINGLE FLANGE–SYSTEMONE	384, 386
ROPS GP	600
ROPS GP-OPEN	601
ROTATING GP-MOTOR–STEERING	400
S	
SCRAPER GP-IDLER	387
SCREEN (IMPLEMENT PILOT OIL)	453
SCREEN AS (HYDRAULIC TANK)	462
SCREEN AS (TORQUE CONVERTER SCAVENGE)	255
SCREEN GP-MAGNETIC (POWER TRAIN)	270
SCREEN GP-MAGNETIC–TRANSMISSION	270
SCREEN GP-PROTECTION–REAR	603, 604
SCREEN-SUCTION (POWER TRAIN)	270
SCREEN-SUCTION (TRANSMISSION SCAVENGE)	221
SEAL GP-CRANKSHAFT	63, 64
SEAL GP-DUO-CONE	362, 363, 364
SEAL-CRANKSHAFT (FRONT)	63
SEAT BELT GP (RETRACTABLE)	607, 611
SEAT GP–CLOTH	605, 607, 613
SEAT GP–CLOTH, AIR	612
SEAT GP–VINYL	609, 611
SEAT GP-SUSPENSION–CLOTH	615
SEAT GP-SUSPENSION–CLOTH, AIR	616
SEAT GP-SUSPENSION–VINYL	614, 617
SEGMENT GP-SPROCKET	271
SENDER AS-FUEL LEVEL	129
SENSOR AS-PRESSURE	173
SENSOR GP-ENGINE	10, 11, 168
SENSOR GP-POSITION	169
SENSOR GP-POSITION (ROTARY) (DECELERATOR)	539
SENSOR GP-PRESSURE	170, 171, 172, 173, 174, 175, 176
SENSOR GP-PRESSURE (AIR INLET MANIFOLD)	168
SENSOR GP-PRESSURE (ATMOSPHERIC)	168
SENSOR GP-PRESSURE (ENGINE OIL)	168
SENSOR GP-PRESSURE (FUEL)	118
SENSOR GP-PRESSURE (IMPLEMENT PILOT PRESSURE)	202
SENSOR GP-PRESSURE (INJECTION ACTUATION)	168
SENSOR GP-PRESSURE (TURBOCHARGER INLET)	138
SENSOR GP-SPEED	168, 177
SENSOR GP-SPEED–ENGINE TIMING	177
SENSOR GP-TEMPERATURE	178, 179, 180
SENSOR GP-TEMPERATURE (HYDRAULIC OIL)	138
SENSOR GP-TEMPERATURE (TORQUE CONVERTER OIL)	199
SENSOR GP-TEMPERATURE (TRANSMISSION SUMP)	199
SHAFT GP-DRIVE	272
SHIELD GP-EXHAUST	111
SOFTWARE GP-COMMUNICATION	147
SOFTWARE GP-COMMUNICATION (PRODUCT LINK 121SR)	167
SOLENOID AS-STARTING MOTOR (24-VOLT)	188
STARTING AID GP-ETHER	181
STARTING MOTOR GP-ELECTRIC	183, 185, 186, 187
STRAINER AS-OIL (HYDRAULIC TANK FILL)	462
STRAINER-FUEL	130
SUPPORT GP-ENGINE	65
SUSPENSION GP-SEAT	618
SUSPENSION GP-SEAT–AIR	620
SWEEP AR	317
SWEEP GP	318
SWITCH AS (BACKUP ALARM)	228
SWITCH AS (NEUTRAL START)	228
SWITCH AS-PRESSURE (REFRIGERANT)	562, 565
SWITCH AS-PUSH BUTTON (IMPLEMENT)	543
SWITCH AS-ROCKER (24-VOLT) (AIR CONDITIONER)	555
SWITCH AS-ROCKER (FLOODLIGHTS)	586
SWITCH AS-ROCKER (FLOODLIGHTS, REAR)	554

INDEX

Name	Page
SWITCH AS-ROCKER (HYDRAULIC LOCKOUT)	206
SWITCH AS-ROCKER (THROTTLE)	206
SWITCH AS-ROTARY (BLOWER FAN SPEED)	554
SWITCH AS-ROTARY (DOOR, LH)	558
SWITCH AS-ROTARY (DOOR, RH)	558
SWITCH AS-ROTARY (FRONT)	558
SWITCH AS-ROTARY (LIGHT SWITCH)	586
SWITCH AS-ROTARY (LIGHTS)	554
SWITCH AS-ROTARY (REAR)	558
SWITCH AS-START (KEY)	554 586
SWITCH GP-BYPASS–POWER TRAIN OIL FILTER	190
SWITCH GP-DISCONNECT (BATTERY)	138
SWITCH GP-MAGNETIC–MAIN RELAY	192
SWITCH GP-MAGNETIC–START RELAY	191
SWITCH GP-PUSH BUTTON–HORN–FUEL PRIMING PUMP	193

T

TANK & MTG GP-HYDRAULIC	461
TANK GP-COOLANT	93 94
TANK GP-FUEL	129 130
TANK GP-HYDRAULIC	462
TANK GP-WINDOW WASHER	622 624
TOOTH GP-RIPPER	675
TOOTH GP-RIPPER–CURVED	674
TOOTH GP-RIPPER–STRAIGHT	673
TORQUE CONVERTER & HOUSING GP	273
TORQUE CONVERTER GP	275 277
TRACK ADJUSTER & RECOIL GP	390
TRACK ADJUSTER & RECOIL GP–SYSTEMONE	388
TRACK GP–2-REQUIRED	392 393 394
TRACK GP–2-REQUIRED, SYSTEMONE	395 396
TRANSMISSION AR	279
TRUNNION GP-BULLDOZER	515 516
TRUNNION GP-ENGINE	66
TURBOCHARGER GP	112 113

U

UNDERCARRIAGE AR–HEAVY-DUTY	396 397
UNDERCARRIAGE AR–SYSTEMONE	398
UNIVERSAL JOINT GP	280

V

V-BELT (REFRIGERANT COMPRESSOR)	532
V-BELT SET (INCLUDES 3-BELTS)	59
VALVE & MTG GP-BULLDOZER–GRADE CONTROL	465
VALVE & MTG GP-COUNTERBALANCE	466
VALVE AS-PRESSURE RELIEF (REFRIGERANT COMPRESSOR)	531
VALVE GP-BANK 3–BULLDOZER, STEERING	467
VALVE GP-BANK 4–STEERING, BULLDOZER, RIPPER	469
VALVE GP-BRAKE (PILOT SHUTOFF)	224
VALVE GP-BRAKE CONTROL	402
VALVE GP-CHECK	471
VALVE GP-CONTROL–BULLDOZER LIFT	474
VALVE GP-CONTROL–BULLDOZER TILT	477
VALVE GP-CONTROL–RIPPER LIFT	479
VALVE GP-CONTROL–STEERING	472
VALVE GP-COUNTERBALANCE	482
VALVE GP-ETHER STARTING	194
VALVE GP-FLOW CONTROL	472
VALVE GP-FLUID SAMPLING–ENGINE OIL	80
VALVE GP-PILOT–BULLDOZER LIFT, TILT	485 487
VALVE GP-PILOT CARTRIDGE–IMPLEMENT	489 490
VALVE GP-PILOT–RIPPER	483
VALVE GP-PRESSURE REDUCING	491
VALVE GP-PRIORITY–LUBRICATION DISTRIBUTION	281
VALVE GP-PUMP CONTROL–PRESSURE, FLOW COMPENSATOR–IMPLEMENT, STEERING	492
VALVE GP-QUICK-DROP	494 495
VALVE GP-RELIEF–CROSSOVER	498
VALVE GP-RELIEF–IMPLEMENT PILOT OIL	500
VALVE GP-RELIEF–MAIN	497
VALVE GP-RELIEF–PILOT OIL PRESSURE	499
VALVE GP-RELIEF–TORQUE CONVERTER OUTLET	282
VALVE GP-SELECTOR & PRESS CONT	283
VALVE GP-SHUTOFF	569
VALVE GP-SHUTTLE	501
VALVE GP-SOLENOID	502 503 504
VALVE GP-SOLENOID (BLADE CONTROL)	465
VALVE GP-SOLENOID (BOOST)	465
VALVE GP-SOLENOID (HYDRAULIC LOCKOUT)	453

INDEX

Name	Page	Name	Page
VALVE GP-TRANSMISSION CONTROL	285		
VALVE MECHANISM GP	67		
	68		
VALVE-BREAKER RELIEF	461		

W

WASHER GP-WINDOW	625		
WINDOW GP-CAB–LH	630		
	633		
WINDOW GP-CAB–RH	629		
	635		
WINDOW GP-CAB–SLIDING, LH	628		
	632		
WINDOW GP-CAB–SLIDING, RH	627		
	631		
WINDOW GP-SLIDING–LH	636		
WINDOW GP-SLIDING–RH	636		
WIPER GP-WINDOW	637		
WIPER PIVOT GP	639		
WIRING GP-BOX	195		
WIRING GP-ELECTRONIC CONTROL	197		
WIRING GP-ENGINE	199		
WIRING GP-GRADE CONTROL	202		
WIRING GP-PLATFORM	206		

Y

YOKE GP	69		

MEMORANDA

MACHINE ARRANGEMENT

336-9684 CHASSIS AR

S/N: S6X1-UP

PART OF 336-9681 GENERAL AR

SMCS-7000 i04011409

NOTE	PART NUMBER	QTY	PART NAME 1 2 3 4 5 6 (PRODUCT LEVEL)	SEE PAGE
Y	*317-4153*	1	CAB AR	522
Y	*317-6560*	1	BATTERY & WIRING GP	138
Y	*218-1838*	1	BOX GP-BATTERY	286
Y	*337-3492*	1	CASE & FRAME GP	290
Y	*362-4539*	1	CYLINDER & LINES GP-LIFT	407
Y	*362-4544*	1	CYLINDER & LINES GP-LIFT	409
Y	*318-2726*	1	ENCLOSURE GP-ENGINE	298
Y	*218-1839*	1	ENCLOSURE GP-HYDRAULIC TANK	300
Y	*363-0856*	1	FENDER GP	303
Y	*218-1836*	1	GUARD GP-BOTTOM	306
Y	*358-4696*	1	GUARD GP-RADIATOR	313
Y	*317-9070*	1	INSTRUMENT GP	554
Y	*329-9110*	1	LIGHTING GP-FLOOD	157
Y	*317-6109*	1	LINES GP-FUEL	120
Y	*362-4548*	1	MOUNTING GP-CYLINDER	455
Y	*208-8699*	1	MOUNTING GP-ROPS	582
Y	*337-1751*	1	PLATE & FILM GP	680
Y	*317-4155*	1	PLATFORM GP-OPERATOR	592
Y	*363-0857*	1	ROPS GP	600
Y	*223-2205*	1	SEAT GP	613
Y	*218-1843*	1	TANK GP-FUEL	129
Y	*317-6565*	1	WIRING GP-PLATFORM	206
	6V-1970	1	LITERATURE GP	
	5P-7958	1	SLEEVE-CABLE SPLICE	
	5P-8500	2	KEY	

Y-SEPARATE ILLUSTRATION

<END>

MACHINE ARRANGEMENT

336-9685 CHASSIS AR

S/N: S6T1-UP

PART OF 336-9682 GENERAL AR

SMCS-7000 i04011412

NOTE	PART NUMBER	QTY	PART NAME 1 2 3 4 5 6 (PRODUCT LEVEL)	SEE PAGE
Y	*317-4153*	1	CAB AR	522
Y	*317-6560*	1	BATTERY & WIRING GP	138
Y	*218-1838*	1	BOX GP-BATTERY	286
Y	*337-3492*	1	CASE & FRAME GP	290
Y	*362-4539*	1	CYLINDER & LINES GP-LIFT	407
Y	*362-4544*	1	CYLINDER & LINES GP-LIFT	409
Y	*318-2726*	1	ENCLOSURE GP-ENGINE	298
Y	*218-1839*	1	ENCLOSURE GP-HYDRAULIC TANK	300
Y	*363-0856*	1	FENDER GP	303
Y	*218-1836*	1	GUARD GP-BOTTOM	306
Y	*358-4696*	1	GUARD GP-RADIATOR	313
Y	*317-9070*	1	INSTRUMENT GP	554
Y	*329-9110*	1	LIGHTING GP-FLOOD	157
Y	*317-6109*	1	LINES GP-FUEL	120
Y	*362-4548*	1	MOUNTING GP-CYLINDER	455
Y	*208-8699*	1	MOUNTING GP-ROPS	582
Y	*337-1752*	1	PLATE & FILM GP	681
Y	*317-4155*	1	PLATFORM GP-OPERATOR	592
Y	*363-0857*	1	ROPS GP	600
Y	*223-2205*	1	SEAT GP	613
Y	*218-1843*	1	TANK GP-FUEL	129
Y	*317-6565*	1	WIRING GP-PLATFORM	206
	6V-1970	1	LITERATURE GP	
	5P-7958	1	SLEEVE-CABLE SPLICE	
	5P-8500	2	KEY	

Y-SEPARATE ILLUSTRATION

<END>

MACHINE ARRANGEMENT

336-9686 CHASSIS AR

S/N: S6Y1-UP
PART OF 336-9683 GENERAL AR

SMCS-7000 i04030170

NOTE	PART NUMBER	QTY	PART NAME 1 2 3 4 5 6 (PRODUCT LEVEL)	SEE PAGE
Y	*317-4153*	1	CAB AR	522
Y	*317-6560*	1	BATTERY & WIRING GP	138
Y	*218-1838*	1	BOX GP-BATTERY	286
Y	*337-3492*	1	CASE & FRAME GP	290
Y	*362-4546*	1	CYLINDER & LINES GP-LIFT (RH)	411
Y	*362-4553*	1	CYLINDER & LINES GP-LIFT (LH)	413
Y	*318-2726*	1	ENCLOSURE GP-ENGINE	298
Y	*218-1839*	1	ENCLOSURE GP-HYDRAULIC TANK	300
Y	*363-0856*	1	FENDER GP	303
Y	*218-1836*	1	GUARD GP-BOTTOM	306
Y	*358-4696*	1	GUARD GP-RADIATOR	313
Y	*317-9070*	1	INSTRUMENT GP	554
Y	*329-9110*	1	LIGHTING GP-FLOOD	157
Y	*317-6109*	1	LINES GP-FUEL	120
Y	*362-4548*	1	MOUNTING GP-CYLINDER	455
Y	*208-8699*	1	MOUNTING GP-ROPS	582
Y	*337-1753*	1	PLATE & FILM GP	683
Y	*317-4155*	1	PLATFORM GP-OPERATOR	592
Y	*363-0857*	1	ROPS GP	600
Y	*223-2205*	1	SEAT GP	613
Y	*218-1843*	1	TANK GP-FUEL	129
Y	*317-6565*	1	WIRING GP-PLATFORM	206
	6V-1970	1	LITERATURE GP	
	5P-7958	1	SLEEVE-CABLE SPLICE	
	5P-8500	2	KEY	

Y-SEPARATE ILLUSTRATION

<END>

358-2567 COLD WEATHER AR

S/N: S6T1-UP; S6X1-UP; S6Y1-UP
AN ATTACHMENT

SMCS-7000 i04030177

NOTE	PART NUMBER	QTY	PART NAME 1 2 3 4 5 6 (PRODUCT LEVEL)	SEE PAGE
Y	321-5803	1	BATTERY & WIRING GP	142
Y	174-7414	1	FAN GP-REVERSIBLE	83
Y	358-4675	1	HEATER GP-FUEL	148
Y	334-6369	1	HEATER GP-JACKET WATER	150
Y	358-4689	1	HOOD AS	316

Y-SEPARATE ILLUSTRATION

<END>

MACHINE ARRANGEMENT

336-9681 GENERAL AR

S/N: S6X1-UP

SMCS-7000 i04011421

NOTE	PART NUMBER	QTY	PART NAME 1 2 3 4 5 6 (PRODUCT LEVEL)	SEE PAGE
Y	*336-9684*	1	CHASSIS AR	1
Y	318-1904	1	ENGINE AR-COMPLETE	10
Y	*317-1758*	1	HYDRAULIC AR-2 VALVE	427
Y	*317-1762*	1	INSTALLATION AR	5
Y	*317-1756*	1	POWER TRAIN AR	266
Y	*317-1759*	1	UNDERCARRIAGE AR	396

Y-SEPARATE ILLUSTRATION

<END>

336-9682 GENERAL AR

S/N: S6T1-UP

SMCS-7000 i04023168

NOTE	PART NUMBER	QTY	PART NAME 1 2 3 4 5 6 (PRODUCT LEVEL)	SEE PAGE
Y	*336-9685*	1	CHASSIS AR	2
Y	318-1905	1	ENGINE AR-COMPLETE	11
Y	*317-1758*	1	HYDRAULIC AR-2 VALVE	427
Y	*317-1762*	1	INSTALLATION AR	5
Y	*317-1756*	1	POWER TRAIN AR	266
Y	*317-1760*	1	UNDERCARRIAGE AR	397

Y-SEPARATE ILLUSTRATION

<END>

336-9683 GENERAL AR

S/N: S6Y1-UP

SMCS-7000 i04023169

NOTE	PART NUMBER	QTY	PART NAME 1 2 3 4 5 6 (PRODUCT LEVEL)	SEE PAGE
Y	*336-9686*	1	CHASSIS AR	3
Y	318-1905	1	ENGINE AR-COMPLETE	11
Y	*317-1758*	1	HYDRAULIC AR-2 VALVE	427
Y	*317-1762*	1	INSTALLATION AR	5
Y	*317-1757*	1	POWER TRAIN AR	266
Y	*317-1761*	1	UNDERCARRIAGE AR	397

Y-SEPARATE ILLUSTRATION

<END>

MACHINE ARRANGEMENT

317-1762 INSTALLATION AR

S/N: S6T1-UP; S6X1-UP; S6Y1-UP

PART OF 336-9681, 336-9682, 336-9683 GENERAL AR

SMCS-7000 i04009071

NOTE	PART NUMBER	QTY	PART NAME 1 2 3 4 5 6 (PRODUCT LEVEL)	SEE PAGE
Y	*250-6056*	1	AFTERCOOLER GP-AIR	96
Y	*206-9000*	1	AIR CLEANER GP	98
Y	*168-8373*	1	ALTERNATOR GP-CHARGING	132
Y	*241-8240*	1	COMPRESSOR GP-REFRIGERANT	532
Y	*168-8783*	1	CONDENSER & MTG GP-REFRIGERANT	534
Y	*169-3806*	1	COOLER GP-HYDRAULIC OIL	406
Y	*215-3251*	1	DRIVE GP-FAN	36
Y	*188-1018*	1	DUST EJECTOR GP	99
Y	*168-8376*	1	FAN GP-BLOWER	82
Y	*295-7933*	1	FILTER & LINES GP-FUEL	114
Y	*230-5585*	1	FUMES DISPOSAL GP	74
Y	*168-8377*	1	LINES GP-AIR	101
Y	*251-4553*	1	LINES GP-AIR (ATAAC)	102
Y	*168-8378*	1	LINES GP-WATER	85
Y	*223-0556*	1	MOUNTING GP-ENGINE	53
Y	*168-8382*	1	MUFFLER GP	105
Y	*316-4438*	1	PULLEY GP-FAN & ALT DRIVE	59
Y	*227-0833*	1	RADIATOR GP	90
Y	*237-2737*	1	SHIELD GP-EXHAUST	111
Y	*263-9012*	1	STARTING AID GP-ETHER	181
Y	*223-0558*	1	STARTING MOTOR GP-ELECTRIC	186
Y	*255-5232*	1	TANK GP-COOLANT	94
Y	*317-6576*	1	WIRING GP-ENGINE	199
Y	*224-2693*	1	YOKE GP	69

Y-SEPARATE ILLUSTRATION

<END>

MACHINE ARRANGEMENT

358-4690 OPTION AR-MACHINE

S/N: S6X1-UP
FOR USE WITH SEMI-UNIVERSAL BLADE
AN ATTACHMENT

SMCS-7000 i04030179

NOTE	REF NO	GRAPHIC REF	PART NUMBER	QTY	PART NAME 1 2 3 4 5 6 (PRODUCT LEVEL)	SEE PAGE
	1	1	4T-1481	1	LINK AS	
Y	2	1	*109-1352*	1	TRUNNION GP-BULLDOZER	515
Y	3	1	*252-5849*	1	LINES GP-TILT CYLINDER	448
Y	4	1	*252-5853*	1	PUSH ARM GP	513
	5	1	3B-4632	2	PIN-COTTER	
	6	1	8H-8898	2	PIN	
F			8T-7371	1	PLATE-SERIAL NUMBER (BLADE)	
					(ON UPPER RH CORNER OF BLADE)	
F			4B-4158	2	SCREW-DRIVE (NO 4X0.25-IN)	

F-NOT SHOWN
Y-SEPARATE ILLUSTRATION

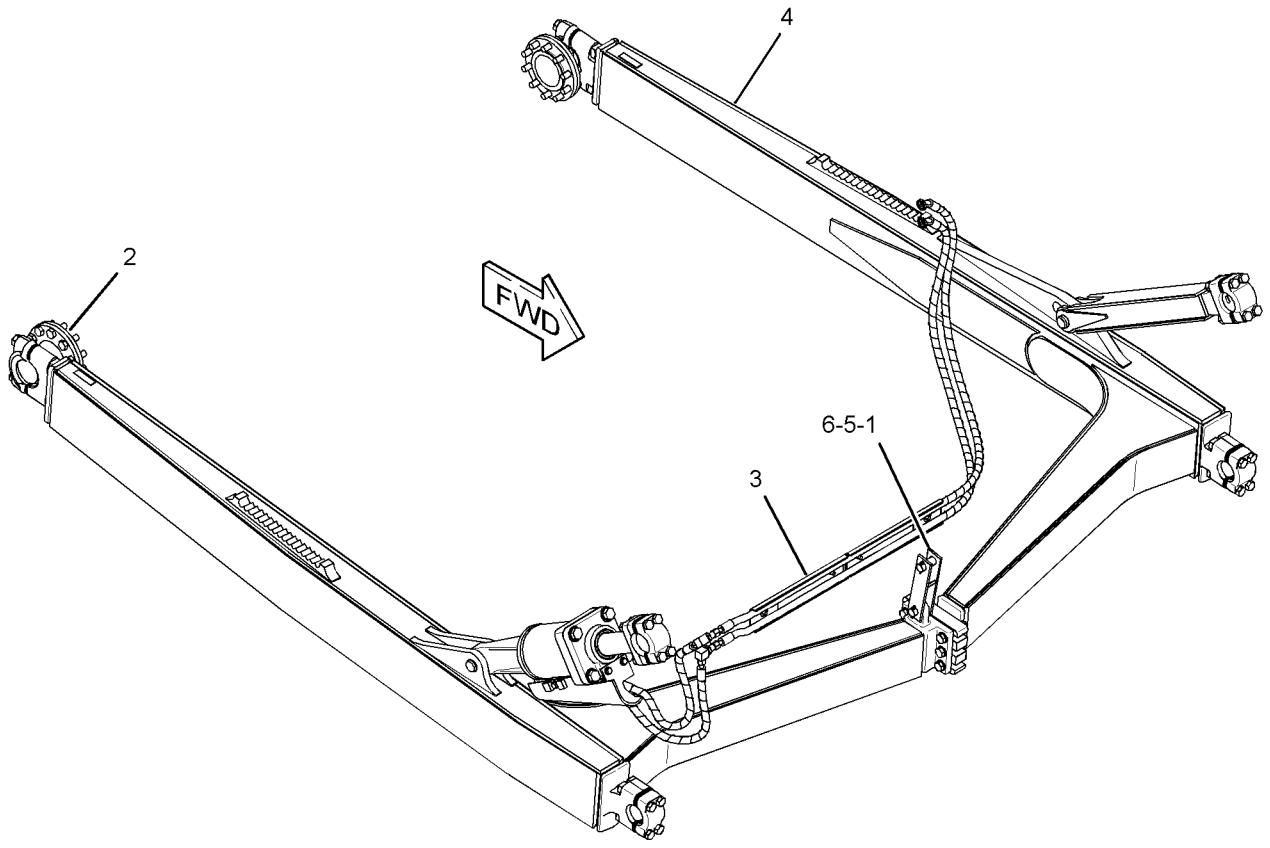

GRAPHIC #1 <END> g02192434

MACHINE ARRANGEMENT

358-4691 OPTION AR-MACHINE

S/N: S6X1-UP
FOR USE WITH ANGLING BLADE
AN ATTACHMENT

SMCS-7000 i04030180

NOTE	REF NO	GRAPHIC REF	PART NUMBER	QTY	PART NAME 1 2 3 4 5 6 (PRODUCT LEVEL)	SEE PAGE
	1	1	6Y-6751	1	PIN	
Y	2	1	*109-1352*	1	TRUNNION GP-BULLDOZER	515
Y	3	1	*251-9814*	1	BRACE GP-BULLDOZER	505
	4	1	251-9827	4	TRUNNION	
	5	1	251-9829	1	RETAINER	
Y	6	1	*255-8951*	1	C-FRAME GP	508
Y	7	1	*255-8954*	1	LINES GP-TILT CYLINDER	449
M	8	1	7X-2553	1	BOLT (M16X2X40-MM)	
M	9	1	7X-2563	16	BOLT (M20X2.5X60-MM)	
F			8T-7371	1	PLATE-SERIAL NUMBER (BLADE)	
					(ON UPPER RH CORNER OF BLADE)	
F			4B-4158	2	SCREW-DRIVE (NO 4X0.25-IN)	

F-NOT SHOWN
M-METRIC PART
Y-SEPARATE ILLUSTRATION

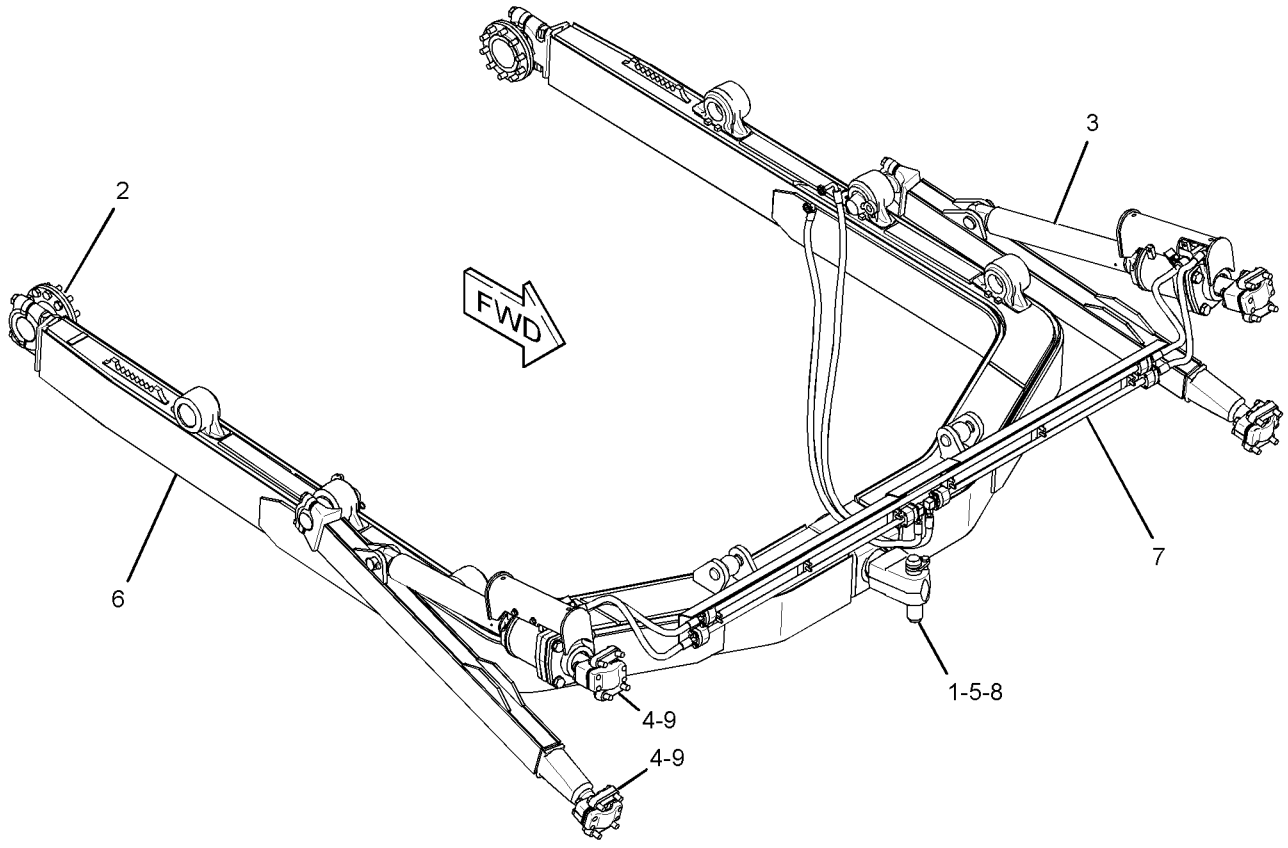

GRAPHIC #1 <END> g02192082

MACHINE ARRANGEMENT

358-4692 OPTION AR-MACHINE

S/N: S6T1-UP
FOR USE WITH SEMI-UNIVERSAL BLADE
AN ATTACHMENT

SMCS-7000 i04030178

NOTE	REF NO	GRAPHIC REF	PART NUMBER	QTY	PART NAME 1 2 3 4 5 6 (PRODUCT LEVEL)	SEE PAGE
	1	1	4T-1481	1	LINK AS	
Y	2	1	*109-1352*	1	TRUNNION GP-BULLDOZER	515
Y	3	1	*230-5554*	1	PUSH ARM GP	511
Y	4	1	*230-5555*	1	LINES GP-TILT CYLINDER	447
	5	1	3B-4632	2	PIN-COTTER	
	6	1	8H-8898	2	PIN	
F			8T-7371	1	PLATE-SERIAL NUMBER (BLADE)	
					(ON UPPER RH CORNER OF BLADE)	
F			4B-4158	2	SCREW-DRIVE (NO 4X0.25-IN)	

F-NOT SHOWN
Y-SEPARATE ILLUSTRATION

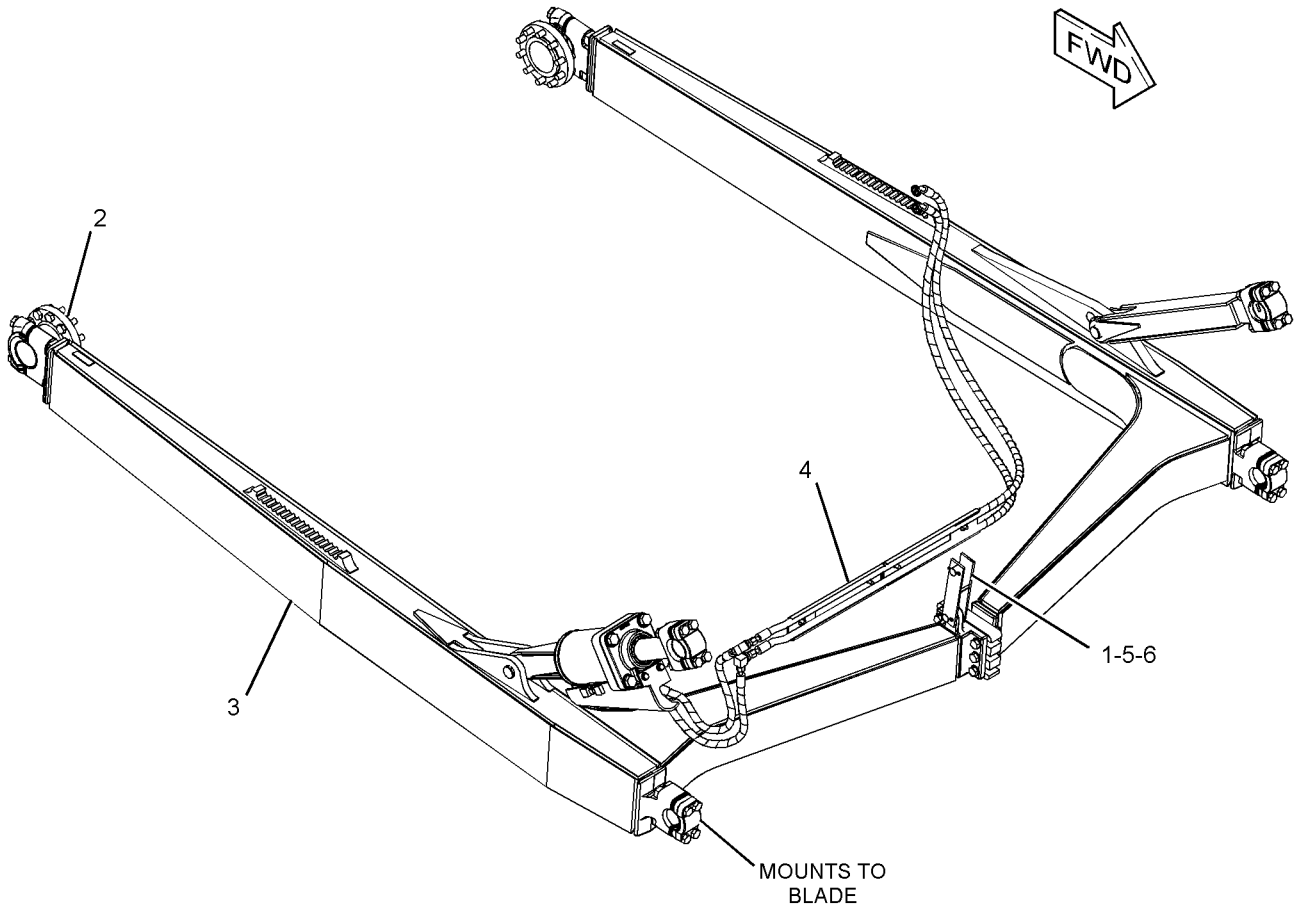

GRAPHIC #1 <END> g02191985

MACHINE ARRANGEMENT

358-4693 OPTION AR-MACHINE

S/N: S6Y1-UP
FOR USE WITH STRAIGHT BLADE
AN ATTACHMENT

SMCS-7000 i04030183

NOTE	REF NO	GRAPHIC REF	PART NUMBER	QTY	PART NAME 1 2 3 4 5 6 (PRODUCT LEVEL)	SEE PAGE
	1	1	4T-1481	1	LINK AS	
Y	2	1	*109-1353*	1	TRUNNION GP-BULLDOZER	516
Y	3	1	*223-3994*	1	LINES GP-TILT CYLINDER	446
Y	4	1	*223-4004*	1	PUSH ARM GP	509
	5	1	3B-4632	2	PIN-COTTER	
	6	1	8H-8898	2	PIN	
F			8T-7371	1	PLATE-SERIAL NUMBER (BLADE)	
					(ON UPPER RH CORNER OF BLADE)	
F			4B-4158	2	SCREW-DRIVE (NO 4X0.25-IN)	

F-NOT SHOWN
Y-SEPARATE ILLUSTRATION

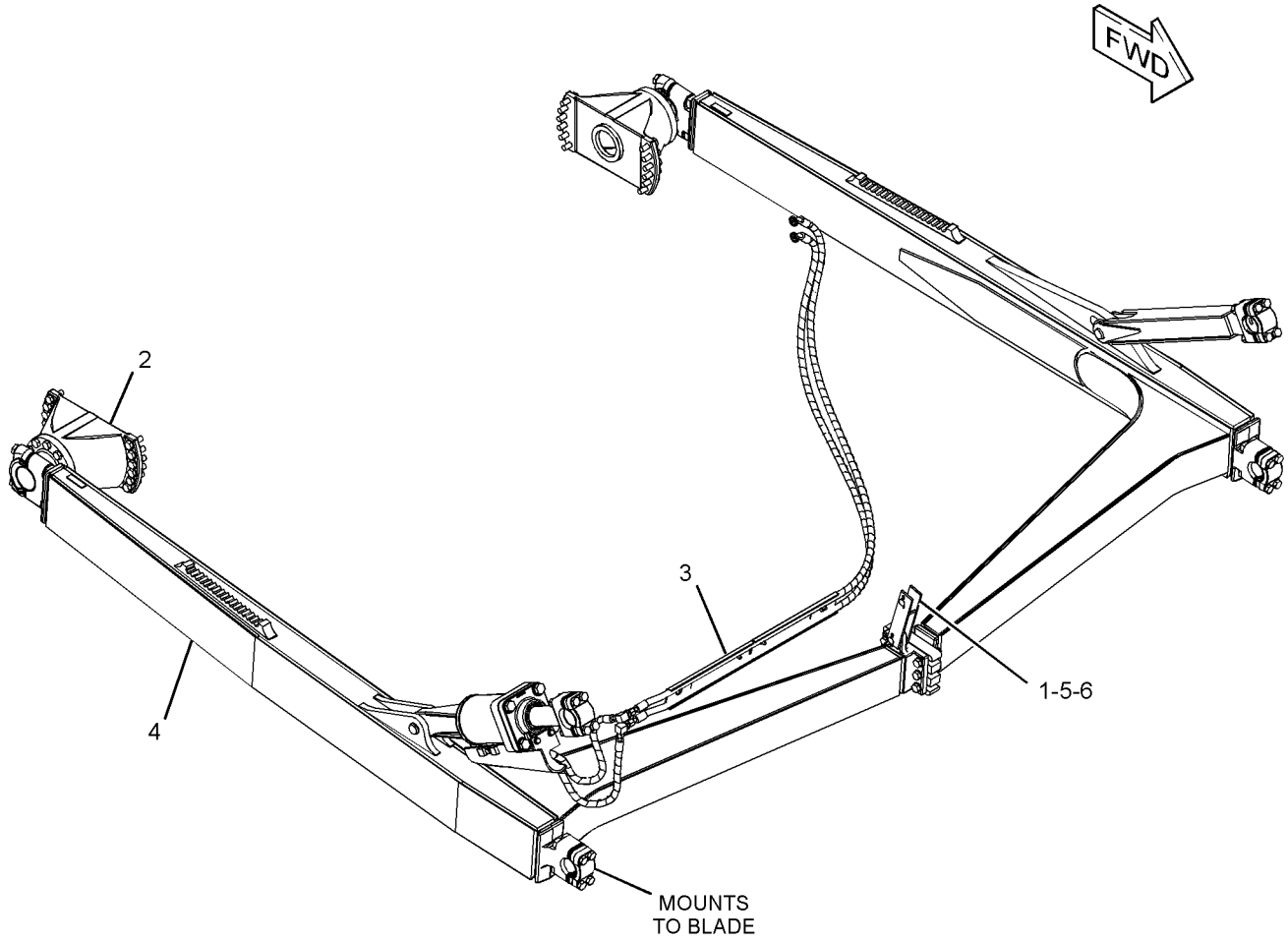

GRAPHIC #1 <END> g02191653

ENGINE ARRANGEMENT

318-1904 ENGINE AR-COMPLETE

S/N: THX19900-UP
131 BRAKE KW (175 BHP) AT 2200 RPM
PART OF 336-9681 GENERAL AR

SMCS-1000 i04029167

NOTE	PART NUMBER	QTY	PART NAME 1 2 3 4 5 6 (PRODUCT LEVEL)	SEE PAGE
Y	*238-1116*	1	COOLER GP-TRANSMISSION OIL	234
Y	*246-0605*	1	COVER GP-CYLINDER BLOCK	15
Y	*118-1727*	1	COVER GP-FRONT HOUSING (ACCESSORY DRIVE)	16
Y	*222-1783*	1	COVER GP-VALVE MECHANISM	18
Y	*211-8041*	1	DAMPER GP	34
Y	*4P-2102*	1	DRAIN GP-ENGINE OIL	35
Y	*246-0599*	1	DRIVE GP-PUMP	250
Y	*246-0596*	1	ELBOW GP-AIR INLET	100
Y	*320-7655*	1	ENGINE AR-CORE	12
Y	*222-2409*	1	FASTENER GP-DAMPER & PULLEY	39
Y	*219-8681*	1	FASTENER GP-FRONT COVER	40
Y	*236-7315*	1	FASTENER GP-VALVE COVER	41
Y	*233-0423*	1	FASTENER GP-VALVE COVER BASE	42
Y	*230-4118*	1	FILLER GP-ENGINE OIL	70
Y	*183-2097*	1	FILTER GP-ENGINE OIL	71
Y	*241-3718*	1	FLYWHEEL GP	43
Y	*241-3719*	1	FUMES DISPOSAL GP	75
Y	*246-0601*	1	GAUGE GP-OIL LEVEL (DIPSTICK) (ENGINE)	76
Y	*175-6260*	1	GEAR GP-REAR	46
Y	*219-8666*	1	HOUSING GP-FLYWHEEL	48
Y	*166-1784*	1	LIFTING GP-ENGINE	51
Y	*198-1319*	1	LINES GP-ENGINE OIL	77
Y	*264-2014*	1	LINES GP-FUEL	118
Y	*266-9810*	1	LINES GP-TURBOCHARGER OIL	78
Y	*165-4461*	1	LINES GP-WATER	84
Y	*165-4445*	1	MANIFOLD GP-EXHAUST	104
Y	*246-0600*	1	MOUNTING GP-ALTERNATOR	52
Y	*246-0598*	1	MOUNTING GP-FAN DRIVE	54
Y	*165-4459*	1	PAN GP-OIL	55
Y	*252-1567*	1	PLUG GP-ENGINE	57
Y	*246-0602*	1	PULLEY GP-CRANKSHAFT	58
Y	*211-1812*	1	PUMP GP-WATER	87
Y	*189-9306*	1	SEAL GP-CRANKSHAFT	63
Y	*231-1978*	1	SENSOR GP-ENGINE	168
Y	*166-1790*	1	SUPPORT GP-ENGINE	65
Y	*166-1792*	1	TRUNNION GP-ENGINE	66
Y	*198-0921*	1	VALVE GP-FLUID SAMPLING	80
Y	*235-8203*	1	WIRING GP-ELECTRONIC CONTROL	197
			PLEASE USE THE GASKET KIT LINK IN SIS OR CONTACT YOUR LOCAL DEALER FOR THE LATEST GASKET KIT INFORMATION	

Y-SEPARATE ILLUSTRATION

ENGINE ARRANGEMENT

318-1905 ENGINE AR-COMPLETE

S/N: THX19900-UP
145 BRAKE KW (194 BHP) AT 2000 RPM
PART OF 336-9682, 336-9683 GENERAL AR

SMCS-1000 i04029173

NOTE	PART NUMBER	QTY	PART NAME 1 2 3 4 5 6 (PRODUCT LEVEL)	SEE PAGE
Y	*238-1116*	1	COOLER GP-TRANSMISSION OIL	234
Y	*246-0605*	1	COVER GP-CYLINDER BLOCK	15
Y	*118-1727*	1	COVER GP-FRONT HOUSING (ACCESSORY DRIVE)	16
Y	*222-1783*	1	COVER GP-VALVE MECHANISM	18
Y	*211-8041*	1	DAMPER GP	34
Y	*4P-2102*	1	DRAIN GP-ENGINE OIL	35
Y	*246-0599*	1	DRIVE GP-PUMP	250
Y	*246-0596*	1	ELBOW GP-AIR INLET	100
Y	*320-7656*	1	ENGINE AR-CORE	13
Y	*222-2409*	1	FASTENER GP-DAMPER & PULLEY	39
Y	*219-8681*	1	FASTENER GP-FRONT COVER	40
Y	*236-7315*	1	FASTENER GP-VALVE COVER	41
Y	*233-0423*	1	FASTENER GP-VALVE COVER BASE	42
Y	*230-4118*	1	FILLER GP-ENGINE OIL	70
Y	*183-2097*	1	FILTER GP-ENGINE OIL	71
Y	*241-3718*	1	FLYWHEEL GP	43
Y	*241-3719*	1	FUMES DISPOSAL GP	75
Y	*246-0601*	1	GAUGE GP-OIL LEVEL (DIPSTICK) (ENGINE)	76
Y	*175-6260*	1	GEAR GP-REAR	46
Y	*219-8666*	1	HOUSING GP-FLYWHEEL	48
Y	*166-1784*	1	LIFTING GP-ENGINE	51
Y	*198-1319*	1	LINES GP-ENGINE OIL	77
Y	*264-2014*	1	LINES GP-FUEL	118
Y	*266-9810*	1	LINES GP-TURBOCHARGER OIL	78
Y	*165-4461*	1	LINES GP-WATER	84
Y	*165-4445*	1	MANIFOLD GP-EXHAUST	104
Y	*246-0600*	1	MOUNTING GP-ALTERNATOR	52
Y	*246-0598*	1	MOUNTING GP-FAN DRIVE	54
Y	*165-4459*	1	PAN GP-OIL	55
Y	*252-1567*	1	PLUG GP-ENGINE	57
Y	*246-0602*	1	PULLEY GP-CRANKSHAFT	58
Y	*211-1812*	1	PUMP GP-WATER	87
Y	*189-9306*	1	SEAL GP-CRANKSHAFT	63
Y	*231-1978*	1	SENSOR GP-ENGINE	168
Y	*166-1790*	1	SUPPORT GP-ENGINE	65
Y	*166-1792*	1	TRUNNION GP-ENGINE	66
Y	*198-0921*	1	VALVE GP-FLUID SAMPLING	80
Y	*235-8203*	1	WIRING GP-ELECTRONIC CONTROL	197
			PLEASE USE THE GASKET KIT LINK IN SIS OR CONTACT YOUR LOCAL DEALER FOR THE LATEST GASKET KIT INFORMATION	

Y-SEPARATE ILLUSTRATION

ENGINE ARRANGEMENT

320-7655 ENGINE AR-CORE

S/N: THX19900-UP
148 BRAKE KW (198 BHP) AT 2000 RPM
PART OF 318-1904 ENGINE AR-COMPLETE

SMCS-1000 i04029174

NOTE	PART NUMBER	QTY	PART NAME 1 2 3 4 5 6 (PRODUCT LEVEL)	SEE PAGE
Y	*242-0674*	1	CAMSHAFT GP	14
Y	*246-9365*	1	CONTROL & MTG GP-ENGINE ELEK	144
Y	*188-3826*	1	COOLER GP-ENGINE OIL	81
Y	*217-8669*	1	COVER GP-FRONT HOUSING	17
Y	*164-6148*	1	CRANKSHAFT GP	19
Y	*161-3406*	1	CYLINDER BLOCK GP	22
Y	*345-8414*	1	CYLINDER HEAD GP	33
Y	*213-4363*	1	FASTENER GP-CYLINDER HEAD	38
Y	*205-1321*	1	GEAR GP-FRONT	44
Y	*245-3262*	1	HOUSING GP-FRONT	50
Y	*265-1400*	6	PISTON & ROD GP	56
Y	*220-8233*	1	PUMP & MTG GP-UNIT INJ HYD	122
Y	*195-8098*	1	PUMP GP-ENGINE OIL	79
Y	*267-9720*	1	PUMP GP-FUEL INJECTION	125
Y	*262-5901*	1	TURBOCHARGER GP	113
Y	*242-0447*	1	VALVE MECHANISM GP	68
	362-3267	1	ELECTRONICS GP-ENGINE RATINGS	
			PLEASE USE THE GASKET KIT LINK IN SIS OR CONTACT YOUR LOCAL DEALER FOR THE LATEST GASKET KIT INFORMATION	

Y-SEPARATE ILLUSTRATION

ENGINE ARRANGEMENT

320-7656 ENGINE AR-CORE

S/N: THX19900-UP

PART OF 318-1905 ENGINE AR-COMPLETE

SMCS-1000 i04029180

NOTE	PART NUMBER	QTY	PART NAME 1 2 3 4 5 6 (PRODUCT LEVEL)	SEE PAGE
Y	*242-0674*	1	CAMSHAFT GP	14
Y	*246-9365*	1	CONTROL & MTG GP-ENGINE ELEK	144
Y	*188-3826*	1	COOLER GP-ENGINE OIL	81
Y	*217-8669*	1	COVER GP-FRONT HOUSING	17
Y	*164-6148*	1	CRANKSHAFT GP	19
Y	*161-3406*	1	CYLINDER BLOCK GP	22
Y	*242-0672*	1	CYLINDER HEAD GP	28
Y	*213-4363*	1	FASTENER GP-CYLINDER HEAD	38
Y	*205-1321*	1	GEAR GP-FRONT	44
Y	*245-3262*	1	HOUSING GP-FRONT	50
Y	*265-1400*	6	PISTON & ROD GP	56
Y	*220-8233*	1	PUMP & MTG GP-UNIT INJ HYD	122
Y	*195-8098*	1	PUMP GP-ENGINE OIL	79
Y	*267-9720*	1	PUMP GP-FUEL INJECTION	125
Y	*262-5901*	1	TURBOCHARGER GP	113
Y	*242-0447*	1	VALVE MECHANISM GP	68
	321-7851	1	ELECTRONICS GP-ENGINE RATINGS	
			PLEASE USE THE GASKET KIT LINK IN SIS OR CONTACT YOUR LOCAL DEALER FOR THE LATEST GASKET KIT INFORMATION	

Y-SEPARATE ILLUSTRATION

BASIC ENGINE

242-0674 CAMSHAFT GP

S/N: THX19900-UP

PART OF 320-7655, 320-7656 ENGINE AR-CORE

SMCS-1210 i04017461

NOTE	REF NO	GRAPHIC REF	PART NUMBER	QTY	PART NAME 1 2 3 4 5 6 (PRODUCT LEVEL)	SEE PAGE
	1	1	107-7694	1	PLATE-THRUST	
R	2	1	242-0673	1	CAMSHAFT AS	
	2A	1	1B-8705	1	KEY-WOODRUFF	
	2B	1	224-3247	1	GEAR (100-TEETH)	
M	3		6V-3940	2	BOLT (M8X1.25X25-MM)	

M-METRIC PART
R-REMFG PART MAY BE AVAILABLE

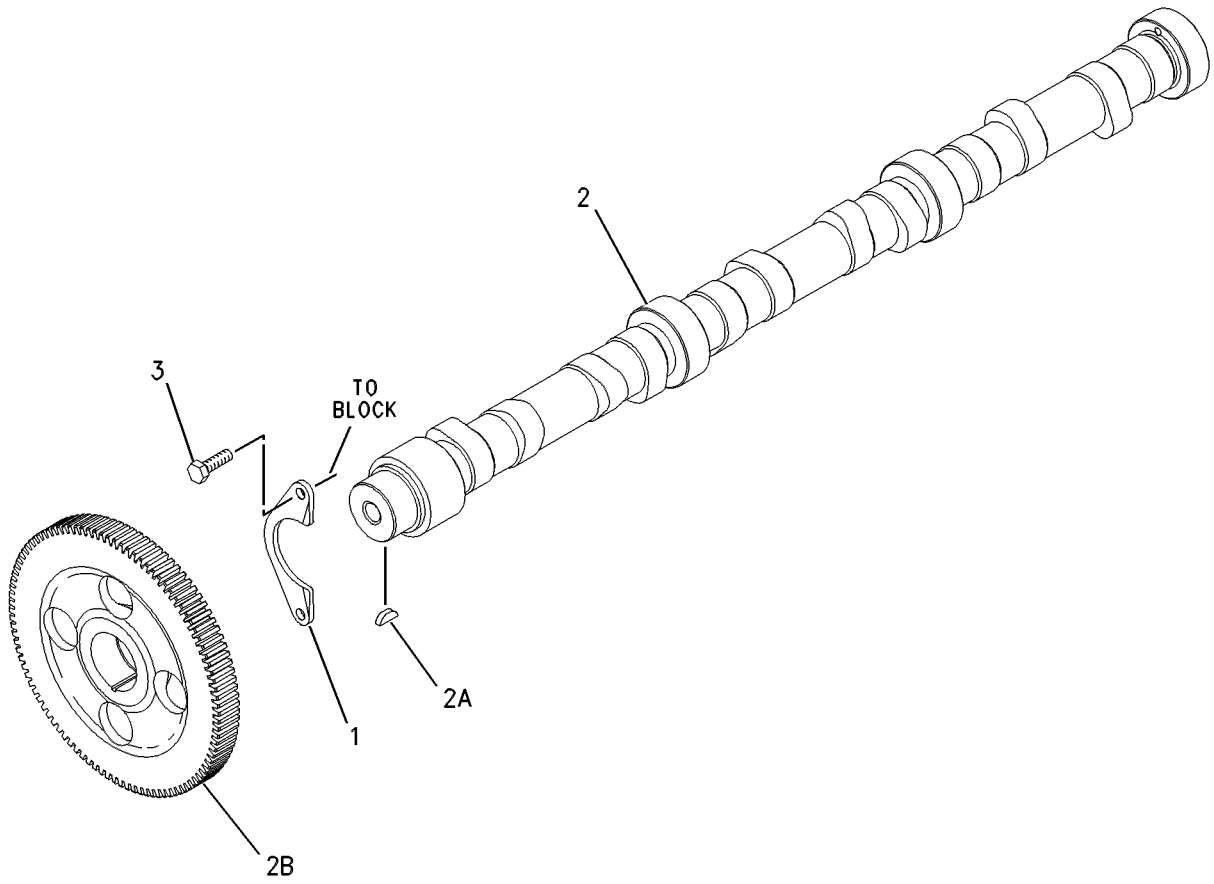

GRAPHIC #1 <END> g00626400

246-0605 COVER GP-CYLINDER BLOCK

S/N: THX19900-UP

PART OF 318-1904, 318-1905 ENGINE AR-COMPLETE

SMCS-1201 i04017539

NOTE	REF NO	GRAPHIC REF	PART NUMBER	QTY	PART NAME 1 2 3 4 5 6 (PRODUCT LEVEL)	SEE PAGE
	1	1	205-5285	1	GASKET	
	2	1	215-4441	1	COVER	
	3	1	240-0041	1	BREATHER AS (CRANKCASE)	
M	4	1	3E-8005	1	BOLT (M8X1.25X160-MM)	
M	5	1	6V-3918	2	BOLT (M8X1.25X50-MM)	
M	6	1	6V-3940	9	BOLT (M8X1.25X25-MM)	
	7	1	9F-4446	1	SEAL-O-RING (CRANKCASE BREATHER)	
	8	1	9M-1974	11	WASHER-HARD (8.8X16X2-MM THK)	
	9	1	5N-4185	1	WASHER-SPECIAL	

M-METRIC PART

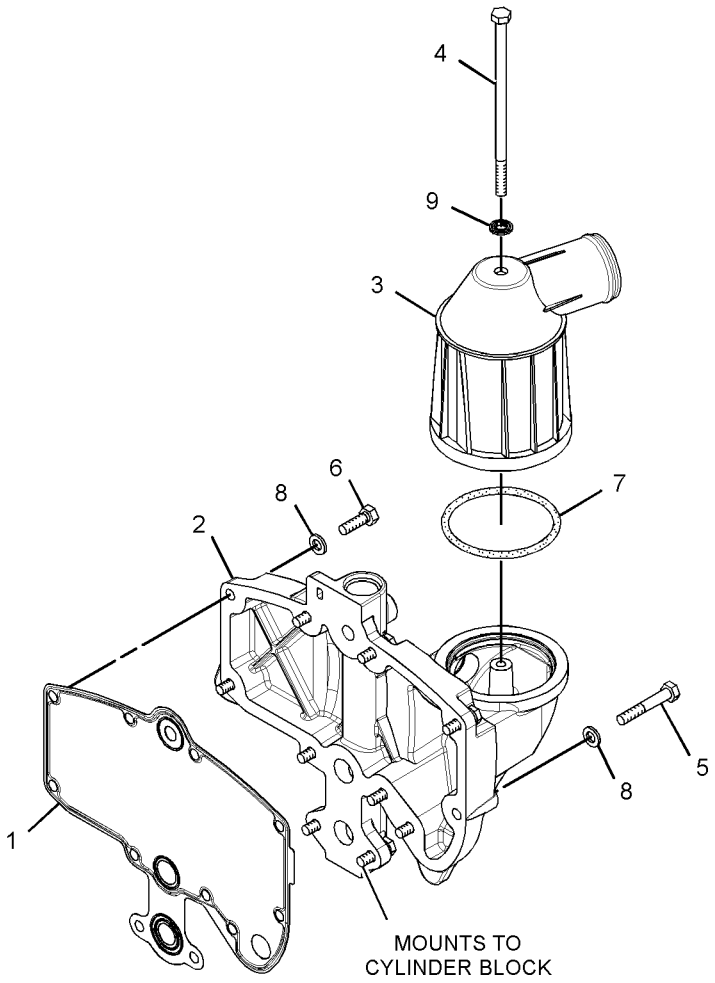

GRAPHIC #1 <END> g01309024

118-1727 COVER GP-FRONT HOUSING–ACCESSORY DRIVE

S/N: THX19900-UP

REQUIRED ON ENGINES WITHOUT FACTORY INSTALLED AIR COMPRESSOR

PART OF 318-1904, 318-1905 ENGINE AR-COMPLETE

SMCS-1151, 1166 i04017411

NOTE	REF NO	GRAPHIC REF	PART NUMBER	QTY	PART NAME 1 2 3 4 5 6 (PRODUCT LEVEL)	SEE PAGE
	1	1	5P-8245	4	WASHER-HARD (13.5X25.5X3-MM THK)	
M	2	1	6V-5696	2	BOLT (M12X1.75X80-MM)	
	3	1	4W-2026	1	COVER	
	4	1	135-9819	1	SEAL-INTEGRAL	
M	5	1	6V-8149	2	NUT (M12X1.75-THD)	

M-METRIC PART

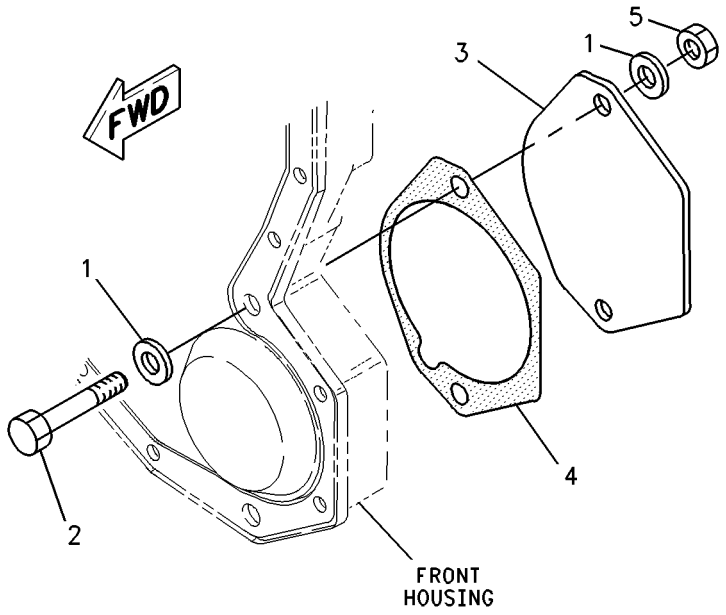

GRAPHIC #1 <END> g00897312

217-8669 COVER GP-FRONT HOUSING

S/N: THX19900-UP

PART OF 320-7655, 320-7656 ENGINE AR-CORE

SMCS-1151, 1166 i04017473

NOTE	REF NO	GRAPHIC REF	PART NUMBER	QTY	PART NAME 1 2 3 4 5 6 (PRODUCT LEVEL)	SEE PAGE
	1	1	209-0760	1	COVER AS-FRONT	
	1A	1	126-1757	2	WASHER (10.85X19.3X1.27-MM THK)	
	1B	1	136-0822	2	STUD	
	2	1	209-0762	1	GASKET AS	

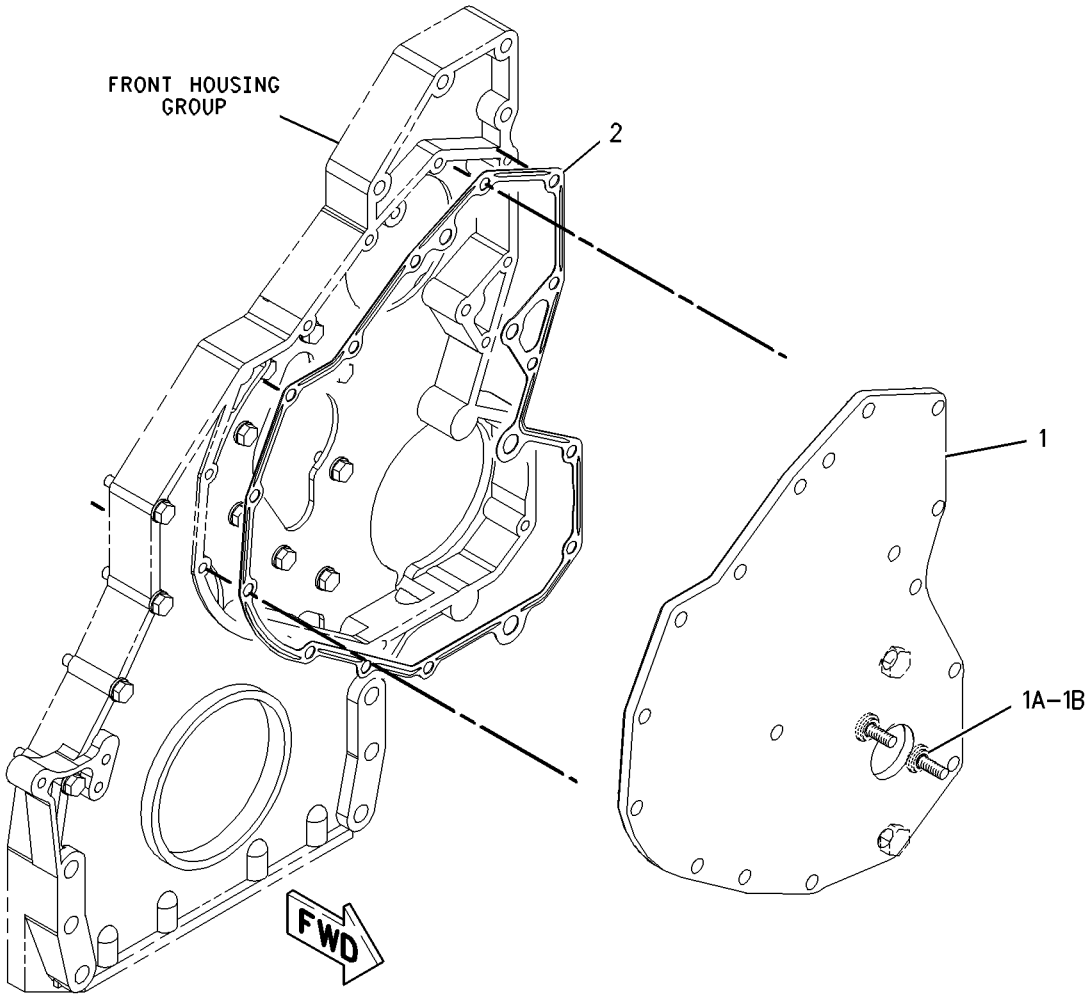

GRAPHIC #1 <END> g00849279

222-1783 COVER GP-VALVE MECHANISM

S/N: THX19900-UP

PART OF 318-1904, 318-1905 ENGINE AR-COMPLETE

SMCS-1107 i04019311

NOTE	REF NO	GRAPHIC REF	PART NUMBER	QTY	PART NAME 1 2 3 4 5 6 (PRODUCT LEVEL)	SEE PAGE
	1	1	358-7876	11	SLEEVE-SPACER	
	2	1	358-7872	1	COVER GP-VALVE MECHANISM	
	2A	1	285-4106	1	SEAL-VALVE COVER	
	3	1	353-6988	1	BASE GP-VALVE COVER	
	3A	1	268-3490	1	SEAL-VALVE COVER	
	4	1	204-4444	1	BREATHER AS (CRANKCASE)	
		1	160-0526	1	SEAL-O-RING	
		1	185-3159	1	FILTER ELEMENT-BREATHER (CRANKCASE)	
		1	341-0979	1	SEAL-O-RING	

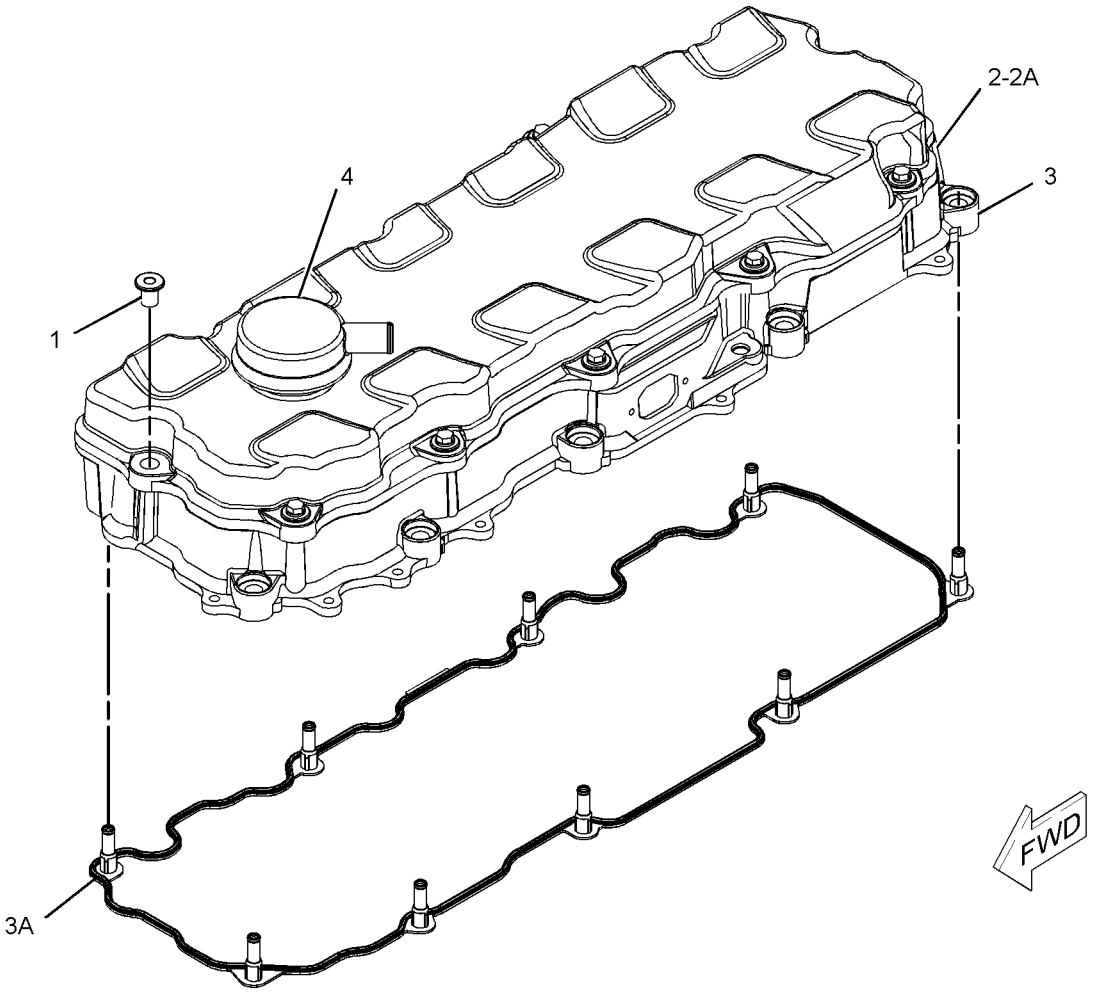

GRAPHIC #1 <END> g01304662

164-6148 CRANKSHAFT GP

S/N: THX19900-UP

PART OF 320-7655, 320-7656 ENGINE AR-CORE

SMCS-1202 i04017474

NOTE	REF NO	GRAPHIC REF	PART NUMBER	QTY	PART NAME 1 2 3 4 5 6 (PRODUCT LEVEL)	SEE PAGE
J	1	1	151-2939	7	BEARING-MAIN (STANDARD)	
AB			282-1771	7	BEARING-MAIN (0.25-MM US)	
AB			282-1772	7	BEARING-MAIN (0.51-MM US)	
R	2	1	261-1544	1	CRANKSHAFT AS	
	2A	1	1B-8705	1	KEY-WOODRUFF	
	2B	1	2W-8147	1	GEAR (50-TEETH)	
	2C	1	9Y-0810	1	SLEEVE-WEAR	
J	3	1	246-3150	2	PLATE-THRUST	
					AVAILABLE REPAIR KIT(S):	
AJ			243-6716		BEARING GP-MAIN (STANDARD)	
					(INCLUDES A COMPLETE SET OF MAIN BEARINGS AND THRUST PLATES)	

A-NOT PART OF THIS GROUP
B-USE AS REQUIRED
J-KIT MARKED J INCLUDES PARTS MARKED J
R-REMFG PART MAY BE AVAILABLE

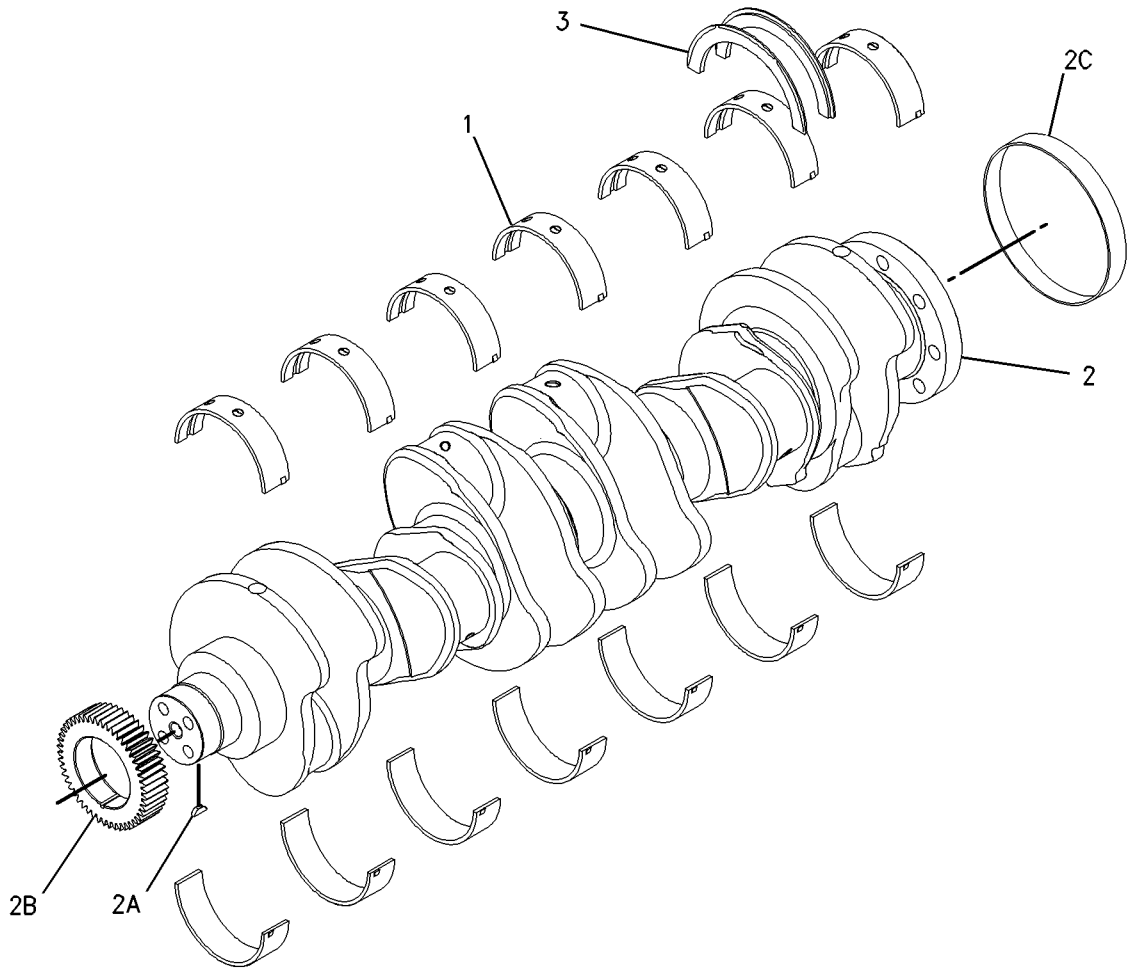

GRAPHIC #1 <END> g00789955

BASIC ENGINE

325-3915 CYLINDER BLOCK AS*R

S/N: THX19900-UP

PART OF 220-1952 CYLINDER BLOCK GP

SMCS-1201 i04017478

NOTE	REF NO	GRAPHIC REF	PART NUMBER	QTY	PART NAME 1 2 3 4 5 6 (PRODUCT LEVEL)	SEE PAGE
	1	1	0L-1026	2	PLUG-CUP	
	2	1	3B-0623	2	PLUG-CUP	
	3	1	4F-5695	4	PLUG-CUP	
M	4	1	175-0454	14	BOLT (M16X2X160-MM)	
	5	1	203-5805	2	BEARING-SLEEVE	
	6	1	203-6090	1	BEARING-SLEEVE	
	7	1	212-7002	7	CAP-BEARING	
	8	1	216-5586	1	BEARING-SLEEVE (CAMSHAFT)	
	9	1	9X-8268	14	WASHER (17.5X30X3.5-MM THK)	

M-METRIC PART

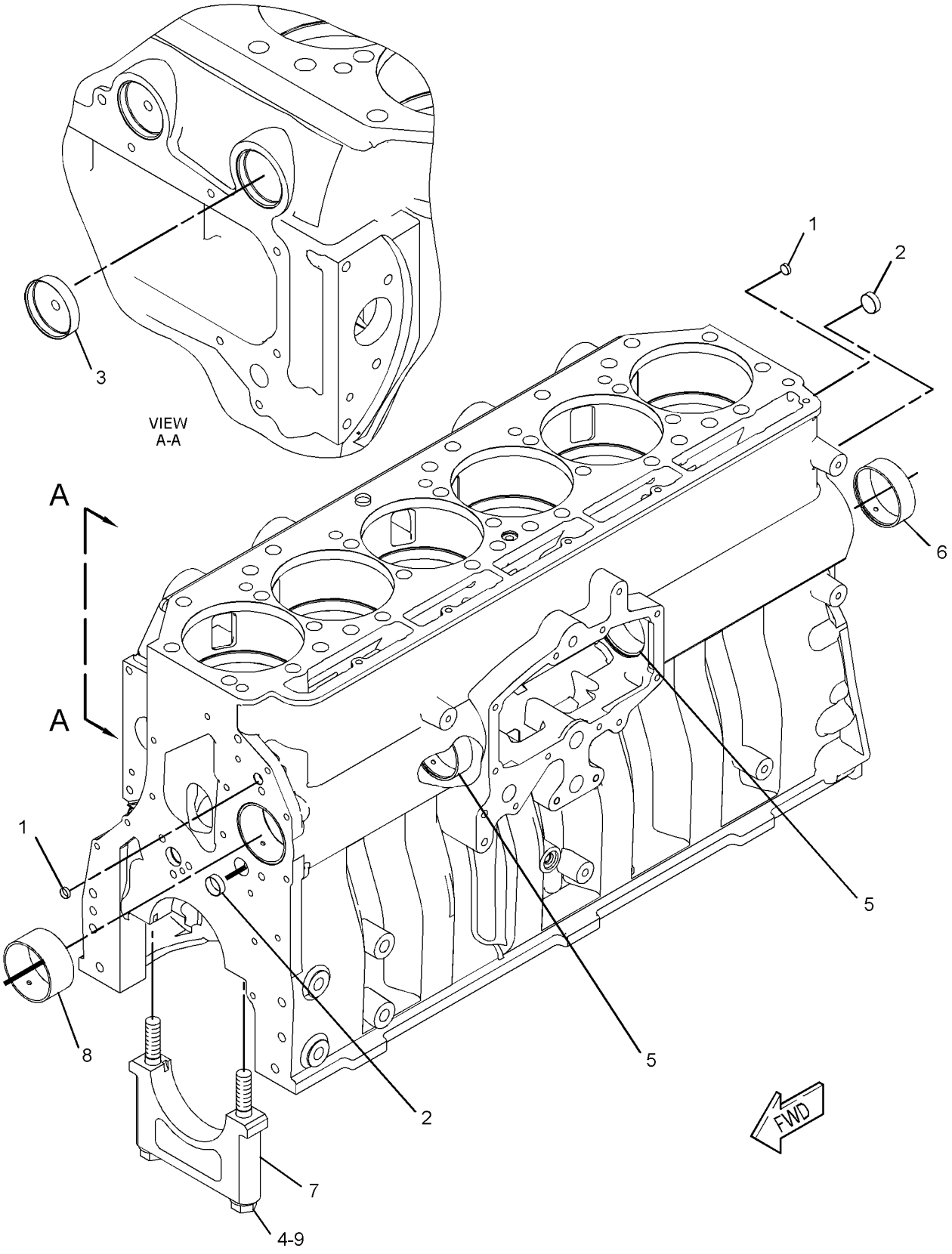

GRAPHIC #1 <END> g02073913

161-3406 CYLINDER BLOCK GP

S/N: THX19900-UP

PART OF 320-7655, 320-7656 ENGINE AR-CORE

SMCS-1201 i04017476

NOTE	REF NO	GRAPHIC REF	PART NUMBER	QTY	PART NAME 1 2 3 4 5 6 (PRODUCT LEVEL)	SEE PAGE
	1	1	0S-0519	1	PLUG-CUP	
	2	1	1W-8407	2	SLEEVE	
	3	1	4G-4972	1	SEAL-O-RING	
CY	4	1	*220-1952*	1	CYLINDER BLOCK GP	23
	5	1	6V-3538	2	DOWEL	
	6	1	7N-5683	2	DOWEL	

C-CHANGE FROM PREVIOUS TYPE
Y-SEPARATE ILLUSTRATION

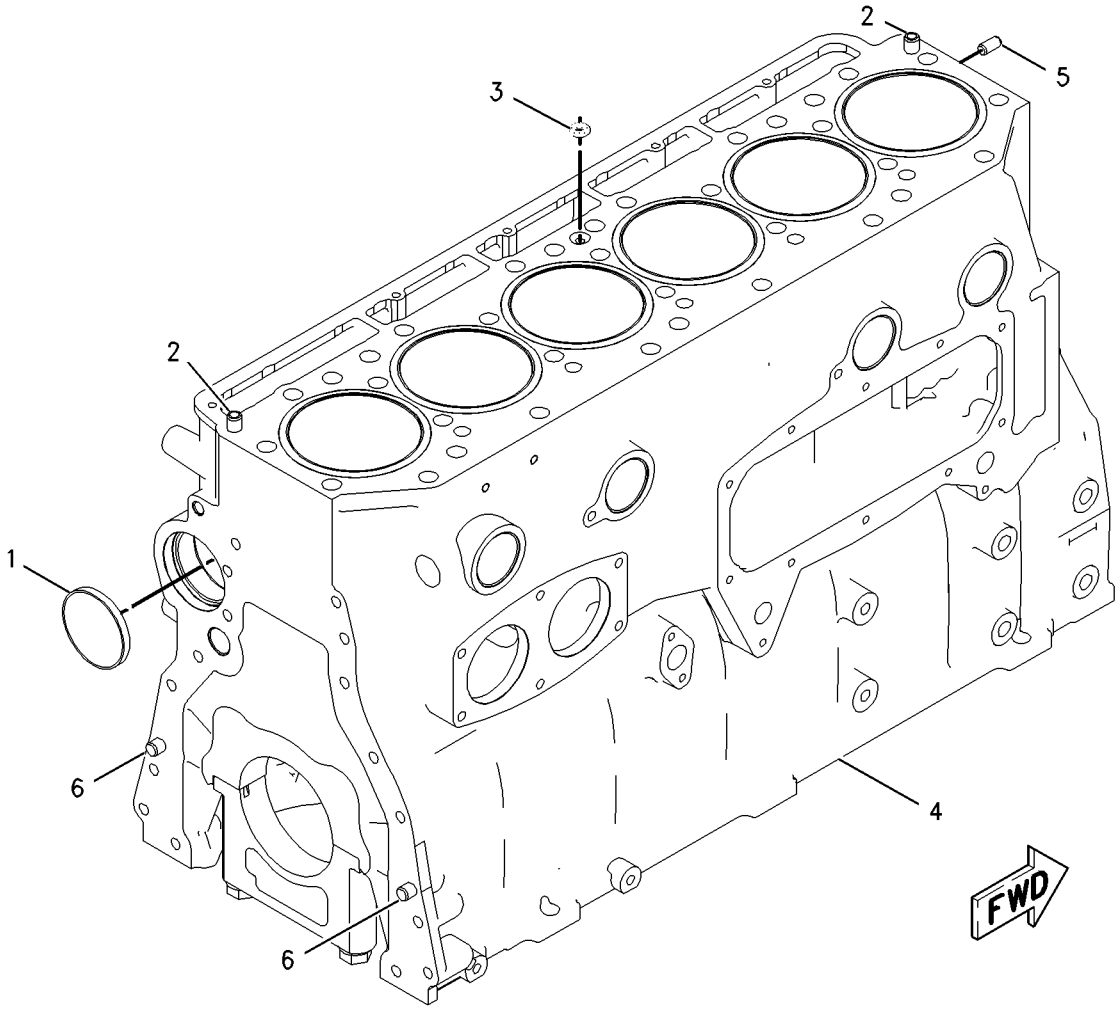

GRAPHIC #1 <END> g00838255

220-1952 CYLINDER BLOCK GP

S/N: THX19900-UP

PART OF 161-3406 CYLINDER BLOCK GP

SMCS-1201 i04017477

NOTE	REF NO	GRAPHIC REF	PART NUMBER	QTY	PART NAME 1 2 3 4 5 6 (PRODUCT LEVEL)	SEE PAGE
	1	1	167-0024	6	SEAL-LINER	
	2	1	190-3562	6	LINER-CYLINDER BLOCK	
YR	3	1	*325-3915*	1	CYLINDER BLOCK AS	20

R-REMFG PART MAY BE AVAILABLE
Y-SEPARATE ILLUSTRATION

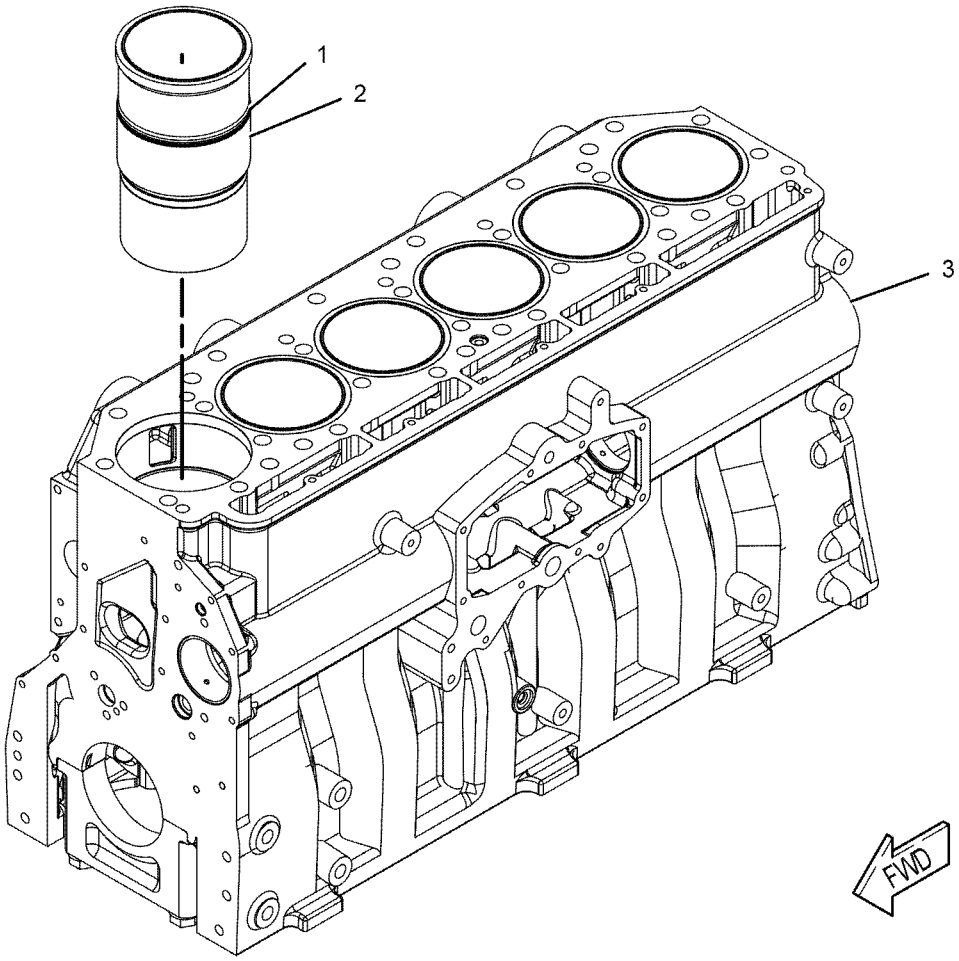

GRAPHIC #1 <END> g01032547

311-7229 CYLINDER HEAD AS

S/N: THX19900-UP

PART OF 344-2149 CYLINDER HEAD GP

SMCS-1100, 1101 i04017489

NOTE	REF NO	GRAPHIC REF	PART NUMBER	QTY	PART NAME 1 2 3 4 5 6 (PRODUCT LEVEL)	SEE PAGE
	1	1	6V-7604	6	PLUG-CUP	
	2	1	8M-5860	18	PLUG-CUP	
	3	1	212-8917	12	INSERT-VALVE SEAT (EXHAUST) (STANDARD)	
AB		1	317-7210		INSERT-VALVE SEAT (0.127-MM OS OD, EXHAUST)	
AB		1	317-7211		INSERT-VALVE SEAT (0.254-MM OS OD, EXHAUST)	
AB		1	254-3947		INSERT-VALVE SEAT (0.508-MM OS OD, EXHAUST)	
	4	1	227-1200	6	SLEEVE-INJECTOR	
	5	1	241-8388	12	INSERT-VALVE SEAT (INLET) (STANDARD)	
AB		1	317-7212		INSERT-VALVE SEAT (0.127-MM OS OD, INLET)	
AB		1	317-7213		INSERT-VALVE SEAT (0.254-MM OS OD, INLET)	
AB		1	254-3946		INSERT-VALVE SEAT (0.508-MM OS OD, INLET)	
	6	1	310-7255	6	SEAL-O-RING	
	7	1	310-7257	6	SEAL-O-RING	

A-NOT PART OF THIS GROUP
B-USE AS REQUIRED

311-7229 CYLINDER HEAD AS ***(contd.)*** i04017489

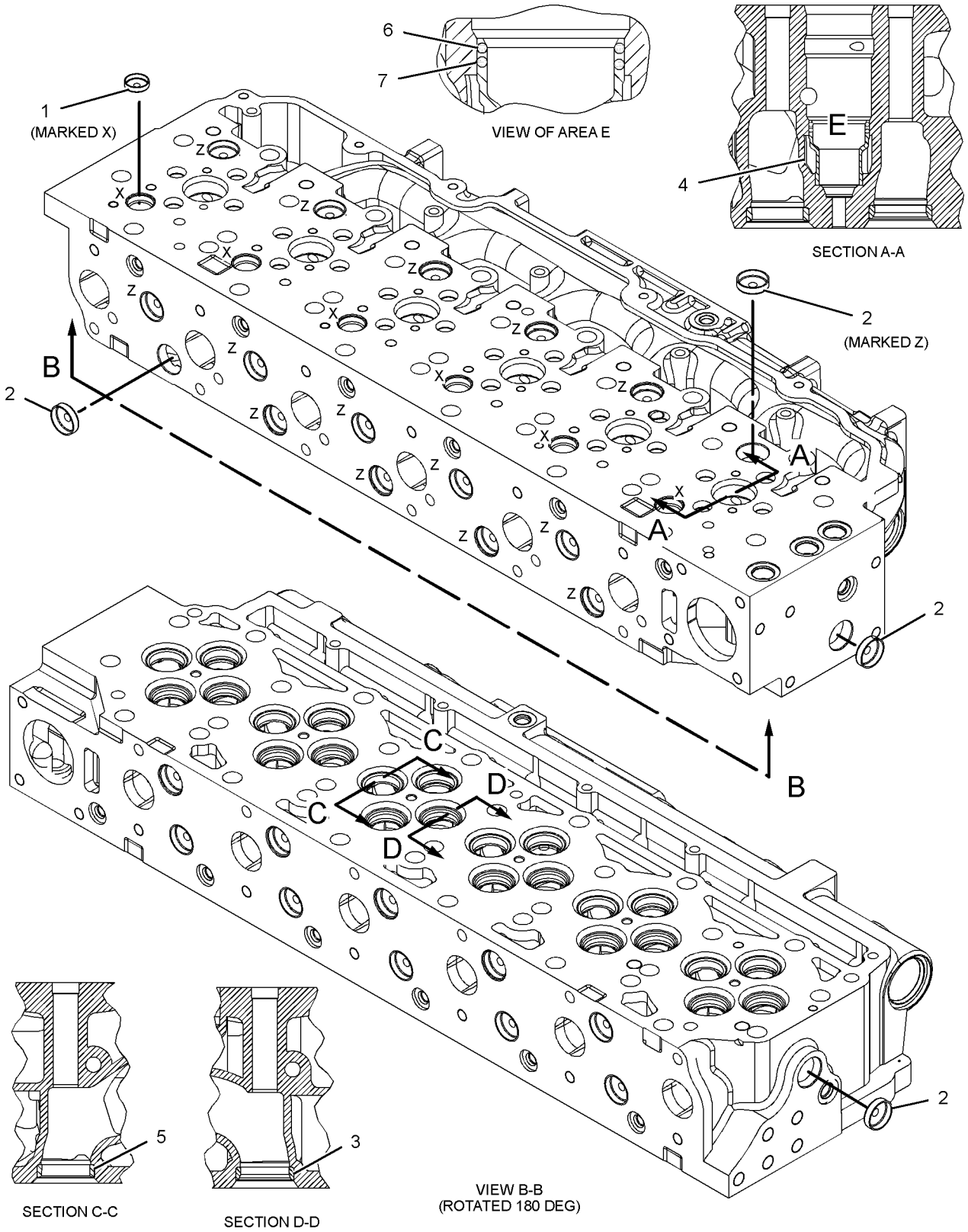

GRAPHIC #1 <END> g01414571

332-3619 CYLINDER HEAD AS

S/N: THX19900-UP

PART OF 252-8439 CYLINDER HEAD GP

SMCS-1100, 1101 i04017669

NOTE	REF NO	GRAPHIC REF	PART NUMBER	QTY	PART NAME 1 2 3 4 5 6 (PRODUCT LEVEL)	SEE PAGE
	1	1	6V-7604	6	PLUG-CUP (MARKED X)	
	2	1	8M-5860	18	PLUG-CUP (MARKED Z)	
	3	1	212-8917	12	INSERT-VALVE SEAT (EXHAUST) (STANDARD)	
AB		1	317-7210		INSERT-VALVE SEAT (0.127-MM OS OD, EXHAUST)	
AB		1	317-7211		INSERT-VALVE SEAT (0.254-MM OS OD, EXHAUST)	
AB		1	254-3947		INSERT-VALVE SEAT (0.508-MM OS OD, EXHAUST)	
	4	1	227-1200	6	SLEEVE-INJECTOR	
	5	1	241-8388	12	INSERT-VALVE SEAT (INLET) (STANDARD)	
AB		1	317-7212		INSERT-VALVE SEAT (0.127-MM OS OD, INLET)	
AB		1	317-7213		INSERT-VALVE SEAT (0.254-MM OS OD, INLET)	
AB		1	254-3946		INSERT-VALVE SEAT (0.508-MM OS OD, INLET)	
	6	1	310-7255	6	SEAL-O-RING	
	7	1	310-7257	6	SEAL-O-RING	

A-NOT PART OF THIS GROUP
B-USE AS REQUIRED

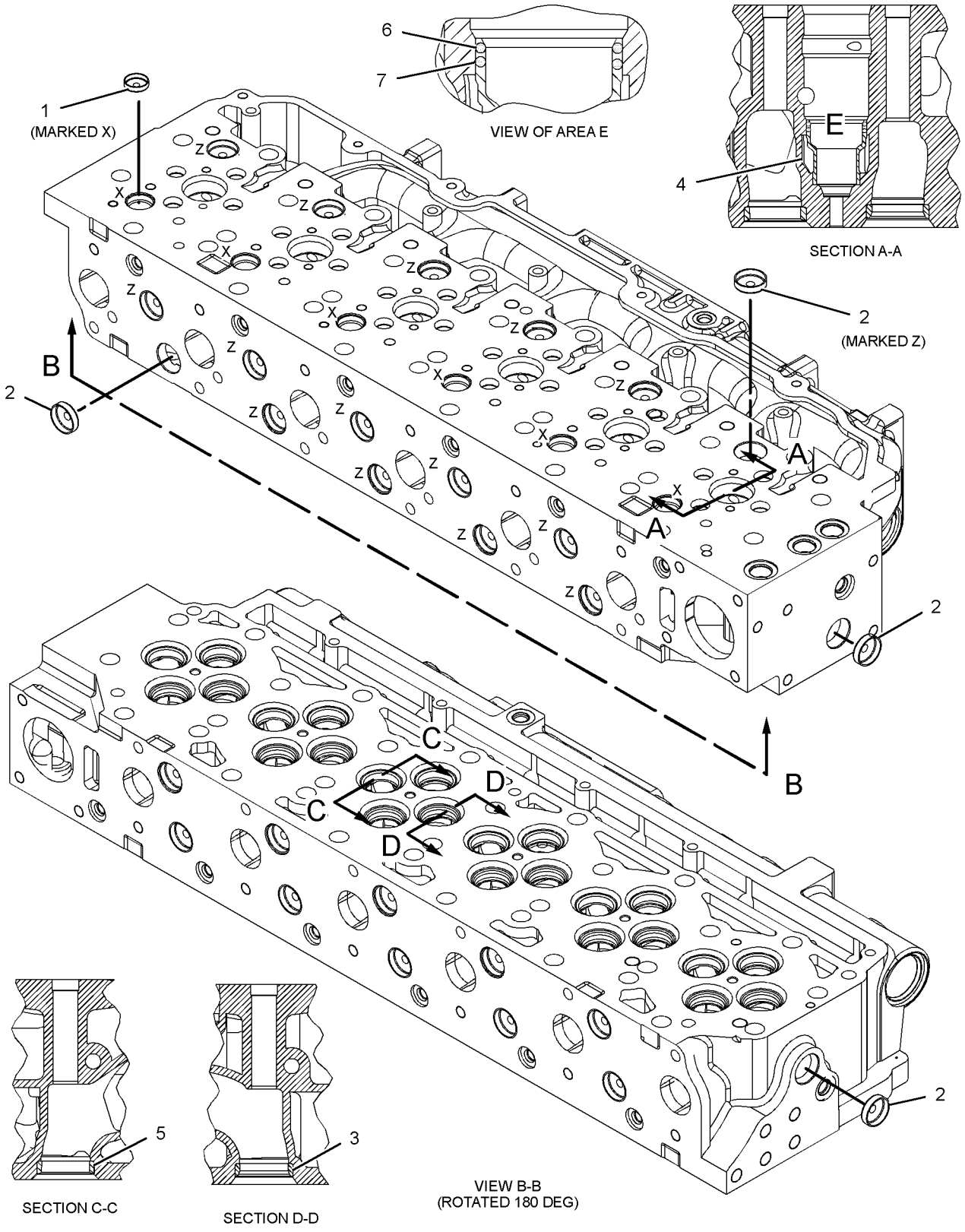

GRAPHIC #1 <END> g01414571

BASIC ENGINE

242-0672 CYLINDER HEAD GP

S/N: THX19900-UP

PART OF 320-7656 ENGINE AR-CORE

SMCS-1100 i04017656

NOTE	REF NO	GRAPHIC REF	PART NUMBER	QTY	PART NAME 1 2 3 4 5 6 (PRODUCT LEVEL)	SEE PAGE
	1	1	2A-3746	1	PLUG-CUP	
	2	1	187-1315	1	GASKET AS	
Y	3	1	252-8439	1	CYLINDER HEAD GP	29

Y-SEPARATE ILLUSTRATION

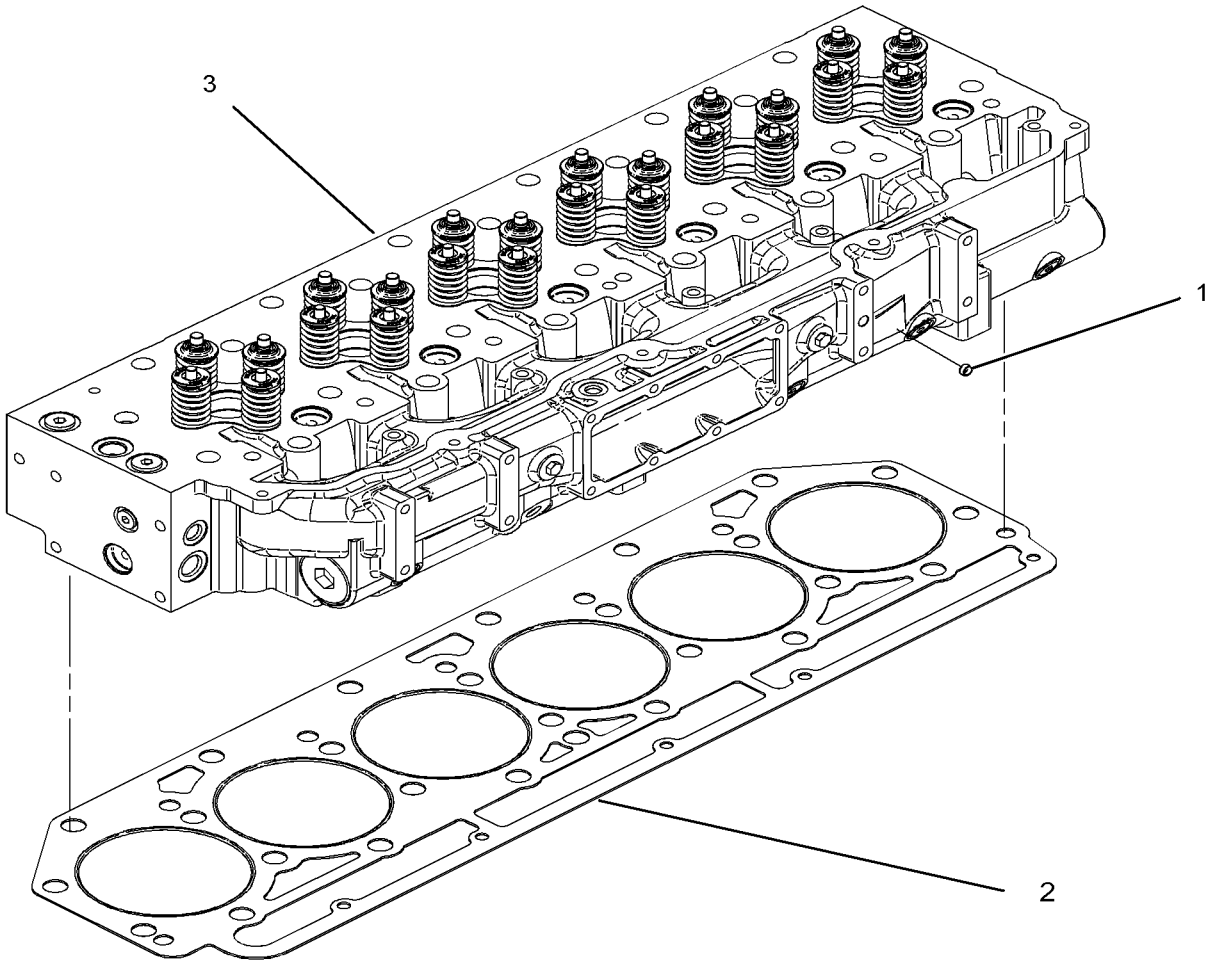

GRAPHIC #1 <END> g01305570

252-8439 CYLINDER HEAD GP*R

S/N: THX19900-UP

PART OF 242-0672 CYLINDER HEAD GP

SMCS-1100 i04017668

NOTE	REF NO	GRAPHIC REF	PART NUMBER	QTY	PART NAME 1 2 3 4 5 6 (PRODUCT LEVEL)	SEE PAGE
	1	1	1W-2715	24	LOCK-RETAINER	
	2	1	2A-4429	24	LOCK-RETAINER	
	3	1	260-4856	12	GUIDE-VALVE (STANDARD, EXHAUST)	
AB		1	203-3237		GUIDE-VALVE (0.13-MM OS, EXHAUST)	
AB		1	203-3238		GUIDE-VALVE (0.5-MM OS, EXHAUST)	
	4	1	163-2478	12	SEAL-VALVE STEM	
	5	1	*321-8638*	6	PLUG AS (MARKED Y)	
					(EACH INCLUDES)	
		1	321-8635	1	PLUG	
		1	214-7568	1	SEAL-O-RING	
	6	1	*319-6237*	2	PLUG AS (HEX HEAD)	
					(EACH INCLUDES)	
		1	271-7442	1	PLUG	
	6A	1	228-7096	1	SEAL-O-RING	
	8	1	190-6115	12	SPRING-VALVE (INNER)	
	9	1	190-6117	12	SPRING-VALVE (OUTER)	
	10	1	211-2134	12	RETAINER (VALVE SPRING)	
	11	1	217-0609	6	SEAT-VALVE SPRING	
	12	1	241-8382	12	VALVE-INLET	
	13	1	241-8383	12	VALVE-EXHAUST	
	14	1	241-8384	12	RETAINER (VALVE SPRING)	
	15	1	241-8385	12	SPRING-VALVE (OUTER)	
	16	1	241-8386	12	SPRING-VALVE (INNER)	
	17	1	241-8387	6	SEAT	
	18	1	259-5829	12	GUIDE-VALVE (STANDARD, INTAKE)	
AB		1	254-3941		GUIDE-VALVE (0.13-MM OS) (INTAKE)	
AB		1	254-3942		GUIDE-VALVE (0.5-MM OS) (INTAKE)	
	19	1	241-8390	12	SEAL-VALVE STEM	
Y	20	1	*332-3619*	1	CYLINDER HEAD AS	26
	21	1	*148-8395*	2	PLUG AS	
					(EACH INCLUDES)	
		1	3K-0360	1	SEAL-O-RING	
		1	9S-8005	1	PLUG-O-RING (HEX HEAD)	
	22	1	9F-2247	2	PLUG-PIPE	

A-NOT PART OF THIS GROUP
B-USE AS REQUIRED
Y-SEPARATE ILLUSTRATION

252-8439 CYLINDER HEAD GP *(contd.)* i04017668

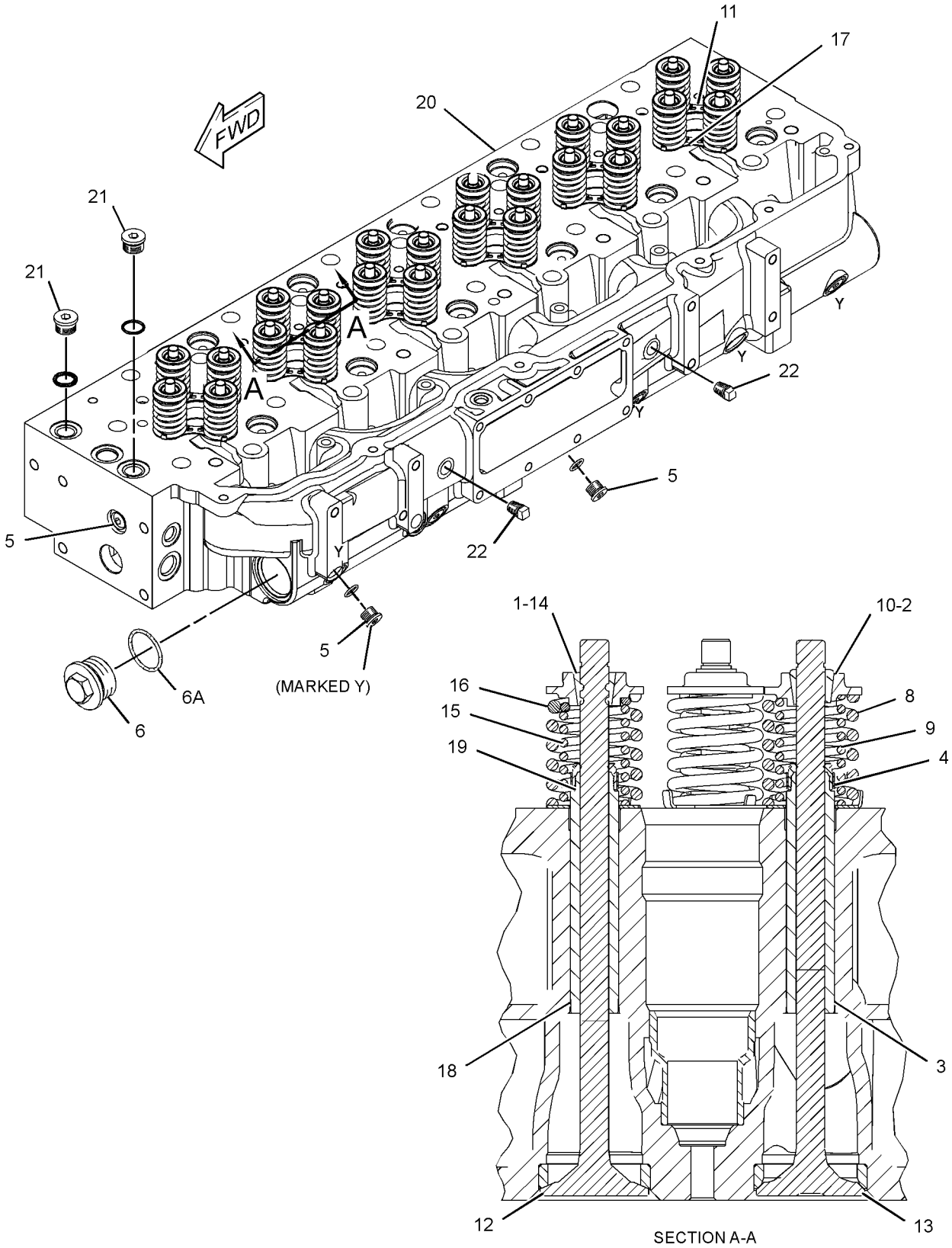

GRAPHIC #1 <END> g01988815

344-2149 CYLINDER HEAD GP

S/N: THX19900-UP

PART OF 345-8414 CYLINDER HEAD GP

SMCS-1100 i04017481

NOTE	REF NO	GRAPHIC REF	PART NUMBER	QTY	PART NAME 1 2 3 4 5 6 (PRODUCT LEVEL)	SEE PAGE
	1	1	1W-2715	24	LOCK-RETAINER (INLET)	
	2	1	2A-4429	24	LOCK-RETAINER (EXHAUST)	
	3	1	163-2478	12	SEAL-VALVE STEM (EXHAUST)	
	4	1	190-6115	12	SPRING-VALVE (INNER)	
	5	1	190-6117	12	SPRING-VALVE (OUTER)	
	6	1	211-2134	12	RETAINER (VALVE SPRING)	
	7	1	217-0609	6	SEAT-VALVE SPRING	
	8	1	241-8383	12	VALVE-EXHAUST	
	9	1	241-8384	12	RETAINER (VALVE SPRING)	
	10	1	241-8385	12	SPRING-VALVE (OUTER)	
	11	1	241-8386	12	SPRING-VALVE (INNER)	
	12	1	241-8387	6	SEAT	
	13	1	241-8390	12	SEAL-VALVE STEM	
	14	1	252-7803	12	VALVE-INLET	
	15	1	259-5829	12	GUIDE-VALVE (STANDARD, INTAKE)	
AB		1	254-3941		GUIDE-VALVE (0.13-MM OS)	
AB		1	254-3942		GUIDE-VALVE (0.5-MM OS)	
	16	1	260-4856	12	GUIDE-VALVE (STANDARD, EXHAUST)	
AB		1	203-3237		GUIDE-VALVE (0.13-MM OS, EXHAUST)	
AB		1	203-3238		GUIDE-VALVE (0.5-MM OS, EXHAUST)	
Y	17	1	*311-7229*	1	CYLINDER HEAD AS	24
	18	1	*319-6237*	2	PLUG AS	
					(EACH INCLUDES)	
		1	228-7096	1	SEAL-O-RING	
		1	271-7442	1	PLUG	
	19	1	*321-8638*	6	PLUG AS	
					(EACH INCLUDES)	
		1	214-7568	1	SEAL-O-RING	
		1	321-8635	1	PLUG	
	20	1	*307-2673*	2	PLUG AS	
					(EACH INCLUDES)	
		1	9S-8005	1	PLUG-O-RING	
		1	238-5080	1	SEAL-O-RING	
	21	1	8T-6764	2	PLUG-PIPE (1/8-27-THD) (CYLINDER HEAD)	

A-NOT PART OF THIS GROUP
B-USE AS REQUIRED
Y-SEPARATE ILLUSTRATION

344-2149 CYLINDER HEAD GP *(contd.)* i04017481

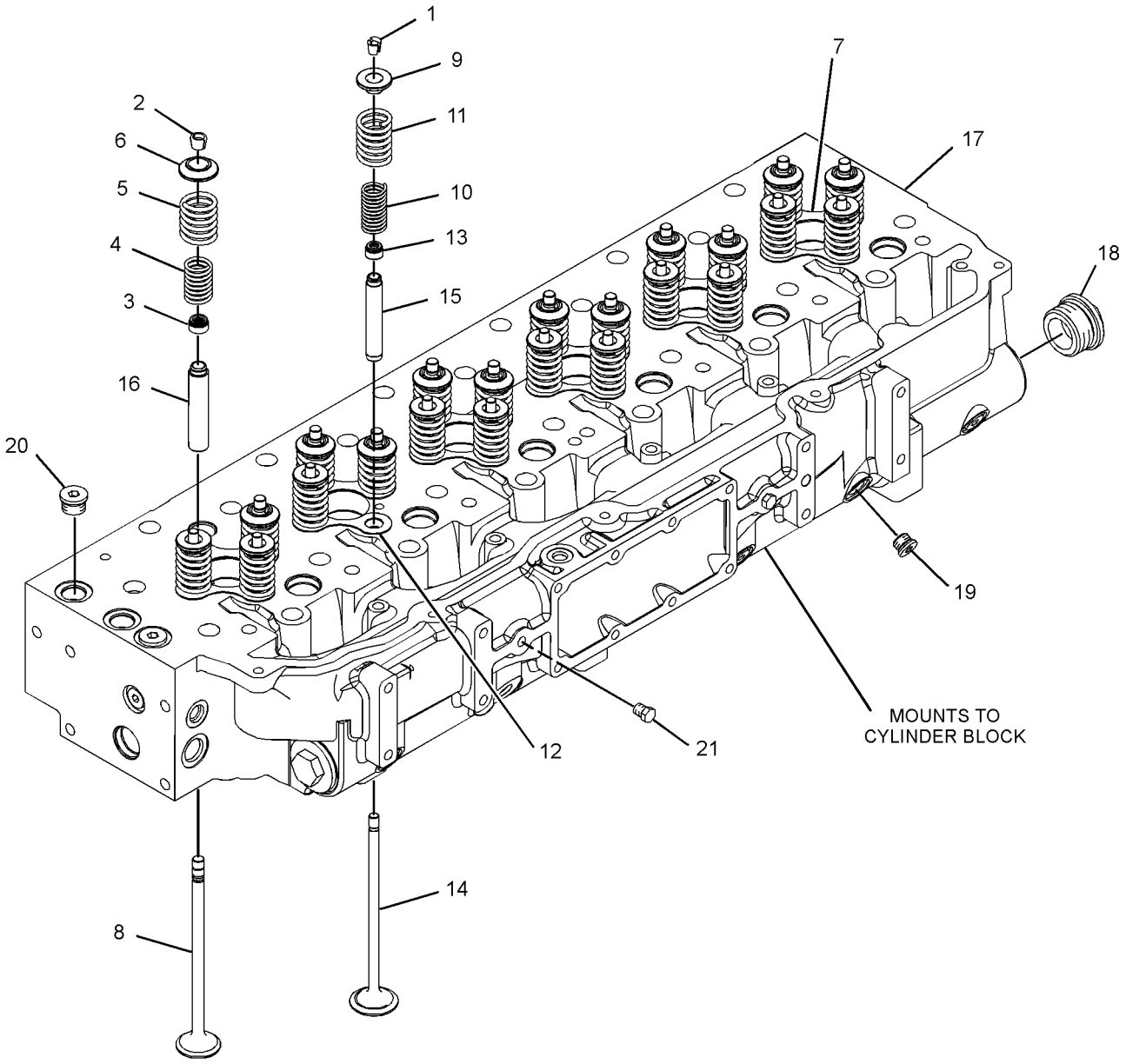

GRAPHIC #1 <END> g01979881

345-8414 CYLINDER HEAD GP

S/N: THX19900-UP

PART OF 320-7655 ENGINE AR-CORE

SMCS-1100 i04017479

NOTE	REF NO	GRAPHIC REF	PART NUMBER	QTY	PART NAME 1 2 3 4 5 6 (PRODUCT LEVEL)	SEE PAGE
	1	1	2A-3746	1	PLUG-CUP	
	2	1	187-1315	1	GASKET AS	
Y	3	1	344-2149	1	CYLINDER HEAD GP	31

Y-SEPARATE ILLUSTRATION

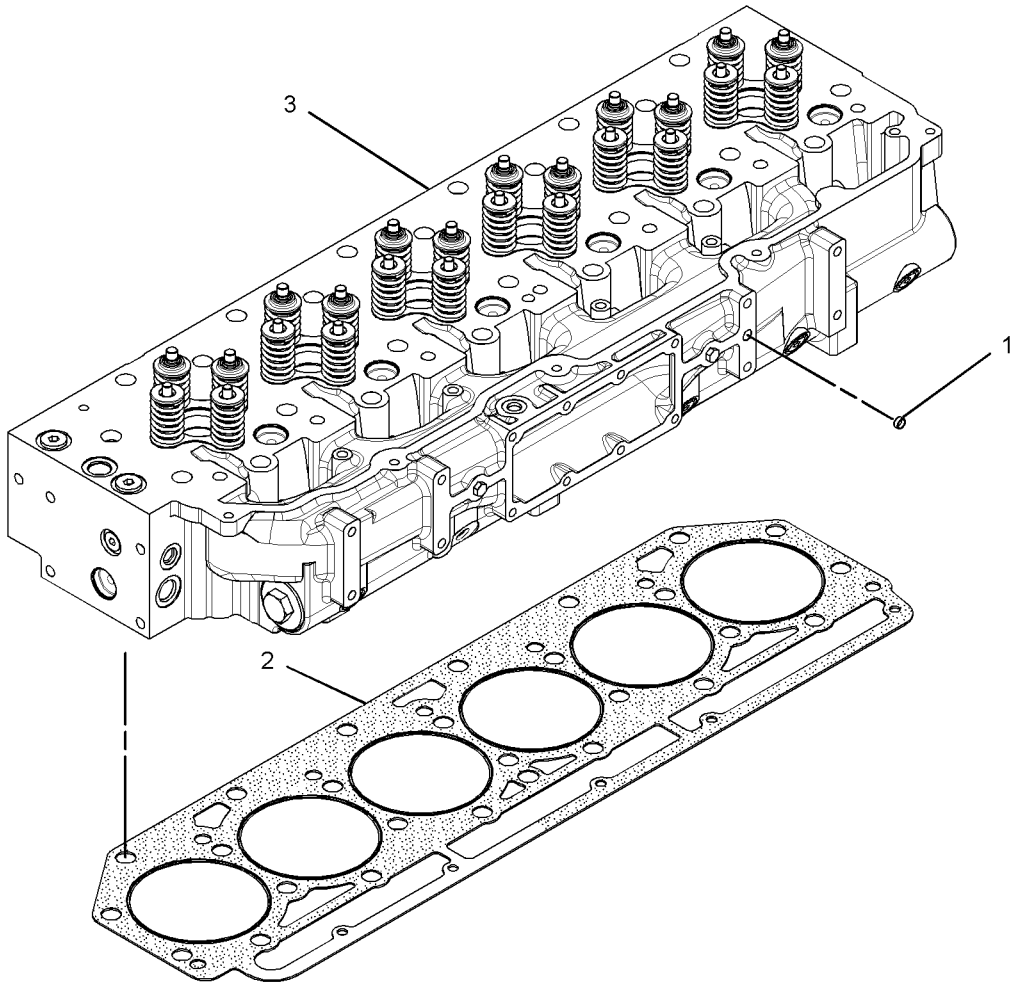

GRAPHIC #1 <END> g01979813

211-8041 DAMPER GP

S/N: THX19900-UP
13 INCH
PART OF 318-1904, 318-1905 ENGINE AR-COMPLETE
FOR USE WITH CRANK PULLEY GP

SMCS-1205 i04017580

NOTE	REF NO	GRAPHIC REF	PART NUMBER	QTY	PART NAME 1 2 3 4 5 6 (PRODUCT LEVEL)	SEE PAGE
	1	1	208-9619	1	DAMPER AS-VIBRATION	

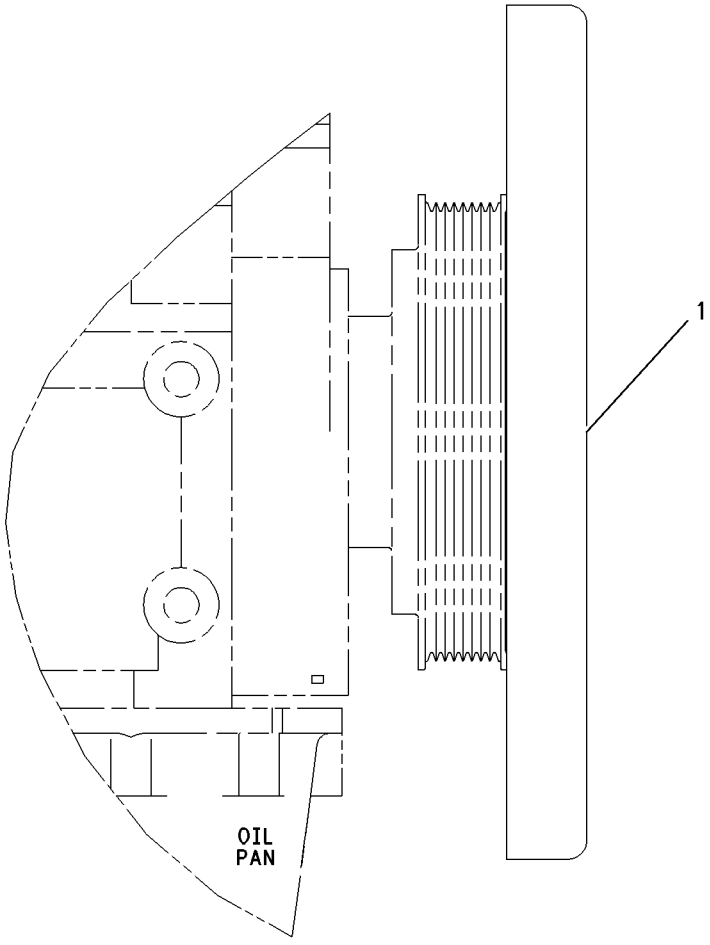

RIGHT SIDE VIEW

GRAPHIC #1 <END> g00919128

4P-2102 DRAIN GP-ENGINE OIL

S/N: THX19900-UP

PART OF 318-1904, 318-1905 ENGINE AR-COMPLETE

SMCS-1302 i04017409

NOTE	REF NO	GRAPHIC REF	PART NUMBER	QTY	PART NAME 1 2 3 4 5 6 (PRODUCT LEVEL)	SEE PAGE
	1	1	8N-6854	1	GASKET	
	2	1	113-5336	1	ADAPTER AS-DRAIN	
	2A	1	126-1683	1	PLUG-DRAIN (ENGINE OIL PAN)	
		1	8N-6849	1	ADAPTER-PLUG	
	3	1	5P-4116	2	WASHER-HARD (8.8X20.5X2-MM THK)	
M	4	1	7X-2537	2	BOLT (M8X1.25X35-MM)	

M-METRIC PART

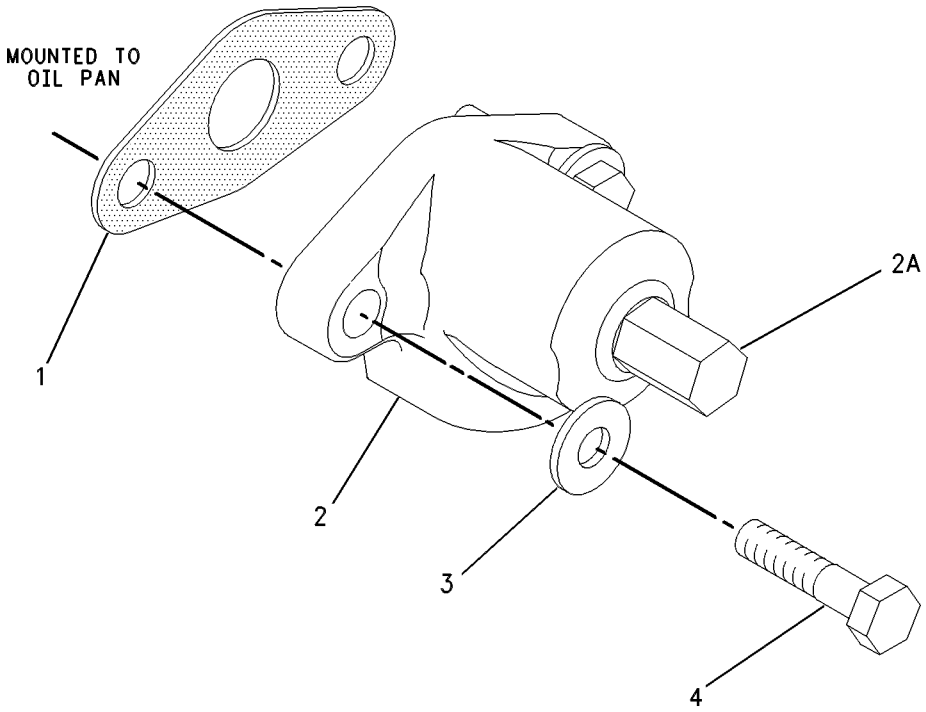

GRAPHIC #1 <END> g00659483

BASIC ENGINE

215-3251 DRIVE GP-FAN

S/N: S6T1-UP; S6X1-UP; S6Y1-UP
PART OF 317-1762 INSTALLATION AR

SMCS-1359 i04001070

NOTE	REF NO	GRAPHIC REF	PART NUMBER	QTY	PART NAME 1 2 3 4 5 6 (PRODUCT LEVEL)	SEE PAGE
Y	1	1	285-6396	1	DRIVE GP-FAN	37
M	2	1	8T-4182	4	BOLT (M10X1.5X45-MM)	
	3	1	8T-4121	4	WASHER-HARD (11X21X2.5-MM THK)	

M-METRIC PART
Y-SEPARATE ILLUSTRATION

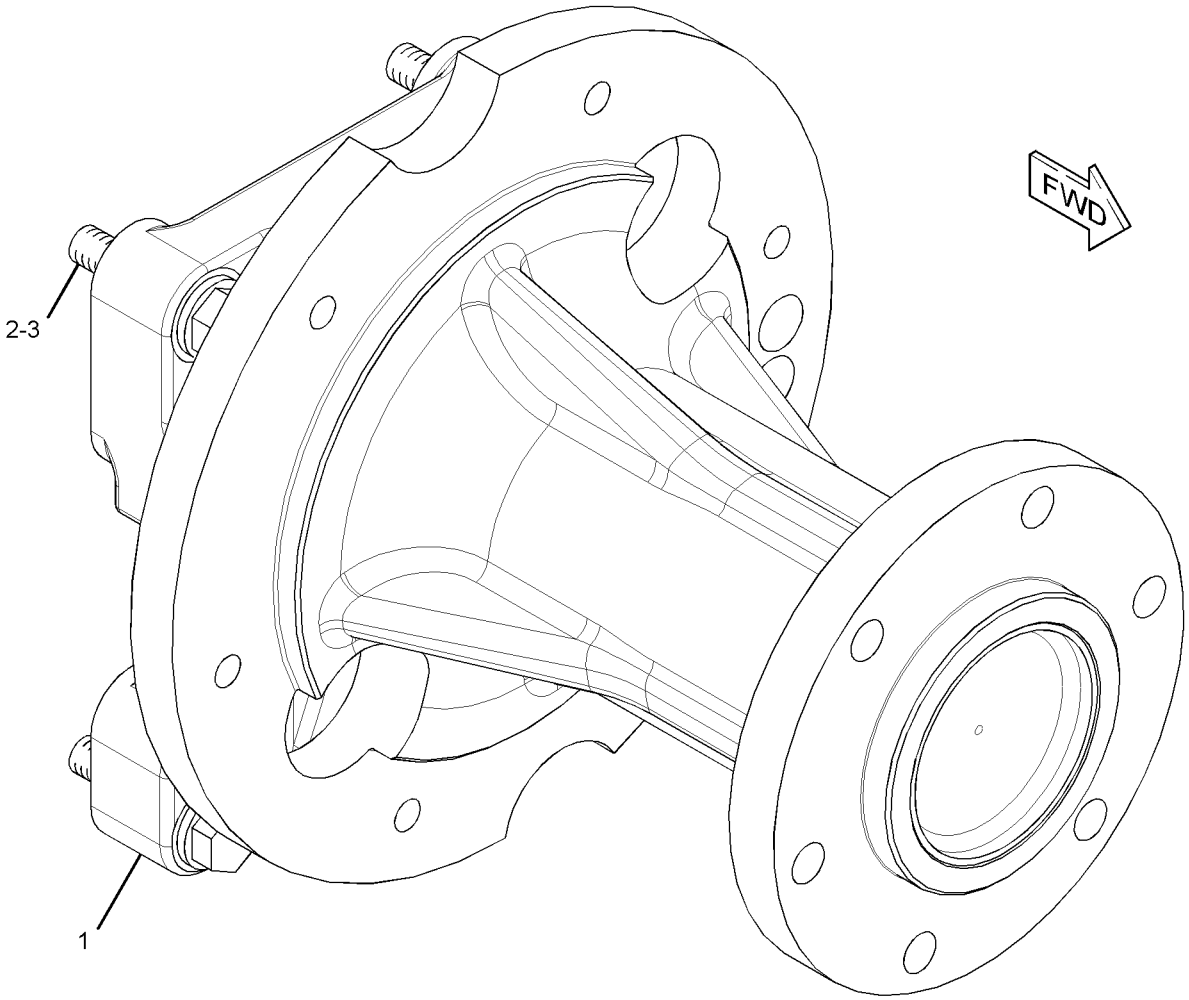

GRAPHIC #1 <END> g01659373

285-6396 DRIVE GP-FAN

S/N: S6T1-UP; S6X1-UP; S6Y1-UP
PART OF 215-3251 DRIVE GP-FAN

SMCS-1359 i04001064

NOTE	REF NO	GRAPHIC REF	PART NUMBER	QTY	PART NAME 1 2 3 4 5 6 (PRODUCT LEVEL)	SEE PAGE
	1	1	4B-4098	1	PLUG-CUP	
	2	1	4W-1203	2	CUP-BEARING	
	3	1	4W-1204	2	CONE-BEARING	
	4	1	7C-8634	1	PLATE	
	5	1	212-5839	1	HUB	
	6	1	212-5844	1	SPACER (35.3X45.5X93-MM THK)	
	7	1	285-5093	1	BRACKET AS	
	8	1	5S-9062	1	SPACER (35.032X50.8X15.88-MM THK)	
M	9	1	6V-7673	1	BOLT (M12X1.75X50-MM)	
	10	1	6V-9748	1	SEAL-LIP TYPE	

M-METRIC PART

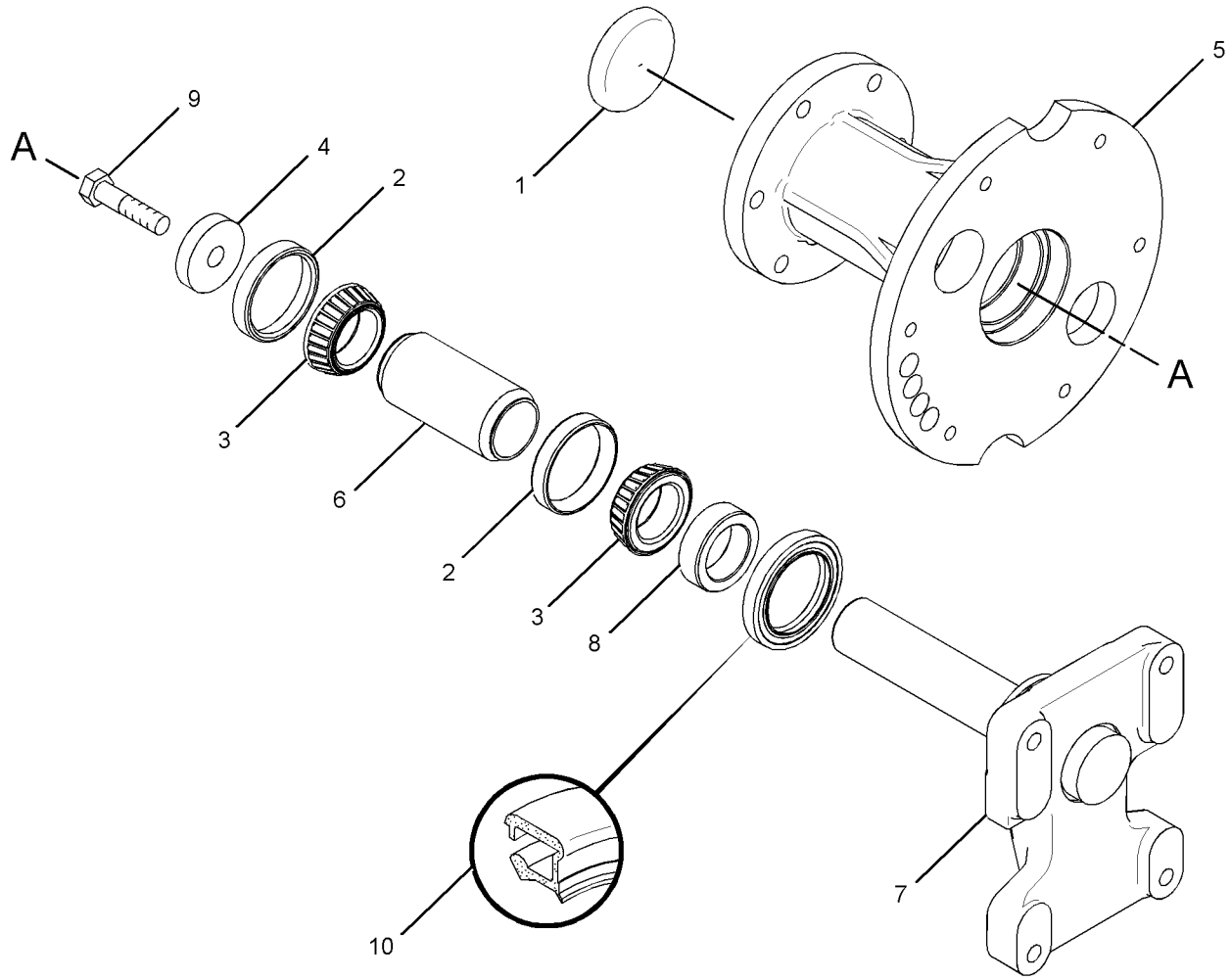

GRAPHIC #1 <END> g01316481

213-4363 FASTENER GP-CYLINDER HEAD

S/N: THX19900-UP

PART OF 320-7655, 320-7656 ENGINE AR-CORE

SMCS-1100 i04017499

NOTE	REF NO	GRAPHIC REF	PART NUMBER	QTY	PART NAME 1 2 3 4 5 6 (PRODUCT LEVEL)	SEE PAGE
C	1	1	*290-6884*	26	FASTENER GP-CYLINDER HEAD	
					(EACH INCLUDES)	
		1	9X-8268	1	WASHER (17.5X30X3.5-MM THK)	
M		1	263-2915	1	BOLT-12 POINT HEAD (M16X2X180-MM)	
M	2	1	8C-4984	5	BOLT (M8X1.25X150-MM)	
	3	1	9M-1974	5	WASHER-HARD (8.8X16X2-MM THK)	

C-CHANGE FROM PREVIOUS TYPE
M-METRIC PART

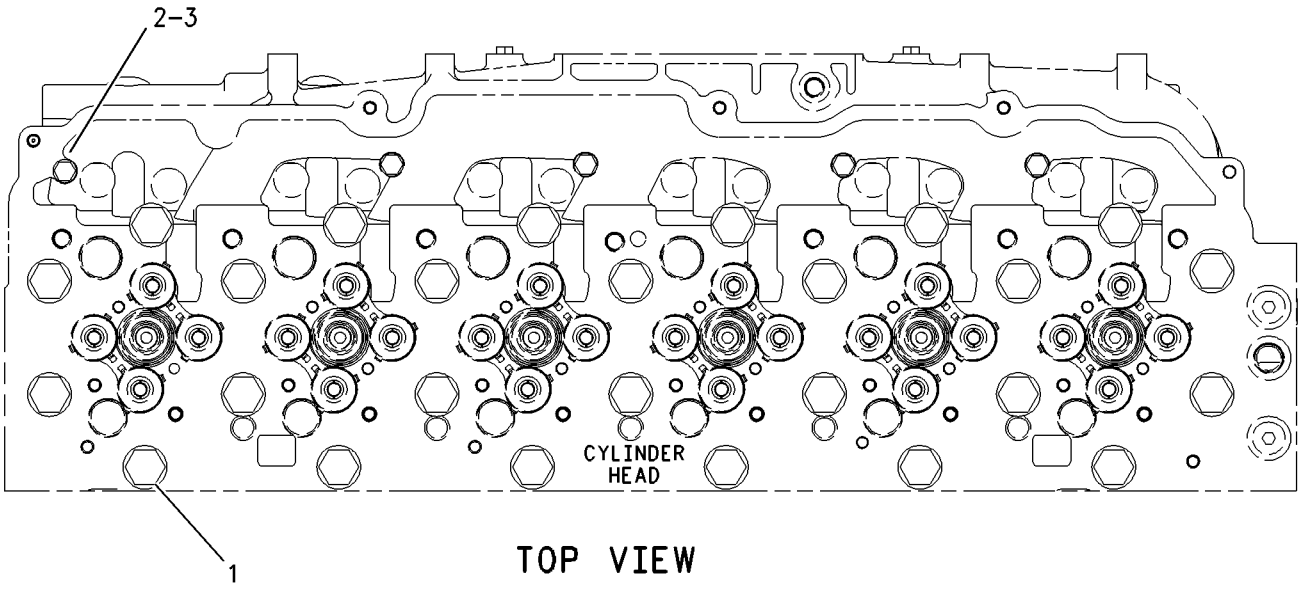

TOP VIEW

GRAPHIC #1 <END> g00919169

222-2409 FASTENER GP-DAMPER & PULLEY

S/N: THX19900-UP

PART OF 318-1904, 318-1905 ENGINE AR-COMPLETE

SMCS-1205, 7553 i04017594

NOTE	REF NO	GRAPHIC REF	PART NUMBER	QTY	PART NAME 1 2 3 4 5 6 (PRODUCT LEVEL)	SEE PAGE
C	1	1	228-3621	1	SPACER (101.5X167X8-MM THK)	

C-CHANGE FROM PREVIOUS TYPE

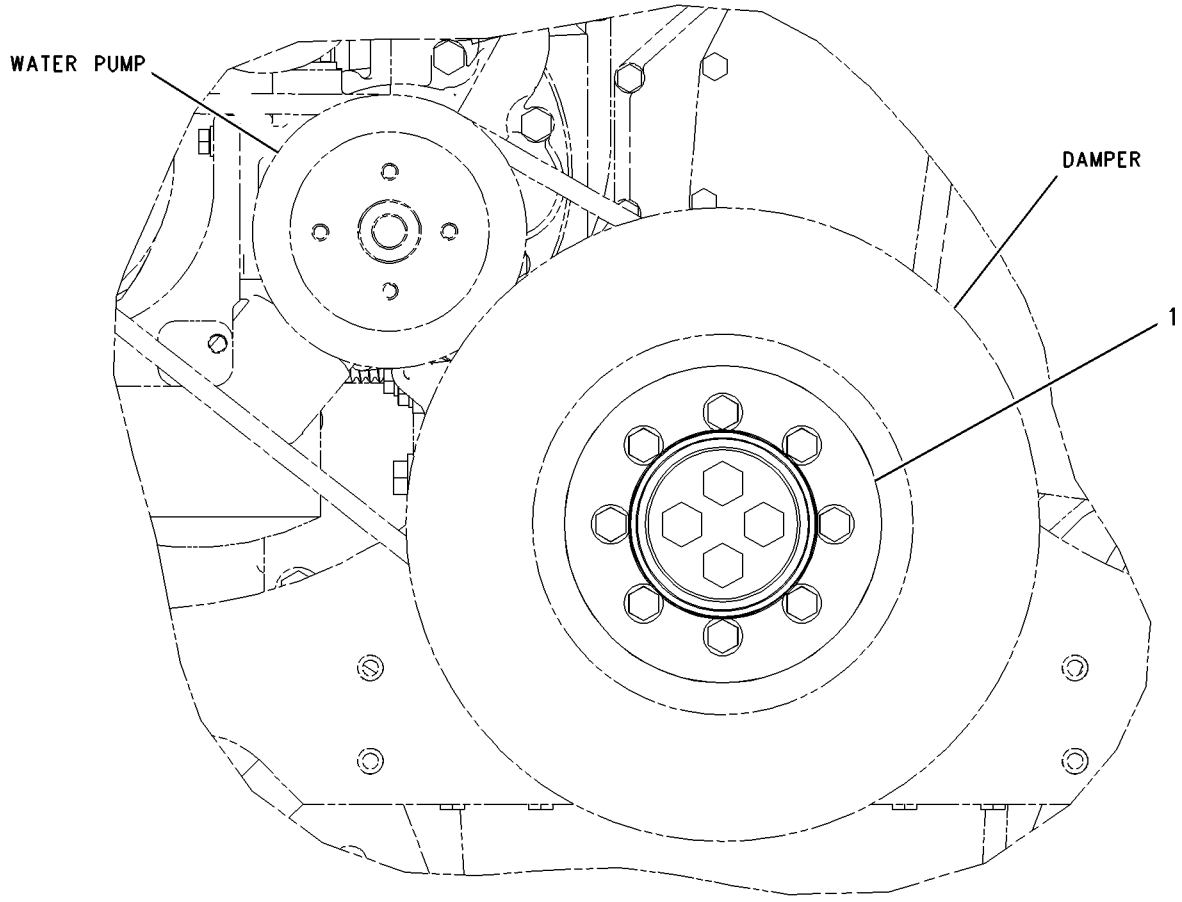

FRONT VIEW

GRAPHIC #1 <END> g00923791

219-8681 FASTENER GP-FRONT COVER

S/N: THX19900-UP

PART OF 318-1904, 318-1905 ENGINE AR-COMPLETE

SMCS-1151, 1166 i04017587

NOTE	REF NO	GRAPHIC REF	PART NUMBER	QTY	PART NAME 1 2 3 4 5 6 (PRODUCT LEVEL)	SEE PAGE
M	1	1	9X-2099	6	STUD (M8X1.25X52.75-MM)	
M	2	1	6V-2317	6	BOLT (M8X1.25X30-MM)	
M	3	1	8T-0100	2	BOLT (M8X1.25X60-MM)	

M-METRIC PART

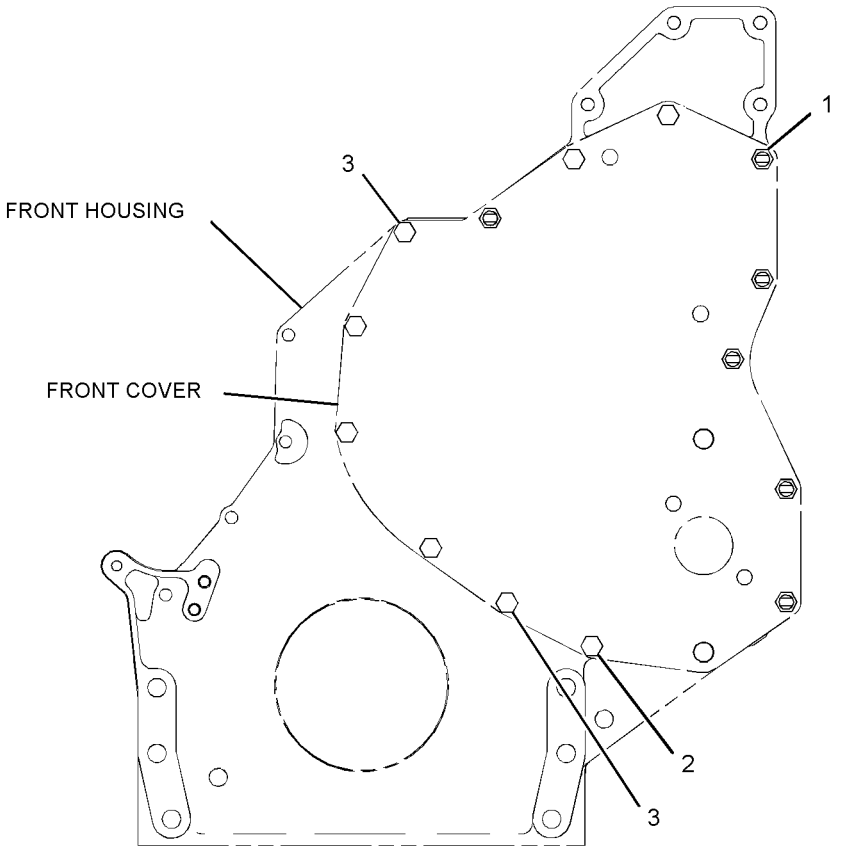

FRONT VIEW

GRAPHIC #1 <END> g01146786

236-7315 FASTENER GP-VALVE COVER

S/N: THX19900-UP

PART OF 318-1904, 318-1905 ENGINE AR-COMPLETE

SMCS-1107 i04017556

NOTE	REF NO	GRAPHIC REF	PART NUMBER	QTY	PART NAME 1 2 3 4 5 6 (PRODUCT LEVEL)	SEE PAGE
M	1	1	8T-6912	11	BOLT (M8X1.25X50-MM)	
	2	1	8T-4224	11	WASHER-HARD (8.8X16X2-MM THK)	

M-METRIC PART

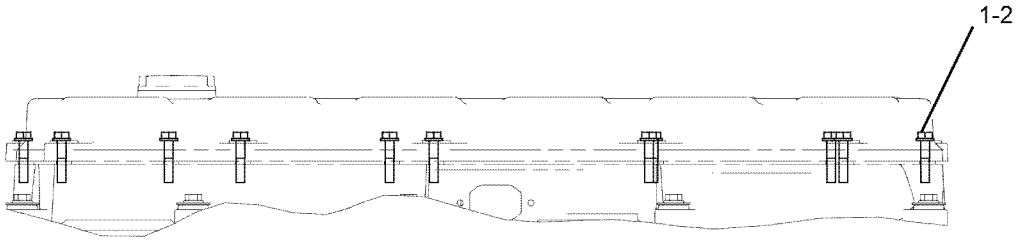

GRAPHIC #1 <END> g01013698

233-0423 FASTENER GP-VALVE COVER BASE

S/N: THX19900-UP

PART OF 318-1904, 318-1905 ENGINE AR-COMPLETE

SMCS-1120 i04017559

NOTE	REF NO	GRAPHIC REF	PART NUMBER	QTY	PART NAME 1 2 3 4 5 6 (PRODUCT LEVEL)	SEE PAGE
C	1	1	244-4500	9	SPRING	
CM	2	1	8T-0100	9	BOLT (M8X1.25X60-MM)	
C	3	1	9N-0869	9	WASHER-HARD (8.8X25.5X2-MM THK)	

C-CHANGE FROM PREVIOUS TYPE
M-METRIC PART

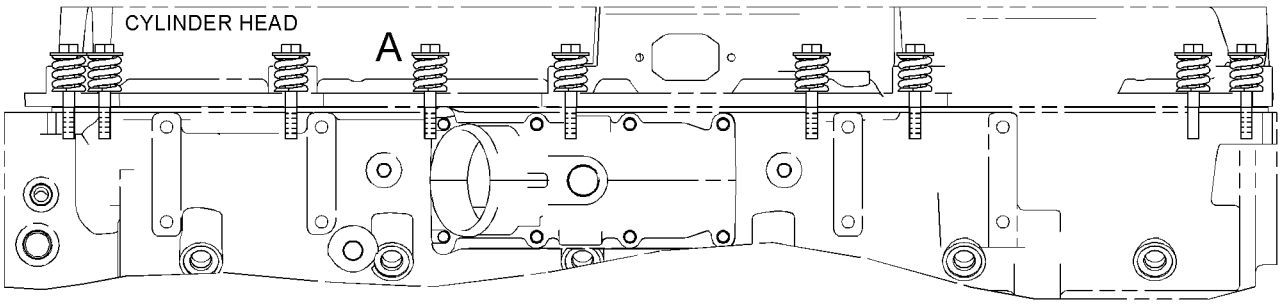

LEFT SIDE VIEW

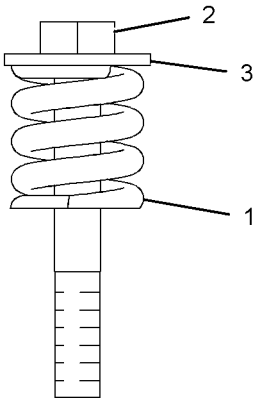

VIEW OF AREA A

GRAPHIC #1 <END> g01207018

241-3718 FLYWHEEL GP

S/N: THX19900-UP

PART OF 318-1904, 318-1905 ENGINE AR-COMPLETE

SMCS-1156 i04017551

NOTE	REF NO	GRAPHIC REF	PART NUMBER	QTY	PART NAME 1 2 3 4 5 6 (PRODUCT LEVEL)	SEE PAGE
M	1	1	9X-2053	8	BOLT	
	2	1	237-0229	1	FLYWHEEL AS	
		1	4N-2514	1	GEAR (113-TEETH)	
	3	1	9X-8268	8	WASHER (17.5X30X3.5-MM THK)	

M-METRIC PART

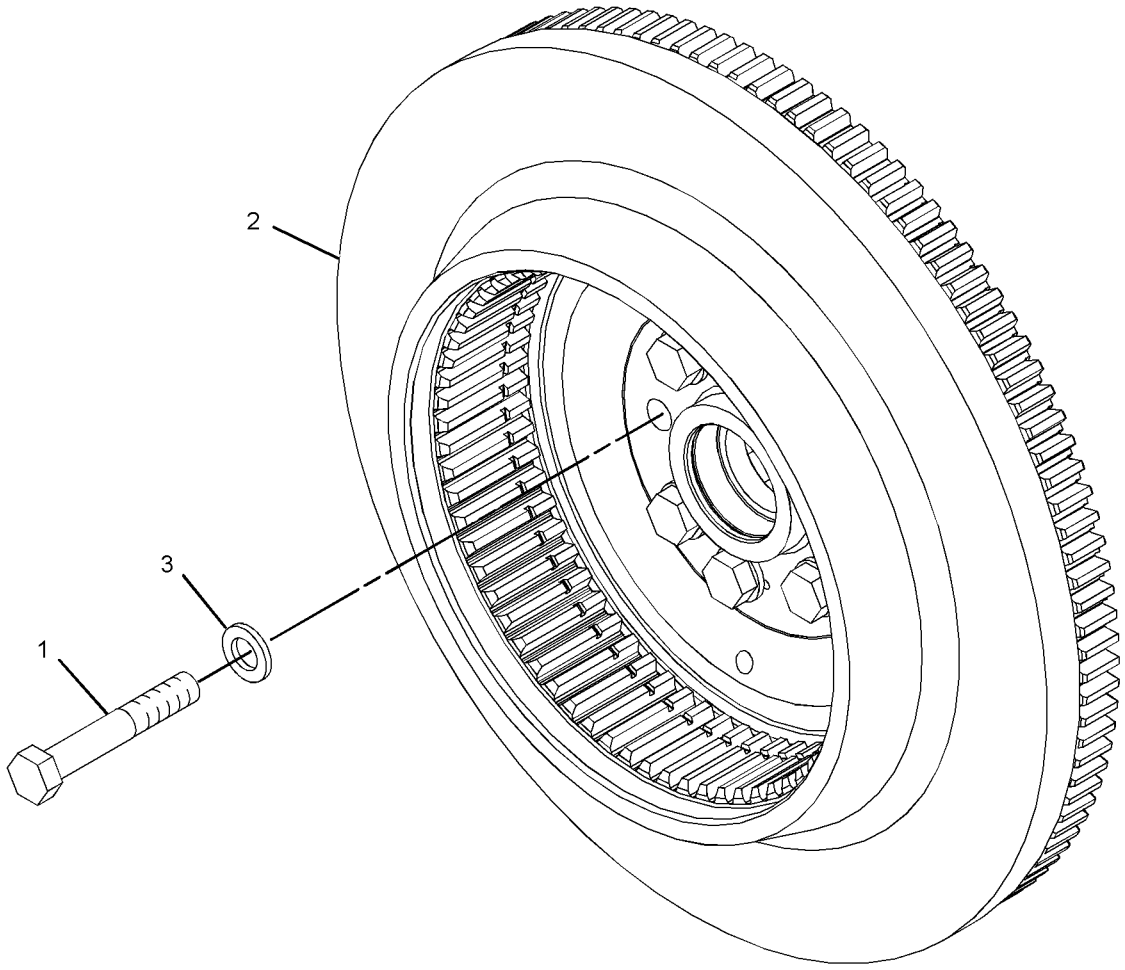

GRAPHIC #1 <END> g01205624

BASIC ENGINE

205-1321 GEAR GP-FRONT

S/N: THX19900-UP

PART OF 320-7655, 320-7656 ENGINE AR-CORE

SMCS-1151, 1162, 1206 i04017501

NOTE	REF NO	GRAPHIC REF	PART NUMBER	QTY	PART NAME 1 2 3 4 5 6 (PRODUCT LEVEL)	SEE PAGE
	1	1	113-6069	1	PLATE-THRUST	
	2	1	115-4219	1	PLATE-RETAINING	
	3	1	200-4495	1	SHAFT-IDLER	
	4	1	205-1320	1	GEAR AS-IDLER (50-TEETH)	
	4A	1	115-4072	1	BEARING	
M	5	1	136-4183	1	BOLT-12 POINT HEAD (M10X1.5X30-MM)	
M	6	1	6V-5843	2	BOLT (M10X1.5X45-MM)	

M-METRIC PART

205-1321 GEAR GP-FRONT *(contd.)* i04017501

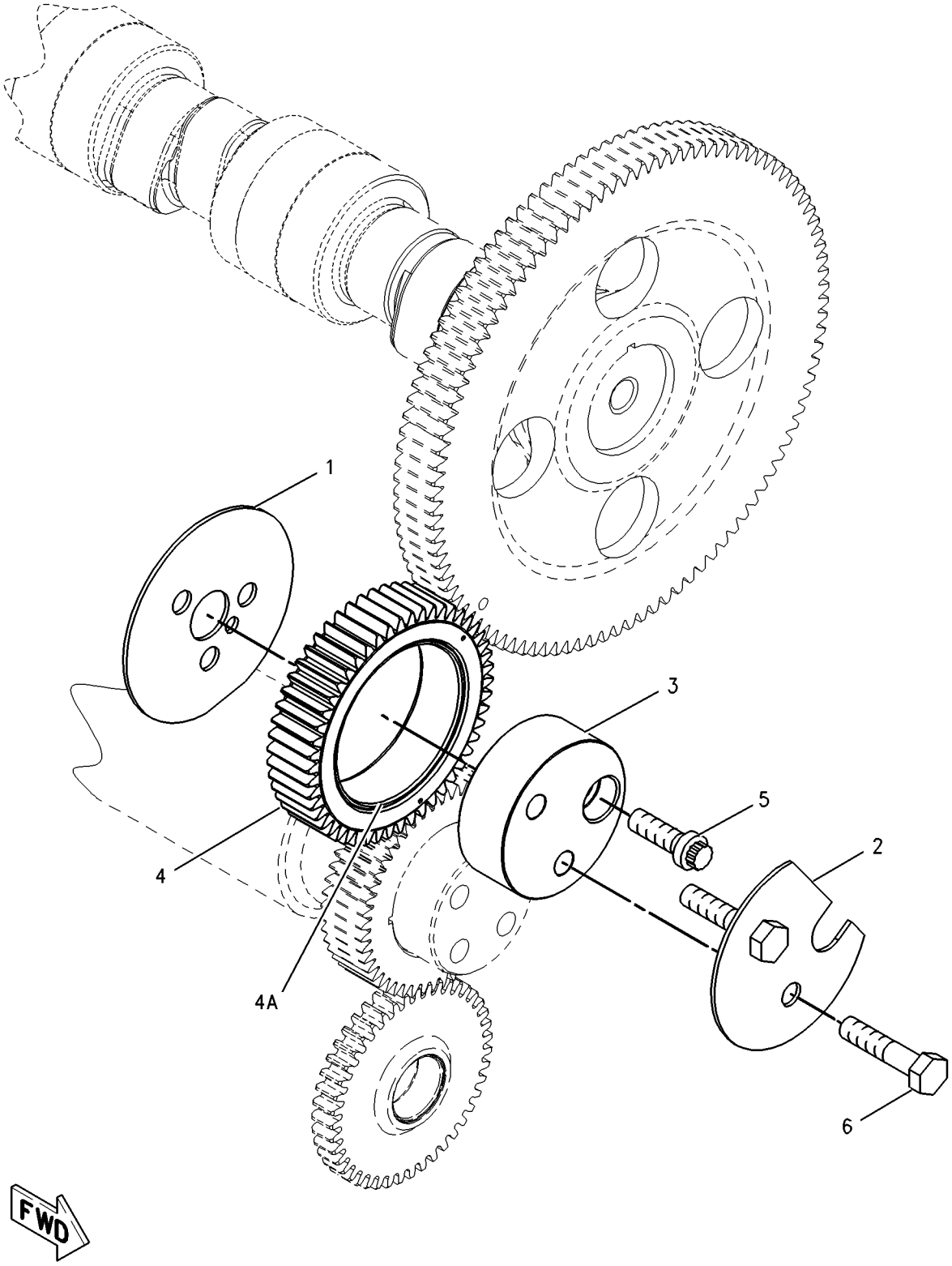

GRAPHIC #1 <END> g00870175

BASIC ENGINE

175-6260 GEAR GP-REAR

S/N: THX19900-UP

PART OF 318-1904, 318-1905 ENGINE AR-COMPLETE

SMCS-1204 i04017422

NOTE	REF NO	GRAPHIC REF	PART NUMBER	QTY	PART NAME 1 2 3 4 5 6 (PRODUCT LEVEL)	SEE PAGE
	1	1	187-8194	1	GEAR AS-DRIVE (64 TEETH)	
		1	4F-6024	1	PIN	
	2	1	1W-4741	2	GEAR AS-IDLER (70 TEETH)	
					(EACH INCLUDES)	
		1	1W-4738	1	BEARING-SLEEVE	
	3	1	1W-4746	2	RETAINER-GEAR	
	4	1	187-8195	1	GEAR AS-DRIVE (64 TEETH)	
	4A	1	4F-6024	1	PIN	
	5	1	154-3358	1	GEAR-ADAPTER (68 TEETH)	
	6	1	187-8222	2	ADAPTER AS-PUMP	
					(EACH INCLUDES)	
		1	160-8184	1	BEARING-SLEEVE	
	7	1	4N-1230	2	SEAL-O-RING	
M	8	1	6V-1820	12	BOLT (M10X1.50X30MM)	
	9	1	6V-5839	12	WASHER (11X21X2.5MM THK)	
M	10	1	6V-7673	6	BOLT (M12X1.75X50MM)	

M-METRIC PART

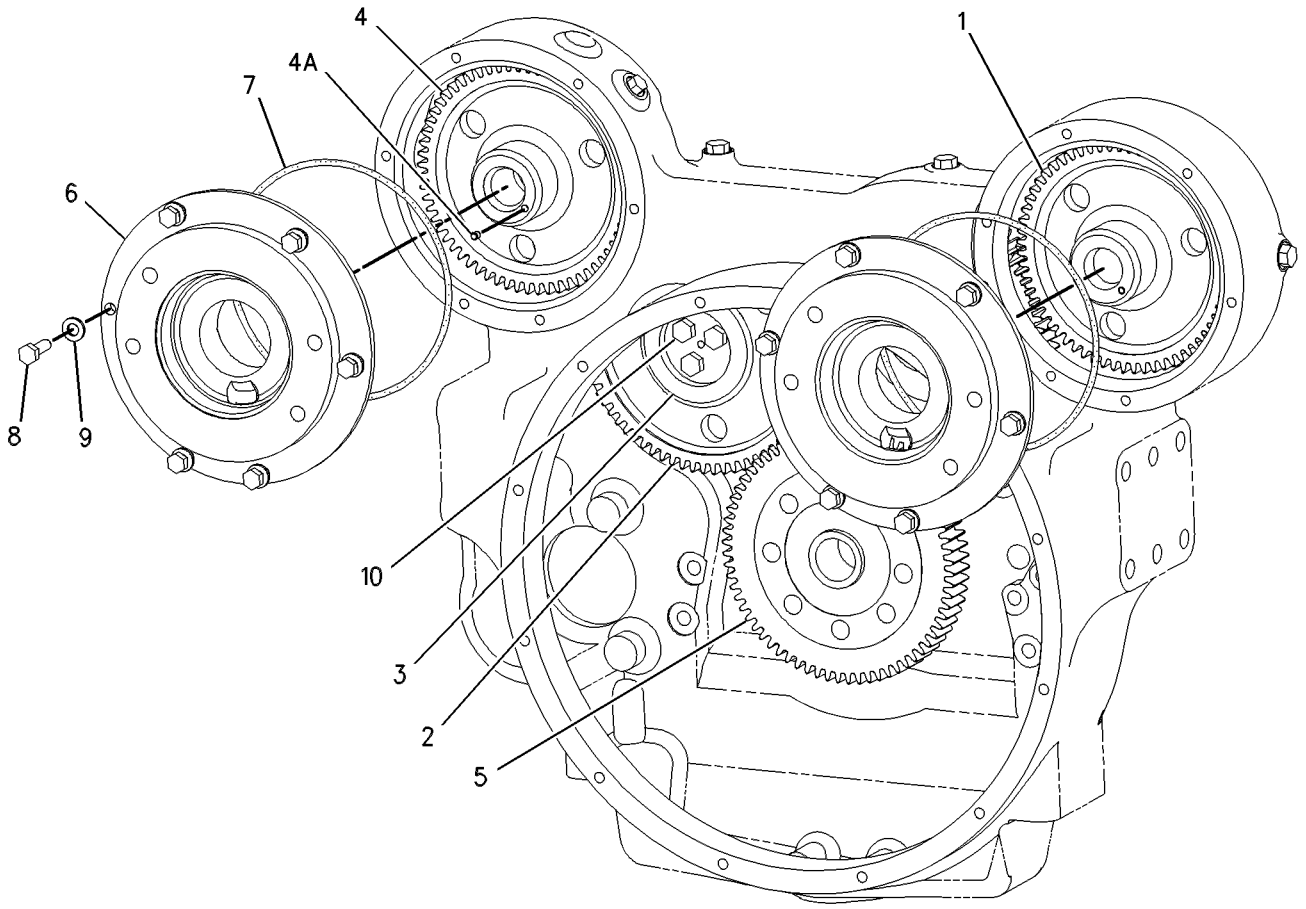

GRAPHIC #1 <END> g00639229

221-5461 HOUSING AS-FLYWHEEL

S/N: THX19900-UP

PART OF 219-8666 HOUSING GP-FLYWHEEL

SMCS-1157 i04017585

NOTE	REF NO	GRAPHIC REF	PART NUMBER	QTY	PART NAME 1 2 3 4 5 6 (PRODUCT LEVEL)	SEE PAGE
	1	1	2A-1162	1	GASKET	
	2	1	5F-0304	1	PLUG	
	3	1	316-8663	1	HOUSING AS-FLYWHEEL	
	3A	1	229-9281	1	HOUSING-FLYWHEEL	
	3B	1	8M-9315	2	BUSHING	
	4	1	*148-8395*	2	PLUG AS	
					(EACH INCLUDES)	
	4A	1	3K-0360	1	SEAL-O-RING	
		1	9S-8005	1	PLUG-O-RING	
	5	1	*148-8405*	1	PLUG AS	
	5A	1	1J-9671	1	SEAL-O-RING	
		1	3K-8460	1	PLUG	
	6	1	*148-8407*	4	PLUG AS	
					(EACH INCLUDES)	
	6A	1	3J-1907	1	SEAL-O-RING	
		1	9S-4191	1	PLUG-O-RING	
	7	1	*155-3624*	1	PLUG AS	
	7A	1	3J-7354	1	SEAL-O-RING	
		1	9S-4182	1	PLUG-O-RING	

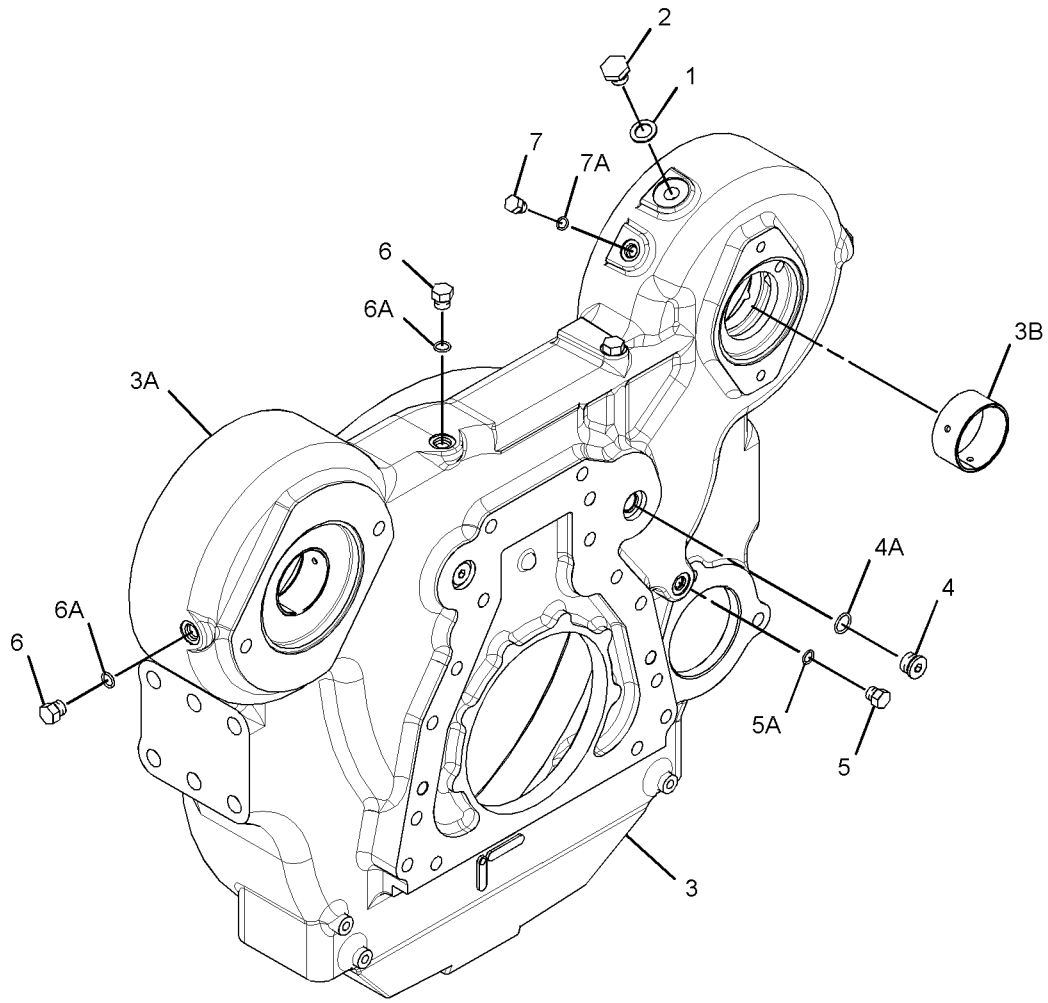

GRAPHIC #1 <END> g01483074

219-8666 HOUSING GP-FLYWHEEL

S/N: THX19900-UP

PART OF 318-1904, 318-1905 ENGINE AR-COMPLETE

SMCS-1157 i04017583

NOTE	REF NO	GRAPHIC REF	PART NUMBER	QTY	PART NAME 1 2 3 4 5 6 (PRODUCT LEVEL)	SEE PAGE
	1	1	9X-8268	2	WASHER (17.5X30X3.5-MM THK)	
	2	1	175-3721	1	COVER	
Y	3	1	221-5461	1	HOUSING AS-FLYWHEEL	47
	4	1	101-3934	1	COVER	
	5	1	3F-5792	1	SEAL-O-RING	
	6	1	4M-0189	1	SEAL-O-RING	
	7	1	5P-8245	17	WASHER-HARD (13.5X25.5X3-MM THK)	
M	8	1	6A-5591	2	BOLT (M12X1.75X25-MM)	
M	9	1	6V-5844	2	BOLT (M16X2X35-MM)	
M	10	1	6V-8197	9	BOLT (M12X1.75X40-MM)	
M	11	1	6V-8336	6	BOLT (M12X1.75X70-MM)	
BF			1U-8846		SEALANT-GASKET (10-ML)	

B-USE AS REQUIRED
F-NOT SHOWN
M-METRIC PART
Y-SEPARATE ILLUSTRATION

219-8666 HOUSING GP-FLYWHEEL ***(contd.)*** i04017583

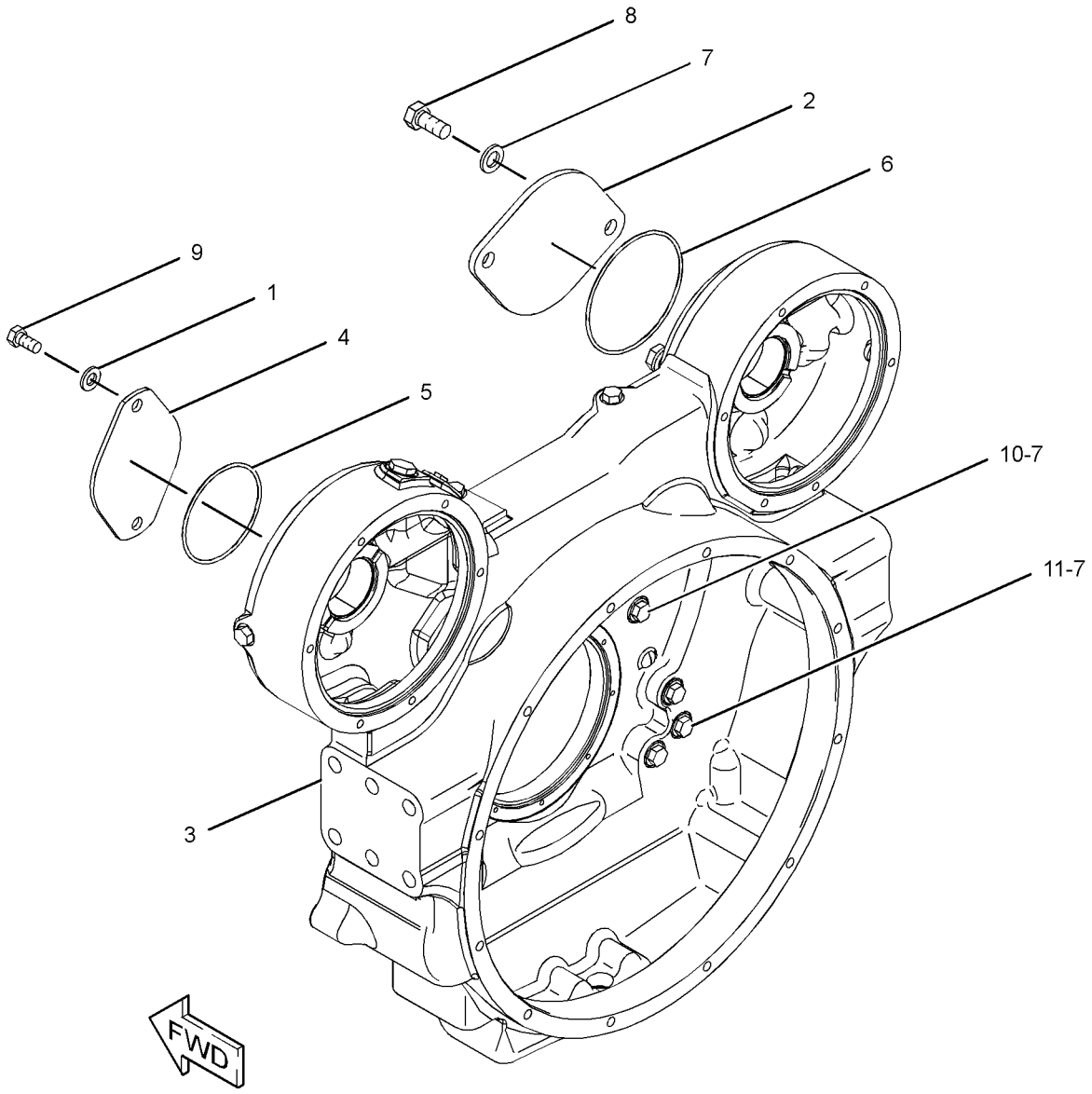

GRAPHIC #1 <END> g01208984

BASIC ENGINE

245-3262 HOUSING GP-FRONT

S/N: THX19900-UP

PART OF 320-7655, 320-7656 ENGINE AR-CORE

SMCS-1151, 1162, 1206 i04017502

NOTE	REF NO	GRAPHIC REF	PART NUMBER	QTY	PART NAME 1 2 3 4 5 6 (PRODUCT LEVEL)	SEE PAGE
	1	1	245-3261	1	HOUSING-FRONT	
M	2	1	6V-3918	4	BOLT (M8X1.25X50-MM)	
M	3	1	6V-5217	8	BOLT (M8X1.25X20-MM)	
	4	1	9M-1974	12	WASHER-HARD (8.8X16X2-MM THK)	
B	5	1	1U-8846		SEALANT-GASKET	

B-USE AS REQUIRED
M-METRIC PART

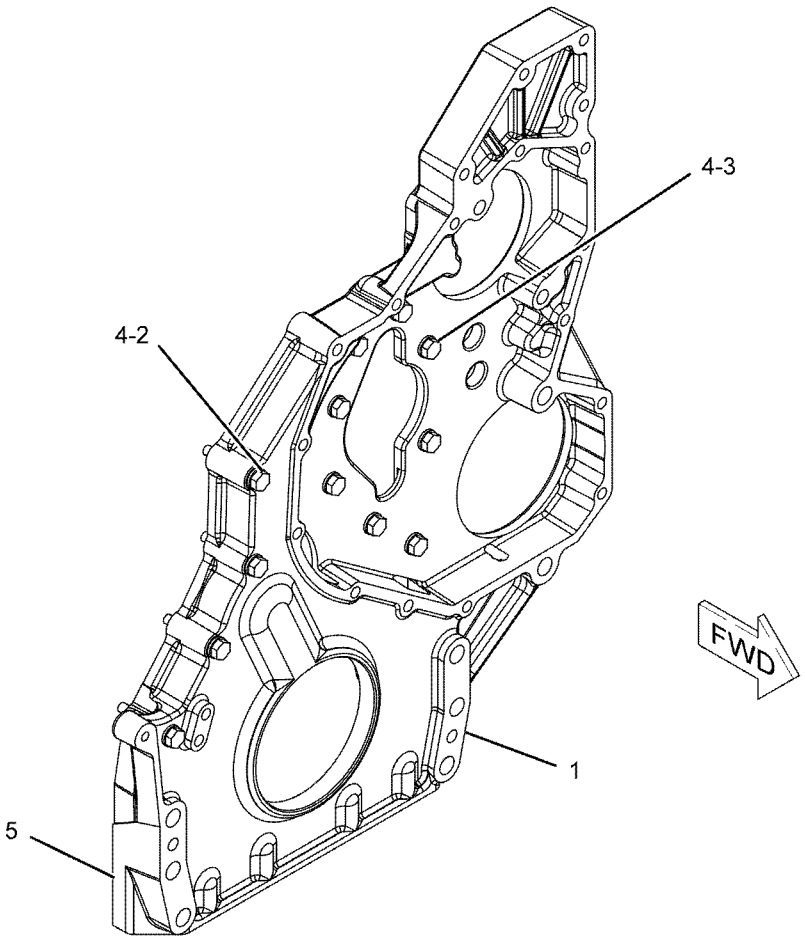

GRAPHIC #1 <END> g01141811

166-1784 LIFTING GP-ENGINE

S/N: THX19900-UP

PART OF 318-1904, 318-1905 ENGINE AR-COMPLETE

SMCS-1122 i04029191

NOTE	REF NO	GRAPHIC REF	PART NUMBER	QTY	PART NAME 1 2 3 4 5 6 (PRODUCT LEVEL)	SEE PAGE
	1	1	188-1017	1	PLATE-LIFTING	
	2	1	219-8675	1	BRACKET AS	
		1	7T-1099	3	LINK	
M		1	159-3042	5	NUT-WELD (M10X1.5-THD)	
	3	1	3E-4353	2	WASHER-HARD (11X25X3-MM THK)	
	4	1	4P-7428	2	CLIP	
	5	1	5P-8245	6	WASHER-HARD (13.5X25.5X3-MM THK)	
M	6	1	6V-1820	2	BOLT (M10X1.5X30-MM)	
M	7	1	6V-5684	2	BOLT (M12X1.75X45-MM)	
M	8	1	6V-8197	2	BOLT (M12X1.75X40-MM)	
M	9	1	6V-8675	4	BOLT (M12X1.75X35-MM)	
	10	1	7D-1649	4	WASHER-HARD (13.5X32X5-MM THK)	

M-METRIC PART

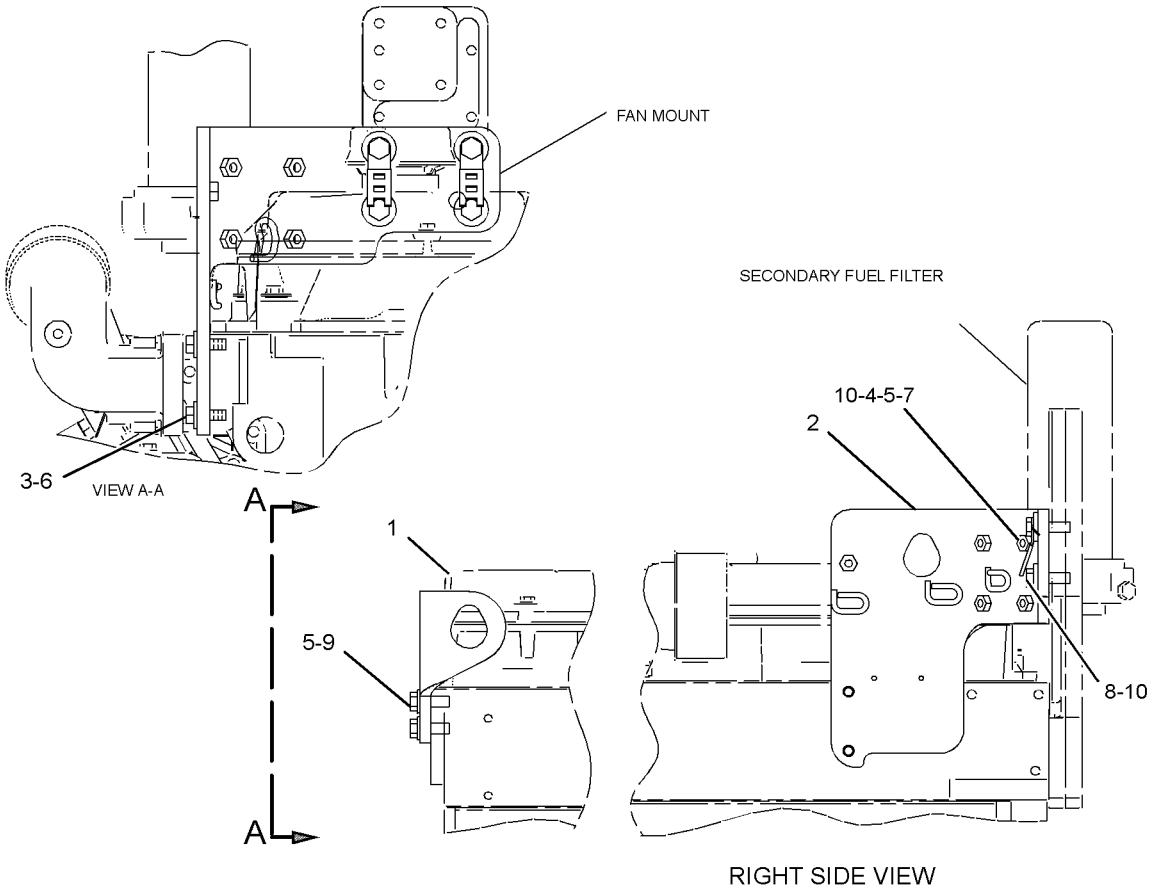

GRAPHIC #1 <END> g01304624

246-0600 MOUNTING GP-ALTERNATOR

S/N: THX19900-UP

PART OF 318-1904, 318-1905 ENGINE AR-COMPLETE

SMCS-1405 i04017544

NOTE	REF NO	GRAPHIC REF	PART NUMBER	QTY	PART NAME 1 2 3 4 5 6 (PRODUCT LEVEL)	SEE PAGE
	1	1	7W-3872	2	SLEEVE	
	2	1	241-8475	1	BRACKET	
M	3	1	6V-2317	4	BOLT (M8X1.25X30-MM)	
	4	1	9M-1974	4	WASHER-HARD (8.8X16X2-MM THK)	

M-METRIC PART

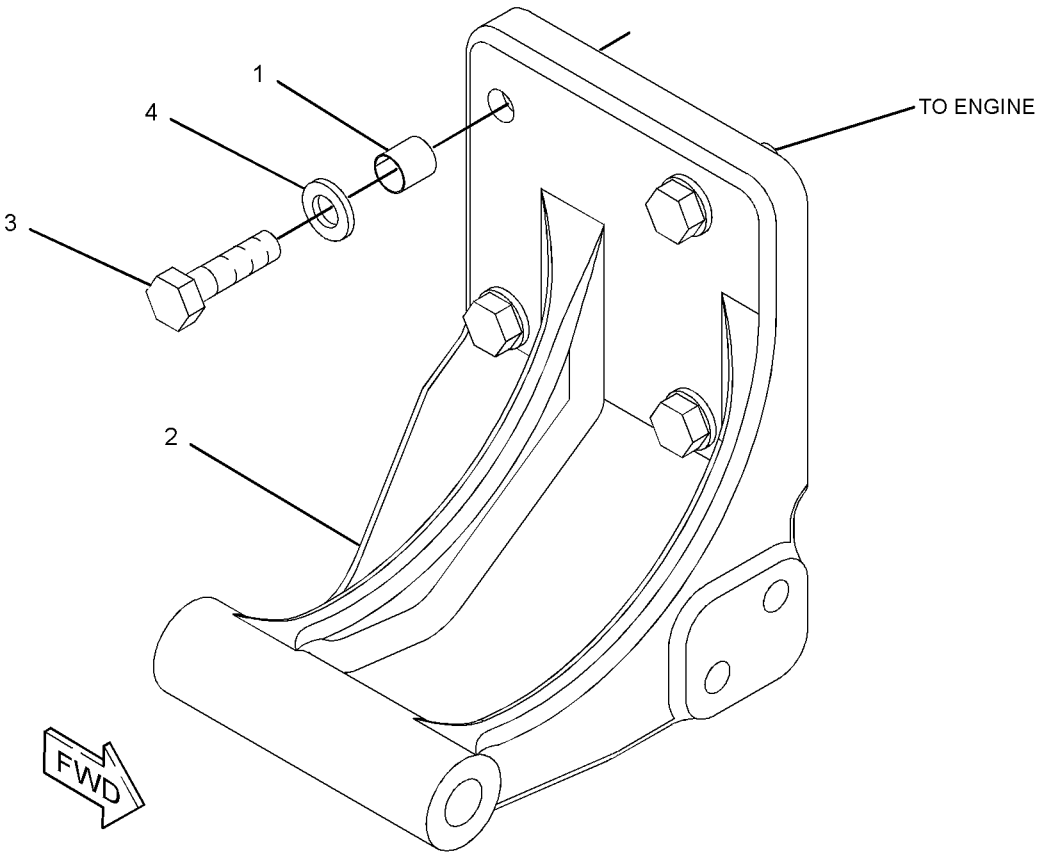

GRAPHIC #1 <END> g01206788

223-0556 MOUNTING GP-ENGINE

S/N: S6T1-UP; S6X1-UP; S6Y1-UP
PART OF 317-1762 INSTALLATION AR

SMCS-1152, 1153, 1154 i03984590

NOTE	REF NO	GRAPHIC REF	PART NUMBER	QTY	PART NAME 1 2 3 4 5 6 (PRODUCT LEVEL)	SEE PAGE
	1	1	7C-3567	2	MOUNT AS	
	2	1	183-9374	2	BLOCK	
	3	1	224-2695	2	SUPPORT-ENGINE	
	4	1	236-8191	2	CAP-MOUNT	
	5	1	7X-0515	4	WASHER-HARD (17X35X5-MM THK)	
	6	1	8T-4123	16	WASHER (22X35X3.5-MM THK)	
M	7	1	8T-4170	4	BOLT (M20X2.5X150-MM)	
M	8	1	8T-4193	4	BOLT (M16X2X50-MM)	
M	9	1	8T-6430	12	BOLT (M20X2.5X50-MM)	

M-METRIC PART

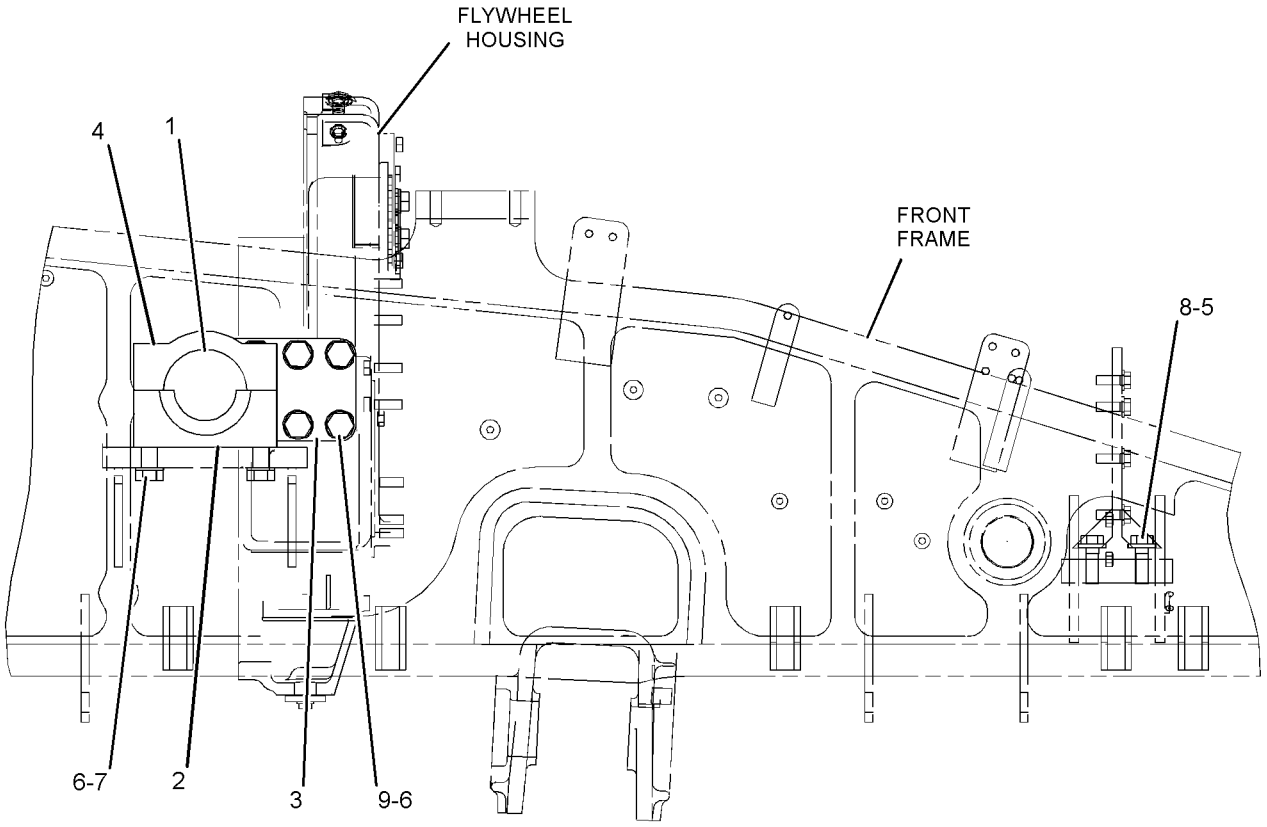

RIGHT SIDE VIEW

GRAPHIC #1 <END> g01209988

246-0598 MOUNTING GP-FAN DRIVE

S/N: THX19900-UP

PART OF 318-1904, 318-1905 ENGINE AR-COMPLETE

SMCS-1359 i04017546

NOTE	REF NO	GRAPHIC REF	PART NUMBER	QTY	PART NAME 1 2 3 4 5 6 (PRODUCT LEVEL)	SEE PAGE
	1	1	241-8474	1	SUPPORT	
	2	1	3E-4353	5	WASHER-HARD (11X25X3-MM THK)	
M	3	1	6V-5843	5	BOLT (M10X1.5X45-MM)	

M-METRIC PART

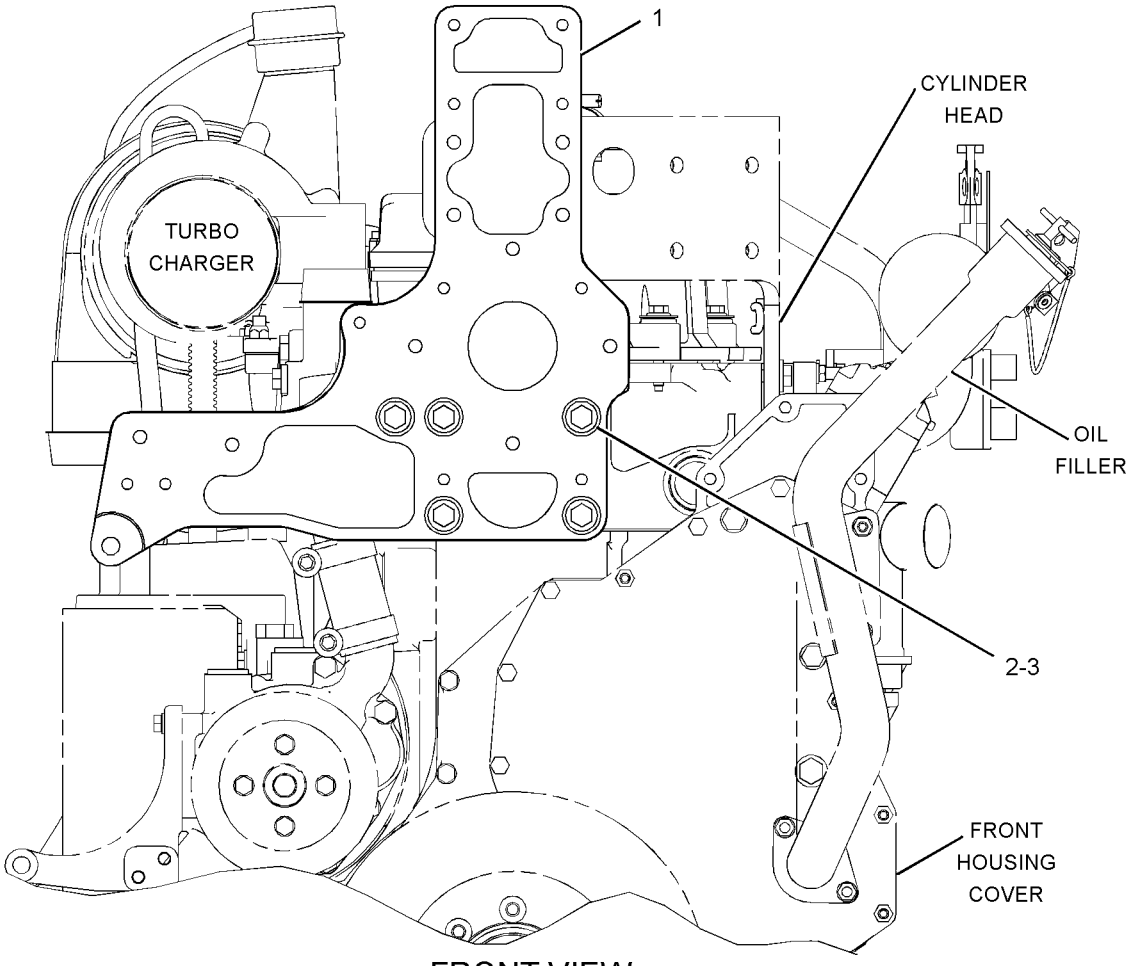

FRONT VIEW

GRAPHIC #1 <END> g01206764

165-4459 PAN GP-OIL—ENGINE

S/N: THX19900-UP

PART OF 318-1904, 318-1905 ENGINE AR-COMPLETE

SMCS-1302 i04017414

NOTE	REF NO	GRAPHIC REF	PART NUMBER	QTY	PART NAME 1 2 3 4 5 6 (PRODUCT LEVEL)	SEE PAGE
B	1	1	4C-9612		SEALANT-SILICONE	
	2	1	190-6114	1	GASKET-OIL PAN	
	3	1	174-3847	1	PAN-OIL	
M	4	1	6V-3918	32	BOLT (M8X1.25X50-MM)	
	5	1	9M-1974	32	WASHER-HARD (8.8X16X2-MM THK)	

B-USE AS REQUIRED
M-METRIC PART

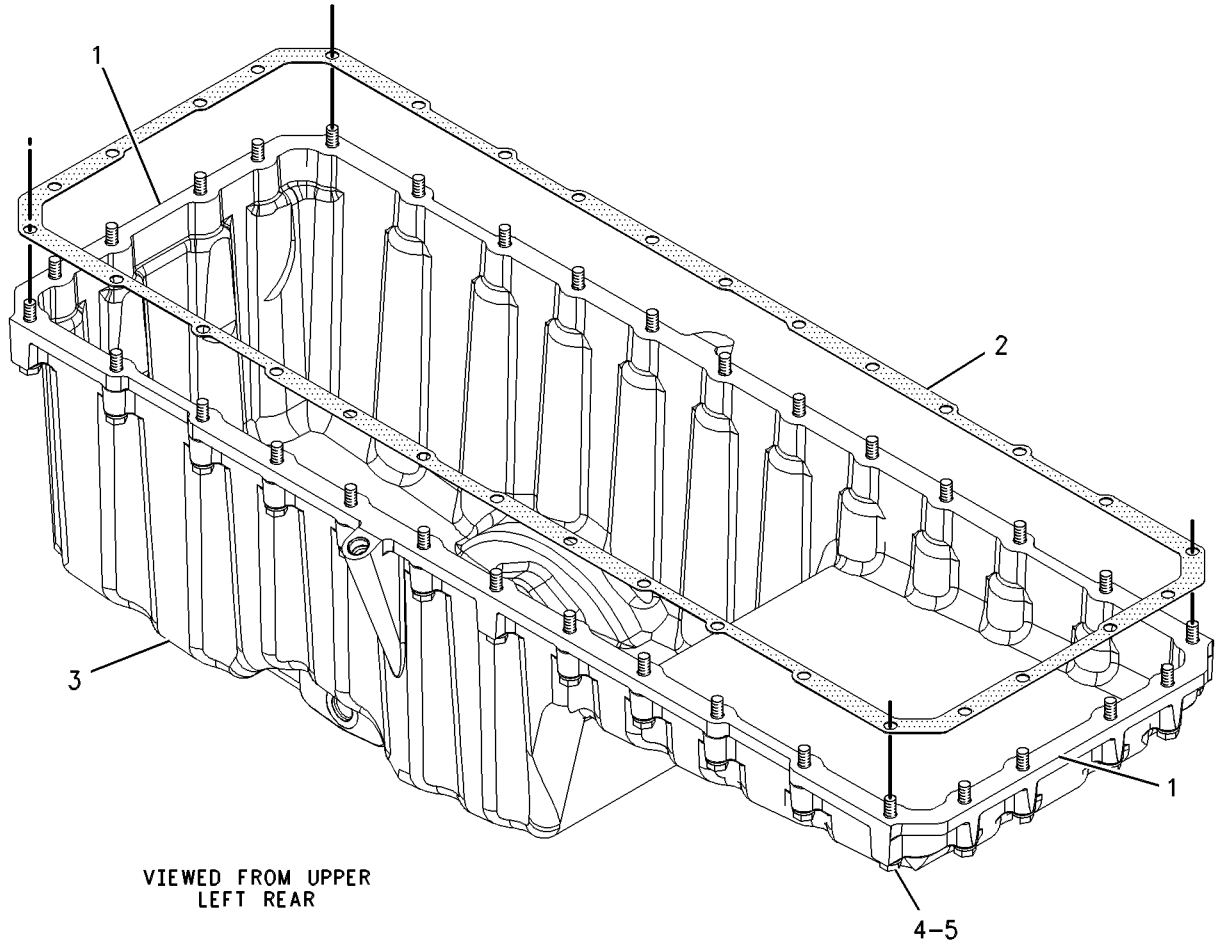

GRAPHIC #1 <END> g00637845

265-1400 PISTON & ROD GP

S/N: THX19900-UP
16.1:1 COMPRESSION RATIO
PART OF 320-7655, 320-7656 ENGINE AR-CORE

SMCS-1225 i04017504

NOTE	REF NO	GRAPHIC REF	PART NUMBER	QTY	PART NAME 1 2 3 4 5 6 (PRODUCT LEVEL)	SEE PAGE
	1	1	213-3190	1	BEARING (CONNECTING ROD)	
R	2	1	160-8199	1	ROD AS	
	2A	1	160-8194	1	BEARING (CONNECTING ROD)	
M	2B	1	160-8197	2	BOLT	
	3	1	166-3648	1	PIN-PISTON	
	4	1	168-7211	1	RING-PISTON (OIL CONTROL)	
	5	1	265-1401	1	CROWN AS-PISTON	
	6	1	161-3424	1	RING-PISTON (INTERMEDIATE)	
	7	1	197-9367	1	TUBE AS (PISTON COOLING JET)	
	8	1	197-9392	1	RING-PISTON (TOP)	
	9	1	324-7380	1	SKIRT-PISTON	
M	10	1	6V-3940	1	BOLT (M8X1.25X25-MM)	
	11	1	7X-2908	2	RING-RETAINING	

M-METRIC PART
R-REMFG PART MAY BE AVAILABLE

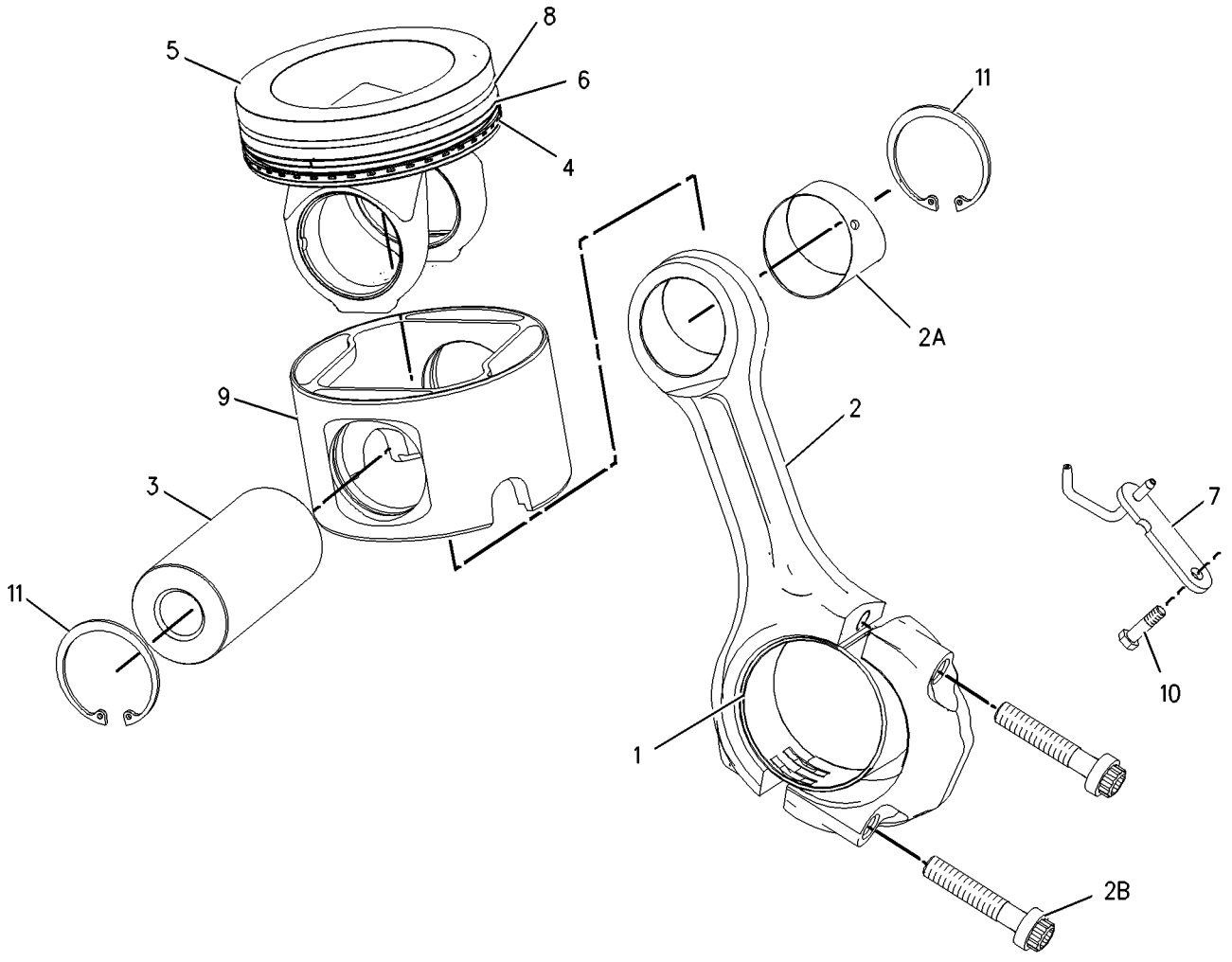

GRAPHIC #1 <END> g00922644

252-1567 PLUG GP-ENGINE

S/N: THX19900-UP

PART OF 318-1904, 318-1905 ENGINE AR-COMPLETE

SMCS-1000 i04017538

NOTE	REF NO	GRAPHIC REF	PART NUMBER	QTY	PART NAME 1 2 3 4 5 6 (PRODUCT LEVEL)	SEE PAGE
	1	1	*315-9859*	1	PLUG AS	
		1	238-5082	1	SEAL-O-RING	
		1	9S-8008	1	PLUG-O-RING	
	2	1	*183-3407*	1	PLUG AS	
		1	214-7568	1	SEAL-O-RING	
		1	9S-8004	1	PLUG-O-RING	
	3	1	*307-2673*	1	PLUG AS	
		1	238-5080	1	SEAL-O-RING	
		1	9S-8005	1	PLUG-O-RING	

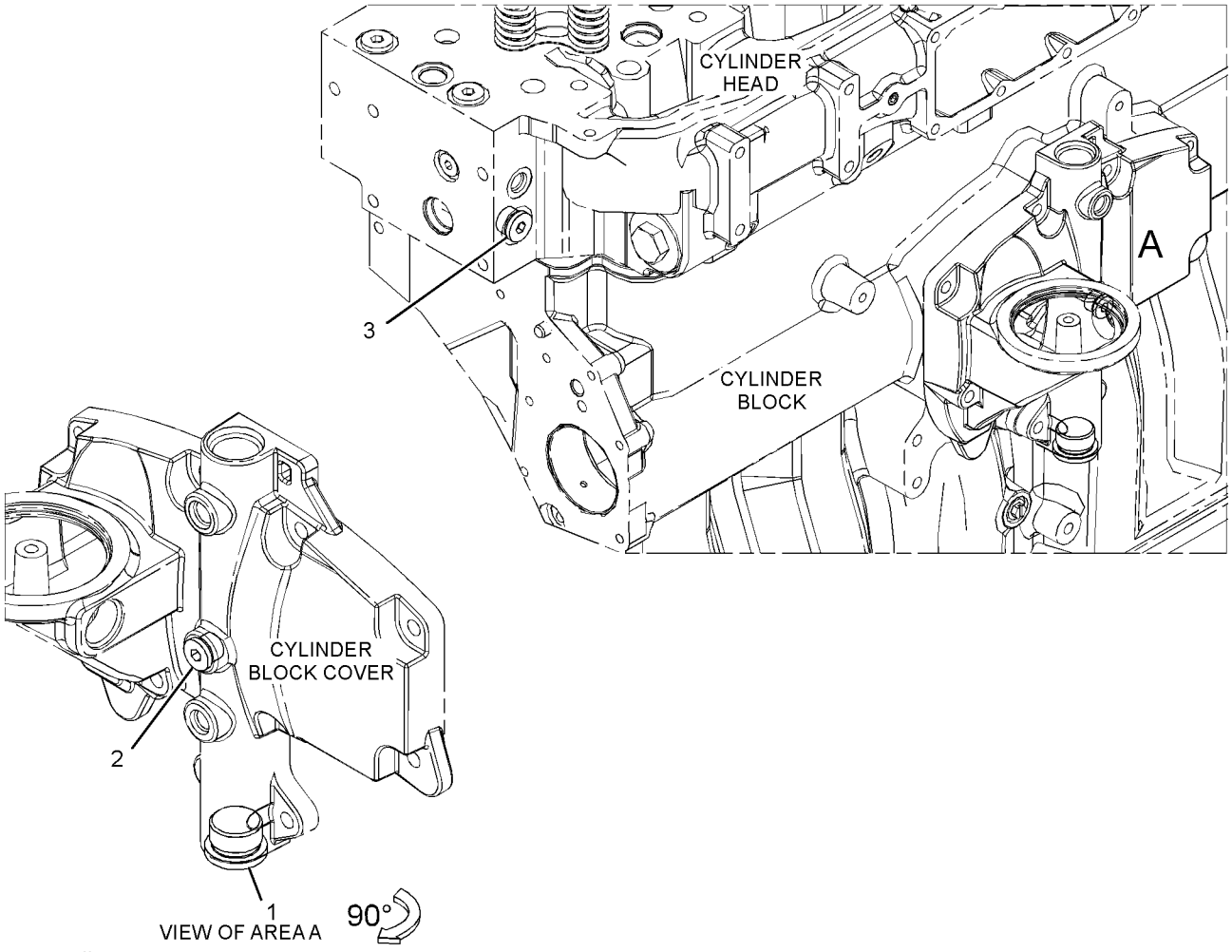

GRAPHIC #1 <END> g02163416

246-0602 PULLEY GP-CRANKSHAFT

S/N: THX19900-UP

PART OF 318-1904, 318-1905 ENGINE AR-COMPLETE

SMCS-1205 i04017540

NOTE	REF NO	GRAPHIC REF	PART NUMBER	QTY	PART NAME 1 2 3 4 5 6 (PRODUCT LEVEL)	SEE PAGE
	1	1	2W-7381	1	PLATE-CLAMP	
	2	1	236-8239	1	PULLEY-CRANKSHAFT (8-GROOVE)	
M	3	1	8T-3666	4	BOLT (M14X2X60-MM)	

M-METRIC PART

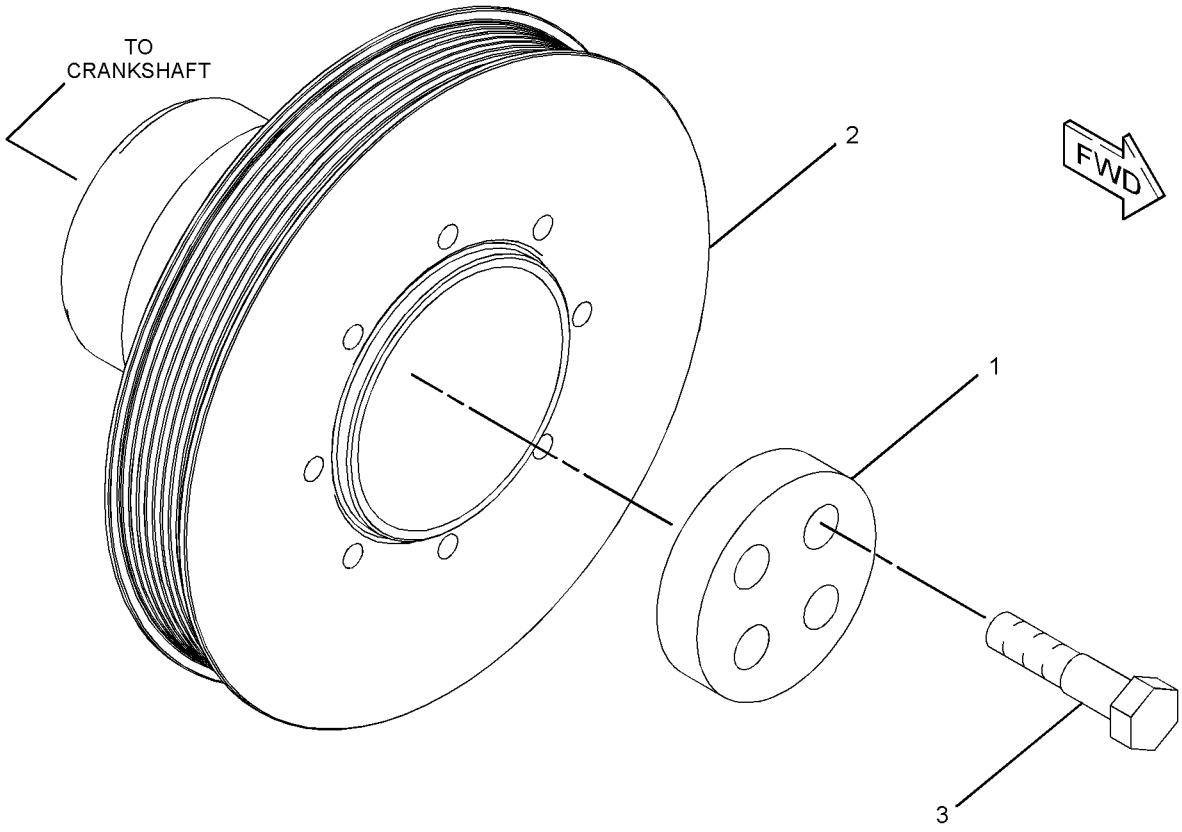

GRAPHIC #1 <END> g01206786

316-4438 PULLEY GP-FAN & ALT DRIVE

S/N: S6T1-UP; S6X1-UP; S6Y1-UP
PART OF 317-1762 INSTALLATION AR

SMCS-1359, 1425 i03989191

NOTE	REF NO	GRAPHIC REF	PART NUMBER	QTY	PART NAME 1 2 3 4 5 6 (PRODUCT LEVEL)	SEE PAGE
	1	1	1L-8545	1	SPACER (1X1.25X0.99-IN THK)	
	2	1	5M-9735	1	SEAL-LIP TYPE	
	3	1	6B-1124	2	BALL BEARING	
	4	1	6N-7053	1	V-BELT SET (INCLUDES 3-BELTS)	
	5	1	7C-8370	1	CAP-DUST	
	6	1	123-0790	1	PULLEY (8-GROOVE)	
	7	1	185-0838	1	ROD-ADJUSTING	
	8	1	214-5705	1	ADAPTER	
	9	1	215-3296	1	ARM AS	
		1	3E-4999	1	PIN-SPRING	
	10	1	222-9151	1	WASHER-HARD (11X32X5-MM THK)	
	11	1	241-4981	1	BELT-SERPENTINE	
	12	1	267-7507	1	PULLEY-FAN	
	13	1	267-7509	1	PULLEY	
	14	1	329-4473	1	PULLEY	
	15	1	5P-1076	1	WASHER-HARD (13.5X30X4-MM THK)	
M	16	1	6V-4248	1	BOLT (M10X1.5X25-MM)	
	17	1	7C-2164	1	BLOCK	
	18	1	8T-4121	14	WASHER-HARD (11X21X2.5-MM THK)	
M	19	1	8T-4186	7	BOLT (M10X1.5X40-MM)	
M	20	1	8T-4196	7	BOLT (M10X1.5X35-MM)	
M	21	1	8T-4198	8	BOLT (M10X1.5X100-MM)	
	22	1	8T-4223	3	WASHER-HARD (13.5X25.5X3-MM THK)	
M	23	1	8T-4244	2	NUT (M12X1.75-THD)	
M	24	1	8T-4910	1	BOLT (M12X1.75X60-MM)	
M	25	1	8T-6868	1	BOLT (M12X1.75X80-MM)	

M-METRIC PART

316-4438 PULLEY GP-FAN & ALT DRIVE *(contd.)* i03989191

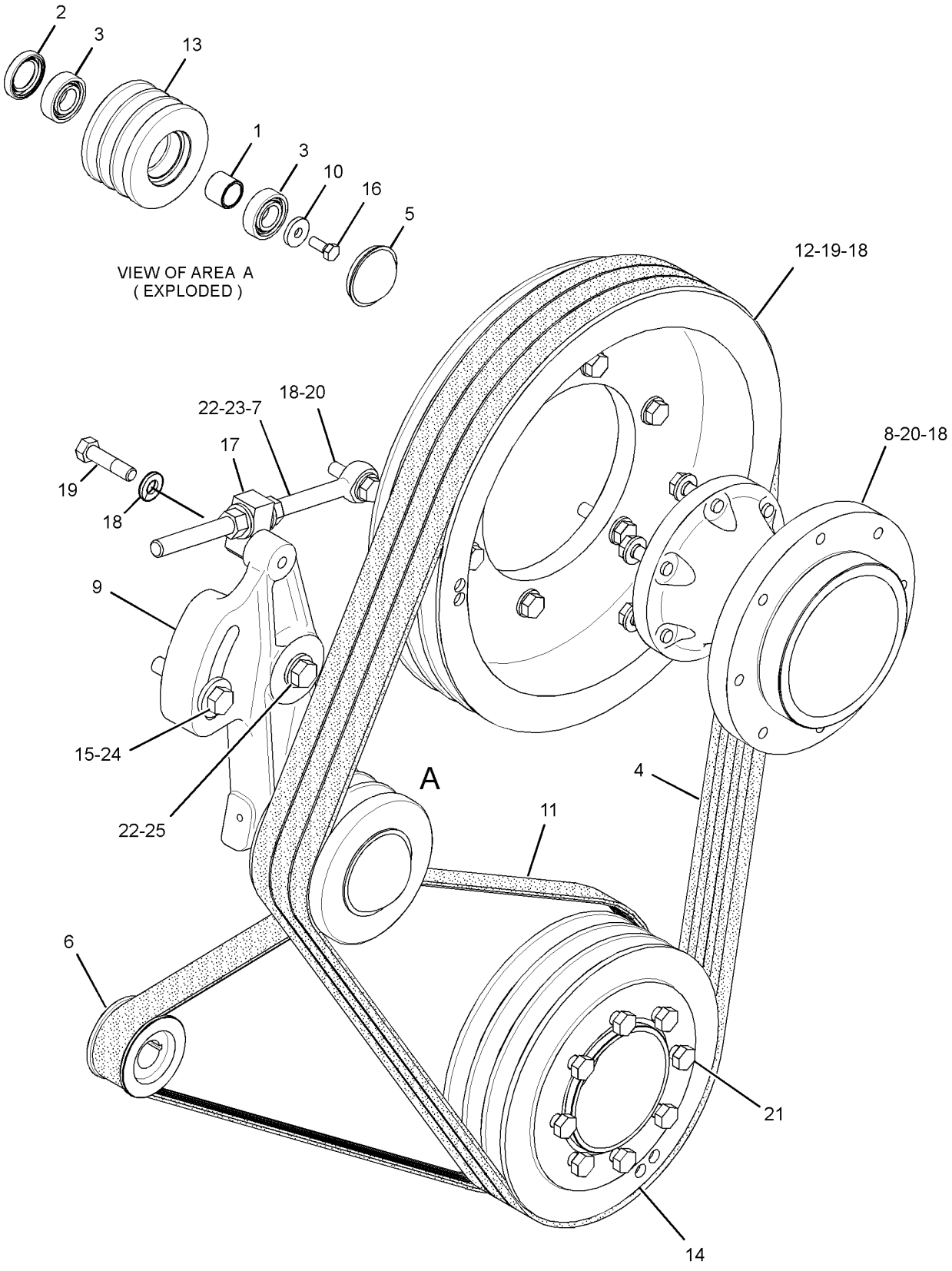

GRAPHIC #1 <END> g02178271

213-9320 ROCKER ARM GP–EXHAUST

S/N: THX19900-UP

PART OF 212-8926 VALVE MECHANISM GP

SMCS-1123 i04017519

NOTE	REF NO	GRAPHIC REF	PART NUMBER	QTY	PART NAME 1 2 3 4 5 6 (PRODUCT LEVEL)	SEE PAGE
R	1	1	163-2447	1	ROCKER ARM AS	
M	2	1	260-7524	1	SCREW-VALVE ADJUSTMENT (M10X1.5-THD)	
M	3	1	2Y-5829	1	NUT (M10X1.5-THD)	

M-METRIC PART
R-REMFG PART MAY BE AVAILABLE

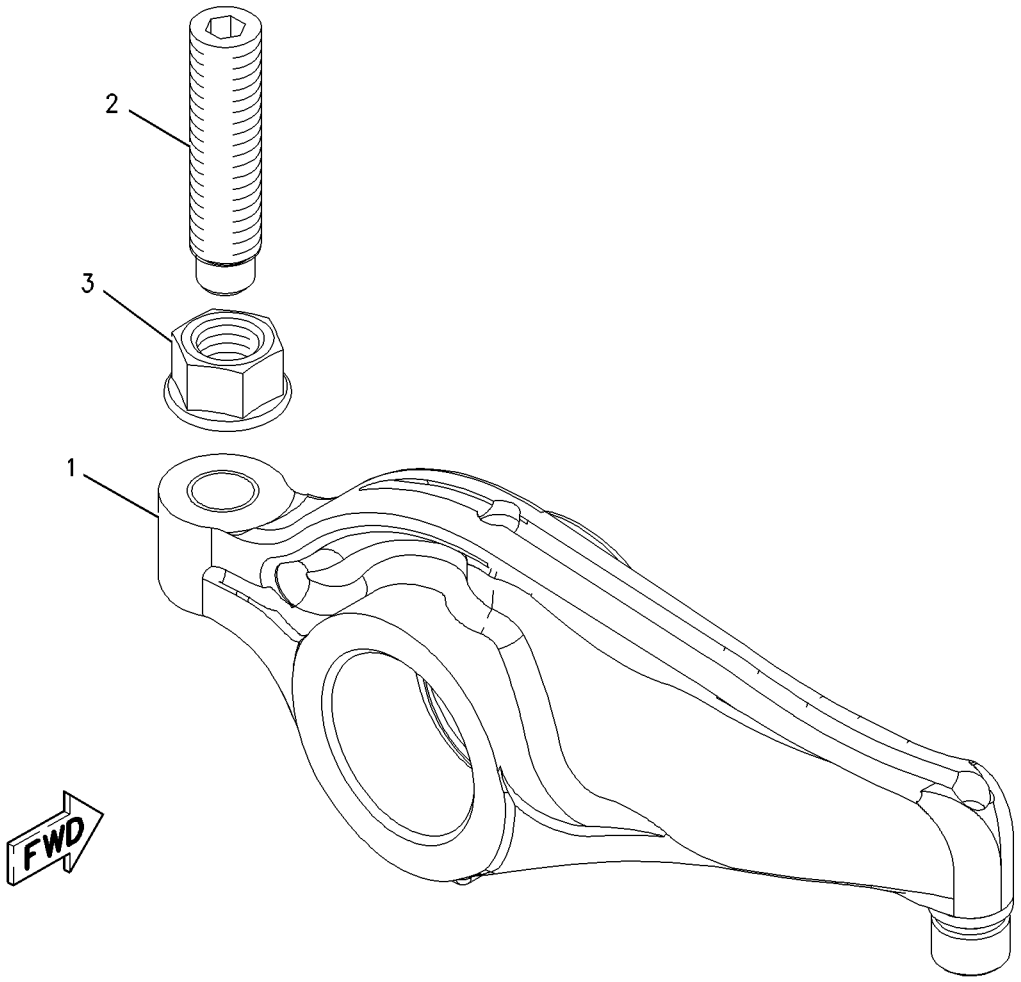

GRAPHIC #1 <END> g00848359

242-0329 ROCKER ARM GP–INLET

S/N: THX19900-UP

PART OF 212-8926 VALVE MECHANISM GP

SMCS-1123 i04017530

NOTE	REF NO	GRAPHIC REF	PART NUMBER	QTY	PART NAME 1 2 3 4 5 6 (PRODUCT LEVEL)	SEE PAGE
M	1	1	260-7524	1	SCREW-VALVE ADJUSTMENT (M10X1.5-THD)	
R	2	1	242-0328	1	ROCKER ARM AS	
M	3	1	2Y-5829	1	NUT (M10X1.5-THD)	

M-METRIC PART
R-REMFG PART MAY BE AVAILABLE

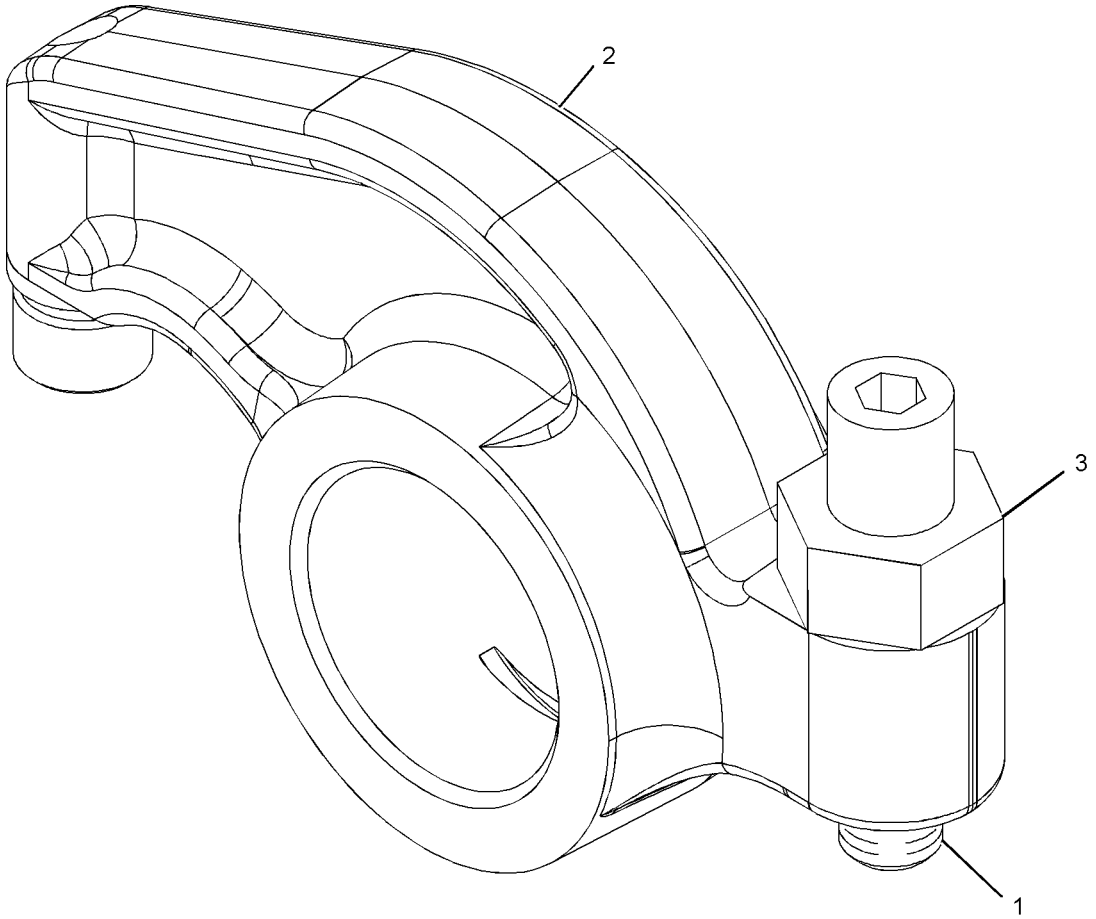

GRAPHIC #1 <END> g01056688

189-9306 SEAL GP-CRANKSHAFT

S/N: THX19900-UP
FRONT AND REAR
PART OF 318-1904, 318-1905 ENGINE AR-COMPLETE
FOR USE WITH WET FLYWHEEL HOUSING AND FRONT DUST EXCLUDER

SMCS-1160, 1161 i04017424

NOTE	REF NO	GRAPHIC REF	PART NUMBER	QTY	PART NAME 1 2 3 4 5 6 (PRODUCT LEVEL)	SEE PAGE
	1	1	4R-9999	1	EXCLUDER-CRANKSHAFT SEAL	
M	2	1	206-3719	9	BOLT AS	
	3	1	245-7339	1	SEAL-CRANKSHAFT (FRONT)	
Y	4	1	285-4074	1	SEAL GP-CRANKSHAFT (REAR)	64

M-METRIC PART
Y-SEPARATE ILLUSTRATION

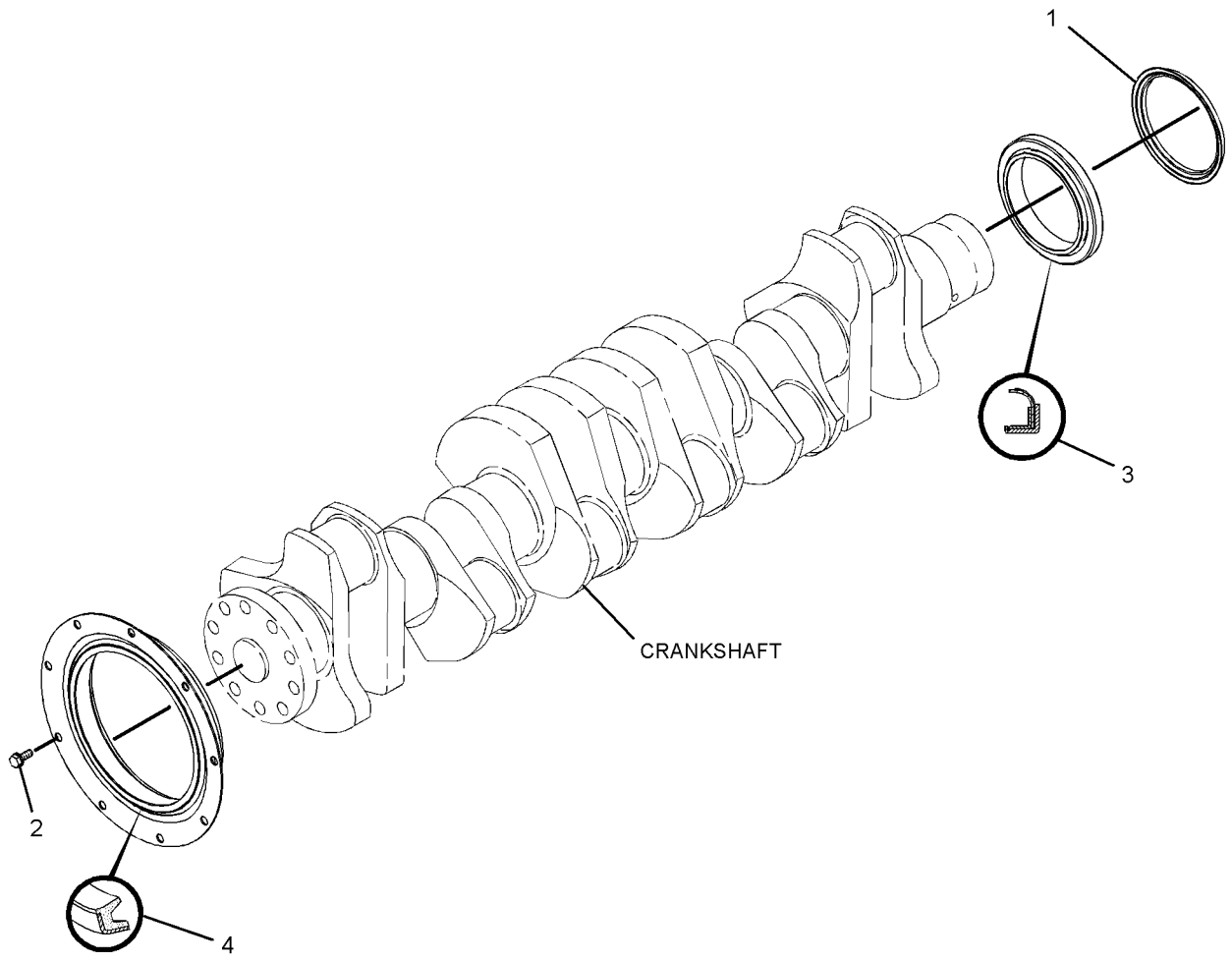

GRAPHIC #1 <END> g01439940

BASIC ENGINE

285-4074 SEAL GP-CRANKSHAFT

S/N: THX19900-UP

PART OF 189-9306 SEAL GP-CRANKSHAFT

SMCS-1160, 1161 i04023102

NOTE	REF NO	GRAPHIC REF	PART NUMBER	QTY	PART NAME 1 2 3 4 5 6 (PRODUCT LEVEL)	SEE PAGE
					(NO SERVICED PARTS)	

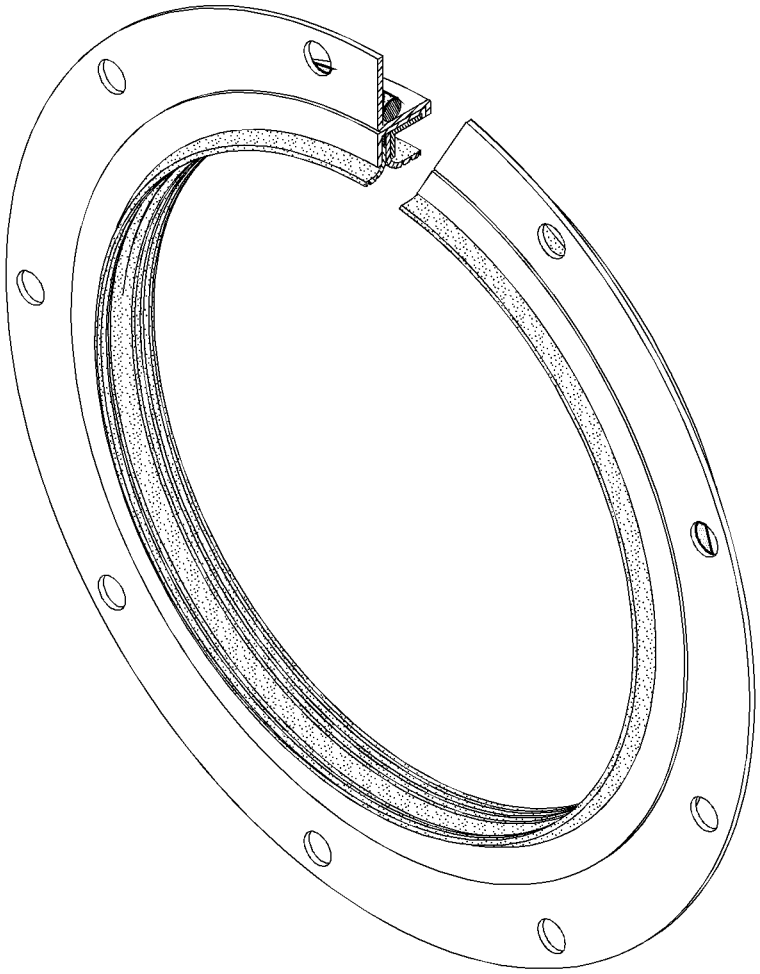

GRAPHIC #1 <END> g02202493

166-1790 SUPPORT GP-ENGINE

S/N: THX19900-UP
PART OF 318-1904, 318-1905 ENGINE AR-COMPLETE
FOR USE WITH FRONT TRUNNION ENGINE SUPPORT

SMCS-1152, 1153, 1154 i04017421

NOTE	REF NO	GRAPHIC REF	PART NUMBER	QTY	PART NAME 1 2 3 4 5 6 (PRODUCT LEVEL)	SEE PAGE
	1	1	169-3899	1	SUPPORT AS-ENGINE	
M	1A	1	8T-3490	4	NUT-WELD (M10X1.5 THD)	
	2	1	5P-8245	6	WASHER-HARD (13.5X25.5X3-MM THK)	
M	3	1	6V-8675	6	BOLT (M12X1.75X35-MM)	

M-METRIC PART

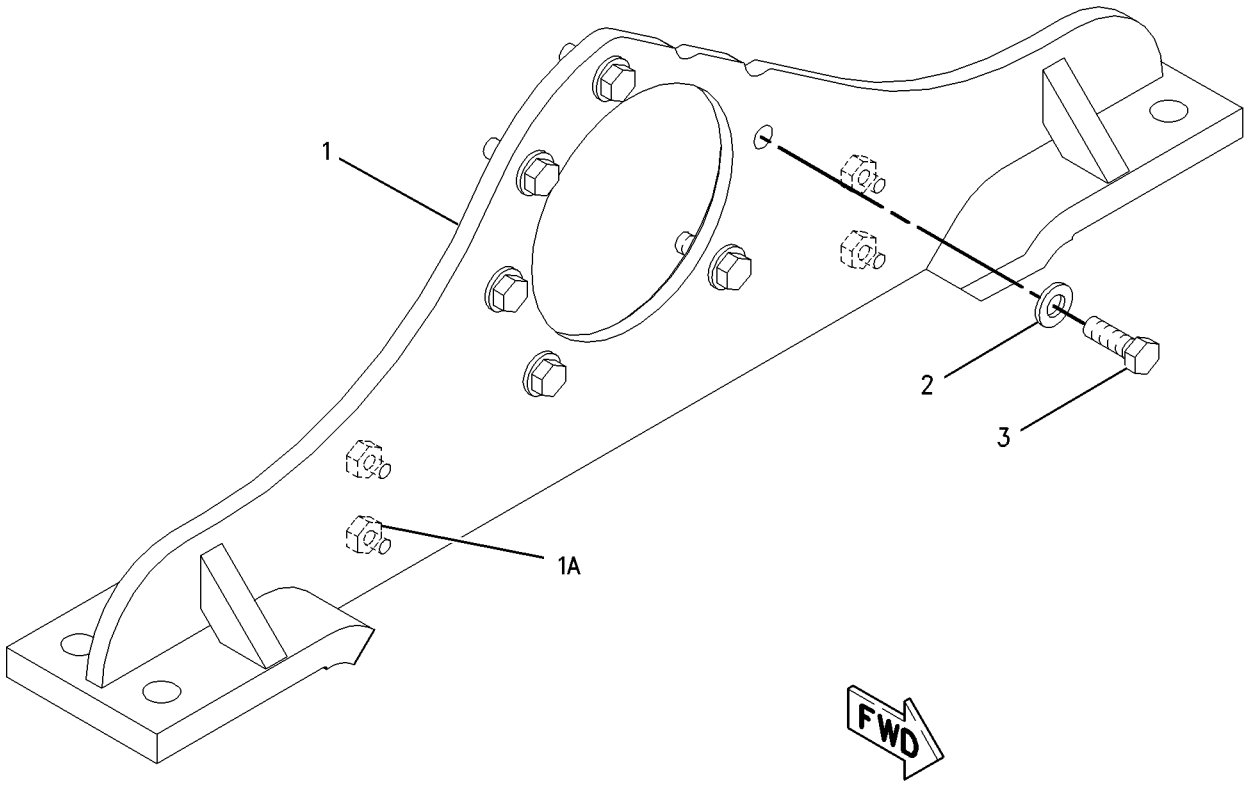

GRAPHIC #1 <END> g00852403

166-1792 TRUNNION GP-ENGINE

S/N: THX19900-UP

PART OF 318-1904, 318-1905 ENGINE AR-COMPLETE

SMCS-1153 i04017420

NOTE	REF NO	GRAPHIC REF	PART NUMBER	QTY	PART NAME 1 2 3 4 5 6 (PRODUCT LEVEL)	SEE PAGE
	1	1	169-3895	1	TRUNNION AS	
	2	1	5P-8245	6	WASHER-HARD (13.5X25.5X3-MM THK)	
M	3	1	6V-5696	6	BOLT (M12X1.75X80-MM)	

M-METRIC PART

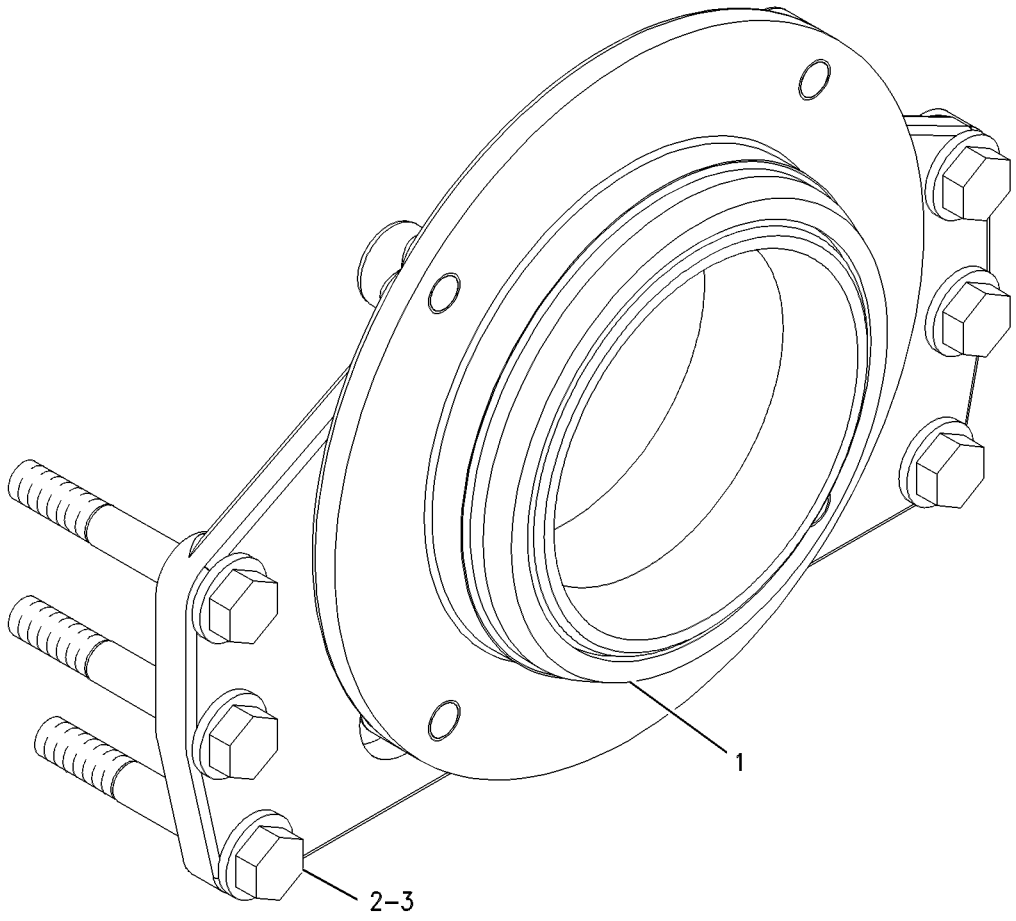

GRAPHIC #1 <END> g00644918

212-8926 VALVE MECHANISM GP

S/N: THX19900-UP

PART OF 242-0447 VALVE MECHANISM GP

SMCS-1102, 1121, 1123 i04017517

NOTE	REF NO	GRAPHIC REF	PART NUMBER	QTY	PART NAME 1 2 3 4 5 6 (PRODUCT LEVEL)	SEE PAGE
	1	1	163-2445	1	SHAFT AS-ROCKER ARM	
		1	8F-6575	2	PLUG-CUP	
	2	1	163-2459	6	SPRING	
	3	1	164-5669	2	STAND (END)	
	4	1	176-5913	4	STAND (MIDDLE)	
	5	1	176-5914	1	STAND (OIL)	
Y	6	1	*213-9320*	6	ROCKER ARM GP (EXHAUST)	61
Y	7	1	*242-0329*	6	ROCKER ARM GP (INLET)	62
	8	1	5P-8245	7	WASHER-HARD (13.5X25.5X3-MM THK)	
M	9	1	8T-0646	7	BOLT (M12X1.75X110-MM)	

M-METRIC PART
Y-SEPARATE ILLUSTRATION

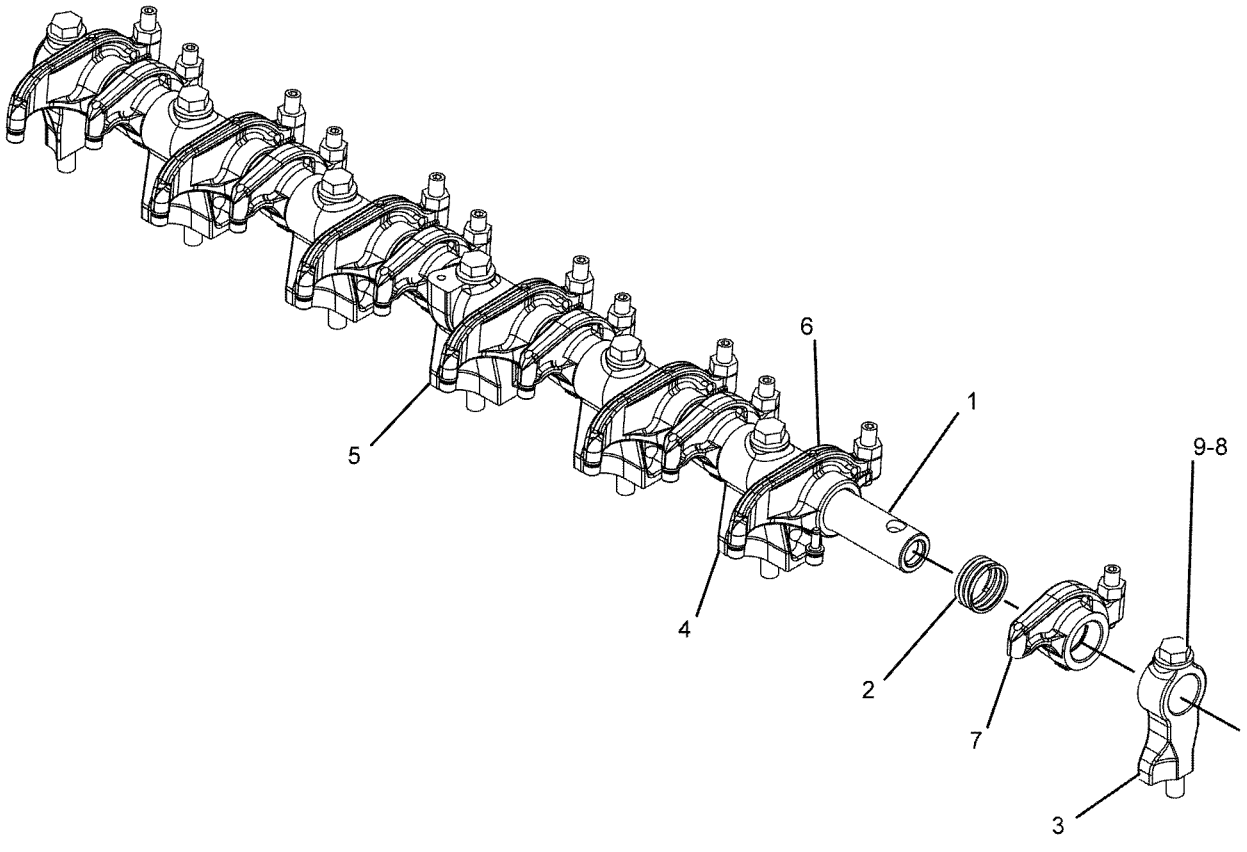

GRAPHIC #1 <END> g01069313

242-0447 VALVE MECHANISM GP

S/N: THX19900-UP

PART OF 320-7655, 320-7656 ENGINE AR-CORE

SMCS-1102, 1121, 1123 i04017516

NOTE	REF NO	GRAPHIC REF	PART NUMBER	QTY	PART NAME 1 2 3 4 5 6 (PRODUCT LEVEL)	SEE PAGE
	1	1	304-5260	12	SPRING-GUIDE	
	2	1	264-6156	12	ROD-VALVE PUSH	
	3	1	163-2437	12	LIFTER AS-VALVE	
Y	4	1	*212-8926*	1	VALVE MECHANISM GP	67
	5	1	244-5891	6	BRIDGE-VALVE	
	6	1	255-8674	6	BRIDGE-VALVE	

Y-SEPARATE ILLUSTRATION

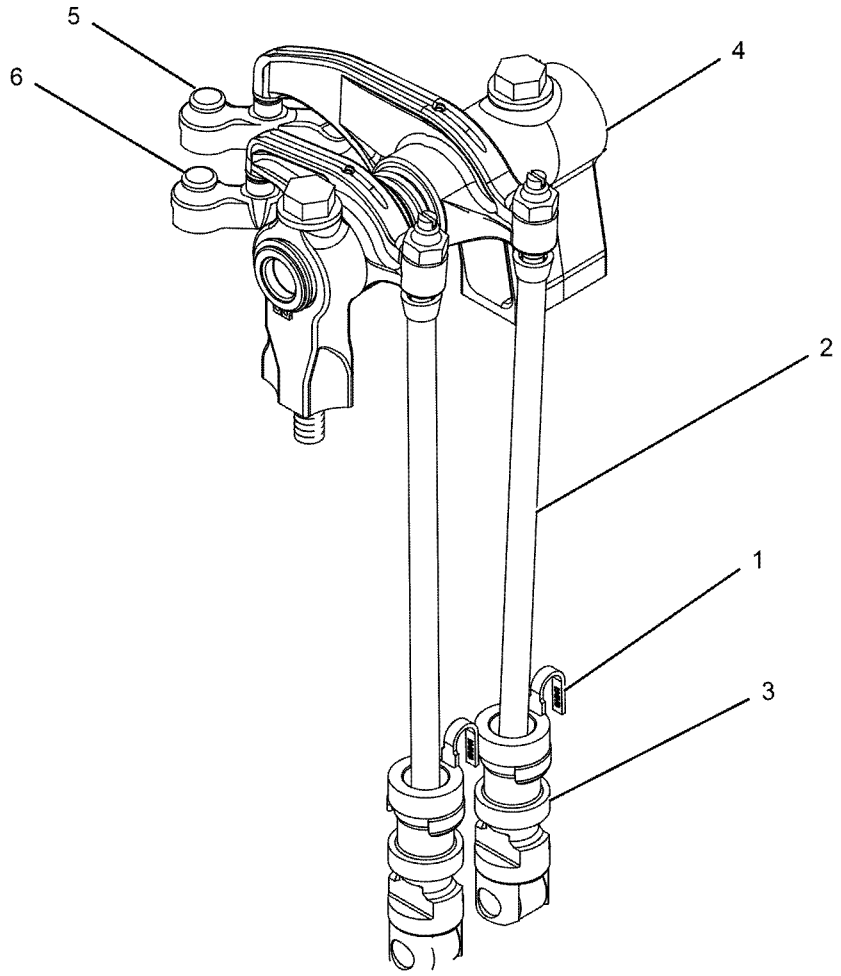

GRAPHIC #1 <END> g01043825

224-2693 YOKE GP

S/N: S6T1-UP; S6X1-UP; S6Y1-UP
PART OF 317-1762 INSTALLATION AR

SMCS-3108 i03984793

NOTE	REF NO	GRAPHIC REF	PART NUMBER	QTY	PART NAME 1 2 3 4 5 6 (PRODUCT LEVEL)	SEE PAGE
	1	1	128-3341	1	COVER	
	2	1	224-2694	1	FLANGE	
	3	1	128-3813	1	SEAL-LIP TYPE	
	4	1	1L-4775	1	RING-RETAINING	
	5	1	2S-3029	1	BALL BEARING	
M	6	1	6V-5844	2	BOLT (M16X2X35-MM)	
	7	1	6V-8260	1	SEAL-O-RING	
	8	1	9X-8268	2	WASHER (17.5X30X3.5-MM THK)	

M-METRIC PART

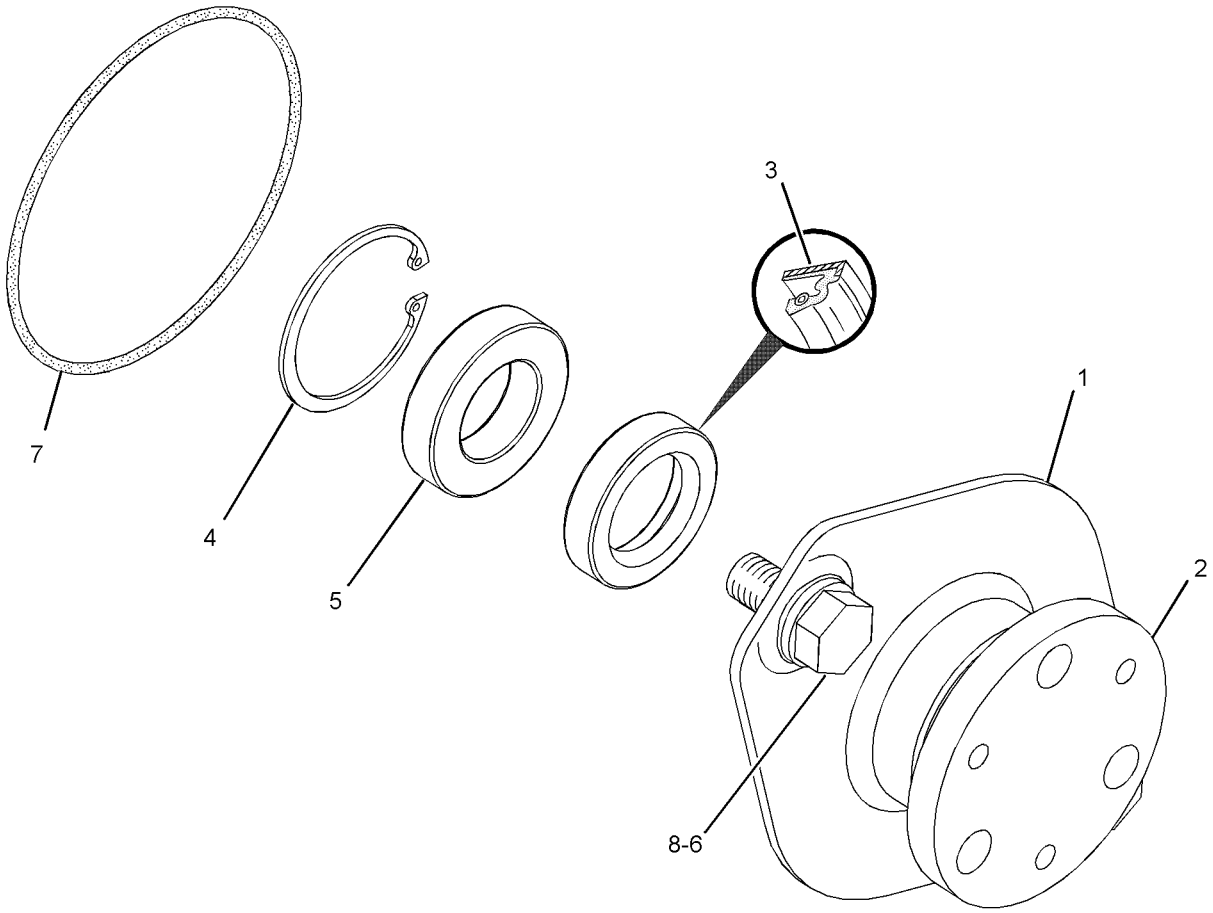

GRAPHIC #1 <END> g01210810

LUBRICATION SYSTEM

230-4118 FILLER GP-ENGINE OIL

S/N: THX19900-UP

PART OF 318-1904, 318-1905 ENGINE AR-COMPLETE

SMCS-1316 i04017593

NOTE	REF NO	GRAPHIC REF	PART NUMBER	QTY	PART NAME 1 2 3 4 5 6 (PRODUCT LEVEL)	SEE PAGE
	1	1	230-4119	1	TUBE AS	
		1	6N-2985	1	CAP AS-FILLER (ENGINE OIL)	
	2	1	061-9455	1	SEAL-O-RING	
M	3	1	5P-7970	4	NUT (M8X1.25-THD)	
	4	1	9M-1974	4	WASHER-HARD (8.8X16X2-MM THK)	

M-METRIC PART

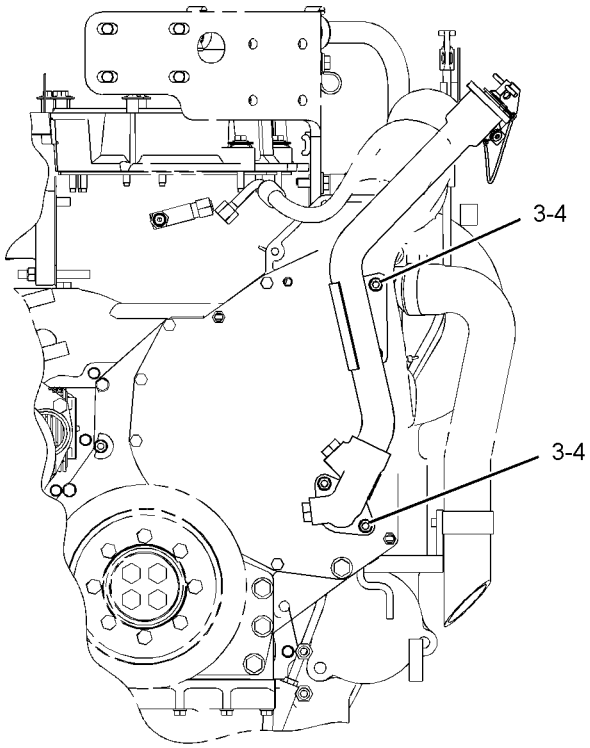

FRONT VIEW

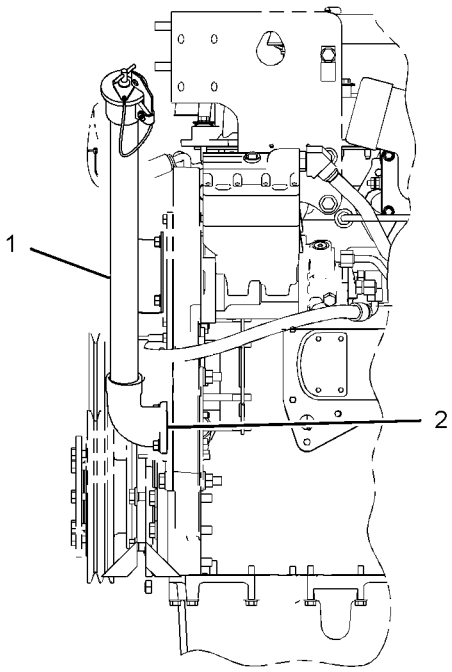

LEFT SIDE VIEW

GRAPHIC #1 <END> g01072234

183-2097 FILTER GP-ENGINE OIL

S/N: THX19900-UP

PART OF 318-1904, 318-1905 ENGINE AR-COMPLETE

SMCS-1306, 1308 i04017423

NOTE	REF NO	GRAPHIC REF	PART NUMBER	QTY	PART NAME 1 2 3 4 5 6 (PRODUCT LEVEL)	SEE PAGE
	1	2	1R-1808	1	FILTER-ENGINE OIL (ADVANCED EFFICIENCY)	
	2	2	7C-1493	2	VALVE AS-BYPASS (ENGINE OIL FILTER)	
	3	2	8C-3445	1	CAP-DUST	
	4	2	8T-8902	1	TEE	
	5	2	209-7290	1	GASKET	
	6	2	242-3864	2	SPRING	
C	7	1	352-8839	1	BASE AS-OIL FILTER	
		1	2P-4304	1	STUD-HOLLOW	
		1	230-5040	1	PLUG	
		1	238-5085	1	SEAL-O-RING	
C	8	1	214-7566	1	SEAL-O-RING	
C	9	1	228-7089	1	SEAL-O-RING	
C	10	1	*307-2670*	1	PLUG AS	
		1	9S-4185	1	PLUG-O-RING	
		1	238-5080	1	SEAL-O-RING	
C	11	1	*321-8647*	3	PLUG AS	
					(EACH INCLUDES)	
M		1	5P-8196	1	PLUG	
		1	238-5081	1	SEAL-O-RING	
C	12	1	*329-5511*	1	ELBOW AS	
		1	6V-8723	1	ELBOW	
		1	228-7089	1	SEAL-O-RING	
		1	238-5080	1	SEAL-O-RING	
	13	2	5P-9617	1	ADAPTER	
	14	2	6V-5049	2	SEAL-O-RING	
M	15	1	6V-5218	2	BOLT (M8X1.25X35-MM)	
M	16	1	6V-5219	8	BOLT (M8X1.25X40-MM)	
M	17	1	6V-5220	2	BOLT (M8X1.25X65-MM)	
	18	2	6V-8077	1	ELBOW	
	19	2	8C-3446	1	VALVE-FLUID SAMPLING (ENGINE OIL)	
	20	1	9M-1974	12	WASHER-HARD (8.8X16X2-MM THK)	

C-CHANGE FROM PREVIOUS TYPE
M-METRIC PART

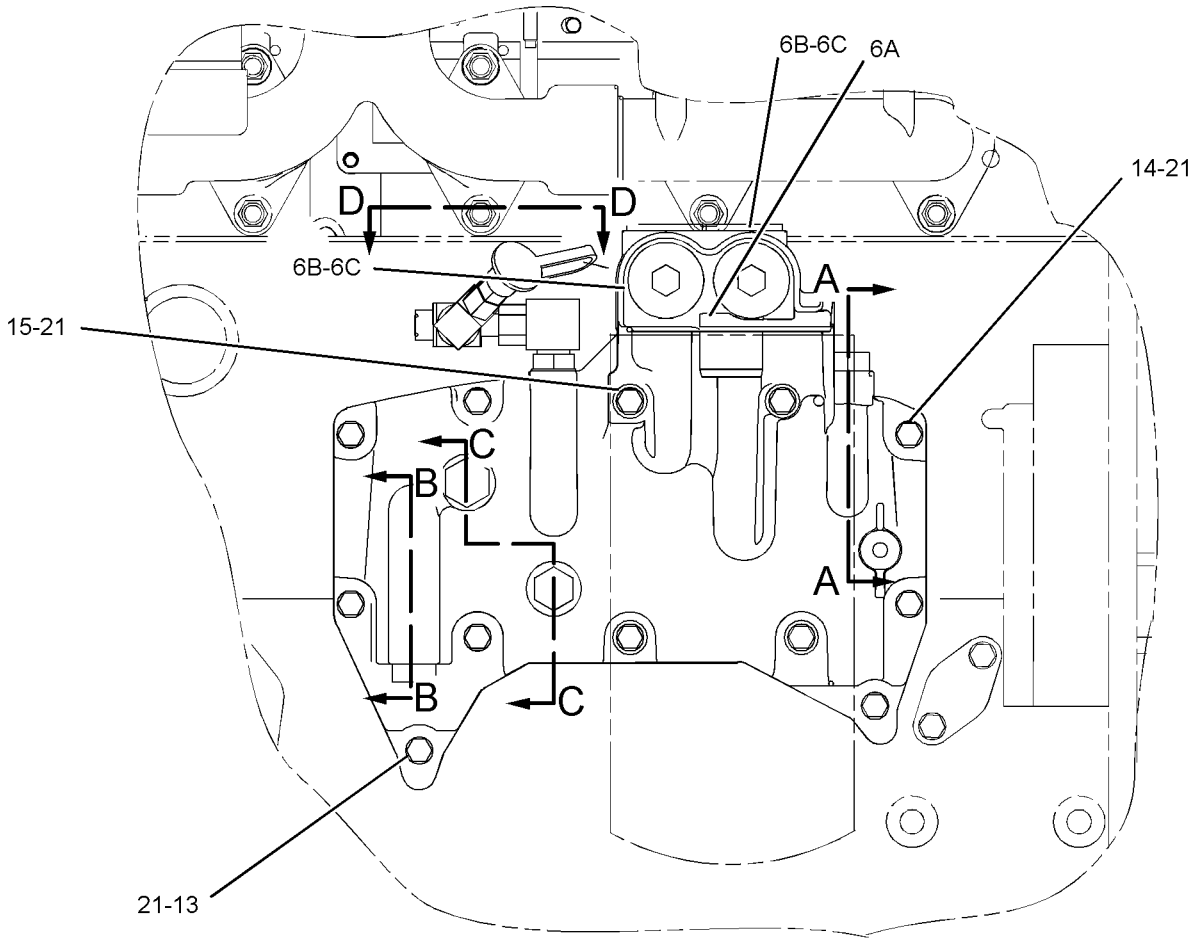

RIGHT SIDE VIEW

GRAPHIC #1 g01912556

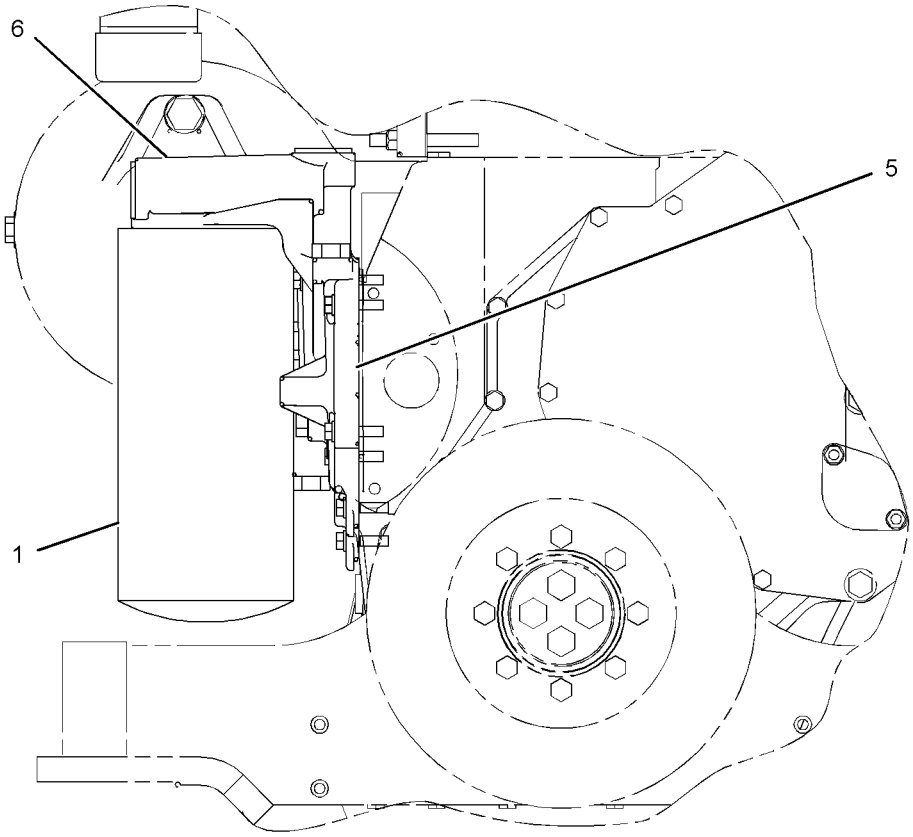

FRONT VIEW

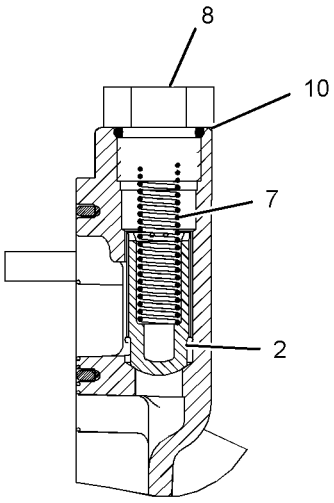

SECTION A-A

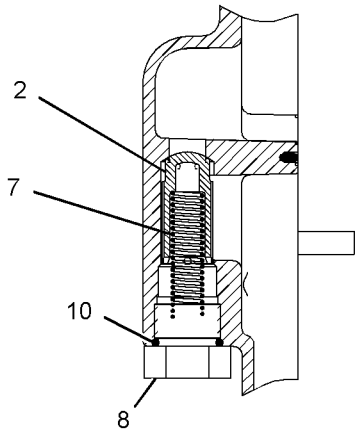

SECTION B-B

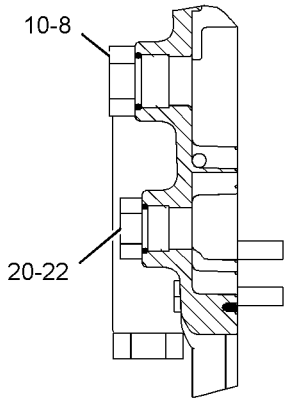

SECTION C-C

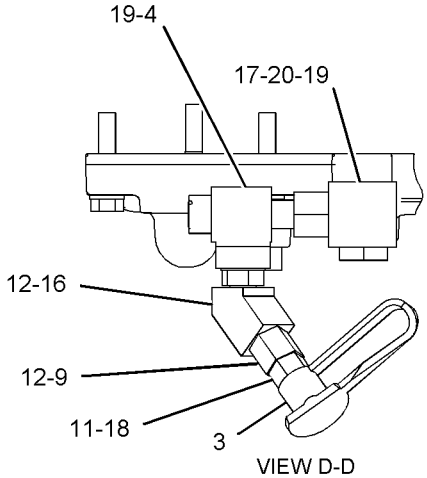

VIEW D-D

GRAPHIC #2 <END> g01062704

LUBRICATION SYSTEM

230-5585 FUMES DISPOSAL GP–CRANKCASE

S/N: S6T1-UP; S6X1-UP; S6Y1-UP
PART OF 317-1762 INSTALLATION AR

SMCS-1317 i03985439

NOTE	REF NO	GRAPHIC REF	PART NUMBER	QTY	PART NAME 1 2 3 4 5 6 (PRODUCT LEVEL)	SEE PAGE
	1	1	2S-3440	1	CLAMP-HOSE	
	2	1	9M-0164	1	CLAMP-HOSE	
	3	1	184-7211	2	CLIP	
	4	1	230-9796	1	DUCT AS	
	5	1	6V-1889	3	CLIP	
	6	1	8T-4121	5	WASHER-HARD (11X21X2.5-MM THK)	
M	7	1	8T-4133	2	NUT (M10X1.5-THD)	
M	8	1	8T-4136	1	BOLT (M10X1.5X25-MM)	
M	9	1	8T-4195	1	BOLT (M10X1.5X30-MM)	

M-METRIC PART

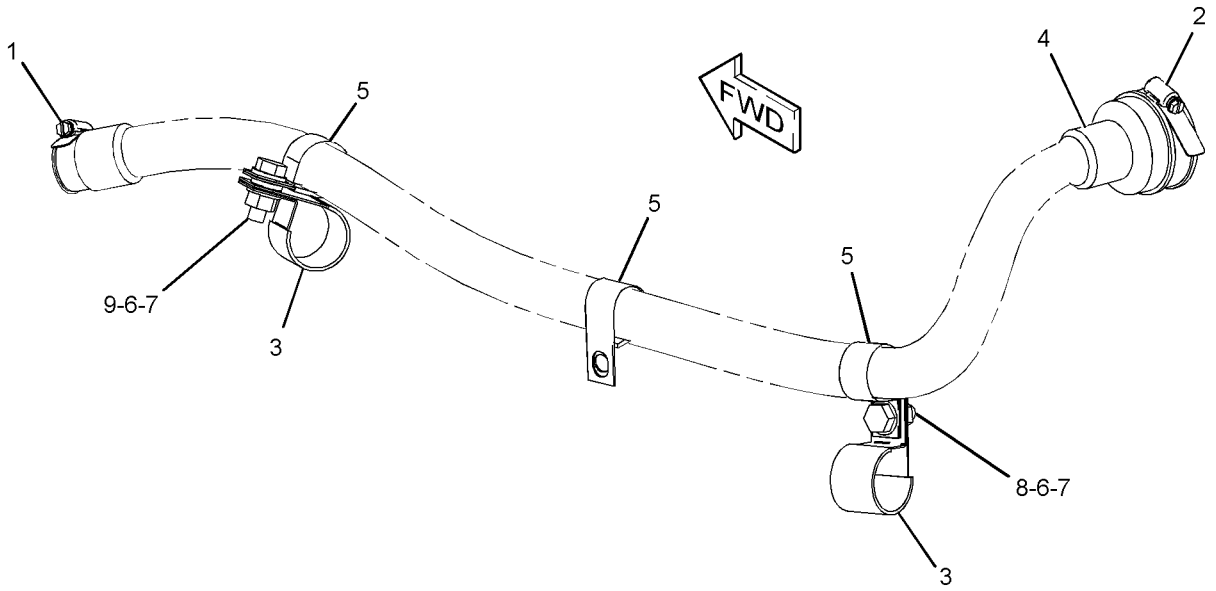

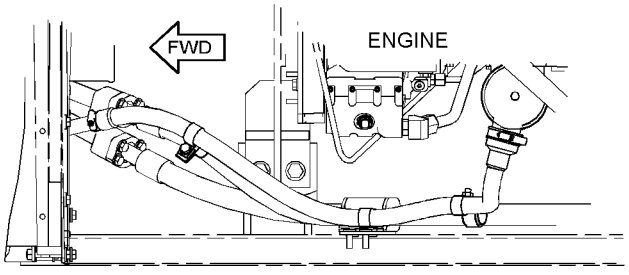

TOP VIEW

GRAPHIC #1 <END> g01353930

241-3719 FUMES DISPOSAL GP

S/N: THX19900-UP

PART OF 318-1904, 318-1905 ENGINE AR-COMPLETE

SMCS-1317 i04017550

NOTE	REF NO	GRAPHIC REF	PART NUMBER	QTY	PART NAME 1 2 3 4 5 6 (PRODUCT LEVEL)	SEE PAGE
	1	1	9M-7958	2	CLAMP-HOSE	
	2	1	9U-6993	1	FITTING GP	
		1	3D-2824	1	SEAL-O-RING	
C	3	1	295-1771	1	HOSE-FUMES DISPOSAL (CRANKCASE)	
	4	1	4D-7388	1	CLIP	
M	5	1	6V-4248	1	BOLT (M10X1.5X25-MM)	
	6	1	6V-5839	1	WASHER (11X21X2.5-MM THK)	

C-CHANGE FROM PREVIOUS TYPE
M-METRIC PART

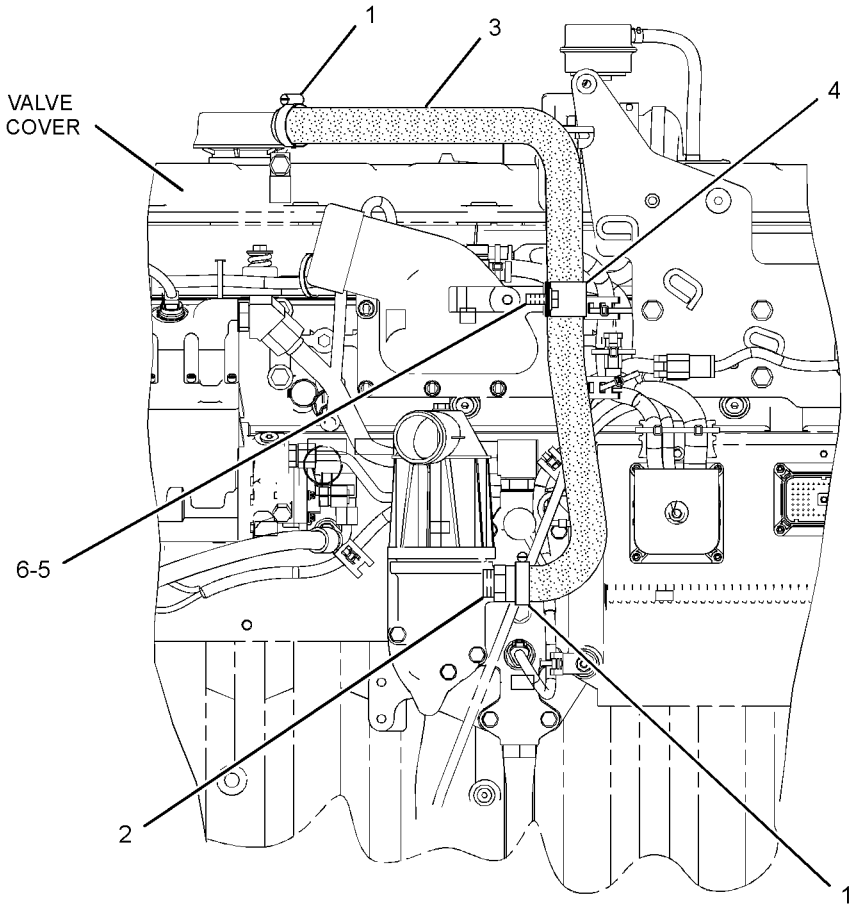

LEFT SIDE VIEW OF ENGINE

GRAPHIC #1 <END> g02084753

246-0601 GAUGE GP-OIL LEVEL (DIPSTICK)—ENGINE

S/N: THX19900-UP

PART OF 318-1904, 318-1905 ENGINE AR-COMPLETE

SMCS-1326 i04017542

NOTE	REF NO	GRAPHIC REF	PART NUMBER	QTY	PART NAME 1 2 3 4 5 6 (PRODUCT LEVEL)	SEE PAGE
	1	1	261-3162	1	GAUGE-OIL LEVEL (DIPSTICK) (ENGINE)	
	2	1	246-7899	1	TUBE AS	

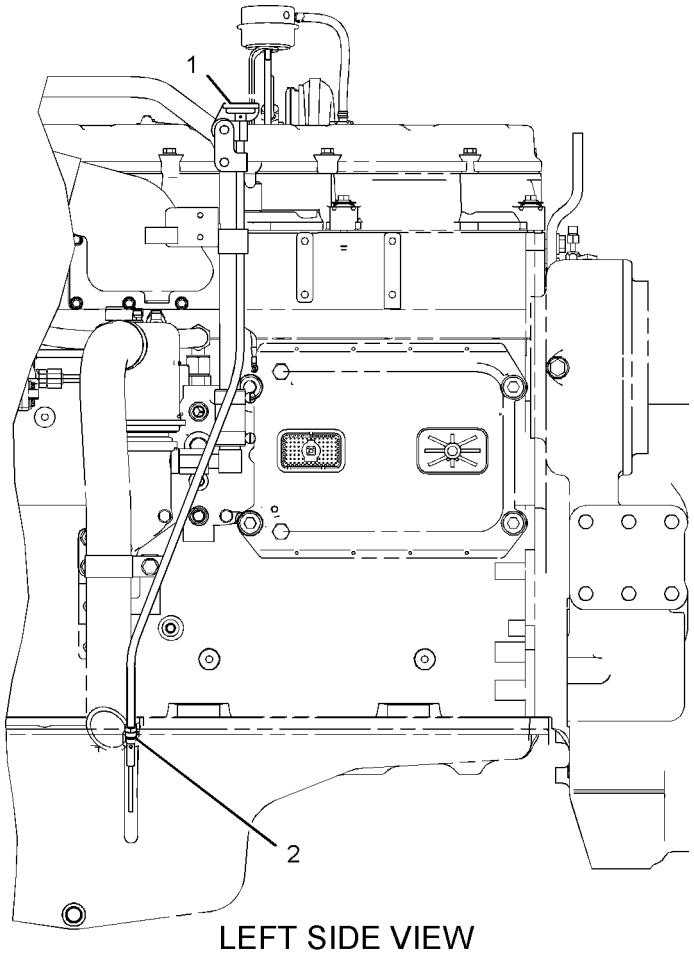

LEFT SIDE VIEW

GRAPHIC #1 <END> g01101373

198-1319 LINES GP-ENGINE OIL

S/N: THX19900-UP
FRONT SUMP
PART OF 318-1904, 318-1905 ENGINE AR-COMPLETE

SMCS-1307 i04017430

NOTE	REF NO	GRAPHIC REF	PART NUMBER	QTY	PART NAME 1 2 3 4 5 6 (PRODUCT LEVEL)	SEE PAGE
C	2	1	234-0203	1	ELBOW-OUTLET	
	3	1	195-0452	1	GASKET	
	4	1	213-8516	1	TUBE AS	
C	5	1	033-6034	1	SEAL-O-RING	
M	7	1	208-9282	1	BOLT (M8X1.25X25-MM)	
C	8	1	5P-7530	1	SEAL-O-RING	
M	9	1	6V-5217	2	BOLT (M8X1.25X20-MM)	
M	11	1	8T-0292	1	BOLT (M8X1.25X90-MM)	
M	12	1	6V-3940	2	BOLT (M8X1.25X25-MM)	
	13	1	9M-1974	5	WASHER-HARD (8.8X16X2-MM THK)	

C-CHANGE FROM PREVIOUS TYPE
M-METRIC PART

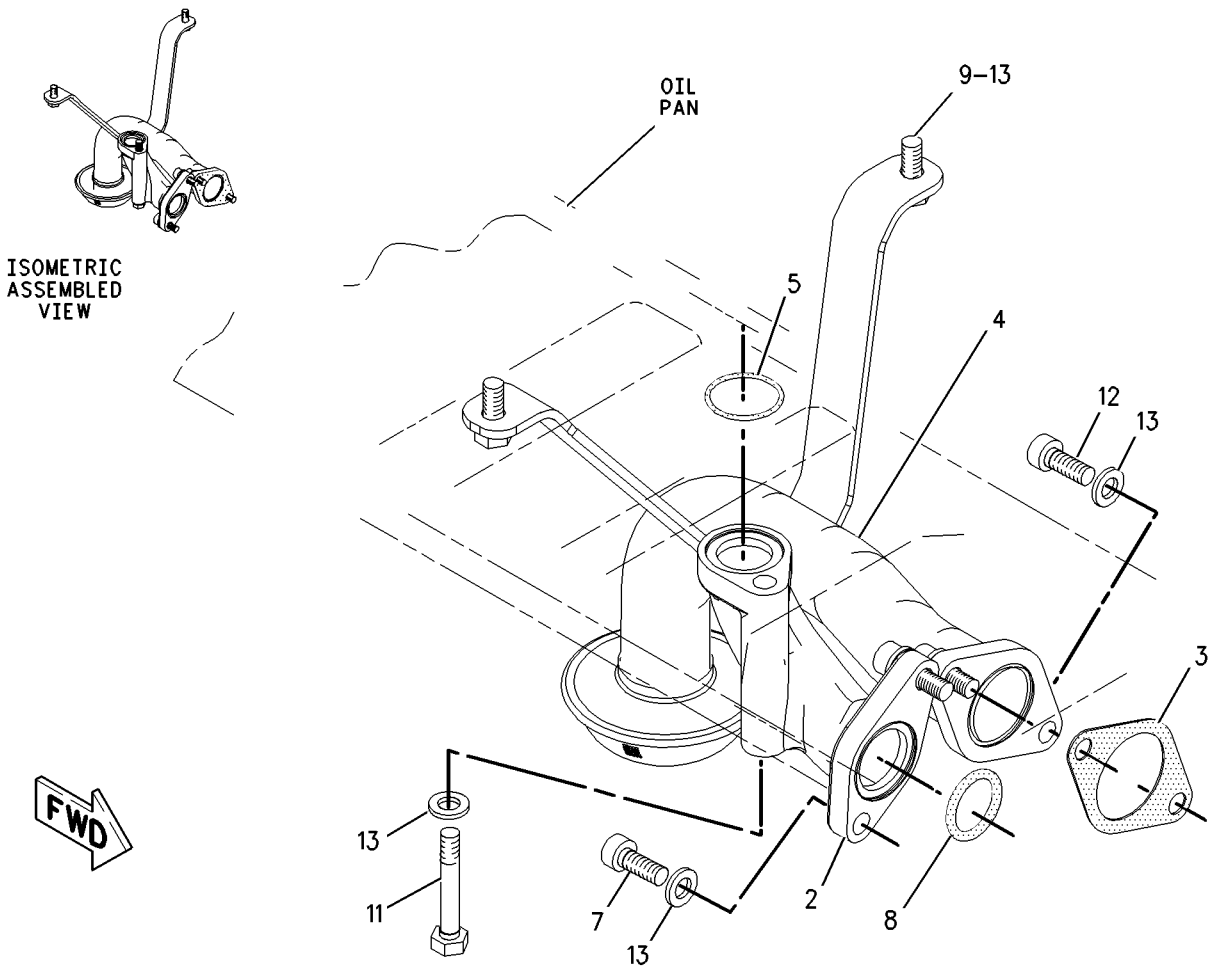

GRAPHIC #1 <END> g01054136

LUBRICATION SYSTEM

266-9810 LINES GP-TURBOCHARGER OIL

S/N: THX19900-UP

PART OF 318-1904, 318-1905 ENGINE AR-COMPLETE

SMCS-1052, 1307 i04017532

NOTE	REF NO	GRAPHIC REF	PART NUMBER	QTY	PART NAME 1 2 3 4 5 6 (PRODUCT LEVEL)	SEE PAGE
	1	1	9N-4685	1	BLOCK	
	2	1	167-0168	1	HOSE AS-OIL SUPPLY	
	3	1	*183-3399*	1	CONNECTOR AS	
		1	214-7568	1	SEAL-O-RING	
		1	6V-8636	1	CONNECTOR	
		1	221-3494	1	SEAL-O-RING	
	4	1	197-8419	1	GASKET	
	5	1	246-6036	1	HOSE	
	6	1	257-5858	1	TUBE AS	
	7	1	263-3464	1	TUBE AS	
	8	1	284-3502	2	CLAMP-BAND	
	9	1	124-0174	1	CLIP	
M	10	1	8T-4133	1	NUT (M10X1.5-THD)	
	11	1	5P-7530	1	SEAL-O-RING	
M	12	1	6V-3940	2	BOLT (M8X1.25X25-MM)	
M	13	1	8T-4185	1	BOLT (M10X1.5X50-MM)	
M	14	1	6V-5218	2	BOLT (M8X1.25X35-MM)	
	15	1	8T-4121	2	WASHER-HARD (11X21X2.5-MM THK)	
	16	1	7C-4354	1	CLIP	
	17	1	9M-1974	4	WASHER-HARD (8.8X16X2-MM THK)	

M-METRIC PART

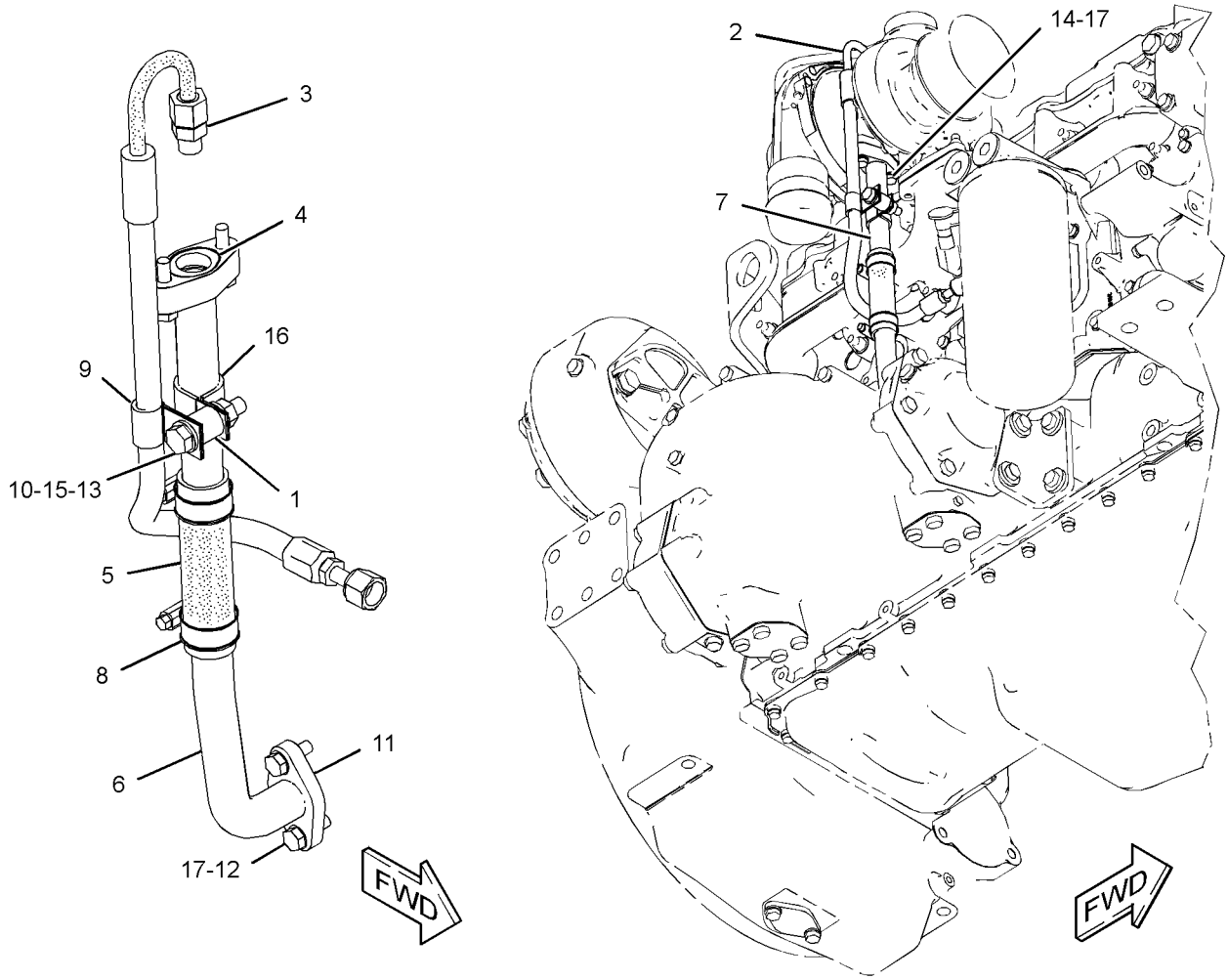

GRAPHIC #1 <END> g01214244

195-8098 PUMP GP-ENGINE OIL

S/N: THX19900-UP

PART OF 320-7655, 320-7656 ENGINE AR-CORE

SMCS-1304, 1315 i04017510

NOTE	REF NO	GRAPHIC REF	PART NUMBER	QTY	PART NAME 1 2 3 4 5 6 (PRODUCT LEVEL)	SEE PAGE
C	1	1	*331-8906*	1	PUMP GP-ENGINE OIL	
	1A	1	221-0144	1	GEAR AS (60-TEETH)	
		1	331-8905	1	PUMP AS-ENGINE OIL	
M	2	1	6V-1819	2	BOLT (M10X1.5X100-MM)	
	3	1	6V-5839	2	WASHER (11X21X2.5-MM THK)	

C-CHANGE FROM PREVIOUS TYPE
M-METRIC PART

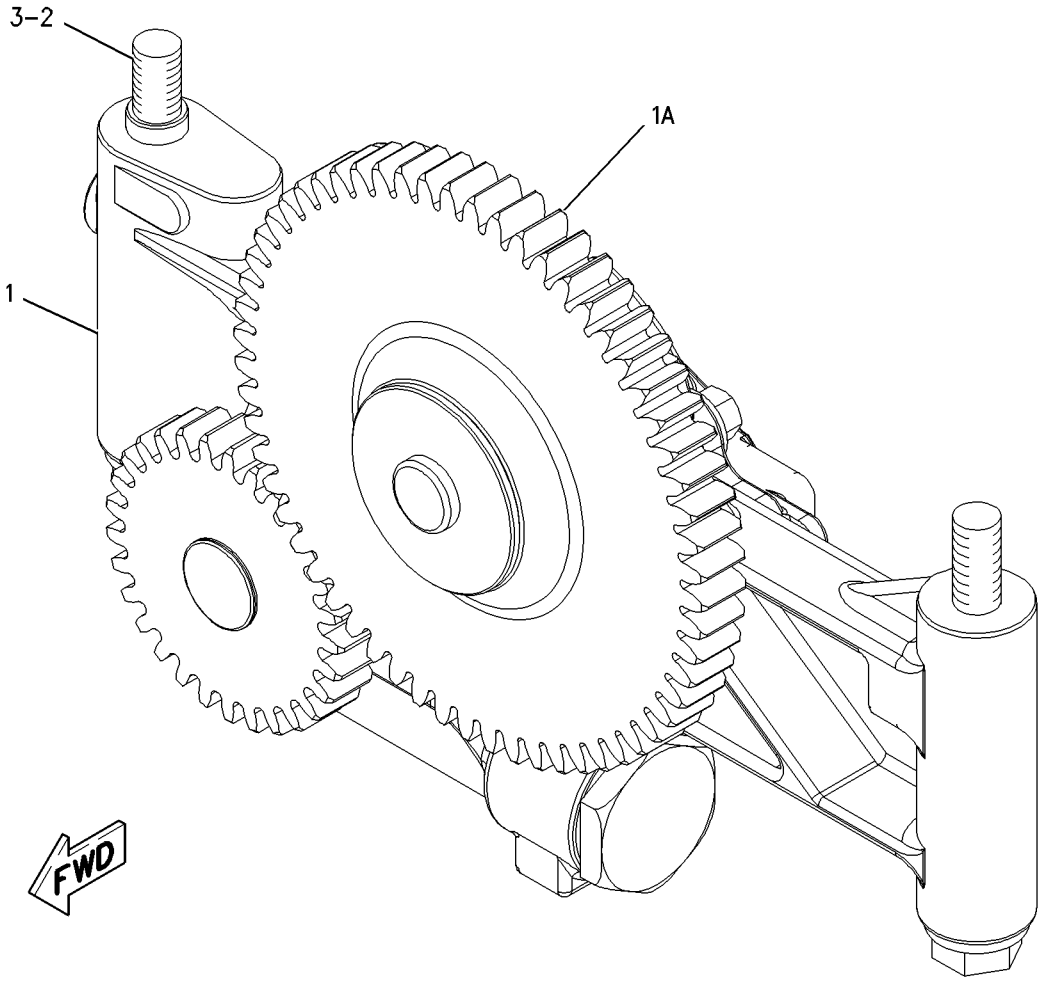

GRAPHIC #1 <END> g00909910

198-0921 VALVE GP-FLUID SAMPLING–ENGINE OIL

S/N: THX19900-UP

PART OF 318-1904, 318-1905 ENGINE AR-COMPLETE

SMCS-7542 i04017427

NOTE	REF NO	GRAPHIC REF	PART NUMBER	QTY	PART NAME 1 2 3 4 5 6 (PRODUCT LEVEL)	SEE PAGE
	2	1	6V-0852	1	CAP-DUST	
	3	1	6V-3965	1	FITTING (QUICK DISCONNECT)	
	4	1	6V-5049	1	SEAL-O-RING	

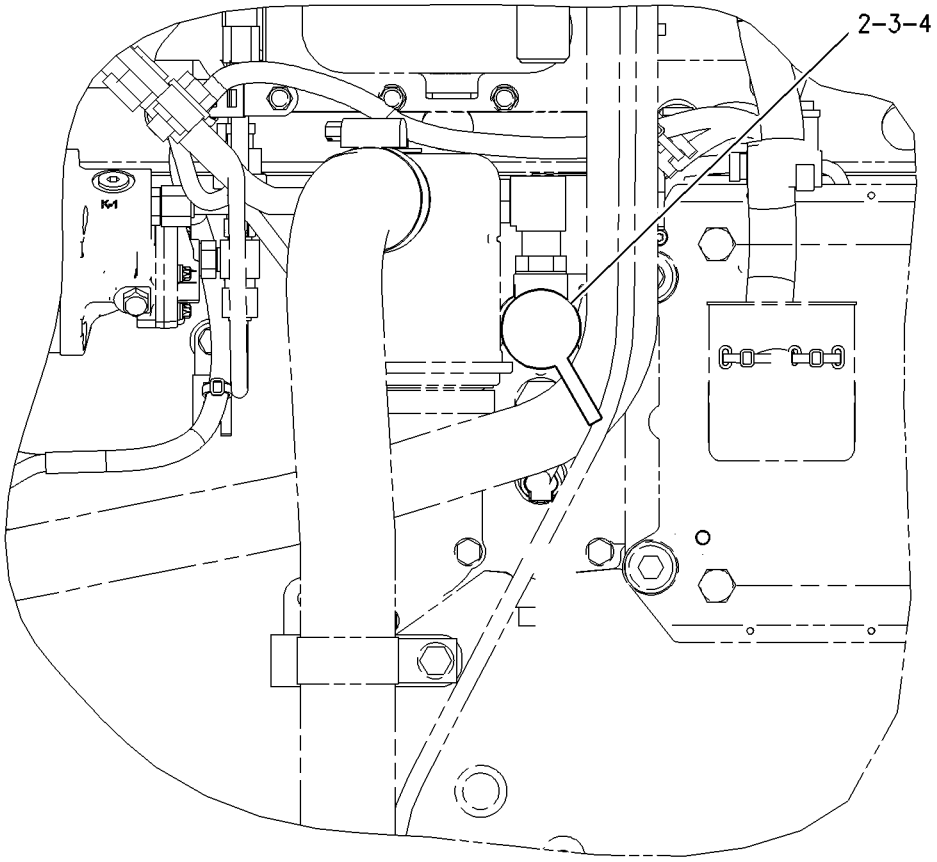

LEFT SIDE VIEW

GRAPHIC #1 <END> g00852655

188-3826 COOLER GP-ENGINE OIL

S/N: THX19900-UP

PART OF 320-7655, 320-7656 ENGINE AR-CORE

SMCS-1378 i04017470

NOTE	REF NO	GRAPHIC REF	PART NUMBER	QTY	PART NAME 1 2 3 4 5 6 (PRODUCT LEVEL)	SEE PAGE
	1	1	209-7293	1	GASKET	
C	2	1	293-9367	1	CORE AS-OIL COOLER (ENGINE)	

C-CHANGE FROM PREVIOUS TYPE

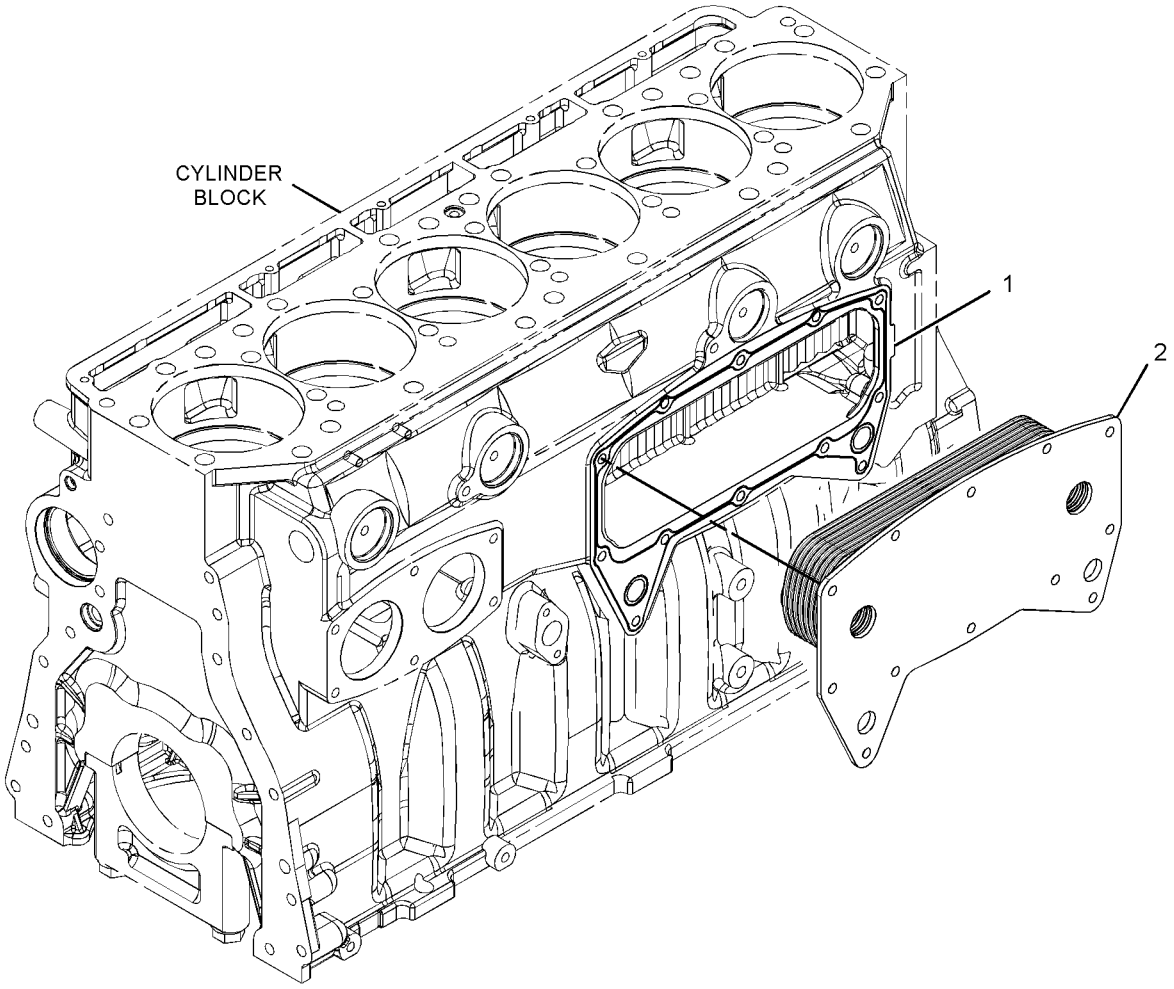

GRAPHIC #1 <END> g01419332

COOLING SYSTEM

168-8376 FAN GP-BLOWER

S/N: S6T1-UP; S6X1-UP; S6Y1-UP
PART OF 317-1762 INSTALLATION AR

SMCS-1356, 1360 i03984130

NOTE	REF NO	GRAPHIC REF	PART NUMBER	QTY	PART NAME 1 2 3 4 5 6 (PRODUCT LEVEL)	SEE PAGE
	1	1	250-1911	1	SPIDER AS-FAN (8-BLADE)	
	2	1	195-7882	4	GUARD AS	
	3	1	8T-4222	4	WASHER-PLATED (11X32X2.5-MM THK)	
	4	1	7X-7729	12	WASHER (11X25X3-MM THK)	
M	5	1	8T-4137	4	BOLT (M10X1.5X20-MM)	
M	6	1	8T-4182	2	BOLT (M10X1.5X45-MM)	
M	7	1	8T-4196	18	BOLT (M10X1.5X35-MM)	
	8	1	8T-4121	8	WASHER-HARD (11X21X2.5-MM THK)	

M-METRIC PART

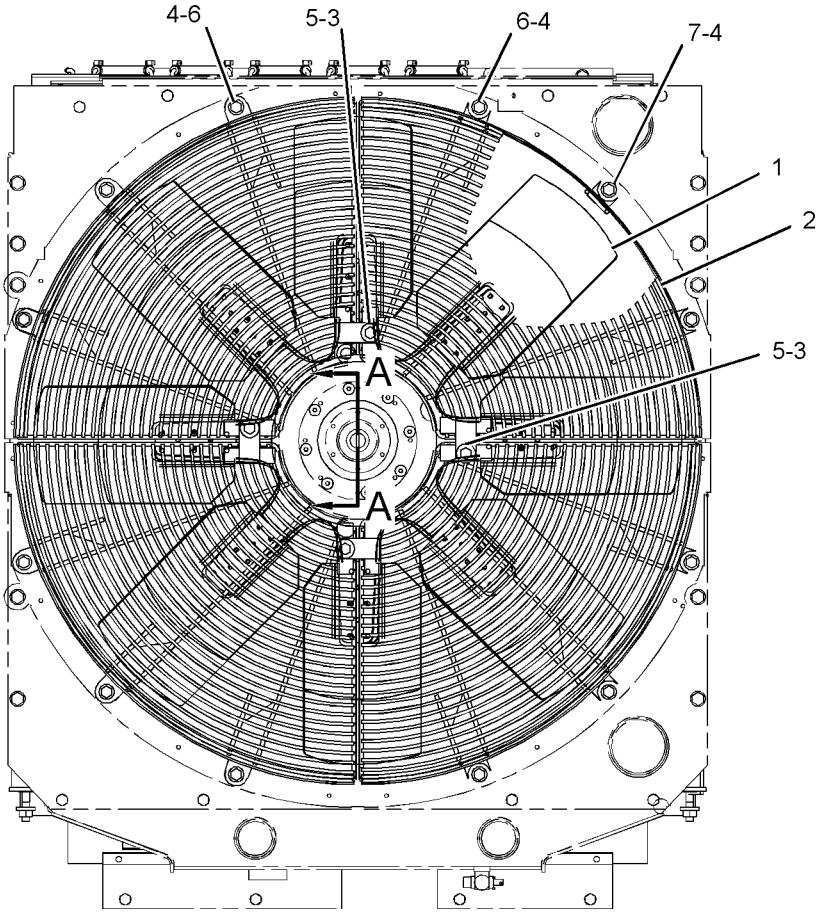

FRONT VIEW

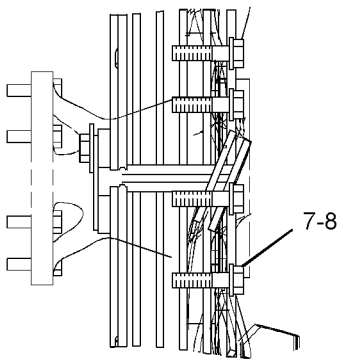

SECTION A-A

GRAPHIC #1 <END> g01213834

174-7414 FAN GP-REVERSIBLE

S/N: S6T1-UP; S6X1-UP; S6Y1-UP
PART OF 358-2567 COLD WEATHER AR
AN ATTACHMENT

SMCS-1356, 1360 i03994982

NOTE	REF NO	GRAPHIC REF	PART NUMBER	QTY	PART NAME 1 2 3 4 5 6 (PRODUCT LEVEL)	SEE PAGE
	1	1	125-1362	1	FAN AS-REVERSIBLE (8-BLADE)	
	2	1	174-7412	1	GUARD AS	
	3	1	2W-5825	1	PLATE	
	4	1	7X-7729	2	WASHER (11X25X3-MM THK)	
M	5	1	8T-4137	2	BOLT (M10X1.5X20-MM)	
	6	1	8T-4896	8	WASHER-HARD (10.2X18.5X2.5-MM THK)	
M	7	1	8T-6466	8	BOLT (M10X1.5X60-MM)	

M-METRIC PART

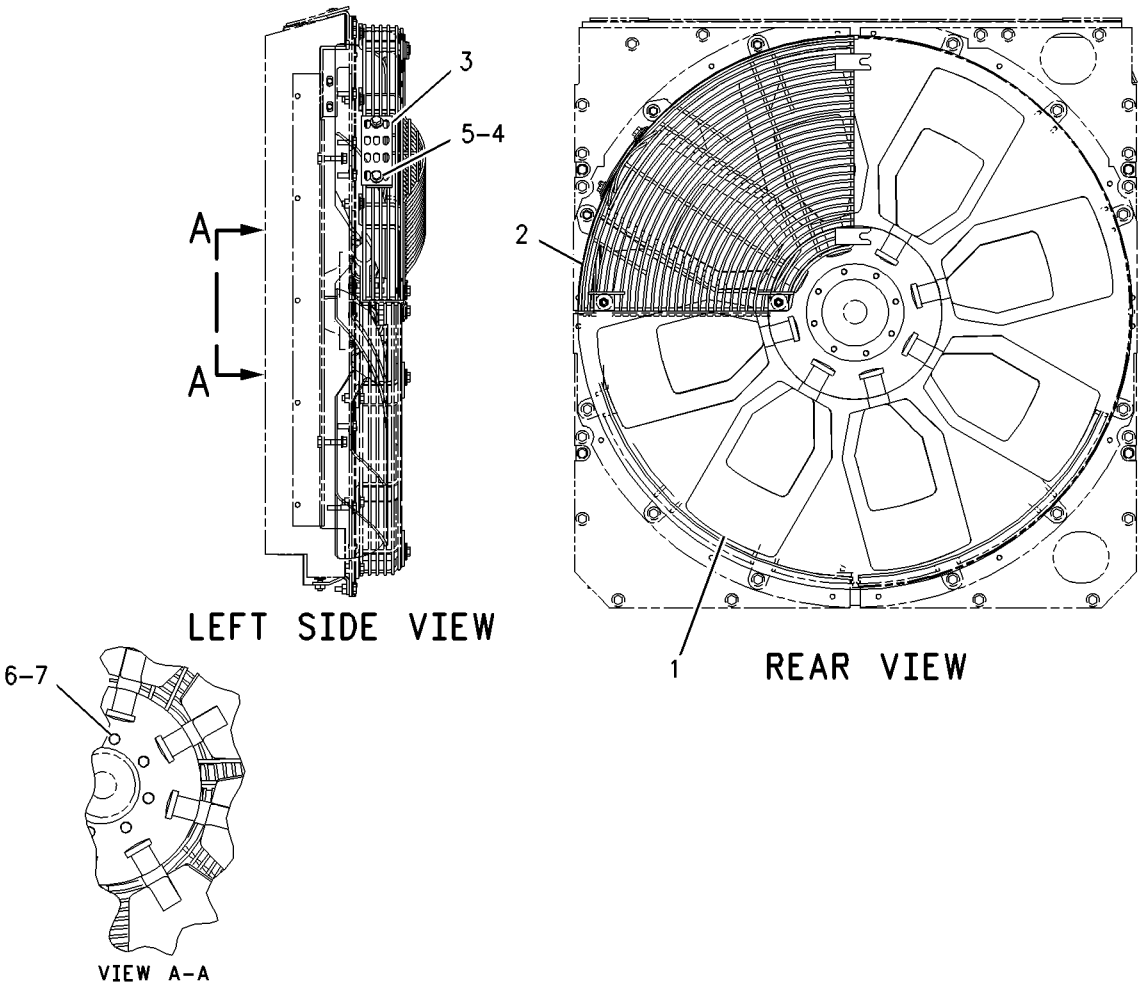

GRAPHIC #1 <END> g00859207

165-4461 LINES GP-WATER—WATER TEMPERATURE REGULATOR

S/N: THX19900-UP

PART OF 318-1904, 318-1905 ENGINE AR-COMPLETE

SMCS-1380 i04017415

NOTE	REF NO	GRAPHIC REF	PART NUMBER	QTY	PART NAME 1 2 3 4 5 6 (PRODUCT LEVEL)	SEE PAGE
	1	1	248-5513	1	REGULATOR-TEMPERATURE (92-DEG C) (WATER, COOLANT)	
	2	1	237-5176	2	CLAMP-BAND	
	3	1	280-6794	1	HOSE	
	4	1	191-4457	1	GASKET (WATER REGULATOR HOUSING)	
	5	1	217-5200	1	HOUSING AS	
		1	217-5199	1	HOUSING	
	5A	1	3S-9643	1	SEAL-LIP TYPE (WATER TEMPERATURE REGULATOR)	
	6	1	*341-0087*	2	PLUG AS	
					(EACH INCLUDES)	
		1	9S-4185	1	PLUG-O-RING	
	6A	1	6V-6609	1	SEAL-O-RING	
	7	1	4S-9191	4	WASHER (12X22.5X5-MM THK)	
M	8	1	8T-0644	4	BOLT (M10X1.5X90-MM)	
	9	1	8T-6762	1	PLUG-PIPE	

M-METRIC PART

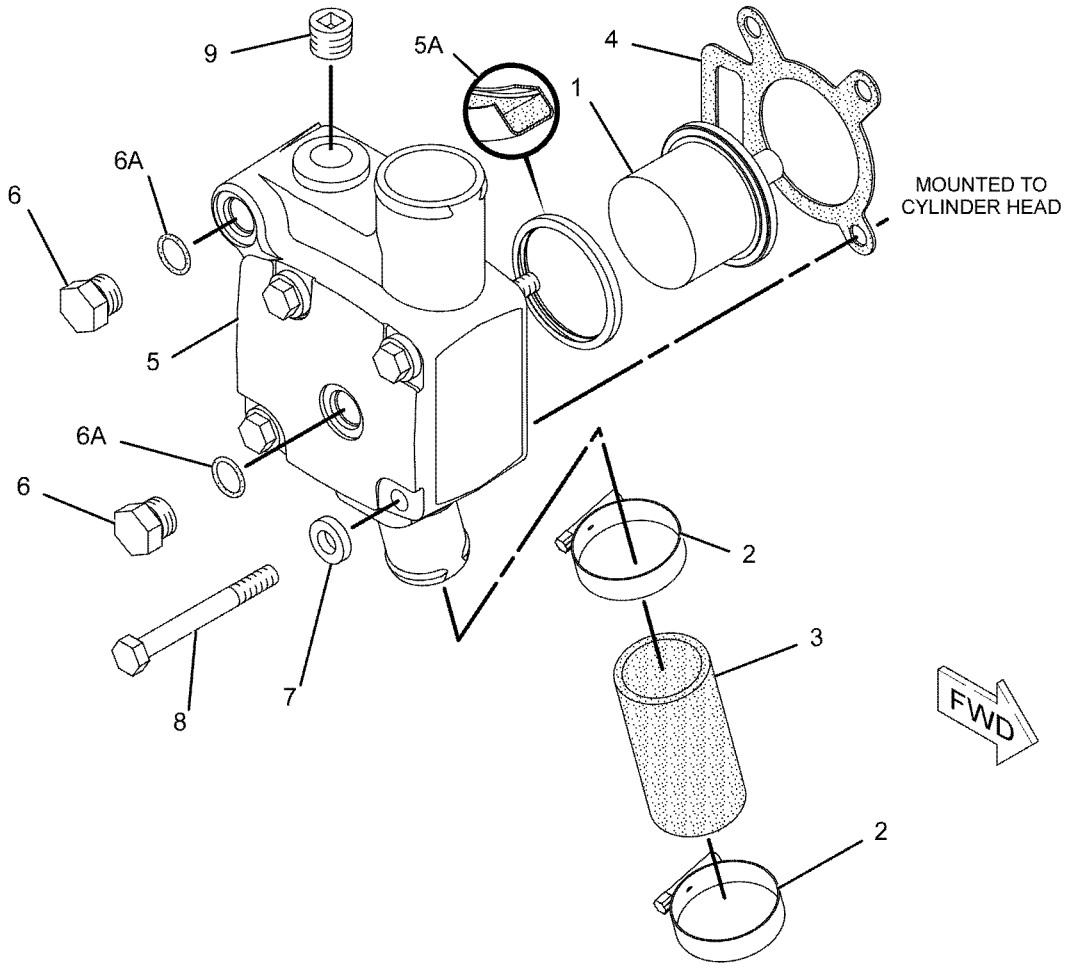

GRAPHIC #1 <END> g01142330

168-8378 LINES GP-WATER

S/N: S6T1-UP; S6X1-UP; S6Y1-UP
PART OF 317-1762 INSTALLATION AR

SMCS-1380 i03984293

NOTE	REF NO	GRAPHIC REF	PART NUMBER	QTY	PART NAME 1 2 3 4 5 6 (PRODUCT LEVEL)	SEE PAGE
	1	1	8T-4984	5	CLAMP-HOSE	
	2	1	157-0670	1	CAP-DUST	
	3	1	185-0844	1	HOSE	
	4	1	185-0845	1	TUBE AS	
	5	1	187-3961	1	HOSE-RADIATOR	
	6	1	190-7515	1	BRACKET AS	
M		1	8T-3490	1	NUT-WELD (M10X1.5-THD)	
	7	1	213-1724	1	HOSE	
	8	1	219-3305	1	BRACKET AS	
M		1	8T-3490	1	NUT-WELD (M10X1.5-THD)	
	9	1	254-5524	1	BRACKET AS	
	10	1	290-3970	1	BRACKET AS	
	11	1	3E-9867	2	CLIP (SLOT)	
	12	1	3E-9868	2	CLIP (TAB)	
	13	1	3J-1907	1	SEAL-O-RING	
	14	1	3J-7354	1	SEAL-O-RING	
	15	1	5P-9617	1	ADAPTER	
	16	1	6V-1581	3	CLIP (SLOT)	
	17	1	6V-1582	3	CLIP (TAB)	
	18	1	7X-7729	5	WASHER (11X25X3-MM THK)	
	19	1	8C-3446	1	VALVE-FLUID SAMPLING (COOLANT)	
	20	1	8T-4121	6	WASHER-HARD (11X21X2.5-MM THK)	
M	21	1	8T-4136	2	BOLT (M10X1.5X25-MM)	
M	22	1	8T-4137	4	BOLT (M10X1.5X20-MM)	
M	23	1	8T-4195	5	BOLT (M10X1.5X30-MM)	
	24	1	301-7298	1	CLAMP AS-BAND (CONSTANT TENSION)	

M-METRIC PART

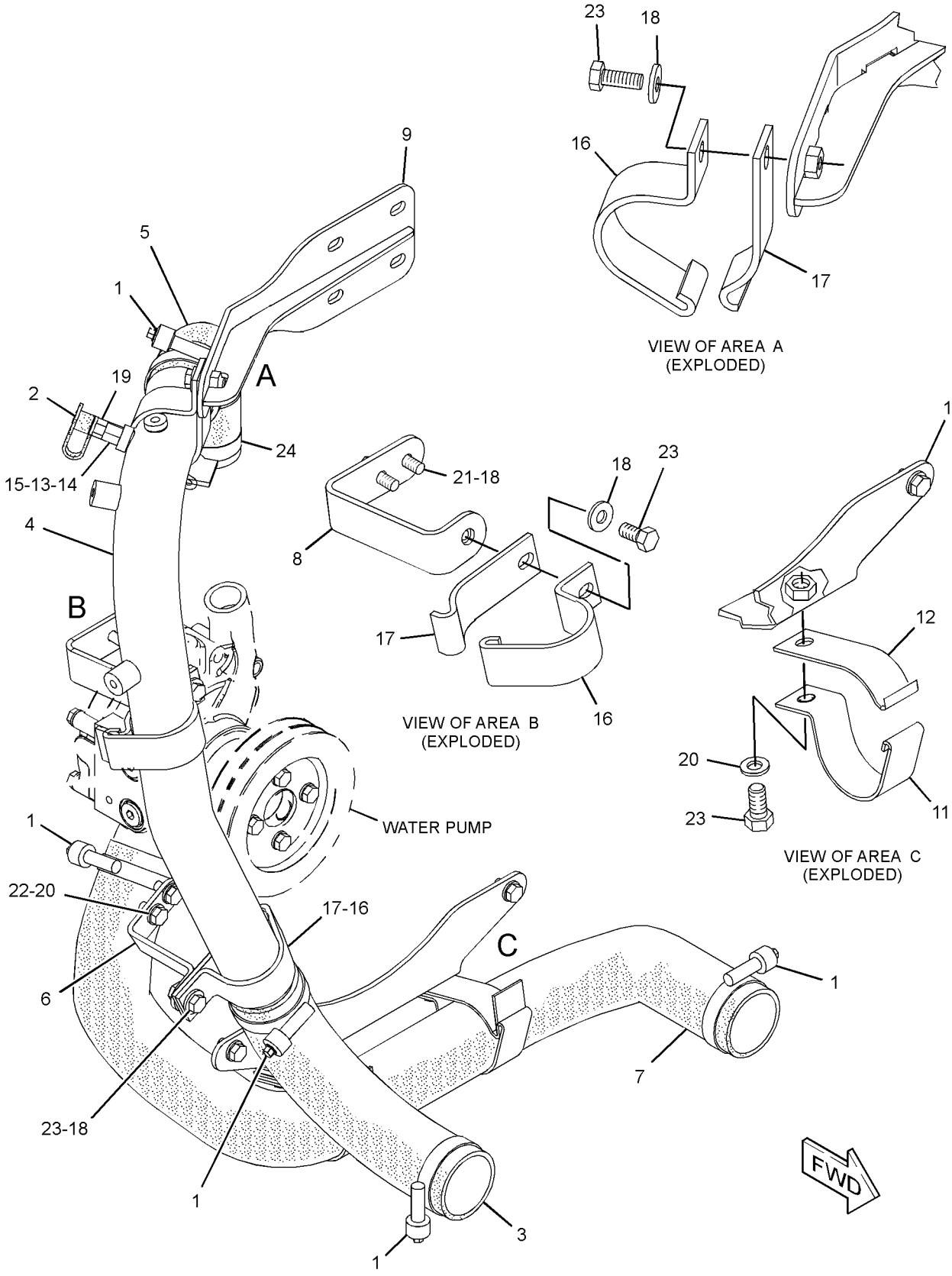

GRAPHIC #1 <END> g01359690

211-1812 PUMP GP-WATER

S/N: THX19900-UP

PART OF 318-1904, 318-1905 ENGINE AR-COMPLETE

SMCS-1361 i04017431

NOTE	REF NO	GRAPHIC REF	PART NUMBER	QTY	PART NAME 1 2 3 4 5 6 (PRODUCT LEVEL)	SEE PAGE
CY	1	1	*350-2536*	1	PUMP GP-WATER	89
	2	1	2M-4453	1	SEAL-O-RING	
	3	1	4J-0525	1	SEAL-O-RING	
M	4	1	8T-0644	4	BOLT (M10X1.5X90-MM)	

C-CHANGE FROM PREVIOUS TYPE
M-METRIC PART
Y-SEPARATE ILLUSTRATION

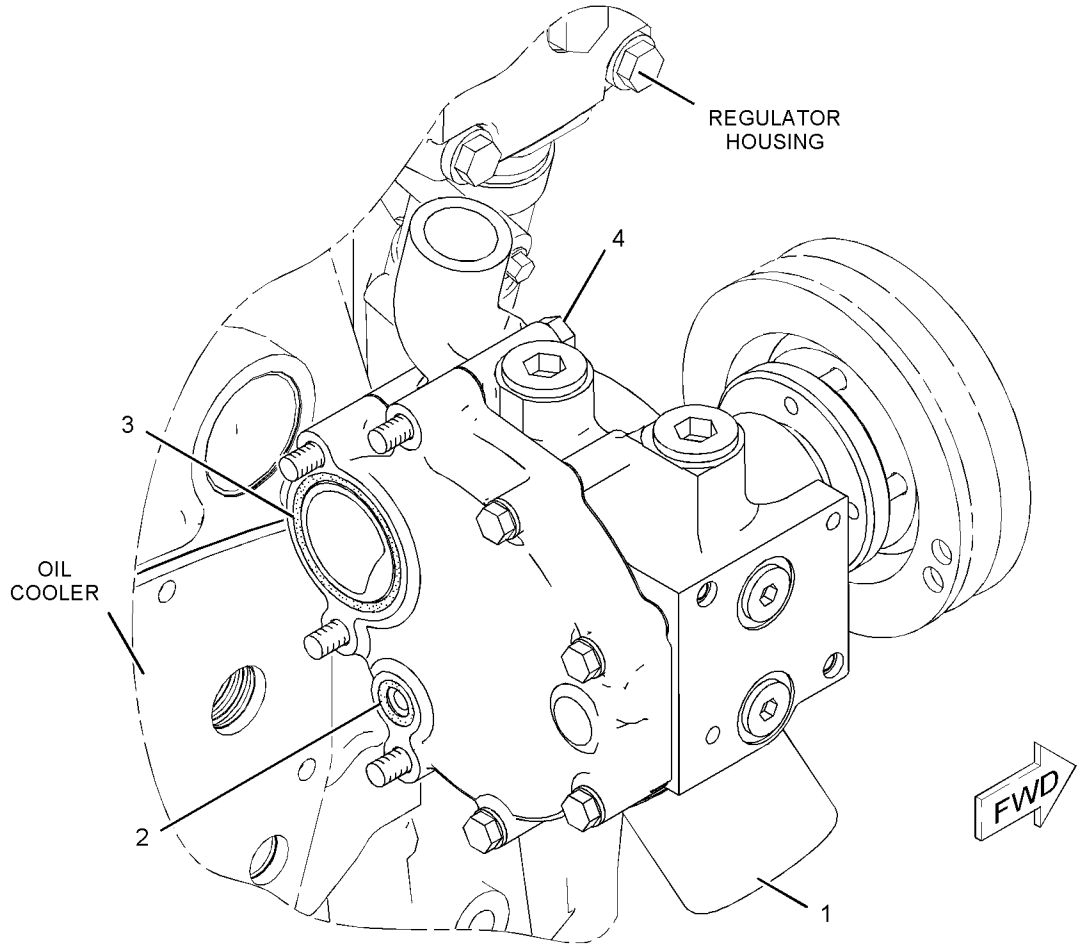

GRAPHIC #1 <END> g01038761

349-6123 PUMP GP-WATER

S/N: THX19900-UP

PART OF 350-2536 PUMP GP-WATER

SMCS-1361 i04017433

NOTE	REF NO	GRAPHIC REF	PART NUMBER	QTY	PART NAME 1 2 3 4 5 6 (PRODUCT LEVEL)	SEE PAGE
	1	1	147-5088	1	SEAL AS-WATER PUMP	
	2	1	177-1050	1	SHAFT AS	
	3	1	177-1056	1	IMPELLER-PUMP	
	4	1	209-6692	1	HUB	
	5	1	347-3110	1	HOUSING AS-WATER PUMP	
		1	177-1058	1	PLUG	

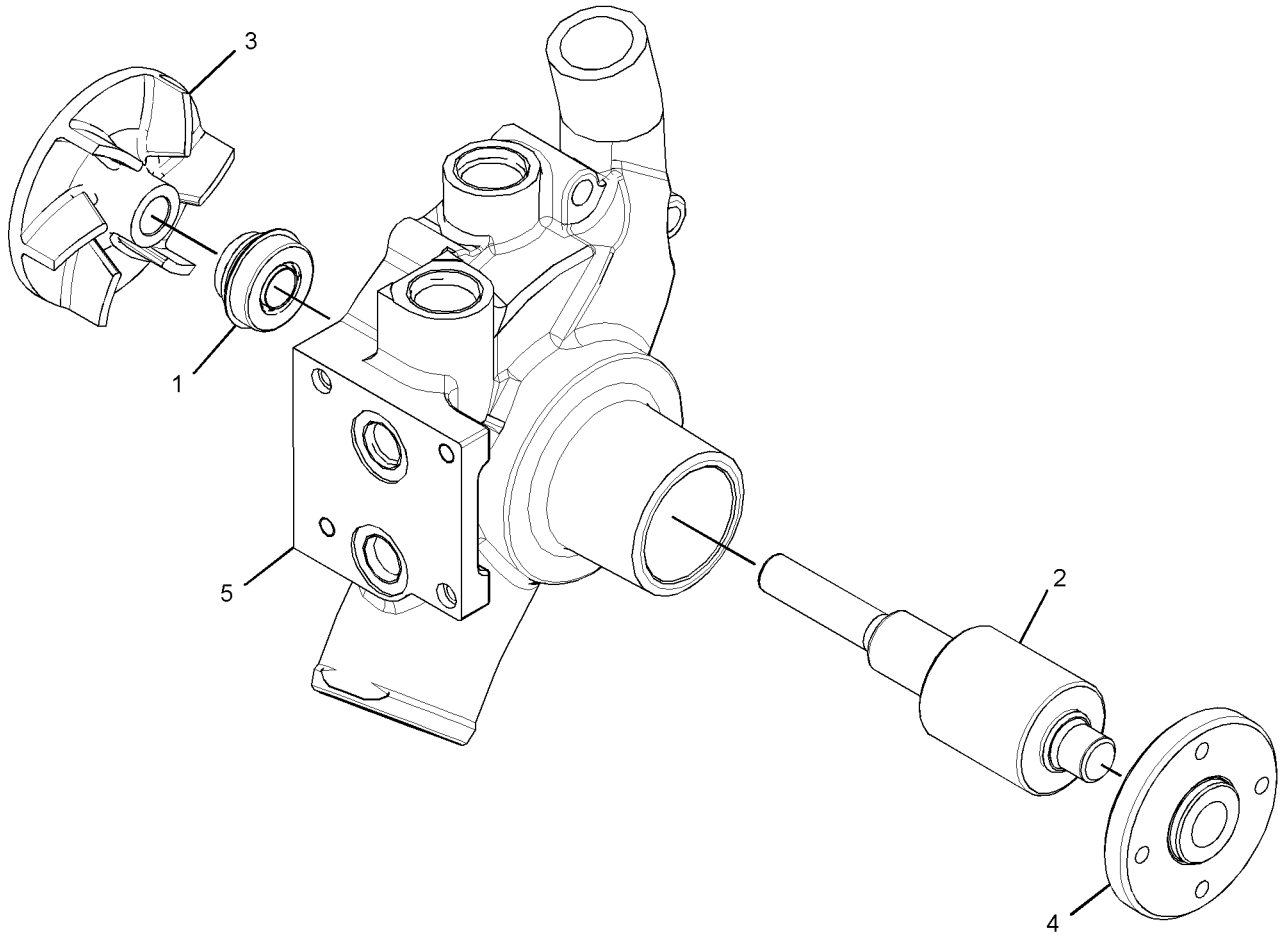

GRAPHIC #1 <END> g02064913

350-2536 PUMP GP-WATER

S/N: THX19900-UP

PART OF 211-1812 PUMP GP-WATER

SMCS-1361 i04017432

NOTE	REF NO	GRAPHIC REF	PART NUMBER	QTY	PART NAME 1 2 3 4 5 6 (PRODUCT LEVEL)	SEE PAGE
	1	1	177-1044	1	COVER	
	2	1	183-2931	4	BOLT AS	
	3	1	222-3901	1	GASKET	
Y	4	1	*349-6123*	1	PUMP GP-WATER	88
	5	1	3D-2824	1	SEAL-O-RING	
	6	1	3K-0360	2	SEAL-O-RING	
	7	1	9S-8005	2	PLUG-O-RING	
	8	1	9S-8008	1	PLUG-O-RING	

Y-SEPARATE ILLUSTRATION

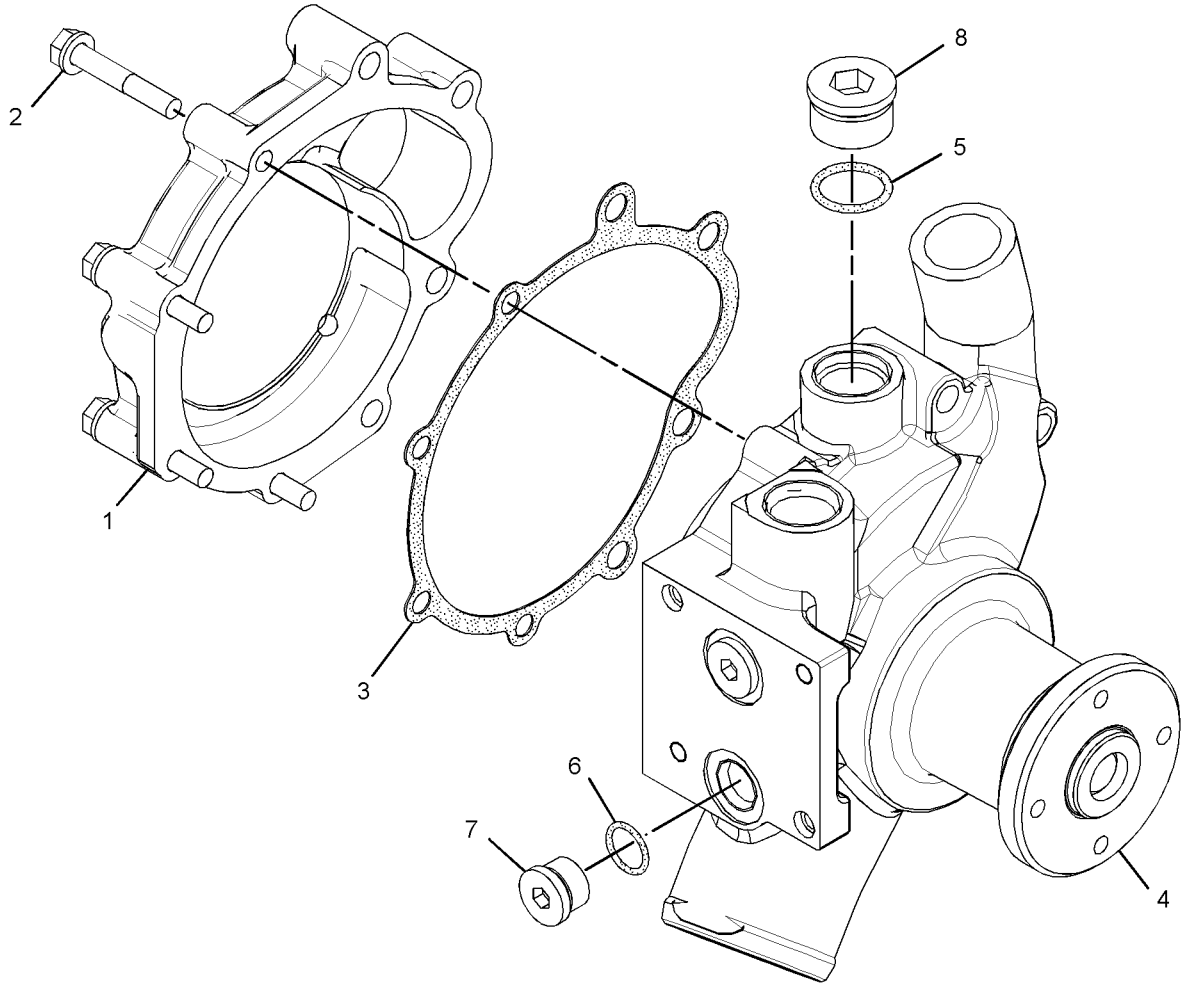

GRAPHIC #1 <END> g02064914

COOLING SYSTEM

227-0833 RADIATOR GP

S/N: S6T1-UP; S6X1-UP; S6Y1-UP
PART OF 317-1762 INSTALLATION AR

SMCS-1353 i03984971

NOTE	REF NO	GRAPHIC REF	PART NUMBER	QTY	PART NAME 1 2 3 4 5 6 (PRODUCT LEVEL)	SEE PAGE
	1	1	1P-4278	10	CLAMP-HOSE	
	2	1	1Y-7452	1	FITTING	
	3	1	8F-8151	1	VALVE-SHUTOFF (ENGINE COOLANT)	
	4	1	106-4572	5	HOSE	
	5	1	169-3797	1	BRACKET AS (BOTTOM)	
		1	6B-4594	4	RIVET	
M		1	8T-3490	8	NUT-WELD (M10X1.5-THD)	
	6	1	169-3798	1	SHIELD AS-BOTTOM (LH)	
		1	4D-6716	4	RIVET-POP	
		1	7G-5186	3	SPACER (13X19X4.5-MM THK)	
M		1	8T-3490	3	NUT-WELD (M10X1.5-THD)	
	7	1	169-3799	1	SHIELD AS-UPPER (LH)	
		1	4D-6716	4	RIVET-POP	
		1	7G-5186	3	SPACER (13X19X4.5-MM THK)	
M		1	8T-3490	2	NUT-WELD (M10X1.5-THD)	
	8	1	169-3800	1	SHIELD AS-BOTTOM (RH)	
		1	4D-6716	4	RIVET-POP	
		1	7G-5186	3	SPACER (13X19X4.5-MM THK)	
M		1	8T-3490	3	NUT-WELD (M10X1.5-THD)	
	9	1	169-3801	1	SHIELD AS-UPPER (RH)	
		1	4D-6716	4	RIVET-POP	
		1	7G-5186	3	SPACER (13X19X4.5-MM THK)	
M		1	8T-3490	2	NUT-WELD (M10X1.5-THD)	
	10	1	169-3812	1	BRACKET AS (RH)	
M		1	8T-3490	1	NUT-WELD (M10X1.5-THD)	
	11	1	180-6695	1	BAFFLE AS-RADIATOR	
		1	6B-4594	5	RIVET	
M		1	8T-3490	2	NUT-WELD (M10X1.5-THD)	
	12	1	180-6696	1	BAFFLE AS-RADIATOR	
		1	6B-4594	6	RIVET	
M		1	8T-3490	2	NUT-WELD (M10X1.5-THD)	
	13	1	224-3981	1	BRACKET AS (LH)	
	14	1	224-4013	1	BAFFLE AS (TOP)	
	15	1	227-0835	1	BAFFLE AS-RADIATOR (BOTTOM)	
		1	6B-4594	4	RIVET	
	16	1	227-0836	1	BAFFLE AS-RADIATOR (BOTTOM)	
		1	6B-4594	3	RIVET	
Y	17	1	*241-2756*	1	RADIATOR GP	92
	18	1	003-2143	1	ELBOW	
	19	1	003-9514	1	COUPLING-PIPE	
	20	1	7X-7729	23	WASHER (11X25X3-MM THK)	
	21	1	8T-4121	12	WASHER-HARD (11X21X2.5-MM THK)	
M	22	1	8T-4136	12	BOLT (M10X1.5X25-MM)	
M	23	1	8T-4185	4	BOLT (M10X1.5X50-MM)	
M	24	1	8T-4195	9	BOLT (M10X1.5X30-MM)	
M	25	1	8T-4196	10	BOLT (M10X1.5X35-MM)	

M-METRIC PART
Y-SEPARATE ILLUSTRATION

227-0833 RADIATOR GP ***(contd.)*** i03984971

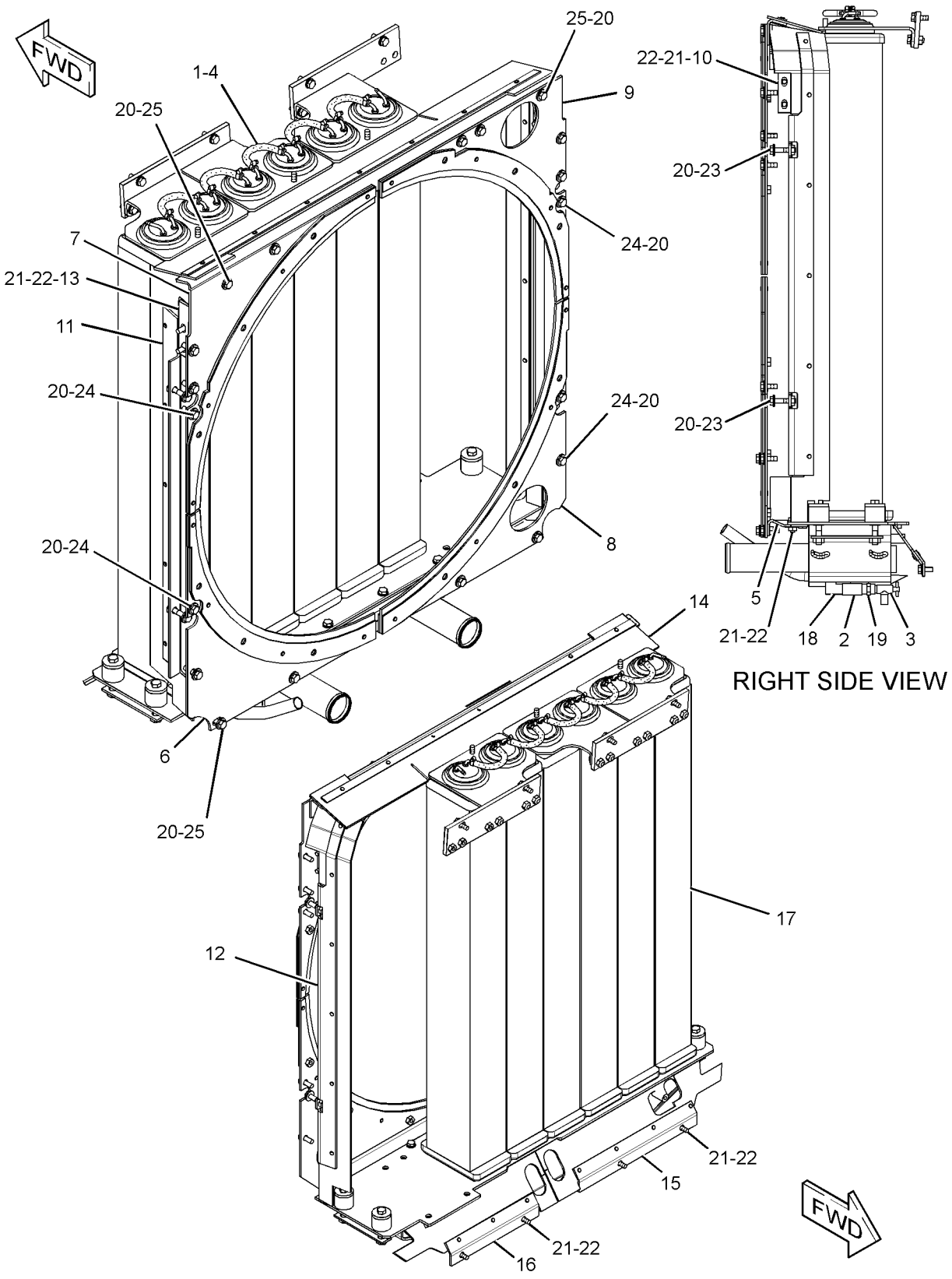

GRAPHIC #1 <END> g01379120

COOLING SYSTEM

241-2756 RADIATOR GP

S/N: S6T1-UP; S6X1-UP; S6Y1-UP
PART OF 227-0833 RADIATOR GP

SMCS-1353 i03985106

NOTE	REF NO	GRAPHIC REF	PART NUMBER	QTY	PART NAME 1 2 3 4 5 6 (PRODUCT LEVEL)	SEE PAGE
	1	1	6I-2431	6	SEAL	
	2	1	6I-2435	6	SPACER (RUBBER)	
	3	1	8K-8517	4	WASHER (0.531X1.75X0.25-IN THK)	
	4	1	9S-4497	4	BLOCK-MOUNTING	
	5	1	169-3796	2	PLATE AS	
					(EACH INCLUDES)	
M		1	8T-3597	2	NUT-WELD (M12X1.75-THD)	
	6	1	189-5586	1	BRACKET AS	
	7	1	189-5587	2	BRACKET AS	
					(EACH BRACKET AS INCLUDES)	
M		1	8T-5413	1	STUD-WELD (M10X1.5X25-MM OAL)	
	8	1	189-5588	2	PLATE AS	
	9	1	223-5111	6	CORE AS-RADIATOR	
	10	1	240-9755	1	TANK AS-BOTTOM	
		1	6B-7246	1	BOSS (3/8 NPTX0.5-IN)	
	11	1	8T-4121	13	WASHER-HARD (11X21X2.5-MM THK)	
M	12	1	8T-4176	4	BOLT (M12X1.75X90-MM)	
M	13	1	8T-4195	13	BOLT (M10X1.5X30-MM)	

M-METRIC PART

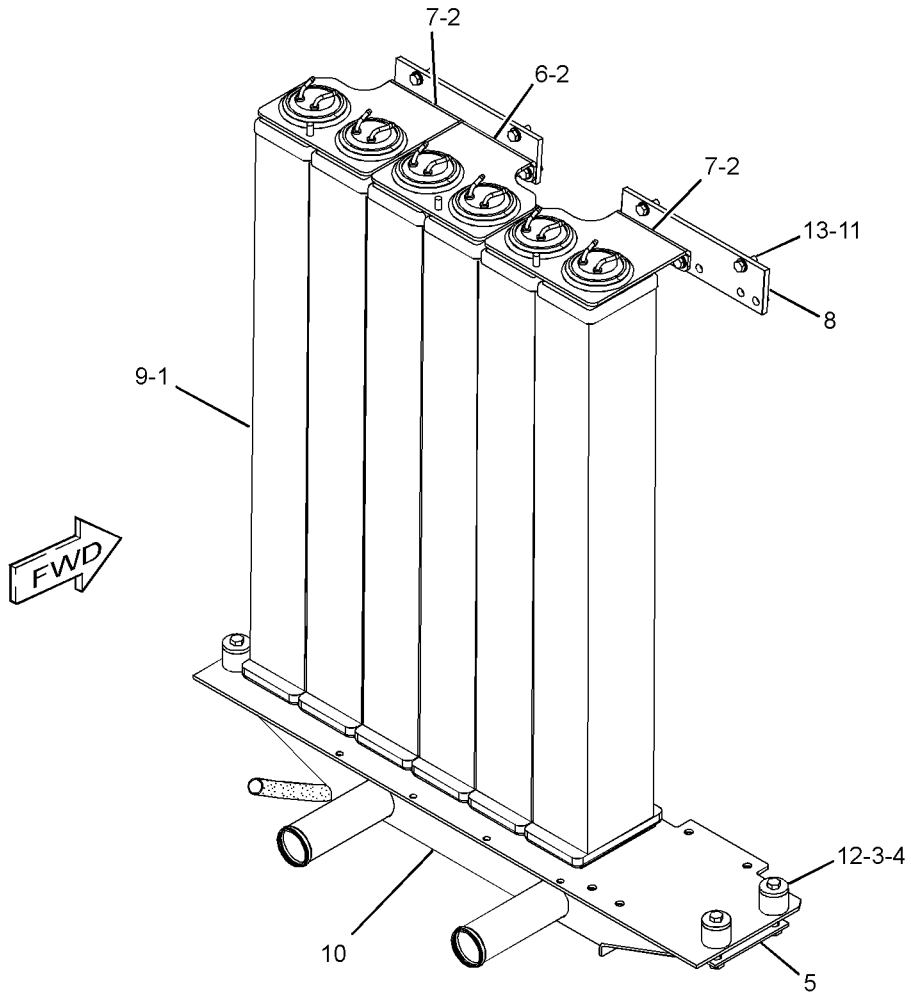

GRAPHIC #1 <END> g01209184

169-1840 TANK GP-COOLANT

S/N: S6T1-UP; S6X1-UP; S6Y1-UP
PART OF 255-5232 TANK GP-COOLANT

SMCS-1377 i04001079

NOTE	REF NO	GRAPHIC REF	PART NUMBER	QTY	PART NAME 1 2 3 4 5 6 (PRODUCT LEVEL)	SEE PAGE
	1	1	031-1119	1	CAP AS-RADIATOR	
	2	1	169-1838	1	TANK AS-EXPANSION	
	2A	1	3L-5893	1	TUBE-OVERFLOW	
	2B	1	8N-8846	1	NECK-FILLER	

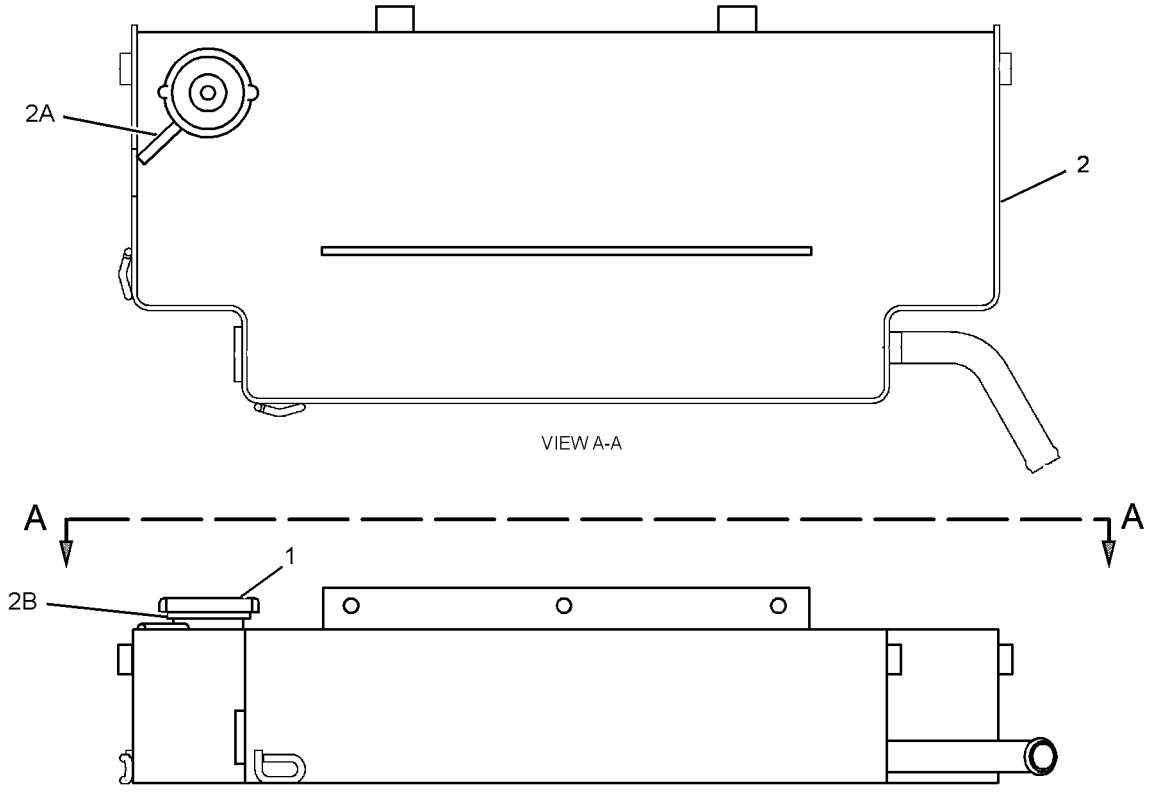

GRAPHIC #1 <END> g01676976

COOLING SYSTEM

255-5232 TANK GP-COOLANT

S/N: S6T1-UP; S6X1-UP; S6Y1-UP
PART OF 317-1762 INSTALLATION AR

SMCS-1377 i04001086

NOTE	REF NO	GRAPHIC REF	PART NUMBER	QTY	PART NAME 1 2 3 4 5 6 (PRODUCT LEVEL)	SEE PAGE
	1	1	2V-4868	1	FITTING	
	2	1	6V-8245	1	ELBOW	
	3	1	110-2445	2	CLAMP-HOSE	
Y	4	1	*169-1840*	1	TANK GP-COOLANT	93
	5	1	169-3826	1	BRACKET AS	
M		1	8T-3490	2	NUT-WELD (M10X1.5-THD)	
	6	1	*188-3034*	2	ELBOW AS	
					(EACH INCLUDES)	
		1	6V-1355	1	ELBOW	
		1	3J-7354	1	SEAL-O-RING	
	7	1	196-9858	1	TEE-SWIVEL	
	8	1	267-2186	1	BAFFLE AS-RADIATOR	
		1	6B-4594	16	RIVET	
		1	7G-5186	2	SPACER (13X19X4.5-MM THK)	
	9	1	069-4269	1	STEM	
	10	1	*148-8347*	1	ELBOW AS	
		1	6V-9007	1	ELBOW	
		1	3D-2824	1	SEAL-O-RING	
		1	6V-9746	1	SEAL-O-RING	
	11	1	1P-4278	6	CLAMP-HOSE	
	12	1	3D-2824	1	SEAL-O-RING	
	13	1	3J-7354	1	SEAL-O-RING	
	14	1	4P-7429	2	CLIP	
	15	1	6K-0806	7	STRAP-CABLE	
	16	1	7D-7233	1	CLIP	
	17	1	7M-8485	1	SEAL-O-RING	
	18	1	8L-5008	1	ELBOW-PIPE	
	19	1	8T-4121	8	WASHER-HARD (11X21X2.5-MM THK)	
M	20	1	8T-4136	6	BOLT (M10X1.5X25-MM)	
M	21	1	8T-4196	2	BOLT (M10X1.5X35-MM)	
	22	1	9Y-9236	1	GAUGE-SIGHT (WATER TANK)	
E	23	1	5P-1251		HOSE (99-CM)	
E	24	1	5P-1465		HOSE (62.5-CM)	
E	24A	1	5P-1465		HOSE (31.5-CM)	
E	24B	1	5P-1465		HOSE (29.6-CM)	
E	25	1	8C-3681		HOSE (142-CM)	

E-ORDER BY THE CENTIMETER
M-METRIC PART
Y-SEPARATE ILLUSTRATION

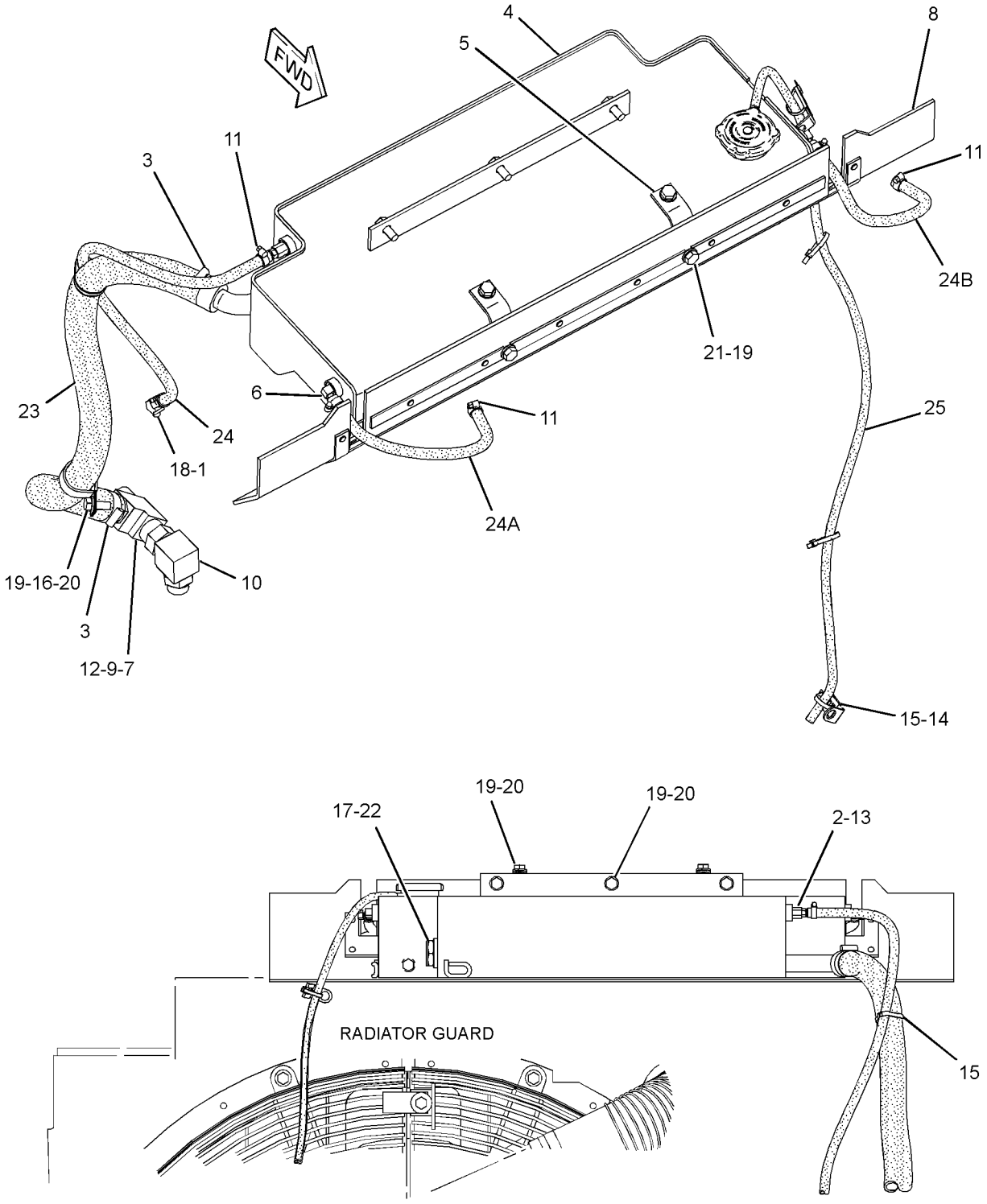

REAR VIEW

GRAPHIC #1 <END> g01425098

AIR INLET AND EXHAUST SYSTEM

250-6056 AFTERCOOLER GP-AIR–ATAAC

S/N: S6T1-UP; S6X1-UP; S6Y1-UP
PART OF 317-1762 INSTALLATION AR

SMCS-1063 i03985726

NOTE	REF NO	GRAPHIC REF	PART NUMBER	QTY	PART NAME 1 2 3 4 5 6 (PRODUCT LEVEL)	SEE PAGE
	1	1	133-6934	4	SPACER (11X20X25-MM THK)	
	2	1	253-5369	1	CORE AS-AFTERCOOLER	
	3	1	7X-7729	3	WASHER (11X25X3-MM THK)	
	4	1	8T-4121	4	WASHER-HARD (11X21X2.5-MM THK)	
M	5	1	8T-4196	3	BOLT (M10X1.5X35-MM)	
M	6	1	8T-6466	4	BOLT (M10X1.5X60-MM)	

M-METRIC PART

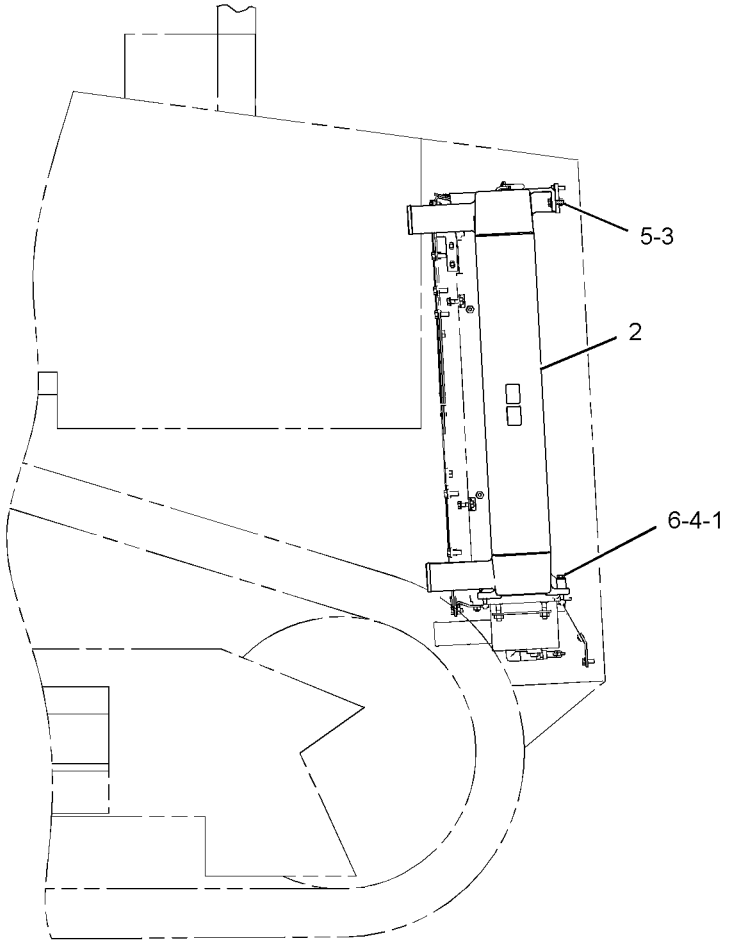

RIGHT SIDE VIEW

GRAPHIC #1 <END> g01209278

205-8674 AIR CLEANER GP

S/N: S6T1-UP; S6X1-UP; S6Y1-UP
PART OF 206-9000 AIR CLEANER GP

SMCS-1051, 1054 i03984477

NOTE	REF NO	GRAPHIC REF	PART NUMBER	QTY	PART NAME 1 2 3 4 5 6 (PRODUCT LEVEL)	SEE PAGE
	1	1	6I-2501	1	FILTER ELEMENT AS-AIR (PRIMARY, STANDARD EFFICIENCY)	
	2	1	6I-2502	1	FILTER ELEMENT AS-AIR (SECONDARY)	
	3	1	6I-4464	1	COVER AS-AIR CLEANER	
		1	4P-5524	1	SEAL-O-RING	
	4	1	8N-4617	2	KIT-AIR CLEANER CLAMP	
					(EACH INCLUDES CLIP AS & RIVET)	

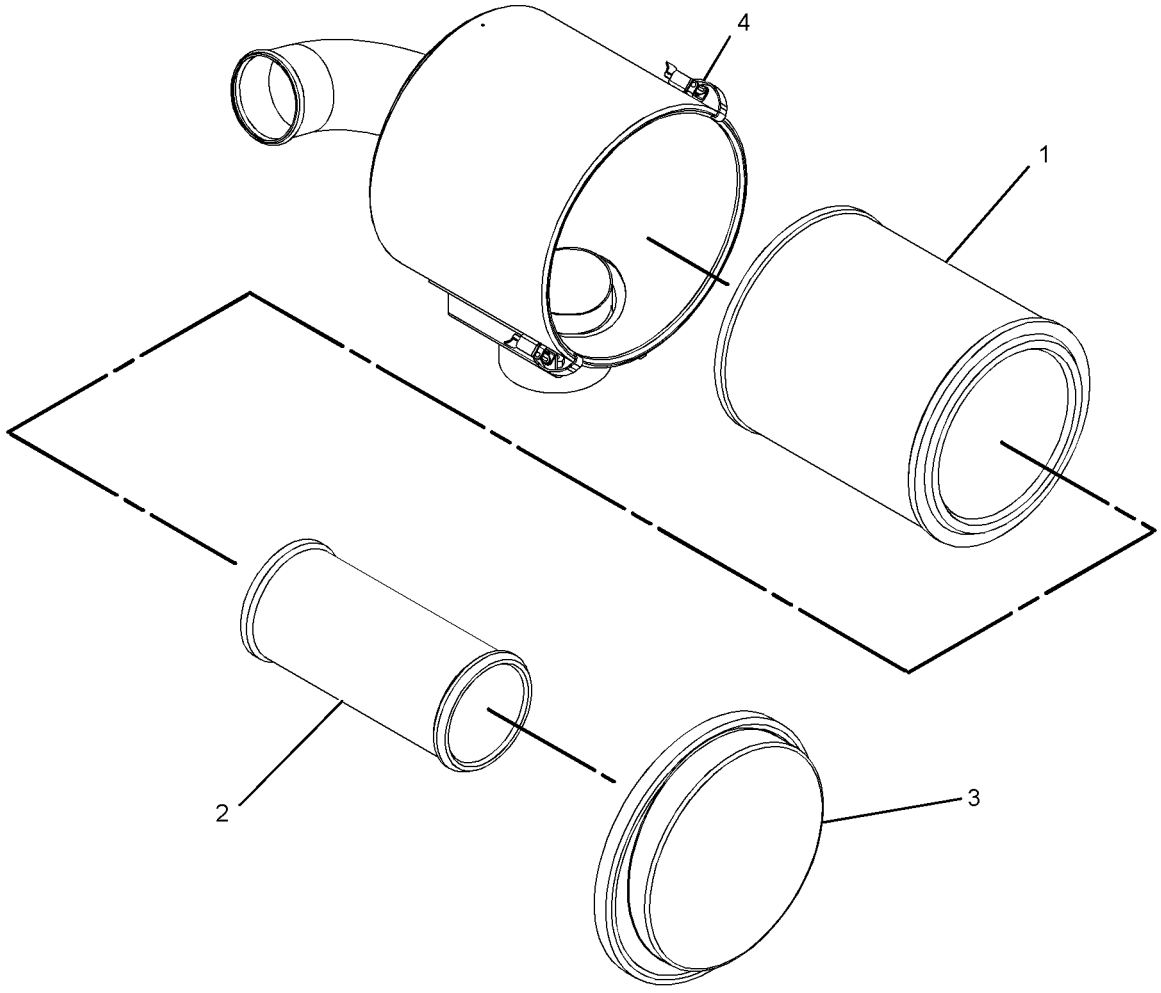

GRAPHIC #1 <END> g01123031

AIR INLET AND EXHAUST SYSTEM

206-9000 AIR CLEANER GP

S/N: S6T1-UP; S6X1-UP; S6Y1-UP
PART OF 317-1762 INSTALLATION AR

SMCS-1051, 1054 i03984475

NOTE	REF NO	GRAPHIC REF	PART NUMBER	QTY	PART NAME 1 2 3 4 5 6 (PRODUCT LEVEL)	SEE PAGE
	1	1	9S-6758	1	PRECLEANER AS	
		1	0S-1591	1	BOLT (3/8-16X1.5-IN)	
		1	9S-8752	1	NUT-FULL (3/8-16-THD)	
Y	2	1	205-8674	1	AIR CLEANER GP	97
	3	1	205-8681	1	BODY AS (PRECLEANER)	
	4	1	250-9290	1	BRACKET AS	
	5	1	7X-7729	7	WASHER (11X25X3-MM THK)	
	6	1	8T-4121	8	WASHER-HARD (11X21X2.5-MM THK)	
M	7	1	8T-4133	2	NUT (M10X1.5-THD)	
M	8	1	8T-4136	9	BOLT (M10X1.5X25-MM)	
M	9	1	8T-4137	4	BOLT (M10X1.5X20-MM)	

M-METRIC PART
Y-SEPARATE ILLUSTRATION

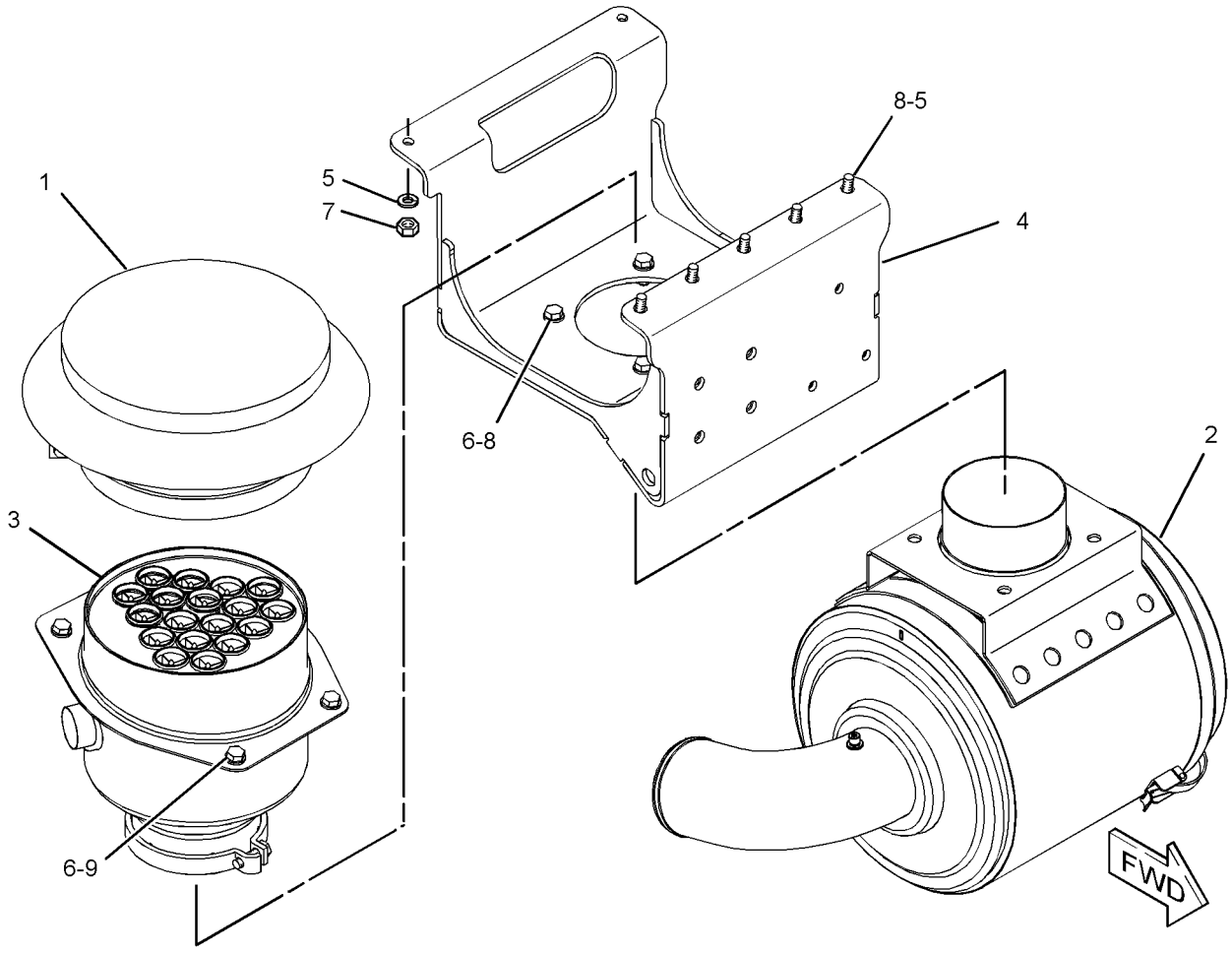

GRAPHIC #1 <END> g01181353

AIR INLET AND EXHAUST SYSTEM

188-1018 DUST EJECTOR GP

S/N: S6T1-UP; S6X1-UP; S6Y1-UP
PART OF 317-1762 INSTALLATION AR

SMCS-1068 i03984354

NOTE	REF NO	GRAPHIC REF	PART NUMBER	QTY	PART NAME 1 2 3 4 5 6 (PRODUCT LEVEL)	SEE PAGE
	1	1	9M-2904	2	CLAMP-HOSE	
	2	1	7W-5838	1	EJECTOR AS-EXHAUST	
	2A	1	7E-3870	1	CLAMP-MUFFLER	
E	3	1	5P-2817		HOSE (44-CM)	

E-ORDER BY THE CENTIMETER

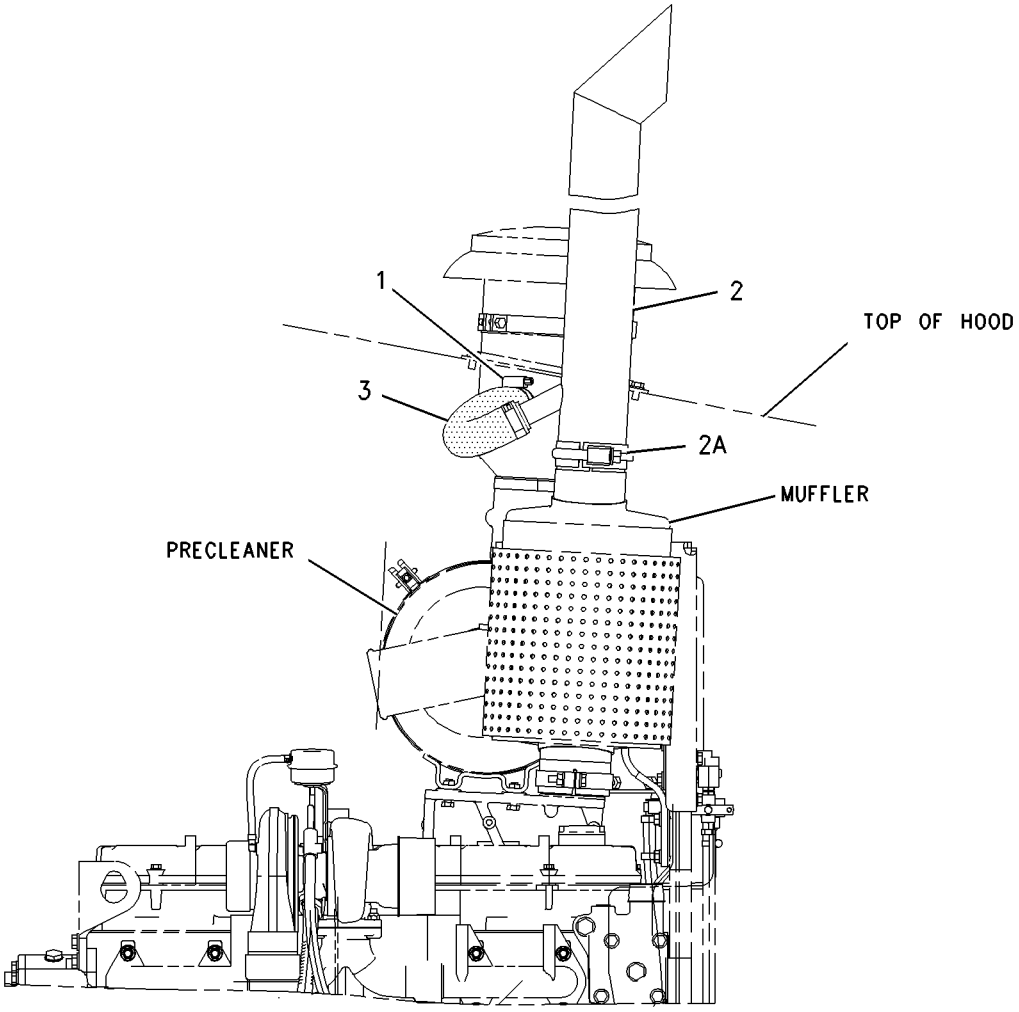

GRAPHIC #1 <END> g00739902

AIR INLET AND EXHAUST SYSTEM

246-0596 ELBOW GP-AIR INLET

S/N: THX19900-UP

PART OF 318-1904, 318-1905 ENGINE AR-COMPLETE

SMCS-1087 i04017547

NOTE	REF NO	GRAPHIC REF	PART NUMBER	QTY	PART NAME 1 2 3 4 5 6 (PRODUCT LEVEL)	SEE PAGE
	1	1	246-0597	1	ELBOW-AIR INLET	
	2	1	162-3148	8	STUD (M8X1.25X40-MM)	
	3	1	3E-4352	2	WASHER-HARD (8.8X20.5X2.5-MM THK)	
	4	1	9M-1974	6	WASHER-HARD (8.8X16X2-MM THK)	
	5	1	*183-3407*	1	PLUG AS	
		1	9S-8004	1	PLUG-O-RING	
		1	214-7568	1	SEAL-O-RING	
B	6	1	1U-8846		SEALANT-GASKET (1-ML)	

B-USE AS REQUIRED

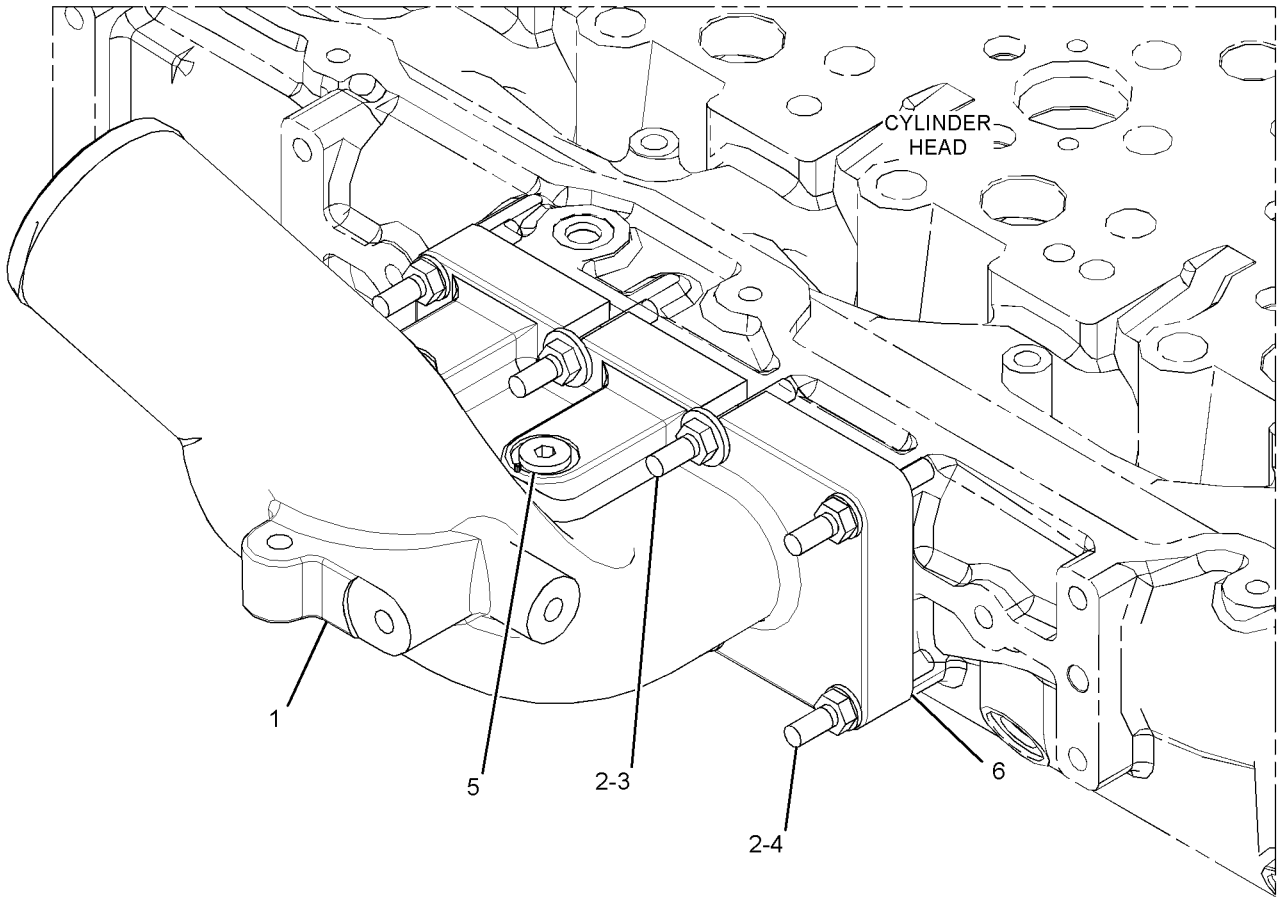

GRAPHIC #1 <END> g02163316

AIR INLET AND EXHAUST SYSTEM

168-8377 LINES GP-AIR

S/N: S6T1-UP; S6X1-UP; S6Y1-UP
PART OF 317-1762 INSTALLATION AR

SMCS-1071 i04001027

NOTE	REF NO	GRAPHIC REF	PART NUMBER	QTY	PART NAME 1 2 3 4 5 6 (PRODUCT LEVEL)	SEE PAGE
	1	1	1W-2431	1	CLAMP-BAND	
	2	1	6N-1558	1	RING-SEAL	
	3	1	8T-4986	4	CLAMP-HOSE	
	4	1	169-3883	1	COUPLING	
	5	1	214-1645	1	ELBOW-EXHAUST	
	6	1	243-1588	1	HOSE	
	7		243-1589	1	HOSE	
	8	1	243-1590	1	TUBE	
M	9	1	6V-4249	3	BOLT (M10X1.5X50-MM)	
	10	1	6V-5839	3	WASHER (11X21X2.5-MM THK)	

M-METRIC PART

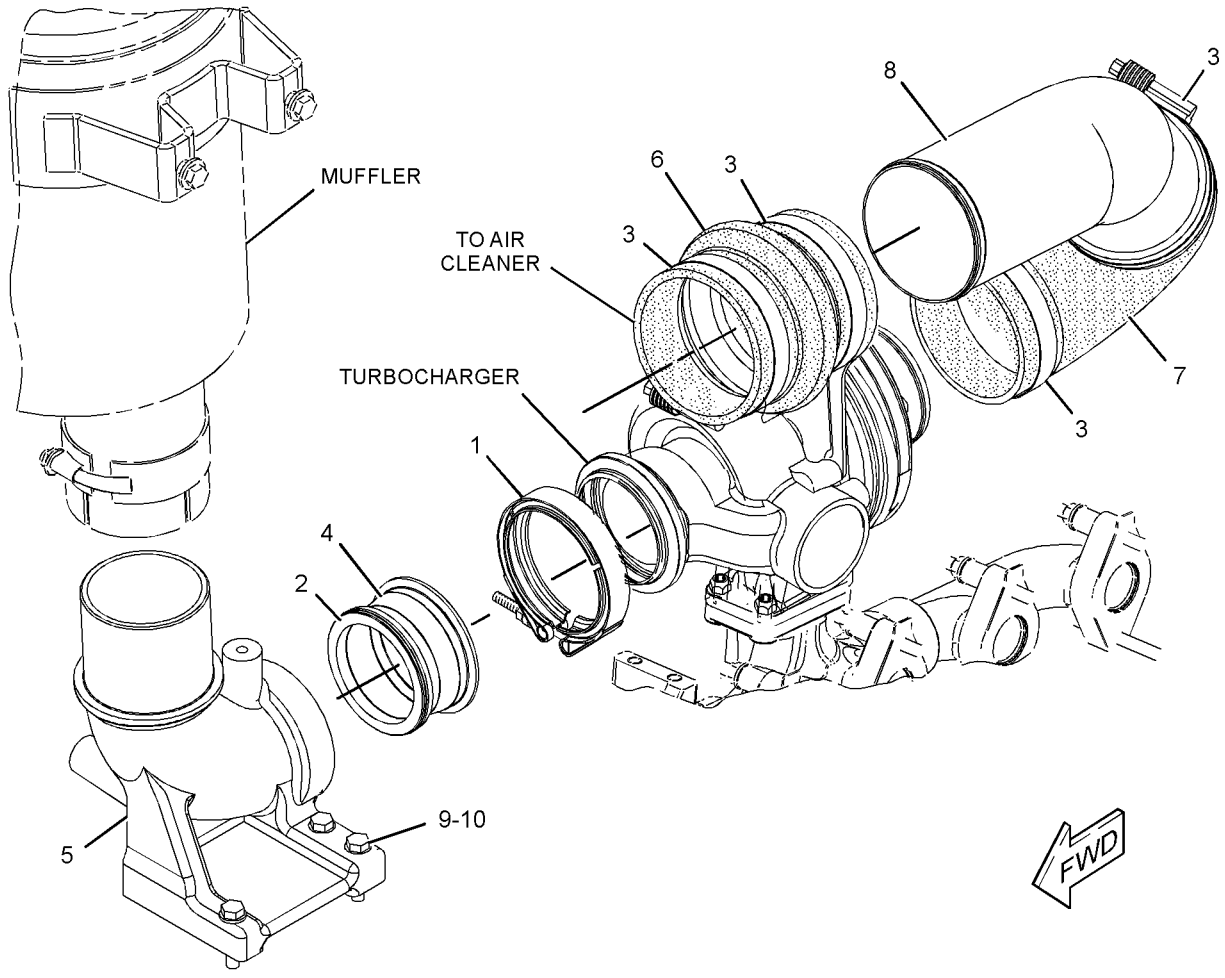

GRAPHIC #1 <END> g01151750

AIR INLET AND EXHAUST SYSTEM

251-4553 LINES GP-AIR–ATAAC

S/N: S6T1-UP; S6X1-UP; S6Y1-UP
PART OF 317-1762 INSTALLATION AR

SMCS-1071 i03986129

NOTE	REF NO	GRAPHIC REF	PART NUMBER	QTY	PART NAME 1 2 3 4 5 6 (PRODUCT LEVEL)	SEE PAGE
	1	1,2	144-0367	16	CLAMP-HOSE	
	2	1,2	201-1260	2	HOSE	
	3	2	250-6052	1	HOSE	
	4	2	250-6053	1	TUBE AS	
	5	1	250-6054	1	TUBE AS	
	6	2	250-7533	1	HOSE	
	7	1	251-0061	1	BRACKET AS	
M		1	8T-3490	1	NUT-WELD (M10X1.5-THD)	
	8	2	251-7214	2	HOSE	
	9	1,2	7X-7729	6	WASHER (11X25X3-MM THK)	
M	10	2	8T-4133	2	NUT (M10X1.5-THD)	
M	11	1	8T-4195	1	BOLT (M10X1.5X30-MM)	
M	12	1	8T-4196	3	BOLT (M10X1.5X35-MM)	
	13	1,2	9X-2646	4	CLIP (SLOT)	
	14	1,2	9X-2647	4	CLIP (TAB)	

M-METRIC PART

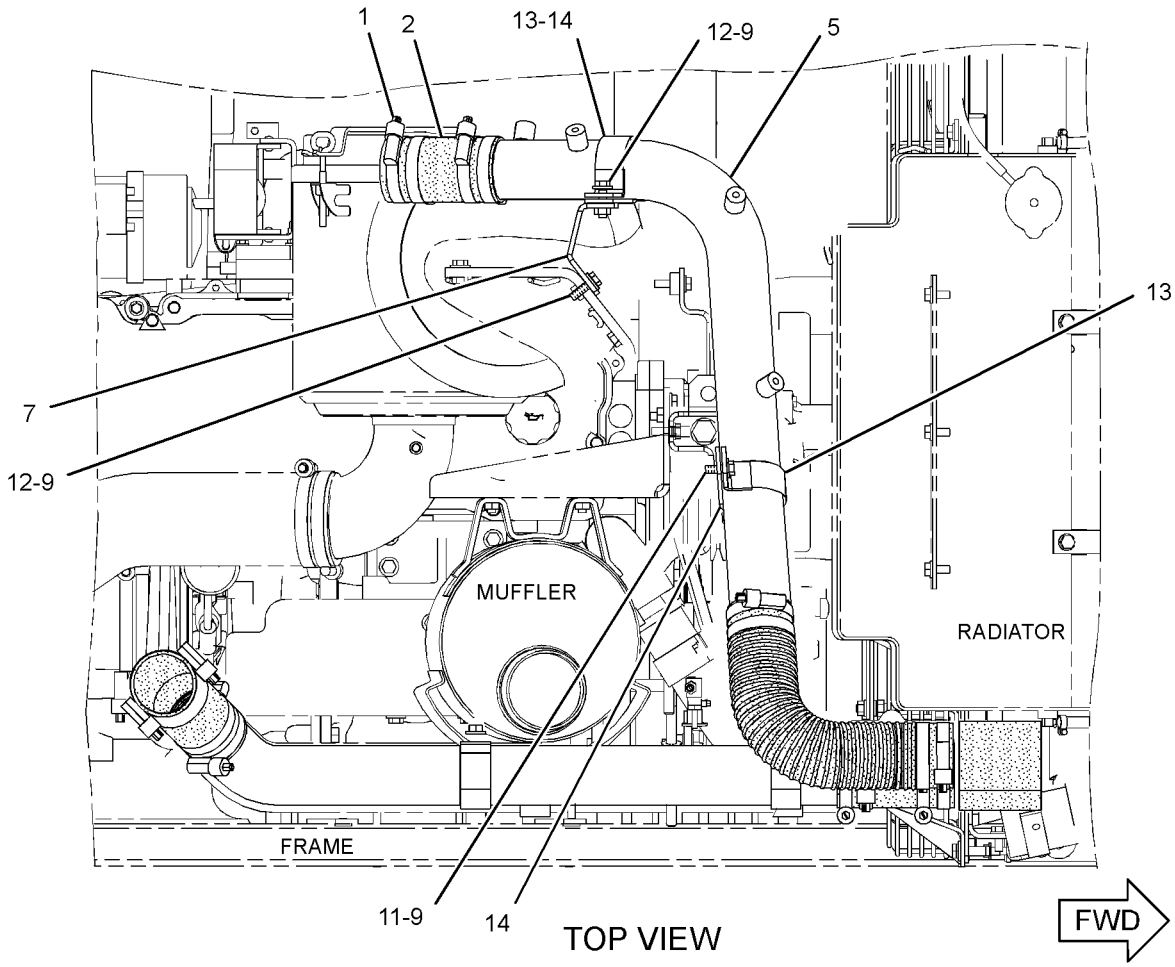

GRAPHIC #1 g02169333

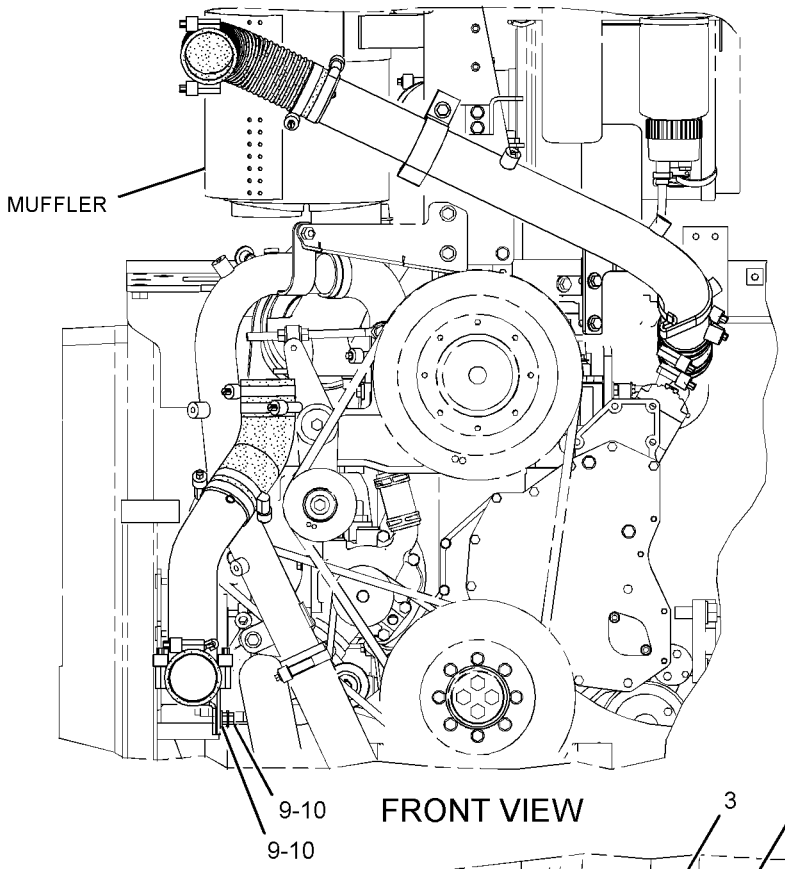

FRONT VIEW

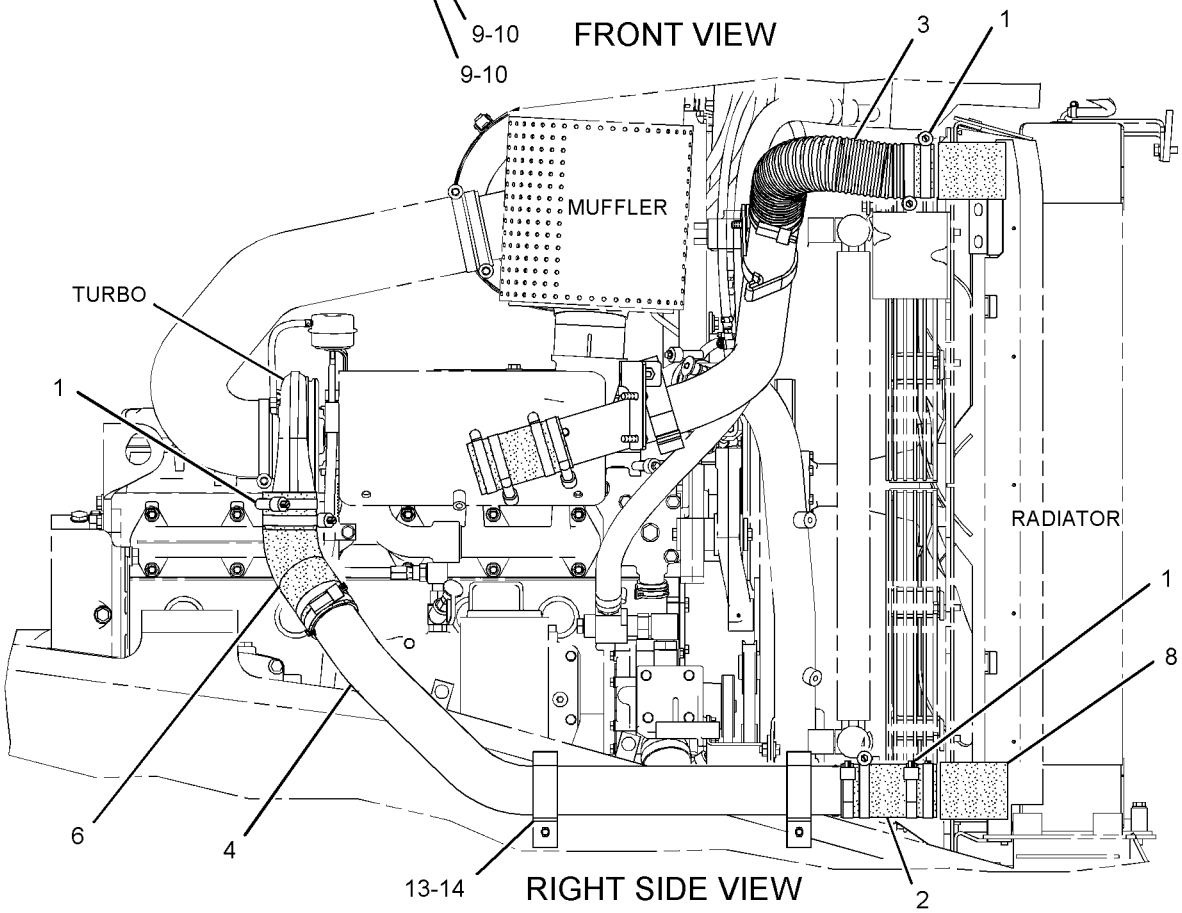

RIGHT SIDE VIEW

GRAPHIC #2

<END>

g01426270

AIR INLET AND EXHAUST SYSTEM

165-4445 MANIFOLD GP-EXHAUST

S/N: THX19900-UP

PART OF 318-1904, 318-1905 ENGINE AR-COMPLETE

SMCS-1059 i04017412

NOTE	REF NO	GRAPHIC REF	PART NUMBER	QTY	PART NAME 1 2 3 4 5 6 (PRODUCT LEVEL)	SEE PAGE
M	1	1	3E-8017	12	LOCKNUT (M10X1.5-MM THD)	
	2	1	161-3398	1	MANIFOLD-EXHAUST	
	3	1	161-3411	6	GASKET	
	4	1	167-0172	1	MANIFOLD-EXHAUST	
	5	1	203-7775	1	MANIFOLD-EXHAUST	
M	6	1	116-3715	12	STUD-TAPERLOCK (M10X1.5X85-MM)	
	7	1	4P-4369	6	SPACER (12X19X23.5-MM THK)	
	8	1	6V-5839	12	WASHER (11X21X2.5-MM THK)	
M	9	1	8T-7044	4	STUD-TAPERLOCK (M10X1.5X40-MM)	

M-METRIC PART

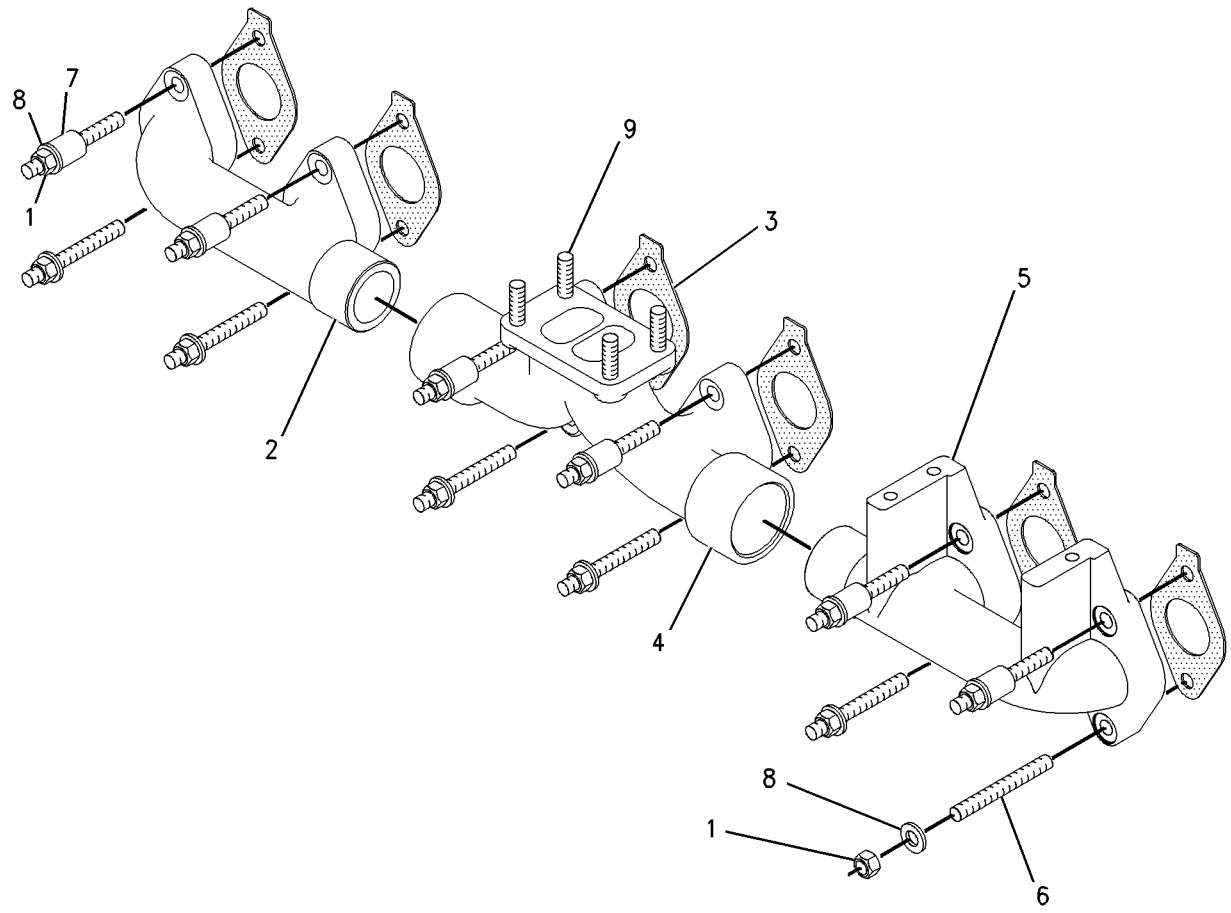

GRAPHIC #1 <END> g00741421

AIR INLET AND EXHAUST SYSTEM

168-8382 MUFFLER GP

S/N: S6T1-UP; S6X1-UP; S6Y1-UP
PART OF 317-1762 INSTALLATION AR

SMCS-1062 i03984306

NOTE	REF NO	GRAPHIC REF	PART NUMBER	QTY	PART NAME 1 2 3 4 5 6 (PRODUCT LEVEL)	SEE PAGE
	1	1	226-5611	1	MUFFLER AS	
	1A	1	7E-3870	1	CLAMP-MUFFLER	
	2	1	186-5120	1	BRACKET AS	
	3	1	3E-4353	2	WASHER-HARD (11X25X3-MM THK)	
M	4	1	6V-1820	2	BOLT (M10X1.5X30-MM)	
M	5	1	8T-4196	4	BOLT (M10X1.5X35-MM)	
	6	1	7X-7729	4	WASHER (11X25X3-MM THK)	

M-METRIC PART

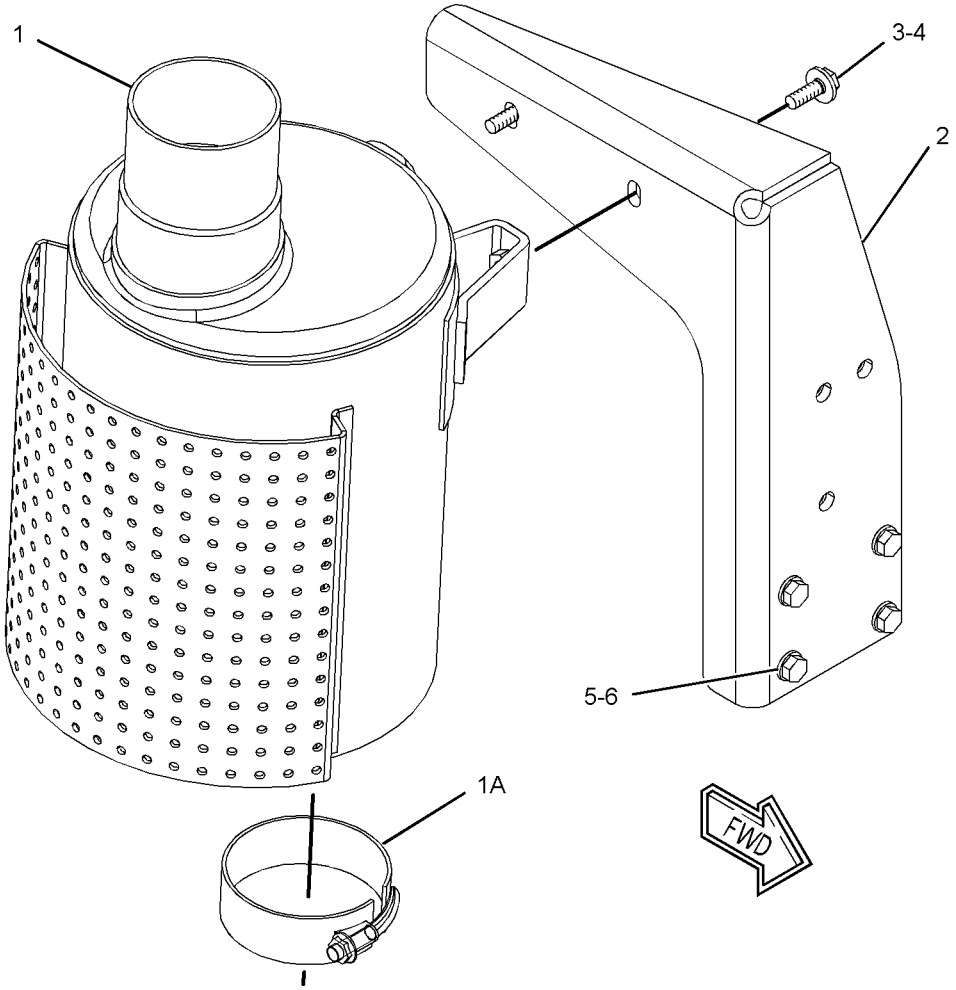

GRAPHIC #1 <END> g01228434

239-3686 MUFFLER GP

S/N: S6T1-UP; S6X1-UP; S6Y1-UP
PART OF 358-4670 PRECLEANER AR
AN ATTACHMENT

SMCS-1062 i04002913

NOTE	REF NO	GRAPHIC REF	PART NUMBER	QTY	PART NAME 1 2 3 4 5 6 (PRODUCT LEVEL)	SEE PAGE
	1	1	308-7112	1	CLAMP-WIRE	
	2	1	229-9601	1	MUFFLER AS	
M		1	8T-3490	2	NUT-WELD (M10X1.5-THD)	
	3	1	250-9286	1	BRACKET AS	
		1	7T-1099	3	LINK	
	4	1	7X-7729	6	WASHER (11X25X3-MM THK)	
M	5	1	8T-4196	6	BOLT (M10X1.5X35-MM)	

M-METRIC PART

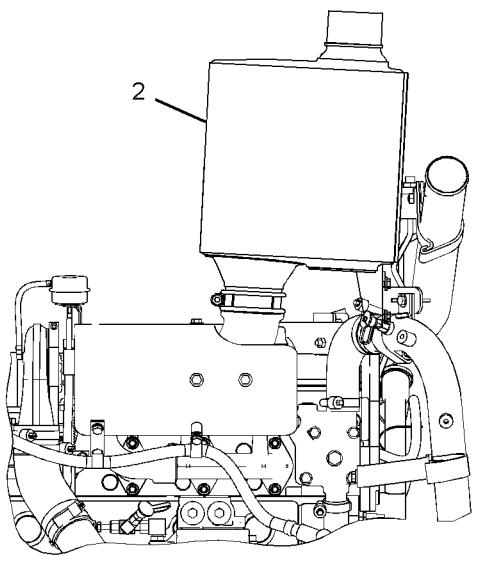

RIGHT SIDE VIEW

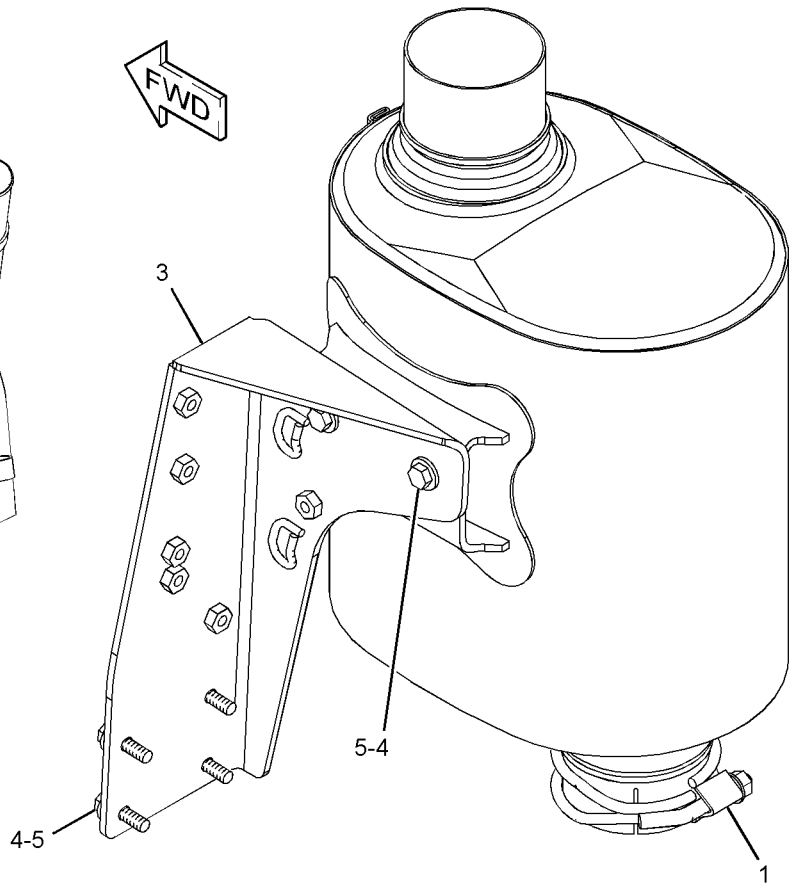

GRAPHIC #1 <END> g01391058

AIR INLET AND EXHAUST SYSTEM

358-4670 PRECLEANER AR—WITH PRESCREEN

S/N: S6T1-UP; S6X1-UP; S6Y1-UP

AN ATTACHMENT

SMCS-1055 i04002909

NOTE	REF NO	GRAPHIC REF	PART NUMBER	QTY	PART NAME 1 2 3 4 5 6 (PRODUCT LEVEL)	SEE PAGE
	1	1	1W-4877	1	HOSE-REDUCER	
	2	1	5P-0599	1	CLAMP-BAND	
	3	1	9M-0164	4	CLAMP-HOSE	
	4	1	127-8178	1	VALVE AS-CHECK	
	5	1	193-5116	1	HOSE	
Y	6	1	*237-9251*	1	PRECLEANER GP	108
Y	7	1	*239-3686*	1	MUFFLER GP	106
	8	1	241-4354	1	EJECTOR AS-EXHAUST	
	9	1	256-2941	1	BASE AS	
	10	1	308-7112	1	CLAMP-WIRE	
	11	1	5P-3860	1	CLAMP-HOSE	
	12	1	7X-7729	9	WASHER (11X25X3-MM THK)	
M	13	1	8T-4136	9	BOLT (M10X1.5X25-MM)	
E	14	1	5P-2817		HOSE (24-CM)	

E-ORDER BY THE CENTIMETER
M-METRIC PART
Y-SEPARATE ILLUSTRATION

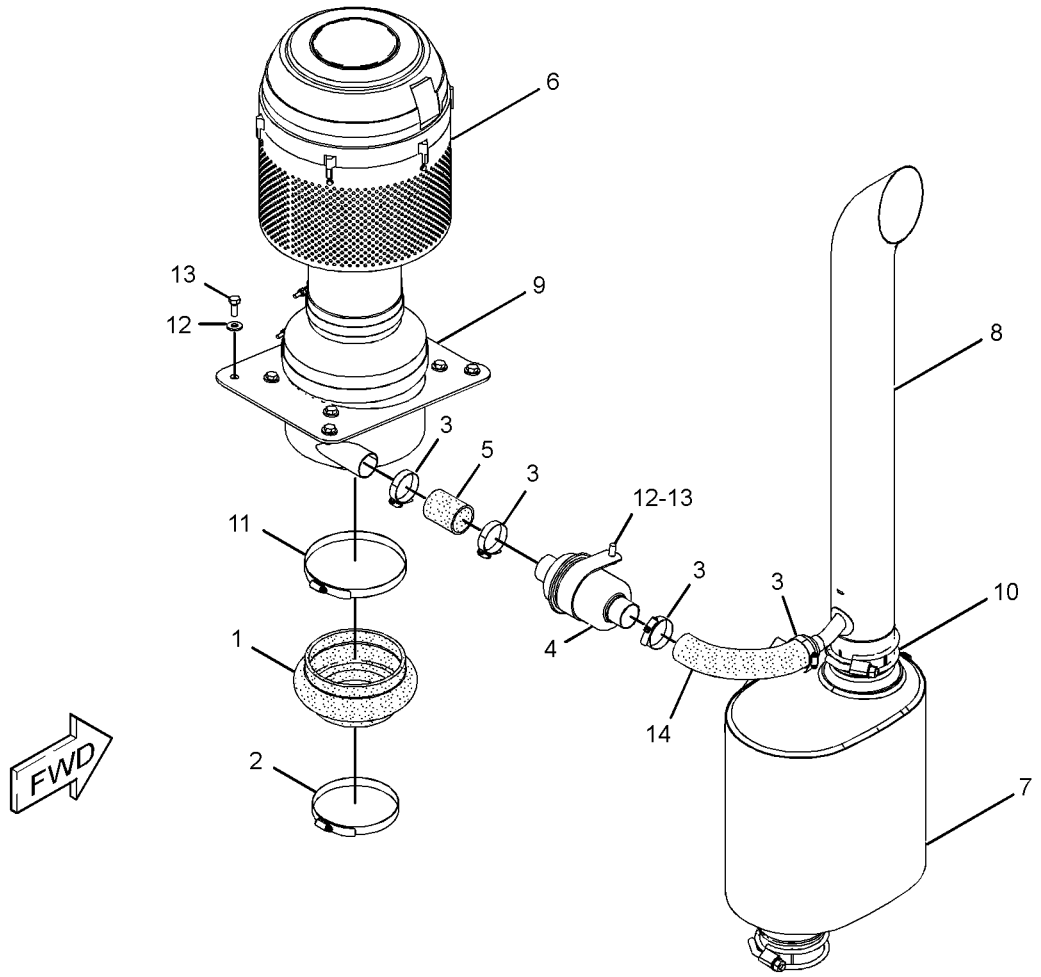

GRAPHIC #1 <END> g02197493

AIR INLET AND EXHAUST SYSTEM

237-9251 PRECLEANER GP—WITH PRESCREEN

S/N: S6T1-UP; S6X1-UP; S6Y1-UP
PART OF 358-4670 PRECLEANER AR
AN ATTACHMENT

SMCS-1055 i04002887

NOTE	REF NO	GRAPHIC REF	PART NUMBER	QTY	PART NAME 1 2 3 4 5 6 (PRODUCT LEVEL)	SEE PAGE
	1	1	130-3280	1	PRECLEANER AS	
	1A	1	174-5415	1	CLAMP	
HZ	2	1		1	PRESCREEN	
	3	1	145-6669	6	SCREW-SELF-TAPPING (10X0.75-IN)	
J	4	1	237-9252	1	TUBE AS	
J	5	1	237-9255	1	TUBE AS	
					AVAILABLE REPAIR KIT(S):	
H			153-1277	1	KIT-SCREEN (PRECLEANER)	
					(INCLUDES PRESCREEN, DAMPER, CLAMP, SCREWS, & TUBE)	
J			237-9254	1	KIT-PRECLEANER (TURBINE)	
					(INCLUDES VALVE AS, TUBE, CLAMPS, HOSE, TUBE ASSEMBLIES, WASHERS & BOLTS)	

H-PART MARKED H INCLUDED IN KIT MARKED H
J-PART MARKED J INCLUDED IN KIT MARKED J
Z-NOT SERVICED SEPARATELY

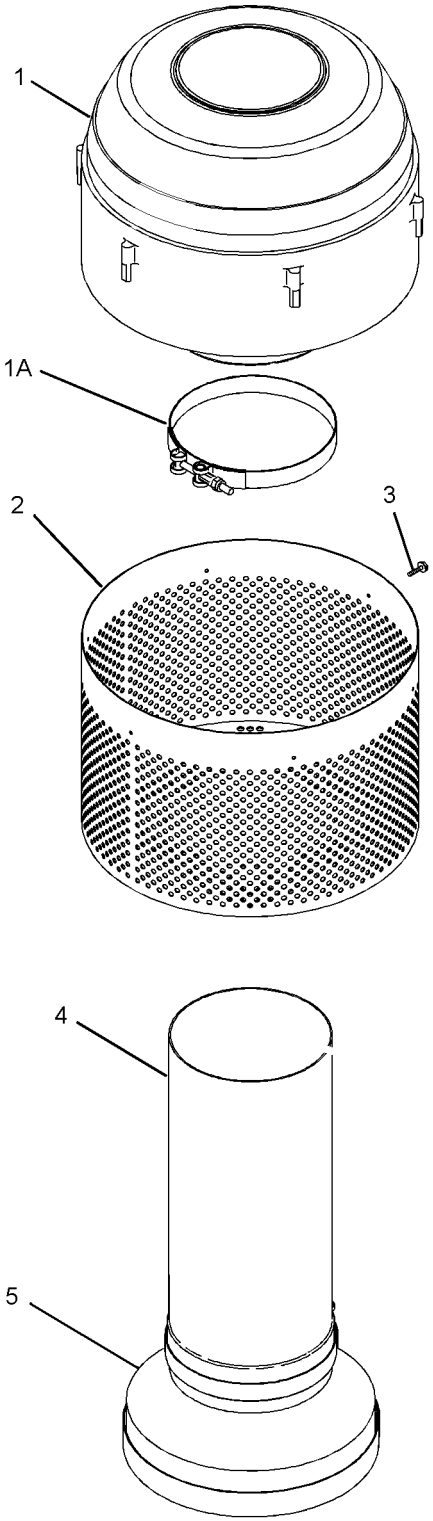

GRAPHIC #1 <END> g01146470

AIR INLET AND EXHAUST SYSTEM

7S-9396 PRESCREENER AS

S/N: S6T1-UP; S6X1-UP; S6Y1-UP

AN ATTACHMENT

SMCS-1055 i04002927

NOTE	REF NO	GRAPHIC REF	PART NUMBER	QTY	PART NAME 1 2 3 4 5 6 (PRODUCT LEVEL)	SEE PAGE
	1	1	0S-1591	1	BOLT (3/8-16X1.5-IN)	
	2	1	6V-8801	1	NUT (3/8-16-THD)	

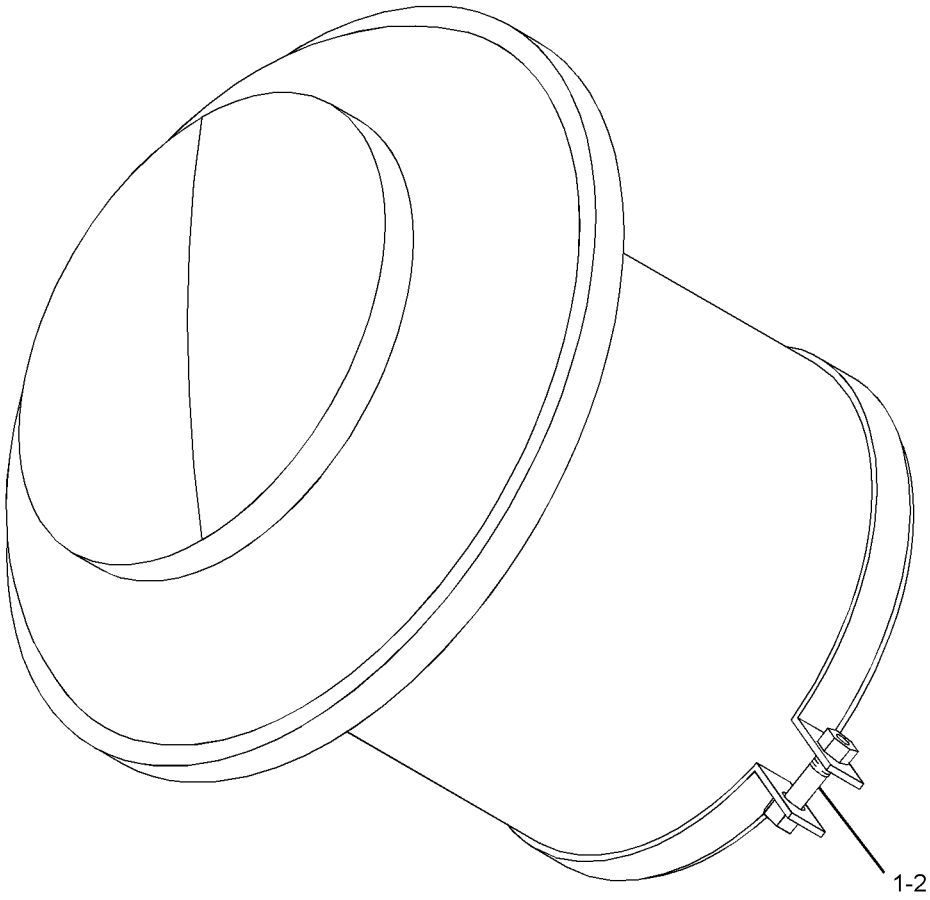

GRAPHIC #1 <END> g01208937

237-2737 SHIELD GP-EXHAUST

S/N: S6T1-UP; S6X1-UP; S6Y1-UP
PART OF 317-1762 INSTALLATION AR

SMCS-1067 i04008951

NOTE	REF NO	GRAPHIC REF	PART NUMBER	QTY	PART NAME 1 2 3 4 5 6 (PRODUCT LEVEL)	SEE PAGE
	1	1	237-2738	1	SHIELD AS-EXHAUST	
M		1	9R-2613	2	BOSS-WELD (M10X1.5X25-MM)	
	2	1	7X-7729	3	WASHER (11X25X3-MM THK)	
M	3	1	8T-4136	3	BOLT (M10X1.5X25-MM)	

M-METRIC PART

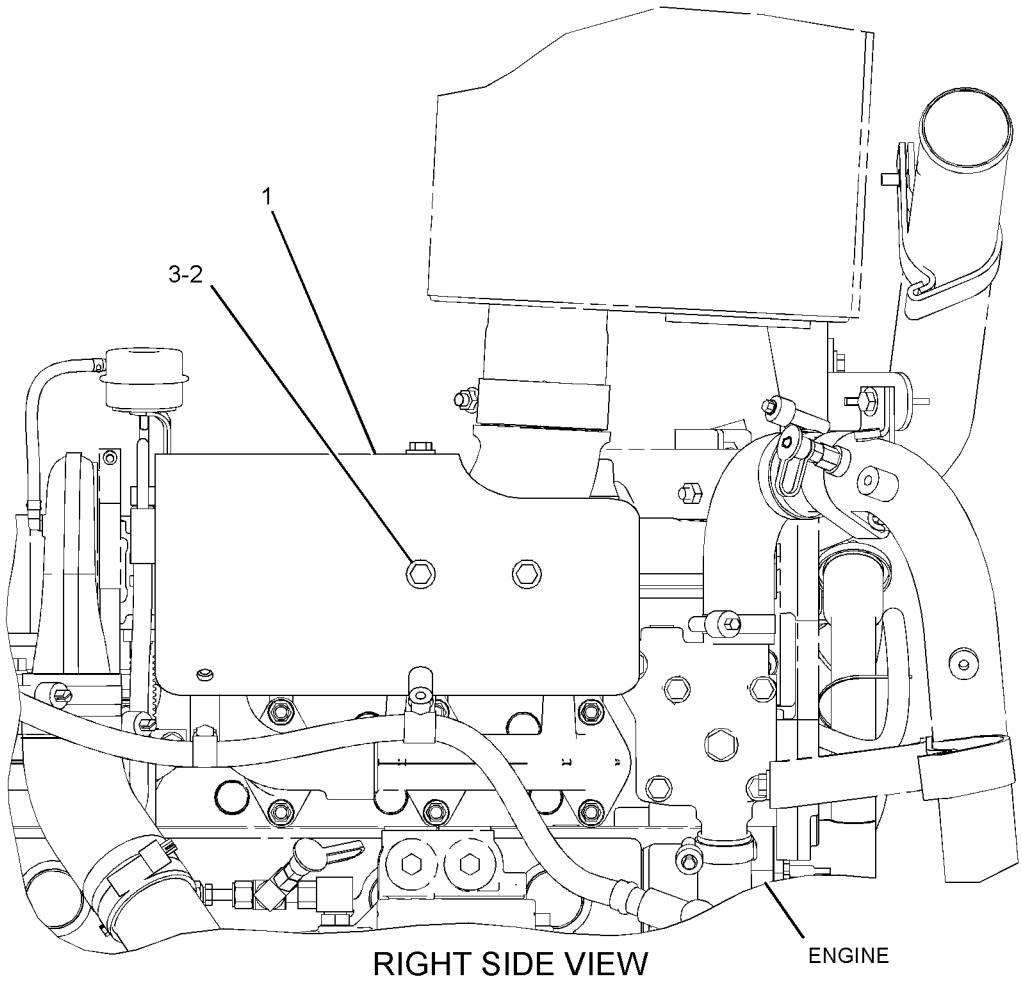

RIGHT SIDE VIEW

GRAPHIC #1 <END> g01209236

AIR INLET AND EXHAUST SYSTEM

252-5165 TURBOCHARGER GP

S/N: THX19900-UP

PART OF 262-5901 TURBOCHARGER GP

SMCS-1052, 1053 i04017515

NOTE	REF NO	GRAPHIC REF	PART NUMBER	QTY	PART NAME 1 2 3 4 5 6 (PRODUCT LEVEL)	SEE PAGE
	1	1	137-1602	1	CLAMP AS (TURBINE)	
	2	1	158-6072	1	CLAMP AS (COMPRESSOR)	
	3	1	161-6963	2	CLAMP	
	4	1	262-2870	1	CARTRIDGE GP-TURBOCHARGER	
E	5	1	242-3360		HOSE (25-CM)	

E-ORDER BY THE CENTIMETER

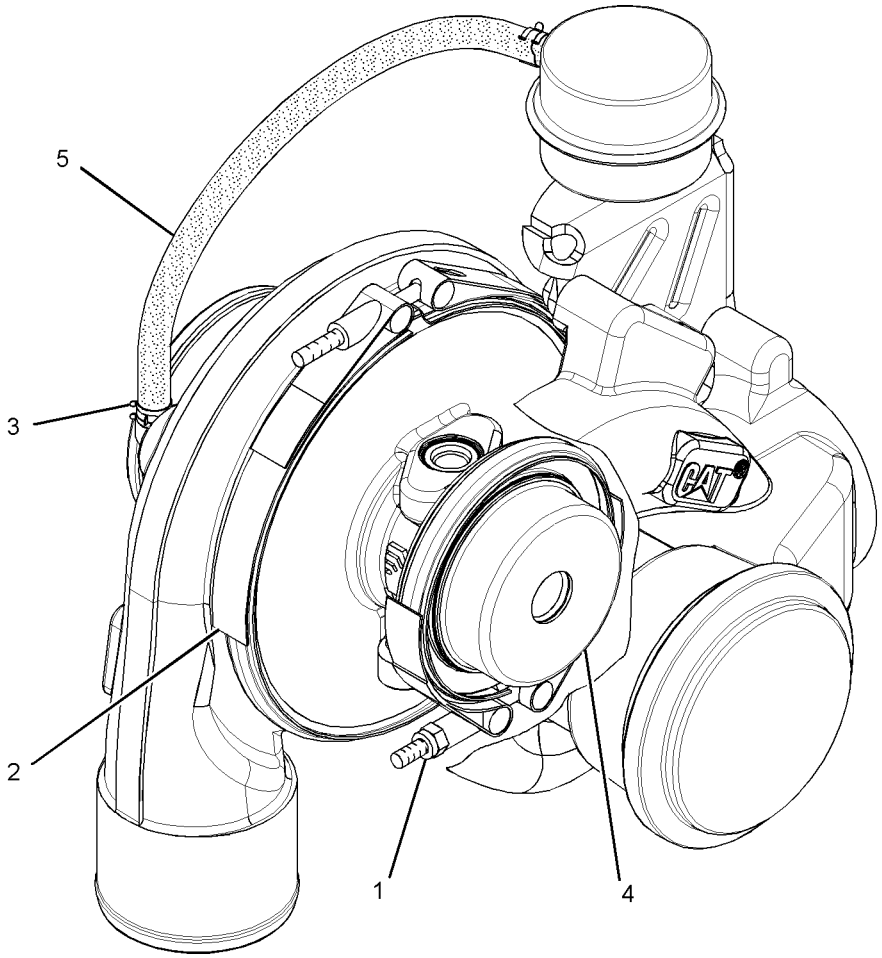

GRAPHIC #1 <END> g01526440

AIR INLET AND EXHAUST SYSTEM

262-5901 TURBOCHARGER GP

S/N: THX19900-UP

PART OF 320-7655, 320-7656 ENGINE AR-CORE

SMCS-1052, 1053 i04017514

NOTE	REF NO	GRAPHIC REF	PART NUMBER	QTY	PART NAME 1 2 3 4 5 6 (PRODUCT LEVEL)	SEE PAGE
	1	1	7C-7431	1	GASKET	
Y	2	1	252-5165	1	TURBOCHARGER GP	112
M	3	1	3E-8017	4	LOCKNUT (M10X1.5-MM-THD)	

M-METRIC PART
Y-SEPARATE ILLUSTRATION

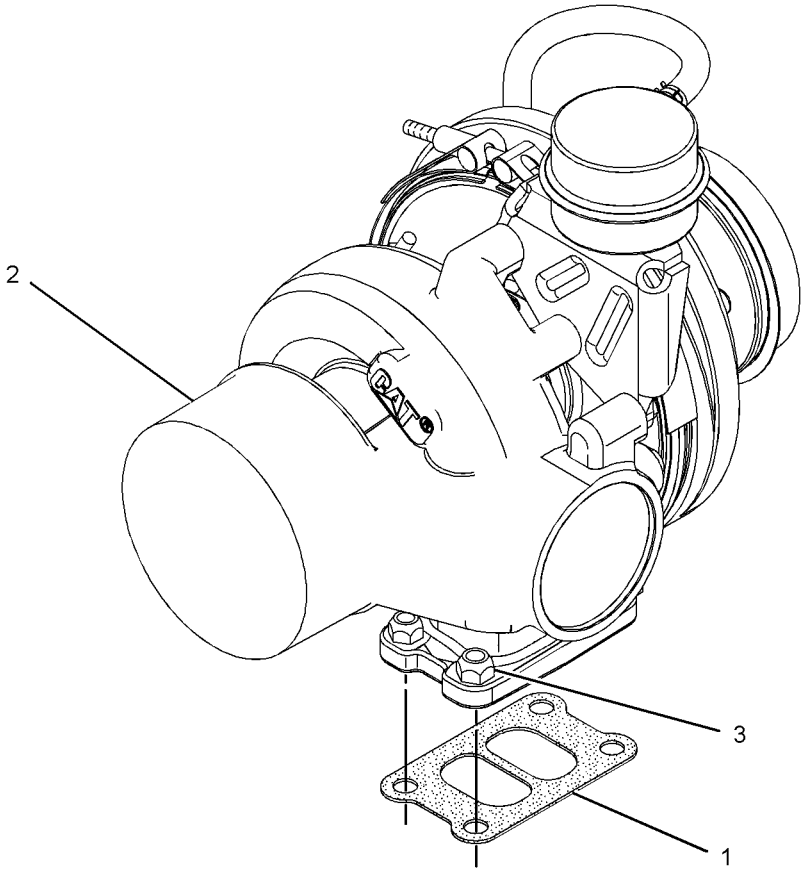

GRAPHIC #1 <END> g01205748

295-7933 FILTER & LINES GP-FUEL

S/N: S6T1-UP; S6X1-UP; S6Y1-UP
PART OF 317-1762 INSTALLATION AR

SMCS-1261, 1274 i03989154

NOTE	REF NO	GRAPHIC REF	PART NUMBER	QTY	PART NAME 1 2 3 4 5 6 (PRODUCT LEVEL)	SEE PAGE
	1	1	1P-4278	1	CLAMP-HOSE	
	2	1	1R-0762	1	FILTER-FUEL (ADVANCED EFFICIENCY)	
	3	1	6V-0852	1	CAP-DUST	
	4	1	8T-9655	6	MOUNT-ISOLATION	
	5	1	174-7599	1	BASE AS-FUEL FILTER	
		1	9S-4167	1	STUD-HOLLOW (1-14X1.47-IN)	
Y	6	1	*174-9570*	1	FILTER GP-WATER SEP & FUEL	116
	7	1	*183-3406*	4	PLUG AS	
					(EACH INCLUDES)	
		1	9S-4191	1	PLUG-O-RING	
		1	6V-5049	1	SEAL-O-RING	
	8	1	190-8970	1	PUMP AS-FUEL PRIMING	
	9	1	191-1782	1	SPACER (8.5X12.7X38.2-MM THK)	
	10	1	191-1783	2	SPACER (8.5X12.7X87.3-MM THK)	
	11	1	206-5017	1	SPACER (11X20X5-MM THK)	
	12	1	*241-6215*	1	ELBOW AS	
		1	6V-8076	1	ELBOW	
		1	3J-1907	1	SEAL-O-RING	
	13	1	284-7650	1	BRACKET AS	
	14	1	284-9639	1	HOSE AS	
	15	1	284-9640	1	HOSE AS	
	16	1	306-9621	1	BRACKET AS	
	17	1	314-2911	1	BRACKET AS	
	18	1	100-4336	2	CLIP	
	19	1	*148-8378*	2	ELBOW AS	
					(EACH INCLUDES)	
		1	6V-8724	1	ELBOW	
		1	3J-1907	1	SEAL-O-RING	
		1	6V-8397	1	SEAL-O-RING	
	20	1	1S-0994	2	CLIP	
	22	1	5P-9297	2	CLIP	
	28	1	7X-0579	6	WASHER-HARD (8.8X25.5X2-MM THK)	
M	29	1	7X-2539	2	BOLT (M8X1.25X110-MM)	
	30	1	7X-7729	4	WASHER (11X25X3-MM THK)	
	31	1	8T-4121	6	WASHER-HARD (11X21X2.5-MM THK)	
M	32	1	8T-4136	3	BOLT (M10X1.5X25-MM)	
M	33	1	8T-4195	9	BOLT (M10X1.5X30-MM)	
	34	1	8T-4896	2	WASHER-HARD (10.2X18.5X2.5-MM THK)	
M	35	1	8T-6869	1	BOLT (M8X1.25X60-MM)	
D	37	1	5P-5991		HOSE (0.7-M)	
	38	1	*313-3492*	2	PLUG AS	
					(EACH INCLUDES)	
		1	238-5081	1	SEAL-O-RING	
		1	9S-4190	1	PLUG-O-RING	
	39	1	*309-5136*	1	FITTING AS	
		1	214-7568	1	SEAL-O-RING	
		1	6V-3965	1	FITTING (QUICK DISCONNECT)	
	40	1	*148-8319*	1	CONNECTOR AS	
		1	2M-9780	1	SEAL-O-RING	
		1	6V-8397	1	SEAL-O-RING	

D-ORDER BY THE METER
M-METRIC PART
Y-SEPARATE ILLUSTRATION

295-7933 FILTER & LINES GP-FUEL ***(contd.)*** i03989154

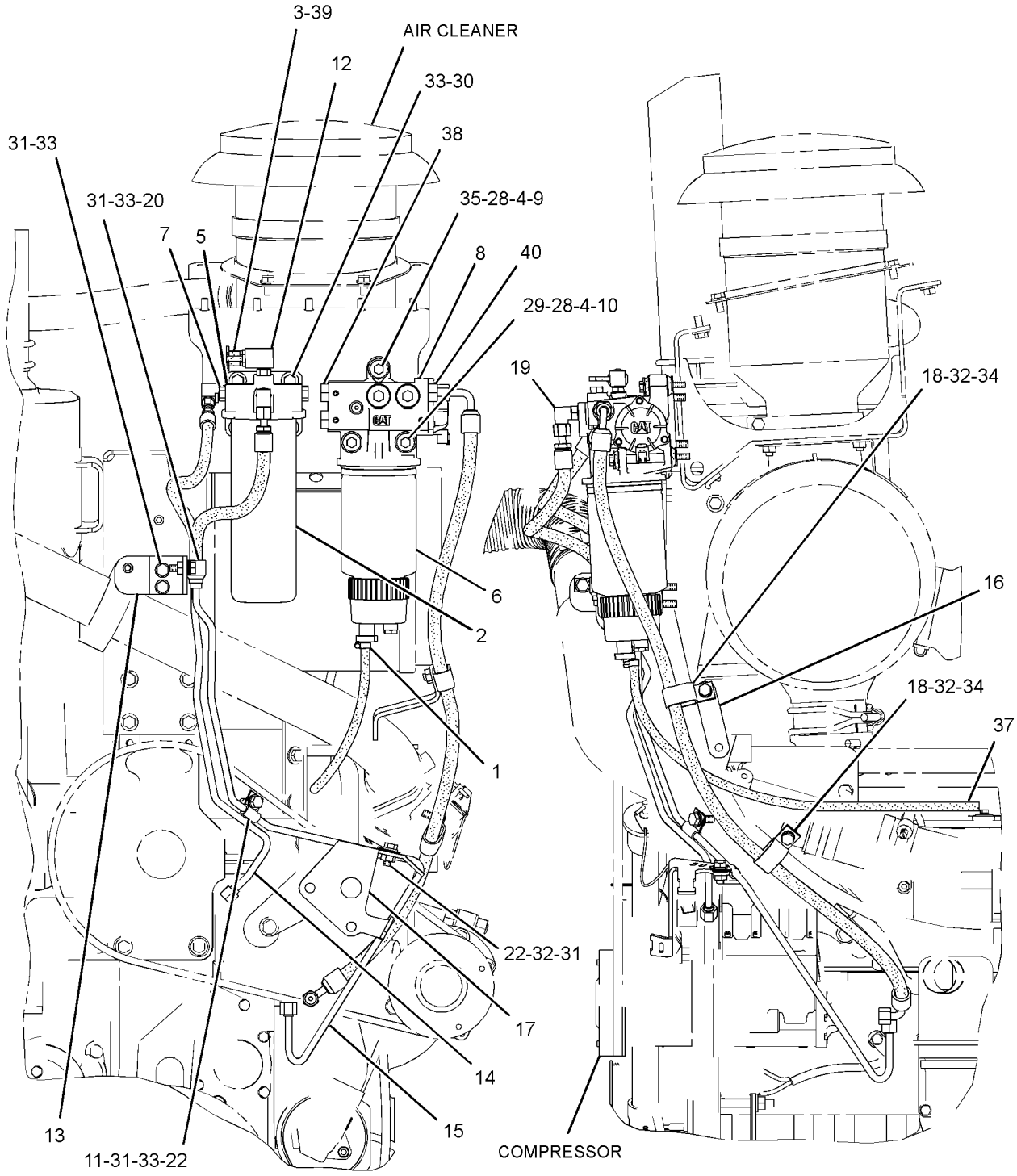

FRONT VIEW OF ENGINE

LEFT SIDE VIEW OF ENGINE

GRAPHIC #1 <END> g01640914

174-9570 FILTER GP-WATER SEP & FUEL

S/N: S6T1-UP; S6X1-UP; S6Y1-UP
PART OF 295-7933 FILTER & LINES GP-FUEL

SMCS-1261, 1263 i03989156

NOTE	REF NO	GRAPHIC REF	PART NUMBER	QTY	PART NAME 1 2 3 4 5 6 (PRODUCT LEVEL)	SEE PAGE
	1	1	326-1644	1	FILTER AS-WATER SEP & FUEL (PRIMARY)	
	1A	1	220-8678	1	SEAL-RING	
	2	1	343-5527	1	BOWL AS	
	2A	1	3J-1907	1	SEAL-O-RING	
	2B	1	5F-9144	1	SEAL-O-RING	
	2C	1	8F-7219	1	SEAL-O-RING	
	2D	1	9S-8004	1	PLUG-O-RING	

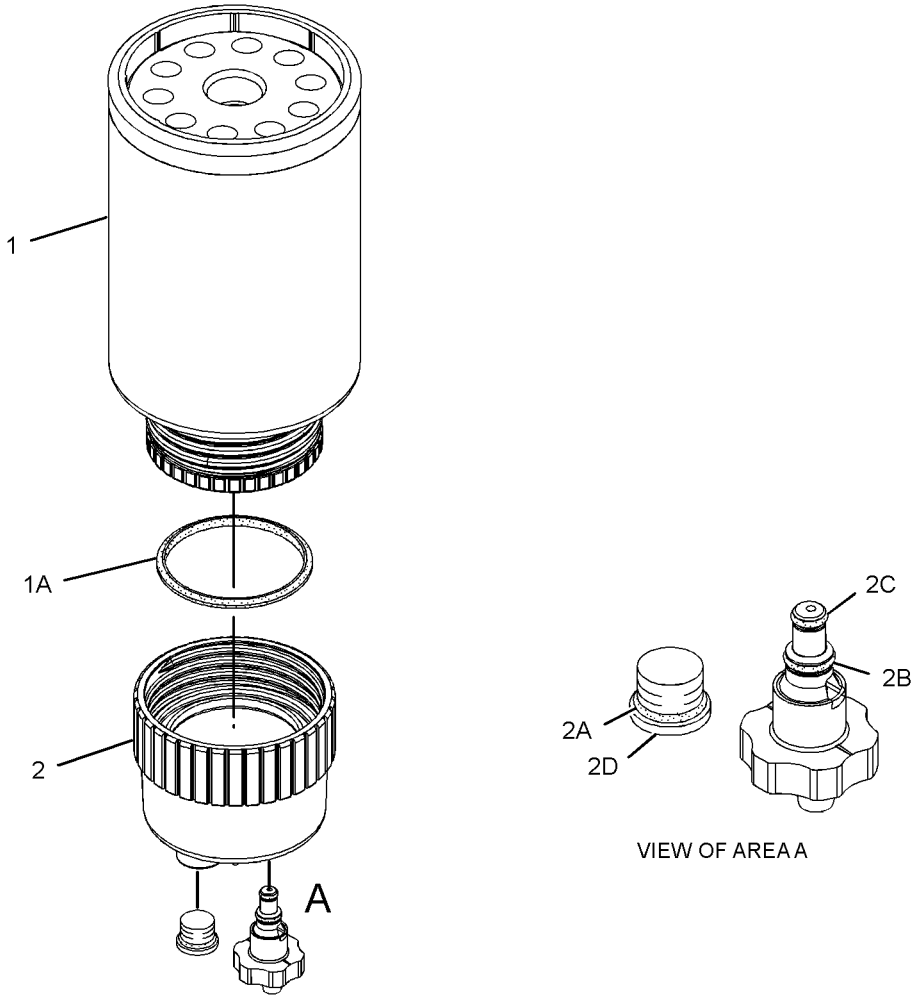

GRAPHIC #1 <END> g01960053

328-2573 INJECTOR GP-FUEL*R

S/N: THX19900-UP

PART OF 267-9715 PUMP GP-FUEL INJECTION

SMCS-1251, 1254, 1290 i04017513

NOTE	REF NO	GRAPHIC REF	PART NUMBER	QTY	PART NAME 1 2 3 4 5 6 (PRODUCT LEVEL)	SEE PAGE
	1	1	149-5240	1	RING-BACKUP	
	2	1	293-0730	1	RING-BACKUP	
	3	1	109-3207	1	SEAL-O-RING	
	4	1	148-2903	2	SEAL-O-RING (FUEL SYSTEM)	

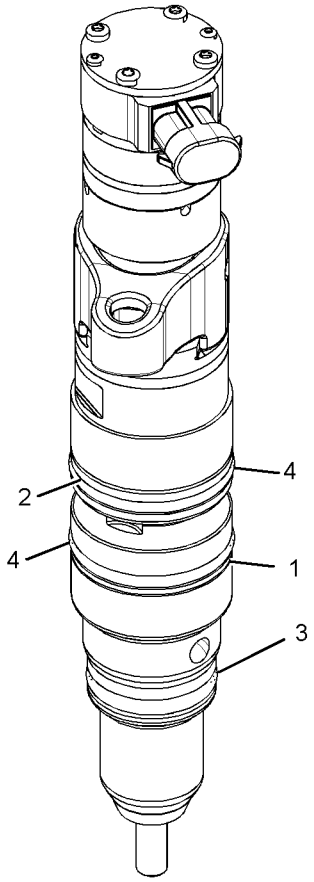

GRAPHIC #1 <END> g01623404

FUEL SYSTEM

264-2014 LINES GP-FUEL

S/N: THX19900-UP

PART OF 318-1904, 318-1905 ENGINE AR-COMPLETE

SMCS-1274 i04020751

NOTE	REF NO	GRAPHIC REF	PART NUMBER	QTY	PART NAME 1 2 3 4 5 6 (PRODUCT LEVEL)	SEE PAGE
	1	1	3E-7410	1	TEE-O-RING	
	2	1	3S-2093	1	STRAP-CABLE	
	3	1	183-3401	1	ELBOW AS	
		1	6V-5049	1	SEAL-O-RING	
		1	6V-9001	1	ELBOW	
		1	8L-2779	1	SEAL-O-RING	
Y	4	1	194-6725	1	SENSOR GP-PRESSURE (FUEL)	171
	5	1	*295-1803*	1	ELBOW AS	
		1	6V-5049	1	SEAL-O-RING	
		1	196-6838	1	ELBOW	
Y	6	1	*232-0343*	1	REGULATOR GP-FUEL PRESSURE	128
	7	1	263-7731	1	HARNESS AS-WIRING (FUEL PRESSURE)	
		1	102-8803	1	KIT-RECEPTACLE (3-PIN)	
					(INCLUDES RECEPTACLE AS & WEDGE)	
		1	102-8806		KIT-RECEPTACLE (8-PIN)	
					(INCLUDES RECEPTACLE AS & WEDGE)	
	8	1	1S-0994	1	CLIP	
I	9	1	224-2228	1	HOSE AS	
M	10	1	6V-4248	1	BOLT (M10X1.5X25-MM)	
	11	1	6V-5048	1	SEAL-O-RING	
	12	1	6V-5049	5	SEAL-O-RING	
	13	1	6V-5839	1	WASHER (11X21X2.5-MM THK)	
	14	1	6V-8636	2	CONNECTOR	
	15	1	6V-8724	1	ELBOW	
	16	1	8L-2779	3	SEAL-O-RING	
	17	1	9X-0261	1	ADAPTER	

I-REFER TO HYDRAULIC INFORMATION SYSTEM
M-METRIC PART
Y-SEPARATE ILLUSTRATION

264-2014 LINES GP-FUEL ***(contd.)*** i04020751

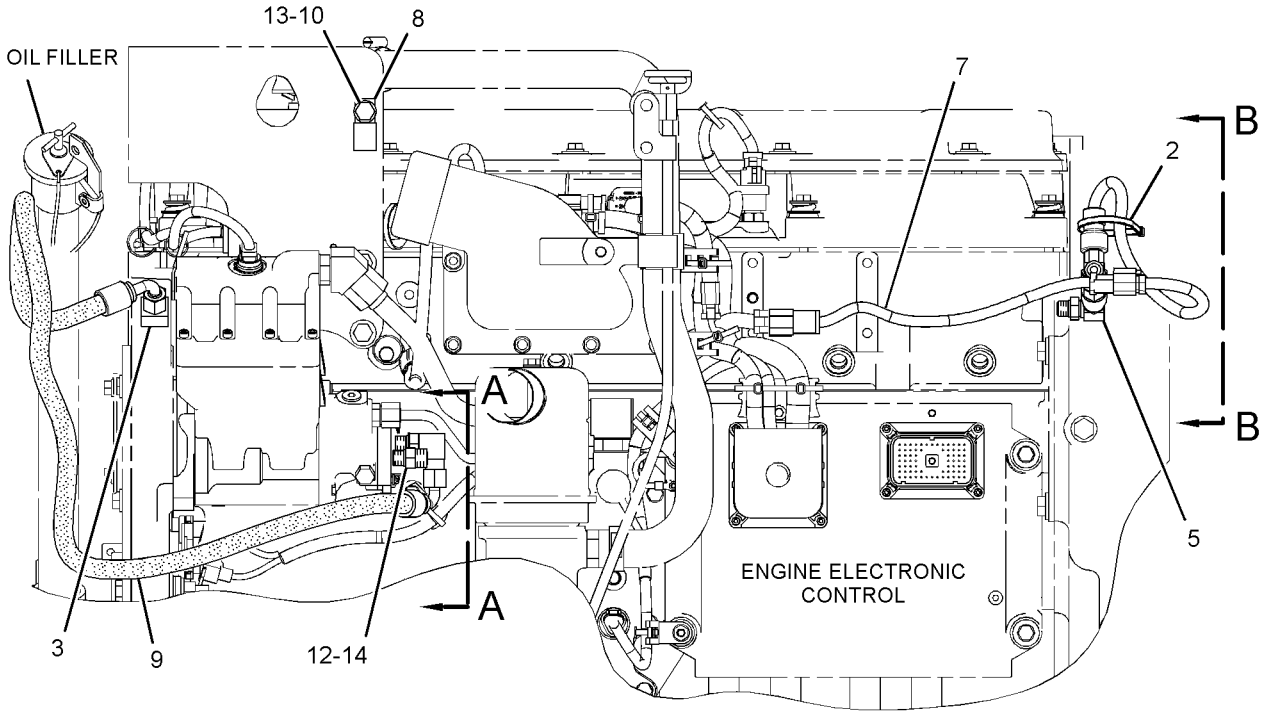

LEFT SIDE VIEW OF ENGINE

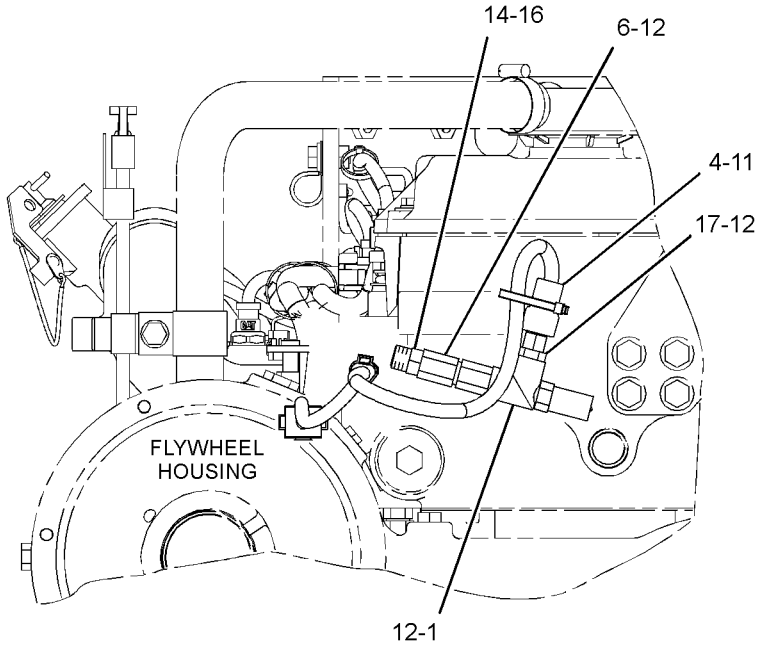

VIEW B-B

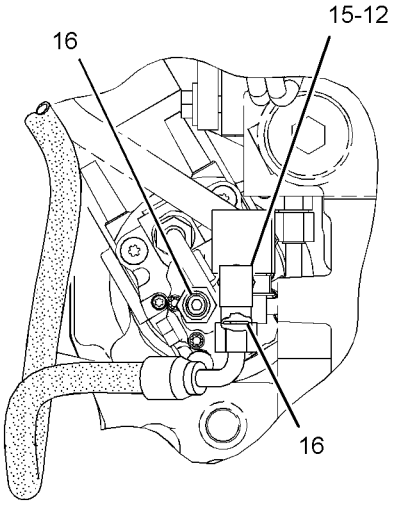

VIEW A-A

GRAPHIC #1 <END> g01394622

FUEL SYSTEM

317-6109 LINES GP-FUEL

S/N: S6T1-UP; S6X1-UP; S6Y1-UP

PART OF 336-9684, 336-9685, 336-9686 CHASSIS AR

SMCS-1274 i04009193

NOTE	REF NO	GRAPHIC REF	PART NUMBER	QTY	PART NAME 1 2 3 4 5 6 (PRODUCT LEVEL)	SEE PAGE
	1	1	1K-4649	2	SPACER (0.516X1X1-IN THK)	
	2	1	1W-3011	1	SPACER (10.5X22X73.5-MM THK)	
	3	1	3W-2647	1	SPACER (13.5X30X10-MM THK)	
	4	1	5D-1026	1	CLAMP-BAND	
	5	1	246-2641	1	PADLOCK GP	
		1	5P-8500	1	KEY	
	6	1	8T-0119	2	ELBOW	
	7	1	8T-6723	1	VALVE-BALL	
	8	1	8T-6724	1	VALVE-BALL	
	9	1	*150-3026*	1	ELBOW AS	
		1	6V-4292	1	ELBOW	
		1	3K-0360	1	SEAL-O-RING	
	10	1	226-3492	1	BRACKET AS	
I	11	1	230-3615	1	HOSE AS	
	12	1	231-1345	1	BRACKET AS	
I	13	1	237-0984	1	HOSE AS	
	14	1	300-8554	1	BRACKET AS	
M		1	8T-3490	1	NUT-WELD (M10X1.5-THD)	
	15	1	317-6110	1	BRACKET AS	
I	16	1	317-9689	1	HOSE AS	
	17	1	067-2551	2	CLIP	
	18	1	100-4336	6	CLIP	
M	19	1	109-3001	1	STUD-TAPERLOCK (M10X1.5X65-MM)	
	20	1	*148-8364*	1	ELBOW AS	
		1	6V-8625	1	ELBOW	
		1	3K-0360	1	SEAL-O-RING	
		1	6V-8398	1	SEAL-O-RING	
	21	1	*148-8372*	1	ELBOW AS	
		1	6V-8721	1	ELBOW	
		1	2M-9780	1	SEAL-O-RING	
		1	6V-8398	1	SEAL-O-RING	
	22	1	*148-8374*	1	ELBOW AS	
		1	6V-8723	1	ELBOW	
		1	3K-0360	1	SEAL-O-RING	
		1	6V-8397	1	SEAL-O-RING	
	23	1	*164-5570*	1	UNION AS	
		1	6V-8730	1	UNION (FACE SEAL)	
		1	6V-8397	2	SEAL-O-RING	
	24	1	1S-0996	1	CLIP	
	25	1	3K-0360	4	SEAL-O-RING	
	26	1	4D-7735	1	CLIP	
	27	1	6D-4246	1	CLIP	
	28	1	7X-7729	2	WASHER (11X25X3-MM THK)	
	29	1	8T-1887	1	CLIP (SLOT)	
	30	1	8T-1888	1	CLIP (TAB)	
	31	1	8T-1893	1	CLIP (SLOT)	
	32	1	8T-1894	1	CLIP (TAB)	
	33	1	8T-4121	12	WASHER-HARD (11X21X2.5-MM THK)	
M	34	1	8T-4133	3	NUT (M10X1.5-THD)	
M	35	1	8T-4137	7	BOLT (M10X1.5X20-MM)	
M	36	1	8T-4182	2	BOLT (M10X1.5X45-MM)	
M	37	1	8T-4195	1	BOLT (M10X1.5X30-MM)	
M	38	1	8T-4196	1	BOLT (M10X1.5X35-MM)	
M	39	1	8T-4198	1	BOLT (M10X1.5X100-MM)	
	40	1	8T-4223	1	WASHER-HARD (13.5X25.5X3-MM THK)	
	41	1	8T-4896	2	WASHER-HARD (10.2X18.5X2.5-MM THK)	

317-6109 LINES GP-FUEL ***(contd.)*** i04009193

NOTE	REF NO	GRAPHIC REF	PART NUMBER	QTY	PART NAME 1 2 3 4 5 6 (PRODUCT LEVEL)	SEE PAGE
	42	1	8T-9383	1	BOLT (1/2-13X0.75-IN)	
E	43	1	5P-1505		HOSE (104-CM)	

E-ORDER BY THE CENTIMETER
I-REFER TO HYDRAULIC INFORMATION SYSTEM
M-METRIC PART

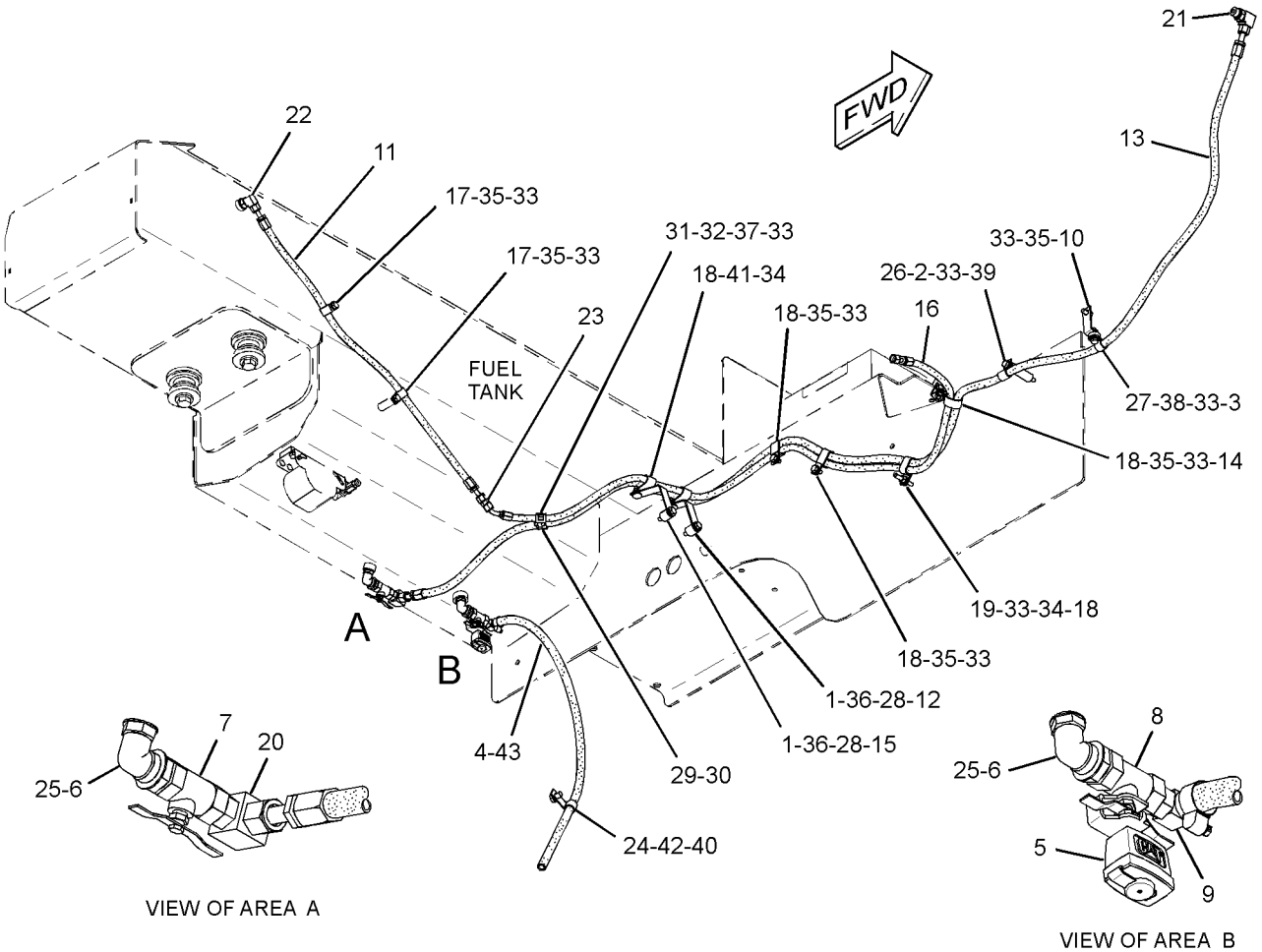

GRAPHIC #1 <END> g02198074

220-8233 PUMP & MTG GP-UNIT INJ HYD

S/N: THX19900-UP
1.61 RATIO
PART OF 320-7655, 320-7656 ENGINE AR-CORE

SMCS-1714 i04017505

NOTE	REF NO	GRAPHIC REF	PART NUMBER	QTY	PART NAME 1 2 3 4 5 6 (PRODUCT LEVEL)	SEE PAGE
	1	1	*183-3399*	2	CONNECTOR AS	
					(EACH INCLUDES)	
		1	6V-8636	1	CONNECTOR	
		1	214-7568	1	SEAL-O-RING	
		1	221-3494	1	SEAL-O-RING	
	2	1	*183-3407*	1	PLUG AS	
		1	9S-8004	1	PLUG-O-RING	
		1	153-4906	1	SEAL-O-RING	
	3	1	227-5904	1	SEAL-O-RING	
	4	1	209-3171	1	TUBE AS	
	5	1	209-3172	1	TUBE AS	
CYR	6	1	319-0678	1	PUMP GP-UNIT INJECTOR HYD	126
	7	1	030-7950	1	ELBOW	
	8	1	5P-3264	1	ELBOW	
	9	1	6V-4589	1	SEAL-O-RING	
	10	1	6V-5050	1	SEAL-O-RING	
	11	1	6V-5839	2	WASHER (11X21X2.5-MM THK)	
M	12	1	6V-7981	2	BOLT (M10X1.5X70-MM)	
	13	1	3E-9412	1	DOWEL	

C-CHANGE FROM PREVIOUS TYPE
M-METRIC PART
R-REMFG PART MAY BE AVAILABLE
Y-SEPARATE ILLUSTRATION

220-8233 PUMP & MTG GP-UNIT INJ HYD *(contd.)* i04017505

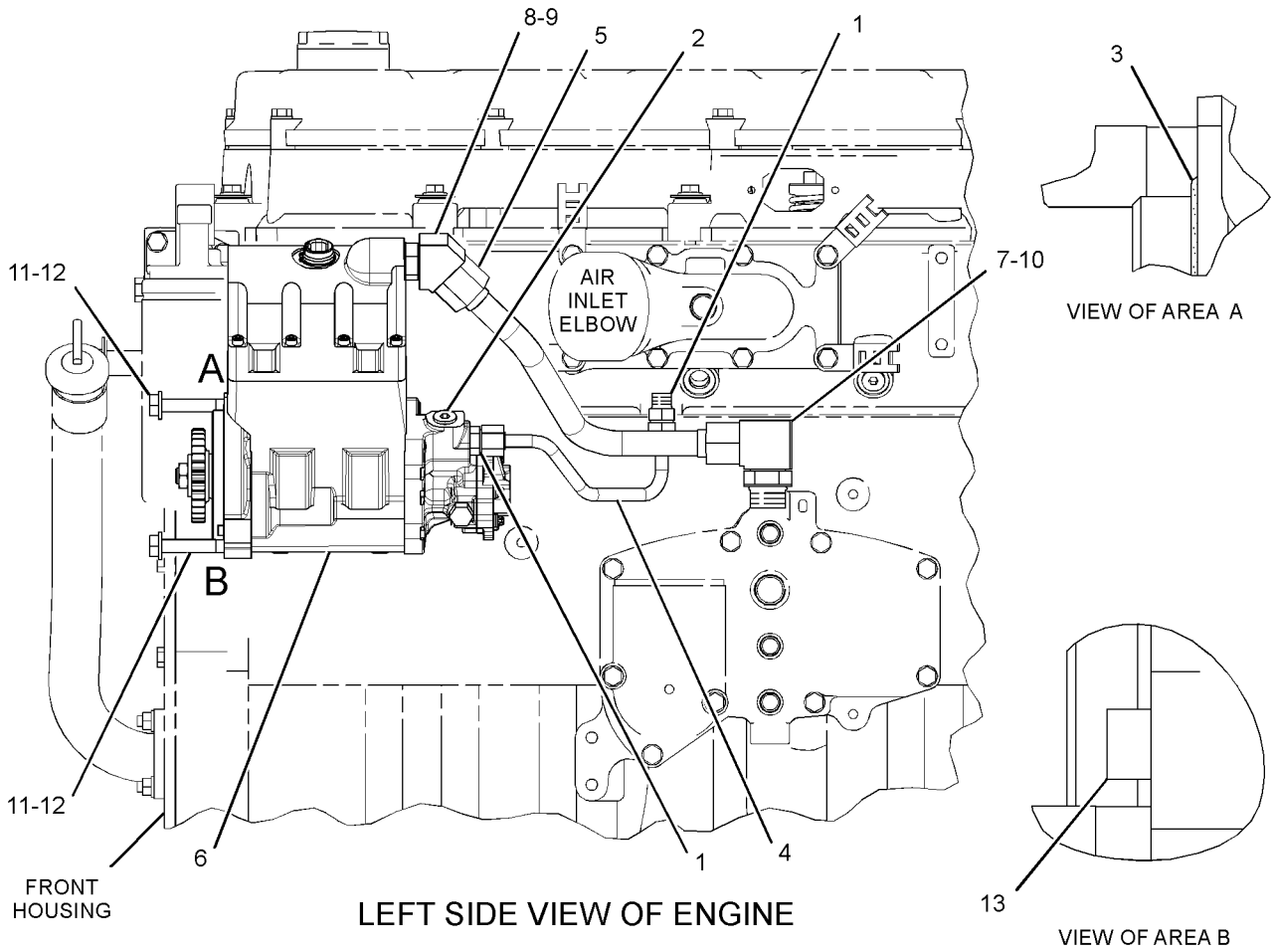

LEFT SIDE VIEW OF ENGINE

GRAPHIC #1 <END> g01442023

FUEL SYSTEM

267-9715 PUMP GP-FUEL INJECTION

S/N: THX19900-UP

PART OF 267-9720 PUMP GP-FUEL INJECTION

SMCS-1251, 1290 i04017512

NOTE	REF NO	GRAPHIC REF	PART NUMBER	QTY	PART NAME 1 2 3 4 5 6 (PRODUCT LEVEL)	SEE PAGE
	1	1	235-9651	2	BOLT-SOCKET HEAD (M8X1.25X65-MM)	
CYR	2	1	328-2573	1	INJECTOR GP-FUEL	117

C-CHANGE FROM PREVIOUS TYPE
R-REMFG PART MAY BE AVAILABLE
Y-SEPARATE ILLUSTRATION

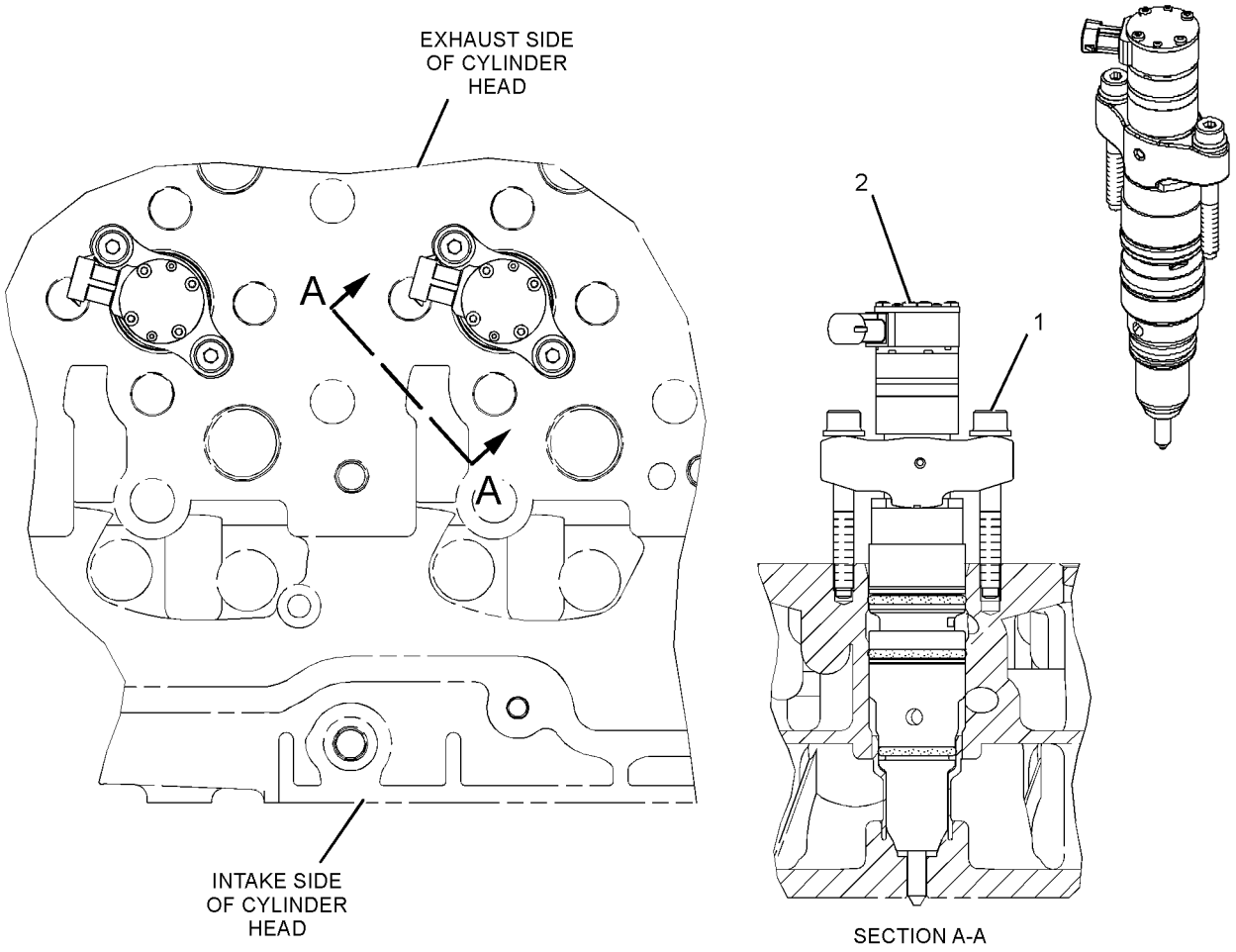

GRAPHIC #1 <END> g01221290

267-9720 PUMP GP-FUEL INJECTION

S/N: THX19900-UP

PART OF 320-7655, 320-7656 ENGINE AR-CORE

SMCS-1251, 1290 i04029201

NOTE	REF NO	GRAPHIC REF	PART NUMBER	QTY	PART NAME 1 2 3 4 5 6 (PRODUCT LEVEL)	SEE PAGE
Y	1	1	*267-9715*	6	PUMP GP-FUEL INJECTION	124

Y-SEPARATE ILLUSTRATION

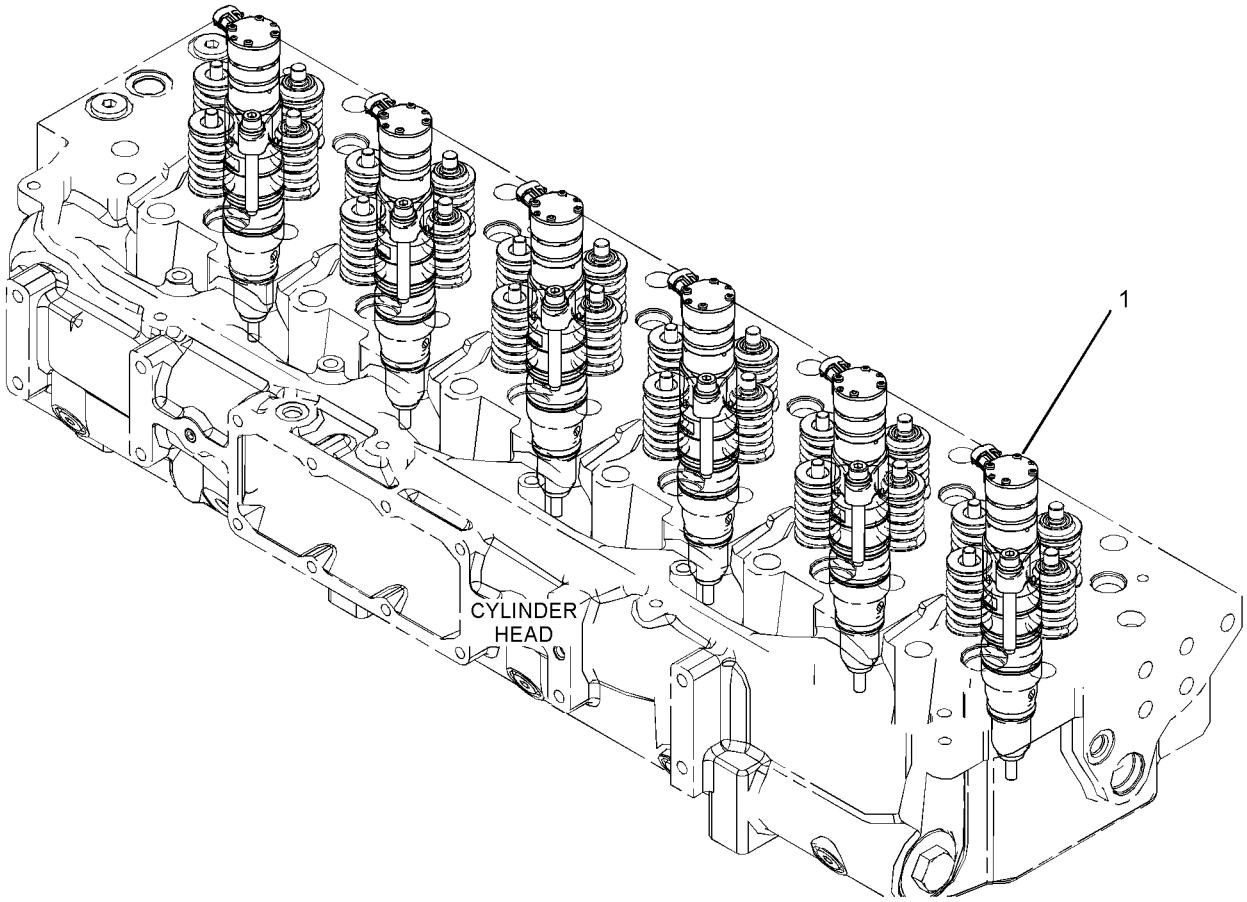

GRAPHIC #1 <END> g02225033

319-0678 PUMP GP-UNIT INJECTOR HYD*R

S/N: THX19900-UP

PART OF 220-8233 PUMP & MTG GP-UNIT INJ HYD

SMCS-1714 i04017508

NOTE	REF NO	GRAPHIC REF	PART NUMBER	QTY	PART NAME 1 2 3 4 5 6 (PRODUCT LEVEL)	SEE PAGE
M	1	1	223-9848	1	NUT (M12X1.25-THD)	
	2	1	318-6357	1	PUMP GP-FUEL TRANSFER	
		1	5P-7814	1	SEAL-O-RING	
		1	7S-5005	1	DOWEL	
		1	8C-3079	1	SEAL-O-RING	
	3	1	179-8128	1	SEAL-O-RING (FUEL SYSTEM)	
M	4	1	228-5897	4	BOLT-TORX (M8X1.25X136.7-MM)	
	5	1	1F-7960	1	WASHER (13.5X32X6-MM THK)	
	6	1	239-2402	3	SEAL-O-RING	

M-METRIC PART

319-0678 PUMP GP-UNIT INJECTOR HYD *(contd.)* i04017508

REFER TO ALL ILLUSTRATIONS OF
THIS GROUP FOR AUXILIARY VIEWS

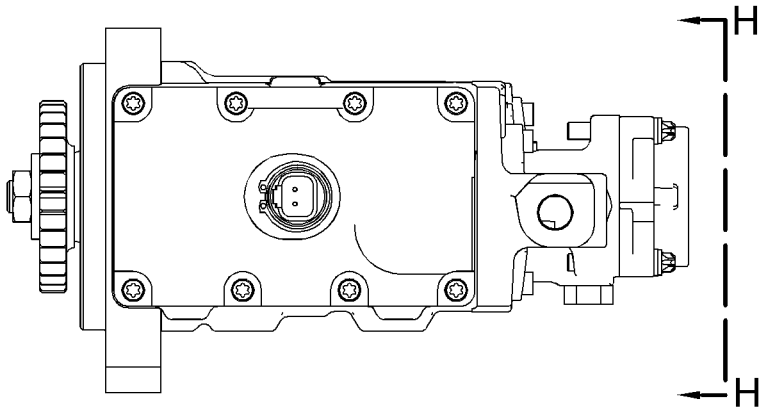

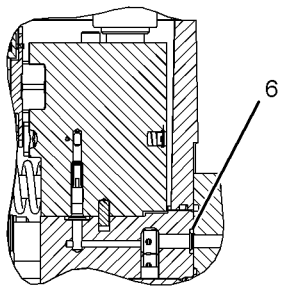

SECTION C-C

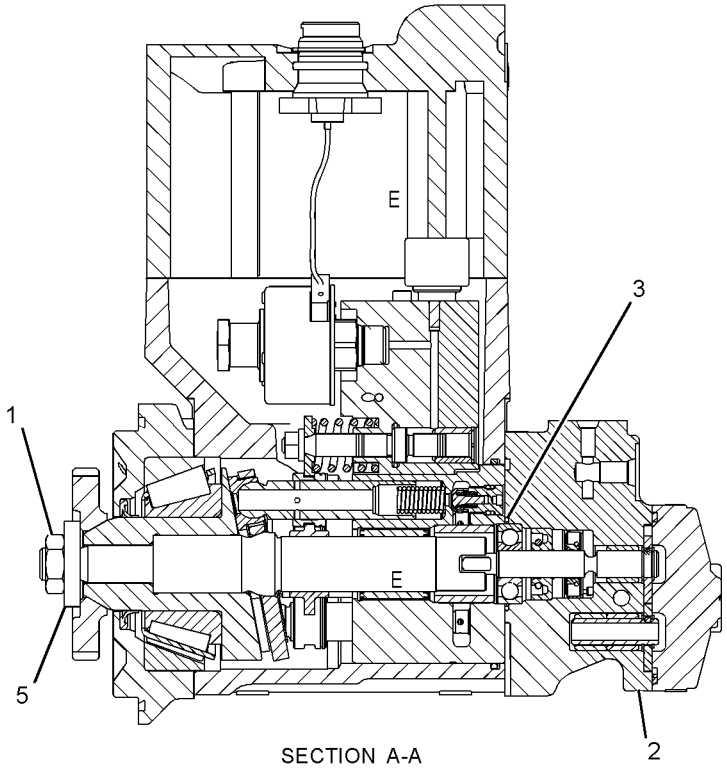

SECTION A-A

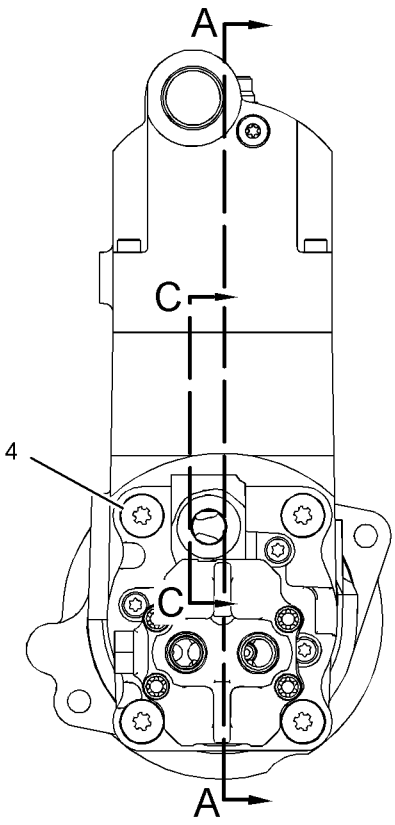

VIEW H-H

GRAPHIC #1 <END> g01455897

232-0343 REGULATOR GP-FUEL PRESSURE

S/N: THX19900-UP

PART OF 264-2014 LINES GP-FUEL

SMCS-1270 i04017536

NOTE	REF NO	GRAPHIC REF	PART NUMBER	QTY	PART NAME 1 2 3 4 5 6 (PRODUCT LEVEL)	SEE PAGE
	1	1	6V-5049	1	SEAL-O-RING	
	2	1	294-8620	1	REGULATOR AS (FUEL PRESSURE)	

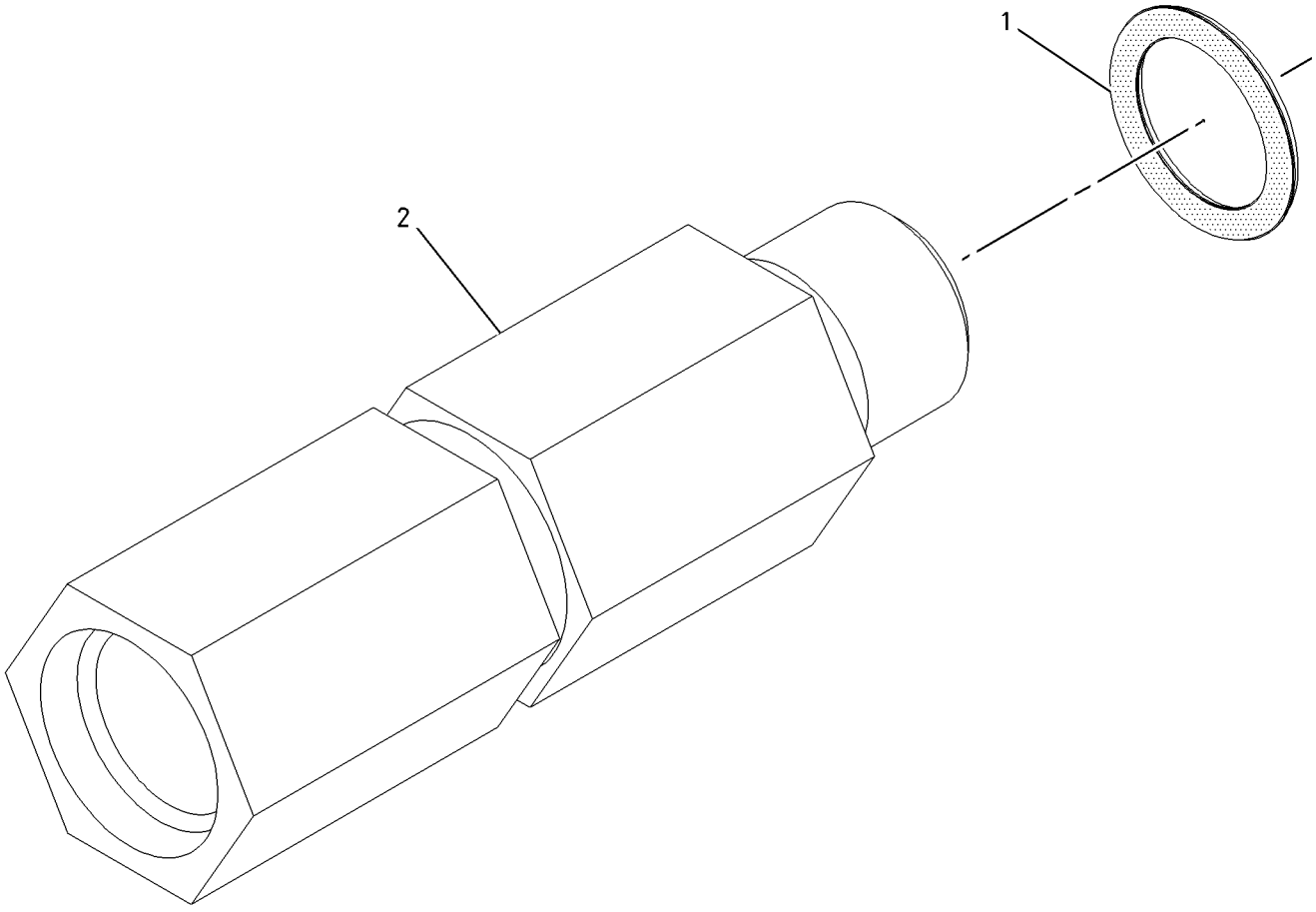

GRAPHIC #1 <END> g01004480

218-1843 TANK GP-FUEL

S/N: S6T1-UP; S6X1-UP; S6Y1-UP
425-L (112.3-US GAL)
PART OF 336-9684, 336-9685, 336-9686 CHASSIS AR

SMCS-1273 i03994534

NOTE	REF NO	GRAPHIC REF	PART NUMBER	QTY	PART NAME 1 2 3 4 5 6 (PRODUCT LEVEL)	SEE PAGE
	1	1	246-2641	1	PADLOCK GP	
		1	5P-8500	1	KEY	
	2	1	6T-1698	8	MOUNT	
Y	3	1	223-5365	1	TANK GP-FUEL	130
	4	1	241-2501	4	WASHER (22X82.55X11-MM THK)	
	5	1	263-5792	1	SENDER AS-FUEL LEVEL	
		1	317-9186	1	KIT-REPAIR (FUEL LEVEL GAUGE)	
					(INCLUDES SENSOR AS, PIN CONNECTORS, RECEPTACLE KIT & SCREWS)	
M	6	1	5C-9553	6	BOLT (M6X1X16-MM)	
	7	1	6C-3060	1	GASKET	
	8	1	6N-7523	6	WASHER (6.48X11.9X1.57-MM THK)	
M	9	1	7X-2565	4	BOLT (M20X2.5X100-MM)	
	10	1	8T-5439	4	WASHER-HARD (21.5X45X6-MM THK)	

M-METRIC PART
Y-SEPARATE ILLUSTRATION

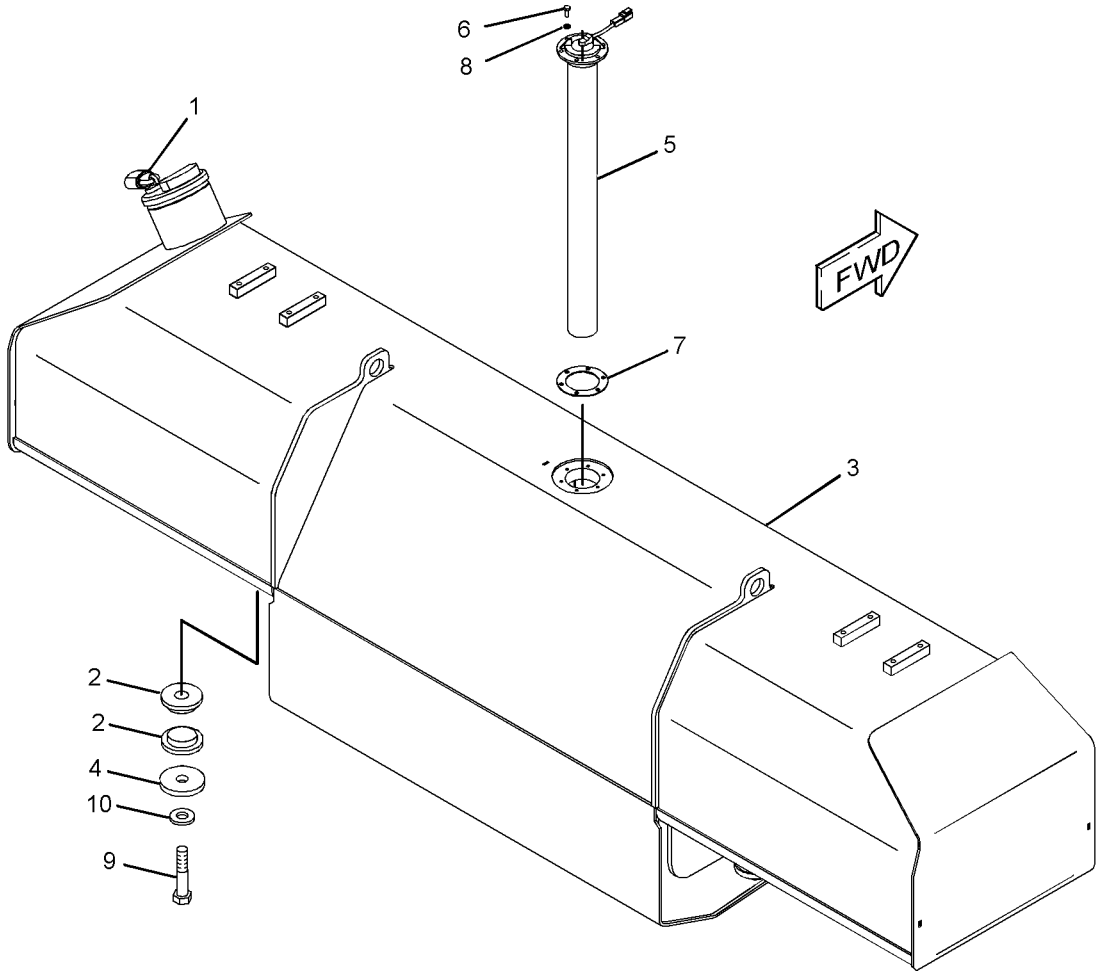

GRAPHIC #1 <END> g01205761

FUEL SYSTEM

223-5365 TANK GP-FUEL

S/N: S6T1-UP; S6X1-UP; S6Y1-UP
425-L (112.3-US GAL)
PART OF 218-1843 TANK GP-FUEL

SMCS-1273 i03994545

NOTE	REF NO	GRAPHIC REF	PART NUMBER	QTY	PART NAME 1 2 3 4 5 6 (PRODUCT LEVEL)	SEE PAGE
	1	1	9P-7121	1	STRAINER-FUEL	
	2	1	7X-7700	1	CAP AS-FILLER (FUEL TANK)	
		1	9X-2205	1	KIT-CAP FILTER (FUEL TANK)	
					(INCLUDES FILTER AS, SCREWS, GASKETS & VALVE)	
		1	9X-8600	1	SEAL-O-RING	
	3	1	4L-6454	8	BOLT (3/8-16X1-IN)	
	4	1	5P-1075	8	WASHER-HARD (10.2X22.5X3-MM THK)	
	5	1	6S-6439	1	COVER	
	6	1	6S-6514	1	GASKET	

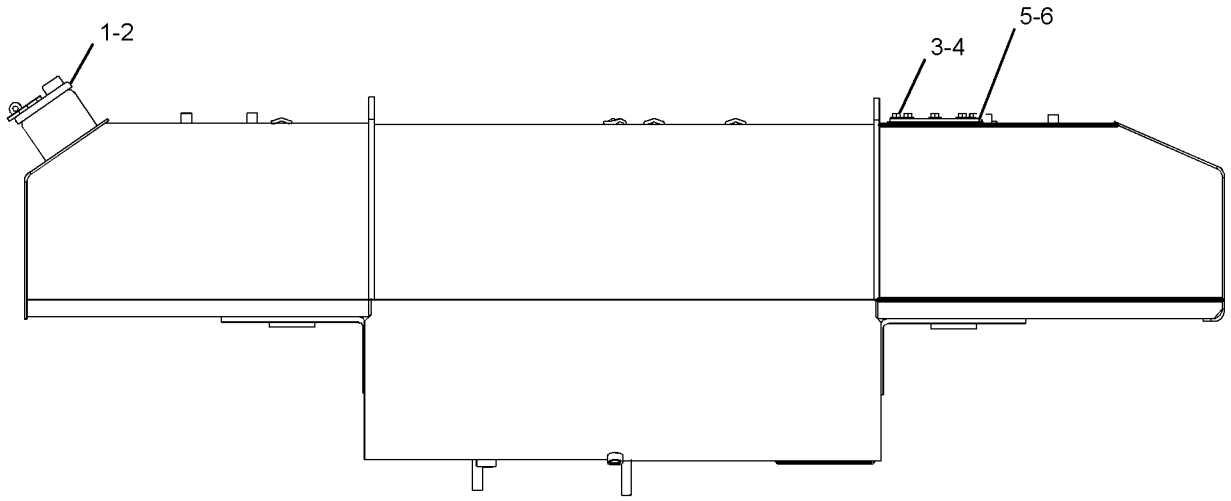

GRAPHIC #1 <END> g02176635

3E-6328 ALARM GP

S/N: S6T1-UP; S6X1-UP; S6Y1-UP
24-VOLT
PART OF 317-6565 WIRING GP-PLATFORM

SMCS-7400, 7402, 7407 i04009229

NOTE	REF NO	GRAPHIC REF	PART NUMBER	QTY	PART NAME 1 2 3 4 5 6 (PRODUCT LEVEL)	SEE PAGE
	1	1	102-8802	1	KIT-RECEPTACLE (2-PIN)	
					(INCLUDES RECEPTACLE AS & WEDGE)	
	2	1	186-3735	2	PIN-CONNECTOR (16-GA TO 18-GA)	
	3	1	3E-3365	1	WEDGE-RECEPTACLE LOCK (2-PIN)	

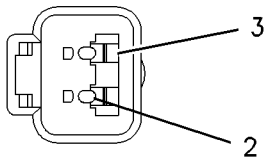

VIEW A–A

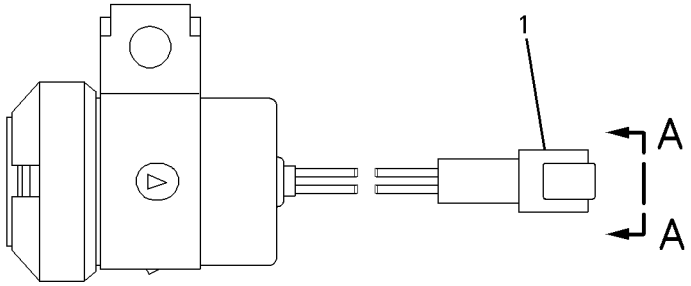

GRAPHIC #1 <END> g00826023

168-8373 ALTERNATOR GP-CHARGING

S/N: S6T1-UP; S6X1-UP; S6Y1-UP
24-VOLT, 70-AMP
PART OF 317-1762 INSTALLATION AR

SMCS-1405 i04001017

NOTE	REF NO	GRAPHIC REF	PART NUMBER	QTY	PART NAME 1 2 3 4 5 6 (PRODUCT LEVEL)	SEE PAGE
	1	1	7K-1181	1	STRAP-CABLE	
	2	1	9S-1240	1	BRACKET AS	
	3	1	184-5498	1	BRACKET AS	
		1	1F-0750	2	NUT-WELD (3/8-16-THD)	
	4	1	208-4622	1	STRAP AS	
	5	1	211-1044	1	BLOCK	
	6	1	214-9492	1	ROD-ADJUSTING	
YR	7	1	185-5294	1	ALTERNATOR GP-CHARGING (24-VOLT)	134
	8	1	4L-6454	1	BOLT (3/8-16X1-IN)	
	9	1	4P-7581	1	CLIP	
	10	1	4S-1962	1	CLIP	
	11	1	5P-1075	1	WASHER-HARD (10.2X22.5X3-MM THK)	
	12	1	7X-0339	1	BOLT (1/2-13X6.25-IN)	
	13	1	8T-4121	1	WASHER-HARD (11X21X2.5-MM THK)	
M	14	1	8T-4132	2	NUT (M16X2-THD)	
M	15	1	8T-4137	1	BOLT (M10X1.5X20-MM)	
M	16	1	8T-4193	1	BOLT (M16X2X50-MM)	
	17	1	8T-4223	2	WASHER-HARD (13.5X25.5X3-MM THK)	
	18	1	8T-8919	1	BOLT (1/2-13X1.75-IN)	
	19	1	9X-8257	3	WASHER (17.5X30X3.5-MM THK)	

M-METRIC PART
R-REMFG PART MAY BE AVAILABLE
Y-SEPARATE ILLUSTRATION

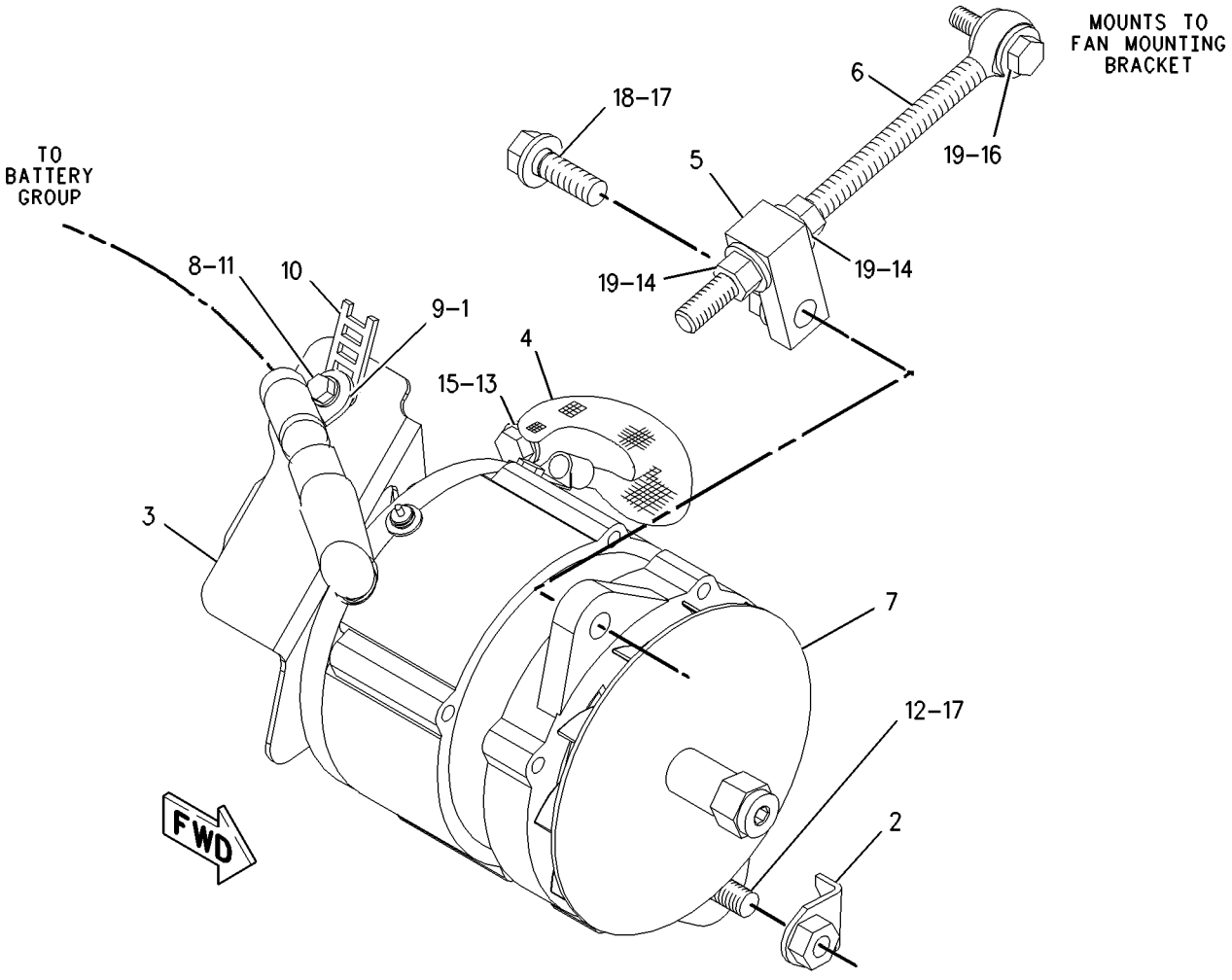

GRAPHIC #1 <END> g00852618

185-5294 ALTERNATOR GP-CHARGING*R

S/N: S6T1-UP; S6X1-UP; S6Y1-UP
24-VOLT, 65-AMP
PART OF 168-8373 ALTERNATOR GP-CHARGING

SMCS-1405 i04001020

NOTE	REF NO	GRAPHIC REF	PART NUMBER	QTY	PART NAME 1 2 3 4 5 6 (PRODUCT LEVEL)	SEE PAGE
	1	1	185-2653	1	FRAME	
	2	1	5S-7349	1	BOLT (1/4-20X0.5-IN)	
	3	1	185-2639	1	FAN AS	
	4	1	1H-3244	1	LOCKWASHER	
	5	1	185-2645	1	FRAME	
	6	1	2K-4821	1	LOCKNUT (5/8-18-THD)	
	7	1	5P-8247	1	WASHER-HARD (17X32X3.5-MM THK)	
	8	1	185-2651	1	COVER	
	9	1	8T-4205	1	WASHER-HARD (7.2X14.5X2-MM THK)	
	10	1	185-2647	1	GROMMET	
	11	1	9L-6770	1	CAP-DUST	
	12	1	185-2642	1	STATOR AS	
	13	1	185-2638	2	COLLAR	
	14	1	185-2654	1	PLATE	
	15	1	185-2650	1	ROTOR AS	
	16	1	185-2644	1	COIL AS	
	17	1	185-2648	1	REGULATOR AS-VOLTAGE (24-VOLT) (ALTERNATOR)	
	18	1	6V-8189	1	NUT (5/16-18-THD)	
	19	1	8T-4224	1	WASHER-HARD (8.8X16X2-MM THK)	
	20	1	3F-9556	1	LOCKWASHER	
					AVAILABLE REPAIR KIT(S):	
			185-2655	1	KIT-BEARING	
					(INCLUDES BEARINGS)	
			199-8436	1	KIT-TERMINAL (ALTERNATOR)	
					(INCLUDES HOLDER AS, PLATE, INSULATOR, PIN, BOLTS, GROMMET, & NUT)	
			199-7891	1	KIT-TERMINAL (ALTERNATOR)	
					(INCLUDES INSULATORS, WASHERS & NUTS)	
			185-2658	1	KIT-HARDWARE (ALTERNATOR)	
					(INCLUDES BOLTS)	

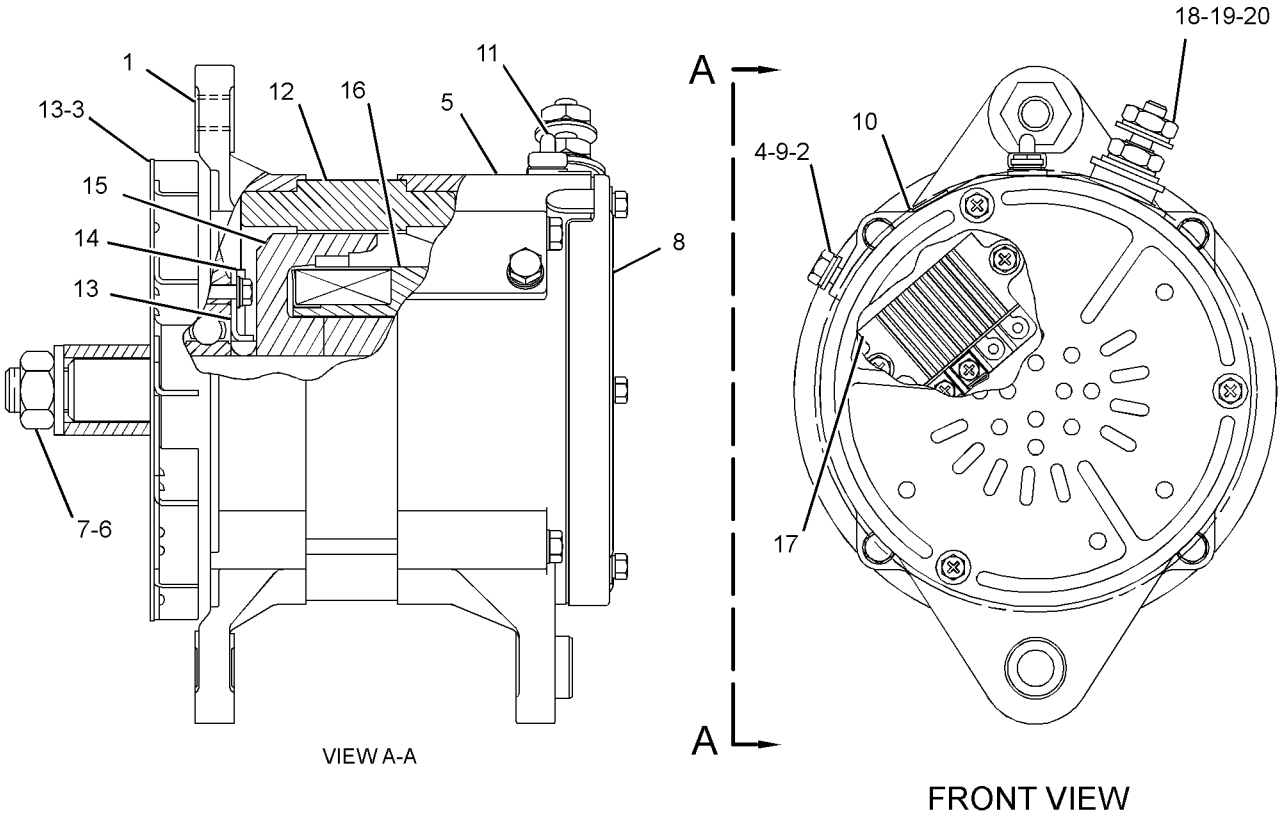

GRAPHIC #1 <END> g02178248

323-7444 ALTERNATOR GP-CHARGING

S/N: S6T1-UP; S6X1-UP; S6Y1-UP
24-VOLT, 150-AMPERE
AN ATTACHMENT

SMCS-1405 i03991469

NOTE	REF NO	GRAPHIC REF	PART NUMBER	QTY	PART NAME 1 2 3 4 5 6 (PRODUCT LEVEL)	SEE PAGE
	1	1	7K-1181	1	STRAP-CABLE	
	2	1	9S-1240	1	BRACKET AS	
		1	1F-0748	1	NUT-WELD (1/2-13-THD)	
	3	1	208-4622	1	STRAP AS	
	4	1	211-1044	1	BLOCK	
	5	1	214-9492	1	ROD-ADJUSTING	
R	6	1	249-0313	1	ALTERNATOR GP-CHARGING (24-VOLT, 150-AMPERE)	
	7	1	292-4906	1	GUARD AS-ALTERNATOR	
	8	1	306-8040	1	BRACKET AS	
M	9	1	160-8497	2	BOLT (M5X0.8X65-MM)	
	10	1	4L-6454	1	BOLT (3/8-16X1-IN)	
	11	1	4P-7581	1	CLIP	
	12	1	5P-1075	1	WASHER-HARD (10.2X22.5X3-MM THK)	
	13	1	7X-0339	1	BOLT (1/2-13X6.25-IN)	
M	14	1	8T-0638	1	BOLT (M5X0.8X50-MM)	
	15	1	8T-4121	1	WASHER-HARD (11X21X2.5-MM THK)	
M	16	1	8T-4132	2	NUT (M16X2-THD)	
M	17	1	8T-4137	1	BOLT (M10X1.5X20-MM)	
M	18	1	8T-4193	1	BOLT (M16X2X50-MM)	
	19	1	8T-4223	2	WASHER-HARD (13.5X25.5X3-MM THK)	
	20	1	8T-8919	1	BOLT (1/2-13X1.75-IN)	
	21	1	9X-8250	1	CLIP	
	22	1	9X-8256	3	WASHER (6.6X12X2-MM THK)	
	23	1	9X-8257	3	WASHER (17.5X30X3.5-MM THK)	

M-METRIC PART
R-REMFG PART MAY BE AVAILABLE

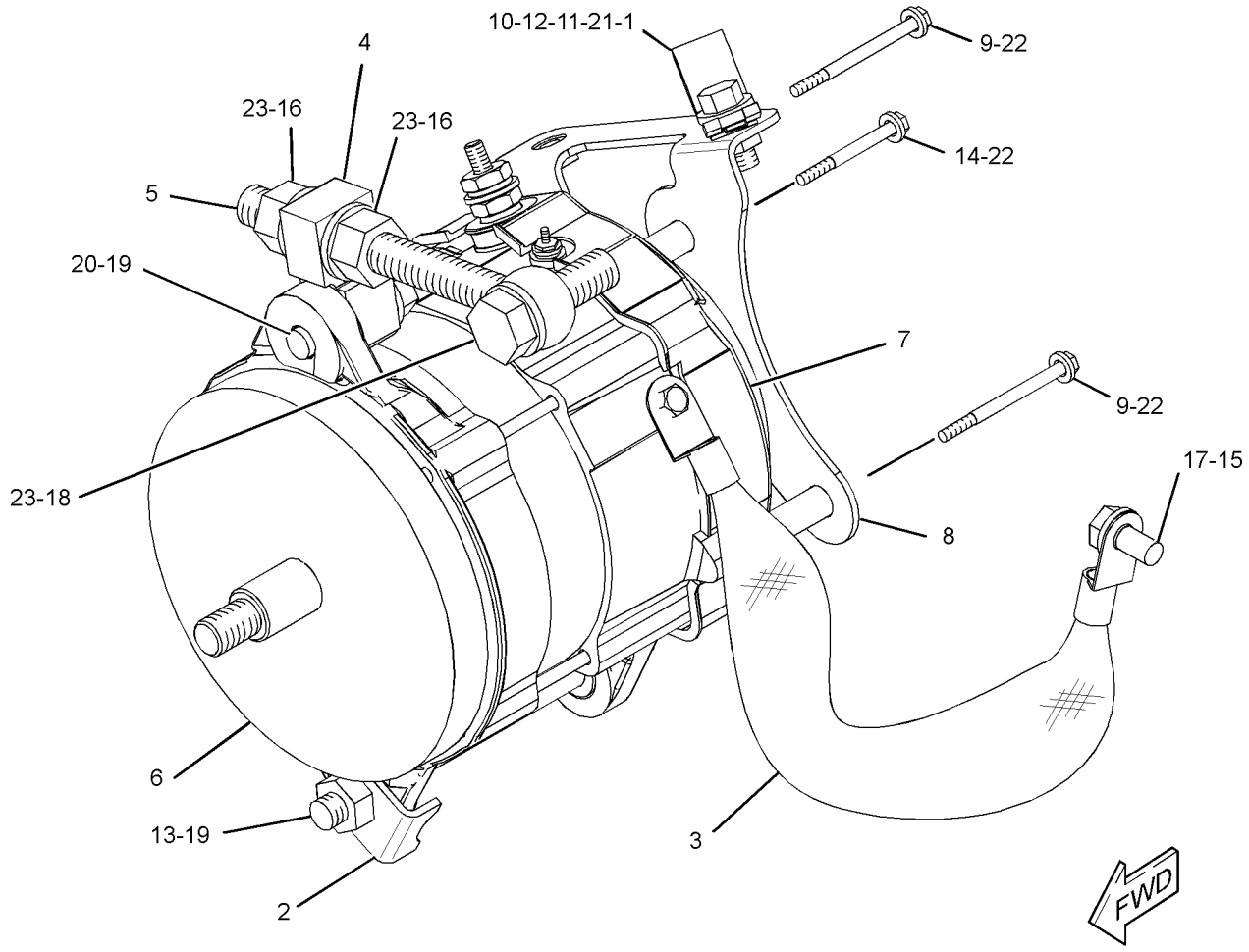

GRAPHIC #1 <END> g02173599

ELECTRICAL AND STARTING SYSTEM

317-6560 BATTERY & WIRING GP

S/N: S6T1-UP; S6X1-UP; S6Y1-UP

PART OF 336-9684, 336-9685, 336-9686 CHASSIS AR

SMCS-1401, 1402, 1408 i04030188

NOTE	REF NO	GRAPHIC REF	PART NUMBER	QTY	PART NAME 1 2 3 4 5 6 (PRODUCT LEVEL)	SEE PAGE
	1	1	7N-0718	1	SWITCH GP-DISCONNECT (BATTERY)	
		1	2H-3922	2	LOCKWASHER	
		1	6F-7045	2	NUT-FULL (3/8-24-THD)	
		1	8H-5303	1	NUT (3/4-16-THD)	
		1	8H-5306	1	KEY (BATTERY DISCONNECT)	
		1	9F-5644	2	LOCKWASHER	
	2	1	7P-6682	1	CABLE AS	
		1	1S-7251	2	TERMINAL-CABLE (00-GA, 1/2-IN SCREW)	
E		1	5P-0747		CABLE (00-GA, BLACK) (40-CM)	
	3	1	091-9035	1	SPACER (11X25X20-MM THK)	
	4	1	111-7978	1	HOLD-DOWN AS	
	5	1	128-0314	1	CABLE AS	
E		1	5P-0761		CABLE (00-GA, RED) (29-CM)	
		1	9G-0002	1	COVER AS-TERMINAL (RED)	
		1	8L-8413	1	STRAP-CABLE	
		1	9G-0005	1	COVER AS-TERMINAL (BLACK)	
		1	8L-8413	1	STRAP-CABLE	
		1	8C-5918	1	TERMINAL AS (NEGATIVE)	
		1	8T-9756	1	TERMINAL AS (POSITIVE)	
					(EACH TERMINAL AS INCLUDES)	
		1	1M-6119	1	BOLT (5/16-18X1.375-IN)	
		1	1M-6120	1	NUT (5/16-18-THD)	
Y	6	1	145-7028	1	SENSOR GP-TEMPERATURE (HYDRAULIC OIL)	178
Y	7	1	158-6632	1	SWITCH GP-PUSH BUTTON (FUEL PRIMING PUMP)	193
Y	8	1	161-9926	1	SENSOR GP-PRESSURE (TURBOCHARGER INLET)	170
	9	1	174-7875	1	HORN AS (24-VOLT, HIGH TONE)	
	10	1	193-3973	10	STRAP-CABLE	
	11	1	197-0668	1	CABLE AS	
		1	1S-4915	2	LINER (CONDUIT)	
E		1	5P-0695		CONDUIT (61-CM)	
E		1	5P-0747		CABLE (00-GA, BLACK) (95-CM)	
		1	8S-3020	1	TERMINAL-CABLE (00-GA, 3/8-IN SCREW)	
		1	8T-2225	16	TUBE-HEAT SHRINK (25.4-MM DIA)	
		1	9G-0003	1	COVER AS-TERMINAL (BLACK)	
		1	8L-8413	1	STRAP-CABLE	
		1	8T-9757	1	TERMINAL AS-BATTERY (NEGATIVE)	
		1	1M-6119	1	BOLT (5/16-18X1.375-IN)	
		1	1M-6120	1	NUT (5/16-18-THD)	
		1	299-9092	1	COVER-TERMINAL	
	12	1	226-9670	1	HARNESS AS-CHASSIS (RADIATOR GUARD)	
		1	102-8803	1	KIT-RECEPTACLE (3-PIN)	
					(INCLUDES RECEPTACLE AS & WEDGE)	
		1	9W-0844	8	SOCKET-CONNECTOR (14-GA)	
		1	9W-0852	3	PIN-CONNECTOR (14-GA TO 16-GA)	
E		1	119-3662		TUBE-HEAT SHRINK (10.85-MM DIA) (7-CM)	
E		1	125-7874		TUBE-HEAT SHRINK (5.72-MM DIA) (5-CM)	
E		1	125-7875		TUBE-HEAT SHRINK (7.44-MM DIA) (5-CM)	
		1	155-2270	4	KIT-CONNECTING PLUG (2-PIN)	
					(EACH KIT INCLUDES PLUG AS, WEDGE & INTERFACE SEAL)	
		1	274-3774	2	CAP-CONNECTOR	
	13	1	237-4240	1	CABLE AS	
		1	1S-4915	4	LINER (CONDUIT)	
E		1	5P-0695		CONDUIT (213-CM)	
E		1	5P-0761		CABLE (00-GA, RED) (249-CM)	
		1	8N-1725	1	COVER AS-TERMINAL (RED)	

317-6560 BATTERY & WIRING GP ***(contd.)*** i04030188

NOTE	REF NO	GRAPHIC REF	PART NUMBER	QTY	PART NAME 1 2 3 4 5 6 (PRODUCT LEVEL)	SEE PAGE
		1	8L-8413	1	STRAP-CABLE	
E		1	8T-2225		TUBE-HEAT SHRINK (25.4-MM DIA) (16-CM)	
		1	3S-6049	1	TERMINAL AS-BATTERY (POSITIVE)	
		1	1M-6119	1	BOLT (5/16-18X1.375-IN)	
		1	1M-6120	1	NUT (5/16-18-THD)	
E		1	1P-0810		TAPE-ELECTRICAL (3-CM)	
		1	1M-4986	1	TERMINAL-RING (0-GA, 1/2-IN SCREW)	
	14	1	240-8317	1	PLATE AS	
M		1	9R-2613	6	BOSS-WELD (M10X1.5X25-MM)	
	15	1	317-6562	1	CABLE AS	
		1	1S-7251	1	TERMINAL-CABLE (00-GA, 1/2-IN SCREW)	
E		1	5P-0747		CABLE (00-GA, BLACK) (181-CM)	
		1	8S-3020	1	TERMINAL-CABLE (00-GA, 3/8-IN SCREW)	
	16	1	320-5895	1	HARNESS AS-SENSOR (HOOD)	
		1	102-8803	1	KIT-RECEPTACLE (3-PIN)	
		1	102-8806	1	KIT-RECEPTACLE (8-PIN)	
					(EACH KIT INCLUDES RECEPTACLE AS & WEDGE)	
		1	8T-8737	3	PLUG-SEAL	
E		1	114-8843		SLEEVE-PLASTIC (60-CM)	
E		1	114-8844		SLEEVE-PLASTIC (20-CM)	
		1	9X-3402	4	SOCKET-CONNECTOR (16-GA TO 18-GA)	
					-OR-	
		1	126-1768	4	SOCKET-CONNECTOR (14-GA)	
		1	9X-3401	8	PIN-CONNECTOR (16-GA TO 18-GA)	
					-OR-	
		1	126-1767	8	PIN-CONNECTOR (14-GA TO 16-GA)	
		1	155-2270	2	KIT-CONNECTING PLUG (2-PIN)	
					(EACH KIT INCLUDES PLUG AS, WEDGE & INTERFACE SEAL)	
	17	1	320-5900	1	HARNESS AS-CHASSIS (FUEL TANK)	
		1	102-8803	2	KIT-RECEPTACLE (3-PIN)	
		1	102-8804	3	KIT-RECEPTACLE (4-PIN)	
		1	102-8801	2	KIT-RECEPTACLE (12-PIN)	
		1	190-7615	1	KIT-RECEPTACLE (12-PIN)	
					(EACH KIT INCLUDES RECEPTACLE AS & WEDGE)	
		1	8T-8737	29	PLUG-SEAL	
E		1	114-8843		SLEEVE-PLASTIC (120-CM)	
E		1	114-8844		SLEEVE-PLASTIC (60-CM)	
E		1	114-8845		SLEEVE-PLASTIC (20-CM)	
E		1	119-3662		TUBE-HEAT SHRINK (10.85-MM DIA) (26-CM)	
E		1	125-7875		TUBE-HEAT SHRINK (7.44-MM DIA) (5-CM)	
		1	9X-3402	15	SOCKET-CONNECTOR (16-GA TO 18-GA)	
					-OR-	
		1	126-1768	15	SOCKET-CONNECTOR (14-GA)	
		1	126-1767	8	PIN-CONNECTOR (14-GA TO 16-GA)	
		1	126-1768	12	SOCKET-CONNECTOR (14-GA)	
		1	9X-3401	20	PIN-CONNECTOR (16-GA TO 18-GA)	
					-OR-	
		1	126-1767	20	PIN-CONNECTOR (14-GA TO 16-GA)	
		1	155-2255	1	KIT-CONNECTING PLUG (12-PIN)	
		1	155-2260	3	KIT-CONNECTING PLUG (3-PIN)	
		1	155-2270	2	KIT-CONNECTING PLUG (2-PIN)	
		1	155-2271	2	KIT-CONNECTING PLUG (4-PIN)	
					(EACH KIT INCLUDES PLUG AS, WEDGE & INTERFACE SEAL)	
	18	1	130-5300	2	CLIP	
	19	1	132-5789	1	CLIP	
M	20	1	133-7810	4	STUD-TAPERLOCK (M10X1.5X45-MM)	
	21	1	174-7876	1	HORN AS (24-VOLT, LOW TONE)	
	22	1	1S-0994	2	CLIP	

317-6560 BATTERY & WIRING GP ***(contd.)*** i04030188

NOTE	REF NO	GRAPHIC REF	PART NUMBER	QTY	PART NAME 1 2 3 4 5 6 (PRODUCT LEVEL)	SEE PAGE
	23	1	220-0230	1	ALARM AS (BACKUP)	
		1	102-8802	1	KIT-RECEPTACLE (2-PIN)	
					(INCLUDES RECEPTACLE AS & WEDGE)	
		1	5P-5623	4	WIRE-ELECTRICAL (16-GA, BLACK)	
		1	8T-8729	2	PIN-CONNECTOR (16-GA TO 18-GA)	
E		1	9X-1813		SLEEVE (29-CM)	
	24	1	238-0303	1	KNOB (PRIMING PUMP)	
	25	1	3J-7354	1	SEAL-O-RING	
	26	1	4P-7581	4	CLIP	
	27	1	4P-8134	1	CLIP	
	28	1	6D-4247	3	CLIP	
	29	1	7J-0204	1	SEAL-O-RING	
	30	1	7K-1181	39	STRAP-CABLE	
	31	1	8S-0948	1	CLIP	
M	32	1	8T-0722	6	BOLT-LOCKING (M10X1.5X30-MM)	
	33	1	8T-4121	19	WASHER-HARD (11X21X2.5-MM THK)	
M	34	1	8T-4133	4	NUT (M10X1.5-THD)	
M	35	1	8T-4137	8	BOLT (M10X1.5X20-MM)	
M	36	1	8T-4196	1	BOLT (M10X1.5X35-MM)	
	37	1	9X-3404	2	BATTERY (12-VOLT, MAINTENANCE FREE, WET)	

E-ORDER BY THE CENTIMETER
M-METRIC PART
Y-SEPARATE ILLUSTRATION

317-6560 BATTERY & WIRING GP ***(contd.)*** i04030188

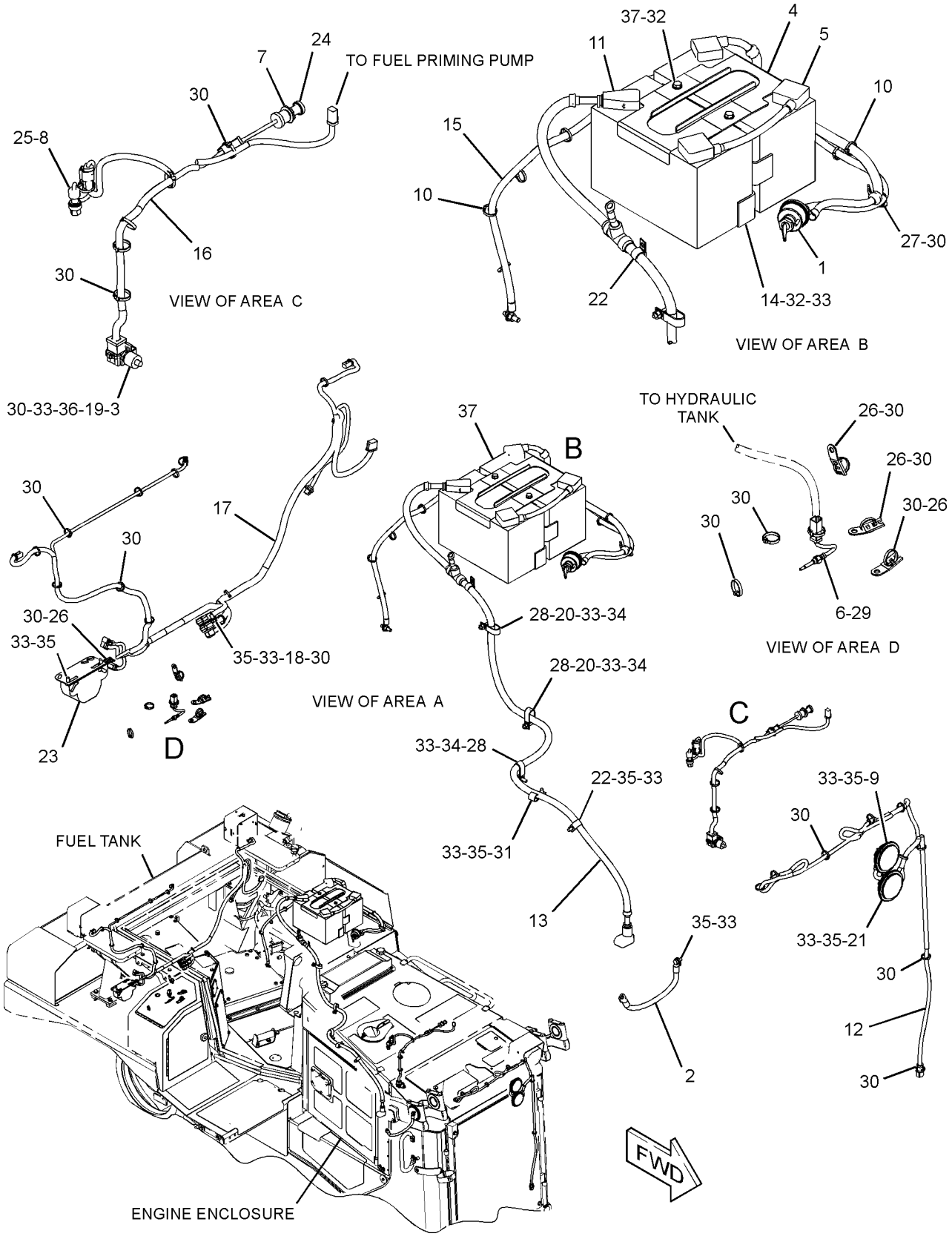

GRAPHIC #1 <END> g02205754

321-5803 BATTERY & WIRING GP–HEAVY-DUTY

S/N: S6T1-UP; S6X1-UP; S6Y1-UP
PART OF 358-2567 COLD WEATHER AR
AN ATTACHMENT

SMCS-1401, 1402, 1408 i03991715

NOTE	REF NO	GRAPHIC REF	PART NUMBER	QTY	PART NAME 1 2 3 4 5 6 (PRODUCT LEVEL)	SEE PAGE
	1	1	8V-0622	1	CABLE AS	
		1	8C-5917	1	TERMINAL AS-BATTERY (POSITIVE)	
		1	8T-9757	1	TERMINAL AS-BATTERY (NEGATIVE)	
					(EACH TERMINAL AS INCLUDES)	
		1	1M-6119	1	BOLT (5/16-18X1.375-IN)	
		1	1M-6120	1	NUT (5/16-18-THD)	
E		1	159-8049		CABLE (OO-GA, RED) (16-CM)	
		1	9G-0003	1	COVER AS-TERMINAL (BLACK)	
		1	9G-0004	1	COVER AS-TERMINAL (RED)	
					(EACH COVER AS INCLUDES)	
		1	8L-8413	1	STRAP-CABLE	
	2	1	153-5710	2	BATTERY (12-VOLT, 1400-CCA)	
	3	1	153-6281	1	HOLD-DOWN-BATTERY	
Y	4	1	*209-8423*	1	STARTING MOTOR GP-ELECTRIC	185
	5	1	240-8321	1	PLATE AS	
M		1	9R-2613	6	BOSS-WELD (M10X1.5X25-MM)	

E-ORDER BY THE CENTIMETER
M-METRIC PART
Y-SEPARATE ILLUSTRATION

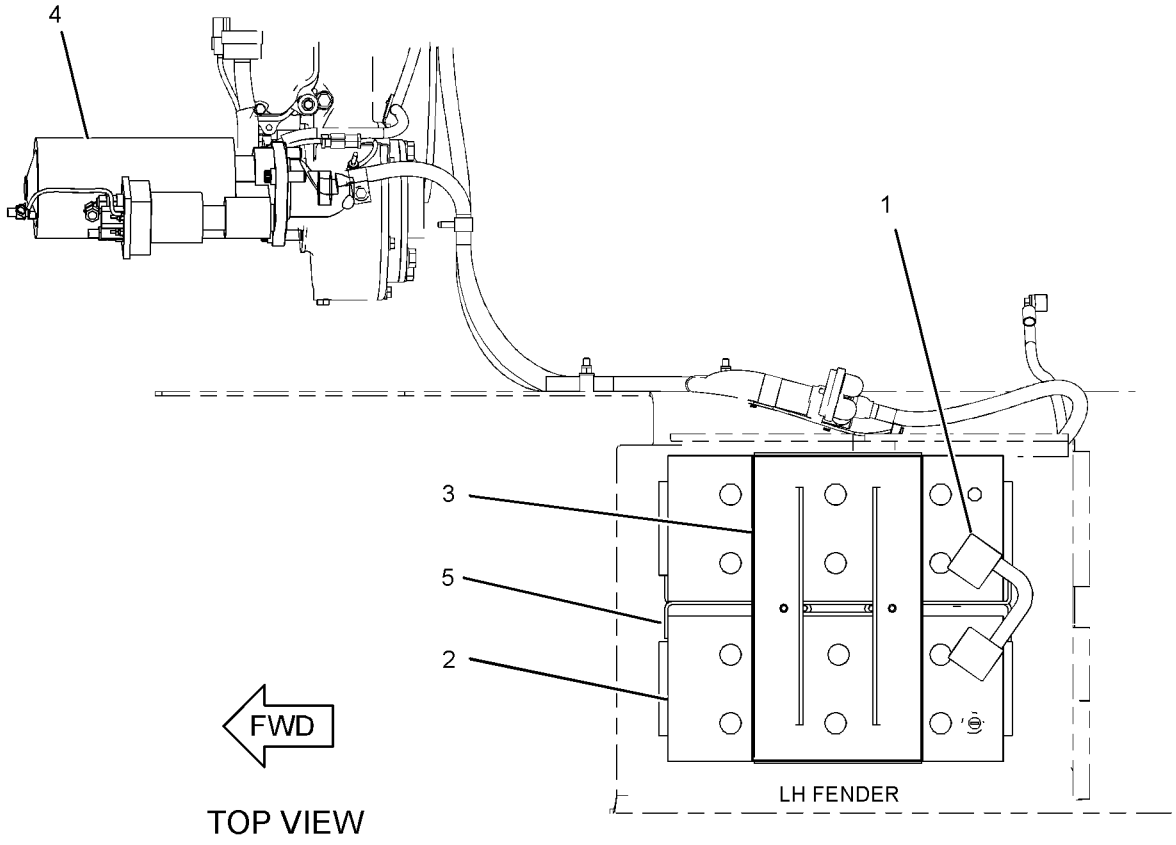

TOP VIEW

GRAPHIC #1 <END> g01207635

258-8473 CLUTCH GP-ELECTRIC

S/N: S6T1-UP; S6X1-UP; S6Y1-UP
PART OF 106-5122 COMPRESSOR GP-REFRIGERANT

SMCS-7320 i03988710

NOTE	REF NO	GRAPHIC REF	PART NUMBER	QTY	PART NAME 1 2 3 4 5 6 (PRODUCT LEVEL)	SEE PAGE
	1	1	258-8477	1	NUT	
	2	1	258-8478	3	BOLT	
	3	1	258-8479	1	COVER-DUST	
	4	1	258-8480	1	COVER-BEARING	
	5	1	258-8481	1	ARMATURE AS	
	6	1	258-8482	1	CORE AS	
	7	1	258-8483	1	ROTOR AS	
					PARTS SHOWN IN GRAPHIC(S) WITHOUT A REFERENCE NUMBER ARE NOT SERVICED SEPARATELY	

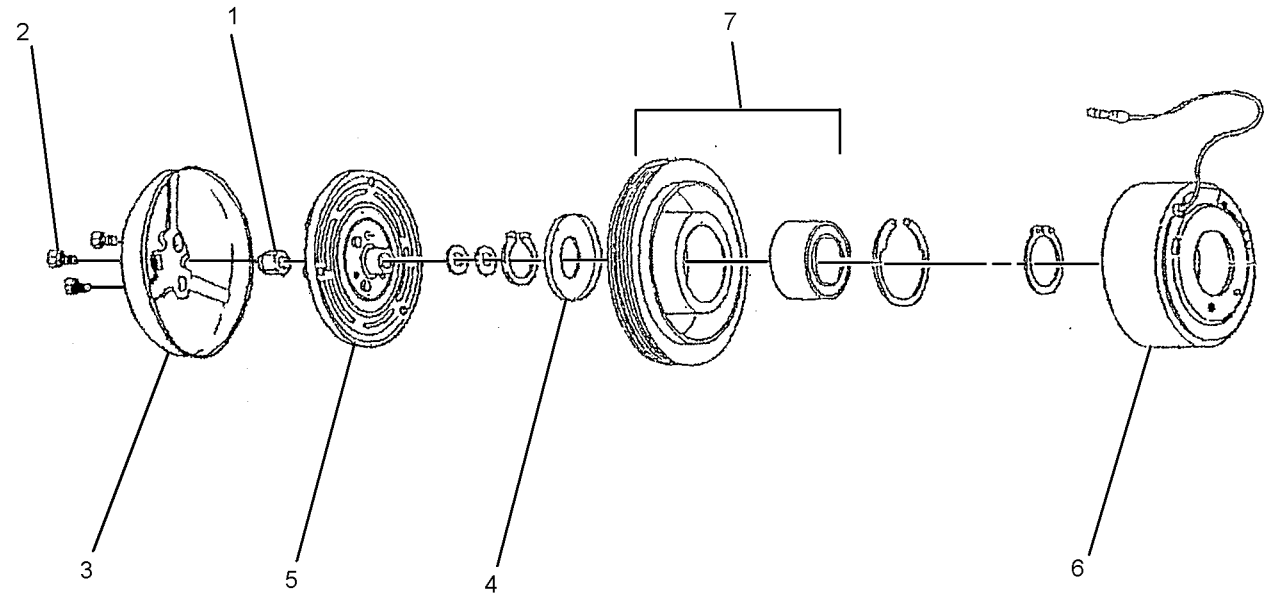

GRAPHIC #1 <END> g02168556

246-9365 CONTROL & MTG GP-ENGINE ELEK

S/N: THX19900-UP
AIR COOLED
PART OF 320-7655, 320-7656 ENGINE AR-CORE

SMCS-1901, 7620 i04029204

NOTE	REF NO	GRAPHIC REF	PART NUMBER	QTY	PART NAME 1 2 3 4 5 6 (PRODUCT LEVEL)	SEE PAGE
	1	1	8T-9655	8	MOUNT-ISOLATION	
	2	1	101-3128	4	SPACER-SPECIAL	
M	3	1	143-9392	4	STUD (M8X1.25-THD)	
Y	4	1	*226-7473*	1	CONTROL GP-ENGINE ELECTRONIC	145
	6	1	233-0891	1	BRACKET AS	
M		1	232-1693	1	BOLT-FLANGE HEAD (M6X1X35-MM)	
	7	1	9M-1974	4	WASHER-HARD (8.8X16X2-MM THK)	
	8	1	9N-0869	4	WASHER-HARD (8.8X25.5X2-MM THK)	

M-METRIC PART
Y-SEPARATE ILLUSTRATION

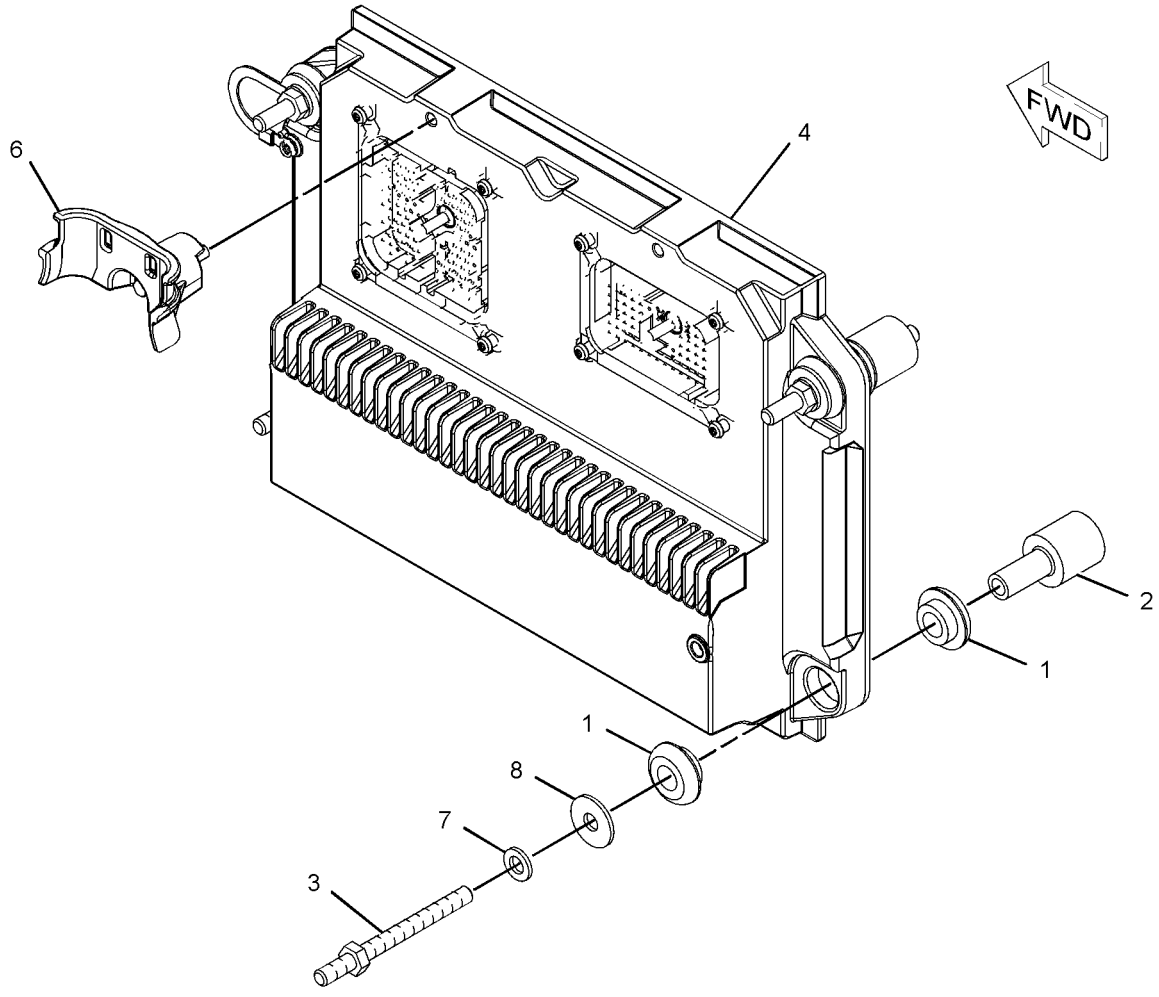

GRAPHIC #1 <END> g01131857

226-7473 CONTROL GP-ENGINE ELECTRONIC

S/N: THX19900-UP

PART OF 246-9365 CONTROL & MTG GP-ENGINE ELEK

SMCS-1901 i04017469

NOTE	REF NO	GRAPHIC REF	PART NUMBER	QTY	PART NAME 1 2 3 4 5 6 (PRODUCT LEVEL)	SEE PAGE
R	1	1	262-2878	1	CONTROL GP-UNPROGRAMMED (ENGINE)	

R-REMFG PART MAY BE AVAILABLE

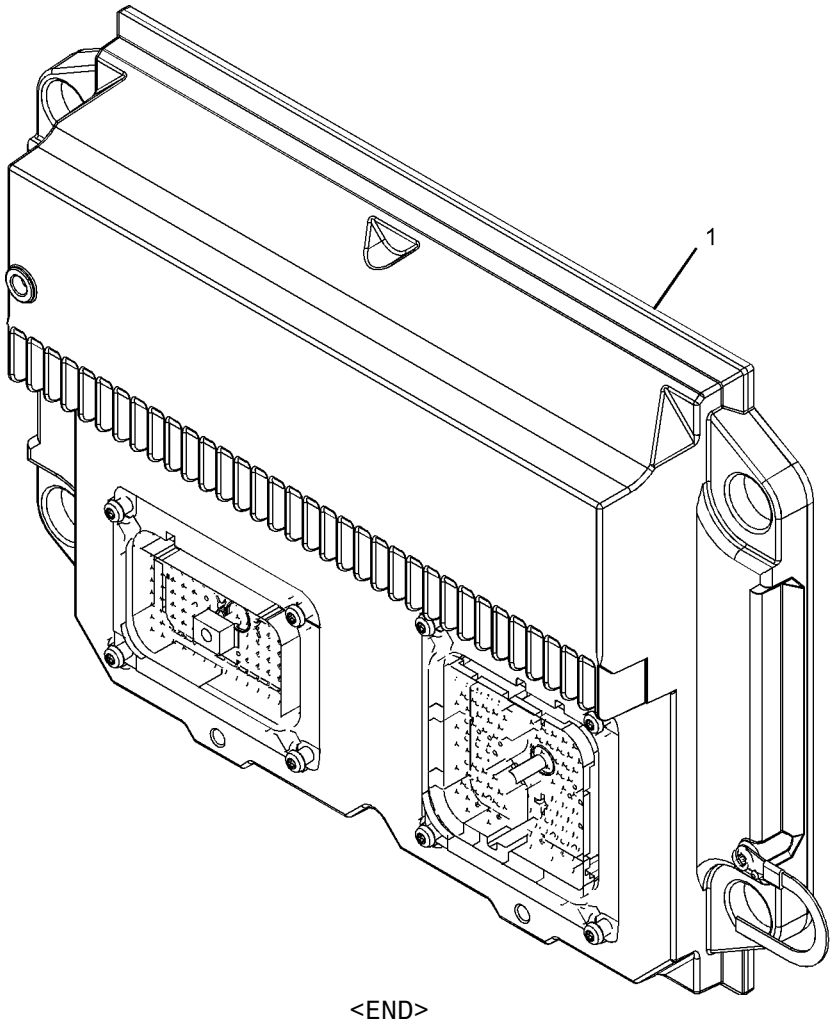

GRAPHIC #1 <END> g01101798

317-6571 CONVERTER GP-ELECTRICAL

S/N: S6T1-UP; S6X1-UP; S6Y1-UP
20-AMPERE, 12-VOLT
AN ATTACHMENT

SMCS-1421 i03997516

NOTE	REF NO	GRAPHIC REF	PART NUMBER	QTY	PART NAME 1 2 3 4 5 6 (PRODUCT LEVEL)	SEE PAGE
	1	1	239-3902	1	CONVERTER-ELECTRICAL (24-VOLT TO 12-VOLT)	
	2	1	321-5802	1	HARNESS AS-POWER	
		1	177-9653	1	KIT-RECEPTACLE (4-PIN)	
					(INCLUDES RECEPTACLE AS & WEDGE)	
		1	7T-0094	10	SOCKET-CONNECTOR (12-GA TO 14-GA)	
		1	8T-8737	11	PLUG-SEAL	
		1	177-9656	1	KIT-CONNECTING PLUG (4-PIN)	
					(INCLUDES PLUG AS & WEDGE)	
E		1	114-8843		SLEEVE-PLASTIC (80-CM)	
E		1	119-3662		TUBE-HEAT SHRINK (10.85-MM DIA) (7-CM)	
		1	126-1768	1	SOCKET-CONNECTOR (14-GA)	
		1	155-2274	1	KIT-CONNECTING PLUG (6-PIN)	
					(INCLUDES PLUG AS, WEDGE & INTERFACE SEAL)	
	3	1	7K-1181	2	STRAP-CABLE	
M	4	1	8T-0267	4	BOLT-SOCKET HEAD (M6X1X12-MM)	
	5	1	9X-8256	4	WASHER (6.6X12X2-MM THK)	

E-ORDER BY THE CENTIMETER
M-METRIC PART

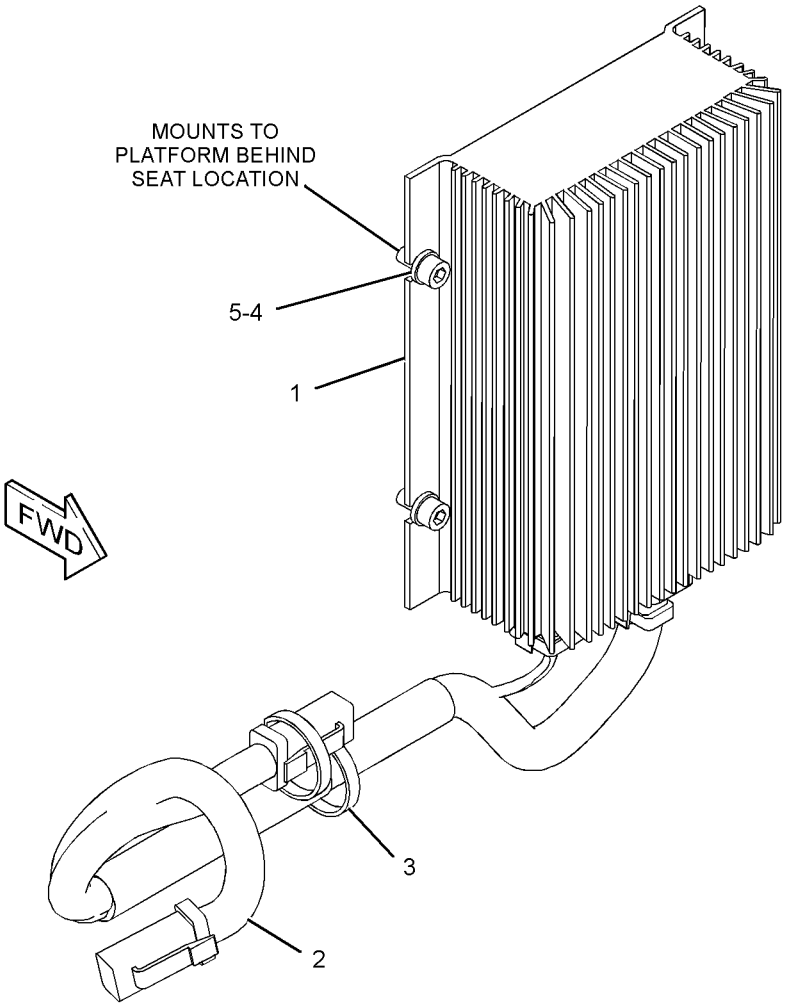

GRAPHIC #1 <END> g02188273

262-1421 ELECTRONICS GP-COMMUNICATION–

PRODUCT LINK 300
S/N: S6T1-UP; S6X1-UP; S6Y1-UP
PART OF 358-6844 INSTALLATION GP-COMMUNICATION
AN ATTACHMENT

SMCS-7606, 7610, 7620 i04002768

NOTE	PART NUMBER	QTY	PART NAME 1 2 3 4 5 6 (PRODUCT LEVEL)	SEE PAGE
	355-5105	1	SOFTWARE GP-COMMUNICATION	
			-OR-	
	355-9764	1	SERVICE GP-COMMUNICATION	
			(OPTIONAL SERVICE REPLACEMENT)(INCLUDES CONTROL GP & SOFTWARE)	
	7X-6315	1	STRAP AS-GROUND	
	126-7574	1	SCREW-PAN HEAD (8-32X9.52-MM)	
	134-4126	1	WASHER (4.52X8.28X0.76-MM THK)	

<END>

317-6573 GRADE CONTROL AR–ACCUGRADE

S/N: S6T1-UP; S6X1-UP; S6Y1-UP
ENCLOSED ROPS
AN ATTACHMENT

SMCS-7220 i04030190

NOTE	PART NUMBER	QTY	PART NAME 1 2 3 4 5 6 (PRODUCT LEVEL)	SEE PAGE
Y	*317-6580*	1	GRADE CONTROL GP	147
Y	*317-6566*	1	MOUNTING GP-MONITOR	581
Y	*317-6567*	1	WIRING GP-GRADE CONTROL (CHASSIS)	202
	297-0693	1	FILM-IDENTIFICATION (JOYSTICK) (BLADE CONTROL)	
			(ON RAISED SURFACE TO RIGHT OF CONTROL & DIRECTLY BELOW BULLDOZER CONTROL FILM)	

Y-SEPARATE ILLUSTRATION

<END>

317-6580 GRADE CONTROL GP

S/N: S6T1-UP; S6X1-UP; S6Y1-UP
PART OF 317-6573 GRADE CONTROL AR
AN ATTACHMENT

SMCS-7220 i04000857

NOTE	PART NUMBER	QTY	PART NAME 1 2 3 4 5 6 (PRODUCT LEVEL)	SEE PAGE
Y	*237-9140*	1	MOUNTING GP-ANTENNA (GRADE CONTROL)	577
Y	*317-6579*	1	MOUNTING GP-GRADE CONTROL	164

Y-SEPARATE ILLUSTRATION

<END>

358-4675 HEATER GP-FUEL

S/N: S6T1-UP; S6X1-UP; S6Y1-UP
PART OF 358-2567 COLD WEATHER AR
AN ATTACHMENT

SMCS-1296 i03994987

NOTE	REF NO	GRAPHIC REF	PART NUMBER	QTY	PART NAME 1 2 3 4 5 6 (PRODUCT LEVEL)	SEE PAGE
	1	1	195-4989	1	HARNESS AS-LIGHTING (FLOODLIGHT)	
		1	102-8804	1	KIT-RECEPTACLE (4-PIN)	
					(INCLUDES RECEPTACLE AS & WEDGE)	
		1	8T-8737	2	PLUG-SEAL	
		1	126-1767	2	PIN-CONNECTOR (14-GA TO 16-GA)	
		1	126-1768	2	SOCKET-CONNECTOR (14-GA)	
		1	155-2270	1	KIT-CONNECTING PLUG (2-PIN)	
					(INCLUDES PLUG AS, WEDGE & INTERFACE SEAL)	
	2	1	224-9772	1	HEATER AS-FUEL	
I	3	1	358-4677	1	HOSE AS	
I	4	1	358-4678	1	HOSE AS	
	5	1	033-8248	1	CLIP	
	6	1	*148-8372*	2	ELBOW AS	
					(EACH INCLUDES)	
		1	6V-8721	1	ELBOW	
		1	2M-9780	1	SEAL-O-RING	
		1	6V-8398	1	SEAL-O-RING	
M	7	1	151-6282	2	BOLT-SOCKET HEAD (M6X1X40-MM)	
M	8	1	191-8921	2	BOLT-SOCKET HEAD (M6X1X25-MM)	
	9	1	8T-4205	4	WASHER-HARD (7.2X14.5X2-MM THK)	

I-REFER TO HYDRAULIC INFORMATION SYSTEM
M-METRIC PART

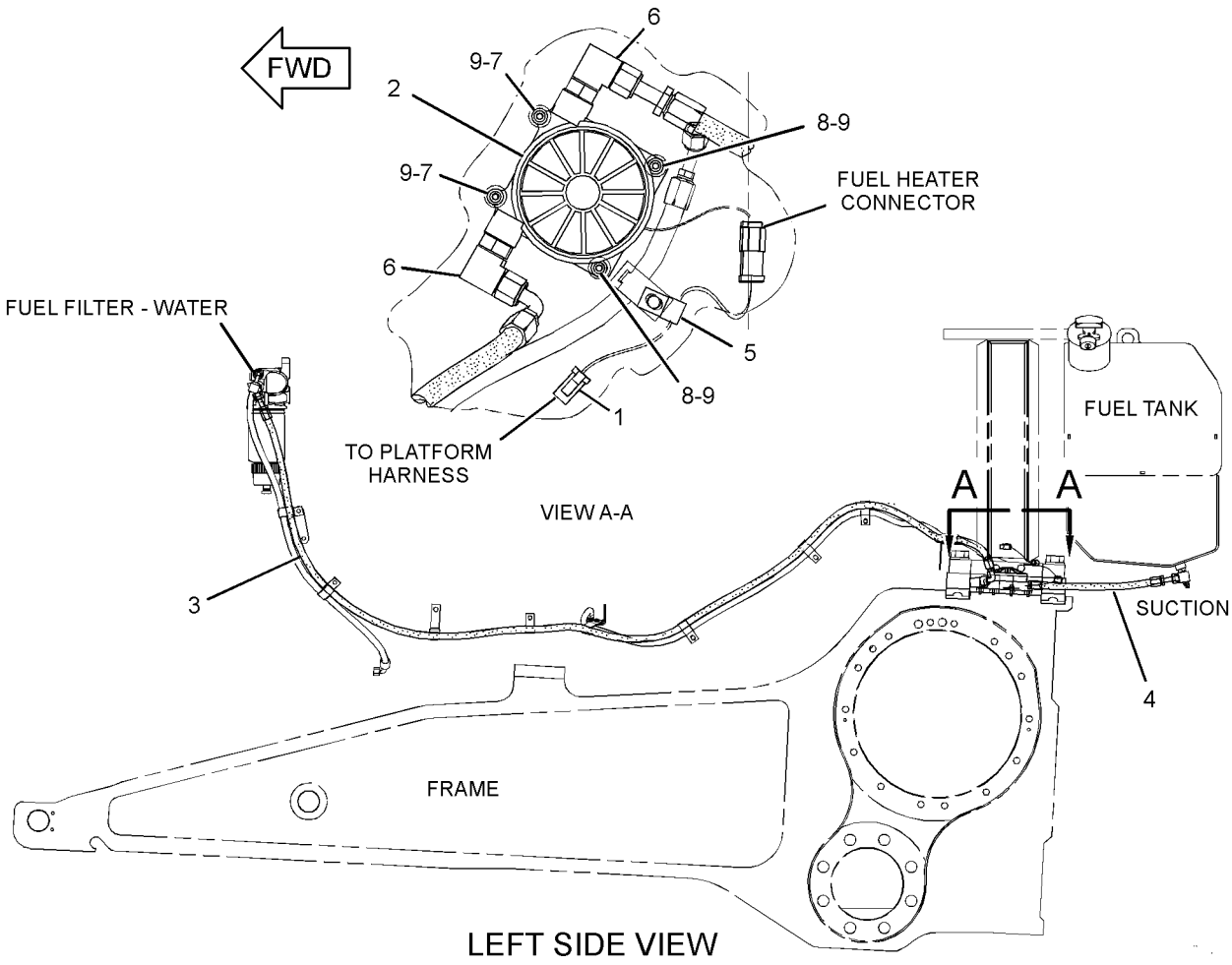

LEFT SIDE VIEW

GRAPHIC #1 <END> g02175497

334-6369 HEATER GP-JACKET WATER

S/N: S6T1-UP; S6X1-UP; S6Y1-UP
240-VOLT, 1500-WATT
PART OF 358-2567 COLD WEATHER AR
AN ATTACHMENT

SMCS-1383 i03994986

NOTE	REF NO	GRAPHIC REF	PART NUMBER	QTY	PART NAME 1 2 3 4 5 6 (PRODUCT LEVEL)	SEE PAGE
	1	1	7K-1181	11	STRAP-CABLE	
	2	1	6T-3764	1	ELEMENT AS-JACKET WATER HEATER (240-VOLT, 1500-WATT)	
	3	1	4N-8227	1	CORD AS-HEATER ELEMENT (240-VOLT, 15-AMPERE)	
	4	1	7M-8485	1	SEAL-O-RING	
	5	1	5P-0492	1	ADAPTER	
	6	1	4P-7581	1	CLIP	
	7	1	214-9389	1	FILM-IDENTIFICATION (WATER HEATER)	

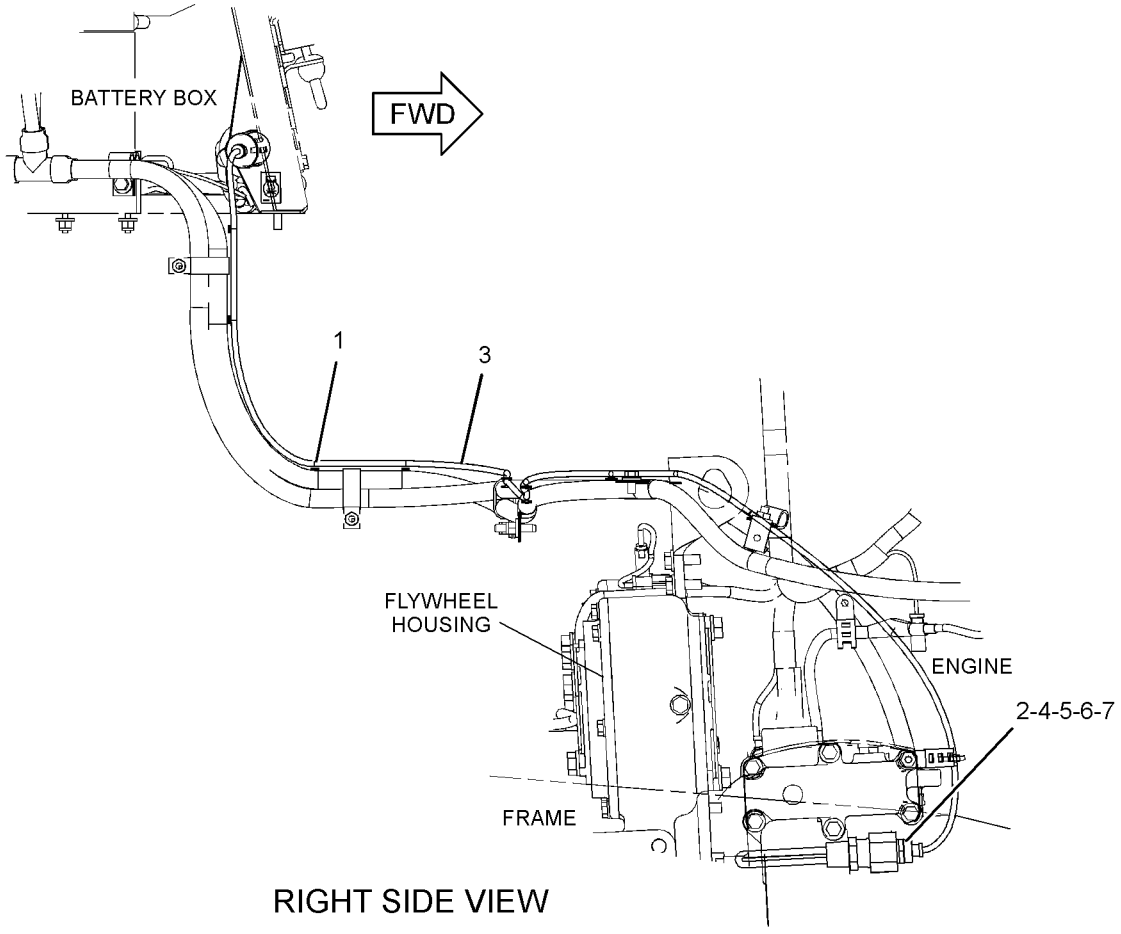

RIGHT SIDE VIEW

GRAPHIC #1 <END> g01195449

358-6844 INSTALLATION GP-COMMUNICATION–

PRODUCT LINK 321SR

S/N: S6T1-UP; S6X1-UP; S6Y1-UP

AN ATTACHMENT

SMCS-7606 i04002772

NOTE	REF NO	GRAPHIC REF	PART NUMBER	QTY	PART NAME 1 2 3 4 5 6 (PRODUCT LEVEL)	SEE PAGE
	1	1	8C-5607	8	MOUNT-ISOLATION	
	2	1	8C-5608	4	SPACER (6.5X9.5X25.4-MM THK)	
	3	1	129-8331	1	PLATE AS	
	4	1	230-1340	1	FILM-WARNING (PRODUCT LINK RADIO, U.S.)	
Y	5	1	*262-1421*	1	ELECTRONICS GP-COMMUNICATION (PRODUCT LINK 300)	147
	6	1	306-0177	1	BRACKET	
	7	1	307-0047	1	FILM-INFORMATION (PRODUCT LINK, READ OMM)	
	8	1	320-5898	1	HARNESS AS-WIRING	
		1	8T-8737	64	PLUG-SEAL	
		1	9X-6772	2	STRAP-CABLE	
E		1	114-8844		SLEEVE-PLASTIC (40-CM)	
		1	9X-3402	26	SOCKET-CONNECTOR (16-GA TO 18-GA)	
					–OR–	
		1	126-1768	26	SOCKET-CONNECTOR (14-GA)	
		1	126-1774	1	COVER-CONNECTOR	
		1	155-2255	1	KIT-CONNECTING PLUG (12-PIN)	
		1	155-2265	1	KIT-CONNECTING PLUG (8-PIN)	
					(EACH KIT INCLUDES PLUG AS, WEDGE & INTERFACE SEAL)	
		1	160-7690	1	PLUG AS-CONNECTOR (70-PIN)	
		1	159-9322	1	SEAL-O-RING	
	9	1	284-8532	1	ANTENNA AS	
		1	301-0589	1	ANTENNA (FLEXIBLE)	
		1	355-0598	1	NUT-SPECIAL	
Y	10	1	336-3545	1	RADIO GP-COMMUNICATION (PRODUCT LINK 121SR)	167
	11	1	4P-7581	4	CLIP	
	12	1	7K-1181	15	STRAP-CABLE	
B	13	1	7X-0365	2	BOLT (3/4-10X1.5-IN)	
BM	14	1	7X-2562	2	BOLT (M20X2.5X45-MM)	
	15	1	7X-7729	2	WASHER (11X25X3-MM THK)	
M	16	1	8T-2192	4	BOLT (M6X1X45-MM)	
M	17	1	8T-4136	2	BOLT (M10X1.5X25-MM)	
M	18	1	8T-4181	4	BOLT (M6X1X20-MM)	
	19	1	8T-5439	2	WASHER-HARD (21.5X45X6-MM THK)	
	20	1	9X-6165	4	WASHER (6.5X22X2.5-MM THK)	
	21	1	9X-8256	4	WASHER (6.6X12X2-MM THK)	

B-USE AS REQUIRED
E-ORDER BY THE CENTIMETER
M-METRIC PART
Y-SEPARATE ILLUSTRATION

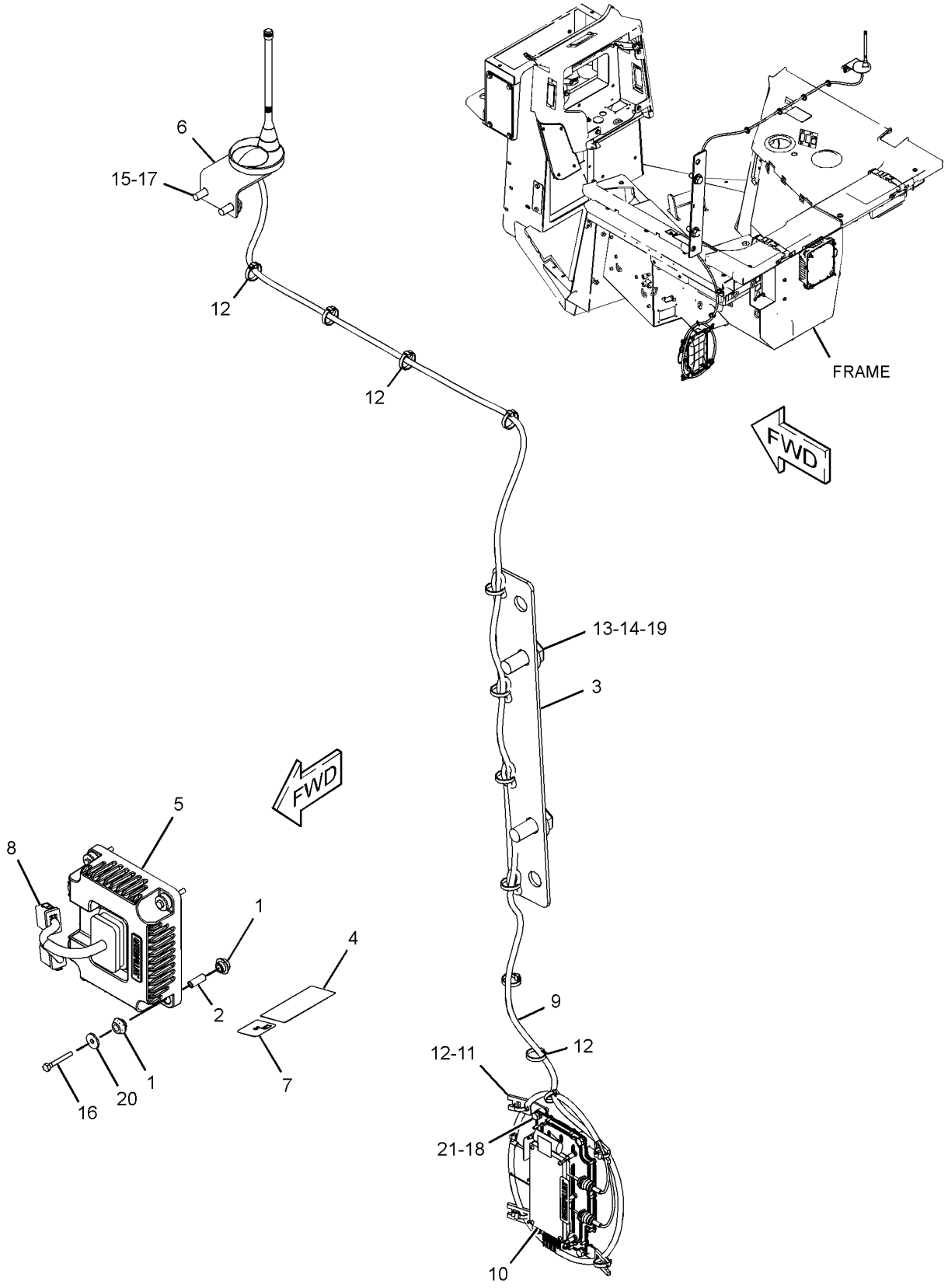

GRAPHIC #1 <END> g02201933

3E-6389 LAMP GP-DOME

S/N: S6T1-UP; S6X1-UP; S6Y1-UP
24-VOLT
PART OF 317-6561 LINER GP-CAB

SMCS-1433 i03994914

NOTE	REF NO	GRAPHIC REF	PART NUMBER	QTY	PART NAME 1 2 3 4 5 6 (PRODUCT LEVEL)	SEE PAGE
	1	1	7N-9943	1	LAMP (24-VOLT)	
	2	1	102-8803	1	KIT-RECEPTACLE (3-PIN)	
					(INCLUDES RECEPTACLE AS & WEDGE)	
	3	1	186-3735	3	PIN-CONNECTOR (16-GA TO 18-GA)	
	4	1	7T-0020	1	LENS-DOME LAMP	

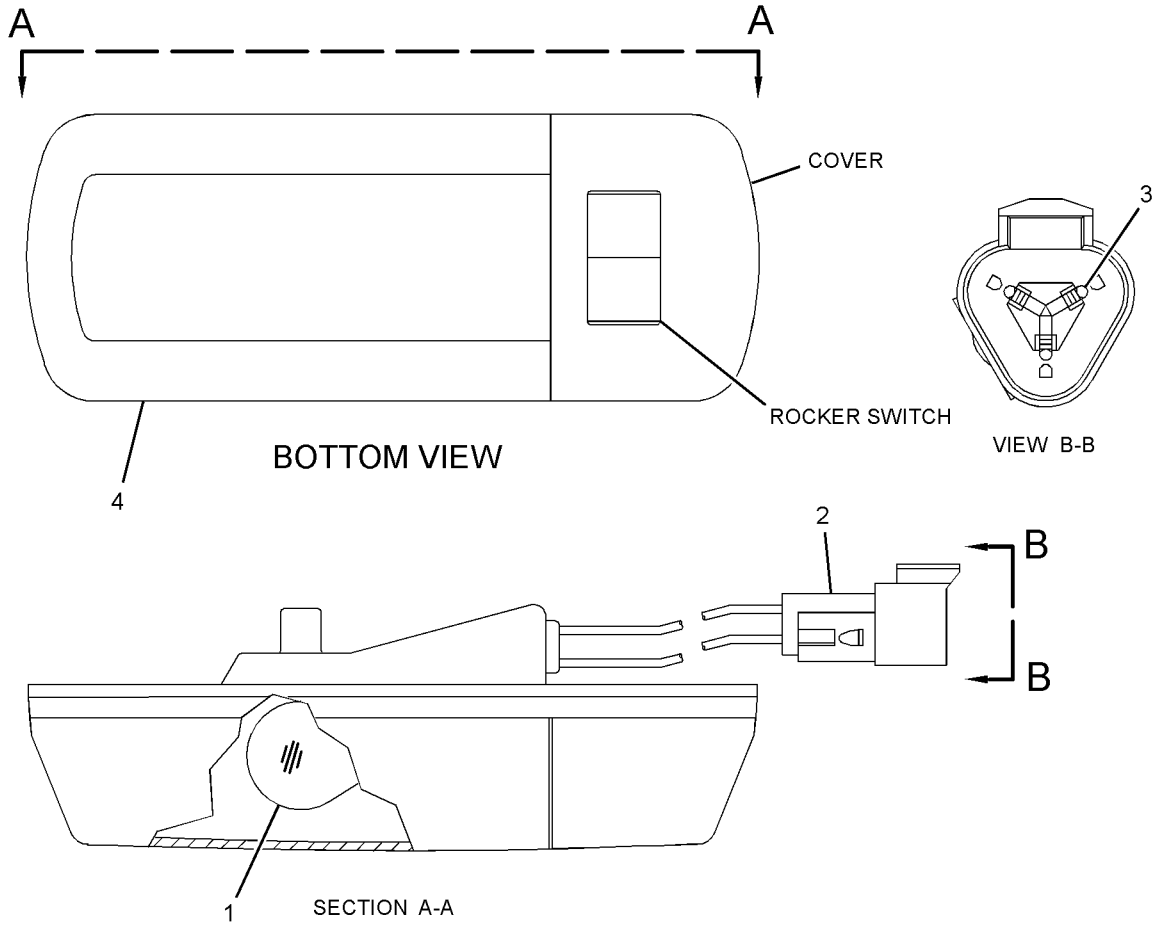

GRAPHIC #1 <END> g01428127

147-0319 LAMP GP-FLOOD

S/N: S6T1-UP; S6X1-UP; S6Y1-UP
24-VOLT, 70-WATT
PART OF 125-2001, 329-9110, 334-6371 LIGHTING GP-FLOOD
ALSO AN ATTACHMENT

SMCS-1434 i03995784

NOTE	REF NO	GRAPHIC REF	PART NUMBER	QTY	PART NAME 1 2 3 4 5 6 (PRODUCT LEVEL)	SEE PAGE
	1	1	351-9918	1	LAMP-HALOGEN (24-VOLT, 70-WATT)	
	2	1	158-0250	1	BODY AS-LAMP	
	3	1	336-7235	1	LENS AS (FLOODLIGHT)	
	4	1	158-0252	1	BEZEL	
	5	1	188-8849	2	CLAMP	

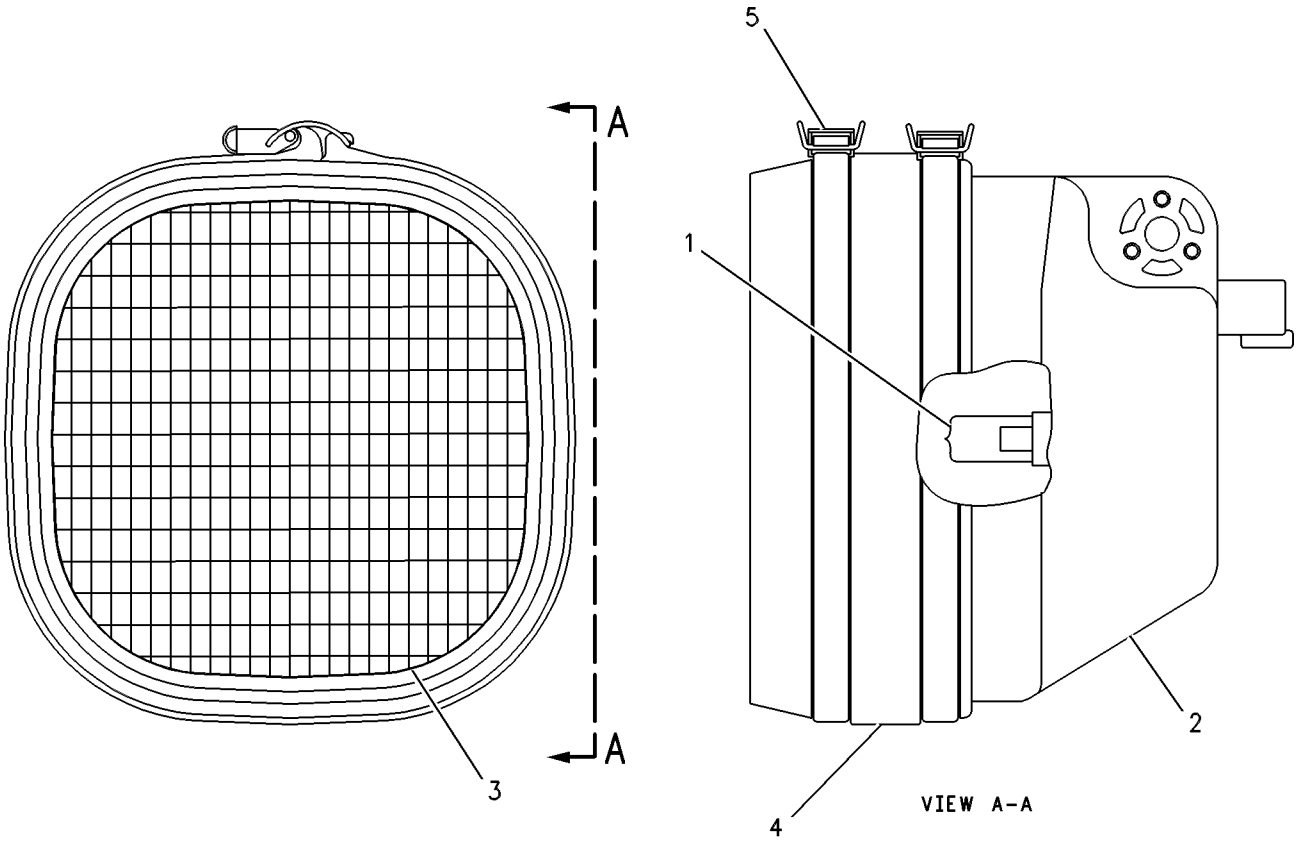

GRAPHIC #1 <END> g00458549

153-2073 LAMP GP-FLOOD

S/N: S6T1-UP; S6X1-UP; S6Y1-UP
24-VOLT, 70-WATT
PART OF 334-6371 LIGHTING GP-FLOOD
AN ATTACHMENT

SMCS-1434 i04015371

NOTE	REF NO	GRAPHIC REF	PART NUMBER	QTY	PART NAME 1 2 3 4 5 6 (PRODUCT LEVEL)	SEE PAGE
	1	1	351-9918	1	LAMP-HALOGEN (24-VOLT, 70-WATT)	
	2	1	158-0250	1	BODY AS-LAMP	
	3	1	336-7235	1	LENS AS (FLOODLIGHT)	
	4	1	158-0252	1	BEZEL	
	5	1	188-8849	2	CLAMP	

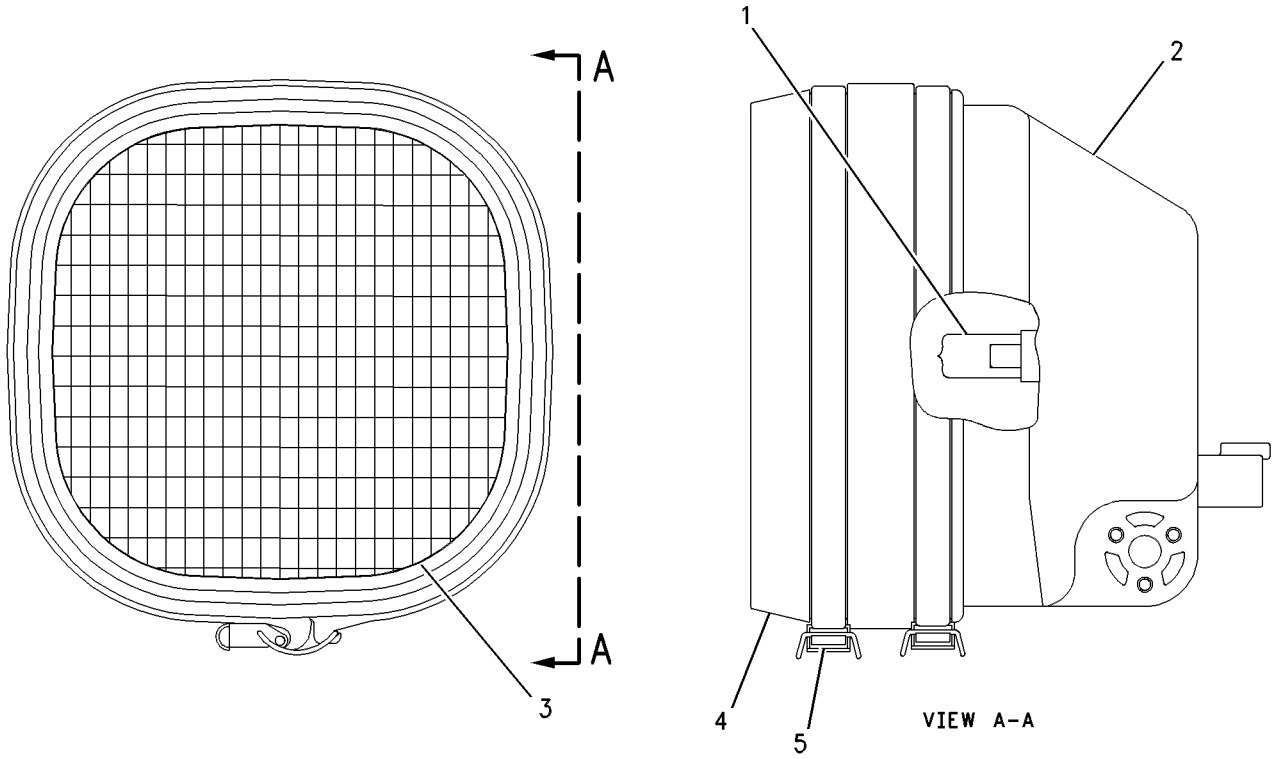

GRAPHIC #1 <END> g00449633

125-2001 LIGHTING GP-FLOOD

S/N: S6T1-UP; S6X1-UP; S6Y1-UP
PART OF 318-1633 LIGHTING GP-ROPS
AN ATTACHMENT

SMCS-1434 i04002782

NOTE	REF NO	GRAPHIC REF	PART NUMBER	QTY	PART NAME 1 2 3 4 5 6 (PRODUCT LEVEL)	SEE PAGE
	1	1	9W-4361	4	MOUNT-FLEXIBLE	
	2	1	111-8314	1	BRACKET AS	
Y	3	1	147-0319	1	LAMP GP-FLOOD (24-VOLT, 65-WATT)	154
	4	1	167-1884	1	GUARD	
	5	1	5M-3062	1	BOLT (3/8-16X0.75-IN)	
	6	1	5P-1075	9	WASHER-HARD (10.2X22.5X3-MM THK)	
	7	1	5P-2955	1	BOLT (5/16-18X2.5-IN)	
	8	1	6V-8189	1	NUT (5/16-18-THD)	
	9	1	6V-8801	8	NUT (3/8-16-THD)	
	10	1	8T-4224	2	WASHER-HARD (8.8X16X2-MM THK)	

Y-SEPARATE ILLUSTRATION

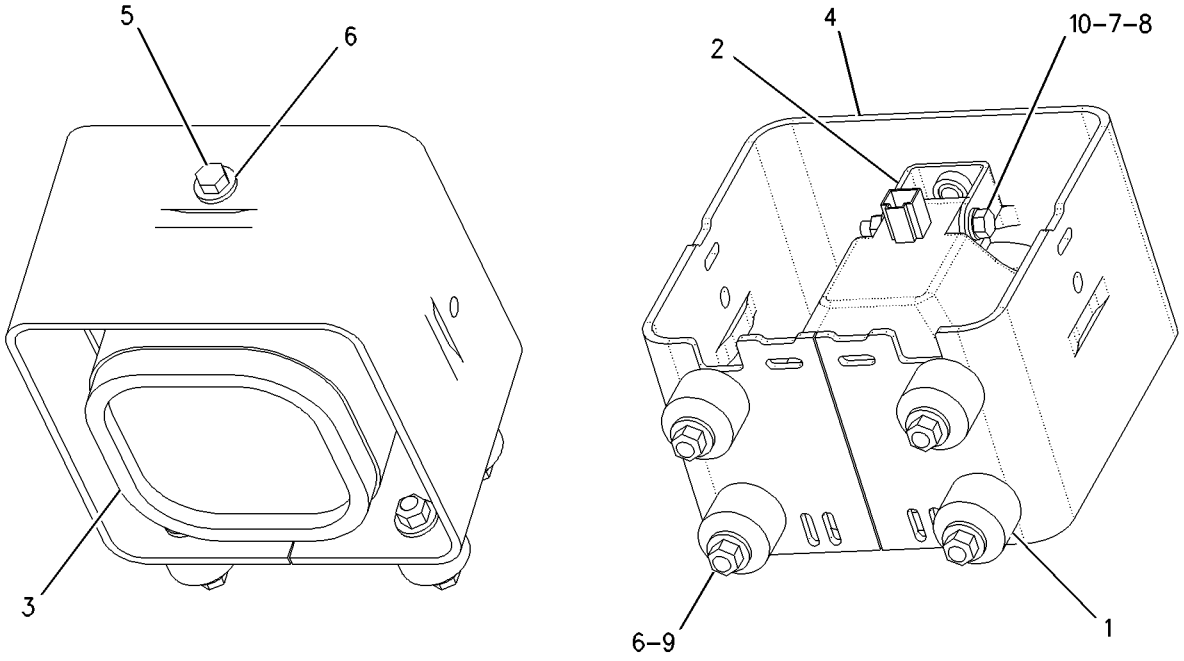

GRAPHIC #1 <END> g00887298

329-9110 LIGHTING GP-FLOOD—FUEL TANK, RADIATOR GUARD

S/N: S6T1-UP; S6X1-UP; S6Y1-UP

PART OF 336-9684, 336-9685, 336-9686 CHASSIS AR

SMCS-1434 i04036992

NOTE	REF NO	GRAPHIC REF	PART NUMBER	QTY	PART NAME 1 2 3 4 5 6 (PRODUCT LEVEL)	SEE PAGE
	1	1	6Y-9471	2	GUARD-LIGHT	
	2	1	8E-1930	2	GUARD AS	
	3	1	111-8314	4	BRACKET AS	
	4	1	195-4989	2	HARNESS AS-LIGHTING (FLOODLIGHT) (REAR)	
					(EACH INCLUDES)	
		1	102-8804	1	KIT-RECEPTACLE (4-PIN)	
					(INCLUDES RECEPTACLE AS & WEDGE)	
		1	8T-8737	2	PLUG-SEAL	
		1	126-1767	2	PIN-CONNECTOR (14-GA TO 16-GA)	
		1	126-1768	2	SOCKET-CONNECTOR (14-GA)	
		1	155-2270	1	KIT-CONNECTING PLUG (2-PIN)	
					(INCLUDES PLUG AS, WEDGE & INTERFACE SEAL)	
Y	5	1	147-0319	4	LAMP GP-FLOOD (24-VOLT, 65-WATT) (RADIATOR GUARD, FUEL TANK)	154
	6	1	3S-2093	2	STRAP-CABLE	
	7	1	4P-7581	2	CLIP	
	8	1	5M-3062	4	BOLT (3/8-16X0.75-IN)	
	9	1	5P-1075	16	WASHER-HARD (10.2X22.5X3-MM THK)	
	10	1	5P-2955	4	BOLT (5/16-18X2.5-IN)	
	11	1	6H-4005	2	GROMMET	
	12	1	6V-8189	4	NUT (5/16-18-THD)	
M	13	1	8T-4136	14	BOLT (M10X1.5X25-MM)	
	14	1	8T-4224	8	WASHER-HARD (8.8X16X2-MM THK)	
	15	1	8T-4896	2	WASHER-HARD (10.2X18.5X2.5-MM THK)	

M-METRIC PART
Y-SEPARATE ILLUSTRATION

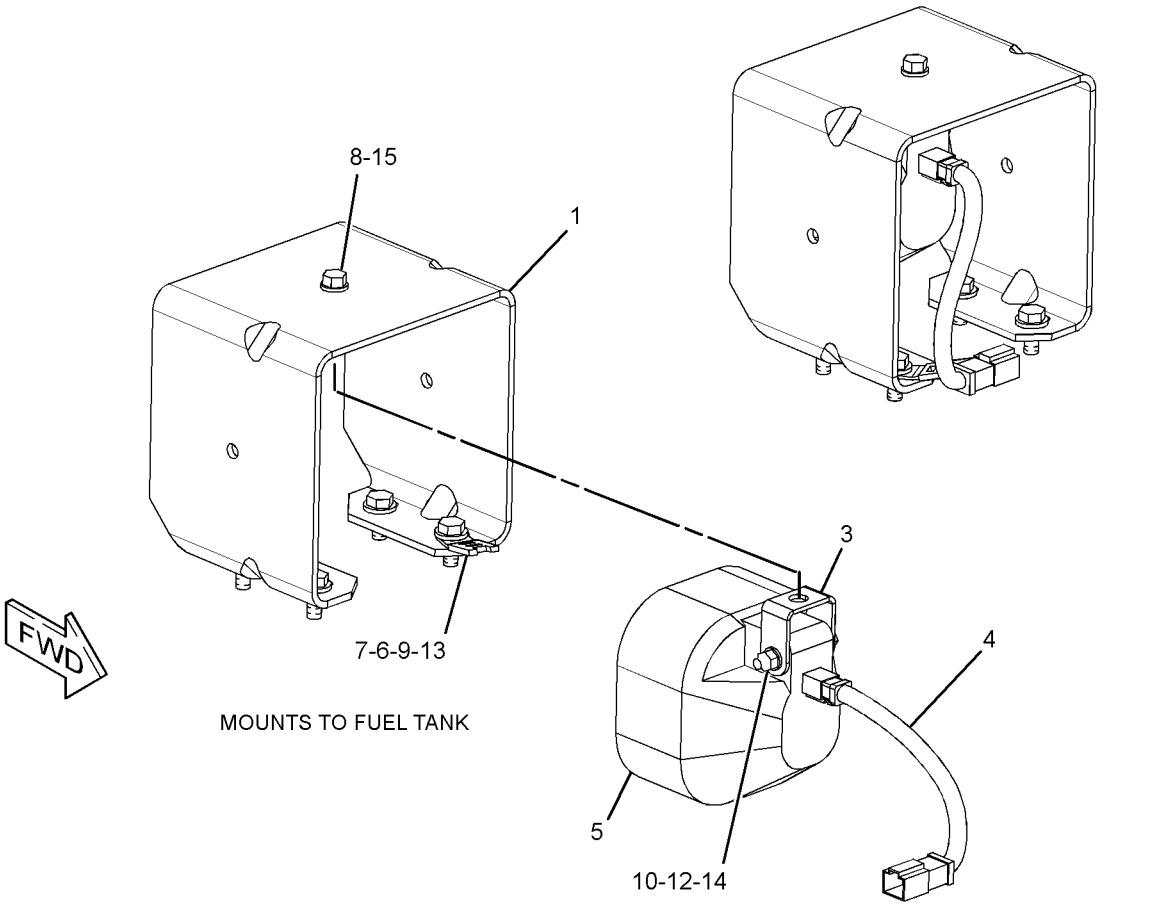

MOUNTS TO FUEL TANK

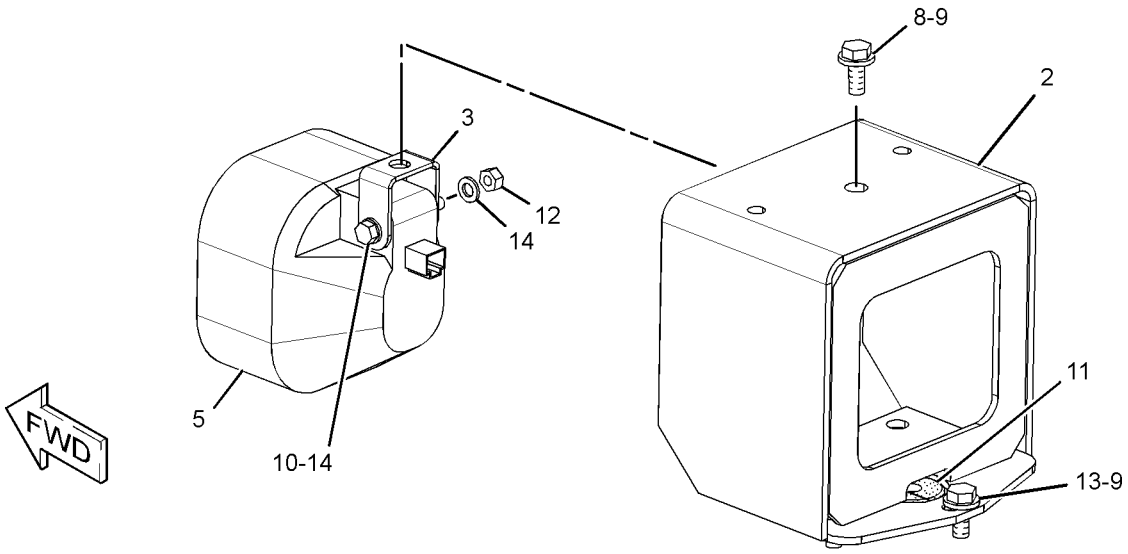

MOUNTS TO RADIATOR GUARD

GRAPHIC #1 <END> g02237814

334-6371 LIGHTING GP-FLOOD—FUEL TANK, SWEEPS

S/N: S6T1-UP; S6X1-UP; S6Y1-UP
PART OF 358-4688 SWEEP AR
AN ATTACHMENT

SMCS-1434 i04036981

NOTE	REF NO	GRAPHIC REF	PART NUMBER	QTY	PART NAME 1 2 3 4 5 6 (PRODUCT LEVEL)	SEE PAGE
B	1	1,2	7K-1181	42	STRAP-CABLE	
	2	2	9W-4361	24	MOUNT-FLEXIBLE	
	3	2	111-8314	8	BRACKET AS	
	4	1	129-8331	2	PLATE AS	
	6	2	167-1884	6	GUARD	
	7	2	168-8656	2	PLATE	
	8	1	186-0636	2	HARNESS AS-LIGHTING (REAR FLOODLIGHTS)	
					(EACH INCLUDES)	
E		1	114-8843		SLEEVE-PLASTIC (60-CM)	
		1	126-1767	4	PIN-CONNECTOR (14-GA TO 16-GA)	
		1	126-1768	4	SOCKET-CONNECTOR (14-GA)	
		1	102-8804	1	KIT-RECEPTACLE (4-PIN)	
					(INCLUDES RECEPTACLE AS & WEDGE)	
		1	155-2270	2	KIT-CONNECTING PLUG (2-PIN)	
					(EACH INCLUDES PLUG AS, WEDGE & INTERFACE SEAL)	
	9	1,2	213-4502	8	GUARD AS-LAMP	
	10	2	213-4504	2	GUARD AS	
	11	2	234-5846	2	PLATE	
Y	14	2	147-0319	6	LAMP GP-FLOOD (24-VOLT, 65-WATT) (FUEL TANK, SWEEP, FRONT)	154
Y	15	2	153-2073	2	LAMP GP-FLOOD (24-VOLT) (SWEEP, SIDE)	155
	16	1	168-8655	2	HARNESS AS-LIGHTING (FRONT FLOODLIGHTS)	
					(EACH INCLUDES)	
E		1	114-8843		SLEEVE-PLASTIC (60-CM)	
E		1	119-3662		TUBE-HEAT SHRINK (10.85-MM DIA) (13-CM)	
		1	126-1767	2	PIN-CONNECTOR (14-GA TO 16-GA)	
		1	126-1768	4	SOCKET-CONNECTOR (14-GA)	
		1	102-8802	1	KIT-RECEPTACLE (2-PIN)	
					(INCLUDES RECEPTACLE AS & WEDGE)	
		1	155-2270	2	KIT-CONNECTING PLUG (2-PIN)	
					(EACH INCLUDES PLUG AS, WEDGE & INTERFACE SEAL)	
	18	2	4L-6454	2	BOLT (3/8-16X1-IN)	
	19	1	4P-7581	4	CLIP	
	20	2	5M-3062	6	BOLT (3/8-16X0.75-IN)	
	21	2	5P-1075	72	WASHER-HARD (10.2X22.5X3-MM THK)	
	22	1,2	5P-2228	8	BOLT (1/2-13X1-IN)	
	23	2	5P-2955	8	BOLT (5/16-18X2.5-IN)	
	24	1	6H-4005	2	GROMMET	
	25	1,2	6V-8188	6	NUT (1/2-13-THD)	
	26	2	6V-8189	8	NUT (5/16-18-THD)	
	27	2	6V-8801	48	NUT (3/8-16-THD)	
M	28	1	7X-2562	4	BOLT (M20X2.5X45-MM)	
M	29	1,2	8T-4136	26	BOLT (M10X1.5X25-MM)	
	30	1,2	8T-4223	14	WASHER-HARD (13.5X25.5X3-MM THK)	
	31	2	8T-4224	16	WASHER-HARD (8.8X16X2-MM THK)	
	32	1,2	8T-4896	10	WASHER-HARD (10.2X18.5X2.5-MM THK)	
	33	1	8T-5439	4	WASHER-HARD (21.5X45X6-MM THK)	

B-USE AS REQUIRED
E-ORDER BY THE CENTIMETER
M-METRIC PART
Y-SEPARATE ILLUSTRATION

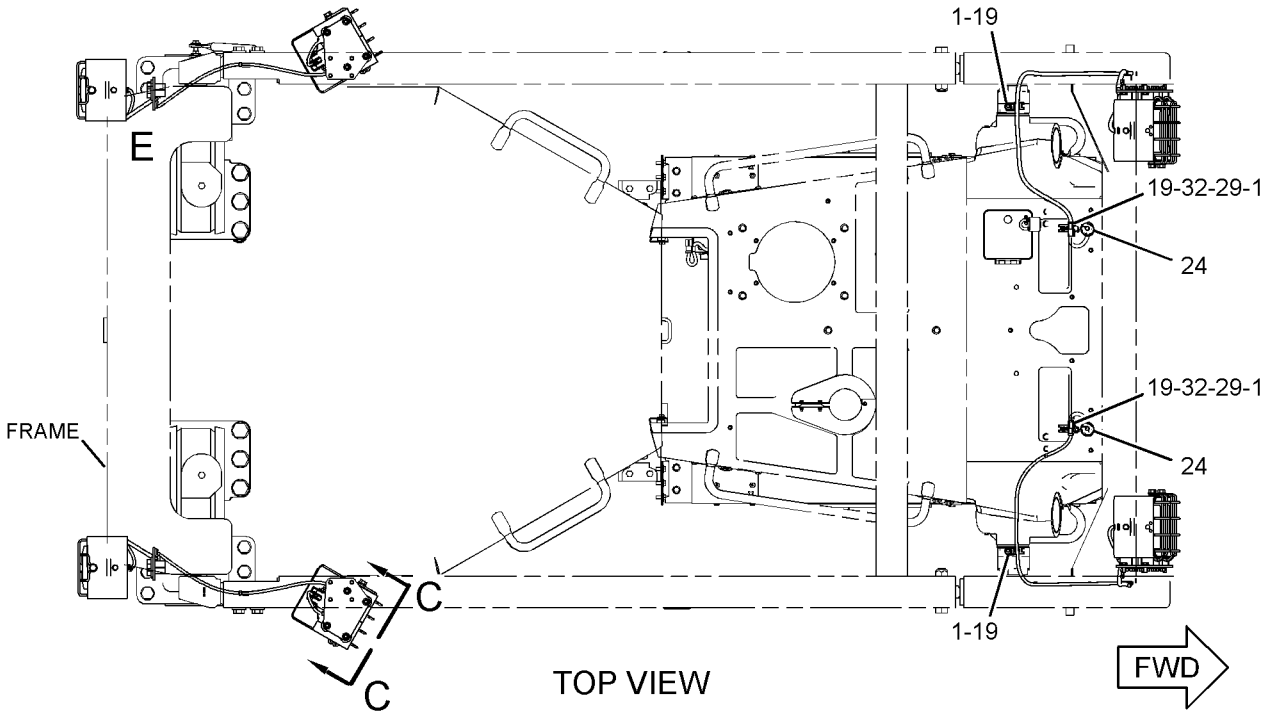

TOP VIEW

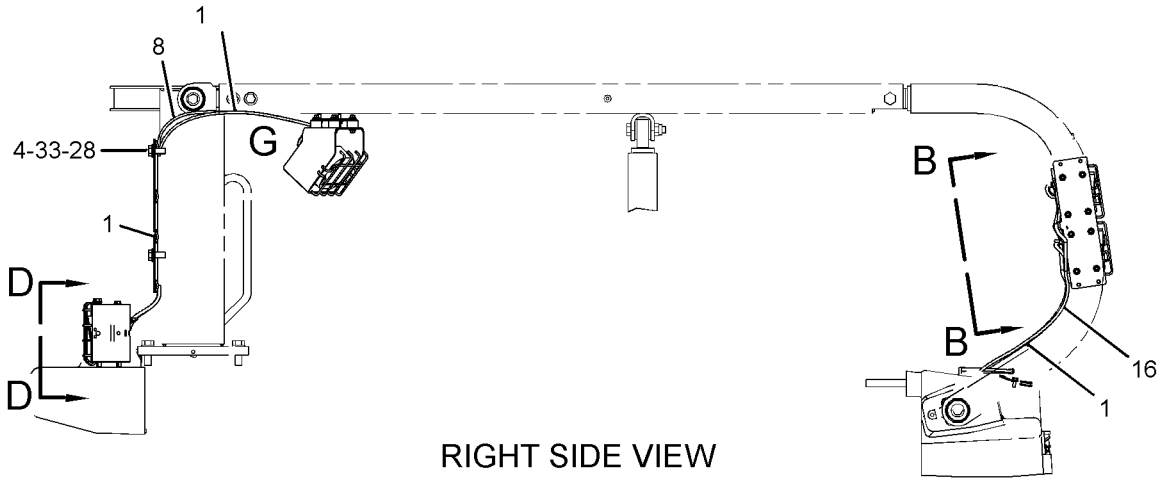

RIGHT SIDE VIEW

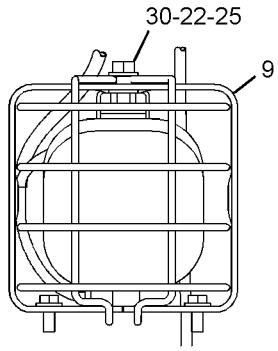

VIEW D-D

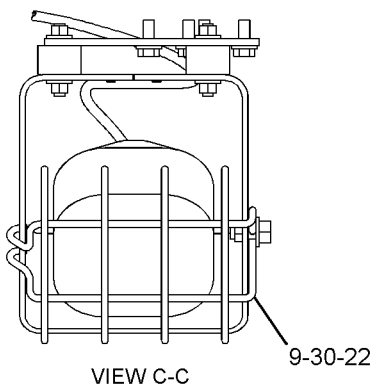

VIEW C-C

GRAPHIC #1 g02237013

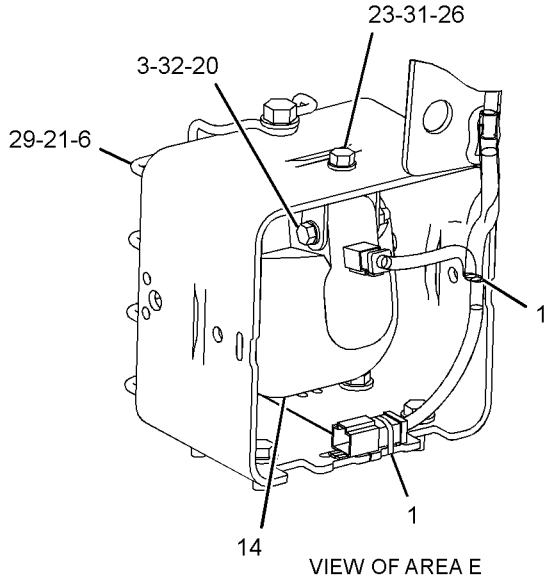

VIEW OF AREA E

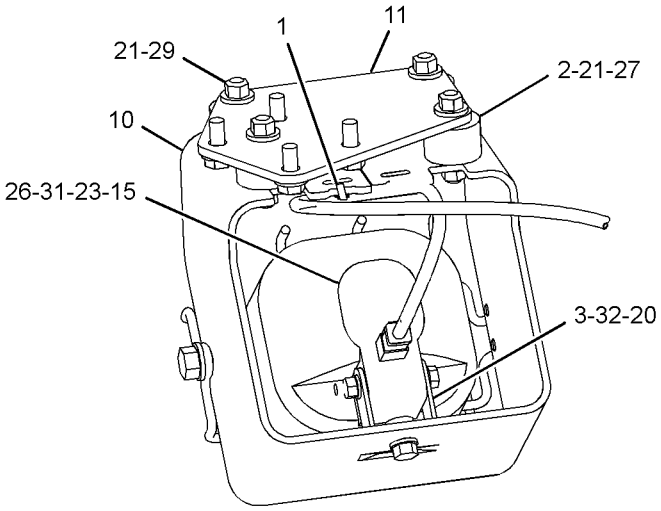

VIEW OF AREA G

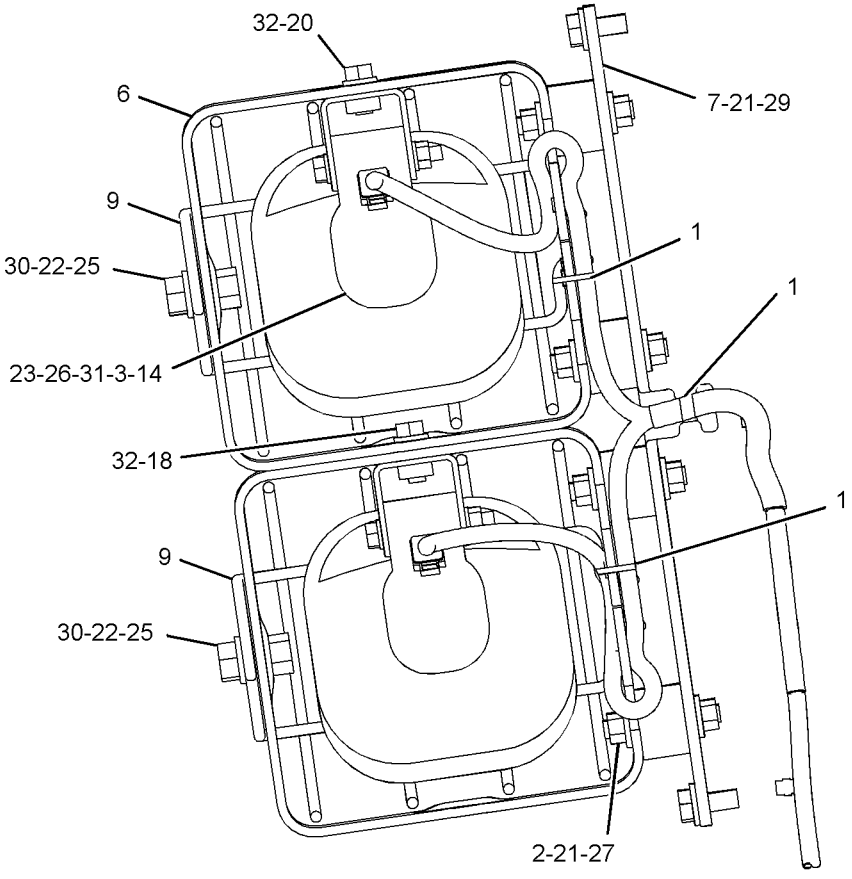

VIEW B-B

GRAPHIC #2 <END> g02196215

318-1633 LIGHTING GP-ROPS

S/N: S6T1-UP; S6X1-UP; S6Y1-UP
AN ATTACHMENT

SMCS-1429, 1433 i04030225

NOTE	REF NO	GRAPHIC REF	PART NUMBER	QTY	PART NAME 1 2 3 4 5 6 (PRODUCT LEVEL)	SEE PAGE
	1	1	7K-1181	12	STRAP-CABLE	
	2	1	115-1024	1	BRACKET AS (RH)	
	3	1	115-1025	1	BRACKET AS (LH)	
Y	4	1	*125-2001*	2	LIGHTING GP-FLOOD (ROPS)	156
B	5	1	129-8331	2	PLATE AS	
B	6	1	172-4869	2	BRACKET	
	7	1	185-9607	2	HARNESS AS-LIGHTING	
					(EACH INCLUDES)	
E		1	114-8843		SLEEVE-PLASTIC (60-CM)	
		1	126-1767	4	PIN-CONNECTOR (14-GA TO 16-GA)	
		1	126-1768	4	SOCKET-CONNECTOR (14-GA)	
		1	102-8804	1	KIT-RECEPTACLE (4-PIN)	
					(INCLUDES RECEPTACLE AS & WEDGE)	
		1	155-2270	2	KIT-CONNECTING PLUG (2-PIN)	
					(EACH INCLUDES PLUG AS, WEDGE, & INTERFACE SEAL)	
B	8	1	215-3662	2	SPACER (22.2X50.8X31.8-MM THK)	
	9	1	5P-1075	4	WASHER-HARD (10.2X22.5X3-MM THK)	
	10	1	5S-7379	4	BOLT (3/8-16X0.875-IN)	
	11	1	6H-4005	2	GROMMET	
M	12	1	7X-2564	2	BOLT (M20X2.5X90-MM)	
	13	1	8T-4123	2	WASHER (22X35X3.5-MM THK)	
B	14	1	8T-5439	4	WASHER-HARD (21.5X45X6-MM THK)	
BM	15	1	8T-5460	4	BOLT (M20X2.5X40-MM)	

B-USE AS REQUIRED
E-ORDER BY THE CENTIMETER
M-METRIC PART
Y-SEPARATE ILLUSTRATION

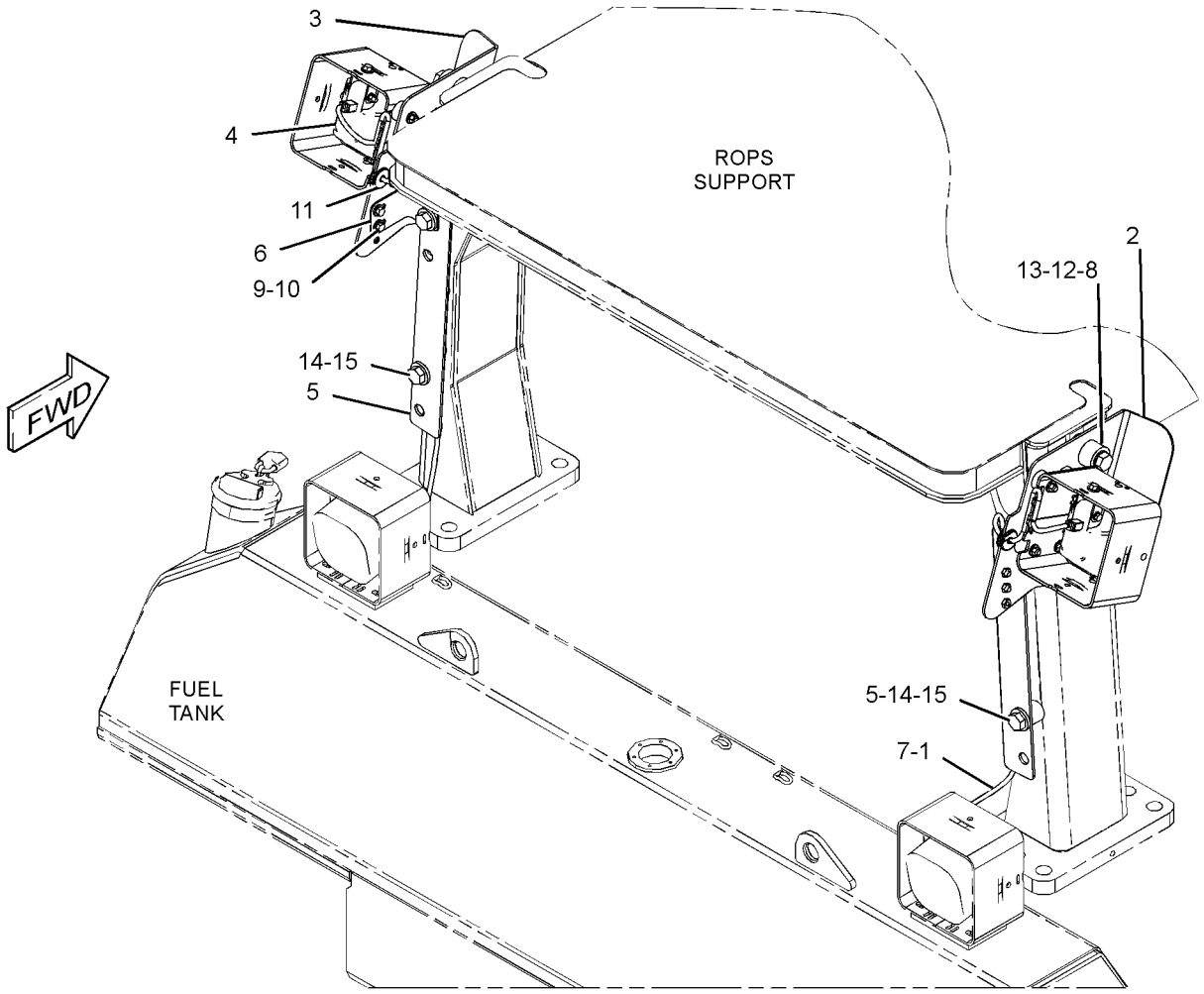

GRAPHIC #1 <END> g02220277

317-6579 MOUNTING GP-GRADE CONTROL

S/N: S6T1-UP; S6X1-UP; S6Y1-UP
PART OF 317-6580 GRADE CONTROL GP
AN ATTACHMENT

SMCS-7220 i04000859

NOTE	REF NO	GRAPHIC REF	PART NUMBER	QTY	PART NAME 1 2 3 4 5 6 (PRODUCT LEVEL)	SEE PAGE
	1	1	226-9169	1	MODULE AS-POWER SUPPLY	
	2	1	241-7913	1	COVER AS-ACCESS	
	3	1	242-8399	1	PANEL-ACOUSTICAL	
	4	1	323-7443	1	PANEL AS-INSTRUMENT	
M	5	1	5C-9553	4	BOLT (M6X1X16-MM)	
	6	1	9X-8256	4	WASHER (6.6X12X2-MM THK)	

M-METRIC PART

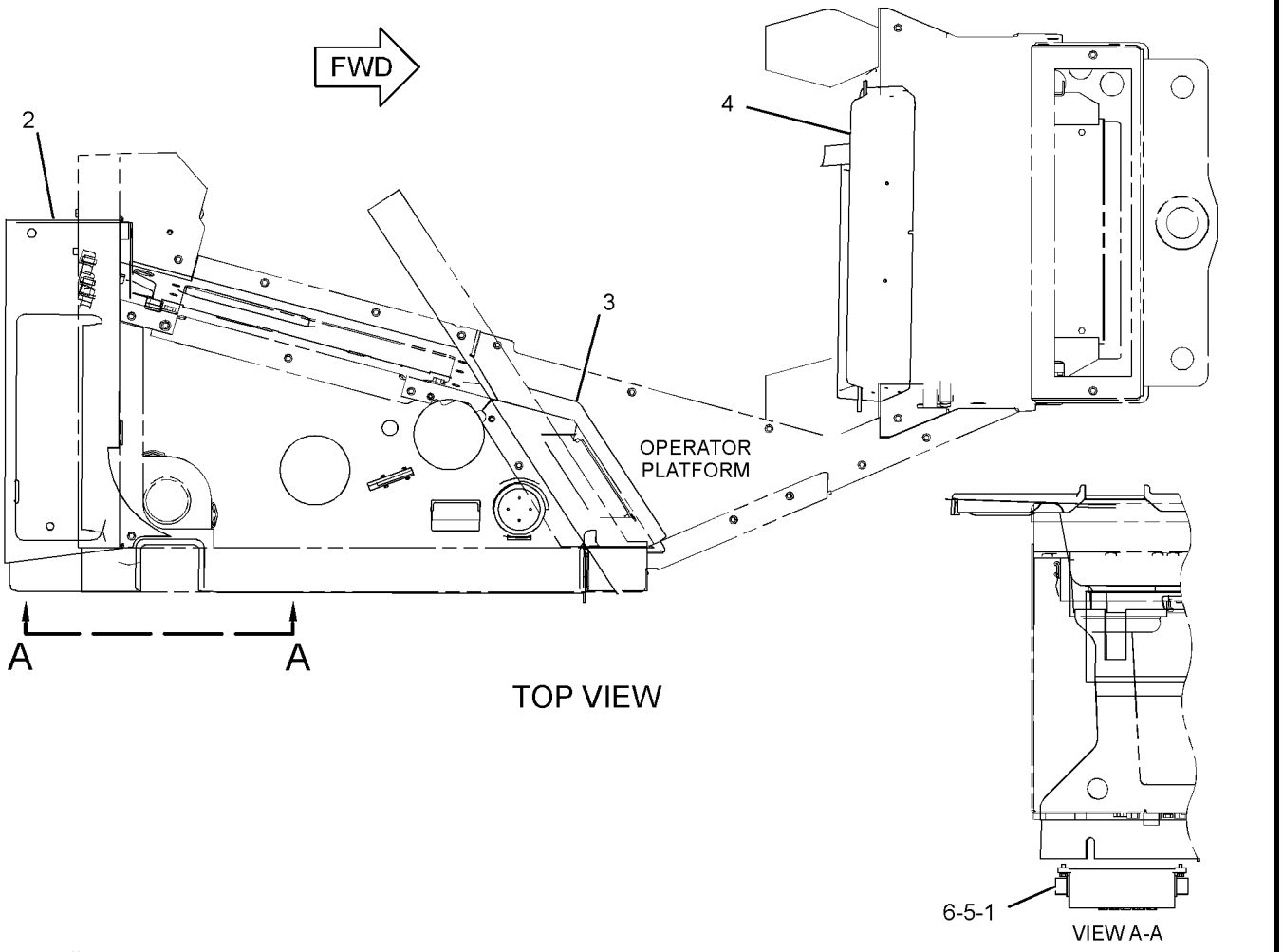

GRAPHIC #1 <END> g02188099

322-1360 PANEL GP-FUSE

S/N: S6T1-UP; S6X1-UP; S6Y1-UP
PART OF 317-6565 WIRING GP-PLATFORM

SMCS-1417 i04031094

NOTE	REF NO	GRAPHIC REF	PART NUMBER	QTY	PART NAME 1 2 3 4 5 6 (PRODUCT LEVEL)	SEE PAGE
	1	1	7K-1181	4	STRAP-CABLE	
	2	1	9W-1441	15	FUSE (15-AMPERE)	
	3	1	9W-1442	7	FUSE (10-AMPERE)	
	4	1	9W-1446	2	FUSE (20-AMPERE)	
Y	5	1	125-1302	1	SWITCH GP-MAGNETIC (24-VOLT) (START RELAY)	191
	6	1	172-4863	1	JUNCTION BLOCK	
	7	1	223-8173	1	HOLDER AS-FUSE	
	8	1	237-0048	1	PANEL AS	
	9	1	237-0050	1	STRAP	
	10	1	237-0051	1	STRAP	
	11	1	237-0052	1	STRAP	
	12	1	237-0053	1	STRAP	
	13	1	237-0225	1	STRAP	
	14	1	238-2014	1	WIRE AS	
	15	1	239-3354	1	CAP AS	
		1	232-3402	1	FILM-WARNING (ELECTRICAL SHOCK)	
	16	1	239-8107	1	FUSE (175-AMPERE)	
	17	1	240-8917	1	FILM-CIRCUIT BREAKER	
Y	18	1	241-8368	1	SWITCH GP-MAGNETIC (24-VOLT) (MAIN RELAY)	192
Y	19	1	322-1359	1	WIRING GP-BOX (FUSE)	195
M	20	1	5C-2890	4	NUT (M6X1-THD)	
M	21	1	5C-7883	7	BOLT-SOCKET HEAD (M6X1X16-MM)	
	22	1	6T-3643	1	CIRCUIT BREAKER AS (15-AMPERE) (BLOWER)	
		1	6V-8376	2	SCREW-MACHINE (8-32X0.25-IN)	
		1	9B-7233	2	LOCKWASHER	
	23	1	6V-5645	4	SCREW-MACHINE (10-32X0.87-IN)	
	24	1	7U-4892	2	SCREW (8-32X0.75-IN)	
M	25	1	7X-2548	2	BOLT (M12X1.75X16-MM)	
M	26	1	8T-3992	4	SCREW (M6X1X12-MM)	
	27	1	8T-4121	2	WASHER-HARD (11X21X2.5-MM THK)	
M	28	1	8T-4191	2	BOLT (M10X1.5X16-MM)	
M	29	1	8T-4199	3	BOLT (M8X1.25X12-MM)	
M	30	1	8T-4200	1	BOLT (M8X1.25X16-MM)	
	31	1	8T-4223	2	WASHER-HARD (13.5X25.5X3-MM THK)	
	32	1	8T-4224	4	WASHER-HARD (8.8X16X2-MM THK)	
	33	1	9X-8256	4	WASHER (6.6X12X2-MM THK)	

M-METRIC PART
Y-SEPARATE ILLUSTRATION

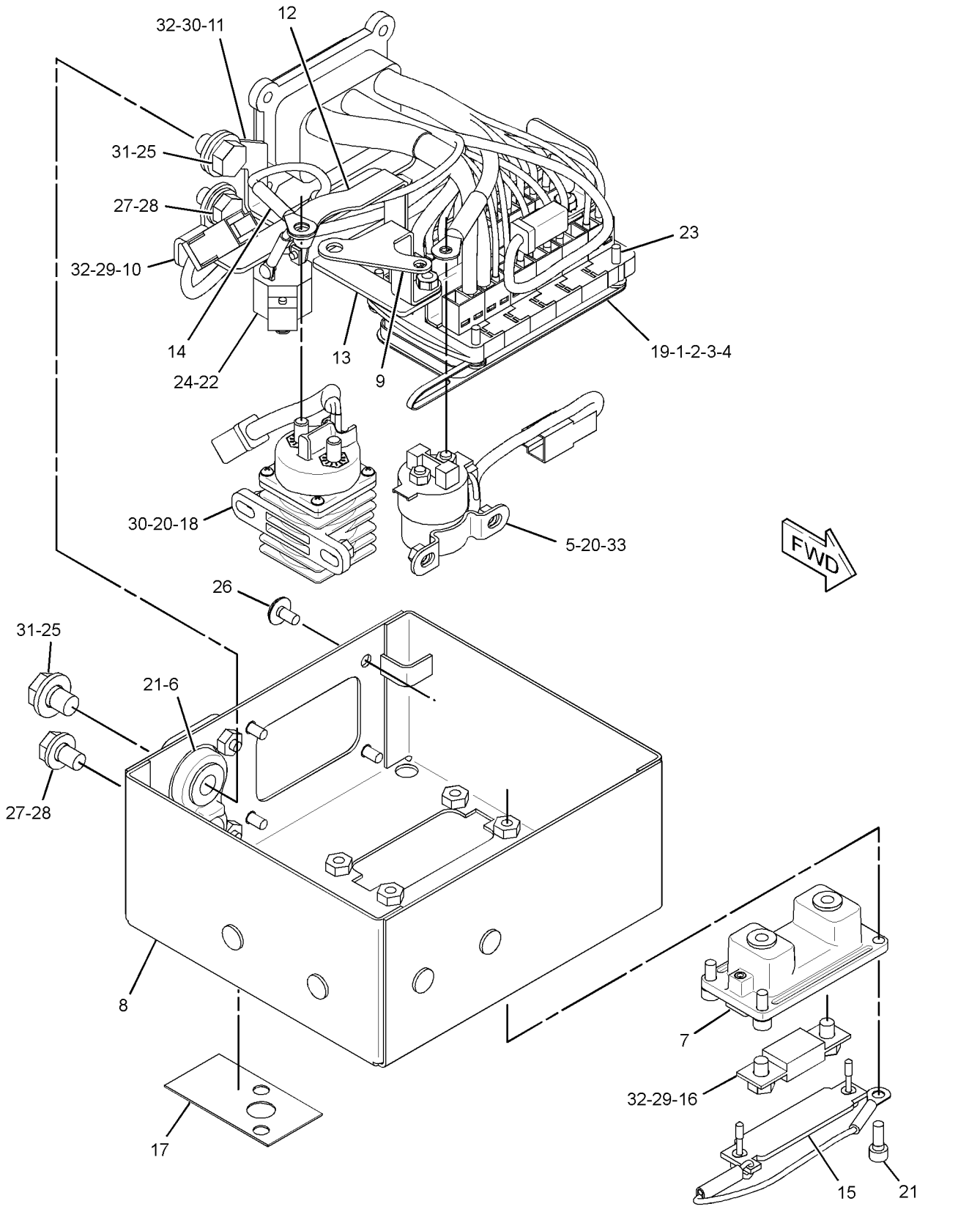

GRAPHIC #1 <END> g02191376

336-3545 RADIO GP-COMMUNICATION–PRODUCT LINK 121SR

S/N: S6T1-UP; S6X1-UP; S6Y1-UP
PART OF 358-6844 INSTALLATION GP-COMMUNICATION
AN ATTACHMENT

SMCS-733T i04002770

NOTE	PART NUMBER	QTY	PART NAME 1 2 3 4 5 6 (PRODUCT LEVEL)	SEE PAGE
	336-3566	1	SOFTWARE GP-COMMUNICATION (PRODUCT LINK 121SR)	

<END>

231-1978 SENSOR GP-ENGINE

S/N: THX19900-UP

PART OF 318-1904, 318-1905 ENGINE AR-COMPLETE

SMCS-1000, 1718, 1906, 1907, 1912, 1917, 1923, 1924, 1925, 1928, 1929, 7400, 7422

i04017574

NOTE	REF NO	GRAPHIC REF	PART NUMBER	QTY	PART NAME 1 2 3 4 5 6 (PRODUCT LEVEL)	SEE PAGE
	1	1	9X-0262	1	ADAPTER (TURBOCHARGER OUTLET)	
Y	2	1	*274-7395*	1	SENSOR GP-TEMPERATURE (AIR INLET MANIFOLD)	179
Y	3	1	*274-7396*	1	SENSOR GP-TEMPERATURE (WATER, COOLANT)	180
Y	4	1	*197-8393*	1	SENSOR GP-PRESSURE (ATMOSPHERIC)	172
Y	5	1	*197-8394*	1	SENSOR GP-PRESSURE (ENGINE OIL)	173
Y	6	1	*210-1747*	1	SENSOR GP-PRESSURE (AIR INLET MANIFOLD)	174
Y	7	1	*236-6220*	1	SENSOR GP-PRESSURE (INJECTION ACTUATION)	176
Y	8	1	*236-6221*	1	SENSOR GP-SPEED	177
	9	1	3E-4352	1	WASHER-HARD (8.8X20.5X2.5-MM THK)	
M	10	1	6V-3940	1	BOLT (M8X1.25X25-MM)	
	11	1	6V-5048	1	SEAL-O-RING	
	12	1	214-7568	1	SEAL-O-RING	
	13	1	9X-0261	1	ADAPTER	

M-METRIC PART
Y-SEPARATE ILLUSTRATION

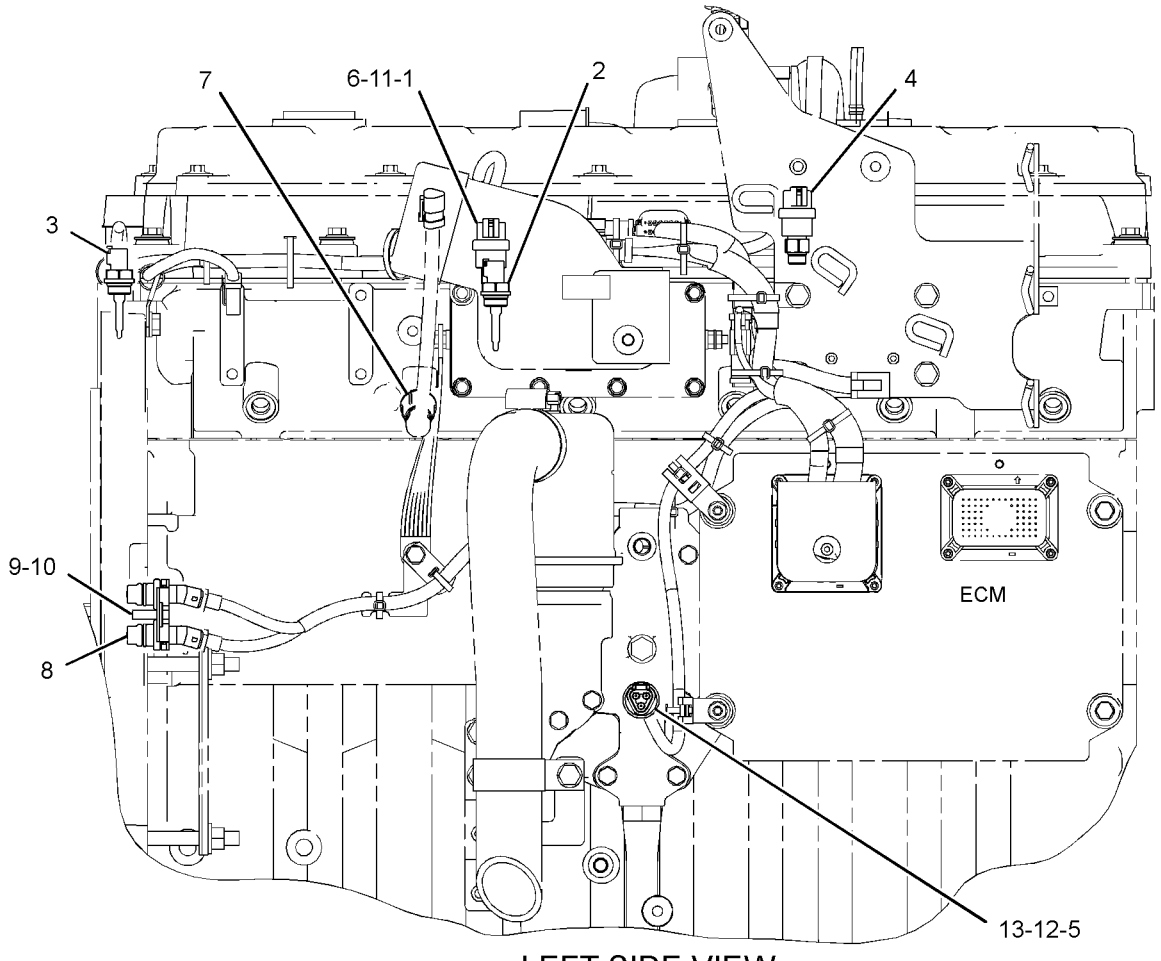

LEFT SIDE VIEW

GRAPHIC #1

<END>

g01199708

266-1467 SENSOR GP-POSITION

S/N: S6T1-UP; S6X1-UP; S6Y1-UP
PART OF 311-7956 CONTROL GP-GOVERNOR & BRAKE

SMCS-1905, 1911, 430S i03976351

NOTE	REF NO	GRAPHIC REF	PART NUMBER	QTY	PART NAME 1 2 3 4 5 6 (PRODUCT LEVEL)	SEE PAGE
	1	1	9X-3401	3	PIN-CONNECTOR (16-GA TO 18-GA)	
					—OR—	
		1	126-1767	3	PIN-CONNECTOR (14-GA TO 16-GA)	
	2	1	102-8803	1	KIT-RECEPTACLE (3-PIN)	
					(INCLUDES RECEPTACLE AS & WEDGE)	

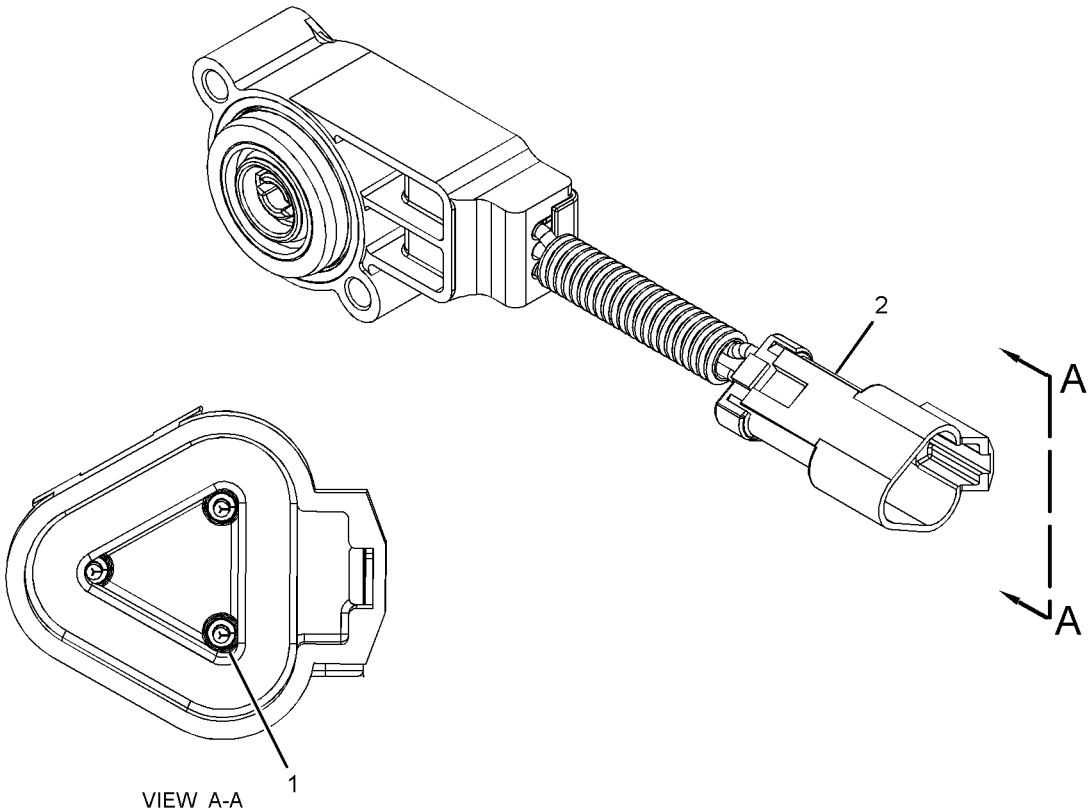

GRAPHIC #1 <END> g01740694

161-9926 SENSOR GP-PRESSURE

S/N: S6T1-UP; S6X1-UP; S6Y1-UP
PART OF 317-6560 BATTERY & WIRING GP

SMCS-1718, 1916, 1917, 1923, 1924, 1925 i04001364

NOTE	REF NO	GRAPHIC REF	PART NUMBER	QTY	PART NAME 1 2 3 4 5 6 (PRODUCT LEVEL)	SEE PAGE
E	1	1	9X-1813		SLEEVE (34-CM)	
	2	1	155-2260	1	KIT-CONNECTING PLUG (3-PIN)	
					(INCLUDES PLUG AS, WEDGE & INTERFACE SEAL)	
	3	1	180-9340	3	SOCKET-CONNECTOR (14-GA TO 18-GA)	

E-ORDER BY THE CENTIMETER

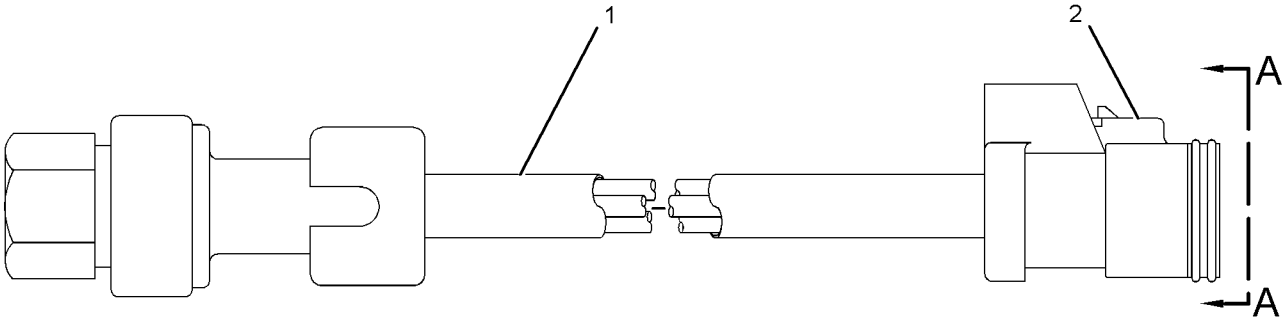

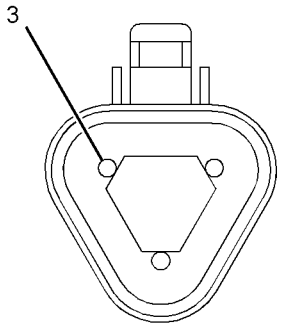

VIEW A-A

GRAPHIC #1 <END> g01820867

194-6725 SENSOR GP-PRESSURE

S/N: THX19900-UP

PART OF 264-2014 LINES GP-FUEL

SMCS-1718, 1916, 1917, 1923, 1924, 1925 i04017535

NOTE	REF NO	GRAPHIC REF	PART NUMBER	QTY	PART NAME 1 2 3 4 5 6 (PRODUCT LEVEL)	SEE PAGE
E	1	1	9X-1813		SLEEVE (34-CM)	
	2	1	155-2260	1	KIT-CONNECTING PLUG (3-PIN)	
					(INCLUDES PLUG AS, INTERFACE SEAL & WEDGE)	
	3	1	180-9340	3	SOCKET-CONNECTOR (14-GA TO 18-GA)	

E-ORDER BY THE CENTIMETER

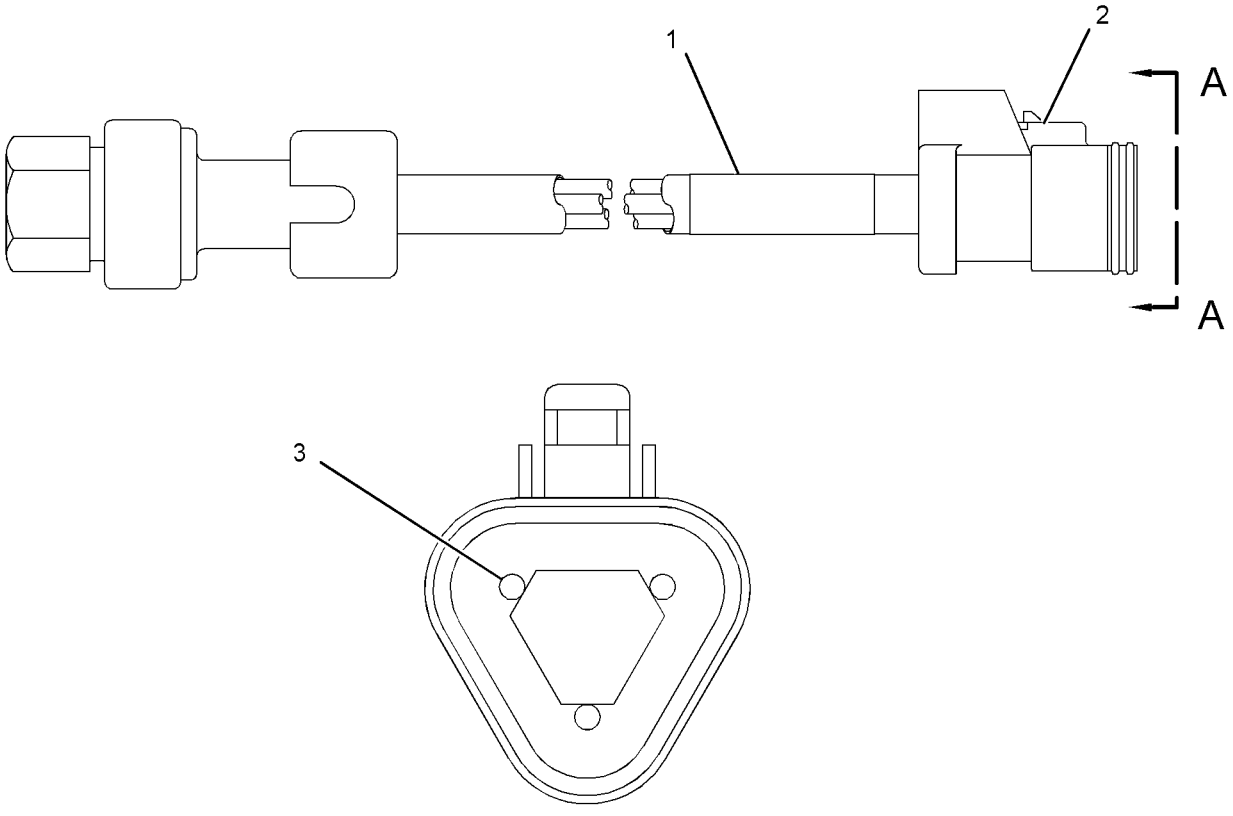

VIEW A-A

GRAPHIC #1 <END> g01662003

197-8393 SENSOR GP-PRESSURE

S/N: THX19900-UP

PART OF 231-1978 SENSOR GP-ENGINE

SMCS-1718, 1916, 1917, 1923, 1924, 1925 i04017575

NOTE	REF NO	GRAPHIC REF	PART NUMBER	QTY	PART NAME 1 2 3 4 5 6 (PRODUCT LEVEL)	SEE PAGE
	1	1	161-1703	1	SENSOR GP-PRESSURE	
	2	1	214-7568	1	SEAL-O-RING	

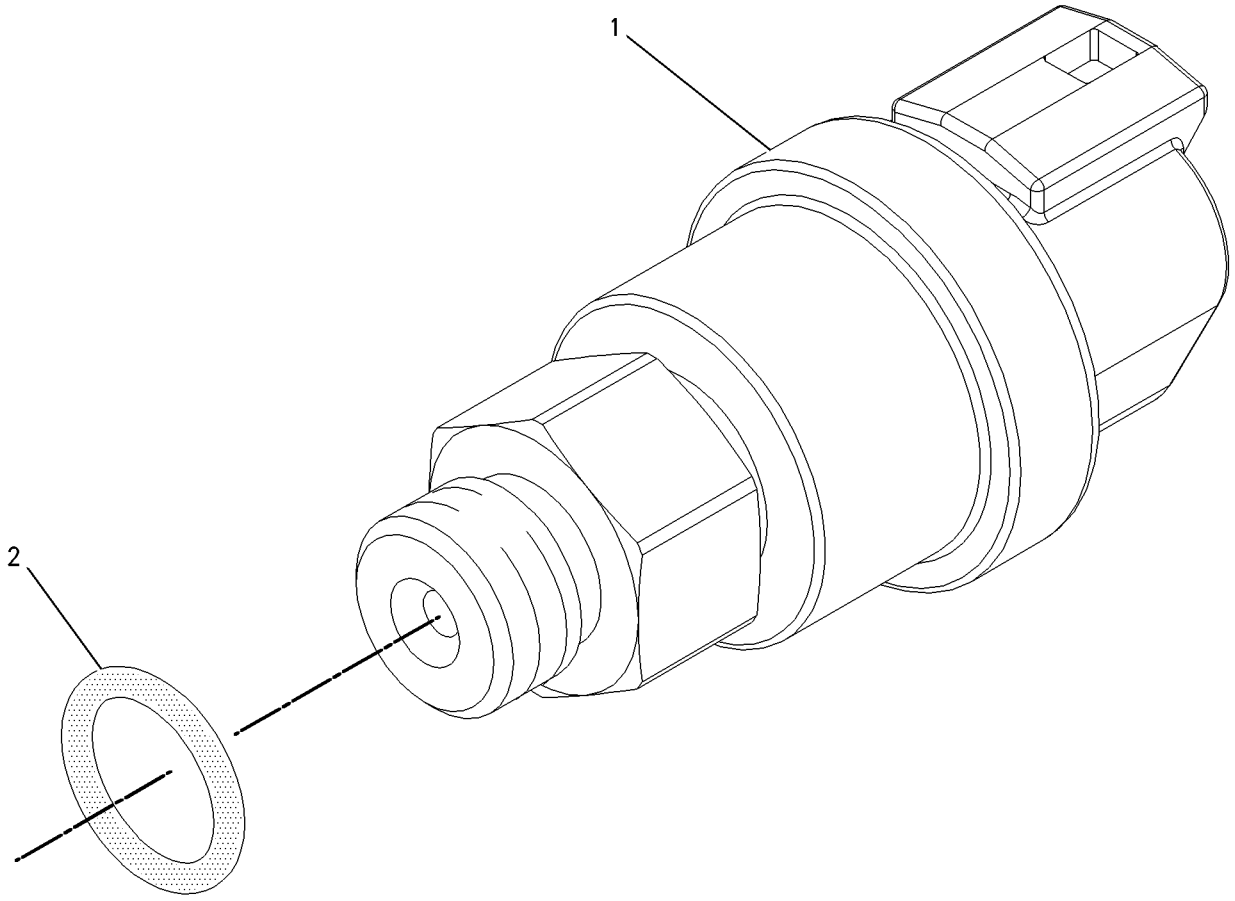

GRAPHIC #1 <END> g00855973

197-8394 SENSOR GP-PRESSURE

S/N: THX19900-UP

PART OF 231-1978 SENSOR GP-ENGINE

SMCS-1718, 1916, 1917, 1923, 1924, 1925 i04017577

NOTE	REF NO	GRAPHIC REF	PART NUMBER	QTY	PART NAME 1 2 3 4 5 6 (PRODUCT LEVEL)	SEE PAGE
	1	1	161-1705	1	SENSOR AS-PRESSURE	
	2	1	6V-5048	1	SEAL-O-RING	

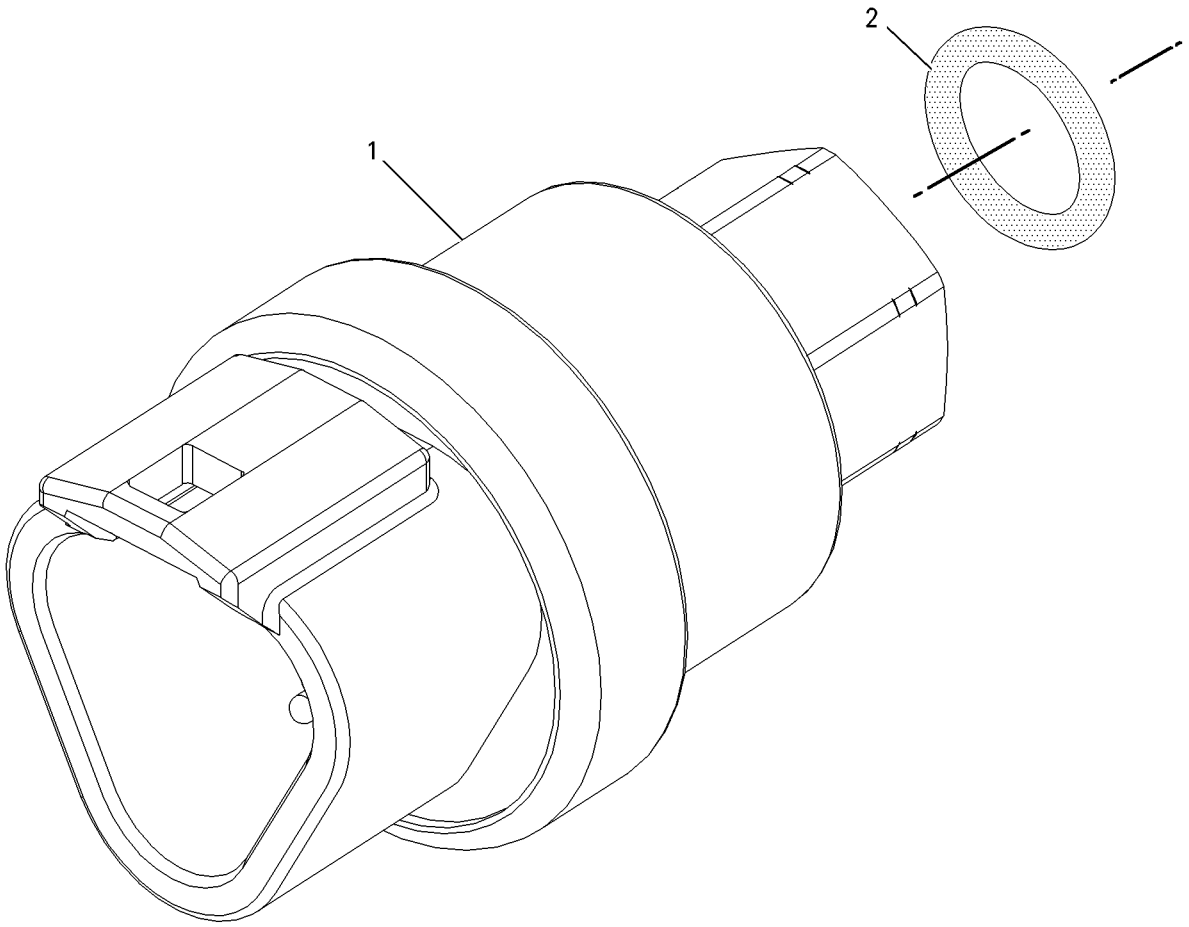

GRAPHIC #1 <END> g00856107

210-1747 SENSOR GP-PRESSURE

S/N: THX19900-UP

PART OF 231-1978 SENSOR GP-ENGINE

SMCS-1718, 1916, 1917, 1923, 1924, 1925 i04017578

NOTE	REF NO	GRAPHIC REF	PART NUMBER	QTY	PART NAME 1 2 3 4 5 6 (PRODUCT LEVEL)	SEE PAGE
	1	1	161-1704	1	SENSOR GP-PRESSURE	
	2	1	6V-5048	1	SEAL-O-RING	

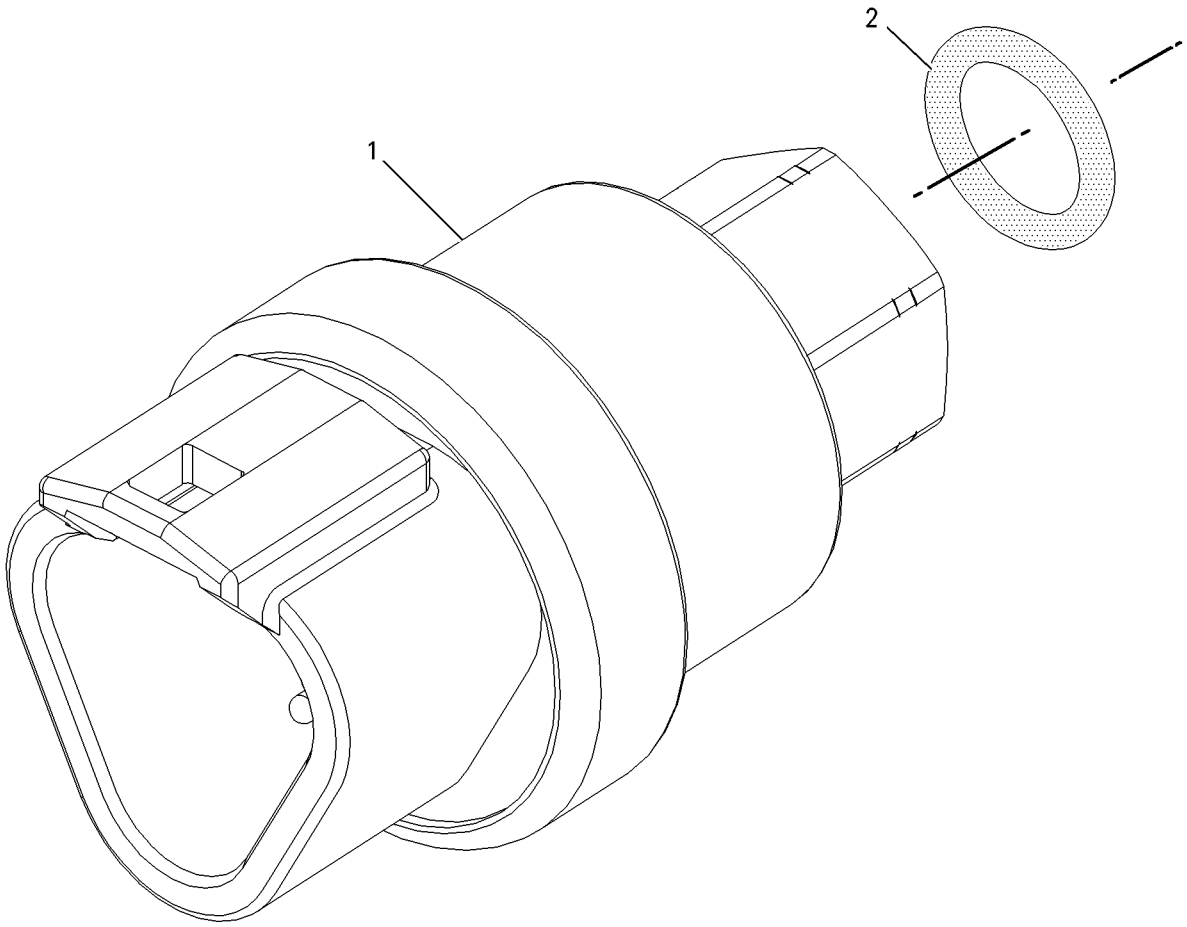

GRAPHIC #1 <END> g00856107

224-4536 SENSOR GP-PRESSURE

S/N: THX19900-UP

PART OF 236-6220 SENSOR GP-PRESSURE

SMCS-1718, 1916, 1917, 1923, 1924, 1925 i04017581

NOTE	REF NO	GRAPHIC REF	PART NUMBER	QTY	PART NAME 1 2 3 4 5 6 (PRODUCT LEVEL)	SEE PAGE
E	1	1	9X-1813		SLEEVE (35-CM)	
	2	1	155-2260	1	KIT-CONNECTING PLUG (3-PIN)	
					(INCLUDES PLUG AS, WEDGES & INTERFACE SEAL)	
	3	1	194-5226	3	WIRE AS (16-GA)	
					–OR–	
		1	194-5227	3	WIRE AS (14-GA)	
E-ORDER BY THE CENTIMETER						

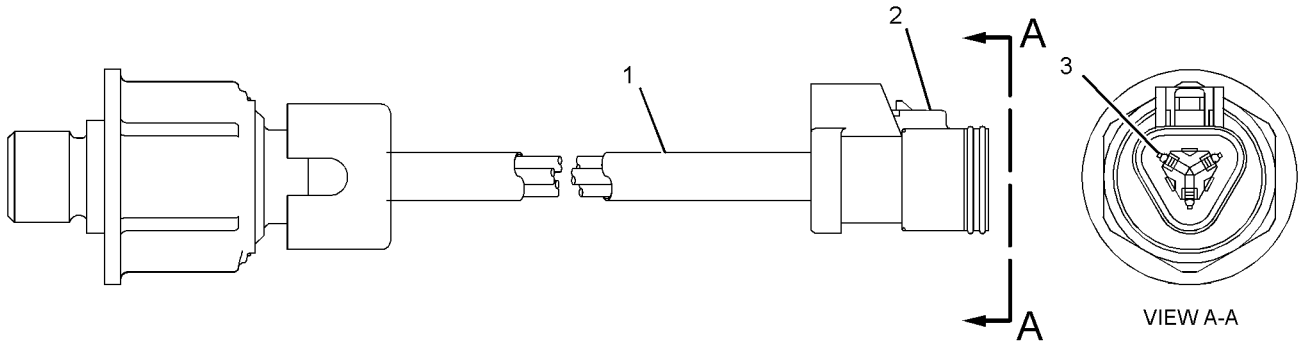

GRAPHIC #1 <END> g01684159

236-6220 SENSOR GP-PRESSURE

S/N: THX19900-UP

PART OF 231-1978 SENSOR GP-ENGINE

SMCS-1718, 1916, 1917, 1923, 1924, 1925 i04017579

NOTE	REF NO	GRAPHIC REF	PART NUMBER	QTY	PART NAME 1 2 3 4 5 6 (PRODUCT LEVEL)	SEE PAGE
	1	1	214-7567	1	SEAL-O-RING	
Y	2	1	224-4536	1	SENSOR GP-PRESSURE	175

Y-SEPARATE ILLUSTRATION

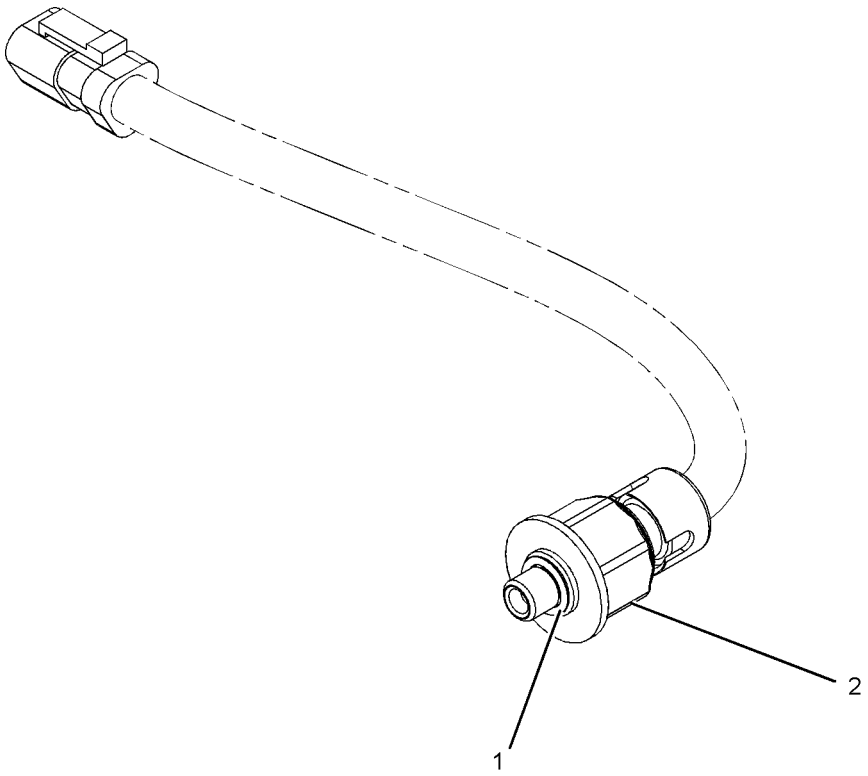

GRAPHIC #1 <END> g01054528

236-6221 SENSOR GP-SPEED–ENGINE TIMING

S/N: THX19900-UP

PART OF 231-1978 SENSOR GP-ENGINE

SMCS-1907 i04017582

NOTE	REF NO	GRAPHIC REF	PART NUMBER	QTY	PART NAME 1 2 3 4 5 6 (PRODUCT LEVEL)	SEE PAGE
	1	1	3P-0647	2	SEAL-O-RING	
	2	1	245-4630	1	SENSOR GP-SPEED	

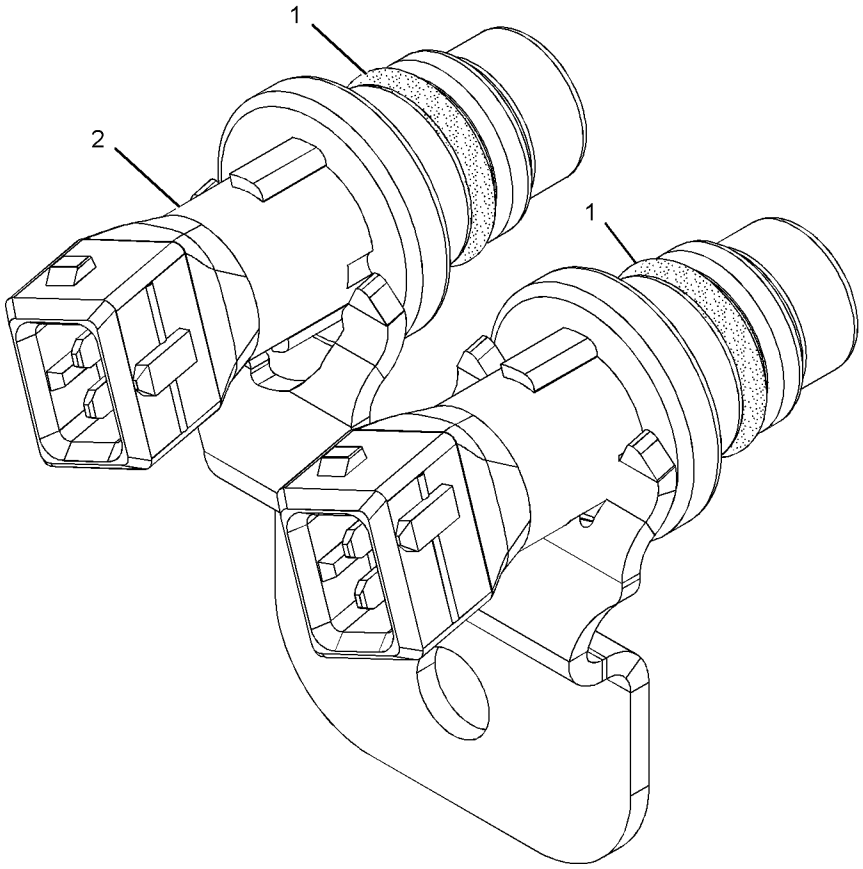

GRAPHIC #1 <END> g01013894

145-7028 SENSOR GP-TEMPERATURE

S/N: S6T1-UP; S6X1-UP; S6Y1-UP

PART OF 317-6560 BATTERY & WIRING GP, 317-6576 WIRING GP-ENGINE

SMCS-1906, 1919, 1921, 1922, 1928, 1929 i04009001

NOTE	REF NO	GRAPHIC REF	PART NUMBER	QTY	PART NAME 1 2 3 4 5 6 (PRODUCT LEVEL)	SEE PAGE
	1	1	102-8802	1	KIT-RECEPTACLE (2-PIN)	
					(INCLUDES RECEPTACLE AS & WEDGE)	
J	2	1	153-5043		SLEEVE (2.8-DM)	
	3	1	186-3735	2	PIN-CONNECTOR (16-GA TO 18-GA)	

J-ORDER BY THE DECIMETER

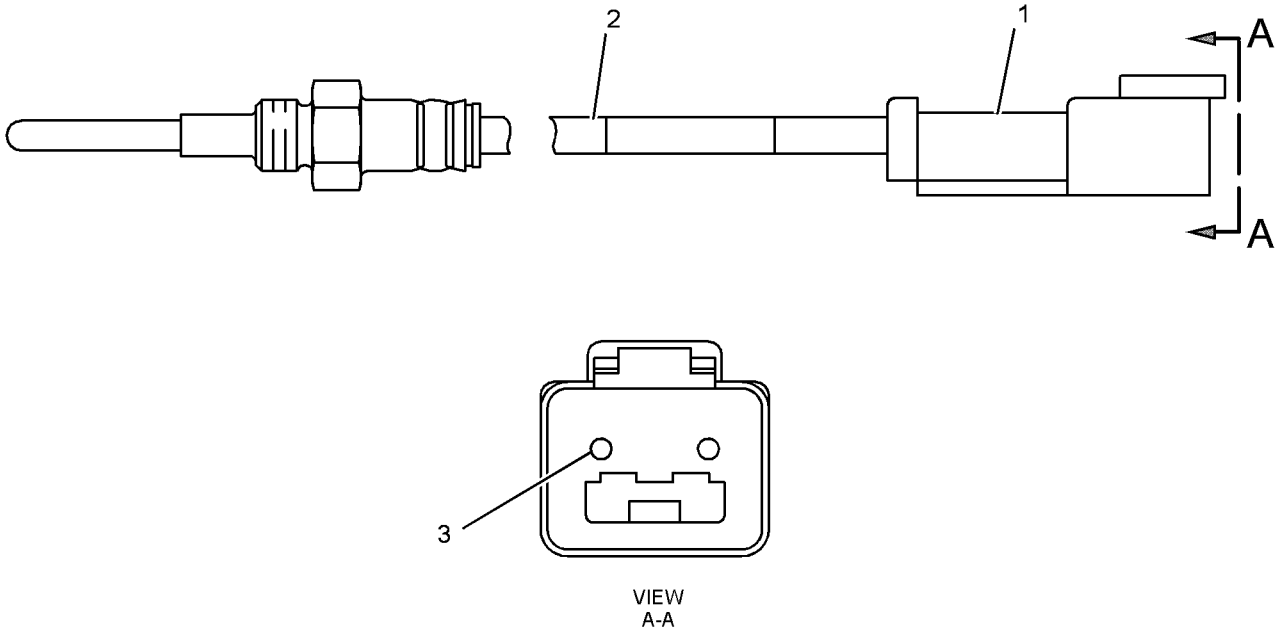

VIEW
A-A

GRAPHIC #1 <END> g01740798

274-7395 SENSOR GP-TEMPERATURE

S/N: THX19900-UP

PART OF 231-1978 SENSOR GP-ENGINE

SMCS-1906, 1919, 1921, 1922, 1928, 1929 i03886181

NOTE	REF NO	GRAPHIC REF	PART NUMBER	QTY	PART NAME 1 2 3 4 5 6 (PRODUCT LEVEL)	SEE PAGE
	1	1	130-9811	1	SENSOR GP-TEMPERATURE	
		1	137-6645	1	PAD	
	2	1	238-5080	1	SEAL-O-RING	

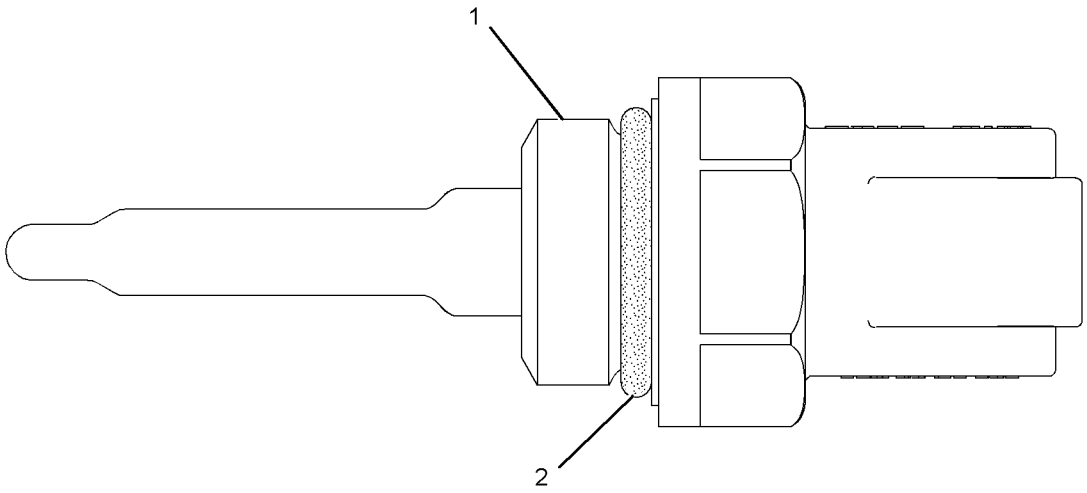

GRAPHIC #1 <END> g01199840

274-7396 SENSOR GP-TEMPERATURE

S/N: THX19900-UP

PART OF 231-1978 SENSOR GP-ENGINE

SMCS-1906, 1919, 1921, 1922, 1928, 1929 i04029214

NOTE	REF NO	GRAPHIC REF	PART NUMBER	QTY	PART NAME 1 2 3 4 5 6 (PRODUCT LEVEL)	SEE PAGE
	1	1	130-9811	1	SENSOR GP-TEMPERATURE	
		1	137-6645	1	PAD	
	2	1	6V-6609	1	SEAL-O-RING	

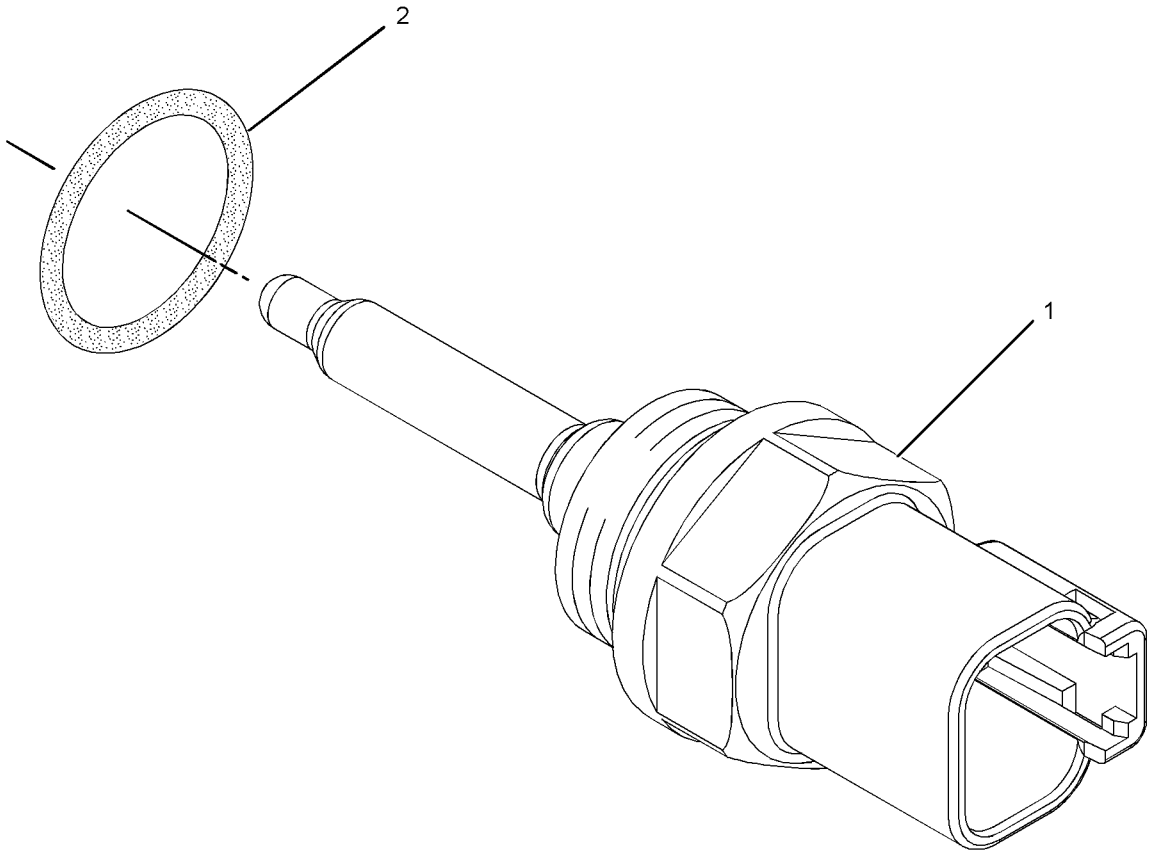

GRAPHIC #1 <END> g01209558

263-9012 STARTING AID GP-ETHER

S/N: S6T1-UP; S6X1-UP; S6Y1-UP
PART OF 317-1762 INSTALLATION AR

SMCS-1456 i04009583

NOTE	REF NO	GRAPHIC REF	PART NUMBER	QTY	PART NAME 1 2 3 4 5 6 (PRODUCT LEVEL)	SEE PAGE
	1	1	3Y-2888	1	CONNECTOR	
	2	1	7N-2059	1	CLAMP AS	
Y	3	1	239-1134	1	VALVE GP-ETHER STARTING (24-VOLT)	194
	4	1	241-4194	1	FITTING AS (CONTROL)	
	5	1	251-4345	1	ATOMIZER GP-ETHER	
	6	1	260-3799	1	BRACKET AS	
M		1	8T-3612	4	NUT-WELD (M8X1.25-THD)	
	7	1	3J-1907	1	SEAL-O-RING	
	8	1	4P-8134	1	CLIP	
	9	1	5P-4116	4	WASHER-HARD (8.8X20.5X2-MM THK)	
	10	1	7X-7729	2	WASHER (11X25X3-MM THK)	
M	11	1	8T-4182	2	BOLT (M10X1.5X45-MM)	
M	12	1	8T-4189	4	BOLT (M8X1.25X20-MM)	
E	13	1	174-9169		TUBE (35-CM)	
A		1	7N-0296	1	CYLINDER AS-ETHER	
					(MUST BE PROCURED LOCALLY FROM YOUR CATERPILLAR DEALER)	

A-NOT PART OF THIS GROUP
E-ORDER BY THE CENTIMETER
M-METRIC PART
Y-SEPARATE ILLUSTRATION

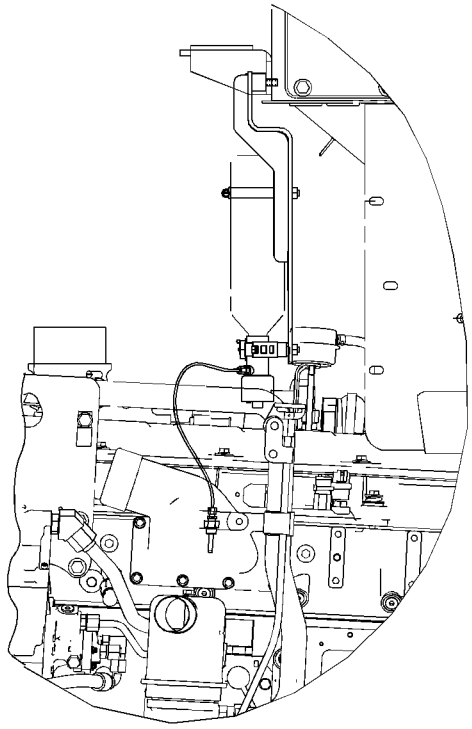

LEFT SIDE VIEW

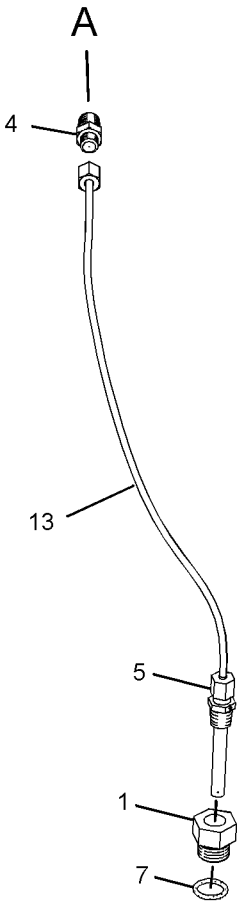

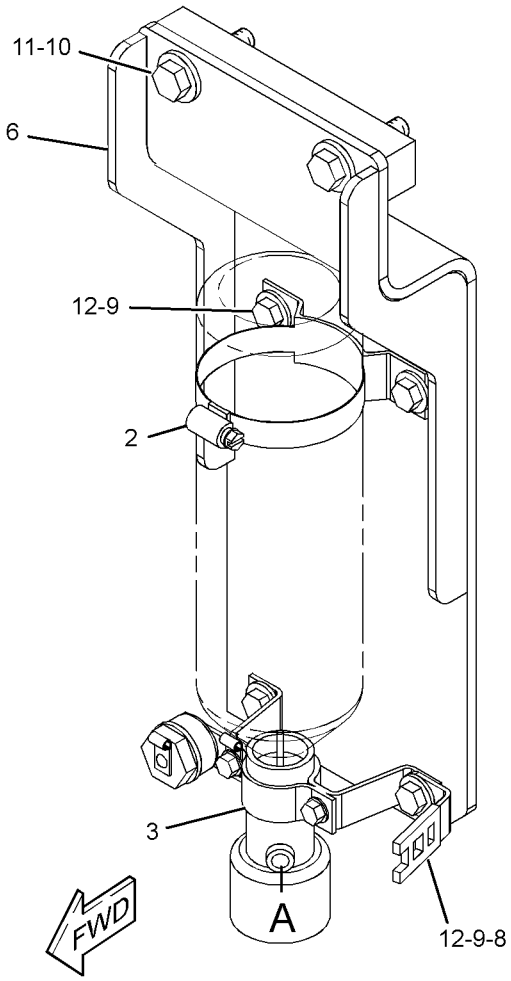

GRAPHIC #1 <END> g01318337

207-1556 STARTING MOTOR GP-ELECTRIC*R

S/N: S6T1-UP; S6X1-UP; S6Y1-UP
24-VOLT
PART OF 223-0558 STARTING MOTOR GP-ELECTRIC
FIELD REPLACEMENT ORDER 237-1962—PAGE 187

SMCS-1453 i03984750

NOTE	REF NO	GRAPHIC REF	PART NUMBER	QTY	PART NAME 1 2 3 4 5 6 (PRODUCT LEVEL)	SEE PAGE
	1	1	3T-3434	6	PLUG	
	2	1	7T-3279	1	HOUSING AS	
	3	1	8T-8566	1	TERMINAL AS	
	4	1	6V-8188	4	NUT (1/2-13-THD)	
	5	1	7X-0562	4	WASHER-HARD (13.5X19X0.8-MM THK)	
	6	1	3T-3422	1	WIRE AS	
	7	1	7T-3278	1	HOLDER AS-BRUSH	
	8	1	7T-3277	1	COIL AS-FIELD	
	9	1	7T-3454	1	INSULATOR	
	10	1	283-1107	1	KIT-CONNECTOR (STARTING MOTOR)	
					(INCLUDES CONNECTORS, BOLT & TERMINAL-STARTER)	
	11	1	7T-3451	1	KIT-INSULATOR (TERMINAL)	
					(INCLUDES INSULATORS & GROMMET)	
	12	1	8T-8569	1	INSULATOR-TERMINAL	
	13	1	5S-7349	4	BOLT (1/4-20X0.5-IN)	
	14	1	8T-4205	4	WASHER-HARD (7.2X14.5X2-MM THK)	
	15	1	8H-1141	4	SHOE-POLE	
	16	1	3R-8797	8	SCREW & WASHER AS (3/8-24X0.72-IN)	
	17	1	7T-3276	1	ARMATURE AS (24-VOLT)	
	18	1	3E-7775	1	HOUSING AS	
	19	1	4M-1831	1	PLUG-LEVER HOUSING	
	20	1	7L-2894	1	GASKET	
	21	1	0S-1597	5	BOLT (1/4-28X1-IN)	
	22	1	6N-3826	1	DRIVE AS-MOTOR	
	23	1	7T-3974	1	HOUSING AS-DRIVE	
	24	1	7X-3373	6	BOLT (5/16-18X0.88-IN)	
	25	1	250-8279	1	KIT-SOLENOID (24-VOLT)	
					(INCLUDES SOLENOID AS, BOLT, NUTS, COVER & CONNECTORS)	
	26	1	6V-8378	3	NUT (10-32-THD)	
	27	1	8F-1434	2	LOCKWASHER	
	28	1	8T-0328	3	WASHER-HARD (5.5X10X1-MM THK)	
	29	1	9X-4824	1	COVER-STARTING MOTOR	
	30	1	8T-9884	1	KIT-INSULATOR (STARTING MOTOR)	
					(INCLUDES INSULATORS & BUSHING)	
	31	1	8C-3655	1	KIT-BRUSH (STARTING MOTOR)	
					(INCLUDES BRUSHES, SPRINGS, SCREWS, SCREW ASSEMBLIES & SEAL)	
	32	1	7T-3268	1	KIT-LEVER (STARTING MOTOR)	
					(INCLUDES LEVER ASSEMBLIES, SEAL, NUT, GASKET & RETAINER)	
					AVAILABLE REPAIR KIT(S):	
			7T-3267	1	KIT-BUSHING (STARTING MOTOR)	
					(INCLUDES BUSHINGS, WICKS, CUPS, SEALS, GASKET, SCREW AS, WASHERS, SPACER & NUT)	

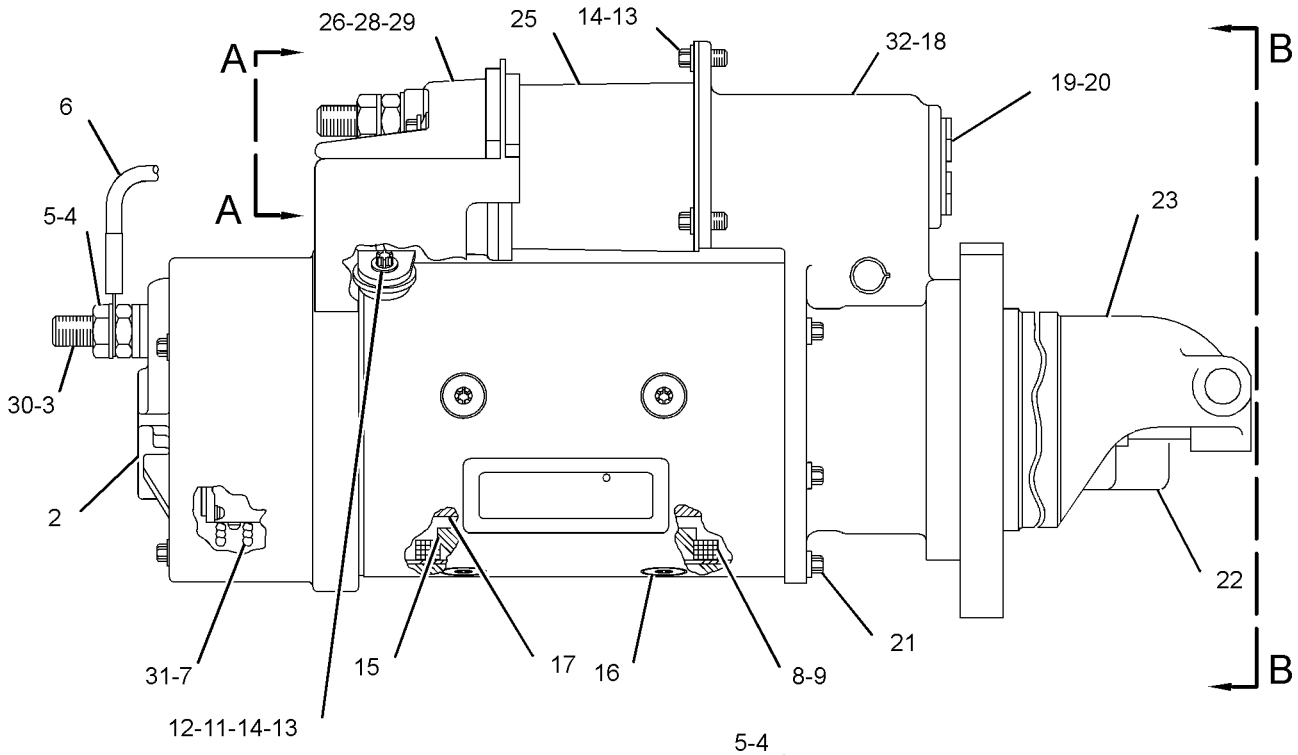

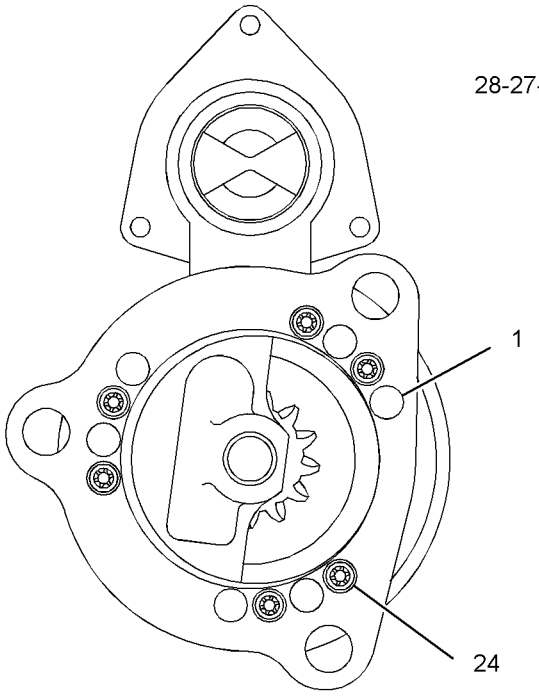

VIEW B-B

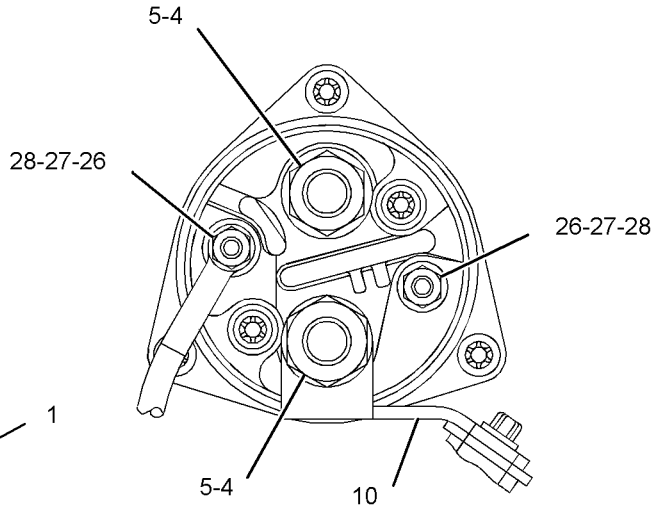

VIEW A-A

GRAPHIC #1 <END> g01478692

209-8423 STARTING MOTOR GP-ELECTRIC

S/N: S6T1-UP; S6X1-UP; S6Y1-UP
PART OF 321-5803 BATTERY & WIRING GP
AN ATTACHMENT

SMCS-1453 i03991730

NOTE	REF NO	GRAPHIC REF	PART NUMBER	QTY	PART NAME 1 2 3 4 5 6 (PRODUCT LEVEL)	SEE PAGE
	1	1	4N-1059	1	GASKET	
	2	1	185-6393	1	CABLE AS-STARTING MOTOR	
		1	1M-4986		TERMINAL-RING (0-GA, 1/2-IN SCREW)	
E		1	5P-0746		CABLE (0-GA, BLACK) (30-CM)	
		1	030-1707	1	TERMINAL-RING (0-GA, 3/8-IN SCREW)	
YR	3	1	237-1962	1	STARTING MOTOR GP-ELECTRIC (24-VOLT)	187
	4	1	220-0771	3	BOLT-12 POINT HEAD (M16X2X45-MM)	

E-ORDER BY THE CENTIMETER
R-REMFG PART MAY BE AVAILABLE
Y-SEPARATE ILLUSTRATION

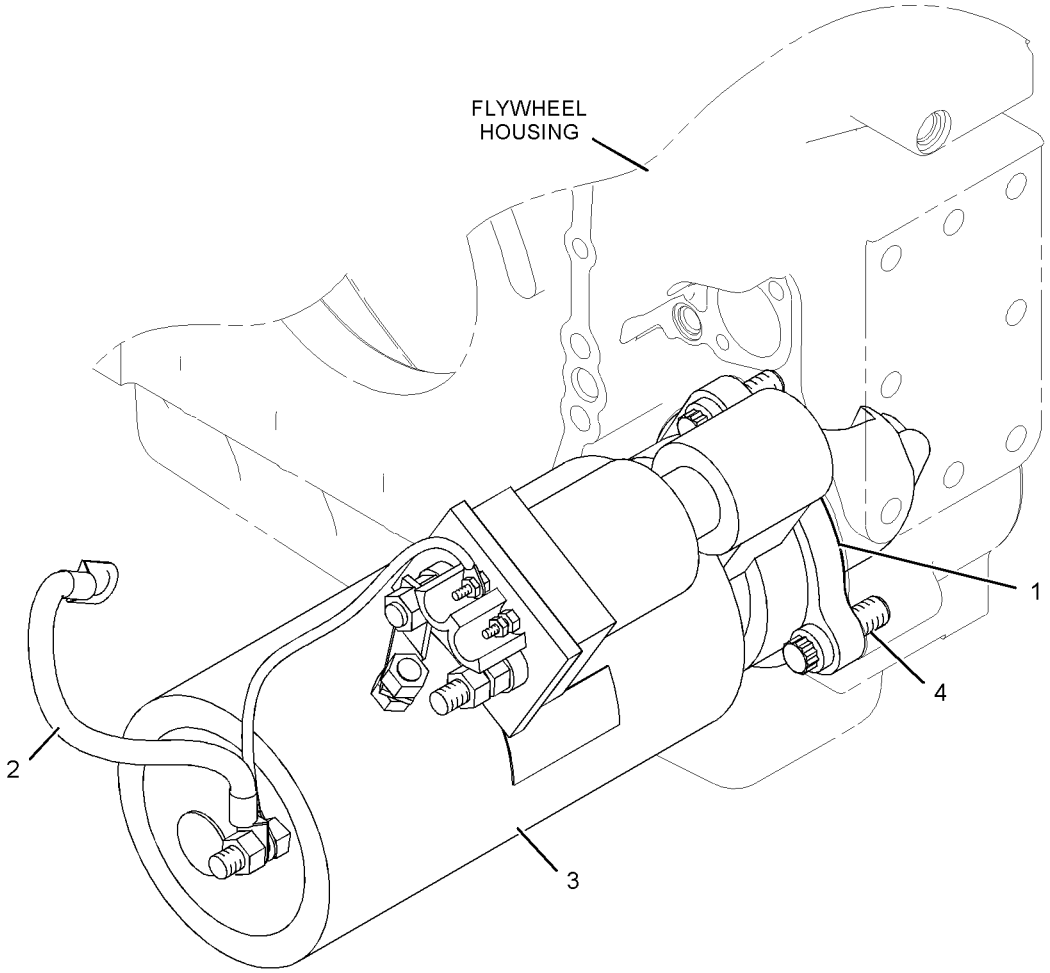

GRAPHIC #1 <END> g01023567

223-0558 STARTING MOTOR GP-ELECTRIC

S/N: S6T1-UP; S6X1-UP; S6Y1-UP
24-VOLT
PART OF 317-1762 INSTALLATION AR

SMCS-1453 i03984671

NOTE	REF NO	GRAPHIC REF	PART NUMBER	QTY	PART NAME 1 2 3 4 5 6 (PRODUCT LEVEL)	SEE PAGE
	1	1	9Y-6089	1	GASKET	
	2	1	8Y-9603	1	CABLE AS-STARTING MOTOR	
		1	1S-7251	1	TERMINAL-CABLE (00-GA, 1/2-IN SCREW)	
		1	1S-7252	1	TERMINAL-CABLE (00-GA, 3/8-IN SCREW)	
E		1	159-8050		CABLE (00-GA, BLACK) (28-CM)	
YR	3	1	207-1556	1	STARTING MOTOR GP-ELECTRIC (24-VOLT)	183
	4	1	220-0771	3	BOLT-12 POINT HEAD (M16X2X45-MM)	
	5	1	6V-5839	1	WASHER (11X21X2.5-MM THK)	
M	6	1	6V-8212	1	BOLT (M10X1.5X16-MM)	

E-ORDER BY THE CENTIMETER
M-METRIC PART
R-REMFG PART MAY BE AVAILABLE
Y-SEPARATE ILLUSTRATION

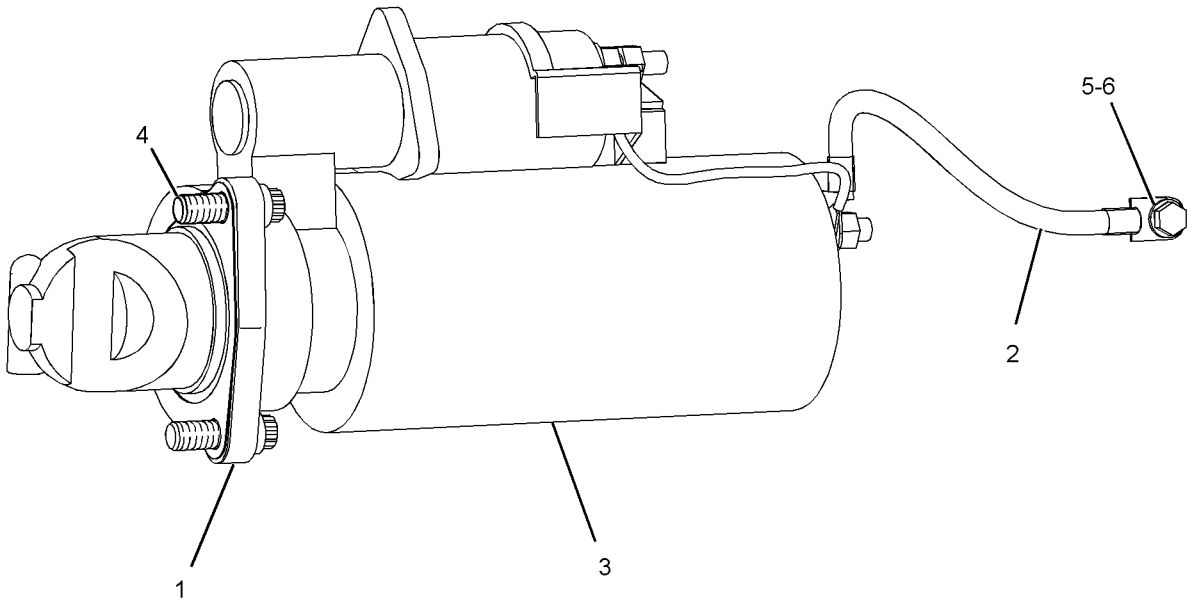

GRAPHIC #1 <END> g01206397

ELECTRICAL AND STARTING SYSTEM

237-1962 STARTING MOTOR GP-ELECTRIC*R

S/N: S6T1-UP; S6X1-UP; S6Y1-UP
24-VOLT
PART OF 209-8423 STARTING MOTOR GP-ELECTRIC
FIELD REPLACEMENT FOR 207-1556—PAGE 183
AN ATTACHMENT

SMCS-1453 i03991749

NOTE	REF NO	GRAPHIC REF	PART NUMBER	QTY	PART NAME 1 2 3 4 5 6 (PRODUCT LEVEL)	SEE PAGE
	1	1	7M-0326	1	CONNECTOR	
	2	1	9H-3757	2	WASHER (0.516X1X0.094-IN THK)	
	3	1	1S-7446	3	SCREW-MACHINE (8-32X0.437-IN)	
	4	1	8C-9660	3	WASHER (4.6X7.9X0.8-MM THK)	
	5	1	9S-2544	9	SCREW-HEX HEAD (8-32X11.13-MM)	
	6	1	7M-0327	1	WASHER-THRUST (17.4X25.4X1.6-MM THK)	
	7	1	3T-3418	1	FRAME AS-END	
		1	3T-3423	1	CUP	
		1	3T-3424	1	PLUG-FELT	
		1	9G-4101	1	BUSHING-END	
	8	1	3T-9525	1	PLATE AS-BRUSH	
	8A	1	6T-0371	1	INSULATOR	
	8B	1	5P-6298	12	SCREW-MACHINE (10-32X0.5-IN)	
		1	9F-5599	12	LOCKWASHER	
	8C	1	7F-3525	6	WASHER-BUSHING (0.207X0.39X0.09-IN THK)	
	8D	1	6T-0372	1	PLATE	
	8E	1	3T-4709	3	PLATE	
	8F	1	2L-6679	3	PLATE-INSULATOR	
	8G	1	3T-4710	3	PLATE	
	8H	1	6T-0363	6	HOLDER AS-BRUSH (STARTING MOTOR)	
					(EACH INCLUDES)	
	8J	1	3T-9494	1	SPRING	
	9	1	7F-3491	2	WASHER (0.516X1X0.094-IN THK)	
	10	1	3T-3422	1	WIRE AS (STARTING MOTOR)	
	11	1	2J-8163	2	SEAL-O-RING	
	12	1	7X-3373	1	BOLT (5/16-18X0.88-IN)	
	13	1	3T-3434	6	PLUG	
	14	1	5J-5314	5	BOLT (5/16-18X1.5-IN)	
	15	1	3L-3380	1	BUSHING-TERMINAL	
	16	1	036-9821	1	WASHER	
	17	1	4M-1828	1	RETAINER-SPRING	
	18	1	306-3998	1	BOOT-RUBBER	
	19	1	9M-7609	1	SPRING (SHIFT LEVER)	
	20	1	4M-1827	1	RETAINER-SPRING	
	21	1	8C-3089	1	SEAL-O-RING	
	22	1	4M-1853	1	LEVER AS-SHIFT	
	23	1	5M-3034	1	LOCKNUT (5/16-24-THD)	
	24	1	7L-2894	4	GASKET	
	25	1	4M-1831	4	PLUG-LEVER HOUSING	
	26	1	4M-1854	1	SHAFT-LEVER	
	27	1	1H-1023	1	SEAL-O-RING	
	28	1	2D-6392	1	SEAL-O-RING	
	29	1	7T-3974	1	HOUSING AS-DRIVE	
	30	1	6N-3826	1	DRIVE AS-MOTOR	
	31	1	2H-3429	2	RING-RETAINING	
	32	1	6V-1322	4	BOLT (1/4-20X0.375-IN)	
	33	1	8T-4205	4	WASHER-HARD (7.2X14.5X2-MM THK)	
	34	1	6N-3279	1	INSULATOR	
	35	1	0S-1597	13	BOLT (1/4-28X1-IN)	
	36	1	1M-9971	1	SPACER (0.835X1.72X0.188-IN THK)	
	37	1	1H-2629	3	STRIP-INSULATION	
	38	1	7M-0324	1	COIL AS-FIELD	
	39	1	3R-8797	12	SCREW & WASHER AS (3/8-24X0.72-IN)	

237-1962 STARTING MOTOR GP-ELECTRIC ***(contd.)*** i03991749

NOTE	REF NO	GRAPHIC REF	PART NUMBER	QTY	PART NAME 1 2 3 4 5 6 (PRODUCT LEVEL)	SEE PAGE
	40	1	7F-3488	6	SHOE-POLE	
	41	1	7M-8651	1	ARMATURE AS	
	42	1	7M-0325	1	INSULATOR	
	43	1	3T-9524	6	BRUSH AS	
	44	1	3N-3763	1	KIT-TERMINAL (STARTING MOTOR)	
					(INCLUDES BUSHINGS & WASHERS)	
	45	1	125-6537	1	INSULATOR	
	46	1	3R-8801	1	CLAMP	
	47	1	8F-1434	2	LOCKWASHER	
	48	1	6V-8188	6	NUT (1/2-13-THD)	
	49	1	7X-0562	6	WASHER-HARD (13.5X19X0.8-MM THK)	
	50	1	4B-2049	6	NUT (10-32-THD)	
	51	1	8T-0328	10	WASHER-HARD (5.5X10X1-MM THK)	
	52	1	3T-9494	6	SPRING (STARTING MOTOR)	
	53	1	3E-7771	1	HOUSING AS (STARTING MOTOR)	
	54	1	9G-4101	1	BUSHING-END	
	55	1	3T-3424	3	PLUG-FELT	
	56	1	3T-3423	3	CUP	
	57	1	1M-9968	1	BUSHING	
	58	1	2F-6678	1	SEAL-LIP TYPE	
	59	1	4L-2729	1	WASHER (0.844X1.9X0.188-IN THK)	
	60	1	4M-1896	1	BUSHING-TERMINAL	
	61	1	045-4065	4	SCREW-MACHINE (10-32X0.75-IN)	
	62	1	125-6535	1	COVER-STARTING MOTOR	
	63	1	7T-9123	1	GASKET-PLATE	
	64	1	318-2082	1	SOLENOID AS-STARTING MOTOR (24-VOLT)	
	65	1	125-6536	1	TERMINAL AS	

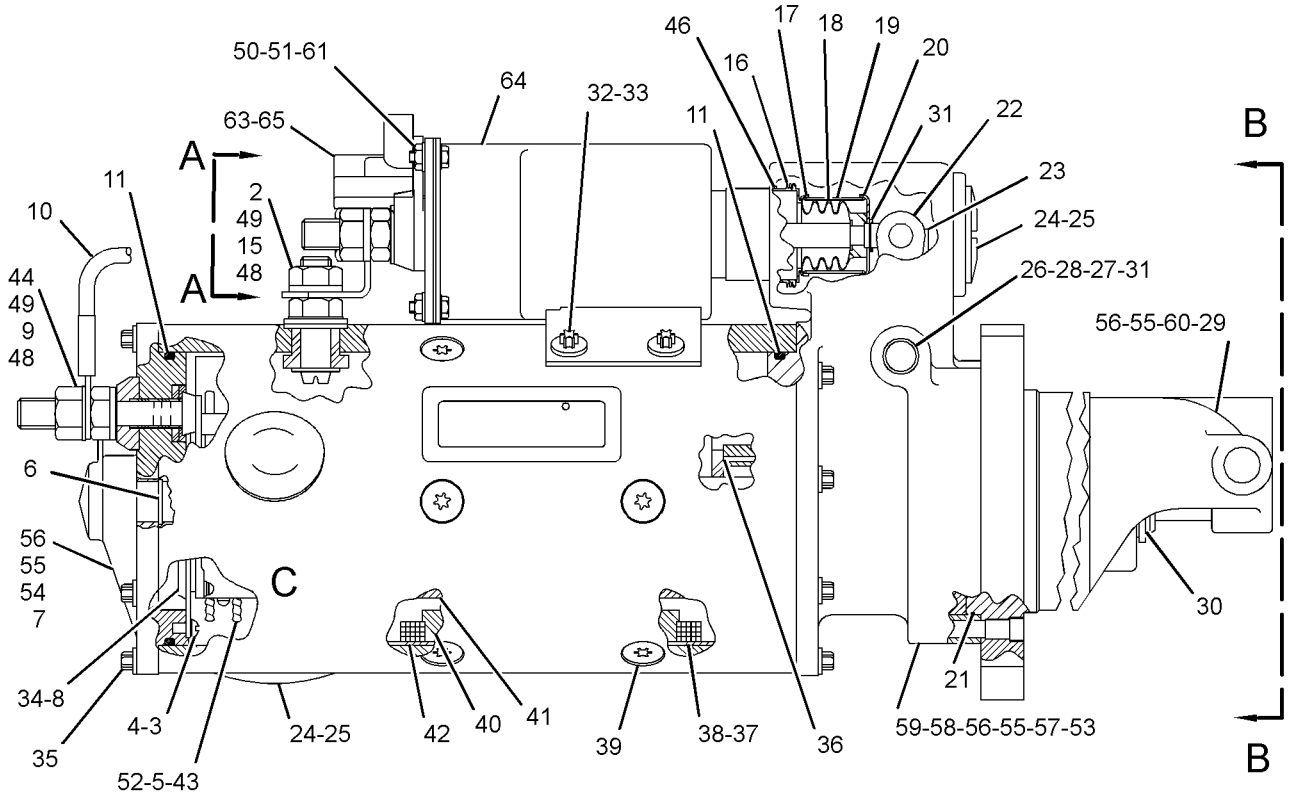

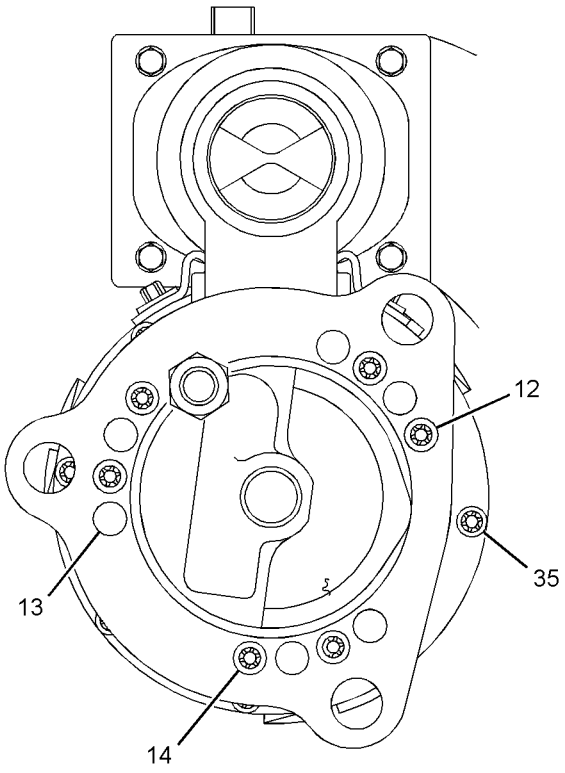

VIEW B-B

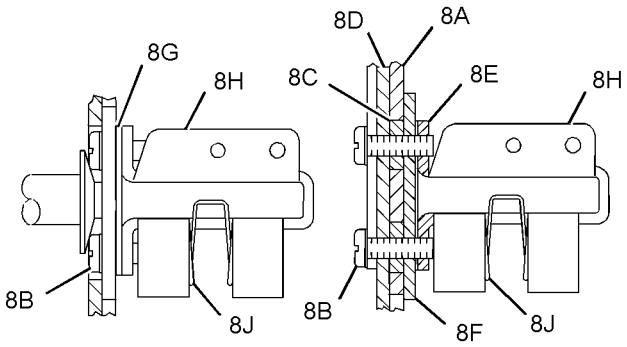

VIEW OF AREA C

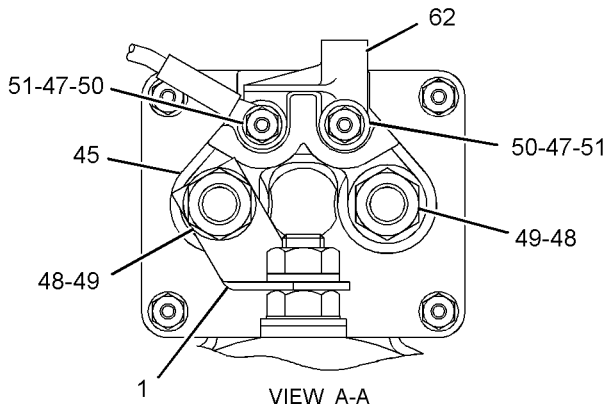

VIEW A-A

GRAPHIC #1 <END> g01453239

164-7577 SWITCH GP-BYPASS–POWER TRAIN OIL FILTER

S/N: S6T1-UP; S6X1-UP; S6Y1-UP
PART OF 333-9308 BASE GP-OIL FILTER

SMCS-1408, 1435 i04022069

NOTE	REF NO	GRAPHIC REF	PART NUMBER	QTY	PART NAME 1 2 3 4 5 6 (PRODUCT LEVEL)	SEE PAGE
E	1	1	9X-1813		SLEEVE (19-CM)	
	2	1	102-8802	1	KIT-RECEPTACLE (2-PIN)	
					(INCLUDES RECEPTACLE AS & WEDGE)	
	3	1	186-3735	2	PIN-CONNECTOR (16-GA TO 18-GA)	
	4	1	3D-2824	1	SEAL-O-RING	

E-ORDER BY THE CENTIMETER

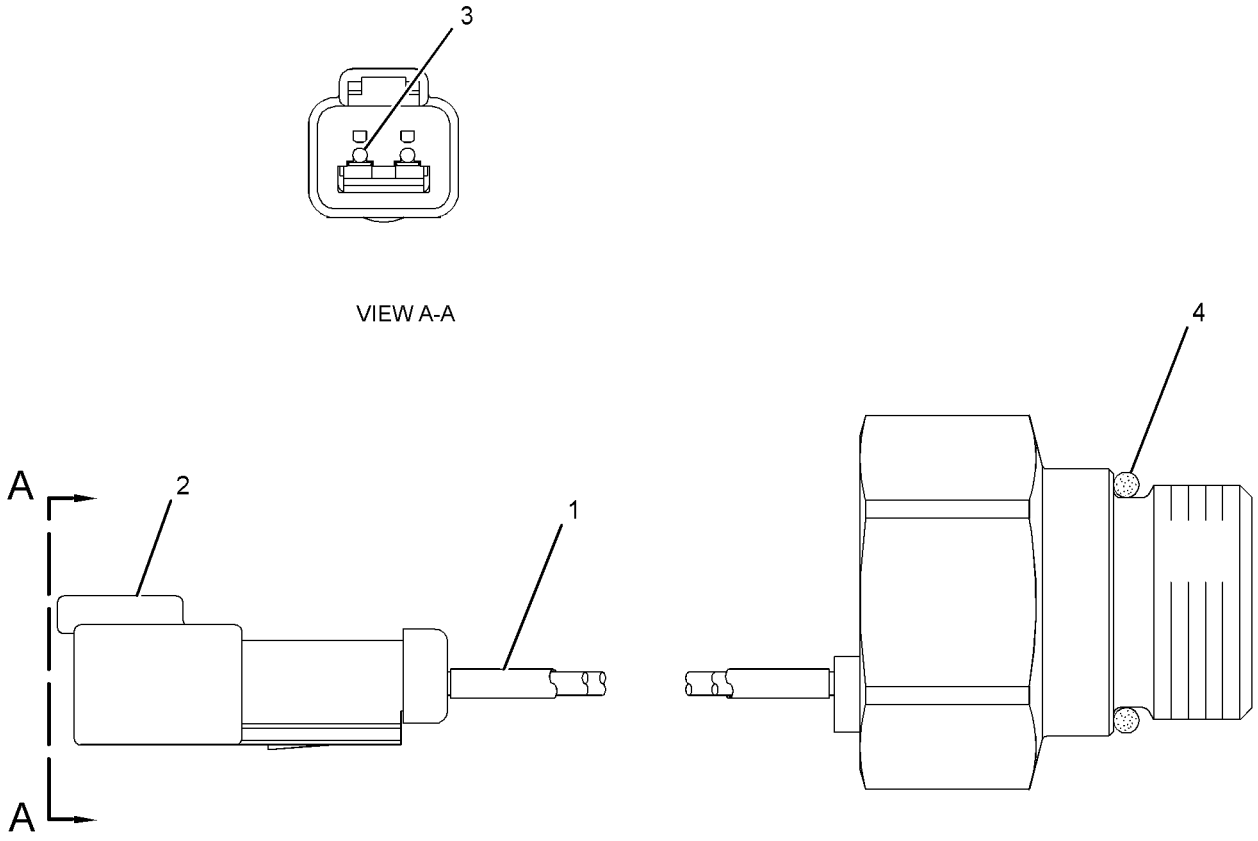

GRAPHIC #1 <END> g02157795

125-1302 SWITCH GP-MAGNETIC–START RELAY

S/N: S6T1-UP; S6X1-UP; S6Y1-UP
PART OF 322-1360 PANEL GP-FUSE

SMCS-7499 i04009269

NOTE	REF NO	GRAPHIC REF	PART NUMBER	QTY	PART NAME 1 2 3 4 5 6 (PRODUCT LEVEL)	SEE PAGE
	1	1	102-8802	1	KIT-RECEPTACLE (2-PIN)	
					(INCLUDES RECEPTACLE AS & WEDGE)	
	2	1	186-3735	2	PIN-CONNECTOR (16-GA TO 18-GA)	
	3	1	1H-3338	2	LOCKWASHER (EXTERNAL TOOTH)	
	4	1	012-0380	2	LOCKWASHER	
M	5	1	5C-2890	2	NUT (M6X1-THD)	
E	6	1	9X-1813		SLEEVE (16-CM)	

E-ORDER BY THE CENTIMETER
M-METRIC PART

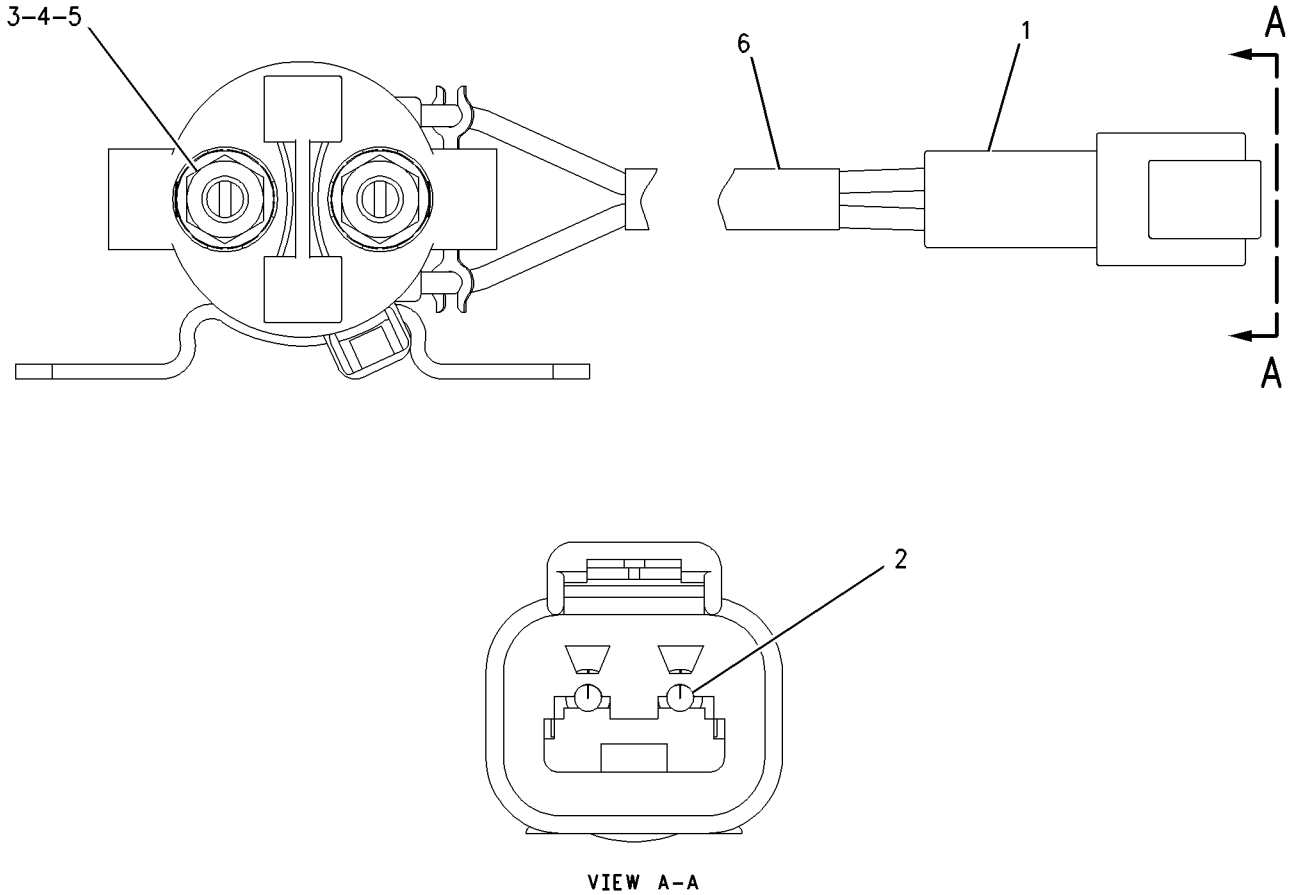

GRAPHIC #1 <END> g00988001

241-8368 SWITCH GP-MAGNETIC–MAIN RELAY

S/N: S6T1-UP; S6X1-UP; S6Y1-UP
24-VOLT
PART OF 322-1360 PANEL GP-FUSE

SMCS-7499 i04009312

NOTE	REF NO	GRAPHIC REF	PART NUMBER	QTY	PART NAME 1 2 3 4 5 6 (PRODUCT LEVEL)	SEE PAGE
	1	1	155-2270	1	KIT-CONNECTING PLUG (2-PIN)	
					(INCLUDES PLUG AS, WEDGE & INTERFACE SEAL)	
	2	1	4F-2294	2	NUT-JAM (5/16-24-THD)	
	3	1	186-3736	2	SOCKET-CONNECTOR (16-GA TO 18-GA)	

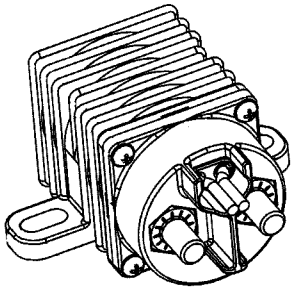

ISOMETRIC VIEW

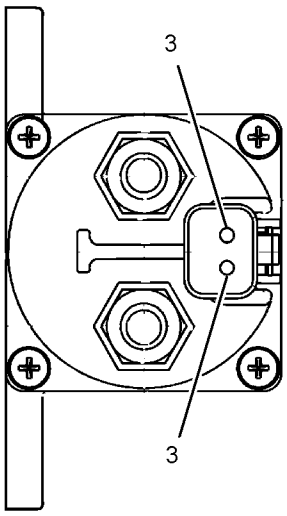

VIEW A-A

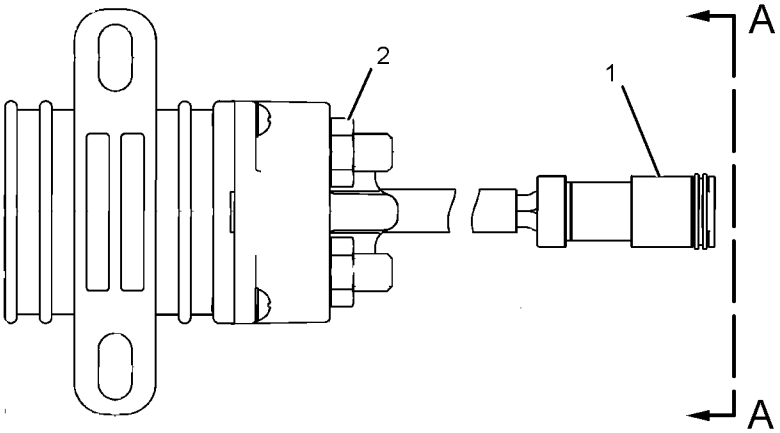

GRAPHIC #1 <END> g01077362

158-6632 SWITCH GP-PUSH BUTTON–HORN–FUEL PRIMING PUMP

S/N: S6T1-UP; S6X1-UP; S6Y1-UP

PART OF 317-6560 BATTERY & WIRING GP, 317-6565 WIRING GP-PLATFORM

SMCS-1435, 7332 i03995519

NOTE	REF NO	GRAPHIC REF	PART NUMBER	QTY	PART NAME 1 2 3 4 5 6 (PRODUCT LEVEL)	SEE PAGE
	1	1	9X-0199	1	BOOT-SWITCH	
	2	1	7T-9515	1	KNOB-HORN	
	3	1	5L-7200	1	SCREW (8-32X0.375-IN)	
	4	1	3B-4501	1	LOCKWASHER	
	5	1	6V-8370	1	NUT-HEX (3/4-32-THD)	
	6	1	2H-3922	1	LOCKWASHER	
	7	1	102-8802	1	KIT-RECEPTACLE (2-PIN)	
					(INCLUDES RECEPTACLE AS & WEDGE)	
	8	1	9X-3401	2	PIN-CONNECTOR (16-GA TO 18-GA)	

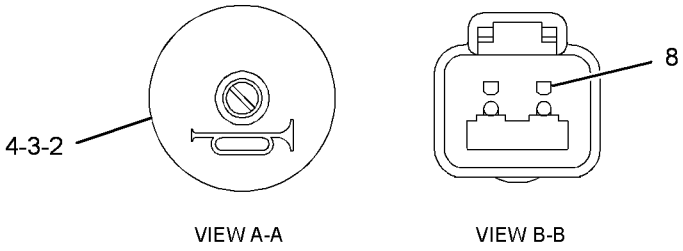

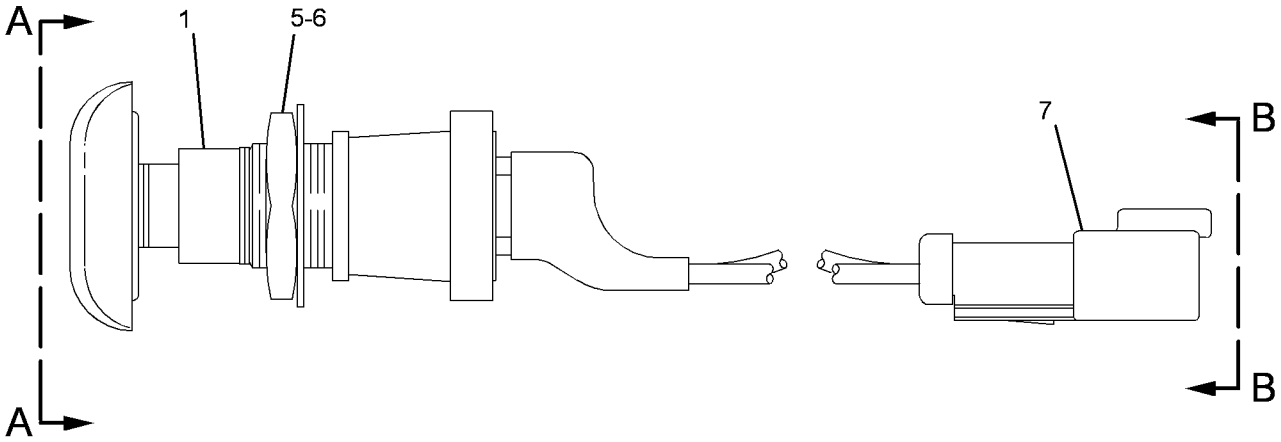

GRAPHIC #1 <END> g02173962

239-1134 VALVE GP-ETHER STARTING

S/N: S6T1-UP; S6X1-UP; S6Y1-UP
24-VOLT
PART OF 263-9012 STARTING AID GP-ETHER

SMCS-1456 i04009069

NOTE	REF NO	GRAPHIC REF	PART NUMBER	QTY	PART NAME 1 2 3 4 5 6 (PRODUCT LEVEL)	SEE PAGE
	1	1	7N-9801	1	GASKET	
	2	1	102-8802	1	KIT-RECEPTACLE (2-PIN)	
					(INCLUDES RECEPTACLE AS & WEDGE)	
	3	1	186-3735	2	PIN-CONNECTOR (16-GA TO 18-GA)	

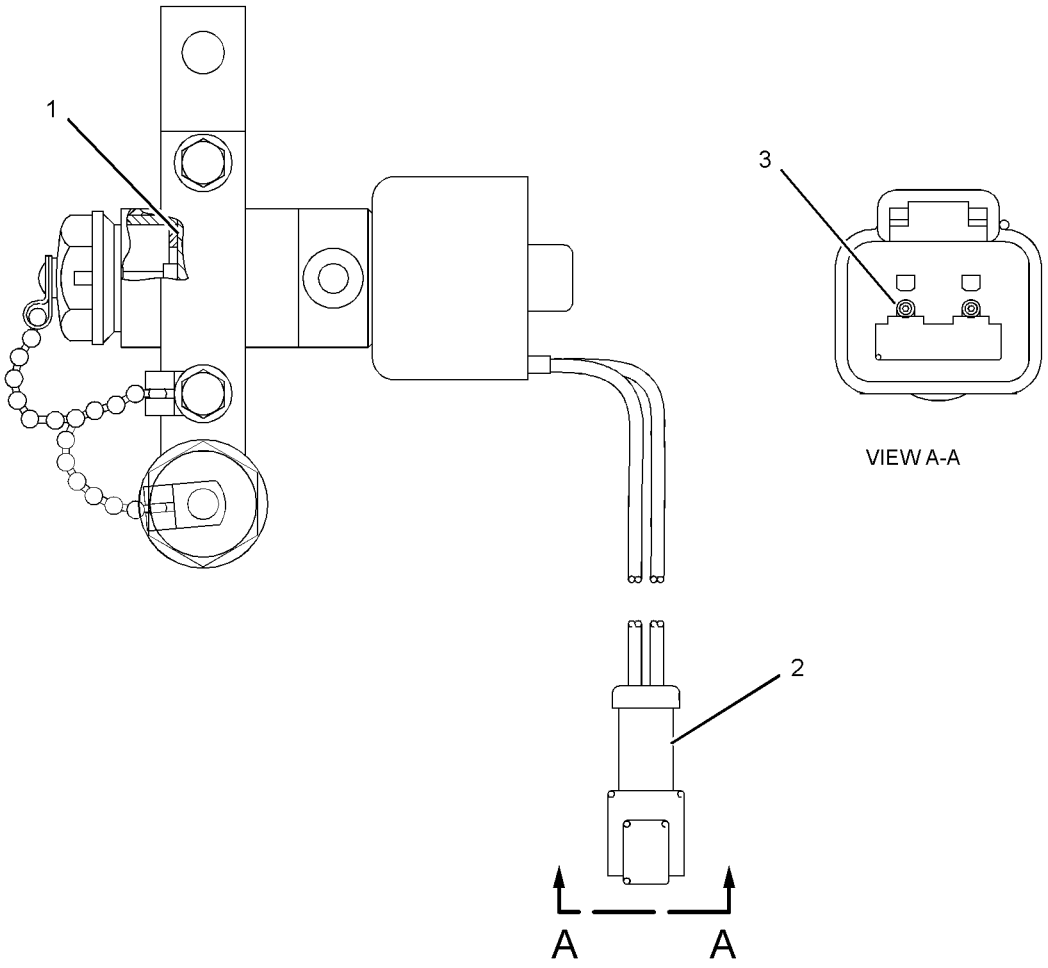

GRAPHIC #1 <END> g01375620

322-1359 WIRING GP-BOX

S/N: S6T1-UP; S6X1-UP; S6Y1-UP
PART OF 322-1360 PANEL GP-FUSE

SMCS-1408 i04012872

NOTE	REF NO	GRAPHIC REF	PART NUMBER	QTY	PART NAME 1 2 3 4 5 6 (PRODUCT LEVEL)	SEE PAGE
	1	1	225-8553	1	BLOCK AS-FUSE	
		1	151-1398	3	KIT-TERMINAL (LOCK) (FUSE BLOCK)	
					(EACH KIT INCLUDES LOCK)	
		1	227-0912	1	BLOCK AS-FUSE	
		1	1H-3244	2	LOCKWASHER	
		1	6V-8185	2	NUT (1/4-20-THD)	
		1	8T-4205	2	WASHER-HARD (7.2X14.5X2-MM THK)	
		1	180-5737	1	COVER	
	2	1	*320-5903*	1	HARNESS AS-PANEL (FUSE BLOCK)	
		1	102-8802	1	KIT-RECEPTACLE (2-PIN)	
					(INCLUDES RECEPTACLE AS & WEDGE)	
		1	9G-3695	37	PLUG-SEAL	
		1	9W-2032	3	TERMINAL-BLADE (10-GA TO 12-GA)	
		1	9W-2033	12	TERMINAL-BLADE (14-GA TO 16-GA)	
E		1	119-3662		TUBE-HEAT SHRINK (10.85-MM DIA) (13-CM)	
		1	9X-3402	2	SOCKET-CONNECTOR (16-GA TO 18-GA)	
					-OR-	
		1	126-1768	2	SOCKET-CONNECTOR (14-GA)	
		1	126-1767	23	PIN-CONNECTOR (14-GA TO 16-GA)	
		1	131-1488	1	TERMINAL AS-RING (6-GA TO 8-GA)	
		1	2L-8075	1	TERMINAL-RING (14-GA TO 16-GA, NO. 8 SCREW)	
		1	9X-3401	12	PIN-CONNECTOR (16-GA TO 18-GA)	
					-OR-	
		1	126-1767	12	PIN-CONNECTOR (14-GA TO 16-GA)	
		1	155-2270	1	KIT-CONNECTING PLUG (2-PIN)	
					(INCLUDES PLUG AS, WEDGE & INTERFACE SEAL)	
		1	214-4208	1	RECEPTACLE AS-CONNECTOR (70-PIN)	
		1	230-8792	5	TERMINAL	

E-ORDER BY THE CENTIMETER

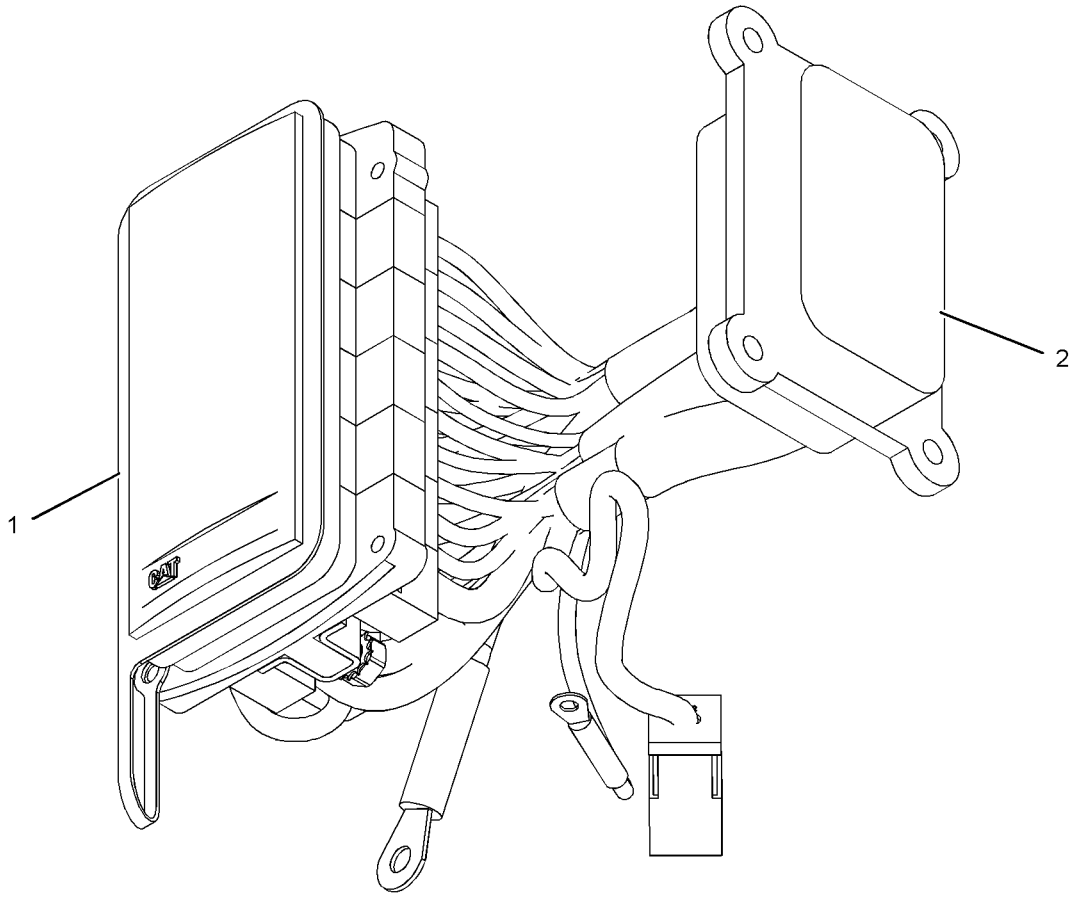

GRAPHIC #1 <END> g02189954

ELECTRICAL AND STARTING SYSTEM

235-8203 WIRING GP-ELECTRONIC CONTROL

S/N: THX19900-UP

PART OF 318-1904, 318-1905 ENGINE AR-COMPLETE

SMCS-1408, 1900 i04017557

NOTE	REF NO	GRAPHIC REF	PART NUMBER	QTY	PART NAME 1 2 3 4 5 6 (PRODUCT LEVEL)	SEE PAGE
	1	1	3S-2093	19	STRAP-CABLE	
	2	1	9M-1974	5	WASHER-HARD (8.8X16X2-MM THK)	
	3	1	160-8124	1	PLUG AS (2-PIN)	
		1	8T-8737	2	PLUG-SEAL	
		1	102-8802	1	KIT-RECEPTACLE (2-PIN)	
					(INCLUDES RECEPTACLE AS & WEDGE)	
	4	1	196-9654	1	BRACKET AS	
		1	3W-9139	1	BOSS	
M		1	6V-9632	2	NUT-WELD (M6X1-THD)	
		1	7T-1099	7	LINK	
M		1	8T-3490	1	NUT-WELD (M10X1.5-THD)	
	5	1	215-3249	1	HARNESS AS-ENGINE (UNIT INJECTOR)	
		1	3S-2093	5	STRAP-CABLE	
		1	105-1797	5	MOUNT	
		1	191-7823	1	RECEPTACLE AS	
	6	1	235-8202	1	HARNESS AS-ENGINE (ELECTRONIC CONTROL MODULE)	
		1	227-4002	1	PLUG AS-CONNECTOR (108-PIN)	
		1	8T-8737	12	PLUG-SEAL	
		1	264-5732	1	PLUG AS-CONNECTOR (120-PIN)	
		1	155-2265	1	KIT-CONNECTING PLUG (8-PIN)	
					(INCLUDES PLUG AS. AND WEDGE)	
		1	155-2270	5	KIT-CONNECTING PLUG (2-PIN)	
					(EACH INCLUDES PLUG AS. AND WEDGE)	
		1	155-2260	3	KIT-CONNECTING PLUG (3-PIN)	
					(EACH INCLUDES PLUG AS. AND WEDGE)	
		1	119-3662		TUBE-HEAT SHRINK (10.85-MM DIA) (33-CM)	
		1	125-7874		TUBE-HEAT SHRINK (5.72-MM DIA) (5-CM)	
		1	125-7875		TUBE-HEAT SHRINK (7.44-MM DIA) (10-CM)	
		1	172-6062	1	PLUG AS-CONNECTOR (18-PIN)	
		1	211-6807	1	COVER (CONNECTOR)	
		1	102-8802	1	KIT-RECEPTACLE (2-PIN)	
					(INCLUDES RECEPTACLE AS. AND WEDGE)	
		1	102-8803	1	KIT-RECEPTACLE (3-PIN)	
					(INCLUDES RECEPTACLE AS. AND WEDGE)	
		1	100-3320	1	PLUG AS-CONNECTOR (2-PIN)	
		1	126-5011	1	SEAL-CONNECTOR	
		1	111-2416	1	PLUG AS-CONNECTOR (2-PIN)	
		1	126-5011	1	SEAL-CONNECTOR	
	7	1	4P-7581	5	CLIP	
	8	1	4P-8134	2	CLIP	
M	9	1	5P-7970	2	NUT (M8X1.25-THD)	
	10	1	6V-4369	1	CLIP	
M	11	1	6V-5217	1	BOLT (M8X1.25X20-MM)	
	12	1	6V-5839	5	WASHER (11X21X2.5-MM THK)	
M	13	1	6V-6317	4	BOLT (M10X1.5X20-MM)	
M	14	1	7I-2272	2	BOLT (M5X0.8X12-MM)	
	15	1	8T-0328	2	WASHER-HARD (5.5X10X1-MM THK)	
M	16	1	8T-4137	1	BOLT (M10X1.5X20-MM)	
	17	1	8T-4205	1	WASHER-HARD (7.2X14.5X2-MM THK)	
M	18	1	8T-5451	1	BOLT (M6X1X12-MM)	

M-METRIC PART

235-8203 WIRING GP-ELECTRONIC CONTROL ***(contd.)*** i04017557

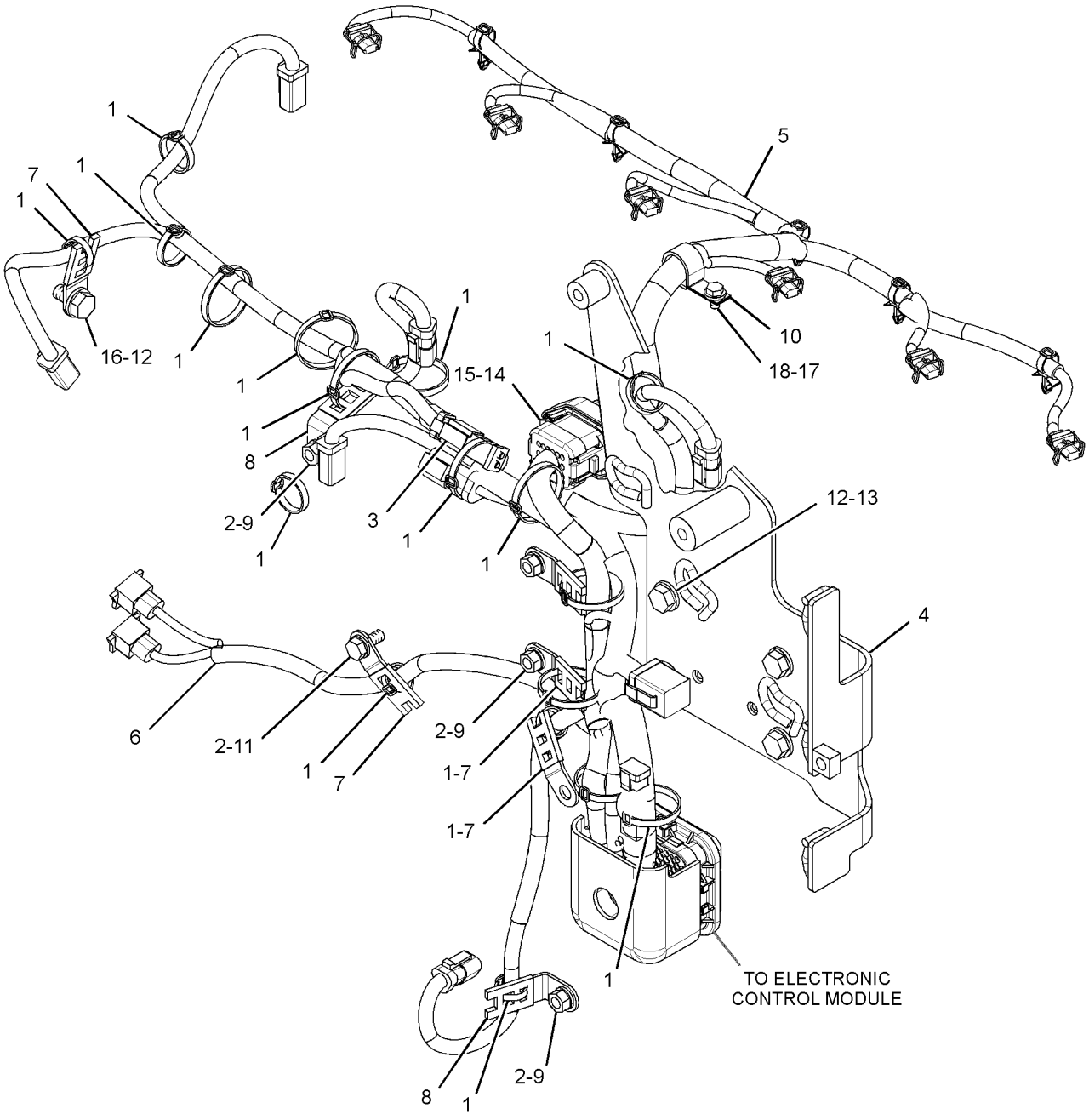

GRAPHIC #1 <END> g01684160

317-6576 WIRING GP-ENGINE

S/N: S6T1-UP; S6X1-UP; S6Y1-UP
PART OF 317-1762 INSTALLATION AR

SMCS-1000, 1408 i04009009

NOTE	REF NO	GRAPHIC REF	PART NUMBER	QTY	PART NAME 1 2 3 4 5 6 (PRODUCT LEVEL)	SEE PAGE
	1	1	7C-8246	1	SPACER (10.5X20X24-MM THK)	
	2	1	8E-3430	1	STRIP AS	
		1	1F-0750	1	NUT-WELD (3/8-16-THD)	
		1	8E-3431	1	PLATE	
	3	1	121-2844	1	HARNESS AS-WIRING (CRANK WITHOUT INJECT)	
		1	102-8803	2	KIT-RECEPTACLE (3-PIN)	
					(EACH INCLUDES RECEPTACLE AS & WEDGE)	
		1	186-3735	4	PIN-CONNECTOR (16-GA TO 18-GA)	
		1	8T-8737	5	PLUG-SEAL	
		1	155-2260	1	KIT-CONNECTING PLUG (3-PIN)	
					(INCLUDES PLUG AS, WEDGE & INTERFACE SEAL)	
	4	1	124-6998	1	PLATE	
Y	5	1	145-7028	1	SENSOR GP-TEMPERATURE (TRANSMISSION SUMP)	178
Y	5A	1	145-7028	1	SENSOR GP-TEMPERATURE (TORQUE CONVERTER OIL)	178
	6	1	147-3150	1	ANGLE AS	
M		1	8T-3490	1	NUT-WELD (M10X1.5-THD)	
	7	1	183-4274	1	BRACKET	
	8	1	240-6902	1	CABLE AS	
		1	1S-4915	2	LINER (CONDUIT)	
E		1	5P-0695		CONDUIT (260-CM)	
		1	8N-0869	1	COVER-TERMINAL (RED)	
E		1	8T-2225		TUBE-HEAT SHRINK (25.4-MM DIA) (16-CM)	
E		1	159-8047		CABLE-ELECTRICAL (0-GA, RED) (276-CM)	
B		1	1P-0810		TAPE-ELECTRICAL	
		1	170-3793	2	RING-TERMINAL	
	9	1	266-2404	1	BRACKET AS	
M		1	8T-3490	1	NUT-WELD (M10X1.5-THD)	
		1	124-6998	1	PLATE	
	10	1	320-5890	1	HARNESS AS-ENGINE	
		1	102-8802	1	KIT-RECEPTACLE (2-PIN)	
		1	102-8803	1	KIT-RECEPTACLE (3-PIN)	
					(EACH KIT INCLUDES RECEPTACLE AS & WEDGE)	
		1	8N-1544	1	PIN-CONNECTOR (8-GA)	
		1	8T-8737	60	PLUG-SEAL	
		1	110-8769	1	WIRE AS	
E		1	114-8843		SLEEVE-PLASTIC (180-CM)	
E		1	114-8844		SLEEVE-PLASTIC (20-CM)	
E		1	114-8845		SLEEVE-PLASTIC (20-CM)	
E		1	119-3662		TUBE-HEAT SHRINK (10.85-MM DIA) (26-CM)	
E		1	125-7874		TUBE-HEAT SHRINK (5.72-MM DIA) (30-CM)	
		1	126-1766	98	SOCKET-CONNECTOR (14-GA TO 18-GA)	
		1	126-1767	1	PIN-CONNECTOR (14-GA TO 16-GA)	
		1	126-1768	21	SOCKET-CONNECTOR (14-GA)	
		1	126-1774	1	COVER-CONNECTOR	
		1	127-5486	1	RECEPTACLE AS-CONNECTOR (1-PIN)	
		1	131-1487	1	TERMINAL AS (6-GA TO 8-GA)	
		1	2L-8071	1	TERMINAL-RING (10-GA TO 12-GA, 1/2-IN SCREW)	
		1	134-2540	1	RESISTOR AS-CONNECTION (3-PIN)	
		1	143-4518	1	RESISTOR GP (PASSIVE DATA BOOSTER)	
		1	144-1636	2	PIN-CONNECTOR (14-GA TO 18-GA)	
		1	155-2265	1	KIT-CONNECTING PLUG (8-PIN)	
		1	155-2260	4	KIT-CONNECTING PLUG (3-PIN)	
		1	155-2270	5	KIT-CONNECTING PLUG (2-PIN)	
		1	155-2271	1	KIT-CONNECTING PLUG (4-PIN)	

317-6576 WIRING GP-ENGINE ***(contd.)*** i04009009

NOTE	REF NO	GRAPHIC REF	PART NUMBER	QTY	PART NAME 1 2 3 4 5 6 (PRODUCT LEVEL)	SEE PAGE
		1	174-0503	1	KIT-CONNECTING PLUG (3-PIN)	
					(EACH KIT INCLUDES PLUG AS, WEDGE & INTERFACE SEAL)	
		1	160-7689	2	PLUG AS-CONNECTOR (70-PIN)	
					(EACH INCLUDES)	
		1	159-9322	1	SEAL-O-RING	
M	11	1	109-3001	1	STUD-TAPERLOCK (M10X1.5X65-MM)	
	12	1	132-5789	1	CLIP	
	13	1	144-8344	1	SPACER (11X19X20-MM THK)	
	14	1	1S-0994	3	CLIP	
	15	1	1S-1015	1	CLIP	
	16	1	4P-7429	2	CLIP	
	17	1	4P-7581	8	CLIP	
	18	1	4P-7582	1	CLIP	
	19	1	4P-8134	5	CLIP	
M	20	1	5C-7261	2	NUT (M8X1.25-THD)	
	21	1	5P-7464	1	CLIP (SLOT)	
	22	1	5P-7465	1	CLIP (TAB)	
M	23	1	6V-7744	1	LOCKNUT (M10X1.5-THD)	
	24	1	7J-0204	2	SEAL-O-RING	
	25	1	7K-1181	45	STRAP-CABLE	
	26	1	7X-0515	1	WASHER-HARD (17X35X5-MM THK)	
	27	1	8S-0948	2	CLIP	
	28	1	8T-2920	1	GROMMET	
	29	1	8T-4121	10	WASHER-HARD (11X21X2.5-MM THK)	
M	30	1	8T-4133	1	NUT (M10X1.5-THD)	
M	31	1	8T-4136	4	BOLT (M10X1.5X25-MM)	
M	32	1	8T-4137	6	BOLT (M10X1.5X20-MM)	
M	33	1	8T-4185	1	BOLT (M10X1.5X50-MM)	
M	34	1	8T-4190	1	BOLT (M16X2X25-MM)	
M	35	1	8T-4192	1	BOLT (M12X1.75X25-MM)	
	36	1	8T-4223	1	WASHER-HARD (13.5X25.5X3-MM THK)	
	37	1	8T-4224	2	WASHER-HARD (8.8X16X2-MM THK)	
	38	1	8T-4896	2	WASHER-HARD (10.2X18.5X2.5-MM THK)	
	39	1	8T-9371	1	BOLT (3/8-16X0.5-IN)	

B-USE AS REQUIRED
E-ORDER BY THE CENTIMETER
M-METRIC PART
Y-SEPARATE ILLUSTRATION

317-6576 WIRING GP-ENGINE ***(contd.)*** i04009009

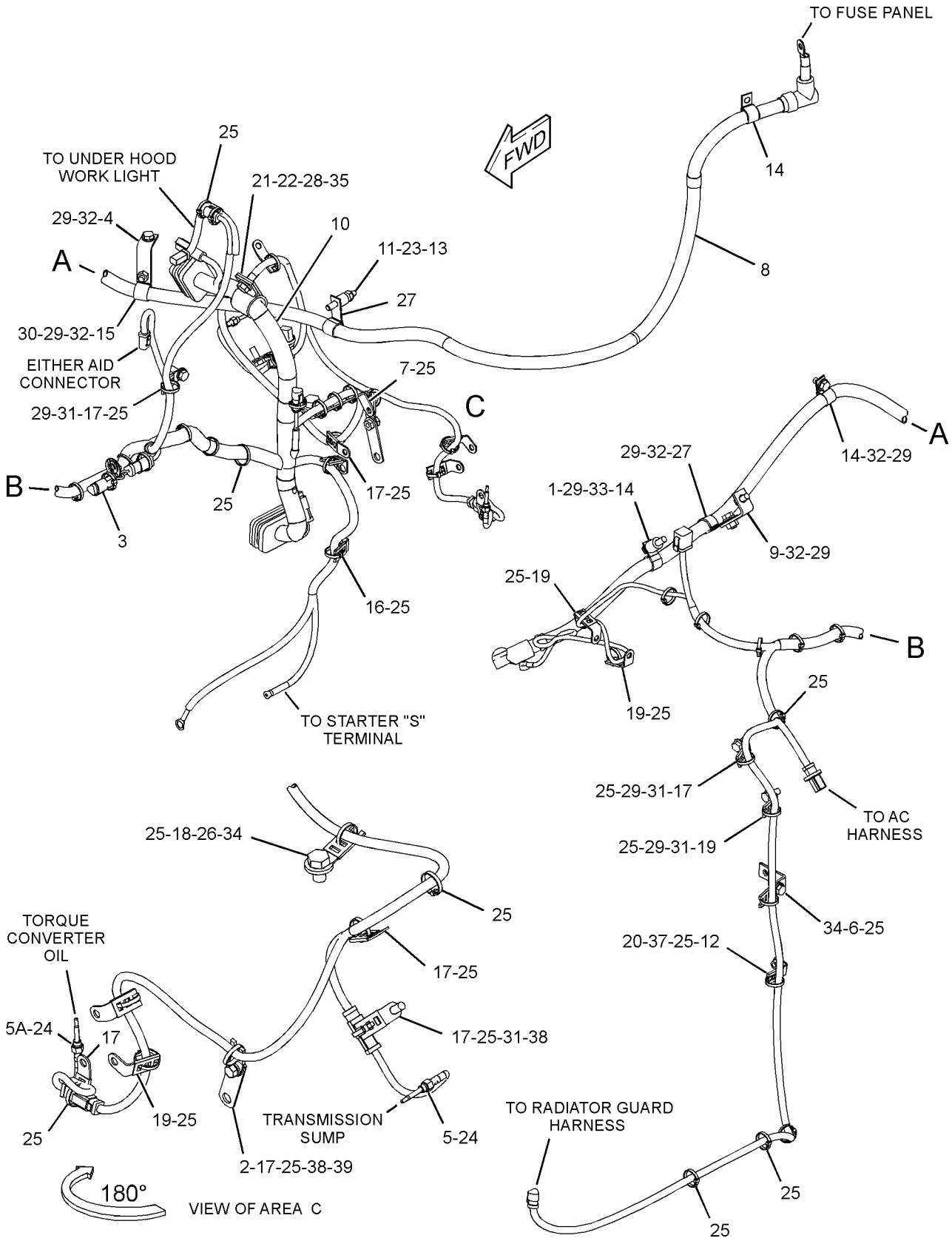

GRAPHIC #1 <END> g02189713

317-6567 WIRING GP-GRADE CONTROL

S/N: S6T1-UP; S6X1-UP; S6Y1-UP
PART OF 317-6573 GRADE CONTROL AR
AN ATTACHMENT

SMCS-1408 i04036706

NOTE	REF NO	GRAPHIC REF	PART NUMBER	QTY	PART NAME 1 2 3 4 5 6 (PRODUCT LEVEL)	SEE PAGE
	1	1	6D-3033	12	SCREW-SOCKET HEAD (4-40X0.5-IN)	
	2	1	6I-1418	4	SPACER (8.2X12.7X28.7-MM THK)	
	3	1	7R-3029	3	CAP-DUST	
	4	1	8T-9655	8	MOUNT-ISOLATION	
	5	1	129-8331	1	PLATE AS	
	6	1	132-8487	3	NUT-RING	
	7	1	*168-1968*	1	TEE AS	
		1	126-6872	1	TEE	
		1	3J-1907	1	SEAL-O-RING	
		1	6V-8397	1	SEAL-O-RING	
	8	1	261-0420	1	SENSOR GP-PRESSURE (IMPLEMENT PILOT PRESSURE)	
R	9	1	304-5687	1	CONTROL GP-UNPROGRAMMED (ACCUGRADE)	
	10	1	319-3753	1	HARNESS AS-WIRING (LIGHT BAR)	
		1	102-8804	1	KIT-RECEPTACLE (4-PIN)	
					(INCLUDES RECEPTACLE AS & WEDGE)	
		1	8T-8737	4	PLUG-SEAL	
E		1	125-7874		TUBE-HEAT SHRINK (5.72-MM DIA) (15-CM)	
		1	9X-3402	9	SOCKET-CONNECTOR (16-GA TO 18-GA)	
					-OR-	
		1	126-1768	1	SOCKET-CONNECTOR (14-GA)	
		1	9X-3401	3	PIN-CONNECTOR (16-GA TO 18-GA)	
					-OR-	
		1	126-1767	3	PIN-CONNECTOR (14-GA TO 16-GA)	
		1	230-5008	3	PLUG AS-CONNECTOR (4-PIN)	
					(EACH INCLUDES)	
		1	264-7031	1	SEAL-CONNECTOR	
	11	1	319-3758	1	HARNESS AS-WIRING (GPS)	
		1	102-8801	1	KIT-RECEPTACLE (12-PIN)	
					(INCLUDES RECEPTACLE AS & WEDGE)	
		1	8T-8737	4	PLUG-SEAL	
		1	114-8844	20	SLEEVE-PLASTIC	
		1	126-1767	2	PIN-CONNECTOR (14-GA TO 16-GA)	
		1	9X-3401	6	PIN-CONNECTOR (16-GA TO 18-GA)	
					-OR-	
		1	126-1767	6	PIN-CONNECTOR (14-GA TO 16-GA)	
		1	167-8987	1	PLUG AS-CONNECTOR (8-PIN)	
	12	1	320-5891	1	HARNESS AS-CHASSIS	
		1	102-8806	1	KIT-RECEPTACLE (8-PIN)	
		1	102-8801	1	KIT-RECEPTACLE (12-PIN)	
		1	190-7615	1	KIT-RECEPTACLE (12-PIN)	
					(EACH KIT INCLUDES RECEPTACLE AS & WEDGE)	
		1	8T-8737	10	PLUG-SEAL	
E		1	114-8843		SLEEVE-PLASTIC (120-CM)	
E		1	114-8844		SLEEVE-PLASTIC (60-CM)	
		1	119-3662	7	TUBE-HEAT SHRINK (10.85-MM DIA)	
		1	125-7874	5	TUBE-HEAT SHRINK (5.72-MM DIA)	
		1	9X-3402	13	SOCKET-CONNECTOR (16-GA TO 18-GA)	
					-OR-	
		1	126-1768	13	SOCKET-CONNECTOR (14-GA)	
		1	126-1767	6	PIN-CONNECTOR (14-GA TO 16-GA)	
		1	9X-3401	16	PIN-CONNECTOR (16-GA TO 18-GA)	
					-OR-	
		1	126-1767	16	PIN-CONNECTOR (14-GA TO 16-GA)	
		1	155-2260	1	KIT-CONNECTING PLUG (3-PIN)	

317-6567 WIRING GP-GRADE CONTROL ***(contd.)*** i04036706

NOTE	REF NO	GRAPHIC REF	PART NUMBER	QTY	PART NAME 1 2 3 4 5 6 (PRODUCT LEVEL)	SEE PAGE
		1	155-2270	5	KIT-CONNECTING PLUG (2-PIN)	
					(EACH KIT INCLUDES PLUG AS, WEDGE & INTERFACE SEAL)	
	13	1	320-5892	1	HARNESS AS-WIRING (RADIATOR GUARD)	
		1	8T-8737	10	PLUG-SEAL	
		1	114-8844	60	SLEEVE-PLASTIC	
E		1	119-3662		TUBE-HEAT SHRINK (10.85-MM DIA) (33-CM)	
E		1	125-7874		TUBE-HEAT SHRINK (5.72-MM DIA) (30-CM)	
		1	9X-3402	10	SOCKET-CONNECTOR (16-GA TO 18-GA)	
					-OR-	
		1	126-1768	10	SOCKET-CONNECTOR (14-GA)	
		1	126-1768	15	SOCKET-CONNECTOR (14-GA)	
		1	134-2540	1	RESISTOR AS-CONNECTION (3-PIN)	
		1	155-2255	1	KIT-CONNECTING PLUG (12-PIN)	
		1	155-2257	1	KIT-CONNECTING PLUG (12-PIN)	
		1	155-2265	1	KIT-CONNECTING PLUG (8-PIN)	
		1	174-0503	1	KIT-CONNECTING PLUG (3-PIN)	
					(EACH KIT INCLUDES PLUG AS, WEDGE & INTERFACE SEAL)	
	14	1	320-5893	1	HARNESS AS-WIRING (BULKHEAD)	
		1	102-8801	1	KIT-RECEPTACLE (12-PIN)	
		1	190-7615	1	KIT-RECEPTACLE (12-PIN)	
					(EACH KIT INCLUDES RECEPTACLE AS & WEDGE)	
		1	8T-8737	7	PLUG-SEAL	
E		1	114-8844		SLEEVE-PLASTIC (100-CM)	
		1	126-1767	11	PIN-CONNECTOR (14-GA TO 16-GA)	
		1	9X-3401	6	PIN-CONNECTOR (16-GA TO 18-GA)	
					-OR-	
		1	126-1767	6	PIN-CONNECTOR (14-GA TO 16-GA)	
		1	228-3323	3	CLIP-SPRING	
	15	1	320-5901	1	HARNESS AS-DASH	
		1	102-8805	1	KIT-RECEPTACLE (6-PIN)	
					(INCLUDES RECEPTACLE AS & WEDGE)	
		1	3R-9965	1	PLUG AS-CONNECTOR (8-PIN)	
		1	6D-5257	1	PLUG AS-CONNECTOR (8-PIN)	
		1	8T-8737	4	PLUG-SEAL	
E		1	114-8843		SLEEVE-PLASTIC (20-CM)	
E		1	119-3662		TUBE-HEAT SHRINK (10.85-MM DIA) (7-CM)	
		1	126-1767	4	PIN-CONNECTOR (14-GA TO 16-GA)	
		1	126-1768	4	SOCKET-CONNECTOR (14-GA)	
		1	155-2274	1	KIT-CONNECTING PLUG (6-PIN)	
					(INCLUDES PLUG AS, WEDGE & INTERFACE SEAL)	
	16	1	320-5902	1	HARNESS AS-CONTROL	
		1	8T-8737	157	PLUG-SEAL	
E		1	125-7874		TUBE-HEAT SHRINK (5.72-MM DIA) (5-CM)	
		1	9X-3402	53	SOCKET-CONNECTOR (16-GA TO 18-GA)	
					-OR-	
		1	126-1768	53	SOCKET-CONNECTOR (14-GA)	
		1	126-1768	2	SOCKET-CONNECTOR (14-GA)	
		1	147-1445	1	PLUG AS-CONNECTOR (70-PIN)	
		1	147-1446	1	PLUG AS-CONNECTOR (70-PIN)	
		1	160-7689	1	PLUG AS-CONNECTOR (70-PIN)	
					(EACH PLUG AS INCLUDES)	
		1	159-9322	1	SEAL-O-RING	
	17	1	322-3025	1	HARNESS AS-SENSOR (IMPLEMENT PUMP OIL)	
		1	102-8803	1	KIT-RECEPTACLE (3-PIN)	
					(INCLUDES RECEPTACLE AS & WEDGE)	
E		1	114-8843		SLEEVE-PLASTIC (40-CM)	
		1	9X-3402	3	SOCKET-CONNECTOR (16-GA TO 18-GA)	
					-OR-	

317-6567 WIRING GP-GRADE CONTROL ***(contd.)*** i04036706

NOTE	REF NO	GRAPHIC REF	PART NUMBER	QTY	PART NAME 1 2 3 4 5 6 (PRODUCT LEVEL)	SEE PAGE
		1	126-1768	3	SOCKET-CONNECTOR (14-GA)	
		1	9X-3401	3	PIN-CONNECTOR (16-GA TO 18-GA)	
					-OR-	
		1	126-1767	3	PIN-CONNECTOR (14-GA TO 16-GA)	
		1	230-4013	1	PLUG AS-CONNECTOR (3-PIN)	
		1	264-7030	1	SEAL-CONNECTOR	
	18	1	130-5300	2	CLIP	
	19	1	1M-4543	2	GROMMET	
	20	1	1S-6420	4	CLIP	
	21	1	3J-1907	2	SEAL-O-RING	
	22	1	4P-7581	3	CLIP	
	23	1	5P-1075	9	WASHER-HARD (10.2X22.5X3-MM THK)	
	24	1	6K-4934	4	CLIP (SLOT)	
	25	1	6K-4935	4	CLIP (TAB)	
	26	1	6V-8076	1	ELBOW	
	27	1	7K-1181	42	STRAP-CABLE	
M	28	1	7X-0818	4	BOLT (M8X1.25X45-MM)	
M	29	1	7X-2562	2	BOLT (M20X2.5X45-MM)	
M	30	1	8T-4133	4	NUT (M10X1.5-THD)	
M	31	1	8T-4136	4	BOLT (M10X1.5X25-MM)	
M	32	1	8T-4137	1	BOLT (M10X1.5X20-MM)	
	33	1	8T-5439	2	WASHER-HARD (21.5X45X6-MM THK)	
	34	1	9N-0869	4	WASHER-HARD (8.8X25.5X2-MM THK)	

E-ORDER BY THE CENTIMETER
M-METRIC PART
R-REMFG PART MAY BE AVAILABLE

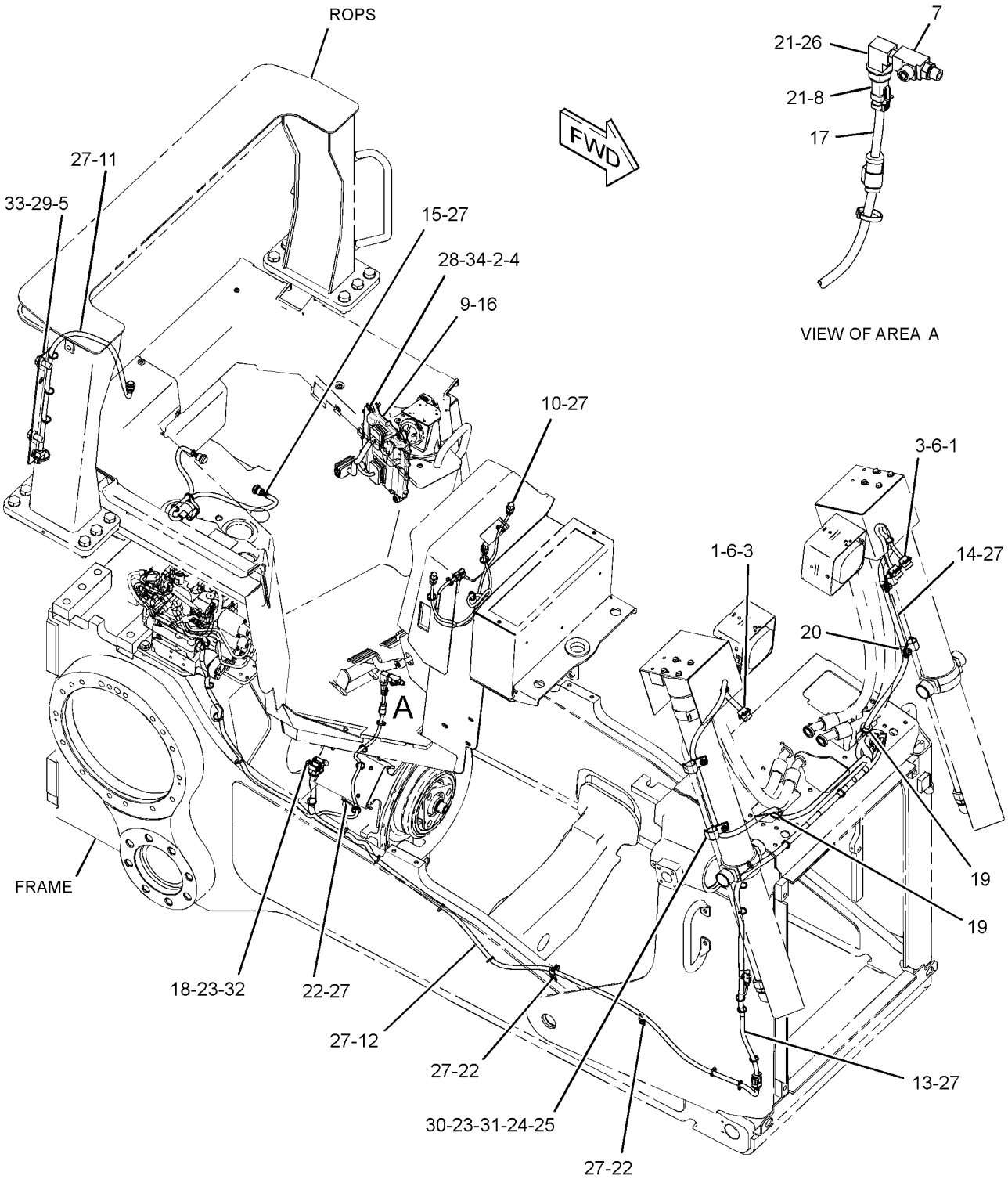

GRAPHIC #1 <END> g02199515

ELECTRICAL AND STARTING SYSTEM

317-6565 WIRING GP-PLATFORM

S/N: S6T1-UP; S6X1-UP; S6Y1-UP

PART OF 336-9684, 336-9685, 336-9686 CHASSIS AR

SMCS-1408 i04031103

NOTE	REF NO	GRAPHIC REF	PART NUMBER	QTY	PART NAME 1 2 3 4 5 6 (PRODUCT LEVEL)	SEE PAGE
	1	1	3E-5239	1	RELAY AS (24-VOLT) (WINCH, BLADE FLOAT DETENT)	
Y	2	1	3E-6328	1	ALARM GP (24-VOLT)	131
	3	1	7N-1996	1	LAMP (24-VOLT)	
	4	2	117-2311	2	SOCKET-AUXILIARY POWER (12-VOLT)	
	5	2	149-9818	1	PLATE	
Y	6	1	158-6632	1	SWITCH GP-PUSH BUTTON (HORN)	193
	7	1	170-3461	1	LAMP AS-INDICATOR (ACTION LIGHT)	
		1	102-8802	1	KIT-RECEPTACLE (2-PIN)	
					(INCLUDES RECEPTACLE AS & WEDGE)	
		1	3T-0304	1	BASE AS-INDICATOR LIGHT	
D		1	5P-5623		WIRE-ELECTRICAL (16-GA, BLACK) (0.3-M)	
D		1	6V-2689		TUBE-HEAT SHRINK (6.35-MM DIA) (0.1-M)	
		1	8T-8729	2	PIN-CONNECTOR (16-GA TO 18-GA)	
E		1	9X-1813		SLEEVE (8-CM)	
	8	1	172-4860	1	WIRE AS	
	9	1	202-4327	1	PULLER-FUSE	
	10	2	204-8000	1	MOUNTING-CABLE TIE	
	11	1	224-9222	1	BRACKET	
	12	2	239-3355	1	GASKET	
	13	2	239-7392	1	PLATE AS	
	14	1	239-8107	1	FUSE (175-AMPERE)	
	15	1	249-5481	1	SWITCH AS-ROCKER (THROTTLE)	
	16	1	259-2093	1	LENS (RED)	
	17	1	261-7990	1	GROMMET	
	18	1	281-3179	1	BRACKET	
	19	1	284-3623	1	SWITCH AS-ROCKER (HYDRAULIC LOCKOUT)	
	20	1	317-6574	1	PLATE AS	
	21	1	317-6577	2	PLATE	
	22	1	320-5888	1	HARNESS AS-PLATFORM	
		1	166-5229	1	KIT-RECEPTACLE (12-PIN)	
		1	190-7615	2	KIT-RECEPTACLE (12-PIN)	
		1	194-4254	1	KIT-RECEPTACLE (8-PIN)	
		1	265-2106	1	KIT-RECEPTACLE (4-PIN)	
					(EACH KIT INCLUDES RECEPTACLE AS & WEDGE)	
		1	8T-8736	1	RECEPTACLE-CONNECTOR (9-PIN)	
		1	8T-8737	310	PLUG-SEAL	
		1	9G-3695	14	PLUG-SEAL	
		1	9W-1951	1	RECEPTACLE-CONNECTOR (9-PIN)	
E		1	114-8843		SLEEVE-PLASTIC (240-CM)	
E		1	114-8844		SLEEVE-PLASTIC (180-CM)	
		1	115-3519	3	PIN-CONNECTOR (12-GA TO 14-GA)	
E		1	119-3662		TUBE-HEAT SHRINK (10.85-MM DIA) (46-CM)	
E		1	125-7874		TUBE-HEAT SHRINK (5.72-MM DIA) (200-CM)	
E		1	125-7875		TUBE-HEAT SHRINK (7.44-MM DIA) (20-CM)	
		1	126-1766	160	SOCKET-CONNECTOR (14-GA TO 18-GA)	
		1	127-5485	1	PLUG AS-CONNECTOR (1-PIN)	
		1	2L-8069	6	TERMINAL-RING (2-GA TO 10-GA, 3/8-IN SCREW)	
		1	2L-8079	2	TERMINAL-RING (14-GA TO 16-GA, 3/8-IN SCREW)	
		1	134-2540	3	RESISTOR AS-CONNECTION (3-PIN)	
		1	144-1636	134	PIN-CONNECTOR (14-GA TO 18-GA)	
		1	155-2255	5	KIT-CONNECTING PLUG (12-PIN)	
		1	155-2257	2	KIT-CONNECTING PLUG (12-PIN)	
		1	155-2260	2	KIT-CONNECTING PLUG (3-PIN)	
		1	155-2270	3	KIT-CONNECTING PLUG (2-PIN)	

317-6565 WIRING GP-PLATFORM ***(contd.)*** i04031103

NOTE	REF NO	GRAPHIC REF	PART NUMBER	QTY	PART NAME 1 2 3 4 5 6 (PRODUCT LEVEL)	SEE PAGE
		1	155-2271	2	KIT-CONNECTING PLUG (4-PIN)	
		1	155-2274	1	KIT-CONNECTING PLUG (6-PIN)	
		1	174-0503	3	KIT-CONNECTING PLUG (3-PIN)	
		1	177-9656	1	KIT-CONNECTING PLUG (4-PIN)	
					(EACH KIT INCLUDES PLUG AS, WEDGE & INTERFACE SEAL)	
		1	160-7689	2	PLUG AS-CONNECTOR (70-PIN)	
					(EACH INCLUDES)	
		1	159-9322	1	SEAL-O-RING	
		1	214-4208	3	RECEPTACLE AS-CONNECTOR (70-PIN)	
		1	230-4009	2	PLUG AS-CONNECTOR (12-PIN)	
		1	230-4010	2	RECEPTACLE AS-CONNECTOR (12-PIN)	
	23	1	320-5889	1	HARNESS AS-CONSOLE	
		1	9G-3695	4	PLUG-SEAL	
		1	9X-1054	1	PLUG AS-CONNECTOR (4-PIN)	
		1	100-5041	4	TERMINAL-RECEPTACLE (18-GA TO 20-GA)	
E		1	114-8843		SLEEVE-PLASTIC (60-CM)	
E		1	114-8844		SLEEVE-PLASTIC (40-CM)	
E		1	125-7874		TUBE-HEAT SHRINK (5.72-MM DIA) (15-CM)	
E		1	125-7875		TUBE-HEAT SHRINK (7.44-MM DIA) (20-CM)	
		1	126-1766	25	SOCKET-CONNECTOR (14-GA TO 18-GA)	
		1	5P-4571	2	TERMINAL-BLADE (14-GA TO 16-GA)	
		1	144-1636	2	PIN-CONNECTOR (14-GA TO 18-GA)	
		1	155-2255	1	KIT-CONNECTING PLUG (12-PIN)	
		1	155-2257	1	KIT-CONNECTING PLUG (12-PIN)	
		1	155-2270	5	KIT-CONNECTING PLUG (2-PIN)	
		1	245-7434	2	KIT-CONNECTING PLUG (10-PIN)	
					(EACH KIT INCLUDES PLUG AS, WEDGE & INTERFACE SEAL)	
		1	185-1861	17	SEAL-WIRE	
		1	202-5397	5	PLUG	
Y	24	2	*322-1360*	1	PANEL GP-FUSE	165
	25	1	322-2095	1	BRACKET AS	
	26	2	339-9514	1	CAP AS	
D		2	5P-5677		WIRE (18-GA, BLACK) (0.3-M)	
		2	8C-6354	1	CAP-RECEPTACLE	
E		2	125-7875		TUBE-HEAT SHRINK (7.44-MM DIA) (3-CM)	
		2	2L-8077	1	TERMINAL-RING (14-GA TO 16-GA, 1/4-IN SCREW)	
	27	1	340-7161	1	CONVERTER-POWER (24-VOLT TO 12-VOLT)	
M	28	2	107-3786	4	BOLT (M4X0.7X12-MM)	
	29	1	130-5300	2	CLIP	
	30	1,2	132-5789	3	CLIP	
	31	2	141-4976	4	SCREW-WASHER HEAD (4-40X0.5-IN)	
M	32	1	153-8001	2	BOLT-SOCKET HEAD (M4X0.7X20-MM)	
	33	2	199-4317	4	BOLT (M10X1.5X115-MM)	
	34	1,2	204-2281	31	STRAP-CABLE	
	35	2	4B-4863	2	WASHER (4.7X11X1.2-MM THK)	
	36	1	4D-8123	2	CLIP	
M	37	2	5C-8312	2	NUT (M4X0.7-THD)	
	38	1,2	5F-9757	2	GROMMET	
	39	1,2	5P-1075	6	WASHER-HARD (10.2X22.5X3-MM THK)	
	40	1	6D-4244	2	CLIP	
	41	1	7K-1181	32	STRAP-CABLE	
	42	1	8T-0328	2	WASHER-HARD (5.5X10X1-MM THK)	
M	43	2	8T-0389	2	LOCKNUT (M10X1.5-THD)	
	44	1	8T-2502	4	BOLT (3/8-16X1.125-IN)	
M	45	1	8T-3992	4	SCREW (M6X1X12-MM)	
	46	1,2	8T-4121	15	WASHER-HARD (11X21X2.5-MM THK)	
M	47	1,2	8T-4137	9	BOLT (M10X1.5X20-MM)	

317-6565 WIRING GP-PLATFORM ***(contd.)*** i04031103

NOTE	REF NO	GRAPHIC REF	PART NUMBER	QTY	PART NAME 1 2 3 4 5 6 (PRODUCT LEVEL)	SEE PAGE
M	48	1	8T-4138	8	BOLT (M6X1X20-MM)	
M	49	1	8T-4171	1	BOLT (M6X1X12-MM)	
M	50	1	8T-4191	2	BOLT (M10X1.5X16-MM)	
M	51	1	8T-4199	1	BOLT (M8X1.25X12-MM)	
	52	1	8T-4224	1	WASHER-HARD (8.8X16X2-MM THK)	
	53	2	8T-7934	1	WASHER-HARD (11X21X5-MM THK)	
M	54	2	8T-9405	2	BOLT-SOCKET HEAD (M4X0.7X16-MM)	
	55	1	9X-8256	9	WASHER (6.6X12X2-MM THK)	

D-ORDER BY THE METER
E-ORDER BY THE CENTIMETER
M-METRIC PART
Y-SEPARATE ILLUSTRATION

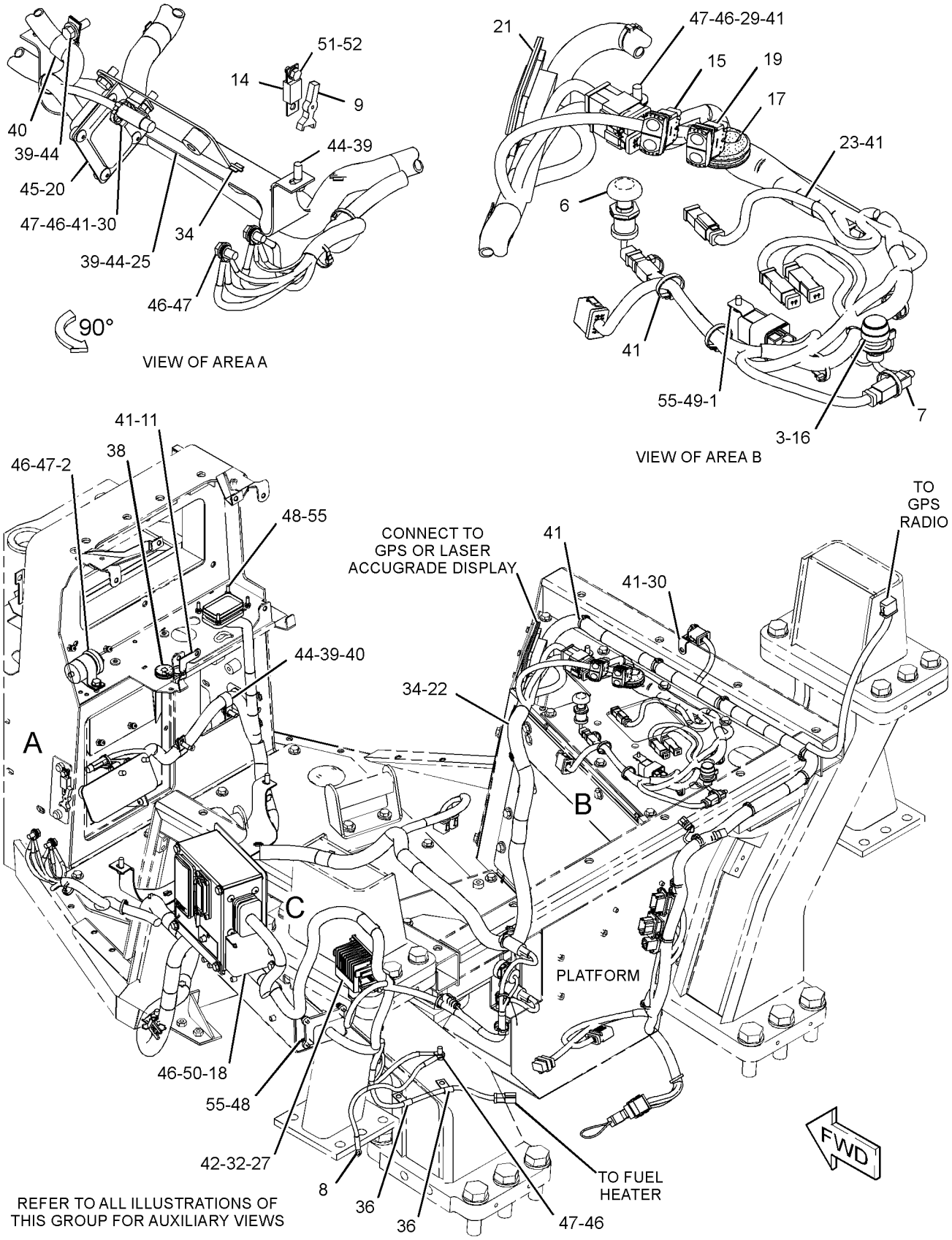

GRAPHIC #1 g02191454

317-6565 WIRING GP-PLATFORM ***(contd.)*** i04031103

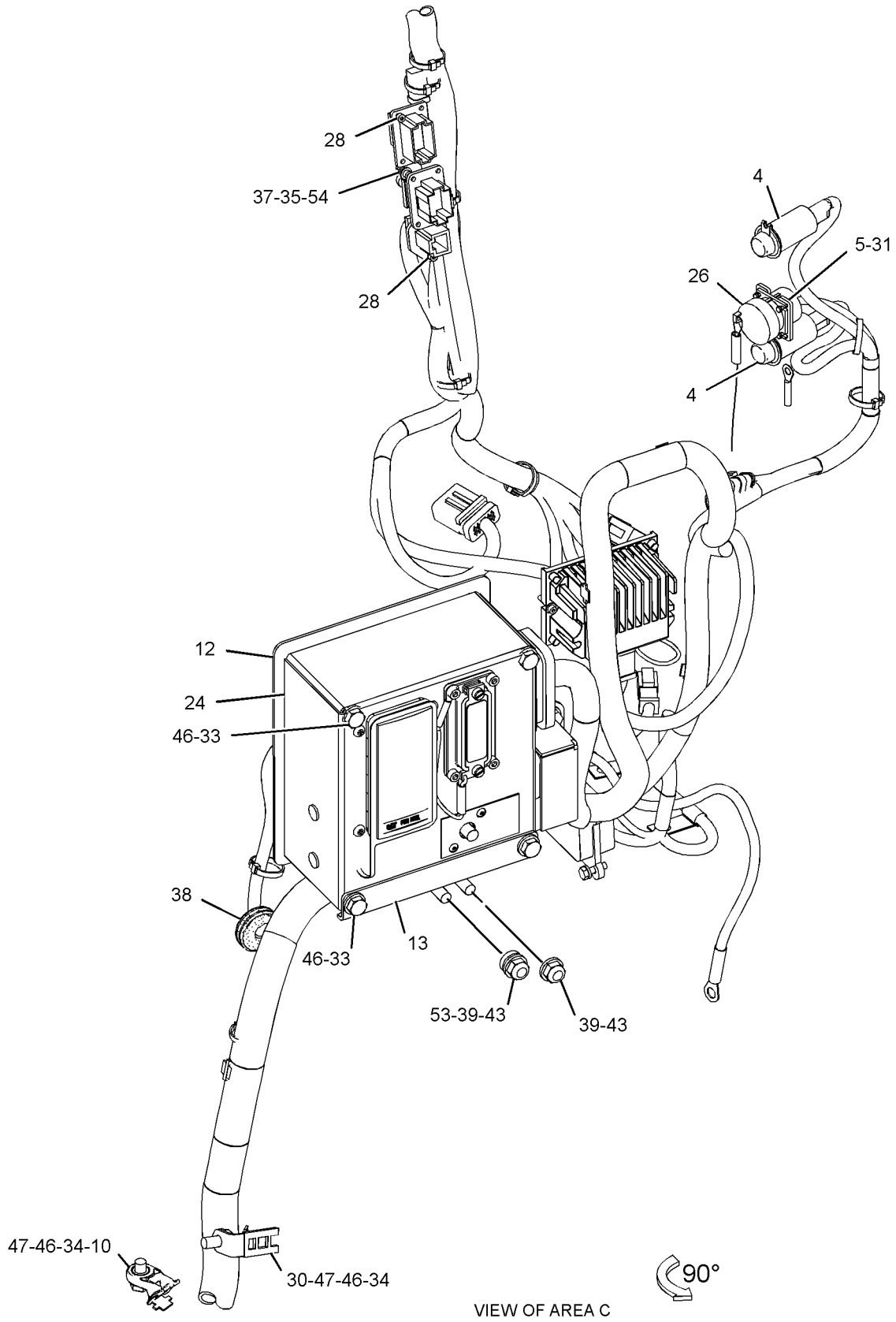

VIEW OF AREA C

GRAPHIC #2 <END> g02191455

317-6394 ACCUMULATOR GP

S/N: S6T1-UP; S6X1-UP; S6Y1-UP
PART OF 340-0117 LINES GP-PILOT

SMCS-5077 i03983364

NOTE	REF NO	GRAPHIC REF	PART NUMBER	QTY	PART NAME 1 2 3 4 5 6 (PRODUCT LEVEL)	SEE PAGE
	1	1	5P-3779	1	TAG-NOTICE (SHIPPING INSTRUCTIONS)	
	2	1	242-9101	2	FILM-WARNING (ACCUM, HIGH PRESS, READ OMM)	
	3	1	317-6749	1	COVER	
	4	1	317-6748	1	VALVE AS-GAS	
	5	1	169-4812	1	SEAL	
	6	1	317-7251	1	SEAL	

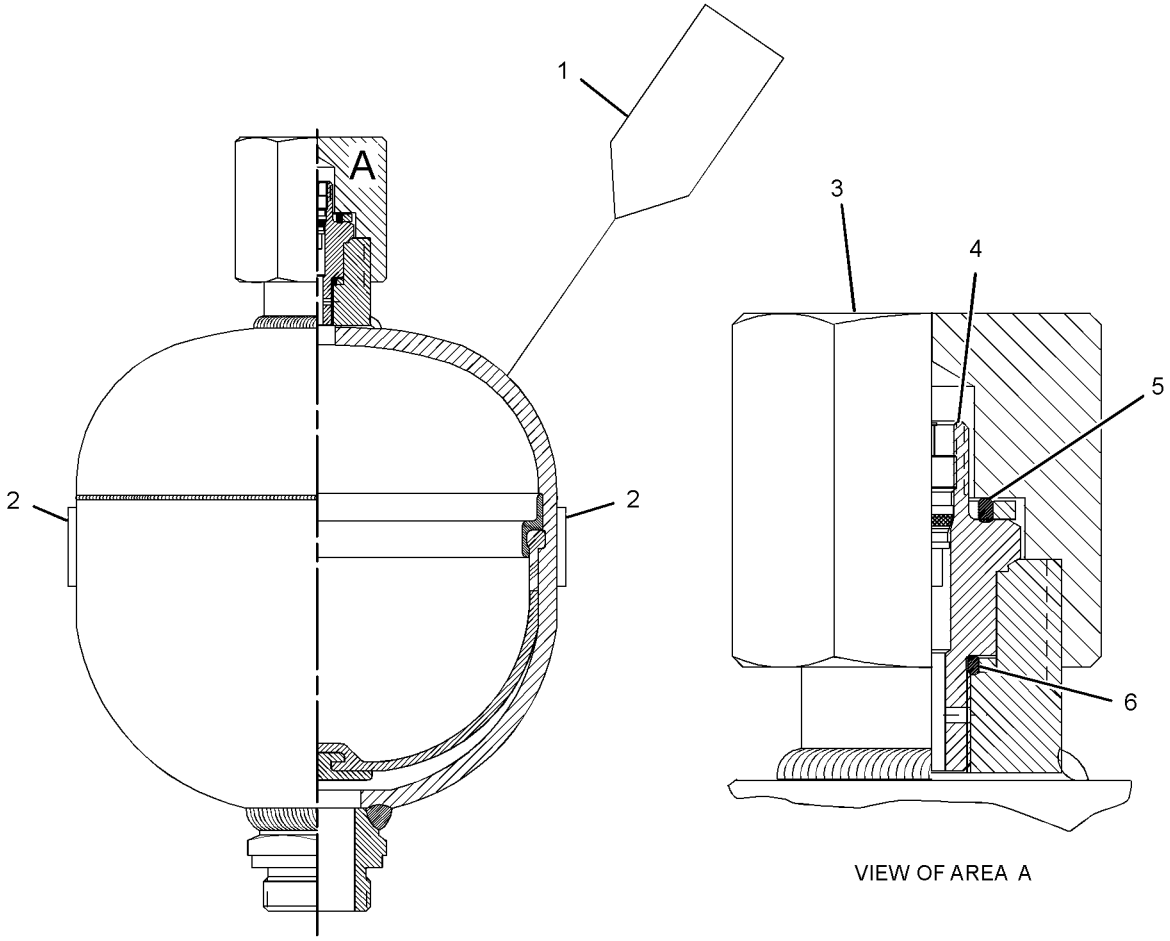

GRAPHIC #1 <END> g02175440

POWER TRAIN

3W-6550 AXLE GP

S/N: S6T1-UP; S6X1-UP
PART OF 317-1756 POWER TRAIN AR

SMCS-3282 i03976531

NOTE	REF NO	GRAPHIC REF	PART NUMBER	QTY	PART NAME 1 2 3 4 5 6 (PRODUCT LEVEL)	SEE PAGE
	1	1	3W-6551	1	SHAFT	
	2	1	3T-5851	1	SHAFT (FINAL DRIVE, CENTER)	
	3	1	9G-8637	1	GEAR-SUN (11-TEETH)	

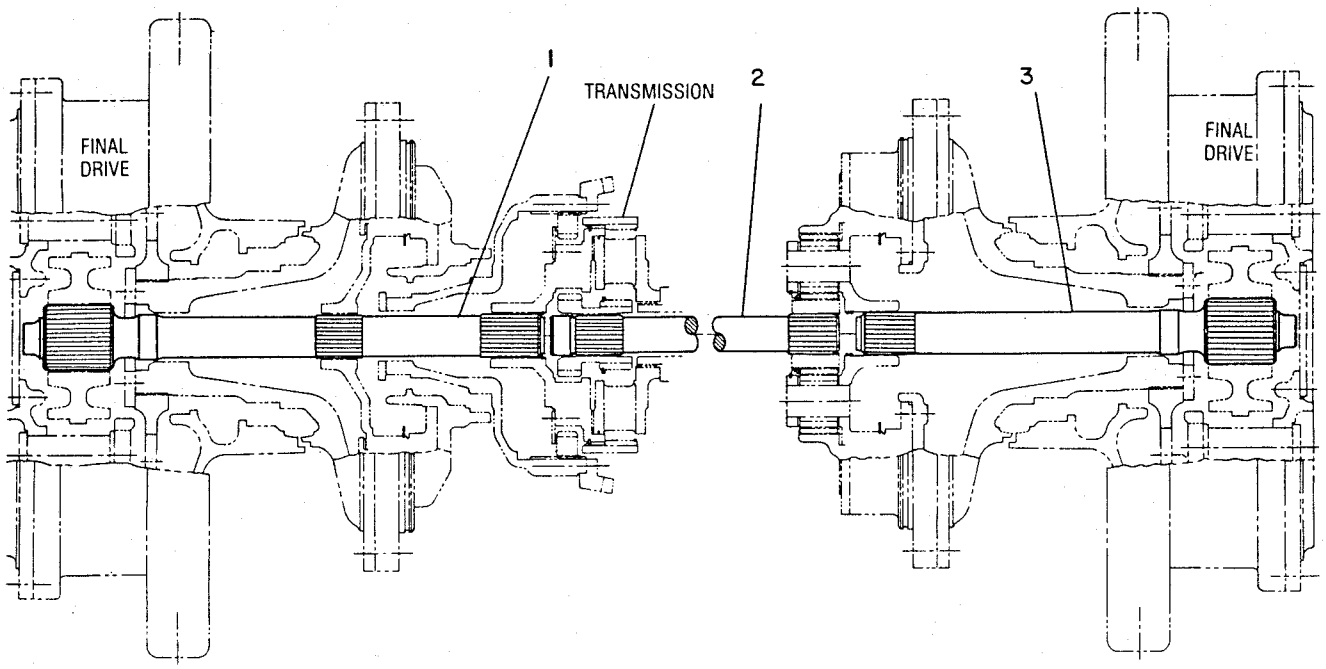

GRAPHIC #1 <END> g00188323

223-0565 AXLE GP

S/N: S6Y1-UP

PART OF 317-1757 POWER TRAIN AR

SMCS-3282 i04011250

NOTE	REF NO	GRAPHIC REF	PART NUMBER	QTY	PART NAME 1 2 3 4 5 6 (PRODUCT LEVEL)	SEE PAGE
	1	1	3T-5851	1	SHAFT (FINAL DRIVE, CENTER)	
	2	1	223-0566	1	SHAFT (FINAL DRIVE, LH)	
	3	1	223-0567	1	SHAFT (FINAL DRIVE, RH)	

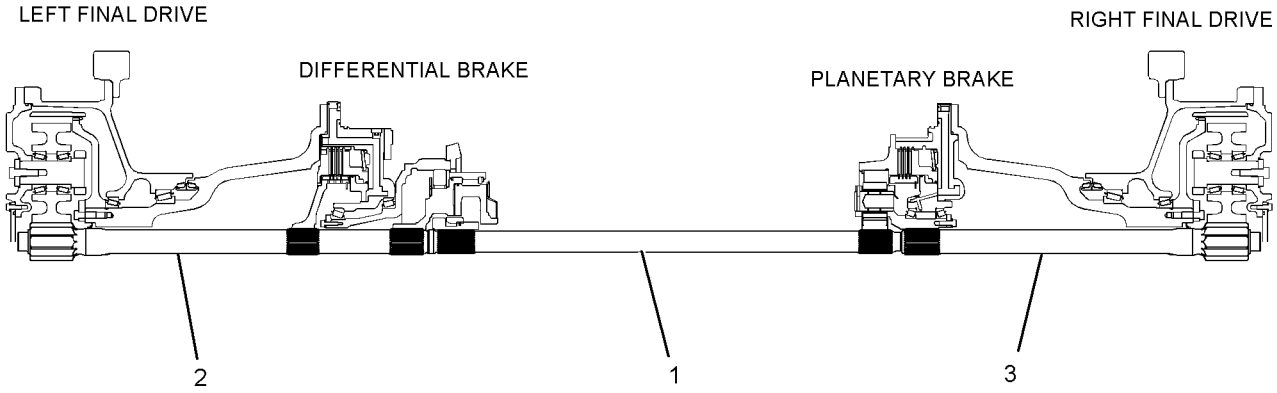

REAR VIEW

GRAPHIC #1 <END> g01219179

333-9308 BASE GP-OIL FILTER

S/N: S6T1-UP; S6X1-UP; S6Y1-UP
INTERNAL BYPASS
PART OF 333-6437 FILTER GP-OIL

SMCS-3004 i04031129

NOTE	REF NO	GRAPHIC REF	PART NUMBER	QTY	PART NAME 1 2 3 4 5 6 (PRODUCT LEVEL)	SEE PAGE
	1	1	3T-9549	1	ADAPTER	
	2	1	7G-4998	1	SPOOL-BYPASS	
Y	3	1	164-7577	1	SWITCH GP-BYPASS (POWER TRAIN OIL FILTER)	190
	4	1	334-2679	1	SPRING	
	5	1	334-2680	1	SPRING	
	6	1	5P-7815	1	SEAL-O-RING	
	7	1	6V-5050	1	SEAL-O-RING	
	8	1	9S-8008	1	PLUG-O-RING	
					PARTS SHOWN IN GRAPHIC(S) WITHOUT A REFERENCE NUMBER ARE NOT SERVICED SEPARATELY	

Y-SEPARATE ILLUSTRATION

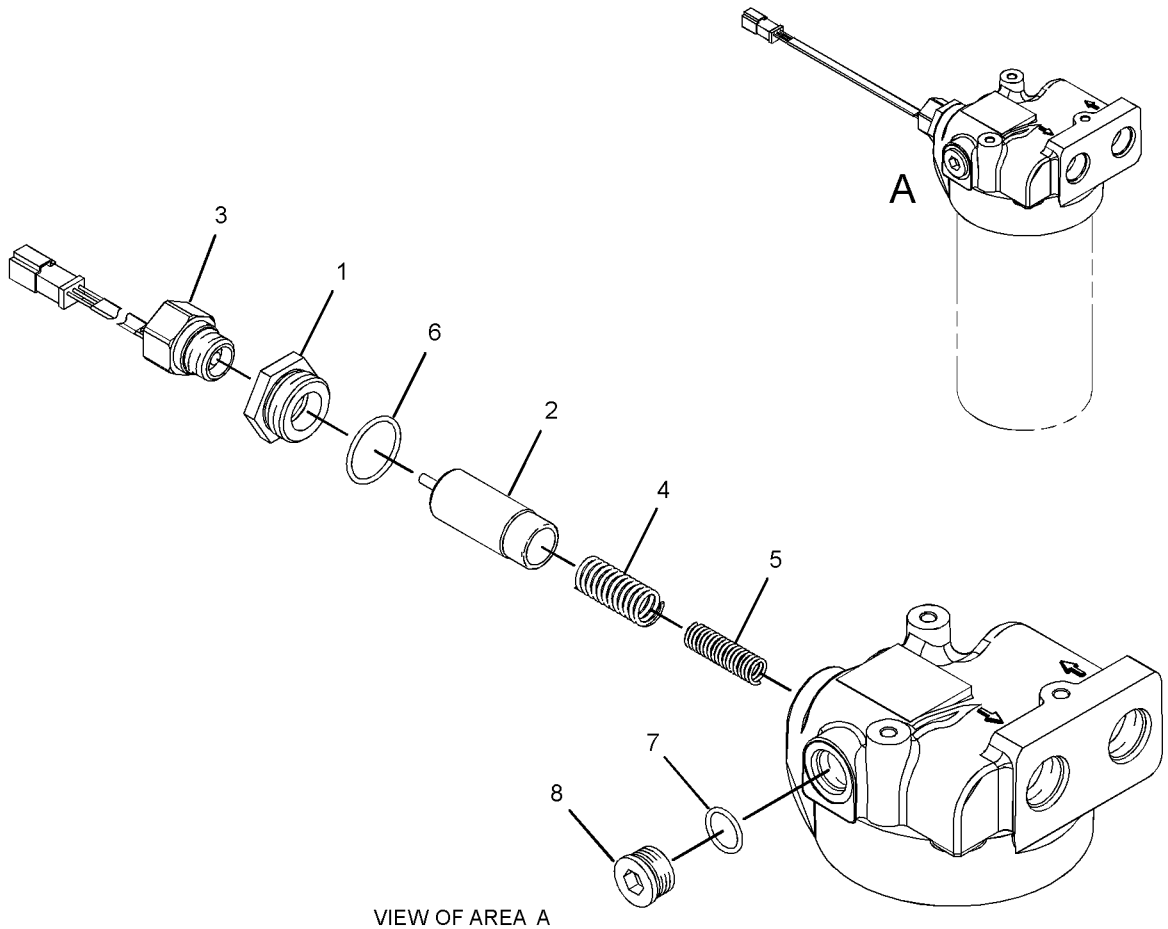

VIEW OF AREA A
(EXPLODED)

GRAPHIC #1 <END> g01863853

POWER TRAIN

231-5969 BRAKE & DIFFERENTIAL DRIVE GP

S/N: S6T1-UP; S6X1-UP; S6Y1-UP

PART OF 317-1756, 317-1757 POWER TRAIN AR

SMCS-4131 i03975655

NOTE	REF NO	GRAPHIC REF	PART NUMBER	QTY	PART NAME 1 2 3 4 5 6 (PRODUCT LEVEL)	SEE PAGE
	1	1	2K-5069	1	CUP-BEARING (TAPERED ROLLER)	
	2	2	2K-9295	1	BEARING AS-TAPERED ROLLER	
	3	2	3B-4124	1	CUP-BEARING (TAPERED ROLLER)	
	4	1	3S-2708	7	PIN-SPRING	
	5	1	3T-4568	3	SHAFT-PLANETARY	
	6	1	292-2016	1	GEAR AS-SUN (30/24-TEETH)	
	6A	1	290-9849	1	RING-RETAINING	
	7	1	3T-4824	4	GEAR-PLANETARY (30-TEETH)	
	8	1	3T-5021	1	CARRIER-PLANETARY	
	9	1	3T-5200	1	CARRIER-PLANETARY	
	10	1	3T-6963	1	SEAL-RING	
B	11	2	3T-9272	1	SHIM PACK (INCLUDES 8-SHIMS)	
	12	1	5M-0578	3	BEARING AS-ROLLER	
	13	1	5M-7925	4	BEARING AS-ROLLER	
	14	1	6I-8724	1	RING-LOCK	
	15	2	6P-1735	1	LOCKWASHER	
	16	2	6P-1736	1	WASHER (55.17X76.2X2.67-MM THK)	
	17	1	6T-0062	1	PLATE	
	18	1	6T-0064	4	SHAFT-PLANETARY	
	19	2	6T-0850	2	WASHER-THRUST (255X287.25X2.75-MM THK)	
	20	1	6V-0855	1	BEARING AS-TAPERED ROLLER	
		1	8T-0072	1	CONE-BEARING	
	21	2	6V-7646	3	WASHER-HARD (7.2X25X2-MM THK)	
	22	1	6Y-0926	3	GEAR-PLANETARY (23-TEETH)	
	23	1	6Y-0984	1	GEAR-RING (75-TEETH)	
	24	2	6Y-2704	1	SPRING-DISC	
	25	2	6Y-9373	4	DISC-FRICTION	
	26	1	7G-1596	1	RING-RETAINING	
	27	2	7H-4566	2	CUP-BEARING (TAPERED ROLLER)	
	28	2	7T-1885	1	RING	
	29	2	7T-6994	3	PLATE-CLUTCH & BRAKE	
	30	1	7T-8130	1	RING-RETAINING	
	31	2	7T-9788	1	HUB	
	32	2	7T-9832	1	RETAINER	
	33	2	7T-9837	1	PLATE	
	34	1	8E-8307	6	DISC-THRUST	
	35	1	8E-8310	8	DISC-THRUST	
	36	2	9B-0576	1	LOCKNUT-BEARING	
	37	1	9W-1571	1	SLINGER	
B	38	2	9W-2853	1	SHIM PACK (INCLUDES 21-SHIMS)	
	41	1	9W-6102	1	GEAR-RING (84-TEETH)	
	42	1	9W-6103	1	RING-THRUST	
	43	2	005-4834	2	BEARING AS-TAPERED ROLLER	
	44	1	136-1595	1	HOUSING-ROTATING	
	45	2	214-3573	1	PISTON	
	46	2	216-6371	1	CARRIER	
	47	2	217-2293	1	RETAINER	
	48	1	226-4462	1	GEAR-BEVEL (74-TEETH)	
	49	2	226-4464	1	PINION-BEVEL (15-TEETH)	
	50	2	227-2451	1	HOUSING AS	
	50A	2	1A-2223	2	DOWEL	
	50B	2	5P-8245	12	WASHER-HARD (13.5X25.5X3-MM THK)	
	50C	2	1A-1460	12	BOLT (1/2-13X2-IN)	
	51	1	030-2135	4	BOLT-LOCKING (5/16-18X0.625-IN)	
	52	1	0L-1143	21	BOLT (3/8-16X2.5-IN)	
	53	2	0S-1614	3	BOLT (1/4-20X0.5-IN)	

231-5969 BRAKE & DIFFERENTIAL DRIVE GP ***(contd.)*** i03975655

NOTE	REF NO	GRAPHIC REF	PART NUMBER	QTY	PART NAME 1 2 3 4 5 6 (PRODUCT LEVEL)	SEE PAGE
	54	2	1A-2029	6	BOLT (3/8-16X1.125-IN)	
	55	2	2A-4639	1	BOLT (3/8-16X1.625-IN)	
	56	2	1A-1460	6	BOLT (1/2-13X2-IN)	
	57	2	3K-0360	2	SEAL-O-RING	
	58	1	5K-9107	3	BOLT-LOCKING (3/8-16X0.75-IN)	
	59	2	5M-2894	7	WASHER-HARD (10.2X18.5X2.5-MM THK)	
	60	2	5P-8245	6	WASHER-HARD (13.5X25.5X3-MM THK)	
	63	2	6P-5317	1	RING-SEAL (EXTERNAL)	
	64	2	7W-6534	4	PLUG-PIPE	
	66	2	8M-4438	1	SEAL-O-RING	
	67	2	8P-8357	1	RING-SEAL (INTERNAL)	
	69	1	9L-9132	3	WASHER (10.2X25.5X2.5-MM THK)	
	70	2	9S-8005	2	PLUG-O-RING	
B	71	1	1U-8846		SEALANT-GASKET	

B-USE AS REQUIRED

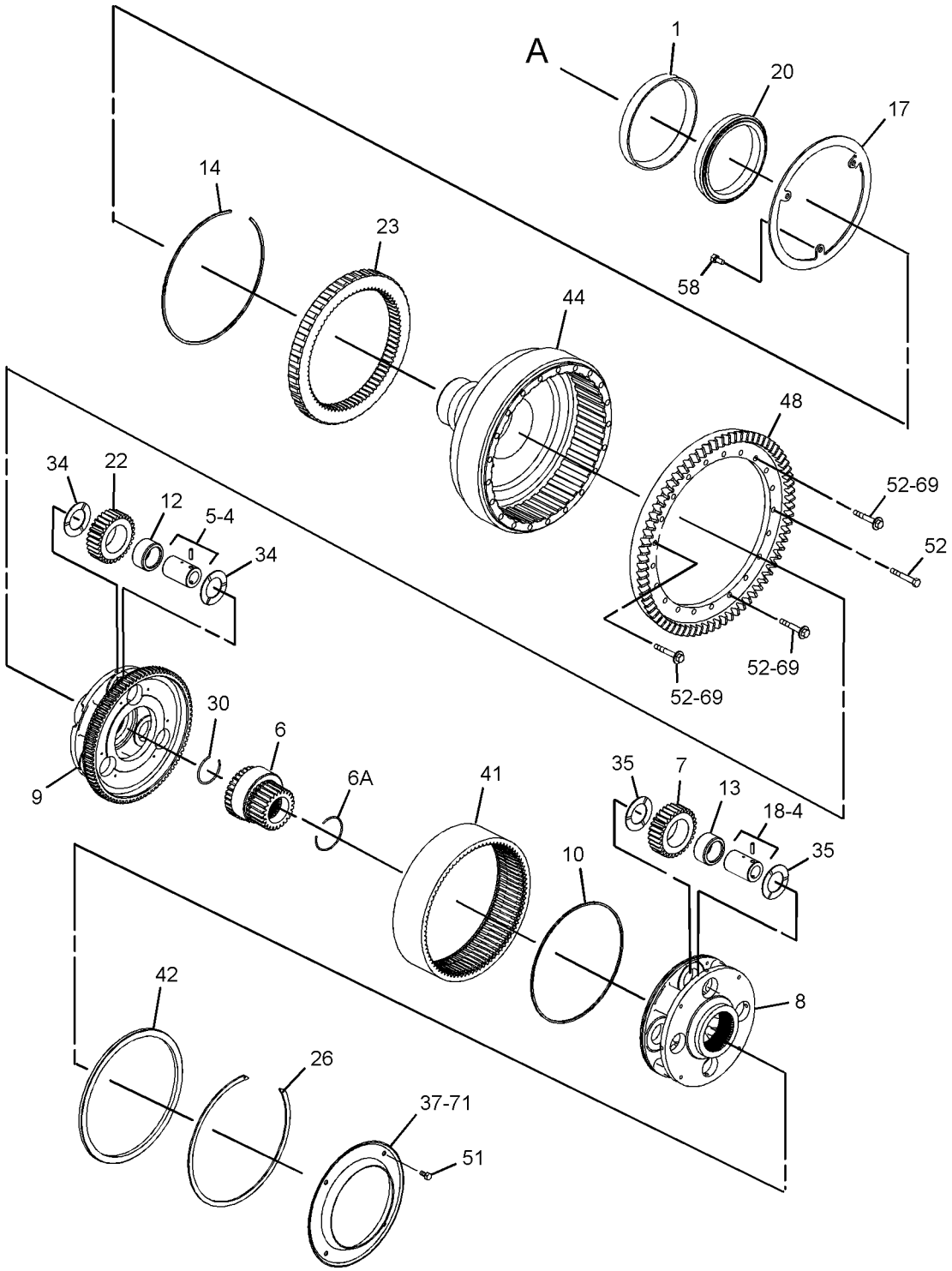

GRAPHIC #1 g01300998

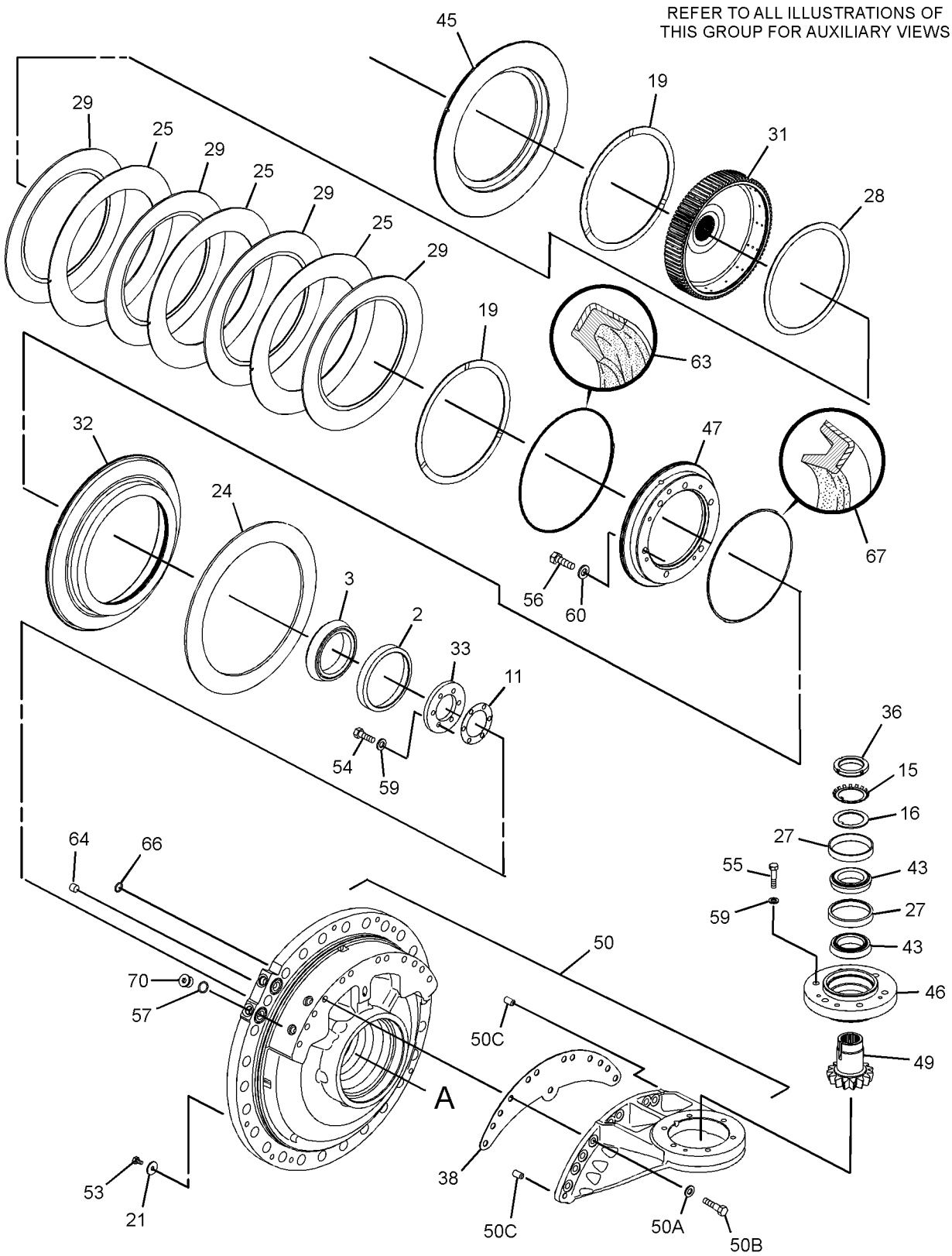

GRAPHIC #2 <END> g01301159

231-5990 BRAKE & PLANETARY GP

S/N: S6T1-UP; S6X1-UP; S6Y1-UP

PART OF 317-1756, 317-1757 POWER TRAIN AR

SMCS-4011, 4255 i04011838

NOTE	REF NO	GRAPHIC REF	PART NUMBER	QTY	PART NAME 1 2 3 4 5 6 (PRODUCT LEVEL)	SEE PAGE
	1	1	3S-2708	3	PIN-SPRING	
	2	1	3T-5807	1	SLINGER	
	3	1	5M-0578	6	BEARING AS-ROLLER	
	4	1	6Y-2704	1	SPRING-DISC	
	5	1	6Y-9373	4	DISC-FRICTION	
	6	1	7T-1885	1	RING	
	7	1	7T-6994	3	PLATE-CLUTCH & BRAKE	
	8	1	7T-8136	3	SHAFT-PLANETARY	
	9	1	7T-9031	1	GEAR-RING (75-TEETH)	
	10	1	7T-9837	1	PLATE	
	11	1	8E-8307	6	DISC-THRUST	
	12	1	9W-7925	2	BEARING AS-TAPERED ROLLER	
	13	1	9W-7926	2	CUP-BEARING	
	14	1	244-2310	3	GEAR-PLANETARY (23-TEETH)	
	15	1	344-0875	1	GEAR AS-SUN (30-TEETH)	
		1	3E-4354	2	BALL	
	16	1	205-5314	1	HOUSING	
	17	1	209-7193	1	CARRIER	
	18	1	214-3573	1	PISTON	
	19	1	216-4591	1	RETAINER AS	
		1	8S-0527	1	PLUG-CUP	
	20	1	0S-1585	12	BOLT (1/2-13X1.5-IN)	
	21	1	1A-1460	6	BOLT (1/2-13X2-IN)	
	22	1	1A-2029	6	BOLT (3/8-16X1.125-IN)	
	23	1	1C-0569	6	BOLT (5/16-18X0.5-IN)	
	24	1	3K-0360	2	SEAL-O-RING	
	25	1	5M-2894	6	WASHER-HARD (10.2X18.5X2.5-MM THK)	
	26	1	5P-8245	18	WASHER-HARD (13.5X25.5X3-MM THK)	
	28	1	6P-5317	1	RING-SEAL (EXTERNAL)	
	30	1	8M-4438	1	SEAL-O-RING	
	31	1	8P-8357	1	RING-SEAL (INTERNAL)	
	32	1	9S-8005	2	PLUG-O-RING	
B	33	1	1U-8846		SEALANT-GASKET	

B-USE AS REQUIRED

231-5990 BRAKE & PLANETARY GP ***(contd.)*** i04011838

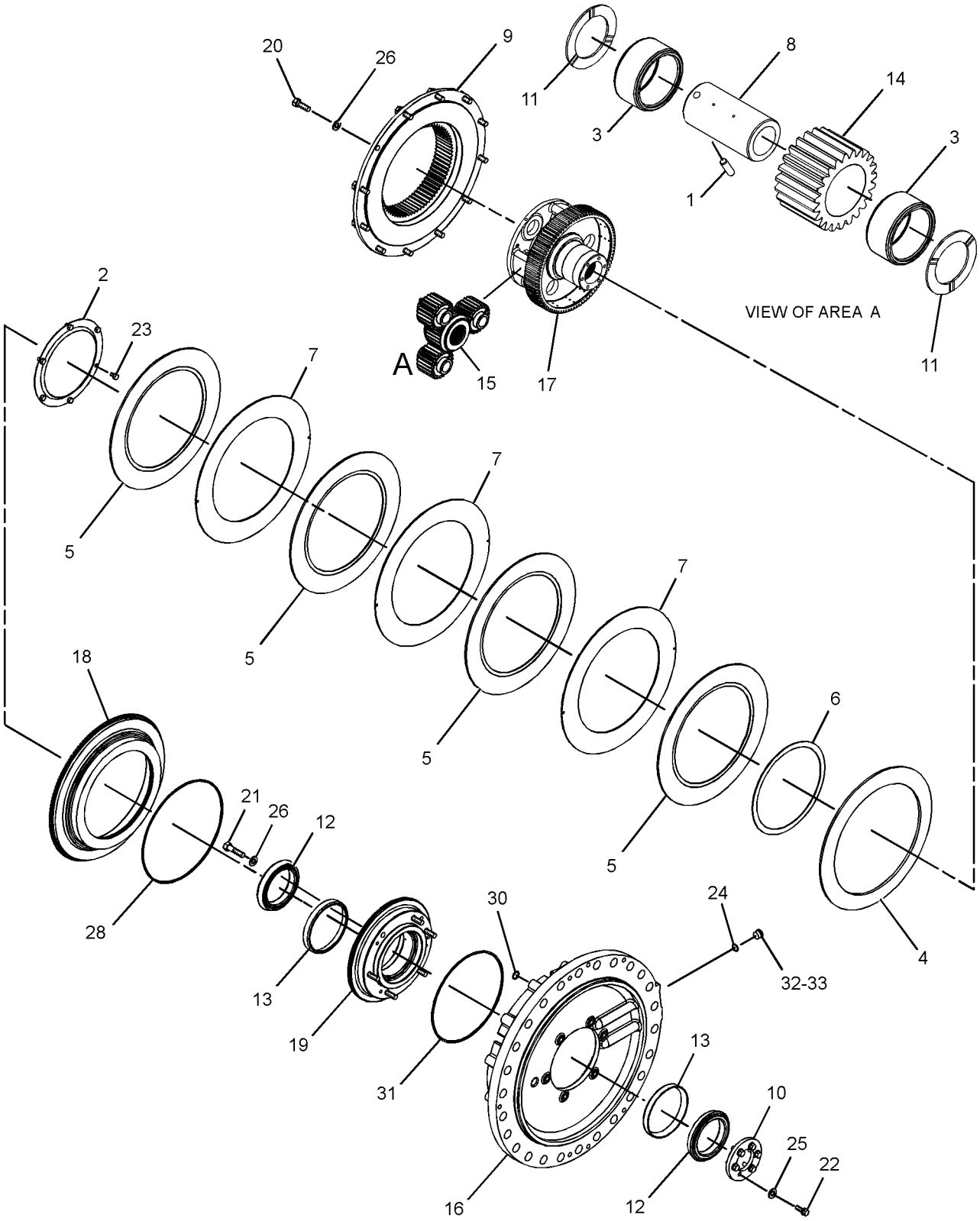

GRAPHIC #1 <END> g02185773

315-9961 CASE & PARTS GP-PLANETARY

S/N: TYA1-UP

PART OF 315-9959 TRANSMISSION AR

SMCS-3030, 3064, 3160 i03977011

NOTE	REF NO	GRAPHIC REF	PART NUMBER	QTY	PART NAME 1 2 3 4 5 6 (PRODUCT LEVEL)	SEE PAGE
	1	1	3T-9921	1	COVER-TRANSMISSION CASE	
	2	1	5K-5120	1	STRIP	
	3	1	5K-9246	1	CONNECTOR	
	4	1	5K-9988	1	TEE-INVERTED FLARED	
	5	1	6K-8498	1	TEE-FLARED	
	6	1	6V-0852	3	CAP-DUST	
	7	1	6V-1720	1	PLATE-SERIAL NUMBER (TRANSMISSION)	
	8	1	7T-8875	1	TUBE AS	
	9	1	7T-8876	1	TUBE AS	
	10	1	8S-9130	1	SCREEN-SUCTION (TRANSMISSION SCAVENGE)	
	11	1	9G-8615	1	COVER	
	12	1	9P-1475	1	SLEEVE	
	13	1	9S-7710	1	ELBOW-FLARED	
	14	1	9W-4159	1	TUBE AS	
	15	1	9W-5334	1	TUBE AS	
Y	16	1	190-2278	1	CASE GP-TRANSMISSION	223
	17	1	203-2288	1	GASKET-COVER	
	18	1	315-9962	1	COVER	
	19	1	031-0218	1	BOLT-LOCKING (3/8-16X0.5-IN)	
	20	1	0S-1585	21	BOLT (1/2-13X1.5-IN)	
	21	1	0T-0102	1	BOLT (3/8-16X0.625-IN)	
	22	1	*164-5567*	3	COUPLER AS-QUICK DISCONNECT (MALE)	
					(EACH INCLUDES)	
		1	6V-3965	1	FITTING (QUICK DISCONNECT)	
		1	214-7568	1	SEAL-O-RING	
	23	1	*164-5616*	2	PLUG AS	
					(EACH INCLUDES)	
		1	9S-6130	1	PLUG	
		1	2S-4078	1	SEAL-O-RING	
	24	1	3S-7781	1	GASKET	
	25	1	4H-5440	1	COVER	
	26	1	5M-2894	1	WASHER-HARD (10.2X18.5X2.5-MM THK)	
	27	1	5P-4057	1	SEAL-O-RING	
	28	1	5P-8245	21	WASHER-HARD (13.5X25.5X3-MM THK)	
	29	1	5P-8998	1	FITTING	
	30	1	7J-8611	1	ELBOW-PIPE	
	31	1	7B-1597	1	CLIP	
	32	1	8M-2530	4	BOLT-12 POINT HEAD (1/2-13X1.25-IN)	
	33	1	8M-4432	2	SEAL-O-RING	
	34	1	8M-5661	1	SEAL-O-RING	
	35	1	8P-0058	1	GASKET-COVER	
	36	1	9M-9647	3	SEAL-O-RING	
M	37	1	9X-2125	23	BOLT-LOCKING (M10X1.5X25-MM)	

M-METRIC PART
Y-SEPARATE ILLUSTRATION

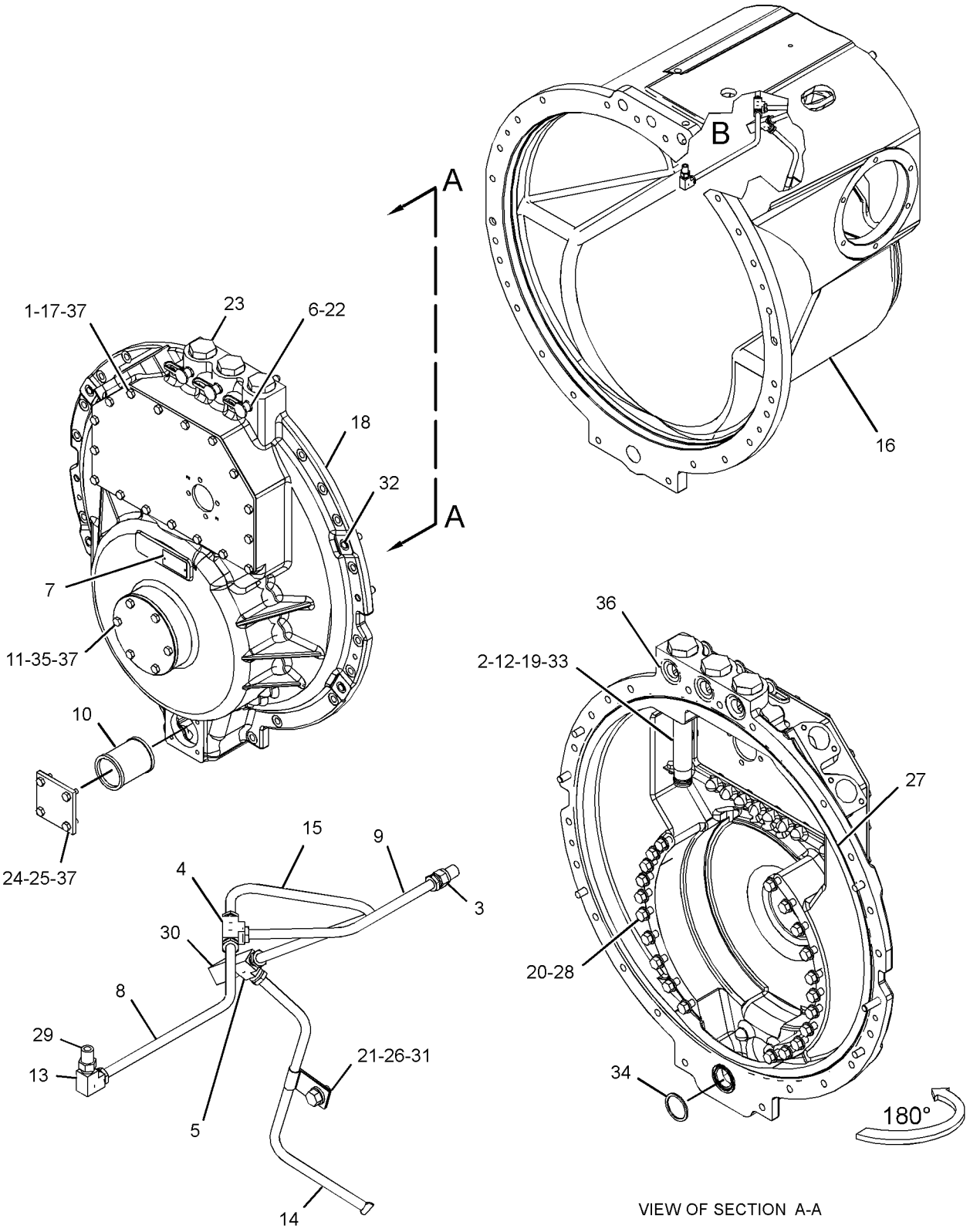

VIEW OF AREA B

VIEW OF SECTION A-A

GRAPHIC #1 <END> g02168639

190-2278 CASE GP-TRANSMISSION

S/N: TYA1-UP

PART OF 315-9961 CASE & PARTS GP-PLANETARY

SMCS-3064 i03982596

NOTE	REF NO	GRAPHIC REF	PART NUMBER	QTY	PART NAME 1 2 3 4 5 6 (PRODUCT LEVEL)	SEE PAGE
	1	1	4B-9785	1	BALL	
	2	1	1A-2610	1	DOWEL	
	3	1	7M-1201	1	DOWEL	
	4	1	3F-3442	2	DOWEL	
	5	1	4B-9782	1	BALL	
	6	1	146-6669	1	GASKET	
	7	1	146-6670	1	COVER	
	8	1	9X-6458	6	WASHER-HARD (10.2X22.5X3-MM THK)	
	9	1	0S-1594	6	BOLT (3/8-16X1-IN)	
F			196-8884	1	BRACKET AS	
			8C-3334	2	RIVET-TUBULAR	
			124-9401	4	CLIP	
F			0S-1620	1	BOLT (1/2-13X0.75-IN)	
F			5P-8245	1	WASHER-HARD (13.5X25.5X3-MM THK)	

F-NOT SHOWN

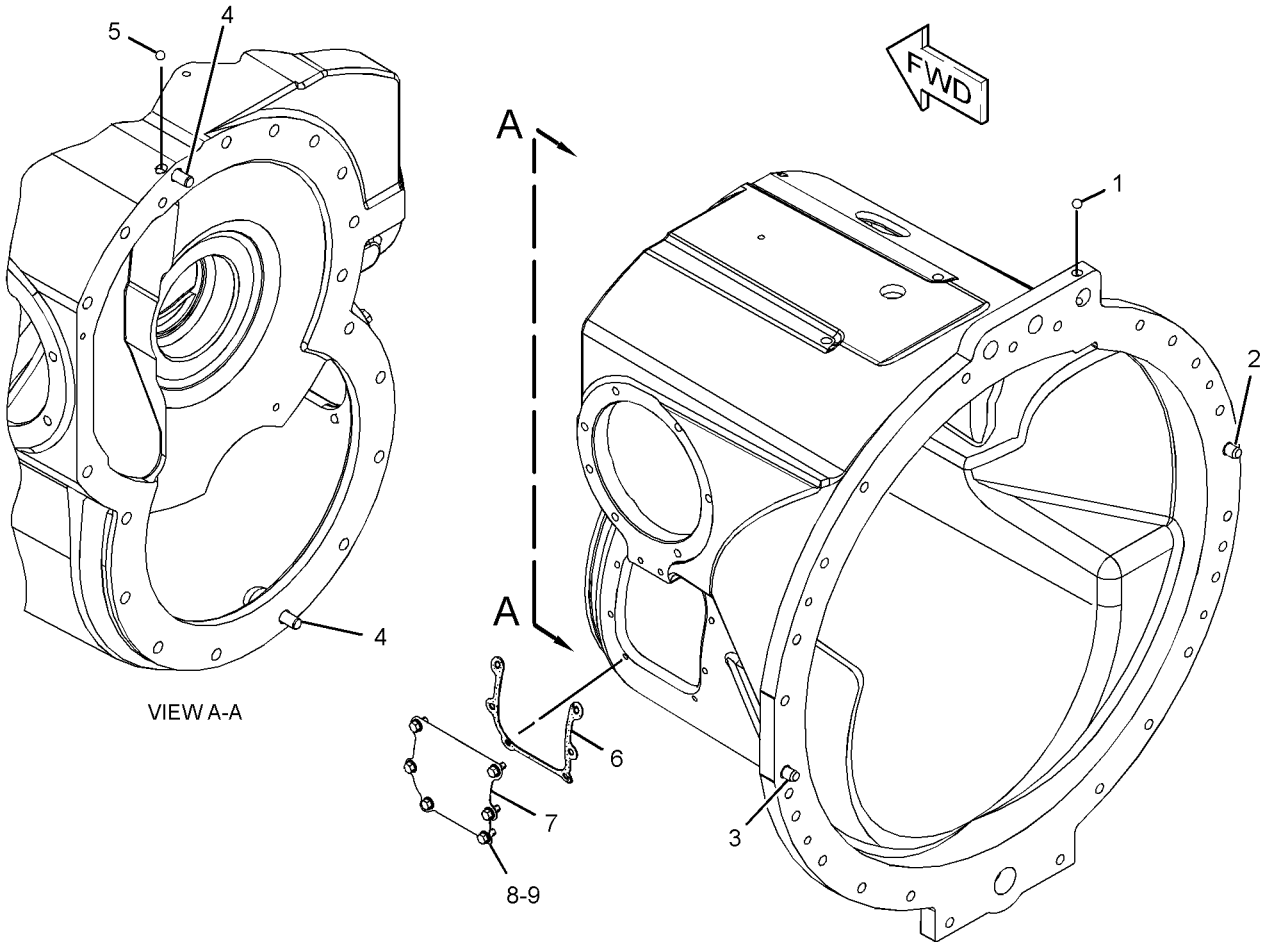

GRAPHIC #1 <END> g01857854

POWER TRAIN

311-6816 CONTROL GP-STEERING & XMSN

S/N: S6T1-UP; S6X1-UP; S6Y1-UP

PART OF 317-1756, 317-1757 POWER TRAIN AR

SMCS-4122 i03976043

NOTE	REF NO	GRAPHIC REF	PART NUMBER	QTY	PART NAME 1 2 3 4 5 6 (PRODUCT LEVEL)	SEE PAGE
	1	1	3E-4374	2	STUD (3/8-24X3.15-IN)	
	2	2	3T-1078	1	VALVE GP-BRAKE (PILOT SHUTOFF)	
		2	3T-5224	2	SEAL-SPOOL	
		2	3T-5225	2	RING	
	3	2	5D-3546	1	COLLAR	
	4	1	246-2641	1	PADLOCK GP	
		1	5P-8500	1	KEY	
	5	2	6G-6396	1	WASHER	
	6	2	6T-8387	1	BEARING	
	7	2	6T-8388	2	FLANGE	
	8	1	6V-5791	1	END AS-ROD	
	9	1	6Y-2768	1	HOUSING-BEARING	
	10	2	6Y-2844	1	PLATE AS	
	11	2	6Y-2851	1	ROD-EYE	
	12	1	7K-1181	1	STRAP-CABLE	
	13	2	7P-4190	2	BEARING-ROLLER	
	14	2	8E-4525	1	BOOT	
	15	1,2	8T-8932	4	PIN AS-SPRING	
	16	1	9G-0715	2	COVER	
	17	1	9G-0742	2	BOOT	
	18	1	136-6093	1	SEAL	
	19	2	143-6871	1	SPACER (26.93X31.75X58-MM THK)	
	20	1	161-3964	1	COVER AS	
	21	2	166-9204	1	SHAFT	
	22	2	166-9209	1	BRACKET	
	23	2	166-9212	1	LEVER	
	24	1	166-9213	1	ROD	
	25	1	203-2288	1	GASKET-COVER	
I	26	1	285-8893	1	HOSE AS	
	27	2	298-7340	1	LEVER	
	28	2	313-9374	1	LINK AS	
I	29	1	317-4178	1	HOSE AS	
	30	1	317-4616	1	CONSOLE AS	
		1	1V-8638	2	NUT (3/8-16-THD)	
M		1	6V-9632	3	NUT-WELD (M6X1-THD)	
M		1	8T-3490	7	NUT-WELD (M10X1.5-THD)	
	31	1	317-4618	1	BRACKET AS	
M		1	8T-3490	1	NUT-WELD (M10X1.5-THD)	
	32	2	319-1676	1	LEVER	
	33	1	319-3729	1	GUARD AS	
Y	34	1	*321-2029*	1	CONTROL GP-STEERING & XMSN	228
I	35	1	323-1450	1	HOSE AS	
	36	2	030-8537	1	BOLT-LOCKING (3/8-16X1.5-IN)	
	37	2	*148-8365*	2	ELBOW AS	
					(EACH INCLUDES)	
		2	8T-6876	1	ELBOW	
		2	3J-1907	1	SEAL-O-RING	
		2	6V-8398	1	SEAL-O-RING	
	38	1	*150-4043*	3	CONNECTOR AS	
					(EACH INCLUDES)	
		1	6V-9873	1	CONNECTOR	
		1	3J-1907	1	SEAL-O-RING	
		1	6V-8398	1	SEAL-O-RING	
	39	1	186-0359	1	CLIP	
	40	2	1A-9252	1	END-ADJUSTMENT ROD	
	41	2	1B-0676	1	PIN	

311-6816 CONTROL GP-STEERING & XMSN ***(contd.)*** i03976043

NOTE	REF NO	GRAPHIC REF	PART NUMBER	QTY	PART NAME 1 2 3 4 5 6 (PRODUCT LEVEL)	SEE PAGE
	42	2	1B-8706	2	KEY-WOODRUFF	
	43	2	1M-1341	2	END-YOKE ROD	
	44	2	3B-4615	3	PIN-COTTER	
	45	1	4H-9105	1	SEAL-O-RING	
	46	1	5P-1075	3	WASHER-HARD (10.2X22.5X3-MM THK)	
	47	1	5P-6438	1	END-YOKE ROD	
	48	1,2	5S-7379	5	BOLT (3/8-16X0.875-IN)	
	49	1	6K-8180	1	GROMMET	
	50	1	6V-3265	1	CLIP	
	51	1	6V-8183	2	NUT-FULL (3/8-24-THD)	
	52	1	6V-8187	2	NUT (1/4-28-THD)	
	53	2	6V-8189	2	NUT (5/16-18-THD)	
	54	2	6V-8801	1	NUT (3/8-16-THD)	
	55	2	7X-0440	2	BOLT (5/16-18X1.75-IN)	
	56	1,2	7X-7729	18	WASHER (11X25X3-MM THK)	
	57	1	8M-5661	2	SEAL-O-RING	
	58	1,2	8T-4121	14	WASHER-HARD (11X21X2.5-MM THK)	
M	59	1	8T-4137	18	BOLT (M10X1.5X20-MM)	
M	60	1,2	8T-4195	14	BOLT (M10X1.5X30-MM)	
M	61	2	8T-4196	2	BOLT (M10X1.5X35-MM)	
	62	2	8T-4224	2	WASHER-HARD (8.8X16X2-MM THK)	
	63	2	8T-4896	4	WASHER-HARD (10.2X18.5X2.5-MM THK)	
	64	2	8T-4994	2	WASHER-HARD (20X36.5X3.5-MM THK)	
	65	2	9L-7712	1	NUT (3/8-24-THD)	
	66	1	9S-1354	2	NUT (5/8-18-THD)	
	67	1	9X-8250	1	CLIP	

I-REFER TO HYDRAULIC INFORMATION SYSTEM
M-METRIC PART
Y-SEPARATE ILLUSTRATION

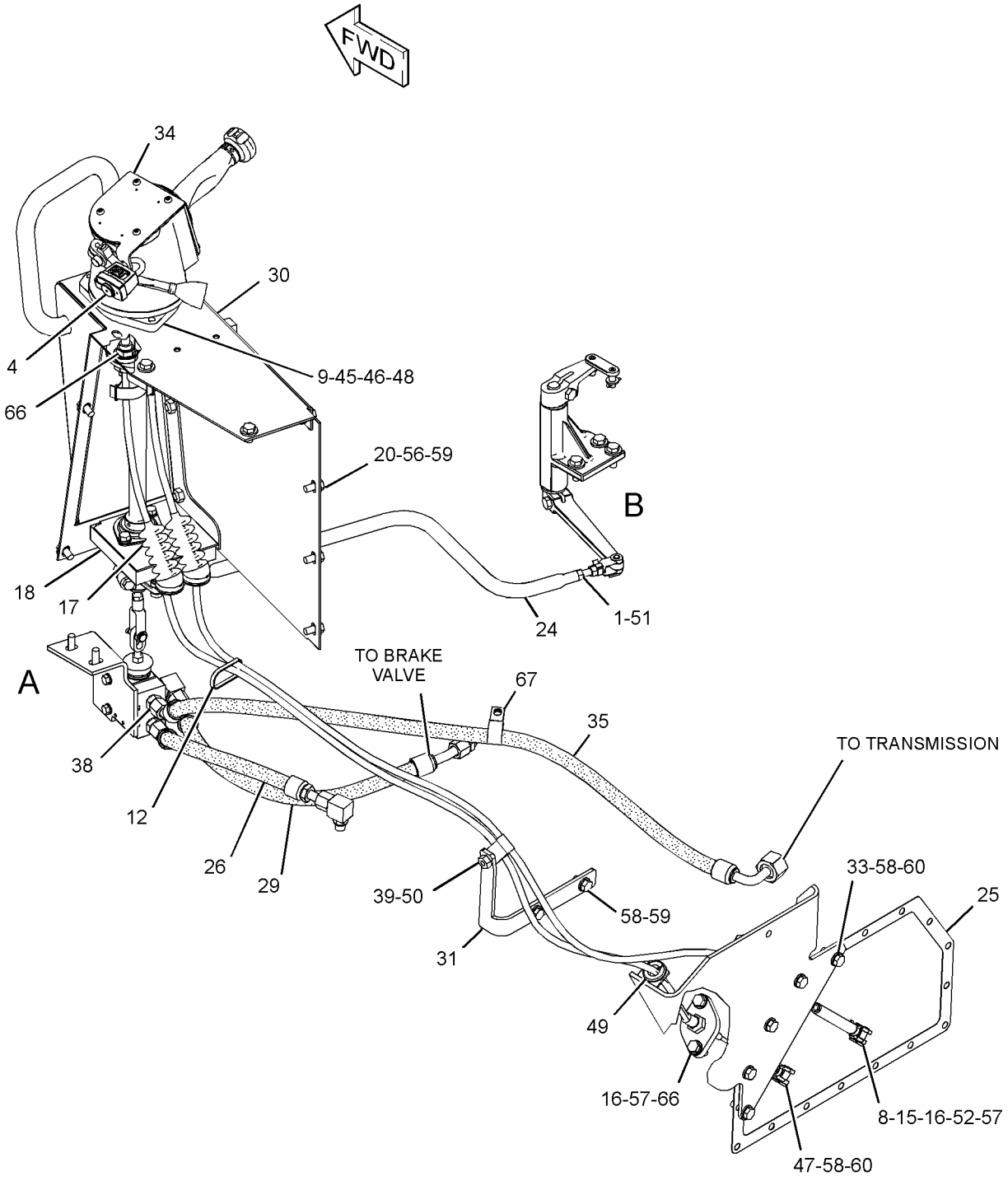

REFER TO ALL ILLUSTRATIONS OF THIS GROUP FOR AUXILIARY VIEWS

GRAPHIC #1 g02175707

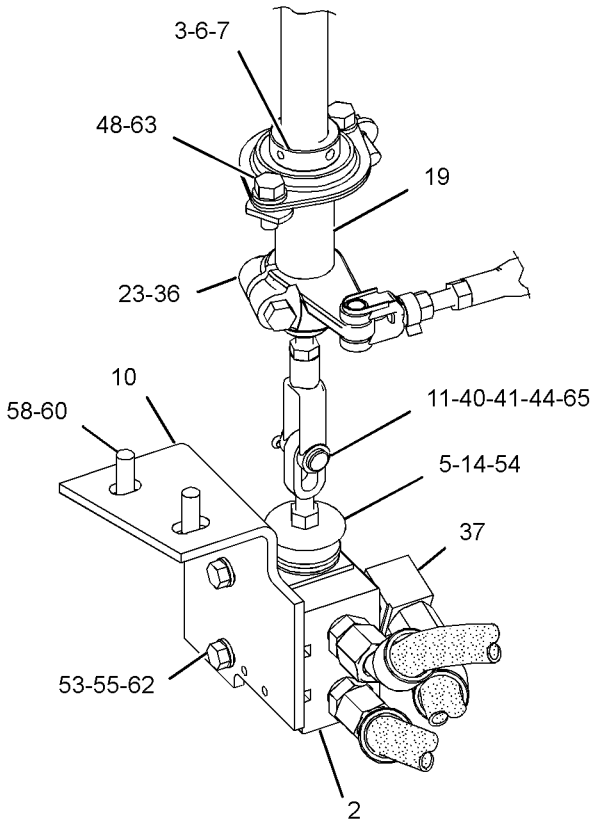

VIEW AREA A
(PARTS REMOVED FOR CLARITY)

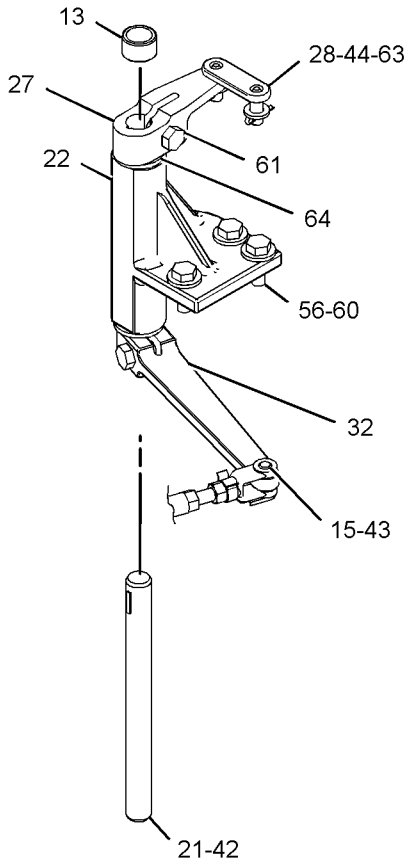

VIEW AREA B

GRAPHIC #2 <END> g02175708

POWER TRAIN

321-2029 CONTROL GP-STEERING & XMSN

S/N: S6T1-UP; S6X1-UP; S6Y1-UP

PART OF 311-6816 CONTROL GP-STEERING & XMSN

SMCS-4122 i04030631

NOTE	REF NO	GRAPHIC REF	PART NUMBER	QTY	PART NAME 1 2 3 4 5 6 (PRODUCT LEVEL)	SEE PAGE
	1	1	6Y-2782	1	SHAFT	
	2	1	6Y-2780	1	LEVER	
	3	1	6V-8801	2	NUT (3/8-16-THD)	
	4	1	3H-3433	1	PIN-SPRING	
B	5	1	6Y-2766	2	WASHER-THRUST	
	6	1	8S-2195	3	BEARING-ROLLER	
	7	1	6Y-2778	1	SHAFT	
	8	1	6Y-6850	1	HANDLE	
	9	1	6Y-7579	1	HANDLE AS	
	10	1	8F-7702	1	SEAL-LIP TYPE	
	11	1	5S-7343	2	WASHER	
	12	1	4B-1270	1	SCREW-MACHINE (8-32X0.75-IN)	
	13	1	8E-9483	1	COLLAR (6-32-THD)	
	14	1	8T-2540	1	BOLT-SOCKET HEAD (6-32-THD)	
	15	1	6Y-3140	2	BALL JOINT AS	
	16	1	6V-8187	3	NUT (1/4-28-THD)	
	17	1	7X-6278	2	CABLE AS	
	18	1	8T-4896	4	WASHER-HARD (10.2X18.5X2.5-MM THK)	
	19	1	6Y-3141	1	ROD AS	
	20	1	6V-8183	1	NUT-FULL (3/8-24-THD)	
	21	1	9S-1354	4	NUT (5/8-18-THD)	
	22	1	6Y-2841	2	BALL BEARING	
	23	2	8T-5410	2	SEAL-LIP TYPE	
	24	1	2N-3680	7	SCREW-HEAD (1/4-20X0.75-IN)	
	25	1	6Y-2773	1	COVER AS	
	26	1	6Y-7573	1	RING	
	27	1	6B-4541	2	SCREW-MACHINE	
	28	1,2	5L-5711	1	PIN-SPRING	
	29	2	8E-0853	1	BALL JOINT AS	
	30	2	8E-0852	1	PIN	
	31	2	7K-1181	2	STRAP-CABLE	
	32	1	6Y-2850	1	ROD	
	33	2	7X-0301	2	BOLT (3/8-16X7-IN)	
	34	1	6Y-2784	1	TUBE AS	
	35	1	6Y-2767	1	HOUSING	
	36	1	6Y-2765	1	HOUSING-LOWER	
	37	1	5L-2029	1	BALL BEARING	
	38	1	6Y-2763	1	HOUSING-MAIN	
	39	2	7X-3317	1	SCREW-HEX SOCKET	
	40	2	101-2868	1	DOWEL	
	41	2	6V-3545	1	BEARING-ROLLER	
	42	2	6Y-2854	1	WASHER-THRUST	
	43	2	6Y-2783	1	LEVER-BRAKE	
	44	2	037-7388	1	KNOB	
	45	1	6Y-2855	1	PLATE	
	46	2	8E-1358	2	PLATE	
	47	2	9X-6281	4	SCREW-MACHINE (4-40X1-IN)	
	48	1	6Y-2777	1	GASKET	
	49	2	6Y-2847	1	MOUNT	
	50	2	5F-9144	2	SEAL-O-RING	
	51	2	6Y-2846	1	SPRING	
	52	1	6Y-2779	1	LEVER	
	54	1	287-3838	1	SWITCH AS (BACKUP ALARM)	
	54A	1	287-3838	1	SWITCH AS (NEUTRAL START)	
					(EACH SWITCH AS INCLUDES)	

321-2029 CONTROL GP-STEERING & XMSN ***(contd.)*** i04030631

NOTE	REF NO	GRAPHIC REF	PART NUMBER	QTY	PART NAME 1 2 3 4 5 6 (PRODUCT LEVEL)	SEE PAGE
		1	102-8803	1	KIT-RECEPTACLE (3-PIN)	
					(INCLUDES RECEPTACLE AS & WEDGE)	
		1	8T-8729	3	PIN-CONNECTOR (16-GA TO 18-GA)	
E		1	114-8843		SLEEVE-PLASTIC (20-CM)	
	55	1	108-8174	2	INSULATION-SWITCH	
	56	1	8E-1203	1	LEVER	
	57	1	4H-1641	1	PIN-SPRING	
	58	1	9X-6016	3	SCREW-HEX SOCKET (8-32X0.875-IN)	
	59	2	009-3138	1	NUT-KNURL	
	60	2	6Y-2848	1	MOUNT	
	61	2	4B-9782	1	BALL	
	62	1	6V-3832	1	SEAL-O-RING	
	63	1	7X-1552	1	SEAL-V-RING	
	64	1	6Y-2764	1	RING	
	65	1	6Y-7576	1	PLATE	
	66	1	6Y-2770	1	PLATE	
	67	1	6Y-2781	1	WASHER-THRUST	
	68	1	6Y-7577	1	GASKET	
	69	2	8S-7048	1	ROD END	
	70	2	8T-4205	1	WASHER-HARD (7.2X14.5X2-MM THK)	
	71	2	5N-6096	1	SPRING	

B-USE AS REQUIRED
E-ORDER BY THE CENTIMETER

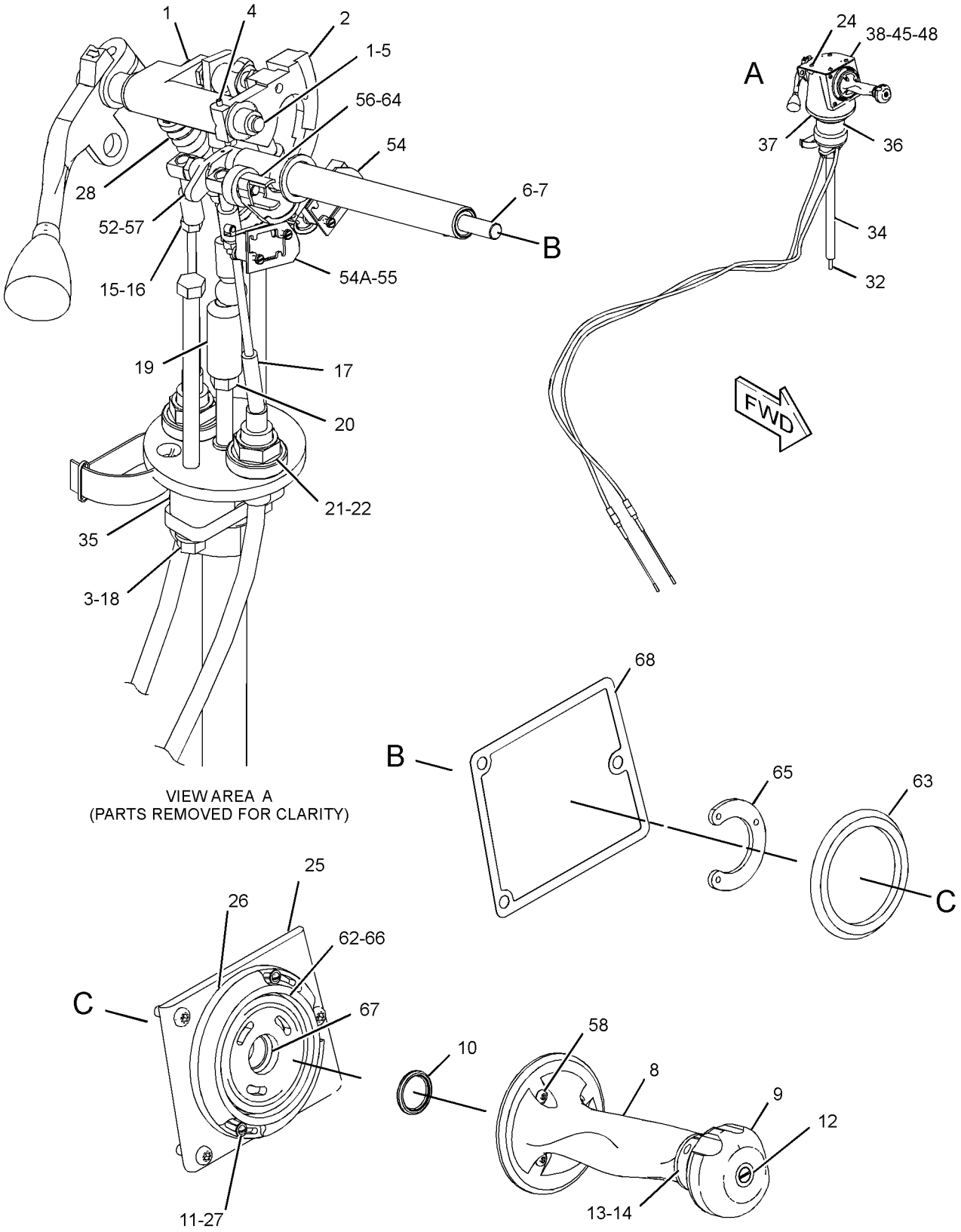

GRAPHIC #1 g02219175

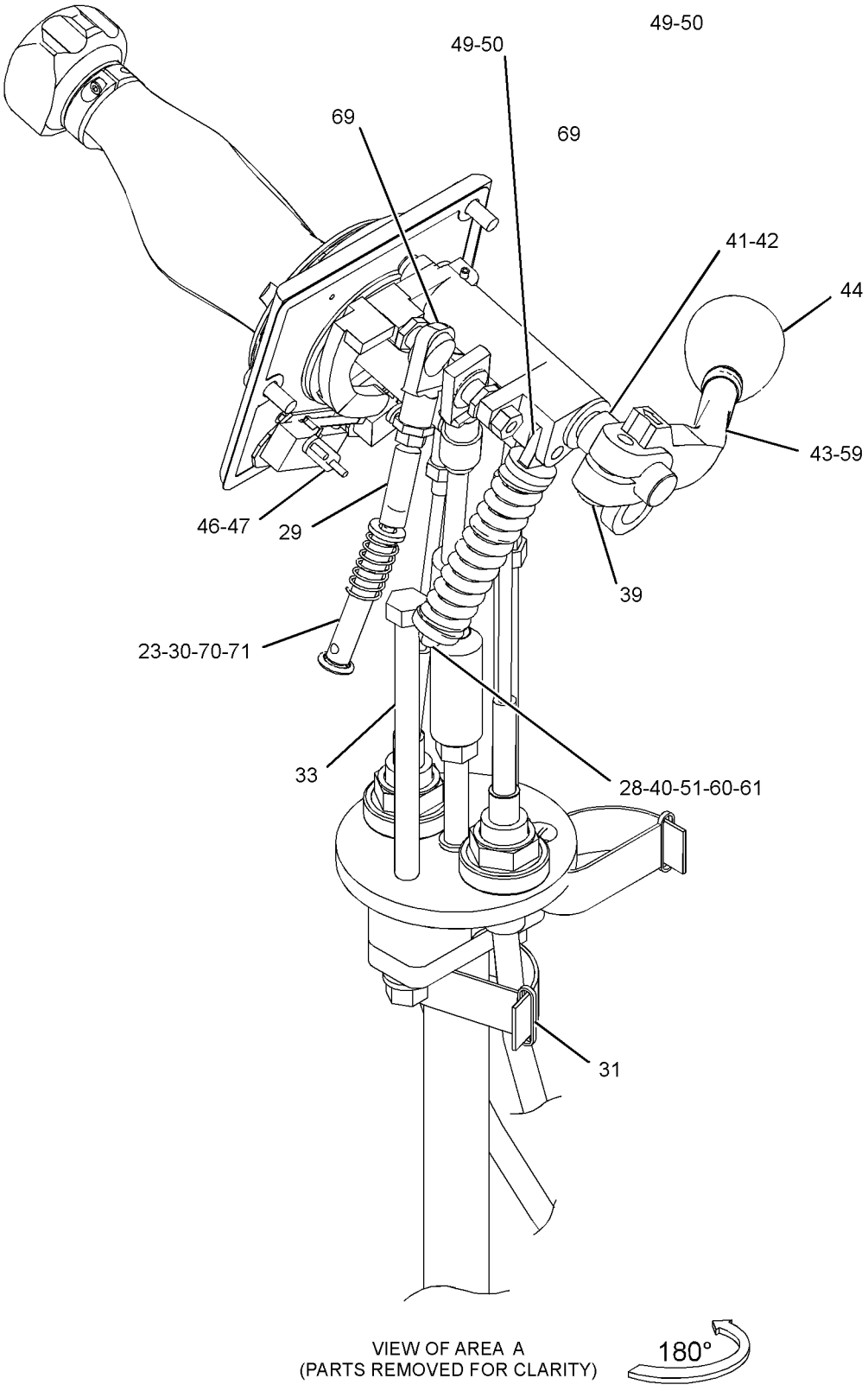

GRAPHIC #2 <END> g02176563

315-9964 CONTROL GP-TRANSMISSION HYD

S/N: TYA1-UP

PART OF 315-9959 TRANSMISSION AR

SMCS-3073, 3167 i04032637

NOTE	REF NO	GRAPHIC REF	PART NUMBER	QTY	PART NAME 1 2 3 4 5 6 (PRODUCT LEVEL)	SEE PAGE
	1	1	3T-4403	2	SPRING	
	2	1	6S-6646	2	PIN-COTTER	
	3	1	9G-2459	1	SLEEVE	
	4	1	9G-2460	1	SLEEVE	
	5	1	9G-2461	1	ADAPTER	
	6	1	9P-1480	2	SLEEVE	
	7	1	9P-5977	2	LEVER AS	
					(EACH INCLUDES)	
		1	2H-3429	2	RING-RETAINING	
		1	8H-8175	1	BUSHING	
		1	9P-6217	1	DOWEL	
Y	8	1	315-9965	1	VALVE GP-PRIORITY (LUBRICATION DISTRIBUTION)	281
Y	9	1	315-9966	1	VALVE GP-TRANSMISSION CONTROL	285
	10	1	0L-1351	4	BOLT (3/8-16X0.875-IN)	
	11	1	1D-4539	4	BOLT (5/16-18X2.5-IN)	
	12	1	*244-3712*	2	PLUG AS	
					(EACH INCLUDES)	
		1	9S-4191	1	PLUG-O-RING	
		1	214-7568	1	SEAL-O-RING	
	13	1	2J-4672	1	GASKET	
	14	1	4H-1394	4	WASHER (19.4X34.9X1.2-MM THK)	
	15	1	5F-4899	4	BOLT (3/8-16X5.5-IN)	
	16	1	5M-2894	4	WASHER-HARD (10.2X18.5X2.5-MM THK)	
	17	1	6V-4365	4	SEAL-O-RING	
	18	1	8M-4432	4	SEAL-O-RING	
	19	1	8M-4986	2	SEAL-O-RING	
	20	1	9M-1974	4	WASHER-HARD (8.8X16X2-MM THK)	

Y-SEPARATE ILLUSTRATION

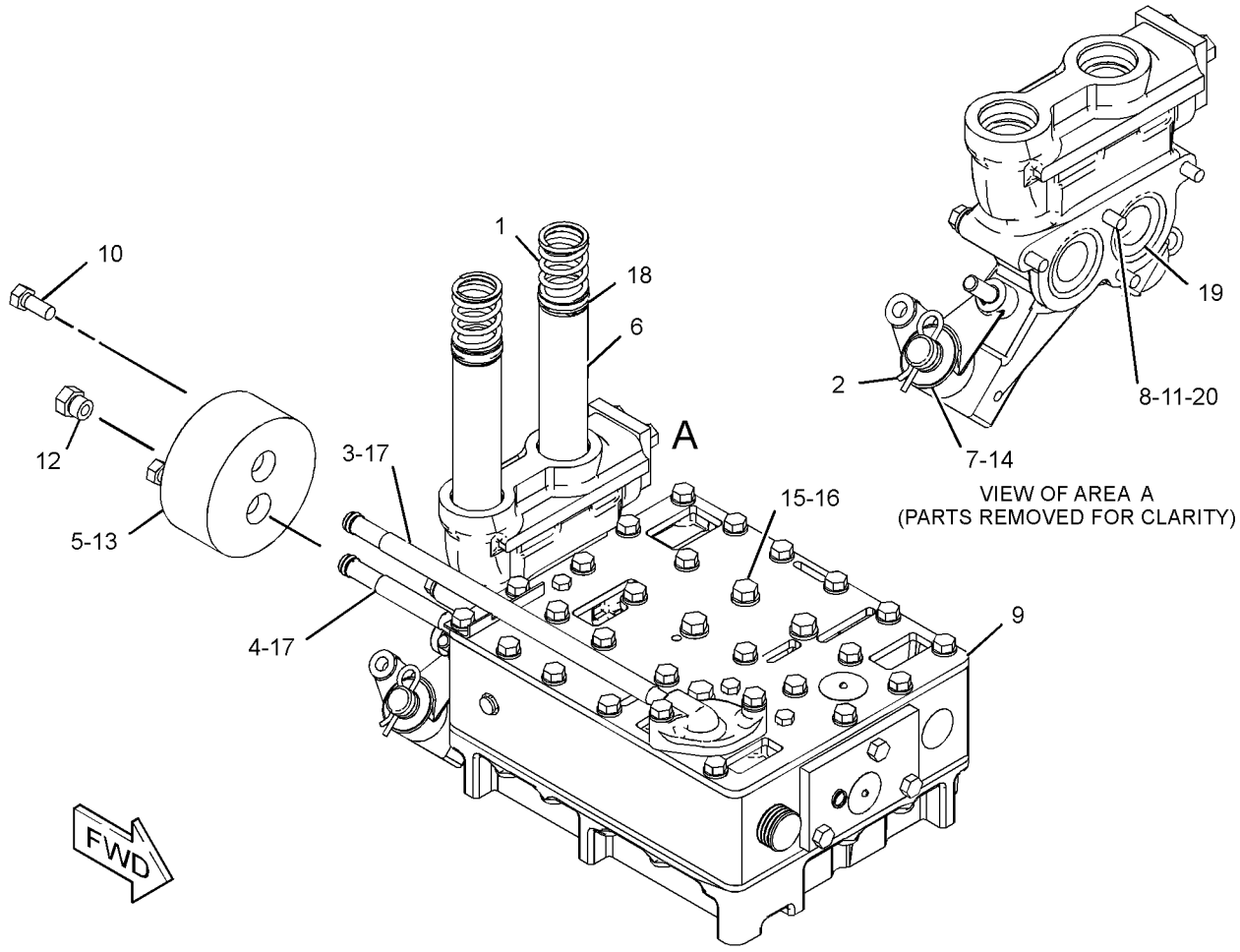

GRAPHIC #1 <END> g02177231

238-1116 COOLER GP-TRANSMISSION OIL

S/N: THX19900-UP

PART OF 318-1904, 318-1905 ENGINE AR-COMPLETE

SMCS-1375 i04017555

NOTE	REF NO	GRAPHIC REF	PART NUMBER	QTY	PART NAME 1 2 3 4 5 6 (PRODUCT LEVEL)	SEE PAGE
	1	1	2S-0795	2	GASKET	
	2	1	6F-7062	1	WASHER (12.7X19.05X1.83-MM THK)	
	3	1	8M-9307	1	PLUG (TRANSMISSION OIL COOLER)	
	4	1	8S-4304	1	BONNET-XMSN OIL COOLER	
	5	1	180-3907	1	SEAL-INTEGRAL	
R	6	1	187-3523	1	CORE AS-OIL COOLER (TRANSMISSION)	
	6A	1	8T-6764	1	PLUG-PIPE (1/8-27-THD)	
	7	1	198-3462	1	DIVERTER	
	8	1	238-1117	1	BONNET	
	9	1	348-5792	1	BRACKET	
	10	1	*148-8407*	1	PLUG AS	
		1	3J-1907	1	SEAL-O-RING	
		1	9S-4191	1	PLUG-O-RING	
	11	1	*148-8411*	1	PLUG AS	
		1	3K-0360	1	SEAL-O-RING	
		1	9S-4185	1	PLUG-O-RING	
	12	1	*164-4180*	1	PLUG AS	
		1	7M-8485	1	SEAL-O-RING	
		1	9S-4181	1	PLUG-O-RING	
M	13	1	6V-3668	4	BOLT (M12X1.75X30-MM)	
M	14	1	6V-3823	2	BOLT (M12X1.75X60-MM)	
M	15	1	6V-5696	6	BOLT (M12X1.75X80-MM)	
	16	1	7D-1649	3	WASHER-HARD (13.5X32X5-MM THK)	
M	17	1	8T-5030	2	BOLT (M10X1.5X120-MM)	
	18	1	8T-6761	1	PLUG-PIPE	
M	19	1	8T-6854	4	BOLT (M10X1.5X200-MM)	
M	20	1	6V-8675	1	BOLT (M12X1.75X35-MM)	

M-METRIC PART
R-REMFG PART MAY BE AVAILABLE

238-1116 COOLER GP-TRANSMISSION OIL ***(contd.)*** i04017555

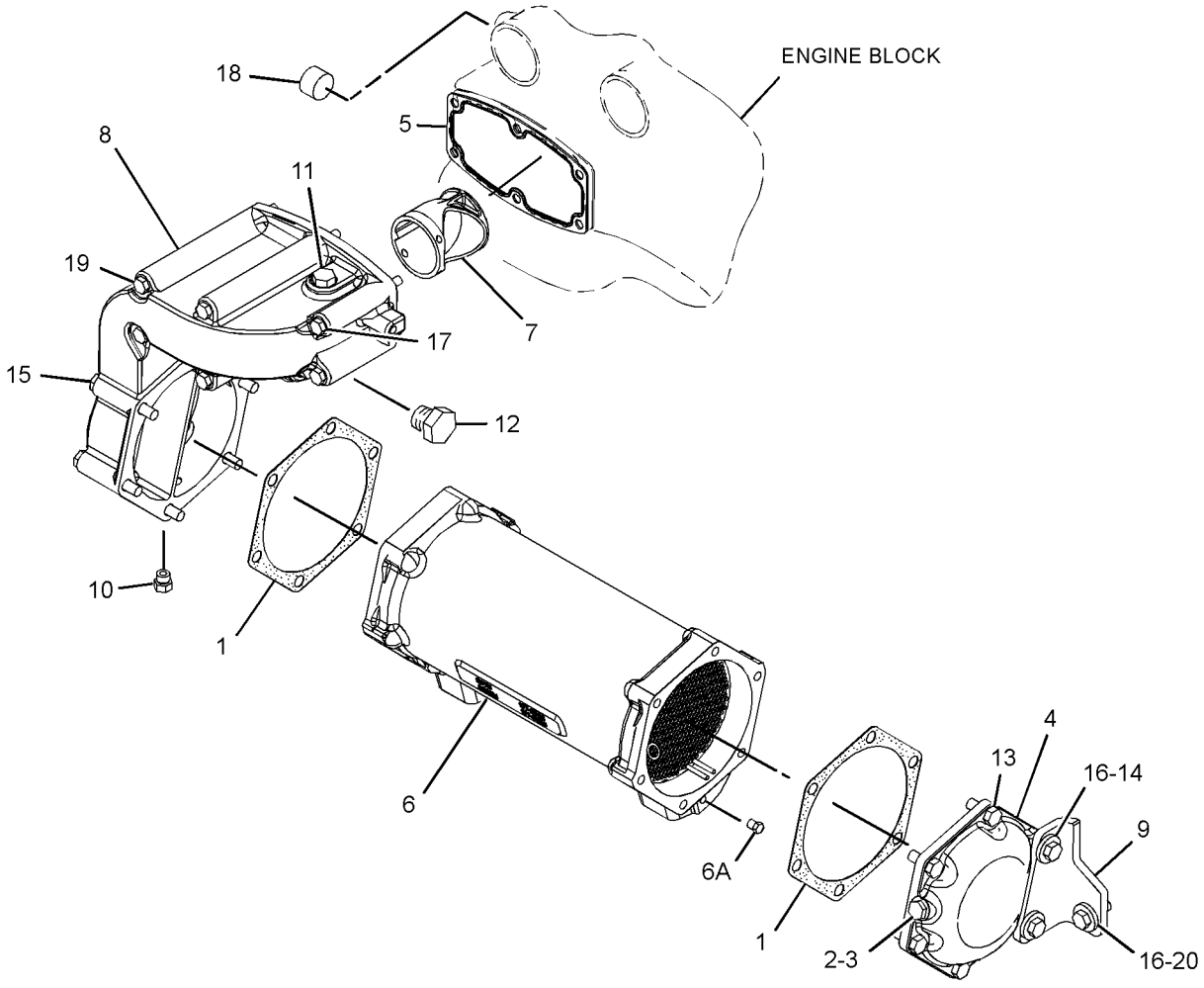

GRAPHIC #1 <END> g02129633

225-1506 COUPLING & GUARD GP–POWERSHIFT

S/N: S6T1-UP; S6X1-UP; S6Y1-UP

PART OF 317-1756, 317-1757 POWER TRAIN AR

SMCS-3279 i03975749

NOTE	REF NO	GRAPHIC REF	PART NUMBER	QTY	PART NAME 1 2 3 4 5 6 (PRODUCT LEVEL)	SEE PAGE
Y	1	1	*227-0924*	1	COUPLING GP-PUMP	237
	2	1	284-0638	1	GUARD AS	
		1	7T-1099	1	LINK	
M		1	9R-2672	1	BOSS-THREADED (M10X1.5-THD)	
M		1	8T-3490	4	NUT-WELD (M10X1.5-THD)	
	3	1	284-0639	1	BRACKET AS	
M		1	8T-3490	5	NUT-WELD (M10X1.5-THD)	
M		1	9R-2672	1	BOSS-THREADED (M10X1.5-THD)	
	4	1	8T-4222	4	WASHER-PLATED (11X32X2.5-MM THK)	
M	5	1	8T-4195	4	BOLT (M10X1.5X30-MM)	

M-METRIC PART
Y-SEPARATE ILLUSTRATION

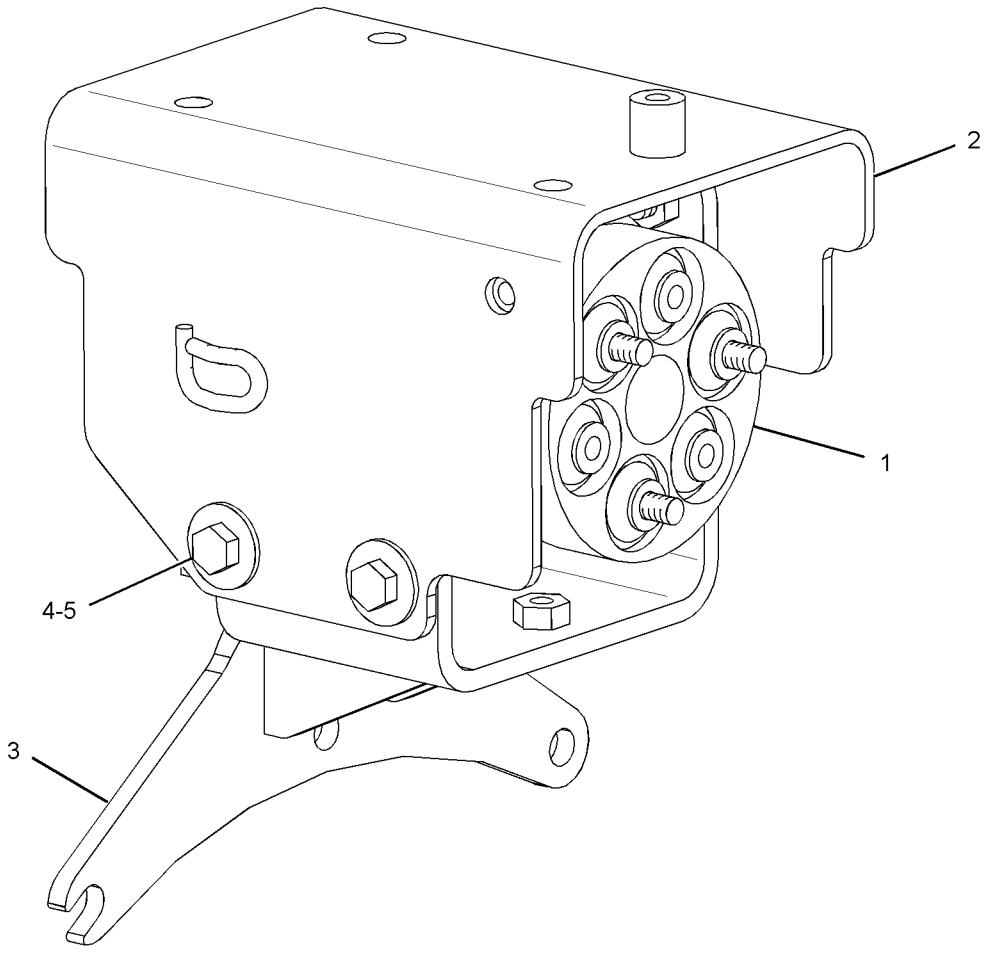

GRAPHIC #1 <END> g01362253

227-0924 COUPLING GP-PUMP

S/N: S6T1-UP; S6X1-UP; S6Y1-UP
PART OF 225-1506 COUPLING & GUARD GP

SMCS-5062 i03975592

NOTE	REF NO	GRAPHIC REF	PART NUMBER	QTY	PART NAME 1 2 3 4 5 6 (PRODUCT LEVEL)	SEE PAGE
	1	1	198-1883	1	TUBE AS	
	2	1	211-9087	2	COUPLING AS	
					(EACH INCLUDES)	
		1	211-9085	3	BUSHING AS	
	3	1	8T-4121	12	WASHER-HARD (11X21X2.5-MM THK)	
M	4	1	8T-4182	6	BOLT (M10X1.5X45-MM)	
M	5	1	8T-4185	6	BOLT (M10X1.5X50-MM)	

M-METRIC PART

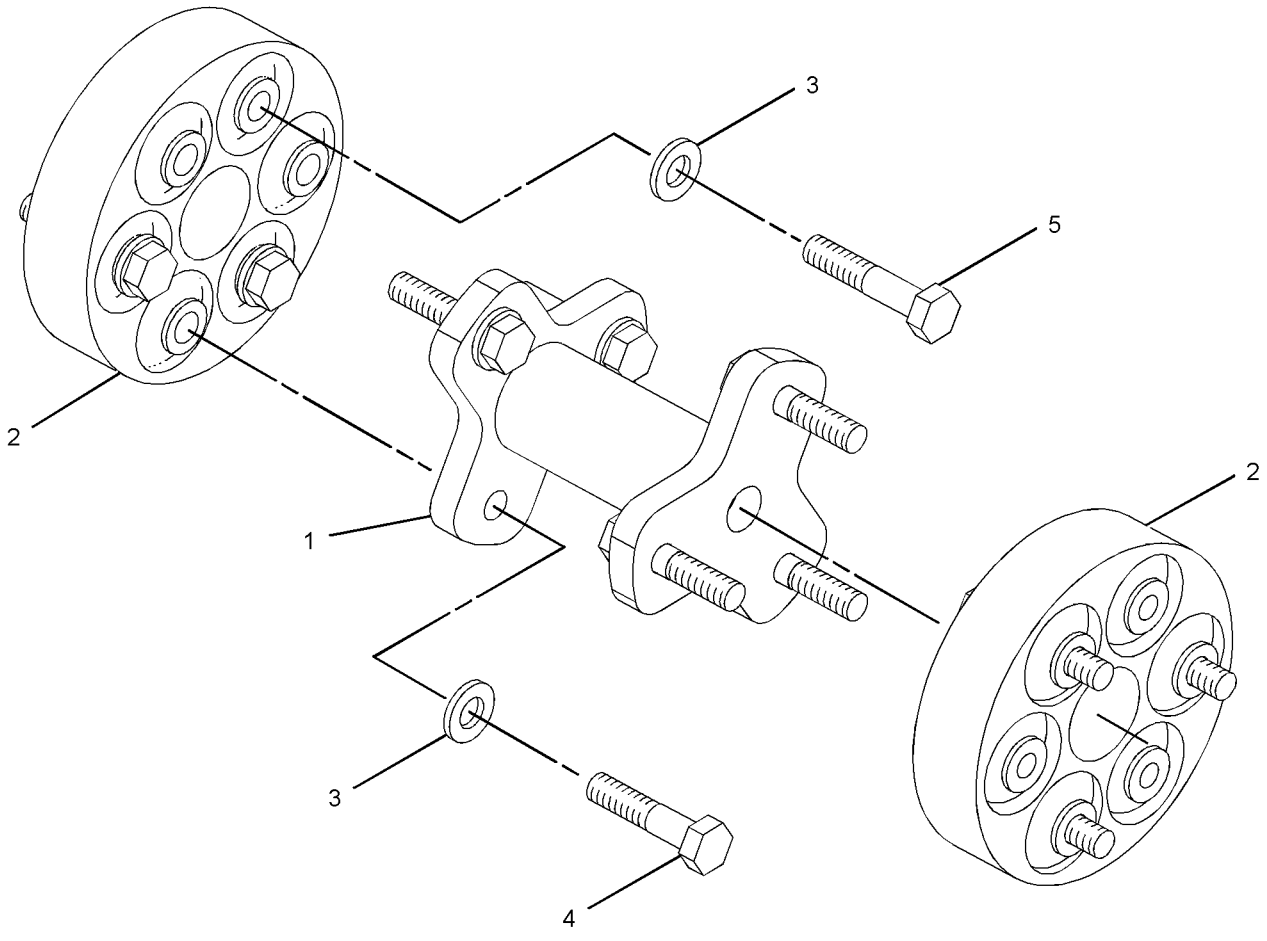

GRAPHIC #1 <END> g01208311

106-4150 DRAIN GP-ECOLOGY

S/N: S6T1-UP; S6X1-UP; S6Y1-UP
PART OF 256-9988 DRAIN GP-ECOLOGY
AN ATTACHMENT

SMCS-3100 i03998319

NOTE	REF NO	GRAPHIC REF	PART NUMBER	QTY	PART NAME 1 2 3 4 5 6 (PRODUCT LEVEL)	SEE PAGE
	1	1	4N-3808	1	PIN-SPRING	
	2	1	5P-9658	1	SEAL-O-RING	

106-4150 DRAIN GP-ECOLOGY ***(contd.)*** i03998319

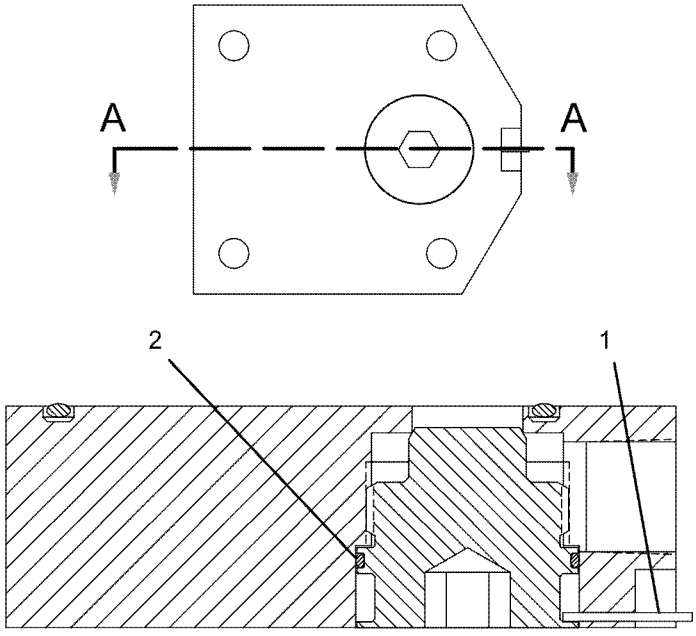

SEC-
TION
A-A

GRAPHIC #1 <END> g01083446

256-9988 DRAIN GP-ECOLOGY

S/N: S6T1-UP; S6X1-UP; S6Y1-UP
AN ATTACHMENT

SMCS-3100 i03997829

NOTE	REF NO	GRAPHIC REF	PART NUMBER	QTY	PART NAME 1 2 3 4 5 6 (PRODUCT LEVEL)	SEE PAGE
	1	1	4B-7739	1	PLUG-DRAIN (TRANSMISSION)	
	2	1	8H-9819	1	ADAPTER-PLUG	
Y	3	1	106-4150	1	DRAIN GP-ECOLOGY	238
	4	1	2B-0858	2	PLUG-PIPE	
	5	1	2H-3931	1	SEAL-O-RING	
	6	1	8H-9818	1	GASKET	
M	7	1	8T-4136	2	BOLT (M10X1.5X25-MM)	
M	8	1	8T-4185	4	BOLT (M10X1.5X50-MM)	

M-METRIC PART
Y-SEPARATE ILLUSTRATION

256-9988 DRAIN GP-ECOLOGY ***(contd.)*** i03997829

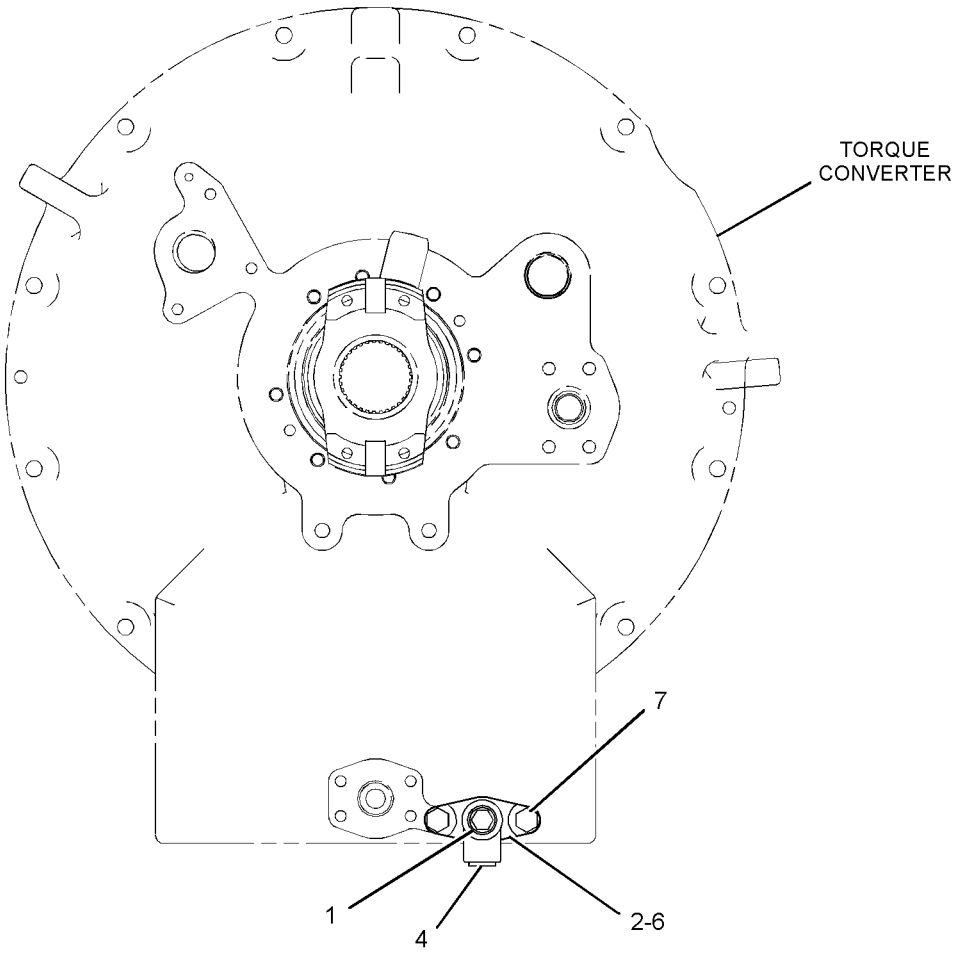

FRONT VIEW

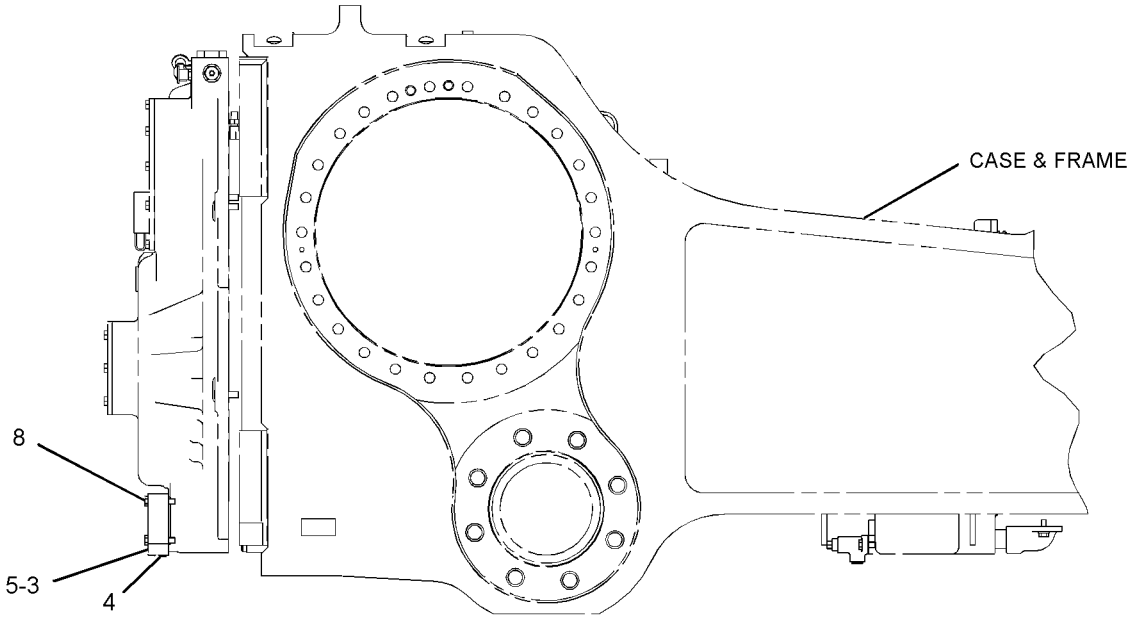

RIGHT SIDE VIEW

GRAPHIC #1 <END> g02175806

222-9218 DRIVE GP-FINAL

S/N: S6Y1-UP

PART OF 317-1757 POWER TRAIN AR

FIELD REPLACEMENT ORDER 265-2299—PAGE 248

SMCS-4050 i04030637

NOTE	REF NO	GRAPHIC REF	PART NUMBER	QTY	PART NAME 1 2 3 4 5 6 (PRODUCT LEVEL)	SEE PAGE
	1	1	343-6237	6	BEARING	
	2	1	1P-9005	1	SEAL-O-RING	
	3	1	2P-3696	3	RETAINER	
	4	1	2R-0098	1	SEAL-O-RING	
	5	1	2S-4078	1	SEAL-O-RING	
	6	1	3K-0360	1	SEAL-O-RING	
	7	1	6V-0327	1	CUP-BEARING (TAPERED ROLLER)	
	8	1	6V-0328	1	CONE-BEARING (TAPERED ROLLER)	
	9	1	6V-0329	1	CONE-BEARING (TAPERED ROLLER)	
	10	1	6V-0330	1	CUP-BEARING (TAPERED ROLLER)	
	11	1	6V-0439	1	PLUG-MAGNETIC (FINAL DRIVE, OIL CHECK, FILL)	
	12	1	6Y-0859	1	SEAL GP-DUO-CONE	
		1	1M-9011	2	RING-TORIC	
	13	1	8E-2748	1	HUB-REACTION	
	14	1	9H-3360	1	SEAL-O-RING	
	15	1	8G-8845	1	COVER	
	16	1	9G-8638	3	GEAR-PLANETARY (40-TEETH)	
	17	1	335-6121	1	GEAR-RING (94-TEETH)	
	18	1	9G-9175	1	CARRIER	
	19	1	9G-9180	1	HUB-SPROCKET	
	20	1	9G-9181	1	RETAINER	
	21	1	333-9410	3	SHAFT	
	22	1	8G-8844	1	RING-LOCK	
	23	1	269-4739	1	SEAL-LIP TYPE	
Y	25	1	*188-0908*	1	SEGMENT GP-SPROCKET	271
	26	1	222-9219	1	SPINDLE	
	27	1	2B-0947	10	BOLT (1/2-13X2.25-IN)	
	28	1	4L-6454	3	BOLT (3/8-16X1-IN)	
	29	1	7X-0346	3	BOLT (5/8-11X2-IN)	
	30	1	8T-4223	2	WASHER-HARD (13.5X25.5X3-MM THK)	
	31	1	8T-4896	3	WASHER-HARD (10.2X18.5X2.5-MM THK)	
	32	1	8T-4994	33	WASHER-HARD (20X36.5X3.5-MM THK)	
	33	1	8T-8919	2	BOLT (1/2-13X1.75-IN)	
	34	1	8T-9399	33	BOLT (3/4-10X2.25-IN)	
	35	1	9S-4185	1	PLUG-O-RING (FINAL DRIVE, OIL DRAIN)	
	36	1	1H-9696	3	SEAL-O-RING	

Y-SEPARATE ILLUSTRATION

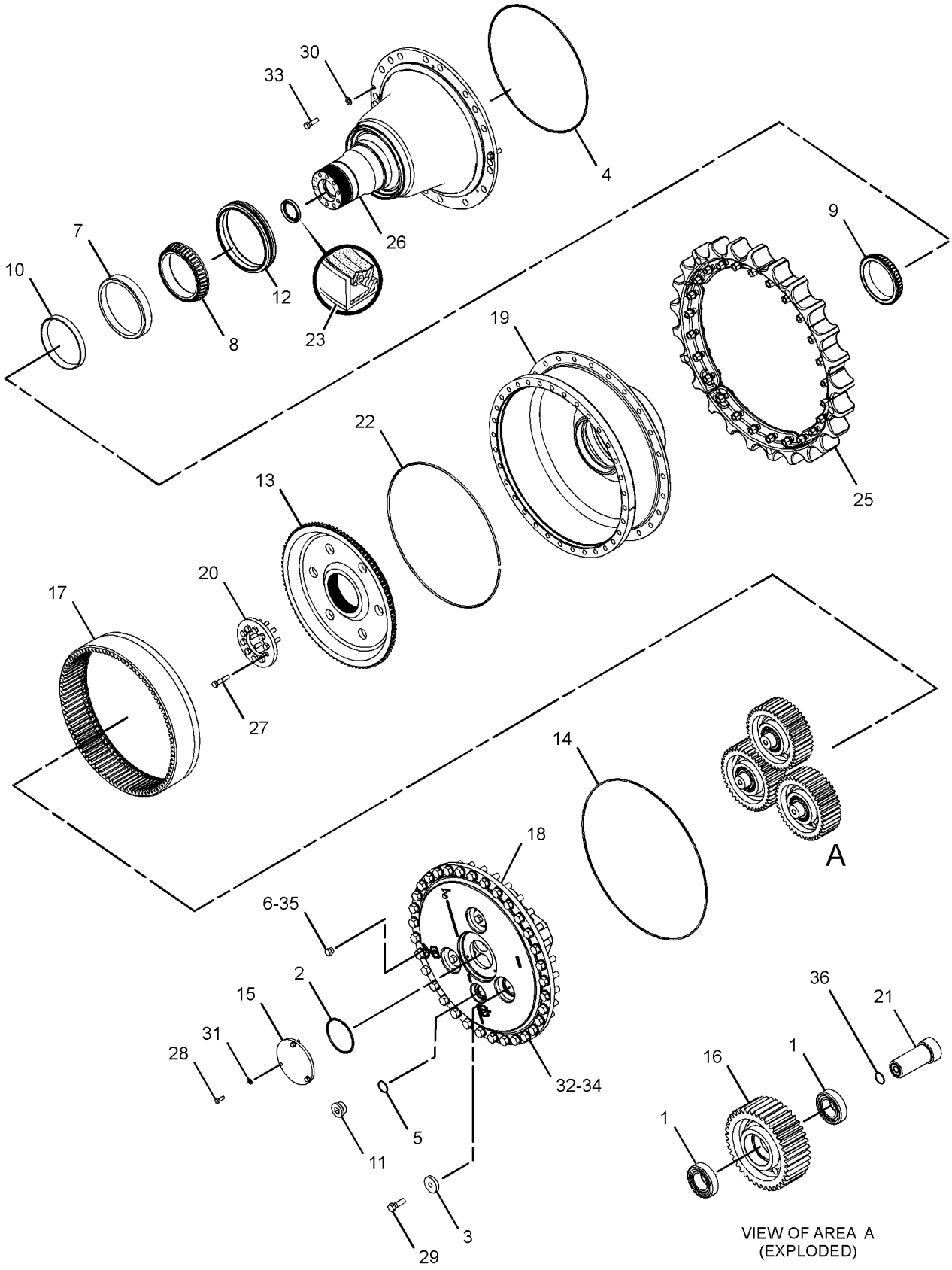

GRAPHIC #1 <END> g02192094

260-6649 DRIVE GP-FINAL

S/N: S6T1-UP; S6X1-UP
PART OF 317-1756 POWER TRAIN AR
FIELD REPLACEMENT ORDER 260-6650—PAGE 246

SMCS-4050 i04030643

NOTE	REF NO	GRAPHIC REF	PART NUMBER	QTY	PART NAME 1 2 3 4 5 6 (PRODUCT LEVEL)	SEE PAGE
	1	1	343-6237	6	BEARING	
	2	1	1P-9005	1	SEAL-O-RING	
	3	1	2P-3696	3	RETAINER	
	4	1	2R-0098	1	SEAL-O-RING	
	5	1	2S-4078	1	SEAL-O-RING	
	6	1	3K-0360	1	SEAL-O-RING	
	7	1	6V-0327	1	CUP-BEARING (TAPERED ROLLER)	
	8	1	6V-0328	1	CONE-BEARING (TAPERED ROLLER)	
	9	1	6V-0329	1	CONE-BEARING (TAPERED ROLLER)	
	10	1	6V-0330	1	CUP-BEARING (TAPERED ROLLER)	
	11	1	6V-0439	1	PLUG-MAGNETIC (FINAL DRIVE, OIL CHECK, FILL)	
	12	1	6Y-0859	1	SEAL GP-DUO-CONE	
	12A	1	1M-9011	2	RING-TORIC	
	13	1	8E-2748	1	HUB-REACTION	
	14	1	8G-8844	1	RING-LOCK	
	15	1	8G-8845	1	COVER	
	16	1	9G-8638	3	GEAR-PLANETARY (40-TEETH)	
	17	1	335-6121	1	GEAR-RING (94-TEETH)	
	18	1	9G-9175	1	CARRIER	
	19	1	9G-9180	1	HUB-SPROCKET	
	20	1	9G-9181	1	RETAINER	
	21	1	333-9410	3	SHAFT	
	22	1	9H-3360	1	SEAL-O-RING	
	23	1	269-4739	1	SEAL-LIP TYPE	
Y	25	1	*188-0908*	1	SEGMENT GP-SPROCKET	271
	26	1	260-6642	1	SPINDLE	
	27	1	2B-0947	10	BOLT (1/2-13X2.25-IN)	
	28	1	4L-6454	3	BOLT (3/8-16X1-IN)	
	29	1	7X-0346	3	BOLT (5/8-11X2-IN)	
	30	1	8T-4223	2	WASHER-HARD (13.5X25.5X3-MM THK)	
	31	1	8T-4896	3	WASHER-HARD (10.2X18.5X2.5-MM THK)	
	32	1	8T-4994	33	WASHER-HARD (20X36.5X3.5-MM THK)	
	33	1	8T-8919	2	BOLT (1/2-13X1.75-IN)	
	34	1	8T-9399	33	BOLT (3/4-10X2.25-IN)	
	35	1	9S-4185	1	PLUG-O-RING (FINAL DRIVE, OIL DRAIN)	
	36	1	1H-9696	3	SEAL-O-RING	
					PARTS SHOWN IN GRAPHIC(S) WITHOUT A REFERENCE NUMBER ARE NOT SERVICED SEPARATELY	

Y-SEPARATE ILLUSTRATION

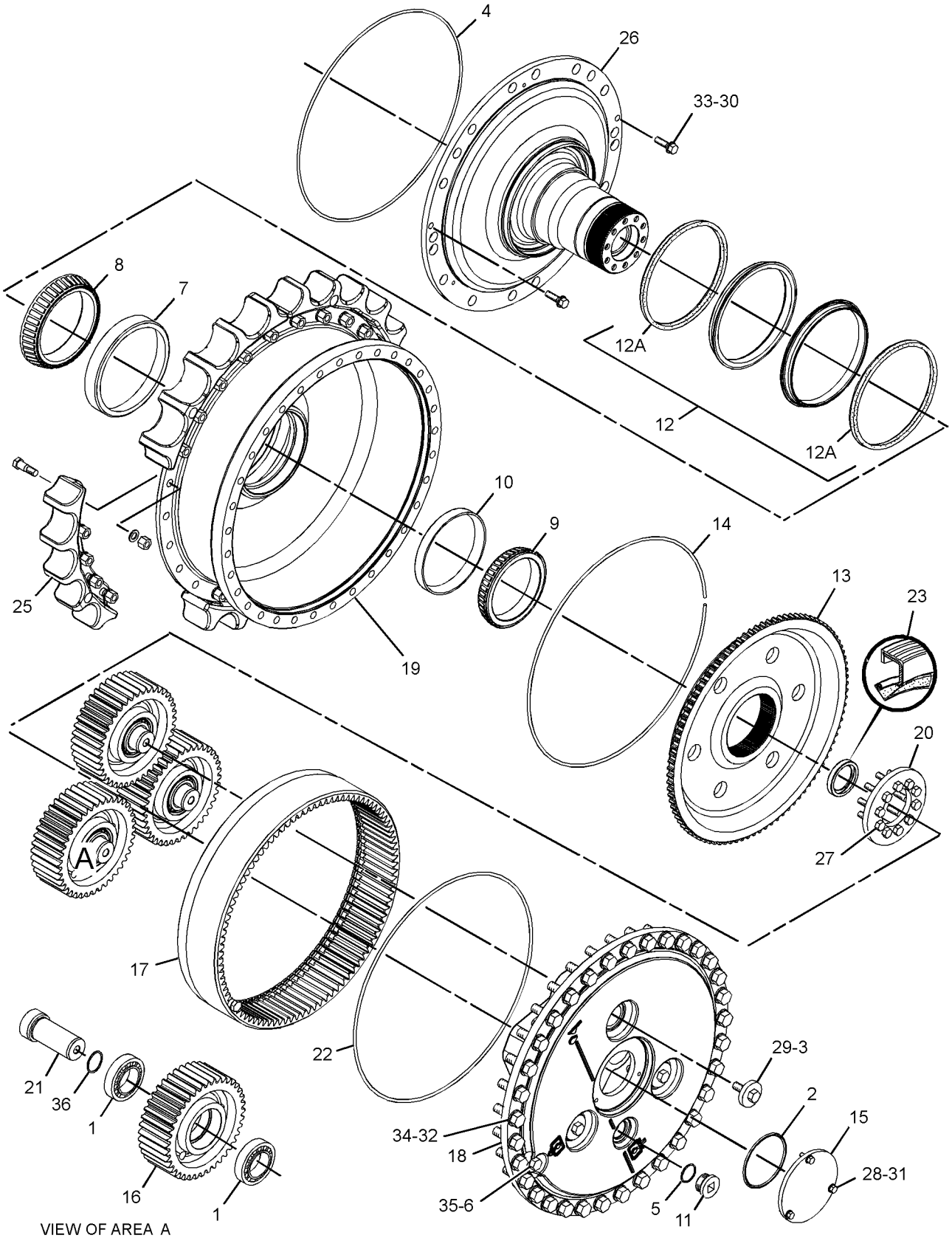

VIEW OF AREA A

GRAPHIC #1 <END> g02166233

260-6650 DRIVE GP-FINAL

S/N: S6T1-UP; S6X1-UP
WITHOUT SEGMENTS
FIELD REPLACEMENT FOR 260-6649—PAGE 244

SMCS-4050 i04031502

NOTE	REF NO	GRAPHIC REF	PART NUMBER	QTY	PART NAME 1 2 3 4 5 6 (PRODUCT LEVEL)	SEE PAGE
	1	1	343-6237	6	BEARING	
	2	1	1P-9005	1	SEAL-O-RING	
	3	1	2P-3696	3	RETAINER	
	4	1	2S-4078	1	SEAL-O-RING	
	5	1	3K-0360	1	SEAL-O-RING	
	6	1	6V-0327	1	CUP-BEARING (TAPERED ROLLER)	
	7	1	6V-0328	1	CONE-BEARING (TAPERED ROLLER)	
	8	1	6V-0329	1	CONE-BEARING (TAPERED ROLLER)	
	9	1	6V-0330	1	CUP-BEARING (TAPERED ROLLER)	
	10	1	6V-0439	1	PLUG-MAGNETIC (FINAL DRIVE, OIL CHECK, FILL)	
	11	1	6Y-0859	1	SEAL GP-DUO-CONE	
	11A	1	1M-9011	2	RING-TORIC	
	12	1	8E-2748	1	HUB-REACTION	
	13	1	8G-8844	1	RING-LOCK	
	14	1	8G-8845	1	COVER	
	15	1	9G-8638	3	GEAR-PLANETARY (40-TEETH)	
	16	1	335-6121	1	GEAR-RING (94-TEETH)	
	17	1	9G-9175	1	CARRIER	
	18	1	9G-9180	1	HUB-SPROCKET	
	19	1	9G-9181	1	RETAINER	
	20	1	333-9410	3	SHAFT	
	21	1	9H-3360	1	SEAL-O-RING	
	22	1	269-4739	1	SEAL-LIP TYPE	
	24	1	260-6642	1	SPINDLE	
	25	1	2B-0947	10	BOLT (1/2-13X2.25-IN)	
	26	1	4L-6454	3	BOLT (3/8-16X1-IN)	
	27	1	7X-0346	3	BOLT (5/8-11X2-IN)	
	28	1	8T-4896	3	WASHER-HARD (10.2X18.5X2.5-MM THK)	
	29	1	8T-4994	33	WASHER-HARD (20X36.5X3.5-MM THK)	
	30	1	8T-9399	33	BOLT (3/4-10X2.25-IN)	
	31	1	9S-4185	1	PLUG-O-RING (FINAL DRIVE, OIL DRAIN)	
	32	1	1H-9696	3	SEAL-O-RING	
					PARTS SHOWN IN GRAPHIC(S) WITHOUT A REFERENCE NUMBER ARE NOT SERVICED SEPARATELY	

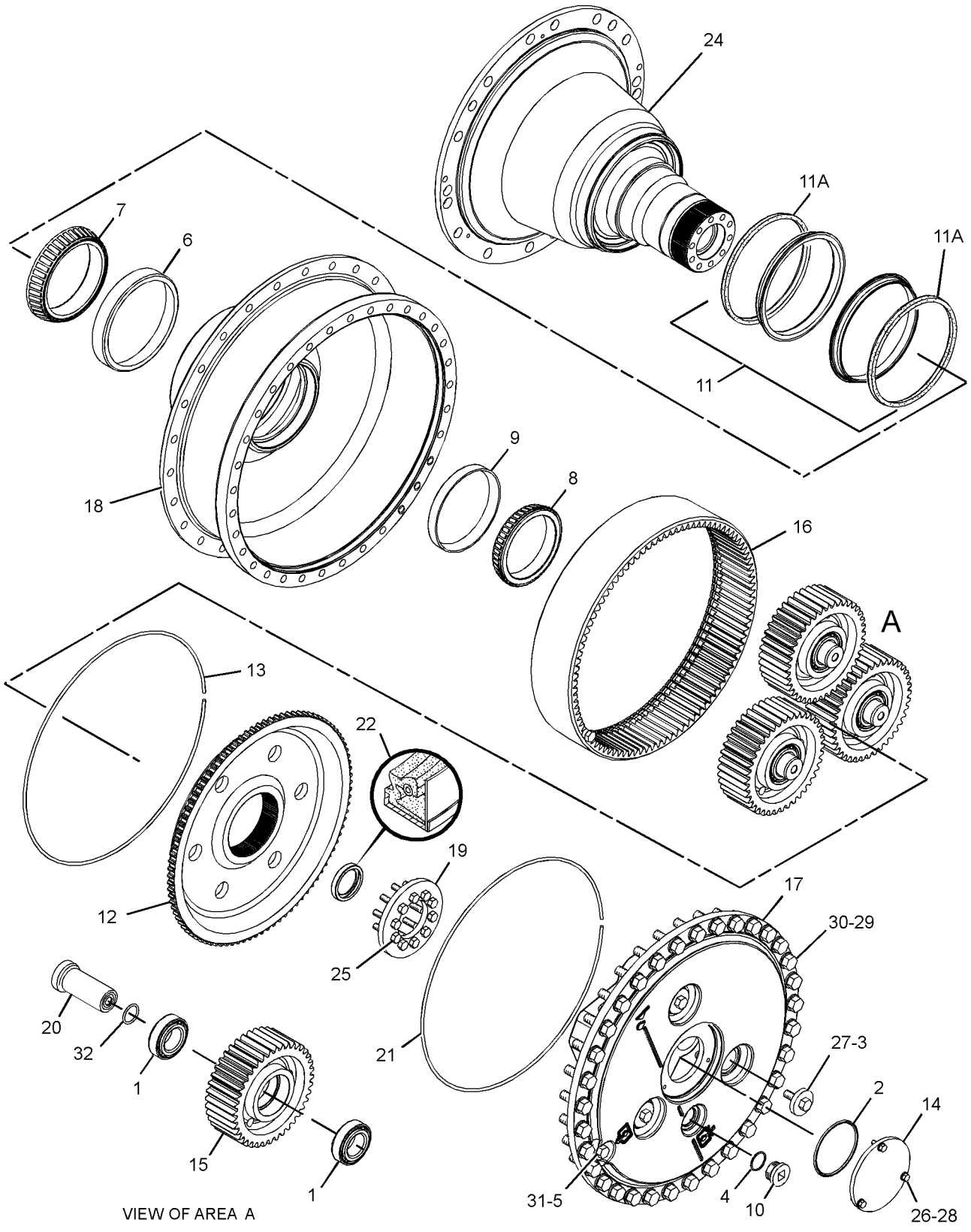

GRAPHIC #1 <END> g02192096

265-2299 DRIVE GP-FINAL

S/N: S6Y1-UP
WITHOUT SEGMENTS
FIELD REPLACEMENT FOR 222-9218—PAGE 242

SMCS-4050 i04030653

NOTE	REF NO	GRAPHIC REF	PART NUMBER	QTY	PART NAME 1 2 3 4 5 6 (PRODUCT LEVEL)	SEE PAGE
	1	1	343-6237	6	BEARING	
	2	1	1P-9005	1	SEAL-O-RING	
	3	1	2P-3696	3	RETAINER	
	4	1	2S-4078	1	SEAL-O-RING	
	5	1	3K-0360	1	SEAL-O-RING	
	6	1	6V-0327	1	CUP-BEARING (TAPERED ROLLER)	
	7	1	6V-0328	1	CONE-BEARING (TAPERED ROLLER)	
	8	1	6V-0329	1	CONE-BEARING (TAPERED ROLLER)	
	9	1	6V-0330	1	CUP-BEARING (TAPERED ROLLER)	
	10	1	6V-0439	1	PLUG-MAGNETIC (FINAL DRIVE, OIL CHECK, FILL)	
	11	1	6Y-0859	1	SEAL GP-DUO-CONE	
	11A	1	1M-9011	2	RING-TORIC	
	12	1	8E-2748	1	HUB-REACTION	
	13	1	8G-8844	1	RING-LOCK	
	14	1	8G-8845	1	COVER	
	15	1	9G-8638	3	GEAR-PLANETARY (40-TEETH)	
	16	1	335-6121	1	GEAR-RING (94-TEETH)	
	17	1	9G-9175	1	CARRIER	
	18	1	9G-9180	1	HUB-SPROCKET	
	19	1	9G-9181	1	RETAINER	
	20	1	333-9410	3	SHAFT	
	21	1	9H-3360	1	SEAL-O-RING	
	22	1	269-4739	1	SEAL-LIP TYPE	
	24	1	222-9219	1	SPINDLE	
	25	1	2B-0947	10	BOLT (1/2-13X2.25-IN)	
	26	1	4L-6454	3	BOLT (3/8-16X1-IN)	
	27	1	7X-0346	3	BOLT (5/8-11X2-IN)	
	28	1	8T-4896	3	WASHER-HARD (10.2X18.5X2.5-MM THK)	
	29	1	8T-4994	33	WASHER-HARD (20X36.5X3.5-MM THK)	
	30	1	8T-9399	33	BOLT (3/4-10X2.25-IN)	
	31	1	9S-4185	1	PLUG-O-RING (FINAL DRIVE, OIL DRAIN)	
	32	1	1H-9696	3	SEAL-O-RING	
					PARTS SHOWN IN GRAPHIC(S) WITHOUT A REFERENCE NUMBER ARE NOT SERVICED SEPARATELY	

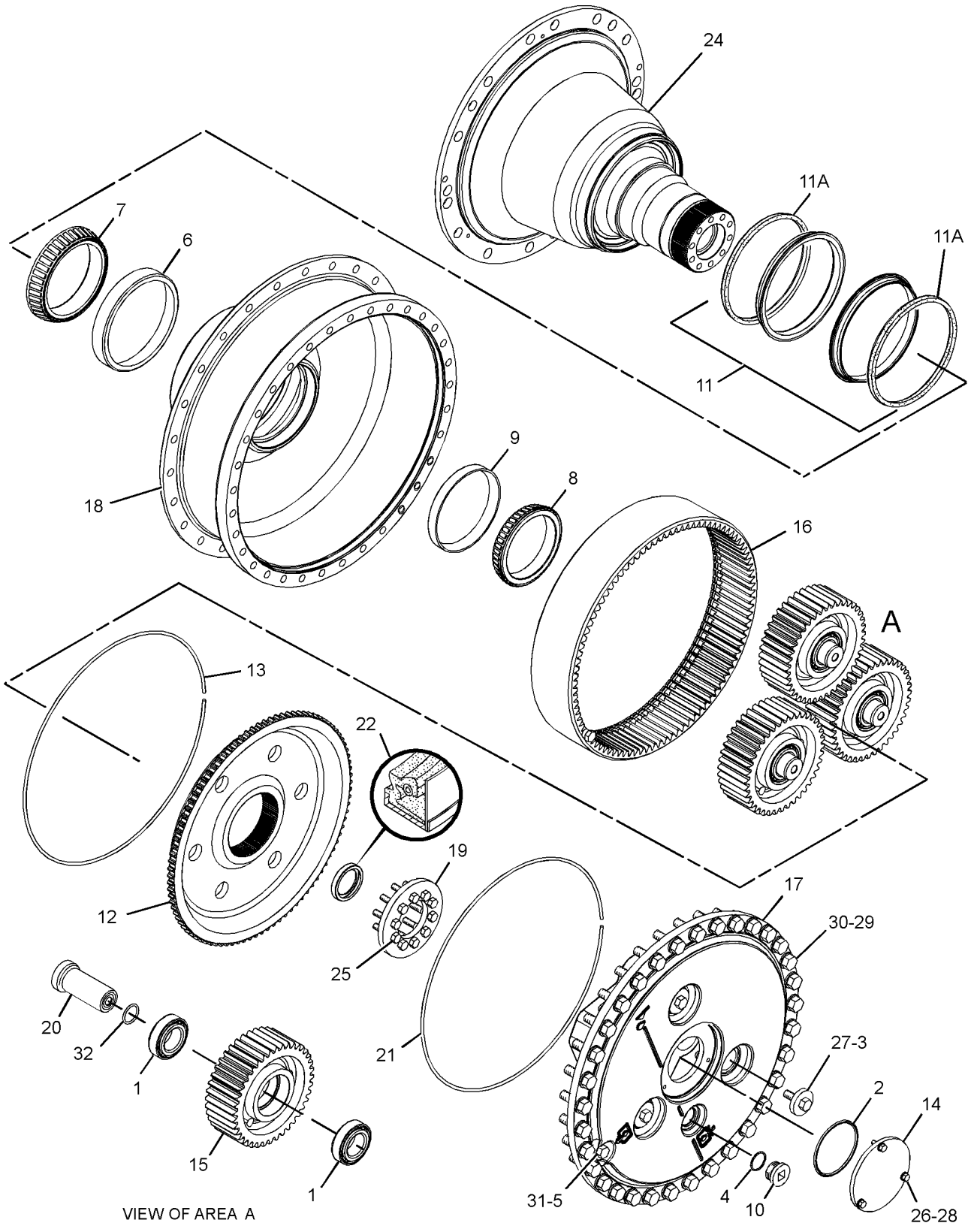

GRAPHIC #1 <END> g02192096

246-0599 DRIVE GP-PUMP

S/N: THX19900-UP

PART OF 318-1904, 318-1905 ENGINE AR-COMPLETE

SMCS-3108 i04017545

NOTE	REF NO	GRAPHIC REF	PART NUMBER	QTY	PART NAME 1 2 3 4 5 6 (PRODUCT LEVEL)	SEE PAGE
	1	1	236-8240	1	PULLEY	
M	2	1	6V-2317	4	BOLT (M8X1.25X30-MM)	
	3	1	9M-1974	4	WASHER-HARD (8.8X16X2-MM THK)	

M-METRIC PART

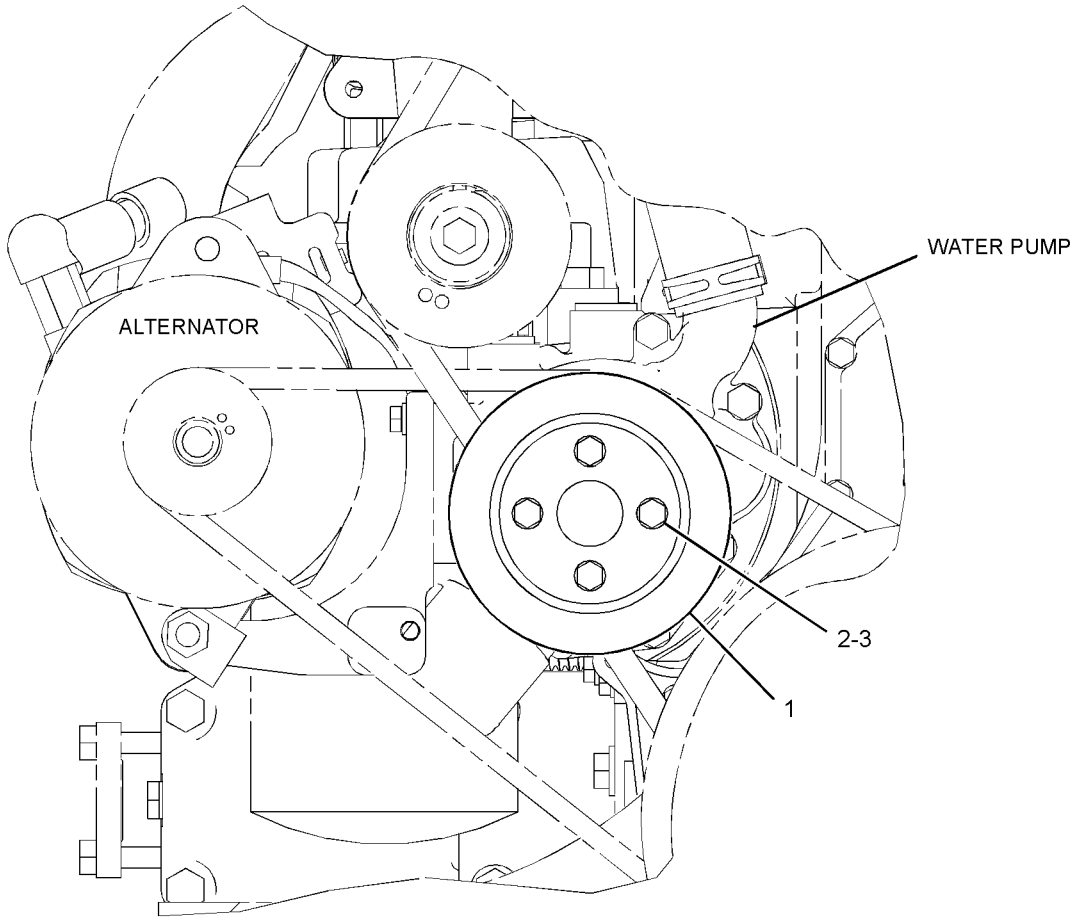

FRONT VIEW

GRAPHIC #1 <END> g01205602

333-6437 FILTER GP-OIL—POWER TRAIN OIL

S/N: S6T1-UP; S6X1-UP; S6Y1-UP

PART OF 317-4109 LINES GP-POWER TRAIN OIL

SMCS-3004, 3067 i04030658

NOTE	REF NO	GRAPHIC REF	PART NUMBER	QTY	PART NAME 1 2 3 4 5 6 (PRODUCT LEVEL)	SEE PAGE
	1	1	6V-0852	1	CAP-DUST	
	2	1	8C-3447	1	CAP-DUST	
	3	1	321-5967	1	HOUSING GP-FILTER	
		1	3J-1907	1	SEAL-O-RING	
		1	9S-8004	1	PLUG-O-RING	
	4	1	328-3655	1	FILTER ELEMENT AS-OIL (ADVANCED EFFICIENCY)	
Y	5	1	333-9308	1	BASE GP-OIL FILTER	214
	6	1	214-7568	1	SEAL-O-RING	
	7	1	6V-5048	1	SEAL-O-RING	
	8	1	6V-3965	1	FITTING (QUICK DISCONNECT)	
	9	1	8C-3446	1	VALVE-FLUID SAMPLING	
	10	1	130-0229	1	SEAL-O-RING	
	11	1	8L-2786	1	SEAL-O-RING	
	12	1	3P-1932	1	ADAPTER	

Y-SEPARATE ILLUSTRATION

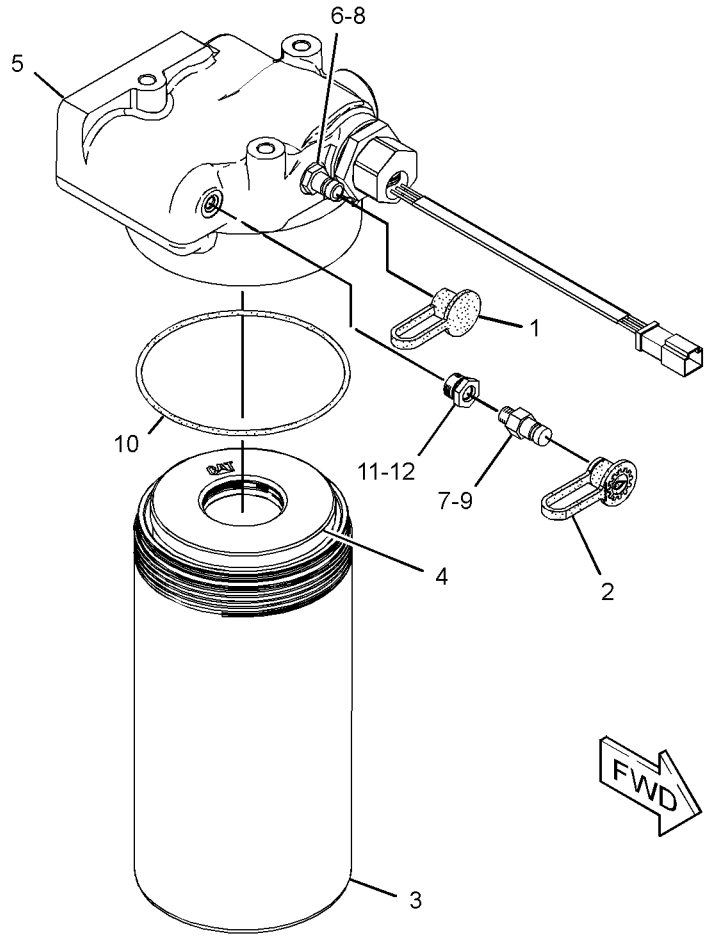

GRAPHIC #1 <END> g01888573

POWER TRAIN

166-3485 GEAR GP-BEVEL & TRANSFER

S/N: TYA1-UP

PART OF 315-9959 TRANSMISSION AR

SMCS-3011 i04030667

NOTE	REF NO	GRAPHIC REF	PART NUMBER	QTY	PART NAME 1 2 3 4 5 6 (PRODUCT LEVEL)	SEE PAGE
	1	2	190-2277	1	CASE AS	
		2	2D-6642	1	BALL	
	2	2	160-7616	1	GEAR (50-TEETH)	
B	3	2	9P-1922	1	SHIM PACK (INCLUDES 14-SHIMS)	
	4	2	9W-2992	1	CAGE-BEARING	
	5	2	3T-6742	1	RETAINER	
	6	2	7X-0352	1	BOLT (5/8-11X4-IN)	
	7	2	7H-7628	1	BEARING	
	8	2	0S-1591	4	BOLT (3/8-16X1.5-IN)	
	9	2	5M-2894	4	WASHER-HARD (10.2X18.5X2.5-MM THK)	
	10	2	7D-1649	2	WASHER-HARD (13.5X32X5-MM THK)	
	11	2	6I-8507	1	PLATE-RETAINER	
	12	2	6I-8511	1	CAGE-BEARING	
B	13	2	9P-1921	1	SHIM PACK (INCLUDES 14-SHIMS)	
C	14	2	216-0273	1	SEAL-LIP TYPE	
	15	2	160-7614	1	GEAR-TRANSFER (44-TEETH)	
	16	2	8D-1817	2	CUP-BEARING	
	17	2	8D-1819	2	CONE-BEARING	
	18	2	6S-2829	2	CONE-BEARING	
	19	2	6S-2828	2	CUP-BEARING	
	20	2	9W-3660	1	PINION-BEVEL (20-TEETH)	
	21	1,2	7B-3235	24	BOLT (1/2-13X1.375-IN)	
	22	1,2	5P-8245	24	WASHER-HARD (13.5X25.5X3-MM THK)	
	23	2	7X-0351	12	BOLT (5/8-11X3.75-IN)	
	24	2	5P-8247	16	WASHER-HARD (17X32X3.5-MM THK)	
	25	1	9W-1570	1	CAGE AS-BEARING	
		1	4B-9880	1	BALL	
C		1	9W-0293	1	CAGE AS-BEARING	
		1	9W-1569	1	PLUG-ORIFICE	
B	26	1	9P-1478	2	SHIM PACK (INCLUDES 14-SHIMS)	
	27	1	1L-6957	1	LOCKNUT-BEARING	
	28	1	6T-0364	1	RING-RETAINING	
	29	1	9W-8612	1	SPACER-BEARING	
	30	1	1P-3934	2	CUP-BEARING	
	31	1	1P-3935	2	CONE-BEARING	
	32	1	9W-5150	1	SHAFT-BEVEL GEAR	
	33	1	0S-1897	12	BOLT (3/4-16X2.25-IN)	
	34	1	1S-1860	12	NUT-TRACK (3/4-16-THD)	
	35	1	9P-1925	1	GEAR-BEVEL (35-TEETH)	
	36	1	9G-0832	1	DOWEL	
	37	1	7T-9946	1	CAGE-BEARING	
	38	1	6J-3473	1	RING-SNAP	
	39	1	5P-7592	1	RACE-ROLLER BEARING	
	40	1	4H-0019	1	RACE & ROLLER AS	
	41	1	9P-7072	1	WASHER (90.6X115X2.5-MM THK)	
	42	1	6V-2404	1	LOCKWASHER-BEARING	
	43	2	7T-1475	1	BRACKET-ROLLER	
	44	2	7T-1474	1	BRACKET-ROLLER	
	45	2	1D-4601	4	BOLT (5/8-11X8.5-IN)	
	46	2	6T-3853	2	SLEEVE	
	47	2	6T-3852	2	ROLLER	
	48	2	1A-5822	2	BOLT (1/2-13X2.75-IN)	

B-USE AS REQUIRED
C-CHANGE FROM PREVIOUS TYPE

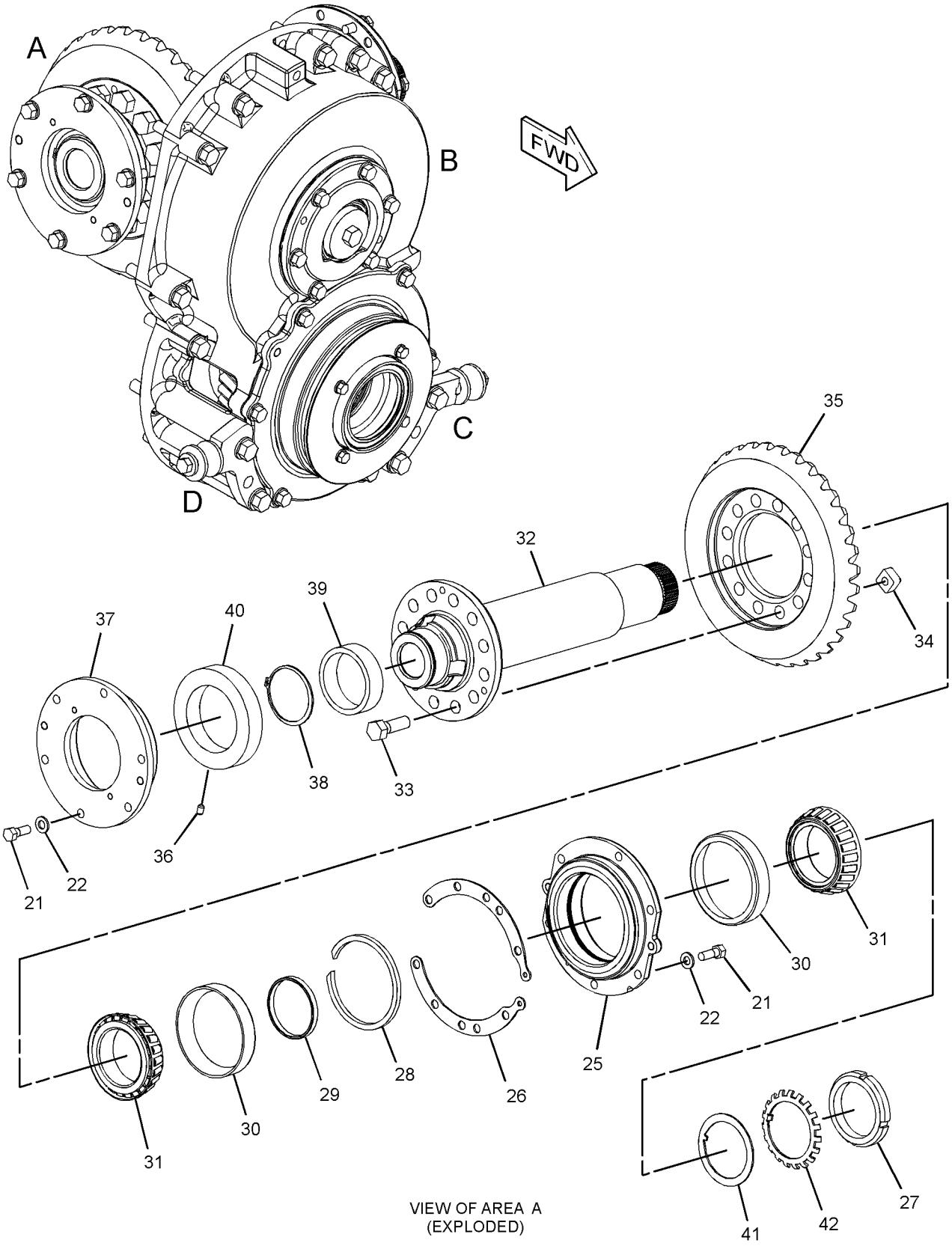

GRAPHIC #1 g02202254

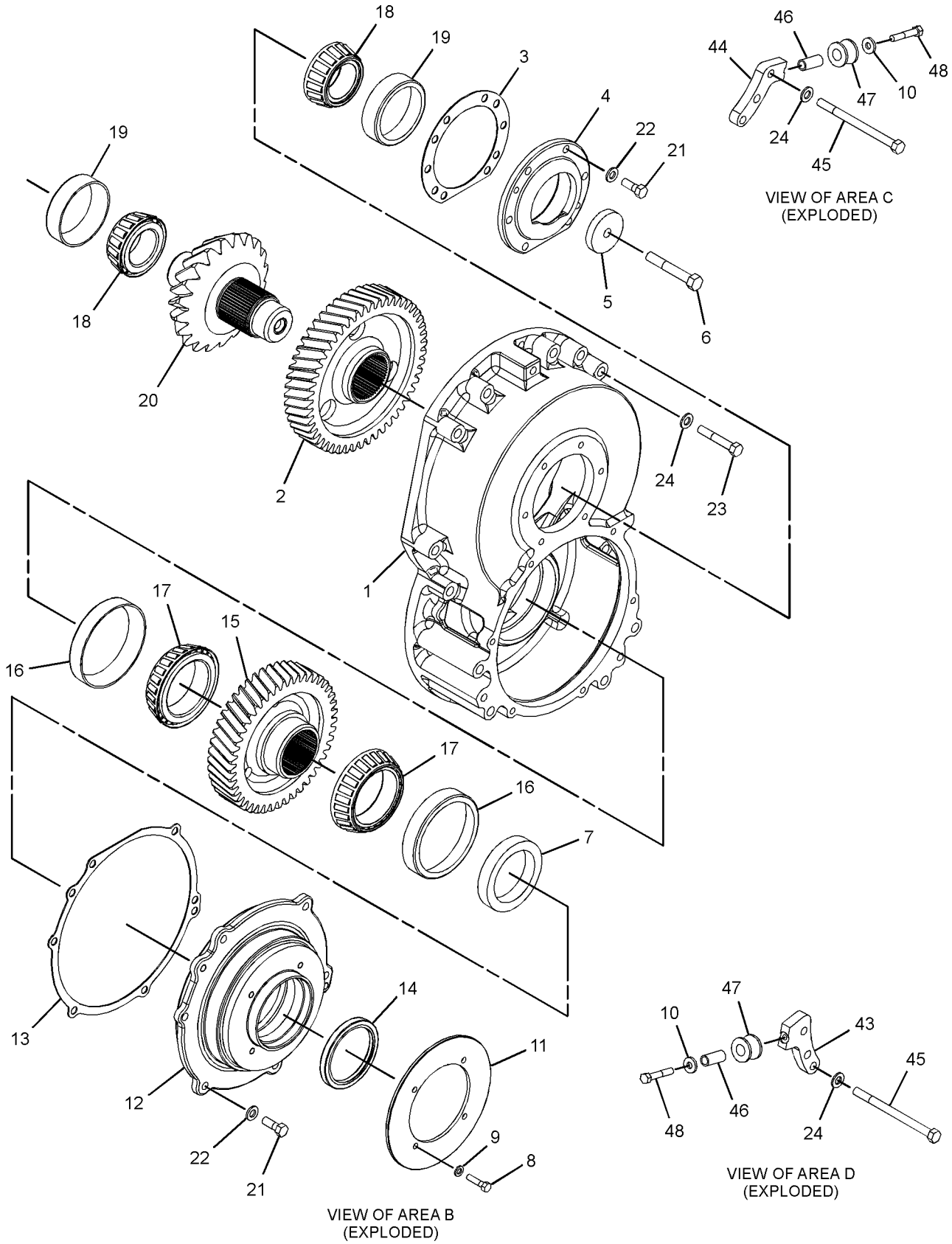

GRAPHIC #2 <END> g02202257

317-4109 LINES GP-POWER TRAIN OIL

S/N: S6T1-UP; S6X1-UP; S6Y1-UP
PART OF 317-1756, 317-1757 POWER TRAIN AR

SMCS-3016 i04030669

NOTE	REF NO	GRAPHIC REF	PART NUMBER	QTY	PART NAME 1 2 3 4 5 6 (PRODUCT LEVEL)	SEE PAGE
	1	2	3T-5301	1	TUBE	
	2	2	3T-5302	1	FLANGE	
	3	2	3T-6471	1	SCREEN AS (TORQUE CONVERTER SCAVENGE)	
		2	3T-6469	1	WASHER (19X26X1.6-MM THK)	
I	4	2	3W-2470	1	HOSE AS	
	5	1,2	6V-0852	3	CAP-DUST	
	6	2	6V-5387	1	PLATE-ORIFICE	
	7	2	7V-8532	1	SPACER	
	8	2	8E-7363	1	PLATE	
	9	1	9D-7924	3	MOUNTING	
	10	1	9G-5127	1	BREATHER (POWER TRAIN OIL)	
	11	1	106-2105	1	ELBOW	
	12	1	113-3656	1	ANGLE	
Y	13	2	220-1418	1	VALVE GP-RELIEF (TORQUE CONVERTER OUTLET)	282
Y	14	2	*231-4166*	1	SCREEN GP-MAGNETIC (TRANSMISSION)	270
	15	1	235-4513	1	HOSE AS	
	16	1	235-4514	1	BRACKET	
	17	1	235-4515	1	TUBE AS	
	18	1	235-4516	1	TUBE AS	
	19	1	235-4826	1	BRACKET AS	
	20	1	241-5634	1	TUBE AS	
	21	1	241-5635	1	GAUGE AS-OIL LEVEL (POWER TRAIN)	
	22	1	*260-9187*	3	CONNECTOR AS	
					(EACH INCLUDES)	
		1	8T-9358	1	CONNECTOR	
		1	6V-8397	1	SEAL-O-RING	
I	23	1	263-3348	1	HOSE AS	
I	24	2	270-3437	1	HOSE AS	
I	25	1	270-3438	1	HOSE AS	
	26	1	294-2503	1	HOSE AS	
I	27	1	317-4118	1	HOSE AS	
I	28	2	317-4142	1	HOSE AS	
I	29	2	317-4143	1	HOSE AS	
Y	30	2	*318-0690*	1	PUMP GP-GEAR (POWER TRAIN OIL)	267
	31	1	323-1448	1	HOSE AS	
Y	33	1	*333-6437*	1	FILTER GP-OIL (POWER TRAIN)	251
	34	1	033-8248	5	CLIP	
M	35	1	109-3001	1	STUD-TAPERLOCK (M10X1.5X65-MM)	
	36	1	112-9783	1	ADAPTER	
	37	1	*148-8335*	2	CONNECTOR AS	
					(EACH INCLUDES)	
		1	6V-8635	1	CONNECTOR	
		1	5K-9090	1	SEAL-O-RING	
		1	7M-8485	1	SEAL-O-RING	
	38	1	*148-8336*	1	CONNECTOR AS	
		1	6V-8636	1	CONNECTOR	
		1	3J-1907	1	SEAL-O-RING	
		1	6V-8397	1	SEAL-O-RING	
	39	2	*148-8367*	1	ELBOW AS	
		2	6V-9850	1	ELBOW	
		2	6V-8397	1	SEAL-O-RING	
	40	2	*148-8368*	1	ELBOW AS	
		2	6V-8627	1	ELBOW	
		2	3J-1907	1	SEAL-O-RING	
		2	4J-5477	1	SEAL-O-RING	
	41	2	*148-8374*	1	ELBOW AS	

317-4109 LINES GP-POWER TRAIN OIL ***(contd.)*** i04030669

NOTE	REF NO	GRAPHIC REF	PART NUMBER	QTY	PART NAME 1 2 3 4 5 6 (PRODUCT LEVEL)	SEE PAGE
		2	6V-8723	1	ELBOW	
		2	3K-0360	1	SEAL-O-RING	
		2	6V-8397	1	SEAL-O-RING	
	42	2	*148-8426*	1	TEE AS	
		2	8T-6696	1	TEE-O-RING	
		2	3K-0360	1	SEAL-O-RING	
		2	6V-8397	1	SEAL-O-RING	
		2	6V-8398	1	SEAL-O-RING	
	43	2	*150-3065*	1	ADAPTER AS	
		2	6V-0484	1	ADAPTER-O-RING	
		2	3J-1907	1	SEAL-O-RING	
	44	1	*153-6243*	1	TEE AS	
		1	8T-1120	1	TEE-O-RING PORT	
		1	2S-4078	1	SEAL-O-RING	
		1	5K-9090	1	SEAL-O-RING	
		1	6V-9746	1	SEAL-O-RING	
	45	2	*153-6252*	1	CONNECTOR AS	
		2	9X-8408	1	CONNECTOR	
		2	6V-8398	1	SEAL-O-RING	
		2	7M-8485	1	SEAL-O-RING	
	46	1,2	*164-5567*	3	COUPLER AS-QUICK DISCONNECT (MALE) (EACH INCLUDES)	
		1,2	6V-3965	1	FITTING (QUICK DISCONNECT)	
		1,2	214-7568	1	SEAL-O-RING	
	47	1	180-4362	2	SEAL-RECTANGULAR	
	48	2	1H-5728	1	SEAL-O-RING	
	49	2	1P-4578	4	FLANGE-HALF	
	50	2	1V-7753	1	SPACER (0.546X0.841X1.75-IN THK)	
	51	2	2K-8257	1	SEAL-O-RING	
	52	1	3G-4214	4	CLIP (SLOT)	
	53	1	3G-4218	4	CLIP (TAB)	
	54	1	3J-1907	1	SEAL-O-RING	
	55	1	3K-0360	1	SEAL-O-RING	
	56	1	4J-5477	1	SEAL-O-RING	
	57	1	4K-6177	1	CLIP	
	58	1	5P-1075	1	WASHER-HARD (10.2X22.5X3-MM THK)	
	59	2	5P-7085	1	SEAL-RECTANGULAR	
	60	1	5P-7468	2	CLIP (SLOT)	
	61	1	5P-7469	2	CLIP (TAB)	
	62	2	5P-8215	2	SEAL-O-RING	
	63	2	6L-1649	2	SEAL-O-RING	
	64	2	6L-5359	1	SEAL-O-RING	
	65	1	6V-9168	3	NUT (11/16-16-THD)	
	66	1	7D-1649	2	WASHER-HARD (13.5X32X5-MM THK)	
	67	1	7G-3832	1	GROMMET	
	68	1	7G-3833	1	CLIP (TAB)	
	69	1	7G-3834	1	CLIP (SLOT)	
	70	1	7S-8920	1	CLIP (SLOT)	
	71	1	7S-8921	1	CLIP (TAB)	
	72	1	7X-7729	2	WASHER (11X25X3-MM THK)	
	73	2	8C-3206	6	FLANGE-HALF	
	74	1,2	8M-4986	6	SEAL-O-RING	
	75	2	8M-4987	4	SEAL-O-RING	
	76	2	8M-5254	2	SEAL-O-RING	
	77	2	8M-8157	1	SEAL-O-RING	
	78	2	8S-0023	1	CLIP (SLOT)	
	79	2	8S-0024	1	CLIP (TAB)	
	80	1	8T-1893	2	CLIP (SLOT)	
	81	1	8T-1894	2	CLIP (TAB)	

317-4109 LINES GP-POWER TRAIN OIL *(contd.)* i04030669

NOTE	REF NO	GRAPHIC REF	PART NUMBER	QTY	PART NAME 1 2 3 4 5 6 (PRODUCT LEVEL)	SEE PAGE
	82	1,2	8T-4121	51	WASHER-HARD (11X21X2.5-MM THK)	
M	83	1,2	8T-4133	7	NUT (M10X1.5-THD)	
M	84	1	8T-4136	11	BOLT (M10X1.5X25-MM)	
M	85	1	8T-4137	1	BOLT (M10X1.5X20-MM)	
M	86	2	8T-4172	3	BOLT (M10X1.5X80-MM)	
M	87	2	8T-4182	8	BOLT (M10X1.5X45-MM)	
M	88	1	8T-4184	2	BOLT (M12X1.75X45-MM)	
M	89	2	8T-4186	4	BOLT (M10X1.5X40-MM)	
M	90	1	8T-4195	4	BOLT (M10X1.5X30-MM)	
M	91	1,2	8T-4196	5	BOLT (M10X1.5X35-MM)	
	92	1,2	8T-4223	13	WASHER-HARD (13.5X25.5X3-MM THK)	
	93	1	8T-4226	6	WASHER-PLATED (10.5X45X3-MM THK)	
M	94	2	8T-4648	1	BOLT (M12X1.75X70-MM)	
M	95	2	8T-4956	4	BOLT (M12X1.75X35-MM)	
M	96	2	8T-5005	8	BOLT (M10X1.5X70-MM)	
M	97	1	8T-6466	3	BOLT (M10X1.5X60-MM)	
M	98	1	8T-6868	8	BOLT (M12X1.75X80-MM)	
	99	1	8T-7087	2	GROMMET	
	100	1	9X-8257	6	WASHER (17.5X30X3.5-MM THK)	

I-REFER TO HYDRAULIC INFORMATION SYSTEM
M-METRIC PART
Y-SEPARATE ILLUSTRATION

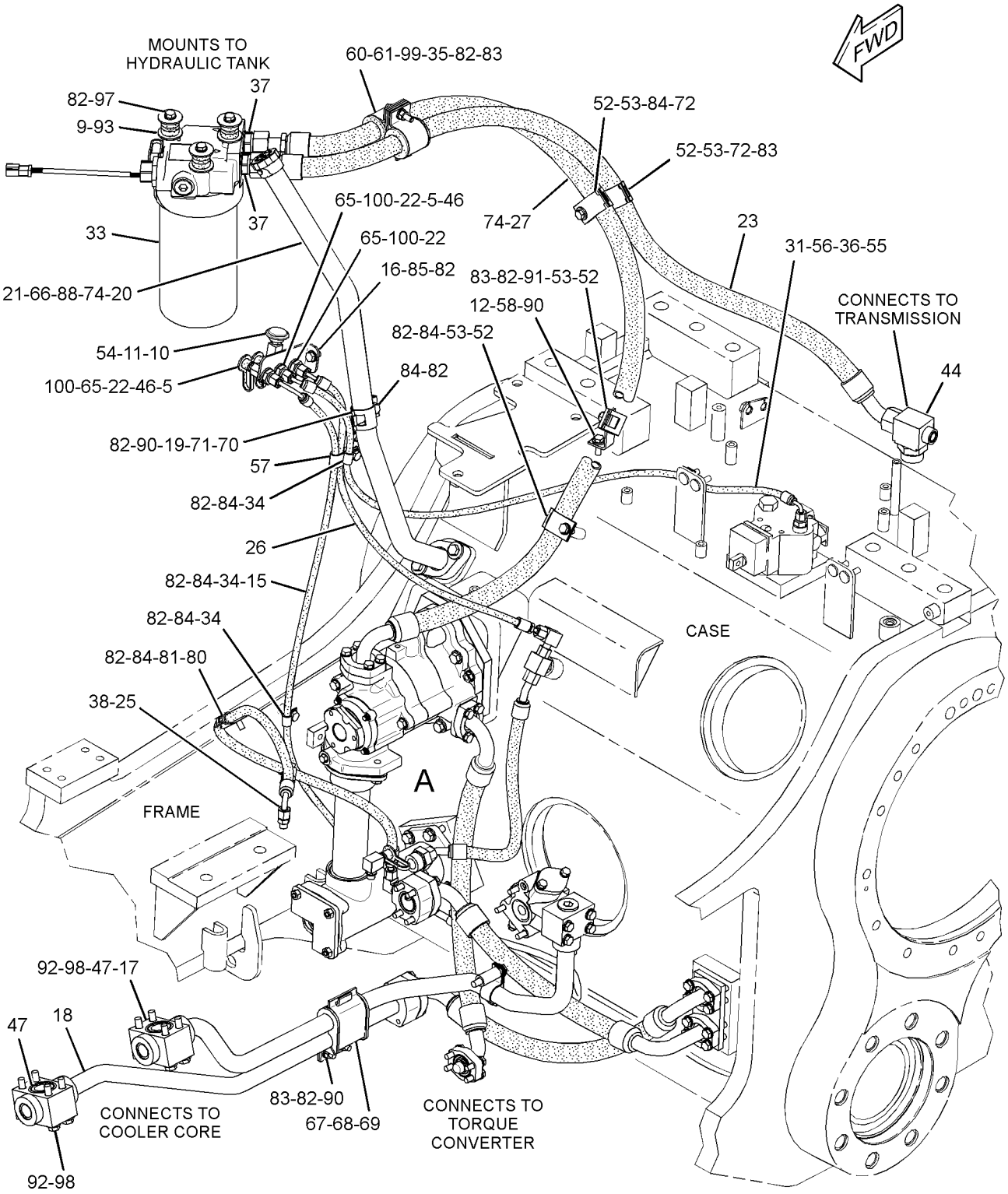

GRAPHIC #1 g02220253

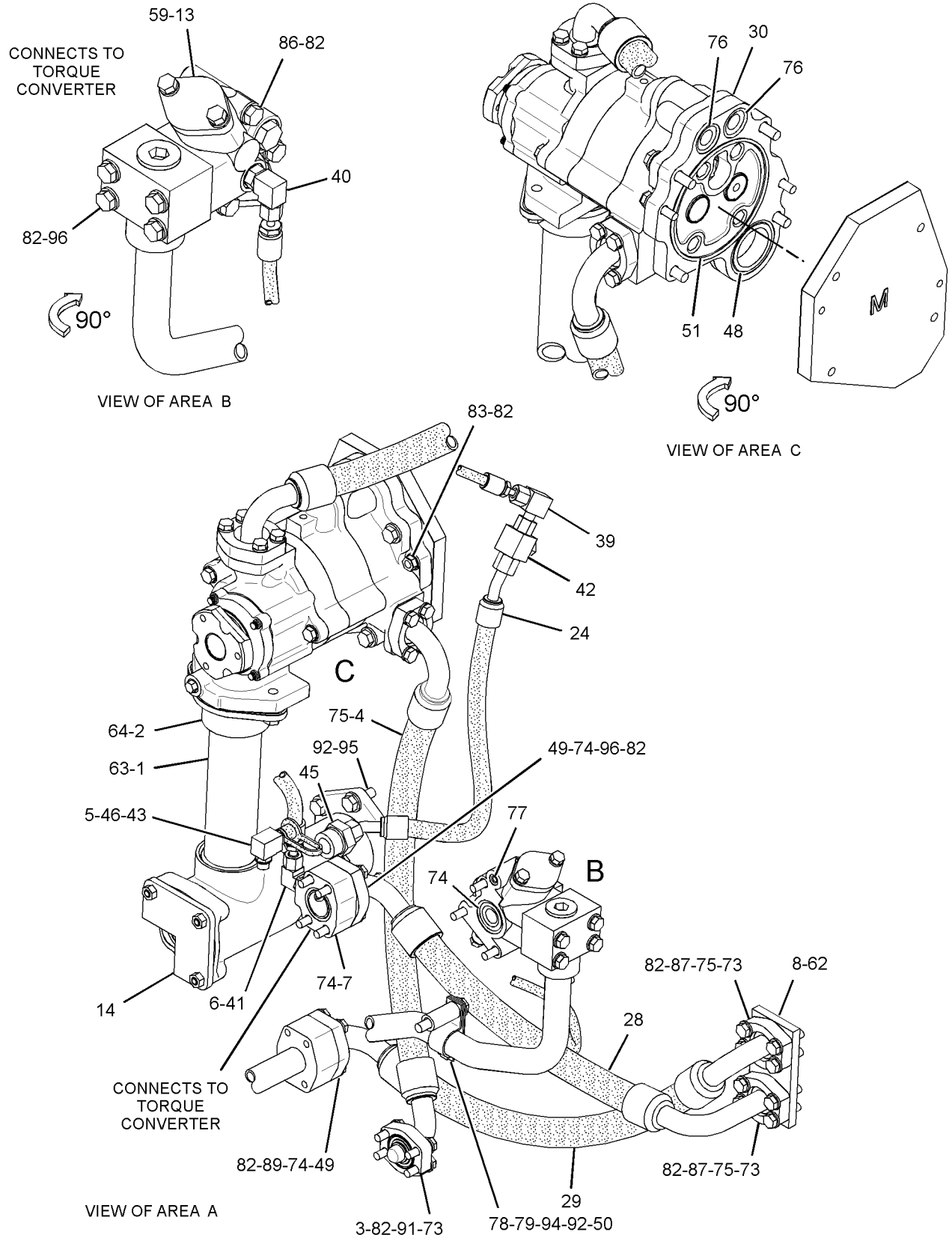

GRAPHIC #2 <END> g02205094

259-3119 MOUNTING GP-FINAL DRIVE

S/N: S6T1-UP; S6X1-UP; S6Y1-UP

PART OF 317-1756, 317-1757 POWER TRAIN AR

SMCS-4050 i03982191

NOTE	REF NO	GRAPHIC REF	PART NUMBER	QTY	PART NAME 1 2 3 4 5 6 (PRODUCT LEVEL)	SEE PAGE
	1	1	219-4481	32	BOLT (M22X2.5X85-MM)	
	2	1	6F-6673	4	SEAL-O-RING	
	3	1	8C-6913	32	WASHER-HARD (24X41.5X4-MM THK)	
	4	1	8D-4771	2	SEAL-O-RING	
M	5	1	8T-4182	4	BOLT (M10X1.5X45-MM)	
	6	1	9X-2027	4	WASHER (11X18X2-MM THK)	

M-METRIC PART

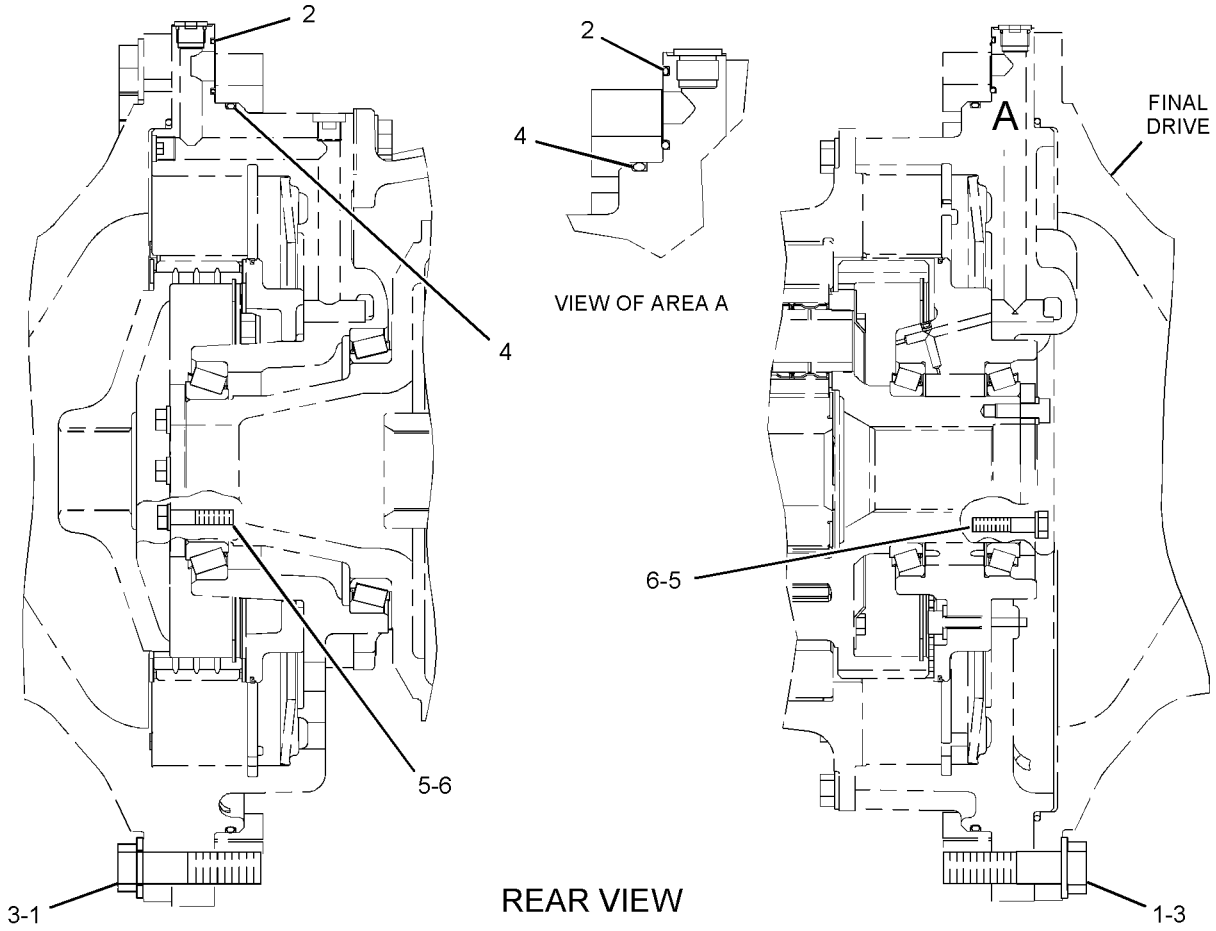

GRAPHIC #1

<END>

g01207792

319-7104 MOUNTING GP-TRANSMISSION

S/N: S6T1-UP; S6X1-UP; S6Y1-UP
PART OF 317-1756, 317-1757 POWER TRAIN AR

SMCS-3082 i03982611

NOTE	REF NO	GRAPHIC REF	PART NUMBER	QTY	PART NAME 1 2 3 4 5 6 (PRODUCT LEVEL)	SEE PAGE
	1	1	8G-9880	2	TUBE AS	
	2	1	1M-9011	1	RING-TORIC	
	3	1	2D-6506	1	SEAL-O-RING	
M	4	1	6V-7744	4	LOCKNUT (M10X1.5-THD)	
	5	1	8M-4390	1	SEAL-O-RING	
	6	1	8T-4121	8	WASHER-HARD (11X21X2.5-MM THK)	
M	7	1	8T-4196	4	BOLT (M10X1.5X35-MM)	
	8	1	8T-4223	22	WASHER-HARD (13.5X25.5X3-MM THK)	
M	9	1	8T-4648	19	BOLT (M12X1.75X70-MM)	
M	10	1	8T-5041	3	BOLT (M12X1.75X120-MM)	
	11	1	9M-7002	3	SEAL-O-RING	

M-METRIC PART

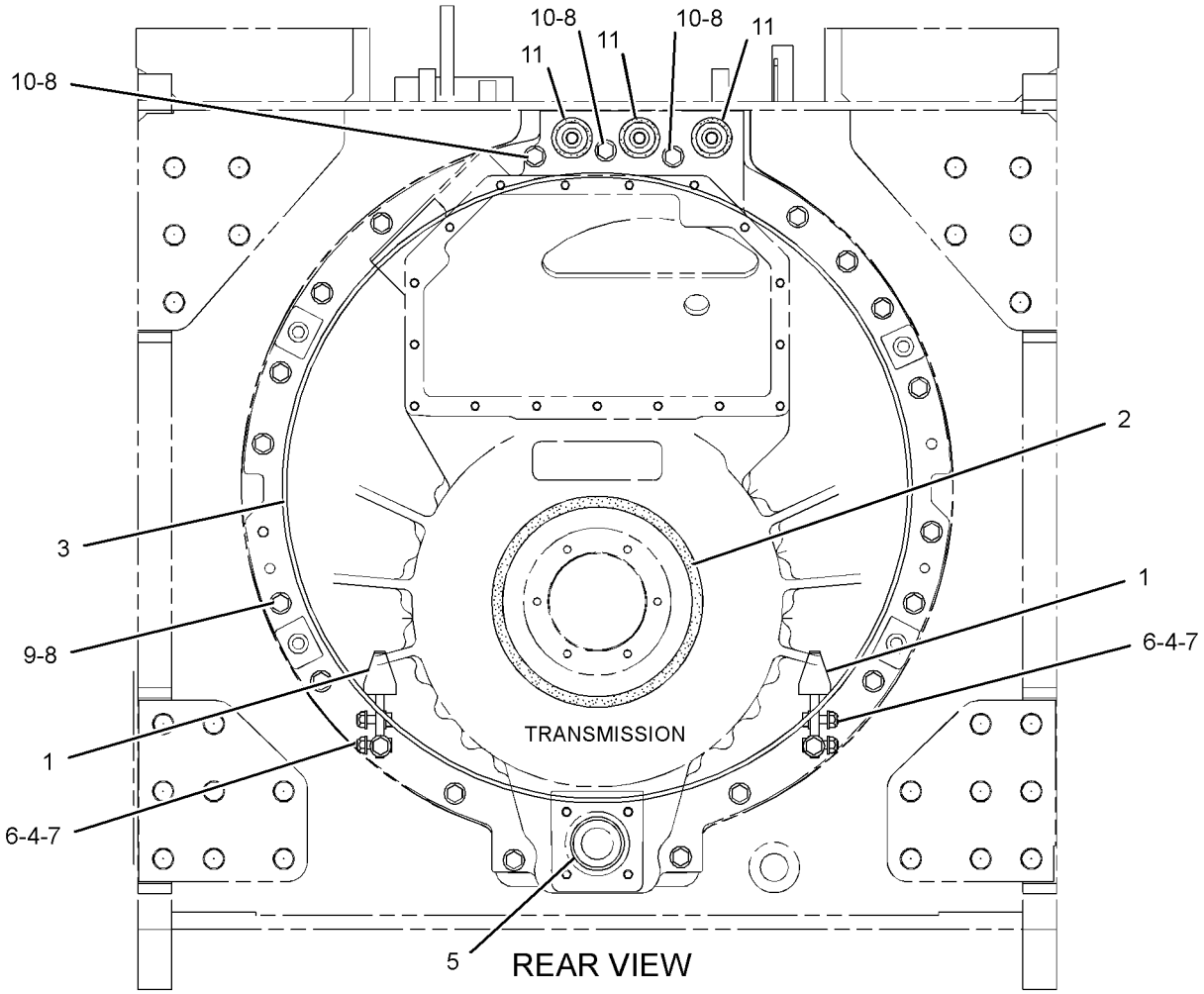

GRAPHIC #1

<END>

g02178508

POWER TRAIN

315-9960 PLANETARY GP-TRANSMISSION

S/N: TYA1-UP

PART OF 315-9959 TRANSMISSION AR

SMCS-3160 i03976789

NOTE	REF NO	GRAPHIC REF	PART NUMBER	QTY	PART NAME 1 2 3 4 5 6 (PRODUCT LEVEL)	SEE PAGE
	1	1	3T-4377	2	SEAL-RING	
	2	1,2	4M-9592	20	SPRING	
	3	1	5D-2989	3	BEARING	
	4	1	5M-6126	6	BEARING AS-ROLLER	
	5	2	5P-3930	3	BEARING AS-ROLLER	
	6	2	5P-8194	1	RING-RETAINING	
	7	1,2	6I-8500	3	PLATE-CLUTCH	
	8	1	6T-7882	3	GEAR-PLANETARY (25-TEETH)	
	9	1,2	6V-0473	3	RING-RETAINING	
	10	2	6V-2478	1	RING-RETAINING	
	11	1	6Y-1602	1	COUPLING	
	12	1	6Y-4819	1	CARRIER-PLANETARY	
	13	1	6Y-4831	1	PLATE AS	
		1	5H-6202	2	PIN	
		1	7M-5130	1	PIN-SPRING	
	14	1	7G-2516	6	GEAR-PLANETARY (24-TEETH)	
	15	2	7G-2830	2	RING-SEAL	
	16	1	7G-6355	1	GEAR-RING (90-TEETH)	
	17	2	7G-7218	1	CARRIER-PLANETARY	
	18	2	7G-7724	1	PISTON-CLUTCH	
	19	1	7H-7658	10	SPRING	
	20	1	7T-3950	1	GEAR (83-TEETH)	
	21	1	7T-9272	1	GEAR-SUN (34-TEETH)	
	22	2	7T-9370	1	GEAR-SUN (51-TEETH)	
	23	2	8E-8299	6	DISC-THRUST	
	24	1	8E-8304	12	DISC-THRUST	
	25	1	8E-8305	6	DISC-THRUST	
	26	2	8P-1892	1	PISTON-CLUTCH	
	27	2	8P-1916	3	GEAR-PLANETARY (20-TEETH)	
	28	2	8P-1964	2	PLATE-CLUTCH	
R	29	1	8P-2051	6	PLATE-CLUTCH	
	30	1	8P-2053	1	SEAL-RING	
	31	1	8P-9507	1	PISTON-CLUTCH	
	32	1	9G-0280	1	PISTON-CLUTCH	
	33	1	9G-0284	1	HOUSING-CLUTCH	
	34	1	9G-0285	1	PISTON-CLUTCH	
	35	2	9G-0289	3	SHAFT-PLANETARY	
	36	2	9G-0290	1	HUB-CLUTCH	
	37	2	9G-8020	1	PLATE-RETAINER	
	38	1	9M-4355	10	DAMPER-BOLT	
	39	1	9P-7390	8	DISC AS-FRICTION	
	40	1	9P-7757	1	GEAR-SUN (42-TEETH)	
	41	1	9P-8614	1	GEAR-RING (90-TEETH)	
	42	1	9P-8623	3	SHAFT-PLANETARY	
	43	1	9P-8626	1	GEAR-SUN (42-TEETH)	
	44	2	9U-9550	1	PLATE-CLUTCH	
	45	1	9W-0645	1	TUBE AS	
	46	2	9W-8270	1	GEAR-RING (90-TEETH)	
	47	2	105-8183	1	HOUSING AS	
		2	6B-6863	1	PIN-SPRING	
		2	6P-7704	1	CARRIER-RING	
	48	1,2	109-3196	1	HOUSING AS	
		1,2	3F-5022	1	PLUG-CUP	
	49	1	112-4511	3	PIN-SPRING	
	50	1	112-5585	3	SHAFT-PLANETARY	
	51	1	112-8041	1	CARRIER-PLANETARY	

315-9960 PLANETARY GP-TRANSMISSION ***(contd.)*** i03976789

NOTE	REF NO	GRAPHIC REF	PART NUMBER	QTY	PART NAME 1 2 3 4 5 6 (PRODUCT LEVEL)	SEE PAGE
	52	2	117-7826	1	HOUSING AS-CLUTCH	
		2	1A-2223	4	DOWEL	
	53	1	131-4091	1	SEAL-RING	
	54	1	144-4284	3	RING-LOCK	
	55	2	144-7878	1	MANIFOLD	
	56	1	231-8855	1	SHAFT AS-INPUT	
		1	156-4406	1	PLUG-PIPE	
	57	1	234-9994	1	SHAFT AS-OUTPUT	
	57A	1	3T-8729	1	BUSHING	
	57B	1	9G-6744	1	BUSHING	
	58	1	328-4374	5	DISC-FRICTION	
	59	1,2	328-4375	3	DISC-FRICTION	
	60	1	030-8538	1	BOLT (1/2-13X1.25-IN)	
	61	1	061-6711	2	RING-RETAINING	
	62	1	068-8093	2	RING-RETAINING	
	63	1	1A-5183	2	BOLT (3/8-16X4.75-IN)	
	64	2	1L-7388	1	RING-RETAINING	
	65	2	1M-8657	2	BOLT (1/2-13X15.69-IN)	
	66	1,2	3K-2511	10	DOWEL-REACTION	
	67	1	3S-2708	6	PIN-SPRING	
	68	2	4M-2442	8	BOLT (1/2-13X12.32-IN)	
	69	1	5M-3038	2	SEAL-O-RING	
	70	1,2	5P-5045	1	BALL BEARING	
	71	2	5P-5296	2	RING-RETAINING	
	72	2	5P-5297	1	RING-RETAINING (EXTERNAL)	
	73	2	5P-8245	11	WASHER-HARD (13.5X25.5X3-MM THK)	
	74	2	7G-2343	3	SPRING-DISC	
	75	1,2	7T-8816	3	BALL BEARING	
	76	2	8D-9739	1	SEAL-RING	
	77	1	8H-5352	2	BALL BEARING	
	78	1	8M-5010	2	SEAL-O-RING	
	79	2	8M-5255	1	SEAL-O-RING	
	80	1	8M-5266	1	SEAL-O-RING	
	81	2	8P-2019	2	RING-SEAL	
	82	1,2	8P-2022	4	RING-SEAL	
	83	2	8P-2023	1	RING-SEAL	
	84	1	9G-0281	1	RING-SEAL	
	85	1	9G-0286	1	RING-SEAL	

R-REMFG PART MAY BE AVAILABLE

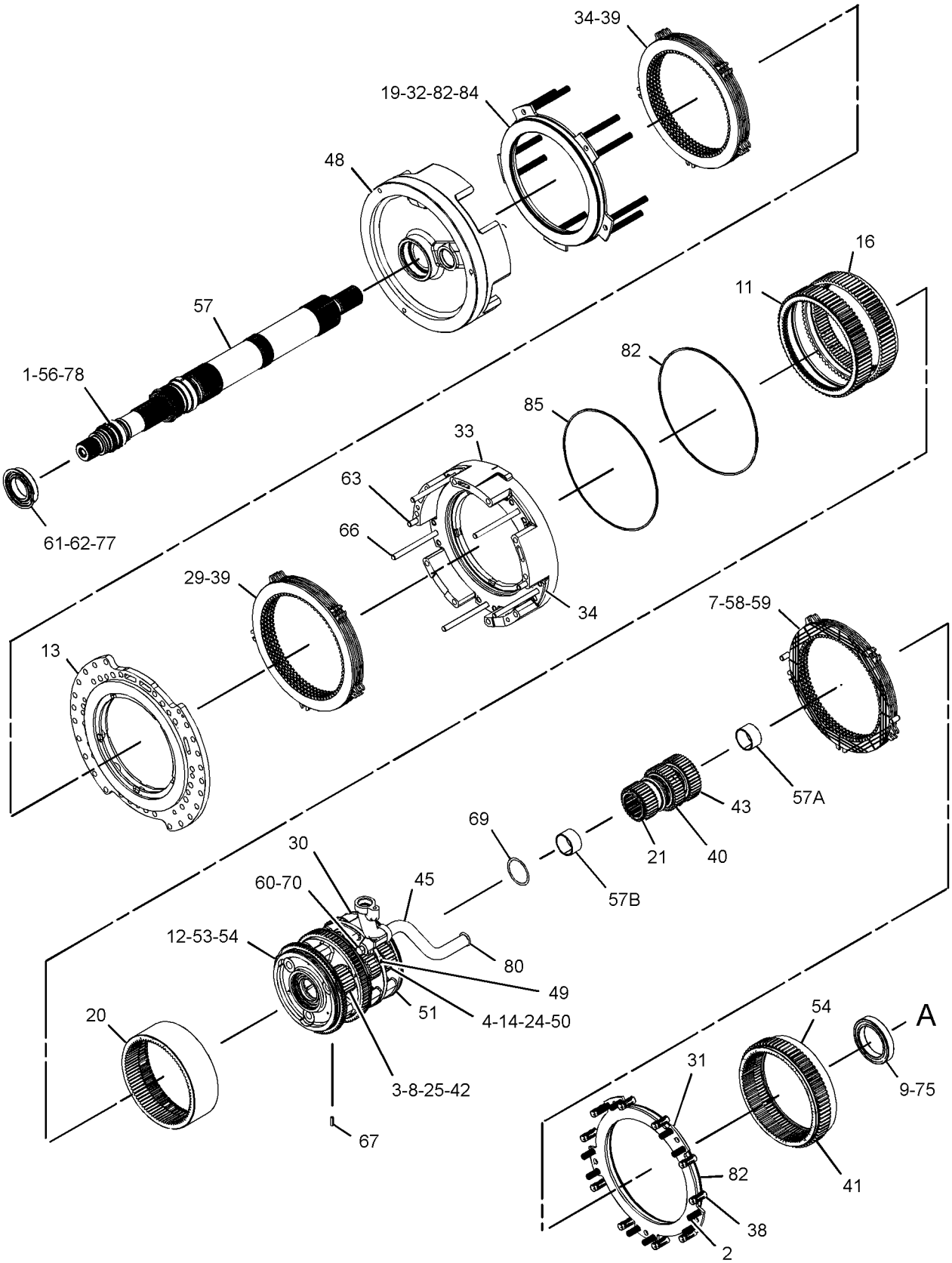

GRAPHIC #1 g02174413

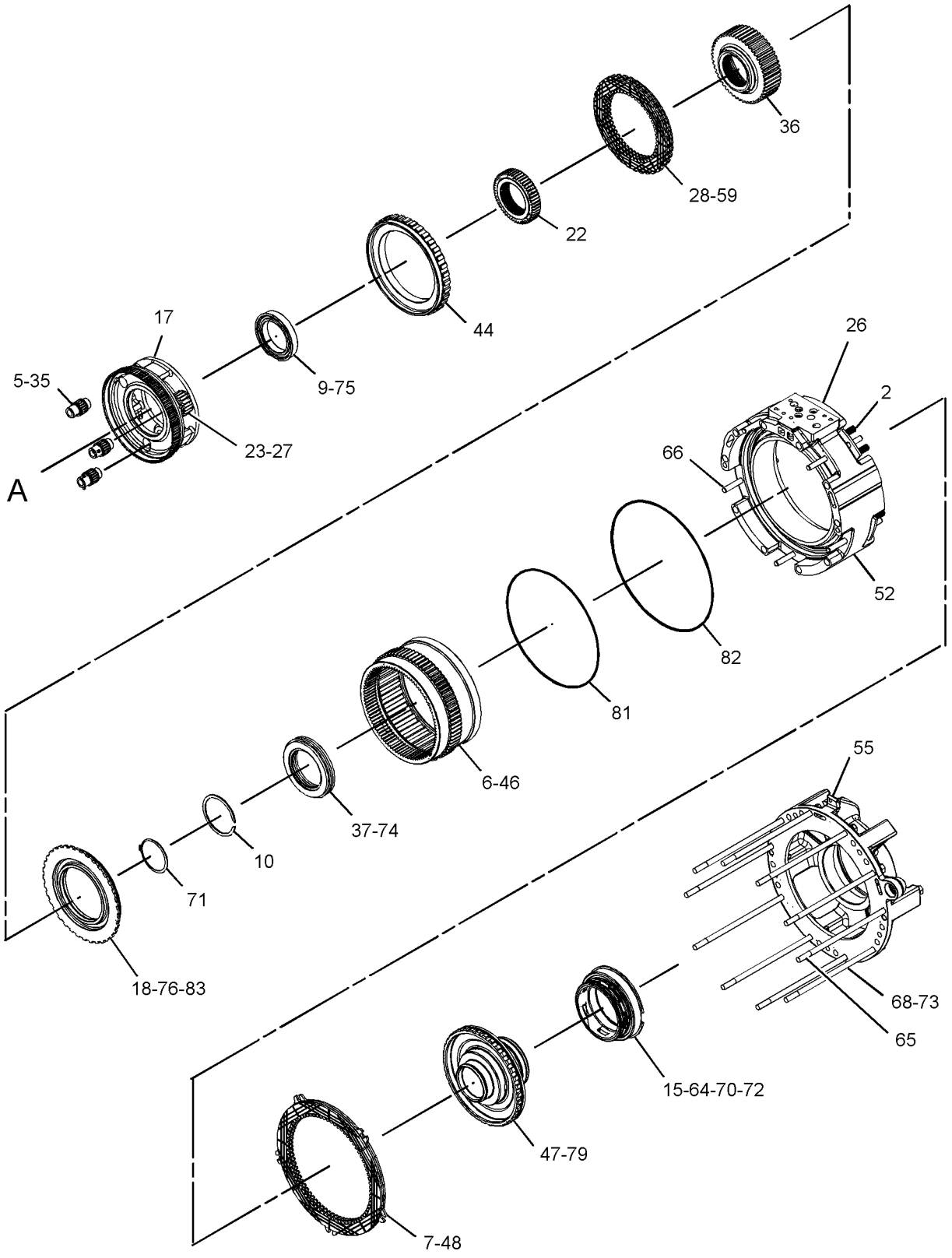

GRAPHIC #2 <END> g02174414

317-1756 POWER TRAIN AR

S/N: S6T1-UP; S6X1-UP
PART OF 336-9681, 336-9682 GENERAL AR

SMCS-3000, 4000 i04011372

NOTE	PART NUMBER	QTY	PART NAME 1 2 3 4 5 6 (PRODUCT LEVEL)	SEE PAGE
Y	*315-9959*	1	TRANSMISSION AR	279
Y	*3W-6550*	1	AXLE GP	212
Y	*231-5969*	1	BRAKE & DIFFERENTIAL DRIVE GP	215
Y	*231-5990*	1	BRAKE & PLANETARY GP	219
Y	*311-7956*	1	CONTROL GP-GOVERNOR & BRAKE	539
Y	*311-6816*	1	CONTROL GP-STEERING & XMSN	224
Y	*225-1506*	1	COUPLING & GUARD GP (POWERSHIFT)	236
Y	*260-6649*	2	DRIVE GP-FINAL	244
Y	*317-4109*	1	LINES GP-POWER TRAIN OIL	255
Y	*259-3119*	1	MOUNTING GP-FINAL DRIVE	260
Y	*319-7104*	1	MOUNTING GP-TRANSMISSION	261
Y	*108-1696*	1	SHAFT GP-DRIVE	272
Y	*317-7052*	1	TORQUE CONVERTER & HOUSING GP	273

Y-SEPARATE ILLUSTRATION

<END>

317-1757 POWER TRAIN AR

S/N: S6Y1-UP
PART OF 336-9683 GENERAL AR

SMCS-3000, 4000 i04011416

NOTE	PART NUMBER	QTY	PART NAME 1 2 3 4 5 6 (PRODUCT LEVEL)	SEE PAGE
Y	*315-9959*	1	TRANSMISSION AR	279
Y	*223-0565*	1	AXLE GP	213
Y	*231-5969*	1	BRAKE & DIFFERENTIAL DRIVE GP	215
Y	*231-5990*	1	BRAKE & PLANETARY GP	219
Y	*311-7956*	1	CONTROL GP-GOVERNOR & BRAKE	539
Y	*311-6816*	1	CONTROL GP-STEERING & XMSN	224
Y	*225-1506*	1	COUPLING & GUARD GP (POWERSHIFT)	236
Y	*222-9218*	2	DRIVE GP-FINAL	242
Y	*317-4109*	1	LINES GP-POWER TRAIN OIL	255
Y	*259-3119*	1	MOUNTING GP-FINAL DRIVE	260
Y	*319-7104*	1	MOUNTING GP-TRANSMISSION	261
Y	*108-1696*	1	SHAFT GP-DRIVE	272
Y	*317-7052*	1	TORQUE CONVERTER & HOUSING GP	273

Y-SEPARATE ILLUSTRATION

<END>

318-0690 PUMP GP-GEAR–POWER TRAIN OIL

S/N: S6T1-UP; S6X1-UP; S6Y1-UP
PART OF 317-4109 LINES GP-POWER TRAIN OIL

SMCS-3066, 3115, 5073 i04009830

NOTE	REF NO	GRAPHIC REF	PART NUMBER	QTY	PART NAME 1 2 3 4 5 6 (PRODUCT LEVEL)	SEE PAGE
	1	1	3T-5356	1	CAGE-BEARING	
	2	1	5H-4279	1	PLUG-CUP	
	3	1	5P-9439	1	BALL BEARING	
	5	1	111-4919	1	SEAL-LIP TYPE	
	6	1	212-2301	1	FLANGE	
Y	7	1	318-0691	1	PUMP GP-GEAR	268
	9	1	1P-4577	2	FLANGE-HALF	
	10	1	1P-4578	2	FLANGE-HALF	
	11	1	2M-3974	1	RING-RETAINING	
	12	1	5M-2894	10	WASHER-HARD (10.2X18.5X2.5-MM THK)	
	13	1	5P-8245	6	WASHER-HARD (13.5X25.5X3-MM THK)	
	14	1	6H-3977	1	SEAL-O-RING	
	15	1	6L-4783	4	BOLT-12 POINT HEAD (5/16-18X1.25-IN)	
M	16	1	6V-3822	8	BOLT (M10X1.5X35-MM)	
M	17	1	6V-3823	2	BOLT (M12X1.75X60-MM)	
M	18	1	6V-8675	2	BOLT (M12X1.75X35-MM)	
M	19	1	8T-0372	2	BOLT (M12X1.75X90-MM)	

M-METRIC PART
Y-SEPARATE ILLUSTRATION

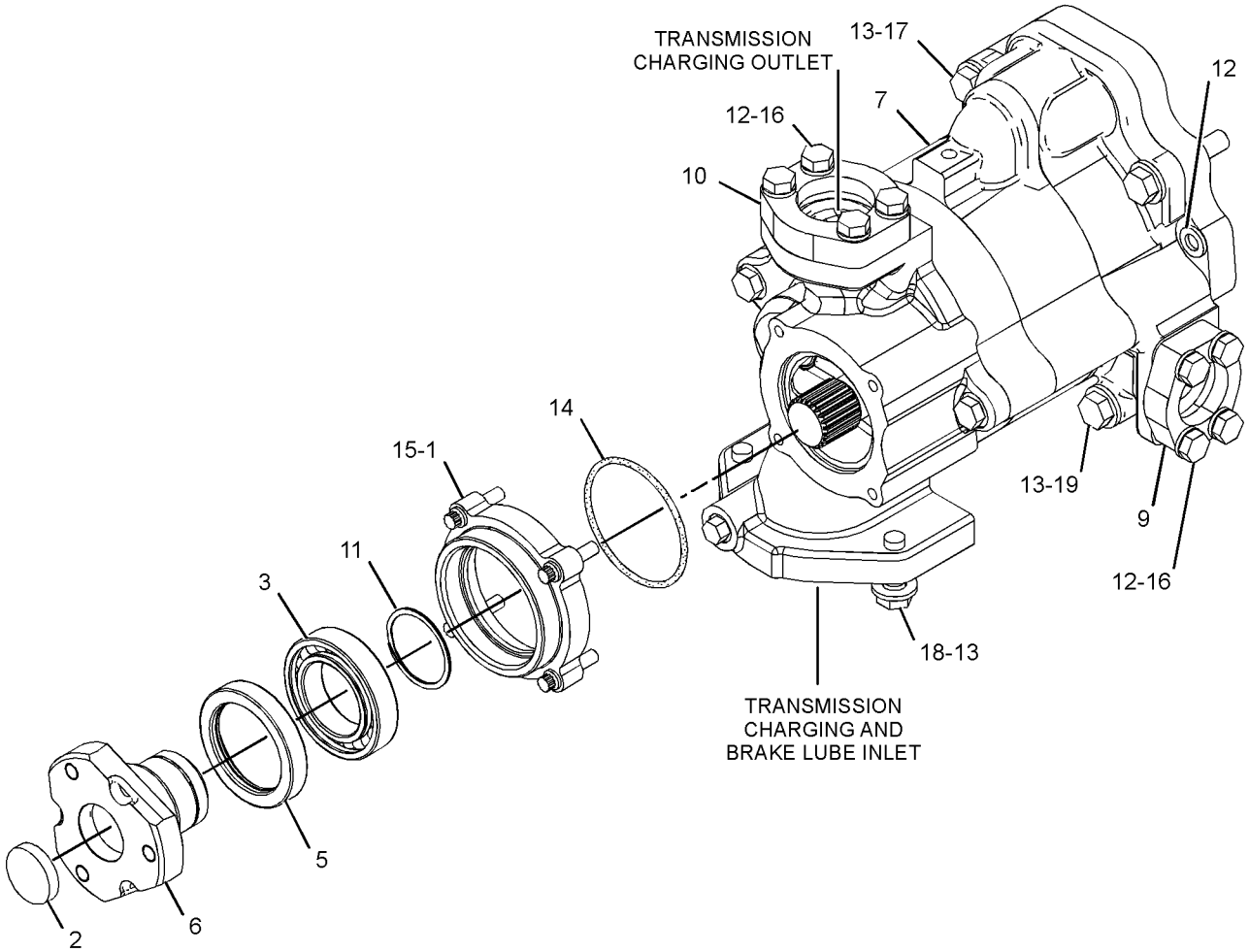

GRAPHIC #1 <END> g02188214

318-0691 PUMP GP-GEAR–POWER TRAIN OIL

S/N: S6T1-UP; S6X1-UP; S6Y1-UP
PART OF 318-0690 PUMP GP-GEAR

SMCS-3066, 3115, 5073 i04009829

NOTE	REF NO	GRAPHIC REF	PART NUMBER	QTY	PART NAME 1 2 3 4 5 6 (PRODUCT LEVEL)	SEE PAGE
M	1	1	8C-2926	2	BOLT (M10X1.5X140-MM)	
	2	1	9W-9890	1	COVER AS-PUMP	
	2A	1	8M-8489	2	DOWEL	
	2B	1	9M-4370	2	BEARING	
	3	1	318-0692	1	COVER AS-OIL PUMP	
	3A	1	131-0167	2	BUSHING	
	4	1	318-0694	1	BODY AS-OIL PUMP	
	4A	1	8M-8489	2	DOWEL	
	4B	1	131-0167	2	BUSHING	
	5	1	318-0696	2	GEAR (12-TEETH)	
	6	1	318-0697	1	BODY-OIL PUMP	
	7	1	318-0698	1	GEAR AS-OIL PUMP (8-TEETH)	
		1	2B-9373	1	KEY-WOODRUFF	
	8	1	318-0699	1	GEAR AS-OIL PUMP (8-TEETH)	
		1	2B-9373	1	KEY-WOODRUFF	
	9	1	318-5040	1	BODY AS-OIL PUMP	
		1	8M-8489	4	DOWEL	
	10	1	318-5042	2	GEAR (12-TEETH)	
	12	1	061-9457	1	SEAL-O-RING	
	13	1	161-8068	4	SEAL-O-RING	
	14	1	1B-8705	1	KEY-WOODRUFF	
	15	1	1B-8736	1	KEY-WOODRUFF	
	16	1	316-8227	4	BOLT	
	17	1	3S-0004	6	WASHER (0.406X0.728X0.09-IN THK)	
	18	1	6F-6673	3	SEAL-O-RING	

M-METRIC PART

318-0691 PUMP GP-GEAR ***(contd.)*** i04009829

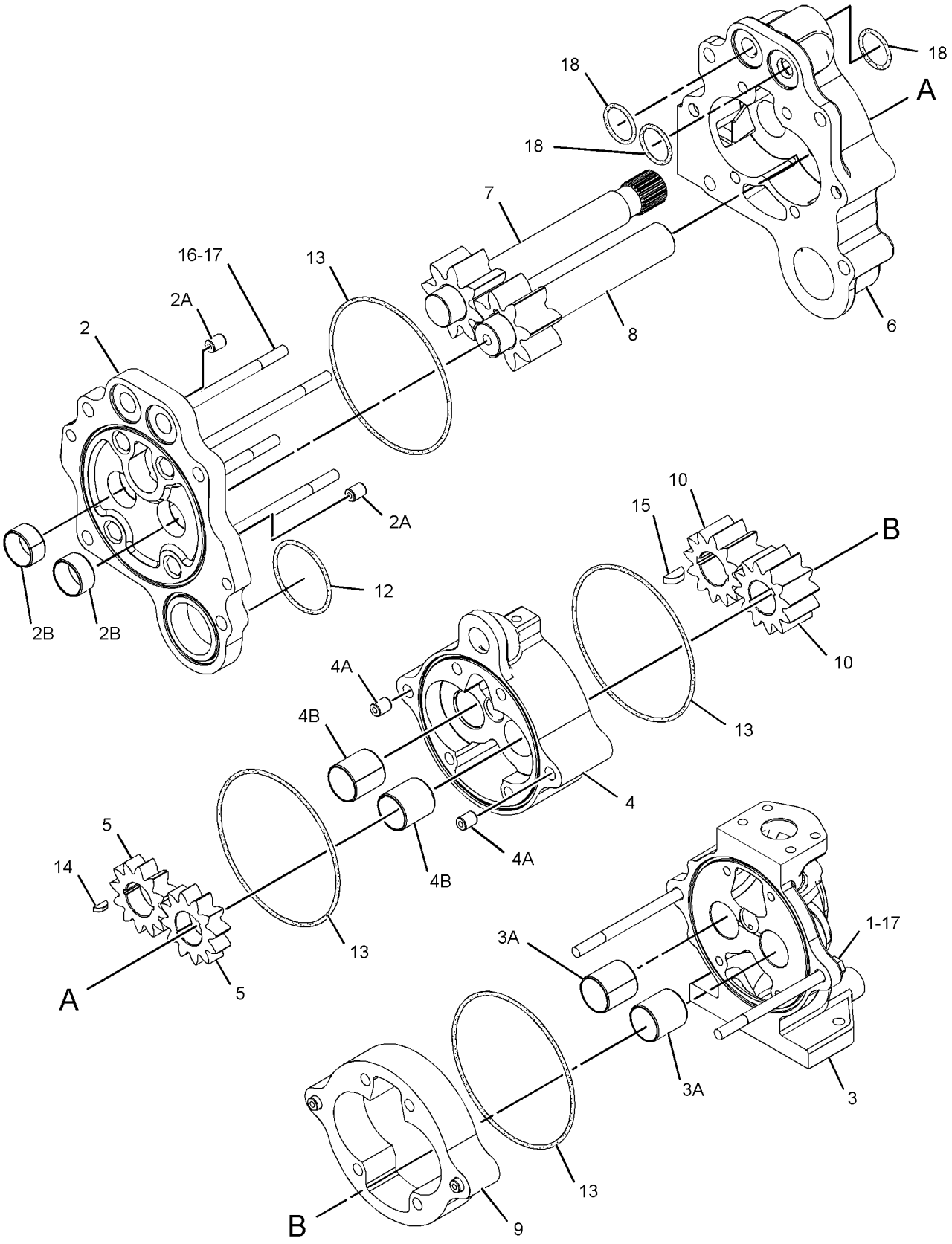

GRAPHIC #1 <END> g02192099

231-4166 SCREEN GP-MAGNETIC—TRANSMISSION

S/N: S6T1-UP; S6X1-UP; S6Y1-UP

PART OF 317-4109 LINES GP-POWER TRAIN OIL

SMCS-3067 i04009769

NOTE	REF NO	GRAPHIC REF	PART NUMBER	QTY	PART NAME 1 2 3 4 5 6 (PRODUCT LEVEL)	SEE PAGE
	1	1	3S-3440	1	WASHER-WAVE (68.1X80.8X0.5-MM THK)	
	2	1	4S-8598	1	SCREEN-SUCTION (POWER TRAIN)	
	3	1	240-8259	1	SCREEN GP-MAGNETIC (POWER TRAIN)	
		1	8M-7160	3	MAGNET	
	4	1	231-4167	1	HOUSING AS-SCREEN	
	5	1	3S-3439	1	COVER-TOP	
	6	1	6L-5359	1	SEAL-O-RING	
	7	1	6V-5188	1	SEAL-O-RING	
M	8	1	8T-4133	4	NUT (M10X1.5-THD)	

M-METRIC PART

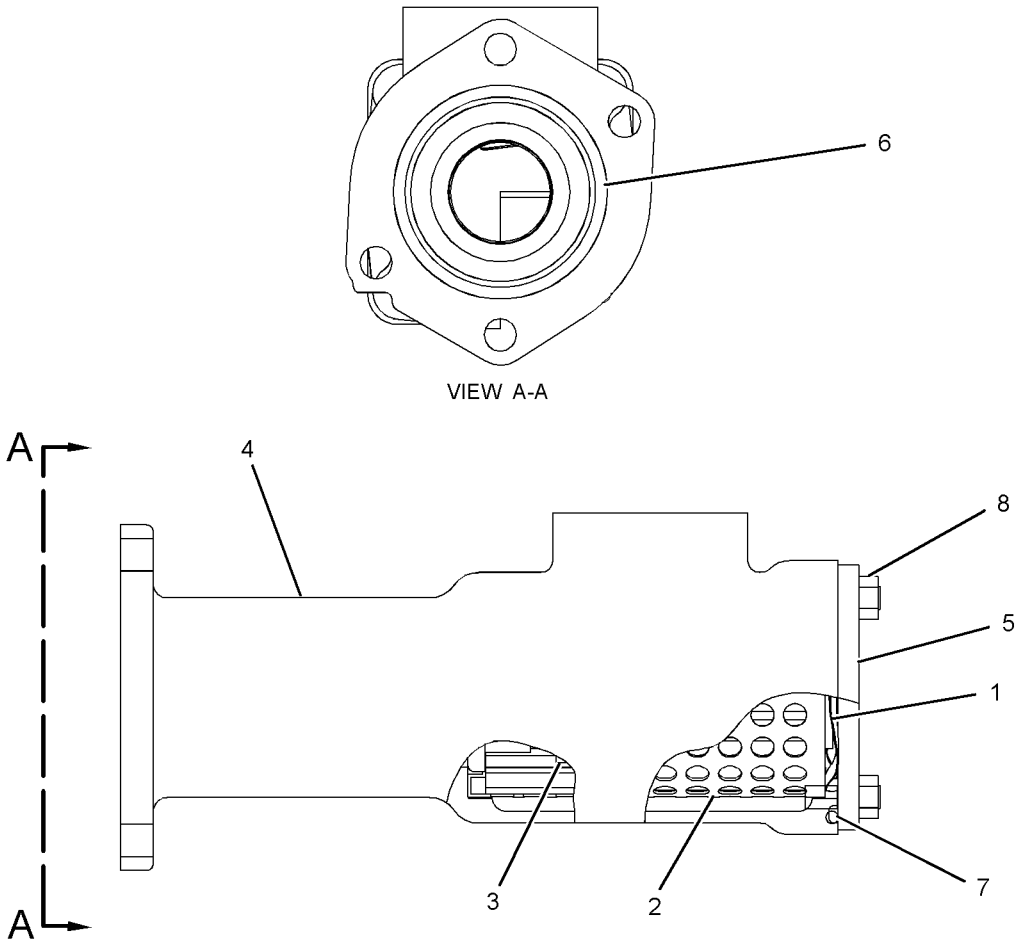

GRAPHIC #1 <END> g01209036

188-0908 SEGMENT GP-SPROCKET

S/N: S6T1-UP; S6X1-UP; S6Y1-UP
PART OF 222-9218, 260-6649 DRIVE GP-FINAL

SMCS-4155 i03998006

NOTE	REF NO	GRAPHIC REF	PART NUMBER	QTY	PART NAME 1 2 3 4 5 6 (PRODUCT LEVEL)	SEE PAGE
	1	1	173-0946	5	SEGMENT-SPROCKET	
	2	1	6V-0937	25	BOLT (5/8-18X2.1-IN)	
	3	1	2S-5658	25	WASHER-HARD (17X29X3-MM THK)	
	4	1	7H-3607	25	NUT (5/8-18-THD)	

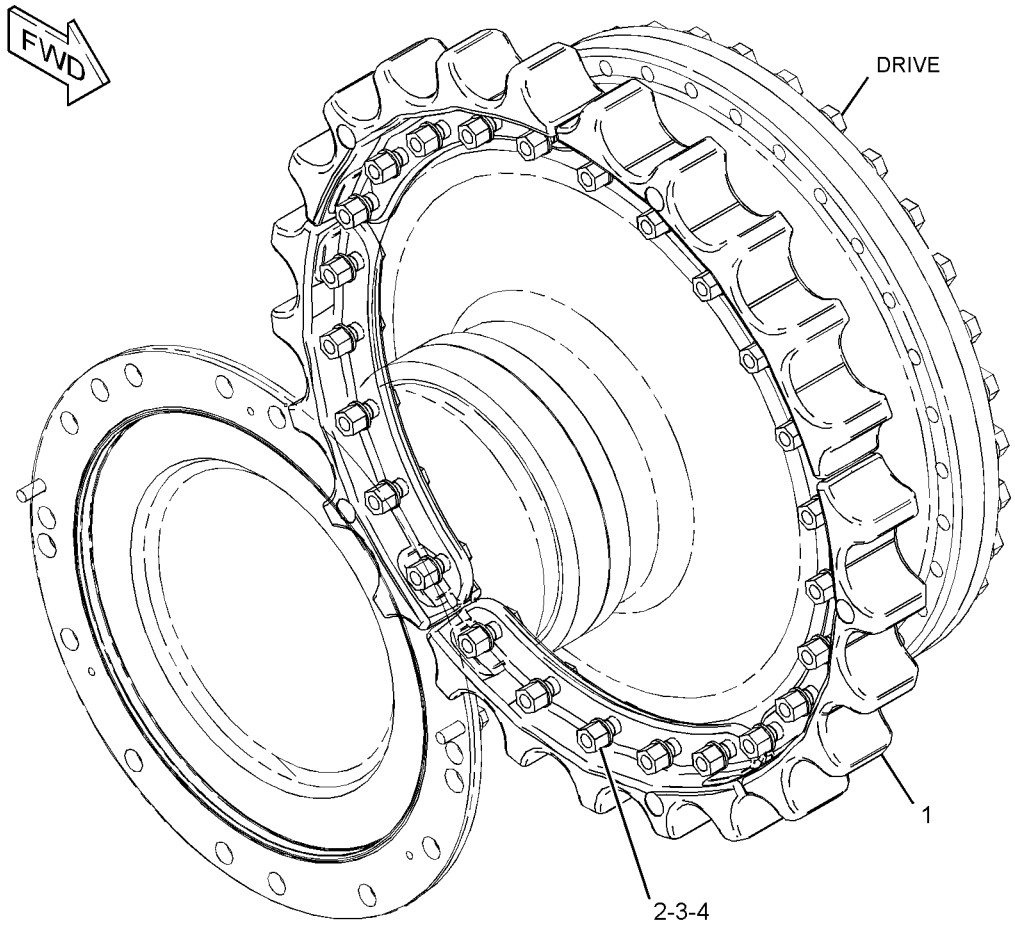

GRAPHIC #1 <END> g02180905

108-1696 SHAFT GP-DRIVE

S/N: S6T1-UP; S6X1-UP; S6Y1-UP
PART OF 317-1756, 317-1757 POWER TRAIN AR

SMCS-3253 i03997996

NOTE	REF NO	GRAPHIC REF	PART NUMBER	QTY	PART NAME 1 2 3 4 5 6 (PRODUCT LEVEL)	SEE PAGE
Y	1	1	108-2106	1	UNIVERSAL JOINT GP	280
	2	1	7X-7477	8	BOLT (3/8-24X1.75-IN)	
	3	1	7X-0608	8	WASHER-HARD (10.2X16X2-MM THK)	
	4	1	3T-8305	1	YOKE AS	
		1	7D-1677	1	RACE-BEARING INNER	
		1	8H-2768	1	PLUG-CUP	

Y-SEPARATE ILLUSTRATION

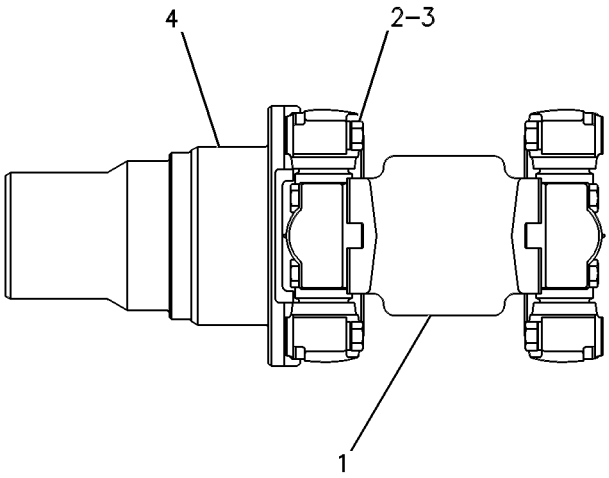

GRAPHIC #1 <END> g00254101

317-7052 TORQUE CONVERTER & HOUSING GP

S/N: S6T1-UP; S6X1-UP; S6Y1-UP
PART OF 317-1756, 317-1757 POWER TRAIN AR

SMCS-3101, 3105 i04024814

NOTE	REF NO	GRAPHIC REF	PART NUMBER	QTY	PART NAME 1 2 3 4 5 6 (PRODUCT LEVEL)	SEE PAGE
	1	1	2D-1523	1	RING-RETAINING	
	2	1	2S-2251	1	SEAL-O-RING	
	3	1	8H-9818	1	GASKET	
	4	1	8S-9008	1	SLEEVE	
	5	1	9H-8712	1	BEARING AS	
	6	1	9M-1976	1	RING-RETAINING	
	7	1	9P-3709	1	GEAR-SUN (35-TEETH)	
	8	1	108-6954	1	YOKE-UNIVERSAL JOINT	
	9	1	155-5161	1	SEAL-OIL	
	10	1	210-4458	1	ELBOW	
	11	1	223-3400	1	HOUSING-TORQUE CONVERTER	
	12	1	232-6411	1	RETAINER-SHAFT	
Y	13	1	317-7051	1	TORQUE CONVERTER GP	277
	14	1	110-0510	1	COVER	
	15	1	136-2216	1	SEAL-LIP TYPE	
	16	1	165-4854	2	SEAL-O-RING	
	17	1	1S-9799	1	SEAL-O-RING	
	18	1	3K-0360	1	SEAL-O-RING	
	19	1	6F-4718	1	SEAL-O-RING	
	20	1	8T-4121	12	WASHER-HARD (11X21X2.5-MM THK)	
M	21	1	8T-4136	2	BOLT (M10X1.5X25-MM)	
M	22	1	8T-4137	2	BOLT (M10X1.5X20-MM)	
M	23	1	8T-4139	9	BOLT (M12X1.75X30-MM)	
M	24	1	8T-4176	1	BOLT (M12X1.75X90-MM)	
M	25	1	8T-4183	3	BOLT (M12X1.75X40-MM)	
M	26	1	8T-4195	8	BOLT (M10X1.5X30-MM)	
	27	1	8T-4223	12	WASHER-HARD (13.5X25.5X3-MM THK)	
	28	1	9H-0846	1	SEAL-O-RING	
	29	1	9S-4185	1	PLUG-O-RING	

M-METRIC PART
Y-SEPARATE ILLUSTRATION

317-7052 TORQUE CONVERTER & HOUSING GP ***(contd.)*** i04024814

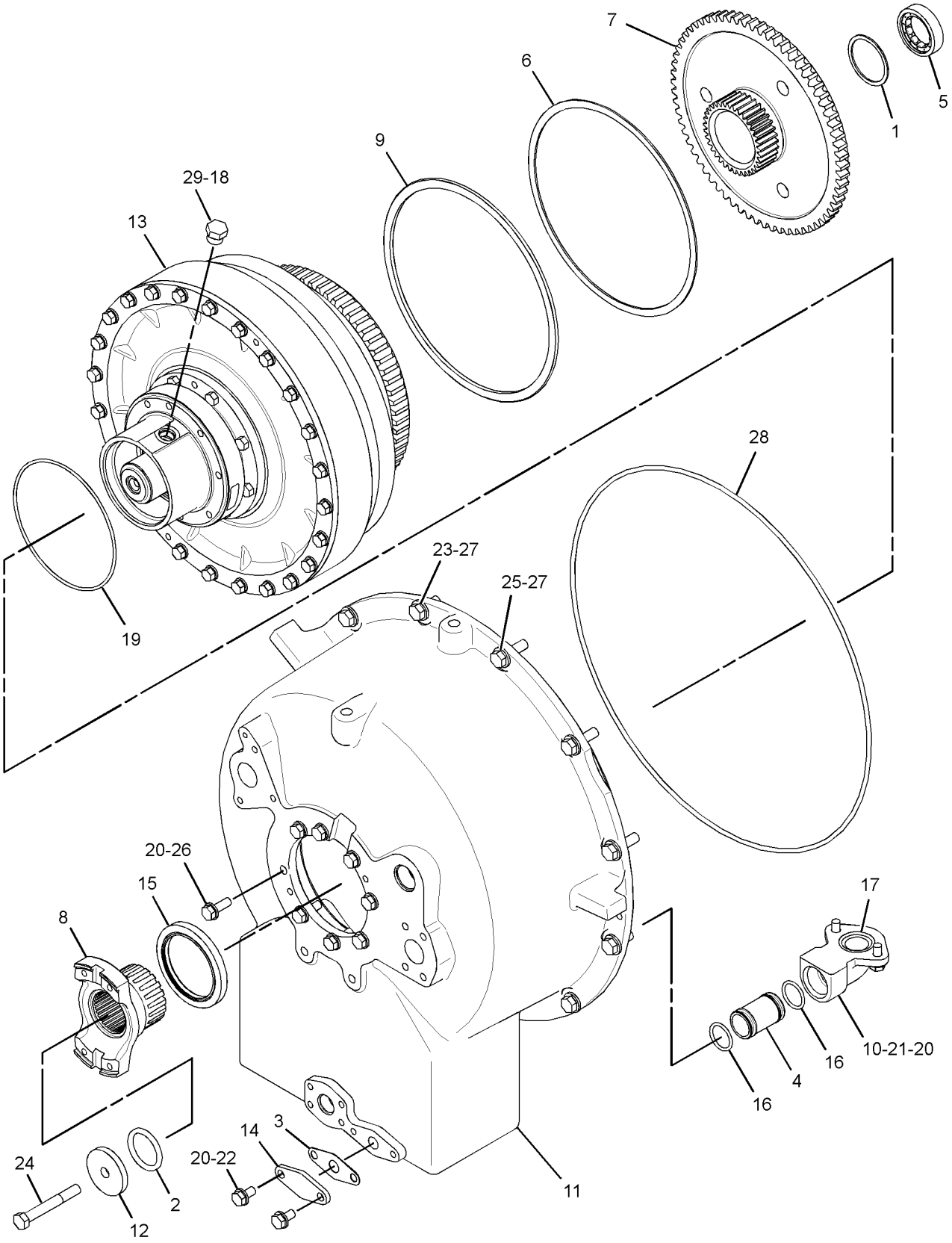

GRAPHIC #1 <END> g02206814

1T-2084 TORQUE CONVERTER GP

S/N: EBA1-UP

PART OF 317-7051 TORQUE CONVERTER GP

SMCS-3101 i03977197

NOTE	REF NO	GRAPHIC REF	PART NUMBER	QTY	PART NAME 1 2 3 4 5 6 (PRODUCT LEVEL)	SEE PAGE
	1	1	1T-0097	1	RING-METAL SEAL	
	2	1	1T-0438	1	RETAINER-BEARING	
	3	1	1T-0446	6	BOLT (3/8-16X0.75-IN)	
	4	1	1T-0447	1	CARRIER-RING	
	5	1	1T-0599	1	SPACER (65.1X85X9.52-MM THK)	
	6	1	1T-1993	1	WHEEL-TURBINE	
	7	1	1T-2052	1	STATOR AS	
	8	1	1T-2069	1	CARRIER-BEARING	
	9	1	1T-2077	1	RETAINER-BEARING	
	10	1	1T-2080	1	HOUSING-ROTATING	
	11	1	1T-2081	1	CARRIER AS-STATOR	
		1	4S-8537	1	DOWEL	
	12	1	1T-2086	1	FLANGE AS-OUTPUT	
	12A	1	1T-0902	2	BUSHING	
	13	1	1T-2089	1	IMPELLER	
	14	1	304-9651	1	BALL BEARING	
	15	1	142-8540	1	RING-SEAL	
	16	1	1A-2029	24	BOLT (3/8-16X1.125-IN)	
	17	1	1A-2209	8	BOLT (3/8-24X1.25-IN)	
	18	1	1T-0414	8	BOLT-12 POINT HEAD (5/16-18X1-IN)	
	19	1	1T-0441	1	BALL BEARING	
	20	1	3F-3727	1	RING-SNAP	
	21	1	4H-1440	6	PIN-SPRING	
	22	1	5B-0582	1	DOWEL	
	23	1	5M-2894	24	WASHER-HARD (10.2X18.5X2.5-MM THK)	

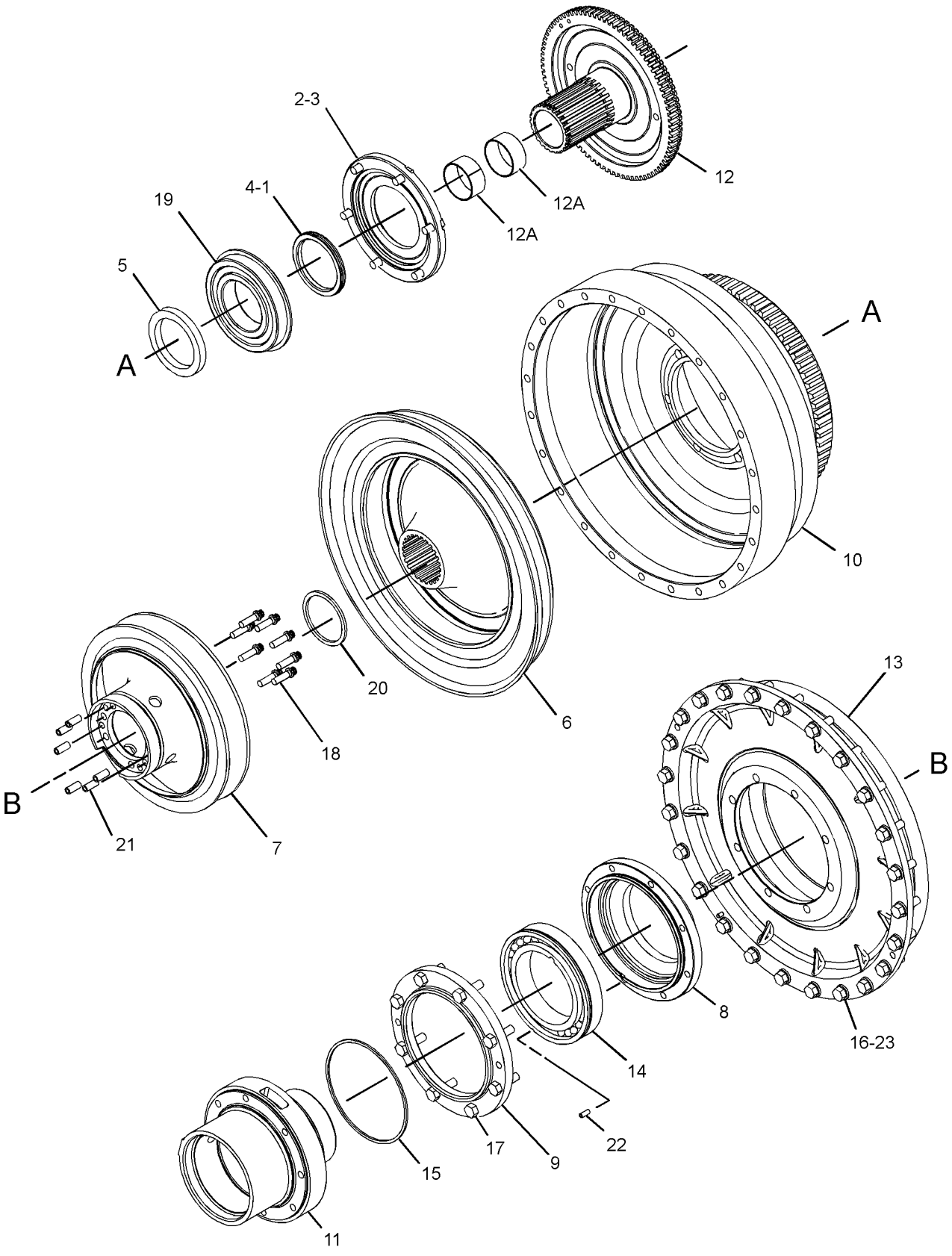

GRAPHIC #1 <END> g02176430

317-7051 TORQUE CONVERTER GP

S/N: EBA1-UP

PART OF 317-7052 TORQUE CONVERTER & HOUSING GP

SMCS-3101 i03977199

NOTE	REF NO	GRAPHIC REF	PART NUMBER	QTY	PART NAME 1 2 3 4 5 6 (PRODUCT LEVEL)	SEE PAGE
Y	1	1	*1T-2084*	1	TORQUE CONVERTER GP	275
	2	1	5M-7878	1	RING-SNAP	
	3	1	3T-4009	1	GEAR-RING (82-TEETH)	
	4	1	3T-4008	3	GEAR-PLANETARY (23-TEETH)	
	5	1	5P-3930	3	BEARING AS-ROLLER	
	6	1	3T-4011	3	SHAFT AS-PLANETARY	
					(EACH INCLUDES)	
		1	2A-3746	1	PLUG-CUP	
	7	1	8E-8300	6	DISC-THRUST	
	8	1	3S-2708	3	PIN-SPRING	
	9	1	5P-7679	1	RACE-SPECIAL ROLLER BEARING	
	10	1	6K-3630	1	RING	
	11	1	3T-4013	1	RETAINER-CARRIER	
	12	1	3T-4007	1	CARRIER-PLANETARY	
	13	1	2K-5986	2	PIN-SPRING	
	14	1	9M-2008	1	RING-METAL SEAL	
	15	1	2D-5658	1	BALL BEARING	
	16	1	5J-3964	1	RING-LOCK	
	17	1	233-0668	1	SHAFT AS	
		1	5J-7386	1	PLUG-ORIFICE	
	18	1	6V-4583	1	RING-RETAINING	

Y-SEPARATE ILLUSTRATION

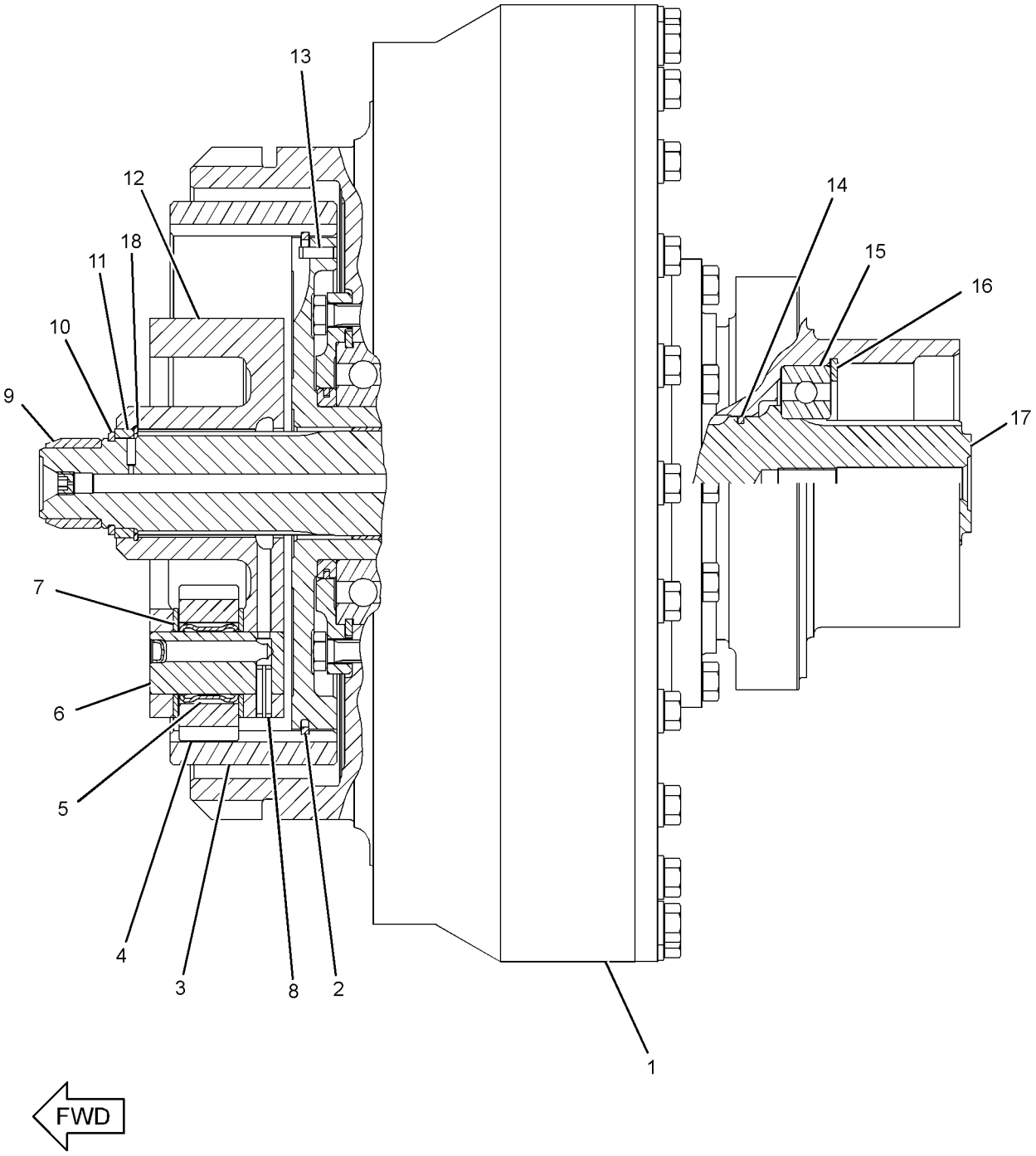

GRAPHIC #1 <END> g01209147

315-9959 TRANSMISSION AR

S/N: TYA1-UP

PART OF 317-1756, 317-1757 POWER TRAIN AR

SMCS-3030 i03998170

NOTE	REF NO	GRAPHIC REF	PART NUMBER	QTY	PART NAME 1 2 3 4 5 6 (PRODUCT LEVEL)	SEE PAGE
Y	1	1	*166-3485*	1	GEAR GP-BEVEL & TRANSFER	252
Y	2	1	*315-9960*	1	PLANETARY GP-TRANSMISSION	262
Y	3	1	*315-9961*	1	CASE & PARTS GP-PLANETARY	221
Y	4	1	*315-9964*	1	CONTROL GP-TRANSMISSION HYD	232

Y-SEPARATE ILLUSTRATION

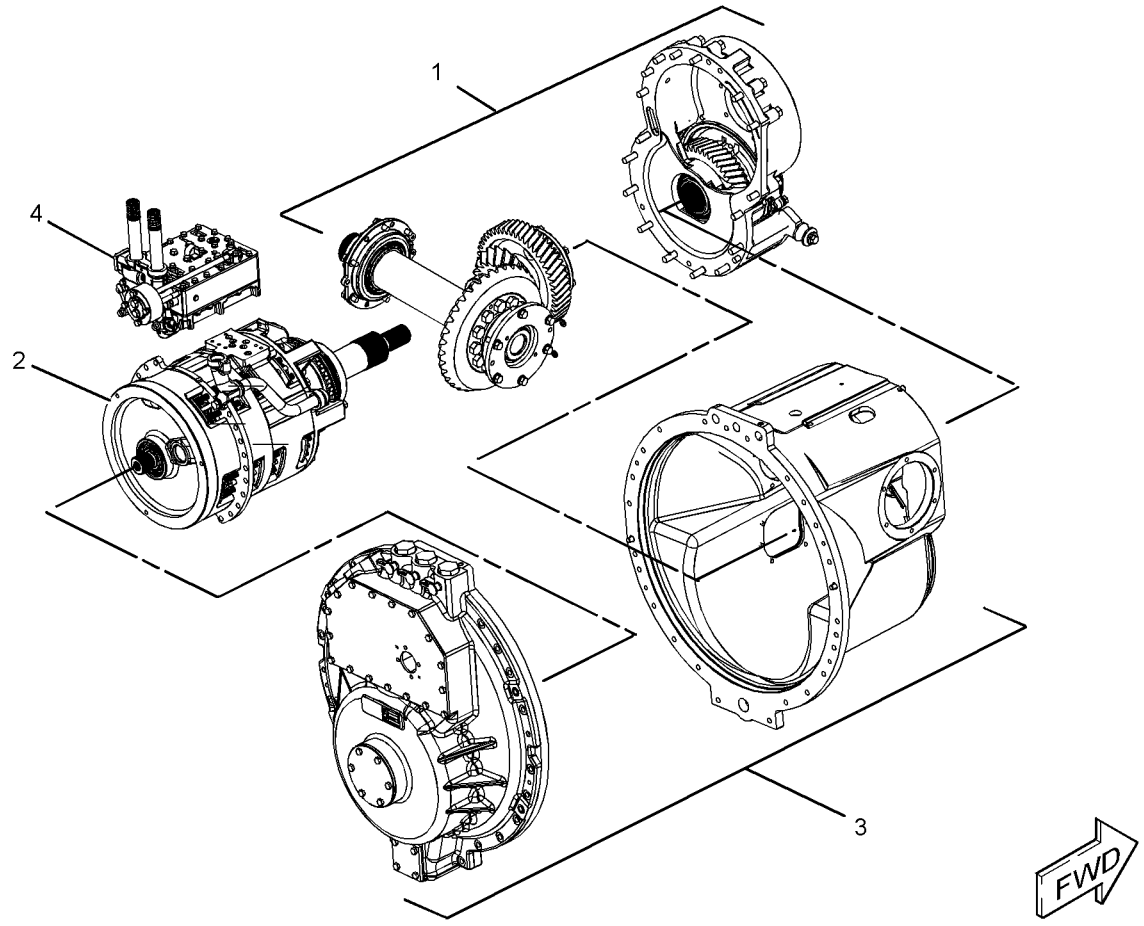

GRAPHIC #1 <END> g02178214

108-2106 UNIVERSAL JOINT GP

S/N: S6T1-UP; S6X1-UP; S6Y1-UP
PART OF 108-1696 SHAFT GP-DRIVE

SMCS-3251, 3253 i03998002

NOTE	REF NO	GRAPHIC REF	PART NUMBER	QTY	PART NAME 1 2 3 4 5 6 (PRODUCT LEVEL)	SEE PAGE
	1	1	3V-2431	8	WASHER (10.2X16X2-MM THK)	
	2	1	7G-9555	2	SPIDER & BEARING AS	
	3	1	7X-7477	8	BOLT (3/8-24X1.75-IN)	

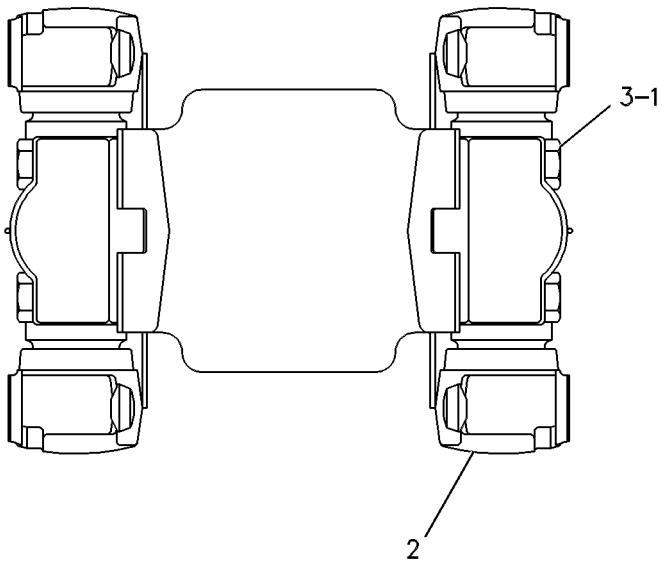

GRAPHIC #1 <END> g00254100

315-9965 VALVE GP-PRIORITY—LUBRICATION DISTRIBUTION

S/N: TYA1-UP

PART OF 315-9964 CONTROL GP-TRANSMISSION HYD

SMCS-3180 i03977093

NOTE	REF NO	GRAPHIC REF	PART NUMBER	QTY	PART NAME 1 2 3 4 5 6 (PRODUCT LEVEL)	SEE PAGE
	1	1	2M-7041	1	SLUG	
	2	1	5M-9622	1	SHIM (1.6-MM THK)	
B	3	1	5M-9624	6	SHIM (0.25-MM THK)	
	4	1	5S-4437	1	SPOOL AS	
		1	3D-8317	1	RING-RETAINING	
		1	4B-9880	1	BALL	
		1	4M-2381	1	SPRING	
		1	8M-1013	1	RETAINER	
	5	1	6T-2307	1	BODY-VALVE	
	6	1	4H-4737	2	PIN-SPRING	
	7	1	7T-8556	1	SPRING	
	8	1	8P-0311	2	SHAFT	
	9	1	9S-2792	1	COVER	
	10	1	0L-1351	2	BOLT (3/8-16X0.875-IN)	

B-USE AS REQUIRED

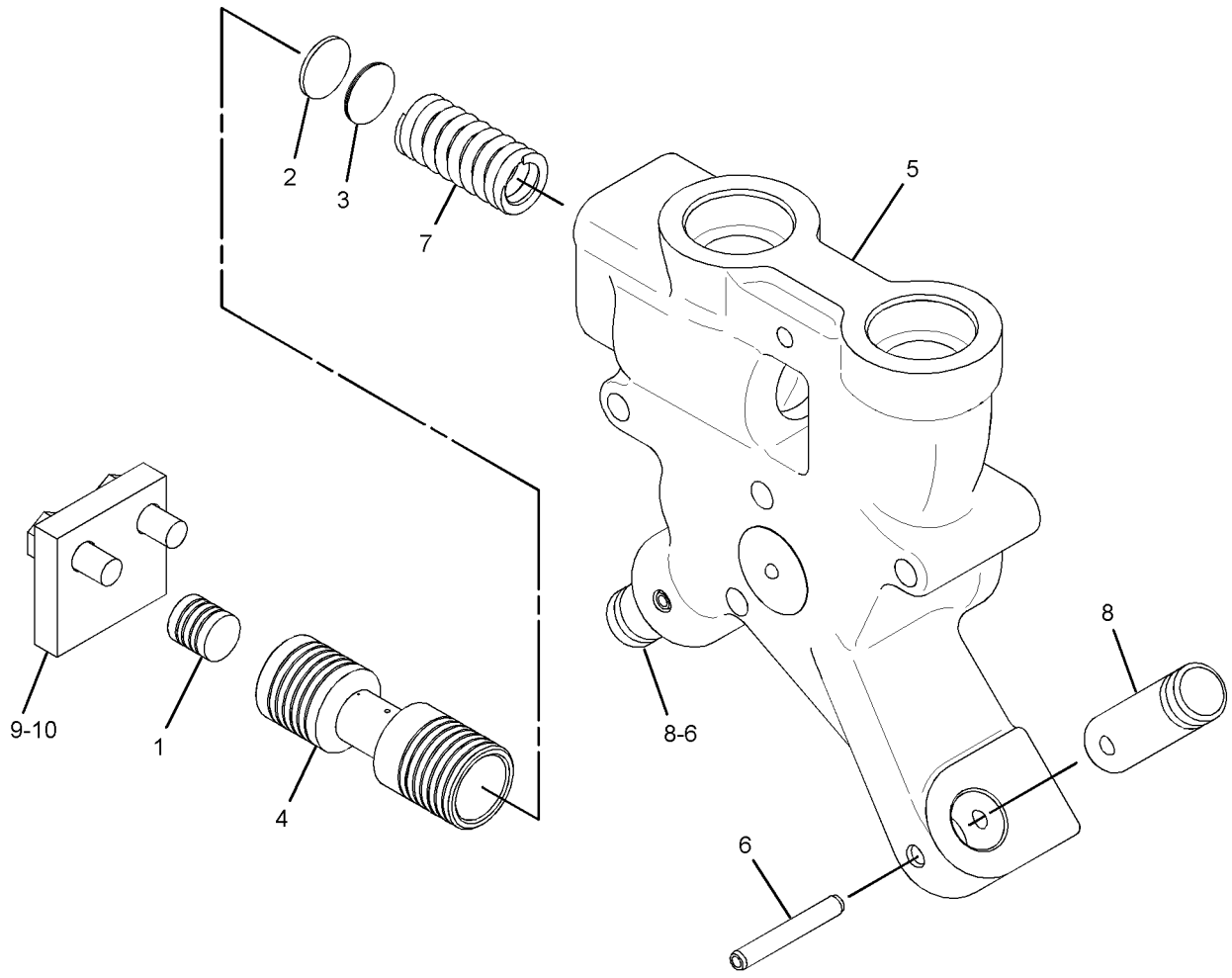

GRAPHIC #1 <END> g02178200

220-1418 VALVE GP-RELIEF–TORQUE CONVERTER OUTLET

S/N: S6T1-UP; S6X1-UP; S6Y1-UP

PART OF 317-4109 LINES GP-POWER TRAIN OIL

SMCS-3133, 3182 i04009669

NOTE	REF NO	GRAPHIC REF	PART NUMBER	QTY	PART NAME 1 2 3 4 5 6 (PRODUCT LEVEL)	SEE PAGE
	1	1	225-6363	1	HOUSING AS-RELIEF VALVE	
		1	7M-1377	1	STOP-VALVE	
	2	1	4M-8239	2	COVER	
	3	1	7M-1296	1	VALVE-RELIEF	
B	4	1	5M-9623	5	SHIM (0.9-MM THK)	
M	5	1	8T-4136	4	BOLT (M10X1.5X25-MM)	
	6	1	8T-4121	7	WASHER-HARD (11X21X2.5-MM THK)	
	7	1	7M-1297	1	SPRING	
	8	1	8M-4986	2	SEAL-O-RING	
	11	1	9W-5595	1	SPRING	
M	12	1	8T-4172	3	BOLT (M10X1.5X80-MM)	

B-USE AS REQUIRED
M-METRIC PART

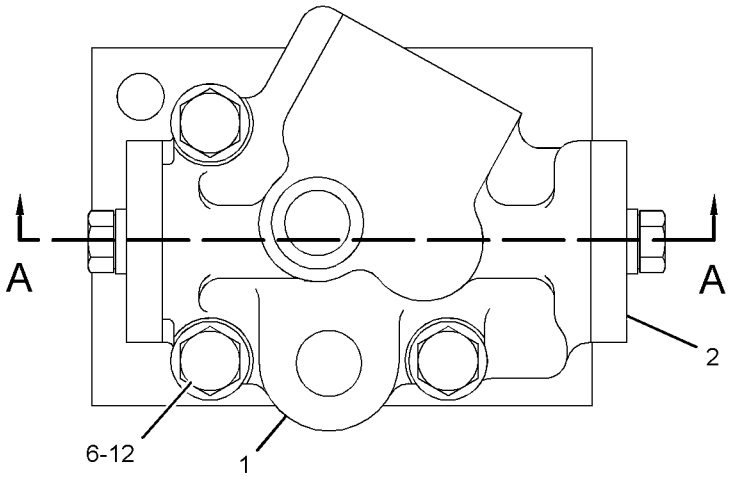

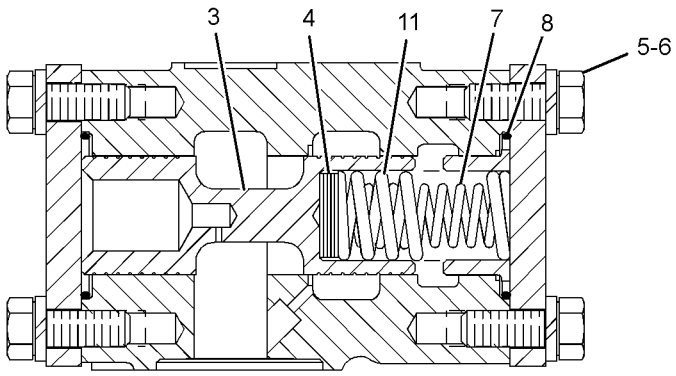

SECTION A-A

GRAPHIC #1 <END> g01206826

318-8531 VALVE GP-SELECTOR & PRESS CONT

S/N: TYA1-UP

PART OF 315-9966 VALVE GP-TRANSMISSION CONTROL

SMCS-3083 i03977090

NOTE	REF NO	GRAPHIC REF	PART NUMBER	QTY	PART NAME 1 2 3 4 5 6 (PRODUCT LEVEL)	SEE PAGE
	1	1	6I-9875	1	BODY AS	
	1A	1	5H-8985	4	PIN-SPRING	
	2	1	6Y-4082	1	SPOOL-SPEED SELECTOR	
	3	1	6P-4940	1	STOP	
	4	1	9W-5568	1	SLUG	
	5	1	9W-5567	1	SPOOL AS-RELIEF	
	5A	1	3D-8317	1	RING-RETAINING	
	5B	1	8M-1013	1	RETAINER	
	5C	1	4M-2381	1	SPRING	
	5D	1	4B-9880	1	BALL	
	6	1	7G-4842	1	SPRING (OUTER)	
	7	1	9P-3041	1	SPRING (INNER)	
	8	1	6P-4971	2	STOP	
	9	1	6P-4939	1	PISTON-LOAD	
B	10	1	5M-9622	1	SHIM (1.6-MM THK)	
B	11	1	5M-9623	1	SHIM (0.9-MM THK)	
B	12	1	5M-9624	3	SHIM (0.25-MM THK)	
	13	1	6F-6673	2	SEAL-O-RING	
	14	1	6P-4938	1	COVER	
	15	1	6P-9786	1	RETAINER	
	16	1	6P-9785	1	SPRING	
	17	1	3P-8485	1	RING-RETAINING	
	18	1	6Y-3033	1	SPOOL AS-DIFFERENTIAL	
	19	1	6P-9783	1	SPRING (INNER)	
	20	1	6P-9784	1	SPRING (OUTER)	
	21	1	6Y-5500	1	SPOOL-SELECTOR	
	22	1	2S-4872	1	STOP	
	23	1	3T-4215	1	SLUG	
	24	1	3T-3494	1	SPOOL-RATIO	
	25	1	8P-6321	1	DOWEL	
	26	1	2S-0696	2	DOWEL	
	27	1	7G-9476	1	ORIFICE-PLUG	
	28	1	9U-8388	4	DETENT AS	
	29	1	1P-8116	4	SEAL-O-RING	
	30	1	238-5508	1	PLUG AS-ORIFICE	
		1	8L-2779	1	SEAL-O-RING	
	31	1	1J-5353	2	PIN-SPRING	
	32	1	2H-2995	1	SETSCREW (10-24X0.438-IN)	
	33	1	2B-2695	3	BOLT (5/16-18X0.875-IN)	

B-USE AS REQUIRED

318-8531 VALVE GP-SELECTOR & PRESS CONT *(contd.)* i03977090

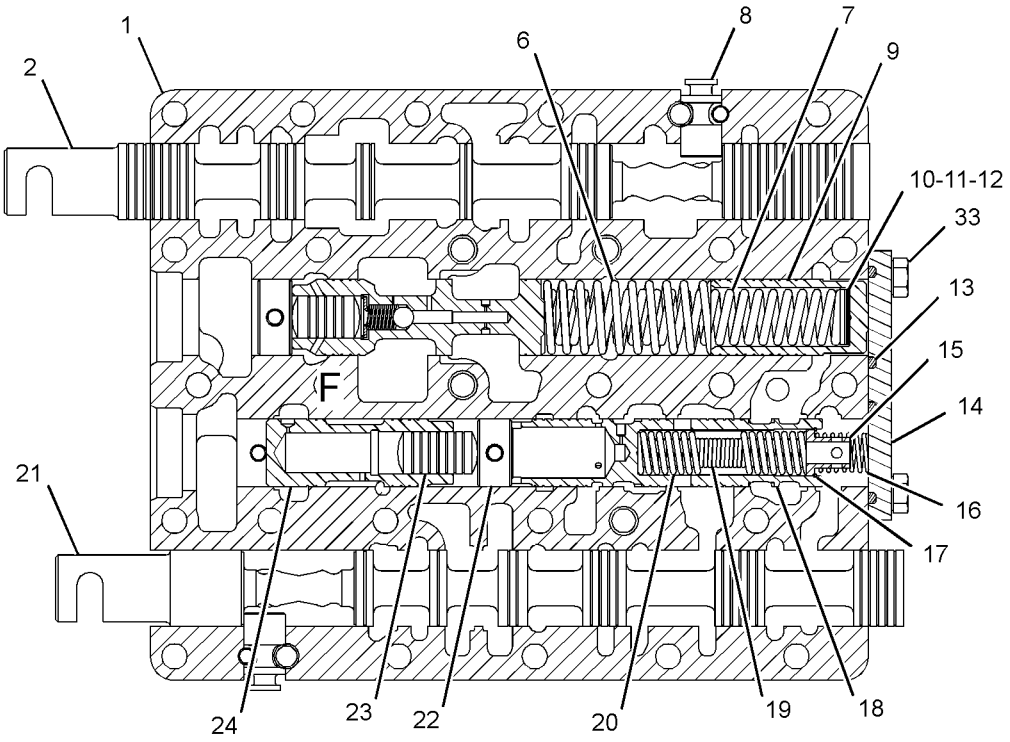

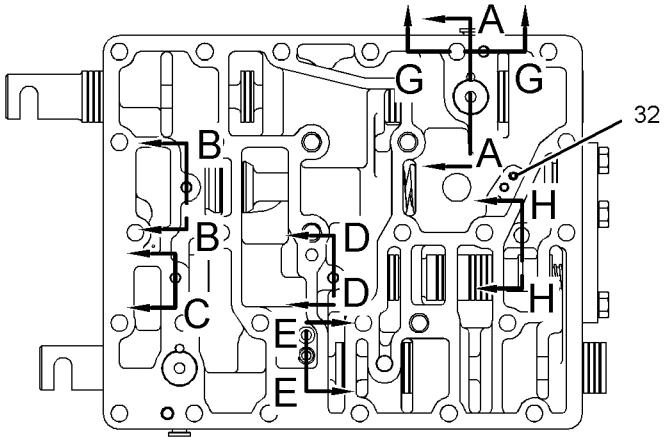

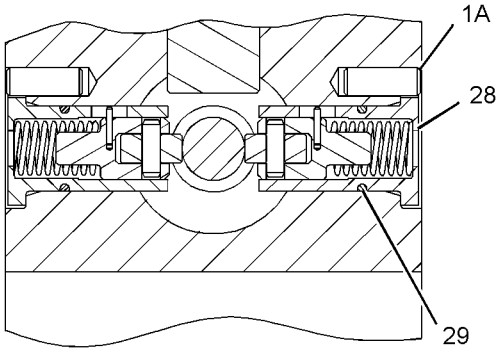

SECTION A-A

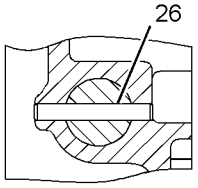

SECTION D-D

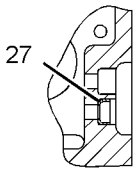

SECTION E-E

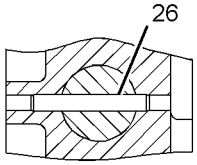

SECTION B-B

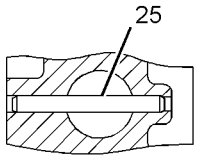

SECTION C

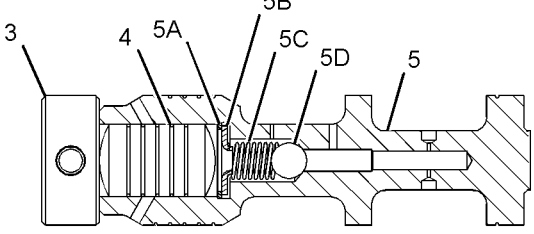

VIEW OF AREA F

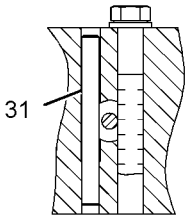

SECTION G-G

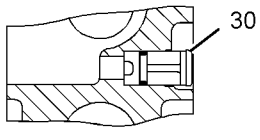

SECTION H-H

GRAPHIC #1 <END> g02166425

315-9966 VALVE GP-TRANSMISSION CONTROL

S/N: TYA1-UP

PART OF 315-9964 CONTROL GP-TRANSMISSION HYD

SMCS-3073, 3167 i03977095

NOTE	REF NO	GRAPHIC REF	PART NUMBER	QTY	PART NAME 1 2 3 4 5 6 (PRODUCT LEVEL)	SEE PAGE
	1	1	6T-8710	1	MANIFOLD-BOTTOM	
	2	1	9G-8551	1	PLATE	
Y	3	1	318-8531	1	VALVE GP-SELECTOR & PRESS CONT	283
	4	1	9P-5928	1	PLATE	
	5	1	4B-0831	24	BOLT (5/16-18X3.75-IN)	
	6	1	9M-1974	26	WASHER-HARD (8.8X16X2-MM THK)	
	7	1	5M-6214	3	PLUG-PIPE	
	8	1	9G-2375	1	ELBOW	
	9	1	5F-9657	1	SEAL-O-RING	
	10	1	3H-3243	2	BOLT (5/16-18X4.75-IN)	
	11	1	9W-3330	1	SUPPORT	

Y-SEPARATE ILLUSTRATION

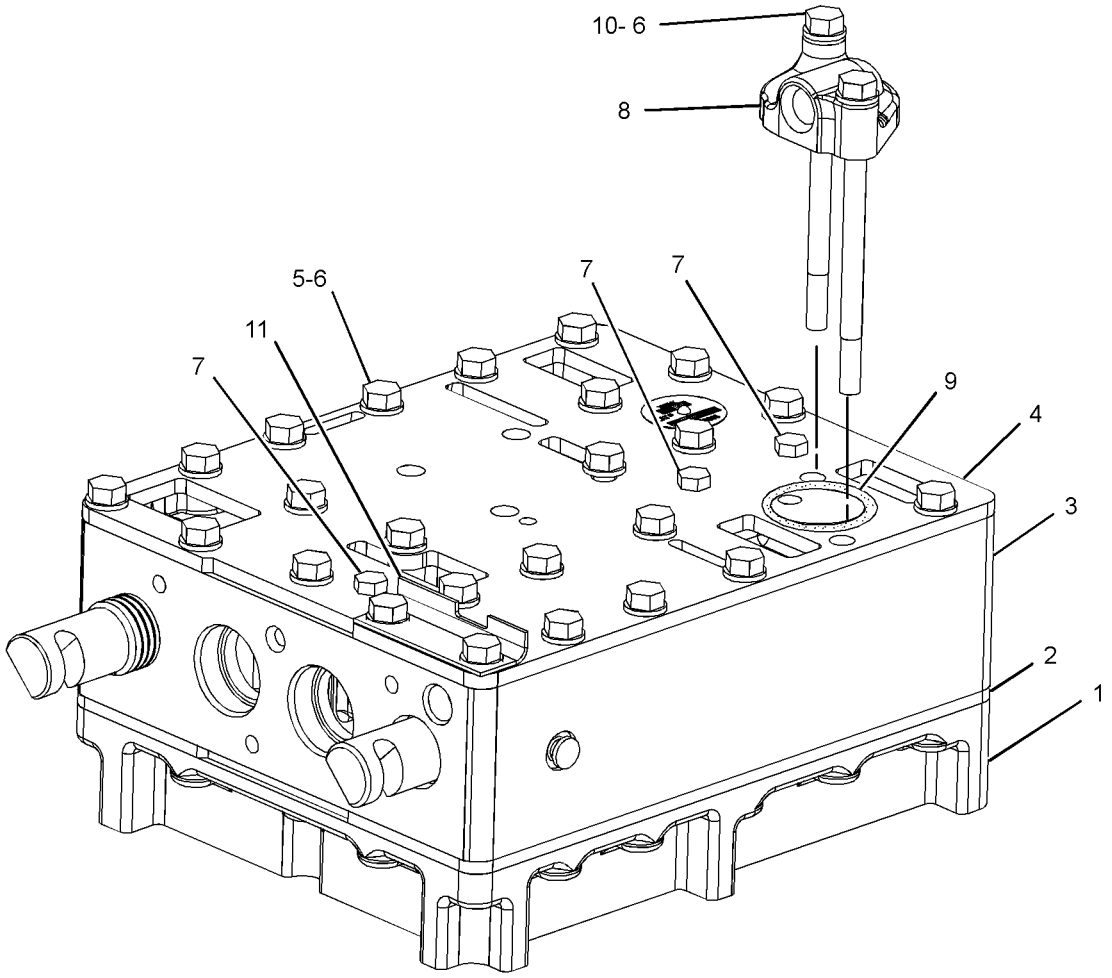

GRAPHIC #1 <END> g02176652

218-1838 BOX GP-BATTERY

S/N: S6T1-UP; S6X1-UP; S6Y1-UP
PART OF 336-9684, 336-9685, 336-9686 CHASSIS AR

SMCS-7257 i03994510

NOTE	REF NO	GRAPHIC REF	PART NUMBER	QTY	PART NAME 1 2 3 4 5 6 (PRODUCT LEVEL)	SEE PAGE
	1	1	246-2641	2	PADLOCK GP	
					(EACH INCLUDES)	
		1	5P-8500	1	KEY	
Y	2	1	*218-1851*	1	BOX GP-BATTERY	288
	3	1	231-4384	2	BRACKET AS	
	4	1	255-6387	1	DOOR AS	
	4A	1	4H-1641	1	PIN-SPRING	
	4B	1	8E-7561	1	KNOB AS	
		1	8E-1205	1	KNOB	
		1	7S-2042	1	STUD (3/8-16X1.5-IN)	
		1	8T-7566	1	PIN-SPRING	
	4C	1	9S-8230	1	PLATE AS	
		1	1F-0750	1	NUT-WELD (3/8-16-THD)	
	5	1	255-6406	1	BRACKET	
	6	1	7X-7729	14	WASHER (11X25X3-MM THK)	
M	7	1	8T-4136	12	BOLT (M10X1.5X25-MM)	
M	8	1	8T-4191	2	BOLT (M10X1.5X16-MM)	
M	9	1	8T-4192	2	BOLT (M12X1.75X25-MM)	
	10	1	8T-4223	2	WASHER-HARD (13.5X25.5X3-MM THK)	
	11	1	4H-1641	2	PIN-SPRING	
	12	1	8E-7561	2	KNOB AS	
					(EACH INCLUDES)	
		1	8E-1205	1	KNOB	
		1	7S-2042	1	STUD (3/8-16X1.5-IN)	
		1	8T-7566	1	PIN-SPRING	
	13	1	9S-8230	2	PLATE AS	
					(EACH INCLUDES)	
		1	1F-0750	1	NUT-WELD (3/8-16-THD)	

M-METRIC PART
Y-SEPARATE ILLUSTRATION

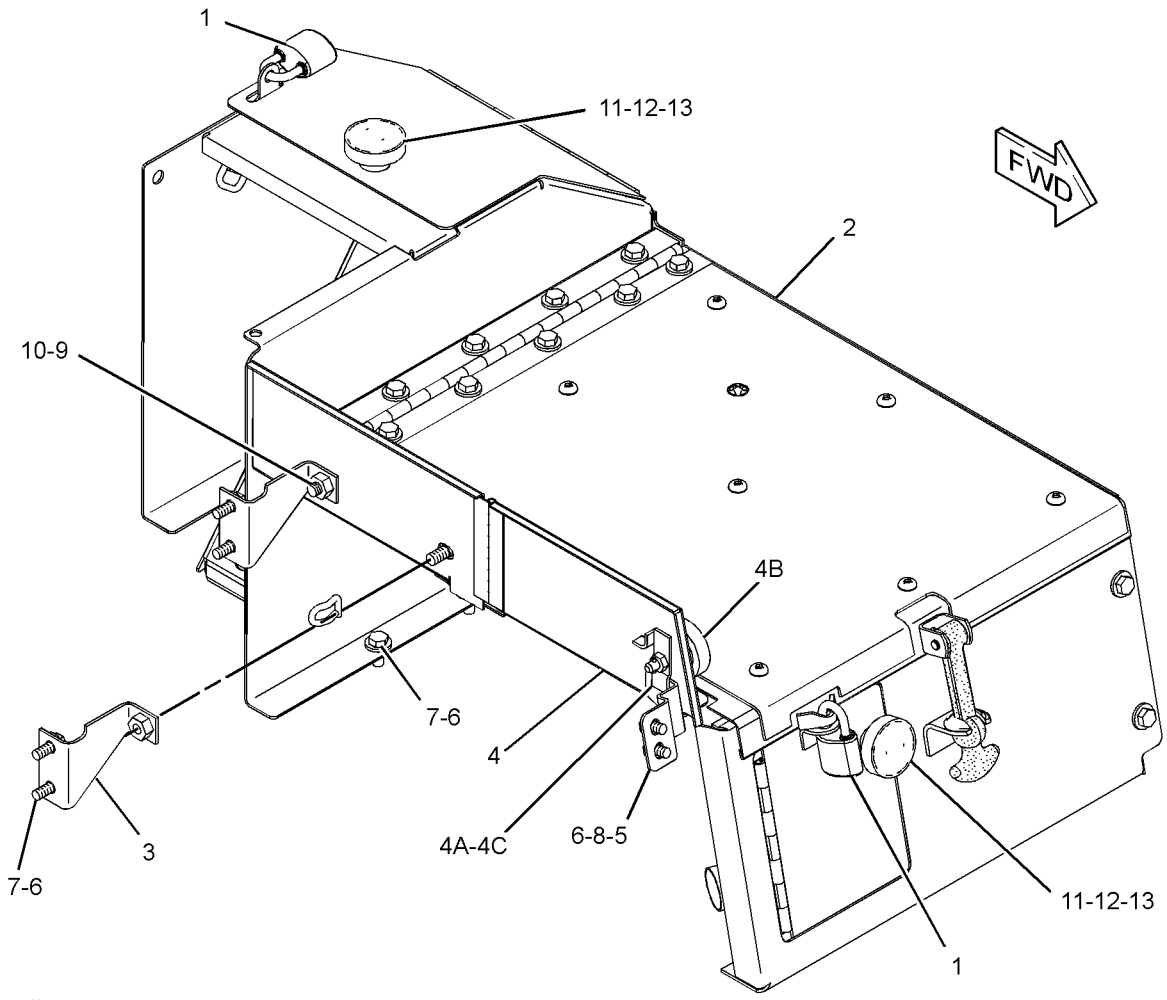

GRAPHIC #1 <END> g01239487

218-1851 BOX GP-BATTERY

S/N: S6T1-UP; S6X1-UP; S6Y1-UP
PART OF 218-1838 BOX GP-BATTERY

SMCS-7257 i03994511

NOTE	REF NO	GRAPHIC REF	PART NUMBER	QTY	PART NAME 1 2 3 4 5 6 (PRODUCT LEVEL)	SEE PAGE
	1	1	2M-5795	1	PIN-CLEVIS	
	2	1	5V-1496	1	RETAINER	
	3	1	6V-9197	2	LOCK PIN	
	4	1	6Y-3973	1	LINK	
	5	1	9M-3835	1	LATCH-RUBBER	
	6	1	141-7596	1	PLATE	
	7	1	231-4385	1	COVER AS	
M		1	8T-3490	9	NUT-WELD (M10X1.5-THD)	
		1	9M-3838	1	BRACKET	
	8	1	231-4386	1	PLATE	
	9	1	231-4387	1	HINGE AS	
M		1	8T-3490	11	NUT-WELD (M10X1.5-THD)	
	10	1	231-4389	1	COVER AS	
		1	7T-1099	8	LINK	
M		1	8T-3490	4	NUT-WELD (M10X1.5-THD)	
M		1	8T-3612	4	NUT-WELD (M8X1.25-THD)	
	11	1	255-5210	1	COVER AS	
		1	1S-6385	1	LUG	
		1	6K-1049	1	HINGE	
		1	7T-1099	2	LINK	
		1	8P-0612	1	BRACKET	
	12	1	7X-7729	16	WASHER (11X25X3-MM THK)	
M	13	1	8C-8585	9	SCREW-BUTTON HEAD (M10X1.5X20-MM)	
M	14	1	8T-4137	15	BOLT (M10X1.5X20-MM)	
	15	1	8T-4222	2	WASHER-PLATED (11X32X2.5-MM THK)	

M-METRIC PART

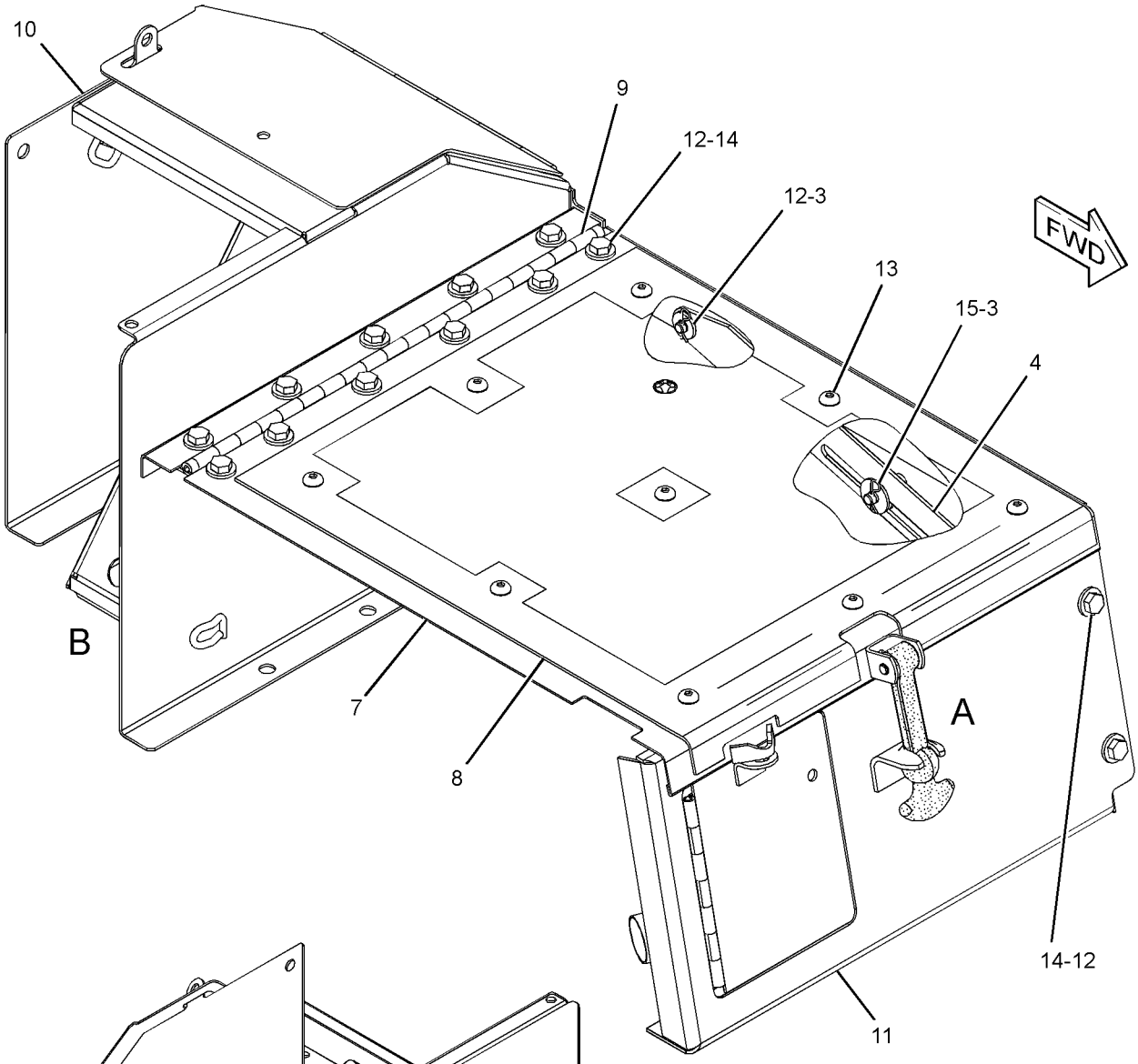

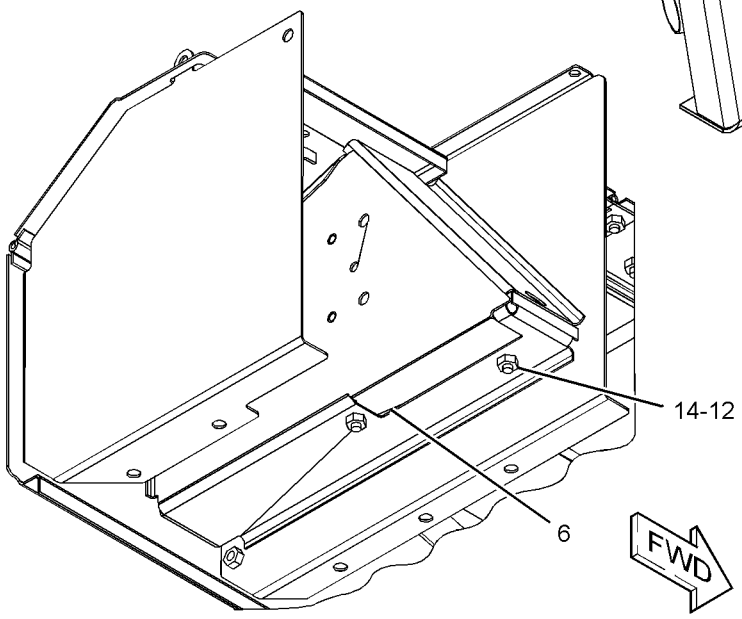

VIEW OF AREA B

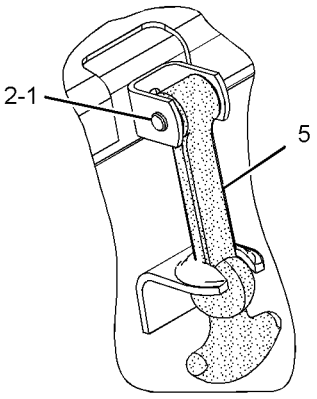

VIEW OF AREA A

GRAPHIC #1 <END> g02177952

FRAME AND BODY

337-3492 CASE & FRAME GP

S/N: S6T1-UP; S6X1-UP; S6Y1-UP

PART OF 336-9684, 336-9685, 336-9686 CHASSIS AR

SMCS-7051 i04009349

NOTE	REF NO	GRAPHIC REF	PART NUMBER	QTY	PART NAME 1 2 3 4 5 6 (PRODUCT LEVEL)	SEE PAGE
	1	1	7X-1456	26	PLUG	
	2	1	106-8186	1	VALVE AS-DRAIN (ECOLOGY)	
		1	077-3241	1	SEAL-O-RING	
	3	1	106-8187	1	PLUG-DRAIN (TRANSMISSION CASE)	
	4	1	337-3493	1	CASE & FRAME AS	
M	5	1	264-0168	2	STUD-TAPERLOCK (M10X1.5X50-MM)	
	6	1	3T-0996	2	BUSHING	
	7	1	6F-0711	1	SEAL-O-RING	
	8	1	7B-9665	1	PLUG	
	9	1	9P-1779	4	BUSHING	
M	10	1	109-3001	2	STUD-TAPERLOCK (M10X1.5X65-MM)	

M-METRIC PART

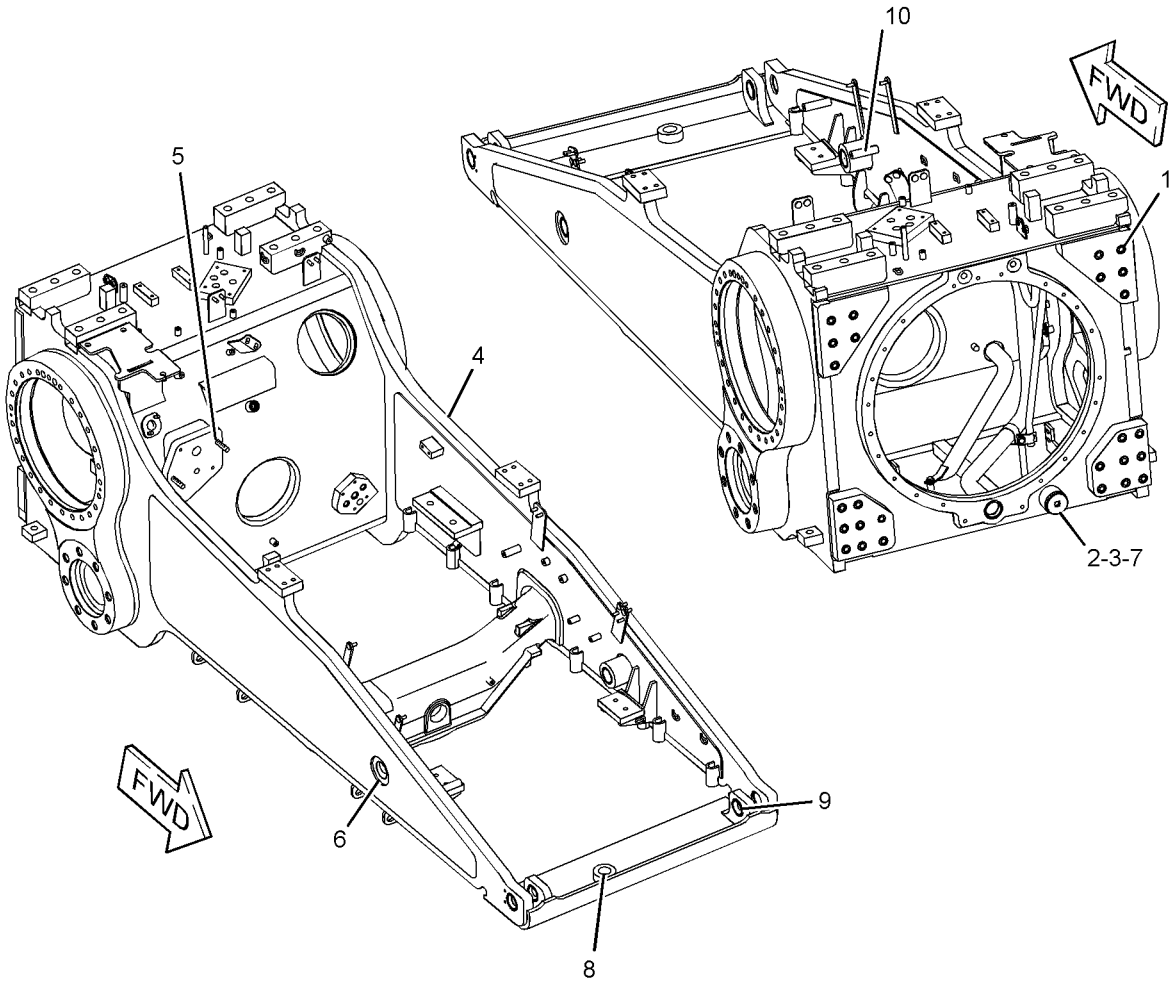

GRAPHIC #1 <END> g01270484

1Q-4324 COUNTERWEIGHT GP

S/N: S6T1-UP; S6X1-UP; S6Y1-UP
821-KG (1810-LB)
AN ATTACHMENT

SMCS-7056 i03997524

NOTE	REF NO	GRAPHIC REF	PART NUMBER	QTY	PART NAME 1 2 3 4 5 6 (PRODUCT LEVEL)	SEE PAGE
	1	1	1U-0612	2	PIN	
	2	1	7X-0292	2	BOLT (3/8-16X4.5-IN)	
	3	1	2K-4973	2	LOCKNUT (3/8-16-THD)	
	4	1	117-5693	2	PLATE	
	5	1	117-5695	1	PLATE	
	6	1	117-5694	1	PLATE	
	7	1	117-5692	2	PLATE	
	8	1	117-5691	2	PLATE	
	9	1	1D-4624	8	BOLT (3/4-10X9-IN)	
	10	1	8T-4994	12	WASHER-HARD (20X36.5X3.5-MM THK)	
	11	1	5D-3118	8	STUD-TAPERLOCK (1-8-THD)	
	12	1	6V-8190	8	NUT (1-8-THD)	
	13	1	7X-0427	2	BOLT (1-1/4-7X3.5-IN)	
	14	1	7X-0533	2	WASHER-HARD (34X55X6-MM THK)	
	15	1	8T-9311	4	BOLT (3/4-10X4.5-IN)	
	16	1	1U-0301	2	BRACKET AS	

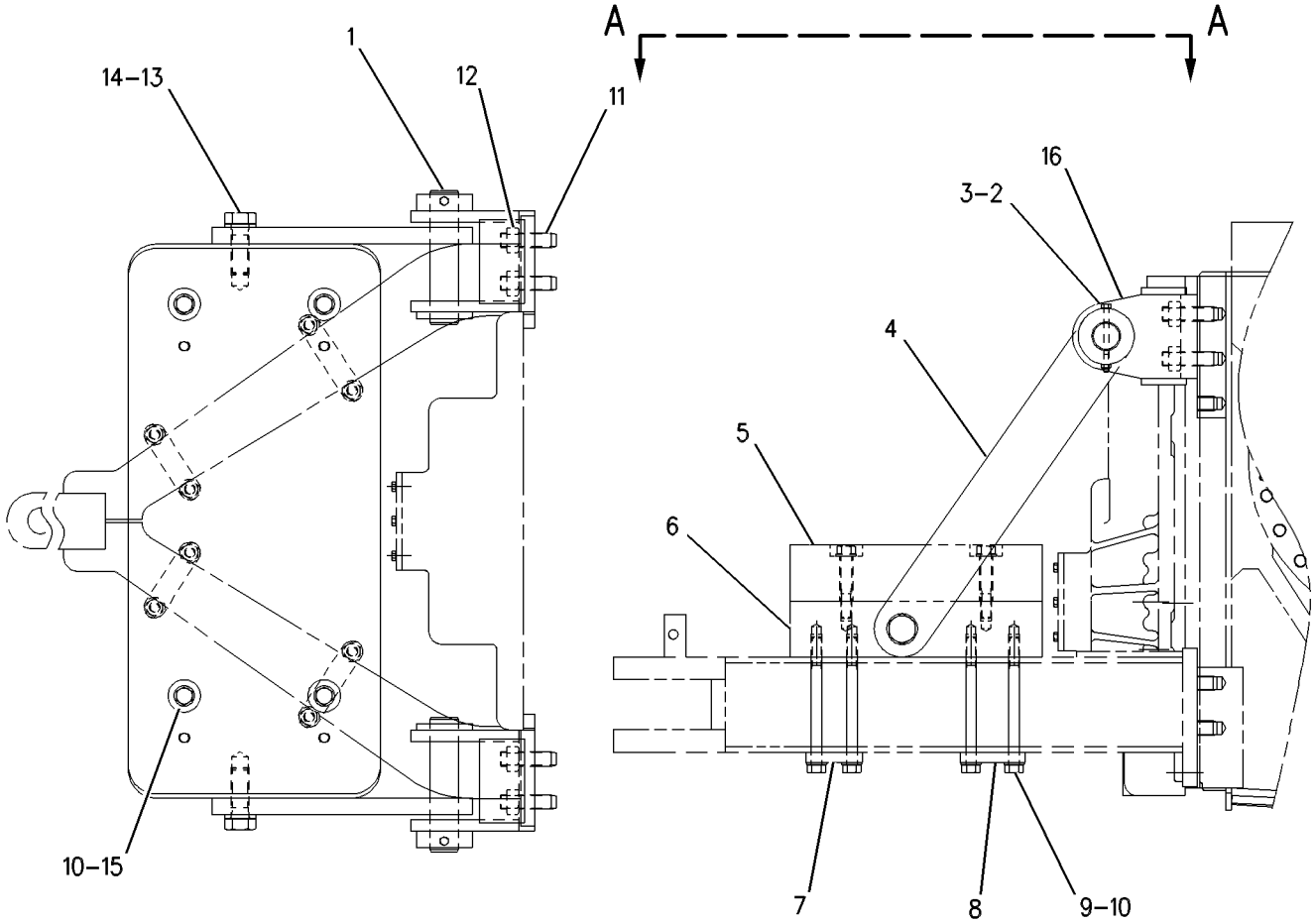

GRAPHIC #1 <END> g00285043

117-9058 COUNTERWEIGHT GP

S/N: S6T1-UP; S6X1-UP; S6Y1-UP
348-KG, 767.2-LB
FOR USE WITH DRAWBAR MOUNTED COUNTERWEIGHT
AN ATTACHMENT

SMCS-7056 i03997560

NOTE	REF NO	GRAPHIC REF	PART NUMBER	QTY	PART NAME 1 2 3 4 5 6 (PRODUCT LEVEL)	SEE PAGE
	1	1	117-5695	1	PLATE	
	2	1	8T-9311	4	BOLT (3/4-10X4.5-IN)	
	3	1	8T-4994	4	WASHER-HARD (20X36.5X3.5-MM THK)	

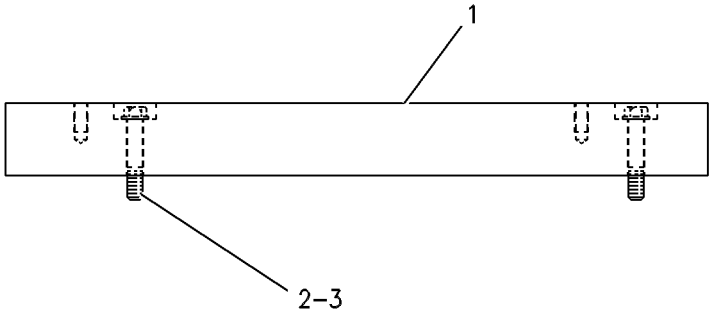

GRAPHIC #1 <END> g00267469

FRAME AND BODY

3W-6866 DRAWBAR GP

S/N: S6T1-UP; S6X1-UP; S6Y1-UP

AN ATTACHMENT

SMCS-7105, 7119 i03998324

NOTE	REF NO	GRAPHIC REF	PART NUMBER	QTY	PART NAME 1 2 3 4 5 6 (PRODUCT LEVEL)	SEE PAGE
	1	1	4Y-3767	1	DRAWBAR AS	
	2	1	7B-0863	1	LATCH-PIN	
	3	1	7F-9547	1	PIN AS-DRAWBAR	
		1	7F-9543	1	COLLAR	
	4	1	3K-2889	1	LOCKNUT (5/8-11-THD)	
	5	1	5D-3118	10	STUD-TAPERLOCK (1-8-THD)	
	6	1	6V-8190	10	NUT (1-8-THD)	
	7	1	7X-0347	1	BOLT (5/8-11X2.25-IN)	
	8	1	8T-5361	10	WASHER-HARD (28X49X5-MM THK)	
F			7X-7644	1	FILM-INFORMATION (TIE-DOWN) (ON DRAWBAR CLEVIS)	

F-NOT SHOWN

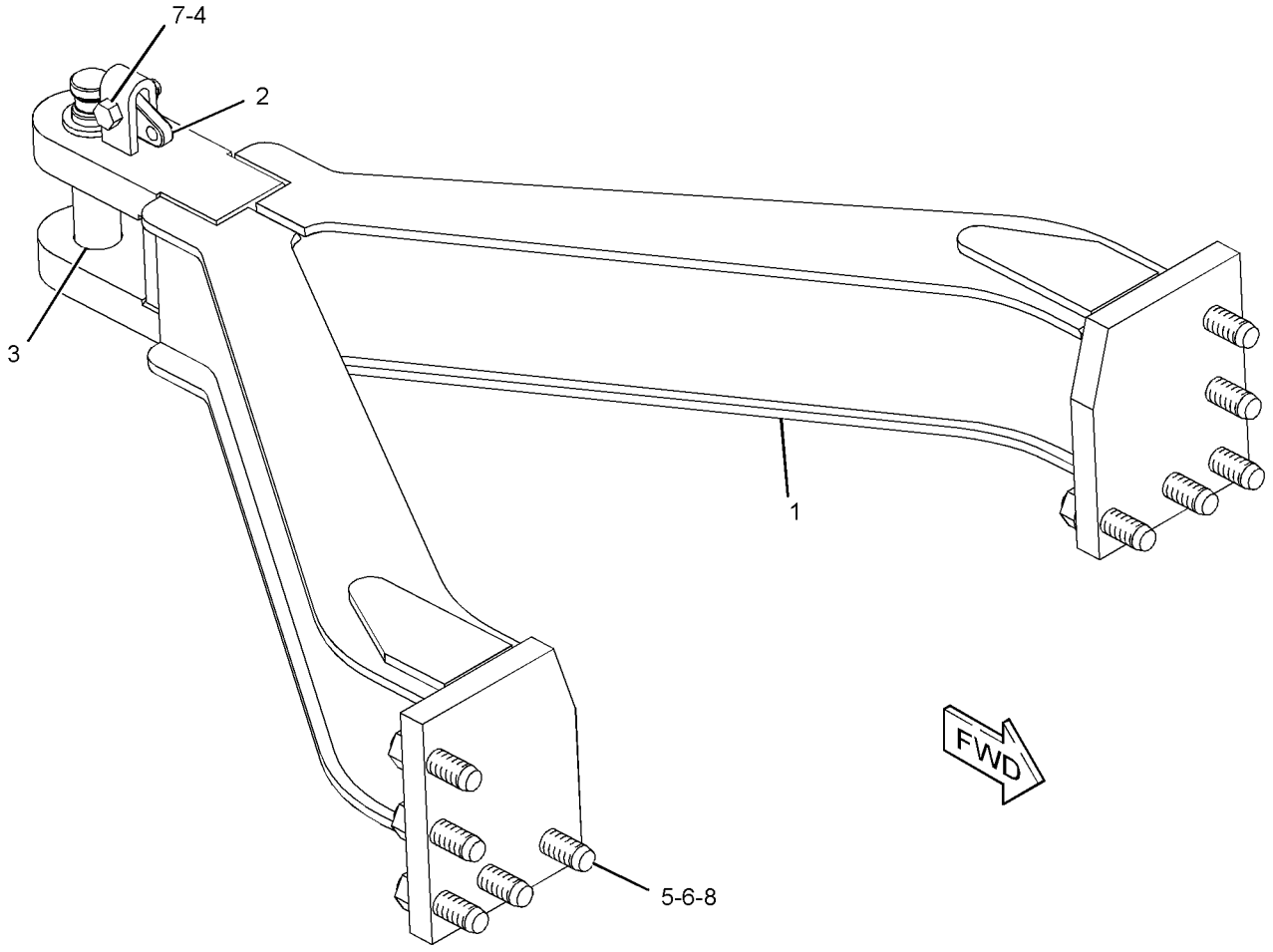

GRAPHIC #1 <END> g01214169

263-7724 ENCLOSURE GP-ENGINE—RH

S/N: S6T1-UP; S6X1-UP; S6Y1-UP
PART OF 318-2726 ENCLOSURE GP-ENGINE

SMCS-7263 i03995742

NOTE	REF NO	GRAPHIC REF	PART NUMBER	QTY	PART NAME 1 2 3 4 5 6 (PRODUCT LEVEL)	SEE PAGE
	1	1	3B-4605	1	PIN-COTTER	
	2	1	3V-9399	1	ROD AS	
		1	4B-4278	2	WASHER (10.2X20.5X1.6-MM THK)	
	3	1	4B-4278	1	WASHER (10.2X20.5X1.6-MM THK)	
	4	1	8B-4624	2	SHIM (0.032-IN THK)	
	5	1	8T-9496	2	LOCKNUT (9/16-18-THD)	
	6	1	8Y-4000	1	LATCH AS (T-BAR, COMPARTMENT)	
	7	1	170-7694	2	HINGE	
	8	1	227-9304	1	GUARD AS (RH)	
	9	1	227-9305	1	DOOR AS (RH)	
	10	1	227-9310	2	BRACKET	
	11	1	237-2732	1	PLATE AS (RH)	
	12	1	261-3156	1	DOOR AS	
	13	1	261-3865	1	TREAD	
	14	1	262-7661	1	SUPPORT AS (RH)	
	15	1	264-6816	1	BAFFLE AS (RH)	
	16	1	275-4236	1	SCREW-WING (M12X1.75X40-MM)	
	17	1	3B-4610	1	PIN-COTTER	
	18	1	3W-9207	1	GUIDE	
	19	1	3W-9208	1	PAWL	
	20	1	4H-2558	1	GROMMET	
	21	1	4M-7470	1	GROMMET	
M	22	1	6V-7744	2	LOCKNUT (M10X1.5-THD)	
	23	1	7X-7729	14	WASHER (11X25X3-MM THK)	
M	24	1	8C-8585	10	SCREW-BUTTON HEAD (M10X1.5X20-MM)	
	25	1	8E-4832	1	STRIKER	
M	26	1	8T-4133	2	NUT (M10X1.5-THD)	
M	27	1	8T-4136	2	BOLT (M10X1.5X25-MM)	
M	28	1	8T-4137	4	BOLT (M10X1.5X20-MM)	
M	29	1	8T-4196	2	BOLT (M10X1.5X35-MM)	
	30	1	9W-8940	1	PLATE	
D	31	1	8T-5372		SEAL (0.3-M)	
D	31A	1	8T-5372		SEAL (0.6-M)	
D	31B	1	8T-5372		SEAL (0.4-M)	

D-ORDER BY THE METER
M-METRIC PART

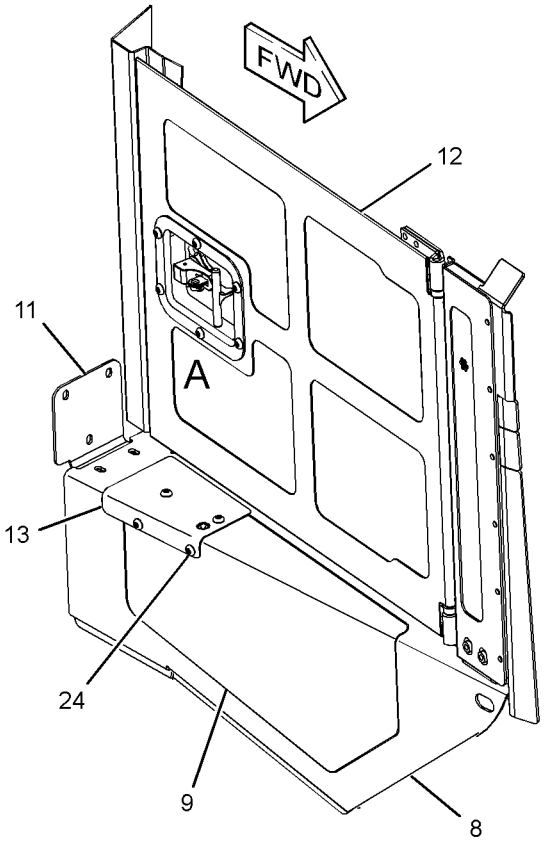

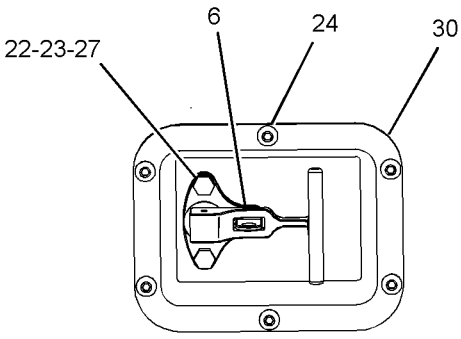

VIEW OF AREA A

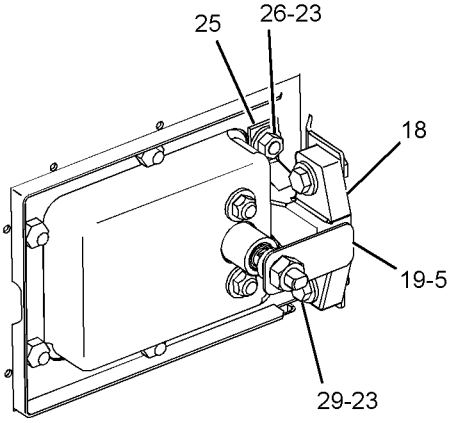

VIEW OF AREA B

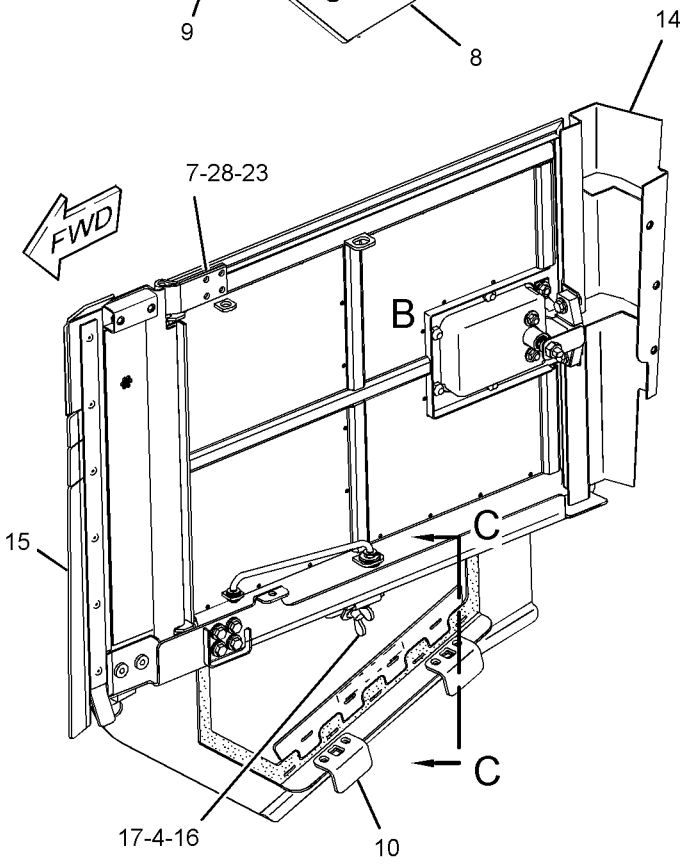

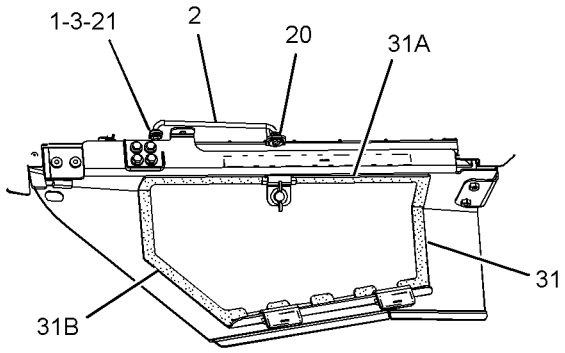

VIEW OF C-C

GRAPHIC #1 <END> g01212436

263-7725 ENCLOSURE GP-ENGINE—LH

S/N: S6T1-UP; S6X1-UP; S6Y1-UP
PART OF 318-2726 ENCLOSURE GP-ENGINE

SMCS-7263 i03995744

NOTE	REF NO	GRAPHIC REF	PART NUMBER	QTY	PART NAME 1 2 3 4 5 6 (PRODUCT LEVEL)	SEE PAGE
	1	1	3B-4605	1	PIN-COTTER	
	2	1	3V-9399	1	ROD AS	
		1	4B-4278	2	WASHER (10.2X20.5X1.6-MM THK)	
	3	1	4B-4278	1	WASHER (10.2X20.5X1.6-MM THK)	
	4	1	8B-4624	2	SHIM (0.032-IN THK)	
	5	1	8T-9496	2	LOCKNUT (9/16-18-THD)	
	6	1	8Y-4000	1	LATCH AS (T-BAR, COMPARTMENT)	
	7	1	170-7694	2	HINGE	
	8	1	227-9306	1	GUARD AS (LH)	
	9	1	227-9310	2	BRACKET	
	10	1	237-2734	1	PLATE AS (LH)	
	11	1	261-3156	1	DOOR AS	
	12	1	262-7662	1	SUPPORT AS (LH)	
	13	1	264-6817	1	BAFFLE AS (LH)	
	14	1	275-4236	1	SCREW-WING (M12X1.75X40-MM)	
	15	1	3B-4610	1	PIN-COTTER	
	16	1	3W-9207	1	GUIDE	
	17	1	3W-9208	1	PAWL	
	18	1	4H-2558	1	GROMMET	
	19	1	4M-7470	1	GROMMET	
M	20	1	6V-7744	2	LOCKNUT (M10X1.5-THD)	
	21	1	7X-7729	14	WASHER (11X25X3-MM THK)	
M	22	1	8C-8585	6	SCREW-BUTTON HEAD (M10X1.5X20-MM)	
	23	1	8E-4832	1	STRIKER	
M	24	1	8T-4133	2	NUT (M10X1.5-THD)	
M	25	1	8T-4136	2	BOLT (M10X1.5X25-MM)	
M	26	1	8T-4137	4	BOLT (M10X1.5X20-MM)	
M	27	1	8T-4196	2	BOLT (M10X1.5X35-MM)	
	28	1	9W-8940	1	PLATE	
D	29	1	8T-5372		SEAL (0.6-M)	
D	29A	1	8T-5372		SEAL (0.3-M)	
D	29B	1	8T-5372		SEAL (0.4-M)	

D-ORDER BY THE METER
M-METRIC PART

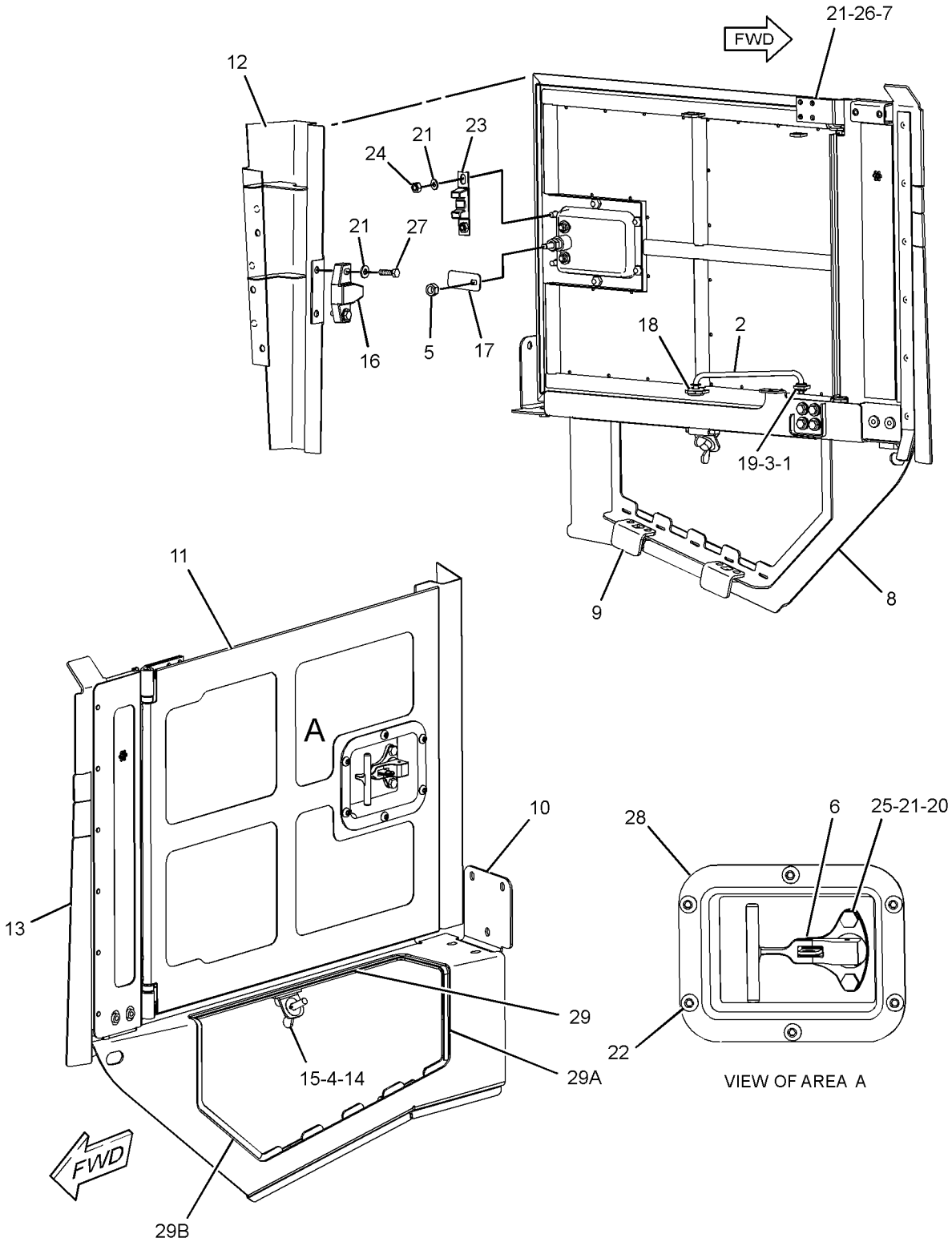

GRAPHIC #1 <END> g01209012

318-2726 ENCLOSURE GP-ENGINE

S/N: S6T1-UP; S6X1-UP; S6Y1-UP

PART OF 336-9684, 336-9685, 336-9686 CHASSIS AR

SMCS-7263 i03995740

NOTE	REF NO	GRAPHIC REF	PART NUMBER	QTY	PART NAME 1 2 3 4 5 6 (PRODUCT LEVEL)	SEE PAGE
	1	1	246-2641	2	PADLOCK GP	
					(EACH INCLUDES)	
		1	5P-8500	1	KEY	
	2	1	6T-9927	2	SLIDE	
	3	1	8G-4014	2	RETAINER	
	4	1	9P-3066	2	MOUNTING	
	5	1	227-9307	1	DOOR AS (LH)	
	6	1	261-3864	1	TREAD	
Y	7	1	*263-7724*	1	ENCLOSURE GP-ENGINE (RH)	294
Y	8	1	*263-7725*	1	ENCLOSURE GP-ENGINE (LH)	296
	9	1	285-3392	1	PLATE	
	10	1	301-6912	1	PLATE AS	
	11	1	318-2727	1	HOOD AS	
		1	126-7975	2	HANDRAIL	
M		1	8T-3490	26	NUT-WELD (M10X1.5-THD)	
M		1	8T-5413	2	STUD-WELD (M10X1.5X25-MM OAL)	
M		1	9X-6269	1	NUT-WELD (M16X2-THD)	
	12	1	3W-3819	2	PLATE	
	13	1	6P-8269	1	WASHER (20.5X88X6-MM THK)	
M	14	1	6V-7743	2	LOCKNUT (M6X1-THD)	
M	15	1	7X-2555	1	BOLT (M16X2X80-MM)	
	16	1	7X-3392	2	WASHER-HARD (13.5X22.5X3-MM THK)	
	17	1	7X-7729	48	WASHER (11X25X3-MM THK)	
M	18	1	8C-8585	4	SCREW-BUTTON HEAD (M10X1.5X20-MM)	
	19	1	8T-2561	4	WASHER-HARD (10.5X28.5X5-MM THK)	
M	20	1	8T-4136	26	BOLT (M10X1.5X25-MM)	
M	21	1	8T-4137	28	BOLT (M10X1.5X20-MM)	
M	22	1	8T-4138	2	BOLT (M6X1X20-MM)	
	23	1	8T-4205	4	WASHER-HARD (7.2X14.5X2-MM THK)	
	24	1	9X-8257	1	WASHER (17.5X30X3.5-MM THK)	
	25	1	9X-8266	2	WASHER (10.2X63.5X6-MM THK)	
D	26	1	5P-5923		SEAL (0.06-M EACH)	
D	27	1	5P-7211		SEAL (1.1-M)	
D	28	1	5P-8309		SEAL (0.6-M EACH)	
D	28A	1	5P-8309		SEAL (2.1-M EACH)	

D-ORDER BY THE METER
M-METRIC PART
Y-SEPARATE ILLUSTRATION

318-2726 ENCLOSURE GP-ENGINE ***(contd.)*** i03995740

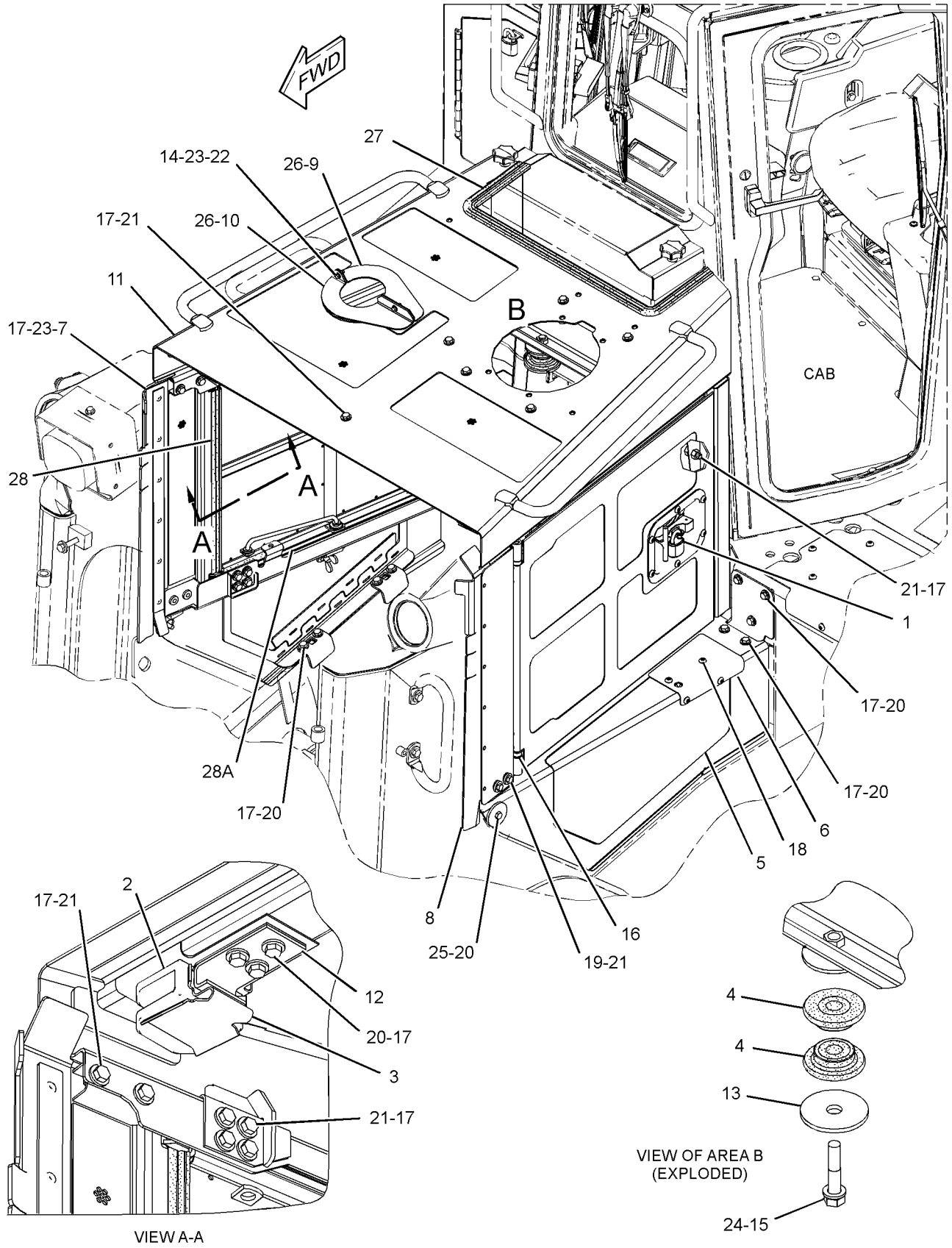

GRAPHIC #1 <END> g02194093

218-1839 ENCLOSURE GP-HYDRAULIC TANK

S/N: S6T1-UP; S6X1-UP; S6Y1-UP

PART OF 336-9684, 336-9685, 336-9686 CHASSIS AR

SMCS-5056 i03994517

NOTE	REF NO	GRAPHIC REF	PART NUMBER	QTY	PART NAME 1 2 3 4 5 6 (PRODUCT LEVEL)	SEE PAGE
	1	1	246-2641	2	PADLOCK GP	
					(EACH INCLUDES)	
		1	5P-8500	1	KEY	
	2	1	231-4390	1	COVER AS	
		1	4H-1641	2	PIN-SPRING	
		1	8E-7561	2	KNOB AS	
					(EACH INCLUDES)	
		1	8E-1205	1	KNOB	
		1	8T-7566	1	PIN-SPRING	
		1	7S-2042	1	STUD (3/8-16X1.5-IN)	
		1	9S-8230	2	PLATE AS	
					(EACH INCLUDES)	
		1	1F-0750	1	NUT-WELD (3/8-16-THD)	
		1	7T-0030	1	HINGE	
	3	1	241-6498	1	BRACKET AS	
	4	1	241-6499	1	PLATE	
	5	1	241-6919	1	BRACKET AS	
	6	1	7X-7729	10	WASHER (11X25X3-MM THK)	
M	7	1	8T-4136	8	BOLT (M10X1.5X25-MM)	
M	8	1	8T-4137	2	BOLT (M10X1.5X20-MM)	

M-METRIC PART

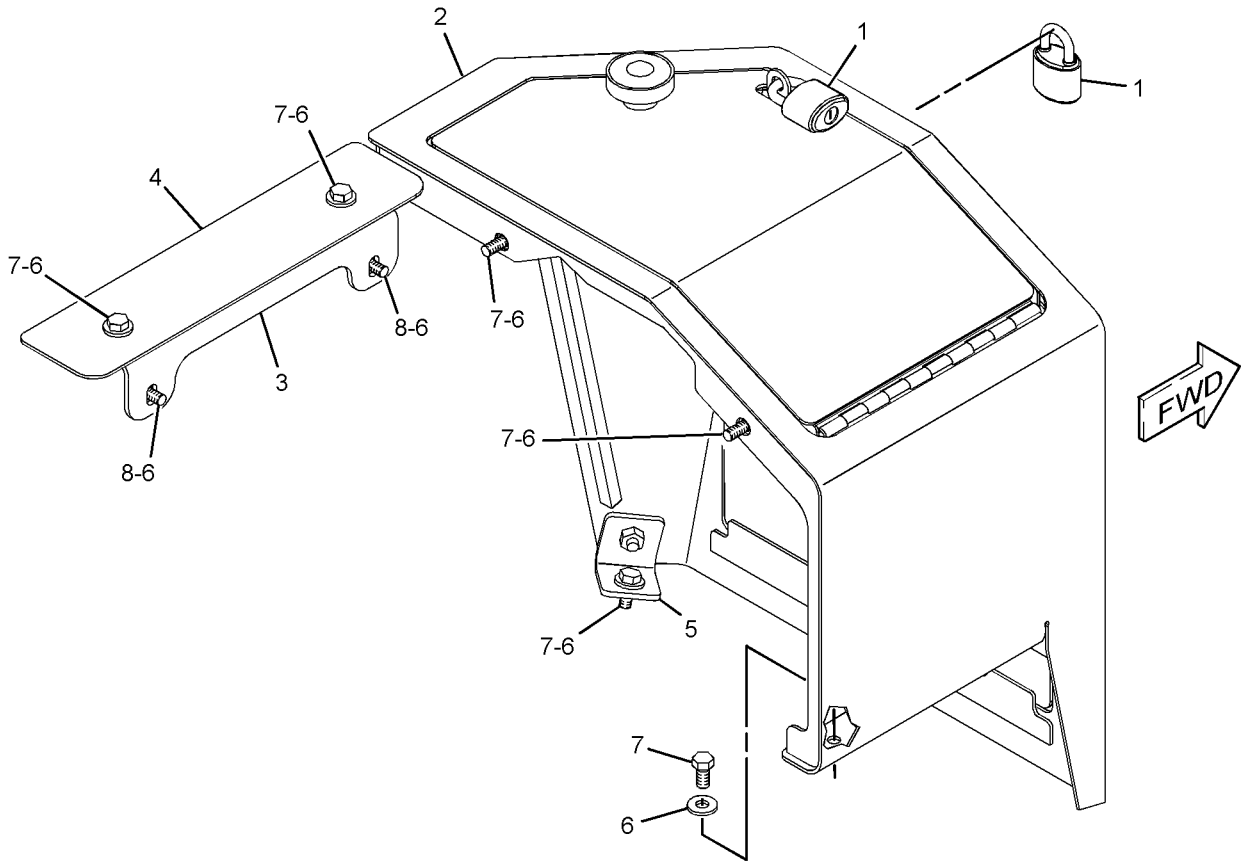

GRAPHIC #1 <END> g01306924

236-2218 FENDER GP–RH

S/N: S6T1-UP; S6X1-UP; S6Y1-UP
PART OF 363-0856 FENDER GP

SMCS-7252 i03998408

NOTE	REF NO	GRAPHIC REF	PART NUMBER	QTY	PART NAME 1 2 3 4 5 6 (PRODUCT LEVEL)	SEE PAGE
	1	1	8Y-0374	1	PLATE	
	2	1	226-5955	1	FENDER AS (RH)	
	3	1	236-2624	1	PLATE	
M	4	1	8C-8585	13	SCREW-BUTTON HEAD (M10X1.5X20-MM)	

M-METRIC PART

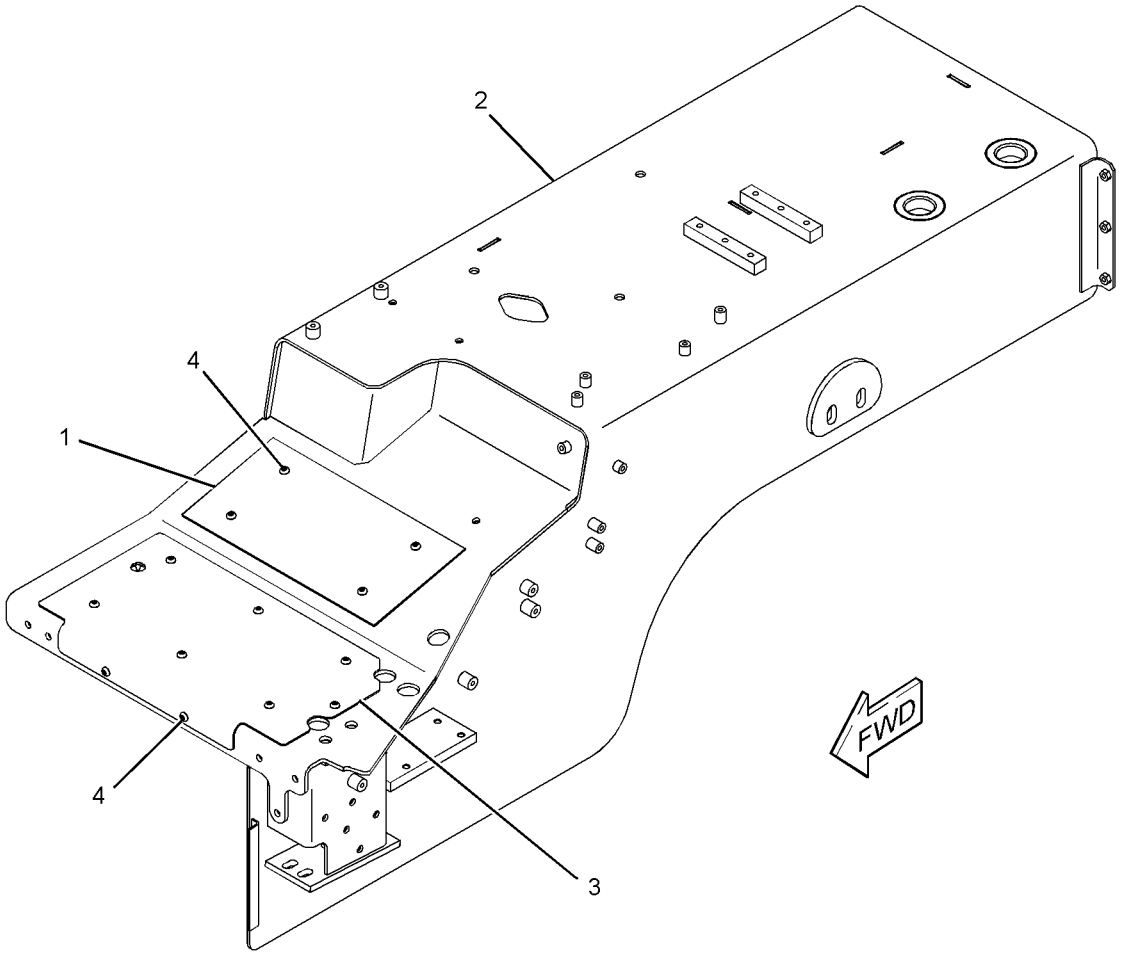

GRAPHIC #1 <END> g01205486

236-2219 FENDER GP–LH

S/N: S6T1-UP; S6X1-UP; S6Y1-UP
PART OF 363-0856 FENDER GP

SMCS-7252 i03998409

NOTE	REF NO	GRAPHIC REF	PART NUMBER	QTY	PART NAME 1 2 3 4 5 6 (PRODUCT LEVEL)	SEE PAGE
	1	1	8Y-0374	1	PLATE	
	2	1	226-5954	1	FENDER AS (LH)	
	3	1	236-5474	1	PLATE	
M	4	1	8C-8585	13	SCREW-BUTTON HEAD (M10X1.5X20-MM)	

M-METRIC PART

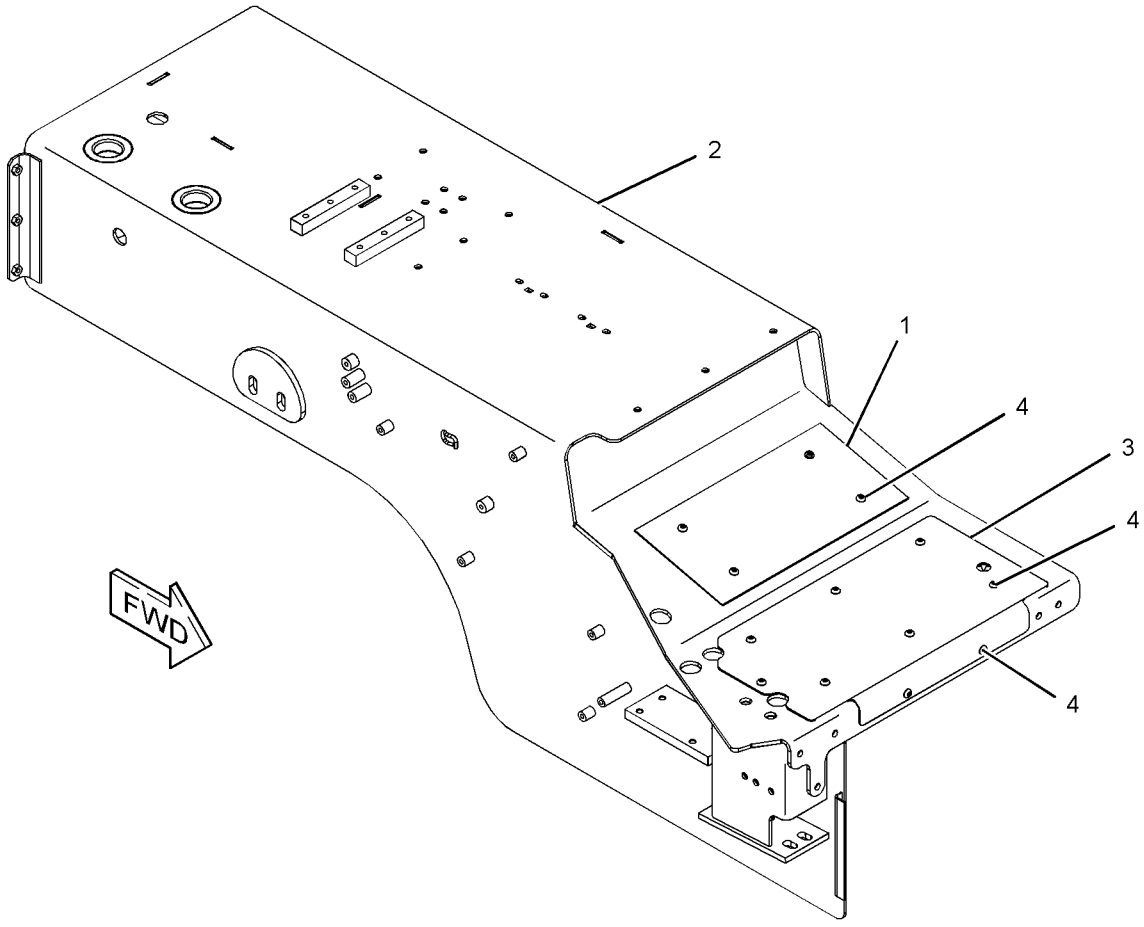

GRAPHIC #1 <END> g01210389

FRAME AND BODY

363-0856 FENDER GP

S/N: S6T1-UP; S6X1-UP; S6Y1-UP

PART OF 336-9684, 336-9685, 336-9686 CHASSIS AR

SMCS-7252 i03998405

NOTE	REF NO	GRAPHIC REF	PART NUMBER	QTY	PART NAME 1 2 3 4 5 6 (PRODUCT LEVEL)	SEE PAGE
	1	1	106-9361	1	PLATE	
	2	1	227-6656	1	SUPPORT AS	
M		1	8T-3597	1	NUT-WELD (M12X1.75-THD)	
M		1	9R-2613	4	BOSS-WELD (M10X1.5X25-MM)	
M		1	9R-2672	5	BOSS-THREADED (M10X1.5-THD)	
Y	3	1	*236-2218*	1	FENDER GP (RH)	301
Y	4	1	*236-2219*	1	FENDER GP (LH)	302
	5	1	3W-3896	2	HANDHOLD	
	6	1	5P-1076	8	WASHER-HARD (13.5X30X4-MM THK)	
M	7	1	7X-2553	8	BOLT (M16X2X40-MM)	
	8	1	7X-3391	12	WASHER-HARD (13.5X32X6-MM THK)	
	9	1	8T-4121	6	WASHER-HARD (11X21X2.5-MM THK)	
M	10	1	8T-4136	6	BOLT (M10X1.5X25-MM)	
M	11	1	8T-4139	4	BOLT (M12X1.75X30-MM)	
M	12	1	8T-4183	20	BOLT (M12X1.75X40-MM)	
M	13	1	8T-4187	4	BOLT (M20X2.5X80-MM)	
	14	1	8T-4223	4	WASHER-HARD (13.5X25.5X3-MM THK)	
	15	1	8T-5439	4	WASHER-HARD (21.5X45X6-MM THK)	
	16	1	9X-8257	8	WASHER (17.5X30X3.5-MM THK)	

M-METRIC PART
Y-SEPARATE ILLUSTRATION

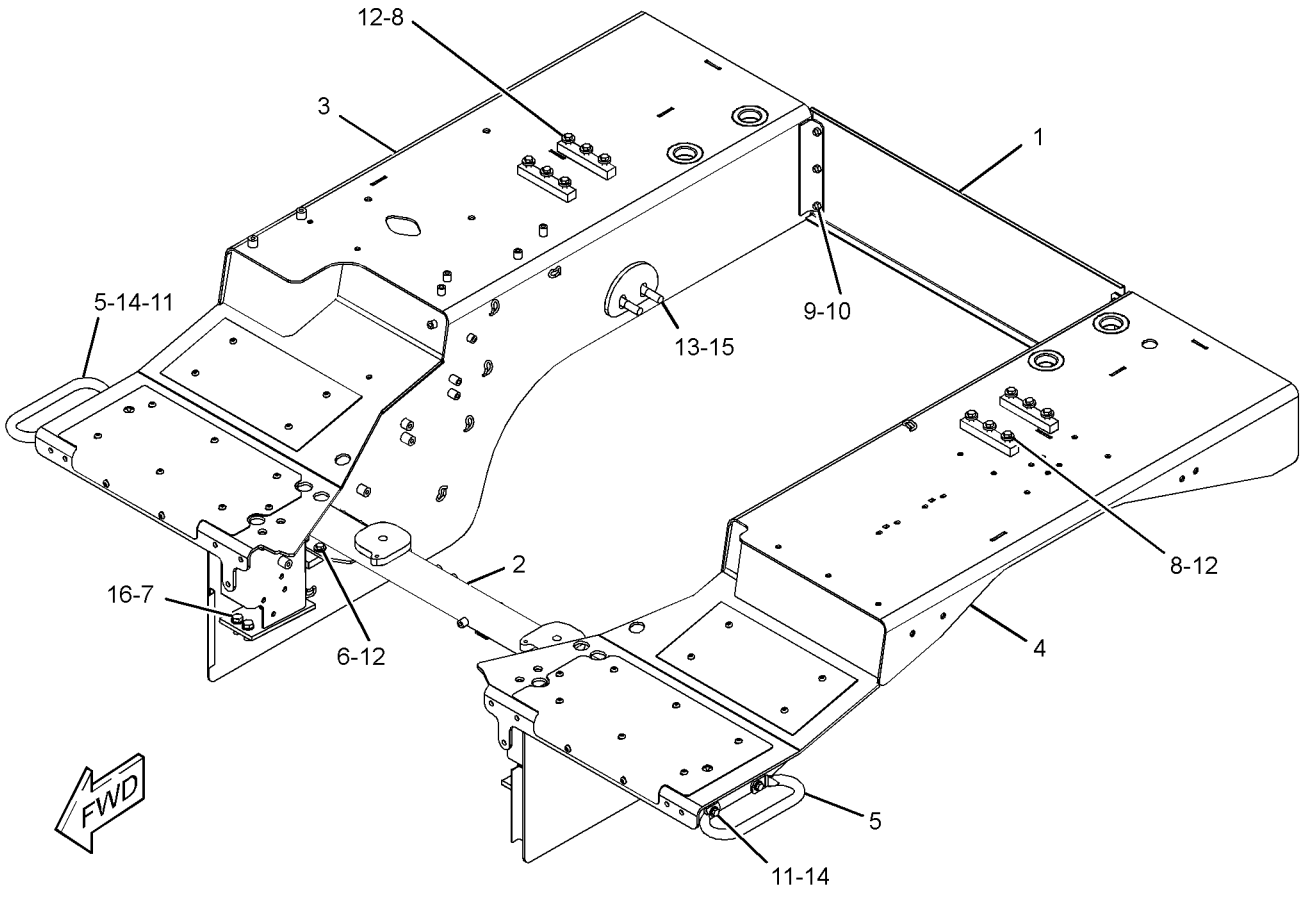

GRAPHIC #1 <END> g02199257

FRAME AND BODY

173-1852 GRID GP-SAND BLAST ERODING

S/N: S6T1-UP; S6X1-UP; S6Y1-UP
AN ATTACHMENT

SMCS-7179 i03999406

NOTE	REF NO	GRAPHIC REF	PART NUMBER	QTY	PART NAME 1 2 3 4 5 6 (PRODUCT LEVEL)	SEE PAGE
	1	1	180-6693	4	BRACKET	
	2	1	180-6692	1	GRID AS	
	3	1	180-6694	1	BRACKET AS	
M		1	8T-3490	4	NUT-WELD (M10X1.5-THD)	
	4	1	7X-7729	14	WASHER (11X25X3-MM THK)	
M	5	1	8T-4133	2	NUT (M10X1.5-THD)	
M	6	1	8T-4136	12	BOLT (M10X1.5X25-MM)	

M-METRIC PART

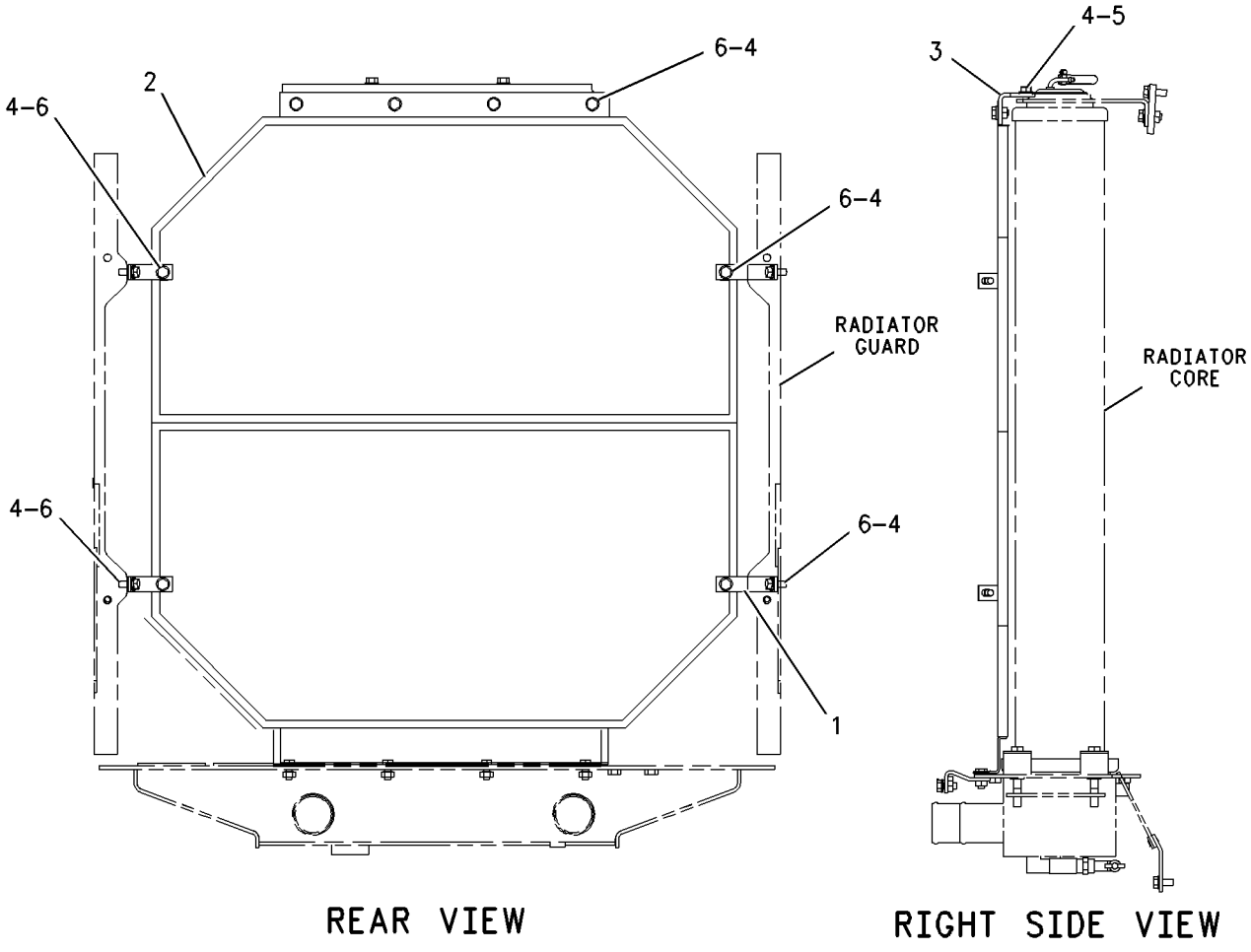

REAR VIEW

RIGHT SIDE VIEW

GRAPHIC #1 <END> g00742847

172-0964 GRILL GP-RADIATOR—HEAVY-DUTY

S/N: S6T1-UP; S6X1-UP; S6Y1-UP

AN ATTACHMENT

SMCS-7170 i03999409

NOTE	REF NO	GRAPHIC REF	PART NUMBER	QTY	PART NAME 1 2 3 4 5 6 (PRODUCT LEVEL)	SEE PAGE
	1	1	3W-1944	1	GRILL AS (RH)	
	2	1	9W-2822	1	ROD	
	3	1	172-0967	1	GRILL AS (LH)	
	4	1	3B-4615	2	PIN-COTTER	
	5	1	5P-1076	8	WASHER-HARD (13.5X30X4-MM THK)	
	6	1	7X-0608	2	WASHER-HARD (10.2X16X2-MM THK)	
M	7	1	8T-4194	4	BOLT (M12X1.75X50-MM)	
M	8	1	8T-6868	4	BOLT (M12X1.75X80-MM)	

M-METRIC PART

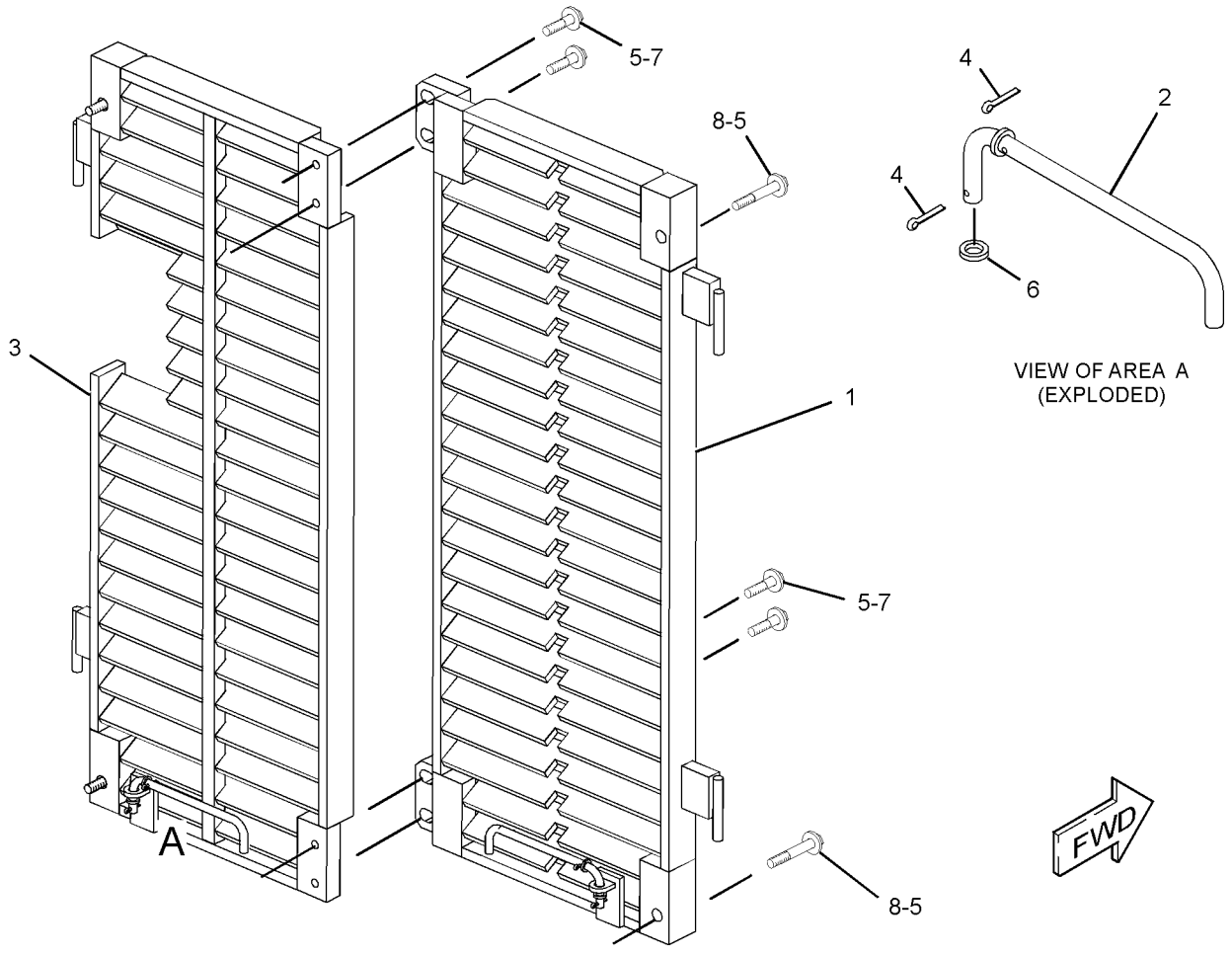

GRAPHIC #1 <END> g01360749

218-1836 GUARD GP-BOTTOM

S/N: S6T1-UP; S6X1-UP; S6Y1-UP

PART OF 336-9684, 336-9685, 336-9686 CHASSIS AR

SMCS-7153 i04030709

NOTE	REF NO	GRAPHIC REF	PART NUMBER	QTY	PART NAME 1 2 3 4 5 6 (PRODUCT LEVEL)	SEE PAGE
	1	1	3T-2748	1	COVER	
	2	1	217-3655	14	RETAINER	
	3	1	230-7699	1	GUARD AS (FRONT)	
	4	1	283-0500	1	GUARD AS-BOTTOM (MIDDLE)	
	5	1	283-0502	1	GUARD AS-BOTTOM (REAR)	
	6	1	3B-4629	4	PIN-COTTER	
	7	1	4J-2036	4	PIN	
	8	1	7X-0594	8	WASHER-HARD (20X38X3-MM THK)	
M	9	1	8C-8478	14	BOLT (M20X2.5X140-MM)	
	10	1	8T-4121	1	WASHER-HARD (11X21X2.5-MM THK)	
M	11	1	8T-4131	14	NUT (M20X2.5-THD)	
M	12	1	8T-4196	1	BOLT (M10X1.5X35-MM)	
	13	1	8T-5439	14	WASHER-HARD (21.5X45X6-MM THK)	

M-METRIC PART

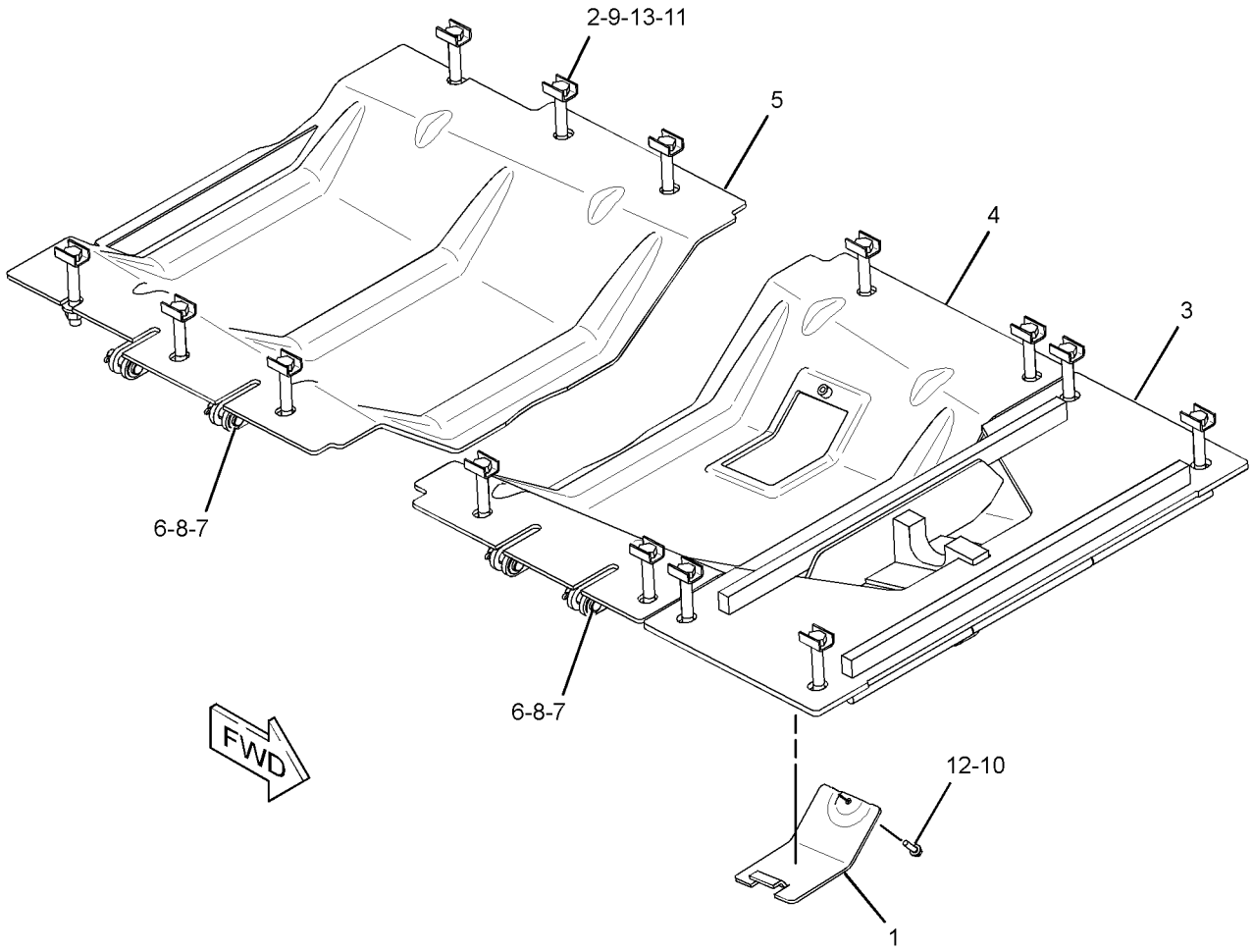

GRAPHIC #1 <END> g02199654

236-7241 GUARD GP-BOTTOM

S/N: S6T1-UP; S6X1-UP; S6Y1-UP
EXTREME SERVICE, SEALED
PART OF 358-4683 GUARD GP-BOTTOM
AN ATTACHMENT

SMCS-7153 i03999881

NOTE	REF NO	GRAPHIC REF	PART NUMBER	QTY	PART NAME 1 2 3 4 5 6 (PRODUCT LEVEL)	SEE PAGE
E	1	1	9X-8699		SEAL (100-CM)	
	2	1	217-3655	14	RETAINER	
	3	1	3T-2748	1	COVER	
	4	1	258-6948	1	GUARD AS	
	5	1	258-6949	1	GUARD AS	
	6	1	260-3208	1	GUARD AS	
	7	1	3B-4629	4	PIN-COTTER	
	8	1	4J-2036	4	PIN	
	9	1	7X-0594	8	WASHER-HARD (20X38X3-MM THK)	
M	10	1	8C-8478	14	BOLT (M20X2.5X140-MM)	
	11	1	8T-4121	1	WASHER-HARD (11X21X2.5-MM THK)	
M	12	1	8T-4131	14	NUT (M20X2.5-THD)	
M	13	1	8T-4196	1	BOLT (M10X1.5X35-MM)	
	14	1	8T-5439	14	WASHER-HARD (21.5X45X6-MM THK)	
D	15	1	5P-7483		SEAL (0.17-M)	
D	15A	1	5P-7483		SEAL (0.14-M)	
D	15B	1	5P-7483		SEAL (1.18-M)	
D	16	1	5P-5755		SEAL (1.1-M)	
D	17	1	5P-7514		SEAL (1.1-M EACH)	

D-ORDER BY THE METER
E-ORDER BY THE CENTIMETER
M-METRIC PART

236-7241 GUARD GP-BOTTOM ***(contd.)*** i03999881

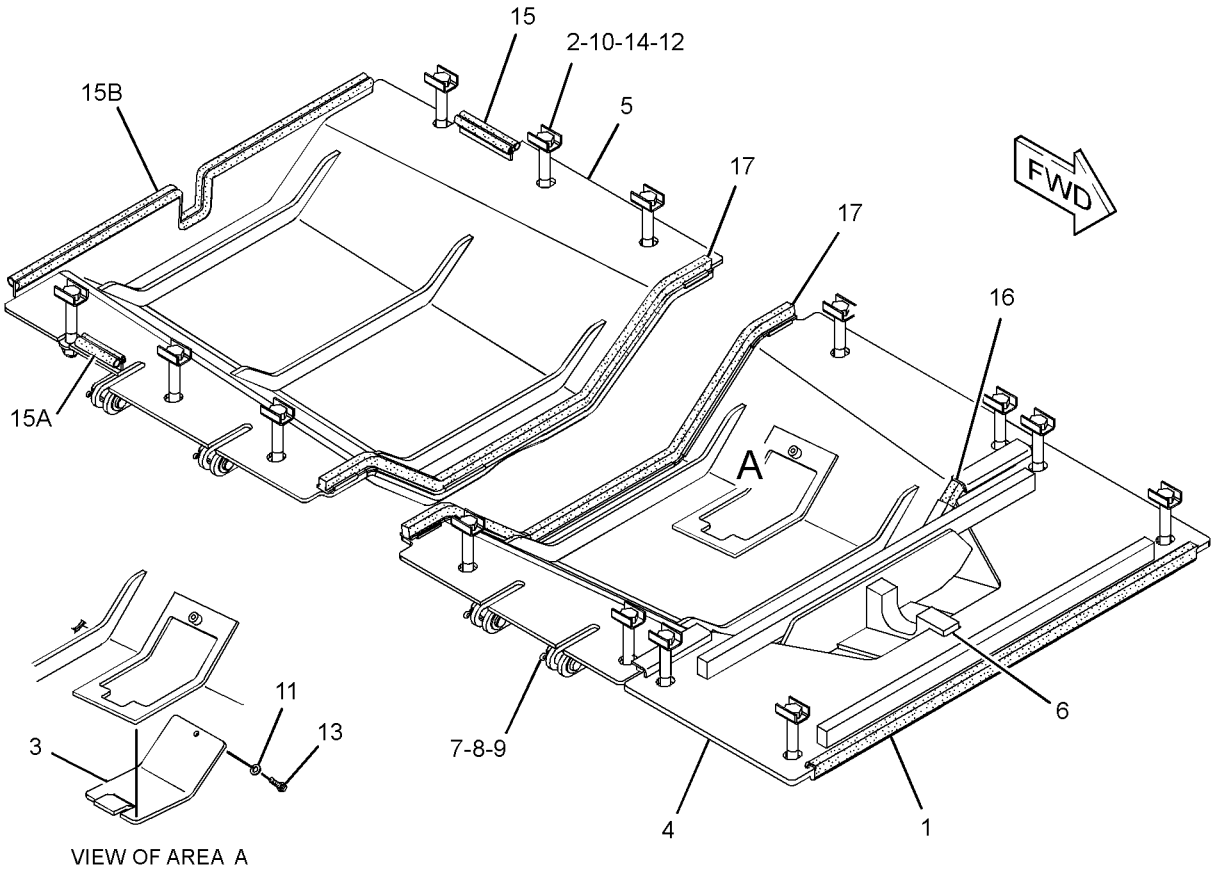

GRAPHIC #1 <END> g01301505

358-4683 GUARD GP-BOTTOM

S/N: S6T1-UP; S6X1-UP; S6Y1-UP
EXTREME SERVICE, SEALED
AN ATTACHMENT

SMCS-7153 i03999868

NOTE	REF NO	GRAPHIC REF	PART NUMBER	QTY	PART NAME 1 2 3 4 5 6 (PRODUCT LEVEL)	SEE PAGE
Y	1	1	*236-7241*	1	GUARD GP-BOTTOM (EXTREME SERVICE, SEALED)	307
Y	2	1	*258-7597*	1	GUARD GP-RADIATOR	312

Y-SEPARATE ILLUSTRATION

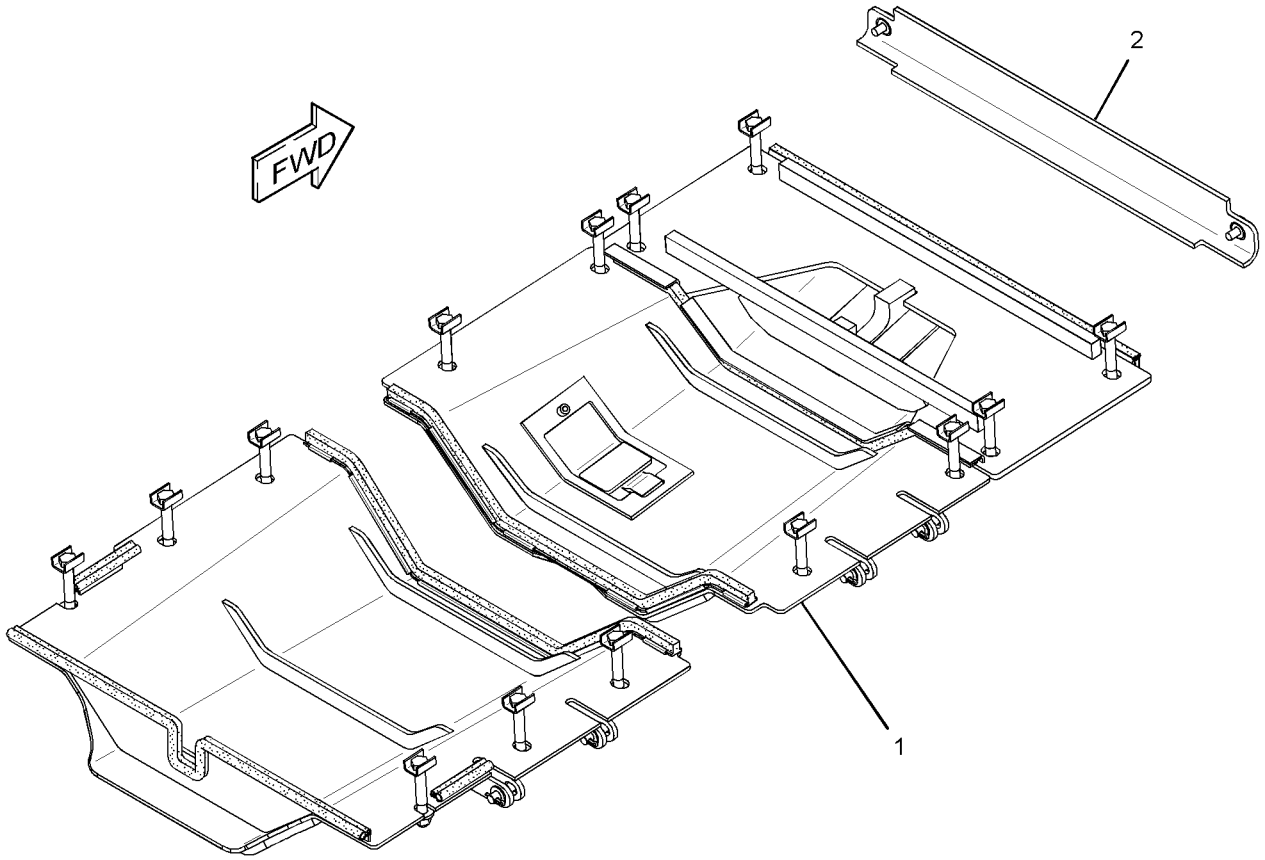

GRAPHIC #1 <END> g02193217

336-8761 GUARD GP-FUEL TANK

S/N: S6T1-UP; S6X1-UP; S6Y1-UP

AN ATTACHMENT

SMCS-1273, 7150 i03999901

NOTE	REF NO	GRAPHIC REF	PART NUMBER	QTY	PART NAME 1 2 3 4 5 6 (PRODUCT LEVEL)	SEE PAGE
	1	1	255-1137	1	GUARD AS-REAR (RH)	
	2	1	255-1138	1	GUARD AS (LH)	
	3	1	255-1139	1	GUARD AS (RH)	
	4	1	256-7780	1	GUARD AS-REAR (LH)	
	5	1	256-7782	1	PLATE	
	6	1	264-7384	1	PLATE AS	
	7	1	5P-1076	26	WASHER-HARD (13.5X30X4-MM THK)	
	8	1	7X-7729	6	WASHER (11X25X3-MM THK)	
M	9	1	8T-4139	4	BOLT (M12X1.75X30-MM)	
M	10	1	8T-4195	6	BOLT (M10X1.5X30-MM)	
M	11	1	8T-4956	16	BOLT (M12X1.75X35-MM)	
M	12	1	8T-6868	6	BOLT (M12X1.75X80-MM)	

M-METRIC PART

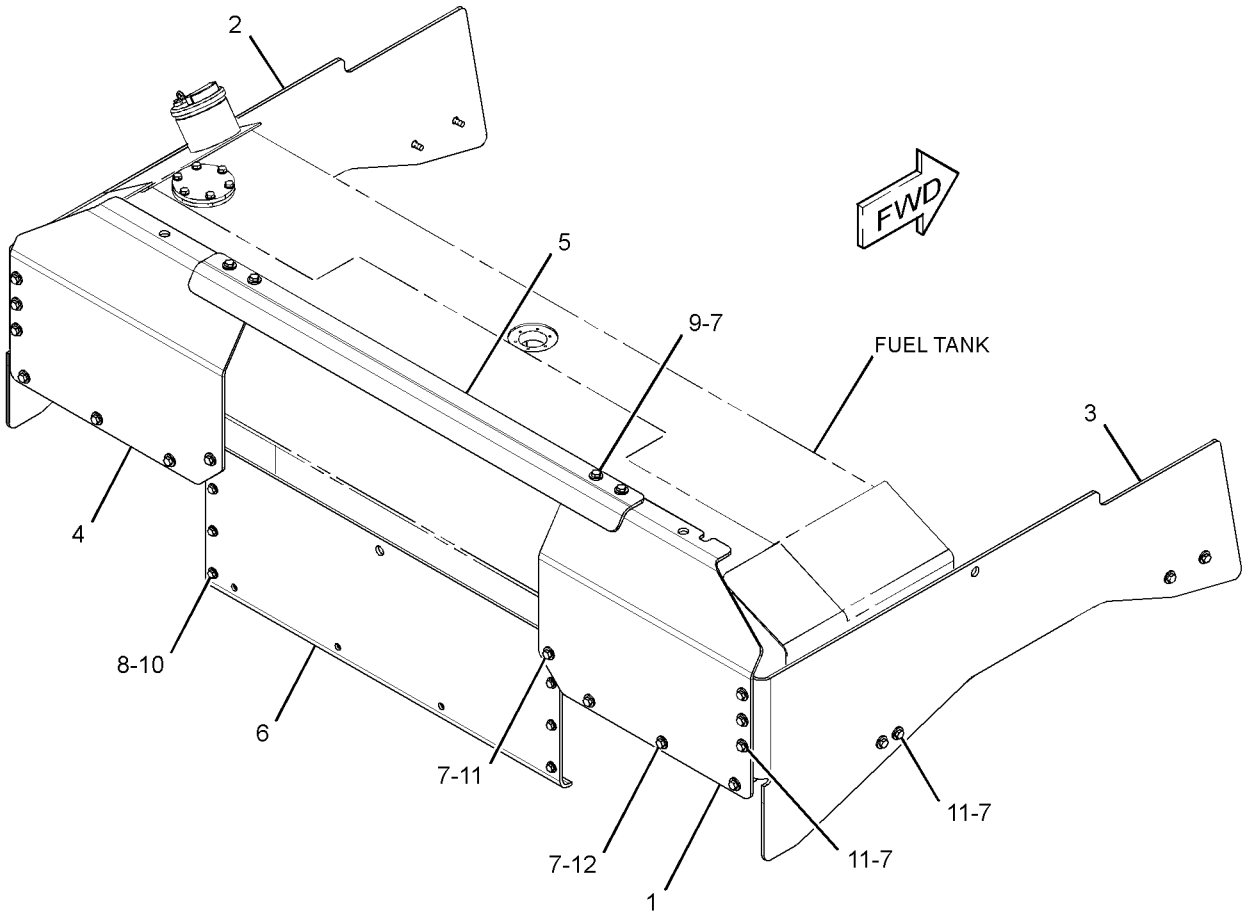

GRAPHIC #1 <END> g01364735

FRAME AND BODY

336-8762 GUARD GP-FUEL TANK

S/N: S6T1-UP; S6X1-UP; S6Y1-UP

AN ATTACHMENT

SMCS-1273, 7150 i03999904

NOTE	REF NO	GRAPHIC REF	PART NUMBER	QTY	PART NAME 1 2 3 4 5 6 (PRODUCT LEVEL)	SEE PAGE
	1	1	255-1137	1	GUARD AS-REAR (RH)	
	2	1	255-1138	1	GUARD AS (LH)	
	3	1	255-1139	1	GUARD AS (RH)	
	4	1	256-7780	1	GUARD AS-REAR (LH)	
	5	1	256-7781	1	PLATE AS	
	6	1	256-7782	1	PLATE	
	7	1	5P-1076	26	WASHER-HARD (13.5X30X4-MM THK)	
	8	1	7X-7729	6	WASHER (11X25X3-MM THK)	
M	9	1	8T-4139	4	BOLT (M12X1.75X30-MM)	
M	10	1	8T-4195	6	BOLT (M10X1.5X30-MM)	
M	11	1	8T-4956	16	BOLT (M12X1.75X35-MM)	
M	12	1	8T-6868	6	BOLT (M12X1.75X80-MM)	

M-METRIC PART

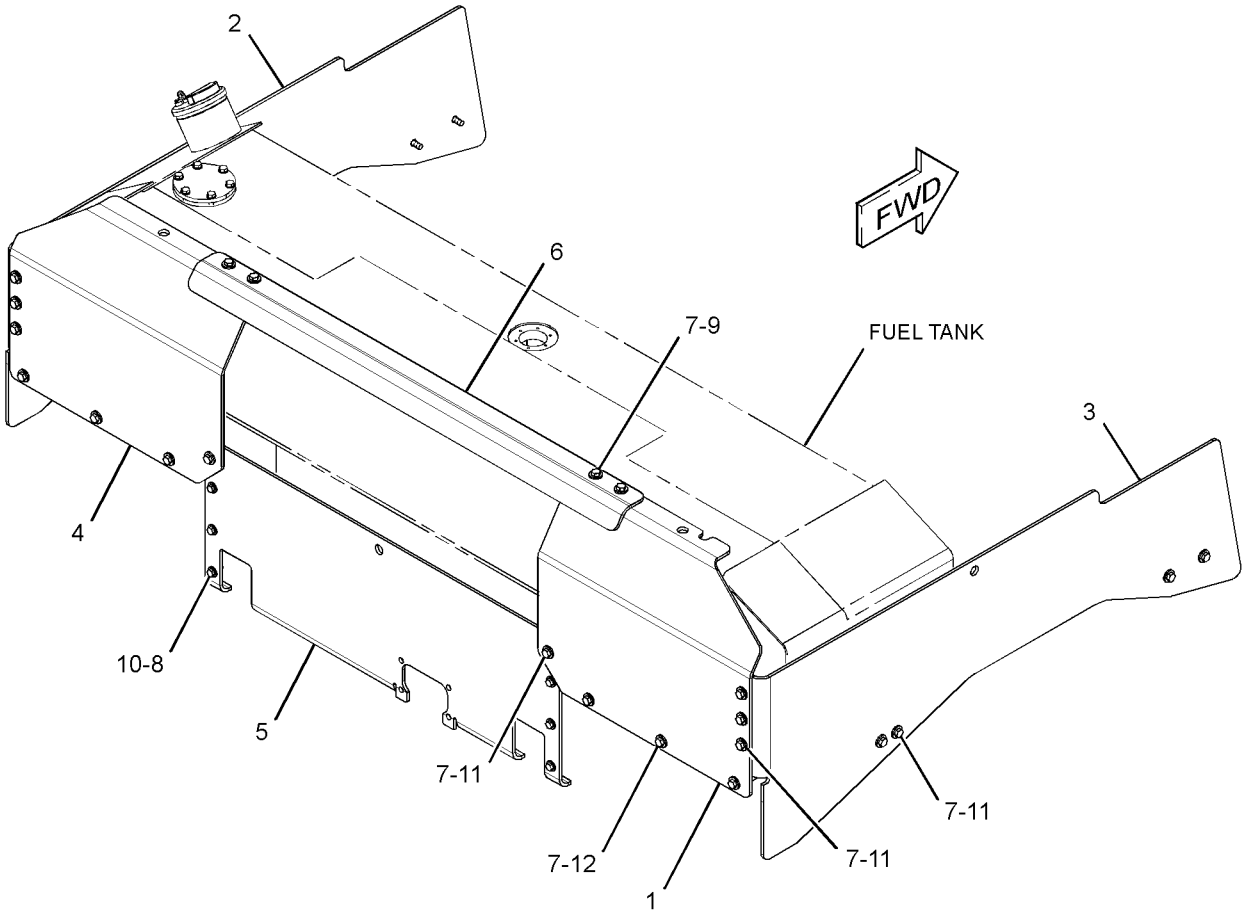

GRAPHIC #1 <END> g01364743

258-7597 GUARD GP-RADIATOR

S/N: S6T1-UP; S6X1-UP; S6Y1-UP
RADIATOR BOTTOM
PART OF 358-4683 GUARD GP-BOTTOM
AN ATTACHMENT

SMCS-7155 i03999890

NOTE	REF NO	GRAPHIC REF	PART NUMBER	QTY	PART NAME 1 2 3 4 5 6 (PRODUCT LEVEL)	SEE PAGE
	1	1	258-7607	1	GUARD AS	
	2	1	3V-9244	2	WASHER (16.5X50X5-MM THK)	
M	3	1	7X-2553	2	BOLT (M16X2X40-MM)	
	4	1	8T-4122	6	WASHER-HARD (17X32X3.5-MM THK)	

M-METRIC PART

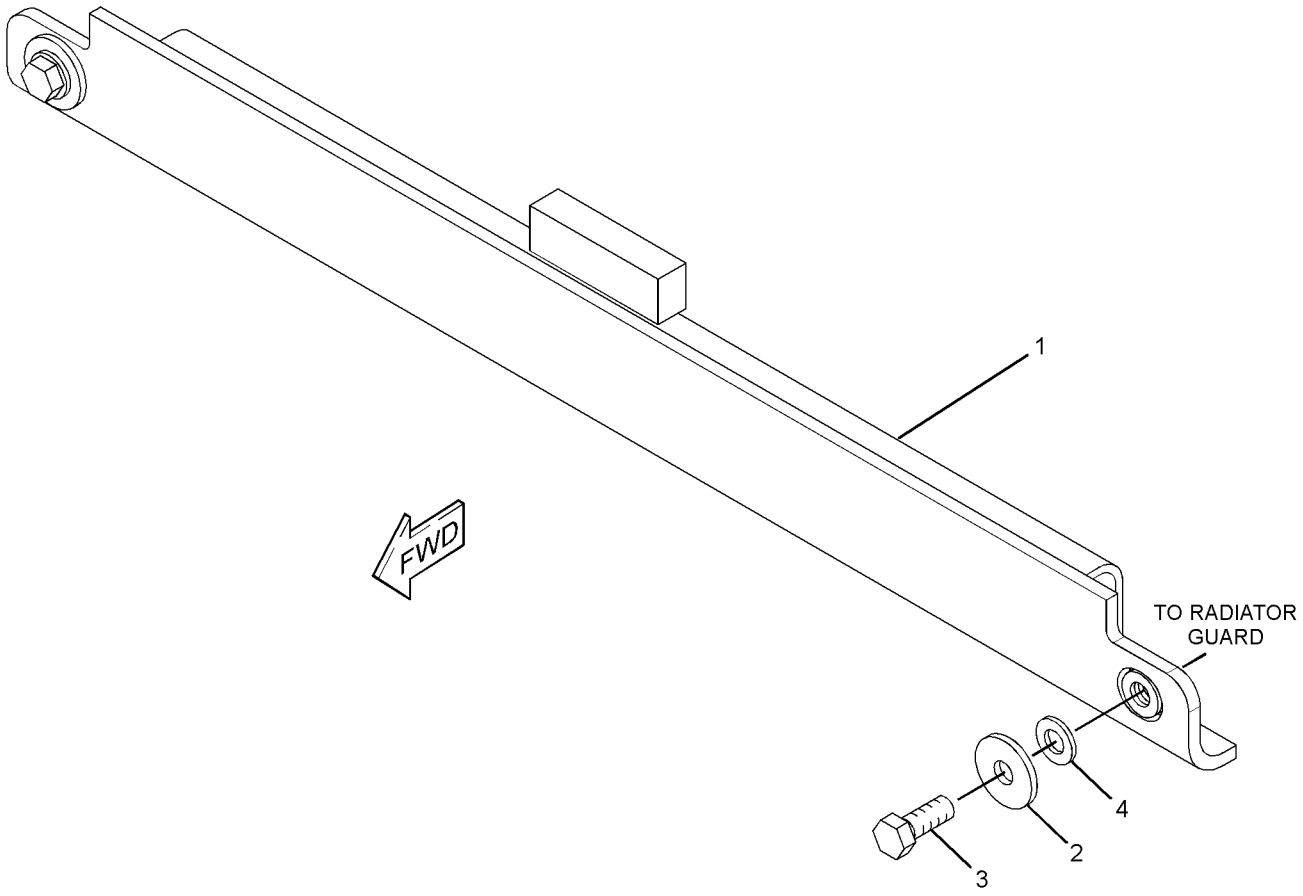

GRAPHIC #1 <END> g01305230

358-4696 GUARD GP-RADIATOR

S/N: S6T1-UP; S6X1-UP; S6Y1-UP

PART OF 336-9684, 336-9685, 336-9686 CHASSIS AR

SMCS-7155 i04009373

NOTE	REF NO	GRAPHIC REF	PART NUMBER	QTY	PART NAME 1 2 3 4 5 6 (PRODUCT LEVEL)	SEE PAGE
	1	1	3W-3742	2	PLUG	
	2	1	5G-9973	2	COVER	
	3	1	5G-9974	2	GASKET	
	4	1	246-2641	1	PADLOCK GP	
		1	5P-8500	1	KEY	
	5	1	8Y-0616	1	GRILL AS	
	6	1	9W-2822	1	ROD	
	7	1	155-8577	2	COVER AS	
	8	1	160-2351	2	WASHER-HARD (22X76X6-MM THK)	
	9	1	170-8592	2	PIN	
	10	1	172-5487	2	SPACER (17X29X7.5-MM THK)	
	11	1	223-1541	1	GUARD AS-RADIATOR	
	11A	1	3G-6372	2	BUSHING	
	11B	1	8E-9522	2	BUSHING	
	11C	1	258-2303	2	BUSHING	
	11D	1	258-2307	2	BUSHING	
	12	1	227-3149	2	PIN	
	13	1	227-3151	1	PLATE AS	
		1	8N-4406	1	BLOCK	
M		1	8T-3490	4	NUT-WELD (M10X1.5-THD)	
	14	1	363-0855	2	HANDHOLD	
	15	1	2G-9245	2	PLATE	
	16	1	3B-4615	2	PIN-COTTER	
	17	1	3V-9244	2	WASHER (16.5X50X5-MM THK)	
	18	1	5M-6214	2	PLUG-PIPE	
	19	1	5P-1076	16	WASHER-HARD (13.5X30X4-MM THK)	
M	20	1	7X-2488	2	BOLT (M20X2.5X160-MM)	
M	21	1	7X-2553	2	BOLT (M16X2X40-MM)	
	22	1	8T-4121	10	WASHER-HARD (11X21X2.5-MM THK)	
M	23	1	8T-4136	8	BOLT (M10X1.5X25-MM)	
M	24	1	8T-4139	12	BOLT (M12X1.75X30-MM)	
M	25	1	8T-6868	4	BOLT (M12X1.75X80-MM)	

M-METRIC PART

358-4696 GUARD GP-RADIATOR *(contd.)* i04009373

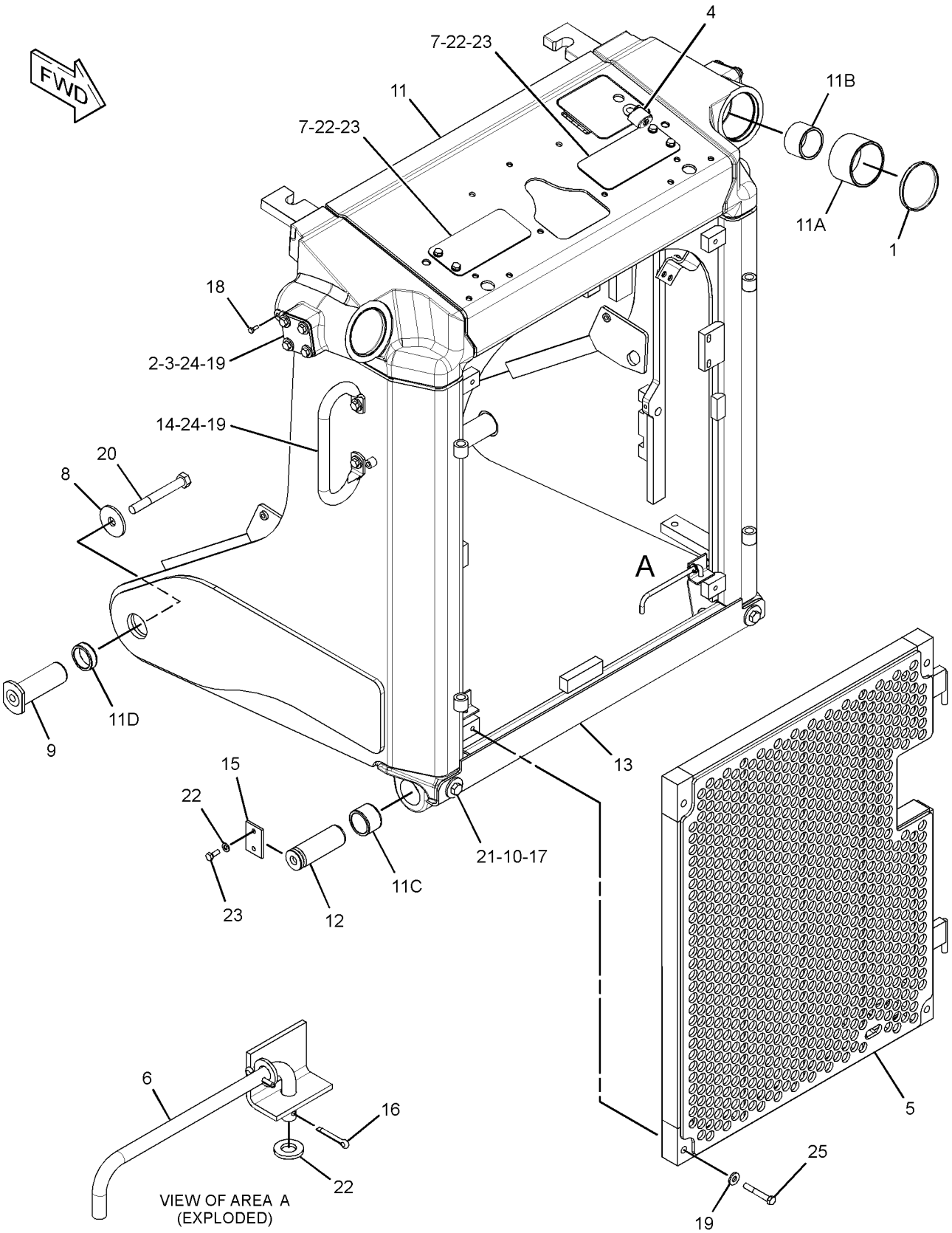

GRAPHIC #1 <END> g02199854

3W-1356 GUARD GP-TRANSMISSION

S/N: RXE1-UP
PART OF 358-4694 RIPPER AR
AN ATTACHMENT

SMCS-7153 i03996249

NOTE	REF NO	GRAPHIC REF	PART NUMBER	QTY	PART NAME 1 2 3 4 5 6 (PRODUCT LEVEL)	SEE PAGE
	1	1	3W-1357	1	GUARD AS	
	2	1	7X-0402	4	BOLT (1-8X2-IN)	
	3	1	8T-1482	4	WASHER-HARD (26X50X8-MM THK)	

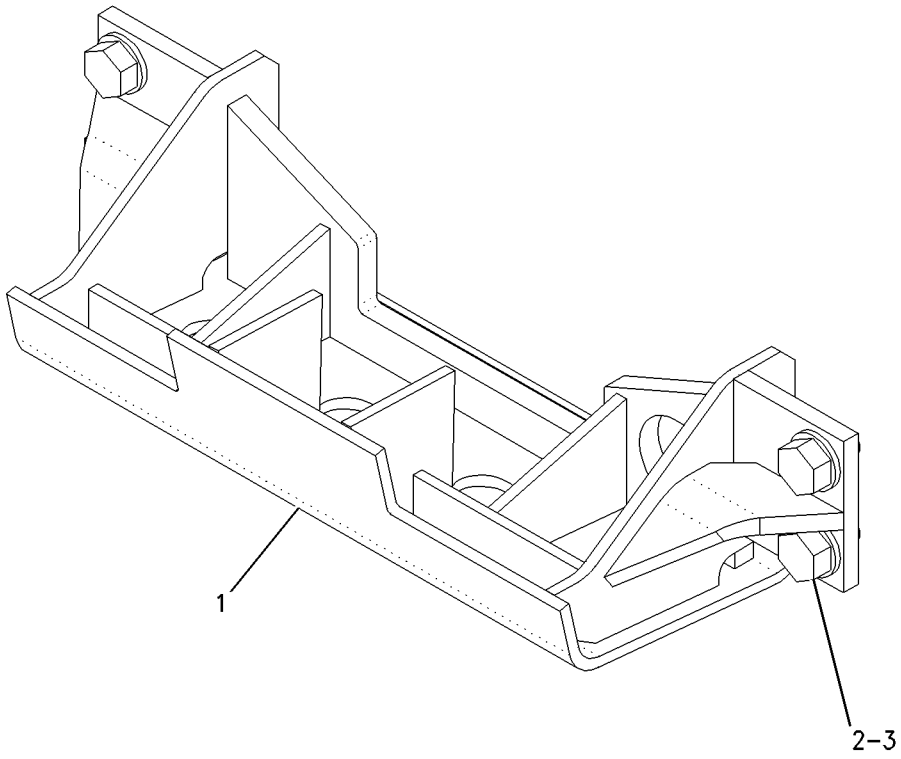

GRAPHIC #1 <END> g00862620

358-4689 HOOD AS

S/N: S6T1-UP; S6X1-UP; S6Y1-UP
SOLID
PART OF 358-2567 COLD WEATHER AR
AN ATTACHMENT

SMCS-7251 i03994988

NOTE	REF NO	GRAPHIC REF	PART NUMBER	QTY	PART NAME 1 2 3 4 5 6 (PRODUCT LEVEL)	SEE PAGE
	1	1	126-7975	2	HANDRAIL	
M	2	1	8T-3490	26	NUT-WELD (M10X1.5-THD)	
M	3	1	8T-5413	2	STUD-WELD (M10X1.5X25-MM OAL)	
M	4	1	9X-6269	1	NUT-WELD (M16X2-THD)	

M-METRIC PART

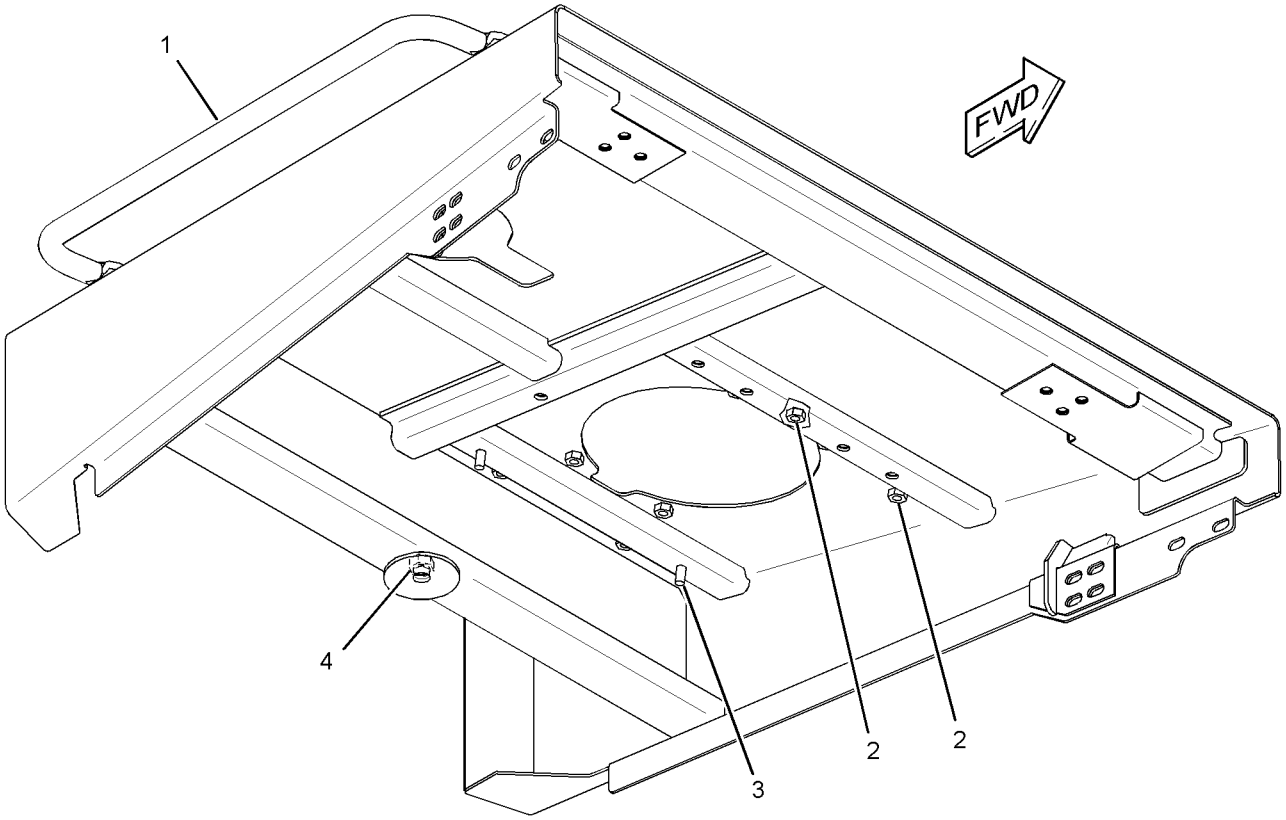

GRAPHIC #1 <END> g02196854

358-4688 SWEEP AR

S/N: S6T1-UP; S6X1-UP; S6Y1-UP

AN ATTACHMENT

SMCS-7000 i04015629

NOTE	REF NO	GRAPHIC REF	PART NUMBER	QTY	PART NAME 1 2 3 4 5 6 (PRODUCT LEVEL)	SEE PAGE
Y	1	1	*237-9318*	1	SWEEP GP	318
Y	2	1	*334-6371*	1	LIGHTING GP-FLOOD (SWEEPS)	159

Y-SEPARATE ILLUSTRATION

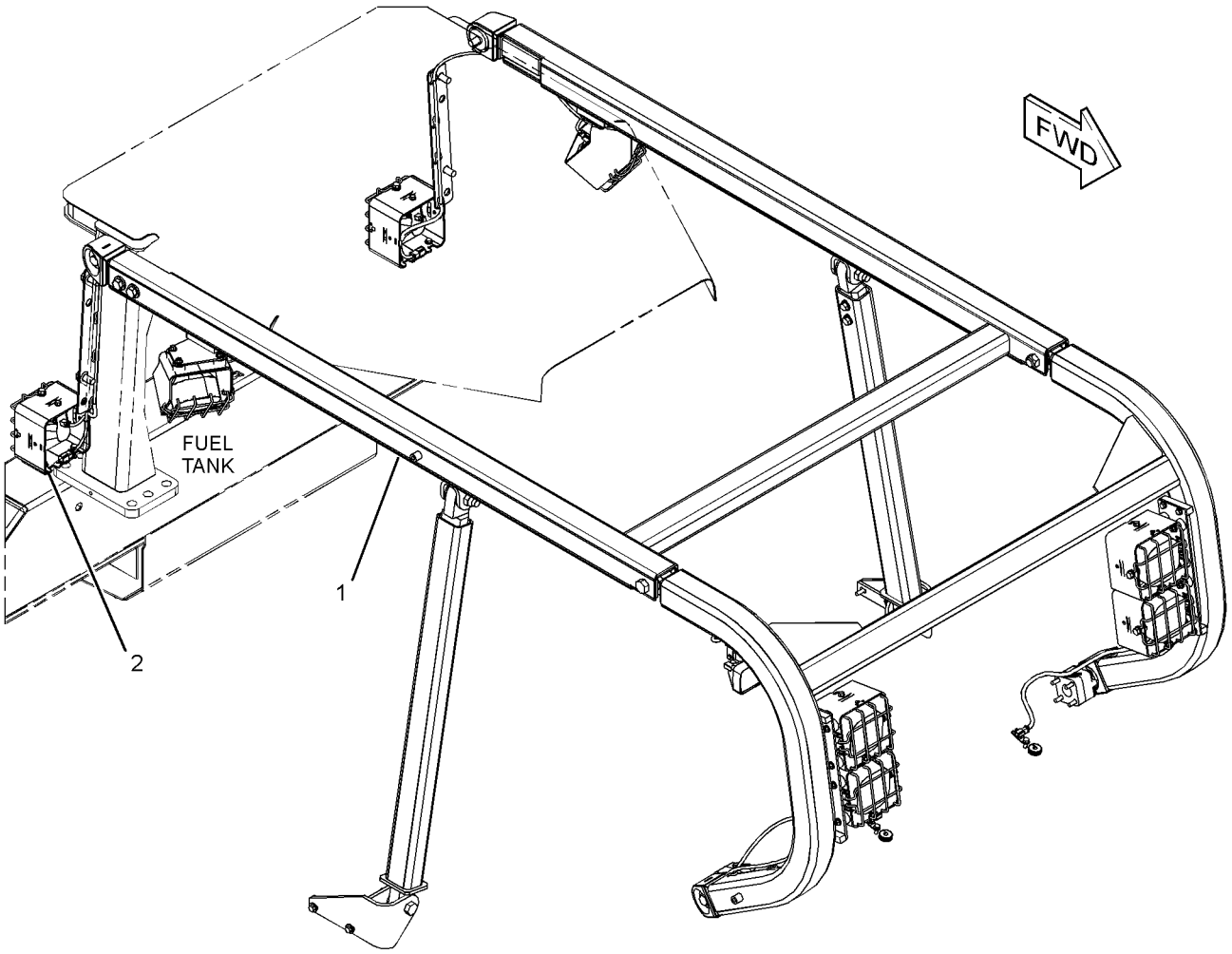

GRAPHIC #1 <END> g02192013

FRAME AND BODY

237-9318 SWEEP GP

S/N: S6T1-UP; S6X1-UP; S6Y1-UP
PART OF 358-4688 SWEEP AR
AN ATTACHMENT

SMCS-7162 i04003453

NOTE	REF NO	GRAPHIC REF	PART NUMBER	QTY	PART NAME 1 2 3 4 5 6 (PRODUCT LEVEL)	SEE PAGE
	1	1	1P-2772	8	SPACER (1.031X1.219X0.75-IN THK)	
	2	1	6T-1698	8	MOUNT	
	3	1	235-0541	2	BLOCK AS	
	4	1	235-0544	8	PLATE	
	5	1	235-0545	2	SPACER	
	6	1	256-7285	1	BRACKET AS (LH)	
	7	1	256-7286	1	BRACKET AS (RH)	
	8	1	*271-3863*	1	SWEEP AS	
	8A	1	1P-2772	4	SPACER (1.031X1.219X0.75-IN THK)	
	8B	1	3W-6528	2	TUBE AS	
	8C	1	9S-5187	6	MOUNTING	
	8D	1	259-1289	2	PLATE AS	
	8E	1	259-1291	1	GUARD AS	
	8F	1	259-1292	1	GUARD AS	
	8G	1	6K-3632	2	LOCKNUT (1-8-THD)	
	8H	1	8C-8844	2	BOLT (1-8X5-IN)	
	8J	1	8P-5244	4	WASHER (33.3X69.8X6.35-MM THK)	
	9	1	278-4696	2	SPACER	
	10	1	5P-1076	12	WASHER-HARD (13.5X30X4-MM THK)	
M	11	1	6V-7676	4	NUT (M24X3-THD)	
M	12	1	7X-2549	8	BOLT (M12X1.75X100-MM)	
M	13	1	7X-2563	4	BOLT (M20X2.5X60-MM)	
M	14	1	7X-2565	2	BOLT (M20X2.5X100-MM)	
M	15	1	7X-2566	2	BOLT (M20X2.5X110-MM)	
	16	1	7X-7729	4	WASHER (11X25X3-MM THK)	
	17	1	8P-5244	8	WASHER (33.3X69.8X6.35-MM THK)	
M	18	1	8T-0363	4	BOLT (M24X3X120-MM)	
	19	1	8T-4122	4	WASHER-HARD (17X32X3.5-MM THK)	
	20	1	8T-4123	2	WASHER (22X35X3.5-MM THK)	
M	21	1	8T-4193	4	BOLT (M16X2X50-MM)	
M	22	1	8T-4196	4	BOLT (M10X1.5X35-MM)	
	23	1	8T-5439	6	WASHER-HARD (21.5X45X6-MM THK)	
M	24	1	172-9966	4	BOLT (M12X1.75X65-MM)	
	25	1	5P-1075	2	WASHER-HARD (10.2X22.5X3-MM THK)	
M	26	1	8T-4137	2	BOLT (M10X1.5X20-MM)	

PARTS SHOWN IN GRAPHIC(S) WITHOUT A REFERENCE NUMBER ARE NOT SERVICED SEPARATELY

M-METRIC PART

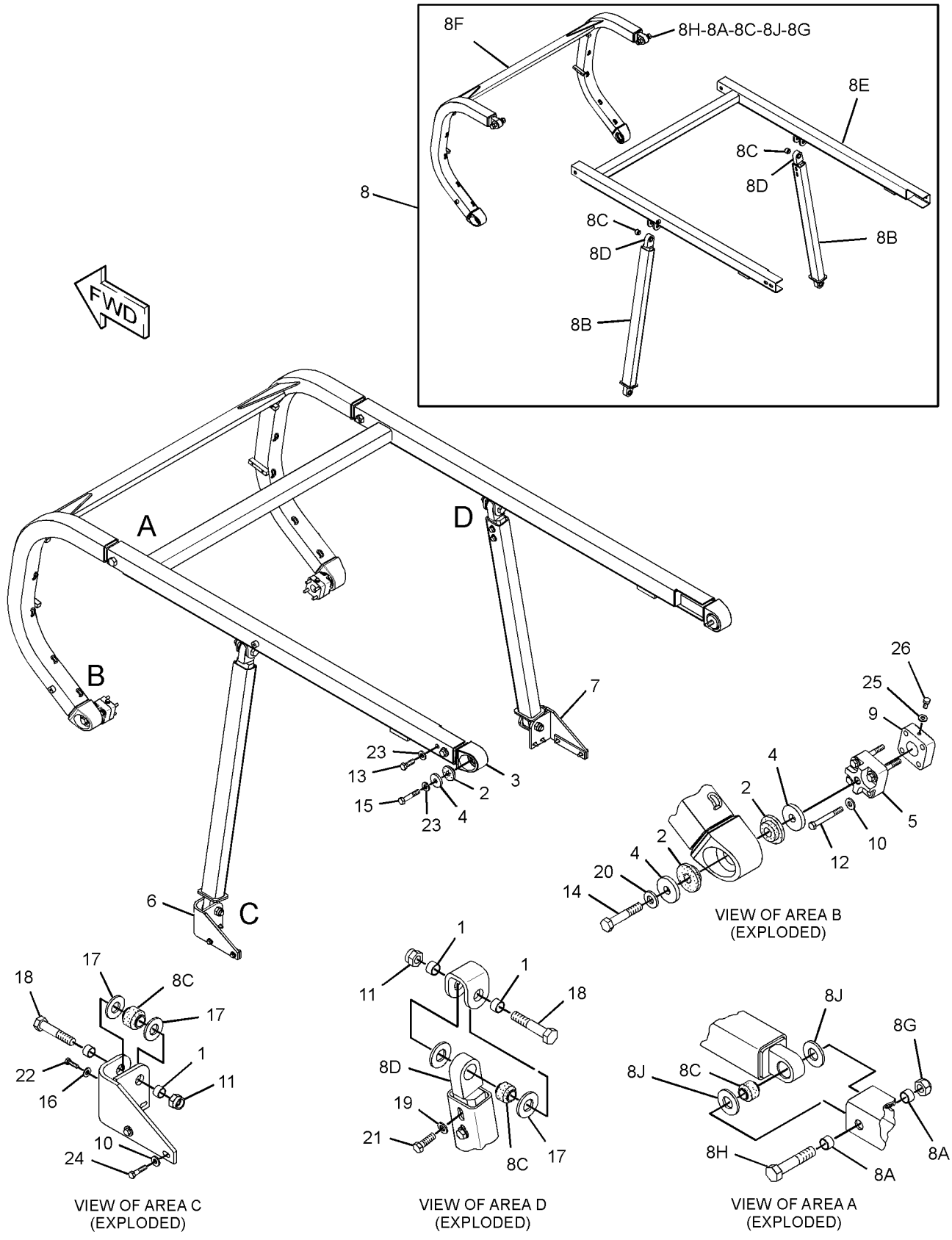

GRAPHIC #1 <END> g01640048

UNDERCARRIAGE

216-8127 BAR GP-EQUALIZER

S/N: S6Y1-UP
PART OF 317-1761, 317-4181 UNDERCARRIAGE AR
ALSO AN ATTACHMENT

SMCS-7206 i04011690

NOTE	REF NO	GRAPHIC REF	PART NUMBER	QTY	PART NAME 1 2 3 4 5 6 (PRODUCT LEVEL)	SEE PAGE
	1	1	3B-8489	1	FITTING-GREASE	
	2	1	3W-9678	1	SPACER (27.5X55X12-MM THK)	
I	3	1	5T-4374	1	HOSE AS	
	4	1	228-4093	1	PIN AS	
	5	1	228-4678	2	SPACER (71.4X94X7-MM THK)	
Y	6	1	281-8491	1	BAR GP-EQUALIZER	325
	7	1	318-6247	4	GUARD	
	8	1	030-7946	1	ELBOW	
	9	1	124-0174	1	CLIP	
	10	1	3J-7354	1	SEAL-O-RING	
	11	1	6V-8237	8	WASHER (26X44X4-MM THK)	
	12	1	7V-3715	1	WASHER (28X85X8-MM THK)	
M	13	1	7X-0851	4	NUT (M24X3-THD)	
M	14	1	7X-2575	1	BOLT (M24X3X60-MM)	
	15	1	7X-7729	1	WASHER (11X25X3-MM THK)	
	16	1	8L-6557	1	CONNECTOR	
M	17	1	8T-0364	4	BOLT (M24X3X220-MM)	
M	18	1	8T-4136	1	BOLT (M10X1.5X25-MM)	

I-REFER TO HYDRAULIC INFORMATION SYSTEM
M-METRIC PART
Y-SEPARATE ILLUSTRATION

216-8127 BAR GP-EQUALIZER ***(contd.)*** i04011690

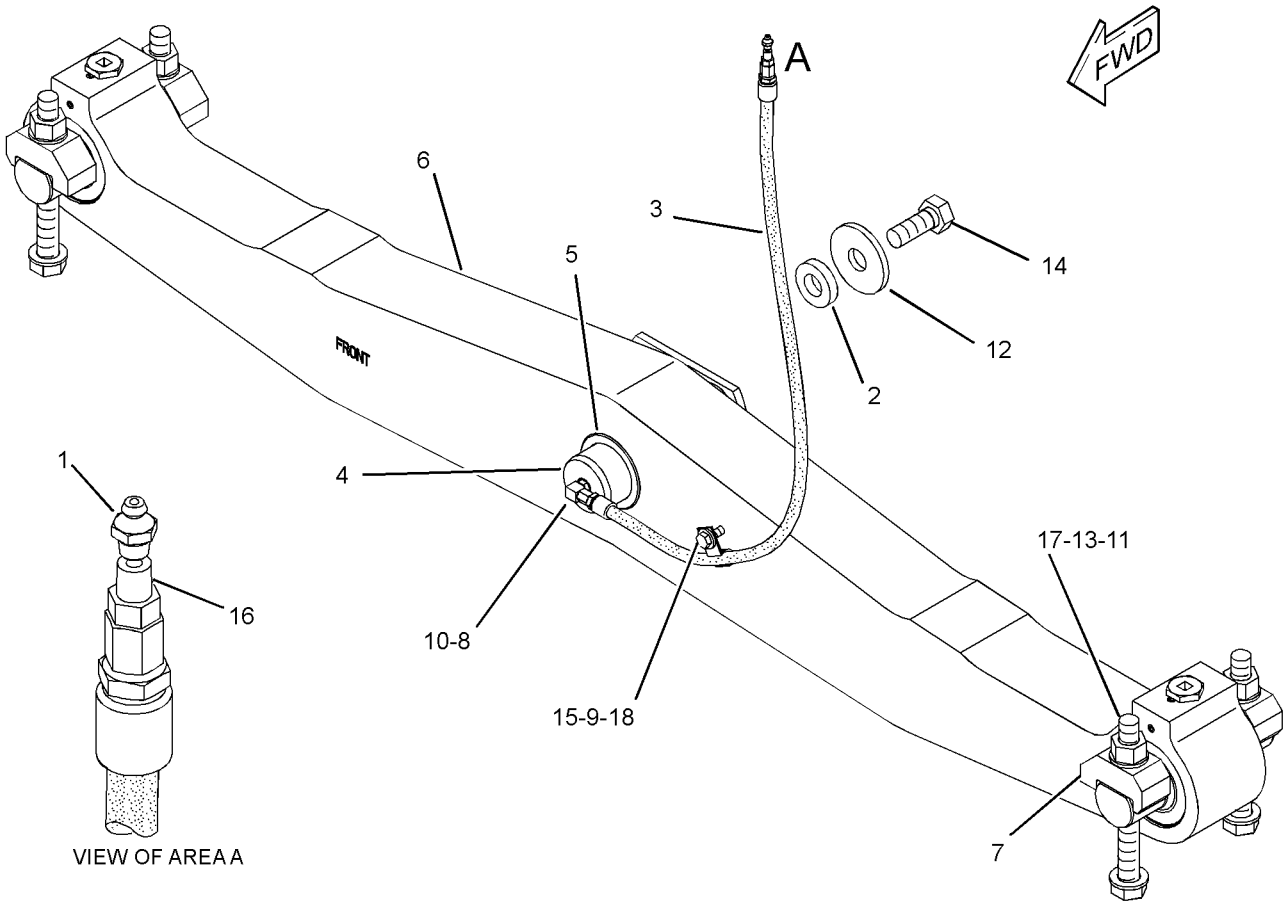

GRAPHIC #1 <END> g01219629

UNDERCARRIAGE

229-7373 BAR GP-EQUALIZER

S/N: S6T1-UP; S6X1-UP
PART OF 317-1759, 317-1760, 317-4180 UNDERCARRIAGE AR
ALSO AN ATTACHMENT

SMCS-7206 i03990538

NOTE	REF NO	GRAPHIC REF	PART NUMBER	QTY	PART NAME 1 2 3 4 5 6 (PRODUCT LEVEL)	SEE PAGE
	1	1	3B-8489	1	FITTING-GREASE	
	2	1	3W-9678	1	SPACER (27.5X55X12-MM THK)	
I	3	1	5T-4374	1	HOSE AS	
	4	1	228-4093	1	PIN AS	
	5	1	228-4678	2	SPACER (71.4X94X7-MM THK)	
Y	6	1	281-8488	1	BAR GP-EQUALIZER	324
	7	1	318-6247	4	GUARD	
	8	1	030-7946	1	ELBOW	
	9	1	124-0174	1	CLIP	
	10	1	3J-7354	1	SEAL-O-RING	
	11	1	6V-8237	8	WASHER (26X44X4-MM THK)	
	12	1	7V-3715	1	WASHER (28X85X8-MM THK)	
M	13	1	7X-0851	4	NUT (M24X3-THD)	
M	14	1	7X-2575	1	BOLT (M24X3X60-MM)	
	15	1	7X-7729	1	WASHER (11X25X3-MM THK)	
	16	1	8L-6557	1	CONNECTOR	
M	17	1	8T-0364	4	BOLT (M24X3X220-MM)	
M	18	1	8T-4136	1	BOLT (M10X1.5X25-MM)	

I-REFER TO HYDRAULIC INFORMATION SYSTEM
M-METRIC PART
Y-SEPARATE ILLUSTRATION

229-7373 BAR GP-EQUALIZER ***(contd.)*** i03990538

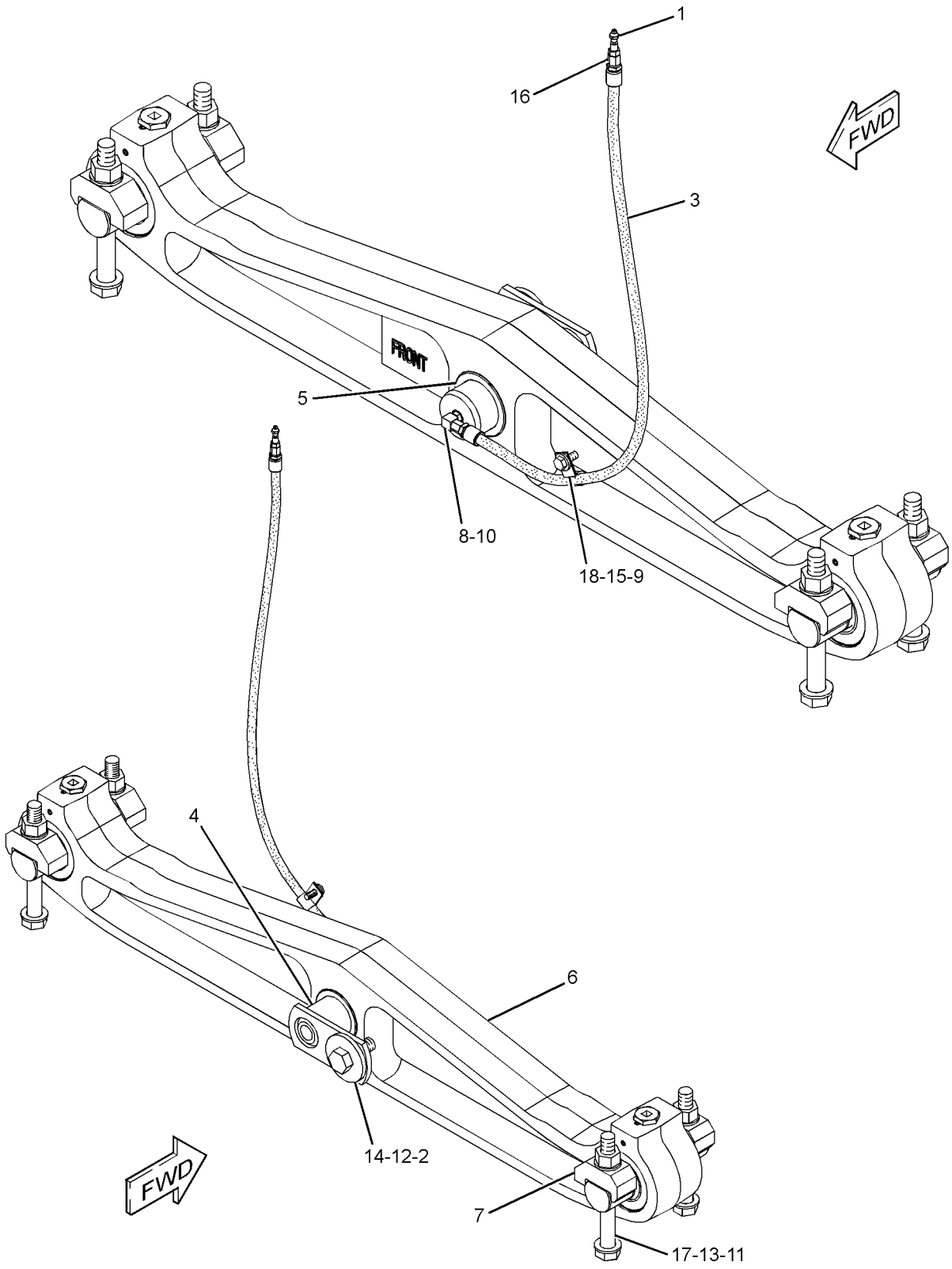

GRAPHIC #1 <END> g01210441

281-8488 BAR GP-EQUALIZER

S/N: S6T1-UP; S6X1-UP
PART OF 229-7373 BAR GP-EQUALIZER
ALSO AN ATTACHMENT

SMCS-7206 i03990532

NOTE	REF NO	GRAPHIC REF	PART NUMBER	QTY	PART NAME 1 2 3 4 5 6 (PRODUCT LEVEL)	SEE PAGE
	1	1	3B-8489	2	FITTING-GREASE	
	2	1	8G-4189	2	BEARING-SELF-ALIGNING	
	3	1	133-5631	2	PLUG	
	4	1	139-0566	4	SEAL AS	
	5	1	229-8352	2	BUSHING	
	6	1	229-9323	2	SEAL-PIN	
	7	1	281-4015	2	PIN	
	8	1	1J-6472	4	RING-RETAINING	
	9	1	2F-5326	8	SETSCREW (3/8-16X0.375-IN)	
	10	1	5F-1678	2	SEAL-O-RING	
					PARTS SHOWN IN GRAPHIC(S) WITHOUT A REFERENCE NUMBER ARE NOT SERVICED SEPARATELY	

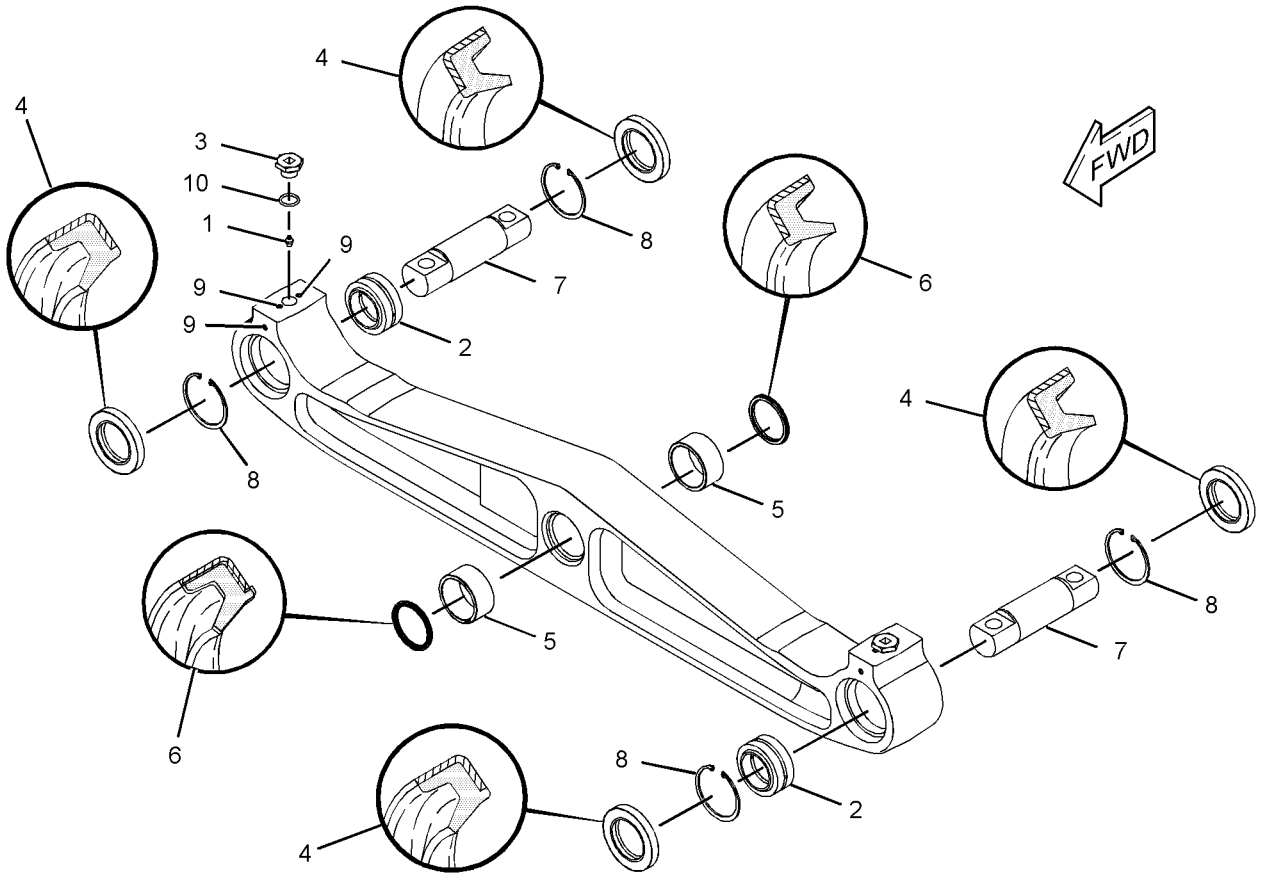

GRAPHIC #1 <END> g02169939

281-8491 BAR GP-EQUALIZER

S/N: S6Y1-UP
PART OF 216-8127 BAR GP-EQUALIZER
ALSO AN ATTACHMENT

SMCS-7206 i04011693

NOTE	REF NO	GRAPHIC REF	PART NUMBER	QTY	PART NAME 1 2 3 4 5 6 (PRODUCT LEVEL)	SEE PAGE
	1	1	3B-8489	2	FITTING-GREASE	
	2	1	8G-4189	2	BEARING-SELF-ALIGNING	
	3	1	133-5631	2	PLUG	
	4	1	139-0566	4	SEAL AS	
		1	139-0567	1	RING-SEAL	
	5	1	229-8352	2	BUSHING	
	6	1	229-9323	2	SEAL-PIN	
	7	1	281-4015	2	PIN	
Z	8	1		1	BAR-EQUALIZER	
	9	1	1J-6472	4	RING-RETAINING	
	10	1	2F-5326	8	SETSCREW (3/8-16X0.375-IN)	
	11	1	5F-1678	2	SEAL-O-RING	

Z-NOT SERVICED SEPARATELY

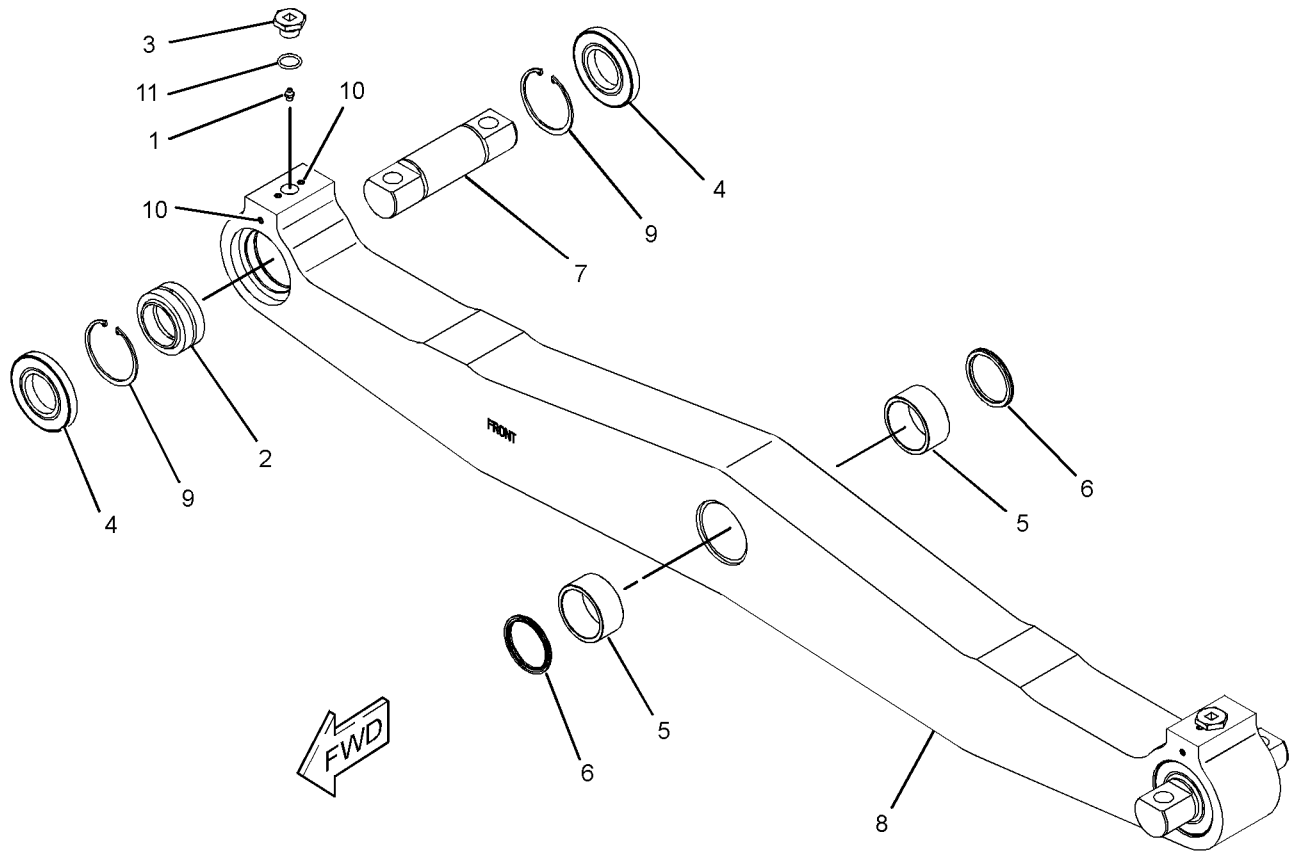

GRAPHIC #1 <END> g01220152

108-1091 CAP GP-TRACK IDLER

S/N: S6T1-UP; S6X1-UP; S6Y1-UP

PART OF 317-1759, 317-1760, 317-1761 UNDERCARRIAGE AR

SMCS-4159 i03989434

NOTE	REF NO	GRAPHIC REF	PART NUMBER	QTY	PART NAME 1 2 3 4 5 6 (PRODUCT LEVEL)	SEE PAGE
	1	1	165-6946	1	BLOCK-TRACK IDLER	
	2	1	152-3421	1	CAP AS-TRACK IDLER	
	2A	1	1T-0068	1	PIN-SPRING	
	3	1	8T-3282	2	WASHER-HARD (22X35X3.5-MM THK)	
M	4	1	6V-9167	2	BOLT (M20X2.5X140-MM)	

M-METRIC PART

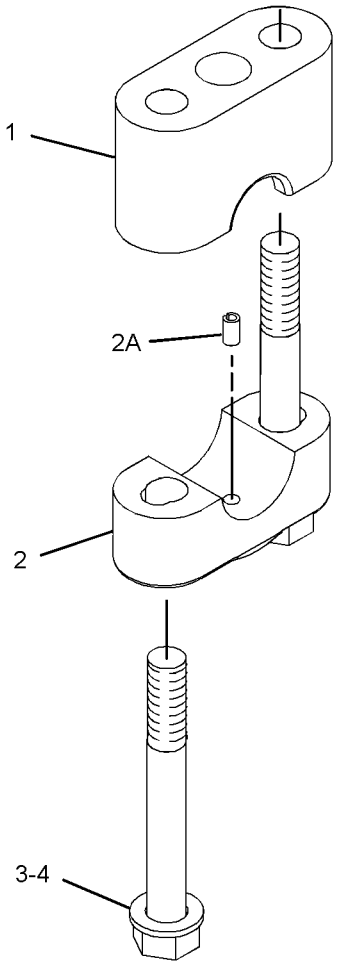

GRAPHIC #1 <END> g02175274

233-4847 CAP GP-TRACK IDLER–LH

S/N: S6Y1-UP
PART OF 317-4181 UNDERCARRIAGE AR
AN ATTACHMENT

SMCS-4159 i04015986

NOTE	REF NO	GRAPHIC REF	PART NUMBER	QTY	PART NAME 1 2 3 4 5 6 (PRODUCT LEVEL)	SEE PAGE
	1	1	156-5342	1	SHIM (10-MM THK)	
	2	1	159-3662	1	CAP AS	
		1	1T-0068	1	PIN-SPRING	
	3	1	233-4848	1	BLOCK-TRACK IDLER	
	4	1	153-5044	2	WASHER-HARD (21.5X45X6-MM THK)	
M	5	1	8T-0657	2	BOLT (M20X2.5X160-MM)	

M-METRIC PART

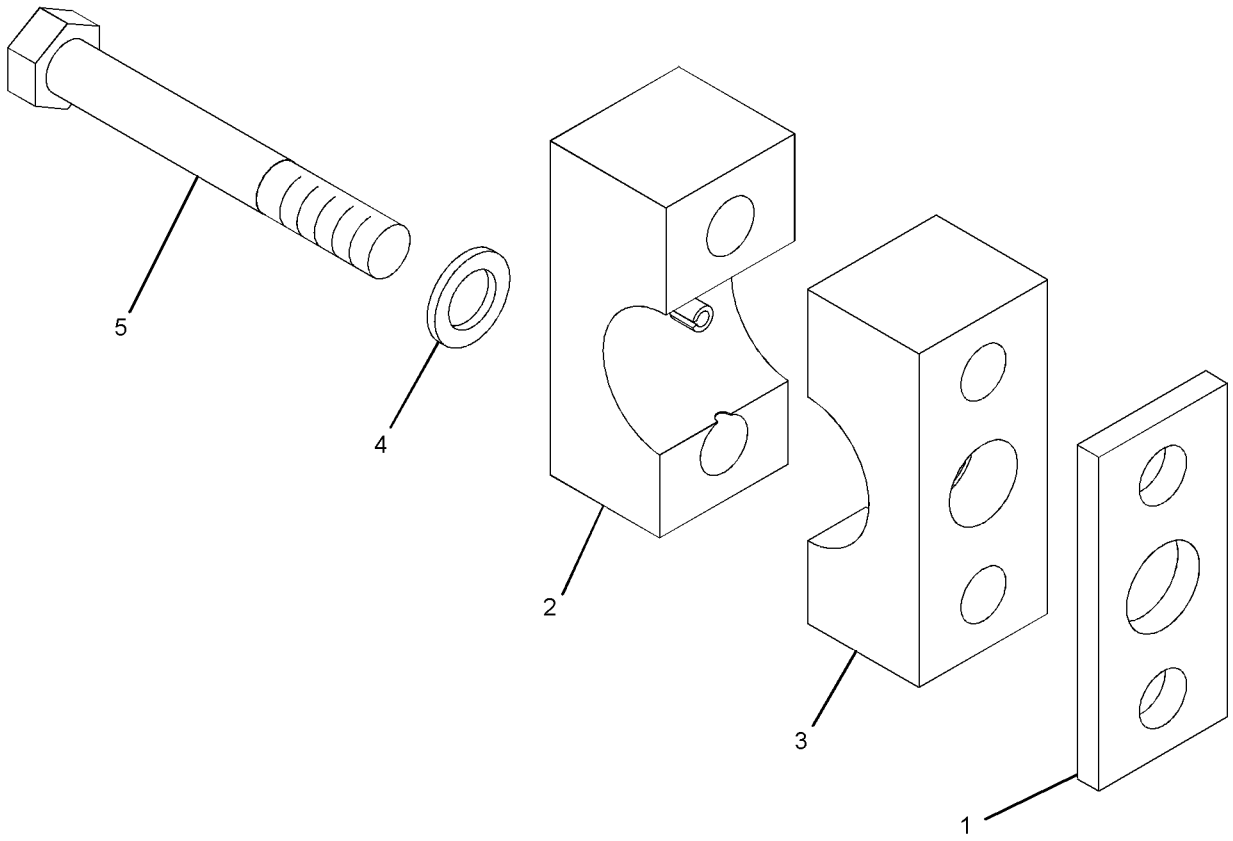

GRAPHIC #1 <END> g01333596

233-4849 CAP GP-TRACK IDLER–RH

S/N: S6Y1-UP
PART OF 317-4181 UNDERCARRIAGE AR
AN ATTACHMENT

SMCS-4159 i04015988

NOTE	REF NO	GRAPHIC REF	PART NUMBER	QTY	PART NAME 1 2 3 4 5 6 (PRODUCT LEVEL)	SEE PAGE
	1	1	156-5342	1	SHIM (10-MM THK)	
	2	1	160-6910	1	CAP AS	
		1	1T-0068	1	PIN-SPRING	
	3	1	233-4851	1	BLOCK-TRACK IDLER	
	4	1	153-5044	2	WASHER-HARD (21.5X45X6-MM THK)	
M	5	1	8T-0657	2	BOLT (M20X2.5X160-MM)	

M-METRIC PART

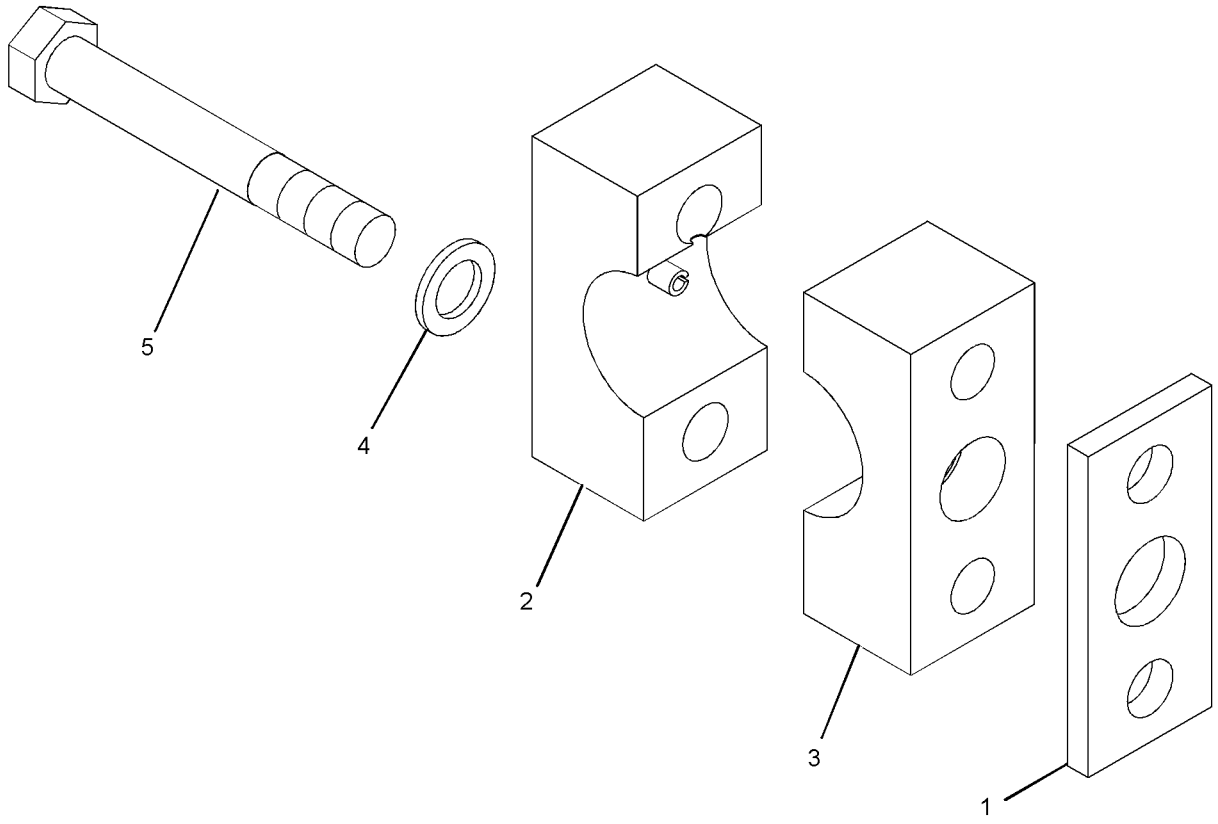

GRAPHIC #1 <END> g01333609

236-2591 CAP GP-TRACK IDLER–LH

S/N: S6Y1-UP
PART OF 317-4181 UNDERCARRIAGE AR
AN ATTACHMENT

SMCS-4159 i04015992

NOTE	REF NO	GRAPHIC REF	PART NUMBER	QTY	PART NAME 1 2 3 4 5 6 (PRODUCT LEVEL)	SEE PAGE
	1	1	174-8783	1	CAP AS	
		1	1T-0068	1	PIN-SPRING	
	2	1	174-8788	1	BLOCK	
	3	1	174-8790	1	SHIM (10-MM THK)	
	4	1	153-5044	2	WASHER-HARD (21.5X45X6-MM THK)	
M	5	1	8T-0657	2	BOLT (M20X2.5X160-MM)	

M-METRIC PART

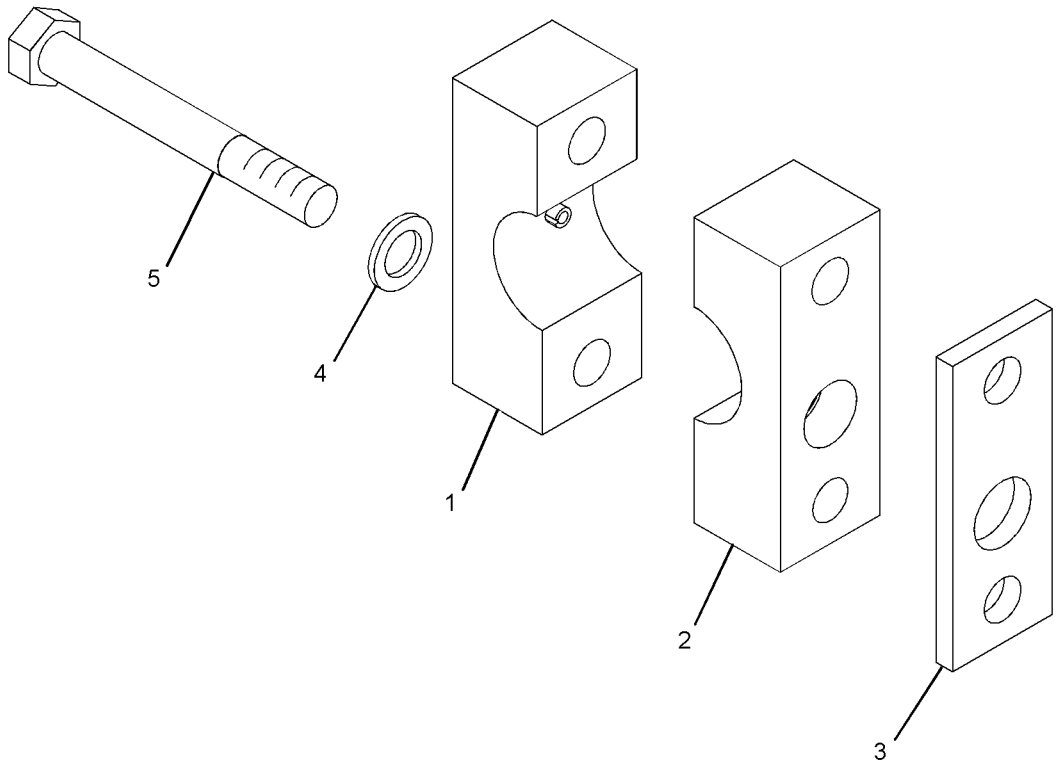

GRAPHIC #1 <END> g01333650

236-2592 CAP GP-TRACK IDLER–RH

S/N: S6Y1-UP
PART OF 317-4181 UNDERCARRIAGE AR
AN ATTACHMENT

SMCS-4159 i04016113

NOTE	REF NO	GRAPHIC REF	PART NUMBER	QTY	PART NAME 1 2 3 4 5 6 (PRODUCT LEVEL)	SEE PAGE
	1	1	174-8786	1	CAP AS	
		1	1T-0068	1	PIN-SPRING	
	2	1	174-8789	1	BLOCK	
	3	1	174-8790	1	SHIM (10-MM THK)	
	4	1	153-5044	2	WASHER-HARD (21.5X45X6-MM THK)	
M	5	1	8T-0657	2	BOLT (M20X2.5X160-MM)	

M-METRIC PART

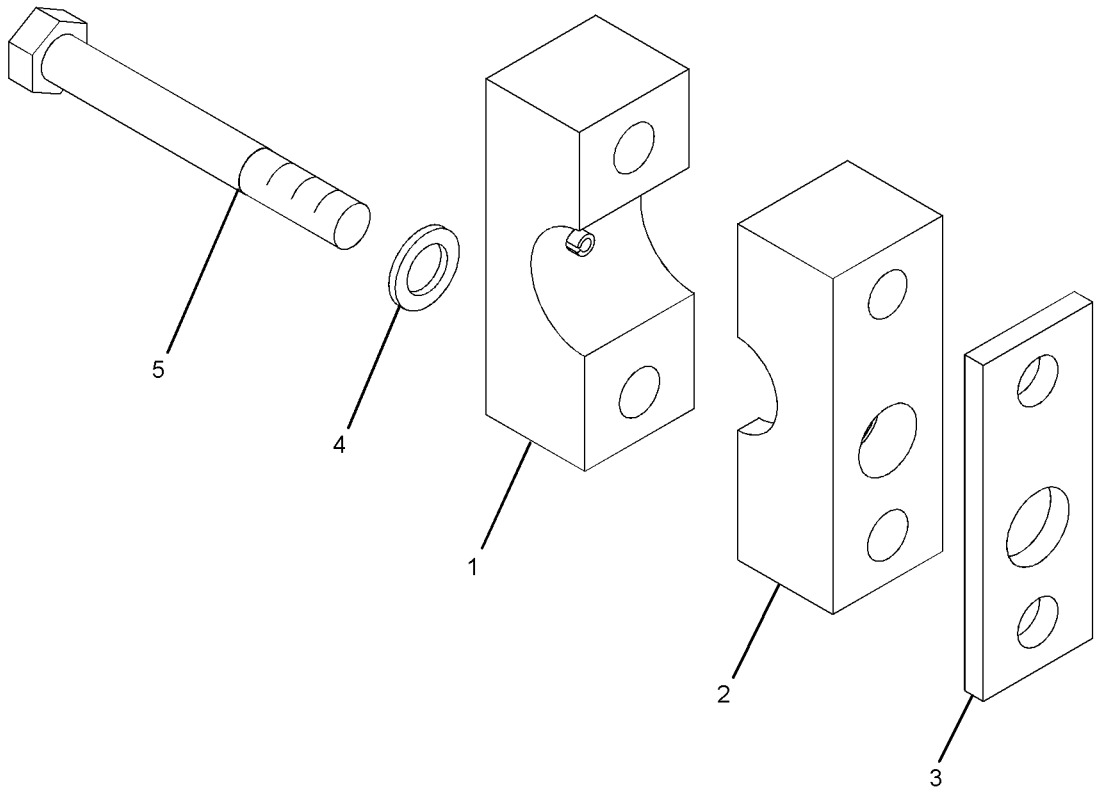

GRAPHIC #1 <END> g01333621

267-4746 CAP GP-TRACK IDLER–SYSTEMONE

S/N: S6T1-UP
PART OF 317-4180 UNDERCARRIAGE AR
AN ATTACHMENT

SMCS-4159 i04022130

NOTE	REF NO	GRAPHIC REF	PART NUMBER	QTY	PART NAME 1 2 3 4 5 6 (PRODUCT LEVEL)	SEE PAGE
	1	1	152-3421	1	CAP AS-TRACK IDLER	
		1	1T-0068	1	PIN-SPRING	
	2	1	165-6946	1	BLOCK-TRACK IDLER	
	3	1	198-4769	2	WASHER (22X40X10-MM THK)	
M	4	1	8T-0656	2	BOLT (M20X2.5X150-MM)	

M-METRIC PART

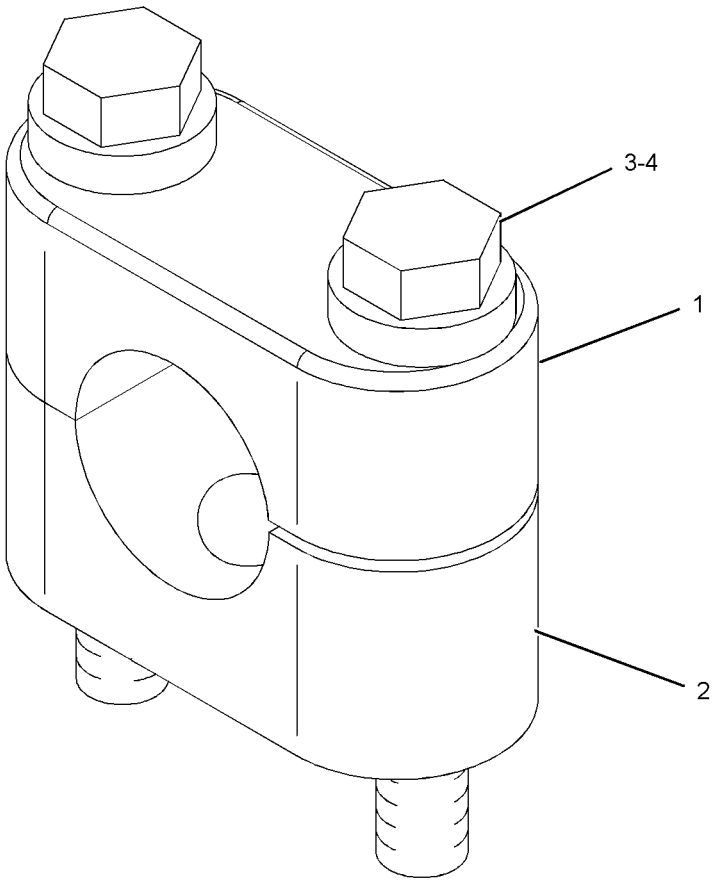

GRAPHIC #1 <END> g01145277

261-3079 FRAME GP-TELESCOPING RECOIL–RH

S/N: S6Y1-UP
PART OF 317-4181 UNDERCARRIAGE AR
AN ATTACHMENT

SMCS-4151 i04016290

NOTE	REF NO	GRAPHIC REF	PART NUMBER	QTY	PART NAME 1 2 3 4 5 6 (PRODUCT LEVEL)	SEE PAGE
	1	1	9X-4582	1	SEAL AS	
Y	2	1	*223-0659*	1	TRACK ADJUSTER & RECOIL GP	388
	3	1	244-6113	1	FRAME AS (FRONT)	
	3A	1	3T-1162	1	BUSHING	
	3B	1	4B-4158	4	SCREW-DRIVE (NO 4X0.25-IN)	
	3C	1	254-1686	1	PLATE-WARNING (RECOIL SPRING)	
	4	1	261-3085	1	FRAME AS (RH)	
	4A	1	221-3197	1	BUSHING	
	4B	1	221-3200	1	BUSHING	
	4C	1	7T-5886	2	DOWEL	
	5	1	261-3257	4	STRIP	
	6	1	268-9709	2	GUIDE AS	
					(EACH INCLUDES)	
	6A	1	241-3720	1	FILM-WARNING (RECOIL SPRING)	
	7	1	268-9710	1	COVER AS	
	7A	1	8E-1211	1	COVER	
	7B	1	253-1346	1	PLATE-WARNING (HIGH PRESSURE CYLINDER)	
	7C	1	7B-3028	4	SCREW-DRIVE (NO 4X 3/16-IN)	
	8	1	1B-5174	2	PLUG-PIPE	
	9	1	3T-2077	1	BEARING	
	10	1	3W-1852	1	RING-RETAINING	
	11	1	5H-6734	1	SEAL-O-RING	
	12	1	8T-4121	4	WASHER-HARD (11X21X2.5-MM THK)	
M	13	1	8T-4136	4	BOLT (M10X1.5X25-MM)	
M	14	1	8T-4184	28	BOLT (M12X1.75X45-MM)	
	15	1	8T-4223	28	WASHER-HARD (13.5X25.5X3-MM THK)	
	16	1	5P-1076	12	WASHER-HARD (13.5X30X4-MM THK)	
M	17	1	8T-4194	12	BOLT (M12X1.75X50-MM)	
	18	1	282-4017	4	PLATE-SCRAPER	

M-METRIC PART
Y-SEPARATE ILLUSTRATION

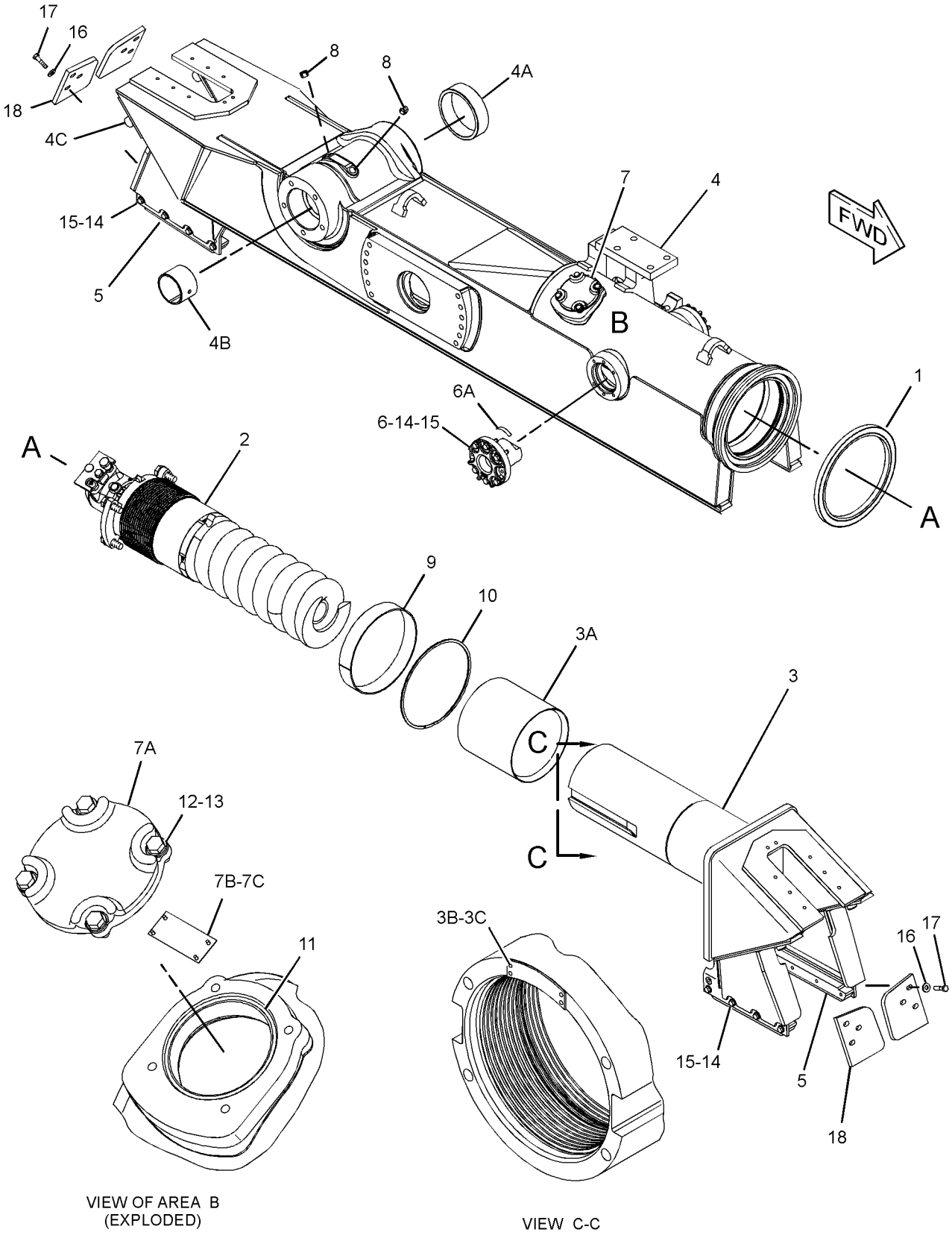

GRAPHIC #1 <END> g01535133

261-3082 FRAME GP-TELESCOPING RECOIL–LH

S/N: S6Y1-UP
PART OF 317-4181 UNDERCARRIAGE AR
AN ATTACHMENT

SMCS-4151 i04016315

NOTE	REF NO	GRAPHIC REF	PART NUMBER	QTY	PART NAME 1 2 3 4 5 6 (PRODUCT LEVEL)	SEE PAGE
	1	1	9X-4582	1	SEAL AS	
Y	2	1	*223-0659*	1	TRACK ADJUSTER & RECOIL GP	388
	3	1	244-6113	1	FRAME AS (FRONT)	
	3A	1	3T-1162	1	BUSHING	
	3B	1	4B-4158	4	SCREW-DRIVE (NO 4X0.25-IN)	
	3C	1	254-1686	1	PLATE-WARNING (RECOIL SPRING)	
	4	1	261-3089	1	FRAME AS (LH)	
	4A	1	221-3197	1	BUSHING	
	4B	1	221-3200	1	BUSHING	
	4C	1	7T-5886	2	DOWEL	
	5	1	261-3257	4	STRIP	
	6	1	268-9709	2	GUIDE AS	
					(EACH INCLUDES)	
	6A	1	241-3720	1	FILM-WARNING (RECOIL SPRING)	
	7	1	268-9710	1	COVER AS	
	7A	1	253-1346	1	PLATE-WARNING (HIGH PRESSURE CYLINDER)	
	7B	1	7B-3028	4	SCREW-DRIVE (NO 4X 3/16-IN)	
	7C	1	8E-1211	1	COVER	
	8	1	1B-5174	2	PLUG-PIPE	
	9	1	3T-2077	1	BEARING	
	10	1	3W-1852	1	RING-RETAINING	
	11	1	5H-6734	1	SEAL-O-RING	
	12	1	8T-4121	4	WASHER-HARD (11X21X2.5-MM THK)	
M	13	1	8T-4136	4	BOLT (M10X1.5X25-MM)	
M	14	1	8T-4184	28	BOLT (M12X1.75X45-MM)	
	15	1	8T-4223	28	WASHER-HARD (13.5X25.5X3-MM THK)	
	16	1	5P-1076	12	WASHER-HARD (13.5X30X4-MM THK)	
M	17	1	8T-4194	12	BOLT (M12X1.75X50-MM)	
	18	1	282-4017	4	PLATE-SCRAPER	

M-METRIC PART
Y-SEPARATE ILLUSTRATION

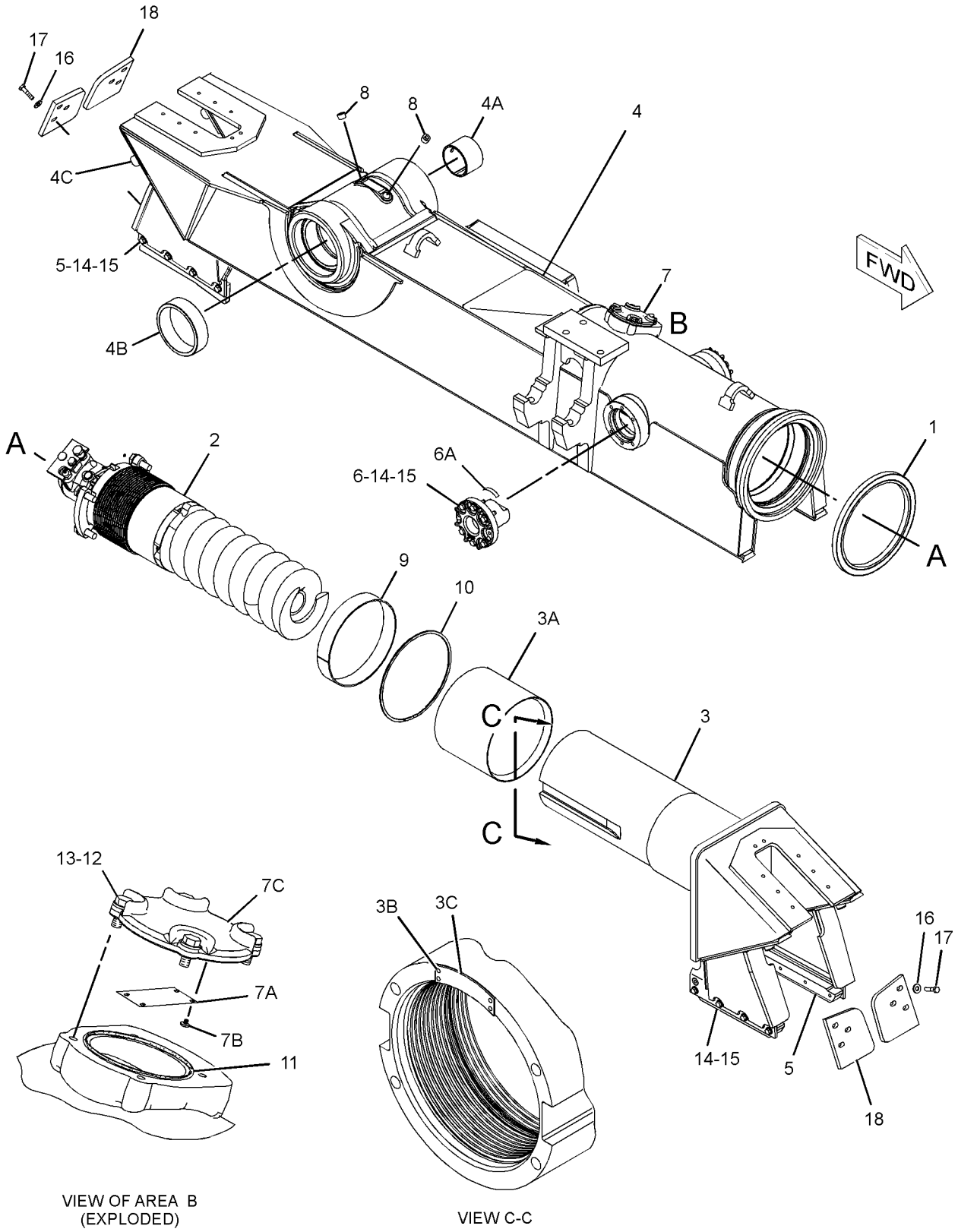

GRAPHIC #1 <END> g01535059

283-8671 FRAME GP-TELESCOPING RECOIL—HEAVY-DUTY, RH

S/N: S6Y1-UP

PART OF 317-1761 UNDERCARRIAGE AR

SMCS-4151 i04033254

NOTE	REF NO	GRAPHIC REF	PART NUMBER	QTY	PART NAME 1 2 3 4 5 6 (PRODUCT LEVEL)	SEE PAGE
	1	1	9X-4582	1	SEAL AS	
	2	1	160-4103	2	STRIP	
	3	1	189-3032	2	STRIP	
Y	4	1	*223-0659*	1	TRACK ADJUSTER & RECOIL GP	388
R	5	1	224-4122	1	FRAME AS (FRONT)	
	5A	1	3T-1162	1	BUSHING	
	5B	1	4B-4158	4	SCREW-DRIVE (NO 4X0.25-IN)	
	5C	1	254-1686	1	PLATE-WARNING (RECOIL SPRING)	
	6	1	224-4125	1	FRAME AS (RH)	
	6A	1	221-3197	1	BUSHING	
	6B	1	221-3200	1	BUSHING	
	7	1	268-9709	2	GUIDE AS	
					(EACH INCLUDES)	
	7A	1	241-3720	1	FILM-WARNING (RECOIL SPRING)	
	8	1	268-9710	1	COVER AS	
	8A	1	7B-3028	4	SCREW-DRIVE (NO 4X 3/16-IN)	
	8B	1	8E-1211	1	COVER	
	8C	1	253-1346	1	PLATE-WARNING (HIGH PRESSURE CYLINDER)	
	9	1	1B-5174	2	PLUG-PIPE	
	10	1	3T-2077	1	BEARING	
	11	1	3W-1852	1	RING-RETAINING	
	12	1	5H-6734	1	SEAL-O-RING	
	13	1	8T-4121	4	WASHER-HARD (11X21X2.5-MM THK)	
M	14	1	8T-4136	4	BOLT (M10X1.5X25-MM)	
M	15	1	8T-4139	16	BOLT (M12X1.75X30-MM)	
M	16	1	8T-4184	12	BOLT (M12X1.75X45-MM)	
	17	1	8T-4223	28	WASHER-HARD (13.5X25.5X3-MM THK)	

M-METRIC PART
R-REMFG PART MAY BE AVAILABLE
Y-SEPARATE ILLUSTRATION

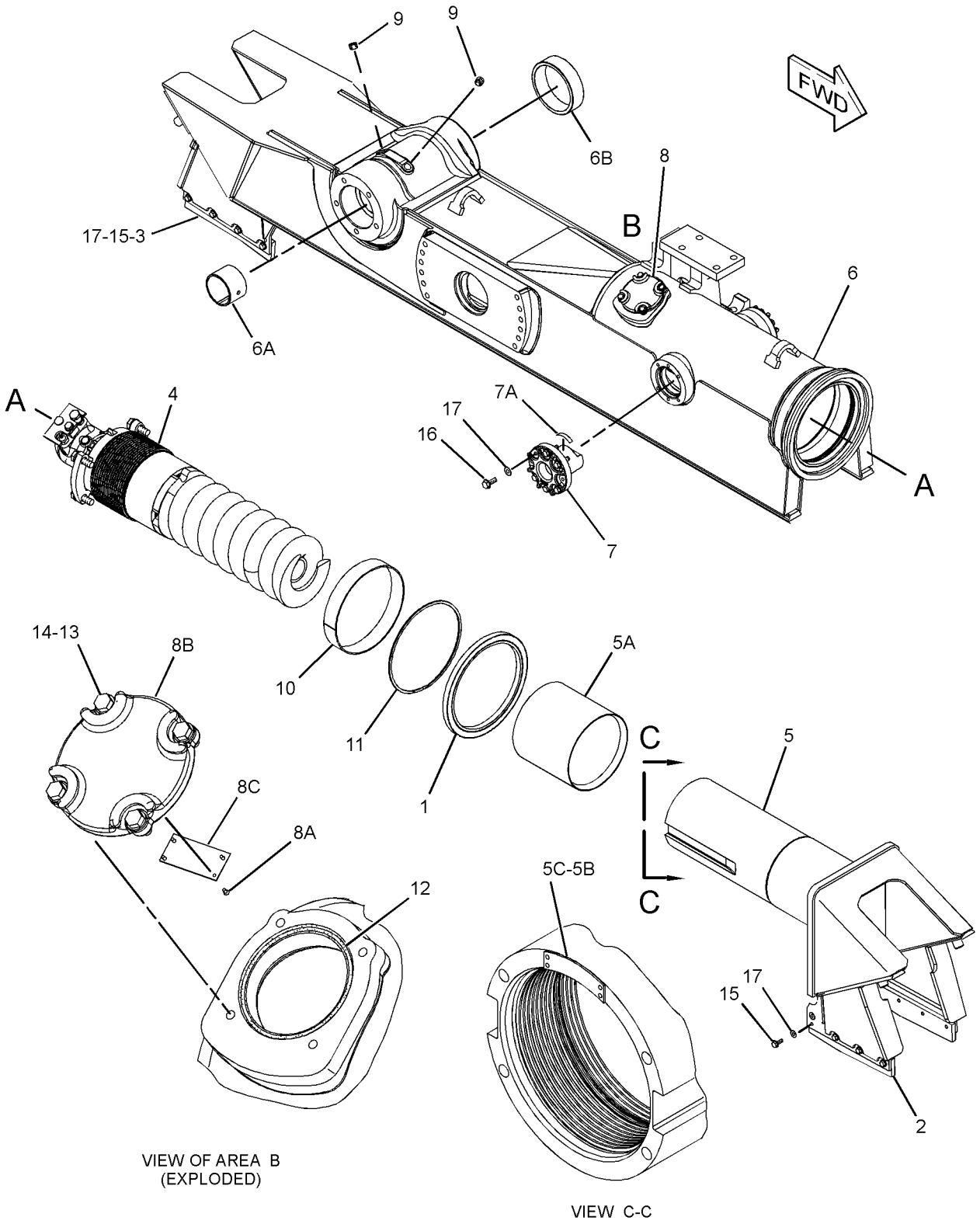

GRAPHIC #1 <END> g01221997

283-8672 FRAME GP-TELESCOPING RECOIL—HEAVY-DUTY, LH

S/N: S6Y1-UP

PART OF 317-1761 UNDERCARRIAGE AR

SMCS-4151 i04011729

NOTE	REF NO	GRAPHIC REF	PART NUMBER	QTY	PART NAME 1 2 3 4 5 6 (PRODUCT LEVEL)	SEE PAGE
	1	1	9X-4582	1	SEAL AS	
	2	1	160-4103	2	STRIP	
	3	1	189-3032	2	STRIP	
Y	4	1	*223-0659*	1	TRACK ADJUSTER & RECOIL GP	388
R	5	1	224-4122	1	FRAME AS (FRONT)	
	5A	1	3T-1162	1	BUSHING	
	5B	1	4B-4158	4	SCREW-DRIVE (NO 4X0.25-IN)	
	5C	1	254-1686	1	PLATE-WARNING (RECOIL SPRING)	
	6	1	226-1338	1	FRAME AS (LH)	
	6A	1	221-3197	1	BUSHING	
	6B	1	221-3200	1	BUSHING	
	7	1	268-9709	2	GUIDE AS	
					(EACH INCLUDES)	
	7A	1	241-3720	1	FILM-WARNING (RECOIL SPRING)	
	8	1	268-9710	1	COVER AS	
	8A	1	7B-3028	4	SCREW-DRIVE (NO 4X 3/16-IN)	
	8B	1	8E-1211	1	COVER	
	8C	1	253-1346	1	PLATE-WARNING (HIGH PRESSURE CYLINDER)	
	9	1	1B-5174	2	PLUG-PIPE	
	10	1	3T-2077	1	BEARING	
	11	1	3W-1852	1	RING-RETAINING	
	12	1	5H-6734	1	SEAL-O-RING	
	13	1	8T-4121	4	WASHER-HARD (11X21X2.5-MM THK)	
M	14	1	8T-4136	4	BOLT (M10X1.5X25-MM)	
M	15	1	8T-4139	16	BOLT (M12X1.75X30-MM)	
M	16	1	8T-4184	12	BOLT (M12X1.75X45-MM)	
	17	1	8T-4223	28	WASHER-HARD (13.5X25.5X3-MM THK)	

M-METRIC PART
R-REMFG PART MAY BE AVAILABLE
Y-SEPARATE ILLUSTRATION

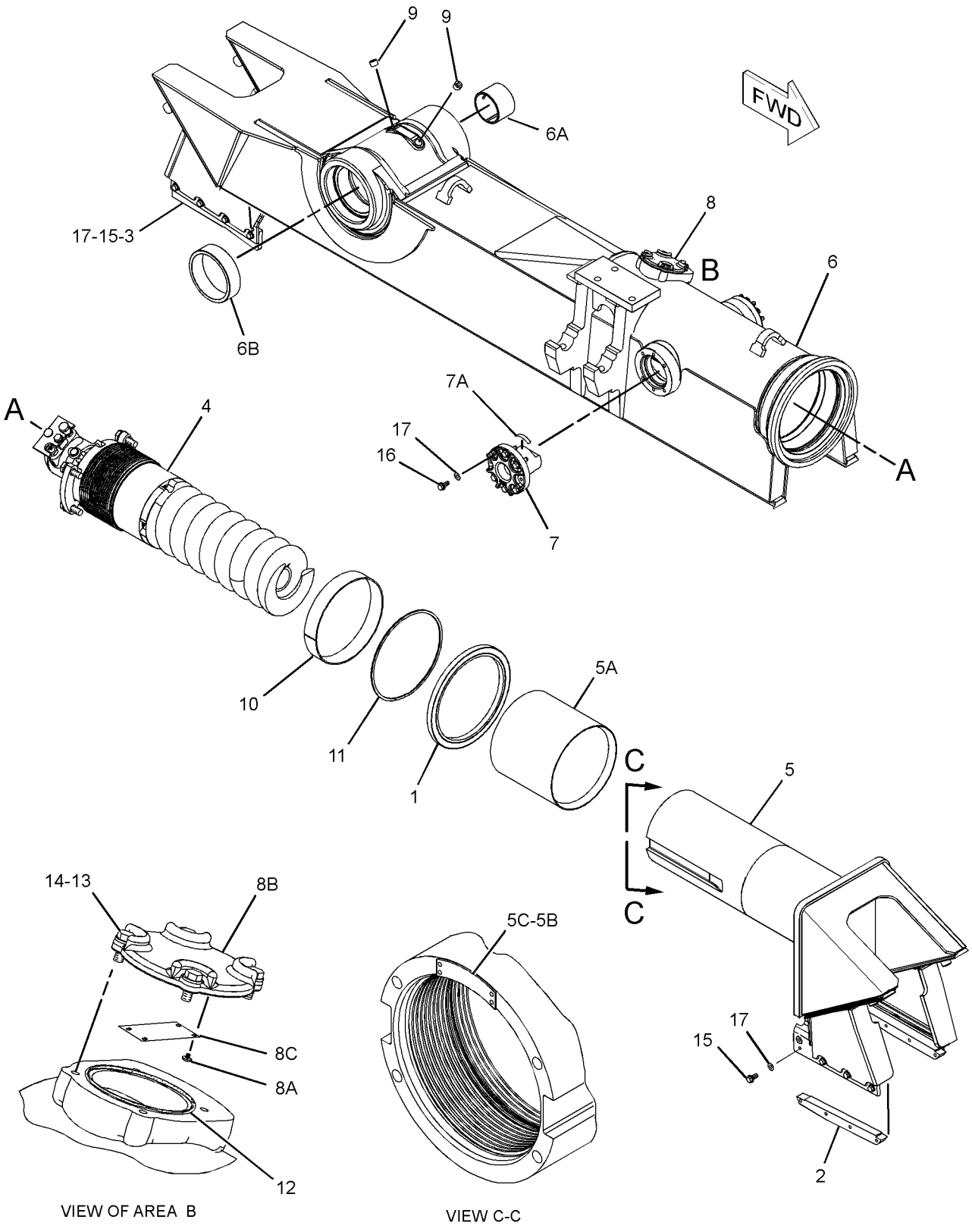

GRAPHIC #1 <END> g01221964

334-0459 FRAME GP-TELESCOPING RECOIL–LH

S/N: S6T1-UP
PART OF 317-4180 UNDERCARRIAGE AR
AN ATTACHMENT

SMCS-4151 i04007409

NOTE	REF NO	GRAPHIC REF	PART NUMBER	QTY	PART NAME 1 2 3 4 5 6 (PRODUCT LEVEL)	SEE PAGE
	1	1	9X-4582	1	SEAL AS	
		1	8T-5071	1	GUARD-SEAL	
	2	1	226-1335	1	FRAME AS (LH)	
	2A	1	221-3197	1	BUSHING	
	2B	1	221-3200	1	BUSHING	
	3	1	260-7733	2	STRIP	
	4	1	261-3257	2	STRIP	
	5	1	268-9709	2	GUIDE AS	
					(EACH INCLUDES)	
	5A	1	241-3720	1	FILM-WARNING (RECOIL SPRING)	
	6	1	268-9710	1	COVER AS	
	6A	1	7B-3028	4	SCREW-DRIVE (NO 4X 3/16-IN)	
	6B	1	8E-1211	1	COVER	
	6C	1	253-1346	1	PLATE-WARNING (HIGH PRESSURE CYLINDER)	
	7	1	282-4017	4	PLATE-SCRAPER	
	8	1	315-7783	1	FRAME AS (FRONT)	
	8A	1	3T-1162	1	BUSHING	
	8B	1	4B-4158	4	SCREW-DRIVE (NO 4X0.25-IN)	
	8C	1	254-1686	1	PLATE-WARNING (RECOIL SPRING)	
Y	9	1	*315-7786*	1	TRACK ADJUSTER & RECOIL GP	390
	10	1	1B-5174	2	PLUG-PIPE	
	11	1	3T-2077	1	BEARING	
	12	1	3W-1852	1	RING-RETAINING	
	13	1	5H-6734	1	SEAL-O-RING	
	14	1	5P-1076	12	WASHER-HARD (13.5X30X4-MM THK)	
	15	1	8T-4121	4	WASHER-HARD (11X21X2.5-MM THK)	
M	16	1	8T-4136	4	BOLT (M10X1.5X25-MM)	
M	17	1	8T-4184	12	BOLT (M12X1.75X45-MM)	
M	18	1	8T-4194	12	BOLT (M12X1.75X50-MM)	
	19	1	8T-4223	26	WASHER-HARD (13.5X25.5X3-MM THK)	
M	20	1	8T-4956	14	BOLT (M12X1.75X35-MM)	

M-METRIC PART
Y-SEPARATE ILLUSTRATION

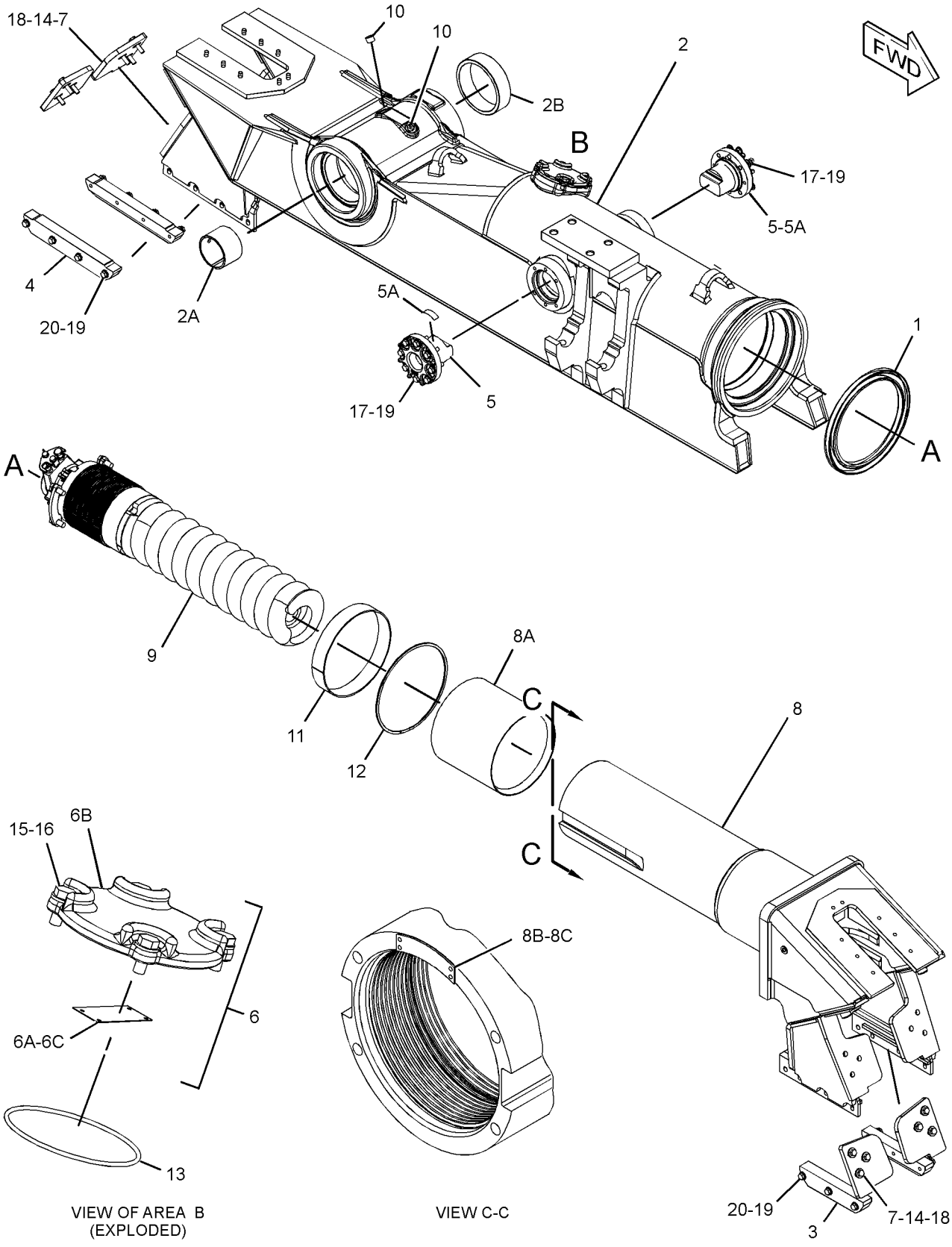

VIEW OF AREA B (EXPLODED)

VIEW C-C

GRAPHIC #1 <END> g01920916

334-0460 FRAME GP-TELESCOPING RECOIL–RH

S/N: S6T1-UP
PART OF 317-4180 UNDERCARRIAGE AR
AN ATTACHMENT

SMCS-4151 i04007430

NOTE	REF NO	GRAPHIC REF	PART NUMBER	QTY	PART NAME 1 2 3 4 5 6 (PRODUCT LEVEL)	SEE PAGE
	1	1	9X-4582	1	SEAL AS	
		1	8T-5071	1	GUARD-SEAL	
	2	1	224-4124	1	FRAME AS (RH)	
	2A	1	221-3197	1	BUSHING	
	2B	1	221-3200	1	BUSHING	
	3	1	260-7733	2	STRIP	
	4	1	261-3257	2	STRIP	
	5	1	268-9709	2	GUIDE AS	
					(EACH INCLUDES)	
	5A	1	241-3720	1	FILM-WARNING (RECOIL SPRING)	
	6	1	268-9710	1	COVER AS	
	6A	1	7B-3028	4	SCREW-DRIVE (NO 4X 3/16-IN)	
	6B	1	8E-1211	1	COVER	
	6C	1	253-1346	1	PLATE-WARNING (HIGH PRESSURE CYLINDER)	
	7	1	282-4017	4	PLATE-SCRAPER	
	8	1	315-7783	1	FRAME AS (FRONT)	
	8A	1	3T-1162	1	BUSHING	
	8B	1	4B-4158	4	SCREW-DRIVE (NO 4X0.25-IN)	
	8C	1	254-1686	1	PLATE-WARNING (RECOIL SPRING)	
Y	9	1	*315-7786*	1	TRACK ADJUSTER & RECOIL GP	390
	10	1	1B-5174	2	PLUG-PIPE	
	11	1	3T-2077	1	BEARING	
	12	1	3W-1852	1	RING-RETAINING	
	13	1	5H-6734	1	SEAL-O-RING	
	14	1	5P-1076	12	WASHER-HARD (13.5X30X4-MM THK)	
	15	1	8T-4121	4	WASHER-HARD (11X21X2.5-MM THK)	
M	16	1	8T-4136	4	BOLT (M10X1.5X25-MM)	
M	17	1	8T-4184	14	BOLT (M12X1.75X45-MM)	
M	18	1	8T-4194	12	BOLT (M12X1.75X50-MM)	
	19	1	8T-4223	28	WASHER-HARD (13.5X25.5X3-MM THK)	
M	20	1	8T-4956	14	BOLT (M12X1.75X35-MM)	

M-METRIC PART
Y-SEPARATE ILLUSTRATION

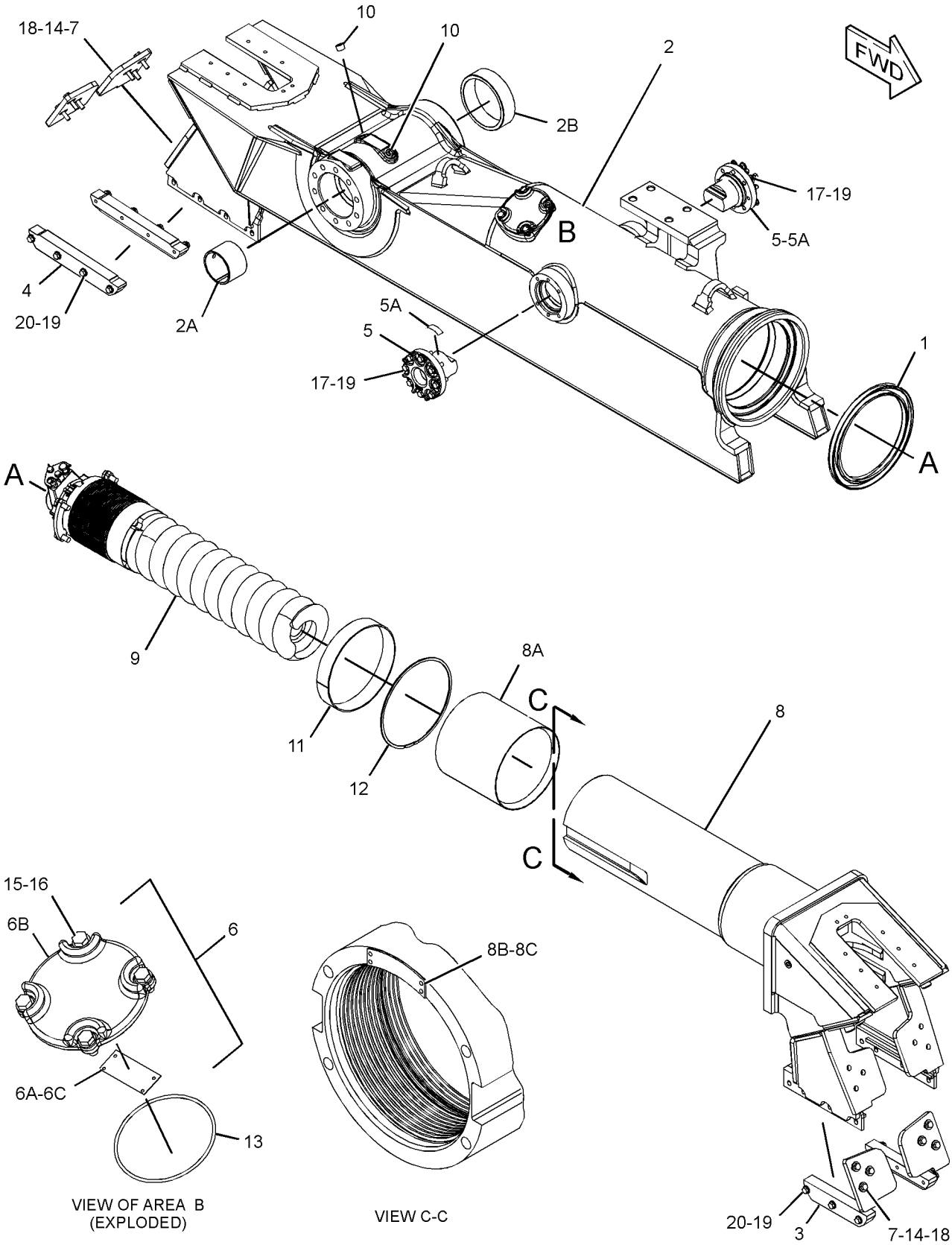

VIEW OF AREA B (EXPLODED)

VIEW C-C

GRAPHIC #1 <END> g01920993

361-7838 FRAME GP-TELESCOPING RECOIL–LH

S/N: S6X1-UP

PART OF 317-1759 UNDERCARRIAGE AR

SMCS-4151 i04009932

NOTE	REF NO	GRAPHIC REF	PART NUMBER	QTY	PART NAME 1 2 3 4 5 6 (PRODUCT LEVEL)	SEE PAGE
	1	1	9X-4582	1	SEAL AS	
Y	2	1	*223-0659*	1	TRACK ADJUSTER & RECOIL GP	388
	3	1	224-4120	1	FRAME AS (FRONT)	
	3A	1	3T-1162	1	BUSHING	
	3B	1	8T-9530	4	TACK-FASTENER	
	3C	1	254-1686	1	PLATE-WARNING (RECOIL SPRING)	
	4	1	335-2351	1	FRAME AS (LH)	
	4A	1	221-3197	1	BUSHING	
	4B	1	221-3200	1	BUSHING	
	5	1	160-4103	2	STRIP	
	6	1	268-9709	2	GUIDE AS	
					(EACH INCLUDES)	
	6A	1	241-3720	1	FILM-WARNING (RECOIL SPRING)	
	7	1	268-9710	1	COVER AS	
	7A	1	7B-3028	4	SCREW-DRIVE (NO 4X 3/16-IN)	
	7B	1	8E-1211	1	COVER	
	7C	1	253-1346	1	PLATE-WARNING (HIGH PRESSURE CYLINDER)	
	8	1	189-3032	2	STRIP	
	9	1	1B-5174	2	PLUG-PIPE	
	10	1	3T-2077	1	BEARING	
	11	1	3W-1852	1	RING-RETAINING	
	12	1	5H-6734	1	SEAL-O-RING	
	13	1	8T-4223	28	WASHER-HARD (13.5X25.5X3-MM THK)	
	14	1	8T-4121	4	WASHER-HARD (11X21X2.5-MM THK)	
M	15	1	8T-4136	4	BOLT (M10X1.5X25-MM)	
M	16	1	8T-4184	12	BOLT (M12X1.75X45-MM)	
M	17	1	8T-4139	16	BOLT (M12X1.75X30-MM)	

M-METRIC PART
Y-SEPARATE ILLUSTRATION

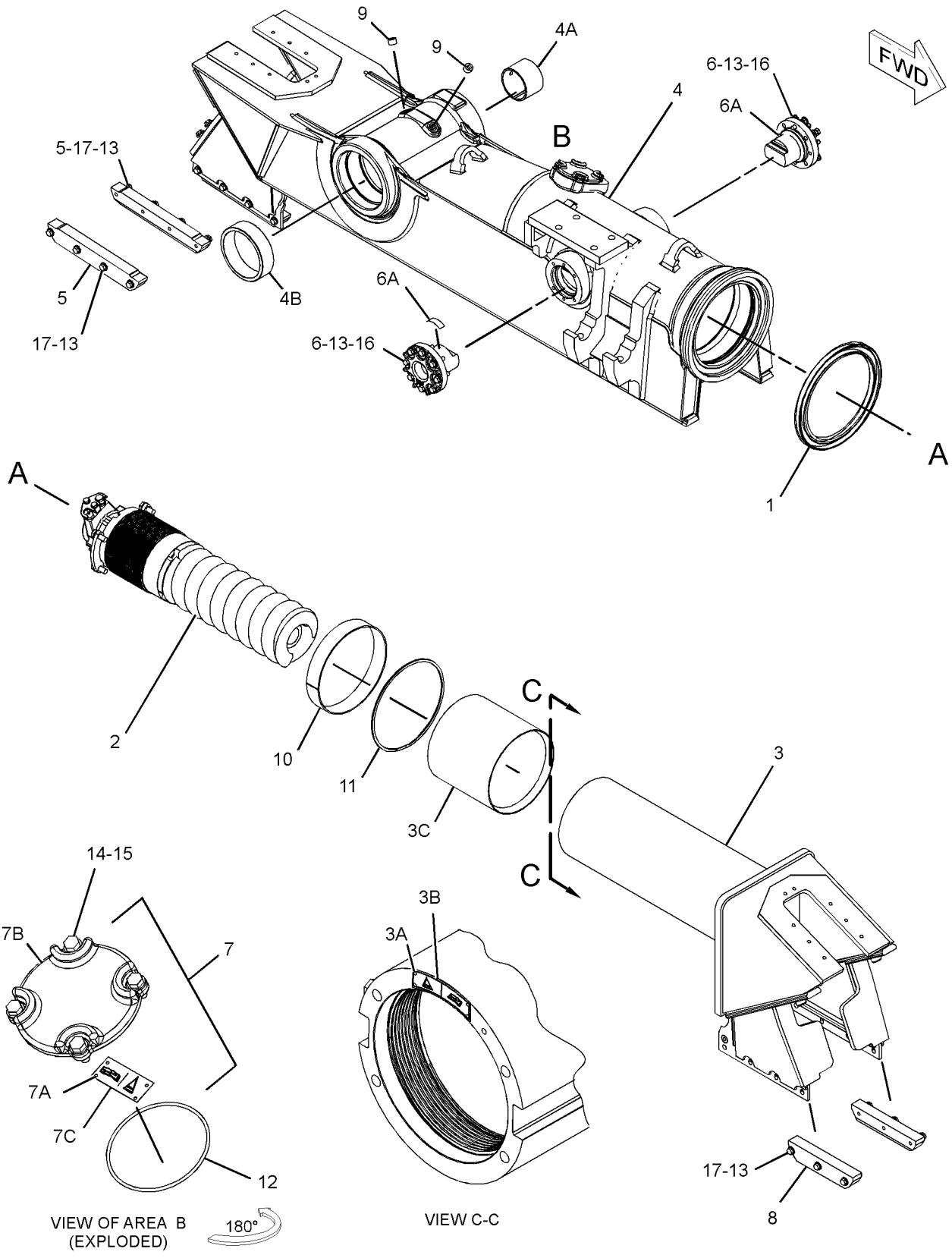

GRAPHIC #1 <END> g02187834

361-7839 FRAME GP-TELESCOPING RECOIL–RH

S/N: S6X1-UP

PART OF 317-1759 UNDERCARRIAGE AR

SMCS-4151 i04009929

NOTE	REF NO	GRAPHIC REF	PART NUMBER	QTY	PART NAME 1 2 3 4 5 6 (PRODUCT LEVEL)	SEE PAGE
	1	1	9X-4582	1	SEAL AS	
Y	2	1	*223-0659*	1	TRACK ADJUSTER & RECOIL GP	388
	3	1	224-4120	1	FRAME AS (FRONT)	
	3A	1	4B-4158	4	SCREW-DRIVE (NO 4X0.25-IN)	
	3B	1	254-1686	1	PLATE-WARNING (RECOIL SPRING)	
	3C	1	3T-1162	1	BUSHING	
	4	1	335-2350	1	FRAME AS (RH)	
	4A	1	221-3197	1	BUSHING	
	4B	1	221-3200	1	BUSHING	
	5	1	160-4103	2	STRIP	
	6	1	268-9709	2	GUIDE AS	
					(EACH INCLUDES)	
	6A	1	241-3720	1	FILM-WARNING (RECOIL SPRING)	
	7	1	268-9710	1	COVER AS	
	7A	1	7B-3028	4	SCREW-DRIVE (NO 4X 3/16-IN)	
	7B	1	8E-1211	1	COVER	
	7C	1	253-1346	1	PLATE-WARNING (HIGH PRESSURE CYLINDER)	
	8	1	189-3032	2	STRIP	
	9	1	1B-5174	2	PLUG-PIPE	
	10	1	3T-2077	1	BEARING	
	11	1	3W-1852	1	RING-RETAINING	
	12	1	5H-6734	1	SEAL-O-RING	
	13	1	8T-4223	28	WASHER-HARD (13.5X25.5X3-MM THK)	
	14	1	8T-4121	4	WASHER-HARD (11X21X2.5-MM THK)	
M	15	1	8T-4136	4	BOLT (M10X1.5X25-MM)	
M	16	1	8T-4184	12	BOLT (M12X1.75X45-MM)	
M	17	1	8T-4139	16	BOLT (M12X1.75X30-MM)	

M-METRIC PART
Y-SEPARATE ILLUSTRATION

361-7839 FRAME GP-TELESCOPING RECOIL ***(contd.)*** i04009929

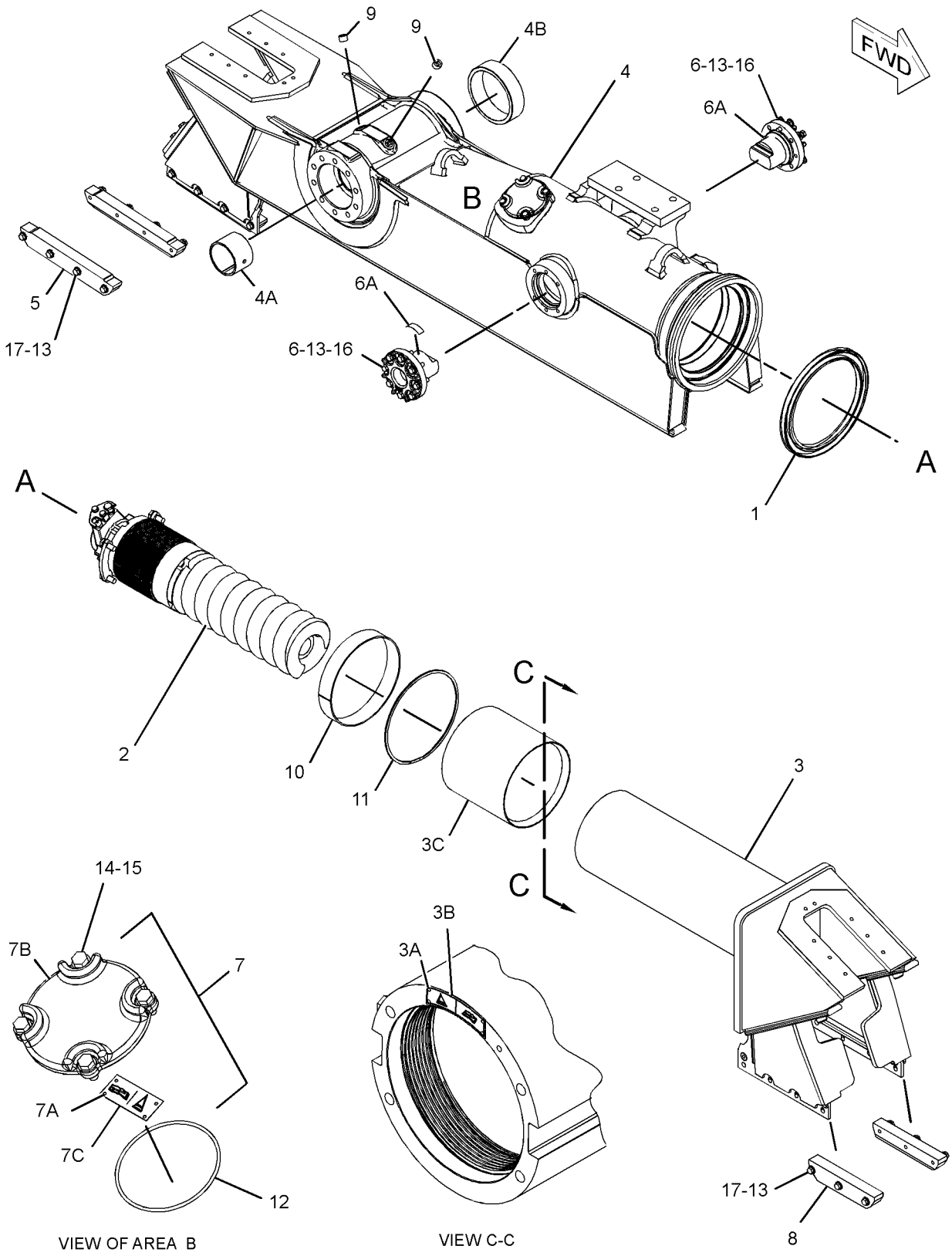

GRAPHIC #1 <END> g02187933

362-1021 FRAME GP-TELESCOPING RECOIL—HEAVY-DUTY, LH

S/N: S6T1-UP

PART OF 317-1760 UNDERCARRIAGE AR

SMCS-4151 i04009611

NOTE	REF NO	GRAPHIC REF	PART NUMBER	QTY	PART NAME 1 2 3 4 5 6 (PRODUCT LEVEL)	SEE PAGE
	1	1	9X-4582	1	SEAL AS	
Y	2	1	*223-0659*	1	TRACK ADJUSTER & RECOIL GP	388
	3	1	189-3032	2	STRIP	
	4	1	279-2570	2	STRIP-WEAR	
	5	1	263-8977	1	FRAME AS (LH)	
	5A	1	221-3197	1	BUSHING	
	5B	1	221-3200	1	BUSHING	
	6	1	263-8978	1	FRAME AS (FRONT)	
	6A	1	3T-1162	1	BUSHING	
	6B	1	4B-4158	4	SCREW-DRIVE (NO 4X0.25-IN)	
	6C	1	254-1686	1	PLATE-WARNING (RECOIL SPRING)	
	7	1	268-9709	2	GUIDE AS	
					(EACH INCLUDES)	
	7A	1	241-3720	1	FILM-WARNING (RECOIL SPRING)	
	8	1	268-9710	1	COVER AS	
	8A	1	7B-3028	4	SCREW-DRIVE (NO 4X 3/16-IN)	
	8B	1	8E-1211	1	COVER	
	8C	1	253-1346	1	PLATE-WARNING (HIGH PRESSURE CYLINDER)	
	9	1	1B-5174	2	PLUG-PIPE	
	10	1	3T-2077	1	BEARING	
	11	1	3W-1852	1	RING-RETAINING	
	12	1	5H-6734	1	SEAL-O-RING	
	13	1	8T-4121	4	WASHER-HARD (11X21X2.5-MM THK)	
M	14	1	8T-4136	4	BOLT (M10X1.5X25-MM)	
M	15	1	8T-4184	12	BOLT (M12X1.75X45-MM)	
	16	1	8T-4223	26	WASHER-HARD (13.5X25.5X3-MM THK)	
M	17	1	8T-4139	14	BOLT (M12X1.75X30-MM)	

M-METRIC PART
Y-SEPARATE ILLUSTRATION

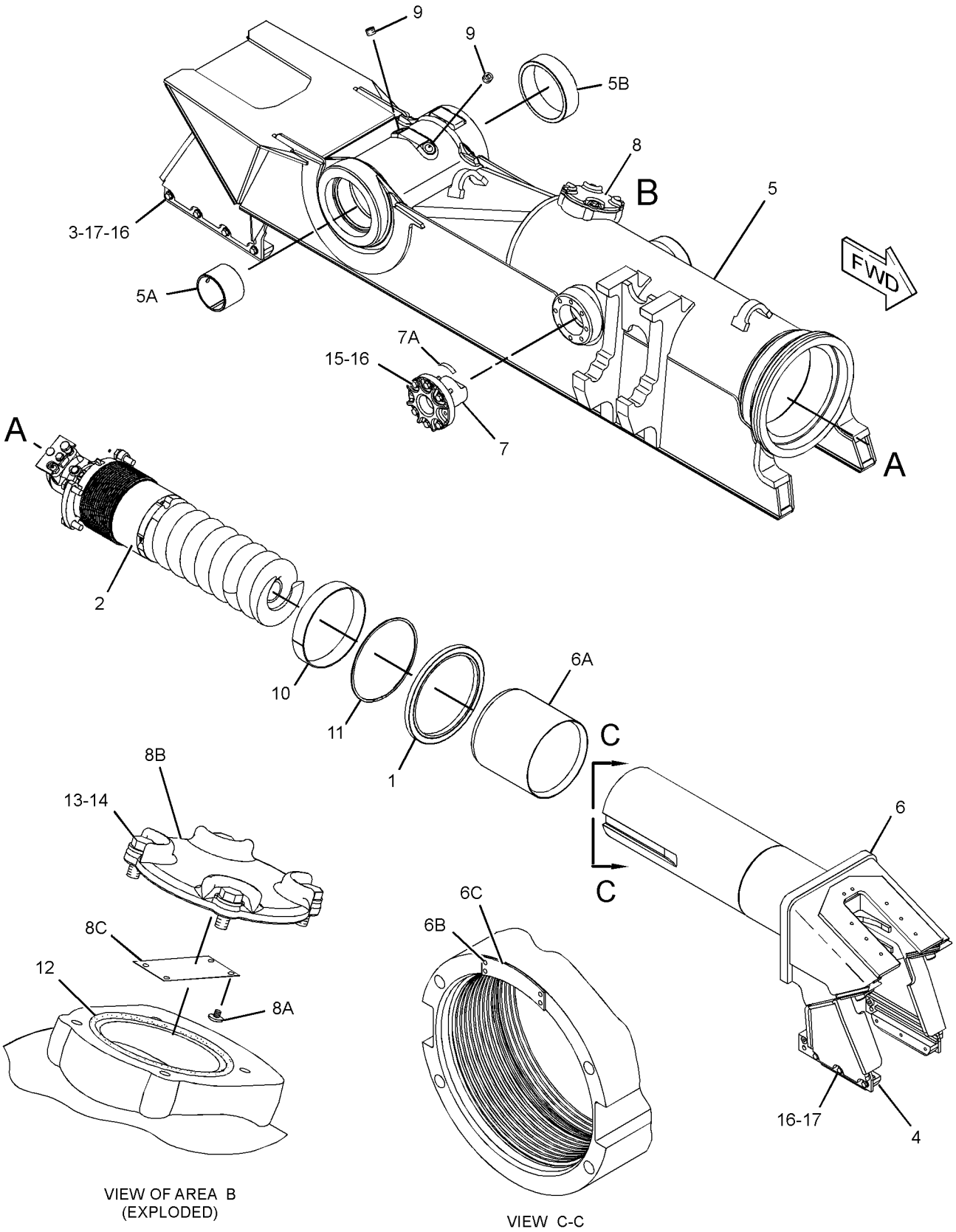

GRAPHIC #1 <END> g01221050

362-1022 FRAME GP-TELESCOPING RECOIL—HEAVY-DUTY, RH

S/N: S6T1-UP

PART OF 317-1760 UNDERCARRIAGE AR

SMCS-4151 i04031056

NOTE	REF NO	GRAPHIC REF	PART NUMBER	QTY	PART NAME 1 2 3 4 5 6 (PRODUCT LEVEL)	SEE PAGE
	1	1	9X-4582	1	SEAL AS	
Y	2	1	*223-0659*	1	TRACK ADJUSTER & RECOIL GP	388
	3	1	189-3032	2	STRIP	
	4	1	279-2570	2	STRIP-WEAR	
	5	1	263-8976	1	FRAME AS (RH)	
	5A	1	221-3197	1	BUSHING	
	5B	1	221-3200	1	BUSHING	
	6	1	263-8978	1	FRAME AS	
	6A	1	3T-1162	1	BUSHING	
	6B	1	4B-4158	4	SCREW-DRIVE (NO 4X0.25-IN)	
	6C	1	254-1686	1	PLATE-WARNING (RECOIL SPRING)	
	7	1	268-9709	2	GUIDE AS	
					(EACH INCLUDES)	
	7A	1	241-3720	1	FILM-WARNING (RECOIL SPRING)	
	8	1	268-9710	1	COVER AS	
	8A	1	7B-3028	4	SCREW-DRIVE (NO 4X 3/16-IN)	
	8B	1	8E-1211	1	COVER	
	8C	1	253-1346	1	PLATE-WARNING (HIGH PRESSURE CYLINDER)	
	9	1	1B-5174	2	PLUG-PIPE	
	10	1	3T-2077	1	BEARING	
	11	1	3W-1852	1	RING-RETAINING	
	12	1	5H-6734	1	SEAL-O-RING	
	13	1	8T-4121	4	WASHER-HARD (11X21X2.5-MM THK)	
M	14	1	8T-4136	4	BOLT (M10X1.5X25-MM)	
M	15	1	8T-4184	12	BOLT (M12X1.75X45-MM)	
	16	1	8T-4223	26	WASHER-HARD (13.5X25.5X3-MM THK)	
M	17	1	8T-4139	14	BOLT (M12X1.75X30-MM)	

M-METRIC PART
Y-SEPARATE ILLUSTRATION

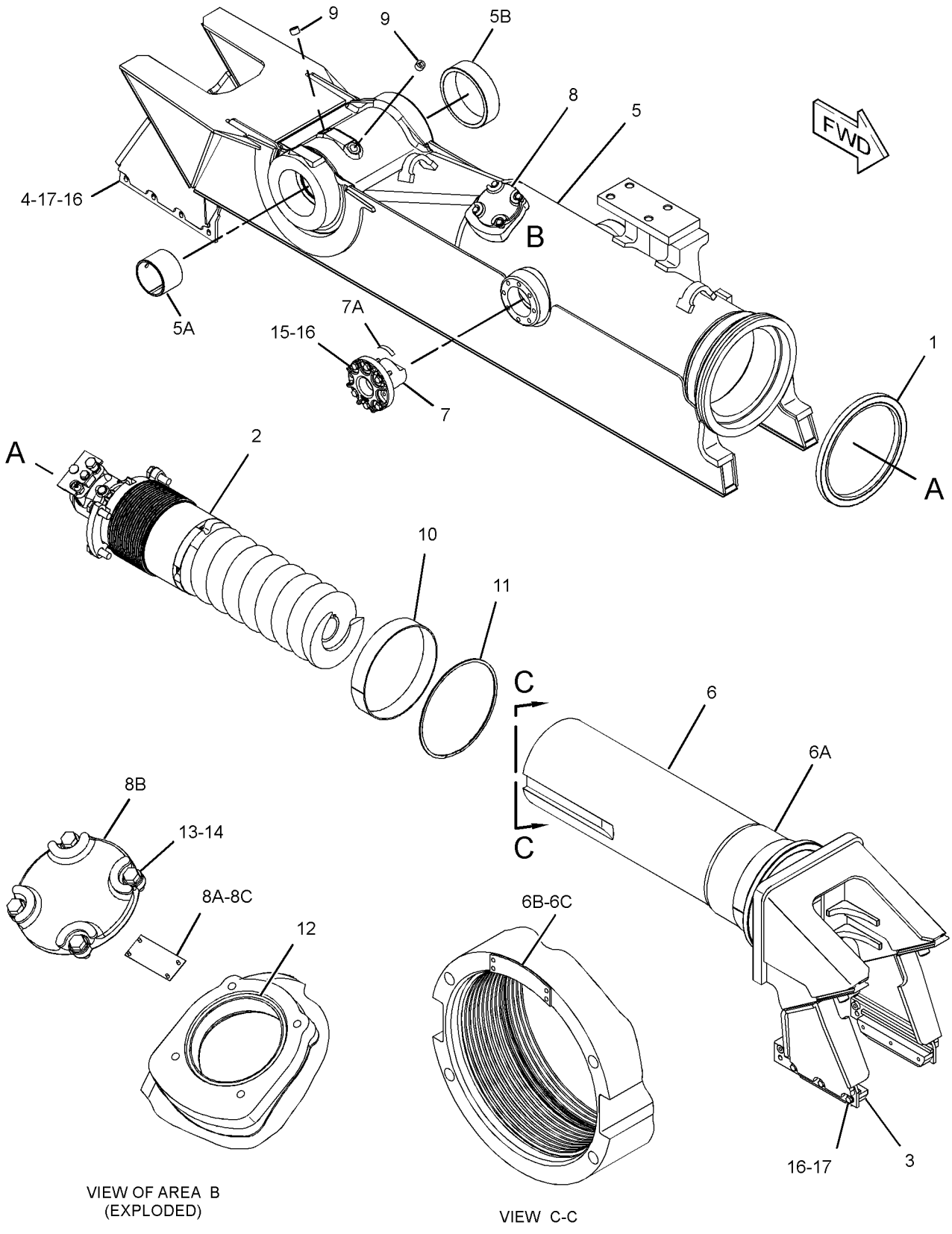

GRAPHIC #1 <END> g01220750

164-0406 GUARD GP-TRACK GUIDE

S/N: S6T1-UP; S6X1-UP; S6Y1-UP
PART OF 203-6415, 203-6440, 278-6374 GUIDING AR-UNDERCARRIAGE, 317-1761 UNDERCARRIAGE AR
ALSO AN ATTACHMENT

SMCS-4177 i03999973

NOTE	REF NO	GRAPHIC REF	PART NUMBER	QTY	PART NAME 1 2 3 4 5 6 (PRODUCT LEVEL)	SEE PAGE
	1	1	166-2287	8	SPACER (22X40X20-MM THK)	
	2	1	268-5945	2	GUARD AS	
M	3	1	8T-4141	8	BOLT (M20X2.5X70-MM)	

QUANTITIES SHOWN ARE THOSE REQUIRED FOR BOTH LH AND RH SIDES
M-METRIC PART

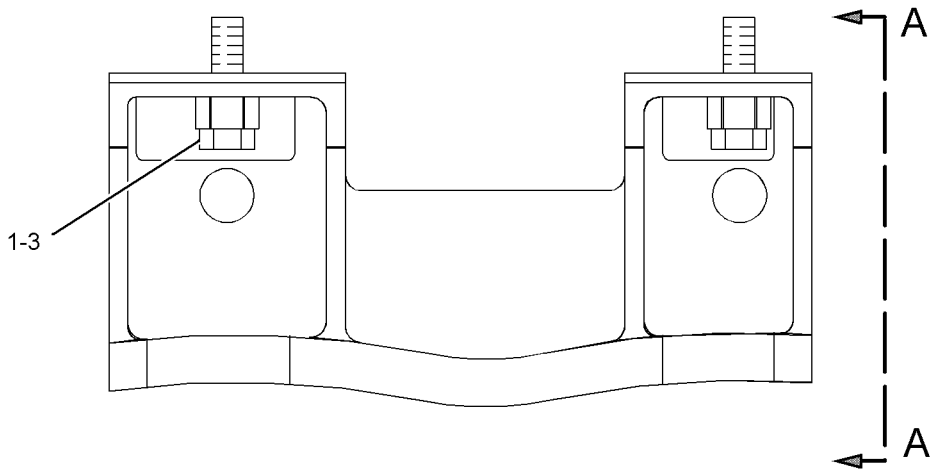

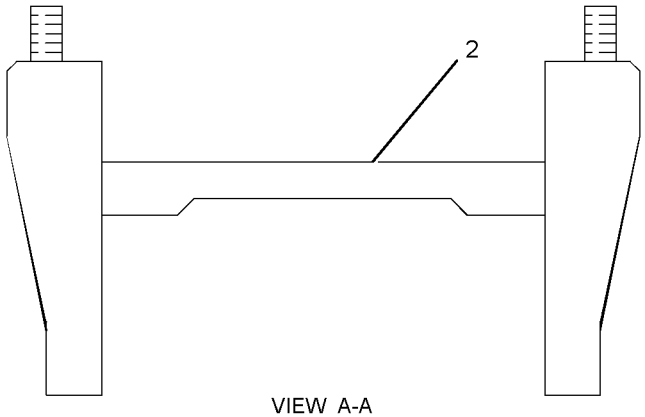

VIEW A-A

GRAPHIC #1 <END> g01210245

206-8836 GUARD GP-TRACK GUIDE—SYSTEMONE

S/N: S6Y1-UP
PART OF 253-0397 GUIDING AR-UNDERCARRIAGE
AN ATTACHMENT

SMCS-4177 i04031076

NOTE	REF NO	GRAPHIC REF	PART NUMBER	QTY	PART NAME 1 2 3 4 5 6 (PRODUCT LEVEL)	SEE PAGE
	1	1	166-2287	8	SPACER (22X40X20-MM THK)	
	2	1	206-8837	2	GUARD AS-TRACK GUIDE	
M	3	1	8T-4141	8	BOLT (M20X2.5X70-MM)	

QUANTITIES SHOWN ARE THOSE REQUIRED FOR BOTH LH AND RH SIDES
M-METRIC PART

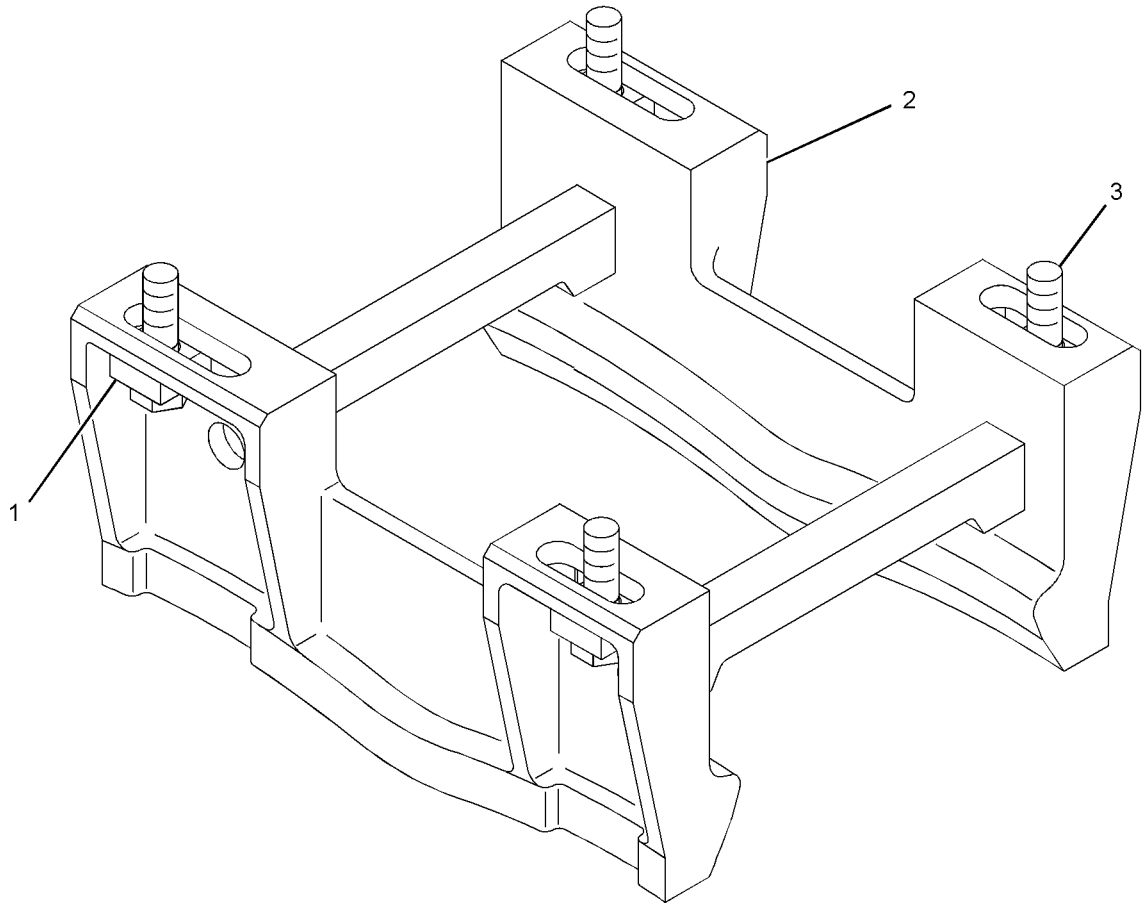

GRAPHIC #1 <END> g01152803

314-3283 GUARD GP-TRACK GUIDE–SYSTEMONE

S/N: S6T1-UP
PART OF 317-4180 UNDERCARRIAGE AR
AN ATTACHMENT

SMCS-4177 i04031074

NOTE	REF NO	GRAPHIC REF	PART NUMBER	QTY	PART NAME 1 2 3 4 5 6 (PRODUCT LEVEL)	SEE PAGE
	1	1	166-2287	16	SPACER (22X40X20-MM THK)	
	2	1	310-4269	4	GUARD AS	
M	3	1	8T-4141	16	BOLT (M20X2.5X70-MM)	

QUANTITIES SHOWN ARE THOSE REQUIRED FOR BOTH LH AND RH SIDES
M-METRIC PART

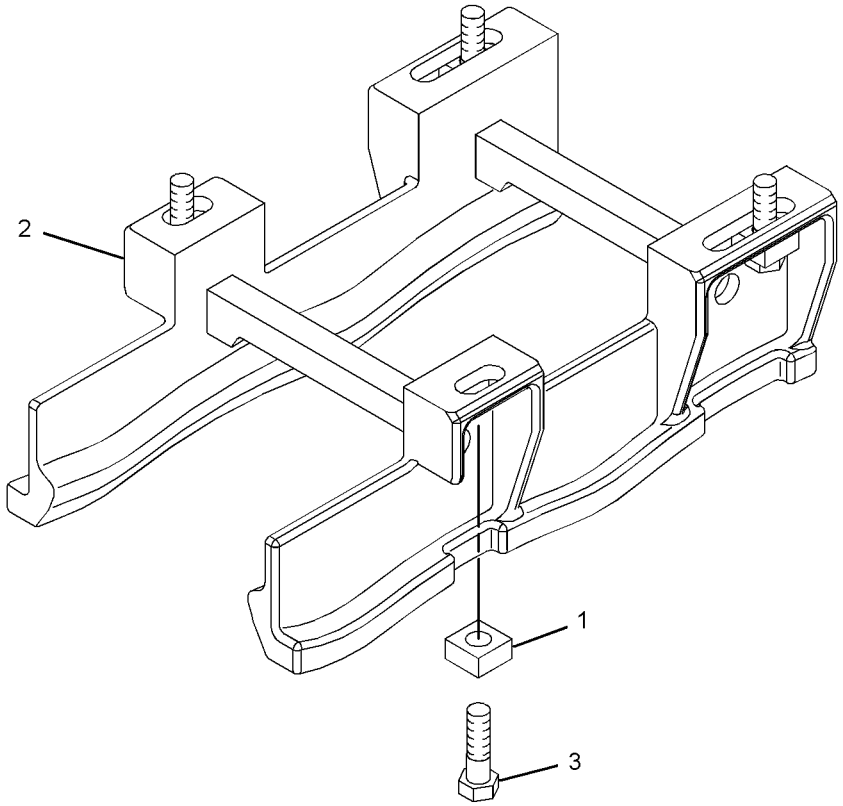

GRAPHIC #1 <END> g01410977

134-5363 GUARD GP-TRACK ROLLER

S/N: S6X1-UP
PART OF 203-6442 GUIDING AR-UNDERCARRIAGE
AN ATTACHMENT

SMCS-7152 i04031075

NOTE	REF NO	GRAPHIC REF	PART NUMBER	QTY	PART NAME 1 2 3 4 5 6 (PRODUCT LEVEL)	SEE PAGE
	1	1	8E-9932	4	PLATE	
	2	1	134-5364	4	GUARD	
					(RH REAR OUTER/RH FRONT INNER/LH FRONT OUTER/LH REAR INNER)	
	3	1	134-5365	4	GUARD	
					(RH REAR INNER/RH FRONT OUTER/LH FRONT INNER/LH REAR OUTER)	
	4	1	134-5366	10	TUBE	
	5	1	134-5368	10	ROD	
	6	1	166-2287	20	SPACER (22X40X20-MM THK)	
M	7	1	7Y-5233	20	LOCKNUT (M24X3-THD)	
M	8	1	8T-4139	4	BOLT (M12X1.75X30-MM)	
M	9	1	8T-4141	20	BOLT (M20X2.5X70-MM)	
	10	1	8T-4167	20	WASHER-HARD (26X44X4-MM THK)	
	11	1	8T-4223	4	WASHER-HARD (13.5X25.5X3-MM THK)	
M	12	1	8T-4956	4	BOLT (M12X1.75X35-MM)	

QUANTITIES SHOWN ARE THOSE REQUIRED FOR BOTH LH AND RH SIDES
M-METRIC PART

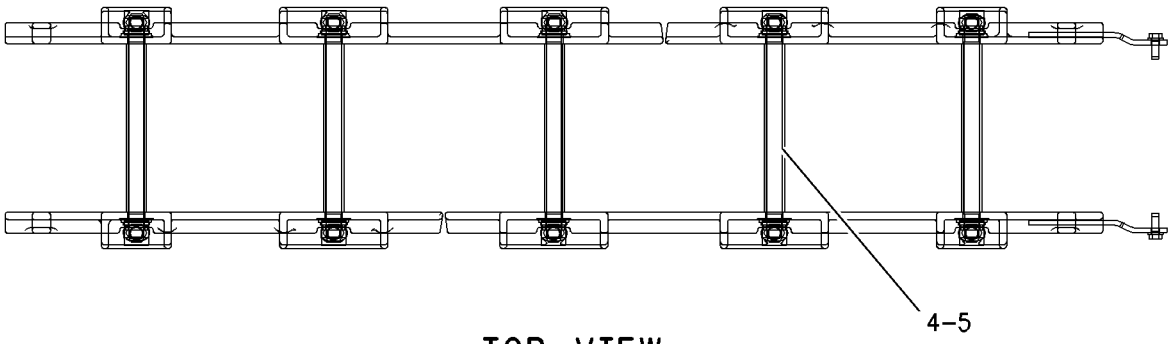

TOP VIEW

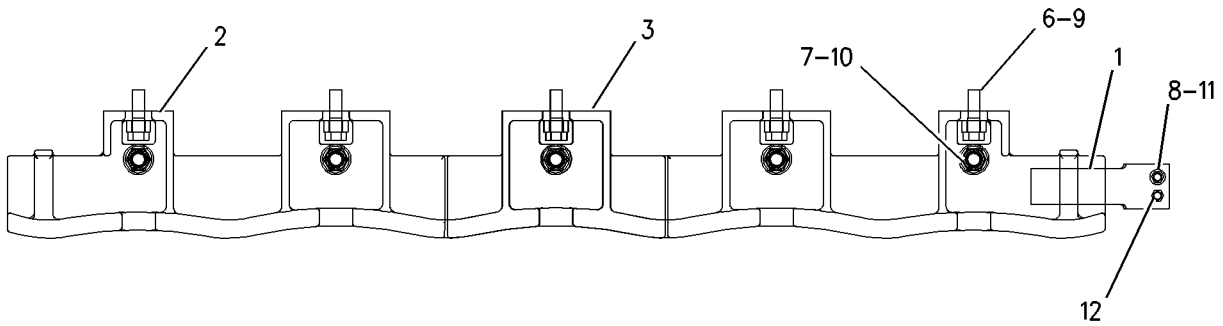

RIGHT SIDE VIEW

GRAPHIC #1 <END> g00650784

134-6402 GUARD GP-TRACK ROLLER

S/N: S6Y1-UP
PART OF 203-6445 GUIDING AR-UNDERCARRIAGE
AN ATTACHMENT

SMCS-7152 i04031078

NOTE	REF NO	GRAPHIC REF	PART NUMBER	QTY	PART NAME 1 2 3 4 5 6 (PRODUCT LEVEL)	SEE PAGE
	1	1	8E-9932	4	PLATE	
	2	1	134-5366	14	TUBE	
	3	1	134-5368	14	ROD	
	4	1	134-6403	4	GUARD	
	5	1	134-6404	4	GUARD	
	6	1	166-2287	28	SPACER (22X40X20-MM THK)	
M	7	1	7Y-5233	28	LOCKNUT (M24X3-THD)	
M	8	1	8T-4139	4	BOLT (M12X1.75X30-MM)	
M	9	1	8T-4141	28	BOLT (M20X2.5X70-MM)	
	10	1	8T-4167	28	WASHER-HARD (26X44X4-MM THK)	
	11	1	8T-4223	4	WASHER-HARD (13.5X25.5X3-MM THK)	
M	12	1	8T-4956	4	BOLT (M12X1.75X35-MM)	

QUANTITIES SHOWN ARE THOSE REQUIRED FOR BOTH LH AND RH SIDES
M-METRIC PART

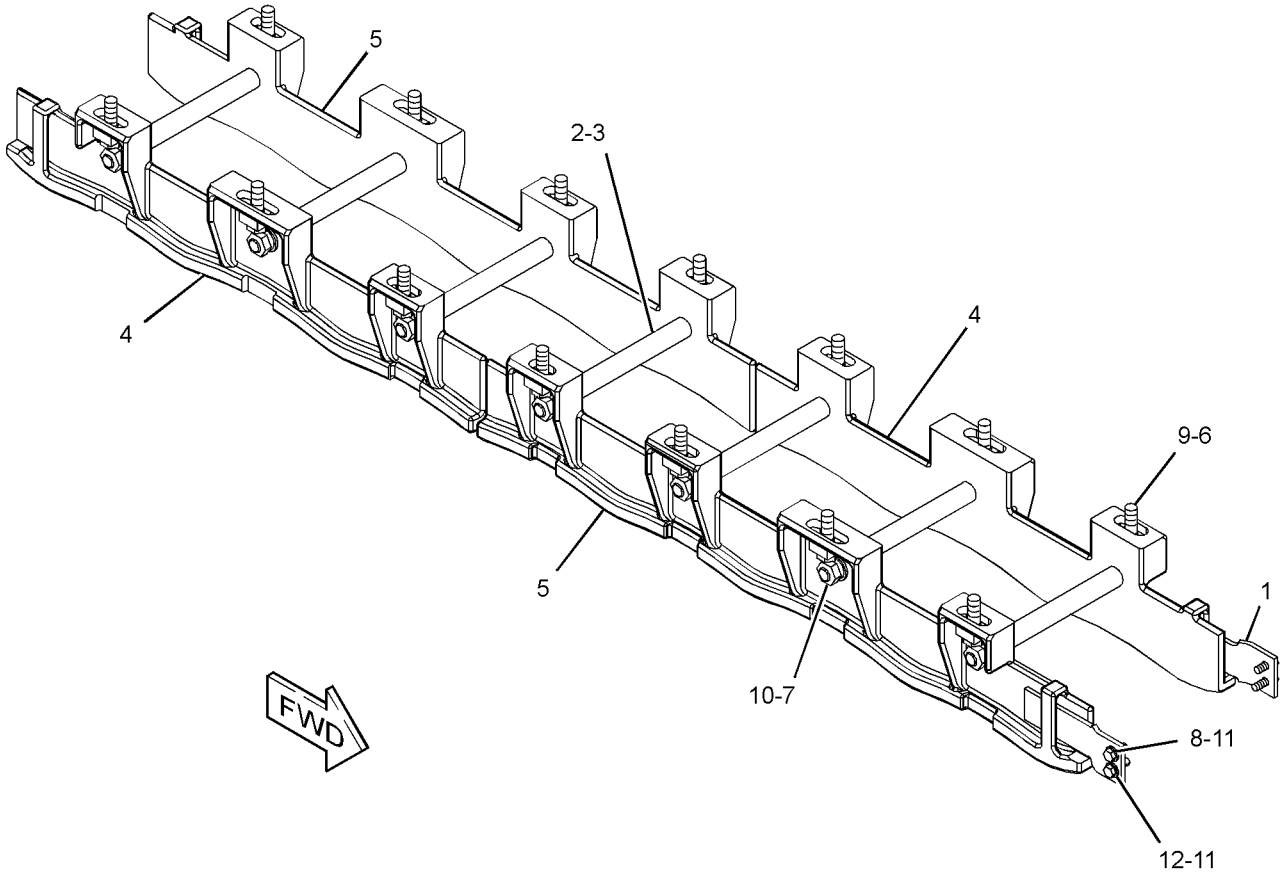

GRAPHIC #1 <END> g02177697

134-9429 GUARD GP-TRACK ROLLER

S/N: S6T1-UP
PART OF 203-6443 GUIDING AR-UNDERCARRIAGE
AN ATTACHMENT

SMCS-7152 i04031080

NOTE	REF NO	GRAPHIC REF	PART NUMBER	QTY	PART NAME 1 2 3 4 5 6 (PRODUCT LEVEL)	SEE PAGE
	1	1	134-5366	12	TUBE	
	2	1	134-5368	12	ROD	
	3	1	134-9431	4	GUARD	
					(RH REAR OUTER, FRONT INNER; LH FRONT OUTER, REAR INNER)	
	4	1	134-9432	4	GUARD	
					(RH REAR INNER, FRONT OUTER; LH FRONT INNER, REAR OUTER)	
	5	1	166-2287	24	SPACER (22X40X20-MM THK)	
M	6	1	7Y-5233	24	LOCKNUT (M24X3-THD)	
M	7	1	8T-4141	24	BOLT (M20X2.5X70-MM)	
	8	1	8T-4167	24	WASHER-HARD (26X44X4-MM THK)	

QUANTITIES SHOWN ARE THOSE REQUIRED FOR BOTH LH AND RH SIDES
M-METRIC PART

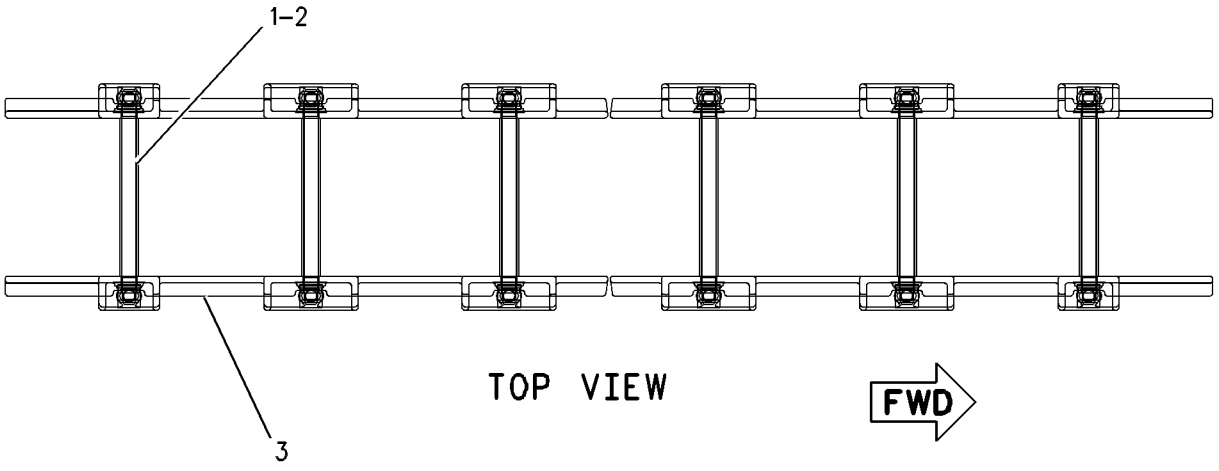

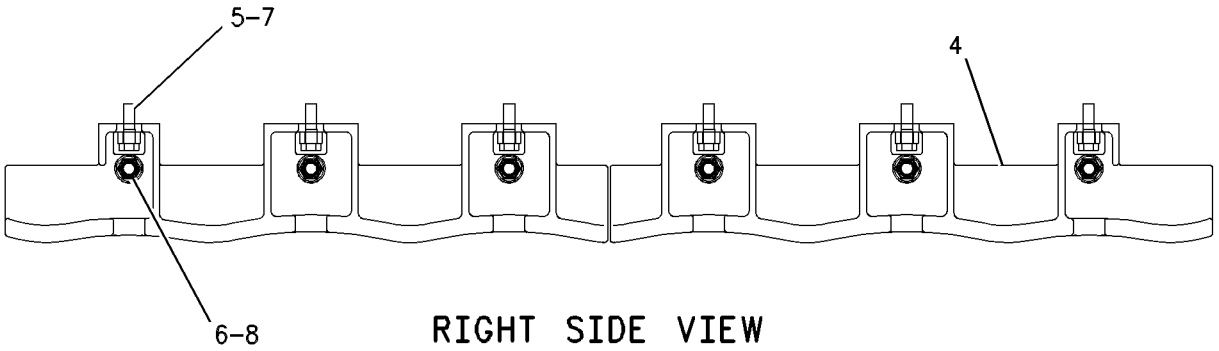

GRAPHIC #1 <END> g00603925

229-9570 GUARD GP-TRACK ROLLER–SYSTEMONE

S/N: S6T1-UP
AN ATTACHMENT

SMCS-7152 i03999923

NOTE	REF NO	GRAPHIC REF	PART NUMBER	QTY	PART NAME 1 2 3 4 5 6 (PRODUCT LEVEL)	SEE PAGE
	1	1	134-5366	12	TUBE	
	2	1	134-5368	12	ROD	
	3	1	166-2287	24	SPACER (22X40X20-MM THK)	
	4	1	229-9558	4	GUARD	
	5	1	229-9559	4	GUARD	
M	6	1	7Y-5233	24	LOCKNUT (M24X3-THD)	
M	7	1	8T-4141	24	BOLT (M20X2.5X70-MM)	
	8	1	8T-4167	24	WASHER-HARD (26X44X4-MM THK)	

QUANTITIES SHOWN ARE THOSE REQUIRED FOR BOTH LH AND RH SIDES
M-METRIC PART

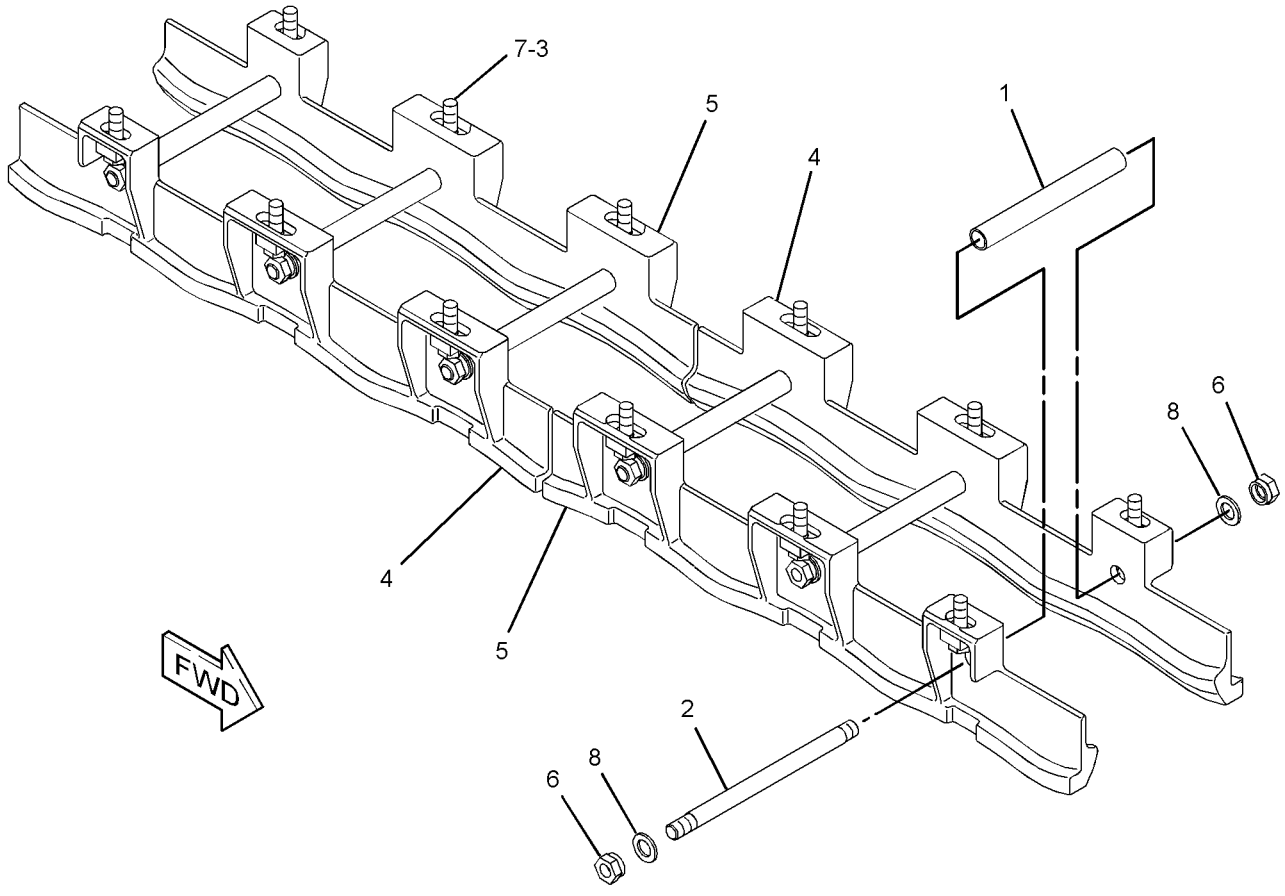

GRAPHIC #1 <END> g01165766

229-9571 GUARD GP-TRACK ROLLER–SYSTEMONE

S/N: S6Y1-UP
AN ATTACHMENT

SMCS-7152 i03999941

NOTE	REF NO	GRAPHIC REF	PART NUMBER	QTY	PART NAME 1 2 3 4 5 6 (PRODUCT LEVEL)	SEE PAGE
	1	1	8E-9932	4	PLATE	
	2	1	134-5366	14	TUBE	
	3	1	134-5368	14	ROD	
	4	1	166-2287	28	SPACER (22X40X20-MM THK)	
	5	1	229-9568	4	GUARD	
	6	1	229-9569	4	GUARD	
M	7	1	7Y-5233	28	LOCKNUT (M24X3-THD)	
M	8	1	8T-4139	4	BOLT (M12X1.75X30-MM)	
M	9	1	8T-4141	28	BOLT (M20X2.5X70-MM)	
	10	1	8T-4167	28	WASHER-HARD (26X44X4-MM THK)	
	11	1	8T-4223	8	WASHER-HARD (13.5X25.5X3-MM THK)	
M	12	1	8T-4184	4	BOLT (M12X1.75X45-MM)	

QUANTITIES SHOWN ARE THOSE REQUIRED FOR BOTH LH AND RH SIDES
M-METRIC PART

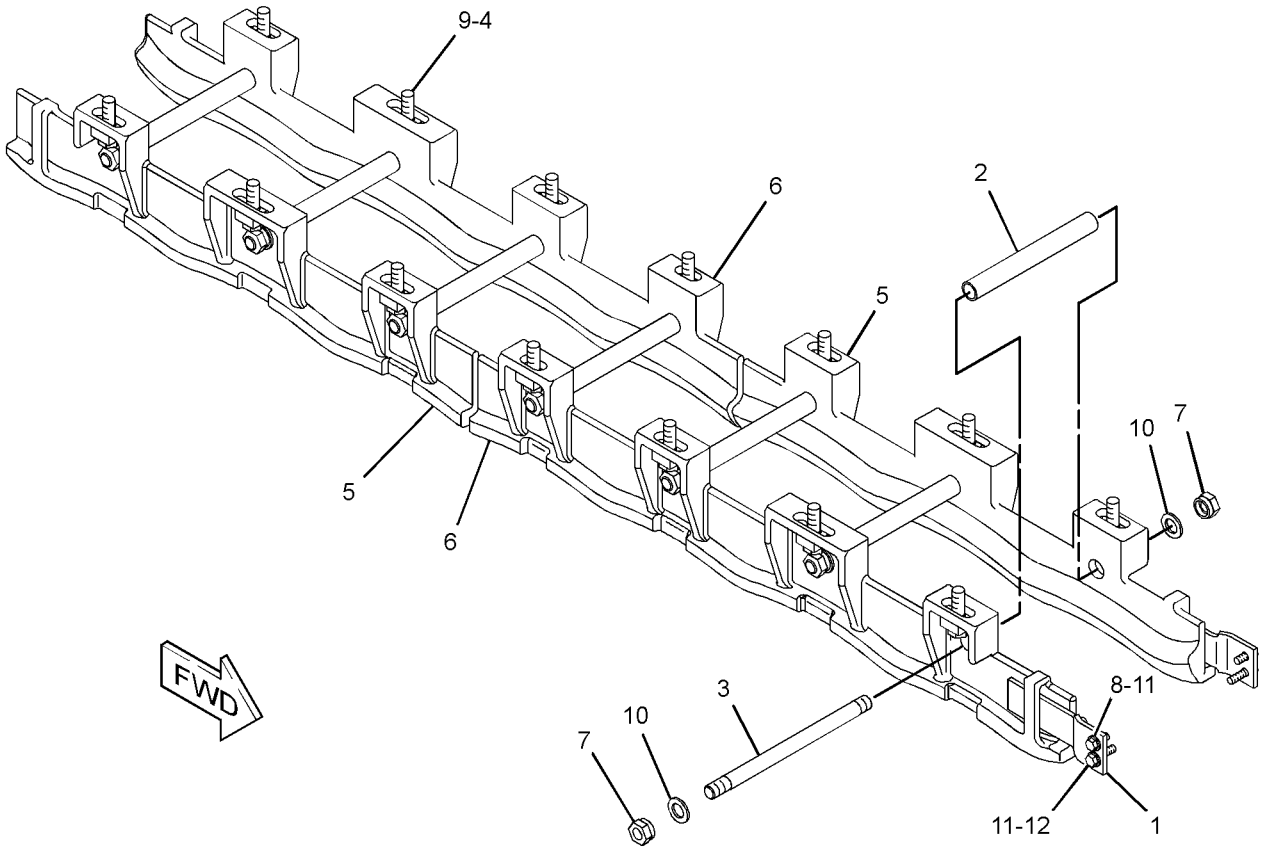

GRAPHIC #1 <END> g01416963

203-6415 GUIDING AR-UNDERCARRIAGE

S/N: S6X1-UP
MODERATE SERVICE
AN ATTACHMENT

SMCS-4150 i04031082

NOTE	PART NUMBER	QTY	PART NAME 1 2 3 4 5 6 (PRODUCT LEVEL)	SEE PAGE
Y	164-0406	2	GUARD GP-TRACK GUIDE	352
Y	*125-4177*	1	ROLLER AR-TRACK	377
Y-SEPARATE ILLUSTRATION				

<END>

203-6440 GUIDING AR-UNDERCARRIAGE

S/N: S6T1-UP
MODERATE SERVICE
AN ATTACHMENT

SMCS-4150 i04000467

NOTE	PART NUMBER	QTY	PART NAME 1 2 3 4 5 6 (PRODUCT LEVEL)	SEE PAGE
Y	164-0406	2	GUARD GP-TRACK GUIDE	352
Y	*125-5533*	1	ROLLER AR-TRACK	377
Y-SEPARATE ILLUSTRATION				

<END>

203-6442 GUIDING AR-UNDERCARRIAGE

S/N: S6X1-UP
HEAVY-DUTY
AN ATTACHMENT

SMCS-4150 i04000482

NOTE	PART NUMBER	QTY	PART NAME 1 2 3 4 5 6 (PRODUCT LEVEL)	SEE PAGE
Y	134-5363	1	GUARD GP-TRACK ROLLER	355
Y	*125-4177*	1	ROLLER AR-TRACK	377
Y-SEPARATE ILLUSTRATION				

<END>

203-6443 GUIDING AR-UNDERCARRIAGE

S/N: S6T1-UP
HEAVY-DUTY
AN ATTACHMENT

SMCS-4150 i04000498

NOTE	PART NUMBER	QTY	PART NAME 1 2 3 4 5 6 (PRODUCT LEVEL)	SEE PAGE
Y	134-9429	1	GUARD GP-TRACK ROLLER	357
Y	*125-5533*	1	ROLLER AR-TRACK	377
Y-SEPARATE ILLUSTRATION				

<END>

203-6445 GUIDING AR-UNDERCARRIAGE

S/N: S6Y1-UP
HEAVY-DUTY
AN ATTACHMENT

SMCS-4150 i04000676

NOTE	PART NUMBER	QTY	PART NAME 1 2 3 4 5 6 (PRODUCT LEVEL)	SEE PAGE
Y	134-6402	1	GUARD GP-TRACK ROLLER	356
Y	*125-5534*	1	ROLLER AR-TRACK	377
Y-SEPARATE ILLUSTRATION				

<END>

253-0397 GUIDING AR-UNDERCARRIAGE—SYSTEMONE

S/N: S6Y1-UP
MODERATE SERVICE
PART OF 317-4181 UNDERCARRIAGE AR
AN ATTACHMENT

SMCS-4150 i04016160

NOTE	PART NUMBER	QTY	PART NAME 1 2 3 4 5 6 (PRODUCT LEVEL)	SEE PAGE
Y	*206-8836*	2	GUARD GP-TRACK GUIDE (SYSTEMONE)	353
Y-SEPARATE ILLUSTRATION				

<END>

278-6374 GUIDING AR-UNDERCARRIAGE

S/N: S6Y1-UP
MODERATE SERVICE
AN ATTACHMENT

SMCS-4150 i04000766

NOTE	PART NUMBER	QTY	PART NAME 1 2 3 4 5 6 (PRODUCT LEVEL)	SEE PAGE
Y	164-0406	2	GUARD GP-TRACK GUIDE	352
Y	*125-5534*	1	ROLLER AR-TRACK	377
Y-SEPARATE ILLUSTRATION				

<END>

227-8715 IDLER GP-FRONT—SYSTEMONE

S/N: S6T1-UP; S6Y1-UP
PART OF 317-4180, 317-4181 UNDERCARRIAGE AR
AN ATTACHMENT

SMCS-4159 i04007235

NOTE	PART NUMBER	QTY	PART NAME 1 2 3 4 5 6 (PRODUCT LEVEL)	SEE PAGE
Y	323-1170	1	IDLER GP-TRACK	364
Y-SEPARATE ILLUSTRATION				

<END>

UNDERCARRIAGE

202-4296 IDLER GP-TRACK

S/N: S6Y1-UP

PART OF 317-1761 UNDERCARRIAGE AR

SMCS-4159 i04001144

NOTE	REF NO	GRAPHIC REF	PART NUMBER	QTY	PART NAME 1 2 3 4 5 6 (PRODUCT LEVEL)	SEE PAGE
	1	1	2H-3928	2	SEAL-O-RING	
	2	1	7J-2036	2	SEAL-O-RING	
	3	1	*8E-2139*	1	STOP AS	
	3A	1	6Y-0473	1	PLUG-CLEAR	
	3B	1	9G-5664	1	STOPPER-RUBBER	
	4	1	106-7691	2	WASHER-THRUST (86X113.93X4.52-MM THK)	
	5	1	107-3945	2	COLLAR-SEAL	
	6	1	149-2494	1	SHAFT-TRACK IDLER	
	7	1	149-2495	2	RETAINER	
	8	1	162-7862	2	SEAL GP-DUO-CONE	
					(EACH INCLUDES)	
		1	162-2166	2	RING-TORIC	
	9	1	202-4295	1	IDLER & BEARING AS	
		1	9P-2245	2	BUSHING	
	10	1	1T-0765	24	BOLT (3/8-16X1-IN)	
	11	1	5M-2894	24	WASHER-HARD (10.2X18.5X2.5-MM THK)	

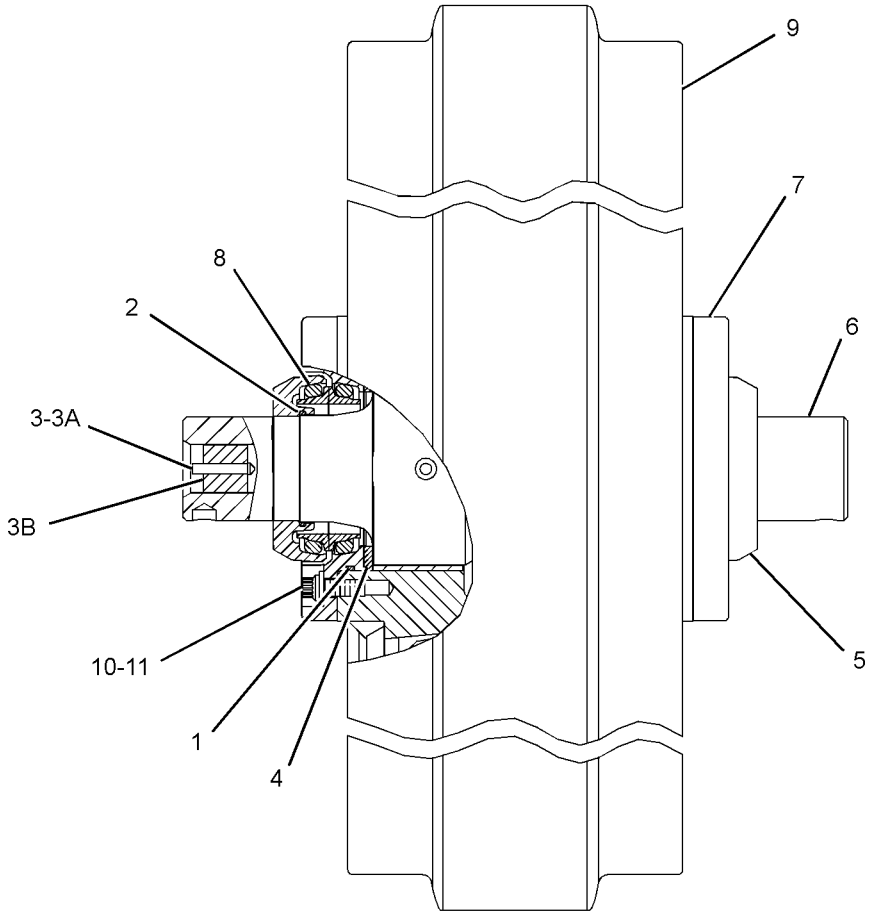

GRAPHIC #1 <END> g02178257

202-4304 IDLER GP-TRACK

S/N: S6T1-UP; S6X1-UP

PART OF 317-1759, 317-1760 UNDERCARRIAGE AR

SMCS-4159 i03990449

NOTE	REF NO	GRAPHIC REF	PART NUMBER	QTY	PART NAME 1 2 3 4 5 6 (PRODUCT LEVEL)	SEE PAGE
	1	1	2H-3928	2	SEAL-O-RING	
	2	1	202-4303	1	IDLER & BEARING AS	
		1	9P-2245	2	BUSHING	
	3	1	7J-2036	2	SEAL-O-RING	
	4	1	*8E-2139*	1	STOP AS	
		1	6Y-0473	1	PLUG-CLEAR	
		1	9G-5664	1	STOPPER-RUBBER	
	5	1	106-7691	2	WASHER-THRUST (86X113.93X4.52-MM THK)	
	6	1	107-3945	2	COLLAR-SEAL	
	7	1	149-2494	1	SHAFT-TRACK IDLER	
	8	1	149-2495	2	RETAINER	
	9	1	162-7862	2	SEAL GP-DUO-CONE	
					(EACH INCLUDES)	
		1	162-2166	2	RING-TORIC	
	10	1	1T-0765	24	BOLT (3/8-16X1-IN)	
	11	1	5M-2894	24	WASHER-HARD (10.2X18.5X2.5-MM THK)	

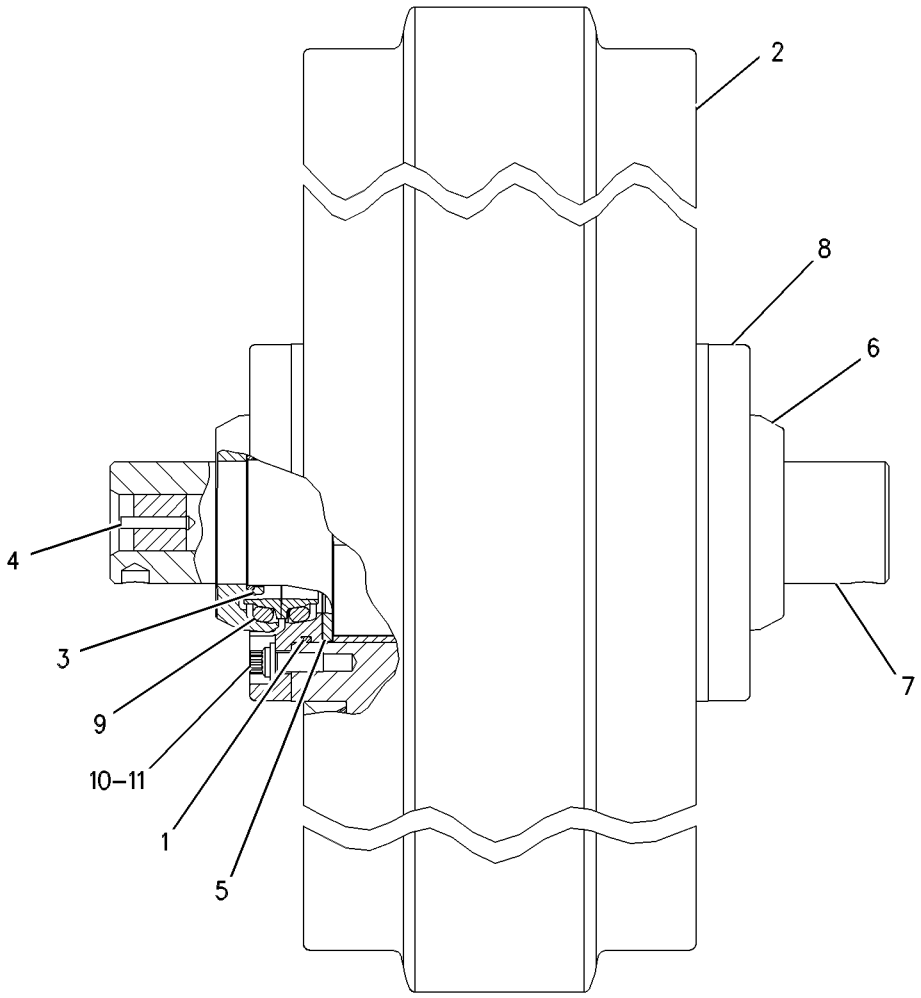

GRAPHIC #1 <END> g00579901

323-1170 IDLER GP-TRACK–SYSTEMONE

S/N: S6T1-UP; S6Y1-UP
PART OF 227-8715 IDLER GP-FRONT
AN ATTACHMENT

SMCS-4159 i04007195

NOTE	REF NO	GRAPHIC REF	PART NUMBER	QTY	PART NAME 1 2 3 4 5 6 (PRODUCT LEVEL)	SEE PAGE
	1	1	2H-3928	2	SEAL-O-RING	
	2	1	7J-2036	2	SEAL-O-RING	
	3	1	6Y-0473	1	PLUG-CLEAR	
	3A	1	9G-5664	1	STOPPER-RUBBER	
	4	1	106-7691	2	WASHER-THRUST (86X113.93X4.52-MM THK)	
	5	1	149-2494	1	SHAFT-TRACK IDLER	
	6	1	149-2495	2	RETAINER	
	7	1	162-7862	2	SEAL GP-DUO-CONE	
					(EACH INCLUDES)	
	7A	1	162-2166	2	RING-TORIC	
	8	1	323-1171	1	IDLER & BEARING AS	
	8A	1	9P-2245	2	BUSHING	
	9	1	107-3945	2	COLLAR-SEAL	
	10	1	1T-0765	24	BOLT (3/8-16X1-IN)	
	11	1	5M-2894	24	WASHER-HARD (10.2X18.5X2.5-MM THK)	
					PARTS SHOWN IN GRAPHIC(S) WITHOUT A REFERENCE NUMBER ARE NOT SERVICED SEPARATELY	

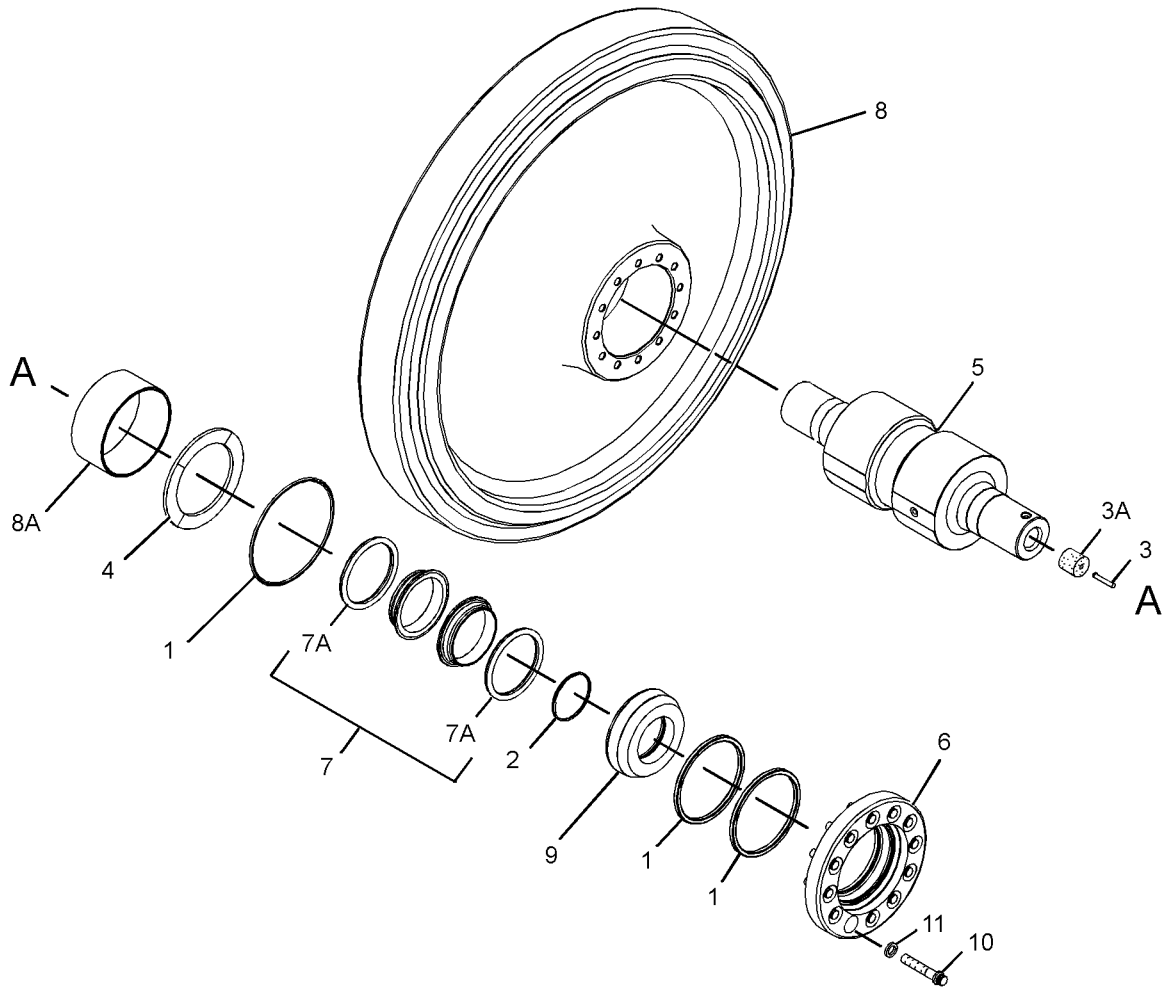

GRAPHIC #1 <END> g02025149

6I-9668 LINK AS-TRACK

S/N: S6X1-UP
SEALED, LUBRICATED, HEAVY-DUTY
PART OF 6I-9641, 6I-9642, 6I-9644 TRACK GP
ALSO AN ATTACHMENT

SMCS-4169, 4171 i04001213

NOTE	REF NO	GRAPHIC REF	PART NUMBER	QTY	PART NAME 1 2 3 4 5 6 (PRODUCT LEVEL)	SEE PAGE
	1	1	8E-7406	38	LINK-TRACK (LH)	
	2	1	8E-7405	38	LINK-TRACK (RH)	
	3	1	8E-7410	1	LINK-TRACK MASTER (BUSHING END, LH)	
	4	1	8E-7409	1	LINK-TRACK MASTER (BUSHING END, RH)	
	5	1	8E-7407	1	LINK-TRACK MASTER (PIN END, RH)	
	6	1	8E-7408	1	LINK-TRACK MASTER (PIN END, LH)	
	7	1	152-8071	78	RING-THRUST	
	8	1	207-0544	78	SEAL AS	
	9	1	8E-7222	39	BUSHING-TRACK	
	10	1	160-7820	39	PIN-TRACK	
	11	1	*6Y-1198*	39	STOP AS	
					(EACH INCLUDES)	
		1	5G-2247	1	STOPPER-RUBBER	
		1	6Y-0473	1	PLUG-CLEAR	

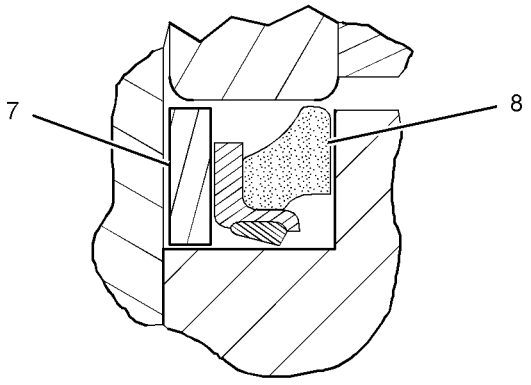

VIEW OF AREA A

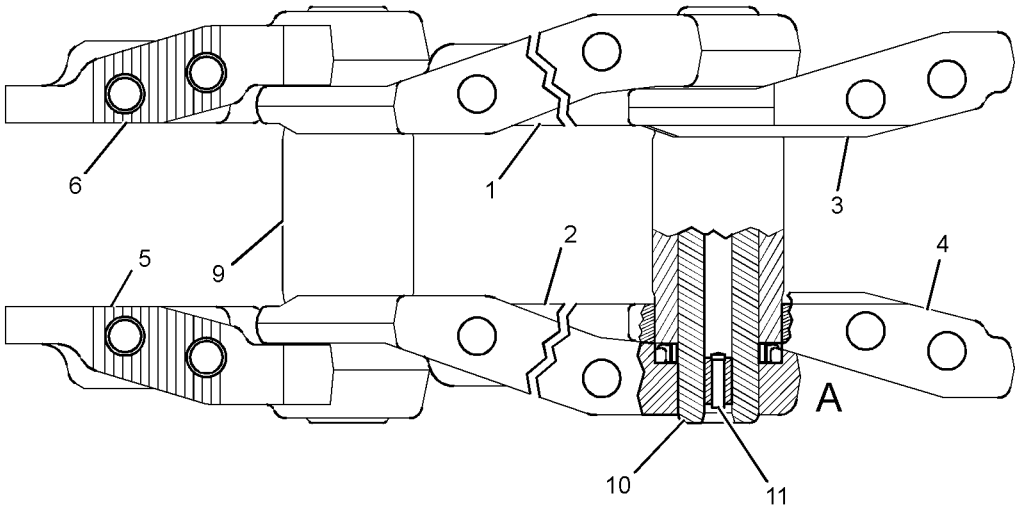

GRAPHIC #1 <END> g01184375

6I-9671 LINK AS-TRACK

S/N: S6T1-UP
SEALED, LUBRICATED, HEAVY-DUTY
PART OF 6I-9653, 6I-9654, 6I-9656 TRACK GP
ALSO AN ATTACHMENT

SMCS-4169, 4171 i04003960

NOTE	REF NO	GRAPHIC REF	PART NUMBER	QTY	PART NAME 1 2 3 4 5 6 (PRODUCT LEVEL)	SEE PAGE
	1	1	6Y-0473	41	PLUG-CLEAR	
	2	1	5G-2247	41	STOPPER-RUBBER	
	3	1	207-0544	82	SEAL AS	
	4	1	8E-7407	1	LINK-TRACK MASTER (PIN END, RH)	
	5	1	8E-7408	1	LINK-TRACK MASTER (PIN END, LH)	
	6	1	8E-7410	1	LINK-TRACK MASTER (BUSHING END, LH)	
	7	1	8E-7409	1	LINK-TRACK MASTER (BUSHING END, RH)	
	8	1	160-7820	41	PIN-TRACK	
	9	1	8E-7222	41	BUSHING-TRACK	
	10	1	8E-7406	40	LINK-TRACK (LH)	
	11	1	8E-7405	40	LINK-TRACK (RH)	
	12	1	152-8071	82	RING-THRUST	

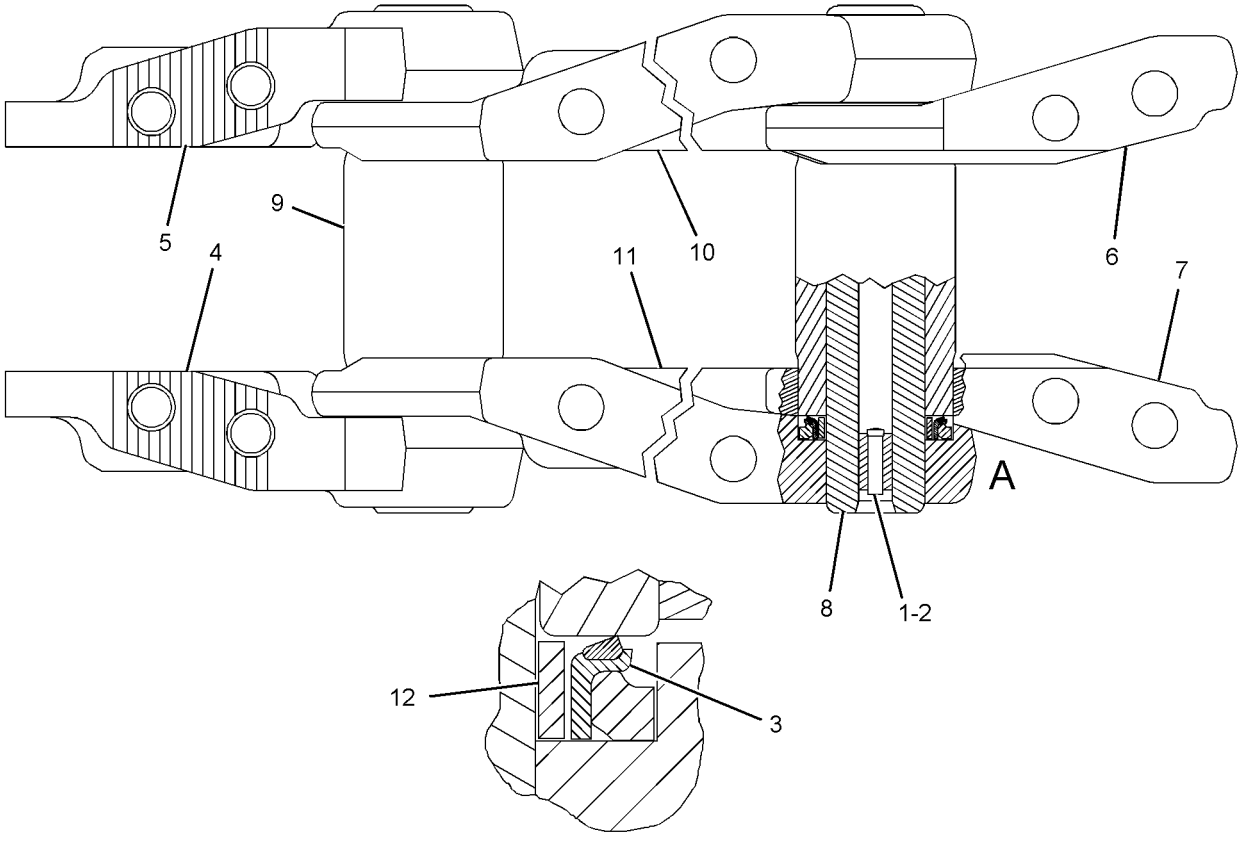

VIEW OF AREA A

GRAPHIC #1 <END> g01120635

8E-9037 LINK AS-TRACK

S/N: S6Y1-UP
SEALED, LUBRICATED, HEAVY-DUTY
PART OF 8E-9039, 8E-9040 TRACK GP
ALSO AN ATTACHMENT

SMCS-4169, 4171 i04008107

NOTE	REF NO	GRAPHIC REF	PART NUMBER	QTY	PART NAME 1 2 3 4 5 6 (PRODUCT LEVEL)	SEE PAGE
	1	1	8E-7410	1	LINK-TRACK MASTER (BUSHING END, LH)	
	2	1	8E-7222	45	BUSHING-TRACK	
	3	1	8E-7409	1	LINK-TRACK MASTER (BUSHING END, RH)	
	4	1	8E-7405	44	LINK-TRACK (RH)	
	5	1	160-7820	45	PIN-TRACK	
	6	1	207-0544	90	SEAL AS	
	7	1	*6Y-1198*	45	STOP AS	
					(EACH INCLUDES)	
		1	6Y-0473	1	PLUG-CLEAR	
		1	5G-2247	1	STOPPER-RUBBER	
	8	1	152-8071	90	RING-THRUST	
	9	1	8E-7407	1	LINK-TRACK MASTER (PIN END, RH)	
	10	1	8E-7406	44	LINK-TRACK (LH)	
	11	1	8E-7408	1	LINK-TRACK MASTER (PIN END, LH)	

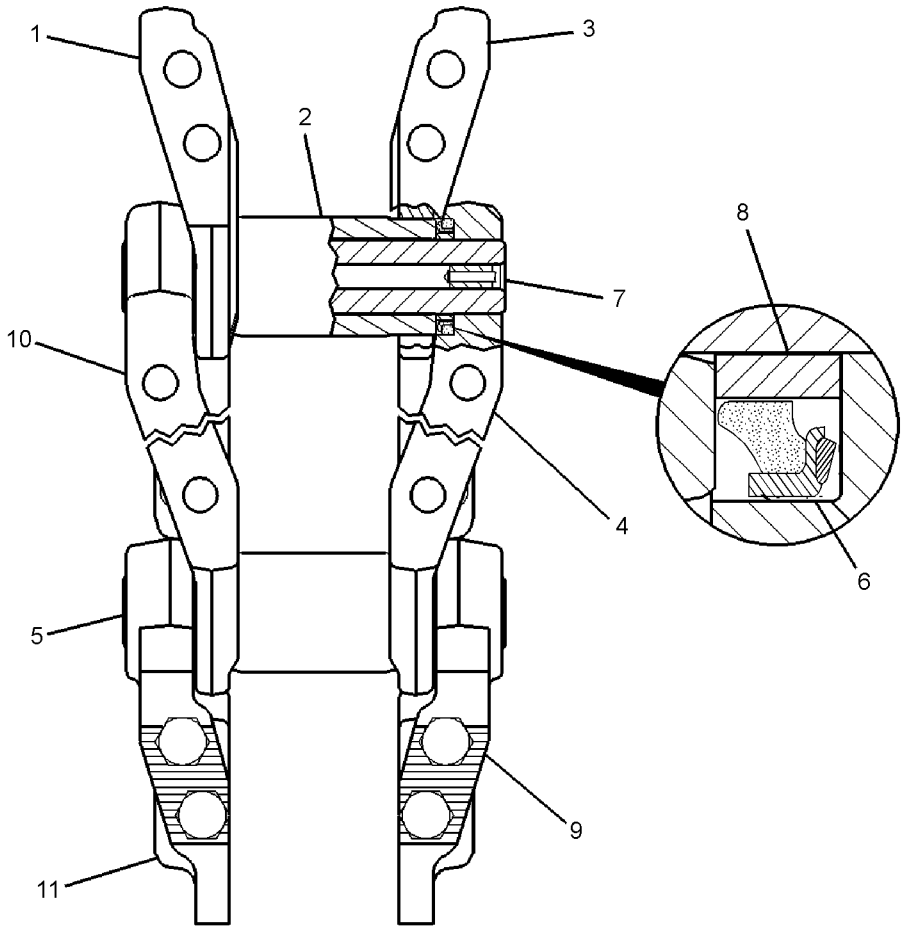

GRAPHIC #1 <END> g01184551

351-0957 LINK AS-TRACK–SYSTEMONE

S/N: S6Y1-UP
45-JOINTS. SEALED, LUBRICATED
PART OF 246-5220 TRACK GP
FOR USE WITH SYSTEMONE ROLLERS, GUARDS, GUIDESTRIPS, SHOES
AN ATTACHMENT

SMCS-4169, 4171 i04031084

NOTE	REF NO	GRAPHIC REF	PART NUMBER	QTY	PART NAME 1 2 3 4 5 6 (PRODUCT LEVEL)	SEE PAGE
	1	1	234-9699	42	LINK-TRACK	
Y	2	1	351-0955	21	LINK AS-TRACK BOX (LINK BOX)	370
Y	3	1	351-0956	1	LINK AS-TRACK BOX (LINK BOX, OFFSET)	371

Y-SEPARATE ILLUSTRATION

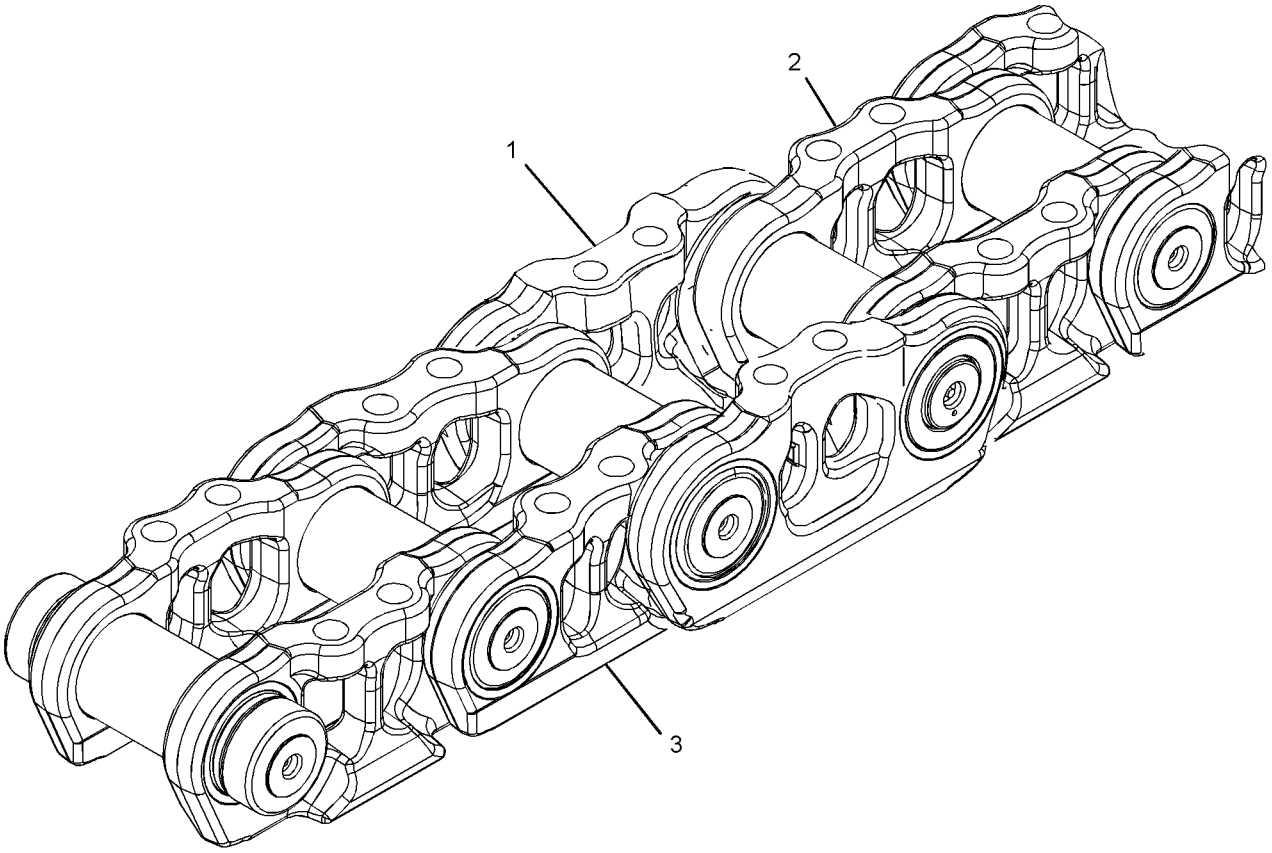

GRAPHIC #1 <END> g01793333

351-0958 LINK AS-TRACK–SYSTEMONE

S/N: S6T1-UP
41-JOINTS. SEALED, LUBRICATED
PART OF 246-5216, 246-5218 TRACK GP
FOR USE WITH SYSTEMONE ROLLERS, GUARDS, GUIDESTRIPS, SHOES
AN ATTACHMENT

SMCS-4169, 4171 i04032966

NOTE	REF NO	GRAPHIC REF	PART NUMBER	QTY	PART NAME 1 2 3 4 5 6 (PRODUCT LEVEL)	SEE PAGE
	1	1	234-9699	38	LINK-TRACK	
Y	2	1	351-0955	19	LINK AS-TRACK BOX (LINK BOX)	370
Y	3	1	351-0956	1	LINK AS-TRACK BOX (LINK BOX, OFFSET)	371

Y-SEPARATE ILLUSTRATION

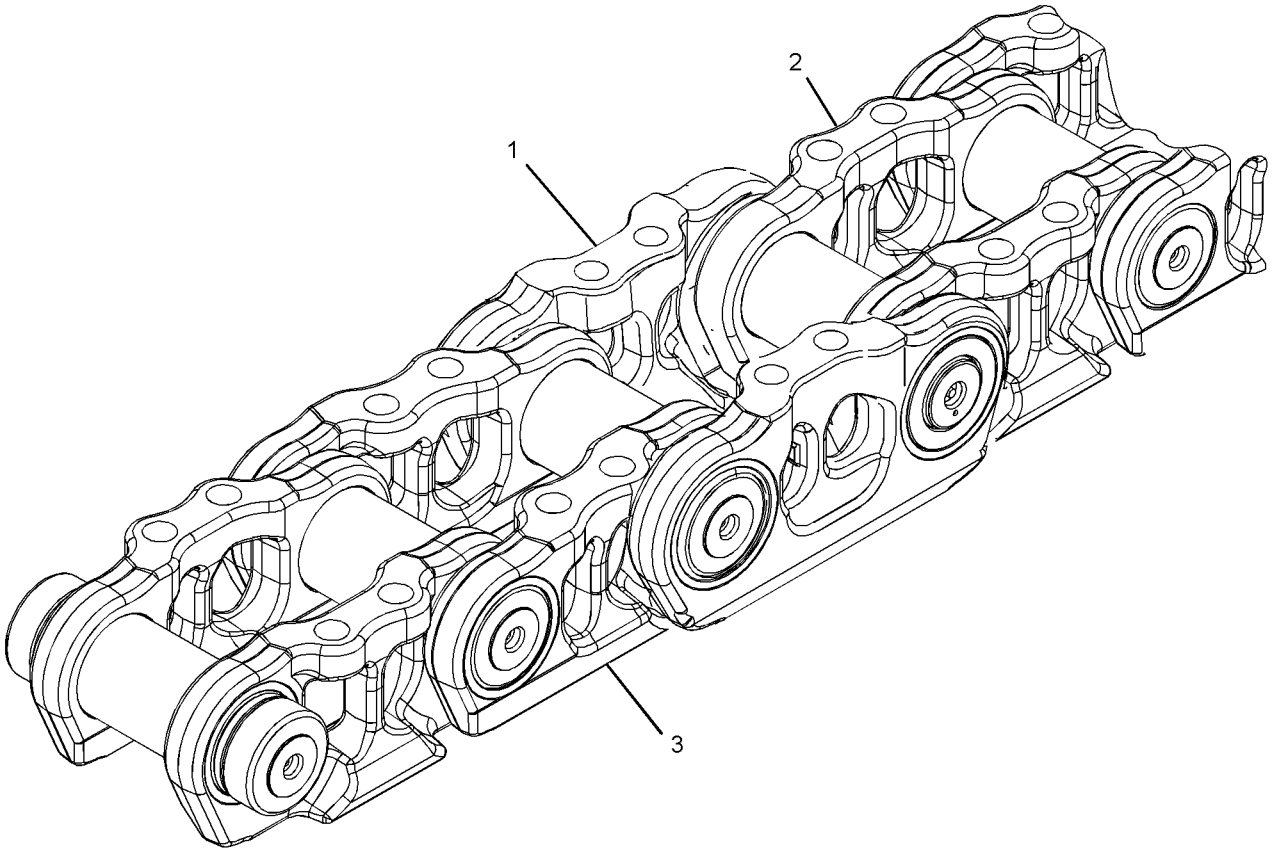

GRAPHIC #1 <END> g01793333

351-0955 LINK AS-TRACK BOX—LINK BOX

S/N: S6T1-UP; S6Y1-UP

SEALED, LUBRICATED, FOR FIELD REPLACEMENT OF LINK BOX THAT IS MORE THAN 40% WORN, ORDER 351-0963 LINK AS

PART OF 351-0957, 351-0958 LINK AS-TRACK, 351-0956 LINK AS-TRACK BOX AN ATTACHMENT

SMCS-4169 i04006930

NOTE	REF NO	GRAPHIC REF	PART NUMBER	QTY	PART NAME 1 2 3 4 5 6 (PRODUCT LEVEL)	SEE PAGE
	1	1	234-9699	2	LINK-TRACK	
	2	1	*331-8464*	2	CARTRIDGE AS-TRACK LINK	
					(EACH INCLUDES)	
		1	6Y-0473	2	PLUG-CLEAR	
		1	9G-1642	2	STOPPER-RUBBER	

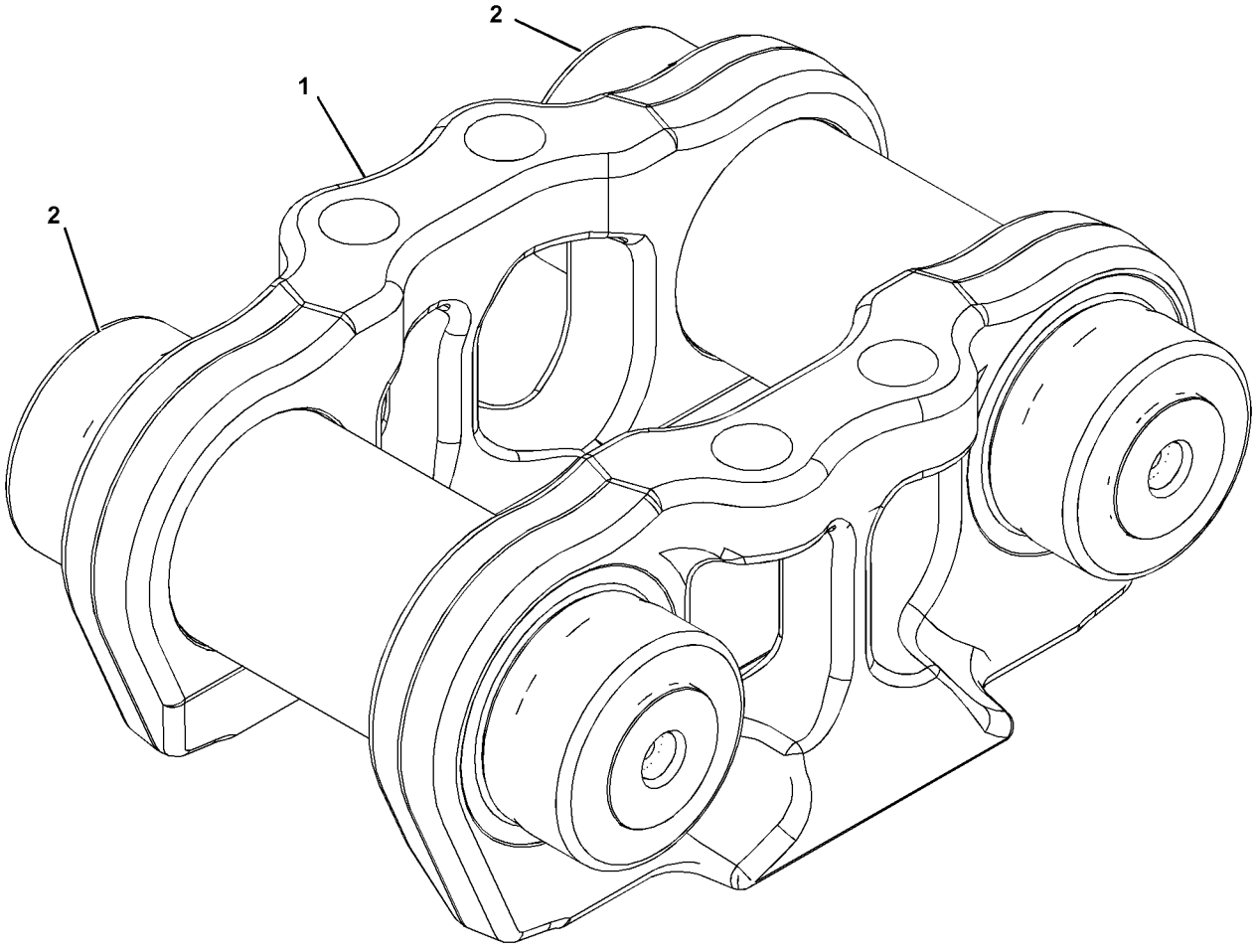

GRAPHIC #1 <END> g01378067

351-0956 LINK AS-TRACK BOX—LINK BOX, OFFSET

S/N: S6T1-UP; S6Y1-UP
SEALED, LUBRICATED, FOR FIELD REPLACEMENT OF LINK BOX THAT IS MORE THAN 40% WORN, ORDER 351-0964 LINK AS
PART OF 351-0957, 351-0958 LINK AS-TRACK
AN ATTACHMENT

SMCS-4169 i04006932

NOTE	REF NO	GRAPHIC REF	PART NUMBER	QTY	PART NAME 1 2 3 4 5 6 (PRODUCT LEVEL)	SEE PAGE
Y	1	1	351-0955	1	LINK AS-TRACK BOX (LINK BOX)	370
	2	1	*331-8464*	1	CARTRIDGE AS-TRACK LINK	
		1	9G-1642	2	STOPPER-RUBBER	
		1	6Y-0473	2	PLUG-CLEAR	
					PARTS SHOWN IN GRAPHIC(S) WITHOUT A REFERENCE NUMBER ARE NOT SERVICED SEPARATELY	

Y-SEPARATE ILLUSTRATION

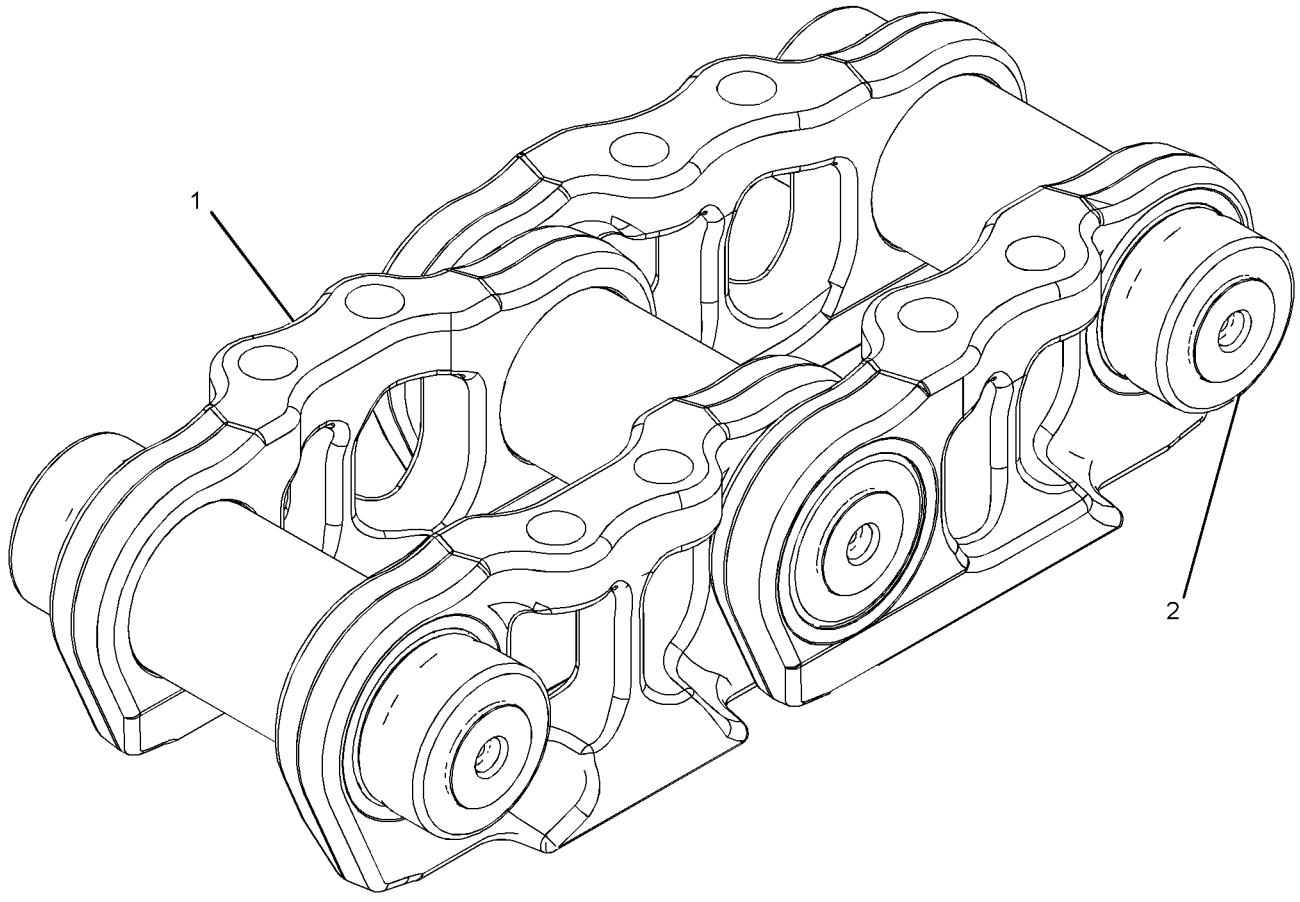

GRAPHIC #1 <END> g02020975

351-0963 LINK AS-TRACK BOX—LINK BOX

S/N: S6T1-UP; S6Y1-UP
70% WORN. SEALED, LUBRICATED
PART OF 351-0964 LINK AS-TRACK BOX
FIELD REPLACEMENT FOR 351-0955—PAGE 370 LINK AS THAT IS MORE THAN 40% WORN

SMCS-4169 i04006995

NOTE	REF NO	GRAPHIC REF	PART NUMBER	QTY	PART NAME 1 2 3 4 5 6 (PRODUCT LEVEL)	SEE PAGE
	1	1	*331-8464*	2	CARTRIDGE AS-TRACK LINK	
					(EACH INCLUDES)	
		1	6Y-0473	2	PLUG-CLEAR	
		1	9G-1642	2	STOPPER-RUBBER	
					PARTS SHOWN IN GRAPHIC(S) WITHOUT A REFERENCE NUMBER ARE NOT SERVICED SEPARATELY	

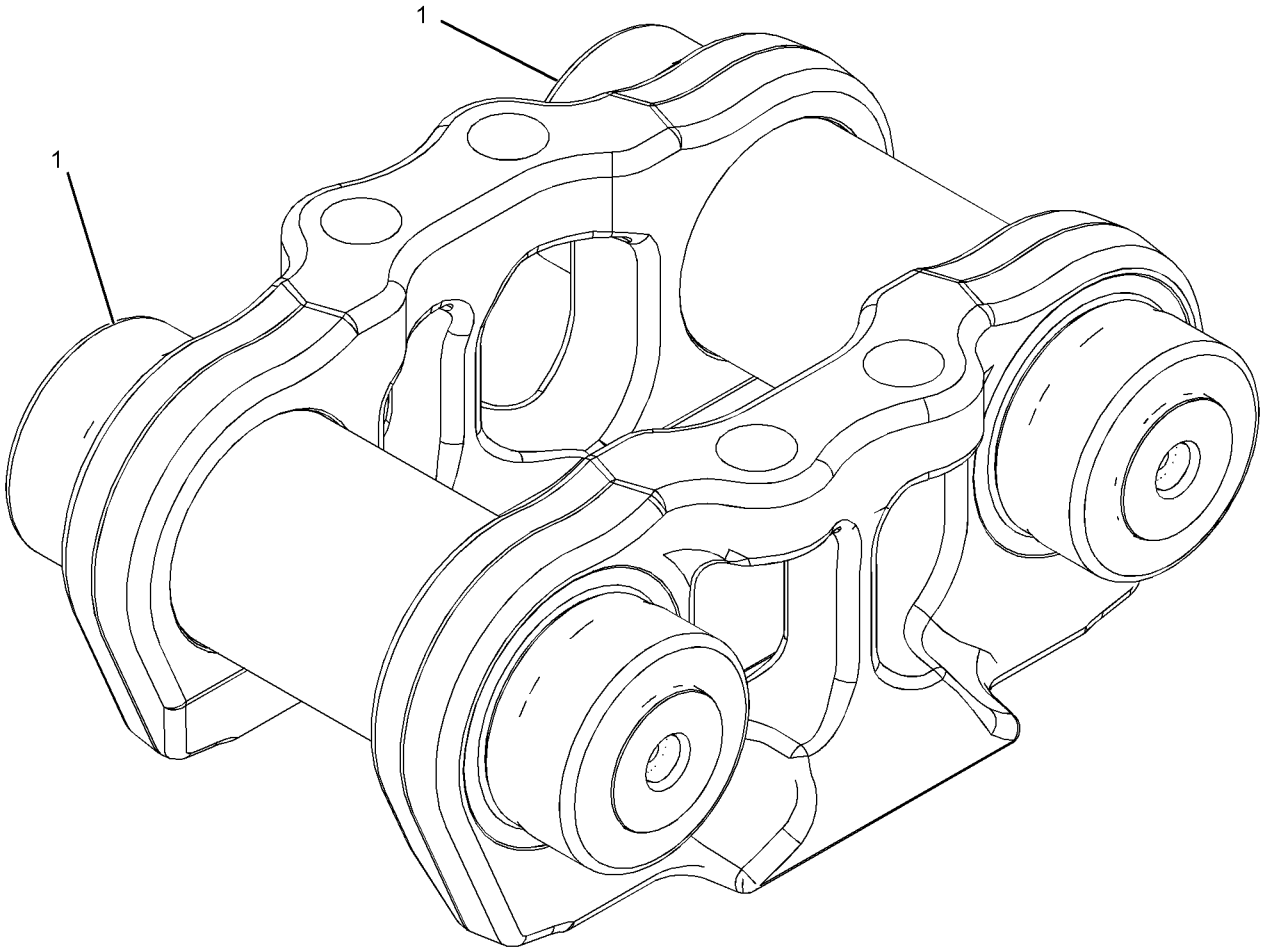

GRAPHIC #1 <END> g01416784

351-0964 LINK AS-TRACK BOX—LINK BOX, OFFSET

S/N: S6T1-UP; S6Y1-UP
70% WORN, SEALED, LUBRICATED,
FIELD REPLACEMENT FOR 351-0956 LINK AS THAT IS MORE THAN 40% WORN

SMCS-4169 i04007033

NOTE	REF NO	GRAPHIC REF	PART NUMBER	QTY	PART NAME 1 2 3 4 5 6 (PRODUCT LEVEL)	SEE PAGE
Y	1	1	351-0963	1	LINK AS-TRACK BOX (LINK BOX)	372
	2	1	*331-8464*	1	CARTRIDGE AS-TRACK LINK	
		1	6Y-0473	2	PLUG-CLEAR	
		1	9G-1642	2	STOPPER-RUBBER	
					PARTS SHOWN IN GRAPHIC(S) WITHOUT A REFERENCE NUMBER ARE NOT SERVICED SEPARATELY	

Y-SEPARATE ILLUSTRATION

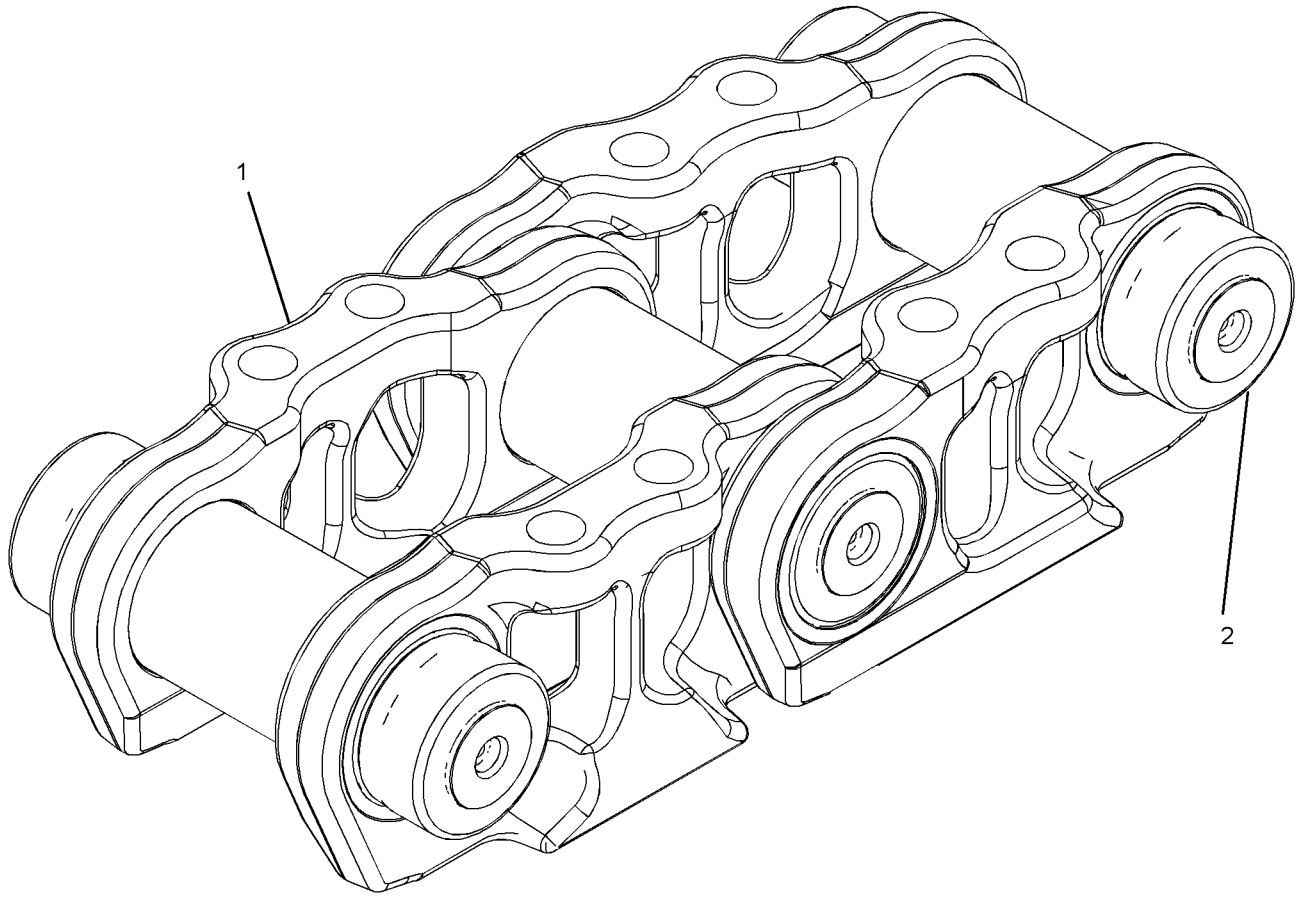

GRAPHIC #1 <END> g02031533

169-4368 MOUNTING GP-CARRIER ROLLER

S/N: S6T1-UP; S6X1-UP; S6Y1-UP
PART OF 366-1747 ROLLER AR-TRACK CARRIER, 317-1759, 317-1760, 317-1761, 317-4180, 317-4181 UNDERCARRIAGE AR
ALSO AN ATTACHMENT

SMCS-4154 i04008432

NOTE	REF NO	GRAPHIC REF	PART NUMBER	QTY	PART NAME 1 2 3 4 5 6 (PRODUCT LEVEL)	SEE PAGE
M	1	1	7X-2575	4	BOLT (M24X3X60-MM)	
M	2	1	8T-4187	2	BOLT (M20X2.5X80-MM)	
	3	1	8T-4123	2	WASHER (22X35X3.5-MM THK)	
	4	1	171-0808	1	BRACKET	
	5	1	8T-4167	4	WASHER-HARD (26X44X4-MM THK)	

M-METRIC PART

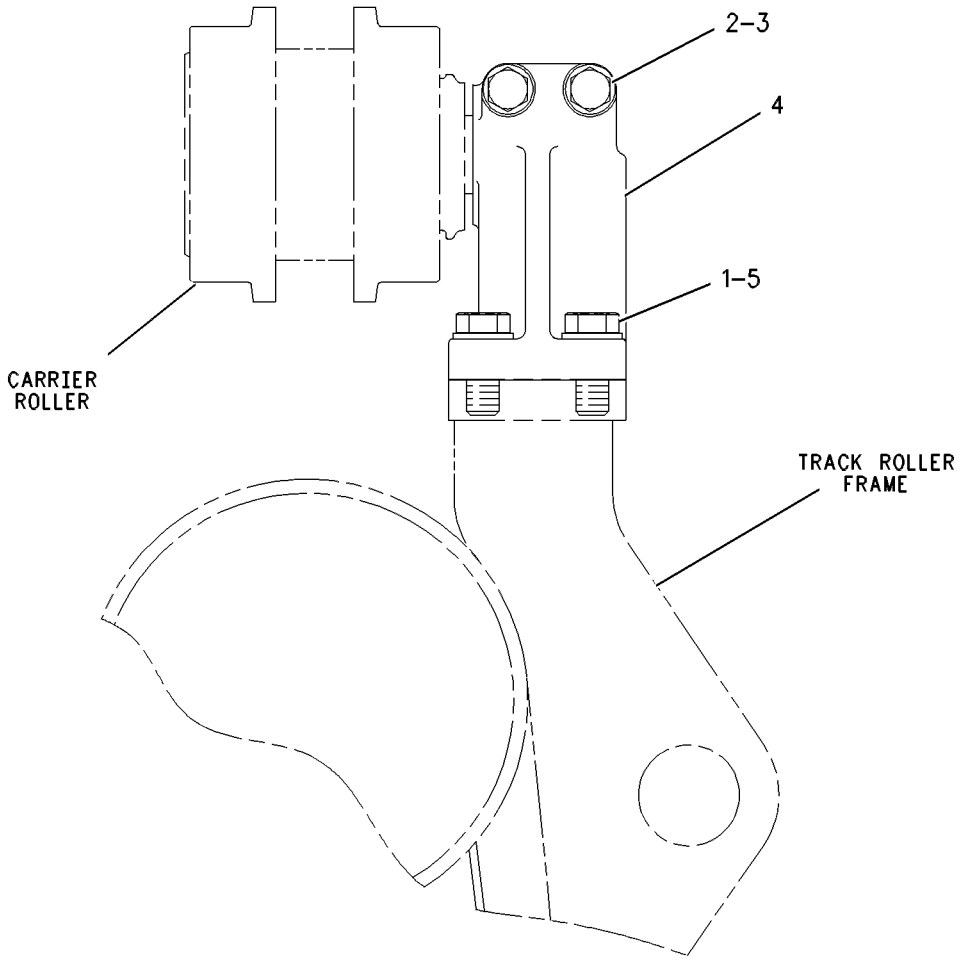

GRAPHIC #1 <END> g00607917

223-0647 PIVOT BAR GP

S/N: S6T1-UP; S6X1-UP
1880-MM (74-IN) GUAGE
PART OF 317-1759, 317-1760, 317-4180 UNDERCARRIAGE AR
ALSO AN ATTACHMENT

SMCS-4153 i03990516

NOTE	REF NO	GRAPHIC REF	PART NUMBER	QTY	PART NAME 1 2 3 4 5 6 (PRODUCT LEVEL)	SEE PAGE
	1	1	5G-8993	2	RETAINER	
	2	1	5G-9842	2	SEAL	
	3	1	5G-9843	2	PLATE	
	4	1	289-9403	2	SHAFT AS-PIVOT	
					(EACH INCLUDES)	
		1	5G-9841	1	RING	
	5	1	238-4520	2	PLATE AS	
M	6	1	7X-2580	16	BOLT (M30X3.5X90-MM)	
	7	1	8E-1900	2	WASHER-THRUST (112X150X6.35-MM THK)	
M	8	1	8T-0375	12	BOLT (M16X2X45-MM)	
	9	1	8T-4123	10	WASHER (22X35X3.5-MM THK)	
M	10	1	8T-5460	10	BOLT (M20X2.5X40-MM)	
	11	1	9M-3786	2	SEAL-O-RING	
	12	1	198-0918	4	PLUG	

M-METRIC PART

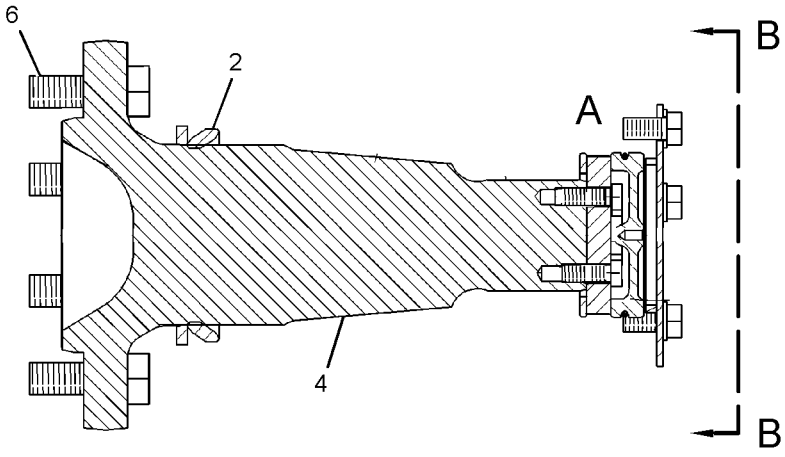

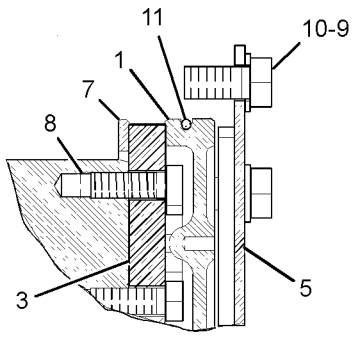

VIEW OF AREA A

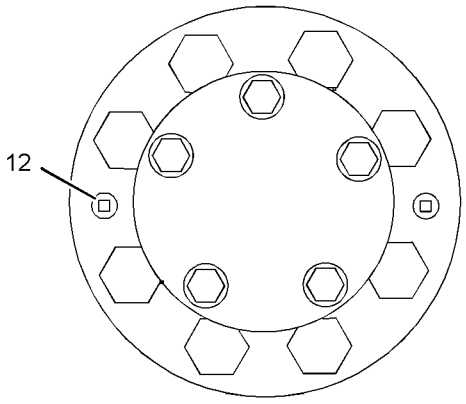

VIEW B-B

GRAPHIC #1 <END> g02175356

339-4589 PIVOT BAR GP

S/N: S6Y1-UP
PART OF 317-1761, 317-4181 UNDERCARRIAGE AR
ALSO AN ATTACHMENT

SMCS-4153 i04011771

NOTE	REF NO	GRAPHIC REF	PART NUMBER	QTY	PART NAME 1 2 3 4 5 6 (PRODUCT LEVEL)	SEE PAGE
	1	1	5G-8993	2	RETAINER	
	2	1	5G-9842	2	SEAL	
	3	1	5G-9843	2	PLATE	
	4	1	238-4520	2	PLATE AS	
	5	1	355-1350	2	SHAFT AS	
					(EACH INCLUDES)	
		1	5G-9841	1	RING	
		1	335-0985	1	PIN-SPRING	
M	6	1	7X-2582	16	BOLT (M30X3.5X110-MM)	
	7	1	8E-1900	2	WASHER-THRUST (112X150X6.35-MM THK)	
M	8	1	8T-0375	12	BOLT (M16X2X45-MM)	
	9	1	8T-4123	10	WASHER (22X35X3.5-MM THK)	
M	10	1	8T-5460	10	BOLT (M20X2.5X40-MM)	
	11	1	9M-3786	2	SEAL-O-RING	
	12	1	198-0918	4	PLUG	

M-METRIC PART

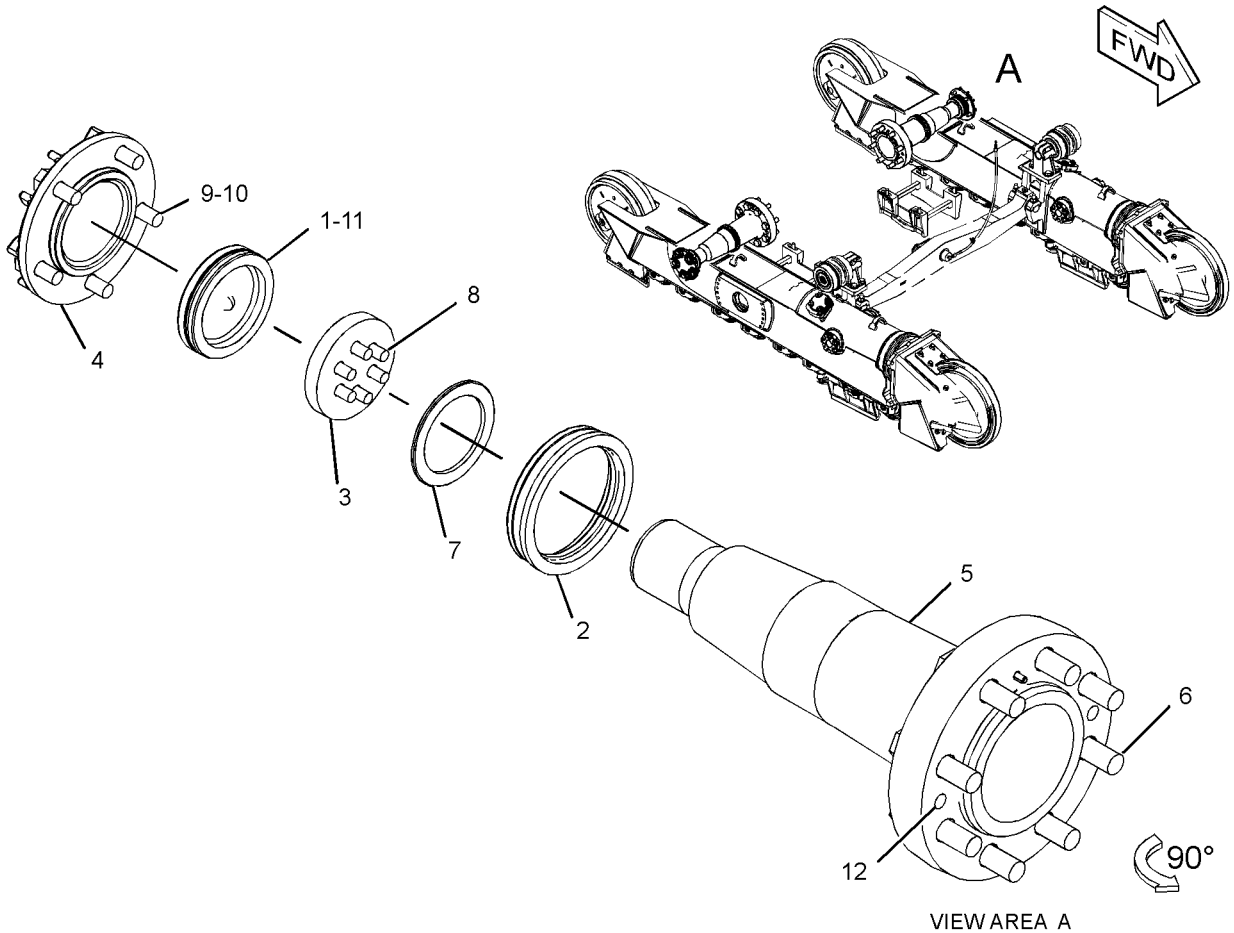

VIEW AREA A

GRAPHIC #1 <END> g02188817

125-4177 ROLLER AR-TRACK

S/N: S6X1-UP
PART OF 203-6415, 203-6442 GUIDING AR-UNDERCARRIAGE
AN ATTACHMENT

SMCS-4180 i03999980

NOTE	PART NUMBER	QTY	PART NAME 1 2 3 4 5 6 (PRODUCT LEVEL)	SEE PAGE
Y	288-0936	8	ROLLER GP-TRACK-DOUBLE FLANGE	382
Y-SEPARATE ILLUSTRATION				

<END>

125-5533 ROLLER AR-TRACK

S/N: S6T1-UP
PART OF 203-6440, 203-6443 GUIDING AR-UNDERCARRIAGE
AN ATTACHMENT

SMCS-4180 i04000470

NOTE	PART NUMBER	QTY	PART NAME 1 2 3 4 5 6 (PRODUCT LEVEL)	SEE PAGE
Y	288-0936	10	ROLLER GP-TRACK-DOUBLE FLANGE	382
Y-SEPARATE ILLUSTRATION				

<END>

125-5534 ROLLER AR-TRACK

S/N: S6Y1-UP
PART OF 203-6445, 278-6374 GUIDING AR-UNDERCARRIAGE
AN ATTACHMENT

SMCS-4180 i04000684

NOTE	PART NUMBER	QTY	PART NAME 1 2 3 4 5 6 (PRODUCT LEVEL)	SEE PAGE
Y	288-0936	12	ROLLER GP-TRACK-DOUBLE FLANGE	382
Y-SEPARATE ILLUSTRATION				

<END>

366-1747 ROLLER AR-TRACK CARRIER

S/N: S6X1-UP
AN ATTACHMENT

SMCS-4154 i04034515

NOTE	REF NO	GRAPHIC REF	PART NUMBER	QTY	PART NAME 1 2 3 4 5 6 (PRODUCT LEVEL)	SEE PAGE
Y	1	1	*169-4368*	2	MOUNTING GP-CARRIER ROLLER	374
Y	2	1	235-5974	2	ROLLER GP-TRACK CARRIER (SYSTEMONE)	379

Y-SEPARATE ILLUSTRATION

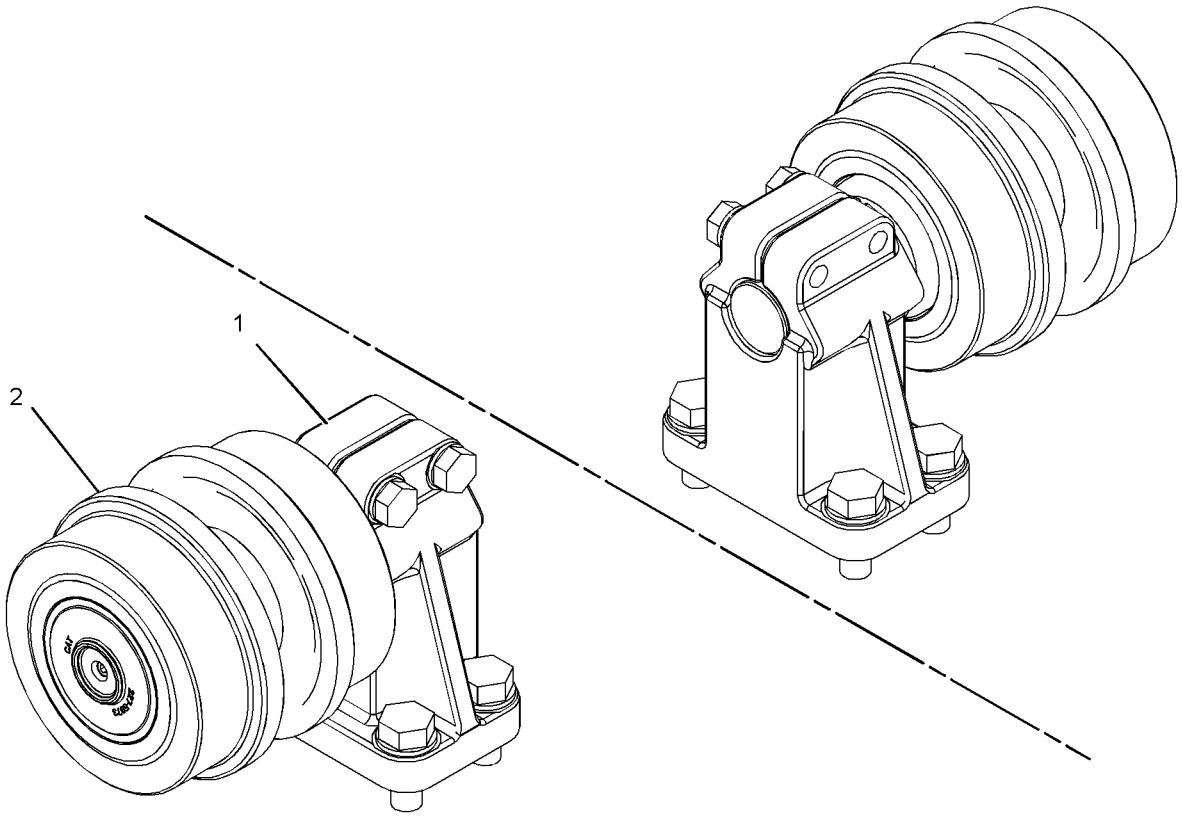

GRAPHIC #1 <END> g02227856

235-5974 ROLLER GP-TRACK CARRIER

S/N: S6T1-UP; S6X1-UP; S6Y1-UP
PART OF 366-1747 ROLLER AR-TRACK CARRIER, 317-1759, 317-1760, 317-1761, 317-4180, 317-4181 UNDERCARRIAGE AR
ALSO AN ATTACHMENT

SMCS-4154 i04008913

NOTE	REF NO	GRAPHIC REF	PART NUMBER	QTY	PART NAME 1 2 3 4 5 6 (PRODUCT LEVEL)	SEE PAGE
					(INDIVIDUAL PARTS ARE NOT SERVICED SEPARATELY)	

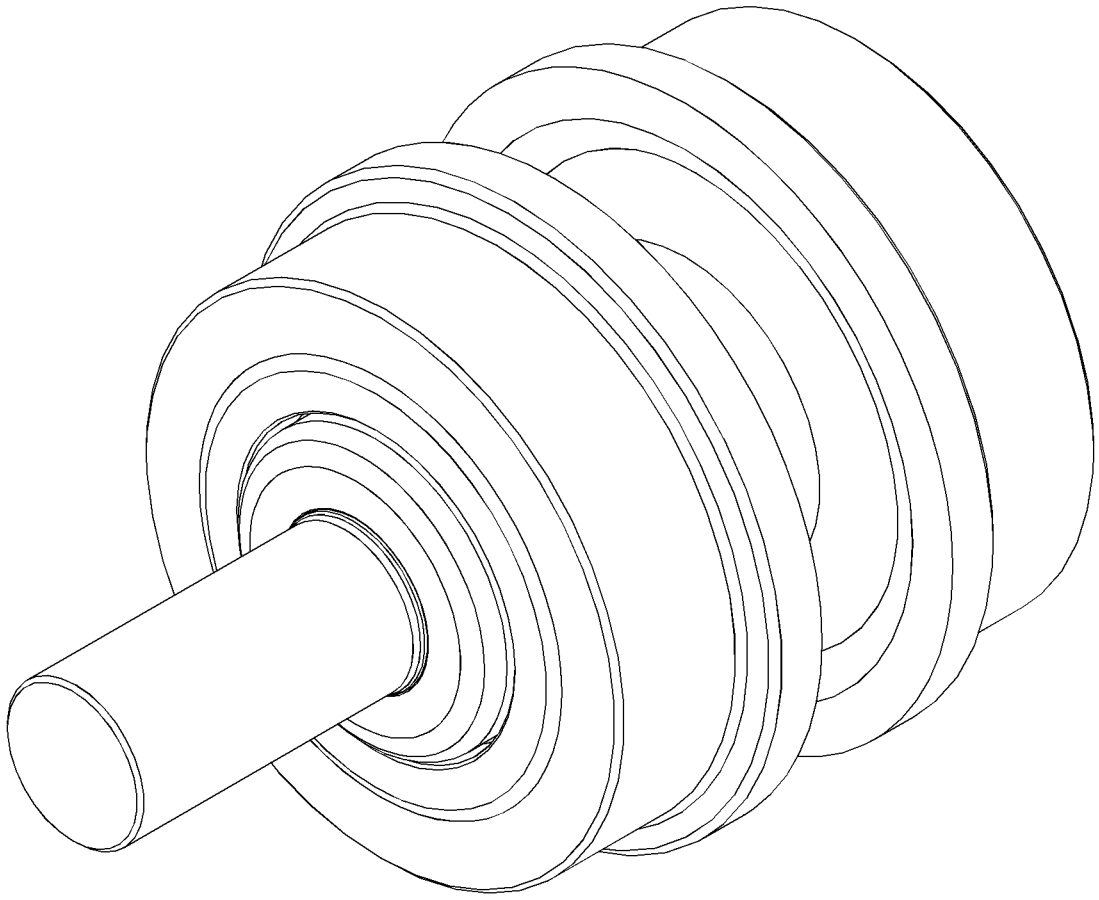

GRAPHIC #1 <END> g01395978

125-4176 ROLLER GP-TRACK-DOUBLE FLANGE

S/N: S6T1-UP; S6X1-UP; S6Y1-UP

PART OF 317-1759, 317-1760, 317-1761 UNDERCARRIAGE AR

SMCS-4180 i03989984

NOTE	REF NO	GRAPHIC REF	PART NUMBER	QTY	PART NAME 1 2 3 4 5 6 (PRODUCT LEVEL)	SEE PAGE
Y	1	1	288-0935	1	ROLLER GP-TRACK-DOUBLE FLANGE	381
	2	1	317-9080	2	CAP-TRACK ROLLER	
M	3	1	8T-0360	4	BOLT (M20X2.5X90-MM)	
	4	1	8T-3282	4	WASHER-HARD (22X35X3.5-MM THK)	

M-METRIC PART
Y-SEPARATE ILLUSTRATION

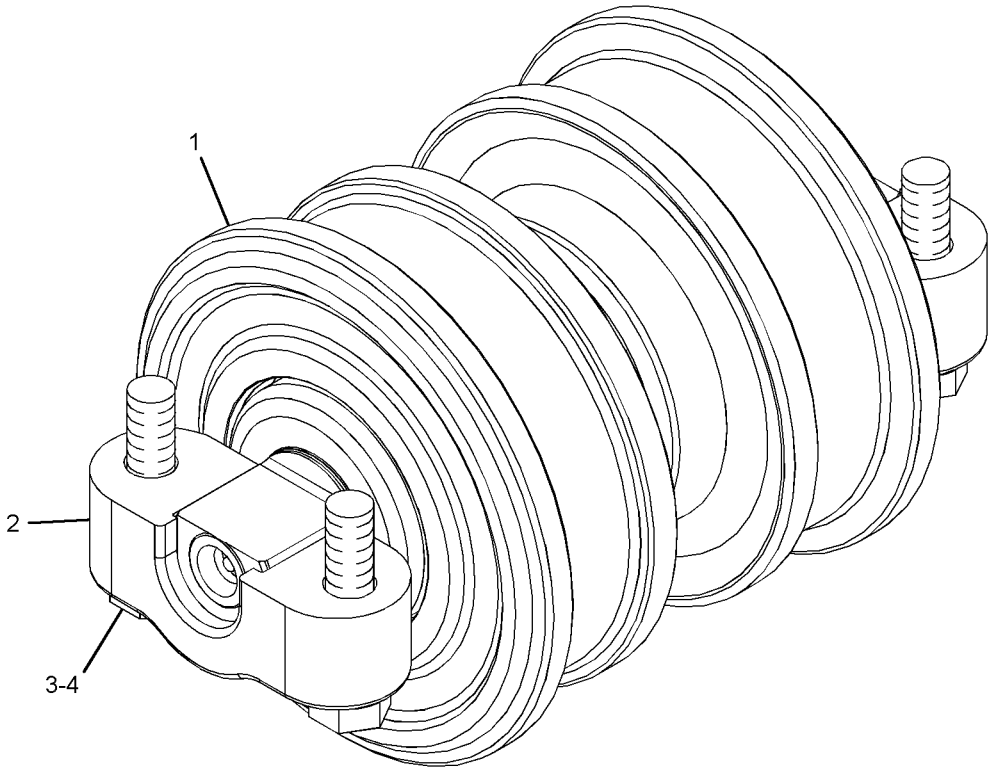

GRAPHIC #1 <END> g01425518

UNDERCARRIAGE

288-0935 ROLLER GP-TRACK-DOUBLE FLANGE

S/N: S6T1-UP; S6X1-UP; S6Y1-UP

PART OF 125-4176 ROLLER GP-TRACK-DOUBLE FLANGE

SMCS-4180 i03990000

NOTE	REF NO	GRAPHIC REF	PART NUMBER	QTY	PART NAME 1 2 3 4 5 6 (PRODUCT LEVEL)	SEE PAGE
					(INDIVIDUAL PARTS ARE NOT SERVICED SEPARATELY)	

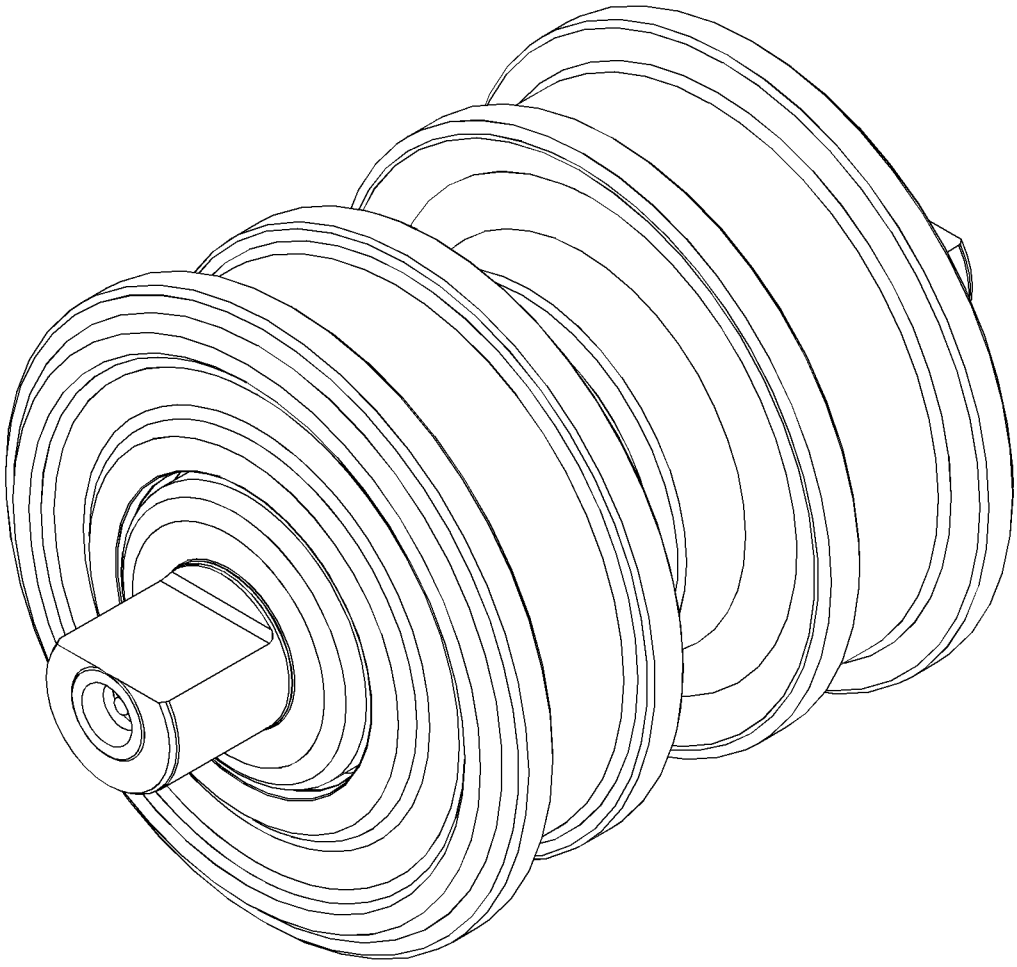

GRAPHIC #1 <END> g01395970

288-0936 ROLLER GP-TRACK-DOUBLE FLANGE–TALL

S/N: S6T1-UP; S6X1-UP; S6Y1-UP
PART OF 125-4177, 125-5533, 125-5534 ROLLER AR-TRACK
AN ATTACHMENT

SMCS-4180 i03999988

NOTE	REF NO	GRAPHIC REF	PART NUMBER	QTY	PART NAME 1 2 3 4 5 6 (PRODUCT LEVEL)	SEE PAGE
					(INDIVIDUAL PARTS ARE NOT SERVICED SEPARATELY)	

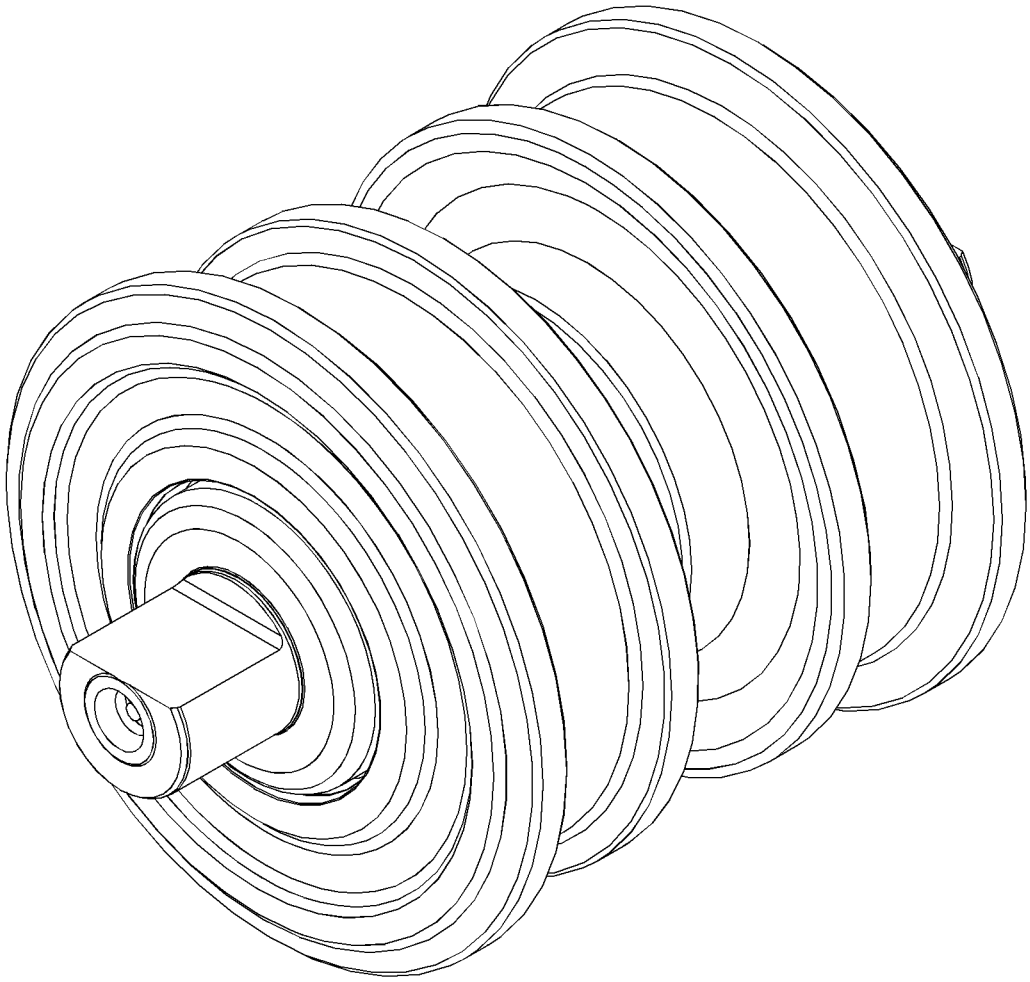

GRAPHIC #1 <END> g01395934

125-4175 ROLLER GP-TRACK-SINGLE FLANGE

S/N: S6T1-UP; S6X1-UP; S6Y1-UP

PART OF 317-1759, 317-1760, 317-1761 UNDERCARRIAGE AR

SMCS-4180 i03989979

NOTE	REF NO	GRAPHIC REF	PART NUMBER	QTY	PART NAME 1 2 3 4 5 6 (PRODUCT LEVEL)	SEE PAGE
Y	1	1	288-0934	1	ROLLER GP-TRACK-SINGLE FLANGE	385
	2	1	317-9080	2	CAP-TRACK ROLLER	
M	3	1	8T-0360	4	BOLT (M20X2.5X90-MM)	
	4	1	8T-3282	4	WASHER-HARD (22X35X3.5-MM THK)	

M-METRIC PART
Y-SEPARATE ILLUSTRATION

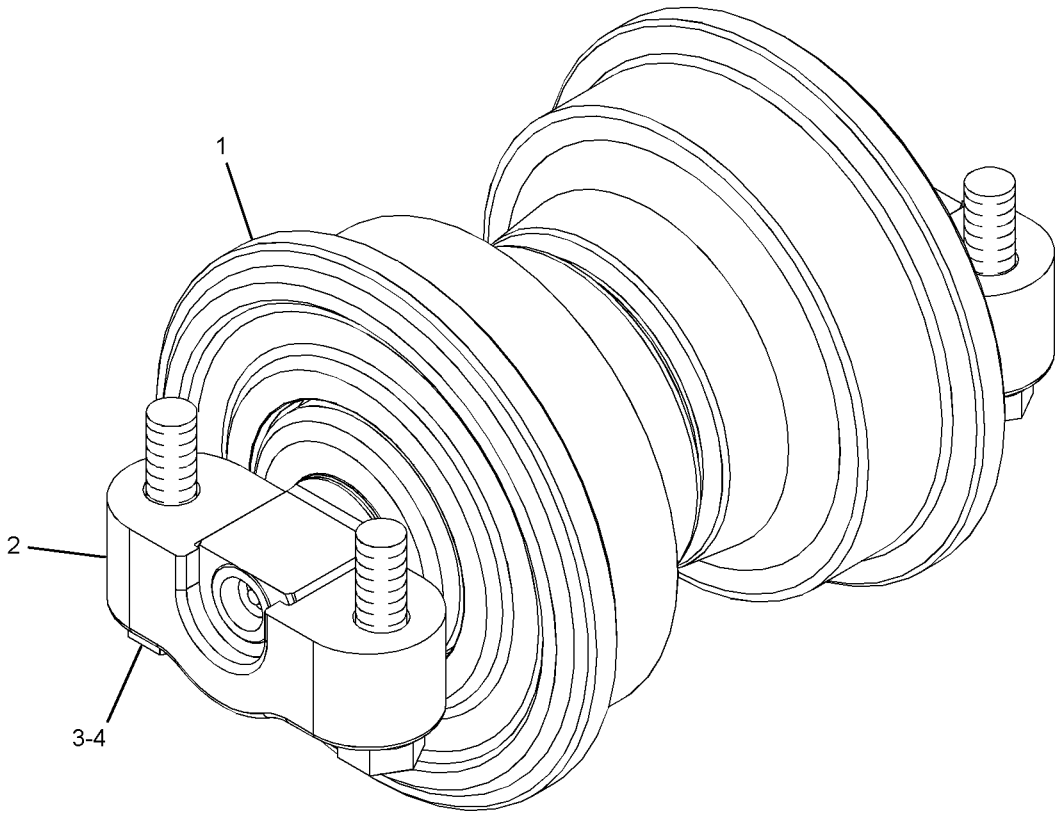

GRAPHIC #1 <END> g01425446

UNDERCARRIAGE

235-4157 ROLLER GP-TRACK-SINGLE FLANGE–SYSTEMONE

S/N: S6T1-UP; S6Y1-UP
PART OF 292-2175 ROLLER GP-TRACK-SINGLE FLANGE
AN ATTACHMENT

SMCS-4180 i04007522

NOTE	REF NO	GRAPHIC REF	PART NUMBER	QTY	PART NAME 1 2 3 4 5 6 (PRODUCT LEVEL)	SEE PAGE
					(INDIVIDUAL PARTS ARE NOT SERVICED SEPARATELY)	

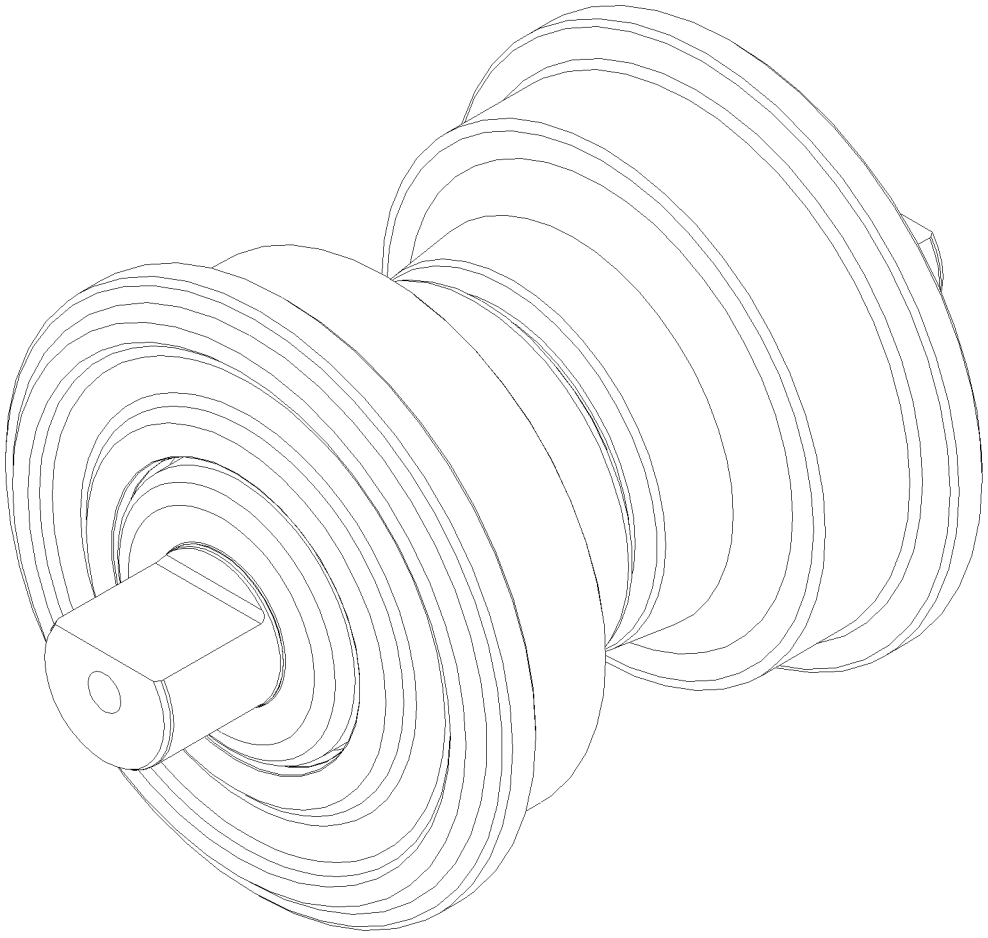

GRAPHIC #1 <END> g01395989

288-0934 ROLLER GP-TRACK-SINGLE FLANGE

S/N: S6T1-UP; S6X1-UP; S6Y1-UP

PART OF 125-4175 ROLLER GP-TRACK-SINGLE FLANGE

SMCS-4180 i03995650

NOTE	REF NO	GRAPHIC REF	PART NUMBER	QTY	PART NAME 1 2 3 4 5 6 (PRODUCT LEVEL)	SEE PAGE
					(INDIVIDUAL PARTS ARE NOT SERVICED SEPARATELY)	

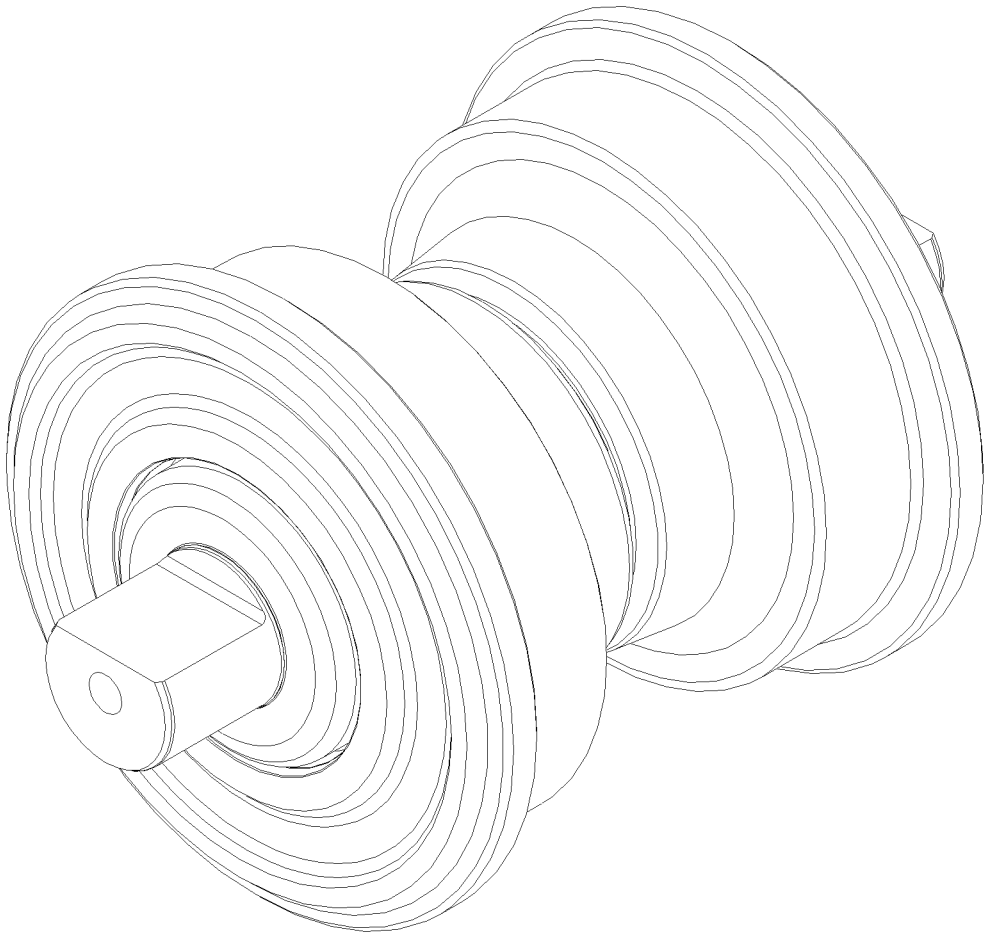

GRAPHIC #1 <END> g01395989

292-2175 ROLLER GP-TRACK-SINGLE FLANGE–SYSTEMONE

S/N: S6T1-UP; S6Y1-UP
PART OF 317-4180, 317-4181 UNDERCARRIAGE AR
AN ATTACHMENT

SMCS-4180 i04007529

NOTE	REF NO	GRAPHIC REF	PART NUMBER	QTY	PART NAME 1 2 3 4 5 6 (PRODUCT LEVEL)	SEE PAGE
Y	1	1	235-4157	1	ROLLER GP-TRACK-SINGLE FLANGE (SYSTEMONE)	384
	2	1	317-9080	2	CAP-TRACK ROLLER	
M	3	1	8T-0360	4	BOLT (M20X2.5X90-MM)	
	4	1	8T-3282	4	WASHER-HARD (22X35X3.5-MM THK)	

M-METRIC PART
Y-SEPARATE ILLUSTRATION

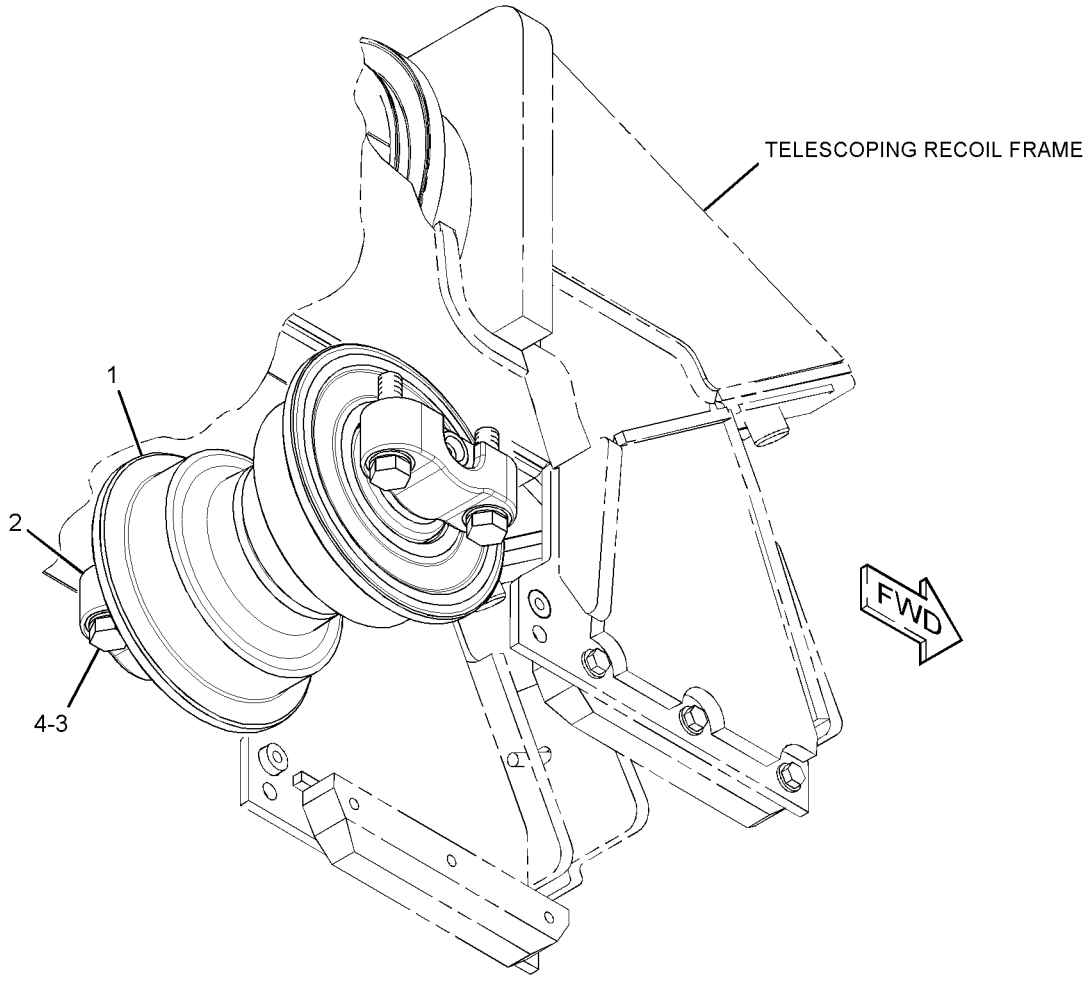

GRAPHIC #1 <END> g01432955

UNDERCARRIAGE

238-0451 SCRAPER GP-IDLER

S/N: S6T1-UP; S6Y1-UP
PART OF 317-4180, 317-4181 UNDERCARRIAGE AR
AN ATTACHMENT

SMCS-4152 i04016114

NOTE	REF NO	GRAPHIC REF	PART NUMBER	QTY	PART NAME 1 2 3 4 5 6 (PRODUCT LEVEL)	SEE PAGE
	1	1	355-6555	4	SCRAPER	
	2	1	238-0453	2	SCRAPER	
	3	1	5P-1076	16	WASHER-HARD (13.5X30X4-MM THK)	
M	4	1	8T-4139	16	BOLT (M12X1.75X30-MM)	

M-METRIC PART

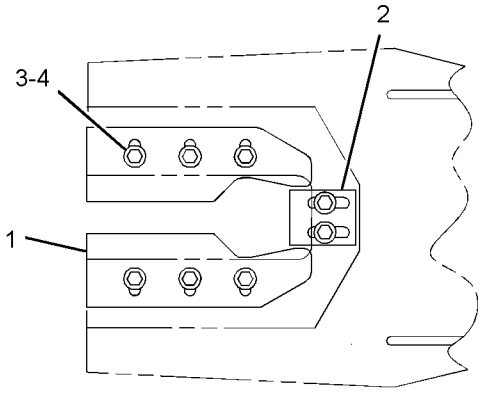

VIEW A-A

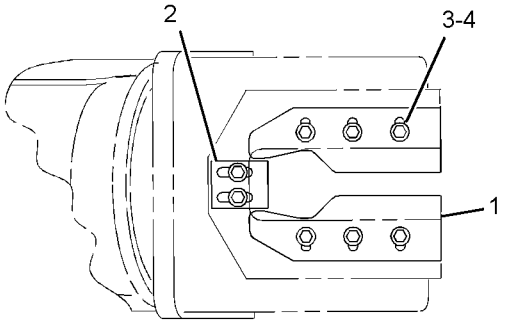

VIEW B-B

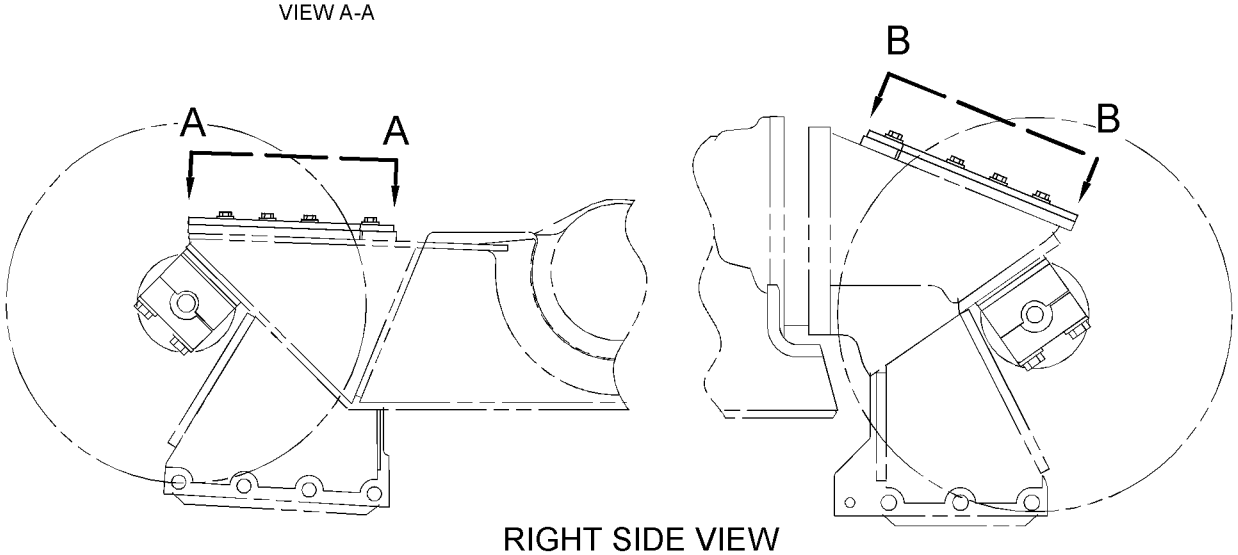

RIGHT SIDE VIEW

GRAPHIC #1 <END> g02153671

223-0659 TRACK ADJUSTER & RECOIL GP–SYSTEMONE

S/N: S6T1-UP; S6X1-UP; S6Y1-UP

PART OF 261-3079, 261-3082, 283-8671, 283-8672, 361-7838, 361-7839, 362-1021, 362-1022 FRAME GP-TELESCOPING RECOIL

ALSO AN ATTACHMENT

SMCS-4157, 4158 i04008931

NOTE	REF NO	GRAPHIC REF	PART NUMBER	QTY	PART NAME 1 2 3 4 5 6 (PRODUCT LEVEL)	SEE PAGE
	1	1	2S-5926	1	VALVE-RELIEF (RECOIL SPRING OIL)	
	2	1	3T-0598	1	TUBE	
	3	1	3W-0640	1	PISTON	
	4	1	3W-2369	1	PLATE AS	
	5	1	6Y-5799	2	LOCK	
	6	1	314-7923	1	CYLINDER	
	7	1	190-8609	1	VALVE-FILL (RECOIL SPRING OIL)	
	8	1	214-9080	1	PLATE AS	
		1	3W-0329	1	PLATE	
	9	1	226-1340	1	SPRING-RECOIL	
	10	1	167-2323	1	SEAL-U-CUP	
	11	1	2J-6274	1	SEAL-O-RING	
	12	1	2S-4078	1	SEAL-O-RING	
M	13	1	7X-2553	4	BOLT (M16X2X40-MM)	
	14	1	8T-4121	2	WASHER-HARD (11X21X2.5-MM THK)	
M	15	1	8T-4182	2	BOLT (M10X1.5X45-MM)	
	16	1	9S-8010	1	PLUG	
	17	1	9X-8257	4	WASHER (17.5X30X3.5-MM THK)	

M-METRIC PART

223-0659 TRACK ADJUSTER & RECOIL GP ***(contd.)*** i04008931

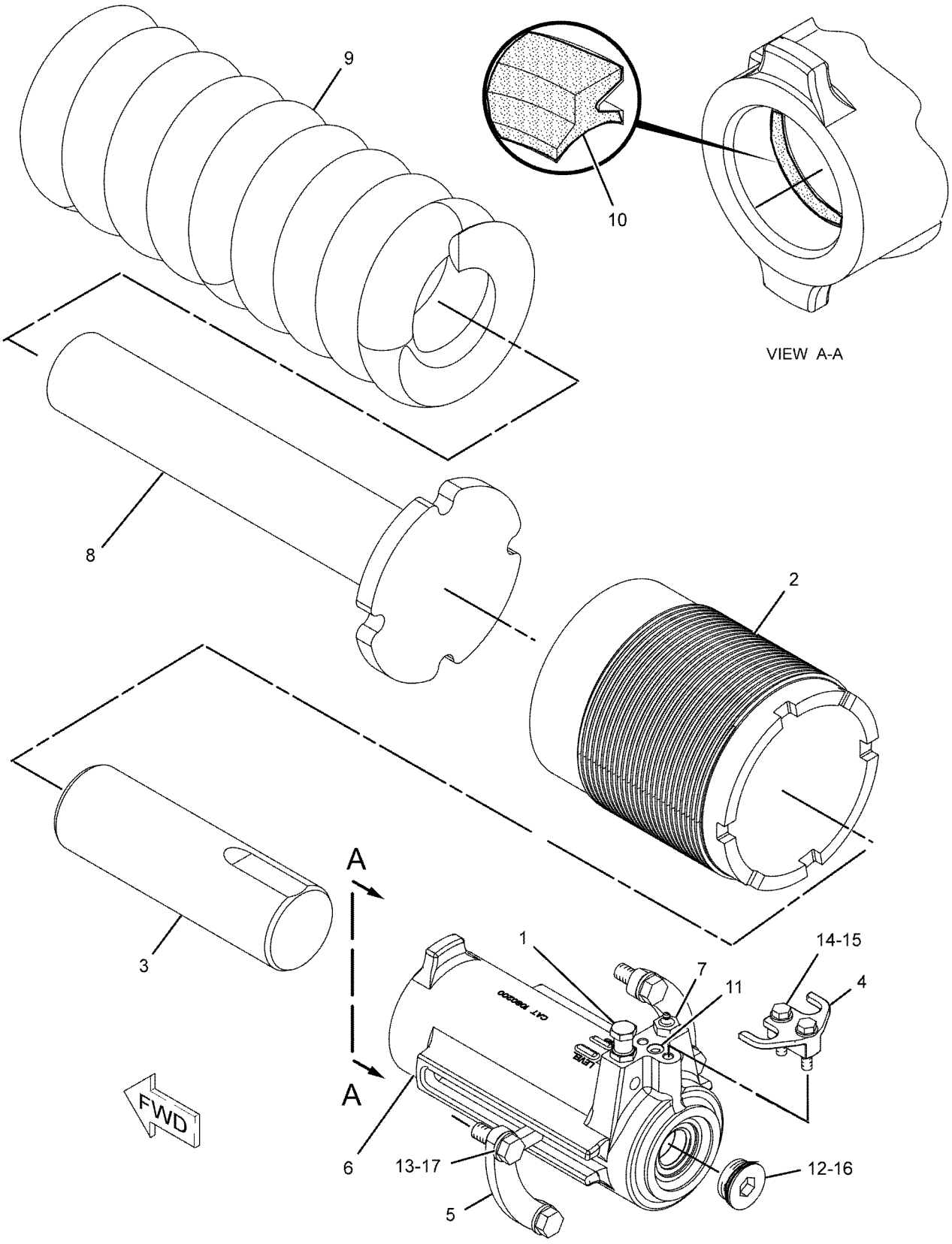

GRAPHIC #1 <END> g01145563

315-7786 TRACK ADJUSTER & RECOIL GP

S/N: S6T1-UP
LONG RECOIL
PART OF 334-0459, 334-0460 FRAME GP-TELESCOPING RECOIL
AN ATTACHMENT

SMCS-4157, 4158 i04007350

NOTE	REF NO	GRAPHIC REF	PART NUMBER	QTY	PART NAME 1 2 3 4 5 6 (PRODUCT LEVEL)	SEE PAGE
	1	1	2S-5926	1	VALVE-RELIEF (TRACK TENSION CYLINDER)	
	2	1	3T-0598	1	TUBE	
	3	1	3W-0640	1	PISTON	
	4	1	3W-2369	1	PLATE AS	
	5	1	6Y-5799	2	LOCK	
	6	1	314-7923	1	CYLINDER	
	7	1	190-8609	1	VALVE-FILL (RECOIL SPRING OIL)	
	8	1	314-2516	1	PLATE AS	
		1	3W-0329	1	PLATE	
	9	1	314-2518	1	SPRING	
	10	1	167-2323	1	SEAL-U-CUP	
	11	1	2J-6274	1	SEAL-O-RING	
	12	1	2S-4078	1	SEAL-O-RING	
M	13	1	7X-2553	4	BOLT (M16X2X40-MM)	
	14	1	8T-4121	2	WASHER-HARD (11X21X2.5-MM THK)	
M	15	1	8T-4182	2	BOLT (M10X1.5X45-MM)	
	16	1	9S-8010	1	PLUG	
	17	1	9X-8257	4	WASHER (17.5X30X3.5-MM THK)	

M-METRIC PART

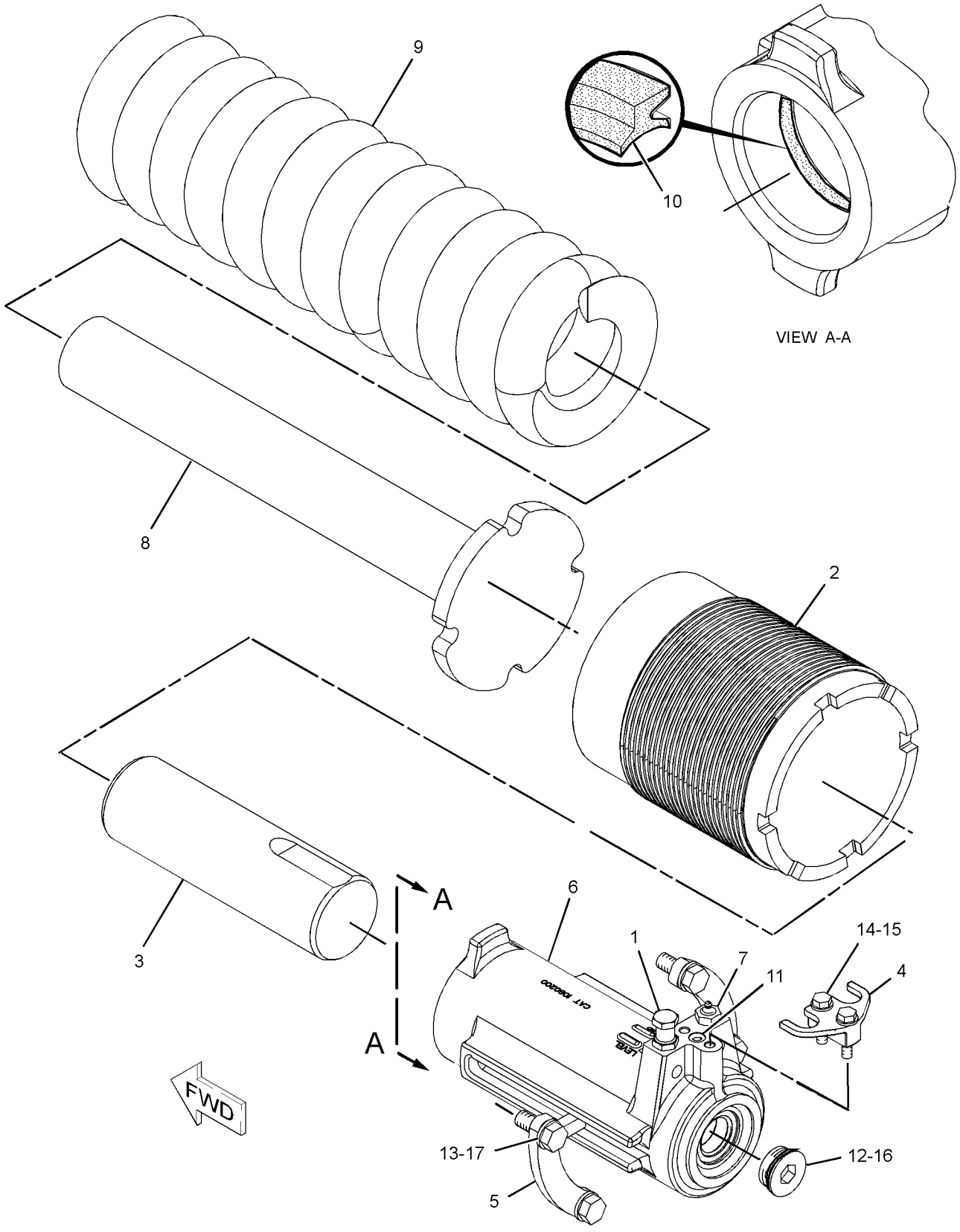

GRAPHIC #1 <END> g01960808

UNDERCARRIAGE

6I-9641 TRACK GP—2-REQUIRED

S/N: S6X1-UP
560-MM (22-IN) GROUSER SHOE.
SEALED, LUBRICATED, MODERATE SERVICE, HEAVY-DUTY
PART OF 317-1759 UNDERCARRIAGE AR

SMCS-4170 i04001307

NOTE	PART NUMBER	QTY	PART NAME 1 2 3 4 5 6 (PRODUCT LEVEL)	SEE PAGE
Y	6I-9668	1	LINK AS-TRACK	365
	6V-1792	152	BOLT-TRACK (3/4-16X2.4-IN)	
	9S-1838	4	BOLT-TRACK MASTER (3/4-16X4.13-IN)	
	1S-1860	152	NUT-TRACK (3/4-16-THD)	
	6Y-6294	1	SHOE-TRACK MASTER	
	6Y-6286	38	SHOE-TRACK	
Y-SEPARATE ILLUSTRATION				

<END>

6I-9642 TRACK GP—2-REQUIRED

S/N: S6X1-UP
610-MM (24-IN) GROUSER SHOE.
SEALED, LUBRICATED, MODERATE SERVICE, HEAVY-DUTY
AN ATTACHMENT

SMCS-4170 i04003522

NOTE	PART NUMBER	QTY	PART NAME 1 2 3 4 5 6 (PRODUCT LEVEL)	SEE PAGE
Y	6I-9668	1	LINK AS-TRACK	365
	6V-1792	152	BOLT-TRACK (3/4-16X2.4-IN)	
	9S-1838	4	BOLT-TRACK MASTER (3/4-16X4.13-IN)	
	1S-1860	152	NUT-TRACK (3/4-16-THD)	
	6Y-6296	1	SHOE-TRACK MASTER	
	6Y-6287	38	SHOE-TRACK	
Y-SEPARATE ILLUSTRATION				

<END>

6I-9644 TRACK GP—2-REQUIRED

S/N: S6X1-UP
560-MM (22-IN) GROUSER SHOE. SEALED, LUBRICATED, EXTREME SERVICE, HEAVY-DUTY
AN ATTACHMENT

SMCS-4170 i04003494

NOTE	PART NUMBER	QTY	PART NAME 1 2 3 4 5 6 (PRODUCT LEVEL)	SEE PAGE
Y	6I-9668	1	LINK AS-TRACK	365
	6V-1792	152	BOLT-TRACK (3/4-16X2.4-IN)	
	9S-1838	4	BOLT-TRACK MASTER (3/4-16X4.13-IN)	
	1S-1860	152	NUT-TRACK (3/4-16-THD)	
	6Y-6412	1	SHOE-TRACK MASTER	
	6Y-6389	38	SHOE-TRACK	
Y-SEPARATE ILLUSTRATION				

<END>

6I-9653 TRACK GP—2-REQUIRED

S/N: S6T1-UP
560-MM (22-IN) GROUSER SHOE.
SEALED, LUBRICATED, MODERATE SERVICE, HEAVY-DUTY
PART OF 317-1760 UNDERCARRIAGE AR

SMCS-4170 i04011809

NOTE	PART NUMBER	QTY	PART NAME 1 2 3 4 5 6 (PRODUCT LEVEL)	SEE PAGE
Y	6I-9671	1	LINK AS-TRACK	366
	6V-1792	160	BOLT-TRACK (3/4-16X2.4-IN)	
	9S-1838	4	BOLT-TRACK MASTER (3/4-16X4.13-IN)	
	1S-1860	160	NUT-TRACK (3/4-16-THD)	
	6Y-6294	1	SHOE-TRACK MASTER	
	6Y-6286	40	SHOE-TRACK	
Y-SEPARATE ILLUSTRATION				

<END>

6I-9654 TRACK GP—2-REQUIRED

S/N: S6T1-UP
610-MM (24-IN) GROUSER SHOE.
SEALED, LUBRICATED, MODERATE SERVICE, HEAVY-DUTY
AN ATTACHMENT

SMCS-4170 i04004017

NOTE	PART NUMBER	QTY	PART NAME 1 2 3 4 5 6 (PRODUCT LEVEL)	SEE PAGE
Y	6I-9671	1	LINK AS-TRACK	366
	6V-1792	160	BOLT-TRACK (3/4-16X2.4-IN)	
	9S-1838	4	BOLT-TRACK MASTER (3/4-16X4.13-IN)	
	1S-1860	160	NUT-TRACK (3/4-16-THD)	
	6Y-6296	1	SHOE-TRACK MASTER	
	6Y-6287	40	SHOE-TRACK	
Y-SEPARATE ILLUSTRATION				

<END>

6I-9656 TRACK GP—2-REQUIRED

S/N: S6T1-UP
560-MM (22-IN) GROUSER SHOE. SEALED, LUBRICATED, EXTREME SERVICE, HEAVY-DUTY
AN ATTACHMENT

SMCS-4170 i04004028

NOTE	PART NUMBER	QTY	PART NAME 1 2 3 4 5 6 (PRODUCT LEVEL)	SEE PAGE
Y	6I-9671	1	LINK AS-TRACK	366
	6V-1792	160	BOLT-TRACK (3/4-16X2.4-IN)	
	9S-1838	4	BOLT-TRACK MASTER (3/4-16X4.13-IN)	
	1S-1860	160	NUT-TRACK (3/4-16-THD)	
	6Y-6389	40	SHOE-TRACK	
	6Y-6412	1	SHOE-TRACK MASTER	
Y-SEPARATE ILLUSTRATION				

<END>

8E-9039 TRACK GP—2-REQUIRED

S/N: S6Y1-UP
915-MM (36-IN) GROUSER SHOE.
SEALED, LUBRICATED, MODERATE SERVICE, HEAVY-DUTY
PART OF 317-1761 UNDERCARRIAGE AR

SMCS-4170 i04011669

NOTE	PART NUMBER	QTY	PART NAME 1 2 3 4 5 6 (PRODUCT LEVEL)	SEE PAGE
Y	8E-9037	1	LINK AS-TRACK	367
	6V-1792	176	BOLT-TRACK (3/4-16X2.4-IN)	
	9S-1838	4	BOLT-TRACK MASTER (3/4-16X4.13-IN)	
	1S-1860	176	NUT-TRACK (3/4-16-THD)	
	196-7839	44	SHOE-TRACK	
	196-1236	1	SHOE-TRACK MASTER	
Y-SEPARATE ILLUSTRATION				

<END>

8E-9040 TRACK GP—2-REQUIRED

S/N: S6Y1-UP
1000-MM (39-IN) SELF CLEANING SHOE. SEALED, LUBRICATED
AN ATTACHMENT

SMCS-4170 i04008036

NOTE	PART NUMBER	QTY	PART NAME 1 2 3 4 5 6 (PRODUCT LEVEL)	SEE PAGE
Y	8E-9037	1	LINK AS-TRACK	367
	3P-1111	2	BOLT-TRACK (3/4-16X5.47-IN)	
	6T-2162	88	BOLT-TRACK (3/4-16X4.13-IN)	
	6V-1792	88	BOLT-TRACK (3/4-16X2.4-IN)	
	9S-1838	2	BOLT-TRACK MASTER (3/4-16X4.13-IN)	
	1S-1860	176	NUT-TRACK (3/4-16-THD)	
	6T-2059	44	SHOE-TRACK	
	8E-5125	1	SHOE-TRACK MASTER	
Y-SEPARATE ILLUSTRATION				

<END>

246-5216 TRACK GP—2-REQUIRED, SYSTEMONE

S/N: S6T1-UP

560-MM (22-IN) GROUSER SHOE. SEALED, LUBRICATED, EXTREME SERVICE
FOR USE WITH SYSTEMONE ROLLERS, GUARDS, GUIDESTRIPS
AN ATTACHMENT

SMCS-4170 i04004071

NOTE	PART NUMBER	QTY	PART NAME 1 2 3 4 5 6 (PRODUCT LEVEL)	SEE PAGE
Y	351-0958	1	LINK AS-TRACK (SYSTEMONE)	369
M	6Y-9024	160	BOLT-TRACK (M22X1.5X67-MM)	
	254-0224	4	BOLT-TRACK MASTER (M22X1.5X108-MM)	
	318-1064	2	LINK-TRACK MASTER (CLAMP)	
M	9W-4381	160	NUT-TRACK (M22X1.5-THD)	
	246-5140	40	SHOE-TRACK	
	254-4473	1	SHOE-TRACK MASTER	

M-METRIC PART
Y-SEPARATE ILLUSTRATION

<END>

246-5218 TRACK GP—2-REQUIRED, SYSTEMONE

S/N: S6T1-UP

610-MM (24-IN) GROUSER SHOE. SEALED, LUBRICATED, EXTREME SERVICE,
CLAMP MASTER
FOR USE WITH SYSTEMONE ROLLERS, GUARDS, GUIDESTRIPS
AN ATTACHMENT

SMCS-4170 i04007653

NOTE	PART NUMBER	QTY	PART NAME 1 2 3 4 5 6 (PRODUCT LEVEL)	SEE PAGE
Y	351-0958	1	LINK AS-TRACK (SYSTEMONE)	369
M	6Y-9024	160	BOLT-TRACK (M22X1.5X67-MM)	
	254-0224	4	BOLT-TRACK MASTER (M22X1.5X108-MM)	
	318-1064	2	LINK-TRACK MASTER (CLAMP)	
M	9W-4381	160	NUT-TRACK (M22X1.5-THD)	
	246-5203	40	SHOE-TRACK	
	254-4471	1	SHOE-TRACK MASTER	

M-METRIC PART
Y-SEPARATE ILLUSTRATION

<END>

246-5220 TRACK GP—2-REQUIRED, SYSTEMONE

S/N: S6Y1-UP

915-MM (36-IN) GROUSER SHOE. SEALED, LUBRICATED, EXTREME SERVICE, CENTER HOLE, CLAMP MASTER

FOR USE WITH SYSTEMONE ROLLERS, GUARDS, GUIDESTRIPS

AN ATTACHMENT

SMCS-4170 i04007953

NOTE	PART NUMBER	QTY	PART NAME 1 2 3 4 5 6 (PRODUCT LEVEL)	SEE PAGE
Y	351-0957	1	LINK AS-TRACK (SYSTEMONE)	368
M	6Y-9024	176	BOLT-TRACK (M22X1.5X67-MM)	
	254-0224	4	BOLT-TRACK MASTER (M22X1.5X108-MM)	
	318-1064	2	LINK-TRACK MASTER (CLAMP)	
M	9W-4381	176	NUT-TRACK (M22X1.5-THD)	
	242-8904	44	SHOE-TRACK	
	254-0234	1	SHOE-TRACK MASTER	

M-METRIC PART
Y-SEPARATE ILLUSTRATION

<END>

317-1759 UNDERCARRIAGE AR—HEAVY-DUTY

S/N: S6X1-UP

PART OF 336-9681 GENERAL AR

SMCS-4150 i04009938

NOTE	PART NUMBER	QTY	PART NAME 1 2 3 4 5 6 (PRODUCT LEVEL)	SEE PAGE
Y	*229-7373*	1	BAR GP-EQUALIZER	322
Y	*108-1091*	8	CAP GP-TRACK IDLER	326
Y	*361-7838*	1	FRAME GP-TELESCOPING RECOIL (LH)	344
Y	*361-7839*	1	FRAME GP-TELESCOPING RECOIL (RH)	346
Y	202-4304	4	IDLER GP-TRACK	363
Y	*169-4368*	2	MOUNTING GP-CARRIER ROLLER	374
Y	*223-0647*	1	PIVOT BAR GP	375
Y	235-5974	2	ROLLER GP-TRACK CARRIER (SYSTEMONE)	379
Y	*125-4176*	4	ROLLER GP-TRACK-DOUBLE FLANGE	380
Y	*125-4175*	8	ROLLER GP-TRACK-SINGLE FLANGE	383
Y	6I-9641	2	TRACK GP	392
B	8G-9530	4	SHIM (8-MM THK)	

B-USE AS REQUIRED
Y-SEPARATE ILLUSTRATION

<END>

317-1760 UNDERCARRIAGE AR—HEAVY-DUTY

S/N: S6T1-UP

PART OF 336-9682 GENERAL AR

SMCS-4150 i04011411

NOTE	PART NUMBER	QTY	PART NAME 1 2 3 4 5 6 (PRODUCT LEVEL)	SEE PAGE
Y	*229-7373*	1	BAR GP-EQUALIZER	322
Y	*108-1091*	8	CAP GP-TRACK IDLER	326
Y	*362-1021*	1	FRAME GP-TELESCOPING RECOIL (LH)	348
Y	*362-1022*	1	FRAME GP-TELESCOPING RECOIL (RH)	350
Y	202-4304	4	IDLER GP-TRACK	363
Y	*169-4368*	2	MOUNTING GP-CARRIER ROLLER	374
Y	*223-0647*	1	PIVOT BAR GP	375
Y	235-5974	2	ROLLER GP-TRACK CARRIER (SYSTEMONE)	379
Y	*125-4176*	6	ROLLER GP-TRACK-DOUBLE FLANGE	380
Y	*125-4175*	8	ROLLER GP-TRACK-SINGLE FLANGE	383
Y	6I-9653	2	TRACK GP	393
	8G-9530	4	SHIM (8-MM THK)	

Y-SEPARATE ILLUSTRATION

<END>

317-1761 UNDERCARRIAGE AR—HEAVY-DUTY

S/N: S6Y1-UP

PART OF 336-9683 GENERAL AR

SMCS-4150 i04011417

NOTE	PART NUMBER	QTY	PART NAME 1 2 3 4 5 6 (PRODUCT LEVEL)	SEE PAGE
Y	*216-8127*	1	BAR GP-EQUALIZER	320
Y	*108-1091*	8	CAP GP-TRACK IDLER	326
Y	*283-8671*	1	FRAME GP-TELESCOPING RECOIL (RH)	336
Y	*283-8672*	1	FRAME GP-TELESCOPING RECOIL (LH)	338
Y	*164-0406*	1	GUARD GP-TRACK GUIDE	352
Y	202-4296	4	IDLER GP-TRACK	362
Y	*169-4368*	2	MOUNTING GP-CARRIER ROLLER	374
Y	*339-4589*	1	PIVOT BAR GP	376
Y	235-5974	2	ROLLER GP-TRACK CARRIER (SYSTEMONE)	379
Y	*125-4176*	8	ROLLER GP-TRACK-DOUBLE FLANGE	380
Y	*125-4175*	8	ROLLER GP-TRACK-SINGLE FLANGE	383
Y	8E-9039	2	TRACK GP	394
	8G-9530	4	SHIM (8-MM THK)	

Y-SEPARATE ILLUSTRATION

<END>

UNDERCARRIAGE

317-4180 UNDERCARRIAGE AR–SYSTEMONE

S/N: S6T1-UP

AN ATTACHMENT

SMCS-4150 i04032985

NOTE	PART NUMBER	QTY	PART NAME 1 2 3 4 5 6 (PRODUCT LEVEL)	SEE PAGE
Y	*229-7373*	1	BAR GP-EQUALIZER	322
Y	*267-4746*	8	CAP GP-TRACK IDLER (SYSTEMONE)	331
Y	*334-0460*	1	FRAME GP-TELESCOPING RECOIL (RH)	342
Y	*334-0459*	1	FRAME GP-TELESCOPING RECOIL (LH)	340
Y	*314-3283*	1	GUARD GP-TRACK GUIDE (SYSTEMONE)	354
Y	*227-8715*	4	IDLER GP-FRONT (SYSTEMONE)	361
Y	*169-4368*	2	MOUNTING GP-CARRIER ROLLER	374
Y	*223-0647*	1	PIVOT BAR GP	375
Y	235-5974	2	ROLLER GP-TRACK CARRIER (SYSTEMONE)	379
Y	292-2175	14	ROLLER GP-TRACK-SINGLE FLANGE (SYSTEMONE)	386
Y	*238-0451*	2	SCRAPER GP-IDLER	387
	156-5342	4	SHIM (10-MM THK) (FRONT)	
	233-4846	4	SHIM (6-MM THK) (REAR)	

Y-SEPARATE ILLUSTRATION

<END>

317-4181 UNDERCARRIAGE AR–SYSTEMONE

S/N: S6Y1-UP

AN ATTACHMENT

SMCS-4150 i04032989

NOTE	PART NUMBER	QTY	PART NAME 1 2 3 4 5 6 (PRODUCT LEVEL)	SEE PAGE
Y	*216-8127*	1	BAR GP-EQUALIZER	320
Y	*233-4847*	2	CAP GP-TRACK IDLER (LH)	327
Y	*233-4849*	2	CAP GP-TRACK IDLER (RH)	328
Y	*236-2591*	2	CAP GP-TRACK IDLER (LH)	329
Y	*236-2592*	2	CAP GP-TRACK IDLER (RH)	330
Y	*261-3079*	1	FRAME GP-TELESCOPING RECOIL (RH)	332
Y	*261-3082*	1	FRAME GP-TELESCOPING RECOIL (LH)	334
Y	*253-0397*	1	GUIDING AR-UNDERCARRIAGE	361
Y	*227-8715*	4	IDLER GP-FRONT (SYSTEMONE)	361
Y	*169-4368*	2	MOUNTING GP-CARRIER ROLLER	374
Y	*339-4589*	1	PIVOT BAR GP	376
Y	235-5974	2	ROLLER GP-TRACK CARRIER (SYSTEMONE)	379
Y	292-2175	16	ROLLER GP-TRACK-SINGLE FLANGE (SYSTEMONE)	386
Y	*238-0451*	2	SCRAPER GP-IDLER	387

Y-SEPARATE ILLUSTRATION

<END>

159-7156 MOTOR GP-PISTON–STEERING*R

S/N: S6T1-UP; S6X1-UP; S6Y1-UP
PART OF 317-1758 HYDRAULIC AR-2 VALVE

SMCS-5058 i03982707

NOTE	REF NO	GRAPHIC REF	PART NUMBER	QTY	PART NAME 1 2 3 4 5 6 (PRODUCT LEVEL)	SEE PAGE
Y	1	1	171-6001	1	ROTATING GP-MOTOR	400
	2	1	106-1227	1	HOUSING	
	3	1	2H-3934	1	SEAL-O-RING	
	4	1	9T-4849	1	HEAD	
	5	1	8T-4231	1	DOWEL	
M	6	1	8T-3957	6	BOLT-SOCKET HEAD (M12X1.75X30-MM)	

M-METRIC PART
Y-SEPARATE ILLUSTRATION

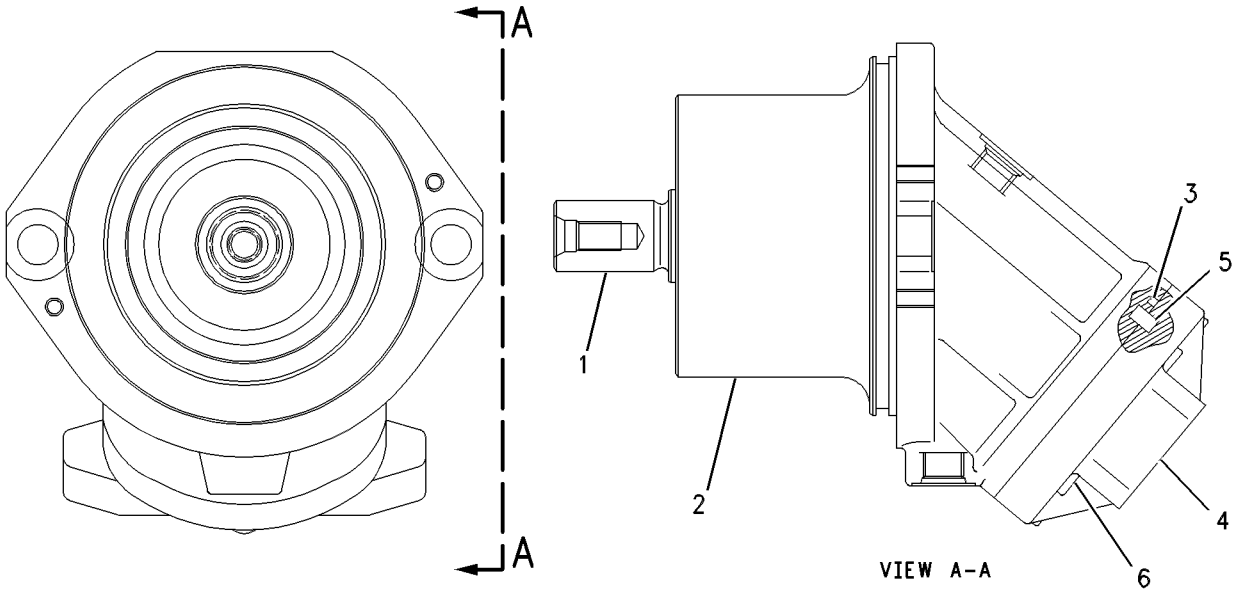

GRAPHIC #1 <END> g00592780

171-6001 ROTATING GP-MOTOR—STEERING

S/N: S6T1-UP; S6X1-UP; S6Y1-UP

PART OF 159-7156 MOTOR GP-PISTON

SMCS-5058 i03982875

NOTE	REF NO	GRAPHIC REF	PART NUMBER	QTY	PART NAME 1 2 3 4 5 6 (PRODUCT LEVEL)	SEE PAGE
	1	1	171-3068	1	SHAFT-MOTOR	
	2	1	123-5748	1	SEAL-SHAFT	
	3	1	9T-1637	1	COVER-FRONT	
	4	1	6V-3326	1	RING-RETAINING	
	5	1	2J-8163	1	SEAL-O-RING	
	6	1	9T-1576	2	SHIM (0.1-MM THK)	
	7	1	9T-1579	2	SHIM (0.3-MM THK)	
	8	1	216-0029	7	SCREW (M6X20-MM)	
	9	1	9T-1687	1	BARREL-CYLINDER	
	10	1	171-3054	1	PIN-CENTER	
	11	1	171-3061	1	SPRING	
B	12	1	171-3055	1	SHIM (4-MM THK)	
B	13	1	171-3057	1	SHIM (3.9-MM THK)	
B	14	1	171-3058	1	SHIM (3.8-MM THK)	
B	15	1	171-3059	1	SHIM (3.7-MM THK)	
B	16	1	171-3060	1	SHIM (3.6-MM THK)	
	17	1	171-5999	1	PLATE-PORT	
	18	1	165-6969	1	PISTON AS	
	19	1	9T-1642	7	PLATE-RETAINING	
	20	1	171-5989	1	KIT-BEARING (ROTATING PISTON MOTOR)	

B-USE AS REQUIRED

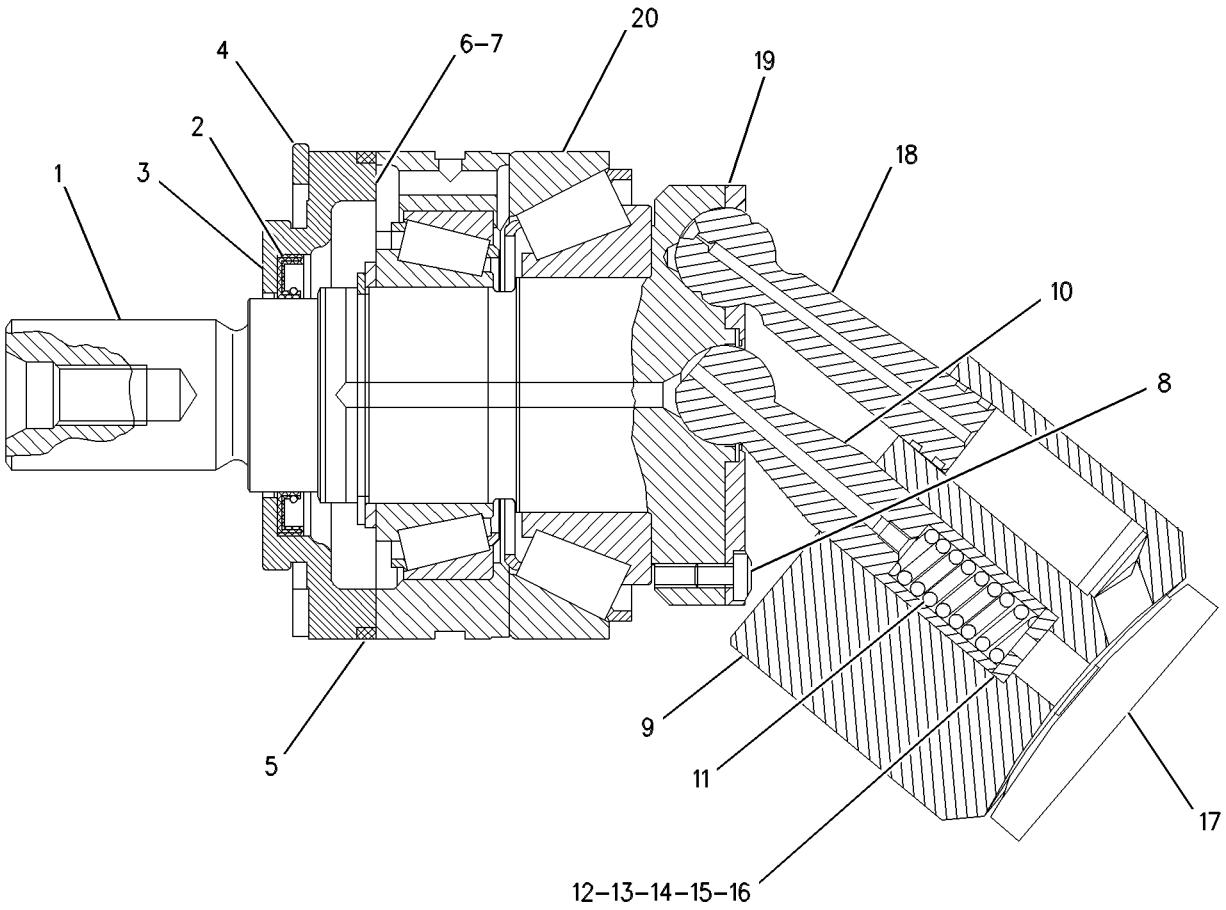

GRAPHIC #1 <END> g00592930

9W-1617 VALVE GP-BRAKE CONTROL

S/N: S6T1-UP; S6X1-UP; S6Y1-UP

PART OF 311-7956 CONTROL GP-GOVERNOR & BRAKE

SMCS-4265, 4282 i03998012

NOTE	REF NO	GRAPHIC REF	PART NUMBER	QTY	PART NAME 1 2 3 4 5 6 (PRODUCT LEVEL)	SEE PAGE
	1	1	9W-1615	1	COVER	
	2	1	0S-1571	2	BOLT (3/8-16X1.75-IN)	
	3	1	6V-1604	1	SEAL-LIP TYPE	
	4	1	8F-3469	1	SEAL-O-RING	
	5	1	8M-4988	1	SEAL-O-RING	
	6	1	9W-1467	1	SPRING	
	7	1	3J-1907	1	SEAL-O-RING	
	8	1	8M-5249	1	SEAL-O-RING	
	9	1	2M-1168	1	SLUG-VALVE	
B	10	1	5S-7018	1	SPACER (7.54X14.15X0.25-MM THK)	
B	11	1	5S-7001	2	SPACER (7.54X14.15X0.9-MM THK)	
	12	1	3K-0360	2	SEAL-O-RING	
	13	1	8M-4435	1	SEAL-O-RING	
	14	1	9W-3302	1	PLUNGER	
	15	1	0L-1351	2	BOLT (3/8-16X0.875-IN)	
	16	1	7G-1577	1	COVER-FLANGE	
	18	1	5P-6944	1	ADAPTER	
	19	1	6V-0852	1	CAP-DUST	
	20	1	6V-3965	1	FITTING (QUICK DISCONNECT)	
	21	1	9W-1614	1	SPOOL AS	
	21A	1	7M-8592	1	RING-RETAINING	
	21B	1	9W-1468	1	SLEEVE	
	21C	1	8M-4409	1	RETAINER	
	21D	1	5M-9548	1	SPRING	
	21E	1	8M-2538	1	POPPET	
	24	1	9S-4185	1	PLUG-O-RING	

B-USE AS REQUIRED

9W-1617 VALVE GP-BRAKE CONTROL ***(contd.)*** i03998012

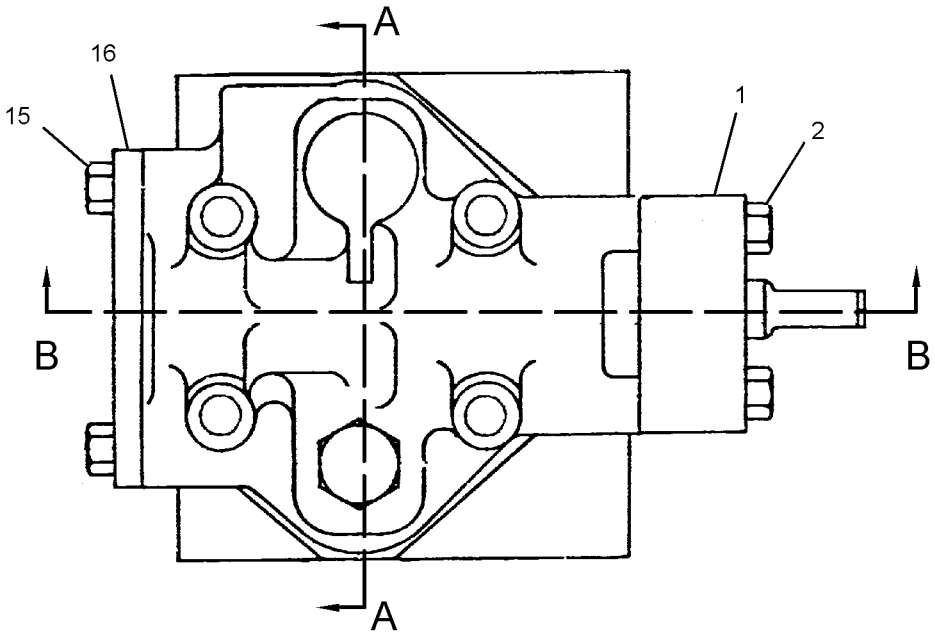

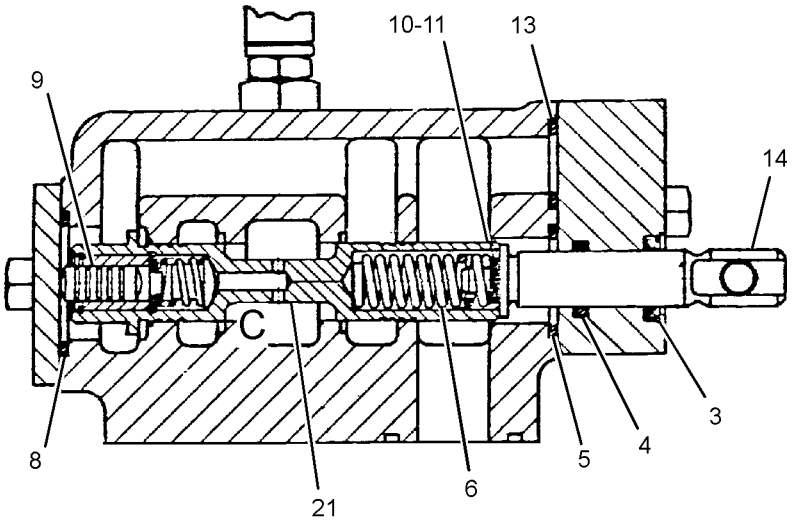

SECTION B-B

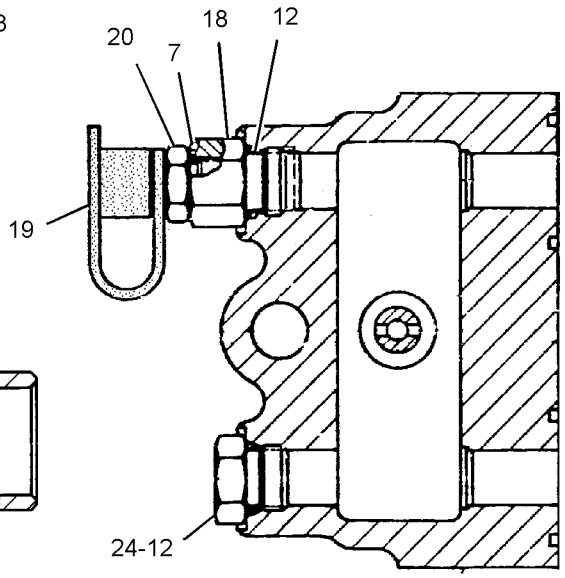

SECTION A-A

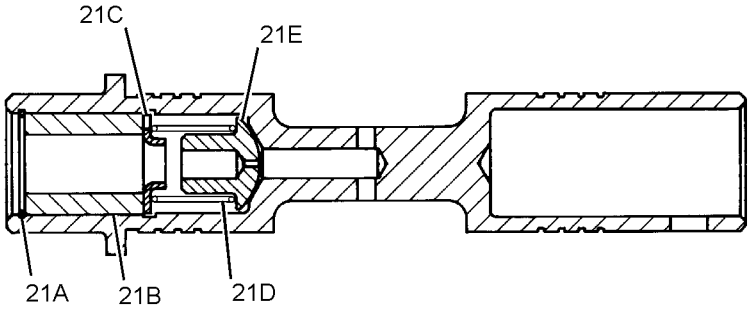

VIEW OF AREA C

GRAPHIC #1 <END> g02177949

229-5421 ADAPTER GP-MOTOR

S/N: S6T1-UP; S6X1-UP; S6Y1-UP
PART OF 317-1758 HYDRAULIC AR-2 VALVE

SMCS-5058 i03997963

NOTE	REF NO	GRAPHIC REF	PART NUMBER	QTY	PART NAME 1 2 3 4 5 6 (PRODUCT LEVEL)	SEE PAGE
	1	1	216-8585	1	ADAPTER	
	2	1	3N-0759	1	RING-SEALING	
	3	1	7K-6058	6	BOLT-12 POINT HEAD (1/2-13X2.5-IN)	
	4	1	8C-6857	2	BOLT (3/4-10X2.75-IN)	
	5	1	8T-4994	2	WASHER-HARD (20X36.5X3.5-MM THK)	
	6	1	8T-7568	1	SEAL-O-RING	

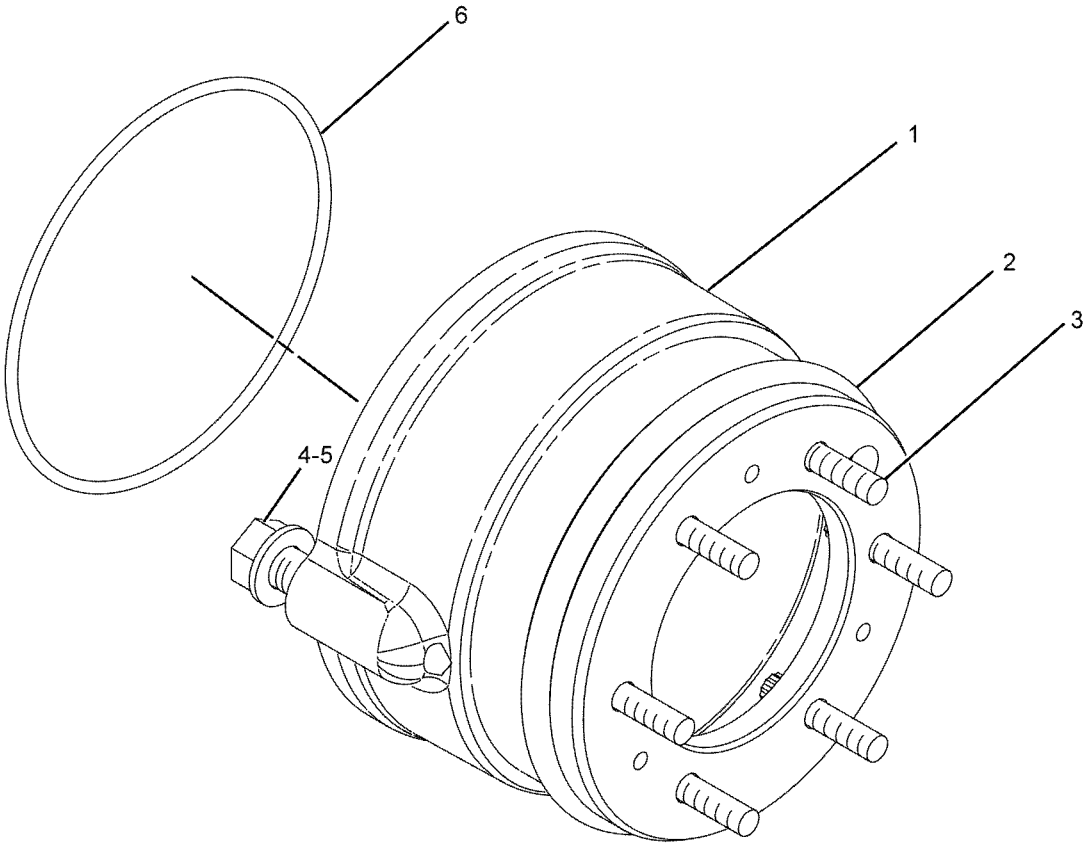

GRAPHIC #1 <END> g01126503

322-3699 CONTROL AR-HYDRAULIC—GRADE CONTROL

S/N: S6T1-UP; S6X1-UP; S6Y1-UP
WITH REAR HYDRAULICS
AN ATTACHMENT

SMCS-5057, 5170, 5357 i04032990

NOTE	PART NUMBER	QTY	PART NAME 1 2 3 4 5 6 (PRODUCT LEVEL)	SEE PAGE
Y	*322-3701*	1	LINES GP-PILOT	432
Y	*322-8631*	1	VALVE GP-PILOT (BULLDOZER)	487
M	8T-4136	2	BOLT (M10X1.5X25-MM)	
M	8T-4192	2	BOLT (M12X1.75X25-MM)	
	235-0523	1	BRACKET	
	8T-4121	2	WASHER-HARD (11X21X2.5-MM THK)	
	8T-4223	2	WASHER-HARD (13.5X25.5X3-MM THK)	

M-METRIC PART
Y-SEPARATE ILLUSTRATION

<END>

322-3710 CONTROL AR-HYDRAULIC—BULLDOZER, RIPPER

S/N: S6T1-UP; S6X1-UP; S6Y1-UP
AN ATTACHMENT

SMCS-5057, 5170, 5357 i04032991

NOTE	PART NUMBER	QTY	PART NAME 1 2 3 4 5 6 (PRODUCT LEVEL)	SEE PAGE
Y	*161-3616*	1	KNOB GP (RIPPER)	557
Y	*222-1167*	1	LINES GP-PILOT	430
Y	*226-8197*	1	LINES GP-RIPPER	443
Y	224-4937	1	VALVE GP-BANK 4 (STEERING, BULLDOZER, RIPPER)	469
Y	167-1177	1	VALVE GP-PILOT (RIPPER)	483
	102-9478	1	FILM-INSTRUCTION (RIPPER CONTROL)	
			(ON THE RAISED SURFACE TO THE RIGHT OF THE CONTROL HANDLE)	

Y-SEPARATE ILLUSTRATION

<END>

322-3711 CONTROL AR-HYDRAULIC—GRADE CONTROL

S/N: S6T1-UP; S6X1-UP; S6Y1-UP
WITHOUT REAR HYDRAULICS
AN ATTACHMENT

SMCS-5057, 5170, 5357 i04032992

NOTE	PART NUMBER	QTY	PART NAME 1 2 3 4 5 6 (PRODUCT LEVEL)	SEE PAGE
Y	*322-3701*	1	LINES GP-PILOT	432
Y	*322-8631*	1	VALVE GP-PILOT (BULLDOZER)	487
M	8T-4136	2	BOLT (M10X1.5X25-MM)	
M	8T-4192	2	BOLT (M12X1.75X25-MM)	
	235-2340	1	BRACKET	
	8T-4121	2	WASHER-HARD (11X21X2.5-MM THK)	
	8T-4223	2	WASHER-HARD (13.5X25.5X3-MM THK)	

M-METRIC PART
Y-SEPARATE ILLUSTRATION

<END>

HYDRAULIC SYSTEM

169-3806 COOLER GP-HYDRAULIC OIL

S/N: S6T1-UP; S6X1-UP; S6Y1-UP
PART OF 317-1762 INSTALLATION AR

SMCS-1374 i04001040

NOTE	REF NO	GRAPHIC REF	PART NUMBER	QTY	PART NAME 1 2 3 4 5 6 (PRODUCT LEVEL)	SEE PAGE
	1	1	143-7397	1	CORE AS-HYDRAULIC OIL COOLER	
	2	1	169-3821	1	BRACKET AS	
	3	1	169-3822	1	BRACKET AS	
M		1	8T-3490	2	NUT-WELD (M10X1.5-THD)	
	4	1	7X-0503	4	WASHER-HARD (10.2X28.5X5-MM THK)	
M	5	1	8T-4133	2	NUT (M10X1.5-THD)	
M	6	1	8T-4136	2	BOLT (M10X1.5X25-MM)	

M-METRIC PART

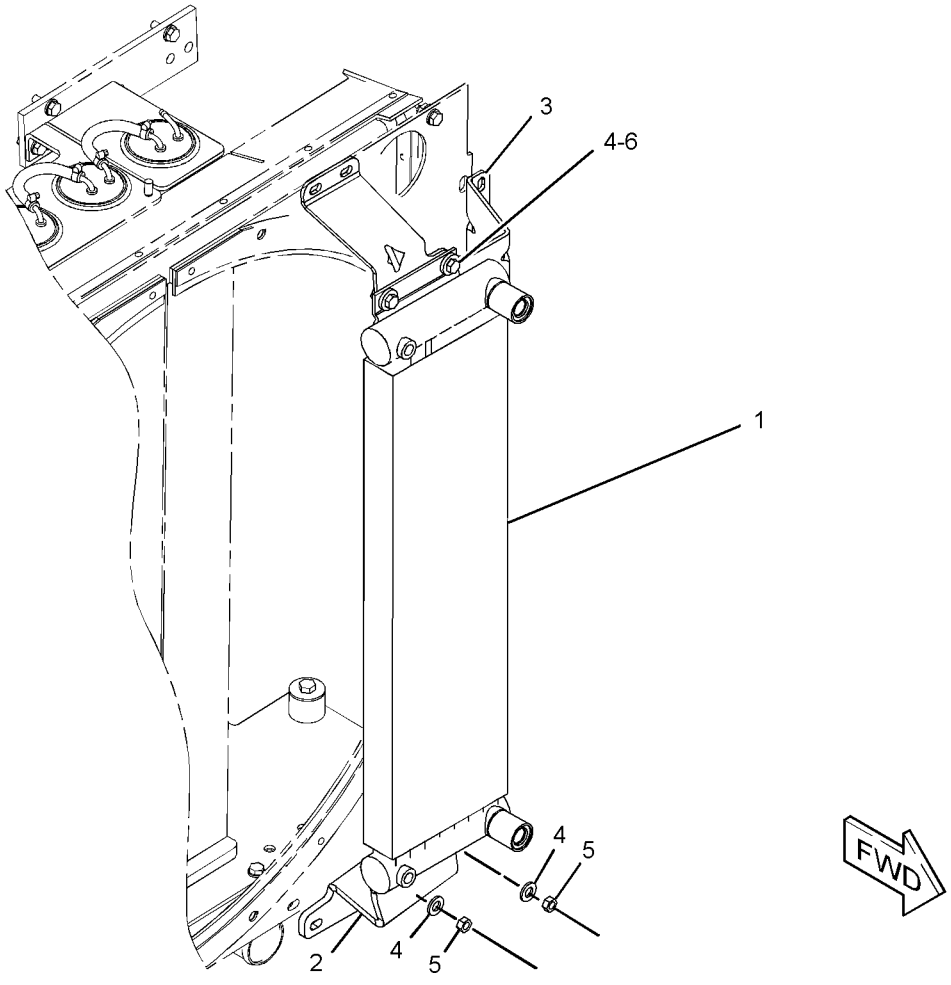

GRAPHIC #1 <END> g02177669

362-4539 CYLINDER & LINES GP-LIFT–RH

S/N: S6T1-UP; S6X1-UP
PART OF 336-9684, 336-9685 CHASSIS AR

SMCS-5102 i03998382

NOTE	REF NO	GRAPHIC REF	PART NUMBER	QTY	PART NAME 1 2 3 4 5 6 (PRODUCT LEVEL)	SEE PAGE
I	1	1	128-2569	1	HOSE AS	
I	2	1	128-2570	1	HOSE AS	
	3	1	*153-6251*	1	CONNECTOR AS	
		1	4K-1388	1	SEAL-O-RING	
		1	6V-8400	1	SEAL-O-RING	
		1	9X-8260	1	CONNECTOR	
Y	4	1	*362-4522*	1	CYLINDER GP-BULLDOZER LIFT	419
	5	1	129-3217	1	GUARD AS	
	6	1	9U-9121	1	CLAMP	
	7	1	9U-9122	1	CLAMP	
	8	1	227-4303	1	TUBE AS	
	9	1	*148-8391*	1	ELBOW AS	
		1	2S-4078	1	SEAL-O-RING	
		1	5K-9090	1	SEAL-O-RING	
		1	8T-8987	1	ELBOW	
	10	1	4J-0520	3	SEAL-O-RING	
	11	1	5P-1075	12	WASHER-HARD (10.2X22.5X3-MM THK)	
	12	1	7S-8920	1	CLIP (SLOT)	
	13	1	7S-8921	1	CLIP (TAB)	
	14	1	8C-3206	2	FLANGE-HALF	
	15	1	8S-0023	1	CLIP (SLOT)	
	16	1	8S-0024	1	CLIP (TAB)	
M	17	1	8T-4133	2	NUT (M10X1.5-THD)	
M	18	1	8T-4136	4	BOLT (M10X1.5X25-MM)	
M	19	1	8T-4196	6	BOLT (M10X1.5X35-MM)	

I-REFER TO HYDRAULIC INFORMATION SYSTEM
M-METRIC PART
Y-SEPARATE ILLUSTRATION

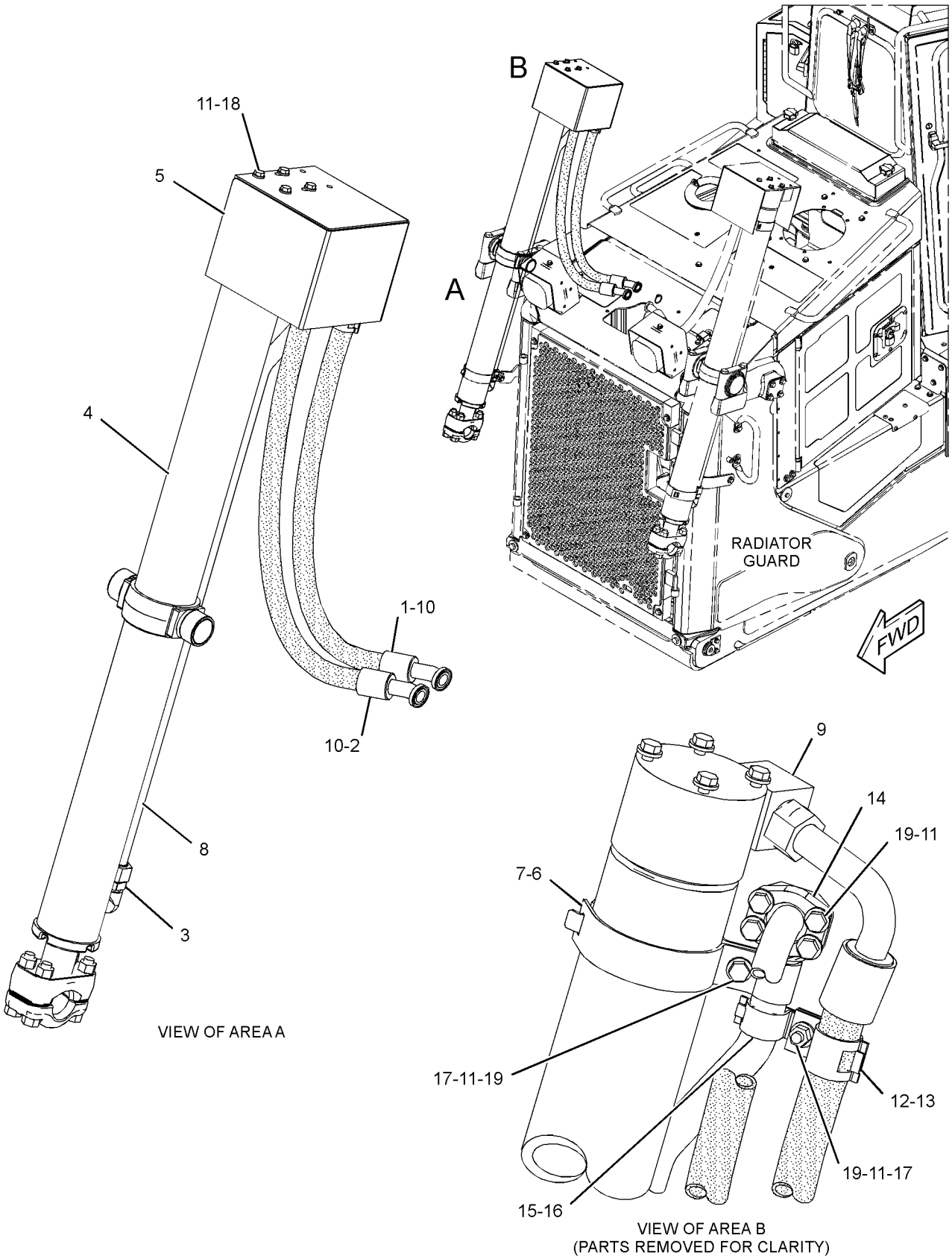

GRAPHIC #1 <END> g02193134

362-4544 CYLINDER & LINES GP-LIFT–LH

S/N: S6T1-UP; S6X1-UP
PART OF 336-9684, 336-9685 CHASSIS AR

SMCS-5102 i03998390

NOTE	REF NO	GRAPHIC REF	PART NUMBER	QTY	PART NAME 1 2 3 4 5 6 (PRODUCT LEVEL)	SEE PAGE
I	1	1	128-2571	1	HOSE AS	
	2	1	9U-9121	1	CLAMP	
	3	1	9U-9122	1	CLAMP	
I	4	1	128-2572	1	HOSE AS	
	5	1	129-3217	1	GUARD AS	
	6	1	*153-6251*	1	CONNECTOR AS	
		1	9X-8260	1	CONNECTOR	
		1	4K-1388	1	SEAL-O-RING	
		1	6V-8400	1	SEAL-O-RING	
Y	7	1	*362-4522*	1	CYLINDER GP-BULLDOZER LIFT	419
	8	1	227-4304	1	TUBE AS	
	9	1	*148-8391*	1	ELBOW AS	
		1	8T-8987	1	ELBOW	
		1	2S-4078	1	SEAL-O-RING	
		1	5K-9090	1	SEAL-O-RING	
	10	1	4J-0520	3	SEAL-O-RING	
	11	1	5P-1075	12	WASHER-HARD (10.2X22.5X3-MM THK)	
	12	1	7S-8920	1	CLIP (SLOT)	
	13	1	7S-8921	1	CLIP (TAB)	
	14	1	8C-3206	2	FLANGE-HALF	
	15	1	8S-0023	1	CLIP (SLOT)	
	16	1	8S-0024	1	CLIP (TAB)	
M	17	1	8T-4133	2	NUT (M10X1.5-THD)	
M	18	1	8T-4136	4	BOLT (M10X1.5X25-MM)	
M	19	1	8T-4196	6	BOLT (M10X1.5X35-MM)	

I-REFER TO HYDRAULIC INFORMATION SYSTEM
M-METRIC PART
Y-SEPARATE ILLUSTRATION

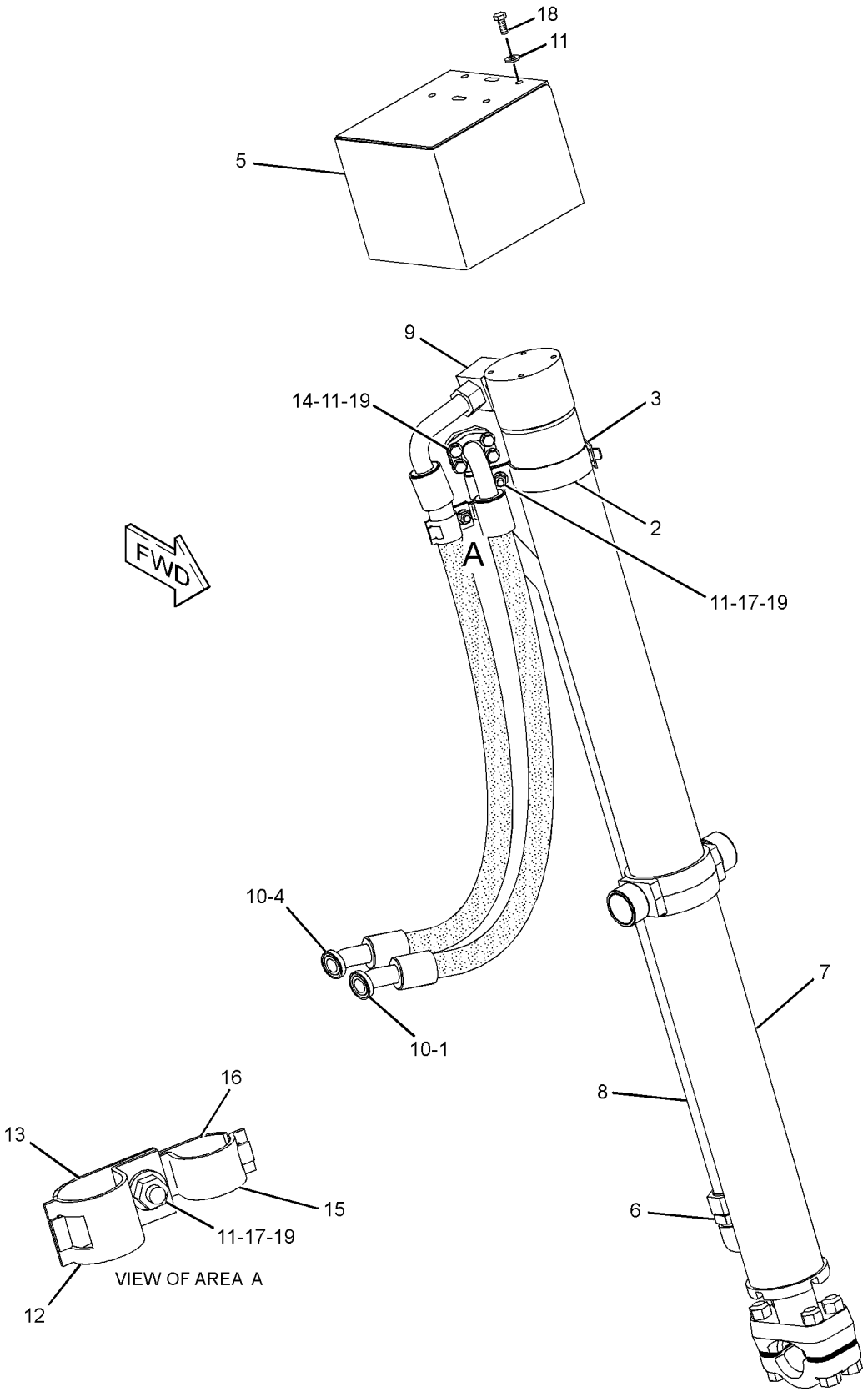

GRAPHIC #1 <END> g01209139

362-4546 CYLINDER & LINES GP-LIFT–RH

S/N: S6Y1-UP

PART OF 336-9686 CHASSIS AR

SMCS-5102 i04011910

NOTE	REF NO	GRAPHIC REF	PART NUMBER	QTY	PART NAME 1 2 3 4 5 6 (PRODUCT LEVEL)	SEE PAGE
I	1	1	128-2573	1	HOSE AS	
I	2	1	128-2574	1	HOSE AS	
	3	1	*153-6251*	1	CONNECTOR AS	
		1	9X-8260	1	CONNECTOR	
		1	4K-1388	1	SEAL-O-RING	
		1	6V-8400	1	SEAL-O-RING	
	4	1	129-3217	1	GUARD AS	
	5	1	9U-9121	1	CLAMP	
	6	1	9U-9122	1	CLAMP	
	7	1	227-4303	1	TUBE AS	
Y	8	1	*362-4547*	1	CYLINDER GP-BULLDOZER LIFT (BULLDOZER LIFT)	420
	9	1	*148-8391*	1	ELBOW AS	
		1	8T-8987	1	ELBOW	
		1	2S-4078	1	SEAL-O-RING	
		1	5K-9090	1	SEAL-O-RING	
	10	1	4J-0520	3	SEAL-O-RING	
	11	1	5P-1075	12	WASHER-HARD (10.2X22.5X3-MM THK)	
	12	1	7S-8920	1	CLIP (SLOT)	
	13	1	7S-8921	1	CLIP (TAB)	
	14	1	8C-3206	2	FLANGE-HALF	
	15	1	8S-0023	1	CLIP (SLOT)	
	16	1	8S-0024	1	CLIP (TAB)	
M	17	1	8T-4133	2	NUT (M10X1.5-THD)	
M	18	1	8T-4136	4	BOLT (M10X1.5X25-MM)	
M	19	1	8T-4196	6	BOLT (M10X1.5X35-MM)	

I-REFER TO HYDRAULIC INFORMATION SYSTEM
M-METRIC PART
Y-SEPARATE ILLUSTRATION

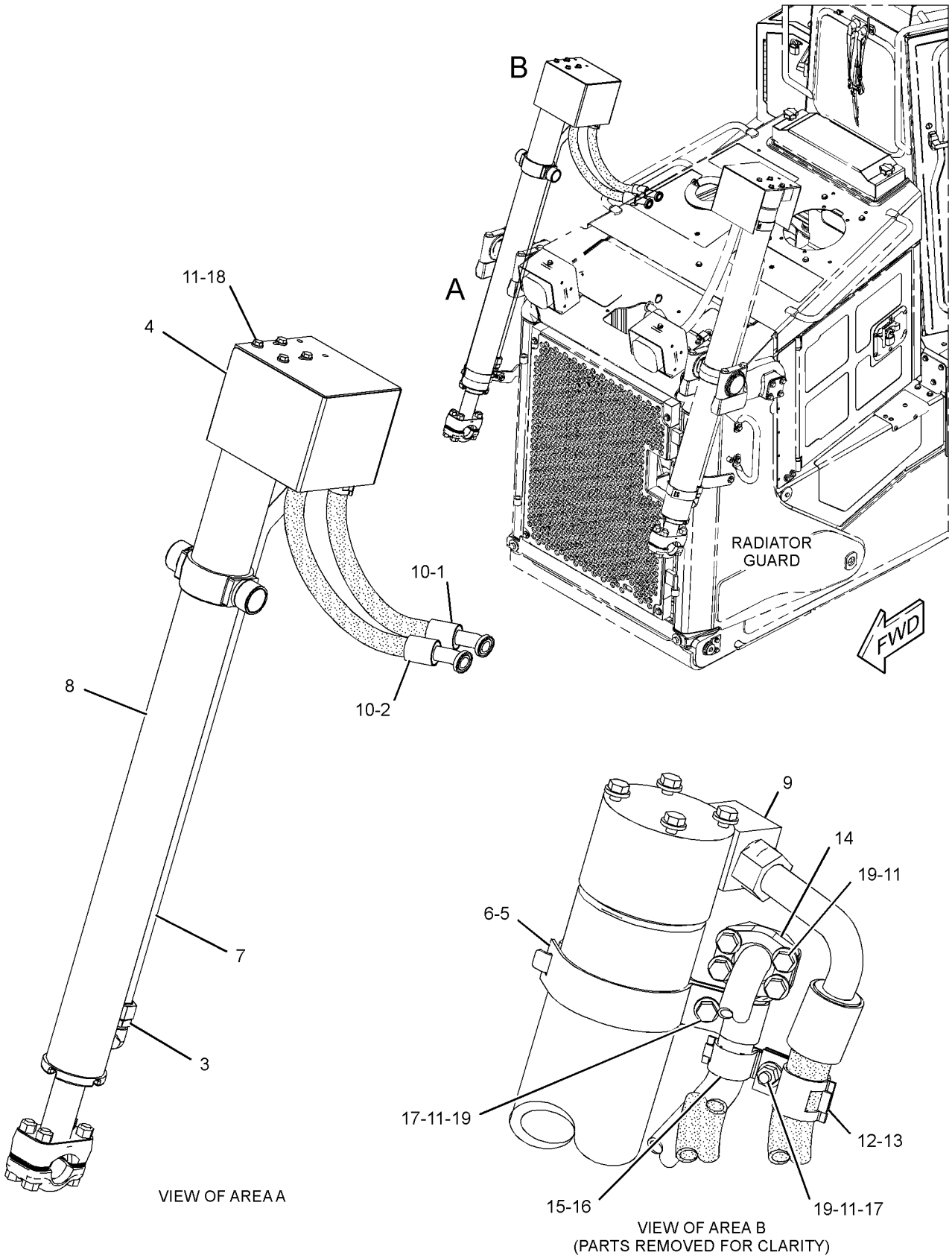

GRAPHIC #1 <END> g02193536

362-4553 CYLINDER & LINES GP-LIFT–LH

S/N: S6Y1-UP

PART OF 336-9686 CHASSIS AR

SMCS-5102 i04011923

NOTE	REF NO	GRAPHIC REF	PART NUMBER	QTY	PART NAME 1 2 3 4 5 6 (PRODUCT LEVEL)	SEE PAGE
I	1	1	128-2575	1	HOSE AS	
I	2	1	128-2576	1	HOSE AS	
	3	1	*153-6251*	1	CONNECTOR AS	
		1	9X-8260	1	CONNECTOR	
		1	4K-1388	1	SEAL-O-RING	
		1	6V-8400	1	SEAL-O-RING	
	4	1	129-3217	1	GUARD AS	
	5	1	9U-9121	1	CLAMP	
	6	1	9U-9122	1	CLAMP	
	7	1	227-4304	1	TUBE AS	
Y	8	1	*362-4547*	1	CYLINDER GP-BULLDOZER LIFT (BULLDOZER LIFT)	420
	9	1	*148-8391*	1	ELBOW AS	
		1	8T-8987	1	ELBOW	
		1	2S-4078	1	SEAL-O-RING	
		1	5K-9090	1	SEAL-O-RING	
	10	1	4J-0520	3	SEAL-O-RING	
	11	1	5P-1075	12	WASHER-HARD (10.2X22.5X3-MM THK)	
	12	1	7S-8920	1	CLIP (SLOT)	
	13	1	7S-8921	1	CLIP (TAB)	
	14	1	8C-3206	2	FLANGE-HALF	
	15	1	8S-0023	1	CLIP (SLOT)	
	16	1	8S-0024	1	CLIP (TAB)	
M	17	1	8T-4133	2	NUT (M10X1.5-THD)	
M	18	1	8T-4136	4	BOLT (M10X1.5X25-MM)	
M	19	1	8T-4196	6	BOLT (M10X1.5X35-MM)	

I-REFER TO HYDRAULIC INFORMATION SYSTEM
M-METRIC PART
Y-SEPARATE ILLUSTRATION

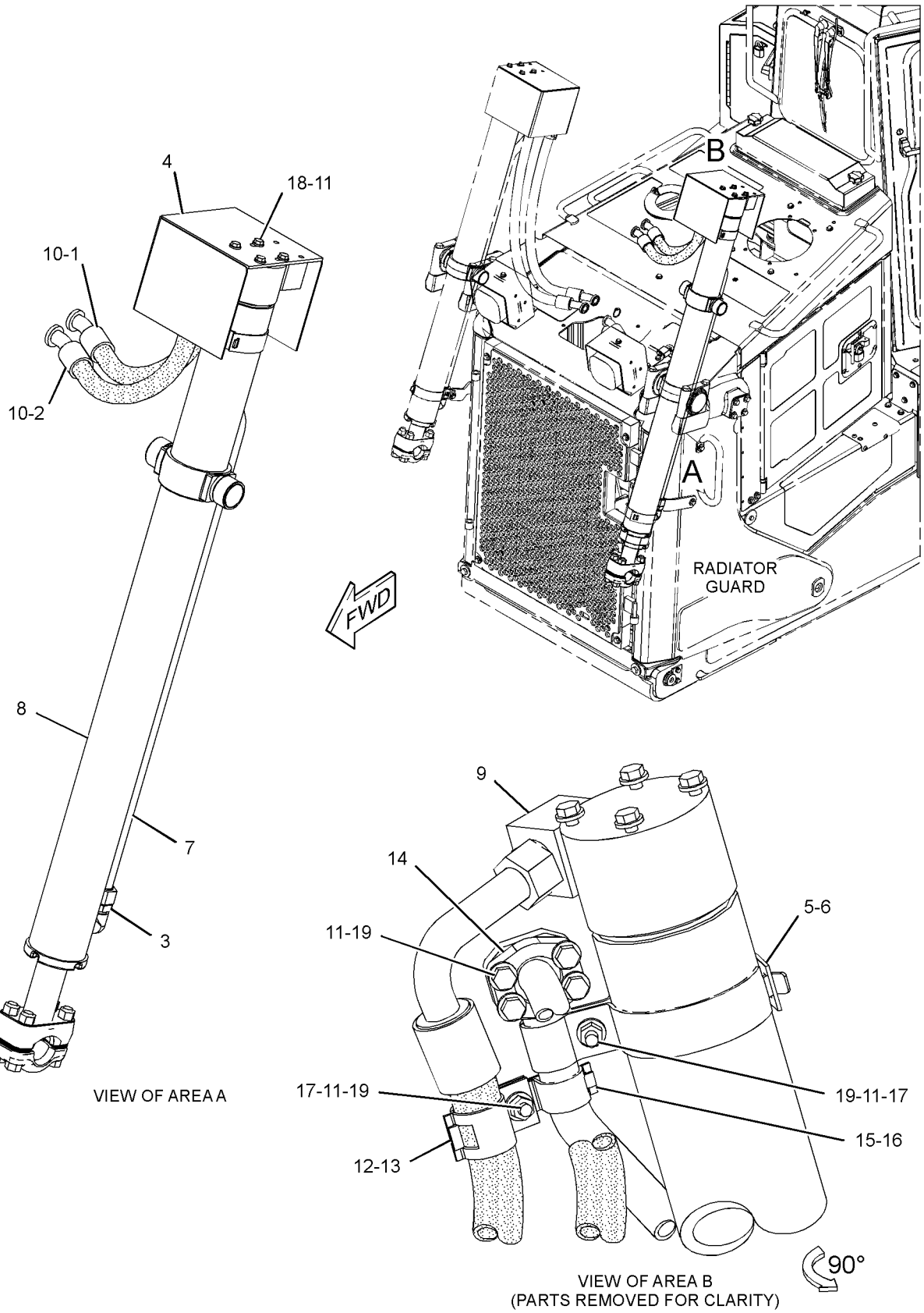

GRAPHIC #1 <END> g02193534

HYDRAULIC SYSTEM

227-0843 CYLINDER GP-BULLDOZER LIFT

S/N: S6Y1-UP

101.6-MM (4-IN) BORE X 1262-MM (49.7-IN) STROKE

PART OF 362-4547 CYLINDER GP-BULLDOZER LIFT

SMCS-5102 i03997805

NOTE	REF NO	GRAPHIC REF	PART NUMBER	QTY	PART NAME 1 2 3 4 5 6 (PRODUCT LEVEL)	SEE PAGE
	1	1	3G-8742	1	WASHER (39.3X63.5X6-MM THK)	
	2	1	4J-0121	1	CAP AS-BEARING	
B	3	1	8E-9212	16	SHIM (0.8-MM THK)	
	4	1	9T-3885	1	PISTON AS	
		1	8C-9160	1	SEAL AS	
R	5	1	114-4304	1	ROD AS	
	6	1	172-9981	1	HEAD	
	7	1	230-4875	1	CYLINDER AS-LIFT	
	7A	1	4J-6374	2	BUSHING	
	7B	1	9T-8958	1	TRUNNION	
	8	1	289-2937	1	SEAL AS-BUFFER	
	9	1	289-2948	1	SEAL-U-CUP	
	10	1	175-7900	1	SEAL-O-RING	
	11	1	1F-6762	1	BOLT (1-1/2-12X4.5-IN)	
	12	1	1M-1571	1	RING-WEAR	
	13	1	225-3281	1	SEAL-WIPER	
	14	1	2K-6830	1	RING-BACKUP	
M	15	1	6V-7742	4	NUT-FULL (M20X2.5-THD)	
M	16	1	8T-0362	4	BOLT (M20X2.5X110-MM)	
	17	1	8T-0785	1	RING-WEAR	

B-USE AS REQUIRED
M-METRIC PART
R-REMFG PART MAY BE AVAILABLE

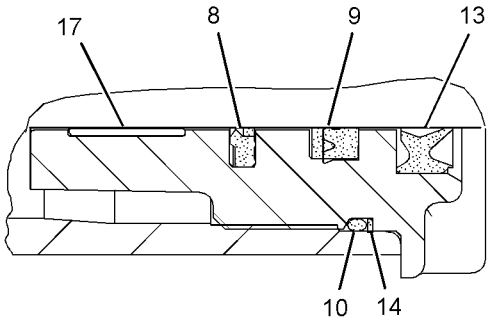

VIEW OF AREA A

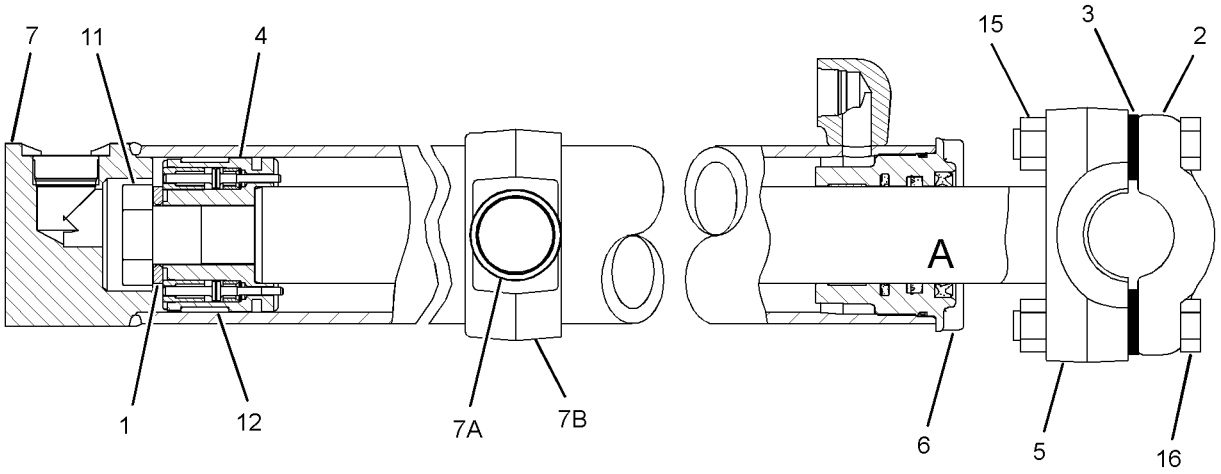

GRAPHIC #1 <END> g01219502

227-0844 CYLINDER GP-BULLDOZER LIFT

S/N: S6T1-UP; S6X1-UP
101.6-MM (4-IN) BORE X 1262-MM (49.7-IN) STROKE
PART OF 362-4522 CYLINDER GP-BULLDOZER LIFT

SMCS-5102 i03997740

NOTE	REF NO	GRAPHIC REF	PART NUMBER	QTY	PART NAME 1 2 3 4 5 6 (PRODUCT LEVEL)	SEE PAGE
	1	1	3G-8742	1	WASHER (39.3X63.5X6-MM THK)	
	2	1	9T-3885	1	PISTON AS	
	2A	1	8C-9160	1	SEAL AS	
R	3	1	114-4304	1	ROD AS	
	4	1	172-9981	1	HEAD	
	5	1	230-4876	1	CYLINDER AS	
	5A	1	4J-6374	2	BUSHING	
	5B	1	9T-8958	1	TRUNNION	
	6	1	167-2201	1	SEAL AS-BUFFER	
	7	1	167-2312	1	SEAL-U-CUP	
	8	1	175-7900	1	SEAL-O-RING	
	9	1	1F-6762	1	BOLT (1-1/2-12X4.5-IN)	
	10	1	1M-1571	1	RING-WEAR	
	11	1	225-3281	1	SEAL-WIPER	
	12	1	2K-6830	1	RING-BACKUP	
	13	1	4J-0121	1	CAP AS-BEARING	
M	14	1	6V-7742	4	NUT-FULL (M20X2.5-THD)	
B	15	1	8E-9212	26	SHIM (0.8-MM THK)	
M	16	1	8T-0362	4	BOLT (M20X2.5X110-MM)	
	17	1	8T-0785	1	RING-WEAR	

B-USE AS REQUIRED
M-METRIC PART
R-REMFG PART MAY BE AVAILABLE

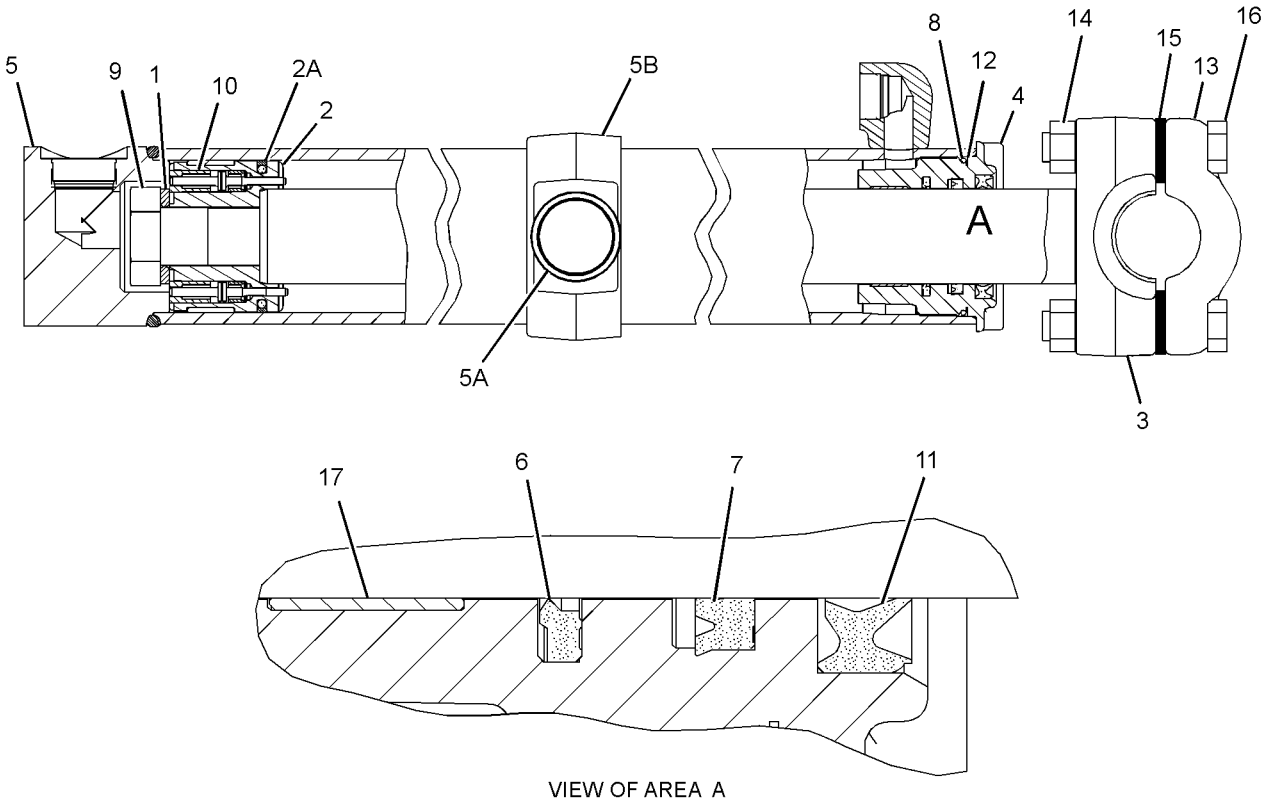

VIEW OF AREA A

GRAPHIC #1 <END> g01227064

362-4522 CYLINDER GP-BULLDOZER LIFT–LH–RH

S/N: S6T1-UP; S6X1-UP

PART OF 362-4539, 362-4544 CYLINDER & LINES GP-LIFT

SMCS-5102 i03998381

NOTE	REF NO	GRAPHIC REF	PART NUMBER	QTY	PART NAME 1 2 3 4 5 6 (PRODUCT LEVEL)	SEE PAGE
Y	1	1	227-0844	1	CYLINDER GP-BULLDOZER LIFT	417

Y-SEPARATE ILLUSTRATION

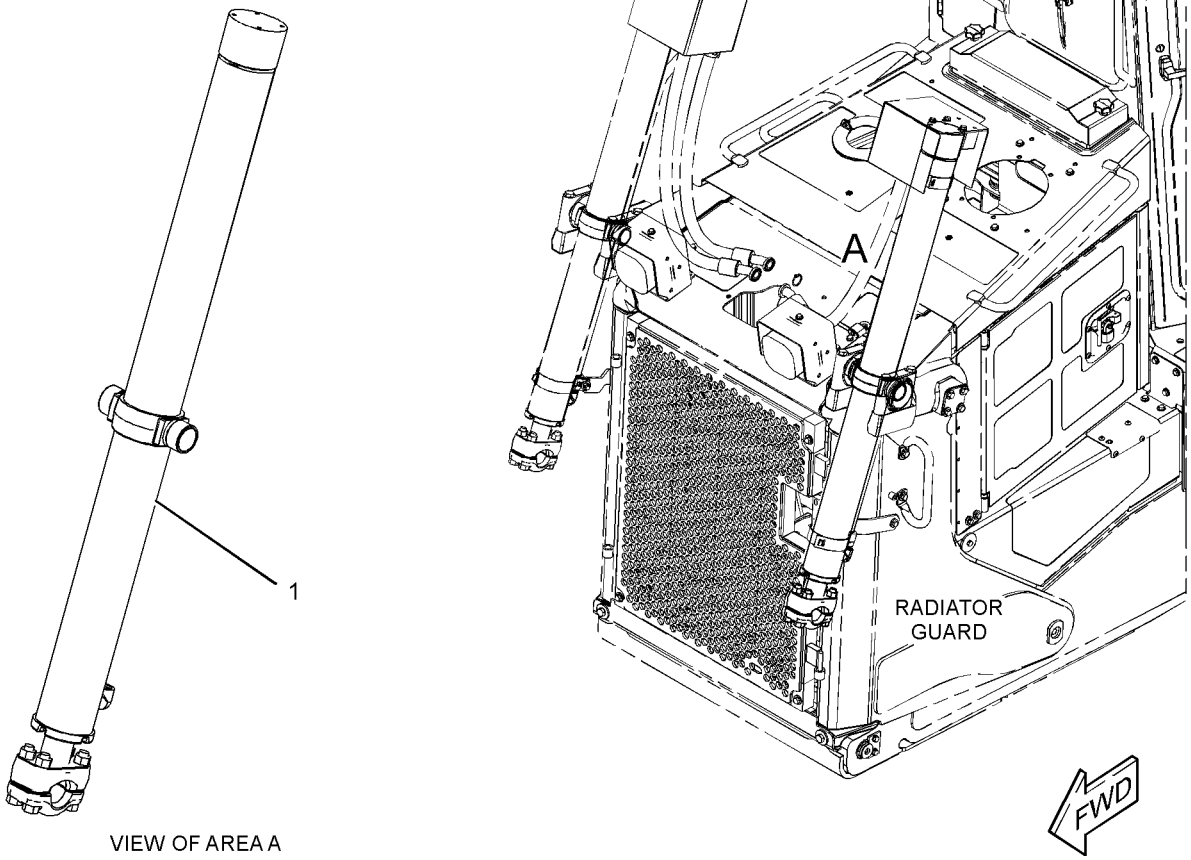

VIEW OF AREA A

GRAPHIC #1 <END> g02193736

362-4547 CYLINDER GP-BULLDOZER LIFT–LH–RH

S/N: S6Y1-UP

PART OF 362-4546, 362-4553 CYLINDER & LINES GP-LIFT

SMCS-5102 i04011912

NOTE	REF NO	GRAPHIC REF	PART NUMBER	QTY	PART NAME 1 2 3 4 5 6 (PRODUCT LEVEL)	SEE PAGE
Y	1	1	227-0843	1	CYLINDER GP-BULLDOZER LIFT	415

Y-SEPARATE ILLUSTRATION

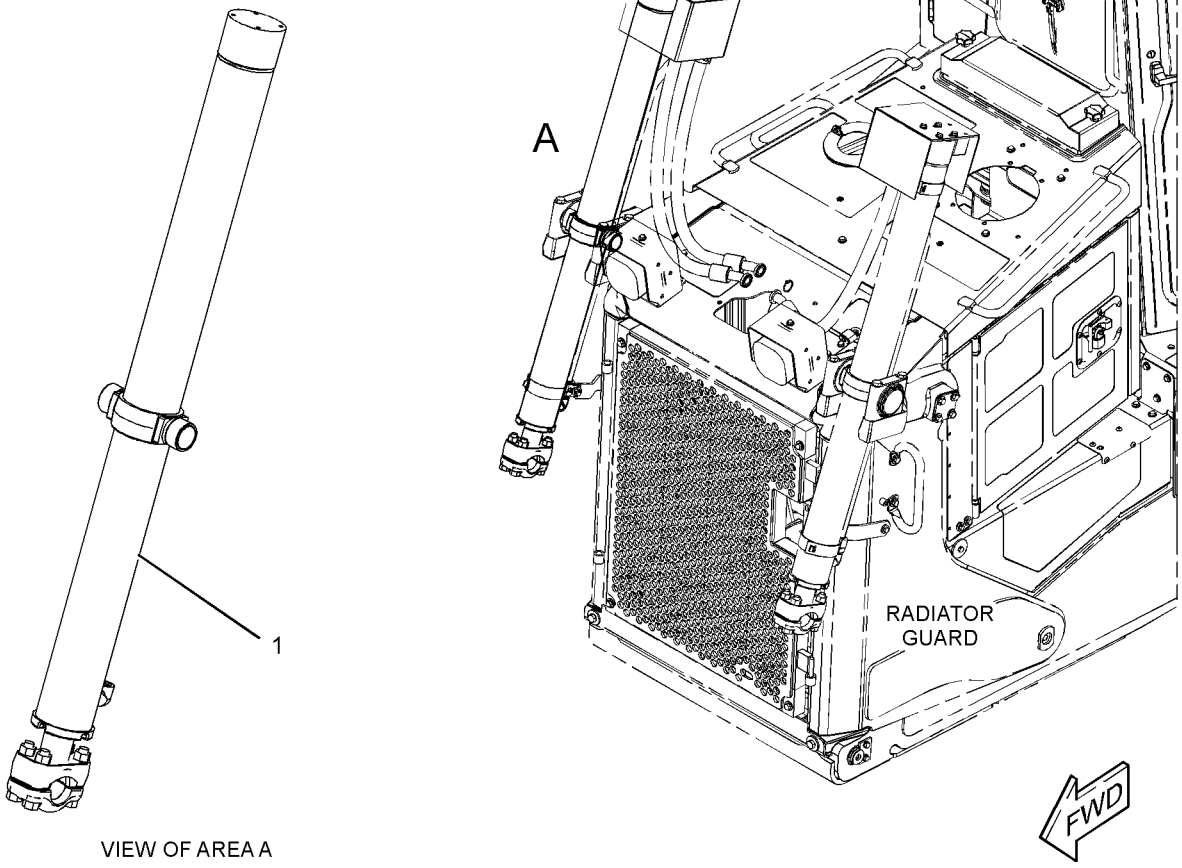

VIEW OF AREA A

GRAPHIC #1 <END> g02193416

227-0842 CYLINDER GP-RIPPER—LIFT

S/N: RXE1-UP
127-MM (5.0-IN) BORE X 362-MM (14.3-IN) STROKE
PART OF 358-4694 RIPPER AR
AN ATTACHMENT

SMCS-5352, 5356 i04015395

NOTE	REF NO	GRAPHIC REF	PART NUMBER	QTY	PART NAME 1 2 3 4 5 6 (PRODUCT LEVEL)	SEE PAGE
	1	1	230-4873	1	CYLINDER AS	
	1A	1	4K-3128	2	BUSHING	
	2	1	2J-0564	1	LOCKNUT (2-12-THD)	
	3	1	3G-1753	1	PISTON	
	4	1	4J-3420	1	RING-WEAR	
	5	1	5J-5020	1	SEAL AS	
		1	5J-4973	1	RING-EXPANDER	
		1	5J-4974	1	SEAL	
	6	1	3G-1757	1	WASHER (50.95X82X12-MM THK)	
	7	1	2K-4096	1	RING-BACKUP	
	8	1	5F-3144	1	SEAL-O-RING	
	9	1	230-4872	1	HEAD	
	10	1	9T-2714	1	ROD AS	
	10A	1	2K-4507	1	BUSHING	
	11	1	8T-5668	1	RING-WEAR	
	12	1	289-2937	1	SEAL AS-BUFFER	
	13	1	289-2948	1	SEAL-U-CUP	
	14	1	225-3281	1	SEAL-WIPER	
	15	1	6V-8237	4	WASHER (26X44X4-MM THK)	
M	16	1	173-9779	4	BOLT (M24X3X80-MM)	
	17	1	1P-4576	4	FLANGE-HALF	
M	18	1	8T-4196	8	BOLT (M10X1.5X35-MM)	
	19	1	8T-4121	8	WASHER-HARD (11X21X2.5-MM THK)	

M-METRIC PART

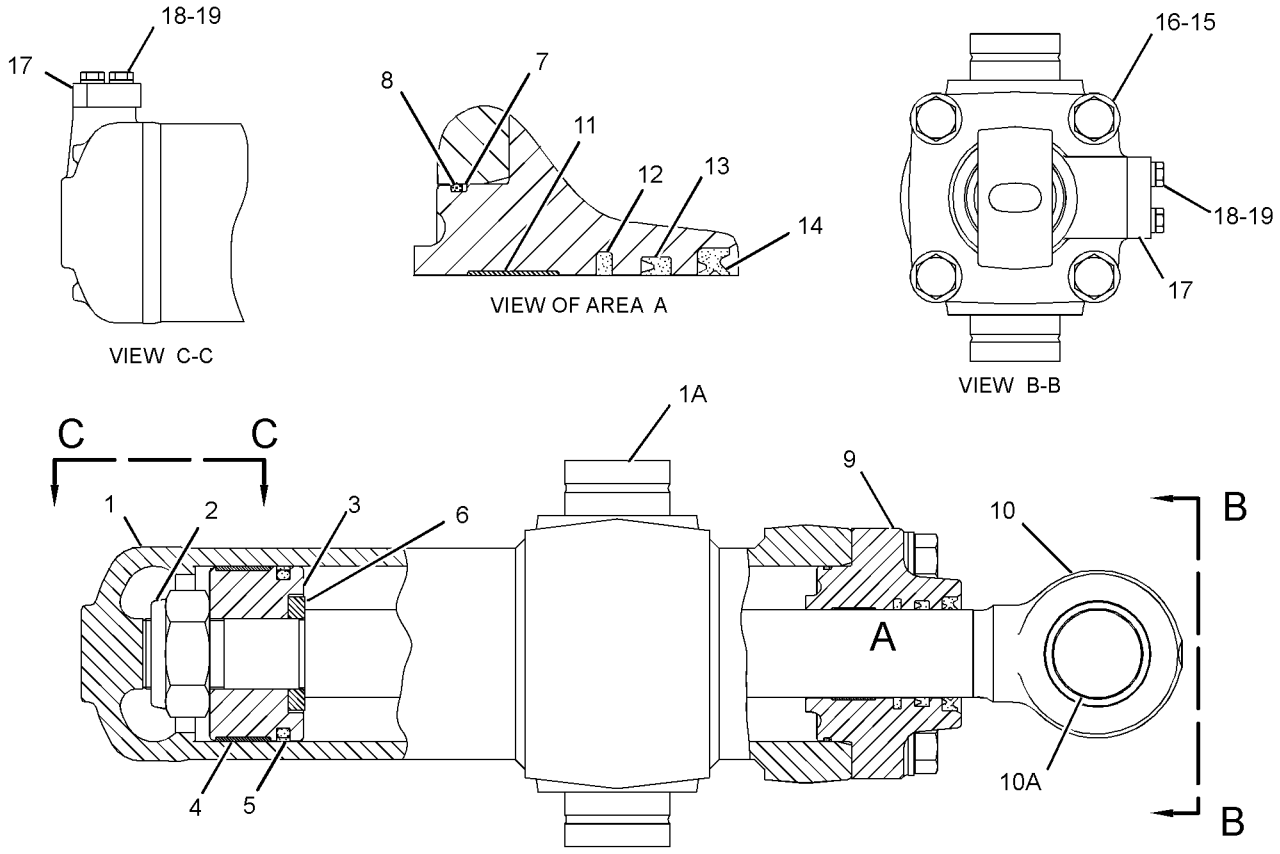

GRAPHIC #1 <END> g01224913

227-0841 CYLINDER GP-TILT

S/N: S6X1-UP
152.4-MM (6.0-IN) BORE X 105-MM (4.1-IN) STROKE
PART OF 251-9814 BRACE GP-BULLDOZER
AN ATTACHMENT

SMCS-5104 i04015388

NOTE	REF NO	GRAPHIC REF	PART NUMBER	QTY	PART NAME 1 2 3 4 5 6 (PRODUCT LEVEL)	SEE PAGE
	1	1	1J-0708	1	RING-WEAR	
	2	1	5J-4989	1	SEAL AS	
		1	5J-4418	1	SEAL	
R	3	1	9T-6093	1	ROD-PISTON	
	4	1	118-1170	1	PISTON AS	
		1	1J-8569	2	INSERT-PISTON	
	5	1	132-1249	2	WASHER (44X84X6.35-MM THK)	
	6	1	230-7887	1	HEAD AS	
		1	225-3281	1	SEAL-WIPER	
	7	1	230-7892	1	CYLINDER AS	
	7A	1	2J-8489	1	BEARING	
	8	1	289-2937	1	SEAL AS-BUFFER	
	9	1	289-2948	1	SEAL-U-CUP	
M	10	1	173-9779	4	BOLT (M24X3X80-MM)	
	11	1	225-3281	1	SEAL-WIPER	
	12	1	2K-3258	1	RING-BACKUP	
	13	1	5H-3252	1	SEAL-O-RING	
	14	1	5J-5731	1	LOCKNUT (1-3/4-12-THD)	
	15	1	6V-8237	4	WASHER (26X44X4-MM THK)	
	16	1	8T-5668	1	RING-WEAR	

M-METRIC PART
R-REMFG PART MAY BE AVAILABLE

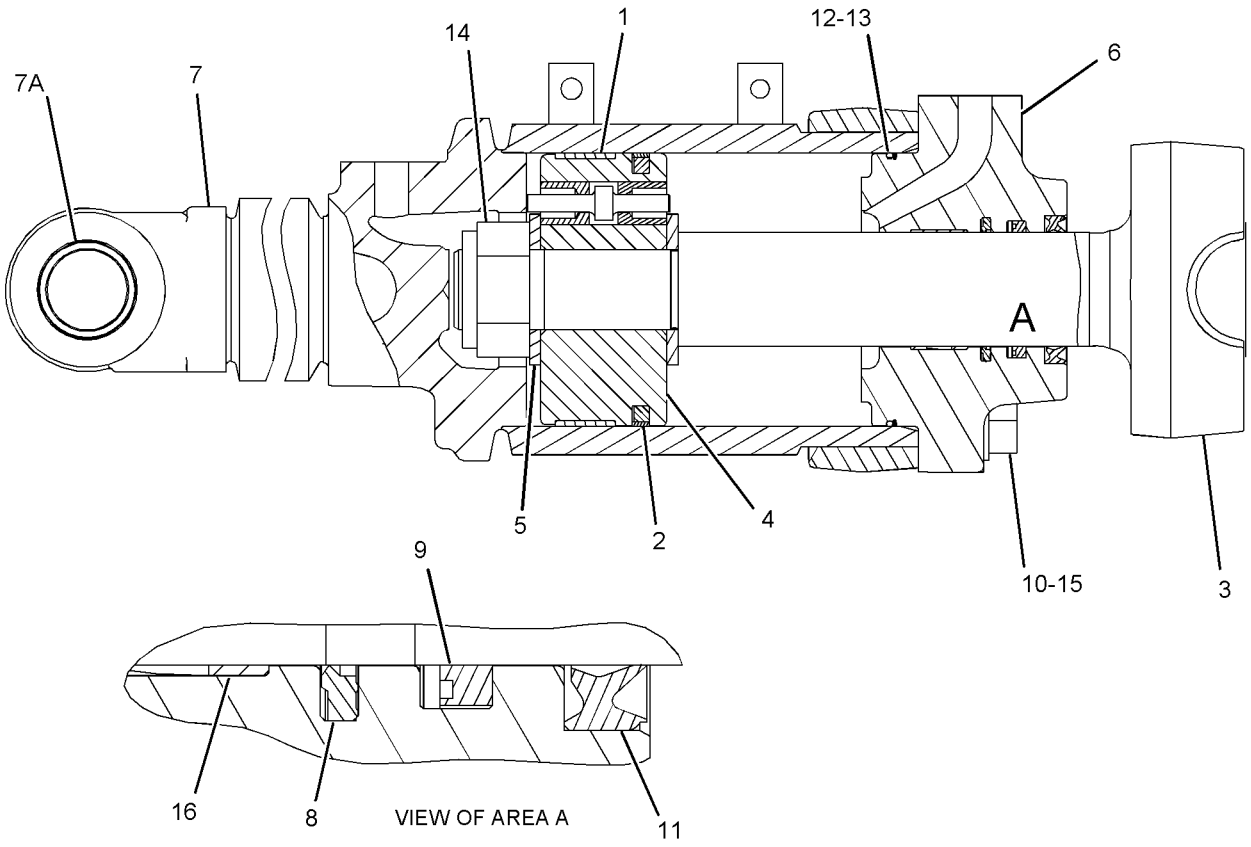

GRAPHIC #1 <END> g02188776

233-9134 CYLINDER GP-TILT

S/N: S6T1-UP; S6X1-UP; S6Y1-UP
165.1-MM (6.5-IN) BORE X 128-MM (5.0-IN) STROKE
PART OF 223-4004, 230-5554, 252-5853 PUSH ARM GP
AN ATTACHMENT

SMCS-5104 i04001506

NOTE	REF NO	GRAPHIC REF	PART NUMBER	QTY	PART NAME 1 2 3 4 5 6 (PRODUCT LEVEL)	SEE PAGE
R	1	1	1U-4069	1	ROD AS	
	2	1	4T-0259	1	PISTON	
	3	1	8E-5703	24	SHIM (0.8-MM THK)	
	4	1	8J-2880	1	CAP-BEARING	
	5	1	225-3284	1	SEAL-WIPER	
	6	1	233-9135	1	CYLINDER AS	
	6A	1	2J-8489	1	BEARING	
	7	1	233-9138	1	HEAD-CYLINDER	
	8	1	167-2208	1	SEAL AS-BUFFER	
	9	1	167-2319	1	SEAL-U-CUP	
	10	1	1J-2921	1	BOLT (1-1/2-12X3.75-IN)	
	11	1	3J-9703	1	RING-WEAR	
	12	1	3S-6162	1	WASHER-HARD (40.5X67X6-MM THK)	
	13	1	5J-4991	1	SEAL AS	
M	14	1	6V-7742	4	NUT-FULL (M20X2.5-THD)	
M	15	1	6V-8133	4	BOLT (M24X3X80-MM)	
	16	1	6V-8237	4	WASHER (26X44X4-MM THK)	
M	17	1	6V-9167	4	BOLT (M20X2.5X140-MM)	
	18	1	7J-8955	1	RING-BACKUP	
	19	1	7J-8956	1	SEAL-O-RING	
	20	1	8T-8379	1	SEAL-HEAD	
	21	1	9T-0094	1	RING-WEAR	

M-METRIC PART
R-REMFG PART MAY BE AVAILABLE

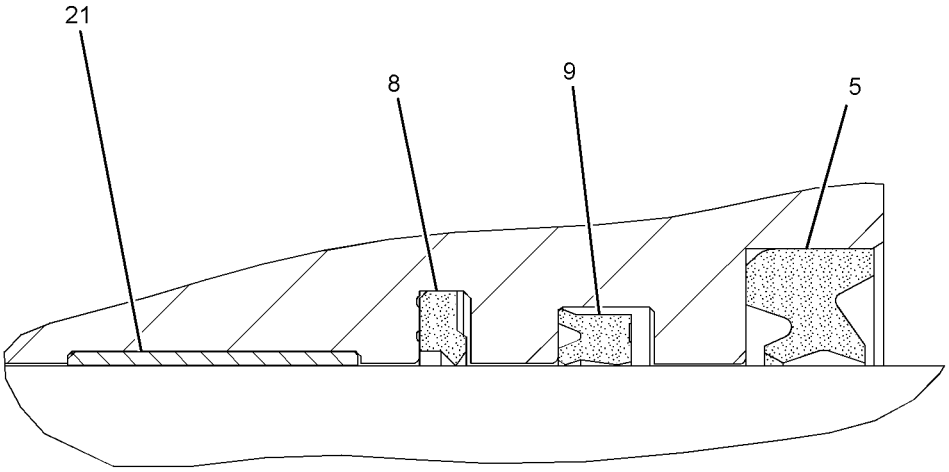

VIEW OF AREA A

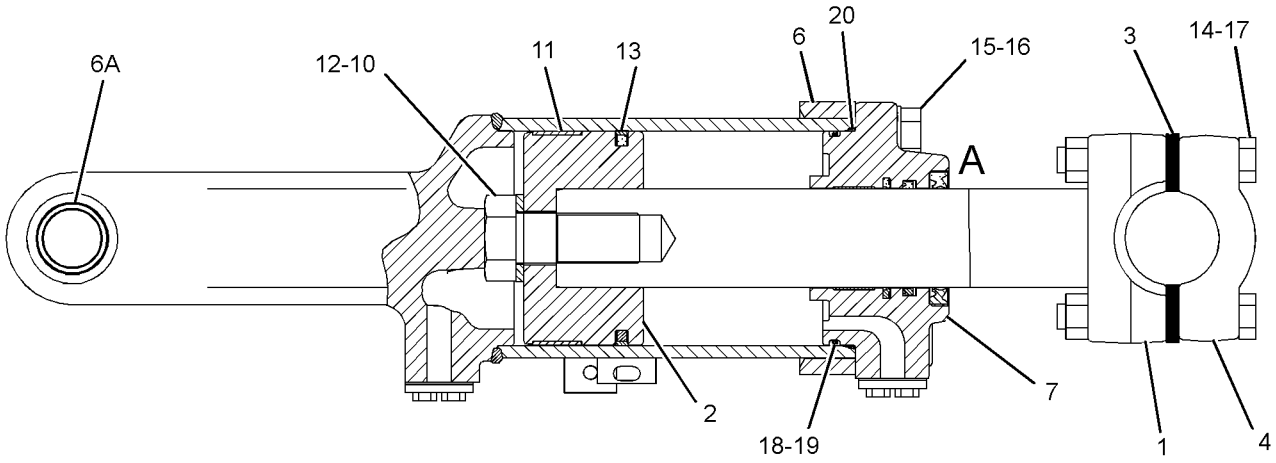

GRAPHIC #1 <END> g01209219

317-1758 HYDRAULIC AR-2 VALVE

S/N: S6T1-UP; S6X1-UP; S6Y1-UP
PART OF 336-9681, 336-9682, 336-9683 GENERAL AR

SMCS-5051 i04033009

NOTE	PART NUMBER	QTY	PART NAME 1 2 3 4 5 6 (PRODUCT LEVEL)	SEE PAGE
Y	*229-5421*	1	ADAPTER GP-MOTOR	404
Y	*222-1150*	1	CONTROL GP-PILOT OPERATED HYD	544
Y	*222-1165*	1	LINES GP-LIFT CYLINDER	428
Y	*340-0117*	1	LINES GP-PILOT	434
Y	*317-3942*	1	LINES GP-PUMP	439
Y	*317-4093*	1	LINES GP-TILT CYLINDER	451
YR	159-7156	1	MOTOR GP-PISTON (STEERING)	399
Y	*222-1159*	1	MOUNTING GP-VALVE	456
Y	*222-1161*	1	PUMP & MOUNTING GP (IMPLEMENT, STEERING)	457
Y	*222-1162*	1	TANK & MTG GP-HYDRAULIC	461
Y	*222-1191*	1	VALVE & MTG GP-COUNTERBALANCE	466
Y	*222-1160*	1	VALVE GP-QUICK-DROP	494

R-REMFG PART MAY BE AVAILABLE
Y-SEPARATE ILLUSTRATION

<END>

HYDRAULIC SYSTEM

222-1165 LINES GP-LIFT CYLINDER

S/N: S6T1-UP; S6X1-UP; S6Y1-UP
PART OF 317-1758 HYDRAULIC AR-2 VALVE

SMCS-5057, 5102 i04008249

NOTE	REF NO	GRAPHIC REF	PART NUMBER	QTY	PART NAME 1 2 3 4 5 6 (PRODUCT LEVEL)	SEE PAGE
I	1	1	239-0797	2	HOSE AS	
	2	1	226-7298	1	TUBE AS	
	3	1	226-7299	1	TUBE AS	
M	4	1	116-3715	2	STUD-TAPERLOCK (M10X1.5X85-MM)	
	5	1	1P-3704	2	SEAL-RECTANGULAR	
	6	1	4J-0520	4	SEAL-O-RING	
	7	1	8T-4121	18	WASHER-HARD (11X21X2.5-MM THK)	
	8	1	7G-5984	4	CLIP (TAB)	
	9	1	7G-5985	4	CLIP (SLOT)	
	10	1	7G-5986	4	GROMMET	
	11	1	7X-7729	8	WASHER (11X25X3-MM THK)	
	12	1	8C-3206	4	FLANGE-HALF	
	13	1	8S-0023	2	CLIP (SLOT)	
	14	1	8S-0024	2	CLIP (TAB)	
M	15	1	8T-4133	8	NUT (M10X1.5-THD)	
M	16	1	8T-4136	2	BOLT (M10X1.5X25-MM)	
M	17	1	8T-4185	8	BOLT (M10X1.5X50-MM)	
M	18	1	8T-4196	8	BOLT (M10X1.5X35-MM)	
	19	1	178-3620	1	STRAP-DUAL CLAMP	

I-REFER TO HYDRAULIC INFORMATION SYSTEM
M-METRIC PART

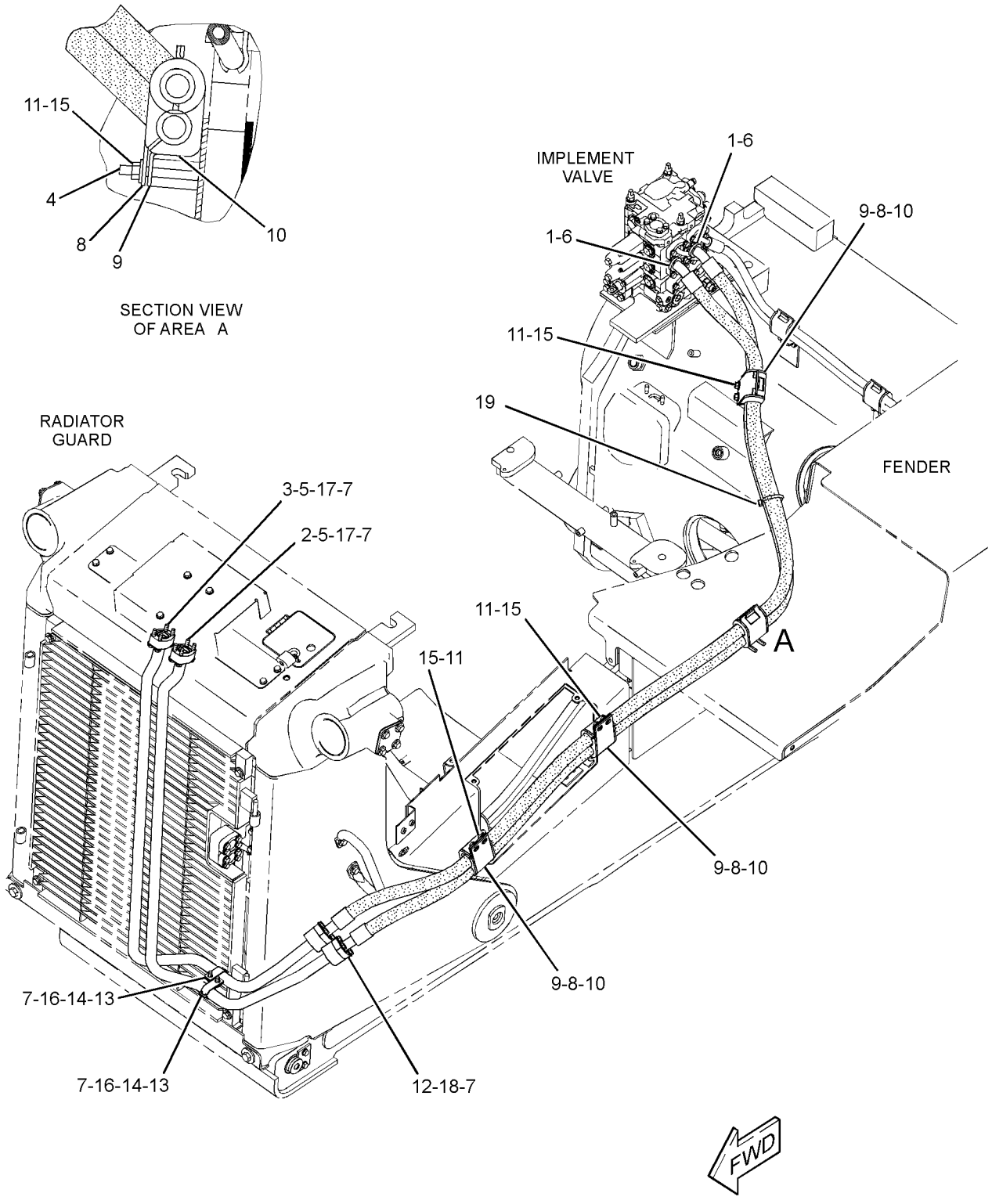

GRAPHIC #1 <END> g02192273

HYDRAULIC SYSTEM

222-1167 LINES GP-PILOT

S/N: S6T1-UP; S6X1-UP; S6Y1-UP
PART OF 322-3710 CONTROL AR-HYDRAULIC
AN ATTACHMENT

SMCS-5057 i03996149

NOTE	REF NO	GRAPHIC REF	PART NUMBER	QTY	PART NAME 1 2 3 4 5 6 (PRODUCT LEVEL)	SEE PAGE
I	1	1	226-3506	1	HOSE AS	
I	2	1	226-3507	1	HOSE AS	
I	3	1	226-3508	1	HOSE AS	
I	4	1	226-3509	1	HOSE AS	
I	5	1	226-3510	1	HOSE AS	
I	6	1	226-3511	1	HOSE AS	
	7	1	*148-8325*	1	CONNECTOR AS	
		1	6V-8641	1	CONNECTOR	
		1	3J-1907	1	SEAL-O-RING	
		1	4J-5477	1	SEAL-O-RING	
	8	1	*148-8326*	1	CONNECTOR AS	
		1	6V-9872	1	CONNECTOR	
		1	3J-7354	1	SEAL-O-RING	
		1	6V-8397	1	SEAL-O-RING	
	9	1	*148-8368*	2	ELBOW AS	
					(EACH INCLUDES)	
		1	6V-8627	1	ELBOW	
		1	3J-1907	1	SEAL-O-RING	
		1	4J-5477	1	SEAL-O-RING	
	10	1	*148-8369*	1	ELBOW AS	
		1	6V-8628	1	ELBOW	
		1	3J-7354	1	SEAL-O-RING	
		1	4J-5477	1	SEAL-O-RING	
	11	1	*148-8378*	1	ELBOW AS	
		1	6V-8724	1	ELBOW	
		1	3J-1907	1	SEAL-O-RING	
		1	6V-8397	1	SEAL-O-RING	

I-REFER TO HYDRAULIC INFORMATION SYSTEM

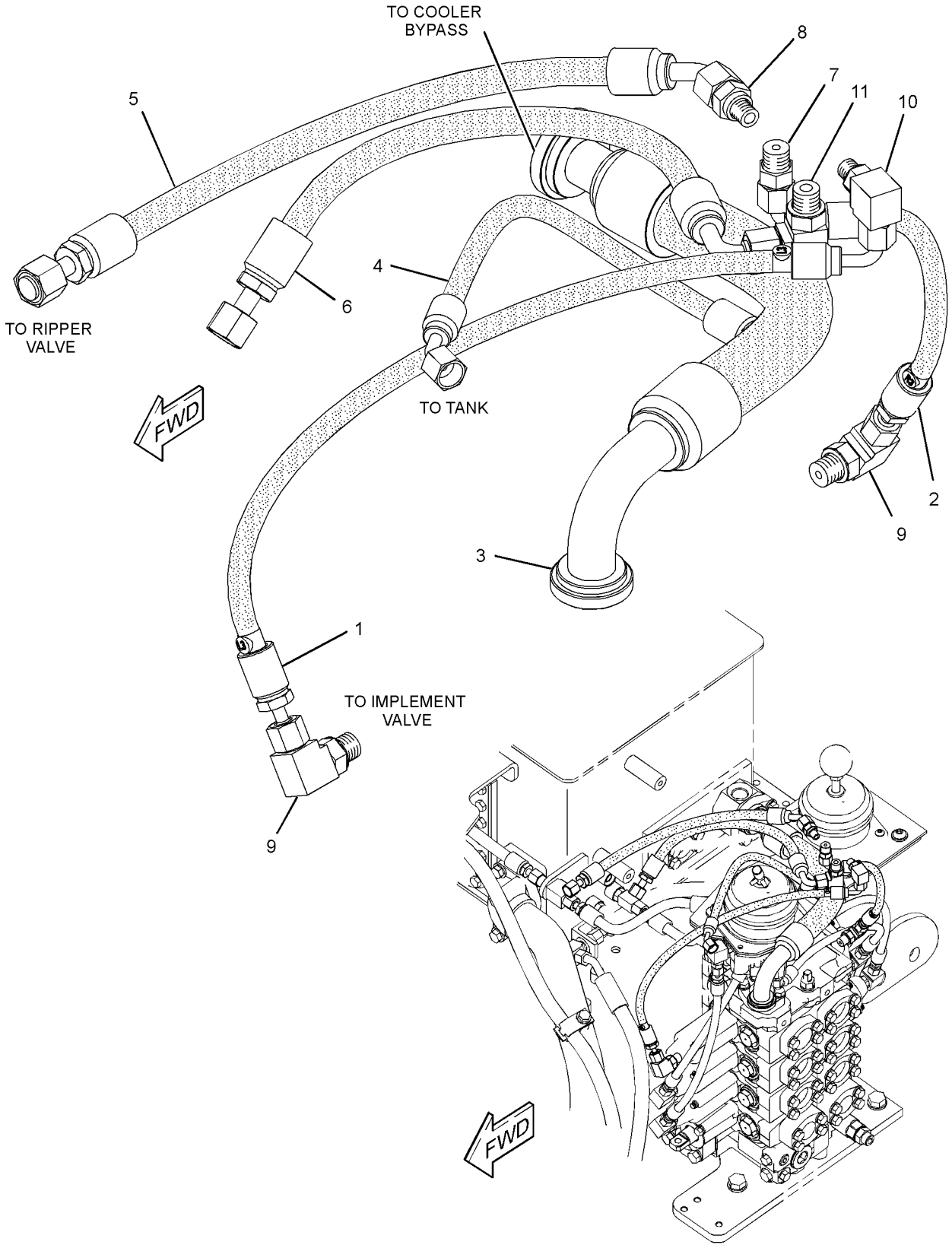

GRAPHIC #1 <END> g01270243

HYDRAULIC SYSTEM

322-3701 LINES GP-PILOT

S/N: S6T1-UP; S6X1-UP; S6Y1-UP
PART OF 322-3699, 322-3711 CONTROL AR-HYDRAULIC
AN ATTACHMENT

SMCS-5057 i04021651

NOTE	REF NO	GRAPHIC REF	PART NUMBER	QTY	PART NAME 1 2 3 4 5 6 (PRODUCT LEVEL)	SEE PAGE
Y	1	1	234-5126	1	VALVE & MTG GP-BULLDOZER (GRADE CONTROL)	465
	2	1	238-4986	4	VALVE GP-SHUTTLE	
	3	1	238-4993	1	HOSE AS	
	4	1	263-3912	1	VALVE	
	5	1	322-3702	1	TUBE AS	
	6	1	322-3703	1	TUBE AS	
	7	1	322-3704	1	TUBE AS	
	8	1	322-3705	1	TUBE AS	
	9	1	322-3706	1	HOSE AS	
	10	1	322-3707	1	HOSE AS	
	11	1	322-3708	1	HOSE AS	
	12	1	322-3709	1	HOSE AS	
	13	1	322-4852	1	HOSE AS	
	14	1	*148-8361*	4	ELBOW AS	
					(EACH INCLUDES)	
		1	6V-9200	1	ELBOW	
		1	3J-7354	1	SEAL-O-RING	
		1	6V-8397	1	SEAL-O-RING	
	15	1	*148-8367*	1	ELBOW AS	
		1	6V-9850	1	ELBOW	
		1	6V-8397	1	SEAL-O-RING	
	16	1	*148-8435*	1	TEE AS	
		1	6V-8781	1	TEE-FACE SEAL	
		1	3J-1907	1	SEAL-O-RING	
		1	6V-8397	2	SEAL-O-RING	
	17	1	*148-8439*	1	TEE AS	
		1	6V-8774	1	TEE	
		1	3J-1907	1	SEAL-O-RING	
		1	6V-8397	2	SEAL-O-RING	
	18	1	*150-4047*	1	ADAPTER AS	
		1	8T-2353	1	ADAPTER	
		1	3J-7354	1	SEAL-O-RING	
	19	1	3J-1907	5	SEAL-O-RING	
	20	1	4J-5477	4	SEAL-O-RING	
	21	1	6V-8397	10	SEAL-O-RING	
	22	1	6V-8934	4	REDUCER AS	

Y-SEPARATE ILLUSTRATION

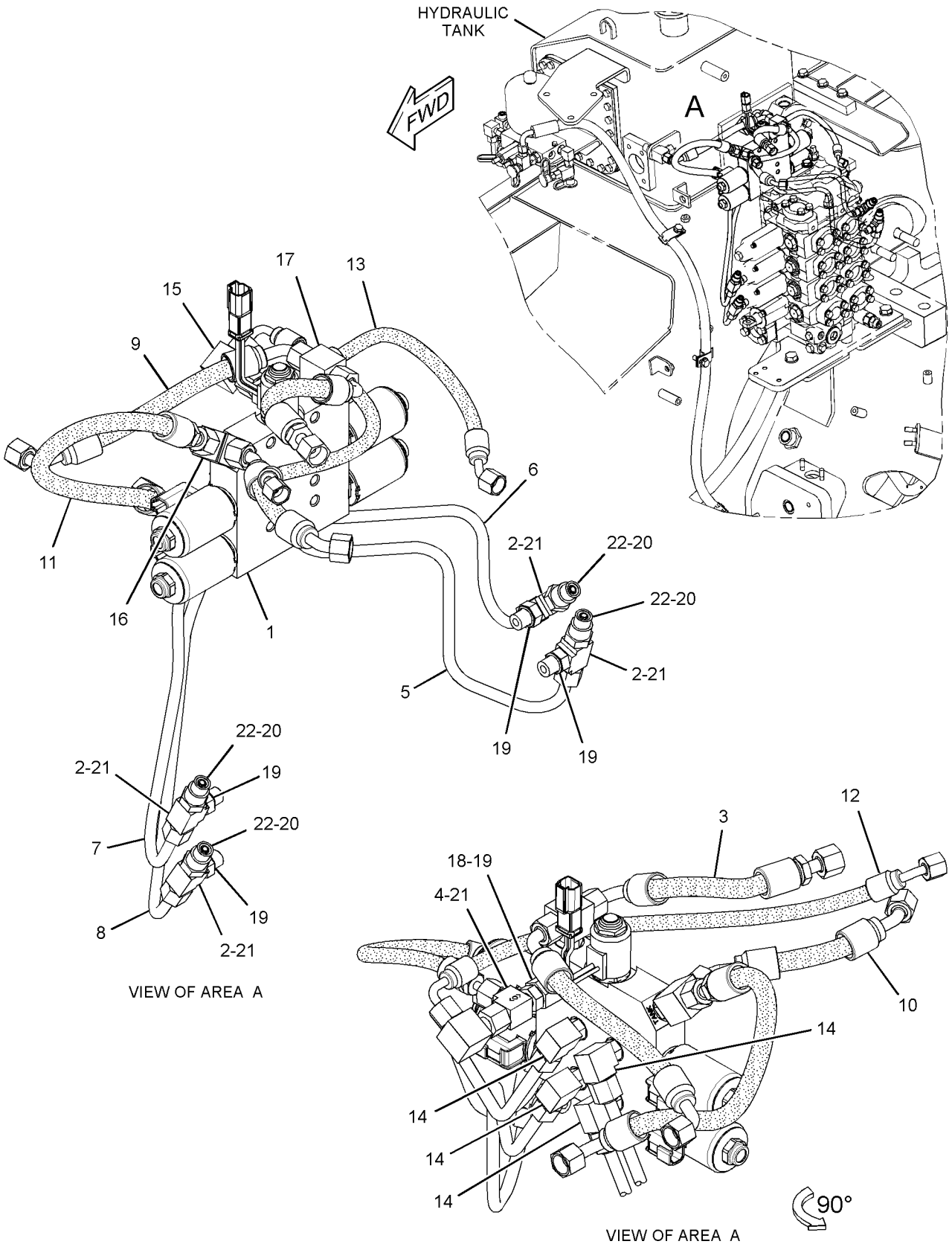

GRAPHIC #1 <END> g02207493

HYDRAULIC SYSTEM

340-0117 LINES GP-PILOT—BULLDOZER

S/N: S6T1-UP; S6X1-UP; S6Y1-UP

PART OF 317-1758 HYDRAULIC AR-2 VALVE

SMCS-5057 i04011458

NOTE	REF NO	GRAPHIC REF	PART NUMBER	QTY	PART NAME 1 2 3 4 5 6 (PRODUCT LEVEL)	SEE PAGE
	1	2	5I-4376	2	FITTING	
	2	2	6V-0852	2	CAP-DUST	
	3	2	8C-3451	1	CAP-DUST	
	4	1	8Y-7452	1	TEE-O-RING	
	5	2	126-0814	1	FITTING AS (SWIVEL)	
		2	6V-0852	1	CAP-DUST	
	6	2	226-3493	1	TUBE AS	
I	7	1	226-3496	1	HOSE AS	
I	8	1	226-3497	2	HOSE AS	
I	9	1	226-3498	1	HOSE AS	
	10	1	226-3500	1	HOSE AS	
	11	1	226-3501	1	HOSE AS	
	12	1	226-3502	1	HOSE AS	
	13	1	226-3503	1	HOSE AS	
I	14	1	226-3504	1	HOSE AS	
	15	1	226-3505	1	HOSE AS	
I	16	1	226-3512	1	HOSE AS	
Y	17	2	226-4751	1	MANIFOLD GP-CONTROL (IMPLEMENT PILOT PRESSURE)	453
Y	18	2	317-6394	1	ACCUMULATOR GP (UNCHARGED)	211
	19	1	320-5896	1	HARNESS AS-SENSOR	
		1	102-8801	1	KIT-RECEPTACLE (12-PIN)	
					(INCLUDES RECEPTACLE AS & WEDGE)	
		1	8T-8737	7	PLUG-SEAL	
E		1	114-8843		SLEEVE-PLASTIC (40-CM)	
E		1	114-8844		SLEEVE-PLASTIC (20-CM)	
E		1	125-7874		TUBE-HEAT SHRINK (5.72-MM DIA) (5-CM)	
		1	9X-3402	6	SOCKET-CONNECTOR (16-GA TO 18-GA)	
					—OR—	
		1	126-1768	6	SOCKET-CONNECTOR (14-GA)	
		1	9X-3401	1	PIN-CONNECTOR (16-GA TO 18-GA)	
					—OR—	
		1	126-1767	1	PIN-CONNECTOR (14-GA TO 16-GA)	
		1	155-2270	3	KIT-CONNECTING PLUG (2-PIN)	
					(EACH INCLUDES PLUG AS, WEDGE & INTERFACE SEAL)	
	20	2	*148-8305*	1	ADAPTER AS	
		2	3J-1907	1	SEAL-O-RING	
		2	5P-9617	1	ADAPTER	
	21	1	*148-8316*	1	CONNECTOR AS	
		1	3J-7354	1	SEAL-O-RING	
		1	4J-5477	1	SEAL-O-RING	
		1	6V-8647	1	CONNECTOR	
	22	2	*148-8318*	3	CONNECTOR AS	
					(EACH INCLUDES)	
		2	3K-0360	1	SEAL-O-RING	
		2	6V-8397	1	SEAL-O-RING	
		2	6V-8634	1	CONNECTOR	
	23	1	*148-8325*	3	CONNECTOR AS	
					(EACH INCLUDES)	
		1	3J-1907	1	SEAL-O-RING	
		1	4J-5477	1	SEAL-O-RING	
		1	6V-8641	1	CONNECTOR	
	24	1	*148-8326*	2	CONNECTOR AS	
					(EACH INCLUDES)	
		1	3J-7354	1	SEAL-O-RING	

340-0117 LINES GP-PILOT ***(contd.)*** i04011458

NOTE	REF NO	GRAPHIC REF	PART NUMBER	QTY	PART NAME 1 2 3 4 5 6 (PRODUCT LEVEL)	SEE PAGE
		1	6V-8397	1	SEAL-O-RING	
		1	6V-9872	1	CONNECTOR	
	25	1,2	*148-8336*	3	CONNECTOR AS	
					(EACH INCLUDES)	
		1,2	3J-1907	1	SEAL-O-RING	
		1,2	6V-8397	1	SEAL-O-RING	
		1,2	6V-8636	1	CONNECTOR	
	26	1	*148-8351*	1	ELBOW AS	
		1	4J-5477	1	SEAL-O-RING	
		1	6V-9849	1	ELBOW	
	27	2	*148-8367*	2	ELBOW AS	
					(EACH INCLUDES)	
		2	6V-8397	1	SEAL-O-RING	
		2	6V-9850	1	ELBOW	
	28	1	*148-8368*	4	ELBOW AS	
					(EACH INCLUDES)	
		1	3J-1907	1	SEAL-O-RING	
		1	4J-5477	1	SEAL-O-RING	
		1	6V-8627	1	ELBOW	
	29	1	*148-8369*	1	ELBOW AS	
		1	3J-7354	1	SEAL-O-RING	
		1	4J-5477	1	SEAL-O-RING	
		1	6V-8628	1	ELBOW	
	30	1	*148-8371*	1	ELBOW AS	
		1	6V-8397	1	SEAL-O-RING	
		1	8C-8988	1	ELBOW	
	31	1,2	*148-8378*	3	ELBOW AS	
					(EACH INCLUDES)	
		1,2	3J-1907	1	SEAL-O-RING	
		1,2	6V-8397	1	SEAL-O-RING	
		1,2	6V-8724	1	ELBOW	
	32	2	*148-8434*	1	TEE AS	
		2	6V-8397	2	SEAL-O-RING	
		2	6V-9843	1	TEE-SWIVEL	
	33	1	*148-8435*	1	TEE AS	
		1	3J-1907	1	SEAL-O-RING	
		1	6V-8397	2	SEAL-O-RING	
		1	6V-8781	1	TEE-FACE SEAL	
	34	1	*153-6246*	1	TEE AS	
		1	6V-8397	3	SEAL-O-RING	
		1	7X-0820	1	TEE-UNION	
	35	2	*164-5567*	2	COUPLER AS-QUICK DISCONNECT (MALE)	
					(EACH INCLUDES)	
		2	6V-3965	1	FITTING (QUICK DISCONNECT)	
		2	214-7568	1	SEAL-O-RING	
	36	2	*164-5590*	1	VALVE AS-FLUID SAMPLING (HYDRAULIC OIL)	
		2	3J-7354	1	SEAL-O-RING	
		2	8C-3446	1	VALVE-FLUID SAMPLING	
	37	2	3D-2824	1	SEAL-O-RING	
	38	2	3J-1907	1	SEAL-O-RING	
	39	1	3J-7354	1	SEAL-O-RING	
	40	1	4J-0520	1	SEAL-O-RING	
	41	1	4J-0522	1	SEAL-O-RING	
	42	1	4J-5477	1	SEAL-O-RING	
	43	1	5P-1075	2	WASHER-HARD (10.2X22.5X3-MM THK)	
	44	2	6V-8076	1	ELBOW	
	45	1	6V-9168	1	NUT (11/16-16-THD)	
	46	1	6V-9829	2	CAP AS	
M	47	2	7X-2535	2	BOLT (M6X1X60-MM)	

340-0117 LINES GP-PILOT ***(contd.)*** i04011458

NOTE	REF NO	GRAPHIC REF	PART NUMBER	QTY	PART NAME 1 2 3 4 5 6 (PRODUCT LEVEL)	SEE PAGE
	48	1	8T-1887	3	CLIP (SLOT)	
	49	1	8T-1888	3	CLIP (TAB)	
M	50	1	8T-4136	2	BOLT (M10X1.5X25-MM)	
	51	2	9X-8256	2	WASHER (6.6X12X2-MM THK)	
	52	1	9X-8257	2	WASHER (17.5X30X3.5-MM THK)	

E-ORDER BY THE CENTIMETER
I-REFER TO HYDRAULIC INFORMATION SYSTEM
M-METRIC PART
Y-SEPARATE ILLUSTRATION

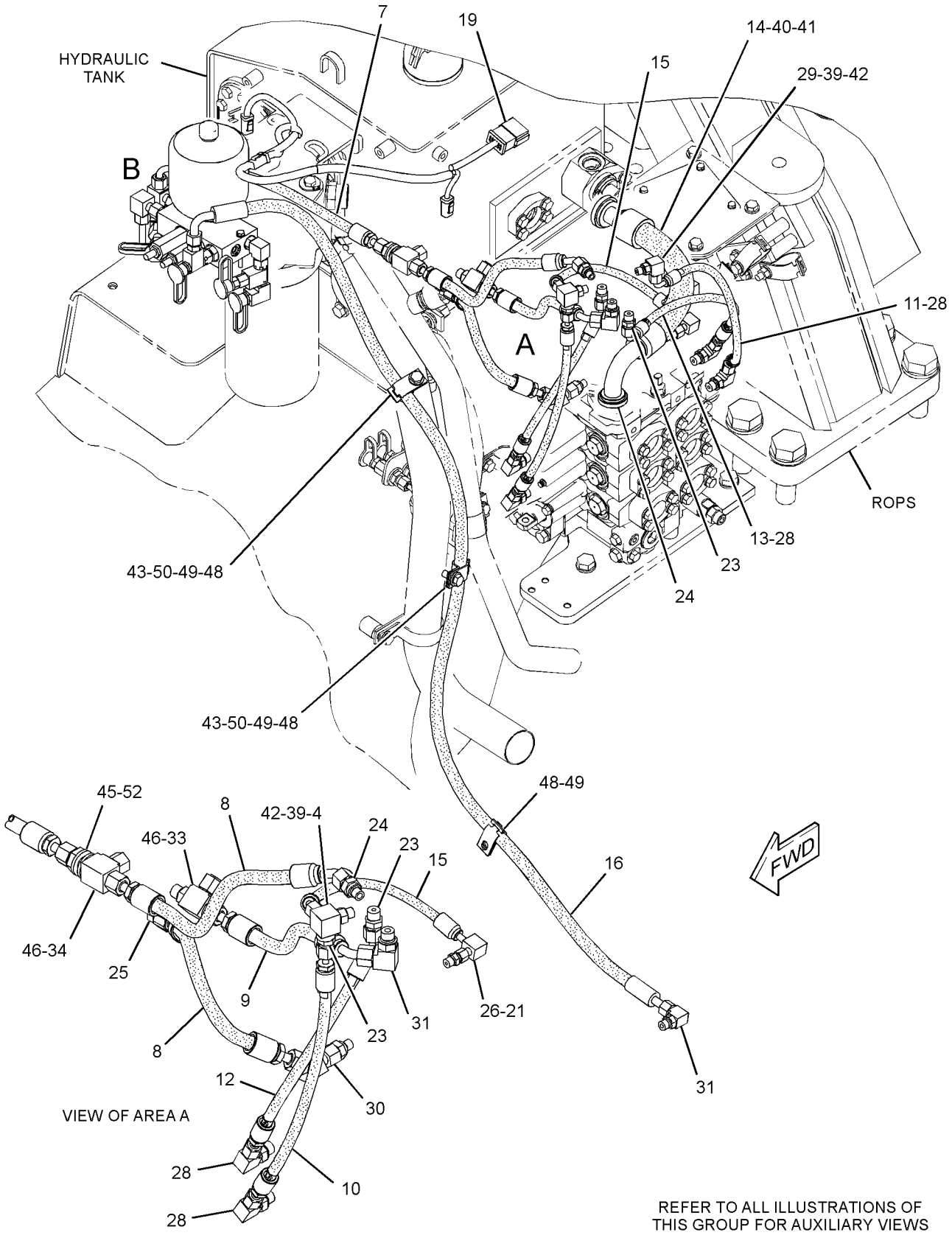

REFER TO ALL ILLUSTRATIONS OF THIS GROUP FOR AUXILIARY VIEWS

GRAPHIC #1 g02207574

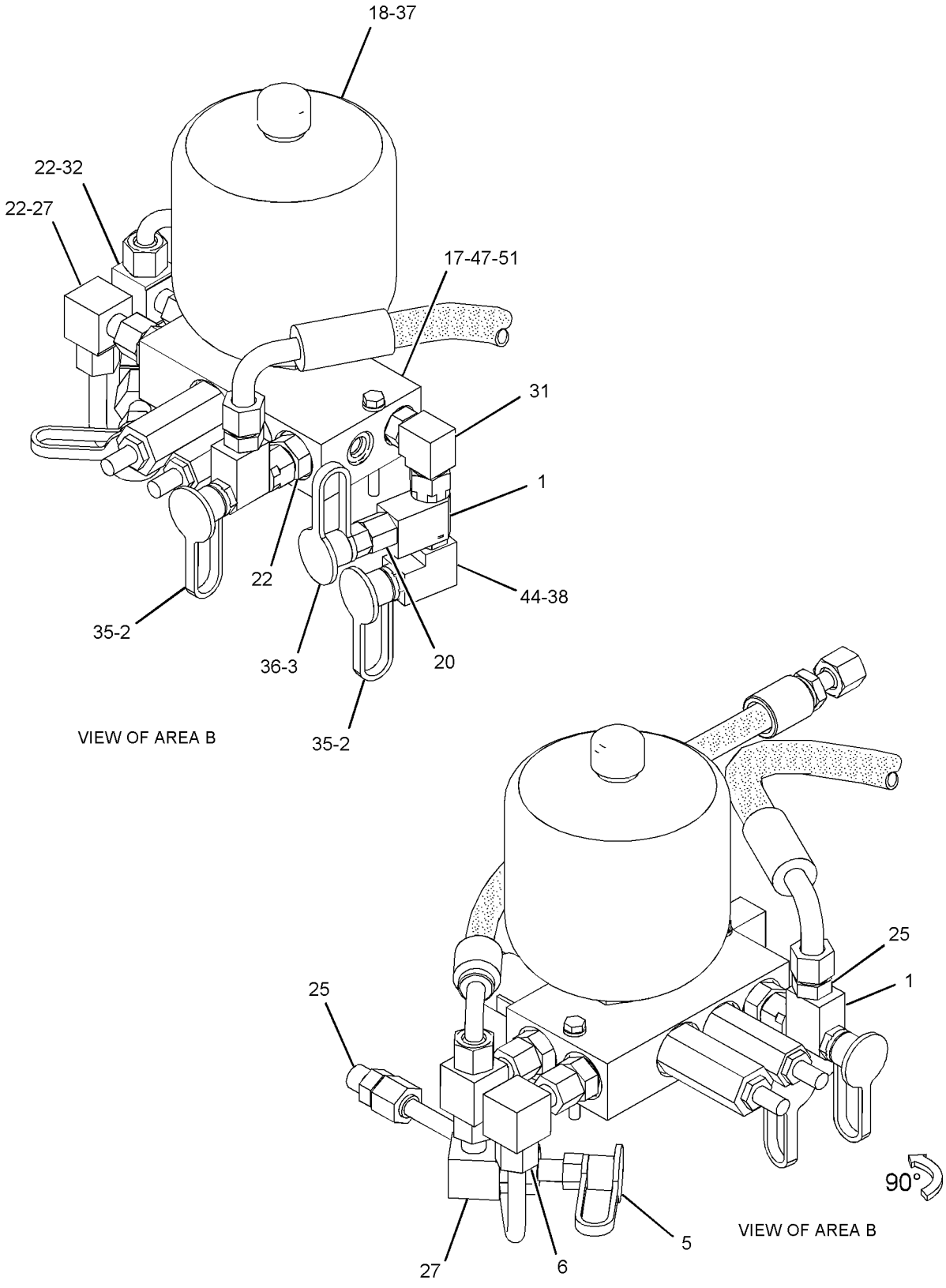

GRAPHIC #2 <END> g02207576

HYDRAULIC SYSTEM

317-3942 LINES GP-PUMP

S/N: S6T1-UP; S6X1-UP; S6Y1-UP
PART OF 317-1758 HYDRAULIC AR-2 VALVE

SMCS-5057 i04011992

NOTE	REF NO	GRAPHIC REF	PART NUMBER	QTY	PART NAME 1 2 3 4 5 6 (PRODUCT LEVEL)	SEE PAGE
	1	1	5G-7191	1	SPRING	
	2	1	6V-0852	1	CAP-DUST	
	3	1	7C-8246	1	SPACER (10.5X20X24-MM THK)	
	4	2	8C-8433	1	SPACER	
	5	1	5P-1294		HOSE (69-CM)	
	6	2	8J-9990	1	PLUG-ORIFICE	
	7	1	8T-4984	4	CLAMP-HOSE	
	8	2	8X-1144	1	CLAMP	
	9	1	126-0814	1	FITTING AS (SWIVEL)	
		1	6V-0852	1	CAP-DUST	
	10	2	146-5923	2	STUD	
I	11	1	173-4611	1	HOSE AS	
	12	1	*201-0782*	1	ELBOW AS	
		1	201-0781	1	ELBOW	
		1	2M-9780	1	SEAL-O-RING	
		1	6V-9746	1	SEAL-O-RING	
	13	1,2	226-6583	2	BRACKET AS	
	14	1	226-6584	1	PLATE AS	
	15	1	226-6585	1	TUBE AS	
	16	1	226-6586	1	TUBE AS	
I	17	1	226-6588	1	HOSE AS	
I	18	1	226-6589	1	HOSE AS	
I	19	1	226-6590	1	HOSE AS	
I	20	1	258-0763	1	HOSE AS	
I	21	1	295-8307	1	HOSE AS	
I	22	1	317-3943	1	HOSE AS	
I	23	1	317-3945	1	HOSE AS	
I	24	1	317-3948	1	HOSE AS	
I	25	1	317-3949	1	HOSE AS	
	26	1	345-9934	1	CLIP (TAB)	
	27	1	345-9935	1	CLIP (SLOT)	
	28	1	345-9936	1	PLATE AS	
	29	2	134-7317	1	PLATE	
	30	2	*148-8372*	2	ELBOW AS	
					(EACH INCLUDES)	
		2	6V-8721	1	ELBOW	
		2	2M-9780	1	SEAL-O-RING	
		2	6V-8398	1	SEAL-O-RING	
	31	2	*148-8378*	1	ELBOW AS	
		2	6V-8724	1	ELBOW	
		2	3J-1907	1	SEAL-O-RING	
		2	6V-8397	1	SEAL-O-RING	
	32	2	*148-8388*	2	ELBOW AS	
					(EACH INCLUDES)	
		2	6V-8629	1	ELBOW	
		2	2M-9780	1	SEAL-O-RING	
		2	6V-9746	1	SEAL-O-RING	
	33	2	*148-8418*	1	REDUCER AS	
		2	6V-8942	1	REDUCER-O-RING	
		2	6V-8398	1	SEAL-O-RING	
	34	2	*148-8449*	2	TEE AS-SWIVEL	
					(EACH INCLUDES)	
		2	6V-9839	1	TEE-SWIVEL	
		2	6V-9746	2	SEAL-O-RING	
	35	2	*150-4050*	1	ELBOW AS	
		2	8T-0788	1	ELBOW	

317-3942 LINES GP-PUMP ***(contd.)*** i04011992

NOTE	REF NO	GRAPHIC REF	PART NUMBER	QTY	PART NAME 1 2 3 4 5 6 (PRODUCT LEVEL)	SEE PAGE
		2	3J-1907	1	SEAL-O-RING	
	36	1	*153-6244*	1	ELBOW AS	
		1	8T-5389	1	ELBOW	
		1	2M-9780	1	SEAL-O-RING	
		1	6V-9746	1	SEAL-O-RING	
	37	1	*153-6246*	1	TEE AS	
		1	7X-0820	1	TEE-UNION	
		1	6V-8397	3	SEAL-O-RING	
	38	2	*164-5570*	1	UNION AS	
		2	6V-8730	1	UNION (FACE SEAL)	
		2	6V-8397	2	SEAL-O-RING	
	39	1	*168-1969*	1	ADAPTER AS	
		1	5P-1318	1	ADAPTER	
		1	1J-9671	1	SEAL-O-RING	
	40	1	1P-3702	2	SEAL-RECTANGULAR	
	41	1	1P-3703	4	SEAL-RECTANGULAR	
	42	2	1P-3704	1	SEAL-RECTANGULAR	
	43	1,2	3J-1907	2	SEAL-O-RING	
	44	1	3P-2404	1	CLIP	
	45	1	4J-0520	1	SEAL-O-RING	
	46	1	4J-0527	2	SEAL-O-RING	
	47	1,2	5P-1075	15	WASHER-HARD (10.2X22.5X3-MM THK)	
	48	2	6V-0400	2	FLANGE-HALF	
	49	1	6V-1574	1	GROMMET	
	50	1	6V-1889	2	CLIP	
	51	1	6V-3965	1	FITTING (QUICK DISCONNECT)	
	52	2	6V-8556	1	NUT (1-3/16-12-THD)	
	53	1	6V-9168	1	NUT (11/16-16-THD)	
	54	2	6W-6220	2	SPACER (0.493X0.675X2.55-IN THK)	
M	55	1	7X-2543	2	BOLT (M10X1.5X120-MM)	
	56	1	7X-7729	3	WASHER (11X25X3-MM THK)	
	57	1,2	8T-1887	3	CLIP (SLOT)	
	58	1,2	8T-1888	3	CLIP (TAB)	
	59	1,2	8T-1895	12	CLIP (SLOT)	
	60	1,2	8T-1896	12	CLIP (TAB)	
B	61	1	8T-4121	6	WASHER-HARD (11X21X2.5-MM THK)	
M	62	1	8T-4133	4	NUT (M10X1.5-THD)	
M	63	1	8T-4136	3	BOLT (M10X1.5X25-MM)	
M	64	1	8T-4137	1	BOLT (M10X1.5X20-MM)	
M	65	1,2	8T-4176	6	BOLT (M12X1.75X90-MM)	
M	66	2	8T-4183	2	BOLT (M12X1.75X40-MM)	
M	67	1	8T-4184	2	BOLT (M12X1.75X45-MM)	
M	68	1	8T-4185	1	BOLT (M10X1.5X50-MM)	
M	69	1,2	8T-4195	8	BOLT (M10X1.5X30-MM)	
	70	2	8T-4223	6	WASHER-HARD (13.5X25.5X3-MM THK)	
M	71	2	8T-4244	2	NUT (M12X1.75-THD)	
	72	1,2	8T-5360	8	WASHER (12X22.5X2.5-MM THK)	
M	73	2	8T-6868	2	BOLT (M12X1.75X80-MM)	
	74	1	8T-7529	1	CLIP	
	75	2	8X-1141	1	CLAMP	
	76	1	9X-8257	2	WASHER (17.5X30X3.5-MM THK)	

B-USE AS REQUIRED
I-REFER TO HYDRAULIC INFORMATION SYSTEM
M-METRIC PART

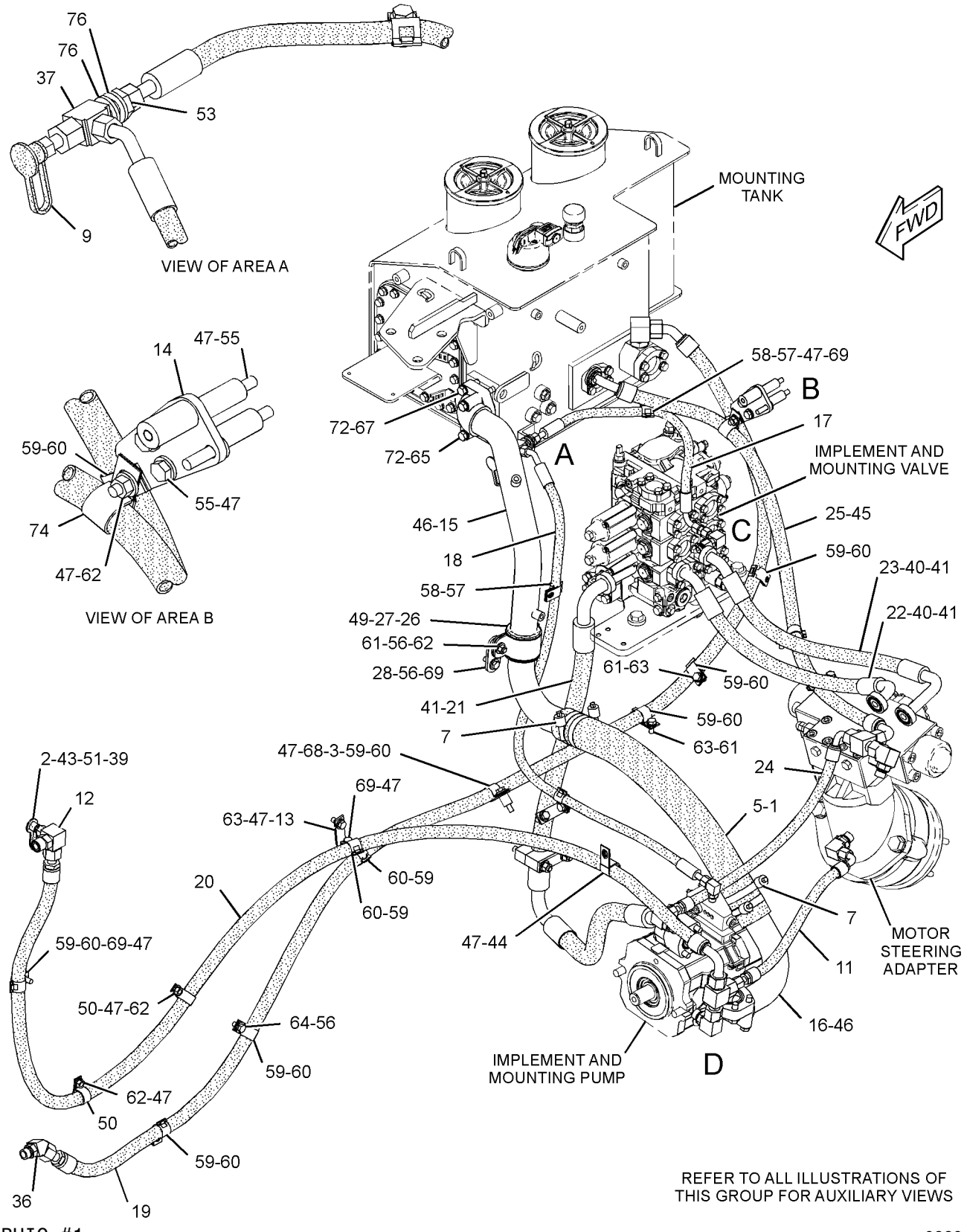

GRAPHIC #1 g02204695

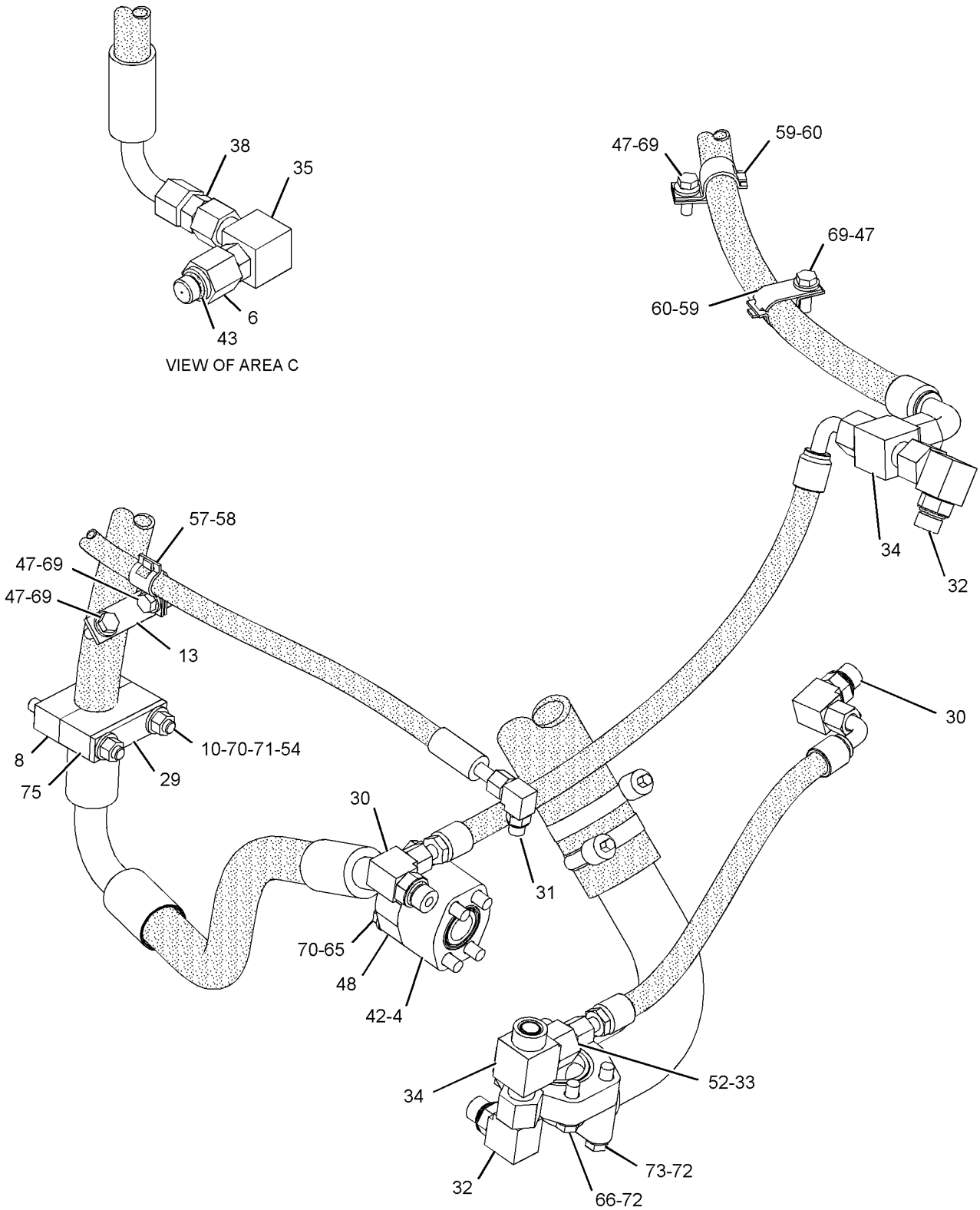

GRAPHIC #2 <END> g02204696

226-8197 LINES GP-RIPPER

S/N: S6T1-UP; S6X1-UP; S6Y1-UP
PART OF 322-3710 CONTROL AR-HYDRAULIC
AN ATTACHMENT

SMCS-5057, 5352, 5356 i03996216

NOTE	REF NO	GRAPHIC REF	PART NUMBER	QTY	PART NAME 1 2 3 4 5 6 (PRODUCT LEVEL)	SEE PAGE
	1	1	217-6887	1	MANIFOLD	
	2	1	226-8206	1	GUARD	
I	3	1	226-8234	1	HOSE AS	
I	4	1	226-8235	1	HOSE AS	
	5	1	4J-0520	2	SEAL-O-RING	
	6	1	4J-5267	2	SEAL-O-RING	
	7	1	7G-3832	1	GROMMET	
	8	1	7G-3833	1	CLIP (TAB)	
	9	1	7G-3834	1	CLIP (SLOT)	
	10	1	8C-3205	8	FLANGE-HALF	
	11	1	8T-4121	20	WASHER-HARD (11X21X2.5-MM THK)	
M	12	1	8T-4136	4	BOLT (M10X1.5X25-MM)	
M	13	1	8T-4196	16	BOLT (M10X1.5X35-MM)	
	14	1	8T-4223	2	WASHER-HARD (13.5X25.5X3-MM THK)	
M	15	1	8T-4956	2	BOLT (M12X1.75X35-MM)	

I-REFER TO HYDRAULIC INFORMATION SYSTEM
M-METRIC PART

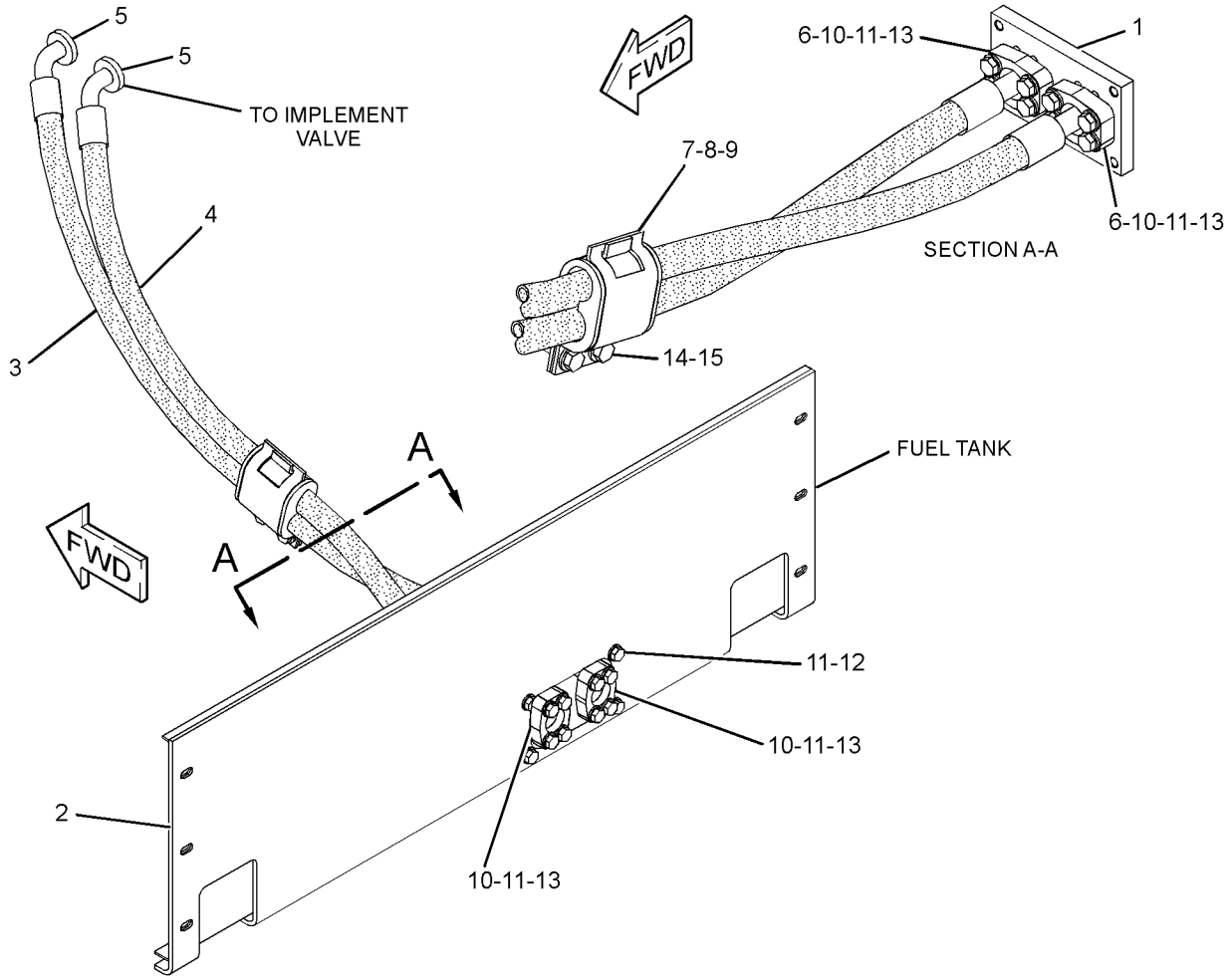

GRAPHIC #1 <END> g01206629

HYDRAULIC SYSTEM

235-8180 LINES GP-RIPPER

S/N: RXE1-UP
PART OF 358-4694 RIPPER AR
AN ATTACHMENT

SMCS-5057, 5352, 5356 i04015415

NOTE	REF NO	GRAPHIC REF	PART NUMBER	QTY	PART NAME 1 2 3 4 5 6 (PRODUCT LEVEL)	SEE PAGE
	1	1	1K-5888	1	SPACER (0.42X0.67X0.63-IN THK)	
	2	1	9M-2904	8	CLAMP-HOSE	
	3	1	112-4368	2	SHIELD	
	4	1	130-1977	8	SHIELD	
B	5	1	130-9192	8	GROMMET	
I	6	1	208-6726	1	HOSE AS	
	7	1	208-6727	1	SHIELD	
I	8	1	208-9699	1	HOSE AS	
	9	1	3G-8047	1	GROMMET	
	10	1	3G-8054	1	CLIP (TAB)	
	11	1	3G-8057	1	CLIP (SLOT)	
	12	1	4J-5267	4	SEAL-O-RING	
	13	1	5P-7464	1	CLIP (SLOT)	
	14	1	5P-7465	1	CLIP (TAB)	
	15	1	6V-1249	1	GROMMET	
	16	1	7X-7729	4	WASHER (11X25X3-MM THK)	
	17	1	8T-4121	2	WASHER-HARD (11X21X2.5-MM THK)	
M	18	1	8T-4133	3	NUT (M10X1.5-THD)	
M	19	1	8T-4185	1	BOLT (M10X1.5X50-MM)	
M	20	1	8T-4186	10	BOLT (M10X1.5X40-MM)	

B-USE AS REQUIRED
I-REFER TO HYDRAULIC INFORMATION SYSTEM
M-METRIC PART

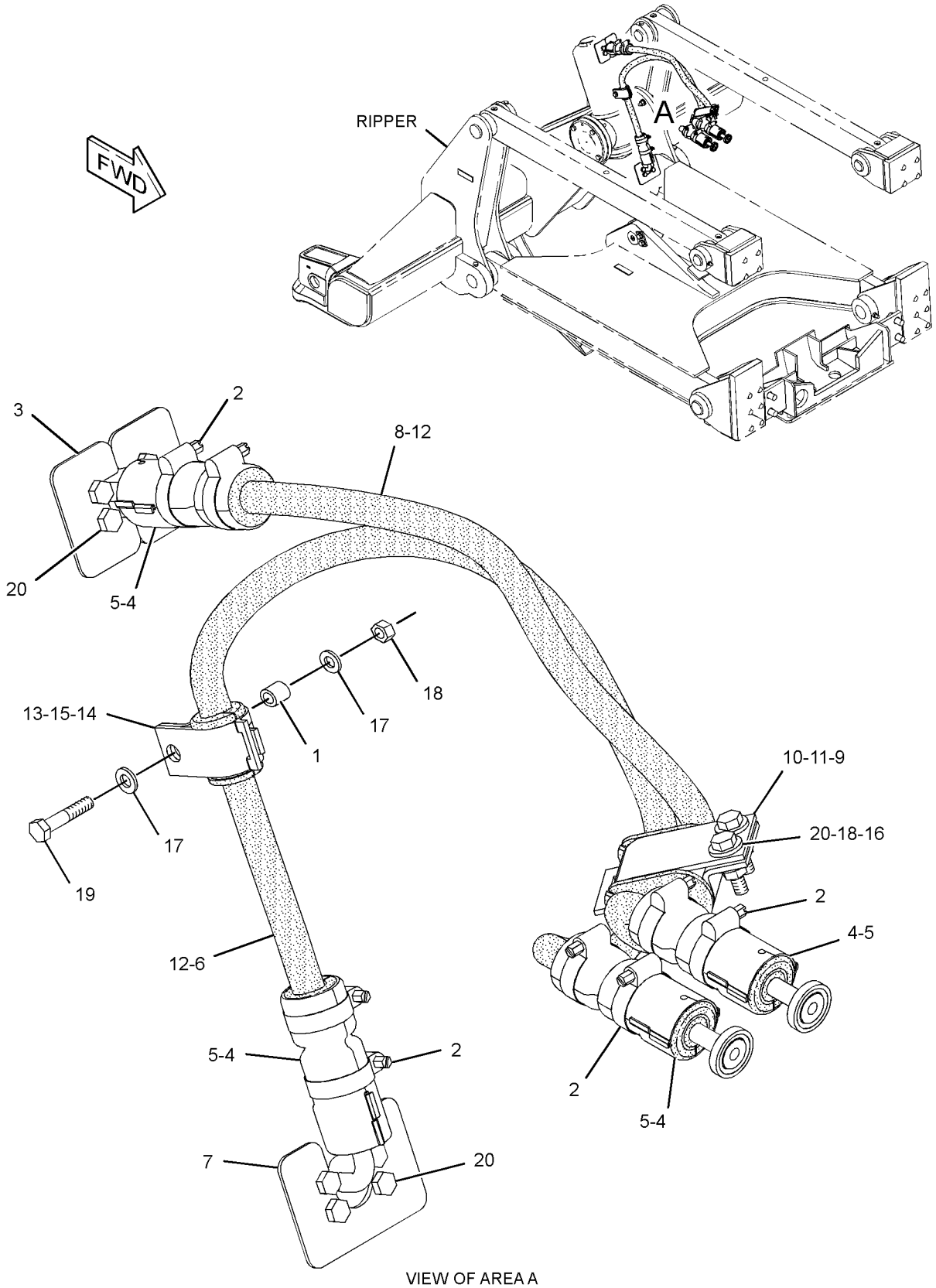

VIEW OF AREA A

GRAPHIC #1 <END> g01209069

HYDRAULIC SYSTEM

223-3994 LINES GP-TILT CYLINDER

S/N: S6Y1-UP
PART OF 358-4693 OPTION AR-MACHINE
AN ATTACHMENT

SMCS-5057, 5104 i04015834

NOTE	REF NO	GRAPHIC REF	PART NUMBER	QTY	PART NAME 1 2 3 4 5 6 (PRODUCT LEVEL)	SEE PAGE
	1	1	3Y-5405	2	RUBBER	
	2	1	145-5181	4	SPACER (13.5X25X12-MM THK)	
I	3	1	168-2599	1	HOSE AS	
	4	1	213-2282	2	GUARD	
	5	1	4J-5267	4	SEAL-O-RING	
	6	1	4T-1563	1	GUARD AS	
	7	1	6V-8398	4	SEAL-O-RING	
	8	1	6V-8981	2	ELBOW	
	9	1	6V-9169	2	NUT-BULKHEAD (13/16-16-THD)	
I	10	1	308-6028	1	HOSE AS	
I	11	1	308-6029	1	HOSE AS	
I	12	1	7T-6934	1	HOSE AS	
	13	1	8C-3205	4	FLANGE-HALF	
	14	1	8T-4121	8	WASHER-HARD (11X21X2.5-MM THK)	
M	15	1	8T-4139	4	BOLT (M12X1.75X30-MM)	
M	16	1	8T-4196	8	BOLT (M10X1.5X35-MM)	
	17	1	8T-4223	4	WASHER-HARD (13.5X25.5X3-MM THK)	
M	18	1	8T-4956	4	BOLT (M12X1.75X35-MM)	

I-REFER TO HYDRAULIC INFORMATION SYSTEM
M-METRIC PART

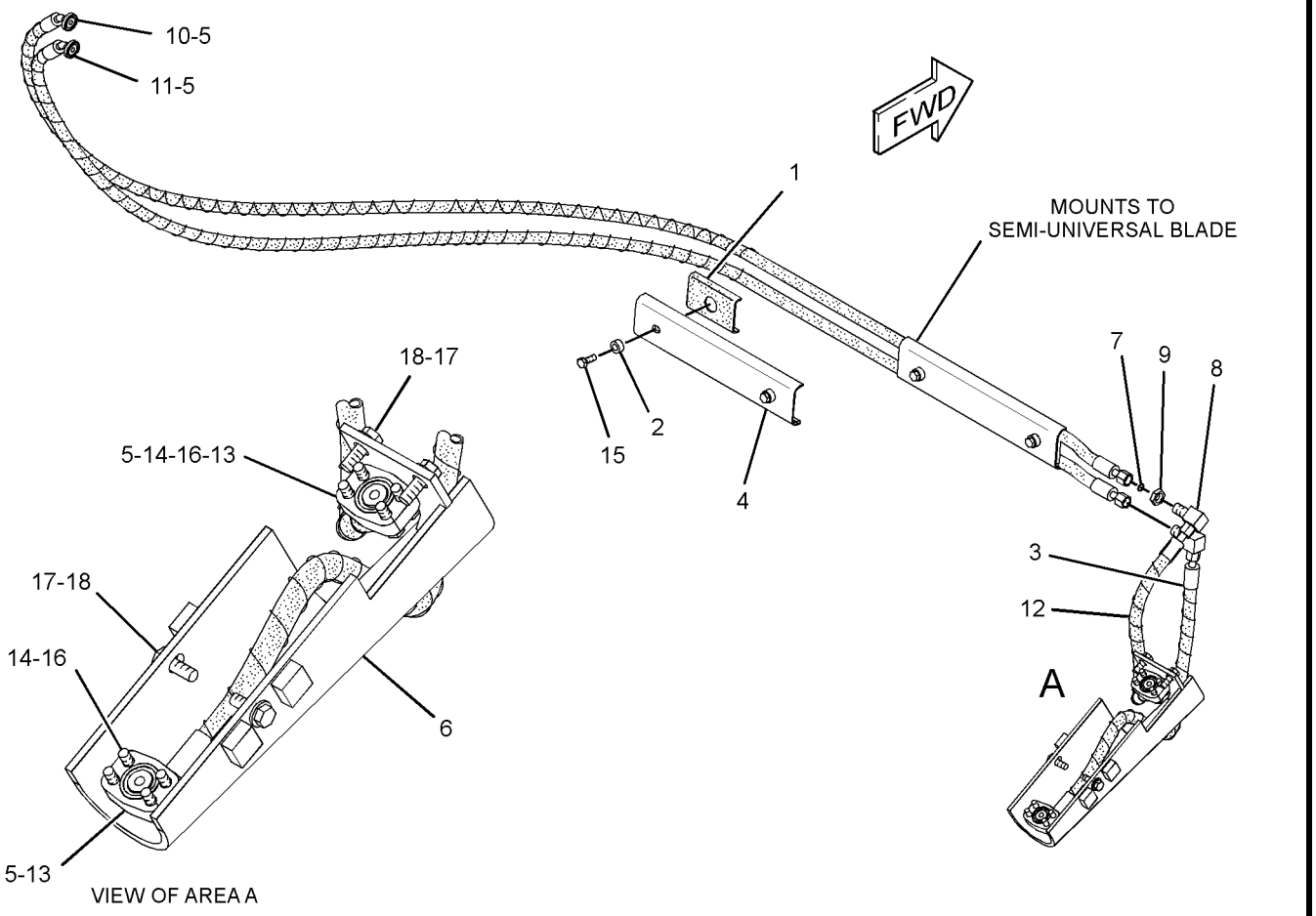

GRAPHIC #1 <END> g01417074

HYDRAULIC SYSTEM

230-5555 LINES GP-TILT CYLINDER

S/N: S6T1-UP
PART OF 358-4692 OPTION AR-MACHINE
AN ATTACHMENT

SMCS-5057, 5104 i04015754

NOTE	REF NO	GRAPHIC REF	PART NUMBER	QTY	PART NAME 1 2 3 4 5 6 (PRODUCT LEVEL)	SEE PAGE
	1	1	3Y-5405	2	RUBBER	
I	2	1	308-6022	1	HOSE AS	
I	3	1	308-6023	1	HOSE AS	
I	4	1	7T-6934	1	HOSE AS	
	5	1	145-5181	4	SPACER (13.5X25X12-MM THK)	
	6	1	213-2282	2	GUARD	
I	7	1	168-2599	1	HOSE AS	
	8	1	4J-5267	4	SEAL-O-RING	
	9	1	4T-1563	1	GUARD AS	
	10	1	6V-8398	4	SEAL-O-RING	
	11	1	6V-8981	2	ELBOW	
	12	1	6V-9169	2	NUT-BULKHEAD (13/16-16-THD)	
	13	1	8C-3205	4	FLANGE-HALF	
	14	1	8T-4121	8	WASHER-HARD (11X21X2.5-MM THK)	
M	15	1	8T-4139	4	BOLT (M12X1.75X30-MM)	
M	16	1	8T-4196	8	BOLT (M10X1.5X35-MM)	
	17	1	8T-4223	4	WASHER-HARD (13.5X25.5X3-MM THK)	
M	18	1	8T-4956	4	BOLT (M12X1.75X35-MM)	

I-REFER TO HYDRAULIC INFORMATION SYSTEM
M-METRIC PART

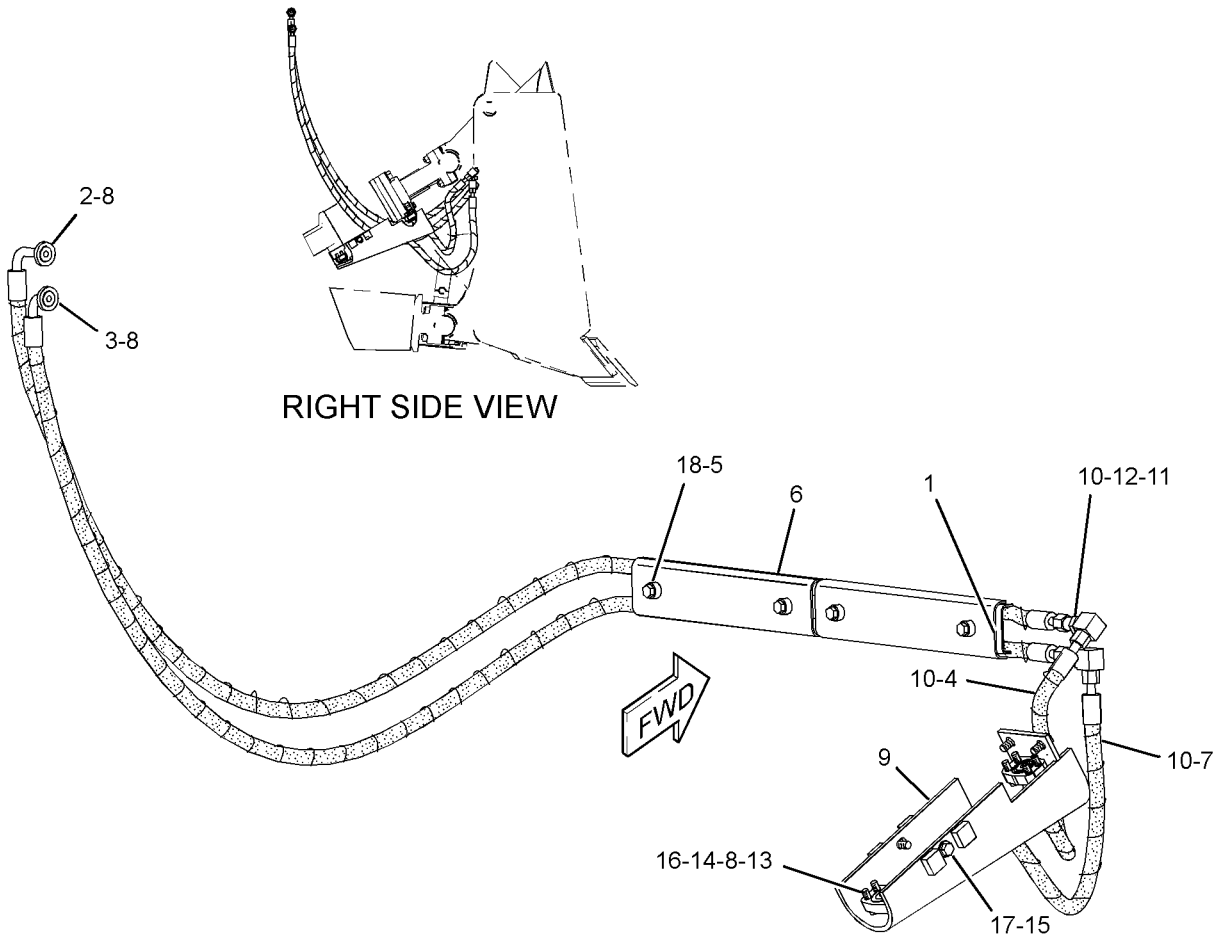

GRAPHIC #1 <END> g01423834

HYDRAULIC SYSTEM

252-5849 LINES GP-TILT CYLINDER

S/N: S6X1-UP
PART OF 358-4690 OPTION AR-MACHINE
AN ATTACHMENT

SMCS-5057, 5104 i04001504

NOTE	REF NO	GRAPHIC REF	PART NUMBER	QTY	PART NAME 1 2 3 4 5 6 (PRODUCT LEVEL)	SEE PAGE
	1	1	3Y-5405	2	RUBBER	
I	2	1	7T-6934	1	HOSE AS	
	3	1	145-5181	4	SPACER (13.5X25X12-MM THK)	
I	4	1	168-2599	1	HOSE AS	
	5	1	213-2282	2	GUARD	
I	6	1	308-6024	1	HOSE AS	
I	7	1	308-6025	1	HOSE AS	
	8	1	4J-5267	4	SEAL-O-RING	
	9	1	4T-1563	1	GUARD AS	
	10	1	6V-8398	4	SEAL-O-RING	
	11	1	6V-8981	2	ELBOW	
	12	1	6V-9169	2	NUT-BULKHEAD (13/16-16-THD)	
	13	1	8C-3205	4	FLANGE-HALF	
	14	1	8T-4121	8	WASHER-HARD (11X21X2.5-MM THK)	
M	15	1	8T-4139	4	BOLT (M12X1.75X30-MM)	
M	16	1	8T-4196	8	BOLT (M10X1.5X35-MM)	
	17	1	8T-4223	4	WASHER-HARD (13.5X25.5X3-MM THK)	
M	18	1	8T-4956	4	BOLT (M12X1.75X35-MM)	

I-REFER TO HYDRAULIC INFORMATION SYSTEM
M-METRIC PART

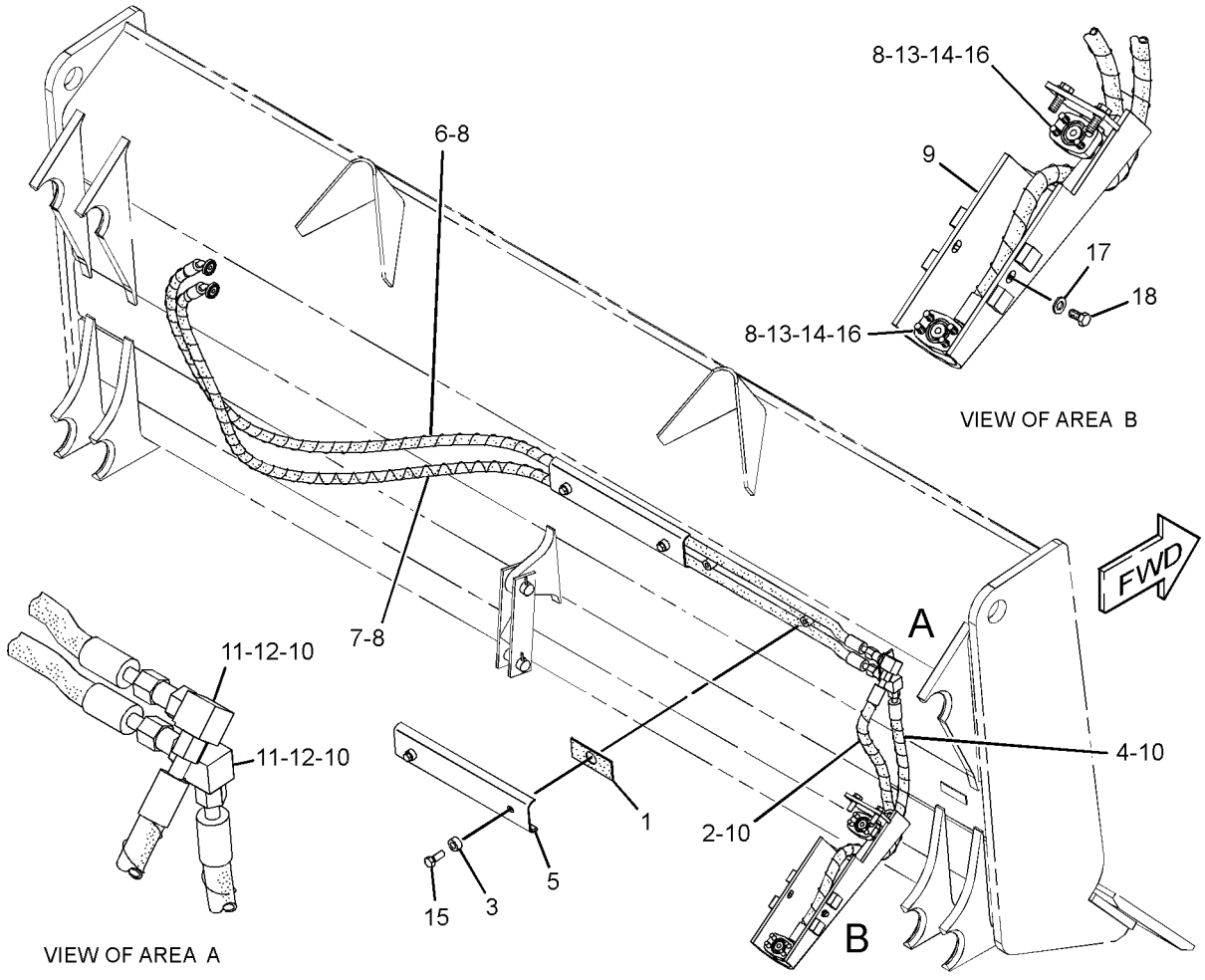

GRAPHIC #1 <END> g01424380

HYDRAULIC SYSTEM

255-8954 LINES GP-TILT CYLINDER

S/N: S6X1-UP
PART OF 358-4691 OPTION AR-MACHINE
AN ATTACHMENT

SMCS-5057, 5104 i04033017

NOTE	REF NO	GRAPHIC REF	PART NUMBER	QTY	PART NAME 1 2 3 4 5 6 (PRODUCT LEVEL)	SEE PAGE
	1	1	2P-6588	2	HEAD-ADAPTER	
	2	1	5S-8709	1	GUARD-CENTER	
	3	1	5S-8712	6	BLOCK	
	4	1	5S-8765	1	GUARD (RH)	
	5	1	5S-8766	1	GUARD (LH)	
	6	1	6Y-0596	1	GUARD AS (LH)	
	7	1	6Y-0597	1	GUARD AS (RH)	
I	8	1	9W-9082	2	HOSE AS	
I	9	1	9W-9083	2	HOSE AS	
	10	1	245-4230	1	BRACKET AS (RH)	
	11	1	245-4231	1	BRACKET AS (LH)	
	12	1	251-9840	2	TUBE AS	
	13	1	251-9841	1	TUBE AS	
I	14	1	308-6026	1	HOSE AS	
I	15	1	308-6027	1	HOSE AS	
	16	1	3G-8047	1	GROMMET	
	17	1	3G-8054	1	CLIP (TAB)	
	18	1	3G-8057	1	CLIP (SLOT)	
	19	1	3K-0360	2	SEAL-O-RING	
	20	1	4J-5267	12	SEAL-O-RING	
	21	1	5P-7464	2	CLIP (SLOT)	
	22	1	5P-7465	2	CLIP (TAB)	
	23	1	6V-1249	2	GROMMET	
	24	1	6V-8398	2	SEAL-O-RING	
	25	1	6V-8625	2	ELBOW	
	26	1	8C-3205	20	FLANGE-HALF	
	27	1	8T-4121	48	WASHER-HARD (11X21X2.5-MM THK)	
M	28	1	8T-4139	10	BOLT (M12X1.75X30-MM)	
M	29	1	8T-4182	6	BOLT (M10X1.5X45-MM)	
M	30	1	8T-4195	42	BOLT (M10X1.5X30-MM)	
	31	1	8T-4223	16	WASHER-HARD (13.5X25.5X3-MM THK)	
M	32	1	8T-4910	6	BOLT (M12X1.75X60-MM)	

I-REFER TO HYDRAULIC INFORMATION SYSTEM
M-METRIC PART

255-8954 LINES GP-TILT CYLINDER ***(contd.)*** i04033017

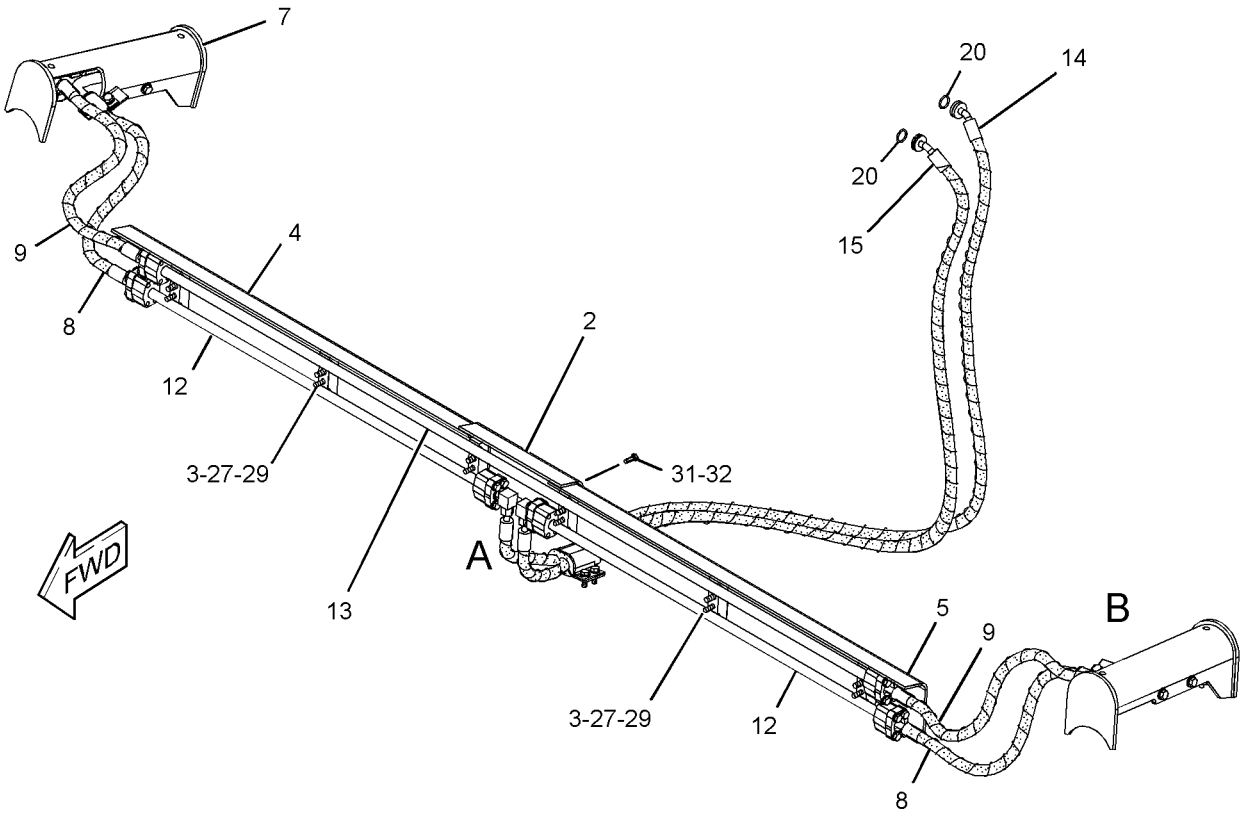

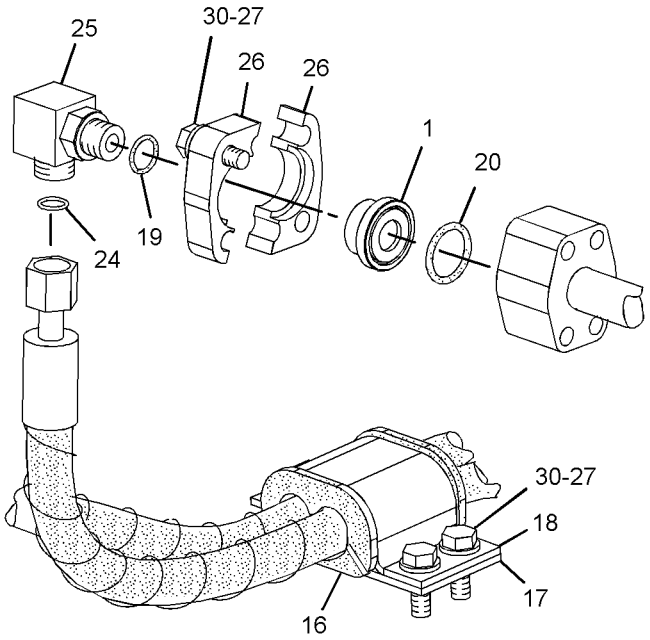

VIEW OF AREA A
(EXPLODED)

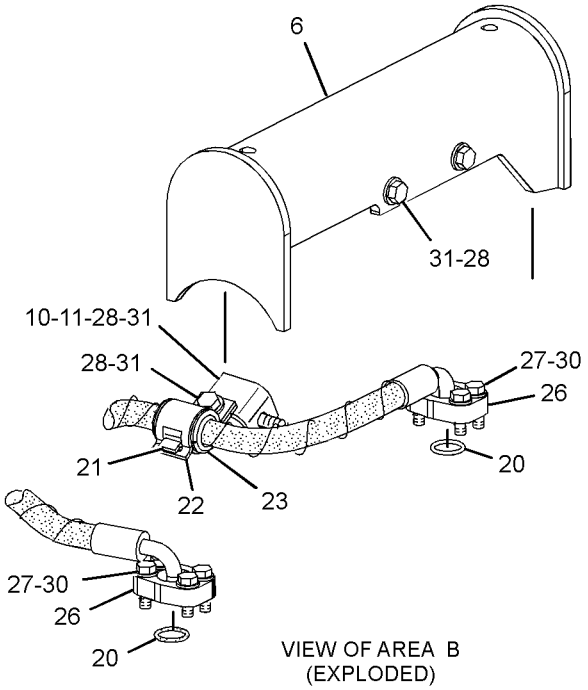

VIEW OF AREA B
(EXPLODED)

GRAPHIC #1 <END> g01393637

317-4093 LINES GP-TILT CYLINDER

S/N: S6T1-UP; S6X1-UP; S6Y1-UP
PART OF 317-1758 HYDRAULIC AR-2 VALVE

SMCS-5057, 5104 i03983370

NOTE	REF NO	GRAPHIC REF	PART NUMBER	QTY	PART NAME 1 2 3 4 5 6 (PRODUCT LEVEL)	SEE PAGE
	1	1	1K-5888	2	SPACER (0.42X0.67X0.63-IN THK)	
	2	1	226-7810	1	TUBE AS	
	3	1	226-7906	1	MANIFOLD	
	4	1	226-7924	1	TUBE AS	
I	5	1	317-4094	1	HOSE AS	
I	6	1	317-4095	1	HOSE AS	
	7	1	1P-3703	2	SEAL-RECTANGULAR	
	8	1	3G-8047	4	GROMMET	
	9	1	3G-8054	4	CLIP (TAB)	
	10	1	3G-8057	4	CLIP (SLOT)	
	11	1	3H-8683	4	CLIP	
	12	1	4J-0520	2	SEAL-O-RING	
	13	1	4J-5267	2	SEAL-O-RING	
	14	1	5H-4018	2	COVER	
	15	1	5P-1075	13	WASHER-HARD (10.2X22.5X3-MM THK)	
	16	1	6V-8398	2	SEAL-O-RING	
	17	1	8C-3205	4	FLANGE-HALF	
	18	1	8T-1887	2	CLIP (SLOT)	
	19	1	8T-1888	2	CLIP (TAB)	
	20	1	8T-4121	16	WASHER-HARD (11X21X2.5-MM THK)	
M	21	1	8T-4133	6	NUT (M10X1.5-THD)	
M	22	1	8T-4182	10	BOLT (M10X1.5X45-MM)	
M	23	1	8T-4186	2	BOLT (M10X1.5X40-MM)	
M	24	1	8T-4195	2	BOLT (M10X1.5X30-MM)	
M	25	1	8T-4196	9	BOLT (M10X1.5X35-MM)	

I-REFER TO HYDRAULIC INFORMATION SYSTEM
M-METRIC PART

317-4093 LINES GP-TILT CYLINDER ***(contd.)*** i03983370

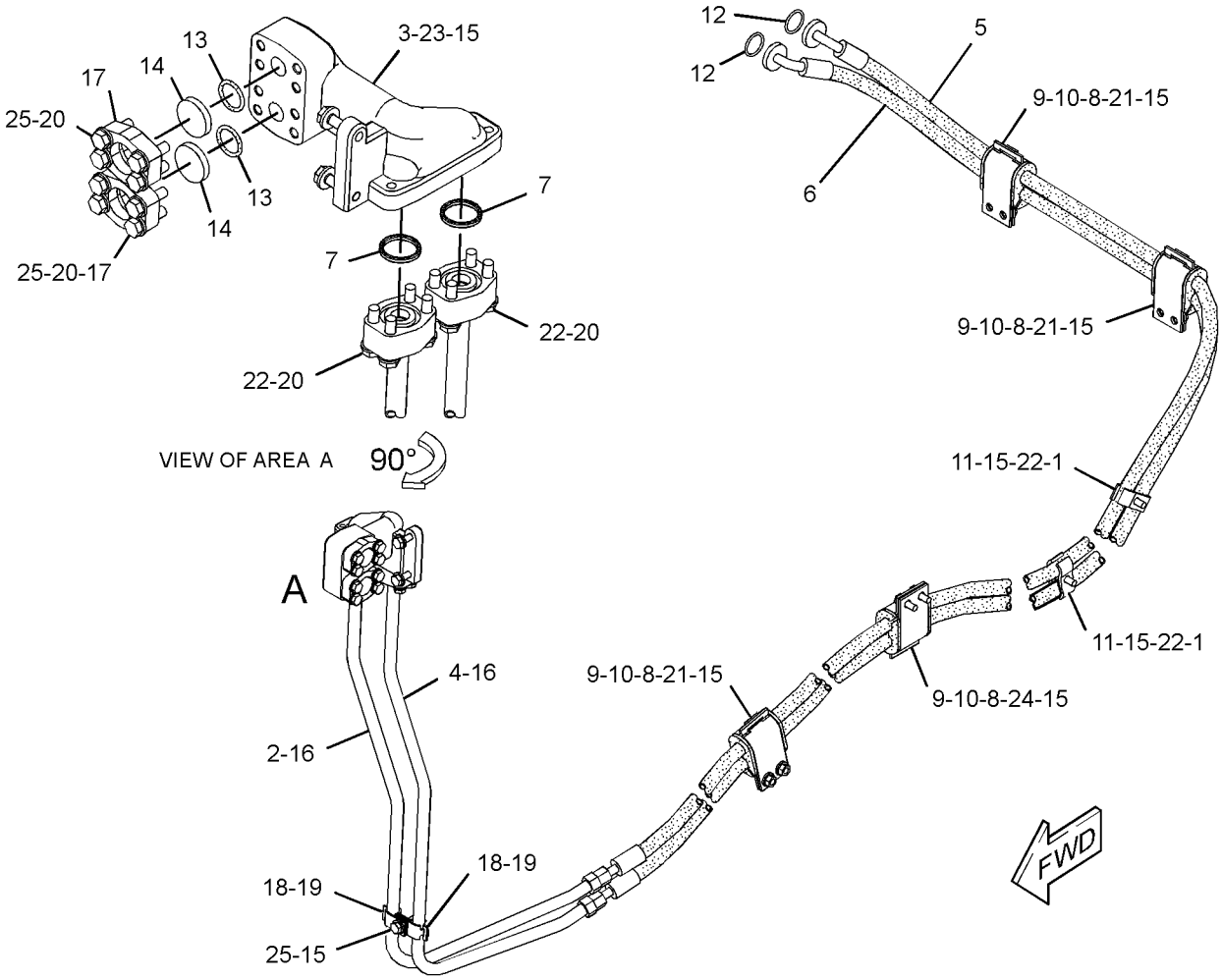

GRAPHIC #1 <END> g02178532

226-4751 MANIFOLD GP-CONTROL

S/N: S6T1-UP; S6X1-UP; S6Y1-UP
PART OF 340-0117 LINES GP-PILOT

SMCS-5264 i04017210

NOTE	REF NO	GRAPHIC REF	PART NUMBER	QTY	PART NAME 1 2 3 4 5 6 (PRODUCT LEVEL)	SEE PAGE
Y	1	1	158-9956	1	VALVE GP-CHECK (PILOT PRESSURE SUPPLY)	471
Y	2	1	170-3357	1	VALVE GP-PRESSURE REDUCING (IMPLEMENT PILOT OIL)	491
Y	3	1	225-8026	1	VALVE GP-RELIEF (IMPLEMENT PILOT OIL)	500
Y	4	1	201-0950	1	VALVE GP-SOLENOID (HYDRAULIC LOCKOUT)	502
	5	1	6E-5066	1	SCREEN (IMPLEMENT PILOT OIL)	
	6	1	9S-8002	1	PLUG-O-RING	
	7	1	9S-8004	1	PLUG-O-RING	
	8	1	3J-7354	1	SEAL-O-RING	
	9	1	3J-1907	1	SEAL-O-RING	

Y-SEPARATE ILLUSTRATION

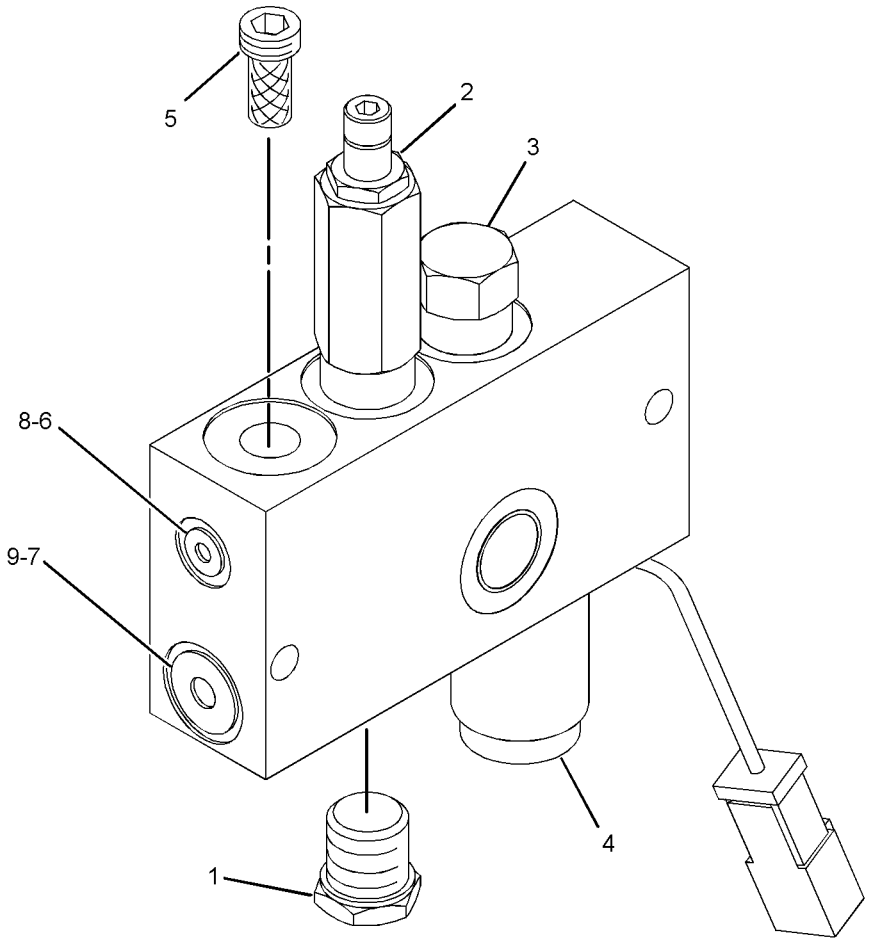

GRAPHIC #1 <END> g01205803

HYDRAULIC SYSTEM

235-0401 MANIFOLD GP-VALVE

S/N: S6T1-UP; S6X1-UP; S6Y1-UP
PART OF 224-4936 VALVE GP-BANK 3, 224-4937 VALVE GP-BANK 4
ALSO AN ATTACHMENT

SMCS-5264 i03983084

NOTE	REF NO	GRAPHIC REF	PART NUMBER	QTY	PART NAME 1 2 3 4 5 6 (PRODUCT LEVEL)	SEE PAGE
	1	1	6V-0400	2	FLANGE-HALF	
M	2	1	8T-4184	4	BOLT (M12X1.75X45-MM)	
	3	1	8T-4223	4	WASHER-HARD (13.5X25.5X3-MM THK)	
Y	4	1	9T-3541	1	VALVE GP-RELIEF (MAIN)	497

M-METRIC PART
Y-SEPARATE ILLUSTRATION

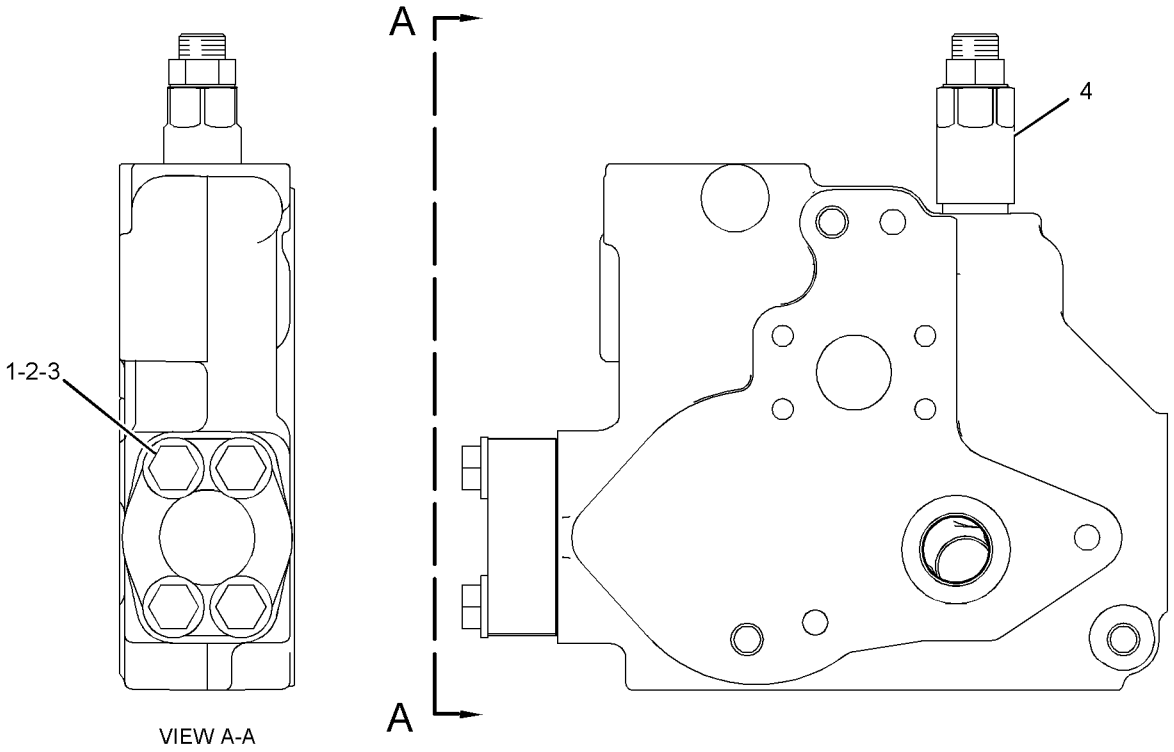

VIEW A-A

GRAPHIC #1 <END> g01218600

362-4548 MOUNTING GP-CYLINDER

S/N: S6T1-UP; S6X1-UP; S6Y1-UP

PART OF 336-9684, 336-9685, 336-9686 CHASSIS AR

SMCS-7562 i03998394

NOTE	REF NO	GRAPHIC REF	PART NUMBER	QTY	PART NAME 1 2 3 4 5 6 (PRODUCT LEVEL)	SEE PAGE
	1	1	3B-8489	2	FITTING-GREASE	
	2	1	4T-4875	2	PIN	
	3	1	5P-2671	2	SEAL-LIP TYPE	
	4	1	9J-4782	2	PROTECTOR	
	5	1	9N-4233	2	STRAP	
	6	1	*362-4549*	4	CAP AS	
					(EACH INCLUDES)	
		1	3G-9405	1	CAP AS	
		1	3G-9402	1	BUSHING	
	7	1	299-5344	2	YOKE	
	8	1	6Y-9280	2	CLAMP (TAB)	
	9	1	6Y-9281	2	CLAMP (SLOT)	
	10	1	5P-1076	4	WASHER-HARD (13.5X30X4-MM THK)	
M	11	1	7X-2557	8	BOLT (M16X2X140-MM)	
	12	1	8T-2561	4	WASHER-HARD (10.5X28.5X5-MM THK)	
M	13	1	8T-4183	2	BOLT (M12X1.75X40-MM)	
M	14	1	8T-4195	2	BOLT (M10X1.5X30-MM)	
M	15	1	8T-4244	2	NUT (M12X1.75-THD)	

M-METRIC PART

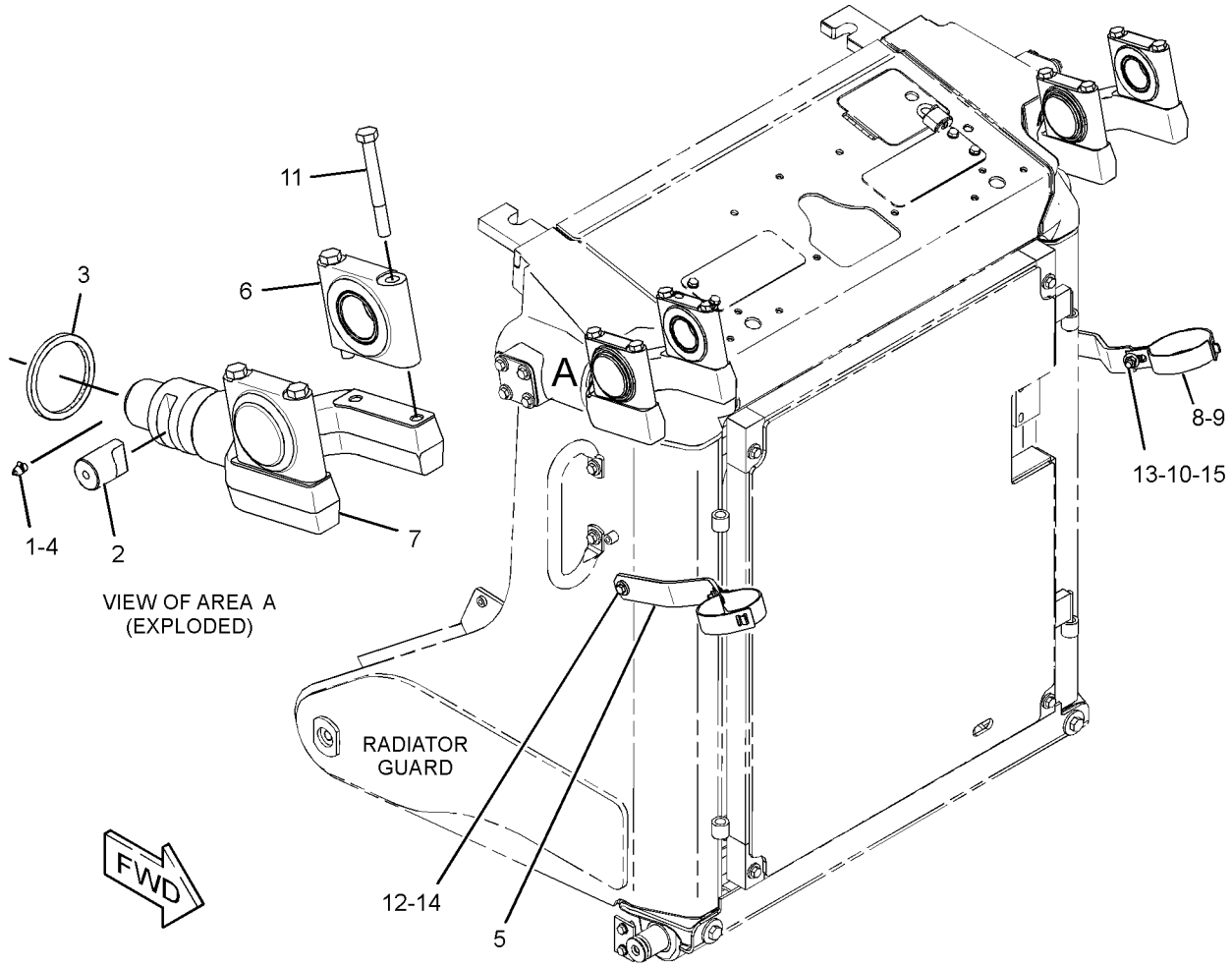

GRAPHIC #1 <END> g02177904

222-1159 MOUNTING GP-VALVE

S/N: S6T1-UP; S6X1-UP; S6Y1-UP
PART OF 317-1758 HYDRAULIC AR-2 VALVE

SMCS-5051 i03982953

NOTE	REF NO	GRAPHIC REF	PART NUMBER	QTY	PART NAME 1 2 3 4 5 6 (PRODUCT LEVEL)	SEE PAGE
	1	1	223-3421	1	PLATE AS	
Y	2	1	224-4936	1	VALVE GP-BANK 3 (BULLDOZER, STEERING)	467
M	3	1	296-7283	3	BOLT (M16X2X50-MM)	
	4	1	198-4778	3	WASHER-HARD (13.5X30X12-MM THK)	
M	5	1	172-9966	3	BOLT (M12X1.75X65-MM)	
	6	1	198-4780	3	WASHER-HARD (17.5X32X8-MM THK)	

M-METRIC PART
Y-SEPARATE ILLUSTRATION

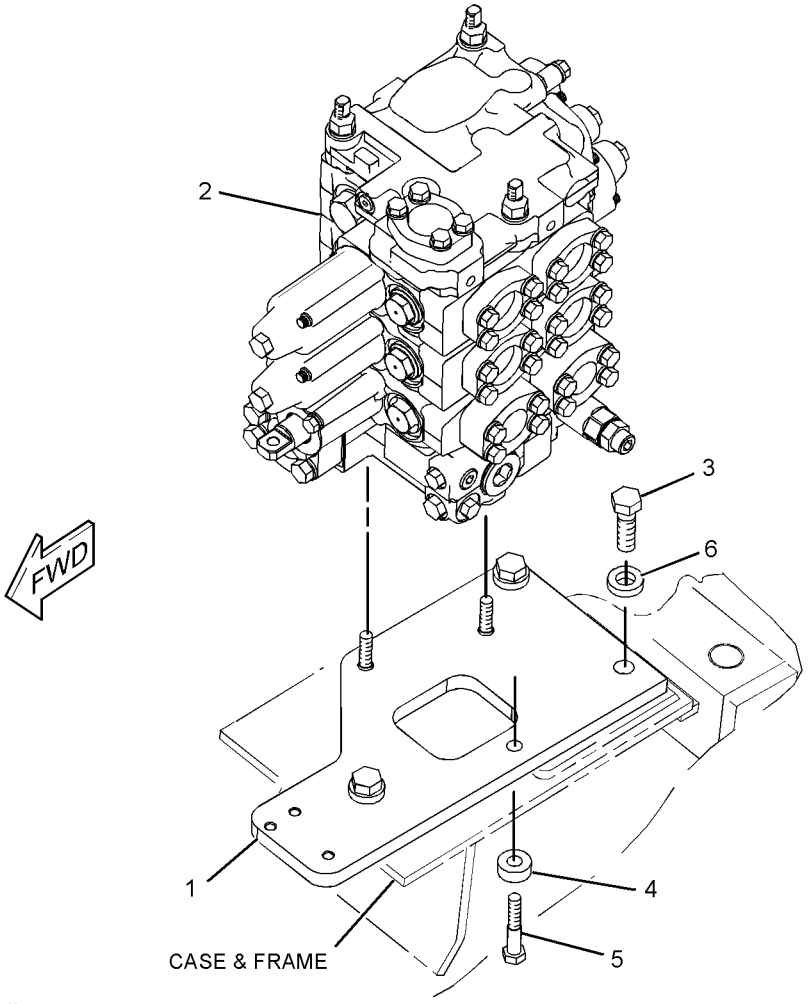

GRAPHIC #1 <END> g01505395

222-1161 PUMP & MOUNTING GP–IMPLEMENT, STEERING

S/N: S6T1-UP; S6X1-UP; S6Y1-UP
PART OF 317-1758 HYDRAULIC AR-2 VALVE

SMCS-5084 i03997937

NOTE	REF NO	GRAPHIC REF	PART NUMBER	QTY	PART NAME 1 2 3 4 5 6 (PRODUCT LEVEL)	SEE PAGE
Y	1	1	227-0830	1	PUMP GP-PISTON (IMPLEMENT, STEERING)	458
	2	1	4S-5898	1	SEAL-O-RING	
M	3	1	8T-7338	2	BOLT (M16X2X45-MM)	
	4	1	9X-8257	2	WASHER (17.5X30X3.5-MM THK)	

M-METRIC PART
Y-SEPARATE ILLUSTRATION

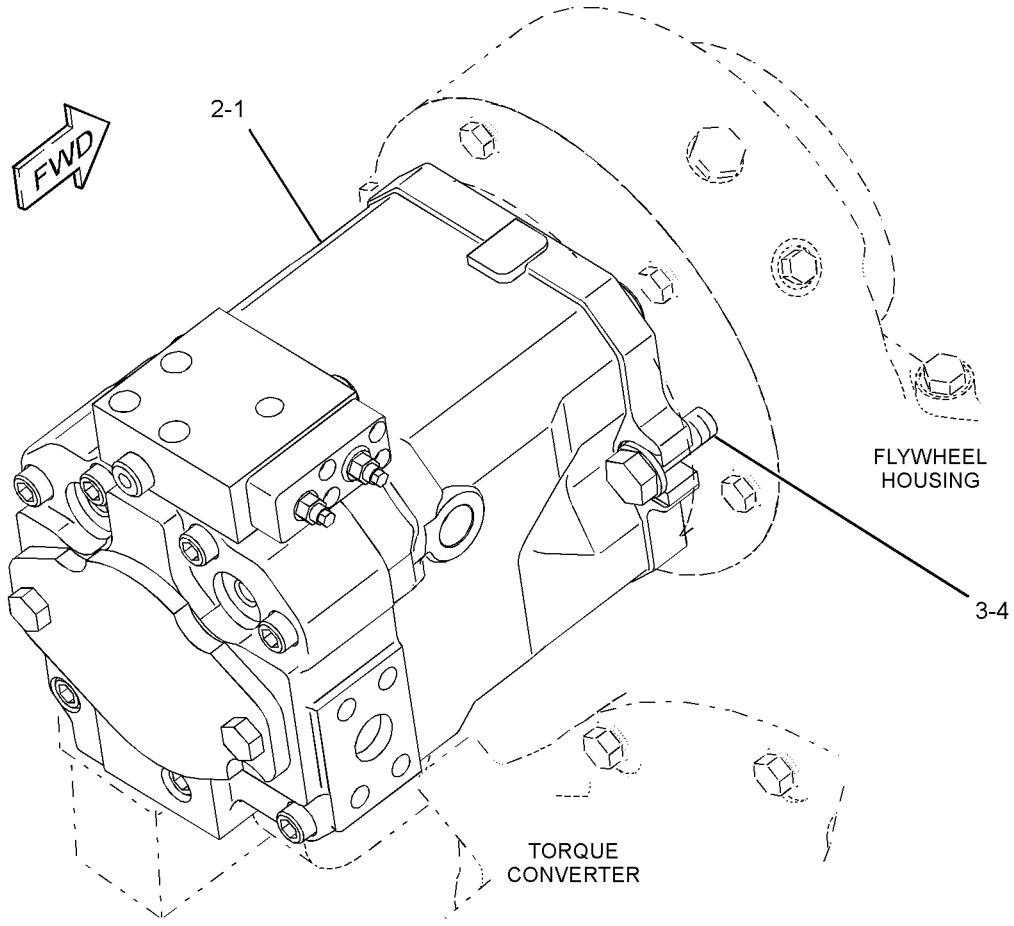

GRAPHIC #1 <END> g01206305

HYDRAULIC SYSTEM

227-0830 PUMP GP-PISTON–IMPLEMENT, STEERING

S/N: S6T1-UP; S6X1-UP; S6Y1-UP
PART OF 222-1161 PUMP & MOUNTING GP

SMCS-5070 i03997940

NOTE	REF NO	GRAPHIC REF	PART NUMBER	QTY	PART NAME 1 2 3 4 5 6 (PRODUCT LEVEL)	SEE PAGE
	1	1	095-0940	1	RING-RETAINING	
	2	1	7X-1553	1	SEAL-LIP TYPE	
	3	1	197-0074	1	HOUSING	
	4	1	9S-8006	2	PLUG-O-RING	
	5	1	2M-9780	2	SEAL-O-RING	
	6	1	197-0075	1	RACE	
	7	1	197-0076	1	BEARING	
	8	1	197-0077	1	SHAFT	
	9	1	8U-9480	2	PIN	
	10	1	197-0078	2	BEARING	
	11	1	131-4647	1	CRADLE	
	12	1	121-9915	3	SLEEVE	
	13	1	197-0079	9	PISTON AS	
	14	1	131-4649	1	WASHER (61X123X5.5-MM THK)	
	15	1	197-0080	1	PLATE	
	16	1	131-4657	1	PLATE	
M	17	1	8U-3297	4	BOLT (M10X1.5X25-MM)	
	18	1	286-1674	1	BARREL	
	19	1	197-0082	1	WASHER (39.2X53.8X4-MM THK)	
	20	1	197-0083	1	SPRING	
	21	1	197-0084	1	RING	
	22	1	197-0085	1	SPACER (41X46X19.2-MM THK)	
	23	1	195-6882	1	RING	
	24	1	121-9943	1	RING	
	25	1	197-0086	1	SPACER (47X54X38-MM THK)	
	26	1	197-0087	1	RING	
	27	1	197-0090	1	PLATE	
	28	1	101-2862	2	DOWEL	
	29	1	197-0088	1	RING	
	30	1	197-0089	1	BEARING	
M	31	1	6V-5192	3	BOLT-SOCKET HEAD (M8X1.25X30-MM)	
	32	1	8C-3131	2	SEAL-O-RING	
	33	1	121-9941	2	RING	
	34	1	131-4674	2	PIPE	
	35	1	131-4675	1	RING	
	36	1	131-4676	1	PISTON	
	37	1	284-3781	1	PISTON	
	38	1	197-0093	1	RETAINER	
	39	1	197-0094	1	SPRING	
	40	1	288-1199	1	RETAINER	
	41	1	284-3782	1	PISTON	
M	42	1	9T-4901	1	NUT (M12X1-THD)	
	43	1	121-9946	1	PIN	
M	44	1	3E-6910	9	BOLT-SOCKET HEAD (M12X1.75X70-MM)	
	45	1	117-8765	1	SEAL-O-RING	
M	46	1	6A-5591	2	BOLT (M12X1.75X25-MM)	
	47	1	195-6932	1	COVER	
Y	48	1	227-3021	1	VALVE GP-PUMP CONTROL (PRESSURE, FLOW COMPENSATOR)	492
	49	1	268-9076	1	HOUSING AS	
	50	1	8U-3875	1	PLUG	
B	51	1	5W-7461	1	SHIM (1.05-MM THK)	
B	52	1	5W-7462	1	SHIM (1.1-MM THK)	
B	53	1	5W-7463	1	SHIM (1.15-MM THK)	
B	54	1	5W-7464	1	SHIM (1.25-MM THK)	
B	55	1	5W-7465	1	SHIM (1.5-MM THK)	

227-0830 PUMP GP-PISTON *(contd.)* i03997940

NOTE	REF NO	GRAPHIC REF	PART NUMBER	QTY	PART NAME 1 2 3 4 5 6 (PRODUCT LEVEL)	SEE PAGE
B	56	1	5W-7466	1	SHIM (1.75-MM THK)	
B	57	1	131-4654	1	PLATE (0.05-MM THK)	
B	58	1	131-4655	1	PLATE (0.075-MM THK)	
B	59	1	131-4656	1	PLATE (0.1-MM THK)	
B	60	1	131-4650	1	PLATE (0.05-MM THK)	
B	61	1	131-4651	1	PLATE (0.075-MM THK)	
B	62	1	131-4652	1	PLATE (0.1-MM THK)	
	63	1	285-5644	1	RING-RETAINING (PISTON PUMP)	
					AVAILABLE REPAIR KIT(S):	
B			199-4193	1	KIT-SHIM (INCLUDES 21-SHIMS) (PISTON PUMP)	

B-USE AS REQUIRED
M-METRIC PART
Y-SEPARATE ILLUSTRATION

227-0830 PUMP GP-PISTON *(contd.)* i03997940

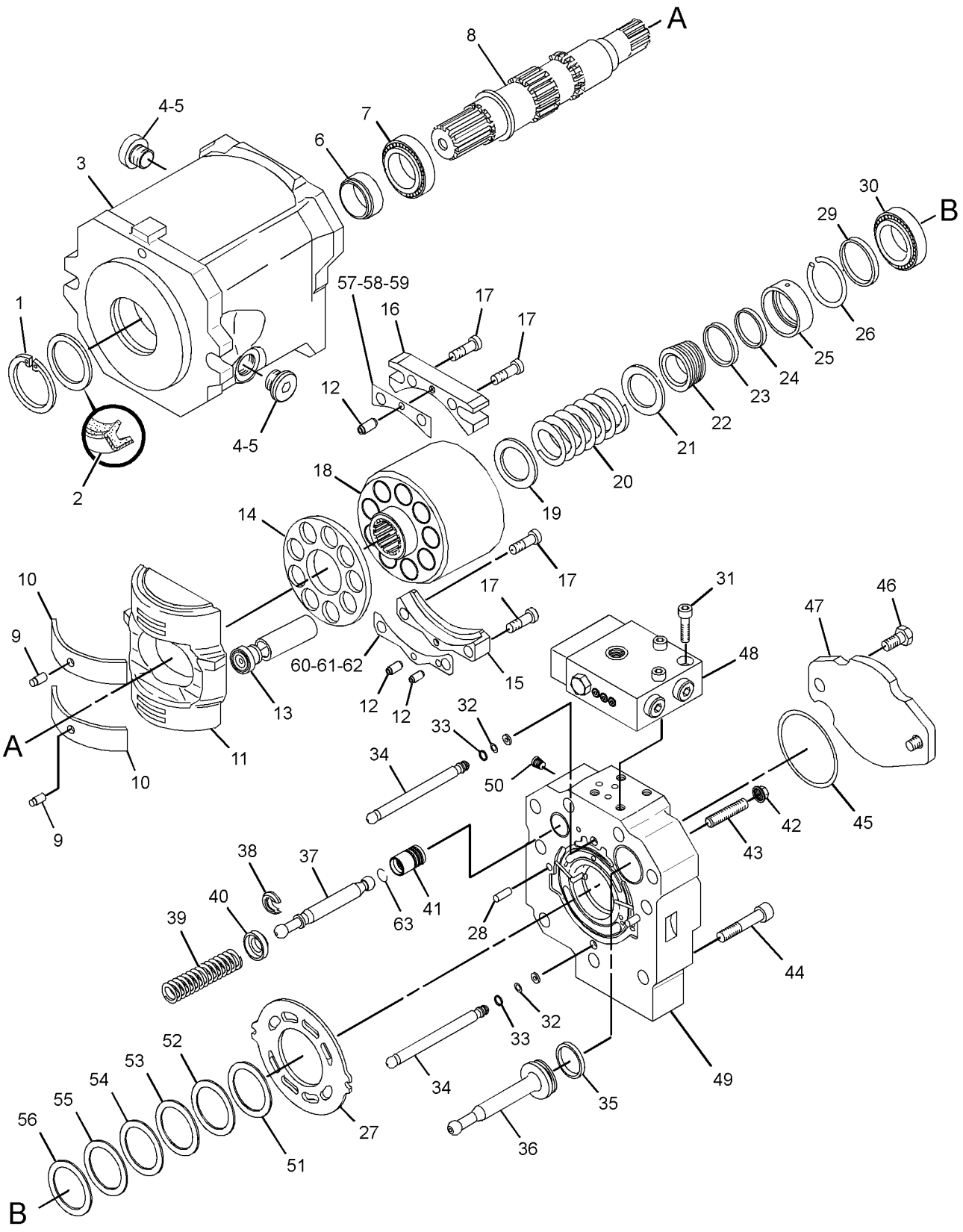

GRAPHIC #1 <END> g01427689

222-1162 TANK & MTG GP-HYDRAULIC

S/N: S6T1-UP; S6X1-UP; S6Y1-UP
PART OF 317-1758 HYDRAULIC AR-2 VALVE

SMCS-5056 i03997954

NOTE	REF NO	GRAPHIC REF	PART NUMBER	QTY	PART NAME 1 2 3 4 5 6 (PRODUCT LEVEL)	SEE PAGE
	1	1	191-5439	1	VALVE-BREAKER RELIEF	
	2	1	246-2641	1	PADLOCK GP	
		1	5P-8500	1	KEY	
	3	1	164-3651	1	ADAPTER	
Y	4	1	*224-4946*	1	TANK GP-HYDRAULIC	462
	5	1	3D-2824	1	SEAL-O-RING	
	6	1	3J-1907	1	SEAL-O-RING	
M	7	1	8T-4779	3	BOLT (M16X2X35-MM)	
	8	1	9X-8257	3	WASHER (17.5X30X3.5-MM THK)	

M-METRIC PART
Y-SEPARATE ILLUSTRATION

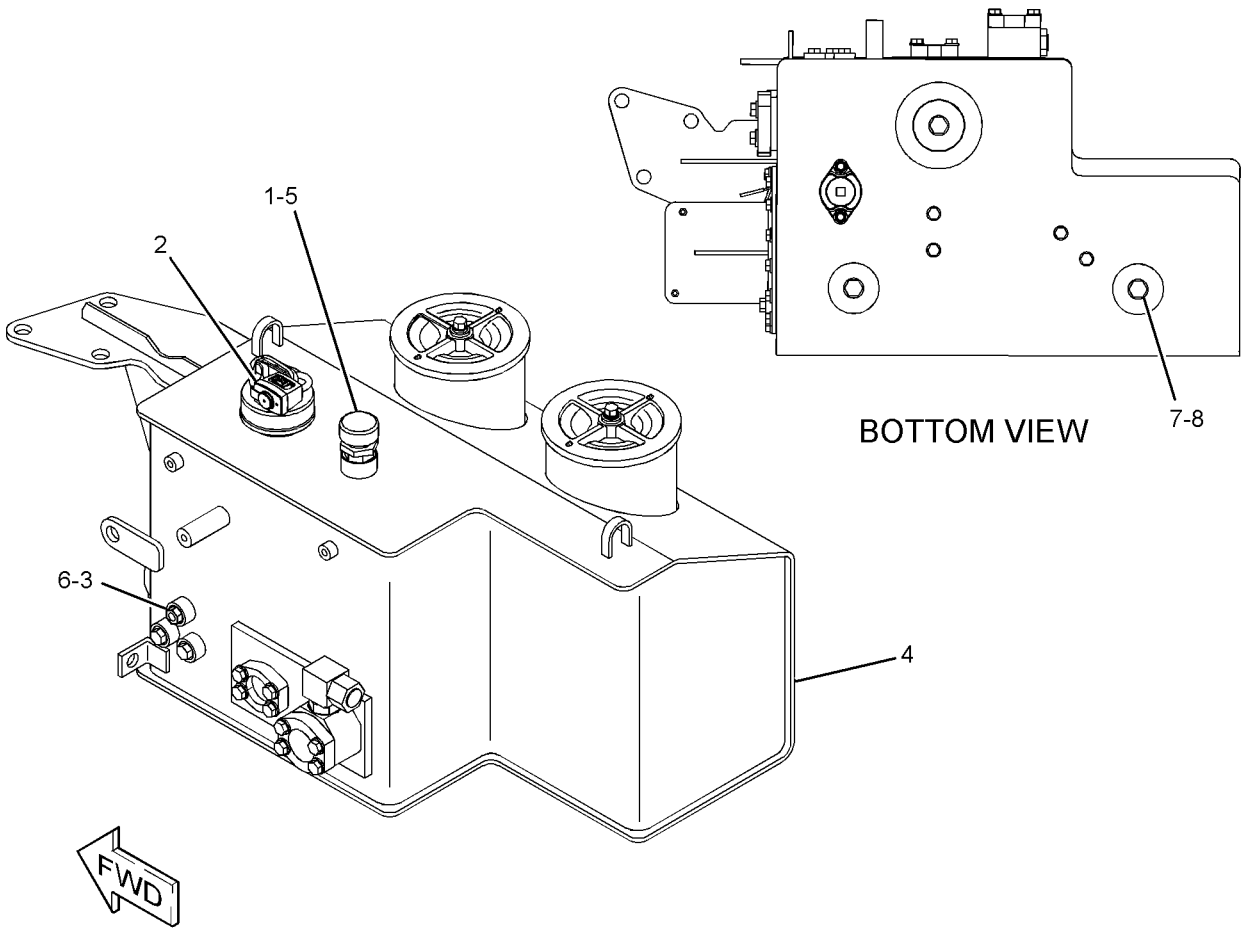

GRAPHIC #1 <END> g01209855

HYDRAULIC SYSTEM

224-4946 TANK GP-HYDRAULIC

S/N: S6T1-UP; S6X1-UP; S6Y1-UP

PART OF 222-1162 TANK & MTG GP-HYDRAULIC

SMCS-5056 i03997955

NOTE	REF NO	GRAPHIC REF	PART NUMBER	QTY	PART NAME 1 2 3 4 5 6 (PRODUCT LEVEL)	SEE PAGE
	1	1	1U-2827	1	GUIDE-VALVE	
	2	1	4J-8251	1	GROMMET	
	3	1	4J-8252	1	GAUGE-SIGHT (HYDRAULIC TANK)	
	4	1	4T-0521	2	BOLT (5/8-11X17.1-IN)	
	5	1	5D-1911	1	COVER-HYDRAULIC CAP	
	6	1	5D-7927	1	STRAINER AS-OIL (HYDRAULIC TANK FILL)	
	7	1	7B-3039	1	SPRING	
	8	1	7H-1447	1	CAP-FILLER (HYDRAULIC TANK)	
	9	1	8J-6913	1	RETAINER-SIGHT GLASS	
	10	1	8J-8443	2	SPRING	
	11	1	8J-8468	2	VALVE	
	12	1	8J-8782	1	BODY-DRAIN VALVE	
	13	1	8J-8783	1	VALVE	
	14	1	8T-3298	1	SEAL-RECTANGULAR	
	15	1	9J-2914	2	SPACER	
	16	1	9J-7031	1	PLUG-DRAIN (HYDRAULIC TANK)	
	17	1	9M-7394	1	LEVER	
	18	1	9T-3004	1	VALVE	
	19	1	9T-3005	1	SPRING	
	20	1	9T-3264	2	COVER	
	21	1	9T-7677	1	RETAINER	
	22	1	187-9194	1	PLATE (SIGHT GLASS)	
	23	1	235-0891	1	TANK AS-HYDRAULIC	
	24	1	235-0892	1	TUBE AS	
	25	1	235-0893	1	TUBE AS	
	26	1	235-0895	1	COVER AS	
	27	1	235-0907	2	BASE-FILTER	
	28	1	257-9788	1	GASKET	
	29	1	268-0066	1	SPACER	
	30	1	*148-8347*	1	ELBOW AS	
		1	6V-9007	1	ELBOW	
		1	3D-2824	1	SEAL-O-RING	
		1	6V-9746	1	SEAL-O-RING	
	31	1	154-1580	1	WASHER-HARD (22X38X6-MM THK)	
	32	1	1L-5072	1	DOWEL	
	33	1	1P-4578	2	FLANGE-HALF	
	34	1	1P-4582	2	FLANGE-HALF	
	35	1	1R-0777	2	FILTER ELEMENT AS-OIL (ADVANCED EFFICIENCY)	
					—OR—	
A		1	139-1537	2	FILTER ELEMENT AS-OIL (ULTRA HIGH EFFICIENCY)	
					—OR—	
A		1	104-6931	2	FILTER ELEMENT AS-OIL (FIRE RESISTANT FLUID)	
M	36	1	270-9433	2	BOLT-SOCKET HEAD (M6X1X45-MM)	
	37	1	2D-4202	1	PLATE	
	38	1	2J-7761	1	RING-RETAINING	
	39	1	3G-3267	2	SCREEN AS (HYDRAULIC TANK)	
	40	1	4F-7389	2	SEAL-O-RING	
	41	1	4K-0367	2	NUT-FULL (5/8-11-THD)	
	42	1	4P-7581	1	CLIP	
	43	1	4P-8134	2	CLIP	
	44	1	5F-1678	4	SEAL-O-RING	
	45	1	5M-2057	1	SEAL-O-RING	
	46	1	6H-9361	1	RING-RETAINING	
	47	1	6V-5839	8	WASHER (11X21X2.5-MM THK)	
M	48	1	6V-7732	4	BOLT (M10X1.5X25-MM)	
M	49	1	6V-7744	6	LOCKNUT (M10X1.5-THD)	

224-4946 TANK GP-HYDRAULIC ***(contd.)*** i03997955

NOTE	REF NO	GRAPHIC REF	PART NUMBER	QTY	PART NAME 1 2 3 4 5 6 (PRODUCT LEVEL)	SEE PAGE
	50	1	6V-9633	2	GASKET	
	51	1	7D-9749	1	SEAL-O-RING	
	52	1	7F-8267	2	SEAL-O-RING	
	53	1	8C-3206	2	FLANGE-HALF	
	54	1	8F-9206	2	SEAL-O-RING	
	55	1	8J-8322	2	RING-RETAINING	
	56	1	8J-8436	2	TUBE AS	
	57	1	8T-2275	1	BALL	
	58	1	8T-4121	34	WASHER-HARD (11X21X2.5-MM THK)	
M	59	1	8T-4136	20	BOLT (M10X1.5X25-MM)	
M	60	1	8T-4172	4	BOLT (M10X1.5X80-MM)	
M	61	1	8T-4196	4	BOLT (M10X1.5X35-MM)	
	62	1	8T-4223	4	WASHER-HARD (13.5X25.5X3-MM THK)	
M	63	1	8T-4956	4	BOLT (M12X1.75X35-MM)	
	64	1	9H-6454	1	GASKET	
M	65	1	9X-2125	4	BOLT-LOCKING (M10X1.5X25-MM)	

A-NOT PART OF THIS GROUP
M-METRIC PART

224-4946 TANK GP-HYDRAULIC *(contd.)* i03997955

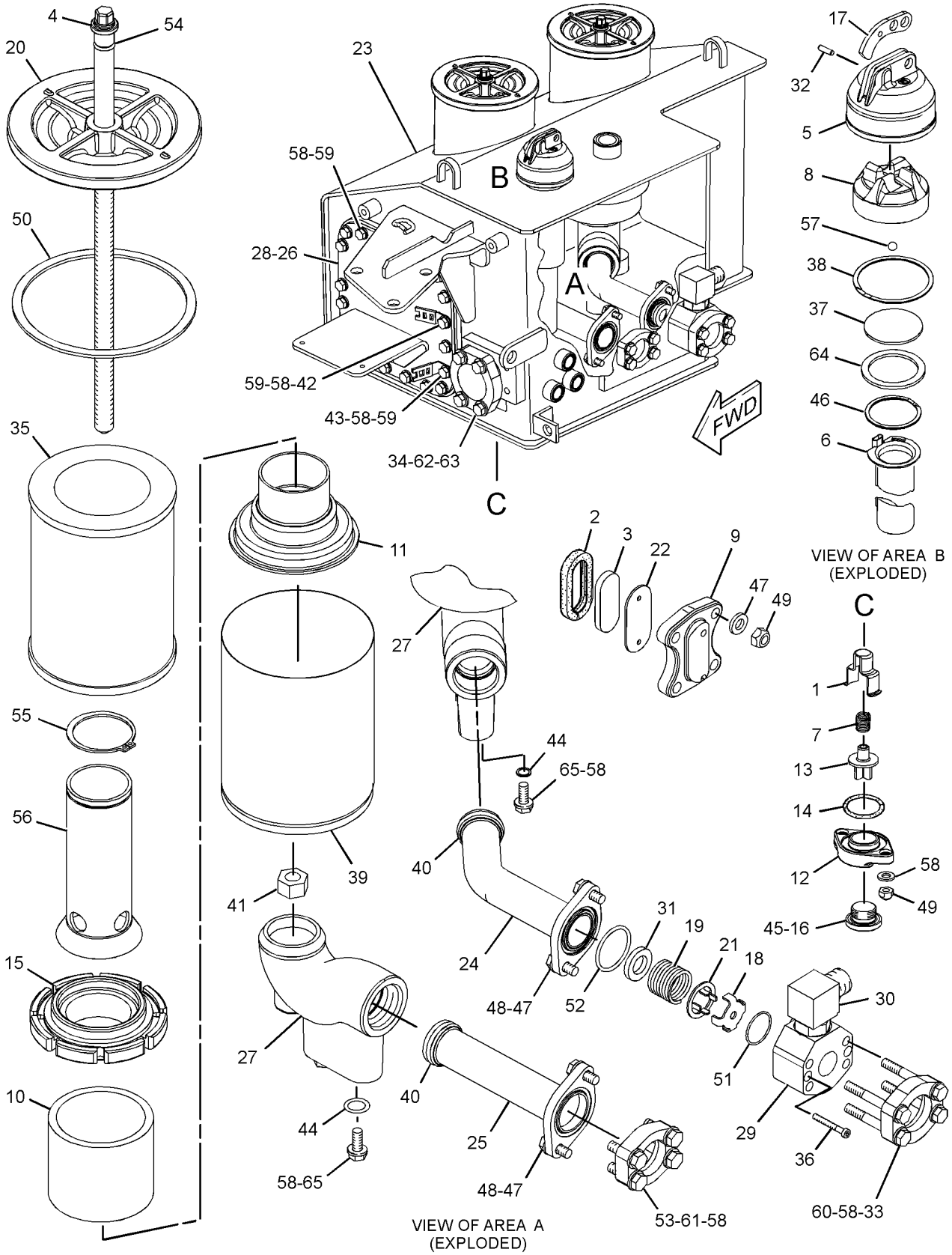

GRAPHIC #1 <END> g01212472

234-5126 VALVE & MTG GP-BULLDOZER–GRADE CONTROL

S/N: S6T1-UP; S6X1-UP; S6Y1-UP
PART OF 322-3701 LINES GP-PILOT
AN ATTACHMENT

SMCS-5051 i04033025

NOTE	REF NO	GRAPHIC REF	PART NUMBER	QTY	PART NAME 1 2 3 4 5 6 (PRODUCT LEVEL)	SEE PAGE
Y	1	1	201-0950	1	VALVE GP-SOLENOID (BOOST)	502
	2	1	234-5124	1	MANIFOLD AS	
		1	148-9359	9	PLUG	
Y	3	1	235-4605	4	VALVE GP-SOLENOID (BLADE CONTROL)	503

Y-SEPARATE ILLUSTRATION

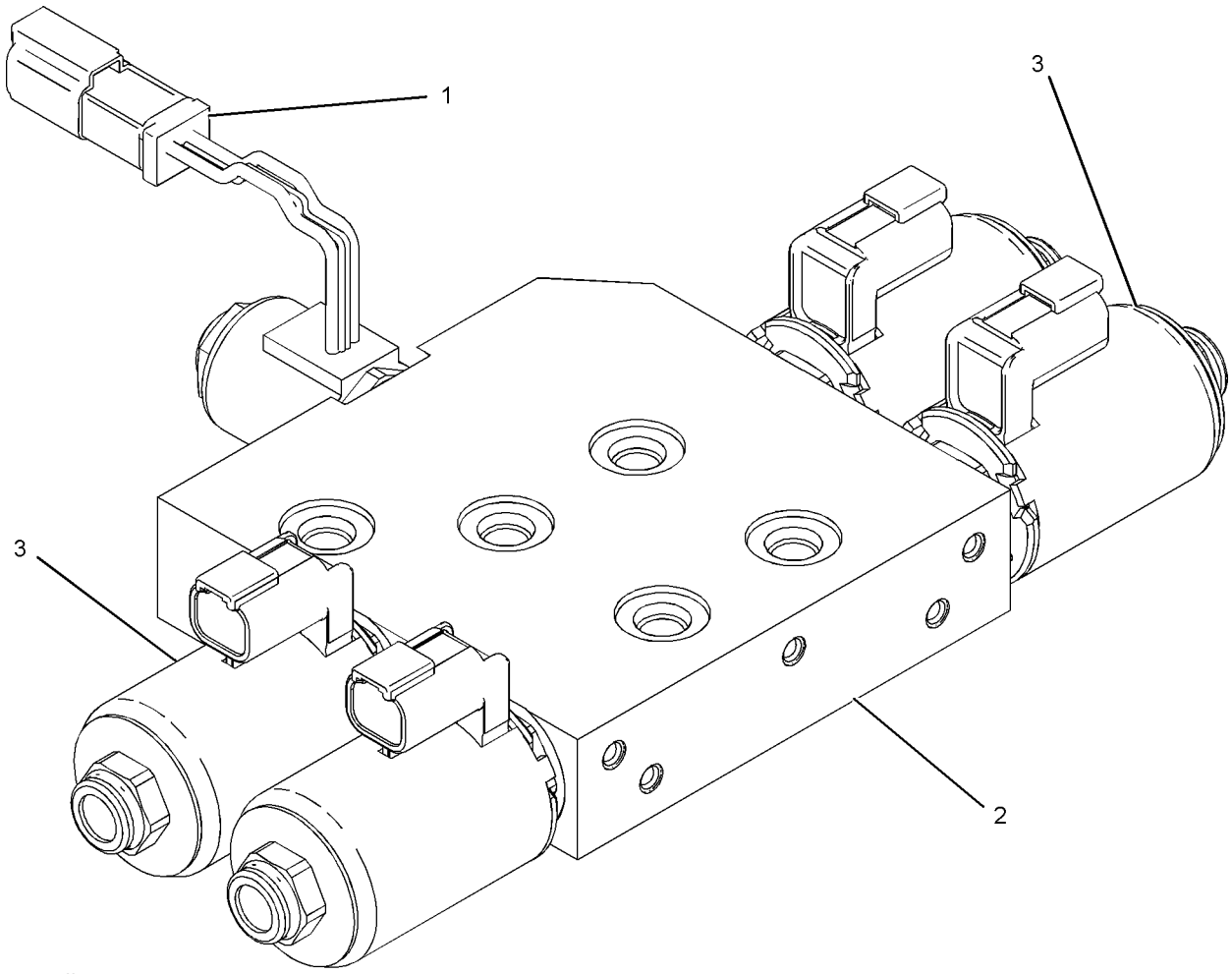

GRAPHIC #1 <END> g01072312

222-1191 VALVE & MTG GP-COUNTERBALANCE

S/N: S6T1-UP; S6X1-UP; S6Y1-UP
PART OF 317-1758 HYDRAULIC AR-2 VALVE

SMCS-5420 i04013956

NOTE	REF NO	GRAPHIC REF	PART NUMBER	QTY	PART NAME 1 2 3 4 5 6 (PRODUCT LEVEL)	SEE PAGE
Y	1	1	227-0832	1	VALVE GP-COUNTERBALANCE	482
M	2	1	8C-4365	6	BOLT (M14X2X80-MM)	
	3	1	4J-0520	2	SEAL-O-RING	
	4	1	6V-0400	4	FLANGE-HALF	
M	5	1	8T-4184	8	BOLT (M12X1.75X45-MM)	
	6	1	8T-4223	8	WASHER-HARD (13.5X25.5X3-MM THK)	

M-METRIC PART
Y-SEPARATE ILLUSTRATION

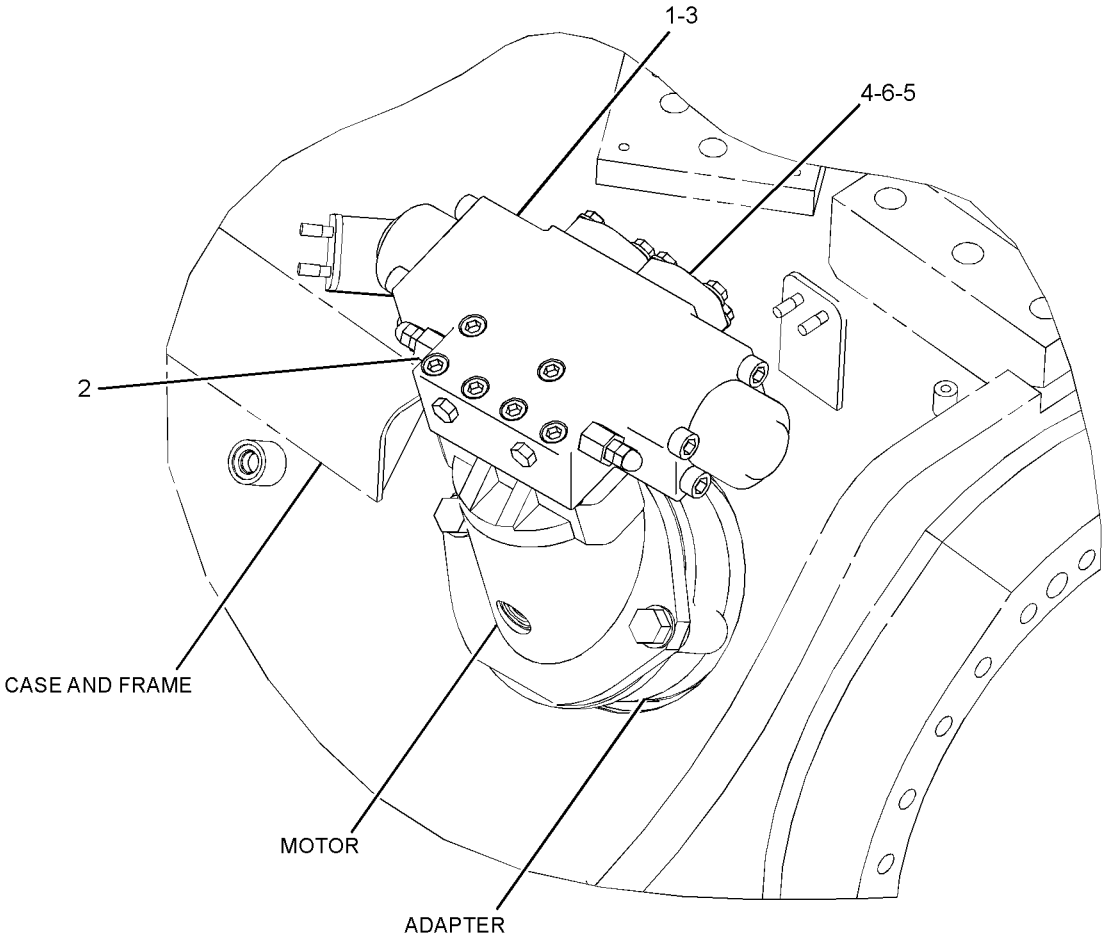

GRAPHIC #1 <END> g01206728

224-4936 VALVE GP-BANK 3—BULLDOZER, STEERING

S/N: S6T1-UP; S6X1-UP; S6Y1-UP
PART OF 222-1159 MOUNTING GP-VALVE

SMCS-5051 i03983034

NOTE	REF NO	GRAPHIC REF	PART NUMBER	QTY	PART NAME 1 2 3 4 5 6 (PRODUCT LEVEL)	SEE PAGE
	1	1	8T-9403	4	FLANGE-HALF	
	2	1	6V-8188	3	NUT (1/2-13-THD)	
	3	1	164-7677	3	ROD	
	4	1	8T-4223	3	WASHER-HARD (13.5X25.5X3-MM THK)	
	5	1	235-0399	1	COVER	
Y	6	1	235-0401	1	MANIFOLD GP-VALVE	454
Y	7	1	235-0402	1	VALVE GP-CONTROL (STEERING)	472
Y	8	1	235-0403	1	VALVE GP-CONTROL (BULLDOZER LIFT)	474
Y	9	1	235-0404	1	VALVE GP-CONTROL (BULLDOZER TILT)	477
	10	1	*155-3624*	2	PLUG AS	
					(EACH INCLUDES)	
		1	9S-4182	1	PLUG-O-RING	
		1	3J-7354	1	SEAL-O-RING	
	11	1	1P-3702	1	SEAL-RECTANGULAR	
	12	1	1P-4578	4	FLANGE-HALF	
	13	1	*207-7899*	1	PLUG AS	
		1	9S-4188	1	PLUG	
		1	4K-1388	1	SEAL-O-RING	
	14	1	4J-0522	12	SEAL-O-RING	
	15	1	4J-8997	3	SEAL-O-RING	
	16	1	6V-5555	12	SEAL-O-RING	
	17	1	8C-3206	8	FLANGE-HALF	
	18	1	8T-4121	32	WASHER-HARD (11X21X2.5-MM THK)	
M	19	1	8T-4182	8	BOLT (M10X1.5X45-MM)	
M	20	1	8T-4196	24	BOLT (M10X1.5X35-MM)	

M-METRIC PART
Y-SEPARATE ILLUSTRATION

224-4936 VALVE GP-BANK 3 ***(contd.)*** i03983034

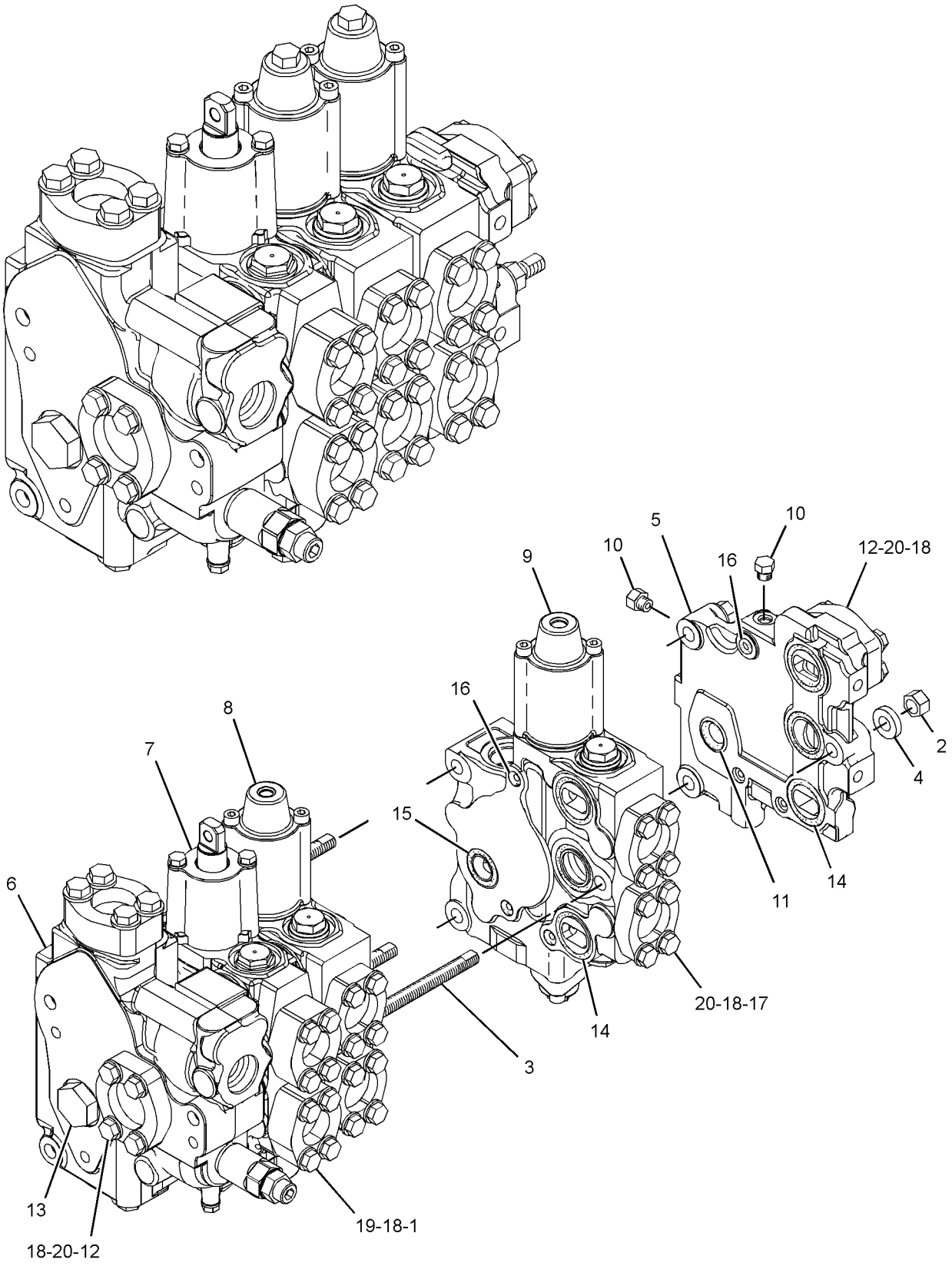

GRAPHIC #1 <END> g02173278

224-4937 VALVE GP-BANK 4—STEERING, BULLDOZER, RIPPER

S/N: S6T1-UP; S6X1-UP; S6Y1-UP
PART OF 322-3710 CONTROL AR-HYDRAULIC
AN ATTACHMENT

SMCS-5051 i04033027

NOTE	REF NO	GRAPHIC REF	PART NUMBER	QTY	PART NAME 1 2 3 4 5 6 (PRODUCT LEVEL)	SEE PAGE
	2	1	164-6174	3	ROD	
	4	1	235-0399	1	COVER	
Y	5	1	235-0401	1	MANIFOLD GP-VALVE	454
Y	6	1	235-0402	1	VALVE GP-CONTROL (STEERING)	472
Y	7	1	235-0403	1	VALVE GP-CONTROL (BULLDOZER LIFT)	474
Y	8	1	235-0404	1	VALVE GP-CONTROL (BULLDOZER TILT)	477
Y	9	1	235-0405	1	VALVE GP-CONTROL (RIPPER LIFT)	479
	10	1	*155-3624*	2	PLUG AS	
					(EACH INCLUDES)	
		1	9S-4182	1	PLUG-O-RING	
		1	3J-7354	1	SEAL-O-RING	
	11	1	1P-3702	1	SEAL-RECTANGULAR	
	12	1	1P-4578	2	FLANGE-HALF	
	13	1	*207-7899*	1	PLUG AS	
		1	4K-1388	1	SEAL-O-RING	
		1	9S-4188	1	PLUG	
	14	1	4J-0522	15	SEAL-O-RING	
	15	1	4J-8997	4	SEAL-O-RING	
	16	1	6V-5555	15	SEAL-O-RING	
	17	1	6V-8188	3	NUT (1/2-13-THD)	
	18	1	8C-3206	14	FLANGE-HALF	
	19	1	8T-4121	40	WASHER-HARD (11X21X2.5-MM THK)	
M	20	1	8T-4182	8	BOLT (M10X1.5X45-MM)	
M	21	1	8T-4196	32	BOLT (M10X1.5X35-MM)	
	22	1	8T-4223	3	WASHER-HARD (13.5X25.5X3-MM THK)	
	23	1	8T-9403	4	FLANGE-HALF	

M-METRIC PART
Y-SEPARATE ILLUSTRATION

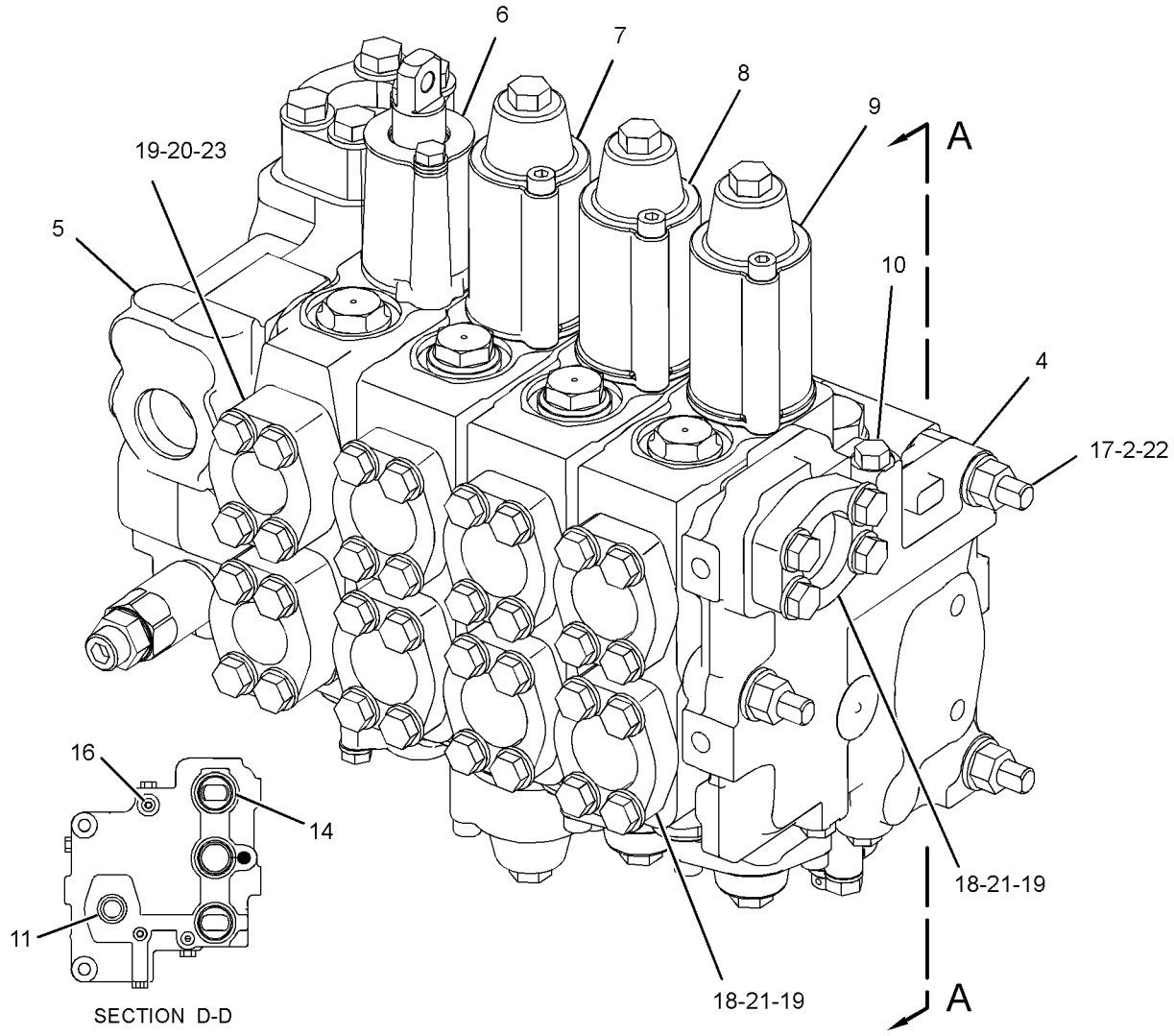

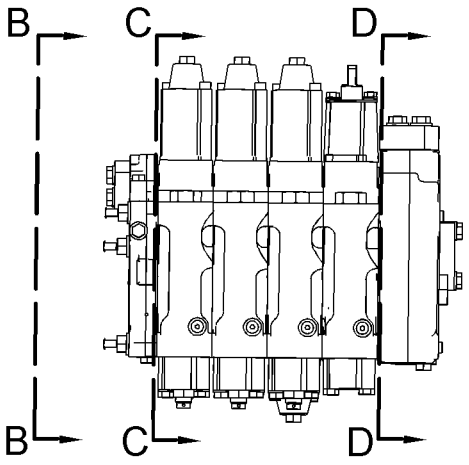

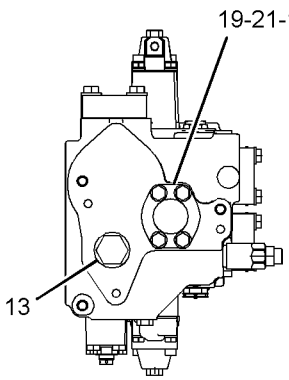

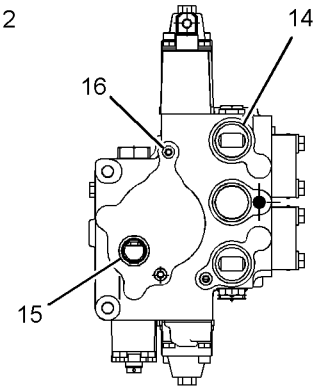

GRAPHIC #1 <END> g01208575

158-9956 VALVE GP-CHECK

S/N: S6T1-UP; S6X1-UP; S6Y1-UP
PART OF 226-4751 MANIFOLD GP-CONTROL

SMCS-5067 i04017236

NOTE	REF NO	GRAPHIC REF	PART NUMBER	QTY	PART NAME 1 2 3 4 5 6 (PRODUCT LEVEL)	SEE PAGE
	1	1	3K-0360	1	SEAL-O-RING	
	2	1	161-6154	1	SEAL-O-RING	
	3	1	6E-0381	1	RING-BACKUP	

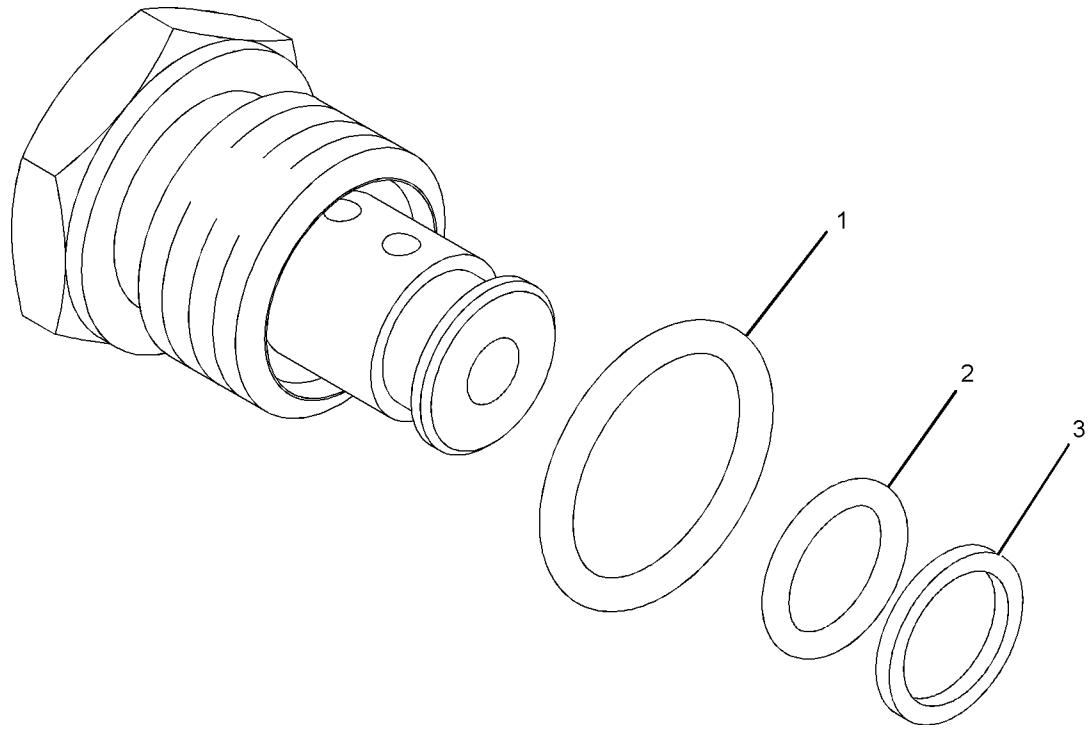

GRAPHIC #1 <END> g01016882

HYDRAULIC SYSTEM

235-0402 VALVE GP-CONTROL—STEERING

S/N: S6T1-UP; S6X1-UP; S6Y1-UP
PART OF 224-4936 VALVE GP-BANK 3, 224-4937 VALVE GP-BANK 4
ALSO AN ATTACHMENT

SMCS-5051 i03983088

NOTE	REF NO	GRAPHIC REF	PART NUMBER	QTY	PART NAME 1 2 3 4 5 6 (PRODUCT LEVEL)	SEE PAGE
	1	1	2S-2596	3	SPRING	
B	3	1	4J-6806	2	SHIM (1.2-MM THK)	
	4	1	4T-0993	2	RETAINER	
	5	1	4T-1021	2	RETAINER	
	6	1	4T-1649	1	HOUSING	
	7	1	4T-1850	1	HOUSING	
Y	8	1	4T-1860	1	VALVE GP-SHUTTLE	501
	9	1	4T-4511	1	SLEEVE	
	10	1	4T-5074	1	RING-BACKUP	
	11	1	6E-0486	1	VALVE GP-FLOW CONTROL	
	12	1	6L-9716	1	PLUG-PIPE	
	13	1	9T-6316	1	SPRING	
	14	1	9T-6688	1	SPRING	
	15	1	100-8012	2	BODY	
	16	1	107-1177	1	HOUSING	
	17	1	107-1179	1	PLATE-SEAL	
	19	1	208-5498	1	SEAL AS	
B	22	1	256-9637	2	SHIM (0.61-MM THK)	
M	23	1	099-3649	2	BOLT (M8X1.25X40-MM)	
	24	1	100-8010	3	VALVE-CHECK	
	25	1	100-8011	1	PLUG	
	26	1	*162-6448*	1	PLUG AS	
		1	1N-5999	1	PLUG-O-RING	
		1	7J-0204	1	SEAL-O-RING	
	27	1	*173-3993*	2	PLUG AS	
					(EACH INCLUDES)	
		1	9S-8001	1	PLUG-O-RING	
		1	4J-7533	1	SEAL-O-RING	
	28	1	*183-7263*	1	PLUG AS	
		1	9S-8002	1	PLUG-O-RING	
		1	3J-7354	1	SEAL-O-RING	
	29	1	2D-0598	1	SEAL-O-RING	
	30	1	4K-1388	2	SEAL-O-RING	
	31	1	4T-5073	2	RING-BACKUP	
	32	1	5M-2057	1	SEAL-O-RING	
	33	1	6V-5556	1	SEAL-O-RING	
	34	1	7D-9749	1	SEAL-O-RING	
	35	1	7J-9933	2	SEAL-O-RING	
	36	1	7M-8485	1	SEAL-O-RING	
M	37	1	8T-4177	2	BOLT (M8X1.25X90-MM)	
M	38	1	8T-4185	2	BOLT (M10X1.5X50-MM)	
	39	1	8T-4224	6	WASHER-HARD (8.8X16X2-MM THK)	

B-USE AS REQUIRED
M-METRIC PART
Y-SEPARATE ILLUSTRATION

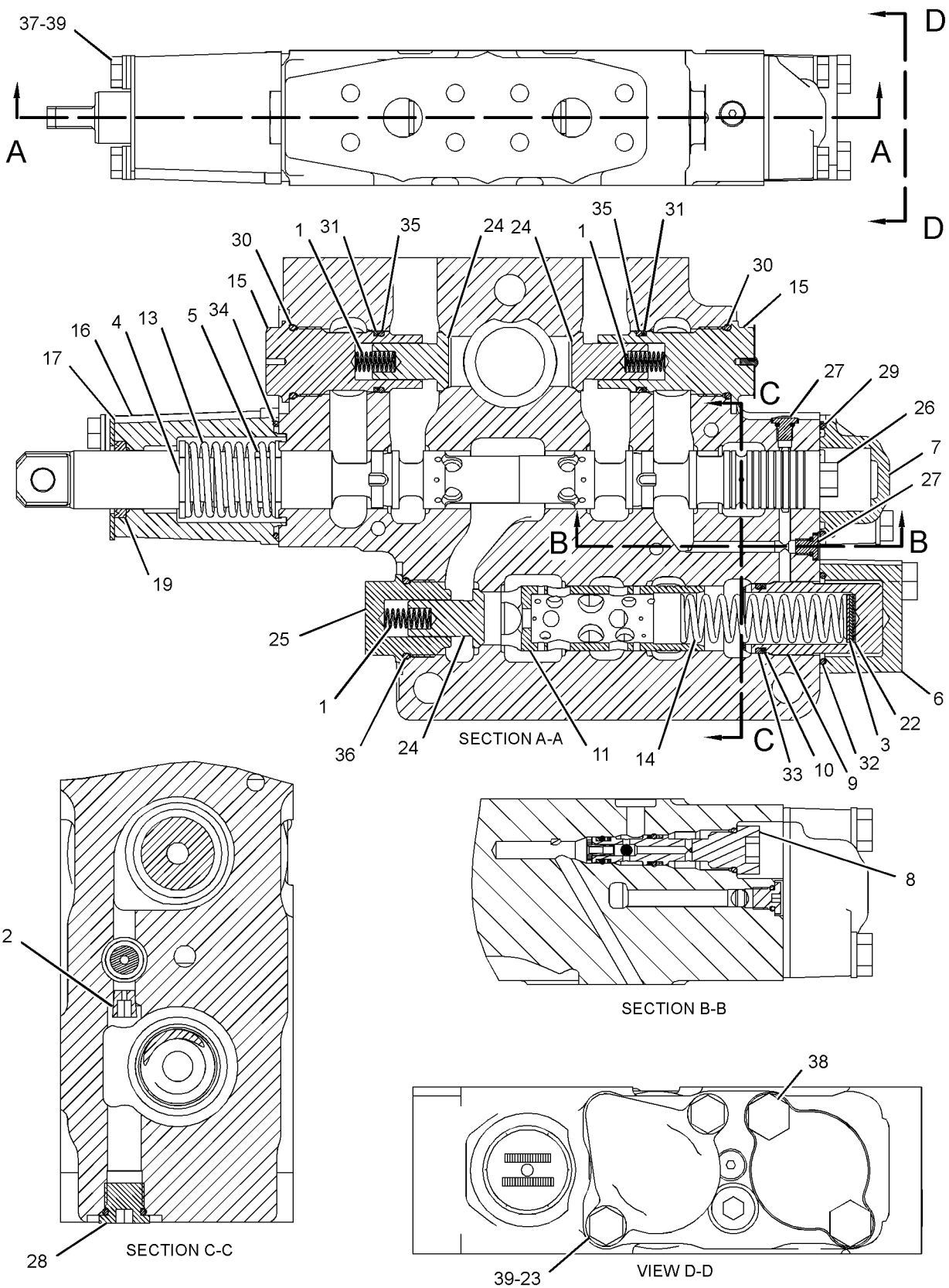

GRAPHIC #1 <END> g01218385

235-0403 VALVE GP-CONTROL—BULLDOZER LIFT

S/N: S6T1-UP; S6X1-UP; S6Y1-UP
PART OF 224-4936 VALVE GP-BANK 3, 224-4937 VALVE GP-BANK 4
ALSO AN ATTACHMENT

SMCS-5051 i03983118

NOTE	REF NO	GRAPHIC REF	PART NUMBER	QTY	PART NAME 1 2 3 4 5 6 (PRODUCT LEVEL)	SEE PAGE
	1	1	2S-2596	2	SPRING	
	3	1	4T-1108	1	PLUG	
B	4	2	4T-4628	5	SHIM (0.5-MM THK)	
	5	1	4T-5072	1	RING-BACKUP	
	6	1	100-8012	1	BODY	
Y	7	1	121-6649	1	VALVE GP-RELIEF (PILOT OIL PRESSURE)	499
	9	2	153-7067	1	RETAINER	
	10	1	153-7549	1	RETAINER	
	11	2	153-7550	1	RETAINER	
	12	1	153-7553	1	SPRING	
	13	2	161-2685	1	SCREW (3/8-24-THD)	
	14	1	163-5671	1	WASHER (17X39X2-MM THK)	
	15	2	164-0938	1	SPRING	
	17	2	170-4001	1	SPRING	
	18	1	173-0511	1	HOUSING	
	19	1	173-0512	1	HOUSING	
	20	1	173-0515	1	SPACER	
M	23	2	085-8091	2	BOLT (M10X1.5X55-MM)	
	24	1	100-8010	2	VALVE-CHECK	
	25	1	100-8011	1	PLUG	
M	26	1	102-7365	2	BOLT-SOCKET HEAD (M8X1.25X100-MM)	
	27	1	123-9624	1	SPRING	
	28	1	*173-3993*	2	PLUG AS	
					(EACH INCLUDES)	
		1	4J-7533	1	SEAL-O-RING	
		1	9S-8001	1	PLUG-O-RING	
	29	2	*183-7263*	1	PLUG AS	
		2	3J-7354	1	SEAL-O-RING	
		2	9S-8002	1	PLUG-O-RING	
B	30	2	2J-2866	3	SHIM (0.12-MM THK)	
	31	1	4J-5351	1	SEAL-O-RING	
	32	1	4K-1388	2	SEAL-O-RING	
Y	33	2	4T-1860	1	VALVE GP-SHUTTLE	501
	34	1	4T-5073	2	RING-BACKUP	
	35	1,2	5K-0227	2	SEAL-O-RING	
	36	1	5M-2057	2	SEAL-O-RING	
	37	1	6E-1637	3	SHIM (1-MM THK)	
	38	2	7J-0204	1	SEAL-O-RING	
	39	1	7J-9933	2	SEAL-O-RING	
	40	1	7M-8485	1	SEAL-O-RING	
	41	1	8J-8462	2	SHIM (0.254-MM THK)	
	42	2	9J-8126	1	PLUG-ORIFICE	
	43	2	9X-2027	2	WASHER (11X18X2-MM THK)	
M	44	1	9X-6154	2	BOLT-SOCKET HEAD (M8X1.25-THD)	

B-USE AS REQUIRED
M-METRIC PART
Y-SEPARATE ILLUSTRATION

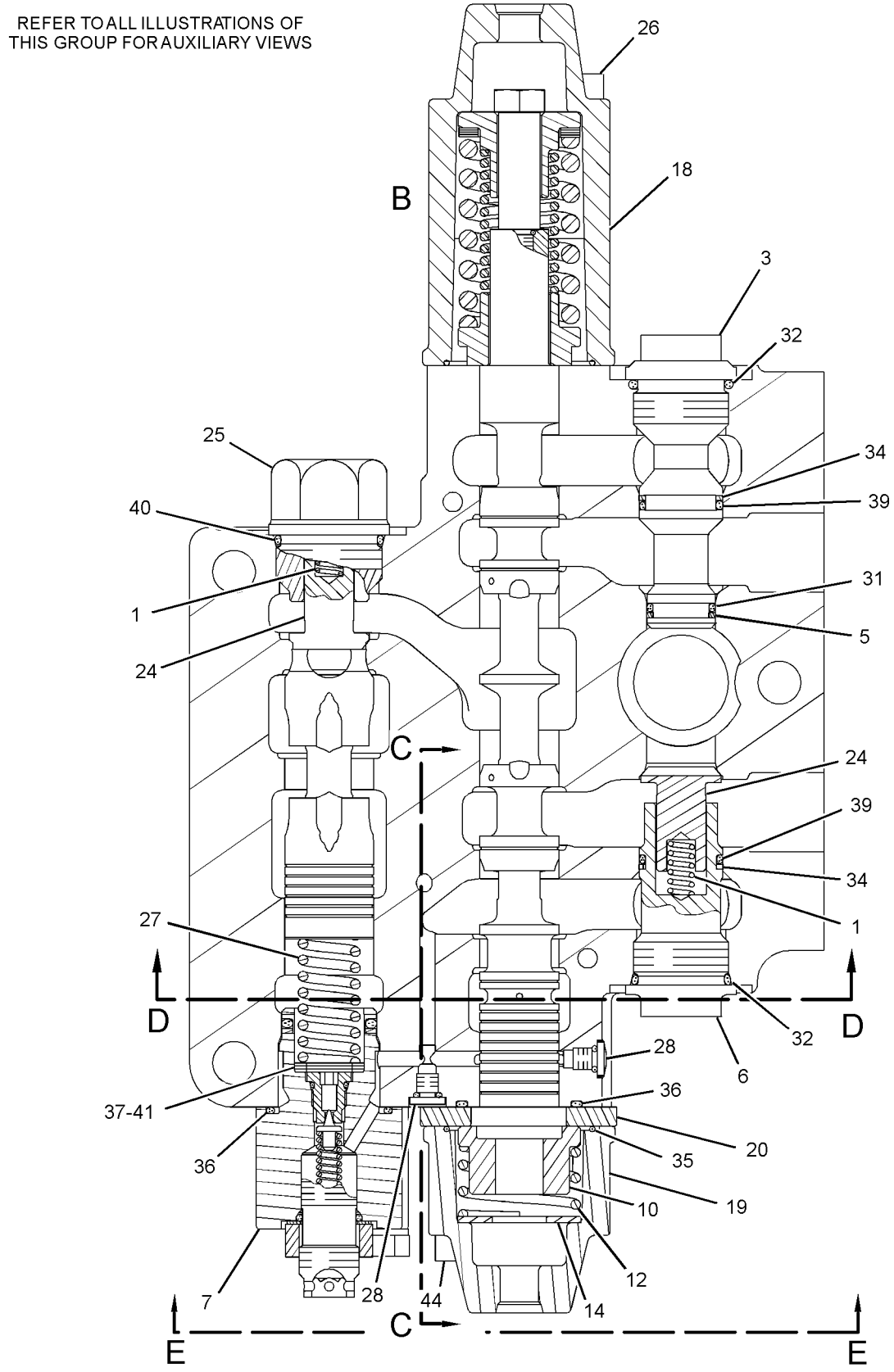

GRAPHIC #1 g01218394

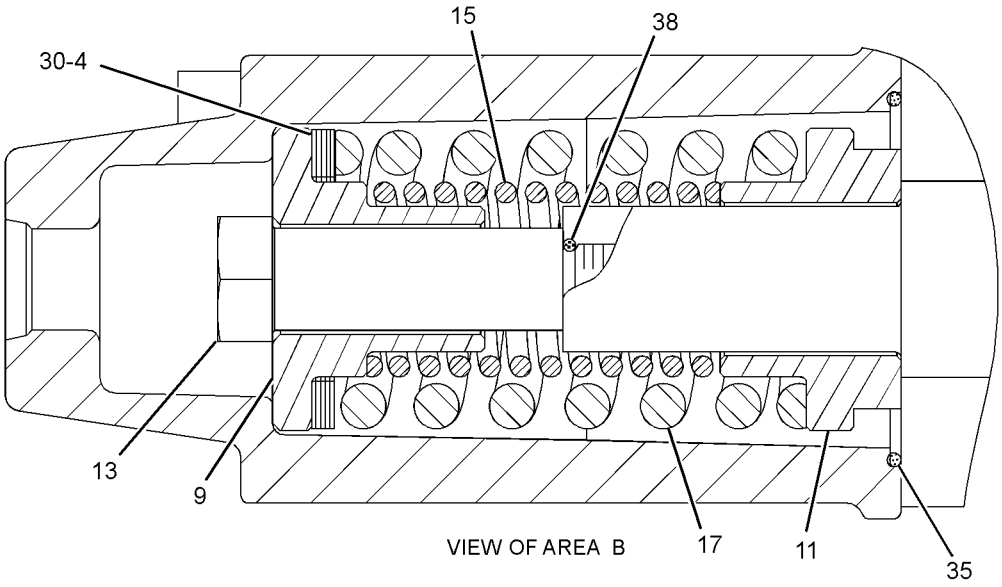

VIEW OF AREA B

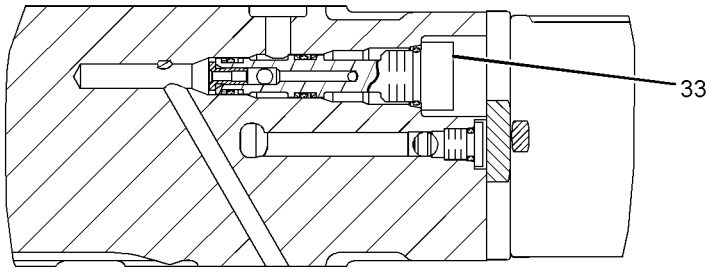

SECTION C-C

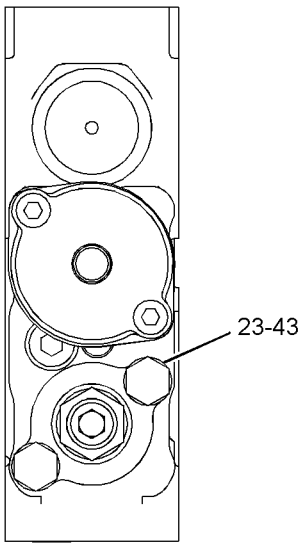

SECTION E-E

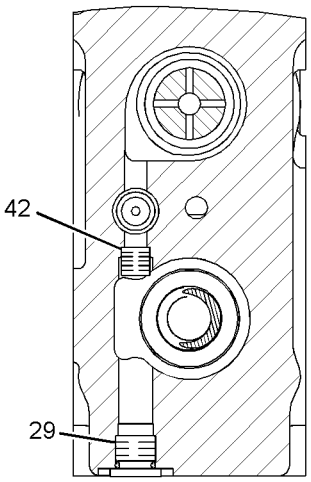

SECTION D-D

GRAPHIC #2 <END> g01209850

235-0404 VALVE GP-CONTROL–BULLDOZER TILT

S/N: S6T1-UP; S6X1-UP; S6Y1-UP
PART OF 224-4936 VALVE GP-BANK 3, 224-4937 VALVE GP-BANK 4
ALSO AN ATTACHMENT

SMCS-5051 i03983134

NOTE	REF NO	GRAPHIC REF	PART NUMBER	QTY	PART NAME 1 2 3 4 5 6 (PRODUCT LEVEL)	SEE PAGE
	1	1	123-9624	1	SPRING	
	2	1	2S-2596	1	SPRING	
	4	1	4T-1108	2	PLUG	
B	5	1	4T-4628	6	SHIM (0.5-MM THK)	
	6	1	4T-4631	1	SPRING	
Y	7	1	121-6649	1	VALVE GP-RELIEF (PILOT OIL PRESSURE)	499
	9	1	153-6976	1	SPRING	
	10	1	153-7067	1	RETAINER	
	11	1	153-7551	1	RETAINER	
	12	1	161-2684	1	SCREW (3/8-24X2.48-IN)	
	14	1	173-0511	1	HOUSING	
	15	1	173-0514	1	COVER	
M	18	1	085-8091	2	BOLT (M10X1.5X55-MM)	
	19	1	100-8010	1	VALVE-CHECK	
	20	1	100-8011	1	PLUG	
M	21	1	102-7365	2	BOLT-SOCKET HEAD (M8X1.25X100-MM)	
	22	1	*173-3993*	2	PLUG AS	
					(EACH INCLUDES)	
		1	9S-8001	1	PLUG-O-RING	
		1	4J-7533	1	SEAL-O-RING	
	23	1	*183-7263*	1	PLUG AS	
		1	9S-8002	1	PLUG-O-RING	
		1	3J-7354	1	SEAL-O-RING	
B	24	1	2J-2866	2	SHIM (0.12-MM THK)	
	25	1	4J-5351	2	SEAL-O-RING	
	26	1	4K-1388	2	SEAL-O-RING	
Y	27	1	4T-1860	1	VALVE GP-SHUTTLE	501
	28	1	4T-5072	2	RING-BACKUP	
	29	1	4T-5073	2	RING-BACKUP	
	30	1	5K-0227	1	SEAL-O-RING	
	31	1	5M-2057	2	SEAL-O-RING	
M	32	1	6V-5192	2	BOLT-SOCKET HEAD (M8X1.25X30-MM)	
	33	1	7J-0204	1	SEAL-O-RING	
	34	1	7J-9933	2	SEAL-O-RING	
	35	1	7M-8485	1	SEAL-O-RING	
	36	1	9J-8126	1	PLUG-ORIFICE	
	37	1	9X-2027	2	WASHER (11X18X2-MM THK)	

B-USE AS REQUIRED
M-METRIC PART
Y-SEPARATE ILLUSTRATION

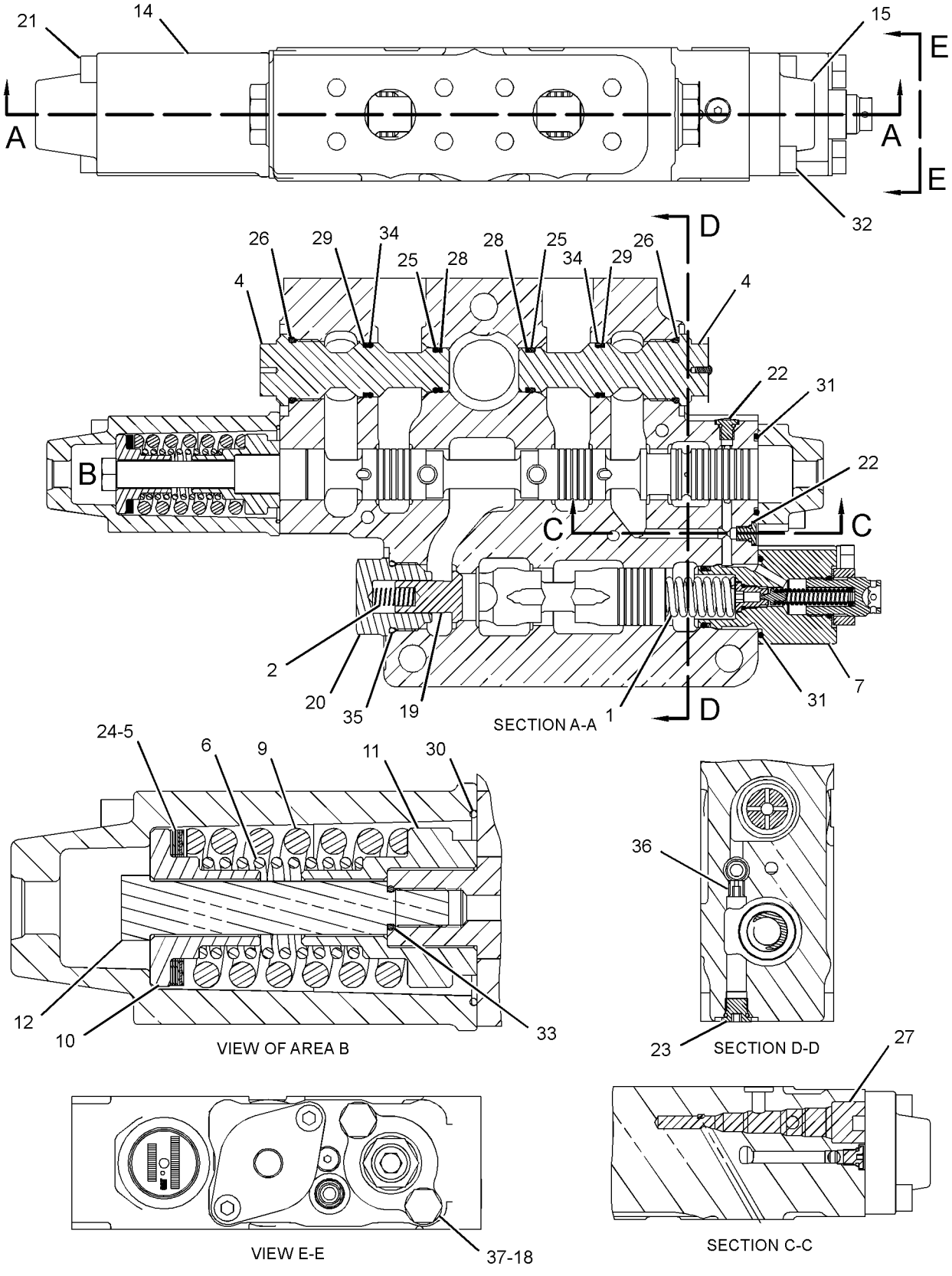

GRAPHIC #1 <END> g01218399

235-0405 VALVE GP-CONTROL—RIPPER LIFT

S/N: S6T1-UP; S6X1-UP; S6Y1-UP
PART OF 224-4937 VALVE GP-BANK 4
AN ATTACHMENT

SMCS-5051 i03996191

NOTE	REF NO	GRAPHIC REF	PART NUMBER	QTY	PART NAME 1 2 3 4 5 6 (PRODUCT LEVEL)	SEE PAGE
	1	1	2S-2596	1	SPRING	
	3	1	4T-1108	2	PLUG	
B	4	2	4T-4628	5	SHIM (0.5-MM THK)	
	5	2	4T-4631	1	SPRING	
Y	7	1	121-6649	1	VALVE GP-RELIEF (PILOT OIL PRESSURE)	499
	9	2	153-6976	1	SPRING	
	10	2	153-7067	1	RETAINER	
	11	2	153-7551	1	RETAINER	
	12	2	161-2684	1	SCREW (3/8-24X2.48-IN)	
	14	1	173-0511	1	HOUSING	
	15	1	173-0514	1	COVER	
M	18	2	085-8091	2	BOLT (M10X1.5X55-MM)	
	19	1	100-8010	1	VALVE-CHECK	
	20	1	100-8011	1	PLUG	
M	21	1	102-7365	2	BOLT-SOCKET HEAD (M8X1.25X100-MM)	
	22	1	123-9624	1	SPRING	
	23	1	*173-3993*	2	PLUG AS	
					(EACH INCLUDES)	
		1	9S-8001	1	PLUG-O-RING	
		1	4J-7533	1	SEAL-O-RING	
	24	2	*183-7263*	1	PLUG AS	
		2	9S-8002	1	PLUG-O-RING	
		2	3J-7354	1	SEAL-O-RING	
B	25	2	2J-2866	2	SHIM (0.12-MM THK)	
	26	1	4J-5351	2	SEAL-O-RING	
	27	1	4K-1388	2	SEAL-O-RING	
Y	28	2	4T-1860	1	VALVE GP-SHUTTLE	501
	29	1	4T-5072	2	RING-BACKUP	
	30	1	4T-5073	2	RING-BACKUP	
	31	2	5K-0227	1	SEAL-O-RING	
	32	1	5M-2057	2	SEAL-O-RING	
B	33	1	6E-1637	2	SHIM (1-MM THK)	
M	34	1	6V-5192	2	BOLT-SOCKET HEAD (M8X1.25X30-MM)	
	35	2	7J-0204	1	SEAL-O-RING	
	36	1	7J-9933	2	SEAL-O-RING	
	37	1	7M-8485	1	SEAL-O-RING	
	38	2	9J-8126	1	PLUG-ORIFICE	
	39	2	9X-2027	2	WASHER (11X18X2-MM THK)	

B-USE AS REQUIRED
M-METRIC PART
Y-SEPARATE ILLUSTRATION

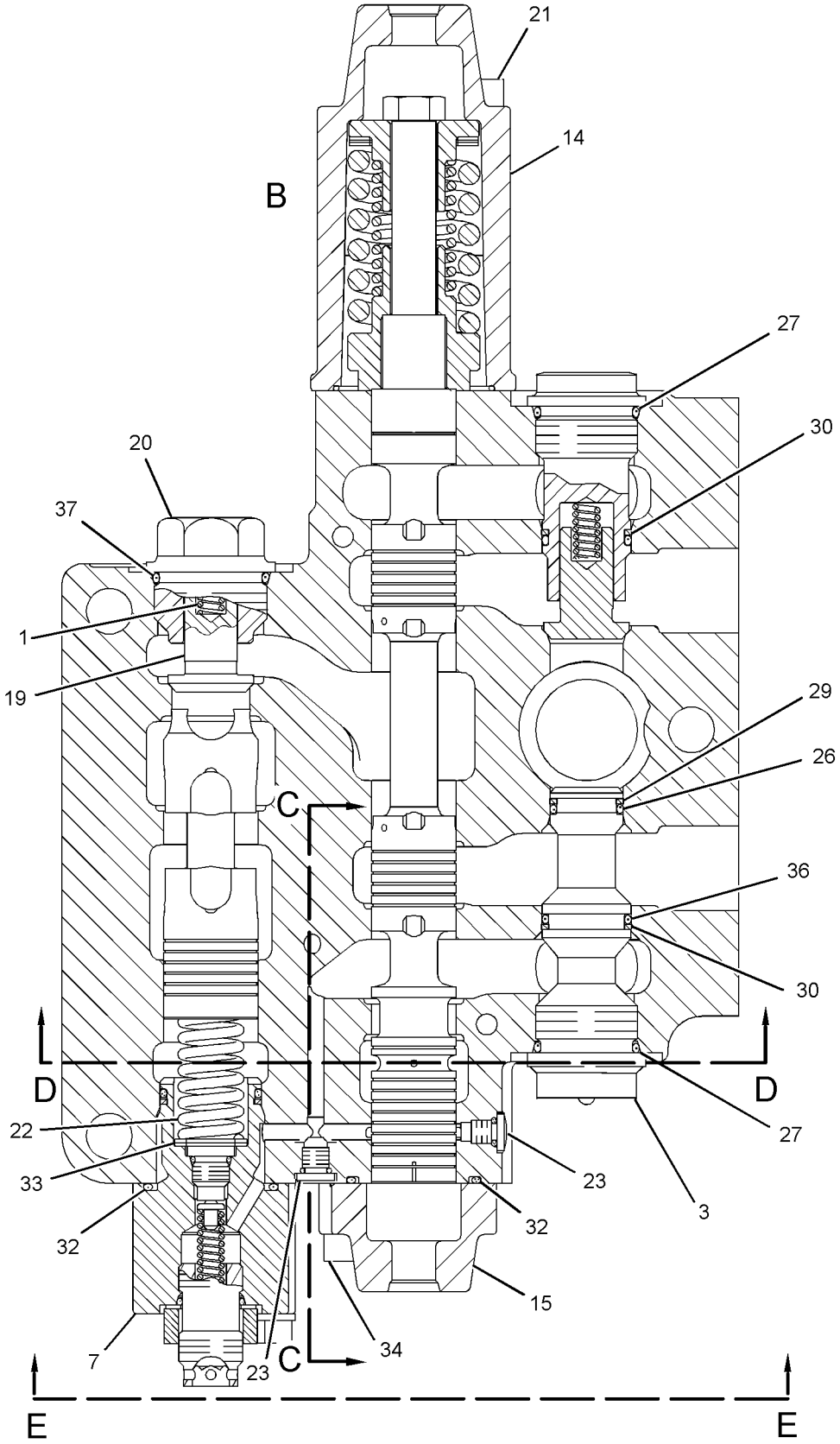

GRAPHIC #1 g01364380

235-0405 VALVE GP-CONTROL *(contd.)* i03996191

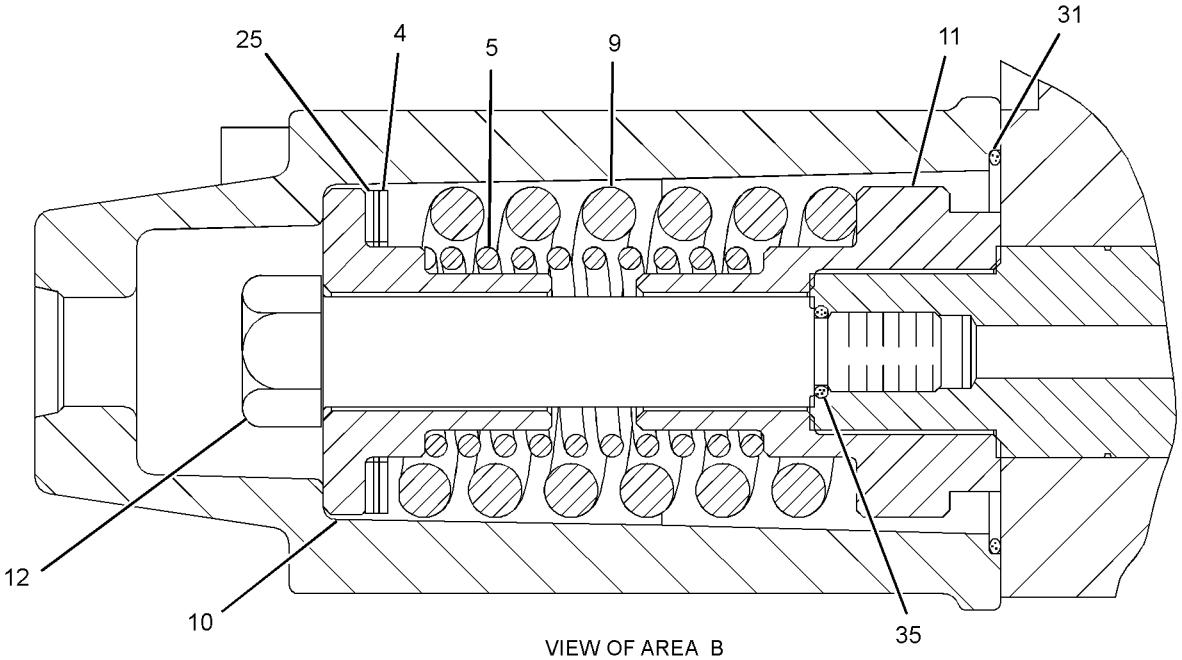

VIEW OF AREA B

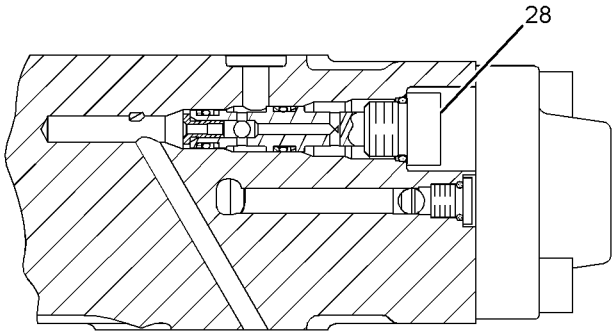

SECTION C-C

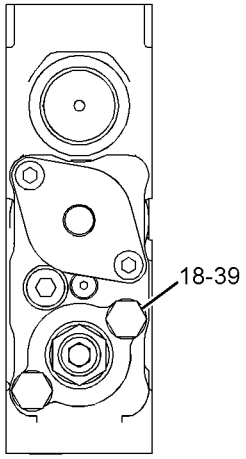

SECTION E-E

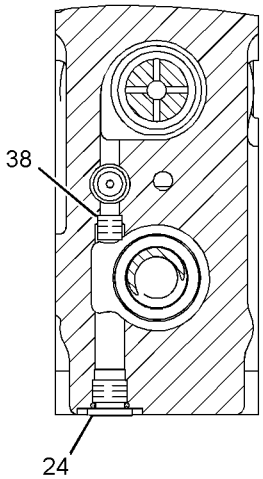

SECTION D-D

GRAPHIC #2 <END> g01212475

227-0832 VALVE GP-COUNTERBALANCE

S/N: S6T1-UP; S6X1-UP; S6Y1-UP
PART OF 222-1191 VALVE & MTG GP-COUNTERBALANCE

SMCS-4340 i04008355

NOTE	REF NO	GRAPHIC REF	PART NUMBER	QTY	PART NAME 1 2 3 4 5 6 (PRODUCT LEVEL)	SEE PAGE
	1	1	9T-8571	2	COVER	
	2	1	4J-0528	2	SEAL-O-RING	
	3	1	9T-5948	2	RING	
	4	1	9T-5949	2	SPRING	
	5	1	9T-5950	4	RETAINER	
M	6	1	8T-1447	8	BOLT-SOCKET HEAD (M16X2X70-MM)	
	7	1	9T-8980	2	RING	
Y	8	1	9T-5364	2	VALVE GP-RELIEF (CROSSOVER)	498
	9	1	5P-6719	2	PLUG	
	10	1	3J-1907	2	SEAL-O-RING	
	11	1	4J-0522	2	SEAL-O-RING	

M-METRIC PART
Y-SEPARATE ILLUSTRATION

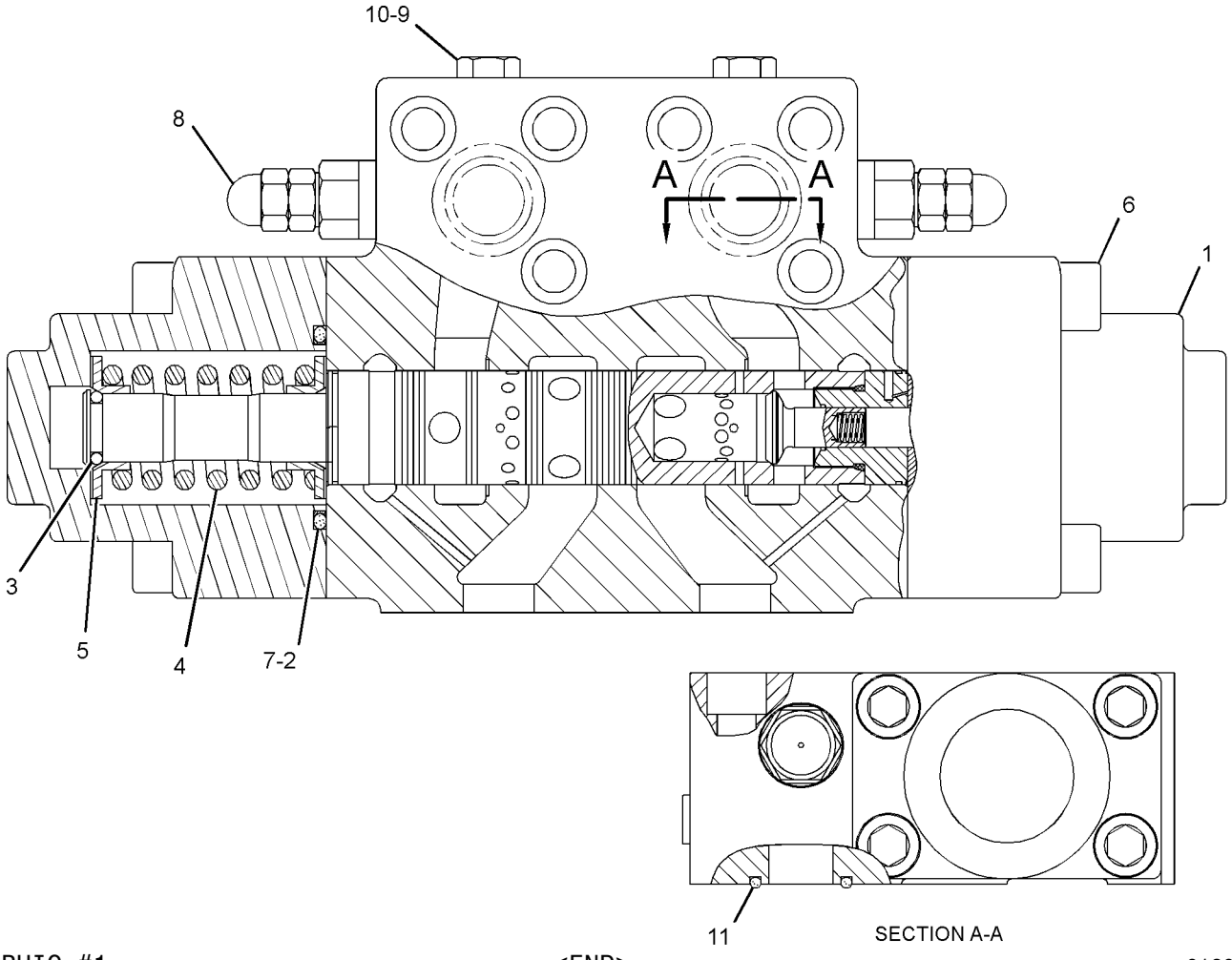

GRAPHIC #1 <END> g01208374

167-1177 VALVE GP-PILOT–RIPPER

S/N: S6T1-UP; S6X1-UP; S6Y1-UP
PART OF 322-3710 CONTROL AR-HYDRAULIC
AN ATTACHMENT

SMCS-5059 i03996074

NOTE	REF NO	GRAPHIC REF	PART NUMBER	QTY	PART NAME 1 2 3 4 5 6 (PRODUCT LEVEL)	SEE PAGE
	1	1	9S-8004	2	PLUG-O-RING	
	2	1	141-4852	1	BOOT	
	3	1	145-2334	1	ADAPTER	
	4	1	146-8477	1	BRACKET	
	5	1	146-8981	1	PIN	
	6	1	9S-8002	6	PLUG-O-RING	
Y	7	1	194-5033	1	VALVE GP-PILOT CARTRIDGE (RIPPER LOWER)	490
	8	1	163-5512	2	GROMMET	
	9	1	213-6659	1	PLATE AS	
M	10	1	191-8920	4	BOLT-SOCKET HEAD (M6X1X12-MM)	
	11	1	033-9139	2	RING-RETAINING	
M	12	1	105-3481	1	BOLT-SOCKET HEAD (M8X1.25X20-MM)	
	13	1	136-9297	1	PLATE	
	14	1	136-9298	1	RETAINER	
	15	1	149-5470	1	PLATE	
	16	1	3J-1907	2	SEAL-O-RING	
	17	1	3J-7354	6	SEAL-O-RING	
	18	1	7W-2632	1	WASHER (8.5X16.8X1.6-MM THK)	
	19	1	8L-2786	1	SEAL-O-RING	
	20	1	201-9127	1	LEVER AS	
	20A	1	139-4189	1	PLATE	
	20B	1	199-6609	1	SPACER	
	20C	1	146-8479	1	SWIVEL	
M	20D	1	178-7877	2	SETSCREW (M6X1X25-MM)	
M	20E	1	5C-2890	2	NUT (M6X1-THD)	
Y	21	1	194-5033	1	VALVE GP-PILOT CARTRIDGE (RIPPER LIFT)	490
	22	1	180-6152	1	RETAINER	

M-METRIC PART
Y-SEPARATE ILLUSTRATION

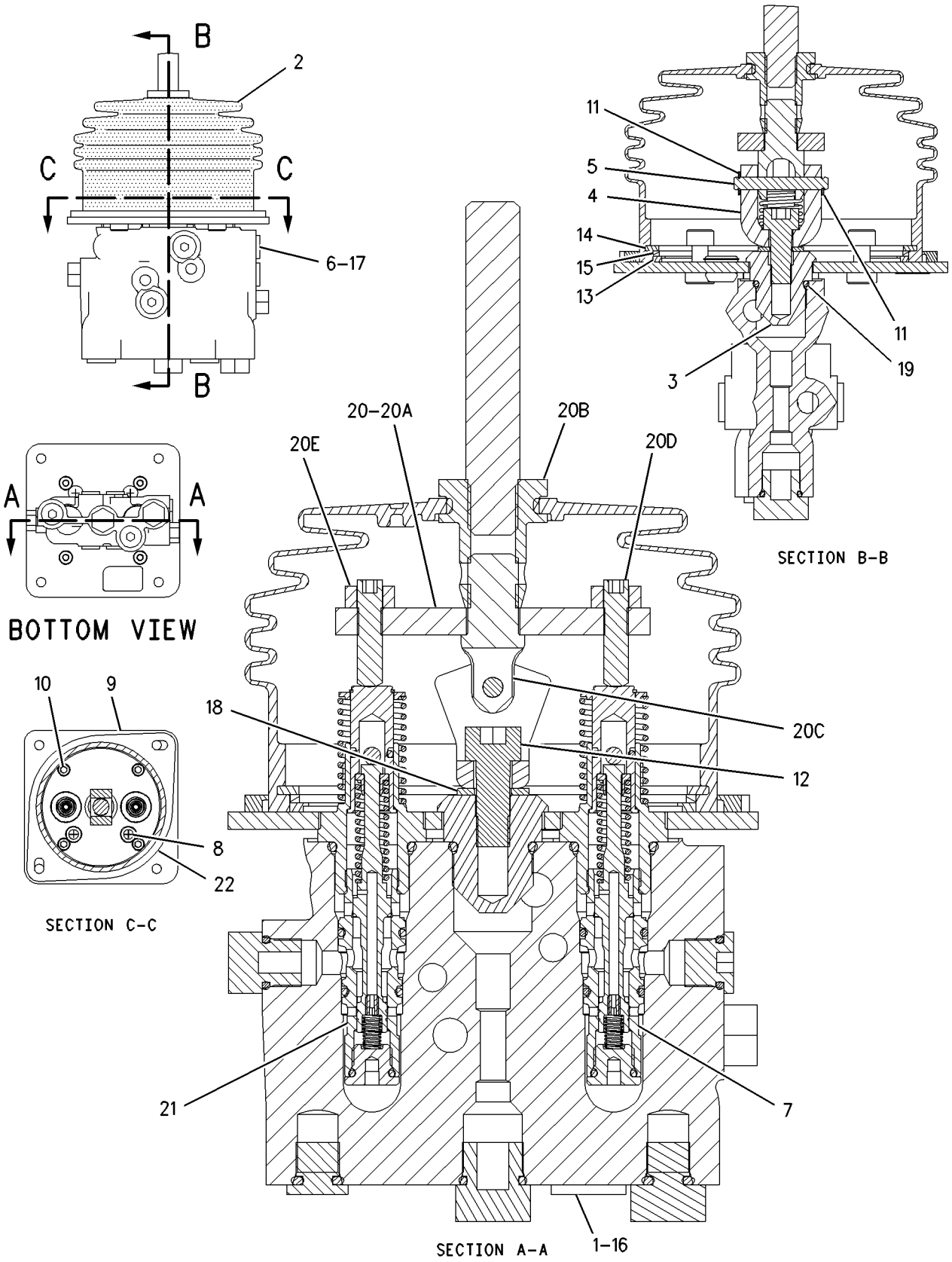

GRAPHIC #1 <END> g00907176

200-0189 VALVE GP-PILOT—BULLDOZER LIFT, TILT

S/N: S6T1-UP; S6X1-UP; S6Y1-UP

PART OF 222-1150 CONTROL GP-PILOT OPERATED HYD

SMCS-5059 i04011422

NOTE	REF NO	GRAPHIC REF	PART NUMBER	QTY	PART NAME 1 2 3 4 5 6 (PRODUCT LEVEL)	SEE PAGE
Y	1	1	194-5033	2	VALVE GP-PILOT CARTRIDGE (BLADE TILT RIGHT, LEFT)	490
	2	1	141-4852	1	BOOT	
	3	1	145-2334	1	ADAPTER	
	4	1	163-5512	2	GROMMET	
	5	1	213-6657	1	PLATE AS	
	6	1	180-6152	1	RETAINER	
Y	7	1	194-5032	2	VALVE GP-PILOT CARTRIDGE (BULLDOZER LIFT, LOWER)	489
	9	1	196-5515	1	LEVER AS	
	9A	1	146-6315	3	PIN-ADJUSTMENT	
	9B	1	199-7834	1	DETENT AS	
		1	8S-7499	2	PIN-SPRING	
	9C	1	146-6317	1	RETAINER	
	9D	1	159-3781	1	SPRING	
M	9E	1	5C-2890	3	NUT (M6X1-THD)	
M	9F	1	191-8920	2	BOLT-SOCKET HEAD (M6X1X12-MM)	
	10	1	206-2800	1	PLATE-DETENT	
	11	1	9S-8004	3	PLUG-O-RING	
B	12	1	200-5003	8	SHIM (0.25-MM THK)	
	13	1	136-9297	1	PLATE	
	14	1	136-9298	1	RETAINER	
	15	1	137-9755	1	COIL AS-DETENT (24-VOLT)	
D		1	6V-2689		TUBE-HEAT SHRINK (6.35-MM DIA) (0.2-M)	
		1	186-3735	2	PIN-CONNECTOR (16-GA TO 18-GA)	
	16	1	149-5470	1	PLATE	
M	17	1	191-8921	4	BOLT-SOCKET HEAD (M6X1X25-MM)	
	18	1	102-8802	1	KIT-RECEPTACLE (2-PIN)	
					(INCLUDES RECEPTACLE AS & WEDGE)	
	22	1	8L-2786	1	SEAL-O-RING	
	23	1	9S-8002	5	PLUG-O-RING	
	25	1	3J-1907	3	SEAL-O-RING	
	26	1	3J-7354	5	SEAL-O-RING	

B-USE AS REQUIRED
D-ORDER BY THE METER
M-METRIC PART
Y-SEPARATE ILLUSTRATION

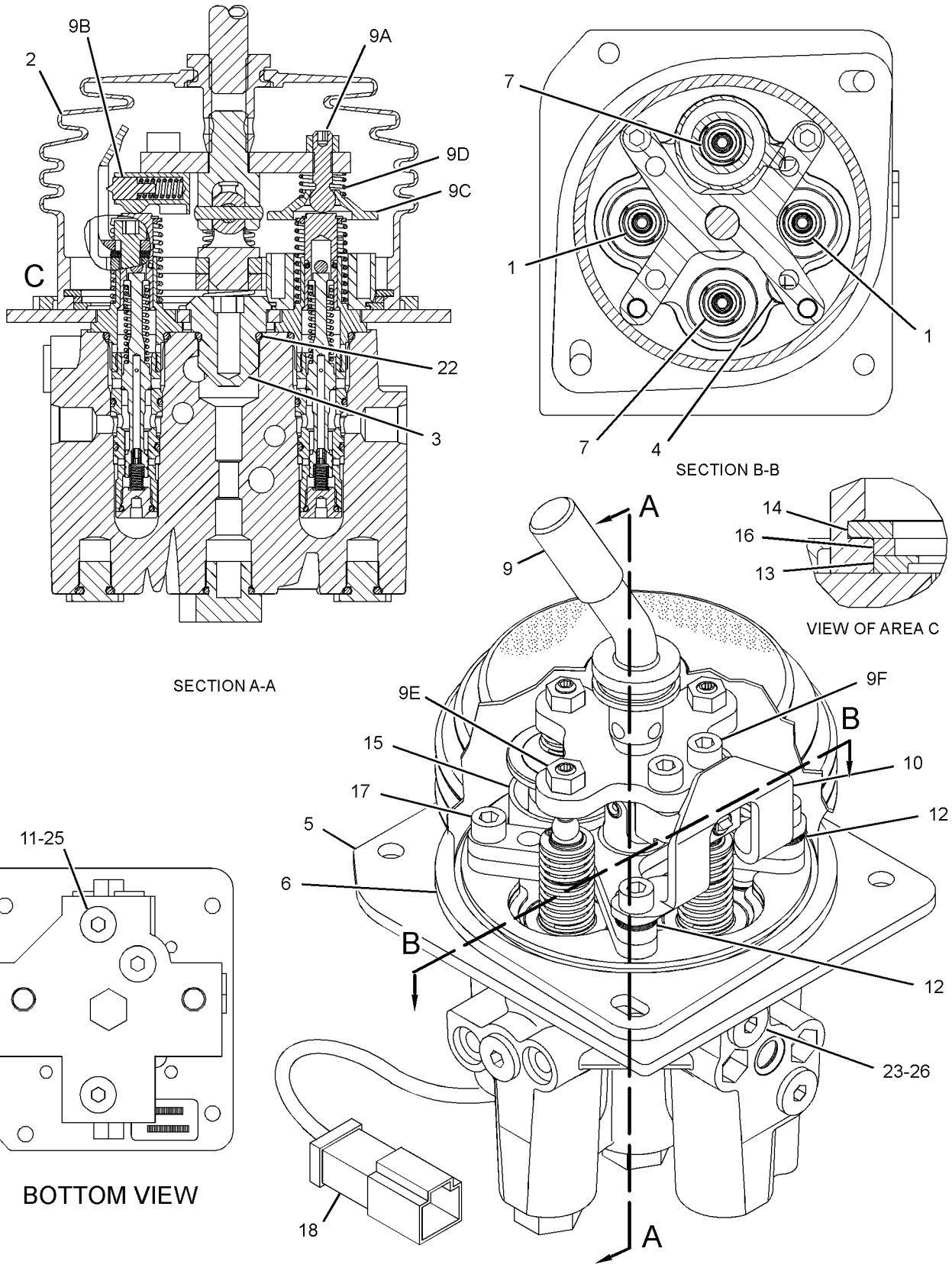

GRAPHIC #1 <END> g02199534

322-8631 VALVE GP-PILOT—BULLDOZER LIFT, TILT

S/N: S6T1-UP; S6X1-UP; S6Y1-UP
PART OF 322-3699, 322-3711 CONTROL AR-HYDRAULIC
AN ATTACHMENT

SMCS-5059 i04021655

NOTE	REF NO	GRAPHIC REF	PART NUMBER	QTY	PART NAME 1 2 3 4 5 6 (PRODUCT LEVEL)	SEE PAGE
	1	1	102-8802	1	KIT-RECEPTACLE (2-PIN)	
	2	1	102-8801	1	KIT-RECEPTACLE (12-PIN)	
					(EACH KIT INCLUDES RECEPTACLE AS & WEDGE)	
	3	1	8T-8737	5	PLUG-SEAL	
	4	1	136-9297	1	PLATE	
	5	1	136-9298	1	RETAINER	
	6	1	137-9755	1	COIL AS-DETENT (24-VOLT)	
D		1	6V-2689		TUBE-HEAT SHRINK (6.35-MM DIA) (0.2-M)	
		1	8T-8729	2	PIN-CONNECTOR (16-GA TO 18-GA)	
	7	1	141-4852	1	BOOT	
	8	1	145-2334	1	ADAPTER	
	9	1	149-5470	1	PLATE	
	10	1	163-5512	3	GROMMET	
	11	1	180-6152	1	RETAINER	
Y	12	1	194-5032	2	VALVE GP-PILOT CARTRIDGE (BULLDOZER LIFT, LOWER)	489
Y	13	1	194-5033	2	VALVE GP-PILOT CARTRIDGE (BLADE TILT RIGHT, LEFT)	490
B	14	1	200-5003	8	SHIM (0.25-MM THK)	
	15	1	206-2800	1	PLATE-DETENT	
	16	1	213-6657	1	PLATE AS	
	17	1	227-8348	1	LEVER AS	
Y	20	1	322-9655	1	CONTROL GP-HANDLE (BULLDOZER CONTROL)	543
	21	1	*162-0177*	3	PLUG AS	
					(EACH INCLUDES)	
		1	9S-8004	1	PLUG-O-RING	
		1	3J-1907	1	SEAL-O-RING	
	22	1	*183-7263*	5	PLUG AS	
					(EACH INCLUDES)	
		1	9S-8002	1	PLUG-O-RING	
		1	3J-7354	1	SEAL-O-RING	
M	23	1	191-8921	4	BOLT-SOCKET HEAD (M6X1X25-MM)	
	26	1	4B-9808	2	SETSCREW (1/4-20X0.5-IN)	
	27	1	8L-2786	1	SEAL-O-RING	

B-USE AS REQUIRED
D-ORDER BY THE METER
M-METRIC PART
Y-SEPARATE ILLUSTRATION

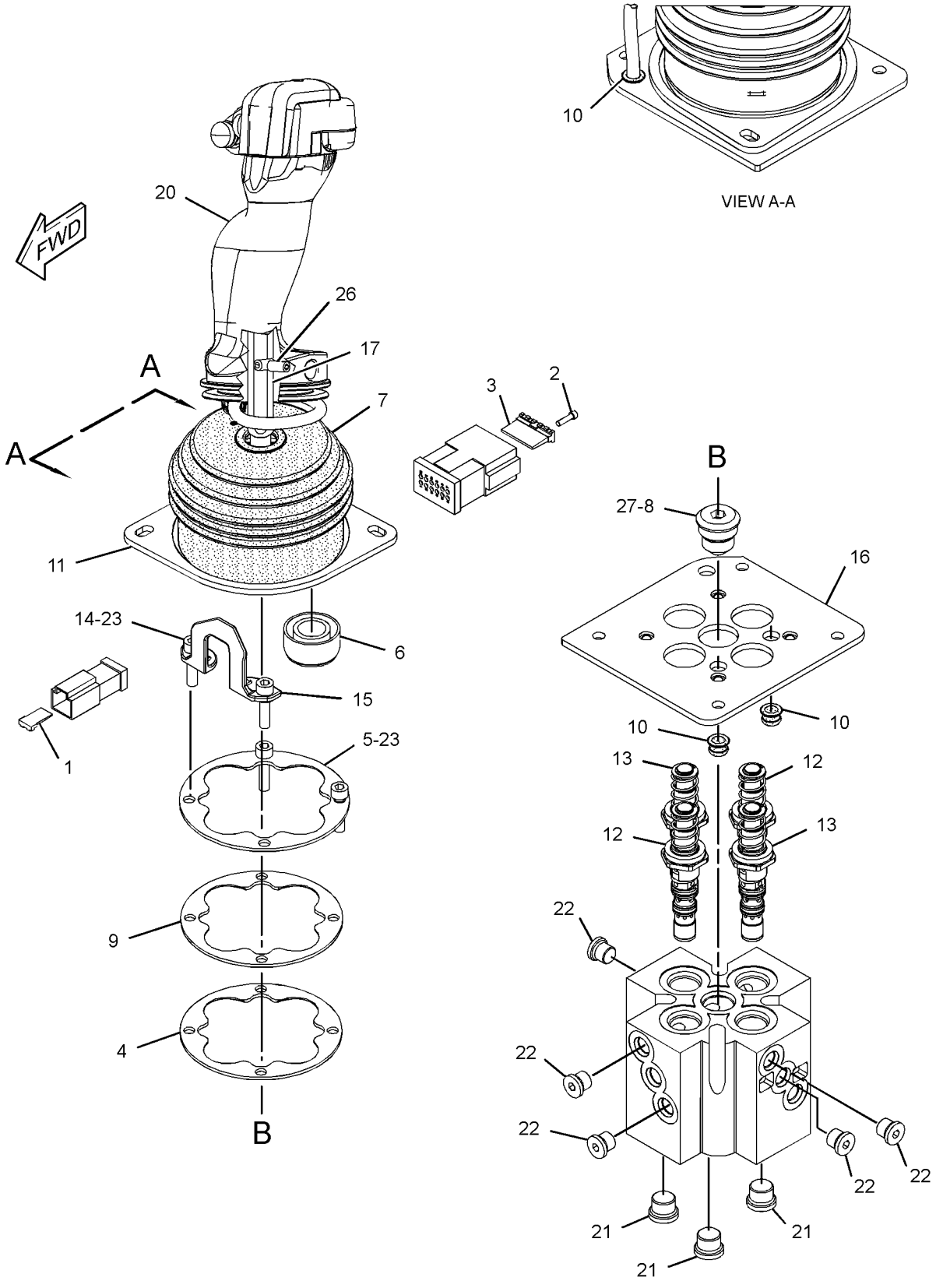

GRAPHIC #1 <END> g02203774

194-5032 VALVE GP-PILOT CARTRIDGE–IMPLEMENT

S/N: S6T1-UP; S6X1-UP; S6Y1-UP
PART OF 200-0189, 322-8631 VALVE GP-PILOT
ALSO AN ATTACHMENT

SMCS-5059 i04025962

NOTE	REF NO	GRAPHIC REF	PART NUMBER	QTY	PART NAME 1 2 3 4 5 6 (PRODUCT LEVEL)	SEE PAGE
	1	1	3K-0360	1	SEAL-O-RING	
	2	1	4K-2039	1	SEAL-O-RING	
	3	1	6M-5062	1	SEAL-O-RING	

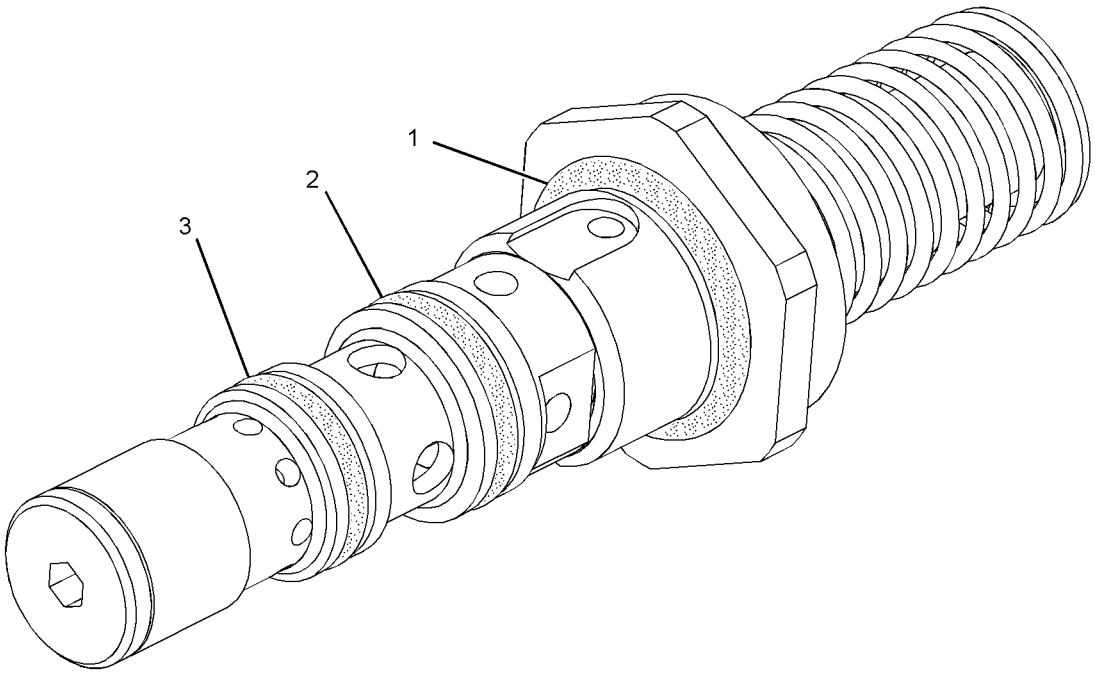

GRAPHIC #1 <END> g01218398

194-5033 VALVE GP-PILOT CARTRIDGE–IMPLEMENT

S/N: S6T1-UP; S6X1-UP; S6Y1-UP
PART OF 167-1177, 200-0189, 322-8631 VALVE GP-PILOT
ALSO AN ATTACHMENT

SMCS-5059 i04025964

NOTE	REF NO	GRAPHIC REF	PART NUMBER	QTY	PART NAME 1 2 3 4 5 6 (PRODUCT LEVEL)	SEE PAGE
	1	1	3K-0360	1	SEAL-O-RING	
	2	1	4K-2039	1	SEAL-O-RING	
	3	1	6M-5062	1	SEAL-O-RING	

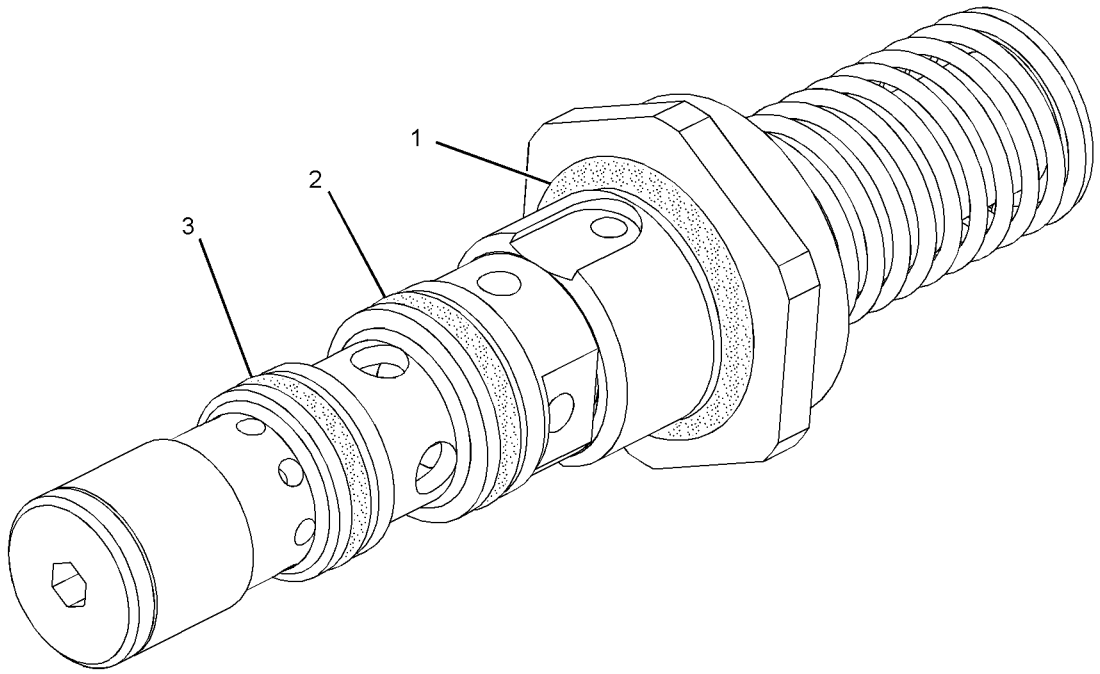

GRAPHIC #1 <END> g01218398

170-3357 VALVE GP-PRESSURE REDUCING

S/N: S6T1-UP; S6X1-UP; S6Y1-UP
PART OF 226-4751 MANIFOLD GP-CONTROL

SMCS-5117 i04017253

NOTE	REF NO	GRAPHIC REF	PART NUMBER	QTY	PART NAME 1 2 3 4 5 6 (PRODUCT LEVEL)	SEE PAGE
	1	1	3K-0360	1	SEAL-O-RING	
	2	1	161-6149	1	SEAL-O-RING	
	3	1	095-1750	1	SEAL-O-RING	
	4	1	161-6161	2	RING-BACKUP	
	5	1	187-0541	2	RING-BACKUP	

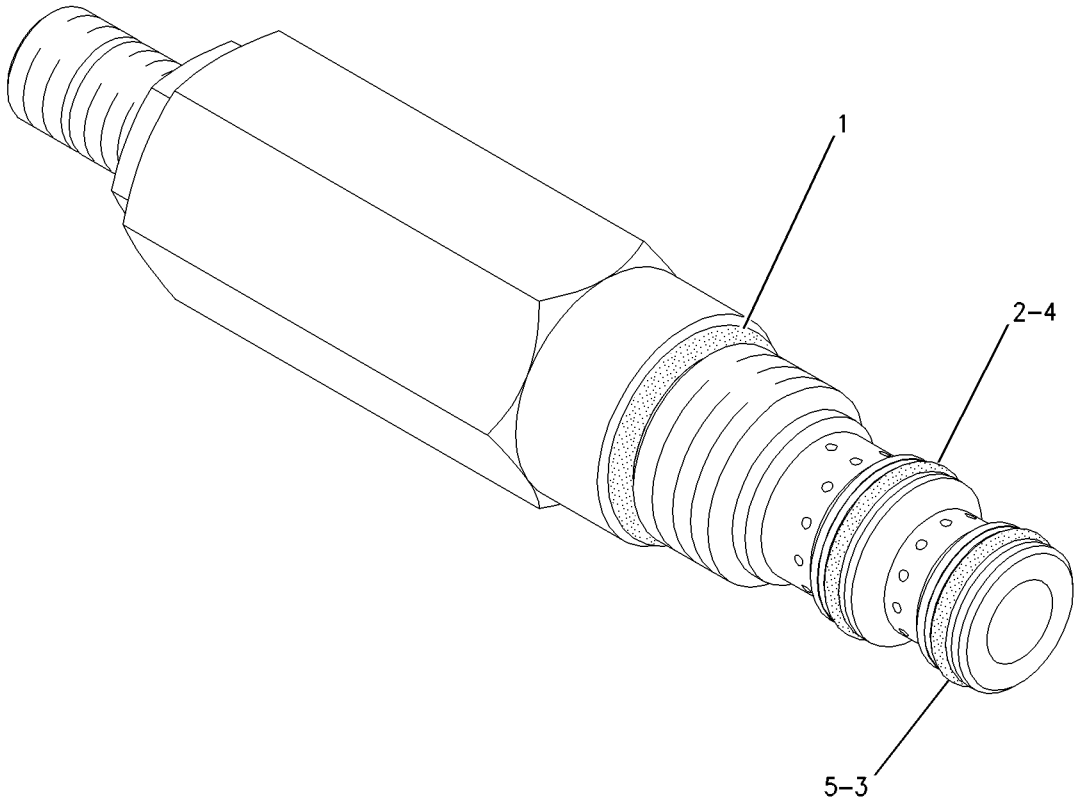

GRAPHIC #1 <END> g00777733

227-3021 VALVE GP-PUMP CONTROL–PRESSURE, FLOW COMPENSATOR–IMPLEMENT, STEERING

S/N: S6T1-UP; S6X1-UP; S6Y1-UP
PART OF 227-0830 PUMP GP-PISTON

SMCS-5455 i03997942

NOTE	REF NO	GRAPHIC REF	PART NUMBER	QTY	PART NAME 1 2 3 4 5 6 (PRODUCT LEVEL)	SEE PAGE
J	1	1	227-3023	1	HOUSING AS	
M	2	1	096-3218	1	SETSCREW-SOCKET (M4X0.7X6-MM)	
	3	1	195-6944	2	RETAINER	
	4	1	9T-4186	1	SPRING-CONTROL	
	5	1	195-6947	1	SPRING	
	6	1	195-6945	1	RETAINER	
	7	1	095-1574	2	SEAL-O-RING	
	8	1	195-6948	2	WASHER (10X13X1-MM THK)	
	9	1	195-6949	2	ADJUSTER	
	10	1	6V-6580	1	SEAL-O-RING	
	11	1	8T-9529	1	SEAL-O-RING	
	12	1	099-8111	2	PIN-SPRING	
	13	1	195-6950	1	COVER	
IM	14	1	6C-9048	2	NUT (M8X1-THD)	
M	15	1	3T-0849	4	BOLT-SOCKET HEAD (M6X1X25-MM)	
	16	1	9T-4143	1	PISTON-PRESS REGULATOR	
	17	1	9T-6322	2	PLUG AS	
					(EACH INCLUDES)	
		1	8C-3082	1	SEAL-O-RING	
	18	1	9S-4191	2	PLUG-O-RING	
	19	1	3J-1907	2	SEAL-O-RING	
	20	1	8U-3875	3	PLUG	
	21	1	3E-4297	3	SEAL-O-RING	
	22	1	9T-5039	1	PLUG	

I-REFER TO HYDRAULIC INFORMATION SYSTEM
J-PARTS MARKED J IN GRAPHIC INCLUDED IN HOUSING AS
M-METRIC PART

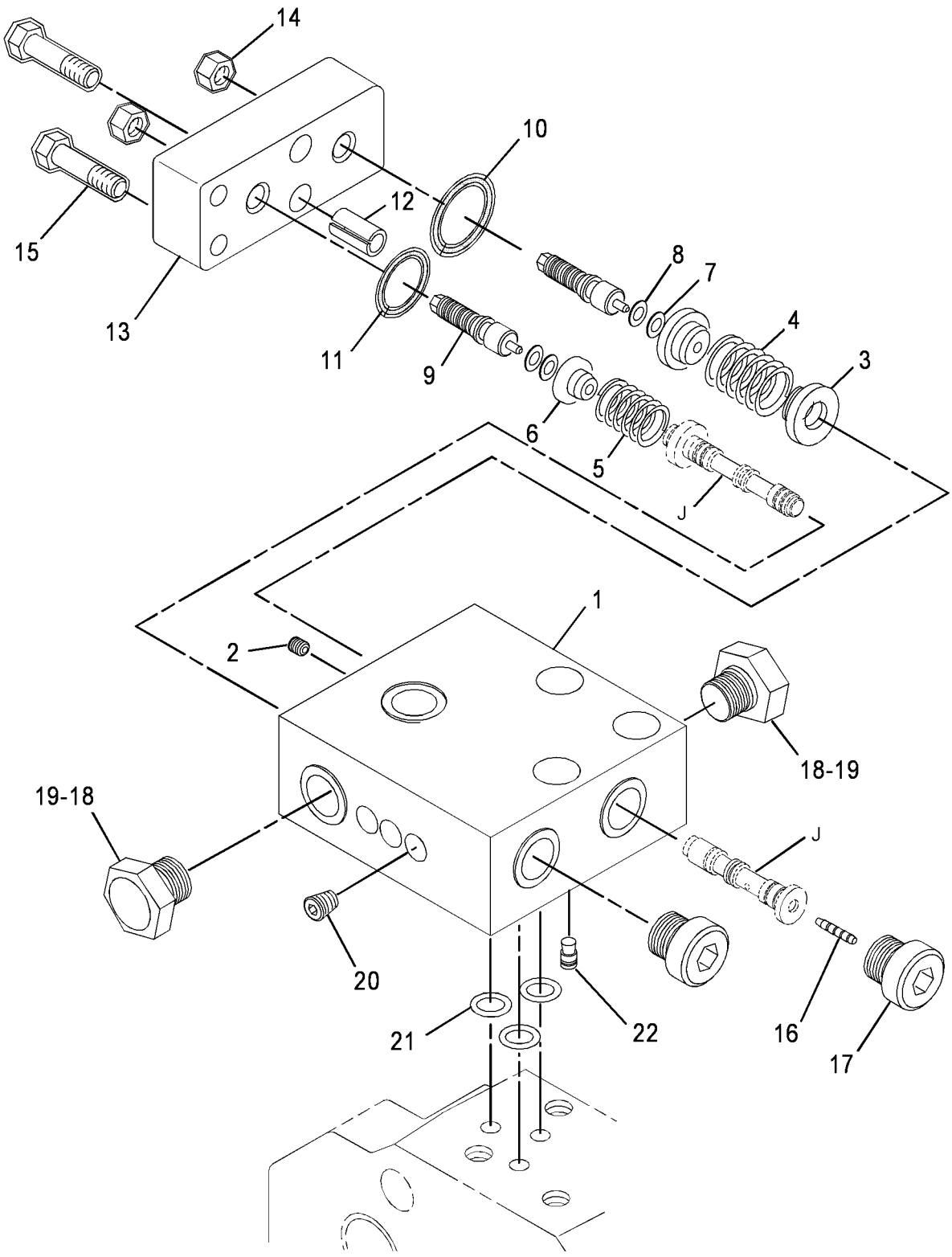

GRAPHIC #1 <END> g02088502

HYDRAULIC SYSTEM

222-1160 VALVE GP-QUICK-DROP

S/N: S6T1-UP; S6X1-UP; S6Y1-UP
PART OF 317-1758 HYDRAULIC AR-2 VALVE

SMCS-5110 i04008389

NOTE	REF NO	GRAPHIC REF	PART NUMBER	QTY	PART NAME 1 2 3 4 5 6 (PRODUCT LEVEL)	SEE PAGE
	1	1	8E-8434	1	GUARD	
Y	2	1	227-0831	1	VALVE GP-QUICK-DROP	495
	3	1	5P-1075	6	WASHER-HARD (10.2X22.5X3-MM THK)	
M	4	1	8T-4186	3	BOLT (M10X1.5X40-MM)	
M	5	1	8T-4191	3	BOLT (M10X1.5X16-MM)	

M-METRIC PART
Y-SEPARATE ILLUSTRATION

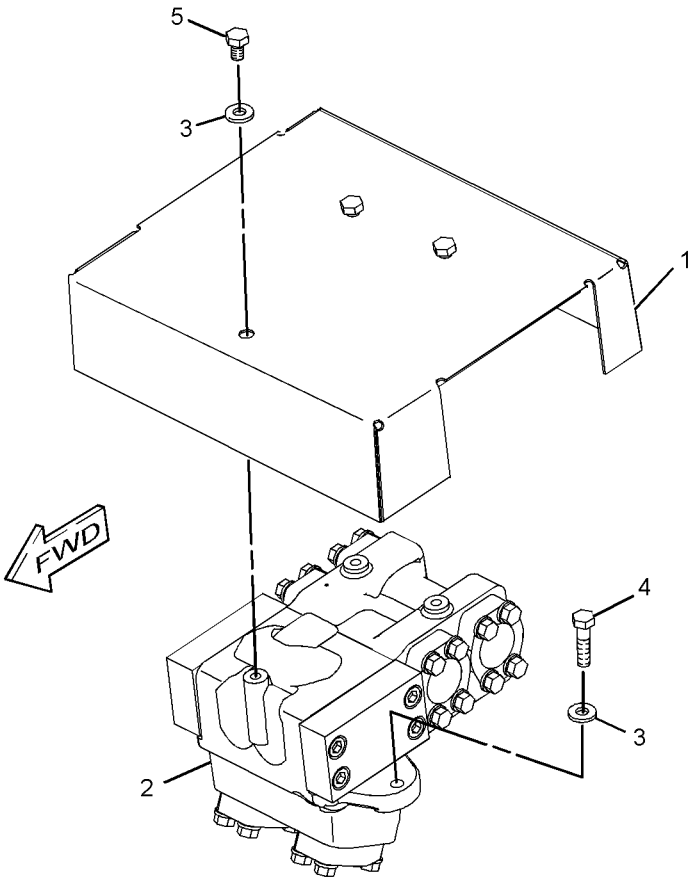

(MOUNTS TO TOP OF RADIATOR GUARD)

GRAPHIC #1 <END> g01206278

227-0831 VALVE GP-QUICK-DROP

S/N: S6T1-UP; S6X1-UP; S6Y1-UP
PART OF 222-1160 VALVE GP-QUICK-DROP

SMCS-5110 i04008352

NOTE	REF NO	GRAPHIC REF	PART NUMBER	QTY	PART NAME 1 2 3 4 5 6 (PRODUCT LEVEL)	SEE PAGE
	1	1	*3J-3679*	2	PLUG AS	
					(EACH INCLUDES)	
		1	9S-8003	1	PLUG	
		1	1J-9671	1	SEAL-O-RING	
B	3	1	4T-4659	6	SHIM (0.8-MM THK)	
	4	1	6E-4907	1	STOP	
	5	1	9T-9836	1	SLEEVE-ORIFICE	
	7	1	100-6211	1	PISTON	
	8	1	108-1847	1	SPRING	
	10	1	234-3043	1	COVER	
	12	1	234-3451	1	COVER	
	14	1	164-5619	1	PLUG AS	
		1	9S-8006	1	PLUG-O-RING	
		1	2M-9780	1	SEAL-O-RING	
	15	1	1P-3706	2	SEAL-RECTANGULAR	
	16	1	3L-3813	1	PIN	
B	17	1	4M-6980	6	SHIM (0.25-MM THK)	
	18	1	6K-8162	1	RING-RETAINING	
M	19	1	6V-8200	8	BOLT-SOCKET HEAD (M12X1.75X35-MM)	
	20	1	8C-3206	12	FLANGE-HALF	
	21	1	8T-4121	24	WASHER-HARD (11X21X2.5-MM THK)	
M	22	1	8T-4196	24	BOLT (M10X1.5X35-MM)	

PARTS SHOWN IN GRAPHIC(S) WITHOUT A REFERENCE NUMBER ARE NOT SERVICED SEPARATELY

B-USE AS REQUIRED
M-METRIC PART

227-0831 VALVE GP-QUICK-DROP *(contd.)* i04008352

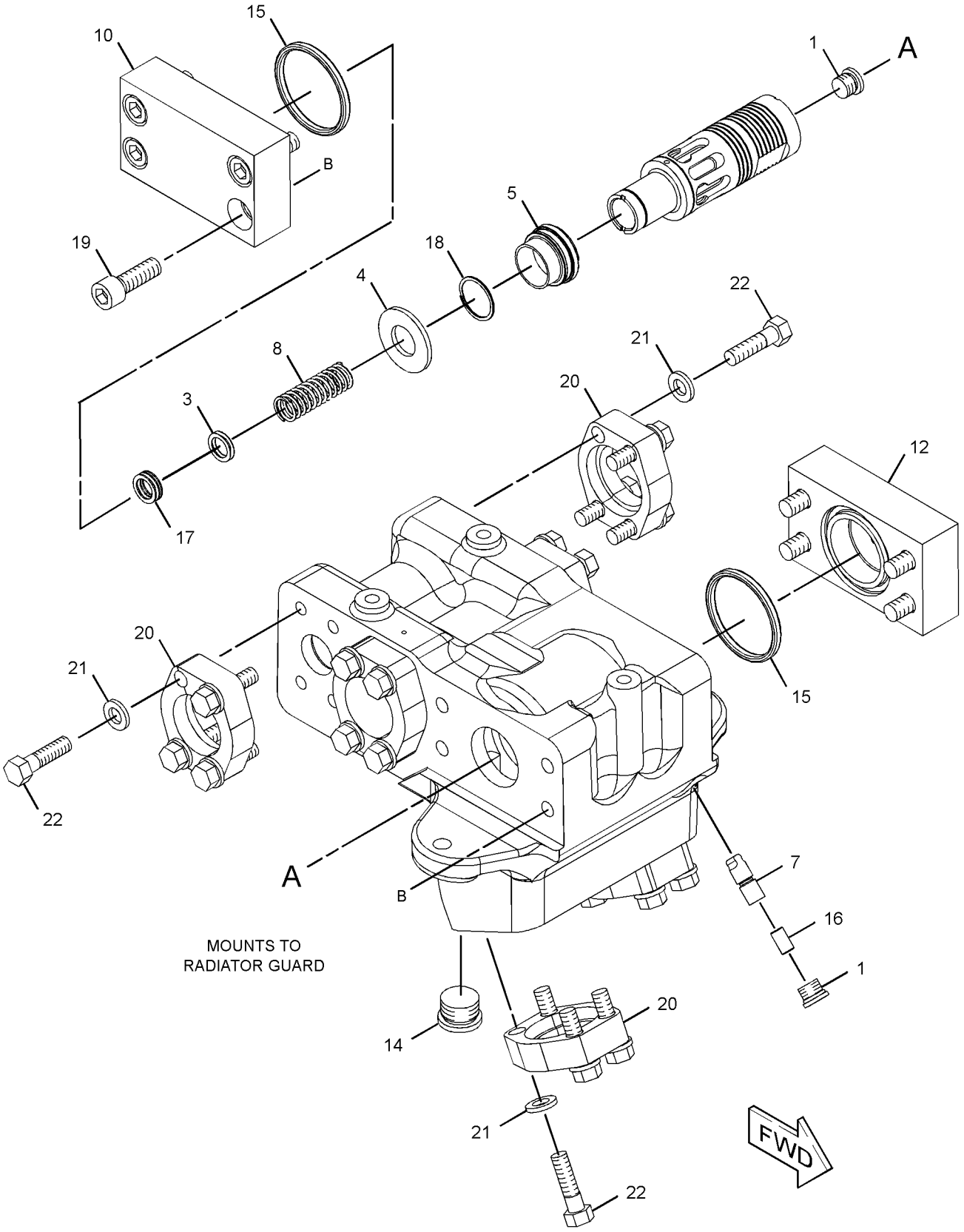

GRAPHIC #1 <END> g02182575

9T-3541 VALVE GP-RELIEF–MAIN

S/N: S6T1-UP; S6X1-UP; S6Y1-UP
PART OF 235-0401 MANIFOLD GP-VALVE
ALSO AN ATTACHMENT

SMCS-5069, 5117 i03984230

NOTE	REF NO	GRAPHIC REF	PART NUMBER	QTY	PART NAME 1 2 3 4 5 6 (PRODUCT LEVEL)	SEE PAGE
	1	1	3K-0360	2	SEAL-O-RING	
	2	1	4T-4942	1	SPRING	
	3	1	7J-9933	1	SEAL-O-RING	
	4	1	4T-7571	1	PLATE	
	5	1	6J-6439	1	VALVE-POPPET	
	6	1	6E-1835	1	RETAINER AS	
	7	1	9X-6395	1	NUT (3/4-16-THD)	

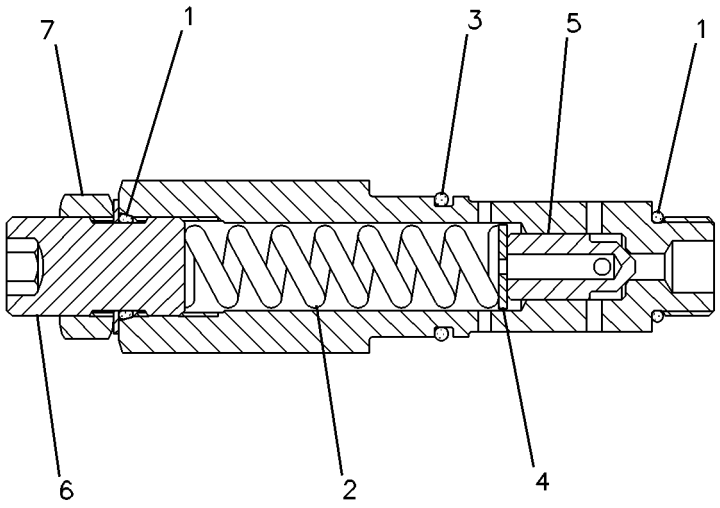

GRAPHIC #1 <END> g00082770

HYDRAULIC SYSTEM

9T-5364 VALVE GP-RELIEF–CROSSOVER

S/N: S6T1-UP; S6X1-UP; S6Y1-UP

PART OF 227-0832 VALVE GP-COUNTERBALANCE

SMCS-5069, 5117 i04022092

NOTE	REF NO	GRAPHIC REF	PART NUMBER	QTY	PART NAME 1 2 3 4 5 6 (PRODUCT LEVEL)	SEE PAGE
	1	1	4J-5351	1	SEAL-O-RING	
	2	1	6V-5326	1	SEAL-O-RING	
M	3	1	9T-6521	1	NUT	
	4	1	9T-6522	1	CAP	
M	5	1	9T-6523	1	SCREW	
	6	1	9T-6827	1	RING	
	7	1	9T-6828	1	RING	
	8	1	6V-3922	1	SEAL-O-RING	
	9	1	6V-5758	2	SEAL-O-RING	

M-METRIC PART

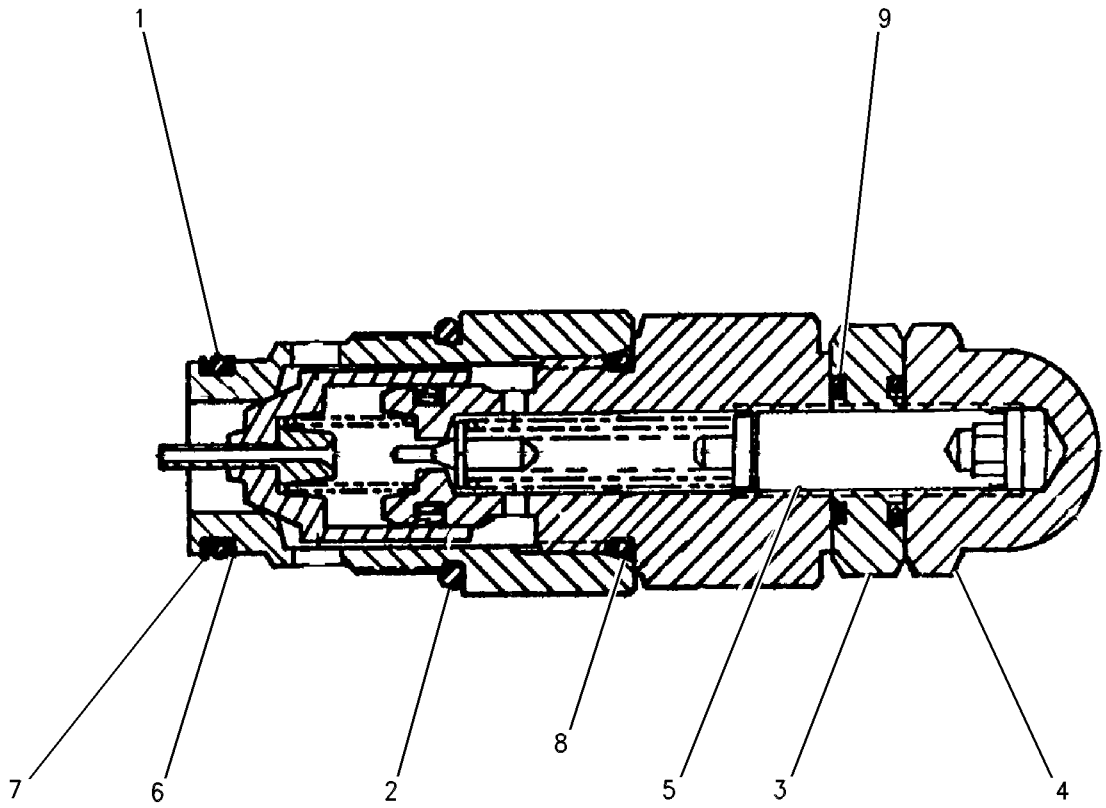

GRAPHIC #1 <END> g00595662

121-6649 VALVE GP-RELIEF–PILOT OIL PRESSURE

S/N: S6T1-UP; S6X1-UP; S6Y1-UP
PART OF 235-0403, 235-0404, 235-0405 VALVE GP-CONTROL
ALSO AN ATTACHMENT

SMCS-5069, 5117 i03996207

NOTE	REF NO	GRAPHIC REF	PART NUMBER	QTY	PART NAME 1 2 3 4 5 6 (PRODUCT LEVEL)	SEE PAGE
	1	1	3J-7354	1	SEAL-O-RING	
	2	1	4T-5074	1	RING-BACKUP	
	3	1	6V-5556	1	SEAL-O-RING	
	4	1	4T-4509	1	SEAT	
	5	1	108-5157	1	VALVE	
	6	1	4T-1700	1	SPRING	
	7	1	3K-0360	1	SEAL-O-RING	
	8	1	9X-6395	1	NUT (3/4-16-THD)	
	9	1	6E-5200	1	RETAINER AS	
B	10	1	096-6166	3	WASHER-HARD (4.5X9X1-MM THK)	

B-USE AS REQUIRED

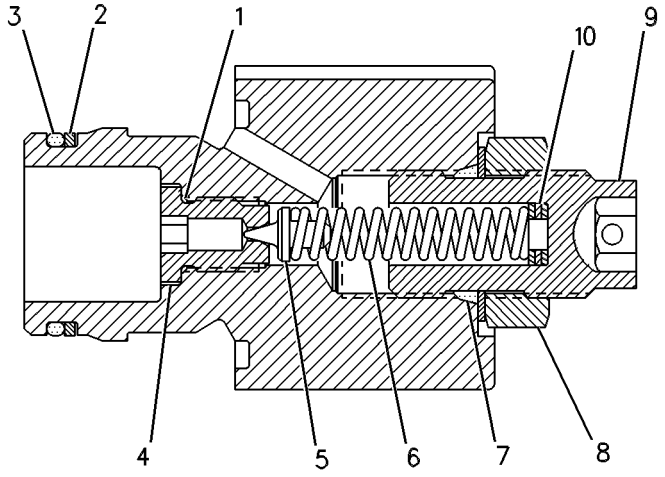

GRAPHIC #1 <END> g00263606

225-8026 VALVE GP-RELIEF–IMPLEMENT PILOT OIL

S/N: S6T1-UP; S6X1-UP; S6Y1-UP
PART OF 226-4751 MANIFOLD GP-CONTROL

SMCS-5069, 5117 i04017273

NOTE	REF NO	GRAPHIC REF	PART NUMBER	QTY	PART NAME 1 2 3 4 5 6 (PRODUCT LEVEL)	SEE PAGE
J	1	1	161-6149	1	SEAL-O-RING	
J	2	1	161-6161	2	RING-BACKUP	
J	3	1	2M-9780	1	SEAL-O-RING	
					AVAILABLE REPAIR KIT(S):	
J			133-5545	1	KIT-SEAL (RELIEF VALVE)	
J-KIT MARKED J SERVICES PART(S) MARKED J						

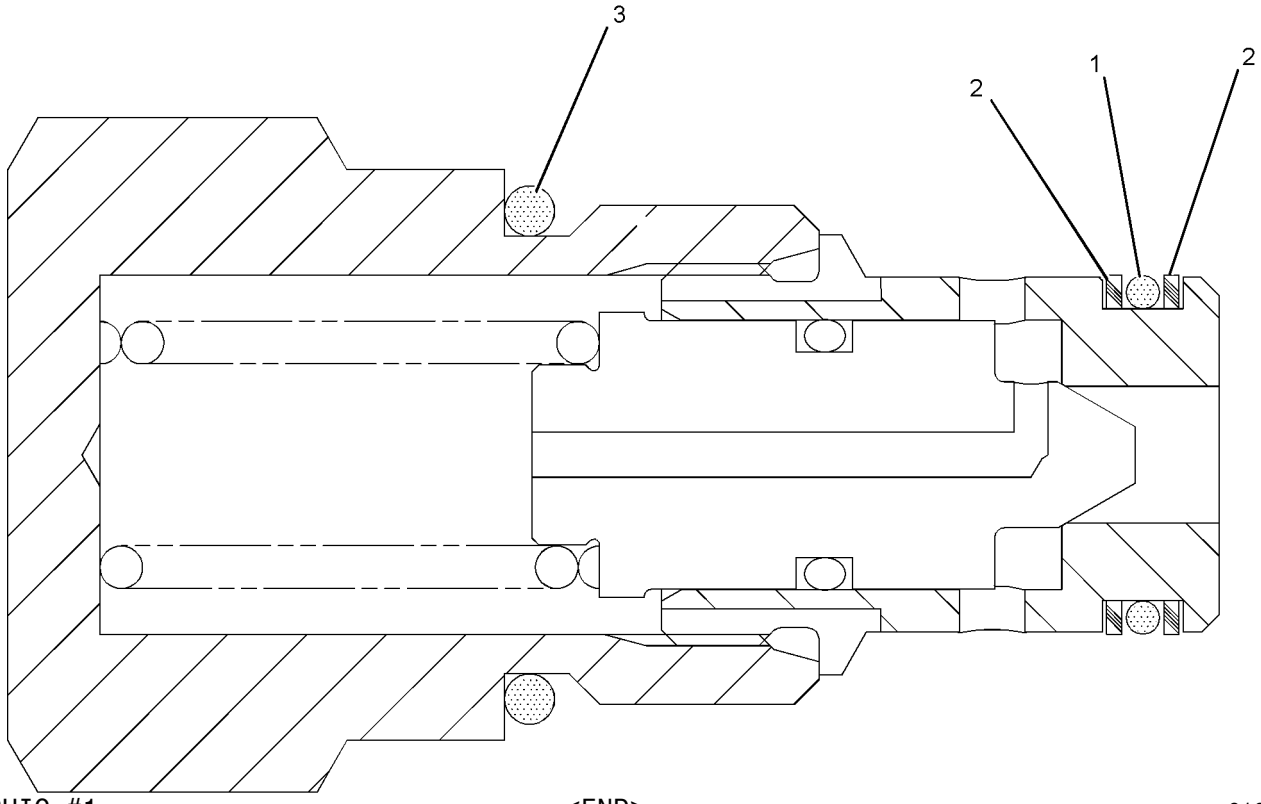

GRAPHIC #1 <END> g01019745

4T-1860 VALVE GP-SHUTTLE

S/N: S6T1-UP; S6X1-UP; S6Y1-UP
PART OF 235-0402, 235-0403, 235-0404, 235-0405 VALVE GP-CONTROL
ALSO AN ATTACHMENT

SMCS-5079 i03983115

NOTE	REF NO	GRAPHIC REF	PART NUMBER	QTY	PART NAME 1 2 3 4 5 6 (PRODUCT LEVEL)	SEE PAGE
	1	1	4T-0925	1	SEAT	
	2	1	1M-6718	1	BALL	
	3	1	4T-0928	1	VALVE	
	4	1	6V-5324	1	SEAL-O-RING	
	5	1	147-6603	1	SEAL-O-RING	
	6	1	3J-1907	1	SEAL-O-RING	
	7	1	147-6604	2	RING-BACKUP	
	8	1	147-6605	2	RING-BACKUP	

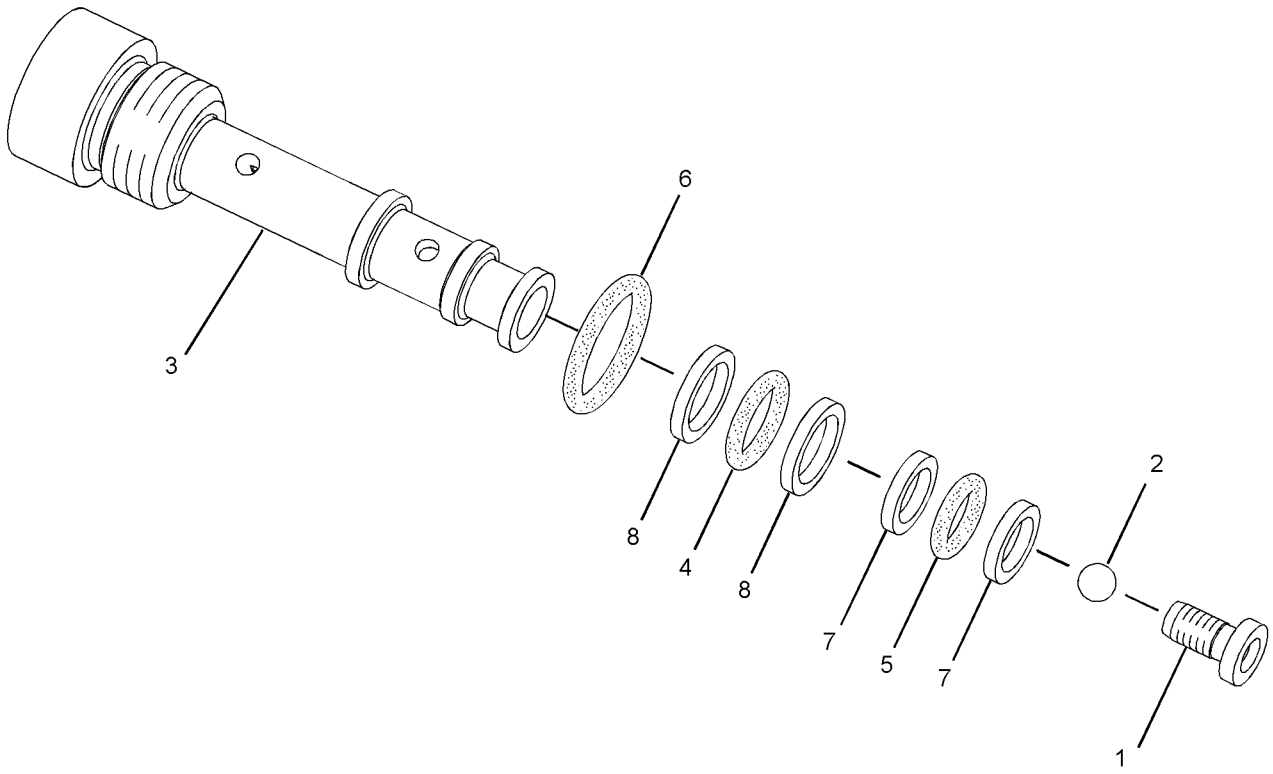

GRAPHIC #1 <END> g01941793

HYDRAULIC SYSTEM

201-0950 VALVE GP-SOLENOID

S/N: S6T1-UP; S6X1-UP; S6Y1-UP
24-VOLT
PART OF 226-4751 MANIFOLD GP-CONTROL, 234-5126 VALVE & MTG GP-BULLDOZER
ALSO AN ATTACHMENT

SMCS-5479 i03997205

NOTE	REF NO	GRAPHIC REF	PART NUMBER	QTY	PART NAME 1 2 3 4 5 6 (PRODUCT LEVEL)	SEE PAGE
	1	1	122-1133	1	COIL AS (24-VOLT)	
		1	1S-9593	2	STRAP-CABLE	
		1	186-3735	2	PIN-CONNECTOR (16-GA TO 18-GA)	
		1	102-8802	1	KIT-RECEPTACLE (2-PIN)	
					(INCLUDES RECEPTACLE AS & WEDGE)	
	2	1	156-5970	1	NUT (1/2-20-THD)	
	3	1	171-8772	1	VALVE AS-SOLENOID	
		1	156-5970	1	NUT (1/2-20-THD)	
					AVAILABLE REPAIR KIT(S):	
			195-7430		KIT-SEAL (SOLENOID VALVE)	
					(INCLUDES O-RING SEALS & BACKUP RINGS)	

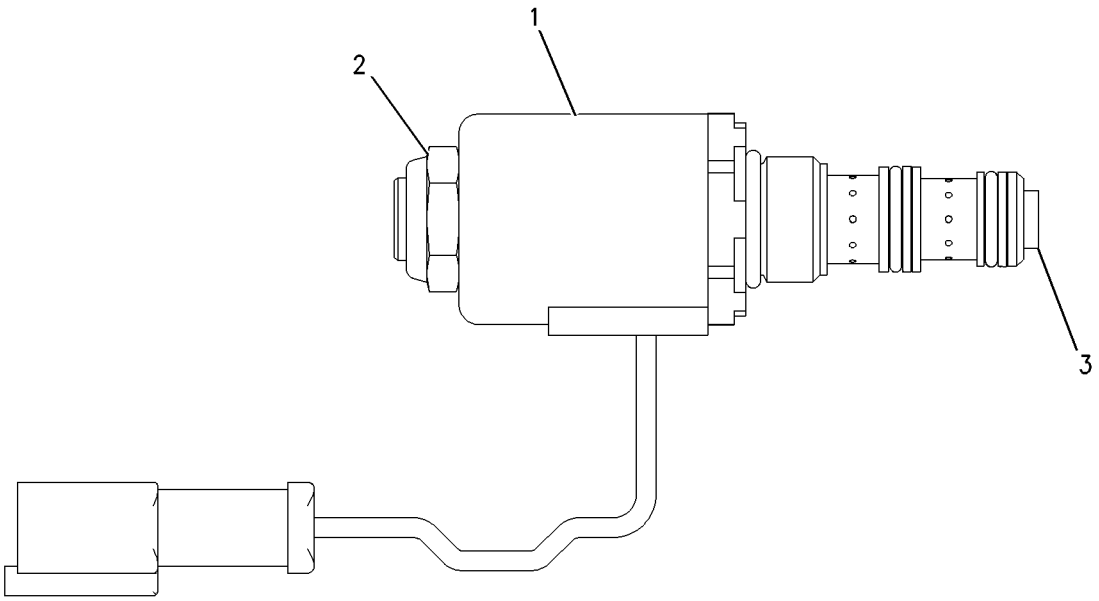

GRAPHIC #1 <END> g00888488

235-4605 VALVE GP-SOLENOID

S/N: S6T1-UP; S6X1-UP; S6Y1-UP
24-VOLT
PART OF 234-5126 VALVE & MTG GP-BULLDOZER
FIELD REPLACEMENT ORDER 341-9214—PAGE 504
AN ATTACHMENT

SMCS-5479 i04021639

NOTE	REF NO	GRAPHIC REF	PART NUMBER	QTY	PART NAME 1 2 3 4 5 6 (PRODUCT LEVEL)	SEE PAGE
	1	1	312-8629	1	COIL AS	
	2	1	033-6043	1	SEAL-O-RING	
	3	1	6V-4589	1	SEAL-O-RING	
	4	1	8L-2746	1	SEAL-O-RING	
	5	1	146-3728	1	WASHER-SPRING	

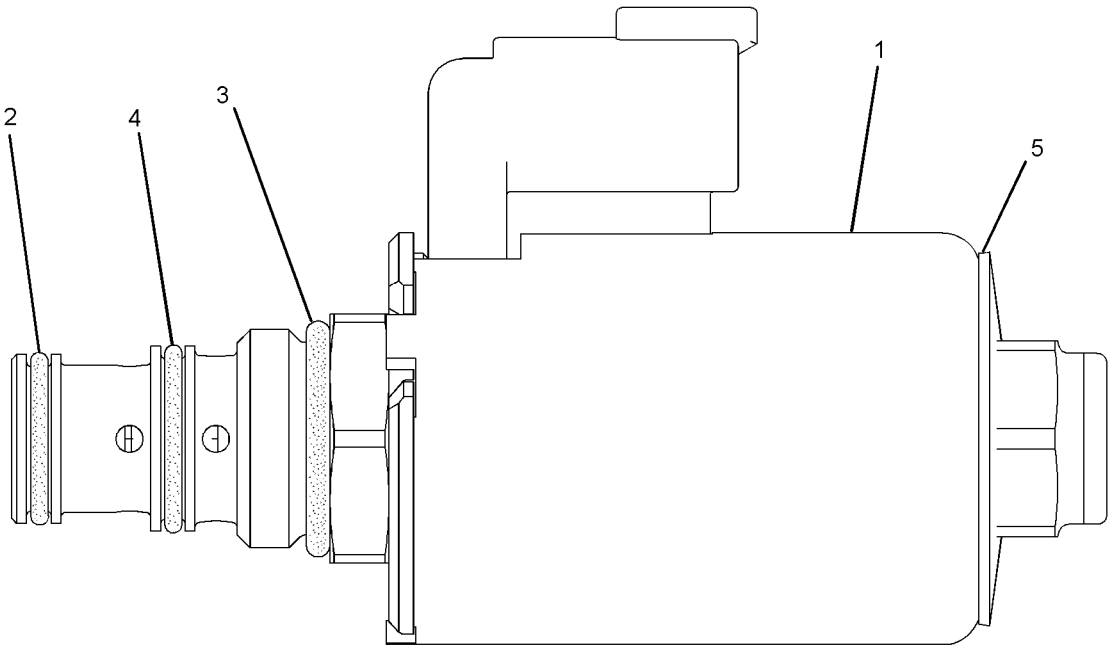

GRAPHIC #1 <END> g01819235

341-9214 VALVE GP-SOLENOID

S/N: S6T1-UP; S6X1-UP; S6Y1-UP
24-VOLT
FIELD REPLACEMENT FOR 235-4605—PAGE 503

SMCS-5479 i04021646

NOTE	REF NO	GRAPHIC REF	PART NUMBER	QTY	PART NAME 1 2 3 4 5 6 (PRODUCT LEVEL)	SEE PAGE
	1	1	312-8629	1	COIL AS	
	2	1	033-6043	1	SEAL-O-RING	
	3	1	6V-4589	1	SEAL-O-RING	
	4	1	8L-2746	1	SEAL-O-RING	
	5	1	191-9247	1	WASHER (19.15X31.65X2.36-MM THK)	
	6	1	198-2914	1	NUT (3/4-32-THD)	

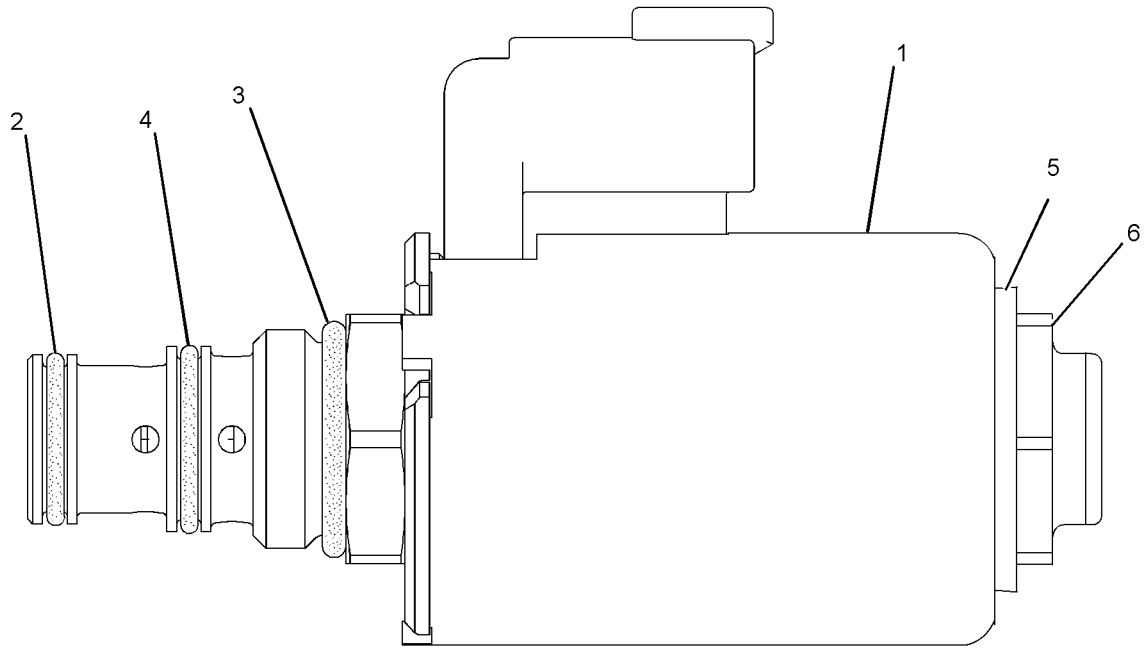

GRAPHIC #1 <END> g02198993

251-9814 BRACE GP-BULLDOZER

S/N: S6X1-UP
PART OF 358-4691 OPTION AR-MACHINE
AN ATTACHMENT

SMCS-6074 i04015409

NOTE	REF NO	GRAPHIC REF	PART NUMBER	QTY	PART NAME 1 2 3 4 5 6 (PRODUCT LEVEL)	SEE PAGE
	1	1	1U-1176	2	PIN	
	2	1	3B-4626	2	PIN-COTTER	
	3	1	3J-6573	2	SCREW-ADJUSTMENT	
	4	1	4F-0255	2	PIN	
	5	1	4F-1252	2	PIN	
	6	1	4T-5495	2	STUD-BALL	
B	7	1	8E-5701	52	SHIM (0.8-MM THK)	
	8	1	160-6306	2	CAP-BEARING	
Y	9	1	227-0841	2	CYLINDER GP-TILT	423
	10	1	251-9815	1	ARM AS (LH)	
	11	1	251-9816	1	ARM AS (RH)	
					(EACH ARM ASSEMBLY INCLUDES)	
		1	1U-1173	1	BRACKET (RH)	
		1	1U-1174	1	BRACKET (LH)	
		1	1U-1175	2	PLATE	
		1	3Y-3866	1	NUT (2-3/4-8-THD)	
		1	4B-4098	1	PLUG-CUP	
		1	251-9817	1	BEARING	
	12	1	251-9828	4	CAP-BEARING	
B	13	1	251-9834	104	SHIM (0.8-MM THK)	
M	14	1	7X-2564	8	BOLT (M20X2.5X90-MM)	
	15	1	8T-4123	8	WASHER (22X35X3.5-MM THK)	
M	16	1	8T-4187	4	BOLT (M20X2.5X80-MM)	
M	17	1	8T-6381	8	BOLT (M20X2.5X120-MM)	
	18	1	3J-1770	2	LOCK PIN	

B-USE AS REQUIRED
M-METRIC PART
Y-SEPARATE ILLUSTRATION

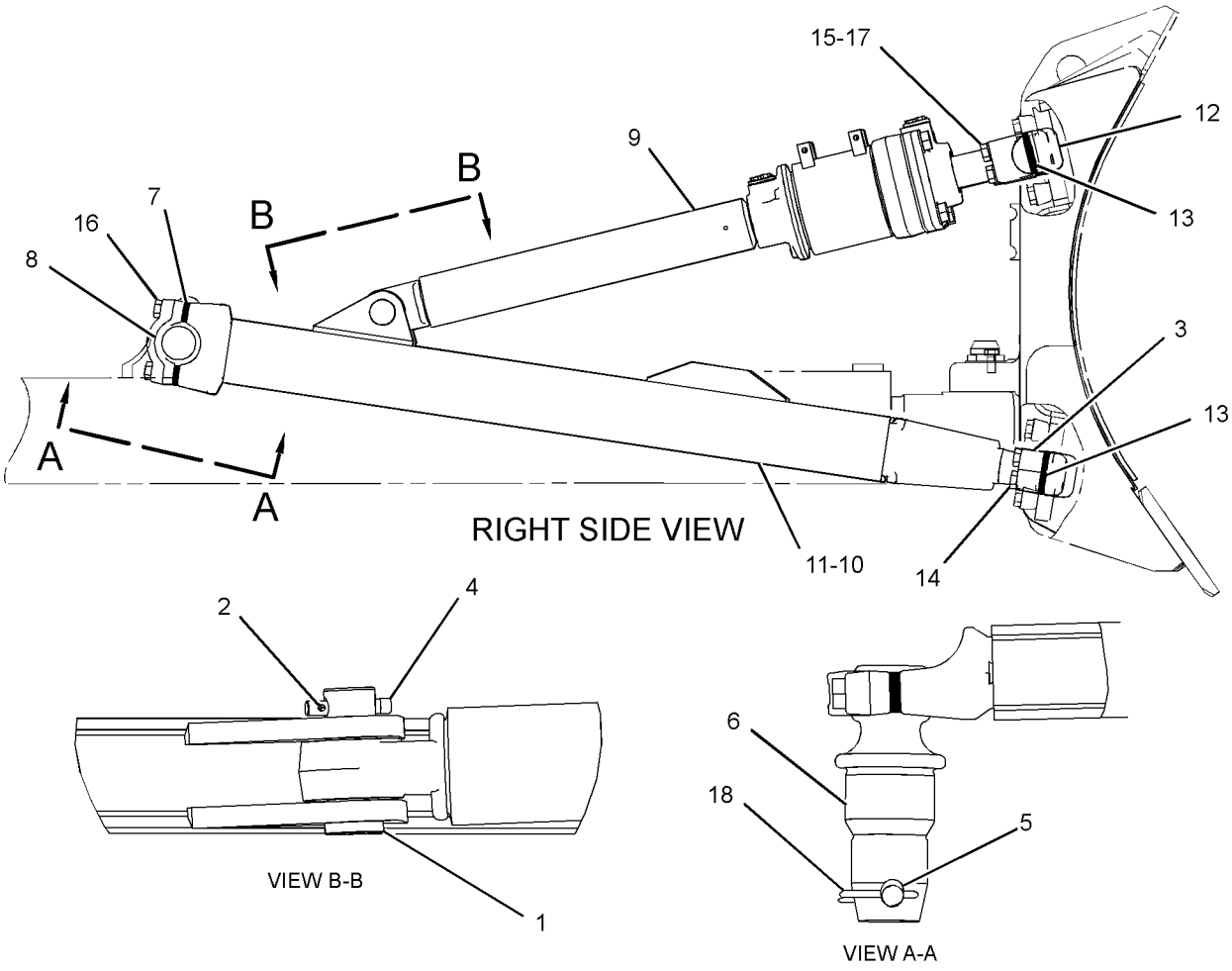

GRAPHIC #1 <END> g01262216

255-8952 C-FRAME AS

S/N: S6X1-UP
PART OF 255-8951 C-FRAME GP
AN ATTACHMENT

SMCS-6063 i04015579

NOTE	REF NO	GRAPHIC REF	PART NUMBER	QTY	PART NAME 1 2 3 4 5 6 (PRODUCT LEVEL)	SEE PAGE
	1	1	6J-9187	1	BRACKET AS (RH)	
	2	1	6J-9188	1	BRACKET AS (LH)	
					(EACH BRACKET AS INCLUDES)	
		1	4J-2414	1	TRUNNION	
		1	7J-2595	2	BRACKET	
	3	1	8P-9770	1	PLATE	
	4	1	9W-4897	6	BRACKET AS	
					(EACH INCLUDES)	
		1	3J-2682	1	BRACKET	
		1	8F-4387	2	PLATE	
	5	1	9W-5375	2	BAR	
	6	1	9W-9000	1	ADAPTER AS	
		1	5M-6214	1	PLUG-PIPE	
		1	8E-5486	2	BUSHING	
	7	1	251-9835	2	BEARING	

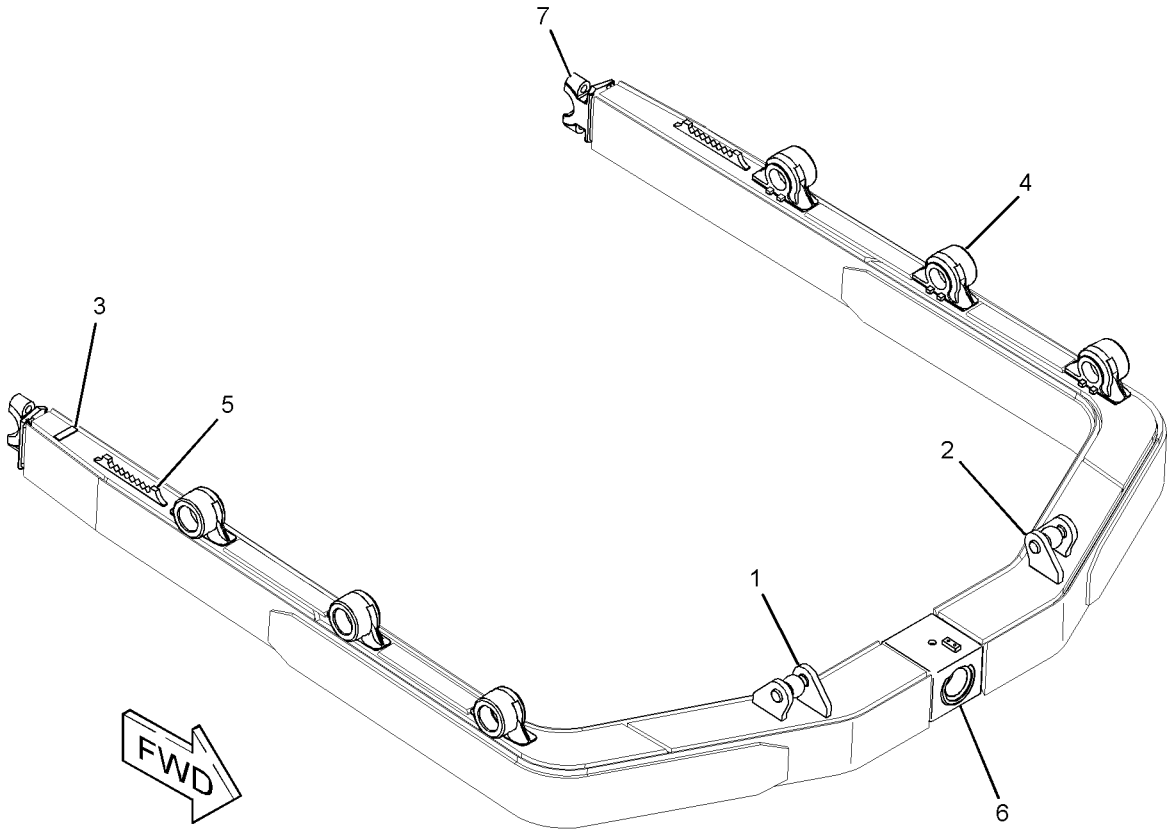

GRAPHIC #1 <END> g01207457

255-8951 C-FRAME GP

S/N: S6X1-UP
PART OF 358-4691 OPTION AR-MACHINE
AN ATTACHMENT

SMCS-6063 i04015584

NOTE	REF NO	GRAPHIC REF	PART NUMBER	QTY	PART NAME 1 2 3 4 5 6 (PRODUCT LEVEL)	SEE PAGE
	1	1	1U-0725	1	RETAINER	
M	2	1	251-8203	4	NUT-SQUARE (M24X3-THD)	
	3	1	251-9832	1	PIN-PIVOT	
	4	1	251-9836	2	CAP-BEARING	
Y	5	1	255-8952	1	C-FRAME AS	507
M	6	1	7X-2562	2	BOLT (M20X2.5X45-MM)	
M	7	1	7X-2567	4	BOLT (M24X3X160-MM)	
	8	1	8T-4167	4	WASHER-HARD (26X44X4-MM THK)	
B	9	1	4T-4866	52	SHIM (0.8-MM THK)	

B-USE AS REQUIRED
M-METRIC PART
Y-SEPARATE ILLUSTRATION

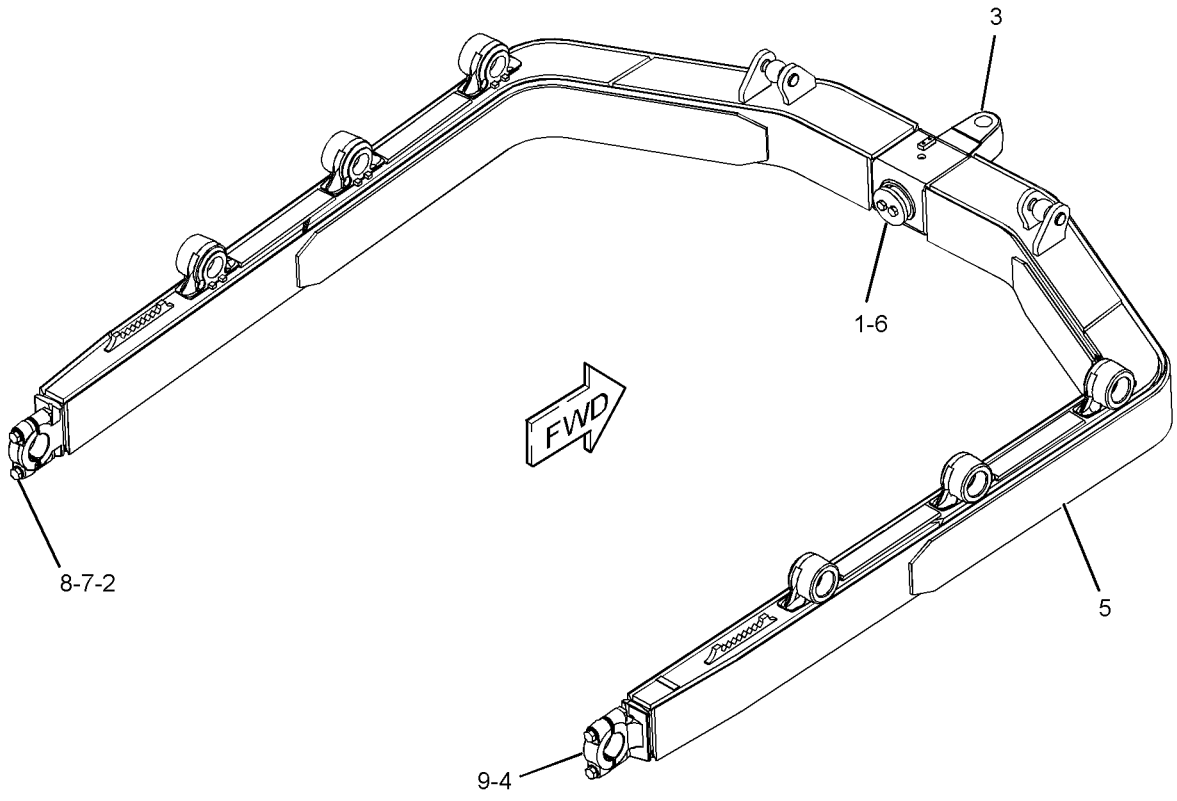

GRAPHIC #1 <END> g01207710

223-4004 PUSH ARM GP

S/N: S6Y1-UP
PART OF 358-4693 OPTION AR-MACHINE
AN ATTACHMENT

SMCS-6061 i04015844

NOTE	REF NO	GRAPHIC REF	PART NUMBER	QTY	PART NAME 1 2 3 4 5 6 (PRODUCT LEVEL)	SEE PAGE
	1	1	4T-1520	1	CAGE AS	
	1A	1	6J-5383	1	BEARING	
B	2	1	4T-4866	52	SHIM (0.8-MM THK)	
M	3	1	7Y-5235	4	BOLT (M24X3X190-MM)	
B	4	1	8E-5703	78	SHIM (0.8-MM THK)	
	5	1	8J-2880	3	CAP-BEARING	
	6	1	124-9672	1	BRACE AS-TILT	
	7	1	160-6305	2	CAP-BEARING	
	8	1	223-4005	1	PUSH ARM AS (LH)	
	8A	1	4T-0780	1	TRUNNION	
	8B	1	124-9666	1	BRACKET	
	8C	1	179-6152	1	BEARING	
	8D	1	179-6153	1	BEARING	
	8E	1	209-2152	1	BAR	
	9	1	223-4006	1	PUSH ARM AS (RH)	
	9A	1	4T-0732	1	BRACKET	
	9B	1	9W-2579	1	PLATE	
	9C	1	179-6152	1	BEARING	
	9D	1	179-6153	1	BEARING	
	9E	1	209-2152	1	BAR	
Y	10	1	233-9134	1	CYLINDER GP-TILT	425
M	11	1	251-8202	8	NUT-SQUARE (M20X2.5-THD)	
M	12	1	251-8203	4	NUT-SQUARE (M24X3-THD)	
	13	1	290-8226	2	PIN	
	14	1	282-9090	2	RETAINER	
M	15	1	7X-2566	6	BOLT (M20X2.5X110-MM)	
M	16	1	8C-8478	12	BOLT (M20X2.5X140-MM)	
	17	1	8T-4123	6	WASHER (22X35X3.5-MM THK)	
M	18	1	8T-4131	10	NUT (M20X2.5-THD)	
	19	1	8T-4167	4	WASHER-HARD (26X44X4-MM THK)	
M	20	1	8T-4779	2	BOLT (M16X2X35-MM)	
	21	1	8T-5439	6	WASHER-HARD (21.5X45X6-MM THK)	
	22	1	9X-8257	2	WASHER (17.5X30X3.5-MM THK)	

B-USE AS REQUIRED
M-METRIC PART
Y-SEPARATE ILLUSTRATION

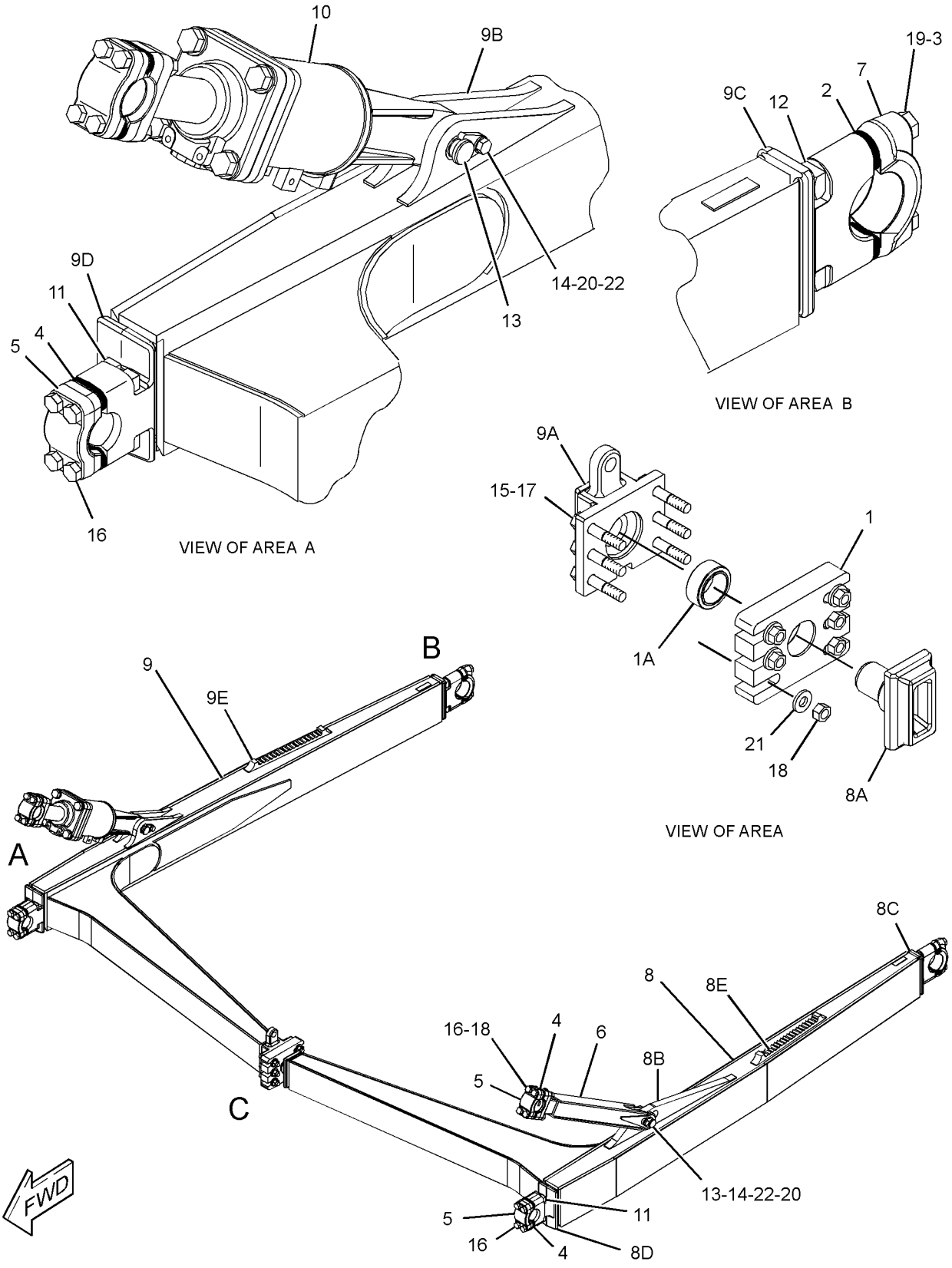

GRAPHIC #1 <END> g01368504

230-5554 PUSH ARM GP

S/N: S6T1-UP
PART OF 358-4692 OPTION AR-MACHINE
AN ATTACHMENT

SMCS-6061 i04015740

NOTE	REF NO	GRAPHIC REF	PART NUMBER	QTY	PART NAME 1 2 3 4 5 6 (PRODUCT LEVEL)	SEE PAGE
	1	1	282-9090	2	RETAINER	
	2	1	4T-1520	1	CAGE AS	
	2A	1	6J-5383	1	BEARING	
B	3	1	4T-4866	52	SHIM (0.8-MM THK)	
M	4	1	7Y-5235	4	BOLT (M24X3X190-MM)	
B	5	1	8E-5703	78	SHIM (0.8-MM THK)	
	6	1	8J-2880	3	CAP-BEARING	
	7	1	124-9672	1	BRACE AS-TILT	
	8	1	160-6305	2	CAP-BEARING	
	9	1	194-0935	1	PUSH ARM AS (LH)	
	9A	1	4T-0780	1	TRUNNION	
	9B	1	8P-9770	1	PLATE	
	9C	1	124-9666	1	BRACKET	
	9D	1	179-6152	1	BEARING	
	9E	1	179-6153	1	BEARING	
	9F	1	209-2152	1	BAR	
	10	1	194-0936	1	PUSH ARM AS (RH)	
	10A	1	4T-0732	1	BRACKET	
	10B	1	8P-9770	1	PLATE	
	10C	1	9W-2579	1	PLATE	
	10D	1	179-6152	1	BEARING	
	10E	1	179-6153	1	BEARING	
	10F	1	209-2152	1	BAR	
Y	11	1	233-9134	1	CYLINDER GP-TILT	425
M	12	1	251-8202	8	NUT-SQUARE (M20X2.5-THD)	
M	13	1	251-8203	4	NUT-SQUARE (M24X3-THD)	
M	14	1	8T-4779	2	BOLT (M16X2X35-MM)	
	15	1	290-8226	2	PIN	
M	16	1	7X-2566	6	BOLT (M20X2.5X110-MM)	
M	17	1	8C-8478	12	BOLT (M20X2.5X140-MM)	
	18	1	8T-4123	6	WASHER (22X35X3.5-MM THK)	
M	19	1	8T-4131	10	NUT (M20X2.5-THD)	
	20	1	8T-4167	4	WASHER-HARD (26X44X4-MM THK)	
	21	1	8T-5439	6	WASHER-HARD (21.5X45X6-MM THK)	
	22	1	9X-8257	1	WASHER (17.5X30X3.5-MM THK)	

B-USE AS REQUIRED
M-METRIC PART
Y-SEPARATE ILLUSTRATION

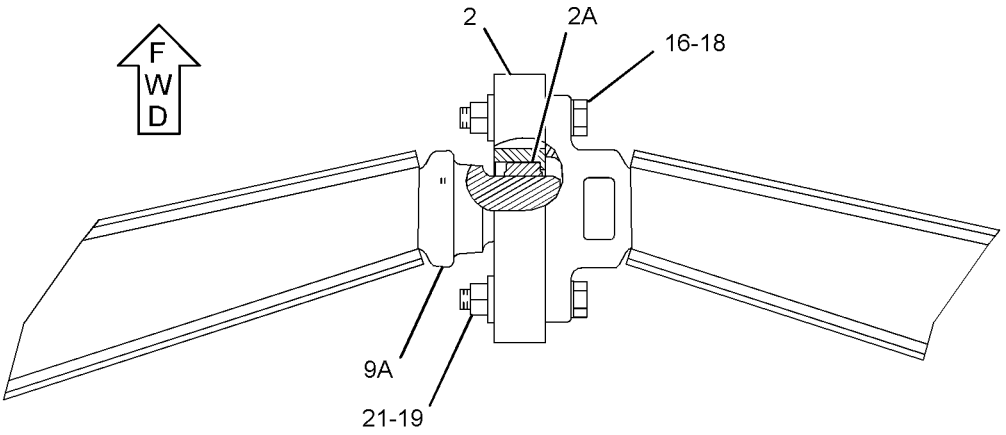

VIEW A-A

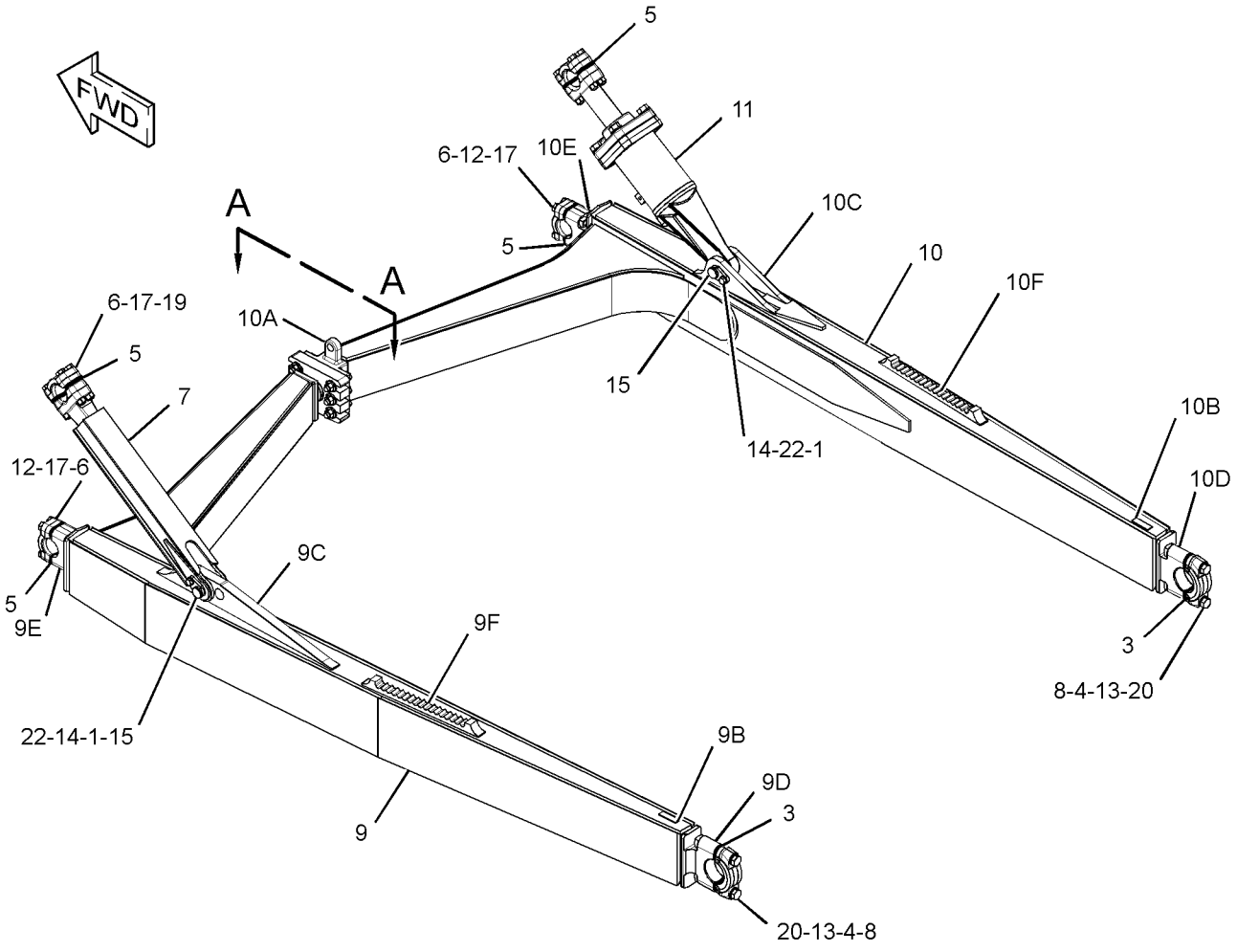

GRAPHIC #1 <END> g01304509

252-5853 PUSH ARM GP

S/N: S6X1-UP
PART OF 358-4690 OPTION AR-MACHINE
AN ATTACHMENT

SMCS-6061 i04033049

NOTE	REF NO	GRAPHIC REF	PART NUMBER	QTY	PART NAME 1 2 3 4 5 6 (PRODUCT LEVEL)	SEE PAGE
	1	1	4T-1520	1	CAGE AS	
	1A	1	6J-5383	1	BEARING	
B	2	1	4T-4866	52	SHIM (0.8-MM THK)	
M	3	1	7Y-5235	4	BOLT (M24X3X190-MM)	
B	4	1	8E-5703	78	SHIM (0.8-MM THK)	
	5	1	8J-2880	3	CAP-BEARING	
	6	1	124-9672	1	BRACE AS-TILT	
	7	1	160-6305	2	CAP-BEARING	
Y	8	1	233-9134	1	CYLINDER GP-TILT	425
	9	1	179-6151	1	PUSH ARM AS (LH)	
	9A	1	4T-0780	1	TRUNNION	
	9B	1	8P-9770	1	PLATE	
	9C	1	124-9666	1	BRACKET	
	9D	1	179-6152	1	BEARING	
	9E	1	179-6153	1	BEARING	
	9F	1	209-2152	1	BAR	
	10	1	179-6162	1	PUSH ARM AS (RH)	
	10A	1	4T-0732	1	BRACKET	
	10B	1	8P-9770	1	PLATE	
	10C	1	9W-2579	2	PLATE	
	10D	1	179-6152	1	BEARING	
	10E	1	179-6153	1	BEARING	
	10F	1	209-2152	1	BAR	
M	11	1	251-8202	8	NUT-SQUARE (M20X2.5-THD)	
M	12	1	251-8203	4	NUT-SQUARE (M24X3-THD)	
	13	1	290-8226	2	PIN	
	14	1	282-9090	2	RETAINER	
M	15	1	7X-2566	6	BOLT (M20X2.5X110-MM)	
M	16	1	8C-8478	12	BOLT (M20X2.5X140-MM)	
	17	1	8T-4123	6	WASHER (22X35X3.5-MM THK)	
M	18	1	8T-4131	10	NUT (M20X2.5-THD)	
	19	1	8T-4167	4	WASHER-HARD (26X44X4-MM THK)	
M	20	1	8T-4779	2	BOLT (M16X2X35-MM)	
	21	1	8T-5439	6	WASHER-HARD (21.5X45X6-MM THK)	
	22	1	9X-8257	2	WASHER (17.5X30X3.5-MM THK)	

B-USE AS REQUIRED
M-METRIC PART
Y-SEPARATE ILLUSTRATION

252-5853 PUSH ARM GP ***(contd.)*** i04033049

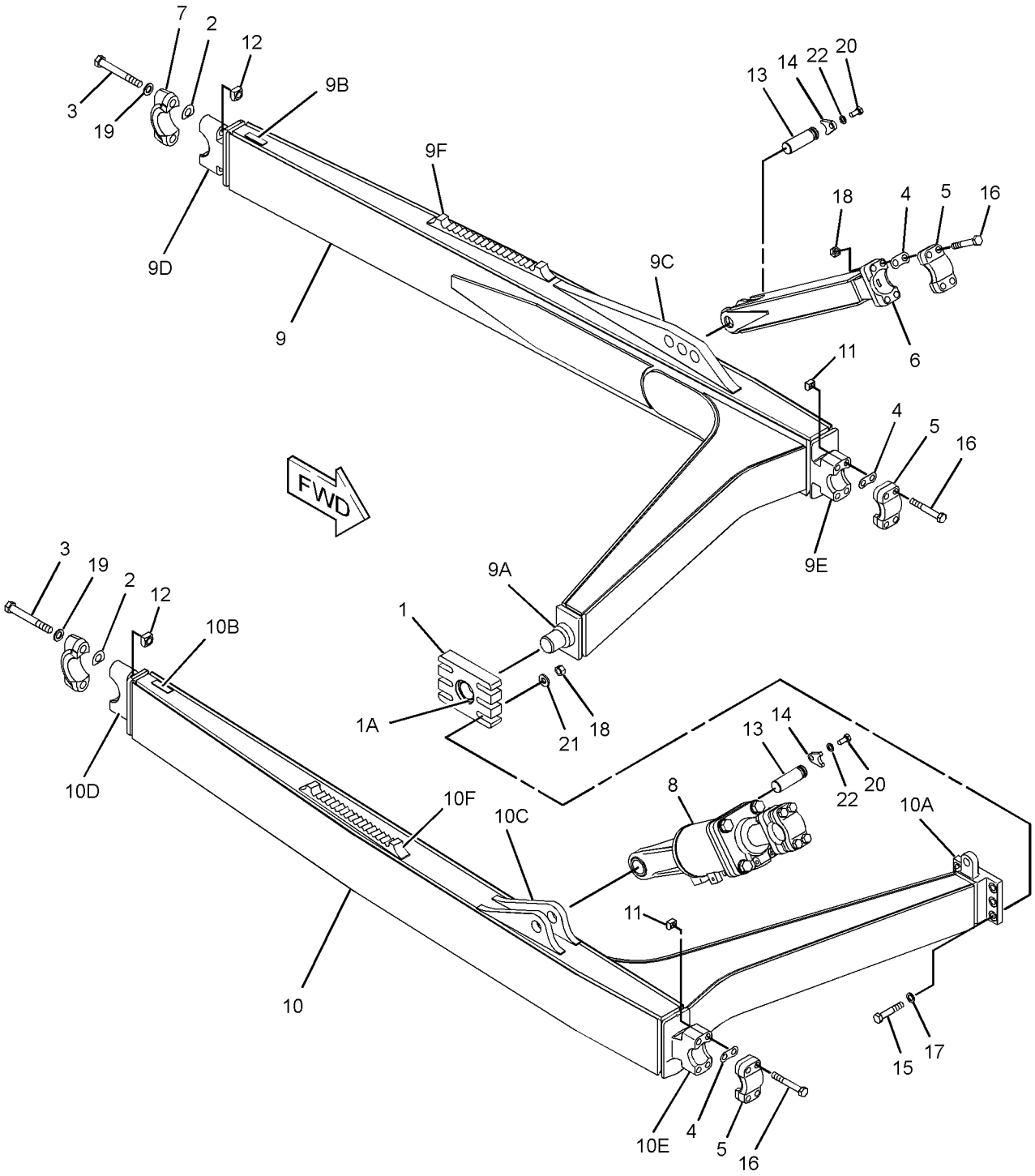

GRAPHIC #1 <END> g01225461

109-1352 TRUNNION GP-BULLDOZER

S/N: S6T1-UP; S6X1-UP
PART OF 358-4690, 358-4691, 358-4692 OPTION AR-MACHINE
AN ATTACHMENT

SMCS-6069 i04001427

NOTE	REF NO	GRAPHIC REF	PART NUMBER	QTY	PART NAME 1 2 3 4 5 6 (PRODUCT LEVEL)	SEE PAGE
	1	1	285-0852	2	TRUNNION	
M	2	1	7X-2563	20	BOLT (M20X2.5X60-MM)	

M-METRIC PART

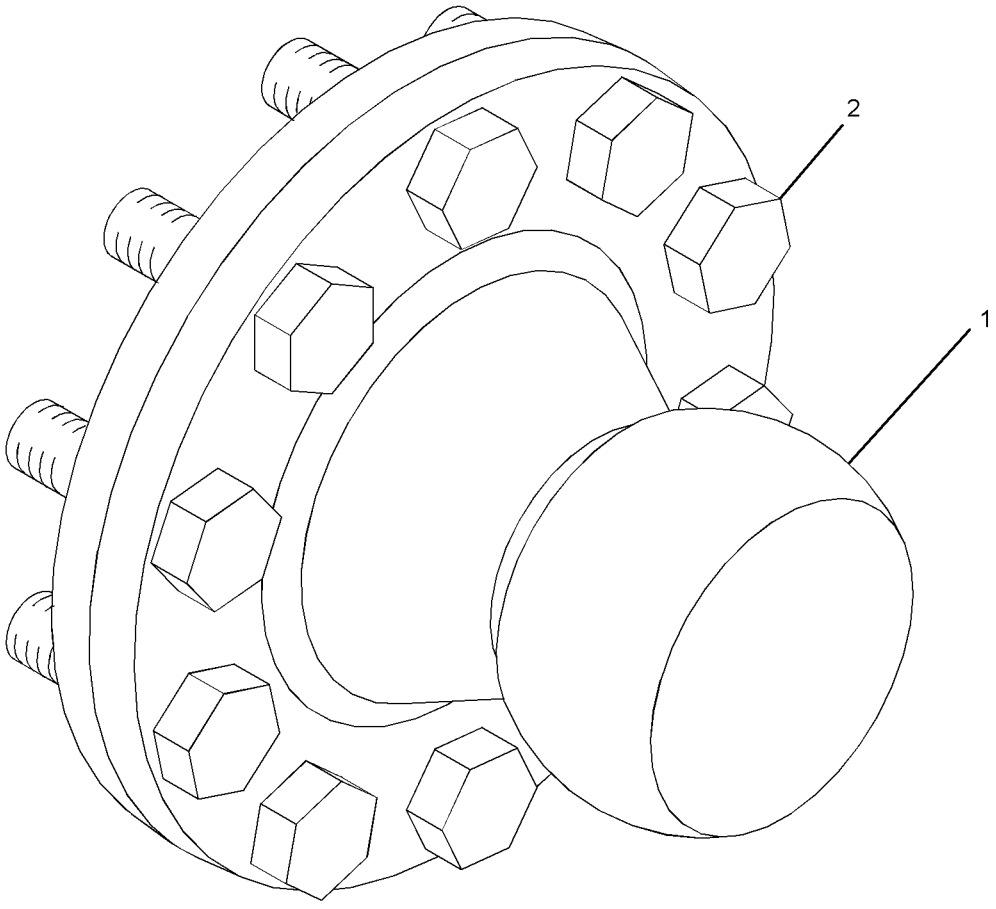

GRAPHIC #1 <END> g01360146

109-1353 TRUNNION GP-BULLDOZER

S/N: S6Y1-UP
PART OF 358-4693 OPTION AR-MACHINE
AN ATTACHMENT

SMCS-6069 i04017170

NOTE	REF NO	GRAPHIC REF	PART NUMBER	QTY	PART NAME 1 2 3 4 5 6 (PRODUCT LEVEL)	SEE PAGE
	1	1	285-0852	2	TRUNNION	
	2	1	109-1354	2	SUPPORT	
M	3	1	7X-2563	44	BOLT (M20X2.5X60-MM)	
	4	1	8T-4123	24	WASHER (22X35X3.5-MM THK)	

M-METRIC PART

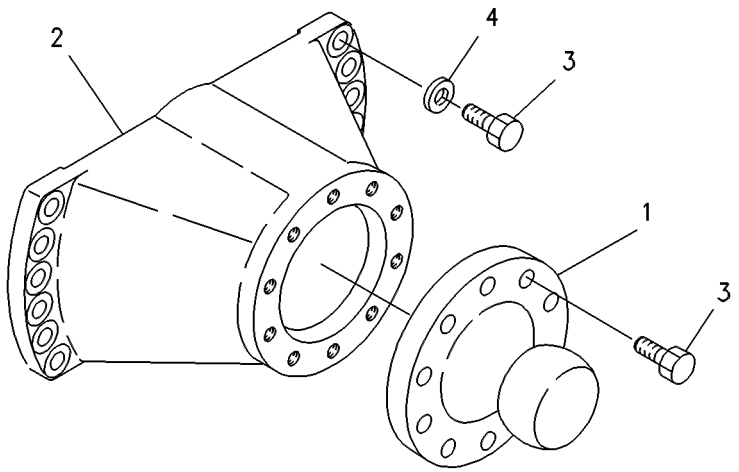

GRAPHIC #1 <END> g00264798

173-1028 ADJUSTER GP-SEAT

S/N: S6T1-UP; S6X1-UP; S6Y1-UP
PART OF 178-0603, 180-7304 SEAT GP
ALSO AN ATTACHMENT

SMCS-7321 i01598643

NOTE	REF NO	GRAPHIC REF	PART NUMBER	QTY	PART NAME 1 2 3 4 5 6 (PRODUCT LEVEL)	SEE PAGE
	1	1	4V-8256	4	SPRING	
	2	1	117-4492	1	ROD	
	3	1	136-1544	1	LATCH AS (LH)	
	4	1	156-5545	1	LATCH AS (RH)	
	5	1	164-4531	1	ROD	
	6	1	170-1112	1	PLATE AS	
	7	1	170-1114	1	HANDLE (SLIDE ADJUSTMENT)	
	8	1	170-1115	1	HANDLE (TILT ADJUSTMENT)	
	9	1	132-0338	2	WASHER-PLASTIC (13X31.7X0.8-MM THK)	
	10	1	2K-4973	2	LOCKNUT (3/8-16-THD)	
	11	1	7X-0608	2	WASHER-HARD (10.2X16X2-MM THK)	

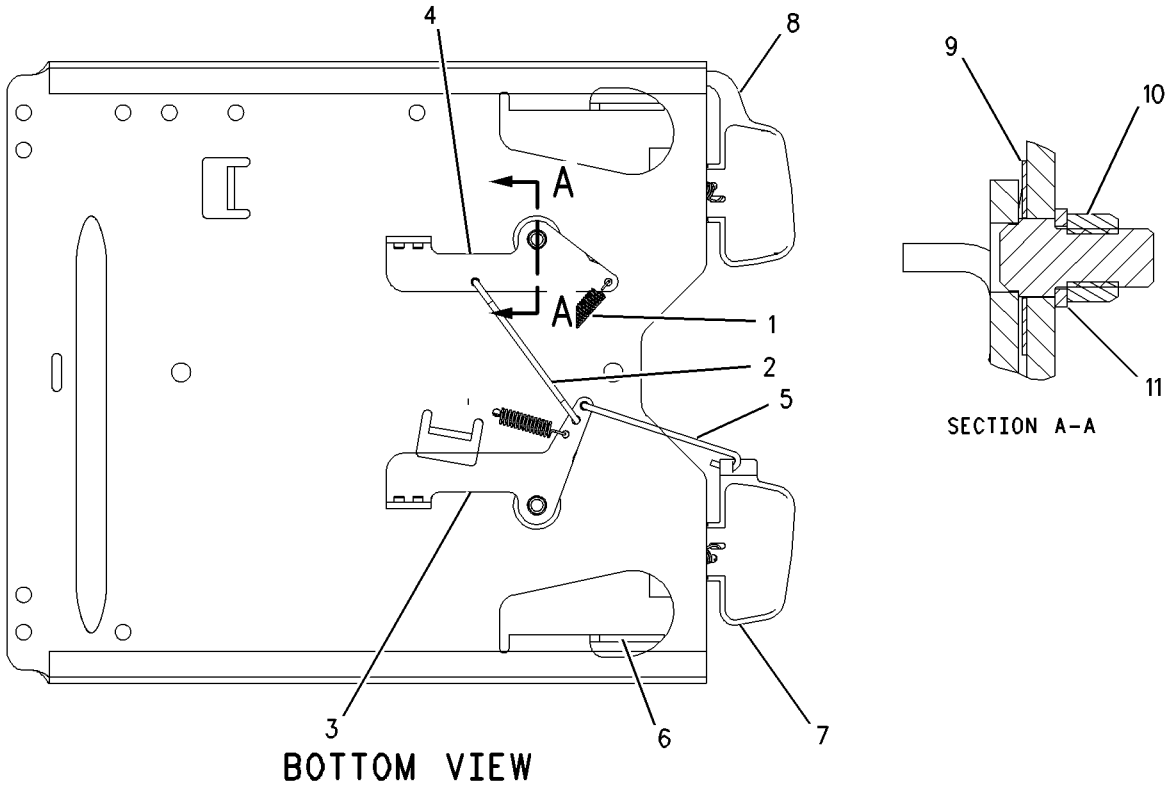

GRAPHIC #1 <END> g00828822

OPERATOR STATION

323-5698 AIR CONDITIONER AR

S/N: S6T1-UP; S6X1-UP; S6Y1-UP

AN ATTACHMENT

SMCS-7320 i03995819

NOTE	PART NUMBER	QTY	PART NAME 1 2 3 4 5 6 (PRODUCT LEVEL)	SEE PAGE
Y	*237-1000*	1	CONDENSER & MTG GP-REFRIGERANT	535
Y	*322-2361*	1	LINES GP-AIR CONDITIONER	565
	227-5055	1	ROPS AS	
	110-6393	1	PLATE-INSTRUCTION (AIR CONDITIONER)	
			(ON LH SIDE OF DASH ABOVE AIR LOUVER)	

Y-SEPARATE ILLUSTRATION

<END>

OPERATOR STATION

279-2591 AIR CONDITIONER GP

S/N: S6T1-UP; S6X1-UP; S6Y1-UP
PART OF 317-4153 CAB AR

SMCS-7320 i03994775

NOTE	REF NO	GRAPHIC REF	PART NUMBER	QTY	PART NAME 1 2 3 4 5 6 (PRODUCT LEVEL)	SEE PAGE
	1	1	3E-5464	1	THERMOSTAT (HVAC) (REFRIGERANT)	
	2	1	109-6406	1	COIL AS (EVAPORATOR)	
	3	1	2V-1937	2	GROMMET	
	4	1	5P-1075	2	WASHER-HARD (10.2X22.5X3-MM THK)	
	5	1	178-3338	2	SCREW (8-32X0.313-IN)	
	6	1	8T-4121	2	WASHER-HARD (11X21X2.5-MM THK)	
M	7	1	8T-4137	2	BOLT (M10X1.5X20-MM)	
M	8	1	8T-4191	2	BOLT (M10X1.5X16-MM)	
E	9	1	144-0195		HOSE (12-CM)	
D	10	1	5P-5643		SEAL (0.4-M EACH)	

D-ORDER BY THE METER
E-ORDER BY THE CENTIMETER
M-METRIC PART

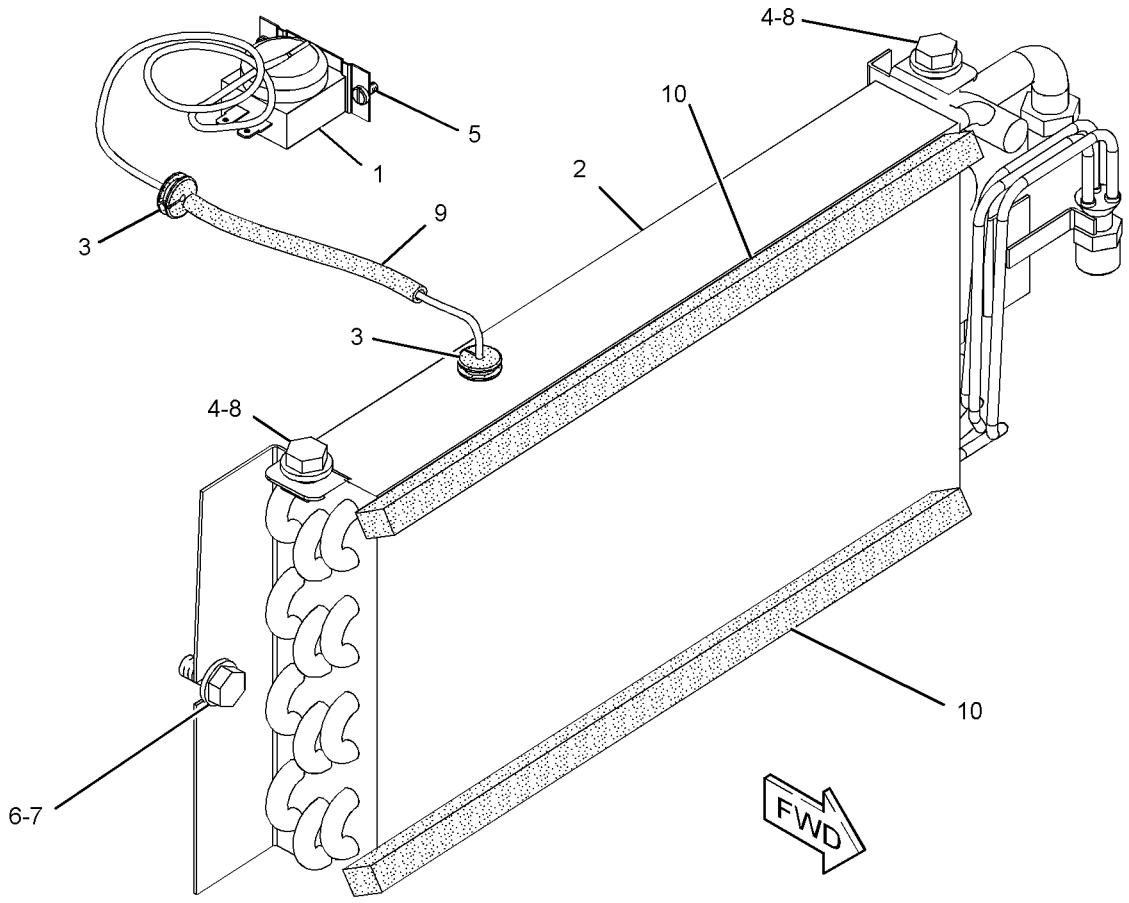

GRAPHIC #1 <END> g01232330

OPERATOR STATION

230-5388 BLOWER GP-CAB

S/N: S6T1-UP; S6X1-UP; S6Y1-UP
PART OF 230-4700 PRESSURIZER GP-CAB

SMCS-7316 i04010716

NOTE	REF NO	GRAPHIC REF	PART NUMBER	QTY	PART NAME 1 2 3 4 5 6 (PRODUCT LEVEL)	SEE PAGE
	1	1	3S-2093	1	STRAP-CABLE	
	2	1	229-6635	1	GASKET	
	3	1	230-5385	2	PLATE AS	
	4	1	237-0934	1	PLATE AS	
	5	1	237-0956	1	PLATE AS	
	6	1	257-5029	1	RESISTOR AS	
	7	1	260-1914	1	HARNESS AS-MOTOR	
		1	102-8805	1	KIT-RECEPTACLE (6-PIN)	
					(INCLUDES RECEPTACLE AS & WEDGE)	
		1	6T-6505	2	HOUSING-RECEPTACLE (BLADE, POSITIVE LOCK)	
		1	6T-6506	2	TERMINAL-BLADE (14-GA TO 18-GA)	
		1	9W-0844	2	SOCKET-CONNECTOR (14-GA)	
		1	9W-0852	6	PIN-CONNECTOR (14-GA TO 16-GA)	
E		1	125-7875		TUBE-HEAT SHRINK (7.44-MM DIA) (10-CM)	
E		1	1P-0810		TAPE-ELECTRICAL (30-CM)	
		1	155-2270	1	KIT-CONNECTING PLUG (2-PIN)	
					(INCLUDES PLUG AS, WEDGE & INTERFACE SEAL)	
		1	192-2112	4	SOCKET-TERMINAL	
	8	1	275-6706	1	MOTOR AS-BLOWER (24-VOLT)	
		1	102-8802	1	KIT-RECEPTACLE (2-PIN)	
					(INCLUDES RECEPTACLE AS & WEDGE)	
		1	9W-0852	2	PIN-CONNECTOR (14-GA TO 16-GA)	
	9	1	282-1951	1	PLATE AS	
	10	1	282-1952	1	COVER AS-ACCESS	
	11	1	282-1953	1	GUARD (RESISTOR)	
	12	1	2M-1444	2	SCREW-TAPPING (8-18X0.3-IN)	
M	13	1	5C-9553	2	BOLT (M6X1X16-MM)	
	14	1	6H-4005	1	GROMMET	
M	15	1	8T-0337	8	SCREW-MACHINE (M4X0.7X12-MM)	

E-ORDER BY THE CENTIMETER
M-METRIC PART

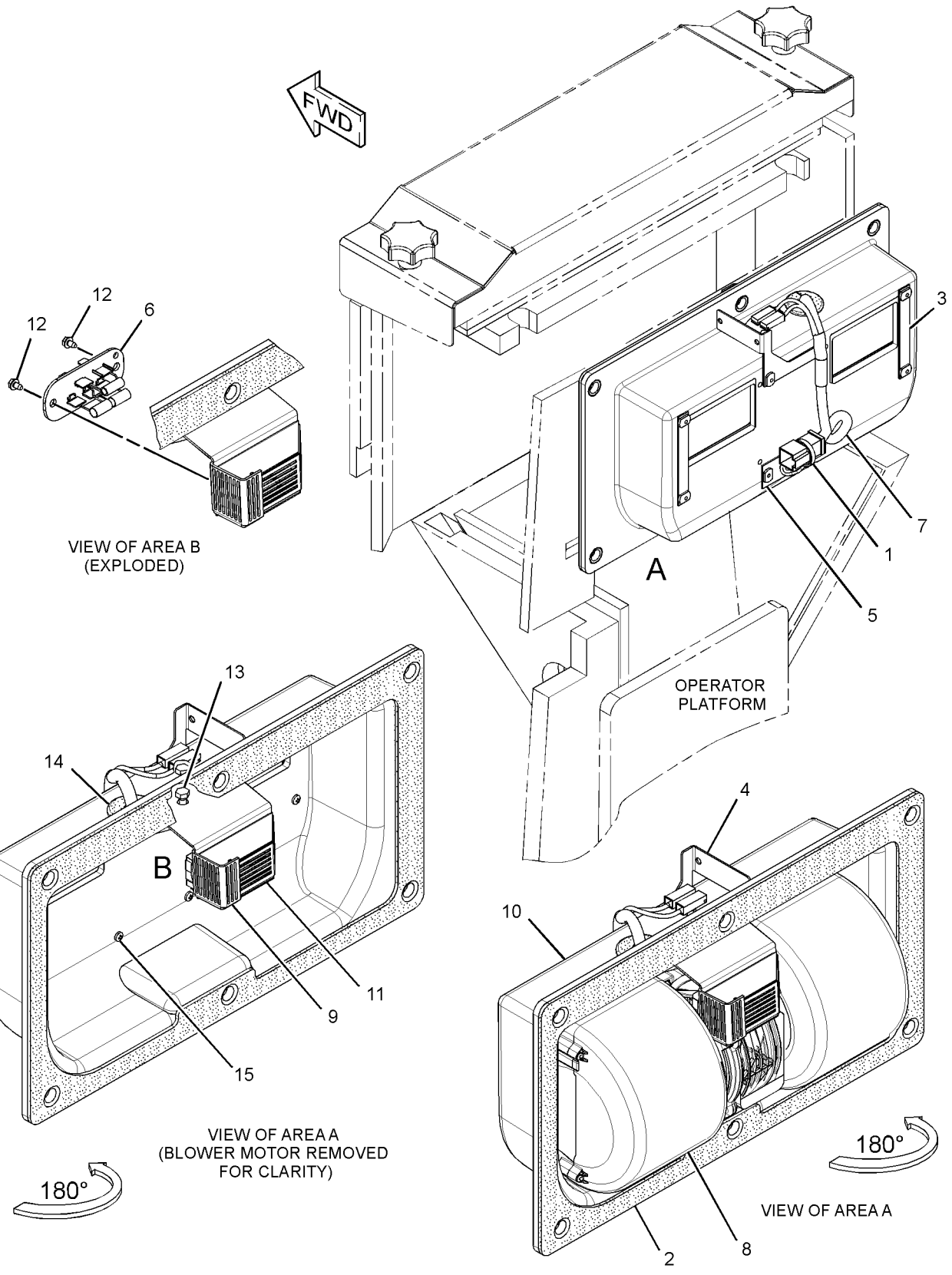

GRAPHIC #1 <END> g02183534

OPERATOR STATION

317-4153 CAB AR

S/N: S6T1-UP; S6X1-UP; S6Y1-UP
PART OF 336-9684, 336-9685, 336-9686 CHASSIS AR

SMCS-7301 i04033050

NOTE	PART NUMBER	QTY	PART NAME 1 2 3 4 5 6 (PRODUCT LEVEL)	SEE PAGE
Y	*323-5696*	1	CAB AR	522
Y	*279-2591*	1	AIR CONDITIONER GP	519
Y	*317-4154*	1	COVER GP-CONSOLE	545
Y	*279-2590*	1	HEATER GP-CAB	550
Y	*223-1677*	1	LINES GP-AIR CONDITIONER	562
Y	*223-1680*	1	LINES GP-HEATER	569
Y	*169-9637*	1	MOUNTING GP-CAB	579
Y	*230-4700*	1	PRESSURIZER GP-CAB	596
Y	*262-5079*	1	TANK GP-WINDOW WASHER	624

Y-SEPARATE ILLUSTRATION

<END>

323-5696 CAB AR

S/N: S6T1-UP; S6X1-UP; S6Y1-UP
PART OF 317-4153 CAB AR

SMCS-7301 i04011010

NOTE	PART NUMBER	QTY	PART NAME 1 2 3 4 5 6 (PRODUCT LEVEL)	SEE PAGE
Y	*179-7094*	1	CAB GP	524
Y	*108-1335*	1	HANDHOLD GP	549
Y	*105-9657*	1	INSTALLATION GP-RADIO	553
Y	*323-5697*	1	LINER GP-CAB	560
Y	*105-9659*	1	MIRROR GP-REAR VIEW (INTERIOR)	572
Y	*322-1394*	1	WASHER GP-WINDOW	625
Y	*354-6924*	1	WIPER GP-WINDOW	637

Y-SEPARATE ILLUSTRATION

<END>

OPERATOR STATION

358-4684 CAB AR–SIDE

S/N: S6T1-UP; S6X1-UP; S6Y1-UP

AN ATTACHMENT

SMCS-7301 i04003683

NOTE	REF NO	GRAPHIC REF	PART NUMBER	QTY	PART NAME 1 2 3 4 5 6 (PRODUCT LEVEL)	SEE PAGE
Y	1	1	*279-7260*	1	GUARD GP-WINDOW	548
Y	2	1	*359-0661*	1	CAB GP	527

Y-SEPARATE ILLUSTRATION

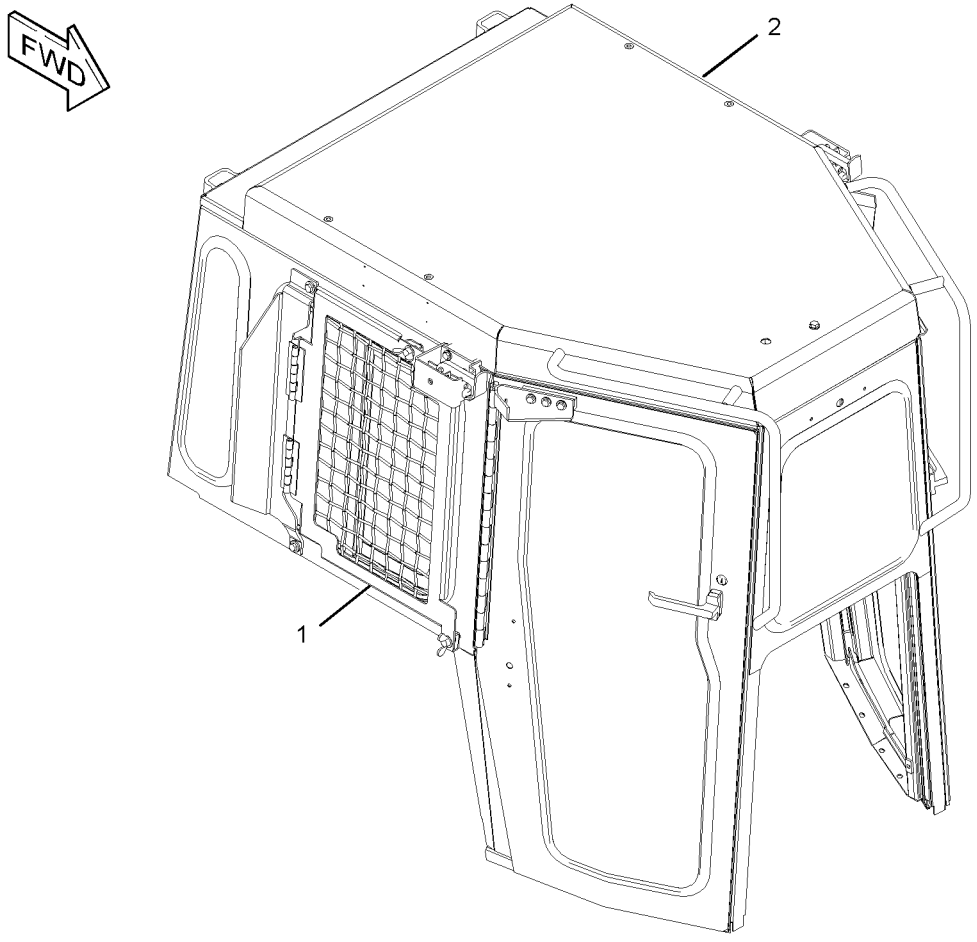

GRAPHIC #1 <END> g02186015

OPERATOR STATION

179-7094 CAB GP

S/N: S6T1-UP; S6X1-UP; S6Y1-UP
PART OF 323-5696 CAB AR

SMCS-7301 i04011073

NOTE	REF NO	GRAPHIC REF	PART NUMBER	QTY	PART NAME 1 2 3 4 5 6 (PRODUCT LEVEL)	SEE PAGE
	1	1	1B-8735	2	KEY-WOODRUFF	
	2	1	4K-3533	4	WASHER (9.7X17.5X1.6-MM THK)	
	3	1	4Y-9344	1	GLASS (REAR)	
	4	1	5G-8655	2	LEVER	
	5	1	5M-8500	2	KNOB (DOOR RELEASE)	
	6	1	6I-9386	2	BRACKET AS	
Y	7	1	*6T-8402*	1	WINDOW GP-CAB (RH)	627
Y	8	1	*6T-8403*	1	WINDOW GP-CAB (LH)	628
	9	1	6V-2331	2	HANDLE AS-OUTSIDE	
	10	1	6V-2375	2	HANDLE AS-INSIDE	
	11	1	6V-3260	8	BOLT-SOCKET HEAD (1/4-20X0.75-IN)	
	12	1	6V-7190	2	LEVER AS	
					(EACH INCLUDES)	
		1	6V-8129	2	SETSCREW-SOCKET	
	13	1	6V-7636	4	PIN AS-SPRING	
	14	1	6V-8073	2	LINK-CONNECTING	
	15	1	7G-2454	1	GLASS (TINTED) (FRONT)	
	16	1	7X-0623	12	WASHER (10.5X21X2-MM THK)	
	17	1	8C-3442	2	SPRING-COIL	
B	18	1	8T-0318	8	SHIM (0.8-MM THK)	
	19	1	8T-1979	1	LINKAGE AS (LH)	
	20	1	8T-1980	1	LINKAGE AS (RH)	
					(EACH LINKAGE AS INCLUDES)	
J		1	5P-8503	1	LOCK AS-CYLINDER	
	21	1	8Y-8304	2	STRIKER AS-LATCH	
					(EACH INCLUDES)	
		1	8T-4158	1	WASHER-SPECIAL (CONICAL)	
	22	1	9D-9736	2	BUMPER	
	23	1	9G-1127	2	GLASS (SIDE, RH, LH)	
	24	1	109-9828	1	LATCH AS-ROTARY (RH)	
	25	1	109-9829	1	LATCH AS-ROTARY (LH)	
	26	1	125-8254	2	GLASS (TINTED) (DOOR, RH, LH)	
	27	1	158-7697	1	CAB AS	
	28	1	170-5854	1	BRACKET (RH)	
	29	1	170-5855	1	BRACKET (LH)	
	30	1	224-4998	1	DOOR AS (RH)	
	31	1	224-5000	1	DOOR AS (LH)	
	32	1	298-4055	2	ROD AS	
					(EACH INCLUDES)	
		1	7X-0608	1	WASHER-HARD (10.2X16X2-MM THK)	
		1	118-0693	1	ROD	
	33	1	3E-6180	4	NUT-CLINCH (M10X1.5-THD)	
	34	1	4M-6425	2	BOLT (5/16-18X1-IN)	
	35	1	6V-8189	2	NUT (5/16-18-THD)	
	36	1	7X-7729	12	WASHER (11X25X3-MM THK)	
	37	1	8T-4121	4	WASHER-HARD (11X21X2.5-MM THK)	
M	38	1	8T-4136	24	BOLT (M10X1.5X25-MM)	
M	39	1	8T-4179	1	BOLT (M12X1.75X20-MM)	
M	40	1	8T-4181	8	BOLT (M6X1X20-MM)	
M	41	1	8T-4195	4	BOLT (M10X1.5X30-MM)	
	42	1	8T-4223	1	WASHER-HARD (13.5X25.5X3-MM THK)	
	43	1	8T-9043	2	BOLT (5/16-18X0.875-IN)	
D	44	1	5P-6605		SEAL (2-M)	
D	44A	1	5P-6605		SEAL (3.5-M EACH)	
D	44B	1	5P-6605		SEAL (1.7-M EACH)	
D	44C	1	5P-6605		SEAL (2.5-M EACH)	

179-7094 CAB GP ***(contd.)*** i04011073

NOTE	REF NO	GRAPHIC REF	PART NUMBER	QTY	PART NAME 1 2 3 4 5 6 (PRODUCT LEVEL)	SEE PAGE
D	45	1	5P-5930		SEAL (0.08-M EACH)	
D	45A	1	5P-5930		SEAL (0.8-M EACH)	
D	46	1	6V-3671		SEAL (0.6-M EACH)	
D	46A	1	6V-3671		SEAL (0.7-M EACH)	
D	46B	1	6V-3671		SEAL (1.5-M EACH)	
D	47	1	5P-7483		SEAL (1.6-M EACH)	
D	48	1	5P-5643		SEAL (0.12-M EACH)	
D	49	1	5P-5926		SEAL (0.05-M EACH)	
D	50	1	5P-5931		SEAL (0.05-M EACH)	
D	51	1	5P-5755		SEAL (0.05-M EACH)	

B-USE AS REQUIRED
D-ORDER BY THE METER
J-REQUIRES CORPORATE KEY
M-METRIC PART
Y-SEPARATE ILLUSTRATION

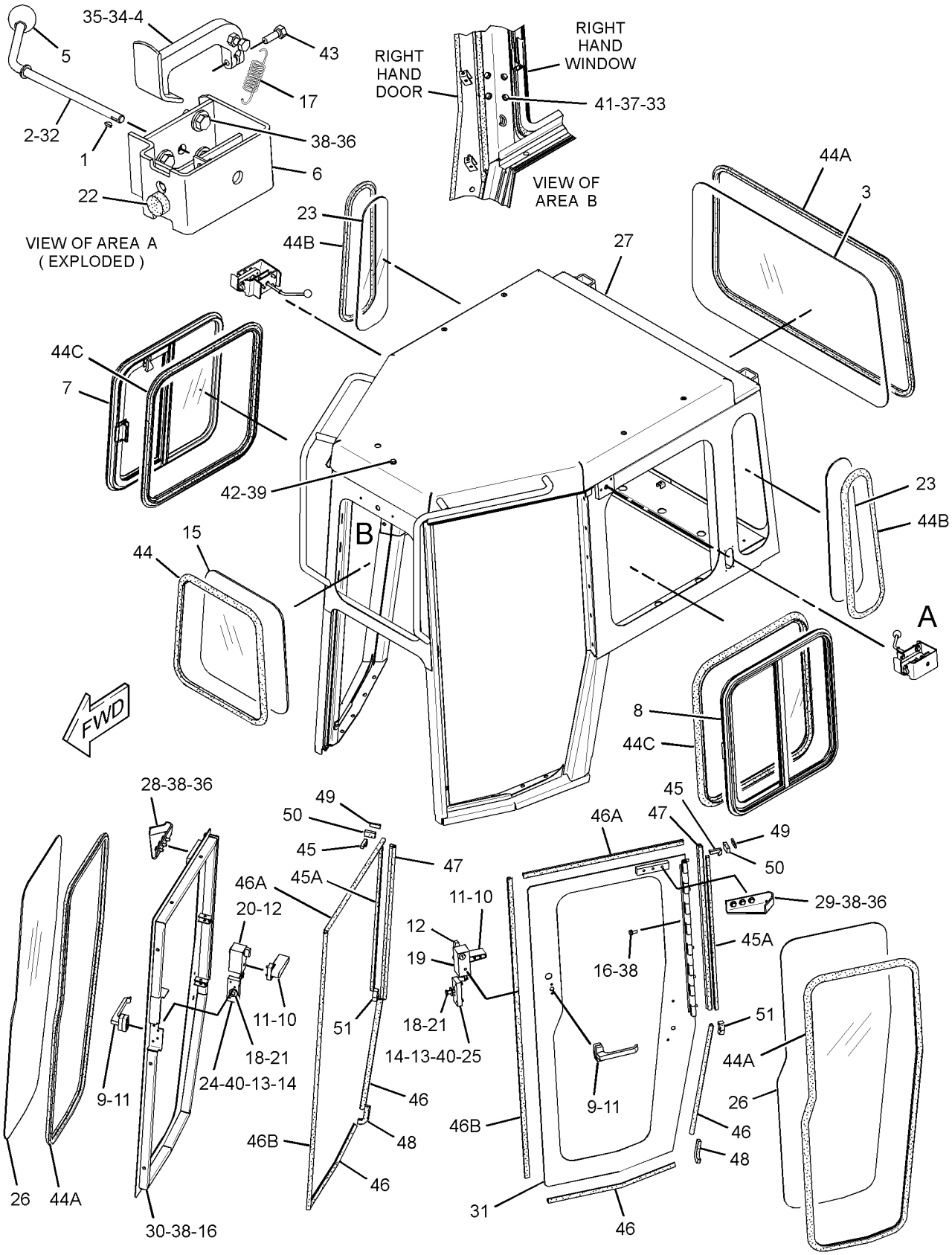

GRAPHIC #1 <END> g02190415

OPERATOR STATION

359-0661 CAB GP

S/N: S6T1-UP; S6X1-UP; S6Y1-UP
PART OF 358-4684 CAB AR
FOR USE WITH SCREENS
AN ATTACHMENT

SMCS-7301 i04003675

NOTE	REF NO	GRAPHIC REF	PART NUMBER	QTY	PART NAME 1 2 3 4 5 6 (PRODUCT LEVEL)	SEE PAGE
	1	1	1B-8735	2	KEY-WOODRUFF	
	2	1	4K-3533	4	WASHER (9.7X17.5X1.6-MM THK)	
	3	1	4Y-9344	1	GLASS (REAR)	
	4	1	5G-8655	2	LEVER	
	5	1	5M-8500	2	KNOB (DOOR RELEASE)	
	6	1	6I-9386	2	BRACKET AS	
Y	7	1	*6T-8402*	1	WINDOW GP-CAB (RH)	627
Y	8	1	*6T-8403*	1	WINDOW GP-CAB (LH)	628
	9	1	6V-2331	2	HANDLE AS-OUTSIDE	
	10	1	6V-2375	2	HANDLE AS-INSIDE	
	11	1	6V-3260	8	BOLT-SOCKET HEAD (1/4-20X0.75-IN)	
	12	1	6V-7190	2	LEVER AS	
					(EACH INCLUDES)	
		1	6V-8129	2	SETSCREW-SOCKET	
	13	1	6V-7636	4	PIN AS-SPRING	
	14	1	6V-8073	2	LINK-CONNECTING	
	15	1	7G-2454	1	GLASS (TINTED) (FRONT)	
	16	1	7X-0623	12	WASHER (10.5X21X2-MM THK)	
	17	1	8C-3442	2	SPRING-COIL	
B	18	1	8T-0318	8	SHIM (0.8-MM THK)	
	19	1	8T-1979	1	LINKAGE AS (LH)	
	20	1	8T-1980	1	LINKAGE AS (RH)	
					(EACH LINKAGE AS INCLUDES)	
J		1	5P-8503	1	LOCK AS-CYLINDER	
	21	1	8Y-8304	2	STRIKER AS-LATCH	
					(EACH INCLUDES)	
		1	8T-4158	1	WASHER-SPECIAL (CONICAL)	
	22	1	9D-9736	2	BUMPER	
	23	1	9G-1127	2	GLASS (SIDE, RH, LH)	
	24	1	109-9828	1	LATCH AS-ROTARY (RH)	
	25	1	109-9829	1	LATCH AS-ROTARY (LH)	
	26	1	125-8254	2	GLASS (TINTED) (DOOR, RH, LH)	
	27	1	359-0662	2	CAB AS	
	28	1	170-5854	1	BRACKET (RH)	
	29	1	170-5855	1	BRACKET (LH)	
	30	1	224-4998	1	DOOR AS (RH)	
	31	1	224-5000	1	DOOR AS (LH)	
	32	1	298-4055	2	ROD AS	
					(EACH INCLUDES)	
		1	7X-0608	1	WASHER-HARD (10.2X16X2-MM THK)	
		1	118-0693	1	ROD	
	33	1	3E-6180	4	NUT-CLINCH (M10X1.5-THD)	
	34	1	4M-6425	2	BOLT (5/16-18X1-IN)	
	35	1	6V-8189	2	NUT (5/16-18-THD)	
	36	1	7X-7729	12	WASHER (11X25X3-MM THK)	
	37	1	8T-4121	4	WASHER-HARD (11X21X2.5-MM THK)	
M	38	1	8T-4136	24	BOLT (M10X1.5X25-MM)	
M	39	1	8T-4179	1	BOLT (M12X1.75X20-MM)	
M	40	1	8T-4181	8	BOLT (M6X1X20-MM)	
M	41	1	8T-4195	4	BOLT (M10X1.5X30-MM)	
	42	1	8T-4223	1	WASHER-HARD (13.5X25.5X3-MM THK)	
	43	1	8T-9043	2	BOLT (5/16-18X0.875-IN)	
D	44	1	5P-6605		SEAL (2-M)	
D	44A	1	5P-6605		SEAL (3.5-M EACH)	

359-0661 CAB GP ***(contd.)*** i04003675

NOTE	REF NO	GRAPHIC REF	PART NUMBER	QTY	PART NAME 1 2 3 4 5 6 (PRODUCT LEVEL)	SEE PAGE
D	44B	1	5P-6605		SEAL (1.7-M EACH)	
D	44C	1	5P-6605		SEAL (2.5-M EACH)	
D	45	1	5P-5930		SEAL (0.08-M EACH)	
D	45A	1	5P-5930		SEAL (0.8-M EACH)	
D	46	1	6V-3671		SEAL (0.6-M EACH)	
D	46A	1	6V-3671		SEAL (0.7-M EACH)	
D	46B	1	6V-3671		SEAL (1.5-M EACH)	
D	47	1	5P-7483		SEAL (1.6-M EACH)	
D	48	1	5P-5643		SEAL (0.12-M EACH)	
D	49	1	5P-5926		SEAL (0.05-M EACH)	
D	50	1	5P-5931		SEAL (0.05-M EACH)	
D	51	1	5P-5755		SEAL (0.05-M EACH)	

B-USE AS REQUIRED
D-ORDER BY THE METER
J-REQUIRES CORPORATE KEY
M-METRIC PART
Y-SEPARATE ILLUSTRATION

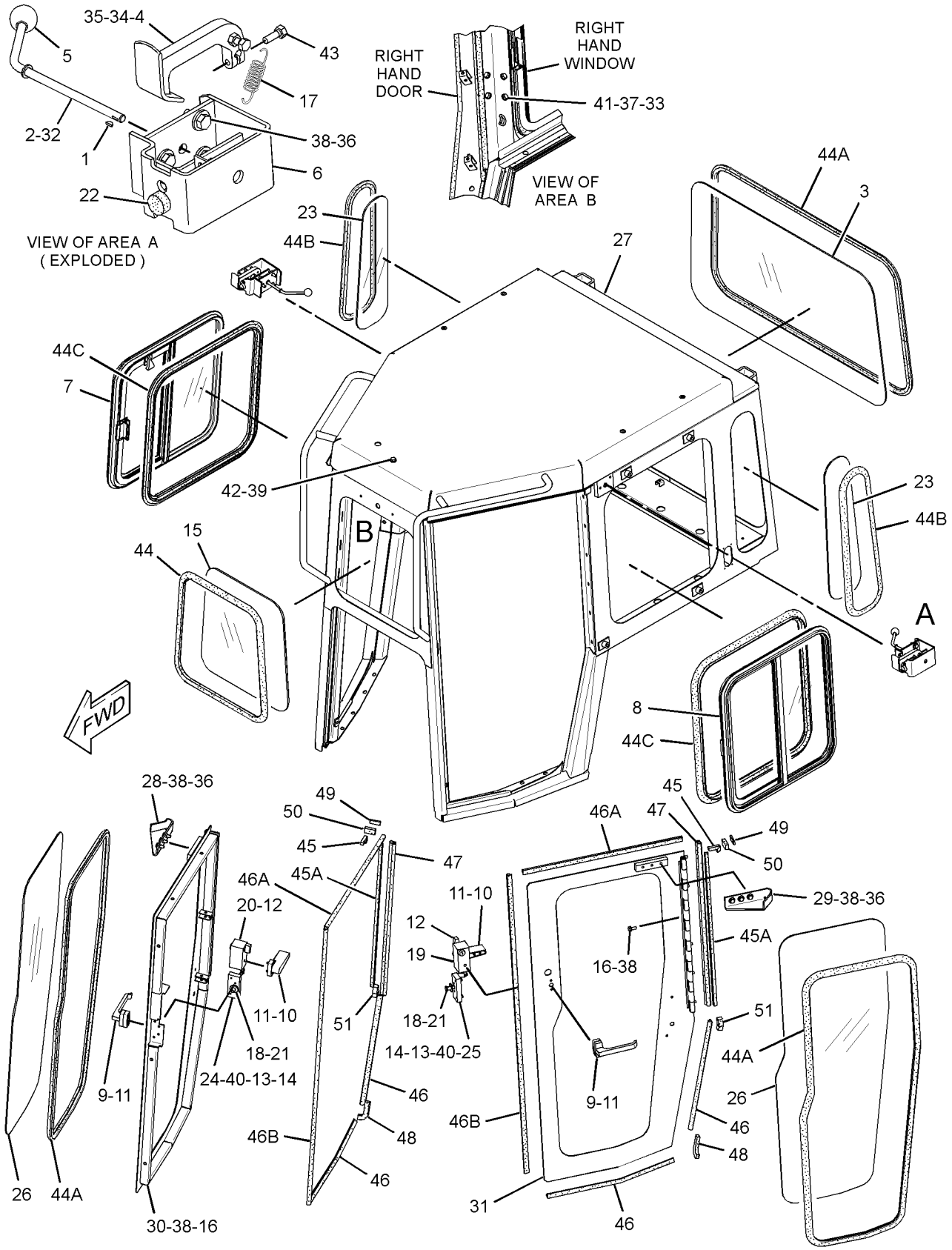

GRAPHIC #1 <END> g02190794

OPERATOR STATION

317-1766 CANOPY AR

S/N: S6T1-UP; S6X1-UP; S6Y1-UP

AN ATTACHMENT

SMCS-7302 i03991752

NOTE	PART NUMBER	QTY	PART NAME 1 2 3 4 5 6 (PRODUCT LEVEL)	SEE PAGE
Y	*317-8767*	1	MOUNTING GP-BRACKET (WITHOUT AIR CONDITIONER)	578
Y	*323-9636*	1	PANEL GP-INSTRUMENT	586
Y	*317-1767*	1	PLATFORM GP-OPERATOR	590
Y	*208-8706*	1	ROPS GP-OPEN	601
Y	*214-1197*	1	SEAT GP-SUSPENSION (VINYL)	617
	6V-1971	1	LITERATURE GP	
	246-2641	1	PADLOCK GP	
	5P-8500	1	KEY	
	5P-7958	1	SLEEVE-CABLE SPLICE	
	148-8411	1	PLUG AS	
	3K-0360	1	SEAL-O-RING	
	9S-4185	1	PLUG-O-RING	
	334-3416	1	FILM-CERTIFICATION (FOPS)	
			(ON LH ROPS POST VIEWABLE FROM GROUND)	
	334-3417	1	FILM-CERTIFICATION (ROPS)	
			(ON LH ROPS POST VIEWABLE FROM GROUND)	
	219-0305	1	FILM-WARNING (NO WELD, NO DRILL, READ OMM)	
			(ON LH ROPS POST VIEWABLE FROM GROUND)	

Y-SEPARATE ILLUSTRATION

<END>

106-5122 COMPRESSOR GP-REFRIGERANT

S/N: S6T1-UP; S6X1-UP; S6Y1-UP

PART OF 241-8240 COMPRESSOR GP-REFRIGERANT

SMCS-1802 i03985637

NOTE	REF NO	GRAPHIC REF	PART NUMBER	QTY	PART NAME 1 2 3 4 5 6 (PRODUCT LEVEL)	SEE PAGE
	1	1	180-9339	2	PIN-CONNECTOR (14-GA TO 18-GA)	
	2	1	314-4018	1	VALVE AS-PRESSURE RELIEF (REFRIGERANT COMPRESSOR)	
	3	1	7T-4532	1	PLUG AS	
	4	1	9X-7385	2	SEAL-O-RING	
	5	1	102-8802	1	KIT-RECEPTACLE (2-PIN)	
					(INCLUDES RECEPTACLE AS & WEDGE)	
Y	6	1	258-8473	1	CLUTCH GP-ELECTRIC (KIT)	143

Y-SEPARATE ILLUSTRATION

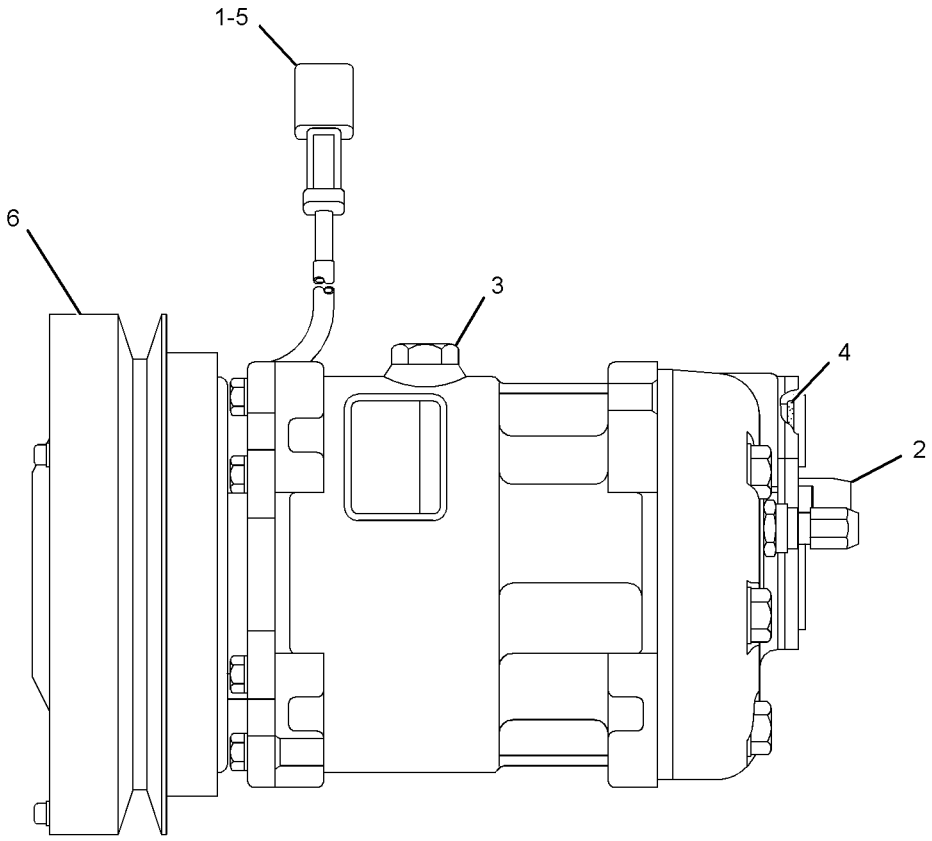

GRAPHIC #1 <END> g02168554

OPERATOR STATION

241-8240 COMPRESSOR GP-REFRIGERANT

S/N: S6T1-UP; S6X1-UP; S6Y1-UP
PART OF 317-1762 INSTALLATION AR

SMCS-1802 i03985519

NOTE	REF NO	GRAPHIC REF	PART NUMBER	QTY	PART NAME 1 2 3 4 5 6 (PRODUCT LEVEL)	SEE PAGE
M	1	1	8T-5436	1	BOLT (M10X1.5X130-MM)	
	2	1	8S-5383	1	BLOCK	
Y	3	1	106-5122	1	COMPRESSOR GP-REFRIGERANT	531
	4	1	188-1012	1	BRACKET	
	5	1	188-1013	1	PLATE	
	6	1	214-9492	1	ROD-ADJUSTING	
	7	1	216-0349	1	V-BELT (REFRIGERANT COMPRESSOR)	
M	8	1	8T-4910	1	BOLT (M12X1.75X60-MM)	
	9	1	8T-4121	10	WASHER-HARD (11X21X2.5-MM THK)	
M	10	1	8T-4132	2	NUT (M16X2-THD)	
M	11	1	8T-4133	3	NUT (M10X1.5-THD)	
M	12	1	8T-4182	1	BOLT (M10X1.5X45-MM)	
M	13	1	8T-4185	3	BOLT (M10X1.5X50-MM)	
M	14	1	8T-4186	2	BOLT (M10X1.5X40-MM)	
M	15	1	8T-4193	1	BOLT (M16X2X50-MM)	
	16	1	8T-4223	2	WASHER-HARD (13.5X25.5X3-MM THK)	
M	17	1	8T-4244	1	NUT (M12X1.75-THD)	
	18	1	9X-8257	3	WASHER (17.5X30X3.5-MM THK)	

M-METRIC PART
Y-SEPARATE ILLUSTRATION

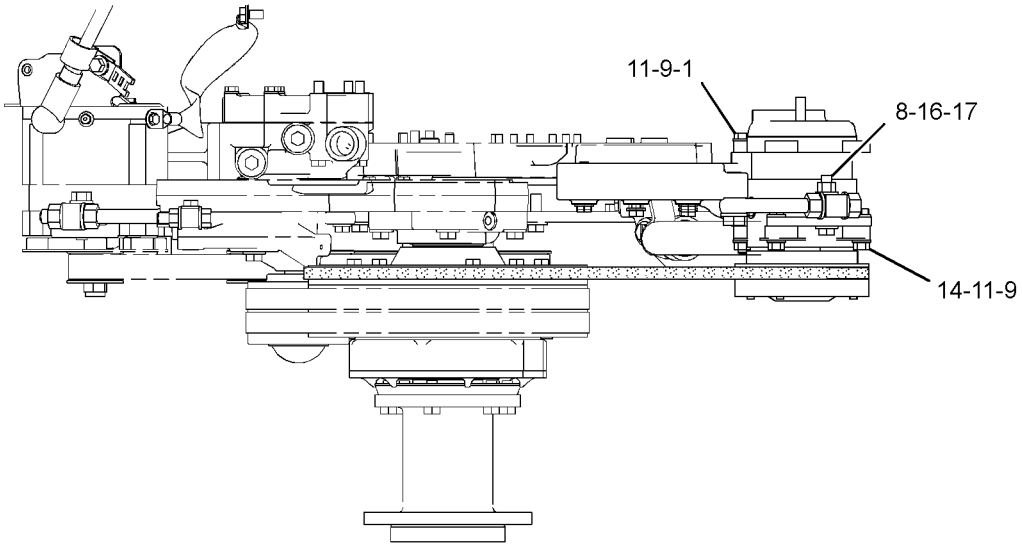

TOP VIEW OF ENGINE

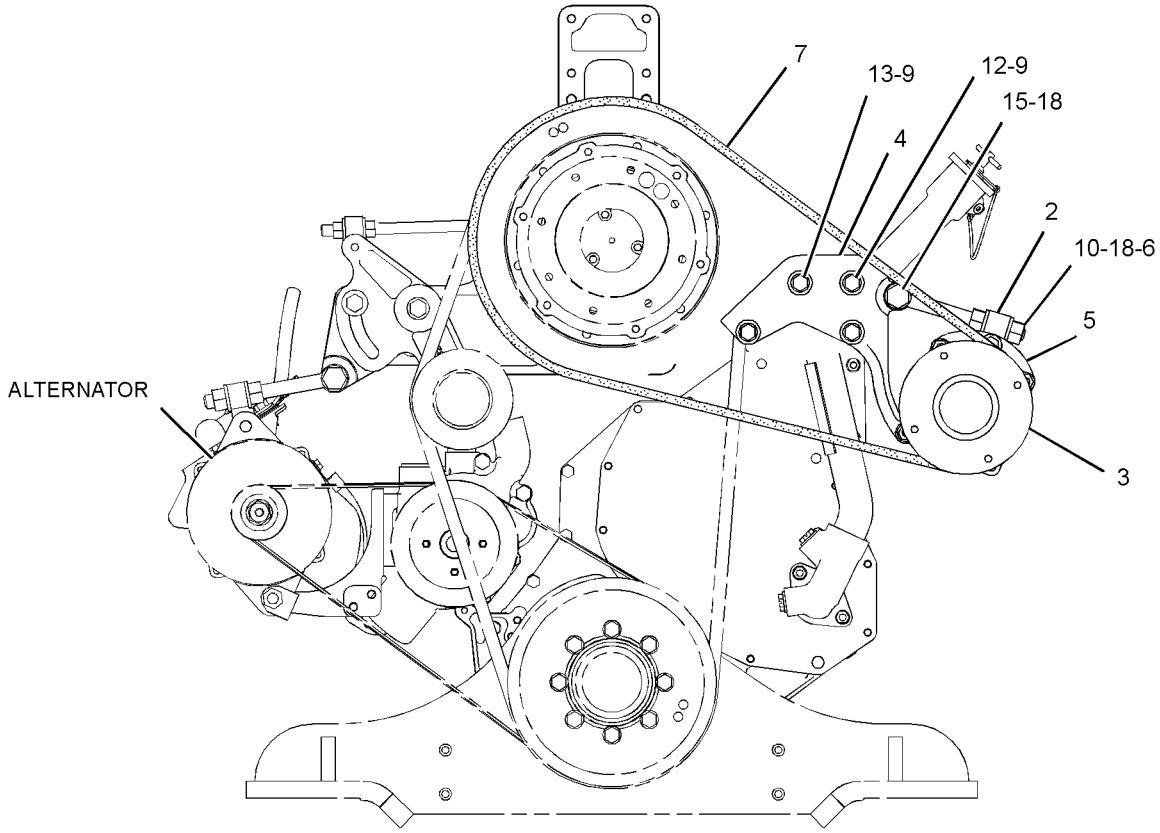

FRONT VIEW OF ENGINE

GRAPHIC #1 <END> g01417593

OPERATOR STATION

168-8783 CONDENSER & MTG GP-REFRIGERANT

S/N: S6T1-UP; S6X1-UP; S6Y1-UP
PART OF 317-1762 INSTALLATION AR

SMCS-1805 i03984321

NOTE	REF NO	GRAPHIC REF	PART NUMBER	QTY	PART NAME 1 2 3 4 5 6 (PRODUCT LEVEL)	SEE PAGE
	1	1	6N-8744	4	MOUNT	
	2	1	110-3844	2	BRACKET	
	3	1	252-4915	1	COIL AS (AIR CONDITIONER)	
	4	1	232-7583	1	BRACKET AS	
	5	1	232-7586	1	BRACKET AS	
M	6	1	8T-4136	8	BOLT (M10X1.5X25-MM)	
	7	1	7X-0632	4	WASHER-HARD (11X36X6-MM THK)	
	8	1	6K-0806	1	STRAP-CABLE	
M	9	1	8T-4133	4	NUT (M10X1.5-THD)	
	10	1	8T-4121	8	WASHER-HARD (11X21X2.5-MM THK)	

M-METRIC PART

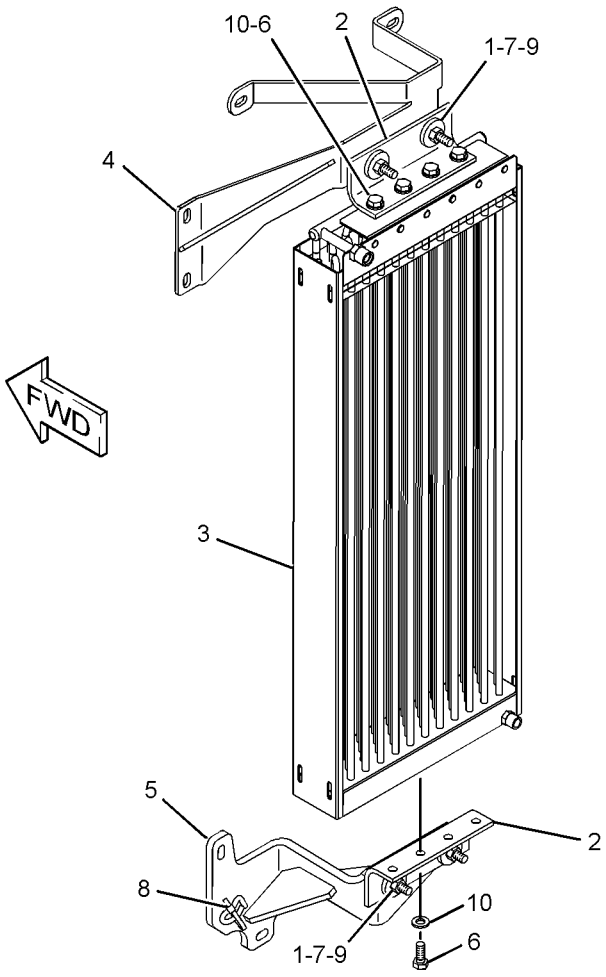

GRAPHIC #1 <END> g01206041

237-1000 CONDENSER & MTG GP-REFRIGERANT–
ROPS MOUNTED
S/N: S6T1-UP; S6X1-UP; S6Y1-UP
PART OF 323-5698 AIR CONDITIONER AR
AN ATTACHMENT

SMCS-1805 i03995820

NOTE	REF NO	GRAPHIC REF	PART NUMBER	QTY	PART NAME 1 2 3 4 5 6 (PRODUCT LEVEL)	SEE PAGE
	1	1	8D-0983	6	MOUNTING AS-VIBRATION ISOLATOR	
	2	1	8D-7185	6	WASHER (11.9X38.1X3-MM THK)	
Y	3	1	103-9527	1	CONDENSER GP-REFRIGERANT (WITH FANS)	537
	4	1	109-5498	1	SCREEN AS (AIR CONDITIONER)	
B	5	1	170-3399	2	BRACKET	
	6	1	172-5989	2	BRACKET	
	7	1	263-7805	1	SUPPORT AS	
M		1	6V-9632	6	NUT-WELD (M6X1-THD)	
		1	7T-1099	1	LINK	
M		1	8T-3490	6	NUT-WELD (M10X1.5-THD)	
	8	1	277-5801	1	PLATE AS	
	9	1	277-5802	1	PLATE AS	
					(EACH PLATE AS INCLUDES)	
		1	7T-1099	4	LINK	
	10	1	1M-4543	2	GROMMET	
M	11	1	6V-7357	6	BOLT (M6X1X25-MM)	
M	12	1	7X-2562	4	BOLT (M20X2.5X45-MM)	
M	13	1	7X-2563	2	BOLT (M20X2.5X60-MM)	
	14	1	7X-7729	16	WASHER (11X25X3-MM THK)	
	15	1	7X-7742	2	WASHER-PULLEY (20.6X63.5X14-MM THK)	
M	16	1	8T-4133	6	NUT (M10X1.5-THD)	
M	17	1	8T-4137	2	BOLT (M10X1.5X20-MM)	
M	18	1	8T-4139	4	BOLT (M12X1.75X30-MM)	
M	19	1	8T-6466	6	BOLT (M10X1.5X60-MM)	
M	20	1	8T-4194	3	BOLT (M12X1.75X50-MM)	
	21	1	8T-4223	7	WASHER-HARD (13.5X25.5X3-MM THK)	
	22	1	8T-5439	4	WASHER-HARD (21.5X45X6-MM THK)	
	23	1	9X-8256	6	WASHER (6.6X12X2-MM THK)	
M	24	1	8T-4136	2	BOLT (M10X1.5X25-MM)	

B-USE AS REQUIRED
M-METRIC PART
Y-SEPARATE ILLUSTRATION

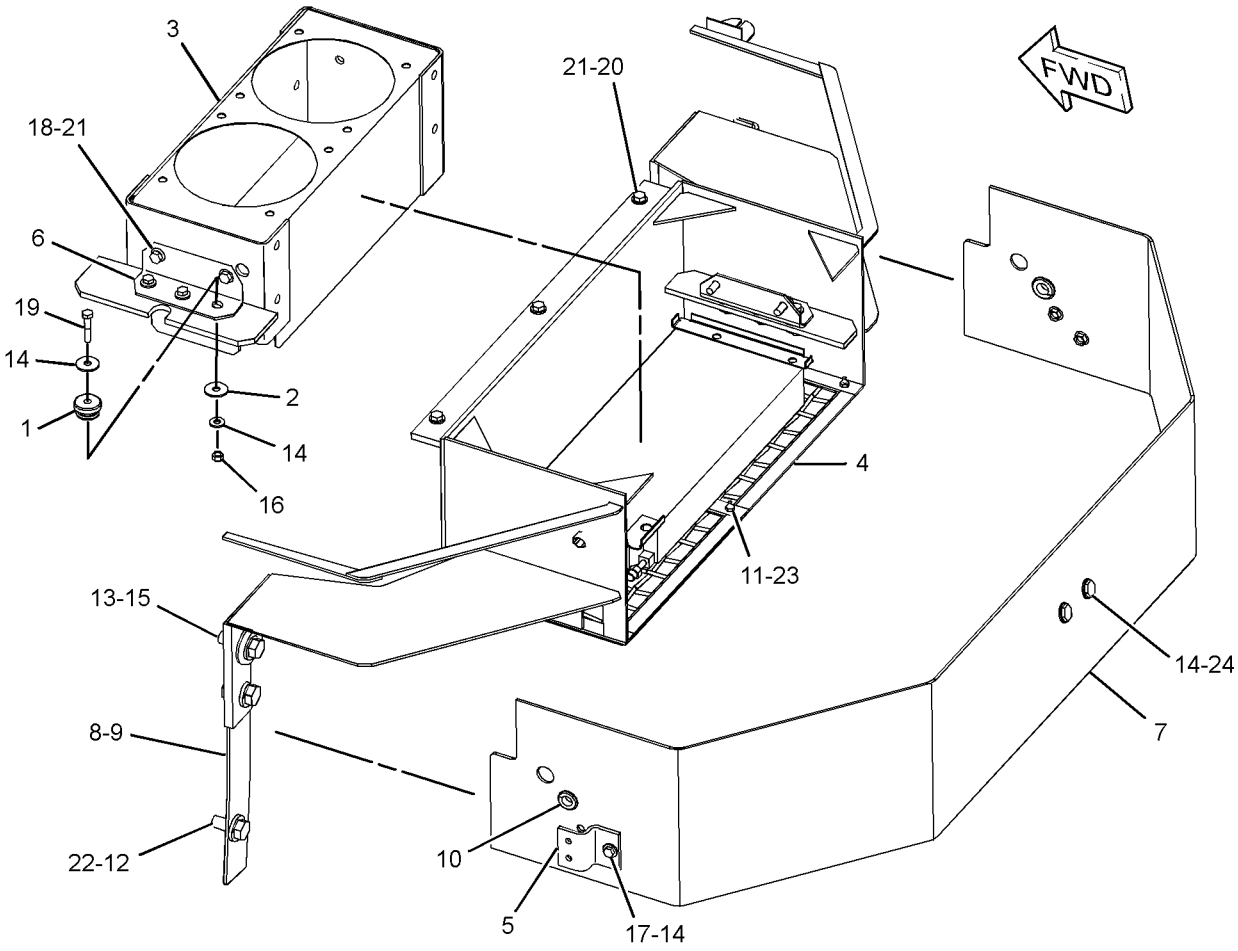

GRAPHIC #1 <END> g01285740

103-9527 CONDENSER GP-REFRIGERANT

S/N: S6T1-UP; S6X1-UP; S6Y1-UP
PART OF 237-1000 CONDENSER & MTG GP-REFRIGERANT
AN ATTACHMENT

SMCS-1805 i03995825

NOTE	REF NO	GRAPHIC REF	PART NUMBER	QTY	PART NAME 1 2 3 4 5 6 (PRODUCT LEVEL)	SEE PAGE
	1	1	3E-5239	1	RELAY AS (24-VOLT) (CONDENSER FAN MOTOR)	
	2	1	3S-2093	7	STRAP-CABLE	
	3	1	7K-1181	2	STRAP-CABLE	
	4	1	7T-5856	4	CLAMP	
	5	1	8C-3756	1	FILM-IDENTIFICATION (GROUP NO., SEQUENCE NO.)	
	6	1	8P-6363	1	PLUG	
	7	1	9X-3452	2	GUARD AS-FAN	
	8	1	124-8490	1	HARNESS AS-HEATER & AIR COND	
		1	9X-1054	1	PLUG AS-CONNECTOR (4-PIN)	
		1	102-8803	1	KIT-RECEPTACLE (3-PIN)	
					(INCLUDES RECEPTACLE AS & WEDGE)	
		1	155-2270	2	KIT-CONNECTING PLUG (2-PIN)	
					(EACH INCLUDES PLUG AS, WEDGE, & INTERFACE SEAL)	
	9	1	142-8620	2	FAN AS-CONDENSER (4-BLADE)	
					(EACH INCLUDES)	
		1	3H-7180	1	SETSCREW (1/4-28X0.25-IN)	
	10	1	308-6335	2	MOTOR GP-ELECTRIC (CONDENSER BLOWER MOTOR)	
					(EACH INCLUDES)	
		1	9W-0852	2	PIN-CONNECTOR (14-GA TO 16-GA)	
		1	102-8802	1	KIT-RECEPTACLE (2-PIN)	
					(INCLUDES RECEPTACLE AS & WEDGE)	
J	11	1	203-2070	8	MOUNT	
J	12	1	204-9530	4	TUBE	
J	13	1	204-9531	1	COIL-CONDENSER	
	14	1	204-9532	1	CASE AS	
	15	1	4P-8134	2	CLIP	
M	16	1	5C-2890	1	NUT (M6X1-THD)	
	17	1	5P-1075	8	WASHER-HARD (10.2X22.5X3-MM THK)	
	18	1	5P-8441	1	GROMMET	
J	19	1	7X-0578	4	WASHER-HARD (10.2X32X2.5-MM THK)	
	20	1	8T-4121	4	WASHER-HARD (11X21X2.5-MM THK)	
M	21	1	8T-4133	4	NUT (M10X1.5-THD)	
M	22	1	8T-4137	8	BOLT (M10X1.5X20-MM)	
M	23	1	8T-4192	12	BOLT (M12X1.75X25-MM)	
	24	1	8T-4205	1	WASHER-HARD (7.2X14.5X2-MM THK)	
	25	1	8T-4223	12	WASHER-HARD (13.5X25.5X3-MM THK)	
JM	26	1	8T-6685	4	BOLT (M10X1.5X110-MM)	
	27	1	9X-7373	1	GROMMET	
D	28	1	5P-5924		SEAL (0.2-M)	
D	29	1	5P-5672		SEAL (1.2-M)	
D	30	1	5P-5908		SEAL (1-M)	
					AVAILABLE REPAIR KIT(S):	
J			216-0805	1	KIT-COIL (AIR CONDITIONER)	

D-ORDER BY THE METER
J-KIT MARKED J SERVICES PARTS MARKED J
M-METRIC PART

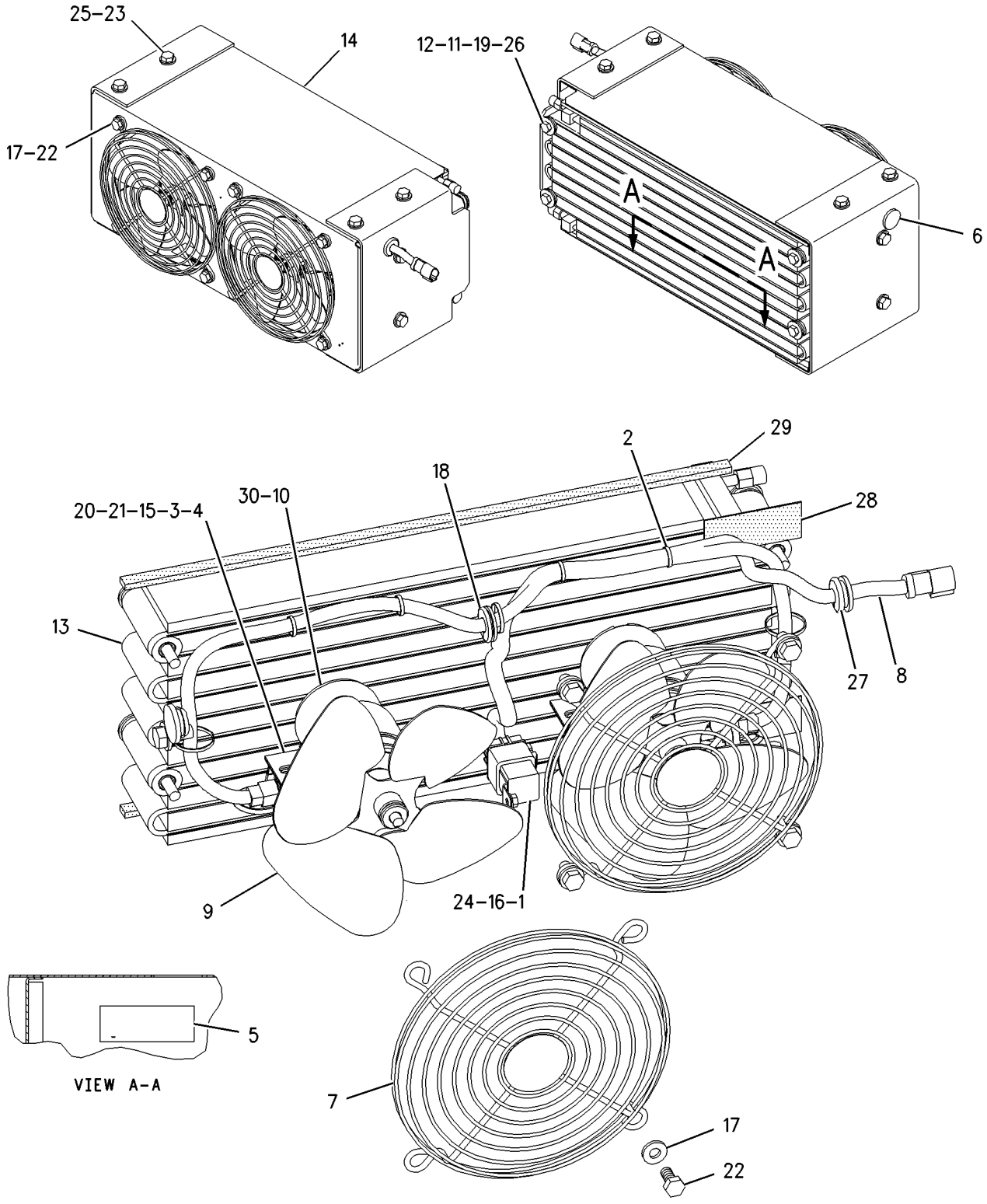

(COVER AND MTG HARDWARE REMOVED)

GRAPHIC #1 <END> g00938782

OPERATOR STATION

311-7956 CONTROL GP-GOVERNOR & BRAKE

S/N: S6T1-UP; S6X1-UP; S6Y1-UP
PART OF 317-1756, 317-1757 POWER TRAIN AR

SMCS-4122 i04033052

NOTE	REF NO	GRAPHIC REF	PART NUMBER	QTY	PART NAME 1 2 3 4 5 6 (PRODUCT LEVEL)	SEE PAGE
	1	1	1B-8706	3	KEY-WOODRUFF	
	2	1	1B-8714	1	KEY-WOODRUFF	
	3	1	1M-4533	1	LEVER	
	4	1	3S-8313	1	PLUG-CUP	
	5	1	3W-0556	1	SHAFT	
	6	1	4S-5719	3	SPACER (10.31X25X12.7-MM THK)	
	7	1	5A-9517	2	CLEVIS	
	8	1	7K-1181	1	STRAP-CABLE	
	9	1	7P-4190	4	BEARING-ROLLER	
	10	1	8T-1177	2	BEARING-ROLLER	
	11	1	9G-5211	1	SPACER (12.95X19.05X9-MM THK)	
Y	12	1	9W-1617	1	VALVE GP-BRAKE CONTROL	402
	13	1	9W-2545	1	BOLT-ANCHOR	
M	14	1	9X-6615	2	BOLT (M5X0.8X30-MM)	
	15	1	110-8379	1	PEDAL (BRAKE)	
	16	1	115-8057	1	SPRING	
	17	1	148-9920	2	SEAL-UMBRELLA	
	18	1	160-1431	1	SHAFT	
	19	1	160-1434	1	LEVER	
	20	1	165-9104	1	SPACER (6.5X9.5X10-MM THK)	
	21	1	171-7077	2	ROD-THREADED	
	22	1	184-8060	1	PEDAL (DECELERATOR)	
	23	1	194-7034	1	SPRING	
Y	24	1	266-1467	1	SENSOR GP-POSITION (ROTARY) (DECELERATOR)	169
	25	1	317-3919	1	HOUSING AS	
	26	1	317-3930	1	BRACKET AS	
	27	1	317-3931	1	BRACKET-SUPPORT	
	28	1	317-3933	1	LEVER	
	29	1	317-3934	1	SHAFT	
	30	1	*317-3939*	1	ROD AS	
	30A	1	1M-1341	1	END-YOKE ROD	
	30B	1	4D-4065	1	ROD END	
	30C	1	6B-6684	1	NUT-FULL (1/2-20-THD)	
	30D	1	6V-8183	1	NUT-FULL (3/8-24-THD)	
	30E	1	317-3940	1	ROD	
	31	1	318-0157	1	SHAFT	
	32	1	318-2717	1	PAD AS	
	33	1	320-2841	1	CABLE AS	
		1	6F-0253	4	LOCKWASHER	
		1	9X-8257	4	WASHER (17.5X30X3.5-MM THK)	
M		1	098-5747	4	NUT (M16X2-THD)	
	34	1	320-2842	1	BRACKET AS	
M	35	1	095-1276	1	SETSCREW-SOCKET	
	36	1	111-9251	4	WASHER-HARD (20X35X1.6-MM THK)	
	37	1	1B-0676	4	PIN	
	38	1	1K-6872	1	LOCKNUT (1/2-13-THD)	
	39	1	1M-1341	1	END-YOKE ROD	
	40	1	2J-6356	4	RING-RETAINING	
	41	1	3B-4615	4	PIN-COTTER	
	42	1	4B-3611	1	SETSCREW-SQUARE HEAD (3/8-16X2-IN)	
	43	1	4L-6496	1	BOLT (3/8-24X2-IN)	
	44	1	4L-9337	1	BOLT (3/8-16X1.5-IN)	
M	45	1	5C-2890	2	NUT (M6X1-THD)	
	46	1	5H-6799	1	LEVER-GOVERNOR CONTROL	
	47	1	5P-1076	3	WASHER-HARD (13.5X30X4-MM THK)	
	48	1	6V-0894	1	SEAL-O-RING	

311-7956 CONTROL GP-GOVERNOR & BRAKE ***(contd.)*** i04033052

NOTE	REF NO	GRAPHIC REF	PART NUMBER	QTY	PART NAME 1 2 3 4 5 6 (PRODUCT LEVEL)	SEE PAGE
M	49	1	6V-7357	1	BOLT (M6X1X25-MM)	
	50	1	6V-8183	1	NUT-FULL (3/8-24-THD)	
	51	1	6V-8801	2	NUT (3/8-16-THD)	
	52	1	7X-0519	3	WASHER-HARD (20X33.5X5-MM THK)	
	53	1	7X-0575	1	WASHER-HARD (10.2X22.5X5-MM THK)	
M	54	1	7X-2543	3	BOLT (M10X1.5X120-MM)	
M	55	1	7Y-7394	4	SCREW-BUTTON HEAD (M8X1.25X25-MM)	
	56	1	8F-7702	4	SEAL-LIP TYPE	
	57	1	8M-5254	3	SEAL-O-RING	
M	58	1	8T-0355	1	BOLT (M10X1.5X110-MM)	
	59	1	8T-4121	4	WASHER-HARD (11X21X2.5-MM THK)	
M	60	1	8T-4133	4	NUT (M10X1.5-THD)	
M	61	1	8T-4139	3	BOLT (M12X1.75X30-MM)	
M	62	1	8T-4182	1	BOLT (M10X1.5X45-MM)	
M	63	1	8T-4186	1	BOLT (M10X1.5X40-MM)	
M	64	1	8T-4195	6	BOLT (M10X1.5X30-MM)	
	65	1	8T-4205	2	WASHER-HARD (7.2X14.5X2-MM THK)	
	66	1	8T-4223	2	WASHER-HARD (13.5X25.5X3-MM THK)	
	67	1	8T-4224	4	WASHER-HARD (8.8X16X2-MM THK)	
	68	1	8T-4896	6	WASHER-HARD (10.2X18.5X2.5-MM THK)	
	69	1	9B-7237	1	BOLT (3/8-16X1.25-IN)	

M-METRIC PART
Y-SEPARATE ILLUSTRATION

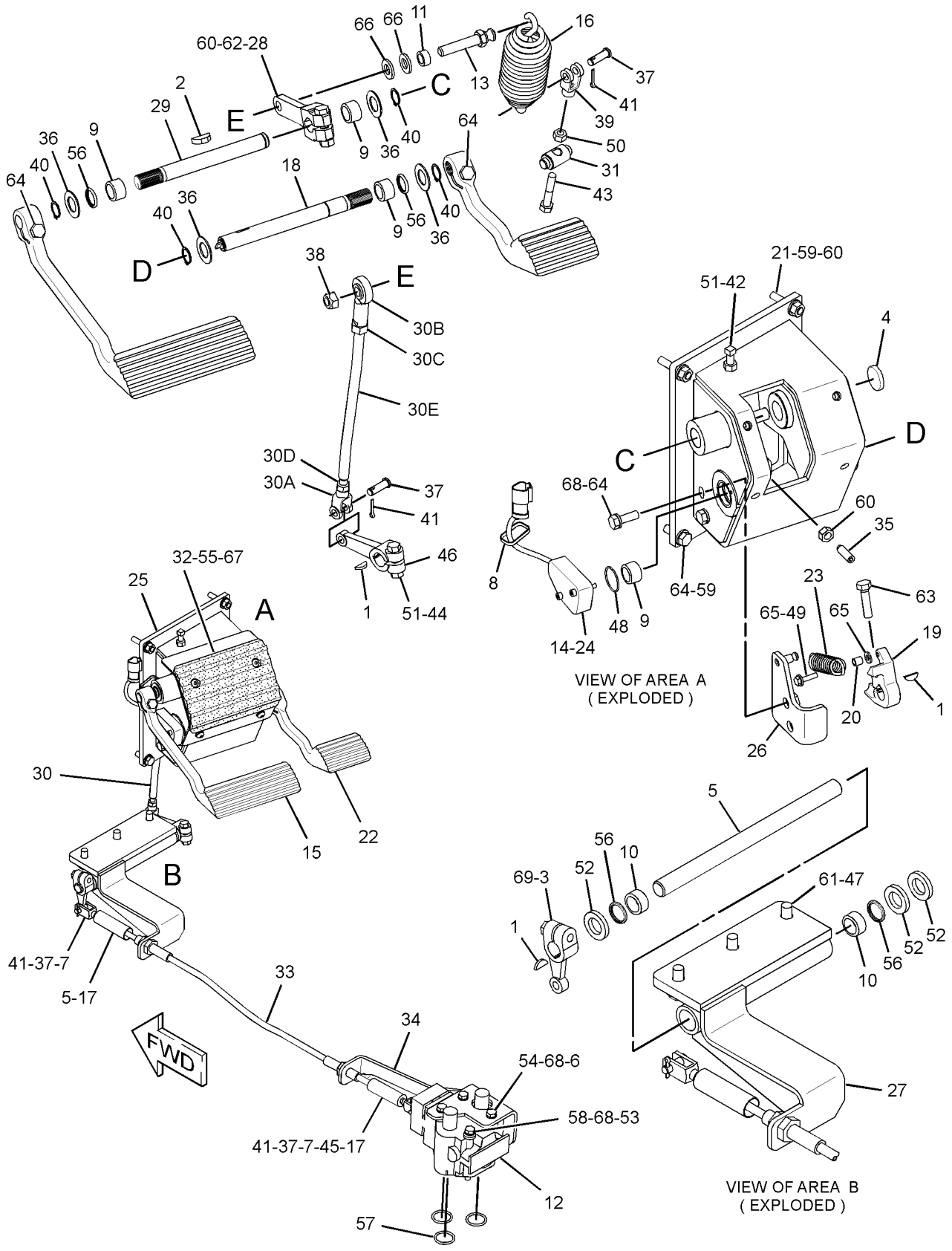

GRAPHIC #1 <END> g02195593

OPERATOR STATION

161-3615 CONTROL GP-HANDLE–BULLDOZER

S/N: S6T1-UP; S6X1-UP; S6Y1-UP

PART OF 222-1150 CONTROL GP-PILOT OPERATED HYD

SMCS-5063, 5705 i04009478

NOTE	REF NO	GRAPHIC REF	PART NUMBER	QTY	PART NAME 1 2 3 4 5 6 (PRODUCT LEVEL)	SEE PAGE
	1	1	188-1079	1	CONTROL GP-HANDLE (BULLDOZER)	
	2	1	4B-9808	2	SETSCREW (1/4-20X0.5-IN)	

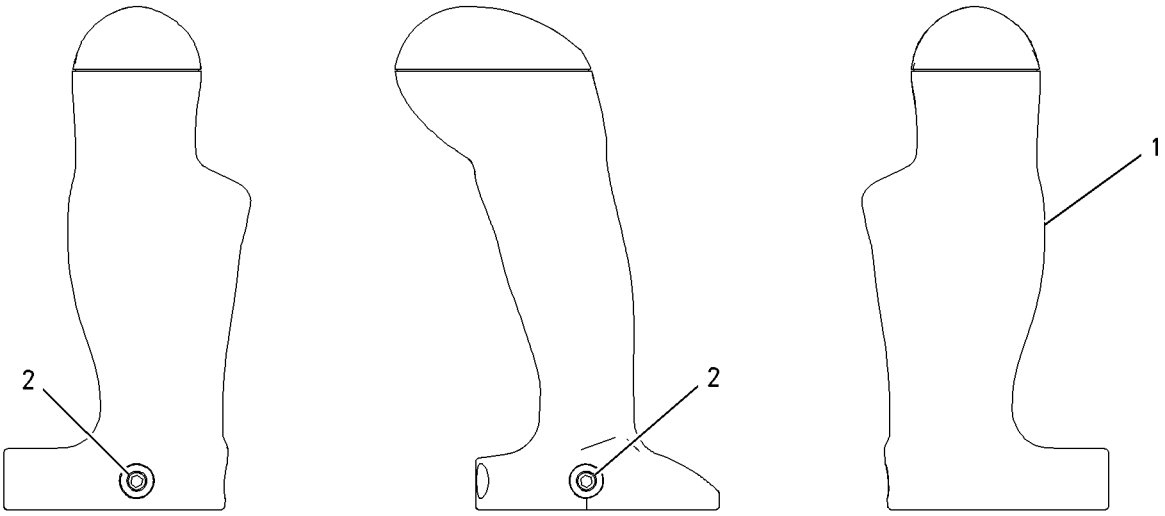

GRAPHIC #1 <END> g00763645

OPERATOR STATION

322-9655 CONTROL GP-HANDLE–BULLDOZER

S/N: S6T1-UP; S6X1-UP; S6Y1-UP
WITH TRIGGER
PART OF 322-8631 VALVE GP-PILOT
AN ATTACHMENT

SMCS-5063, 5705 i04021667

NOTE	REF NO	GRAPHIC REF	PART NUMBER	QTY	PART NAME 1 2 3 4 5 6 (PRODUCT LEVEL)	SEE PAGE
	1	1	162-8387	1	LEVER-TRIGGER	
	2	1	162-8389	1	PLATE (SWITCH)	
	3	1	175-4165	2	SCREW-PAN HEAD (4-20X0.5-IN)	
	4	1	179-7376	3	SWITCH AS-PUSH BUTTON (IMPLEMENT)	
					(EACH INCLUDES)	
		1	162-8378	1	SWITCH AS-PUSH BUTTON (IMPLEMENT)	
		1	144-0331	1	CAP-PUSH BUTTON (YELLOW)	
E		1	5P-8435		WIRE (22-GA) (14-CM)	
	5	1	175-4170	2	SCREW-PAN HEAD (6-19X1.625-IN)	
	6	1	9B-1117	2	LOCKWASHER	
	7	1	1S-9593	1	STRAP-CABLE	
	8	1	8T-8729	11	PIN-CONNECTOR (16-GA TO 18-GA)	
E	9	1	218-7136		SLEEVE (63-CM)	

E-ORDER BY THE CENTIMETER

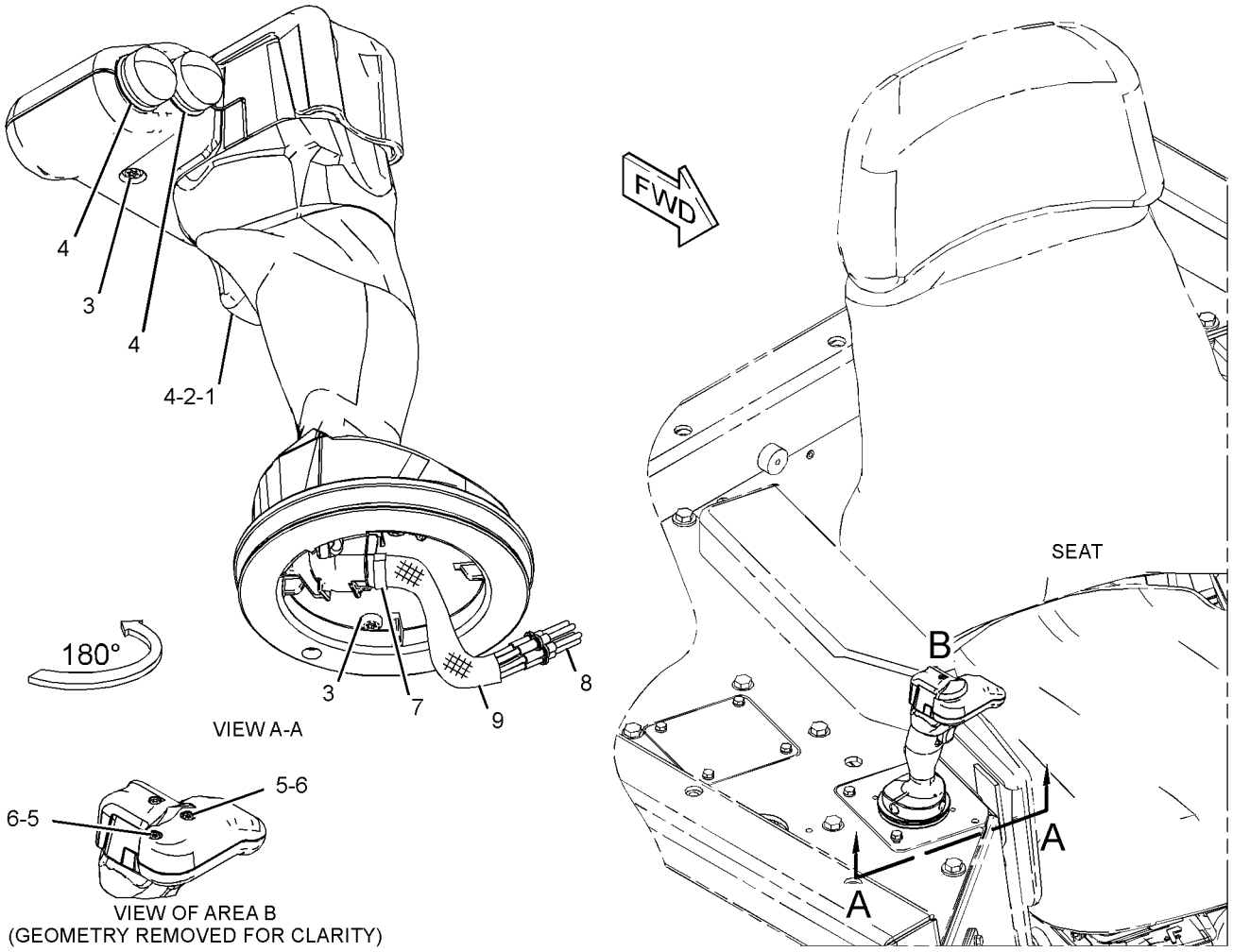

GRAPHIC #1 <END> g02201655

OPERATOR STATION

222-1150 CONTROL GP-PILOT OPERATED HYD–BULLDOZER

S/N: S6T1-UP; S6X1-UP; S6Y1-UP
PART OF 317-1758 HYDRAULIC AR-2 VALVE

SMCS-5059, 5063, 5705 i04033057

NOTE	REF NO	GRAPHIC REF	PART NUMBER	QTY	PART NAME 1 2 3 4 5 6 (PRODUCT LEVEL)	SEE PAGE
	1	1	160-4702	1	PLATE	
Y	2	1	*161-3615*	1	CONTROL GP-HANDLE (BULLDOZER)	542
Y	3	1	200-0189	1	VALVE GP-PILOT (BULLDOZER LIFT, TILT)	485
	4	1	223-3313	1	PLATE AS	
	5	1	225-4134	1	GASKET	
	6	1	225-4135	1	GASKET	
	7	1	5P-1075	4	WASHER-HARD (10.2X22.5X3-MM THK)	
M	8	1	6V-7357	6	BOLT (M6X1X25-MM)	
M	9	1	8T-4195	4	BOLT (M10X1.5X30-MM)	
	10	1	9X-8256	6	WASHER (6.6X12X2-MM THK)	

M-METRIC PART
Y-SEPARATE ILLUSTRATION

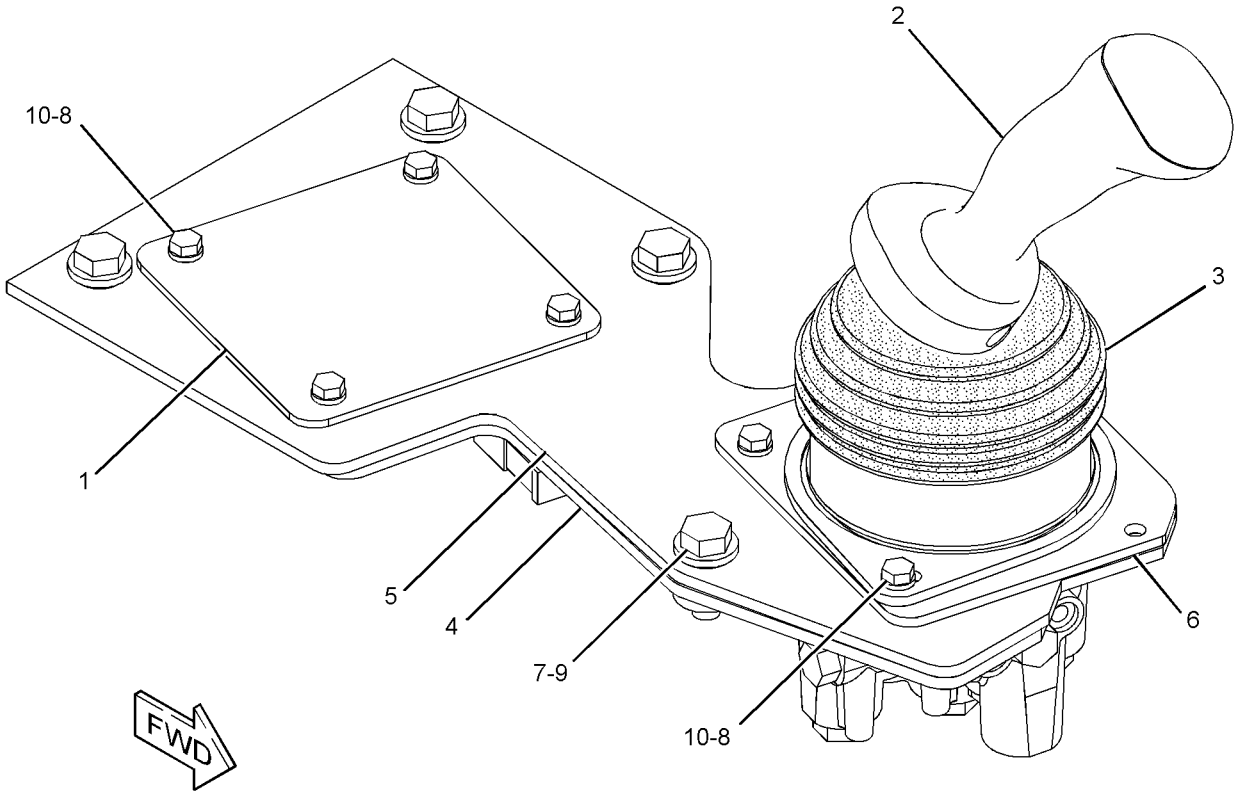

GRAPHIC #1 <END> g01298553

OPERATOR STATION

317-4154 COVER GP-CONSOLE

S/N: S6T1-UP; S6X1-UP; S6Y1-UP
PART OF 317-4153 CAB AR

SMCS-5258 i03994805

NOTE	REF NO	GRAPHIC REF	PART NUMBER	QTY	PART NAME 1 2 3 4 5 6 (PRODUCT LEVEL)	SEE PAGE
	1	1	6Y-0206	4	RETAINER	
	2	1	7G-4824	2	STRAP	
	3	1	8E-7791	2	STRAP	
	4	1	8Y-6388	3	LOUVER AS-VENT	
	5	1	154-5629	1	ASHTRAY AS	
	6	1	156-7410	1	COVER AS	
	7	1	159-7943	1	PANEL-ACOUSTICAL	
	8	1	159-7946	1	PANEL-ACOUSTICAL	
	9	1	159-7948	1	FLOOR MAT (REAR)	
	10	1	159-7949	1	FLOOR MAT (FRONT)	
	11	1	161-4024	2	BOOT	
	12	1	170-5849	1	SHROUD AS	
		1	170-5851	1	LINER-FOAM	
		1	170-5852	1	LINER-FOAM	
		1	170-5853	1	LINER-FOAM	
	13	1	211-0220	1	COVER AS	
	14	1	241-7913	1	COVER AS-ACCESS	
	15	1	242-8403	1	PANEL AS-CONSOLE	
	16	1	242-8404	1	PANEL	
	17	1	243-1171	1	PANEL-ACOUSTICAL	
	18	1	317-4156	1	COVER	
	19	1	317-4157	1	COVER	
	20	1	317-4171	1	PLATE	
	21	1	111-5147	6	SCREW-MACHINE (6-32X0.625-IN)	
	22	1	198-9706	4	SCREW-TRUSS HEAD (M5X0.8X16-MM)	
	23	1	5P-4116	4	WASHER-HARD (8.8X20.5X2-MM THK)	
	24	1	7D-6922	6	LOCKNUT (6-32-THD)	
M	25	1	8T-4189	4	BOLT (M8X1.25X20-MM)	
	26	1	9N-0869	3	WASHER-HARD (8.8X25.5X2-MM THK)	
	27	1	9X-2038	5	WASHER (7X19X2-MM THK)	
M	28	1	9X-2043	9	SCREW-TRUSS HEAD (M6X1X14-MM)	
M	29	1	9X-2045	8	SCREW-TRUSS HEAD (M6X1X20-MM)	
E	30	1	124-3243		SEAL (56-CM)	

E-ORDER BY THE CENTIMETER
M-METRIC PART

317-4154 COVER GP-CONSOLE ***(contd.)*** i03994805

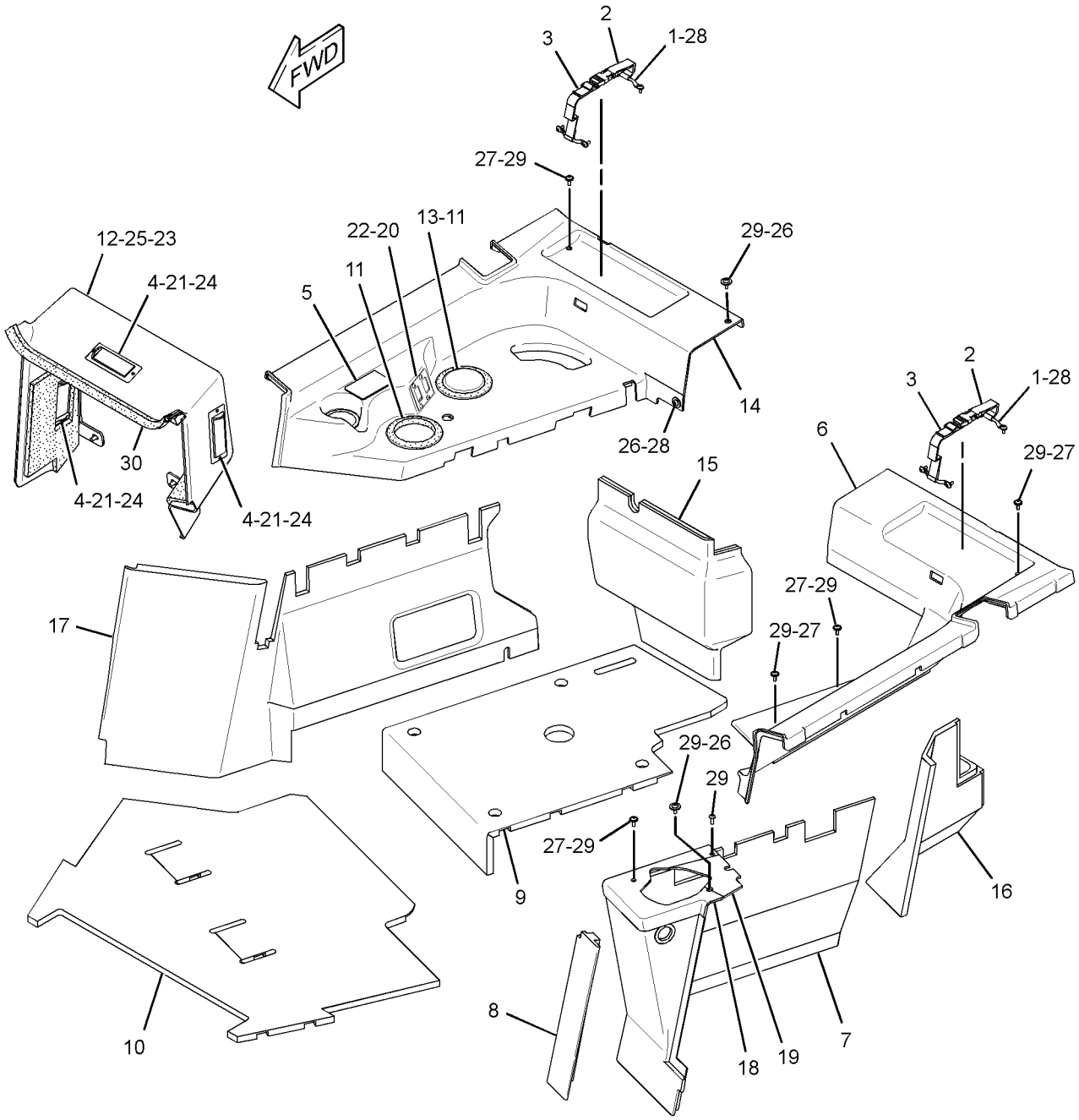

GRAPHIC #1 <END> g02185954

OPERATOR STATION

336-1846 COVER GP-CONSOLE

S/N: S6T1-UP; S6X1-UP; S6Y1-UP
PART OF 317-1767 PLATFORM GP-OPERATOR
AN ATTACHMENT

SMCS-5258 i03994970

NOTE	REF NO	GRAPHIC REF	PART NUMBER	QTY	PART NAME 1 2 3 4 5 6 (PRODUCT LEVEL)	SEE PAGE
	1	1	193-7377	2	PANEL	
	2	1	336-1847	1	COVER AS	
		1	5P-8244	2	WASHER-HARD (12X22.5X2.5-MM THK)	
	3	1	336-3968	1	SEAL	
D	4	1	6V-2803		SEAL (0.21-M)	

D-ORDER BY THE METER

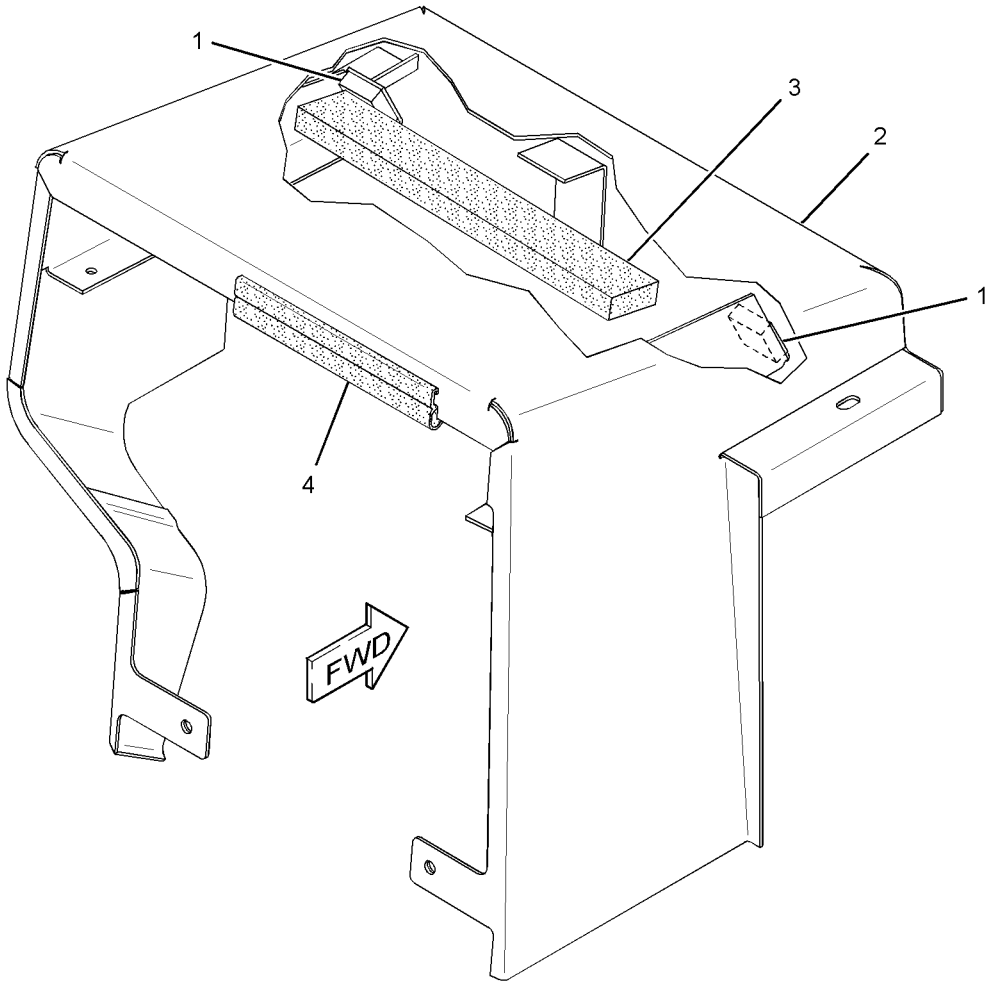

GRAPHIC #1 <END> g02177867

OPERATOR STATION

279-7260 GUARD GP-WINDOW

S/N: S6T1-UP; S6X1-UP; S6Y1-UP
PART OF 358-4684 CAB AR
AN ATTACHMENT

SMCS-7165 i04003425

NOTE	REF NO	GRAPHIC REF	PART NUMBER	QTY	PART NAME 1 2 3 4 5 6 (PRODUCT LEVEL)	SEE PAGE
	1	1	249-2844	8	WASHER (12.7X31.7X1-MM THK)	
	2	1	275-4236	4	SCREW-WING (M12X1.75X40-MM)	
	3	1	279-7259	1	GUARD AS (RH)	
	3A	1	155-6479	2	HINGE AS	
	4	1	279-7267	1	GUARD AS (LH)	
	4A	1	155-6479	2	HINGE AS	
	5	1	3B-4610	4	PIN-COTTER	
	6	1	5P-1076	4	WASHER-HARD (13.5X30X4-MM THK)	
M	7	1	8T-4192	4	BOLT (M12X1.75X25-MM)	

M-METRIC PART

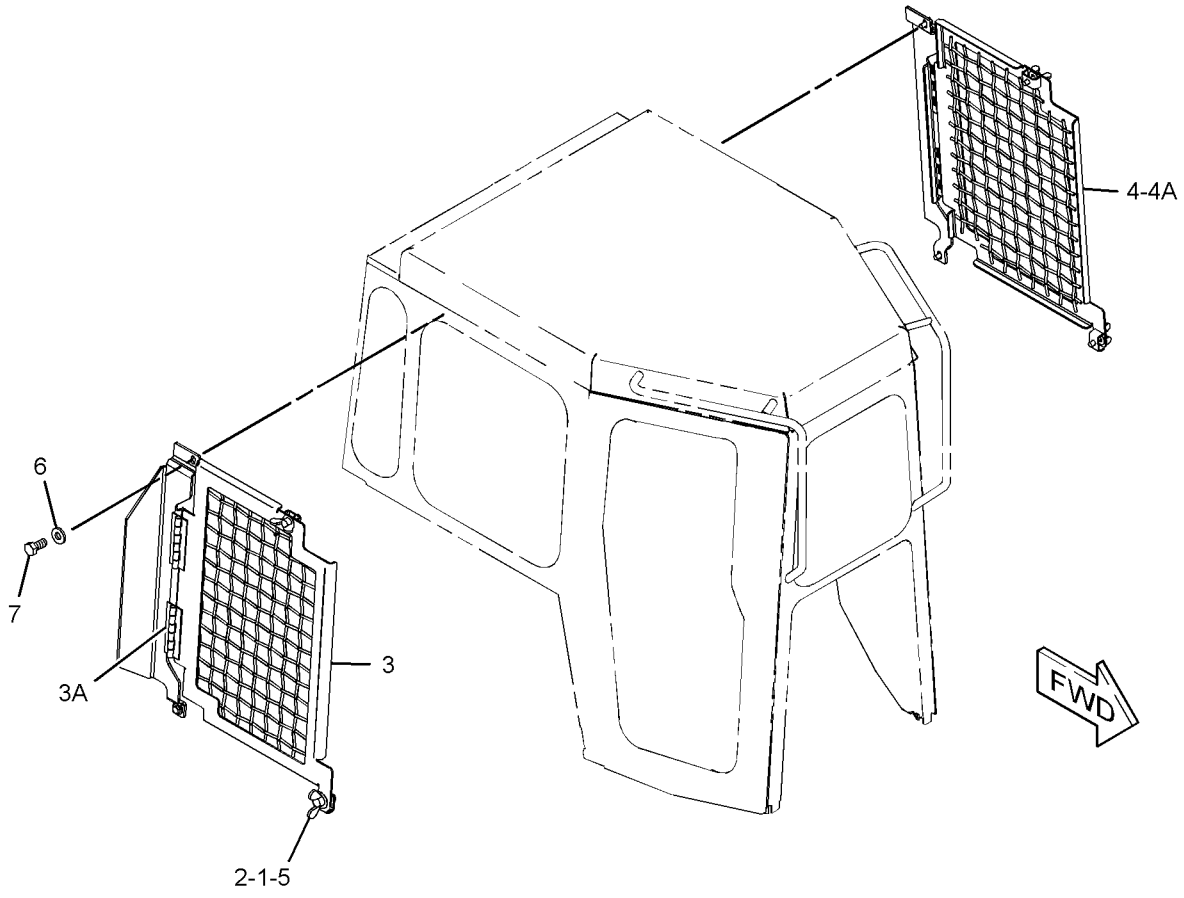

GRAPHIC #1 <END> g01301715

OPERATOR STATION

108-1335 HANDHOLD GP

S/N: S6T1-UP; S6X1-UP; S6Y1-UP
PART OF 323-5696 CAB AR

SMCS-7256 i04010892

NOTE	REF NO	GRAPHIC REF	PART NUMBER	QTY	PART NAME 1 2 3 4 5 6 (PRODUCT LEVEL)	SEE PAGE
	1	1	9W-5343	2	HANDHOLD	
	2	1	5P-1076	4	WASHER-HARD (13.5X30X4-MM THK)	
M	3	1	8T-4183	4	BOLT (M12X1.75X40-MM)	

M-METRIC PART

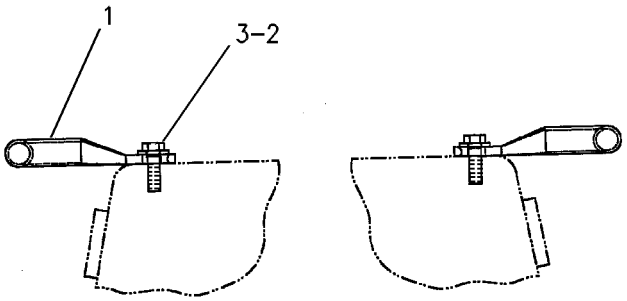

REAR VIEW

GRAPHIC #1 <END> g00254256

OPERATOR STATION

279-2590 HEATER GP-CAB

S/N: S6T1-UP; S6X1-UP; S6Y1-UP
PART OF 317-4153 CAB AR

SMCS-7304 i03994764

NOTE	REF NO	GRAPHIC REF	PART NUMBER	QTY	PART NAME 1 2 3 4 5 6 (PRODUCT LEVEL)	SEE PAGE
	1	1	5D-1026	2	CLAMP-BAND	
	2	1	6T-5617	1	PLATE	
	3	1	7T-6299	1	GROMMET	
	4	1	9X-2185	4	SCREW (8-15X0.44-IN)	
	5	1	109-5761	1	COIL AS-HEATER	
	6	1	134-9602	1	VALVE AS-WATER	
	6A	1	3E-1841	1	LEVER	
	6B	1	6V-6717	1	SCREW-WASHER HEAD (8-32X9.52-MM)	
	6C	1	8Y-5737	1	CLAMP	
	6D	1	037-4426	1	RETAINER	
	6E	1	102-0341	1	CLIP	
	7	1	141-4123	1	PLATE	
	8	1	8T-4121	2	WASHER-HARD (11X21X2.5-MM THK)	
M	9	1	8T-4137	2	BOLT (M10X1.5X20-MM)	
E	10	1	5P-0767		HOSE (12-CM)	
D	11	1	5P-5639		SEAL (0.3-M EACH)	
D	12	1	5P-5643		SEAL (0.4-M EACH)	

D-ORDER BY THE METER
E-ORDER BY THE CENTIMETER
M-METRIC PART

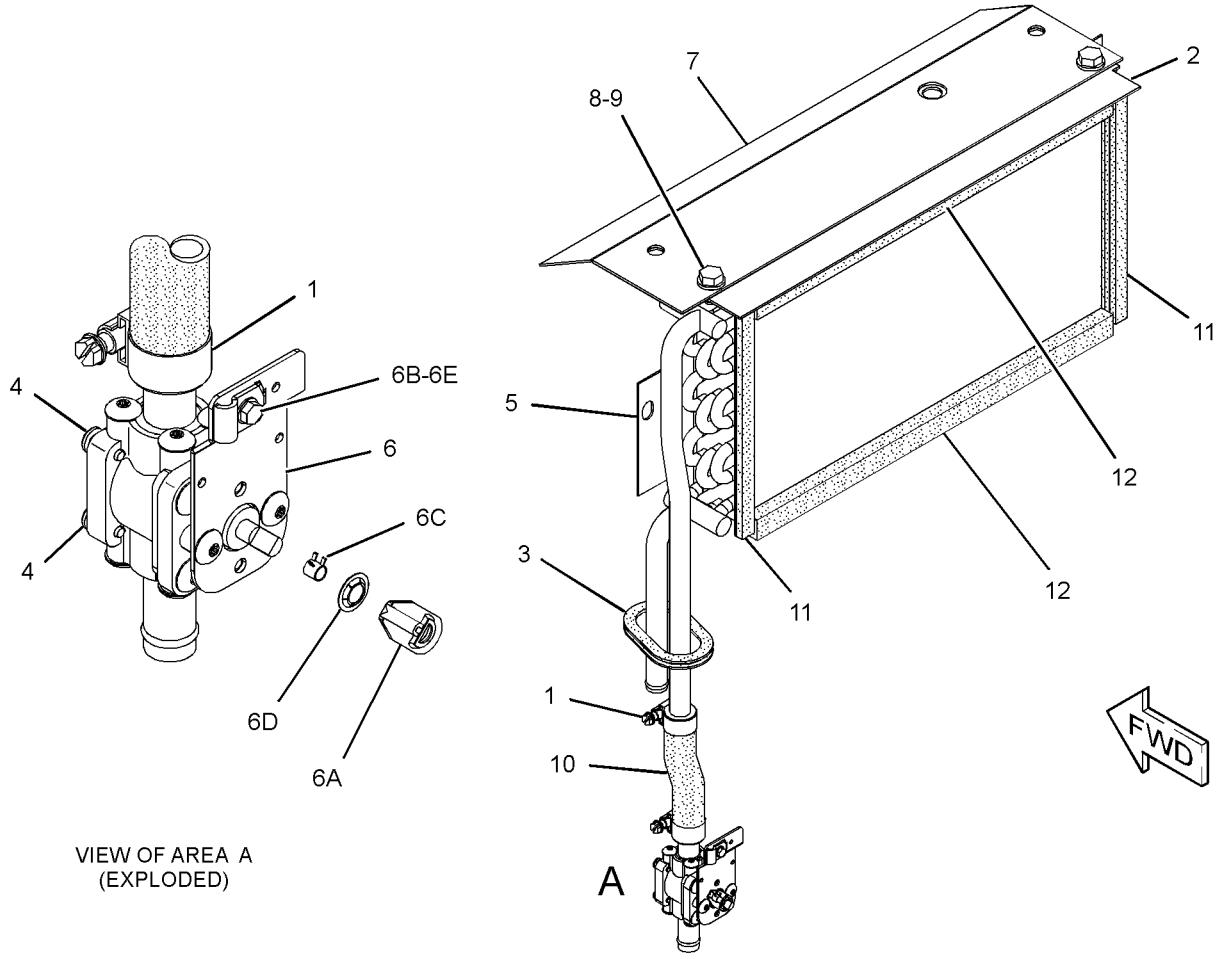

GRAPHIC #1 <END> g02174239

OPERATOR STATION

174-2231 HOUSING GP-SEAT SUSPENSION

S/N: S6T1-UP; S6X1-UP; S6Y1-UP
PART OF 160-7165 SUSPENSION GP-SEAT
ALSO AN ATTACHMENT

SMCS-7321 i03557482

NOTE	REF NO	GRAPHIC REF	PART NUMBER	QTY	PART NAME 1 2 3 4 5 6 (PRODUCT LEVEL)	SEE PAGE
	1	1	1Y-7927	1	PIN	
	2	1	2D-6235	2	LOCKNUT (1/4-20-THD)	
	3	1	2M-7819	4	RING-RETAINING	
L	4	1	3D-2975	2	RING-RETAINING	
	5	1	4B-5059	6	WASHER (15X29.5X2.5-MM THK)	
	6	1	4N-2927	2	RACE-THRUST BEARING	
	7	1	5D-4822	2	RING-RETAINING	
	8	1	5P-8445	4	RING-RETAINING	
	9	1	5V-0770	2	BOLT-CARRIAGE (1/4-20X0.74-IN)	
	10	1	7M-7219	1	BEARING-THRUST	
	11	1	7V-5191	2	SPACER (28X10X7.1-MM THK)	
P	12	1	8L-8413	2	STRAP-CABLE	
	13	1	8S-7803	4	RING-RETAINING	
	14	1	8Y-6041	1	ARM AS	
	15	1	8Y-6045	1	CAM	
	16	1	8Y-6046	1	PIN	
	17	1	8Y-6047	2	PIN	
	18	1	8Y-6060	2	ROLLER	
	19	1	8Y-6062	1	LINK-ACTUATOR	
	20	1	8Y-6063	1	LINK-ACTUATOR	
	21	1	8Y-6064	2	ROLLER-SLIDER	
	22	1	8Y-6066	1	SPRING	
	23	1	8Y-6067	1	SPACER (10.54-MM THK)	
	24	1	8Y-6068	1	NUT (3/8X16-THD)	
	25	1	8Y-6069	1	ADJUSTER AS	
	26	1	9X-8918	3	SCREW-FLAT HEAD (8-32X0.5-IN)	
	27	1	095-0878	1	PIN-SPRING	
	28	1	131-4242	1	BOLT (3/8-16X5.18-IN)	
	29	1	131-5167	1	KNOB AS-ADJUSTMENT	
	30	1	161-5967	1	SHAFT	
	31	1	174-2237	1	FRAME AS-SUSPENSION	
					AVAILABLE REPAIR KIT(S):	
			8Y-5945	1	KIT-SUSPENSION KNOB (HEIGHT ADJUSTMENT)	
					(INCLUDES KNOBS)	
L			8Y-6859	1	KIT-SPRING	
					(INCLUDES RINGS, SPRING & BUSHING)	
			8Y-6860	1	KIT-SPRING (HEIGHT ADJUSTMENT)	
					(INCLUDES SPRING, BUSHING & ROD)	
P			100-3224	1	KIT-INDICATOR (WEIGHT ADJUSTMENT)	
					(INCLUDES GUIDE, TAPE & STRAP)	
			100-5179	1	KIT-BUMPER (WEIGHT ADJUSTMENT)	
					(INCLUDES BUMPER)	
			108-4086	1	KIT-FOLLOWER	
					(INCLUDES PIN & CAM FOLLOWER)	
			108-4087	1	KIT-FOLLOWER	
					(INCLUDES PIN & CAM FOLLOWER)	
			108-4103	1	KIT-BEARING	
					(INCLUDES ROLLER ASSEMBLIES)	

L-KIT MARKED L SERVICES PARTS MARKED L
P-KIT MARKED P SERVICES PARTS MARKED P

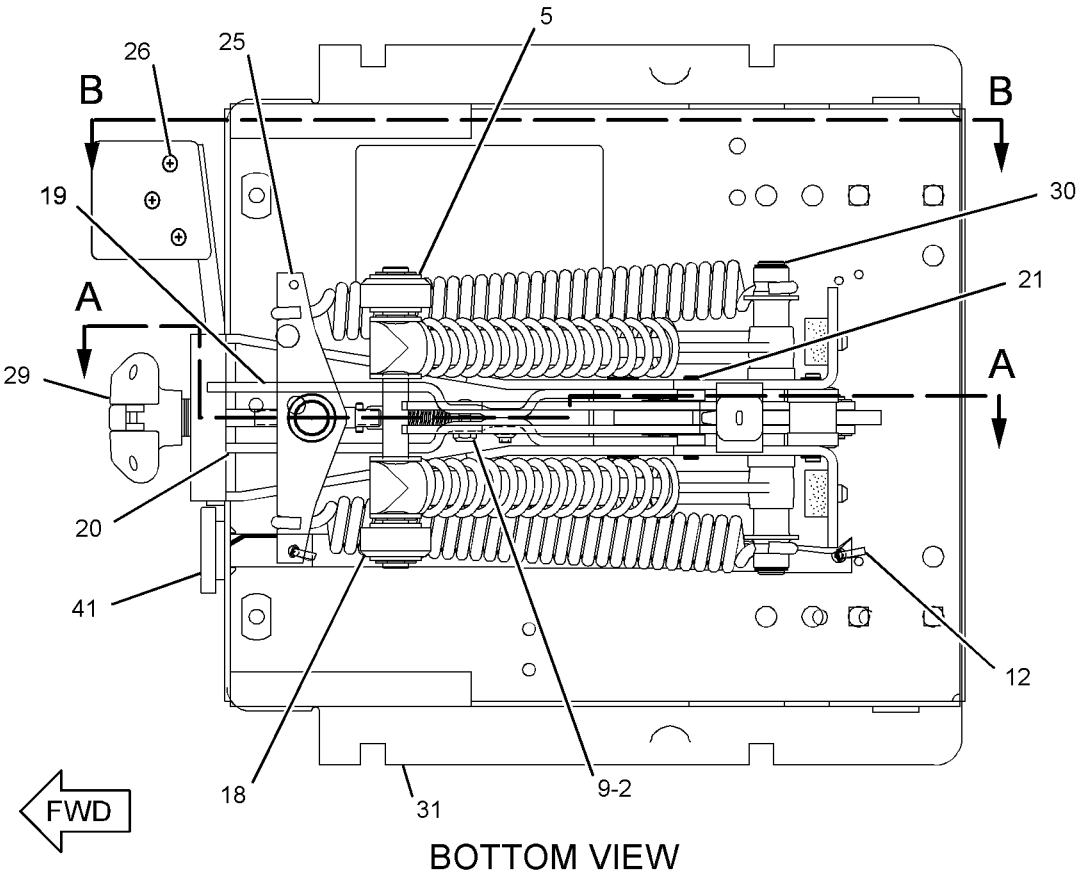

BOTTOM VIEW

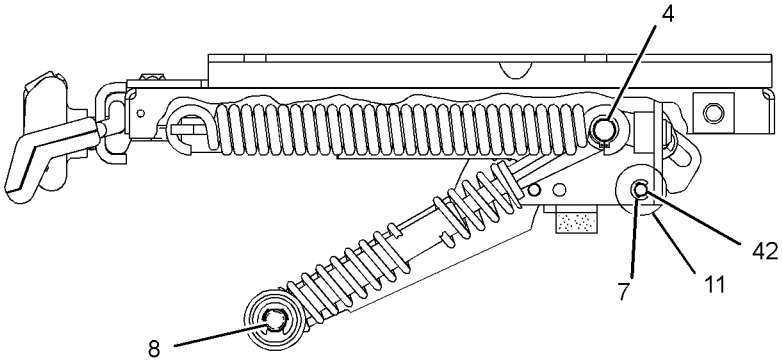

SECTION B-B

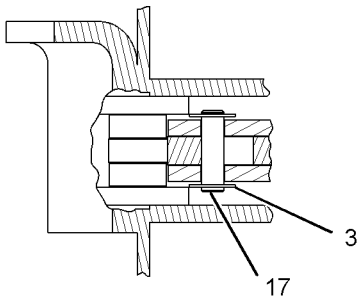

SECTION C-C

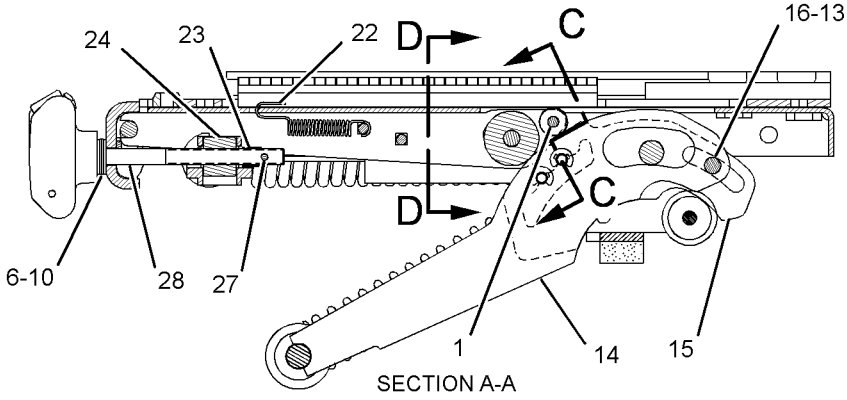

SECTION A-A

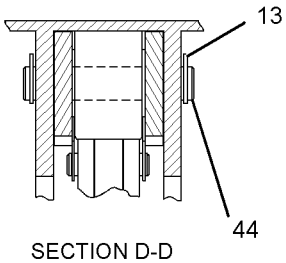

SECTION D-D

GRAPHIC #1 <END> g01883073

105-9657 INSTALLATION GP-RADIO

S/N: S6T1-UP; S6X1-UP; S6Y1-UP
PART OF 323-5696 CAB AR

SMCS-7338 i04010749

NOTE	REF NO	GRAPHIC REF	PART NUMBER	QTY	PART NAME 1 2 3 4 5 6 (PRODUCT LEVEL)	SEE PAGE
	1	1	108-3138	1	BRACKET AS	
	2	1	6Y-7385	1	BRACKET	
M	3	1	8T-4171	1	BOLT (M6X1X12-MM)	
	4	1	9X-8256	1	WASHER (6.6X12X2-MM THK)	
	5	1	8E-1118	1	ANTENNA AS	
	6	1	9U-8263	1	COVER	
	7	1	9U-8746	1	CABLE AS-COAXIAL	
	8	1	6V-7646	4	WASHER-HARD (7.2X25X2-MM THK)	
M	9	1	5C-2890	4	NUT (M6X1-THD)	
	10	1	217-8433	1	FILM-NOTICE (RADIO)	
	11	1	8K-1433	1	GROMMET	
	12	1	4N-9915	4	GROMMET AS	
	13	1	3E-4356	4	WASHER-HARD (17.5X30X6-MM THK)	
	14	1	8T-4223	4	WASHER-HARD (13.5X25.5X3-MM THK)	

M-METRIC PART

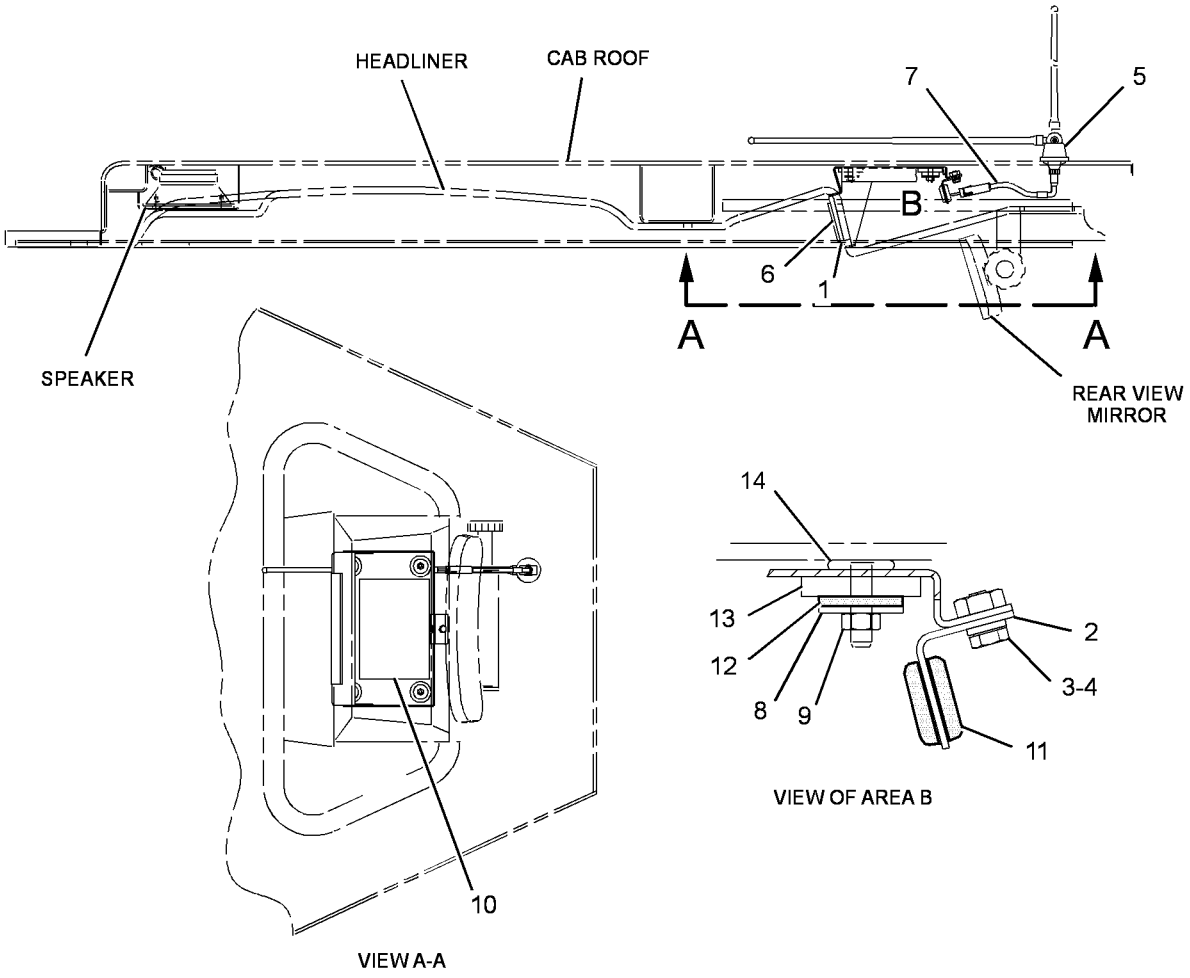

GRAPHIC #1 <END> g02183621

OPERATOR STATION

317-9070 INSTRUMENT GP

S/N: S6T1-UP; S6X1-UP; S6Y1-UP
ENCLOSED ROPS
PART OF 336-9684, 336-9685, 336-9686 CHASSIS AR

SMCS-7450, 7451 i04011864

NOTE	REF NO	GRAPHIC REF	PART NUMBER	QTY	PART NAME 1 2 3 4 5 6 (PRODUCT LEVEL)	SEE PAGE
	1	1	2P-4339	1	NUT-JAM (7/16-28-THD)	
	2	1	3E-5239	2	RELAY AS (24-VOLT)	
	3	1	3S-2093	9	STRAP-CABLE	
	4	1	7F-6998	1	LOCKWASHER	
	5	1	8Y-6388	2	LOUVER AS-VENT	
	6	1	083-9527	2	SPACER (13X20X1.5-MM THK)	
	7	1	110-6109	1	KNOB-CONTROL (FAN SPEED)	
	7A	1	110-6109	1	KNOB-CONTROL (TEMPERATURE CONTROL)	
	7B	1	110-6109	1	KNOB-CONTROL (LIGHT SWITCH)	
	8	1	110-7887	1	SWITCH AS-START (KEY)	
		1	7T-6799	1	NUT-MOUNTING (1-32-THD)	
		1	102-8804	1	KIT-RECEPTACLE (4-PIN)	
					(INCLUDES RECEPTACLE AS & WEDGE)	
		1	8T-8729	4	PIN-CONNECTOR (16-GA TO 18-GA)	
	9	1	122-7127	18	NUT-SPECIAL (NYLON)	
	10	1	123-9294	2	LAMP (24-VOLT) (PANEL)	
	11	1	157-1361	1	SWITCH AS-ROTARY (BLOWER FAN SPEED)	
		1	9W-0852	6	PIN-CONNECTOR (14-GA TO 16-GA)	
		1	102-8805	1	KIT-RECEPTACLE (6-PIN)	
					(INCLUDES RECEPTACLE AS & WEDGE)	
	12	1	159-9257	1	PANEL-DASH (LIGHT)	
	13	1	164-0847	1	CABLE	
	14	1	164-8473	2	LOUVER AS	
	15	1	170-0260	1	PLATE	
	16	1	171-4046	1	LOUVER AS	
	17	1	175-1349	1	PLATE	
	18	1	175-3950	1	SWITCH AS-ROTARY (LIGHTS)	
		1	9W-0852	7	PIN-CONNECTOR (14-GA TO 16-GA)	
		1	102-8806	1	KIT-RECEPTACLE (8-PIN)	
					(INCLUDES RECEPTACLE AS & WEDGE)	
	19	1	175-4393	1	SPACER (11.4X17.5X2-MM THK)	
	20	1	193-3356	1	CABLE AS	
	21	1	193-3359	1	CONTROL AS (TEMPERATURE)	
		1	129-1831	1	CLAMP	
M	22	1	213-7315	6	SCREW-TRUSS HEAD (M4X0.7X25-MM)	
	23	1	218-0651	1	FILM-INSTRUCTION (KEY START SWITCH)	
	24	1	293-9123	1	SWITCH AS-ROCKER (FLOODLIGHTS, REAR)	
	25	1	318-2389	1	MODULE GP-DISPLAY (INSTRUMENT CLUSTER)	
	26	1	320-5887	1	HARNESS AS-DASH	
		1	102-8803	1	KIT-RECEPTACLE (3-PIN)	
		1	102-8804	1	KIT-RECEPTACLE (4-PIN)	
		1	102-8805	3	KIT-RECEPTACLE (6-PIN)	
					(EACH KIT INCLUDES RECEPTACLE AS & WEDGE)	
		1	3T-3157	2	TERMINAL-BLADE (16-GA TO 20-GA)	
		1	3T-3158	2	SOCKET-LAMP	
		1	3T-3159	4	SPRING	
		1	3T-3278	2	BOOT	
		1	6D-4161	2	CONTACT	
		1	7X-6222	1	PLUG AS-CONNECTOR (24-PIN)	
		1	3E-4367	1	RING-RETAINING	
M		1	3E-8558	1	BOLT (M5X0.8X39.37-MM)	
		1	9X-3265	2	SEAL-CONNECTOR (24-PIN)	
		1	8T-8737	85	PLUG-SEAL	
		1	9X-1054	2	PLUG AS-CONNECTOR (4-PIN)	
		1	9X-1056	2	TERMINAL-RECEPTACLE (14-GA TO 16-GA)	

317-9070 INSTRUMENT GP ***(contd.)*** i04011864

NOTE	REF NO	GRAPHIC REF	PART NUMBER	QTY	PART NAME 1 2 3 4 5 6 (PRODUCT LEVEL)	SEE PAGE
		1	100-5041	6	TERMINAL-RECEPTACLE (18-GA TO 20-GA)	
		1	114-8843	20	SLEEVE-PLASTIC	
		1	125-7874	30	TUBE-HEAT SHRINK (5.72-MM DIA)	
		1	125-7875	15	TUBE-HEAT SHRINK (7.44-MM DIA)	
		1	9X-3402	39	SOCKET-CONNECTOR (16-GA TO 18-GA)	
					—OR—	
		1	126-1768	39	SOCKET-CONNECTOR (14-GA)	
		1	9X-3401	36	PIN-CONNECTOR (16-GA TO 18-GA)	
					—OR—	
		1	126-1767	36	PIN-CONNECTOR (14-GA TO 16-GA)	
		1	155-2270	1	KIT-CONNECTING PLUG (2-PIN)	
		1	155-2271	1	KIT-CONNECTING PLUG (4-PIN)	
		1	155-2274	1	KIT-CONNECTING PLUG (6-PIN)	
		1	155-2265	1	KIT-CONNECTING PLUG (8-PIN)	
		1	155-2260	1	KIT-CONNECTING PLUG (3-PIN)	
		1	155-2270	1	KIT-CONNECTING PLUG (2-PIN)	
		1	155-2271	2	KIT-CONNECTING PLUG (4-PIN)	
		1	155-2274	3	KIT-CONNECTING PLUG (6-PIN)	
		1	245-7434	2	KIT-CONNECTING PLUG (10-PIN)	
					(EACH KIT INCLUDES PLUG AS, WEDGE & INTERFACE SEAL)	
		1	185-1861	12	SEAL-WIRE	
		1	202-5397	10	PLUG	
		1	214-4208	1	RECEPTACLE AS-CONNECTOR (70-PIN)	
	27	1	323-5774	1	PANEL AS-INSTRUMENT	
		1	311-3737	2	GUIDE	
	28	1	334-7389	1	FILM-IDENTIFICATION (INSTRUMENT PANEL)	
	29	1	104-2091	12	SCREW-FLAT HEAD (6-20X0.5-IN)	
	30	1	204-6102	18	WASHER-HARD (4.45X9.52X1-MM THK)	
	31	1	216-7352	2	SCREW-TRUSS HEAD (M8X1.25X30-MM)	
	32	1	251-1198	1	SWITCH AS-ROCKER (24-VOLT) (AIR CONDITIONER)	
	33	1	3E-4352	2	WASHER-HARD (8.8X20.5X2.5-MM THK)	
	34	1	3E-6922	4	SCREW-RECESS FLAT HEAD (6-19X0.5-IN)	
	35	1	4P-8134	2	CLIP	
	36	1	5P-4115	2	WASHER-HARD (7.2X19X2-MM THK)	
	37	1	6P-6591	1	GROMMET	
M	38	1	6V-8214	2	BOLT (M6X1X20-MM)	
M	39	1	7Y-7256	12	SCREW-TRUSS HEAD (M4X0.7X35-MM)	
M	40	1	8T-4138	3	BOLT (M6X1X20-MM)	
M	41	1	8T-4171	2	BOLT (M6X1X12-MM)	
	42	1	8T-4205	5	WASHER-HARD (7.2X14.5X2-MM THK)	
	43	1	9D-3769	2	GROMMET	
M	44	1	9X-2044	2	SCREW-TRUSS HEAD (M6X1X16-MM)	
	45	1	9X-8267	2	WASHER (6.6X12X2-MM THK)	

M-METRIC PART

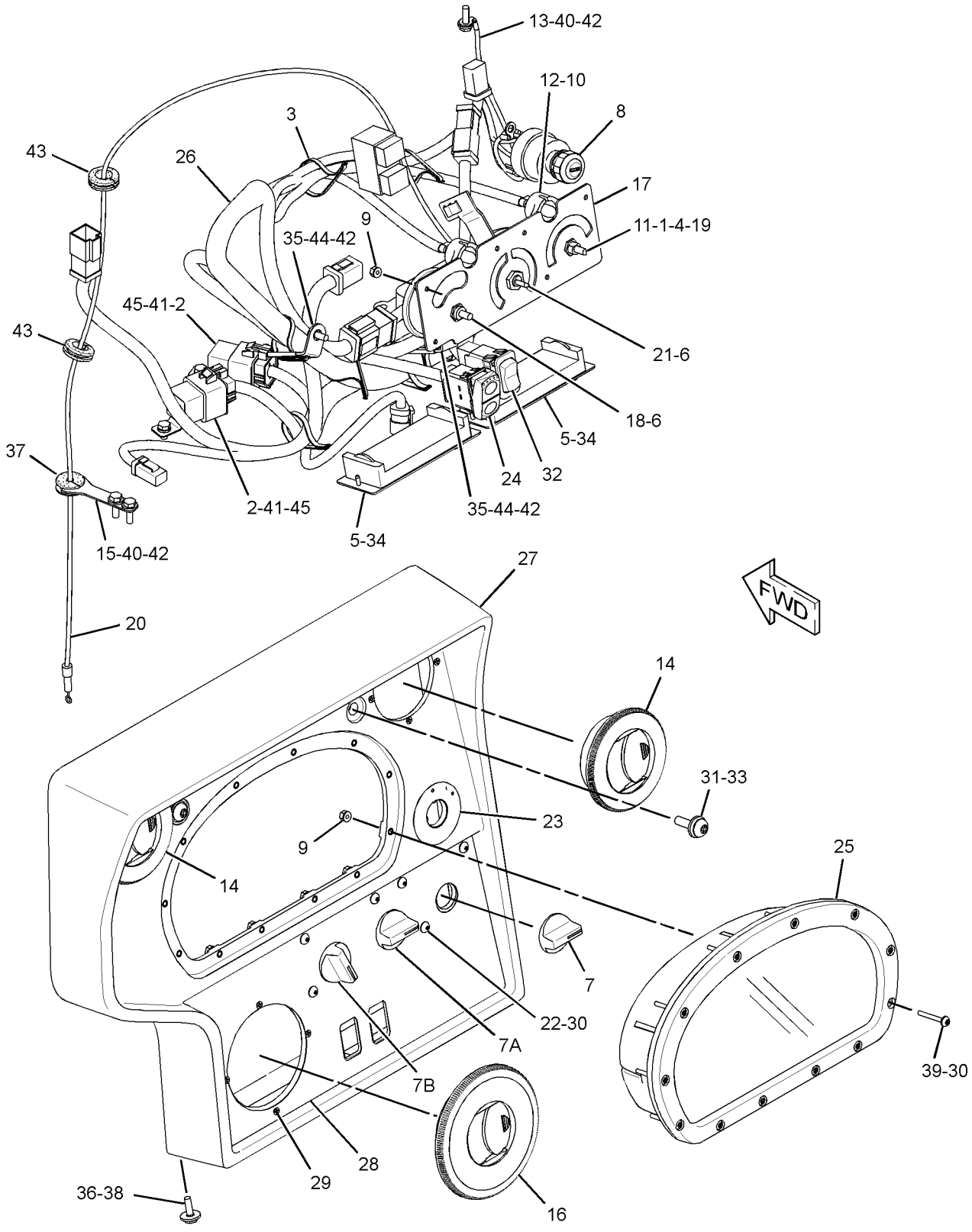

GRAPHIC #1 <END> g02201734

OPERATOR STATION

161-3616 KNOB GP–RIPPER

S/N: S6T1-UP; S6X1-UP; S6Y1-UP
PART OF 322-3710 CONTROL AR-HYDRAULIC
AN ATTACHMENT

SMCS-5800 i03995849

NOTE	REF NO	GRAPHIC REF	PART NUMBER	QTY	PART NAME 1 2 3 4 5 6 (PRODUCT LEVEL)	SEE PAGE
	1	1	2A-1736	1	HANDLE	
	2	1	7X-3374	1	NUT-FULL (1/2-20-THD)	

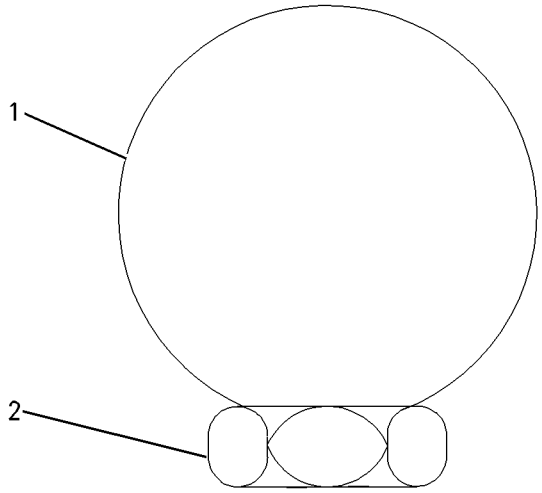

GRAPHIC #1 <END> g00763264

OPERATOR STATION

317-6561 LINER GP-CAB

S/N: S6T1-UP; S6X1-UP; S6Y1-UP
PART OF 323-5697 LINER GP-CAB

SMCS-7329 i03995425

NOTE	REF NO	GRAPHIC REF	PART NUMBER	QTY	PART NAME 1 2 3 4 5 6 (PRODUCT LEVEL)	SEE PAGE
Y	1	1	3E-6389	1	LAMP GP-DOME (24-VOLT)	153
	2	1	3S-2093	11	STRAP-CABLE	
	3	1	6T-7695	2	SPEAKER AS-RADIO	
	4	1	7T-9303	1	SWITCH AS-ROTARY (REAR)	
	4A	1	7T-9303	1	SWITCH AS-ROTARY (DOOR, RH)	
	4B	1	7T-9303	1	SWITCH AS-ROTARY (DOOR, LH)	
	4C	1	7T-9303	1	SWITCH AS-ROTARY (FRONT)	
		1	2H-3920	1	LOCKWASHER	
		1	6V-8369	1	NUT (7/16-28-THD)	
	5	1	8T-4752	4	NUT (M5X0.8-THD)	
	6	1	101-3055	2	COVER-SPEAKER	
	7	1	110-6109	1	KNOB-CONTROL (REAR WIPER)	
	7A	1	110-6109	1	KNOB-CONTROL (WIPER, RH DOOR)	
	7B	1	110-6109	1	KNOB-CONTROL (WIPER, LH DOOR)	
	7C	1	110-6109	1	KNOB-CONTROL (FRONT WIPER)	
	8	1	131-5137	1	PLUG	
	9	1	161-1097	1	LINER-CAB	
	10	1	161-1099	1	PLATE	
	11	1	166-3733	11	NUT-SPEED (8-32-THD)	
	12	1	267-8685	1	FILM-IDENTIFICATION (WINDOW WIPER CONTROLS)	
	13	1	320-5885	1	HARNESS AS-CAB	
		1	102-8801	1	KIT-RECEPTACLE (12-PIN)	
					(INCLUDES RECEPTACLE AS AND WEDGE)	
		1	6T-8048	2	TERMINAL-RECEPTACLE	
		1	5P-4571	2	TERMINAL-BLADE (14-GA TO 16-GA)	
		1	8T-8737	6	PLUG-SEAL	
		1	9G-9314	17	TERMINAL-BLADE (14-GA TO 16-GA)	
E		1	114-8843		SLEEVE-PLASTIC (20-CM)	
E		1	125-7875		TUBE-HEAT SHRINK (7.44-MM DIA) (5-CM)	
		1	9X-3402	16	SOCKET-CONNECTOR (16-GA TO 18-GA)	
		1	9X-3401	11	PIN-CONNECTOR (16-GA TO 18-GA)	
		1	155-2255	1	KIT-CONNECTING PLUG (12-PIN)	
		1	155-2260	1	KIT-CONNECTING PLUG (3-PIN)	
		1	155-2274	1	KIT-CONNECTING PLUG (6-PIN)	
					(EACH PLUG KIT INCLUDES PLUG ASSEMBLY, WEDGE & INTERFACE SEAL)	
	14	1	103-9425	11	SCREW-MACHINE (8-32X1-IN)	
M	15	1	7Y-7388	4	SCREW-BUTTON HEAD (M5X0.8X12-MM)	

E-ORDER BY THE CENTIMETER
M-METRIC PART
Y-SEPARATE ILLUSTRATION

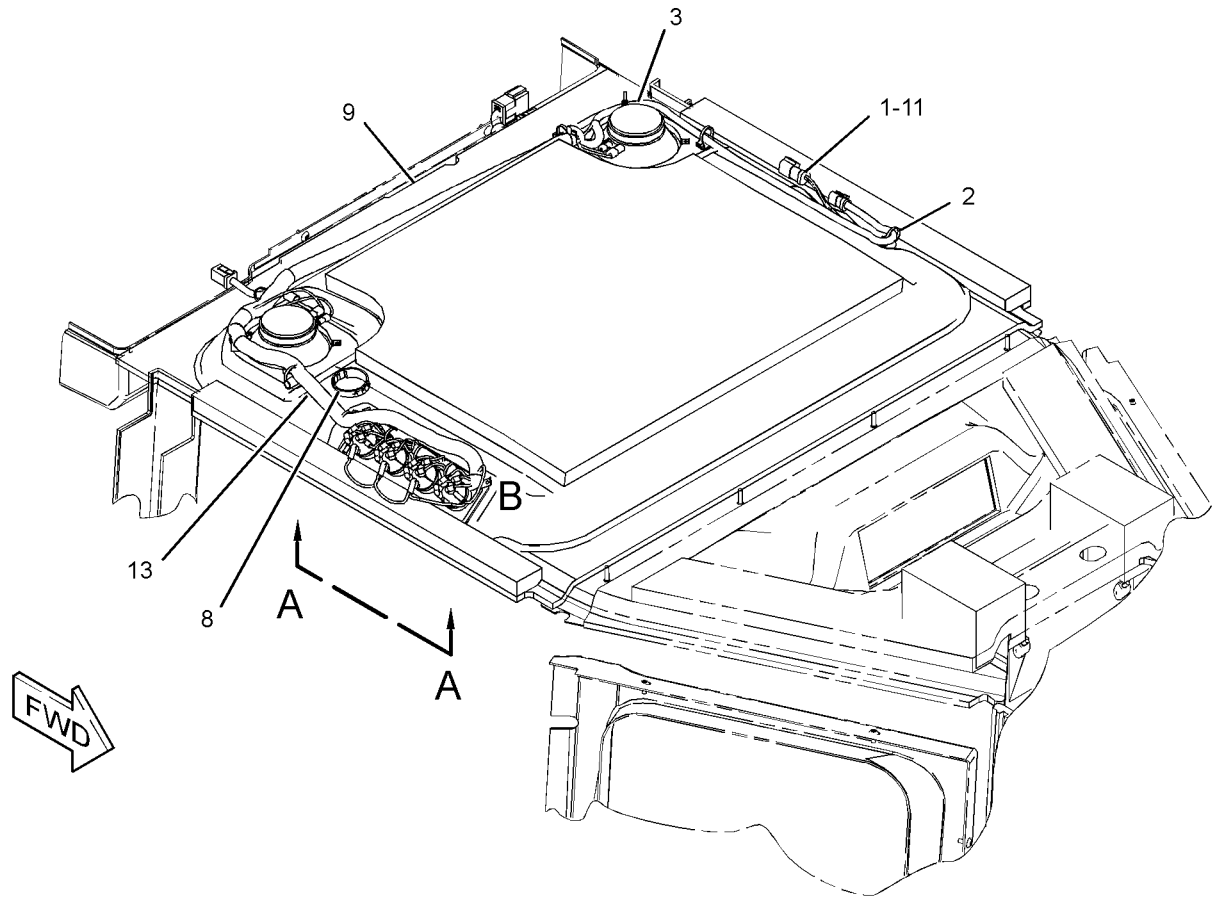

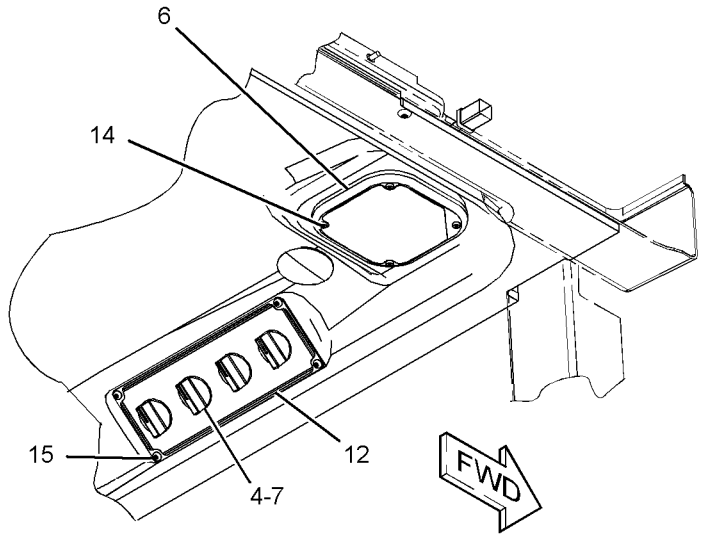

VIEW A-A

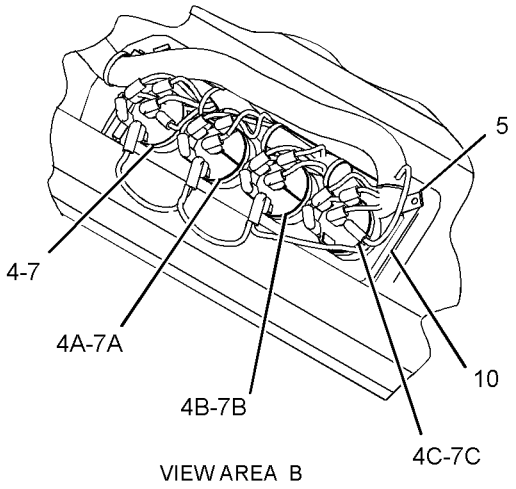

VIEW AREA B

GRAPHIC #1 <END> g02182874

OPERATOR STATION

323-5697 LINER GP-CAB

S/N: S6T1-UP; S6X1-UP; S6Y1-UP
PART OF 323-5696 CAB AR

SMCS-7329 i03994910

NOTE	REF NO	GRAPHIC REF	PART NUMBER	QTY	PART NAME 1 2 3 4 5 6 (PRODUCT LEVEL)	SEE PAGE
	1	1	6V-8928	1	HOOK-COAT	
	2	1	110-8152	2	HANDLE AS-PULL	
	3	1	158-8906	2	BLOCK-FOAM	
	4	1	161-1083	1	COVER-DOOR (RH)	
	5	1	161-1084	1	COVER-DOOR (LH)	
	6	1	161-1085	1	COVER-FRONT	
	7	1	161-1091	1	COVER-POST (RH)	
	8	1	161-1092	1	COVER-POST (LH)	
	9	1	161-1093	2	TRIM-POST	
	10	1	161-1094	1	LINER-CAB	
	11	1	161-1098	1	RETAINER	
	12	1	228-6787	1	COVER	
Y	13	1	*317-6561*	1	LINER GP-CAB	558
M	14	1	3E-8020	4	SCREW-TRUSS HEAD (M6X1X25-MM)	
M	15	1	6V-5683	4	BOLT (M6X1X16-MM)	
M	16	1	9X-2043	18	SCREW-TRUSS HEAD (M6X1X14-MM)	
M	17	1	9X-2045	1	SCREW-TRUSS HEAD (M6X1X20-MM)	

M-METRIC PART
Y-SEPARATE ILLUSTRATION

323-5697 LINER GP-CAB ***(contd.)*** i03994910

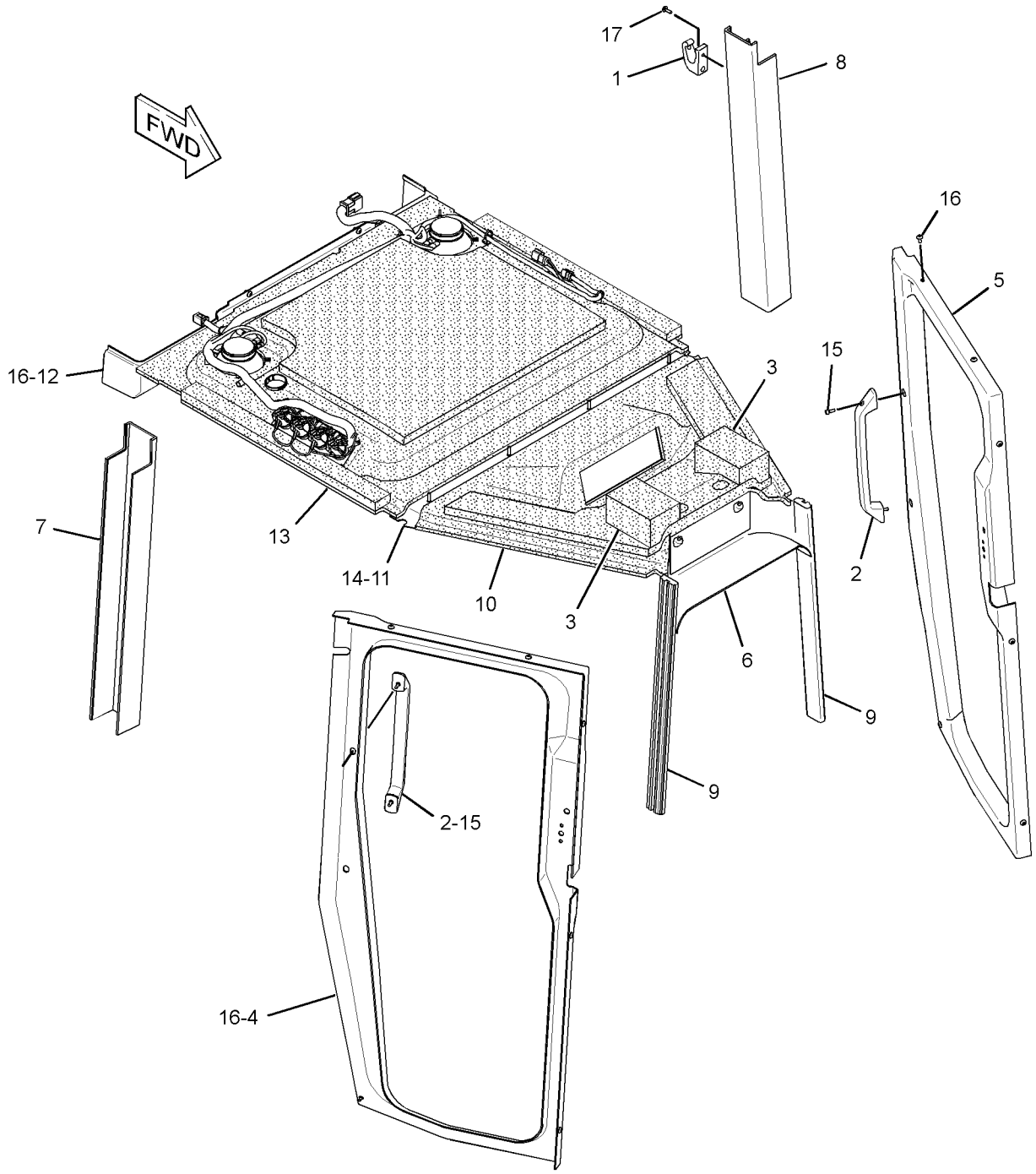

GRAPHIC #1 <END> g02177941

OPERATOR STATION

223-1677 LINES GP-AIR CONDITIONER—UNDER HOOD

S/N: S6T1-UP; S6X1-UP; S6Y1-UP
PART OF 317-4153 CAB AR

SMCS-1808 i04033064

NOTE	REF NO	GRAPHIC REF	PART NUMBER	QTY	PART NAME 1 2 3 4 5 6 (PRODUCT LEVEL)	SEE PAGE
	1	1	1P-6356	1	PLATE	
	2	1	175-7162	1	CONDENSER GP-REFRIGERANT (IN-LINE)	
		1	7X-2049	1	TUBE AS-REFRIGERANT ORIFICE	
	3	1	5N-9204	1	BRACKET AS	
D	4	1	6V-2495		SEAL (0.1-M EACH)	
	5	1	7T-9426	1	GROMMET	
	6	1	8C-5682	1	TEE	
	7	1	8R-3393	1	STRAP	
	8	1	103-6100	2	FITTING AS-AIR CONDITIONER (QUICK DISCONNECT)	
					(EACH INCLUDES)	
		1	9X-7382	2	SEAL-O-RING	
	9	1	114-5333	1	SWITCH AS-PRESSURE (REFRIGERANT)	
		1	102-8802	1	KIT-RECEPTACLE (2-PIN)	
					(INCLUDES RECEPTACLE AS & WEDGE)	
		1	8T-8729	2	PIN-CONNECTOR (16-GA TO 18-GA)	
E		1	9X-1386		SLEEVE (25-CM)	
	10	1	116-6202	2	BOOT	
	11	1	128-5924	1	CLAMP	
	12	1	287-0338	1	BRACKET AS	
I	13	1	173-9815	1	HOSE AS	
I	14	1	173-9816	1	HOSE AS	
	15	1	180-9236	1	BRACKET AS	
	16	1	183-4273	1	HARNESS AS-WIRING (AIR CONDITIONER COMPRESSOR)	
E		1	114-8843		SLEEVE-PLASTIC (20-CM)	
E		1	114-8845		SLEEVE-PLASTIC (60-CM)	
E		1	119-3662		TUBE-HEAT SHRINK (10.85-MM DIA) (13-CM)	
		1	126-1768	8	SOCKET-CONNECTOR (14-GA)	
		1	155-2270	4	KIT-CONNECTING PLUG (2-PIN)	
					(EACH INCLUDES PLUG AS, WEDGE & INTERFACE SEAL)	
	17	1	186-6189	1	ACCUMULATOR-REFRIGERANT	
I	18	1	230-5106	1	HOSE AS	
I	19	1	266-1961	1	HOSE AS	
	20	1	189-3158	1	SUPPRESSOR-ARC	
	21	1	190-5583	1	CLIP (SLOT)	
	22	1	190-5584	1	CLIP (TAB)	
I	23	1	236-5132	1	HOSE AS	
	24	1	3E-4067	1	FITTING AS-COMPRESSOR	
		1	3E-4052	1	CAP-SEAL (HIGH SIDE CHARGE PORT)	
		1	3E-4058	1	VALVE AS	
	25	1	3E-4087	1	FITTING AS-AIR CONDITIONER	
		1	3E-4051	1	CAP-SEAL (REFRIGERANT, LOW SIDE)	
		1	3E-4057	1	VALVE AS	
	26	1	3S-2093	5	STRAP-CABLE	
	27	1	3S-8664	2	CLIP	
	28	1	4P-8134	2	CLIP	
M	29	1	5C-7261	1	NUT (M8X1.25-THD)	
	30	1	6K-8178	1	CLIP	
	31	1	6V-1228	1	CLIP	
	32	1	6V-2372	1	ELBOW	
	33	1	7T-8894	1	GROMMET	
	34	1	7T-8895	1	GROMMET	
	35	1	7T-9793	1	VALVE-CHECK	
	36	1	7X-7729	3	WASHER (11X25X3-MM THK)	
	37	1	8T-4121	8	WASHER-HARD (11X21X2.5-MM THK)	

223-1677 LINES GP-AIR CONDITIONER ***(contd.)*** i04033064

NOTE	REF NO	GRAPHIC REF	PART NUMBER	QTY	PART NAME 1 2 3 4 5 6 (PRODUCT LEVEL)	SEE PAGE
M	38	1	8T-4133	1	NUT (M10X1.5-THD)	
M	39	1	8T-4136	4	BOLT (M10X1.5X25-MM)	
M	40	1	8T-4137	2	BOLT (M10X1.5X20-MM)	
M	41	1	8T-4182	1	BOLT (M10X1.5X45-MM)	
M	42	1	8T-4196	2	BOLT (M10X1.5X35-MM)	
	43	1	8T-4224	1	WASHER-HARD (8.8X16X2-MM THK)	
	44	1	6D-4636	1	CLIP	
M	45	1	8T-6466	1	BOLT (M10X1.5X60-MM)	
	46	1	9M-8406	1	CLIP	
	47	1	9X-7378	1	SEAL-O-RING	
	48	1	9X-7380	3	SEAL-O-RING	
	49	1	9X-7381	3	SEAL-O-RING	
	50	1	9X-7382	2	SEAL-O-RING	
	51	1	9X-7383	2	SEAL-O-RING	
	52	1	9X-7385	2	SEAL-O-RING	
D	53	1	5P-6129		TUBE (0.4-M)	
D	53A	1	5P-6129		TUBE (0.2-M EACH)	
D	53B	1	5P-6129		TUBE (1.1-M)	
	54	1	1P-7009	1	CLIP	
	55	1	4P-7429	1	CLIP	
	56	1	155-2270	1	KIT-CONNECTING PLUG (2-PIN) (INCLUDES PLUG AS, WEDGE & INTERFACE SEAL)	

D-ORDER BY THE METER
E-ORDER BY THE CENTIMETER
I-REFER TO HYDRAULIC INFORMATION SYSTEM
M-METRIC PART

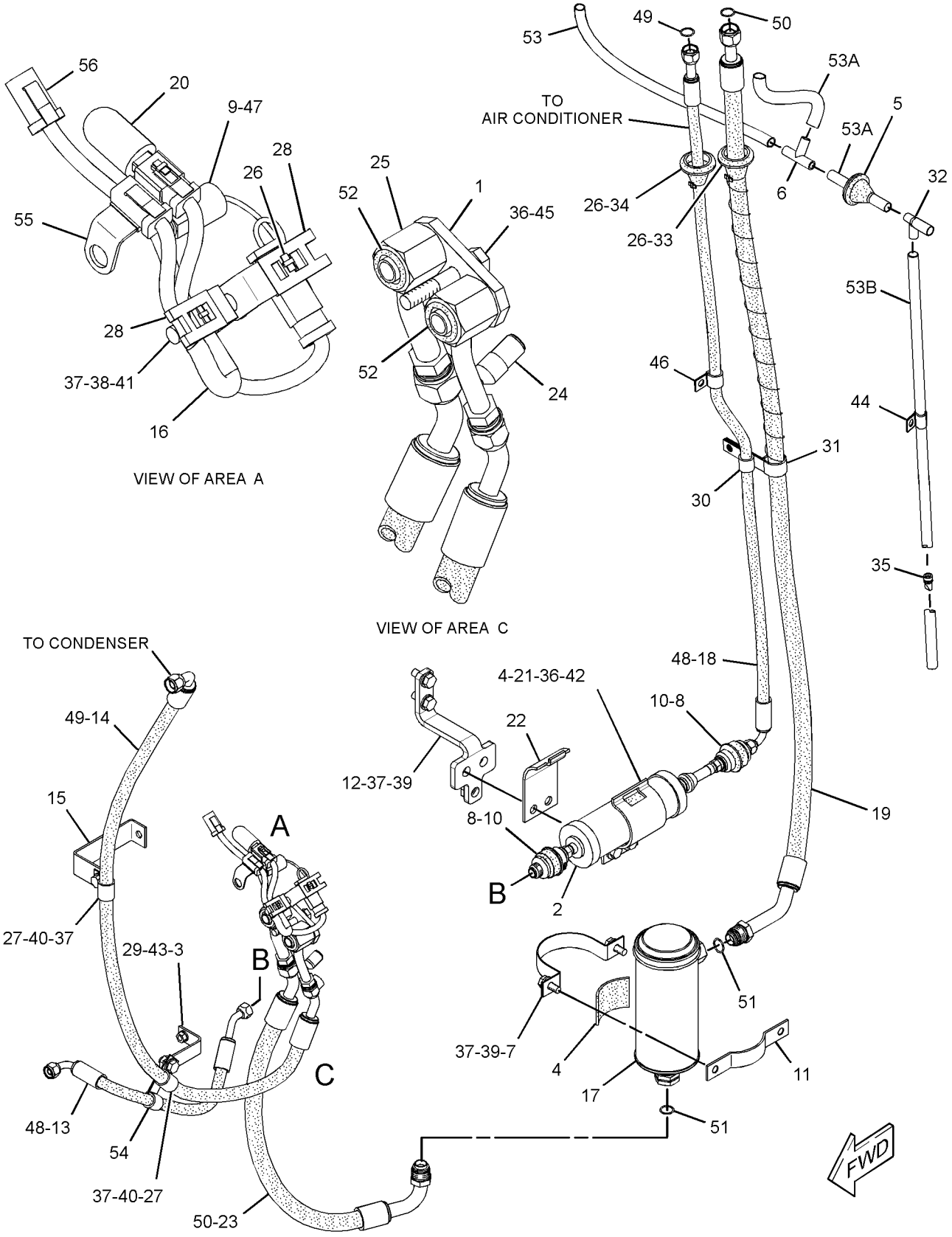

GRAPHIC #1 <END> g02174223

OPERATOR STATION

322-2361 LINES GP-AIR CONDITIONER—ROPS MOUNTED

S/N: S6T1-UP; S6X1-UP; S6Y1-UP
PART OF 323-5698 AIR CONDITIONER AR
AN ATTACHMENT

SMCS-1808 i04033066

NOTE	REF NO	GRAPHIC REF	PART NUMBER	QTY	PART NAME 1 2 3 4 5 6 (PRODUCT LEVEL)	SEE PAGE
	1	2	1P-6356	1	PLATE	
	2	2	3S-2093	4	STRAP-CABLE	
	3	1	5P-3948	2	COUPLING AS-REFRIGERANT	
					(EACH INCLUDES)	
		1	7F-8607	1	SEAL-O-RING	
		1	107-4399	1	VALVE AS	
D	4	2	6V-2495		SEAL (0.2-M EACH)	
	5	1	7K-1181	4	STRAP-CABLE	
	6	1	7K-3176	2	COUPLING AS-REFRIGERANT (SELF SEALING)	
					(EACH INCLUDES)	
		1	107-4393	1	VALVE AS	
		1	107-4394	1	GASKET	
	7	2	7T-8894	1	GROMMET	
	8	2	7T-9426	2	GROMMET	
	9	2	8C-5682	1	TEE	
	10	2	8R-3393	1	STRAP	
	11	2	103-6100	2	FITTING AS-AIR CONDITIONER (QUICK DISCONNECT)	
					(EACH INCLUDES)	
		2	9X-7382	2	SEAL-O-RING	
I	12	1	109-4044	1	HOSE AS	
I	13	1	110-8834	1	HOSE AS	
	14	2	114-5333	1	SWITCH AS-PRESSURE (REFRIGERANT)	
		2	8T-8729	2	PIN-CONNECTOR (16-GA TO 18-GA)	
		2	102-8802	1	KIT-RECEPTACLE (2-PIN)	
					(INCLUDES RECEPTACLE AS AND WEDGE)	
	15	2	116-6202	2	BOOT	
	16	2	128-5924	1	CLAMP	
I	17	1	173-6930	1	HOSE AS	
	18	2	183-4273	1	HARNESS AS-WIRING (AIR CONDITIONER COMPRESSOR)	
E		2	114-8843		SLEEVE-PLASTIC (20-CM)	
E		2	114-8845	1	SLEEVE-PLASTIC (60-CM)	
E		2	119-3662	1	TUBE-HEAT SHRINK (10.85-MM DIA) (13-CM)	
		2	126-1768	8	SOCKET-CONNECTOR (14-GA)	
		2	155-2270	4	KIT-CONNECTING PLUG (2-PIN)	
					(EACH PLUG KIT INCLUDES PLUG AS, WEDGE & INTERFACE SEAL)	
	19	2	186-6189	1	ACCUMULATOR-REFRIGERANT	
	20	2	189-3158	1	SUPPRESSOR-ARC	
	21	1	224-9222	1	BRACKET	
I	22	2	230-5106	1	HOSE AS	
	23	1	231-1271	1	BRACKET AS	
M		1	8T-3490	1	NUT-WELD (M10X1.5-THD)	
I	24	1	236-5131	1	HOSE AS	
I	25	2	266-1961	1	HOSE AS	
	26	2	287-0338	1	BRACKET AS	
M		2	8T-3490	3	NUT-WELD (M10X1.5-THD)	
	27	1	321-5804	1	HARNESS AS-SWITCH	
		1	102-8803	1	KIT-RECEPTACLE (3-PIN)	
					(INCLUDES RECEPTACLE AS AND WEDGE)	
E		1	114-8843	1	SLEEVE-PLASTIC (20-CM)	
		1	9X-3402	1	SOCKET-CONNECTOR (16-GA TO 18-GA)	
		1	126-1768	2	SOCKET-CONNECTOR (14-GA)	
		1	126-1767	2	PIN-CONNECTOR (14-GA TO 16-GA)	
		1	9X-3401	1	PIN-CONNECTOR (16-GA TO 18-GA)	

322-2361 LINES GP-AIR CONDITIONER ***(contd.)*** i04033066

NOTE	REF NO	GRAPHIC REF	PART NUMBER	QTY	PART NAME 1 2 3 4 5 6 (PRODUCT LEVEL)	SEE PAGE
		1	155-2260	1	KIT-CONNECTING PLUG (3-PIN)	
					(INCLUDES PLUG ASSEMBLY, WEDGE & INTERFACE SEAL)	
	28	2	190-5583	1	CLIP (SLOT)	
	29	2	190-5584	1	CLIP (TAB)	
I	30	2	236-5132	1	HOSE AS	
	31	2	175-7162	1	CONDENSER GP-REFRIGERANT (IN-LINE)	
		2	7X-2049	1	TUBE AS-REFRIGERANT ORIFICE	
		2	330-3118	1	FILM-WARNING (UNIVERSAL, READ OMM)	
		2	326-8604	1	FILM-INFORMATION (AIR DRYER)	
		2	330-3117	1	FILM-WARNING (UNIVERSAL, READ OMM)	
	32	2	3E-4080	1	FITTING AS-AIR CONDITIONER	
		2	3E-4052	1	CAP-SEAL (HIGH SIDE CHARGE PORT)	
		2	3E-4058	1	VALVE AS	
	33	2	3E-4087	1	FITTING AS-AIR CONDITIONER	
		2	3E-4051	1	CAP-SEAL (REFRIGERANT, LOW SIDE)	
		2	3E-4057	1	VALVE AS	
	34	1,2	4D-7733	6	CLIP	
	35	1	4H-2558	1	GROMMET	
	36	1	4K-8302	2	CLIP	
	37	1	4P-7428	1	CLIP	
	38	1,2	4P-7429	3	CLIP	
	39	1	4P-7581	1	CLIP	
	40	2	4P-8134	2	CLIP	
	41	1	5P-4295	2	CLIP	
	42	1	6D-1641	1	CLIP	
	43	2	6K-8178	1	CLIP	
	44	2	6V-1228	1	CLIP	
	45	2	6V-2372	1	ELBOW	
	46	2	7T-9793	1	VALVE-CHECK	
	47	1,2	7X-7729	4	WASHER (11X25X3-MM THK)	
	48	1,2	8T-4121	8	WASHER-HARD (11X21X2.5-MM THK)	
M	49	2	8T-4133	1	NUT (M10X1.5-THD)	
M	50	1,2	8T-4136	5	BOLT (M10X1.5X25-MM)	
M	51	1	8T-4137	2	BOLT (M10X1.5X20-MM)	
M	52	1	8T-4139	2	BOLT (M12X1.75X30-MM)	
M	53	2	8T-4196	3	BOLT (M10X1.5X35-MM)	
	54	1	8T-4223	2	WASHER-HARD (13.5X25.5X3-MM THK)	
	55	1	8T-4896	1	WASHER-HARD (10.2X18.5X2.5-MM THK)	
M	56	2	8T-6466	2	BOLT (M10X1.5X60-MM)	
	57	2	8V-9708	1	SPACER (14.3X25.4X35-MM THK)	
	58	2	9M-8406	2	CLIP	
	59	2	9X-7378	1	SEAL-O-RING	
	60	1,2	9X-7380	3	SEAL-O-RING	
	61	1,2	9X-7381	3	SEAL-O-RING	
	62	2	9X-7382	2	SEAL-O-RING	
	63	1,2	9X-7383	6	SEAL-O-RING	
	64	2	9X-7385	2	SEAL-O-RING	
	65	2	5P-6129		TUBE (0.2-M)	
	65A	2	5P-6129		TUBE (0.15-M)	
	65B	2	5P-6129		TUBE (0.7-M)	
	65C	2	5P-6129		TUBE (0.4-M)	

D-ORDER BY THE METER
E-ORDER BY THE CENTIMETER
I-REFER TO HYDRAULIC INFORMATION SYSTEM
M-METRIC PART

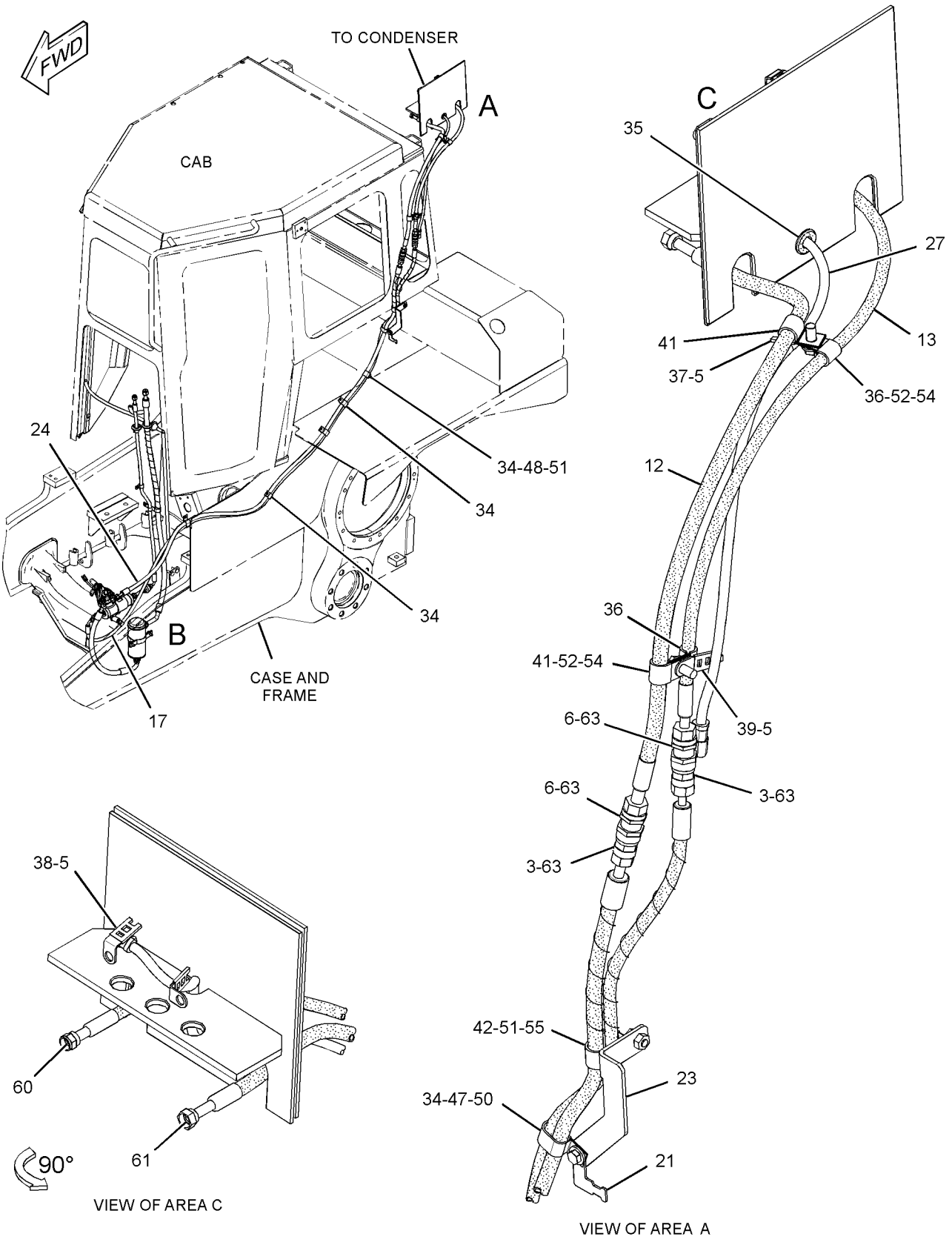

GRAPHIC #1 g02204697

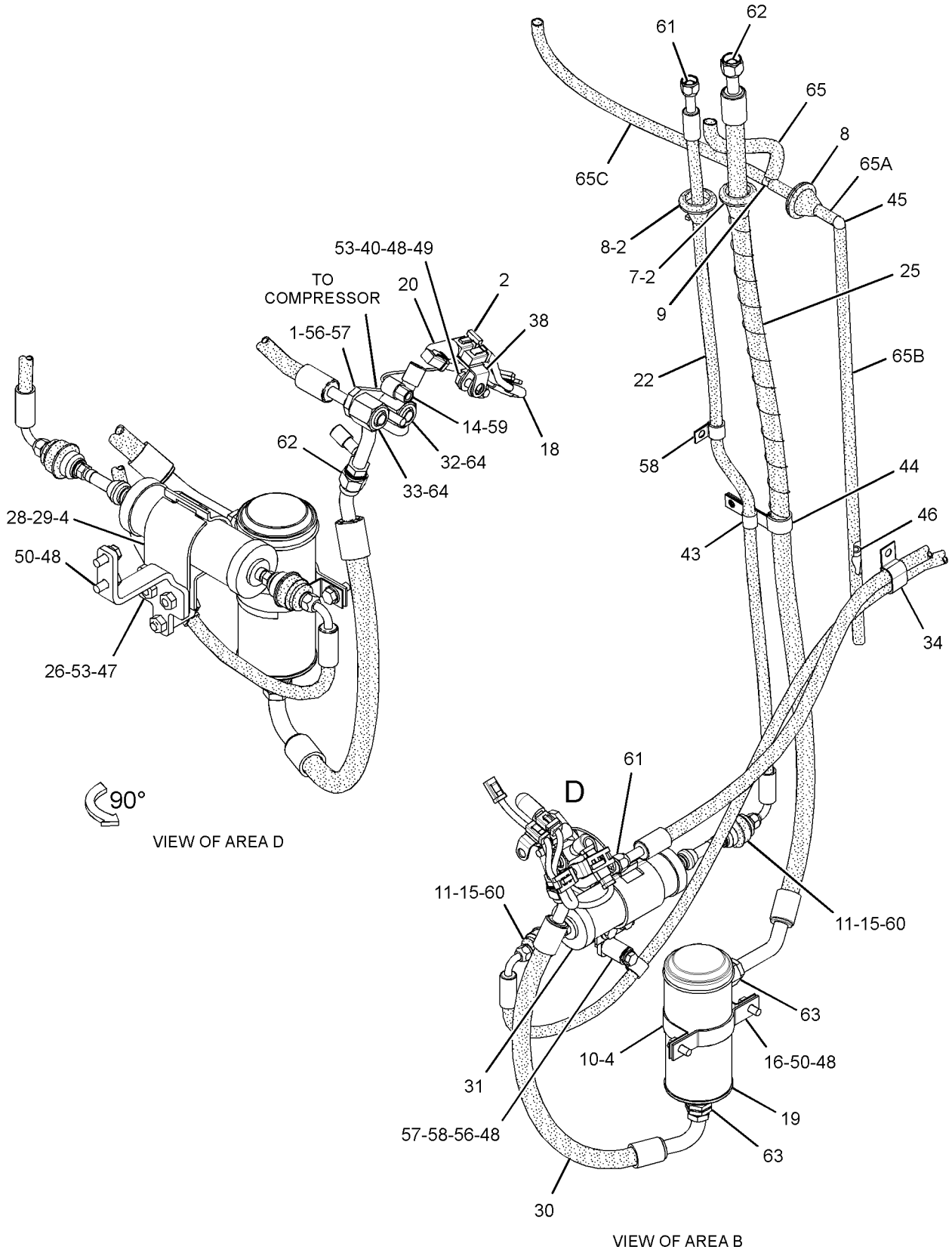

GRAPHIC #2 <END> g02204700

OPERATOR STATION

223-1680 LINES GP-HEATER

S/N: S6T1-UP; S6X1-UP; S6Y1-UP
PART OF 317-4153 CAB AR

SMCS-7304 i03994752

NOTE	REF NO	GRAPHIC REF	PART NUMBER	QTY	PART NAME 1 2 3 4 5 6 (PRODUCT LEVEL)	SEE PAGE
	1	1	1W-2860	1	BRACKET	
	2	1	4P-0489	2	SPACER (11X25X26.8-MM THK)	
	3	1	035-1933	2	WASHER (0.516X1X0.12-IN THK)	
	4	1	124-6998	1	PLATE	
	5	1	*165-2273*	2	VALVE GP-SHUTOFF	
					(EACH INCLUDES)	
		1	3K-0360	1	SEAL-O-RING	
		1	6V-7238	1	VALVE-SHUTOFF	
	6	1	*194-2903*	1	ELBOW AS	
		1	8T-0119	1	ELBOW	
		1	3K-0360	1	SEAL-O-RING	
	7	1	294-5076	1	PLATE AS	
M		1	8T-3490	1	NUT-WELD (M10X1.5-THD)	
	8	1	137-6722	1	CLIP	
	9	1	159-1503	4	CLAMP-HOSE	
	10	1	6D-1641	4	CLIP	
	11	1	6D-4636	2	CLIP	
	12	1	8J-8197	1	CLIP	
	13	1	8S-0948	1	CLIP	
	14	1	8T-4121	12	WASHER-HARD (11X21X2.5-MM THK)	
M	15	1	8T-4133	2	NUT (M10X1.5-THD)	
M	16	1	8T-4136	5	BOLT (M10X1.5X25-MM)	
M	17	1	8T-4137	1	BOLT (M10X1.5X20-MM)	
M	18	1	8T-4182	1	BOLT (M10X1.5X45-MM)	
M	19	1	8T-4185	1	BOLT (M10X1.5X50-MM)	
M	20	1	8T-4195	2	BOLT (M10X1.5X30-MM)	
	21	1	8T-4223	1	WASHER-HARD (13.5X25.5X3-MM THK)	
M	22	1	8T-4779	1	BOLT (M16X2X35-MM)	
M	23	1	8T-4956	1	BOLT (M12X1.75X35-MM)	
	24	1	9X-8257	1	WASHER (17.5X30X3.5-MM THK)	
E	25	1	7X-7702		CONDUIT-FLEXIBLE (23.35-MM ID, SPLIT) (48-CM)	
E	26	1	5P-0767		HOSE (297-CM)	
E	26A	1	5P-0767		HOSE (236-CM)	

E-ORDER BY THE CENTIMETER
M-METRIC PART

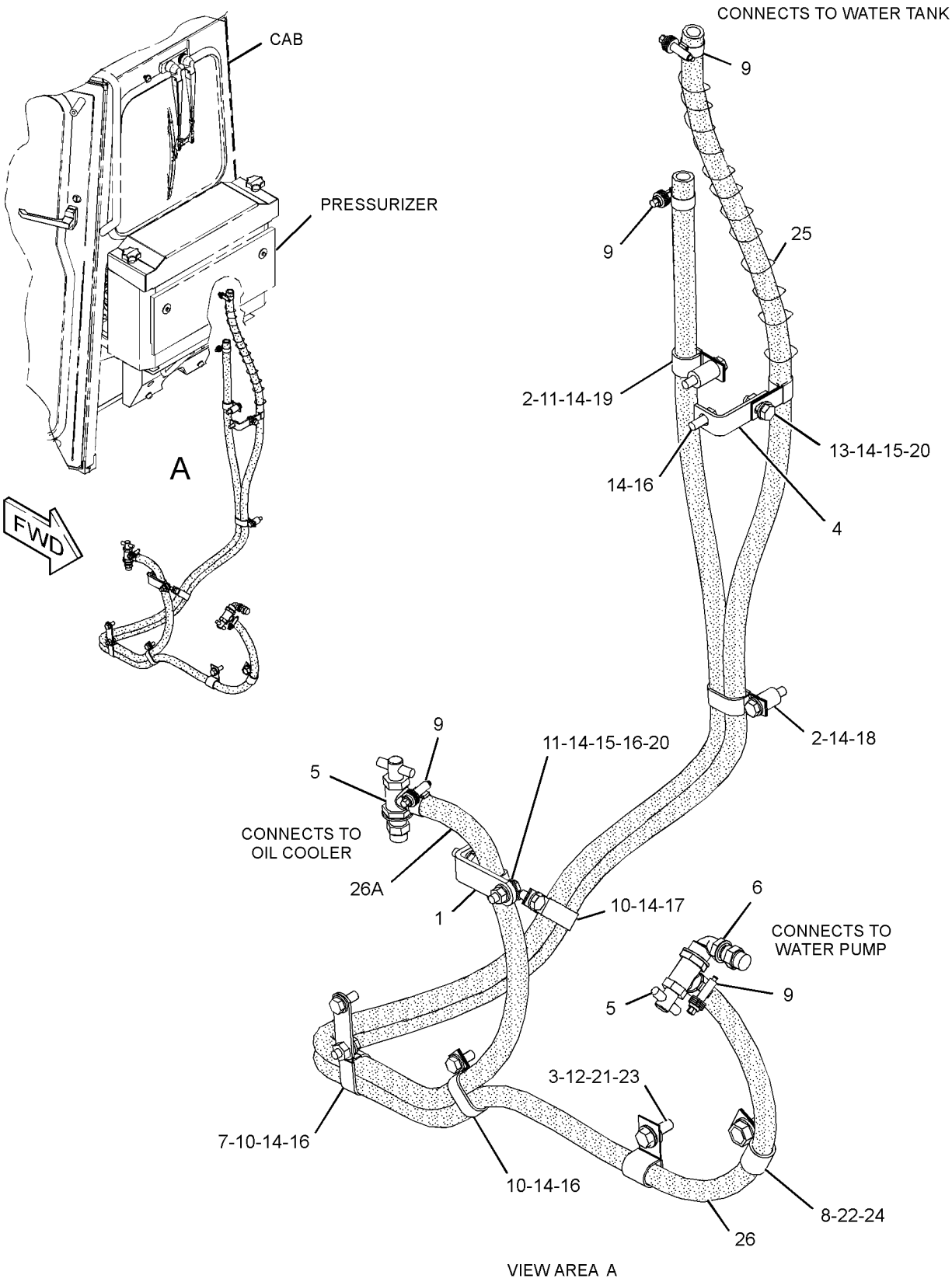

VIEW AREA A

GRAPHIC #1 <END> g02177849

9P-9392 MIRROR GP-REAR VIEW

S/N: S6T1-UP; S6X1-UP; S6Y1-UP
PART OF 208-8706 ROPS GP-OPEN
AN ATTACHMENT

SMCS-7319 i03991770

NOTE	REF NO	GRAPHIC REF	PART NUMBER	QTY	PART NAME 1 2 3 4 5 6 (PRODUCT LEVEL)	SEE PAGE
	1	1	5S-7379	2	BOLT (3/8-16X0.875-IN)	
		1	5P-1075	2	WASHER-HARD (10.2X22.5X3-MM THK)	
	2	1	9P-9390	1	BRACKET	
	3	1	9P-9388	1	KNOB (MIRROR ADJUSTMENT)	
	4	1	5P-6874	1	MIRROR (REAR VIEW)	
	5	1	5K-9179	1	BOLT-ROUND HEAD (3/8-16X11-IN)	

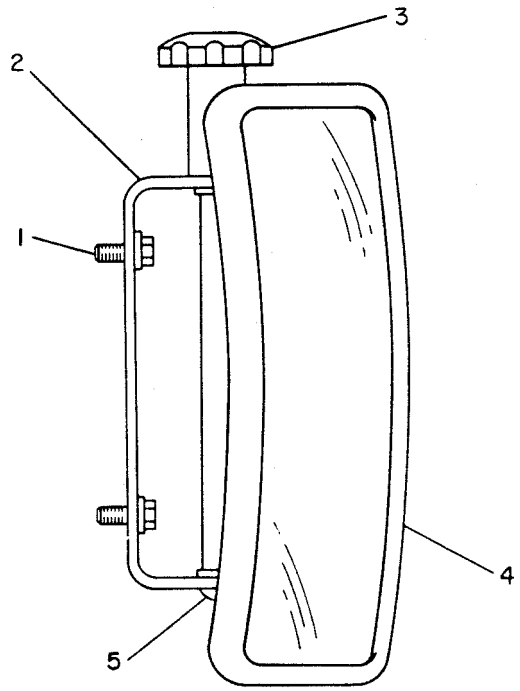

GRAPHIC #1 <END> g00143265

OPERATOR STATION

105-9659 MIRROR GP-REAR VIEW

S/N: S6T1-UP; S6X1-UP; S6Y1-UP
PART OF 323-5696 CAB AR

SMCS-7319 i03994848

NOTE	REF NO	GRAPHIC REF	PART NUMBER	QTY	PART NAME 1 2 3 4 5 6 (PRODUCT LEVEL)	SEE PAGE
	1	1	9P-9388	1	KNOB (REAR VIEW MIRROR)	
	2	1	5P-6874	1	MIRROR (REAR VIEW)	
	3	1	5K-9179	1	BOLT-ROUND HEAD (3/8-16X11-IN)	
	4	1	6Y-5113	1	BRACKET	
	5	1	8T-4121	2	WASHER-HARD (11X21X2.5-MM THK)	
M	6	1	8T-4137	2	BOLT (M10X1.5X20-MM)	

M-METRIC PART

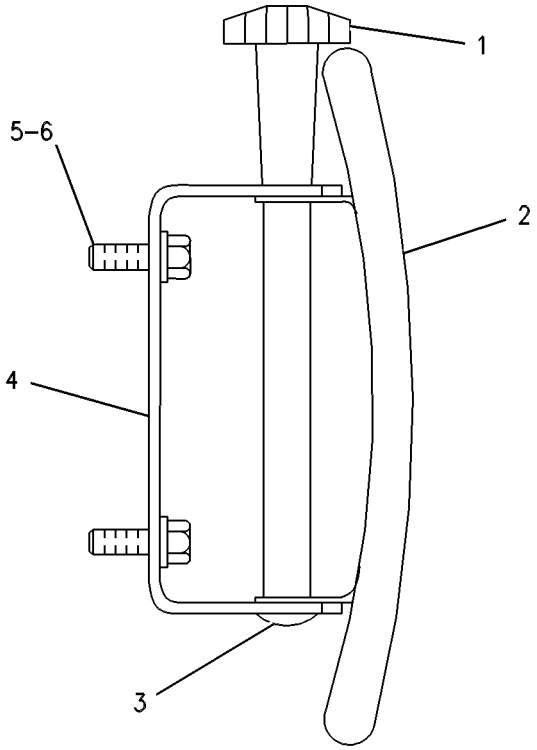

GRAPHIC #1 <END> g00254288

147-7976 MOTOR GP-WINDOW WIPER–FRONT

S/N: S6T1-UP; S6X1-UP; S6Y1-UP
24-VOLT
PART OF 354-6924 WIPER GP-WINDOW

SMCS-7305 i03995944

NOTE	REF NO	GRAPHIC REF	PART NUMBER	QTY	PART NAME 1 2 3 4 5 6 (PRODUCT LEVEL)	SEE PAGE
M	1	1	5C-7261	1	NUT (M8X1.25-THD)	
	2	1	3F-9556	1	LOCKWASHER	
	3	1	102-8805	1	KIT-RECEPTACLE (6-PIN)	
					(INCLUDES RECEPTACLE AND WEDGE)	
	4	1	9G-3695	1	PLUG-SEAL	
	5	1	8T-8729	5	PIN-CONNECTOR (16-GA TO 18-GA)	

M-METRIC PART

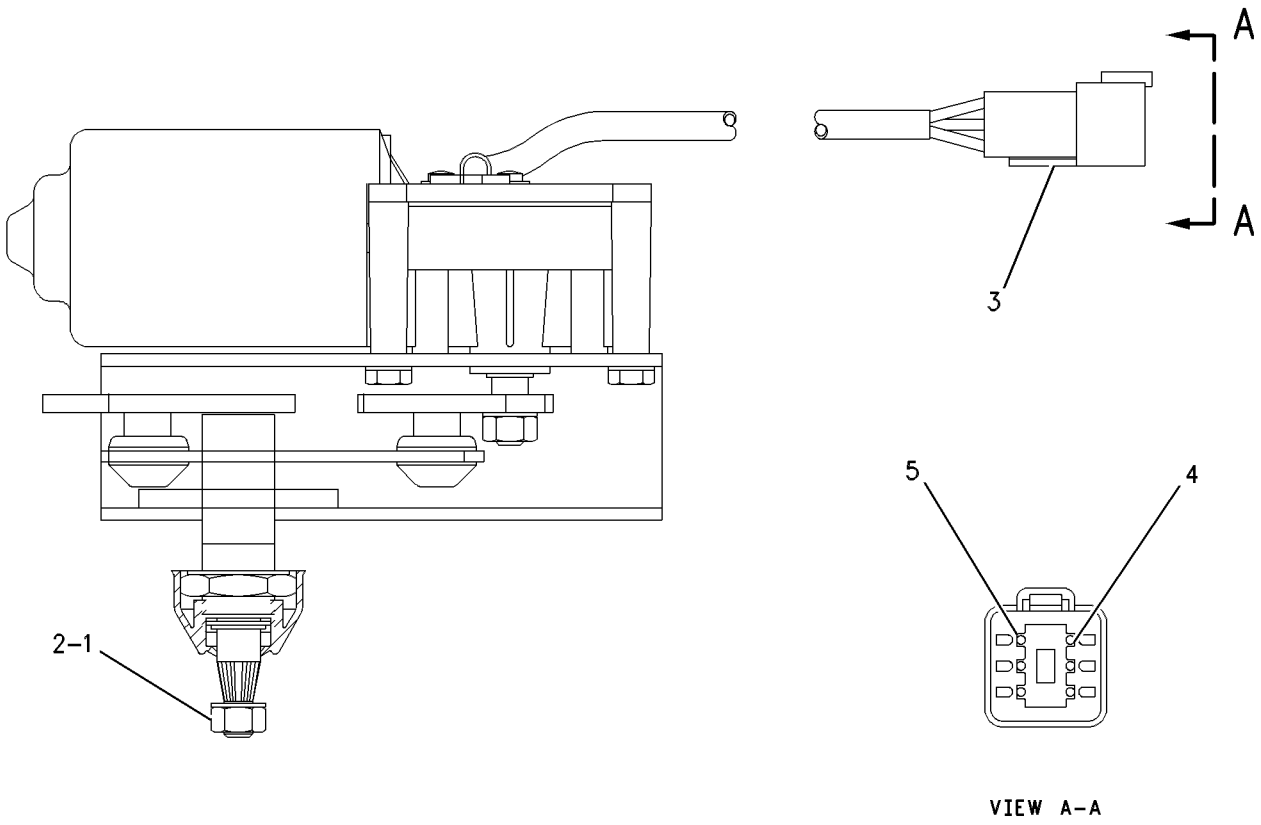

GRAPHIC #1 <END> g00464037

147-7979 MOTOR GP-WINDOW WIPER–REAR

S/N: S6T1-UP; S6X1-UP; S6Y1-UP
24-VOLT
PART OF 354-6924 WIPER GP-WINDOW

SMCS-7305 i03995945

NOTE	REF NO	GRAPHIC REF	PART NUMBER	QTY	PART NAME 1 2 3 4 5 6 (PRODUCT LEVEL)	SEE PAGE
M	1	1	5C-7261	1	NUT (M8X1.25-THD)	
	2	1	3F-9556	1	LOCKWASHER	
	3	1	102-8805	1	KIT-RECEPTACLE (6-PIN)	
					(INCLUDES RECEPTACLE AS & WEDGE)	
	4	1	9G-3695	1	PLUG-SEAL	
	5	1	8T-8729	5	PIN-CONNECTOR (16-GA TO 18-GA)	

M-METRIC PART

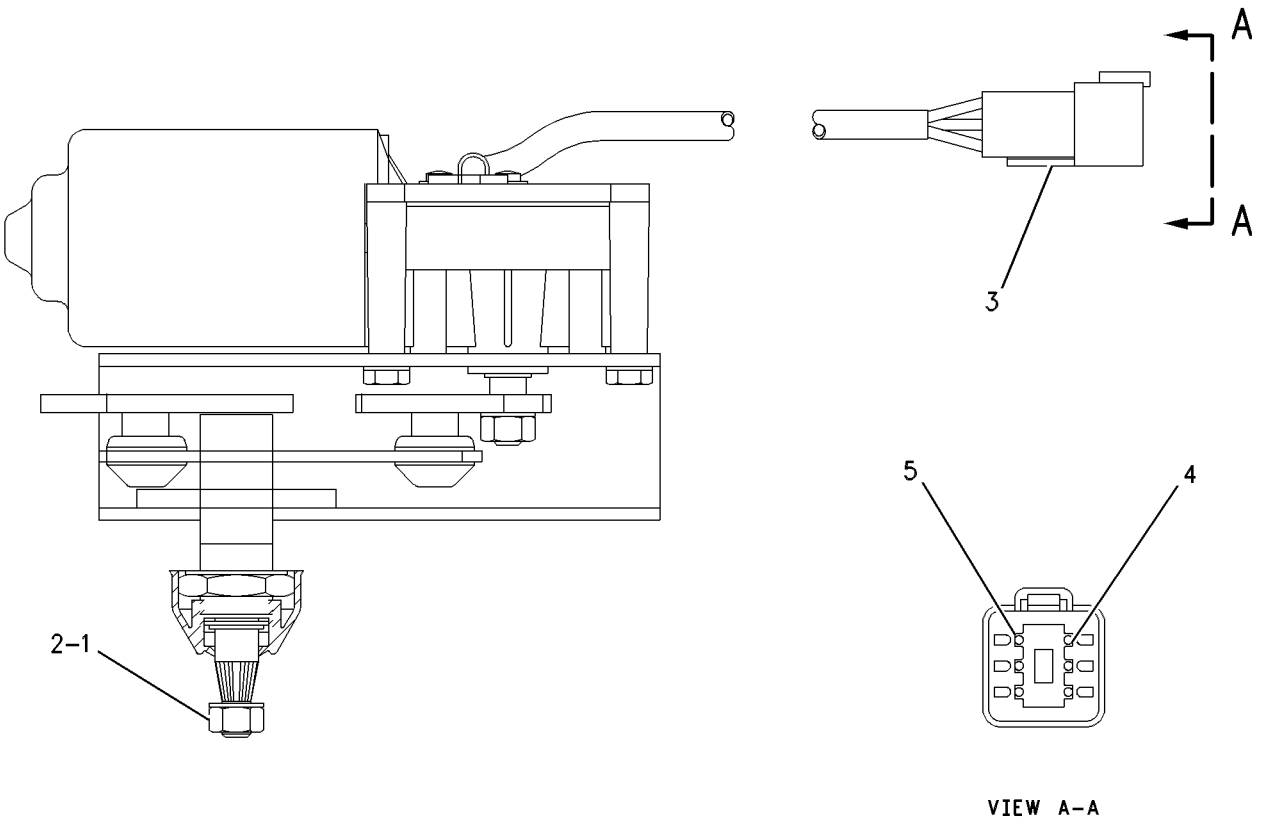

GRAPHIC #1 <END> g00464037

330-5013 MOTOR GP-WINDOW WIPER–DOOR, LH

S/N: S6T1-UP; S6X1-UP; S6Y1-UP
24-VOLT
PART OF 354-6924 WIPER GP-WINDOW

SMCS-7305 i03995189

NOTE	REF NO	GRAPHIC REF	PART NUMBER	QTY	PART NAME 1 2 3 4 5 6 (PRODUCT LEVEL)	SEE PAGE
	1	1	102-8805	1	KIT-RECEPTACLE (6-PIN)	
					(INCLUDES RECEPTACLE AS & WEDGE)	
	2	1	186-3735	5	PIN-CONNECTOR (16-GA TO 18-GA)	
	3	1	8T-8737	1	PLUG-SEAL	
M	4	1	5C-7261	1	NUT (M8X1.25-THD)	
	5	1	3F-9556	1	LOCKWASHER	
	6	1	263-3823	1	CAP-WIPER	

M-METRIC PART

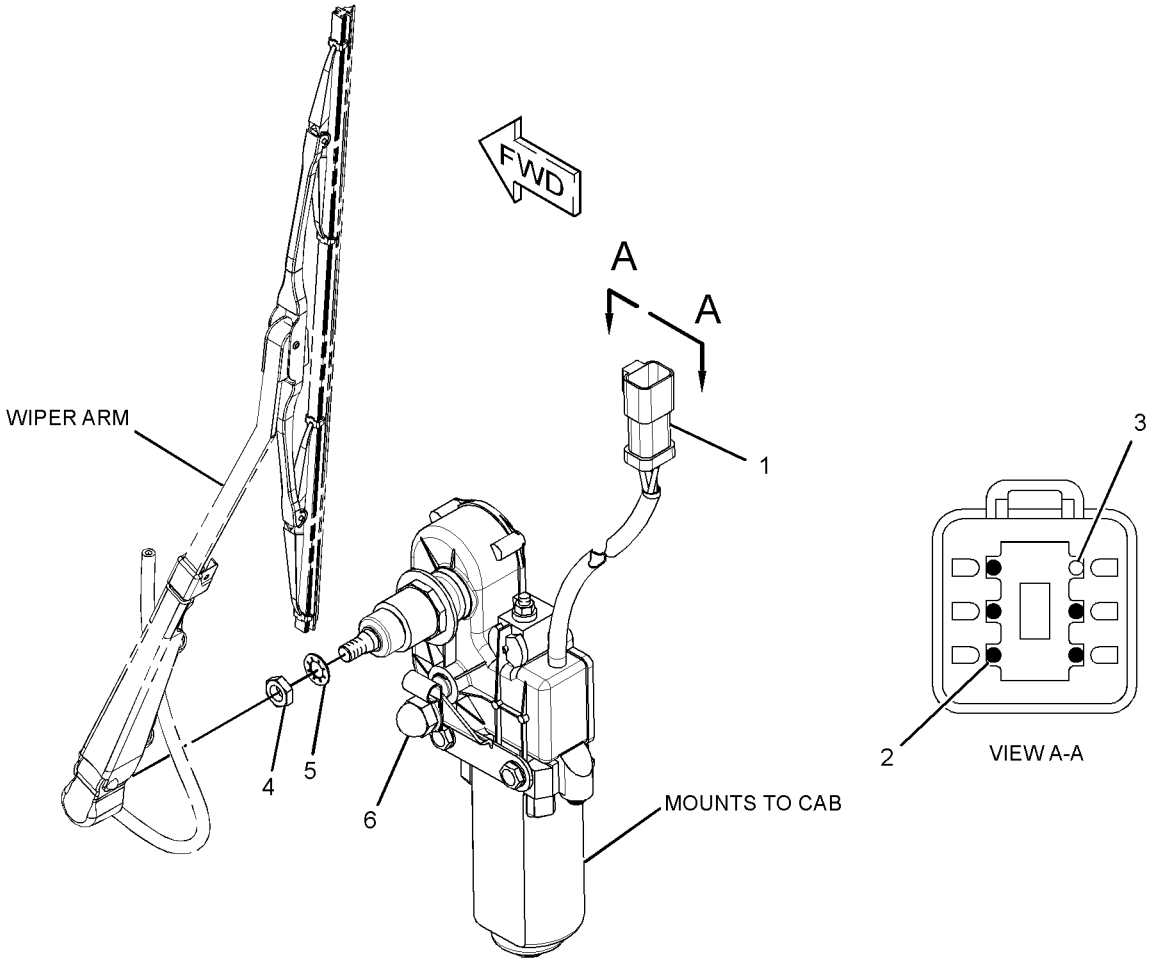

GRAPHIC #1 <END> g02052753

OPERATOR STATION

330-5014 MOTOR GP-WINDOW WIPER–DOOR, RH

S/N: S6T1-UP; S6X1-UP; S6Y1-UP
24-VOLT
PART OF 354-6924 WIPER GP-WINDOW

SMCS-7305 i03995187

NOTE	REF NO	GRAPHIC REF	PART NUMBER	QTY	PART NAME 1 2 3 4 5 6 (PRODUCT LEVEL)	SEE PAGE
	1	1	8T-8737	1	PLUG-SEAL	
	2	1	102-8805	1	KIT-RECEPTACLE (6-PIN)	
					(INCLUDES RECEPTACLE AS & WEDGE)	
	3	1	186-3735	5	PIN-CONNECTOR (16-GA TO 18-GA)	
	4	1	263-3823	1	CAP-WIPER	
	5	1	3F-9556	1	LOCKWASHER	
M	6	1	5C-7261	1	NUT (M8X1.25-THD)	

M-METRIC PART

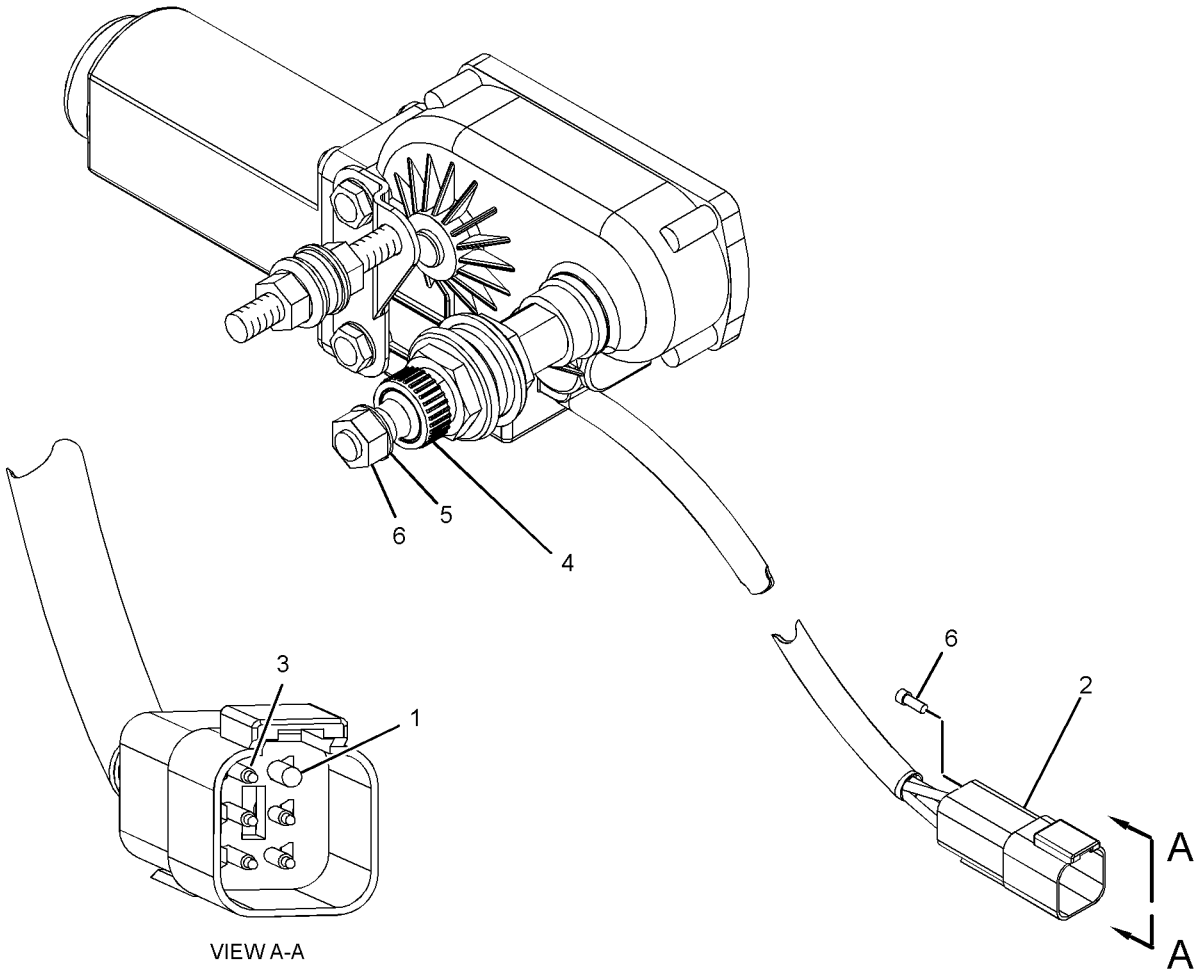

GRAPHIC #1 <END> g02029793

237-9140 MOUNTING GP-ANTENNA–GRADE CONTROL

S/N: S6T1-UP; S6X1-UP; S6Y1-UP
PART OF 317-6580 GRADE CONTROL GP
AN ATTACHMENT

SMCS-7606 i04000858

NOTE	REF NO	GRAPHIC REF	PART NUMBER	QTY	PART NAME 1 2 3 4 5 6 (PRODUCT LEVEL)	SEE PAGE
	1	1	317-2656	1	HANDHOLD AS	
	2	1	5P-1076	2	WASHER-HARD (13.5X30X4-MM THK)	
M	3	1	8T-4139	2	BOLT (M12X1.75X30-MM)	

M-METRIC PART

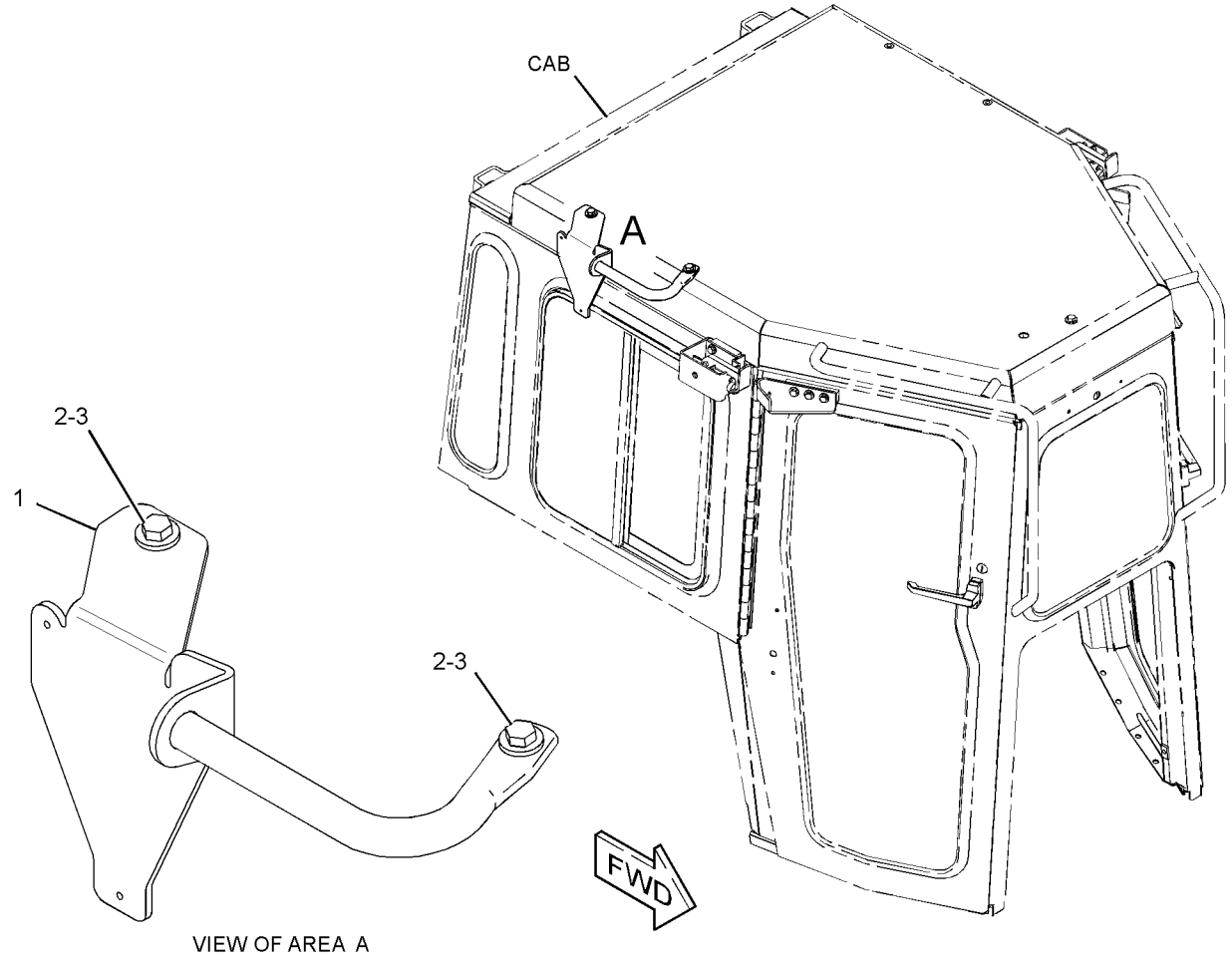

GRAPHIC #1 <END> g01571261

OPERATOR STATION

317-8767 MOUNTING GP-BRACKET

S/N: S6T1-UP; S6X1-UP; S6Y1-UP
PART OF 317-1766 CANOPY AR
AN ATTACHMENT

SMCS-7604 i03994971

NOTE	REF NO	GRAPHIC REF	PART NUMBER	QTY	PART NAME 1 2 3 4 5 6 (PRODUCT LEVEL)	SEE PAGE
	1	1	8T-4121	2	WASHER-HARD (11X21X2.5-MM THK)	
M	2	1	8T-4185	2	BOLT (M10X1.5X50-MM)	
	3	1	9R-2216	2	BOSS	

M-METRIC PART

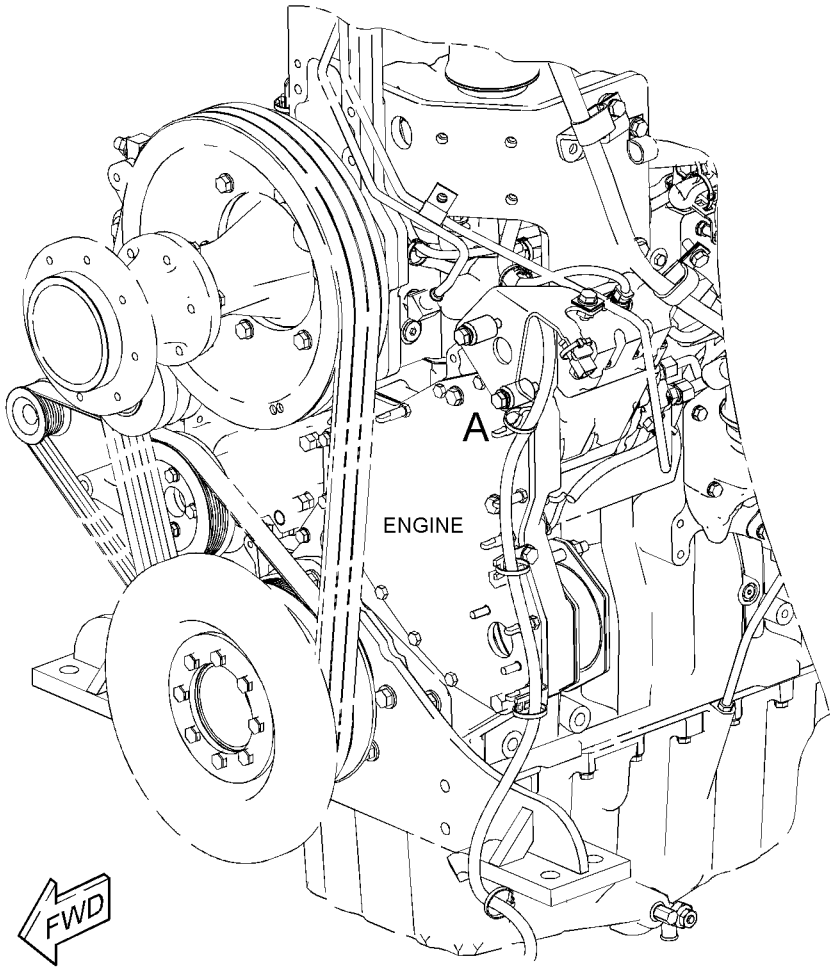

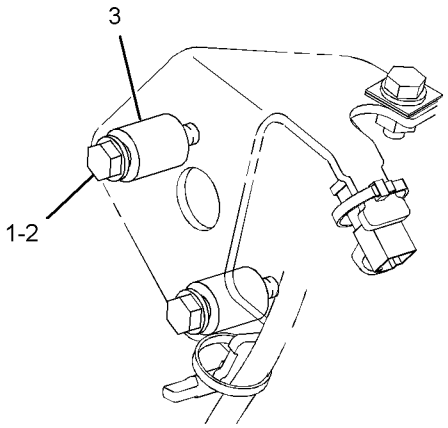

VIEW OF AREA A

GRAPHIC #1 <END> g01426620

OPERATOR STATION

169-9637 MOUNTING GP-CAB

S/N: S6T1-UP; S6X1-UP; S6Y1-UP
PART OF 317-4153 CAB AR

SMCS-7266, 7301 i04010529

NOTE	REF NO	GRAPHIC REF	PART NUMBER	QTY	PART NAME 1 2 3 4 5 6 (PRODUCT LEVEL)	SEE PAGE
	1	1	9G-0986	1	SEAL	
	2	1	9G-0983	2	SEAL	
D	3	1	5P-7514		SEAL (2.1-M)	
	4	1	9G-0990	1	SEAL	
	5	1	113-6033	1	ANGLE	
M	6	1	189-5358	2	BOLT (M10X1.5X60-MM)	
	7	1	7X-3392	31	WASHER-HARD (13.5X22.5X3-MM THK)	
	8	1	171-2438	7	BOLT-12 POINT HEAD (M12X1.75X30-MM)	
M	9	1	8T-4136	8	BOLT (M10X1.5X25-MM)	
	10	1	7X-7729	8	WASHER (11X25X3-MM THK)	
D	11	1	5P-7513		SEAL (4.2-M)	
	12	1	189-5359	2	WASHER-HARD (10.5X28.5X5-MM THK)	
M	13	1	189-6123	12	BOLT-12 POINT HEAD (M12X1.75X60-MM)	

D-ORDER BY THE METER
M-METRIC PART

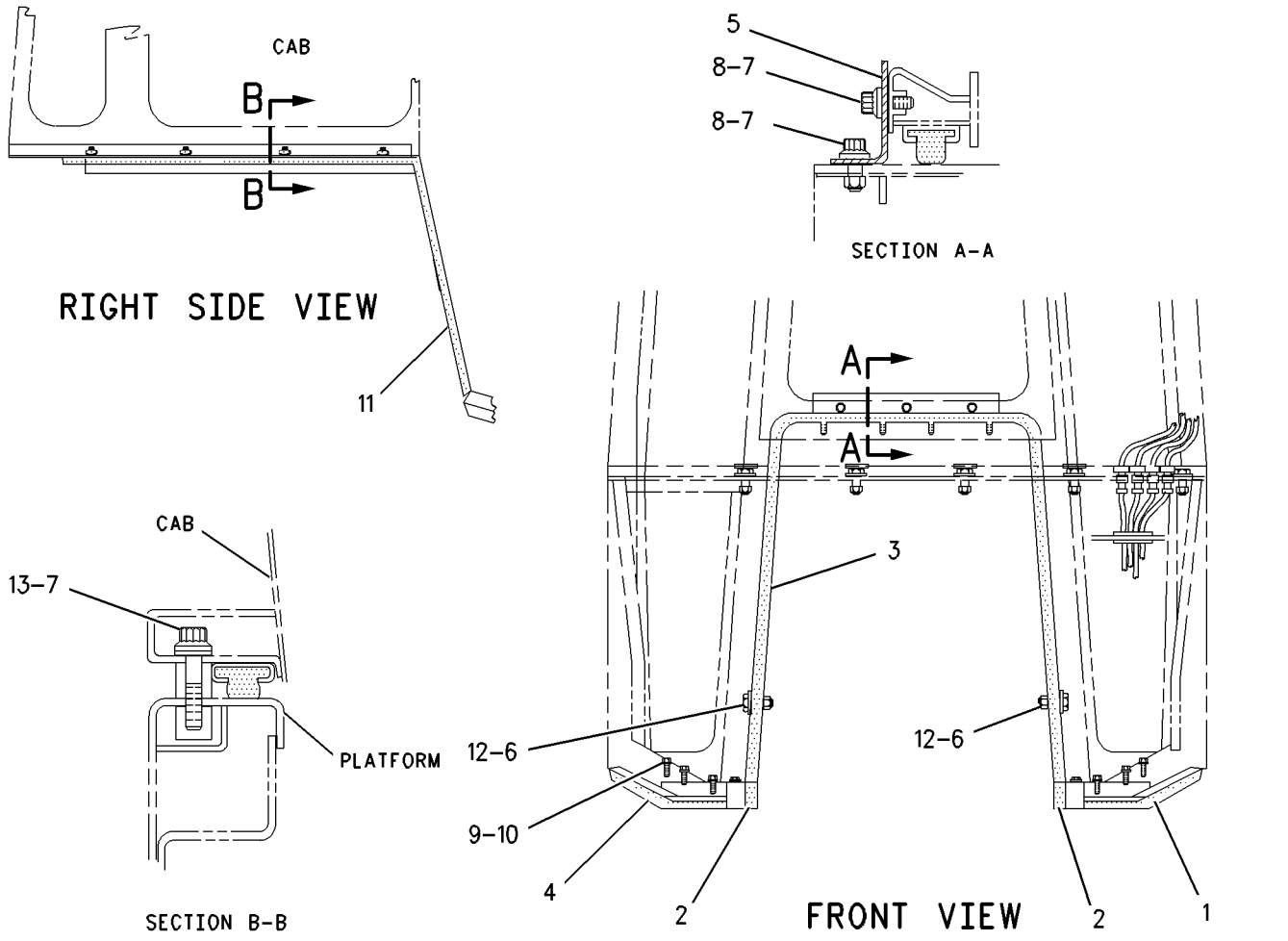

GRAPHIC #1 <END> g00722402

OPERATOR STATION

296-0612 MOUNTING GP-MONITOR—GRADE CONTROL

S/N: S6T1-UP; S6X1-UP; S6Y1-UP
PART OF 317-6566 MOUNTING GP-MONITOR
AN ATTACHMENT

SMCS-7490 i04000833

NOTE	REF NO	GRAPHIC REF	PART NUMBER	QTY	PART NAME 1 2 3 4 5 6 (PRODUCT LEVEL)	SEE PAGE
	1	1	222-9151	2	WASHER-HARD (11X32X5-MM THK)	
	2	1	245-8334	2	KNOB	
	3	1	296-0614	1	BRACKET AS	
	4	1	296-2861	1	BRACKET AS	
	5	1	299-5417	1	SWIVEL AS	
		1	6V-8236	2	PIN-SPRING	
	6	1	299-5418	1	PIVOT AS-LOWER	
M	7	1	5C-2890	1	NUT (M6X1-THD)	
M	8	1	7X-7888	1	BOLT (M6X1X90-MM)	
M	9	1	8T-0389	1	LOCKNUT (M10X1.5-THD)	
M	10	1	8T-0639	4	BOLT (M6X1X12-MM)	
	11	1	8T-4121	6	WASHER-HARD (11X21X2.5-MM THK)	
M	12	1	8T-4195	5	BOLT (M10X1.5X30-MM)	
M	13	1	8T-7852	6	BOLT (M4X0.7X10-MM)	
	14	1	9X-8256	10	WASHER (6.6X12X2-MM THK)	

M-METRIC PART

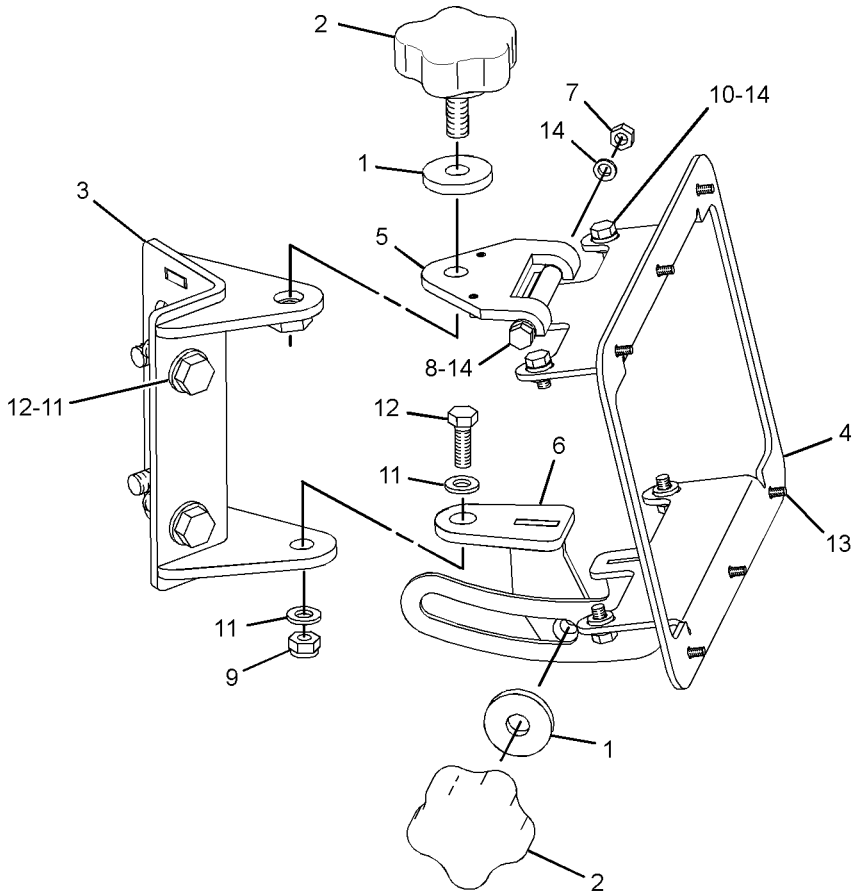

GRAPHIC #1 <END> g01362299

OPERATOR STATION

317-6566 MOUNTING GP-MONITOR—GRADE CONTROL

S/N: S6T1-UP; S6X1-UP; S6Y1-UP
PART OF 317-6573 GRADE CONTROL AR
AN ATTACHMENT

SMCS-7490 i04000823

NOTE	PART NUMBER	QTY	PART NAME 1 2 3 4 5 6 (PRODUCT LEVEL)	SEE PAGE
Y	*296-0612*	1	MOUNTING GP-MONITOR (GRADE CONTROL)	580
	320-5905	1	HARNESS AS-MONITOR (ADVISOR)	
	8T-8737	115	PLUG-SEAL	
	9X-6772	2	STRAP-CABLE	
E	125-7874		TUBE-HEAT SHRINK (5.72-MM DIA) (5-CM)	
E	125-7875		TUBE-HEAT SHRINK (7.44-MM DIA) (5-CM)	
	9X-3402	18	SOCKET-CONNECTOR (16-GA TO 18-GA)	
	126-1768	7	SOCKET-CONNECTOR (14-GA)	
	126-1774	1	COVER-CONNECTOR	
	5P-2766	2	TERMINAL-RING (18-GA TO 22-GA, NO. 6 SCREW)	
	147-1444	1	PLUG AS-CONNECTOR (70-PIN)	
	159-9322	1	SEAL-O-RING	
	160-7689	1	PLUG AS-CONNECTOR (70-PIN)	
	159-9322	1	SEAL-O-RING	
	320-5906	1	HARNESS AS-MONITOR (GPS)	
	8T-8737	57	PLUG-SEAL	
	9X-6772	2	STRAP-CABLE	
E	119-3662		TUBE-HEAT SHRINK (10.85-MM DIA) (7-CM)	
E	125-7875		TUBE-HEAT SHRINK (7.44-MM DIA) (5-CM)	
	9X-3402	11	SOCKET-CONNECTOR (16-GA TO 18-GA)	
	126-1768	2	SOCKET-CONNECTOR (14-GA)	
	126-1774	1	COVER-CONNECTOR	
	160-7689	1	PLUG AS-CONNECTOR (70-PIN)	
	159-9322	1	SEAL-O-RING	
	248-5358	1	PLUG AS-CONNECTOR (39-PIN)	
	7K-1181	1	STRAP-CABLE	

E-ORDER BY THE CENTIMETER
Y-SEPARATE ILLUSTRATION

<END>

OPERATOR STATION

208-8699 MOUNTING GP-ROPS

S/N: S6T1-UP; S6X1-UP; S6Y1-UP

PART OF 336-9684, 336-9685, 336-9686 CHASSIS AR

SMCS-7266 i03994509

NOTE	REF NO	GRAPHIC REF	PART NUMBER	QTY	PART NAME 1 2 3 4 5 6 (PRODUCT LEVEL)	SEE PAGE
	1	1	227-5058	1	SUPPORT AS-ROPS (LH)	
	2	1	227-5059	1	SUPPORT AS-ROPS (RH)	
M	3	1	7X-2581	12	BOLT (M30X3.5X100-MM)	
	4	1	9X-8258	12	WASHER (33X56X6-MM THK)	

M-METRIC PART

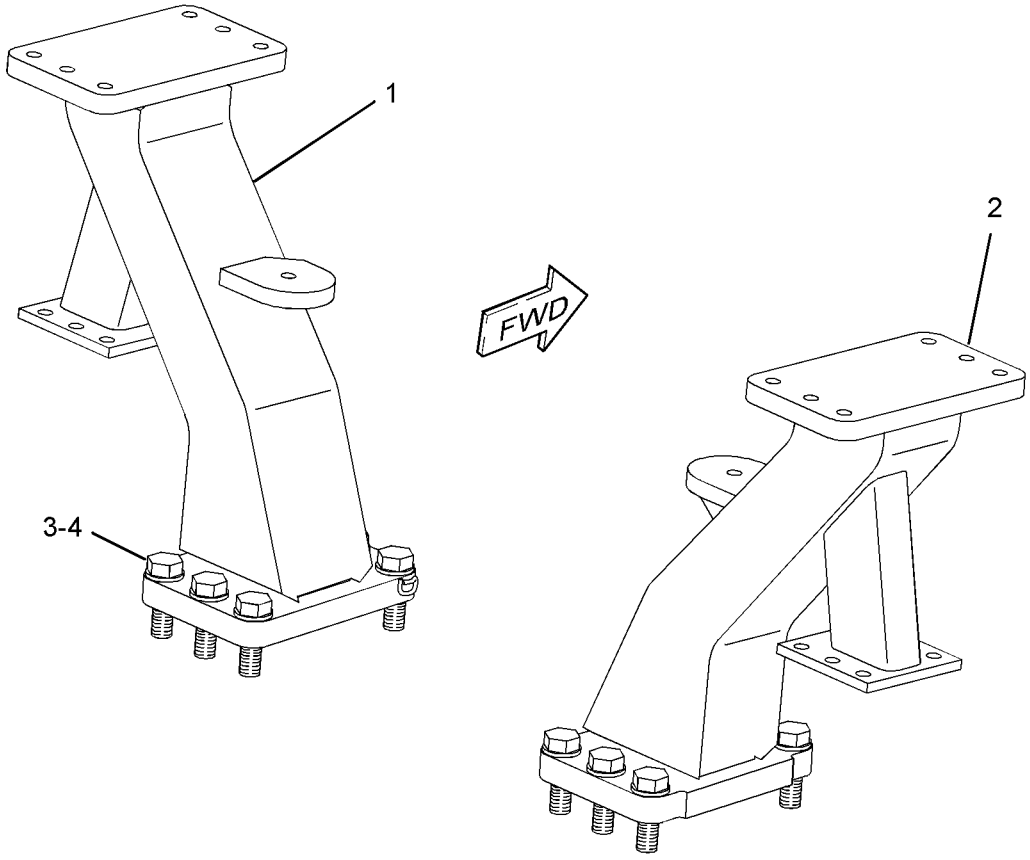

GRAPHIC #1 <END> g01205588

178-0604 PAN GP-BACKREST–CLOTH

S/N: S6T1-UP; S6X1-UP; S6Y1-UP
PART OF 178-0603 SEAT GP
ALSO AN ATTACHMENT

SMCS-7312 i02605954

NOTE	REF NO	GRAPHIC REF	PART NUMBER	QTY	PART NAME 1 2 3 4 5 6 (PRODUCT LEVEL)	SEE PAGE
	1	1	164-4883	1	KNOB-LUMBAR	
Y	2	1	*178-0605*	1	PAN GP-BACKREST (LUMBAR)	584
	3	1	233-6745	1	CUSHION AS (CLOTH)	
	4	1	250-4628	3	PLUG	
	5	1	8T-7566	1	PIN-SPRING	

Y-SEPARATE ILLUSTRATION

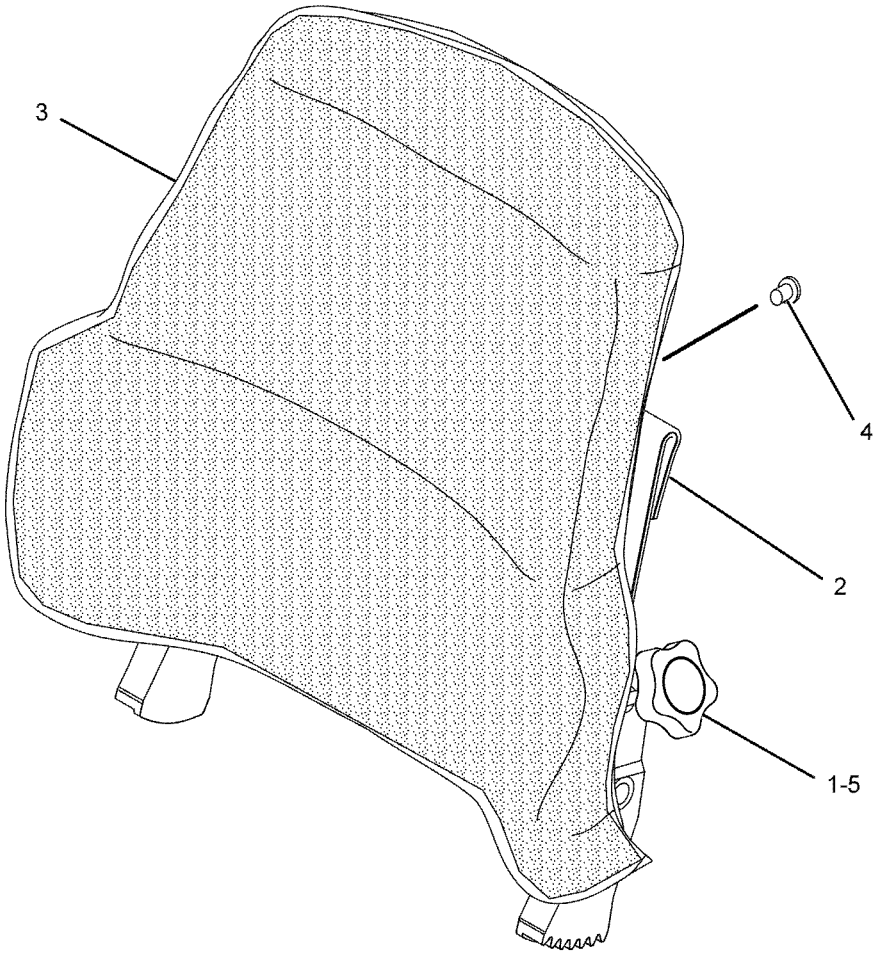

GRAPHIC #1 <END> g01092296

OPERATOR STATION

178-0605 PAN GP-BACKREST–LUMBAR

S/N: S6T1-UP; S6X1-UP; S6Y1-UP
PART OF 178-0604, 180-7305 PAN GP-BACKREST
ALSO AN ATTACHMENT

SMCS-7312 i03437182

NOTE	REF NO	GRAPHIC REF	PART NUMBER	QTY	PART NAME 1 2 3 4 5 6 (PRODUCT LEVEL)	SEE PAGE
	1	1	4K-9429	8	RIVET-POP	
	2	1	5P-7957	1	LANYARD	
	3	1	136-1543	1	PLATE AS-LUMBAR	
	4	1	173-2052	1	RETAINER	
	5	1	178-7907	1	HOLDER	
	6	1	261-5694	1	PAN AS-BACKREST	

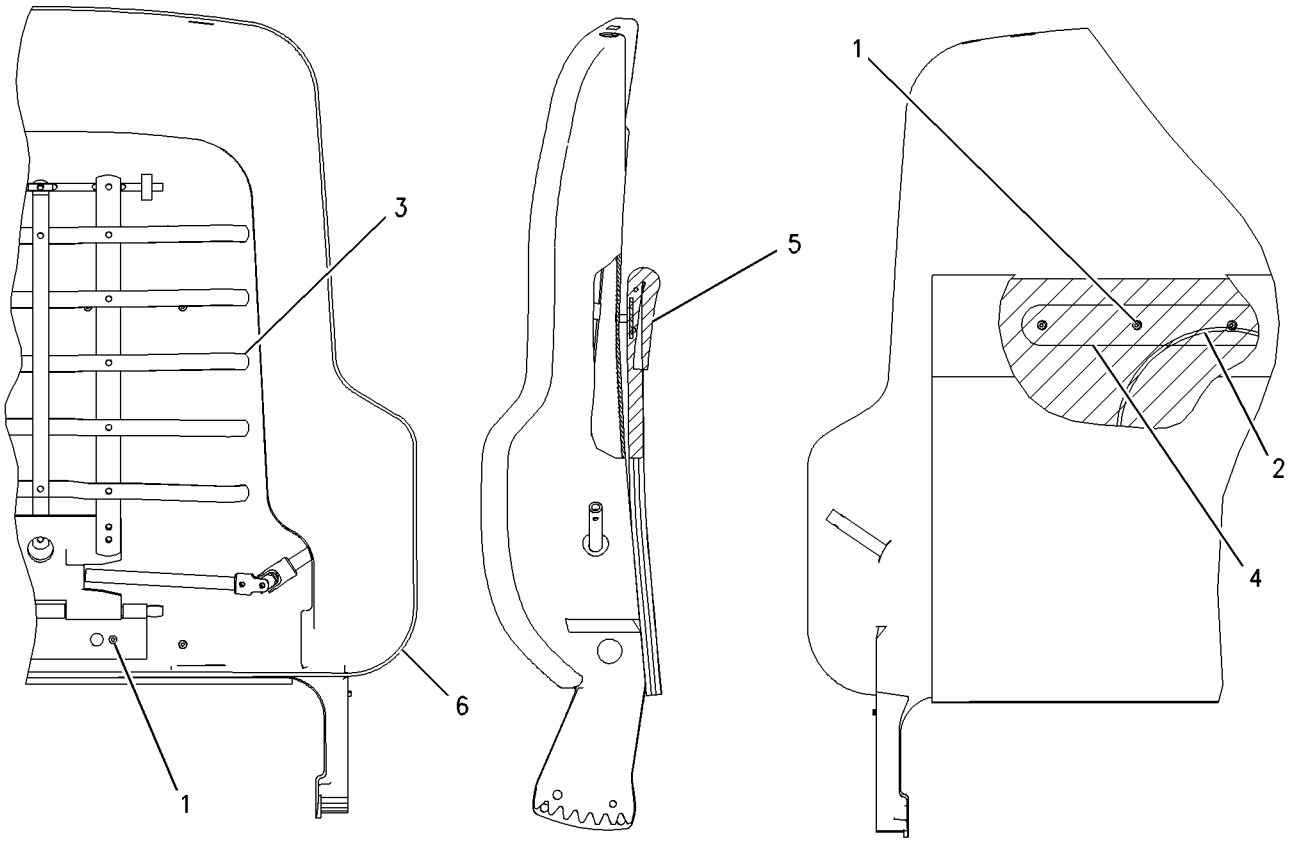

GRAPHIC #1 <END> g00716497

180-7305 PAN GP-BACKREST–VINYL

S/N: S6T1-UP; S6X1-UP; S6Y1-UP
PART OF 180-7304 SEAT GP
AN ATTACHMENT

SMCS-7312 i02122316

NOTE	REF NO	GRAPHIC REF	PART NUMBER	QTY	PART NAME 1 2 3 4 5 6 (PRODUCT LEVEL)	SEE PAGE
	1	1	164-4883	1	KNOB-LUMBAR	
	2	1	169-0697	1	CUSHION AS	
Y	3	1	*178-0605*	1	PAN GP-BACKREST (LUMBAR)	584
	4	1	250-4628	3	PLUG	
	5	1	8T-7566	1	PIN-SPRING	

Y-SEPARATE ILLUSTRATION

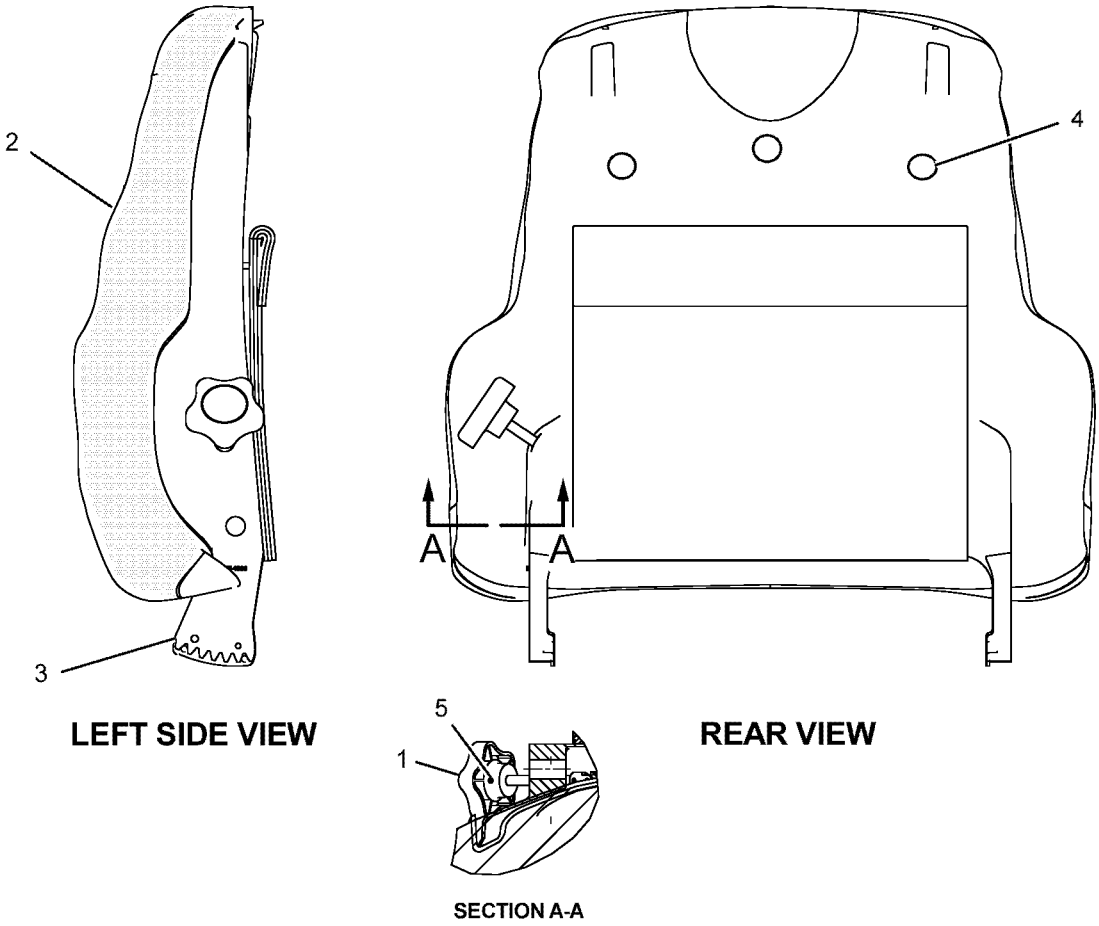

LEFT SIDE VIEW

REAR VIEW

SECTION A-A

GRAPHIC #1 <END> g01082619

OPERATOR STATION

323-9636 PANEL GP-INSTRUMENT—OPEN ROPS

S/N: S6T1-UP; S6X1-UP; S6Y1-UP
PART OF 317-1766 CANOPY AR
AN ATTACHMENT

SMCS-7450, 7451 i04033074

NOTE	REF NO	GRAPHIC REF	PART NUMBER	QTY	PART NAME 1 2 3 4 5 6 (PRODUCT LEVEL)	SEE PAGE
	1	1	3E-5239	2	RELAY AS (24-VOLT)	
	2	1	3S-2093	9	STRAP-CABLE	
	3	1	083-9527	1	SPACER (13X20X1.5-MM THK)	
	4	1	110-6109	1	KNOB-CONTROL (LAMP)	
	5	1	110-7887	1	SWITCH AS-START (KEY)	
		1	7T-6799	1	NUT-MOUNTING (1-32-THD)	
		1	102-8804	1	KIT-RECEPTACLE (4-PIN)	
					(INCLUDES RECEPTACLE AS & WEDGE)	
		1	8T-8729	4	PIN-CONNECTOR (16-GA TO 18-GA)	
	6	1	122-7127	18	NUT-SPECIAL (NYLON)	
	7	1	123-9294	2	LAMP (24-VOLT)	
	8	1	159-9257	1	PANEL-DASH (LIGHT)	
	9	1	164-0847	1	CABLE	
	10	1	175-1349	1	PLATE	
	11	1	175-3950	1	SWITCH AS-ROTARY (LIGHT SWITCH)	
		1	9W-0852	7	PIN-CONNECTOR (14-GA TO 16-GA)	
		1	102-8806	1	KIT-RECEPTACLE (8-PIN)	
					(INCLUDES RECEPTACLE AS & WEDGE)	
	12	1	178-3003	1	COVER	
M	13	1	187-7719	4	SCREW-HEX FLANGE (M5X2.24X14-MM)	
	14	1	194-1466	1	CLIP	
	15	1	293-9123	1	SWITCH AS-ROCKER (FLOODLIGHTS)	
	16	1	311-3741	1	GUARD-VANDALISM	
	17	1	311-3742	1	PANEL AS	
		1	311-3737	2	GUIDE	
	18	1	311-3744	1	ROD	
	19	1	*314-3124*	1	LOCK GP	
		1	226-0293	1	LOCK AS	
		1	300-1643	1	CAM	
	20	1	318-2389	1	MODULE GP-DISPLAY (INSTRUMENT CLUSTER)	
	21	1	320-5887	1	HARNESS AS-DASH	
		1	102-8803	1	KIT-RECEPTACLE (3-PIN)	
		1	102-8804	1	KIT-RECEPTACLE (4-PIN)	
		1	102-8805	1	KIT-RECEPTACLE (6-PIN)	
					(EACH RECEPTACLE KIT INCLUDES RECEPTACLE AS & WEDGE)	
		1	3T-3158	2	SOCKET-LAMP	
		1	3T-3159	4	SPRING	
		1	3T-3278	2	BOOT	
		1	6D-4161	2	CONTACT	
		1	7X-6222	1	PLUG AS-CONNECTOR (24-PIN)	
		1	3E-4367	1	RING-RETAINING	
M		1	3E-8558	1	BOLT (M5X0.8X39.37-MM)	
		1	9X-3265	2	SEAL-CONNECTOR (24-PIN)	
		1	8T-8737	85	PLUG-SEAL	
		1	9X-1054	2	PLUG AS-CONNECTOR (4-PIN)	
E		1	114-8843	1	SLEEVE-PLASTIC (20-CM)	
		1	125-7874	30	TUBE-HEAT SHRINK (5.72-MM DIA)	
		1	125-7875	15	TUBE-HEAT SHRINK (7.44-MM DIA)	
		1	9X-3402	1	SOCKET-CONNECTOR (16-GA TO 18-GA)	
		1	9X-3401	1	PIN-CONNECTOR (16-GA TO 18-GA)	
					—OR—	
		1	126-1767	1	PIN-CONNECTOR (14-GA TO 16-GA)	
		1	155-2270	1	KIT-CONNECTING PLUG (2-PIN)	
		1	155-2271	1	KIT-CONNECTING PLUG (4-PIN)	

323-9636 PANEL GP-INSTRUMENT ***(contd.)*** i04033074

NOTE	REF NO	GRAPHIC REF	PART NUMBER	QTY	PART NAME 1 2 3 4 5 6 (PRODUCT LEVEL)	SEE PAGE
		1	155-2274	1	KIT-CONNECTING PLUG (6-PIN)	
		1	155-2260	1	KIT-CONNECTING PLUG (3-PIN)	
		1	174-0503	1	KIT-CONNECTING PLUG (3-PIN)	
					(EACH PLUG KIT INCLUDES PLUG AS, WEDGE & INTERFACE SEAL)	
		1	245-7434	1	KIT-CONNECTING PLUG (10-PIN)	
		1	288-7146	10	WIRE AS	
		1	185-1861	12	SEAL-WIRE	
		1	214-4208	1	RECEPTACLE AS-CONNECTOR (70-PIN)	
	22	1	334-7392	1	FILM-CERTIFICATION (OPS, READ OMM)	
	23	1	204-6102	18	WASHER-HARD (4.45X9.52X1-MM THK)	
M	24	1	213-7315	6	SCREW-TRUSS HEAD (M4X0.7X25-MM)	
	25	1	216-7352	2	SCREW-TRUSS HEAD (M8X1.25X30-MM)	
	26	1	4M-5281	2	BOLT (1/4-20X0.75-IN)	
	27	1	4P-8134	2	CLIP	
	28	1	5P-4115	2	WASHER-HARD (7.2X19X2-MM THK)	
	29	1	5P-4116	2	WASHER-HARD (8.8X20.5X2-MM THK)	
M	30	1	7Y-7256	12	SCREW-TRUSS HEAD (M4X0.7X35-MM)	
M	31	1	8T-0337	1	SCREW-MACHINE (M4X0.7X12-MM)	
M	32	1	8T-2659	1	LOCKNUT (M4X0.7-THD)	
M	33	1	8T-4138	1	BOLT (M6X1X20-MM)	
M	34	1	8T-4171	2	BOLT (M6X1X12-MM)	
	35	1	8T-4205	3	WASHER-HARD (7.2X14.5X2-MM THK)	
M	36	1	9X-2044	2	SCREW-TRUSS HEAD (M6X1X16-MM)	
	37	1	9X-8267	2	WASHER (6.6X12X2-MM THK)	

E-ORDER BY THE CENTIMETER
M-METRIC PART

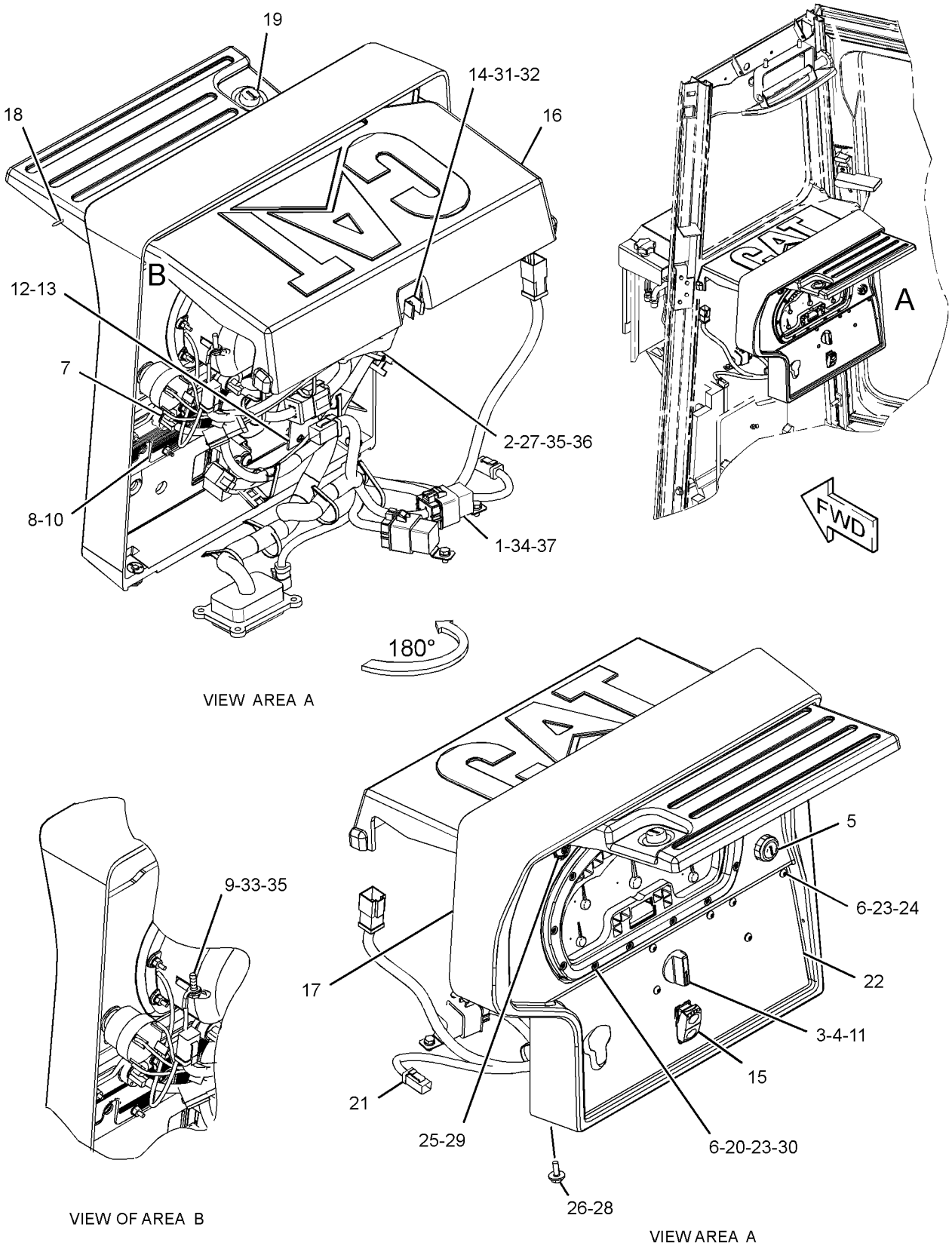

GRAPHIC #1 <END> g02178454

OPERATOR STATION

317-4158 PLATFORM GP

S/N: S6T1-UP; S6X1-UP; S6Y1-UP

PART OF 317-4155 PLATFORM GP-OPERATOR

SMCS-7253, 7254 i03995336

NOTE	REF NO	GRAPHIC REF	PART NUMBER	QTY	PART NAME 1 2 3 4 5 6 (PRODUCT LEVEL)	SEE PAGE
	1	1	169-6902	1	BRACKET AS	
M		1	8T-3490	9	NUT-WELD (M10X1.5-THD)	
	2	1	317-4159	1	PLATFORM AS	
	3	1	7X-7729	2	WASHER (11X25X3-MM THK)	
M	4	1	8T-4136	2	BOLT (M10X1.5X25-MM)	

M-METRIC PART

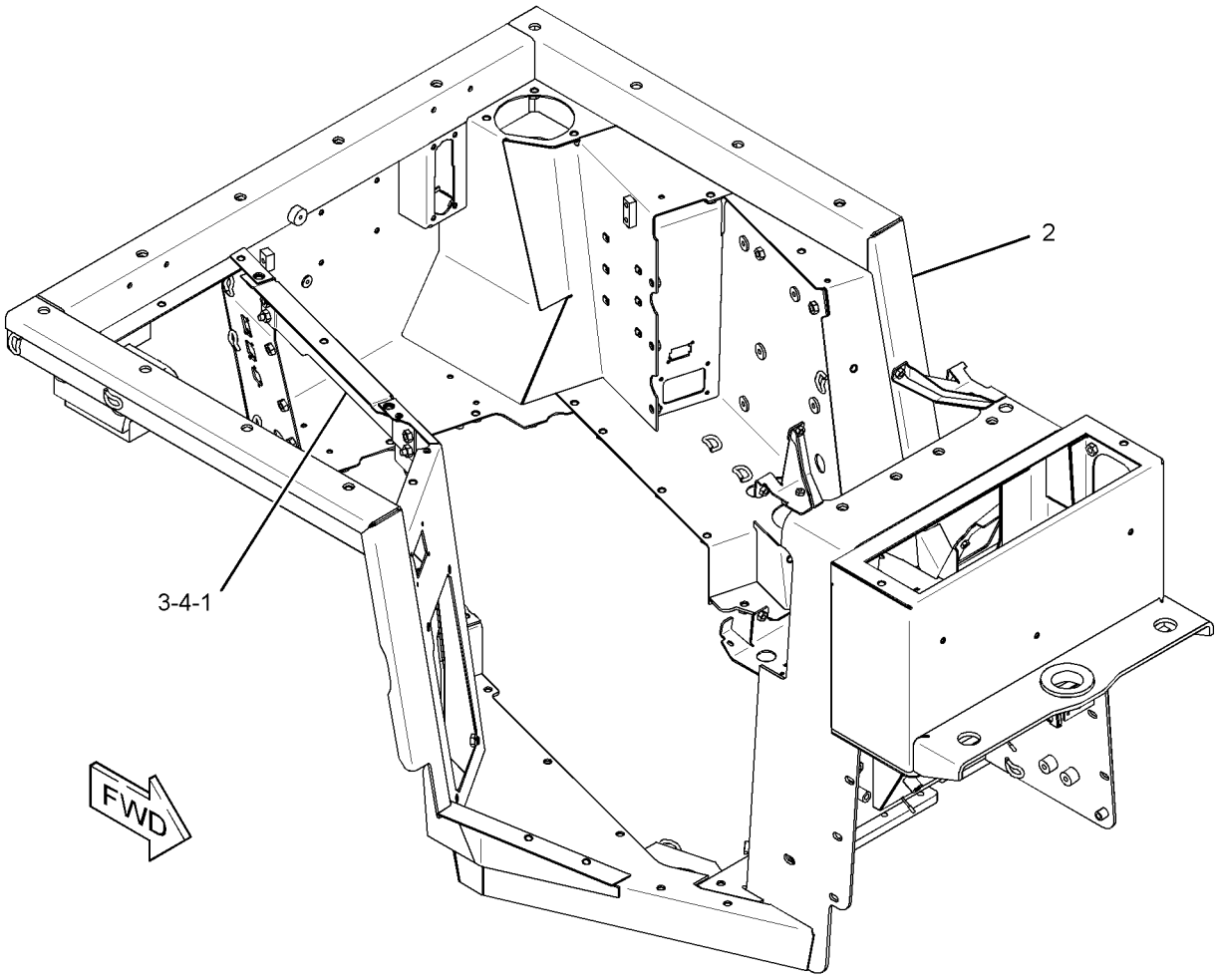

GRAPHIC #1 <END> g02194083

OPERATOR STATION

317-1767 PLATFORM GP-OPERATOR–OPEN ROPS

S/N: S6T1-UP; S6X1-UP; S6Y1-UP
PART OF 317-1766 CANOPY AR
AN ATTACHMENT

SMCS-7253 i03994945

NOTE	REF NO	GRAPHIC REF	PART NUMBER	QTY	PART NAME 1 2 3 4 5 6 (PRODUCT LEVEL)	SEE PAGE
	1	1	3T-3634	1	HANDRAIL	
	2	1	5P-0998	3	PLUG-SEAL	
	3	1	6I-9706	1	RETAINER AS	
M		1	6V-9632	4	NUT-WELD (M6X1-THD)	
	4	1	6V-1790	3	PLUG-BUTTON	
	5	1	6Y-0206	2	RETAINER	
	6	1	6Y-8114	2	SPACER (13.8X23.75X12.7-MM THK)	
	7	1	7G-4824	1	STRAP	
	8	1	7T-6299	1	GROMMET	
	9	1	8E-7791	1	STRAP	
	10	1	127-3018	1	HANDHOLD	
	11	1	141-2240	1	PLATE	
M	12	1	184-0982	4	SCREW-PAN HEAD (M6X1X16-MM)	
	13	1	237-0204	1	FLOORPLATE AS	
M		1	8T-3490	2	NUT-WELD (M10X1.5-THD)	
	14	1	237-0205	1	FLOORPLATE AS	
M		1	8T-3597	4	NUT-WELD (M12X1.75-THD)	
	15	1	241-4342	1	GASKET	
	16	1	241-4344	1	GASKET	
	17	1	241-7917	1	HOUSING	
	18	1	261-8619	1	FLOOR MAT	
	19	1	317-4171	1	PLATE	
Y	20	1	*336-1846*	1	COVER GP-CONSOLE	547
	21	1	198-9706	4	SCREW-TRUSS HEAD (M5X0.8X16-MM)	
	22	1	5P-1076	10	WASHER-HARD (13.5X30X4-MM THK)	
	23	1	5P-4115	2	WASHER-HARD (7.2X19X2-MM THK)	
	24	1	5P-4116	2	WASHER-HARD (8.8X20.5X2-MM THK)	
	25	1	7X-7729	10	WASHER (11X25X3-MM THK)	
M	26	1	8T-4136	8	BOLT (M10X1.5X25-MM)	
M	27	1	8T-4137	2	BOLT (M10X1.5X20-MM)	
M	28	1	8T-4138	2	BOLT (M6X1X20-MM)	
M	29	1	8T-4139	10	BOLT (M12X1.75X30-MM)	
M	30	1	8T-4189	2	BOLT (M8X1.25X20-MM)	
M	31	1	8T-4194	2	BOLT (M12X1.75X50-MM)	
	32	1	8T-4223	2	WASHER-HARD (13.5X25.5X3-MM THK)	
	33	1	8T-8908	2	BOLT (1/4-20X1-IN)	
	34	1	9X-8256	2	WASHER (6.6X12X2-MM THK)	

M-METRIC PART
Y-SEPARATE ILLUSTRATION

317-1767 PLATFORM GP-OPERATOR ***(contd.)*** i03994945

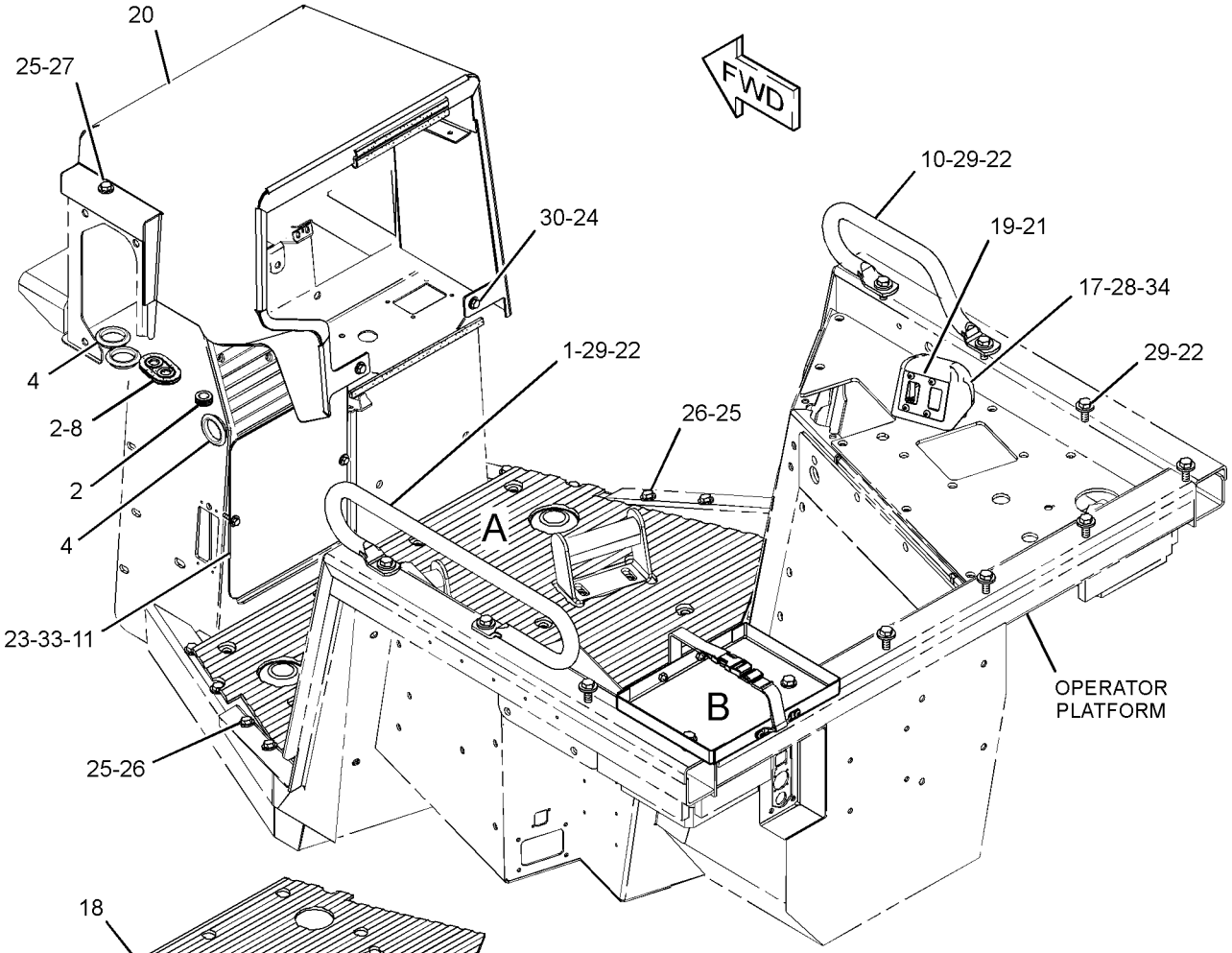

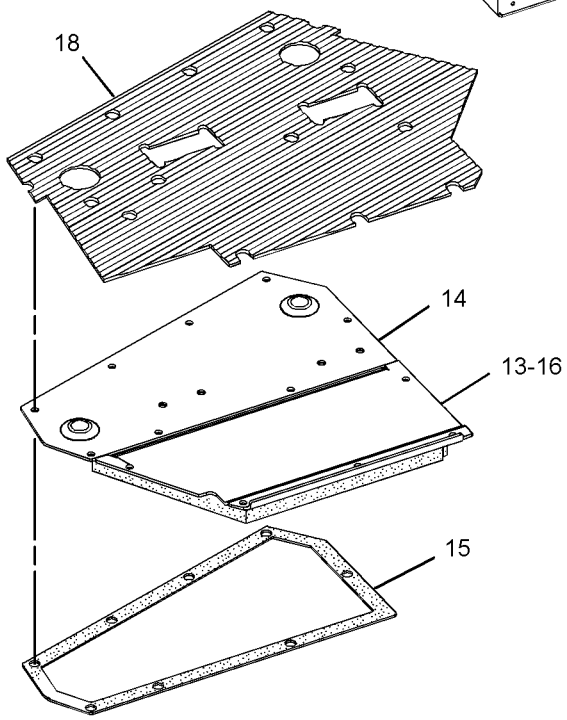

VIEW OF AREA A (EXPLODED)

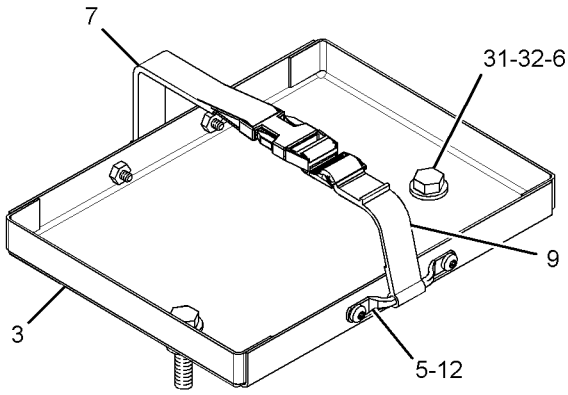

VIEW OF AREA B

GRAPHIC #1 <END> g02177907

OPERATOR STATION

317-4155 PLATFORM GP-OPERATOR

S/N: S6T1-UP; S6X1-UP; S6Y1-UP
ENCLOSED ROPS
PART OF 336-9684, 336-9685, 336-9686 CHASSIS AR

SMCS-7253 i03995335

NOTE	REF NO	GRAPHIC REF	PART NUMBER	QTY	PART NAME 1 2 3 4 5 6 (PRODUCT LEVEL)	SEE PAGE
	1	1,2	4H-0407	10	PLUG-PROTECTION	
	2	1	5P-7509	1	PLUG-BUTTON	
	3	1	6T-4556	1	COVER	
	4	1	6T-4557	1	GASKET	
	5	1	6V-8547	1	PLUG-BUTTON	
	6	1	6Y-0206	2	RETAINER	
	7	1	7G-4824	1	STRAP	
	8	1	8E-7791	1	STRAP	
	9	1	9P-6571	1	PLUG	
	10	2	117-8131	8	MOUNT AS	
	11	1	117-9966	1	PLUG	
	12	1	161-3958	1	GASKET	
	13	2	164-0758	1	BOLT (9/16-18X2-IN)	
	14	1	165-6857	1	PAD AS-RUBBER	
	15	1	170-0251	2	STRIP	
M	16	1	184-0982	12	SCREW-PAN HEAD (M6X1X16-MM)	
	17	1	185-2076	2	SUPPORT AS (FOOT)	
	18	2	185-3666	4	SLEEVE	
	19	1	198-9707	2	SCREW-TRUSS HEAD (M6X1X35-MM)	
	20	1	237-4268	1	COVER AS-PLATFORM	
	21	1	237-4269	1	PLATE AS	
	22	1	237-4270	1	PLATE AS	
	23	2	239-5113	1	COVER AS	
		2	2G-0391	2	SCREW	
		2	131-5492	2	RETAINER-CAPTIVE	
	24	1	241-4343	1	FLOORPLATE AS	
		1	184-3289	1	PANEL	
		1	237-0205	1	FLOORPLATE AS	
		1	241-4342	1	GASKET	
	25	1	241-4345	1	FLOORPLATE AS	
		1	184-3285	1	PANEL	
		1	237-0204	1	FLOORPLATE AS	
		1	241-4344	1	GASKET	
	26	1	241-4346	1	PLATE AS	
	27	1	241-4348	1	GASKET	
	28	1	241-4349	1	GASKET	
	29	1	242-8405	1	BRACKET AS	
	30	1	242-8407	1	GASKET	
	31	1	243-5168	1	GASKET	
	32	1	243-5170	1	COVER AS	
	33	2	248-8866	4	CAP	
	34	1	307-8686	1	PLUG-BUTTON	
Y	35	1	*317-4158*	1	PLATFORM GP	589
	36	1	320-8283	1	PLATE AS	
	37	1	341-7036	1	PLATE	
	38	1	5P-1076	4	WASHER-HARD (13.5X30X4-MM THK)	
	39	2	6T-8714	4	WASHER-HARD (28X125X12-MM THK)	
	40	1	7X-7729	58	WASHER (11X25X3-MM THK)	
M	41	1	8T-4136	38	BOLT (M10X1.5X25-MM)	
M	42	1	8T-4137	3	BOLT (M10X1.5X20-MM)	
M	43	1	8T-4139	4	BOLT (M12X1.75X30-MM)	
	44	2	8T-4167	4	WASHER-HARD (26X44X4-MM THK)	
M	45	1	8T-4195	11	BOLT (M10X1.5X30-MM)	
M	46	1	8T-4196	6	BOLT (M10X1.5X35-MM)	
M	47	2	8T-4649	4	BOLT (M24X3X140-MM)	

317-4155 PLATFORM GP-OPERATOR ***(contd.)*** i03995335

NOTE	REF NO	GRAPHIC REF	PART NUMBER	QTY	PART NAME 1 2 3 4 5 6 (PRODUCT LEVEL)	SEE PAGE
M	48	1	8T-4971	4	BOLT (M6X1X30-MM)	
	49	1	9X-8256	6	WASHER (6.6X12X2-MM THK)	
D	52	2	5P-9909		SEAL (0.1-M)	
E	53	1	3E-3892		SEAL (31-CM)	

D-ORDER BY THE METER
E-ORDER BY THE CENTIMETER
M-METRIC PART
Y-SEPARATE ILLUSTRATION

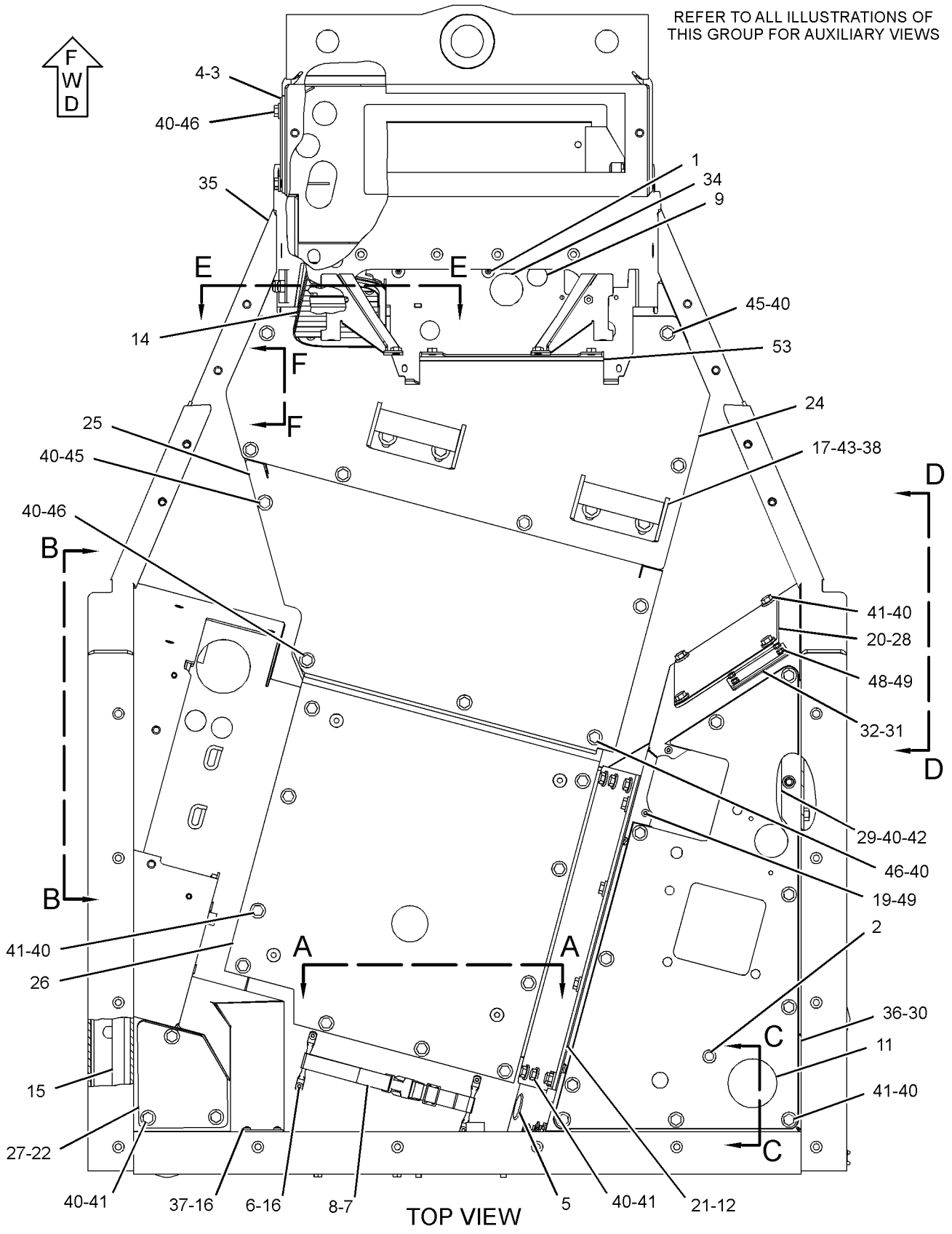

GRAPHIC #1 g02195953

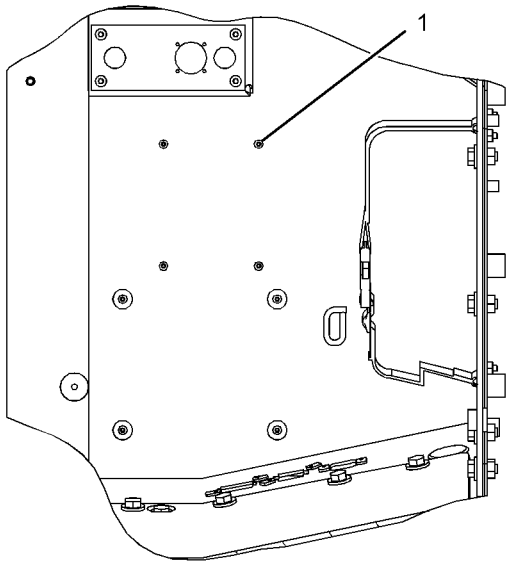

SECTION A-A

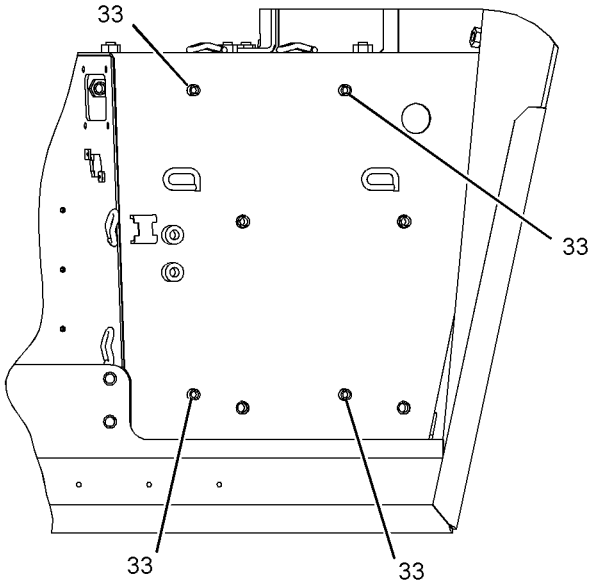

VIEW B-B

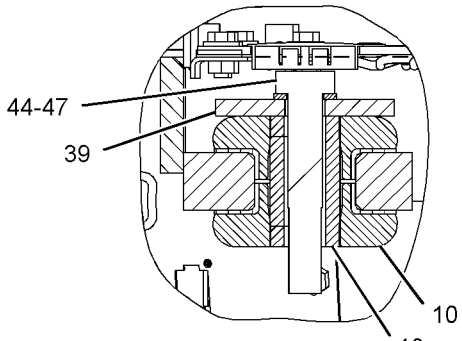

SECTION C-C

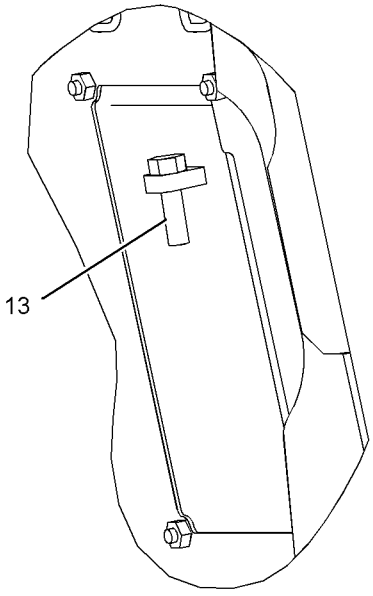

VIEW D-D

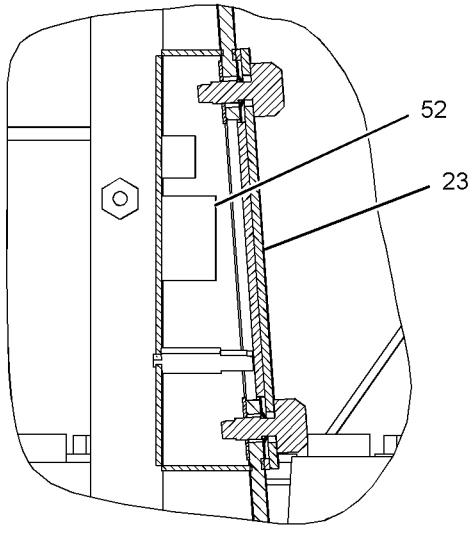

SECTION E-E

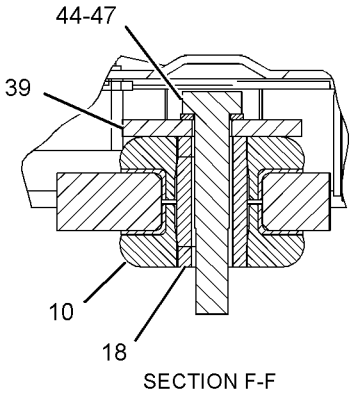

SECTION F-F

GRAPHIC #2 <END> g02195973

OPERATOR STATION

230-4700 PRESSURIZER GP-CAB

S/N: S6T1-UP; S6X1-UP; S6Y1-UP
PART OF 317-4153 CAB AR

SMCS-7311 i04011069

NOTE	REF NO	GRAPHIC REF	PART NUMBER	QTY	PART NAME 1 2 3 4 5 6 (PRODUCT LEVEL)	SEE PAGE
	1	1	3L-0594	3	SPACER (8.7X15.9X15.9-MM THK)	
	2	1	3W-6756	2	KNOB (AIR FILTER COVER)	
	3	1	6P-2216	7	CAP	
	4	1	6T-0988	1	FILTER ELEMENT-CAB AIR (STANDARD EFFICIENCY)	
					—OR—	
		1	175-2831	1	FILTER ELEMENT-CAB AIR (ULTRA HIGH EFFICIENCY)	
	5	1	6T-5067	1	LINER	
	6	1	6T-5068	1	FILTER ELEMENT-CAB AIR (AIR RECIRCULATION)	
	7	1	7D-8431	2	RING-RETAINING	
	8	1	111-4482	1	COVER AS	
	9	1	117-8863	1	LINER	
	10	1	127-1043	1	LINER	
	11	1	127-1044	1	LINER	
	12	1	127-1045	1	LINER	
	13	1	127-1046	1	LINER	
	14	1	127-1048	1	LINER	
	15	1	141-4044	1	PANEL	
	16	1	224-9072	2	KNOB (AIR FILTER COVER)	
Y	17	1	230-5388	1	BLOWER GP-CAB	520
	18	1	7X-0603	3	WASHER-HARD (9.9X35X2.5-MM THK)	
	19	1	8T-4121	6	WASHER-HARD (11X21X2.5-MM THK)	
M	20	1	8T-4136	6	BOLT (M10X1.5X25-MM)	
M	21	1	8T-4971	3	BOLT (M6X1X30-MM)	
	22	1	5P-4115	3	WASHER-HARD (7.2X19X2-MM THK)	
E	23	1	7X-7877		STRIP-EDGING (47-CM)	

E-ORDER BY THE CENTIMETER
M-METRIC PART
Y-SEPARATE ILLUSTRATION

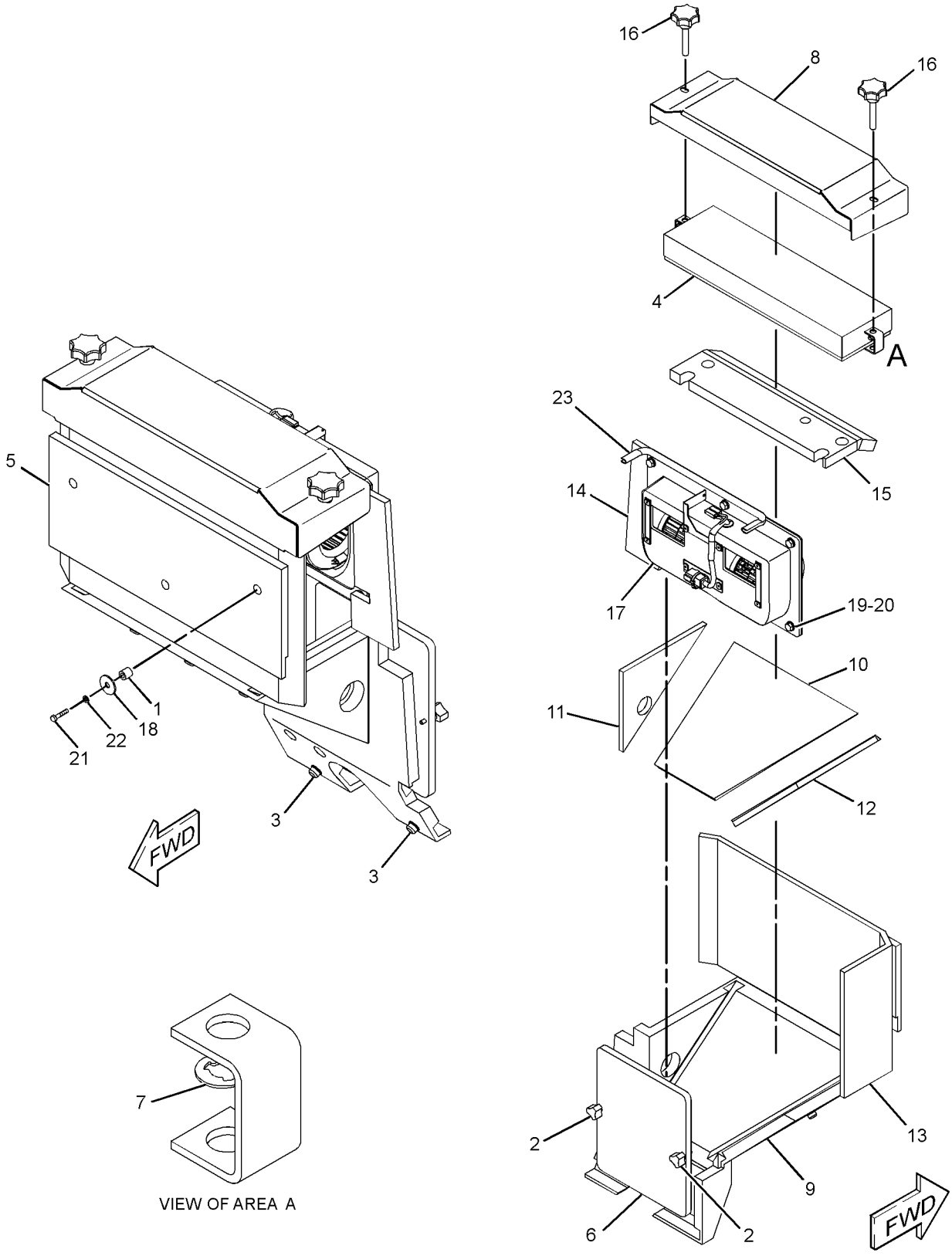

GRAPHIC #1 <END> g01209668

OPERATOR STATION

177-4935 RECLINER GP-SEAT

S/N: S6T1-UP; S6X1-UP; S6Y1-UP
PART OF 180-7304 SEAT GP
AN ATTACHMENT

SMCS-7312 i03367841

NOTE	REF NO	GRAPHIC REF	PART NUMBER	QTY	PART NAME 1 2 3 4 5 6 (PRODUCT LEVEL)	SEE PAGE
	1	1	164-4146	1	SPRING	
	2	1	177-1860	1	GEAR (14-TEETH)	
	3	1	177-1862	1	BRACKET	
	4	1	178-0607	1	SHAFT AS	
	4A	1	2L-5893	2	PIN-SPRING	
	4B	1	192-5627	2	PIN	
	4C	1	170-8590	1	SPRING	
	5	1	178-0608	1	BRACKET AS	
	6	1	178-0609	1	BRACKET AS	
	7	1	217-7933	1	LATCH	
	8	1	031-0214	1	BOLT-LOCKING (1/4-20X0.5-IN)	
	9	1	101-2867	1	WASHER-HARD (7.2X25X2-MM THK)	
	10	1	4M-6425	1	BOLT (5/16-18X1-IN)	
	11	1	5S-7383	1	BOLT (3/8-16X1.75-IN)	
	12	1	8T-4224	1	WASHER-HARD (8.8X16X2-MM THK)	

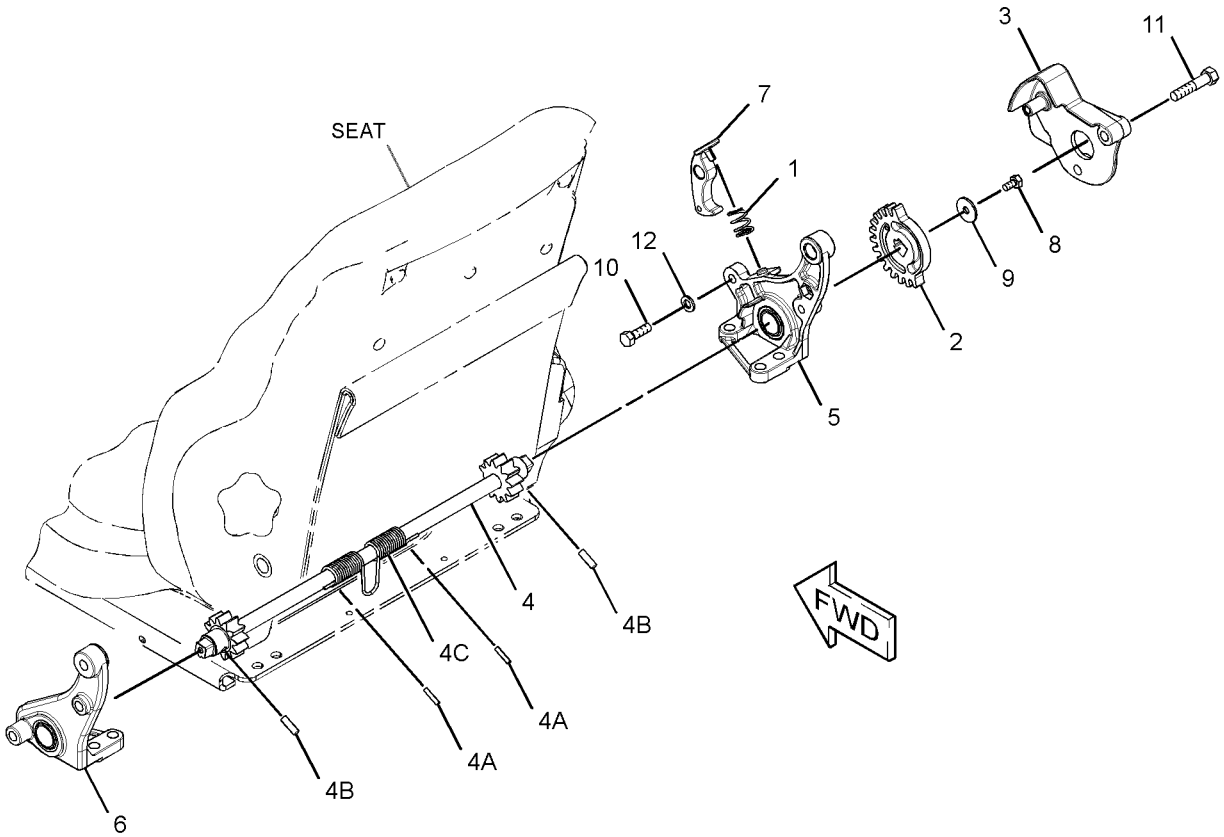

GRAPHIC #1 <END> g01741297

210-2270 RECLINER GP-SEAT

S/N: S6T1-UP; S6X1-UP; S6Y1-UP
PART OF 178-0603 SEAT GP
ALSO AN ATTACHMENT

SMCS-7312 i02794046

NOTE	REF NO	GRAPHIC REF	PART NUMBER	QTY	PART NAME 1 2 3 4 5 6 (PRODUCT LEVEL)	SEE PAGE
	1	1	177-1862	1	BRACKET (SEAT BELT)	
	2	1	210-2262	1	BRACKET AS (LH)	
	3	1	210-2263	1	BRACKET AS (RH)	
	4	1	210-2266	1	GEAR-LOCK (14-TEETH)	
	5	1	293-2911	1	SHAFT AS	
		1	2L-5893	2	PIN-SPRING	
		1	170-8590	1	SPRING	
	6	1	217-7933	1	LATCH	
	7	1	236-5197	1	SPRING	
	8	1	031-0214	1	BOLT-LOCKING (1/4-20X0.5-IN)	
	9	1	101-2867	1	WASHER-HARD (7.2X25X2-MM THK)	
	10	1	4M-6425	1	BOLT (5/16-18X1-IN)	
	11	1	5M-2894	1	WASHER-HARD (10.2X18.5X2.5-MM THK)	
	12	1	5S-7383	1	BOLT (3/8-16X1.75-IN)	
	13	1	8T-4224	1	WASHER-HARD (8.8X16X2-MM THK)	

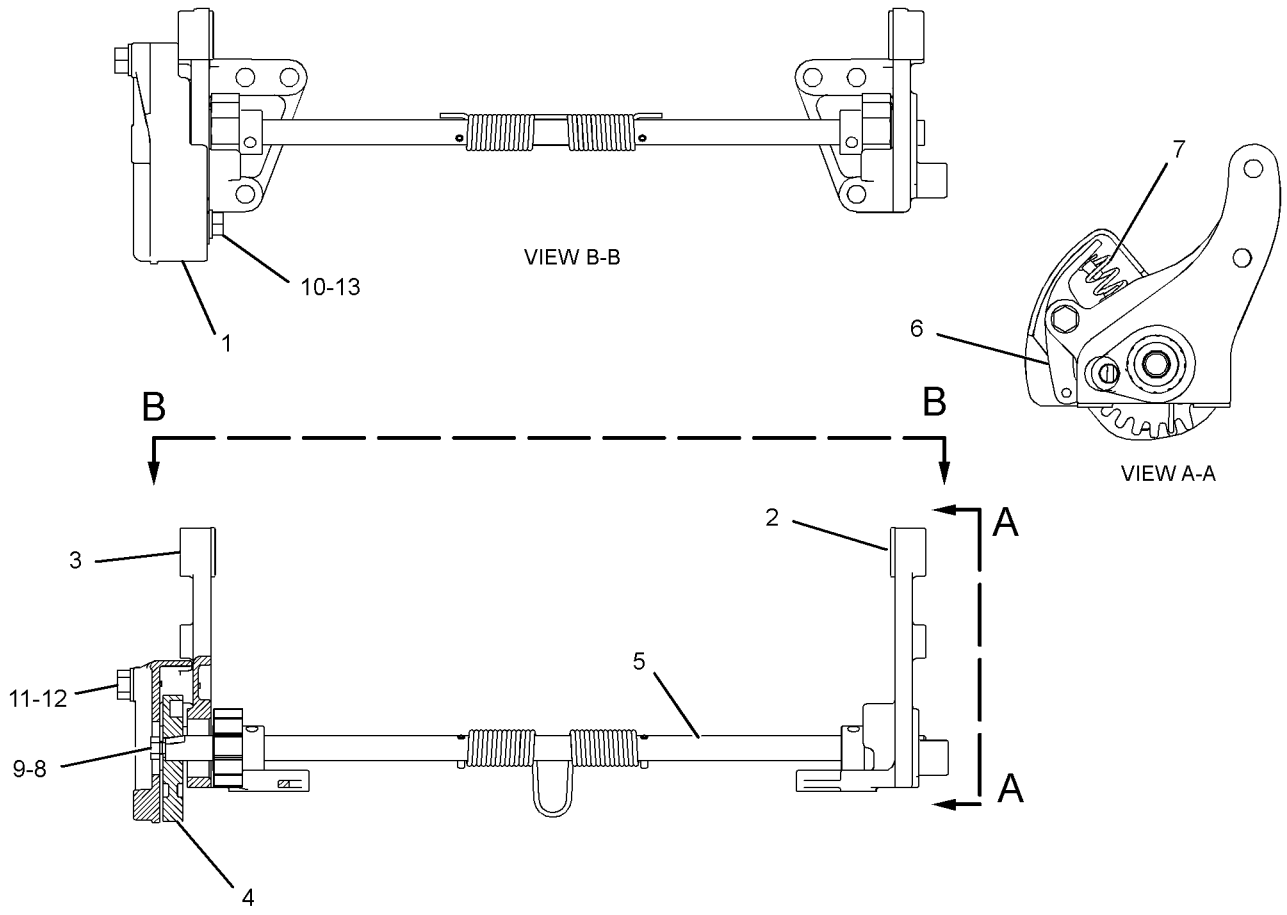

GRAPHIC #1 <END> g01296294

OPERATOR STATION

363-0857 ROPS GP

S/N: S6T1-UP; S6X1-UP; S6Y1-UP

PART OF 336-9684, 336-9685, 336-9686 CHASSIS AR

SMCS-7177, 7301 i03998412

NOTE	REF NO	GRAPHIC REF	PART NUMBER	QTY	PART NAME 1 2 3 4 5 6 (PRODUCT LEVEL)	SEE PAGE
	1	1	227-5054	1	ROPS AS	
		1	7T-1099	6	LINK	
	2	1	180-6600	1	HANDRAIL	
	3	1	5P-1076	3	WASHER-HARD (13.5X30X4-MM THK)	
M	4	1	7X-2576	12	BOLT (M24X3X70-MM)	
M	5	1	8T-4139	2	BOLT (M12X1.75X30-MM)	
	6	1	8T-4167	12	WASHER-HARD (26X44X4-MM THK)	

M-METRIC PART

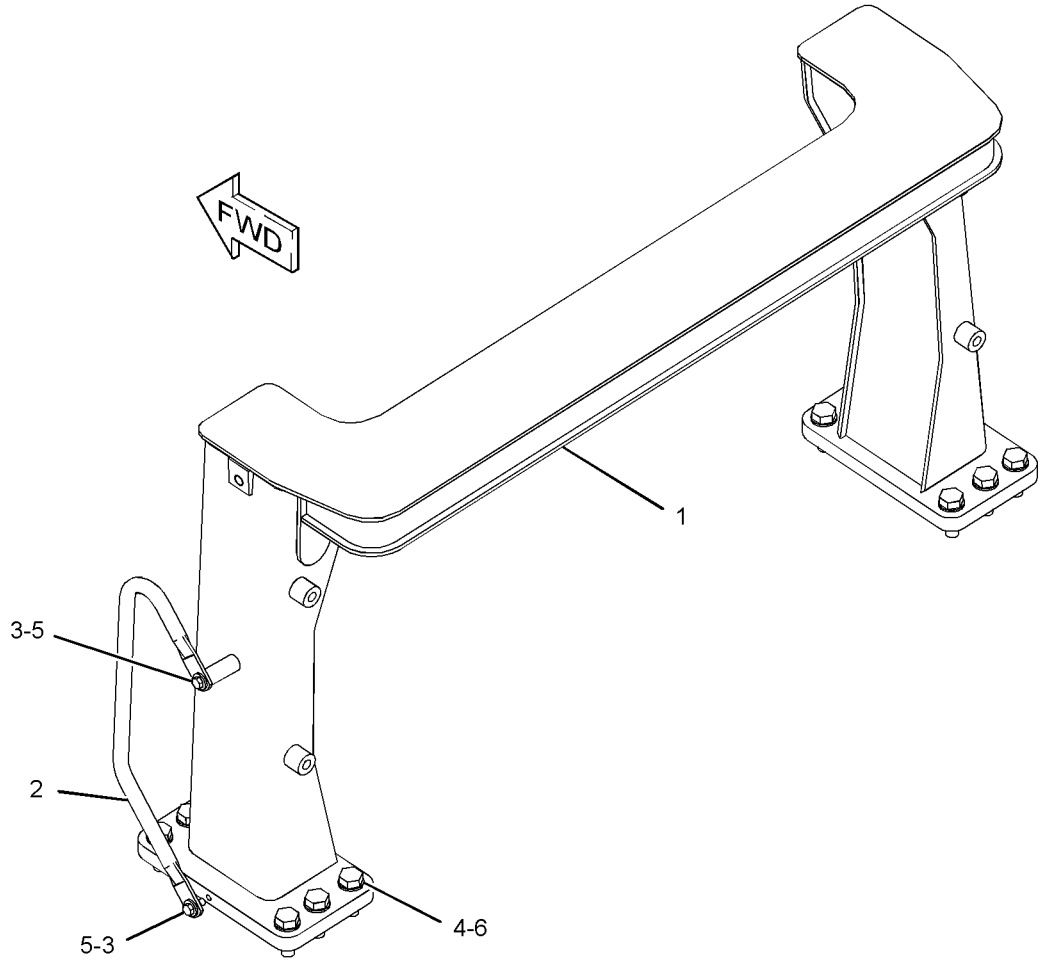

GRAPHIC #1 <END> g02182814

OPERATOR STATION

208-8706 ROPS GP-OPEN

S/N: S6T1-UP; S6X1-UP; S6Y1-UP
PART OF 317-1766 CANOPY AR
AN ATTACHMENT

SMCS-7323 i03991769

NOTE	REF NO	GRAPHIC REF	PART NUMBER	QTY	PART NAME 1 2 3 4 5 6 (PRODUCT LEVEL)	SEE PAGE
	1	1	1P-2772	4	SPACER (1.031X1.219X0.75-IN THK)	
	2	1	8P-9747	1	HANDRAIL	
	3	1	9G-0992	2	HANDRAIL	
Y	4	1	*9P-9392*	1	MIRROR GP-REAR VIEW	571
	5	1	9S-5187	2	MOUNTING	
	6	1	180-6600	1	HANDRAIL	
	7	1	198-6574	14	WASHER (16X75X3.5-MM THK)	
	8	1	198-6575	14	BUTTON	
	9	1	227-5056	1	ROLLOVER AS	
	10	1	228-4051	1	TUBE AS	
	11	1	228-4052	1	TUBE AS	
	12	1	263-2601	1	HEADLINER	
	13	1	5P-1076	9	WASHER-HARD (13.5X30X4-MM THK)	
	14	1	6K-3632	2	LOCKNUT (1-8-THD)	
M	15	1	7X-2563	4	BOLT (M20X2.5X60-MM)	
M	16	1	7X-2576	12	BOLT (M24X3X70-MM)	
	17	1	8C-8843	2	BOLT (1-8X4.5-IN)	
	18	1	8P-5244	4	WASHER (33.3X69.8X6.35-MM THK)	
	19	1	8T-4123	4	WASHER (22X35X3.5-MM THK)	
M	20	1	8T-4139	8	BOLT (M12X1.75X30-MM)	
	21	1	8T-4167	12	WASHER-HARD (26X44X4-MM THK)	

M-METRIC PART
Y-SEPARATE ILLUSTRATION

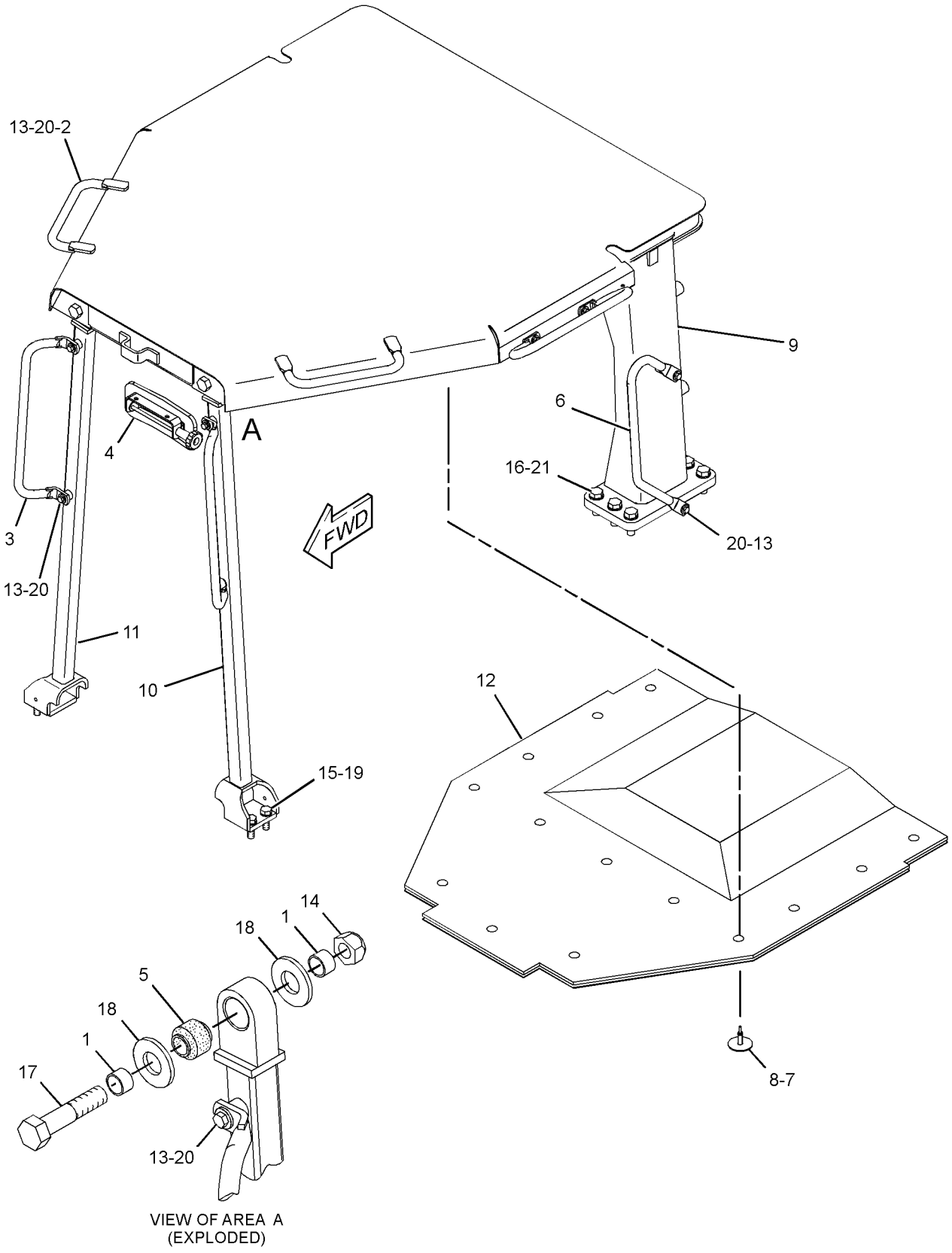

VIEW OF AREA A
(EXPLODED)

GRAPHIC #1 <END> g01205598

336-9704 SCREEN GP-PROTECTION–REAR

S/N: S6T1-UP; S6X1-UP; S6Y1-UP

AN ATTACHMENT

SMCS-7165 i04014457

NOTE	REF NO	GRAPHIC REF	PART NUMBER	QTY	PART NAME 1 2 3 4 5 6 (PRODUCT LEVEL)	SEE PAGE
	1	1	165-2577	1	SCREEN AS (PROTECTIVE)	
			7T-1099	8	LINK	
	2	1	8T-5439	4	WASHER-HARD (21.5X45X6-MM THK)	
M	3	1	8T-6430	4	BOLT (M20X2.5X50-MM)	

M-METRIC PART

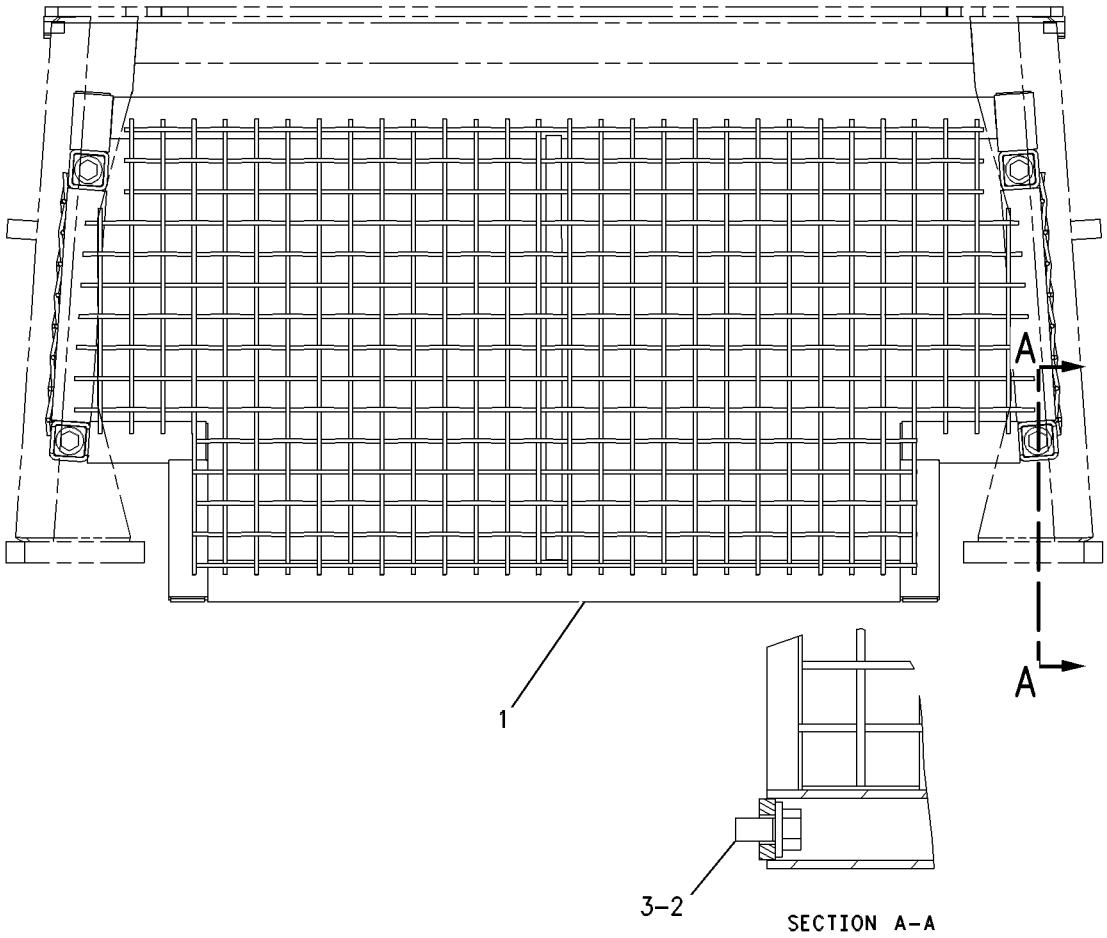

GRAPHIC #1 <END> g00569648

OPERATOR STATION

336-9705 SCREEN GP-PROTECTION–REAR

S/N: S6T1-UP; S6X1-UP; S6Y1-UP
FOR USE WITH ROPS MOUNTED AIR CONDITIONER
AN ATTACHMENT

SMCS-7165 i04014472

NOTE	REF NO	GRAPHIC REF	PART NUMBER	QTY	PART NAME 1 2 3 4 5 6 (PRODUCT LEVEL)	SEE PAGE
	1	1	166-2153	1	SCREEN AS	
		1	7T-1099	6	LINK	
	2	1	194-3708	2	BOSS	
M	3	1	7X-2566	2	BOLT (M20X2.5X110-MM)	
M	4	1	8T-4131	2	NUT (M20X2.5-THD)	
	5	1	8T-5439	6	WASHER-HARD (21.5X45X6-MM THK)	
M	6	1	8T-6430	2	BOLT (M20X2.5X50-MM)	

M-METRIC PART

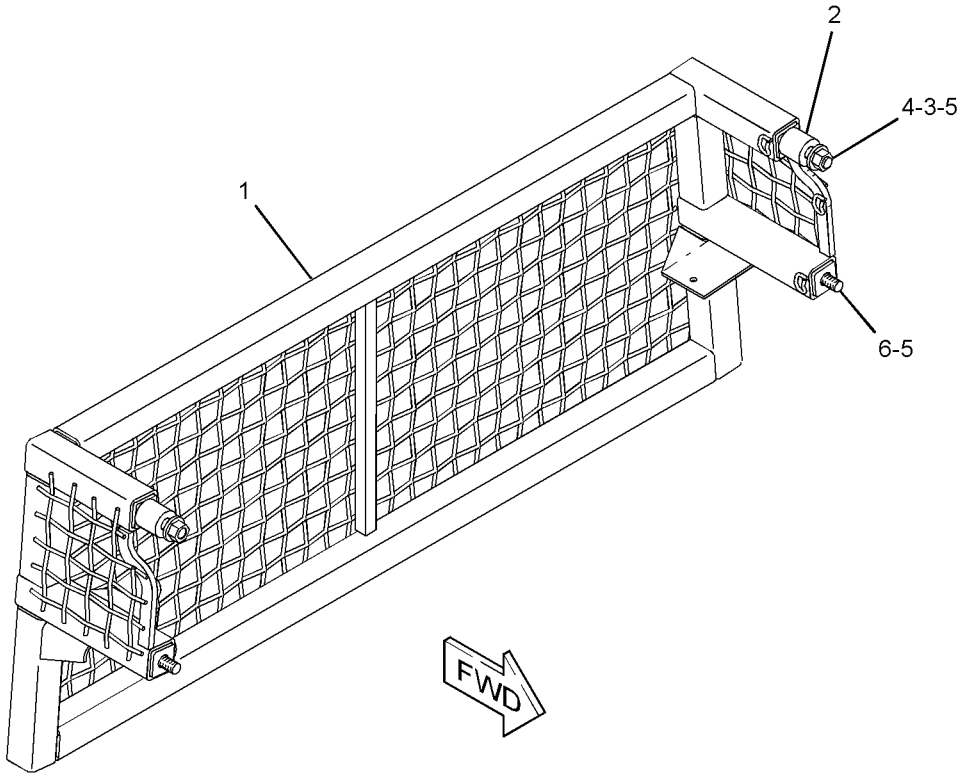

GRAPHIC #1 <END> g01214257

OPERATOR STATION

178-0603 SEAT GP—CLOTH

S/N: S6T1-UP; S6X1-UP; S6Y1-UP
PART OF 178-0606 SEAT GP
ALSO AN ATTACHMENT

SMCS-7312 i04033097

NOTE	REF NO	GRAPHIC REF	PART NUMBER	QTY	PART NAME 1 2 3 4 5 6 (PRODUCT LEVEL)	SEE PAGE
	1	1	143-1288	8	LOCKNUT-FLANGE (3/8-16-THD)	
	2	1	171-1230	6	SCREW-BUTTON HEAD (3/8-16X1-IN)	
	3	1	171-6682	1	BAR	
	4	1	172-2416	2	PIN	
Y	5	1	*173-1028*	1	ADJUSTER GP-SEAT	517
	6	1	177-1863	2	BOLT-PIVOT (3/8-16X2.89-IN)	
Y	7	1	*178-0604*	1	PAN GP-BACKREST (CLOTH)	583
	8	1	184-2298	1	ROD	
	9	1	184-2299	4	WASHER (7X25.4X2.54-MM THK)	
CY	10	1	*210-2270*	1	RECLINER GP-SEAT (CLOTH)	599
	11	1	218-0861	1	PAN AS	
		1	8T-9082	5	RIVET-POP	
		1	217-9049	1	CUSHION AS	
	12	1	095-0843	2	PIN-COTTER	
	13	1	5V-1496	2	RETAINER	
	14	1	6V-7646	2	WASHER-HARD (7.2X25X2-MM THK)	
	15	1	8T-0328	1	WASHER-HARD (5.5X10X1-MM THK)	
	16	1	8T-4205	1	WASHER-HARD (7.2X14.5X2-MM THK)	
	17	1	8Y-6277	2	SPACER (10.5X28.6X10-MM THK)	

C-CHANGE FROM PREVIOUS TYPE
Y-SEPARATE ILLUSTRATION

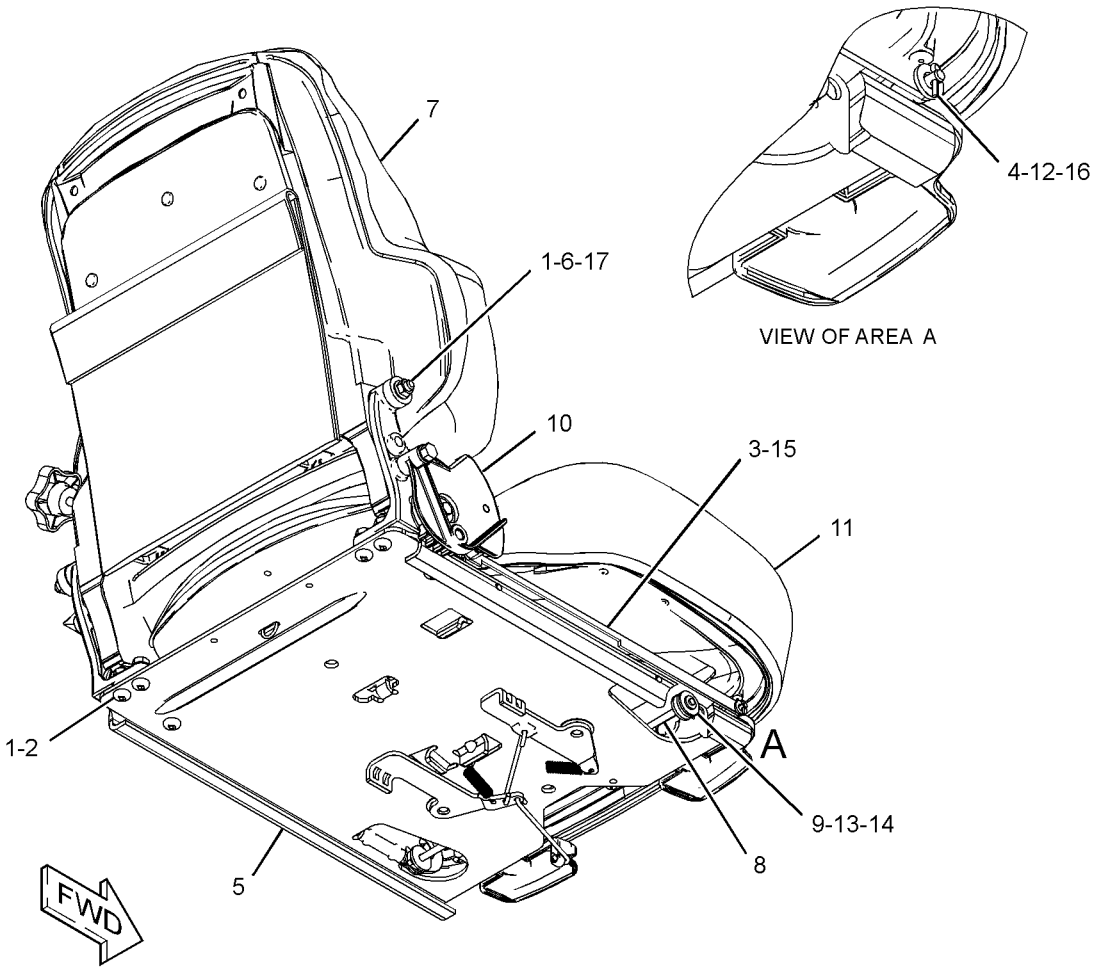

GRAPHIC #1 <END> g01395947

OPERATOR STATION

178-0606 SEAT GP–CLOTH

S/N: S6T1-UP; S6X1-UP; S6Y1-UP
PART OF 160-7186, 200-3174 SEAT GP-SUSPENSION
ALSO AN ATTACHMENT

SMCS-7312 i02123114

NOTE	REF NO	GRAPHIC REF	PART NUMBER	QTY	PART NAME 1 2 3 4 5 6 (PRODUCT LEVEL)	SEE PAGE
	1	1	177-4937	1	SPACER (11.7X19.8X20.3-MM THK)	
Y	2	1	178-0603	1	SEAT GP (CLOTH)	605
	3	1	222-0345	1	SEAT BELT GP (RETRACTABLE)	
C	4	1	229-1494	1	EXTENSION GP-BACKREST (CLOTH)	
	5	1	0T-0244	1	BOLT (7/16-20X1.25-IN)	
	6	1	205-6388	1	BOLT (7/16-20X1.75-IN)	

C-CHANGE FROM PREVIOUS TYPE
Y-SEPARATE ILLUSTRATION

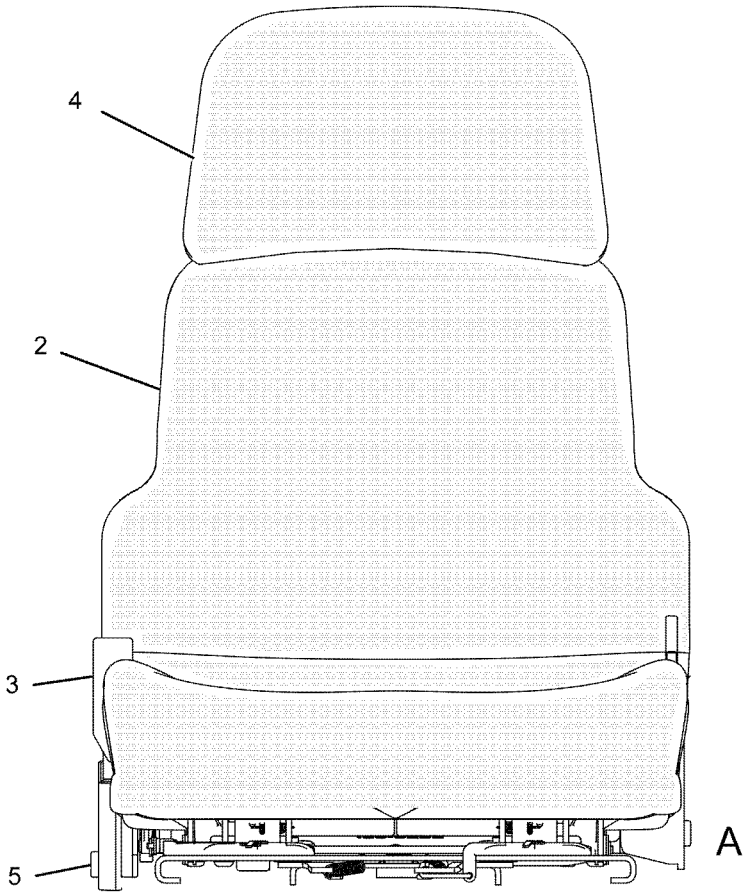

FRONT VIEW

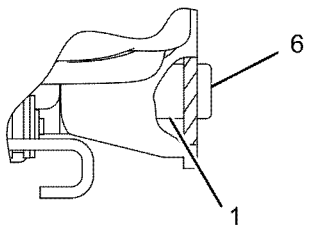

VIEW A

GRAPHIC #1 <END> g01084230

OPERATOR STATION

180-7304 SEAT GP–VINYL

S/N: S6T1-UP; S6X1-UP; S6Y1-UP
PART OF 184-6011 SEAT GP
AN ATTACHMENT

SMCS-7312 i03550904

NOTE	REF NO	GRAPHIC REF	PART NUMBER	QTY	PART NAME 1 2 3 4 5 6 (PRODUCT LEVEL)	SEE PAGE
	1	1	143-1288	8	LOCKNUT-FLANGE (3/8-16-THD)	
	2	1	171-1230	6	SCREW-BUTTON HEAD (3/8-16X1-IN)	
	3	1	171-6682	1	BAR	
	4	1	172-2416	2	PIN	
Y	5	1	*173-1028*	1	ADJUSTER GP-SEAT	517
	6	1	173-3283	1	PAN AS (VINYL)	
		1	6K-3273	5	RIVET-POP	
		1	169-1026	1	CUSHION AS	
	7	1	177-1863	2	BOLT-PIVOT (3/8-16X2.89-IN)	
Y	8	1	*177-4935*	1	RECLINER GP-SEAT	598
Y	9	1	*180-7305*	1	PAN GP-BACKREST (VINYL)	585
	10	1	184-2298	1	ROD	
	11	1	184-2299	4	WASHER (7X25.4X2.54-MM THK)	
	12	1	095-0843	2	PIN-COTTER	
	13	1	5V-1496	2	RETAINER	
	14	1	6V-7646	2	WASHER-HARD (7.2X25X2-MM THK)	
	15	1	8T-0328	1	WASHER-HARD (5.5X10X1-MM THK)	
	16	1	8T-4205	1	WASHER-HARD (7.2X14.5X2-MM THK)	
	17	1	8Y-6277	2	SPACER (10.5X28.6X10-MM THK)	

Y-SEPARATE ILLUSTRATION

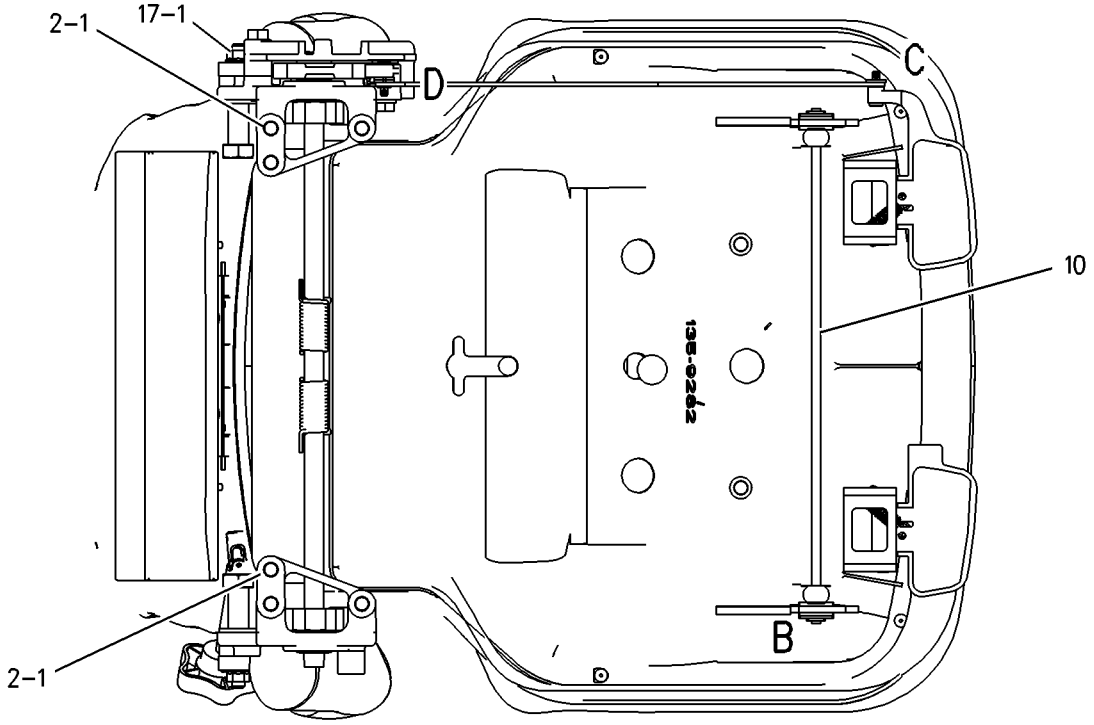

SECTION A-A

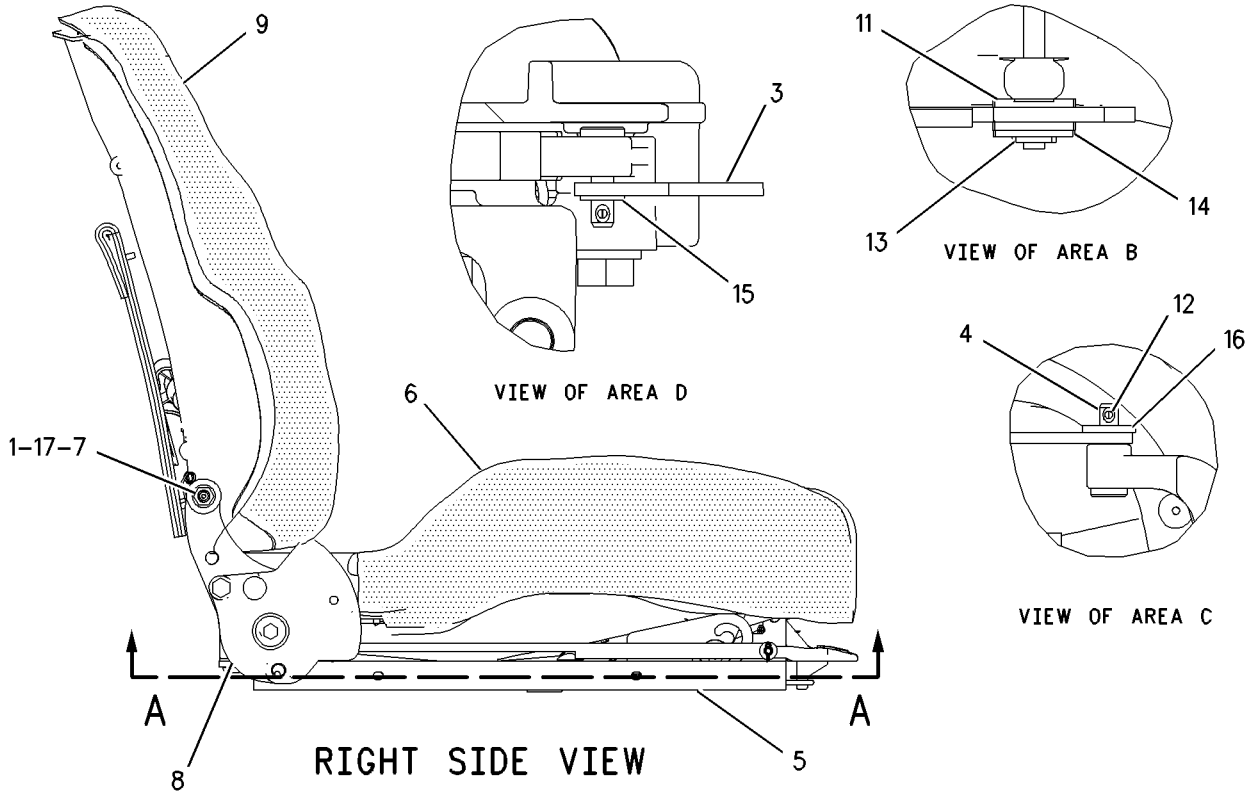

GRAPHIC #1 <END> g00828649

OPERATOR STATION

184-6011 SEAT GP–VINYL

S/N: S6T1-UP; S6X1-UP; S6Y1-UP
PART OF 159-2950 SEAT GP-SUSPENSION
AN ATTACHMENT

SMCS-7312 i03422460

NOTE	REF NO	GRAPHIC REF	PART NUMBER	QTY	PART NAME 1 2 3 4 5 6 (PRODUCT LEVEL)	SEE PAGE
	1	1	173-3083	1	EXTENSION GP-BACKREST (VINYL)	
		1	117-4491	1	ROD	
	2	1	177-4937	1	SPACER (11.7X19.8X20.3-MM THK)	
	3	1	205-6388	1	BOLT (7/16-20X1.75-IN)	
	4	1	0T-0244	1	BOLT (7/16-20X1.25-IN)	
Y	5	1	180-7304	1	SEAT GP (VINYL)	609
	6	1	222-0345	1	SEAT BELT GP (RETRACTABLE)	

Y-SEPARATE ILLUSTRATION

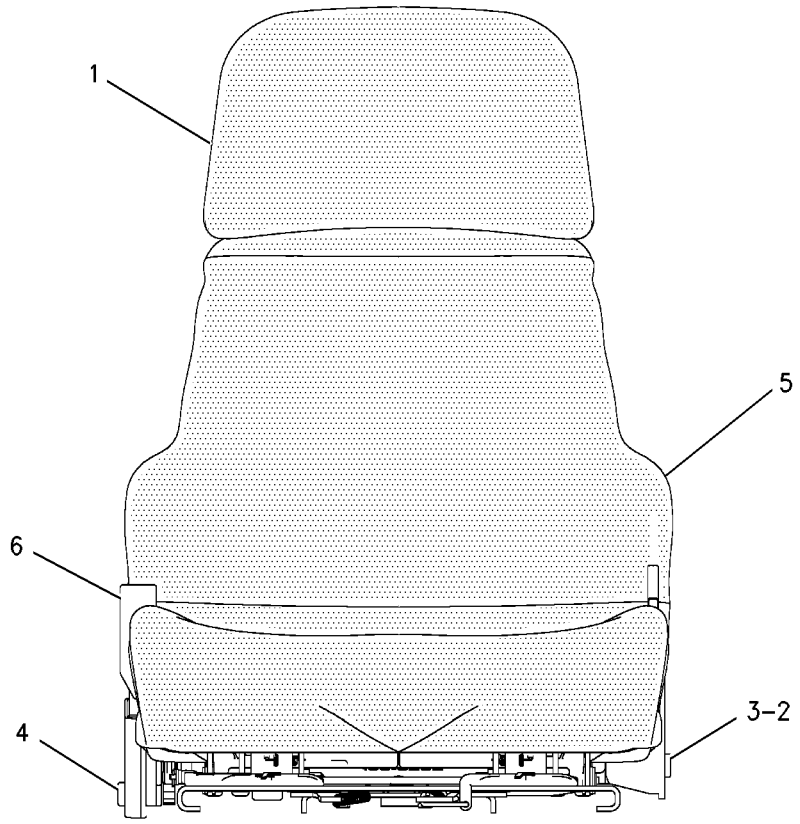

FRONT VIEW

GRAPHIC #1 <END> g00683843

OPERATOR STATION

214-1196 SEAT GP–CLOTH, AIR

S/N: S6T1-UP; S6X1-UP; S6Y1-UP
AN ATTACHMENT

SMCS-7312 i04033103

NOTE	REF NO	GRAPHIC REF	PART NUMBER	QTY	PART NAME 1 2 3 4 5 6 (PRODUCT LEVEL)	SEE PAGE
Y	1	1	200-3174	1	SEAT GP-SUSPENSION (CLOTH, AIR)	616
	2	1	9V-2818	1	GROMMET	

Y-SEPARATE ILLUSTRATION

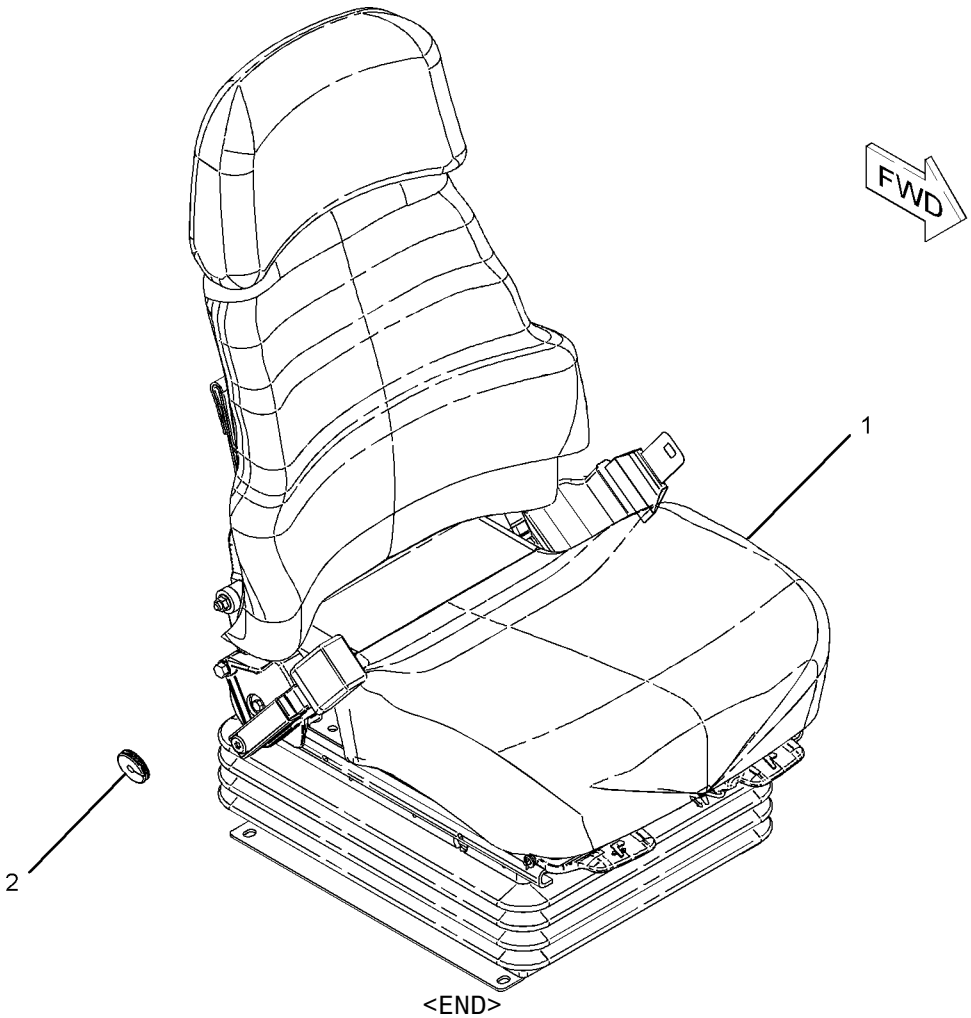

GRAPHIC #1 <END> g01021550

223-2205 SEAT GP–CLOTH

S/N: S6T1-UP; S6X1-UP; S6Y1-UP

PART OF 336-9684, 336-9685, 336-9686 CHASSIS AR

SMCS-7312 i04011429

NOTE	REF NO	GRAPHIC REF	PART NUMBER	QTY	PART NAME 1 2 3 4 5 6 (PRODUCT LEVEL)	SEE PAGE
	1	1	126-3700	1	ARMREST AS (RH)	
	2	1	126-3701	1	ARMREST AS (LH)	
Y	3	1	160-7186	1	SEAT GP-SUSPENSION (CLOTH)	615
	4	1	184-1503	2	KNOB	
	5	1	184-3269	1	PLATE AS	
		1	1F-0750	1	NUT-WELD (3/8-16-THD)	
	6	1	184-3270	1	PLATE AS	
M		1	8T-3490	2	NUT-WELD (M10X1.5-THD)	
	7	1	5P-1075	2	WASHER-HARD (10.2X22.5X3-MM THK)	
	8	1	7X-7729	10	WASHER (11X25X3-MM THK)	
	9	1	8T-4121	2	WASHER-HARD (11X21X2.5-MM THK)	
M	10	1	8T-4137	4	BOLT (M10X1.5X20-MM)	
M	11	1	8T-4196	2	BOLT (M10X1.5X35-MM)	
M	12	1	9X-2125	4	BOLT-LOCKING (M10X1.5X25-MM)	

M-METRIC PART
Y-SEPARATE ILLUSTRATION

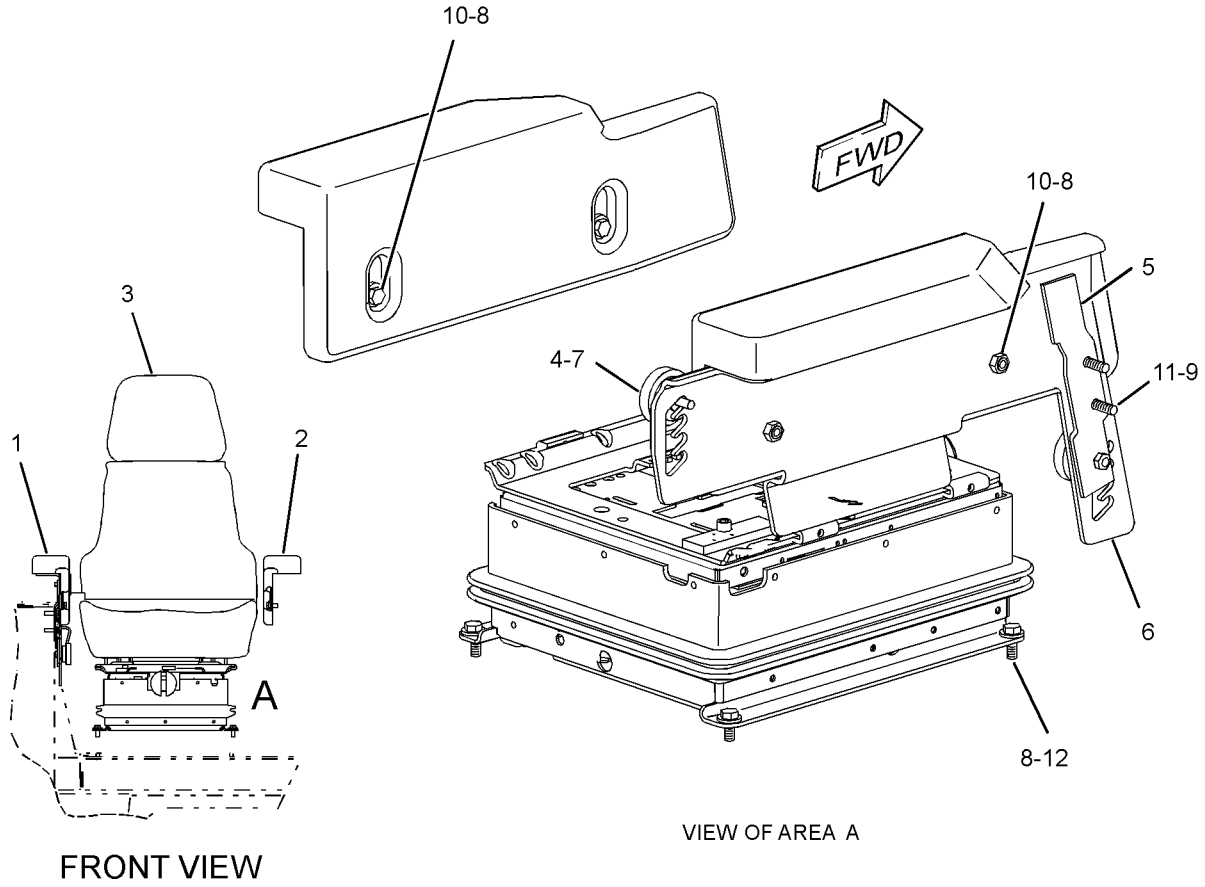

GRAPHIC #1 <END> g02190973

OPERATOR STATION

159-2950 SEAT GP-SUSPENSION—VINYL

S/N: S6T1-UP; S6X1-UP; S6Y1-UP
PART OF 214-1197 SEAT GP-SUSPENSION
AN ATTACHMENT

SMCS-7321, 7324, 7336 i03422480

NOTE	REF NO	GRAPHIC REF	PART NUMBER	QTY	PART NAME 1 2 3 4 5 6 (PRODUCT LEVEL)	SEE PAGE
Y	1	1	160-7165	1	SUSPENSION GP-SEAT	618
Y	2	1	*184-6011*	1	SEAT GP (VINYL)	611
J	3	1	161-9289	4	BLOCK-SLIDER	
J	4	1	4F-4879	1	BOLT (3/8-16X0.5-IN)	
J	5	1	203-7703	2	WASHER-HARD (10.2X22.22X2.38-MM THK)	
J	6	1	173-5787	4	SETSCREW (1/4-20-THD)	
					AVAILABLE REPAIR KIT(S):	
J			173-7035	1	KIT-SLIDER BLOCK (SUSPENSION SEAT)	
					(INCLUDES BLOCK, WASHERS & SETSCREWS)	

J-KIT MARKED J SERVICES PART(S) MARKED J
Y-SEPARATE ILLUSTRATION

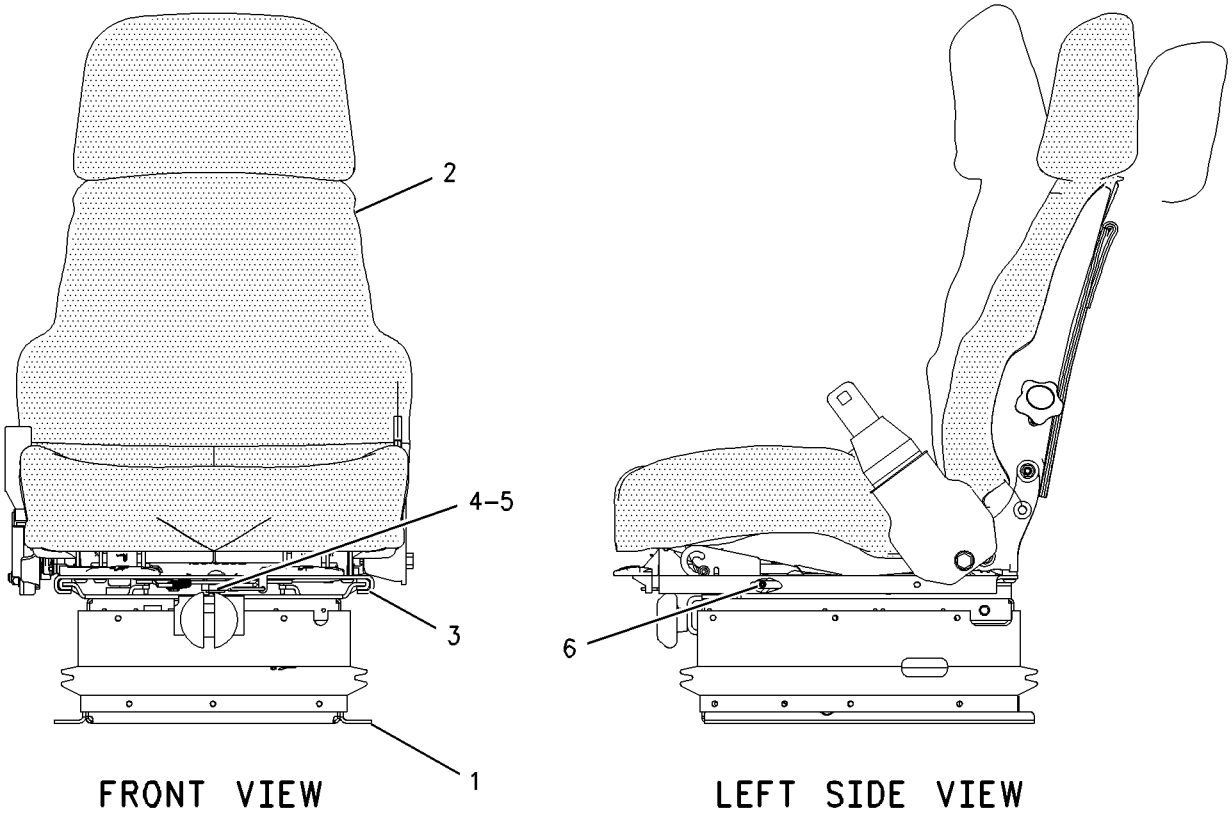

GRAPHIC #1 <END> g00819547

160-7186 SEAT GP-SUSPENSION–CLOTH

S/N: S6T1-UP; S6X1-UP; S6Y1-UP
PART OF 223-2205 SEAT GP

SMCS-7321, 7324, 7336 i04038392

NOTE	REF NO	GRAPHIC REF	PART NUMBER	QTY	PART NAME 1 2 3 4 5 6 (PRODUCT LEVEL)	SEE PAGE
Y	1	1	160-7165	1	SUSPENSION GP-SEAT	618
Y	2	1	178-0606	1	SEAT GP (CLOTH)	607
J	3	1	173-5787	4	SETSCREW (1/4-20-THD)	
J	4	1	4F-4879	1	BOLT (3/8-16X0.5-IN)	
J	5	1	203-7703	2	WASHER-HARD (10.2X22.22X2.38-MM THK)	
J	6	1	161-9289	4	BLOCK-SLIDER	
					AVAILABLE REPAIR KIT(S):	
J			173-7035	1	KIT-SLIDER BLOCK (SUSPENSION SEAT)	
					(INCLUDES BLOCKS, BOLT, WASHERS & SETSCREWS)	

J-(KIT MARKED J SERVICES PART(S) MARKED J)
Y-SEPARATE ILLUSTRATION

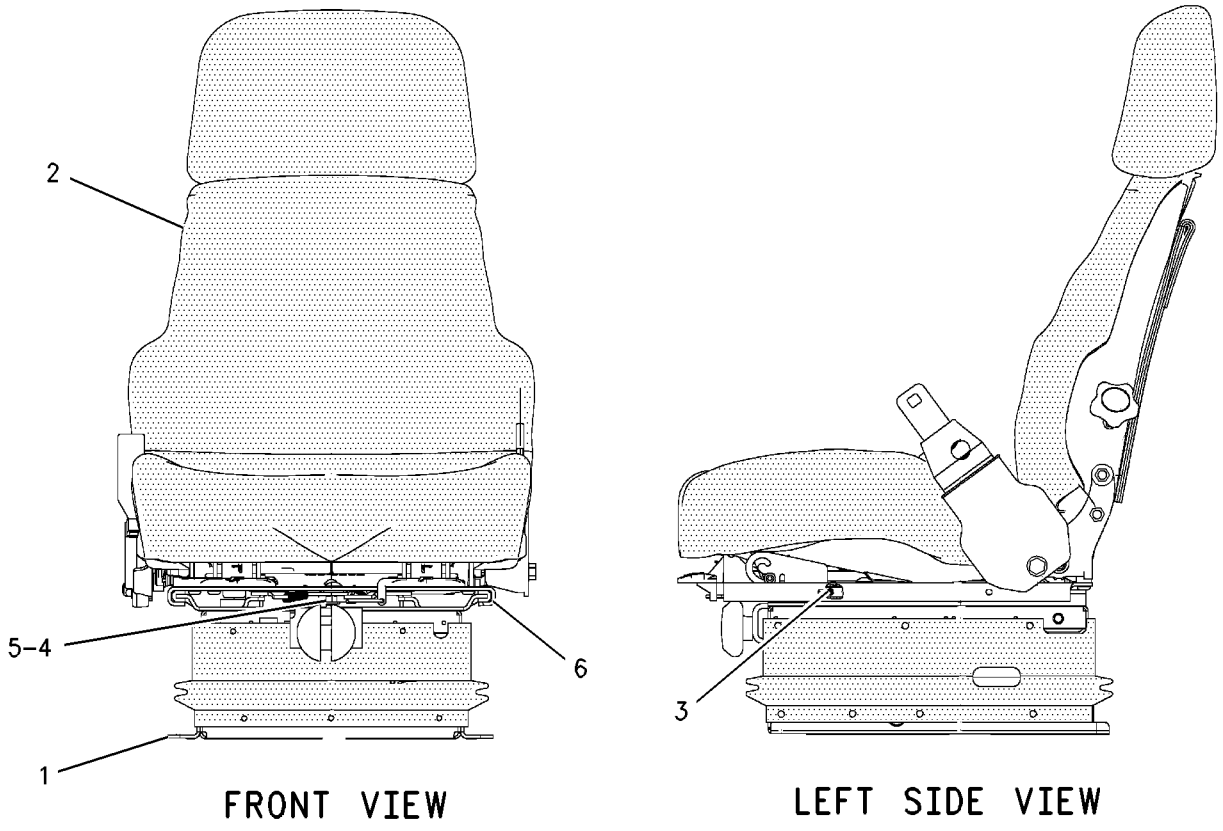

FRONT VIEW LEFT SIDE VIEW

GRAPHIC #1 <END> g00835586

OPERATOR STATION

200-3174 SEAT GP-SUSPENSION—CLOTH, AIR

S/N: S6T1-UP; S6X1-UP; S6Y1-UP
PART OF 214-1196 SEAT GP
AN ATTACHMENT

SMCS-7321, 7324, 7336 i04038391

NOTE	REF NO	GRAPHIC REF	PART NUMBER	QTY	PART NAME 1 2 3 4 5 6 (PRODUCT LEVEL)	SEE PAGE
J	1	1	161-9289	4	BLOCK-SLIDER	
J	2	1	173-5787	4	SETSCREW (1/4-20-THD)	
Y	3	1	178-0606	1	SEAT GP (CLOTH)	607
Y	4	1	191-2933	1	SUSPENSION GP-SEAT (AIR)	620
J	5	1	203-7703	2	WASHER-HARD (10.2X22.22X2.38-MM THK)	
J	6	1	4F-4879	1	BOLT (3/8-16X0.5-IN)	
					AVAILABLE REPAIR KIT(S):	
J			173-7035	1	KIT-SLIDER BLOCK (SUSPENSION SEAT)	
					(INCLUDES BLOCKS, BOLT, WASHERS & SETSCREWS)	

J-(KIT MARKED J INCLUDES PARTS MARKED J)
Y-SEPARATE ILLUSTRATION

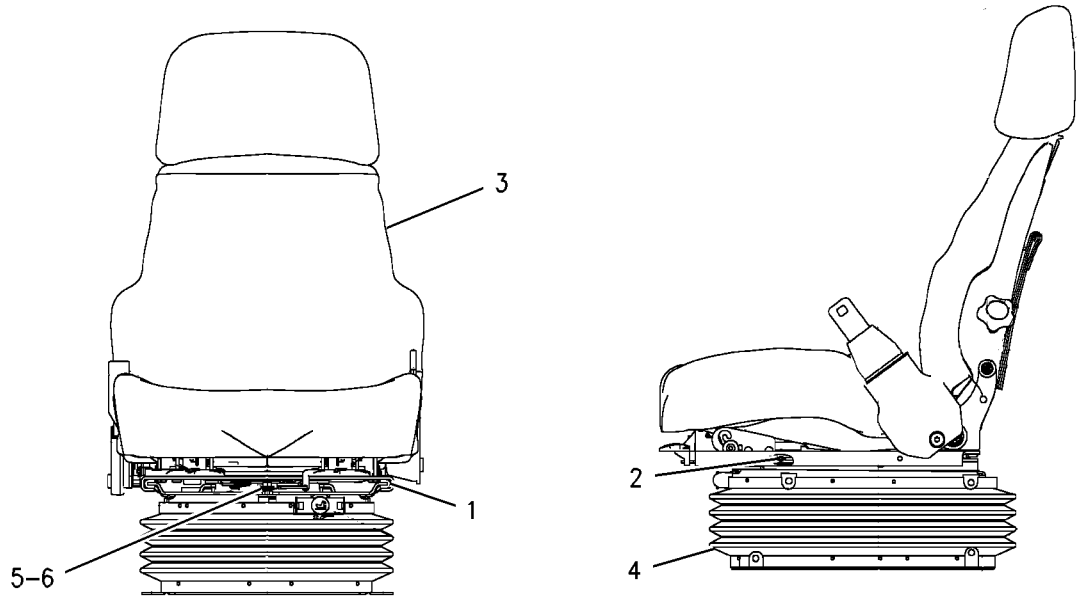

GRAPHIC #1 <END> g00909437

214-1197 SEAT GP-SUSPENSION–VINYL

S/N: S6T1-UP; S6X1-UP; S6Y1-UP
PART OF 317-1766 CANOPY AR
AN ATTACHMENT

SMCS-7321, 7324, 7336 i03991780

NOTE	REF NO	GRAPHIC REF	PART NUMBER	QTY	PART NAME 1 2 3 4 5 6 (PRODUCT LEVEL)	SEE PAGE
Y	1	1	159-2950	1	SEAT GP-SUSPENSION (VINYL)	614

Y-SEPARATE ILLUSTRATION

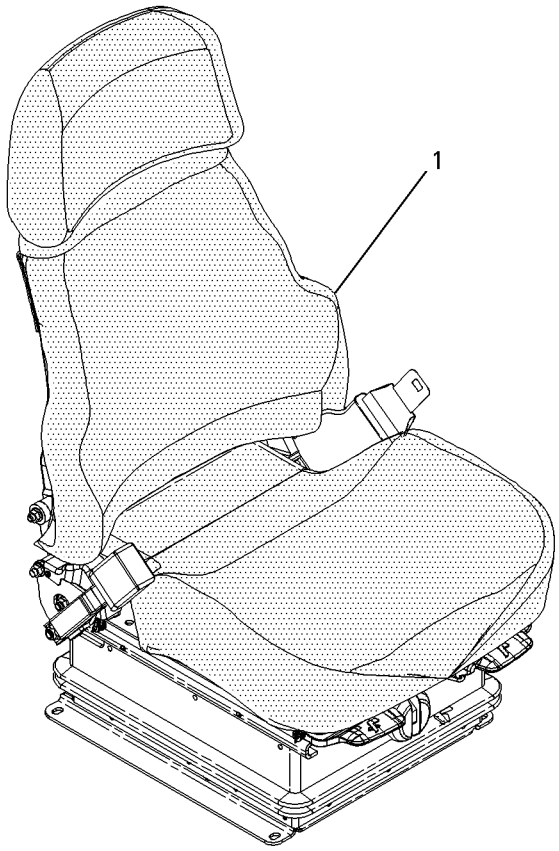

GRAPHIC #1 <END> g00695004

OPERATOR STATION

160-7165 SUSPENSION GP-SEAT

S/N: S6T1-UP; S6X1-UP; S6Y1-UP
PART OF 159-2950, 160-7186 SEAT GP-SUSPENSION
ALSO AN ATTACHMENT

SMCS-7324 i02605884

NOTE	REF NO	GRAPHIC REF	PART NUMBER	QTY	PART NAME 1 2 3 4 5 6 (PRODUCT LEVEL)	SEE PAGE
	1	1	2K-4973	2	LOCKNUT (3/8-16-THD)	
	2	1	4V-7884	2	BEARING	
	3	1	4V-8577	4	BEARING	
	4	1	5V-1497	1	RETAINER	
	5	1	8Y-5965	1	ABSORBER AS-SHOCK	
	6	1	8Y-6012	1	ARM AS-SUSPENSION	
	7	1	8Y-6014	1	HOUSING AS (LOWER)	
	8	1	8Y-6024	2	SHAFT AS	
J	9	1	101-0003	20	FASTENER	
J	10	1	166-6781	6	FASTENER	
J	11	1	163-1146	3	FASTENER	
	12	1	145-0326	1	FILM-INSTRUCTION (SEAT ADJUSTMENT)	
	13	1	169-7380	1	BOLT-SOCKET HEAD (3/8-16X0.375-IN)	
Y	14	1	174-2231	1	HOUSING GP-SEAT SUSPENSION	551
J	15	1	197-7689	3	FASTENER	
					AVAILABLE REPAIR KIT(S):	
J			8Y-5944	1	KIT-SUSPENSION BOOT (SEAT)	
					(INCLUDES FASTENERS, BOOT & RETAINERS)	
			101-4194	1	KIT-TETHER BELT (SUSPENSION SEAT)	
					(INCLUDES BELTS)	
			101-4195	1	KIT-SUSPENSION ROLLER (SUSPENSION SEAT)	
					(INCLUDES ROLLERS)	

J-KIT MARKED J SERVICES PARTS MARKED J
Y-SEPARATE ILLUSTRATION

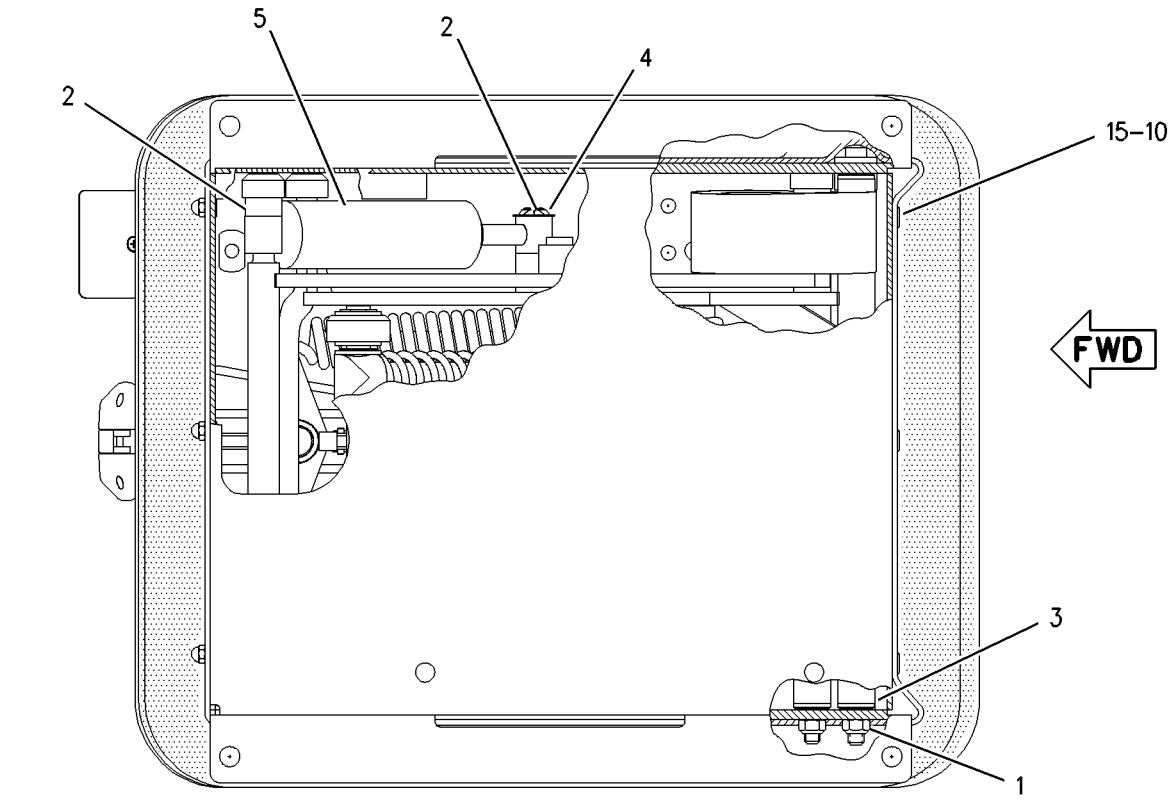

BOTTOM VIEW

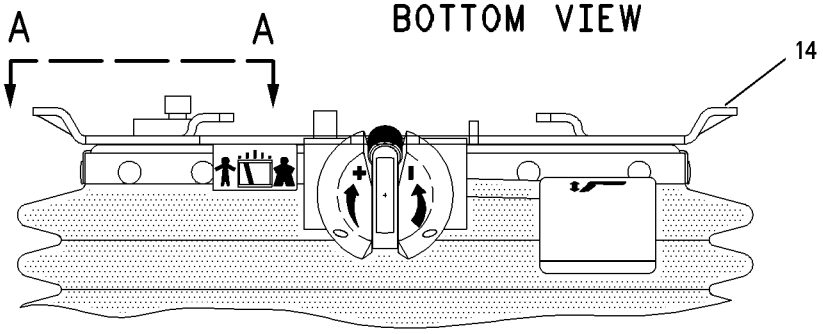

FRONT VIEW

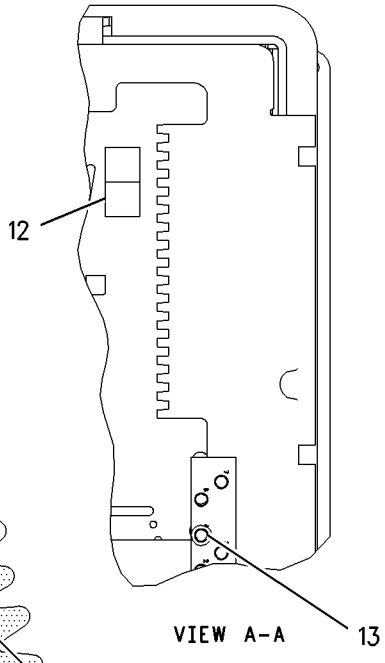

VIEW A-A

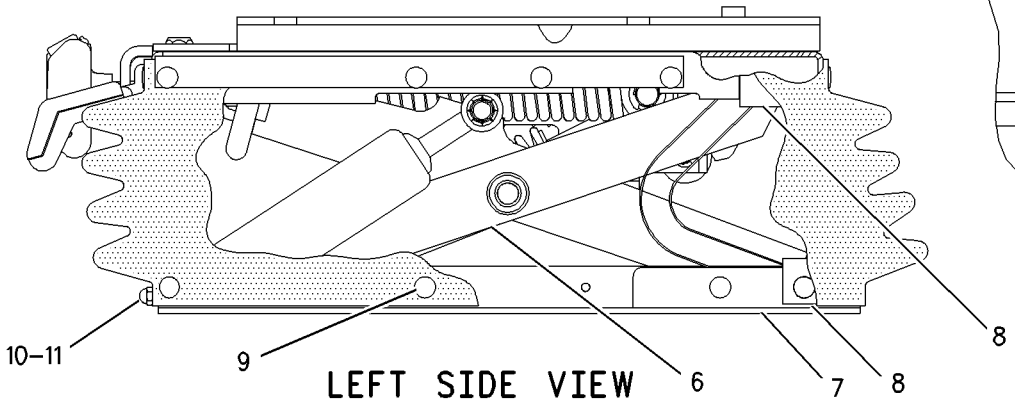

LEFT SIDE VIEW

GRAPHIC #1 <END> g00828820

OPERATOR STATION

191-2933 SUSPENSION GP-SEAT–AIR

S/N: S6T1-UP; S6X1-UP; S6Y1-UP
PART OF 200-3174 SEAT GP-SUSPENSION
AN ATTACHMENT

SMCS-7324 i04033117

NOTE	REF NO	GRAPHIC REF	PART NUMBER	QTY	PART NAME 1 2 3 4 5 6 (PRODUCT LEVEL)	SEE PAGE
	1	1	3P-9900	5	WASHER (10.5X30X3-MM THK)	
	2	1	4B-4278	2	WASHER (10.2X20.5X1.6-MM THK)	
	3	1	4V-8577	12	BEARING	
	4	1	8L-8413	1	STRAP-CABLE	
	5	1	145-0326	1	FILM-INSTRUCTION (SEAT ADJUSTMENT)	
	6	1	164-1234	1	PLATE	
	7	1	101-0003	33	FASTENER	
	8	1	169-7380	1	BOLT-SOCKET HEAD (3/8-16X0.375-IN)	
	9	1	186-5107	2	SCREW-DRIVE (NO 8-16X1.25-IN)	
	10	1	192-7752	4	SHAFT AS	
	11	1	192-7755	1	HOUSING AS (LOWER)	
	12	1	192-7760	1	SHAFT	
	13	1	192-7767	1	SCISSORS AS	
	14	1	192-7783	1	TOGGLE AS (WIDE)	
	15	1	192-7787	1	TOGGLE AS (NARROW)	
	16	1	192-7790	1	HOUSING AS (UPPER)	
	17	1	192-7795	1	BOOT	
	18	1	192-7805	1	HARNESS AS-VALVE (SEAT AIR COMPRESSOR)	
		1	102-8802	1	KIT-RECEPTACLE (2-PIN)	
					(INCLUDES RECEPTACLE AS & WEDGE)	
	19	1	192-7810	1	SPRING AS-AIR	
		1	5P-4423	1	ELBOW	
		1	163-1135	1	SPRING	
	20	1	192-7812	1	BOLT-SPECIAL	
	21	1	192-7820	3	BUMPER	
	22	1	192-7822	1	SHAFT	
	23	1	237-3943	1	BRACKET	
	24	1	237-3970	1	AIR COMPRESSOR GP-SEAT	
	25	1	1H-8296	1	SCREW-MACHINE (3/8-16X0.52-IN)	
	26	1	2K-4973	8	LOCKNUT (3/8-16-THD)	
	27	1	3J-4818	1	LOCKWASHER	
M	28	1	5C-2890	3	NUT (M6X1-THD)	
	29	1	8T-9371	1	BOLT (3/8-16X0.5-IN)	
E	30	1	211-5358		CONDUIT-FLEXIBLE (100CM)	
D	31	1	5P-6010		TUBE (1M)	
					AVAILABLE REPAIR KIT(S):	
			192-7799	1	KIT-AIR VALVE (SUSPENSION SEAT)	
					(INCLUDES KNOB AS)	
			192-7848	1	KIT-SHOCK ABSORBER (SUSPENSION SEAT)	
					(INCLUDES LOCKNUT, LOCKWASHER, SHOCK ABSORBER, BEARING, WASHER, AND BOLTS)	
			211-9294	1	KIT-TETHER (SUSPENSION SEAT)	

D-ORDER BY THE METER
E-ORDER BY THE CENTIMETER
M-METRIC PART

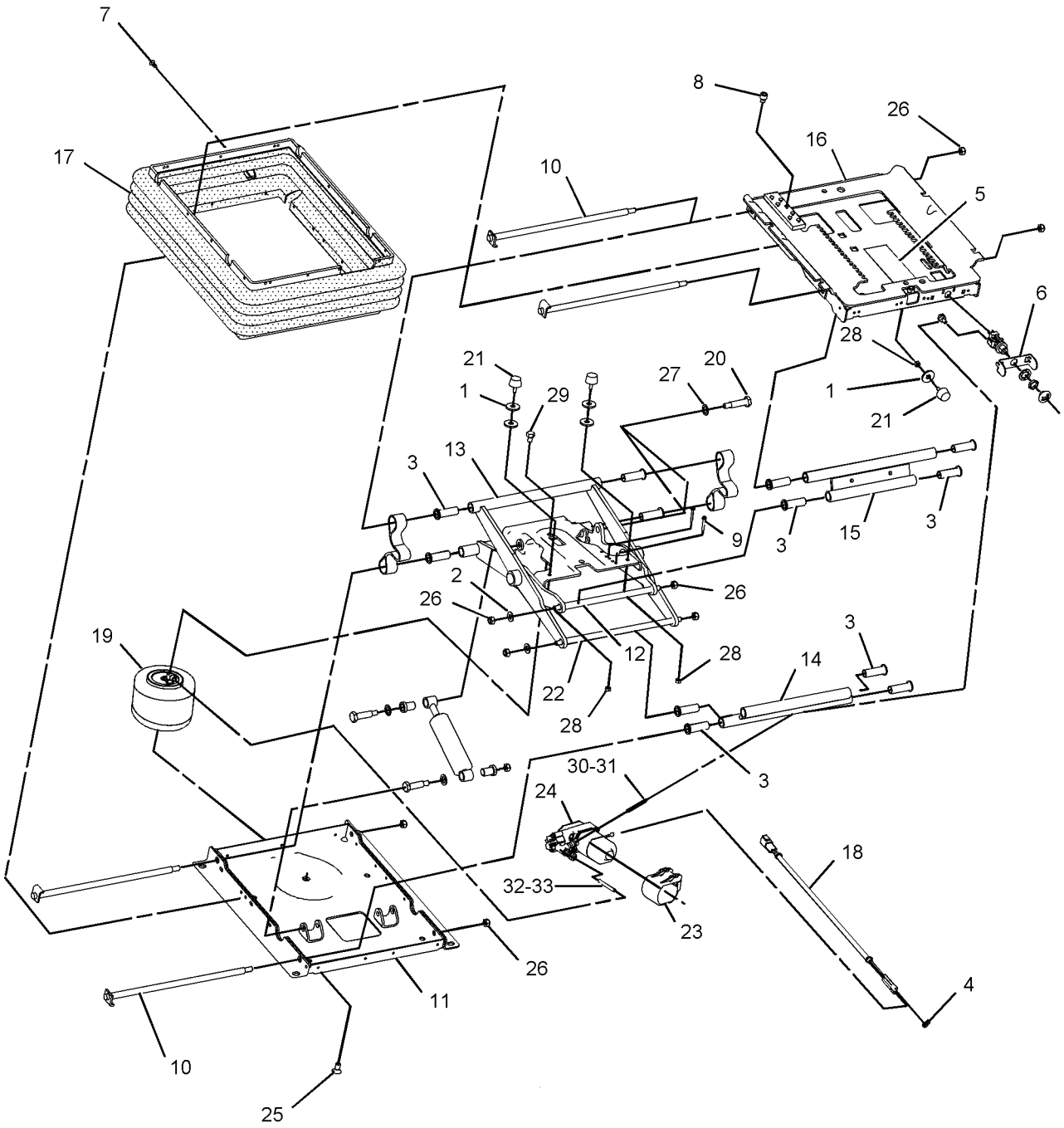

GRAPHIC #1 <END> g01011847

OPERATOR STATION

169-9649 TANK GP-WINDOW WASHER

S/N: S6T1-UP; S6X1-UP; S6Y1-UP
PART OF 262-5079 TANK GP-WINDOW WASHER

SMCS-7306 i04017072

NOTE	REF NO	GRAPHIC REF	PART NUMBER	QTY	PART NAME 1 2 3 4 5 6 (PRODUCT LEVEL)	SEE PAGE
	1	1	169-9650	1	TANK-WASHER	
	2	1	8E-8292	1	CAP-VENTED (WINDOW WASHER RESERVOIR)	
D	3	1	6V-5817		CONDUIT-FLEXIBLE (26.1-MM ID, SPLIT) (0.4-M)	
	4	1	186-4857	1	HARNESS AS-WIRING (WINDOW WASHER)	
		1	102-8805	1	KIT-RECEPTACLE (6-PIN)	
					(INCLUDES RECEPTACLE AS & WEDGE)	
		1	9X-0194	4	TERMINAL AS	
		1	3T-8371	4	TERMINAL-SOLDER	
		1	9G-3695	1	PLUG-SEAL	
E		1	114-8843		SLEEVE-PLASTIC (100-CM)	
E		1	119-3662		TUBE-HEAT SHRINK (10.85-MM DIA) (7-CM)	
		1	144-1636	5	PIN-CONNECTOR (14-GA TO 18-GA)	
E	5	1	144-0195		HOSE (60.5-CM EACH)	
E	5A	1	144-0195		HOSE (57-CM EACH)	
E	5B	1	144-0195		HOSE (15.3-CM EACH)	
	6	1	7T-8891	4	PUMP AS-WASHER	
B	7	1	3S-2093	12	STRAP-CABLE	
E	8	1	7X-7927		TAPE-IDENTIFICATION (LETTER A) (6-CM EACH)	
E	9	1	7X-7928		TAPE-IDENTIFICATION (LETTER B) (6-CM EACH)	
E	10	1	7X-7929		TAPE-IDENTIFICATION (LETTER C) (6-CM EACH)	
E	11	1	7X-7930		TAPE-IDENTIFICATION (LETTER D) (6-CM EACH)	
E	12	1	7I-7439		GUARD (20-CM EACH)	
E	12A	1	7I-7439		GUARD (15-CM)	

B-USE AS REQUIRED
D-ORDER BY THE METER
E-ORDER BY THE CENTIMETER

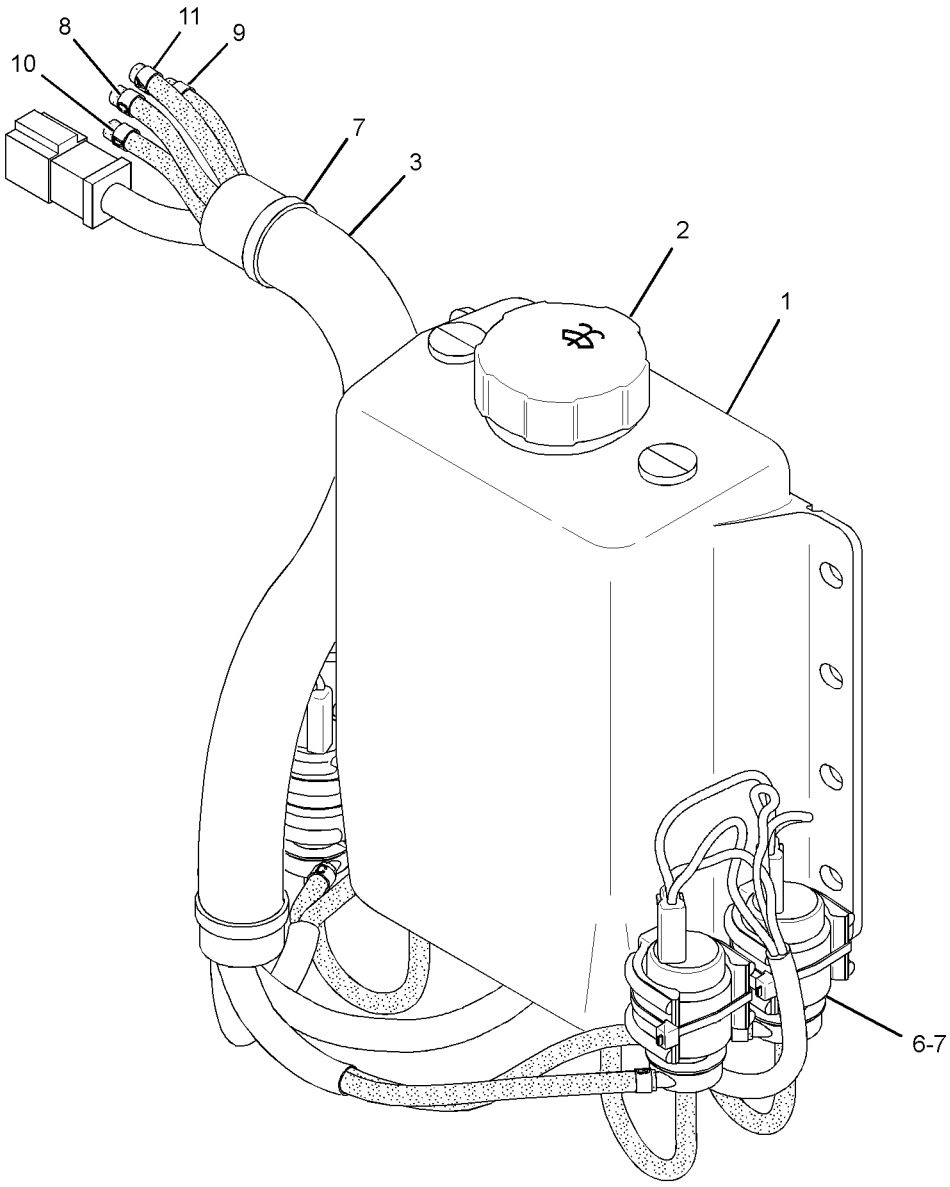

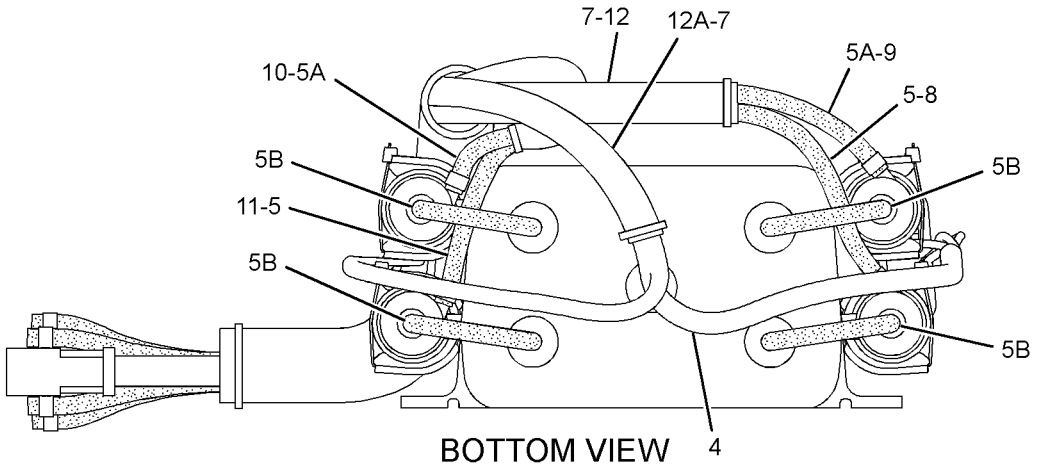

BOTTOM VIEW

GRAPHIC #1

<END>

g02192058

OPERATOR STATION

262-5079 TANK GP-WINDOW WASHER

S/N: S6T1-UP; S6X1-UP; S6Y1-UP
PART OF 317-4153 CAB AR

SMCS-7306 i04011450

NOTE	REF NO	GRAPHIC REF	PART NUMBER	QTY	PART NAME 1 2 3 4 5 6 (PRODUCT LEVEL)	SEE PAGE
	1	1	3S-2093	1	STRAP-CABLE	
	2	1	8T-5383	4	VALVE AS-CHECK (WASHER, WIPER SYSTEM)	
Y	3	1	169-9649	1	TANK GP-WINDOW WASHER	622
M	4	1	8T-4200	4	BOLT (M8X1.25X16-MM)	
	6	1	8T-4224	4	WASHER-HARD (8.8X16X2-MM THK)	

M-METRIC PART
Y-SEPARATE ILLUSTRATION

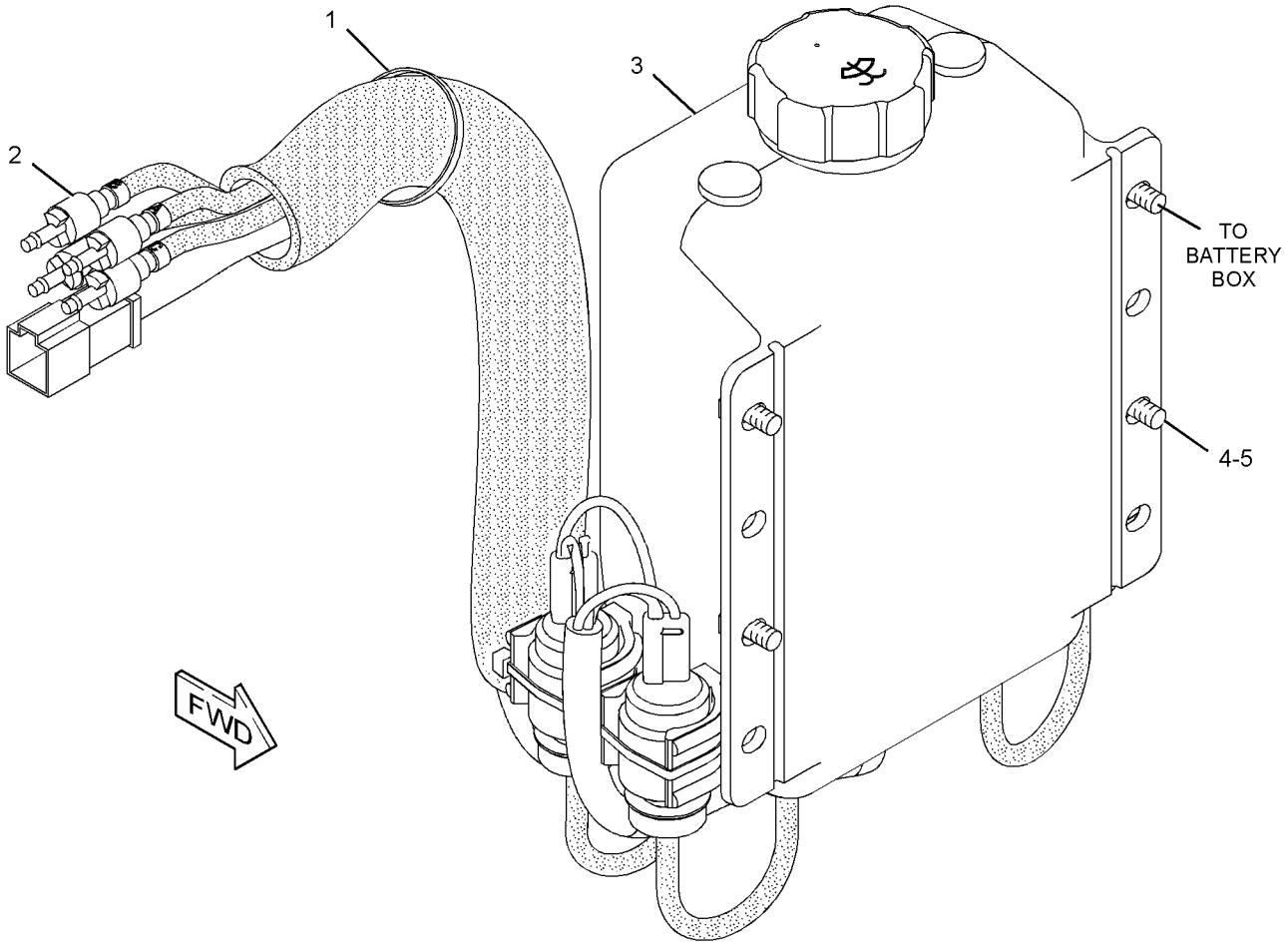

GRAPHIC #1 <END> g01210012

322-1394 WASHER GP-WINDOW

S/N: S6T1-UP; S6X1-UP; S6Y1-UP
PART OF 323-5696 CAB AR

SMCS-7306 i03994887

NOTE	REF NO	GRAPHIC REF	PART NUMBER	QTY	PART NAME 1 2 3 4 5 6 (PRODUCT LEVEL)	SEE PAGE
	1	1	3S-2093	19	STRAP-CABLE	
	2	1	8T-5400	4	CONNECTOR AS	
	3	1	145-7328	2	ELBOW-HOSE	
	4	1	320-5904	1	HARNESS AS-WINDOW WIPER	
		1	102-8801	1	KIT-RECEPTACLE (12-PIN)	
					(INCLUDES RECEPTACLE AS AND WEDGE)	
		1	8T-8737	10	PLUG-SEAL	
E		1	114-8844		SLEEVE-PLASTIC (20-CM)	
E		1	119-3662		TUBE-HEAT SHRINK (10.85-MM DIA) (13-CM)	
		1	9X-3402	42	SOCKET-CONNECTOR (16-GA TO 18-GA)	
		1	126-1768	1	SOCKET-CONNECTOR (14-GA)	
		1	9X-3401	9	PIN-CONNECTOR (16-GA TO 18-GA)	
					—OR—	
		1	126-1767	1	PIN-CONNECTOR (14-GA TO 16-GA)	
		1	155-2255	1	KIT-CONNECTING PLUG (12-PIN)	
		1	155-2265	1	KIT-CONNECTING PLUG (8-PIN)	
		1	155-2274	5	KIT-CONNECTING PLUG (6-PIN)	
					(EACH KIT INCLUDES PLUG AS, WEDGE & INTERFACE SEAL)	
	5	1	5D-7635	1	GROMMET	
	6	1	8E-6856	1	COVER	
M	7	1	8T-4133	1	NUT (M10X1.5-THD)	
	8	1	8T-4896	1	WASHER-HARD (10.2X18.5X2.5-MM THK)	
	9	1	9N-1995	4	RIVET-POP	
E	10	1	6V-5818		CONDUIT-FLEXIBLE (18.62-MM ID, SPLIT) (375-CM EACH)	
E	11	1	7X-7702		CONDUIT-FLEXIBLE (23.35-MM ID, SPLIT) (83-CM)	
E	12	1	144-0195		HOSE (288-CM)	
E	12A	1	144-0195		HOSE (364-CM EACH)	
E	12B	1	144-0195		HOSE (440-CM)	
E	12C	1	144-0195		HOSE (3-CM EACH)	
E	13	1	7X-7877		STRIP-EDGING (5-CM)	
E	13A	1	7X-7877		STRIP-EDGING (10-CM EACH)	
E	14	1	7X-7927		TAPE-IDENTIFICATION (LETTER A) (6-CM)	
E	15	1	7X-7928		TAPE-IDENTIFICATION (LETTER B) (6-CM)	
E	16	1	7X-7929		TAPE-IDENTIFICATION (LETTER C) (6-CM)	
E	17	1	7X-7930		TAPE-IDENTIFICATION (LETTER D) (6-CM)	

E-ORDER BY THE CENTIMETER
M-METRIC PART

322-1394 WASHER GP-WINDOW ***(contd.)*** i03994887

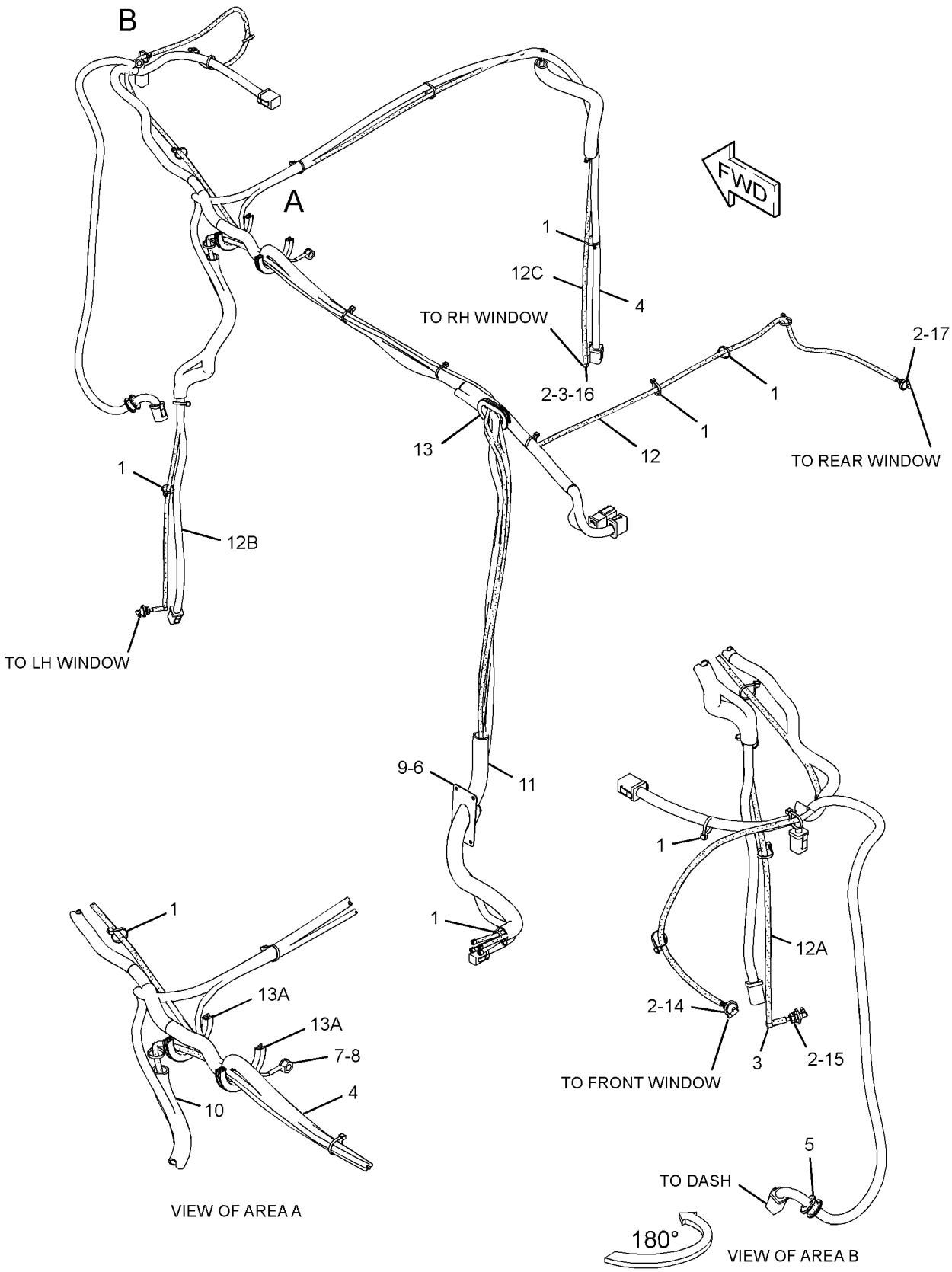

GRAPHIC #1 <END> g02198193

6T-8402 WINDOW GP-CAB—SLIDING, RH

S/N: S6T1-UP; S6X1-UP; S6Y1-UP
PART OF 179-7094, 359-0661 CAB GP, 8E-5113 WINDOW GP-SLIDING
FIELD REPLACEMENT ORDER 8E-5113—PAGE 636
ALSO AN ATTACHMENT

SMCS-7310 i04003585

NOTE	REF NO	GRAPHIC REF	PART NUMBER	QTY	PART NAME 1 2 3 4 5 6 (PRODUCT LEVEL)	SEE PAGE
Y	1	1	7T-1068	1	WINDOW GP-CAB (RH)	629
	2	1	7T-1330	1	GLASS (TINTED) (RH)	
D	3	1	5P-5680		SEAL (1.2-M)	
D	3A	1	5P-5680		SEAL (0.7-M)	
D	4	1	8T-0687		FILLER (1.2-M)	
E	5	1	8Y-6839		SEAL (64-CM)	
D	6	1	6V-5833		SEAL (0.7-M)	

D-ORDER BY THE METER
E-ORDER BY THE CENTIMETER
Y-SEPARATE ILLUSTRATION

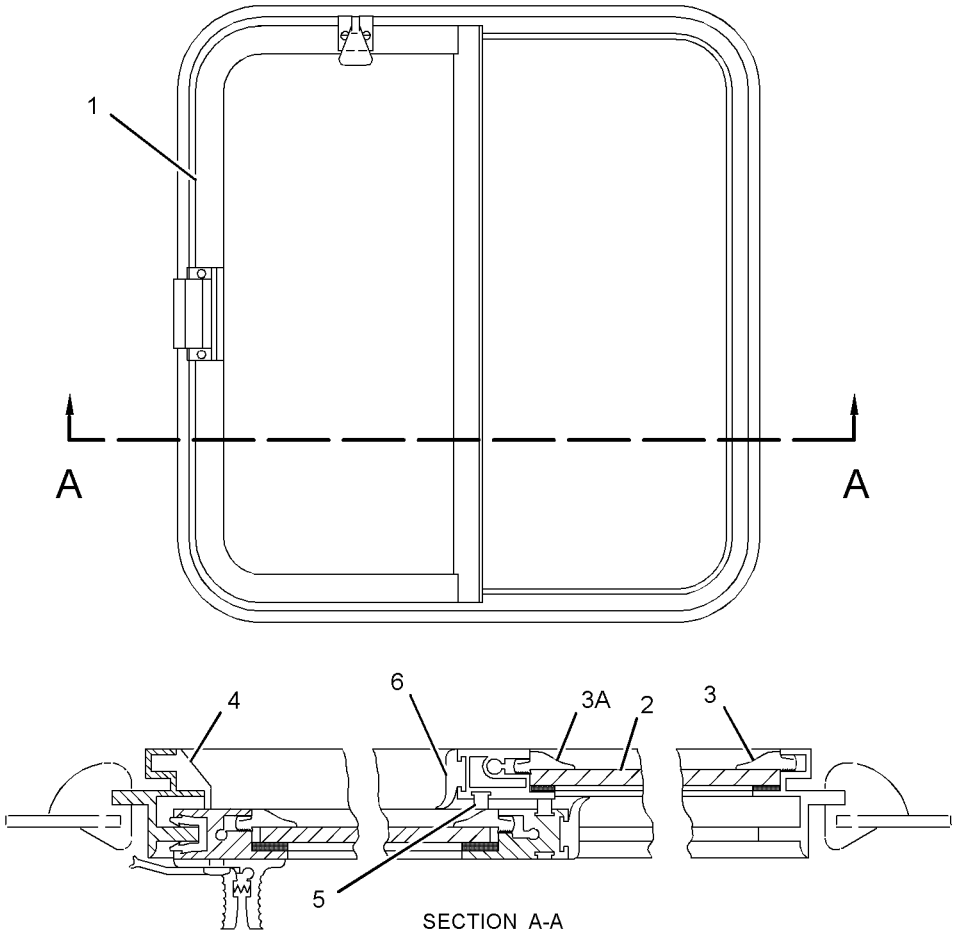

SECTION A-A

GRAPHIC #1 <END> g02181002

6T-8403 WINDOW GP-CAB—SLIDING, LH

S/N: S6T1-UP; S6X1-UP; S6Y1-UP
PART OF 179-7094, 359-0661 CAB GP, 8E-5114 WINDOW GP-SLIDING
FIELD REPLACEMENT ORDER 8E-5114—PAGE 636
ALSO AN ATTACHMENT

SMCS-7310 i04003587

NOTE	REF NO	GRAPHIC REF	PART NUMBER	QTY	PART NAME 1 2 3 4 5 6 (PRODUCT LEVEL)	SEE PAGE
D	1	1	5P-5680		SEAL (1.2-M)	
D	1A	1	5P-5680		SEAL (0.7-M)	
D	2	1	8T-0687		FILLER (1.2-M)	
D	3	1	6V-5833		SEAL (0.7-M)	
Y	4	1	7T-1069	1	WINDOW GP-CAB (LH)	630
E	5	1	8Y-6839		SEAL (64-CM)	
	6	1	7T-1330	1	GLASS (TINTED) (LH)	

D-ORDER BY THE METER
E-ORDER BY THE CENTIMETER
Y-SEPARATE ILLUSTRATION

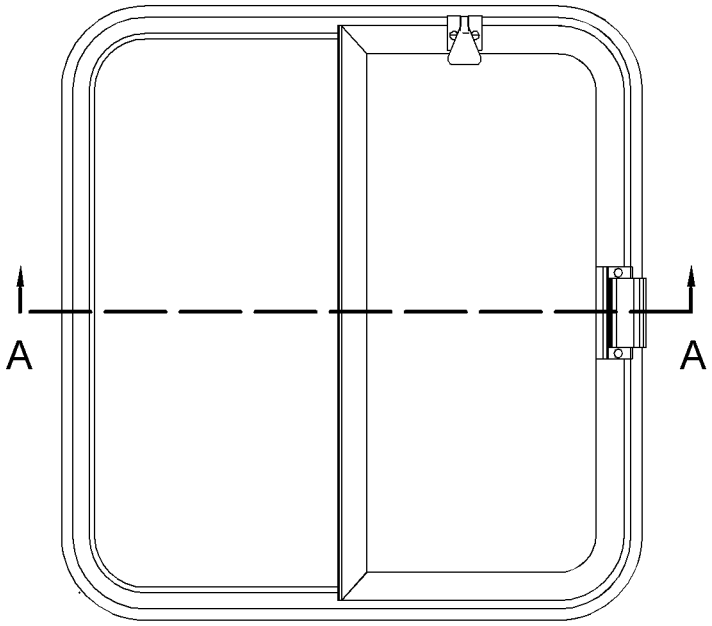

SECTION A-A

GRAPHIC #1 <END> g02181214

OPERATOR STATION

7T-1068 WINDOW GP-CAB–RH

S/N: S6T1-UP; S6X1-UP; S6Y1-UP
PART OF 6T-8402 WINDOW GP-CAB
ALSO AN ATTACHMENT

SMCS-7310 i04003580

NOTE	REF NO	GRAPHIC REF	PART NUMBER	QTY	PART NAME 1 2 3 4 5 6 (PRODUCT LEVEL)	SEE PAGE
	1	1	3T-1121	1	LOCK AS	
	2	1	2H-6622	2	SCREW-SELF-TAPPING (10-16X0.77-IN)	
	3	1	9P-7860	1	LOCK AS	
	4	1	9P-7859	2	SCREW-SELF-TAPPING (10-16X0.5-IN)	
D	5	1	5P-5680		SEAL (0.7-M)	
D	5A	1	5P-5680		SEAL (1.1-M)	
D	6	1	6V-5833		SEAL (0.7-M)	
D	7	1	5P-8918		SEAL (1.2-M)	
	8	1	8Y-6448	1	GLASS	
E	9	1	8Y-6839		SEAL (64-CM)	

D-ORDER BY THE METER
E-ORDER BY THE CENTIMETER

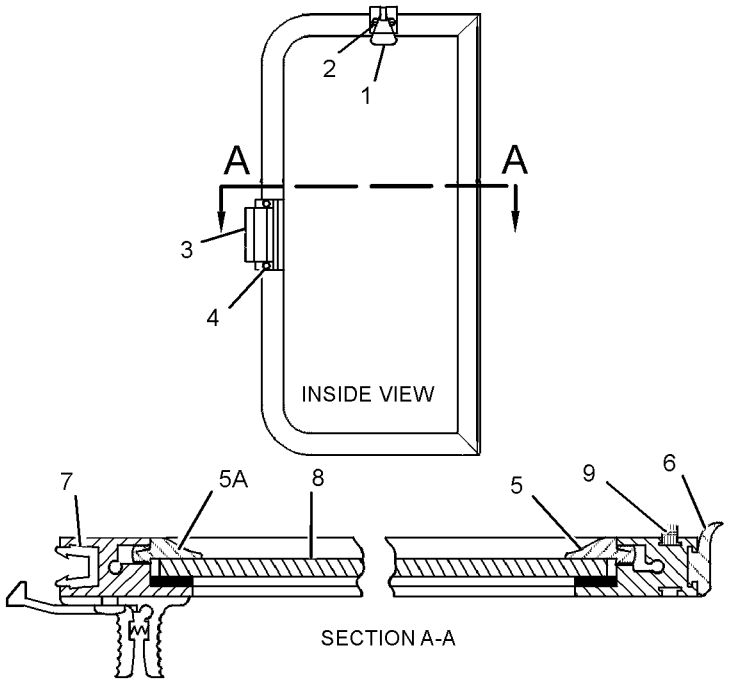

GRAPHIC #1 <END> g01211059

OPERATOR STATION

7T-1069 WINDOW GP-CAB—LH

S/N: S6T1-UP; S6X1-UP; S6Y1-UP
PART OF 6T-8403 WINDOW GP-CAB
ALSO AN ATTACHMENT

SMCS-7310 i04003589

NOTE	REF NO	GRAPHIC REF	PART NUMBER	QTY	PART NAME 1 2 3 4 5 6 (PRODUCT LEVEL)	SEE PAGE
	1	1	3T-1121	1	LOCK AS	
	2	1	2H-6622	2	SCREW-SELF-TAPPING (10-16X0.77-IN)	
	3	1	9P-7860	1	LOCK AS	
	4	1	9P-7859	2	SCREW-SELF-TAPPING (10-16X0.5-IN)	
D	5	1	5P-5680		SEAL (0.7-M)	
D	5A	1	5P-5680		SEAL (1.1-M)	
D	6	1	6V-5833		SEAL (0.7-M)	
D	7	1	5P-8918		SEAL (1.2-M)	
	8	1	8Y-6448	1	GLASS	
E	9	1	8Y-6839		SEAL (64-CM)	

D-ORDER BY THE METER
E-ORDER BY THE CENTIMETER

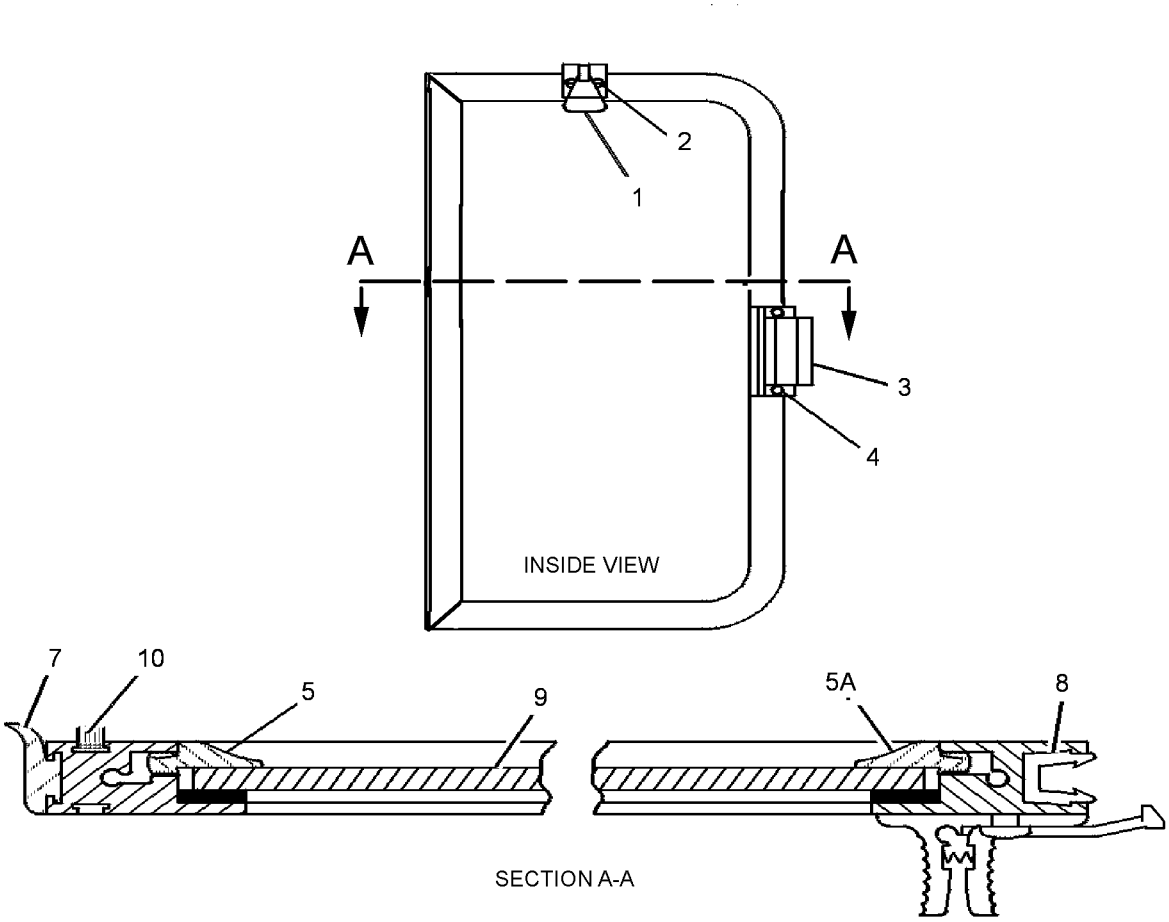

GRAPHIC #1 <END> g01435540

8E-3446 WINDOW GP-CAB—SLIDING, RH

S/N: S6T1-UP; S6X1-UP; S6Y1-UP
PART OF 8E-5113 WINDOW GP-SLIDING
FIELD REPLACEMENT ORDER 8E-5113—PAGE 636

SMCS-7310 i04003645

NOTE	REF NO	GRAPHIC REF	PART NUMBER	QTY	PART NAME 1 2 3 4 5 6 (PRODUCT LEVEL)	SEE PAGE
E	1	1	8Y-6423		SEAL (130-CM)	
E	1A	1	8Y-6423		SEAL (65-CM)	
B	2	1	8Y-6459		TAPE-BUTYL	
	3	1	8Y-6430	1	SEAL-WINDOW	
Y	4	1	8Y-6433	1	WINDOW GP-CAB (RH)	635
	5	1	8Y-6462	1	KIT-LEAF SPRING	
					(INCLUDES SPRING AS & RIVET)	
	6	1	8Y-6432	1	GLASS-CAB (FIXED)	
E	7	1	8Y-6424		SEAL (122-CM)	
E	8	1	8Y-6910		WEATHERSTRIP (68-CM)	

B-USE AS REQUIRED
E-ORDER BY THE CENTIMETER
Y-SEPARATE ILLUSTRATION

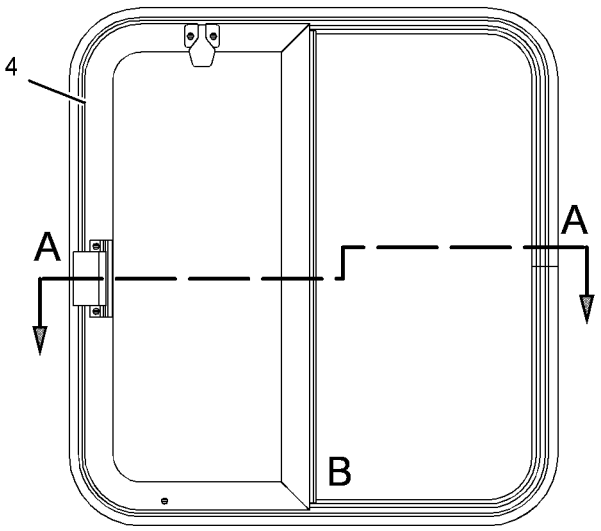

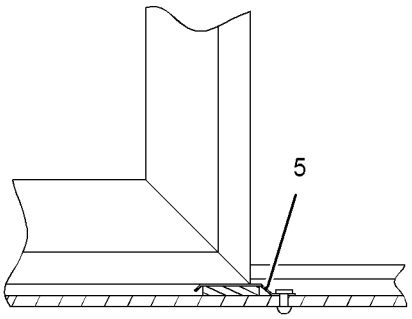

VIEW OF AREA B

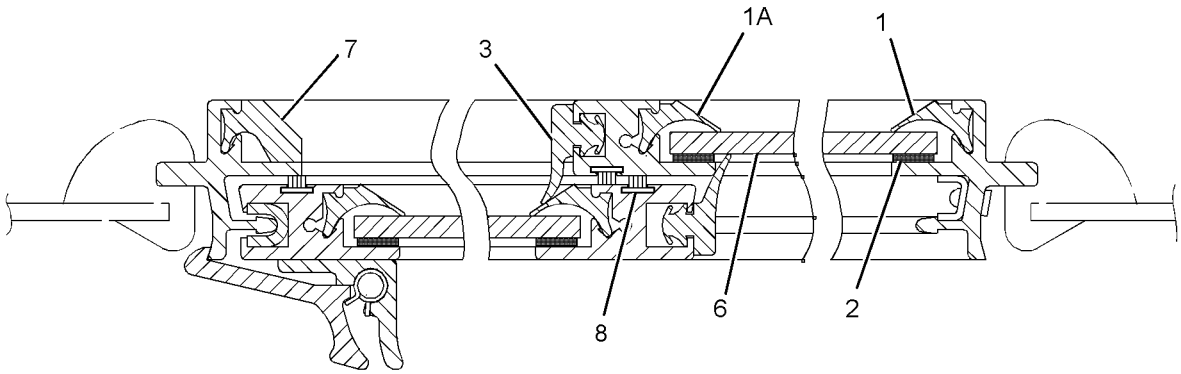

SECTION A-A

GRAPHIC #1 <END> g02197993

8E-3447 WINDOW GP-CAB—SLIDING, LH

S/N: S6T1-UP; S6X1-UP; S6Y1-UP
PART OF 8E-5114 WINDOW GP-SLIDING
FIELD REPLACEMENT ORDER 8E-5114—PAGE 636

SMCS-7310 i04003655

NOTE	REF NO	GRAPHIC REF	PART NUMBER	QTY	PART NAME 1 2 3 4 5 6 (PRODUCT LEVEL)	SEE PAGE
E	1	1	8Y-6423		SEAL (65-CM)	
E	1A	1	8Y-6423		SEAL (130-CM)	
B	2	1	8Y-6459		TAPE-BUTYL	
	3	1	8Y-6430	1	SEAL-WINDOW	
Y	4	1	8Y-6420	1	WINDOW GP-CAB (LH)	633
	5	1	8Y-6462	1	KIT-LEAF SPRING (CAB WINDOW)	
					(INCLUDES SPRING AS & RIVET)	
	6	1	8Y-6419	1	GLASS-CAB (FIXED) (TINTED)	
E	7	1	8Y-6424		SEAL (122-CM)	
E	8	1	8Y-6910		WEATHERSTRIP (68-CM)	

B-USE AS REQUIRED
E-ORDER BY THE CENTIMETER
Y-SEPARATE ILLUSTRATION

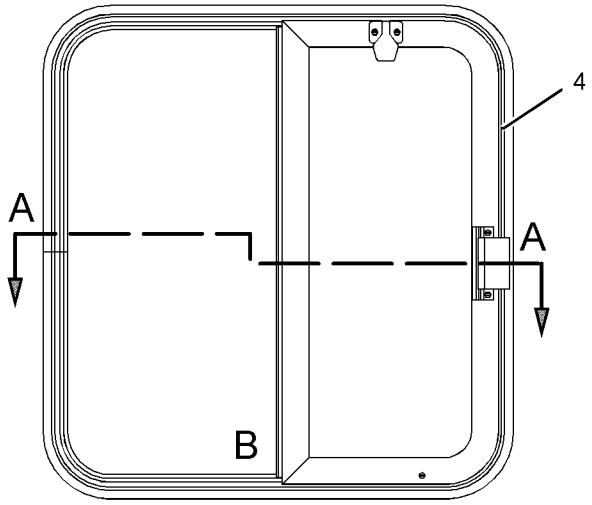

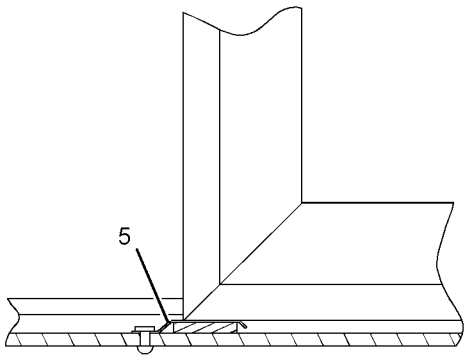

SECTION VIEW
OF AREA B

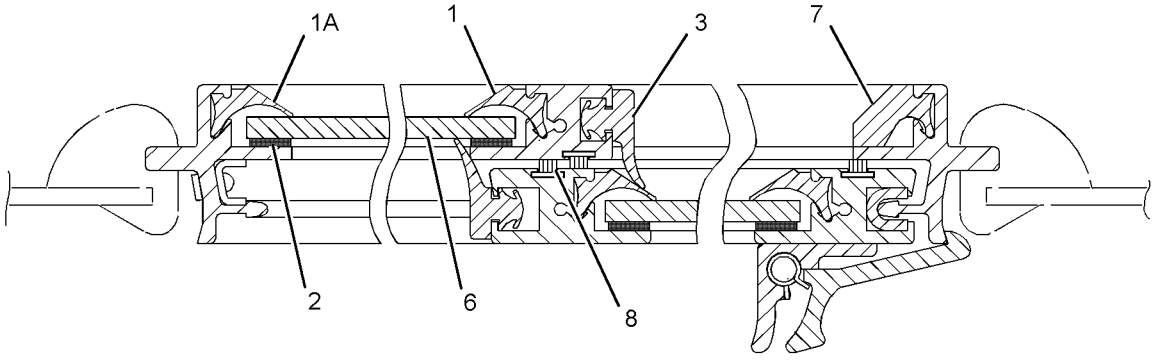

SECTION A-A

GRAPHIC #1 <END> g01232324

OPERATOR STATION

8Y-6420 WINDOW GP-CAB—LH

S/N: S6T1-UP; S6X1-UP; S6Y1-UP
PART OF 8E-3447 WINDOW GP-CAB

SMCS-7310 i04003657

NOTE	REF NO	GRAPHIC REF	PART NUMBER	QTY	PART NAME 1 2 3 4 5 6 (PRODUCT LEVEL)	SEE PAGE
	1	1	8Y-6454	1	KIT-CATCH (CAB WINDOW)	
					(INCLUDES CATCH AS & AMP; 2 SCREWS)	
M	2	1	084-4111	2	SCREW-PAN HEAD (M5X0.8X16-MM)	
	3	1	8Y-6455	1	KIT-CATCH (CAB WINDOW)	
					(INCLUDES CATCH AS & 2 SCREWS)	
M	4	1	8T-4777	2	SCREW-MACHINE (M5X0.8X12-MM)	
	5	1	8Y-6460	1	KIT-RUNNER GUIDE (CAB WINDOW)	
					(INCLUDES GUIDE & SCREW)	
	6	1	3S-9557	2	SCREW-PAN HEAD (4-40X0.5-IN)	
	7	1	8Y-6461	1	KIT-RUNNER GUIDE (CAB WINDOW)	
					(INCLUDES GUIDE & SCREW)	
M	8	1	6V-2312	2	SCREW-MACHINE (M6X1X25-MM)	
BE	9	1	8Y-6423		SEAL	
	10	1	8Y-6430	1	SEAL-WINDOW	
BE	11	1	8Y-6459		TAPE-BUTYL	
	12	1	8Y-6422	1	GLASS-CAB (SLIDING, TINTED)	
BE	13	1	8Y-6910		WEATHERSTRIP	

B-USE AS REQUIRED
E-ORDER BY THE CENTIMETER
M-METRIC PART

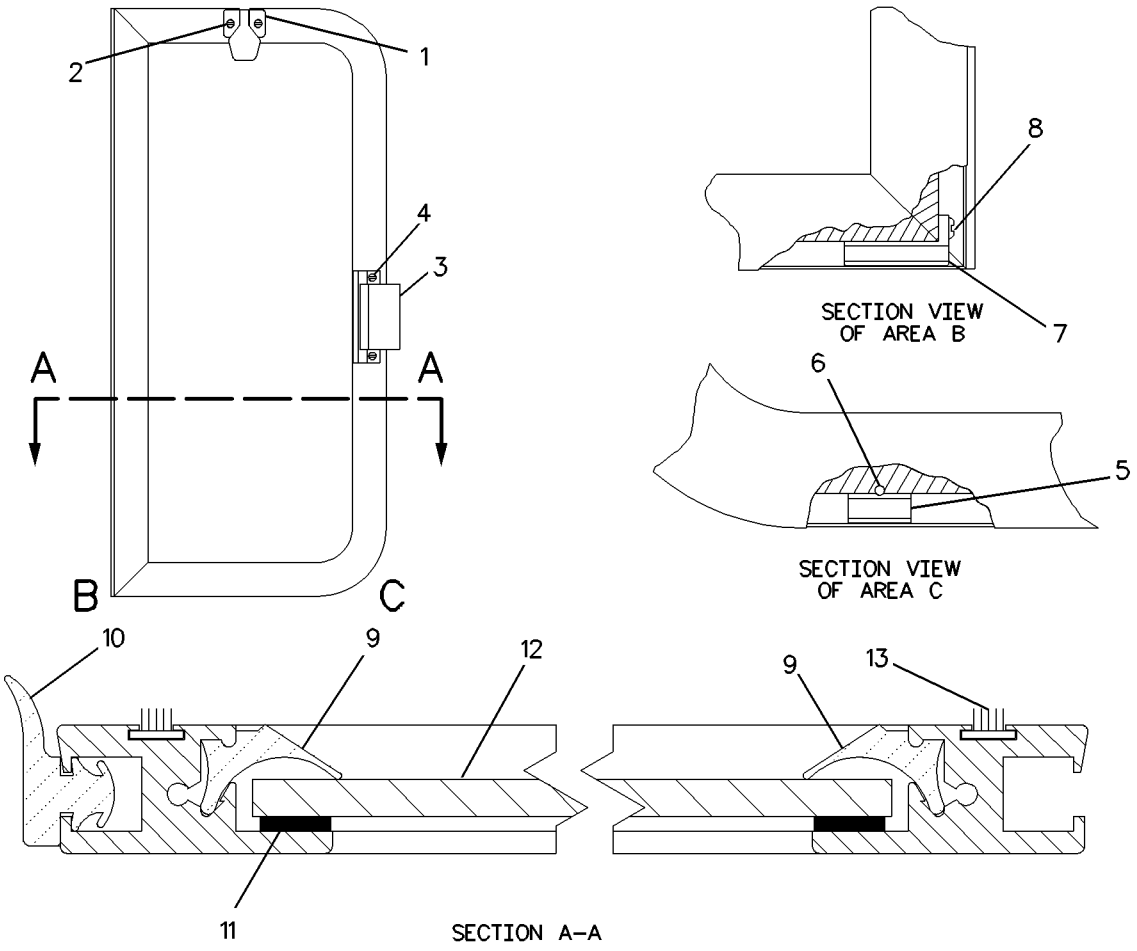

GRAPHIC #1 <END> g00864814

8Y-6433 WINDOW GP-CAB—RH

S/N: S6T1-UP; S6X1-UP; S6Y1-UP
PART OF 8E-3446 WINDOW GP-CAB

SMCS-7310 i04003640

NOTE	REF NO	GRAPHIC REF	PART NUMBER	QTY	PART NAME 1 2 3 4 5 6 (PRODUCT LEVEL)	SEE PAGE
	1	1	8Y-6454	1	KIT-CATCH (CAB WINDOW)	
					(INCLUDES CATCH AS & 2 SCREWS)	
M	2	1	084-4111	2	SCREW-PAN HEAD (M5X0.8X16-MM)	
	3	1	8Y-6455	1	KIT-CATCH (CAB WINDOW)	
					(INCLUDES CATCH AS & 2 SCREWS)	
M	4	1	8T-4777	2	SCREW-MACHINE (M5X0.8X12-MM)	
	5	1	8Y-6460	1	KIT-RUNNER GUIDE (CAB WINDOW)	
					(INCLUDES GUIDE & SCREW)	
M	6	1	6V-2312	2	SCREW-MACHINE (M6X1X25-MM)	
	7	1	8Y-6461	1	KIT-RUNNER GUIDE (CAB WINDOW)	
					(INCLUDES GUIDE & SCREW)	
BE	8	1	8Y-6423		SEAL	
	9	1	8Y-6430	1	SEAL-WINDOW	
BE	10	1	8Y-6459		TAPE-BUTYL	
BE	11	1	8Y-6423		SEAL	
	12	1	8Y-6431	1	GLASS-CAB (SLIDING, TINTED)	
BE	13	1	8Y-6910		WEATHERSTRIP	

B-USE AS REQUIRED
E-ORDER BY THE CENTIMETER
M-METRIC PART

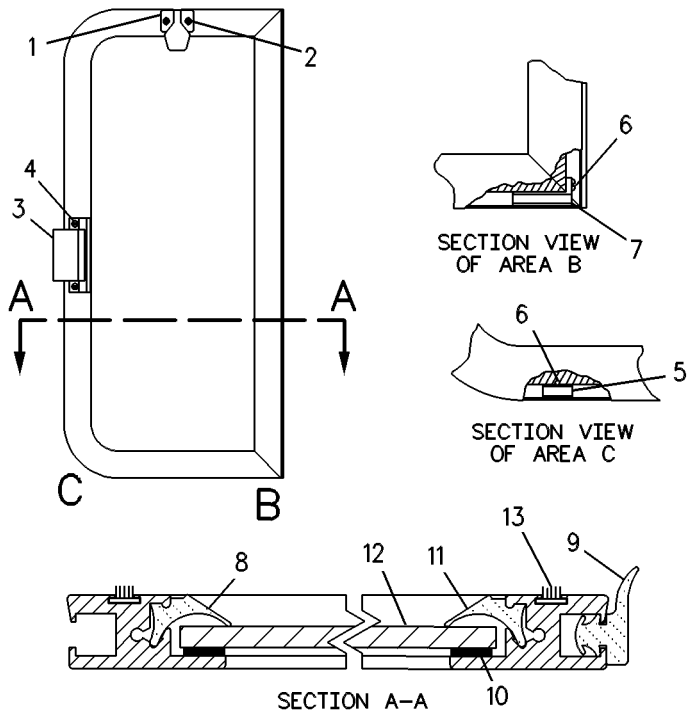

GRAPHIC #1 <END> g00326281

8E-5113 WINDOW GP-SLIDING—RH

S/N: S6T1-UP; S6X1-UP; S6Y1-UP

FIELD REPLACEMENT FOR 6T-8402—PAGE 627, 8E-3446—PAGE 631

SMCS-7310 i04003664

NOTE	PART NUMBER	QTY	PART NAME 1 2 3 4 5 6 (PRODUCT LEVEL)	SEE PAGE
Y	*6T-8402*	1	WINDOW GP-CAB (RH)	627
			—OR—	
Y	*8E-3446*	1	WINDOW GP-CAB (RH)	631

Y-SEPARATE ILLUSTRATION

<END>

8E-5114 WINDOW GP-SLIDING—LH

S/N: S6T1-UP; S6X1-UP; S6Y1-UP

FIELD REPLACEMENT FOR 6T-8403—PAGE 628, 8E-3447—PAGE 632

SMCS-7310 i04003622

NOTE	PART NUMBER	QTY	PART NAME 1 2 3 4 5 6 (PRODUCT LEVEL)	SEE PAGE
Y	*6T-8403*	1	WINDOW GP-CAB (LH)	628
			—OR—	
Y	*8E-3447*	1	WINDOW GP-CAB (LH)	632

Y-SEPARATE ILLUSTRATION

<END>

354-6924 WIPER GP-WINDOW

S/N: S6T1-UP; S6X1-UP; S6Y1-UP
PART OF 323-5696 CAB AR

SMCS-7305 i03995949

NOTE	REF NO	GRAPHIC REF	PART NUMBER	QTY	PART NAME 1 2 3 4 5 6 (PRODUCT LEVEL)	SEE PAGE
	1	1	6V-5849	2	BLADE AS-WIPER (350-MM) (DOOR, RH, LH)	
					(EACH INCLUDES)	
		1	8C-5060	1	KIT-WIPER BLADE (INCLUDES 2-BLADES)	
	2	1	6V-5851	1	BLADE AS-WIPER (400-MM) (FRONT WINDOW)	
	3	1	8Y-8309	1	ARM AS-WIPER	
E		1	194-5171		HOSE (55-CM)	
		1	305-9190	1	NOZZLE AS-WASHER	
Y	4	1	101-0742	1	WIPER PIVOT GP (FRONT WINDOW)	639
	5	1	145-8741	1	ARM AS-WINDOW WIPER (FRONT)	
		1	136-3188	1	CLIP	
		1	136-3191	1	NOZZLE AS-WASHER	
E		1	194-5171		HOSE (53-CM)	
	6	1	146-6433	1	BLADE AS-WIPER (500-MM) (REAR)	
Y	7	1	147-7976	1	MOTOR GP-WINDOW WIPER (FRONT)	573
	8	1	151-0254	1	ARM AS-WINDOW WIPER (DOOR, RH)	
		1	305-9192	1	NOZZLE AS-WASHER	
	9	1	151-0255	1	ARM AS-WINDOW WIPER (DOOR, LH)	
		1	305-9192	1	NOZZLE AS-WASHER	
Y	10	1	147-7979	1	MOTOR GP-WINDOW WIPER (REAR)	574
	11	1	224-6829	2	SPACER (17X24.5X17-MM THK)	
Y	12	1	330-5013	1	MOTOR GP-WINDOW WIPER (DOOR, LH)	575
Y	13	1	330-5014	1	MOTOR GP-WINDOW WIPER (DOOR, RH)	576
	14	1	6N-7523	2	WASHER (6.48X11.9X1.57-MM THK)	
M	15	1	8T-4138	2	BOLT (M6X1X20-MM)	
	16	1	8V-5455	1	BOSS	

E-ORDER BY THE CENTIMETER
M-METRIC PART
Y-SEPARATE ILLUSTRATION

354-6924 WIPER GP-WINDOW ***(contd.)*** i03995949

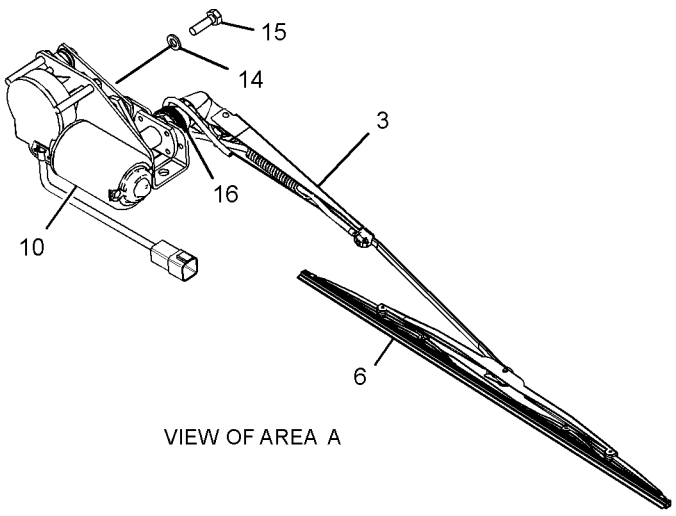

VIEW OF AREA A

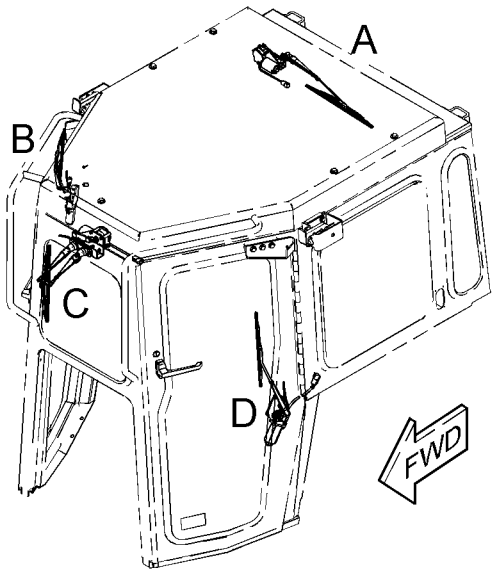

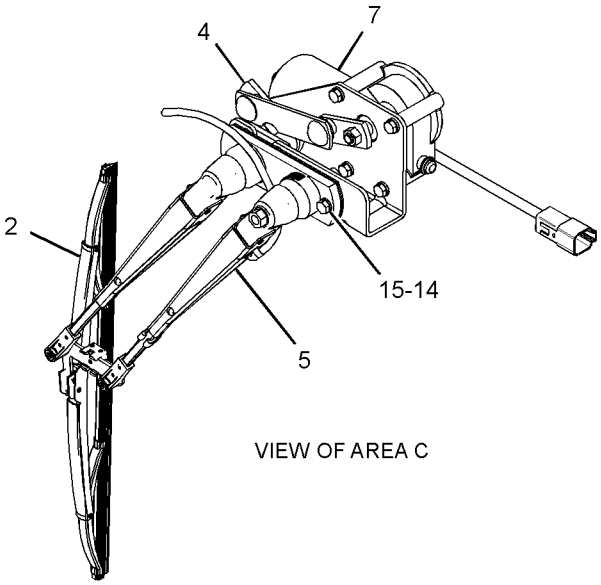

VIEW OF AREA C

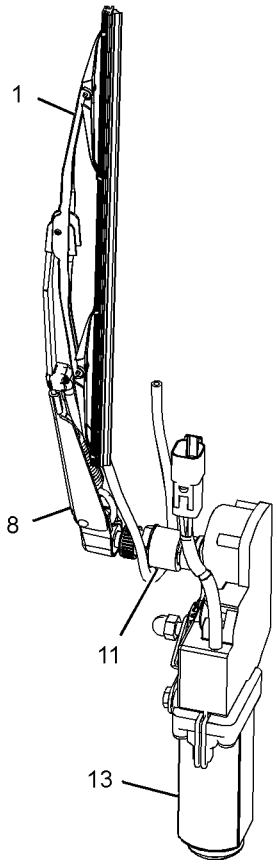

VIEW OF AREA B

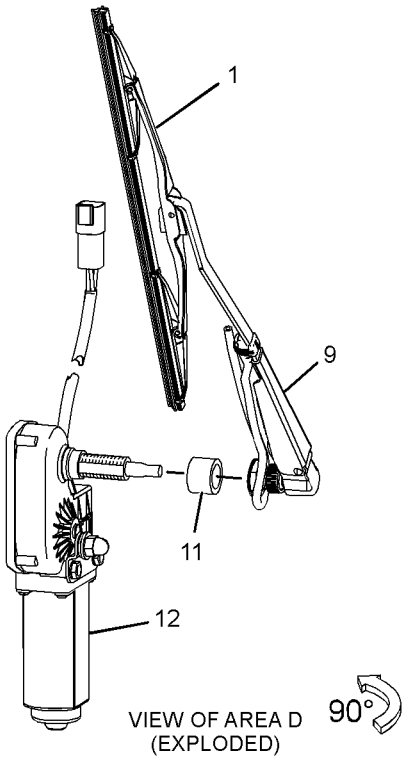

VIEW OF AREA D
(EXPLODED)

90°

GRAPHIC #1 <END> g02185335

101-0742 WIPER PIVOT GP

S/N: S6T1-UP; S6X1-UP; S6Y1-UP
PART OF 354-6924 WIPER GP-WINDOW

SMCS-7305 i04017689

NOTE	REF NO	GRAPHIC REF	PART NUMBER	QTY	PART NAME 1 2 3 4 5 6 (PRODUCT LEVEL)	SEE PAGE
M	1	1	6V-6889	1	NUT (M8X1.25-THD)	
	2	1	6A-9718	1	WASHER (8.1X12.5X1-MM THK)	
	3	1	6V-6209	1	CAP-WIPER	

M-METRIC PART

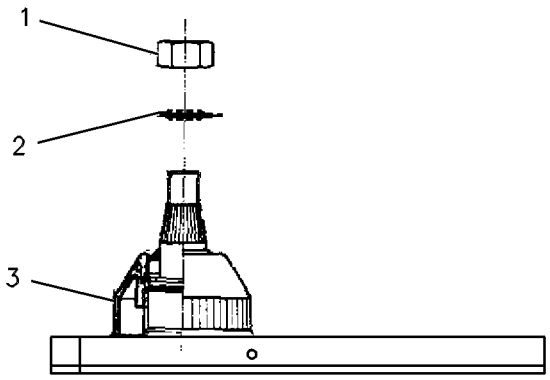

GRAPHIC #1 <END> g00084472

WORK TOOLS

364-3468 BLADE & EDGE GP-ANGLING

S/N: YSA1-UP
AN ATTACHMENT

SMCS-6060 i04018712

NOTE	REF NO	GRAPHIC REF	PART NUMBER	QTY	PART NAME 1 2 3 4 5 6 (PRODUCT LEVEL)	SEE PAGE
Y	1	1	*6Y-2039*	1	EDGE GP-BIT & CUTTING	662
Y	2	1	*364-5488*	1	BLADE AS-ANGLING	648

Y-SEPARATE ILLUSTRATION

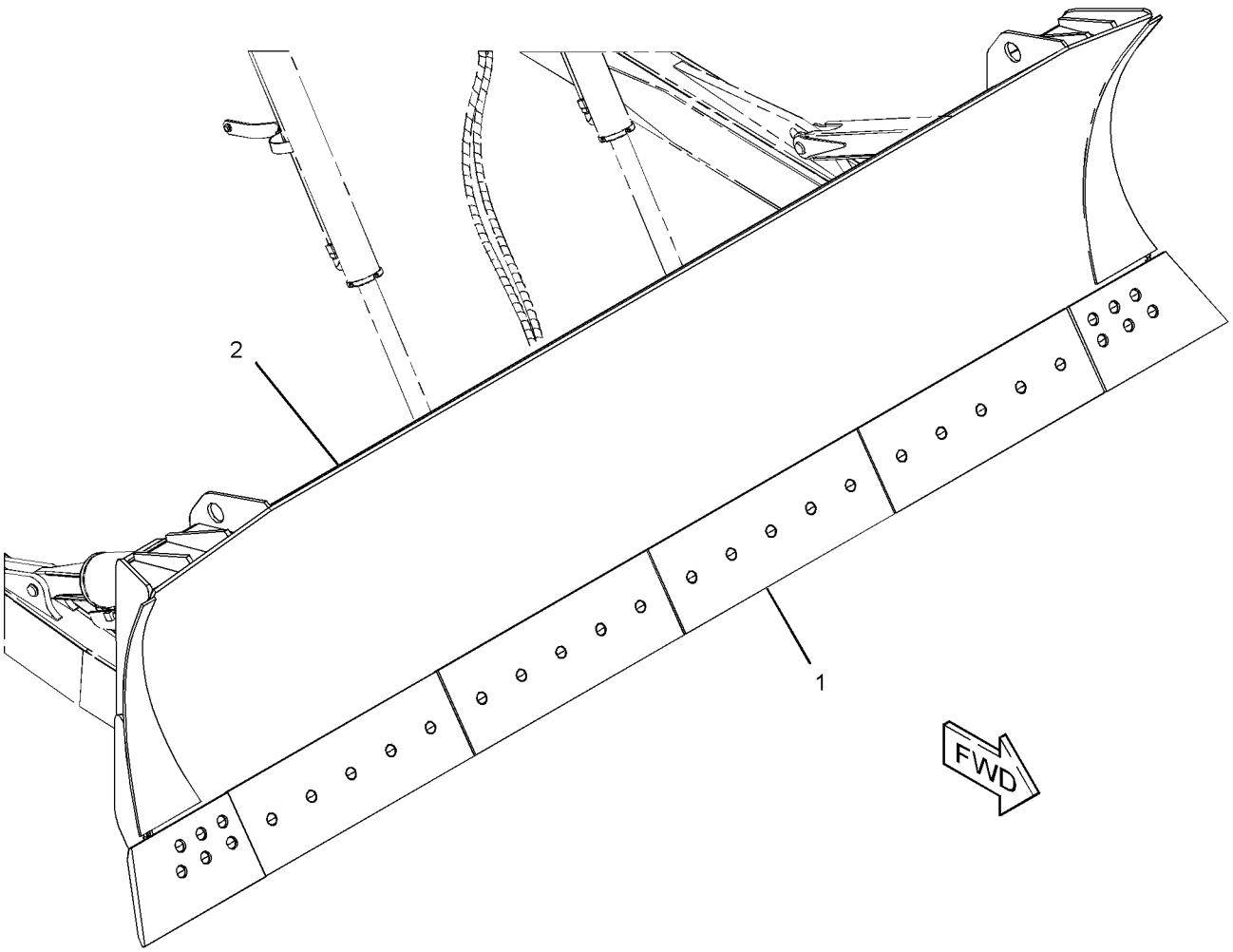

GRAPHIC #1 <END> g02196940

WORK TOOLS

364-3470 BLADE & EDGE GP-SEMI-UNIVERSAL

S/N: YSC1-UP

AN ATTACHMENT

SMCS-6060 i04019030

NOTE	REF NO	GRAPHIC REF	PART NUMBER	QTY	PART NAME 1 2 3 4 5 6 (PRODUCT LEVEL)	SEE PAGE
Y	1	1	*9W-3762*	1	EDGE GP-BIT & CUTTING	663
Y	2	1	*364-5490*	1	BLADE AS-SEMI-UNIVERSAL	652

Y-SEPARATE ILLUSTRATION

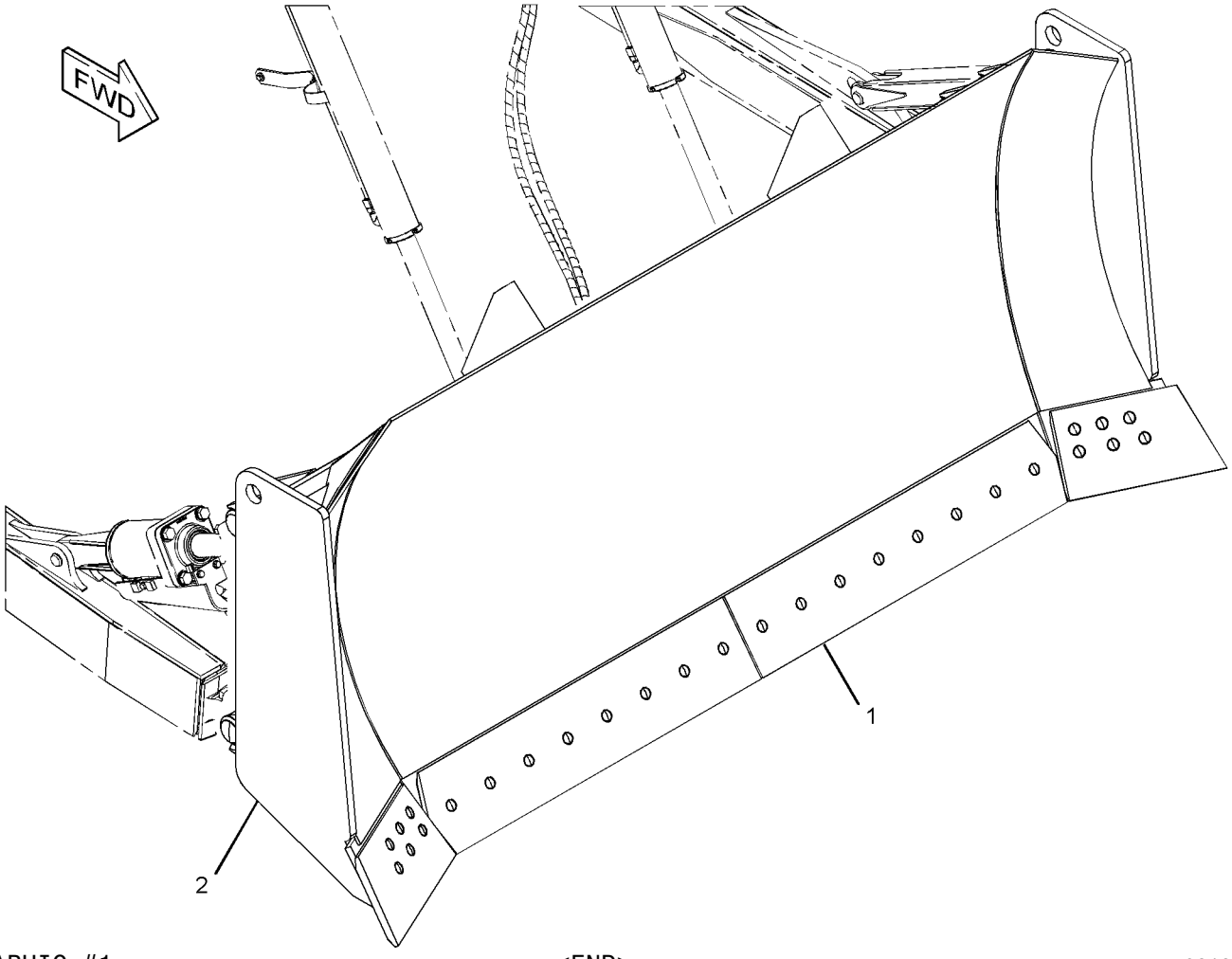

GRAPHIC #1 <END> g02196935

WORK TOOLS

364-3471 BLADE & EDGE GP-SEMI-UNIVERSAL

S/N: YXD1-UP
AN ATTACHMENT

SMCS-6060 i04018651

NOTE	REF NO	GRAPHIC REF	PART NUMBER	QTY	PART NAME 1 2 3 4 5 6 (PRODUCT LEVEL)	SEE PAGE
Y	1	1	*9W-3762*	1	EDGE GP-BIT & CUTTING	663
Y	2	1	*364-5491*	1	BLADE AS-SEMI-UNIVERSAL	653

Y-SEPARATE ILLUSTRATION

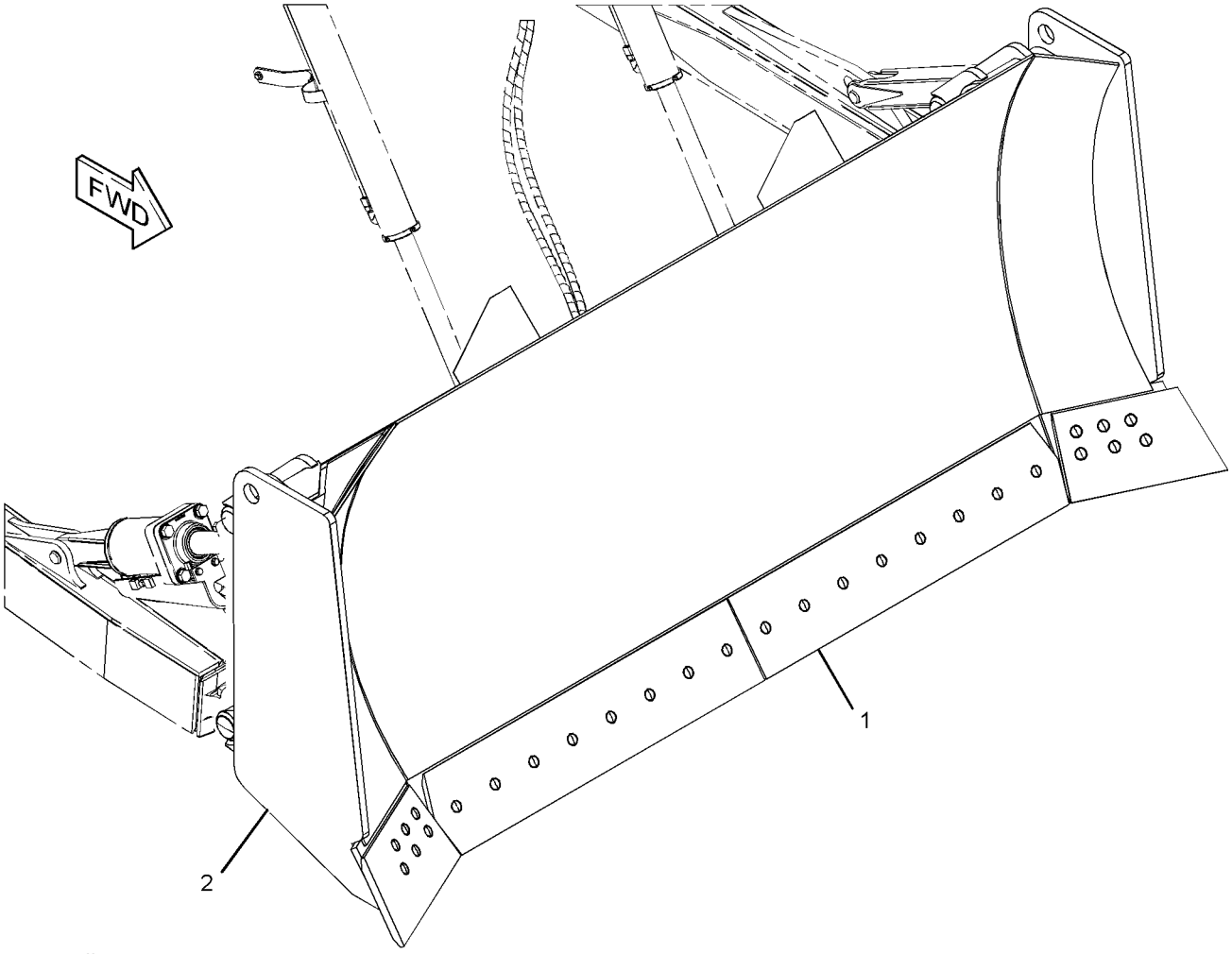

GRAPHIC #1 <END> g02196944

WORK TOOLS

365-7010 BLADE & EDGE GP-SEMI-UNIVERSAL

S/N: S6X1-UP
FOR USE WITH ACCUGRADE
AN ATTACHMENT

SMCS-6060 i04033289

NOTE	REF NO	GRAPHIC REF	PART NUMBER	QTY	PART NAME 1 2 3 4 5 6 (PRODUCT LEVEL)	SEE PAGE
Y	1	1	*9W-3762*	1	EDGE GP-BIT & CUTTING	663
Y	2	1	365-7011	1	BLADE AS-SEMI-UNIVERSAL	654

Y-SEPARATE ILLUSTRATION

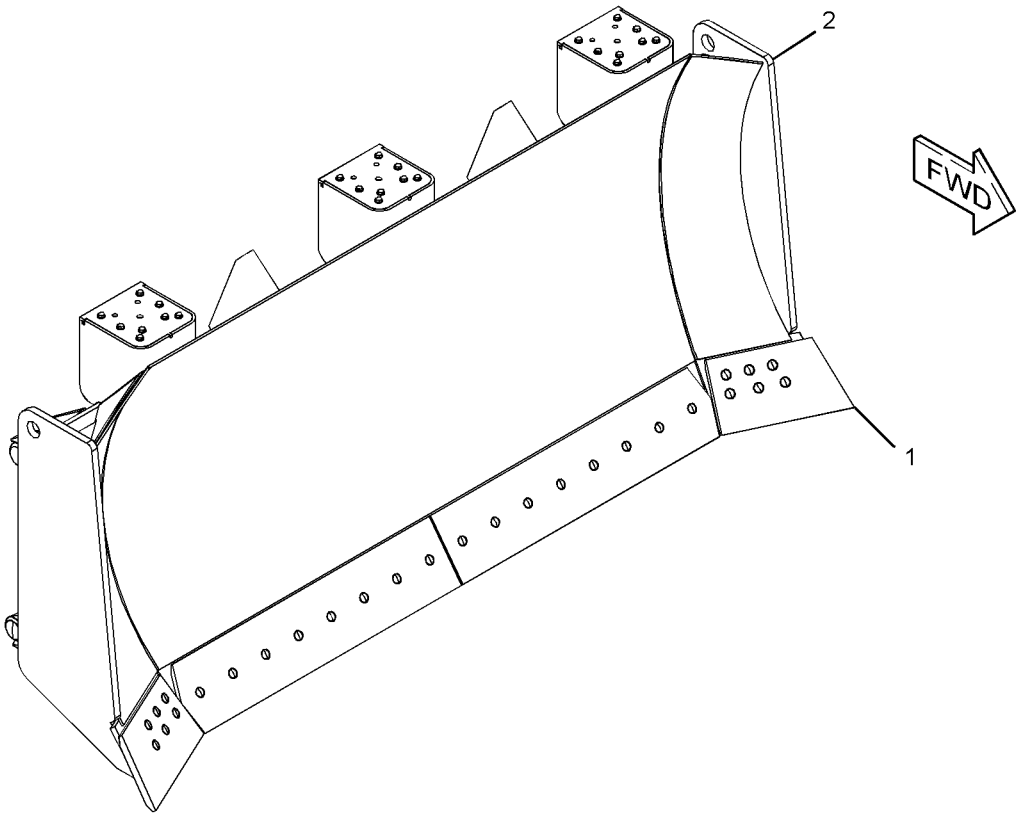

GRAPHIC #1 <END> g02231997

WORK TOOLS

365-7012 BLADE & EDGE GP-SEMI-UNIVERSAL

S/N: S6T1-UP
FOR USE WITH ACCUGRADE
AN ATTACHMENT

SMCS-6060 i04033291

NOTE	REF NO	GRAPHIC REF	PART NUMBER	QTY	PART NAME 1 2 3 4 5 6 (PRODUCT LEVEL)	SEE PAGE
Y	1	1	*9W-3762*	1	EDGE GP-BIT & CUTTING	663
Y	2	1	365-7013	1	BLADE AS-SEMI-UNIVERSAL	655

Y-SEPARATE ILLUSTRATION

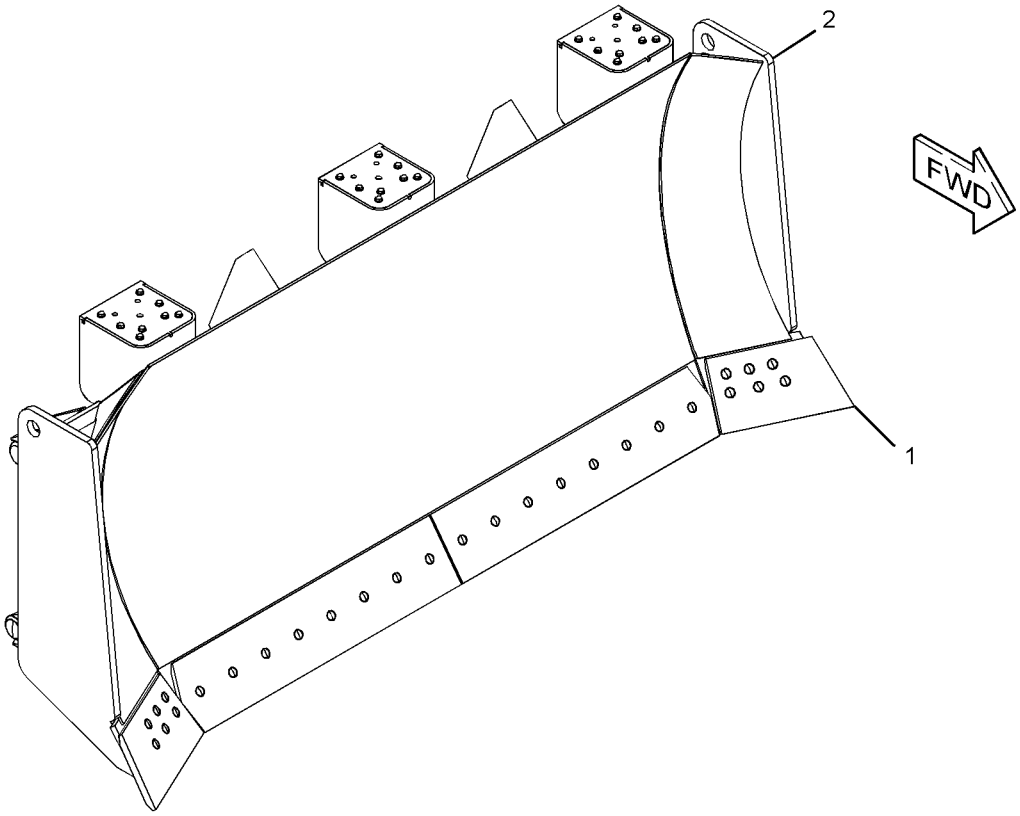

GRAPHIC #1 <END> g02231997

WORK TOOLS

364-3469 BLADE & EDGE GP-STRAIGHT

S/N: YSB1-UP
AN ATTACHMENT

SMCS-6051 i04018972

NOTE	REF NO	GRAPHIC REF	PART NUMBER	QTY	PART NAME 1 2 3 4 5 6 (PRODUCT LEVEL)	SEE PAGE
Y	1	1	*6Y-1744*	1	EDGE GP-BIT & CUTTING	661
Y	2	1	*364-5489*	1	BLADE AS-STRAIGHT	658

Y-SEPARATE ILLUSTRATION

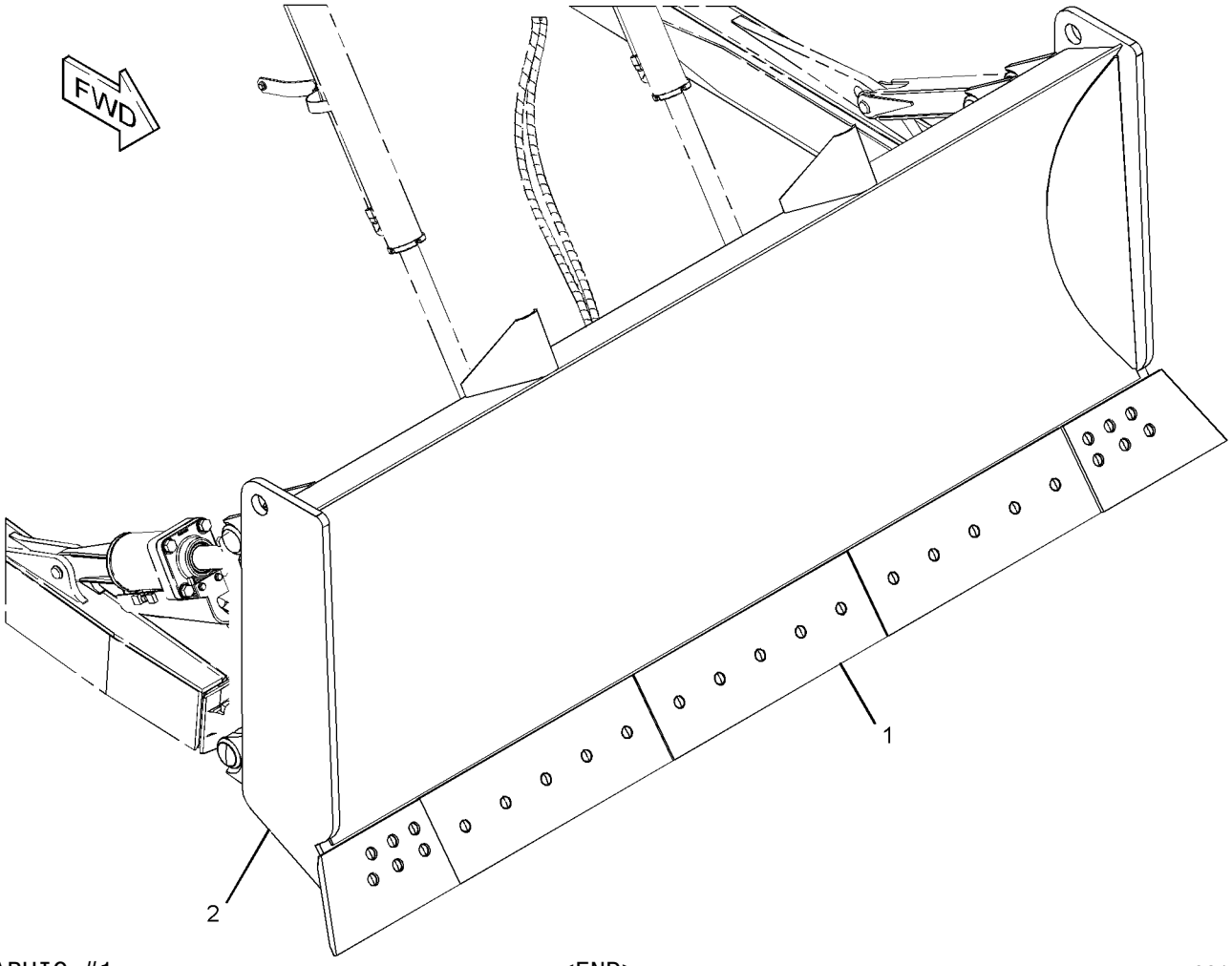

GRAPHIC #1 <END> g02196938

WORK TOOLS

364-3472 BLADE & EDGE GP-STRAIGHT

S/N: YLE1-UP

AN ATTACHMENT

SMCS-6051 i04019307

NOTE	REF NO	GRAPHIC REF	PART NUMBER	QTY	PART NAME 1 2 3 4 5 6 (PRODUCT LEVEL)	SEE PAGE
Y	1	1	*229-6957*	1	EDGE GP-BIT & CUTTING	664
Y	2	1	*364-5492*	1	BLADE GP-STRAIGHT	659

Y-SEPARATE ILLUSTRATION

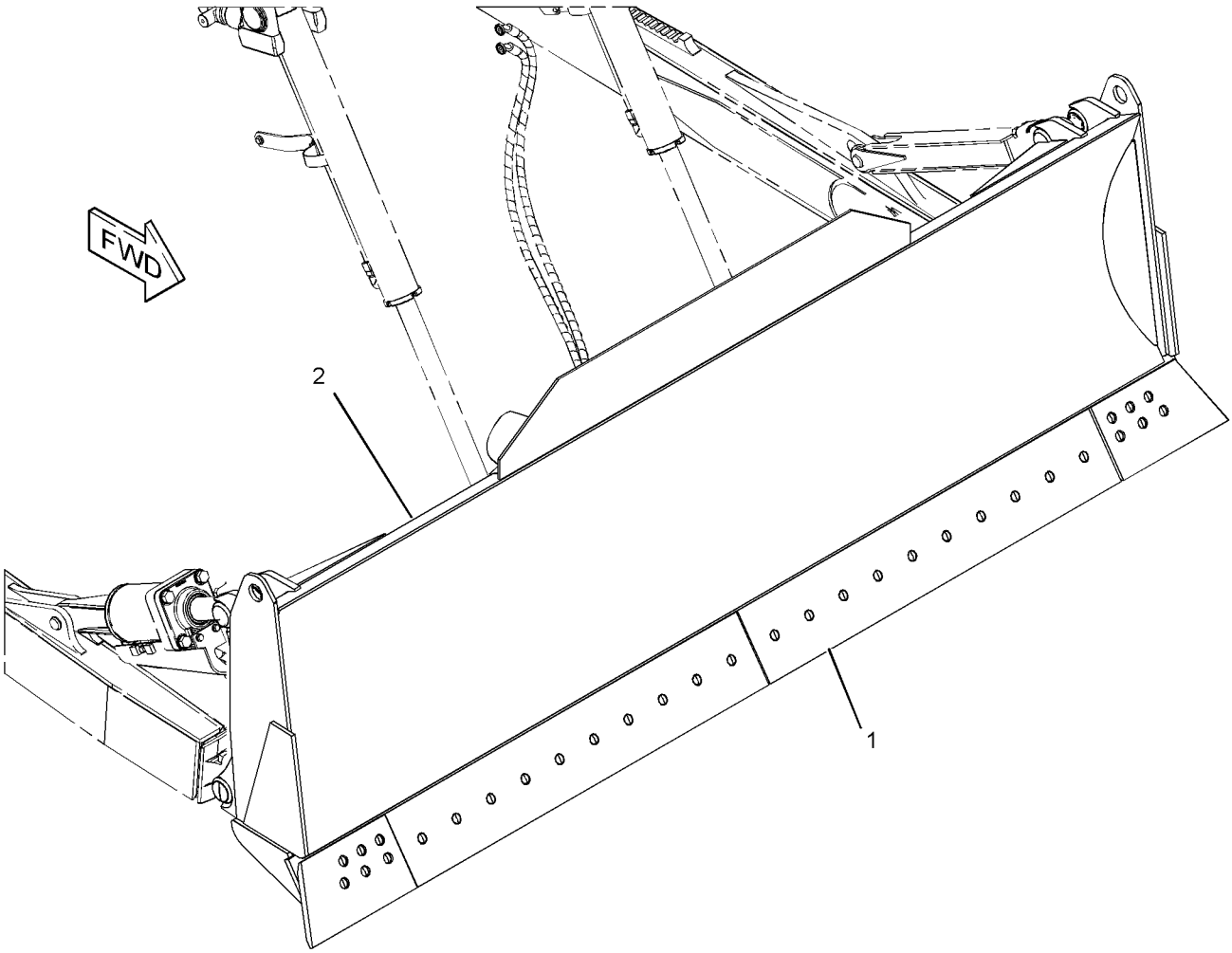

GRAPHIC #1 <END> g02196937

365-7014 BLADE & EDGE GP-STRAIGHT

S/N: S6Y1-UP
FOR USE WITH ACCUGRADE
AN ATTACHMENT

SMCS-6051 i04033293

NOTE	REF NO	GRAPHIC REF	PART NUMBER	QTY	PART NAME 1 2 3 4 5 6 (PRODUCT LEVEL)	SEE PAGE
Y	1	1	*229-6957*	1	EDGE GP-BIT & CUTTING	664
Y	2	1	365-7015	1	BLADE GP-STRAIGHT	660

Y-SEPARATE ILLUSTRATION

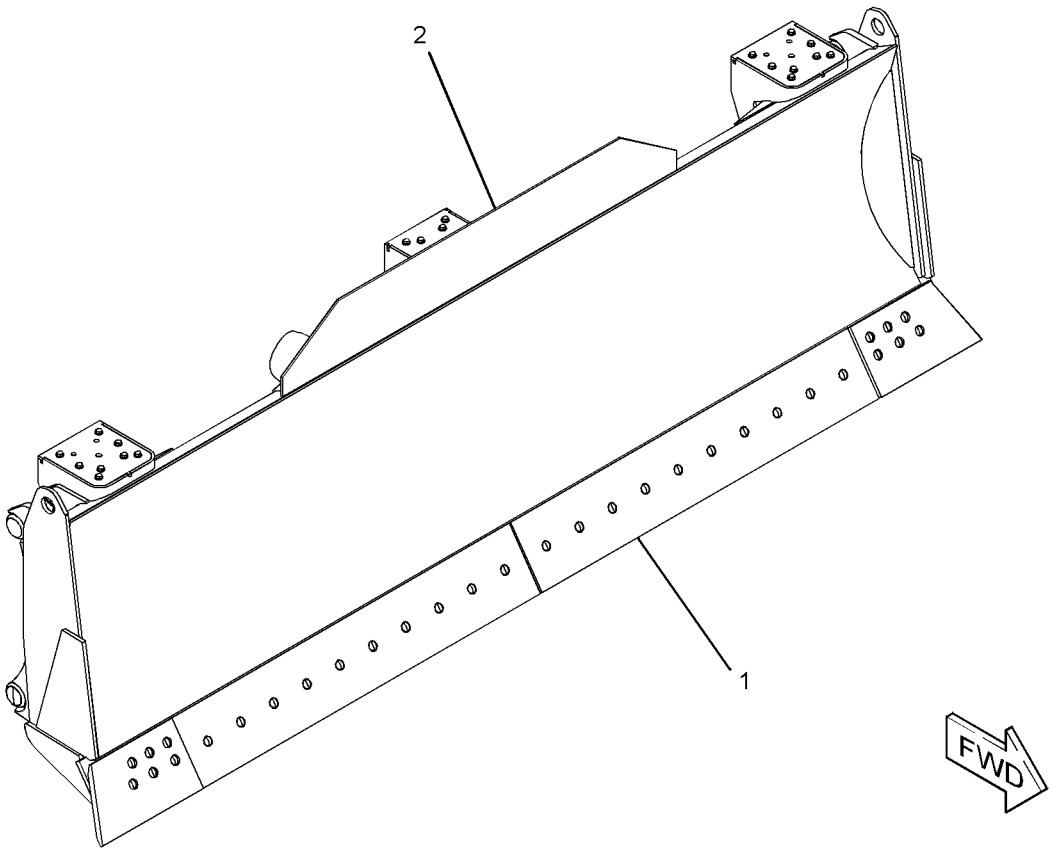

GRAPHIC #1 <END> g02227774

WORK TOOLS

364-5488 BLADE AS-ANGLING

S/N: YSA1-UP
PART OF 364-3468 BLADE & EDGE GP-ANGLING
AN ATTACHMENT

SMCS-6060 i04018714

NOTE	REF NO	GRAPHIC REF	PART NUMBER	QTY	PART NAME 1 2 3 4 5 6 (PRODUCT LEVEL)	SEE PAGE
	1	1	8P-9770	1	PLATE	
	2	1	251-9820	1	BLADE AS	

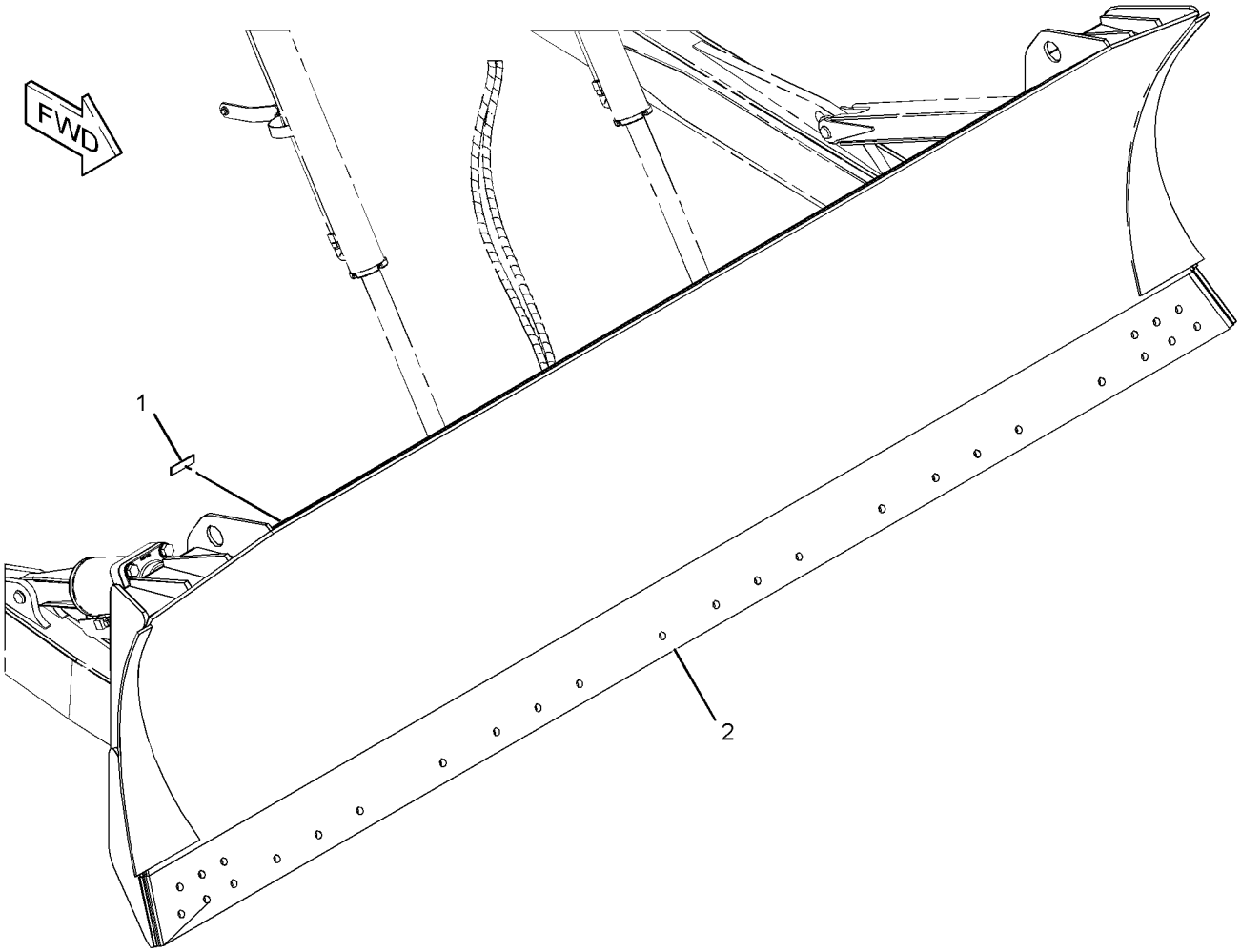

GRAPHIC #1 <END> g02196939

230-5556 BLADE AS-SEMI-UNIVERSAL

S/N: YXD1-UP; S6T1-UP
PART OF 364-5491 BLADE AS-SEMI-UNIVERSAL
AN ATTACHMENT

SMCS-6060 i04015531

NOTE	REF NO	GRAPHIC REF	PART NUMBER	QTY	PART NAME 1 2 3 4 5 6 (PRODUCT LEVEL)	SEE PAGE
	1	1	1U-0183	2	DEFLECTOR	
	2	1	6Y-1390	1	SUPPORT	
	3	1	8E-5205	2	SUPPORT	
	4	1	8P-9770	1	PLATE	
	5	1	9W-6381	1	PLATE	
	6	1	135-2964	1	BRACKET AS (LH)	
	6A	1	7J-5131	1	TRUNNION	
	7	1	135-2966	1	BRACKET AS (RH)	
	7A	1	7J-5131	1	TRUNNION	
	8	1	135-3084	2	BRACKET AS	
					(EACH INCLUDES)	
	8A	1	4J-1641	1	TRUNNION	
	9	1	142-2328	1	BRACKET	
	10	1	142-9643	2	BRACKET AS	
					(EACH INCLUDES)	
	10A	1	4T-1504	1	TRUNNION	

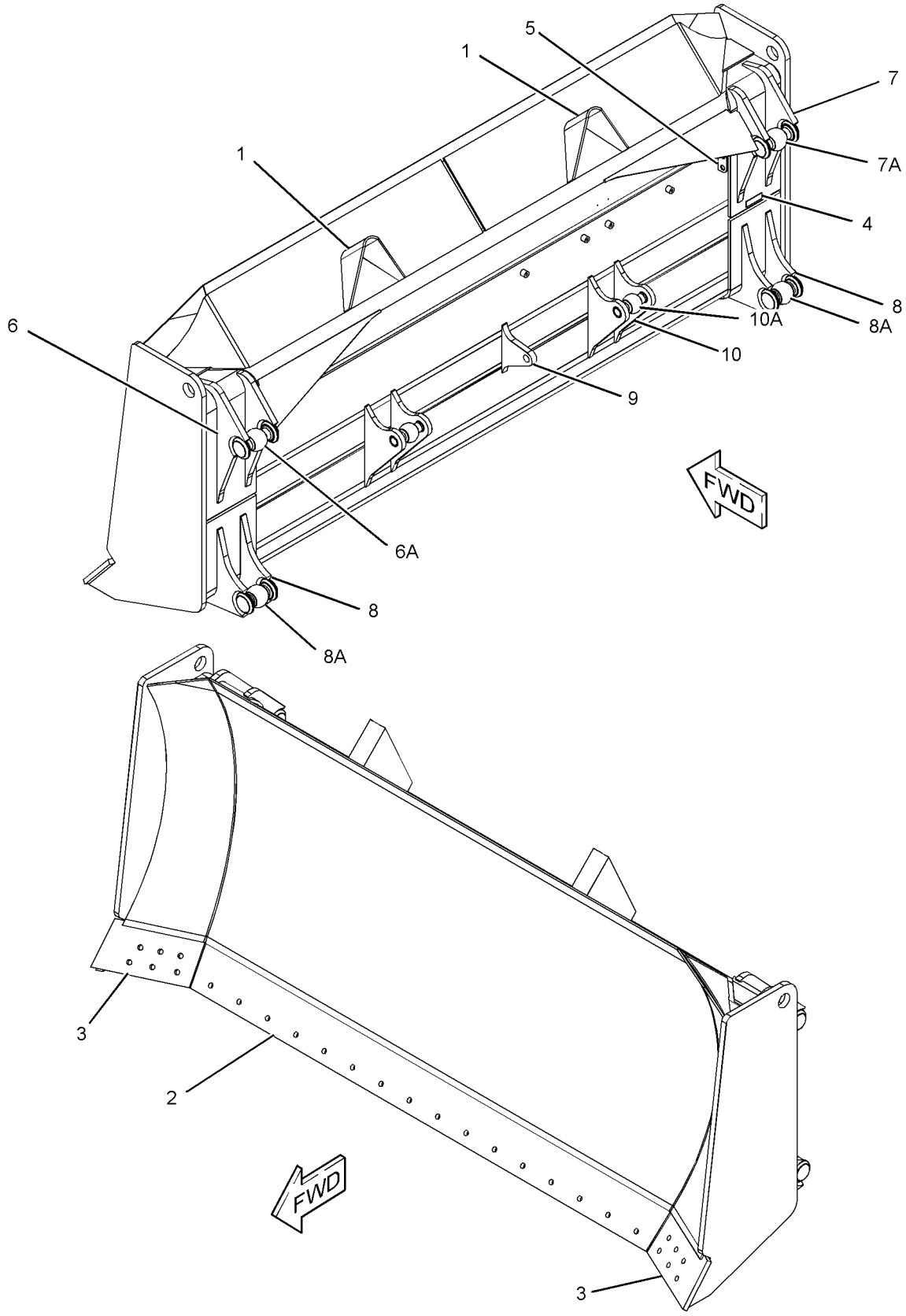

GRAPHIC #1 <END> g01213373

252-5858 BLADE AS-SEMI-UNIVERSAL

S/N: YSC1-UP; S6X1-UP
PART OF 364-5490 BLADE AS-SEMI-UNIVERSAL
AN ATTACHMENT

SMCS-6060 i04019279

NOTE	REF NO	GRAPHIC REF	PART NUMBER	QTY	PART NAME 1 2 3 4 5 6 (PRODUCT LEVEL)	SEE PAGE
	1	1	1U-0183	2	DEFLECTOR	
	2	1	8P-9770	1	PLATE	
	3	1	9W-6381	1	PLATE	
	4	1	8E-5188	2	BRACKET AS	
					(EACH INCLUDES)	
	4A	1	7J-5131	1	TRUNNION	
	5	1	6Y-1387	1	PLATE	
	6	1	8E-5190	2	BRACKET AS	
					(EACH INCLUDES)	
	6A	1	4T-1504	1	TRUNNION	
	7	1	6Y-1390	1	SUPPORT	
	8	1	8E-5194	1	BRACKET	
	9	1	8E-5192	2	BRACKET AS	
					(EACH INCLUDES)	
	9A	1	4J-1641	1	TRUNNION	
	10	1	8E-5205	2	SUPPORT	

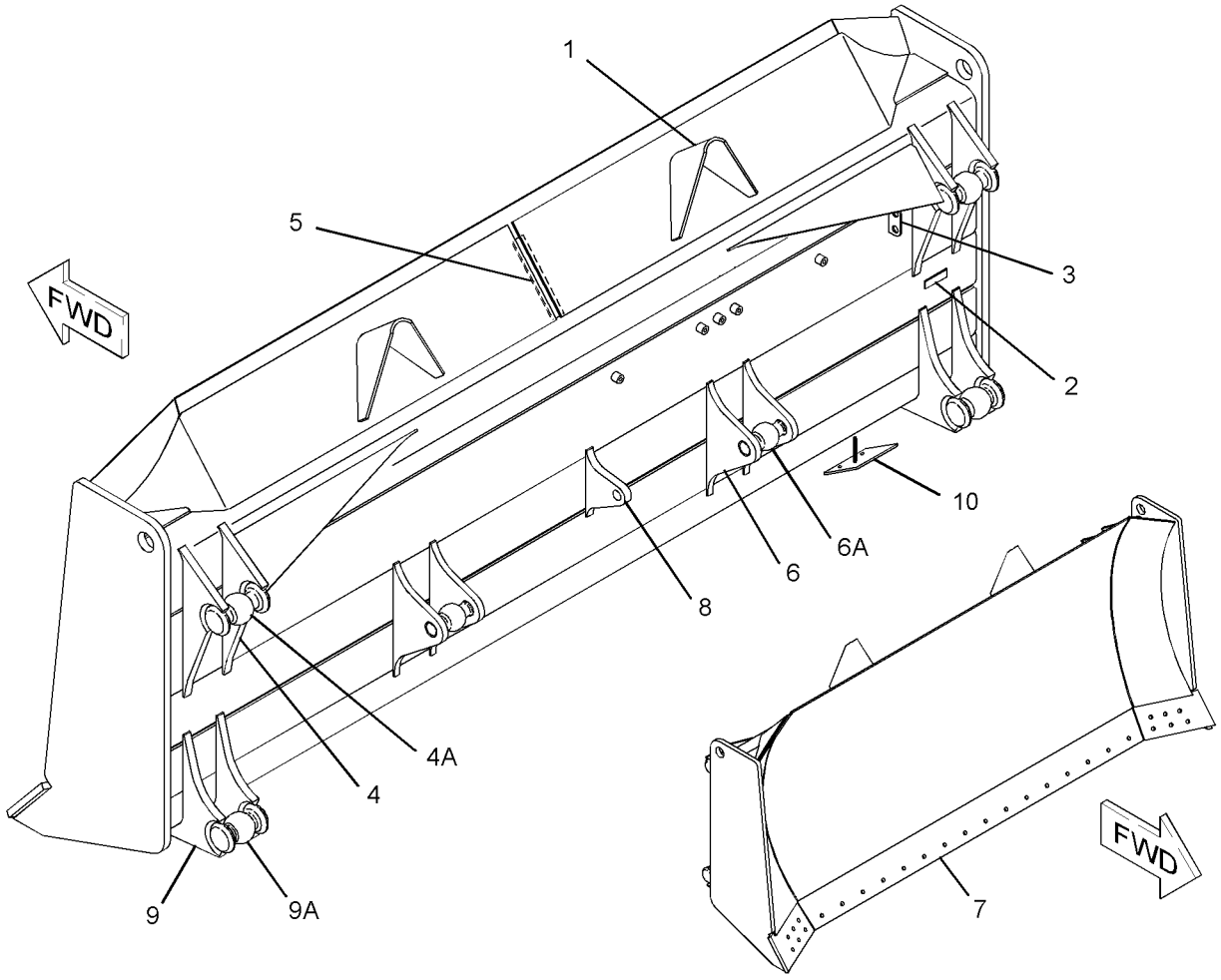

GRAPHIC #1 <END> g01205475

364-5490 BLADE AS-SEMI-UNIVERSAL

S/N: YSC1-UP; S6X1-UP
PART OF 364-3470 BLADE & EDGE GP-SEMI-UNIVERSAL, 365-7011 BLADE AS-SEMI-UNIVERSAL
AN ATTACHMENT

SMCS-6060 i04019031

NOTE	REF NO	GRAPHIC REF	PART NUMBER	QTY	PART NAME 1 2 3 4 5 6 (PRODUCT LEVEL)	SEE PAGE
	1	1	8P-9770	1	PLATE	
Y	2	1	252-5858	1	BLADE AS-SEMI-UNIVERSAL	651

Y-SEPARATE ILLUSTRATION

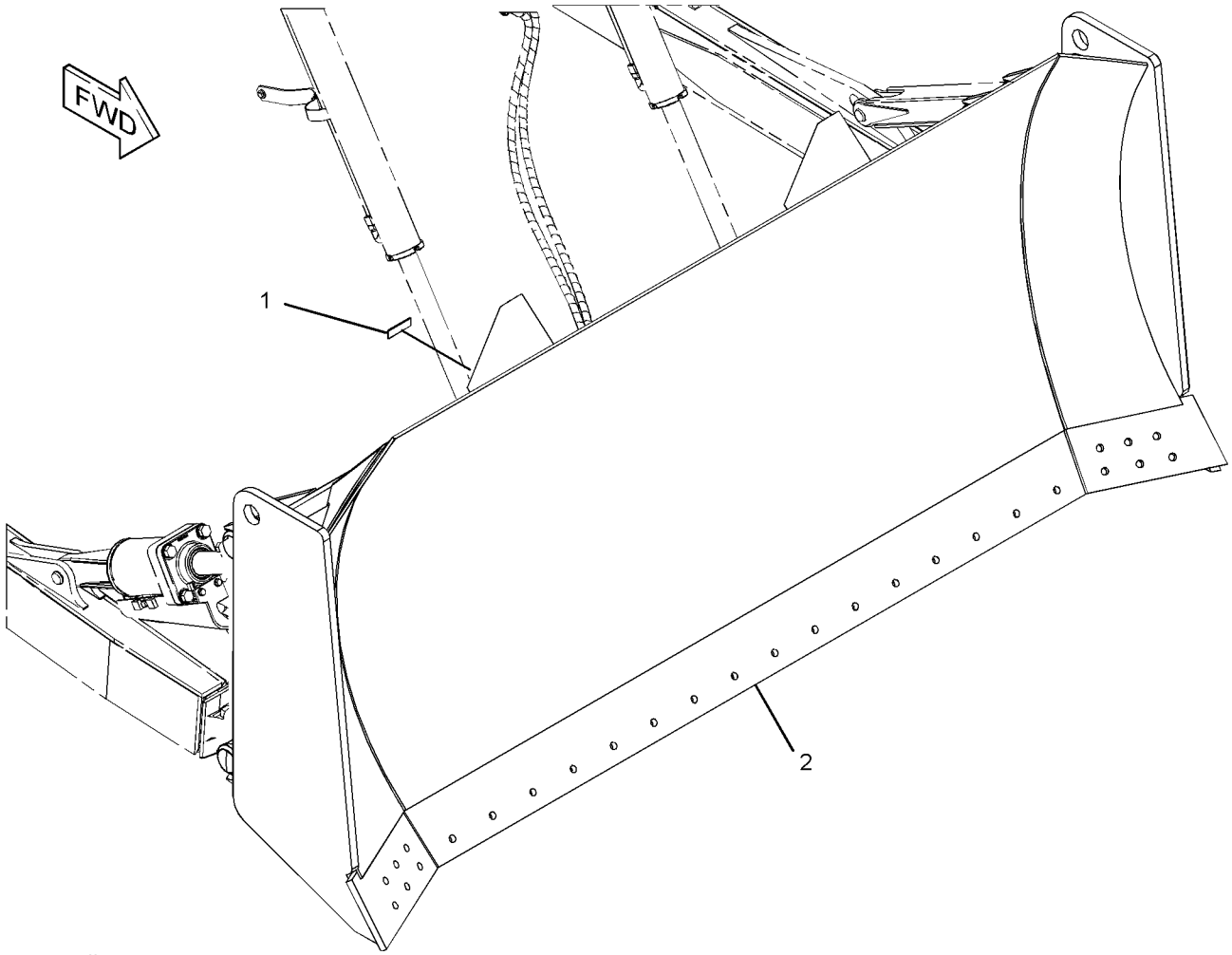

GRAPHIC #1 <END> g02196936

364-5491 BLADE AS-SEMI-UNIVERSAL

S/N: YXD1-UP; S6T1-UP
PART OF 364-3471 BLADE & EDGE GP-SEMI-UNIVERSAL, 365-7013 BLADE AS-SEMI-UNIVERSAL
AN ATTACHMENT

SMCS-6060 i04018652

NOTE	REF NO	GRAPHIC REF	PART NUMBER	QTY	PART NAME 1 2 3 4 5 6 (PRODUCT LEVEL)	SEE PAGE
	1	1	8P-9770	1	PLATE	
Y	2	1	230-5556	1	BLADE AS-SEMI-UNIVERSAL	649

Y-SEPARATE ILLUSTRATION

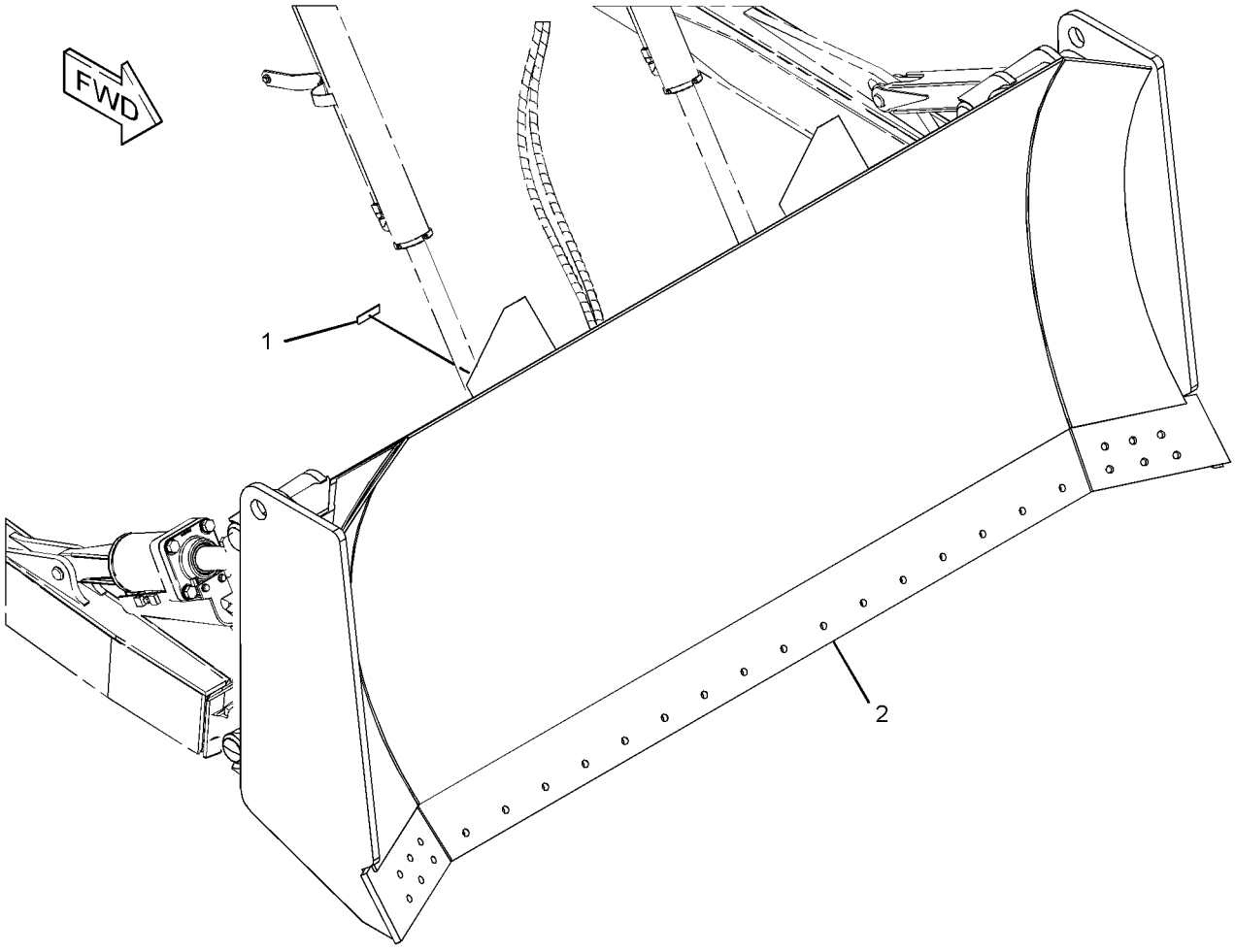

GRAPHIC #1 <END> g02196942

WORK TOOLS

365-7011 BLADE AS-SEMI-UNIVERSAL

S/N: S6X1-UP
PART OF 365-7010 BLADE & EDGE GP-SEMI-UNIVERSAL
AN ATTACHMENT

SMCS-6060 i04035720

NOTE	REF NO	GRAPHIC REF	PART NUMBER	QTY	PART NAME 1 2 3 4 5 6 (PRODUCT LEVEL)	SEE PAGE
	1	1	247-5689	3	BRACKET AS	
	2	1	248-2336	1	PLATE AS	
Y	3	1	364-5490	1	BLADE AS-SEMI-UNIVERSAL	652

Y-SEPARATE ILLUSTRATION

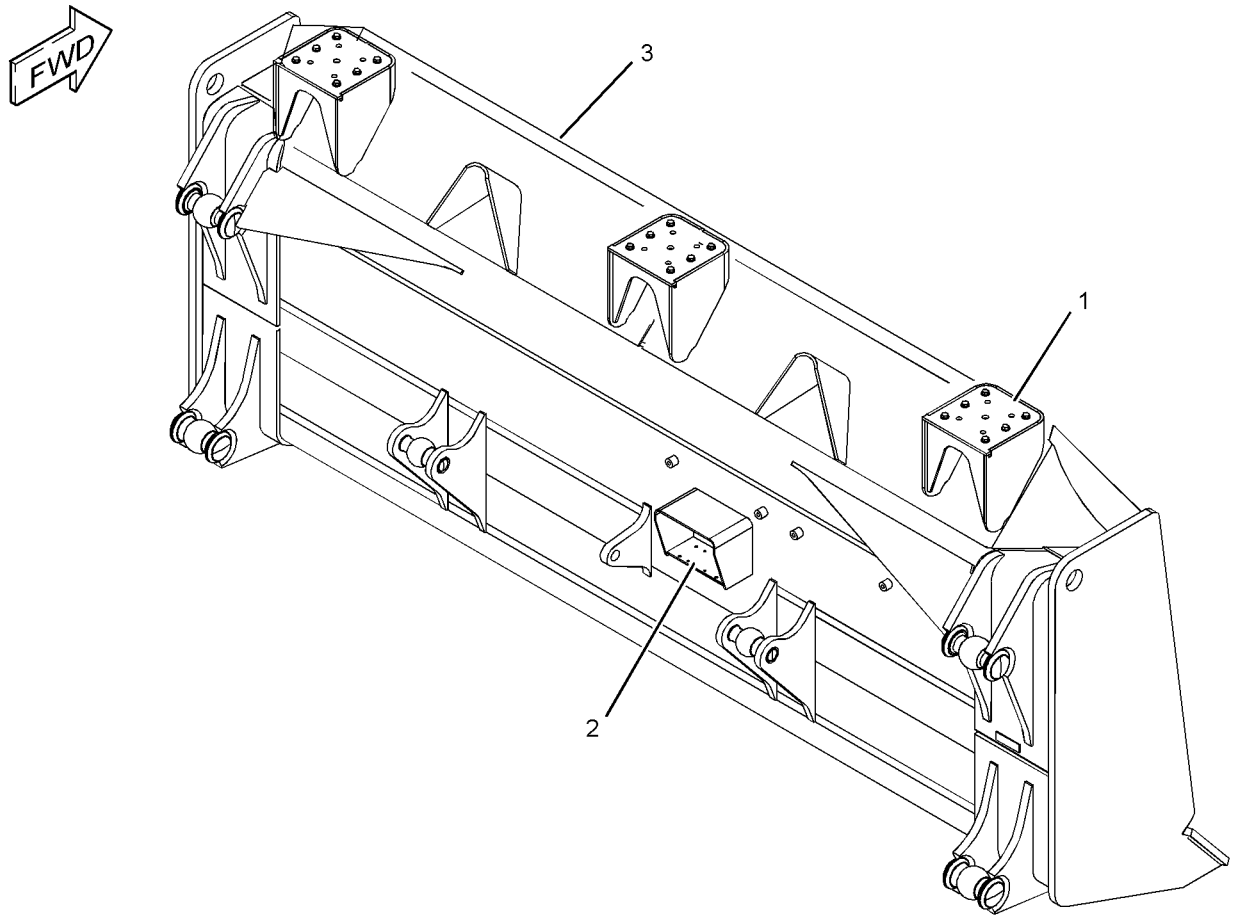

GRAPHIC #1 <END> g02231277

365-7013 BLADE AS-SEMI-UNIVERSAL

S/N: S6T1-UP

PART OF 365-7012 BLADE & EDGE GP-SEMI-UNIVERSAL

AN ATTACHMENT

SMCS-6060 i04034336

NOTE	REF NO	GRAPHIC REF	PART NUMBER	QTY	PART NAME 1 2 3 4 5 6 (PRODUCT LEVEL)	SEE PAGE
	1	1	247-5683	3	BRACKET AS	
	2	1	248-2336	1	PLATE AS	
Y	3	1	364-5491	1	BLADE AS-SEMI-UNIVERSAL	653

Y-SEPARATE ILLUSTRATION

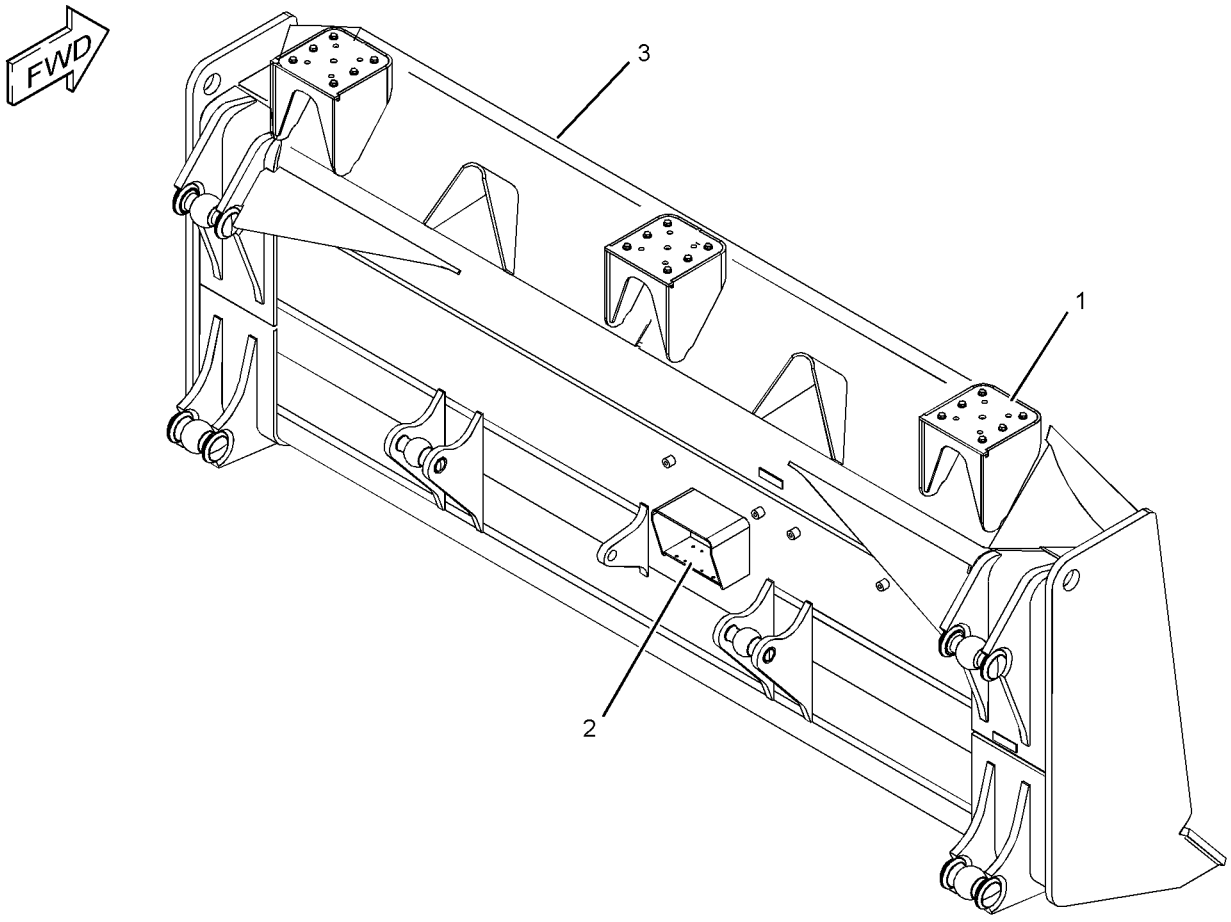

GRAPHIC #1 <END> g02230693

WORK TOOLS

223-4009 BLADE AS-STRAIGHT

S/N: YLE1-UP; S6Y1-UP
PART OF 364-5492 BLADE GP-STRAIGHT
AN ATTACHMENT

SMCS-6051, 6060 i04019303

NOTE	REF NO	GRAPHIC REF	PART NUMBER	QTY	PART NAME 1 2 3 4 5 6 (PRODUCT LEVEL)	SEE PAGE
	1	1	4T-1496	1	BRACKET AS (RH)	
	2	1	4T-1500	1	BRACKET AS (LH)	
					(EACH INCLUDES)	
	2A	1	7J-5131	1	TRUNNION	
	3	1	4T-1506	1	BRACKET AS (RH)	
	4	1	4T-1509	1	BRACKET AS (LH)	
					(EACH INCLUDES)	
	4A	1	4J-1641	1	TRUNNION	
	5	1	4T-1762	2	BRACKET AS	
					(EACH INCLUDES)	
	5A	1	4T-1504	1	TRUNNION	
	6	1	8E-2244	2	DEFLECTOR	
	7	1	8P-9770	1	PLATE	
	8	1	9W-6381	1	PLATE	
	9	1	223-4010	1	SUPPORT	
	10	1	*278-4519*	1	PLATE AS (RH)	
	11	1	*278-4520*	1	PLATE AS (LH)	
					(EACH PLATE AS INCLUDES)	
		1	278-4522	1	SHOE	
		1	1U-1951	1	BIT-ROUTER	

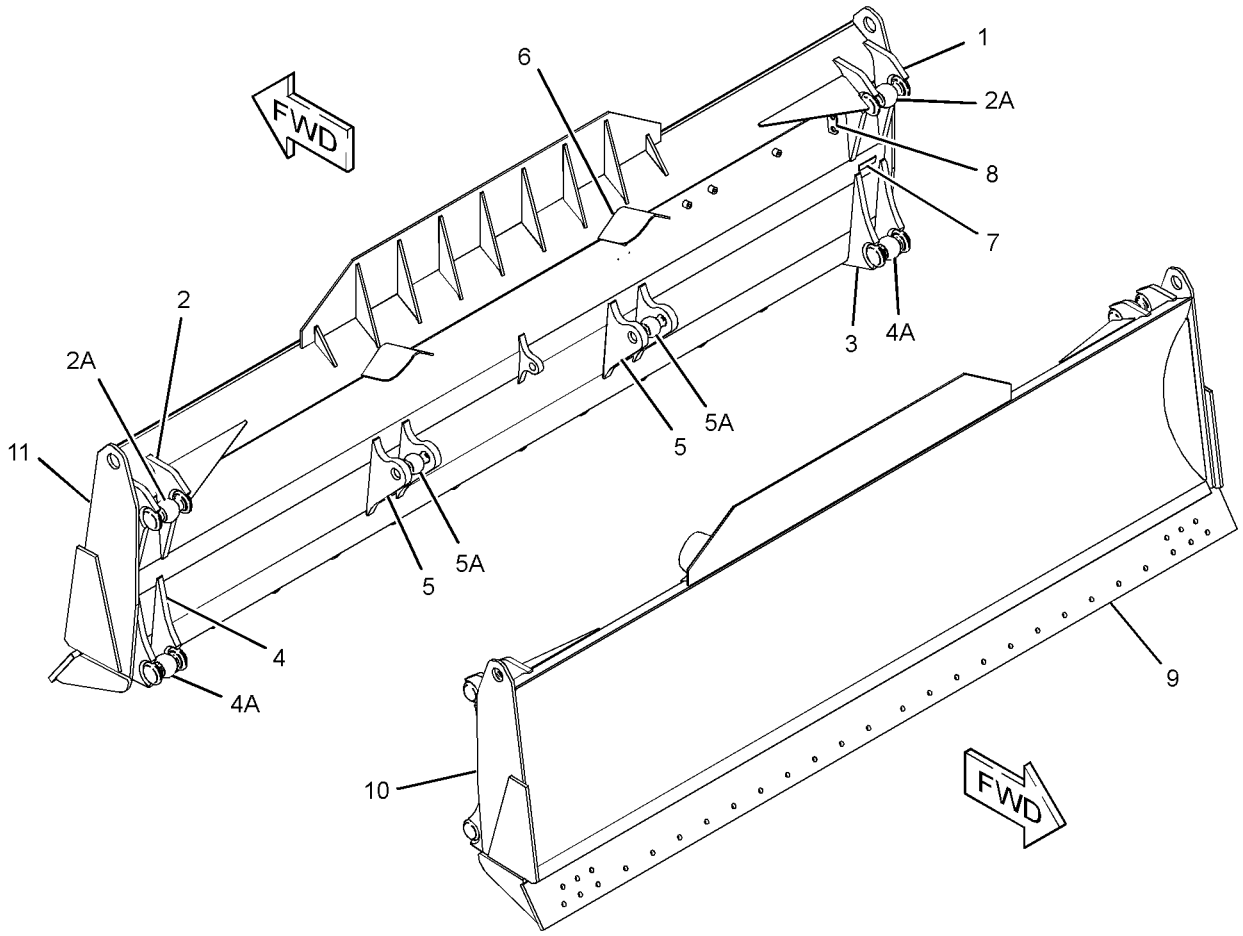

GRAPHIC #1 <END> g01710994

252-5852 BLADE AS-STRAIGHT

S/N: YSB1-UP
PART OF 364-5489 BLADE AS-STRAIGHT
AN ATTACHMENT

SMCS-6051, 6060 i04018994

NOTE	REF NO	GRAPHIC REF	PART NUMBER	QTY	PART NAME 1 2 3 4 5 6 (PRODUCT LEVEL)	SEE PAGE
	1	1	9W-6381	1	PLATE	
	2	1	8E-5188	2	BRACKET AS	
					(EACH INCLUDES)	
	2A	1	7J-5131	1	TRUNNION	
	3	1	8P-9770	1	PLATE	
	4	1	8E-5192	2	BRACKET AS	
					(EACH INCLUDES)	
	4A	1	4J-1641	1	TRUNNION	
	5	1	8E-5190	2	BRACKET AS	
					(EACH INCLUDES)	
	5A	1	4T-1504	1	TRUNNION	
	6	1	8E-5194	1	BRACKET	
	7	1	1U-0183	2	DEFLECTOR	
	8	1	8E-5199	1	SUPPORT	

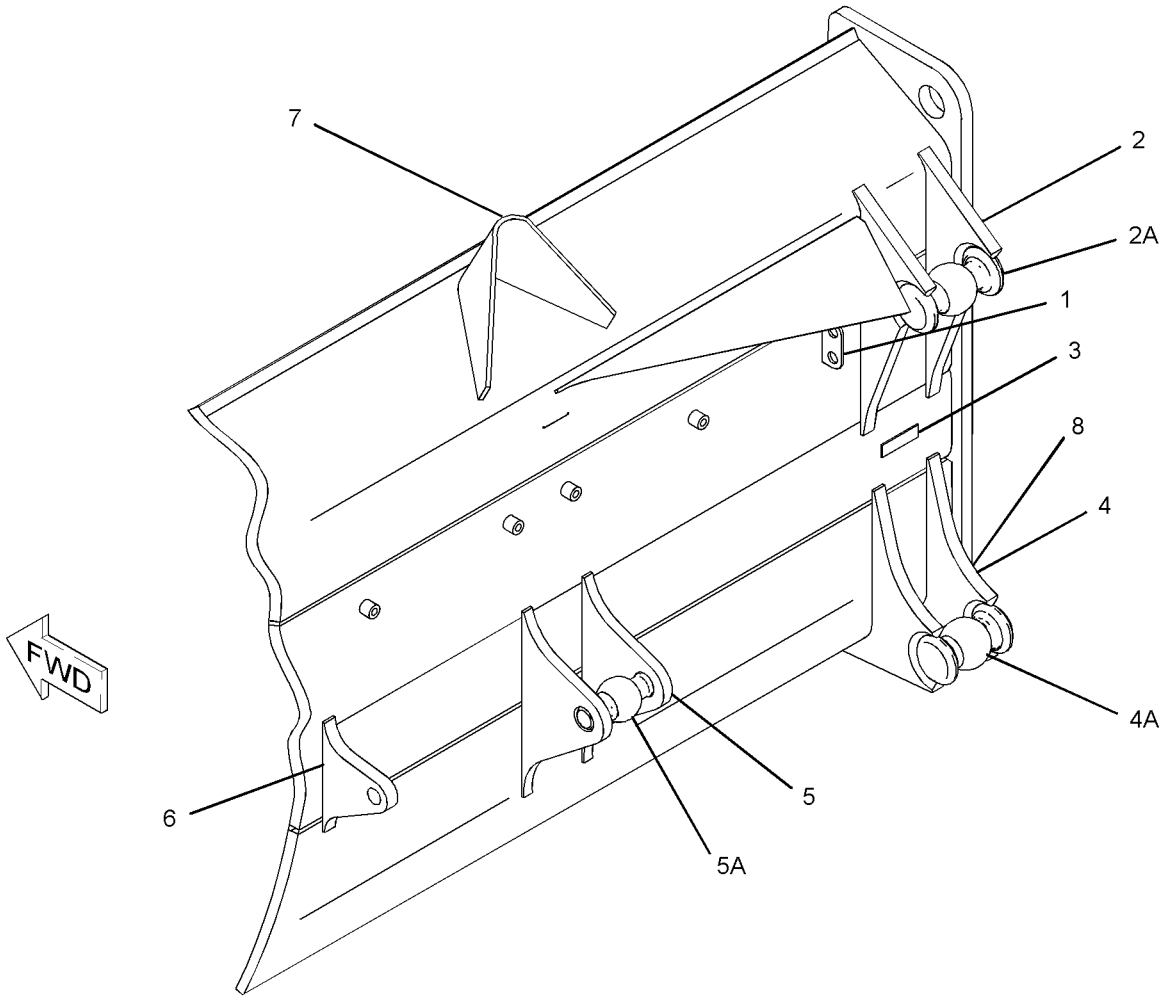

GRAPHIC #1 <END> g01211465

WORK TOOLS

364-5489 BLADE AS-STRAIGHT

S/N: YSB1-UP

PART OF 364-3469 BLADE & EDGE GP-STRAIGHT

AN ATTACHMENT

SMCS-6051, 6060 i04018973

NOTE	REF NO	GRAPHIC REF	PART NUMBER	QTY	PART NAME 1 2 3 4 5 6 (PRODUCT LEVEL)	SEE PAGE
	1	1	8P-9770	1	PLATE	
Y	2	1	252-5852	1	BLADE AS-STRAIGHT	657

Y-SEPARATE ILLUSTRATION

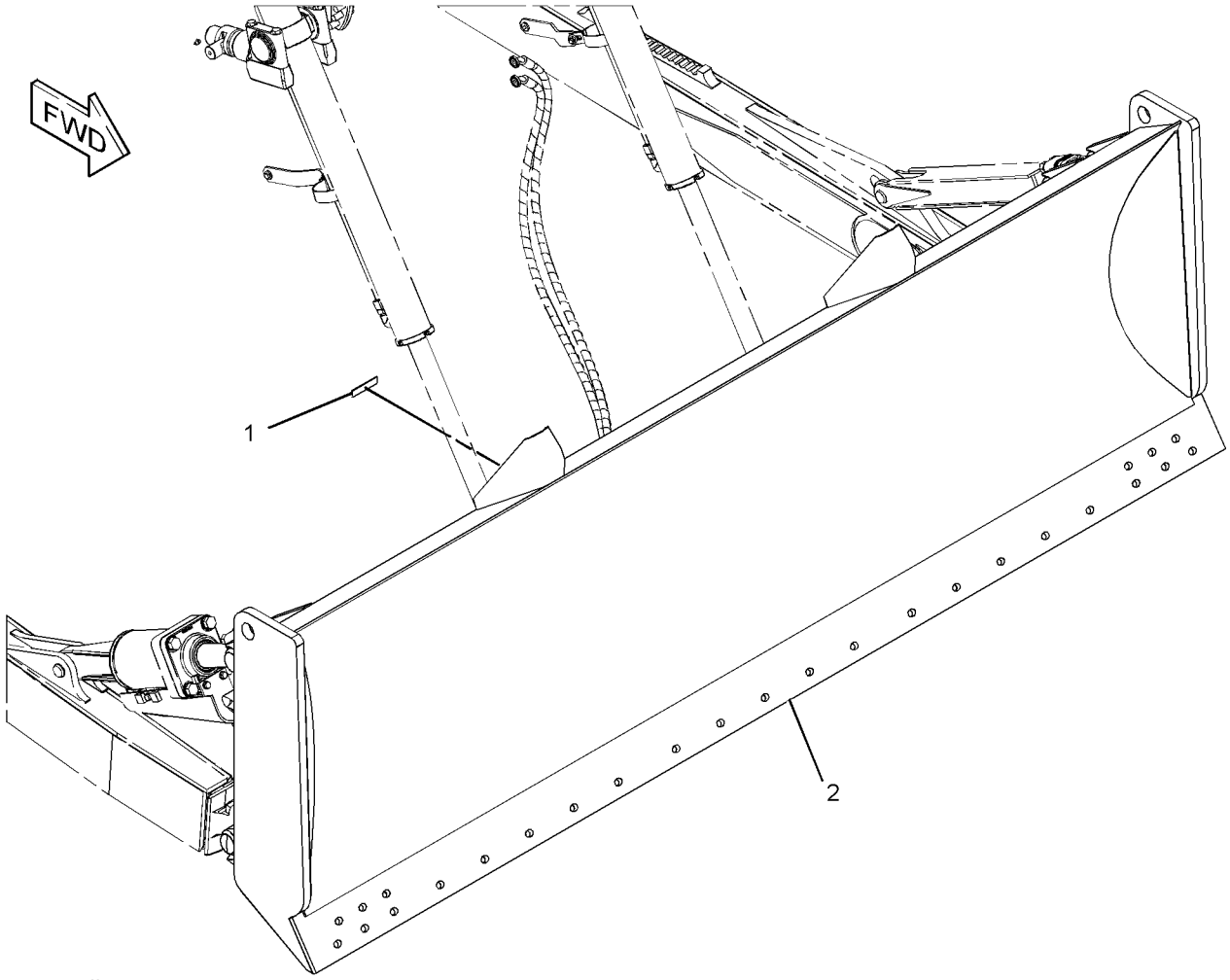

GRAPHIC #1 <END> g02196934

364-5492 BLADE GP-STRAIGHT

S/N: YLE1-UP; S6Y1-UP
PART OF 364-3472 BLADE & EDGE GP-STRAIGHT, 365-7015 BLADE GP-STRAIGHT
AN ATTACHMENT

SMCS-6051, 6060 i04019308

NOTE	REF NO	GRAPHIC REF	PART NUMBER	QTY	PART NAME 1 2 3 4 5 6 (PRODUCT LEVEL)	SEE PAGE
	1	1	8P-9770	1	PLATE	
Y	2	1	223-4009	1	BLADE AS-STRAIGHT	656

Y-SEPARATE ILLUSTRATION

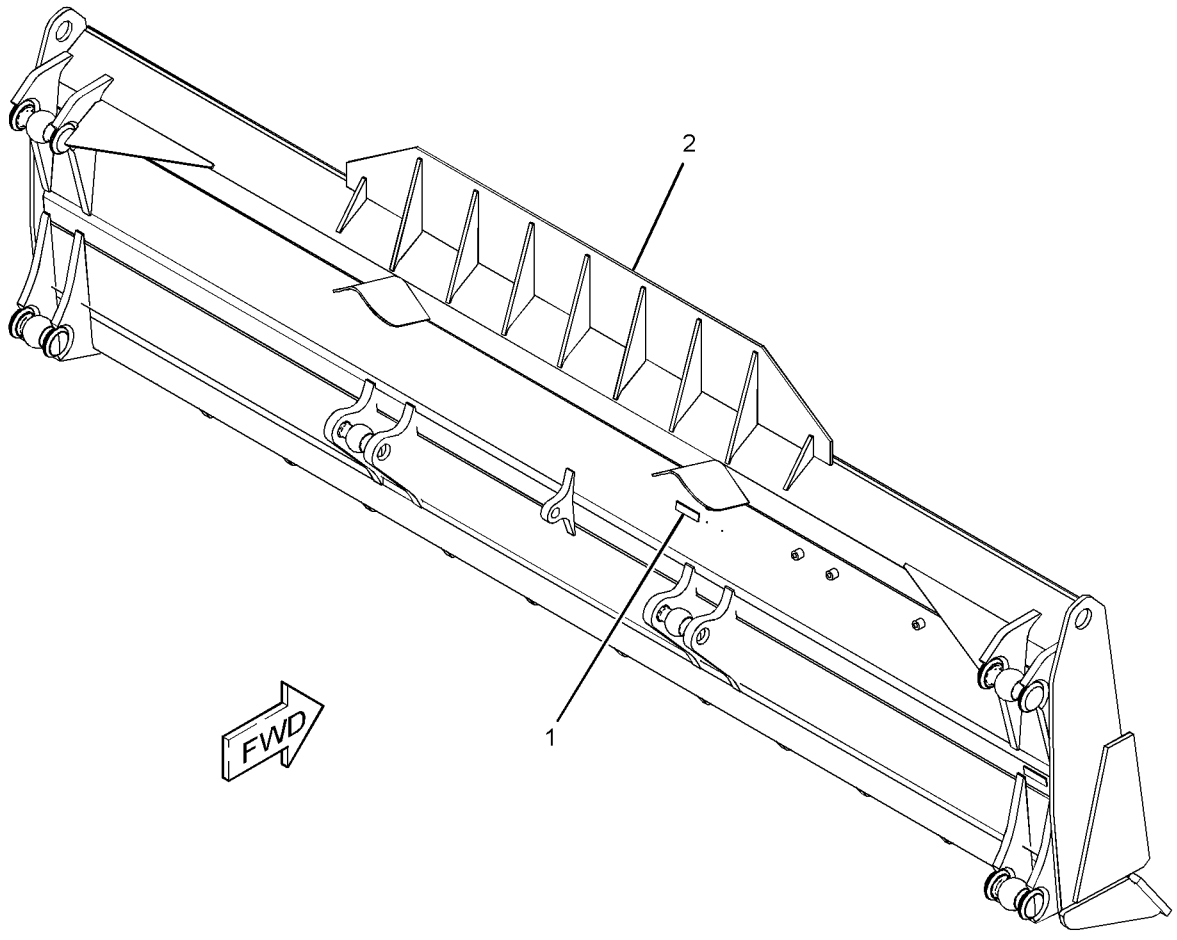

GRAPHIC #1 <END> g02196977

WORK TOOLS

365-7015 BLADE GP-STRAIGHT

S/N: S6Y1-UP

PART OF 365-7014 BLADE & EDGE GP-STRAIGHT

AN ATTACHMENT

SMCS-6051, 6060 i04038393

NOTE	REF NO	GRAPHIC REF	PART NUMBER	QTY	PART NAME 1 2 3 4 5 6 (PRODUCT LEVEL)	SEE PAGE
	1	1	245-4263	1	BRACKET AS	
	2	1	247-5693	1	BRACKET AS	
	3	1	247-5694	1	BRACKET AS	
	4	1	248-2336	1	PLATE AS	
Y	5	1	364-5492	1	BLADE GP-STRAIGHT	659

Y-SEPARATE ILLUSTRATION

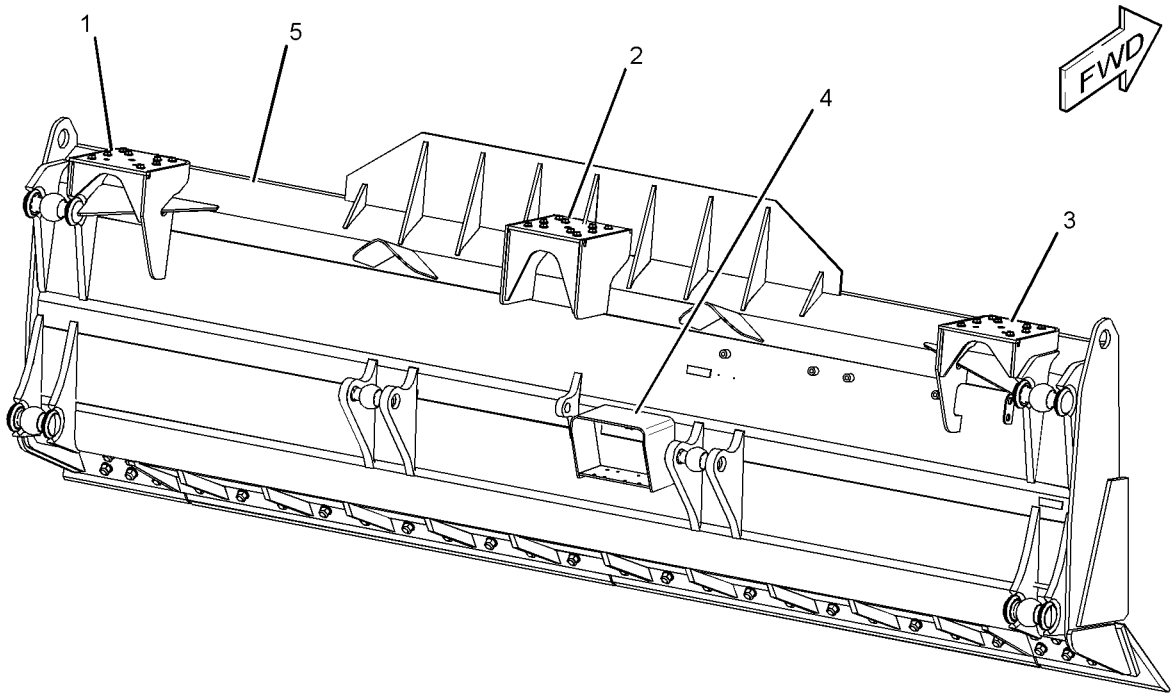

GRAPHIC #1 <END> g02227814

6Y-1744 EDGE GP-BIT & CUTTING

S/N: YSB1-UP

PART OF 364-3469 BLADE & EDGE GP-STRAIGHT

AN ATTACHMENT

SMCS-6801, 6804 i04018916

NOTE	REF NO	GRAPHIC REF	PART NUMBER	QTY	PART NAME 1 2 3 4 5 6 (PRODUCT LEVEL)	SEE PAGE
	1	1	9W-8874	1	BIT-END (RH)	
		1	9W-8875	1	BIT-END (LH)	
	2	1	5J-4773	27	BOLT-PLOW (3/4-10X2.5-IN)	
		1	2J-3506	27	NUT-FULL (3/4-10-THD)	
		1	5P-8248	27	WASHER-HARD (20X36.5X3.5-MM THK)	
	3	1	4T-2952	3	EDGE-CUTTING	
QUANTITIES SHOWN ARE THOSE REQUIRED FOR BOTH LH AND RH SIDES						

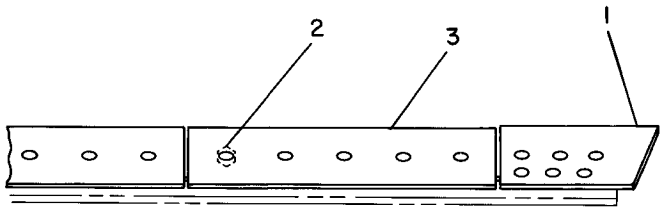

GRAPHIC #1 <END> g00195337

WORK TOOLS

6Y-2039 EDGE GP-BIT & CUTTING

S/N: YSA1-UP

PART OF 364-3468 BLADE & EDGE GP-ANGLING

AN ATTACHMENT

SMCS-6801, 6804 i04018710

NOTE	REF NO	GRAPHIC REF	PART NUMBER	QTY	PART NAME 1 2 3 4 5 6 (PRODUCT LEVEL)	SEE PAGE
	1	1	9W-8874	1	BIT-END (RH)	
		1	9W-8875	1	BIT-END (LH)	
	2	1	5J-4773	32	BOLT-PLOW (3/4-10X2.5-IN)	
		1	5P-8248	32	WASHER-HARD (20X36.5X3.5-MM THK)	
		1	2J-3506	32	NUT-FULL (3/4-10-THD)	
	3	1	4T-2952	4	EDGE-CUTTING	
QUANTITIES SHOWN ARE THOSE REQUIRED FOR BOTH LH AND RH SIDES						

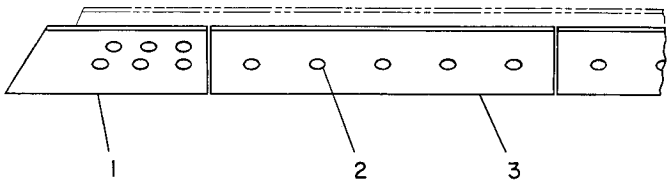

GRAPHIC #1 <END> g00195495

9W-3762 EDGE GP-BIT & CUTTING

S/N: YSC1-UP; YXD1-UP; S6T1-UP; S6X1-UP
PART OF 364-3470, 364-3471, 365-7010, 365-7012 BLADE & EDGE GP-SEMI-UNIVERSAL
AN ATTACHMENT

SMCS-6801, 6804 i04015475

NOTE	REF NO	GRAPHIC REF	PART NUMBER	QTY	PART NAME 1 2 3 4 5 6 (PRODUCT LEVEL)	SEE PAGE
	1	1	9W-8874	1	BIT-END (RH)	
	2	1	9W-8875	1	BIT-END (LH)	
	3	1	9W-1878	2	EDGE-CUTTING	
	4	1	5J-4773	28	BOLT-PLOW (3/4-10X2.5-IN)	
	5	1	5P-8248	28	WASHER-HARD (20X36.5X3.5-MM THK)	
	6	1	2J-3506	28	NUT-FULL (3/4-10-THD)	

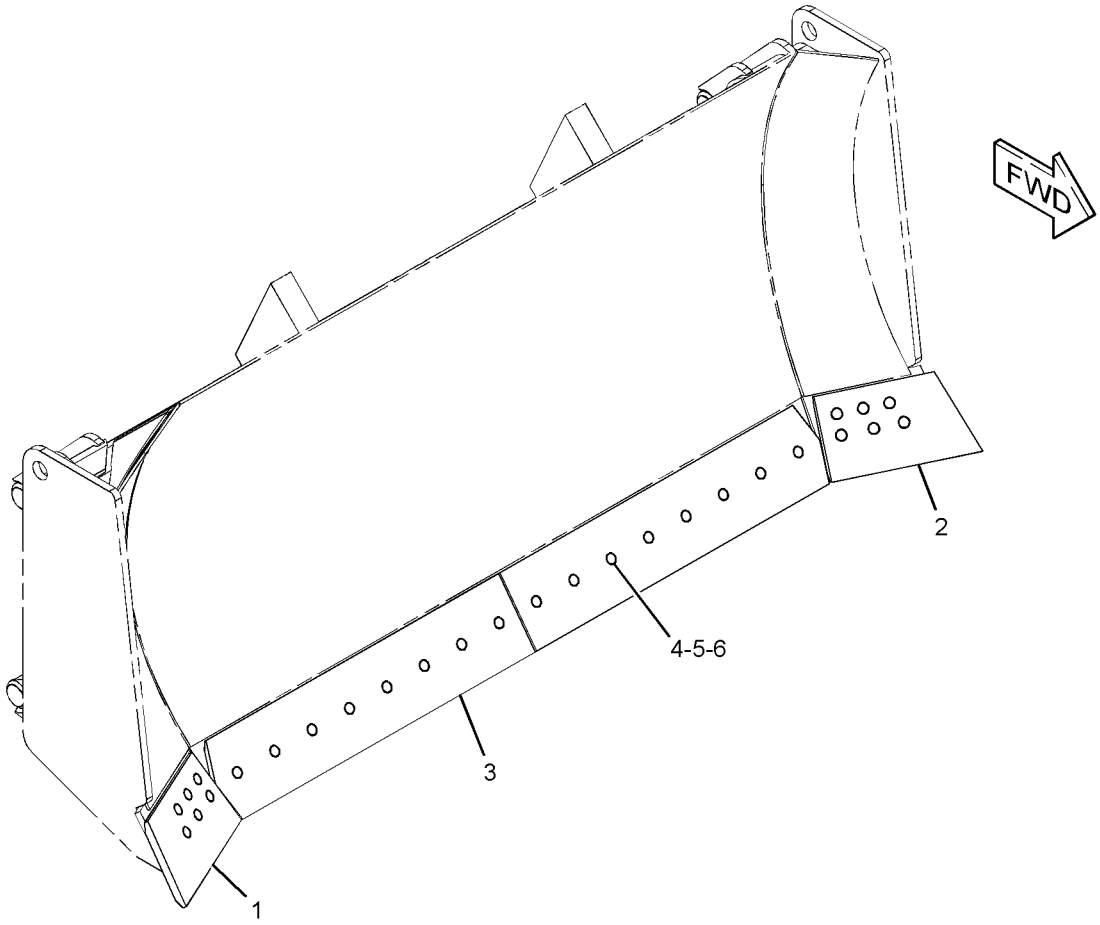

GRAPHIC #1 <END> g01225785

229-6957 EDGE GP-BIT & CUTTING

S/N: YLE1-UP; S6Y1-UP
PART OF 364-3472, 365-7014 BLADE & EDGE GP-STRAIGHT
AN ATTACHMENT

SMCS-6801, 6804 i04019316

NOTE	REF NO	GRAPHIC REF	PART NUMBER	QTY	PART NAME 1 2 3 4 5 6 (PRODUCT LEVEL)	SEE PAGE
	1	1	9W-8874	1	BIT-END (RH)	
	2	1	9W-8875	1	BIT-END (LH)	
	3	1	4T-2950	2	EDGE-CUTTING	
	4	1	5J-4773	32	BOLT-PLOW (3/4-10X2.5-IN)	
	5	1	2J-3506	32	NUT-FULL (3/4-10-THD)	
	6	1	5P-8248	32	WASHER-HARD (20X36.5X3.5-MM THK)	

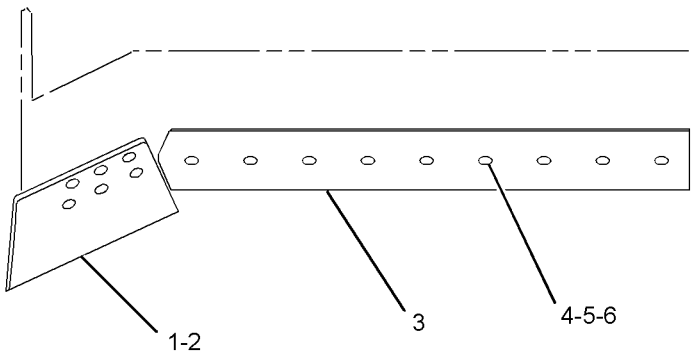

GRAPHIC #1 <END> g02193053

245-4122 MOUNTING GP-MAST—GRADE CONTROL

S/N: S6X1-UP
LASER APPLICATION
FOR USE WITH SEMI-UNIVERSAL BLADE
AN ATTACHMENT

SMCS-79NS i04002821

NOTE	REF NO	GRAPHIC REF	PART NUMBER	QTY	PART NAME 1 2 3 4 5 6 (PRODUCT LEVEL)	SEE PAGE
	1	1	247-5689	3	BRACKET AS	
					(EACH INCLUDES)	
M	1A	1	8T-4183	10	BOLT (M12X1.75X40-MM)	
	1B	1	8T-4223	10	WASHER-HARD (13.5X25.5X3-MM THK)	
	2	1	248-2336	1	PLATE AS	

M-METRIC PART

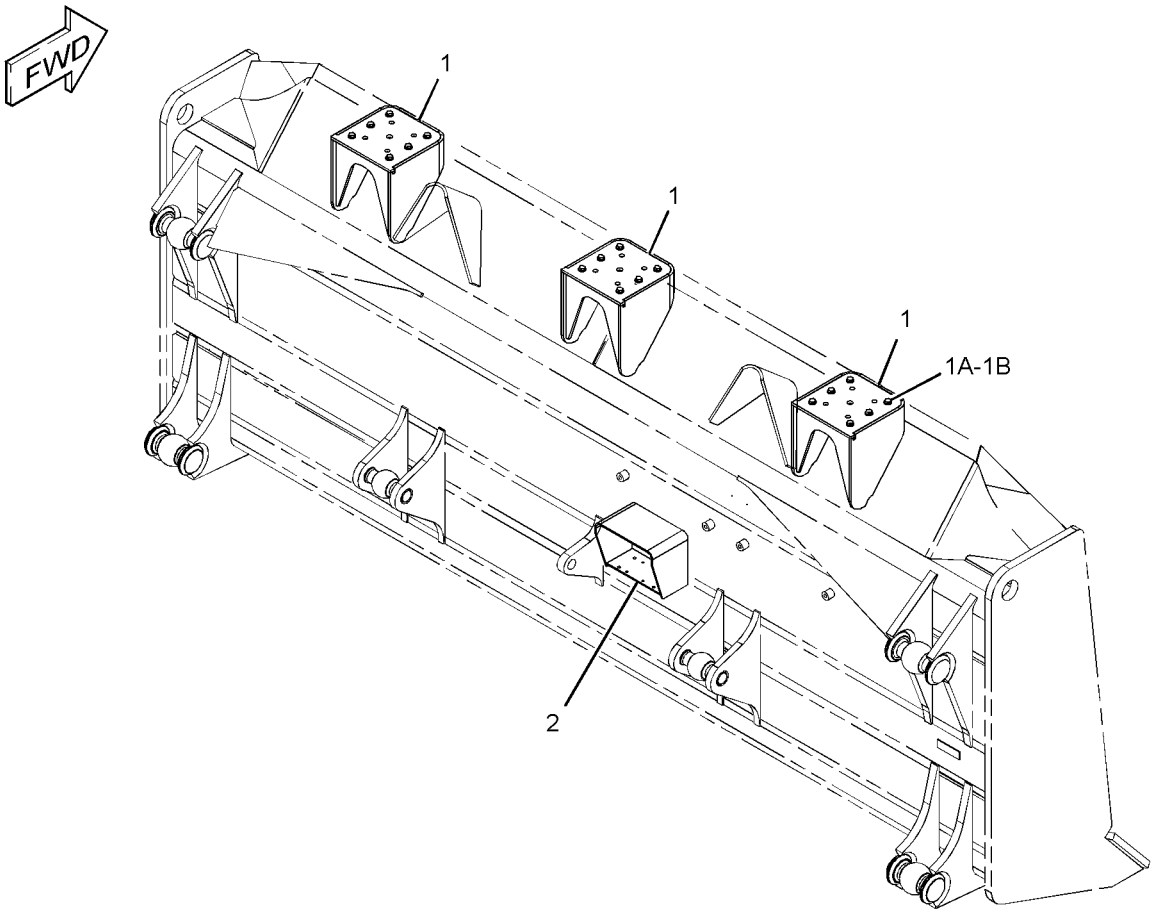

GRAPHIC #1 <END> g01369307

245-4123 MOUNTING GP-MAST—GRADE CONTROL

S/N: S6T1-UP
LASER APPLICATION
FOR USE WITH SEMI-UNIVERSAL BLADE
AN ATTACHMENT

SMCS-79NS i04003934

NOTE	REF NO	GRAPHIC REF	PART NUMBER	QTY	PART NAME 1 2 3 4 5 6 (PRODUCT LEVEL)	SEE PAGE
	1	1	247-5683	3	BRACKET AS	
					(EACH INCLUDES)	
M		1	8T-4183	10	BOLT (M12X1.75X40-MM)	
		1	8T-4223	10	WASHER-HARD (13.5X25.5X3-MM THK)	
	2	1	248-2336	1	PLATE AS	

M-METRIC PART

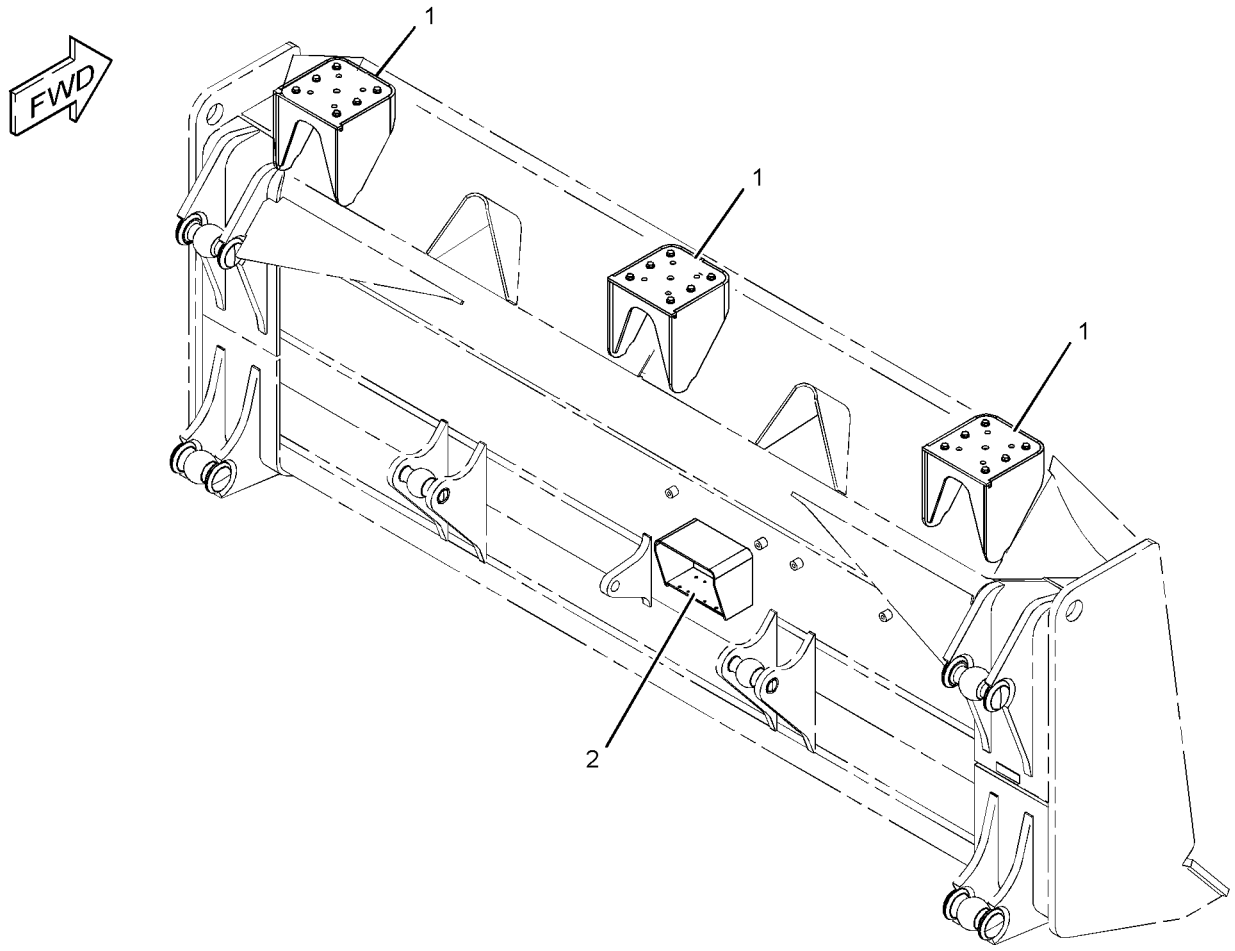

GRAPHIC #1 <END> g01369423

245-4133 MOUNTING GP-MAST–ACCUGRADE

S/N: S6Y1-UP
FIELD INSTALLED
FOR USE WITH STRAIGHT BLADE
AN ATTACHMENT

SMCS-79NS i04015930

NOTE	REF NO	GRAPHIC REF	PART NUMBER	QTY	PART NAME 1 2 3 4 5 6 (PRODUCT LEVEL)	SEE PAGE
	1	1	245-4263	1	BRACKET AS	
	2	1	247-5693	1	BRACKET AS	
	3	1	247-5694	1	BRACKET AS	
	4	1	248-2336	1	PLATE AS	

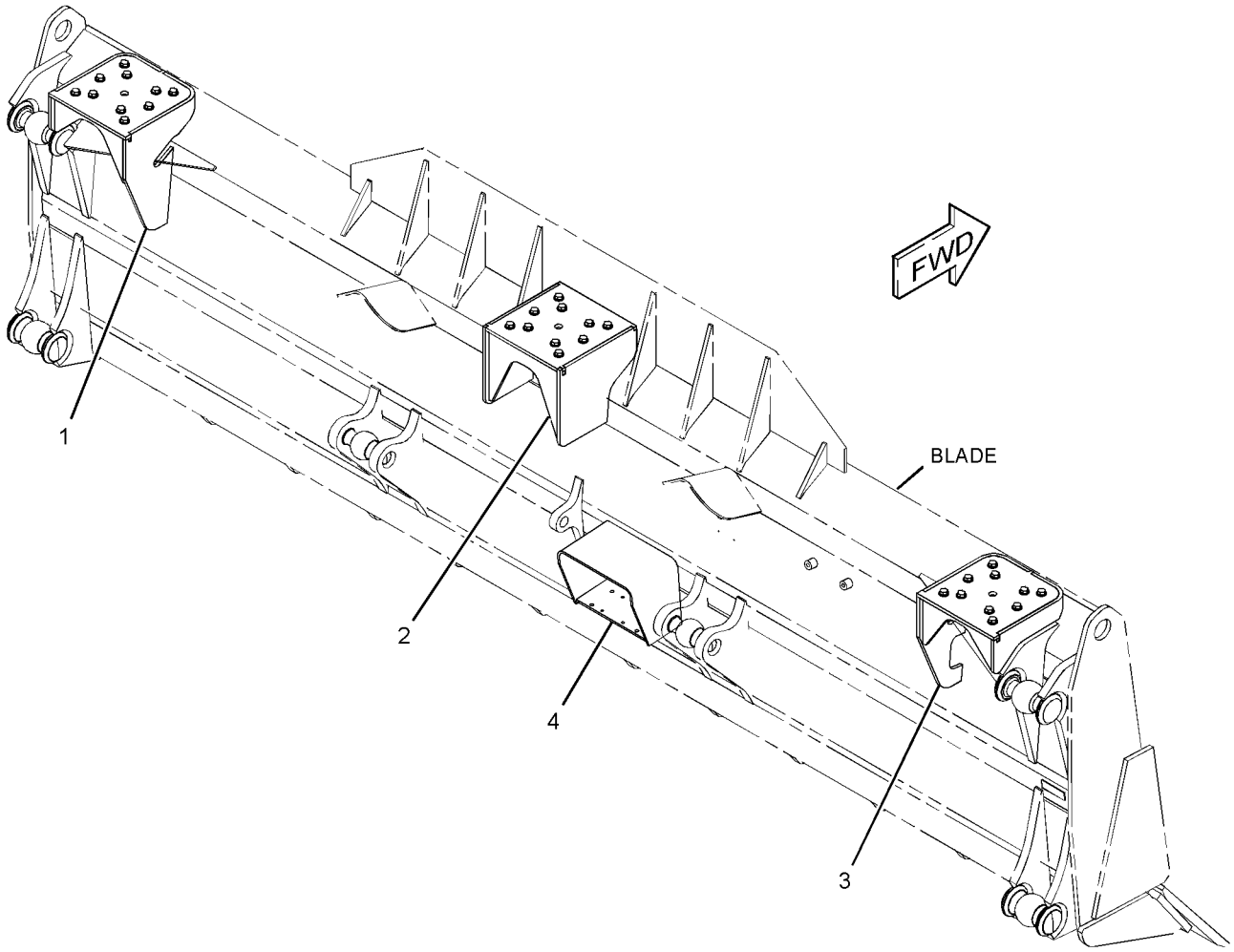

GRAPHIC #1 <END> g01382365

WORK TOOLS

224-4454 MOUNTING GP-RIPPER

S/N: RXE1-UP
PART OF 358-4694 RIPPER AR
AN ATTACHMENT

SMCS-6165, 6310, 6324 i04003000

NOTE	REF NO	GRAPHIC REF	PART NUMBER	QTY	PART NAME 1 2 3 4 5 6 (PRODUCT LEVEL)	SEE PAGE
	1	1	1U-0300	1	BRACKET AS	
		1	3G-9995	2	PLATE	
	2	1	1U-0301	2	BRACKET AS	
					(EACH INCLUDES)	
		1	2K-6279	1	BOSS	
	3	1	7T-1975	1	BRACKET AS	
		1	3G-9995	2	PLATE	
B	4	1	9N-4449	12	SPACER (68X121X1.5-MM THK)	
B	5	1	9N-4450	4	SPACER (68X120X5-MM THK)	
	6	1	9W-0609	4	SPACER (53X100X35-MM THK)	
	7	1	1U-0159	2	PIN	
	8	1	1U-0612	2	PIN	
	9	1	9M-5854	20	STUD-TAPERLOCK (1-8-THD)	
M	10	1	6V-7687	2	LOCKNUT (M12X1.75-THD)	
M	11	1	6V-7744	2	LOCKNUT (M10X1.5-THD)	
	12	1	6V-8190	20	NUT (1-8-THD)	
M	13	1	7X-2543	2	BOLT (M10X1.5X120-MM)	
	14	1	8T-5361	20	WASHER-HARD (28X49X5-MM THK)	
M	15	1	8T-5412	2	BOLT (M12X1.75X140-MM)	

B-USE AS REQUIRED
M-METRIC PART

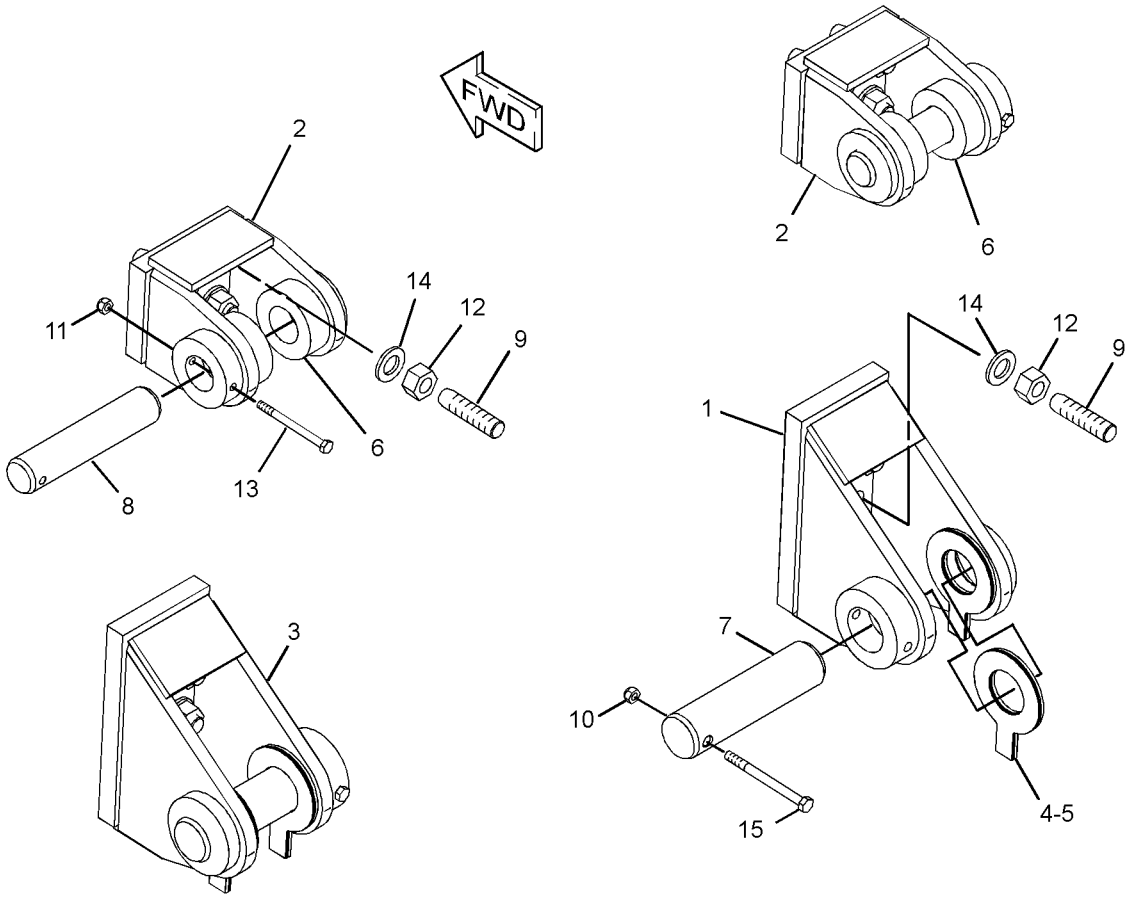

GRAPHIC #1 <END> g01208561

WORK TOOLS

358-4694 RIPPER AR

S/N: RXE1-UP
AN ATTACHMENT

SMCS-6310 i04015429

NOTE	REF NO	GRAPHIC REF	PART NUMBER	QTY	PART NAME 1 2 3 4 5 6 (PRODUCT LEVEL)	SEE PAGE
Y	1	1	*3W-1356*	1	GUARD GP-TRANSMISSION	315
Y	2	1	*224-4454*	1	MOUNTING GP-RIPPER	668
Y	3	1	227-0842	1	CYLINDER GP-RIPPER	421
Y	4	1	*235-8180*	1	LINES GP-RIPPER	444
Y	5	1	*358-4695*	1	RIPPER GP	671
F			7X-7644	2	FILM-INFORMATION (TIE-DOWN)	
					(ON RH & LH SIDE OF TRACK ROLLER FRAME CENTERED BETWEEN FRONT ROLLER & REAR IDLER)	
F			8M-3494	1	PLATE-SERIAL NUMBER (RIPPER)	
					(ON CARRIAGE AS ON RH SIDE OF RH TOWER)	
F			4B-4158	2	SCREW-DRIVE (NO 4X0.25-IN)	

F-NOT SHOWN
Y-SEPARATE ILLUSTRATION

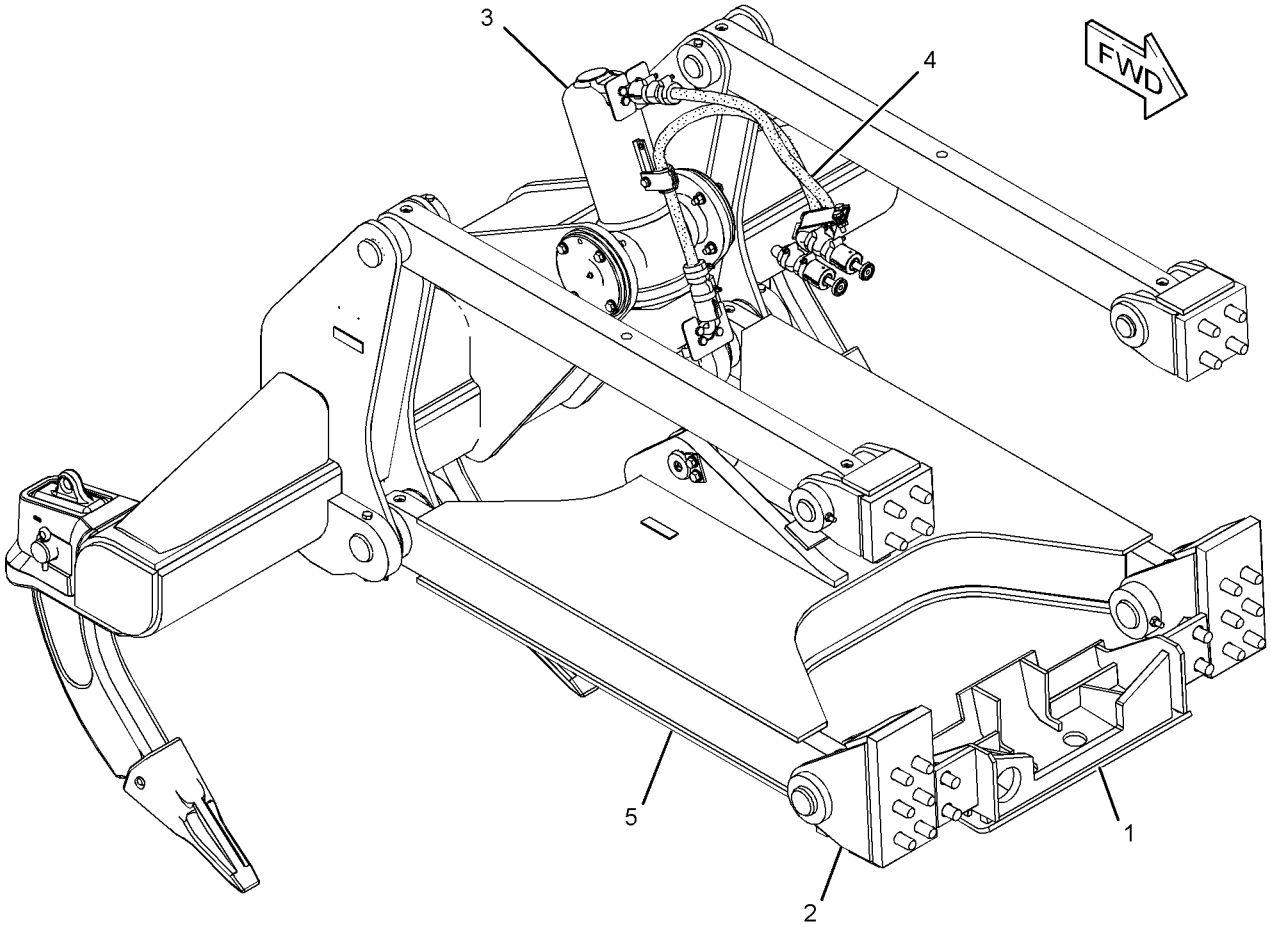

GRAPHIC #1 <END> g02192055

WORK TOOLS

358-4695 RIPPER GP

S/N: RXE1-UP
PART OF 358-4694 RIPPER AR
AN ATTACHMENT

SMCS-6310, 6325 i04003402

NOTE	REF NO	GRAPHIC REF	PART NUMBER	QTY	PART NAME 1 2 3 4 5 6 (PRODUCT LEVEL)	SEE PAGE
	1	1	2K-0703	1	BAR	
	2	1	3B-8489	3	FITTING-GREASE	
	3	1	3K-8510	1	PIN	
	4	1	4K-3004	2	BEARING-TRUNNION SUPPLEMENTARY	
Y	5	1	*9J-8926*	3	TOOTH GP-RIPPER	674
	6	1	9J-9598	2	PIN	
	7	1	290-0862	1	CARRIAGE AS	
		1	8P-9770	1	PLATE	
		1	5K-7748	3	HOLDER-BIT	
	8	1	9W-0873	2	LINK AS	
					(EACH INCLUDES)	
		1	3B-8489	2	FITTING-GREASE	
		1	9W-0876	2	BUSHING	
	9	1	189-0985	1	FRAME & BEARING AS	
		1	3B-8489	4	FITTING-GREASE	
		1	9W-0099	4	BUSHING	
		1	3V-2024	8	BOSS	
		1	8P-9770	1	PLATE	
	10	1	1U-0159	2	PIN	
	11	1	5C-6565	2	BOLT (1/2-13X1.125-IN)	
M	12	1	6V-7687	2	LOCKNUT (M12X1.75-THD)	
M	13	1	6V-7744	2	LOCKNUT (M10X1.5-THD)	
M	14	1	7X-2543	2	BOLT (M10X1.5X120-MM)	
	15	1	8T-4223	18	WASHER-HARD (13.5X25.5X3-MM THK)	
M	16	1	8T-4244	8	NUT (M12X1.75-THD)	
M	17	1	8T-4648	8	BOLT (M12X1.75X70-MM)	
M	18	1	8T-7930	2	BOLT (M12X1.75X160-MM)	
	19	1	9N-4449	2	SPACER (68X121X1.5-MM THK)	
	20	1	9N-4450	4	SPACER (68X120X5-MM THK)	

M-METRIC PART
Y-SEPARATE ILLUSTRATION

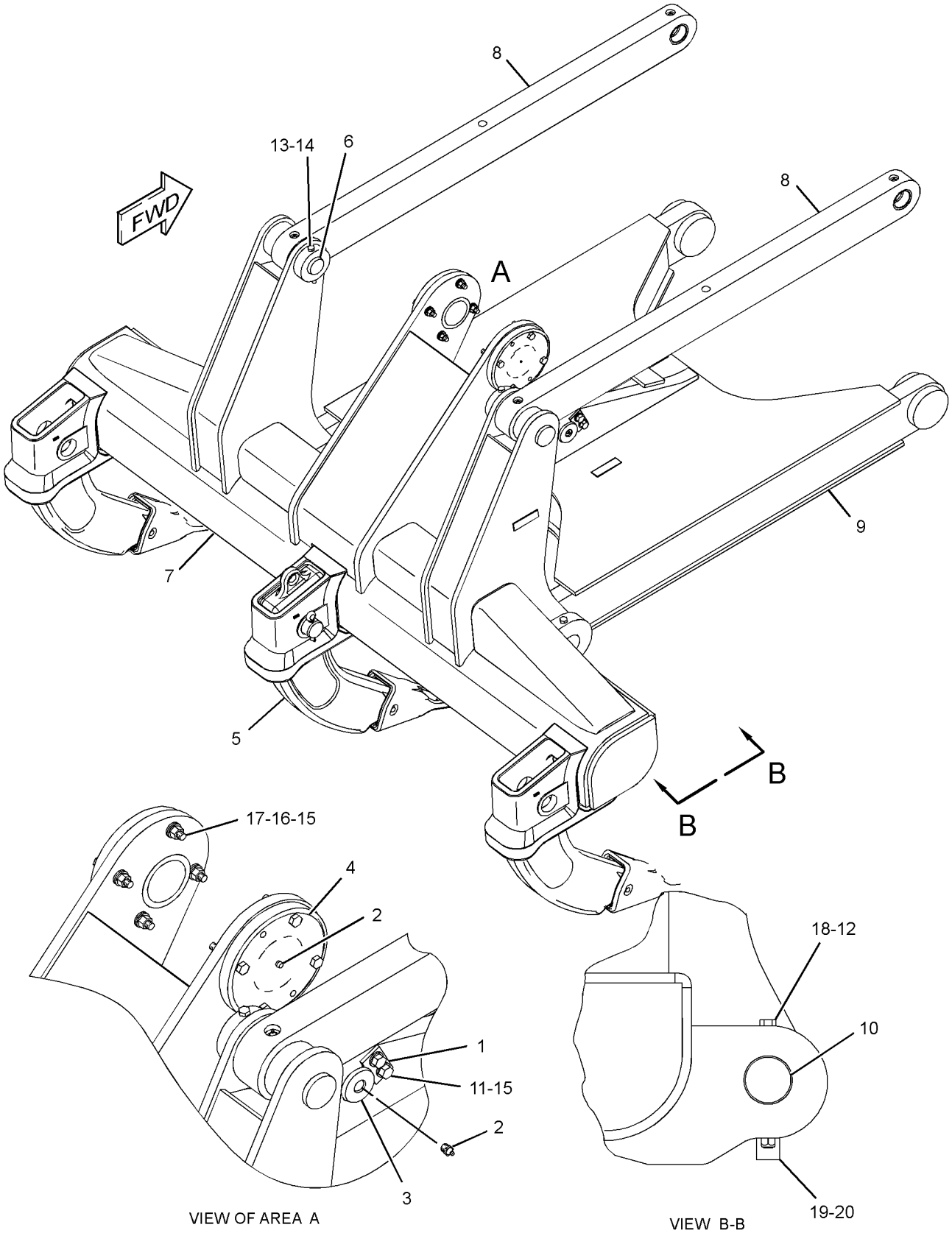

GRAPHIC #1 <END> g02185403

8J-2189 TOOTH GP-RIPPER—STRAIGHT

S/N: S6T1-UP; S6X1-UP; S6Y1-UP
PART OF 109-2701 TOOTH GP-RIPPER
AN ATTACHMENT

SMCS-6808, 6810 i04004013

NOTE	REF NO	GRAPHIC REF	PART NUMBER	QTY	PART NAME 1 2 3 4 5 6 (PRODUCT LEVEL)	SEE PAGE
	1	1	3B-5325	2	PIN-COTTER	
	2	1	8J-2190	1	PIN	
	3	1	9J-3139	1	SHANK-RIPPER	
C	4	1	114-0358	1	PIN	
C		1	114-0359	1	RETAINER AS	
	5	1	6Y-0359	1	TIP-RIPPER	

C-CHANGE FROM PREVIOUS TYPE

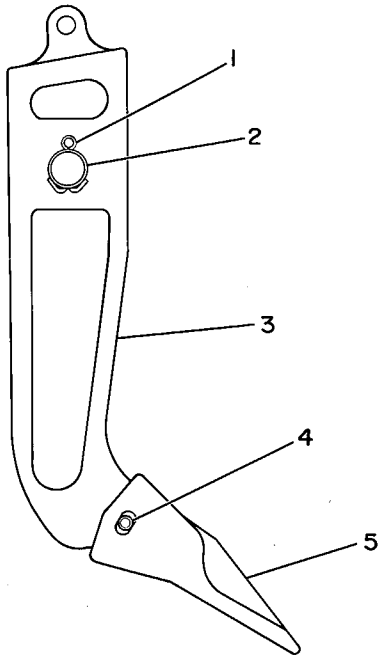

GRAPHIC #1 <END> g00081660

9J-8926 TOOTH GP-RIPPER—CURVED

S/N: RXE1-UP
PART OF 358-4695 RIPPER GP
AN ATTACHMENT

SMCS-6808, 6810 i04003215

NOTE	REF NO	GRAPHIC REF	PART NUMBER	QTY	PART NAME 1 2 3 4 5 6 (PRODUCT LEVEL)	SEE PAGE
	1	1	3B-5325	2	PIN-COTTER	
	2	1	8J-2190	1	PIN	
	3	1	9J-8923	1	SHANK-RIPPER	
	4	1	114-0358	1	PIN	
	5	1	6Y-0352	1	TIP-RIPPER	
	6	1	114-0359	1	RETAINER AS	

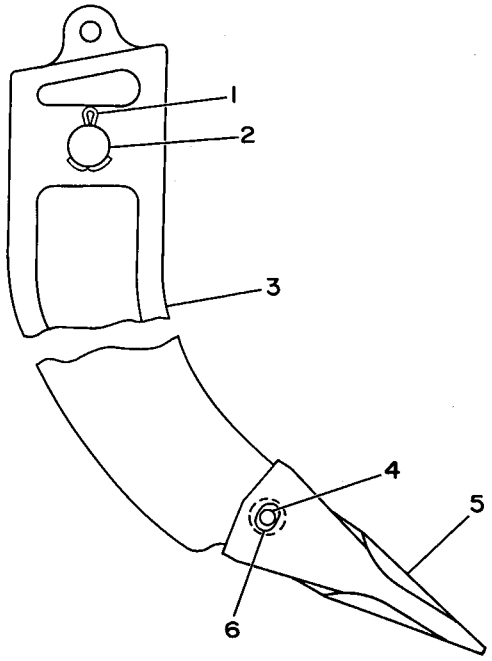

GRAPHIC #1 <END> g00174183

WORK TOOLS

109-2701 TOOTH GP-RIPPER

S/N: S6T1-UP; S6X1-UP; S6Y1-UP

AN ATTACHMENT

SMCS-6808, 6810 i04003990

NOTE	REF NO	GRAPHIC REF	PART NUMBER	QTY	PART NAME 1 2 3 4 5 6 (PRODUCT LEVEL)	SEE PAGE
Y	1	1	*8J-2189*	3	TOOTH GP-RIPPER	673

Y-SEPARATE ILLUSTRATION

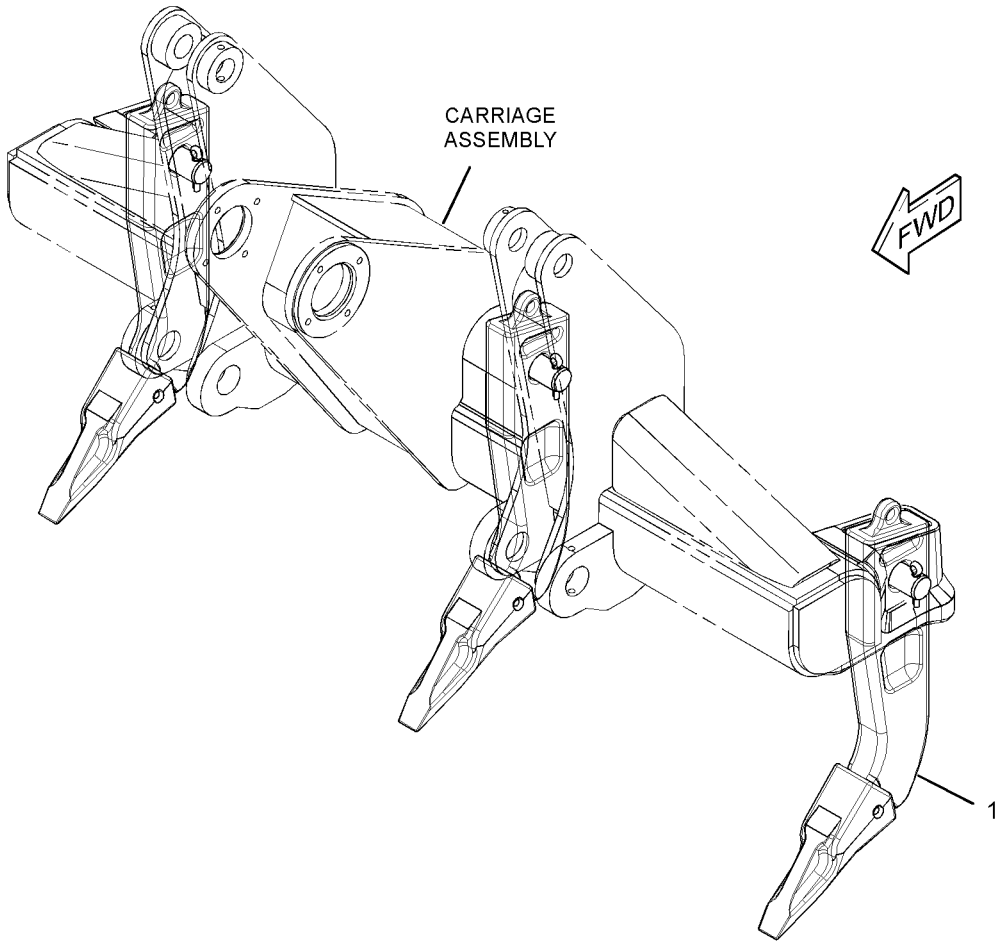

GRAPHIC #1 <END> g02199193

SERVICE EQUIPMENT AND SUPPLIES

321-6075 FILM GP

S/N: S6X1-UP

PART OF 337-1751 PLATE & FILM GP

SMCS-7000 i04016909

NOTE	REF NO	GRAPHIC REF	PART NUMBER	QTY	PART NAME 1 2 3 4 5 6 (PRODUCT LEVEL)	SEE PAGE
	1	1	340-0092	1	FILM-IDENTIFICATION (D6R, LH)	
	2	1	340-0091	1	FILM-IDENTIFICATION (D6R, RH)	
	3	1	308-4558	1	FILM-IDENTIFICATION (CAT, LH)	
	4	1	308-4559	1	FILM-IDENTIFICATION (CAT, RH)	
	5	1	274-6978	1	FILM-IDENTIFICATION (CATERPILLAR)	
	6	1	292-4396	1	FILM-IDENTIFICATION (CAT, REAR)	
	7	1	253-0861	2	FILM-INFORMATION (CAT POWER, ACERT TECHNOLOGY)	

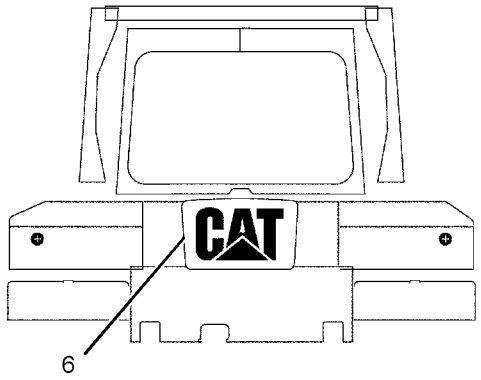

REAR VIEW

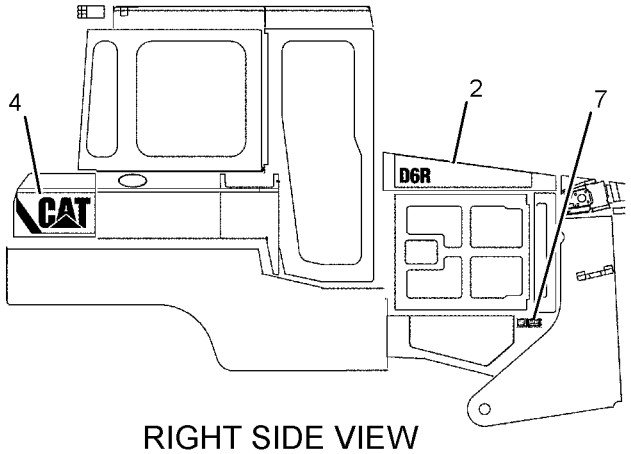

RIGHT SIDE VIEW

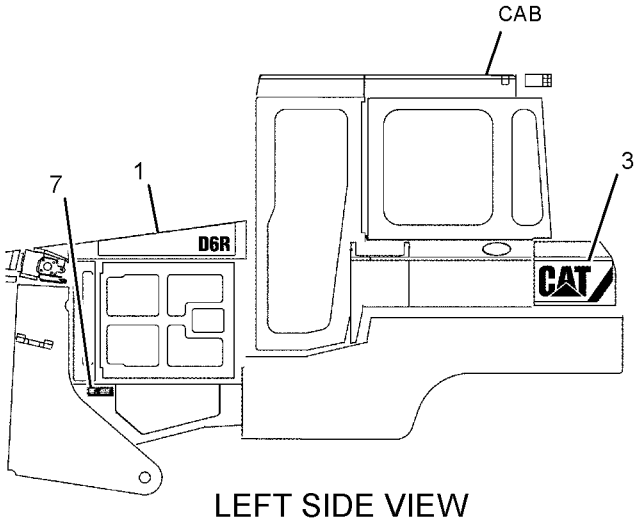

LEFT SIDE VIEW

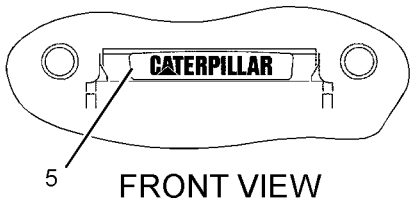

FRONT VIEW

GRAPHIC #1 <END> g02194177

SERVICE EQUIPMENT AND SUPPLIES

323-6771 FILM GP

S/N: S6T1-UP

PART OF 337-1752 PLATE & FILM GP

SMCS-7000 i04009381

NOTE	REF NO	GRAPHIC REF	PART NUMBER	QTY	PART NAME 1 2 3 4 5 6 (PRODUCT LEVEL)	SEE PAGE
	1	1	340-0094	1	FILM-IDENTIFICATION (D6R XL, LH)	
	2	1	340-0093	1	FILM-IDENTIFICATION (D6R XL, RH)	
	3	1	308-4558	1	FILM-IDENTIFICATION (CAT, LH)	
	4	1	308-4559	1	FILM-IDENTIFICATION (CAT, RH)	
	5	1	274-6978	1	FILM-IDENTIFICATION (CATERPILLAR)	
	6	1	292-4396	1	FILM-IDENTIFICATION (CAT, REAR)	
	7	1	253-0861	2	FILM-INFORMATION (CAT POWER, ACERT TECHNOLOGY)	

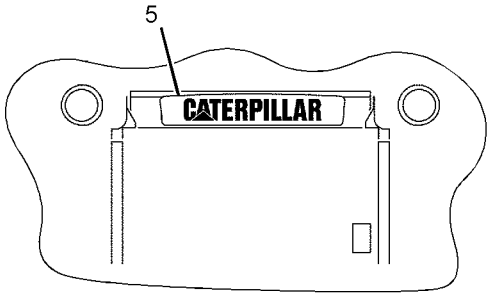

FRONT VIEW

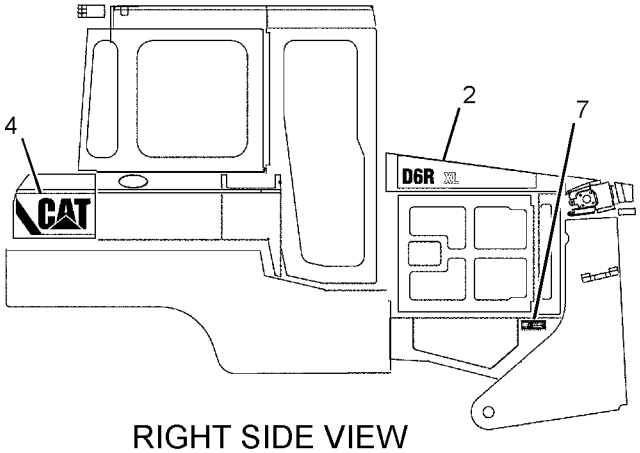

RIGHT SIDE VIEW

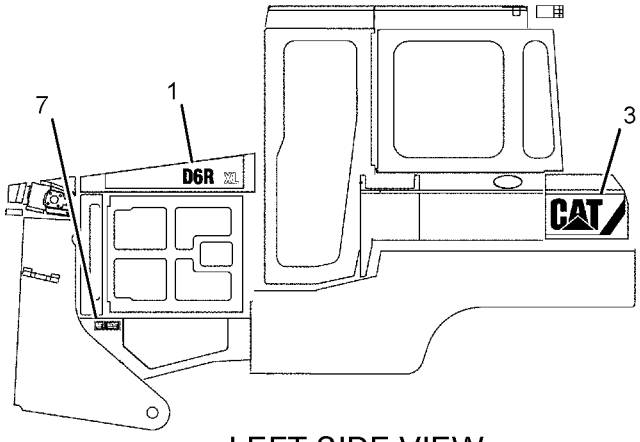

LEFT SIDE VIEW

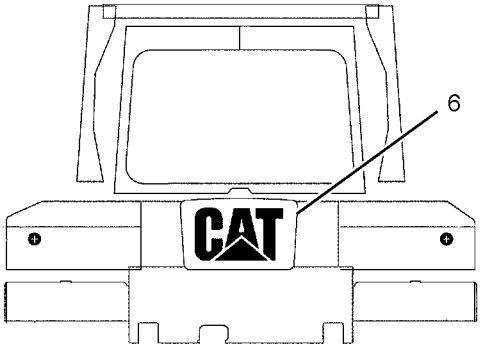

REAR VIEW

GRAPHIC #1 <END> g02188293

SERVICE EQUIPMENT AND SUPPLIES

323-6773 FILM GP

S/N: S6Y1-UP

PART OF 337-1753 PLATE & FILM GP

SMCS-7000 i04017055

NOTE	REF NO	GRAPHIC REF	PART NUMBER	QTY	PART NAME 1 2 3 4 5 6 (PRODUCT LEVEL)	SEE PAGE
	1	1	340-0096	1	FILM-IDENTIFICATION (D6R LGP, LH)	
	2	1	340-0095	1	FILM-IDENTIFICATION (D6R LGP, RH)	
	3	1	308-4558	1	FILM-IDENTIFICATION (CAT, LH)	
	4	1	308-4559	1	FILM-IDENTIFICATION (CAT, RH)	
	5	1	274-6978	1	FILM-IDENTIFICATION (CATERPILLAR)	
	6	1	292-4396	1	FILM-IDENTIFICATION (CAT, REAR)	
	7	1	253-0861	2	FILM-INFORMATION (CAT POWER, ACERT TECHNOLOGY)	

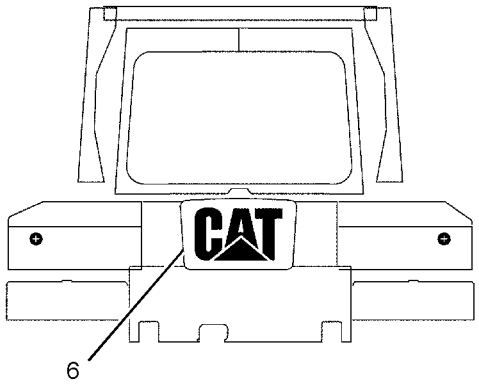

REAR VIEW

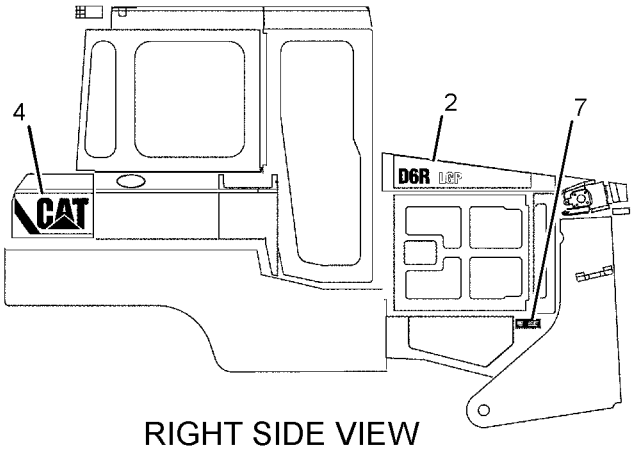

RIGHT SIDE VIEW

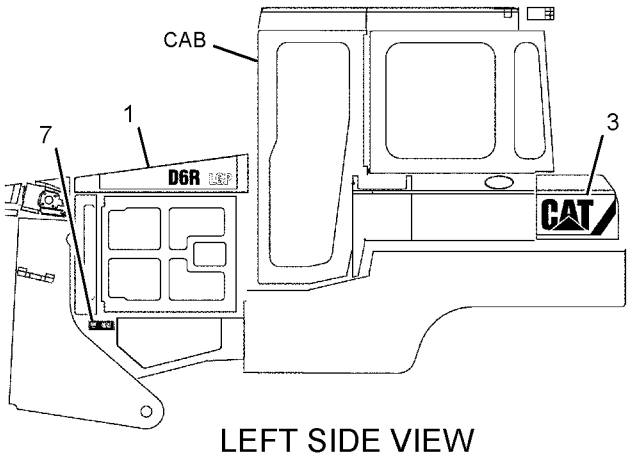

LEFT SIDE VIEW

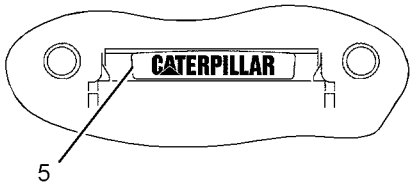

FRONT VIEW

GRAPHIC #1 <END> g02194176

341-2611 FILM GP–TANK GUARD

S/N: S6T1-UP; S6X1-UP; S6Y1-UP

AN ATTACHMENT

SMCS-7000 i04015610

NOTE	REF NO	GRAPHIC REF	PART NUMBER	QTY	PART NAME 1 2 3 4 5 6 (PRODUCT LEVEL)	SEE PAGE
	1	1	308-4558	1	FILM-IDENTIFICATION (CAT, LH)	
	2	1	308-4559	1	FILM-IDENTIFICATION (CAT, RH)	
	3	1	292-4396	1	FILM-IDENTIFICATION (CAT, REAR)	

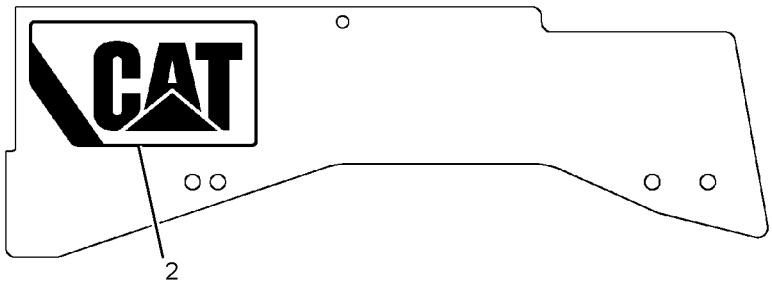

RIGHT SIDE VIEW

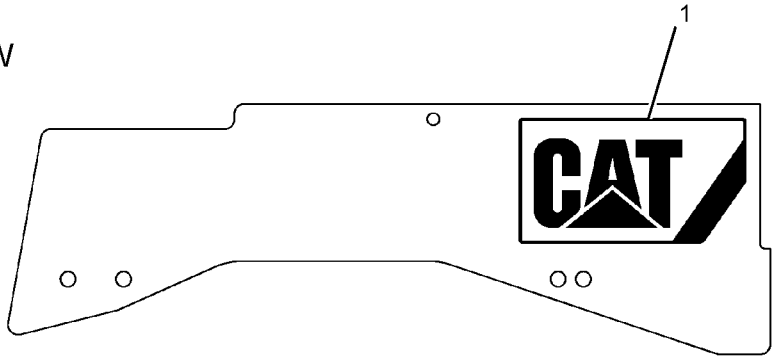

LEFT SIDE VIEW

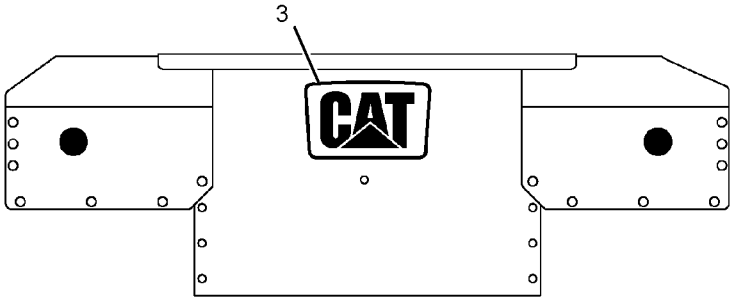

REAR VIEW

GRAPHIC #1 <END> g02192048

SERVICE EQUIPMENT AND SUPPLIES

337-1751 PLATE & FILM GP

S/N: S6X1-UP

PART OF 336-9684 CHASSIS AR

SMCS-7557, 7563 i04011981

NOTE	PART NUMBER	QTY	PART NAME 1 2 3 4 5 6 (PRODUCT LEVEL)	SEE PAGE
Y	*321-6075*	1	FILM GP	676
	214-8976	1	PLATE-IDENTIFICATION (FUEL DRAIN VALVE)	
			(ON FUEL TANK DRAIN VALVE)	
	330-6873	1	PLATE (SERVICE INFORMATION NUMBERS)	
			(ON STEEL AREA OF LH DASH UPRIGHT)	
	110-6393	1	PLATE-INSTRUCTION (AIR CONDITIONER)	
			(ON LH SIDE OF DASH 250-MM ABOVE FLOOR & 10-MM IN FRONT OF DASH REAR EDGE)	
	239-6986	1	PLATE-IDENTIFICATION (MACHINE)	
			(ON ROPS MOUNTING PAD ON TRANSMISSION)	
A	4W-1413	1	PLATE-SERIAL NUMBER (ENGINE)	
			(ON LH SIDE OF CYLINDER BLOCK TOWARD TOP & REAR FLAT AREA)	
	9F-6656	1	RING-RETAINING	
			(ON FUEL TANK DRAIN VALVE)	
	8T-9530	8	TACK-FASTENER	
			(USE FASTENERS WHEN MOUNTING PLATES)	
	169-2876	2	FILM-IDENTIFICATION (POWER RECEPTACLE, 12-VOLT)	
			2-(ON REAR CONSOLE BEHIND OPERATORS SEAT)	
	190-5386	2	FILM-STRIPE (ROUND RED REFLECTIVE)	
			(ON REAR LH & RH SIDE OF MACHINE ON FILM STRIPE)	
	321-6073	1	FILM-IDENTIFICATION (FUSE PANEL)	
			(VERTICALLY ON REAR OF BATTERY BOX PANEL)	
	245-8456	1	FILM-IDENTIFICATION (FUEL PUMP)	
			(NEXT TO FUEL PRIMING PUMP SWITCH)	
	258-2355	1	FILM-IDENTIFICATION (FUSE)	
			(ON STEEL AREA ON LH DASH SUPPORT UPRIGHT)	
	7X-7644	3	FILM-INFORMATION (TIE-DOWN)	
			3-(ON FRONT TOWING EYES)	
	134-7258	1	FILM-INFORMATION (EXTENDED LIFE COOLANT)	
			(TO RIGHT OF RADIATOR FILL COVER)	
	146-6747	1	FILM-INFORMATION (24-VOLT)	
			(ON BOTTOM OF BATTERY BOX COVER)	
	229-0887	1	FILM-INFORMATION (AIR CLEANER)	
			(ON EXTERIOR OF AIR CLEANER COVER)	
	7X-3229	4	FILM-INSTRUCTION (LIFT EYE, TIE-DOWN LOCATION)	
			WITHOUT RIPPER	
			4-(ON SIDE OF TRACK ROLLER BETWEEN FRONT ROLLER & IDLER & BETWEEN REAR ROLLER & IDLER(2 EACH SIDE))	
			WITH RIPPER	
			4-(ON SIDE OF TRACK ROLLER FRAME BETWEEN FRONT ROLLER & IDLER,ON SIDE OF LOWER RIPPER FRAME BY REAR PIN (2 EACH SIDE))	
	8T-4999	1	FILM-INSTRUCTION (BATTERY DISCONNECT)	
			(ON FACE OF BATTERY DISCONNECT SWITCH)	
	9X-6340	1	FILM-INSTRUCTION (ENGINE OIL)	
			(ON ENGINE OIL FILL TUBE)	
	325-5460	1	FILM-INSTRUCTION (PARKING BRAKE LOCK)	
			(ON TOP OF STEERING CONTROL LENGTHWAYS)	
	102-2913	1	FILM-INSTRUCTION (BULLDOZER CONTROL)	

337-1751 PLATE & FILM GP *(contd.)* i04011981

NOTE	PART NUMBER	QTY	PART NAME 1 2 3 4 5 6 (PRODUCT LEVEL)	SEE PAGE
			(ON RAISED SURFACE TO RIGHT OF BULLDOZER CONTROL)	
	334-4603	1	FILM-INFORMATION (HYDO ADVANCED 10)	
			(ON REAR TANK LIFT HOOK NEXT TO TANK FILLER SPOUT)	
	241-4167	1	FILM-INSTRUCTION (READ OMM, STEERING)	
			(ON TOP OF DIFFERENTIAL STEERING CONTROL)	
	334-3416	1	FILM-CERTIFICATION (FOPS)	
			(ON LH ROPS POST)	
	334-3417	1	FILM-CERTIFICATION (ROPS)	
			(ON CAB)	
	224-0672	1	FILM-WARNING (HIGH PRESSURE, READ OMM, INTL)	
			(ON PLATFORM)	
	225-0312	1	FILM-WARNING (JUMP START, READ OMM, INTL)	
			(ON BOTTOM OF BATTERY BOX COVER)	
	225-4257	1	FILM-WARNING (HOT FLUID UNDER PRESS, INTL)	
			(TO RIGHT OF RADIATOR FILL COVER)	
	219-0305	2	FILM-WARNING (NO WELD, NO DRILL, READ OMM)	
			1-(ON LH ROPS POST)	
			1-(ON CAB FOPS BESIDE FOPS CERTIFICATION FILM)	
	247-6876	1	FILM-WARNING (DO NOT OPERATE, READ OMM)	
			(ON UPPER LEDGE OF LH CONSOLE OF OPERATOR'S STATION)	
	247-6878	1	FILM-WARNING (SEAT BELT)	
			(ON RH CONSOLE ON HORIZONTAL SURFACE TO RIGHT OF BULLDOZER CONTROL)	

A-NOT PART OF THIS GROUP
Y-SEPARATE ILLUSTRATION

<END>

337-1752 PLATE & FILM GP

S/N: S6T1-UP
PART OF 336-9685 CHASSIS AR

SMCS-7557, 7563 i04011974

NOTE	PART NUMBER	QTY	PART NAME 1 2 3 4 5 6 (PRODUCT LEVEL)	SEE PAGE
Y	*323-6771*	1	FILM GP	677
	214-8976	1	PLATE-IDENTIFICATION (FUEL DRAIN VALVE)	
			(ON FUEL TANK DRAIN VALVE)	
	330-6873	1	PLATE (SERVICE INFORMATION NUMBERS)	
			(ON STEEL AREA OF LH DASH UPRIGHT)	
	110-6393	1	PLATE-INSTRUCTION (AIR CONDITIONER)	
			(ON LH SIDE OF DASH 250-MM ABOVE FLOOR & 10-MM IN FRONT OF DASH REAR EDGE)	
	239-6986	1	PLATE-IDENTIFICATION (MACHINE)	
			(ON ROPS MOUNTING PAD ON TRANSMISSION)	
A	4W-1413	1	PLATE-SERIAL NUMBER (ENGINE)	
			(ON LH SIDE OF CYLINDER BLOCK TOWARD TOP & REAR FLAT AREA)	
	9F-6656	1	RING-RETAINING	
			(ON FUEL TANK DRAIN VALVE)	
	8T-9530	8	TACK-FASTENER	
			4-(USE FASTENERS WHEN MOUNTING PLATES)	
	169-2876	2	FILM-IDENTIFICATION (POWER RECEPTACLE, 12-VOLT)	

SERVICE EQUIPMENT AND SUPPLIES

337-1752 PLATE & FILM GP ***(contd.)*** i04011974

NOTE	PART NUMBER	QTY	PART NAME 1 2 3 4 5 6 (PRODUCT LEVEL)	SEE PAGE
			2-(ON REAR CONSOLE BEHIND OPERATORS SEAT)	
	190-5386	2	FILM-STRIPE (ROUND RED REFLECTIVE)	
			(ON REAR LH & RH SIDE OF MACHINE ON FILM STRIPE)	
	321-6073	1	FILM-IDENTIFICATION (FUSE PANEL)	
			(VERTICALLY ON REAR OF BATTERY BOX PANEL)	
	245-8456	1	FILM-IDENTIFICATION (FUEL PUMP)	
			(NEXT TO FUEL PRIMING PUMP SWITCH)	
	258-2355	1	FILM-IDENTIFICATION (FUSE)	
			(ON STEEL AREA ON LH DASH SUPPORT UPRIGHT)	
	7X-7644	3	FILM-INFORMATION (TIE-DOWN)	
			3-(ON FRONT TOWING EYES)	
	134-7258	1	FILM-INFORMATION (EXTENDED LIFE COOLANT)	
			(TO RIGHT OF RADIATOR FILL COVER)	
	146-6747	1	FILM-INFORMATION (24-VOLT)	
			(ON BOTTOM OF BATTERY BOX COVER)	
	229-0887	1	FILM-INFORMATION (AIR CLEANER)	
			(ON EXTERIOR OF AIR CLEANER COVER)	
	7X-3229	4	FILM-INSTRUCTION (LIFT EYE, TIE-DOWN LOCATION)	
			WITHOUT RIPPER	
			4-(ON SIDE OF TRACK ROLLER BETWEEN FRONT ROLLER & IDLER & BETWEEN REAR ROLLER & IDLER(2 EACH SIDE))	
			WITH RIPPER	
			4-(ON SIDE OF TRACK ROLLER FRAME BETWEEN FRONT ROLLER & IDLER,ON SIDE OF LOWER RIPPER FRAME BY REAR PIN (2 EACH SIDE))	
	8T-4999	1	FILM-INSTRUCTION (BATTERY DISCONNECT)	
			(ON FACE OF BATTERY DISCONNECT SWITCH)	
	9X-6340	1	FILM-INSTRUCTION (ENGINE OIL)	
			(ON ENGINE OIL FILL TUBE)	
	325-5460	1	FILM-INSTRUCTION (PARKING BRAKE LOCK)	
			(ON TOP OF STEERING CONTROL LENGTHWAYS)	
	102-2913	1	FILM-INSTRUCTION (BULLDOZER CONTROL)	
			(ON RAISED SURFACE TO RIGHT OF BULLDOZER CONTROL)	
	334-4603	1	FILM-INFORMATION (HYDO ADVANCED 10)	
			(ON REAR TANK LIFT HOOK NEXT TO TANK FILLER SPOUT)	
	241-4167	1	FILM-INSTRUCTION (READ OMM, STEERING)	
			(ON TOP OF DIFFERENTIAL STEERING CONTROL)	
	334-3416	1	FILM-CERTIFICATION (FOPS)	
			(ON LH ROPS POST)	
	334-3417	1	FILM-CERTIFICATION (ROPS)	
			(ON CAB)	
	224-0672	1	FILM-WARNING (HIGH PRESSURE, READ OMM, INTL)	
			(ON PLATFORM)	
	225-0312	1	FILM-WARNING (JUMP START, READ OMM, INTL)	
			(ON BOTTOM OF BATTERY BOX COVER)	
	225-4257	1	FILM-WARNING (HOT FLUID UNDER PRESS, INTL)	
			(TO RIGHT OF RADIATOR FILL COVER)	
	219-0305	2	FILM-WARNING (NO WELD, NO DRILL, READ OMM)	
			1-(ON LH ROPS POST)	
			1-(ON CAB FOPS BESIDE FOPS CERTIFICATION FILM)	
	247-6876	1	FILM-WARNING (DO NOT OPERATE, READ OMM)	
			(ON UPPER LEDGE OF LH CONSOLE OF OPERATOR'S STATION)	
	247-6878	1	FILM-WARNING (SEAT BELT)	
			(ON RH CONSOLE ON HORIZONTAL SURFACE TO RIGHT OF BULLDOZER CONTROL)	

337-1752 PLATE & FILM GP ***(contd.)*** i04011974

A-NOT PART OF THIS GROUP
Y-SEPARATE ILLUSTRATION

<END>

337-1753 PLATE & FILM GP

S/N: S6Y1-UP
PART OF 336-9686 CHASSIS AR

SMCS-7557, 7563 i04011881

NOTE	PART NUMBER	QTY	PART NAME 1 2 3 4 5 6 (PRODUCT LEVEL)	SEE PAGE
Y	*323-6773*	1	FILM GP	678
	214-8976	1	PLATE-IDENTIFICATION (FUEL DRAIN VALVE)	
			(ON FUEL TANK DRAIN VALVE)	
	330-6873	1	PLATE (SERVICE INFORMATION NUMBERS)	
			(ON STEEL AREA OF LH DASH UPRIGHT)	
	110-6393	1	PLATE-INSTRUCTION (AIR CONDITIONER)	
			(ON LH SIDE OF DASH 250-MM ABOVE FLOOR & 10-MM IN FRONT OF DASH REAR EDGE)	
	239-6986	1	PLATE-IDENTIFICATION (MACHINE)	
			(ON ROPS MOUNTING PAD ON TRANSMISSION)	
A	4W-1413	1	PLATE-SERIAL NUMBER (ENGINE)	
			(ON LH SIDE OF CYLINDER BLOCK TOWARD TOP & REAR FLAT AREA)	
	9F-6656	1	RING-RETAINING	
			(ON FUEL TANK DRAIN VALVE)	
	8T-9530	8	TACK-FASTENER	
			(USE FASTENERS WHEN MOUNTING PLATES)	
	169-2876	2	FILM-IDENTIFICATION (POWER RECEPTACLE, 12-VOLT)	
			2-(ON REAR CONSOLE BEHIND OPERATORS SEAT)	
	190-5386	2	FILM-STRIPE (ROUND RED REFLECTIVE)	
			(ON REAR LH & RH SIDE OF MACHINE ON FILM STRIPE)	
	321-6073	1	FILM-IDENTIFICATION (FUSE PANEL)	
			(VERTICALLY ON REAR OF BATTERY BOX PANEL)	
	245-8456	1	FILM-IDENTIFICATION (FUEL PUMP)	
			(NEXT TO FUEL PRIMING PUMP SWITCH)	
	258-2355	1	FILM-IDENTIFICATION (FUSE)	
			(ON STEEL AREA ON LH DASH SUPPORT UPRIGHT)	
	7X-7644	3	FILM-INFORMATION (TIE-DOWN)	
			3-(ON FRONT TOWING EYES)	
	134-7258	1	FILM-INFORMATION (EXTENDED LIFE COOLANT)	
			(TO RIGHT OF RADIATOR FILL COVER)	
	146-6747	1	FILM-INFORMATION (24-VOLT)	
			(ON BOTTOM OF BATTERY BOX COVER)	
	229-0887	1	FILM-INFORMATION (AIR CLEANER)	
			(ON EXTERIOR OF AIR CLEANER COVER)	
	7X-3229	4	FILM-INSTRUCTION (LIFT EYE, TIE-DOWN LOCATION)	
			WITHOUT RIPPER	
			4-(ON SIDE OF TRACK ROLLER BETWEEN FRONT ROLLER & IDLER & BETWEEN REAR ROLLER & IDLER(2 EACH SIDE))	
			WITH RIPPER	
			4-(ON SIDE OF TRACK ROLLER FRAME BETWEEN FRONT ROLLER & IDLER,ON SIDE OF LOWER RIPPER FRAME BY REAR PIN (2 EACH SIDE))	

337-1753 PLATE & FILM GP ***(contd.)*** i04011881

NOTE	PART NUMBER	QTY	PART NAME 1 2 3 4 5 6 (PRODUCT LEVEL)	SEE PAGE
	8T-4999	1	FILM-INSTRUCTION (BATTERY DISCONNECT)	
			(ON FACE OF BATTERY DISCONNECT SWITCH)	
	9X-6340	1	FILM-INSTRUCTION (ENGINE OIL)	
			(ON ENGINE OIL FILL TUBE)	
	325-5460	1	FILM-INSTRUCTION (PARKING BRAKE LOCK)	
			(ON TOP OF STEERING CONTROL LENGTHWAYS)	
	102-2913	1	FILM-INSTRUCTION (BULLDOZER CONTROL)	
			(ON RAISED SURFACE TO RIGHT OF BULLDOZER CONTROL)	
	334-4603	1	FILM-INFORMATION (HYDO ADVANCED 10)	
			(ON REAR TANK LIFT HOOK NEXT TO TANK FILLER SPOUT)	
	241-4167	1	FILM-INSTRUCTION (READ OMM, STEERING)	
			(ON TOP OF DIFFERENTIAL STEERING CONTROL)	
	334-3416	1	FILM-CERTIFICATION (FOPS)	
			(ON LH ROPS POST)	
	334-3417	1	FILM-CERTIFICATION (ROPS)	
			(ON CAB)	
	224-0672	1	FILM-WARNING (HIGH PRESSURE, READ OMM, INTL)	
			(ON PLATFORM)	
	225-0312	1	FILM-WARNING (JUMP START, READ OMM, INTL)	
			(ON BOTTOM OF BATTERY BOX COVER)	
	225-4257	1	FILM-WARNING (HOT FLUID UNDER PRESS, INTL)	
			(TO RIGHT OF RADIATOR FILL COVER)	
	219-0305	2	FILM-WARNING (NO WELD, NO DRILL, READ OMM)	
			1-(ON LH ROPS POST)	
			1-(ON CAB FOPS BESIDE FOPS CERTIFICATION FILM)	
	247-6876	1	FILM-WARNING (DO NOT OPERATE, READ OMM)	
			(ON UPPER LEDGE OF LH CONSOLE OF OPERATOR'S STATION)	
	247-6878	1	FILM-WARNING (SEAT BELT)	
			(ON RH CONSOLE ON HORIZONTAL SURFACE TO RIGHT OF BULLDOZER CONTROL)	

A-NOT PART OF THIS GROUP
Y-SEPARATE ILLUSTRATION

<END>

PART NUMBER INDEX

Part	Page
0	
0L-1026	20
0L-1143	215
0L-1351	232
	281
	402
0S-0519	22
0S-1571	402
0S-1585	219
	221
0S-1591	98
	110
	252
0S-1594	223
0S-1597	183
	187
0S-1614	215
0S-1620	223
0S-1897	252
0T-0102	221
0T-0244	607
	611
1	
1A-1460	215
	216
	219
1A-2029	216
	219
	275
1A-2209	275
1A-2223	215
	263
1A-2610	223
1A-5183	263
1A-5822	252
1A-9252	224
1B-0676	224
	539
1B-5174	332
	334
	336
	338
	340
	342
	344
	346
	348
	350
1B-8705	14
	19
	268
1B-8706	225
	539
1B-8714	539
1B-8735	524
	527
1B-8736	268
1C-0569	219
1D-4539	232
1D-4601	252
1D-4624	291
1F-0748	136
1F-0750	132
	199
	286
	300
	613
1F-6762	415
	417
1F-7960	126
1H-1023	187
1H-2629	187
1H-3244	134
	195
1H-3338	191
1H-5728	256
1H-8296	620
1H-9696	242
	244
	246
	248
1J-0708	423
1J-2921	425
1J-5353	283
1J-6472	324
	325
1J-8569	423
1J-9671	47
	440
	495
1K-4649	120
1K-5888	444
	451
1K-6872	539
1L-4775	69
1L-5072	462
1L-6957	252
1L-7388	263
1L-8545	59
1M-1341	225
	539
1M-1571	415
	417
1M-4533	539
1M-4543	204
	535
1M-4986	139
	185
1M-6119	138
	139
	142
1M-6120	138
	139
	142
1M-6718	501
1M-8657	263
1M-9011	242
	244
	246
	248
	261
1M-9968	188
1M-9971	187
1N-5999	472
1P-0810	139
	199
	520
1P-2772	318
	601
1P-3702	440
	467
	469
1P-3703	440
	451
1P-3704	428
	440
1P-3706	495
1P-3934	252
1P-3935	252
1P-4278	90
	94
	114
1P-4576	421
1P-4577	267
1P-4578	256
	267
	462
	467
	469
1P-4582	462
1P-6356	562
	565
1P-7009	563
1P-8116	283
1P-9005	242
	244
	246
	248
1Q-4324	▶291
1R-0762	114
1R-0777	462
1R-1808	71
1S-0994	114
	118
	139
	200
1S-0996	120
1S-1015	200
1S-1860	252
	392
	393
	394
1S-4915	138
	199
1S-6385	288
1S-6420	204
1S-7251	138
	139
	186
1S-7252	186
1S-7446	187
1S-9593	502
	543
1S-9799	273
1T-0068	326
	327
	328
	329
	330
	331
1T-0097	275
1T-0414	275
1T-0438	275
1T-0441	275
1T-0446	275
1T-0447	275
1T-0599	275
1T-0765	362
	363
	364
1T-0902	275
1T-1993	275
1T-2052	275
1T-2069	275
1T-2077	275
1T-2080	275
1T-2081	275
1T-2084	▶275
	277
1T-2086	275
1T-2089	275
1U-0159	668
	671
1U-0183	649
	651
	657
1U-0300	668
1U-0301	291
	668
1U-0612	291
	668
1U-0725	508
1U-1173	505
1U-1174	505
1U-1175	505
1U-1176	505
1U-1951	656
1U-2827	462
1U-4069	425
1U-8846	48
	50
	100
	216
	219
1V-7753	256
1V-8638	224
1W-2431	101
1W-2715	29
	31
1W-2860	569
1W-3011	120
1W-4738	46
1W-4741	46
1W-4746	46
1W-4877	107
1W-8407	22
1Y-7452	90
1Y-7927	551
2	
2A-1162	47
2A-1736	557
2A-3746	28
	33

▶ PRIMARY REFERENCE

PART NUMBER INDEX

Part	Page	Part	Page	Part	Page	Part	Page
	277	2K-6279	668	2W-5825	83		54
2A-4429	29	2K-6830	415	2W-7381	58		105
	31		417	2W-8147	19	3E-4354	219
2A-4639	216	2K-8257	256	2Y-5829	61	3E-4356	553
2B-0858	240	2K-9295	215		62	3E-4367	554
2B-0947	242	2L-5893	598				586
	244		599			3E-4374	224
	246	2L-6679	187	**3**		3E-4999	59
	248	2L-8069	206			3E-5239	206
2B-2695	283	2L-8071	199	3B-0623	20		537
2B-9373	268	2L-8075	195	3B-4124	215		554
2D-0598	472	2L-8077	207	3B-4501	193		586
2D-1523	273	2L-8079	206	3B-4605	294	3E-5464	519
2D-4202	462	2M-1168	402		296	3E-6180	524
2D-5658	277	2M-1444	520	3B-4610	294		527
2D-6235	551	2M-3974	267		296	3E-6328	▶131
2D-6392	187	2M-4453	87		548		206
2D-6506	261	2M-5795	288	3B-4615	225	3E-6389	▶153
2D-6642	252	2M-7041	281		305		558
2F-5326	324	2M-7819	551		313	3E-6910	458
	325	2M-9780	114		539	3E-6922	555
2F-6678	188		120	3B-4626	505	3E-7410	118
2G-0391	592		148	3B-4629	306	3E-7771	188
2G-9245	313		439		307	3E-7775	183
2H-2995	283		440	3B-4632	6	3E-8005	15
2H-3429	187		458		8	3E-8017	104
	232		495		9		113
2H-3920	558		500	3B-5325	673	3E-8020	560
2H-3922	138	2N-3680	228		674	3E-8558	554
	193	2P-3696	242	3B-8489	320		586
2H-3928	362		244		322	3E-9412	122
	363		246		324	3E-9867	85
	364		248		325	3E-9868	85
2H-3931	240	2P-4304	71		455	3F-3442	223
2H-3934	399	2P-4339	554		671	3F-3727	275
2H-6622	629	2P-6588	449	3D-2824	75	3F-5022	262
	630	2R-0098	242		89	3F-5792	48
2J-0564	421		244		94	3F-9556	134
2J-2866	474	2S-0696	283		190		573
	477	2S-0795	234		435		574
	479	2S-2251	273		461		575
2J-3506	661	2S-2596	472		462		576
	662		474	3D-2975	551	3G-1753	421
	663		477	3D-8317	281	3G-1757	421
	664		479		283	3G-3267	462
2J-4672	232	2S-3029	69	3E-1841	550	3G-4214	256
2J-6274	388	2S-3440	74	3E-3365	131	3G-4218	256
	390	2S-4078	221	3E-3892	593	3G-6372	313
2J-6356	539		242	3E-4051	562	3G-8047	444
2J-7761	462		244		566		449
2J-8163	187		246	3E-4052	562		451
	400		248		566	3G-8054	444
2J-8489	423		256	3E-4057	562		449
	425		388		566		451
2K-0703	671		390	3E-4058	562	3G-8057	444
2K-3258	423		407		566		449
2K-4096	421		409	3E-4067	562		451
2K-4507	421		411	3E-4080	566	3G-8742	415
2K-4821	134		413	3E-4087	562		417
2K-4973	291	2S-4872	283		566	3G-9402	455
	517	2S-5658	271	3E-4297	492	3G-9405	455
	618	2S-5926	388	3E-4352	100	3G-9995	668
	620		390		168	3H-3243	285
2K-5069	215	2V-1937	519		555	3H-3433	228
2K-5986	277	2V-4868	94	3E-4353	51	3H-7180	537

▶ PRIMARY REFERENCE

PART NUMBER INDEX

Part	Page	Part	Page	Part	Page	Part	Page
3H-8683	451		248	3T-0996	290		213
3J-1770	505		256	3T-1078	224	3T-6469	255
3J-1907	47		273	3T-1121	629	3T-6471	255
	85		402		630	3T-6742	252
	114		434	3T-1162	332	3T-6963	215
	116		449		334	3T-8305	272
	181		471		336	3T-8371	622
	202		489		338	3T-8729	263
	204		490		340	3T-9272	215
	224		491		342	3T-9494	187
	234		497		344		188
	251		499		346	3T-9524	188
	255		530		348	3T-9525	187
	256		569		350	3T-9549	214
	402	3K-2511	263	3T-2077	332	3T-9921	221
	430	3K-2889	293		334	3V-2024	671
	432	3K-8460	47		336	3V-2431	280
	434	3K-8510	671		338	3V-9244	312
	435	3L-0594	596		340		313
	439	3L-3380	187		342	3V-9399	294
	440	3L-3813	495		344		296
	453	3L-5893	93		346	3W-0329	388
	461	3N-0759	404		348		390
	482	3N-3763	188		350	3W-0556	539
	483	3P-0647	177	3T-2748	306	3W-0640	388
	485	3P-1111	394		307		390
	487	3P-1932	251	3T-3157	554	3W-1356	▶315
	492	3P-2404	440	3T-3158	554		670
	501	3P-8485	283		586	3W-1357	315
3J-2682	507	3P-9900	620	3T-3159	554	3W-1852	332
3J-3679	495	3R-8797	183		586		334
3J-4818	620		187	3T-3278	554		336
3J-6573	505	3R-8801	188		586		338
3J-7354	47	3R-9965	203	3T-3418	187		340
	85	3S-0004	268	3T-3422	183		342
	94	3S-2093	118		187		344
	140		157	3T-3423	187		346
	320		197		188		348
	322		520	3T-3424	187		350
	430		537		188	3W-1944	305
	432		554	3T-3434	183	3W-2369	388
	434		558		187		390
	435		562	3T-3494	283	3W-2470	255
	453		565	3T-3634	590	3W-2647	120
	467		586	3T-4007	277	3W-3742	313
	469		622	3T-4008	277	3W-3819	298
	472		624	3T-4009	277	3W-3896	303
	474		625	3T-4011	277	3W-6528	318
	477	3S-2708	215	3T-4013	277	3W-6550	▶212
	479		219	3T-4215	283		266
	483		263	3T-4377	262	3W-6551	212
	485		277	3T-4403	232	3W-6756	596
	487	3S-3439	270	3T-4568	215	3W-6866	▶293
	499	3S-3440	270	3T-4709	187	3W-9139	197
3J-9703	425	3S-6049	139	3T-4710	187	3W-9207	294
3K-0360	29	3S-6162	425	3T-4824	215		296
	47	3S-7781	221	3T-5021	215	3W-9208	294
	89	3S-8313	539	3T-5200	215		296
	120	3S-8664	562	3T-5224	224	3W-9678	320
	216	3S-9557	633	3T-5225	224		322
	219	3S-9643	84	3T-5301	255	3Y-2888	181
	234	3T-0304	206	3T-5302	255	3Y-3866	505
	242	3T-0598	388	3T-5356	267	3Y-5405	446
	244		390	3T-5807	219		447
	246	3T-0849	492	3T-5851	212		448

▶ PRIMARY REFERENCE

PART NUMBER INDEX

Part	Page
4	
4B-0831	285
4B-1270	228
4B-2049	188
4B-3611	539
4B-4098	37
	505
4B-4158	6
	7
	8
	9
	332
	334
	336
	338
	340
	342
	346
	348
	350
	670
4B-4278	294
	296
	620
4B-4863	207
4B-5059	551
4B-7739	240
4B-9782	223
	229
4B-9785	223
4B-9808	487
	542
4B-9880	252
	281
	283
4C-9612	55
4D-4065	539
4D-6716	90
4D-7388	75
4D-7733	566
4D-7735	120
4D-8123	207
4F-0255	505
4F-1252	505
4F-2294	192
4F-4879	614
	615
	616
4F-5695	20
4F-6024	46
4F-7389	462
4G-4972	22
4H-0019	252
4H-0407	592
4H-1394	232
4H-1440	275
4H-1641	229
	286
	300
4H-2558	294
	296
	566
4H-4737	281
4H-5440	221
4H-9105	225
4J-0121	415
	417
4J-0520	407
	409
	411
	413
	428
	435
	440
	443
	451
	466
4J-0522	435
	467
	469
	482
4J-0525	87
4J-0527	440
4J-0528	482
4J-1641	649
	651
	656
	657
4J-2036	306
	307
4J-2414	507
4J-3420	421
4J-5267	443
	444
	446
	447
	448
	449
	451
4J-5351	474
	477
	479
	498
4J-5477	255
	256
	430
	432
	434
	435
4J-6374	415
	417
4J-6806	472
4J-7533	472
	474
	477
	479
4J-8251	462
4J-8252	462
4J-8997	467
	469
4K-0367	462
4K-1388	407
	409
	411
	413
	467
	469
	472
	474
	477
	479
4K-2039	489
	490
4K-3004	671
4K-3128	421
4K-3533	524
	527
4K-6177	256
4K-8302	566
4K-9429	584
4L-2729	188
4L-6454	130
	132
	136
	159
	242
	244
	246
	248
4L-6496	539
4L-9337	539
4M-0189	48
4M-1827	187
4M-1828	187
4M-1831	183
	187
4M-1853	187
4M-1854	187
4M-1896	188
4M-2381	281
	283
4M-2442	263
4M-5281	587
4M-6425	524
	527
	598
	599
4M-6980	495
4M-7470	294
	296
4M-8239	282
4M-9592	262
4N-1059	185
4N-1230	46
4N-2514	43
4N-2927	551
4N-3808	238
4N-8227	150
4N-9915	553
4P-0489	569
4P-2102	10
	11
	▶35
4P-4369	104
4P-5524	97
4P-7428	51
	566
4P-7429	94
	200
	563
	566
4P-7581	132
	136
	140
4P-7582	200
4P-8134	140
	181
	197
	200
	462
	537
	555
	562
	566
	587
4R-9999	63
4S-1962	132
4S-5719	539
4S-5898	457
4S-8537	275
4S-8598	270
4S-9191	84
4T-0259	425
4T-0521	462
4T-0732	509
	511
	513
4T-0780	509
	511
	513
4T-0925	501
4T-0928	501
4T-0993	472
4T-1021	472
4T-1108	474
	477
	479
4T-1481	6
	8
	9
4T-1496	656
4T-1500	656
4T-1504	649
	651
	656
	657
4T-1506	656
4T-1509	656
4T-1520	509
	511
	513
4T-1563	446
	447
	448
4T-1649	472
4T-1700	499
4T-1762	656
4T-1850	472
4T-1860	472
	474

▶ PRIMARY REFERENCE

PART NUMBER INDEX

Part	Page
	477
	479
	▶501
4T-2950	664
4T-2952	661
	662
4T-4509	499
4T-4511	472
4T-4628	474
	477
	479
4T-4631	477
	479
4T-4659	495
4T-4866	508
	509
	511
	513
4T-4875	455
4T-4942	497
4T-5072	474
	477
	479
4T-5073	472
	474
	477
	479
4T-5074	472
	499
4T-5495	505
4T-7571	497
4V-7884	618
4V-8256	517
4V-8577	618
	620
4W-1203	37
4W-1204	37
4W-1413	680
	681
	683
4W-2026	16
4Y-3767	293
4Y-9344	524
	527

5

Part	Page
5A-9517	539
5B-0582	275
5C-2890	165
	191
	483
	485
	537
	539
	553
	580
	620
5C-6565	671
5C-7261	200
	562
	573
	574
	575
5C-7883	165
5C-8312	207
5C-9553	129
	164
	520
5D-1026	120
	550
5D-1911	462
5D-2989	262
5D-3118	291
	293
5D-3546	224
5D-4822	551
5D-7635	625
5D-7927	462
5F-0304	47
5F-1678	324
	325
	462
5F-3144	421
5F-4899	232
5F-9144	116
	228
5F-9657	285
5F-9757	207
5G-2247	365
	366
	367
5G-7191	439
5G-8655	524
	527
5G-8993	375
	376
5G-9841	375
	376
5G-9842	375
	376
5G-9843	375
	376
5G-9973	313
5G-9974	313
5H-3252	423
5H-4018	451
5H-4279	267
5H-6202	262
5H-6734	332
	334
	336
	338
	340
	342
	344
	346
	348
	350
5H-6799	539
5H-8985	283
5I-4376	434
5J-3964	277
5J-4418	423
5J-4773	661
	662
	663
	664
5J-4973	421
5J-4974	421
5J-4989	423
5J-4991	425
5J-5020	421
5J-5314	187
5J-5731	423
5J-7386	277
5K-0227	474
	477
	479
5K-5120	221
5K-7748	671
5K-9090	255
	256
	407
	409
	411
	413
5K-9107	216
5K-9179	571
	572
5K-9246	221
5K-9988	221
5L-2029	228
5L-5711	228
5L-7200	193
5M-0578	215
	219
5M-2057	462
	472
	474
	477
	479
5M-2894	216
	219
	221
	232
	252
	267
	275
	362
	363
	364
	599
5M-3034	187
5M-3038	263
5M-3062	156
	157
	159
5M-6126	262
5M-6214	285
	313
	507
5M-7878	277
5M-7925	215
5M-8500	524
	527
5M-9548	402
5M-9622	281
	283
5M-9623	282
	283
5M-9624	281
	283
5M-9735	59
5N-4185	15
5N-6096	229
5N-9204	562
5P-0492	150
5P-0599	107
5P-0695	138
	199
5P-0746	185
5P-0747	138
	139
5P-0761	138
5P-0767	550
	569
5P-0998	590
5P-1075	130
	132
	136
	156
	157
	159
	162
	204
	207
	225
	256
	318
	407
	409
	411
	413
	435
	440
	451
	494
	519
	537
	544
	571
	613
5P-1076	59
	303
	305
	310
	311
	313
	318
	332
	334
	339
	340
	342
	387
	455
	539
	548
	549
	577
	590
	592
	600
	601
5P-1251	94
5P-1294	439
5P-1318	440
5P-1465	94

▶ PRIMARY REFERENCE

PART NUMBER INDEX

Part	Page
5P-1505	121
	528
5P-2228	159
5P-2671	455
5P-2766	581
5P-2817	99
	107
5P-2955	156
	157
	159
5P-3264	122
5P-3779	211
5P-3860	107
5P-3930	262
	277
5P-3948	565
5P-4057	221
5P-4115	555
	587
	590
	596
5P-4116	35
	181
	545
	587
	590
5P-4295	566
5P-4423	620
5P-4571	207
	558
5P-5045	263
5P-5296	263
5P-5297	263
5P-5623	140
	206
5P-5639	550
5P-5643	519
	525
	528
	550
5P-5672	537
5P-5677	207
5P-5680	627
	628
	629
	630
5P-5755	307
	525
	528
5P-5908	537
5P-5923	298
5P-5924	537
5P-5926	525
	528
5P-5930	525
	528
5P-5931	525
	528
5P-5991	114
5P-6010	620
5P-6129	563
	566
5P-6298	187
5P-6438	225
5P-6605	524
	527
5P-6719	482
5P-6874	571
	572
5P-6944	402
5P-7085	256
5P-7211	298
5P-7464	200
	444
	449
5P-7465	200
	444
	449
5P-7468	256
5P-7469	256
5P-7483	307
	525
	528
5P-7509	592
5P-7513	579
5P-7514	307
	579
5P-7530	77
	78
5P-7592	252
5P-7679	277
5P-7814	126
5P-7815	214
5P-7957	584
5P-7958	1
	2
	3
	530
5P-7970	70
	197
5P-8194	262
5P-8196	71
5P-8215	256
5P-8244	547
5P-8245	16
	48
	51
	65
	66
	67
	215
	216
	219
	221
	223
	252
	263
	267
5P-8247	134
	252
5P-8248	661
	662
	663
	664
5P-8309	298
5P-8435	543
5P-8441	537
5P-8445	551
5P-8500	1
	2
	3
	120
	129
	224
	286
	298
	300
	313
	461
	530
5P-8503	524
	527
5P-8918	629
	630
5P-8998	221
5P-9297	114
5P-9439	267
5P-9617	71
	85
	434
5P-9658	238
5P-9909	593
5S-4437	281
5S-7001	402
5S-7018	402
5S-7343	228
5S-7349	134
	183
5S-7379	162
	225
	571
5S-7383	598
	599
5S-8709	449
5S-8712	449
5S-8765	449
5S-8766	449
5S-9062	37
5T-4374	320
	322
5V-0770	551
5V-1496	288
	605
	609
5V-1497	618
5W-7461	458
5W-7462	458
5W-7463	458
5W-7464	458
5W-7465	458
5W-7466	459
6	
6A-5591	48
	458
6A-9718	639
6B-1124	59
6B-4541	228
6B-4594	90
	94
6B-6684	539
6B-6863	262
6B-7246	92
6C-3060	129
6C-9048	492
6D-1641	566
	569
6D-3033	202
6D-4161	554
	586
6D-4244	207
6D-4246	120
6D-4247	140
6D-4636	563
	569
6D-5257	203
6E-0381	471
6E-0486	472
6E-1637	474
	479
6E-1835	497
6E-4907	495
6E-5066	453
6E-5200	499
6F-0253	539
6F-0711	290
6F-4718	273
6F-6673	260
	268
	283
6F-7045	138
6F-7062	234
6G-6396	224
6H-3977	267
6H-4005	157
	159
	162
	520
6H-9361	462
6I-1418	202
6I-2431	92
6I-2435	92
6I-2501	97
6I-2502	97
6I-4464	97
6I-8500	262
6I-8507	252
6I-8511	252
6I-8724	215
6I-9386	524
	527
6I-9641	▶392
	396
6I-9642	▶392
6I-9644	▶392
6I-9653	▶393
	397
6I-9654	▶393
6I-9656	▶393
6I-9668	▶365
	392
6I-9671	▶366
	393
6I-9706	590
6I-9875	283
6J-3473	252
6J-5383	509
	511

▶ PRIMARY REFERENCE

PART NUMBER INDEX

Part	Page	Part	Page	Part	Page	Part	Page
	513	6T-2059	394	6V-0937	271		77
6J-6439	497	6T-2162	394	6V-1228	562		78
6J-9187	507	6T-2307	281		566		168
6J-9188	507	6T-3643	165	6V-1249	444	6V-3965	80
6K-0806	94	6T-3764	150		449		114
	534	6T-3852	252	6V-1322	187		221
6K-1049	288	6T-3853	252	6V-1355	94		251
6K-3273	609	6T-4556	592	6V-1574	440		256
6K-3630	277	6T-4557	592	6V-1581	85		402
6K-3632	318	6T-5067	596	6V-1582	85		435
	601	6T-5068	596	6V-1604	402		440
6K-4934	204	6T-5617	550	6V-1720	221	6V-4248	59
6K-4935	204	6T-6505	520	6V-1790	590		75
6K-8162	495	6T-6506	520	6V-1792	392		118
6K-8178	562	6T-7695	558		393	6V-4249	101
	566	6T-7882	262		394	6V-4292	120
6K-8180	225	6T-8048	558	6V-1819	79	6V-4365	232
6K-8498	221	6T-8387	224	6V-1820	46	6V-4369	197
6L-1649	256	6T-8388	224		51	6V-4583	277
6L-4783	267	6T-8402	524		105	6V-4589	122
6L-5359	256		527	6V-1889	74		503
	270		▶627		440		504
6L-9716	472		636	6V-1970	1	6V-5048	118
6M-5062	489	6T-8403	524		2		168
	490		527		3		173
6N-1558	101		▶628	6V-1971	530		174
6N-2985	70		636	6V-2312	633		251
6N-3279	187	6T-8710	285		635	6V-5049	71
6N-3826	183	6T-8714	592	6V-2317	40		80
	187	6T-9927	298		52		114
6N-7053	59	6V-0327	242		250		118
6N-7523	129		244	6V-2331	524		128
	637		246		527	6V-5050	122
6N-8744	534		248	6V-2372	562		214
6P-1735	215	6V-0328	242		566	6V-5188	270
6P-1736	215		244	6V-2375	524	6V-5192	458
6P-2216	596		246		527		477
6P-4938	283		248	6V-2404	252		479
6P-4939	283	6V-0329	242	6V-2478	262	6V-5217	50
6P-4940	283		244	6V-2495	562		77
6P-4971	283		246		565		197
6P-5317	216		248	6V-2689	206	6V-5218	71
	219	6V-0330	242		485		78
6P-6591	555		244		487	6V-5219	71
6P-7704	262		246	6V-2803	547	6V-5220	71
6P-8269	298		248	6V-3260	524	6V-5324	501
6P-9783	283	6V-0400	440		527	6V-5326	498
6P-9784	283		454	6V-3265	225	6V-5387	255
6P-9785	283		466	6V-3326	400	6V-5555	467
6P-9786	283	6V-0439	242	6V-3538	22		469
6S-2828	252		244	6V-3545	228	6V-5556	472
6S-2829	252		246	6V-3668	234		499
6S-6439	130		248	6V-3671	525	6V-5645	165
6S-6514	130	6V-0473	262		528	6V-5683	560
6S-6646	232	6V-0484	256	6V-3822	267	6V-5684	51
6T-0062	215	6V-0852	80	6V-3823	234	6V-5696	16
6T-0064	215		114		267		66
6T-0363	187		221	6V-3832	229		234
6T-0364	252		251	6V-3918	15	6V-5758	498
6T-0371	187		255		50	6V-5791	224
6T-0372	187		402		55	6V-5817	622
6T-0850	215		434	6V-3922	498	6V-5818	625
6T-0988	596		439	6V-3940	14	6V-5833	627
6T-1698	129	6V-0855	215		15		628
	318	6V-0894	539		56		629

▶ PRIMARY REFERENCE

PART NUMBER INDEX

Part	Page	Part	Page	Part	Page	Part	Page
	630	6V-8149	16		413	6V-9200	432
6V-5839	46	6V-8183	225	6V-8547	592	6V-9632	197
	75		228	6V-8556	440		224
	79		539	6V-8625	120		535
	101		540		449		590
	104	6V-8185	195	6V-8627	255	6V-9633	463
	118	6V-8187	225		430	6V-9746	94
	122		228		435		256
	186	6V-8188	159	6V-8628	430		439
	197		183		435		440
	462		188	6V-8629	439		462
6V-5843	44		467	6V-8634	434	6V-9748	37
	54		469	6V-8635	255	6V-9829	435
6V-5844	48	6V-8189	134	6V-8636	78	6V-9839	439
	69		156		118	6V-9843	435
6V-5849	637		157		122	6V-9849	435
6V-5851	637		159		255	6V-9850	255
6V-6209	639		225		435		432
6V-6317	197		524	6V-8641	430		435
6V-6580	492		527		434	6V-9872	430
6V-6609	84	6V-8190	291	6V-8647	434		435
	180		293	6V-8675	51	6V-9873	224
6V-6717	550		668		65	6W-6220	440
6V-6889	639	6V-8197	48		234	6Y-0206	545
6V-7190	524		51		267		590
	527	6V-8200	495	6V-8721	120		592
6V-7238	569	6V-8212	186		148	6Y-0352	674
6V-7357	535	6V-8214	555		439	6Y-0359	673
	540	6V-8236	580	6V-8723	71	6Y-0473	362
	544	6V-8237	320		120		363
6V-7604	24		322		256		364
	26		421	6V-8724	114		365
6V-7636	524		423		118		366
	527		425		430		367
6V-7646	215	6V-8245	94		435		370
	553	6V-8260	69		439		371
	605	6V-8336	48	6V-8730	120		372
	609	6V-8369	558		440		373
6V-7673	37	6V-8370	193	6V-8774	432	6Y-0596	449
	46	6V-8376	165	6V-8781	432	6Y-0597	449
6V-7676	318	6V-8378	183		435	6Y-0859	242
6V-7687	668	6V-8397	114	6V-8801	110		244
	671		120		156		246
6V-7732	462		202		159		248
6V-7742	415		255		225	6Y-0926	215
	417		256		228	6Y-0984	215
	425		430		540	6Y-1198	365
6V-7743	298		432	6V-8928	560		367
6V-7744	200		434	6V-8934	432	6Y-1387	651
	261		435	6V-8942	439	6Y-1390	649
	294		439	6V-8981	446		651
	296		440		447	6Y-1602	262
	462	6V-8398	120		448	6Y-1744	645
	668		148	6V-9001	118		►661
	671		224	6V-9007	94	6Y-2039	640
6V-7981	122		256		462		►662
6V-8073	524		439	6V-9167	326	6Y-2704	215
	527		446		425		219
6V-8076	114		447	6V-9168	256	6Y-2763	228
	204		448		435	6Y-2764	229
	435		449		440	6Y-2765	228
6V-8077	71		451	6V-9169	446	6Y-2766	228
6V-8129	524	6V-8400	407		447	6Y-2767	228
	527		409		448	6Y-2768	224
6V-8133	425		411	6V-9197	288	6Y-2770	229

► PRIMARY REFERENCE

PART NUMBER INDEX

Part	Page
6Y-2773	228
6Y-2777	228
6Y-2778	228
6Y-2779	228
6Y-2780	228
6Y-2781	229
6Y-2782	228
6Y-2783	228
6Y-2784	228
6Y-2841	228
6Y-2844	224
6Y-2846	228
6Y-2847	228
6Y-2848	229
6Y-2850	228
6Y-2851	224
6Y-2854	228
6Y-2855	228
6Y-3033	283
6Y-3140	228
6Y-3141	228
6Y-3973	288
6Y-4082	283
6Y-4819	262
6Y-4831	262
6Y-5113	572
6Y-5500	283
6Y-5799	388
	390
6Y-6286	392
	393
6Y-6287	392
	393
6Y-6294	392
	393
6Y-6296	392
	393
6Y-6389	392
	393
6Y-6412	392
	393
6Y-6751	7
6Y-6850	228
6Y-7385	553
6Y-7573	228
6Y-7576	229
6Y-7577	229
6Y-7579	228
6Y-8114	590
6Y-9024	395
	396
6Y-9280	455
6Y-9281	455
6Y-9373	215
	219
6Y-9471	157

7

Part	Page
7B-0863	293
7B-1597	221
7B-3028	332
	334
	336
7B-3039	462
7B-3235	252
7B-9665	290
7C-1493	71
7C-2164	59
7C-3567	53
7C-4354	78
7C-7431	113
7C-8246	199
	439
7C-8370	59
7C-8634	37
7D-1649	51
	234
	252
	256
7D-1677	272
7D-6922	545
7D-7233	94
7D-8431	596
7D-9749	463
	472
7E-3870	99
	105
7F-3488	188
7F-3491	187
7F-3525	187
7F-6998	554
7F-8267	463
7F-8607	565
7F-9543	293
7F-9547	293
7G-1577	402
7G-1596	215
7G-2343	263
7G-2454	524
	527
7G-2516	262
7G-2830	262
7G-3832	256
	443
7G-3833	256
	443
7G-3834	256
	443
7G-4824	545
	590
	592
7G-4842	283
7G-4998	214
7G-5186	90
	94
7G-5984	428
7G-5985	428
7G-5986	428
7G-6355	262
7G-7218	262
7G-7724	262
7G-9476	283
7G-9555	280
7H-1447	462
7H-3607	271
7H-4566	215
7H-7628	252
7H-7658	262
7I-2272	197
7I-7439	622
7J-0204	140
	200
	472
	474
	477
	479
7J-2036	362
	363
	364
7J-2595	507
7J-5131	649
	651
	656
	657
7J-8611	221
7J-8955	425
7J-8956	425
7J-9933	472
	474
	477
	479
	497
7K-1181	132
	136
	140
	146
	150
	151
	159
	162
	165
	200
	204
	207
	224
	228
	537
	539
	565
	581
	565
7K-3176	565
7K-6058	404
7L-2894	183
	187
7M-0324	187
7M-0325	188
7M-0326	187
7M-0327	187
7M-1201	223
7M-1296	282
7M-1297	282
7M-1377	282
7M-5130	262
7M-7219	551
7M-8485	94
	150
7M-8592	402
7M-8651	188
7N-0296	181
7N-0718	138
7N-1996	206
7N-2059	181
7N-5683	22
7N-9801	194
7N-9943	153
7P-4190	224
	539
7P-6682	138
7R-3029	202
7S-2042	286
	300
7S-5005	126
7S-8920	256
	407
	409
	411
	413
7S-8921	256
	407
	409
	411
	413
7S-9396	▶110
7T-0020	153
7T-0030	300
7T-0094	146
7T-1068	627
	▶629
7T-1069	628
	▶630
7T-1099	51
	106
	197
	236
	288
	535
	600
	603
	604
7T-1330	627
	628
7T-1474	252
7T-1475	252
7T-1885	215
	219
7T-1975	668
7T-3267	183
7T-3268	183
7T-3276	183
7T-3277	183
7T-3278	183
7T-3279	183
7T-3451	183
7T-3454	183

▶ PRIMARY REFERENCE

PART NUMBER INDEX

Part	Page
7T-3950	262
7T-3974	183
	187
7T-4532	531
7T-5856	537
7T-5886	332
	334
7T-6299	550
	590
7T-6799	554
	586
7T-6934	446
	447
	448
7T-6994	215
	219
7T-8130	215
7T-8136	219
7T-8556	281
7T-8816	263
7T-8875	221
7T-8876	221
7T-8891	622
7T-8894	562
	565
7T-8895	562
7T-9031	219
7T-9123	188
7T-9272	262
7T-9303	558
7T-9370	262
7T-9426	562
	565
7T-9515	193
7T-9788	215
7T-9793	562
	566
7T-9832	215
7T-9837	215
	219
7T-9946	252
7U-4892	165
7V-3715	320
	322
7V-5191	551
7V-8532	255
7W-2632	483
7W-3872	52
7W-5838	99
7W-6534	216
7X-0292	291
7X-0301	228
7X-0339	132
	136
7X-0346	242
	244
	246
	248
7X-0347	293
7X-0351	252
7X-0352	252
7X-0365	151
7X-0402	315
7X-0427	291
7X-0440	225
7X-0503	406
7X-0515	53
	200
7X-0519	540
7X-0533	291
7X-0562	183
	188
7X-0575	540
7X-0578	537
7X-0579	114
7X-0594	306
	307
7X-0603	596
7X-0608	272
	305
	517
	524
	527
7X-0623	524
	527
7X-0632	534
7X-0818	204
7X-0820	435
	440
7X-0851	320
	322
7X-1456	290
7X-1552	229
7X-1553	458
7X-2049	562
	566
7X-2488	313
7X-2535	435
7X-2537	35
7X-2539	114
7X-2543	440
	540
	668
	671
7X-2548	165
7X-2549	318
7X-2553	7
	303
	312
	313
	388
	390
7X-2555	298
7X-2557	455
7X-2562	151
	159
	204
	508
	535
7X-2563	7
	318
	515
	516
	535
	601
7X-2564	162
	505
7X-2565	129
	318
7X-2566	318
	509
	511
	513
	604
7X-2567	508
7X-2575	320
	322
	374
7X-2576	600
	601
7X-2580	375
7X-2581	582
7X-2582	376
7X-2908	56
7X-3229	680
	682
	683
7X-3317	228
7X-3373	183
	187
7X-3374	557
7X-3391	303
7X-3392	298
	579
7X-6222	554
	586
7X-6278	228
7X-6315	147
7X-7477	272
	280
7X-7644	293
	670
	680
	682
	683
7X-7700	130
7X-7702	569
	625
7X-7729	82
	83
	85
	90
	96
	98
	102
	105
	106
	107
	111
	114
	120
	151
	181
	225
	256
	286
	288
	294
	296
	298
	300
	304
	310
	311
	318
	320
	322
	428
	440
	444
	524
	527
	535
	562
	566
	579
	589
	590
	592
	613
7X-7742	535
7X-7877	596
	625
7X-7888	580
7X-7927	622
	625
7X-7928	622
	625
7X-7929	622
	625
7X-7930	622
	625
7Y-5233	355
	356
	357
	358
	359
7Y-5235	509
	511
	513
7Y-7256	555
	587
7Y-7388	558
7Y-7394	540
8	
8B-4624	294
	296
8C-2926	268
8C-3079	126
8C-3082	492
8C-3089	187
8C-3131	458
8C-3205	443
	446
	447
	448
	449
	451
8C-3206	256
	407
	409
	411
	413
	428
	463
	467
	469

PART NUMBER INDEX

Part	Page	Part	Page	Part	Page	Part	Page
	495		350		300	8J-2880	425
8C-3334	223	8E-1358	228	8E-7791	545		509
8C-3442	524	8E-1900	375		590		511
	527		376		592		513
8C-3445	71	8E-1930	157	8E-8292	622	8J-6913	462
8C-3446	71	8E-2139	362	8E-8299	262	8J-8197	569
	85		363	8E-8300	277	8J-8322	463
	251	8E-2244	656	8E-8304	262	8J-8436	463
	435	8E-2748	242	8E-8305	262	8J-8443	462
8C-3447	251		244	8E-8307	215	8J-8462	474
8C-3451	434		246		219	8J-8468	462
8C-3655	183		248	8E-8310	215	8J-8782	462
8C-3681	94	8E-3430	199	8E-8434	494	8J-8783	462
8C-3756	537	8E-3431	199	8E-9037	▶367	8J-9990	439
8C-4365	466	8E-3446	▶631		394	8K-1433	553
8C-4984	38		636	8E-9039	▶394	8K-8517	92
8C-5060	637	8E-3447	▶632		397	8L-2746	503
8C-5607	151		636	8E-9040	▶394		504
8C-5608	151	8E-4525	224	8E-9212	415	8L-2779	118
8C-5682	562	8E-4832	294		417		283
	565		296	8E-9483	228	8L-2786	251
8C-5917	142	8E-5113	▶636	8E-9522	313		483
8C-5918	138	8E-5114	▶636	8E-9932	355		485
8C-6354	207	8E-5125	394		356		487
8C-6857	404	8E-5188	651		359	8L-5008	94
8C-6913	260		657	8F-1434	183	8L-6557	320
8C-8433	439	8E-5190	651		188		322
8C-8478	306		657	8F-3469	402	8L-8413	138
	307	8E-5192	651	8F-4387	507		139
	509		657	8F-6575	67		142
	511	8E-5194	651	8F-7219	116		551
	513		657	8F-7702	228		620
8C-8585	288	8E-5199	657		540	8M-1013	281
	294	8E-5205	649	8F-8151	90		283
	296		651	8F-9206	463	8M-2530	221
	298	8E-5486	507	8G-4014	298	8M-2538	402
	301	8E-5701	505	8G-4189	324	8M-3494	670
	302	8E-5703	425		325	8M-4390	261
8C-8843	601		509	8G-8844	242	8M-4409	402
8C-8844	318		511		244	8M-4432	221
8C-8988	435		513		246		232
8C-9160	415	8E-6856	625		248	8M-4435	402
	417	8E-7222	365	8G-8845	242	8M-4438	216
8C-9660	187		366		244		219
8D-0983	535		367		246	8M-4986	232
8D-1817	252	8E-7363	255		248		256
8D-1819	252	8E-7405	365	8G-9530	396		282
8D-4771	260		366		397	8M-4987	256
8D-7185	535		367	8G-9880	261	8M-4988	402
8D-9739	263	8E-7406	365	8H-1141	183	8M-5010	263
8E-0852	228		366	8H-2768	272	8M-5249	402
8E-0853	228		367	8H-5303	138	8M-5254	256
8E-1118	553	8E-7407	365	8H-5306	138		540
8E-1203	229		366	8H-5352	263	8M-5255	263
8E-1205	286		367	8H-8175	232	8M-5266	263
	300	8E-7408	365	8H-8898	6	8M-5661	221
8E-1211	332		366		8		225
	334		367		9	8M-5860	24
	336	8E-7409	365	8H-9818	240		26
	338		366		273	8M-7160	270
	340		367	8H-9819	240	8M-8157	256
	342	8E-7410	365	8J-2189	▶673	8M-8489	268
	344		366		675	8M-9307	234
	346		367	8J-2190	673	8M-9315	47
	348	8E-7561	286		674	8N-0869	199

▶ PRIMARY REFERENCE

PART NUMBER INDEX

Part	Page	Part	Page	Part	Page	Part	Page
8N-1544	199	8S-9008	273	8T-1895	440		98
8N-1725	138	8S-9130	221	8T-1896	440		114
8N-4406	313	8T-0072	215	8T-1979	524		120
8N-4617	97	8T-0100	40		527		132
8N-6849	35		42	8T-1980	524		136
8N-6854	35	8T-0119	120		527		140
8N-8846	93		569	8T-2192	151		165
8P-0058	221	8T-0267	146	8T-2225	138		200
8P-0311	281	8T-0292	77		139		207
8P-0612	288	8T-0318	524		199		225
8P-1892	262		527	8T-2275	463		237
8P-1916	262	8T-0328	183	8T-2353	432		257
8P-1964	262		188	8T-2502	207		261
8P-2019	263		197	8T-2540	228		273
8P-2022	263		207	8T-2561	298		282
8P-2023	263		605		455		303
8P-2051	262		609	8T-2659	587		306
8P-2053	262	8T-0337	520	8T-2920	200		307
8P-5244	318		587	8T-3282	326		313
	601	8T-0355	540		380		332
8P-6321	283	8T-0360	380		383		334
8P-6363	537		383		386		336
8P-8357	216		386	8T-3298	462		338
	219	8T-0362	415	8T-3490	65		340
8P-9507	262		417		85		342
8P-9747	601	8T-0363	318		90		344
8P-9770	507	8T-0364	320		94		346
	511		322		102		348
	513	8T-0372	267		106		350
	648	8T-0375	375		120		388
	649		376		197		390
	651	8T-0389	207		199		405
	652		580		224		421
	653	8T-0638	136		236		428
	656	8T-0639	580		288		440
	657	8T-0644	84		298		443
	658		87		304		444
	659	8T-0646	67		313		446
	671	8T-0656	331		316		447
8R-3393	562	8T-0657	327		406		448
	565		328		535		449
8S-0023	256		329		565		451
	407		330		569		463
	409	8T-0687	627		589		467
	411		628		590		469
	413	8T-0722	140		613		495
	428	8T-0785	415	8T-3597	92		519
8S-0024	256		417		303		524
	407	8T-0788	439		590		527
	409	8T-1120	256	8T-3612	181		532
	411	8T-1177	539		288		534
	413	8T-1447	482	8T-3666	58		537
	428	8T-1482	315	8T-3957	399		540
8S-0527	219	8T-1887	120	8T-3992	165		550
8S-0948	140		436		207		562
	200		440	8T-4121	36		566
	569		451		59		569
8S-2195	228	8T-1888	120		74		572
8S-3020	138		436		78		578
	139		440		82		580
8S-4304	234		451		85		596
8S-5383	532	8T-1893	120		90		613
8S-7048	229		256		92	8T-4122	312
8S-7499	485	8T-1894	120		94		318
8S-7803	551		256		96	8T-4123	53

PART NUMBER INDEX

Part	Page	Part	Page	Part	Page	Part	Page
	162		257		300		511
	318		273		318		513
	374		282		440		592
	375		286		519		600
	376		294		535		601
	505		296		537	8T-4170	53
	509		298		550	8T-4171	208
	511		300		563		553
	513		303		566		555
	516		304		569		587
	601		313		572	8T-4172	257
8T-4131	306		320		590		282
	307		322		592		463
	509		332		613	8T-4176	92
	511		334	8T-4138	208		273
	513		336		298		440
	604		338		555	8T-4177	472
8T-4132	132		340		587	8T-4179	524
	136		342		590		527
	532		344		637	8T-4181	151
8T-4133	74		346	8T-4139	273		524
	78		348		303		527
	98		350		310	8T-4182	36
	102		405		311		82
	120		406		313		120
	140		407		336		181
	200		409		338		237
	204		411		344		257
	257		413		346		260
	270		428		348		388
	294		436		350		390
	296		440		355		449
	304		443		356		451
	406		463		359		467
	407		524		387		469
	409		527		446		532
	411		534		447		540
	413		535		448		563
	428		563		449		569
	440		566		535	8T-4183	273
	444		569		540		303
	451		579		566		440
	532		589		577		455
	534		590		590		549
	535		592		592		665
	537		596		600		666
	540	8T-4137	82		601	8T-4184	257
	563		83	8T-4141	352		332
	566		85		353		334
	569		98		354		336
	625		120		355		338
8T-4136	74		132		356		340
	85		136		357		342
	90		140		358		344
	94		197		359		346
	98		200	8T-4158	524		348
	107		204		527		350
	111		207	8T-4167	355		359
	114		225		356		440
	151		257		357		454
	157		273		358		466
	159		288		359	8T-4185	78
	200		294		374		90
	204		296		508		200
	240		298		509		237

► PRIMARY REFERENCE

PART NUMBER INDEX

Part	Page
	240
	428
	440
	444
	472
	532
	569
	578
8T-4186	59
	257
	444
	451
	494
	532
	540
8T-4187	303
	374
	505
8T-4189	181
	545
	590
8T-4190	200
8T-4191	165
	208
	286
	494
	519
8T-4192	200
	286
	405
	537
	548
8T-4193	53
	132
	136
	318
	532
8T-4194	305
	332
	334
	340
	342
	535
	590
8T-4195	74
	85
	90
	92
	102
	114
	120
	225
	236
	257
	273
	310
	311
	440
	449
	451
	455
	524
	527
	540
	544
	569
	580
	592
8T-4196	59
	82
	90
	94
	96
	102
	105
	106
	120
	140
	225
	257
	261
	294
	296
	306
	307
	318
	407
	409
	411
	413
	421
	428
	443
	446
	447
	448
	451
	463
	467
	469
	495
	563
	566
	592
	613
8T-4198	59
	120
8T-4199	165
	208
8T-4200	165
	624
8T-4205	134
	148
	183
	187
	195
	197
	229
	298
	537
	540
	555
	587
	605
	609
8T-4222	82
	236
	288
8T-4223	59
	120
	132
	136
	159
	165
	200
	242
	244
	257
	261
	273
	286
	303
	332
	334
	336
	338
	340
	342
	344
	346
	348
	350
	355
	356
	359
	405
	440
	443
	446
	447
	448
	449
	454
	463
	466
	467
	469
	524
	527
	532
	535
	537
	540
	553
	566
	569
	590
	665
	666
	671
8T-4224	41
	134
	156
	157
	159
	165
	200
	208
	225
	472
	540
	563
	598
	599
	624
8T-4226	257
8T-4231	399
8T-4244	59
	440
	455
	532
	671
8T-4648	257
	261
	671
8T-4649	592
8T-4752	558
8T-4777	633
	635
8T-4779	461
	509
	511
	513
	569
8T-4896	83
	114
	120
	157
	159
	200
	225
	228
	242
	244
	246
	248
	540
	566
	625
8T-4910	59
	449
	532
8T-4956	257
	310
	311
	340
	342
	355
	356
	443
	446
	447
	448
	463
	569
8T-4971	593
	596
8T-4984	85
	439
8T-4986	101
8T-4994	225
	242
	244
	246
	248
	291
	292
	404
8T-4999	680
	682

► PRIMARY REFERENCE

PART NUMBER INDEX

Part	Page	Part	Page	Part	Page	Part	Page
	684		313		413		609
8T-5005	257		440	8T-9043	524	8Y-6388	545
8T-5030	234	8T-6869	114		527		554
8T-5041	261	8T-6876	224	8T-9082	605	8Y-6419	632
8T-5071	340	8T-6912	41	8T-9311	291	8Y-6420	632
	342	8T-7044	104		292		►633
8T-5360	440	8T-7087	257	8T-9358	255	8Y-6422	633
8T-5361	293	8T-7338	457	8T-9371	200	8Y-6423	631
	668	8T-7371	6		620		632
8T-5372	294		7	8T-9383	121		633
	296		8	8T-9399	242		635
8T-5383	624		9		244	8Y-6424	631
8T-5389	440	8T-7529	440		246		632
8T-5400	625	8T-7566	286		248	8Y-6430	631
8T-5410	228		300	8T-9403	467		632
8T-5412	668		583		469		633
8T-5413	92		585	8T-9405	208		635
	298	8T-7568	404	8T-9496	294	8Y-6431	635
	316	8T-7852	580		296	8Y-6432	631
8T-5436	532	8T-7930	671	8T-9529	492	8Y-6433	631
8T-5439	129	8T-7934	208	8T-9530	344		►635
	151	8T-8379	425		680	8Y-6448	629
	159	8T-8566	183		681		630
	162	8T-8569	183		683	8Y-6454	633
	204	8T-8729	140	8T-9655	114		635
	303		206		144	8Y-6455	633
	306		229		202		635
	307		487	8T-9756	138	8Y-6459	631
	318		543	8T-9757	138		632
	509		554		142		633
	511		562	8T-9884	183		635
	513		565	8U-3297	458	8Y-6460	633
	535		573	8U-3875	458		635
	603		574		492	8Y-6461	633
	604		586	8U-9480	458		635
8T-5451	197	8T-8736	206	8V-0622	142	8Y-6462	631
8T-5460	162	8T-8737	139	8V-5455	637		632
	375		146	8V-9708	566	8Y-6839	627
	376		148	8X-1141	440		628
8T-5668	421		151	8X-1144	439		629
	423		157	8Y-0374	301		630
8T-6381	505		197		302	8Y-6859	551
8T-6430	53		199	8Y-0616	313	8Y-6860	551
	603		202	8Y-4000	294	8Y-6910	631
	604		203		296		632
8T-6466	83		206	8Y-5737	550		633
	96		434	8Y-5944	618		635
	257		487	8Y-5945	551	8Y-7452	434
	535		554	8Y-5965	618	8Y-8304	524
	563		558	8Y-6012	618		527
	566		575	8Y-6014	618	8Y-8309	637
8T-6685	537		576	8Y-6024	618	8Y-9603	186
8T-6696	256		581	8Y-6041	551		
8T-6723	120		586	8Y-6045	551		
8T-6724	120		625	8Y-6046	551	**9**	
8T-6761	234	8T-8902	71	8Y-6047	551		
8T-6762	84	8T-8908	590	8Y-6060	551	9B-0576	215
8T-6764	31	8T-8919	132	8Y-6062	551	9B-1117	543
	234		136	8Y-6063	551	9B-7233	165
8T-6854	234		242	8Y-6064	551	9B-7237	540
8T-6868	59		244	8Y-6066	551	9D-3769	555
	257	8T-8932	224	8Y-6067	551	9D-7924	255
	305	8T-8987	407	8Y-6068	551	9D-9736	524
	310		409	8Y-6069	551		527
	311		411	8Y-6277	605	9F-2247	29

► PRIMARY REFERENCE

PART NUMBER INDEX

Part	Page
9F-4446	15
9F-5599	187
9F-5644	138
9F-6656	680
	681
	683
9G-0002	138
9G-0003	138
	142
9G-0004	142
9G-0005	138
9G-0280	262
9G-0281	263
9G-0284	262
9G-0285	262
9G-0286	263
9G-0289	262
9G-0290	262
9G-0715	224
9G-0742	224
9G-0832	252
9G-0983	579
9G-0986	579
9G-0990	579
9G-0992	601
9G-1127	524
	527
9G-1642	370
	371
	372
	373
9G-2375	285
9G-2459	232
9G-2460	232
9G-2461	232
9G-3695	195
	206
	207
	573
	574
	622
9G-4101	187
	188
9G-5127	255
9G-5211	539
9G-5664	362
	363
	364
9G-6744	263
9G-8020	262
9G-8551	285
9G-8615	221
9G-8637	212
9G-8638	242
	244
	246
	248
9G-9175	242
	244
	246
	248
9G-9180	242
	244
	246
	248
9G-9181	242
	244
	246
	248
9G-9314	558
9H-0846	273
9H-3360	242
	244
	246
	248
9H-3757	187
9H-6454	463
9H-8712	273
9J-2914	462
9J-3139	673
9J-4782	455
9J-7031	462
9J-8126	474
	477
	479
9J-8923	674
9J-8926	671
	▶674
9J-9598	671
9L-6770	134
9L-7712	225
9L-9132	216
9M-0164	74
	107
9M-1974	15
	38
	50
	52
	55
	70
	71
	77
	78
	100
	144
	197
	232
	250
	285
9M-1976	273
9M-2008	277
9M-2904	99
	444
9M-3786	375
	376
9M-3835	288
9M-3838	288
9M-4355	262
9M-4370	268
9M-5854	668
9M-7002	261
9M-7394	462
9M-7609	187
9M-7958	75
9M-8406	563
	566
9M-9647	221
9N-0869	42
	144
	204
	545
9N-1995	625
9N-4233	455
9N-4449	668
	671
9N-4450	668
	671
9N-4685	78
9P-1475	221
9P-1478	252
9P-1480	232
9P-1779	290
9P-1921	252
9P-1922	252
9P-1925	252
9P-2245	362
	363
	364
9P-3041	283
9P-3066	298
9P-3709	273
9P-5928	285
9P-5977	232
9P-6217	232
9P-6571	592
9P-7072	252
9P-7121	130
9P-7390	262
9P-7757	262
9P-7859	629
	630
9P-7860	629
	630
9P-8614	262
9P-8623	262
9P-8626	262
9P-9388	571
	572
9P-9390	571
9P-9392	▶571
	601
9R-2216	578
9R-2613	111
	139
	142
	303
9R-2672	236
	303
9S-1240	132
	136
9S-1354	225
	228
9S-1838	392
	393
	394
9S-2544	187
9S-2792	281
9S-4167	114
9S-4181	234
9S-4182	47
	467
	469
9S-4185	71
	84
	234
	242
	244
	246
	248
	273
	402
	530
9S-4188	467
	469
9S-4190	114
9S-4191	47
	114
	232
	234
	492
9S-4497	92
9S-5187	318
	601
9S-6130	221
9S-6758	98
9S-7710	221
9S-8001	472
	474
	477
	479
9S-8002	453
	472
	474
	477
	479
	483
	485
	487
9S-8003	495
9S-8004	57
	100
	116
	122
	251
	453
	483
	485
	487
9S-8005	29
	31
	47
	57
	89
	216
	219
9S-8006	458
	495
9S-8008	57
	89
	214
9S-8010	388
	390
9S-8230	286
	300
9S-8752	98
9T-0094	425
9T-1576	400
9T-1579	400
9T-1637	400
9T-1642	400

▶ PRIMARY REFERENCE

PART NUMBER INDEX

Part	Page	Part	Page	Part	Page	Part	Page
9T-1687	400	9W-1468	402	9X-0194	622	9X-3404	140
9T-2714	421	9W-1569	252	9X-0199	193	9X-3452	537
9T-3004	462	9W-1570	252	9X-0261	118	9X-4582	332
9T-3005	462	9W-1571	215		168		334
9T-3264	462	9W-1614	402	9X-0262	168		336
9T-3541	454	9W-1615	402	9X-1054	207		338
	▶497	9W-1617	▶402		537		340
9T-3885	415		539		554		342
	417	9W-1878	663		586		344
9T-4143	492	9W-1951	206	9X-1056	554		346
9T-4186	492	9W-2032	195	9X-1386	562		348
9T-4849	399	9W-2033	195	9X-1813	140		350
9T-4901	458	9W-2545	539		170	9X-4824	183
9T-5039	492	9W-2579	509		171	9X-6016	229
9T-5364	482		511		175	9X-6154	474
	▶498		513		190	9X-6165	151
9T-5948	482	9W-2822	305		191	9X-6269	298
9T-5949	482		313		206		316
9T-5950	482	9W-2853	215	9X-2027	260	9X-6281	228
9T-6093	423	9W-2992	252		474	9X-6340	680
9T-6316	472	9W-3302	402		477		682
9T-6322	492	9W-3330	285		479		684
9T-6521	498	9W-3660	252	9X-2038	545	9X-6395	497
9T-6522	498	9W-3762	641	9X-2043	545		499
9T-6523	498		642		560	9X-6458	223
9T-6688	472		643	9X-2044	555	9X-6615	539
9T-6827	498		644		587	9X-6772	151
9T-6828	498		▶663	9X-2045	545		581
9T-7677	462	9W-4159	221		560	9X-7373	537
9T-8571	482	9W-4361	156	9X-2053	43	9X-7378	563
9T-8958	415		159	9X-2099	40		566
	417	9W-4381	395	9X-2125	221	9X-7380	563
9T-8980	482		396		463		566
9T-9836	495	9W-4897	507		613	9X-7381	563
9U-6993	75	9W-5150	252	9X-2185	550		566
9U-8263	553	9W-5334	221	9X-2205	130	9X-7382	562
9U-8388	283	9W-5343	549	9X-2646	102		563
9U-8746	553	9W-5375	507	9X-2647	102		565
9U-9121	407	9W-5567	283	9X-3265	554		566
	409	9W-5568	283		586	9X-7383	563
	411	9W-5595	282	9X-3401	139		566
	413	9W-6102	215		169	9X-7385	531
9U-9122	407	9W-6103	215		193		563
	409	9W-6381	649		195		566
	411		651		202	9X-8250	136
	413		656		203		225
9U-9550	262		657		204	9X-8256	136
9V-2818	612	9W-7925	219		434		146
9W-0099	671	9W-7926	219		555		151
9W-0293	252	9W-8270	262		558		164
9W-0609	668	9W-8612	252		565		165
9W-0645	262	9W-8874	661		586		208
9W-0844	138		662		625		436
	520		663	9X-3402	139		535
9W-0852	138		664		151		544
	520	9W-8875	661		195		553
	537		662		202		580
	554		663		203		590
	586		664		434		593
9W-0873	671	9W-8940	294		555	9X-8257	132
9W-0876	671		296		558		136
9W-1441	165	9W-9000	507		565		257
9W-1442	165	9W-9082	449		581		298
9W-1446	165	9W-9083	449		586		303
9W-1467	402	9W-9890	268		625		388

▶ PRIMARY REFERENCE

PART NUMBER INDEX

Part	Page
	390
	436
	440
	457
	461
	509
	511
	513
	532
	539
	569
9X-8258	582
9X-8260	407
	409
	411
	413
9X-8266	298
9X-8267	555
	587
9X-8268	20
	38
	43
	48
	69
9X-8408	256
9X-8600	130
9X-8699	307
9X-8918	551
9Y-0810	19
9Y-6089	186
9Y-9236	94
0	
003-2143	90
003-9514	90
005-4834	215
009-3138	229
012-0380	191
030-1707	185
030-2135	215
030-7946	320
	322
030-7950	122
030-8537	224
030-8538	263
031-0214	598
	599
031-0218	221
031-1119	93
033-6034	77
033-6043	503
	504
033-8248	148
	255
033-9139	483
035-1933	569
036-9821	187
037-4426	550
037-7388	228
045-4065	188
061-6711	263
061-9455	70
061-9457	268
067-2551	120
068-8093	263
069-4269	94
077-3241	290
083-9527	554
	586
084-4111	633
	635
085-8091	474
	477
	479
091-9035	138
095-0843	605
	609
095-0878	551
095-0940	458
095-1276	539
095-1574	492
095-1750	491
096-3218	492
096-6166	499
098-5747	539
099-3649	472
099-8111	492
1	
100-3224	551
100-3320	197
100-4336	114
	120
100-5041	207
	555
100-5179	551
100-6211	495
100-8010	472
	474
	477
	479
100-8011	472
	474
	477
	479
100-8012	472
	474
101-0003	618
	620
101-0742	637
	▶639
101-2862	458
101-2867	598
	599
101-2868	228
101-3055	558
101-3128	144
101-3934	48
101-4194	618
101-4195	618
102-0341	550
102-2913	680
	682
	684
102-7365	474
	477
102-8801	139
	202
	203
	434
	487
	558
	625
102-8802	131
	140
	159
	178
	190
	191
	193
	194
	195
	197
	199
	206
	485
	487
	502
	520
	531
	537
	562
	565
	620
102-8803	118
	138
	139
	153
	169
	197
	199
	203
	229
	537
	554
	565
	586
102-8804	139
	148
	157
	159
	162
	202
	554
	586
102-8805	203
	520
	554
	573
	574
	575
	576
	586
	622
102-8806	118
	139
	202
	554
	586
102-9478	405
103-6100	562
	565
103-9425	558
103-9527	535
	▶537
104-2091	555
104-6931	462
105-1797	197
105-3481	483
105-8183	262
105-9657	522
	▶553
105-9659	522
	▶572
106-1227	399
106-2105	255
106-4150	▶238
	240
106-4572	90
106-5122	▶531
	532
106-7691	362
	363
	364
106-8186	290
106-8187	290
106-9361	303
107-1177	472
107-1179	472
107-3786	207
107-3945	362
	363
	364
107-4393	565
107-4394	565
107-4399	565
107-7694	14
108-1091	▶326
	396
	397
108-1335	522
	▶549
108-1696	266
	▶272
108-1847	495
108-2106	272
	▶280
108-3138	553
108-4086	551
108-4087	551
108-4103	551
108-5157	499
108-6954	273
108-8174	229
109-1352	6
	7
	8
	▶515
109-1353	9
	▶516
109-1354	516
109-2701	▶675
109-3001	120
	200
	255

▶ PRIMARY REFERENCE

PART NUMBER INDEX

Part	Page	Part	Page	Part	Page	Part	Page
	290		558	121-6649	474		197
109-3196	262		562		477		206
109-3207	117		565		479		207
109-4044	565		586		▶499		520
109-5498	535		622	121-9915	458		555
109-5761	550	114-8844	139	121-9941	458		558
109-6406	519		151	121-9943	458		581
109-9828	524		199	121-9946	458		586
	527		202	122-1133	502	125-8254	524
109-9829	524		203	122-7127	554		527
	527		206		586	126-0814	434
110-0510	273		207	123-0790	59		439
110-2445	94		434	123-5748	400	126-1683	35
110-3844	534		625	123-9294	554	126-1757	17
110-6109	554	114-8845	139		586	126-1766	199
	558		199	123-9624	474		206
	586		562		477		207
110-6393	518		565		479	126-1767	139
	680	115-1024	162	124-0174	78		148
	681	115-1025	162		320		157
	683	115-3519	206		322		159
110-7887	554	115-4072	44	124-3243	545		162
	586	115-4219	44	124-6998	199		169
110-8152	560	115-8057	539		569		195
110-8379	539	116-3715	104	124-8490	537		199
110-8769	199		428	124-9401	223		202
110-8834	565	116-6202	562	124-9666	509		203
111-2416	197		565		511		204
111-4482	596	117-2311	206		513		434
111-4919	267	117-4491	611	124-9672	509		555
111-5147	545	117-4492	517		511		565
111-7978	138	117-5691	291		513		586
111-8314	156	117-5692	291	125-1302	165		625
	157	117-5693	291		▶191	126-1768	139
	159	117-5694	291	125-1362	83		146
111-9251	539	117-5695	291	125-2001	▶156		148
112-4368	444		292		162		151
112-4511	262	117-7826	263	125-4175	▶383		157
112-5585	262	117-8131	592		396		159
112-8041	262	117-8765	458		397		162
112-9783	255	117-8863	596	125-4176	▶380		195
113-3656	255	117-9058	▶292		396		199
113-5336	35	117-9966	592		397		202
113-6033	579	118-0693	524	125-4177	360		203
113-6069	44		527		▶377		204
114-0358	673	118-1170	423	125-5533	360		434
	674	118-1727	10		▶377		555
114-0359	673		11	125-5534	361		562
	674		▶16		▶377		565
114-4304	415	119-3662	138	125-6535	188		581
	417		139	125-6536	188		625
114-5333	562		146	125-6537	188	126-1774	151
	565		159	125-7874	138		199
114-8843	139		195		197		581
	146		197		199	126-3700	613
	159		199		202	126-3701	613
	162		202		203	126-5011	197
	199		203		206	126-6872	202
	202		206		207	126-7574	147
	203		562		434	126-7975	298
	206		565		555		316
	207		581		581	127-1043	596
	229		622		586	127-1044	596
	434		625	125-7875	138	127-1045	596
	555	121-2844	199		139	127-1046	596

▶ PRIMARY REFERENCE

PART NUMBER INDEX

Part	Page
127-1048	596
127-3018	590
127-5485	206
127-5486	199
127-8178	107
128-0314	138
128-2569	407
128-2570	407
128-2571	409
128-2572	409
128-2573	411
128-2574	411
128-2575	413
128-2576	413
128-3341	69
128-3813	69
128-5924	562
	565
129-1831	554
129-3217	407
	409
	411
	413
129-8331	151
	159
	162
	202
130-0229	251
130-1977	444
130-3280	108
130-5300	139
	204
	207
130-9192	444
130-9811	179
	180
131-0167	268
131-1487	199
131-1488	195
131-4091	263
131-4242	551
131-4647	458
131-4649	458
131-4650	459
131-4651	459
131-4652	459
131-4654	459
131-4655	459
131-4656	459
131-4657	458
131-4674	458
131-4675	458
131-4676	458
131-5137	558
131-5167	551
131-5492	592
132-0338	517
132-1249	423
132-5789	139
	200
	207
132-8487	202
133-5545	500
133-5631	324
	325
133-6934	96
133-7810	139
134-2540	199
	203
	206
134-4126	147
134-5363	▶355
	360
134-5364	355
134-5365	355
134-5366	355
	356
	357
	358
	359
134-5368	355
	356
	357
	358
	359
134-6402	▶356
	361
134-6403	356
134-6404	356
134-7258	680
	682
	683
134-7317	439
134-9429	▶357
	360
134-9431	357
134-9432	357
134-9602	550
135-2964	649
135-2966	649
135-3084	649
135-9819	16
136-0822	17
136-1543	584
136-1544	517
136-1595	215
136-2216	273
136-3188	637
136-3191	637
136-4183	44
136-6093	224
136-9297	483
	485
	487
136-9298	483
	485
	487
137-1602	112
137-6645	179
	180
137-6722	569
137-9755	485
	487
139-0566	324
	325
139-0567	325
139-1537	462
139-4189	483
141-2240	590
141-4044	596
141-4123	550
141-4852	483
	485
	487
141-4976	207
141-7596	288
142-2328	649
142-8540	275
142-8620	537
142-9643	649
143-1288	605
	609
143-4518	199
143-6871	224
143-7397	406
143-9392	144
144-0195	519
	622
	625
144-0331	543
144-0367	102
144-1636	199
	206
	207
	622
144-4284	263
144-7878	263
144-8344	200
145-0326	618
	620
145-2334	483
	485
	487
145-5181	446
	447
	448
145-6669	108
145-7028	138
	▶178
	199
145-7328	625
145-8741	637
146-3728	503
146-5923	439
146-6315	485
146-6317	485
146-6433	637
146-6669	223
146-6670	223
146-6747	680
	682
	683
146-8477	483
146-8479	483
146-8981	483
147-0319	▶154
	156
	157
	159
147-1444	581
147-1445	203
147-1446	203
147-3150	199
147-5088	88
147-6603	501
147-6604	501
147-6605	501
147-7976	▶573
	637
147-7979	▶574
	637
148-2903	117
148-8305	434
148-8316	434
148-8318	434
148-8319	114
148-8325	430
	434
148-8326	430
	434
148-8335	255
148-8336	255
	435
148-8347	94
	462
148-8351	435
148-8361	432
148-8364	120
148-8365	224
148-8367	255
	432
	435
148-8368	255
	430
	435
148-8369	430
	435
148-8371	435
148-8372	120
	148
	439
148-8374	120
	255
148-8378	114
	430
	435
	439
148-8388	439
148-8391	407
	409
	411
	413
148-8395	29
	47
148-8405	47
148-8407	47
	234
148-8411	234
	530
148-8418	439
148-8426	256
148-8434	435
148-8435	432
	435
148-8439	432
148-8449	439
148-9359	465
148-9920	539
149-2494	362
	363

▶ PRIMARY REFERENCE

PART NUMBER INDEX

Part	Page
	364
149-2495	362
	363
	364
149-5240	117
149-5470	483
	485
	487
149-9818	206
150-3026	120
150-3065	256
150-4043	224
150-4047	432
150-4050	439
151-0254	637
151-0255	637
151-1398	195
151-2939	19
151-6282	148
152-3421	326
	331
152-8071	365
	366
	367
153-1277	108
153-2073	▶155
	159
153-4906	122
153-5043	178
153-5044	327
	328
	329
	330
153-5710	142
153-6243	256
153-6244	440
153-6246	435
	440
153-6251	407
	409
	411
	413
153-6252	256
153-6281	142
153-6976	477
	479
153-7067	474
	477
	479
153-7549	474
153-7550	474
153-7551	477
	479
153-7553	474
153-8001	207
154-1580	462
154-3358	46
154-5629	545
155-2255	139
	151
	203
	206
	207
	558
	625
155-2257	203
	206
	207
155-2260	139
	170
	171
	175
	197
	199
	202
	206
	555
	558
	566
	587
155-2265	151
	197
	199
	203
	555
	625
155-2270	138
	139
	148
	157
	159
	162
	192
	195
	197
	199
	203
	206
	207
	434
	520
	537
	555
	562
	563
	565
	586
155-2271	139
	199
	207
	555
	586
155-2274	146
	203
	207
	555
	558
	587
	625
155-3624	47
	467
	469
155-5161	273
155-6479	548
155-8577	313
156-4406	263
156-5342	327
	328
	398
156-5545	517
156-5970	502
156-7410	545
157-0670	85
157-1361	554
158-0250	154
	155
158-0252	154
	155
158-6072	112
158-6632	138
	206
	▶193
	206
158-7697	524
158-8906	560
158-9956	453
	▶471
159-1503	569
159-2950	▶614
	617
159-3042	51
159-3662	327
159-3781	485
159-7156	▶399
	427
159-7943	545
159-7946	545
159-7948	545
159-7949	545
159-8047	199
159-8049	142
159-8050	186
159-9257	554
	586
159-9322	151
	200
	203
	207
	581
160-0526	18
160-1431	539
160-1434	539
160-2351	313
160-4103	336
	338
	344
	346
160-4702	544
160-6305	509
	511
	513
160-6306	505
160-6910	328
160-7165	614
	615
	▶618
160-7186	613
	▶615
160-7614	252
160-7616	252
160-7689	200
	203
	207
	581
160-7690	151
160-7820	365
	366
	367
160-8124	197
160-8184	46
160-8194	56
160-8197	56
160-8199	56
160-8497	136
161-1083	560
161-1084	560
161-1085	560
161-1091	560
161-1092	560
161-1093	560
161-1094	560
161-1097	558
161-1098	560
161-1099	558
161-1703	172
161-1704	174
161-1705	173
161-2684	477
	479
161-2685	474
161-3398	104
161-3406	12
	13
	▶22
161-3411	104
161-3424	56
161-3615	▶542
	544
161-3616	405
	▶557
161-3958	592
161-3964	224
161-4024	545
161-5967	551
161-6149	491
	500
161-6154	471
161-6161	491
	500
161-6963	112
161-8068	268
161-9289	614
	615
	616
161-9926	138
	▶170
162-0177	487
162-2166	362
	363
	364
162-3148	100
162-6448	472
162-7862	362
	363
	364
162-8378	543
162-8387	543
162-8389	543
163-1135	620
163-1146	618
163-2437	68

▶ PRIMARY REFERENCE

PART NUMBER INDEX

Part	Page
163-2445	67
163-2447	61
163-2459	67
163-2478	29
	31
163-5512	483
	485
	487
163-5671	474
164-0406	▶352
	360
	361
	397
164-0758	592
164-0847	554
	586
164-0938	474
164-1234	620
164-3651	461
164-4146	598
164-4180	234
164-4531	517
164-4883	583
	585
164-5567	221
	256
	435
164-5570	120
	440
164-5590	435
164-5616	221
164-5619	495
164-5669	67
164-6148	12
	13
	▶19
164-6174	469
164-7577	▶190
	214
164-7677	467
164-8473	554
165-2273	569
165-2577	603
165-4445	10
	11
	▶104
165-4459	10
	11
	▶55
165-4461	10
	11
	▶84
165-4854	273
165-6857	592
165-6946	326
	331
165-6969	400
165-9104	539
166-1784	10
	11
	▶51
166-1790	10
	11
	▶65
166-1792	10
	11
	▶66
166-2153	604
166-2287	352
	353
	354
	355
	356
	357
	358
	359
166-3485	▶252
	279
166-3648	56
166-3733	558
166-5229	206
166-6781	618
166-9204	224
166-9209	224
166-9212	224
166-9213	224
167-0024	23
167-0168	78
167-0172	104
167-1177	405
	▶483
167-1884	156
	159
167-2201	417
167-2208	425
167-2312	417
167-2319	425
167-2323	388
	390
167-8987	202
168-1968	202
168-1969	440
168-2599	446
	447
	448
168-7211	56
168-8373	5
	▶132
168-8376	5
	▶82
168-8377	5
	▶101
168-8378	5
	▶85
168-8382	5
	▶105
168-8655	159
168-8656	159
168-8783	5
	▶534
169-0697	585
169-1026	609
169-1838	93
169-1840	▶93
	94
169-2876	680
	681
	683
169-3796	92
169-3797	90
169-3798	90
169-3799	90
169-3800	90
169-3801	90
169-3806	5
	▶406
169-3812	90
169-3821	406
169-3822	406
169-3826	94
169-3883	101
169-3895	66
169-3899	65
169-4368	▶374
	378
	396
	397
	398
169-4812	211
169-6902	589
169-7380	618
	620
169-9637	522
	▶579
169-9649	▶622
	624
169-9650	622
170-0251	592
170-0260	554
170-1112	517
170-1114	517
170-1115	517
170-3357	453
	▶491
170-3399	535
170-3461	206
170-3793	199
170-4001	474
170-5849	545
170-5851	545
170-5852	545
170-5853	545
170-5854	524
	527
170-5855	524
	527
170-7694	294
	296
170-8590	598
	599
170-8592	313
171-0808	374
171-1230	605
	609
171-2438	579
171-3054	400
171-3055	400
171-3057	400
171-3058	400
171-3059	400
171-3060	400
171-3061	400
171-3068	400
171-4046	554
171-5989	400
171-5999	400
171-6001	399
	▶400
171-6682	605
	609
171-7077	539
171-8772	502
172-0964	▶305
172-0967	305
172-2416	605
	609
172-4860	206
172-4863	165
172-4869	162
172-5487	313
172-5989	535
172-6062	197
172-9966	318
	456
172-9981	415
	417
173-0511	474
	477
	479
173-0512	474
173-0514	477
	479
173-0515	474
173-0946	271
173-1028	▶517
	605
	609
173-1852	▶304
173-2052	584
173-3083	611
173-3283	609
173-3993	472
	474
	477
	479
173-4611	439
173-5787	614
	615
	616
173-6930	565
173-7035	614
	615
	616
173-9779	421
	423
173-9815	562
173-9816	562
174-0503	200
	203
	207
	587
174-2231	▶551
	618
174-2237	551
174-3847	55
174-5415	108
174-7412	83
174-7414	3
	▶83
174-7599	114

▶ PRIMARY REFERENCE

PART NUMBER INDEX

Part	Page	Part	Page	Part	Page	Part	Page
174-7875	138	179-6152	509		614		▶99
174-7876	139		511	184-7211	74	188-1079	542
174-8783	329		513	184-8060	539	188-3034	94
174-8786	330	179-6153	509	185-0838	59	188-3826	12
174-8788	329		511	185-0844	85		13
174-8789	330		513	185-0845	85		▶81
174-8790	329	179-6162	513	185-1861	207	188-8849	154
	330	179-7094	522		555		155
174-9169	181		▶524		587	189-0985	671
174-9570	114	179-7376	543	185-2076	592	189-3032	336
	▶116	179-8128	126	185-2638	134		338
175-0454	20	180-3907	234	185-2639	134		344
175-1349	554	180-4362	256	185-2642	134		346
	586	180-5737	195	185-2644	134		348
175-2831	596	180-6152	483	185-2645	134		350
175-3721	48		485	185-2647	134	189-3158	562
175-3950	554		487	185-2648	134		565
	586	180-6600	600	185-2650	134	189-5358	579
175-4165	543		601	185-2651	134	189-5359	579
175-4170	543	180-6692	304	185-2653	134	189-5586	92
175-4393	554	180-6693	304	185-2654	134	189-5587	92
175-6260	10	180-6694	304	185-2655	134	189-5588	92
	11	180-6695	90	185-2658	134	189-6123	579
	▶46	180-6696	90	185-3159	18	189-9306	10
175-7162	562	180-7304	▶609	185-3666	592		11
	566		611	185-5294	132		▶63
175-7900	415	180-7305	▶585		▶134	190-2277	252
	417		609	185-6393	185	190-2278	221
176-5913	67	180-9236	562	185-9607	162		▶223
176-5914	67	180-9339	531	186-0359	224	190-3562	23
177-1044	89	180-9340	170	186-0636	159	190-5386	680
177-1050	88		171	186-3735	131		682
177-1056	88	183-2097	10		153		683
177-1058	88		11		178	190-5583	562
177-1860	598		▶71		190		566
177-1862	598	183-2931	89		191	190-5584	562
	599	183-3399	78		194		566
177-1863	605		122		199	190-6114	55
	609	183-3401	118		485	190-6115	29
177-4935	▶598	183-3406	114		502		31
	609	183-3407	57		575	190-6117	29
177-4937	607		100		576		31
	611		122	186-3736	192	190-7515	85
177-9653	146	183-4273	562	186-4857	622	190-7615	139
177-9656	146		565	186-5107	620		202
	207	183-4274	199	186-5120	105		203
178-0603	▶605	183-7263	472	186-6189	562		206
	607		474		565	190-8609	388
178-0604	▶583		477	187-0541	491		390
	605		479	187-1315	28	190-8970	114
178-0605	583		487		33	191-1782	114
	▶584	183-9374	53	187-3523	234	191-1783	114
	585	184-0982	590	187-3961	85	191-2933	616
178-0606	▶607		592	187-7719	586		▶620
	615	184-1503	613	187-8194	46	191-4457	84
	616	184-2298	605	187-8195	46	191-5439	461
178-0607	598		609	187-8222	46	191-7823	197
178-0608	598	184-2299	605	187-9194	462	191-8920	483
178-0609	598		609	188-0908	242		485
178-3003	586	184-3269	613		244	191-8921	148
178-3338	519	184-3270	613		▶271		485
178-3620	428	184-3285	592	188-1012	532		487
178-7877	483	184-3289	592	188-1013	532	191-9247	504
178-7907	584	184-5498	132	188-1017	51	192-2112	520
179-6151	513	184-6011	▶611	188-1018	5	192-5627	598

▶ PRIMARY REFERENCE

PART NUMBER INDEX

Part	Page
192-7752	620
192-7755	620
192-7760	620
192-7767	620
192-7783	620
192-7787	620
192-7790	620
192-7795	620
192-7799	620
192-7805	620
192-7810	620
192-7812	620
192-7820	620
192-7822	620
192-7848	620
193-3356	554
193-3359	554
193-3973	138
193-5116	107
193-7377	547
194-0935	511
194-0936	511
194-1466	586
194-2903	569
194-3708	604
194-4254	206
194-5032	485
	487
	▶489
194-5033	483
	485
	487
	▶490
194-5171	637
194-5226	175
194-5227	175
194-6725	118
	▶171
194-7034	539
195-0452	77
195-4989	148
	157
195-6882	458
195-6932	458
195-6944	492
195-6945	492
195-6947	492
195-6948	492
195-6949	492
195-6950	492
195-7430	502
195-7882	82
195-8098	12
	13
	▶79
196-1236	394
196-5515	485
196-6838	118
196-7839	394
196-8884	223
196-9654	197
196-9858	94
197-0074	458
197-0075	458
197-0076	458
197-0077	458
197-0078	458
197-0079	458
197-0080	458
197-0082	458
197-0083	458
197-0084	458
197-0085	458
197-0086	458
197-0087	458
197-0088	458
197-0089	458
197-0090	458
197-0093	458
197-0094	458
197-0668	138
197-7689	618
197-8393	168
	▶172
197-8394	168
	▶173
197-8419	78
197-9367	56
197-9392	56
198-0918	375
	376
198-0921	10
	11
	▶80
198-1319	10
	11
	▶77
198-1883	237
198-2914	504
198-3462	234
198-4769	331
198-4778	456
198-4780	456
198-6574	601
198-6575	601
198-9706	545
	590
198-9707	592
199-4193	459
199-4317	207
199-6609	483
199-7834	485
199-7891	134
199-8436	134
200-0189	▶485
	544
200-3174	612
	▶616
200-4495	44
200-5003	485
	487
201-0781	439
201-0782	439
201-0950	453
	465
	▶502
201-1260	102
201-9127	483
202-4295	362
202-4296	▶362
	397
202-4303	363
202-4304	▶363
	396
	397
202-4327	206
202-5397	207
	555
203-2070	537
203-2288	221
	224
203-3237	29
	31
203-3238	29
	31
203-5805	20
203-6090	20
203-6415	▶360
203-6440	▶360
203-6442	▶360
203-6443	▶360
203-6445	▶361
203-7703	614
	615
	616
203-7775	104
204-2281	207
204-4444	18
204-6102	555
	587
204-8000	206
204-9530	537
204-9531	537
204-9532	537
205-1320	44
205-1321	12
	13
	▶44
205-5285	15
205-5314	219
205-6388	607
	611
205-8674	▶97
	98
205-8681	98
206-2800	485
	487
206-3719	63
206-5017	114
206-8836	▶353
	361
206-8837	353
206-9000	5
	▶98
207-0544	365
	366
	367
207-1556	▶183
	186
207-7899	467
	469
208-4622	132
	136
208-5498	472
208-6726	444
208-6727	444
208-8699	1
	2
	3
	▶582
208-8706	530
	▶601
208-9282	77
208-9619	34
208-9699	444
209-0760	17
209-0762	17
209-2152	509
	511
	513
209-3171	122
209-3172	122
209-6692	88
209-7193	219
209-7290	71
209-7293	81
209-8423	142
	▶185
210-1747	168
	▶174
210-2262	599
210-2263	599
210-2266	599
210-2270	▶599
	605
210-4458	273
211-0220	545
211-1044	132
	136
211-1812	10
	11
	▶87
211-2134	29
	31
211-5358	620
211-6807	197
211-8041	10
	11
	▶34
211-9085	237
211-9087	237
211-9294	620
212-2301	267
212-5839	37
212-5844	37
212-7002	20
212-8917	24
	26
212-8926	▶67
	68
213-1724	85
213-2282	446
	447
	448
213-3190	56
213-4363	12

2

▶ PRIMARY REFERENCE

PART NUMBER INDEX

Part	Page	Part	Page	Part	Page	Part	Page
	13	216-8585	404		338		334
	▶38	217-0609	29		340		336
213-4502	159		31		342		338
213-4504	159	217-2293	215		344		344
213-6657	485	217-3655	306		346		346
	487		307		348		348
213-6659	483	217-5199	84		350		350
213-7315	554	217-5200	84	221-3200	332		▶388
	587	217-6887	443		334	223-1541	313
213-8516	77	217-7933	598		336	223-1677	522
213-9320	▶61		599		338		▶562
	67	217-8433	553		340	223-1680	522
214-1196	▶612	217-8669	12		342		▶569
214-1197	530		13		344	223-2205	1
	▶617		▶17		346		2
214-1645	101	217-9049	605		348		3
214-3573	215	218-0651	554		350		▶613
	219	218-0861	605	221-3494	78	223-3313	544
214-4208	195	218-1836	1		122	223-3400	273
	207		2	221-5461	▶47	223-3421	456
	555		3		48	223-3994	9
	587		▶306	222-0345	607		▶446
214-5705	59	218-1838	1		611	223-4004	9
214-7566	71		2	222-1150	427		▶509
214-7567	176		3		▶544	223-4005	509
214-7568	29		▶286	222-1159	427	223-4006	509
	31	218-1839	1		▶456	223-4009	▶656
	57		2	222-1160	427		659
	78		3		▶494	223-4010	656
	100		▶300	222-1161	427	223-5111	92
	114	218-1843	1		▶457	223-5365	129
	122		2	222-1162	427		▶130
	168		3		▶461	223-8173	165
	172		▶129	222-1165	427	223-9848	126
	221	218-1851	286		▶428	224-0672	681
	232		▶288	222-1167	405		682
	251	218-7136	543		▶430		684
	256	219-0305	530	222-1191	427	224-2228	118
	435		681		▶466	224-2693	5
214-8976	680		682	222-1783	10		▶69
	681		684		11	224-2694	69
	683	219-3305	85		▶18	224-2695	53
214-9080	388	219-4481	260	222-2409	10	224-3247	14
214-9389	150	219-8666	10		11	224-3981	90
214-9492	132		11		▶39	224-4013	90
	136		▶48	222-3901	89	224-4120	344
	532	219-8675	51	222-9151	59		346
215-3249	197	219-8681	10		580	224-4122	336
215-3251	5		11	222-9218	▶242		338
	▶36		▶40		266	224-4124	342
215-3296	59	220-0230	140	222-9219	242	224-4125	336
215-3662	162	220-0771	185		248	224-4454	▶668
215-4441	15		186	223-0556	5		670
216-0029	400	220-1418	255		▶53	224-4536	▶175
216-0273	252		▶282	223-0558	5		176
216-0349	532	220-1952	22		▶186	224-4936	456
216-0805	537		▶23	223-0565	▶213		▶467
216-4591	219	220-8233	12		266	224-4937	405
216-5586	20		13	223-0566	213		▶469
216-6371	215		▶122	223-0567	213	224-4946	461
216-7352	555	220-8678	116	223-0647	▶375		▶462
	587	221-0144	79		396	224-4998	524
216-8127	▶320	221-3197	332		397		527
	397		334		398	224-5000	524
	398		336	223-0659	332		527

▶ PRIMARY REFERENCE

PART NUMBER INDEX

Part	Page
224-6829	637
224-9072	596
224-9222	206
	565
224-9772	148
225-0312	681
	682
	684
225-1506	▶236
	266
225-3281	415
	417
	421
	423
225-3284	425
225-4134	544
225-4135	544
225-4257	681
	682
	684
225-6363	282
225-8026	453
	▶500
225-8553	195
226-0293	586
226-1335	340
226-1338	338
226-1340	388
226-3492	120
226-3493	434
226-3496	434
226-3497	434
226-3498	434
226-3500	434
226-3501	434
226-3502	434
226-3503	434
226-3504	434
226-3505	434
226-3506	430
226-3507	430
226-3508	430
226-3509	430
226-3510	430
226-3511	430
226-3512	434
226-4462	215
226-4464	215
226-4751	434
	▶453
226-5611	105
226-5954	302
226-5955	301
226-6583	439
226-6584	439
226-6585	439
226-6586	439
226-6588	439
226-6589	439
226-6590	439
226-7298	428
226-7299	428
226-7473	144
	▶145
226-7810	451
226-7906	451
226-7924	451
226-8197	405
	▶443
226-8206	443
226-8234	443
226-8235	443
226-9169	164
226-9670	138
227-0830	457
	▶458
227-0831	494
	▶495
227-0832	466
	▶482
227-0833	5
	▶90
227-0835	90
227-0836	90
227-0841	▶423
	505
227-0842	▶421
	670
227-0843	▶415
	420
227-0844	▶417
	419
227-0912	195
227-0924	236
	▶237
227-1200	24
	26
227-2451	215
227-3021	458
	▶492
227-3023	492
227-3149	313
227-3151	313
227-4002	197
227-4303	407
	411
227-4304	409
	413
227-5054	600
227-5055	518
227-5056	601
227-5058	582
227-5059	582
227-5904	122
227-6656	303
227-8348	487
227-8715	▶361
	398
227-9304	294
227-9305	294
227-9306	296
227-9307	298
227-9310	294
	296
228-3323	203
228-3621	39
228-4051	601
228-4052	601
228-4093	320
	322
228-4678	320
	322
228-5897	126
228-6787	560
228-7089	71
228-7096	29
	31
229-0887	680
	682
	683
229-1494	607
229-5421	▶404
	427
229-6635	520
229-6957	646
	647
	▶664
229-7373	▶322
	396
	397
	398
229-8352	324
	325
229-9281	47
229-9323	324
	325
229-9558	358
229-9559	358
229-9568	359
229-9569	359
229-9570	▶358
229-9571	▶359
229-9601	106
230-1340	151
230-3615	120
230-4009	207
230-4010	207
230-4013	204
230-4118	10
	11
	▶70
230-4119	70
230-4700	522
	▶596
230-4872	421
230-4873	421
230-4875	415
230-4876	417
230-5008	202
230-5040	71
230-5106	562
	565
230-5385	520
230-5388	▶520
	596
230-5554	8
	▶511
230-5555	8
	▶447
230-5556	▶649
	653
230-5585	5
	▶74
230-7699	306
230-7887	423
230-7892	423
230-8792	195
230-9796	74
231-1271	565
231-1345	120
231-1978	10
	11
	▶168
231-4166	255
	▶270
231-4167	270
231-4384	286
231-4385	288
231-4386	288
231-4387	288
231-4389	288
231-4390	300
231-5969	▶215
	266
231-5990	▶219
	266
231-8855	263
232-0343	118
	▶128
232-1693	144
232-3402	165
232-6411	273
232-7583	534
232-7586	534
233-0423	10
	11
	▶42
233-0668	277
233-0891	144
233-4846	398
233-4847	▶327
	398
233-4848	327
233-4849	▶328
	398
233-4851	328
233-6745	583
233-9134	▶425
	509
	511
	513
233-9135	425
233-9138	425
234-0203	77
234-3043	495
234-3451	495
234-5124	465
234-5126	432
	▶465
234-5846	159
234-9699	368
	369
	370
234-9994	263
235-0399	467
	469
235-0401	▶454
	467
	469
235-0402	467

▶ PRIMARY REFERENCE

PART NUMBER INDEX

Part	Page
	469
	▶472
235-0403	467
	469
	▶474
235-0404	467
	469
	▶477
235-0405	469
	▶479
235-0523	405
235-0541	318
235-0544	318
235-0545	318
235-0891	462
235-0892	462
235-0893	462
235-0895	462
235-0907	462
235-2340	405
235-4157	▶384
	386
235-4513	255
235-4514	255
235-4515	255
235-4516	255
235-4605	465
	▶503
235-4826	255
235-5974	378
	▶379
	396
	397
	398
235-8180	▶444
	670
235-8202	197
235-8203	10
	11
	▶197
235-9651	124
236-2218	▶301
	303
236-2219	▶302
	303
236-2591	▶329
	398
236-2592	▶330
	398
236-2624	301
236-5131	565
236-5132	562
	566
236-5197	599
236-5474	302
236-6220	168
	▶176
236-6221	168
	▶177
236-7241	▶307
	309
236-7315	10
	11
	▶41
236-8191	53
236-8239	58
236-8240	250
237-0048	165
237-0050	165
237-0051	165
237-0052	165
237-0053	165
237-0204	590
	592
237-0205	590
	592
237-0225	165
237-0229	43
237-0934	520
237-0956	520
237-0984	120
237-1000	518
	▶535
237-1962	185
	▶187
237-2732	294
237-2734	296
237-2737	5
	▶111
237-2738	111
237-3943	620
237-3970	620
237-4240	138
237-4268	592
237-4269	592
237-4270	592
237-5176	84
237-9140	147
	▶577
237-9251	107
	▶108
237-9252	108
237-9254	108
237-9255	108
237-9318	317
	▶318
238-0303	140
238-0451	▶387
	398
238-0453	387
238-1116	10
	11
	▶234
238-1117	234
238-2014	165
238-4520	375
	376
238-4986	432
238-4993	432
238-5080	31
	57
	71
238-5081	71
	114
238-5082	57
238-5085	71
238-5508	283
239-0797	428
239-1134	181
	▶194
239-2402	126
239-3354	165
239-3355	206
239-3686	▶106
	107
239-3902	146
239-5113	592
239-6986	680
	681
	683
239-7392	206
239-8107	165
	206
240-0041	15
240-6902	199
240-8259	270
240-8317	139
240-8321	142
240-8917	165
240-9755	92
241-2501	129
241-2756	90
	▶92
241-3718	10
	11
	▶43
241-3719	10
	11
	▶75
241-3720	332
	334
	336
	338
	340
	342
	344
	346
	348
	350
241-4167	681
	682
	684
241-4194	181
241-4342	590
	592
241-4343	592
241-4344	590
	592
241-4345	592
241-4346	592
241-4348	592
241-4349	592
241-4354	107
241-4981	59
241-5634	255
241-5635	255
241-6215	114
241-6498	300
241-6499	300
241-6919	300
241-7913	164
	545
241-7917	590
241-8240	5
241-8368	165
	▶192
241-8382	29
241-8383	29
	31
241-8384	29
	31
241-8385	29
	31
241-8386	29
	31
241-8387	29
	31
241-8388	24
	26
241-8390	29
	31
241-8474	54
241-8475	52
242-0328	62
242-0329	▶62
	67
242-0447	12
	13
	▶68
242-0672	13
	▶28
242-0673	14
242-0674	12
	13
	▶14
242-3360	112
242-3864	71
242-8399	164
242-8403	545
242-8404	545
242-8405	592
242-8407	592
242-8904	396
242-9101	211
243-1171	545
243-1588	101
243-1589	101
243-1590	101
243-5168	592
243-5170	592
243-6716	19
244-2310	219
244-3712	232
244-4500	42
244-5891	68
244-6113	332
	334
245-3261	50
245-3262	12
	13
	▶50
245-4122	▶665
245-4123	▶666
245-4133	▶667
245-4230	449
245-4231	449
245-4263	660
	667

▶ PRIMARY REFERENCE

PART NUMBER INDEX

Part	Page
245-4630	177
245-7339	63
245-7434	207
	555
	587
245-8334	580
245-8456	680
	682
	683
246-0596	10
	11
	▶100
246-0597	100
246-0598	10
	11
	▶54
246-0599	10
	11
	▶250
246-0600	10
	11
	▶52
246-0601	10
	11
	▶76
246-0602	10
	11
	▶58
246-0605	10
	11
	▶15
246-2641	120
	129
	224
	286
	298
	300
	313
	461
	530
246-3150	19
246-5140	395
246-5203	395
246-5216	▶395
246-5218	▶395
246-5220	▶396
246-6036	78
246-7899	76
246-9365	12
	13
	▶144
247-5683	655
	666
247-5689	654
	665
247-5693	660
	667
247-5694	660
	667
247-6876	681
	682
	684
247-6878	681
	682
	684
248-2336	654
	655
	660
	665
	666
	667
248-5358	581
248-5513	84
248-8866	592
249-0313	136
249-2844	548
249-5481	206
250-1911	82
250-4628	583
	585
250-6052	102
250-6053	102
250-6054	102
250-6056	5
	▶96
250-7533	102
250-8279	183
250-9286	106
250-9290	98
251-0061	102
251-1198	555
251-4345	181
251-4553	5
	▶102
251-7214	102
251-8202	509
	511
	513
251-8203	508
	509
	511
	513
251-9814	7
	▶505
251-9815	505
251-9816	505
251-9817	505
251-9820	648
251-9827	7
251-9828	505
251-9829	7
251-9832	508
251-9834	505
251-9835	507
251-9836	508
251-9840	449
251-9841	449
252-1567	10
	11
	▶57
252-4915	534
252-5165	▶112
	113
252-5849	6
	▶448
252-5852	▶657
	658
252-5853	6
	▶513
252-5858	▶651
	652
252-7803	31
252-8439	28
	▶29
253-0397	▶361
	398
253-0861	676
	677
	678
253-1346	332
	334
	336
	338
	340
	342
	344
	346
	348
	350
253-5369	96
254-0224	395
	396
254-0234	396
254-1686	332
	334
	336
	338
	340
	342
	344
	346
254-3941	29
	31
254-3942	29
	31
254-3946	24
	26
254-3947	24
	26
254-4471	395
254-4473	395
254-5524	85
255-1137	310
	311
255-1138	310
	311
255-1139	310
	311
255-5210	288
255-5232	5
	▶94
255-6387	286
255-6406	286
255-8674	68
255-8951	7
	▶508
255-8952	▶507
	508
255-8954	7
	▶449
256-2941	107
256-7285	318
256-7286	318
256-7780	310
	311
256-7781	311
256-7782	310
	311
256-9637	472
256-9988	▶240
257-5029	520
257-5858	78
257-9788	462
258-0763	439
258-2303	313
258-2307	313
258-2355	680
	682
	683
258-6948	307
258-6949	307
258-7597	309
	▶312
258-7607	312
258-8473	▶143
	531
258-8477	143
258-8478	143
258-8479	143
258-8480	143
258-8481	143
258-8482	143
258-8483	143
259-1289	318
259-1291	318
259-1292	318
259-2093	206
259-3119	▶260
	266
259-5829	29
	31
260-1914	520
260-3208	307
260-3799	181
260-4856	29
	31
260-6642	244
	246
260-6649	▶244
	266
260-6650	▶246
260-7524	61
	62
260-7733	340
	342
260-9187	255
261-0420	202
261-1544	19
261-3079	▶332
	398
261-3082	▶334
	398
261-3085	332
261-3089	334
261-3156	294
	296
261-3162	76
261-3257	332

▶ PRIMARY REFERENCE

PART NUMBER INDEX

Part	Page
	334
	340
	342
261-3864	298
261-3865	294
261-5694	584
261-7990	206
261-8619	590
262-1421	▶147
	151
262-2870	112
262-2878	145
262-5079	522
	▶624
262-5901	12
	13
	▶113
262-7661	294
262-7662	296
263-2601	601
263-2915	38
263-3348	255
263-3464	78
263-3823	575
	576
263-3912	432
263-5792	129
263-7724	▶294
	298
263-7725	▶296
	298
263-7731	118
263-7805	535
263-8976	350
263-8977	348
263-8978	348
	350
263-9012	5
	▶181
264-0168	290
264-2014	10
	11
	▶118
264-5732	197
264-6156	68
264-6816	294
264-6817	296
264-7030	204
264-7031	202
264-7384	310
265-1400	12
	13
	▶56
265-1401	56
265-2106	206
265-2299	▶248
266-1467	▶169
	539
266-1961	562
	565
266-2404	199
266-9810	10
	11
	▶78
267-2186	94
267-4746	▶331
	398
267-7507	59
267-7509	59
267-8685	558
267-9715	▶124
	125
267-9720	12
	13
	▶125
268-0066	462
268-3490	18
268-5945	352
268-9076	458
268-9709	332
	334
	336
	338
	340
	342
	344
	346
	348
	350
268-9710	332
	334
	336
	338
	340
	342
269-4739	242
	244
	246
	248
270-3437	255
270-3438	255
270-9433	462
271-3863	318
271-7442	29
	31
274-3774	138
274-6978	676
	677
	678
274-7395	168
	▶179
274-7396	168
	▶180
275-4236	294
	296
	548
275-6706	520
277-5801	535
277-5802	535
278-4519	656
278-4520	656
278-4522	656
278-4696	318
278-6374	▶361
279-2570	348
	350
279-2590	522
	▶550
279-2591	▶519
	522
279-7259	548
279-7260	523
	▶548
279-7267	548
280-6794	84
281-3179	206
281-4015	324
	325
281-8488	322
	▶324
281-8491	320
	▶325
282-1771	19
282-1772	19
282-1951	520
282-1952	520
282-1953	520
282-4017	332
	334
	340
	342
282-9090	509
	511
	513
283-0500	306
283-0502	306
283-1107	183
283-8671	▶336
	397
283-8672	▶338
	397
284-0638	236
284-0639	236
284-3502	78
284-3623	206
284-3781	458
284-3782	458
284-7650	114
284-8532	151
284-9639	114
284-9640	114
285-0852	515
	516
285-3392	298
285-4074	63
	▶64
285-4106	18
285-5093	37
285-5644	459
285-6396	36
	▶37
285-8893	224
286-1674	458
287-0338	562
	565
287-3838	228
288-0934	383
	▶385
288-0935	380
	▶381
288-0936	377
	▶382
288-1199	458
288-7146	587
289-2937	415
	421
	423
289-2948	415
	421
	423
289-9403	375
290-0862	671
290-3970	85
290-6884	38
290-8226	509
	511
	513
290-9849	215
292-2016	215
292-2175	▶386
	398
292-4396	676
	677
	678
	679
292-4906	136
293-0730	117
293-2911	599
293-9123	554
	586
293-9367	81
294-2503	255
294-5076	569
294-8620	128
295-1771	75
295-1803	118
295-7933	5
	▶114
295-8307	439
296-0612	▶580
	581
296-0614	580
296-2861	580
296-7283	456
297-0693	147
298-4055	524
	527
298-7340	224
299-5344	455
299-5417	580
299-5418	580
299-9092	138
	3
300-1643	586
300-8554	120
301-0589	151
301-6912	298
301-7298	85
304-5260	68
304-5687	202
304-9651	275
305-9190	637
305-9192	637

▶ PRIMARY REFERENCE

PART NUMBER INDEX

Part	Page
306-0177	151
306-3998	187
306-8040	136
306-9621	114
307-0047	151
307-2670	71
307-2673	31
	57
307-8686	592
308-4558	676
	677
	678
	679
308-4559	676
	677
	678
	679
308-6022	447
308-6023	447
308-6024	448
308-6025	448
308-6026	449
308-6027	449
308-6028	446
308-6029	446
308-6335	537
308-7112	106
	107
309-5136	114
310-4269	354
310-7255	24
	26
310-7257	24
	26
311-3737	555
	586
311-3741	586
311-3742	586
311-3744	586
311-6816	▶224
	266
311-7229	▶24
	31
311-7956	266
	▶539
312-8629	503
	504
313-3492	114
313-9374	224
314-2516	390
314-2518	390
314-2911	114
314-3124	586
314-3283	▶354
	398
314-4018	531
314-7923	388
	390
315-7783	340
	342
315-7786	340
	342
	▶390
315-9859	57
315-9959	266
	▶279
315-9960	▶262
	279
315-9961	▶221
	279
315-9962	221
315-9964	▶232
	279
315-9965	232
	▶281
315-9966	232
	▶285
316-4438	5
	▶59
316-8227	268
316-8663	47
317-1756	4
	▶266
317-1757	4
	▶266
317-1758	4
	▶427
317-1759	4
	▶396
317-1760	4
	▶397
317-1761	4
	▶397
317-1762	4
	▶5
317-1766	▶530
317-1767	530
	▶590
317-2656	577
317-3919	539
317-3930	539
317-3931	539
317-3933	539
317-3934	539
317-3939	539
317-3940	539
317-3942	427
	▶439
317-3943	439
317-3945	439
317-3948	439
317-3949	439
317-4093	427
	▶451
317-4094	451
317-4095	451
317-4109	▶255
	266
317-4118	255
317-4142	255
317-4143	255
317-4153	1
	2
	3
	▶522
317-4154	522
	▶545
317-4155	1
	2
	3
	▶592
317-4156	545
317-4157	545
317-4158	▶589
	592
317-4159	589
317-4171	545
	590
317-4178	224
317-4180	▶398
317-4181	▶398
317-4616	224
317-4618	224
317-6109	1
	2
	3
	▶120
317-6110	120
317-6394	▶211
	434
317-6560	1
	2
	3
	▶138
317-6561	▶558
	560
317-6562	139
317-6565	1
	2
	3
	▶206
317-6566	147
	▶581
317-6567	147
	▶202
317-6571	▶146
317-6573	▶147
317-6574	206
317-6576	5
	▶199
317-6577	206
317-6579	147
	▶164
317-6580	147
317-6748	211
317-6749	211
317-7051	273
	▶277
317-7052	266
	▶273
317-7210	24
	26
317-7211	24
	26
317-7212	24
	26
317-7213	24
	26
317-7251	211
317-8767	530
	▶578
317-9070	1
	2
	3
	▶554
317-9080	380
	383
	386
317-9186	129
317-9689	120
318-0157	539
318-0690	255
	▶267
318-0691	267
	▶268
318-0692	268
318-0694	268
318-0696	268
318-0697	268
318-0698	268
318-0699	268
318-1064	395
	396
318-1633	▶162
318-1904	4
	▶10
318-1905	4
	▶11
318-2082	188
318-2389	554
	586
318-2717	539
318-2726	1
	2
	3
	▶298
318-2727	298
318-5040	268
318-5042	268
318-6247	320
	322
318-6357	126
318-8531	▶283
	285
319-0678	122
	▶126
319-1676	224
319-3729	224
319-3753	202
319-3758	202
319-6237	29
	31
319-7104	▶261
	266
320-2841	539
320-2842	539
320-5885	558
320-5887	554
	586
320-5888	206
320-5889	207
320-5890	199
320-5891	202
320-5892	203
320-5893	203
320-5895	139
320-5896	434
320-5898	151
320-5900	139
320-5901	203

▶ PRIMARY REFERENCE

PART NUMBER INDEX

Part	Page
320-5902	203
320-5903	195
320-5904	625
320-5905	581
320-5906	581
320-7655	10
	▶12
320-7656	11
	▶13
320-8283	592
321-2029	224
	▶228
321-5802	146
321-5803	3
	▶142
321-5804	565
321-5967	251
321-6073	680
	682
	683
321-6075	▶676
	680
321-7851	13
321-8635	29
	31
321-8638	29
	31
321-8647	71
322-1359	165
	▶195
322-1360	▶165
	207
322-1394	522
	▶625
322-2095	207
322-2361	518
	▶565
322-3025	203
322-3699	▶405
322-3701	405
	▶432
322-3702	432
322-3703	432
322-3704	432
322-3705	432
322-3706	432
322-3707	432
322-3708	432
322-3709	432
322-3710	▶405
322-3711	▶405
322-4852	432
322-8631	405
	▶487
322-9655	487
	▶543
323-1170	361
	▶364
323-1171	364
323-1448	255
323-1450	224
323-5696	▶522
323-5697	522
	▶560
323-5698	▶518
323-5774	555
323-6771	▶677
	681
323-6773	▶678
	683
323-7443	164
323-7444	▶136
323-9636	530
	▶586
324-7380	56
325-3915	▶20
	23
325-5460	680
	682
	684
326-1644	116
326-8604	566
328-2573	▶117
	124
328-3655	251
328-4374	263
328-4375	263
329-4473	59
329-5511	71
329-9110	1
	2
	3
	▶157
330-3117	566
330-3118	566
330-5013	▶575
	637
330-5014	▶576
	637
330-6873	680
	681
	683
331-8464	370
	371
	372
	373
331-8905	79
331-8906	79
332-3619	▶26
	29
333-6437	▶251
	255
333-9308	▶214
	251
333-9410	242
	244
	246
	248
334-0459	▶340
	398
334-0460	▶342
	398
334-2679	214
334-2680	214
334-3416	530
	681
	682
	684
334-3417	530
	681
	682
	684
334-4603	681
	682
	684
334-6369	3
	▶150
334-6371	▶159
	317
334-7389	555
334-7392	587
335-0985	376
335-2350	346
335-2351	344
335-6121	242
	244
	246
	248
336-1846	▶547
	590
336-1847	547
336-3545	151
	▶167
336-3566	167
336-3968	547
336-7235	154
	155
336-8761	▶310
336-8762	▶311
336-9681	▶4
336-9682	▶4
336-9683	▶4
336-9684	▶1
	4
336-9685	▶2
	4
336-9686	▶3
	4
336-9704	▶603
336-9705	▶604
337-1751	1
	▶680
337-1752	2
	▶681
337-1753	3
	▶683
337-3492	1
	2
	3
	▶290
337-3493	290
339-4589	▶376
	397
	398
339-9514	207
340-0091	676
340-0092	676
340-0093	677
340-0094	677
340-0095	678
340-0096	678
340-0117	427
	▶434
340-7161	207
341-0087	84
341-0979	18
341-2611	▶679
341-7036	592
341-9214	▶504
343-5527	116
343-6237	242
	244
	246
	248
344-0875	219
344-2149	▶31
	33
345-8414	12
	▶33
345-9934	439
345-9935	439
345-9936	439
347-3110	88
348-5792	234
349-6123	▶88
	89
350-2536	87
	▶89
351-0955	368
	369
	▶370
	371
351-0956	368
	369
	▶371
351-0957	▶368
	396
351-0958	▶369
	395
351-0963	▶372
	373
351-0964	▶373
351-9918	154
	155
352-8839	71
353-6988	18
354-6924	522
	▶637
355-0598	151
355-1350	376
355-5105	147
355-6555	387
355-9764	147
358-2567	▶3
358-4670	▶107
358-4675	3
	▶148
358-4677	148
358-4678	148
358-4683	▶309
358-4684	▶523
358-4688	▶317
358-4689	3
	▶316
358-4690	▶6
358-4691	▶7
358-4692	▶8
358-4693	▶9
358-4694	▶670
358-4695	670

▶ PRIMARY REFERENCE

PART NUMBER INDEX

Part	Page
	▶671
358-4696	1
	2
	3
	▶313
358-6844	▶151
358-7872	18
358-7876	18
359-0661	523
	▶527
359-0662	527
361-7838	▶344
	396
361-7839	▶346
	396
362-1021	▶348
	397
362-1022	▶350
	397
362-3267	12
362-4522	407
	409
	▶419
362-4539	1
	2
	▶407
362-4544	1
	2
	▶409
362-4546	3
	▶411
362-4547	411
	413
	▶420
362-4548	1
	2
	3
	▶455
362-4549	455
362-4553	3
	▶413
363-0855	313
363-0856	1
	2
	3
	▶303
363-0857	1
	2
	3
	▶600
364-3468	▶640
364-3469	▶645
364-3470	▶641
364-3471	▶642
364-3472	▶646
364-5488	640
	▶648
364-5489	645
	▶658
364-5490	641
	▶652
	654
364-5491	642
	▶653
	655
364-5492	646
	▶659
	660
365-7010	▶643
365-7011	643
	▶654
365-7012	▶644
365-7013	644
	▶655
365-7014	▶647
365-7015	647
	▶660
366-1747	▶378

▶ PRIMARY REFERENCE



© 2010 CATERPILLAR
ALL RIGHTS
RESERVED

CAT, CATERPILLAR, THEIR RESPECTIVE LOGOS, “CATERPILLAR YELLOW” AND THE POWER EDGE TRADE DRESS, AS WELL AS CORPORATE AND PRODUCT IDENTITY USED HEREIN, ARE TRADEMARKS OF CATERPILLAR AND MAY NOT BE USED WITHOUT PERMISSION.

Printed in
Japan

SEBP5048-01

D6R TRACK-TYPE TRACTOR

S6T1-Up
S6X1-Up
S6Y1-Up