SEBP7236-01
August 2015

RUTHZIL TRATOR COMERCIAL DE PEÇAS LTDA 11 97083-6812 ROLANDO CITRANGULO

Parts Manual

D6R2 TRACK-TYPE TRACTOR
STD, XL, LGP

PPP1-Up (Machine)
SSS1-Up (Machine)
TTT1-Up (Machine)
TXD1-Up (Engine)
6R21-Up (Transmission)
6R31-Up (Transmission)
RTZ1-Up (Ripper)
EBA1-Up (Torque Converter)
RHC1-Up (Torque Converter)
RTH1-Up (Angle Blade)
R6L1-Up (Blade)
RTE1-Up (Blade)
RTF1-Up (Blade)
RTS1-Up (Blade)

Powered By C9 Engine

Product and Dealer Information

Note: For product identification plate locations, see the section “Product Identification Information” in the Operation and Maintenance Manual.

Delivery Date: _____

Product Information

Model: _____

Product Identification Number: _____

Engine Serial Number: _____

Transmission Serial Number: _____

Generator Serial Number: _____

Attachment Serial Numbers: _____

Attachment Information: _____

Customer Equipment Number: _____

Dealer Equipment Number: _____

Dealer Information

Name: _____ Branch: _____

Address: _____

_____

_____

	Dealer Contact	Phone Number	Hours
Sales:	_____	_____	_____
Parts:	_____	_____	_____
Service:	_____	_____	_____

MEMORANDA

TABLE OF CONTENTS

NAME	PAGE
GENERAL INFORMATION	**A5**
REPAIR ALTERNATIVES	**A8**
SUPPLEMENTAL COOLANT ADDITIVES	A9
MAINTENANCE PARTS	**A10**
INDEX	**A13**
MACHINE ARRANGEMENT	**1**
CHASSIS AR	1
COMMON AR	1
DISTRIBUTION AR	2
GENERAL AR	3
ENGINE ARRANGEMENT	**4**
ENGINE AR	4
ENGINE AR-CORE	5
ENGINE AR-COMPLETE	6
ENGINE AR-CORE	12
INSTALLATION AR	13
INSTALLATION AR-ENGINE	14
BASIC ENGINE	**16**
CAMSHAFT GP	16
COVER GP-CYLINDER BLOCK	17
COVER GP-FRONT HOUSING	18
COVER GP-VALVE MECHANISM	20
CRANKSHAFT GP	21
CYLINDER BLOCK AS	22
CYLINDER BLOCK GP	24
CYLINDER HEAD AS	27
CYLINDER HEAD GP	29
DAMPER & PULLEY GP	32
DRAIN GP-ENGINE OIL	33
DRIVE GP-FAN	34
DRIVE GP-WATER PUMP	36
FASTENER GP-CYLINDER HEAD	37
FASTENER GP-FRONT COVER	39
FASTENER GP-VALVE COVER	40
FASTENER GP-VALVE COVER BASE	41
FLYWHEEL GP	42
GEAR GP-FRONT	43
GEAR GP-REAR	45
HOUSING AS-FLYWHEEL	47
HOUSING GP-FLYWHEEL	48
HOUSING GP-FRONT	49
LIFTING GP-ENGINE	50
MOUNTING GP-ALTERNATOR	51
MOUNTING GP-ENGINE	52
PAN GP-OIL	53
PISTON & ROD GP	54
PLUG GP-ENGINE	55
PULLEY GP-FAN & ALT DRIVE	56
ROCKER ARM GP	58
SEAL GP-CRANKSHAFT	60
SUPPORT GP-ENGINE	62
TRUNNION GP-ENGINE	63
VALVE MECHANISM GP	64
LUBRICATION SYSTEM	**66**
FILLER GP-ENGINE OIL	66
FILTER GP-ENGINE OIL	67
FUMES DISPOSAL GP	70
GAUGE GP-OIL LEVEL (DIPSTICK)	72
LINES GP-ENGINE OIL	73
LINES GP-TURBOCHARGER OIL	74
OIL CHANGE GP-HIGH SPEED	77
PUMP GP-ENGINE OIL	79
VALVE GP-FLUID SAMPLING	81
COOLING SYSTEM	**82**
COOLER GP-ENGINE OIL	82
FAN GP-BLOWER	83
FAN GP-REVERSIBLE	85
HOUSING & REGULATOR GP	86
LINES GP-TURBOCHARGER WATER	87
LINES GP-WATER	89
PUMP GP-WATER	91
RADIATOR GP	94
TANK GP-COOLANT	102
AIR INLET AND EXHAUST SYSTEM	**107**
AFTERCOOLER GP-AIR	107
AIR CLEANER AR	108
AIR CLEANER GP	109
DUST EJECTOR GP	113
ELBOW GP-AIR INLET	115
LINES GP-AIR	117
MANIFOLD GP-EXHAUST	120
MUFFLER GP	121
PRECLEANER GP	123
SHIELD GP-HEAT	126
TURBOCHARGER GP	128
FUEL SYSTEM	**132**
FILTER & LINES GP-FUEL	132
INJECTOR GP-FUEL	135
LINES GP-FUEL	136
PUMP & MTG GP-UNIT INJ HYD	142
PUMP GP-FUEL INJECTION	144
PUMP GP-FUEL PRIMING	145
PUMP GP-FUEL PRM & PRIM FILTER	146
REGULATOR GP-FUEL PRESSURE	147
TANK GP-FUEL	148
ELECTRICAL AND STARTING SYSTEM	150

TABLE OF CONTENTS

NAME	PAGE
ALARM GP	150
ALTERNATOR GP-CHARGING	151
BATTERY GP	156
CONTROL & MTG GP-ENGINE ELEK	160
CONTROL GP-ENGINE ELECTRONIC	161
CONTROL GP-POWER TRAIN	162
ELECTRONICS GP-COMMUNICATION	163
ELECTRONICS GP-MACHINE	164
HARNESS AS-CAB	164
HARNESS AS-CONTROL	169
HARNESS AS-DASH	170
HARNESS AS-ENGINE	171
HARNESS AS-HEATER & AIR COND	173
HARNESS AS-LIGHTING	173
HARNESS AS-PLATFORM	175
HARNESS AS-REAR LIGHTING	176
HARNESS AS-SENSOR	177
HARNESS AS-STARTING AID	177
HARNESS AS-TRANSMISSION	178
HARNESS AS-VALVE	179
HARNESS AS-WIRING	179
HEATER GP-JACKET WATER	181
INSTALLATION GP-COMMUNICATION	182
LAMP GP-DOME	188
LAMP GP-FLOOD	190
LIGHTING GP-FLOOD	195
MOUNTING GP-CONNECTOR	214
PLATE AS-BRUSH	215
RADIO GP-COMMUNICATION	216
SENSOR GP-ENGINE	218
SENSOR GP-LIQUID LEVEL	220
SENSOR GP-POSITION	221
SENSOR GP-PRESSURE	224
SENSOR GP-SPEED	231
SENSOR GP-TEMPERATURE	233
STARTING AID GP-ETHER	237
STARTING MOTOR GP-ELECTRIC	239
SWITCH GP-DISCONNECT	245
SWITCH GP-MAGNETIC	246
SWITCH GP-PRESSURE	247
SWITCH GP-PUSH BUTTON	248
SWITCH GP-ROTARY	249
VALVE GP-ETHER STARTING	250
WIRING GP-CAB	251
WIRING GP-CHASSIS	263
WIRING GP-ELECTRONIC CONTROL	266
WIRING GP-ENGINE	268
POWER TRAIN	**271**
AXLE GP	271
BRAKE & DIFFERENTIAL DRIVE GP	273
BRAKE & PLANETARY GP	277
CASE & PARTS GP-PLANETARY	279
CASE GP-TRANSMISSION	282
CONTROL GP-TRANSMISSION HYD	283
COOLER GP-TRANSMISSION OIL	285
COVER GP-TRANSMISSION	287
DRAIN GP-ECOLOGY	288
DRIVE AR-FINAL	291
DRIVE GP-FINAL	293
FILTER GP-OIL	305
GEAR GP-BEVEL & TRANSFER	307
LINES GP-POWER TRAIN OIL	313
MOUNTING GP-FINAL DRIVE	320
MOUNTING GP-TRANSMISSION	321
PLANETARY GP-TRANSMISSION	322
POWER TRAIN AR	328
PUMP GP-GEAR	330
SEGMENT GP-SPROCKET	333
SHAFT GP-DRIVE	334
TORQUE CONVERTER & HOUSING GP	335
TORQUE CONVERTER GP	340
TRANSMISSION AR	348
VALVE GP-RELIEF	350
FRAME AND BODY	**351**
BAR AR-STRIKER	351
BAR GP-STRIKER	353
BOX GP-BATTERY	357
CASE & FRAME GP	358
COUNTERWEIGHT AR	361
COUNTERWEIGHT GP	362
DRAWBAR GP	365
ENCLOSURE AR	366
ENCLOSURE GP-ENGINE	366
ENCLOSURE GP-HYDRAULIC TANK	377
FENDER AS	378
FENDER GP	380
GRID GP-SAND BLAST ERODING	382
GRILL AR-RADIATOR	383
GRILL GP-RADIATOR	384
GUARD GP-BOTTOM	386
GUARD GP-FUEL TANK	389
GUARD GP-RADIATOR	391
GUARD GP-REAR	392
GUARD GP-TRANSMISSION	394
HANDHOLD GP	396
HOOD AS	398
LATCH GP	399
PLUG GP	400
SEAL GP-WASTE HANDLING	401
SWEEP GP	403

TABLE OF CONTENTS

NAME	PAGE
UNDERCARRIAGE	**405**
BAR GP-EQUALIZER	405
CAP GP-TRACK IDLER	410
FRAME GP-TELESCOPING RECOIL	416
FRAME GP-TRACK ROLLER	455
GUARD GP-TRACK GUIDE	456
GUARD GP-TRACK ROLLER	459
IDLER GP-TRACK	464
LINK AS-TRACK	469
LINK AS-TRACK BOX	474
MOUNTING GP-CARRIER ROLLER	476
PIVOT BAR GP	477
ROLLER GP-TRACK CARRIER	479
ROLLER GP-TRACK-DOUBLE FLANGE	480
ROLLER GP-TRACK-SINGLE FLANGE	484
SCRAPER GP-IDLER	488
STRIKER GP-REAR	489
TRACK ADJUSTER & RECOIL GP	493
TRACK AR	497
TRACK GP	511
UNDERCARRIAGE AR	525
STEERING AND BRAKING SYSTEM	**533**
CONTROL GP-PARKING BRAKE	533
CONTROL GP-STEERING & XMSN	534
FILTER GP-OIL	535
LINES GP-STEERING	536
HYDRAULIC SYSTEM	**539**
ACCUMULATOR GP-HYDRAULIC	539
ACCUMULATOR GP-PILOT OIL	544
ACTUATOR GP-PUMP	545
ADAPTER GP-MOTOR	546
COOLER GP-HYDRAULIC OIL	547
CYLINDER & LINES GP-LIFT	548
CYLINDER AR-LIFT	556
CYLINDER GP-BULLDOZER LIFT	558
CYLINDER GP-RIPPER	563
CYLINDER GP-TILT	564
HYDRAULIC AR	568
LINES GP-LIFT CYLINDER	570
LINES GP-PILOT	572
LINES GP-PUMP	579
LINES GP-RIPPER	582
LINES GP-TILT CYLINDER	584
MANIFOLD GP-CONTROL	597
MANIFOLD GP-VALVE	598
MOTOR GP-PISTON	599
MOUNTING GP-CYLINDER	600
PUMP & MOUNTING GP	602
PUMP GP-CHARGE	604
PUMP GP-PISTON	605
ROTATING GP-MOTOR	611
ROTATING GP-PUMP	612
TANK & FILTER GP-HYDRAULIC	615
TANK & MTG GP-HYDRAULIC	618
VALVE & MOUNTING GP	619
VALVE & MTG GP-IMPLEMENT CONT	620
VALVE GP-BANK 2	622
VALVE GP-BANK 3	624
VALVE GP-CHECK	626
VALVE GP-CONTROL	627
VALVE GP-PILOT	636
VALVE GP-PILOT CARTRIDGE	638
VALVE GP-PRESSURE REDUCING	640
VALVE GP-PUMP CONTROL	641
VALVE GP-QUICK-DROP	644
VALVE GP-RELIEF	647
VALVE GP-SHUTTLE	652
VALVE GP-SOLENOID	653
IMPLEMENTS	**655**
BRACE GP-BULLDOZER	655
C-FRAME AS	659
C-FRAME GP	660
INSTALLATION AR-BULLDOZER	662
PUSH ARM GP	671
TRUNNION GP-BULLDOZER	677
OPERATOR STATION	**679**
ADJUSTER GP-SEAT	679
AIR CONDITIONER & MOUNTING GP	680
AIR CONDITIONER GP	682
ARM GP-WINDOW WIPER	684
CAB AR	688
CAB AR-ENCLOSED ROPS	689
CANOPY AR	690
COMPRESSOR GP-REFRIGERANT	691
CONDENSER & MTG GP-REFRIGERANT	694
CONDENSER GP-REFRIGERANT	695
CONTROL & MTG GP-PEDAL	696
CONTROL GP-AIR & TEMPERATURE	697
CONTROL GP-HANDLE	698
CONTROL GP-JOYSTICK	703
CONTROL GP-PILOT OPERATED HYD	704
CONTROL GP-THROTTLE	706
COVER GP-CAB	707
DOOR GP-CAB	712
FAN GP-CIRCULATING	717
FILTER GP-CAB AIR	718
HEATER & MTG GP-CAB	720
HOUSING GP-SEAT SUSPENSION	722
INSTALLATION GP-RADIO	724
KIT-HANDLE	725
KIT-SEAT AIR COMPRESSOR	726
KIT-SEAT CUSHION	727

TABLE OF CONTENTS

NAME	PAGE
KIT-SHOCK ABSORBER	728
LINER GP-CAB	730
LINES GP-AIR CONDITIONER	735
LINES GP-HEATER	739
MIRROR GP-REAR VIEW	740
MOTOR GP-WINDOW WIPER	742
MOUNTING GP-BRACKET	746
MOUNTING GP-ROPS	747
PAN GP-BACKREST	749
PEDAL GP-GOVERNOR & BRAKE	752
RECLINER GP-SEAT	753
ROPS GP	754
SCREEN GP-PROTECTION	757
SEAT & MOUNTING GP	771
SEAT BELT GP	773
SEAT GP	774
SEAT GP-SUSPENSION	784
SUSPENSION GP-SEAT	787
TANK GP-WINDOW WASHER	791
WINDOW GP-CAB	794
WIPER GP-WINDOW	804
WORK TOOLS	**807**
BLADE & EDGE GP-ANGLING	807
BLADE & EDGE GP-SEMI-UNIVERSAL	809
BLADE & EDGE GP-STRAIGHT	814
BLADE AS	817
BLADE AS-ANGLING	818
BLADE AS-SEMI-UNIVERSAL	820
BLADE AS-STRAIGHT	828
EDGE GP-BIT & CUTTING	831
MOUNTING GP-RIPPER	837
RIPPER AR	838
RIPPER GP	839
TOOTH GP-RIPPER	841
SERVICE EQUIPMENT AND SUPPLIES	843
FILM GP	843
PLATE & FILM GP	850
PLATE GP-CERTIFICATION	859
PART NUMBER INDEX	**B1**

1. MACHINE IDENTIFICATION

Cat machines are identified by Product Identification Numbers (PIN). Some components included in a machine may be identified by Serial Numbers (S/N). Typical components that will be serialized include engines, transmissions, bulldozers, and rippers. The machine and engine are further identified by arrangement numbers and in some cases modification numbers. These numbers are shown on the product identification plate(s) and on the master plate in the operator's compartment.

Cat dealers need all of these numbers to determine accurate parts identification.

Effective First Quarter 2001 the Cat Product Identification Number (PIN) changed from 8 to 17 characters. In an effort to provide uniform equipment identification, Caterpillar and other construction equipment manufacturers are moving to comply with the latest version of the product identification numbering standard. Non-road machine PINs are defined by ISO 10261. The new PIN format will apply to all Cat machines and generator sets. The PIN plates and frame marking will display the 17 character PIN. The new format will look like the following:

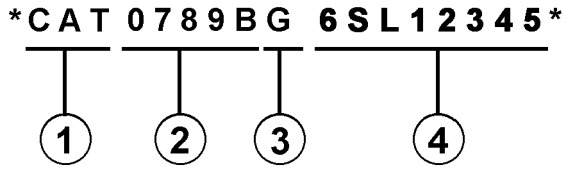

Where:

1. Caterpillar's World Manufacturing Code (characters 1-3)

2. Machine Descriptor (characters 4-8)

3. Check Character (character 9)

4. Machine Indicator Section (MIS) or Product Sequence Number (characters 10-17). These were previously referred to as the Serial Number.

Machines and generator sets produced before First Quarter 2001 will maintain their 8 character PIN format.

Components such as engines, transmissions, axles, etc. and work tools will continue to use an 8 character Serial Number (S/N).

2. ORDERING PARTS

⚠ WARNING

When replacement parts are required for this product Caterpillar recommends using Caterpillar replacement parts or parts with equivalent specifications including, but not limited to, physical dimensions, type, strength and material.

Failure to heed this warning can lead to premature failures, product damage, personal injury or death.

Quality Cat replacement parts are available from Cat dealers throughout the world. Their parts inventories are up to date and include all parts normally required to protect your investment in Cat machines. Dealers may offer repair kits or remanufactured parts to allow selection of the most effective repair alternative for a particular situation. When ordering parts, your order should specify the quantity, part number, part name, and the serial number/product identification number of the machine for which the parts are needed.

3. PARTS MANUAL ORGANIZATION

Product information in this manual is presented as "information elements" that represent all of the components for the specific model. Engine Arrangement and Seat Group are examples of information elements. The information elements are organized alphabetically by part name and secondarily by part number within each major section of the manual.

4. TABLE OF CONTENTS

A table of contents (TOC) is found at the beginning of the manual. The TOC lists each section of the manual with a complete list of all information elements organized as they appear in the manual. Page numbers are provided for quick reference to detailed parts identification illustrations and serviceable consist lists.

5. MAINTENANCE PARTS INDEX

The Maintenance Parts Index, located near the beginning of the manual, references most frequently used maintenance part numbers, providing description, quantity, usage and page number. This information is organized alphabetically by part description.

6. INDEX

The index located near the front of the manual is an alphabetical listing of all information elements included in the manual. Page numbers are provided for quick reference to detailed parts identification illustrations and serviceable consist lists.

7. PART NUMBER INDEX

A numerical index listing all part numbers and the corresponding page number(s) appears at the back of the manual.

8. CAPTIONS

Captions located at the beginning of each information element identify the part number and part name along with additional descriptive information. PIN and S/N information found in each caption should be used to select correct information for a specific machine. Field replacement options, identification of optional attachment components, and where used ("part of") information is also provided.

The first line of a caption is shown in larger type font to indicate the beginning of an information element. Captions for additional pages that may be required to illustrate an information element will be shown in standard type font and will include the term *(contd.)* .

9. NON-SERVICED PARTS

In some instances it is necessary to display non-serviced parts that are a link to a lower level serviceable consist lists. These non-serviced part numbers are shown in *italic* type indicating that they are not available.

10. PARTS LIST REFERENCE NUMBERS

Numbers shown in the Ref No column correspond to numbers used in the associated graphic(s). An alphabetic suffix may be added to a reference number to identify lower level consist items. Numbers shown in the Graphic Ref column refer to the graphic number identifier displayed in the lower left corner of each illustration. The Graphic Ref number may be used in combination with the item Ref No to determine the correct part number. There may be intentional omission of a Ref No in a consist list as information is updated to reflect the latest serviceable part numbers.

11. INDENTED PART NAMES

When a part name is indented in a parts list, it is part of (included in) the group or assembly under which it is indented.

12. ILLUSTRATION REFERENCE LETTERS

When necessary, illustrations contain reference letters (A, B, C etc.) that are intended to track lines and harnesses from one point to another. They are also used to show where to reconnect illustrations that have been separated.

13. ABBREVIATIONS AND SYMBOLS

O.D. – Outside Diameter
I.D. – Inside Diameter
A – Not Part Of This Group
B – Use As Required
C – Change From Previous Type
D – Order By The Meter
E – Order By The Centimeter
F – Not Shown
G – Order By The Inch
I – Refer To Hydraulic Information System
M – Metric Part
R – Remfg Part May Be Available
Y – Separate Illustration
Z – Not Serviced Separately

14. DESCRIPTION OF TYPE CHANGES

Type - A type is defined as any configuration change that requires an additional Information Element for an Arrangement, Group, or Assembly. If serial number breaks for types are not available, a type # (Type 1, Type 2, etc.) will be displayed in the caption. These "type" changes are identified with a "C" note (change from previous type) in the Parts List. Only the "types" that apply to this Parts Manual will be included. Additional types may exist causing "C" notes to appear on an Information Element when no other types are shown.

15.<END>

This symbol indicates the end of an information element.

NOTE:

Continuing improvement and advancement of product design may cause changes to your machine which may not be included in this publication. Whenever a question arises regarding your Cat product or this publication, please consult your Cat dealer for the latest available information.

FRAME AND BODY

8E-3299 PLATFORM GP-CAB

PIN 38K1-99999

8MS-7253 100090751

NOTE	REF NO	GRAPHIC REF	PART NUMBER	QTY	PART NAME (1 2 3 4 5 6 PRODUCT LEVEL)	SEE PAGE
	1	1	3T-3963	1	PLATE AS	
	2	1	5H-3962	25	BOLT (3/8-16X.750IN)	
	3	1	6P-1075	41	WASHER-HARD (3MM THK)	
	4	1	9P-1444	2	SUPPORT AS-FOOT	
	5	1	5P-2229	19	BOLT (1/2-13X1IN)	
		1	9x-[illegible]	19	WASHER-HARD (4MM THK)	
	6	1	9E-8134	1	COVER AS-LH	
		1	9F-2979	6	NUT-WELD (3/8-16 THD)	
		1	1F-9189	1	CLIP	
	7	1	7S-2411	4	COVER	
	8	1	5J-0468	19	SCREW-HEAD (3/8-16X.87SIN)	
	9	1	[illegible]074	1	COVER	
		1	9E-8[illegible]	1	GASKET	
	10	1	9E-3248	1	[illegible]	
		1	9E-3250	1	GASKET	
	11	1	3T-3930	1	HANDHOLD	
	12	1	9E-8078	1	COVER AS	
		1	9F-2979	6	NUT-WELD (3/8-16 THD)	
		1	9E-8079	1	GASKET	
	13	1	7T-0131	1	FLOORPLATE AS	
		1	1F-0748	4	NUT-WELD (1/2-13 THD)	
	14	1	7V-8067	1	PLUG-BUTTON	
	15	1	7T-0136	1	PLATE AS	
		1	9F-2979	5	NUT-WELD (3/8-16 THD)	
	16	1	7T-5066	1	COVER	
		1	7T-0779	1	GASKET	
	17	1	3T-3951	1	PLATE AS	
	18	1	9T-9364	4	BOLT (1/4-20X.62SIN)	
M		1	9T-4286	4	WASHER-HARD (2MM THK)	
	19	1	6I-9464	1	FLOOR MAT	
	20	1	8E-8846	1	MODULE AS-OPERATOR	
	21	1	3T-3934	1	HANDHOLD	
	22	1	9P-8571	2	PLUG	
	23	2	9T-9364	4	BOLT (1/4-20X.62SIN)	
M		2	9T-4286	4	WASHER-HARD (2MM THK)	
	24	2	5H-3962	17	BOLT (3/8-16X.750IN)	
	25	2	6P-1078	21	WASHER-HARD (9MM THK)	
	26	2	7T-0136	1	SEAL	
	27	2	7X-0378	2	BOLT (3/4-10X5IN)	
		2	7X-0682	2	WASHER-HARD (6MM THK)	
	28	2	3T-3482	2	PLATE	
	29	2	3T-8290	1	PLATE AS	
		2	7S-4828	6	SPACER	
	30	2	3T-8281	1	SEAL	
	31	2	7S-8017	1	GASKET	
	32	2	7S-8016	1	COVER AS	
		2	2R-2376	2	WASHER	
		2	6P-0626	2	SCREW-KNURLED	
	33	2	9W-3429	1	COVER	
	34	2	8E-9697	1	COVER	
	35	2	9D-3091	8	SCREW-SOCKET HEAD	
	36	2	9W-3142	8	MOUNTING	
	37	2	9W-9527	2	PLATE	
	38	2	7X-0390	2	BOLT (7/8-9X6IN)	
		2	7X-0672	2	WASHER-HARD	
	39	2	4L-6454	4	BOLT (3/8-16X1.0IN)	
	40	2	3T-4788	1	COVER	

12 FRAME AND BODY 1 of 4 SELP4570-01

FRAME AND BODY

8E-3299 PLATFORM GP-CAB (contd.)

100090751

NOTE	REF NO	GRAPHIC REF	PART NUMBER	QTY	PART NAME (1 2 3 4 5 6 PRODUCT LEVEL)	SEE PAGE
	41	2	8E-2515	1	COVER	
	42	2	7T-0134	1	PLATE	
	43	2	7T-0128	1	GASKET	
	44	2	7S-8724	1	GASKET	
	45	2	7S-8723	1	COVER	
	46	2	6V-1960	2	PLUG-BUTTON	

M-METRIC PART

SELP4570-01 2 of 4 FRAME AND BODY 13

FRAME AND BODY

8E-3299 PLATFORM GP-CAB (contd.)

100090751

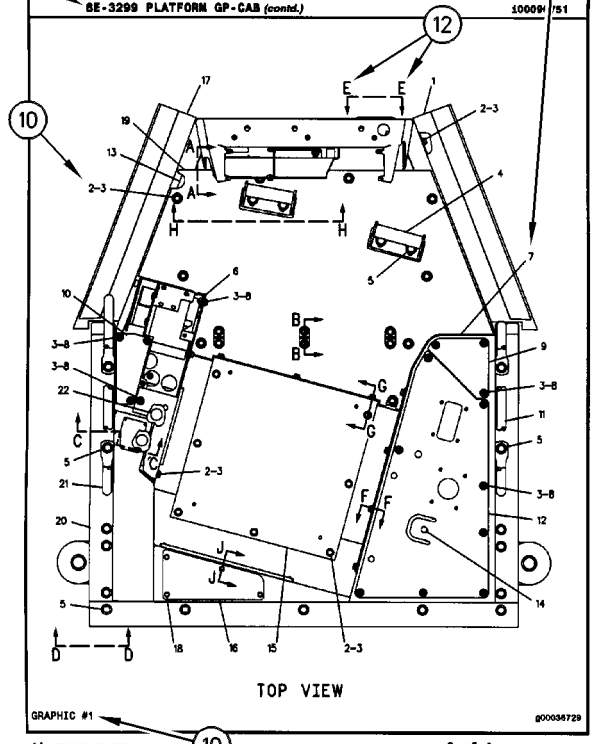

14 FRAME AND BODY 3 of 4 SELP4570-01

FRAME AND BODY

8E-3299 PLATFORM GP-CAB (contd.)

100090751

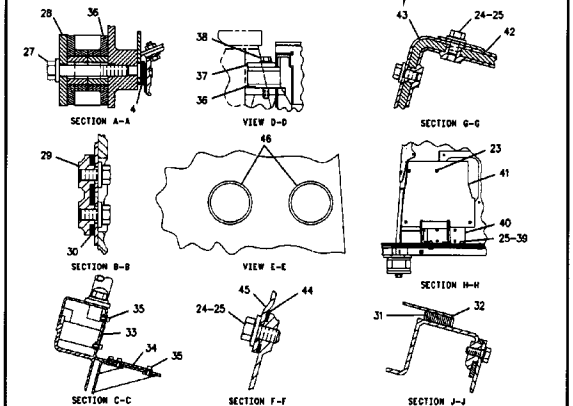

SELP4570-01 4 of 4 FRAME AND BODY 15

REMANUFACTURED COMPONENTS

As an option when making repairs consider Cat Remanufactured Components. Components that are available through the Cat Remanufactured Program are identified three ways in the parts book:

- with the letter R in the note field of the parts list
- with an R* at the beginning of the first line of the caption
- with an *R at the end of the first line of the caption

Typical components included in the Remanufacturing Program include:

ALTERNATORS
CONNECTING RODS
CRANKSHAFTS - UNDERSIZE
CRANKSHAFTS - UPGRADE TO NEW
CYLINDER HEADS
ELECTRONIC CONTROL MODULES (ECM)
ELECTRONIC SENSORS
FUEL INJECTORS
FUEL NOZZLES
FUEL PUMPS
GOVERNORS
OIL PUMPS
PISTONS
SHORT BLOCKS
STARTERS
TURBOCHARGERS - COMPLETE
TURBOCHARGER CARTRIDGES
WATER PUMPS

Cat Remanufactured engines for many engine arrangements are also available.

SUPPLEMENTAL COOLANT ADDITIVES

CUSTOMER BENEFITS:

Protects against cavitation, foam, erosion, corrosion, and scale buildup in cooling systems.

- Provides measured coolant conditioner.

DESCRIPTION:

Additives deplete from the coolant with normal operation. For this reason, Supplemental Coolant Additives (SCA) must be added to all heavy duty coolants at regular intervals. In addition, when not using a fully formulated, pre-charged antifreeze, like Cat DEAC, an initial charge of SCA must be added to the cooling system. The amount of SCA added to the system is dependent on the capacity of the system.

The SCA for initial fill is provided as a liquid. SCA's for maintenance intervals are available in liquid form and as a spin-on element. (No Spin-on available for 3600 Family of Engines)

NOTE:

The amount of SCA added at initial fill is not the same as the amount added at maintenance intervals.

The coolant additive elements can be used with any ethylene or propylene glycol type antifreeze which meets ASTM D4985 or ASTM D5345 Specifications.

NOTE:

For use with standard heavy duty coolant only, not for use with Extended Life Coolant.

PARTS NEEDED:

Cooling System Capacity		Liquid SCA at Initial Fill	Liquid SCA at Maintenance*	Spin-on SCA Maintenance Element*
Liters	Gallons			
22-30	(6-8)	3P-2044 (1)	6V-3542 (1)	111-2370 (1)
30-38	(8-10)	3P-2044 (1) 6V-3542 (1)	111-2372 (1)	111-2369 (1)
38-49	(10-13)	3P-2044 (1) 8T-1589 (1)	111-2372 (1)	111-2369 (1)
49-64	(13-17)	3P-2044 (2)	8T-1589 (1)	9N-3368 (1)
64-83	(17-22)	3P-2044 (2) 8T-1589 (1)	111-2372 (1) 6V-3542 (1)	111-2371 (1)
83-114	(22-30)	3P-2044 (3) 8T-1589 (1)	3P-2044 (1)	9N-3718 (1)
114-163	(30-43)	3P-2044 (5)	3P-2044 (1) 6V-3542 (1)	111-2371 (2)
163-242	(43-64)	3P-2044 (8)	3P-2044 (2)	9N-3718 (2)

** Normal maintenance period is 250 hrs. See your Operation and Maintenance Manual for complete coolant maintenance instructions.*

( ) Indicates quantity required.

MAINTENANCE PARTS

DESCRIPTION	PART NUMBER	QTY	WHERE USED	PAGE
AIR INLET AND EXHAUST SYSTEM				
FILTER ELEMENT AS-AIR (PRIMARY, STANDARD EFFICIENCY)	6I-2501	1	AIR CLEANER GP	109
FILTER ELEMENT AS-AIR (SECONDARY)	6I-2502	1	AIR CLEANER GP	109
BASIC ENGINE				
BELT-SERPENTINE	174-9690	1	PULLEY GP-FAN & ALT DRIVE	57
	455-3677	1	PULLEY GP-FAN & ALT DRIVE	56
BREATHER AS (CRANKCASE)	204-4444	1	COVER GP-VALVE MECHANISM	20
	240-0041	1	COVER GP-CYLINDER BLOCK	17
FILTER ELEMENT-BREATHER (CRANKCASE)	185-3159	1	COVER GP-VALVE MECHANISM	20
PLUG-DRAIN (ENGINE OIL PAN)	126-1683	1	DRAIN GP-ENGINE OIL	33
COOLING SYSTEM				
CAP AS-RADIATOR	294-3342	1	TANK GP-COOLANT	102
		1	TANK GP-COOLANT	106
GASKET (WATER REGULATOR HOUSING)	191-4457	1	HOUSING & REGULATOR GP	86
REGULATOR-TEMPERATURE (92-DEG C) (WATER, COOLANT)	248-5513	1	HOUSING & REGULATOR GP	86
ELECTRICAL AND STARTING SYSTEM				
BATTERY GP (12-VOLT, MAINTENANCE FREE, WET)	153-5710	2	BATTERY GP	158
CAP AS-FILLER (BATTERY)	123-1373	6	BATTERY GP	156
CAP AS-FILLER (BATTERY) (NEGATIVE)	123-1373	6	BATTERY GP	158
CAP AS-FILLER (BATTERY) (POSITIVE)	461-5232	6	BATTERY GP	158
FILTER (ETHER START)	358-4889	1	VALVE GP-ETHER STARTING	250
FUSE (10-AMPERE)	113-8490	4	WIRING GP-CAB	251
		4	WIRING GP-CAB	256
FUSE (15-AMPERE)	113-8491	16	WIRING GP-CAB	251
		16	WIRING GP-CAB	256
KEY (BATTERY DISCONNECT)	8H-5306	1	SWITCH GP-DISCONNECT	245
LAMP (24-VOLT) (DOME LIGHT)	7N-9943	1	LAMP GP-DOME	188
LAMP-HALOGEN (24-VOLT, 70-WATT)	351-9918	1	LAMP GP-FLOOD	190
		1	LAMP GP-FLOOD	191
		1	LAMP GP-FLOOD	192
		1	LAMP GP-FLOOD	193
SCREEN (ALTERNATOR COOLING)	226-4909	1	ALTERNATOR GP-CHARGING	154
FRAME AND BODY				
PLUG-DRAIN (TRANSMISSION CASE)	106-8187	1	CASE & FRAME GP	358

MAINTENANCE PARTS

DESCRIPTION	PART NUMBER	QTY	WHERE USED	PAGE
FUEL SYSTEM				
CAP AS-FUEL (LOCKABLE, VENTED) (TANK)	349-7059	1	TANK GP-FUEL	149
FILTER AS-WATER SEP & FUEL (ULTRA HIGH EFFICIENCY)	438-5386	1	PUMP GP-FUEL PRM & PRIM FILTER	146
FILTER-FUEL (ADVANCED EFFICIENCY)	1R-0762	1	FILTER & LINES GP-FUEL	132
STRAINER-FUEL (FUEL TANK)	9P-7121	1	TANK GP-FUEL	149
HYDRAULIC SYSTEM				
CAP-FILLER (HYDRAULIC OIL)	7H-1447	1	TANK & FILTER GP-HYDRAULIC	615
FILTER (SCREEN)	382-9259	3	PUMP GP-PISTON	605
PLUG-DRAIN	9J-7031	1	TANK & FILTER GP-HYDRAULIC	615
SCREEN (HYDRAULIC TANK)	6E-1752	2	TANK & FILTER GP-HYDRAULIC	615
SCREEN (IMPLEMENT PILOT OIL)	6E-5066	1	MANIFOLD GP-CONTROL	597
STRAINER AS-OIL (HYDRAULIC)	5D-7927	1	TANK & FILTER GP-HYDRAULIC	615
LUBRICATION SYSTEM				
CAP AS-FILLER (ENGINE OIL)	6N-2985	1	FILLER GP-ENGINE OIL	66
FILTER-ENGINE OIL (ADVANCED EFFICIENCY)	1R-1808	1	FILTER GP-ENGINE OIL	67
OPERATOR STATION				
BLADE AS-WIPER (350-MM)	6V-5849	3	WIPER GP-WINDOW	804
BLADE AS-WIPER (500-MM)	146-6433	1	WIPER GP-WINDOW	804
CAP-VENTED (WINDOW WASHER TANK)	322-4964	1	TANK GP-WINDOW WASHER	792
CIRCUIT BREAKER AS (15-AMPERE)	6T-3643	1	AIR CONDITIONER & MOUNTING GP	680
CIRCUIT BREAKER AS (15-AMPERE) (AIR CONDITIONER)	6T-3643	1	HEATER & MTG GP-CAB	720
DRYER-REFRIGERANT (RECEIVER)	106-5534	1	LINES GP-AIR CONDITIONER	735
FILTER ELEMENT-CAB AIR (STANDARD EFFICIENCY)	112-7448	1	AIR CONDITIONER & MOUNTING GP	680
		1	HEATER & MTG GP-CAB	720
SEAT BELT GP (RETRACTABLE, 3-IN)	222-0345	1	SEAT & MOUNTING GP	771
		1	SEAT & MOUNTING GP	772
		1	SEAT GP	776
V-BELT (REFRIGERANT COMPRESSOR)	216-0349	1	COMPRESSOR GP-REFRIGERANT	692
POWER TRAIN				
BREATHER AS (POWER TRAIN OIL)	9G-5127	1	LINES GP-POWER TRAIN OIL	313
CAP-OIL FILLER (ENGINE)	068-4497	1	LINES GP-POWER TRAIN OIL	313
FILTER ELEMENT AS-OIL (POWER TRAIN)	337-5270	1	FILTER GP-OIL	306
GASKET-COVER	8P-0058	1	CASE & PARTS GP-PLANETARY	279
PLUG-DRAIN (TORQUE CONVERTER)	321-8665	1	DRAIN GP-ECOLOGY	289
PLUG-MAGNETIC (FINAL DRIVE, OIL FILL)	6V-0439	1	DRIVE GP-FINAL	293

DESCRIPTION	PART NUMBER	QTY	WHERE USED	PAGE
		1	DRIVE GP-FINAL	295
		1	DRIVE GP-FINAL	297
		1	DRIVE GP-FINAL	299
		1	DRIVE GP-FINAL	301
		1	DRIVE GP-FINAL	303
SCREEN AS (TORQUE CONVERTER SCAVENGE)	3T-6471	1	LINES GP-POWER TRAIN OIL	313
	9P-0214	1	LINES GP-POWER TRAIN OIL	313
SCREEN-SUCTION (TRANSMISSION CASE)	8S-9130	1	CASE & PARTS GP-PLANETARY	279
STEERING AND BRAKING SYSTEM				
FILTER-OIL (ULTRA HIGH EFFICIENCY)	126-1818	1	FILTER GP-OIL	535

INDEX

NAME PAGE

A

ACCUMULATOR GP (BRAKE) 634
ACCUMULATOR GP-HYDRAULIC–CHARGED . . . 541
ACCUMULATOR GP-HYDRAULIC–UNCHARGED 539 540 542 543
ACCUMULATOR GP-PILOT OIL–CHARGED 544
ACTUATOR GP-PUMP 545
ADAPTER GP-MOTOR 546
ADAPTER GP-PLUG 289
ADJUSTER GP-SEAT 679
AFTERCOOLER GP-AIR 107
AIR CLEANER AR 108
AIR CLEANER GP 109 110 111 112
AIR CONDITIONER & MOUNTING GP 680
AIR CONDITIONER GP 682
ALARM GP–ACTION 150
ALTERNATOR GP-CHARGING 151 152 153
ALTERNATOR GP-CHARGING–DUCTED 154
ARM GP-WINDOW WIPER 686
ARM GP-WINDOW WIPER–DOOR, LH 685
ARM GP-WINDOW WIPER–DOOR, RH 684
ARM GP-WINDOW WIPER–FRONT 687
ATOMIZER GP-ETHER 237
AXLE GP 271 272

B

BAR AR-STRIKER 351 352
BAR GP-EQUALIZER 405 406 408 409
BAR GP-STRIKER–REAR 353 355
BASE GP-VALVE COVER 20
BATTERY GP 156
BATTERY GP (12-VOLT, MAINTENANCE FREE, WET) 156 158
BATTERY GP–HEAVY-DUTY 158
BELT-SERPENTINE 56 57
BLADE & EDGE GP-ANGLING 807
BLADE & EDGE GP-ANGLING–FORESTRY 808
BLADE & EDGE GP-SEMI-UNIVERSAL 809 810 811 812

NAME PAGE

BLADE & EDGE GP-SEMI-UNIVERSAL–WASTE HANDLING 813
BLADE & EDGE GP-STRAIGHT 814 815
BLADE & EDGE GP-STRAIGHT–WASTE HANDLING 816
BLADE AS-ANGLING 818 819
BLADE AS-SEMI-UNIVERSAL 820 822 823 824 825 826
BLADE AS-SEMI-UNIVERSAL–WASTE HANDLING 827
BLADE AS-STRAIGHT 828 829
BLADE AS-STRAIGHT–WASTE HANDLING 830
BLADE AS-WIPER (350-MM) 804
BLADE AS-WIPER (500-MM) 804
BLADE AS–ANGLING 817
BOX GP-BATTERY 357
BRACE GP-BULLDOZER 655
BRACE GP-BULLDOZER–HYDRAULIC TILT 657
BRAKE & DIFFERENTIAL DRIVE GP 273
BRAKE & PLANETARY GP 277
BREATHER AS (CRANKCASE) 17 20
BREATHER AS (POWER TRAIN OIL) 313

C

C-FRAME AS 659
C-FRAME GP 660 661
CAB AR 688
CAB AR-ENCLOSED ROPS 689
CAB AR–DUAL PANE GLASS 689
CAMSHAFT GP 16
CANOPY AR–HEATED 690
CAP AS-FILLER (BATTERY) 156
CAP AS-FILLER (BATTERY) (NEGATIVE) 158
CAP AS-FILLER (BATTERY) (POSITIVE) 158
CAP AS-FILLER (ENGINE OIL) 66
CAP AS-FUEL (LOCKABLE, VENTED) (TANK) 149
CAP AS-RADIATOR 102 106
CAP GP-TRACK IDLER 410
CAP GP-TRACK IDLER–SYSTEMONE 411 412 413 414 415
CAP-FILLER (HYDRAULIC OIL) 615
CAP-OIL FILLER (ENGINE) 313
CAP-VENTED (WINDOW WASHER TANK) 792
CASE & FRAME GP 358 359

INDEX

NAME	PAGE
CASE & PARTS GP-PLANETARY	279
CASE GP-TRANSMISSION	282
CHASSIS AR	1
CIRCUIT BREAKER AS (15-AMPERE)	680
CIRCUIT BREAKER AS (15-AMPERE) (AIR CONDITIONER)	720
CLAMP GP-HYDRAULIC LINES	536
COMMON AR	1 2
COMPRESSOR GP-REFRIGERANT	691 692
CONDENSER & MTG GP-REFRIGERANT	694
CONDENSER GP-REFRIGERANT	695
CONTROL & MTG GP-ENGINE ELEK	160
CONTROL & MTG GP-PEDAL–GOVERNOR, BRAKE	696
CONTROL GP-AIR & TEMPERATURE	697
CONTROL GP-ENGINE ELECTRONIC	161
CONTROL GP-HANDLE	698 699 701
CONTROL GP-JOYSTICK–STEERING, TRANSMISSION	703
CONTROL GP-PARKING BRAKE	533
CONTROL GP-PILOT OPERATED HYD–BULLDOZER	704
CONTROL GP-PILOT OPERATED HYD–BULLDOZER, RIPPER	705
CONTROL GP-POWER TRAIN–AUTOSHIFT	162
CONTROL GP-STEERING & XMSN	534
CONTROL GP-THROTTLE	706
CONTROL GP-TRANSMISSION HYD	283
CONTROL GP-UNPROGRAMMED (IMPLEMENT)	251
CONTROL GP-UNPROGRAMMED (MACHINE)	256
CONTROL GP-UNPROGRAMMED (NETWORK MANAGER)	163
COOLER GP-ENGINE OIL	82
COOLER GP-HYDRAULIC OIL	547
COOLER GP-TRANSMISSION OIL	285
CORE AS-AFTERCOOLER	107
CORE AS-OIL COOLER (ENGINE)	82
CORE AS-OIL COOLER (HYDRAULIC)	547
CORE AS-OIL COOLER (TRANSMISSION)	285
CORE AS-RADIATOR (LH)	96 100
CORE AS-RADIATOR (RH)	96 100
COUNTERWEIGHT AR	361
COUNTERWEIGHT GP	362 363 364
COVER GP-BATTERY	357
COVER GP-CAB	707 710
COVER GP-CYLINDER BLOCK	17
COVER GP-FRONT HOUSING	19
COVER GP-FRONT HOUSING–ACCESSORY DRIVE	18
COVER GP-TRANSMISSION	287
COVER GP-VALVE MECHANISM	20
CRANKSHAFT GP	21
CYLINDER & LINES GP-LIFT–LH	550 554
CYLINDER & LINES GP-LIFT–RH	548 552
CYLINDER AR-LIFT	556 557
CYLINDER BLOCK AS	22
CYLINDER BLOCK GP	24 26
CYLINDER GP-BULLDOZER LIFT	558 560 562
CYLINDER GP-RIPPER–LIFT	563
CYLINDER GP-TILT	564 566
CYLINDER HEAD AS	27
CYLINDER HEAD GP	29 31

D

DAMPER & PULLEY GP	32
DISTRIBUTION AR	2
DOOR GP-CAB (LH)	712
DOOR GP-CAB–LH	712
DOOR GP-CAB–RH	714
DRAIN GP-ECOLOGY	288 289
DRAIN GP-ENGINE OIL	33
DRAWBAR GP	365
DRIVE AR-FINAL	291 292
DRIVE AR-FINAL–COLD WEATHER	291
DRIVE GP-FAN	34 35
DRIVE GP-FINAL	293 295 297 301
DRIVE GP-FINAL–COLD WEATHER	299 303
DRIVE GP-WATER PUMP	36
DRYER-REFRIGERANT (RECEIVER)	735
DUST EJECTOR GP	113 114

E

EDGE GP-BIT & CUTTING	831 832 833 834 835 836
ELBOW GP-AIR INLET	115
ELECTRONICS GP-COMMUNICATION–NETWORK MANAGER	163

INDEX

NAME PAGE

ELECTRONICS GP-MACHINE 164
ENCLOSURE AR 366
ENCLOSURE GP-ENGINE 366
367
369
371
ENCLOSURE GP-ENGINE–LH 373
ENCLOSURE GP-ENGINE–RH. 375
ENCLOSURE GP-HYDRAULIC TANK 377
ENGINE AR. 4
5
ENGINE AR-COMPLETE 6
7
8
9
10
11
ENGINE AR-CORE 5
12
13
EXTENSION GP-BACKREST (CLOTH) 776
782
EXTENSION GP-BACKREST (VINYL) 781

F

FAN GP-BLOWER 83
84
FAN GP-CIRCULATING 717
FAN GP-CIRCULATING (24-VOLT). 717
FAN GP-REVERSIBLE 85
FASTENER GP-CYLINDER HEAD 37
38
FASTENER GP-FRONT COVER 39
FASTENER GP-VALVE COVER 40
FASTENER GP-VALVE COVER BASE 41
FENDER AS–LH. 378
FENDER AS–RH 379
FENDER GP 380
FILLER GP-ENGINE OIL 66
FILM GP. 843
844
846
848
FILM-CERTIFICATION (PL631). 217
FILM-CERTIFICATION (SERIAL NUMBER). 216
FILM-CIRCUIT BREAKER 680
720
FILM-IDENTIFICATION (CAT). 252
FILM-IDENTIFICATION (GROUP NO., SEQUENCE NO.) 695
FILM-IDENTIFICATION (HYDRAULIC ACCUMULATOR) 543
544
FILM-IDENTIFICATION (JOYSTICK CONTROL) (TRANSMISSION CONTROL) 701
FILM-IDENTIFICATION (OPERATOR). 251
257
FILM-IDENTIFICATION (TIE-DOWN). 361
365
FILM-IDENTIFICATION (WASTE HANDLER) 14
FILM-IDENTIFICATION (WATER HEATER). 181
FILM-IDENTIFICATION (WINDOW WIPER CONTROLS) 251
FILM-INFORMATION (DRAWBAR, READ OMM). 361
365
FILM-INFORMATION (PL641 CELLULAR). 216
FILM-INFORMATION (PRODUCT LINK, READ OMM). 182
184
186
FILM-INFORMATION (SERIAL NUMBER) 217
FILM-INFORMATION (TRANSMISSION FILTER). 854
856
FILM-INSTRUCTION (BULLDOZER CONTROL). 852
855
857
FILM-INSTRUCTION (KEY START SWITCH). . . . 251
256
FILM-INSTRUCTION (RIPPER CONTROL). 705
FILM-INSTRUCTION (SEAT ADJUSTMENT) 787
789
FILM-WARNING (DO NOT LIFT, READ OMM). 403
FILM-WARNING (EXPLOSION HAZARD, READ OMM). 163
FILM-WARNING (HIGH PRESSURE CYLINDER) 539
FILM-WARNING (HIGH PRESSURE, READ OMM, INTL) 843
FILM-WARNING (HIGH PRESSURE, READ OMM). 540
541
542
FILM-WARNING (NO WELD, NO DRILL, READ OMM). 843
FILM-WARNING (PRODUCT LINK RADIO, INTL) 182
184
186
FILM-WARNING (RECOIL SPRING) 416
418
420
422
426
428
431
433
437
443
445
449
451
FILM-WARNING (SHOCK, ELECTROCUTION HAZARD) 181
FILTER (ETHER START). 250
FILTER (SCREEN). 605
FILTER & LINES GP-FUEL. 132

INDEX

NAME PAGE

FILTER AS-WATER SEP & FUEL (ULTRA HIGH EFFICIENCY). 146
FILTER ELEMENT AS-AIR (PRIMARY, STANDARD EFFICIENCY). 109
FILTER ELEMENT AS-AIR (SECONDARY) 109
FILTER ELEMENT AS-OIL (POWER TRAIN). . . . 306
FILTER ELEMENT-BREATHER (CRANKCASE). . . 20
FILTER ELEMENT-CAB AIR (STANDARD EFFICIENCY). 680
720
FILTER GP-CAB AIR 718
719
FILTER GP-ENGINE OIL 67
FILTER GP-OIL. 306
535
FILTER GP-OIL–MEDIUM PRESSURE 305
FILTER-ENGINE OIL (ADVANCED EFFICIENCY). 67
FILTER-FUEL (ADVANCED EFFICIENCY) 132
FILTER-OIL (ULTRA HIGH EFFICIENCY). 535
FINAL DRIVE AR. 291
292
FINAL DRIVE GP 293
295
297
299
301
303
FLOOR MAT AS 707
710
FLYWHEEL GP 42
FRAME GP-TELESCOPING RECOIL–HEAVY-DUTY, LH. 416
420
439
443
447
449
453
FRAME GP-TELESCOPING RECOIL–HEAVY-DUTY, RH 418
422
437
445
448
451
454
FRAME GP-TELESCOPING RECOIL–LH 424
430
433
436
442
FRAME GP-TELESCOPING RECOIL–RH 425
435
441
FRAME GP-TELESCOPING RECOIL–SYSTEMONE, LH. 426
FRAME GP-TELESCOPING RECOIL–SYSTEMONE, RH 428
431

NAME PAGE

FRAME GP-TRACK ROLLER (FRONT). 430
435
436
455
FRAME GP-TRACK ROLLER–RH 455
FUMES DISPOSAL GP 70
71
FUSE (10-AMPERE) 251
256
FUSE (15-AMPERE) 251
256

G

GASKET (WATER REGULATOR HOUSING). 86
GASKET-COVER 279
GAUGE (POWER TRAIN OIL) 313
GAUGE GP-OIL LEVEL (DIPSTICK)–ENGINE. . . . 72
GAUGE-SIGHT 104
615
GAUGE-SIGHT (COOLANT TANK) 102
GEAR GP-BEVEL & TRANSFER 307
310
GEAR GP-FRONT 43
GEAR GP-REAR 45
GENERAL AR. 3
GRID GP-SAND BLAST ERODING 382
GRILL AR-RADIATOR. 383
GRILL AR-RADIATOR–HEAVY-DUTY. 383
GRILL GP-RADIATOR. 384
GRILL GP-RADIATOR–HEAVY-DUTY. 385
GUARD GP-BOTTOM 386
GUARD GP-BOTTOM–HEAVY-DUTY 387
GUARD GP-ENGINE. 373
375
GUARD GP-FUEL TANK 389
390
GUARD GP-RADIATOR 391
GUARD GP-REAR. 392
393
GUARD GP-TILT CYLINDER 662
663
664
669
670
GUARD GP-TRACK GUIDE–HEAVY-DUTY 456
GUARD GP-TRACK GUIDE–SYSTEMONE. 457
458
GUARD GP-TRACK ROLLER–HEAVY-DUTY. . . . 459
461
463
GUARD GP-TRACK ROLLER–SYSTEMONE 460
462
GUARD GP-TRANSMISSION 394
GUARD GP-TRANSMISSION–HEAVY-DUTY 395

H

HANDHOLD GP 396

INDEX

NAME	PAGE
HANDHOLD GP–HEAVY-DUTY	397
HARDWARE GP	242
HARNESS AS-CAB	164 165 166
HARNESS AS-CAB–FRONT	167
HARNESS AS-CAB–LH	167
HARNESS AS-CAB–REAR	168
HARNESS AS-CHASSIS (RADIATOR GUARD)	263
HARNESS AS-CONTROL	169
HARNESS AS-CONTROL (STARTER)	244
HARNESS AS-DASH	170
HARNESS AS-ENGINE	171 172
HARNESS AS-ENGINE (UNIT INJECTOR)	266
HARNESS AS-FRONT LIGHTING	201 212
HARNESS AS-FUEL TANK	263
HARNESS AS-HEATER	786
HARNESS AS-HEATER & AIR COND	173 695
HARNESS AS-LIGHTING	173 174 175
HARNESS AS-LIGHTING (CYLINDER)	195 198 204 206 208 210
HARNESS AS-LIGHTING (SWEEPS)	201
HARNESS AS-PLATFORM	175 682
HARNESS AS-REAR LIGHTING	176
HARNESS AS-SENSOR	177
HARNESS AS-STARTING AID	177
HARNESS AS-SWITCH (WITH SWITCH) (SEAT HEATER)	782
HARNESS AS-TRANSMISSION	178
HARNESS AS-VALVE	179
HARNESS AS-WIRING (AIR CONDITIONER COMPRESSOR)	735
HARNESS AS-WIRING (CRANK WITHOUT INJECT)	268
HARNESS AS-WIRING (FUEL PRESSURE)	136
HARNESS AS-WIRING (SEAT AIR COMPRESSOR)	789
HARNESS AS-WIRING–FENDER, RH	180
HARNESS AS-WIRING–SEAT	180
HARNESS AS-WIRING–WINDOW WASHER	179
HEATER & MTG GP-CAB	720
HEATER GP-JACKET WATER	181
HOOD AS	398
HOOD GP	369
HOUSING & REGULATOR GP–WATER TEMPERATURE REGULATOR	86
HOUSING AS-FLYWHEEL	47
HOUSING GP-FLYWHEEL	48
HOUSING GP-FRONT	49
HOUSING GP-SEAT SUSPENSION	722
HYDRAULIC AR	568 569
HYDRAULIC AR–IMPLEMENT CONTROLS	568

I

IDLER GP-TRACK	464 465 466 467
IDLER GP-TRACK–SYSTEMONE	468
INJECTOR GP-FUEL	135
INSTALLATION AR	13
INSTALLATION AR-BULLDOZER	662 663 664 665 666 667 668 669
INSTALLATION AR-BULLDOZER–WASTE HANDLING	670
INSTALLATION AR-ENGINE	14 15
INSTALLATION GP-COMMUNICATION–PL631 SATELLITE	182
INSTALLATION GP-COMMUNICATION–PLE641 CELLULAR	184
INSTALLATION GP-COMMUNICATION–PLE641 +PL631	186
INSTALLATION GP-RADIO	724

K

KEY (BATTERY DISCONNECT)	245
KIT-HANDLE	725
KIT-SEAT AIR COMPRESSOR	726
KIT-SEAT CUSHION–DELUXE	727
KIT-SHOCK ABSORBER	728

L

LAMP (24-VOLT) (DOME LIGHT)	188
LAMP GP-DOME–LED	189
LAMP GP-DOME–WITH SWITCH	188
LAMP GP-FLOOD	190 191 192 193
LAMP GP-FLOOD (24-VOLT)	210
LAMP GP-FLOOD–LED	194
LAMP-HALOGEN (24-VOLT, 70-WATT)	190 191 192 193
LATCH GP	399
LIFTING GP-ENGINE	50

INDEX

NAME PAGE

LIGHTING GP-FLOOD 210
LIGHTING GP-FLOOD–CAB, CYLINDER. 195
198
208
LIGHTING GP-FLOOD–CANOPY, CYLINDER . . . 204
206
LIGHTING GP-FLOOD–SWEEPS 201
212
LINER GP-CAB. 730
733
LINES GP-AIR 117
119
LINES GP-AIR CONDITIONER–ROPS MOUNTED 735
LINES GP-AIR–ATAAC 118
LINES GP-ENGINE OIL 73
LINES GP-FUEL. 136
138
140
LINES GP-HEATER. 739
LINES GP-LIFT CYLINDER. 570
LINES GP-PILOT 572
576
LINES GP-POWER TRAIN OIL 313
LINES GP-PUMP 579
LINES GP-RIPPER 582
583
LINES GP-STEERING. 536
LINES GP-TILT CYLINDER. 584
586
588
590
592
593
595
LINES GP-TURBOCHARGER OIL. 74
76
LINES GP-TURBOCHARGER WATER. 87
LINES GP-WATER. 89
LINK AS-TRACK BOX–LINK BOX, SYSTEMONE. 474
LINK AS-TRACK BOX–SYSTEMONE, OFFSET 475
LINK AS-TRACK–HEAVY-DUTY. 471
472
473
LINK AS-TRACK–SYSTEMONE, OFFSET. 469
470
LITERATURE GP (STANDARD CAB) 688
689
690

M

MANIFOLD GP-CONTROL. 597
MANIFOLD GP-EXHAUST 120
MANIFOLD GP-VALVE 598
MIRROR GP-REAR VIEW 740
MIRROR GP-REAR VIEW–LH 741
MOTOR GP-PISTON (STEERING) 568
569
MOTOR GP-PISTON–STEERING. 599
MOTOR GP-WINDOW WIPER 742
743
745
MOTOR GP-WINDOW WIPER–REAR 744
MOUNTING GP-ALTERNATOR 51
MOUNTING GP-BRACKET 746
MOUNTING GP-CARRIER ROLLER. 476
MOUNTING GP-CONNECTOR 214
MOUNTING GP-CYLINDER. 600
MOUNTING GP-ENGINE 52
MOUNTING GP-FINAL DRIVE 320
MOUNTING GP-RIPPER 837
MOUNTING GP-ROPS 747
748
MOUNTING GP-TRANSMISSION. 321
MUFFLER GP 121
122

O

OIL CHANGE GP-HIGH SPEED 77

P

PADLOCK GP. 852
854
856
PAN GP-BACKREST. 749
750
751
PAN GP-OIL–ENGINE. 53
PEDAL GP-GOVERNOR & BRAKE 752
PISTON & ROD GP 54
PIVOT BAR GP 477
478
PLANETARY GP-TRANSMISSION. 322
PLATE & FILM GP 851
852
PLATE & FILM GP–CHINESE 858
PLATE & FILM GP–COLD WEATHER. 856
PLATE & FILM GP–HIGH AMBIENT 854
PLATE & FILM GP–RIPPER. 850
PLATE AS-BRUSH 215
PLATE AS-IDENTIFICATION (SERIAL NUMBER). 810
PLATE AS-IDENTIFICATION (SERIAL NUMBER) (BLADE) 807
808
809
811
812
PLATE GP-CERTIFICATION 859
PLATE-CERTIFICATION (MACHINE) 859

INDEX

NAME	PAGE
PLATE-SERIAL NUMBER	809, 810, 811, 812
PLATE-SERIAL NUMBER (BLADE)	807, 808, 813, 815, 816
PLATE-SERIAL NUMBER (RIPPER)	850
PLATE-SERIAL NUMBER (TRANSMISSION)	279
PLATE-WARNING (HIGH PRESSURE CYLINDER)	416, 418, 420, 422, 426, 428, 431, 433, 437, 439, 443, 445, 449, 451
PLATE-WARNING (RECOIL SPRING)	416, 418, 424, 425, 430, 435, 436, 441, 442, 455
PLUG GP	400
PLUG GP-ENGINE	55
PLUG-DRAIN	615
PLUG-DRAIN (ENGINE OIL PAN)	33
PLUG-DRAIN (TORQUE CONVERTER)	289
PLUG-DRAIN (TRANSMISSION CASE)	358
PLUG-MAGNETIC (FINAL DRIVE, OIL FILL)	293, 295, 297, 299, 301, 303
POWER TRAIN AR	328, 329
PRECLEANER GP–WITH SCREEN	123, 125
PULLEY GP-FAN & ALT DRIVE	56, 57
PUMP & MOUNTING GP	603
PUMP & MOUNTING GP–IMPLEMENT	602
PUMP & MTG GP-UNIT INJ HYD	142
PUMP GP-CHARGE–STEERING	604
PUMP GP-ENGINE OIL	79, 80
PUMP GP-FUEL INJECTION	144
PUMP GP-FUEL PRIMING	145
PUMP GP-FUEL PRM & PRIM FILTER	146
PUMP GP-GEAR–TRANSMISSION, TORQUE CONVERTER	330, 332
PUMP GP-PISTON	607, 609
PUMP GP-PISTON–STEERING	605
PUMP GP-WATER	91, 92, 93
PUSH ARM GP	671, 673, 675

R

NAME	PAGE
RADIATOR GP	94, 96, 98, 100
RADIO GP-COMMUNICATION–PL631 SATELLITE	217
RADIO GP-COMMUNICATION–PL641E CELLULAR	216
RECLINER GP-SEAT	753
REGULATOR GP-FUEL PRESSURE	147
REGULATOR-TEMPERATURE (92-DEG C) (WATER, COOLANT)	86
RELAY AS (24-VOLT) (CONDENSER)	695
RELAY AS (24-VOLT) (WINDOW WIPERS)	251, 257
RIPPER AR	838
RIPPER GP	839
ROCKER ARM GP–EXHAUST	58
ROCKER ARM GP–INLET	59
ROLLER GP-TRACK CARRIER	479
ROLLER GP-TRACK-DOUBLE FLANGE	480, 481, 482, 483
ROLLER GP-TRACK-SINGLE FLANGE	484, 486
ROLLER GP-TRACK-SINGLE FLANGE–SYSTEMONE	485, 487
ROPS GP	754, 755
ROTATING GP-MOTOR	611
ROTATING GP-PUMP	612
ROTATING GP-PUMP–STEERING	613

S

NAME	PAGE
SCRAPER GP-IDLER	488
SCREEN (ALTERNATOR COOLING)	154
SCREEN (HYDRAULIC TANK)	615
SCREEN (IMPLEMENT PILOT OIL)	597

INDEX

NAME	PAGE
SCREEN AS (TORQUE CONVERTER SCAVENGE)	313
SCREEN GP-PROTECTION	759, 761, 762, 763, 766
SCREEN GP-PROTECTION–LH	758, 769
SCREEN GP-PROTECTION–REAR	765
SCREEN GP-PROTECTION–RH	757, 767
SCREEN-SUCTION (TRANSMISSION CASE)	279
SEAL GP-CRANKSHAFT	60
SEAL GP-CRANKSHAFT–REAR	61
SEAL GP-DUO-CONE	293, 295, 297, 301, 464, 466, 467, 468
SEAL GP-WASTE HANDLING	401
SEAL-CRANKSHAFT (FRONT)	60
SEAT & MOUNTING GP–CLOTH, HEATED	772
SEAT & MOUNTING GP–VINYL	771
SEAT BELT GP	773
SEAT BELT GP (RETRACTABLE, 3-IN)	771, 772, 776
SEAT GP (CLOTH, HEATED)	786
SEAT GP-SUSPENSION (CLOTH, HEATED, AIR)	772
SEAT GP-SUSPENSION–CLOTH	784
SEAT GP-SUSPENSION–CLOTH, HEATED, AIR	786
SEAT GP-SUSPENSION–VINYL	785
SEAT GP–CLOTH	774, 776, 780
SEAT GP–CLOTH, HEATED	782
SEAT GP–VINYL	778, 781
SEGMENT GP-SPROCKET	333
SENDER AS-FUEL LEVEL	148
SENSOR AS-PRESSURE (ENGINE OIL)	218
SENSOR AS-TEMPERATURE	235, 236
SENSOR GP-ENGINE	12, 218, 219
SENSOR GP-LIQUID LEVEL (WATER IN FUEL)	132
SENSOR GP-LIQUID LEVEL–WATER IN FUEL	220
SENSOR GP-POSITION	221, 222, 223
SENSOR GP-POSITION (DECELERATOR)	752
SENSOR GP-POSITION (FORWARD, NEUTRAL, REVERSE)	701
SENSOR GP-POSITION (ROTARY) (SERVICE BRAKE)	752
SENSOR GP-POSITION (STEERING)	703
SENSOR GP-PRESSURE	136, 224, 225, 226, 227, 228, 229, 230
SENSOR GP-PRESSURE (AIR INLET MANIFOLD)	218
SENSOR GP-PRESSURE (ATMOSPHERIC)	218, 219
SENSOR GP-PRESSURE (ENGINE OIL)	219
SENSOR GP-PRESSURE (INJECTION ACTUATION)	218, 219
SENSOR GP-PRESSURE (OUTLET AIR)	219
SENSOR GP-SPEED	231, 232
SENSOR GP-SPEED (STEERING MOTOR)	263
SENSOR GP-SPEED (TRANSMISSION OUTPUT 1)	322
SENSOR GP-SPEED (TRANSMISSION OUTPUT 2)	322
SENSOR GP-TEMPERATURE	233, 234, 235, 236
SENSOR GP-TEMPERATURE (AIR INLET MANIFOLD)	218
SENSOR GP-TEMPERATURE (COOLANT)	219
SENSOR GP-TEMPERATURE (WATER, COOLANT)	218
SENSOR-TEMPERATURE	233, 234
SENSOR-TEMPERATURE (HYDRAULIC OIL)	263
SENSOR-TEMPERATURE (TRANSMISSION SUMP)	263
SHAFT GP-DRIVE	334
SHIELD GP-HEAT	126, 127
SOFTWARE GP-MONITOR	217
SOFTWARE GP-MONITOR (CELLULAR)	216
SOLENOID AS (PUMP CONTROL VALVE)	642
SOLENOID AS-STARTING MOTOR	242
SOLENOID AS-STARTING MOTOR (24-VOLT)	240
STARTING AID GP-ETHER	237
STARTING MOTOR GP-ELECTRIC	239, 242, 243, 244
STRAINER AS-OIL (HYDRAULIC)	615
STRAINER-FUEL (FUEL TANK)	149

INDEX

NAME PAGE

STRIKER GP-REAR 489
490
491
492
SUPPORT GP-ENGINE 62
SUSPENSION GP-SEAT 787
SUSPENSION GP-SEAT–AIR 789
SWEEP GP 403
SWITCH AS (POWER TRAIN) 162
SWITCH AS (SPEED CONTROL) 706
SWITCH AS-LIMIT (SERVICE BRAKE PEDAL) 752
SWITCH AS-PRESSURE (HIGH, LOW) 735
SWITCH AS-PUSH BUTTON (DISPLAY MODES) 251
256
SWITCH AS-PUSH BUTTON (DOWNSHIFT) 701
SWITCH AS-PUSH BUTTON (UPSHIFT) 701
SWITCH AS-ROCKER (24-VOLT) (AIR CONDITIONER ON, OFF) 697
SWITCH AS-ROCKER (24-VOLT) (FLOODLIGHT, FRONT) 251
SWITCH AS-ROCKER (24-VOLT) (FLOODLIGHTS, REAR) 251
SWITCH AS-ROCKER (24-VOLT) (FRONT WORK LIGHT) 256
SWITCH AS-ROCKER (24-VOLT) (IMPLEMENT LOCKOUT) 251
256
SWITCH AS-ROCKER (24-VOLT) (REAR WORK LIGHTS) 256
SWITCH AS-ROCKER (PARKING BRAKE ON, OFF) 699
SWITCH AS-START (KEY) 251
256
SWITCH GP-DISCONNECT–BATTERY 245
SWITCH GP-LIMIT (STEERING) 701
SWITCH GP-MAGNETIC 246
SWITCH GP-PRESSURE 247
SWITCH GP-PRESSURE (STEERING CHARGE) 535
SWITCH GP-PUSH BUTTON 248
SWITCH GP-ROTARY 249
SWITCH-TEMPERATURE (HVAC) (AIR CONDITIONER) 682

T

TANK & FILTER GP-HYDRAULIC 615
TANK & MTG GP-HYDRAULIC 618
TANK GP-COOLANT 102
104
106
TANK GP-FUEL 148
149
TANK GP-WINDOW WASHER 791
792
TOOTH GP-RIPPER 841
TOOTH GP-RIPPER–CURVED 842
TORQUE CONVERTER & HOUSING GP 335
336
337
338
TORQUE CONVERTER GP 340
342
344
346
TRACK ADJUSTER & RECOIL GP 493
495
TRACK AR–HEAVY-DUTY 498
499
500
502
503
504
505
506
508
509
510
TRACK AR–SYSTEMONE 497
501
507
TRACK GP–2-REQUIRED, HEAVY-DUTY 511
513
514
515
517
518
519
520
522
523
524
TRACK GP–2-REQUIRED, SYSTEMONE 512
516
521
TRANSMISSION AR 348
349
TRUNNION GP-BULLDOZER 677
678
TRUNNION GP-ENGINE 63
TURBOCHARGER GP 128
129
130
131

U

UNDERCARRIAGE AR–HEAVY-DUTY 526
527
528
530
531
UNDERCARRIAGE AR–HEAVY-DUTY, WASTE HANDLING 525
UNDERCARRIAGE AR–SYSTEMONE 529
530
532

INDEX

NAME PAGE

UNIVERSAL JOINT GP 334

V

V-BELT (REFRIGERANT COMPRESSOR) 692
VALVE & MOUNTING GP–BRAKE 619
VALVE & MTG GP-IMPLEMENT CONT–BLADE LIFT, TILT 620
VALVE & MTG GP-IMPLEMENT CONT–BLADE, RIPPER LIFT, TILT 621
VALVE AS-FLUID SAMPLING 537
VALVE AS-PRESSURE RELIEF (REFRIGERANT COMPRESSOR) 691
VALVE AS-RELIEF 605
VALVE AS-SOLENOID 654
VALVE GP-BANK 2. 622
VALVE GP-BANK 3. 624
VALVE GP-CHECK 626
VALVE GP-CHECK (PILOT PRESSURE SUPPLY). 597
VALVE GP-CONTROL 627 629 631
VALVE GP-CONTROL (IMPLEMENT, STEERING, BRAKE). 634
VALVE GP-CONTROL–BRAKE. 634
VALVE GP-ETHER STARTING 250
VALVE GP-ETHER STARTING (24-VOLT) 237
VALVE GP-FLUID SAMPLING (POWER TRAIN OIL) 314
VALVE GP-FLUID SAMPLING–ENGINE OIL 81
VALVE GP-PILOT 636
VALVE GP-PILOT (RIPPER CONTROL) 705
VALVE GP-PILOT CARTRIDGE. 638 639
VALVE GP-PRESSURE REDUCING 640
VALVE GP-PRESSURE REDUCING (BRAKE) . . 634
VALVE GP-PUMP CONTROL. 642
VALVE GP-PUMP CONTROL–FLOW COMPENSATOR 641
VALVE GP-QUICK-DROP 644 645
VALVE GP-RELIEF 350 605 647 648 649 650 651
VALVE GP-SHUTOFF 739
VALVE GP-SHUTTLE 652
VALVE GP-SOLENOID 653 654
VALVE GP-SOLENOID (24-VOLT) (HYDRAULIC LOCKOUT) 634
VALVE GP-SOLENOID (BRAKE). 634
VALVE GP-SOLENOID (HYDRAULIC LOCKOUT) 597
VALVE GP-SOLENOID (SHIFT). 283
VALVE MECHANISM GP. 64 65
VALVE-RELIEF (TORQUE CONVERTER INLET) 313

W

WINDOW GP-CAB 794 798
WINDOW GP-CAB–LH 796 802
WINDOW GP-CAB–RH 797 800
WIPER GP-WINDOW 804
WIRING GP-CAB 251 256
WIRING GP-CHASSIS 263
WIRING GP-ELECTRONIC CONTROL. 266
WIRING GP-ENGINE. 268

MACHINE ARRANGEMENT

398-4281 CHASSIS AR

S/N: PPP1-UP; SSS1-UP; TTT1-UP
PART OF 398-4278, 398-4279, 398-4280 COMMON AR
ALSO AN ATTACHMENT

SMCS-7000 **i06199179**

NOTE	PART NUMBER	QTY	PART NAME 1 2 3 4 5 6 (PRODUCT LEVEL)	SEE PAGE
Y	*398-4538*	1	BOX GP-BATTERY	357
Y	*398-4386*	1	CASE & FRAME GP	358
Y	*398-4539*	1	ENCLOSURE GP-HYDRAULIC TANK	377
Y	*398-4385*	1	GUARD GP-RADIATOR	391
Y	*424-1763*	1	MOUNTING GP-ROPS	748
Y	*398-4540*	1	TANK GP-FUEL	148
Y	*398-4434*	1	WIRING GP-CHASSIS	263

Y - SEPARATE ILLUSTRATION

<END>

398-4278 COMMON AR

S/N: SSS1-UP
PART OF 481-9508 DISTRIBUTION AR
ALSO AN ATTACHMENT

SMCS-7000 **i06229425**

NOTE	PART NUMBER	QTY	PART NAME 1 2 3 4 5 6 (PRODUCT LEVEL)	SEE PAGE
Y	*398-4281*	1	CHASSIS AR	1
Y	*469-2274*	1	ELECTRONICS GP-MACHINE	164
Y	*483-3859*	1	FILM GP	844
Y	*398-4286*	1	HYDRAULIC AR	568
Y	*398-4287*	1	INSTALLATION AR-ENGINE	13
Y	*398-4284*	1	POWER TRAIN AR	328

Y - SEPARATE ILLUSTRATION

<END>

398-4279 COMMON AR

S/N: TTT1-UP
ALSO AN ATTACHMENT

SMCS-7000 **i06229430**

NOTE	PART NUMBER	QTY	PART NAME 1 2 3 4 5 6 (PRODUCT LEVEL)	SEE PAGE
Y	*398-4281*	1	CHASSIS AR	1
Y	*469-2274*	1	ELECTRONICS GP-MACHINE	164
Y	*483-3860*	1	FILM GP	846
Y	*398-4286*	1	HYDRAULIC AR	568
Y	*398-4287*	1	INSTALLATION AR-ENGINE	13
Y	*398-4284*	1	POWER TRAIN AR	328

Y - SEPARATE ILLUSTRATION

<END>

MACHINE ARRANGEMENT

398-4280 COMMON AR

S/N: PPP1-UP

SMCS-7000 **i06216962**

NOTE	PART NUMBER	QTY	PART NAME 1 2 3 4 5 6 (PRODUCT LEVEL)	SEE PAGE
Y	*398-4281*	1	CHASSIS AR	1
Y	*469-2274*	1	ELECTRONICS GP-MACHINE	164
Y	*483-3861*	1	FILM GP	848
Y	*398-4331*	1	HYDRAULIC AR	569
Y	*398-4287*	1	INSTALLATION AR-ENGINE	13
Y	*398-4285*	1	POWER TRAIN AR	328

Y - SEPARATE ILLUSTRATION

<END>

481-9508 DISTRIBUTION AR

S/N: SSS1-UP

AN ATTACHMENT

SMCS-7000 **i06222088**

NOTE	PART NUMBER	QTY	PART NAME 1 2 3 4 5 6 (PRODUCT LEVEL)	SEE PAGE
Y	*398-4339*	1	AIR CLEANER AR	108
Y	*398-4373*	1	ALTERNATOR GP-CHARGING	153
Y	*398-4454*	1	BATTERY GP	156
Y	*398-4297*	1	CAB AR	688
Y	*398-4278*	1	COMMON AR	1
Y	*449-9291*	1	CONTROL GP-THROTTLE	706
Y	*389-3252*	1	DRIVE AR-FINAL	291
Y	*398-4305*	1	ENCLOSURE GP-ENGINE	366
Y	*393-9041*	1	FAN GP-BLOWER	83
Y	*398-4357*	1	GRID GP-SAND BLAST ERODING	382
Y	*424-1730*	1	GRILL AR-RADIATOR	383
Y	*475-6568*	1	GUARD GP-BOTTOM	387
Y	*398-4292*	1	HYDRAULIC AR	568
Y	*398-4314*	1	INSTALLATION AR-ENGINE	15
Y	*450-2737*	1	INSTALLATION GP-COMMUNICATION (PLE641 CELLULAR)	184
Y	*398-4440*	1	LIGHTING GP-FLOOD	198
Y	*398-4503*	1	LINES GP-FUEL	138
Y	*398-4302*	1	PLATE & FILM GP	852
Y	*398-4337*	1	PULLEY GP-FAN & ALT DRIVE	57
Y	*434-8126*	1	RIPPER AR	838
Y	*374-5771*	1	SEAT GP	780
Y	*9J-8926*	3	TOOTH GP-RIPPER	842
Y	*385-5459*	1	TRACK AR	504
Y	*457-7966*	1	UNDERCARRIAGE AR	527

Y - SEPARATE ILLUSTRATION

<END>

MACHINE ARRANGEMENT

398-4315 GENERAL AR

S/N: PPP1-UP; TTT1-UP

AN ATTACHMENT

SMCS-7000 **i06221616**

NOTE	PART NUMBER	QTY	PART NAME 1 2 3 4 5 6 (PRODUCT LEVEL)	SEE PAGE
Y	**420-1871**	1	ENGINE AR-COMPLETE	7
Y	*398-4308*	1	INSTALLATION AR-ENGINE	14
Y	*398-4319*	1	POWER TRAIN AR	329

Y - SEPARATE ILLUSTRATION

<END>

ENGINE ARRANGEMENT

398-4313 ENGINE AR

S/N: PPP1-UP; TTT1-UP
CANNOT BE USED WITH 398-4336—PAGE: 56
AN ATTACHMENT

SMCS-1000 **i06221598**

NOTE	PART NUMBER	QTY	PART NAME 1 2 3 4 5 6 (PRODUCT LEVEL)	SEE PAGE
Y	**423-8453**	1	ENGINE AR-COMPLETE	10
Y	*398-4308*	1	INSTALLATION AR-ENGINE	14
Y	*398-4318*	1	POWER TRAIN AR	328

Y - SEPARATE ILLUSTRATION

<END>

398-4316 ENGINE AR

S/N: PPP1-UP; TTT1-UP
AN ATTACHMENT

SMCS-1000 **i06221630**

NOTE	PART NUMBER	QTY	PART NAME 1 2 3 4 5 6 (PRODUCT LEVEL)	SEE PAGE
Y	**423-8454**	1	ENGINE AR-COMPLETE	11
Y	*398-4309*	1	INSTALLATION AR-ENGINE	14
Y	*398-4318*	1	POWER TRAIN AR	328

Y - SEPARATE ILLUSTRATION

<END>

398-4317 ENGINE AR

S/N: PPP1-UP; TTT1-UP
AN ATTACHMENT

SMCS-1000 **i06221643**

NOTE	PART NUMBER	QTY	PART NAME 1 2 3 4 5 6 (PRODUCT LEVEL)	SEE PAGE
Y	**423-8451**	1	ENGINE AR-COMPLETE	8
Y	*398-4309*	1	INSTALLATION AR-ENGINE	14
Y	*398-4319*	1	POWER TRAIN AR	329

Y - SEPARATE ILLUSTRATION

<END>

420-1872 ENGINE AR

S/N: TXD1-UP
PART OF 420-1870 ENGINE AR-COMPLETE
AN ATTACHMENT

SMCS-1000 **i05981638**

NOTE	PART NUMBER	QTY	PART NAME 1 2 3 4 5 6 (PRODUCT LEVEL)	SEE PAGE
Y	*387-8619*	1	ENGINE AR-CORE	12
Y	*385-1747*	1	PLATE & FILM GP	851
	472-5696	1	ELECTRONICS GP-ENGINE	

Y - SEPARATE ILLUSTRATION

<END>

ENGINE ARRANGEMENT

420-1873 ENGINE AR

S/N: TXD1-UP

PART OF 420-1871 ENGINE AR-COMPLETE

AN ATTACHMENT

SMCS-1000 **i06040026**

NOTE	PART NUMBER	QTY	PART NAME 1 2 3 4 5 6 (PRODUCT LEVEL)	SEE PAGE
Y	*387-8619*	1	ENGINE AR-CORE	12
Y	*385-1747*	1	PLATE & FILM GP	851
	472-5723	1	ELECTRONICS GP-ENGINE	

Y - SEPARATE ILLUSTRATION

<END>

423-8456 ENGINE AR

S/N: TXD1-UP

PART OF 423-8452 ENGINE AR-COMPLETE

AN ATTACHMENT

SMCS-1000 **i06220873**

NOTE	PART NUMBER	QTY	PART NAME 1 2 3 4 5 6 (PRODUCT LEVEL)	SEE PAGE
Y	*387-8618*	1	ENGINE AR-CORE	12
Y	*385-1747*	1	PLATE & FILM GP	851
	472-5729	1	ELECTRONICS GP-ENGINE	

Y - SEPARATE ILLUSTRATION

<END>

423-8457 ENGINE AR-CORE

S/N: TXD1-UP

PART OF 423-8453 ENGINE AR-COMPLETE

AN ATTACHMENT

SMCS-1000 **i06144785**

NOTE	PART NUMBER	QTY	PART NAME 1 2 3 4 5 6 (PRODUCT LEVEL)	SEE PAGE
Y	*387-8618*	1	ENGINE AR-CORE	12
Y	*385-1747*	1	PLATE & FILM GP	851
	472-5734	1	ELECTRONICS GP-ENGINE	

Y - SEPARATE ILLUSTRATION

<END>

ENGINE ARRANGEMENT

420-1870 ENGINE AR-COMPLETE

S/N: TXD1-UP
148 BRAKE KW(198BHP)AT 2000 RPM
PART OF 398-4314 INSTALLATION AR-ENGINE
AN ATTACHMENT

SMCS-1000 **i05981189**

NOTE	PART NUMBER	QTY	PART NAME 1 2 3 4 5 6 (PRODUCT LEVEL)	SEE PAGE
Y	*246-9365*	1	CONTROL & MTG GP-ENGINE ELEK	160
Y	*188-3826*	1	COOLER GP-ENGINE OIL	82
Y	*238-1116*	1	COOLER GP-TRANSMISSION OIL	285
Y	*388-4887*	1	COVER GP-CYLINDER BLOCK	17
Y	*118-1727*	1	COVER GP-FRONT HOUSING (ACCESSORY DRIVE)	18
Y	*217-8669*	1	COVER GP-FRONT HOUSING	19
Y	*222-1783*	1	COVER GP-VALVE MECHANISM	20
Y	*442-4658*	1	DAMPER & PULLEY GP	32
Y	*4P-2102*	1	DRAIN GP-ENGINE OIL	33
Y	*246-0599*	1	DRIVE GP-WATER PUMP	36
Y	*246-0596*	1	ELBOW GP-AIR INLET	115
Y	*420-1872*	1	ENGINE AR	4
Y	*219-8681*	1	FASTENER GP-FRONT COVER	39
Y	*236-7315*	1	FASTENER GP-VALVE COVER	40
Y	*233-0423*	1	FASTENER GP-VALVE COVER BASE	41
Y	*389-8270*	1	FILLER GP-ENGINE OIL	66
Y	*183-2097*	1	FILTER GP-ENGINE OIL	67
Y	*241-3718*	1	FLYWHEEL GP	42
Y	*241-3719*	1	FUMES DISPOSAL GP	70
Y	*246-0601*	1	GAUGE GP-OIL LEVEL (DIPSTICK)	72
Y	*438-0955*	1	GEAR GP-REAR	45
Y	*165-4461*	1	HOUSING & REGULATOR GP (WATER TEMPERATURE REGULATOR)	86
Y	*438-1110*	1	HOUSING GP-FLYWHEEL	48
Y	*245-3262*	1	HOUSING GP-FRONT	49
Y	*166-1784*	1	LIFTING GP-ENGINE	50
Y	*198-1319*	1	LINES GP-ENGINE OIL	73
Y	*397-5040*	1	LINES GP-FUEL	136
Y	*266-9810*	1	LINES GP-TURBOCHARGER OIL	74
Y	*165-4445*	1	MANIFOLD GP-EXHAUST	120
Y	*438-0935*	1	MOUNTING GP-ALTERNATOR	51
Y	*367-7314*	1	MOUNTING GP-CONNECTOR	214
Y	*165-4459*	1	PAN GP-OIL	53
Y	*252-1567*	1	PLUG GP-ENGINE	55
Y	*189-9306*	1	SEAL GP-CRANKSHAFT	60
Y	*166-1790*	1	SUPPORT GP-ENGINE	62
Y	*166-1792*	1	TRUNNION GP-ENGINE	63
Y	*262-5901*	1	TURBOCHARGER GP	131
Y	*198-0921*	1	VALVE GP-FLUID SAMPLING	81
Y	*438-3435*	1	WIRING GP-ELECTRONIC CONTROL	266
			PLEASE USE THE GASKET KIT LINK IN SIS OR CONTACT YOUR LOCAL DEALER FOR THE LATEST GASKET KIT INFORMATION	

Y - SEPARATE ILLUSTRATION

<END>

420-1871 ENGINE AR-COMPLETE

S/N: TXD1-UP

PART OF 398-4315 GENERAL AR

AN ATTACHMENT

SMCS-1000 **i05877292**

NOTE	PART NUMBER	QTY	PART NAME 1 2 3 4 5 6 (PRODUCT LEVEL)	SEE PAGE
Y	*246-9365*	1	CONTROL & MTG GP-ENGINE ELEK	160
Y	*188-3826*	1	COOLER GP-ENGINE OIL	82
Y	*238-1116*	1	COOLER GP-TRANSMISSION OIL	285
Y	*388-4887*	1	COVER GP-CYLINDER BLOCK	17
Y	*118-1727*	1	COVER GP-FRONT HOUSING (ACCESSORY DRIVE)	18
Y	*217-8669*	1	COVER GP-FRONT HOUSING	19
Y	*222-1783*	1	COVER GP-VALVE MECHANISM	20
Y	*442-4658*	1	DAMPER & PULLEY GP	32
Y	*4P-2102*	1	DRAIN GP-ENGINE OIL	33
Y	*246-0599*	1	DRIVE GP-WATER PUMP	36
Y	*246-0596*	1	ELBOW GP-AIR INLET	115
Y	*420-1873*	1	ENGINE AR	5
Y	*219-8681*	1	FASTENER GP-FRONT COVER	39
Y	*236-7315*	1	FASTENER GP-VALVE COVER	40
Y	*233-0423*	1	FASTENER GP-VALVE COVER BASE	41
Y	*389-8270*	1	FILLER GP-ENGINE OIL	66
Y	*183-2097*	1	FILTER GP-ENGINE OIL	67
Y	*241-3718*	1	FLYWHEEL GP	42
Y	*241-3719*	1	FUMES DISPOSAL GP	70
Y	*246-0601*	1	GAUGE GP-OIL LEVEL (DIPSTICK) (ENGINE)	72
Y	*438-0955*	1	GEAR GP-REAR	45
Y	*165-4461*	1	HOUSING & REGULATOR GP (WATER TEMPERATURE REGULATOR)	86
Y	*438-1110*	1	HOUSING GP-FLYWHEEL	48
Y	*245-3262*	1	HOUSING GP-FRONT	49
Y	*166-1784*	1	LIFTING GP-ENGINE	50
Y	*198-1319*	1	LINES GP-ENGINE OIL	73
Y	*397-5040*	1	LINES GP-FUEL	136
Y	*266-9810*	1	LINES GP-TURBOCHARGER OIL	74
Y	*165-4445*	1	MANIFOLD GP-EXHAUST	120
Y	*438-0935*	1	MOUNTING GP-ALTERNATOR	51
Y	*367-7314*	1	MOUNTING GP-CONNECTOR	214
Y	*165-4459*	1	PAN GP-OIL	53
Y	*252-1567*	1	PLUG GP-ENGINE	55
Y	*189-9306*	1	SEAL GP-CRANKSHAFT	60
Y	*166-1790*	1	SUPPORT GP-ENGINE	62
Y	*166-1792*	1	TRUNNION GP-ENGINE	63
Y	*262-5901*	1	TURBOCHARGER GP	131
Y	*198-0921*	1	VALVE GP-FLUID SAMPLING	81
Y	*438-3435*	1	WIRING GP-ELECTRONIC CONTROL	266

Y - SEPARATE ILLUSTRATION

<END>

423-8451 ENGINE AR-COMPLETE

S/N: TXD1-UP

PART OF 398-4317 ENGINE AR

AN ATTACHMENT

SMCS-1000 **i06122417**

NOTE	PART NUMBER	QTY	PART NAME 1 2 3 4 5 6 (PRODUCT LEVEL)	SEE PAGE
Y	*246-9365*	1	CONTROL & MTG GP-ENGINE ELEK	160
Y	*188-3826*	1	COOLER GP-ENGINE OIL	82
Y	*238-1116*	1	COOLER GP-TRANSMISSION OIL	285
Y	*388-4887*	1	COVER GP-CYLINDER BLOCK	17
Y	*118-1727*	1	COVER GP-FRONT HOUSING (ACCESSORY DRIVE)	18
Y	*217-8669*	1	COVER GP-FRONT HOUSING	19
Y	*222-1783*	1	COVER GP-VALVE MECHANISM	20
Y	*442-4658*	1	DAMPER & PULLEY GP	32
Y	*4P-2102*	1	DRAIN GP-ENGINE OIL	33
Y	*246-0599*	1	DRIVE GP-WATER PUMP	36
Y	*246-0596*	1	ELBOW GP-AIR INLET	115
Y	*423-8455*	1	ENGINE AR-CORE	13
Y	*219-8681*	1	FASTENER GP-FRONT COVER	39
Y	*236-7315*	1	FASTENER GP-VALVE COVER	40
Y	*233-0423*	1	FASTENER GP-VALVE COVER BASE	41
Y	*389-8270*	1	FILLER GP-ENGINE OIL	66
Y	*183-2097*	1	FILTER GP-ENGINE OIL	67
Y	*241-3718*	1	FLYWHEEL GP	42
Y	*241-3719*	1	FUMES DISPOSAL GP	70
Y	*246-0601*	1	GAUGE GP-OIL LEVEL (DIPSTICK)	72
Y	*438-0955*	1	GEAR GP-REAR	45
Y	*165-4461*	1	HOUSING & REGULATOR GP (WATER TEMPERATURE REGULATOR)	86
Y	*438-1110*	1	HOUSING GP-FLYWHEEL	48
Y	*245-3262*	1	HOUSING GP-FRONT	49
Y	*166-1784*	1	LIFTING GP-ENGINE	50
Y	*198-1319*	1	LINES GP-ENGINE OIL	73
Y	*397-5040*	1	LINES GP-FUEL	136
Y	*266-9811*	1	LINES GP-TURBOCHARGER OIL	76
Y	*165-4445*	1	MANIFOLD GP-EXHAUST	120
Y	*438-0935*	1	MOUNTING GP-ALTERNATOR	51
Y	*367-7314*	1	MOUNTING GP-CONNECTOR	214
Y	*165-4459*	1	PAN GP-OIL	53
Y	*252-1567*	1	PLUG GP-ENGINE	55
Y	*189-9306*	1	SEAL GP-CRANKSHAFT	60
Y	*166-1790*	1	SUPPORT GP-ENGINE	62
Y	*166-1792*	1	TRUNNION GP-ENGINE	63
Y	*237-2041*	1	TURBOCHARGER GP	129
Y	*198-0921*	1	VALVE GP-FLUID SAMPLING	81
Y	*438-3435*	1	WIRING GP-ELECTRONIC CONTROL	266
			PLEASE USE THE GASKET KIT LINK IN SIS OR CONTACT YOUR LOCAL DEALER FOR THE LATEST GASKET KIT INFORMATION	

Y - SEPARATE ILLUSTRATION

<END>

ENGINE ARRANGEMENT

423-8452 ENGINE AR-COMPLETE

S/N: TXD1-UP
158KW(211BHP) AT 1850RPM
PART OF 398-4312 INSTALLATION AR-ENGINE
AN ATTACHMENT

SMCS-1000 **i06220596**

NOTE	PART NUMBER	QTY	PART NAME 1 2 3 4 5 6 (PRODUCT LEVEL)	SEE PAGE
Y	*246-9365*	1	CONTROL & MTG GP-ENGINE ELEK	160
Y	*188-3826*	1	COOLER GP-ENGINE OIL	82
Y	*238-1116*	1	COOLER GP-TRANSMISSION OIL	285
Y	*388-4887*	1	COVER GP-CYLINDER BLOCK	17
Y	*118-1727*	1	COVER GP-FRONT HOUSING (ACCESSORY DRIVE)	18
Y	*217-8669*	1	COVER GP-FRONT HOUSING	19
Y	*222-1783*	1	COVER GP-VALVE MECHANISM	20
Y	*442-4658*	1	DAMPER & PULLEY GP	32
Y	*4P-2102*	1	DRAIN GP-ENGINE OIL	33
Y	*246-0599*	1	DRIVE GP-WATER PUMP	36
Y	*246-0596*	1	ELBOW GP-AIR INLET	115
Y	*423-8456*	1	ENGINE AR	5
Y	*219-8681*	1	FASTENER GP-FRONT COVER	39
Y	*236-7315*	1	FASTENER GP-VALVE COVER	40
Y	*233-0423*	1	FASTENER GP-VALVE COVER BASE	41
Y	*389-8270*	1	FILLER GP-ENGINE OIL	66
Y	*183-2097*	1	FILTER GP-ENGINE OIL	67
Y	*241-3718*	1	FLYWHEEL GP	42
Y	*241-3719*	1	FUMES DISPOSAL GP	70
Y	*246-0601*	1	GAUGE GP-OIL LEVEL (DIPSTICK)	72
Y	*438-0955*	1	GEAR GP-REAR	45
Y	*165-4461*	1	HOUSING & REGULATOR GP (WATER TEMPERATURE REGULATOR)	86
Y	*438-1110*	1	HOUSING GP-FLYWHEEL	48
Y	*245-3262*	1	HOUSING GP-FRONT	49
Y	*166-1784*	1	LIFTING GP-ENGINE	50
Y	*198-1319*	1	LINES GP-ENGINE OIL	73
Y	*397-5040*	1	LINES GP-FUEL	136
Y	*266-9810*	1	LINES GP-TURBOCHARGER OIL	74
Y	*165-4445*	1	MANIFOLD GP-EXHAUST	120
Y	*438-0935*	1	MOUNTING GP-ALTERNATOR	51
Y	*367-7314*	1	MOUNTING GP-CONNECTOR	214
Y	*165-4459*	1	PAN GP-OIL	53
Y	*252-1567*	1	PLUG GP-ENGINE	55
Y	*189-9306*	1	SEAL GP-CRANKSHAFT	60
Y	*166-1790*	1	SUPPORT GP-ENGINE	62
Y	*166-1792*	1	TRUNNION GP-ENGINE	63
Y	*262-5901*	1	TURBOCHARGER GP	131
Y	*198-0921*	1	VALVE GP-FLUID SAMPLING	81
Y	*438-3435*	1	WIRING GP-ELECTRONIC CONTROL	266
			PLEASE USE THE GASKET KIT LINK IN SIS OR CONTACT YOUR LOCAL DEALER FOR THE LATEST GASKET KIT INFORMATION	

Y - SEPARATE ILLUSTRATION

<END>

423-8453 ENGINE AR-COMPLETE

S/N: TXD1-UP
PART OF 398-4313 ENGINE AR
AN ATTACHMENT

SMCS-1000 **i06144752**

NOTE	PART NUMBER	QTY	PART NAME 1 2 3 4 5 6 (PRODUCT LEVEL)	SEE PAGE
Y	*246-9365*	1	CONTROL & MTG GP-ENGINE ELEK	160
Y	*188-3826*	1	COOLER GP-ENGINE OIL	82
Y	*238-1116*	1	COOLER GP-TRANSMISSION OIL	285
Y	*388-4887*	1	COVER GP-CYLINDER BLOCK	17
Y	*118-1727*	1	COVER GP-FRONT HOUSING (ACCESSORY DRIVE)	18
Y	*217-8669*	1	COVER GP-FRONT HOUSING	19
Y	*222-1783*	1	COVER GP-VALVE MECHANISM	20
Y	*442-4658*	1	DAMPER & PULLEY GP	32
Y	*4P-2102*	1	DRAIN GP-ENGINE OIL	33
Y	*246-0599*	1	DRIVE GP-WATER PUMP	36
Y	*246-0596*	1	ELBOW GP-AIR INLET	115
Y	*423-8457*	1	ENGINE AR-CORE	5
Y	*219-8681*	1	FASTENER GP-FRONT COVER	39
Y	*236-7315*	1	FASTENER GP-VALVE COVER	40
Y	*233-0423*	1	FASTENER GP-VALVE COVER BASE	41
Y	*389-8270*	1	FILLER GP-ENGINE OIL	66
Y	*183-2097*	1	FILTER GP-ENGINE OIL	67
Y	*241-3718*	1	FLYWHEEL GP	42
Y	*241-3719*	1	FUMES DISPOSAL GP	70
Y	*246-0601*	1	GAUGE GP-OIL LEVEL (DIPSTICK)	72
Y	*438-0955*	1	GEAR GP-REAR	45
Y	*165-4461*	1	HOUSING & REGULATOR GP (WATER TEMPERATURE REGULATOR)	86
Y	*438-1110*	1	HOUSING GP-FLYWHEEL	48
Y	*245-3262*	1	HOUSING GP-FRONT	49
Y	*166-1784*	1	LIFTING GP-ENGINE	50
Y	*198-1319*	1	LINES GP-ENGINE OIL	73
Y	*397-5040*	1	LINES GP-FUEL	136
Y	*266-9810*	1	LINES GP-TURBOCHARGER OIL	74
Y	*165-4445*	1	MANIFOLD GP-EXHAUST	120
Y	*438-0935*	1	MOUNTING GP-ALTERNATOR	51
Y	*367-7314*	1	MOUNTING GP-CONNECTOR	214
Y	*165-4459*	1	PAN GP-OIL	53
Y	*252-1567*	1	PLUG GP-ENGINE	55
Y	*189-9306*	1	SEAL GP-CRANKSHAFT	60
Y	*166-1790*	1	SUPPORT GP-ENGINE	62
Y	*166-1792*	1	TRUNNION GP-ENGINE	63
Y	*262-5901*	1	TURBOCHARGER GP	131
Y	*198-0921*	1	VALVE GP-FLUID SAMPLING	81
Y	*438-3435*	1	WIRING GP-ELECTRONIC CONTROL	266
			PLEASE USE THE GASKET KIT LINK IN SIS OR CONTACT YOUR LOCAL DEALER FOR THE LATEST GASKET KIT INFORMATION	

Y - SEPARATE ILLUSTRATION

<END>

423-8454 ENGINE AR-COMPLETE

S/N: TXD1-UP
PART OF 398-4316 ENGINE AR
AN ATTACHMENT

SMCS-1000 **i06132695**

NOTE	PART NUMBER	QTY	PART NAME 1 2 3 4 5 6 (PRODUCT LEVEL)	SEE PAGE
Y	*246-9365*	1	CONTROL & MTG GP-ENGINE ELEK	160
Y	*188-3826*	1	COOLER GP-ENGINE OIL	82
Y	*238-1116*	1	COOLER GP-TRANSMISSION OIL	285
Y	*388-4887*	1	COVER GP-CYLINDER BLOCK	17
Y	*118-1727*	1	COVER GP-FRONT HOUSING (ACCESSORY DRIVE)	18
Y	*217-8669*	1	COVER GP-FRONT HOUSING	19
Y	*222-1783*	1	COVER GP-VALVE MECHANISM	20
Y	*442-4658*	1	DAMPER & PULLEY GP	32
Y	*4P-2102*	1	DRAIN GP-ENGINE OIL	33
Y	*246-0599*	1	DRIVE GP-WATER PUMP	36
Y	*246-0596*	1	ELBOW GP-AIR INLET	115
Y	*423-8458*	1	ENGINE AR-CORE	13
Y	*219-8681*	1	FASTENER GP-FRONT COVER	39
Y	*236-7315*	1	FASTENER GP-VALVE COVER	40
Y	*233-0423*	1	FASTENER GP-VALVE COVER BASE	41
Y	*389-8270*	1	FILLER GP-ENGINE OIL	66
Y	*183-2097*	1	FILTER GP-ENGINE OIL	67
Y	*241-3718*	1	FLYWHEEL GP	42
Y	*241-3719*	1	FUMES DISPOSAL GP	70
Y	*246-0601*	1	GAUGE GP-OIL LEVEL (DIPSTICK)	72
Y	*438-0955*	1	GEAR GP-REAR	45
Y	*165-4461*	1	HOUSING & REGULATOR GP (WATER TEMPERATURE REGULATOR)	86
Y	*438-1110*	1	HOUSING GP-FLYWHEEL	48
Y	*245-3262*	1	HOUSING GP-FRONT	49
Y	*166-1784*	1	LIFTING GP-ENGINE	50
Y	*198-1319*	1	LINES GP-ENGINE OIL	73
Y	*397-5040*	1	LINES GP-FUEL	136
Y	*266-9811*	1	LINES GP-TURBOCHARGER OIL	76
Y	*165-4445*	1	MANIFOLD GP-EXHAUST	120
Y	*438-0935*	1	MOUNTING GP-ALTERNATOR	51
Y	*367-7314*	1	MOUNTING GP-CONNECTOR	214
Y	*165-4459*	1	PAN GP-OIL	53
Y	*252-1567*	1	PLUG GP-ENGINE	55
Y	*189-9306*	1	SEAL GP-CRANKSHAFT	60
Y	*166-1790*	1	SUPPORT GP-ENGINE	62
Y	*166-1792*	1	TRUNNION GP-ENGINE	63
Y	*237-2041*	1	TURBOCHARGER GP	129
Y	*198-0921*	1	VALVE GP-FLUID SAMPLING	81
Y	*438-3435*	1	WIRING GP-ELECTRONIC CONTROL	266
			PLEASE USE THE GASKET KIT LINK IN SIS OR CONTACT YOUR LOCAL DEALER FOR THE LATEST GASKET KIT INFORMATION	

Y - SEPARATE ILLUSTRATION

<END>

ENGINE ARRANGEMENT

387-8618 ENGINE AR-CORE

S/N: TXD1-UP

PART OF 423-8456, 423-8457 ENGINE AR, 423-8458 ENGINE AR-CORE

AN ATTACHMENT

SMCS-1000 **i06132763**

NOTE	PART NUMBER	QTY	PART NAME 1 2 3 4 5 6 (PRODUCT LEVEL)	SEE PAGE
Y	*242-0674*	1	CAMSHAFT GP	16
Y	*164-6148*	1	CRANKSHAFT GP	21
Y	*161-3406*	1	CYLINDER BLOCK GP	24
Y	*384-5590*	1	CYLINDER HEAD GP	31
Y	*205-1321*	1	GEAR GP-FRONT	43
YR	*265-1400*	6	PISTON & ROD GP	54
Y	*387-8622*	1	PUMP & MTG GP-UNIT INJ HYD	142
Y	*195-8098*	1	PUMP GP-ENGINE OIL	79
Y	*267-9715*	6	PUMP GP-FUEL INJECTION	144
Y	*211-1812*	1	PUMP GP-WATER	91
Y	*330-6034*	1	SENSOR GP-ENGINE	219
Y	*242-0447*	1	VALVE MECHANISM GP	65

R - REMFG PART MAY BE AVAILABLE
Y - SEPARATE ILLUSTRATION

<END>

387-8619 ENGINE AR-CORE

S/N: TXD1-UP

PART OF 420-1872, 420-1873 ENGINE AR, 423-8455 ENGINE AR-CORE

AN ATTACHMENT

SMCS-1000 **i05555509**

NOTE	PART NUMBER	QTY	PART NAME 1 2 3 4 5 6 (PRODUCT LEVEL)	SEE PAGE
Y	*242-0674*	1	CAMSHAFT GP	16
Y	*164-6148*	1	CRANKSHAFT GP	21
Y	*161-3406*	1	CYLINDER BLOCK GP	24
Y	*384-5590*	1	CYLINDER HEAD GP	31
Y	*205-1321*	1	GEAR GP-FRONT	43
YR	*265-1400*	6	PISTON & ROD GP	54
Y	*387-8622*	1	PUMP & MTG GP-UNIT INJ HYD	142
Y	*195-8098*	1	PUMP GP-ENGINE OIL	79
Y	*267-9715*	6	PUMP GP-FUEL INJECTION	144
Y	*211-1812*	1	PUMP GP-WATER	91
Y	*231-1978*	1	SENSOR GP-ENGINE	218
			S/N: TXD1-796	
Y	*330-6034*	1	SENSOR GP-ENGINE	219
			S/N: TXD797-UP	
Y	*242-0447*	1	VALVE MECHANISM GP	65

R - REMFG PART MAY BE AVAILABLE
Y - SEPARATE ILLUSTRATION

<END>

ENGINE ARRANGEMENT

423-8455 ENGINE AR-CORE

S/N: TXD1-UP
PART OF 423-8451 ENGINE AR-COMPLETE
AN ATTACHMENT

SMCS-1000 **i06122469**

NOTE	PART NUMBER	QTY	PART NAME 1 2 3 4 5 6 (PRODUCT LEVEL)	SEE PAGE
Y	*387-8619*	1	ENGINE AR-CORE	12
Y	*385-1747*	1	PLATE & FILM GP	851
	472-5727	1	ELECTRONICS GP-ENGINE	

Y - SEPARATE ILLUSTRATION

<END>

423-8458 ENGINE AR-CORE

S/N: TXD1-UP
PART OF 423-8454 ENGINE AR-COMPLETE
AN ATTACHMENT

SMCS-1000 **i06132696**

NOTE	PART NUMBER	QTY	PART NAME 1 2 3 4 5 6 (PRODUCT LEVEL)	SEE PAGE
Y	*387-8618*	1	ENGINE AR-CORE	12
Y	*385-1747*	1	PLATE & FILM GP	851
	472-5736	1	ELECTRONICS GP-ENGINE	

Y - SEPARATE ILLUSTRATION

<END>

398-4287 INSTALLATION AR

S/N: PPP1-UP; SSS1-UP; TTT1-UP
PART OF 398-4278, 398-4279, 398-4280 COMMON AR
ALSO AN ATTACHMENT

SMCS-1000 **i06216551**

NOTE	PART NUMBER	QTY	PART NAME 1 2 3 4 5 6 (PRODUCT LEVEL)	SEE PAGE
Y	*423-3991*	1	AFTERCOOLER GP-AIR	107
Y	*398-4347*	1	COOLER GP-HYDRAULIC OIL	547
Y	*215-3251*	1	DRIVE GP-FAN	34
Y	*398-4334*	1	FILTER GP-FUEL	132
Y	*398-4348*	1	FUMES DISPOSAL GP	71
Y	*418-2404*	1	LINES GP-AIR (ATAAC)	118
Y	*398-4502*	1	LINES GP-HEATER	739
Y	*398-4356*	1	MOUNTING GP-ENGINE	52
Y	*398-4435*	1	WIRING GP-ENGINE	268

Y - SEPARATE ILLUSTRATION

<END>

398-4308 INSTALLATION AR-ENGINE

S/N: PPP1-UP; SSS1-UP; TTT1-UP

PART OF 398-4313 ENGINE AR, 398-4315 GENERAL AR, 398-4312, 398-4314 INSTALLATION AR-ENGINE

AN ATTACHMENT

SMCS-1000 **i06219468**

NOTE	PART NUMBER	QTY	PART NAME 1 2 3 4 5 6 (PRODUCT LEVEL)	SEE PAGE
Y	*398-4351*	1	LINES GP-AIR	117
Y	*398-4340*	1	LINES GP-WATER	89
Y	*393-9044*	1	RADIATOR GP	94
Y	*426-5000*	1	SHIELD GP-HEAT	127
Y	*398-4341*	1	TANK GP-COOLANT	102

Y - SEPARATE ILLUSTRATION

<END>

398-4309 INSTALLATION AR-ENGINE

S/N: PPP1-UP; TTT1-UP

PART OF 398-4316, 398-4317 ENGINE AR

AN ATTACHMENT

SMCS-1000 **i06221653**

NOTE	PART NUMBER	QTY	PART NAME 1 2 3 4 5 6 (PRODUCT LEVEL)	SEE PAGE
Y	*426-5018*	1	LINES GP-AIR	119
Y	*398-4344*	1	LINES GP-TURBOCHARGER WATER	87
Y	*398-4340*	1	LINES GP-WATER	89
Y	*423-3993*	1	RADIATOR GP	98
Y	*264-7963*	1	SHIELD GP-HEAT (ENGINE)	126
Y	*398-4343*	1	TANK GP-COOLANT	104
	307-6264	2	FILM-IDENTIFICATION (WASTE HANDLER)	

Y - SEPARATE ILLUSTRATION

<END>

398-4312 INSTALLATION AR-ENGINE

S/N: SSS1-UP

AN ATTACHMENT

SMCS-1000 **i06219026**

NOTE	PART NUMBER	QTY	PART NAME 1 2 3 4 5 6 (PRODUCT LEVEL)	SEE PAGE
Y	**423-8452**	1	ENGINE AR-COMPLETE	9
Y	*398-4308*	1	INSTALLATION AR-ENGINE	14
Y	*398-4318*	1	POWER TRAIN AR	328

Y - SEPARATE ILLUSTRATION

<END>

398-4314 INSTALLATION AR-ENGINE

S/N: SSS1-UP

PART OF 481-9508 DISTRIBUTION AR

AN ATTACHMENT

SMCS-1000 **i06221611**

NOTE	PART NUMBER	QTY	PART NAME 1 2 3 4 5 6 (PRODUCT LEVEL)	SEE PAGE
Y	**420-1870**	1	ENGINE AR-COMPLETE	6
Y	*398-4308*	1	INSTALLATION AR-ENGINE	14
Y	*398-4319*	1	POWER TRAIN AR	329

Y - SEPARATE ILLUSTRATION

<END>

242-0674 CAMSHAFT GP

S/N: TXD1-UP
PART OF 387-8618, 387-8619 ENGINE AR-CORE
AN ATTACHMENT

SMCS-1210 **i05555589**

NOTE	REF NO	GRAPHIC REF	PART NUMBER	QTY	PART NAME 1 2 3 4 5 6 (PRODUCT LEVEL)	SEE PAGE
	1	1	**107-7694**	1	PLATE-THRUST	
R	2	1	**242-0673**	1	CAMSHAFT AS	
	2A	1	**1B-8705**	1	KEY-WOODRUFF	
	2B	1	**224-3247**	1	GEAR (100-TEETH)	
M	3		**6V-3940**	2	BOLT (M8X1.25X25-MM)	

M - METRIC PART
R - REMFG PART MAY BE AVAILABLE

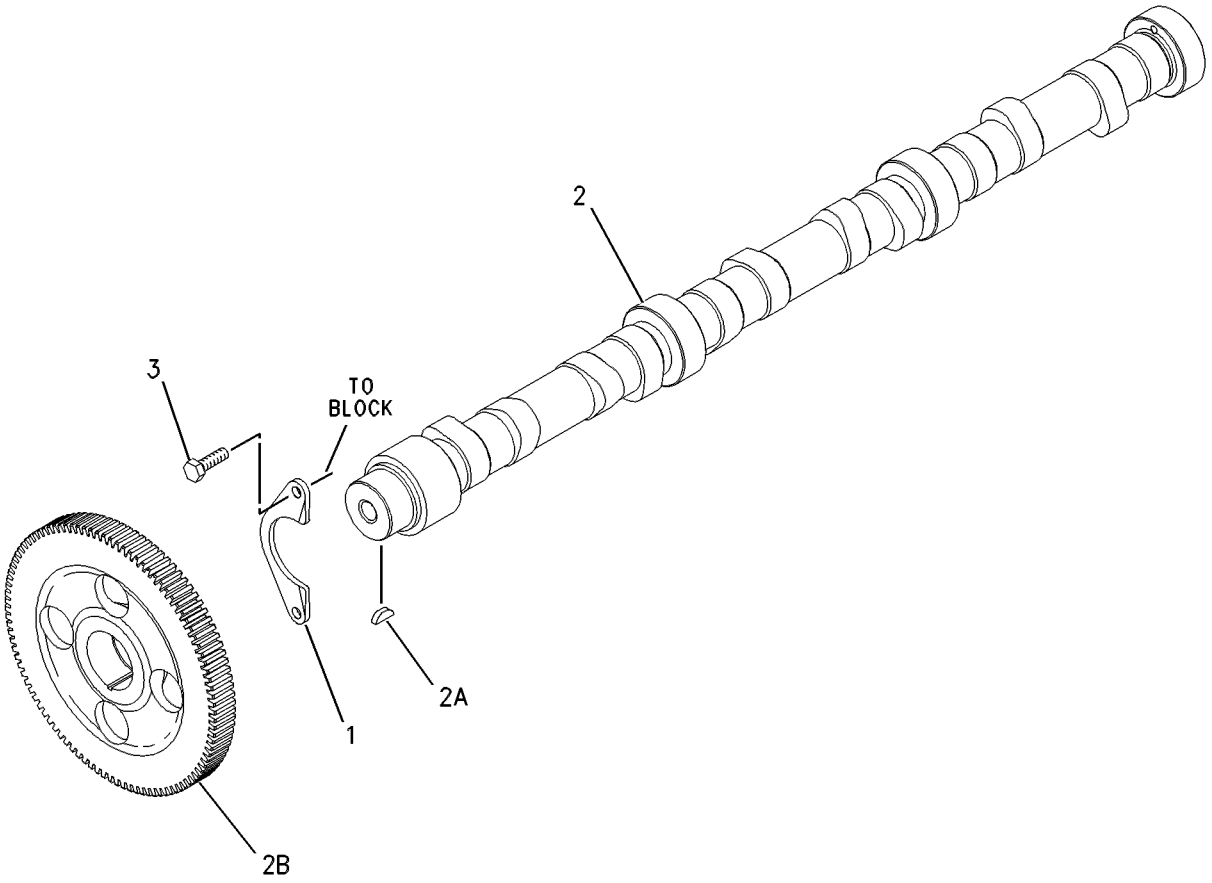

GRAPHIC #1 **<END>** g00626400

388-4887 COVER GP-CYLINDER BLOCK

S/N: TXD1-UP

PART OF 420-1870, 420-1871, 423-8451, 423-8452, 423-8453, 423-8454 ENGINE AR-COMPLETE AN ATTACHMENT

SMCS-1201 **i05877726**

NOTE	REF NO	GRAPHIC REF	PART NUMBER	QTY	PART NAME 1 2 3 4 5 6 (PRODUCT LEVEL)	SEE PAGE
	1	1	**5N-4185**	1	WASHER-SPECIAL	
	2	1	**9M-1974**	11	WASHER-HARD (8.8X16X2-MM THK)	
	3	1	**205-5285**	1	GASKET	
	4	1	**215-4441**	1	COVER	
	5	1	**240-0041**	1	BREATHER AS (CRANKCASE)	
M	6	1	**3E-8005**	1	BOLT (M8X1.25X160-MM)	
M	7	1	**6V-3918**	2	BOLT (M8X1.25X50-MM)	
M	8	1	**6V-3940**	9	BOLT (M8X1.25X25-MM)	
	9	1	**9F-4446**	1	SEAL-O-RING	

M - METRIC PART

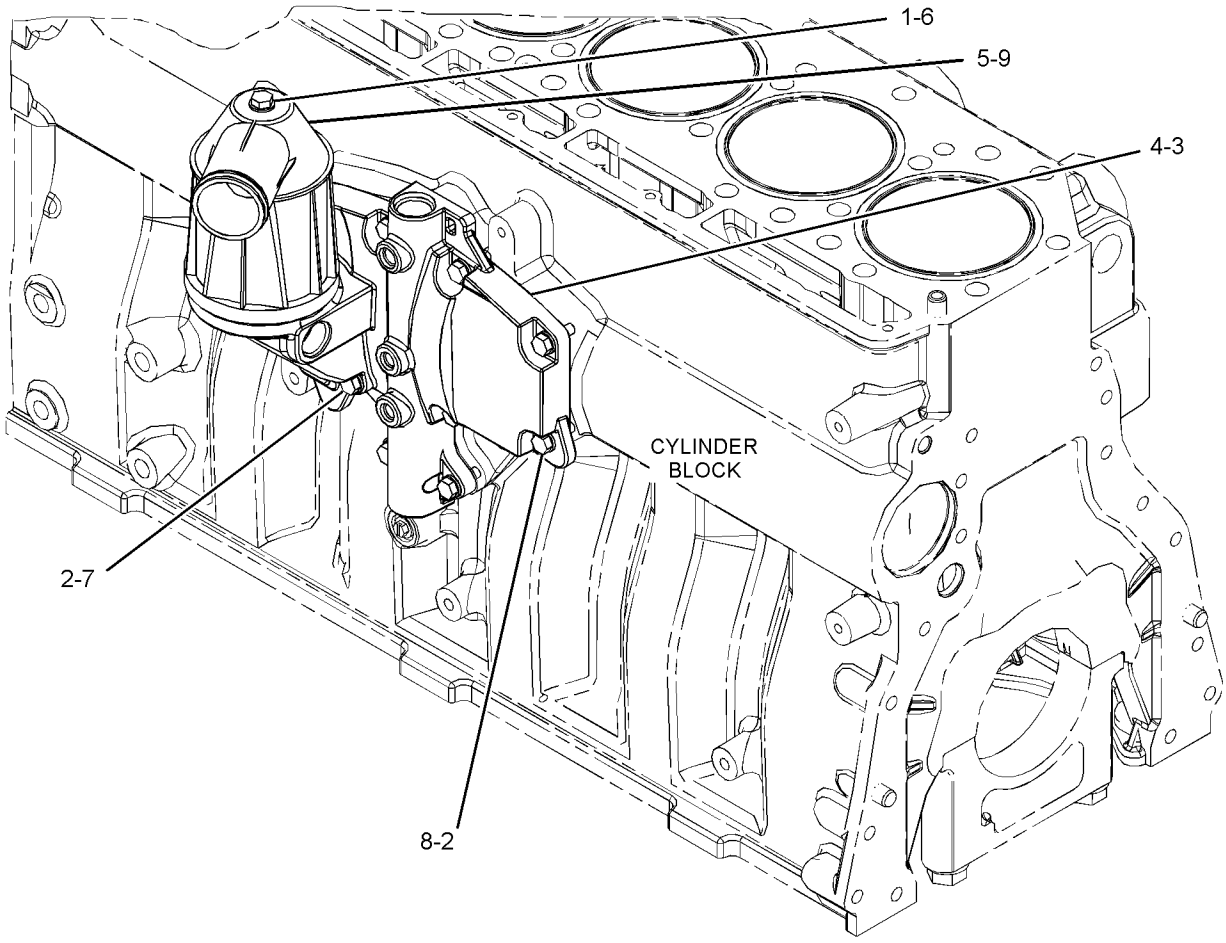

GRAPHIC #1 **<END>** g02840657

118-1727 COVER GP-FRONT HOUSING—ACCESSORY DRIVE

S/N: TXD1-UP

REQUIRED ON ENGINES WITHOUT FACTORY INSTALLED AIR COMPRESSOR

PART OF 420-1870, 420-1871, 423-8451, 423-8452, 423-8453, 423-8454 ENGINE AR-COMPLETE AN ATTACHMENT

SMCS-1151, 1166 **i05555239**

NOTE	REF NO	GRAPHIC REF	PART NUMBER	QTY	PART NAME 1 2 3 4 5 6 (PRODUCT LEVEL)	SEE PAGE
	1	1	**5P-8245**	4	WASHER-HARD (13.5X25.5X3-MM THK)	
M	2	1	**6V-5696**	2	BOLT (M12X1.75X80-MM)	
	3	1	**4W-2026**	1	COVER	
	4	1	**135-9819**	1	SEAL-INTEGRAL	
M	5	1	**6V-8149**	2	NUT (M12X1.75-THD)	

M - METRIC PART

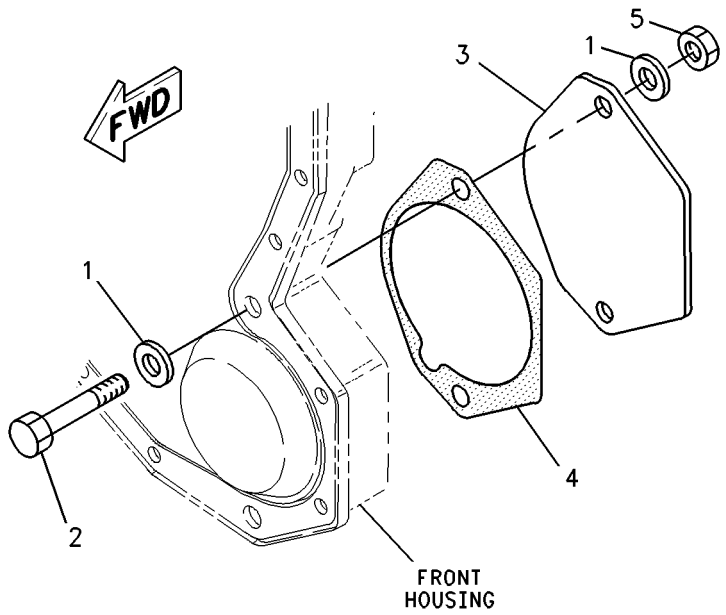

GRAPHIC #1 **<END>** g00897312

217-8669 COVER GP-FRONT HOUSING

S/N: TXD1-UP

PART OF 420-1870, 420-1871, 423-8451, 423-8452, 423-8453, 423-8454 ENGINE AR-COMPLETE AN ATTACHMENT

SMCS-1151, 1166

i05555246

NOTE	REF NO	GRAPHIC REF	PART NUMBER	QTY	PART NAME 1 2 3 4 5 6 (PRODUCT LEVEL)	SEE PAGE
	1	1	**209-0760**	1	COVER AS-FRONT	
	1A	1	**126-1757**	2	WASHER (10.85X19.3X1.27-MM THK)	
	1B	1	**136-0822**	2	STUD	
	2	1	**209-0762**	1	GASKET AS	

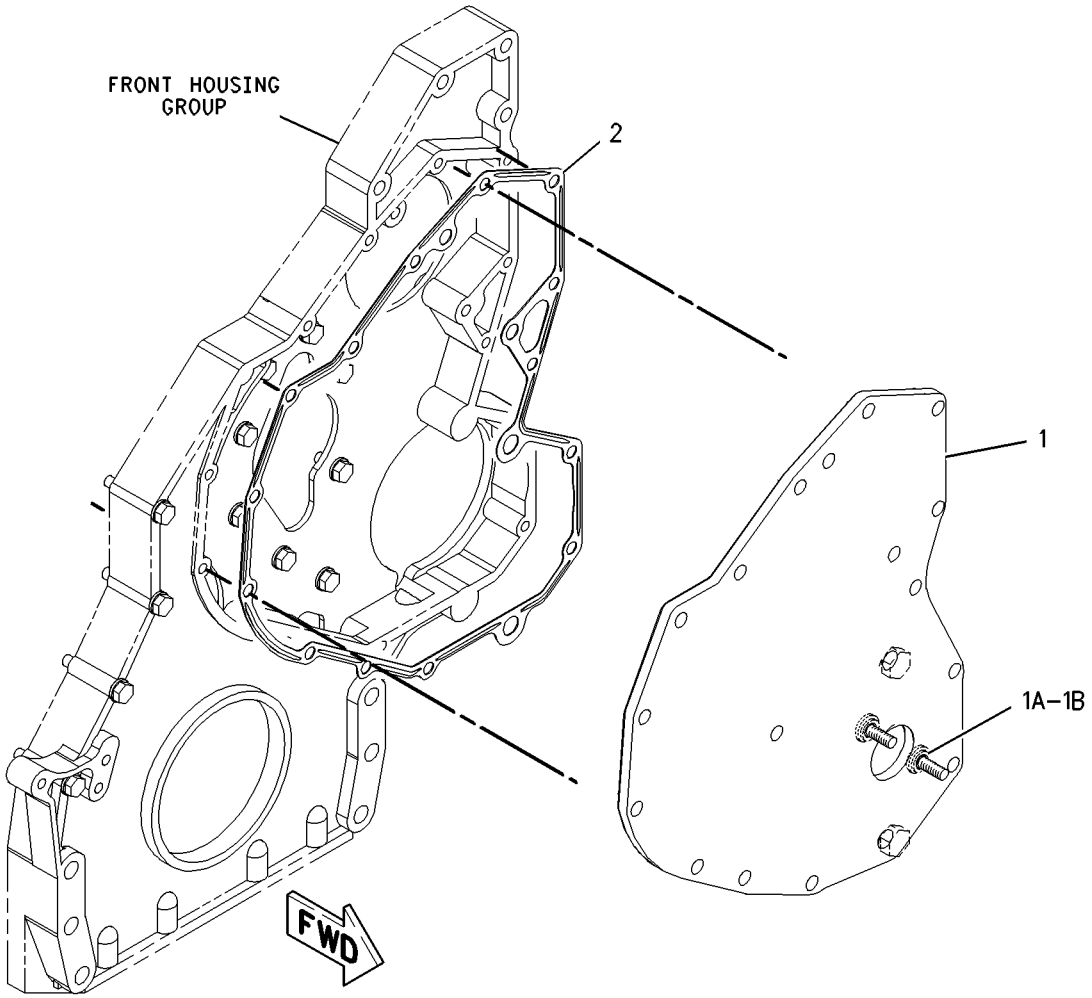

GRAPHIC #1

<END>

g00849279

222-1783 COVER GP-VALVE MECHANISM

S/N: TXD1-UP

PART OF 420-1870, 420-1871, 423-8451, 423-8452, 423-8453, 423-8454 ENGINE AR-COMPLETE AN ATTACHMENT

SMCS-1107 **i05555253**

NOTE	REF NO	GRAPHIC REF	PART NUMBER	QTY	PART NAME 1 2 3 4 5 6 (PRODUCT LEVEL)	SEE PAGE
	1	1	**358-7876**	11	SLEEVE-SPACER	
	2	1	**358-7872**	1	COVER GP-VALVE MECHANISM	
	2A	1	**285-4106**	1	SEAL-VALVE COVER	
	3	1	**353-6988**	1	BASE GP-VALVE COVER	
	3A	1	**268-3490**	1	SEAL-VALVE COVER	
	4	1	**204-4444**	1	BREATHER AS (CRANKCASE)	
		1	**160-0526**	1	SEAL-O-RING	
		1	**185-3159**	1	FILTER ELEMENT-BREATHER (CRANKCASE)	
		1	**341-0979**	1	SEAL-O-RING	

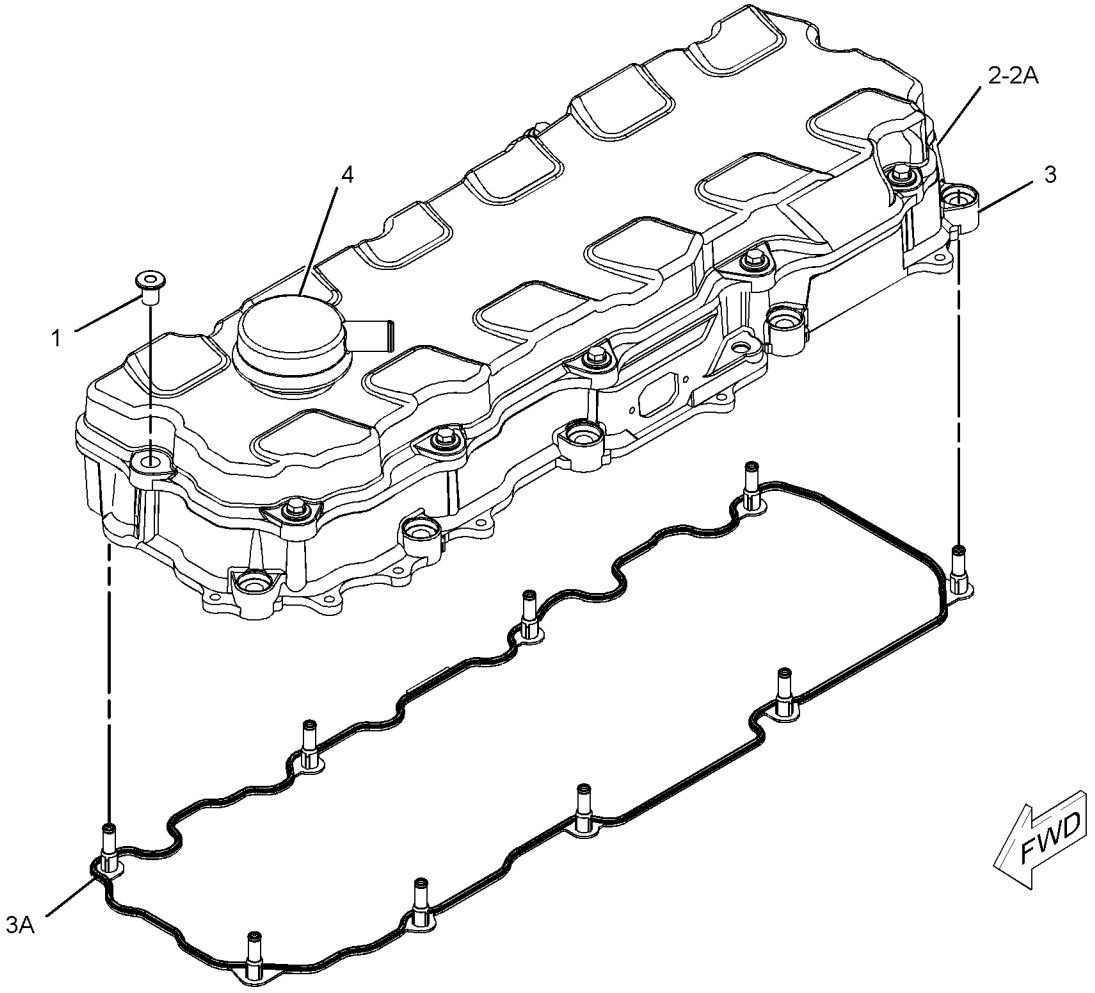

GRAPHIC #1 **<END>** g01304662

164-6148 CRANKSHAFT GP

S/N: TXD1-UP
PART OF 387-8618, 387-8619 ENGINE AR-CORE
AN ATTACHMENT

SMCS-1202 **i05935398**

NOTE	REF NO	GRAPHIC REF	PART NUMBER	QTY	PART NAME 1 2 3 4 5 6 (PRODUCT LEVEL)	SEE PAGE
J	1	1	**151-2939**	7	BEARING-MAIN (STANDARD)	
AB			**282-1771**	7	BEARING-MAIN (0.25-MM US)	
AB			**282-1772**	7	BEARING-MAIN (0.51-MM US)	
R	2	1	**261-1544**	1	CRANKSHAFT AS	
	2A	1	**1B-8705**	1	KEY-WOODRUFF	
	2B	1	**2W-8147**	1	GEAR (50-TEETH)	
	2C	1	**9Y-0810**	1	SLEEVE-WEAR	
J	3	1	**246-3150**	2	PLATE-THRUST	
					AVAILABLE REPAIR KIT(S):	
AJ			**243-6716**		KIT-BEARING (STANDARD)	
					(INCLUDES A COMPLETE SET OF MAIN BEARINGS AND THRUST PLATES)	

A - NOT PART OF THIS GROUP
B - USE AS REQUIRED
J - KIT MARKED J INCLUDES PARTS MARKED J
R - REMFG PART MAY BE AVAILABLE

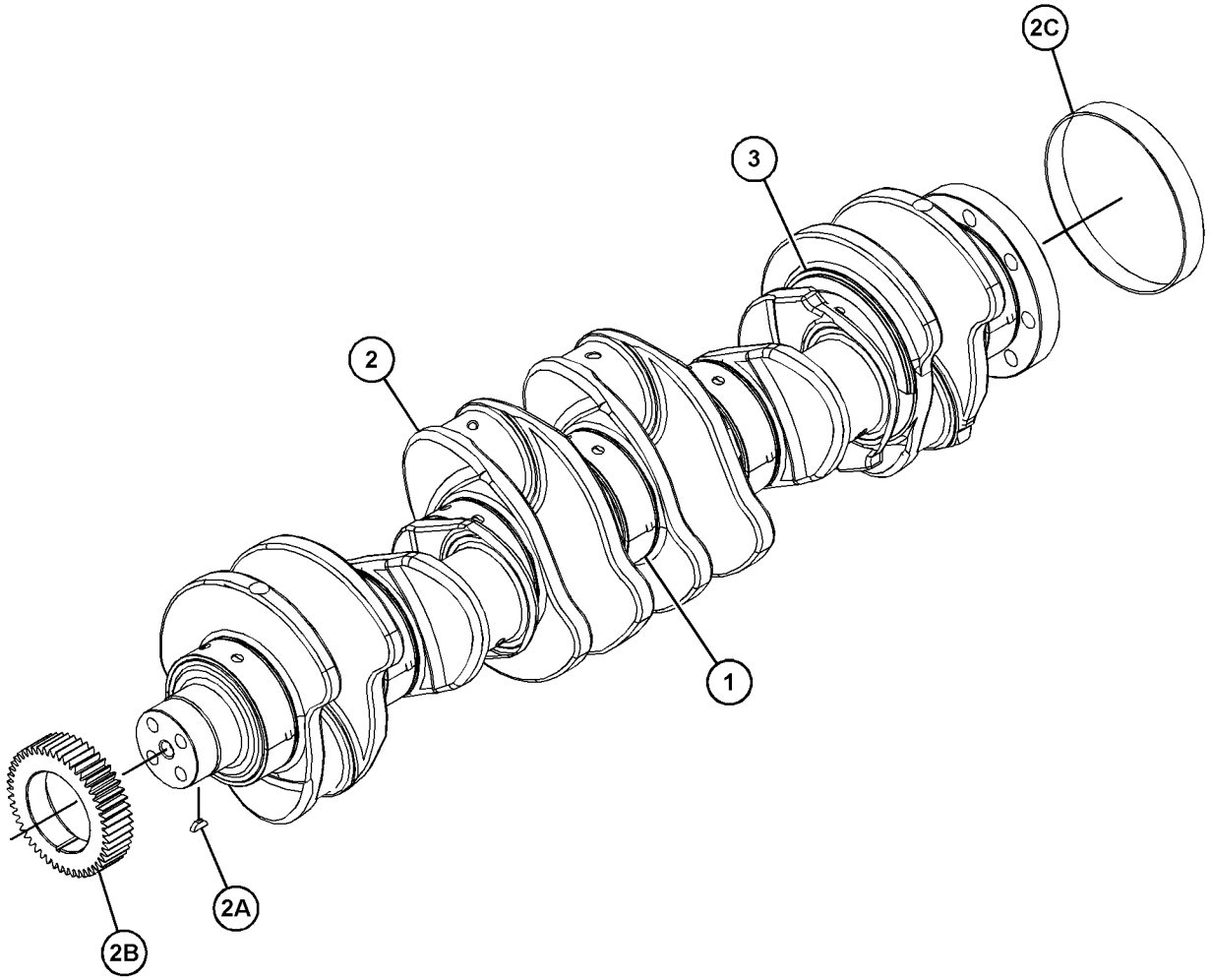

GRAPHIC #1 **<END>** g03729337

325-3915 CYLINDER BLOCK AS*R

S/N: TXD1-UP

PART OF 220-1952 CYLINDER BLOCK GP

AN ATTACHMENT

SMCS-1201 **i05935411**

NOTE	REF NO	GRAPHIC REF	PART NUMBER	QTY	PART NAME 1 2 3 4 5 6 (PRODUCT LEVEL)	SEE PAGE
	1	1	**0L-1026**	2	PLUG-CUP	
	2	1	**3B-0623**	2	PLUG-CUP	
	3	1	**4F-5695**	4	PLUG-CUP	
M	4	1	**175-0454**	14	BOLT (M16X2X160-MM)	
	5	1	**203-5805**	2	BUSHING	
	6	1	**203-6090**	1	BUSHING	
	7	1	**212-7002**	7	CAP-BEARING	
	8	1	**216-5586**	1	BUSHING (CAMSHAFT)	
	9	1	**9X-8268**	14	WASHER (17.5X30X3.5-MM THK)	

M - METRIC PART

325-3915 **CYLINDER BLOCK AS (*contd.*)** **i05935411**

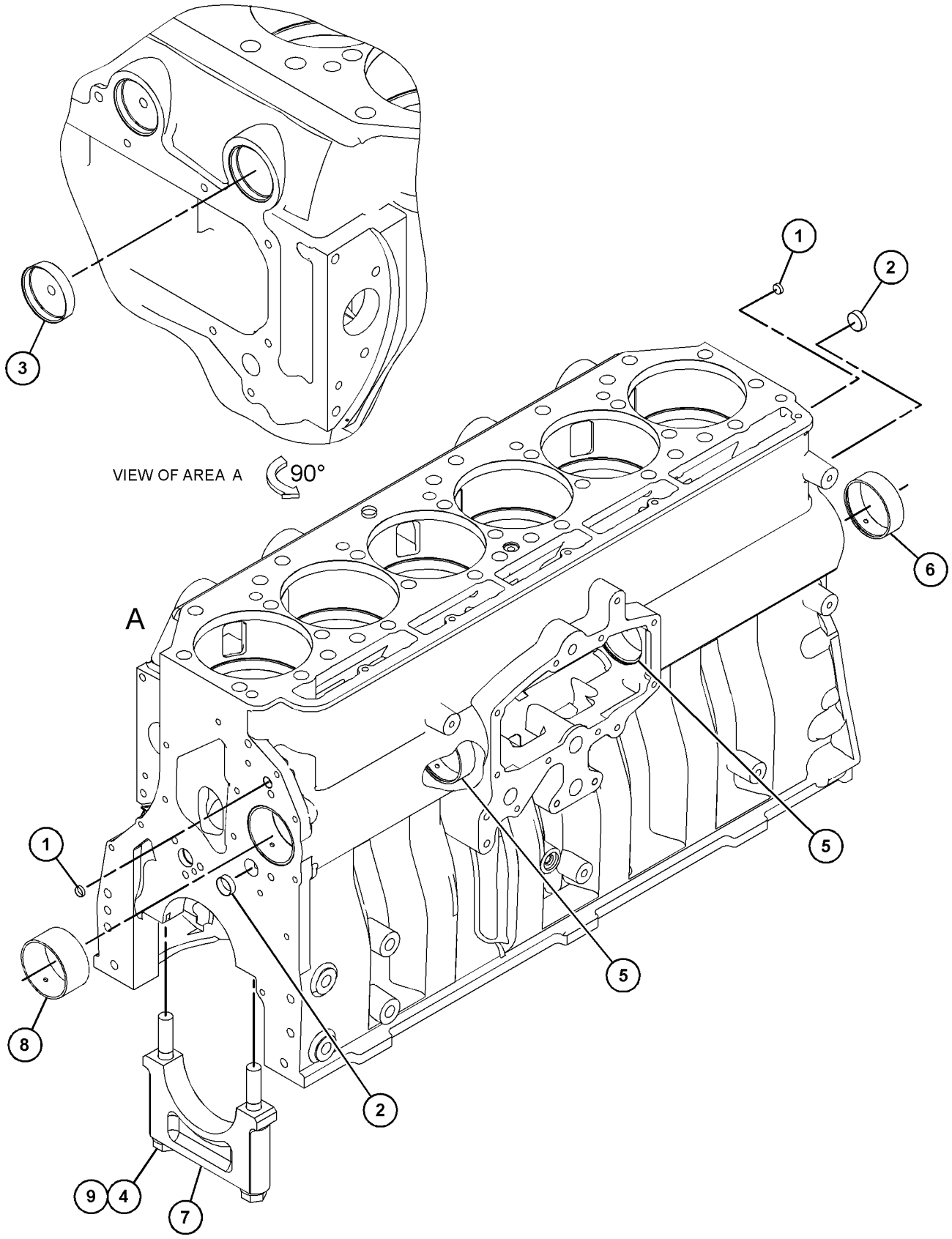

GRAPHIC #1 **<END>** g03729325

161-3406 CYLINDER BLOCK GP

S/N: TXD1-UP

PART OF 387-8618, 387-8619 ENGINE AR-CORE

AN ATTACHMENT

SMCS-1201 **i05555591**

NOTE	REF NO	GRAPHIC REF	PART NUMBER	QTY	PART NAME 1 2 3 4 5 6 (PRODUCT LEVEL)	SEE PAGE
	1	1	**0S-0519**	1	PLUG-CUP	
CY	2	1	*220-1952*	1	CYLINDER BLOCK GP	26
	3	1	**1W-8407**	2	SLEEVE	
	4	1	*396-0393*	1	PLUG AS	
		1	**214-7566**	1	SEAL-O-RING	
		1	**360-3677**	1	PLUG	
	5	1	**4G-4972**	1	SEAL-O-RING	
	6	1	**6V-3538**	2	DOWEL	
	7	1	**7N-5683**	2	DOWEL	

C - CHANGE FROM PREVIOUS TYPE
Y - SEPARATE ILLUSTRATION

161-3406 **CYLINDER BLOCK GP (*contd.*)** **i05555591**

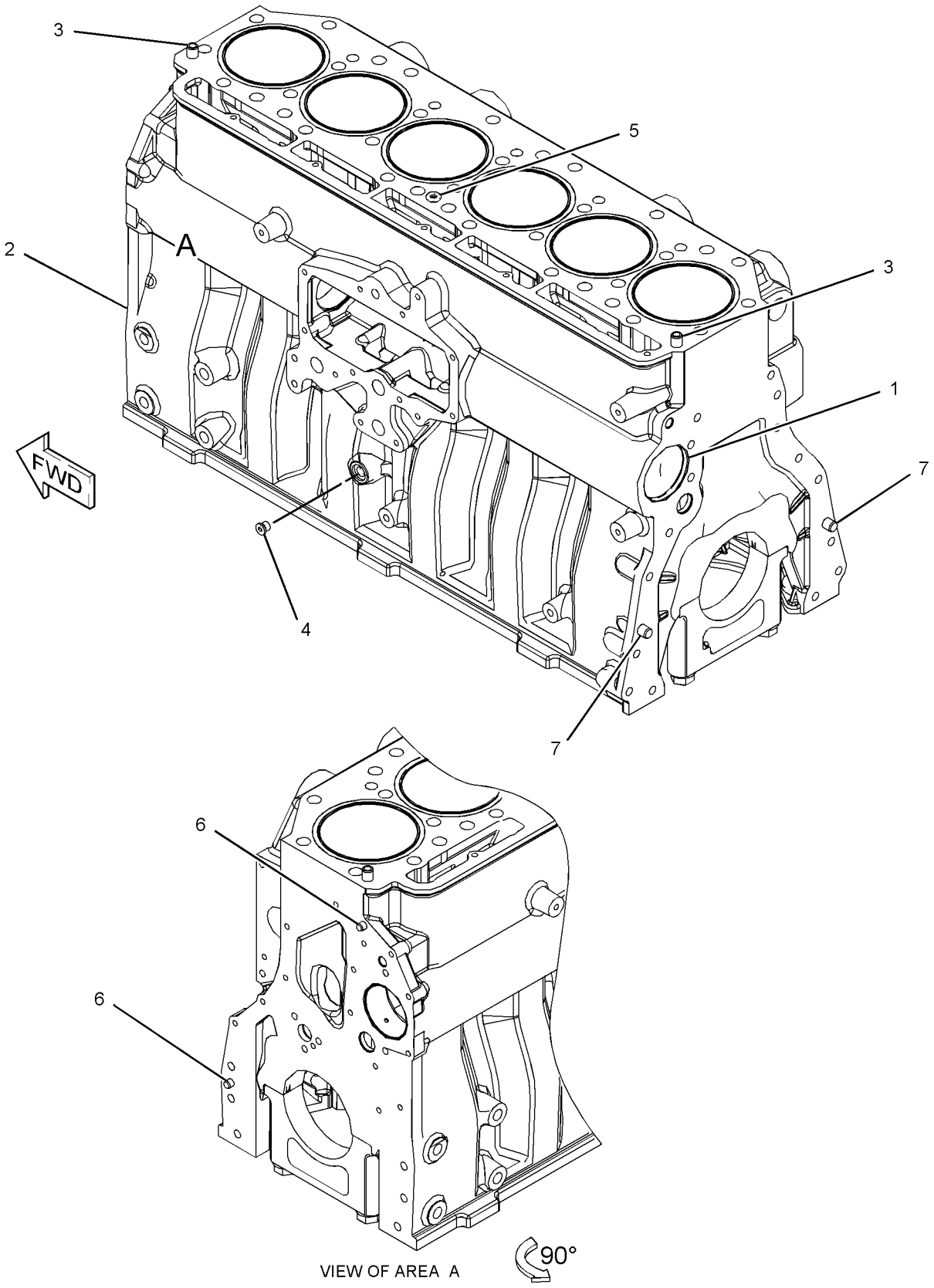

VIEW OF AREA A

GRAPHIC #1

<END>

g02727107

220-1952 CYLINDER BLOCK GP

S/N: TXD1-UP

PART OF 161-3406 CYLINDER BLOCK GP

AN ATTACHMENT

SMCS-1201 **i05643882**

NOTE	REF NO	GRAPHIC REF	PART NUMBER	QTY	PART NAME 1 2 3 4 5 6 (PRODUCT LEVEL)	SEE PAGE
	1	1	**167-0024**	6	SEAL-LINER	
	2	1	**385-7276**	6	LINER-CYLINDER BLOCK	
YR	3	1	**325-3915**	1	CYLINDER BLOCK AS	22

R - REMFG PART MAY BE AVAILABLE
Y - SEPARATE ILLUSTRATION

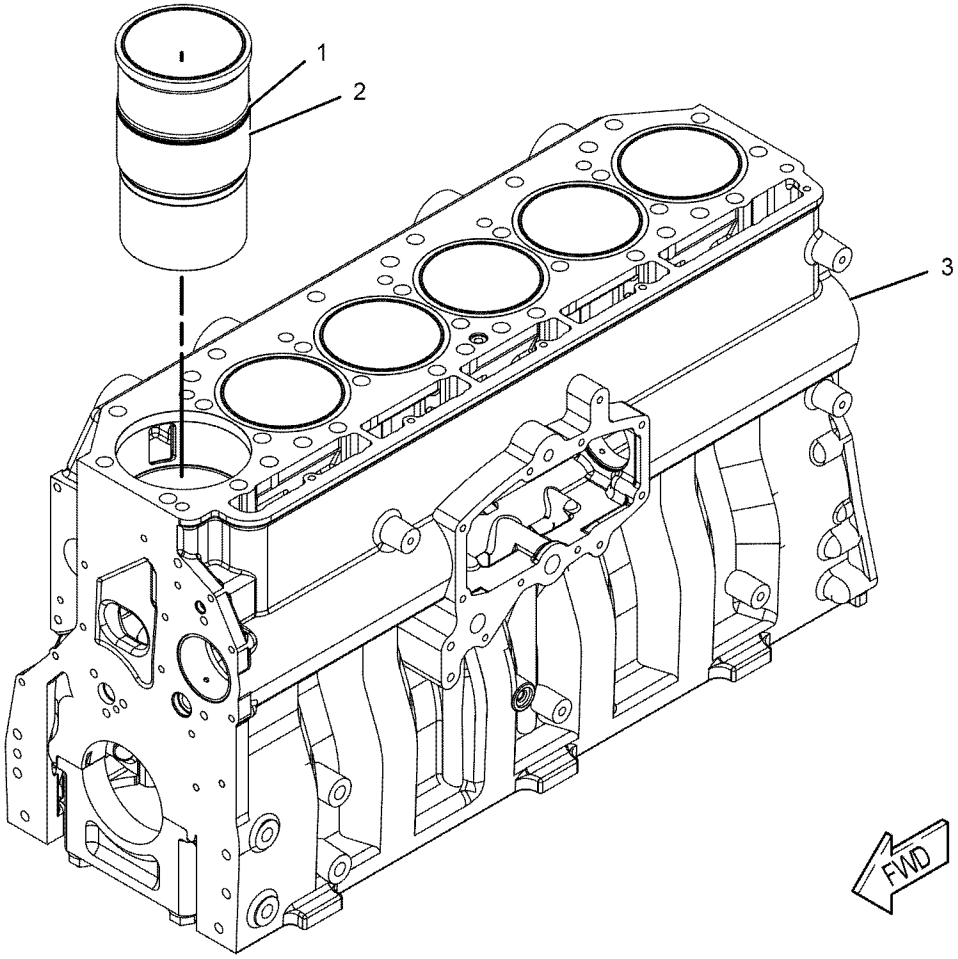

GRAPHIC #1 **<END>** g01032547

332-3619 CYLINDER HEAD AS

S/N: TXD1-UP

PART OF 344-2149 CYLINDER HEAD GP

AN ATTACHMENT

SMCS-1100, 1101

i05643893

NOTE	REF NO	GRAPHIC REF	PART NUMBER	QTY	PART NAME 1 2 3 4 5 6 (PRODUCT LEVEL)	SEE PAGE
	1	1	**6V-7604**	7	PLUG-CUP (MARKED X)	
	2	1	**8M-5860**	18	PLUG-CUP (MARKED Z)	
	3	1	**212-8917**	12	INSERT-VALVE SEAT (EXHAUST) (STANDARD)	
AB		1	**317-7210**		INSERT-VALVE SEAT (0.127-MM OS, EXHAUST)	
AB		1	**317-7211**		INSERT-VALVE SEAT (0.25-MM OS, EXHAUST)	
AB		1	**254-3947**		INSERT-VALVE SEAT (0.508-MM OS, EXHAUST)	
	4	1	**227-1200**	6	SLEEVE-INJECTOR	
	5	1	**241-8388**	12	INSERT-VALVE SEAT (INLET) (STANDARD)	
AB		1	**317-7212**		INSERT-VALVE SEAT (0.127-MM OS, INLET)	
AB		1	**317-7213**		INSERT-VALVE SEAT (0.25-MM OS, INLET)	
AB		1	**254-3946**		INSERT-VALVE SEAT (0.508-MM OS, INLET)	
	6	1	**310-7255**	6	SEAL-O-RING	
	7	1	**310-7257**	6	SEAL-O-RING	

A - NOT PART OF THIS GROUP
B - USE AS REQUIRED

332-3619 **CYLINDER HEAD AS (*contd.*)** **i05643893**

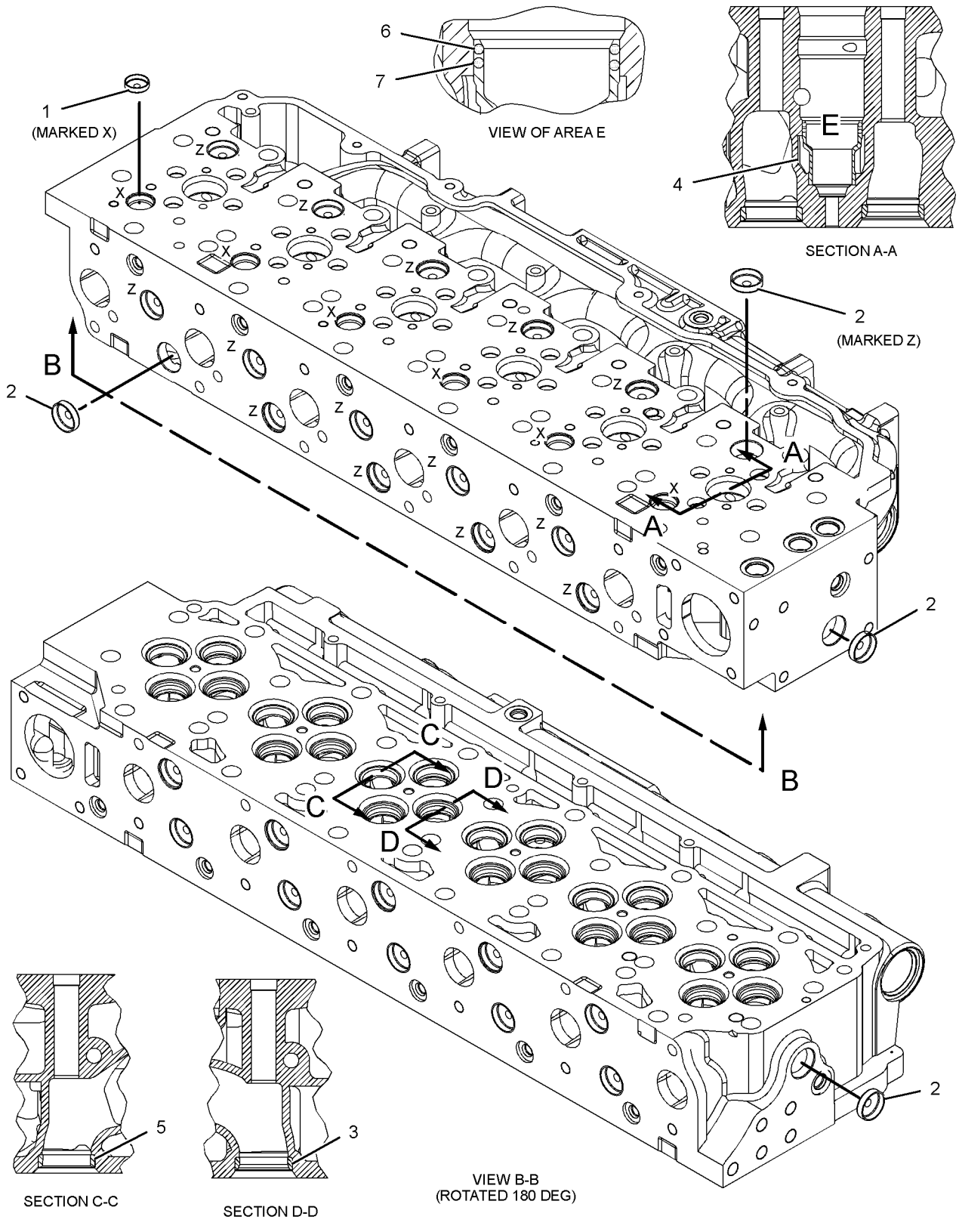

GRAPHIC #1 **<END>** g01414571

344-2149 CYLINDER HEAD GP*R

S/N: TXD1-UP

PART OF 384-5590 CYLINDER HEAD GP

AN ATTACHMENT

SMCS-1100 **i05643886**

NOTE	REF NO	GRAPHIC REF	PART NUMBER	QTY	PART NAME 1 2 3 4 5 6 (PRODUCT LEVEL)	SEE PAGE
	1	1	**1W-2715**	24	LOCK-RETAINER (INLET)	
	2	1	**2A-4429**	24	LOCK-RETAINER (EXHAUST)	
	3	1	**163-2478**	12	SEAL-VALVE STEM (EXHAUST)	
	4	1	**190-6115**	12	SPRING-VALVE (INNER)	
	5	1	**190-6117**	12	SPRING-VALVE (OUTER)	
	6	1	**211-2134**	12	RETAINER (VALVE SPRING)	
	7	1	**217-0609**	6	SEAT-VALVE SPRING	
	8	1	**241-8383**	12	VALVE-EXHAUST	
	9	1	**241-8384**	12	RETAINER (VALVE SPRING)	
	10	1	**241-8386**	12	SPRING-VALVE (INNER)	
	11	1	**241-8385**	12	SPRING-VALVE (OUTER)	
	12	1	**241-8387**	6	SEAT	
	13	1	**241-8390**	12	SEAL-VALVE STEM	
	14	1	**252-7803**	12	VALVE-INLET	
	15	1	**259-5829**	12	GUIDE-VALVE (STANDARD, INTAKE)	
AB		1	**254-3941**		GUIDE-VALVE (0.13-MM OS)	
AB		1	**254-3942**		GUIDE-VALVE (0.5-MM OS)	
	16	1	**260-4856**	12	GUIDE-VALVE (STANDARD, EXHAUST)	
AB		1	**203-3237**		GUIDE-VALVE (0.13-MM OS, EXHAUST)	
AB		1	**203-3238**		GUIDE-VALVE (0.5-MM OS, EXHAUST)	
Y	17	1	*332-3619*	1	CYLINDER HEAD AS	27
	18	1	*319-6237*	2	PLUG AS	
					(EACH INCLUDES)	
		1	**228-7096**	1	SEAL-O-RING	
		1	**271-7442**	1	PLUG	
	19	1	*389-3708*	6	PLUG AS	
					(EACH INCLUDES)	
		1	**214-7568**	1	SEAL-O-RING	
		1	**360-3679**	1	PLUG-CONNECTOR	
	20	1	*396-0405*	2	PLUG AS	
					(EACH INCLUDES)	
		1	**6V-6609**	1	SEAL-O-RING	
		1	**360-3680**	1	PLUG	
	21	1	**8T-6757**	2	PLUG-PIPE	

A - NOT PART OF THIS GROUP
B - USE AS REQUIRED
Y - SEPARATE ILLUSTRATION

344-2149 **CYLINDER HEAD GP (*contd.*)** **i05643886**

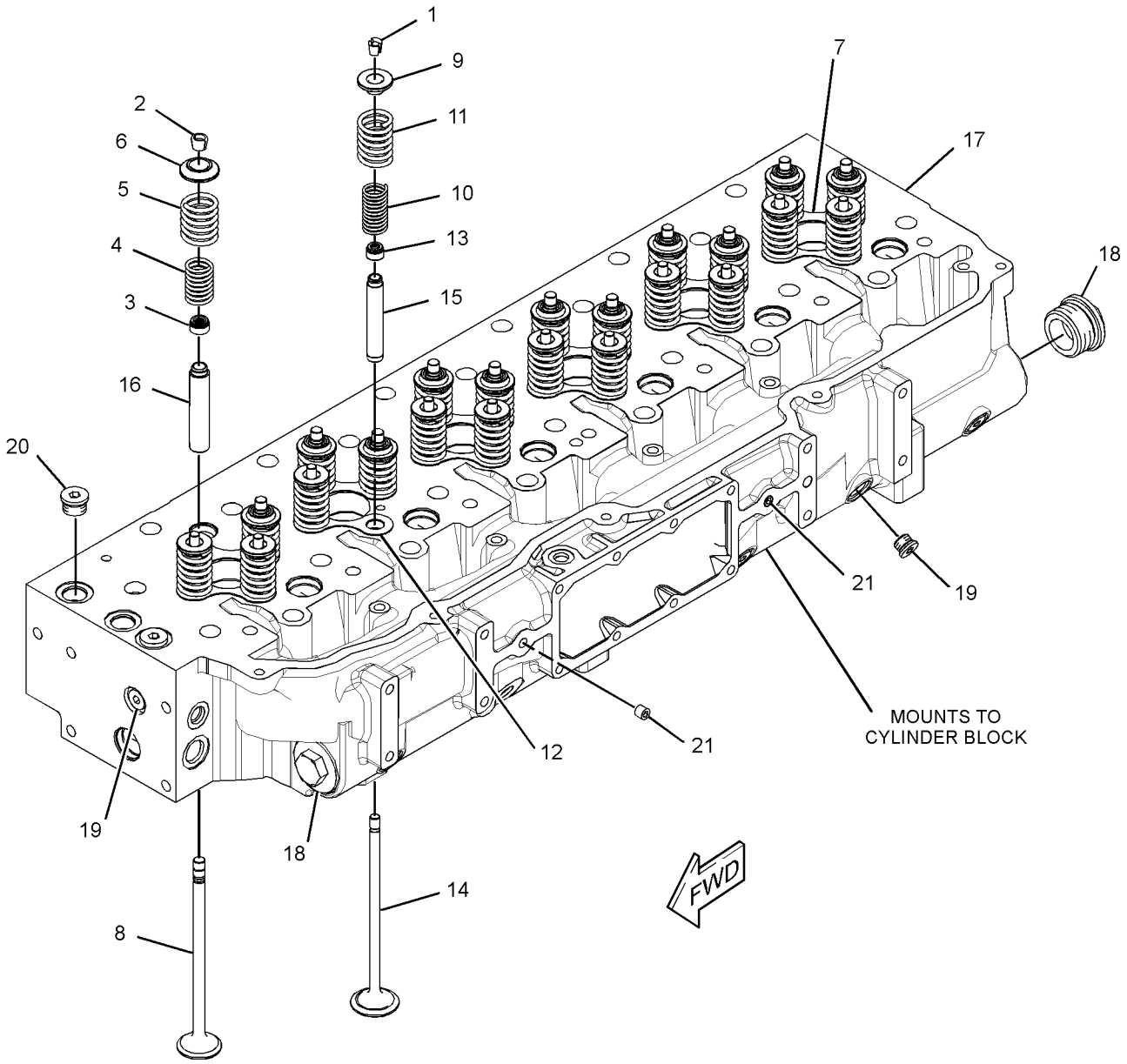

GRAPHIC #1 **<END>** g02236094

384-5590 CYLINDER HEAD GP

S/N: TXD1-UP
PART OF 387-8618, 387-8619 ENGINE AR-CORE
AN ATTACHMENT

SMCS-1100 **i05555592**

NOTE	REF NO	GRAPHIC REF	PART NUMBER	QTY	PART NAME 1 2 3 4 5 6 (PRODUCT LEVEL)	SEE PAGE
	1	1	**2A-3746**	1	PLUG-CUP	
	2	1	**187-1315**	1	GASKET AS	
Y	3	1	*213-4363*	1	FASTENER GP-CYLINDER HEAD	37
YR	4	1	**344-2149**	1	CYLINDER HEAD GP	29

R - REMFG PART MAY BE AVAILABLE
Y - SEPARATE ILLUSTRATION

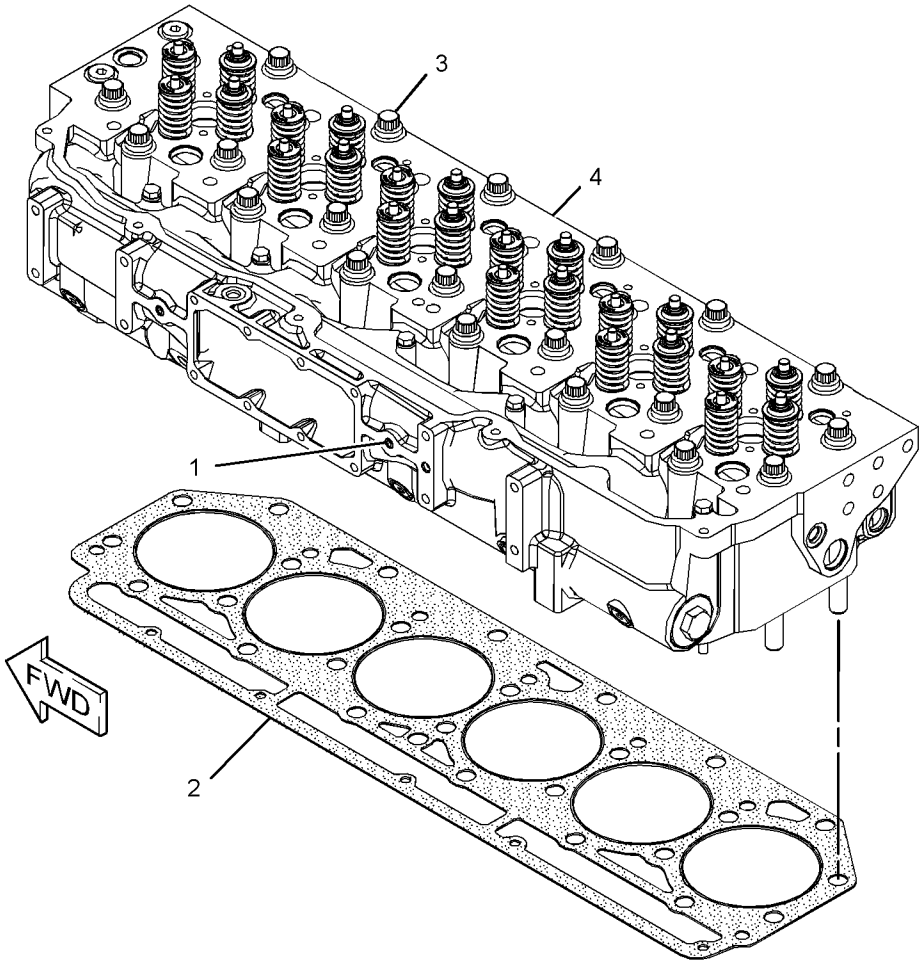

GRAPHIC #1 **<END>** g02802637

442-4658 DAMPER & PULLEY GP

S/N: TXD1-UP

PART OF 420-1870, 420-1871, 423-8451, 423-8452, 423-8453, 423-8454 ENGINE AR-COMPLETE AN ATTACHMENT

SMCS-1205 **i05982232**

NOTE	REF NO	GRAPHIC REF	PART NUMBER	QTY	PART NAME 1 2 3 4 5 6 (PRODUCT LEVEL)	SEE PAGE
	1	1	**2W-7381**	1	PLATE-CLAMP	
	2	1	**116-6332**	1	SPACER-SPECIAL	
	3	1	**208-9619**	1	DAMPER AS-VIBRATION	
	4	1	**228-3621**	1	SPACER (101.5X167X8-MM THK)	
	5	1	**236-8239**	1	PULLEY-CRANKSHAFT	
M	6	1	**6V-4249**	8	BOLT (M10X1.5X50-MM)	
	7	1	**6V-5839**	8	WASHER (11X21X2.5-MM THK)	
	8	1	**214-6277**	4	BOLT (M14X2X60-MM)	

M - METRIC PART

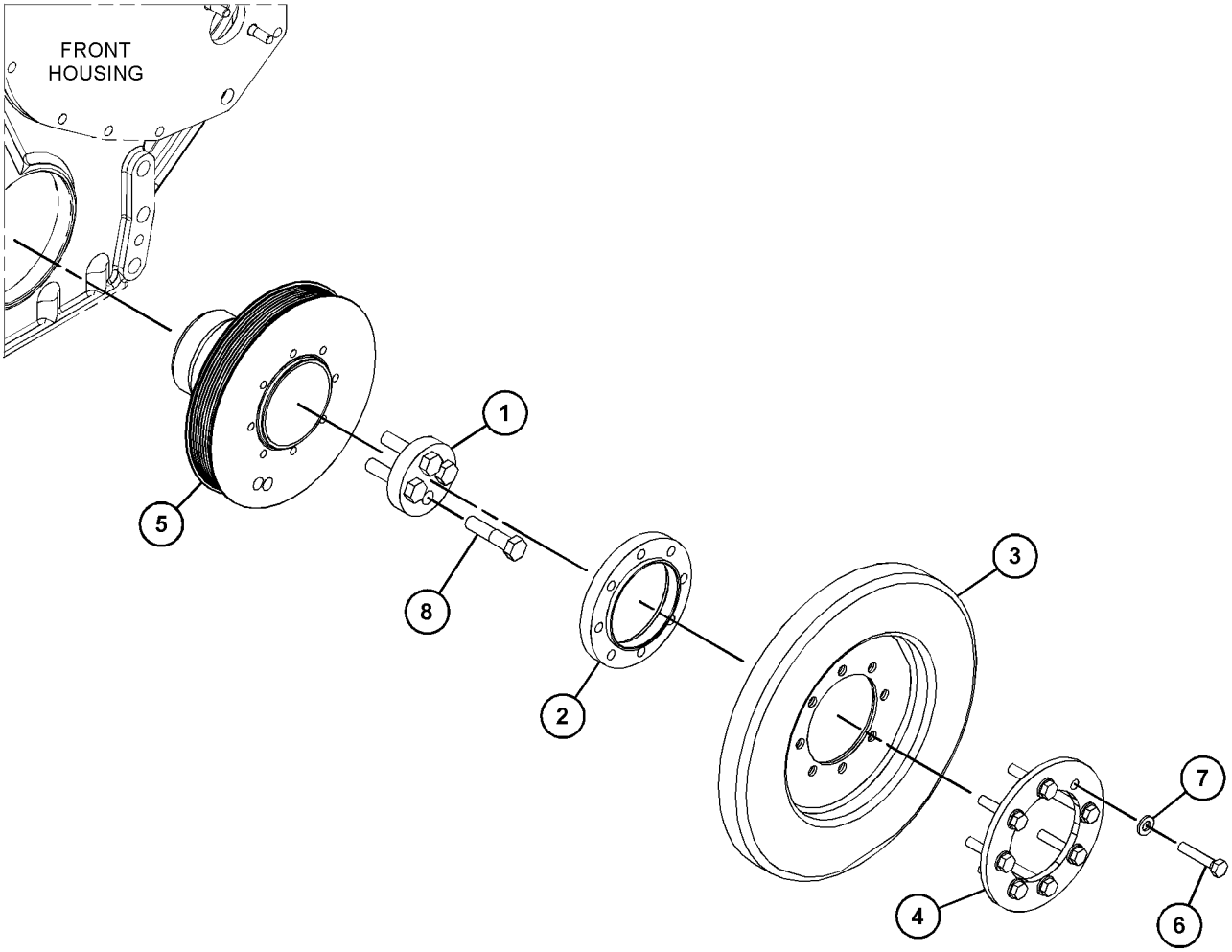

GRAPHIC #1 **<END>** g03843506

4P-2102 DRAIN GP-ENGINE OIL

S/N: TXD1-UP

PART OF 420-1870, 420-1871, 423-8451, 423-8452, 423-8453, 423-8454 ENGINE AR-COMPLETE AN ATTACHMENT

SMCS-1302 **i05555265**

NOTE	REF NO	GRAPHIC REF	PART NUMBER	QTY	PART NAME 1 2 3 4 5 6 (PRODUCT LEVEL)	SEE PAGE
	1	1	**8N-6854**	1	GASKET	
	2	1	**113-5336**	1	ADAPTER AS-DRAIN	
	2A	1	**126-1683**	1	PLUG-DRAIN (ENGINE OIL PAN)	
		1	**8N-6849**	1	ADAPTER-PLUG	
	3	1	**3E-4352**	2	WASHER-HARD (8.8X20.5X2.5-MM THK)	
M	4	1	**6V-5218**	2	BOLT (M8X1.25X35-MM)	

M - METRIC PART

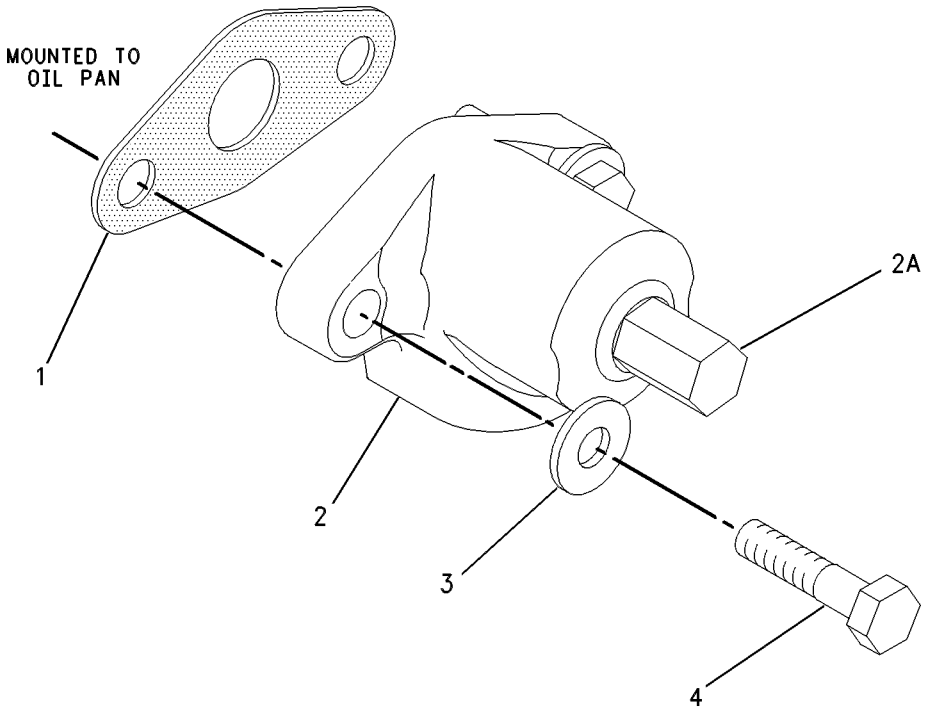

GRAPHIC #1 **<END>** g00659483

215-3251 DRIVE GP-FAN

S/N: PPP1-UP; SSS1-UP; TTT1-UP
PART OF 398-4287 INSTALLATION AR-ENGINE
ALSO AN ATTACHMENT

SMCS-1359 **i05640416**

NOTE	REF NO	GRAPHIC REF	PART NUMBER	QTY	PART NAME 1 2 3 4 5 6 (PRODUCT LEVEL)	SEE PAGE
Y	1	1	**285-6396**	1	DRIVE GP-FAN	35
M	2	1	**8T-4182**	4	BOLT (M10X1.5X45-MM)	
	3	1	**8T-4121**	4	WASHER-HARD (11X21X2.5-MM THK)	

M - METRIC PART
Y - SEPARATE ILLUSTRATION

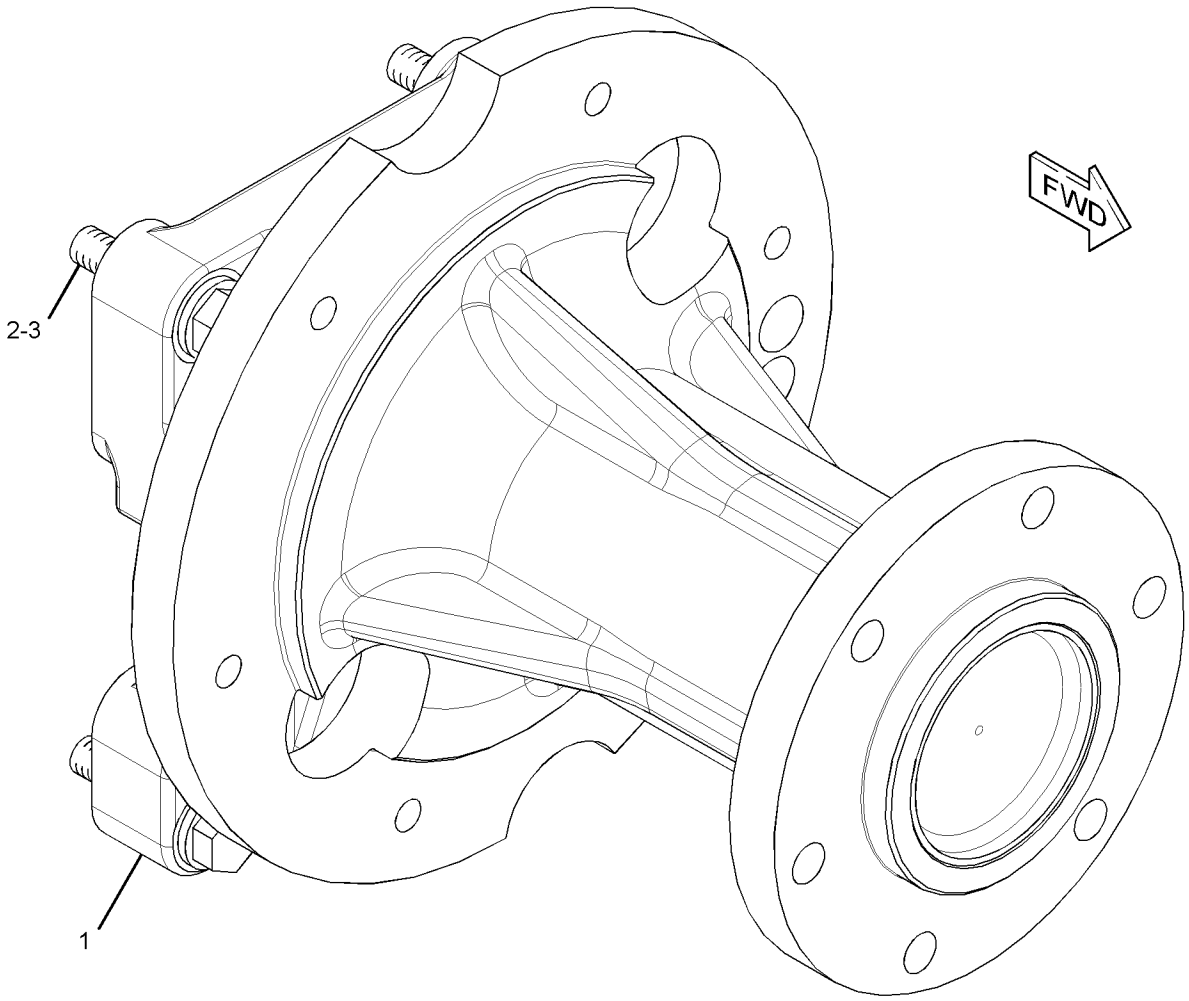

GRAPHIC #1 **<END>** g01659373

285-6396 DRIVE GP-FAN

S/N: PPP1-UP; SSS1-UP; TTT1-UP
PART OF 215-3251 DRIVE GP-FAN
ALSO AN ATTACHMENT

SMCS-1359 **i05640450**

NOTE	REF NO	GRAPHIC REF	PART NUMBER	QTY	PART NAME 1 2 3 4 5 6 (PRODUCT LEVEL)	SEE PAGE
	1	1	**4B-4098**	1	PLUG-CUP	
	2	1	**4W-1203**	2	CUP-BEARING	
	3	1	**4W-1204**	2	CONE-BEARING	
	4	1	**7C-8634**	1	PLATE	
	5	1	**212-5839**	1	HUB	
	6	1	**212-5844**	1	SPACER (35.3X45.5X93-MM THK)	
	7	1	**285-5093**	1	BRACKET AS	
	8	1	**5S-9062**	1	SPACER (35.032X50.8X15.88-MM THK)	
M	9	1	**6V-7673**	1	BOLT (M12X1.75X50-MM)	
	10	1	**6V-9748**	1	SEAL-LIP TYPE	

M - METRIC PART

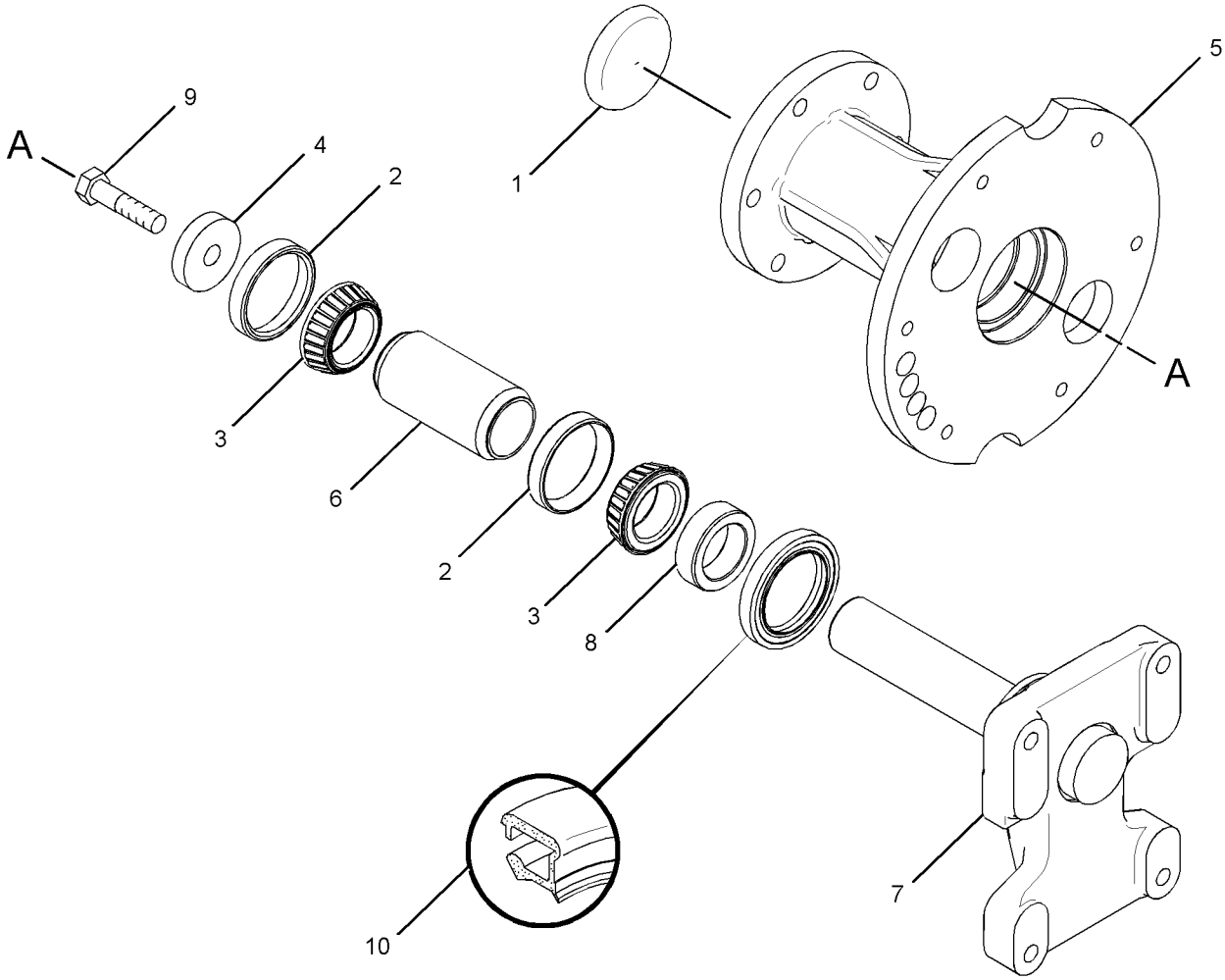

GRAPHIC #1 **<END>** g01316481

246-0599 DRIVE GP-WATER PUMP

S/N: TXD1-UP

PART OF 420-1870, 420-1871, 423-8451, 423-8452, 423-8453, 423-8454 ENGINE AR-COMPLETE AN ATTACHMENT

SMCS-1361 **i05555266**

NOTE	REF NO	GRAPHIC REF	PART NUMBER	QTY	PART NAME 1 2 3 4 5 6 (PRODUCT LEVEL)	SEE PAGE
	1	1	**236-8240**	1	PULLEY (8-GROOVE)	
M	2	1	**6V-2317**	4	BOLT (M8X1.25X30-MM)	
	3	1	**9M-1974**	4	WASHER-HARD (8.8X16X2-MM THK)	

M - METRIC PART

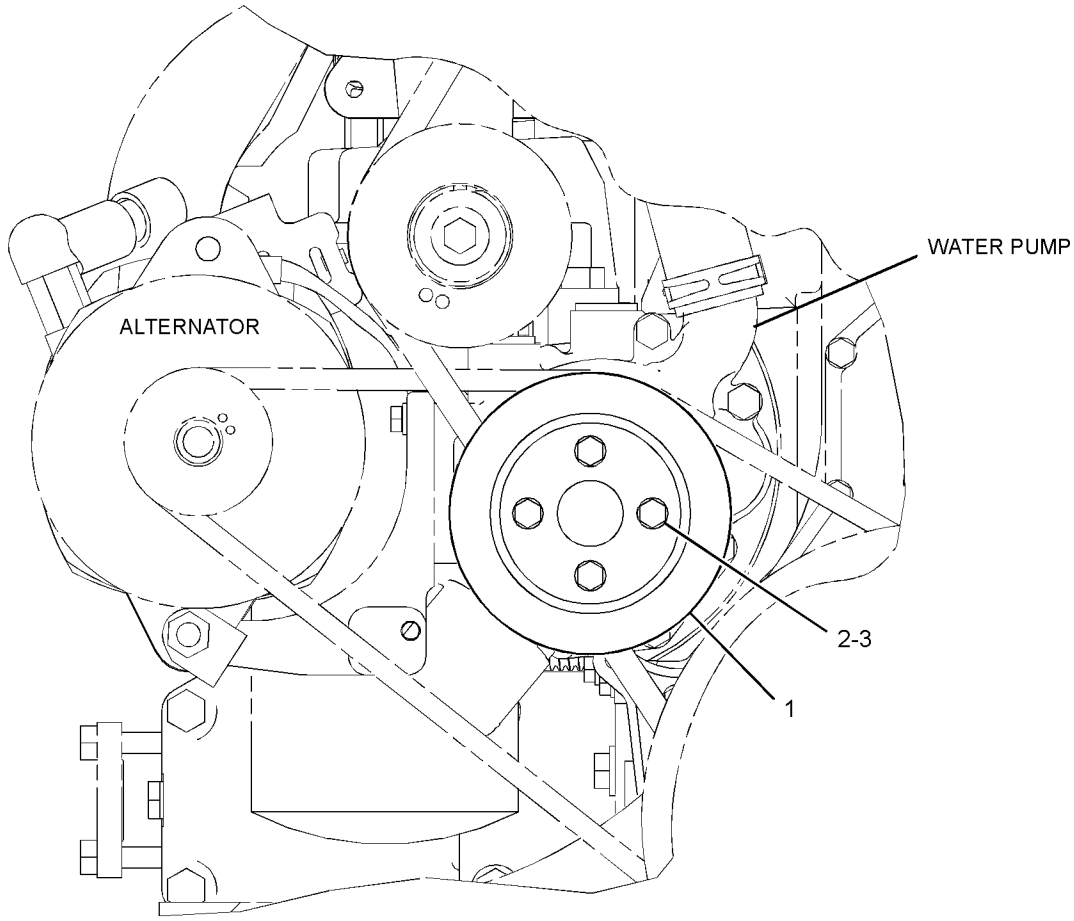

FRONT VIEW

GRAPHIC #1 **<END>** g01205602

213-4363 FASTENER GP-CYLINDER HEAD

S/N: TXD1-UP
PART OF 384-5590 CYLINDER HEAD GP
AN ATTACHMENT

SMCS-1100 **i06230710**

NOTE	REF NO	GRAPHIC REF	PART NUMBER	QTY	PART NAME 1 2 3 4 5 6 (PRODUCT LEVEL)	SEE PAGE
Y	1	1	*290-6884*	26	FASTENER GP-CYLINDER HEAD	38
M	2	1	**8C-4984**	5	BOLT (M8X1.25X150-MM)	
	3	1	**9M-1974**	5	WASHER-HARD (8.8X16X2-MM THK)	

M - METRIC PART
Y - SEPARATE ILLUSTRATION

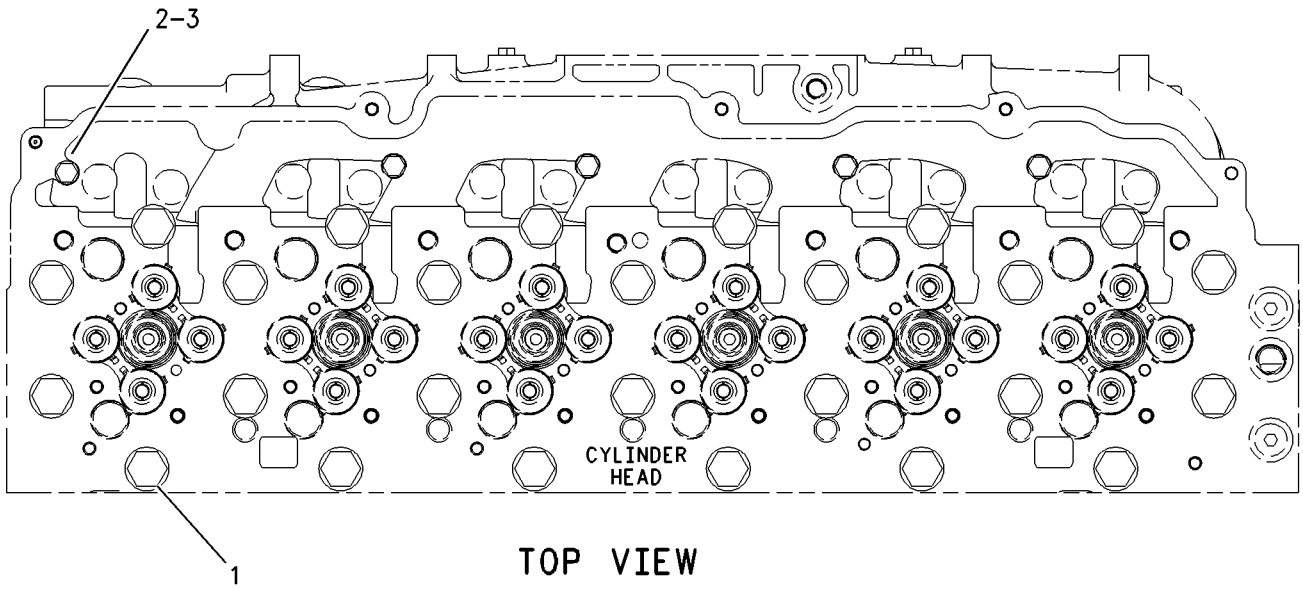

TOP VIEW

GRAPHIC #1 **<END>** g00919169

290-6884 FASTENER GP-CYLINDER HEAD

S/N: TXD1-UP

PART OF 213-4363 FASTENER GP-CYLINDER HEAD

AN ATTACHMENT

SMCS-1100 **i06146876**

NOTE	REF NO	GRAPHIC REF	PART NUMBER	QTY	PART NAME 1 2 3 4 5 6 (PRODUCT LEVEL)	SEE PAGE
M	1	1	**263-2915**	1	BOLT-12 POINT HEAD (M16X2X180-MM)	
	2	1	**9X-8268**	1	WASHER (17.5X30X3.5-MM THK)	

M - METRIC PART

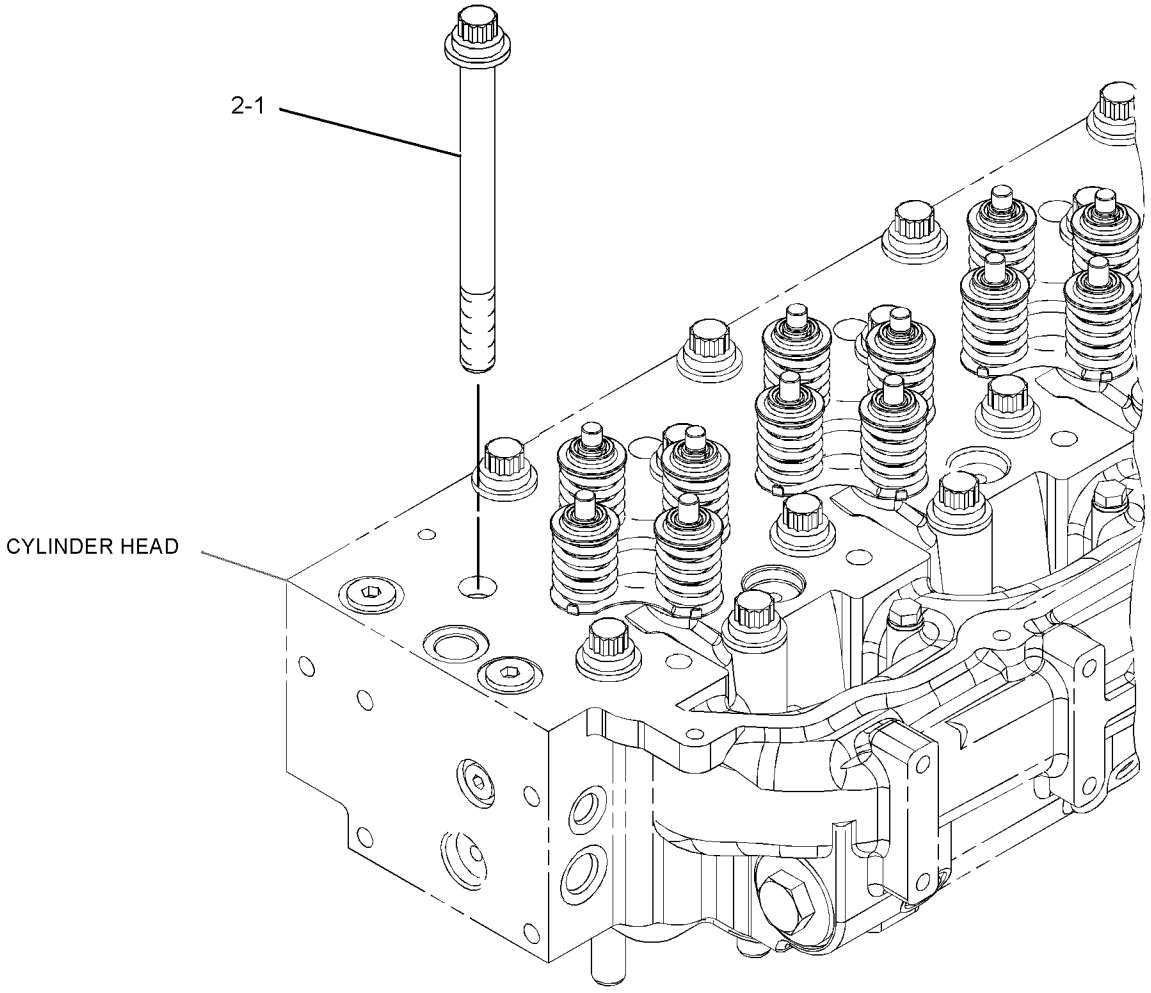

GRAPHIC #1 **<END>** g01684533

219-8681 FASTENER GP-FRONT COVER

S/N: TXD1-UP

PART OF 420-1870, 420-1871, 423-8451, 423-8452, 423-8453, 423-8454 ENGINE AR-COMPLETE AN ATTACHMENT

SMCS-1151, 1166

i05555315

NOTE	REF NO	GRAPHIC REF	PART NUMBER	QTY	PART NAME 1 2 3 4 5 6 (PRODUCT LEVEL)	SEE PAGE
M	1	1	**9X-2099**	6	STUD (M8X1.25X52.75-MM)	
M	2	1	**6V-2317**	6	BOLT (M8X1.25X30-MM)	
M	3	1	**8T-0100**	2	BOLT (M8X1.25X60-MM)	

M - METRIC PART

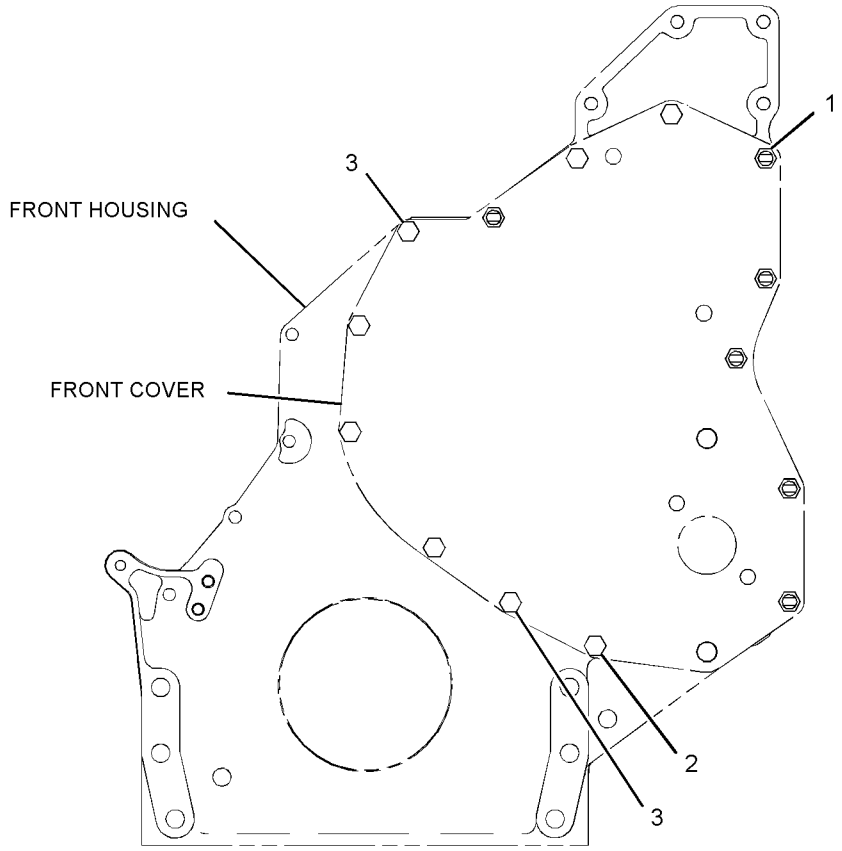

FRONT VIEW

GRAPHIC #1

<END>

g01146786

236-7315 FASTENER GP-VALVE COVER

S/N: TXD1-UP

PART OF 420-1870, 420-1871, 423-8451, 423-8452, 423-8453, 423-8454 ENGINE AR-COMPLETE AN ATTACHMENT

SMCS-1107 **i05555329**

NOTE	REF NO	GRAPHIC REF	PART NUMBER	QTY	PART NAME 1 2 3 4 5 6 (PRODUCT LEVEL)	SEE PAGE
M	1	1	**8T-6912**	11	BOLT (M8X1.25X50-MM)	
	2	1	**8T-4224**	11	WASHER-HARD (8.8X16X2-MM THK)	

M - METRIC PART

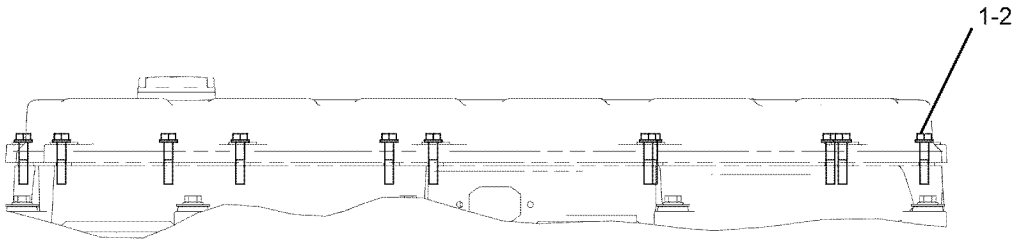

GRAPHIC #1 **<END>** g01013698

233-0423 FASTENER GP-VALVE COVER BASE

S/N: TXD1-UP

PART OF 420-1870, 420-1871, 423-8451, 423-8452, 423-8453, 423-8454 ENGINE AR-COMPLETE AN ATTACHMENT

SMCS-1120 **i06230715**

NOTE	REF NO	GRAPHIC REF	PART NUMBER	QTY	PART NAME 1 2 3 4 5 6 (PRODUCT LEVEL)	SEE PAGE
	1	1	**244-4500**	9	SPRING	
M	2	1	**8T-0100**	9	BOLT (M8X1.25X60-MM)	
	3	1	**9N-0869**	9	WASHER-HARD (8.8X25.5X2-MM THK)	

M - METRIC PART

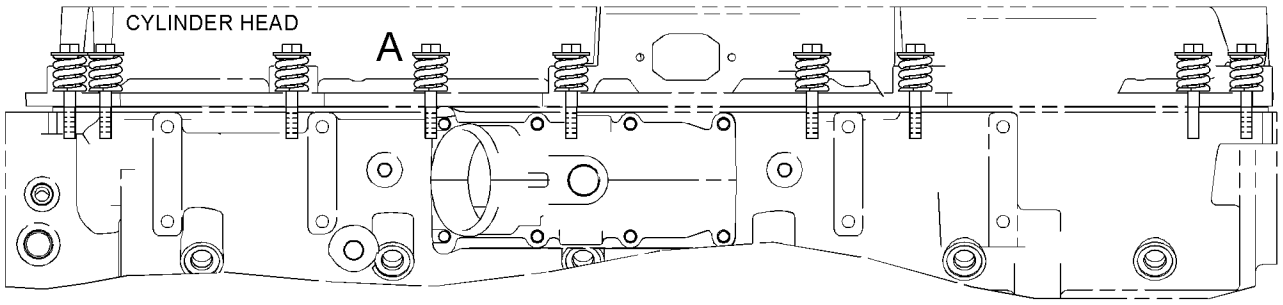

LEFT SIDE VIEW

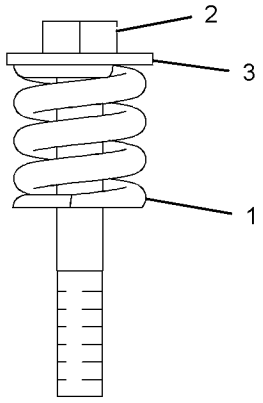

VIEW OF AREA A

GRAPHIC #1 **<END>** g01207018

241-3718 FLYWHEEL GP

S/N: TXD1-UP

PART OF 420-1870, 420-1871, 423-8451, 423-8452, 423-8453, 423-8454 ENGINE AR-COMPLETE AN ATTACHMENT

SMCS-1156 **i05555390**

NOTE	REF NO	GRAPHIC REF	PART NUMBER	QTY	PART NAME 1 2 3 4 5 6 (PRODUCT LEVEL)	SEE PAGE
M	1	1	**9X-2053**	8	BOLT (M16X2X100-MM)	
	2	1	**237-0229**	1	FLYWHEEL AS	
		1	**4N-2514**	1	GEAR (113-TEETH)	
	3	1	**9X-8268**	8	WASHER (17.5X30X3.5-MM THK)	

M - METRIC PART

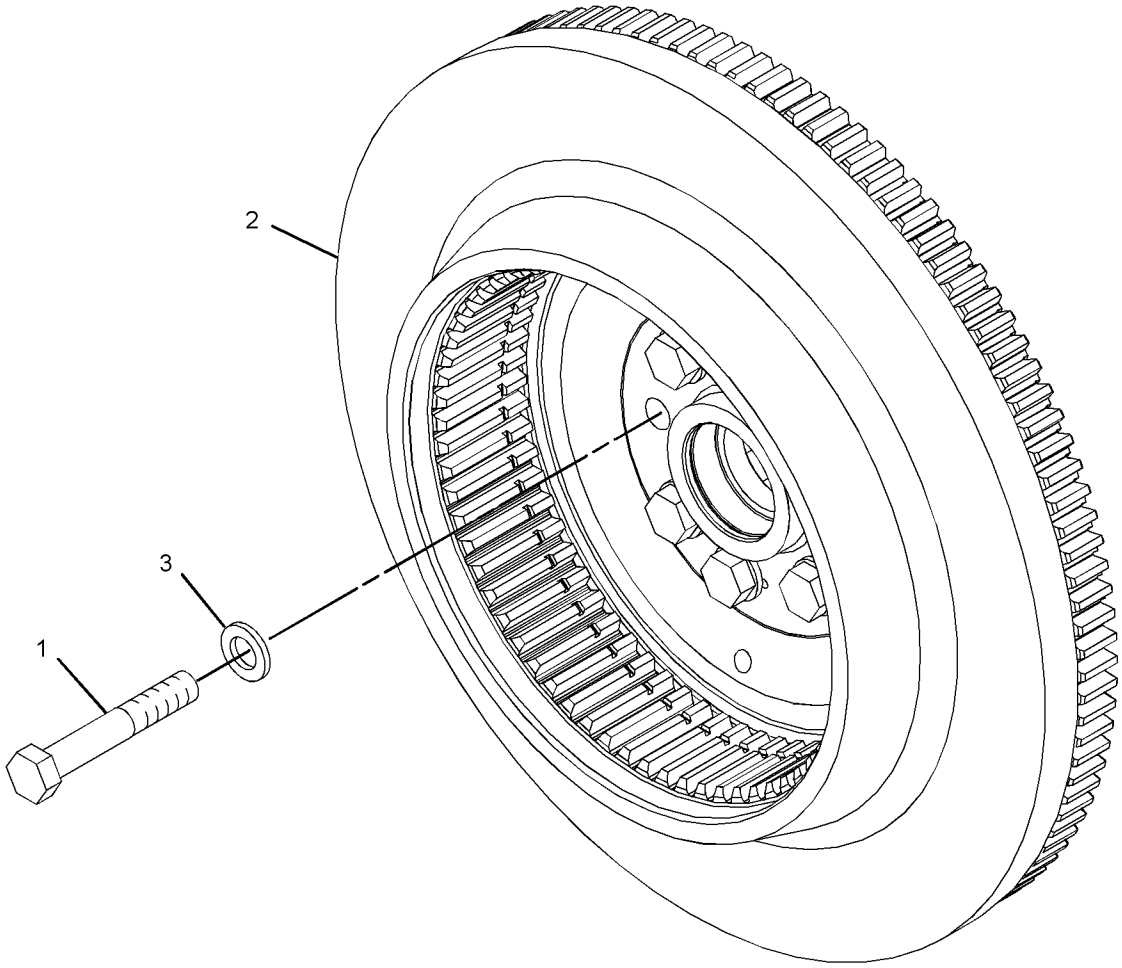

GRAPHIC #1 **<END>** g01205624

205-1321 GEAR GP-FRONT

S/N: TXD1-UP
PART OF 387-8618, 387-8619 ENGINE AR-CORE
AN ATTACHMENT

SMCS-1151, 1162, 1206

i05555609

NOTE	REF NO	GRAPHIC REF	PART NUMBER	QTY	PART NAME 1 2 3 4 5 6 (PRODUCT LEVEL)	SEE PAGE
	1	1	**113-6069**	1	PLATE-THRUST	
	2	1	**115-4219**	1	PLATE-RETAINING	
	3	1	**200-4495**	1	SHAFT-IDLER	
	4	1	**205-1320**	1	GEAR AS-IDLER (50-TEETH)	
	4A	1	**115-4072**	1	BEARING	
M	5	1	**136-4183**	1	BOLT-12 POINT HEAD (M10X1.5X30-MM)	
M	6	1	**6V-5843**	2	BOLT (M10X1.5X45-MM)	

M - METRIC PART

205-1321 **GEAR GP-FRONT (*contd.*)** **i05555609**

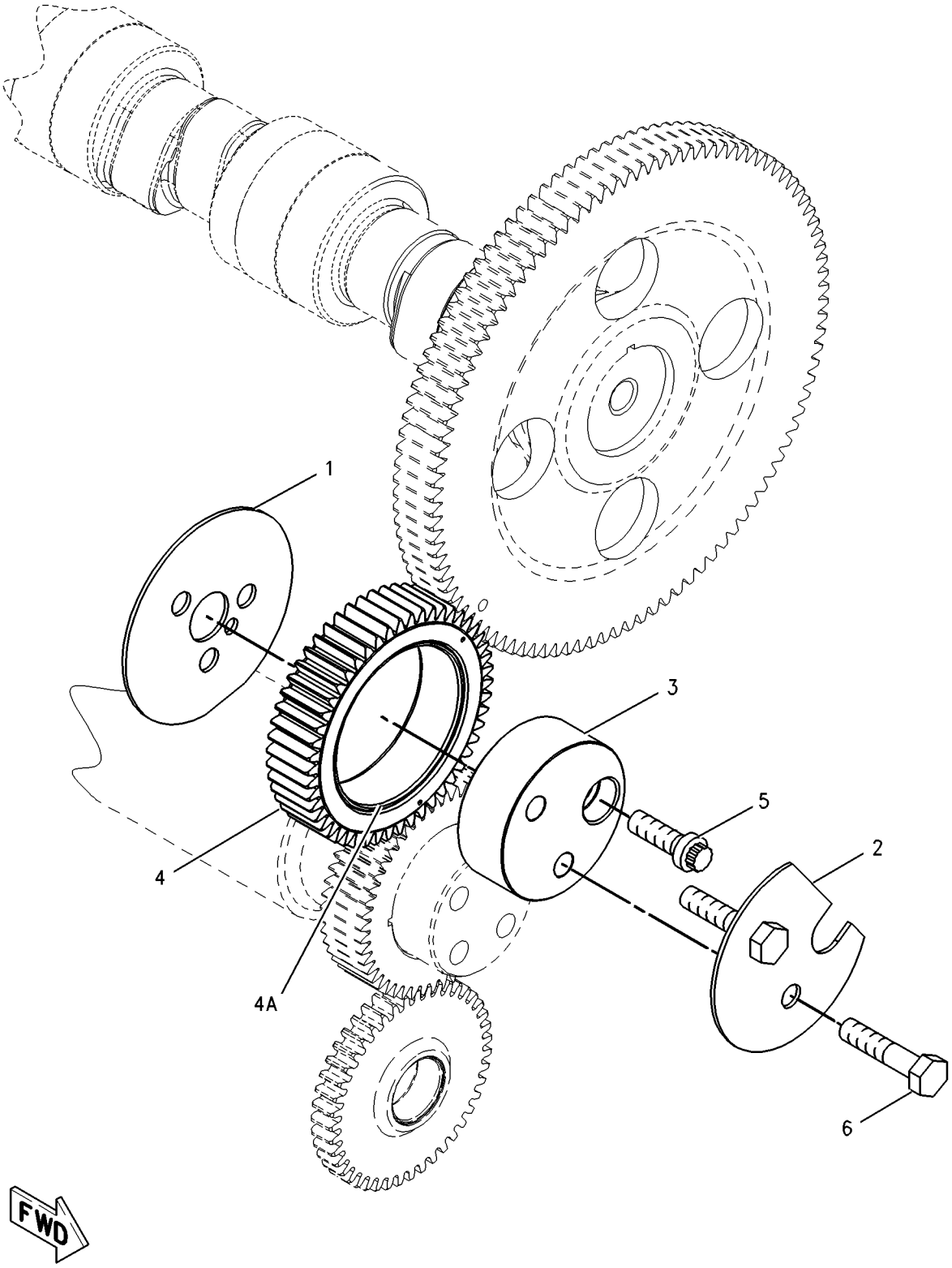

GRAPHIC #1 **<END>** g00870175

438-0955 GEAR GP-REAR

S/N: TXD1-UP

PART OF 420-1870, 420-1871, 423-8451, 423-8452, 423-8453, 423-8454 ENGINE AR-COMPLETE AN ATTACHMENT

SMCS-1204 **i06236225**

NOTE	REF NO	GRAPHIC REF	PART NUMBER	QTY	PART NAME 1 2 3 4 5 6 (PRODUCT LEVEL)	SEE PAGE
	1	1	**187-8196**	1	GEAR AS (68-TEETH)	
		1	**4F-6024**	1	PIN	
	2	1	**286-5303**	1	GEAR AS-IDLER (74-TEETH)	
		1	**1W-4738**	1	BUSHING	
	3	1	**286-5304**	1	GEAR-ADAPTER (72-TEETH)	
	4	1	**422-8984**	1	ADAPTER AS-HYDRAULIC PUMP	
		1	**209-8624**	1	BUSHING	
	5	1	**422-8986**	1	ADAPTER AS-PUMP	
		1	**160-8184**	1	BUSHING	
	6	1	**438-0956**	1	GEAR AS-IDLER (70-TEETH)	
		1	**1W-4738**	1	BUSHING	
	7	1	**441-0459**	1	GEAR AS-PUMP (59-TEETH)	
		1	**4F-6024**	1	PIN	
	8	1	**444-9617**	2	RETAINER-GEAR	
M	9	1	**8T-7811**	6	BOLT-SOCKET HEAD (M12X1.75X50-MM)	
M	10	1	**6V-5842**	6	BOLT (M10X1.5X40-MM)	
	11	1	**5D-9344**	1	SEAL-O-RING	
	12	1	**6V-3349**	1	SEAL-O-RING	
M	13	1	**6V-3822**	6	BOLT (M10X1.5X35-MM)	
	14	1	**6V-5839**	12	WASHER (11X21X2.5-MM THK)	

M - METRIC PART

438-0955 **GEAR GP-REAR (*contd.*)** **i06236225**

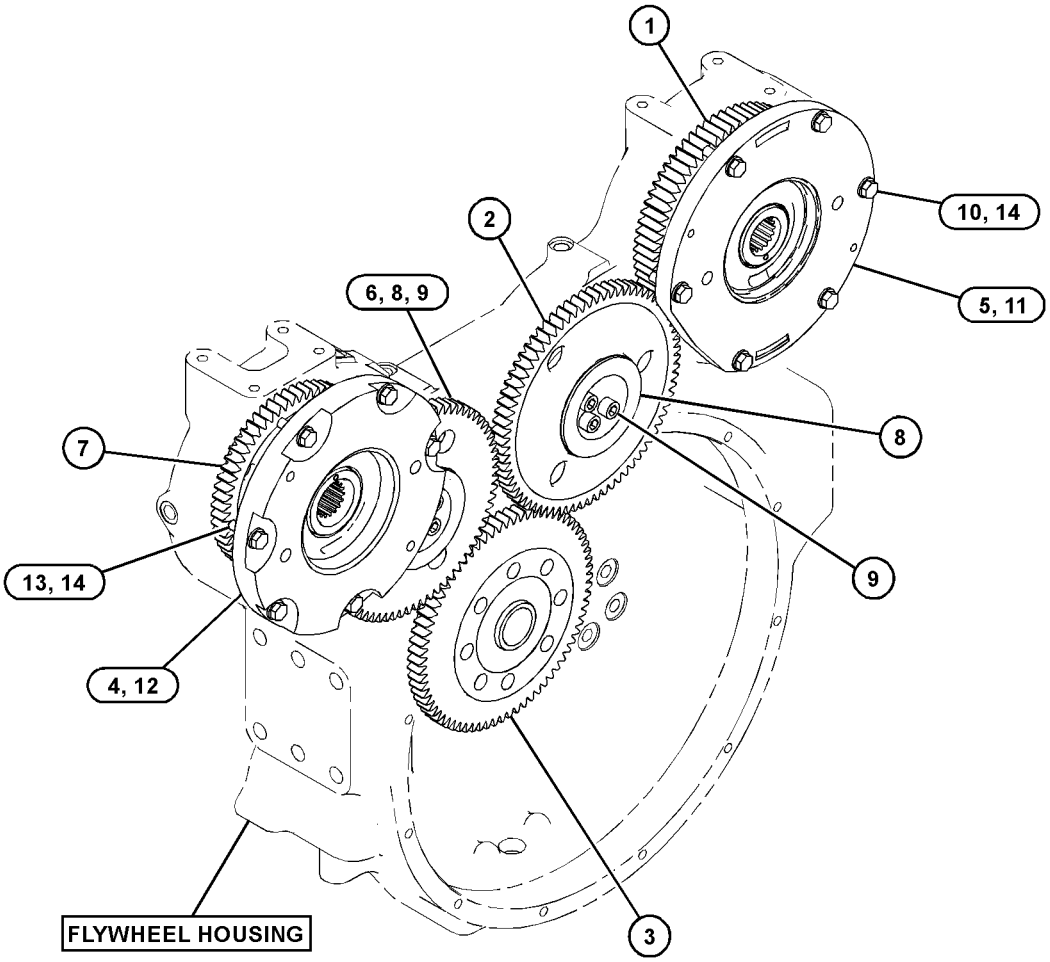

GRAPHIC #1 **<END>** g03837508

438-1109 HOUSING AS-FLYWHEEL

S/N: TXD1-UP

PART OF 438-1110 HOUSING GP-FLYWHEEL

AN ATTACHMENT

SMCS-1157 **i06138114**

NOTE	REF NO	GRAPHIC REF	PART NUMBER	QTY	PART NAME 1 2 3 4 5 6 (PRODUCT LEVEL)	SEE PAGE
	1	1	**5F-0304**	1	PLUG	
	2	1	*183-3407*	4	PLUG AS	
					(EACH INCLUDES)	
		1	**9S-8004**	1	PLUG	
		1	**214-7568**	1	SEAL-O-RING	
	3	1	**2A-1162**	1	GASKET	
	4	1	*307-2671*	1	PLUG AS	
		1	**9S-8002**	1	PLUG	
		1	**214-7566**	1	SEAL-O-RING	
	5	1	*307-2673*	2	PLUG AS	
					(EACH INCLUDES)	
		1	**9S-8005**	1	PLUG-O-RING	
		1	**238-5080**	1	SEAL-O-RING	
	6	1	*321-8642*	1	PLUG AS	
		1	**9S-8003**	1	PLUG	
		1	**214-7567**	1	SEAL-O-RING	
	8	1	**8M-9315**	1	BUSHING	
	9	1	**209-8622**	1	BUSHING	

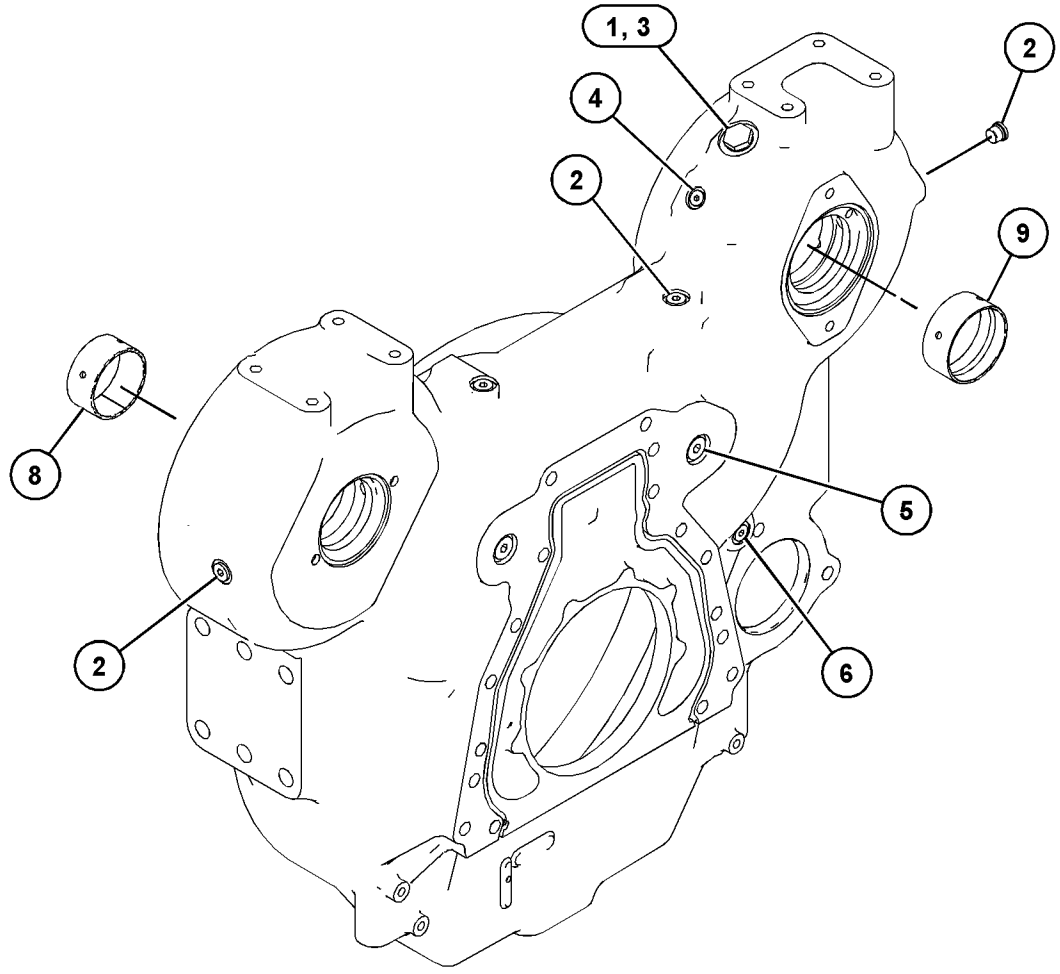

GRAPHIC #1 **<END>** g03824753

438-1110 HOUSING GP-FLYWHEEL

S/N: TXD1-UP

PART OF 420-1870, 420-1871, 423-8451, 423-8452, 423-8453, 423-8454 ENGINE AR-COMPLETE AN ATTACHMENT

SMCS-1157 **i05982298**

NOTE	REF NO	GRAPHIC REF	PART NUMBER	QTY	PART NAME 1 2 3 4 5 6 (PRODUCT LEVEL)	SEE PAGE
	1	1	**175-3721**	1	COVER	
	2	1	**268-5582**	1	SEAL	
Y	3	1	**438-1109**	1	HOUSING AS-FLYWHEEL	47
	4	1	**2P-4358**	1	FLANGE	
	5	1	**4M-0189**	1	SEAL-O-RING	
	6	1	**5P-8245**	17	WASHER-HARD (13.5X25.5X3-MM THK)	
M	7	1	**6A-5591**	2	BOLT (M12X1.75X25-MM)	
M	8	1	**6V-1820**	2	BOLT (M10X1.5X30-MM)	
	9	1	**6V-5839**	2	WASHER (11X21X2.5-MM THK)	
	10	1	**6V-8001**	1	SEAL-O-RING	
M	11	1	**6V-8197**	9	BOLT (M12X1.75X40-MM)	
M	12	1	**6V-8336**	6	BOLT (M12X1.75X70-MM)	
BF			**1U-8846**		SEALANT-GASKET	

B - USE AS REQUIRED
F - NOT SHOWN
M - METRIC PART
Y - SEPARATE ILLUSTRATION

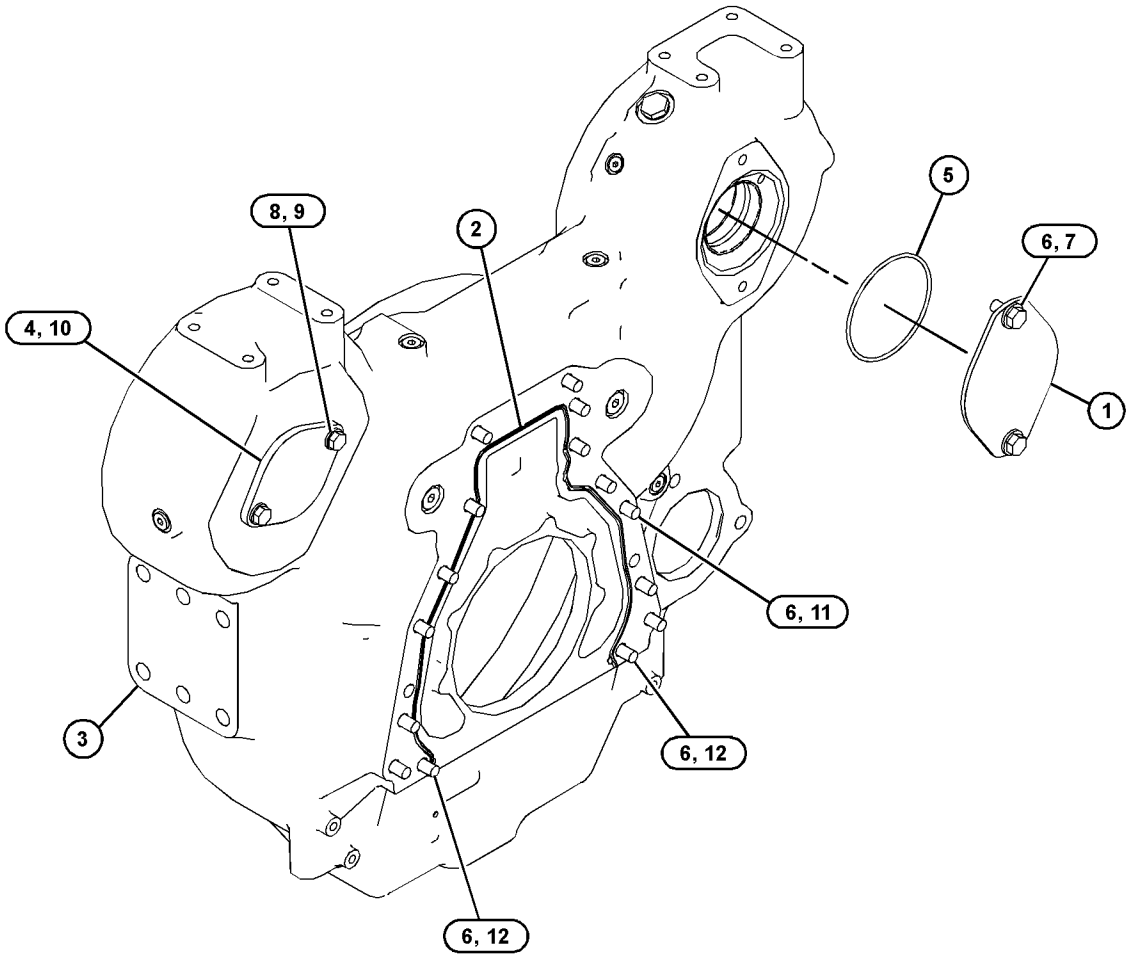

GRAPHIC #1 **<END>** g03824883

245-3262 HOUSING GP-FRONT

S/N: TXD1-UP

PART OF 420-1870, 420-1871, 423-8451, 423-8452, 423-8453, 423-8454 ENGINE AR-COMPLETE AN ATTACHMENT

SMCS-1151, 1162, 1206

i05567495

NOTE	REF NO	GRAPHIC REF	PART NUMBER	QTY	PART NAME 1 2 3 4 5 6 (PRODUCT LEVEL)	SEE PAGE
	1	1	**245-3261**	1	HOUSING-FRONT	
M	2	1	**6V-3918**	4	BOLT (M8X1.25X50-MM)	
M	3	1	**6V-5217**	8	BOLT (M8X1.25X20-MM)	
	4	1	**9M-1974**	12	WASHER-HARD (8.8X16X2-MM THK)	
B	5	1	**1U-8846**		SEALANT-GASKET	

B - USE AS REQUIRED
M - METRIC PART

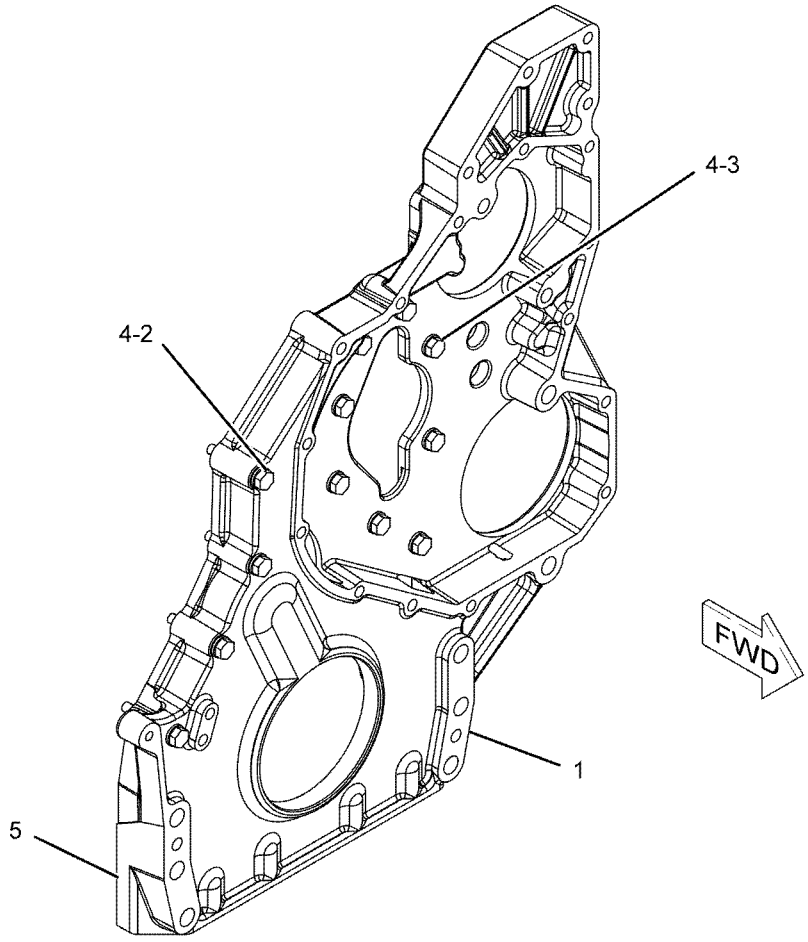

GRAPHIC #1

<END>

g01141811

166-1784 LIFTING GP-ENGINE

S/N: TXD1-UP

PART OF 420-1870, 420-1871, 423-8451, 423-8452, 423-8453, 423-8454 ENGINE AR-COMPLETE AN ATTACHMENT

SMCS-1122 **i05555438**

NOTE	REF NO	GRAPHIC REF	PART NUMBER	QTY	PART NAME 1 2 3 4 5 6 (PRODUCT LEVEL)	SEE PAGE
	1	1	**188-1017**	1	PLATE-LIFTING	
	2	1	**219-8675**	1	BRACKET AS	
		1	**7T-1099**	3	LINK	
M		1	**159-3042**	5	NUT-WELD (M10X1.5-THD)	
	3	1	**3E-4353**	2	WASHER-HARD (11X25X3-MM THK)	
	4	1	**4P-7428**	2	CLIP	
	5	1	**5P-8245**	6	WASHER-HARD (13.5X25.5X3.0-MM THK)	
M	6	1	**6V-1820**	2	BOLT (M10X1.5X30-MM)	
M	7	1	**6V-5684**	2	BOLT (M12X1.75X45-MM)	
M	8	1	**6V-8197**	2	BOLT (M12X1.75X40-MM)	
M	9	1	**6V-8675**	4	BOLT (M12X1.75X35-MM)	
	10	1	**7D-1649**	4	WASHER-HARD (13.5X32.0X5.0-MM THK)	

M - METRIC PART

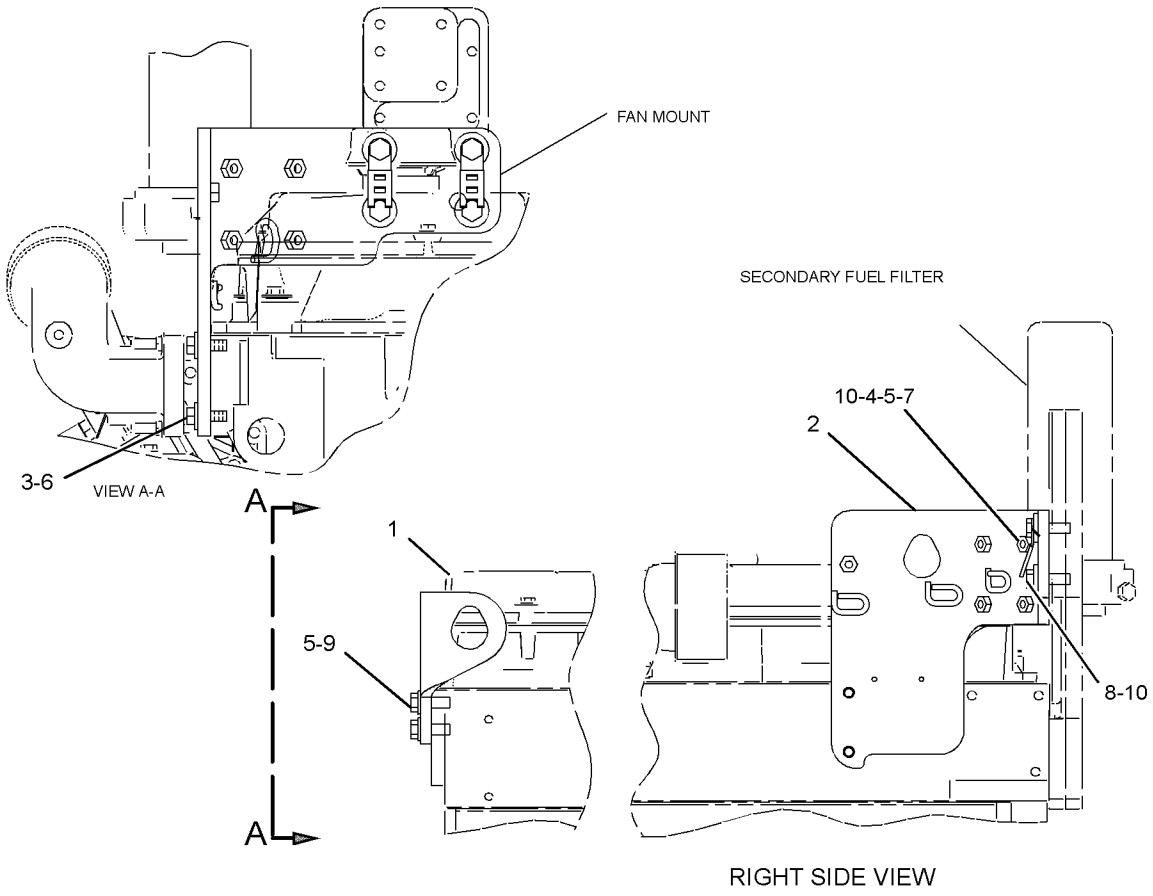

GRAPHIC #1 **<END>** g01304624

438-0935 MOUNTING GP-ALTERNATOR

S/N: TXD1-UP

PART OF 420-1870, 420-1871, 423-8451, 423-8452, 423-8453, 423-8454 ENGINE AR-COMPLETE AN ATTACHMENT

SMCS-1405 **i06047316**

NOTE	REF NO	GRAPHIC REF	PART NUMBER	QTY	PART NAME 1 2 3 4 5 6 (PRODUCT LEVEL)	SEE PAGE
	1	1	**243-2310**	2	COVER	
	2	1	**333-1207**	2	IDLER AS	
	3	1	**347-7963**	1	TENSIONER-BELT	
	4	1	**459-4062**	1	BRACKET-SUPPORT	
M	5	1	**6V-4249**	5	BOLT (M10X1.5X50-MM)	
	6	1	**6V-5839**	6	WASHER (11X21X2.5-MM THK)	
M	7	1	**8T-0643**	1	BOLT (M10X1.5X80-MM)	

M - METRIC PART

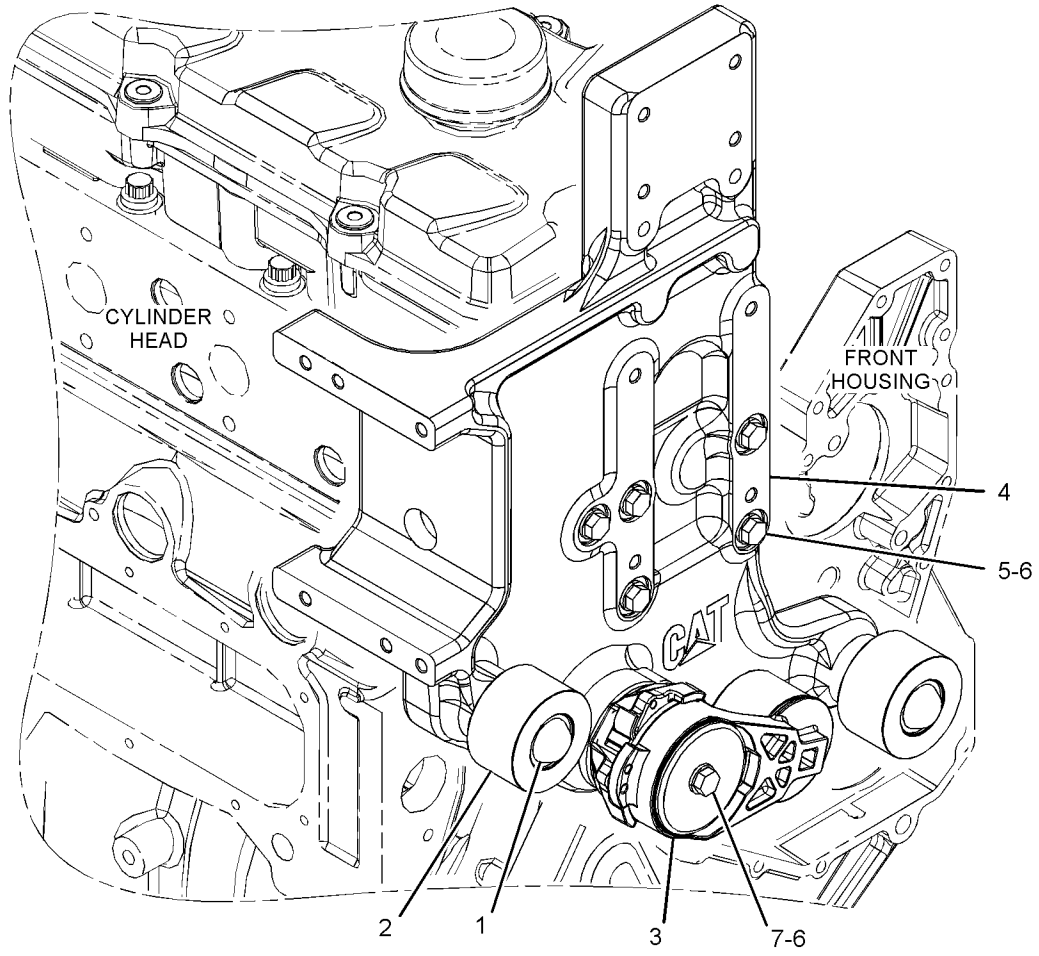

GRAPHIC #1 **<END>** g03566564

398-4356 MOUNTING GP-ENGINE

S/N: PPP1-UP; SSS1-UP; TTT1-UP
PART OF 398-4287 INSTALLATION AR-ENGINE
ALSO AN ATTACHMENT

SMCS-1152, 1153, 1154 **i06147035**

NOTE	REF NO	GRAPHIC REF	PART NUMBER	QTY	PART NAME 1 2 3 4 5 6 (PRODUCT LEVEL)	SEE PAGE
	1	1	**7C-3567**	2	MOUNT AS	
	2	1	**183-9374**	2	BLOCK	
	3	1	**236-8191**	2	CAP-MOUNT	
	4	1	**375-3216**	2	SUPPORT-ENGINE	
	5	1	**198-4780**	4	WASHER-HARD (17.5X32X8-MM THK)	
	6	1	**8T-4123**	12	WASHER (3.62X5.75X0.375-MM THK)	
M	7	1	**8T-4140**	4	BOLT (M16X2X60-MM)	
M	8	1	**8T-4170**	4	BOLT (M20X2.5X150-MM)	
M	9	1	**8T-6430**	8	BOLT (M20X2.5X50-MM)	

M - METRIC PART

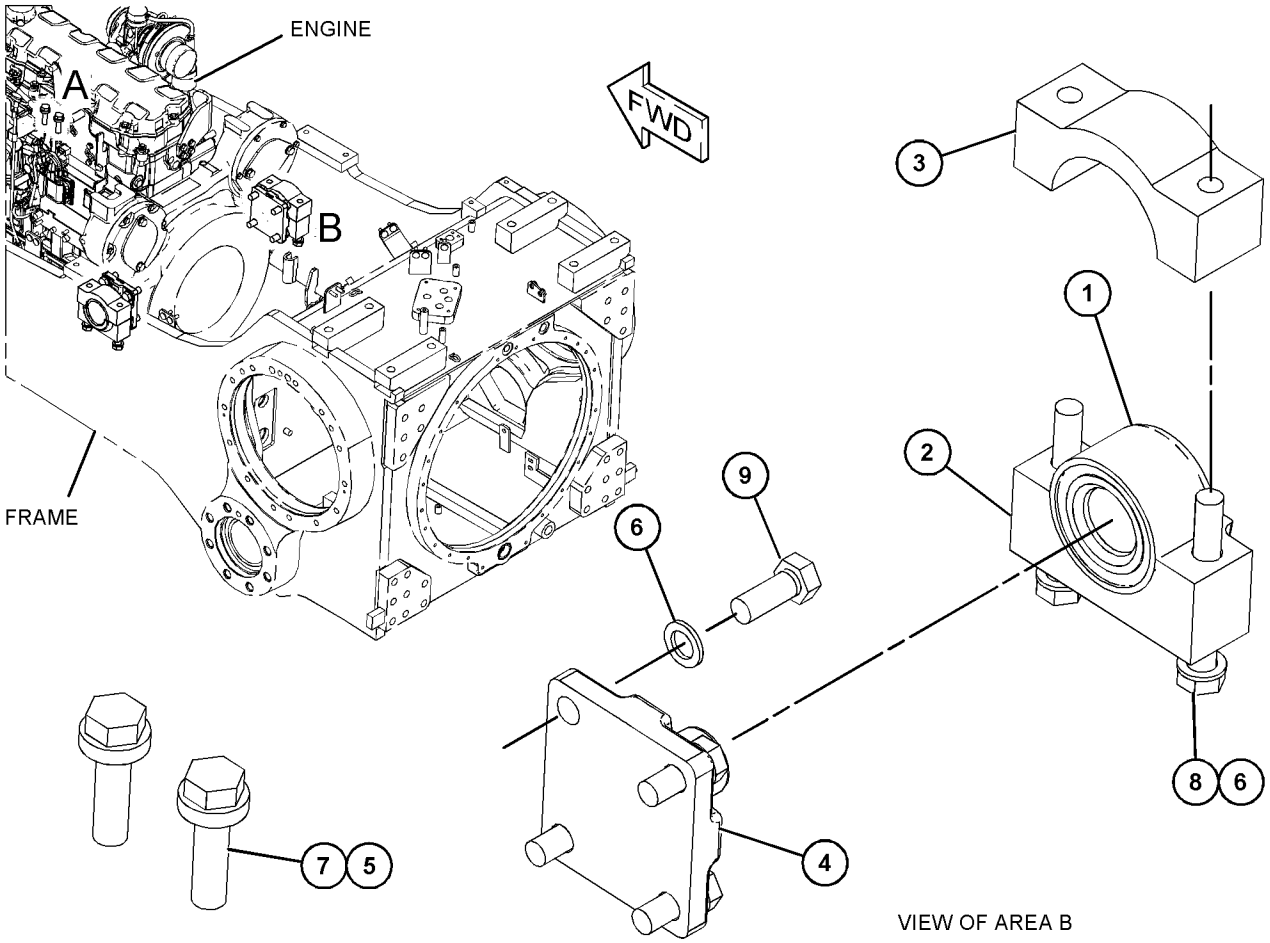

GRAPHIC #1 **<END>** g03842356

165-4459 PAN GP-OIL—ENGINE

S/N: TXD1-UP

PART OF 420-1870, 420-1871, 423-8451, 423-8452, 423-8453, 423-8454 ENGINE AR-COMPLETE AN ATTACHMENT

SMCS-1302 **i05555450**

NOTE	REF NO	GRAPHIC REF	PART NUMBER	QTY	PART NAME 1 2 3 4 5 6 (PRODUCT LEVEL)	SEE PAGE
B	1	1	**4C-9612**		SEALANT-SILICONE	
	2	1	**190-6114**	1	GASKET-OIL PAN	
	3	1	**174-3847**	1	PAN-OIL	
M	4	1	**6V-3918**	32	BOLT (M8X1.25X50-MM)	
	5	1	**9M-1974**	32	WASHER-HARD (8.8X16X2-MM THK)	

B - USE AS REQUIRED
M - METRIC PART

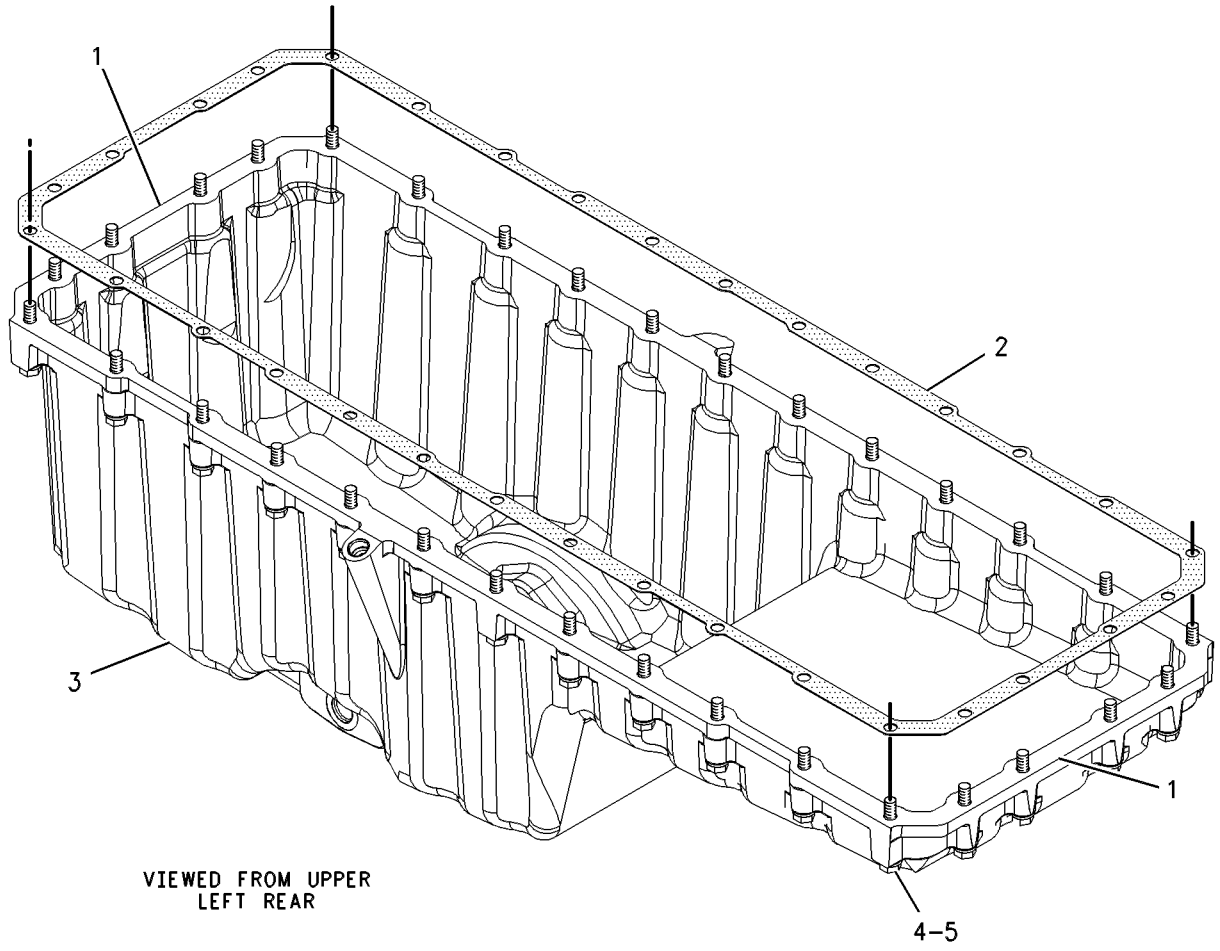

GRAPHIC #1 **<END>** g00637845

265-1400 PISTON & ROD GP*R

S/N: TXD1-UP
16.1:1 COMPRESSION RATIO
PART OF 387-8618, 387-8619 ENGINE AR-CORE
AN ATTACHMENT

SMCS-1225 **i05555622**

NOTE	REF NO	GRAPHIC REF	PART NUMBER	QTY	PART NAME 1 2 3 4 5 6 (PRODUCT LEVEL)	SEE PAGE
	1	1	**213-3190**	1	BEARING (CONNECTING ROD)	
R	2	1	**160-8199**	1	ROD AS	
	2A	1	**160-8194**	1	BEARING (CONNECTING ROD)	
M	2B	1	**160-8197**	2	BOLT	
	3	1	**166-3648**	1	PIN-PISTON	
	4	1	**347-2382**	1	RING-PISTON (OIL CONTROL)	
	5	1	**385-1657**	1	CROWN AS-PISTON	
	6	1	**347-2381**	1	RING-PISTON (INTERMEDIATE)	
	7	1	**197-9367**	1	TUBE AS (PISTON COOLING JET)	
	8	1	**347-2380**	1	RING-PISTON (TOP)	
	9	1	**324-7380**	1	SKIRT-PISTON	
M	10	1	**6V-3940**	1	BOLT (M8X1.25X25-MM)	
	11	1	**7X-2908**	2	RING-RETAINING	

M - METRIC PART
R - REMFG PART MAY BE AVAILABLE

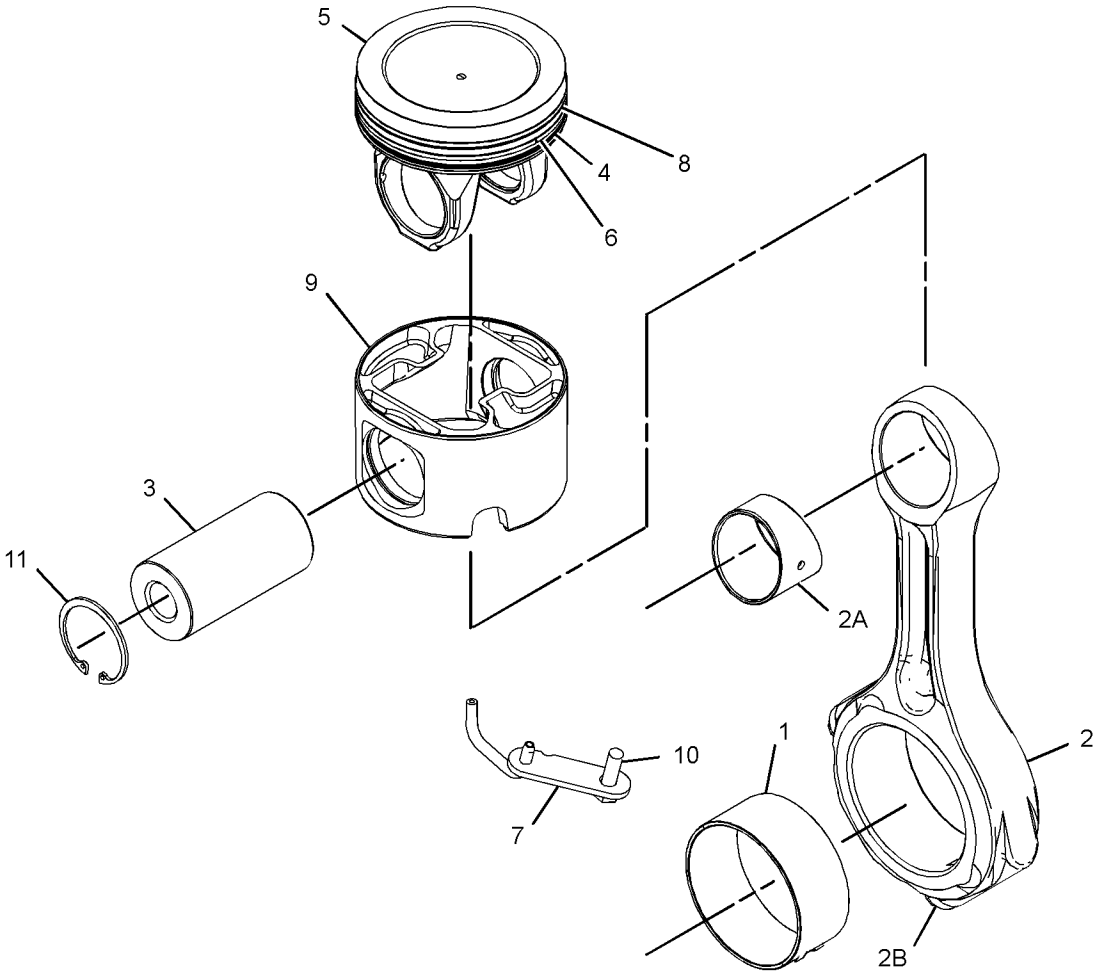

GRAPHIC #1 **<END>** g02511165

252-1567 PLUG GP-ENGINE

S/N: TXD1-UP

PART OF 420-1870, 420-1871, 423-8451, 423-8452, 423-8453, 423-8454 ENGINE AR-COMPLETE AN ATTACHMENT

SMCS-1000 **i05555451**

NOTE	REF NO	GRAPHIC REF	PART NUMBER	QTY	PART NAME 1 2 3 4 5 6 (PRODUCT LEVEL)	SEE PAGE
	1	1	*389-3709*	1	PLUG AS	
		1	**238-5082**	1	SEAL-O-RING	
		1	**360-3682**	1	PLUG-O-RING	
	2	1	*389-3708*	1	PLUG AS	
		1	**214-7568**	1	SEAL-O-RING	
		1	**360-3679**	1	PLUG-CONNECTOR	
	3	1	*398-5596*	1	PLUG AS	
		1	**238-5080**	1	SEAL-O-RING	
		1	**360-3680**	1	PLUG	

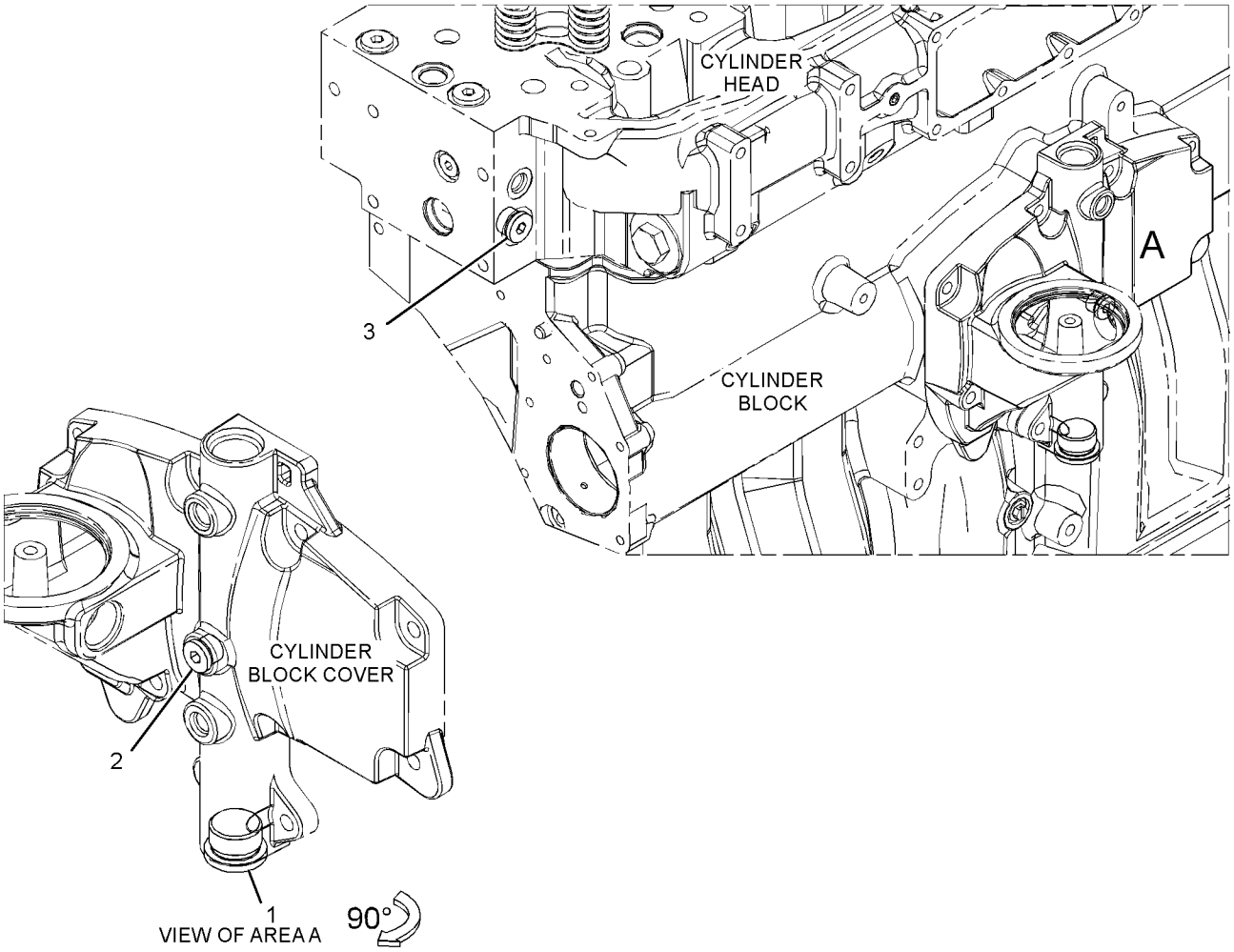

GRAPHIC #1 **<END>** g02163416

398-4336 PULLEY GP-FAN & ALT DRIVE

S/N: PPP1-UP; SSS1-UP; TTT1-UP
AN ATTACHMENT

SMCS-1359, 1425 **i06220878**

NOTE	REF NO	GRAPHIC REF	PART NUMBER	QTY	PART NAME 1 2 3 4 5 6 (PRODUCT LEVEL)	SEE PAGE
	1	1	**446-5035**	1	PULLEY-FAN (8-GROOVE)	
	2	1	**455-3677**	1	BELT-SERPENTINE	
	3	1	**8T-4121**	6	WASHER-HARD (11X21X2.5-MM THK)	
M	4	1	**8T-4186**	6	BOLT (M10X1.5X40-MM)	

M - METRIC PART

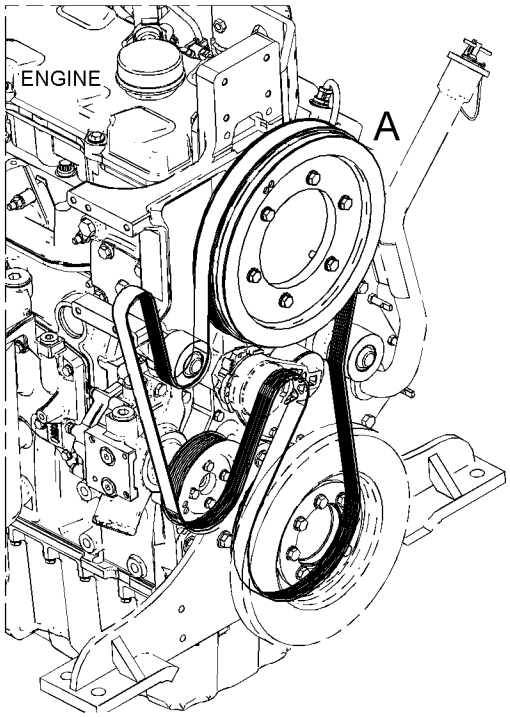

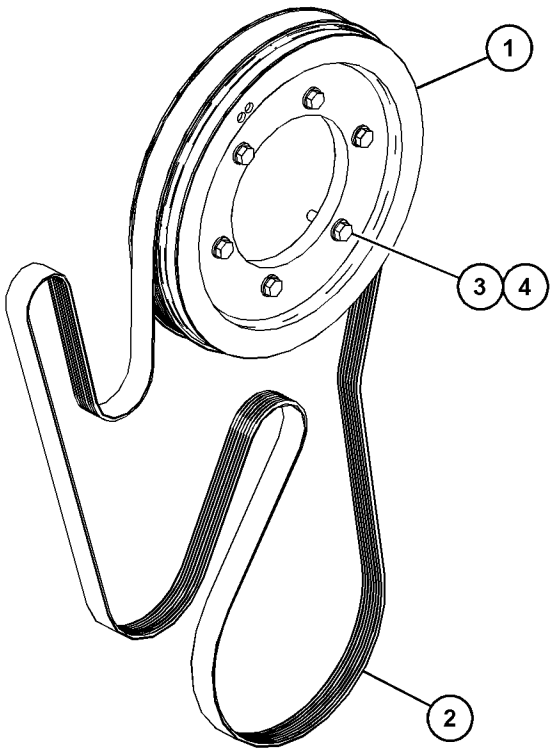

VIEW OF AREA A

GRAPHIC #1 **<END>** g03862323

398-4337 PULLEY GP-FAN & ALT DRIVE

S/N: PPP1-UP; SSS1-UP; TTT1-UP
PART OF 481-9508 DISTRIBUTION AR
AN ATTACHMENT

SMCS-1359, 1425

i06220875

NOTE	REF NO	GRAPHIC REF	PART NUMBER	QTY	PART NAME 1 2 3 4 5 6 (PRODUCT LEVEL)	SEE PAGE
	1	1	**174-9690**	1	BELT-SERPENTINE	
	2	1	**446-5036**	1	PULLEY-FAN (8-GROOVE)	
	3	1	**8T-4121**	6	WASHER-HARD (11X21X2.5-MM THK)	
M	4	1	**8T-4186**	6	BOLT (M10X1.5X40-MM)	

M - METRIC PART

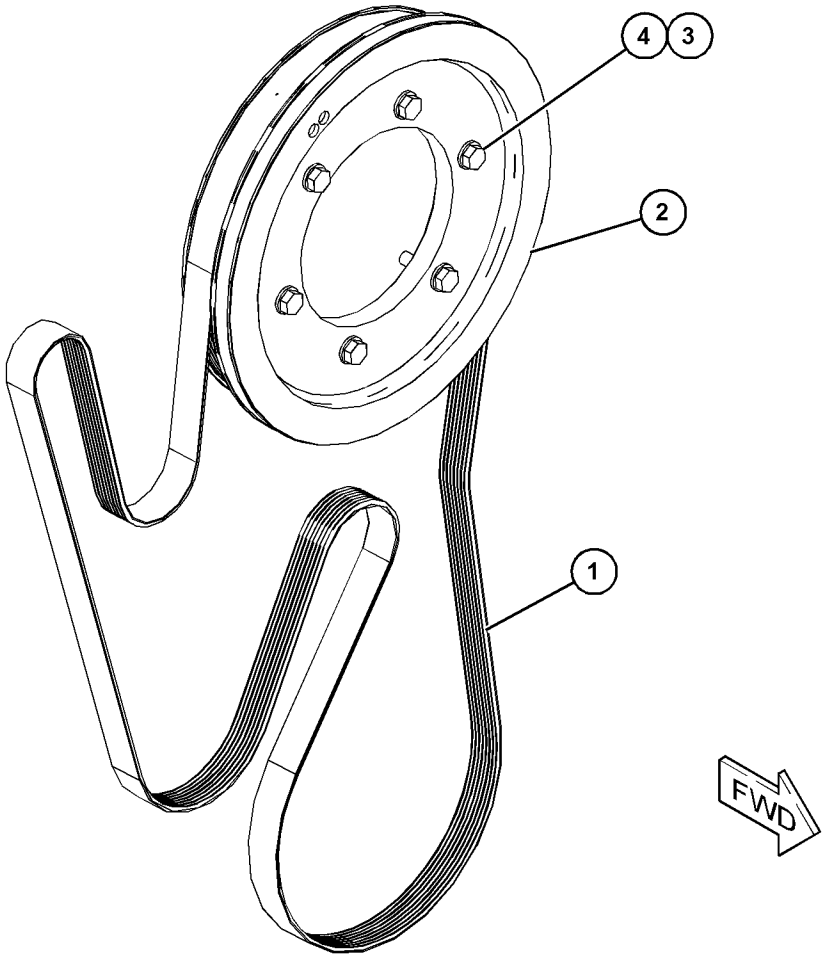

GRAPHIC #1

<END>

g03861056

213-9320 ROCKER ARM GP–EXHAUST

S/N: TXD1-UP

PART OF 212-8926 VALVE MECHANISM GP

AN ATTACHMENT

SMCS-1123 **i05615918**

NOTE	REF NO	GRAPHIC REF	PART NUMBER	QTY	PART NAME 1 2 3 4 5 6 (PRODUCT LEVEL)	SEE PAGE
R	1	1	**163-2447**	1	ROCKER ARM AS	
M	2	1	**260-7524**	1	SCREW-VALVE ADJUSTMENT (M10X1.5-THD)	
M	3	1	**2Y-5829**	1	NUT (M10X1.5-THD)	

M - METRIC PART
R - REMFG PART MAY BE AVAILABLE

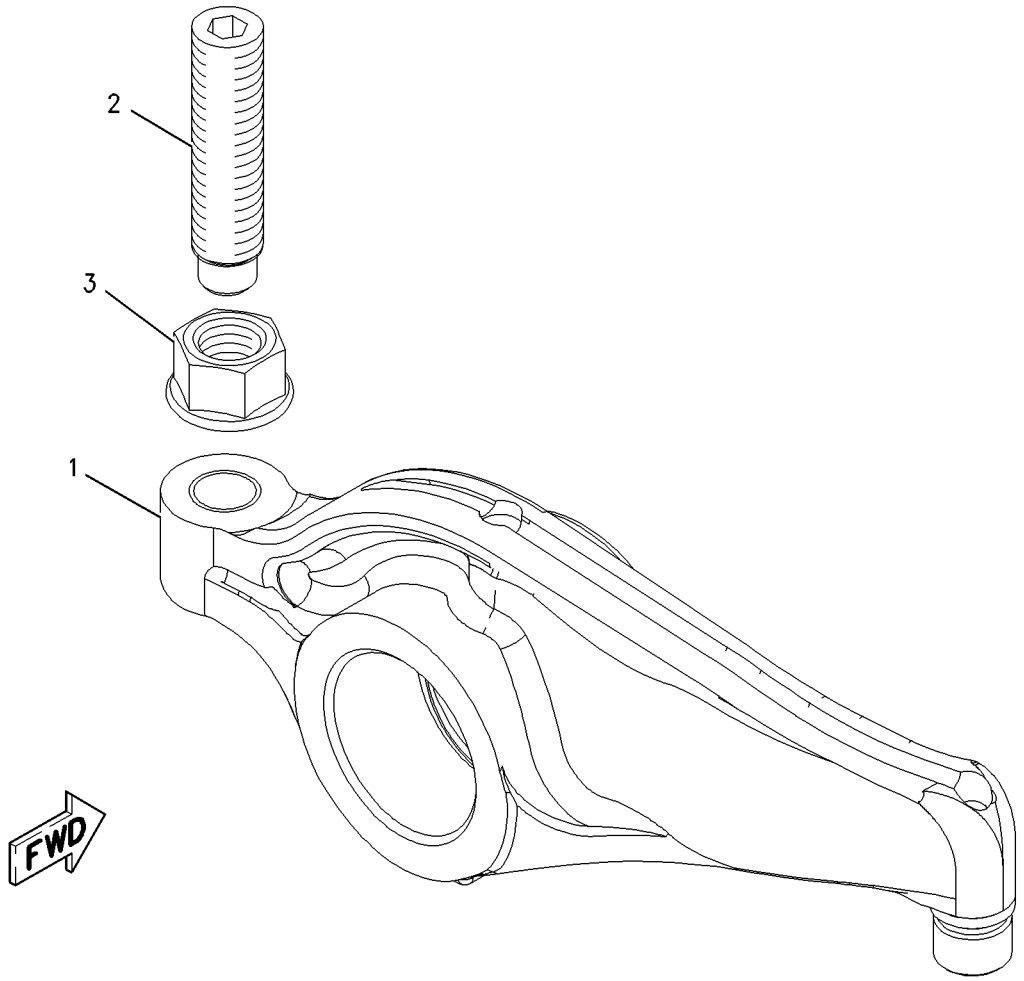

GRAPHIC #1 **<END>** g00848359

242-0329 ROCKER ARM GP–INLET

S/N: TXD1-UP
PART OF 212-8926 VALVE MECHANISM GP
AN ATTACHMENT

SMCS-1123 **i05615922**

NOTE	REF NO	GRAPHIC REF	PART NUMBER	QTY	PART NAME 1 2 3 4 5 6 (PRODUCT LEVEL)	SEE PAGE
M	1	1	**260-7524**	1	SCREW-VALVE ADJUSTMENT (M10X1.5-THD)	
R	2	1	**242-0328**	1	ROCKER ARM AS	
M	3	1	**2Y-5829**	1	NUT (M10X1.5-THD)	

M - METRIC PART
R - REMFG PART MAY BE AVAILABLE

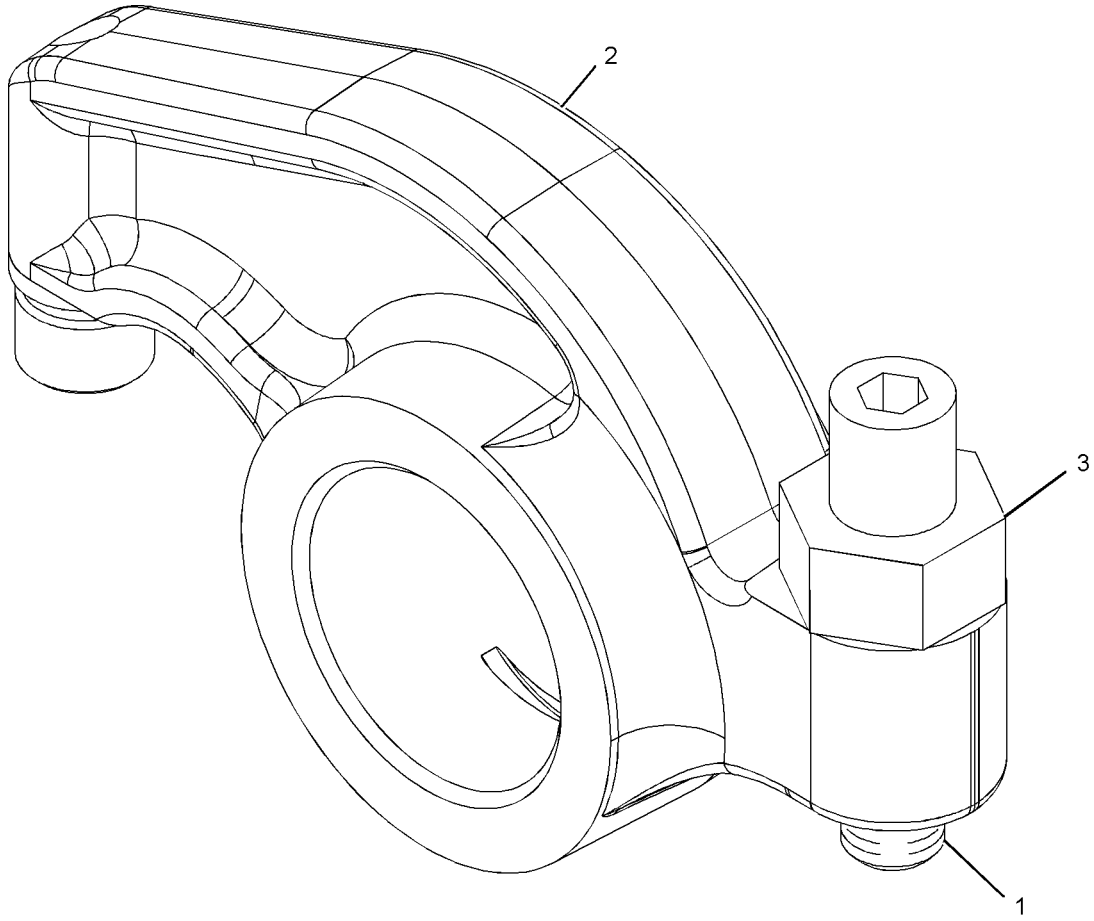

GRAPHIC #1 **<END>** g01056688

189-9306 SEAL GP-CRANKSHAFT

S/N: TXD1-UP
FRONT AND REAR
FOR USE WITH WET FLYWHEEL HOUSING AND FRONT DUST EXCLUDER
PART OF 420-1870, 420-1871, 423-8451, 423-8452, 423-8453, 423-8454 ENGINE AR-COMPLETE
AN ATTACHMENT

SMCS-1160, 1161 **i06231296**

NOTE	REF NO	GRAPHIC REF	PART NUMBER	QTY	PART NAME 1 2 3 4 5 6 (PRODUCT LEVEL)	SEE PAGE
	1	1	**4R-9999**	1	EXCLUDER-CRANKSHAFT SEAL	
M	2	1	**206-3719**	9	BOLT AS	
	3	1	**245-7339**	1	SEAL-CRANKSHAFT (FRONT)	
Y	4	1	**285-4074**	1	SEAL GP-CRANKSHAFT (REAR)	61

M - METRIC PART
Y - SEPARATE ILLUSTRATION

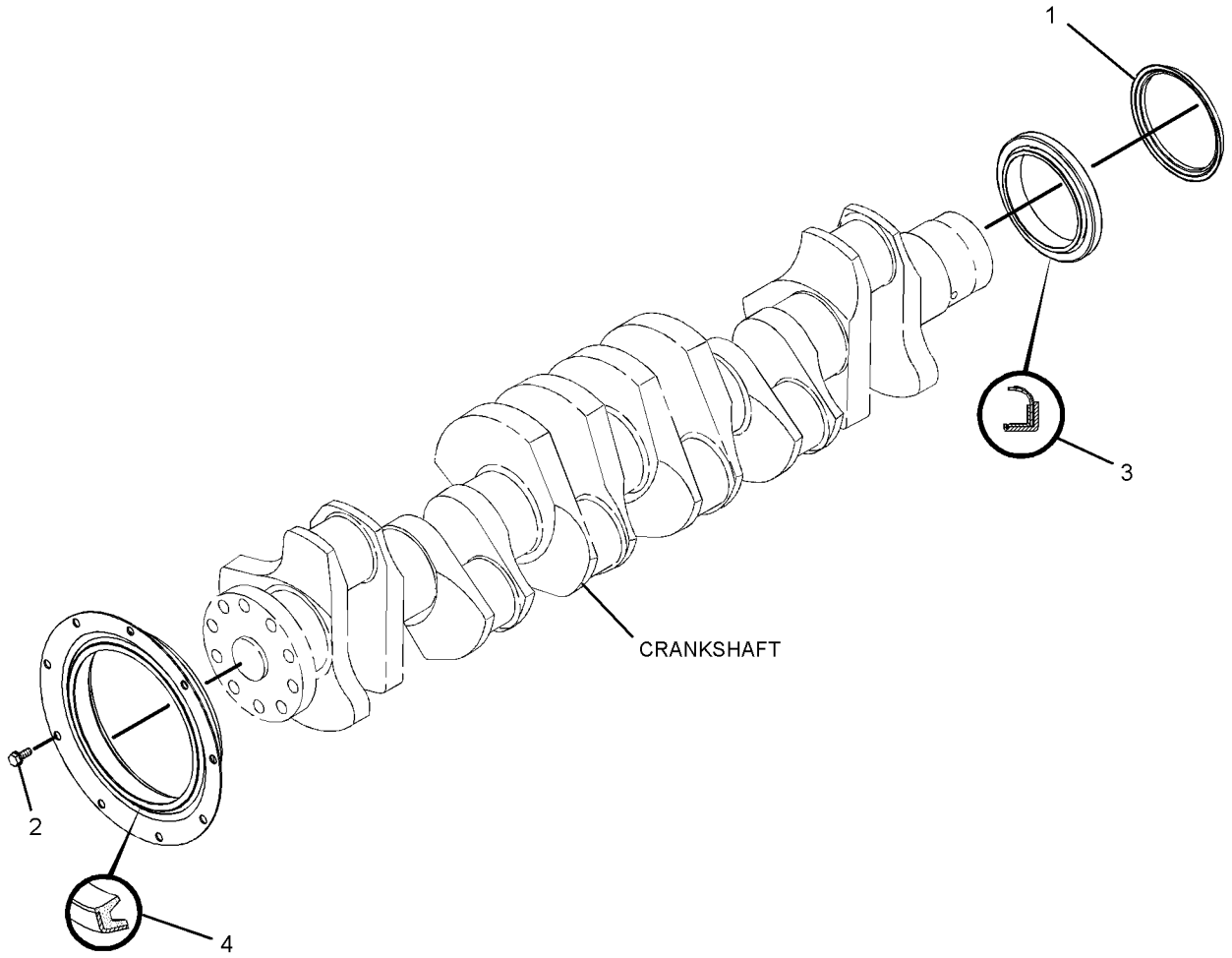

GRAPHIC #1 **<END>** g01439940

285-4074 SEAL GP-CRANKSHAFT–REAR

S/N: TXD1-UP
PART OF 189-9306 SEAL GP-CRANKSHAFT
AN ATTACHMENT

SMCS-1160, 1161

i05634097

NOTE	REF NO	GRAPHIC REF	PART NUMBER	QTY	PART NAME 1 2 3 4 5 6 (PRODUCT LEVEL)	SEE PAGE
					(NO SERVICED PARTS)	

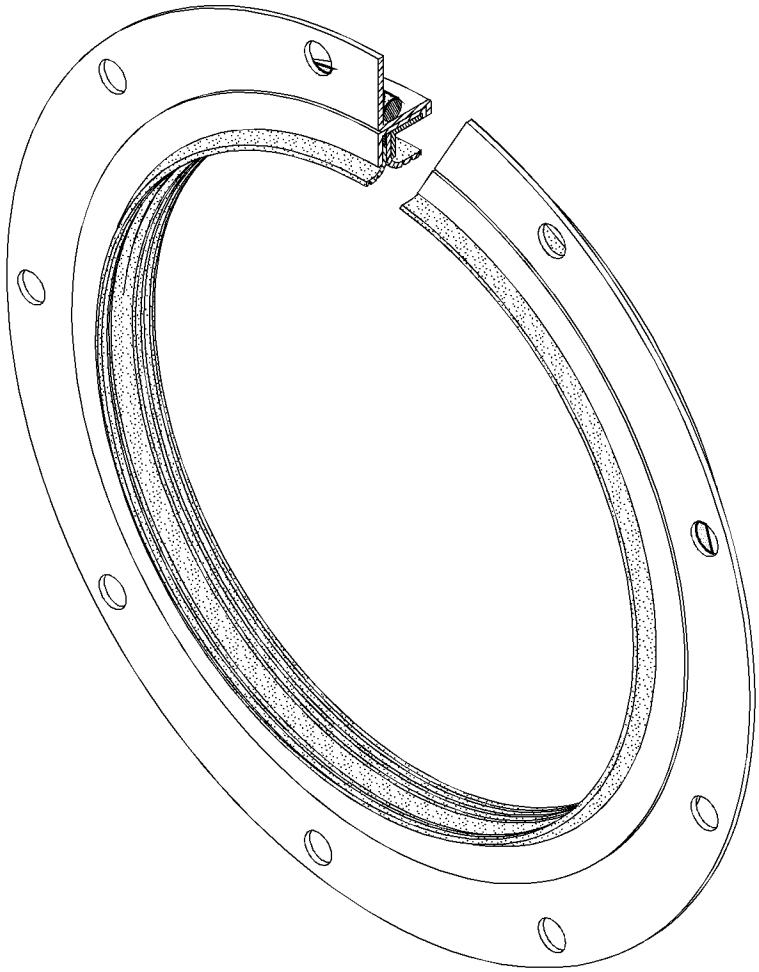

GRAPHIC #1

<END>

g02202493

166-1790 SUPPORT GP-ENGINE

S/N: TXD1-UP

FOR USE WITH FRONT TRUNNION ENGINE SUPPORT

PART OF 420-1870, 420-1871, 423-8451, 423-8452, 423-8453, 423-8454 ENGINE AR-COMPLETE AN ATTACHMENT

SMCS-1152, 1153, 1154 **i05555472**

NOTE	REF NO	GRAPHIC REF	PART NUMBER	QTY	PART NAME 1 2 3 4 5 6 (PRODUCT LEVEL)	SEE PAGE
	1	1	**169-3899**	1	SUPPORT AS-ENGINE	
M	1A	1	**8T-3490**	4	NUT-WELD (M10X1.5 THD)	
	2	1	**5P-8245**	6	WASHER-HARD (13.5X25.5X3-MM THK)	
M	3	1	**6V-8675**	6	BOLT (M12X1.75X35-MM)	

M - METRIC PART

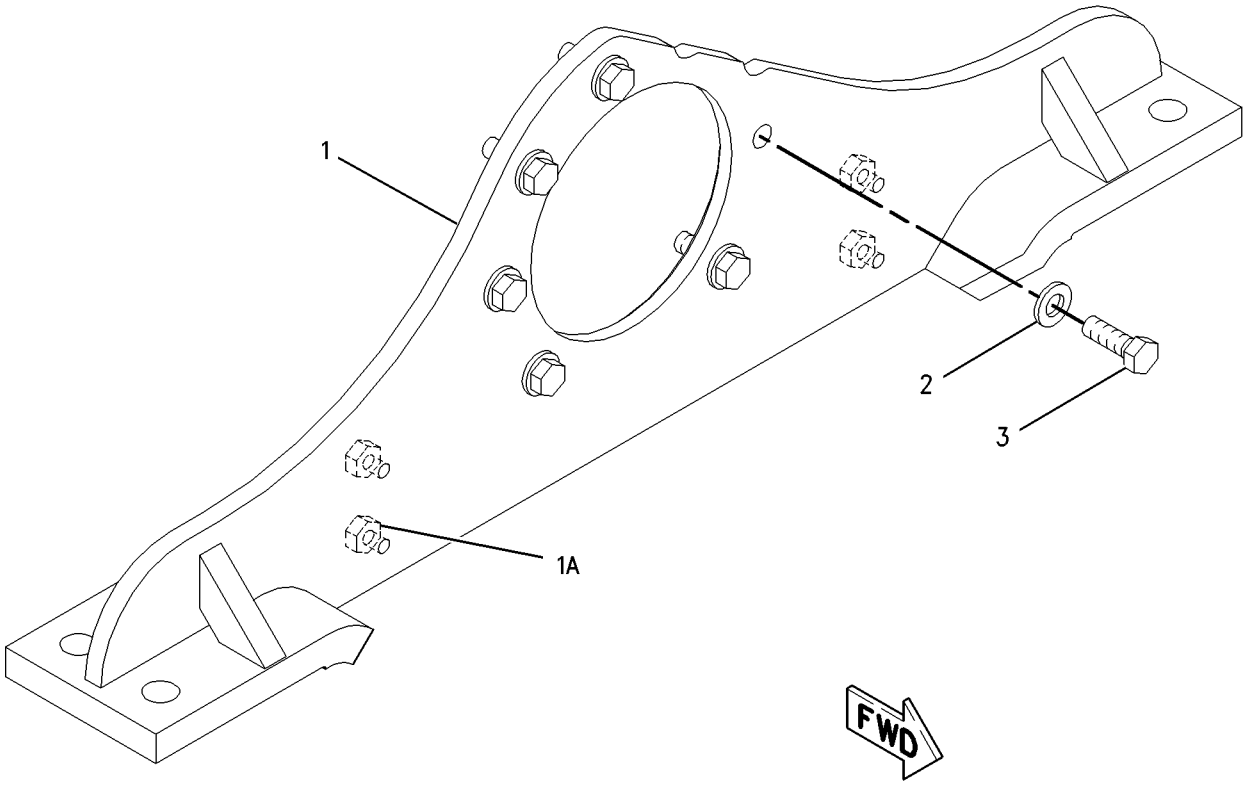

GRAPHIC #1 **<END>** g00852403

166-1792 TRUNNION GP-ENGINE

S/N: TXD1-UP

PART OF 420-1870, 420-1871, 423-8451, 423-8452, 423-8453, 423-8454 ENGINE AR-COMPLETE AN ATTACHMENT

SMCS-1153 **i05555473**

NOTE	REF NO	GRAPHIC REF	PART NUMBER	QTY	PART NAME 1 2 3 4 5 6 (PRODUCT LEVEL)	SEE PAGE
	1	1	**311-8096**	1	TRUNNION AS	
	2	1	**5P-8245**	6	WASHER-HARD (13.5X25.5X3-MM THK)	
M	3	1	**6V-5696**	6	BOLT (M12X1.75X80-MM)	

M - METRIC PART

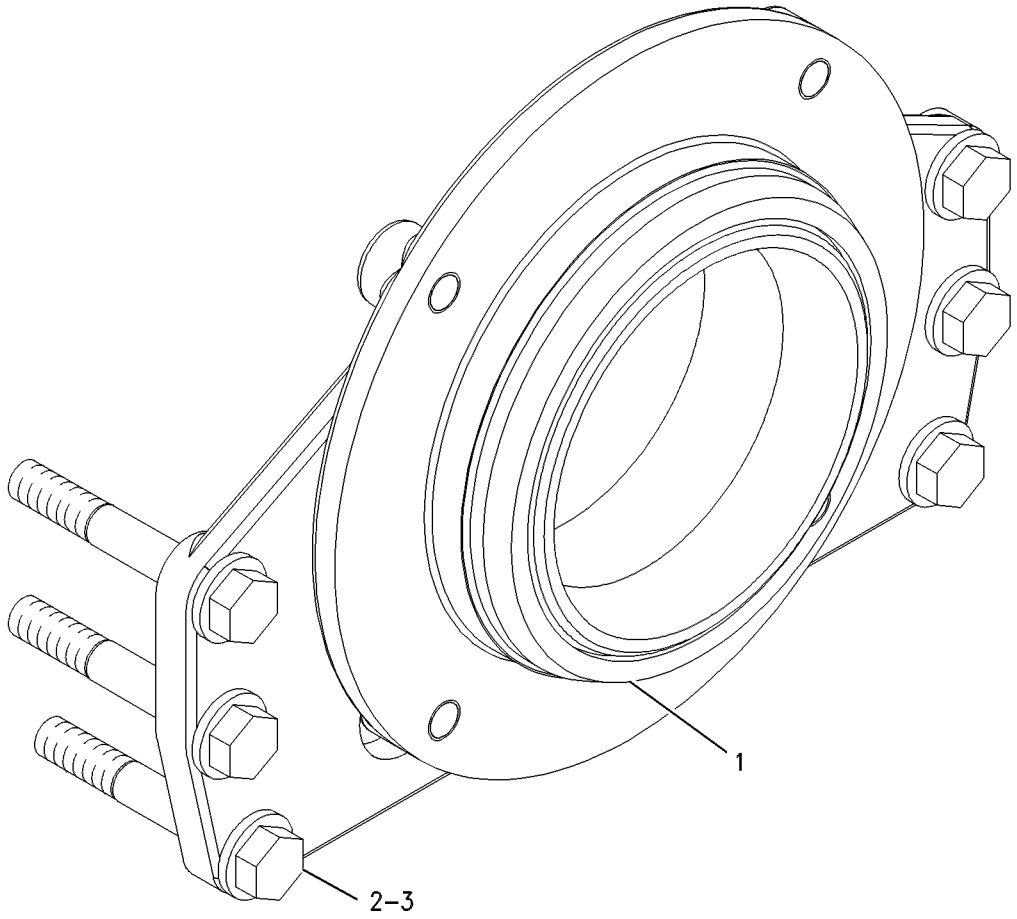

GRAPHIC #1 **<END>** g00644918

212-8926 VALVE MECHANISM GP

S/N: TXD1-UP

PART OF 242-0447 VALVE MECHANISM GP

AN ATTACHMENT

SMCS-1102, 1121, 1123 **i05615914**

NOTE	REF NO	GRAPHIC REF	PART NUMBER	QTY	PART NAME 1 2 3 4 5 6 (PRODUCT LEVEL)	SEE PAGE
	1	1	**163-2445**	1	SHAFT AS-ROCKER ARM	
		1	**8F-6575**	2	PLUG-CUP	
	2	1	**163-2459**	6	SPRING	
	3	1	**164-5669**	2	STAND (END)	
	4	1	**176-5913**	4	STAND (MIDDLE)	
	5	1	**176-5914**	1	STAND (OIL)	
Y	6	1	*213-9320*	6	ROCKER ARM GP (EXHAUST)	58
Y	7	1	*242-0329*	6	ROCKER ARM GP (INLET)	59
	8	1	**5P-8245**	7	WASHER-HARD (13.5X25.5X3-MM THK)	
M	9	1	**8T-0646**	7	BOLT (M12X1.75X110-MM)	

M - METRIC PART
Y - SEPARATE ILLUSTRATION

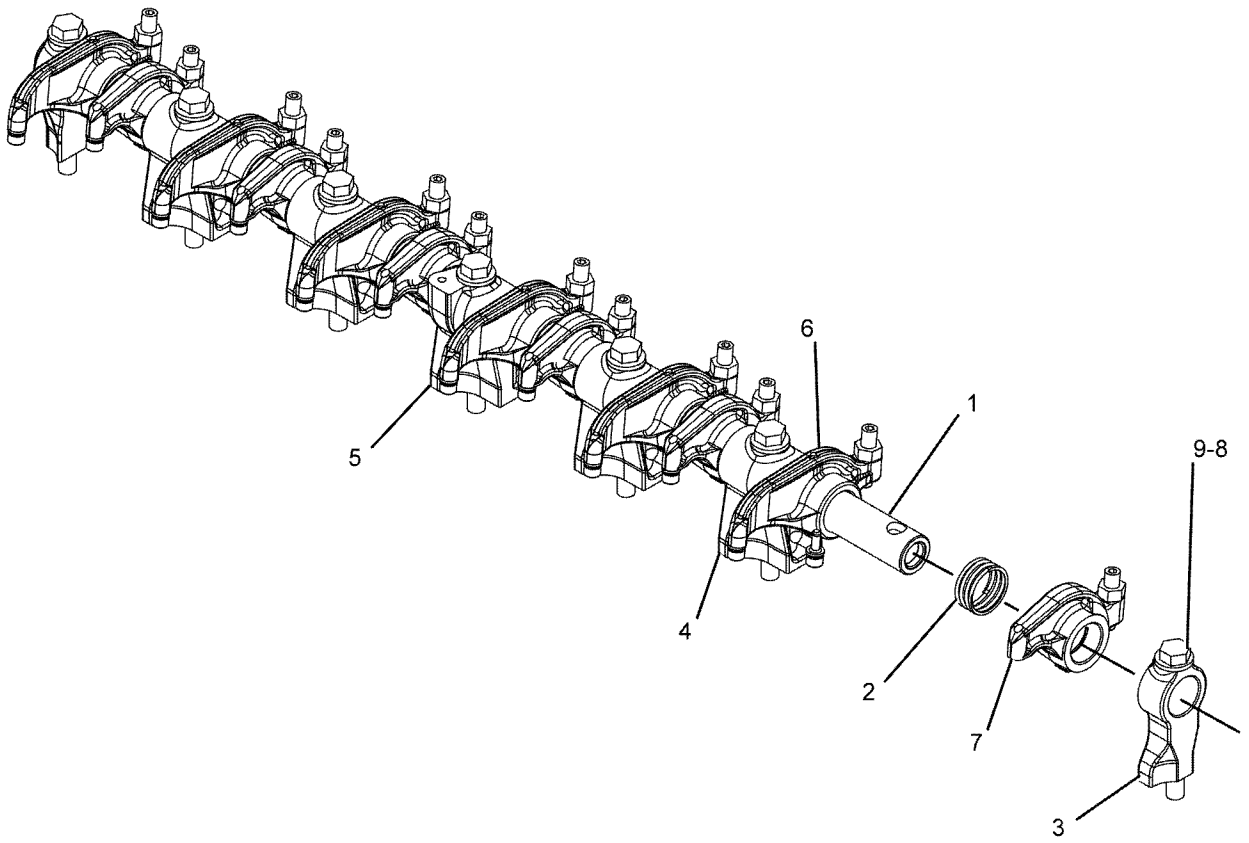

GRAPHIC #1 **<END>** g01069313

242-0447 VALVE MECHANISM GP

S/N: TXD1-UP
PART OF 387-8618, 387-8619 ENGINE AR-CORE
AN ATTACHMENT

SMCS-1102, 1121, 1123

i06230965

NOTE	REF NO	GRAPHIC REF	PART NUMBER	QTY	PART NAME 1 2 3 4 5 6 (PRODUCT LEVEL)	SEE PAGE
	1	1	**467-4243**	12	SPRING-GUIDE	
	2	1	**264-6156**	12	ROD-VALVE PUSH	
	3	1	**453-5998**	12	LIFTER AS-VALVE	
Y	4	1	*212-8926*	1	VALVE MECHANISM GP	64
	5	1	**244-5891**	6	BRIDGE-VALVE	
	6	1	**255-8674**	6	BRIDGE-VALVE	

Y - SEPARATE ILLUSTRATION

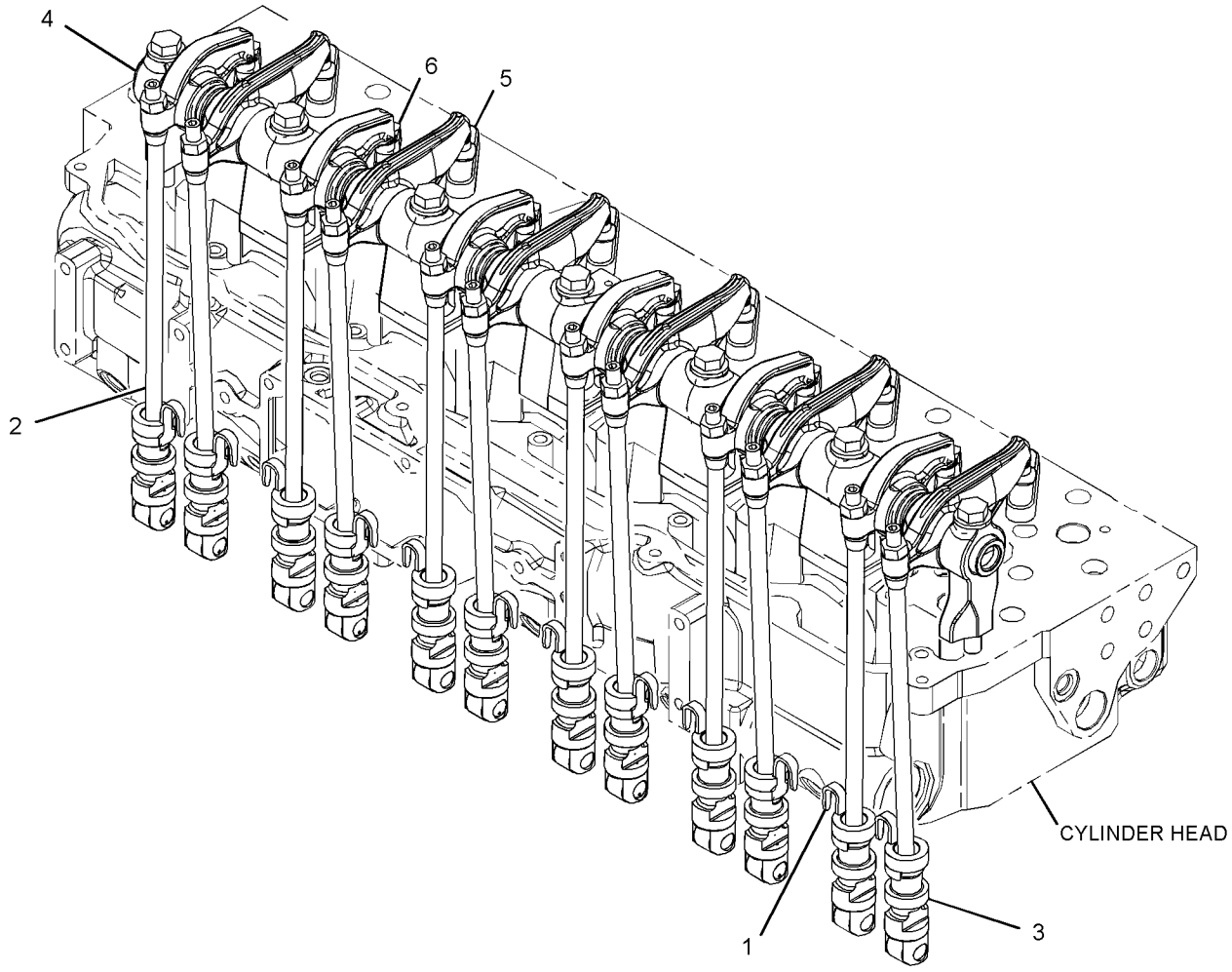

GRAPHIC #1

<END>

g03348904

389-8270 FILLER GP-ENGINE OIL

S/N: TXD1-UP

PART OF 420-1870, 420-1871, 423-8451, 423-8452, 423-8453, 423-8454 ENGINE AR-COMPLETE AN ATTACHMENT

SMCS-1316 **i05555369**

NOTE	REF NO	GRAPHIC REF	PART NUMBER	QTY	PART NAME 1 2 3 4 5 6 (PRODUCT LEVEL)	SEE PAGE
	1	1	**206-5887**	1	TUBE AS	
		1	**2P-2717**	1	HASP	
		1	**4N-6045**	1	LUG	
		1	**6N-2985**	1	CAP AS-FILLER (ENGINE OIL)	
	2	1	**061-9455**	1	SEAL-O-RING	
M	3	1	**5P-7970**	4	NUT (M8X1.25-THD)	
	4	1	**9M-1974**	4	WASHER-HARD (8.8X16X2-MM THK)	

M - METRIC PART

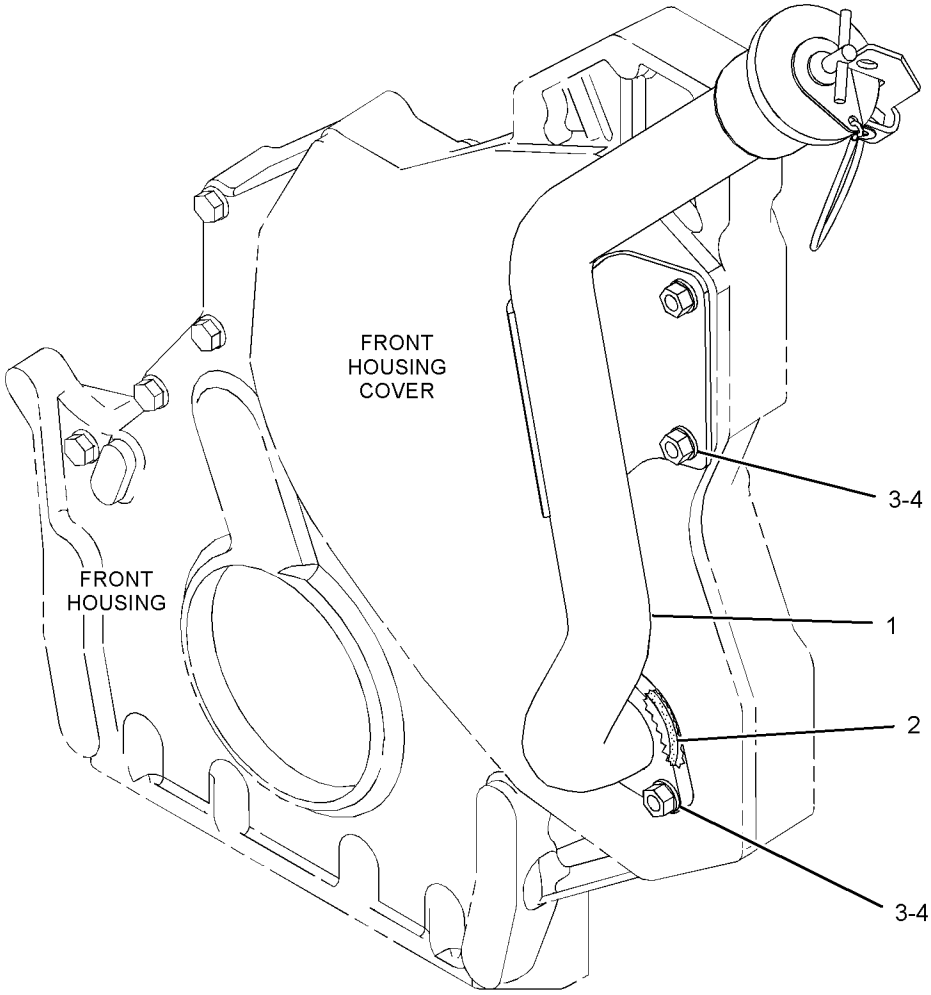

GRAPHIC #1 **<END>** g02841557

183-2097 FILTER GP-ENGINE OIL

S/N: TXD1-UP

PART OF 420-1870, 420-1871, 423-8451, 423-8452, 423-8453, 423-8454 ENGINE AR-COMPLETE AN ATTACHMENT

SMCS-1306, 1308

i06236227

NOTE	REF NO	GRAPHIC REF	PART NUMBER	QTY	PART NAME 1 2 3 4 5 6 (PRODUCT LEVEL)	SEE PAGE
	1	2	**7C-1493**	2	VALVE AS-BYPASS (ENGINE OIL FILTER)	
	2	2	**209-7290**	1	GASKET	
	3	2	*352-6498*	1	TEE AS	
		2	**8T-8902**	1	TEE	
		2	**228-7089**	1	SEAL-O-RING	
	4	2	**352-8839**	1	BASE AS-OIL FILTER (ENGINE)	
		2	**2P-4304**	1	STUD-HOLLOW	
		2	*347-4428*	4	PLUG AS	
					(EACH INCLUDES)	
		2	**230-5040**	1	PLUG	
		2	**238-5085**	1	SEAL-O-RING	
	5	2	**1R-1808**	1	FILTER-ENGINE OIL (ADVANCED EFFICIENCY)	
	6	2	**242-3864**	2	SPRING	
	7	2	*398-5596*	1	PLUG AS	
		2	**360-3680**	1	PLUG	
		2	**238-5080**	1	SEAL-O-RING	
	8	2	*398-5601*	3	PLUG AS	
					(EACH INCLUDES)	
		2	**360-3681**	1	PLUG	
		2	**238-5081**	1	SEAL-O-RING	
	9	2	*315-9840*	1	ELBOW AS	
		2	**6V-8077**	1	ELBOW	
		2	**214-7568**	1	SEAL-O-RING	
	10	2	*319-6208*	1	ADAPTER AS	
		2	**5P-9617**	1	ADAPTER	
		2	**214-7568**	1	SEAL-O-RING	
	11	2	*321-8649*	1	VALVE AS-FLUID SAMPLING (ENGINE OIL)	
		2	**8C-3446**	1	VALVE-SAMPLING (ENGINE OIL)	
		2	**214-7566**	1	SEAL-O-RING	
	12	2	*329-5511*	1	ELBOW AS	
		2	**6V-8723**	1	ELBOW	
		2	**228-7089**	1	SEAL-O-RING	
		2	**238-5080**	1	SEAL-O-RING	
M	13	1	**6V-5218**	2	BOLT (M8X1.25X35-MM)	
M	14	1	**6V-5219**	8	BOLT (M8X1.25X40-MM)	
M	15	1	**6V-5220**	2	BOLT (M8X1.25X65-MM)	
	16	2	**8C-3445**	1	CAP-DUST	
	17	1	**9M-1974**	12	WASHER-HARD (8.8X16X2-MM THK)	

M - METRIC PART

183-2097 **FILTER GP-ENGINE OIL (*contd.*)** **i06236227**

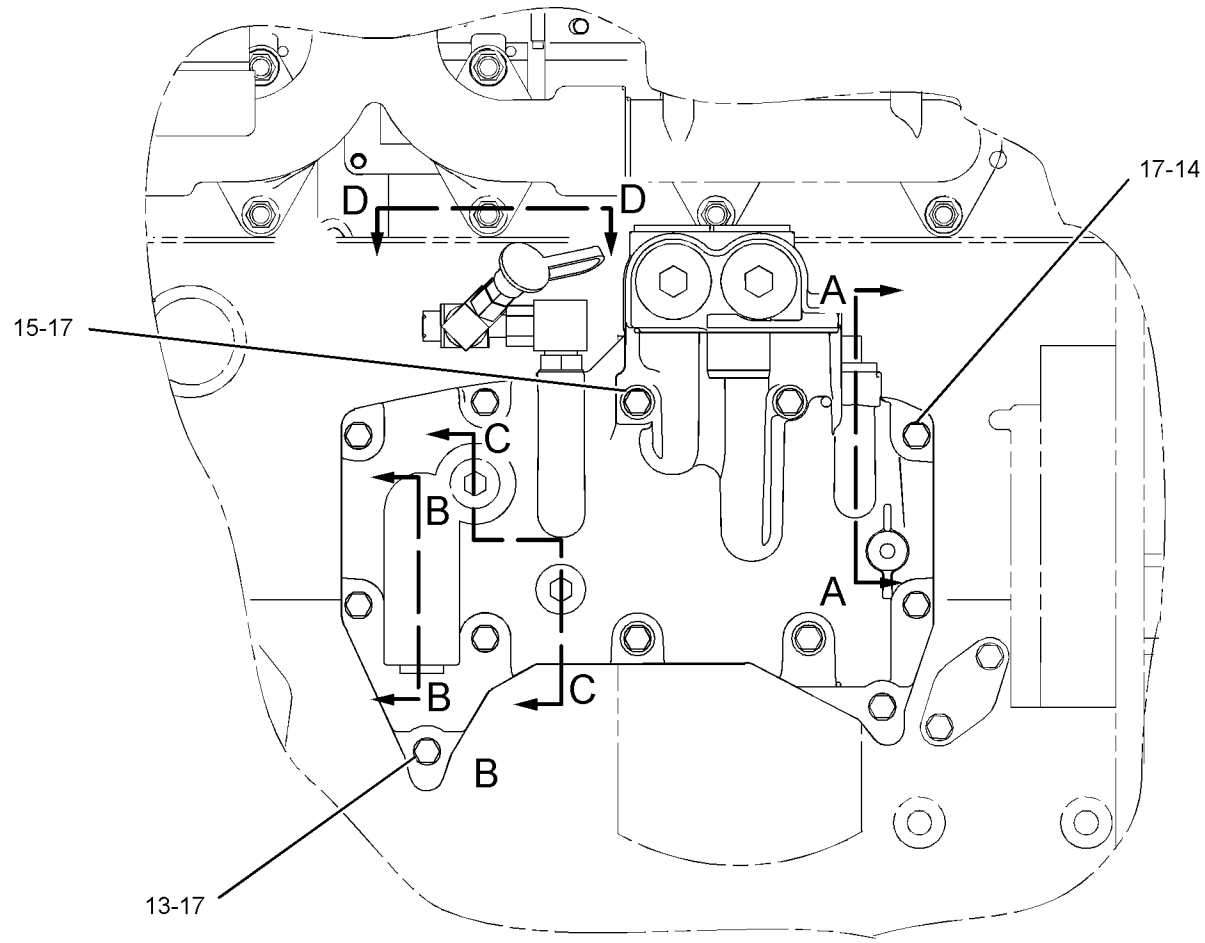

RIGHT SIDE VIEW

GRAPHIC #1 g02750116

183-2097 **FILTER GP-ENGINE OIL (*contd.*)** **i06236227**

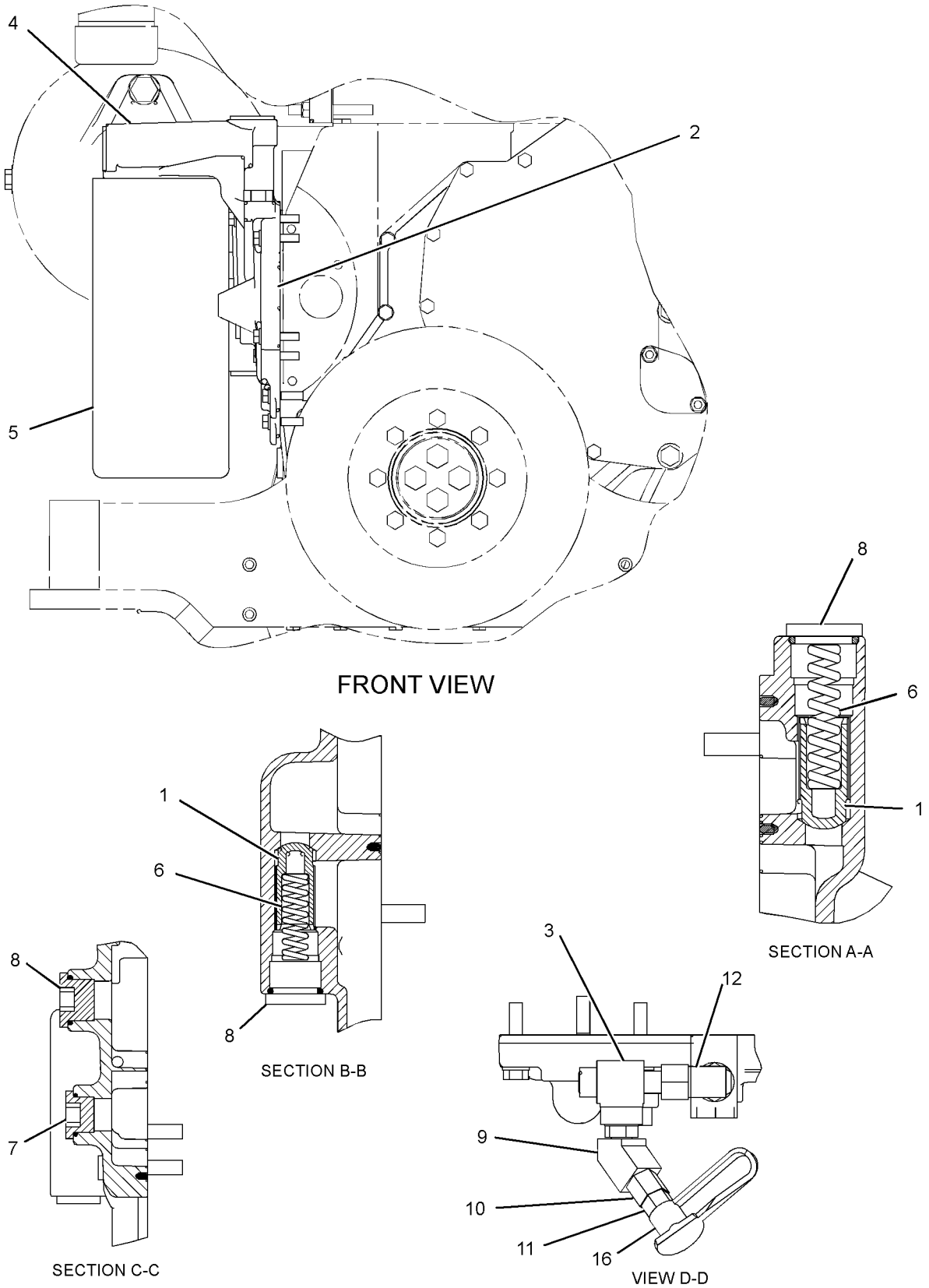

GRAPHIC #2 **<END>** g02750118

241-3719 FUMES DISPOSAL GP

S/N: TXD1-UP

PART OF 420-1870, 420-1871, 423-8451, 423-8452, 423-8453, 423-8454 ENGINE AR-COMPLETE AN ATTACHMENT

SMCS-1317 **i06230973**

NOTE	REF NO	GRAPHIC REF	PART NUMBER	QTY	PART NAME 1 2 3 4 5 6 (PRODUCT LEVEL)	SEE PAGE
	1	1	**9M-7958**	2	CLAMP-HOSE	
	2	1	*384-9220*	1	CONNECTOR AS	
		1	**069-4269**	1	ADAPTER	
		1	**238-5082**	1	SEAL-O-RING	
	3	1	**295-1771**	1	HOSE-FUMES DISPOSAL (CRANKCASE)	
	4	1	**4D-7388**	1	CLIP	
M	5	1	**6V-4248**	1	BOLT (M10X1.5X25-MM)	
	6	1	**6V-5839**	1	WASHER (11X21X2.5-MM THK)	

M - METRIC PART

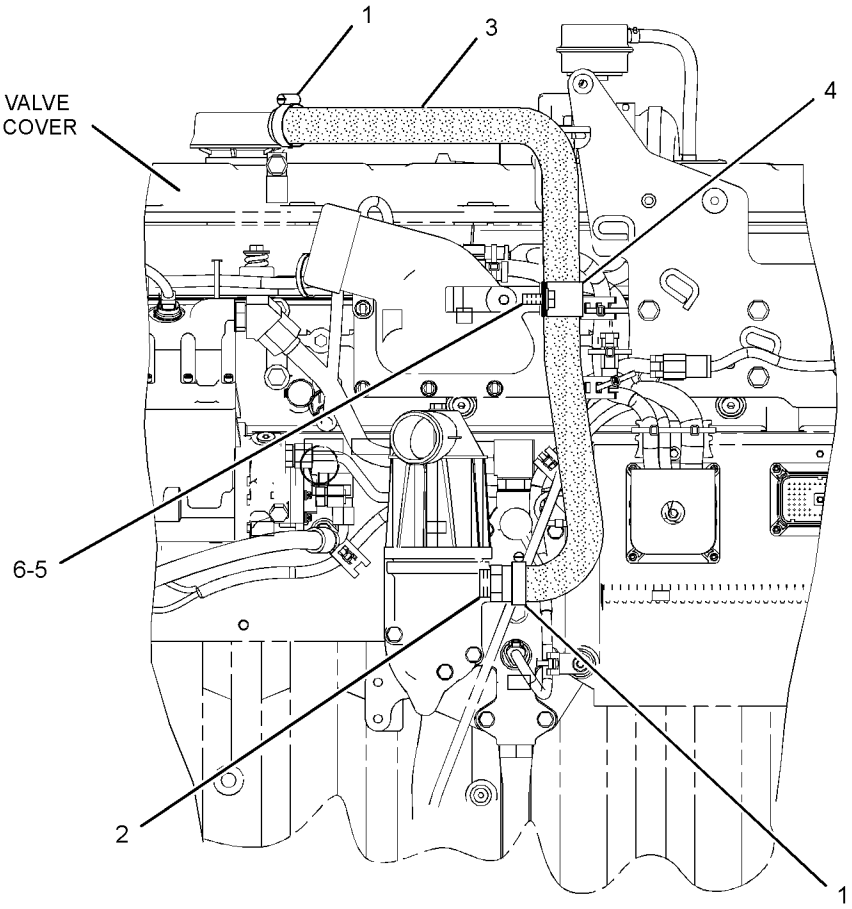

LEFT SIDE VIEW OF ENGINE

GRAPHIC #1 **<END>** g02084753

398-4348 FUMES DISPOSAL GP

S/N: PPP1-UP; SSS1-UP; TTT1-UP
PART OF 398-4287 INSTALLATION AR-ENGINE
ALSO AN ATTACHMENT

SMCS-1317 **i06203696**

NOTE	REF NO	GRAPHIC REF	PART NUMBER	QTY	PART NAME 1 2 3 4 5 6 (PRODUCT LEVEL)	SEE PAGE
	1	1	**230-9796**	1	DUCT AS	
	2	1	**4P-7581**	2	CLIP	
	3	1	**7K-1181**	4	STRAP-CABLE	
	4	1	**9M-0164**	1	CLAMP-HOSE	

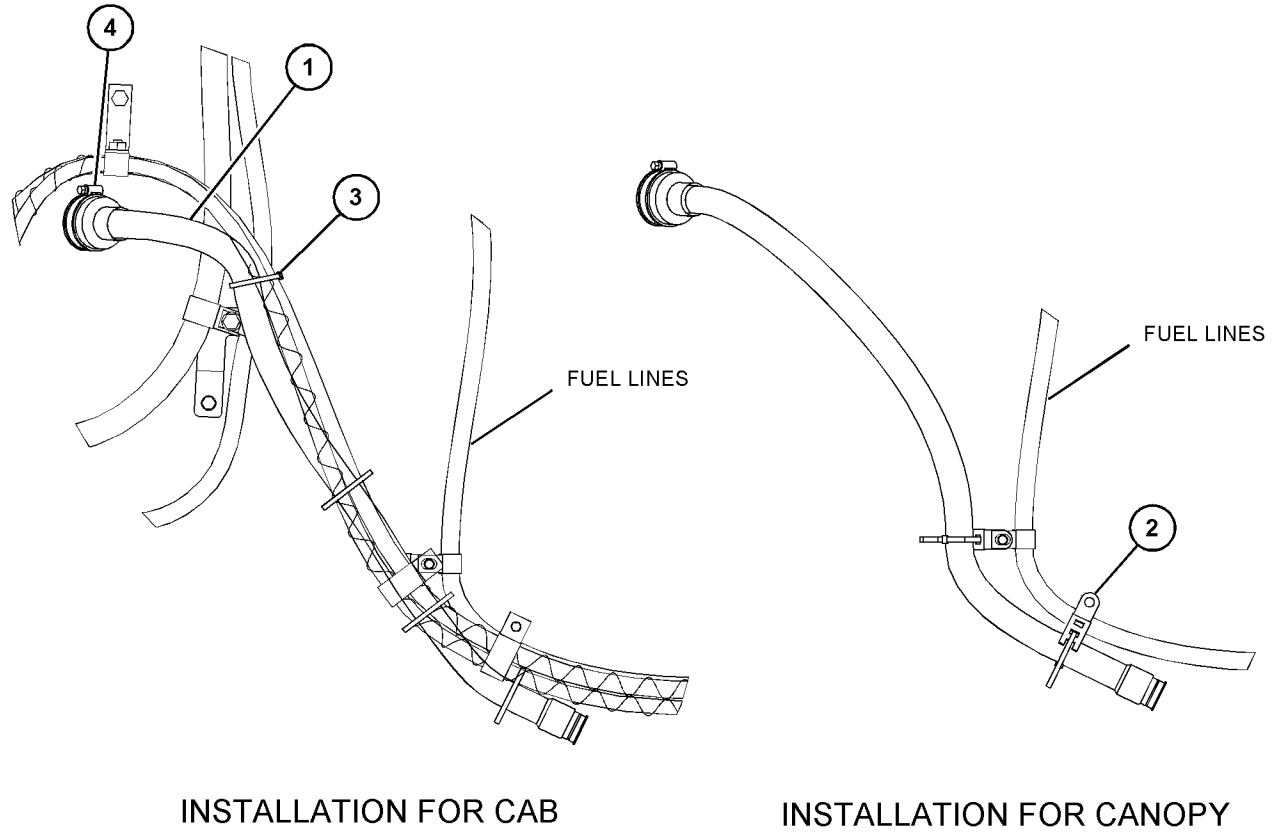

INSTALLATION FOR CAB

INSTALLATION FOR CANOPY

GRAPHIC #1 **<END>** g03854280

246-0601 GAUGE GP-OIL LEVEL (DIPSTICK)—ENGINE

S/N: TXD1-UP

PART OF 420-1870, 420-1871, 423-8451, 423-8452, 423-8453, 423-8454 ENGINE AR-COMPLETE AN ATTACHMENT

SMCS-1326 **i05555414**

NOTE	REF NO	GRAPHIC REF	PART NUMBER	QTY	PART NAME 1 2 3 4 5 6 (PRODUCT LEVEL)	SEE PAGE
	1	1	**261-3162**	1	GAUGE-OIL LEVEL (DIPSTICK) (ENGINE)	
	2	1	**246-7899**	1	TUBE AS	

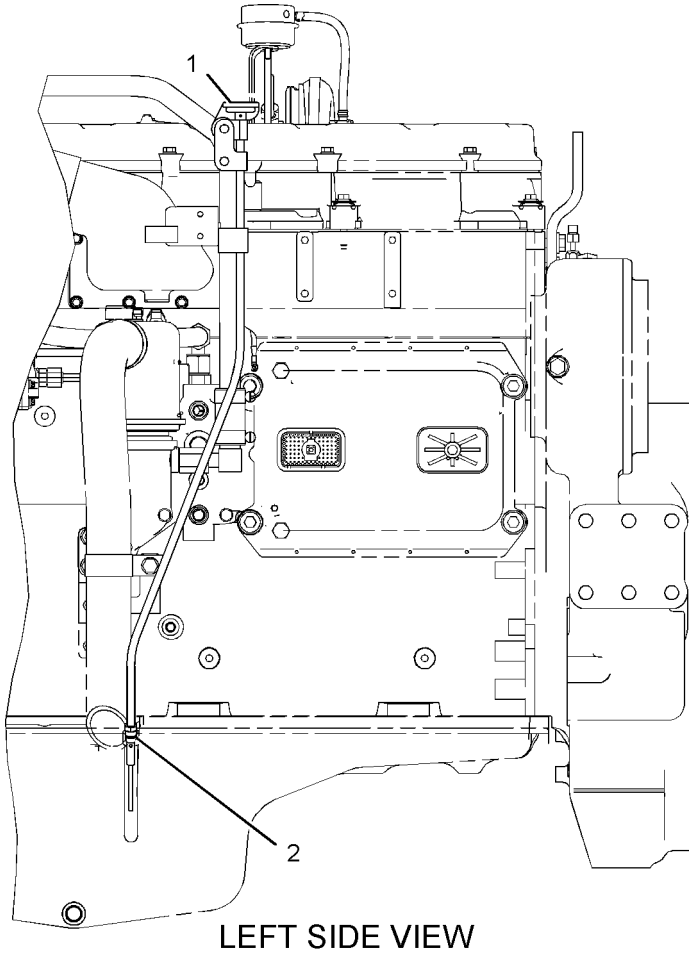

LEFT SIDE VIEW

GRAPHIC #1 **<END>** g01101373

198-1319 LINES GP-ENGINE OIL

S/N: TXD1-UP
FRONT SUMP
PART OF 420-1870, 420-1871, 423-8451, 423-8452, 423-8453, 423-8454 ENGINE AR-COMPLETE AN ATTACHMENT

SMCS-1307 **i05555440**

NOTE	REF NO	GRAPHIC REF	PART NUMBER	QTY	PART NAME 1 2 3 4 5 6 (PRODUCT LEVEL)	SEE PAGE
	2	1	**207-6087**	1	ELBOW	
	3	1	**195-0452**	1	GASKET	
	4	1	**213-8516**	1	TUBE AS	
	5	1	**033-6032**	1	SEAL-O-RING	
M	7	1	**208-9282**	1	BOLT (M8X1.25X25-MM)	
	8	1	**5P-6436**	1	SEAL-O-RING	
M	9	1	**6V-5217**	2	BOLT (M8X1.25X20-MM)	
M	11	1	**8T-0292**	1	BOLT (M8X1.25X90-MM)	
M	12	1	**6V-3940**	2	BOLT (M8X1.25X25-MM)	
	13	1	**9M-1974**	5	WASHER-HARD (8.8X16X2-MM THK)	

M - METRIC PART

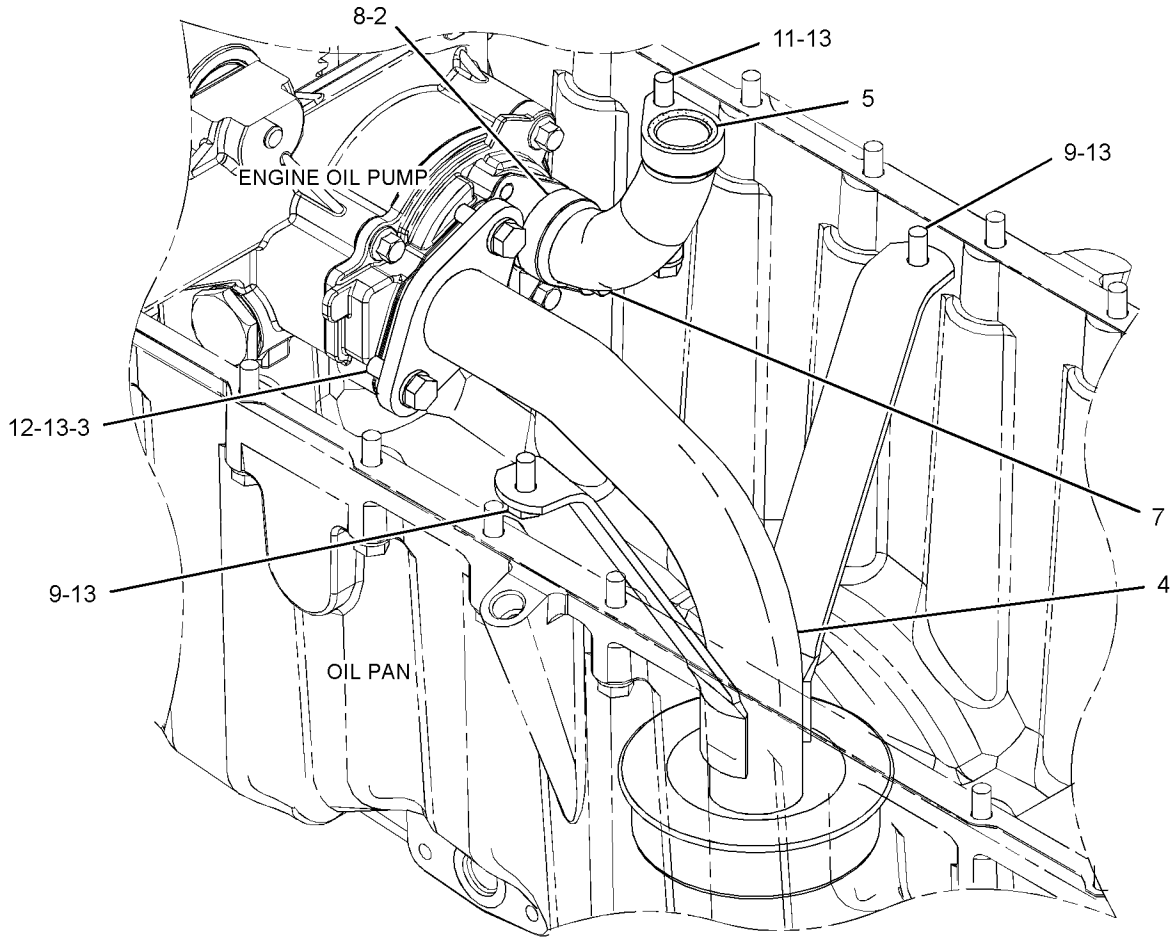

GRAPHIC #1 **<END>** g02798791

266-9810 LINES GP-TURBOCHARGER OIL

S/N: TXD1-UP

PART OF 420-1870, 420-1871, 423-8452, 423-8453 ENGINE AR-COMPLETE

AN ATTACHMENT

SMCS-1052, 1307 **i05555443**

NOTE	REF NO	GRAPHIC REF	PART NUMBER	QTY	PART NAME 1 2 3 4 5 6 (PRODUCT LEVEL)	SEE PAGE
	1	1	**9N-4685**	1	BLOCK	
	2	1	**167-0168**	1	HOSE AS-OIL SUPPLY	
	3	1	*183-3399*	1	CONNECTOR AS	
		1	**214-7568**	1	SEAL-O-RING	
		1	**6V-8636**	1	CONNECTOR	
		1	**228-7089**	1	SEAL-O-RING	
	4	1	**197-8419**	1	GASKET	
	5	1	**246-6036**	1	HOSE	
	6	1	**257-5858**	1	TUBE AS	
	7	1	**263-3464**	1	TUBE AS	
	8	1	**284-3502**	2	CLAMP-BAND	
	9	1	**124-0174**	1	CLIP	
M	10	1	**2Y-5829**	1	NUT (M10X1.5-THD)	
	11	1	**5P-7530**	1	SEAL-O-RING	
M	12	1	**6V-3940**	2	BOLT (M8X1.25X25-MM)	
M	13	1	**6V-5230**	1	BOLT (M10X1.5X60-MM)	
M	14	1	**6V-5218**	2	BOLT (M8X1.25X35-MM)	
	15	1	**6V-5839**	2	WASHER (11X21X2.5-MM THK)	
	16	1	**1S-0724**	1	CLIP	
	17	1	**9M-1974**	4	WASHER-HARD (8.8X16X2-MM THK)	

M - METRIC PART

266-9810 **LINES GP-TURBOCHARGER OIL (*contd.*)** **i05555443**

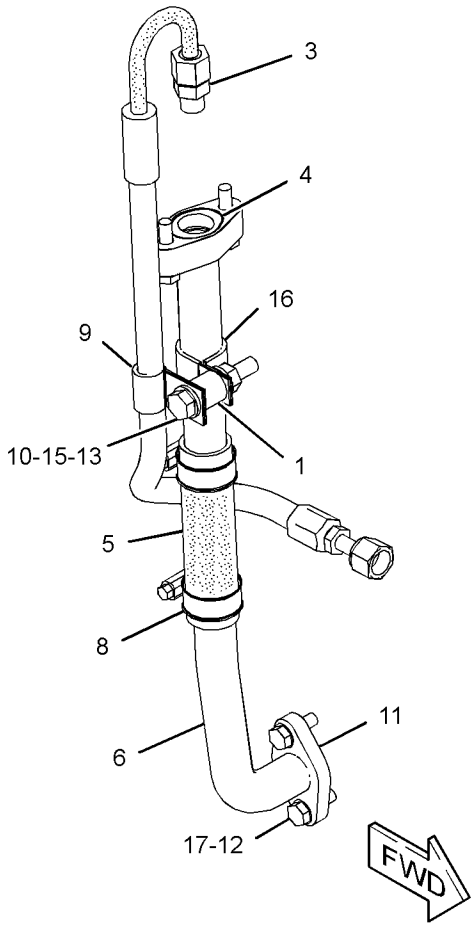

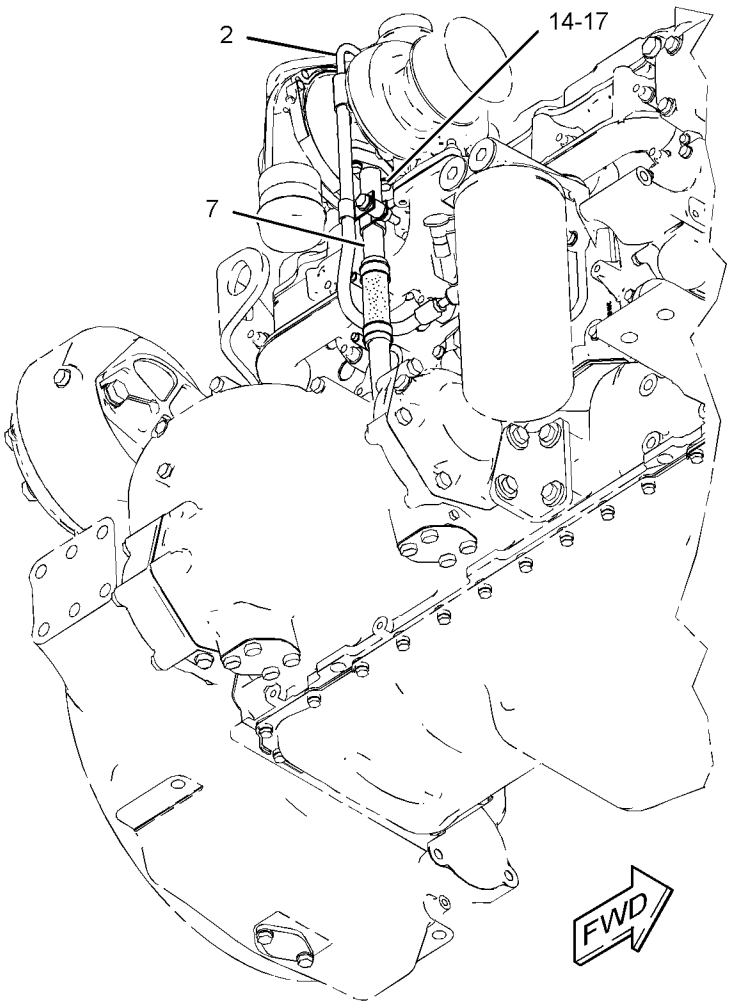

GRAPHIC #1 **<END>** g03254917

266-9811 LINES GP-TURBOCHARGER OIL

S/N: TXD1-UP
PART OF 423-8451, 423-8454 ENGINE AR-COMPLETE
AN ATTACHMENT

SMCS-1052, 1307 **i06018852**

NOTE	REF NO	GRAPHIC REF	PART NUMBER	QTY	PART NAME 1 2 3 4 5 6 (PRODUCT LEVEL)	SEE PAGE
	1	1	*183-3399*	1	CONNECTOR AS	
		1	**6V-8636**	1	CONNECTOR	
		1	**214-7568**	1	SEAL-O-RING	
		1	**228-7089**	1	SEAL-O-RING	
	2	1	**197-8419**	1	GASKET	
	3	1	**234-7526**	1	TUBE AS	
	4	1	**246-6036**	1	HOSE	
	5	1	**257-5858**	1	TUBE AS	
	6	1	**263-3464**	1	TUBE AS	
	7	1	**284-3502**	2	CLAMP-BAND	
M	8	1	**2Y-5829**	1	NUT (M10X1.5-THD)	
	9	1	**5P-7530**	1	SEAL-O-RING	
	10	1	**5P-9297**	1	CLIP	
M	11	1	**6V-3940**	2	BOLT (M8X1.25X25-MM)	
M	12	1	**6V-4248**	1	BOLT (M10X1.5X25-MM)	
M	13	1	**6V-5218**	2	BOLT (M8X1.25X35-MM)	
	14	1	**6V-5839**	2	WASHER (11X21X2.5-MM THK)	
	15	1	**7C-4354**	1	CLIP	
	16	1	**9M-1974**	4	WASHER-HARD (8.8X16X2-MM THK)	

M - METRIC PART

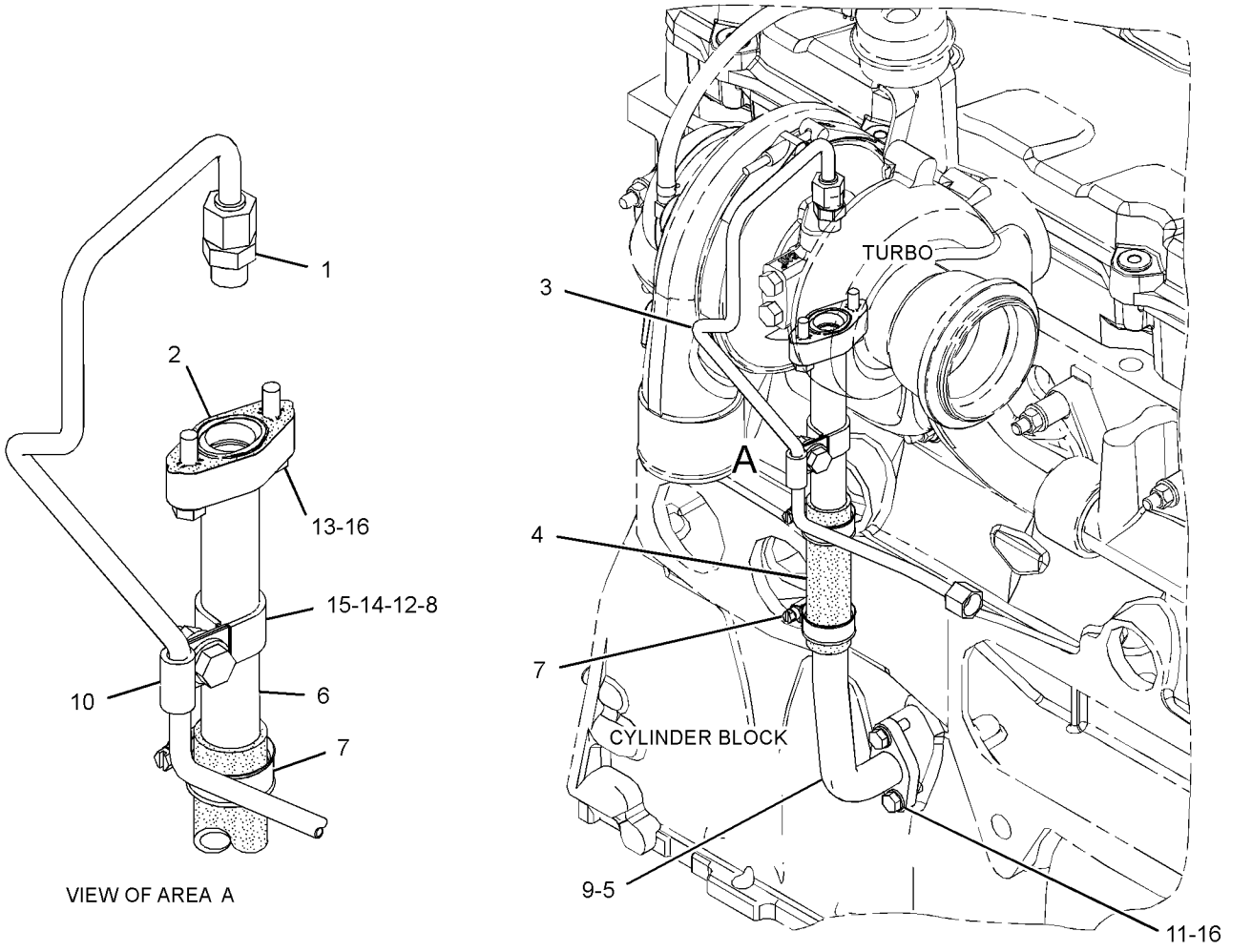

GRAPHIC #1 **<END>** g02179893

437-5964 OIL CHANGE GP-HIGH SPEED

S/N: PPP1-UP; SSS1-UP; TTT1-UP

AN ATTACHMENT

SMCS-1325 **i06220742**

NOTE	REF NO	GRAPHIC REF	PART NUMBER	QTY	PART NAME 1 2 3 4 5 6 (PRODUCT LEVEL)	SEE PAGE
	1	1	**8W-0327**	1	ADAPTER	
	2	1	**431-4844**	1	FLANGE	
	3	1	**446-5039**	1	BRACKET AS	
	4	1	**446-5040**	1	PLATE	
	5	1	**446-5041**	1	BRACKET AS	
I	6	1	**446-5042**	1	HOSE AS	
I	7	1	**446-5043**	1	HOSE AS	
	8	1	**099-3001**	5	CLIP	
	9	1	**110-8319**	1	FITTING AS (QUICK DISCONNECT, FEMALE)	
	10	1	**110-8827**	1	FITTING (QUICK DISCONNECT, MALE)	
	11	1	*148-8347*	1	ELBOW AS	
		1	**3D-2824**	1	SEAL-O-RING	
		1	**6V-9007**	1	ELBOW	
		1	**6V-9746**	1	SEAL-O-RING	
	12	1	*148-8382*	1	ELBOW AS	
		1	**3D-2824**	1	SEAL-O-RING	
		1	**7J-9108**	1	SEAL-O-RING	
		1	**8T-0404**	1	ELBOW	
	13	1	*150-4049*	1	ELBOW AS	
		1	**6V-9746**	1	SEAL-O-RING	
		1	**7M-8485**	1	SEAL-O-RING	
		1	**8T-4149**	1	ELBOW	
	14	1	*153-6237*	1	ELBOW AS	
		1	**3D-2824**	1	SEAL-O-RING	
		1	**6V-9004**	1	ELBOW	
		1	**6V-9746**	1	SEAL-O-RING	
	15	1	**1H-7339**	1	SEAL-O-RING	
	16	1	**2P-1286**	1	LOCKNUT-BULKHEAD (1-5/16-12-THD)	
	17	1	**2V-2043**	1	NUT-BULKHEAD (1-5/8-12-THD)	
	18	1	**3M-7045**	1	PLUG (3/4-14 NPT-THD)	
	19	1	**8N-6854**	1	GASKET	
	20	1	**8T-4121**	9	WASHER-HARD (11X21X2.5-MM THK)	
M	21	1	**8T-4136**	6	BOLT (M10X1.5X25-MM)	
M	22	1	**8T-4137**	2	BOLT (M10X1.5X20-MM)	
M	23	1	**8T-4196**	1	BOLT (M10X1.5X35-MM)	
M	24	1	**8T-6868**	4	BOLT (M12X1.75X80-MM)	

I - REFER TO HYDRAULIC INFORMATION SYSTEM
M - METRIC PART

437-5964 **OIL CHANGE GP-HIGH SPEED** (*contd.*) **i06220742**

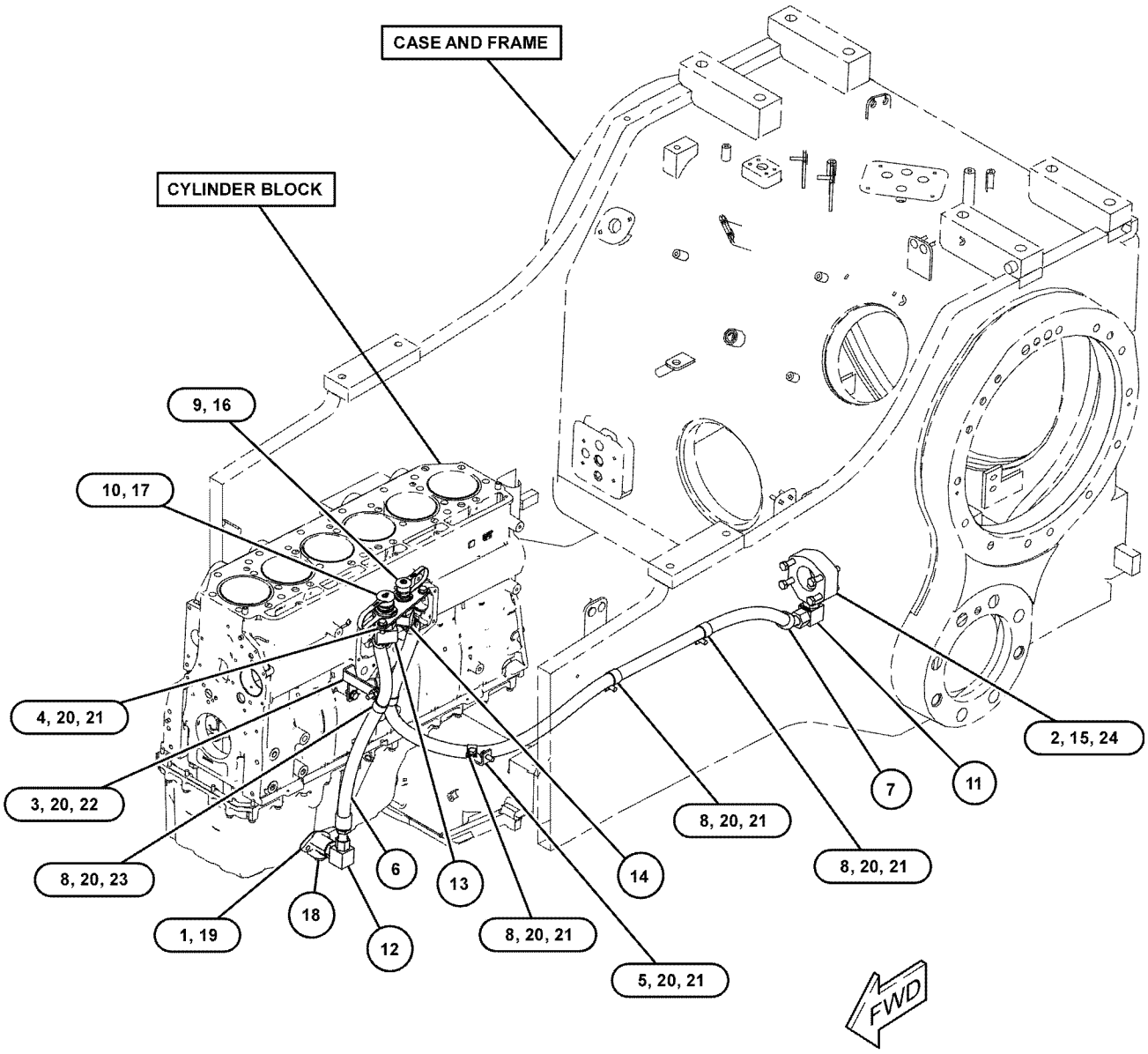

GRAPHIC #1 **<END>** g03862379

195-8098 PUMP GP-ENGINE OIL

S/N: TXD1-UP
PART OF 387-8618 ENGINE AR-CORE
AN ATTACHMENT
TYPE 1

SMCS-1304, 1315

i05732813

NOTE	REF NO	GRAPHIC REF	PART NUMBER	QTY	PART NAME 1 2 3 4 5 6 (PRODUCT LEVEL)	SEE PAGE
C	1	1	**396-6022**	1	PUMP GP-GEROTOR	
	1A	1	**221-0144**	1	GEAR AS (60-TEETH)	
M	2	1	**6V-1819**	2	BOLT (M10X1.5X100-MM)	
	3	1	**6V-5839**	2	WASHER (11X21X2.5-MM THK)	

C - CHANGE FROM PREVIOUS TYPE
M - METRIC PART

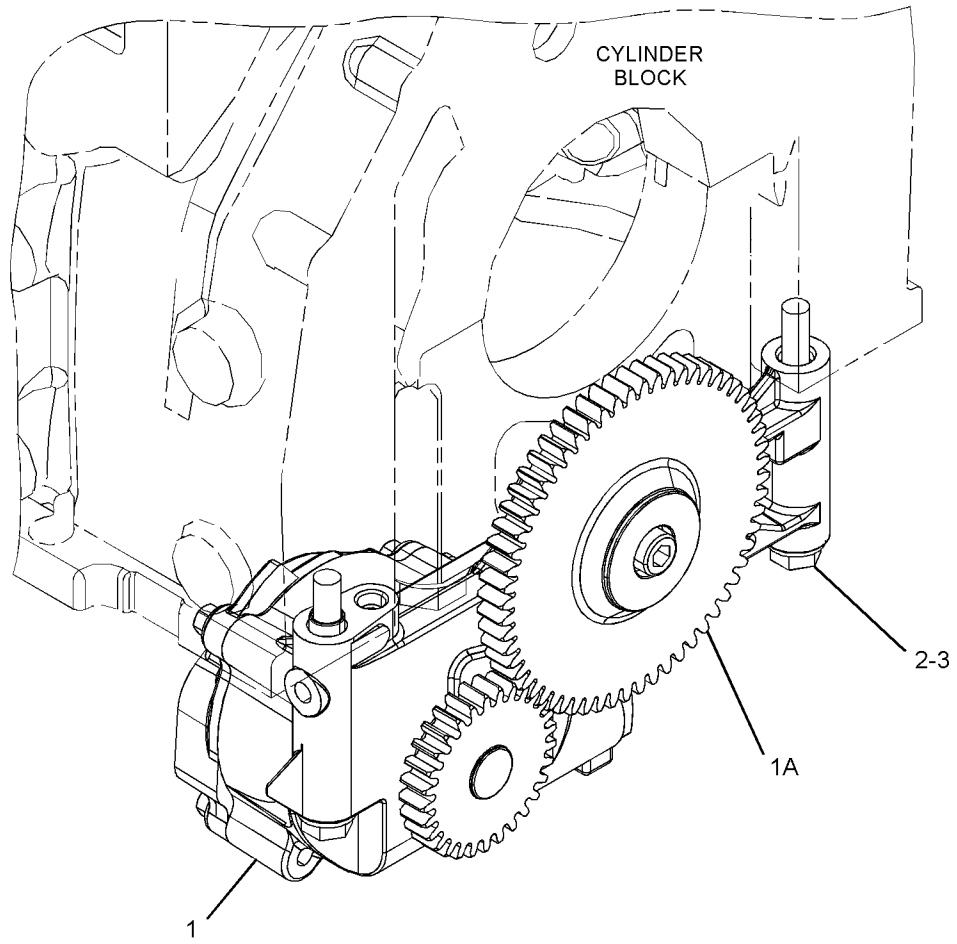

GRAPHIC #1

<END>

g03392480

195-8098 PUMP GP-ENGINE OIL

S/N: TXD1-UP
PART OF 387-8618, 387-8619 ENGINE AR-CORE
AN ATTACHMENT
TYPE 2

SMCS-1304, 1315

i05732842

NOTE	REF NO	GRAPHIC REF	PART NUMBER	QTY	PART NAME 1 2 3 4 5 6 (PRODUCT LEVEL)	SEE PAGE
	1	1	*331-8906*	1	PUMP GP-ENGINE OIL	
	1A	1	**221-0144**	1	GEAR AS (60-TEETH)	
R		1	**331-8905**	1	PUMP AS-ENGINE OIL	
M	2	1	**6V-1819**	2	BOLT (M10X1.5X100-MM)	
	3	1	**6V-5839**	2	WASHER (11X21X2.5-MM THK)	

M - METRIC PART
R - REMFG PART MAY BE AVAILABLE

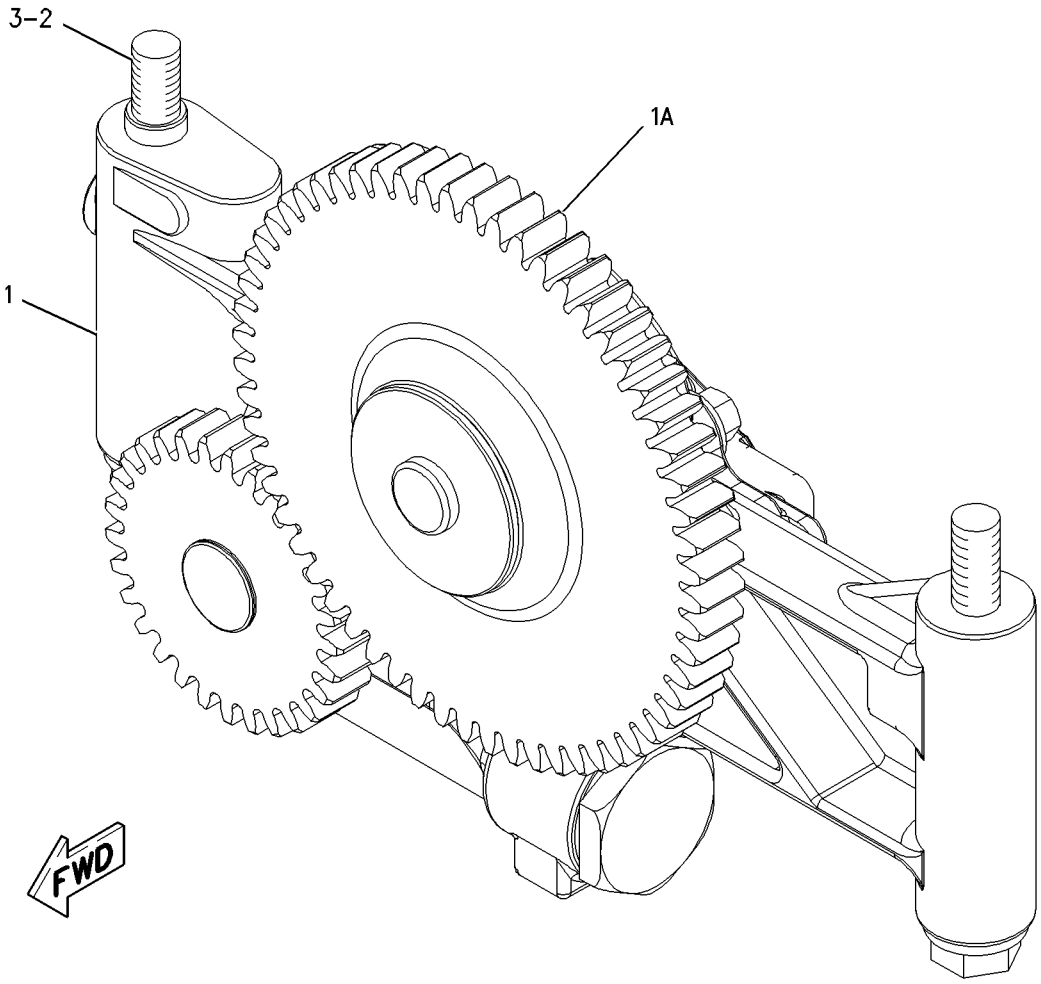

GRAPHIC #1

<END>

g00909910

198-0921 VALVE GP-FLUID SAMPLING–ENGINE OIL

S/N: TXD1-UP

PART OF 420-1870, 420-1871, 423-8451, 423-8452, 423-8453, 423-8454 ENGINE AR-COMPLETE AN ATTACHMENT

SMCS-7542 **i05555475**

NOTE	REF NO	GRAPHIC REF	PART NUMBER	QTY	PART NAME 1 2 3 4 5 6 (PRODUCT LEVEL)	SEE PAGE
	1	1	**6V-0852**	1	CAP-DUST	
	2	1	*164-5567*	1	COUPLER AS-QUICK DISCONNECT (MALE)	
		1	**6V-3965**	1	FITTING (QUICK DISCONNECT)	
		1	**214-7568**	1	SEAL-O-RING	

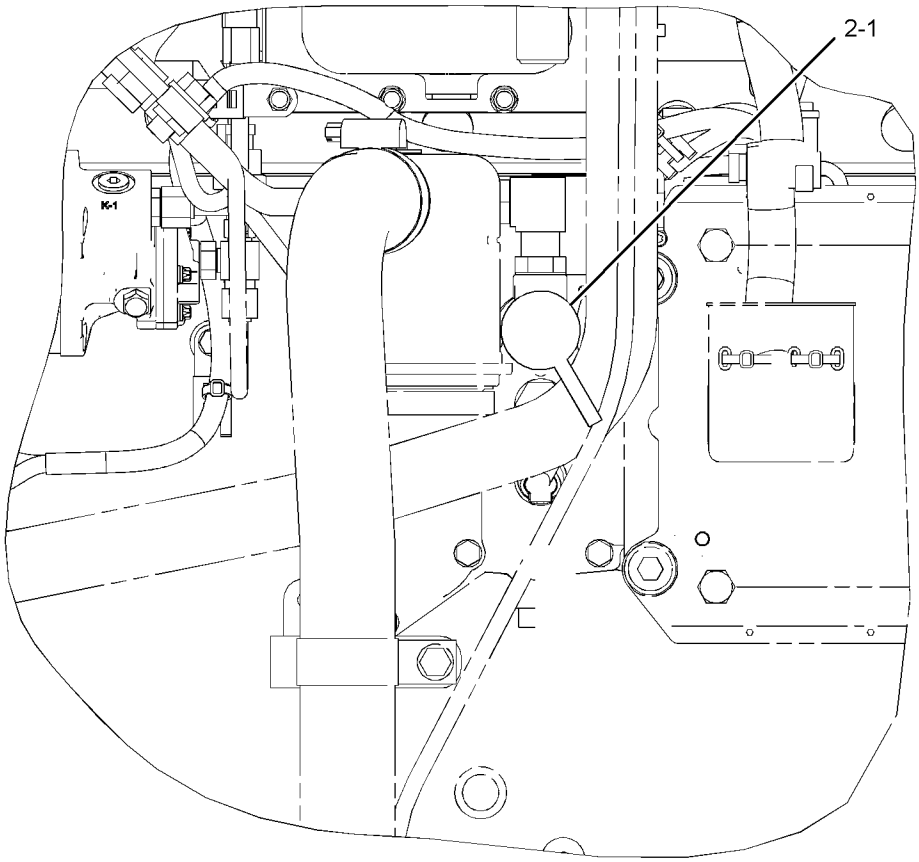

LEFT SIDE VIEW

GRAPHIC #1 **<END>** g03005496

188-3826 COOLER GP-ENGINE OIL

S/N: TXD1-UP

PART OF 420-1870, 420-1871, 423-8451, 423-8452, 423-8453, 423-8454 ENGINE AR-COMPLETE AN ATTACHMENT

SMCS-1378 **i06230977**

NOTE	REF NO	GRAPHIC REF	PART NUMBER	QTY	PART NAME 1 2 3 4 5 6 (PRODUCT LEVEL)	SEE PAGE
	1	1	**209-7293**	1	GASKET	
R	2	1	**293-9367**	1	CORE AS-OIL COOLER (ENGINE)	

R - REMFG PART MAY BE AVAILABLE

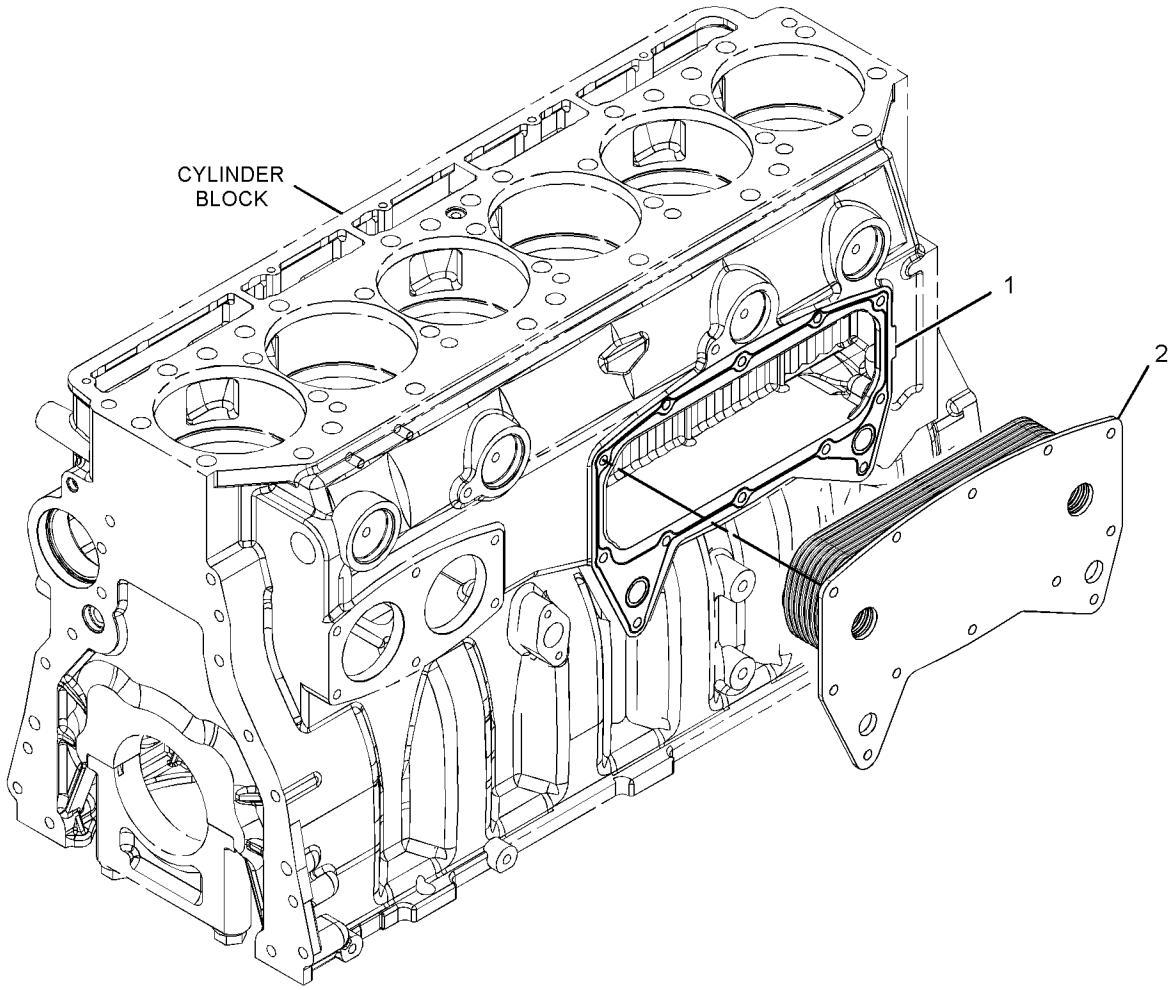

GRAPHIC #1 **<END>** g01419332

393-9041 FAN GP-BLOWER

S/N: PPP1-UP; SSS1-UP; TTT1-UP
PART OF 481-9508 DISTRIBUTION AR
AN ATTACHMENT

SMCS-1356, 1360

i06210758

NOTE	REF NO	GRAPHIC REF	PART NUMBER	QTY	PART NAME 1 2 3 4 5 6 (PRODUCT LEVEL)	SEE PAGE
	1	1	**423-4028**	1	SPIDER AS-FAN (8-BLADE)	
	2	1	**424-7007**	8	MOUNT	
	3	1	**426-4988**	1	ADAPTER-FAN	
	4	1	**476-0074**	1	GUARD AS-FAN	
	5	1	**476-0075**	2	GUARD AS-FAN	
	6	1	**8T-4121**	20	WASHER-HARD (11X21X2.5-MM THK)	
M	7	1	**8T-4136**	6	BOLT (M10X1.5X25-MM)	
M	8	1	**8T-4182**	8	BOLT (M10X1.5X45-MM)	
M	9	1	**8T-4196**	14	BOLT (M10X1.5X35-MM)	
	10	1	**8T-4222**	8	WASHER-PLATED (11X32X2.5-MM THK)	

M - METRIC PART

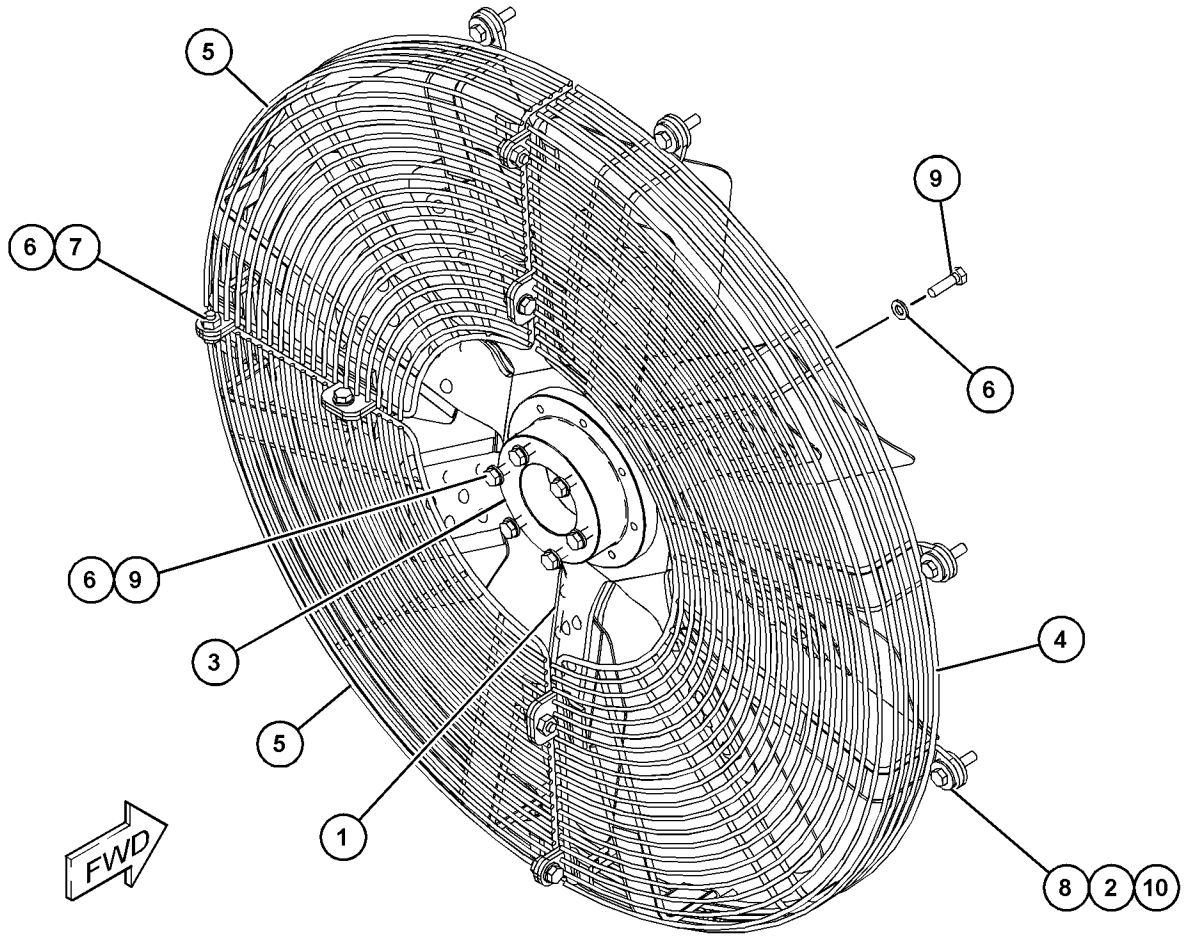

GRAPHIC #1

<END>

g03858197

393-9043 FAN GP-BLOWER

S/N: PPP1-UP; TTT1-UP

AN ATTACHMENT

SMCS-1356, 1360 **i06224742**

NOTE	REF NO	GRAPHIC REF	PART NUMBER	QTY	PART NAME 1 2 3 4 5 6 (PRODUCT LEVEL)	SEE PAGE
	1	1	**418-7970**	1	FAN AS (8-BLADE)	
	2	1	**424-7007**	8	MOUNT	
	3	1	**426-4988**	1	ADAPTER-FAN	
	4	1	**476-0074**	1	GUARD AS-FAN	
	5	1	**476-0075**	2	GUARD AS-FAN	
	6	1	**8T-4121**	20	WASHER-HARD (11X21X2.5-MM THK)	
M	7	1	**8T-4136**	6	BOLT (M10X1.5X25-MM)	
M	8	1	**8T-4182**	8	BOLT (M10X1.5X45-MM)	
M	9	1	**8T-4196**	14	BOLT (M10X1.5X35-MM)	
	10	1	**8T-4222**	8	WASHER-PLATED (11X32X2.5-MM THK)	

M - METRIC PART

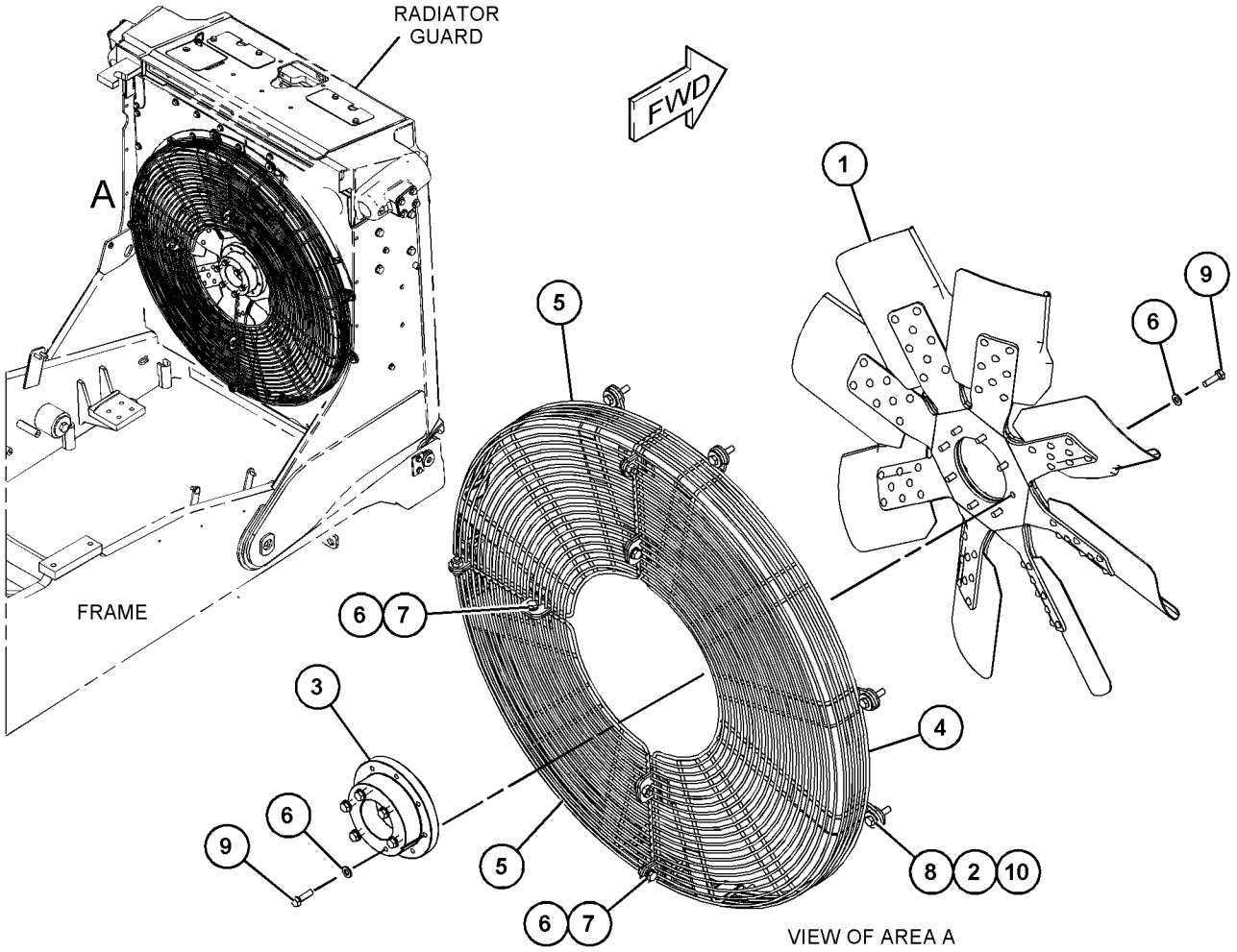

GRAPHIC #1

<END>

g03862686

393-9042 FAN GP-REVERSIBLE

S/N: PPP1-UP; SSS1-UP; TTT1-UP
FOR USE WITH COLD WEATHER ATTACHMENTS
AN ATTACHMENT

SMCS-1356, 1360

i06210746

NOTE	REF NO	GRAPHIC REF	PART NUMBER	QTY	PART NAME 1 2 3 4 5 6 (PRODUCT LEVEL)	SEE PAGE
	1	1	**2W-5825**	1	PLATE	
	2	1	**418-7969**	1	FAN AS-REVERSIBLE (8-BLADE)	
	3	1	**426-4989**	1	ADAPTER-FAN	
	4	1	**472-6304**	1	GUARD AS-FAN	
	5	1	**472-6305**	1	GUARD AS-FAN	
	6	1	**476-0065**	1	GUARD AS-FAN	
	7	1	**7X-7729**	14	WASHER (11X25X3-MM THK)	
	8	1	**8T-4121**	20	WASHER-HARD (11X21X2.5-MM THK)	
M	9	1	**8T-4136**	6	BOLT (M10X1.5X25-MM)	
M	10	1	**8T-4137**	2	BOLT (M10X1.5X20-MM)	
M	11	1	**8T-4186**	8	BOLT (M10X1.5X40-MM)	
M	12	1	**8T-4196**	18	BOLT (M10X1.5X35-MM)	

M - METRIC PART

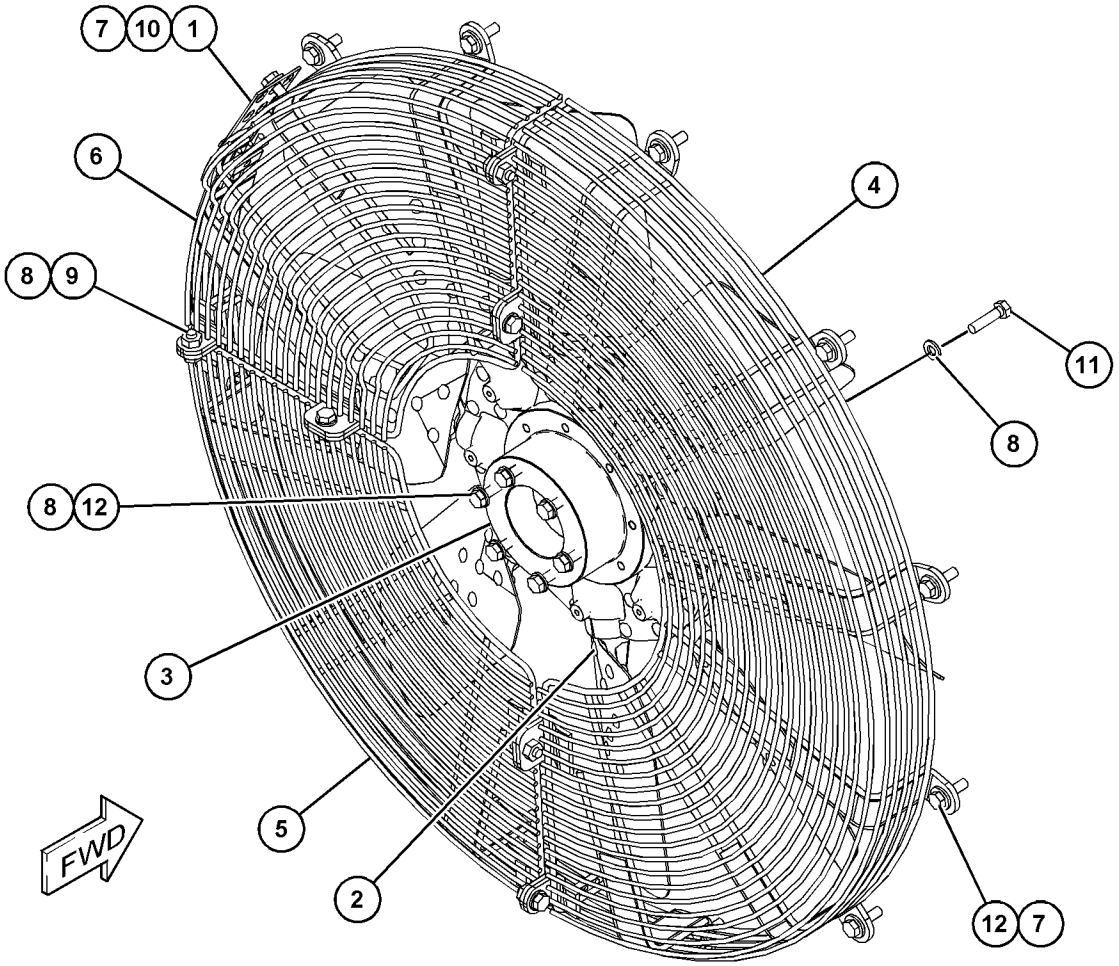

GRAPHIC #1

<END>

g03858225

165-4461 HOUSING & REGULATOR GP—WATER TEMPERATURE REGULATOR

S/N: TXD1-UP

PART OF 420-1870, 420-1871, 423-8451, 423-8452, 423-8453, 423-8454 ENGINE AR-COMPLETE AN ATTACHMENT

SMCS-1355, 1393 **i06230988**

NOTE	REF NO	GRAPHIC REF	PART NUMBER	QTY	PART NAME 1 2 3 4 5 6 (PRODUCT LEVEL)	SEE PAGE
	1	1	**248-5513**	1	REGULATOR-TEMPERATURE (92-DEG C) (WATER, COOLANT)	
	2	1	**347-3148**	2	CLAMP-BAND	
	3	1	**280-6794**	1	HOSE	
	4	1	**191-4457**	1	GASKET (WATER REGULATOR HOUSING)	
	5	1	**217-5200**	1	HOUSING AS	
	5A	1	**3S-9643**	1	SEAL-LIP TYPE (WATER TEMPERATURE REGULATOR)	
	6	1	*392-0818*	2	PLUG AS	
					(EACH INCLUDES)	
		1	**360-3693**	1	PLUG	
	6A	1	**6V-6609**	1	SEAL-O-RING	
	7	1	**4S-9191**	4	WASHER (12X22.5X5-MM THK)	
M	8	1	**8T-0644**	4	BOLT (M10X1.5X90-MM)	
	9	1	**8T-6762**	1	PLUG-PIPE (1/2-14-THD)	

M - METRIC PART

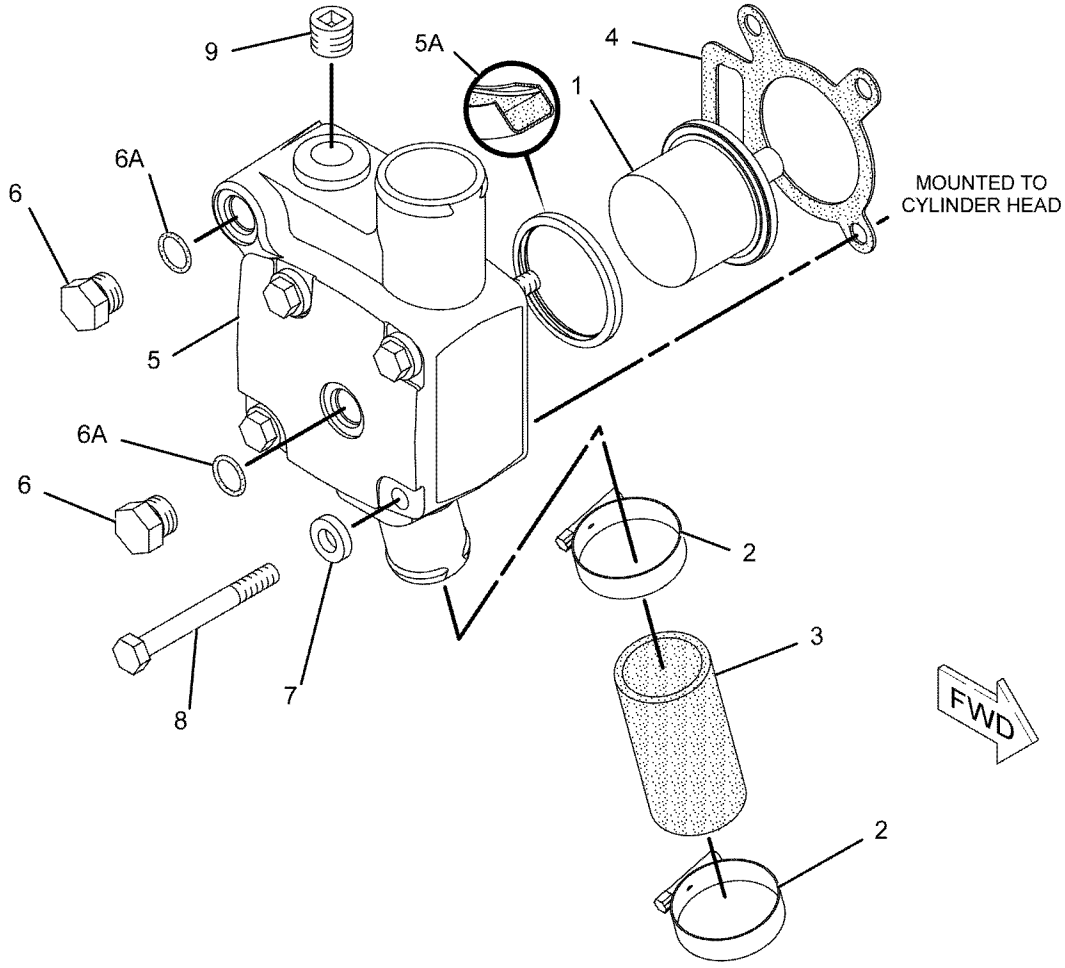

GRAPHIC #1 **<END>** g01142330

398-4344 LINES GP-TURBOCHARGER WATER

S/N: PPP1-UP; TTT1-UP
PART OF 398-4309 INSTALLATION AR-ENGINE
AN ATTACHMENT

SMCS-1052, 1380 **i06221885**

NOTE	REF NO	GRAPHIC REF	PART NUMBER	QTY	PART NAME 1 2 3 4 5 6 (PRODUCT LEVEL)	SEE PAGE
	1	1	**7K-1181**	2	STRAP-CABLE	
	2	1	**8T-5043**	2	ADAPTER	
	3	1	**121-4344**	2	SEAL-O-RING	
	4	1	**234-1496**	1	BRACKET AS	
	5	1	**290-5562**	1	MOUNT (DUAL SWIVEL)	
	6	1	**366-4687**	1	ADAPTER	
	7	1	*371-7194*	1	CONNECTOR AS	
		1	**3D-2824**	1	SEAL-O-RING	
		1	**6V-8397**	1	SEAL-O-RING	
		1	**371-7193**	1	CONNECTOR	
	8	1	*398-5641*	1	CONNECTOR AS	
		1	**6D-7128**	1	SEAL-O-RING	
		1	**6V-3250**	1	SEAL-O-RING	
		1	**6V-8636**	1	CONNECTOR	
	9	1	**446-5051**	1	TUBE AS	
	10	1	**446-5052**	1	TUBE AS	
I	11	1	**446-5053**	1	HOSE AS	
	12	1	**446-5055**	1	BRACKET AS	
	13	1	*448-9004*	1	ADAPTER AS	
		1	**6D-7128**	1	SEAL-O-RING	
		1	**8T-6663**	1	ADAPTER-PORT	
	14	1	**091-0081**	2	SPACER (10.5X20X10-MM THK)	
M	15	1	**344-5674**	2	NUT (M8X1.25-THD)	
	16	1	**5M-5689**	2	CLAMP	
	17	1	**6D-7128**	3	SEAL-O-RING	
	18	1	**6V-3250**	1	SEAL-O-RING	
	19	1	**8T-1889**	1	CLIP (SLOT)	
	20	1	**8T-1890**	1	CLIP (TAB)	
	21	1	**8T-4121**	5	WASHER-HARD (11X21X2.5-MM THK)	
M	22	1	**8T-4136**	1	BOLT (M10X1.5X25-MM)	
M	23	1	**8T-4137**	2	BOLT (M10X1.5X20-MM)	
M	24	1	**8T-4189**	1	BOLT (M8X1.25X20-MM)	
	25	1	**8T-4224**	5	WASHER-HARD (8.8X16X2-MM THK)	
M	26	1	**8T-4908**	1	BOLT (M8X1.25X25-MM)	
M	27	1	**8T-6466**	2	BOLT (M10X1.5X60-MM)	
M	28	1	**8T-7547**	1	BOLT (M8X1.25X30-MM)	
	29	1	**9S-4200**	2	CLIP	

I - REFER TO HYDRAULIC INFORMATION SYSTEM
M - METRIC PART

398-4344 **LINES GP-TURBOCHARGER WATER (*contd.*)** **i06221885**

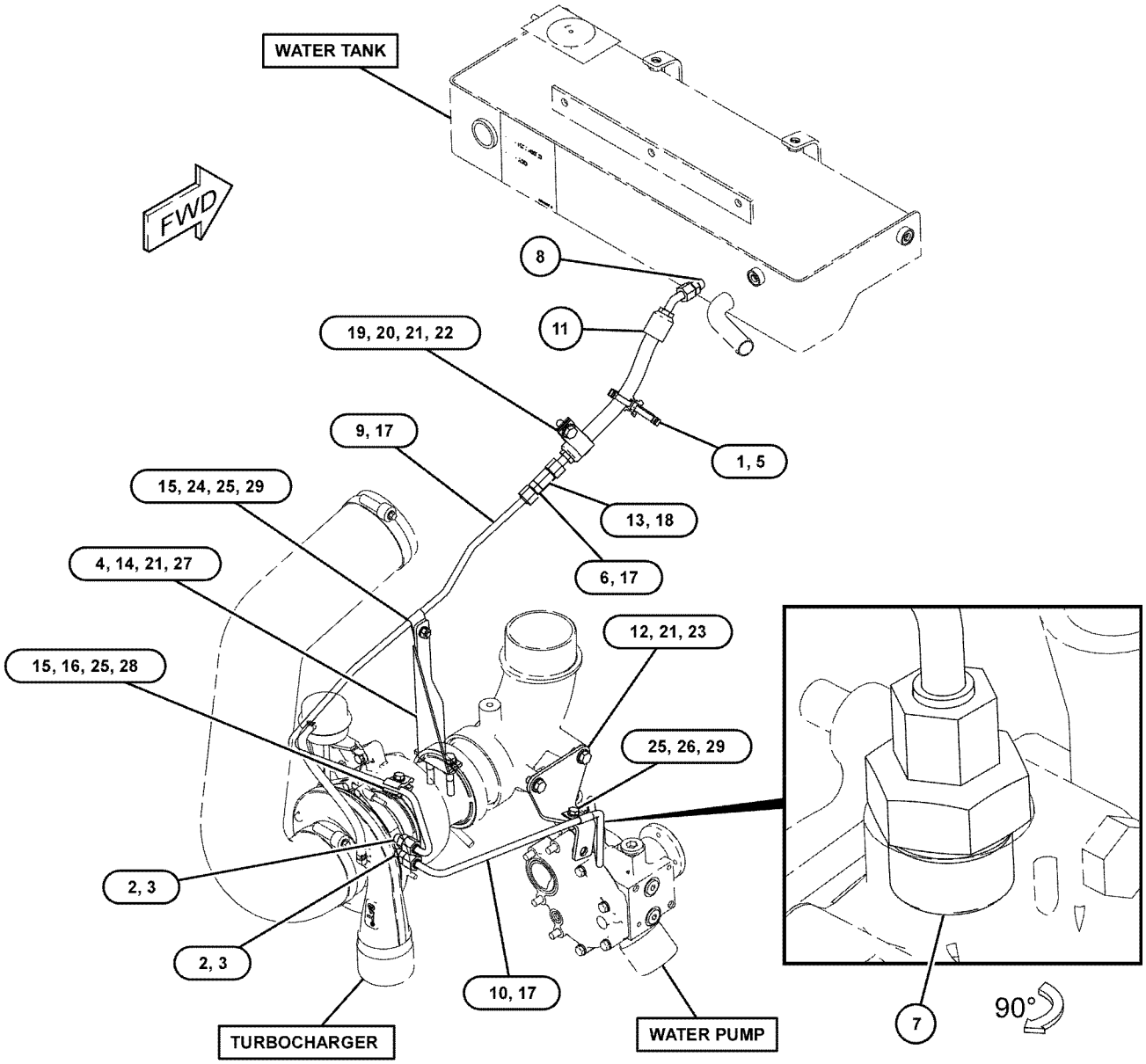

GRAPHIC #1 **<END>** g03862380

398-4340 LINES GP-WATER

S/N: PPP1-UP; SSS1-UP; TTT1-UP
PART OF 398-4308, 398-4309 INSTALLATION AR-ENGINE
AN ATTACHMENT

SMCS-1380 **i06221586**

NOTE	REF NO	GRAPHIC REF	PART NUMBER	QTY	PART NAME 1 2 3 4 5 6 (PRODUCT LEVEL)	SEE PAGE
	1	1	**8T-4984**	3	CLAMP-HOSE	
	2	1	**157-0670**	1	CAP-DUST	
	3	1	**426-5014**	1	BRACKET AS	
M		1	**8T-3490**	1	NUT-WELD (M10X1.5-THD)	
	4	1	**290-3970**	1	BRACKET AS	
	5	1	**398-4360**	1	TUBE AS	
	6	1	**398-4361**	1	HOSE	
	7	1	**398-4362**	1	HOSE	
	8	1	**398-4363**	1	BRACKET AS	
	9	1	**398-4364**	1	BRACKET AS	
					(EACH BRACKET AS INCLUDES)	
M		1	**8T-3490**	1	NUT-WELD (M10X1.5-THD)	
	10	1	**426-4986**	1	HOSE	
	11	1	**3E-9867**	2	CLIP (SLOT)	
	12	1	**3E-9868**	2	CLIP (TAB)	
	13	1	**3J-7354**	1	SEAL-O-RING	
	14	1	**7X-7729**	3	WASHER (11X25X3-MM THK)	
	15	1	**8C-3446**	1	VALVE-SAMPLING	
	16	1	**8T-4224**	2	WASHER-HARD (8.8X16X2-MM THK)	
	17	1	**8T-4121**	4	WASHER-HARD (11X21X2.5-MM THK)	
M	18	1	**8T-4137**	2	BOLT (M10X1.5X20-MM)	
M	19	1	**8T-4186**	1	BOLT (M10X1.5X40-MM)	
M	20	1	**8T-4189**	2	BOLT (M8X1.25X20-MM)	
M	21	1	**8T-4196**	4	BOLT (M10X1.5X35-MM)	
	22	1	**8T-6703**	3	CLAMP-HOSE	
	23	1	**9D-6196**	3	CLIP (SLOT)	
	24	1	**9D-6197**	3	CLIP (TAB)	

M - METRIC PART

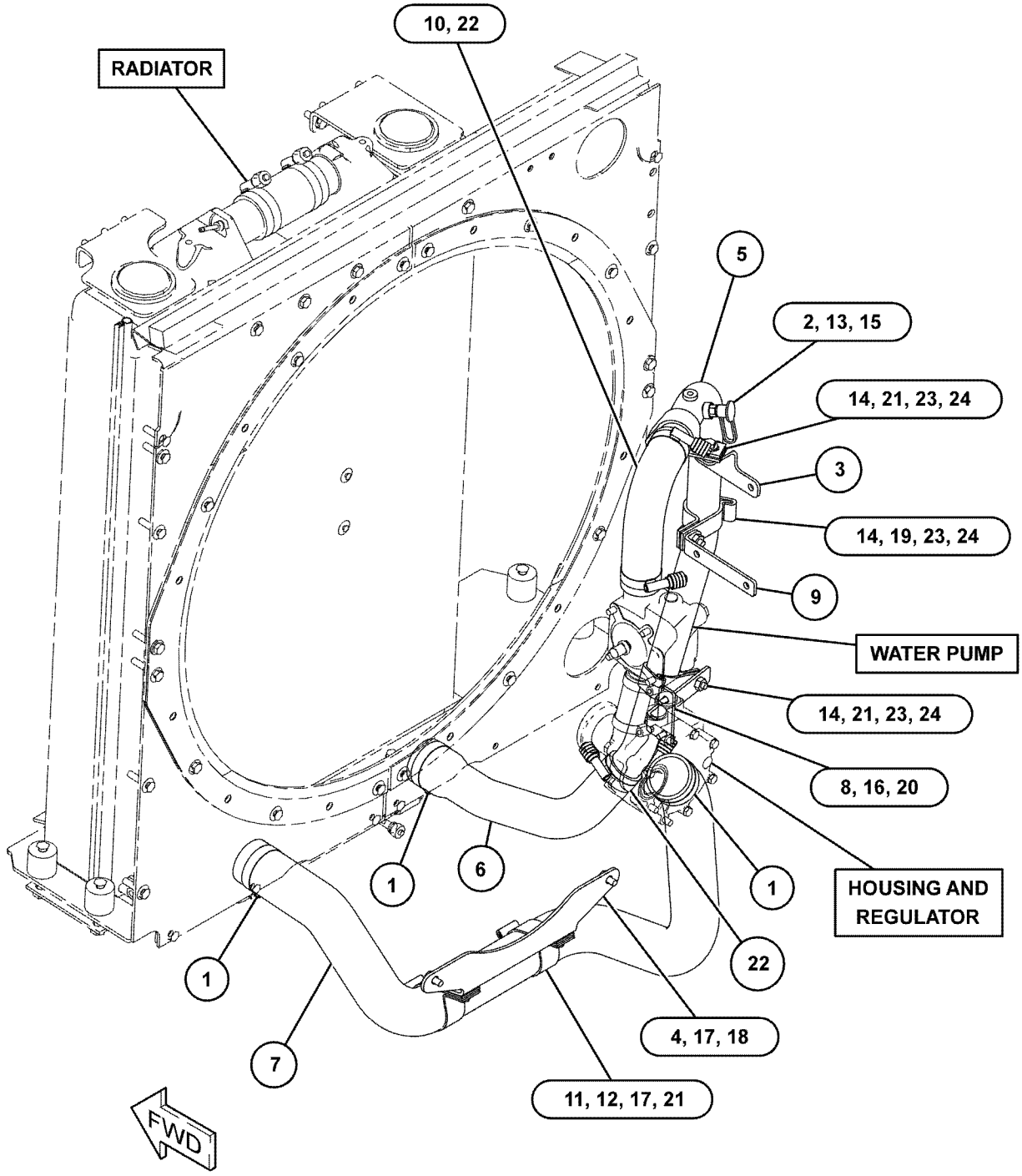

GRAPHIC #1 **<END>** g03862283

211-1812 PUMP GP-WATER

S/N: TXD1-UP
PART OF 387-8618, 387-8619 ENGINE AR-CORE
AN ATTACHMENT

SMCS-1361 **i05555631**

NOTE	REF NO	GRAPHIC REF	PART NUMBER	QTY	PART NAME 1 2 3 4 5 6 (PRODUCT LEVEL)	SEE PAGE
CYR	1	1	*350-2536*	1	PUMP GP-WATER	93
	2	1	**147-0182**	1	SEAL-O-RING	
	3	1	**384-9992**	1	SEAL-O-RING	
M	4	1	**8T-0644**	4	BOLT (M10X1.5X90-MM)	

C - CHANGE FROM PREVIOUS TYPE
M - METRIC PART
R - REMFG PART MAY BE AVAILABLE
Y - SEPARATE ILLUSTRATION

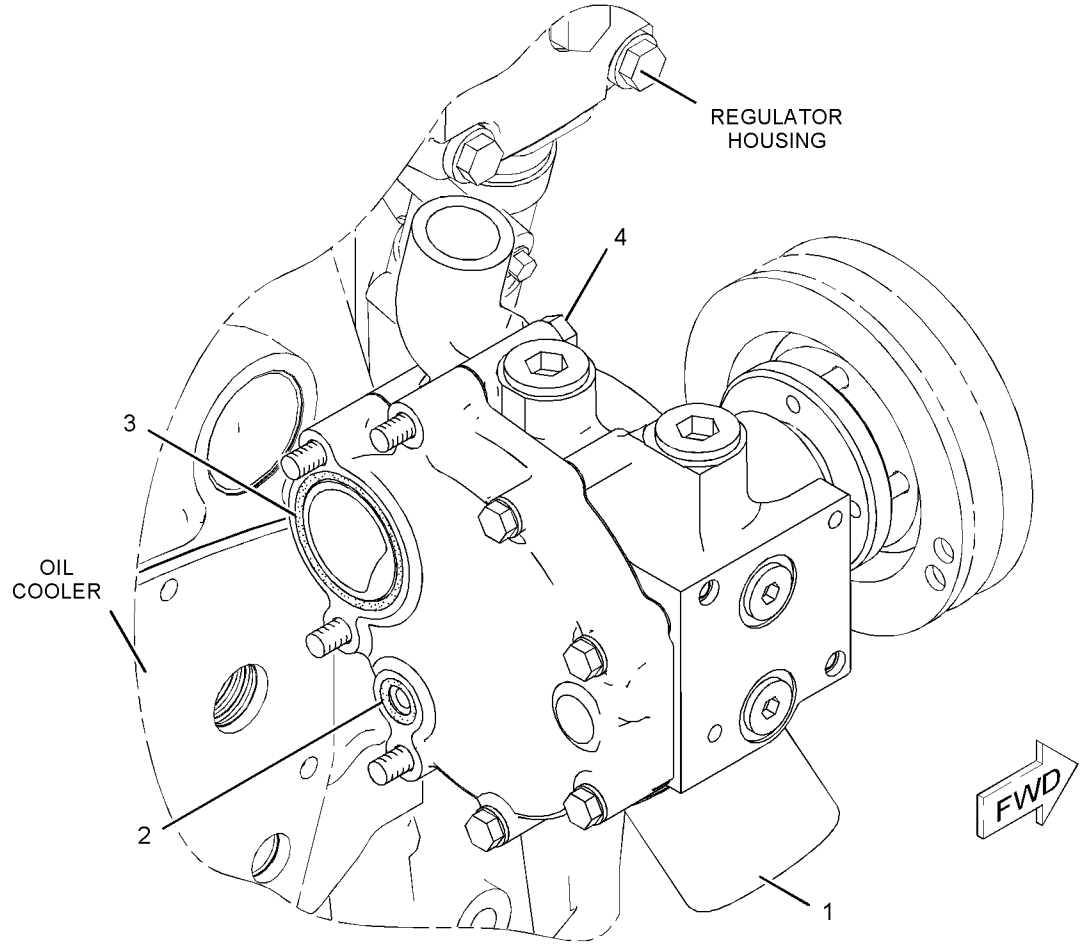

GRAPHIC #1 **<END>** g01038761

349-6123 PUMP GP-WATER

S/N: TXD1-UP
PART OF 350-2536 PUMP GP-WATER
AN ATTACHMENT

SMCS-1361 **i05643899**

NOTE	REF NO	GRAPHIC REF	PART NUMBER	QTY	PART NAME 1 2 3 4 5 6 (PRODUCT LEVEL)	SEE PAGE
	1	1	**350-5417**	1	SEAL-WATER PUMP	
	2	1	**177-1050**	1	SHAFT AS	
	3	1	**177-1056**	1	IMPELLER-PUMP	
	4	1	**209-6692**	1	HUB	
	5	1	**347-3110**	1	HOUSING AS-WATER PUMP	
		1	**177-1058**	1	PLUG	

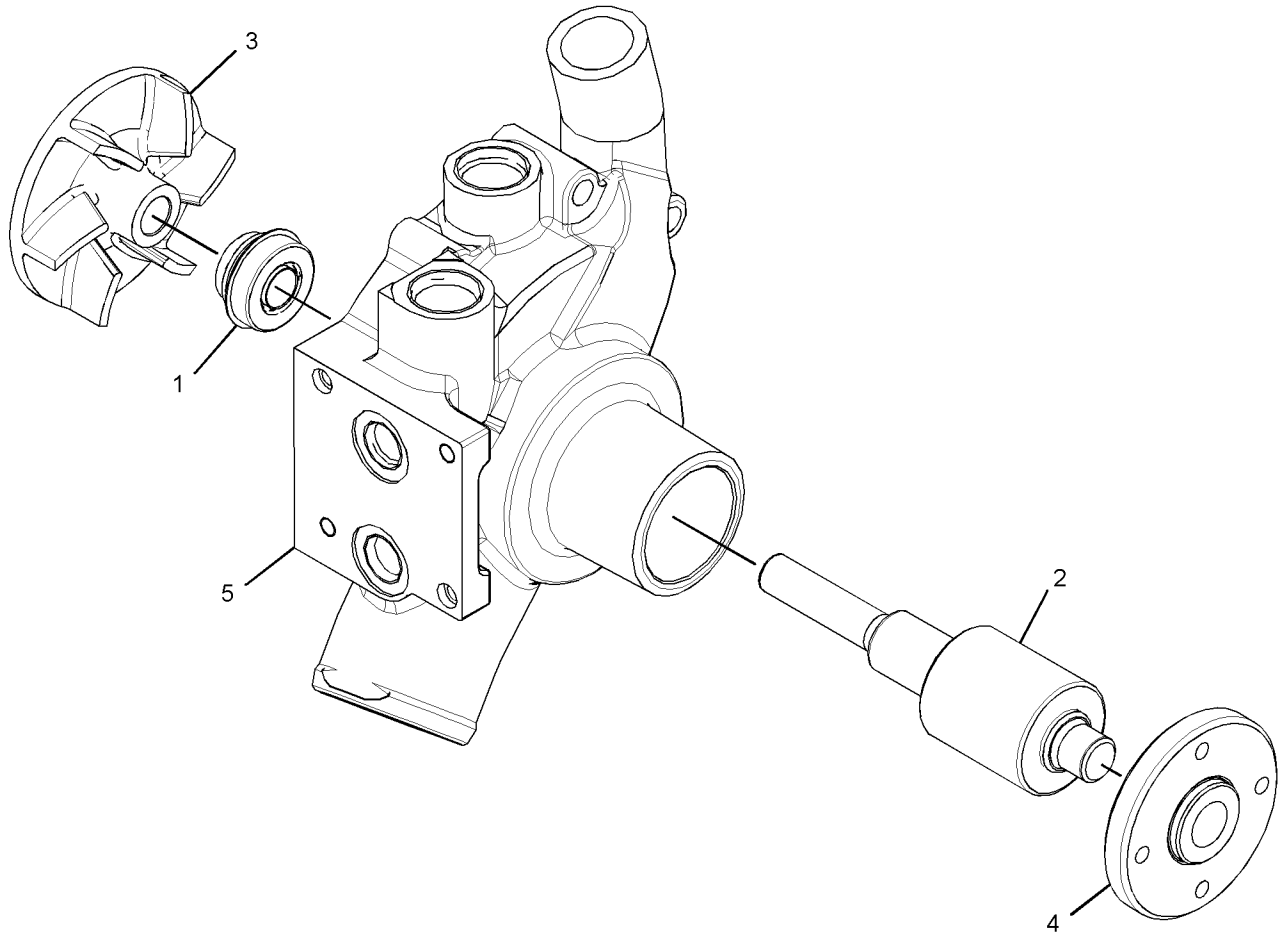

GRAPHIC #1 **<END>** g02064913

350-2536 PUMP GP-WATER*R

S/N: TXD1-UP
PART OF 211-1812 PUMP GP-WATER
AN ATTACHMENT

SMCS-1361 **i06193733**

NOTE	REF NO	GRAPHIC REF	PART NUMBER	QTY	PART NAME 1 2 3 4 5 6 (PRODUCT LEVEL)	SEE PAGE
	1	1	**177-1044**	1	COVER	
M	2	1	**6V-3918**	4	BOLT (M8X1.25X50-MM)	
	3	1	**222-3901**	1	GASKET	
Y	4	1	*349-6123*	1	PUMP GP-WATER	92
	5	1	**3D-2824**	1	SEAL-O-RING	
	6	1	**3K-0360**	2	SEAL-O-RING	
	7	1	**9S-8005**	2	PLUG-O-RING	
	8	1	**9S-8008**	1	PLUG	
	9	1	**9M-1974**	4	WASHER-HARD (8.8X16X2-MM THK)	

M - METRIC PART
Y - SEPARATE ILLUSTRATION

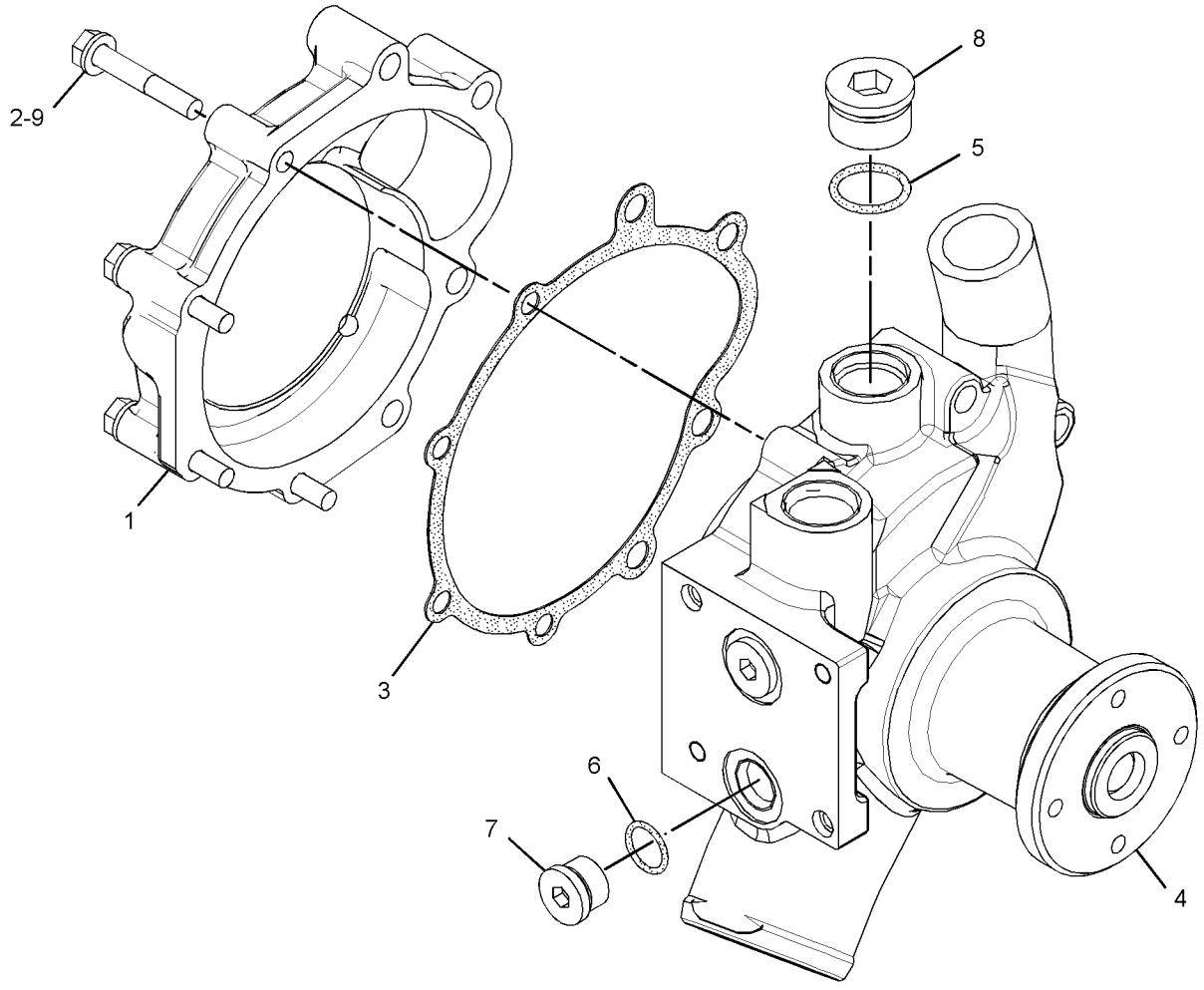

GRAPHIC #1 **<END>** g03845113

393-9044 RADIATOR GP

S/N: PPP1-UP; SSS1-UP; TTT1-UP
PART OF 398-4308 INSTALLATION AR-ENGINE
AN ATTACHMENT

SMCS-1353 **i06221580**

NOTE	REF NO	GRAPHIC REF	PART NUMBER	QTY	PART NAME 1 2 3 4 5 6 (PRODUCT LEVEL)	SEE PAGE
	1	1	**185-1047**	1	ADAPTER	
	2	1	**371-7185**	1	VALVE AS-SHUTOFF	
		1	**238-5080**	1	SEAL-O-RING	
	3	1	*384-9223*	1	TEE AS	
		1	**6V-1625**	1	TEE-O-RING	
		1	**214-7568**	1	SEAL-O-RING	
	4	1	**393-9040**	2	PLATE	
Y	5	1	*393-9045*	1	RADIATOR GP	96
	6	1	**423-3996**	1	BAFFLE AS-RADIATOR	
		1	**4D-6716**	7	RIVET-POP	
M		1	**8T-3490**	10	NUT-WELD (M10X1.5-THD)	
	7	1	**423-3997**	1	BAFFLE AS-RADIATOR	
		1	**7G-5186**	2	SPACER (13X19X4.5-MM THK)	
	8	1	**423-3998**	1	BAFFLE AS-RADIATOR	
		1	**7G-5186**	2	SPACER (13X19X4.5-MM THK)	
	9	1	*426-4143*	1	ADAPTER AS	
		1	**6V-9028**	1	SEAL-O-RING	
		1	**426-4101**	1	ADAPTER	
	10	1	**438-8213**	1	HOSE	
	11	1	**472-6306**	4	PLATE	
	12	1	**472-6307**	2	BAFFLE AS	
	13	1	**472-6308**	2	BAFFLE AS	
	14	1	**472-6309**	1	SHIELD AS-UPPER	
	15	1	**472-6310**	1	SHIELD AS-BOTTOM	
	16	1	**472-6311**	1	SHIELD AS-BOTTOM	
	17	1	**472-6312**	1	SHIELD AS-UPPER	
					(EACH SHIELD AS INCLUDES)	
M		1	**8T-3490**	6	NUT-WELD (M10X1.5-THD)	
	18	1	**092-7385**	1	CLIP	
	19	1	**141-1668**	1	CLAMP-HOSE	
	20	1	**159-1503**	2	CLAMP-HOSE	
	21	1	**219-0669**	1	SEAL-O-RING	
	22	1	*351-0276*	1	CONNECTOR AS	
		1	**6V-3250**	1	SEAL-O-RING	
		1	**297-7964**	1	CONNECTOR	
	23	1	**6N-2944**	1	PLUG	
	24	1	**7X-7729**	31	WASHER (11X25X3-MM THK)	
	25	1	**8T-4121**	5	WASHER-HARD (11X21X2.5-MM THK)	
M	26	1	**8T-4136**	8	BOLT (M10X1.5X25-MM)	
M	27	1	**8T-4185**	4	BOLT (M10X1.5X50-MM)	
M	28	1	**8T-4186**	7	BOLT (M10X1.5X40-MM)	
M	29	1	**8T-4191**	1	BOLT (M10X1.5X16-MM)	
M	30	1	**8T-4195**	16	BOLT (M10X1.5X30-MM)	
E	31	1	**5P-0767**		HOSE (91-CM)	
D	32	1	**5P-8309**		SEAL (1.1-M)	
D	32A	1	**5P-8309**		SEAL (0.1-M)	
E	33	1	**146-0414**		SEAL (103-CM)	

D - ORDER BY THE METER
E - ORDER BY THE CENTIMETER
M - METRIC PART
Y - SEPARATE ILLUSTRATION

393-9044 **RADIATOR GP (*contd.*)** **i06221580**

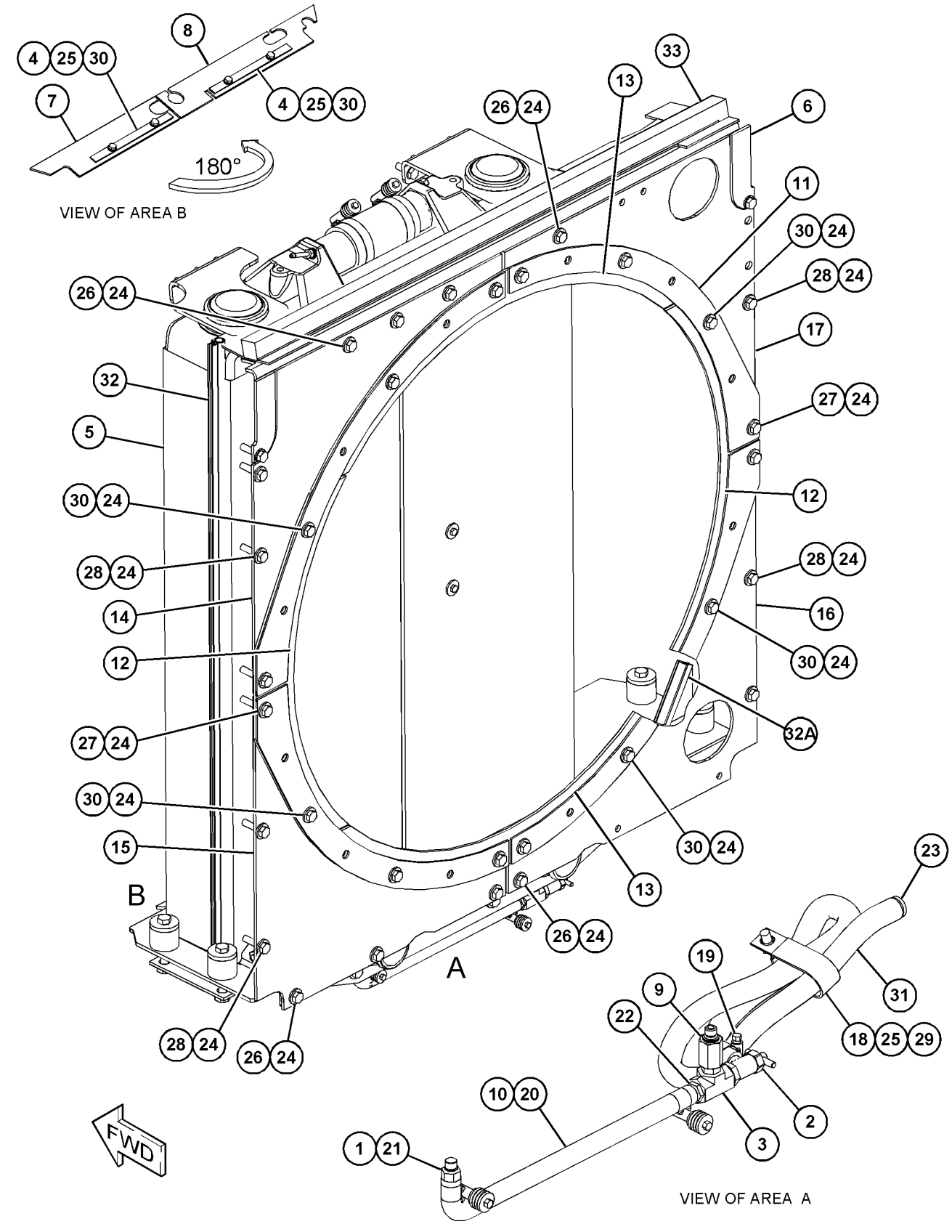

GRAPHIC #1 **<END>** g03863805

393-9045 RADIATOR GP

S/N: PPP1-UP; SSS1-UP; TTT1-UP
PART OF 393-9044 RADIATOR GP
AN ATTACHMENT

SMCS-1353 **i06221583**

NOTE	REF NO	GRAPHIC REF	PART NUMBER	QTY	PART NAME 1 2 3 4 5 6 (PRODUCT LEVEL)	SEE PAGE
	1	1	**3W-2568**	4	MOUNTING	
	2	1	**6I-2435**	2	SPACER (80X108X25-MM THK)	
	3	1	**8K-8517**	4	WASHER (0.531X1.75X0.25-IN THK)	
	4	1	**9S-4497**	4	BLOCK-MOUNTING	
	5	1	**169-3796**	2	PLATE AS	
	6	1	**243-2076**	4	WASHER-HARD (12.2X45.5X4.4-MM THK)	
	7	1	**245-9941**	4	WASHER-HARD (12.2X55.1X3.2-MM THK)	
	8	1	**371-2443**	1	CORE AS-RADIATOR (LH)	
	9	1	**372-6387**	1	HOSE	
	10	1	**393-9046**	1	SUPPORT AS-RADIATOR	
	11	1	**393-9048**	1	BRACKET	
	12	1	**393-9050**	1	BRACKET	
	13	1	**423-4004**	1	CORE AS-RADIATOR (RH)	
	14	1	**423-4026**	1	PLATE AS	
M		1	**8T-3490**	10	NUT-WELD (M10X1.5-THD)	
	15	1	**1N-5999**	1	PLUG-O-RING	
	16	1	*337-8767*	1	CONNECTOR AS	
		1	**238-5079**	1	SEAL-O-RING	
		1	**337-8766**	1	CONNECTOR	
	17	1	**7J-0204**	1	SEAL-O-RING	
	18	1	**7X-7729**	4	WASHER (11X25X3-MM THK)	
	19	1	**8T-4121**	10	WASHER-HARD (11X21X2.5-MM THK)	
M	20	1	**8T-4136**	8	BOLT (M10X1.5X25-MM)	
M	21	1	**8T-4176**	4	BOLT (M12X1.75X90-MM)	
M	22	1	**8T-4195**	6	BOLT (M10X1.5X30-MM)	
M	23	1	**8T-4910**	4	BOLT (M12X1.75X60-MM)	
	24	1	**8T-4984**	2	CLAMP-HOSE	
E	25	1	**195-0601**		SEAL (103-CM)	
E	25A	1	**195-0601**		SEAL (14.5-CM EACH)	
E	25B	1	**195-0601**		SEAL (75-CM EACH)	

E - ORDER BY THE CENTIMETER
M - METRIC PART

393-9045 **RADIATOR GP (*contd.*)** **i06221583**

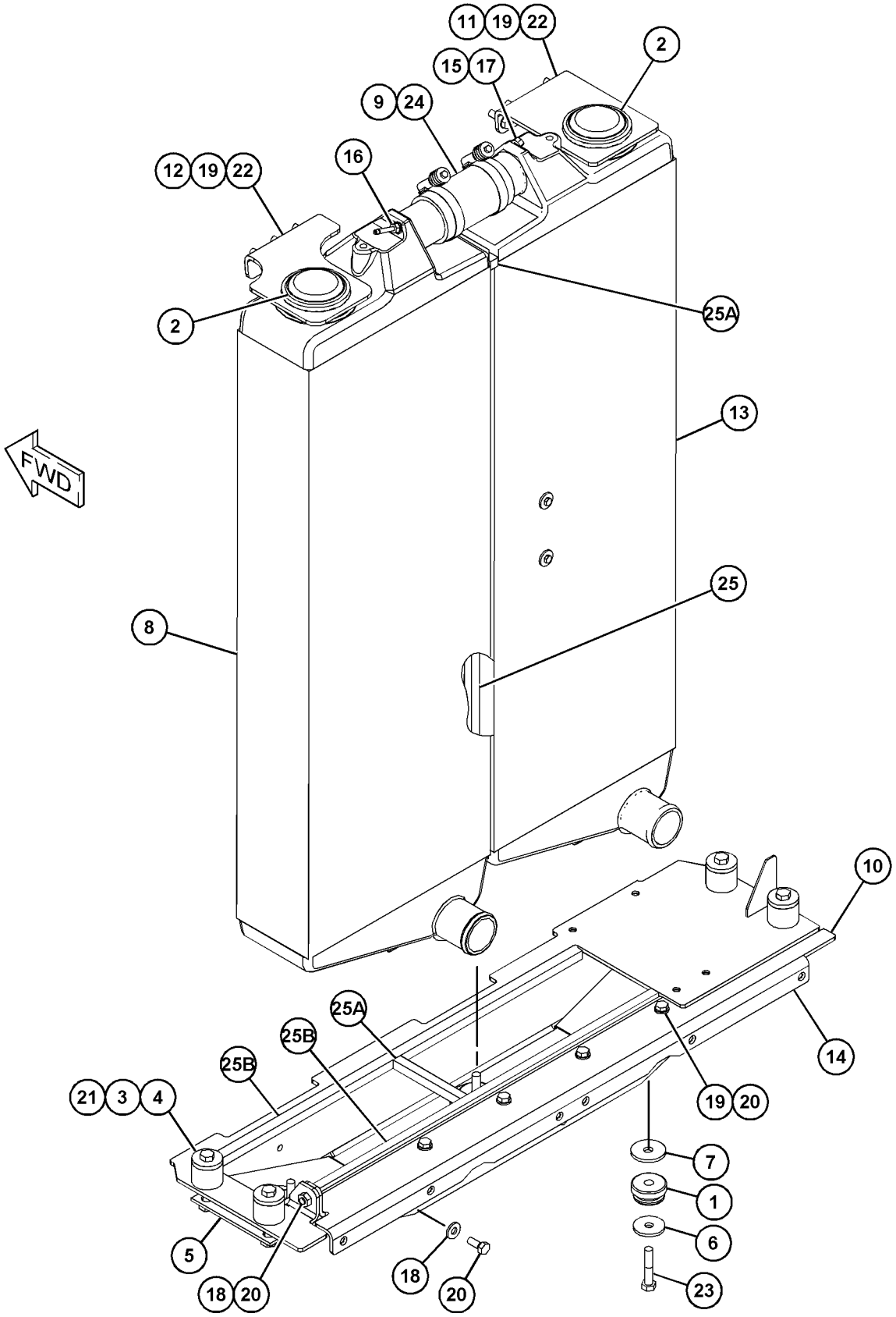

GRAPHIC #1 **<END>** g03863851

423-3993 RADIATOR GP

S/N: PPP1-UP; TTT1-UP
PART OF 398-4309 INSTALLATION AR-ENGINE
AN ATTACHMENT

SMCS-1353 **i06222039**

NOTE	REF NO	GRAPHIC REF	PART NUMBER	QTY	PART NAME 1 2 3 4 5 6 (PRODUCT LEVEL)	SEE PAGE
	1	1	**185-1047**	1	ADAPTER	
	2	1	**371-7185**	1	VALVE AS-SHUTOFF	
		1	**238-5080**	1	SEAL-O-RING	
	3	1	*384-9223*	1	TEE AS	
		1	**6V-1625**	1	TEE-O-RING	
		1	**214-7568**	1	SEAL-O-RING	
	4	1	**393-9040**	2	PLATE	
	5	1	**423-3996**	1	BAFFLE AS-RADIATOR	
		1	**4D-6716**	7	RIVET-POP	
M		1	**8T-3490**	10	NUT-WELD (M10X1.5-THD)	
	6	1	**423-3997**	1	BAFFLE AS-RADIATOR	
		1	**7G-5186**	2	SPACER (13X19X4.5-MM THK)	
	7	1	**423-3998**	1	BAFFLE AS-RADIATOR	
		1	**7G-5186**	2	SPACER (13X19X4.5-MM THK)	
Y	8	1	*423-4003*	1	RADIATOR GP	100
	9	1	*426-4143*	1	ADAPTER AS	
		1	**6V-9028**	1	SEAL-O-RING	
		1	**426-4101**	1	ADAPTER	
	10	1	**438-8213**	1	HOSE	
	11	1	**476-0073**	4	PLATE	
	12	1	**476-0077**	1	SHIELD AS-UPPER (LH)	
M		1	**8T-3490**	6	NUT-WELD (M10X1.5-THD)	
	13	1	**476-0078**	1	SHIELD AS-BOTTOM (LH)	
M		1	**8T-3490**	6	NUT-WELD (M10X1.5-THD)	
	14	1	**476-0079**	1	SHIELD AS-BOTTOM (RH)	
M		1	**8T-3490**	6	NUT-WELD (M10X1.5-THD)	
	15	1	**476-0080**	1	SHIELD AS-UPPER (RH)	
M		1	**8T-3490**	6	NUT-WELD (M10X1.5-THD)	
	16	1	**487-0190**	2	BAFFLE AS	
					(EACH INCLUDES)	
		1	**7G-5186**	6	SPACER (13X19X4.5-MM THK)	
	17	1	**487-0191**	2	BAFFLE AS	
					(EACH INCLUDES)	
		1	**7G-5186**	6	SPACER (13X19X4.5-MM THK)	
	18	1	**092-7385**	1	CLIP	
	19	1	**141-1668**	1	CLAMP-HOSE	
	20	1	**159-1503**	2	CLAMP-HOSE	
	21	1	**219-0669**	1	SEAL-O-RING	
	22	1	*351-0276*	1	CONNECTOR AS	
		1	**6V-3250**	1	SEAL-O-RING	
		1	**297-7964**	1	CONNECTOR	
	23	1	**6N-2944**	1	PLUG	
	24	1	**7X-7729**	31	WASHER (11X25X3-MM THK)	
	25	1	**8T-4121**	5	WASHER-HARD (11X21X2.5-MM THK)	
M	26	1	**8T-4136**	8	BOLT (M10X1.5X25-MM)	
M	27	1	**8T-4186**	7	BOLT (M10X1.5X40-MM)	
M	28	1	**8T-4191**	1	BOLT (M10X1.5X16-MM)	
M	29	1	**8T-4195**	20	BOLT (M10X1.5X30-MM)	
E	30	1	**5P-0767**		HOSE (91-CM)	
D	31	1	**5P-8309**		SEAL (0.1-M)	
D	31A	1	**5P-8309**		SEAL (1.1-M)	
E	32	1	**146-0414**		SEAL (103-CM)	

D - ORDER BY THE METER
E - ORDER BY THE CENTIMETER
M - METRIC PART
Y - SEPARATE ILLUSTRATION

423-3993 **RADIATOR GP (*contd.*)** **i06222039**

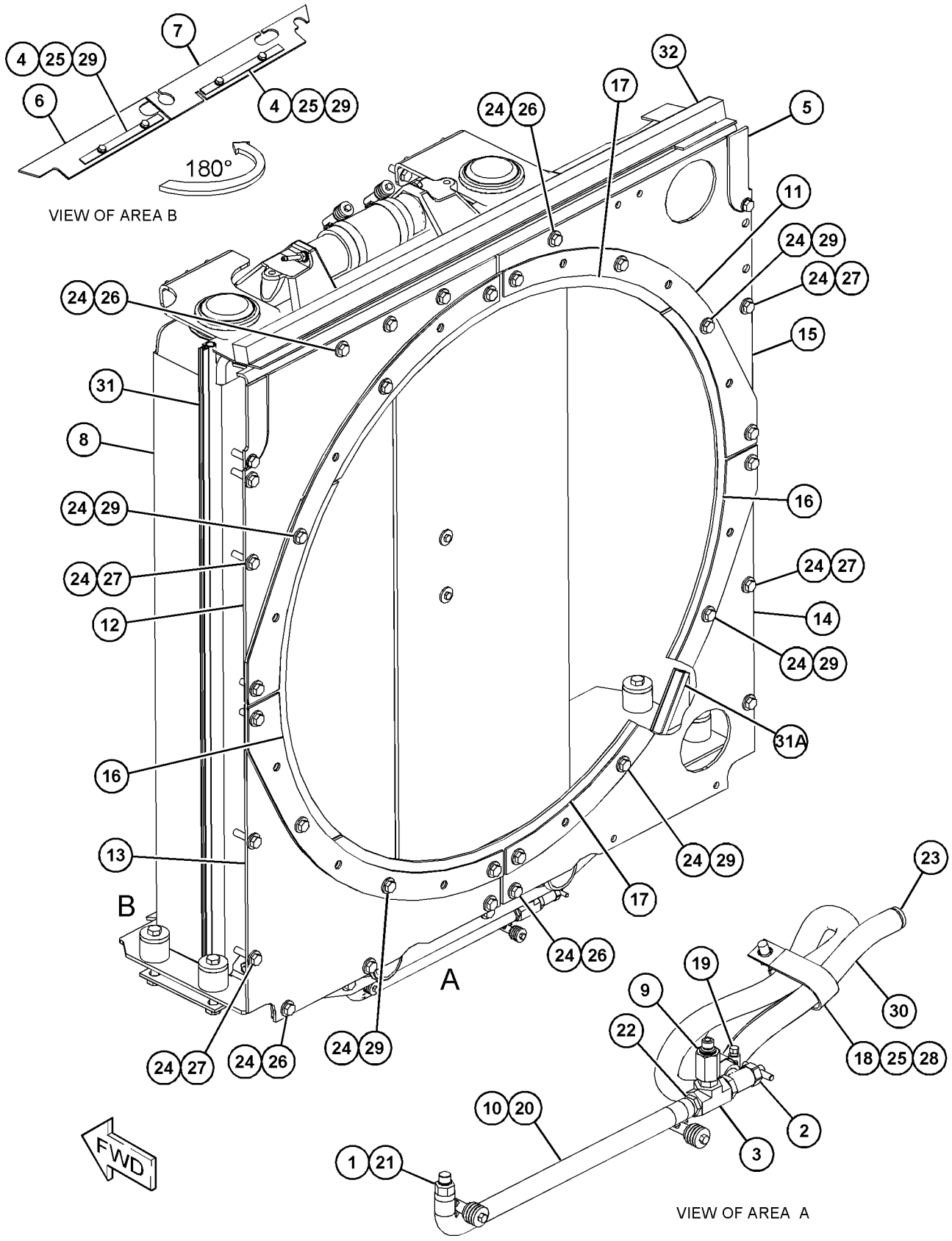

GRAPHIC #1 **<END>** g03863993

423-4003 RADIATOR GP

S/N: PPP1-UP; TTT1-UP
PART OF 423-3993 RADIATOR GP
AN ATTACHMENT

SMCS-1353 **i06225170**

NOTE	REF NO	GRAPHIC REF	PART NUMBER	QTY	PART NAME 1 2 3 4 5 6 (PRODUCT LEVEL)	SEE PAGE
	1	1	**3W-2568**	4	MOUNTING	
	2	1	**6I-2435**	2	SPACER (80X108X25-MM THK)	
	3	1	**8K-8517**	4	WASHER (0.531X1.75X0.25-IN THK)	
	4	1	**9S-4497**	4	BLOCK-MOUNTING	
	5	1	**169-3796**	2	PLATE AS	
	6	1	**243-2076**	4	WASHER-HARD (12.2X45.5X4.4-MM THK)	
	7	1	**245-9941**	4	WASHER-HARD (12.2X55.1X3.2-MM THK)	
	8	1	**372-4485**	1	CORE AS-RADIATOR (LH)	
	9	1	**372-6387**	1	HOSE	
	10	1	**393-9046**	1	SUPPORT AS-RADIATOR	
	11	1	**393-9048**	1	BRACKET	
	12	1	**393-9050**	1	BRACKET	
	13	1	**423-4005**	1	CORE AS-RADIATOR (RH)	
	14	1	**423-4026**	1	PLATE AS	
M		1	**8T-3490**	10	NUT-WELD (M10X1.5-THD)	
	15	1	**1N-5999**	1	PLUG-O-RING	
	16	1	*337-8767*	1	CONNECTOR AS	
		1	**238-5079**	1	SEAL-O-RING	
		1	**337-8766**	1	CONNECTOR	
	17	1	**7J-0204**	1	SEAL-O-RING	
	18	1	**7X-7729**	4	WASHER (11X25X3-MM THK)	
	19	1	**8T-4121**	10	WASHER-HARD (11X21X2.5-MM THK)	
M	20	1	**8T-4136**	8	BOLT (M10X1.5X25-MM)	
M	21	1	**8T-4176**	4	BOLT (M12X1.75X90-MM)	
M	22	1	**8T-4195**	6	BOLT (M10X1.5X30-MM)	
M	23	1	**8T-4910**	4	BOLT (M12X1.75X60-MM)	
	24	1	**8T-4984**	2	CLAMP-HOSE	
E	25	1	**195-0601**		SEAL (103-CM)	
E	25A	1	**195-0601**		SEAL (14.5-CM EACH)	
E	25B	1	**195-0601**		SEAL (75-CM EACH)	

E - ORDER BY THE CENTIMETER
M - METRIC PART

423-4003 **RADIATOR GP (*contd.*)** **i06225170**

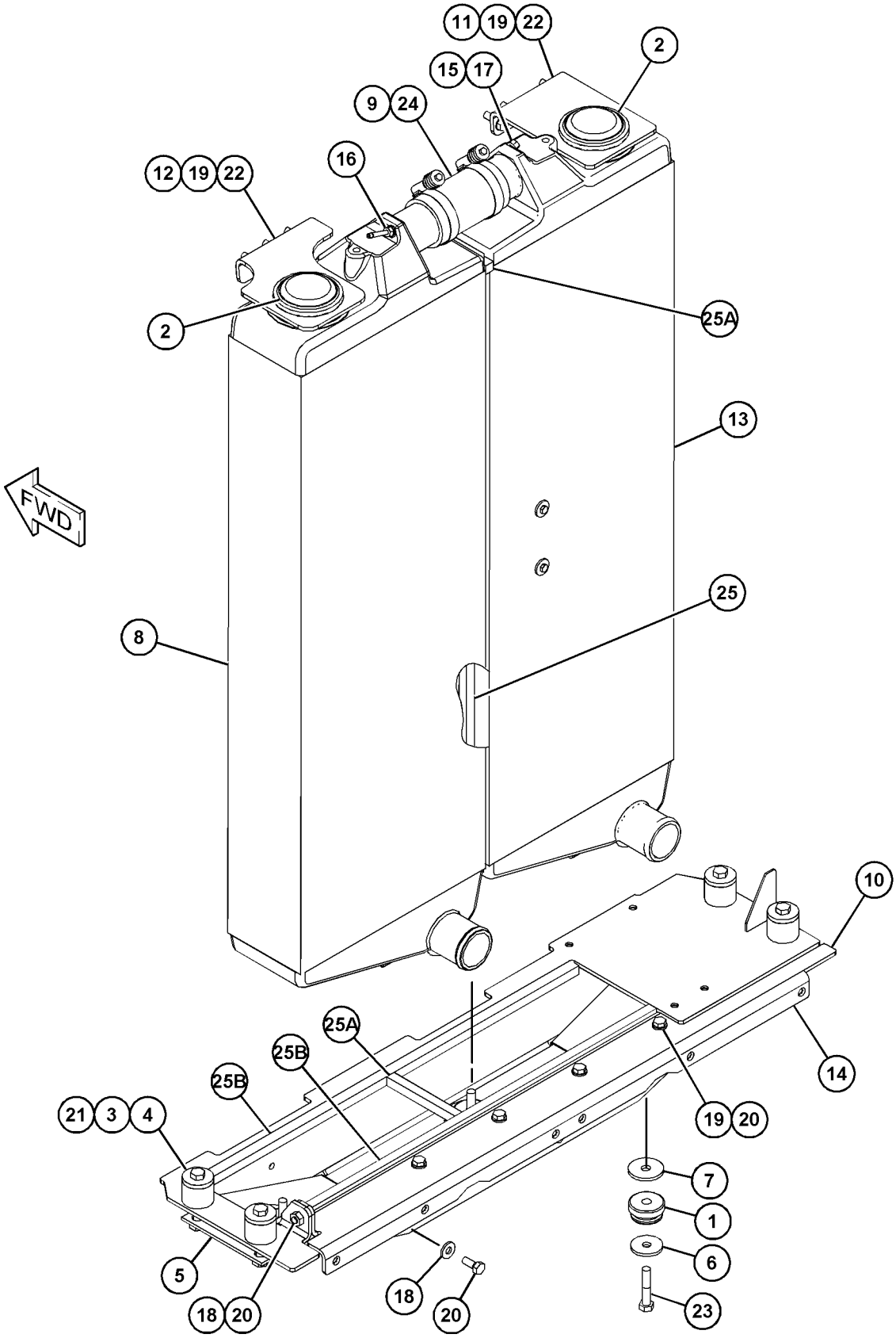

GRAPHIC #1 **<END>** g03863476

398-4341 TANK GP-COOLANT

S/N: PPP1-UP; SSS1-UP; TTT1-UP
PART OF 398-4308 INSTALLATION AR-ENGINE
AN ATTACHMENT

SMCS-1377 **i06163433**

NOTE	REF NO	GRAPHIC REF	PART NUMBER	QTY	PART NAME 1 2 3 4 5 6 (PRODUCT LEVEL)	SEE PAGE
	1		**3S-2093**	1	STRAP-CABLE	
	2		**9Y-9236**	1	GAUGE-SIGHT (COOLANT TANK)	
	3		*188-3034*	1	ELBOW AS	
			3J-7354	1	SEAL-O-RING	
			6V-1355	1	ELBOW	
	4		*351-0261*	1	ELBOW AS	
			5P-1230	1	CONNECTOR	
			6V-5063	1	SEAL-O-RING	
	5		*351-0273*	2	ELBOW AS	
					(EACH INCLUDES)	
			6V-8245	1	ELBOW	
			6V-9027	1	SEAL-O-RING	
	6		**398-4365**	1	TANK GP-COOLANT	
			294-3342	1	CAP AS-RADIATOR	
	7		**398-4368**	1	PLATE	
	8		**398-4369**	1	PLATE	
	9		**110-2445**	2	CLAMP-HOSE	
	10		**1P-4278**	6	CLAMP-HOSE	
	11		**2V-4868**	2	FITTING (1/8-27 PTF)	
	12		**7D-7233**	1	CLIP	
	13		**7K-1181**	5	STRAP-CABLE	
	14		**7M-8485**	1	SEAL-O-RING	
	15		**7X-7729**	4	WASHER (11X25X3-MM THK)	
	16		**8B-1931**	1	BUSHING-REDUCER	
	17		**8L-5008**	1	ELBOW-PIPE	
	18		**8T-4121**	5	WASHER-HARD (11X21X2.5-MM THK)	
M	19		**8T-4195**	9	BOLT (M10X1.5X30-MM)	
E	20		**371-8094**		HOSE (106-CM)	
E	21		**5P-1465**		HOSE (19-CM)	
E	21A		**5P-1465**		HOSE (50-CM)	
E	21B		**5P-1465**		HOSE (73-CM)	
E	22		**8C-3681**		HOSE (41-CM)	
D	23		**5P-8309**		SEAL (0.2-M EACH)	
D	23A		**5P-8309**		SEAL (0.1-M EACH)	
E	24		**195-0601**		SEAL (15-CM EACH)	

D - ORDER BY THE METER
E - ORDER BY THE CENTIMETER
M - METRIC PART

398-4341 **TANK GP-COOLANT (*contd.*)** **i06163433**

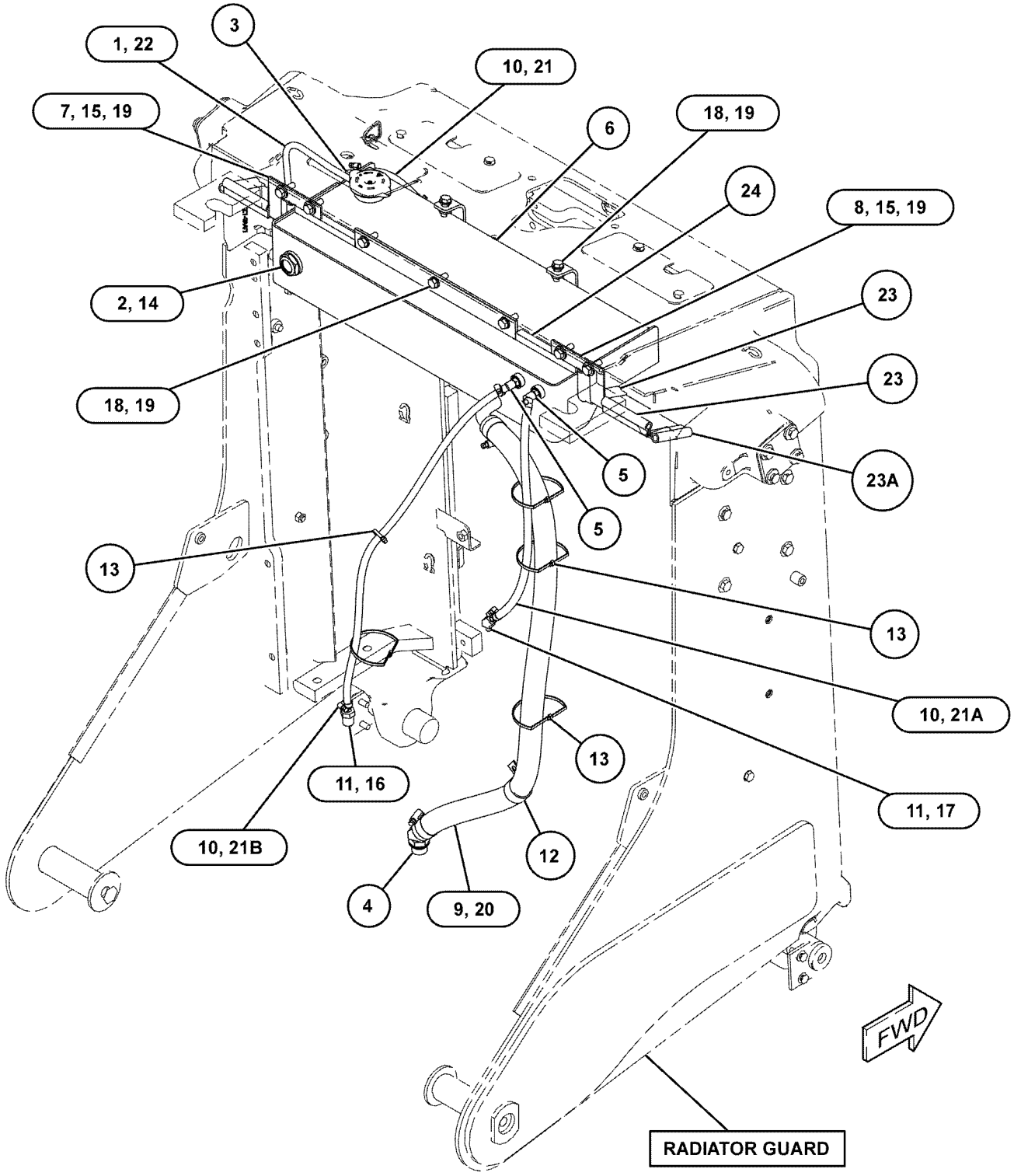

GRAPHIC #1 **<END>** g03839081

398-4343 TANK GP-COOLANT

S/N: PPP1-UP; TTT1-UP
PART OF 398-4309 INSTALLATION AR-ENGINE
AN ATTACHMENT

SMCS-1377 **i06221729**

NOTE	REF NO	GRAPHIC REF	PART NUMBER	QTY	PART NAME 1 2 3 4 5 6 (PRODUCT LEVEL)	SEE PAGE
	1	1	**3S-2093**	1	STRAP-CABLE	
	2	1	**8L-5008**	1	ELBOW-PIPE	
	3	1	**9Y-9236**	1	GAUGE-SIGHT	
	4	1	*188-3034*	1	ELBOW AS	
		1	**3J-7354**	1	SEAL-O-RING	
		1	**6V-1355**	1	ELBOW	
	5	1	*351-0261*	1	ELBOW AS	
		1	**5P-1230**	1	CONNECTOR	
		1	**6V-5063**	1	SEAL-O-RING	
	6	1	*351-0273*	2	ELBOW AS	
					(EACH INCLUDES)	
		1	**6V-8245**	1	ELBOW	
		1	**6V-9027**	1	SEAL-O-RING	
	7	1	**398-4368**	1	PLATE	
	8	1	**398-4369**	1	PLATE	
Y	9	1	*446-5054*	1	TANK GP-COOLANT	106
	10	1	**110-2445**	2	CLAMP-HOSE	
	11	1	**1P-4278**	6	CLAMP-HOSE	
	12	1	**2V-4868**	2	FITTING (1/8-27 PTF)	
	13	1	**7D-7233**	1	CLIP	
	14	1	**7K-1181**	5	STRAP-CABLE	
	15	1	**7M-8485**	1	SEAL-O-RING	
	16	1	**7X-7729**	4	WASHER (11X25X3-MM THK)	
	17	1	**8B-1931**	1	BUSHING-REDUCER	
	18	1	**8T-4121**	5	WASHER-HARD (11X21X2.5-MM THK)	
M	19	1	**8T-4195**	9	BOLT (M10X1.5X30-MM)	
E	20	1	**371-8094**		HOSE (106-CM)	
E	21	1	**5P-1465**		HOSE (19-CM)	
E	21A	1	**5P-1465**		HOSE (73-CM)	
E	21B	1	**5P-1465**		HOSE (50-CM)	
B	22	1	**8C-3681**		HOSE (41-CM)	
D	23	1	**5P-8309**		SEAL (0.15-M EACH)	
D	23A	1	**5P-8309**		SEAL (0.11-M EACH)	
D	23B	1	**5P-8309**		SEAL (0.09-M EACH)	
B	24	1	**195-0601**		SEAL (15-CM EACH)	

B - USE AS REQUIRED
D - ORDER BY THE METER
E - ORDER BY THE CENTIMETER
M - METRIC PART
Y - SEPARATE ILLUSTRATION

398-4343 **TANK GP-COOLANT (*contd.*)** **i06221729**

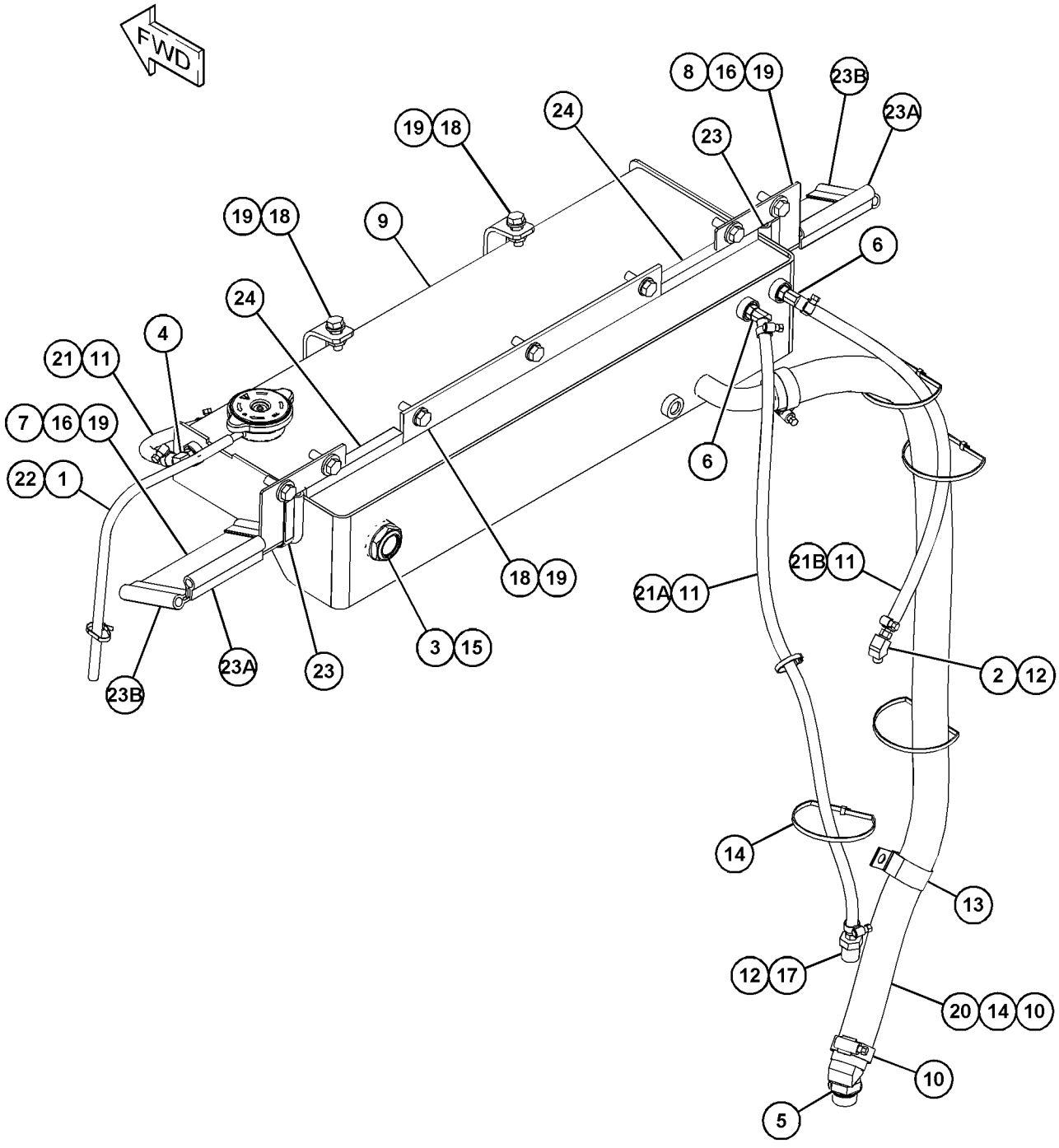

GRAPHIC #1 **<END>** g03863656

446-5054 TANK GP-COOLANT

S/N: PPP1-UP; TTT1-UP
PART OF 398-4343 TANK GP-COOLANT
AN ATTACHMENT

SMCS-1377 **i06229225**

NOTE	REF NO	GRAPHIC REF	PART NUMBER	QTY	PART NAME 1 2 3 4 5 6 (PRODUCT LEVEL)	SEE PAGE
	1	1	**398-4365**	1	TANK GP-COOLANT	
		1	**294-3342**	1	CAP AS-RADIATOR	

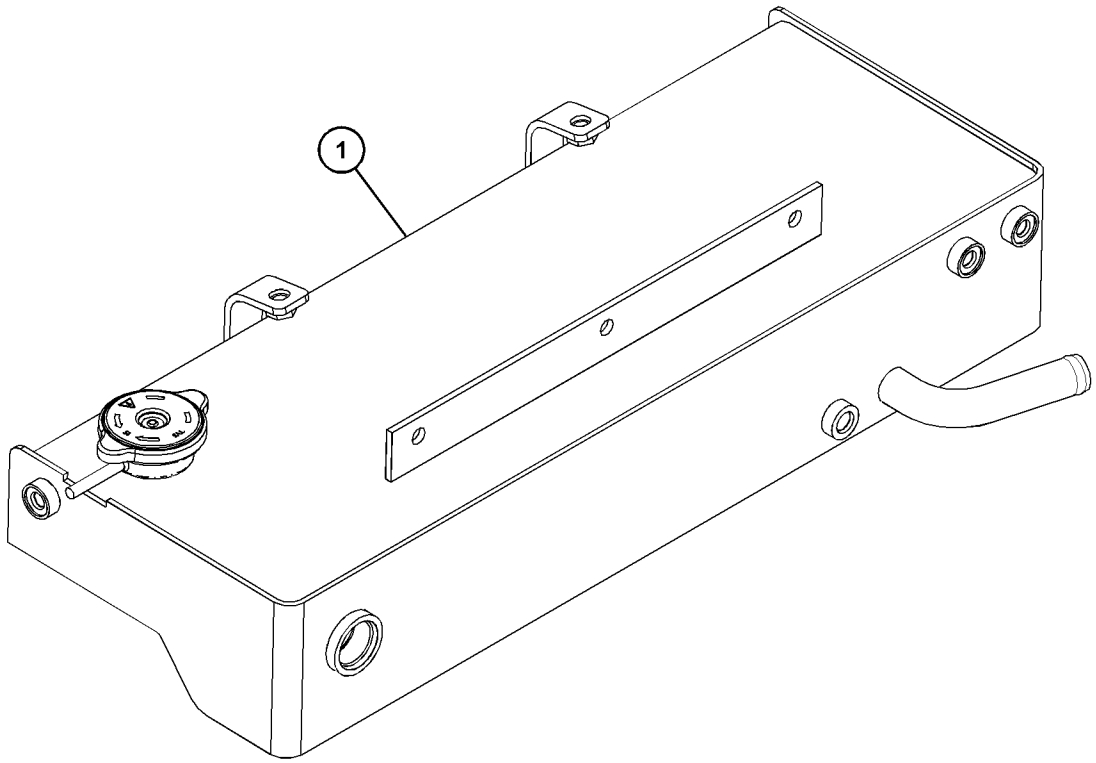

GRAPHIC #1 **<END>** g03863672

423-3991 AFTERCOOLER GP-AIR

S/N: PPP1-UP; SSS1-UP; TTT1-UP
PART OF 398-4287 INSTALLATION AR-ENGINE
ALSO AN ATTACHMENT

SMCS-1063 **i06199954**

NOTE	REF NO	GRAPHIC REF	PART NUMBER	QTY	PART NAME 1 2 3 4 5 6 (PRODUCT LEVEL)	SEE PAGE
	1	1	**6I-2435**	1	SPACER (80X108X25-MM THK)	
	2	1	**331-9864**	1	CORE AS-AFTERCOOLER	
	3	1	**331-9866**	1	MOUNT AS	
	4	1	**361-5188**	1	MOUNT-RUBBER	
	5	1	**393-9049**	1	BRACKET	
	6	1	**8T-4121**	6	WASHER-HARD (11X21X2.5-MM THK)	
M	7	1	**8T-4185**	4	BOLT (M10X1.5X50-MM)	
M	8	1	**8T-4196**	2	BOLT (M10X1.5X35-MM)	
D	9	1	**5P-8309**		SEAL (1.0-M)	
E	10	1	**195-0601**		SEAL (103-CM)	

D - ORDER BY THE METER
E - ORDER BY THE CENTIMETER
M - METRIC PART

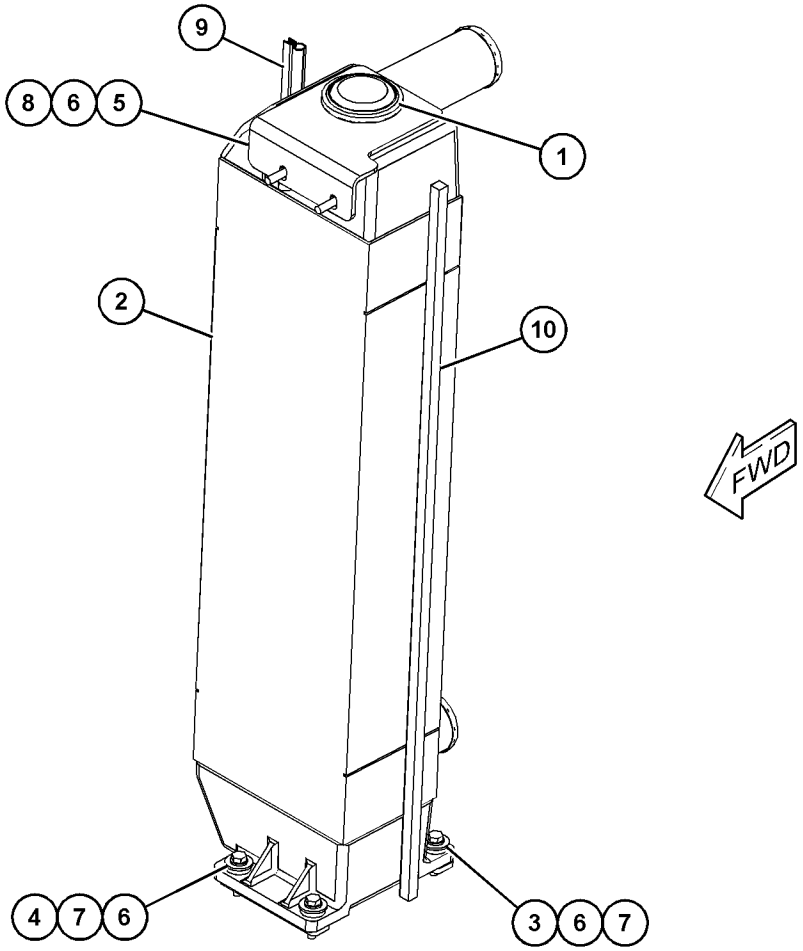

GRAPHIC #1 **<END>** g03852211

398-4338 AIR CLEANER AR

S/N: PPP1-UP; SSS1-UP; TTT1-UP

AN ATTACHMENT

SMCS-1051 **i06224443**

NOTE	PART NUMBER	QTY	PART NAME 1 2 3 4 5 6 (PRODUCT LEVEL)	SEE PAGE
Y	*418-2405*	1	AIR CLEANER GP	110
Y	*398-4349*	1	DUST EJECTOR GP	113

Y - SEPARATE ILLUSTRATION

<END>

398-4339 AIR CLEANER AR

S/N: SSS1-UP

PART OF 481-9508 DISTRIBUTION AR

AN ATTACHMENT

SMCS-1051 **i06222092**

NOTE	PART NUMBER	QTY	PART NAME 1 2 3 4 5 6 (PRODUCT LEVEL)	SEE PAGE
Y	*418-2407*	1	AIR CLEANER GP	111
Y	*398-4349*	1	DUST EJECTOR GP	113

Y - SEPARATE ILLUSTRATION

<END>

205-8674 AIR CLEANER GP

S/N: PPP1-UP; SSS1-UP; TTT1-UP
PART OF 418-2405, 418-2407, 446-5032 AIR CLEANER GP
AN ATTACHMENT

SMCS-1051, 1054

i05625169

NOTE	REF NO	GRAPHIC REF	PART NUMBER	QTY	PART NAME 1 2 3 4 5 6 (PRODUCT LEVEL)	SEE PAGE
	1	1	**6I-2501**	1	FILTER ELEMENT AS-AIR (PRIMARY, STANDARD EFFICIENCY)	
	2	1	**6I-2502**	1	FILTER ELEMENT AS-AIR (SECONDARY)	
	3	1	**6I-4464**	1	COVER AS-AIR CLEANER	
		1	**4P-5524**	1	SEAL-O-RING	
	4	1	**8N-4617**	2	KIT-AIR CLEANER CLAMP	
					(EACH INCLUDES CLIP AS & RIVET)	

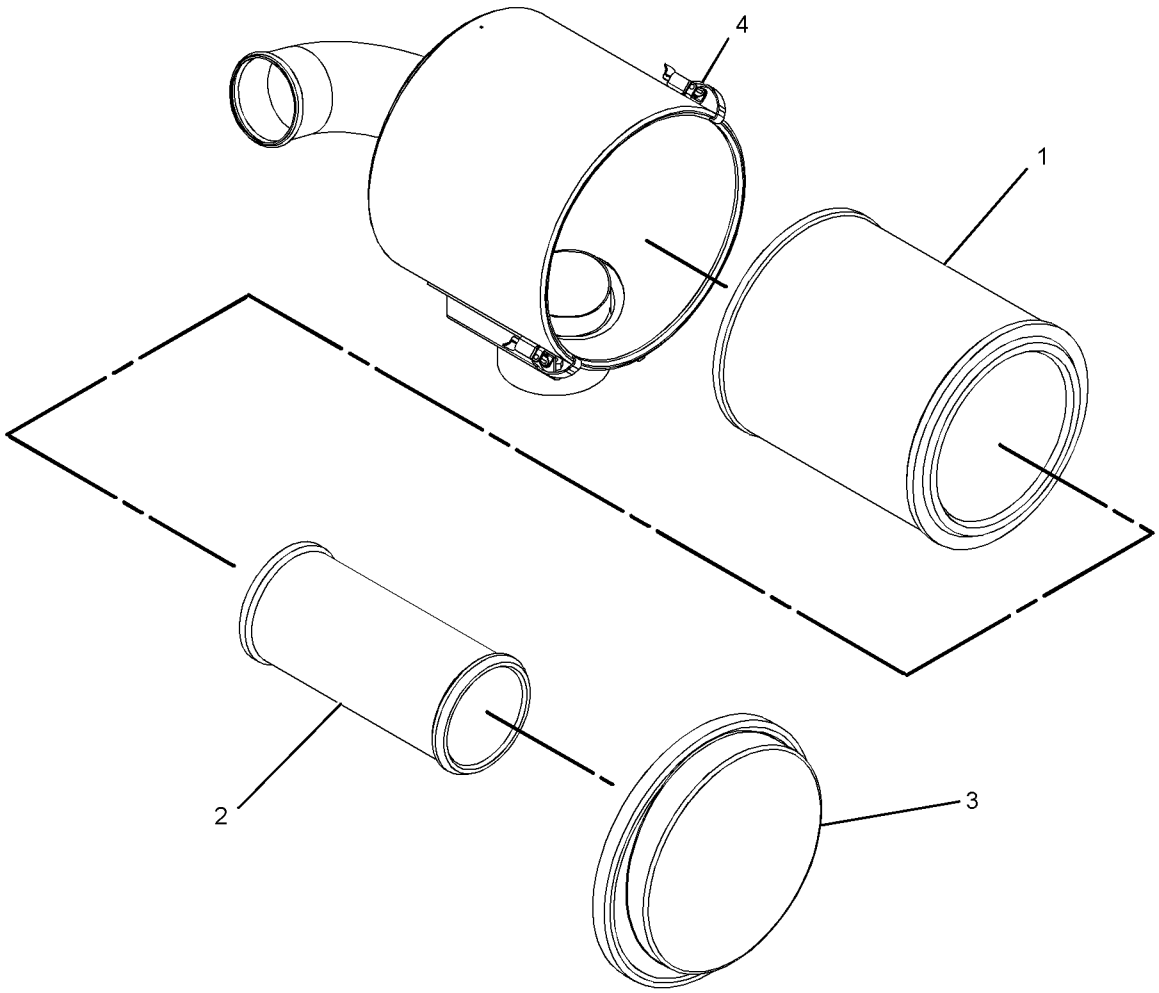

GRAPHIC #1

<END>

g01123031

418-2405 AIR CLEANER GP

S/N: PPP1-UP; SSS1-UP; TTT1-UP
PART OF 398-4338 AIR CLEANER AR
AN ATTACHMENT

SMCS-1051, 1054 **i06147000**

NOTE	REF NO	GRAPHIC REF	PART NUMBER	QTY	PART NAME 1 2 3 4 5 6 (PRODUCT LEVEL)	SEE PAGE
	1	1	**9S-6758**	1	PRECLEANER AS	
		1	**165-3929**	1	BOLT (3/8-16X1.5-IN)	
		1	**9S-8752**	1	NUT-FULL (3/8-16-THD)	
Y	2	1	**205-8674**	1	AIR CLEANER GP	109
	3	1	**423-5797**	1	BODY AS-PRECLEANER	
		1	**8H-2758**	1	CLAMP	
M		1	**8T-4185**	1	BOLT (M10X1.5X50-MM)	
M		1	**344-5675**	1	NUT (M10X1.5-THD)	
	4	1	**8T-4121**	8	WASHER-HARD (11X21X2.5-MM THK)	
M	5	1	**8T-4136**	12	BOLT (M10X1.5X25-MM)	
	6	1	**8T-7934**	4	WASHER-HARD (11X21X5-MM THK)	

M - METRIC PART
Y - SEPARATE ILLUSTRATION

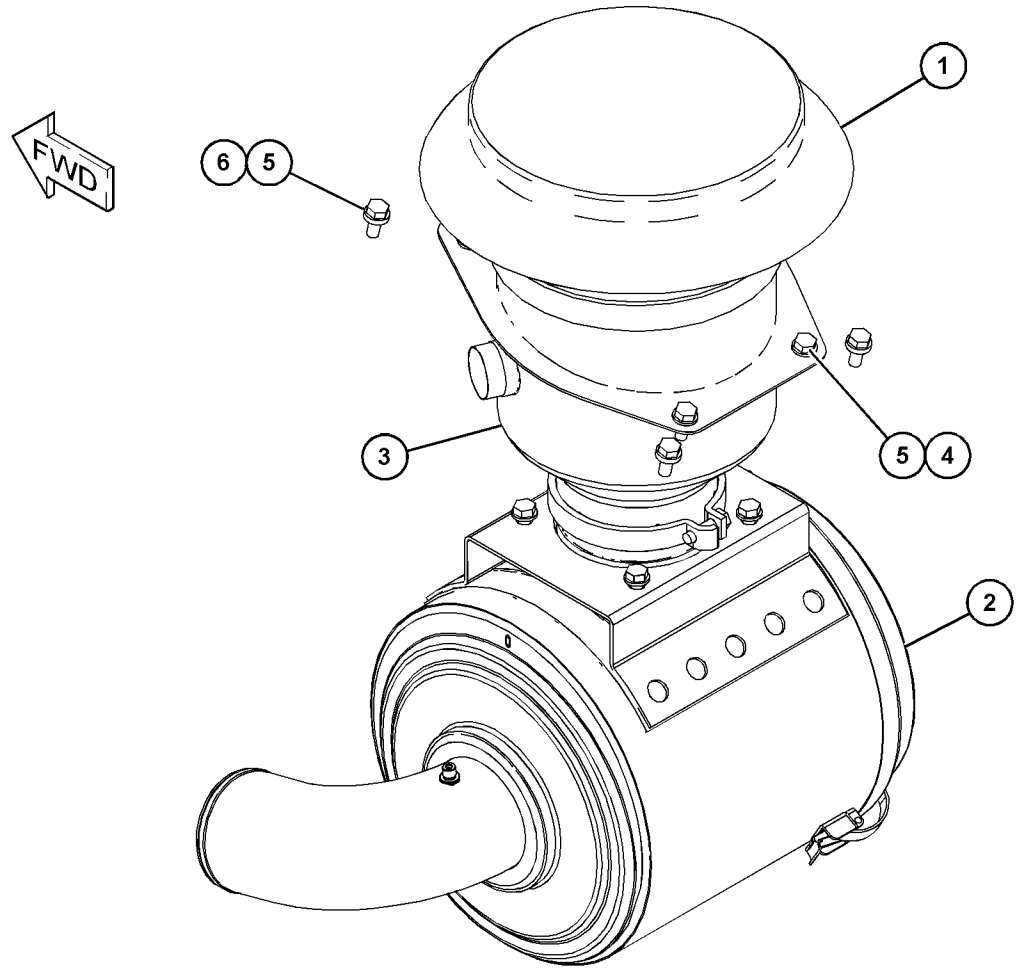

GRAPHIC #1 **<END>** g03832460

418-2407 AIR CLEANER GP

S/N: SSS1-UP
PART OF 398-4339 AIR CLEANER AR
AN ATTACHMENT

SMCS-1051, 1054 **i06146397**

NOTE	REF NO	GRAPHIC REF	PART NUMBER	QTY	PART NAME 1 2 3 4 5 6 (PRODUCT LEVEL)	SEE PAGE
	1	1	**7S-9396**	1	PRESCREENER AS	
		1	**165-3929**	1	BOLT (3/8-16X1.5-IN)	
		1	**6V-8801**	1	NUT (3/8-16-THD)	
Y	2	1	**205-8674**	1	AIR CLEANER GP	109
	3	1	**423-5797**	1	BODY AS-PRECLEANER	
		1	**8H-2758**	1	CLAMP	
M		1	**8T-4185**	1	BOLT (M10X1.5X50-MM)	
M		1	**344-5675**	1	NUT (M10X1.5-THD)	
	4	1	**8T-4121**	8	WASHER-HARD (11X21X2.5-MM THK)	
M	5	1	**8T-4136**	12	BOLT (M10X1.5X25-MM)	
	6	1	**8T-7934**	4	WASHER-HARD (11X21X5-MM THK)	

M - METRIC PART
Y - SEPARATE ILLUSTRATION

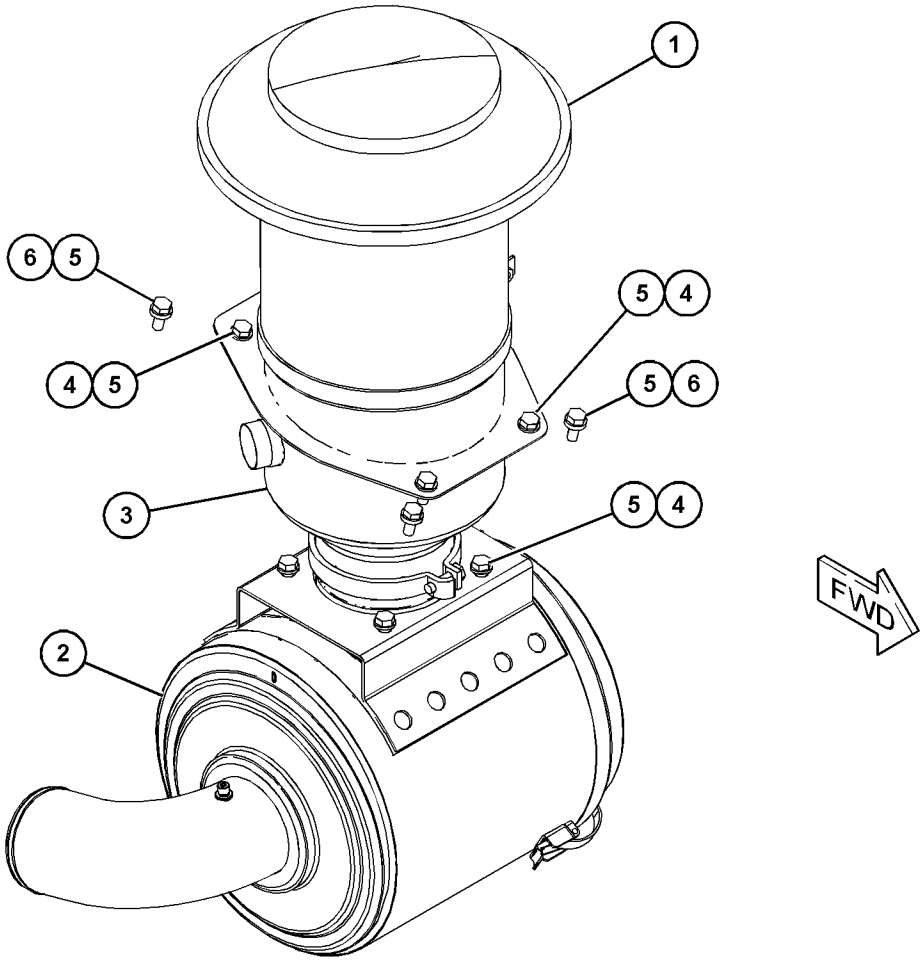

GRAPHIC #1 **<END>** g03831405

446-5032 AIR CLEANER GP

S/N: PPP1-UP; SSS1-UP; TTT1-UP
PART OF 418-2408 PRECLEANER GP
AN ATTACHMENT

SMCS-1051, 1054 **i06198971**

NOTE	REF NO	GRAPHIC REF	PART NUMBER	QTY	PART NAME 1 2 3 4 5 6 (PRODUCT LEVEL)	SEE PAGE
	1	1	**1W-4877**	1	HOSE-REDUCER	
Y	2	1	**205-8674**	1	AIR CLEANER GP	109
Y	3	1	*237-9251*	1	PRECLEANER GP (WITH SCREEN)	123
	4	1	**398-4381**	1	BASE AS	
	5	1	**5P-0599**	1	CLAMP-BAND	
	6	1	**5P-3860**	1	CLAMP-HOSE	
	7	1	**7X-7729**	8	WASHER (11X25X3-MM THK)	
	8	1	**8T-4121**	4	WASHER-HARD (11X21X2.5-MM THK)	
M	9	1	**8T-4136**	12	BOLT (M10X1.5X25-MM)	

M - METRIC PART
Y - SEPARATE ILLUSTRATION

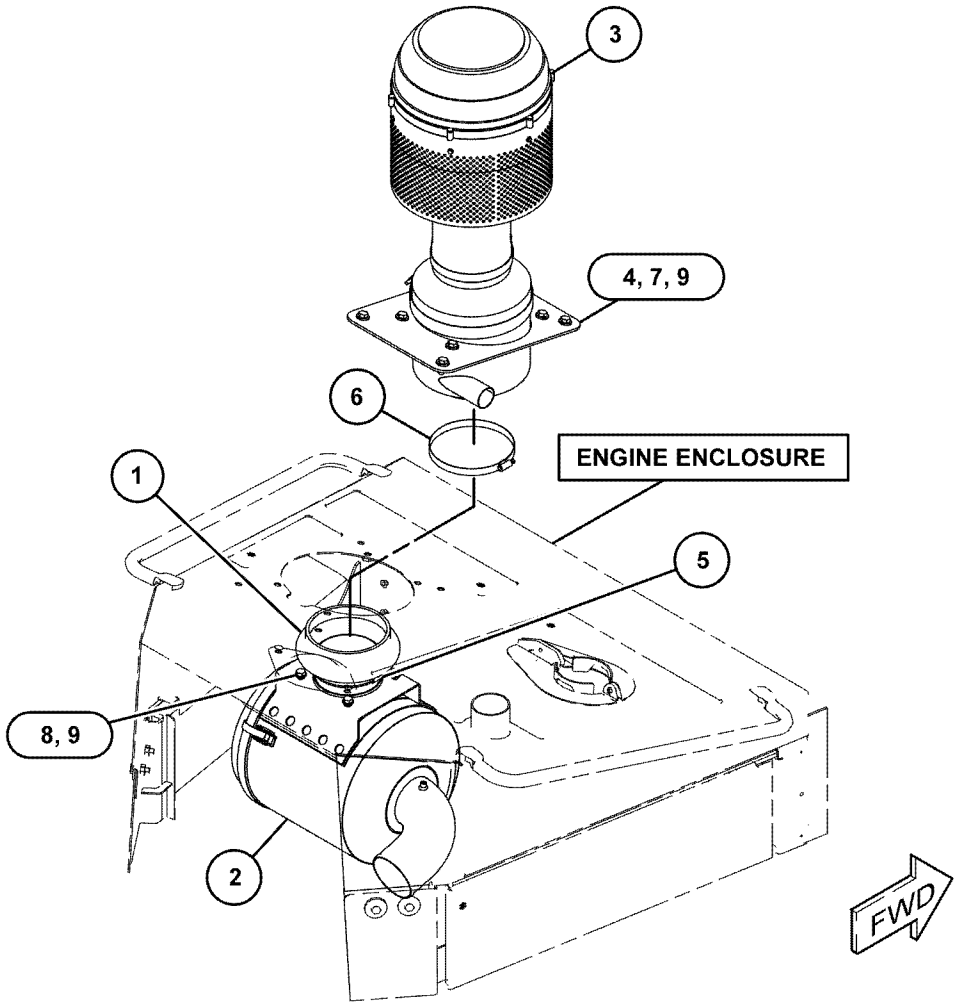

GRAPHIC #1 **<END>** g03853002

398-4349 DUST EJECTOR GP

S/N: PPP1-UP; SSS1-UP; TTT1-UP
PART OF 398-4338, 398-4339 AIR CLEANER AR
AN ATTACHMENT

SMCS-1068 **i06223329**

NOTE	REF NO	GRAPHIC REF	PART NUMBER	QTY	PART NAME 1 2 3 4 5 6 (PRODUCT LEVEL)	SEE PAGE
	1	1	**478-4186**	1	EJECTOR AS	
		1	**388-7012**	1	CLAMP-BENT BOLT	
	2	1	**9M-2904**	2	CLAMP-HOSE	
E	3	1	**5P-2817**		HOSE (42-CM)	

E - ORDER BY THE CENTIMETER

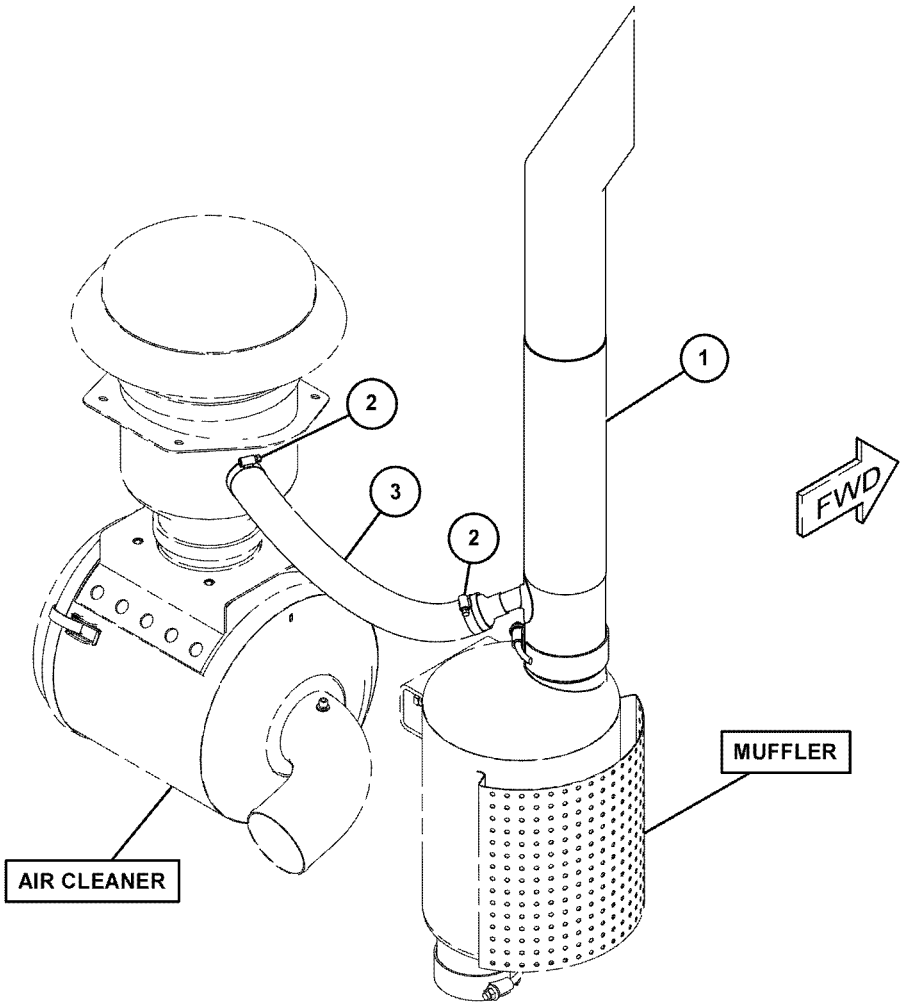

GRAPHIC #1 **<END>** g03862359

446-5031 DUST EJECTOR GP

S/N: PPP1-UP; SSS1-UP; TTT1-UP
PART OF 418-2408 PRECLEANER GP
AN ATTACHMENT

SMCS-1068 **i06224664**

NOTE	REF NO	GRAPHIC REF	PART NUMBER	QTY	PART NAME 1 2 3 4 5 6 (PRODUCT LEVEL)	SEE PAGE
	1	1	**127-8178**	1	VALVE AS-CHECK (EXHAUST)	
	2	1	**478-4186**	1	EJECTOR AS	
		1	**388-7012**	1	CLAMP-BENT BOLT	
	3	1	**091-9035**	1	SPACER (11X25X20-MM THK)	
	4	1	**7X-7729**	1	WASHER (11X25X3-MM THK)	
M	5	1	**8T-4186**	1	BOLT (M10X1.5X40-MM)	
	6	1	**9M-0164**	4	CLAMP-HOSE	
E	7	1	**5P-2817**		HOSE (8-CM)	
E	7A	1	**5P-2817**		HOSE (40-CM)	

E - ORDER BY THE CENTIMETER
M - METRIC PART

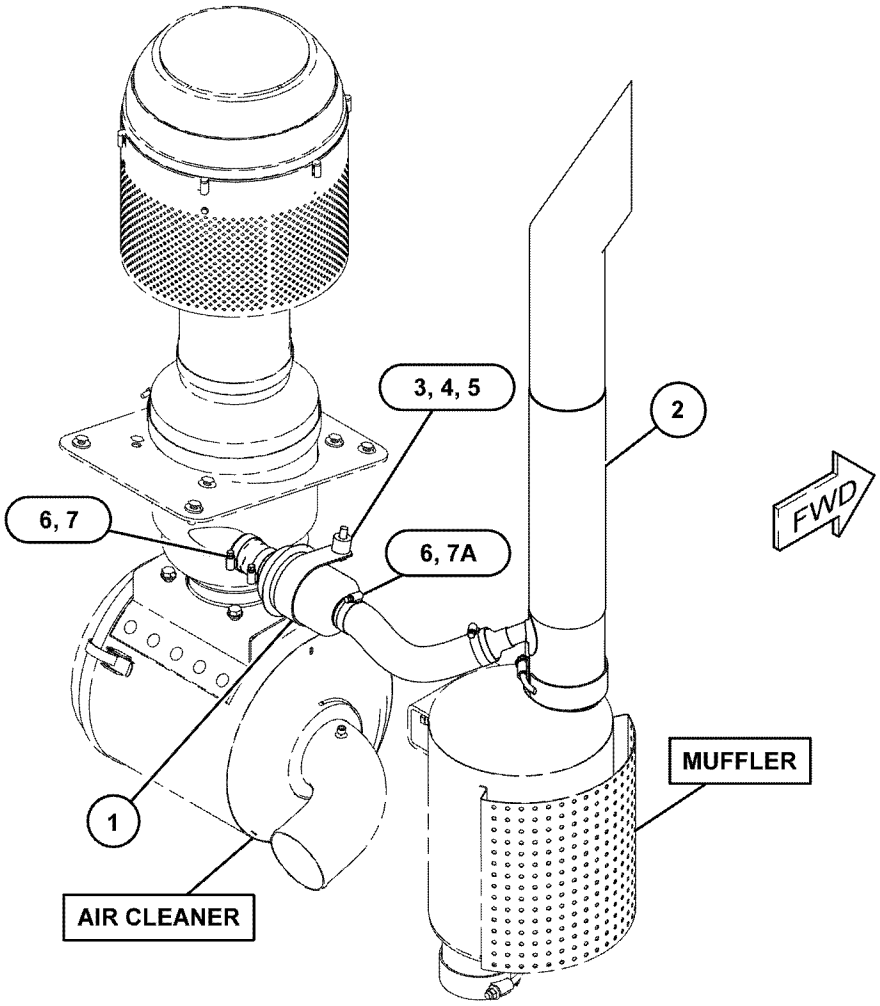

GRAPHIC #1 **<END>** g03862193

246-0596 ELBOW GP-AIR INLET

S/N: TXD1-UP

PART OF 420-1870, 420-1871, 423-8451, 423-8452, 423-8453, 423-8454 ENGINE AR-COMPLETE AN ATTACHMENT

SMCS-1087 **i05555267**

NOTE	REF NO	GRAPHIC REF	PART NUMBER	QTY	PART NAME 1 2 3 4 5 6 (PRODUCT LEVEL)	SEE PAGE
	1	1	**246-0597**	1	ELBOW-AIR INLET	
	2	1	**162-3148**	8	STUD (M8X1.25X62.75-MM)	
	3	1	**3E-4352**	2	WASHER-HARD (8.8X20.5X2.5-MM THK)	
	4	1	**9M-1974**	6	WASHER-HARD (8.8X16X2-MM THK)	
	5	1	*389-3708*	1	PLUG AS	
		1	**360-3679**	1	PLUG-CONNECTOR	
		1	**214-7568**	1	SEAL-O-RING	
BF			**1U-8846**		SEALANT-GASKET	

B - USE AS REQUIRED
F - NOT SHOWN

246-0596 **ELBOW GP-AIR INLET (*contd.*)** **i05555267**

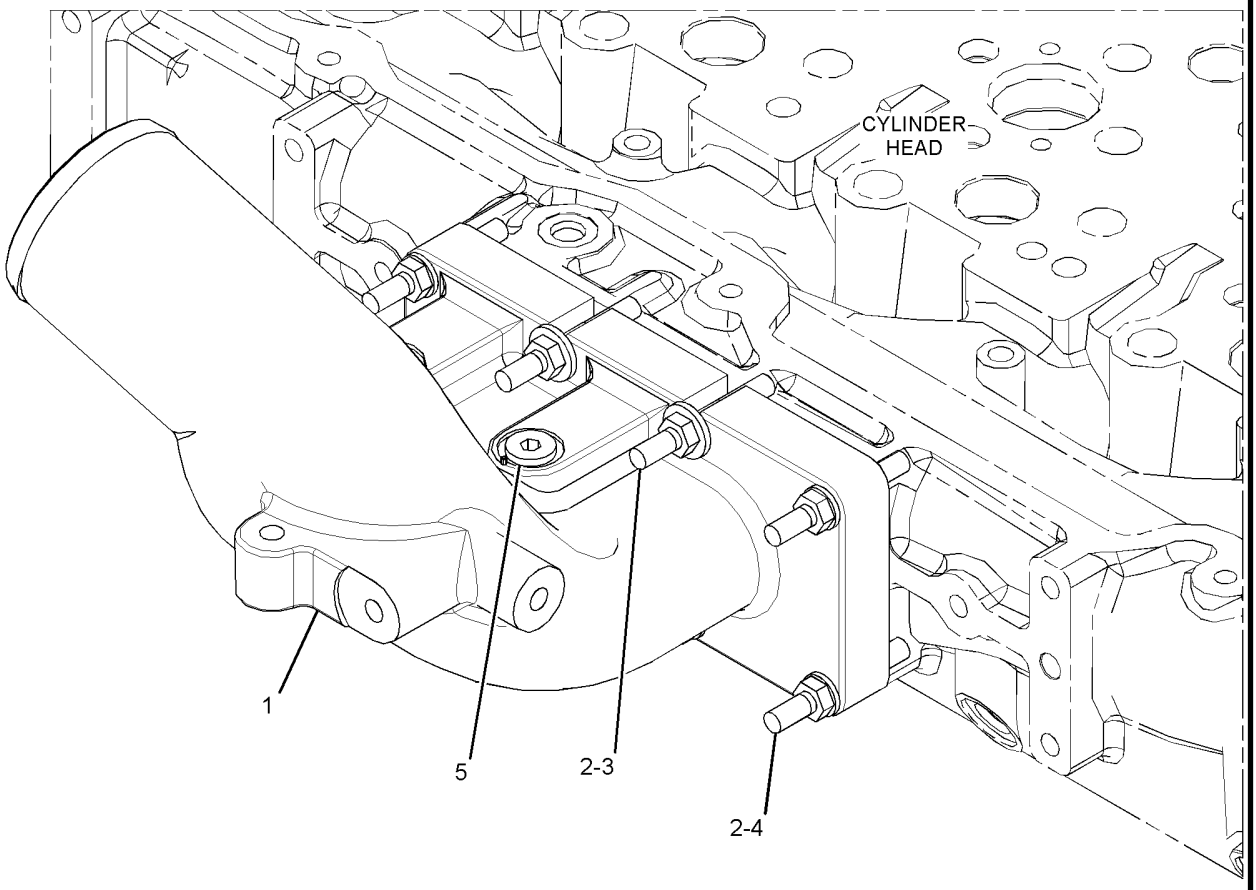

GRAPHIC #1 **<END>** g03282798

398-4351 LINES GP-AIR

S/N: PPP1-UP; SSS1-UP; TTT1-UP
PART OF 398-4308 INSTALLATION AR-ENGINE
AN ATTACHMENT

SMCS-1071 **i06147052**

NOTE	REF NO	GRAPHIC REF	PART NUMBER	QTY	PART NAME 1 2 3 4 5 6 (PRODUCT LEVEL)	SEE PAGE
	1	1	**1W-2431**	1	CLAMP-BAND	
	2	1	**6N-1558**	1	RING-SEAL	
	3	1	**8T-4986**	2	CLAMP-HOSE	
	4	1	**169-3883**	1	COUPLING	
	5	1	**214-1645**	1	ELBOW-EXHAUST	
	6	1	**398-4358**	1	HOSE-AIR	
M	7	1	**6V-4249**	3	BOLT (M10X1.5X50-MM)	
	8	1	**6V-5839**	3	WASHER (11X21X2.5-MM THK)	

M - METRIC PART

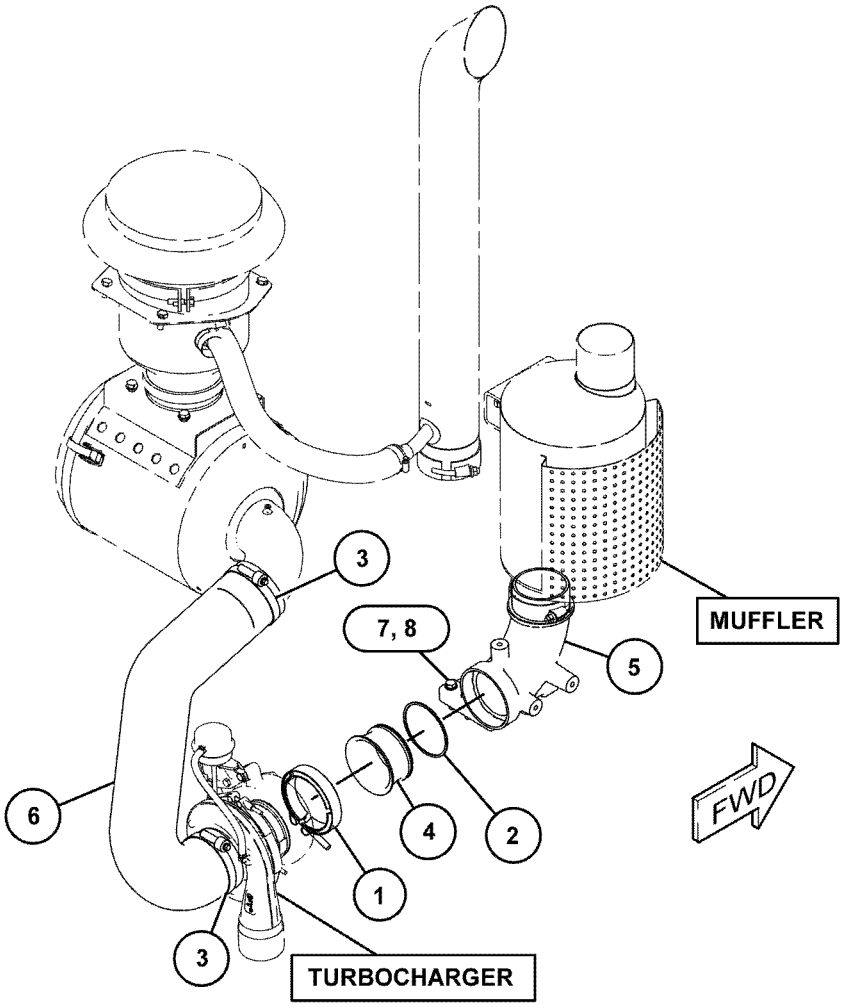

GRAPHIC #1

<END>

g03837007

418-2404 LINES GP-AIR–ATAAC

S/N: PPP1-UP; SSS1-UP; TTT1-UP
PART OF 398-4287 INSTALLATION AR-ENGINE
ALSO AN ATTACHMENT

SMCS-1071 **i06216567**

NOTE	REF NO	GRAPHIC REF	PART NUMBER	QTY	PART NAME 1 2 3 4 5 6 (PRODUCT LEVEL)	SEE PAGE
	1	1	**201-1260**	2	HOSE	
	2	1	**250-6052**	1	HOSE	
	3	1	**250-7533**	1	HOSE	
	4	1	**251-7214**	2	HOSE	
	5	1	**426-5009**	1	TUBE AS	
	6	1	**476-0066**	1	BRACKET AS	
	7	1	**476-0072**	1	TUBE AS	
	8	1	**208-6055**	8	CLAMP	
	9	1	**7X-7729**	4	WASHER (11X25X3-MM THK)	
	10	1	**8T-4121**	2	WASHER-HARD (11X21X2.5-MM THK)	
M	11	1	**8T-4133**	2	NUT (M10X1.5-THD)	
M	12	1	**8T-4196**	4	BOLT (M10X1.5X35-MM)	
	13	1	**9X-2646**	4	CLIP (SLOT)	
	14	1	**9X-2647**	4	CLIP (TAB)	

M - METRIC PART

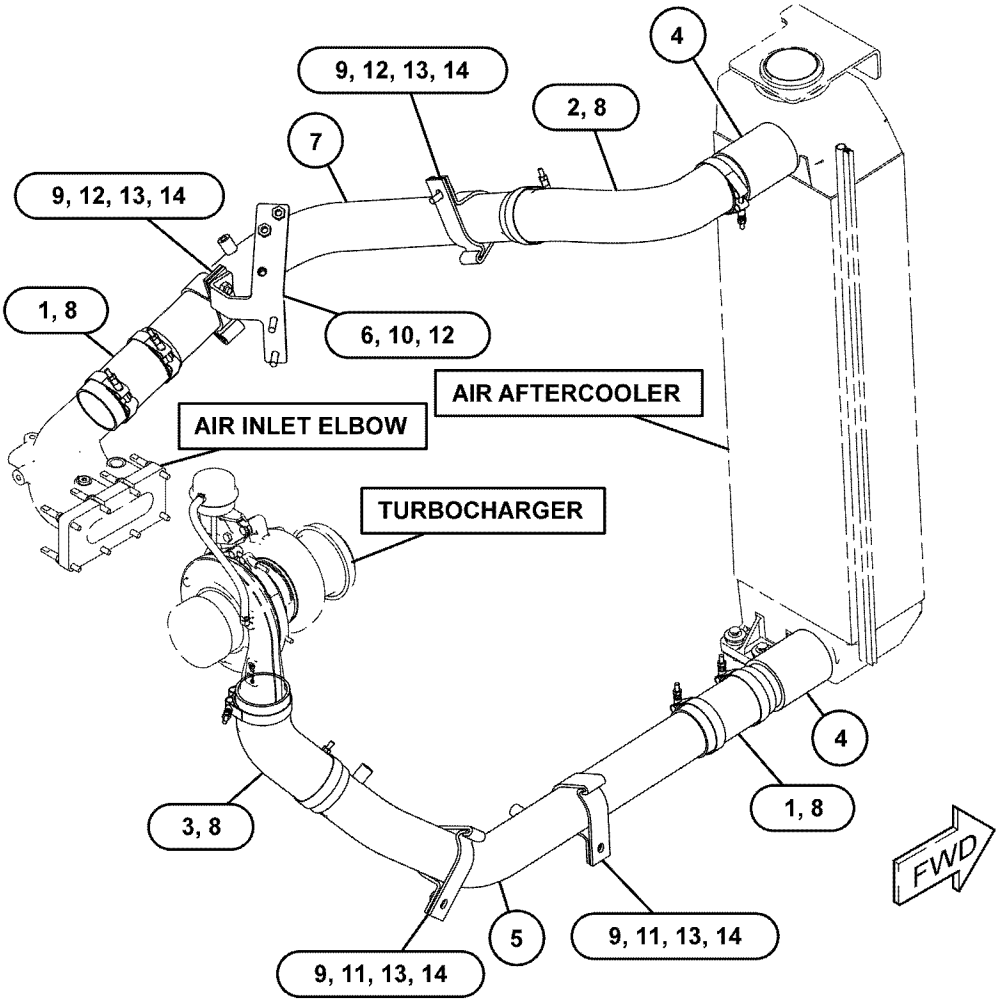

GRAPHIC #1 **<END>** g03858398

426-5018 LINES GP-AIR

S/N: PPP1-UP; TTT1-UP
PART OF 398-4309 INSTALLATION AR-ENGINE
AN ATTACHMENT

SMCS-1071 **i06222071**

NOTE	REF NO	GRAPHIC REF	PART NUMBER	QTY	PART NAME 1 2 3 4 5 6 (PRODUCT LEVEL)	SEE PAGE
	1	1	**1W-2431**	1	CLAMP-BAND	
	2	1	**6N-1558**	1	RING-SEAL	
	3	1	**8T-4986**	2	CLAMP-HOSE	
	4	1	**169-3883**	1	COUPLING	
	5	1	**237-2708**	1	ELBOW-EXHAUST	
	6	1	**398-4358**	1	HOSE-AIR	
M	7	1	**6V-4249**	1	BOLT (M10X1.5X50-MM)	
	8	1	**6V-5839**	1	WASHER (11X21X2.5-MM THK)	

M - METRIC PART

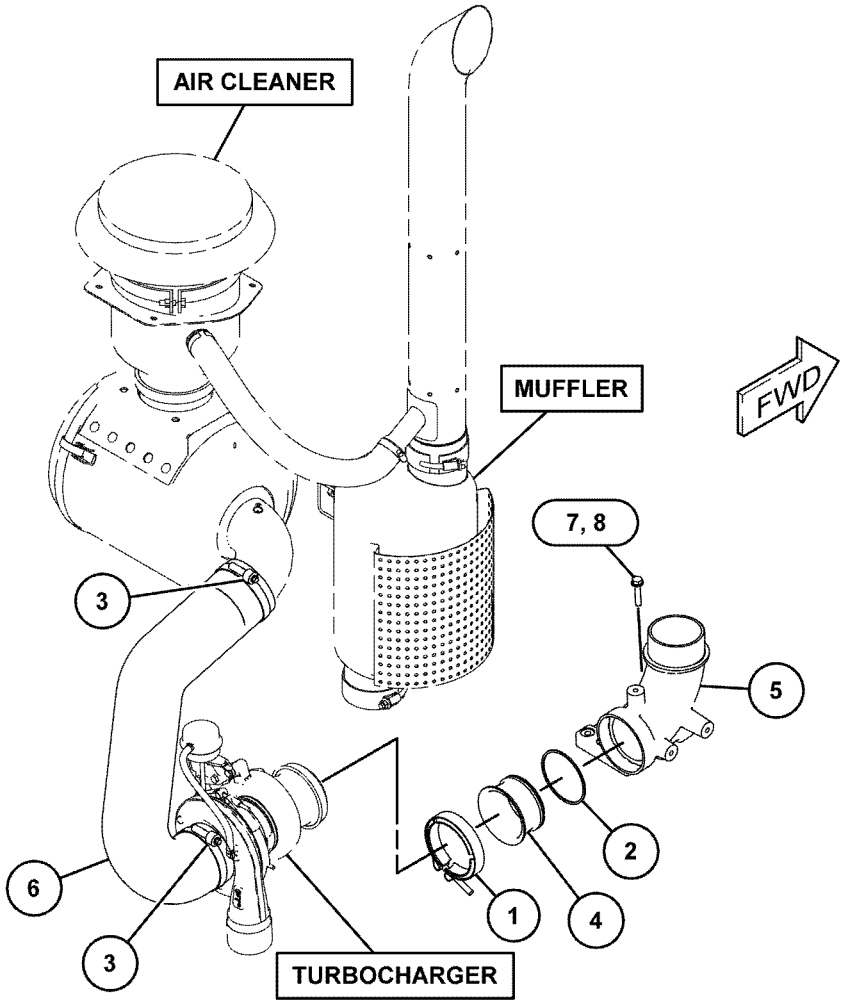

GRAPHIC #1 **<END>** g03862381

165-4445 MANIFOLD GP-EXHAUST

S/N: TXD1-UP

PART OF 420-1870, 420-1871, 423-8451, 423-8452, 423-8453, 423-8454 ENGINE AR-COMPLETE AN ATTACHMENT

SMCS-1059 **i05555446**

NOTE	REF NO	GRAPHIC REF	PART NUMBER	QTY	PART NAME 1 2 3 4 5 6 (PRODUCT LEVEL)	SEE PAGE
M	1	1	**3E-8017**	12	LOCKNUT (M10X1.5-MM THD)	
	2	1	**161-3398**	1	MANIFOLD-EXHAUST	
	3	1	**161-3411**	6	GASKET	
	4	1	**167-0172**	1	MANIFOLD-EXHAUST	
	5	1	**203-7775**	1	MANIFOLD-EXHAUST	
M	6	1	**116-3715**	12	STUD-TAPERLOCK (M10X1.5X85-MM)	
	7	1	**4P-4369**	6	SPACER (12X19X23.5-MM THK)	
	8	1	**6V-5839**	12	WASHER (11X21X2.5-MM THK)	
M	9	1	**8T-7044**	4	STUD-TAPERLOCK (M10X1.5X40-MM)	

M - METRIC PART

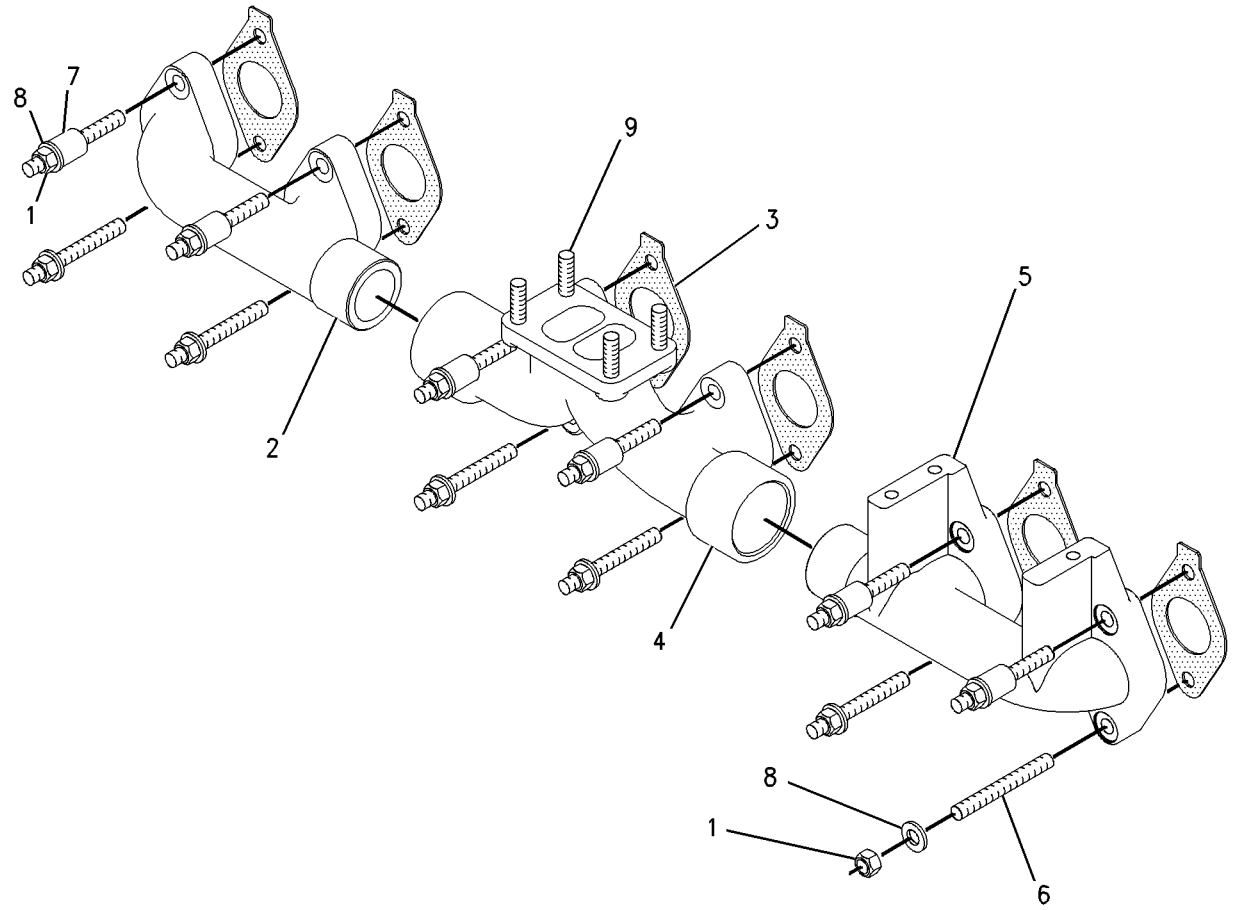

GRAPHIC #1 **<END>** g00741421

418-2403 MUFFLER GP

S/N: PPP1-UP; SSS1-UP; TTT1-UP
PART OF 398-4305, 398-4307 ENCLOSURE GP-ENGINE
AN ATTACHMENT

SMCS-1062 **i06203750**

NOTE	REF NO	GRAPHIC REF	PART NUMBER	QTY	PART NAME 1 2 3 4 5 6 (PRODUCT LEVEL)	SEE PAGE
	1	1	**226-5611**	1	MUFFLER AS	
		1	**388-7012**	1	CLAMP-BENT BOLT	
	2	1	**446-5057**	1	BRACKET AS	
		1	**7T-1099**	4	LINK	
M		1	**8T-3490**	2	NUT-WELD (M10X1.5-THD)	
	3	1	**7X-7729**	6	WASHER (11X25X3-MM THK)	
M	4	1	**8T-4195**	6	BOLT (M10X1.5X30-MM)	

M - METRIC PART

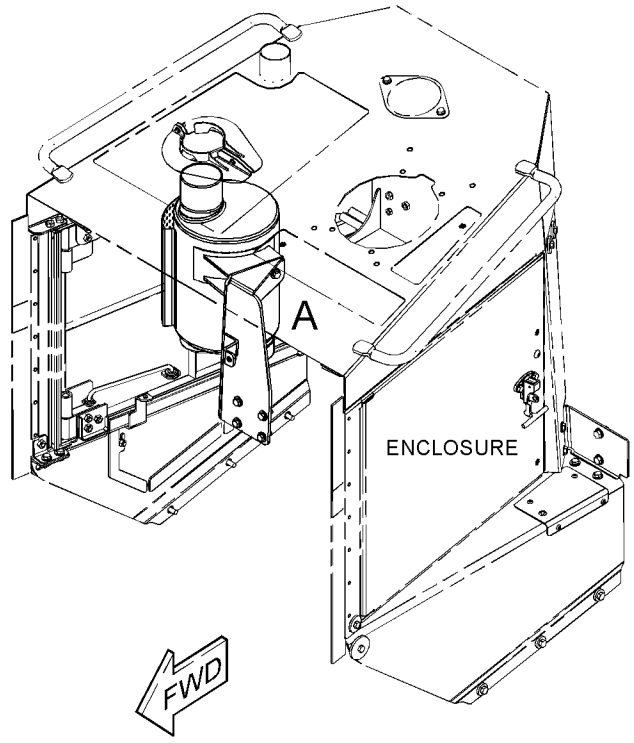

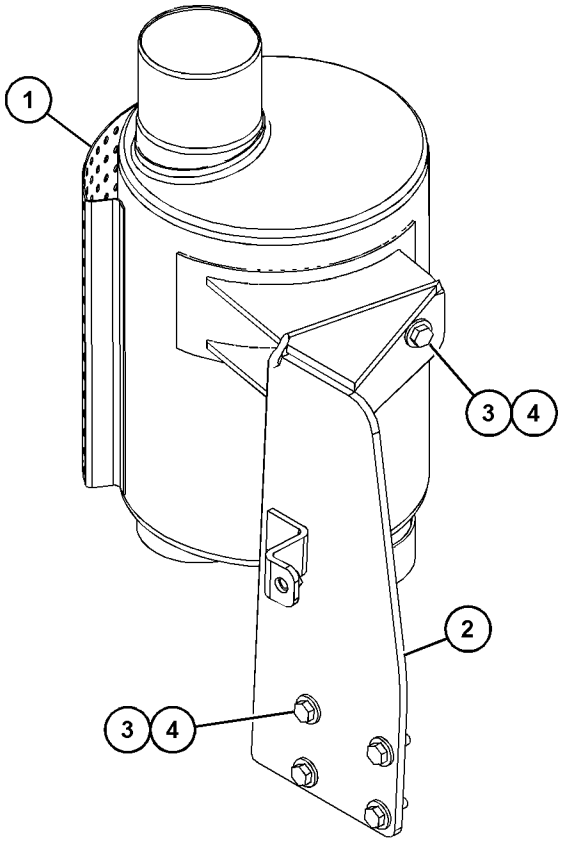

VIEW OF AREA A

GRAPHIC #1 **<END>** g03853432

446-5050 MUFFLER GP

S/N: PPP1-UP; SSS1-UP; TTT1-UP
PART OF 398-4306 ENCLOSURE AR
AN ATTACHMENT

SMCS-1062 **i06225690**

NOTE	REF NO	GRAPHIC REF	PART NUMBER	QTY	PART NAME 1 2 3 4 5 6 (PRODUCT LEVEL)	SEE PAGE
	1	1	**229-9601**	1	MUFFLER AS	
	2	1	**308-7112**	1	CLAMP-WIRE	
	3	1	**446-5057**	1	BRACKET AS	
		1	**7T-1099**	4	LINK	
M		1	**8T-3490**	2	NUT-WELD (M10X1.5-THD)	
	4	1	**7X-7729**	6	WASHER (11X25X3-MM THK)	
M	5	1	**8T-4195**	6	BOLT (M10X1.5X30-MM)	

M - METRIC PART

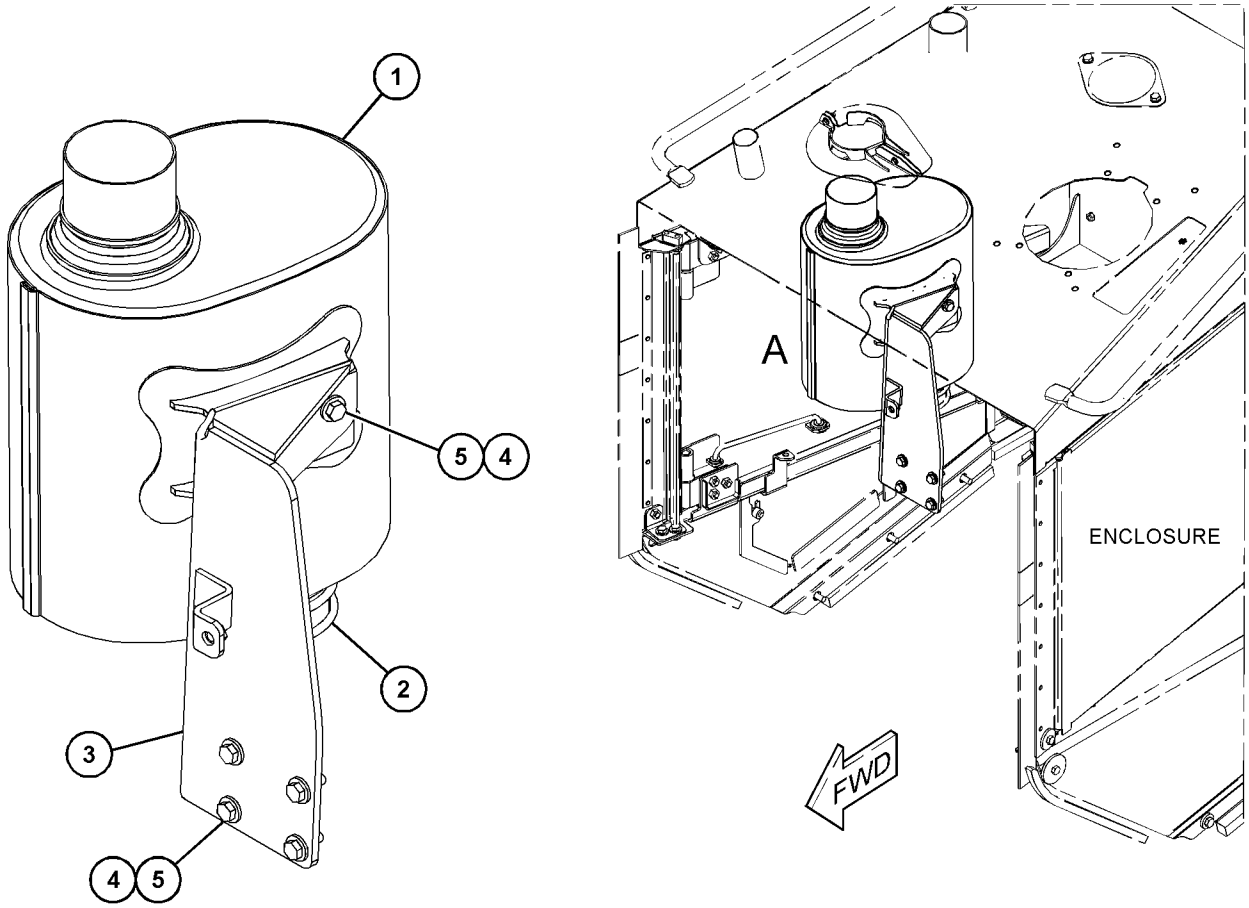

VIEW OF AREA A

GRAPHIC #1 **<END>** g03862907

237-9251 PRECLEANER GP—WITH SCREEN

S/N: PPP1-UP; SSS1-UP; TTT1-UP
PART OF 446-5032 AIR CLEANER GP
AN ATTACHMENT

SMCS-1055 **i05625173**

NOTE	REF NO	GRAPHIC REF	PART NUMBER	QTY	PART NAME 1 2 3 4 5 6 (PRODUCT LEVEL)	SEE PAGE
	1	1	**130-3280**	1	PRECLEANER AS	
	1A	1	**174-5415**	1	CLAMP	
HZ	2	1		1	PRESCREEN	
	3	1	**145-6669**	6	SCREW-SELF-TAPPING (10X0.75-IN)	
J	4	1	**237-9252**	1	TUBE AS	
J	5	1	**237-9255**	1	TUBE AS	
					AVAILABLE REPAIR KIT(S):	
H			**153-1277**	1	KIT-SCREEN (PRECLEANER)	
					(INCLUDES PRESCREEN, DAMPER, CLAMP, SCREWS, & TUBE)	
J			**237-9254**	1	KIT-PRECLEANER (TURBINE)	
					(INCLUDES VALVE AS, TUBE, CLAMPS, HOSE, TUBE ASSEMBLIES, WASHERS & BOLTS)	

H - PART MARKED H INCLUDED IN KIT MARKED H
J - PART MARKED J INCLUDED IN KIT MARKED J
Z - NOT SERVICED SEPARATELY

237-9251 **PRECLEANER GP (*contd.*)** **i05625173**

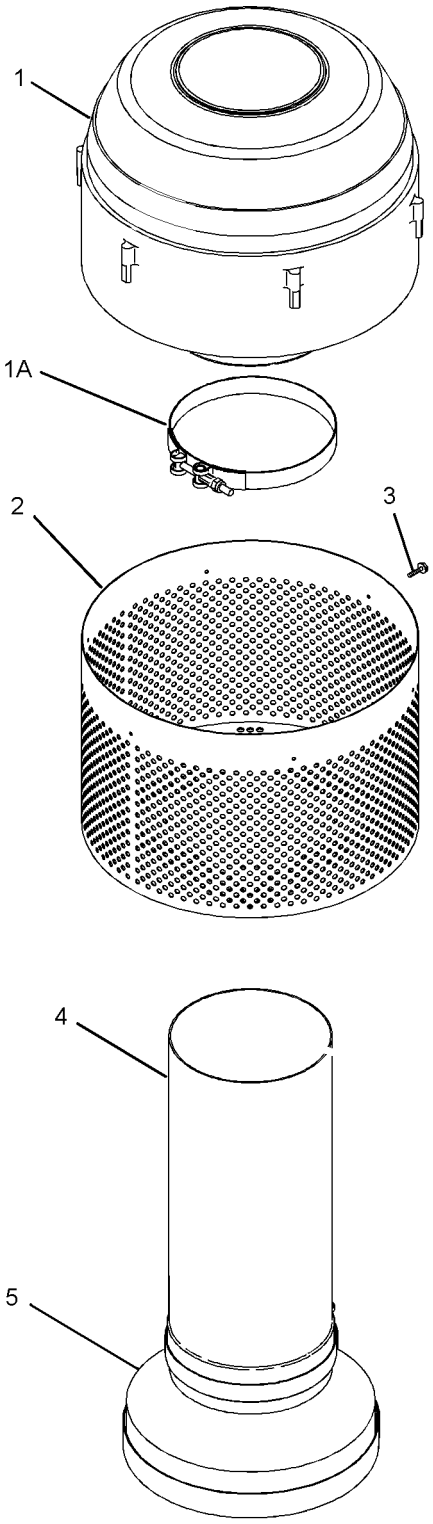

GRAPHIC #1 **<END>** g01146470

418-2408 PRECLEANER GP—WITH SCREEN

S/N: PPP1-UP; SSS1-UP; TTT1-UP

AN ATTACHMENT

SMCS-1055 **i06224611**

NOTE	PART NUMBER	QTY	PART NAME 1 2 3 4 5 6 (PRODUCT LEVEL)	SEE PAGE
Y	*446-5032*	1	AIR CLEANER GP	112
Y	*446-5031*	1	DUST EJECTOR GP	114

Y - SEPARATE ILLUSTRATION

<END>

264-7963 SHIELD GP-HEAT

S/N: PPP1-UP; TTT1-UP
PART OF 398-4309 INSTALLATION AR-ENGINE
AN ATTACHMENT

SMCS-1067 **i06221665**

NOTE	REF NO	GRAPHIC REF	PART NUMBER	QTY	PART NAME 1 2 3 4 5 6 (PRODUCT LEVEL)	SEE PAGE
	1	1	**212-4936**	1	SHIELD (MANIFOLD)	
	2	1	**264-7964**	1	SHIELD (TURBOCHARGER)	
	3	1	**132-5789**	1	CLIP	
	4	1	**4P-7428**	1	CLIP	
	5	1	**5P-4116**	4	WASHER-HARD (8.8X20.5X2-MM THK)	
M	6	1	**8T-4189**	2	BOLT (M8X1.25X20-MM)	

M - METRIC PART

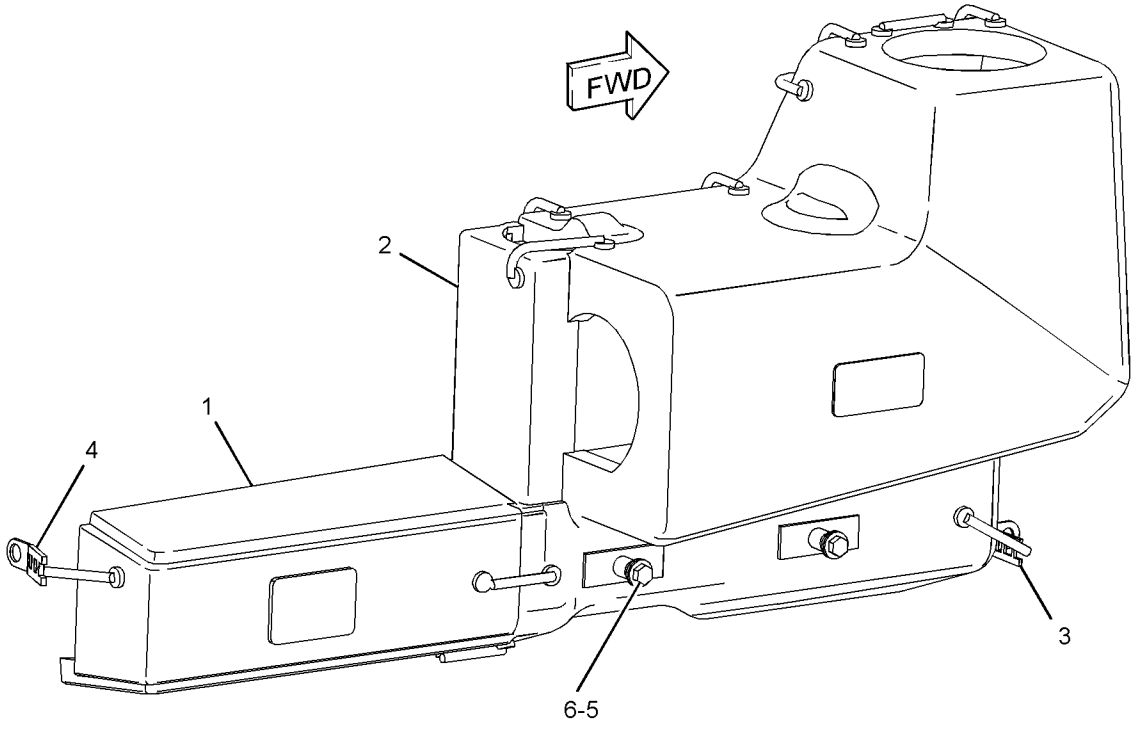

GRAPHIC #1 **<END>** g02337378

426-5000 SHIELD GP-HEAT

S/N: PPP1-UP; SSS1-UP; TTT1-UP
PART OF 398-4308 INSTALLATION AR-ENGINE
AN ATTACHMENT

SMCS-1067 **i06221589**

NOTE	REF NO	GRAPHIC REF	PART NUMBER	QTY	PART NAME 1 2 3 4 5 6 (PRODUCT LEVEL)	SEE PAGE
	1	1	**426-5011**	1	SHIELD AS-HEAT	
M		1	**8T-3490**	1	NUT-WELD (M10X1.5-THD)	
	2	1	**7X-7729**	3	WASHER (11X25X3-MM THK)	
M	3	1	**8T-4136**	3	BOLT (M10X1.5X25-MM)	

M - METRIC PART

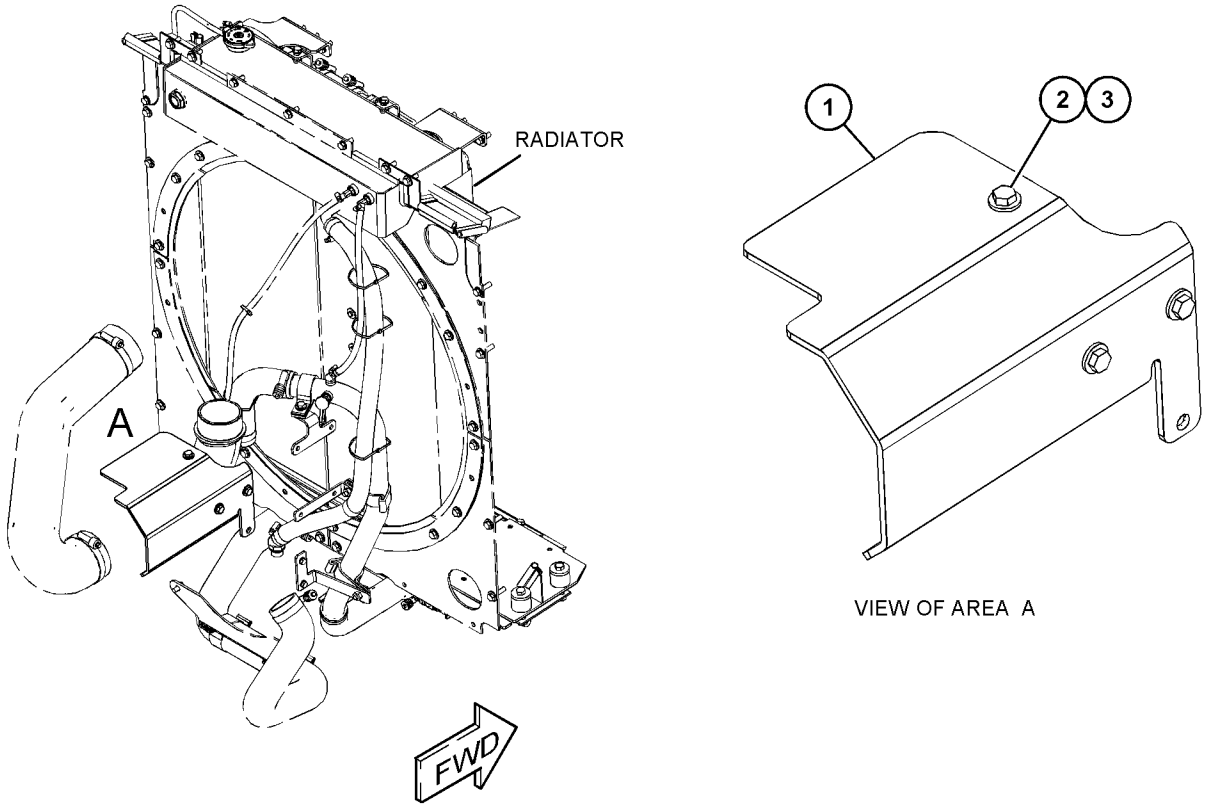

GRAPHIC #1 **<END>** g03862276

229-2913 TURBOCHARGER GP*R

S/N: TXD1-UP

PART OF 237-2041 TURBOCHARGER GP

AN ATTACHMENT

SMCS-1052, 1053 **i06019454**

NOTE	REF NO	GRAPHIC REF	PART NUMBER	QTY	PART NAME 1 2 3 4 5 6 (PRODUCT LEVEL)	SEE PAGE
	1	1	**5P-4536**	1	ELBOW	
M	2	1	**7C-6670**	4	BOLT (M8X1.25X12.5-MM)	
	3	1	**7C-6672**	2	PLATE-CLAMP (TURBINE)	
	4	1	**158-6072**	1	CLAMP AS (COMPRESSOR)	
	5	1	**161-6963**	2	CLAMP	
E	6	1	**242-3360**		HOSE (25-CM)	
	7	1	**229-2914**	1	CARTRIDGE GP-TURBOCHARGER	

E - ORDER BY THE CENTIMETER
M - METRIC PART

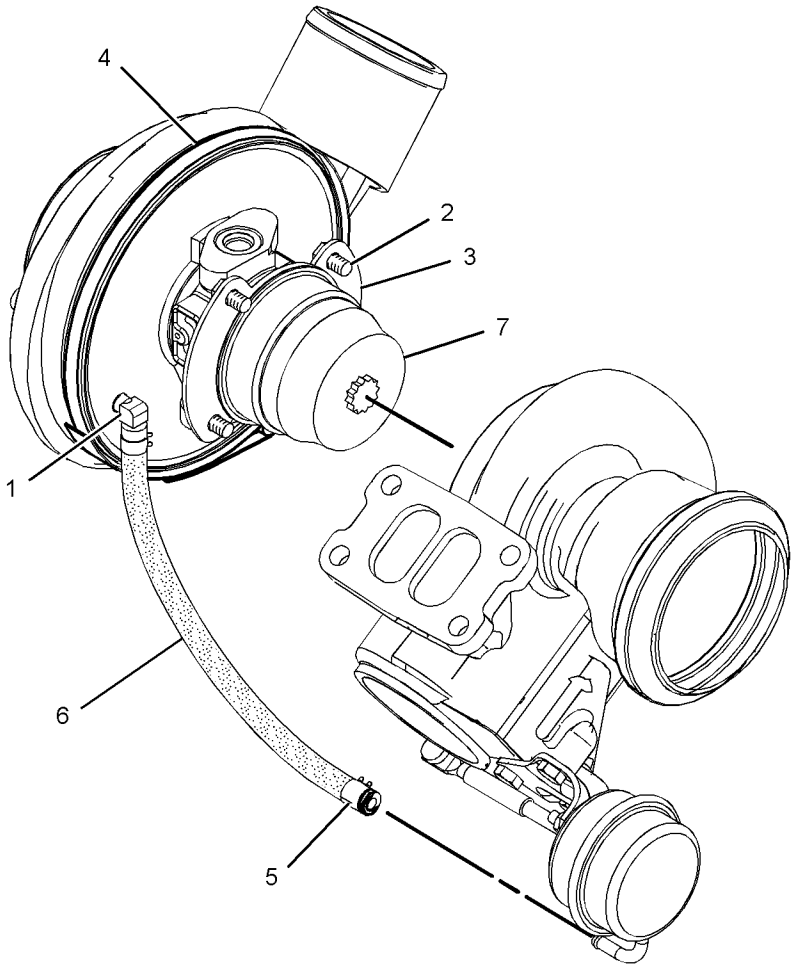

GRAPHIC #1 **<END>** g01250949

237-2041 TURBOCHARGER GP

S/N: TXD1-UP
PART OF 423-8451, 423-8454 ENGINE AR-COMPLETE
AN ATTACHMENT

SMCS-1052, 1053

i06122444

NOTE	REF NO	GRAPHIC REF	PART NUMBER	QTY	PART NAME 1 2 3 4 5 6 (PRODUCT LEVEL)	SEE PAGE
YR	1	1	**229-2913**	1	TURBOCHARGER GP	128
M	2	1	**3E-8017**	4	LOCKNUT (M10X1.5-THD)	
	3	1	**7C-7431**	1	GASKET	

M - METRIC PART
R - REMFG PART MAY BE AVAILABLE
Y - SEPARATE ILLUSTRATION

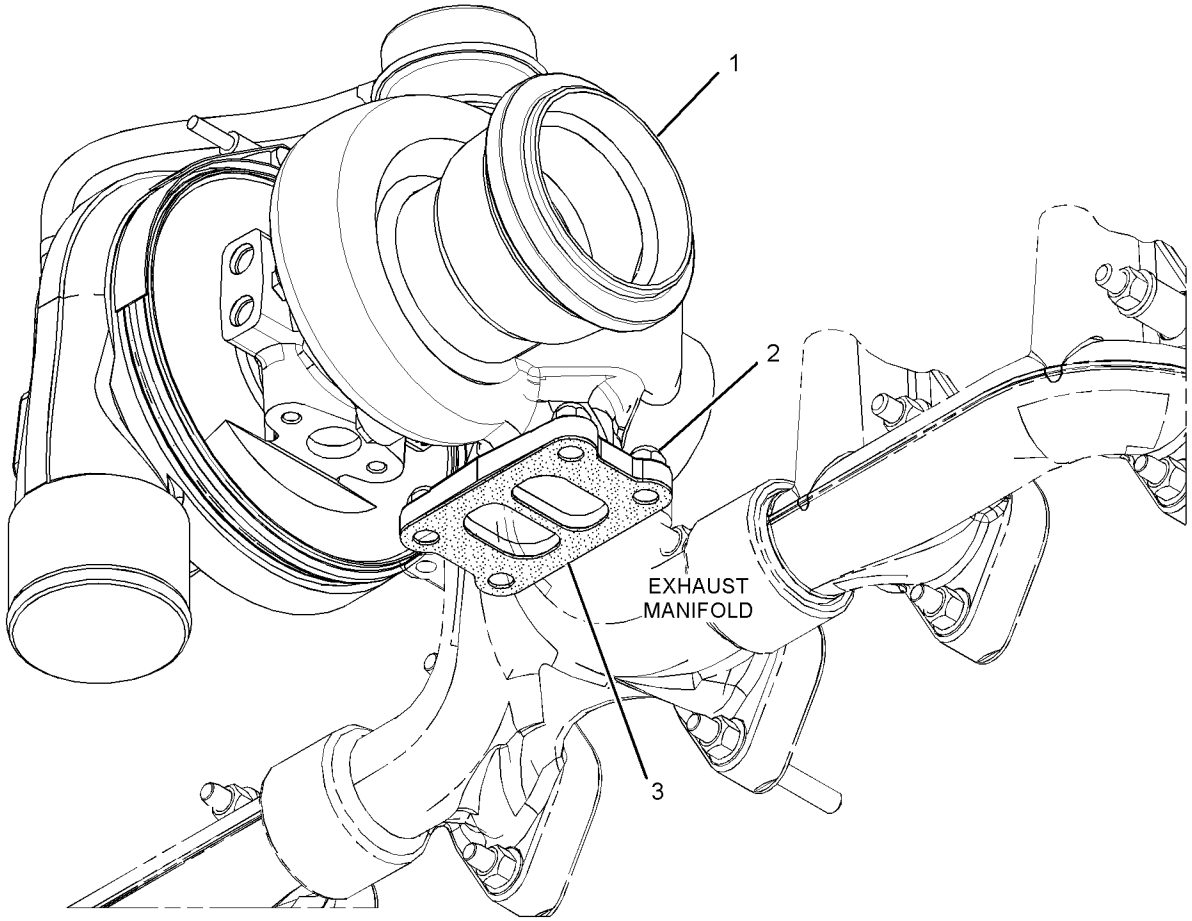

GRAPHIC #1

<END>

g02797320

252-5165 TURBOCHARGER GP*R

S/N: TXD1-UP

PART OF 262-5901 TURBOCHARGER GP

AN ATTACHMENT

SMCS-1052, 1053

i05643946

NOTE	REF NO	GRAPHIC REF	PART NUMBER	QTY	PART NAME 1 2 3 4 5 6 (PRODUCT LEVEL)	SEE PAGE
	1	1	**137-1602**	1	CLAMP AS (TURBINE)	
	2	1	**158-6072**	1	CLAMP AS (COMPRESSOR)	
	3	1	**161-6963**	2	CLAMP	
R	4	1	**262-2870**	1	CARTRIDGE GP-TURBOCHARGER	
E	5	1	**242-3360**		HOSE (25-CM)	

E - ORDER BY THE CENTIMETER
R - REMFG PART MAY BE AVAILABLE

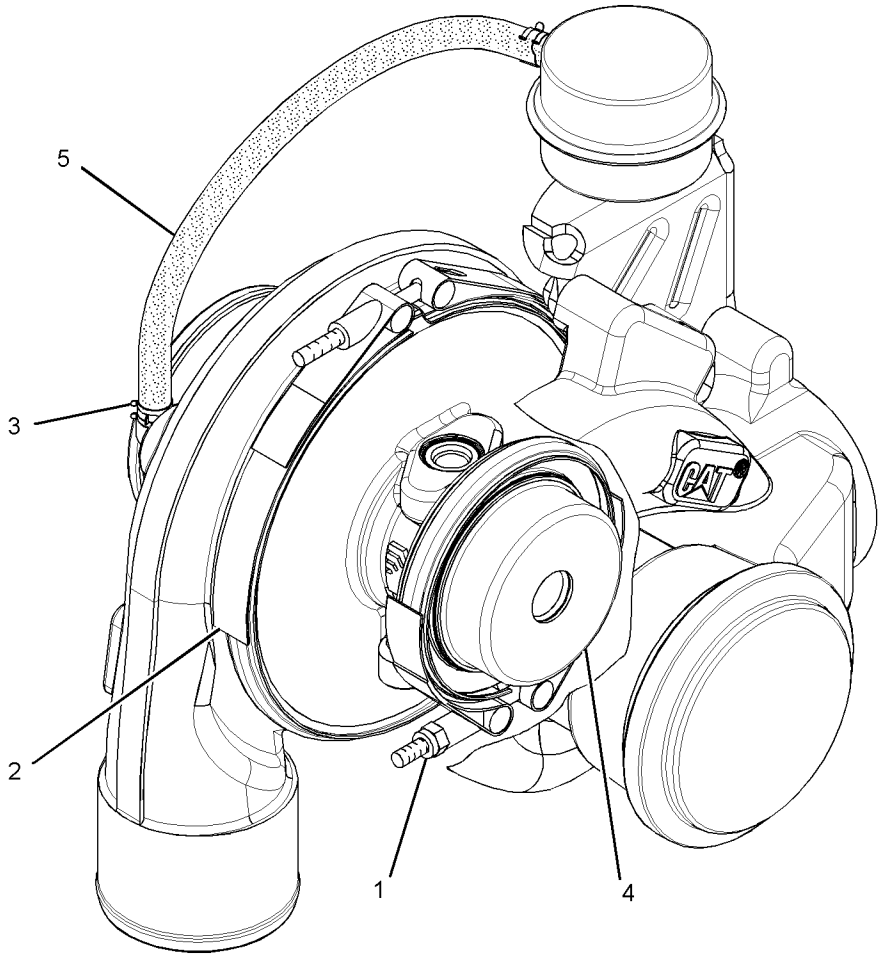

GRAPHIC #1

<END>

g01526440

262-5901 TURBOCHARGER GP

S/N: TXD1-UP

PART OF 420-1870, 420-1871, 423-8452, 423-8453 ENGINE AR-COMPLETE AN ATTACHMENT

SMCS-1052, 1053

i05555474

NOTE	REF NO	GRAPHIC REF	PART NUMBER	QTY	PART NAME 1 2 3 4 5 6 (PRODUCT LEVEL)	SEE PAGE
	1	1	**7C-7431**	1	GASKET	
YR	2	1	**252-5165**	1	TURBOCHARGER GP	130
M	3	1	**3E-8017**	4	LOCKNUT (M10X1.5-THD)	

M - METRIC PART
R - REMFG PART MAY BE AVAILABLE
Y - SEPARATE ILLUSTRATION

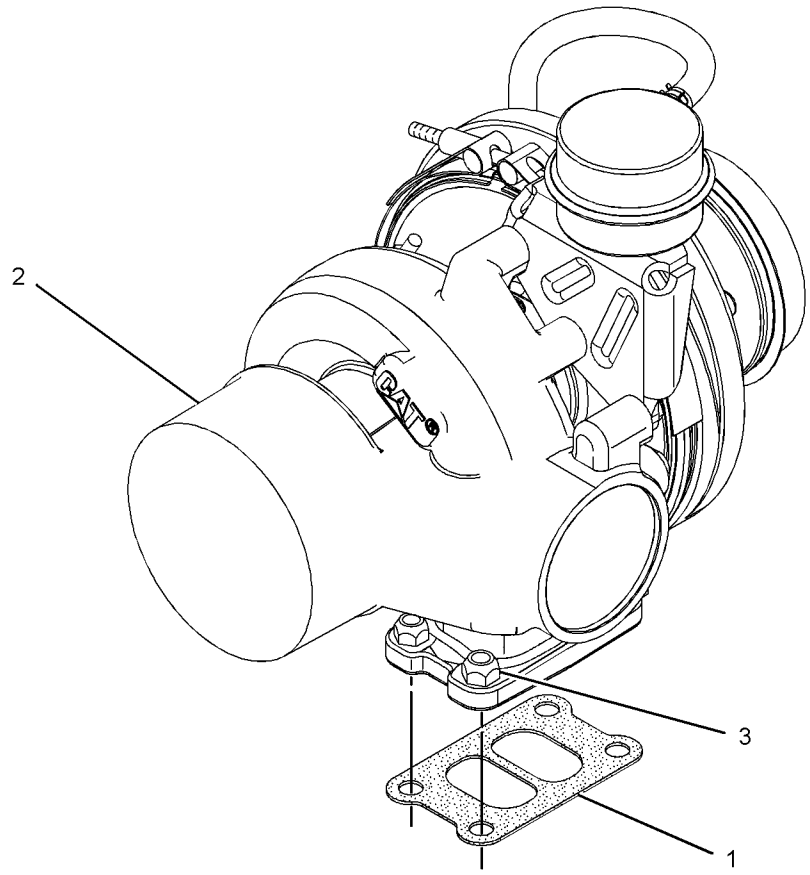

GRAPHIC #1

<END>

g01205748

398-4334 FILTER & LINES GP-FUEL

S/N: PPP1-UP; SSS1-UP; TTT1-UP
PART OF 398-4287 INSTALLATION AR-ENGINE
ALSO AN ATTACHMENT

SMCS-1261, 1274 **i06216557**

NOTE	REF NO	GRAPHIC REF	PART NUMBER	QTY	PART NAME 1 2 3 4 5 6 (PRODUCT LEVEL)	SEE PAGE
	1	1	**3S-2093**	1	STRAP-CABLE	
	2	1	**7K-1181**	2	STRAP-CABLE	
	3	1	**8T-9655**	6	MOUNT-ISOLATION	
	4	1	**174-7599**	1	BASE AS-FUEL FILTER	
		1	**9S-4167**	1	STUD-HOLLOW (1-14X1.47-IN)	
	5	1	**191-1782**	1	SPACER (8.5X12.7X38.2-MM THK)	
	6	1	**191-1783**	2	SPACER (8.5X12.7X87.3-MM THK)	
	7	1	*250-1424*	1	ELBOW AS	
		1	**6V-8724**	1	ELBOW	
		1	**214-7568**	1	SEAL-O-RING	
		1	**228-7089**	1	SEAL-O-RING	
	8	1	**290-5562**	1	MOUNT (DUAL SWIVEL)	
	9	1	*321-8657*	1	ELBOW AS	
		1	**6V-8076**	1	ELBOW	
		1	**214-7568**	1	SEAL-O-RING	
	10	1	*370-6297*	1	CONNECTOR AS	
		1	**6V-8715**	1	CONNECTOR	
		1	**228-7089**	1	SEAL-O-RING	
		1	**238-5081**	1	SEAL-O-RING	
Y	11	1	**382-2001**	1	SENSOR GP-LIQUID LEVEL (WATER IN FUEL)	220
Y	12	1	*390-6840*	1	PUMP GP-FUEL PRM & PRIM FILTER	146
	13	1	**446-5045**	1	BRACKET AS	
	14	1	*460-2435*	1	DRAIN AS	
		1	**484-5856**	1	CLIP	
		1	**484-5859**	1	CONNECTOR	
	15	1	**476-0068**	1	HOSE & TUBE AS	
I	16	1	**476-0070**	1	HOSE AS	
I	17	1	**476-0071**	1	HOSE AS	
	18	1	*164-5567*	1	COUPLER AS-QUICK DISCONNECT (MALE)	
		1	**6V-3965**	1	FITTING (QUICK DISCONNECT)	
		1	**214-7568**	1	SEAL-O-RING	
	19	1	*183-3399*	1	CONNECTOR AS	
		1	**6V-8636**	1	CONNECTOR	
		1	**214-7568**	1	SEAL-O-RING	
		1	**228-7089**	1	SEAL-O-RING	
	20	1	*183-3407*	4	PLUG AS	
					(EACH INCLUDES)	
		1	**9S-8004**	1	PLUG	
		1	**214-7568**	1	SEAL-O-RING	
	21	1	**1R-0762**	1	FILTER-FUEL (ADVANCED EFFICIENCY)	
	22	1	**1S-0994**	2	CLIP	
	23	1	*309-5131*	2	PLUG AS	
					(EACH INCLUDES)	
		1	**9S-8006**	1	PLUG	
		1	**238-5081**	1	SEAL-O-RING	
	24	1	**4D-7733**	2	CLIP	
	25	1	**6V-0852**	1	CAP-DUST	
	26	1	**6V-3265**	1	CLIP	
	27	1	**7X-0579**	6	WASHER-HARD (8.8X25.5X2-MM THK)	
M	28	1	**7X-2539**	2	BOLT (M8X1.25X110-MM)	
	29	1	**7X-7729**	4	WASHER (11X25X3-MM THK)	
	30	1	**8M-2773**	5	CLIP	
	31	1	**8T-4121**	9	WASHER-HARD (11X21X2.5-MM THK)	
M	32	1	**8T-4136**	4	BOLT (M10X1.5X25-MM)	
M	33	1	**8T-4137**	5	BOLT (M10X1.5X20-MM)	
M	34	1	**8T-4195**	4	BOLT (M10X1.5X30-MM)	

398-4334 **FILTER & LINES GP-FUEL (*contd.*)** **i06216557**

NOTE	REF NO	GRAPHIC REF	PART NUMBER	QTY	PART NAME 1 2 3 4 5 6 (PRODUCT LEVEL)	SEE PAGE
M	35	1	**8T-6869**	1	BOLT (M8X1.25X60-MM)	
E	36	1	**8C-6959**		HOSE (80-CM)	

E - ORDER BY THE CENTIMETER
I - REFER TO HYDRAULIC INFORMATION SYSTEM
M - METRIC PART
Y - SEPARATE ILLUSTRATION

398-4334 **FILTER & LINES GP-FUEL (*contd.*)** **i06216557**

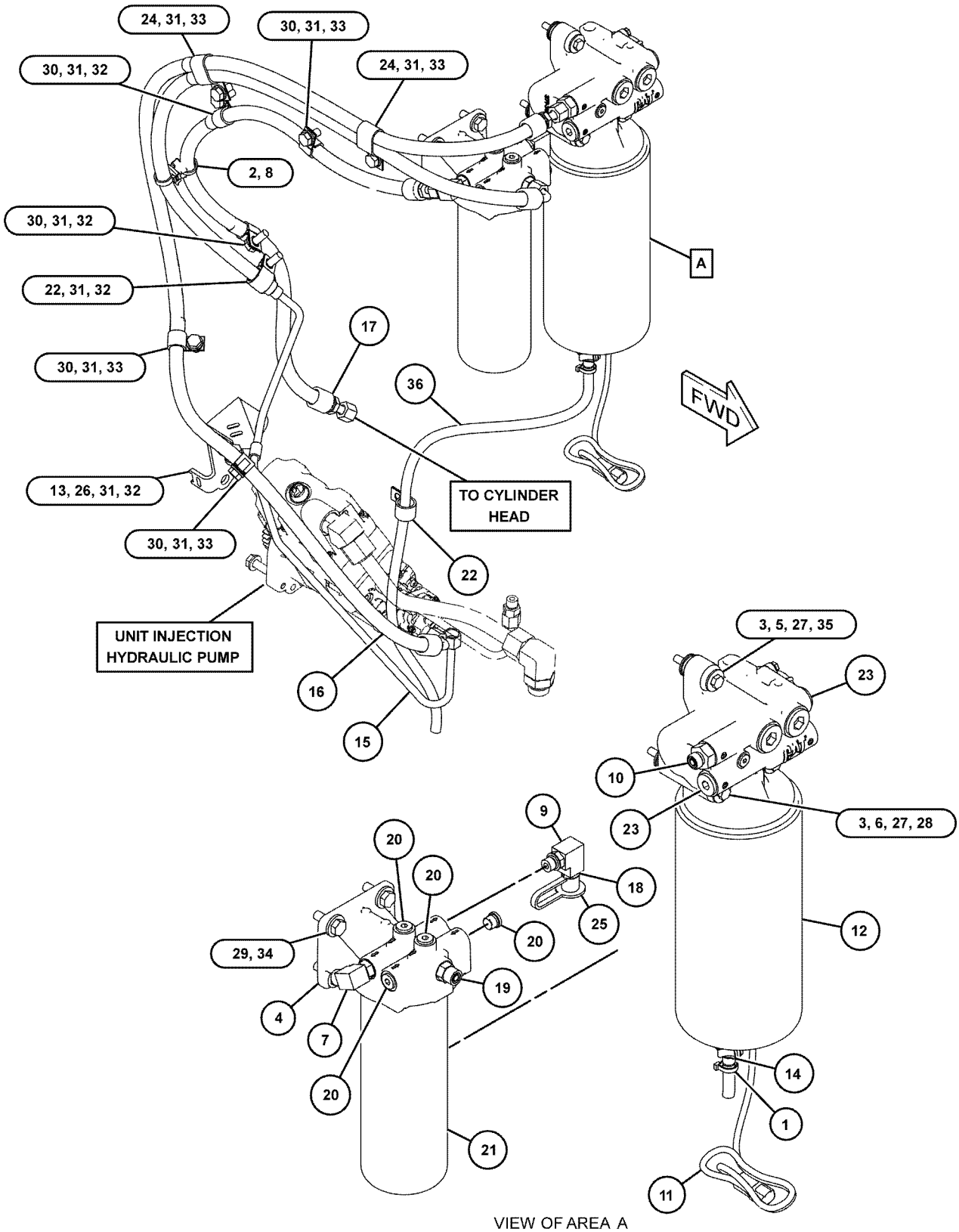

VIEW OF AREA A

GRAPHIC #1 **<END>** g03859982

387-9434 INJECTOR GP-FUEL*R

S/N: TXD1-UP
PART OF 267-9715 PUMP GP-FUEL INJECTION
AN ATTACHMENT

SMCS-1251, 1254, 1290

i05643894

NOTE	REF NO	GRAPHIC REF	PART NUMBER	QTY	PART NAME 1 2 3 4 5 6 (PRODUCT LEVEL)	SEE PAGE
	1	1	**148-2903**	2	SEAL-O-RING	
	2	1	**109-3207**	1	SEAL-O-RING	
	3	1	**149-5240**	1	RING-BACKUP	
	4	1	**293-0730**	1	RING-BACKUP	

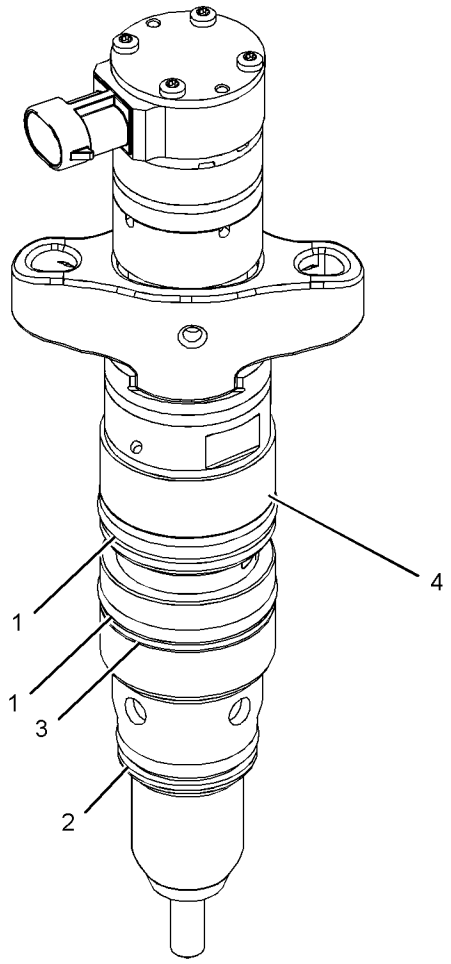

GRAPHIC #1

<END>

g03341832

397-5040 LINES GP-FUEL

S/N: TXD1-UP

PART OF 420-1870, 420-1871, 423-8451, 423-8452, 423-8453, 423-8454 ENGINE AR-COMPLETE AN ATTACHMENT

SMCS-1274 **i05555442**

NOTE	REF NO	GRAPHIC REF	PART NUMBER	QTY	PART NAME 1 2 3 4 5 6 (PRODUCT LEVEL)	SEE PAGE
	1	1	**3S-2093**	3	STRAP-CABLE	
	2	1	*175-9106*	1	ELBOW AS	
		1	**6V-9001**	1	ELBOW	
		1	**214-7568**	1	SEAL-O-RING	
		1	**228-7089**	1	SEAL-O-RING	
Y	3	1	**194-6725**	1	SENSOR GP-PRESSURE	225
I	4	1	**224-2228**	1	HOSE AS	
Y	5	1	*232-0343*	1	REGULATOR GP-FUEL PRESSURE	147
	6	1	**263-7731**	1	HARNESS AS-WIRING (FUEL PRESSURE)	
		1	**9X-3401**	6	PIN-CONNECTOR (16-GA TO 18-GA)	
					—OR—	
		1	**126-1767**	6	PIN-CONNECTOR (14-GA TO 16-GA)	
		1	**8T-8737**	5	PLUG-SEAL	
		1	**102-8803**	1	KIT-RECEPTACLE (3-PIN)	
		1	**102-8806**	1	KIT-RECEPTACLE (8-PIN)	
					(EACH RECEPTACLE KIT INCLUDES RECEPTACLE AS & WEDGE)	
	7	1	*295-1803*	1	ELBOW AS	
		1	**214-7568**	1	SEAL-O-RING	
	8	1	*396-0386*	1	CONNECTOR AS	
		1	**214-7568**	1	SEAL-O-RING	
		1	**228-7089**	1	SEAL-O-RING	
		1	**396-0385**	1	CONNECTOR	
	9	1	*183-3399*	1	CONNECTOR AS	
		1	**6V-8636**	1	CONNECTOR	
		1	**214-7568**	1	SEAL-O-RING	
		1	**228-7089**	1	SEAL-O-RING	
	10	1	**1S-0994**	1	CLIP	
	11	1	*250-1424*	1	ELBOW AS	
		1	**6V-8724**	1	ELBOW	
		1	**214-7568**	1	SEAL-O-RING	
		1	**228-7089**	1	SEAL-O-RING	
	12	1	*329-5451*	1	ADAPTER AS	
		1	**9X-0261**	1	ADAPTER	
		1	**214-7566**	1	SEAL-O-RING	
		1	**214-7568**	1	SEAL-O-RING	
	13	1	*330-9750*	1	TEE AS	
		1	**3E-7410**	1	TEE-O-RING	
		1	**214-7568**	1	SEAL-O-RING	
M	14	1	**6V-4248**	1	BOLT (M10X1.5X25-MM)	
	15	1	**6V-5839**	1	WASHER (11X21X2.5-MM THK)	
	16	1	**7K-1181**	1	STRAP-CABLE	
	17	1	**304-9465**	2	STRAP-CABLE	

I - REFER TO HYDRAULIC INFORMATION SYSTEM
M - METRIC PART
Y - SEPARATE ILLUSTRATION

397-5040 **LINES GP-FUEL (*contd.*)** **i05555442**

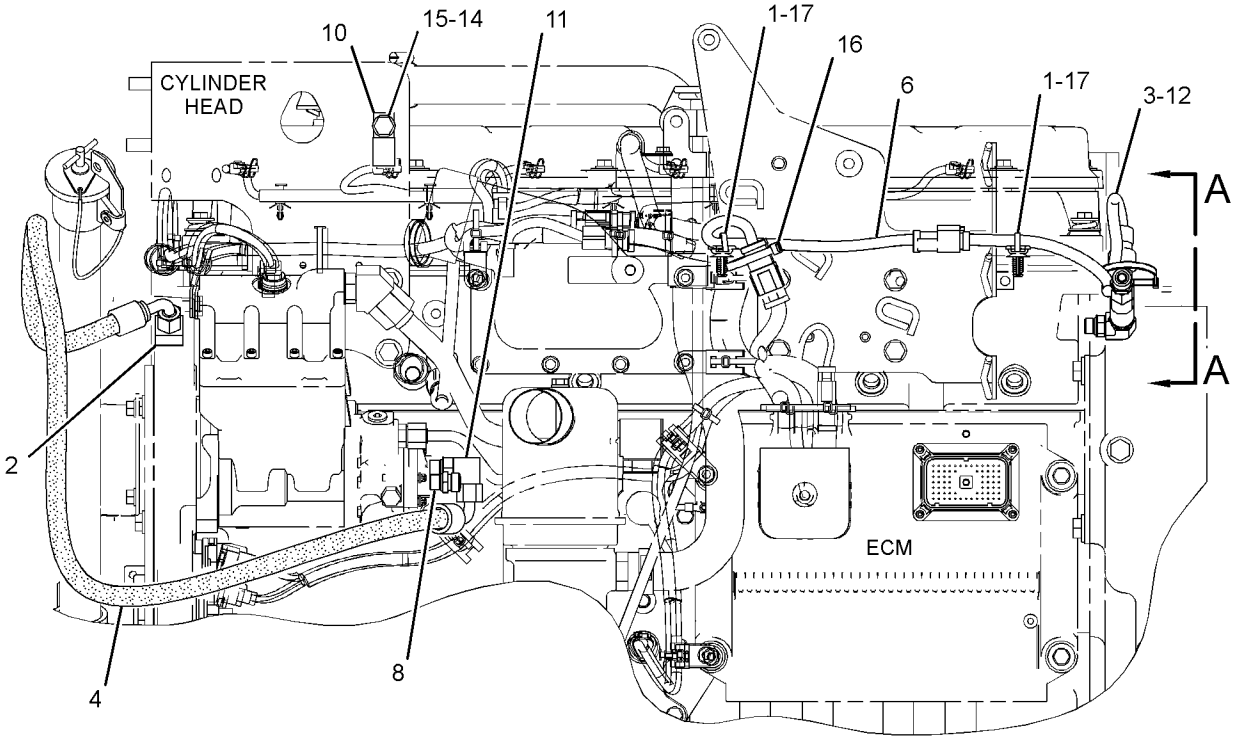

LEFT SIDE VIEW OF ENGINE

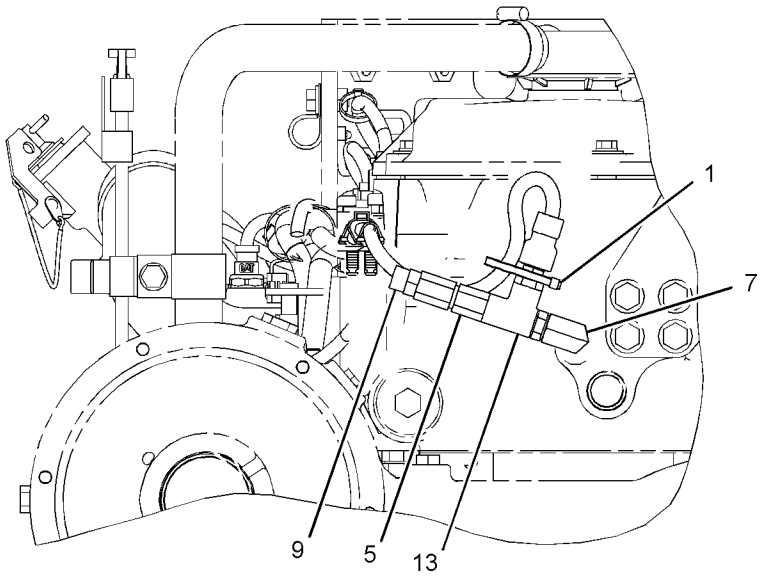

VIEW A-A

GRAPHIC #1 **<END>** g03177466

398-4503 LINES GP-FUEL

S/N: PPP1-UP; SSS1-UP; TTT1-UP
PART OF 481-9508 DISTRIBUTION AR
AN ATTACHMENT

SMCS-1274 **i06220834**

NOTE	REF NO	GRAPHIC REF	PART NUMBER	QTY	PART NAME 1 2 3 4 5 6 (PRODUCT LEVEL)	SEE PAGE
	1	1	**5D-1026**	1	CLAMP-BAND	
	2	1	**8T-6723**	1	VALVE-BALL (FUEL SHUTOFF)	
	3	1	**8T-6724**	1	VALVE-BALL (FUEL TANK DRAIN)	
	4	1	*150-3026*	1	ELBOW AS	
		1	**3K-0360**	1	SEAL-O-RING	
		1	**6V-4292**	1	ELBOW	
	5	1	*194-2903*	2	ELBOW AS	
					(EACH INCLUDES)	
		1	**3K-0360**	1	SEAL-O-RING	
		1	**8T-0119**	1	ELBOW	
I	6	1	**472-0595**	1	HOSE AS	
	7	1	**472-0596**	1	BRACKET AS	
I	8	1	**472-0598**	1	HOSE AS	
	9	1	**067-2551**	7	CLIP	
	10	1	*148-8318*	1	CONNECTOR AS	
		1	**3K-0360**	1	SEAL-O-RING	
		1	**6V-8397**	1	SEAL-O-RING	
		1	**6V-8634**	1	CONNECTOR	
	11	1	*148-8340*	1	CONNECTOR AS	
		1	**3K-0360**	1	SEAL-O-RING	
		1	**6V-8398**	1	SEAL-O-RING	
		1	**6V-8639**	1	CONNECTOR	
	12	1	*148-8372*	1	ELBOW AS	
		1	**2M-9780**	1	SEAL-O-RING	
		1	**6V-8398**	1	SEAL-O-RING	
		1	**6V-8721**	1	ELBOW	
	13	1	**1S-0996**	1	CLIP	
	14	1	**3K-0360**	2	SEAL-O-RING	
	15	1	**6D-4246**	11	CLIP	
	16	1	**8T-4121**	14	WASHER-HARD (11X21X2.5-MM THK)	
M	17	1	**8T-4136**	7	BOLT (M10X1.5X25-MM)	
M	18	1	**8T-4137**	7	BOLT (M10X1.5X20-MM)	
M	19	1	**8T-4179**	1	BOLT (M12X1.75X20-MM)	
	20	1	**8T-4223**	1	WASHER-HARD (13.5X25.5X3-MM THK)	
G	21	1	**423-1983**		HOSE (40-IN)	

G - ORDER BY THE INCH
I - REFER TO HYDRAULIC INFORMATION SYSTEM
M - METRIC PART

398-4503 **LINES GP-FUEL (*contd.*)** **i06220834**

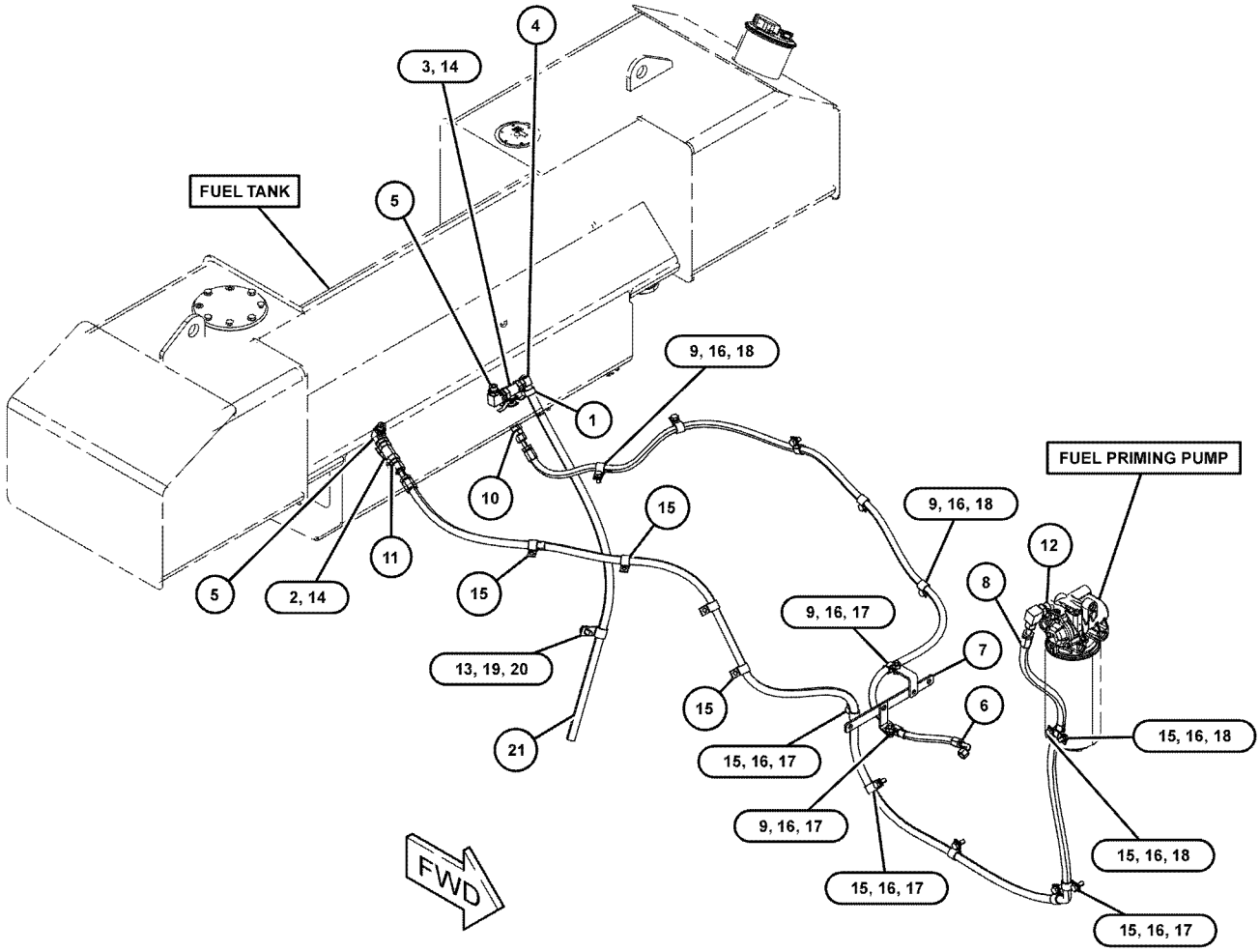

GRAPHIC #1 **<END>** g03861171

398-4504 LINES GP-FUEL

S/N: PPP1-UP; SSS1-UP; TTT1-UP
WITH HEATER
FOR USE WITH COLD WEATHER ATTACHMENTS
AN ATTACHMENT

SMCS-1274 **i06220830**

NOTE	REF NO	GRAPHIC REF	PART NUMBER	QTY	PART NAME 1 2 3 4 5 6 (PRODUCT LEVEL)	SEE PAGE
	1	1	**5D-1026**	1	CLAMP-BAND	
	2	1	**8T-6723**	1	VALVE-BALL (FUEL SHUTOFF)	
	3	1	**8T-6724**	1	VALVE-BALL (FUEL TANK DRAIN)	
	4	1	*150-3026*	1	ELBOW AS	
		1	**3K-0360**	1	SEAL-O-RING	
		1	**6V-4292**	1	ELBOW	
	5	1	*194-2903*	2	ELBOW AS	
					(EACH INCLUDES)	
		1	**3K-0360**	1	SEAL-O-RING	
		1	**8T-0119**	1	ELBOW	
	6	1	**224-9772**	1	HEATER AS-FUEL	
I	7	1	**426-2469**	1	HOSE AS	
	8	1	**426-2470**	1	BRACKET AS	
I	9	1	**472-0595**	1	HOSE AS	
	10	1	**472-0596**	1	BRACKET AS	
I	11	1	**472-0599**	1	HOSE AS	
	12	1	**067-2551**	7	CLIP	
M	13	1	**136-4192**	2	BOLT (M6X1X35-MM)	
	14	1	*148-8318*	1	CONNECTOR AS	
		1	**3K-0360**	1	SEAL-O-RING	
		1	**6V-8397**	1	SEAL-O-RING	
		1	**6V-8634**	1	CONNECTOR	
	15	1	*148-8340*	1	CONNECTOR AS	
		1	**3K-0360**	1	SEAL-O-RING	
		1	**6V-8398**	1	SEAL-O-RING	
		1	**6V-8639**	1	CONNECTOR	
	16	1	*148-8372*	3	ELBOW AS	
					(EACH INCLUDES)	
		1	**2M-9780**	1	SEAL-O-RING	
		1	**6V-8398**	1	SEAL-O-RING	
		1	**6V-8721**	1	ELBOW	
M	17	1	**191-8921**	2	BOLT-SOCKET HEAD (M6X1X25-MM)	
	18	1	**1S-0996**	1	CLIP	
	19	1	**269-7680**	1	CLIP	
	20	1	**3K-0360**	2	SEAL-O-RING	
	21	1	**4P-7581**	1	CLIP	
	22	1	**6D-4246**	10	CLIP	
	23	1	**7K-1181**	2	STRAP-CABLE	
	24	1	**8T-4121**	15	WASHER-HARD (11X21X2.5-MM THK)	
M	25	1	**8T-4136**	7	BOLT (M10X1.5X25-MM)	
M	26	1	**8T-4137**	8	BOLT (M10X1.5X20-MM)	
M	27	1	**8T-4179**	1	BOLT (M12X1.75X20-MM)	
	28	1	**8T-4223**	1	WASHER-HARD (13.5X25.5X3-MM THK)	
	29	1	**9X-8256**	4	WASHER (6.6X12X2-MM THK)	
G	30	1	**423-1983**		HOSE (40-IN)	

G - ORDER BY THE INCH
I - REFER TO HYDRAULIC INFORMATION SYSTEM
M - METRIC PART

398-4504 **LINES GP-FUEL (*contd.*)** **i06220830**

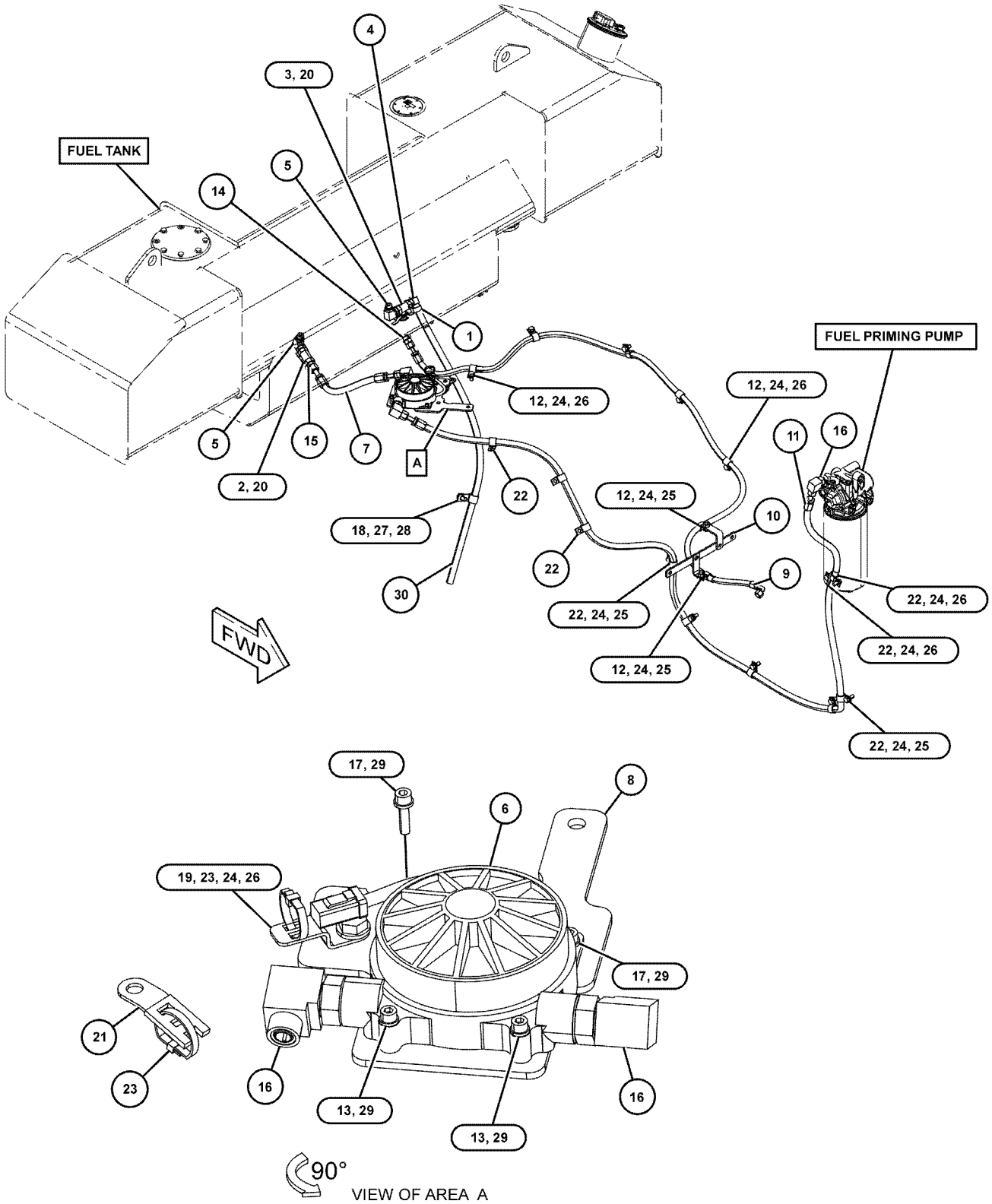

GRAPHIC #1 **<END>** g03861190

387-8622 PUMP & MTG GP-UNIT INJ HYD

S/N: TXD1-UP
1.61 GEAR RATIO
FOR USE WITH REHS7902
PART OF 387-8618, 387-8619 ENGINE AR-CORE
AN ATTACHMENT

SMCS-1714 **i06275797**

NOTE	REF NO	GRAPHIC REF	PART NUMBER	QTY	PART NAME 1 2 3 4 5 6 (PRODUCT LEVEL)	SEE PAGE
R	1	1	**476-8769**	1	PUMP GP-UNIT INJECTOR HYD	
	2	1	**387-7154**	1	TUBE AS	
	3	1	**387-7159**	1	TUBE AS	
	4	1	*389-3708*	1	PLUG AS	
		1	**214-7568**	1	SEAL-O-RING	
		1	**360-3679**	1	PLUG-CONNECTOR	
	5	1	*396-0390*	1	ELBOW AS	
		1	**128-6841**	1	ELBOW	
		1	**228-7092**	1	SEAL-O-RING	
		1	**238-5082**	1	SEAL-O-RING	
	6	1	*183-3399*	2	CONNECTOR AS	
					(EACH INCLUDES)	
		1	**6V-8636**	1	CONNECTOR	
		1	**214-7568**	1	SEAL-O-RING	
		1	**228-7089**	1	SEAL-O-RING	
	7	1	**227-5904**	1	SEAL-O-RING	
	8	1	*281-5984*	1	ELBOW AS	
		1	**8T-5389**	1	ELBOW	
		1	**228-7092**	1	SEAL-O-RING	
		1	**238-5081**	1	SEAL-O-RING	
	9	1	**6V-5839**	2	WASHER (11X21X2.5-MM THK)	
M	10	1	**6V-7981**	2	BOLT (M10X1.5X70-MM)	

M - METRIC PART
R - REMFG PART MAY BE AVAILABLE

387-8622 **PUMP & MTG GP-UNIT INJ HYD (*contd.*)** **i06275797**

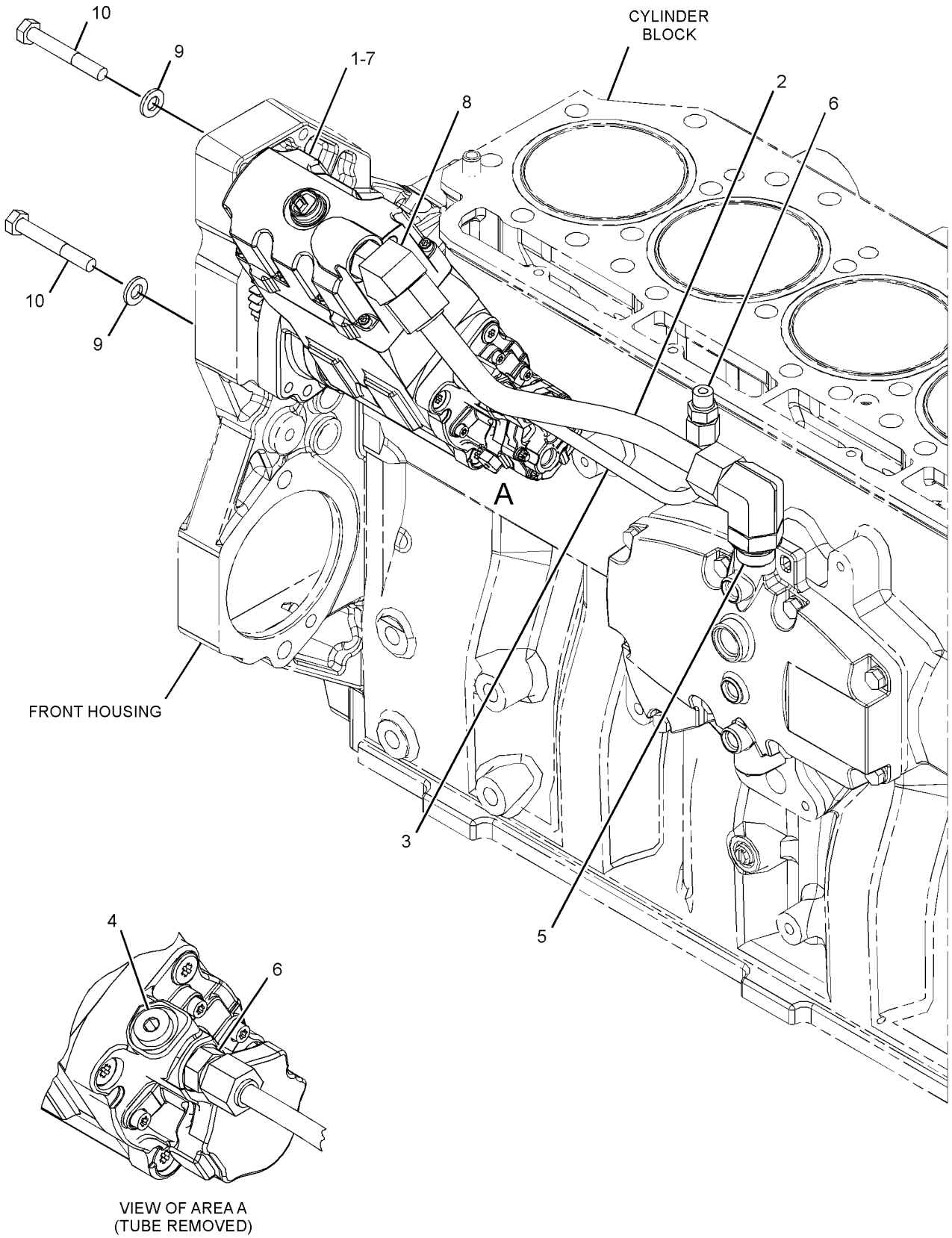

VIEW OF AREA A
(TUBE REMOVED)

GRAPHIC #1 **<END>** g03119658

267-9715 PUMP GP-FUEL INJECTION

S/N: TXD1-UP
PART OF 387-8618, 387-8619 ENGINE AR-CORE
AN ATTACHMENT

SMCS-1251, 1290 **i05555628**

NOTE	REF NO	GRAPHIC REF	PART NUMBER	QTY	PART NAME 1 2 3 4 5 6 (PRODUCT LEVEL)	SEE PAGE
	1	1	**235-9651**	2	BOLT-SOCKET HEAD (M8X1.25X65-MM)	
CYR	2	1	**387-9434**	1	INJECTOR GP-FUEL	135

C - CHANGE FROM PREVIOUS TYPE
R - REMFG PART MAY BE AVAILABLE
Y - SEPARATE ILLUSTRATION

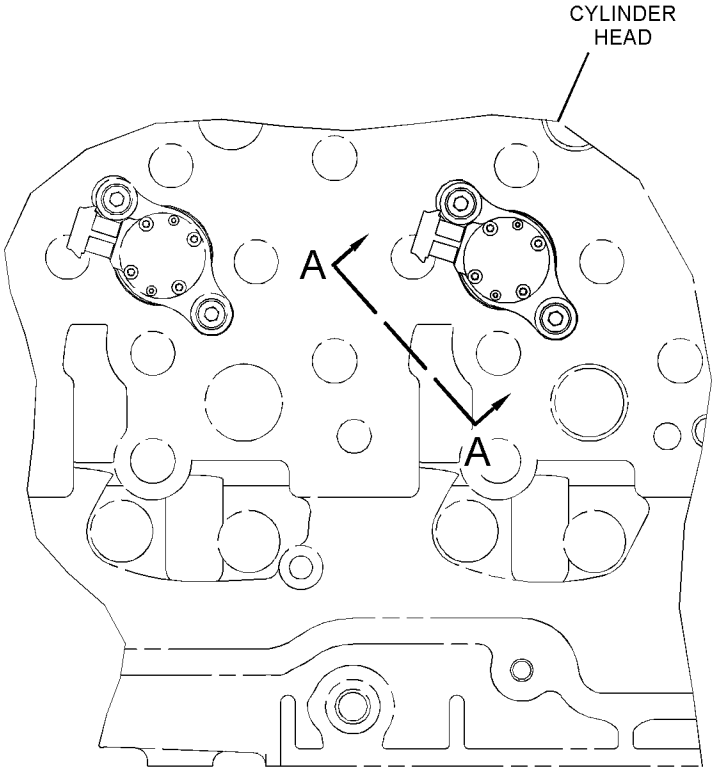

TOP VIEW OF ENGINE

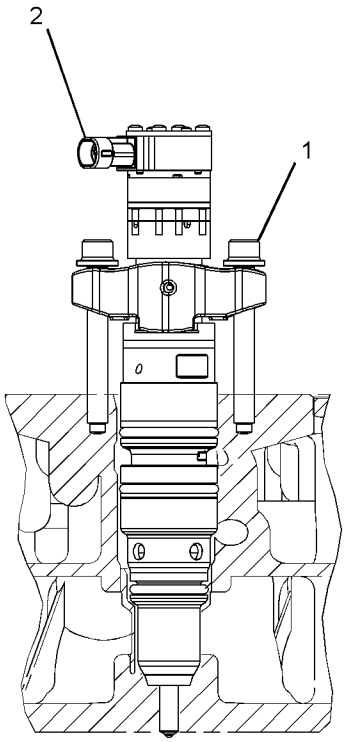

SECTION A-A

GRAPHIC #1 **<END>** g03349097

390-4679 PUMP GP-FUEL PRIMING

S/N: PPP1-UP; SSS1-UP; TTT1-UP
PART OF 390-6840 PUMP GP-FUEL PRM & PRIM FILTER
ALSO AN ATTACHMENT

SMCS-1258 **i06268470**

NOTE	REF NO	GRAPHIC REF	PART NUMBER	QTY	PART NAME 1 2 3 4 5 6 (PRODUCT LEVEL)	SEE PAGE
	1	1	**436-8983**	2	VALVE-CHECK	
	2	1	**162-2222**	2	SPRING	
	3	1	**9X-8267**	3	WASHER (6.6X12X2-MM THK)	
	4	1	**9S-8002**	1	PLUG	
M	5	1	**8T-4138**	3	BOLT (M6X1X20-MM)	
	6	1	**447-7206**	1	SEAL-O-RING	
	7	1	**6D-5801**	2	LOCKNUT (8-32-THD)	
	8	1	**236-6717**	2	SEAL-O-RING	
	9	1	**188-7541**	1	SEAL	
	10	1	**188-7536**	1	SEAL	
	11	1	**173-1016**	2	RING-BACKUP	
	12	1	**179-7400**	2	SEAL	
					PARTS SHOWN IN GRAPHIC(S) WITHOUT A REFERENCE NUMBER ARE NOT SERVICED SEPARATELY	

M - METRIC PART

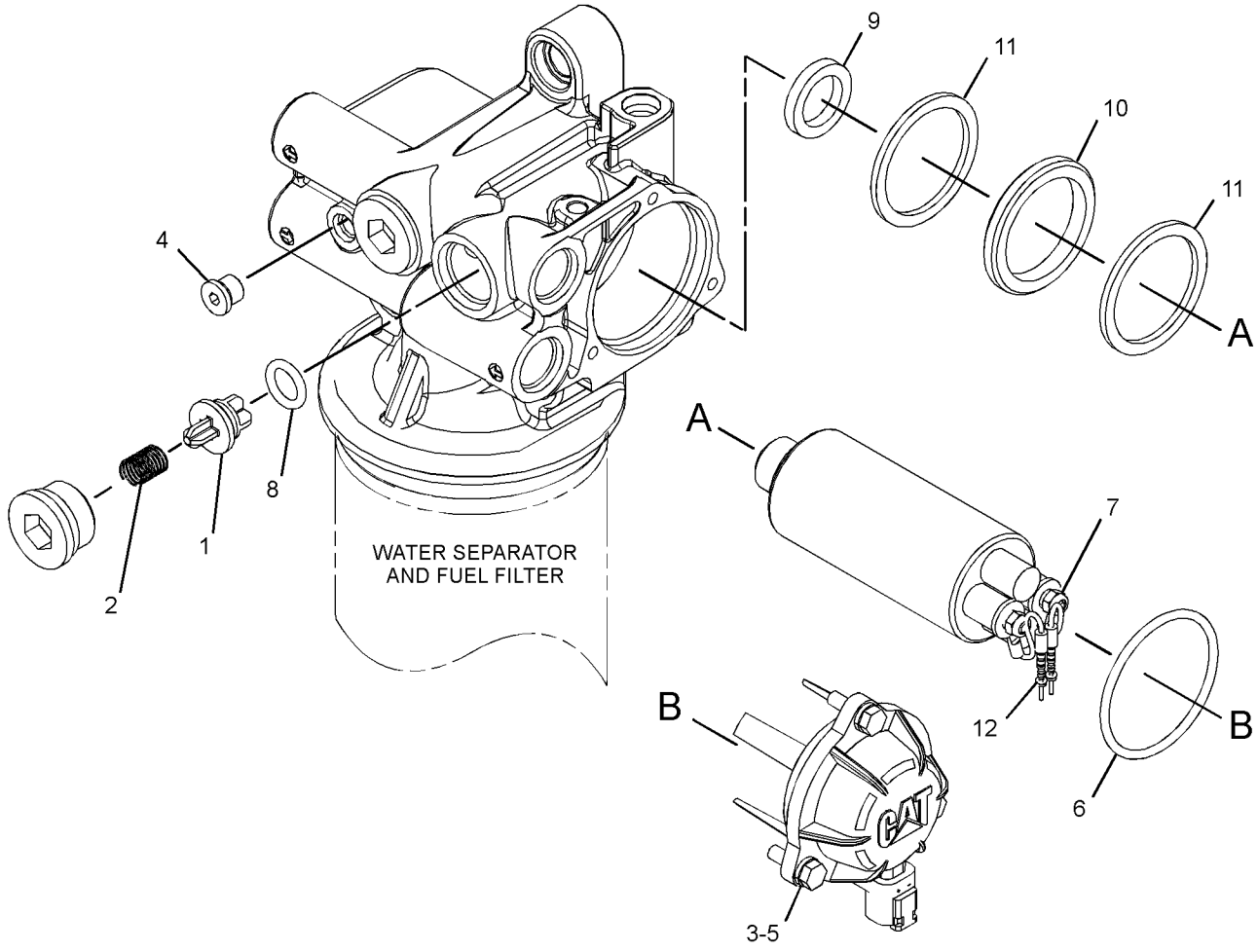

GRAPHIC #1 **<END>** g03878100

390-6840 PUMP GP-FUEL PRM & PRIM FILTER

S/N: PPP1-UP; SSS1-UP; TTT1-UP
PART OF 398-4334 FILTER & LINES GP-FUEL
ALSO AN ATTACHMENT

SMCS-1258, 1260 **i06216564**

NOTE	REF NO	GRAPHIC REF	PART NUMBER	QTY	PART NAME 1 2 3 4 5 6 (PRODUCT LEVEL)	SEE PAGE
Y	1	1	**390-4679**	1	PUMP GP-FUEL PRIMING	145
	2	1	**438-5386**	1	FILTER AS-WATER SEP & FUEL (ULTRA HIGH EFFICIENCY)	

Y - SEPARATE ILLUSTRATION

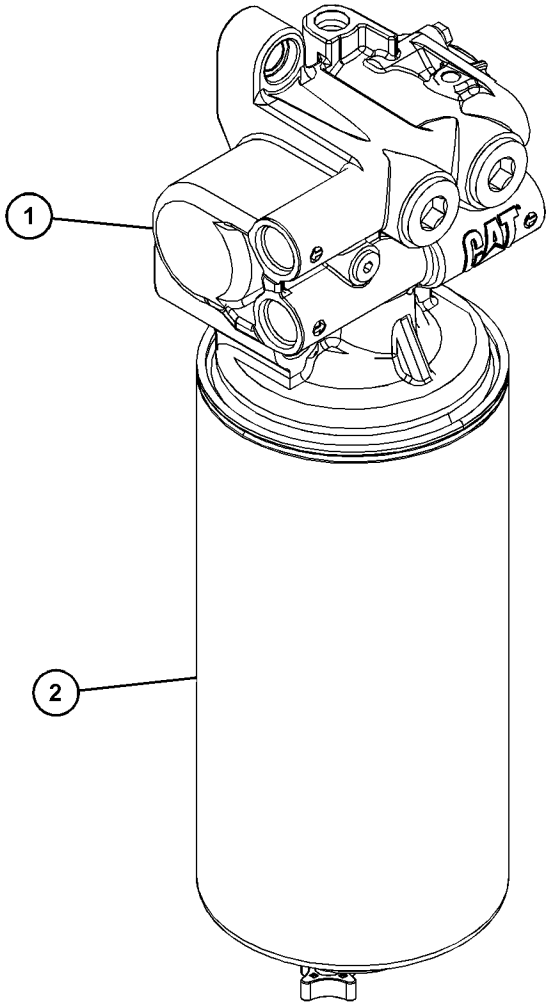

GRAPHIC #1 **<END>** g03454786

232-0343 REGULATOR GP-FUEL PRESSURE

S/N: TXD1-UP
PART OF 397-5040 LINES GP-FUEL
AN ATTACHMENT

SMCS-1270 **i05555693**

NOTE	REF NO	GRAPHIC REF	PART NUMBER	QTY	PART NAME 1 2 3 4 5 6 (PRODUCT LEVEL)	SEE PAGE
	1	1	**214-7568**	1	SEAL-O-RING	
	2	1	**369-6662**	1	REGULATOR AS (FUEL PRESSURE)	

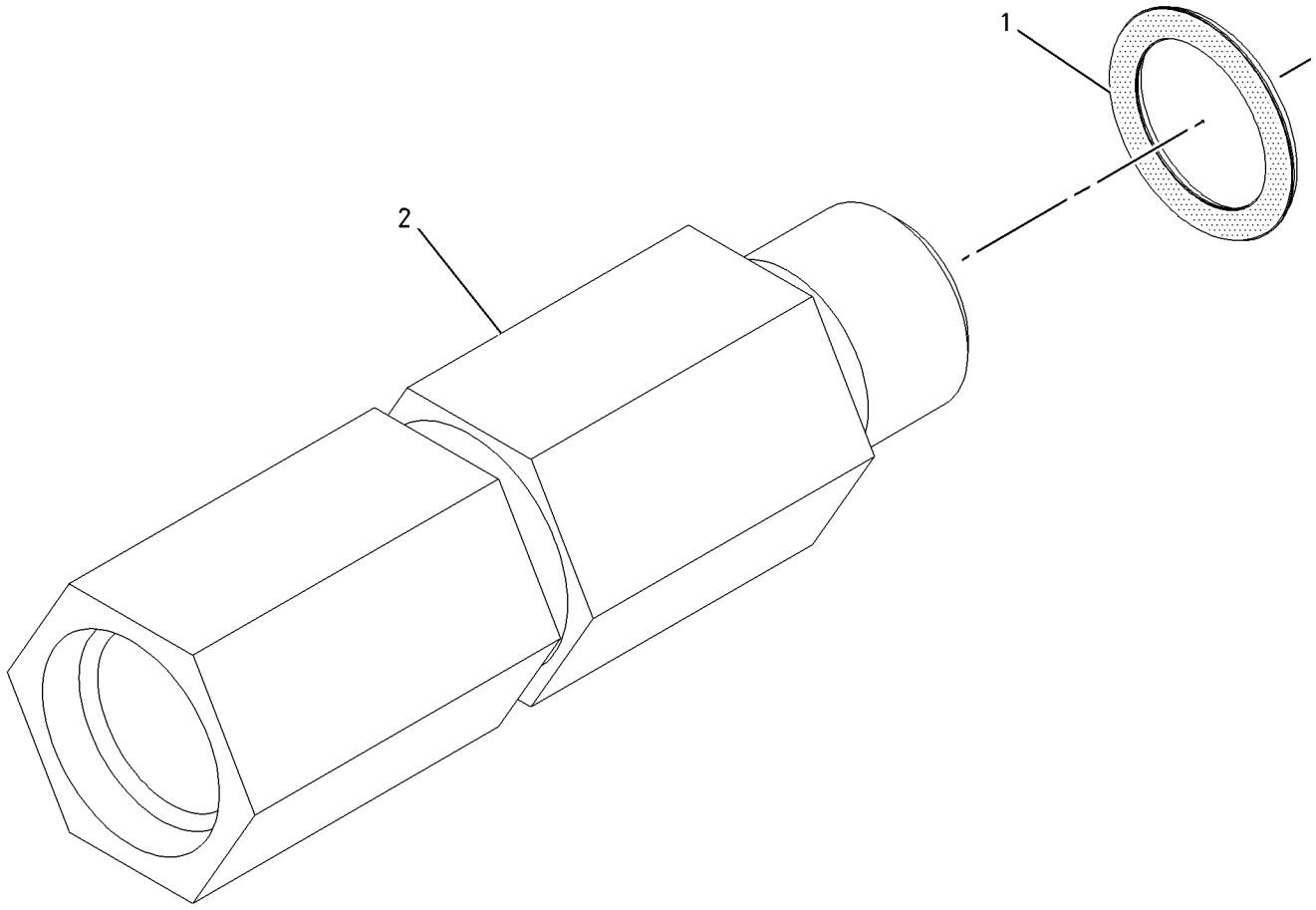

GRAPHIC #1 **<END>** g01004480

398-4540 TANK GP-FUEL

S/N: PPP1-UP; SSS1-UP; TTT1-UP
425-L (112.3-US GAL)
PART OF 398-4281 CHASSIS AR
ALSO AN ATTACHMENT

SMCS-1273 **i06214915**

NOTE	REF NO	GRAPHIC REF	PART NUMBER	QTY	PART NAME 1 2 3 4 5 6 (PRODUCT LEVEL)	SEE PAGE
	1	1	**6T-1698**	8	MOUNT	
	2	1	**363-4122**	1	GASKET	
Y	3	1	**415-1343**	1	TANK GP-FUEL	149
	4	1	**423-8860**	1	SENDER AS-FUEL LEVEL	
		1	**9X-3401**	2	PIN-CONNECTOR (16-GA TO 18-GA)	
		1	**102-8802**	1	KIT-RECEPTACLE (2-PIN)	
					(INCLUDES RECEPTACLE AS & WEDGE)	
	5	1	**241-2501**	4	WASHER (22X82.55X11-MM THK)	
M	6	1	**5C-9553**	6	BOLT (M6X1X16-MM)	
	7	1	**6N-7523**	6	WASHER (6.48X11.9X1.57-MM THK)	
M	8	1	**7X-2564**	4	BOLT (M20X2.5X90-MM)	
	9	1	**8T-5439**	4	WASHER-HARD (21.5X45X6-MM THK)	

M - METRIC PART
Y - SEPARATE ILLUSTRATION

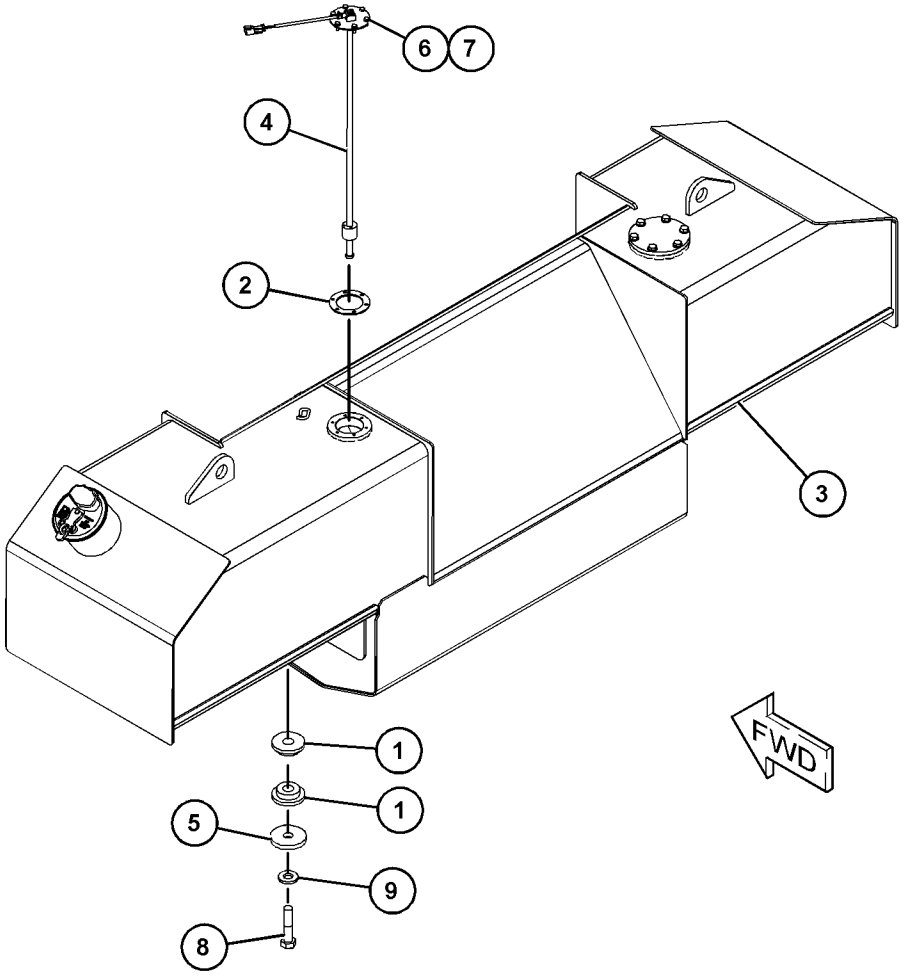

GRAPHIC #1 **<END>** g03858151

415-1343 TANK GP-FUEL

S/N: PPP1-UP; SSS1-UP; TTT1-UP
425-L (112.3-US GAL)
PART OF 398-4540 TANK GP-FUEL
ALSO AN ATTACHMENT

SMCS-1273 **i06274013**

NOTE	REF NO	GRAPHIC REF	PART NUMBER	QTY	PART NAME 1 2 3 4 5 6 (PRODUCT LEVEL)	SEE PAGE
	1	1	**349-7059**	1	CAP AS-FUEL (LOCKABLE, VENTED) (TANK)	
		1	**350-7735**	1	KIT-CAP FILTER (FUEL TANK)	
					(INCLUDES BREATHER, GASKET, SCREWS & WASHERS)	
		1	**7D-7111**	1	SEAL-O-RING	
	2	1	**9P-7121**	1	STRAINER-FUEL (FUEL TANK)	
	3	1	**187-1679**	1	COVER	
M	4	1	**8T-4136**	6	BOLT (M10X1.5X25-MM)	
	5	1	**8T-4121**	6	WASHER-HARD (11X21X2.5-MM THK)	
	6	1	**1H-8128**	1	SEAL-O-RING	

M - METRIC PART

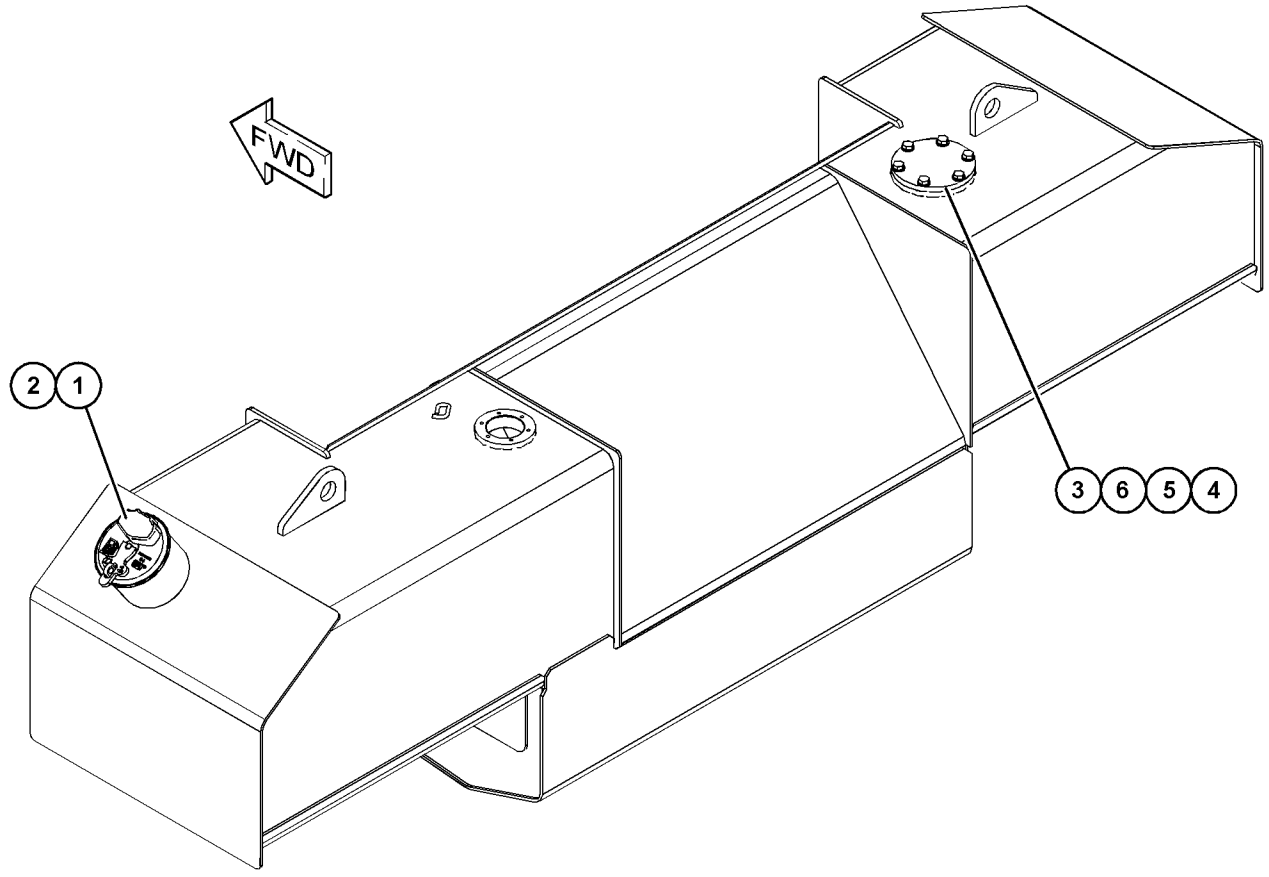

GRAPHIC #1 **<END>** g03855040

3E-6328 ALARM GP–ACTION

S/N: PPP1-UP; SSS1-UP; TTT1-UP
24-VOLT
PART OF 415-4252, 420-1160 WIRING GP-CAB
AN ATTACHMENT

SMCS-7400, 7402, 7407 **i06056667**

NOTE	REF NO	GRAPHIC REF	PART NUMBER	QTY	PART NAME 1 2 3 4 5 6 (PRODUCT LEVEL)	SEE PAGE
	1	1	**102-8802**	1	KIT-RECEPTACLE (2-PIN)	
					(INCLUDES RECEPTACLE AS & WEDGE)	
	2	1	**8T-8729**	2	PIN-CONNECTOR (16-GA TO 18-GA)	

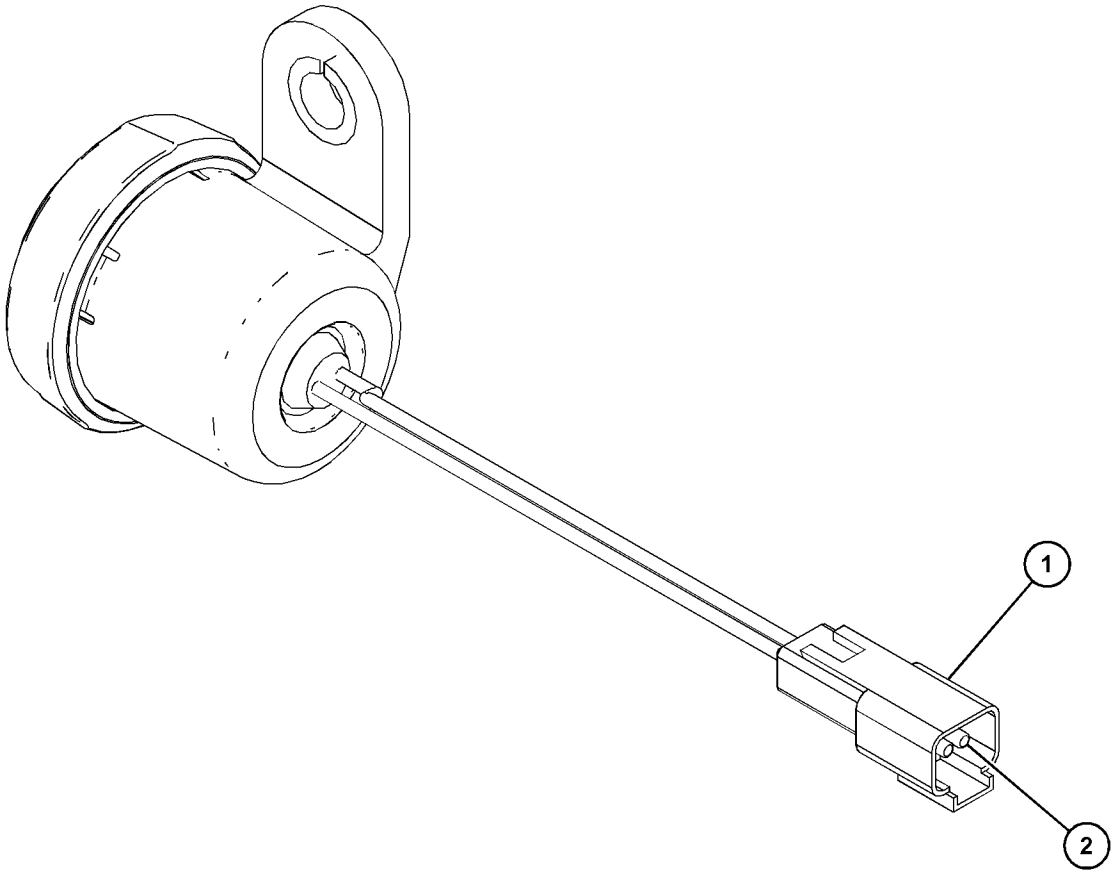

GRAPHIC #1 **<END>** g03798741

272-1889 ALTERNATOR GP-CHARGING*R

S/N: PPP1-UP; SSS1-UP; TTT1-UP
24-VOLT, 150-AMPERE
PART OF 446-5049 ALTERNATOR GP-CHARGING
AN ATTACHMENT

SMCS-1405 **i06223393**

NOTE	REF NO	GRAPHIC REF	PART NUMBER	QTY	PART NAME 1 2 3 4 5 6 (PRODUCT LEVEL)	SEE PAGE
					(NO SERVICED PARTS)	

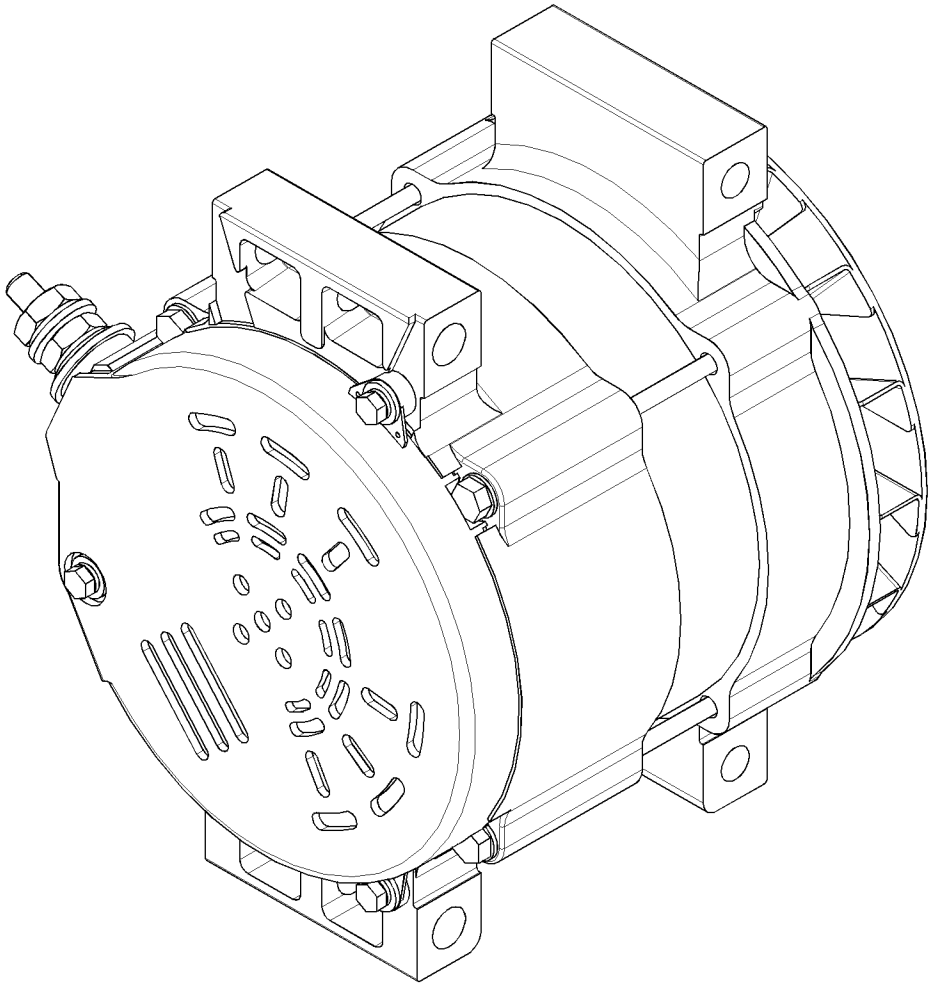

GRAPHIC #1 **<END>** g01735513

398-4350 ALTERNATOR GP-CHARGING

S/N: PPP1-UP; SSS1-UP; TTT1-UP
24-VOLT, 115-AMPERE
AN ATTACHMENT

SMCS-1405 **i06145829**

NOTE	REF NO	GRAPHIC REF	PART NUMBER	QTY	PART NAME 1 2 3 4 5 6 (PRODUCT LEVEL)	SEE PAGE
	1	1	**8X-9618**	1	STRAP AS-GROUND	
	2	1	**123-0791**	1	PULLEY (8-GROOVE)	
R	3	1	**344-5081**	1	ALTERNATOR GP-CHARGING	
M	4	1	**6V-7357**	1	BOLT (M6X1X25-MM)	
	5	1	**8T-4121**	5	WASHER-HARD (11X21X2.5-MM THK)	
M	6	1	**8T-4137**	1	BOLT (M10X1.5X20-MM)	
M	7	1	**8T-4198**	4	BOLT (M10X1.5X100-MM)	
	8	1	**9X-2038**	1	WASHER (7X19X2-MM THK)	

M - METRIC PART
R - REMFG PART MAY BE AVAILABLE

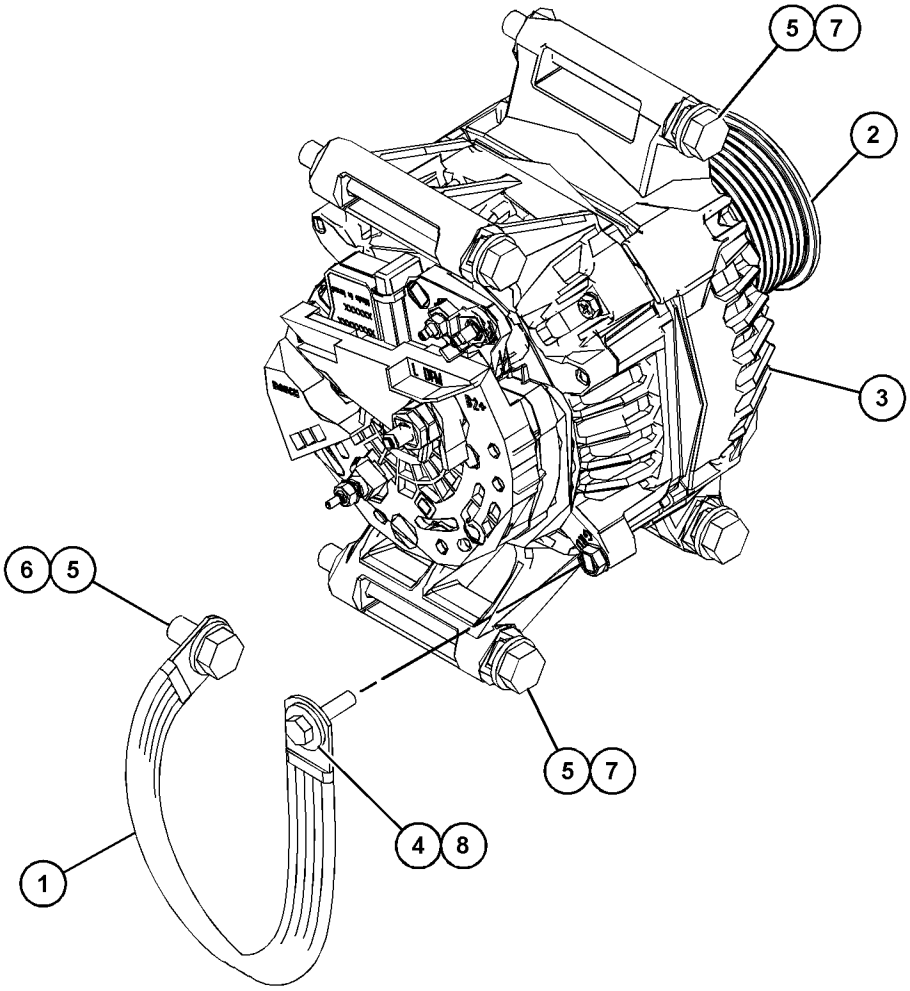

GRAPHIC #1 **<END>** g03831378

398-4373 ALTERNATOR GP-CHARGING

S/N: PPP1-UP; SSS1-UP; TTT1-UP
24-VOLT, 150-AMPERE
PART OF 481-9508 DISTRIBUTION AR
AN ATTACHMENT

SMCS-1405 **i06199513**

NOTE	REF NO	GRAPHIC REF	PART NUMBER	QTY	PART NAME 1 2 3 4 5 6 (PRODUCT LEVEL)	SEE PAGE
	1	1	**8X-9618**	1	STRAP AS-GROUND	
	2	1	**123-0790**	1	PULLEY (8-GROOVE)	
R	3	1	**272-1889**	1	ALTERNATOR GP-CHARGING (24-VOLT, 150-AMPERE)	
	4	1	**293-0303**	1	COVER AS-ALTERNATOR	
	5	1	**446-5058**	1	WIRE AS	
	6	1	**283-8650**	1	WASHER-HARD (10.2X18.5X5-MM THK)	
	7	1	**4M-5281**	1	BOLT (1/4-20X0.75-IN)	
M	8	1	**5C-2874**	1	NUT (M5X0.8-THD)	
M	9	1	**7I-2272**	1	BOLT (M5X0.8X12-MM)	
	10	1	**8T-4121**	5	WASHER-HARD (11X21X2.5-MM THK)	
M	11	1	**8T-4137**	1	BOLT (M10X1.5X20-MM)	
M	12	1	**8T-4198**	4	BOLT (M10X1.5X100-MM)	
	13	1	**9X-2038**	1	WASHER (7X19X2-MM THK)	
	14	1	**9X-8256**	2	WASHER (6.6X12X2-MM THK)	

M - METRIC PART
R - REMFG PART MAY BE AVAILABLE

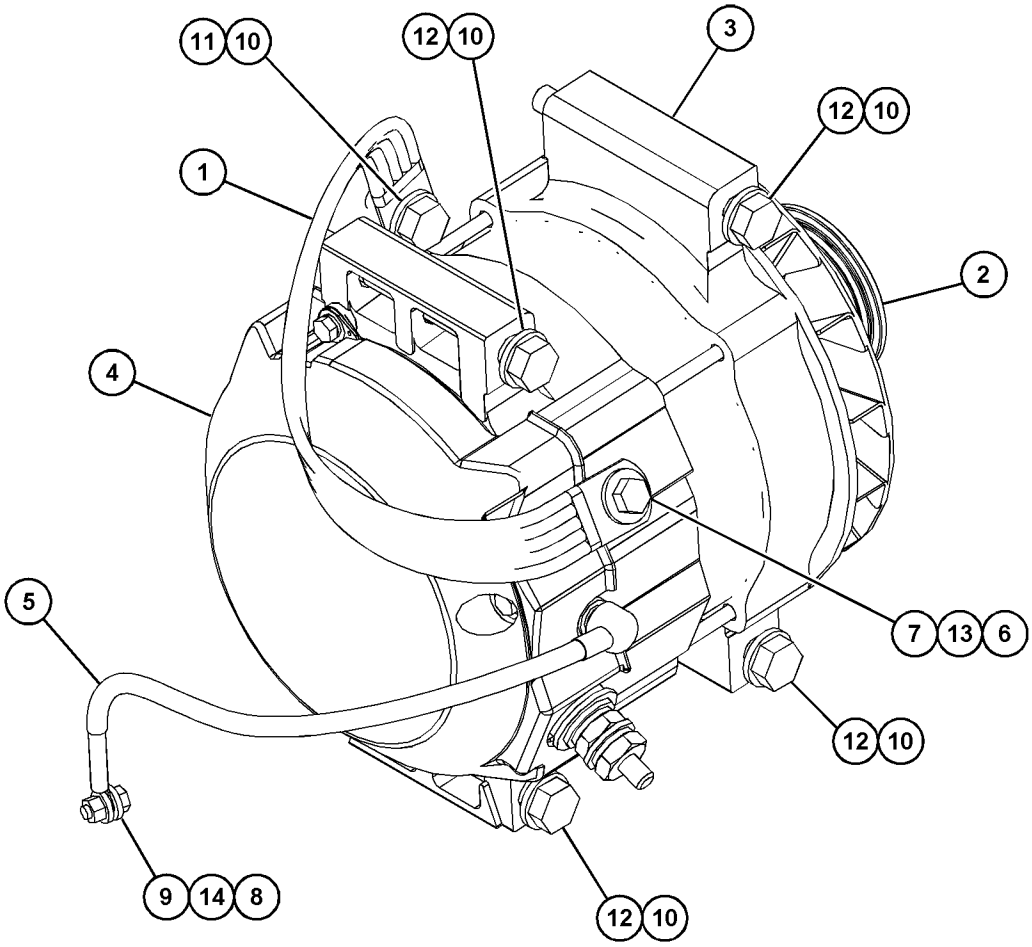

GRAPHIC #1 **<END>** g03852345

446-5049 ALTERNATOR GP-CHARGING—DUCTED

S/N: PPP1-UP; SSS1-UP; TTT1-UP
24-VOLT, 150-AMPERE
FOR USE WITH 398-4306—PAGE: 366
CANNOT BE USED WITH 398-4305—PAGE: 366, 398-4307—PAGE: 366, 398-4304—PAGE: 856
AN ATTACHMENT

SMCS-1405 **i06231597**

NOTE	REF NO	GRAPHIC REF	PART NUMBER	QTY	PART NAME 1 2 3 4 5 6 (PRODUCT LEVEL)	SEE PAGE
	1	1	**7K-1181**	1	STRAP-CABLE	
	2	1	**8P-5411**	1	BUTTON-PLUG	
	3	1	**8X-9618**	1	STRAP AS-GROUND	
	4	1	**123-0790**	1	PULLEY (8-GROOVE)	
	5	1	**164-5798**	1	CAP AS-RAIN	
		1	**5P-0597**	1	CLAMP-HOSE	
	6	1	**226-4909**	1	SCREEN (ALTERNATOR COOLING)	
YR	7	1	**272-1889**	1	ALTERNATOR GP-CHARGING (24-VOLT, 150-AMPERE)	151
	8	1	**446-5058**	1	WIRE AS	
	9	1	**446-5060**	1	COVER AS	
	10	1	**110-2445**	2	CLAMP-HOSE	
	11	1	**283-8650**	1	WASHER-HARD (10.2X18.5X5-MM THK)	
M	12	1	**344-5675**	1	NUT (M10X1.5-THD)	
	13	1	**4M-5281**	1	BOLT (1/4-20X0.75-IN)	
M	14	1	**5C-2874**	1	NUT (M5X0.8-THD)	
M	15	1	**6V-2314**	2	BOLT (M5X0.8X35-MM)	
	16	1	**7D-7233**	3	CLIP	
M	17	1	**7I-2272**	1	BOLT (M5X0.8X12-MM)	
	18	1	**8T-4121**	8	WASHER-HARD (11X21X2.5-MM THK)	
M	19	1	**8T-4136**	2	BOLT (M10X1.5X25-MM)	
M	20	1	**8T-4137**	1	BOLT (M10X1.5X20-MM)	
M	21	1	**8T-4198**	4	BOLT (M10X1.5X100-MM)	
	22	1	**9X-2038**	1	WASHER (7X19X2-MM THK)	
	23	1	**9X-8256**	4	WASHER (6.6X12X2-MM THK)	
G	24	1	**371-8094**		HOSE (31-IN)	
E	25	1	**7X-7877**		STRIP-EDGE (44-CM EACH)	

E - ORDER BY THE CENTIMETER
G - ORDER BY THE INCH
M - METRIC PART
R - REMFG PART MAY BE AVAILABLE
Y - SEPARATE ILLUSTRATION

446-5049 **ALTERNATOR GP-CHARGING (*contd.*)** **i06231597**

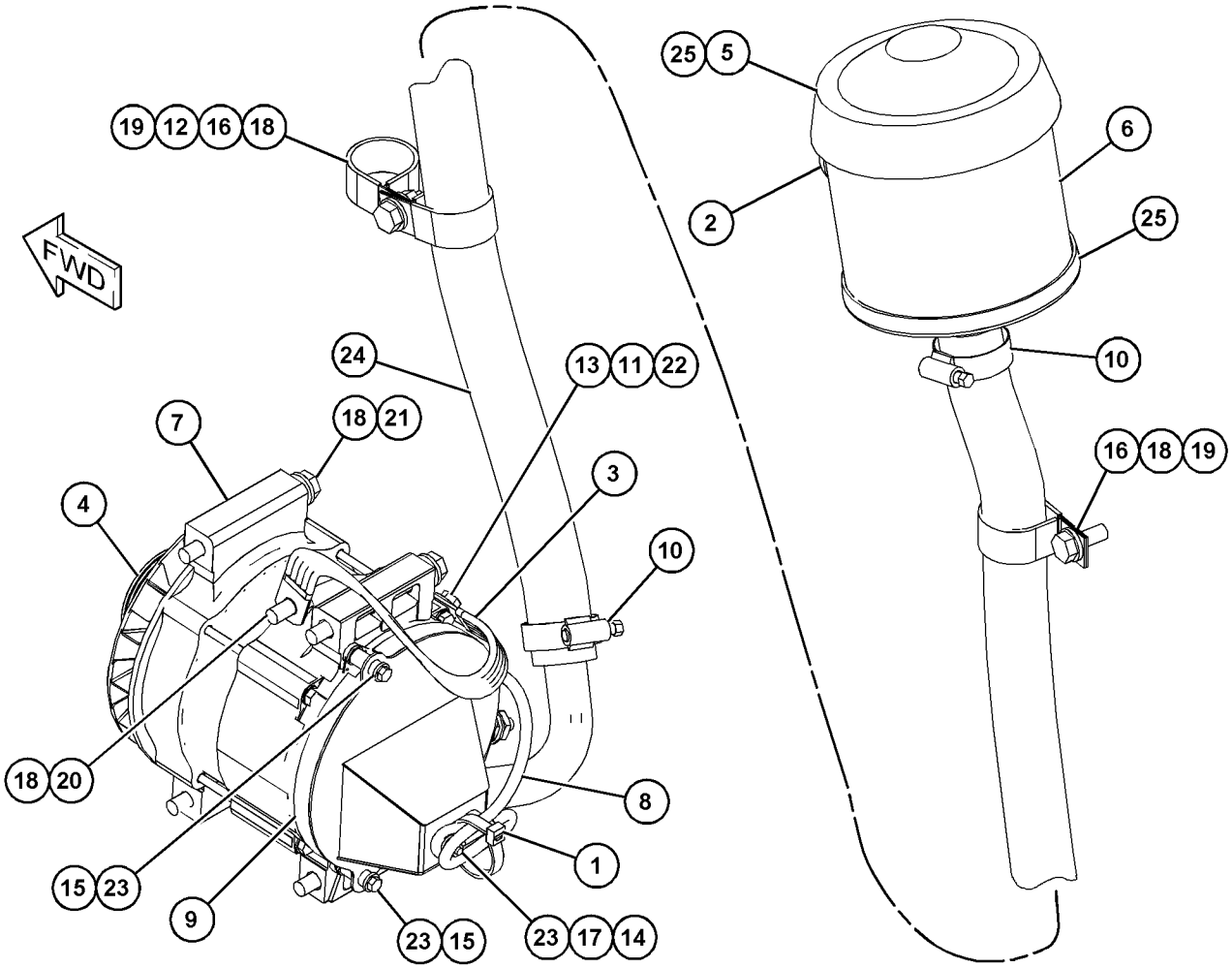

GRAPHIC #1 **<END>** g03862527

398-4454 BATTERY GP

S/N: SSS1-UP
CANNOT BE USED WITH 398-4304—PAGE: 856
PART OF 481-9508 DISTRIBUTION AR
AN ATTACHMENT

SMCS-1401 **i06230739**

NOTE	REF NO	GRAPHIC REF	PART NUMBER	QTY	PART NAME 1 2 3 4 5 6 (PRODUCT LEVEL)	SEE PAGE
	1	1	**5I-8304**	1	ROD	
	2	1	**6W-6005**	1	HOLD-DOWN-BATTERY	
	3	1	**160-2182**	1	CABLE AS	
E		1	**159-8049**		CABLE (00-GA, RED) (33-CM)	
		1	**9G-0002**	1	COVER AS-TERMINAL (RED)	
		1	**9G-0005**	1	COVER AS-TERMINAL (BLACK)	
					(EACH COVER AS INCLUDES)	
		1	**8L-8413**	1	STRAP-CABLE (WHITE)	
		1	**8C-5918**	1	TERMINAL AS (NEGATIVE)	
		1	**8T-9756**	1	TERMINAL AS (POSITIVE)	
					(EACH TERMINAL AS INCLUDES)	
		1	**1M-6119**	1	BOLT (5/16-18X1.375-IN)	
		1	**1M-6120**	1	NUT (5/16-18-THD)	
	4	1	**195-1117**	1	BRACKET	
	5	1	**252-6922**	1	COVER	
	6	1	**356-4232**	1	STRAP AS	
Y	7	1	*398-4374*	1	STARTING MOTOR GP-ELECTRIC	243
	8	1	**115-2422**	2	BATTERY GP (12-VOLT, MAINTENANCE FREE, WET)	
					(EACH INCLUDES)	
		1	**123-1373**	6	CAP AS-FILLER (BATTERY)	
M	9	1	**344-5674**	1	NUT (M8X1.25-THD)	
	10	1	**5P-4116**	1	WASHER-HARD (8.8X20.5X2-MM THK)	
	11	1	**7X-7729**	1	WASHER (11X25X3-MM THK)	
M	12	1	**8T-0389**	1	LOCKNUT (M10X1.5-THD)	
M	13	1	**8T-4137**	1	BOLT (M10X1.5X20-MM)	
	14	1	**8T-4226**	2	WASHER-PLATED (10.5X45X3-MM THK)	
M	15	1	**8T-4908**	1	BOLT (M8X1.25X25-MM)	

E - ORDER BY THE CENTIMETER
M - METRIC PART
Y - SEPARATE ILLUSTRATION

398-4454 **BATTERY GP (*contd.*)** **i06230739**

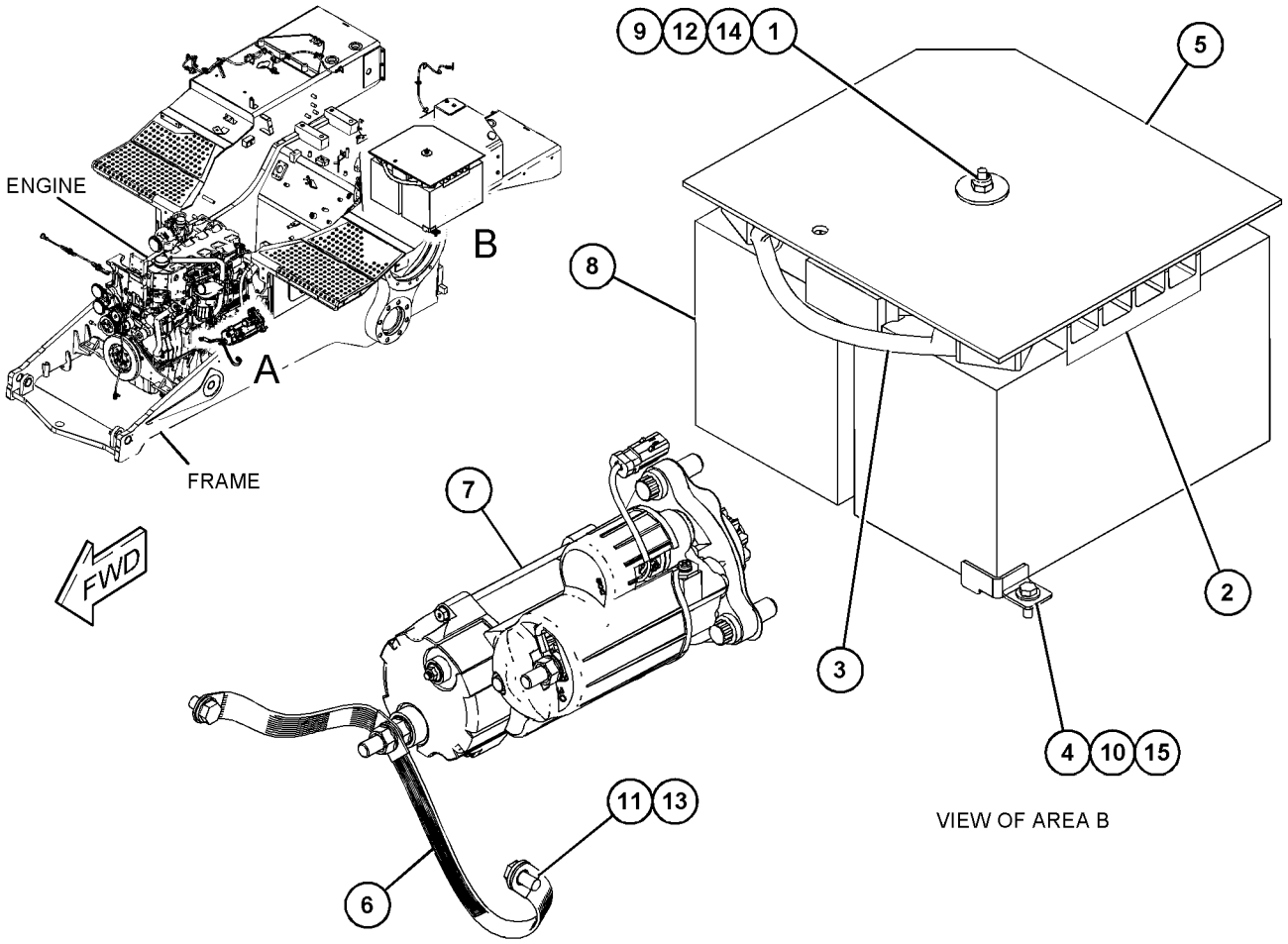

GRAPHIC #1 **<END>** g03832481

398-4455 BATTERY GP—HEAVY-DUTY

S/N: PPP1-UP; SSS1-UP; TTT1-UP

AN ATTACHMENT

SMCS-1401 **i06145817**

NOTE	REF NO	GRAPHIC REF	PART NUMBER	QTY	PART NAME 1 2 3 4 5 6 (PRODUCT LEVEL)	SEE PAGE
	1	1	**5I-8304**	2	ROD	
	2	1	**8V-0622**	1	CABLE AS-BATTERY	
		1	**8C-5917**	1	TERMINAL AS-BATTERY (POSITIVE)	
		1	**1M-6119**	2	BOLT (5/16-18X1.375-IN)	
		1	**1M-6120**	2	NUT (5/16-18-THD)	
E		1	**159-8049**		CABLE (00-GA, RED) (16-CM)	
		1	**8T-9757**	1	TERMINAL AS-BATTERY (NEGATIVE)	
		1	**9G-0003**	1	COVER AS-TERMINAL (BLACK)	
		1	**9G-0004**	1	COVER AS-TERMINAL (RED)	
					(EACH COVER AS INCLUDES)	
		1	**8L-8413**	1	STRAP-CABLE (WHITE)	
	3	1	**153-5710**	2	BATTERY GP (12-VOLT, MAINTENANCE FREE, WET)	
					(EACH INCLUDES)	
		1	**123-1373**	6	CAP AS-FILLER (BATTERY) (NEGATIVE)	
		1	**461-5232**	6	CAP AS-FILLER (BATTERY) (POSITIVE)	
	4	1	**195-1117**	1	BRACKET	
	5	1	**321-1291**	1	HOLD-DOWN AS	
M		1	**8T-3490**	1	NUT-WELD (M10X1.5-THD)	
	6	1	**356-4232**	1	STRAP AS	
Y	7	1	*398-4375*	1	STARTING MOTOR GP-ELECTRIC	244
M	8	1	**344-5674**	2	NUT (M8X1.25-THD)	
	9	1	**7X-7729**	1	WASHER (11X25X3-MM THK)	
M	10	1	**8T-0389**	2	LOCKNUT (M10X1.5-THD)	
	11	1	**8T-4121**	2	WASHER-HARD (11X21X2.5-MM THK)	
M	12	1	**8T-4137**	1	BOLT (M10X1.5X20-MM)	

E - ORDER BY THE CENTIMETER
M - METRIC PART
Y - SEPARATE ILLUSTRATION

398-4455 **BATTERY GP (*contd.*)** **i06145817**

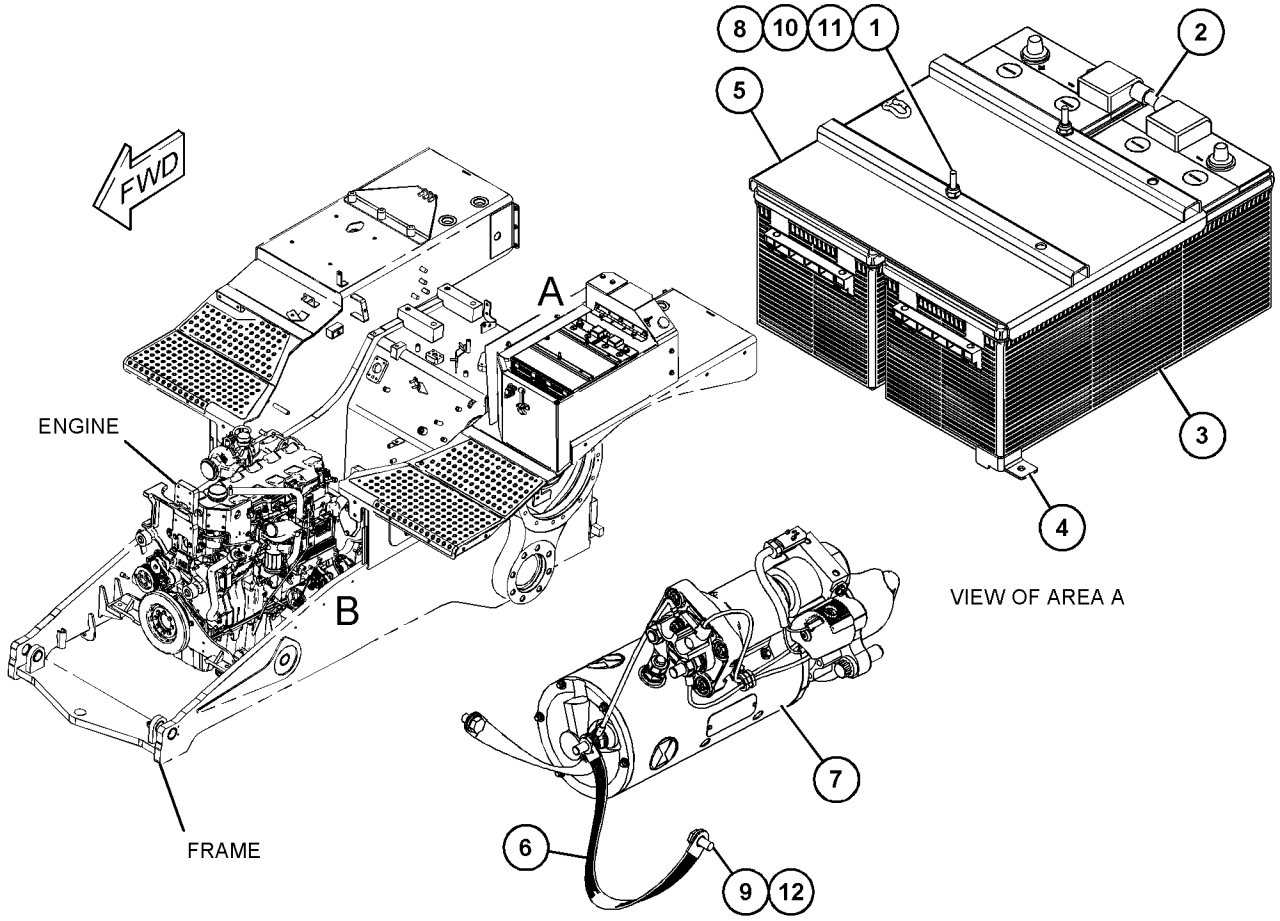

GRAPHIC #1

<END>

g03831358

246-9365 CONTROL & MTG GP-ENGINE ELEK

S/N: TXD1-UP
AIR COOLED
PART OF 420-1870, 420-1871, 423-8451, 423-8452, 423-8453, 423-8454 ENGINE AR-COMPLETE
AN ATTACHMENT

SMCS-1901, 7620 **i05555221**

NOTE	REF NO	GRAPHIC REF	PART NUMBER	QTY	PART NAME 1 2 3 4 5 6 (PRODUCT LEVEL)	SEE PAGE
	1	1	**8T-9655**	8	MOUNT-ISOLATION	
	2	1	**101-3128**	4	SPACER-SPECIAL	
M	3	1	**143-9392**	4	STUD (M8X1.25-THD)	
Y	4	1	*226-7473*	1	CONTROL GP-ENGINE ELECTRONIC	161
	6	1	**233-0891**	1	BRACKET AS	
M		1	**232-1693**	1	BOLT-FLANGE HEAD (M6X1X35-MM)	
	7	1	**9M-1974**	4	WASHER-HARD (8.8X16X2-MM THK)	
	8	1	**9N-0869**	4	WASHER-HARD (8.8X25.5X2-MM THK)	

M - METRIC PART
Y - SEPARATE ILLUSTRATION

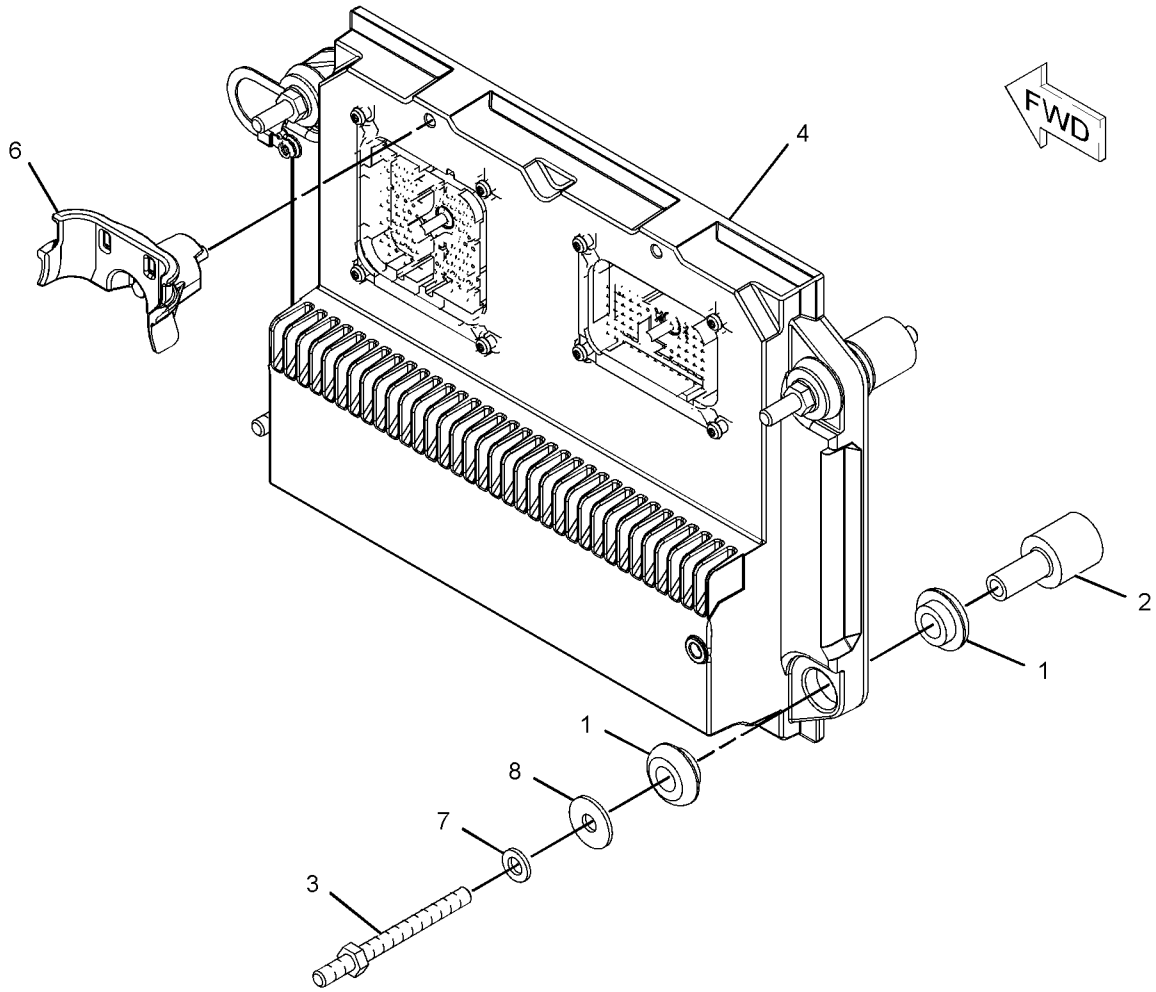

GRAPHIC #1 **<END>** g01131857

226-7473 CONTROL GP-ENGINE ELECTRONIC

S/N: TXD1-UP

PART OF 246-9365 CONTROL & MTG GP-ENGINE ELEK

AN ATTACHMENT

SMCS-1901 **i05643874**

NOTE	REF NO	GRAPHIC REF	PART NUMBER	QTY	PART NAME 1 2 3 4 5 6 (PRODUCT LEVEL)	SEE PAGE
	1	1	**372-2905**	1	CONTROL GP-ELECTRONIC (ENGINE)	

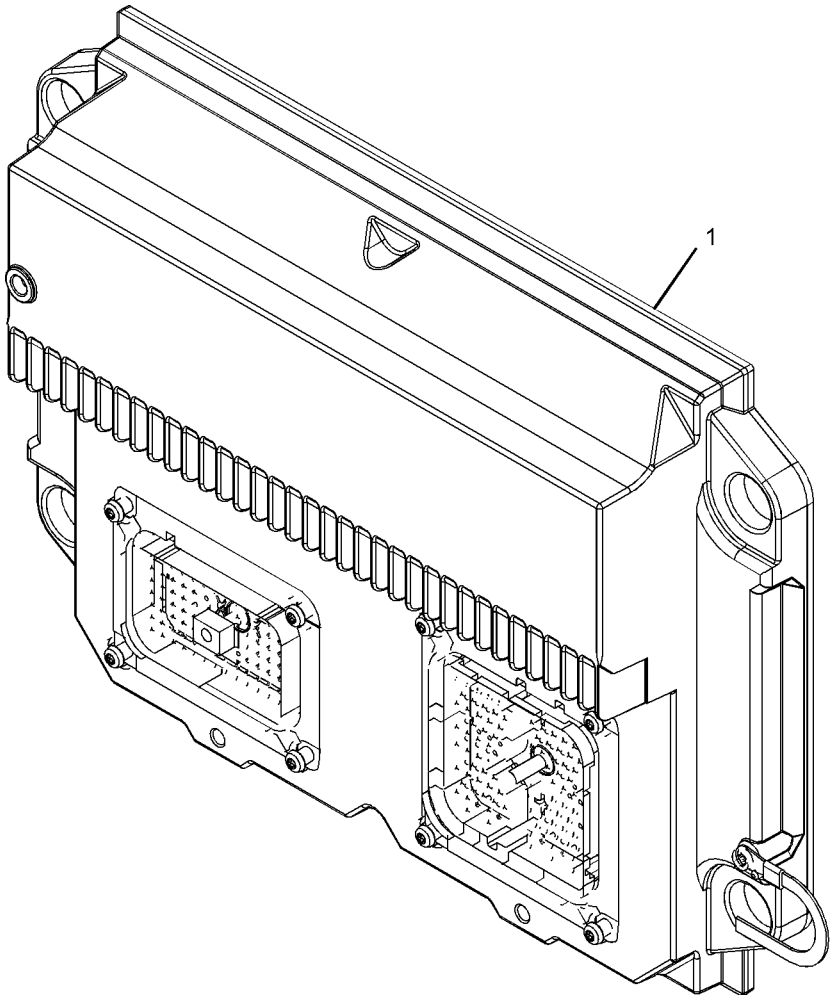

GRAPHIC #1 **<END>** g01101798

449-9303 CONTROL GP-POWER TRAIN–AUTOSHIFT

S/N: PPP1-UP; SSS1-UP; TTT1-UP

AN ATTACHMENT

SMCS-4808, 7610 **i06165537**

NOTE	REF NO	GRAPHIC REF	PART NUMBER	QTY	PART NAME 1 2 3 4 5 6 (PRODUCT LEVEL)	SEE PAGE
	1	1	**428-9166**	1	SWITCH AS (POWER TRAIN)	
M	2	1	**9X-2045**	2	SCREW-TRUSS HEAD (M6X1X20-MM)	

M - METRIC PART

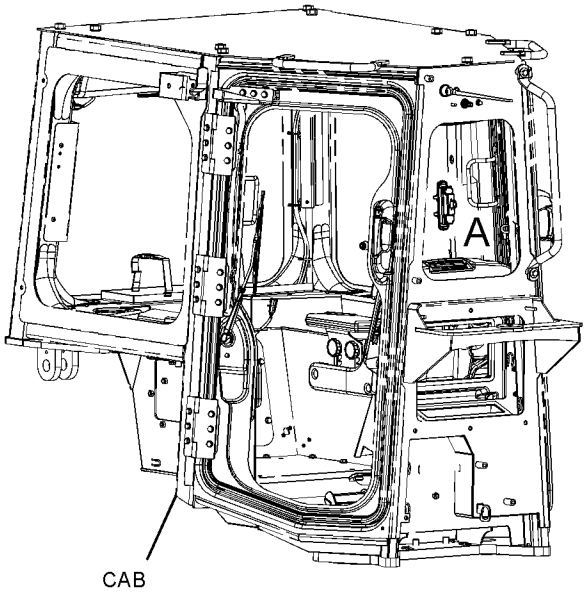

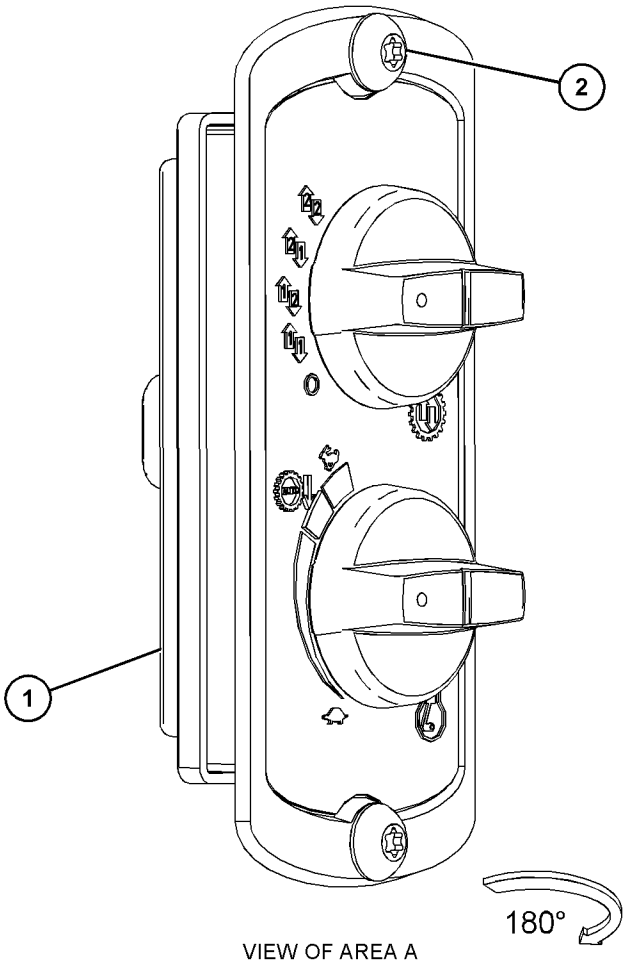

VIEW OF AREA A

GRAPHIC #1 **<END>** g03849723

417-4722 ELECTRONICS GP-COMMUNICATION–NETWORK MANAGER

S/N: PPP1-UP; SSS1-UP; TTT1-UP
PART OF 450-3389 INSTALLATION GP-COMMUNICATION
AN ATTACHMENT

SMCS-7606, 7610, 7620

i06210311

NOTE	REF NO	GRAPHIC REF	PART NUMBER	QTY	PART NAME 1 2 3 4 5 6 (PRODUCT LEVEL)	SEE PAGE
	1	1	**459-0786**	1	CONTROL GP-UNPROGRAMMED (NETWORK MANAGER)	
		1	**7X-6315**	1	STRAP AS-GROUND	
		1	**5P-6006**	1	TUBE-HEAT SHRINK (9.52-MM DIA)	
		1	**2L-8078**	1	TERMINAL-RING (14-GA TO 16-GA, 5/16-IN SCREW)	
		1	**2L-8075**	1	TERMINAL-RING (14-GA TO 16-GA, NO. 8 SCREW)	
		1	**8C-8514**	1	SCREW-MACHINE (8-32X0.375-IN)	
		1	**134-4126**	1	WASHER (4.52X8.28X0.76-MM THK)	
		1	**175-4168**	12	SCREW-PAN HEAD (6-32X0.37-IN)	
		1	**272-2379**	1	FILM-WARNING (EXPLOSION HAZARD, READ OMM)	

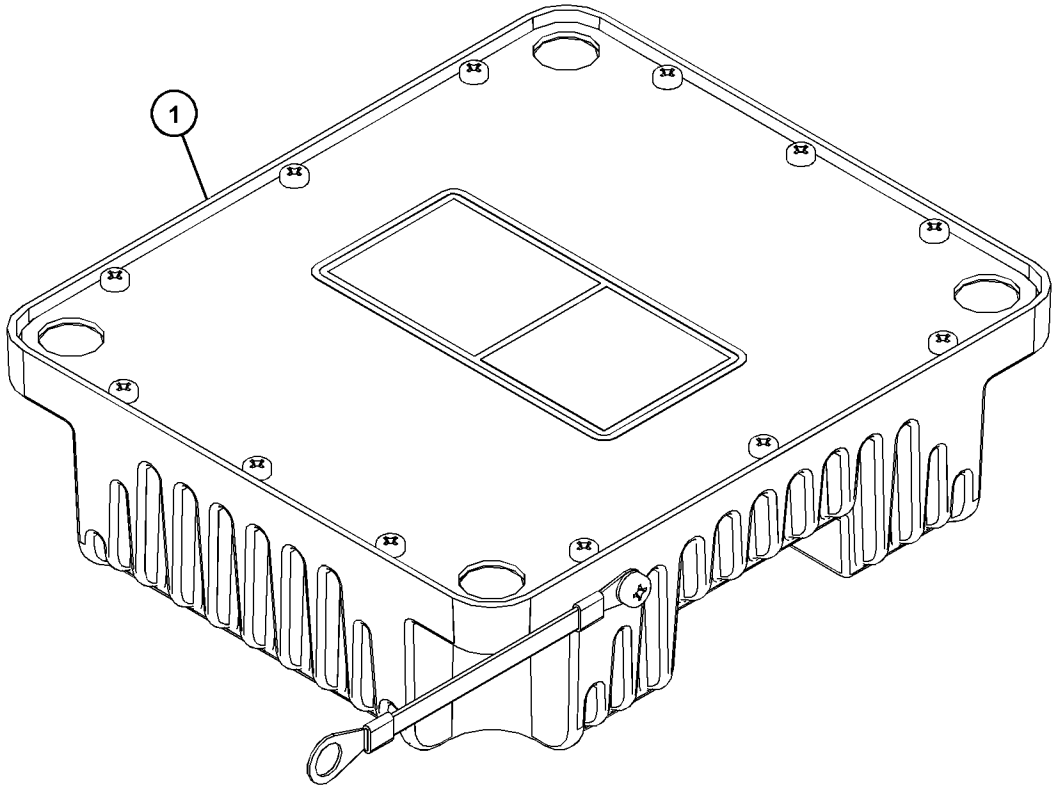

GRAPHIC #1

<END>

g03786631

469-2274 ELECTRONICS GP-MACHINE

S/N: PPP1-UP; SSS1-UP; TTT1-UP
PART OF 398-4278, 398-4279, 398-4280 COMMON AR
ALSO AN ATTACHMENT

SMCS-7610, 7620 **i06231145**

NOTE	PART NUMBER	QTY	PART NAME 1 2 3 4 5 6 (PRODUCT LEVEL)	SEE PAGE
	462-7790	1	SOFTWARE GP-MACHINE (TIER II)	
	462-7808	1	SOFTWARE GP-MACHINE (TIER III)	
	441-6655	1	SOFTWARE GP-MONITOR	

<END>

384-1825 HARNESS AS-CAB

S/N: PPP1-UP; SSS1-UP; TTT1-UP
PART OF 398-0416, 398-0423 DOOR GP-CAB
AN ATTACHMENT

SMCS-1408 **i05899880**

NOTE	PART NUMBER	QTY	PART NAME 1 2 3 4 5 6 (PRODUCT LEVEL)	SEE PAGE
	155-2274	2	KIT-CONNECTING PLUG (6-PIN)	
			(EACH PLUG KIT INCLUDES PLUG AS, WEDGE & INTERACE SEAL)	
	8T-8737	2	PLUG-SEAL	
	9X-3402	10	SOCKET-CONNECTOR (16-GA TO 18-GA)	

<END>

415-2089 HARNESS AS-CAB

S/N: PPP1-UP; SSS1-UP; TTT1-UP
PART OF 415-4252 WIRING GP-CAB
AN ATTACHMENT

SMCS-1408 **i06213241**

NOTE	PART NUMBER	QTY	PART NAME 1 2 3 4 5 6 (PRODUCT LEVEL)	SEE PAGE
	102-8805	2	KIT-RECEPTACLE (6-PIN)	
	166-5229	1	KIT-RECEPTACLE (12-PIN)	
			(EACH RECEPTACLE KIT INCLUDES RECEPTACLE AS & WEDGE)	
	8T-8737	39	PLUG-SEAL	
	9X-1054	2	PLUG AS-CONNECTOR (4-PIN)	
	9X-1056	8	TERMINAL-RECEPTACLE (14-GA TO 16-GA)	
E	**125-7874**		TUBE-HEAT SHRINK (5.72-MM DIA) (50-CM)	
E	**125-7875**		TUBE-HEAT SHRINK (7.44-MM DIA) (25-CM)	
	9X-3402	55	SOCKET-CONNECTOR (16-GA TO 18-GA)	
			—OR—	
	126-1768	55	SOCKET-CONNECTOR (14-GA TO 16-GA)	
	5P-4571	2	TERMINAL-BLADE (14-GA TO 16-GA)	
	097-7234	2	TERMINAL-BLADE (18-GA TO 22-GA)	
	2L-8069	3	TERMINAL-RING (2-GA TO 10-GA, 3/8-IN SCREW)	
	9X-3401	44	PIN-CONNECTOR (16-GA TO 18-GA)	
			—OR—	
	126-1767	44	PIN-CONNECTOR (14-GA TO 16-GA)	
	155-2255	2	KIT-CONNECTING PLUG (12-PIN)	
	155-2265	5	KIT-CONNECTING PLUG (8-PIN)	
	155-2260	1	KIT-CONNECTING PLUG (3-PIN)	
	155-2270	2	KIT-CONNECTING PLUG (2-PIN)	
	155-2274	2	KIT-CONNECTING PLUG (6-PIN)	
			(EACH PLUG KIT INCLUDES PLUG AS WEDGE(S) & INTERFACE SEAL)	
B	**1P-0810**		TAPE-ELECTRICAL	
	167-3692	1	RECEPTACLE AS-CONNECTOR (31-PIN)	
	185-1860	12	SEAL-WIRE	
	185-1861	8	SEAL-WIRE	
	202-5397	10	PLUG	
	204-1297	14	TERMINAL AS-BLADE (18-GA TO 20-GA)	
			(EACH INCLUDES)	
	235-4123	1	TERMINAL (18-GA TO 20-GA)	
	245-7434	3	KIT-CONNECTING PLUG (10-PIN)	
			(EACH INCLUDES CONNECTOR PLUG, WIRE ASSEMBLIES & PLUGS)	
	274-3774	1	CAP-CONNECTOR	
	274-3778	1	CAP-SEAL	

B - USE AS REQUIRED
E - ORDER BY THE CENTIMETER

<END>

415-2090 HARNESS AS-CAB

S/N: PPP1-UP; SSS1-UP; TTT1-UP
PART OF 415-2092 HARNESS AS-CAB
AN ATTACHMENT

SMCS-1408 **i06213242**

NOTE	PART NUMBER	QTY	PART NAME 1 2 3 4 5 6 (PRODUCT LEVEL)	SEE PAGE
	102-8802	1	KIT-RECEPTACLE (2-PIN)	
	102-8803	1	KIT-RECEPTACLE (3-PIN)	
	102-8804	2	KIT-RECEPTACLE (4-PIN)	
	102-8801	1	KIT-RECEPTACLE (12-PIN)	
	190-7614	1	KIT-RECEPTACLE (12-PIN)	
	197-7565	1	KIT-RECEPTACLE (4-PIN)	
			(EACH RECEPTACLE KIT INCLUDES RECEPTACLE AS & WEDGE)	
	3S-2093	2	STRAP-CABLE	
	9X-0196	1	TERMINAL AS	
	8T-8737	131	PLUG-SEAL	
	9X-6772	4	STRAP-CABLE	
E	**114-8843**		SLEEVE-PLASTIC (100-CM)	
E	**125-7874**		TUBE-HEAT SHRINK (5.72-MM DIA) (160-CM)	
E	**125-7875**		TUBE-HEAT SHRINK (7.44-MM DIA) (50-CM)	
	9X-3402	204	SOCKET-CONNECTOR (16-GA TO 18-GA)	
			—OR—	
	126-1768	204	SOCKET-CONNECTOR (14-GA TO 16-GA)	
	126-1774	2	COVER-CONNECTOR	
	128-4123	20	SEAL	
	2L-8069	3	TERMINAL-RING (2-GA TO 10-GA, 3/8-IN SCREW)	
	2L-8075	1	TERMINAL-RING (14-GA TO 16-GA, NO. 8 SCREW)	
	2L-8079	2	TERMINAL-RING (14-GA TO 16-GA, 3/8-IN SCREW)	
	134-2540	1	RESISTOR AS-CONNECTION (3-PIN)	
	9X-3401	75	PIN-CONNECTOR (16-GA TO 18-GA)	
			—OR—	
	126-1767	75	PIN-CONNECTOR (14-GA TO 16-GA)	
	147-1445	1	PLUG AS-CONNECTOR (70-PIN)	
	147-1446	1	PLUG AS-CONNECTOR (70-PIN)	
			(EACH PLUG AS INCLUDES)	
	159-9322	1	SEAL-O-RING	
	155-2255	1	KIT-CONNECTING PLUG (12-PIN)	
	155-2256	1	KIT-CONNECTING PLUG (12-PIN)	
	155-2265	1	KIT-CONNECTING PLUG (8-PIN)	
	155-2260	2	KIT-CONNECTING PLUG (3-PIN)	
	155-2270	4	KIT-CONNECTING PLUG (2-PIN)	
	155-2271	4	KIT-CONNECTING PLUG (4-PIN)	
	155-2274	5	KIT-CONNECTING PLUG (6-PIN)	
	174-0503	1	KIT-CONNECTING PLUG (3-PIN)	
			(EACH PLUG KIT INCLUDES PLUG AS, WEDGE(S) & INTERFACE SEAL)	
B	**1P-0810**		TAPE-ELECTRICAL	
	167-3692	2	RECEPTACLE AS-CONNECTOR (31-PIN)	
	167-3693	2	PLUG AS-CONNECTOR (31-PIN)	
	185-1860	5	SEAL-WIRE	
	189-3158	1	SUPPRESSOR-ARC	
	202-0314	20	TERMINAL AS (14-GA)	
			(EACH INCLUDES)	
	128-4123	1	SEAL	
	202-5397	5	PLUG	
	204-1297	5	TERMINAL AS-BLADE (18-GA TO 20-GA)	
			(EACH INCLUDES)	
	235-4123	1	TERMINAL (18-GA TO 20-GA)	
	245-7434	1	KIT-CONNECTING PLUG (10-PIN)	
			(INCLUDES CONNECTOR PLUG, WIRE ASSEMBLIES & PLUGS)	

415-2090 **HARNESS AS-CAB (*contd.*)** **i06213242**

NOTE	PART NUMBER	QTY	PART NAME 1 2 3 4 5 6 (PRODUCT LEVEL)	SEE PAGE
	274-3774	1	CAP-CONNECTOR	
	274-3775	1	CAP-CONNECTOR	
	274-3776	2	CAP-SEAL	
	274-3777	2	CAP-CONNECTOR	

B - USE AS REQUIRED
E - ORDER BY THE CENTIMETER

<END>

415-2091 HARNESS AS-CAB—FRONT

S/N: PPP1-UP; SSS1-UP; TTT1-UP
PART OF 415-4252, 420-1160 WIRING GP-CAB
AN ATTACHMENT

SMCS-1408 **i06213243**

NOTE	PART NUMBER	QTY	PART NAME 1 2 3 4 5 6 (PRODUCT LEVEL)	SEE PAGE
	8T-8737	10	PLUG-SEAL	
E	**125-7874**		TUBE-HEAT SHRINK (5.72-MM DIA) (10-CM)	
	9X-3402	44	SOCKET-CONNECTOR (16-GA TO 18-GA)	
			—OR—	
	126-1768	44	SOCKET-CONNECTOR (14-GA TO 16-GA)	
	2L-8079	2	TERMINAL-RING (14-GA TO 16-GA, 3/8-IN SCREW)	
	155-2260	2	KIT-CONNECTING PLUG (3-PIN)	
	155-2271	2	KIT-CONNECTING PLUG (4-PIN)	
	155-2274	1	KIT-CONNECTING PLUG (6-PIN)	
			(EACH PLUG KIT INCLUDES PLUG AS, WEDGE(S) & INTERFACE SEAL)	
B	**1P-0810**		TAPE-ELECTRICAL	
	167-3693	1	PLUG AS-CONNECTOR (31-PIN)	
	230-4013	1	PLUG AS-CONNECTOR (3-PIN)	
	455-0705	1	SEAL-CONNECTOR	
	274-3777	1	CAP-CONNECTOR	
	340-2567	10	WIRE AS (18-GA)	
	340-2566	42	PLUG-SEAL	

B - USE AS REQUIRED
E - ORDER BY THE CENTIMETER

<END>

415-2092 HARNESS AS-CAB—LH

S/N: PPP1-UP; SSS1-UP; TTT1-UP
PART OF 415-4252, 420-1160 WIRING GP-CAB
AN ATTACHMENT

SMCS-1408 **i06215433**

NOTE	PART NUMBER	QTY	PART NAME 1 2 3 4 5 6 (PRODUCT LEVEL)	SEE PAGE
Y	**415-2090**	1	HARNESS AS-CAB (FUSE BLOCK)	166
	275-7877	1	BLOCK AS-FUSE	
	1H-3244	2	LOCKWASHER	
M	**5C-2890**	2	NUT (M6X1-THD)	
	8T-4205	2	WASHER-HARD (7.2X14.5X2-MM THK)	
	306-0348	1	COVER-FUSE	
	306-0351	1	SEAL-COVER	

M - METRIC PART
Y - SEPARATE ILLUSTRATION

<END>

420-1159 HARNESS AS-CAB—REAR

S/N: PPP1-UP; SSS1-UP; TTT1-UP
PART OF 420-1160 WIRING GP-CAB
AN ATTACHMENT

SMCS-1408 **i06213244**

NOTE	PART NUMBER	QTY	PART NAME 1 2 3 4 5 6 (PRODUCT LEVEL)	SEE PAGE
	102-8801	1	KIT-RECEPTACLE (12-PIN)	
			(INCLUDES RECEPTACLE AS & WEDGE)	
	8T-8737	37	PLUG-SEAL	
	9X-1054	2	PLUG AS-CONNECTOR (4-PIN)	
	9X-1056	8	TERMINAL-RECEPTACLE (14-GA TO 16-GA)	
E	**125-7874**		TUBE-HEAT SHRINK (5.72-MM DIA) (25-CM)	
E	**125-7875**		TUBE-HEAT SHRINK (7.44-MM DIA) (10-CM)	
	9X-3402	17	SOCKET-CONNECTOR (16-GA TO 18-GA)	
			—OR—	
	126-1768	17	SOCKET-CONNECTOR (14-GA TO 16-GA)	
	2L-8069	2	TERMINAL-RING (2-GA TO 10-GA, 3/8-IN SCREW)	
	9X-3401	20	PIN-CONNECTOR (16-GA TO 18-GA)	
			—OR—	
	126-1767	20	PIN-CONNECTOR (14-GA TO 16-GA)	
	155-2255	2	KIT-CONNECTING PLUG (12-PIN)	
	155-2260	1	KIT-CONNECTING PLUG (3-PIN)	
	155-2270	2	KIT-CONNECTING PLUG (2-PIN)	
			(EACH PLUG KIT INCLUDES PLUG AS, WEDGE(S) & INTERFACE SEAL)	
B	**1P-0810**		TAPE-ELECTRICAL	
	167-3692	1	RECEPTACLE AS-CONNECTOR (31-PIN)	
	185-1860	8	SEAL-WIRE	
	185-1861	6	SEAL-WIRE	
	202-5397	6	PLUG	
	204-1297	8	TERMINAL AS-BLADE (18-GA TO 20-GA)	
			(EACH INCLUDES)	
	235-4123	1	TERMINAL (18-GA TO 20-GA)	
	245-7434	2	KIT-CONNECTING PLUG (10-PIN)	
			(EACH INCLUDES CONNECTOR PLUG, WIRE ASSEMBLIES & PLUGS)	
	274-3774	1	CAP-CONNECTOR	
	274-3779	1	CAP-SEAL	

B - USE AS REQUIRED
E - ORDER BY THE CENTIMETER

<END>

465-2789 HARNESS AS-CONTROL

S/N: PPP1-UP; SSS1-UP; TTT1-UP
PART OF 450-2736, 450-2737 INSTALLATION GP-COMMUNICATION
AN ATTACHMENT

SMCS-1408 **i06219389**

NOTE	PART NUMBER	QTY	PART NAME 1 2 3 4 5 6 (PRODUCT LEVEL)	SEE PAGE
	190-7614	1	KIT-RECEPTACLE (12-PIN)	
			(INCLUDES RECEPTACLE AS & WEDGE)	
	8T-8737	6	PLUG-SEAL	
	9X-3402	9	SOCKET-CONNECTOR (16-GA TO 18-GA)	
			—OR—	
	126-1768	9	SOCKET-CONNECTOR (14-GA TO 16-GA)	
	9X-3401	9	PIN-CONNECTOR (16-GA TO 18-GA)	
			—OR—	
	126-1767	9	PIN-CONNECTOR (14-GA TO 16-GA)	
	155-2256	1	KIT-CONNECTING PLUG (12-PIN)	
			(INCLUDES PLUG AS, WEDGE & INTERFACE SEAL)	

<END>

465-2806 HARNESS AS-CONTROL

S/N: PPP1-UP; SSS1-UP; TTT1-UP
PART OF 450-3389 INSTALLATION GP-COMMUNICATION
AN ATTACHMENT

SMCS-1408 **i06210330**

NOTE	PART NUMBER	QTY	PART NAME 1 2 3 4 5 6 (PRODUCT LEVEL)	SEE PAGE
	102-8804	1	KIT-RECEPTACLE (4-PIN)	
	190-7614	1	KIT-RECEPTACLE (12-PIN)	
			(EACH RECEPTACLE KIT INCLUDES RECEPTACLE AS & WEDGE)	
	3E-3377	1	WEDGE-RECEPTACLE LOCK (4-PIN)	
D	**5P-6001**		TUBE-HEAT SHRINK (4.75-MM DIA) (0.2-M)	
	8T-8737	63	PLUG-SEAL	
	9X-6772	2	STRAP-CABLE	
E	**125-7874**		TUBE-HEAT SHRINK (5.72-MM DIA) (20-CM)	
E	**125-7876**		TUBE-HEAT SHRINK (17.78-MM DIA) (20-CM)	
	9X-3402	47	SOCKET-CONNECTOR (16-GA TO 18-GA)	
			—OR—	
	126-1768	47	SOCKET-CONNECTOR (14-GA TO 16-GA)	
	126-1774	1	COVER-CONNECTOR	
	9X-3401	12	PIN-CONNECTOR (16-GA TO 18-GA)	
			—OR—	
	126-1767	12	PIN-CONNECTOR (14-GA TO 16-GA)	
	147-1445	1	PLUG AS-CONNECTOR (70-PIN)	
	159-9322	1	SEAL-O-RING	
	155-2255	1	KIT-CONNECTING PLUG (12-PIN)	
	155-2256	2	KIT-CONNECTING PLUG (12-PIN)	
			(EACH PLUG KIT INCLUDES PLUG AS, WEDGE & INTERFACE SEAL)	
	155-2258	3	WEDGE-PLUG LOCK (12-PIN)	

D - ORDER BY THE METER
E - ORDER BY THE CENTIMETER

<END>

387-1410 HARNESS AS-DASH

S/N: PPP1-UP; SSS1-UP; TTT1-UP

PART OF 387-5701 AIR CONDITIONER & MOUNTING GP, 375-7911 HEATER & MTG GP-CAB

AN ATTACHMENT

SMCS-1408 **i05898398**

NOTE	PART NUMBER	QTY	PART NAME 1 2 3 4 5 6 (PRODUCT LEVEL)	SEE PAGE
	6T-6505	2	HOUSING-RECEPTACLE (BLADE, POSITIVE LOCK)	
	155-2270	1	KIT-CONNECTING PLUG (2-PIN)	
			(INCLUDES PLUG AS, WEDGE & INTERFACE SEAL)	
	102-8805	1	KIT-RECEPTACLE (6-PIN)	
			(INCLUDES RECEPTACLE AS & WEDGE)	
	9W-0852	6	PIN-CONNECTOR (14-GA TO 16-GA)	
	9W-0844	2	SOCKET-CONNECTOR (14-GA TO 16-GA)	
	6T-6506	2	TERMINAL-BLADE (14-GA TO 18-GA)	
	065-5071	3	TERMINAL-BLADE (14-GA TO 16-GA)	
	5P-4571	1	TERMINAL-BLADE (14-GA TO 16-GA)	
E	**125-7874**		TUBE-HEAT SHRINK (5.72-MM DIA) (10-CM)	
	3E-3383	1	WEDGE-RECEPTACLE LOCK (6-PIN)	

E - ORDER BY THE CENTIMETER

<END>

323-9140 HARNESS AS-ENGINE

S/N: TXD1-UP

PART OF 438-3435 WIRING GP-ELECTRONIC CONTROL

AN ATTACHMENT

SMCS-1408 **i05817769**

NOTE	PART NUMBER	QTY	PART NAME 1 2 3 4 5 6 (PRODUCT LEVEL)	SEE PAGE
	211-6807	1	COVER-CONNECTOR	
	111-2416	1	PLUG AS-CONNECTOR (2-PIN)	
	100-3320	1	PLUG AS-CONNECTOR (2-PIN)	
			(EACH PLUG AS-CONNECTOR INCLUDES)	
	126-5011	1	SEAL-CONNECTOR	
	155-2265	1	KIT-CONNECTING PLUG (8-PIN)	
	155-2270	3	KIT-CONNECTING PLUG (2-PIN)	
			(EACH PLUG KIT INCLUDES PLUG AS, WEDGE & INTERFACE SEAL)	
	172-6062	1	PLUG AS-CONNECTOR (18-PIN)	
	230-4011	2	PLUG AS-CONNECTOR (2-PIN)	
			(EACH INCLUDES)	
	264-7029	1	SEAL-CONNECTOR	
	237-0227	3	PLUG AS-CONNECTOR (3-PIN)	
	230-4013	1	PLUG AS-CONNECTOR (3-PIN)	
			(EACH PLUG AS INCLUDES)	
	264-7030	1	SEAL-CONNECTOR	
	264-5732	1	PLUG AS-CONNECTOR (120-PIN)	
	288-7324	1	SEAL-CONNECTOR	
	160-8124	1	PLUG AS (2-PIN)	
	8T-8737	2	PLUG-SEAL	
	8T-8737	93	PLUG-SEAL	
E	**317-1204**		SLEEVE (8-CM)	
E	**289-5150**		SLEEVE (112-CM)	
E	**289-5151**		SLEEVE (12-CM)	
	9X-3402	75	SOCKET-CONNECTOR (16-GA TO 18-GA)	
			—OR—	
	126-1768	75	SOCKET-CONNECTOR (14-GA TO 16-GA)	
	305-5362	4	TERMINAL AS (18-GA)	
	1S-9593	2	STRAP-CABLE	
E	**125-7874**		TUBE-HEAT SHRINK (5.72-MM DIA) (40-CM)	

E - ORDER BY THE CENTIMETER

<END>

433-2476 HARNESS AS-ENGINE

S/N: PPP1-UP; SSS1-UP; TTT1-UP
PART OF 398-4435 WIRING GP-ENGINE
ALSO AN ATTACHMENT

SMCS-1408 **i06216570**

NOTE	PART NUMBER	QTY	PART NAME 1 2 3 4 5 6 (PRODUCT LEVEL)	SEE PAGE
	102-8802	1	KIT-RECEPTACLE (2-PIN)	
	102-8803	1	KIT-RECEPTACLE (3-PIN)	
			(EACH RECEPTACLE KIT INCLUDES RECEPTACLE AS & WEDGE)	
	3E-3371	1	WEDGE-RECEPTACLE LOCK (3-PIN)	
	3S-2093	2	STRAP-CABLE	
	6L-3483	1	COVER-TERMINAL	
	7K-1181	1	STRAP-CABLE	
	8T-8737	57	PLUG-SEAL	
E	**119-3662**		TUBE-HEAT SHRINK (10.85-MM DIA) (13-CM)	
E	**125-7874**		TUBE-HEAT SHRINK (5.72-MM DIA) (25-CM)	
	9X-3402	75	SOCKET-CONNECTOR (16-GA TO 18-GA)	
			—OR—	
	126-1768	75	SOCKET-CONNECTOR (14-GA TO 16-GA)	
	126-1774	1	COVER-CONNECTOR	
	2L-8071	1	TERMINAL-RING (10-GA TO 12-GA, 1/2-IN SCREW)	
	134-2540	1	RESISTOR AS-CONNECTION (3-PIN)	
	9X-3401	5	PIN-CONNECTOR (16-GA TO 18-GA)	
			—OR—	
	126-1767	5	PIN-CONNECTOR (14-GA TO 16-GA)	
	7N-9017	1	TERMINAL-RING (18-GA TO 22-GA, NO. 10 SCREW)	
	155-2260	2	KIT-CONNECTING PLUG (3-PIN)	
	155-2270	7	KIT-CONNECTING PLUG (2-PIN)	
	155-2271	1	KIT-CONNECTING PLUG (4-PIN)	
	174-0503	1	KIT-CONNECTING PLUG (3-PIN)	
			(EACH PLUG KIT INCLUDES PLUG AS, WEDGE(S) & INTERFACE SEAL)	
	160-7689	1	PLUG AS-CONNECTOR (70-PIN)	
	159-9322	1	SEAL-O-RING	
	160-8124	1	PLUG AS (2-PIN)	
	102-8802	1	KIT-RECEPTACLE (2-PIN)	
			(INCLUDES RECEPTACLE AS & WEDGE)	
	8T-8737	2	PLUG-SEAL	
	167-3693	1	PLUG AS-CONNECTOR (31-PIN)	
	230-4011	2	PLUG AS-CONNECTOR (2-PIN)	
			(EACH INCLUDES)	
	455-0704	1	SEAL-CONNECTOR	

E - ORDER BY THE CENTIMETER

<END>

245-5891 HARNESS AS-HEATER & AIR COND

S/N: PPP1-UP; SSS1-UP; TTT1-UP
PART OF 394-6377 CONDENSER GP-REFRIGERANT
AN ATTACHMENT

SMCS-1408 **i05903365**

NOTE	PART NUMBER	QTY	PART NAME 1 2 3 4 5 6 (PRODUCT LEVEL)	SEE PAGE
	155-2270	2	KIT-CONNECTING PLUG (2-PIN)	
			(EACH INCLUDES PLUG AS, WEDGE & INTERFACE SEAL)	
	102-8805	1	KIT-RECEPTACLE (6-PIN)	
			(INCLUDES RECEPTACLE AS & WEDGE)	
	9W-0852	5	PIN-CONNECTOR (14-GA TO 16-GA)	
	9X-1054	2	PLUG AS-CONNECTOR (4-PIN)	
	9G-3695	1	PLUG-SEAL	
	9W-0844	4	SOCKET-CONNECTOR (14-GA TO 16-GA)	
	9X-1056	8	TERMINAL-RECEPTACLE (14-GA TO 16-GA)	
E	**119-3662**		TUBE-HEAT SHRINK (10.85-MM DIA) (20-CM)	

E - ORDER BY THE CENTIMETER

<END>

420-1154 HARNESS AS-LIGHTING

S/N: PPP1-UP; SSS1-UP; TTT1-UP
PART OF 398-4440 LIGHTING GP-FLOOD
AN ATTACHMENT

SMCS-1408 **i06200627**

NOTE	PART NUMBER	QTY	PART NAME 1 2 3 4 5 6 (PRODUCT LEVEL)	SEE PAGE
	274-3774	7	CAP-CONNECTOR	
	274-3777	1	CAP-CONNECTOR	
	155-2270	7	KIT-CONNECTING PLUG (2-PIN)	
	155-2274	1	KIT-CONNECTING PLUG (6-PIN)	
	155-2255	1	KIT-CONNECTING PLUG (12-PIN)	
			(EACH PLUG KIT INCLUDES PLUG AS, WEDGE & INTERFACE SEAL)	
	8T-8737	3	PLUG-SEAL	
	8T-8730	17	SOCKET-CONNECTOR (16-GA TO 18-GA)	
	9W-0844	12	SOCKET-CONNECTOR (14-GA TO 16-GA)	
E	**125-7874**		TUBE-HEAT SHRINK (5.72-MM DIA) (5-CM)	
E	**125-7875**		TUBE-HEAT SHRINK (7.44-MM DIA) (15-CM)	
	155-2258	1	WEDGE-PLUG LOCK (12-PIN)	

E - ORDER BY THE CENTIMETER

<END>

420-1156 HARNESS AS-LIGHTING

S/N: PPP1-UP; SSS1-UP; TTT1-UP
PART OF 433-2469, 433-2482 LIGHTING GP-FLOOD
AN ATTACHMENT

SMCS-1408 **i06200629**

NOTE	PART NUMBER	QTY	PART NAME 1 2 3 4 5 6 (PRODUCT LEVEL)	SEE PAGE
	274-3774	3	CAP-CONNECTOR	
	155-2255	1	KIT-CONNECTING PLUG (12-PIN)	
	155-2270	7	KIT-CONNECTING PLUG (2-PIN)	
			(EACH PLUG KIT INCLUDES PLUG AS, WEDGE & INTERFACE SEAL)	
	8T-8737	7	PLUG-SEAL	
	8T-8730	15	SOCKET-CONNECTOR (16-GA TO 18-GA)	
	9W-0844	4	SOCKET-CONNECTOR (14-GA TO 16-GA)	
E	**125-7874**		TUBE-HEAT SHRINK (5.72-MM DIA) (5-CM)	
E	**125-7875**		TUBE-HEAT SHRINK (7.44-MM DIA) (15-CM)	
	155-2258	1	WEDGE-PLUG LOCK (12-PIN)	

E - ORDER BY THE CENTIMETER

<END>

430-4097 HARNESS AS-LIGHTING

S/N: PPP1-UP; SSS1-UP; TTT1-UP
CAB FLOODLIGHT
PART OF 433-2481 LIGHTING GP-FLOOD
AN ATTACHMENT

SMCS-1408 **i06220778**

NOTE	PART NUMBER	QTY	PART NAME 1 2 3 4 5 6 (PRODUCT LEVEL)	SEE PAGE
	8T-8737	3	PLUG-SEAL	
E	**125-7874**		TUBE-HEAT SHRINK (5.72-MM DIA) (15-CM)	
E	**125-7875**		TUBE-HEAT SHRINK (7.44-MM DIA) (5-CM)	
	9X-3402	25	SOCKET-CONNECTOR (16-GA TO 18-GA)	
			—OR—	
	126-1768	25	SOCKET-CONNECTOR (14-GA TO 16-GA)	
	155-2255	1	KIT-CONNECTING PLUG (12-PIN)	
	155-2270	5	KIT-CONNECTING PLUG (2-PIN)	
	155-2274	1	KIT-CONNECTING PLUG (6-PIN)	
			(EACH KIT INCLUDES PLUG AS, WEDGE & INTERFACE SEAL)	
	374-7463	1	CAP-SEAL	
	374-7466	1	CAP-SEAL	

E - ORDER BY THE CENTIMETER

<END>

448-2114 HARNESS AS-LIGHTING

S/N: PPP1-UP; SSS1-UP; TTT1-UP
PART OF 398-4439 LIGHTING GP-FLOOD
AN ATTACHMENT

SMCS-1408 **i06193696**

NOTE	PART NUMBER	QTY	PART NAME 1 2 3 4 5 6 (PRODUCT LEVEL)	SEE PAGE
	8T-8737	4	PLUG-SEAL	
E	**125-7874**		TUBE-HEAT SHRINK (5.72-MM DIA) (10-CM)	
	9X-3402	20	SOCKET-CONNECTOR (16-GA TO 18-GA)	
			—OR—	
	126-1768	20	SOCKET-CONNECTOR (14-GA TO 16-GA)	
	155-2258	1	WEDGE-PLUG LOCK (12-PIN)	
	155-2270	3	KIT-CONNECTING PLUG (2-PIN)	
	155-2274	1	KIT-CONNECTING PLUG (6-PIN)	
	155-2255	1	KIT-CONNECTING PLUG (12-PIN)	
			(EACH PLUG KIT INCLUDES PLUG AS, WEDGE & INTERFACE SEAL)	
	274-3774	1	CAP-CONNECTOR	
	274-3777	1	CAP-CONNECTOR	

E - ORDER BY THE CENTIMETER

<END>

399-7895 HARNESS AS-PLATFORM

S/N: PPP1-UP; SSS1-UP; TTT1-UP
PART OF 375-0350 AIR CONDITIONER GP
AN ATTACHMENT

SMCS-1408 **i05901424**

NOTE	PART NUMBER	QTY	PART NAME 1 2 3 4 5 6 (PRODUCT LEVEL)	SEE PAGE
	2V-8260	1	GROMMET	
	155-2270	1	KIT-CONNECTING PLUG (2-PIN)	
			(INCLUDES PLUG AS, WEDGE & INTERFACE SEAL)	
	102-8802	1	KIT-RECEPTACLE (2-PIN)	
			(INCLUDES RECEPTACLE AS & WEDGE)	
	9W-0852	2	PIN-CONNECTOR (14-GA TO 16-GA)	
	9W-0844	2	SOCKET-CONNECTOR (14-GA TO 16-GA)	

<END>

398-4445 HARNESS AS-REAR LIGHTING

S/N: PPP1-UP; SSS1-UP; TTT1-UP
PART OF 398-4444, 488-2530 LIGHTING GP-FLOOD
AN ATTACHMENT

SMCS-1408 **i06193835**

NOTE	PART NUMBER	QTY	PART NAME 1 2 3 4 5 6 (PRODUCT LEVEL)	SEE PAGE
	274-3774	1	CAP-CONNECTOR	
	274-3777	1	CAP-CONNECTOR	
	155-2270	3	KIT-CONNECTING PLUG (2-PIN)	
	155-2274	1	KIT-CONNECTING PLUG (6-PIN)	
	155-2255	1	KIT-CONNECTING PLUG (12-PIN)	
			(EACH PLUG KIT INCLUDES PLUG AS, WEDGE & INTERFACE SEAL)	
	102-8804	1	KIT-RECEPTACLE (4-PIN)	
			(INCLUDES RECEPTACLE AS & WEDGE)	
	8T-8729	4	PIN-CONNECTOR (16-GA TO 18-GA)	
	8T-8737	3	PLUG-SEAL	
	8T-8730	9	SOCKET-CONNECTOR (16-GA TO 18-GA)	
	9W-0844	12	SOCKET-CONNECTOR (14-GA TO 16-GA)	
E	**125-7874**		TUBE-HEAT SHRINK (5.72-MM DIA) (15-CM)	
E	**125-7875**		TUBE-HEAT SHRINK (7.44-MM DIA) (5-CM)	
	155-2258	1	WEDGE-PLUG LOCK (12-PIN)	
	3E-3377	1	WEDGE-RECEPTACLE LOCK (4-PIN)	

E - ORDER BY THE CENTIMETER

<END>

420-1157 HARNESS AS-REAR LIGHTING

S/N: PPP1-UP; SSS1-UP; TTT1-UP
PART OF 433-2468 LIGHTING GP-FLOOD
AN ATTACHMENT

SMCS-1408 **i06193772**

NOTE	PART NUMBER	QTY	PART NAME 1 2 3 4 5 6 (PRODUCT LEVEL)	SEE PAGE
	274-3774	1	CAP-CONNECTOR	
	155-2255	1	KIT-CONNECTING PLUG (12-PIN)	
	155-2270	3	KIT-CONNECTING PLUG (2-PIN)	
			(EACH PLUG KIT INCLUDES PLUG AS, WEDGE & INTERFACE SEAL)	
	8T-8737	8	PLUG-SEAL	
	8T-8730	6	SOCKET-CONNECTOR (16-GA TO 18-GA)	
	9W-0844	4	SOCKET-CONNECTOR (14-GA TO 16-GA)	
B	**125-7874**		TUBE-HEAT SHRINK (5.72-MM DIA) (10-CM)	
	155-2258	1	WEDGE-PLUG LOCK (12-PIN)	

B - USE AS REQUIRED

<END>

391-6256 HARNESS AS-SENSOR

S/N: PPP1-UP; SSS1-UP; TTT1-UP
PART OF 415-4252, 420-1160 WIRING GP-CAB
AN ATTACHMENT

SMCS-1408 **i06210630**

NOTE	PART NUMBER	QTY	PART NAME 1 2 3 4 5 6 (PRODUCT LEVEL)	SEE PAGE
	8T-8737	13	PLUG-SEAL	
E	**125-7874**		TUBE-HEAT SHRINK (5.72-MM DIA) (10-CM)	
	9X-3402	26	SOCKET-CONNECTOR (16-GA TO 18-GA)	
			—OR—	
	126-1768	26	SOCKET-CONNECTOR (14-GA TO 16-GA)	
	9X-3401	22	PIN-CONNECTOR (16-GA TO 18-GA)	
			—OR—	
	126-1767	22	PIN-CONNECTOR (14-GA TO 16-GA)	
	155-2259	1	WEDGE-PLUG LOCK (8-PIN)	
	155-2265	1	KIT-CONNECTING PLUG (8-PIN)	
	155-2271	1	KIT-CONNECTING PLUG (4-PIN)	
	155-2274	3	KIT-CONNECTING PLUG (6-PIN)	
			(EACH PLUG KIT INCLUDES PLUG AS, WEDGE & INTERFACE SEAL)	
	167-3692	1	RECEPTACLE AS-CONNECTOR (31-PIN)	

E - ORDER BY THE CENTIMETER

<END>

398-4378 HARNESS AS-STARTING AID

S/N: PPP1-UP; SSS1-UP; TTT1-UP
PART OF 398-4346 STARTING AID GP-ETHER
AN ATTACHMENT

SMCS-1408 **i06193847**

NOTE	PART NUMBER	QTY	PART NAME 1 2 3 4 5 6 (PRODUCT LEVEL)	SEE PAGE
	102-8802	1	KIT-RECEPTACLE (2-PIN)	
			(INCLUDES RECEPTACLE AS & WEDGE)	
	9X-3402	2	SOCKET-CONNECTOR (16-GA TO 18-GA)	
			—OR—	
	126-1768	2	SOCKET-CONNECTOR (14-GA TO 16-GA)	
	9X-3401	2	PIN-CONNECTOR (16-GA TO 18-GA)	
			—OR—	
	126-1767	2	PIN-CONNECTOR (14-GA TO 16-GA)	
	155-2270	1	KIT-CONNECTING PLUG (2-PIN)	
			(INCLUDES PLUG AS, WEDGE & INTERFACE SEAL)	
B	**1P-0810**		TAPE-ELECTRICAL (8-CM)	

B - USE AS REQUIRED

<END>

433-2471 HARNESS AS-TRANSMISSION

S/N: PPP1-UP; SSS1-UP; TTT1-UP
PART OF 398-4434 WIRING GP-CHASSIS
ALSO AN ATTACHMENT

SMCS-1408, 3030 **i06193745**

NOTE	PART NUMBER	QTY	PART NAME 1 2 3 4 5 6 (PRODUCT LEVEL)	SEE PAGE
	8T-8737	1	PLUG-SEAL	
	108-6259	1	PLUG AS-CONNECTOR (17-PIN)	
	9X-3402	11	SOCKET-CONNECTOR (16-GA TO 18-GA)	
			—OR—	
	126-1768	11	SOCKET-CONNECTOR (14-GA TO 16-GA)	
	155-2255	1	KIT-CONNECTING PLUG (12-PIN)	
			(INCLUDES PLUG AS, WEDGE & INTERFACE SEAL)	
	155-2258	1	WEDGE-PLUG LOCK (12-PIN)	

<END>

446-5811 HARNESS AS-TRANSMISSION

S/N: 6R21-UP; 6R31-UP
PART OF 447-6642 CONTROL GP-TRANSMISSION HYD
AN ATTACHMENT

SMCS-1408, 3030 **i06203884**

NOTE	PART NUMBER	QTY	PART NAME 1 2 3 4 5 6 (PRODUCT LEVEL)	SEE PAGE
	3S-2093	6	STRAP-CABLE	
	4P-7428	1	CLIP	
	4P-8134	5	CLIP	
	446-5569	1	HARNESS AS-TRANSMISSION	
E	**8T-6342**		TUBE-HEAT SHRINK (3.2-MM DIA) (39-CM)	
E	**9X-2109**		TUBE-HEAT SHRINK (6.4-MM DIA) (10-CM)	
	9X-3402	14	SOCKET-CONNECTOR (16-GA TO 18-GA)	
			—OR—	
	126-1768	14	SOCKET-CONNECTOR (14-GA TO 16-GA)	
	155-2270	7	KIT-CONNECTING PLUG (2-PIN)	
	331-4226	7	KIT-CONNECTING PLUG (2-PIN)	
			(EACH PLUG KIT INCLUDES PLUG AS, WEDGE & INTERFACE SEAL)	

E - ORDER BY THE CENTIMETER

<END>

433-2474 HARNESS AS-VALVE

S/N: PPP1-UP; SSS1-UP; TTT1-UP
PART OF 398-4434 WIRING GP-CHASSIS
ALSO AN ATTACHMENT

SMCS-1408 **i06193740**

NOTE	PART NUMBER	QTY	PART NAME 1 2 3 4 5 6 (PRODUCT LEVEL)	SEE PAGE
	102-8802	1	KIT-RECEPTACLE (2-PIN)	
	102-8805	1	KIT-RECEPTACLE (6-PIN)	
	102-8806	1	KIT-RECEPTACLE (8-PIN)	
			(EACH RECEPTACLE KIT INCLUDES RECEPTACLE AS & WEDGE)	
	3E-3383	1	WEDGE-RECEPTACLE LOCK (6-PIN)	
	3E-3389	1	WEDGE-RECEPTACLE LOCK (8-PIN)	
	7K-1181	1	STRAP-CABLE	
	8T-8737	2	PLUG-SEAL	
B	**125-7874**		TUBE-HEAT SHRINK (5.72-MM DIA) (10-CM)	
	9X-3402	12	SOCKET-CONNECTOR (16-GA TO 18-GA)	
			—OR—	
	126-1768	12	SOCKET-CONNECTOR (14-GA TO 16-GA)	
	9X-3401	18	PIN-CONNECTOR (16-GA TO 18-GA)	
			—OR—	
	126-1767	18	PIN-CONNECTOR (14-GA TO 16-GA)	
	155-2270	5	KIT-CONNECTING PLUG (2-PIN)	
			(EACH INCLUDES PLUG AS, WEDGE & INTERFACE SEAL)	
	230-4012	1	RECEPTACLE AS-CONNECTOR (2-PIN)	
	230-5008	1	PLUG AS-CONNECTOR (4-PIN)	
	455-0706	1	SEAL-CONNECTOR	
	361-6052	1	RESISTOR AS	
	102-8802	1	KIT-RECEPTACLE (2-PIN)	
			(INCLUDES RECEPTACLE AS & WEDGE)	
	8T-8729	2	PIN-CONNECTOR (16-GA TO 18-GA)	

B - USE AS REQUIRED

<END>

389-3056 HARNESS AS-WIRING—WINDOW WASHER

S/N: PPP1-UP; SSS1-UP; TTT1-UP
PART OF 375-7927 TANK GP-WINDOW WASHER
AN ATTACHMENT

SMCS-1408 **i05899870**

NOTE	PART NUMBER	QTY	PART NAME 1 2 3 4 5 6 (PRODUCT LEVEL)	SEE PAGE
	102-8805	1	KIT-RECEPTACLE (6-PIN)	
			(INCLUDES RECEPTACLE AS & WEDGE)	
	8T-8729	5	PIN-CONNECTOR (16-GA TO 18-GA)	
	8T-8737	1	PLUG-SEAL	
	9X-0194	4	TERMINAL AS	
			(EACH INCLUDES)	
D	**5P-5623**		WIRE-ELECTRICAL (16-GA, BLACK) (0.6-M)	
	5P-4571	8	TERMINAL-BLADE (14-GA TO 16-GA)	
E	**125-7875**		TUBE-HEAT SHRINK (7.44-MM DIA) (5-CM)	
	3E-3383	1	WEDGE-RECEPTACLE LOCK (6-PIN)	

D - ORDER BY THE METER
E - ORDER BY THE CENTIMETER

<END>

390-6814 HARNESS AS-WIRING—SEAT

S/N: PPP1-UP; SSS1-UP; TTT1-UP
PART OF 391-4061 SEAT & MOUNTING GP
AN ATTACHMENT

SMCS-1408 **i05906458**

NOTE	PART NUMBER	QTY	PART NAME 1 2 3 4 5 6 (PRODUCT LEVEL)	SEE PAGE
	155-2270	1	KIT-CONNECTING PLUG (2-PIN)	
	155-2271	1	KIT-CONNECTING PLUG (4-PIN)	
			(EACH PLUG KIT INCLUDES PLUG AS, WEDGE & INTERFACE SEAL)	
	8T-8737	2	PLUG-SEAL	
	9W-0844	4	SOCKET-CONNECTOR (14-GA TO 16-GA)	

<END>

433-2480 HARNESS AS-WIRING—FENDER, RH

S/N: PPP1-UP; SSS1-UP; TTT1-UP
PART OF 398-4434 WIRING GP-CHASSIS
ALSO AN ATTACHMENT

SMCS-1408 **i06193708**

NOTE	PART NUMBER	QTY	PART NAME 1 2 3 4 5 6 (PRODUCT LEVEL)	SEE PAGE
	102-8801	1	KIT-RECEPTACLE (12-PIN)	
			(INCLUDES RECEPTACLE AS & WEDGE)	
	8T-8737	2	PLUG-SEAL	
	9X-3402	10	SOCKET-CONNECTOR (16-GA TO 18-GA)	
			—OR—	
	126-1768	10	SOCKET-CONNECTOR (14-GA TO 16-GA)	
	9X-3401	10	PIN-CONNECTOR (16-GA TO 18-GA)	
			—OR—	
	126-1767	10	PIN-CONNECTOR (14-GA TO 16-GA)	
	155-2270	3	KIT-CONNECTING PLUG (2-PIN)	
			(EACH INCLUDES PLUG AS, WEDGE & INTERFACE SEAL)	
	230-4011	2	PLUG AS-CONNECTOR (2-PIN)	
			(EACH INCLUDES)	
	455-0704	1	SEAL-CONNECTOR	

<END>

433-5754 HARNESS AS-WIRING—SEAT

S/N: PPP1-UP; SSS1-UP; TTT1-UP
PART OF 191-2933 SUSPENSION GP-SEAT
AN ATTACHMENT

SMCS-1408 **i05926711**

NOTE	PART NUMBER	QTY	PART NAME 1 2 3 4 5 6 (PRODUCT LEVEL)	SEE PAGE
	9X-3401	2	PIN-CONNECTOR (16-GA TO 18-GA)	
			—OR—	
	126-1767	2	PIN-CONNECTOR (14-GA TO 16-GA)	
	102-8802	1	KIT-RECEPTACLE (2-PIN)	
			(INCLUDES RECEPTACLE AS & WEDGE)	
B	**1P-0810**		TAPE-ELECTRICAL	
B	**329-3734**		TAPE-ELECTRICAL	
	5P-4571	2	TERMINAL-BLADE (14-GA TO 16-GA)	
	097-7234	2	TERMINAL-BLADE (18-GA TO 22-GA)	

B - USE AS REQUIRED

<END>

398-4345 HEATER GP-JACKET WATER

S/N: PPP1-UP; SSS1-UP; TTT1-UP
240-VOLT, 1500-WATT
AN ATTACHMENT

SMCS-1383 **i06220865**

NOTE	REF NO	GRAPHIC REF	PART NUMBER	QTY	PART NAME 1 2 3 4 5 6 (PRODUCT LEVEL)	SEE PAGE
	1	1	**6T-3764**	1	ELEMENT AS-JACKET WATER HEATER (240-VOLT, 1500-WATT)	
	2	1	**7K-1181**	11	STRAP-CABLE	
	3	1	**214-9389**	1	FILM-IDENTIFICATION (WATER HEATER)	
	4	1	**424-6097**	1	FILM-WARNING (SHOCK, ELECTROCUTION HAZARD)	
	5	1	**454-7920**	1	CORD AS	
	6	1	**4P-7428**	1	CLIP	
	7	1	**4P-7429**	1	CLIP	
	8	1	**4P-7581**	1	CLIP	
	9	1	**4P-8134**	2	CLIP	
	10	1	**5P-0492**	1	ADAPTER	
	11	1	**7M-8485**	1	SEAL-O-RING	
M	12	1	**8T-4179**	1	BOLT (M12X1.75X20-MM)	
	13	1	**8T-4223**	1	WASHER-HARD (13.5X25.5X3-MM THK)	

M - METRIC PART

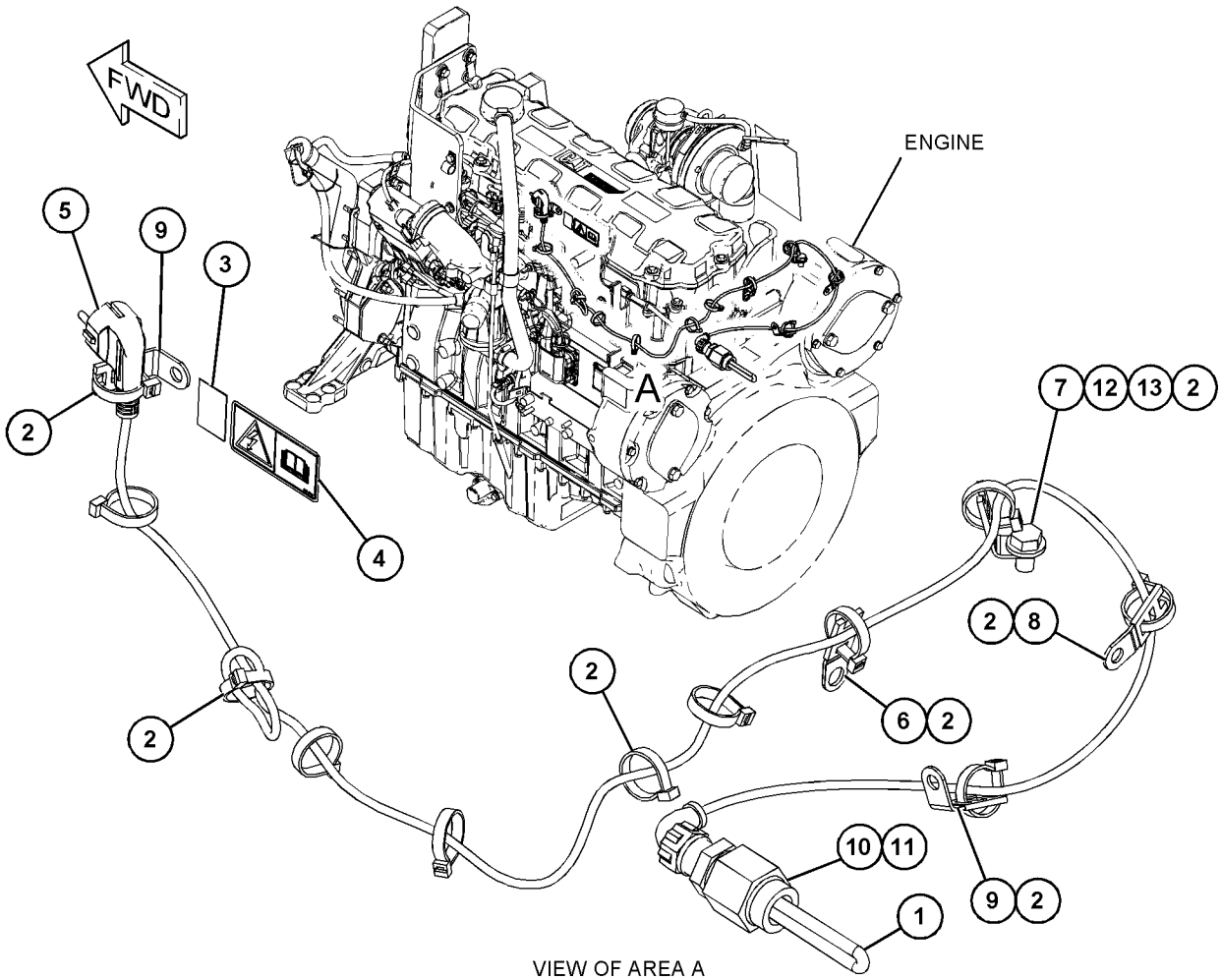

VIEW OF AREA A

GRAPHIC #1 **<END>** g03862722

450-2736 INSTALLATION GP-COMMUNICATION–PL631 SATELLITE

S/N: PPP1-UP; SSS1-UP; TTT1-UP

AN ATTACHMENT

SMCS-7606 **i06219397**

NOTE	REF NO	GRAPHIC REF	PART NUMBER	QTY	PART NAME 1 2 3 4 5 6 (PRODUCT LEVEL)	SEE PAGE
	1	1	**7K-1181**	9	STRAP-CABLE	
	2	1	**8T-8737**	8	PLUG-SEAL	
	3	1	**230-1341**	1	FILM-WARNING (PRODUCT LINK RADIO, INTL)	
	4	1	**307-0047**	1	FILM-INFORMATION (PRODUCT LINK, READ OMM)	
B	5	2	**8K-1433**	1	GROMMET	
Y	6	1	**442-7199**	1	RADIO GP-COMMUNICATION (PL631 SATELLITE)	217
	7	1	**443-8462**	1	ANTENNA AS (CELLULAR)	
	7A	1	**385-8201**	1	CAP AS-CONNECTOR	
	7B	1	**361-1045**	1	NUT-SPECIAL (5/8-18-THD)	
	8	1	**450-2733**	1	CABLE AS	
E		1	**135-5009**		TUBE-HEAT SHRINK (32-MM DIA) (24-CM)	
E		1	**232-0897**		CONDUIT-FLEXIBLE (16.2-MM ID) (90-CM)	
Y	9	1	**465-2789**	1	HARNESS AS-CONTROL	169
	10	1	**155-2265**	1	KIT-CONNECTING PLUG (8-PIN)	
					(INCLUDES PLUG AS, WEDGE & INTERFACE SEAL)	
M	11	1	**8T-4138**	4	BOLT (M6X1X20-MM)	
	12	1	**9X-8256**	4	WASHER (6.6X12X2-MM THK)	

B - USE AS REQUIRED
E - ORDER BY THE CENTIMETER
M - METRIC PART
Y - SEPARATE ILLUSTRATION

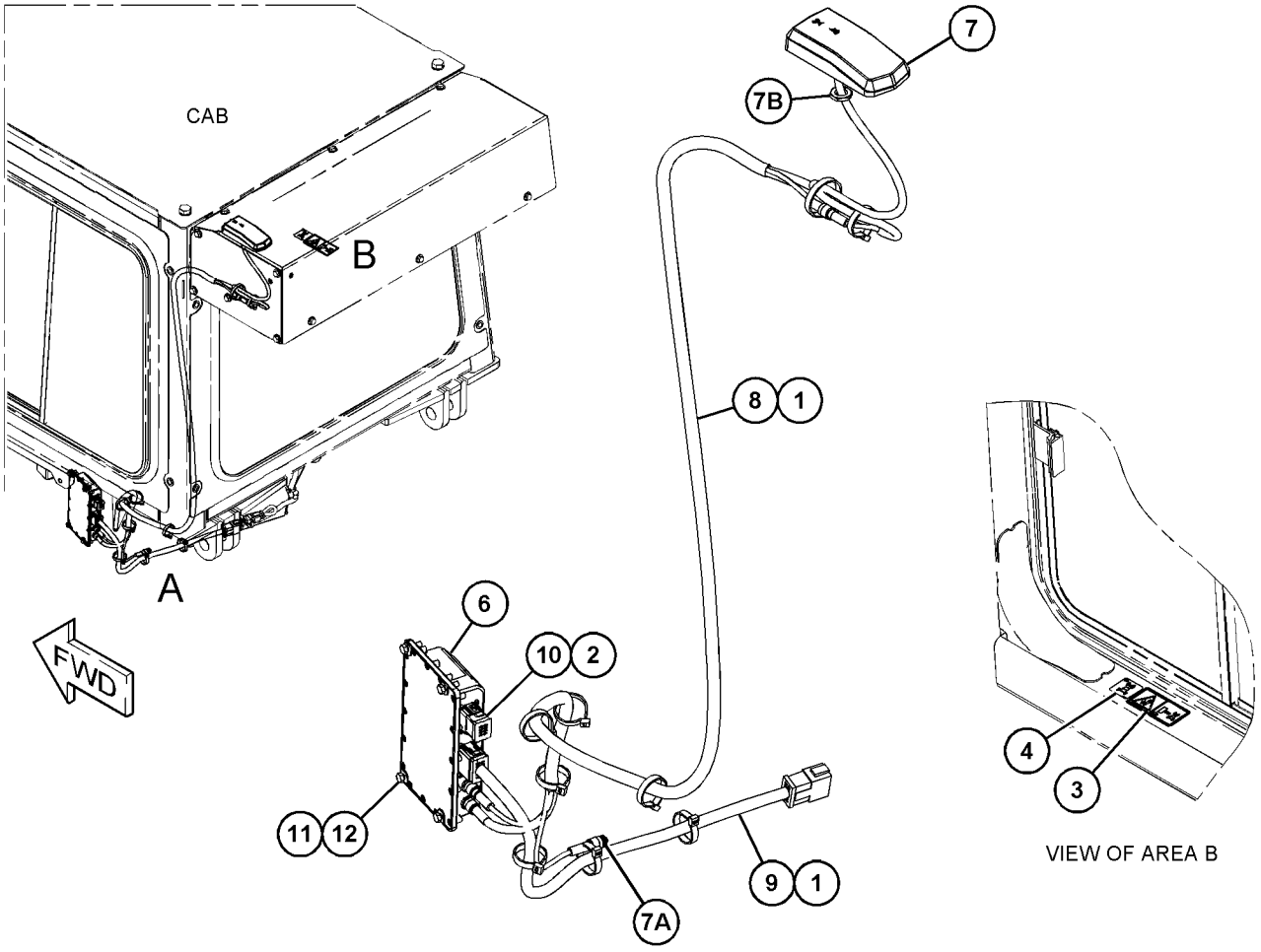

GRAPHIC #1 g03862670

450-2736 **INSTALLATION GP-COMMUNICATION (*contd.*)** **i06219397**

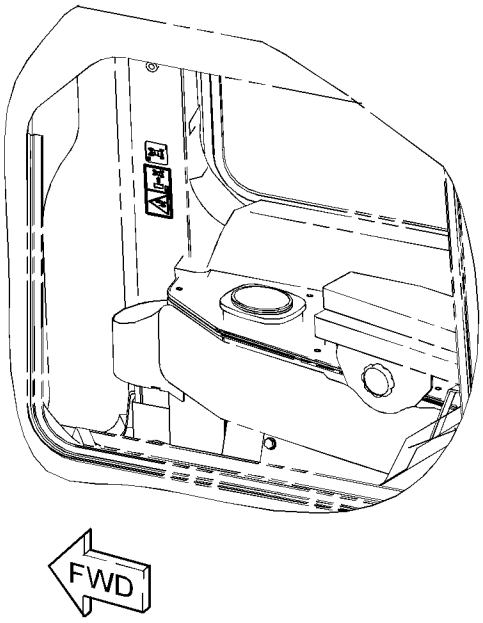

(FILM LOCATION WHEN RIGHT HAND COVER IS ASSEMBLED)

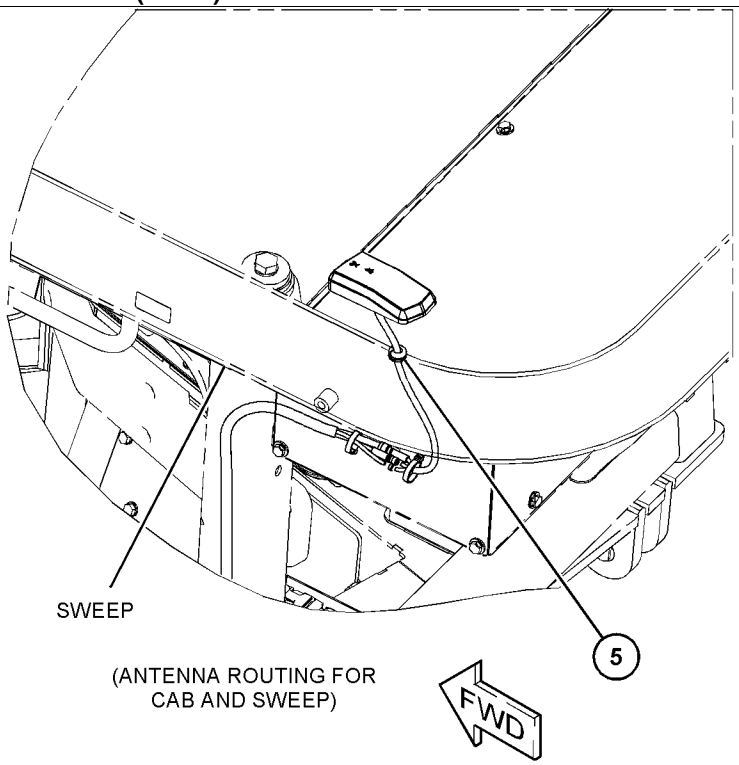

(ANTENNA ROUTING FOR CAB AND SWEEP)

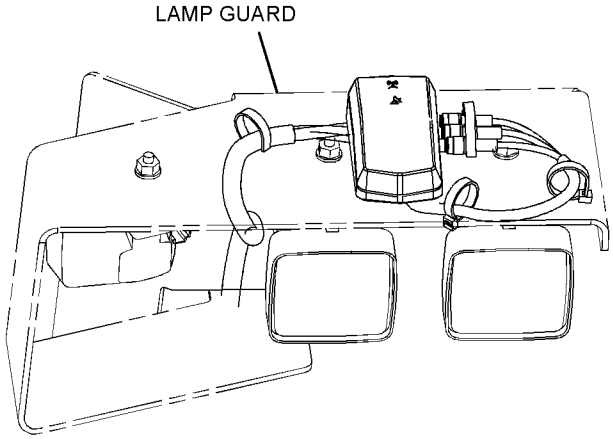

REAR VIEW
(ANTENNA ROUTING FOR LIGHTING GROUP 06)

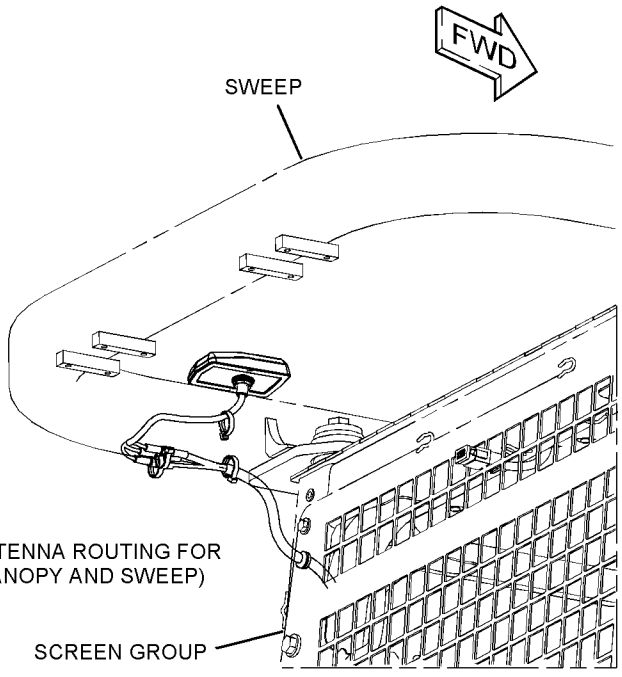

(ANTENNA ROUTING FOR CANOPY AND SWEEP)

GRAPHIC #2 **<END>** g03862672

450-2737 INSTALLATION GP-COMMUNICATION–PLE641 CELLULAR

S/N: PPP1-UP; SSS1-UP; TTT1-UP
PART OF 481-9508 DISTRIBUTION AR
AN ATTACHMENT

SMCS-7606 **i06219394**

NOTE	REF NO	GRAPHIC REF	PART NUMBER	QTY	PART NAME 1 2 3 4 5 6 (PRODUCT LEVEL)	SEE PAGE
	1	1	**7K-1181**	9	STRAP-CABLE	
	2	1	**8T-8737**	8	PLUG-SEAL	
	3	1	**230-1341**	1	FILM-WARNING (PRODUCT LINK RADIO, INTL)	
	4	1	**307-0047**	1	FILM-INFORMATION (PRODUCT LINK, READ OMM)	
B	5	2	**8K-1433**	1	GROMMET	
Y	6	1	**440-2105**	1	RADIO GP-COMMUNICATION (PL641E CELLULAR)	216
	7	1	**443-8462**	1	ANTENNA AS	
	7A	1	**385-8201**	1	CAP AS-CONNECTOR	
	7B	1	**361-1045**	1	NUT-SPECIAL (5/8-18-THD)	
	8	1	**450-2733**	1	CABLE AS	
E		1	**135-5009**		TUBE-HEAT SHRINK (32-MM DIA) (24-CM)	
E		1	**232-0897**		CONDUIT-FLEXIBLE (16.2-MM ID) (90-CM)	
Y	9	1	**465-2789**	1	HARNESS AS-CONTROL	169
	10	1	**155-2265**	1	KIT-CONNECTING PLUG (8-PIN)	
					(INCLUDES PLUG AS, WEDGE & INTERFACE SEAL)	
M	11	1	**8T-4138**	4	BOLT (M6X1X20-MM)	
	12	1	**9X-8256**	4	WASHER (6.6X12X2-MM THK)	

B - USE AS REQUIRED
E - ORDER BY THE CENTIMETER
M - METRIC PART
Y - SEPARATE ILLUSTRATION

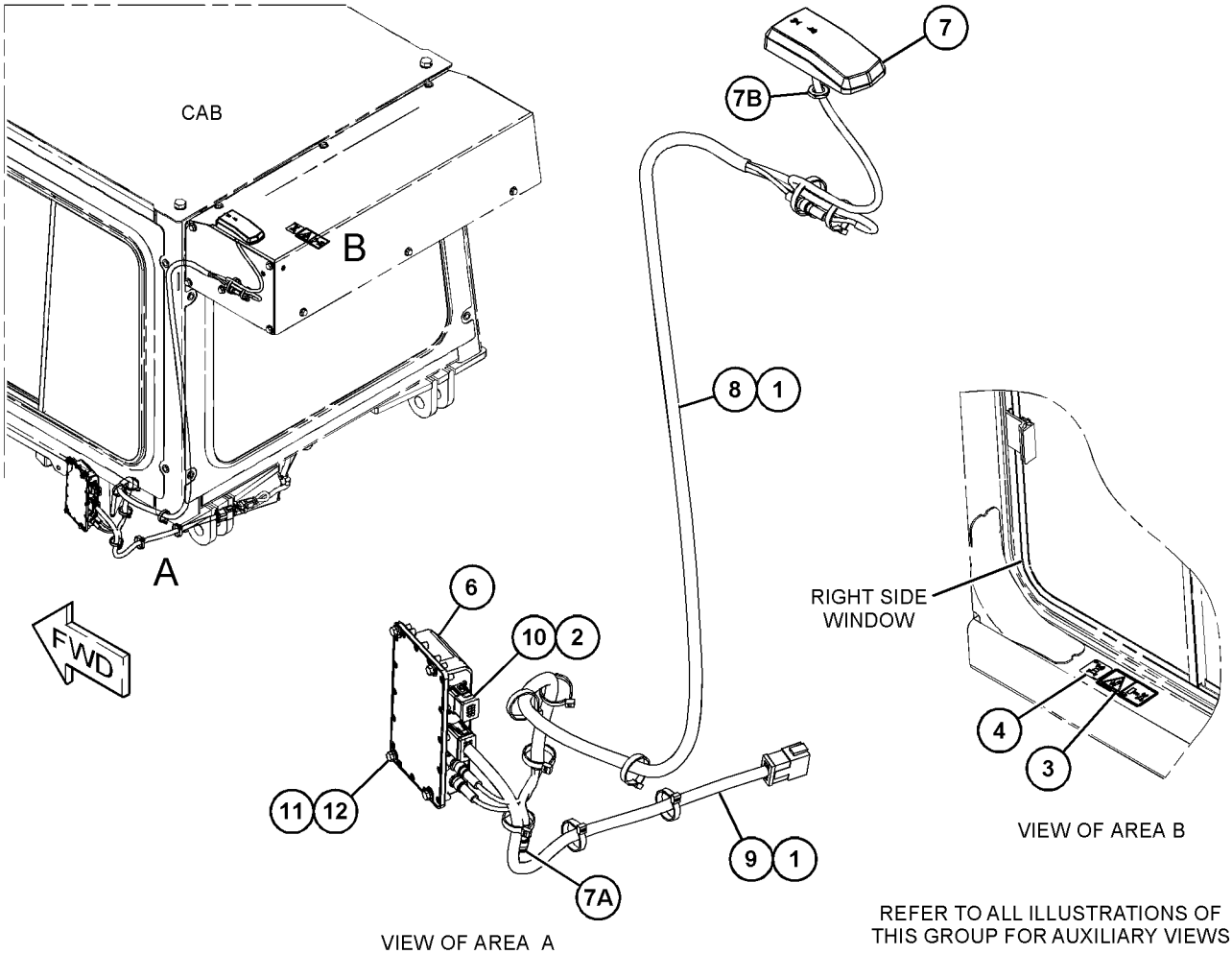

GRAPHIC #1 g03862580

450-2737 **INSTALLATION GP-COMMUNICATION (*contd.*)** **i06219394**

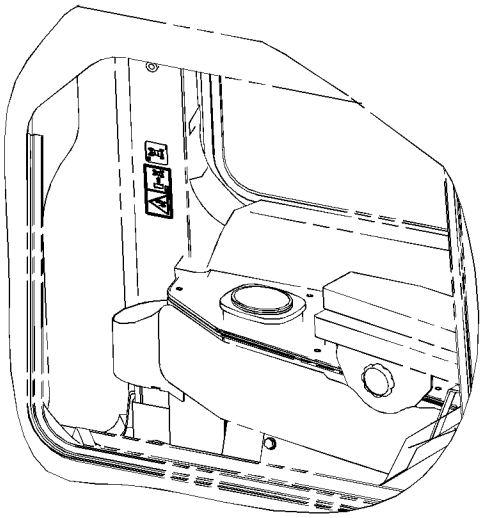

FWD

(FILM LOCATION WHEN RIGHT HAND COVER IS ASSEMBLED)

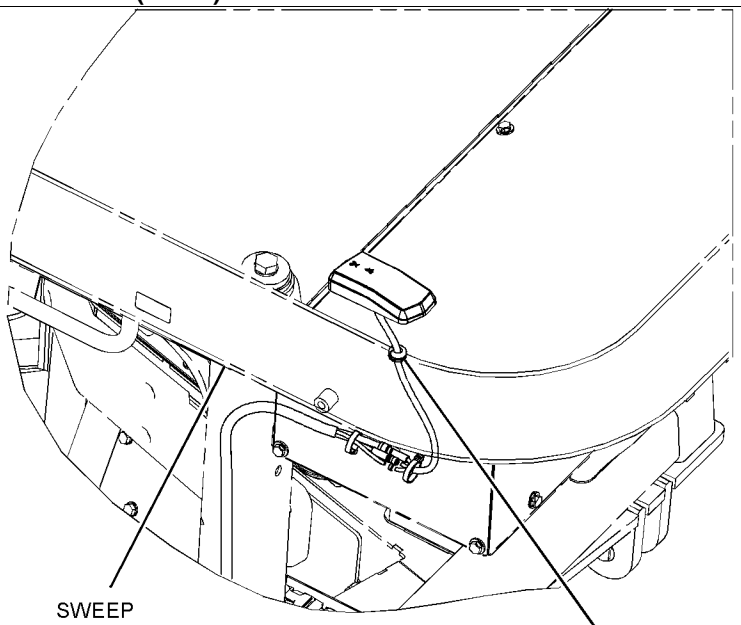

(ANTENNA ROUTING FOR CAB AND SWEEP)

FWD

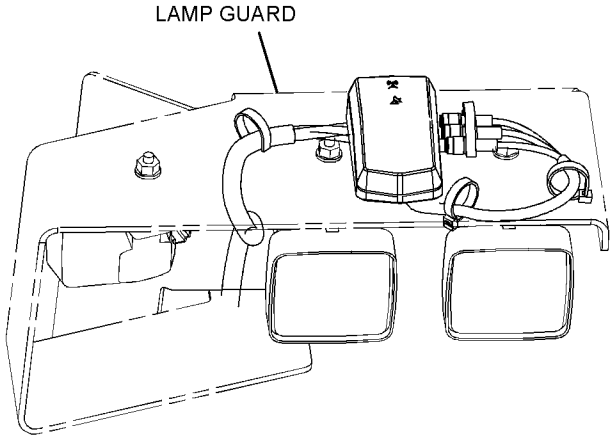

REAR VIEW
(ANTENNA ROUTING FOR LIGHTING GROUP 06)

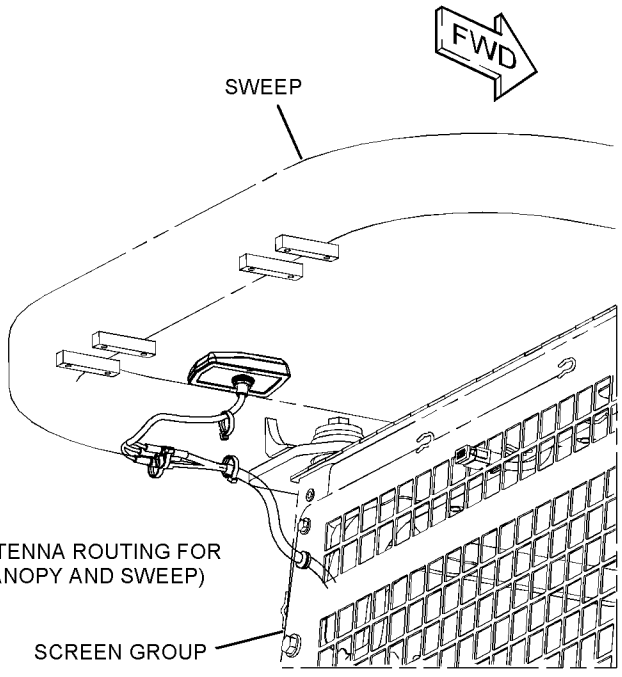

(ANTENNA ROUTING FOR CANOPY AND SWEEP)

GRAPHIC #2 **<END>** g03862588

450-3389 INSTALLATION GP-COMMUNICATION–PLE641+PL631

S/N: PPP1-UP; SSS1-UP; TTT1-UP

AN ATTACHMENT

SMCS-7606 **i06231153**

NOTE	REF NO	GRAPHIC REF	PART NUMBER	QTY	PART NAME 1 2 3 4 5 6 (PRODUCT LEVEL)	SEE PAGE
	1	1	**7K-1181**	11	STRAP-CABLE	
	2	1	**8C-5607**	8	MOUNT-ISOLATION	
	3	1	**8T-8737**	16	PLUG-SEAL	
	4	1	**230-1341**	1	FILM-WARNING (PRODUCT LINK RADIO, INTL)	
	5	1	**307-0047**	1	FILM-INFORMATION (PRODUCT LINK, READ OMM)	
Y	6	1	**417-4722**	1	ELECTRONICS GP-COMMUNICATION (PLE601 NETWORK MANAGER)	163
Y	7	1	**440-2105**	1	RADIO GP-COMMUNICATION (PL641E CELLULAR)	216
Y	8	1	**442-7199**	1	RADIO GP-COMMUNICATION (PL631 SATELLITE)	217
	9	1	**443-8462**	1	ANTENNA AS	
		1	**361-1045**	1	NUT-SPECIAL (5/8-18-THD)	
		1	**385-8201**	1	CAP AS-CONNECTOR	
	10	1	**450-2733**	1	CABLE AS	
E			**135-5009**		TUBE-HEAT SHRINK (32-MM DIA) (24-CM)	
E			**232-0897**		CONDUIT-FLEXIBLE (16.2-MM ID) (90-CM)	
Y	11	1	**465-2806**	1	HARNESS AS-CONTROL	169
	12	1	**155-2265**	2	KIT-CONNECTING PLUG (8-PIN)	
					(EACH INCLUDES PLUG AS, WEDGE & INTERFACE SEAL)	
	13	1	**352-3968**	1	CLIP	
M	14	1	**6V-7357**	4	BOLT (M6X1X25-MM)	
	15	1	**8C-5608**	4	SPACER (6.5X9.5X25.4-MM THK)	
M	16	1	**8C-8451**	4	BOLT (M6X1X40-MM)	
	17	1	**8T-4121**	1	WASHER-HARD (11X21X2.5-MM THK)	
M	18	1	**8T-4137**	1	BOLT (M10X1.5X20-MM)	
	19	1	**9X-6165**	4	WASHER (6.5X22X2.5-MM THK)	
	20	1	**9X-8256**	4	WASHER (6.6X12X2-MM THK)	
J	21	1	**8K-1433**	1	GROMMET	

E - ORDER BY THE CENTIMETER
J - FOR USE WITH CAB & SWEEP CONFIGURATION
M - METRIC PART
Y - SEPARATE ILLUSTRATION

450-3389 **INSTALLATION GP-COMMUNICATION (*contd.*)** **i06231153**

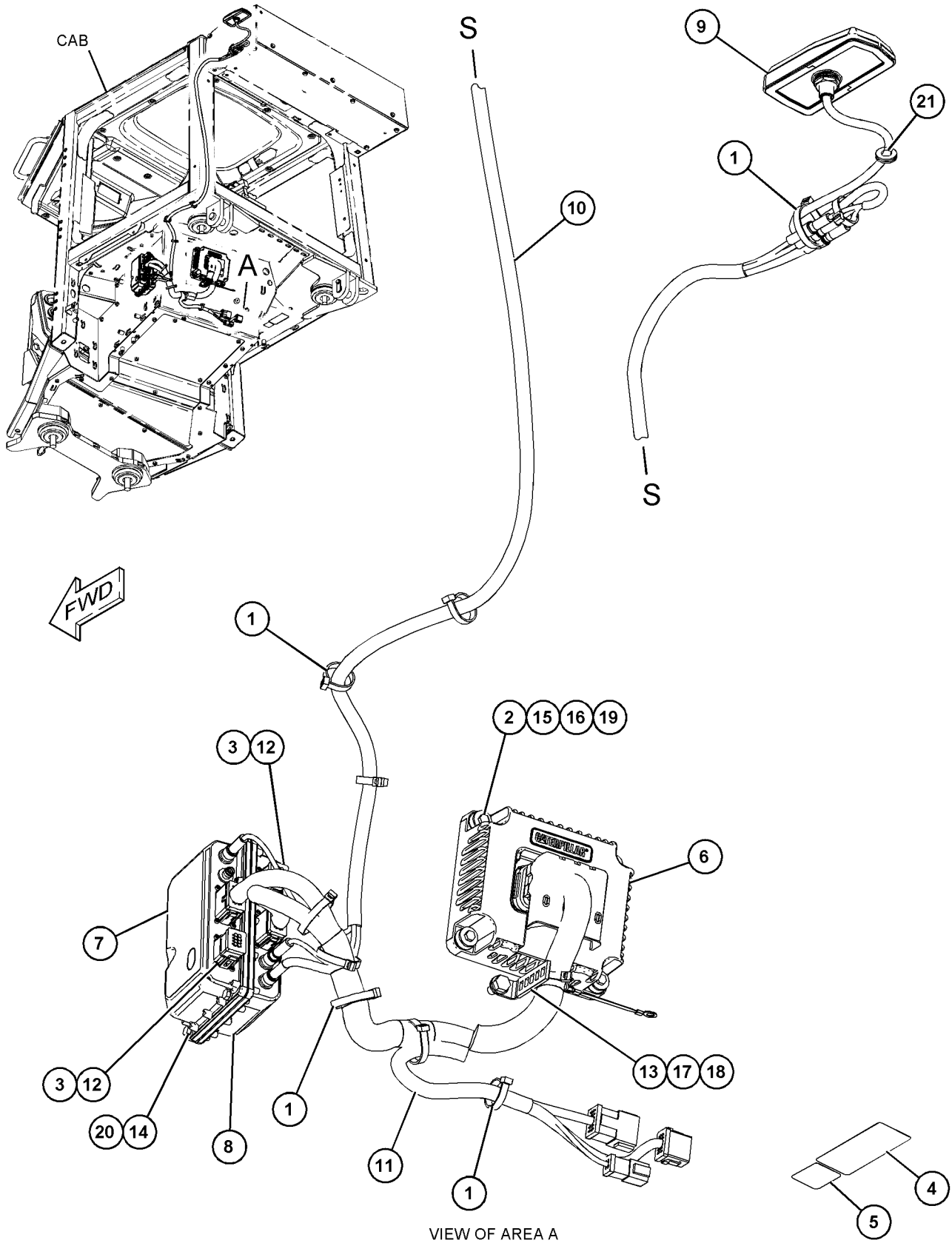

VIEW OF AREA A

GRAPHIC #1

<END>

g03858352

3E-6389 LAMP GP-DOME–WITH SWITCH

S/N: PPP1-UP; SSS1-UP; TTT1-UP
24-VOLT
PART OF 415-4252, 420-1160 WIRING GP-CAB
AN ATTACHMENT

SMCS-1433 **i04953728**

NOTE	REF NO	GRAPHIC REF	PART NUMBER	QTY	PART NAME 1 2 3 4 5 6 (PRODUCT LEVEL)	SEE PAGE
	1	1	**7N-9943**	1	LAMP (24-VOLT) (DOME LIGHT)	
	2	1	**102-8803**	1	KIT-RECEPTACLE (3-PIN)	
					(INCLUDES RECEPTACLE AS & WEDGE)	
	3	1	**8T-8729**	3	PIN-CONNECTOR (16-GA TO 18-GA)	
	4	1	**7T-0020**	1	LENS-DOME LAMP	

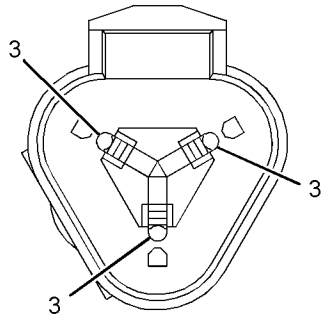

VIEW A-A

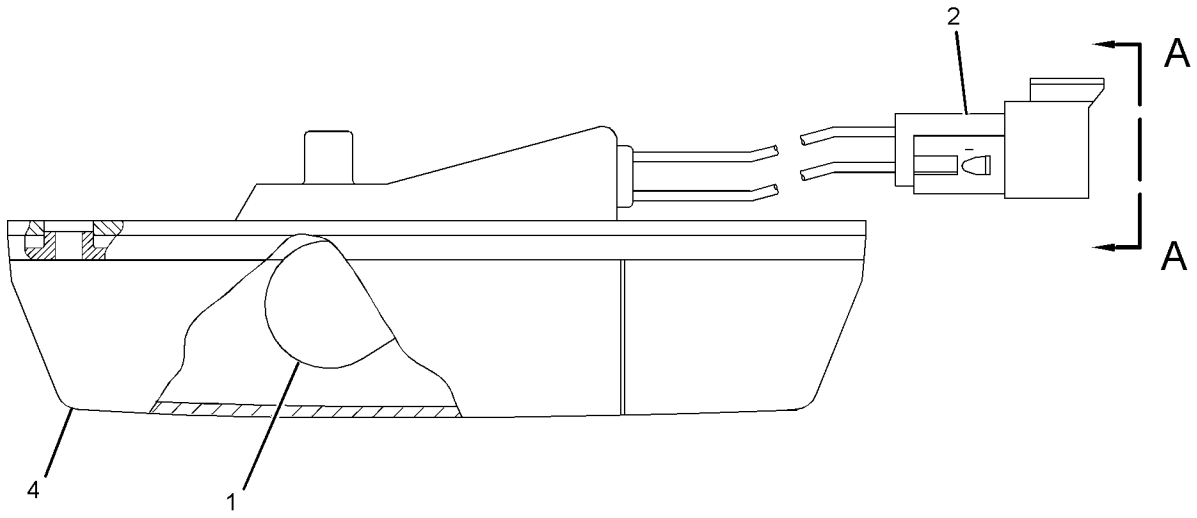

GRAPHIC #1 **<END>** g02646562

375-1478 LAMP GP-DOME–LED

S/N: PPP1-UP; SSS1-UP; TTT1-UP
24-VOLT. WITH SWITCH

SMCS-1433 **i06023915**

NOTE	REF NO	GRAPHIC REF	PART NUMBER	QTY	PART NAME 1 2 3 4 5 6 (PRODUCT LEVEL)	SEE PAGE
	1	1	**102-8803**	1	KIT-RECEPTACLE (3-PIN)	
					(INCLUDES RECEPTACLE AS & WEDGE)	
	2	1	**8T-8729**	3	PIN-CONNECTOR (16-GA TO 18-GA)	
	3	1	**7T-0020**	1	LENS-DOME LAMP	

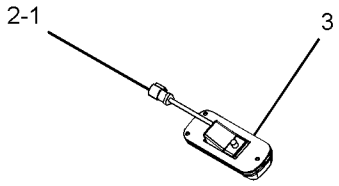

GRAPHIC #1 **<END>** g03648520

219-6485 LAMP GP-FLOOD

S/N: PPP1-UP; SSS1-UP; TTT1-UP
24-VOLT, 70-WATT
FIELD REPLACEMENT FOR 272-6641—PAGE: 193

SMCS-1434 **i05640718**

NOTE	REF NO	GRAPHIC REF	PART NUMBER	QTY	PART NAME 1 2 3 4 5 6 (PRODUCT LEVEL)	SEE PAGE
	1	1	**351-9918**	1	LAMP-HALOGEN (24-VOLT, 70-WATT)	
	2	1	**9X-4244**	2	SCREW-SPECIAL (M4X1.79X25-MM)	
	3	1	**175-4291**	1	BRACKET AS	
	4	1	**202-6614**	1	LENS AS (FLOODLIGHT)	
	5	1	**175-4292**	1	BODY AS	
	6	1	**164-7556**	1	BRACKET (LAMP RETAINING)	
	7	1	**247-4285**	1	BOLT (M8X1.25X50-MM)	
M	8	1	**6V-9189**	1	LOCKNUT (M8X1.25-THD)	
	9	1	**8T-4224**	2	WASHER-HARD (8.8X16X2-MM THK)	

M - METRIC PART

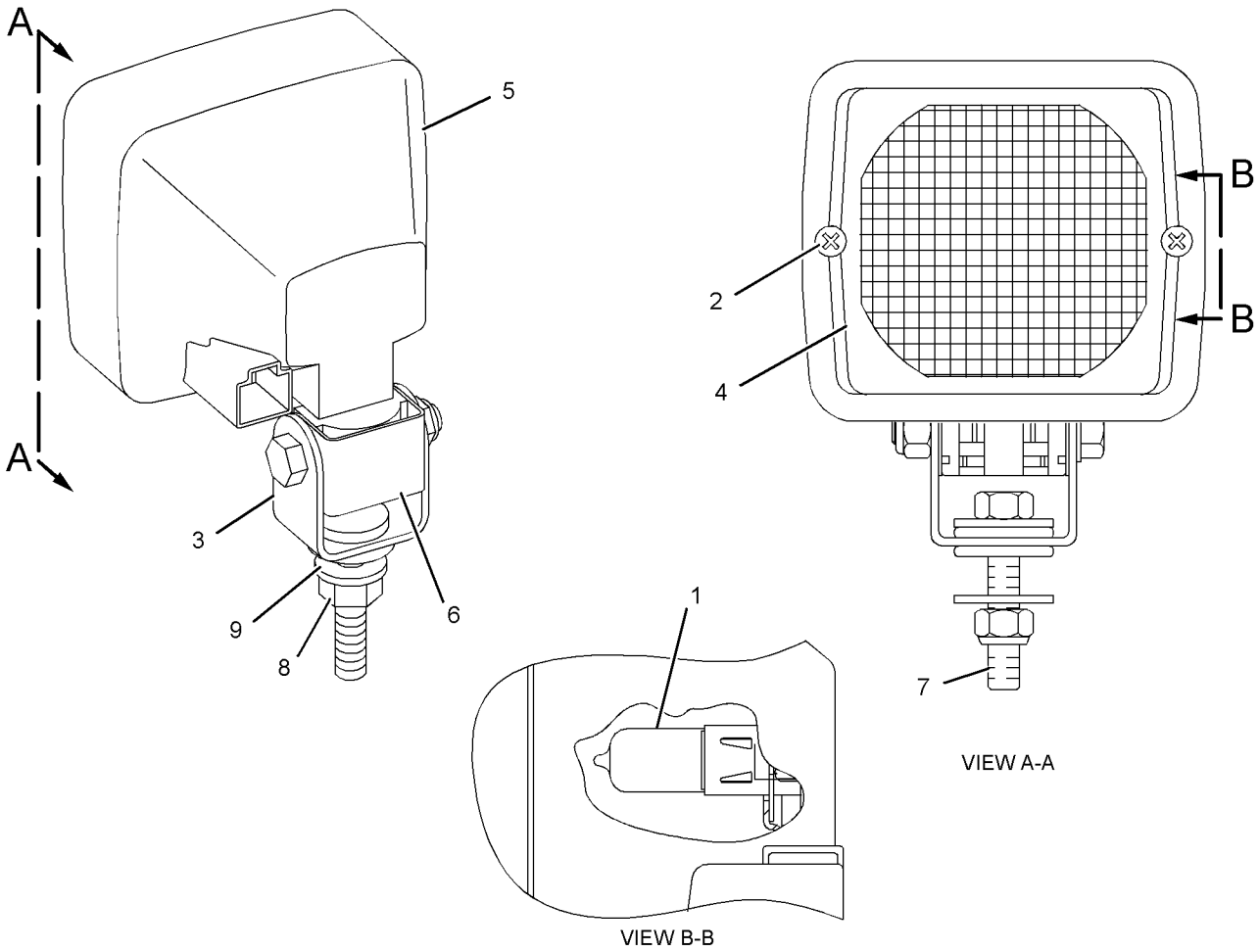

VIEW A-A

VIEW B-B

GRAPHIC #1

<END>

g02075738

219-6487 LAMP GP-FLOOD

S/N: PPP1-UP; SSS1-UP; TTT1-UP
24-VOLT, 70-WATT
FIELD REPLACEMENT FOR 254-8155—PAGE: 192

SMCS-1434 **i05517862**

NOTE	REF NO	GRAPHIC REF	PART NUMBER	QTY	PART NAME 1 2 3 4 5 6 (PRODUCT LEVEL)	SEE PAGE
	1	1	**351-9918**	1	LAMP-HALOGEN (24-VOLT, 70-WATT)	
M	2	1	**8T-6912**	1	BOLT (M8X1.25X50-MM)	
M	3	1	**6V-9189**	1	LOCKNUT (M8X1.25-THD)	
	4	1	**8T-4224**	2	WASHER-HARD (8.8X16X2-MM THK)	
	5	1	**9X-4244**	2	SCREW-SPECIAL (M4X1.79X25-MM)	
	6	1	**175-4291**	1	BRACKET AS	
	7	1	**202-6614**	1	LENS AS (FLOODLIGHT)	
	8	1	**175-4292**	1	BODY AS	
	9	1	**164-7556**	1	BRACKET (LAMP RETAINING)	

M - METRIC PART

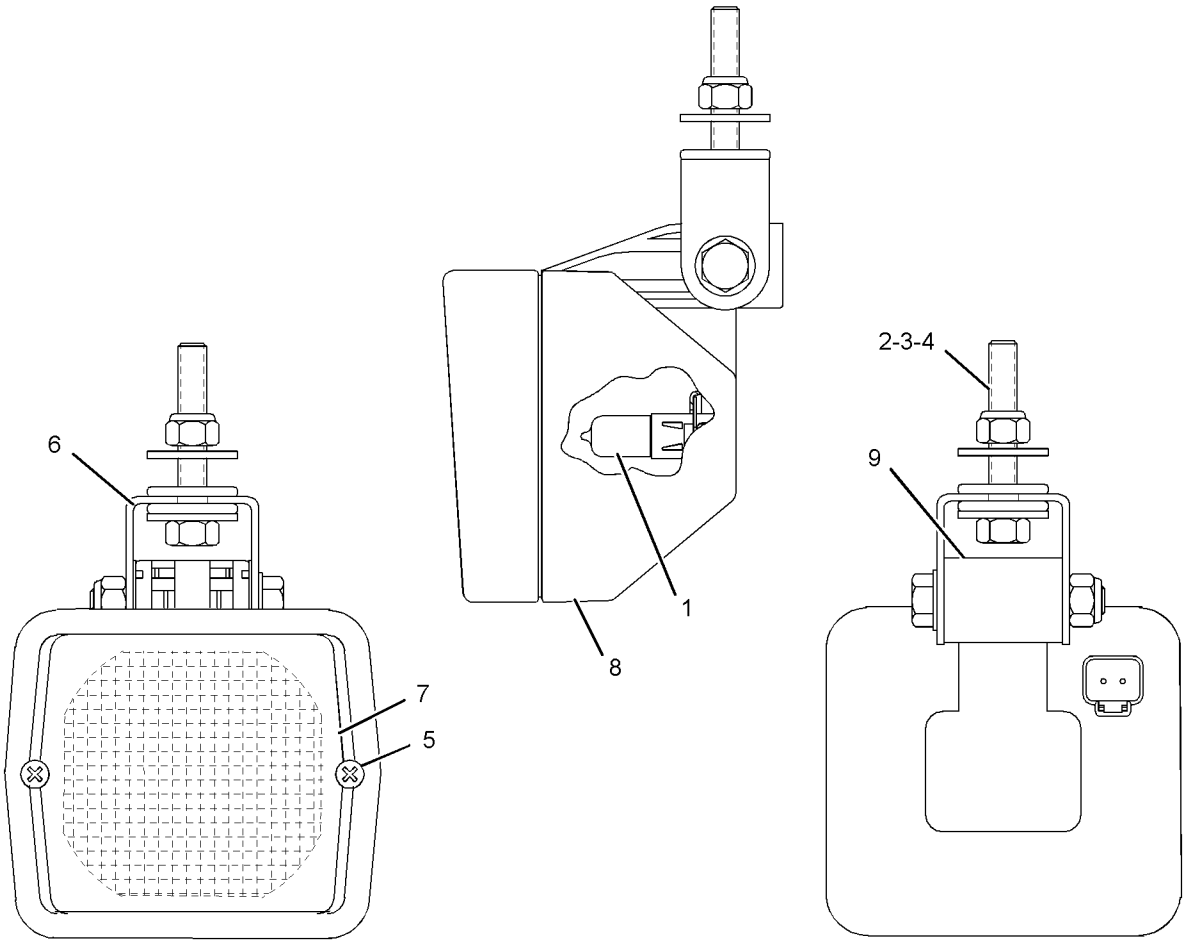

GRAPHIC #1 **<END>** g02167882

254-8155 LAMP GP-FLOOD

S/N: PPP1-UP; SSS1-UP; TTT1-UP
24-VOLT, 70-WATT
FIELD REPLACEMENT ORDER 219-6487—PAGE: 191
PART OF 398-4439, 398-4440, 398-4444, 433-2468, 433-2469, 488-2530 LIGHTING GP-FLOOD
AN ATTACHMENT

SMCS-1434 **i05501419**

NOTE	REF NO	GRAPHIC REF	PART NUMBER	QTY	PART NAME 1 2 3 4 5 6 (PRODUCT LEVEL)	SEE PAGE
	1	1	**351-9918**	1	LAMP-HALOGEN (24-VOLT, 70-WATT)	
M	2	1	**8T-4154**	1	BOLT (M8X1.25X35-MM)	
M	3	1	**5C-7261**	1	NUT (M8X1.25-THD)	
	4	1	**8T-4224**	2	WASHER-HARD (8.8X16X2-MM THK)	
	5	1	**9X-4244**	2	SCREW-SPECIAL (M4X1.79X25-MM)	
	6	1	**202-6614**	1	LENS AS	
	7	1	**175-4292**	1	BODY AS	
	8	1	**164-7556**	1	BRACKET (LAMP RETAINING)	
	9	1	**175-4291**	1	BRACKET AS	

M - METRIC PART

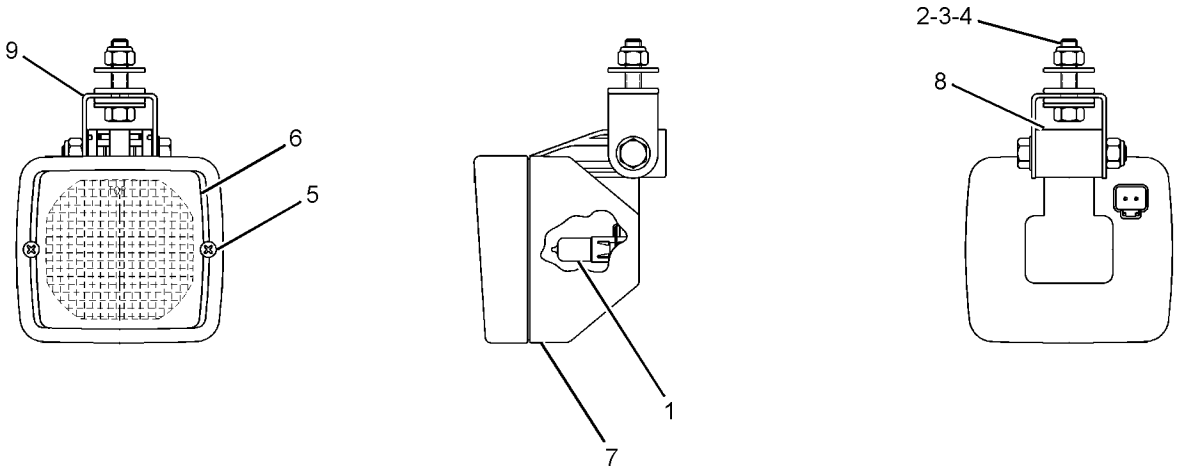

GRAPHIC #1 **<END>** g01205426

272-6641 LAMP GP-FLOOD

S/N: PPP1-UP; SSS1-UP; TTT1-UP
24-VOLT, 70-WATT
FIELD REPLACEMENT ORDER 219-6485—PAGE: 190
PART OF 398-4444, 488-2530 LIGHTING GP-FLOOD
AN ATTACHMENT

SMCS-1434 **i05626809**

NOTE	REF NO	GRAPHIC REF	PART NUMBER	QTY	PART NAME 1 2 3 4 5 6 (PRODUCT LEVEL)	SEE PAGE
	1	1	**351-9918**	1	LAMP-HALOGEN (24-VOLT, 70-WATT)	
	2	1	**9X-4244**	2	SCREW-SPECIAL (M4X1.79X25-MM)	
	3	1	**202-6614**	1	LENS AS	
	4	1	**175-4292**	1	BODY AS	
	5	1	**164-7556**	1	BRACKET (LAMP RETAINING)	
M	6	1	**8T-7547**	1	BOLT (M8X1.25X30-MM)	
M	7	1	**5C-7261**	1	NUT (M8X1.25-THD)	
	8	1	**8T-4224**	2	WASHER-HARD (8.8X16X2-MM THK)	
	9	1	**175-4291**	1	BRACKET AS	

M - METRIC PART

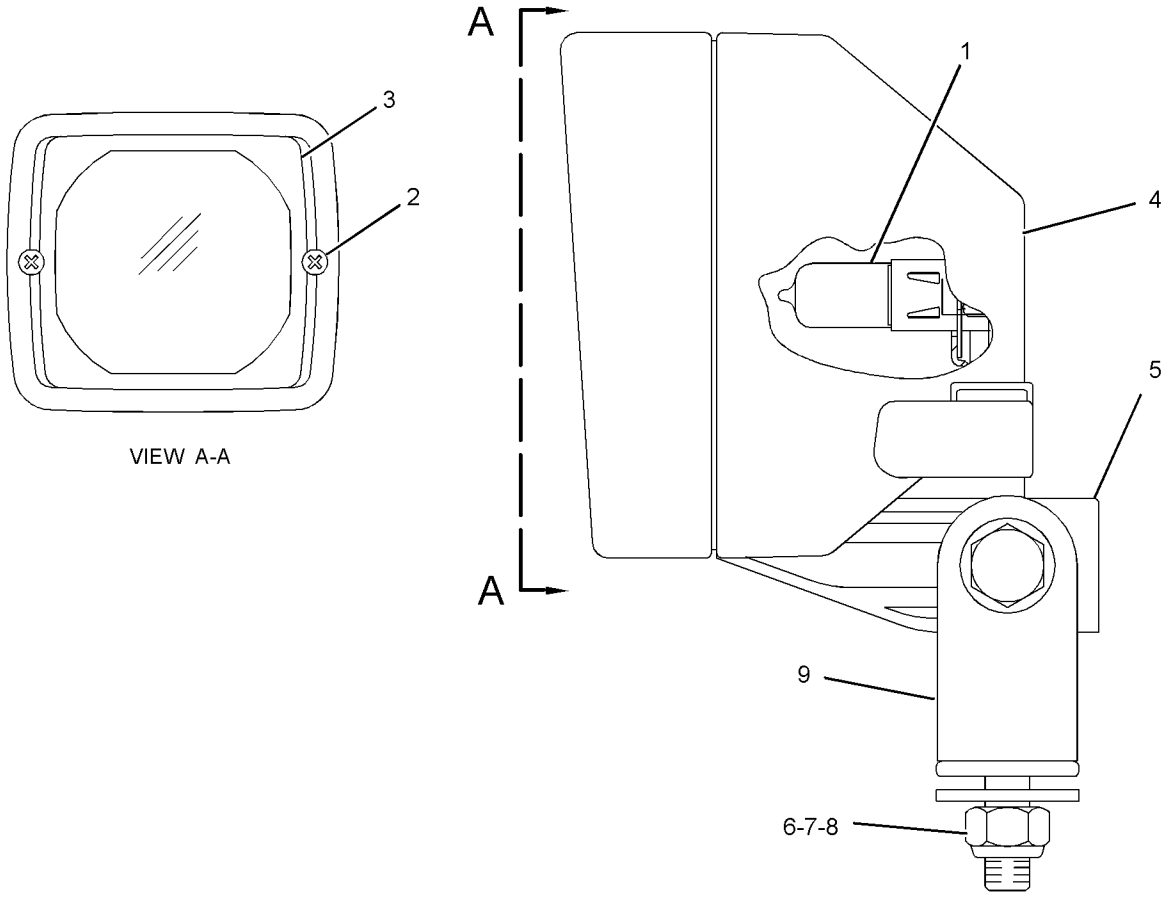

GRAPHIC #1 **<END>** g01305640

383-8634 LAMP GP-FLOOD–LED

S/N: PPP1-UP; SSS1-UP; TTT1-UP
24-VOLT, 35 WATT
PART OF 433-2481, 433-2482 LIGHTING GP-FLOOD
AN ATTACHMENT

SMCS-1434 **i05875511**

NOTE	REF NO	GRAPHIC REF	PART NUMBER	QTY	PART NAME 1 2 3 4 5 6 (PRODUCT LEVEL)	SEE PAGE
					(NO BREAKDOWN OF SERVICEABLE PARTS AVAILABLE AT TIME OF PUBLICATION)	

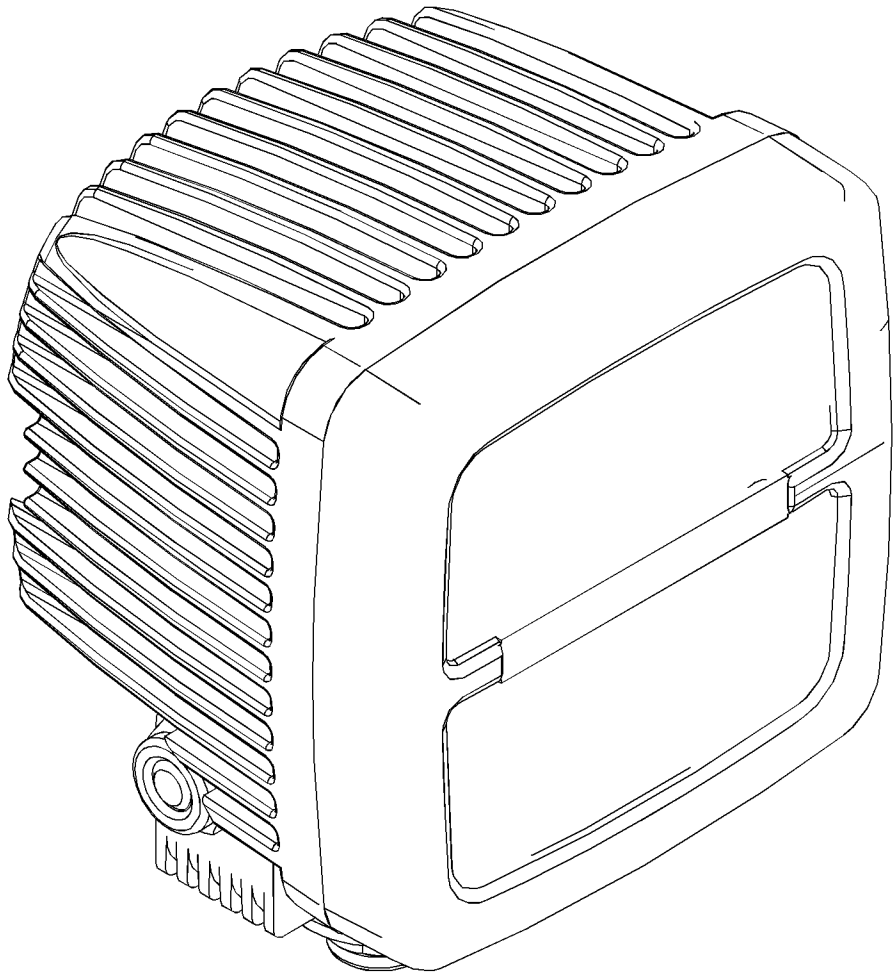

GRAPHIC #1 **<END>** g03355664

398-4439 LIGHTING GP-FLOOD—CAB, CYLINDER

S/N: PPP1-UP; SSS1-UP; TTT1-UP
CANNOT BE USED WITH CANOPY, SWEEPS, CAB SCREENS AN ATTACHMENT

SMCS-1434 **i06229456**

NOTE	REF NO	GRAPHIC REF	PART NUMBER	QTY	PART NAME 1 2 3 4 5 6 (PRODUCT LEVEL)	SEE PAGE
	1	2	**9W-4361**	8	MOUNT-FLEXIBLE	
Y	2	1,2	*254-8155*	4	LAMP GP-FLOOD (24-VOLT) (CAB, CYLINDER)	192
	3	2	**384-0071**	2	GUARD AS-LAMP	
	4	2	**385-7302**	2	HARNESS AS-LIGHTING (CYLINDER)	
					(EACH INCLUDES)	
		2	**102-8802**	1	KIT-RECEPTACLE (2-PIN)	
					(INCLUDES RECEPTACLE AS & WEDGE)	
E		2	**114-8843**		SLEEVE-PLASTIC (40-CM)	
		2	**126-1767**	2	PIN-CONNECTOR (14-GA TO 16-GA)	
		2	**126-1768**	2	SOCKET-CONNECTOR (14-GA TO 16-GA)	
		2	**155-2270**	1	KIT-CONNECTING PLUG (2-PIN)	
					(INCLUDES PLUG AS, WEDGE & INTERFACE SEAL)	
	5	1	**386-9710**	2	HANDHOLD	
Y	6	1	**448-2114**	1	HARNESS AS-LIGHTING (CAB)	175
	7	1	**132-5789**	2	CLIP	
M	8	2	**344-5675**	4	NUT (M10X1.5-THD)	
	9	1,2	**4P-7581**	4	CLIP	
	10	2	**5F-9757**	2	GROMMET	
	11	2	**5P-1075**	16	WASHER-HARD (10.2X22.5X3-MM THK)	
	12	1	**5P-4116**	2	WASHER-HARD (8.8X20.5X2-MM THK)	
	13	2	**5P-8522**	2	GROMMET	
	14	2	**5P-9085**	6	CLIP	
	15	2	**6K-4934**	4	CLIP (SLOT)	
	16	2	**6K-4935**	4	CLIP (TAB)	
	17	2	**6V-8801**	16	NUT (3/8-16-THD)	
	18	1,2	**7K-1181**	19	STRAP-CABLE	
	19	2	**8T-4121**	8	WASHER-HARD (11X21X2.5-MM THK)	
M	20	2	**8T-4136**	4	BOLT (M10X1.5X25-MM)	
M	21	1	**8T-4189**	2	BOLT (M8X1.25X20-MM)	

E - ORDER BY THE CENTIMETER
M - METRIC PART
Y - SEPARATE ILLUSTRATION

REFER TO ALL ILLUSTRATIONS OF
THIS GROUP FOR AUXILIARY VIEWS

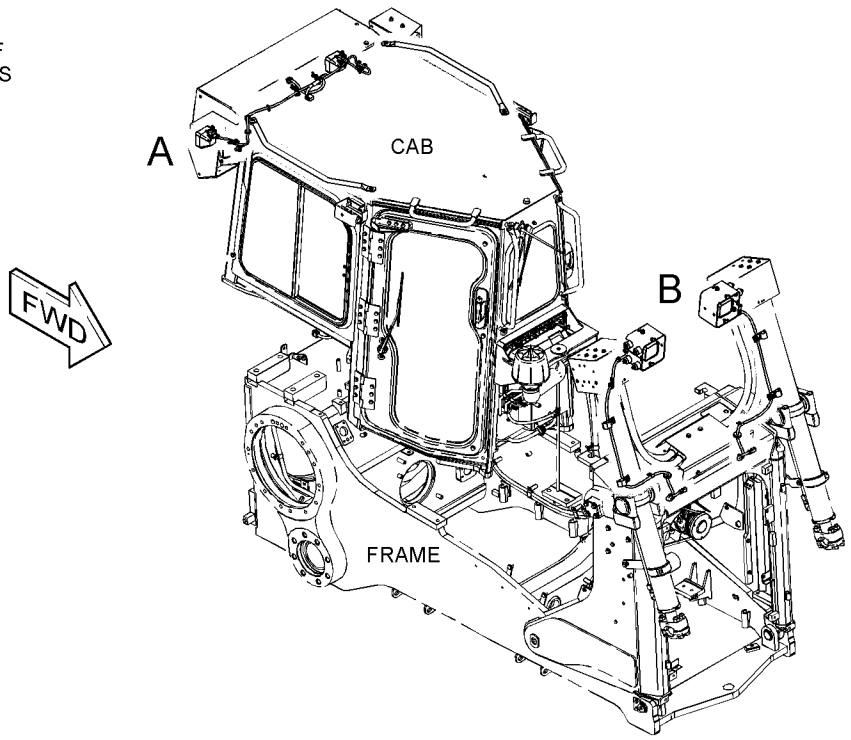

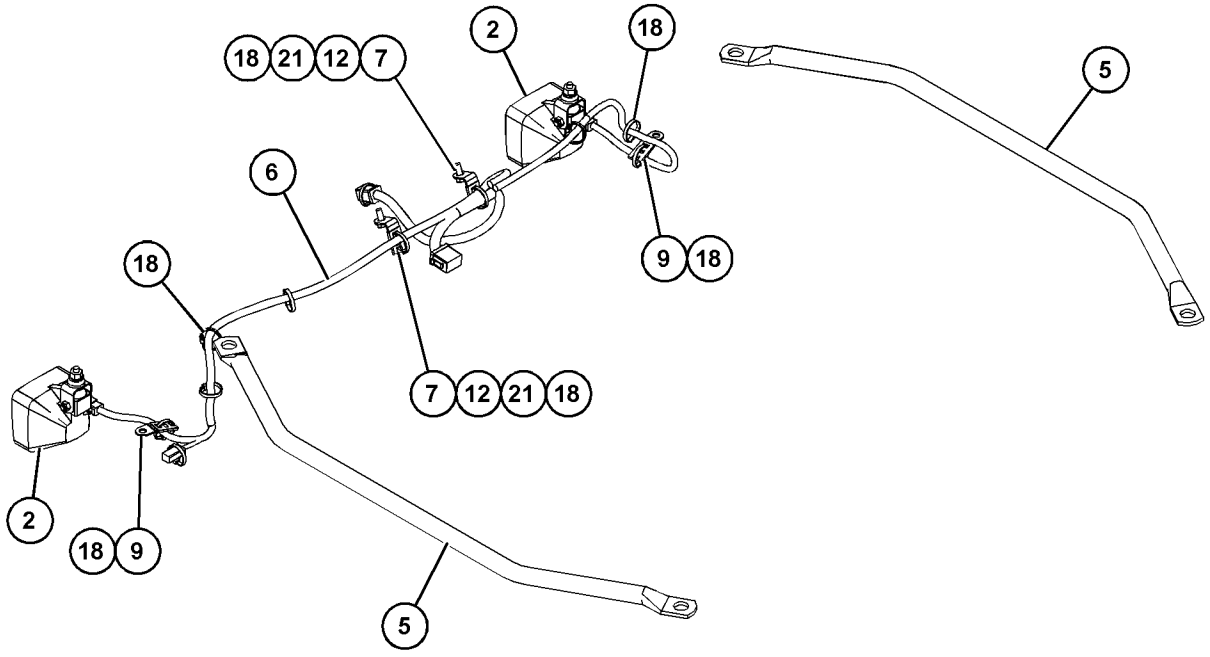

VIEW OF AREA A

GRAPHIC #1 g03863301

398-4439 **LIGHTING GP-FLOOD (*contd.*)** **i06229456**

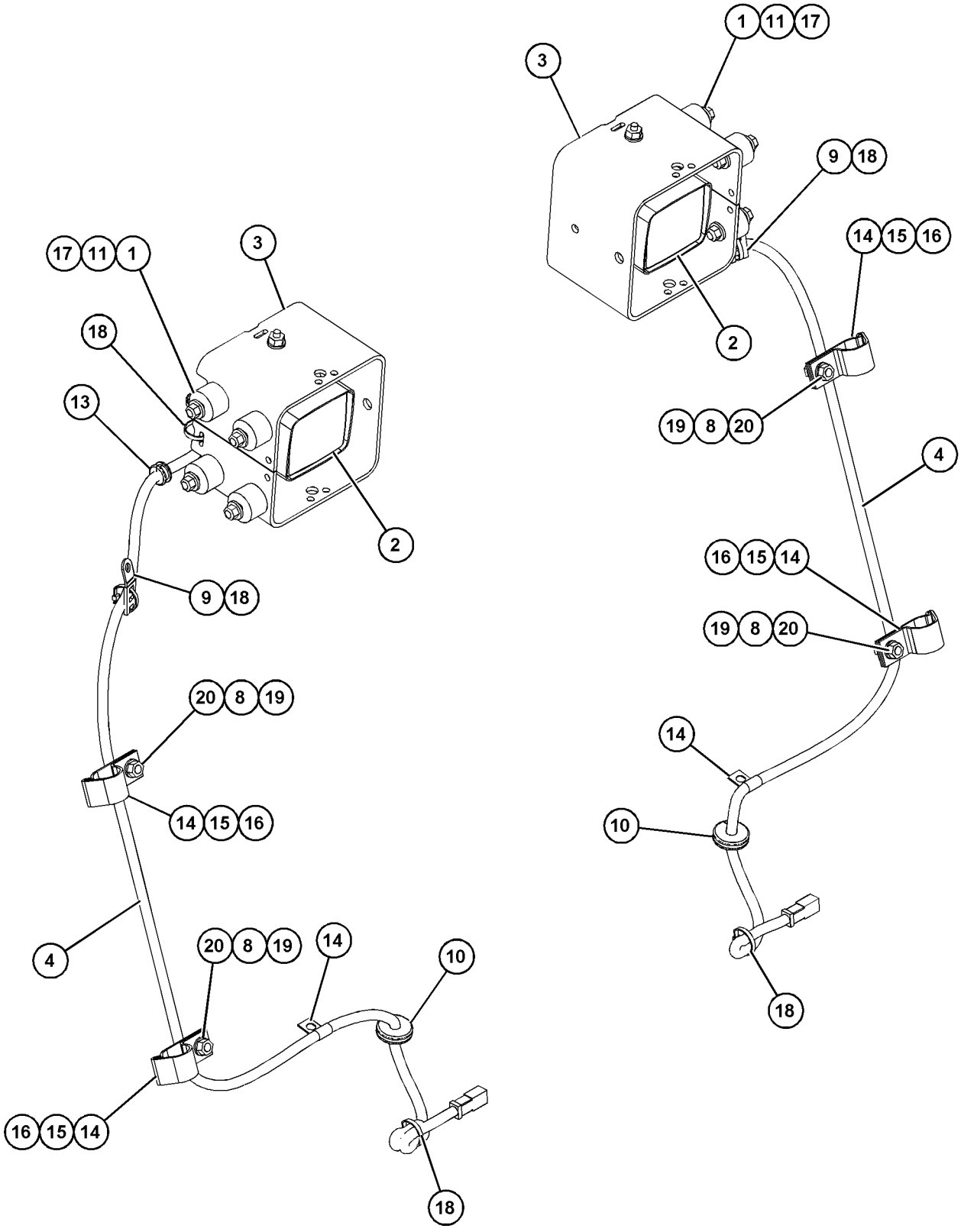

VIEW OF AREA B

GRAPHIC #2 **<END>** g03863302

398-4440 LIGHTING GP-FLOOD—CAB, CYLINDER

S/N: PPP1-UP; SSS1-UP; TTT1-UP
CANNOT BE USED WITH CANOPY, SWEEPS, SCREEN GP-PROTECTION
PART OF 481-9508 DISTRIBUTION AR
AN ATTACHMENT

SMCS-1434 **i06231060**

NOTE	REF NO	GRAPHIC REF	PART NUMBER	QTY	PART NAME 1 2 3 4 5 6 (PRODUCT LEVEL)	SEE PAGE
	1	1,2	**7K-1181**	23	STRAP-CABLE	
	2	2	**9W-4361**	8	MOUNT-FLEXIBLE	
Y	3	1,2	*254-8155*	6	LAMP GP-FLOOD (24-VOLT) (CAB, CYLINDER)	192
	4	2	**384-0071**	2	GUARD AS-LAMP	
	5	2	**385-7302**	2	HARNESS AS-LIGHTING (CYLINDER)	
					(EACH INCLUDES)	
		2	**102-8802**	1	KIT-RECEPTACLE (2-PIN)	
					(INCLUDES RECEPTACLE AS & WEDGE)	
E		2	**114-8843**		SLEEVE-PLASTIC (40-CM)	
		2	**126-1767**	2	PIN-CONNECTOR (14-GA TO 16-GA)	
		2	**126-1768**	2	SOCKET-CONNECTOR (14-GA TO 16-GA)	
		2	**155-2270**	1	KIT-CONNECTING PLUG (2-PIN)	
					(INCLUDES PLUG AS, WEDGE & INTERFACE SEAL)	
	6	1	**386-9710**	2	HANDHOLD	
Y	7	1	**420-1154**	1	HARNESS AS-LIGHTING (CAB, REAR)	173
	8	1	**431-7734**	1	GUARD AS (LH)	
	9	1	**431-7735**	1	GUARD AS (RH)	
	10	1	**132-5789**	2	CLIP	
M	11	2	**344-5675**	4	NUT (M10X1.5-THD)	
	12	2	**4P-7581**	2	CLIP	
	13	2	**5F-9757**	2	GROMMET	
	14	2	**5P-1075**	16	WASHER-HARD (10.2X22.5X3-MM THK)	
	15	1	**5P-1076**	2	WASHER-HARD (13.5X30X4-MM THK)	
	16	1	**5P-4116**	2	WASHER-HARD (8.8X20.5X2-MM THK)	
	17	2	**5P-8522**	2	GROMMET	
	18	2	**5P-9085**	6	CLIP	
	19	2	**6K-4934**	4	CLIP (SLOT)	
	20	2	**6K-4935**	4	CLIP (TAB)	
	21	2	**6V-8801**	16	NUT (3/8-16-THD)	
	22	2	**8T-4121**	8	WASHER-HARD (11X21X2.5-MM THK)	
M	23	2	**8T-4136**	4	BOLT (M10X1.5X25-MM)	
M	24	1	**8T-4189**	2	BOLT (M8X1.25X20-MM)	
M	25	1	**8T-4648**	2	BOLT (M12X1.75X70-MM)	
	26	1	**8V-9708**	2	SPACER (14.3X25.4X35-MM THK)	

E - ORDER BY THE CENTIMETER
M - METRIC PART
Y - SEPARATE ILLUSTRATION

398-4440 **LIGHTING GP-FLOOD (*contd.*)** **i06231060**

REFER TO ALL ILLUSTRATIONS OF
THIS GROUP FOR AUXILIARY VIEWS

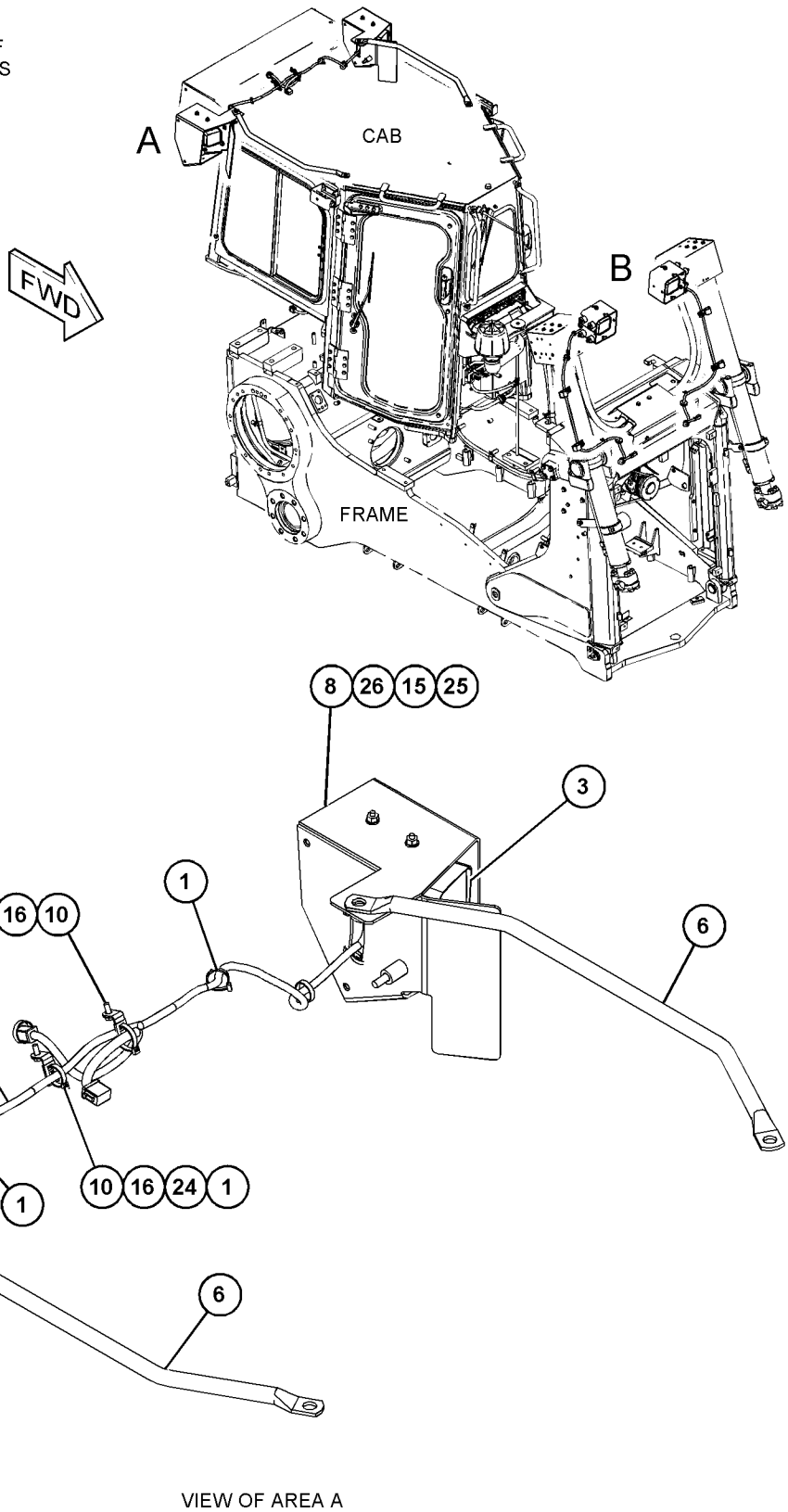

VIEW OF AREA A

GRAPHIC #1 g03863265

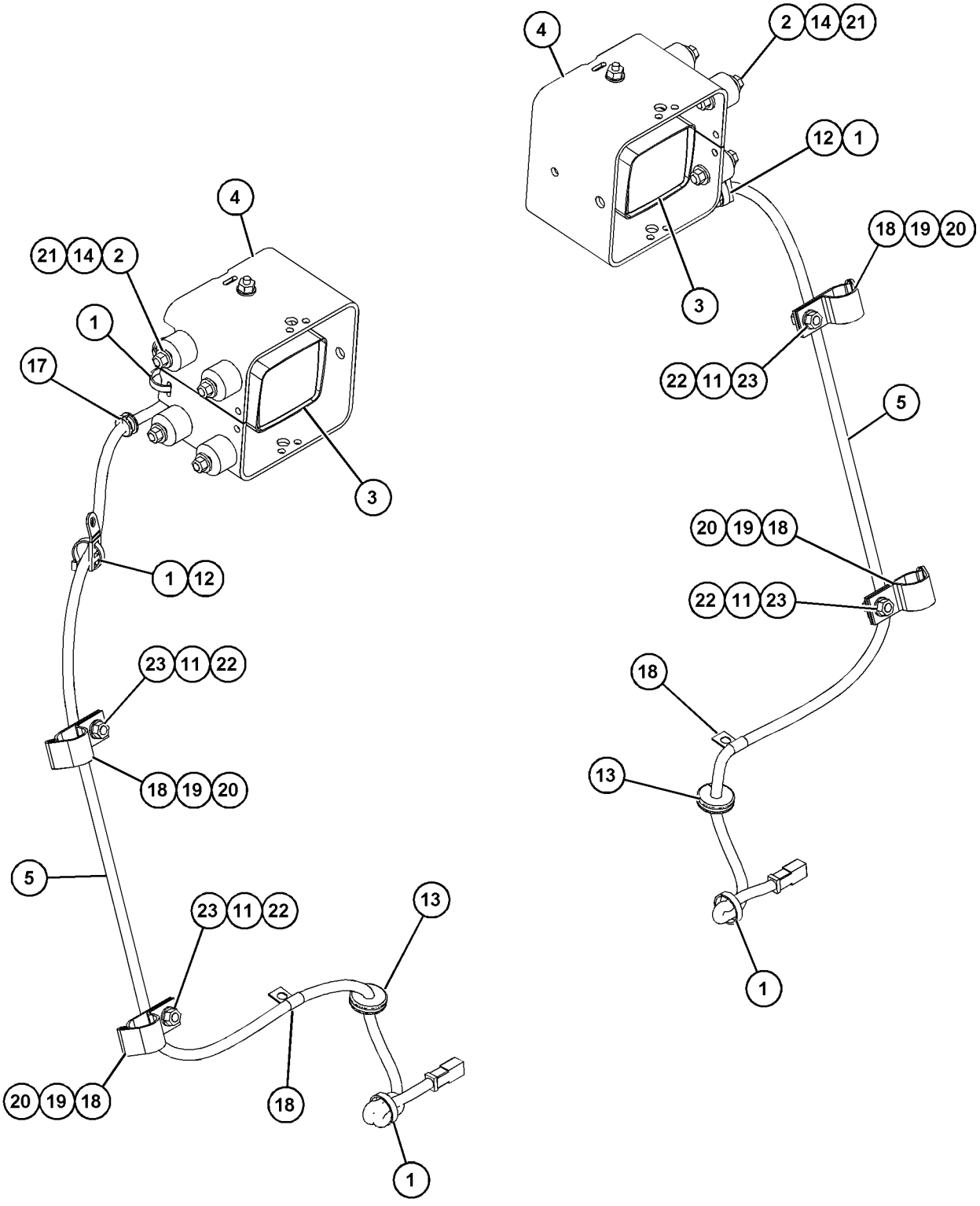

VIEW OF AREA B

GRAPHIC #2 **<END>** g03863268

398-4444 LIGHTING GP-FLOOD—SWEEPS

S/N: PPP1-UP; SSS1-UP; TTT1-UP
FOR USE WITH 398-4550—PAGE: 403
AN ATTACHMENT

SMCS-1434 **i06220843**

NOTE	REF NO	GRAPHIC REF	PART NUMBER	QTY	PART NAME 1 2 3 4 5 6 (PRODUCT LEVEL)	SEE PAGE
	1	1,2	**7K-1181**	57	STRAP-CABLE	
	2	1	**9W-4361**	8	MOUNT-FLEXIBLE	
Y	3	1,2	*254-8155*	4	LAMP GP-FLOOD (24-VOLT)	192
Y	4	1,2	*272-6641*	4	LAMP GP-FLOOD (24-VOLT)	193
	5	1	**356-4254**	2	GUARD AS	
	6	1	**356-4259**	2	GUARD AS-LAMP	
	7	2	**383-1731**	2	GUARD AS-LAMP	
	8	2	**384-0071**	2	GUARD AS-LAMP	
Y	9	2	**398-4445**	1	HARNESS AS-REAR LIGHTING	176
	10	2	**398-4446**	1	HARNESS AS-FRONT LIGHTING	
		2	**8T-8730**	8	SOCKET-CONNECTOR (16-GA TO 18-GA)	
		2	**155-2270**	2	KIT-CONNECTING PLUG (2-PIN)	
		2	**155-2271**	1	KIT-CONNECTING PLUG (4-PIN)	
					(EACH PLUG KIT INCLUDES PLUG AS, WEDGE & INTERFACE SEAL)	
	11	1	**398-4459**	2	HARNESS AS-LIGHTING (SWEEPS)	
					(EACH INCLUDES)	
		1	**102-8802**	1	KIT-RECEPTACLE (2-PIN)	
					(INCLUDES RECEPTACLE AS & WEDGE)	
		1	**9W-0852**	2	PIN-CONNECTOR (14-GA TO 16-GA)	
		1	**9W-0844**	4	SOCKET-CONNECTOR (14-GA TO 16-GA)	
E		1	**125-7874**		TUBE-HEAT SHRINK (5.72-MM DIA) (10-CM)	
		1	**155-2270**	2	KIT-CONNECTING PLUG (2-PIN)	
					(EACH PLUG KIT INCLUDES PLUG AS, WEDGE & INTERFACE SEAL)	
	12	2	**132-5789**	2	CLIP	
M	13	2	**329-3356**	2	NUT (M12X1.75-THD)	
	14	1	**4P-7428**	2	CLIP	
	15	1,2	**5F-9757**	3	GROMMET	
	16	1	**5P-1075**	16	WASHER-HARD (10.2X22.5X3-MM THK)	
	17	2	**5P-4116**	2	WASHER-HARD (8.8X20.5X2-MM THK)	
	18	1	**5P-9085**	2	CLIP	
	19	1	**6V-8801**	16	NUT (3/8-16-THD)	
	20	1,2	**8T-4121**	10	WASHER-HARD (11X21X2.5-MM THK)	
M	21	1,2	**8T-4136**	10	BOLT (M10X1.5X25-MM)	
M	22	2	**8T-4139**	2	BOLT (M12X1.75X30-MM)	
M	23	2	**8T-4189**	2	BOLT (M8X1.25X20-MM)	
	24	2	**8T-4223**	4	WASHER-HARD (13.5X25.5X3-MM THK)	

E - ORDER BY THE CENTIMETER
M - METRIC PART
Y - SEPARATE ILLUSTRATION

REFER TO ALL ILLUSTRATIONS OF THIS GROUP FOR AUXILIARY VIEWS

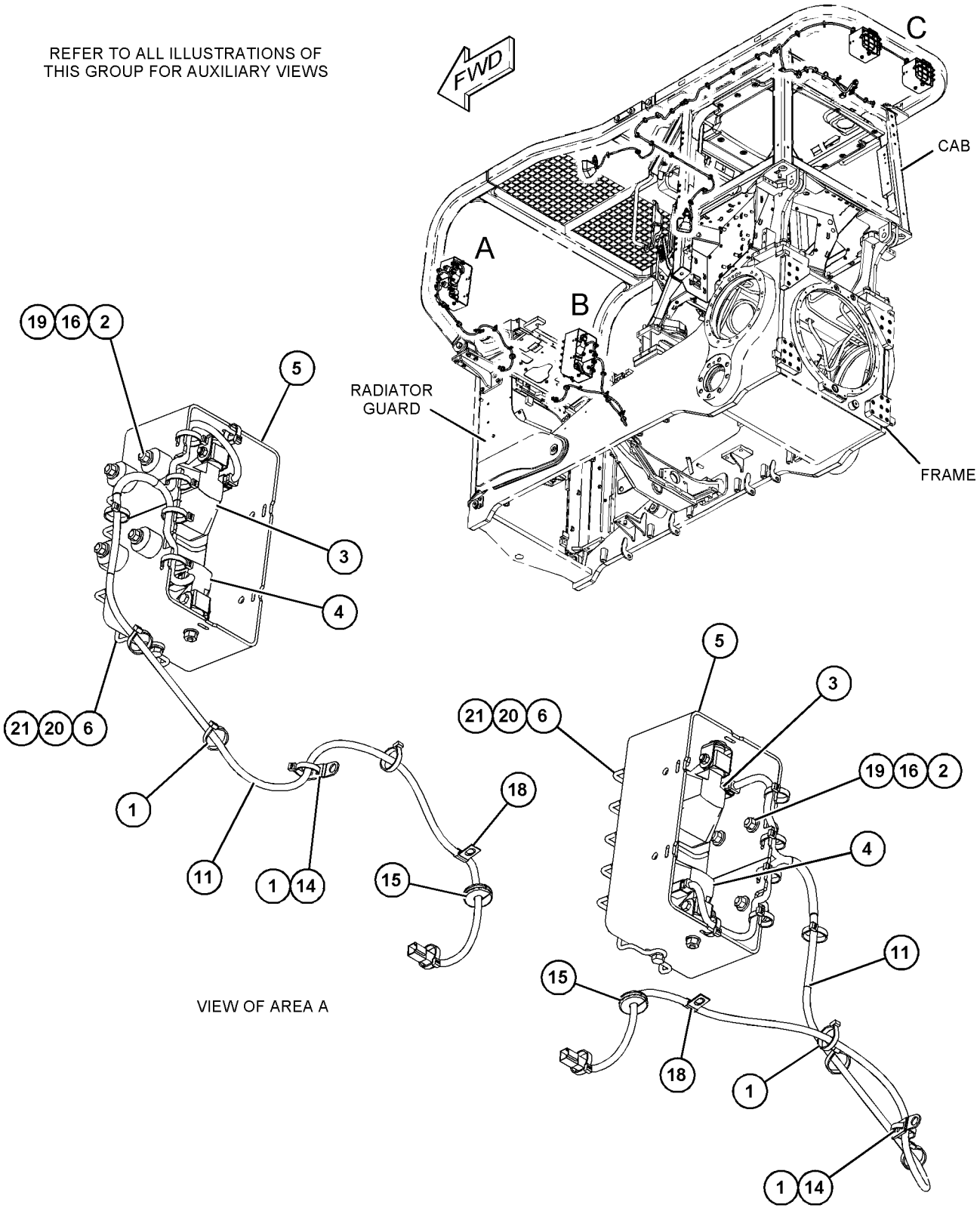

GRAPHIC #1

g03862042

398-4444 **LIGHTING GP-FLOOD (*contd.*)** **i06220843**

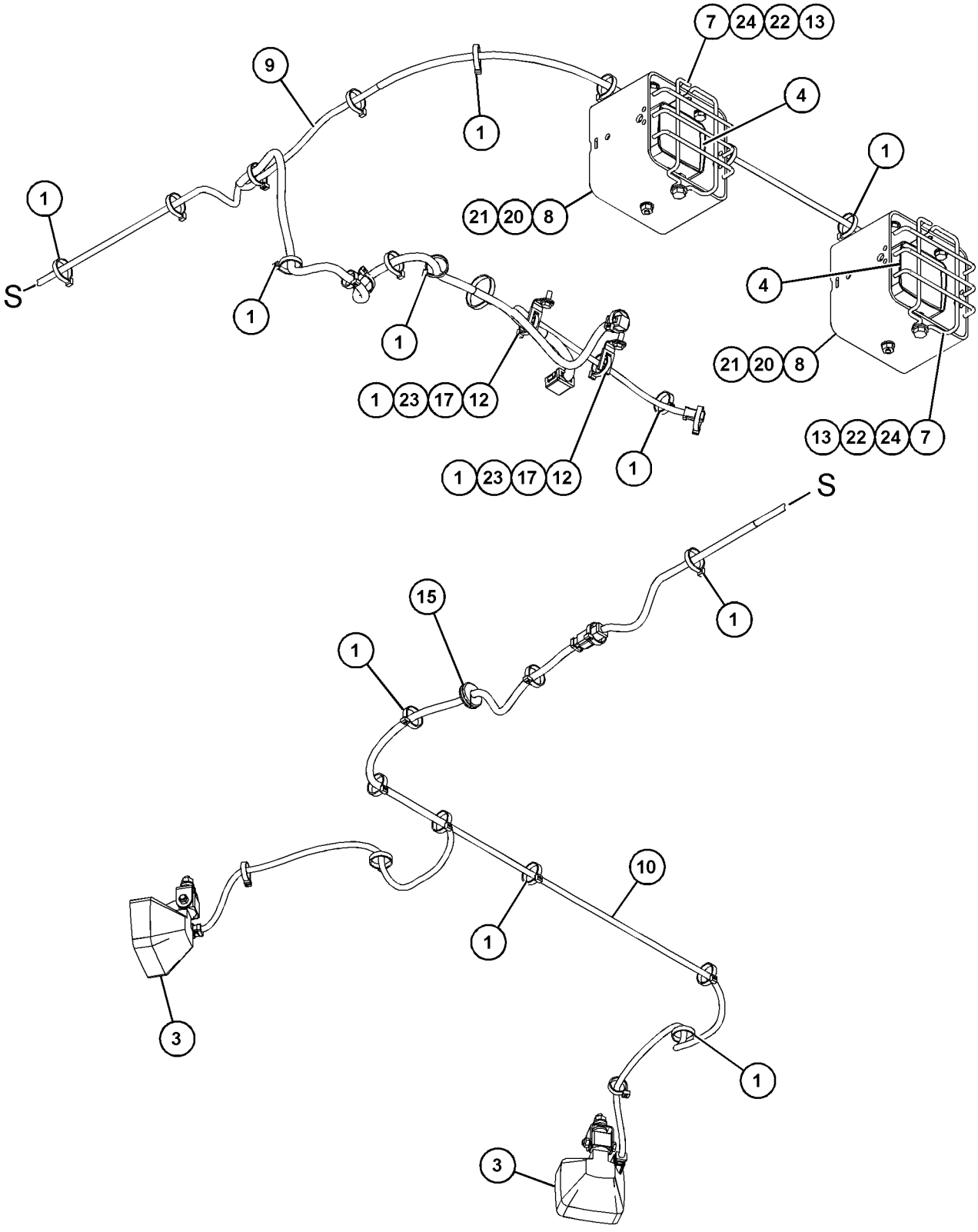

VIEW OF AREA C

GRAPHIC #2 **<END>** g03862043

433-2468 LIGHTING GP-FLOOD—CANOPY, CYLINDER

S/N: PPP1-UP; SSS1-UP; TTT1-UP
CANNOT BE USED WITH SWEEPS
AN ATTACHMENT

SMCS-1434 **i06231615**

NOTE	REF NO	GRAPHIC REF	PART NUMBER	QTY	PART NAME 1 2 3 4 5 6 (PRODUCT LEVEL)	SEE PAGE
	1	1	**9W-4361**	8	MOUNT-FLEXIBLE	
Y	2	1	*254-8155*	4	LAMP GP-FLOOD (24-VOLT)	192
	3	1	**384-0071**	2	GUARD AS-LAMP	
	4	1	**385-7302**	2	HARNESS AS-LIGHTING (CYLINDER)	
					(EACH INCLUDES)	
		1	**102-8802**	1	KIT-RECEPTACLE (2-PIN)	
					(INCLUDES RECEPTACLE AS & WEDGE)	
E		1	**114-8843**		SLEEVE-PLASTIC (40-CM)	
		1	**126-1767**	2	PIN-CONNECTOR (14-GA TO 16-GA)	
		1	**126-1768**	2	SOCKET-CONNECTOR (14-GA TO 16-GA)	
		1	**155-2270**	1	KIT-CONNECTING PLUG (2-PIN)	
					(INCLUDES PLUG AS, WEDGE & INTERFACE SEAL)	
	5	1	**386-9710**	2	HANDHOLD	
	6	1	**395-4184**	1	BRACKET (LH)	
	7	1	**395-4185**	1	BRACKET (RH)	
Y	8	1	**420-1157**	1	HARNESS AS-REAR LIGHTING	176
M	9	1	**344-5675**	4	NUT (M10X1.5-THD)	
	10	1	**4H-2558**	1	GROMMET	
	11	1	**4P-7581**	2	CLIP	
	12	1	**5F-9757**	2	GROMMET	
	13	1	**5P-1075**	16	WASHER-HARD (10.2X22.5X3-MM THK)	
	14	1	**5P-8522**	2	GROMMET	
	15	1	**5P-9085**	6	CLIP	
	16	1	**6K-4934**	4	CLIP (SLOT)	
	17	1	**6K-4935**	4	CLIP (TAB)	
	18	1	**6V-8801**	16	NUT (3/8-16-THD)	
	19	1	**7K-1181**	12	STRAP-CABLE	
	20	1	**7X-7729**	4	WASHER (11X25X3-MM THK)	
	21	1	**8T-4121**	8	WASHER-HARD (11X21X2.5-MM THK)	
M	22	1	**8T-4136**	4	BOLT (M10X1.5X25-MM)	
M	23	1	**8T-4196**	4	BOLT (M10X1.5X35-MM)	

E - ORDER BY THE CENTIMETER
M - METRIC PART
Y - SEPARATE ILLUSTRATION

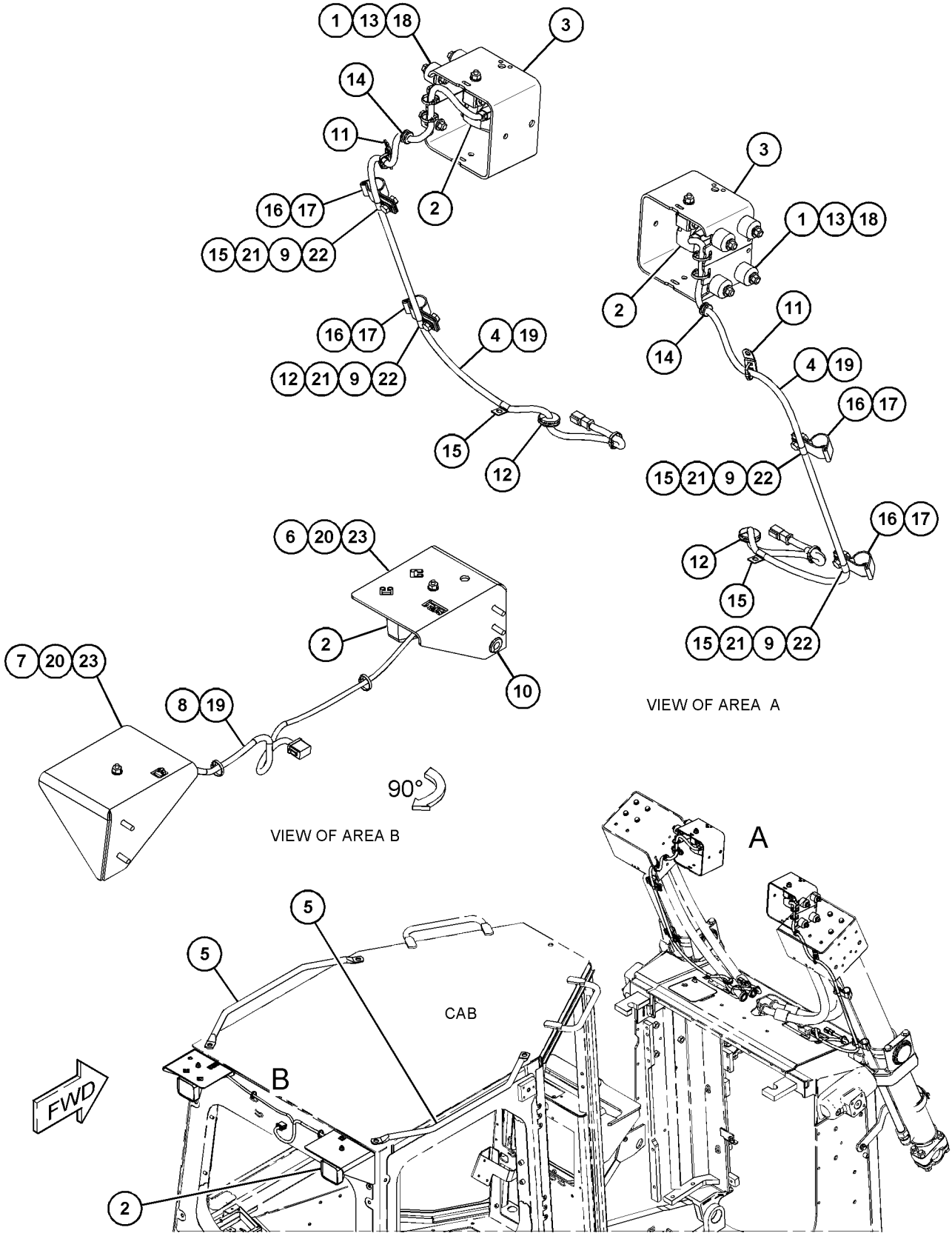

GRAPHIC #1 **<END>** g03854285

433-2469 LIGHTING GP-FLOOD—CANOPY, CYLINDER

S/N: PPP1-UP; SSS1-UP; TTT1-UP
CANNOT BE USED WITH SWEEPS
AN ATTACHMENT

SMCS-1434 **i06231613**

NOTE	REF NO	GRAPHIC REF	PART NUMBER	QTY	PART NAME 1 2 3 4 5 6 (PRODUCT LEVEL)	SEE PAGE
	1	1	**9W-4361**	8	MOUNT-FLEXIBLE	
Y	2	1	*254-8155*	6	LAMP GP-FLOOD (24-VOLT)	192
	3	1	**384-0071**	2	GUARD AS-LAMP	
	4	1	**385-7302**	2	HARNESS AS-LIGHTING (CYLINDER)	
					(EACH INCLUDES)	
		1	**102-8802**	1	KIT-RECEPTACLE (2-PIN)	
					(INCLUDES RECEPTACLE AS & WEDGE)	
E		1	**114-8843**		SLEEVE-PLASTIC (40-CM)	
		1	**126-1767**	2	PIN-CONNECTOR (14-GA TO 16-GA)	
		1	**126-1768**	2	SOCKET-CONNECTOR (14-GA TO 16-GA)	
		1	**155-2270**	1	KIT-CONNECTING PLUG (2-PIN)	
					(INCLUDES PLUG AS, WEDGE & INTERFACE SEAL)	
	5	1	**386-9710**	2	HANDHOLD	
	6	1	**395-4186**	1	BRACKET (LH)	
	7	1	**395-4187**	1	BRACKET (RH)	
Y	8	1	**420-1156**	1	HARNESS AS-LIGHTING (REAR)	174
M	9	1	**344-5675**	4	NUT (M10X1.5-THD)	
	10	1	**4H-2558**	1	GROMMET	
	11	1	**4P-7581**	2	CLIP	
	12	1	**5F-9757**	2	GROMMET	
	13	1	**5P-1075**	16	WASHER-HARD (10.2X22.5X3-MM THK)	
	14	1	**5P-8522**	2	GROMMET	
	15	1	**5P-9085**	6	CLIP	
	16	1	**6K-4934**	4	CLIP (SLOT)	
	17	1	**6K-4935**	4	CLIP (TAB)	
	18	1	**6V-8801**	16	NUT (3/8-16-THD)	
	19	1	**7K-1181**	14	STRAP-CABLE	
	20	1	**7X-7729**	4	WASHER (11X25X3-MM THK)	
	21	1	**8T-4121**	8	WASHER-HARD (11X21X2.5-MM THK)	
M	22	1	**8T-4136**	4	BOLT (M10X1.5X25-MM)	
M	23	1	**8T-4196**	4	BOLT (M10X1.5X35-MM)	

E - ORDER BY THE CENTIMETER
M - METRIC PART
Y - SEPARATE ILLUSTRATION

433-2469 **LIGHTING GP-FLOOD (*contd.*)** **i06231613**

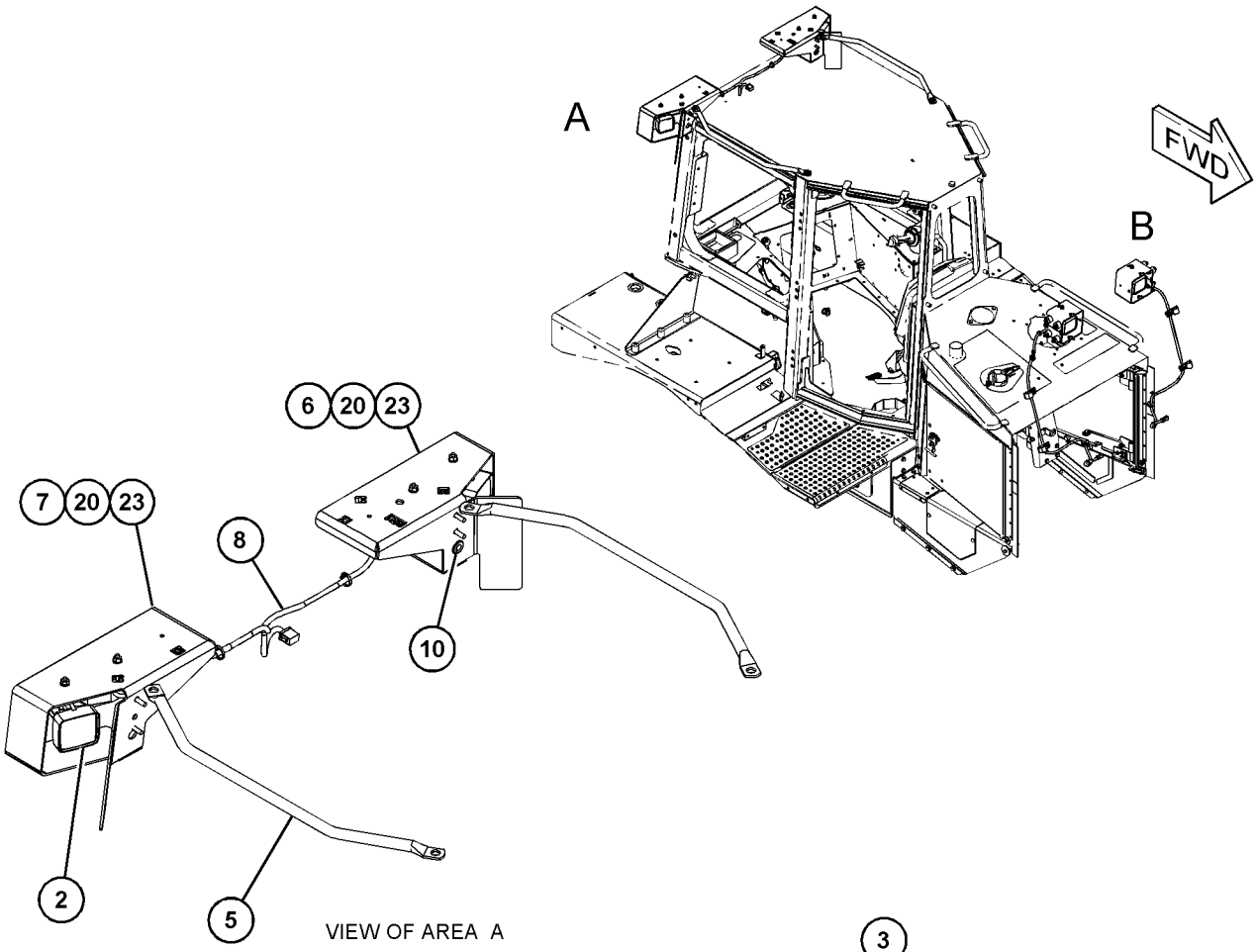

VIEW OF AREA A

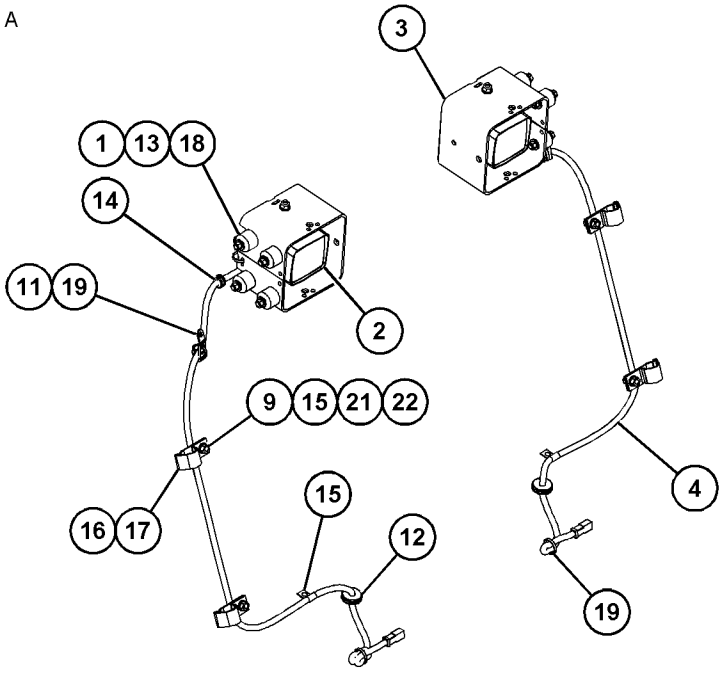

VIEW OF AREA B

GRAPHIC #1 **<END>** g03854502

433-2481 LIGHTING GP-FLOOD—CAB, CYLINDER

S/N: PPP1-UP; SSS1-UP; TTT1-UP
CANNOT BE USED WITH CANOPY, SWEEPS, SCREEN GP-PROTECTION AN ATTACHMENT

SMCS-1434 **i06230809**

NOTE	REF NO	GRAPHIC REF	PART NUMBER	QTY	PART NAME 1 2 3 4 5 6 (PRODUCT LEVEL)	SEE PAGE
	1	1	**457-1045**	16	NUT (3/8-16-THD)	
	2	1	**7K-1181**	23	STRAP-CABLE	
	3	1	**9W-4361**	8	MOUNT-FLEXIBLE	
Y	4	1	**383-8634**	6	LAMP GP-FLOOD (24-VOLT) (CAB, CYLINDER)	194
	5	1	**384-0071**	2	GUARD AS-LAMP	
	6	1	**385-7302**	2	HARNESS AS-LIGHTING (CYLINDER)	
					(EACH INCLUDES)	
		1	**102-8802**	1	KIT-RECEPTACLE (2-PIN)	
					(INCLUDES RECEPTACLE AS & WEDGE)	
E		1	**114-8843**		SLEEVE-PLASTIC (40-CM)	
		1	**126-1767**	2	PIN-CONNECTOR (14-GA TO 16-GA)	
		1	**126-1768**	2	SOCKET-CONNECTOR (14-GA TO 16-GA)	
		1	**155-2270**	1	KIT-CONNECTING PLUG (2-PIN)	
					(INCLUDES PLUG AS, WEDGE & INTERFACE SEAL)	
	7	1	**386-9710**	2	HANDHOLD	
Y	8	1	**430-4097**	1	HARNESS AS-LIGHTING (CAB FLOODLIGHT)	174
	9	1	**481-8427**	1	GUARD AS	
	10	1	**481-8428**	1	GUARD AS	
	11	1	**132-5789**	2	CLIP	
M	12	1	**344-5675**	4	NUT (M10X1.5-THD)	
	13	1	**4P-7581**	2	CLIP	
	14	1	**5F-9757**	2	GROMMET	
	15	1	**5P-1075**	16	WASHER-HARD (10.2X22.5X3-MM THK)	
	16	1	**5P-1076**	2	WASHER-HARD (13.5X30X4-MM THK)	
	17	1	**5P-4116**	2	WASHER-HARD (8.8X20.5X2-MM THK)	
	18	1	**5P-8522**	2	GROMMET	
	19	1	**5P-9085**	6	CLIP	
	20	1	**6K-4934**	4	CLIP (SLOT)	
	21	1	**6K-4935**	4	CLIP (TAB)	
	22	1	**8T-4121**	8	WASHER-HARD (11X21X2.5-MM THK)	
M	23	1	**8T-4136**	4	BOLT (M10X1.5X25-MM)	
M	24	1	**8T-4189**	2	BOLT (M8X1.25X20-MM)	
M	25	1	**8T-4648**	2	BOLT (M12X1.75X70-MM)	
	26	1	**8V-9708**	2	SPACER (14.3X25.4X35-MM THK)	

E - ORDER BY THE CENTIMETER
M - METRIC PART
Y - SEPARATE ILLUSTRATION

433-2481 **LIGHTING GP-FLOOD (*contd.*)** **i06230809**

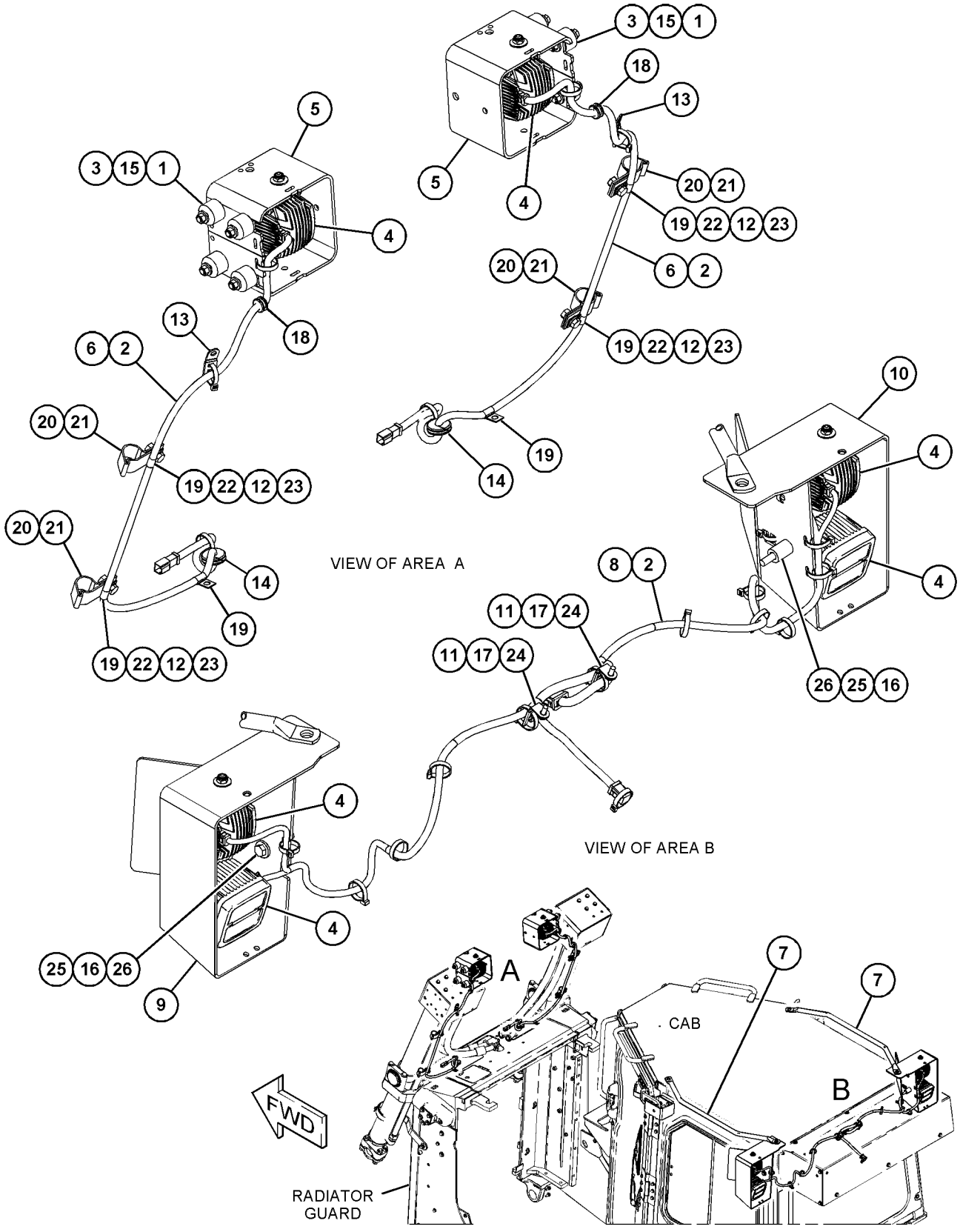

GRAPHIC #1

<END>

g03862243

433-2482 LIGHTING GP-FLOOD

S/N: PPP1-UP; SSS1-UP; TTT1-UP
LED
FOR USE WITH CANOPY
CANNOT BE USED WITH SWEEP GP
AN ATTACHMENT

SMCS-1434 **i06198004**

NOTE	REF NO	GRAPHIC REF	PART NUMBER	QTY	PART NAME 1 2 3 4 5 6 (PRODUCT LEVEL)	SEE PAGE
	1	1	**457-1045**	16	NUT (3/8-16-THD)	
	2	1	**7K-1181**	12	STRAP-CABLE	
	3	1	**9W-4361**	8	MOUNT-FLEXIBLE	
Y	4	1	**383-8634**	6	LAMP GP-FLOOD (24-VOLT)	194
	5	1	**384-0071**	2	GUARD AS-LAMP	
	6	1	**385-7302**	2	HARNESS AS-LIGHTING (CYLINDER)	
					(EACH INCLUDES)	
		1	**102-8802**	1	KIT-RECEPTACLE (2-PIN)	
					(INCLUDES RECEPTACLE AS & WEDGE)	
E		1	**114-8843**		SLEEVE-PLASTIC (40-CM)	
		1	**126-1767**	2	PIN-CONNECTOR (14-GA TO 16-GA)	
		1	**126-1768**	2	SOCKET-CONNECTOR (14-GA TO 16-GA)	
		1	**155-2270**	1	KIT-CONNECTING PLUG (2-PIN)	
					(INCLUDES PLUG AS, WEDGE & INTERFACE SEAL)	
	7	1	**386-9710**	2	HANDHOLD	
	8	1	**395-4186**	1	BRACKET (LH)	
	9	1	**395-4187**	1	BRACKET (RH)	
Y	10	1	**420-1156**	1	HARNESS AS-LIGHTING	174
M	11	1	**344-5675**	4	NUT (M10X1.5-THD)	
	12	1	**4H-2558**	1	GROMMET	
	13	1	**4P-7581**	2	CLIP	
	14	1	**5F-9757**	2	GROMMET	
	15	1	**5P-1075**	16	WASHER-HARD (10.2X22.5X3-MM THK)	
	16	1	**5P-8522**	2	GROMMET	
	17	1	**5P-9085**	6	CLIP	
	18	1	**6K-4934**	4	CLIP (SLOT)	
	19	1	**6K-4935**	4	CLIP (TAB)	
	20	1	**7X-7729**	4	WASHER (11X25X3-MM THK)	
	21	1	**8T-4121**	8	WASHER-HARD (11X21X2.5-MM THK)	
M	22	1	**8T-4136**	4	BOLT (M10X1.5X25-MM)	
M	23	1	**8T-4196**	4	BOLT (M10X1.5X35-MM)	

E - ORDER BY THE CENTIMETER
M - METRIC PART
Y - SEPARATE ILLUSTRATION

433-2482 **LIGHTING GP-FLOOD (*contd.*)** **i06198004**

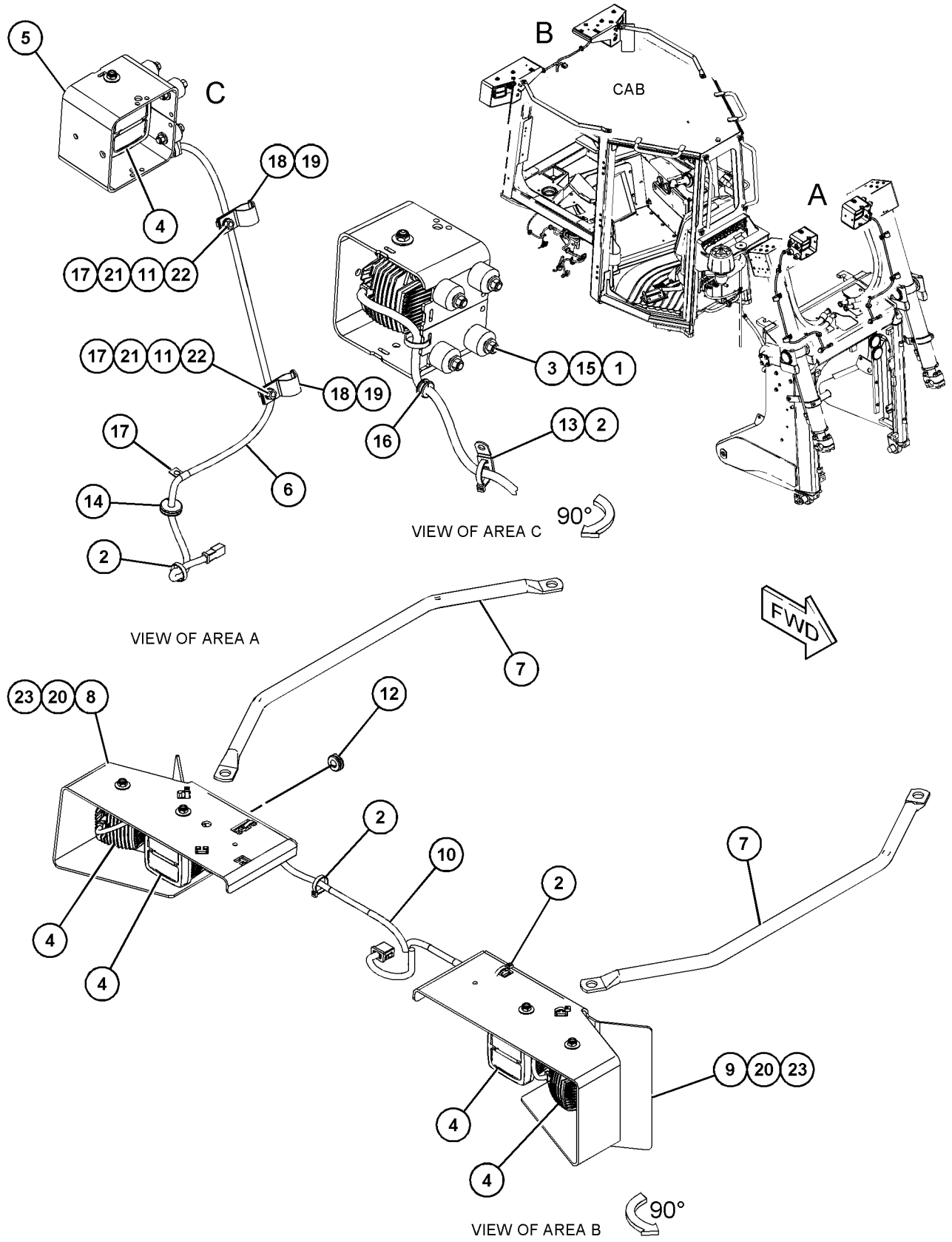

GRAPHIC #1 **<END>** g03852388

488-2530 LIGHTING GP-FLOOD—SWEEPS

S/N: PPP1-UP; SSS1-UP; TTT1-UP
FOR USE WITH 398-4550—PAGE: 403
AN ATTACHMENT

SMCS-1434 **i06234135**

NOTE	REF NO	GRAPHIC REF	PART NUMBER	QTY	PART NAME 1 2 3 4 5 6 (PRODUCT LEVEL)	SEE PAGE
	1	1	**7K-1181**	35	STRAP-CABLE	
Y	2	1	*254-8155*	2	LAMP GP-FLOOD (24-VOLT)	192
Y	3	1	*272-6641*	2	LAMP GP-FLOOD (24-VOLT)	193
	4	1	**383-1731**	2	GUARD AS-LAMP	
	5	1	**384-0071**	2	GUARD AS-LAMP	
Y	6	1	**398-4445**	1	HARNESS AS-REAR LIGHTING	176
	7	1	**398-4446**	1	HARNESS AS-FRONT LIGHTING	
		1	**8T-8730**	8	SOCKET-CONNECTOR (16-GA TO 18-GA)	
		1	**155-2270**	2	KIT-CONNECTING PLUG (2-PIN)	
		1	**155-2271**	1	KIT-CONNECTING PLUG (4-PIN)	
					(EACH PLUG KIT INCLUDES PLUG AS, WEDGE & INTERFACE SEAL)	
	8	1	**132-5789**	2	CLIP	
M	9	1	**329-3356**	2	NUT (M12X1.75-THD)	
	10	1	**374-7463**	2	CAP-SEAL	
	11	1	**5F-9757**	1	GROMMET	
	12	1	**5P-4116**	2	WASHER-HARD (8.8X20.5X2-MM THK)	
	13	1	**8T-4121**	8	WASHER-HARD (11X21X2.5-MM THK)	
M	14	1	**8T-4136**	8	BOLT (M10X1.5X25-MM)	
M	15	1	**8T-4139**	2	BOLT (M12X1.75X30-MM)	
M	16	1	**8T-4189**	2	BOLT (M8X1.25X20-MM)	
	17	1	**8T-4223**	4	WASHER-HARD (13.5X25.5X3-MM THK)	

M - METRIC PART
Y - SEPARATE ILLUSTRATION

488-2530 **LIGHTING GP-FLOOD (*contd.*)** **i06234135**

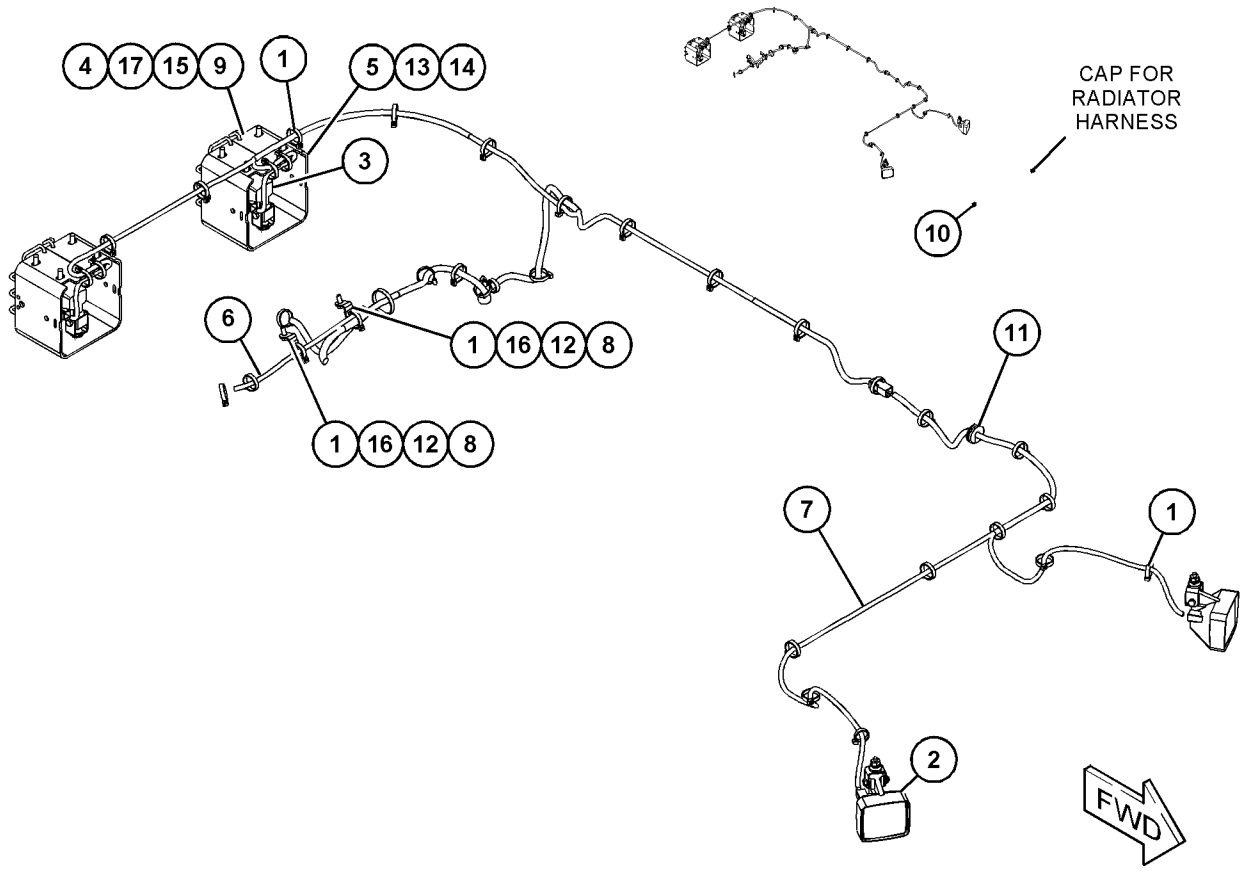

GRAPHIC #1 **<END>** g03866179

367-7314 MOUNTING GP-CONNECTOR

S/N: TXD1-UP

PROVIDES A BRACKET THAT SECURES THE ENGINE AND MACHINE HARNESS CONNECTIONS. ALSO PROVIDE MOUNTING SUPPORT TO THE EXTERNAL FOAM WIRING HARNESS

FOR USE WITH T4F EXTERNAL HARNESS, FUEL COOLED ECMS, AIR COOLED ECM

CANNOT BE USED WITH T4I EXTERNAL HARNESS

PART OF 420-1870, 420-1871, 423-8451, 423-8452, 423-8453, 423-8454 ENGINE AR-COMPLETE AN ATTACHMENT

SMCS-1408 **i05877879**

NOTE	REF NO	GRAPHIC REF	PART NUMBER	QTY	PART NAME 1 2 3 4 5 6 (PRODUCT LEVEL)	SEE PAGE
	1	1	**367-7223**	1	PLATE AS	
M		1	**8R-3857**	1	BOSS (M8X1.25X12-MM)	
M		1	**8T-5413**	3	STUD-WELD (M10X1.5X25-MM)	
M		1	**9R-2160**	1	BOSS (M8X1.25X25-MM)	
M		1	**9R-2821**	1	BOSS (M10X1.5X15-MM)	
M		1	**171-2419**	1	STUD-WELD (M10X1.5X35-MM)	
M	2	1	**178-3336**	2	NUT-HEX FLANGE (M8X1.25-THD)	
	3	1	**9M-1974**	2	WASHER-HARD (8.8X16X2-MM THK)	

M - METRIC PART

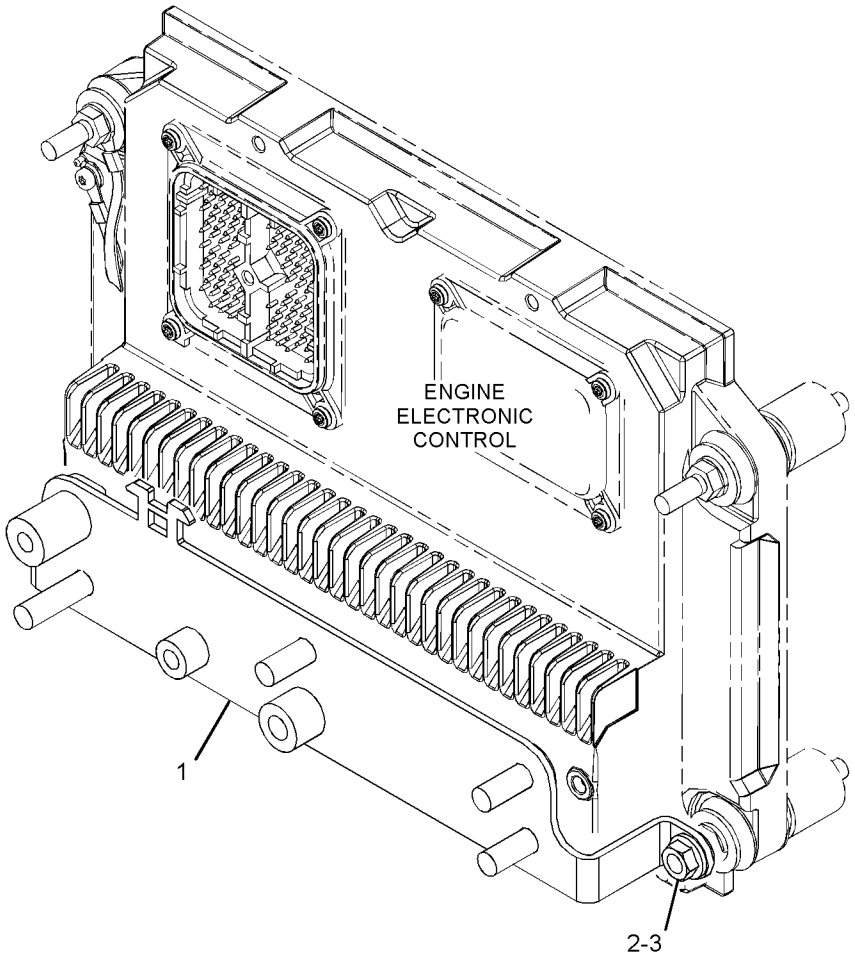

GRAPHIC #1 **<END>** g03324079

3T-9525 PLATE AS-BRUSH

S/N: PPP1-UP; SSS1-UP; TTT1-UP
PART OF 349-6530 STARTING MOTOR GP-ELECTRIC
AN ATTACHMENT

SMCS-1453, 4463

i05354315

NOTE	REF NO	GRAPHIC REF	PART NUMBER	QTY	PART NAME 1 2 3 4 5 6 (PRODUCT LEVEL)	SEE PAGE
	1	1	**6T-0372**	1	PLATE	
	2	1	**6T-0371**	1	INSULATOR	
	3	1	**9F-5599**	12	LOCKWASHER	
	4	1	**6T-0363**	6	HOLDER AS-BRUSH	
					(EACH INCLUDES)	
		1	**3T-9494**	1	SPRING	
	5	1	**3T-4709**	3	PLATE	
	6	1	**3T-4710**	3	PLATE	
	7	1	**2L-6679**	3	PLATE-INSULATOR	
	8	1	**7F-3525**	6	WASHER-BUSHING (0.207X0.39X0.09-IN THK)	
	9	1	**5P-6298**	12	SCREW-MACHINE (10-32X0.5-IN)	

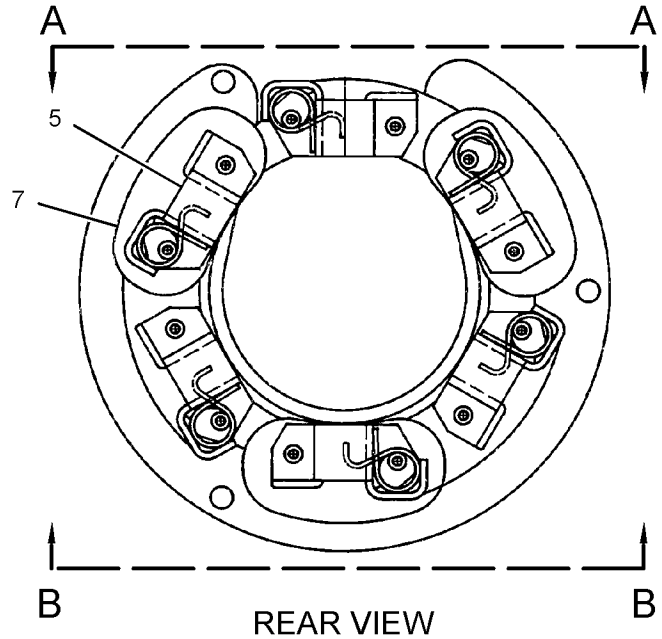

REAR VIEW

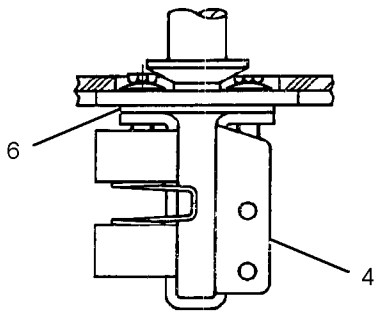

VIEW A-A

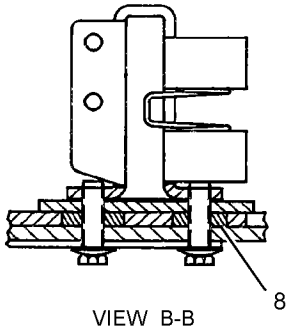

VIEW B-B

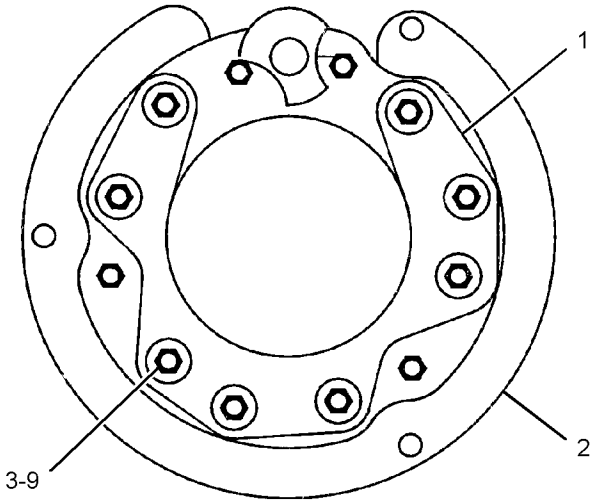

FRONT VIEW

GRAPHIC #1

<END>

g02294074

440-2105 RADIO GP-COMMUNICATION–PL641E CELLULAR

S/N: PPP1-UP; SSS1-UP; TTT1-UP

PART OF 450-2737, 450-3389 INSTALLATION GP-COMMUNICATION

AN ATTACHMENT

SMCS-733T **i06231146**

NOTE	REF NO	GRAPHIC REF	PART NUMBER	QTY	PART NAME 1 2 3 4 5 6 (PRODUCT LEVEL)	SEE PAGE
	1	1	**449-7301**	1	FILM-INFORMATION (PL641 CELLULAR)	
	2	1	**467-2514**	1	FILM-CERTIFICATION (SERIAL NUMBER)	
F			**479-0024**	1	SOFTWARE GP-MONITOR (CELLULAR)	

F - NOT SHOWN

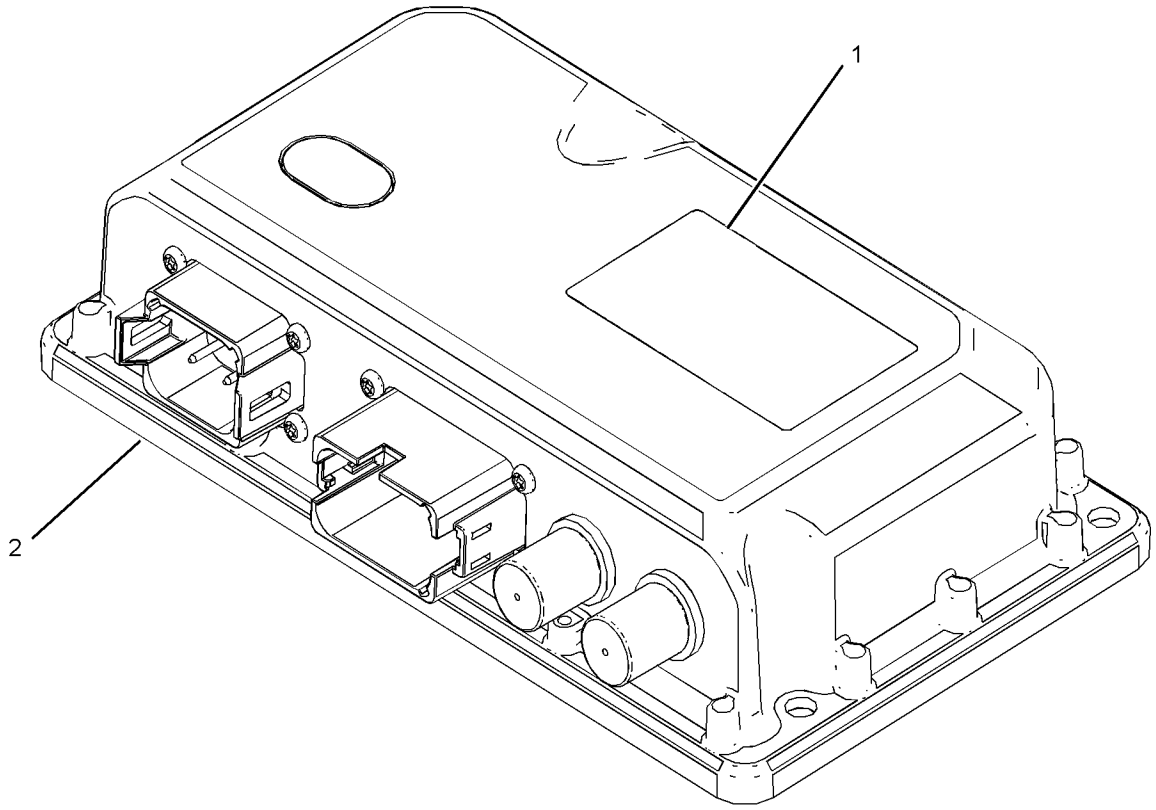

GRAPHIC #1 **<END>** g03806573

442-7199 RADIO GP-COMMUNICATION–PL631 SATELLITE

S/N: PPP1-UP; SSS1-UP; TTT1-UP

PART OF 450-2736, 450-3389 INSTALLATION GP-COMMUNICATION

AN ATTACHMENT

SMCS-733T **i06210321**

NOTE	REF NO	GRAPHIC REF	PART NUMBER	QTY	PART NAME 1 2 3 4 5 6 (PRODUCT LEVEL)	SEE PAGE
	1	1	**467-2513**	1	FILM-CERTIFICATION (PL631)	
	2	1	**449-7303**	1	FILM-INFORMATION (SERIAL NUMBER)	
F			**479-0025**	1	SOFTWARE GP-MONITOR	

F - NOT SHOWN

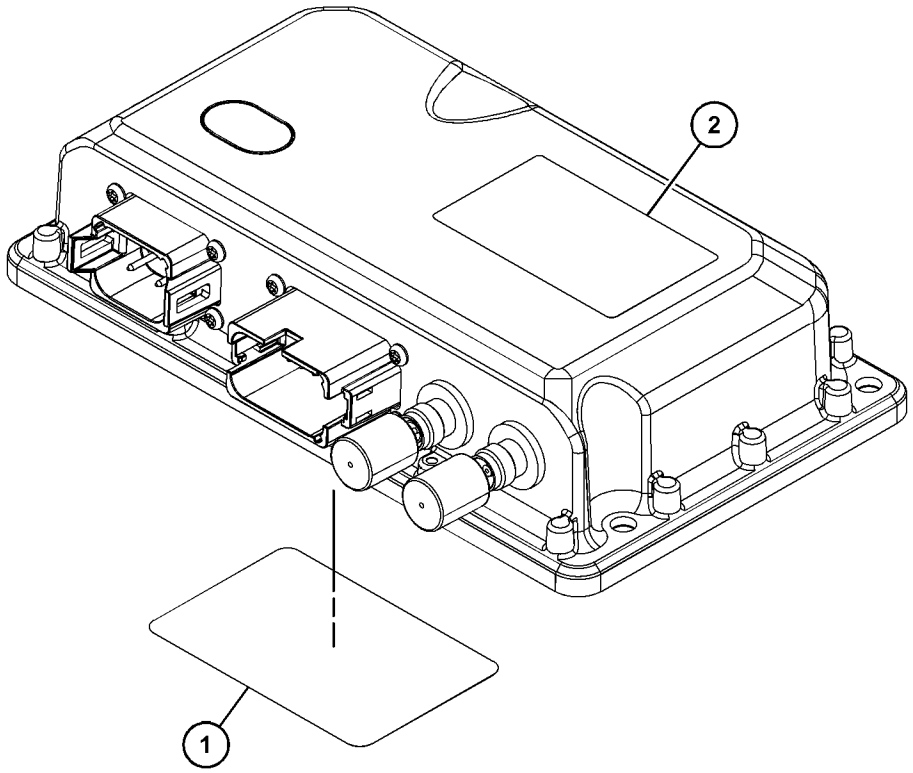

GRAPHIC #1 **<END>** g03836726

231-1978 SENSOR GP-ENGINE

S/N: TXD1-UP
PART OF 387-8619 ENGINE AR-CORE
AN ATTACHMENT

SMCS-1000, 1718, 1906, 1907, 1912, 1917, 1923, 1924, 1925, 1928, 1929, 7400, 7422

i06231070

NOTE	REF NO	GRAPHIC REF	PART NUMBER	QTY	PART NAME 1 2 3 4 5 6 (PRODUCT LEVEL)	SEE PAGE
	1	1	*353-5112*	1	ADAPTER AS	
		1	**9X-0262**	1	ADAPTER	
		1	**214-7566**	2	SEAL-O-RING	
Y	2	1	*274-7395*	1	SENSOR GP-TEMPERATURE (AIR INLET MANIFOLD)	235
Y	3	1	*274-7396*	1	SENSOR GP-TEMPERATURE (WATER, COOLANT)	236
Y	4	1	*197-8393*	1	SENSOR GP-PRESSURE (ATMOSPHERIC)	226
	5	1	**161-1705**	1	SENSOR AS-PRESSURE (ENGINE OIL)	
	6	1	**161-1704**	1	SENSOR GP-PRESSURE (AIR INLET MANIFOLD)	
Y	7	1	*236-6220*	1	SENSOR GP-PRESSURE (INJECTION ACTUATION)	228
Y	8	1	*236-6221*	1	SENSOR GP-SPEED (ENGINE TIMING)	231
	9	1	**3E-4352**	1	WASHER-HARD (8.8X20.5X2.5-MM THK)	
M	10	1	**6V-3940**	1	BOLT (M8X1.25X25-MM)	
	11	1	*329-5451*	1	ADAPTER AS	
		1	**9X-0261**	1	ADAPTER	
		1	**214-7566**	1	SEAL-O-RING	
		1	**214-7568**	1	SEAL-O-RING	

M - METRIC PART
Y - SEPARATE ILLUSTRATION

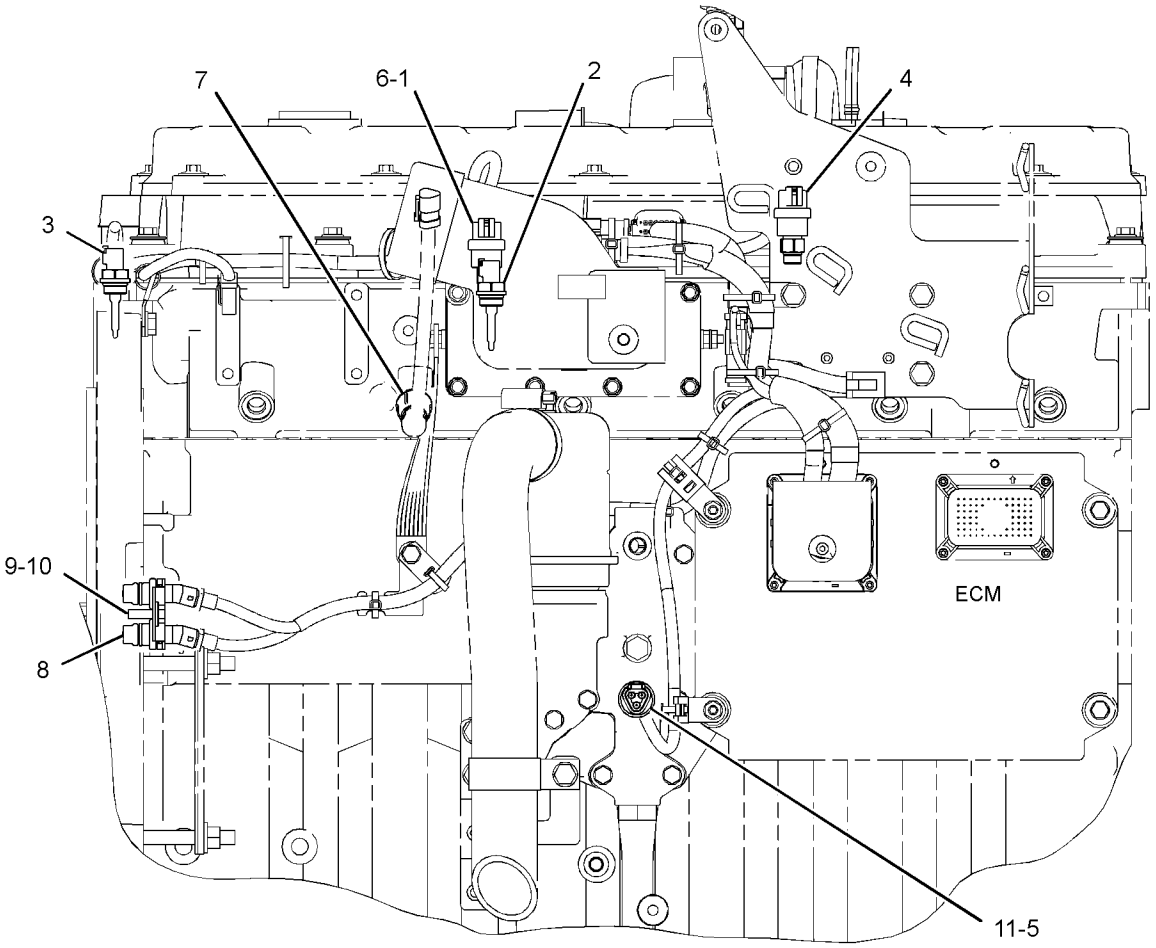

LEFT SIDE VIEW

GRAPHIC #1

<END>

g02847276

330-6034 SENSOR GP-ENGINE

S/N: TXD1-UP
PART OF 387-8618, 387-8619 ENGINE AR-CORE
AN ATTACHMENT

SMCS-1000, 1718, 1906, 1907, 1912, 1917, 1923, 1924, 1925, 1928, 1929, 7400, 7422

i06236226

NOTE	REF NO	GRAPHIC REF	PART NUMBER	QTY	PART NAME 1 2 3 4 5 6 (PRODUCT LEVEL)	SEE PAGE
Y	1	1	*234-5012*	1	SENSOR GP-TEMPERATURE (COOLANT)	233
Y	2	1	*234-5013*	1	SENSOR GP-TEMPERATURE (INTAKE AIR TEMPERATURE)	234
Y	3	1	*236-6221*	1	SENSOR GP-SPEED (ENGINE TIMING)	231
	4	1	**276-6793**	1	SENSOR GP-PRESSURE (OUTLET AIR)	
Y	5	1	*267-1402*	1	SENSOR GP-PRESSURE (INJECTION ACTUATION)	229
	6	1	**274-6719**	1	SENSOR GP-PRESSURE (ENGINE OIL)	
Y	7	1	*303-3357*	1	SENSOR GP-PRESSURE (ATMOSPHERIC)	230
	8	1	*329-5451*	1	ADAPTER AS	
		1	**9X-0261**	1	ADAPTER	
		1	**214-7566**	1	SEAL-O-RING	
		1	**214-7568**	1	SEAL-O-RING	
	9	1	**3E-4352**	1	WASHER-HARD (8.8X20.5X2.5-MM THK)	
M	10	1	**6V-3940**	1	BOLT (M8X1.25X25-MM)	
	11	1	*353-5112*	1	ADAPTER AS	
		1	**9X-0262**	1	ADAPTER	
		1	**214-7566**	2	SEAL-O-RING	

M - METRIC PART
Y - SEPARATE ILLUSTRATION

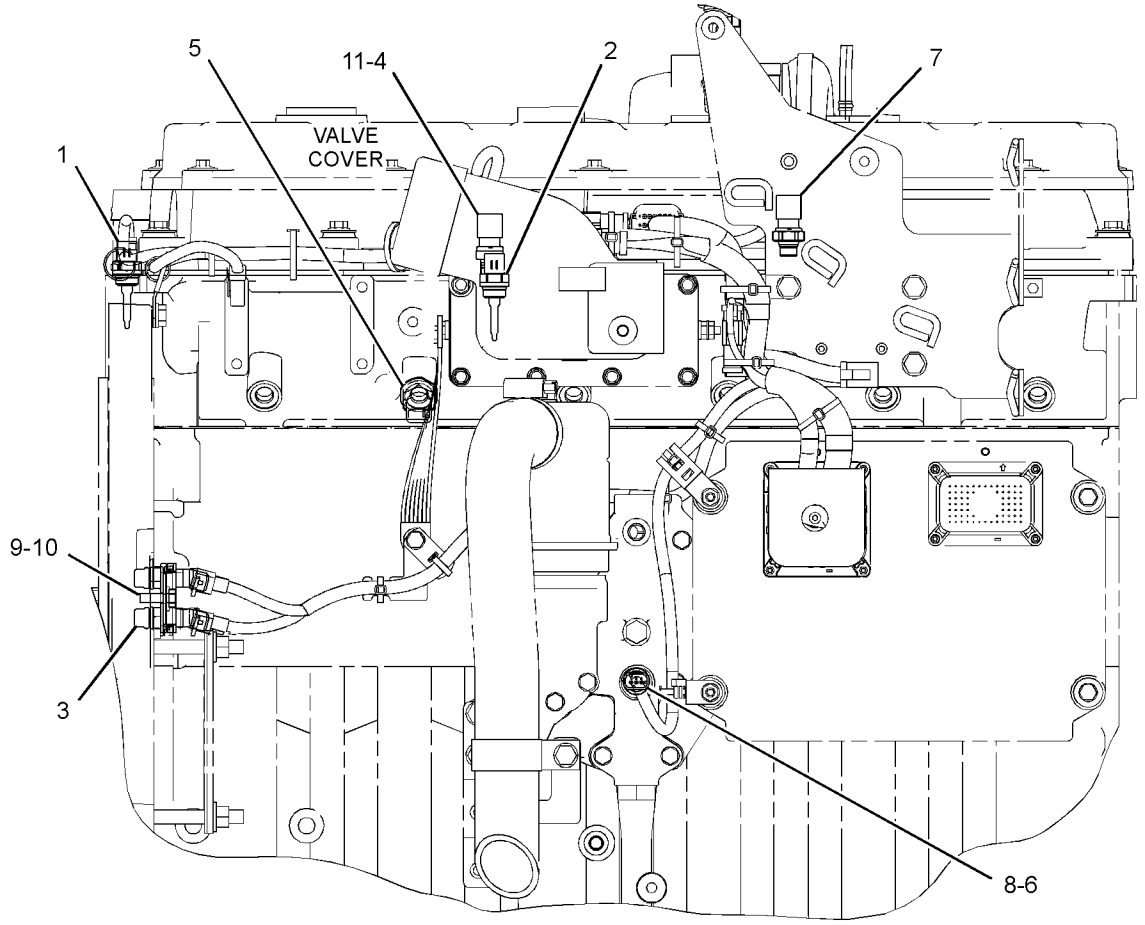

LEFT SIDE VIEW OF ENGINE

GRAPHIC #1

<END>

g02844399

382-2001 SENSOR GP-LIQUID LEVEL–WATER IN FUEL

S/N: PPP1-UP; SSS1-UP; TTT1-UP
PART OF 398-4334 FILTER & LINES GP-FUEL
ALSO AN ATTACHMENT

SMCS-7422 **i06216563**

NOTE	REF NO	GRAPHIC REF	PART NUMBER	QTY	PART NAME 1 2 3 4 5 6 (PRODUCT LEVEL)	SEE PAGE
	1	1	**214-7568**	1	SEAL-O-RING	
	2	1	**102-8804**	1	KIT-RECEPTACLE (4-PIN)	
					(INCLUDES RECEPTACLE AS & WEDGE)	
	3	1	**9X-3401**	4	PIN-CONNECTOR (16-GA TO 18-GA)	

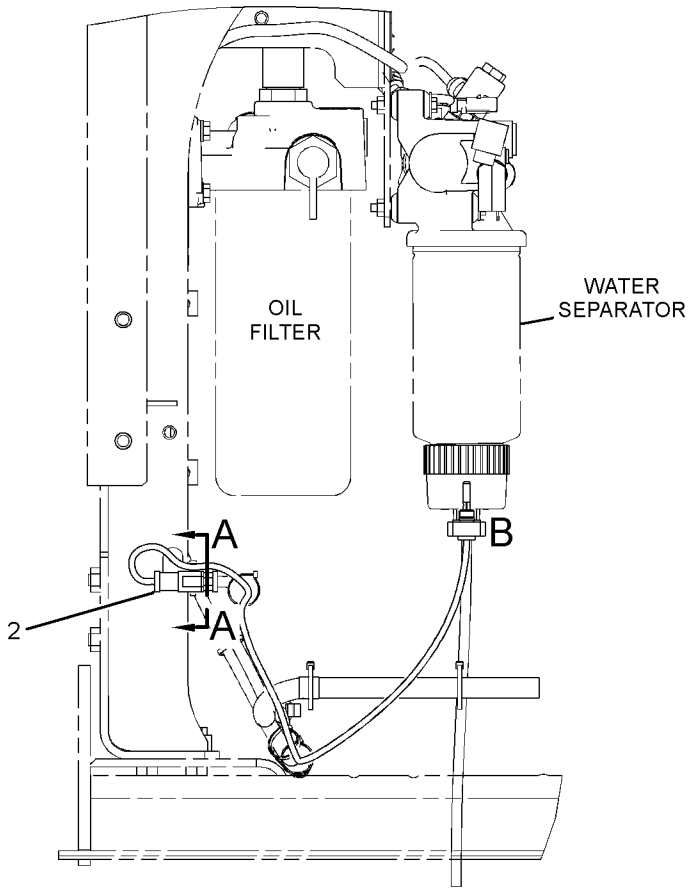

RIGHT SIDE VIEW

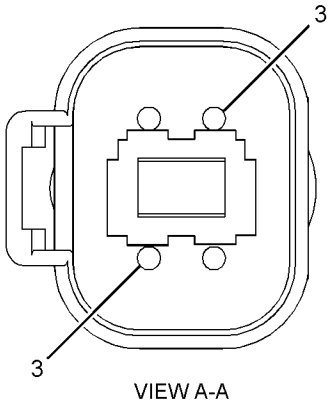

VIEW A-A

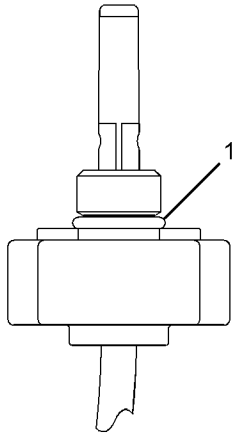

VIEW OF AREA B

GRAPHIC #1 **<END>** g03344389

266-1467 SENSOR GP-POSITION

S/N: PPP1-UP; SSS1-UP; TTT1-UP
PART OF 329-5766 PEDAL GP-GOVERNOR & BRAKE
AN ATTACHMENT

SMCS-1905, 1911, 430S

i05575170

NOTE	REF NO	GRAPHIC REF	PART NUMBER	QTY	PART NAME 1 2 3 4 5 6 (PRODUCT LEVEL)	SEE PAGE
	1	1	**9X-3401**	3	PIN-CONNECTOR (16-GA TO 18-GA)	
					—OR—	
		1	**126-1767**	3	PIN-CONNECTOR (14-GA TO 16-GA)	
	2	1	**102-8803**	1	KIT-RECEPTACLE (3-PIN)	
					(INCLUDES RECEPTACLE AS & WEDGE)	
E	3	1	**3E-9375**		CONDUIT (13-CM)	

E - ORDER BY THE CENTIMETER

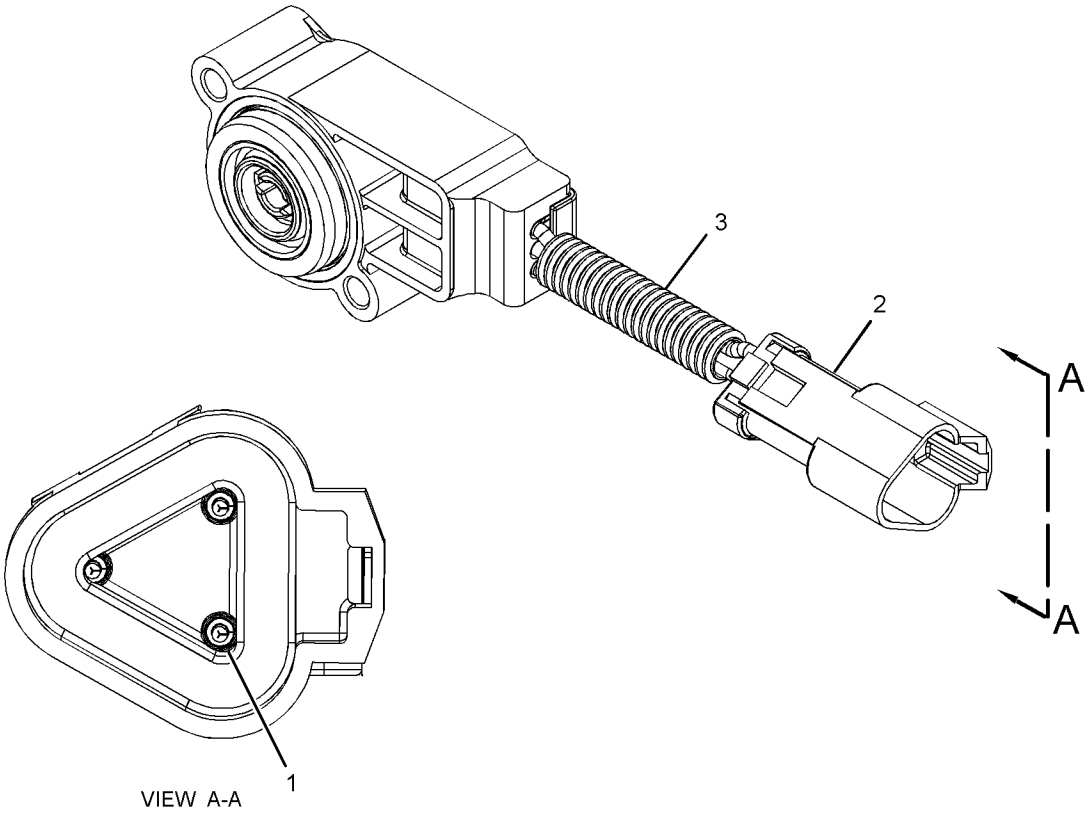

GRAPHIC #1

<END>

g03547699

269-1981 SENSOR GP-POSITION

S/N: PPP1-UP; SSS1-UP; TTT1-UP
PART OF 329-5766 PEDAL GP-GOVERNOR & BRAKE
AN ATTACHMENT

SMCS-1905, 1911, 430S

i06171946

NOTE	REF NO	GRAPHIC REF	PART NUMBER	QTY	PART NAME 1 2 3 4 5 6 (PRODUCT LEVEL)	SEE PAGE
	1	1	**230-4014**	2	RECEPTACLE AS-CONNECTOR (3-PIN)	
	2	1	**9X-3401**	6	PIN-CONNECTOR (16-GA TO 18-GA)	
					–OR–	
			126-1767	6	PIN-CONNECTOR (14-GA TO 16-GA)	

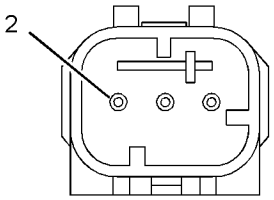

VIEW A-A

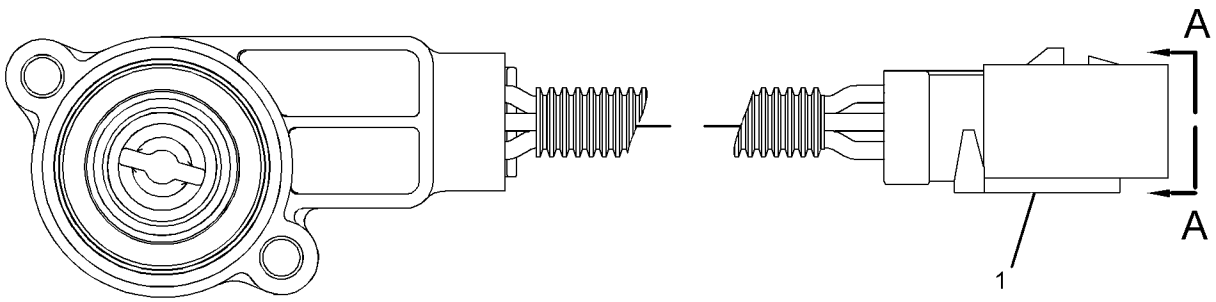

GRAPHIC #1

<END>

g01391032

356-5425 SENSOR GP-POSITION

S/N: PPP1-UP; SSS1-UP; TTT1-UP
PART OF 424-8511 CONTROL GP-JOYSTICK
AN ATTACHMENT

SMCS-1905, 1911, 430S

i06207092

NOTE	REF NO	GRAPHIC REF	PART NUMBER	QTY	PART NAME 1 2 3 4 5 6 (PRODUCT LEVEL)	SEE PAGE
	1	1	**7P-4190**	2	BEARING-ROLLER	
	2	1	**237-0145**	1	SPACER (19.5X58X3.5-MM THK)	
	3	1	**269-7050**	1	SPRING	
	4	1	**356-5426**	1	CAM AS	
		1	**3H-0702**	1	DOWEL	
	5	1	**356-5428**	1	HOUSING	
	6	1	**356-5429**	1	HOUSING	
	7	1	**1B-8706**	1	KEY-WOODRUFF	
	8	1	**1W-6448**	3	DOWEL	
	9	1	**2H-9445**	1	PIN-SPRING	
	10	1	**2J-6356**	2	RING-RETAINING	
	11	1	**5M-1179**	1	PIN-SPRING	
	12	1	**8F-7702**	2	SEAL-LIP TYPE	
M	13	1	**8T-0640**	4	BOLT (M6X1X30-MM)	
	14	1	**8T-4994**	1	WASHER-HARD (20X36.5X3.5-MM THK)	
	15	1	**9X-8256**	4	WASHER (6.6X12X2-MM THK)	

M - METRIC PART

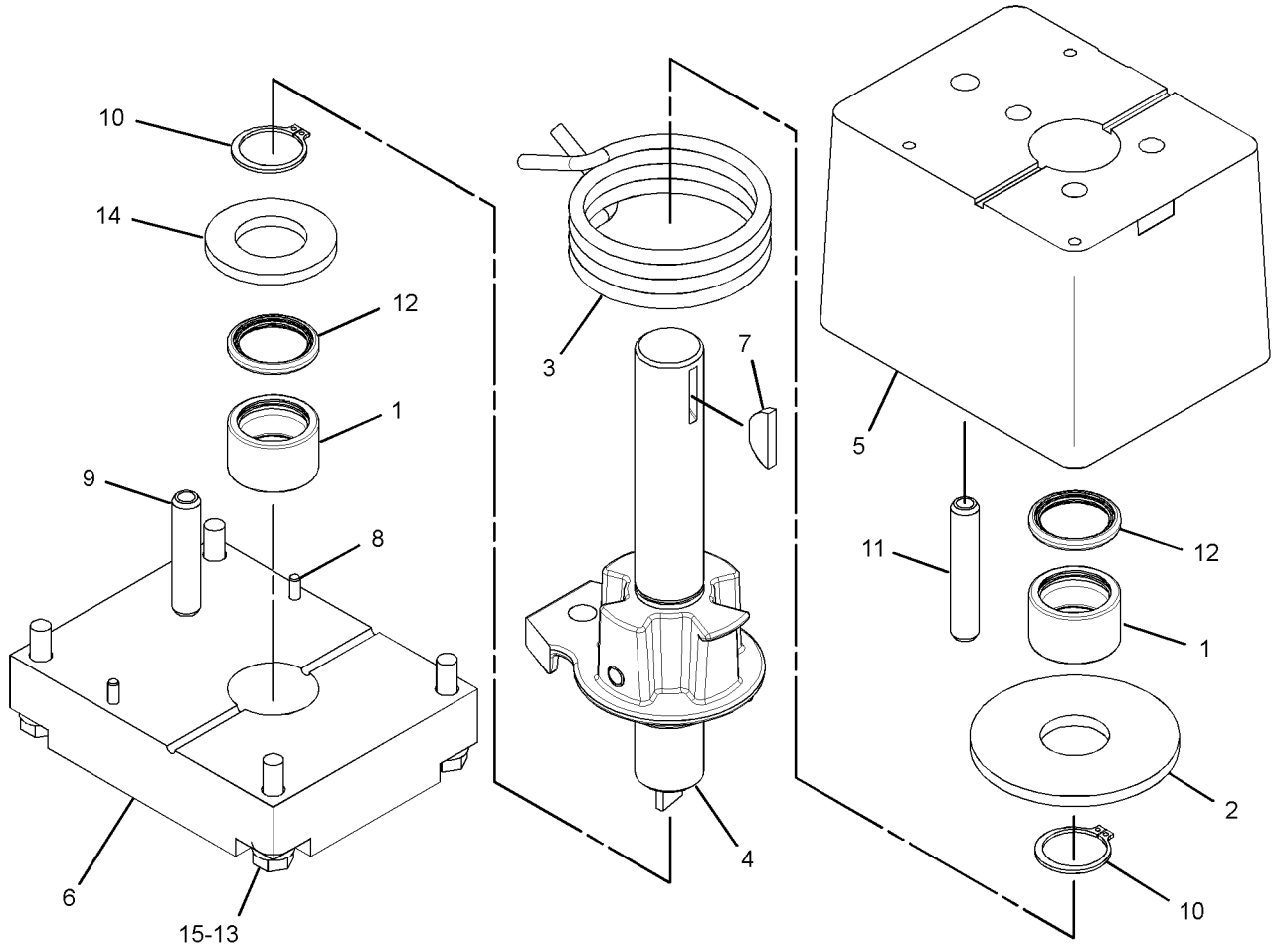

GRAPHIC #1

<END>

g02872602

161-9926 SENSOR GP-PRESSURE

S/N: PPP1-UP; SSS1-UP; TTT1-UP
OPTIONAL FIELD REPLACEMENT ORDER 350-0664 SENSOR GP-PRESSURE, 249-5293 HARNESS AS-SENSOR
PART OF 398-4435 WIRING GP-ENGINE
ALSO AN ATTACHMENT

SMCS-1718, 1916, 1917, 1923, 1924, 1925 **i05943988**

NOTE	REF NO	GRAPHIC REF	PART NUMBER	QTY	PART NAME 1 2 3 4 5 6 (PRODUCT LEVEL)	SEE PAGE
E	1	1	**9X-1813**		SLEEVE (34-CM)	
	2	1	**155-2260**	1	KIT-CONNECTING PLUG (3-PIN)	
					(INCLUDES PLUG AS, WEDGES & INTERFACE SEAL)	
	3	1	**194-5226**	3	WIRE AS (16-GA)	
					–OR–	
		1	**194-5227**	3	WIRE AS (14-GA)	
E - ORDER BY THE CENTIMETER						

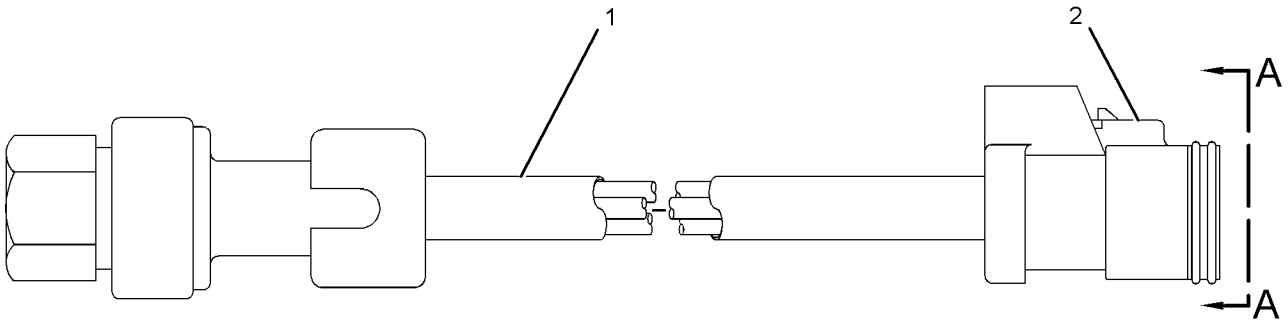

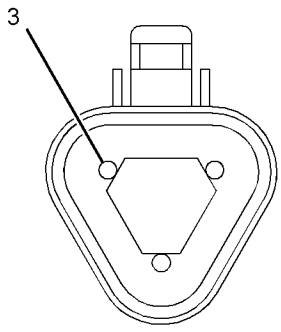

VIEW A-A

GRAPHIC #1 **<END>** g02244736

194-6725 SENSOR GP-PRESSURE

S/N: TXD1-UP
ENGINE OIL
PART OF 397-5040 LINES GP-FUEL
AN ATTACHMENT

SMCS-1718, 1916, 1917, 1923, 1924, 1925 **i05926073**

NOTE	REF NO	GRAPHIC REF	PART NUMBER	QTY	PART NAME 1 2 3 4 5 6 (PRODUCT LEVEL)	SEE PAGE
E	1	1	**9X-1813**		SLEEVE (34-CM)	
	2	1	**155-2260**	1	KIT-CONNECTING PLUG (3-PIN)	
					(INCLUDES PLUG AS, INTERFACE SEAL & WEDGE)	
	3	1	**180-9340**	3	SOCKET-CONNECTOR (14-GA TO 18-GA)	

E - ORDER BY THE CENTIMETER

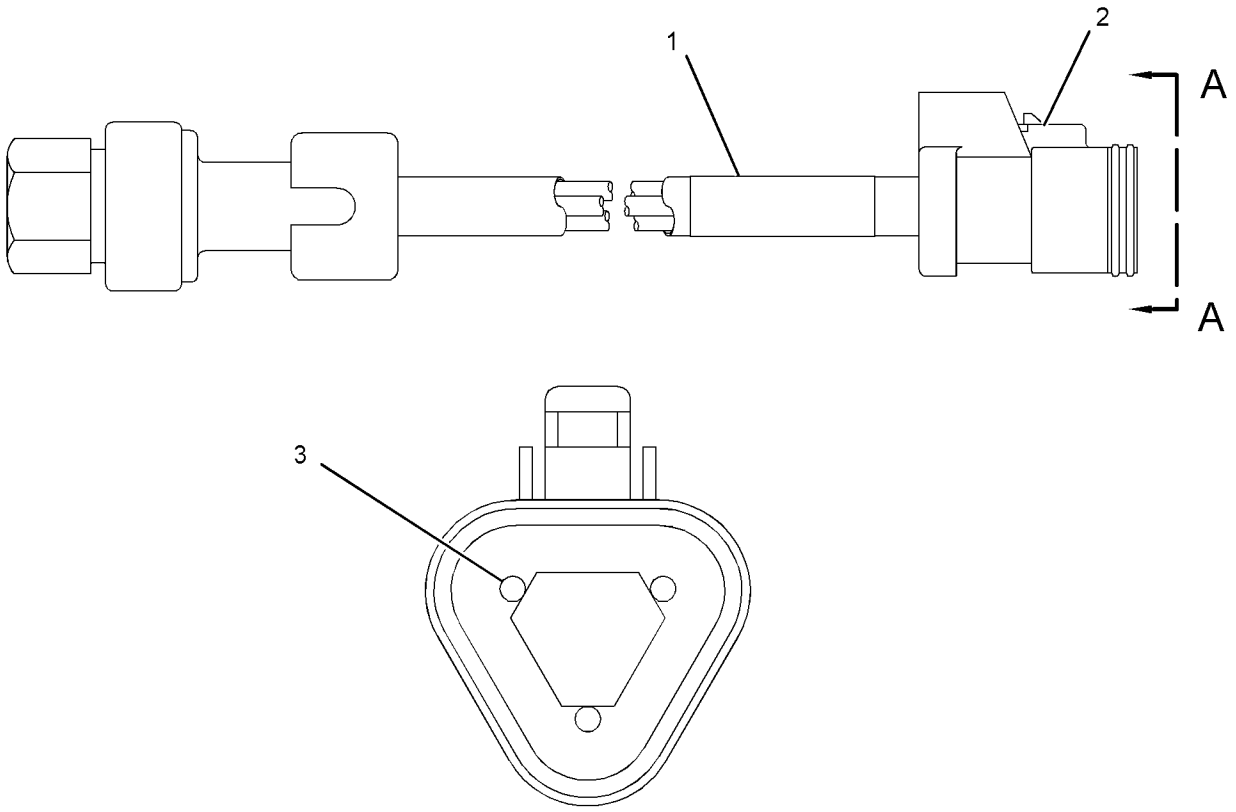

VIEW A-A

GRAPHIC #1 **<END>** g01662003

197-8393 SENSOR GP-PRESSURE

S/N: TXD1-UP

PART OF 231-1978 SENSOR GP-ENGINE

AN ATTACHMENT

SMCS-1718, 1916, 1917, 1923, 1924, 1925 **i05643900**

NOTE	REF NO	GRAPHIC REF	PART NUMBER	QTY	PART NAME 1 2 3 4 5 6 (PRODUCT LEVEL)	SEE PAGE
	1	1	**161-1703**	1	SENSOR GP-PRESSURE	
	2	1	**214-7568**	1	SEAL-O-RING	

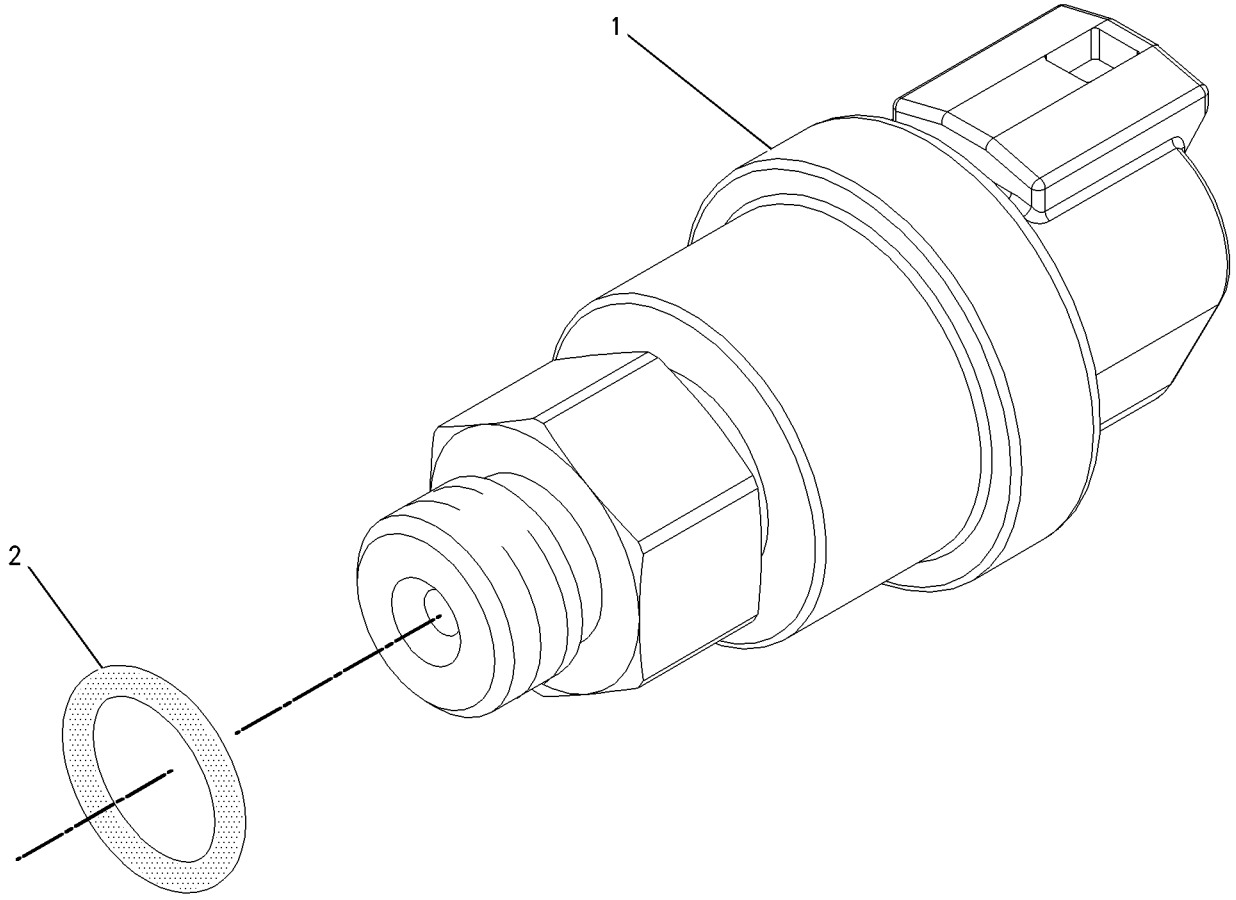

GRAPHIC #1 **<END>** g00855973

224-4536 SENSOR GP-PRESSURE

S/N: TXD1-UP

PART OF 236-6220 SENSOR GP-PRESSURE

AN ATTACHMENT

SMCS-1718, 1916, 1917, 1923, 1924, 1925 **i05643913**

NOTE	REF NO	GRAPHIC REF	PART NUMBER	QTY	PART NAME 1 2 3 4 5 6 (PRODUCT LEVEL)	SEE PAGE
E	1	1	**9X-1813**		SLEEVE (35-CM)	
	2	1	**155-2260**	1	KIT-CONNECTING PLUG (3-PIN)	
					(INCLUDES PLUG AS, WEDGES & INTERFACE SEAL)	
	3	1	**180-9340**	3	SOCKET-CONNECTOR (14-GA TO 18-GA)	

E - ORDER BY THE CENTIMETER

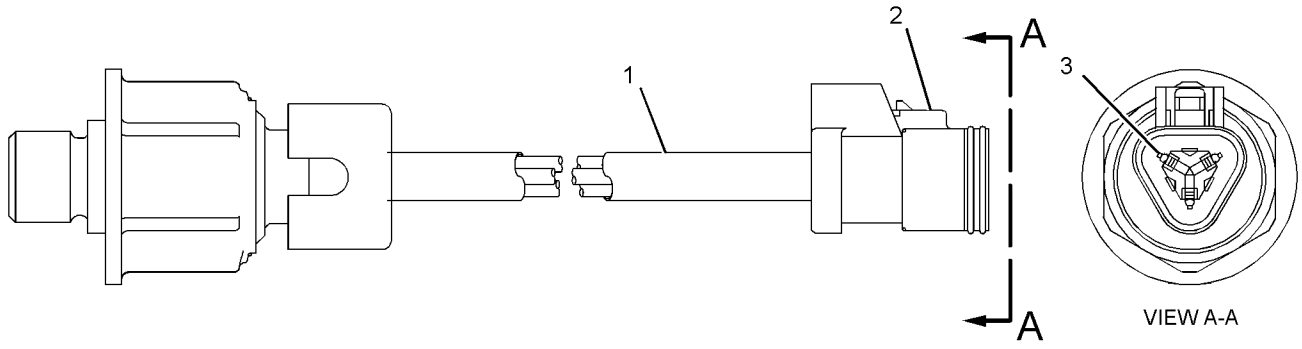

GRAPHIC #1 **<END>** g01684159

236-6220 SENSOR GP-PRESSURE

S/N: TXD1-UP

PART OF 231-1978 SENSOR GP-ENGINE

AN ATTACHMENT

SMCS-1718, 1916, 1917, 1923, 1924, 1925 **i05643901**

NOTE	REF NO	GRAPHIC REF	PART NUMBER	QTY	PART NAME 1 2 3 4 5 6 (PRODUCT LEVEL)	SEE PAGE
	1	1	**214-7567**	1	SEAL-O-RING	
Y	2	1	**224-4536**	1	SENSOR GP-PRESSURE	227

Y - SEPARATE ILLUSTRATION

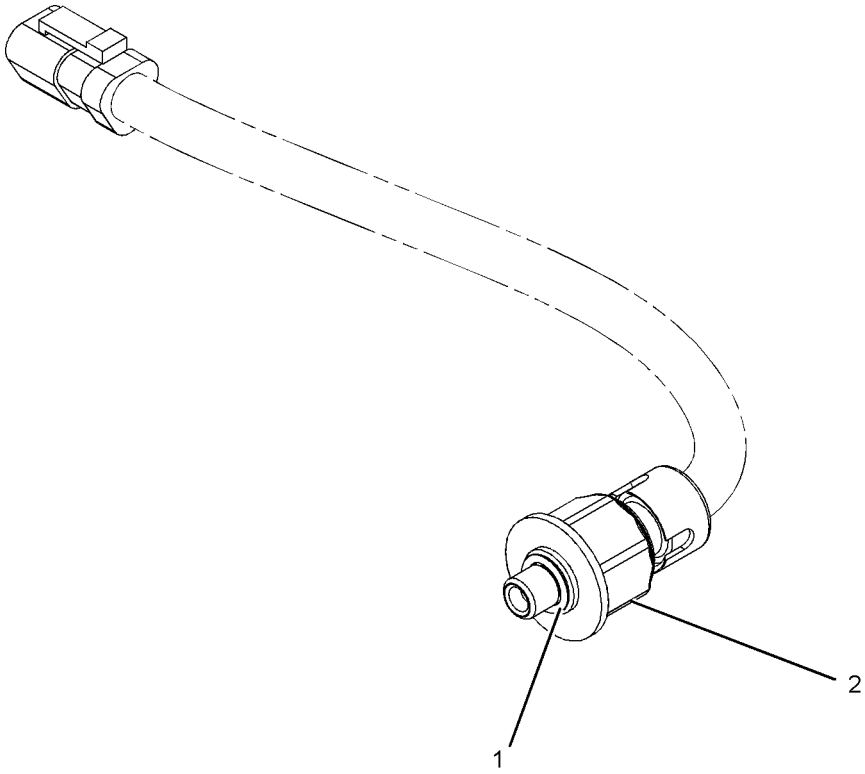

GRAPHIC #1 **<END>** g01054528

267-1402 SENSOR GP-PRESSURE

S/N: TXD1-UP
AMPSEAL CONNECTOR
PART OF 330-6034 SENSOR GP-ENGINE
AN ATTACHMENT

SMCS-1718, 1916, 1917, 1923, 1924, 1925 **i06133246**

NOTE	REF NO	GRAPHIC REF	PART NUMBER	QTY	PART NAME 1 2 3 4 5 6 (PRODUCT LEVEL)	SEE PAGE
	1	1	**214-7567**	1	SEAL-O-RING	
	2	1	**248-2169**	1	SENSOR GP-PRESSURE	

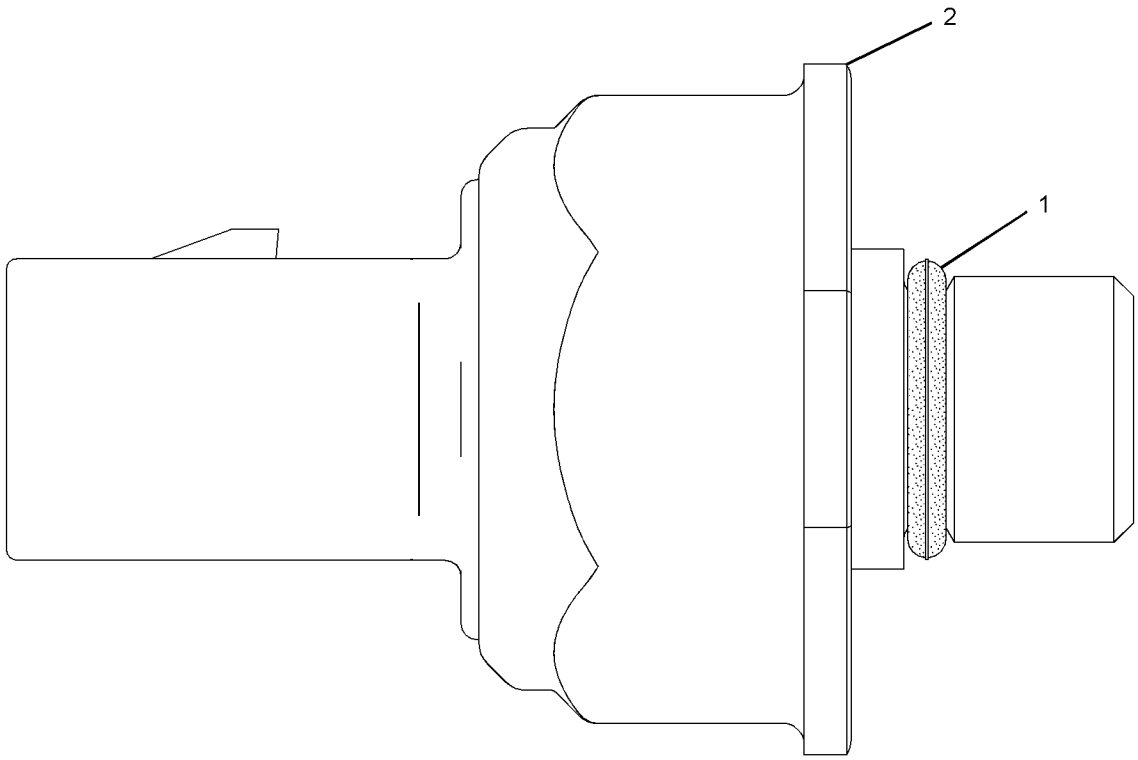

GRAPHIC #1 **<END>** g01164283

303-3357 SENSOR GP-PRESSURE

S/N: TXD1-UP
ATM
PART OF 330-6034 SENSOR GP-ENGINE
AN ATTACHMENT

SMCS-1718, 1916, 1917, 1923, 1924, 1925 **i06133250**

NOTE	REF NO	GRAPHIC REF	PART NUMBER	QTY	PART NAME 1 2 3 4 5 6 (PRODUCT LEVEL)	SEE PAGE
	1	1	**296-8060**	1	SENSOR GP-PRESSURE	
	2	1	**214-7568**	1	SEAL-O-RING	

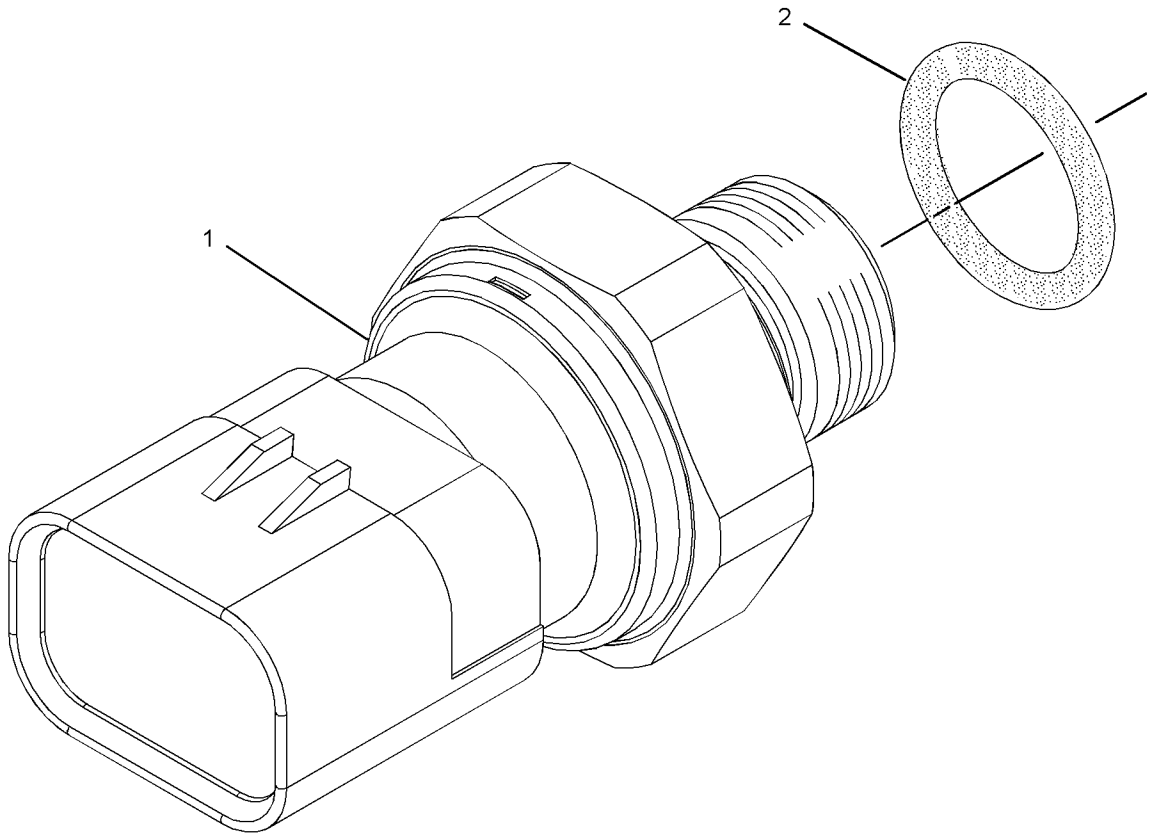

GRAPHIC #1 **<END>** g01331369

236-6221 SENSOR GP-SPEED

S/N: TXD1-UP
PART OF 231-1978, 330-6034 SENSOR GP-ENGINE
AN ATTACHMENT

SMCS-1907 **i05643904**

NOTE	REF NO	GRAPHIC REF	PART NUMBER	QTY	PART NAME 1 2 3 4 5 6 (PRODUCT LEVEL)	SEE PAGE
	1	1	**228-4947**	2	SEAL-O-RING	
	2	1	**245-4630**	1	SENSOR GP-SPEED	

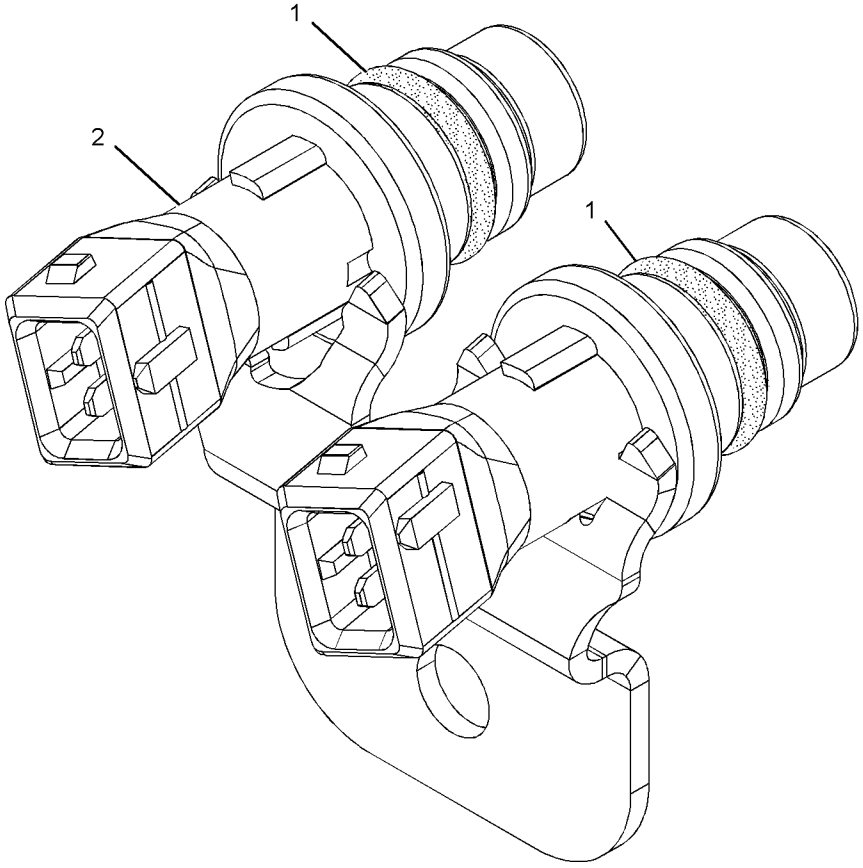

GRAPHIC #1 **<END>** g01013894

290-5792 SENSOR GP-SPEED

S/N: PPP1-UP; SSS1-UP; TTT1-UP
PART OF 398-4435 WIRING GP-ENGINE
ALSO AN ATTACHMENT

SMCS-1907 **i06222965**

NOTE	REF NO	GRAPHIC REF	PART NUMBER	QTY	PART NAME 1 2 3 4 5 6 (PRODUCT LEVEL)	SEE PAGE
	1	1	**171-5349**	1	STRAP-MARKER	
	2	1	**102-8802**	1	KIT-RECEPTACLE (2-PIN)	
					(INCLUDES RECEPTACLE AS & WEDGE)	
	3	1	**9X-3401**	2	PIN-CONNECTOR (16-GA TO 18-GA)	
					–OR–	
		1	**126-1767**	2	PIN-CONNECTOR (14-GA TO 16-GA)	
E	4	1	**9X-1813**		SLEEVE (14-CM)	

E - ORDER BY THE CENTIMETER

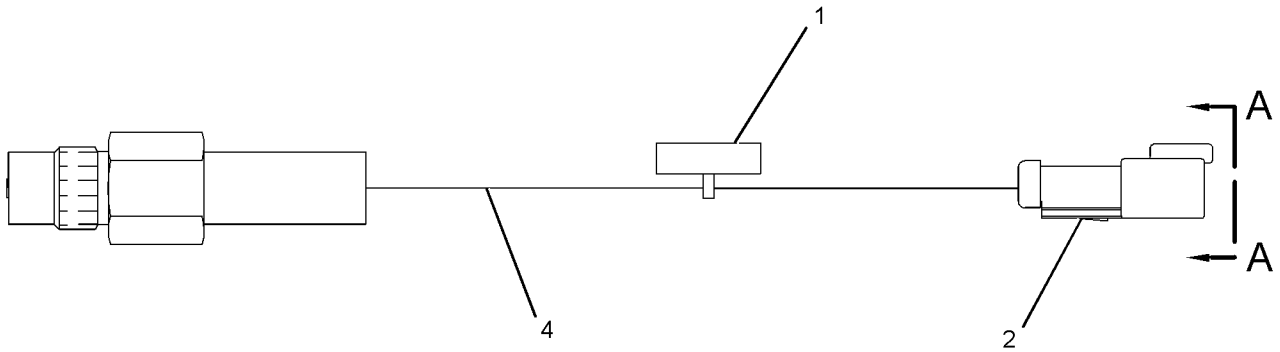

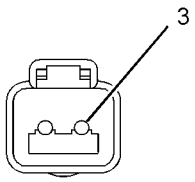

VIEW A-A

GRAPHIC #1 **<END>** g01409880

234-5012 SENSOR GP-TEMPERATURE

S/N: TXD1-UP
PART OF 330-6034 SENSOR GP-ENGINE
AN ATTACHMENT

SMCS-1906, 1919, 1921, 1922, 1928, 1929 **i05362835**

NOTE	REF NO	GRAPHIC REF	PART NUMBER	QTY	PART NAME 1 2 3 4 5 6 (PRODUCT LEVEL)	SEE PAGE
	1	1	**256-6453**	1	SENSOR-TEMPERATURE	
	2	1	**6V-6609**	1	SEAL-O-RING	

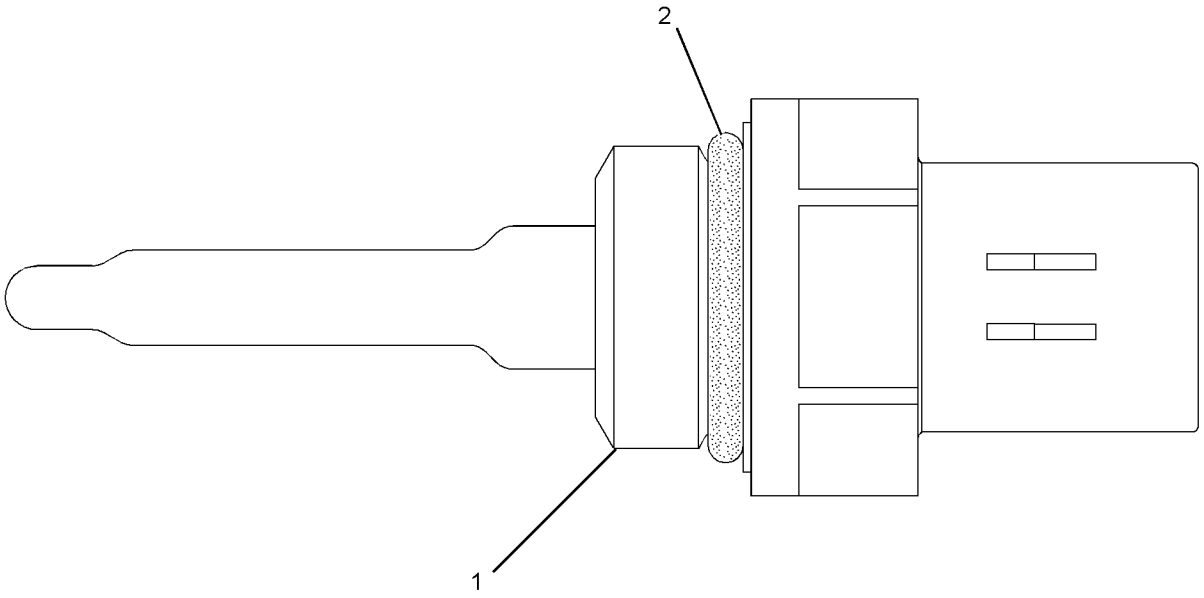

GRAPHIC #1 **<END>** g01164284

234-5013 SENSOR GP-TEMPERATURE

S/N: TXD1-UP; PPP1-UP; SSS1-UP; TTT1-UP
PART OF 330-6034 SENSOR GP-ENGINE, 398-4435 WIRING GP-ENGINE
ALSO AN ATTACHMENT

SMCS-1906, 1919, 1921, 1922, 1928, 1929 **i05355870**

NOTE	REF NO	GRAPHIC REF	PART NUMBER	QTY	PART NAME 1 2 3 4 5 6 (PRODUCT LEVEL)	SEE PAGE
	1	1	**256-6453**	1	SENSOR-TEMPERATURE	
	2	1	**238-5080**	1	SEAL-O-RING	

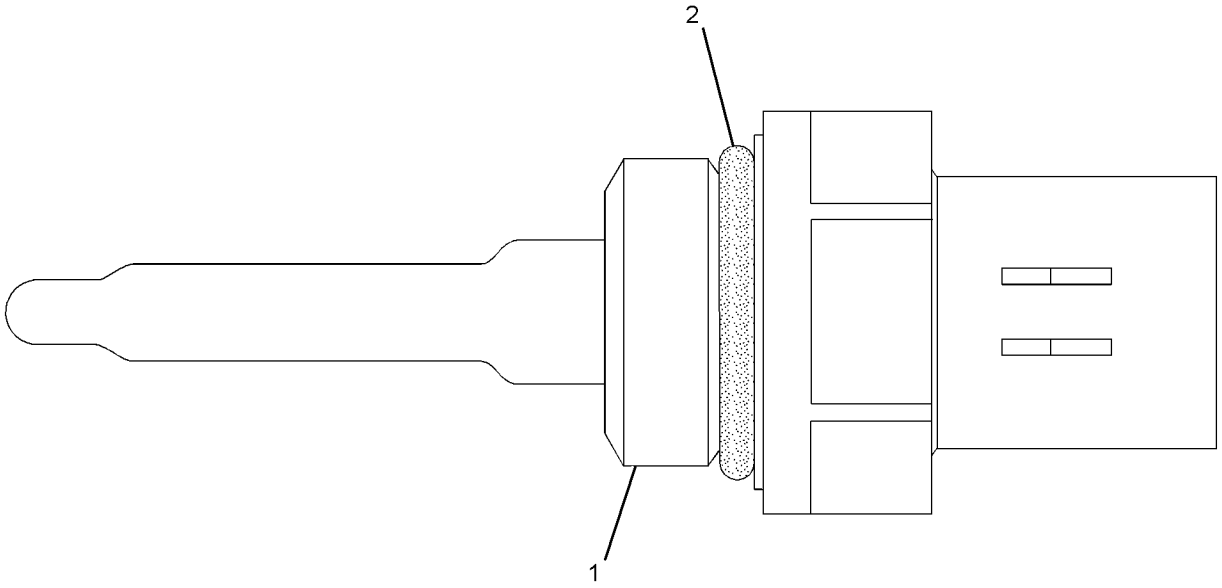

GRAPHIC #1 **<END>** g01164268

274-7395 SENSOR GP-TEMPERATURE

S/N: TXD1-UP
PART OF 231-1978 SENSOR GP-ENGINE
AN ATTACHMENT

SMCS-1906, 1919, 1921, 1922, 1928, 1929 **i05643907**

NOTE	REF NO	GRAPHIC REF	PART NUMBER	QTY	PART NAME 1 2 3 4 5 6 (PRODUCT LEVEL)	SEE PAGE
	1	1	**264-4297**	1	SENSOR AS-TEMPERATURE	
		1	**137-6645**	1	PAD-CONNECTOR	
	2	1	**238-5080**	1	SEAL-O-RING	

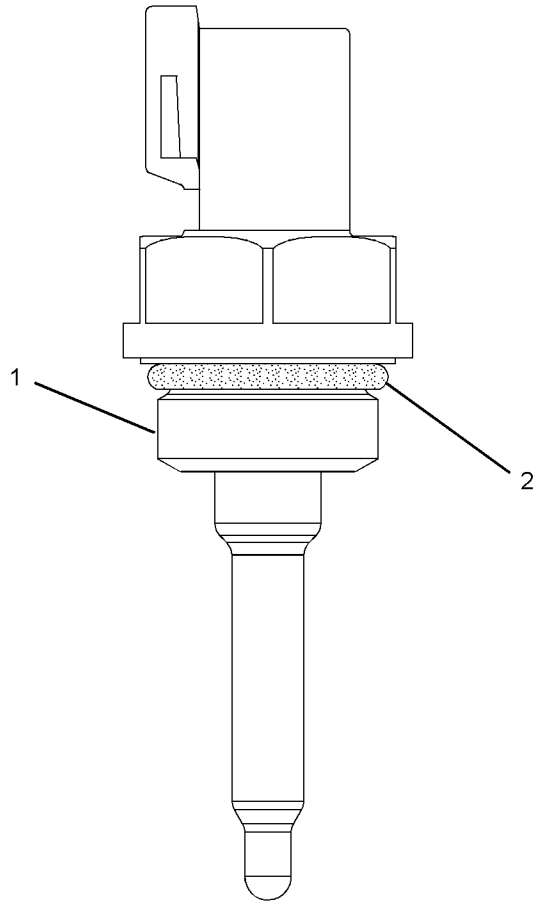

GRAPHIC #1 **<END>** g01353734

274-7396 SENSOR GP-TEMPERATURE

S/N: TXD1-UP

PART OF 231-1978 SENSOR GP-ENGINE

AN ATTACHMENT

SMCS-1906, 1919, 1921, 1922, 1928, 1929 **i05643910**

NOTE	REF NO	GRAPHIC REF	PART NUMBER	QTY	PART NAME 1 2 3 4 5 6 (PRODUCT LEVEL)	SEE PAGE
	1	1	**264-4297**	1	SENSOR AS-TEMPERATURE	
		1	**137-6645**	1	PAD-CONNECTOR	
	2	1	**6V-6609**	1	SEAL-O-RING	

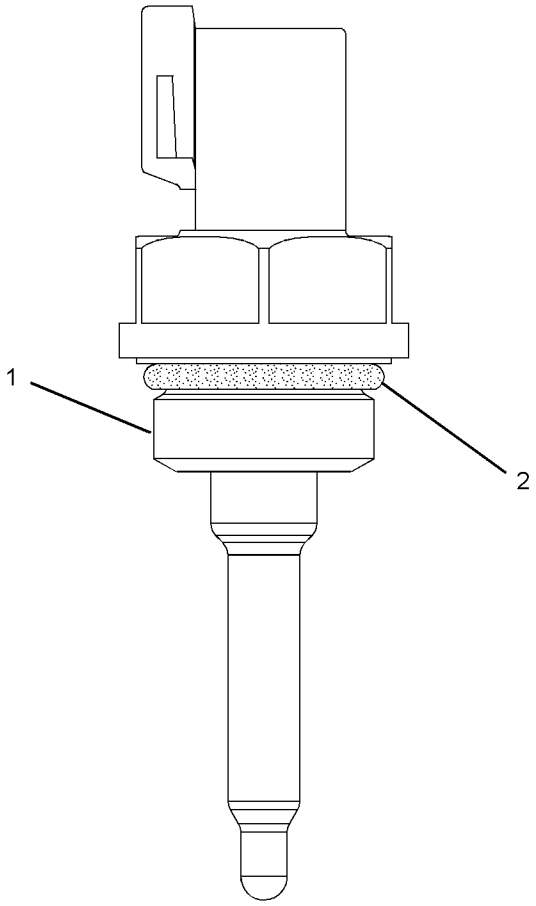

GRAPHIC #1 **<END>** g01353734

398-4346 STARTING AID GP-ETHER

S/N: PPP1-UP; SSS1-UP; TTT1-UP

AN ATTACHMENT

SMCS-1456 **i06199977**

NOTE	REF NO	GRAPHIC REF	PART NUMBER	QTY	PART NAME 1 2 3 4 5 6 (PRODUCT LEVEL)	SEE PAGE
	1	1	**7N-2059**	1	CLAMP AS	
Y	3	1	**239-1134**	1	VALVE GP-ETHER STARTING (24-VOLT)	250
	4	1	**241-4194**	1	FITTING AS (CONTROL)	
		1	**236-4545**	1	NUT-SLEEVE (5/16-24-THD)	
	5	1	**251-4345**	1	ATOMIZER GP-ETHER	
		1	**236-4545**	1	NUT-SLEEVE (5/16-24-THD)	
	6	1	**286-6192**	1	SPACER (11X40X25-MM THK)	
Y	7	1	**398-4378**	1	HARNESS AS-STARTING AID	177
	8	1	**398-4380**	1	BRACKET AS	
	9	1	**279-8859**	2	CLIP	
	10	1	**3J-1907**	1	SEAL-O-RING	
	11	1	**3Y-2888**	1	CONNECTOR	
	12	1	**7K-1181**	2	STRAP-CABLE	
	13	1	**8T-4121**	2	WASHER-HARD (11X21X2.5-MM THK)	
M	14	1	**8T-4137**	1	BOLT (M10X1.5X20-MM)	
M	15	1	**8T-4189**	2	BOLT (M8X1.25X20-MM)	
	16	1	**8T-4224**	6	WASHER-HARD (8.8X16X2-MM THK)	
M	17	1	**8T-5005**	1	BOLT (M10X1.5X70-MM)	
M	18	1	**8T-6912**	4	BOLT (M8X1.25X50-MM)	
E	19	1	**174-9169**		TUBE (73-CM)	
A			**7N-0296**	1	CYLINDER AS-ETHER (MUST BE PROCURED LOCALLY FROM YOUR CAT DEALER)	

A - NOT PART OF THIS GROUP
E - ORDER BY THE CENTIMETER
M - METRIC PART
Y - SEPARATE ILLUSTRATION

398-4346 **STARTING AID GP-ETHER (*contd.*)** **i06199977**

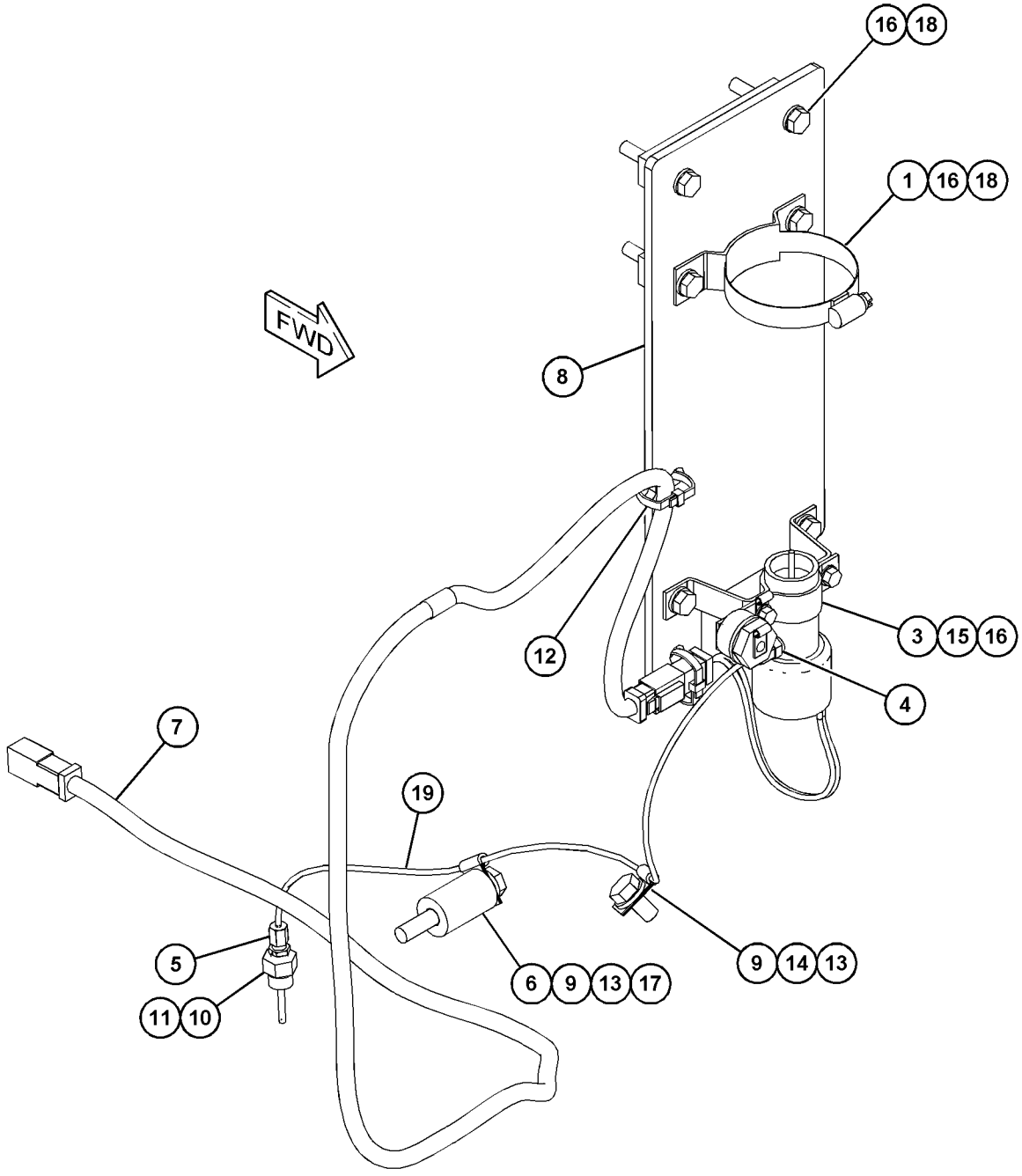

GRAPHIC #1 **<END>** g03852028

349-6530 STARTING MOTOR GP-ELECTRIC*R

S/N: PPP1-UP; SSS1-UP; TTT1-UP
24-VOLT
PART OF 398-4375 STARTING MOTOR GP-ELECTRIC
AN ATTACHMENT

SMCS-1453 **i06197554**

NOTE	REF NO	GRAPHIC REF	PART NUMBER	QTY	PART NAME 1 2 3 4 5 6 (PRODUCT LEVEL)	SEE PAGE
	1	1	**7M-0326**	1	CONNECTOR	
	2	1	**9H-3757**	2	WASHER (0.516X1X0.094-IN THK)	
	3	1	**1S-7446**	3	SCREW-MACHINE (8-32X0.437-IN)	
	4	1	**8C-9660**	3	WASHER (4.6X7.9X0.8-MM THK)	
	5	1	**9S-2544**	9	SCREW-HEX HEAD (8-32X11.13-MM)	
	6	1	**7M-0327**	1	WASHER-THRUST (17.4X25.4X1.6-MM THK)	
	7	1	**3T-3418**	1	FRAME AS-END	
		1	**3T-3423**	1	CUP	
		1	**3T-3424**	1	PLUG-FELT	
		1	**9G-4101**	1	BUSHING-END	
Y	8	1	**3T-9525**	1	PLATE AS-BRUSH (STARTING MOTOR)	215
	9	1	**1T-0808**	2	WASHER (0.516X0.812X0.09-IN THK)	
	10	1	**3T-3422**	1	WIRE AS	
	11	1	**2J-8163**	2	SEAL-O-RING	
	12	1	**7X-3373**	1	BOLT (5/16-18X0.88-IN)	
	13	1	**5J-5314**	5	BOLT (5/16-18X1.5-IN)	
	14	1	**3L-3380**	1	BUSHING-TERMINAL	
	15	1	**8C-3089**	1	SEAL-O-RING	
	16	1	**4M-1853**	1	LEVER AS-SHIFT	
	17	1	**5M-3034**	1	LOCKNUT (5/16-24-THD)	
	18	1	**7L-2894**	4	GASKET	
	19	1	**4M-1831**	4	PLUG-LEVER HOUSING	
	20	1	**4M-1854**	1	SHAFT-LEVER	
	21	1	**1H-1023**	1	SEAL-O-RING	
	22	1	**2D-6392**	1	SEAL-O-RING	
	23	1	**7T-3974**	1	HOUSING AS-DRIVE	
	24	1	**6N-3826**	1	DRIVE AS-MOTOR	
	25	1	**2H-3429**	1	RING-RETAINING	
	26	1	**6V-1322**	4	BOLT (1/4-20X0.375-IN)	
	27	1	**8T-4205**	1	WASHER-HARD (7.2X14.5X2-MM THK)	
	28	1	**6N-3279**	1	INSULATOR	
	29	1	**0S-1597**	13	BOLT (1/4-28X1-IN)	
	30	1	**1M-9971**	1	SPACER (0.835X1.72X0.188-IN THK)	
	31	1	**1H-2629**	3	STRIP-INSULATION	
	32	1	**7M-0324**	1	COIL AS-FIELD	
	33	1	**3R-8797**	12	SCREW & WASHER AS (3/8-24X0.72-IN)	
	34	1	**7F-3488**	6	SHOE-POLE	
	35	1	**7M-8651**	1	ARMATURE AS	
	36	1	**7M-0325**	1	INSULATOR	
	37	1	**3T-9524**	6	BRUSH AS	
	38	1	**3N-3763**	1	KIT-TERMINAL (STARTING MOTOR)	
					(KIT INCLUDES BUSHINGS & WASHERS)	
	40	1	**3R-8801**	1	CLAMP	
	41	1	**8F-1434**	2	LOCKWASHER	
	42	1	**6V-8188**	6	NUT (1/2-13-THD)	
	43	1	**7X-0562**	6	WASHER-HARD (13.5X19X0.8-MM THK)	
	44	1	**4B-2049**	6	NUT (10-32-THD)	
	45	1	**8T-0328**	10	WASHER-HARD (5.5X10X1-MM THK)	
	46	1	**3T-9494**	6	SPRING	
	47	1	**349-6255**	1	HOUSING AS	
	48	1	**9G-4101**	1	BUSHING-END	
	49	1	**3T-3424**	3	PLUG-FELT	
	50	1	**3T-3423**	3	CUP	
	51	1	**1M-9968**	1	BUSHING	
	52	1	**2F-6678**	1	SEAL-LIP TYPE	
	53	1	**4L-2729**	1	WASHER (0.844X1.9X0.188-IN THK)	

349-6530 **STARTING MOTOR GP-ELECTRIC (*contd.*)** **i06197554**

NOTE	REF NO	GRAPHIC REF	PART NUMBER	QTY	PART NAME 1 2 3 4 5 6 (PRODUCT LEVEL)	SEE PAGE
	54	1	**4M-1896**	1	BUSHING-TERMINAL	
	55	1	**045-4065**	4	SCREW-MACHINE (10-32X0.75-IN)	
	56	1	**125-6535**	1	COVER-STARTING MOTOR	
	57	1	**338-3453**	1	SOLENOID AS-STARTING MOTOR (24-VOLT)	
		1	**3R-8801**	1	CLAMP	
	58	1	**352-7994**	1	KIT-SWITCH (RELAY, STARTER)	
					(KIT INCLUDES STARTER RELAY SWITCH AS, JUMP START PROTECTION COVER, BOLTS, ANCHOR & CLAMP)	
	59	1	**3T-3434**	6	PLUG	

Y - SEPARATE ILLUSTRATION

349-6530 **STARTING MOTOR GP-ELECTRIC (*contd.*)** **i06197554**

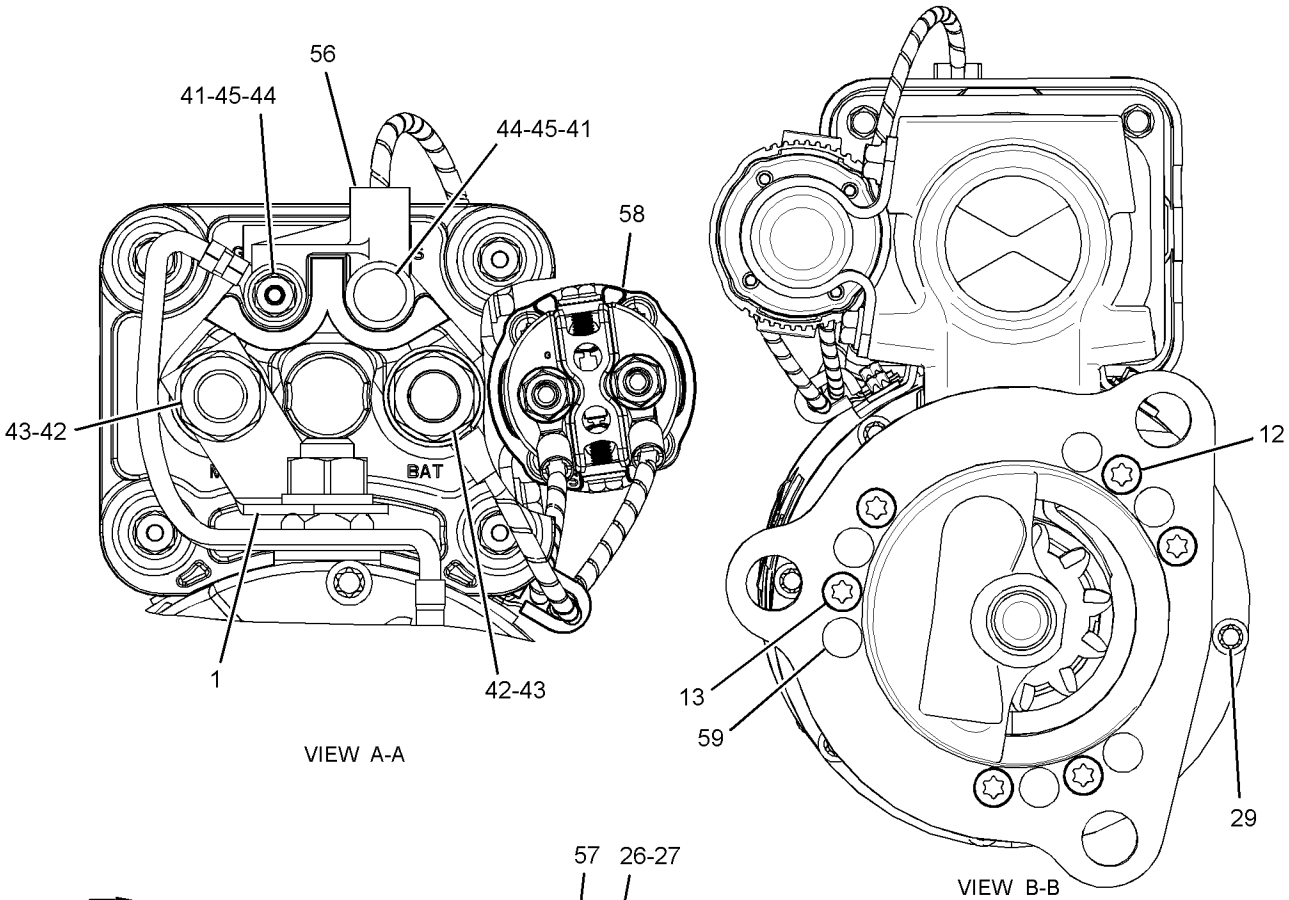

VIEW A-A

VIEW B-B

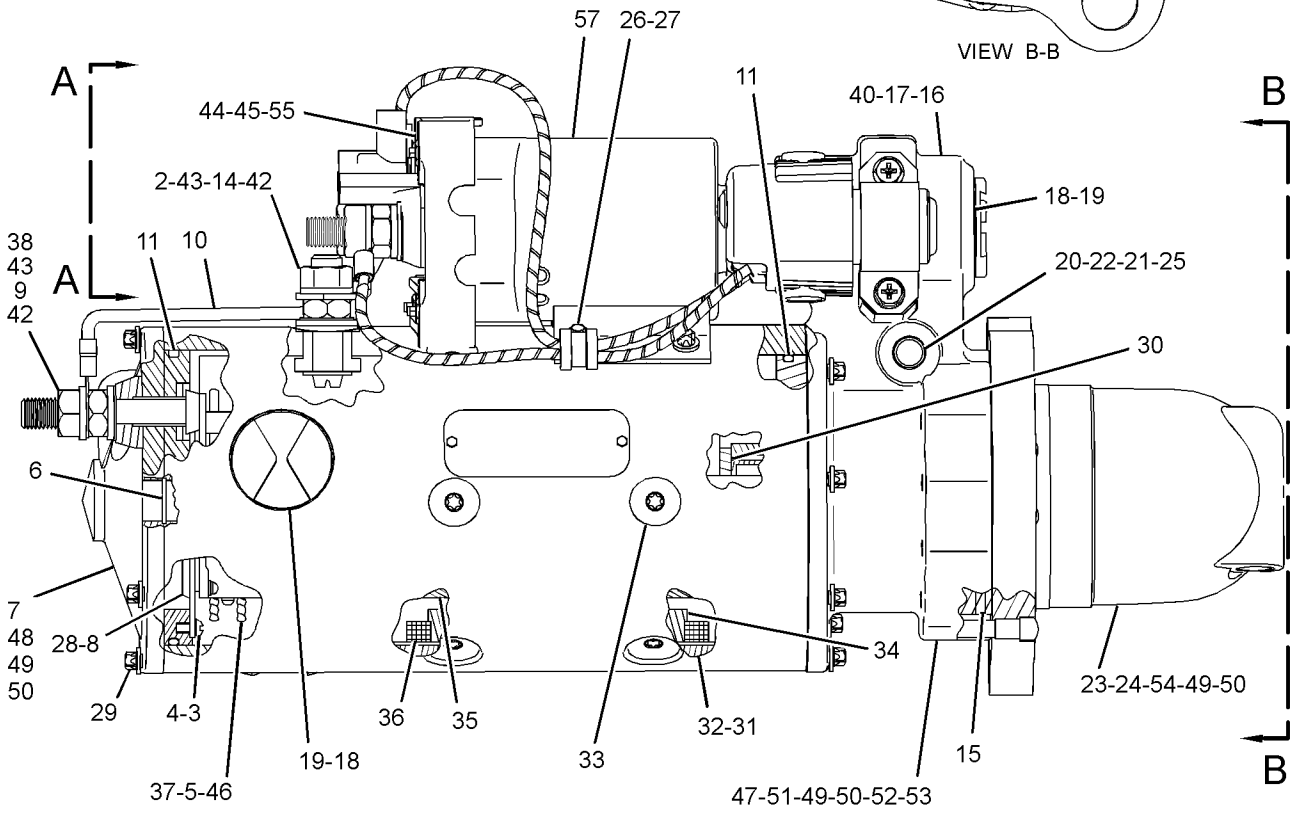

GRAPHIC #1 **<END>** g03100476

390-0788 STARTING MOTOR GP-ELECTRIC

S/N: SSS1-UP
24-VOLT
PART OF 398-4374 STARTING MOTOR GP-ELECTRIC
AN ATTACHMENT

SMCS-1453 **i06215492**

NOTE	REF NO	GRAPHIC REF	PART NUMBER	QTY	PART NAME 1 2 3 4 5 6 (PRODUCT LEVEL)	SEE PAGE
	1	1	**476-0541**	1	COVER AS-MOTOR	
	2	1	**462-1601**	1	HOLDER AS-BRUSH	
	3	1	**462-1602**	1	COIL AS-FIELD	
	4	1	**462-1603**	1	ROTOR AS-MAGNETIC	
	5	1	**462-1605**	1	HARDWARE GP	
	6	1	**462-1606**	1	LEVER AS-GOVERNOR	
	7	1	**462-1607**	1	GEAR AS-DRIVE	
	8	1	**462-1608**	1	STARTER-MOTOR	
	9	1	**462-1609**	1	SOLENOID AS-STARTING MOTOR	
	10	1	**462-1611**	1	HOUSING AS-DRIVE	
	11	1	**462-1613**	1	SWITCH	
	12	1	**462-1615**	1	PINION	
	13	1	**462-1616**	1	BRUSH	
	14	1	**462-1618**	1	WIRE AS-STARTING MOTOR	
	15	1	**230-4012**	1	RECEPTACLE AS-CONNECTOR (2-PIN)	
	16	1	**423-9049**	1	SEAL-O-RING	

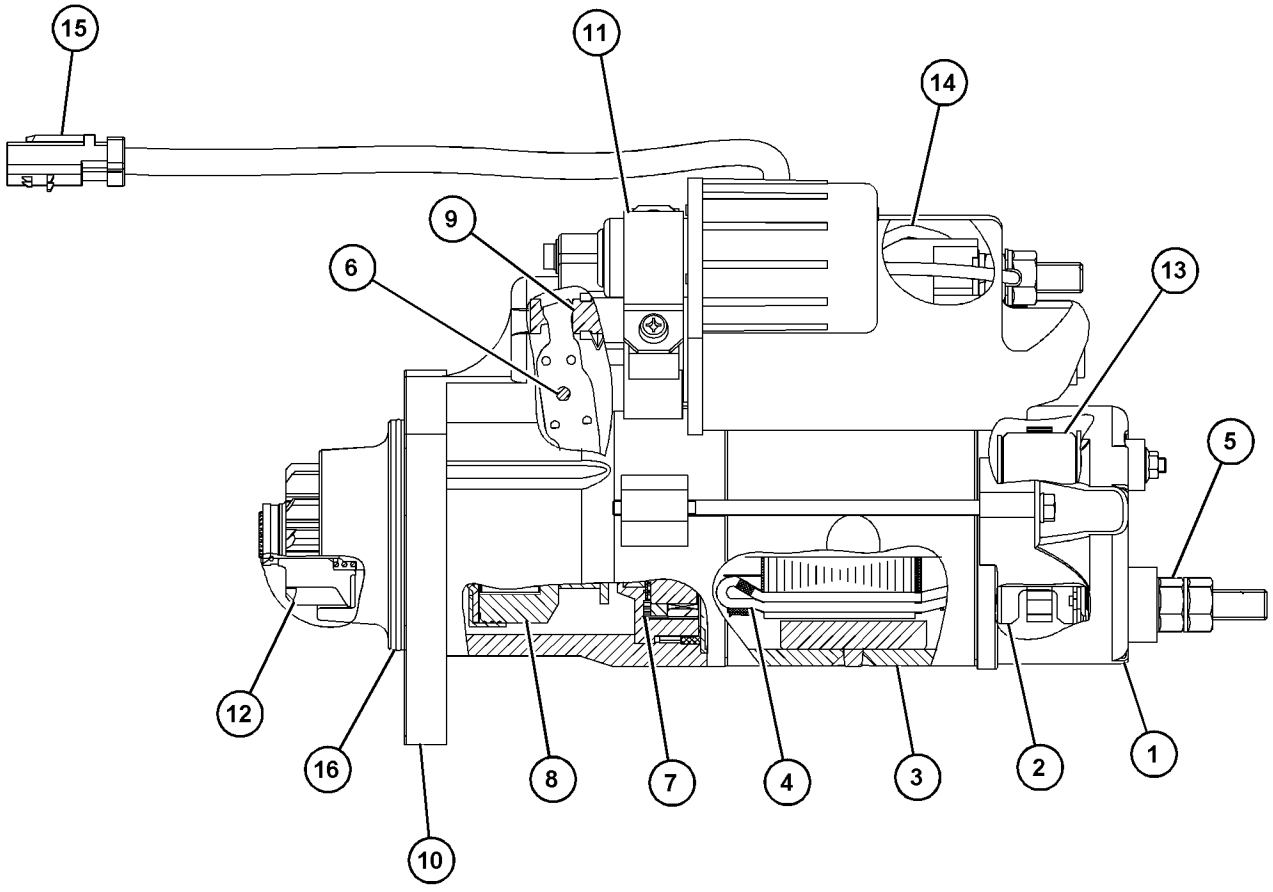

GRAPHIC #1 **<END>** g03860991

398-4374 STARTING MOTOR GP-ELECTRIC

S/N: SSS1-UP
24-VOLT
PART OF 398-4454 BATTERY GP
AN ATTACHMENT

SMCS-1453 **i06145805**

NOTE	REF NO	GRAPHIC REF	PART NUMBER	QTY	PART NAME 1 2 3 4 5 6 (PRODUCT LEVEL)	SEE PAGE
	1	1	**9Y-6089**	1	GASKET	
	2	1	**306-6687**	1	STRAP AS	
Y	3	1	**390-0788**	1	STARTING MOTOR GP-ELECTRIC	242
M	4	1	**299-3437**	3	BOLT (M16X2X45-MM)	
	5	1	**8T-4121**	1	WASHER-HARD (11X21X2.5-MM THK)	
M	6	1	**8T-4191**	1	BOLT (M10X1.5X16-MM)	
	7	1	**9X-8257**	3	WASHER (17.5X30X3.5-MM THK)	

M - METRIC PART
Y - SEPARATE ILLUSTRATION

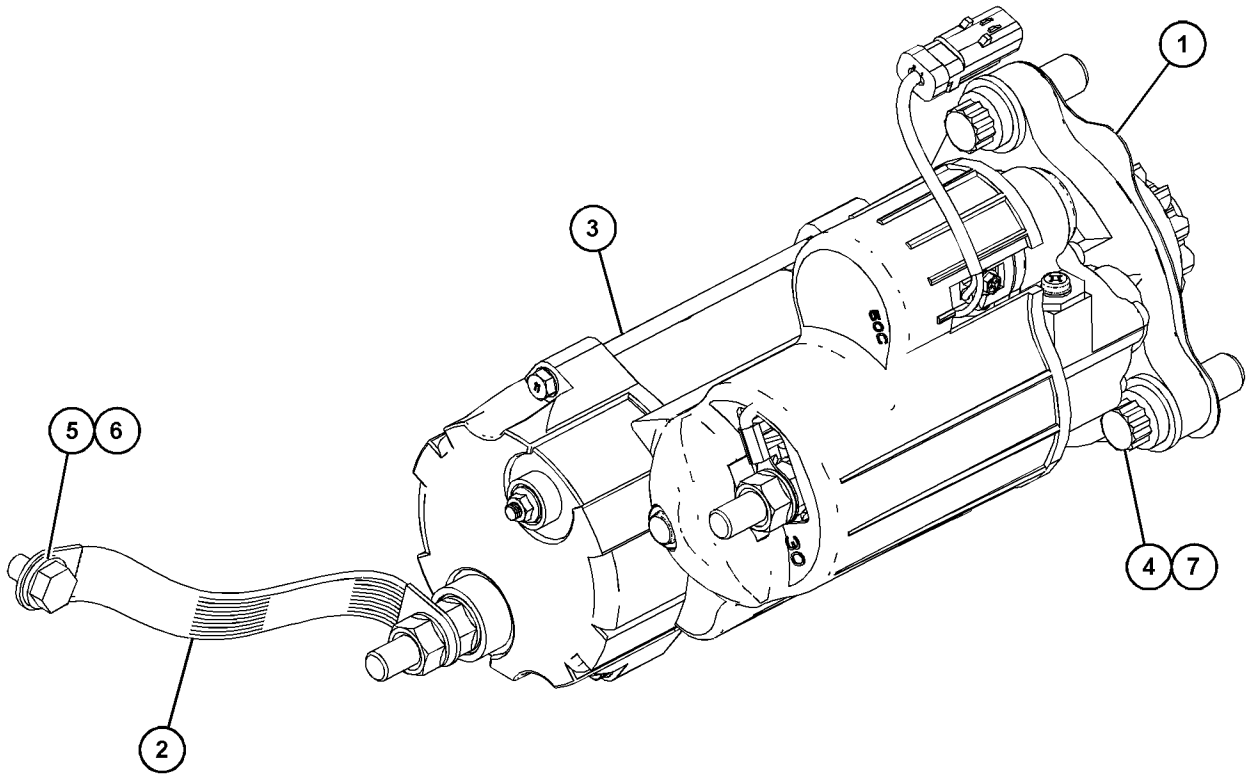

GRAPHIC #1 **<END>** g03840518

398-4375 STARTING MOTOR GP-ELECTRIC

S/N: PPP1-UP; SSS1-UP; TTT1-UP
PART OF 398-4455 BATTERY GP
AN ATTACHMENT

SMCS-1453 **i06145822**

NOTE	REF NO	GRAPHIC REF	PART NUMBER	QTY	PART NAME 1 2 3 4 5 6 (PRODUCT LEVEL)	SEE PAGE
	1	1	**9Y-6089**	1	GASKET	
	2	1	**306-6687**	1	STRAP AS	
YR	3	1	**349-6530**	1	STARTING MOTOR GP-ELECTRIC (24-VOLT)	239
	4	1	**398-4376**	1	HARNESS AS-CONTROL (STARTER)	
		1	**9X-3401**	2	PIN-CONNECTOR (16-GA TO 18-GA)	
					—OR—	
		1	**126-1767**	2	PIN-CONNECTOR (14-GA TO 16-GA)	
		1	**7N-9017**	2	TERMINAL-RING (18-GA TO 22-GA, NO. 10 SCREW)	
		1	**230-4012**	1	RECEPTACLE AS-CONNECTOR (2-PIN)	
M	5	1	**299-3437**	3	BOLT (M16X2X45-MM)	
	6	1	**8T-4121**	1	WASHER-HARD (11X21X2.5-MM THK)	
M	7	1	**8T-4191**	1	BOLT (M10X1.5X16-MM)	

M - METRIC PART
R - REMFG PART MAY BE AVAILABLE
Y - SEPARATE ILLUSTRATION

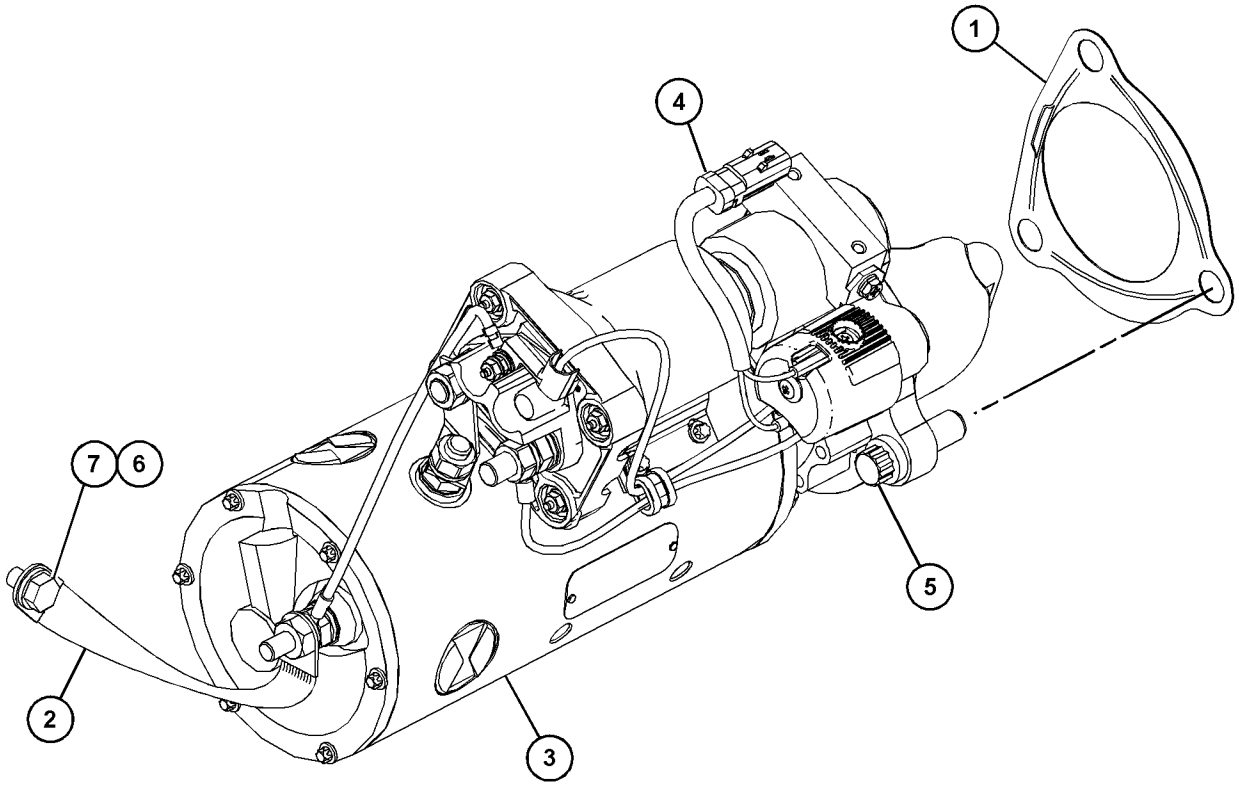

GRAPHIC #1 **<END>** g03851553

7N-0718 SWITCH GP-DISCONNECT–BATTERY

S/N: PPP1-UP; SSS1-UP; TTT1-UP DESCONECTADORA

PART OF 398-4434 WIRING GP-CHASSIS

ALSO AN ATTACHMENT

SMCS-1411 **i04921892**

NOTE	REF NO	GRAPHIC REF	PART NUMBER	QTY	PART NAME 1 2 3 4 5 6 (PRODUCT LEVEL)	SEE PAGE
	1	1	**2H-3922**	2	LOCKWASHER	
	2	1	**8H-5303**	1	NUT (3/4-16-THD)	
	3	1	**9F-5644**	2	LOCKWASHER	
	4	1	**6F-7045**	2	NUT-FULL (3/8-24-THD)	
	5	1	**8H-5306**	1	KEY (BATTERY DISCONNECT) DESCONECTADORA	

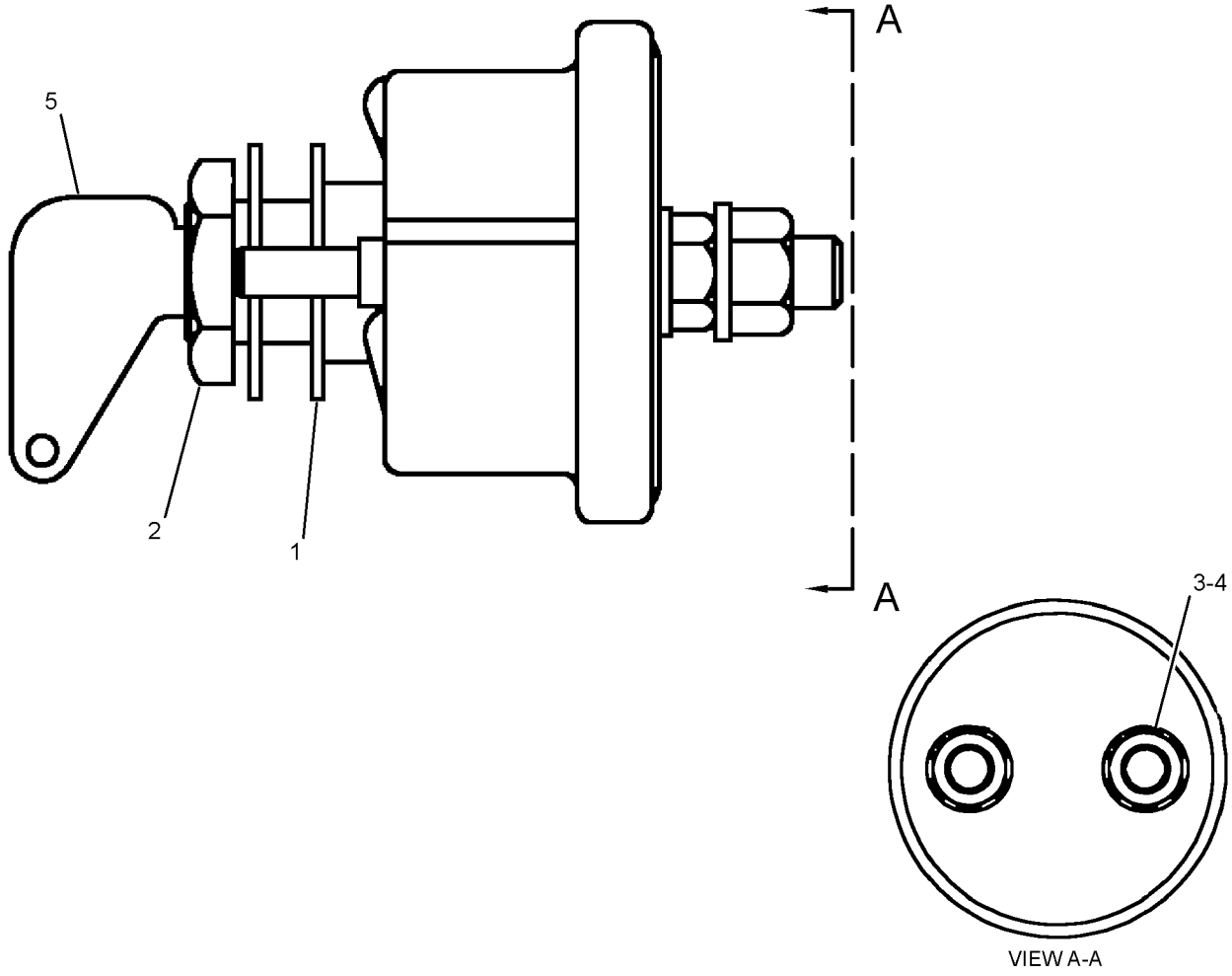

VIEW A-A

GRAPHIC #1 **<END>** g02663120

241-8368 SWITCH GP-MAGNETIC

S/N: PPP1-UP; SSS1-UP; TTT1-UP
24-VOLT
PART OF 415-4252, 420-1160 WIRING GP-CAB
AN ATTACHMENT

SMCS-7499 **i05456657**

NOTE	REF NO	GRAPHIC REF	PART NUMBER	QTY	PART NAME 1 2 3 4 5 6 (PRODUCT LEVEL)	SEE PAGE
	1	1	**155-2270**	1	KIT-CONNECTING PLUG (2-PIN)	
					(INCLUDES PLUG AS, WEDGE & INTERFACE SEAL)	
	2	1	**4F-2294**	2	NUT-JAM (5/16-24-THD)	
	3	1	**8T-8730**	2	SOCKET-CONNECTOR (16-GA TO 18-GA)	

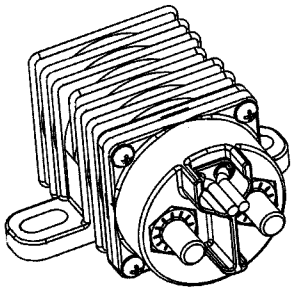

ISOMETRIC VIEW

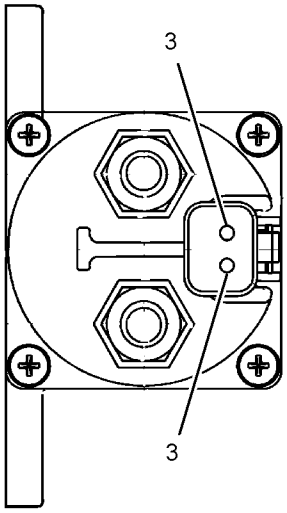

VIEW A-A

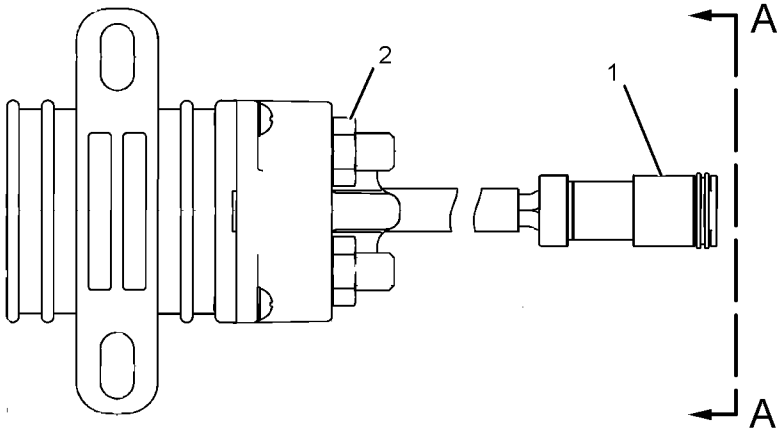

GRAPHIC #1 **<END>** g01077362

440-0257 SWITCH GP-PRESSURE

S/N: PPP1-UP; SSS1-UP; TTT1-UP
DIFFERENTIAL
PART OF 332-8833 FILTER GP-OIL
ALSO AN ATTACHMENT

SMCS-7400, 7421

i06124009

NOTE	REF NO	GRAPHIC REF	PART NUMBER	QTY	PART NAME 1 2 3 4 5 6 (PRODUCT LEVEL)	SEE PAGE
	1	1	**102-8802**	1	KIT-RECEPTACLE (2-PIN)	
					(INCLUDES RECEPTACLE AS & WEDGE)	
	2	1	**033-6033**	1	SEAL-O-RING	
	3	1	**8T-8729**	2	PIN-CONNECTOR (16-GA TO 18-GA)	
E	4	1	**9X-1813**		SLEEVE (28-CM)	
	5	1	**206-9295**	1	SEAL-O-RING	

E - ORDER BY THE CENTIMETER

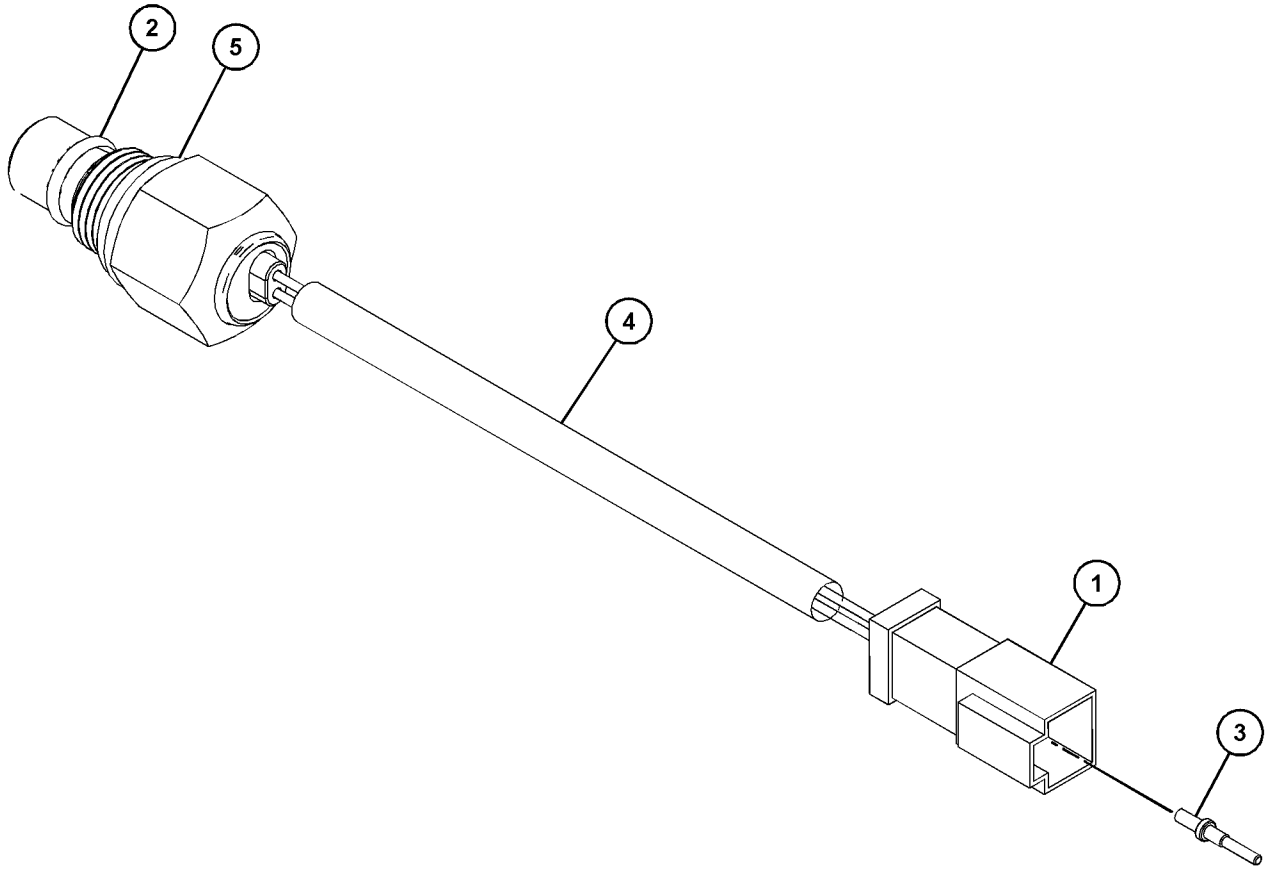

GRAPHIC #1

<END>

g03688962

158-6632 SWITCH GP-PUSH BUTTON

S/N: PPP1-UP; SSS1-UP; TTT1-UP
24-VOLT
PART OF 415-4252, 420-1160 WIRING GP-CAB, 398-4435 WIRING GP-ENGINE
ALSO AN ATTACHMENT

SMCS-1435, 7332 **i05330661**

NOTE	REF NO	GRAPHIC REF	PART NUMBER	QTY	PART NAME 1 2 3 4 5 6 (PRODUCT LEVEL)	SEE PAGE
	1	1	**9X-0199**	1	BOOT-SWITCH	
	2	1	**7T-9515**	1	KNOB-HORN	
	3	1	**5L-7200**	1	SCREW (8-32X0.375-IN)	
	4	1	**3B-4501**	1	LOCKWASHER	
	5	1	**6V-8370**	1	NUT-HEX (3/4-32-THD)	
	6	1	**2H-3922**	1	LOCKWASHER	
	7	1	**102-8802**	1	KIT-RECEPTACLE (2-PIN)	
					(INCLUDES RECEPTACLE AS & WEDGE)	
	8	1	**9X-3401**	2	PIN-CONNECTOR (16-GA TO 18-GA)	
	9	1	**3E-3365**	1	WEDGE-RECEPTACLE LOCK (2-PIN)	

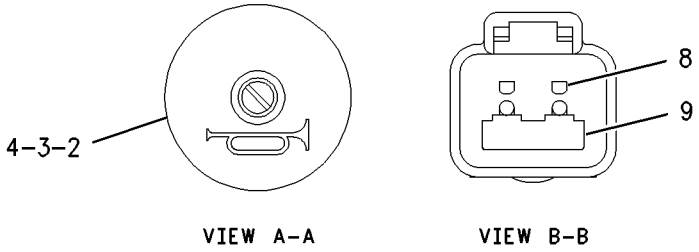

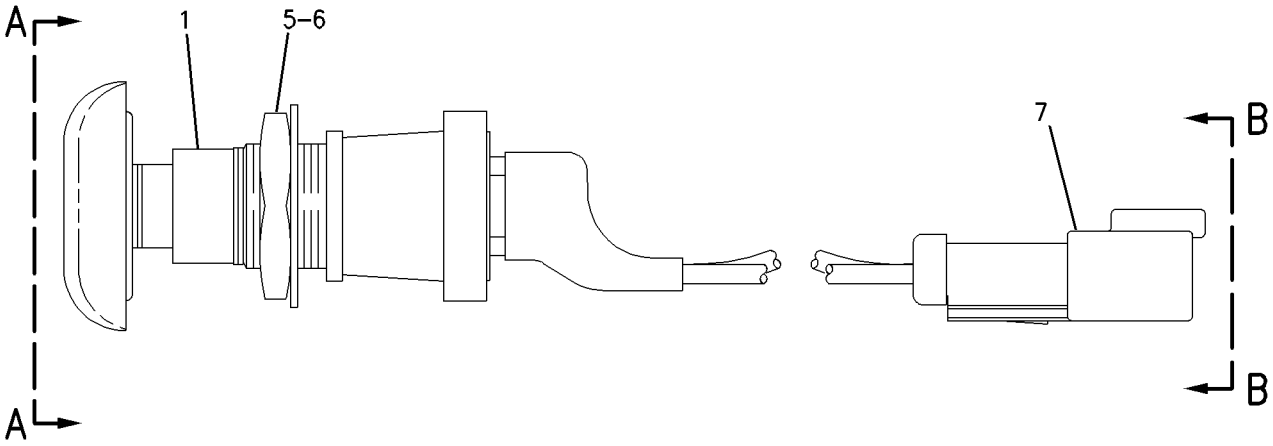

GRAPHIC #1 **<END>** g00942674

112-6174 SWITCH GP-ROTARY

S/N: PPP1-UP; SSS1-UP; TTT1-UP
PART OF 415-4252 WIRING GP-CAB
AN ATTACHMENT

SMCS-7332 **i05269471**

NOTE	REF NO	GRAPHIC REF	PART NUMBER	QTY	PART NAME 1 2 3 4 5 6 (PRODUCT LEVEL)	SEE PAGE
	1	1	**6V-8369**	1	NUT (7/16-28-THD)	
	2	1	**2H-3920**	1	LOCKWASHER	
	3	1	**102-8806**	1	KIT-RECEPTACLE (8-PIN)	
					(INCLUDES RECEPTACLE AS & WEDGE)	
	4	1	**8T-8737**	2	PLUG-SEAL	
	5	1	**8T-8729**	6	PIN-CONNECTOR (16-GA TO 18-GA)	

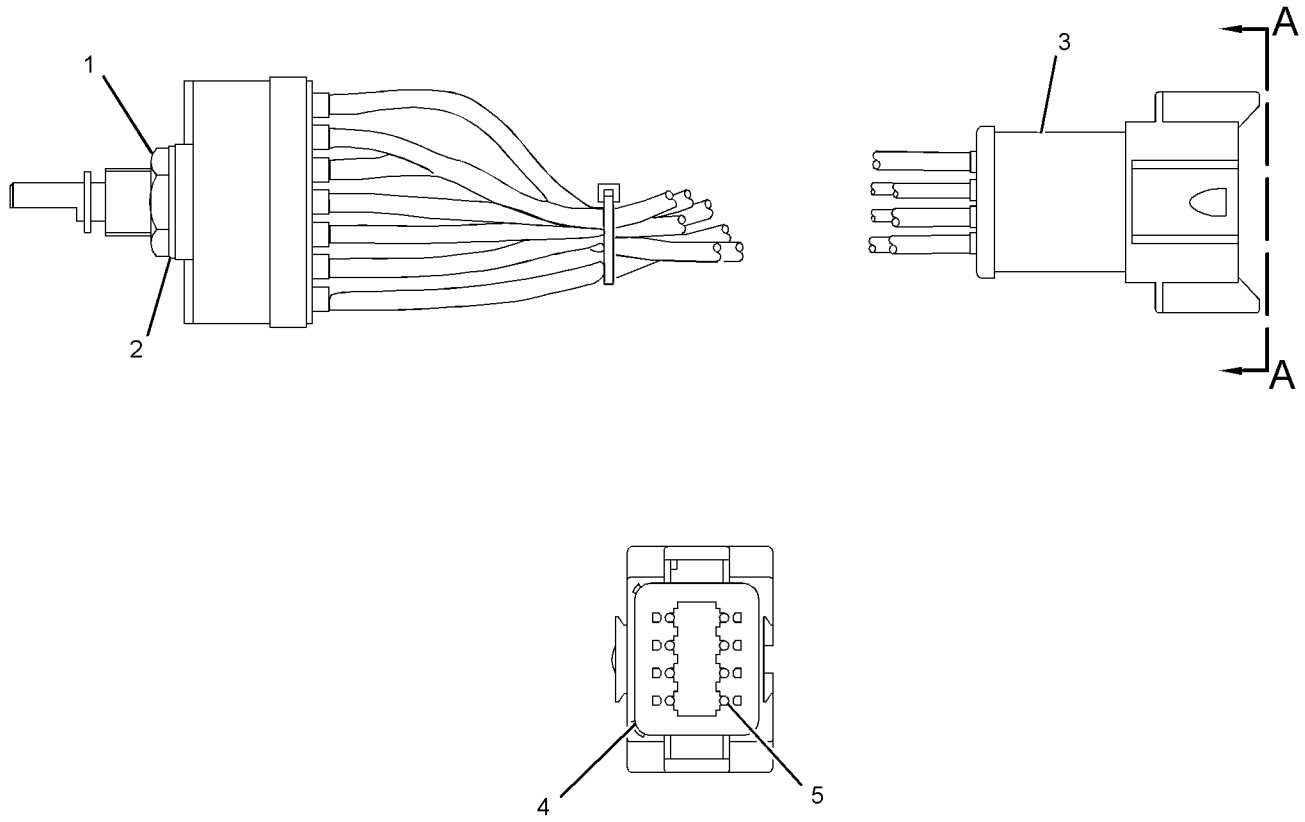

VIEW A-A

GRAPHIC #1 **<END>** g03197518

239-1134 VALVE GP-ETHER STARTING

S/N: PPP1-UP; SSS1-UP; TTT1-UP
24-VOLT, CONTINUOUS
PART OF 398-4346 STARTING AID GP-ETHER
AN ATTACHMENT

SMCS-1456 **i05505369**

NOTE	REF NO	GRAPHIC REF	PART NUMBER	QTY	PART NAME 1 2 3 4 5 6 (PRODUCT LEVEL)	SEE PAGE
	1	1	**7N-9801**	1	GASKET	
	2	1	**102-8802**	1	KIT-RECEPTACLE (2-PIN)	
					(INCLUDES RECEPTACLE AS & WEDGE)	
	3	1	**8T-8729**	2	PIN-CONNECTOR (16-GA TO 18-GA)	
	4	1	**358-4889**	1	FILTER (ETHER START)	

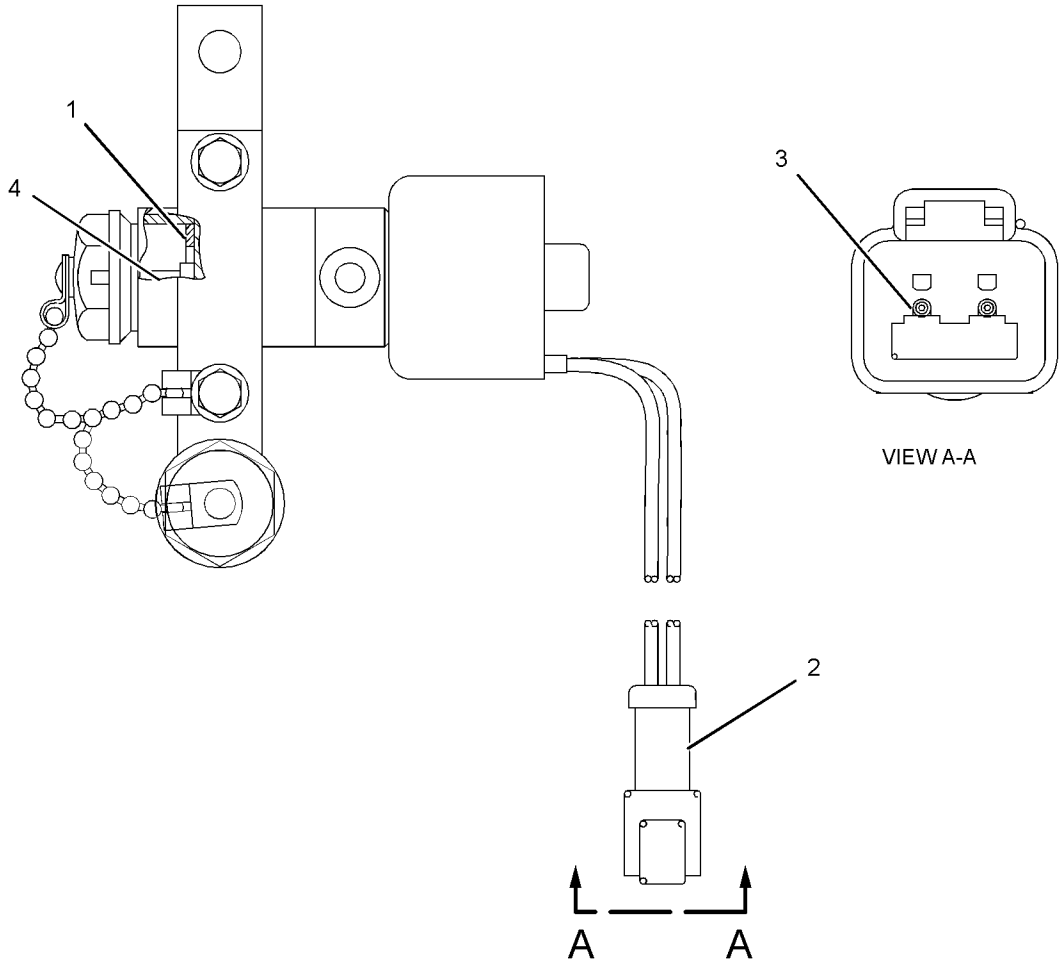

GRAPHIC #1 **<END>** g02138138

415-4252 WIRING GP-CAB

S/N: PPP1-UP; SSS1-UP; TTT1-UP
PART OF 393-6480 CAB AR, 393-6485 CAB AR-ENCLOSED ROPS
AN ATTACHMENT

SMCS-1408, 7301 **i06218748**

NOTE	REF NO	GRAPHIC REF	PART NUMBER	QTY	PART NAME 1 2 3 4 5 6 (PRODUCT LEVEL)	SEE PAGE
	1	1	**3E-5239**	2	RELAY AS (24-VOLT) (WINDOW WIPERS)	
Y	2	1	**3E-6328**	1	ALARM GP (24-VOLT) (ACTION)	150
Y	3	1	**3E-6389**	1	LAMP GP-DOME (24-VOLT) (WITH SWITCH)	188
	4	3	**6I-1418**	4	SPACER (8.2X12.7X28.7-MM THK)	
	5	3	**8T-9655**	8	MOUNT-ISOLATION	
	6	3	**9N-0869**	4	WASHER-HARD (8.8X25.5X2-MM THK)	
	7	2	**467-8535**	1	SWITCH AS-START (KEY)CHAVE DE CONTATO	
		2	**7T-6799**	1	NUT-MOUNTING (1-32-THD)	
		2	**8T-8729**	4	PIN-CONNECTOR (16-GA TO 18-GA)	
		2	**102-8804**	1	KIT-RECEPTACLE (4-PIN)	
					(INCLUDES RECEPTACLE AS & WEDGE)	
Y	8	1	**112-6174**	4	SWITCH GP-ROTARY (WIPER, WASHER)	249
	9	3	**113-8490**	4	FUSE (10-AMPERE)	
	10	3	**113-8491**	16	FUSE (15-AMPERE)	
	11	2	**133-9405**	1	SWITCH AS-PUSH BUTTON (DISPLAY MODES)	
		2	**3E-3371**	1	WEDGE-RECEPTACLE LOCK (3-PIN)	
		2	**3K-0835**	1	NUT (5/8-24-THD)	
		2	**6F-0253**	1	LOCKWASHER	
		2	**8T-8729**	3	PIN-CONNECTOR (16-GA TO 18-GA)	
		2	**102-8803**	1	KIT-RECEPTACLE (3-PIN)	
					(INCLUDES RECEPTACLE AS & WEDGE)	
Y	12	3	**158-6632**	1	SWITCH GP-PUSH BUTTON (HORN)	248
	13	1	**161-1099**	1	PLATE	
	14	2	**218-0651**	1	FILM-INSTRUCTION (KEY START SWITCH)	
Y	15	3	**241-8368**	1	SWITCH GP-MAGNETIC (24-VOLT) (MAIN POWER RELAY)	246
	16	2	**261-7990**	1	GROMMET	
M	17	3	**263-6556**	1	STUD (M10X1.5-THD)	
	18	1	**270-2679**	1	LOCKWASHER	
	19	1	**274-3774**	1	CAP-CONNECTOR	
	20	3	**274-3777**	1	CAP-CONNECTOR	
	21	3	**274-3778**	1	CAP-SEAL	
	22	1	**274-3779**	1	CAP-SEAL	
	23	1	**284-3623**	1	SWITCH AS-ROCKER (24-VOLT) (IMPLEMENT LOCKOUT)	
	24	1	**284-3664**	1	SWITCH AS-ROCKER (24-VOLT) (FLOODLIGHT, FRONT)	
	25	3	**286-0322**	1	GASKET	
	26	1	**286-0323**	1	GASKET	
	27	1	**293-9123**	1	SWITCH AS-ROCKER (24-VOLT) (FLOODLIGHTS, REAR)	
	28	3	**296-2649**	1	BRACKET AS	
	29	1	**307-0649**	4	KNOB (WINDOW WIPER CONTROLS)	
	30	1	**335-5365**	1	SOCKET-AUXILIARY POWER (12-VOLT)	
	31	3	**340-7161**	1	CONVERTER-POWER (24-VOLT TO 12-VOLT) (COMMAND COMMUNICATION)	
	32	3	**365-6773**	1	CONTROL GP-UNPROGRAMMED (IMPLEMENT)	
	33	1	**375-7929**	1	FILM-IDENTIFICATION (WINDOW WIPER CONTROLS)	
	34	2	**375-9257**	1	BRACKET	
Y	35	3	**391-6256**	1	HARNESS AS-SENSOR (STEERING)	177
	36	3	**392-4771**	1	CABLE AS	
D		3	**6V-2369**		CABLE (4-GA, BLACK) (0.4-M)	
		3	**8T-8799**	1	BOOT (RED)	
		3	**5P-3454**	1	TERMINAL-RING (4-GA, 5/16-IN SCREW)	
		3	*317-3240*	1	TERMINAL AS	
E		3	**125-7876**		TUBE-HEAT SHRINK (17.78-MM DIA) (4-CM)	
		3	**317-3239**	1	TERMINAL-RING	
	37	1	**392-9884**	1	PLATE	
	38	2	**393-3962**	1	FILM-IDENTIFICATION (OPERATOR)	

415-4252 **WIRING GP-CAB (*contd.*)** **i06218748**

NOTE	REF NO	GRAPHIC REF	PART NUMBER	QTY	PART NAME 1 2 3 4 5 6 (PRODUCT LEVEL)	SEE PAGE
	39	3	**395-7861**	1	CABLE AS	
D		3	**6V-2369**		CABLE (4-GA, BLACK) (0.4-M)	
		3	**9G-4336**	1	TERMINAL-RING (4-GA, 3/8-IN SCREW)	
		3	*317-3240*	1	TERMINAL AS	
E		3	**125-7876**		TUBE-HEAT SHRINK (17.78-MM DIA) (4-CM)	
		3	**317-3239**	1	TERMINAL-RING	
Y	40	1	**415-2089**	1	HARNESS AS-CAB (MAIN)	165
Y	41	2	**415-2091**	1	HARNESS AS-CAB (FRONT)	167
Y	42	1	*415-2092*	1	HARNESS AS-CAB (LH)	167
	43	3	**420-1153**	1	HARNESS AS-CONSOLE (SWITCH PANEL)	
	44	2	**423-7330**	1	MODULE GP-DISPLAY (DASH)	
		2	**364-8277**	1	FILM-IDENTIFICATION (CAT)	
	45	3	**450-2194**	1	FILM-IDENTIFICATION (FUSE PANEL)	
	46	1	**455-9568**	1	CAP AS	
	47	3	**465-3467**	1	CABLE AS	
D		3	**6V-2369**		CABLE (4-GA, BLACK) (0.2-M)	
		3	**8T-8827**	1	BOOT (RED)	
		3	**5P-3454**	1	TERMINAL-RING (4-GA, 5/16-IN SCREW)	
		3	**9G-4336**	1	TERMINAL-RING (4-GA, 3/8-IN SCREW)	
M	48	1	**107-3786**	2	BOLT (M4X0.7X12-MM)	
	49	2	**132-5789**	1	CLIP	
	50	3	**156-6175**	1	CLIP	
M	51	3	**174-8131**	2	SCREW-TRUSS HEAD (M4X0.7X12-MM)	
M	52	2	**191-8921**	4	BOLT-SOCKET HEAD (M6X1X25-MM)	
	53	3	**1H-3244**	2	LOCKWASHER	
	54	1	**203-9007**	1	NUT (1-1/2-18-THD)	
	55	1,3	**204-2281**	6	STRAP-CABLE	
	56	2,3	**211-0052**	4	NUT (1-11/16-18-THD)	
	57	2,3	**310-0674**	4	LOCKWASHER	
	58	1	**3S-2093**	2	STRAP-CABLE	
	59	1,2	**4P-7581**	2	CLIP	
	60	1,2	**4P-8134**	2	CLIP	
M	61	1,3	**5C-2890**	4	NUT (M6X1-THD)	
	62	3	**5F-9757**	1	GROMMET	
	63	2	**5P-4116**	1	WASHER-HARD (8.8X20.5X2-MM THK)	
	64	3	**5P-7162**	4	SCREW-MACHINE (10-32X0.5-IN)	
	65	3	**5P-8939**	2	GROMMET	
	66	1,2,3	**7K-1181**	121	STRAP-CABLE	
M	67	3	**7X-0818**	4	BOLT (M8X1.25X45-MM)	
M	68	3	**7Y-7388**	2	SCREW-BUTTON HEAD (M5X0.8X12-MM)	
	69	1,2,3	**8T-4121**	8	WASHER-HARD (11X21X2.5-MM THK)	
M	70	3	**8T-4133**	1	NUT (M10X1.5-THD)	
M	71	1	**8T-4136**	1	BOLT (M10X1.5X25-MM)	
M	72	1,2	**8T-4137**	6	BOLT (M10X1.5X20-MM)	
M	73	2	**8T-4171**	2	BOLT (M6X1X12-MM)	
M	74	2	**8T-4200**	1	BOLT (M8X1.25X16-MM)	
	75	3	**8T-4205**	2	WASHER-HARD (7.2X14.5X2-MM THK)	
M	76	1,3	**9X-1046**	13	SCREW (M4X0.7X18-MM)	
M	77	3	**9X-2044**	2	SCREW-TRUSS HEAD (M6X1X16-MM)	
	78	1,2	**9X-8256**	4	WASHER (6.6X12X2-MM THK)	
E	79	2	**7X-7877**		STRIP-EDGE (8-CM EACH)	
E	79A	3	**7X-7877**		STRIP-EDGE (20-CM)	

D - ORDER BY THE METER
E - ORDER BY THE CENTIMETER
M - METRIC PART
Y - SEPARATE ILLUSTRATION

415-4252 **WIRING GP-CAB (*contd.*)** **i06218748**

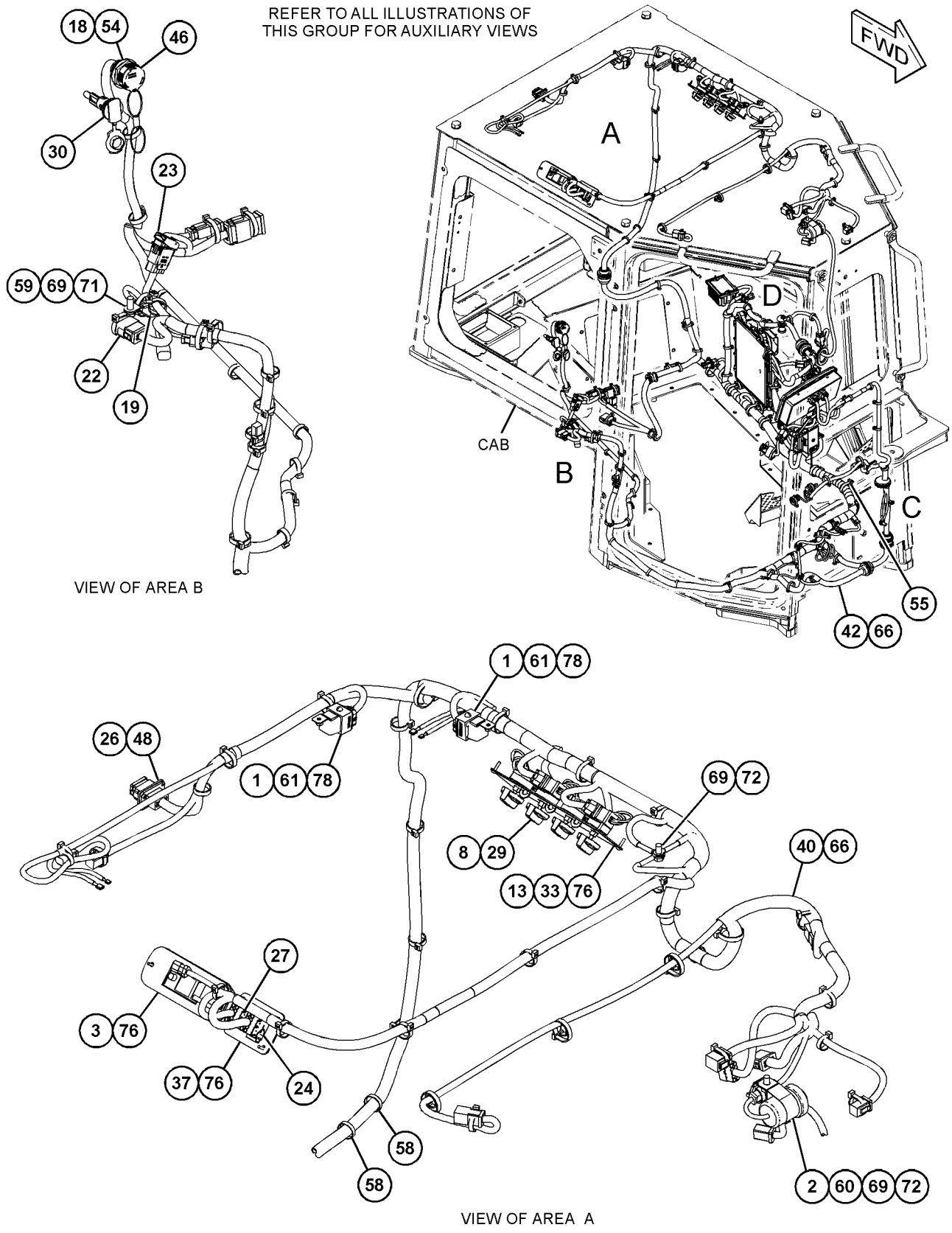

GRAPHIC #1 g03864521

415-4252 **WIRING GP-CAB (*contd.*)** **i06218748**

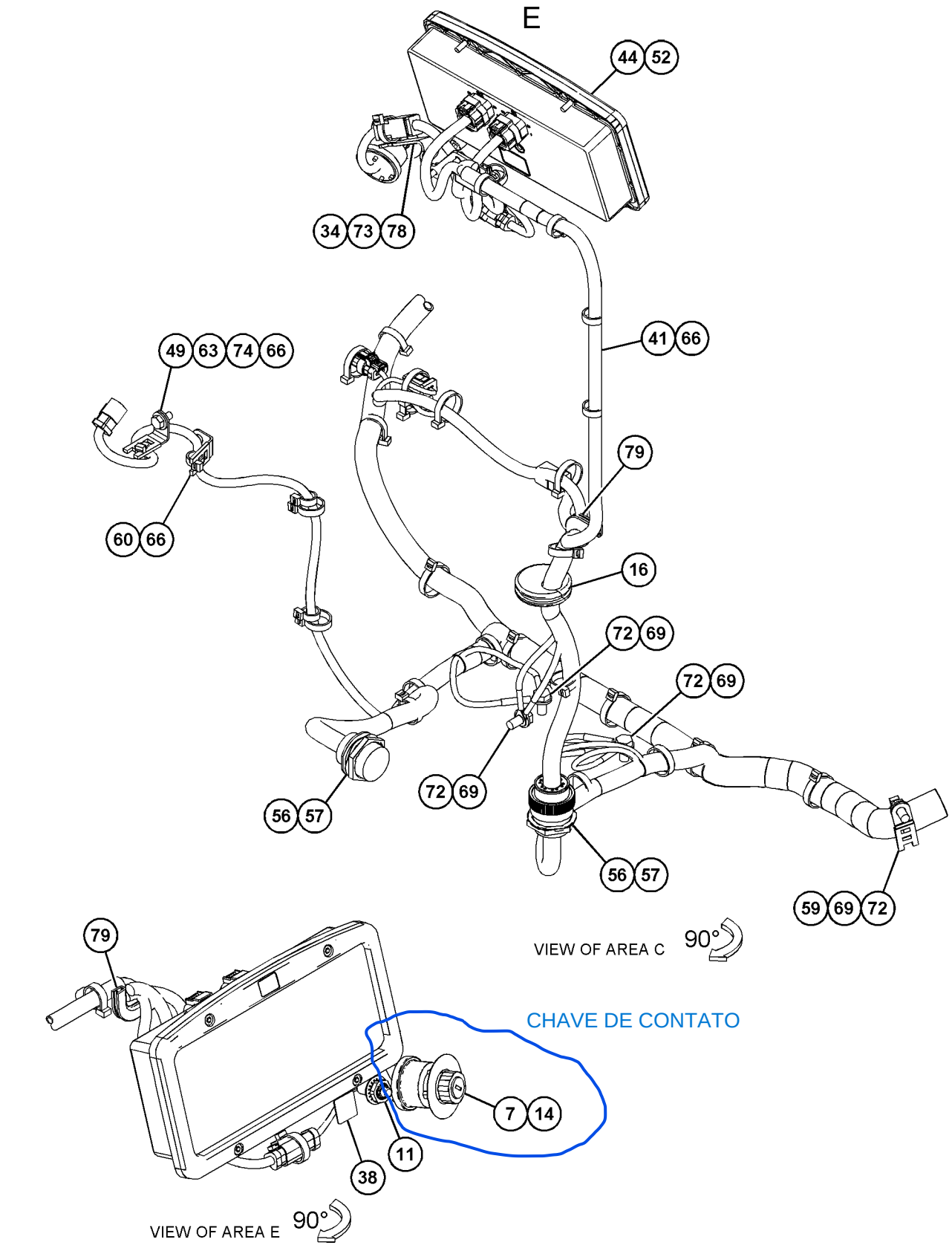

GRAPHIC #2

g03864522

415-4252 **WIRING GP-CAB (*contd.*)** **i06218748**

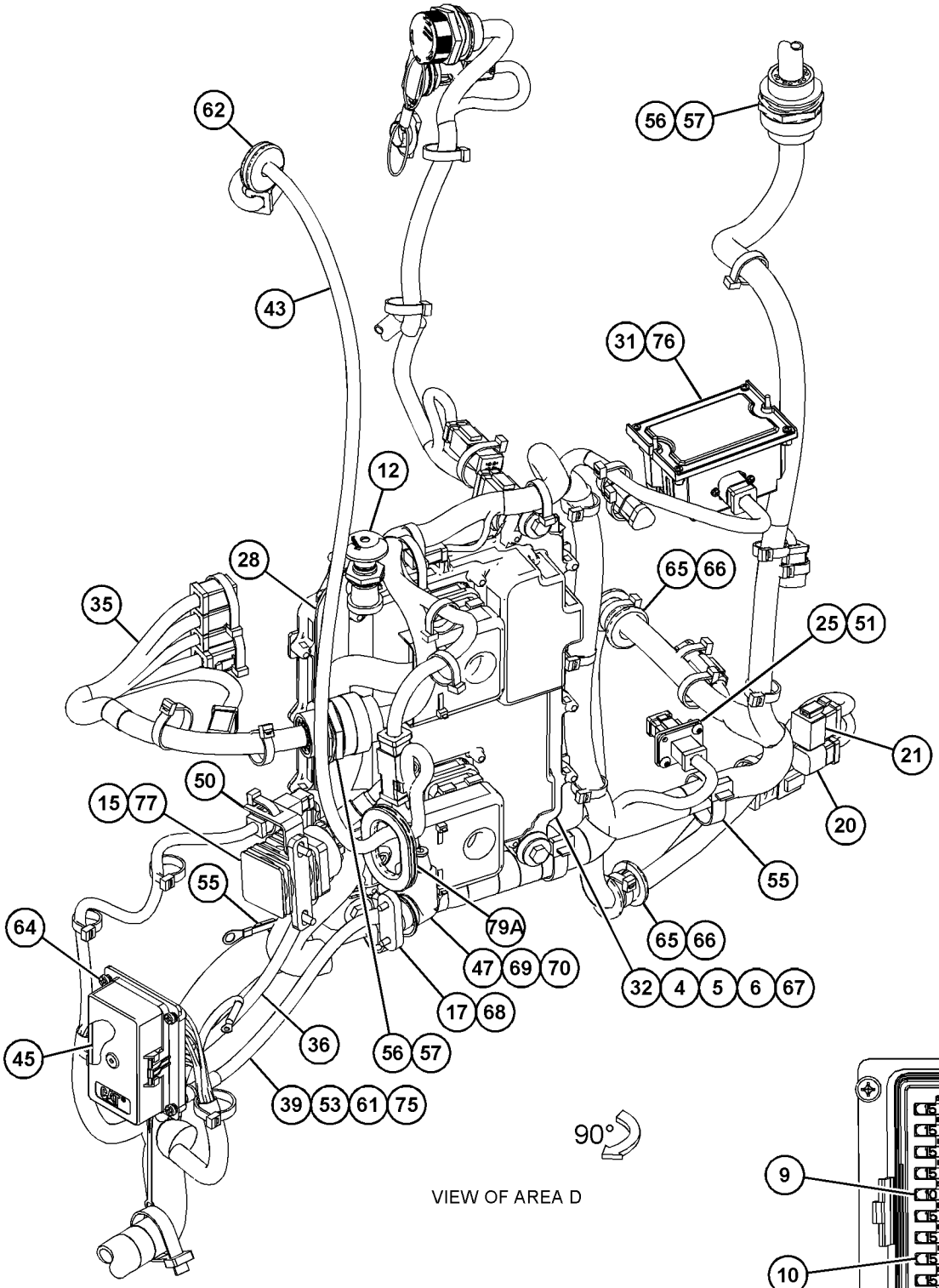

GRAPHIC #3 **<END>** g03864524

420-1160 WIRING GP-CAB

S/N: PPP1-UP; SSS1-UP; TTT1-UP
PART OF 393-6475 CANOPY AR
AN ATTACHMENT

SMCS-1408, 7301 **i06215286**

NOTE	REF NO	GRAPHIC REF	PART NUMBER	QTY	PART NAME 1 2 3 4 5 6 (PRODUCT LEVEL)	SEE PAGE
	1	5	**113-8490**	4	FUSE (10-AMPERE)	
	2	5	**113-8491**	16	FUSE (15-AMPERE)	
	3	3	**132-5789**	1	CLIP	
	4	4	**156-6175**	1	CLIP	
Y	5	4	**158-6632**	1	SWITCH GP-PUSH BUTTON (HORN)	248
M	6	3	**191-8921**	4	BOLT-SOCKET HEAD (M6X1X25-MM)	
	7	3	**218-0651**	1	FILM-INSTRUCTION (KEY START SWITCH)	
	8	3	**261-7990**	1	GROMMET	
M	9	4	**263-6556**	1	STUD (M10X1.5-THD)	
	10	2	**270-2679**	1	LOCKWASHER	
	11	2	**274-3777**	1	CAP-CONNECTOR	
	12	2	**274-3778**	1	CAP-SEAL	
	13	2	**274-3779**	1	CAP-SEAL	
	14	2	**284-3623**	1	SWITCH AS-ROCKER (24-VOLT) (IMPLEMENT LOCKOUT)	
	15	4	**286-0322**	1	GASKET	
	16	4	**296-2649**	1	BRACKET AS	
	17	2	**335-5365**	1	SOCKET-AUXILIARY POWER (12-VOLT)	
	18	4	**340-7161**	1	CONVERTER-POWER (24-VOLT TO 12-VOLT)	
	19	4	**365-6773**	1	CONTROL GP-UNPROGRAMMED (MACHINE)	
	20	3	**375-9257**	1	BRACKET	
Y	21	4	**391-6256**	1	HARNESS AS-SENSOR	177
	22	1	**392-9884**	1	PLATE	
Y	23	3	**415-2091**	1	HARNESS AS-CAB (FRONT)	167
Y	24	2	*415-2092*	1	HARNESS AS-CAB (LH)	167
	25	4	**420-1153**	1	HARNESS AS-CONSOLE	
Y	26	1	**420-1159**	1	HARNESS AS-CAB (REAR)	168
	27	3	**423-7330**	1	MODULE GP-DISPLAY	
	28	5	**450-2194**	1	FILM-IDENTIFICATION (FUSE PANEL)	
	29	2	**455-9568**	1	CAP AS	
	30	4	**465-3467**	1	CABLE AS	
D		4	**6V-2369**		CABLE (4-GA, BLACK) (0.2-M)	
		4	**8T-8827**	1	BOOT (RED)	
		4	**5P-3454**	1	TERMINAL-RING (4-GA, 5/16-IN SCREW)	
		4	**9G-4336**	1	TERMINAL-RING (4-GA, 3/8-IN SCREW)	
	31	3	**467-8535**	1	SWITCH AS-START (KEY)	
		3	**7T-6799**	1	NUT-MOUNTING (1-32-THD)	
		3	**8T-8729**	4	PIN-CONNECTOR (16-GA TO 18-GA)	
		3	**102-8804**	1	KIT-RECEPTACLE (4-PIN)	
					(INCLUDES RECEPTACLE AS & WEDGE)	
	32	3	**133-9405**	1	SWITCH AS-PUSH BUTTON (DISPLAY MODES)	
		3	**3E-3371**	1	WEDGE-RECEPTACLE LOCK (3-PIN)	
		3	**3K-0835**	1	NUT (5/8-24-THD)	
		3	**6F-0253**	1	LOCKWASHER	
		3	**8T-8729**	3	PIN-CONNECTOR (16-GA TO 18-GA)	
		3	**102-8803**	1	KIT-RECEPTACLE (3-PIN)	
					(INCLUDES RECEPTACLE AS & WEDGE)	
M	33	4	**174-8131**	2	SCREW-TRUSS HEAD (M4X0.7X12-MM)	
	34	5	**1H-3244**	2	LOCKWASHER	
	35	2	**203-9007**	1	NUT (1-1/2-18-THD)	
	36	3,4	**204-2281**	6	STRAP-CABLE	
	37	3,4	**211-0052**	4	NUT (1-11/16-18-THD)	
Y	38	4	**241-8368**	1	SWITCH GP-MAGNETIC (24-VOLT) (MAIN RELAY)	246
	39	2	**274-3774**	1	CAP-CONNECTOR	
	40	1	**284-3664**	1	SWITCH AS-ROCKER (24-VOLT) (FRONT WORK LIGHT)	
	41	1	**293-9123**	1	SWITCH AS-ROCKER (24-VOLT) (REAR WORK LIGHTS)	
	42	3,4	**310-0674**	4	LOCKWASHER	

420-1160 **WIRING GP-CAB (*contd.*)** **i06215286**

NOTE	REF NO	GRAPHIC REF	PART NUMBER	QTY	PART NAME 1 2 3 4 5 6 (PRODUCT LEVEL)	SEE PAGE
	43	5	**392-4771**	1	CABLE AS	
D		5	**6V-2369**		CABLE (4-GA, BLACK) (0.4-M)	
		5	**8T-8799**	1	BOOT (RED)	
		5	**5P-3454**	1	TERMINAL-RING (4-GA, 5/16-IN SCREW)	
		5	*317-3240*	1	TERMINAL AS	
E		5	**125-7876**		TUBE-HEAT SHRINK (17.78-MM DIA) (4-CM)	
		5	**317-3239**	1	TERMINAL-RING	
	44	3	**393-3962**	1	FILM-IDENTIFICATION (OPERATOR)	
	45	5	**395-7861**	1	CABLE AS	
D		5	**6V-2369**		CABLE (4-GA, BLACK) (0.4-M)	
		5	**9G-4336**	1	TERMINAL-RING (4-GA, 3/8-IN SCREW)	
		5	*317-3240*	1	TERMINAL AS	
E		5	**125-7876**		TUBE-HEAT SHRINK (17.78-MM DIA) (4-CM)	
		5	**317-3239**	1	TERMINAL-RING	
	46	1	**3E-5239**	2	RELAY AS (24-VOLT) (WINDOW WIPERS)	
Y	47	1	*3E-6389*	1	LAMP GP-DOME (24-VOLT)	188
Y	48	1	**3E-6328**	1	ALARM GP (24-VOLT)	150
	49	2,3	**4P-7581**	2	CLIP	
	50	1,3	**4P-8134**	2	CLIP	
M	51	1,5	**5C-2890**	4	NUT (M6X1-THD)	
	52	1	**5F-9757**	1	GROMMET	
	53	3	**5P-4116**	1	WASHER-HARD (8.8X20.5X2-MM THK)	
	54	5	**5P-7162**	4	SCREW-MACHINE (10-32X0.5-IN)	
	55	2	**5P-8939**	2	GROMMET	
	56	4	**6I-1418**	4	SPACER (8.2X12.7X28.7-MM THK)	
	57	1,2,3,4	**7K-1181**	113	STRAP-CABLE	
M	58	4	**7X-0818**	4	BOLT (M8X1.25X45-MM)	
M	59	4	**7Y-7388**	2	SCREW-BUTTON HEAD (M5X0.8X12-MM)	
	60	1,2,3,4	**8T-4121**	8	WASHER-HARD (11X21X2.5-MM THK)	
M	61	4	**8T-4133**	1	NUT (M10X1.5-THD)	
M	62	2	**8T-4136**	1	BOLT (M10X1.5X25-MM)	
M	63	1,3	**8T-4137**	6	BOLT (M10X1.5X20-MM)	
M	64	3	**8T-4171**	2	BOLT (M6X1X12-MM)	
M	65	3	**8T-4200**	1	BOLT (M8X1.25X16-MM)	
	66	5	**8T-4205**	2	WASHER-HARD (7.2X14.5X2-MM THK)	
	67	4	**8T-9655**	8	MOUNT-ISOLATION	
	68	4	**9N-0869**	4	WASHER-HARD (8.8X25.5X2-MM THK)	
M	69	1,4	**9X-1046**	9	SCREW (M4X0.7X18-MM)	
M	70	4	**9X-2044**	2	SCREW-TRUSS HEAD (M6X1X16-MM)	
	71	1,3	**9X-8256**	4	WASHER (6.6X12X2-MM THK)	
E	72	4	**7X-7877**		STRIP-EDGE (20-CM)	
E	72A	3	**7X-7877**		STRIP-EDGE (8-CM EACH)	

D - ORDER BY THE METER
E - ORDER BY THE CENTIMETER
M - METRIC PART
Y - SEPARATE ILLUSTRATION

REFER TO ALL ILLUSTRATIONS OF THIS GROUP FOR AUXILIARY VIEWS

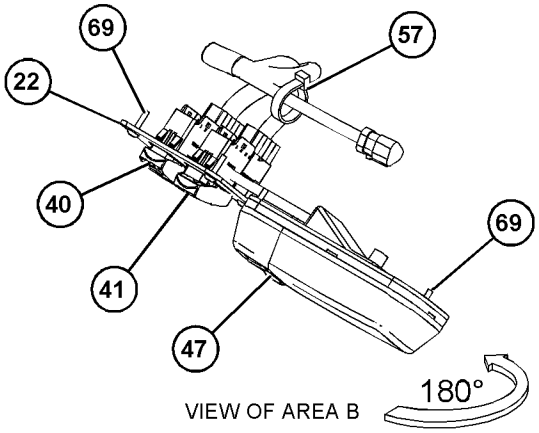

VIEW OF AREA B

180°

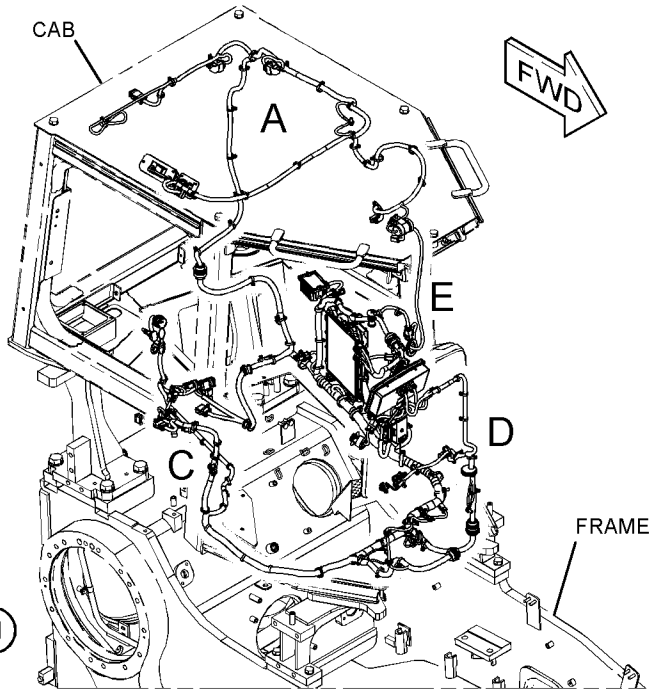

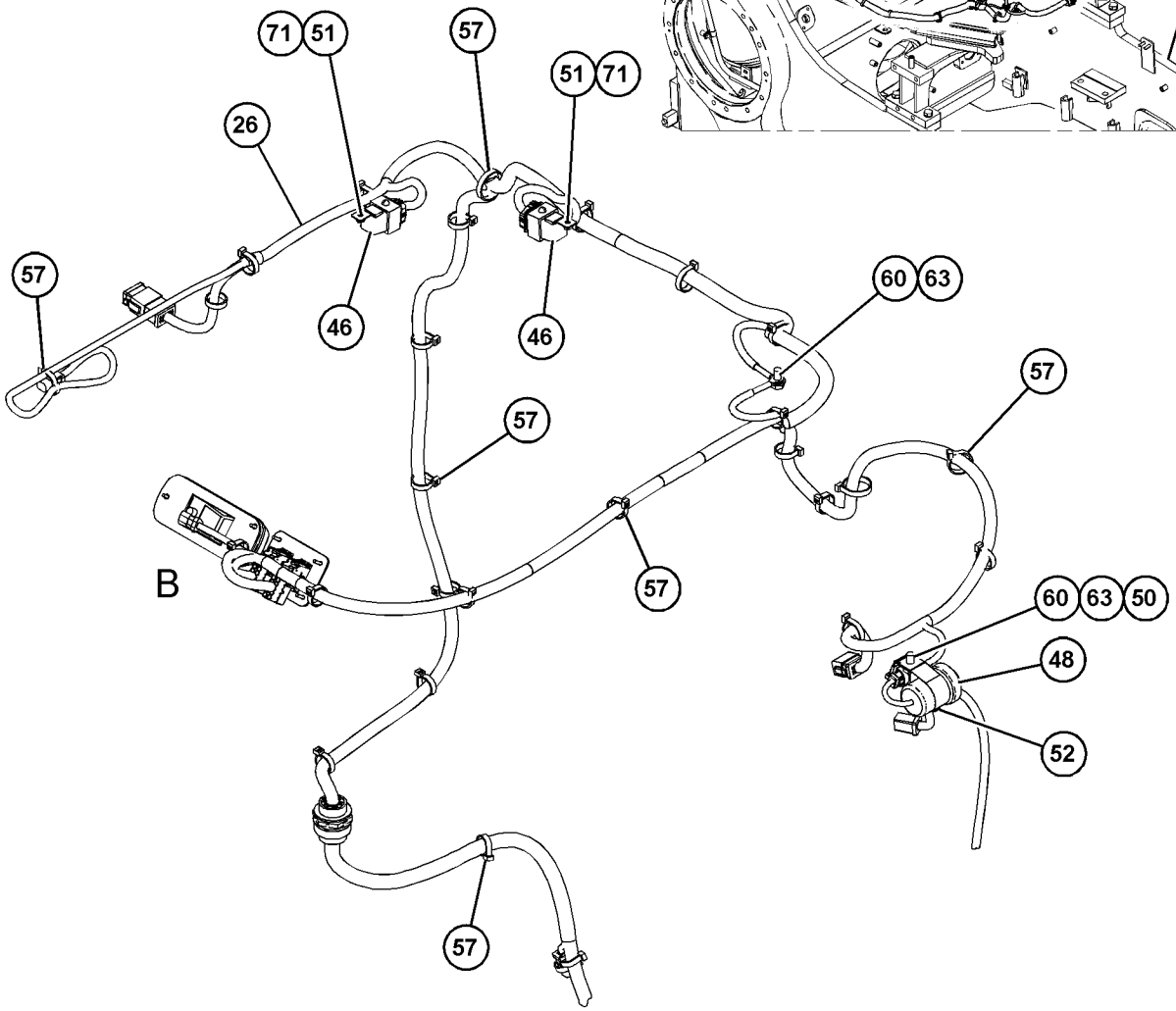

VIEW OF AREA A

GRAPHIC #1 g03860526

420-1160 **WIRING GP-CAB (*contd.*)** **i06215286**

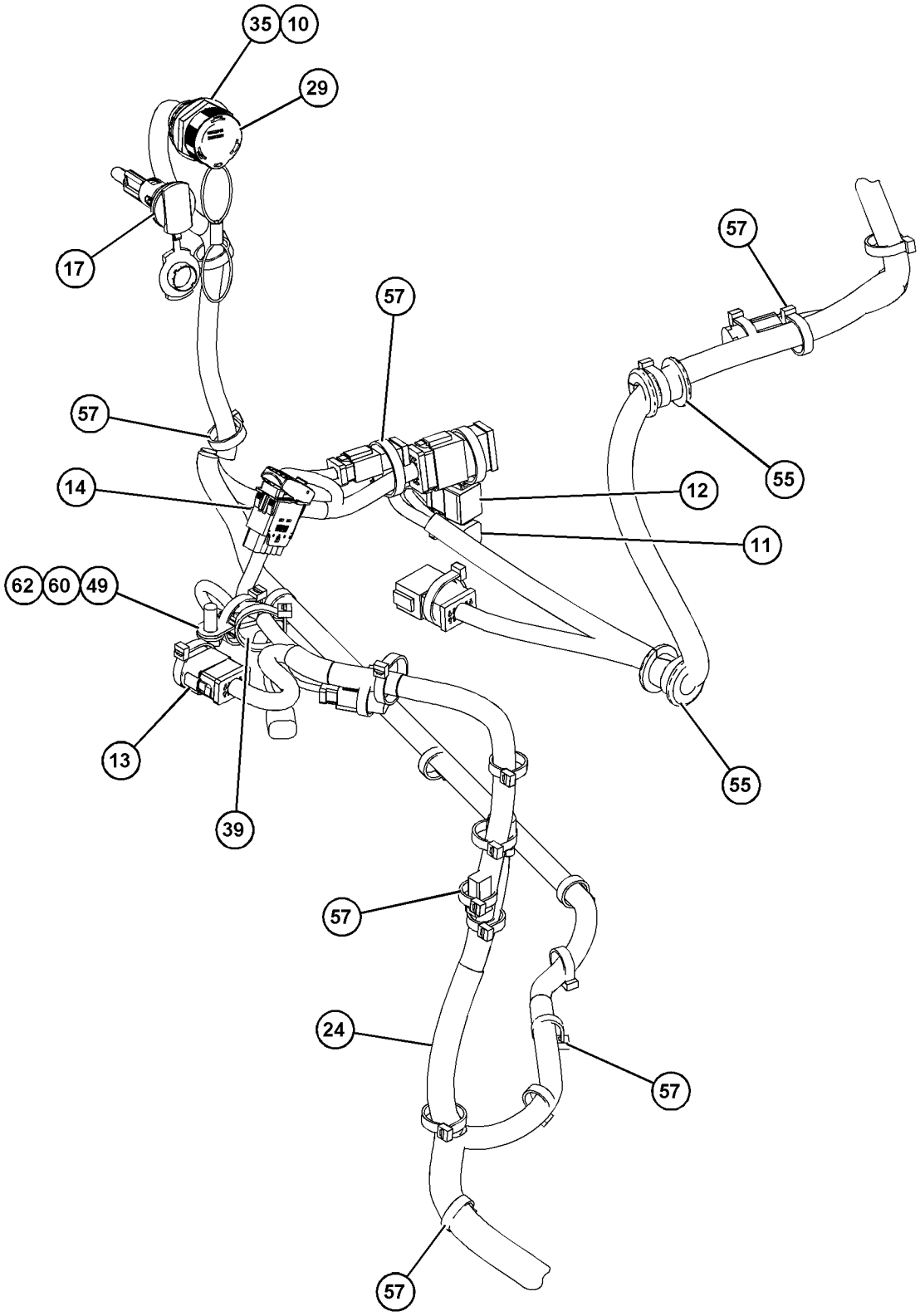

VIEW OF AREA C

GRAPHIC #2 g03860527

REFER TO ALL ILLUSTRATIONS OF
THIS GROUP FOR AUXILIARY VIEWS

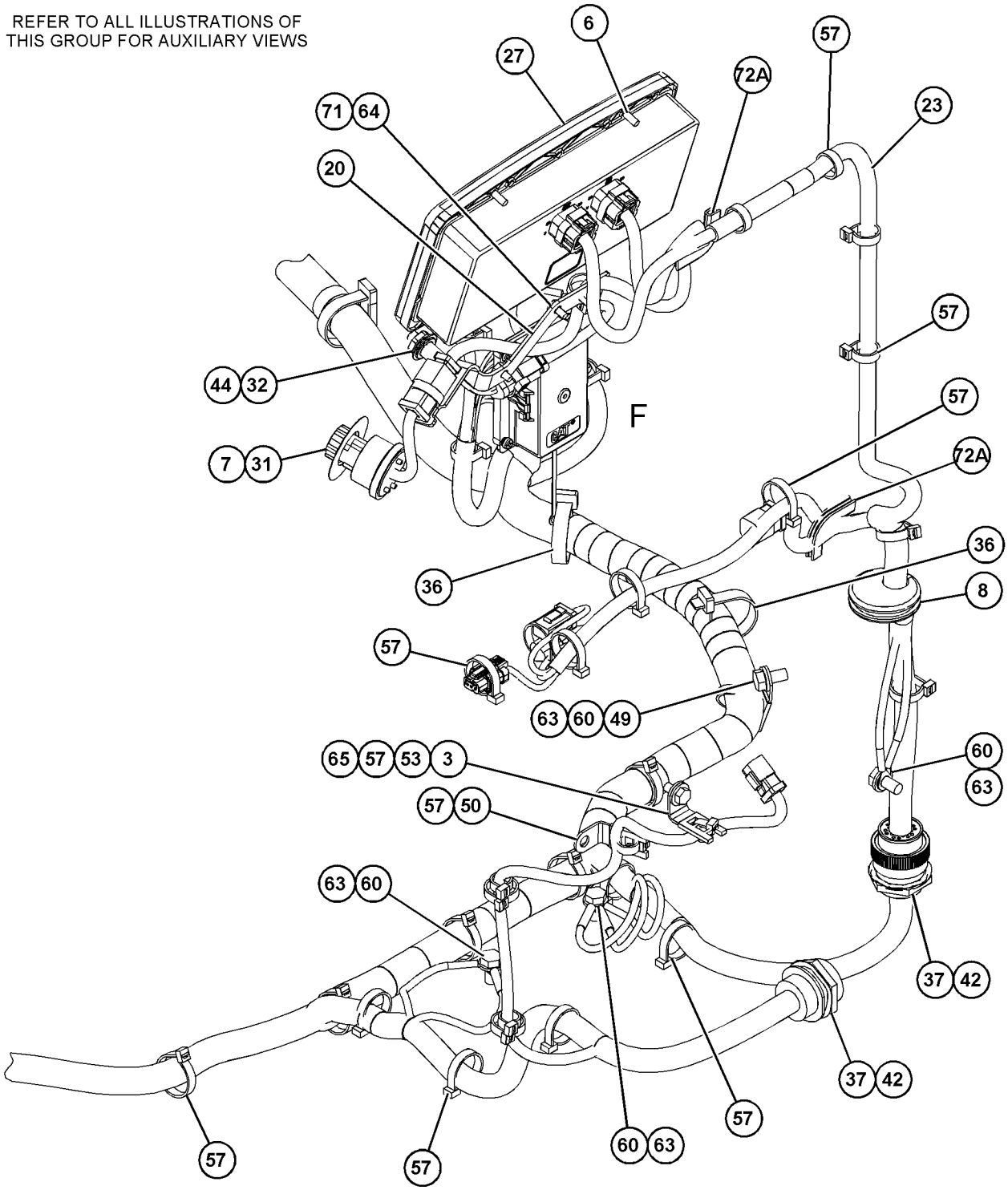

VIEW OF AREA D

GRAPHIC #3 g03860528

420-1160 **WIRING GP-CAB (*contd.*)** **i06215286**

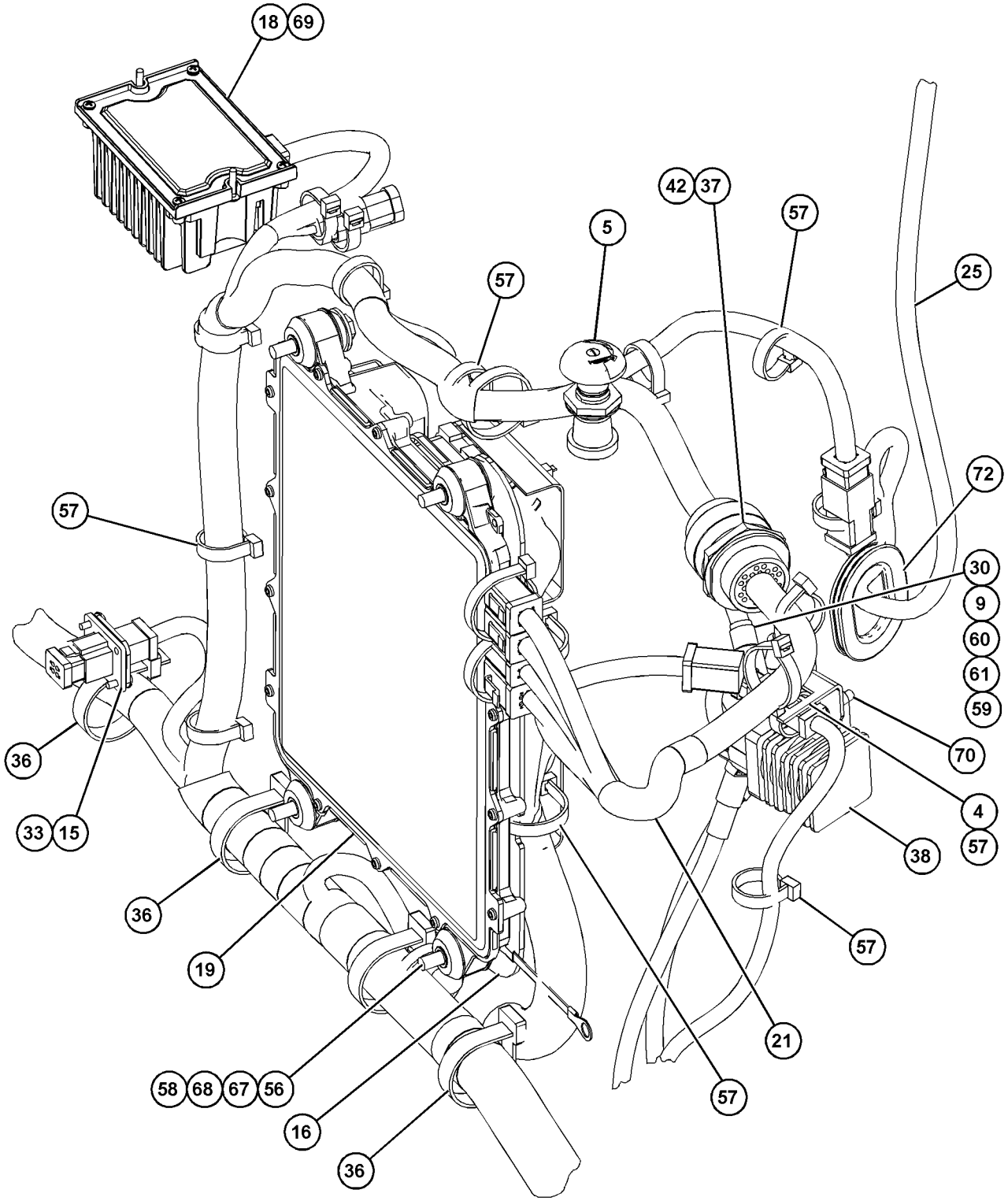

VIEW OF AREA E

GRAPHIC #4 g03860531

420-1160 **WIRING GP-CAB (*contd.*)** **i06215286**

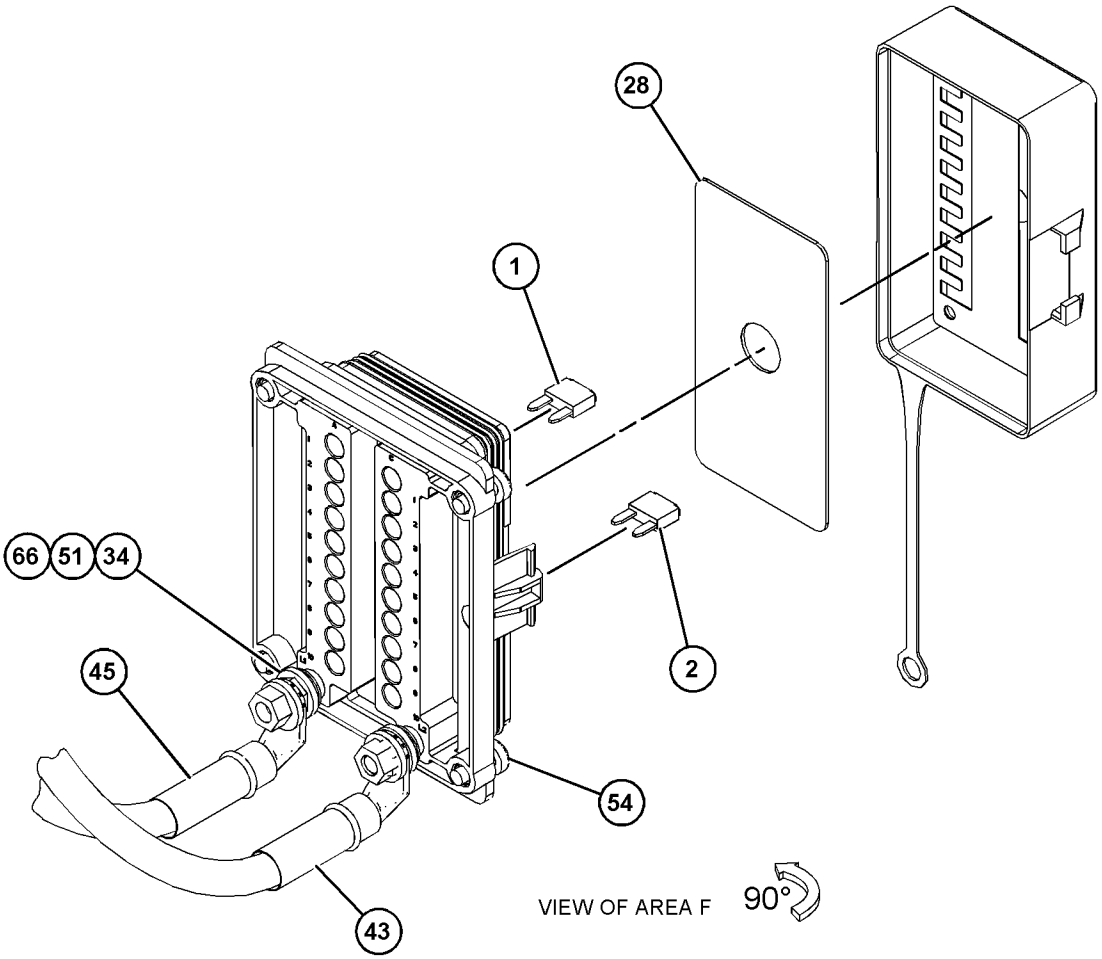

GRAPHIC #5 **<END>** g03860554

398-4434 WIRING GP-CHASSIS

S/N: PPP1-UP; SSS1-UP; TTT1-UP
PART OF 398-4281 CHASSIS AR
ALSO AN ATTACHMENT

SMCS-1408 **i06218811**

NOTE	REF NO	GRAPHIC REF	PART NUMBER	QTY	PART NAME 1 2 3 4 5 6 (PRODUCT LEVEL)	SEE PAGE
	1	1	**3S-2093**	7	STRAP-CABLE	
	2	1	**7K-1181**	37	STRAP-CABLE	
	3	1	**163-1201**	1	HORN AS (24-VOLT, LOW TONE)	
	4	1	**167-3583**	1	STRAP AS-GROUND	
	5	1	**172-4864**	1	GUARD AS	
M		1	**8T-3490**	1	NUT-WELD (M10X1.5-THD)	
	6	1	**213-9100**	1	ALARM AS (BACKUP)	
		1	**102-8802**	1	KIT-RECEPTACLE (2-PIN)	
					(INCLUDES RECEPTACLE AS & WEDGE)	
		1	**8T-8729**	2	PIN-CONNECTOR (16-GA TO 18-GA)	
E		1	**9X-1813**		SLEEVE (29-CM)	
	7	1	**226-9670**	1	HARNESS AS-CHASSIS (RADIATOR GUARD)	
		1	**102-8803**	1	KIT-RECEPTACLE (3-PIN)	
					(INCLUDES RECEPTACLE AS & WEDGE)	
		1	**9W-0844**	8	SOCKET-CONNECTOR (14-GA TO 16-GA)	
		1	**9W-0852**	3	PIN-CONNECTOR (14-GA TO 16-GA)	
E		1	**119-3662**		TUBE-HEAT SHRINK (10.85-MM DIA) (7-CM)	
E		1	**125-7874**		TUBE-HEAT SHRINK (5.72-MM DIA) (5-CM)	
E		1	**125-7875**		TUBE-HEAT SHRINK (7.44-MM DIA) (5-CM)	
		1	**155-2270**	4	KIT-CONNECTING PLUG (2-PIN)	
					(EACH PLUG KIT INCLUDES PLUG AS, WEDGE & INTERFACE SEAL)	
		1	**274-3774**	2	CAP-CONNECTOR	
	8	1	**256-6453**	1	SENSOR-TEMPERATURE (TRANSMISSION SUMP)	
	8A	1	**256-6453**	1	SENSOR-TEMPERATURE (HYDRAULIC OIL)	
	9	1	**358-2399**	1	SENSOR GP-SPEED (STEERING MOTOR)	
	10	1	**398-4480**	1	HARNESS AS-FUEL TANK	
		1	**9X-3402**	4	SOCKET-CONNECTOR (16-GA TO 18-GA)	
					—OR—	
		1	**126-1768**	4	SOCKET-CONNECTOR (14-GA TO 16-GA)	
		1	**155-2270**	1	KIT-CONNECTING PLUG (2-PIN)	
					(INCLUDES PLUG AS, WEDGE & INTERFACE SEAL)	
		1	**230-4011**	1	PLUG AS-CONNECTOR (2-PIN)	
		1	**455-0704**	1	SEAL-CONNECTOR	
	11	1	**433-2463**	1	CABLE AS	
E		1	**159-8050**		CABLE (00-GA, BLACK) (128-CM)	
		1	**1S-7252**	1	TERMINAL-CABLE (00-GA, 3/8-IN SCREW)	
		1	**8S-3020**	1	TERMINAL-CABLE (00-GA, 3/8-IN SCREW)	
B		1	**1P-0810**		TAPE-ELECTRICAL	
		1	**299-9092**	1	COVER-TERMINAL (BLACK)	
Y	12	1	**433-2471**	1	HARNESS AS-TRANSMISSION (JUMPER)	178
	13	1	**433-2472**	1	CABLE AS	
		1	**3S-6049**	1	TERMINAL AS-BATTERY (POSITIVE)	
		1	**1M-6119**	1	BOLT (5/16-18X1.375-IN)	
		1	**1M-6120**	1	NUT (5/16-18-THD)	
B		1	**1P-0810**		TAPE-ELECTRICAL	
		1	**1S-7251**	1	TERMINAL-CABLE (00-GA, 1/2-IN SCREW)	
		1	**1S-7252**	1	TERMINAL-CABLE (00-GA, 3/8-IN SCREW)	
E		1	**159-8049**		CABLE (00-GA, RED) (149-CM)	
		1	**8N-1725**	1	COVER AS-TERMINAL (RED)	
		1	**8L-8413**	1	STRAP-CABLE (WHITE)	
		1	**8T-8827**	1	BOOT (RED)	
	14	1	**433-2473**	1	CABLE AS	
		1	**1S-4915**	2	LINER (CONDUIT)	
		1	**1S-7251**	1	TERMINAL-CABLE (00-GA, 1/2-IN SCREW)	

398-4434 **WIRING GP-CHASSIS (*contd.*)** **i06218811**

NOTE	REF NO	GRAPHIC REF	PART NUMBER	QTY	PART NAME 1 2 3 4 5 6 (PRODUCT LEVEL)	SEE PAGE
E		1	**5P-0695**		CONDUIT (94-CM)	
E		1	**159-8049**		CABLE (00-GA, RED) (114-CM)	
E		1	**8T-2225**		TUBE-HEAT SHRINK (25.4-MM DIA) (16-CM)	
B		1	**1P-0810**		TAPE-ELECTRICAL	
		1	**301-0091**	1	COVER-TERMINAL (RED)	
Y	15	1	**433-2474**	1	HARNESS AS-VALVE	179
	16	1	**433-2475**	1	CABLE AS	
		1	**1S-7252**	1	TERMINAL-CABLE (00-GA, 3/8-IN SCREW)	
E		1	**159-8050**		CABLE (00-GA, BLACK) (110-CM)	
		1	**9G-0003**	1	COVER AS-TERMINAL (BLACK)	
		1	**8L-8413**	1	STRAP-CABLE (WHITE)	
		1	**9G-8909**	1	COVER-TERMINAL (BLACK)	
		1	**8T-9757**	1	TERMINAL AS-BATTERY (NEGATIVE)	
		1	**1M-6119**	1	BOLT (5/16-18X1.375-IN)	
		1	**1M-6120**	1	NUT (5/16-18-THD)	
Y	17	1	**433-2480**	1	HARNESS AS-WIRING (FENDER, RH)	180
	18	1	**435-6590**	1	BRACKET	
	19	1	**130-5300**	1	CLIP	
	20	1	*148-8306*	1	ADAPTER AS	
		1	**5P-5777**	1	ADAPTER-O-RING	
		1	**7M-8485**	1	SEAL-O-RING	
	21	1	**174-7875**	1	HORN AS (24-VOLT, HIGH TONE)	
	22	1	**204-2281**	4	STRAP-CABLE	
	23	1	**1S-0994**	2	CLIP	
	24	1	**269-7680**	1	CLIP	
	25	1	**301-7791**	1	CLIP (SLOT)	
	26	1	**301-7792**	1	CLIP (TAB)	
	27	1	**351-1904**	1	SEAL-O-RING	
	28	1	**352-3964**	1	CLIP	
	29	1	**3K-0360**	2	SEAL-O-RING	
	30	1	**4P-7581**	3	CLIP	
	31	1	**4P-8134**	4	CLIP	
	32	1	**4S-1962**	3	CLIP	
	33	1	**5P-4116**	1	WASHER-HARD (8.8X20.5X2-MM THK)	
	34	1	**5P-8522**	1	GROMMET	
	35	1	**5S-7379**	1	BOLT (3/8-16X0.875-IN)	
	36	1	**7F-0560**	4	WASHER (0.516X0.938X0.101-IN THK)	
Y	37	1	**7N-0718**	1	SWITCH GP-DISCONNECT (BATTERY)	245
	38	1	**7V-6571**	7	GROMMET	
	39	1	**8C-6358**	1	BLOCK AS-JUNCTION (BATTERY)	
		1	**7F-0560**	6	WASHER (0.516X0.938X0.101-IN THK)	
		1	**8T-3518**	6	NUT-FULL (1/2-13-THD)	
M	40	1	**8T-0267**	2	BOLT-SOCKET HEAD (M6X1X12-MM)	
	41	1	**8T-3518**	4	NUT-FULL (1/2-13-THD)	
	42	1	**8T-4121**	22	WASHER-HARD (11X21X2.5-MM THK)	
M	43	1	**8T-4136**	5	BOLT (M10X1.5X25-MM)	
M	44	1	**8T-4137**	12	BOLT (M10X1.5X20-MM)	
M	45	1	**8T-4182**	2	BOLT (M10X1.5X45-MM)	
M	46	1	**8T-4195**	2	BOLT (M10X1.5X30-MM)	
M	47	1	**8T-4908**	1	BOLT (M8X1.25X25-MM)	
D	48	1	**8T-3425**		CHANNEL-TRIM (0.2-M)	

B - USE AS REQUIRED
D - ORDER BY THE METER
E - ORDER BY THE CENTIMETER
M - METRIC PART
Y - SEPARATE ILLUSTRATION

398-4434 **WIRING GP-CHASSIS (*contd.*)** **i06218811**

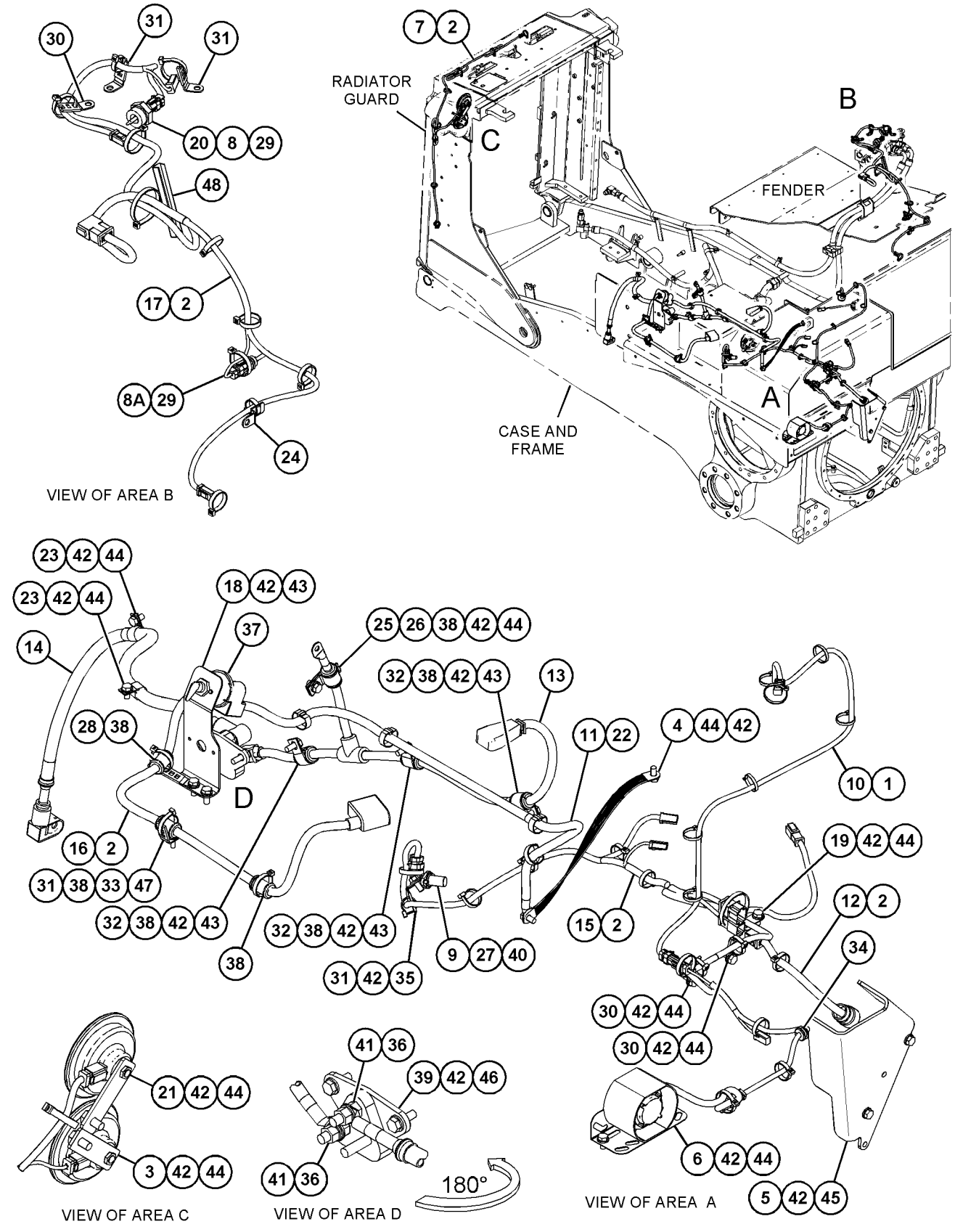

GRAPHIC #1

<END>

g03861330

438-3435 WIRING GP-ELECTRONIC CONTROL

S/N: TXD1-UP

PART OF 420-1870, 420-1871, 423-8451, 423-8452, 423-8453, 423-8454 ENGINE AR-COMPLETE AN ATTACHMENT

SMCS-1408, 1900 **i05981411**

NOTE	REF NO	GRAPHIC REF	PART NUMBER	QTY	PART NAME 1 2 3 4 5 6 (PRODUCT LEVEL)	SEE PAGE
	1	1	**274-3774**	1	CAP-CONNECTOR	
Y	2	1	**323-9140**	1	HARNESS AS-ENGINE (SPEED SENSOR)	171
	3	1	**419-0841**	1	HARNESS AS-ENGINE (UNIT INJECTOR)	
		1	**9X-3401**	12	PIN-CONNECTOR (16-GA TO 18-GA)	
					—OR—	
		1	**126-1767**	12	PIN-CONNECTOR (14-GA TO 16-GA)	
		1	**191-7823**	1	RECEPTACLE AS	
		1	**307-8428**	1	GASKET	
	4	1	**3S-2093**	17	STRAP-CABLE	
	5	1	**439-4571**	5	CLIP	
	6	1	**440-0881**	5	BOLT-SOCKET HEAD (M8X1.25-THD)	
	7	1	**4P-7581**	5	CLIP	
	8	1	**4P-8134**	2	CLIP	
M	9	1	**5P-7970**	4	NUT (M8X1.25-THD)	
	10	1	**6V-4369**	1	CLIP	
M	11	1	**6V-5217**	1	BOLT (M8X1.25X20-MM)	
	12	1	**6V-5839**	1	WASHER (11X21X2.5-MM THK)	
M	13	1	**7I-2272**	2	BOLT (M5X0.8X12-MM)	
	14	1	**8T-0328**	2	WASHER-HARD (5.5X10X1-MM THK)	
M	15	1	**8T-4137**	1	BOLT (M10X1.5X20-MM)	
	16	1	**8T-4205**	1	WASHER-HARD (7.2X14.5X2-MM THK)	
M	17	1	**8T-5451**	1	BOLT (M6X1X12-MM)	
	18	1	**9M-1974**	5	WASHER-HARD (8.8X16X2-MM THK)	

M - METRIC PART
Y - SEPARATE ILLUSTRATION

438-3435 **WIRING GP-ELECTRONIC CONTROL (*contd.*)** **i05981411**

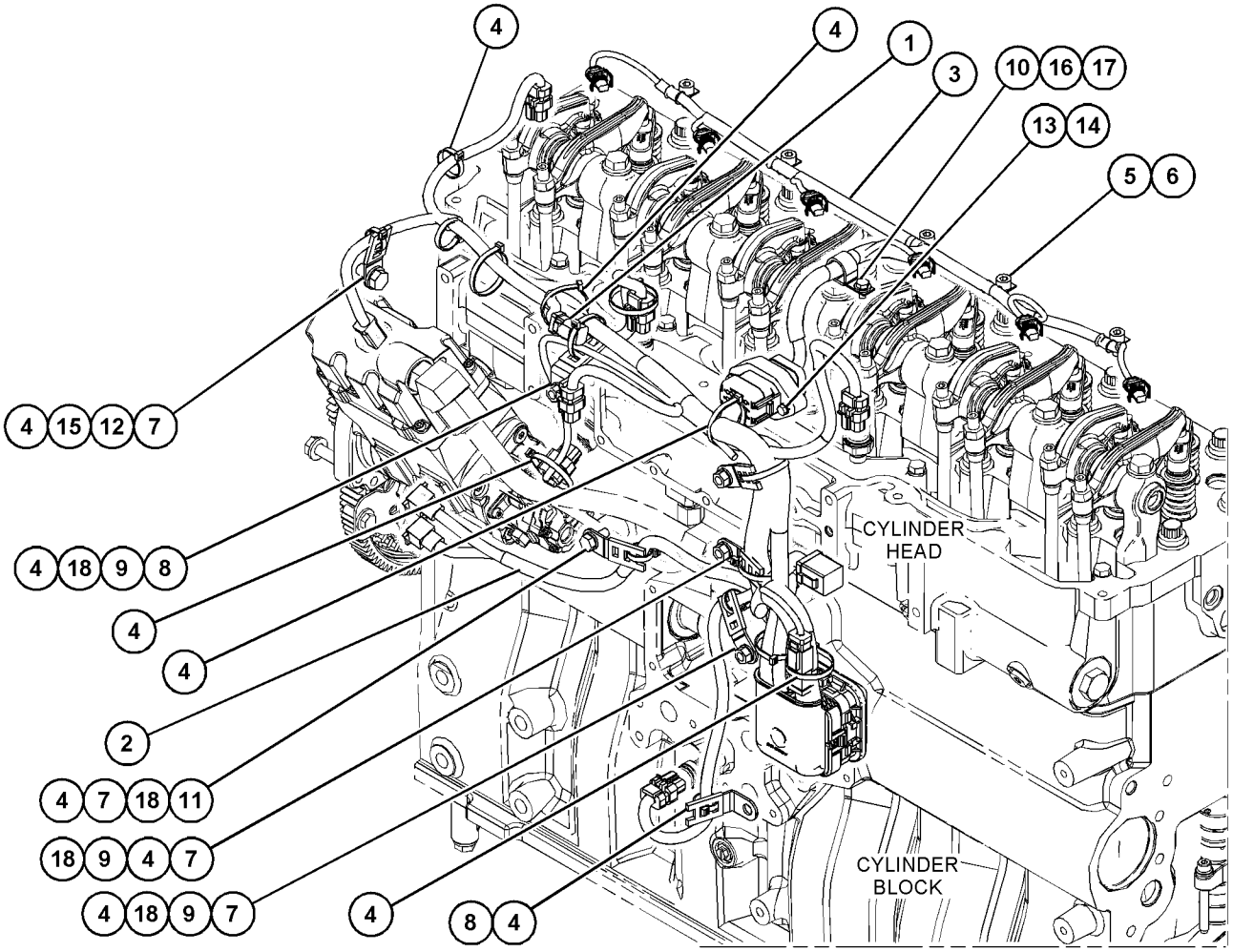

GRAPHIC #1 **<END>** g03809040

398-4435 WIRING GP-ENGINE

S/N: PPP1-UP; SSS1-UP; TTT1-UP
PART OF 398-4287 INSTALLATION AR-ENGINE
ALSO AN ATTACHMENT

SMCS-1000, 1408 **i06216569**

NOTE	REF NO	GRAPHIC REF	PART NUMBER	QTY	PART NAME 1 2 3 4 5 6 (PRODUCT LEVEL)	SEE PAGE
	1	1	**7K-1181**	48	STRAP-CABLE	
	2	2	**121-2844**	1	HARNESS AS-WIRING (CRANK WITHOUT INJECT)	
		2	**102-8803**	2	KIT-RECEPTACLE (3-PIN)	
					(EACH INCLUDES RECEPTACLE AS & WEDGE)	
		2	**8T-8729**	4	PIN-CONNECTOR (16-GA TO 18-GA)	
		2	**8T-8737**	5	PLUG-SEAL	
		2	**155-2260**	1	KIT-CONNECTING PLUG (3-PIN)	
					(INCLUDES PLUG AS, WEDGE(S) & INTERFACE SEAL)	
	3	2	**147-3150**	1	ANGLE AS	
Y	4	2	**158-6632**	1	SWITCH GP-PUSH BUTTON (PRIMING PUMP)	248
Y	5	2	**161-9926**	1	SENSOR GP-PRESSURE (TURBOCHARGER INLET)	224
Y	6	2	*234-5013*	1	SENSOR GP-TEMPERATURE (TORQUE CONVERTER OIL)	234
	7	2	**238-0303**	1	KNOB (PRIMING PUMP)	
Y	8	2	**290-5792**	1	SENSOR GP-SPEED (TORQUE CONVERTER OUTPUT)	232
	9	2	**294-5076**	1	PLATE AS	
	10	2	**398-4483**	1	BRACKET	
	11	2	**433-2466**	1	BRACKET AS	
Y	12	1	**433-2476**	1	HARNESS AS-ENGINE	172
	13	2	**433-2477**	1	CABLE AS	
		2	**1S-4915**	2	LINER (CONDUIT)	
E		2	**5P-0695**		CONDUIT (198-CM)	
E		2	**8T-2225**		TUBE-HEAT SHRINK (25.4-MM DIA) (16-CM)	
		2	**9X-9825**	1	TERMINAL-CABLE (00-GA, 1/2-IN SCREW)	
		2	**030-1705**	1	TERMINAL-CABLE (00-GA, 5/16-IN SCREW)	
E		2	**159-8049**		CABLE (00-GA, RED) (235-CM)	
B		2	**1P-0810**		TAPE-ELECTRICAL	
		2	**276-1786**	1	COVER-TERMINAL (RED)	
		2	**301-0091**	1	COVER-TERMINAL (RED)	
	14	2	**433-2478**	1	BRACKET AS	
	15	2	**433-2479**	1	BRACKET AS	
	16	2	**091-9035**	1	SPACER (11X25X20-MM THK)	
	17	2	**104-6202**	2	CLIP	
	18	2	**132-5789**	1	CLIP	
	19	2	*148-8306*	1	ADAPTER AS	
		2	**5P-5777**	1	ADAPTER-O-RING	
		2	**7M-8485**	1	SEAL-O-RING	
	20	2	**1S-0994**	6	CLIP	
M	21	2	**344-5674**	4	NUT (M8X1.25-THD)	
M	22	2	**344-5675**	4	NUT (M10X1.5-THD)	
	23	2	**3J-7354**	1	SEAL-O-RING	
	24	2	**4P-7428**	1	CLIP	
	25	2	**4P-7429**	1	CLIP	
	26	1,2	**4P-7581**	6	CLIP	
	27	2	**4P-8134**	6	CLIP	
	28	2	**5G-3676**	1	GROMMET	
	29	2	**7F-0560**	2	WASHER (0.516X0.938X0.101-IN THK)	
	30	2	**8L-2786**	1	SEAL-O-RING	
	31	2	**8S-0948**	1	CLIP	
	32	2	**8T-1887**	1	CLIP (SLOT)	
	33	2	**8T-1888**	1	CLIP (TAB)	
	34	2	**8T-1889**	1	CLIP (SLOT)	
	35	2	**8T-1890**	1	CLIP (TAB)	
	36	2	**8T-3518**	2	NUT-FULL (1/2-13-THD)	
	37	1,2	**8T-4121**	23	WASHER-HARD (11X21X2.5-MM THK)	
M	38	2	**8T-4136**	5	BOLT (M10X1.5X25-MM)	
M	39	1,2	**8T-4137**	11	BOLT (M10X1.5X20-MM)	

398-4435 **WIRING GP-ENGINE (*contd.*)** **i06216569**

NOTE	REF NO	GRAPHIC REF	PART NUMBER	QTY	PART NAME 1 2 3 4 5 6 (PRODUCT LEVEL)	SEE PAGE
M	40	2	**8T-4182**	1	BOLT (M10X1.5X45-MM)	
M	41	2	**8T-4190**	2	BOLT (M16X2X25-MM)	
M	42	2	**8T-4191**	1	BOLT (M10X1.5X16-MM)	
M	43	2	**8T-4195**	1	BOLT (M10X1.5X30-MM)	
	44	2	**8T-4224**	4	WASHER-HARD (8.8X16X2-MM THK)	
	45	2	**8X-5489**	1	SLEEVE	
	46	2	**9X-8257**	2	WASHER (17.5X30X3.5-MM THK)	

B - USE AS REQUIRED
E - ORDER BY THE CENTIMETER
M - METRIC PART
Y - SEPARATE ILLUSTRATION

REFER TO ALL ILLUSTRATIONS OF THIS GROUP FOR AUXILIARY VIEWS

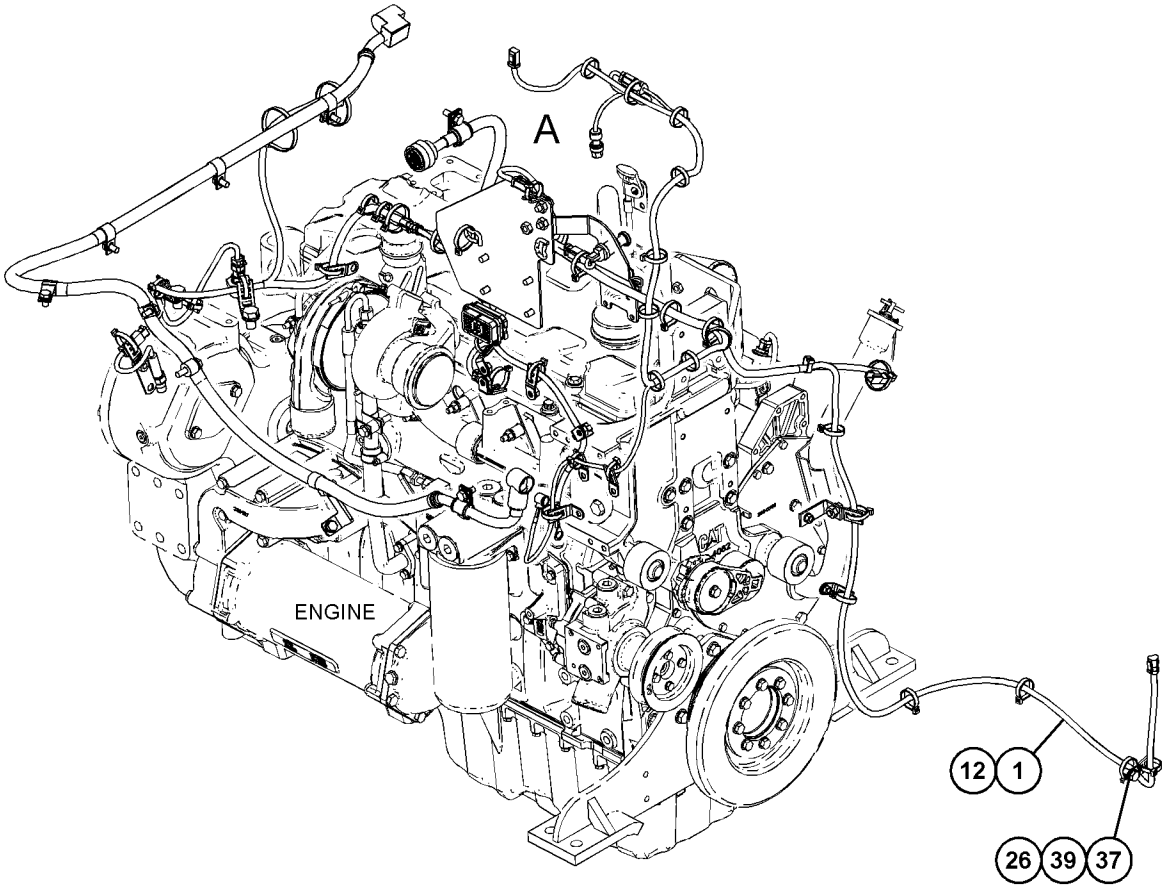

GRAPHIC #1 g03861031

398-4435 **WIRING GP-ENGINE (*contd.*)** **i06216569**

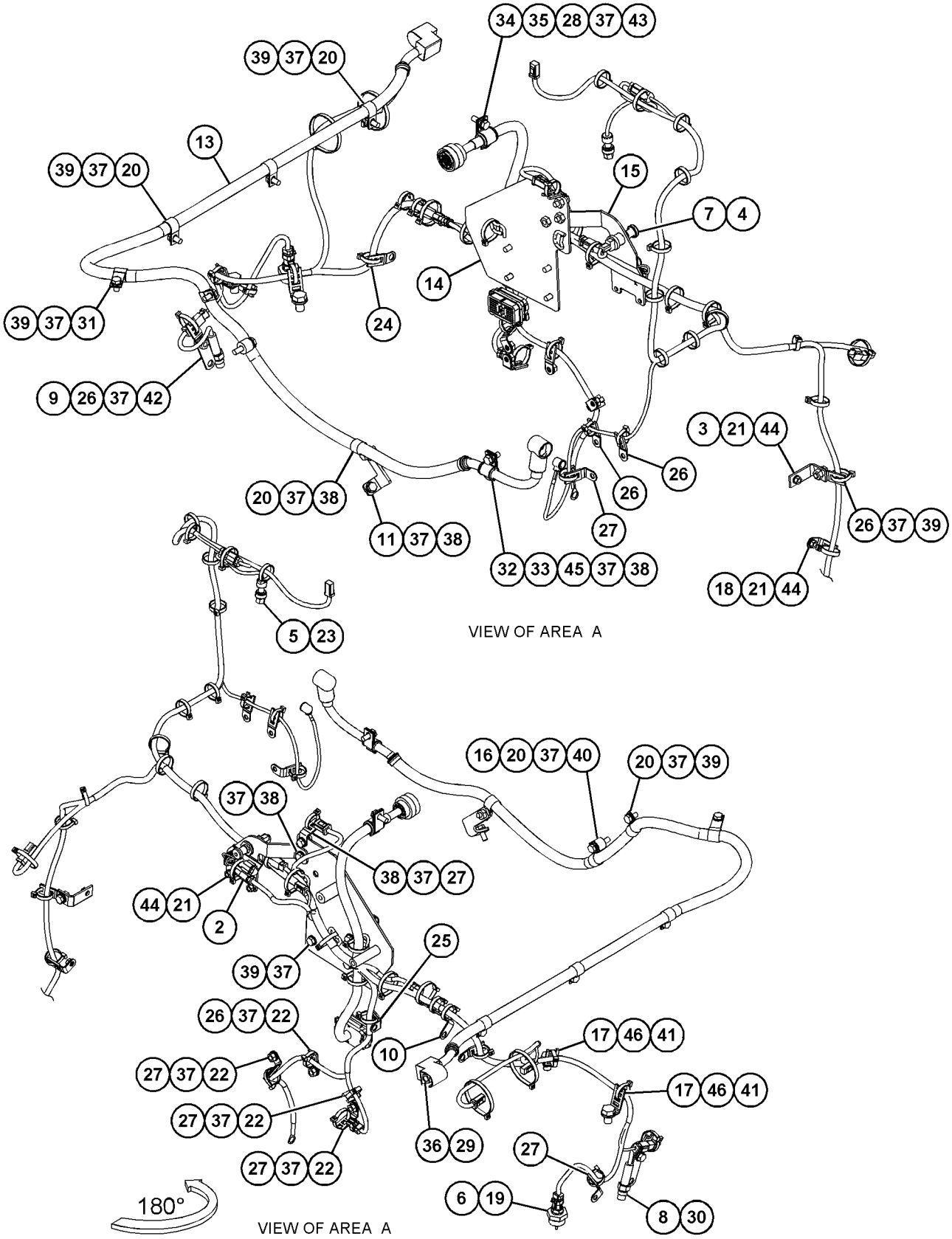

GRAPHIC #2 **<END>** g03861036

3W-6550 AXLE GP

S/N: SSS1-UP; TTT1-UP
PART OF 398-4284 POWER TRAIN AR
ALSO AN ATTACHMENT

SMCS-3282 **i06231076**

NOTE	REF NO	GRAPHIC REF	PART NUMBER	QTY	PART NAME 1 2 3 4 5 6 (PRODUCT LEVEL)	SEE PAGE
	1	1	**3W-6551**	1	SHAFT (FINAL DRIVE, LH)	
	2	1	**3T-5851**	1	SHAFT (FINAL DRIVE, CENTER)	
	3	1	**9G-8637**	1	GEAR-SUN (11-TEETH)	

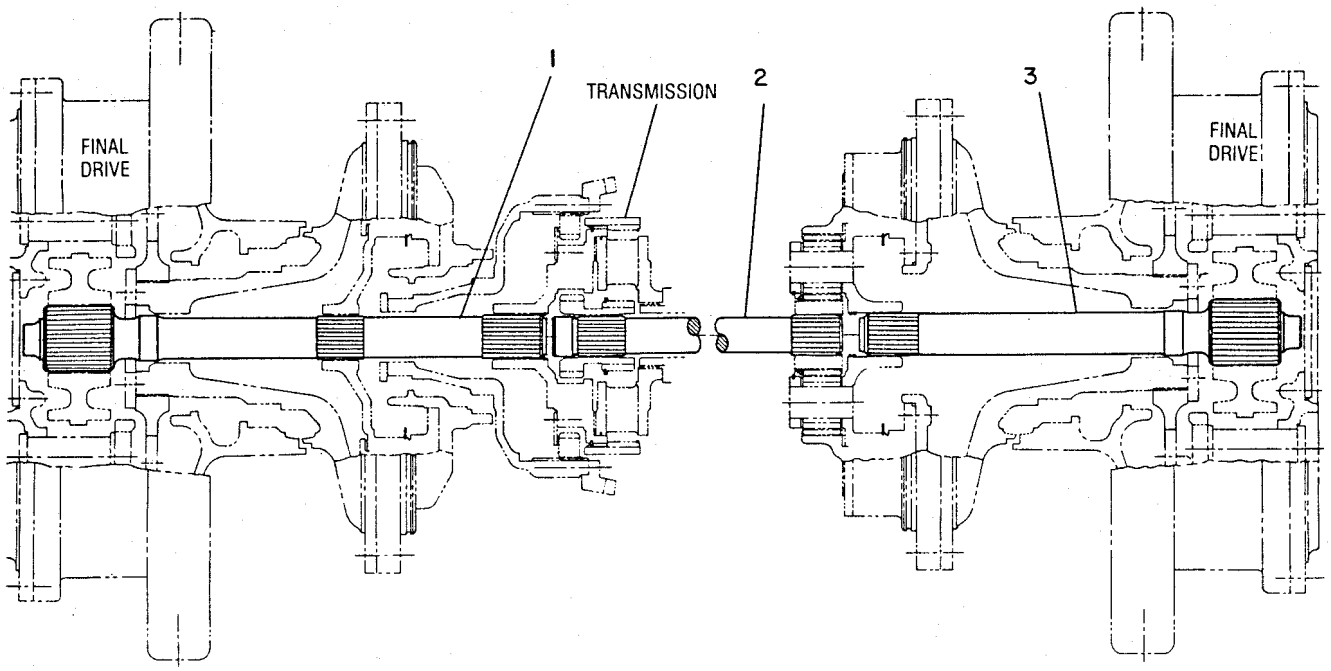

GRAPHIC #1 **<END>** g00188323

223-0565 AXLE GP

S/N: PPP1-UP

PART OF 398-4285 POWER TRAIN AR

SMCS-3282 **i06217093**

NOTE	REF NO	GRAPHIC REF	PART NUMBER	QTY	PART NAME 1 2 3 4 5 6 (PRODUCT LEVEL)	SEE PAGE
	1	1	**3T-5851**	1	SHAFT (FINAL DRIVE, CENTER)	
	2	1	**223-0566**	1	SHAFT (FINAL DRIVE, LH)	
	3	1	**223-0567**	1	SHAFT (FINAL DRIVE, RH)	

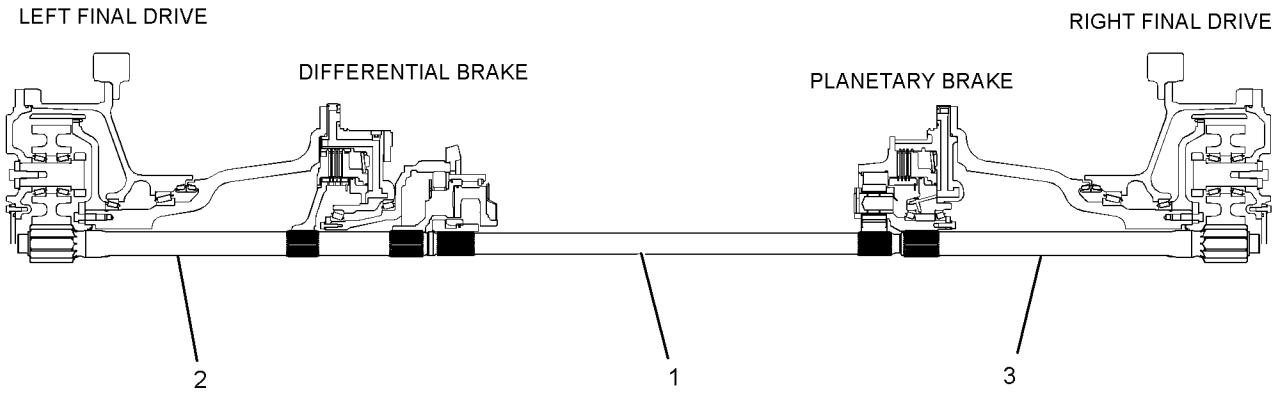

REAR VIEW

GRAPHIC #1 **<END>** g01219179

231-5969 BRAKE & DIFFERENTIAL DRIVE GP

S/N: PPP1-UP; SSS1-UP; TTT1-UP
PART OF 398-4284, 398-4285 POWER TRAIN AR
ALSO AN ATTACHMENT

SMCS-4131 **i05636595**

NOTE	REF NO	GRAPHIC REF	PART NUMBER	QTY	PART NAME 1 2 3 4 5 6 (PRODUCT LEVEL)	SEE PAGE
	1	1	**2K-5069**	1	CUP-BEARING (TAPERED ROLLER)	
	2	2	**2K-9295**	1	BEARING AS-TAPERED ROLLER	
	3	2	**3B-4124**	1	CUP-BEARING (TAPERED ROLLER)	
	4	1	**3S-2708**	7	PIN-SPRING	
	5	1	**3T-4568**	3	SHAFT-PLANETARY	
	6	1	**292-2016**	1	GEAR AS-SUN (30/24-TEETH)	
	6A	1	**290-9849**	1	RING-RETAINING	
	7	1	**3T-4824**	4	GEAR-PLANETARY (30-TEETH)	
	8	1	**3T-5021**	1	CARRIER-PLANETARY	
	9	1	**3T-5200**	1	CARRIER-PLANETARY	
	10	1	**3T-6963**	1	SEAL-RING	
B	11	2	**3T-9272**	1	SHIM PACK (INCLUDES 8-SHIMS)	
	12	1	**5M-0578**	3	BEARING AS-ROLLER	
	13	1	**5M-7925**	4	BEARING AS-ROLLER	
	14	1	**6I-8724**	1	RING-LOCK	
	15	2	**6P-1735**	1	LOCKWASHER	
	16	2	**6P-1736**	1	WASHER (55.17X76.2X2.67-MM THK)	
	17	1	**6T-0062**	1	PLATE	
	18	1	**6T-0064**	4	SHAFT-PLANETARY	
	19	2	**6T-0850**	2	WASHER-THRUST (255X287.25X2.75-MM THK)	
	20	1	**6V-0855**	1	BEARING AS-TAPERED ROLLER	
		1	**8T-0072**	1	CONE-BEARING	
	21	2	**6V-7646**	3	WASHER-HARD (7.2X25X2-MM THK)	
	22	1	**6Y-0926**	3	GEAR-PLANETARY (23-TEETH)	
	23	1	**6Y-0984**	1	GEAR-RING (75-TEETH)	
	24	2	**6Y-2704**	1	SPRING-DISC	
	25	2	**6Y-9373**	4	DISC-FRICTION	
	26	1	**7G-1596**	1	RING-RETAINING	
	27	2	**7H-4566**	2	CUP-BEARING (TAPERED ROLLER)	
	28	2	**7T-1885**	1	RING	
	29	2	**7T-6994**	3	PLATE-CLUTCH & BRAKE	
	30	1	**7T-8130**	1	RING-RETAINING	
	31	2	**7T-9788**	1	HUB	
	32	2	**214-3573**	1	PISTON	
	33	2	**7T-9837**	1	PLATE	
	34	1	**8E-8307**	6	DISC-THRUST	
	35	1	**8E-8310**	8	DISC-THRUST	
	36	2	**9B-0576**	1	LOCKNUT-BEARING	
	37	1	**9W-1571**	1	SLINGER	
B	38	2	**9W-2853**	1	SHIM PACK (INCLUDES 21-SHIMS)	
	41	1	**9W-6102**	1	GEAR-RING (84-TEETH)	
	42	1	**9W-6103**	1	RING-THRUST	
	43	2	**005-4834**	2	BEARING AS-TAPERED ROLLER	
	44	1	**136-1595**	1	HOUSING-ROTATING	
	45	2	**7T-9832**	1	RETAINER	
	46	2	**216-6371**	1	CARRIER	
	47	2	**217-2293**	1	RETAINER	
	48	1	**226-4462**	1	GEAR-BEVEL (74-TEETH)	
	49	2	**226-4464**	1	PINION-BEVEL (15-TEETH)	
	50	2	**227-2451**	1	HOUSING AS	
	50A	2	**1A-2223**	2	DOWEL	
	50B	2	**5P-8245**	12	WASHER-HARD (13.5X25.5X3-MM THK)	
	50C	2	**1A-1460**	12	BOLT (1/2-13X2-IN)	
	51	1	**030-2135**	4	BOLT-LOCKING (5/16-18X0.625-IN)	
	52	1	**0L-1143**	21	BOLT (3/8-16X2.5-IN)	
	53	2	**0S-1614**	3	BOLT (1/4-20X0.5-IN)	
	54	2	**1A-2029**	6	BOLT (3/8-16X1.125-IN)	

231-5969 **BRAKE & DIFFERENTIAL DRIVE GP (*contd.*)** **i05636595**

NOTE	REF NO	GRAPHIC REF	PART NUMBER	QTY	PART NAME 1 2 3 4 5 6 (PRODUCT LEVEL)	SEE PAGE
	55	2	**2A-4639**	1	BOLT (3/8-16X1.625-IN)	
	56	2	**1A-1460**	6	BOLT (1/2-13X2-IN)	
	57	2	**3K-0360**	2	SEAL-O-RING	
	58	1	**5K-9107**	3	BOLT-LOCKING (3/8-16X0.75-IN)	
	59	2	**5M-2894**	7	WASHER-HARD (10.2X18.5X2.5-MM THK)	
	60	2	**5P-8245**	6	WASHER-HARD (13.5X25.5X3-MM THK)	
	63	2	**6P-5317**	1	RING-SEAL (EXTERNAL)	
	64	2	**7W-6534**	4	PLUG-PIPE	
	66	2	**8M-4438**	1	SEAL-O-RING	
	67	2	**8P-8357**	1	RING-SEAL (INTERNAL)	
	69	1	**9L-9132**	3	WASHER (10.2X25.5X2.5-MM THK)	
	70	2	**9S-8005**	2	PLUG-O-RING	
B	71	1	**1U-8846**		SEALANT-GASKET	

B - USE AS REQUIRED

231-5969 **BRAKE & DIFFERENTIAL DRIVE GP (*contd.*)** **i05636595**

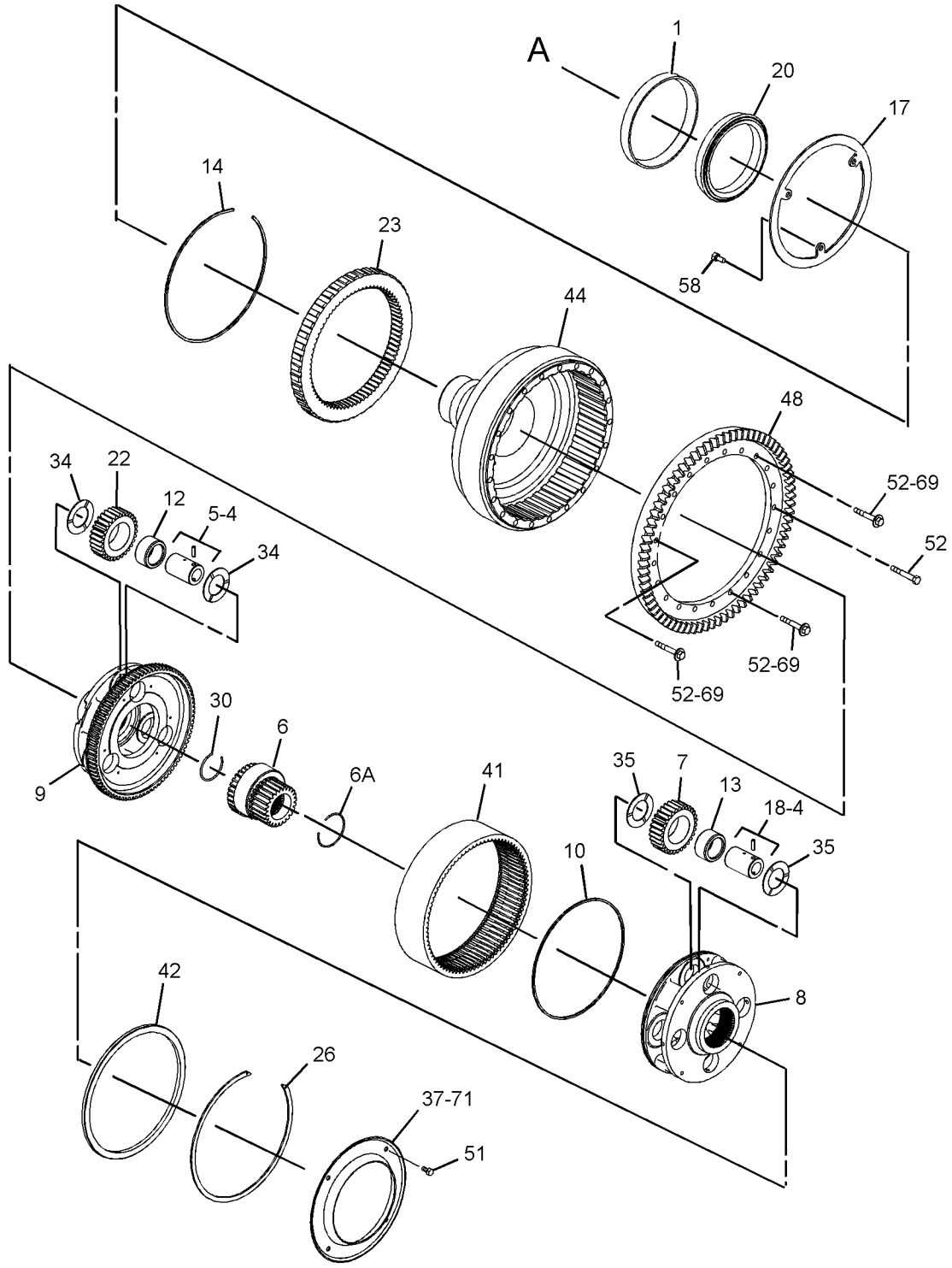

GRAPHIC #1 g01300998

231-5969 **BRAKE & DIFFERENTIAL DRIVE GP (*contd.*)** **i05636595**

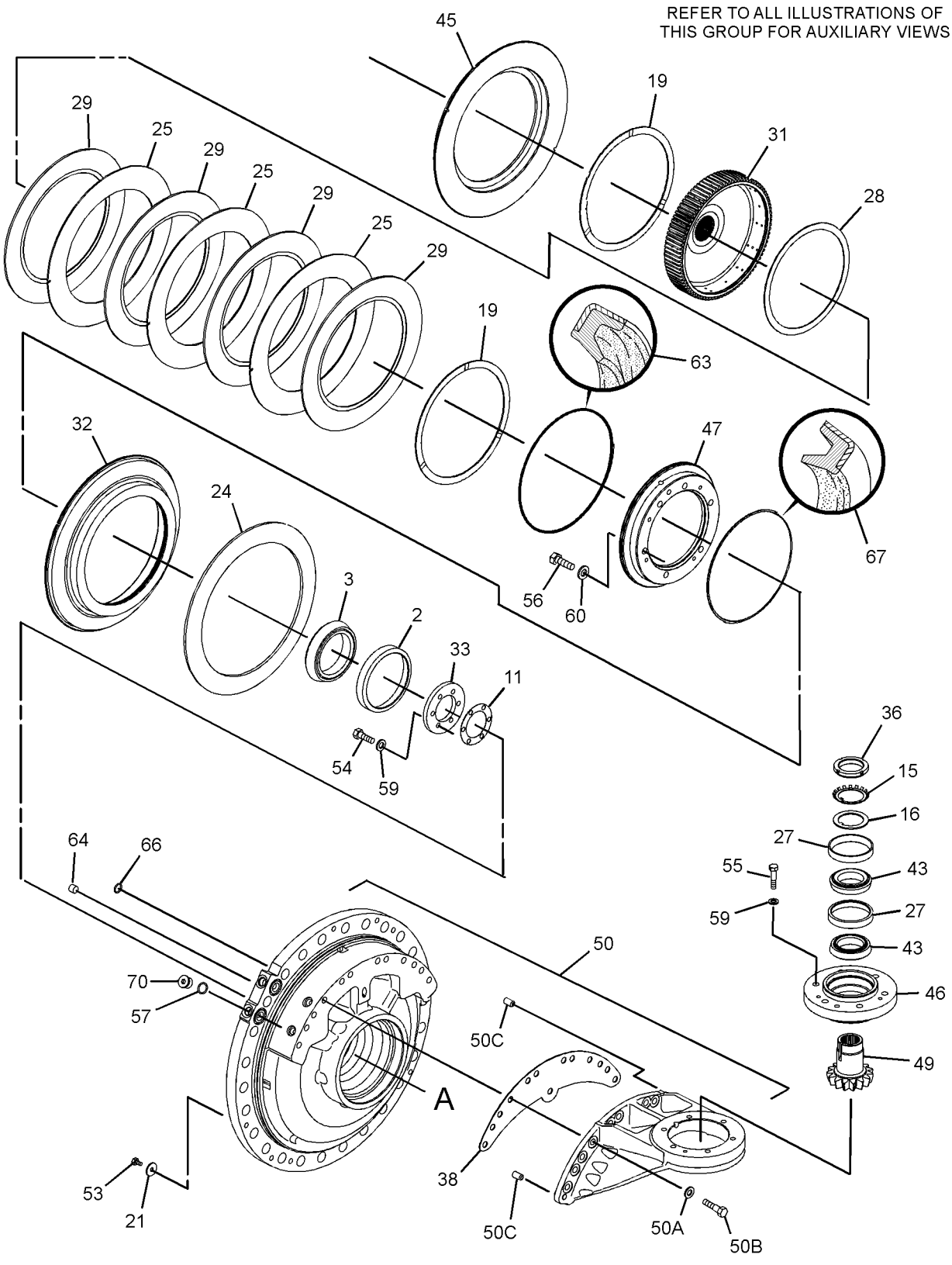

GRAPHIC #2 **<END>** g01301159

231-5990 BRAKE & PLANETARY GP

S/N: PPP1-UP; SSS1-UP; TTT1-UP
PART OF 398-4284, 398-4285 POWER TRAIN AR
ALSO AN ATTACHMENT

SMCS-4011, 4132, 4255

i05636890

NOTE	REF NO	GRAPHIC REF	PART NUMBER	QTY	PART NAME 1 2 3 4 5 6 (PRODUCT LEVEL)	SEE PAGE
	1	1	**3S-2708**	3	PIN-SPRING	
	2	1	**3T-5807**	1	SLINGER	
	3	1	**5M-0578**	6	BEARING AS-ROLLER	
	4	1	**6Y-2704**	1	SPRING-DISC	
	5	1	**6Y-9373**	4	DISC-FRICTION	
	6	1	**7T-1885**	1	RING	
	7	1	**7T-6994**	3	PLATE-CLUTCH & BRAKE	
	8	1	**7T-8136**	3	SHAFT-PLANETARY	
	9	1	**7T-9031**	1	GEAR-RING (75-TEETH)	
	10	1	**7T-9837**	1	PLATE	
	11	1	**8E-8307**	6	DISC-THRUST	
	12	1	**9W-7925**	2	BEARING AS-TAPERED ROLLER	
	13	1	**9W-7926**	2	CUP-BEARING	
	14	1	**244-2310**	3	GEAR-PLANETARY (23-TEETH)	
	15	1	**306-0278**	1	GEAR AS-SUN (30-TEETH)	
		1	**3E-4354**	2	BALL	
	16	1	**205-5314**	1	HOUSING	
	17	1	**209-7193**	1	CARRIER	
	18	1	**214-3573**	1	PISTON	
	19	1	**216-4591**	1	RETAINER AS	
		1	**8S-0527**	1	PLUG-CUP	
	20	1	**0S-1585**	12	BOLT (1/2-13X1.5-IN)	
	21	1	**1A-1460**	6	BOLT (1/2-13X2-IN)	
	22	1	**1A-2029**	6	BOLT (3/8-16X1.125-IN)	
	23	1	**1C-0569**	6	BOLT (5/16-18X0.5-IN)	
	24	1	**3K-0360**	2	SEAL-O-RING	
	25	1	**5M-2894**	6	WASHER-HARD (10.2X18.5X2.5-MM THK)	
	26	1	**5P-8245**	18	WASHER-HARD (13.5X25.5X3-MM THK)	
	28	1	**6P-5317**	1	RING-SEAL (EXTERNAL)	
	30	1	**8M-4438**	1	SEAL-O-RING	
	31	1	**8P-8357**	1	RING-SEAL (INTERNAL)	
	32	1	**9S-8005**	2	PLUG-O-RING	
B	33	1	**1U-8846**		SEALANT-GASKET	

B - USE AS REQUIRED

231-5990 **BRAKE & PLANETARY GP (*contd.*)** **i05636890**

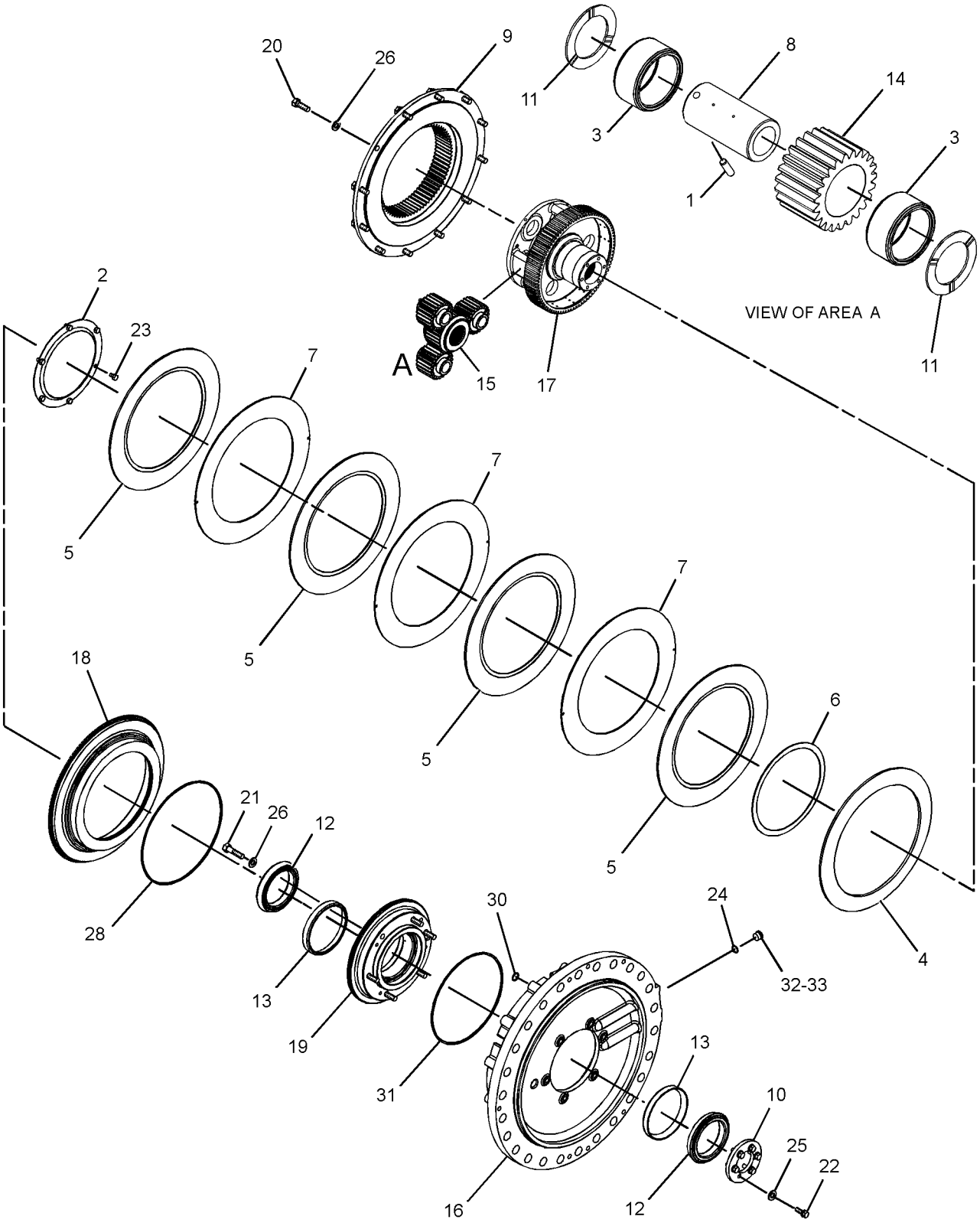

GRAPHIC #1 **<END>** g02185773

354-0153 CASE & PARTS GP-PLANETARY

S/N: 6R21-UP; 6R31-UP
PART OF 417-8818, 417-8819 TRANSMISSION AR
AN ATTACHMENT

SMCS-3030, 3064, 3160 **i06147149**

NOTE	REF NO	GRAPHIC REF	PART NUMBER	QTY	PART NAME 1 2 3 4 5 6 (PRODUCT LEVEL)	SEE PAGE
	1	2	**5K-9246**	1	CONNECTOR	
	2	2	**5K-9988**	1	TEE-INVERTED FLARED	
	3	2	**6K-8498**	1	TEE-FLARED	
	4	1	**6V-0852**	2	CAP-DUST	
	5	1	**6V-1720**	1	PLATE-SERIAL NUMBER (TRANSMISSION)	
	6	2	**7T-8875**	1	TUBE AS	
	7	2	**7T-8876**	1	TUBE AS	
	8	1	**8S-9130**	1	SCREEN-SUCTION (TRANSMISSION CASE)	
	9	1	**9G-8615**	1	COVER	
	10	2	**9S-7710**	1	ELBOW-FLARED	
	11	2	**9W-4159**	1	TUBE AS	
	12	2	**9W-5334**	1	TUBE AS	
Y	13	2	**190-2278**	1	CASE GP-TRANSMISSION	282
	15	1	*326-0316*	3	PLUG AS	
					(EACH INCLUDES)	
		1	**9S-6130**	1	PLUG	
		1	**228-7096**	1	SEAL-O-RING	
	17	1	**354-0166**	1	COVER	
	18	2	**061-9455**	1	SEAL-O-RING	
	19	2	**0S-1585**	21	BOLT (1/2-13X1.5-IN)	
	20	2	**0T-0102**	1	BOLT (3/8-16X0.625-IN)	
	21	1	*164-5567*	2	COUPLER AS-QUICK DISCONNECT (MALE)	
					(EACH INCLUDES)	
		1	**6V-3965**	1	FITTING (QUICK DISCONNECT)	
		1	**214-7568**	1	SEAL-O-RING	
	22	1	*319-6231*	1	PLUG AS	
		1	**9S-4183**	1	PLUG	
		1	**238-5082**	1	SEAL-O-RING	
	23	1	**3S-7781**	1	GASKET	
	24	1	**4H-5440**	1	COVER	
	25	2	**5M-2894**	1	WASHER-HARD (10.2X18.5X2.5-MM THK)	
	26	2	**5P-4057**	1	SEAL-O-RING	
	27	2	**5P-5846**	2	SEAL-O-RING	
	28	2	**5P-8245**	21	WASHER-HARD (13.5X25.5X3-MM THK)	
	29	2	**5P-8998**	1	FITTING	
	30	2	**7J-8611**	1	ELBOW-PIPE	
	31	2	**7B-1597**	1	CLIP	
	32	1	**8M-2530**	4	BOLT-12 POINT HEAD (1/2-13X1.25-IN)	
	33	1	**8P-0058**	1	GASKET-COVER	
M	34	1	**8T-4196**	6	BOLT (M10X1.5X35-MM)	
M	35	1	**9X-2125**	10	BOLT-LOCKING (M10X1.5X25-MM)	
Y	36	1	*393-9001*	1	COVER GP-TRANSMISSION	287

M - METRIC PART
Y - SEPARATE ILLUSTRATION

354-0153 **CASE & PARTS GP-PLANETARY (*contd.*)** **i06147149**

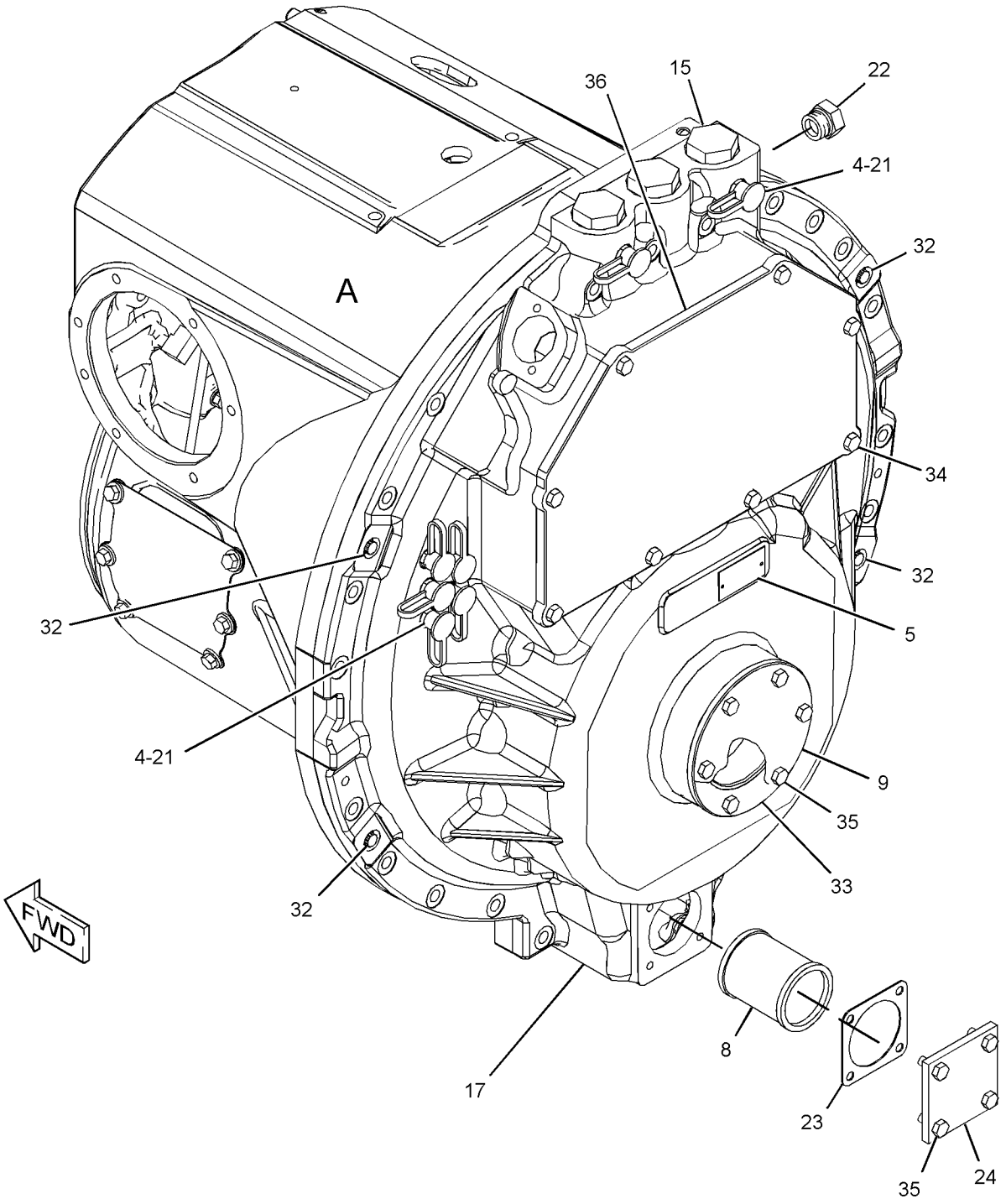

REFER TO ALL ILLUSTRATIONS OF
THIS GROUP FOR AUXILIARY VIEWS

GRAPHIC #1 g03657902

354-0153 **CASE & PARTS GP-PLANETARY (*contd.*)** **i06147149**

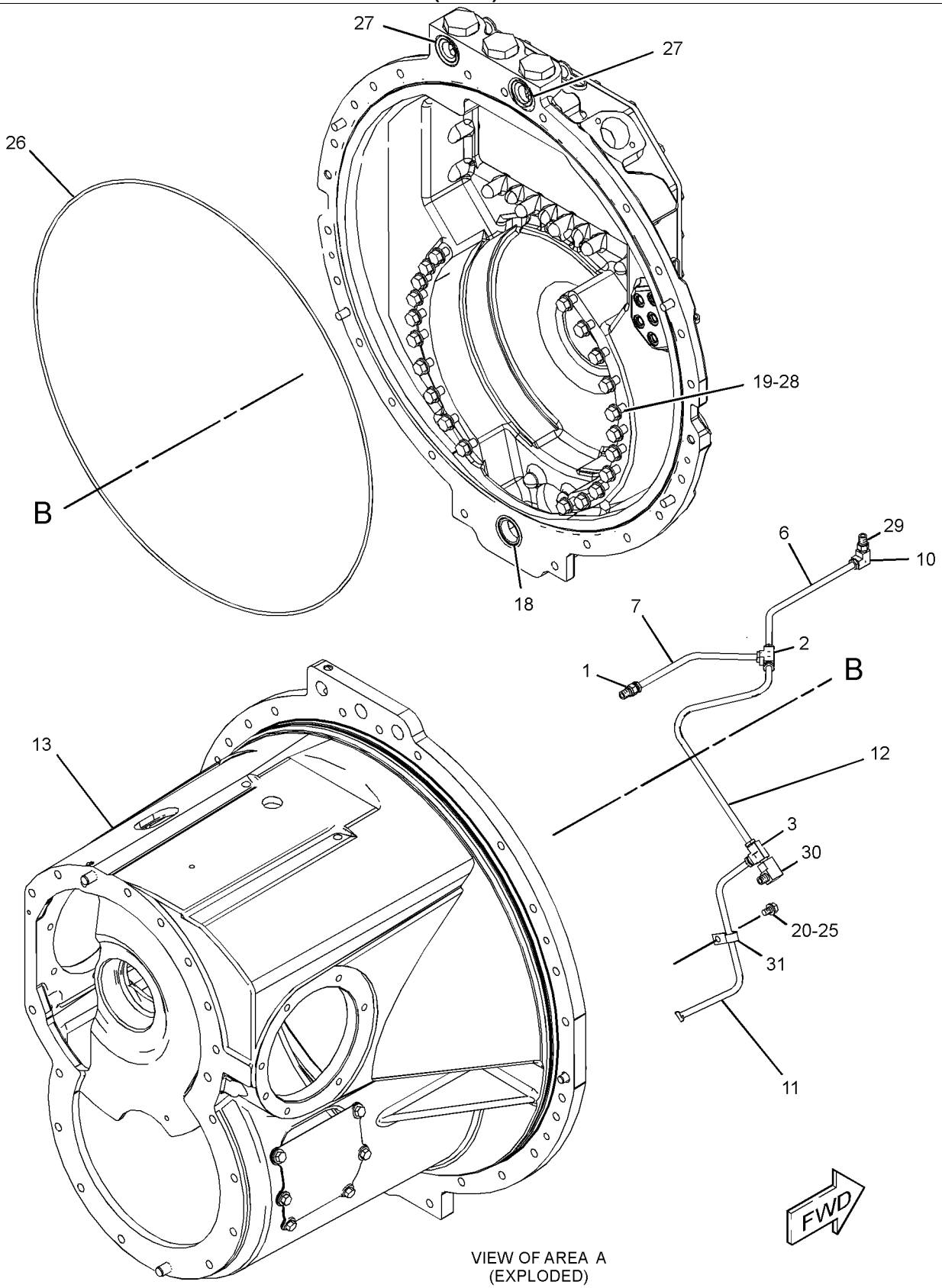

VIEW OF AREA A
(EXPLODED)

GRAPHIC #2 **<END>** g02352715

190-2278 CASE GP-TRANSMISSION

S/N: 6R21-UP; 6R31-UP
PART OF 354-0153 CASE & PARTS GP-PLANETARY
AN ATTACHMENT

SMCS-3064 **i05319646**

NOTE	REF NO	GRAPHIC REF	PART NUMBER	QTY	PART NAME 1 2 3 4 5 6 (PRODUCT LEVEL)	SEE PAGE
	1	1	**4B-9785**	1	BALL	
	2	1	**1A-2610**	1	DOWEL	
	3	1	**7M-1201**	1	DOWEL	
	4	1	**3F-3442**	2	DOWEL	
	5	1	**4B-9782**	1	BALL	
	6	1	**146-6669**	1	GASKET	
	7	1	**146-6670**	1	COVER	
	8	1	**9X-6458**	6	WASHER-HARD (10.2X22.5X3-MM THK)	
	9	1	**0S-1594**	6	BOLT (3/8-16X1-IN)	
F			**196-8884**	1	BRACKET AS	
			8C-3334	2	RIVET-TUBULAR	
			124-9401	4	CLIP	
F			**0S-1620**	1	BOLT (1/2-13X0.75-IN)	
F			**5P-8245**	1	WASHER-HARD (13.5X25.5X3-MM THK)	

F - NOT SHOWN

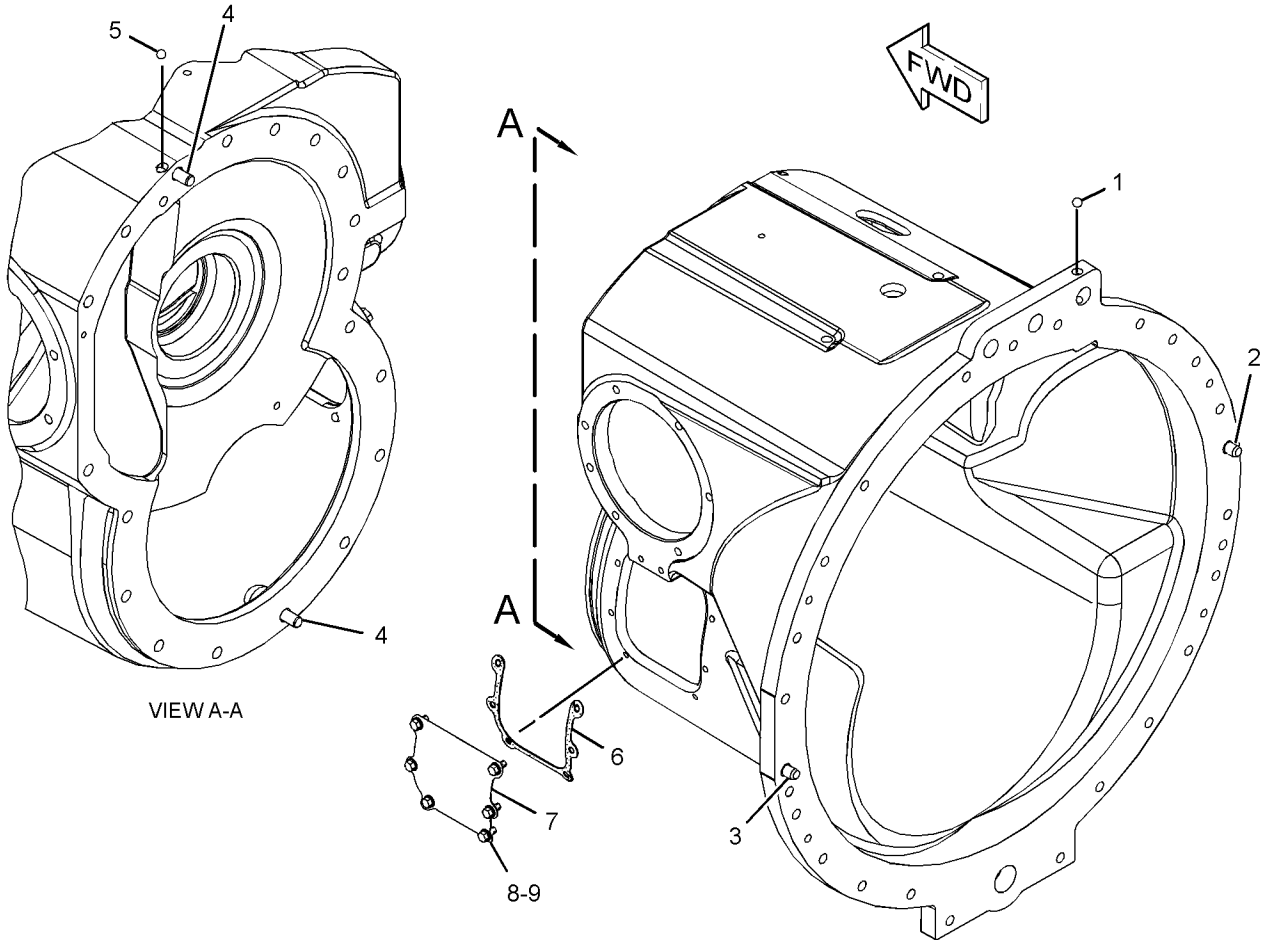

GRAPHIC #1 **<END>** g01857854

447-6642 CONTROL GP-TRANSMISSION HYD

S/N: 6R21-UP; 6R31-UP
PART OF 417-8818, 417-8819 TRANSMISSION AR
AN ATTACHMENT

SMCS-3073, 3167 **i06211813**

NOTE	REF NO	GRAPHIC REF	PART NUMBER	QTY	PART NAME 1 2 3 4 5 6 (PRODUCT LEVEL)	SEE PAGE
	1	1	**5K-5120**	2	STRIP	
	2	1	**104-6729**	1	RETAINER	
	3	1	**354-0155**	1	TUBE AS	
	4	1	**354-0156**	1	TUBE AS	
Y	5	1	**354-0164**	1	VALVE GP-RELIEF (MAIN)	650
	6	1	**448-2858**	2	DRAIN	
	7	1	**372-3740**	5	BODY	
J	8	1	**423-6535**	5	VALVE GP-SOLENOID (SHIFT)	
Y	9	1	**446-5811**	1	HARNESS AS-TRANSMISSION	178
	10	1	**031-0218**	2	BOLT-LOCKING (3/8-16X0.5-IN)	
	11	1	**0S-1621**	1	BOLT (1/2-13X1-IN)	
	12	1	**104-6730**	1	GASKET	
M	13	1	**162-2165**	10	BOLT-SOCKET HEAD (M4X0.7X16-MM)	
	14	1	*164-5567*	5	COUPLER AS-QUICK DISCONNECT (MALE)	
					(EACH INCLUDES)	
		1	**6V-3965**	1	FITTING (QUICK DISCONNECT)	
		1	**214-7568**	1	SEAL-O-RING	
	15	1	**1D-4539**	4	BOLT (5/16-18X2.5-IN)	
	16	1	**1D-4540**	10	BOLT (5/16-18X2.75-IN)	
	17	1	**5P-8245**	1	WASHER-HARD (13.5X25.5X3-MM THK)	
	18	1	**8M-4432**	4	SEAL-O-RING	
	19	1	**9M-1974**	14	WASHER-HARD (8.8X16X2-MM THK)	
M	20	1	**9X-2125**	2	BOLT-LOCKING (M10X1.5X25-MM)	
					AVAILABLE REPAIR KIT(S):	
J			**387-2867**	1	KIT-SEAL (SOLENOID VALVE)	
					(INCLUDES O-RINGS)	

J - KIT MARKED J SERVICES PART(S) MARKED J
M - METRIC PART
Y - SEPARATE ILLUSTRATION

447-6642 **CONTROL GP-TRANSMISSION HYD (*contd.*)** **i06211813**

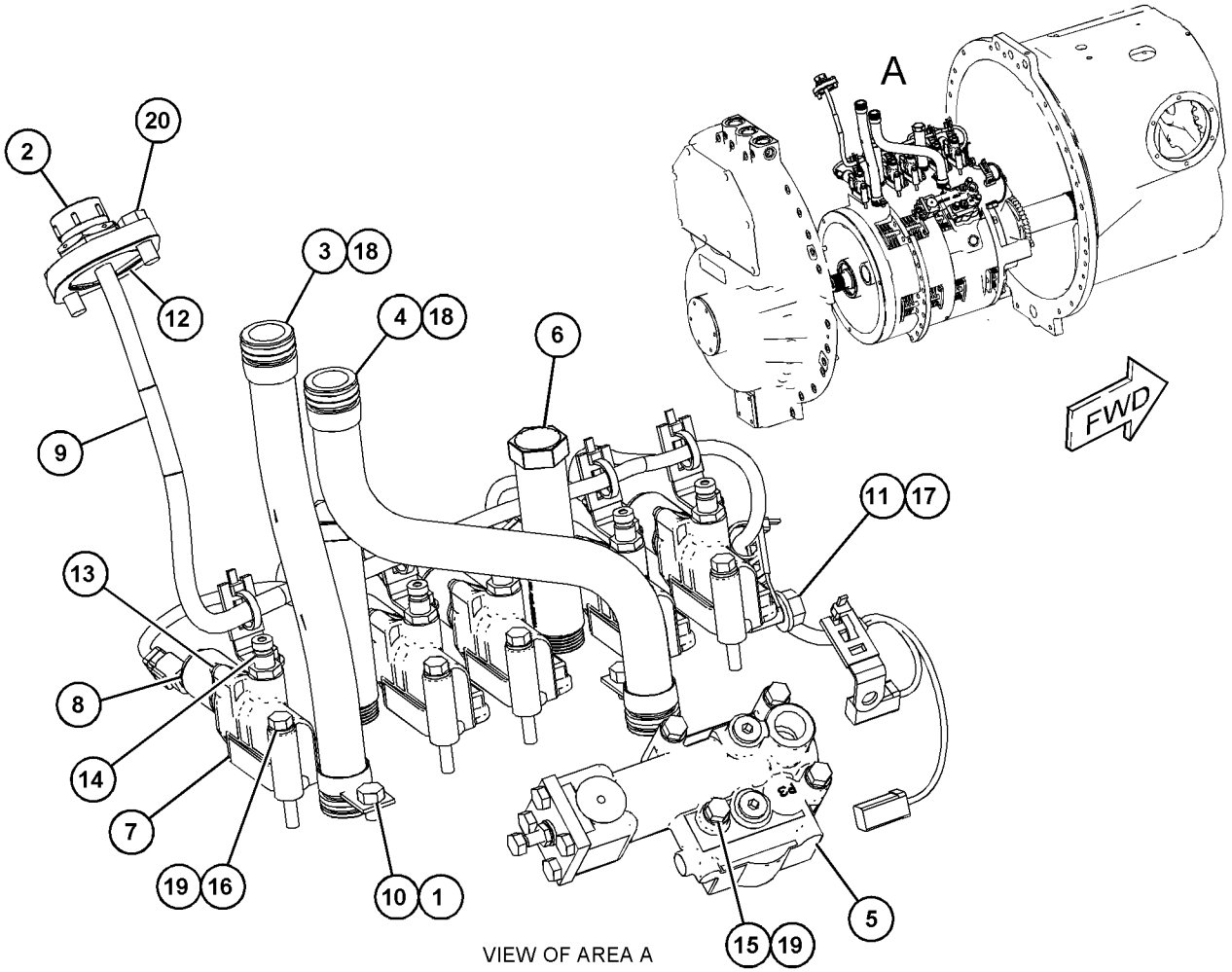

VIEW OF AREA A

GRAPHIC #1

<END>

g03856861

238-1116 COOLER GP-TRANSMISSION OIL

S/N: TXD1-UP

PART OF 420-1870, 420-1871, 423-8451, 423-8452, 423-8453, 423-8454 ENGINE AR-COMPLETE AN ATTACHMENT

SMCS-1375 **i05567490**

NOTE	REF NO	GRAPHIC REF	PART NUMBER	QTY	PART NAME 1 2 3 4 5 6 (PRODUCT LEVEL)	SEE PAGE
	1	1	**2S-0795**	2	GASKET	
	2	1	**6F-7062**	1	WASHER (12.7X19.05X1.83-MM THK)	
	3	1	**8M-9307**	1	PLUG (TRANSMISSION OIL COOLER)	
	4	1	**8S-4304**	1	BONNET-XMSN OIL COOLER	
	5	1	**180-3907**	1	SEAL-INTEGRAL	
R	6	1	**187-3523**	1	CORE AS-OIL COOLER (TRANSMISSION)	
	6A	1	**8T-6764**	1	PLUG-PIPE (1/8-27-THD)	
	7	1	**198-3462**	1	DIVERTER	
	8	1	**238-1117**	1	BONNET	
	9	1	*392-0818*	1	PLUG AS	
		1	**6V-6609**	1	SEAL-O-RING	
		1	**360-3693**	1	PLUG	
	10	1	**348-5792**	1	BRACKET	
	11	1	*398-5599*	1	PLUG AS	
		1	**6V-3250**	1	SEAL-O-RING	
		1	**360-3692**	1	PLUG	
	12	1	*398-5614*	1	PLUG AS	
		1	**6V-5064**	1	SEAL-O-RING	
		1	**360-3684**	1	PLUG-O-RING	
M	15	1	**6V-3668**	4	BOLT (M12X1.75X30-MM)	
M	16	1	**6V-3823**	2	BOLT (M12X1.75X60-MM)	
M	17	1	**6V-5696**	6	BOLT (M12X1.75X80-MM)	
M	18	1	**6V-8675**	1	BOLT (M12X1.75X35-MM)	
	19	1	**7D-1649**	3	WASHER-HARD (13.5X32X5-MM THK)	
M	20	1	**7X-2543**	2	BOLT (M10X1.5X120-MM)	
	22	1	**8T-6761**	1	PLUG-PIPE (1-11-1/2 NPT THD)	
M	23	1	**8T-6854**	4	BOLT (M10X1.5X200-MM)	

M - METRIC PART
R - REMFG PART MAY BE AVAILABLE

238-1116 **COOLER GP-TRANSMISSION OIL (*contd.*)** **i05567490**

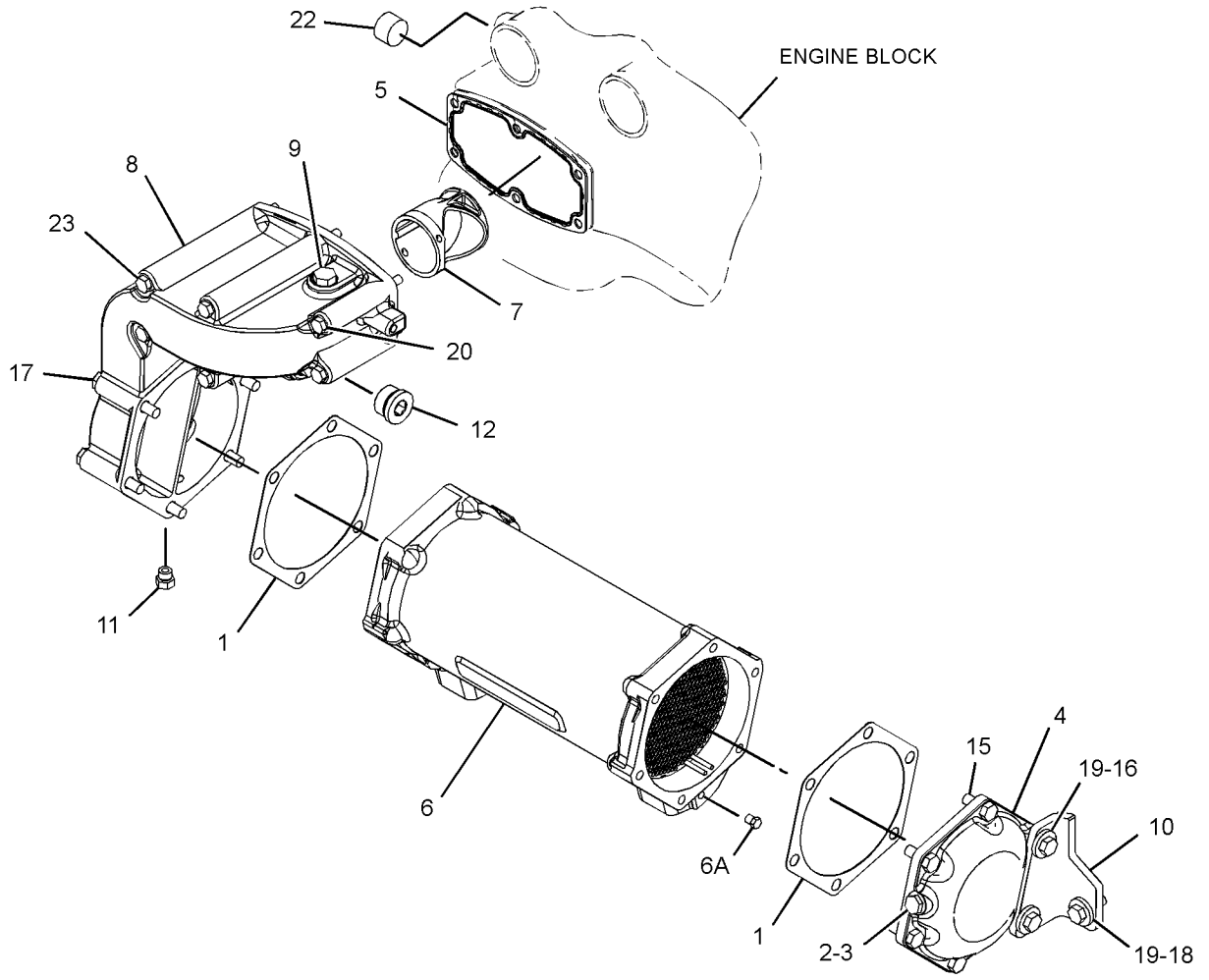

GRAPHIC #1 **<END>** g03316537

393-9001 COVER GP-TRANSMISSION

S/N: 6R21-UP; 6R31-UP
PART OF 354-0153 CASE & PARTS GP-PLANETARY
AN ATTACHMENT

SMCS-3030 **i06147156**

NOTE	REF NO	GRAPHIC REF	PART NUMBER	QTY	PART NAME 1 2 3 4 5 6 (PRODUCT LEVEL)	SEE PAGE
	1	1	**393-4915**	1	COVER AS-TRANSMISSION	
	2	1	**416-0654**	1	SEAL	

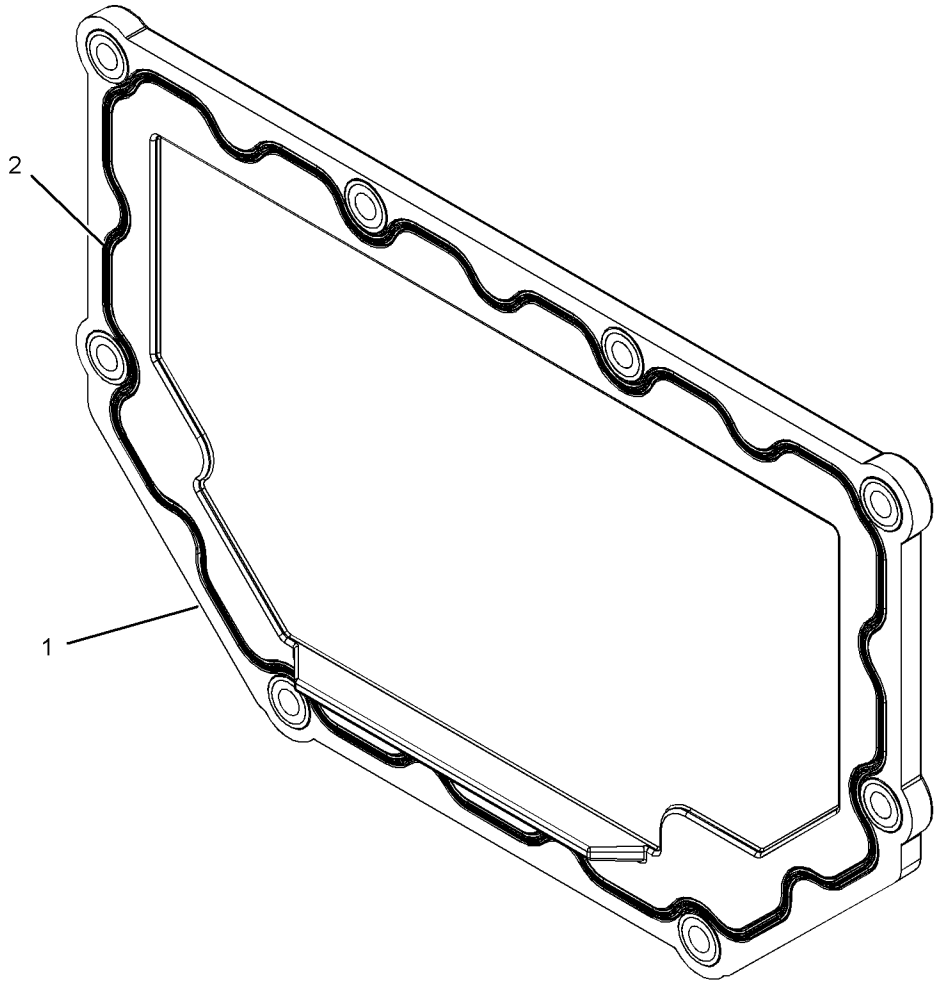

GRAPHIC #1 **<END>** g03645768

106-4150 DRAIN GP-ECOLOGY

S/N: PPP1-UP; SSS1-UP; TTT1-UP
PART OF 389-6164 DRAIN GP-ECOLOGY
AN ATTACHMENT

SMCS-3100 **i05319645**

NOTE	REF NO	GRAPHIC REF	PART NUMBER	QTY	PART NAME 1 2 3 4 5 6 (PRODUCT LEVEL)	SEE PAGE
	1	1	**4N-3808**	1	PIN-SPRING	
	2	1	**5P-9658**	1	SEAL-O-RING	

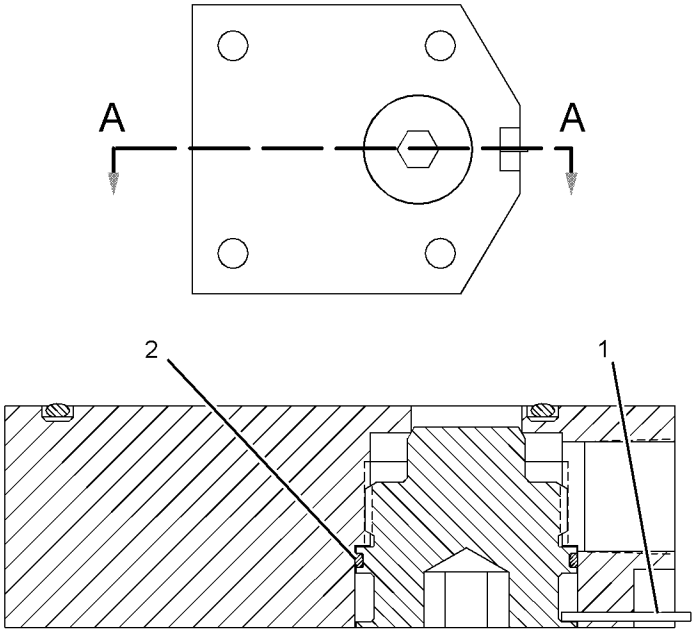

SECTION A-A

GRAPHIC #1 **<END>** g02350745

389-6164 DRAIN GP-ECOLOGY

S/N: PPP1-UP; SSS1-UP; TTT1-UP

AN ATTACHMENT

SMCS-3100 **i05631411**

NOTE	REF NO	GRAPHIC REF	PART NUMBER	QTY	PART NAME 1 2 3 4 5 6 (PRODUCT LEVEL)	SEE PAGE
M	1	1	**8T-4185**	4	BOLT (M10X1.5X50-MM)	
	2	1	**321-8667**	1	ADAPTER GP-PLUG	
		1	**321-8666**	1	ADAPTER	
		1	**6V-1322**	1	BOLT (1/4-20X0.375-IN)	
		1	**321-8665**	1	PLUG-DRAIN (TORQUE CONVERTER)	
		1	**109-9549**	1	SPACER (0.13-MM THK)	
Y	3	1	**106-4150**	1	DRAIN GP-ECOLOGY (TRANSMISSION CASE)	288
	4	1	**2B-0858**	1	PLUG-PIPE (HYDRAULIC TANK OIL DRAIN)	
	4A	1	**2B-0858**	1	PLUG-PIPE (TORQUE CONVERTER)	
	5	1	**2H-3931**	1	SEAL-O-RING	
	6	1	**8H-9818**	1	GASKET	
M	7	1	**8T-4136**	2	BOLT (M10X1.5X25-MM)	

M - METRIC PART
Y - SEPARATE ILLUSTRATION

389-6164 **DRAIN GP-ECOLOGY (*contd.*)** **i05631411**

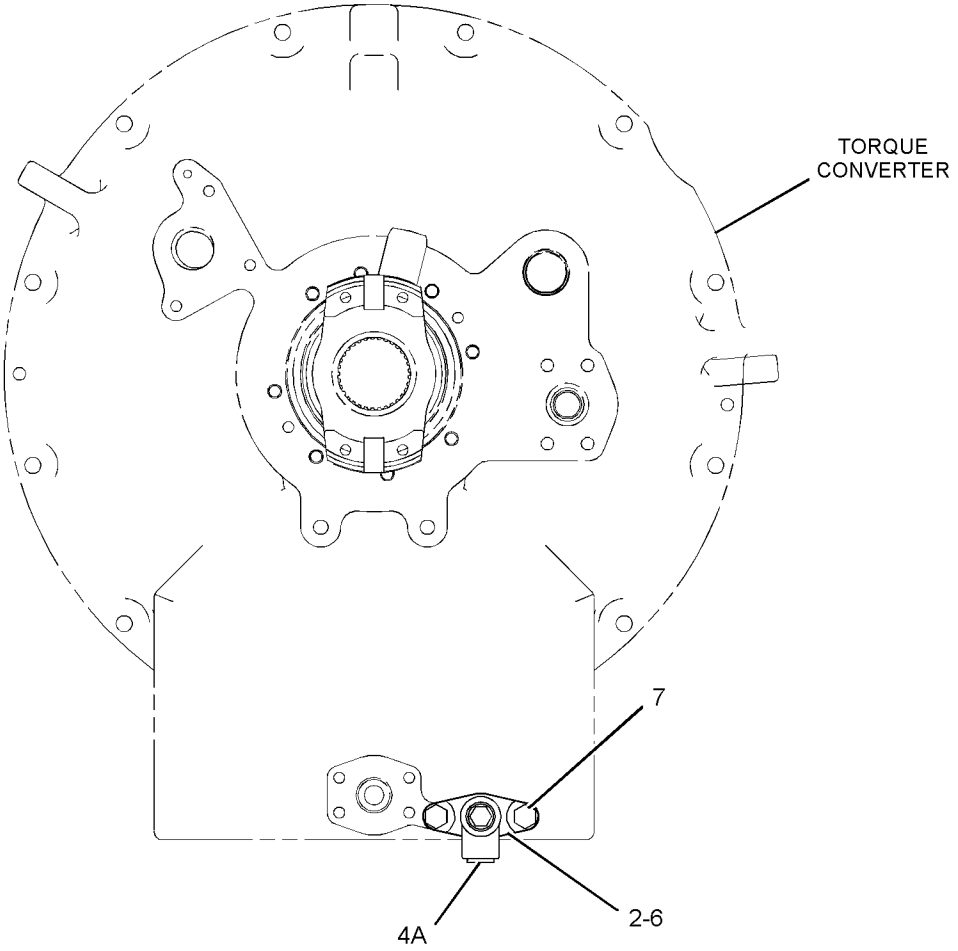

FRONT VIEW

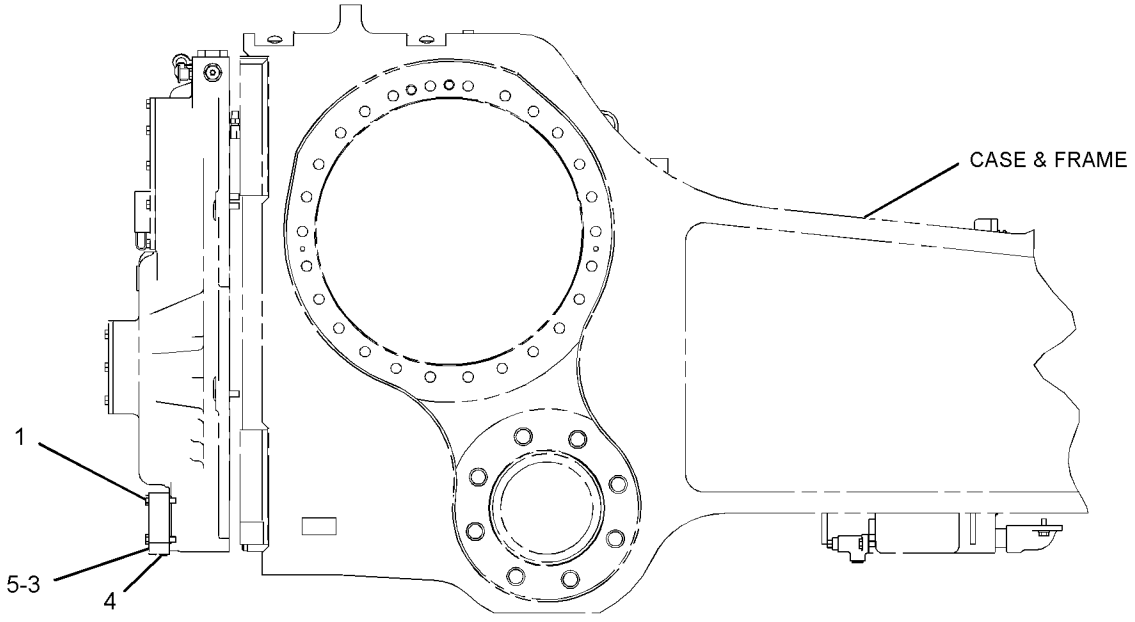

RIGHT SIDE VIEW

GRAPHIC #1 **<END>** g03578222

389-3252 DRIVE AR-FINAL

S/N: SSS1-UP; TTT1-UP
PART OF 481-9508 DISTRIBUTION AR
AN ATTACHMENT

SMCS-4050 **i05612824**

NOTE	PART NUMBER	QTY	PART NAME 1 2 3 4 5 6 (PRODUCT LEVEL)	SEE PAGE
Y	**260-6650**	2	DRIVE GP-FINAL	295

Y - SEPARATE ILLUSTRATION

<END>

389-3253 DRIVE AR-FINAL

S/N: PPP1-UP
AN ATTACHMENT

SMCS-4050 **i06147675**

NOTE	PART NUMBER	QTY	PART NAME 1 2 3 4 5 6 (PRODUCT LEVEL)	SEE PAGE
Y	**265-2299**	2	DRIVE GP-FINAL	301

Y - SEPARATE ILLUSTRATION

<END>

389-3254 DRIVE AR-FINAL–COLD WEATHER

S/N: SSS1-UP; TTT1-UP
EXTREME TEMPERATURE
AN ATTACHMENT

SMCS-4050 **i05612825**

NOTE	PART NUMBER	QTY	PART NAME 1 2 3 4 5 6 (PRODUCT LEVEL)	SEE PAGE
Y	*260-6653*	2	DRIVE GP-FINAL	299

Y - SEPARATE ILLUSTRATION

<END>

389-3255 DRIVE AR-FINAL–COLD WEATHER

S/N: PPP1-UP
AN ATTACHMENT

SMCS-4050 **i06231021**

NOTE	PART NUMBER	QTY	PART NAME 1 2 3 4 5 6 (PRODUCT LEVEL)	SEE PAGE
Y	*379-2916*	2	DRIVE GP-FINAL	303

Y - SEPARATE ILLUSTRATION

<END>

389-3256 DRIVE AR-FINAL

S/N: TTT1-UP
WITH GUARD
CANNOT BE USED WITH 398-4304–PAGE: 856
AN ATTACHMENT

SMCS-4050 **i06224670**

NOTE	PART NUMBER	QTY	PART NAME 1 2 3 4 5 6 (PRODUCT LEVEL)	SEE PAGE
Y	**260-6652**	2	DRIVE GP-FINAL	297

Y - SEPARATE ILLUSTRATION

<END>

389-3257 DRIVE AR-FINAL

S/N: PPP1-UP
WITH GUARD
CANNOT BE USED WITH 246-4737–PAGE: 293, 398-4304–PAGE: 856
AN ATTACHMENT

SMCS-4050 **i06224737**

NOTE	PART NUMBER	QTY	PART NAME 1 2 3 4 5 6 (PRODUCT LEVEL)	SEE PAGE
Y	**246-4737**	2	DRIVE GP-FINAL	293

Y - SEPARATE ILLUSTRATION

<END>

246-4737 DRIVE GP-FINAL

S/N: PPP1-UP

PART OF 389-3257 DRIVE AR-FINAL

AN ATTACHMENT

SMCS-4050 **i06147742**

NOTE	REF NO	GRAPHIC REF	PART NUMBER	QTY	PART NAME 1 2 3 4 5 6 (PRODUCT LEVEL)	SEE PAGE
	1	1	**1H-9696**	3	SEAL-O-RING	
	2	1	**1P-9005**	1	SEAL-O-RING	
	3	1	**2P-3696**	3	RETAINER	
	5	1	**2S-4078**	1	SEAL-O-RING	
	6	1	**3K-0360**	1	SEAL-O-RING	
	7	1	**6V-0327**	1	CUP-BEARING (TAPERED ROLLER)	
	8	1	**6V-0328**	1	CONE-BEARING (TAPERED ROLLER)	
	9	1	**6V-0329**	1	CONE-BEARING (TAPERED ROLLER)	
	10	1	**6V-0330**	1	CUP-BEARING (TAPERED ROLLER)	
	11	1	**6V-0439**	1	PLUG-MAGNETIC (FINAL DRIVE, OIL FILL)	
	12	1	**6Y-0859**	1	SEAL GP-DUO-CONE	
	12A	1	**1M-9011**	2	RING-TORIC	
	13	1	**8E-2748**	1	HUB-REACTION	
	14	1	**8G-8844**	1	RING-LOCK	
	15	1	**8G-8845**	1	COVER	
	16	1	**9G-8638**	3	GEAR-PLANETARY (40-TEETH)	
	17	1	**335-6121**	1	GEAR-RING (94-TEETH)	
	18	1	**9G-9175**	1	CARRIER	
	19	1	**9G-9181**	1	RETAINER	
	20	1	**333-9410**	3	SHAFT	
	21	1	**9H-3360**	1	SEAL-O-RING	
	22	1	**419-4175**	1	SEAL-LIP TYPE	
	23	1	**137-4490**	2	RETAINER	
	24	1	**137-9810**	2	SEAL-PACKING	
	25	1	**343-6237**	6	BEARING	
	26	1	**180-7910**	1	HUB AS	
	26A	1	**137-4488**	1	GUARD	
	28	1	**246-4736**	1	SPINDLE AS	
	28A	1	**137-4489**	1	GUARD	
	29	1	**2B-0947**	10	BOLT (1/2-13X2.25-IN)	
	30	1	**4L-6454**	3	BOLT (3/8-16X1-IN)	
	31	1	**7X-0346**	3	BOLT (5/8-11X2-IN)	
	32	1	**8C-6561**	16	BOLT (5/16-18X1.375-IN)	
	34	1	**8T-4224**	16	WASHER-HARD (8.8X16X2-MM THK)	
	35	1	**8T-4896**	3	WASHER-HARD (10.2X18.5X2.5-MM THK)	
	36	1	**8T-4994**	33	WASHER-HARD (20X36.5X3.5-MM THK)	
	38	1	**8T-9399**	33	BOLT (3/4-10X2.25-IN)	
	39	1	**9S-4185**	1	PLUG (FINAL DRIVE, OIL DRAIN)	
					PARTS SHOWN IN GRAPHIC(S) WITHOUT A REFERENCE NUMBER ARE NOT SERVICED SEPARATELY	

246-4737 **DRIVE GP-FINAL (*contd.*)** **i06147742**

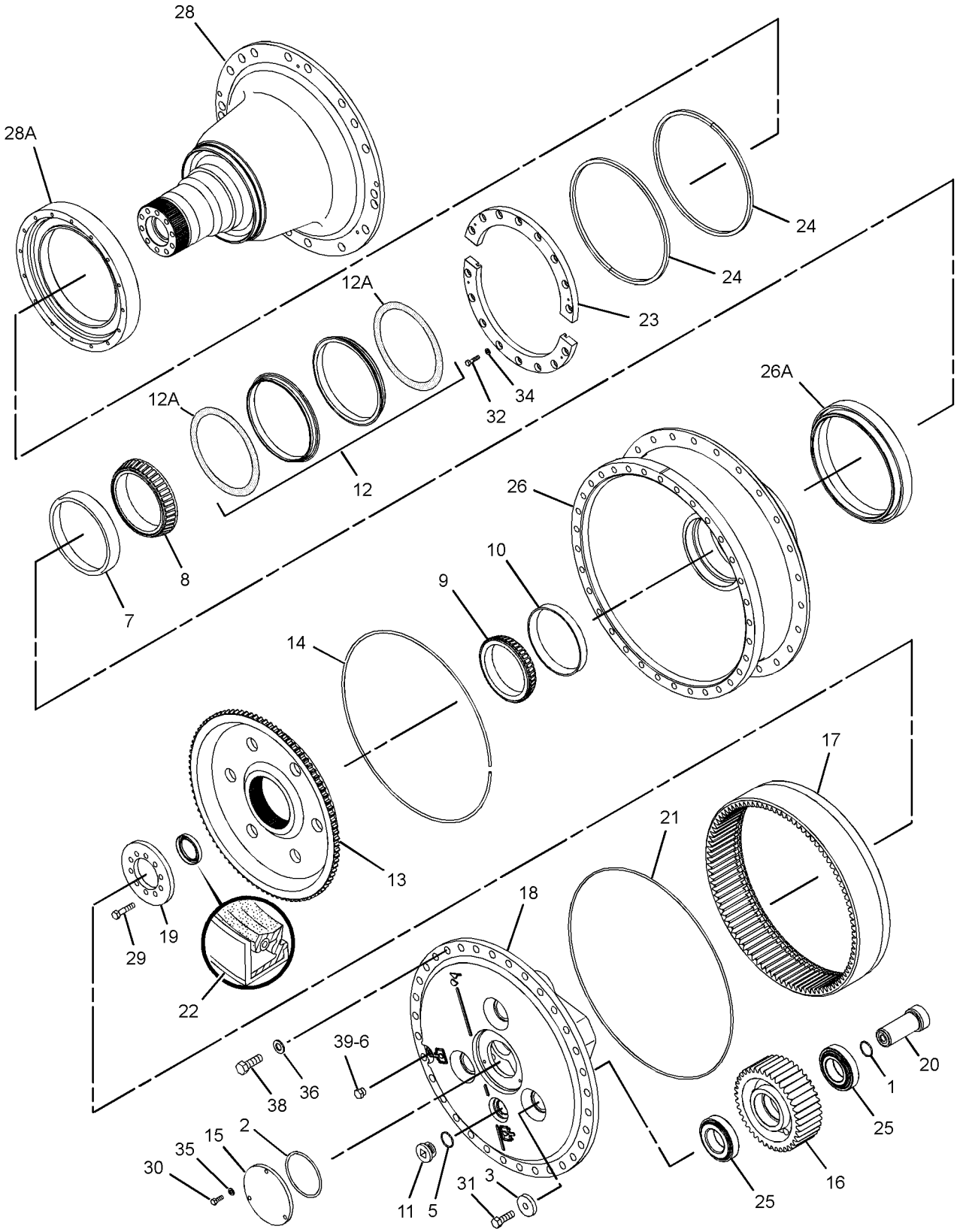

GRAPHIC #1 **<END>** g02332118

260-6650 DRIVE GP-FINAL

S/N: SSS1-UP; TTT1-UP
PART OF 389-3252 DRIVE AR-FINAL
AN ATTACHMENT

SMCS-4050 **i06222089**

NOTE	REF NO	GRAPHIC REF	PART NUMBER	QTY	PART NAME 1 2 3 4 5 6 (PRODUCT LEVEL)	SEE PAGE
	1	1	**343-6237**	6	BEARING	
	2	1	**1P-9005**	1	SEAL-O-RING	
	3	1	**2P-3696**	3	RETAINER	
	4	1	**2S-4078**	1	SEAL-O-RING	
	5	1	**3K-0360**	1	SEAL-O-RING	
	6	1	**8H-0901**	1	CUP-BEARING (TAPERED ROLLER)	
	7	1	**8H-0902**	1	CONE-BEARING (TAPERED ROLLER)	
	8	1	**2K-5066**	1	CONE-BEARING (TAPERED ROLLER)	
	9	1	**6V-0330**	1	CUP-BEARING (TAPERED ROLLER)	
	10	1	**6V-0439**	1	PLUG-MAGNETIC (FINAL DRIVE, OIL FILL)	
	11	1	**6Y-0859**	1	SEAL GP-DUO-CONE	
	11A	1	**1M-9011**	2	RING-TORIC	
	12	1	**8E-2748**	1	HUB-REACTION	
	13	1	**456-7041**	1	RING	
	14	1	**8G-8845**	1	COVER	
	15	1	**9G-8638**	3	GEAR-PLANETARY (40-TEETH)	
	16	1	**461-9930**	1	GEAR-RING (94-TEETH)	
	17	1	**9G-9175**	1	CARRIER	
	18	1	**9G-9180**	1	HUB-SPROCKET	
	19	1	**9G-9181**	1	RETAINER	
	20	1	**333-9410**	3	SHAFT	
	21	1	**9H-3360**	1	SEAL-O-RING	
	22	1	**419-4175**	1	SEAL-LIP TYPE	
	24	1	**260-6642**	1	SPINDLE	
	25	1	**467-4196**	10	BOLT-SPECIAL	
	26	1	**4L-6454**	3	BOLT (3/8-16X1-IN)	
	27	1	**7X-0346**	3	BOLT (5/8-11X2-IN)	
	28	1	**8T-4896**	3	WASHER-HARD (10.2X18.5X2.5-MM THK)	
	29	1	**8T-4994**	33	WASHER-HARD (20X36.5X3.5-MM THK)	
	30	1	**8T-9399**	33	BOLT (3/4-10X2.25-IN)	
	31	1	**9S-4185**	1	PLUG (FINAL DRIVE, OIL DRAIN)	
	32	1	**1H-9696**	3	SEAL-O-RING	
					PARTS SHOWN IN GRAPHIC(S) WITHOUT A REFERENCE NUMBER ARE NOT SERVICED SEPARATELY	

260-6650 **DRIVE GP-FINAL (*contd.*)** **i06222089**

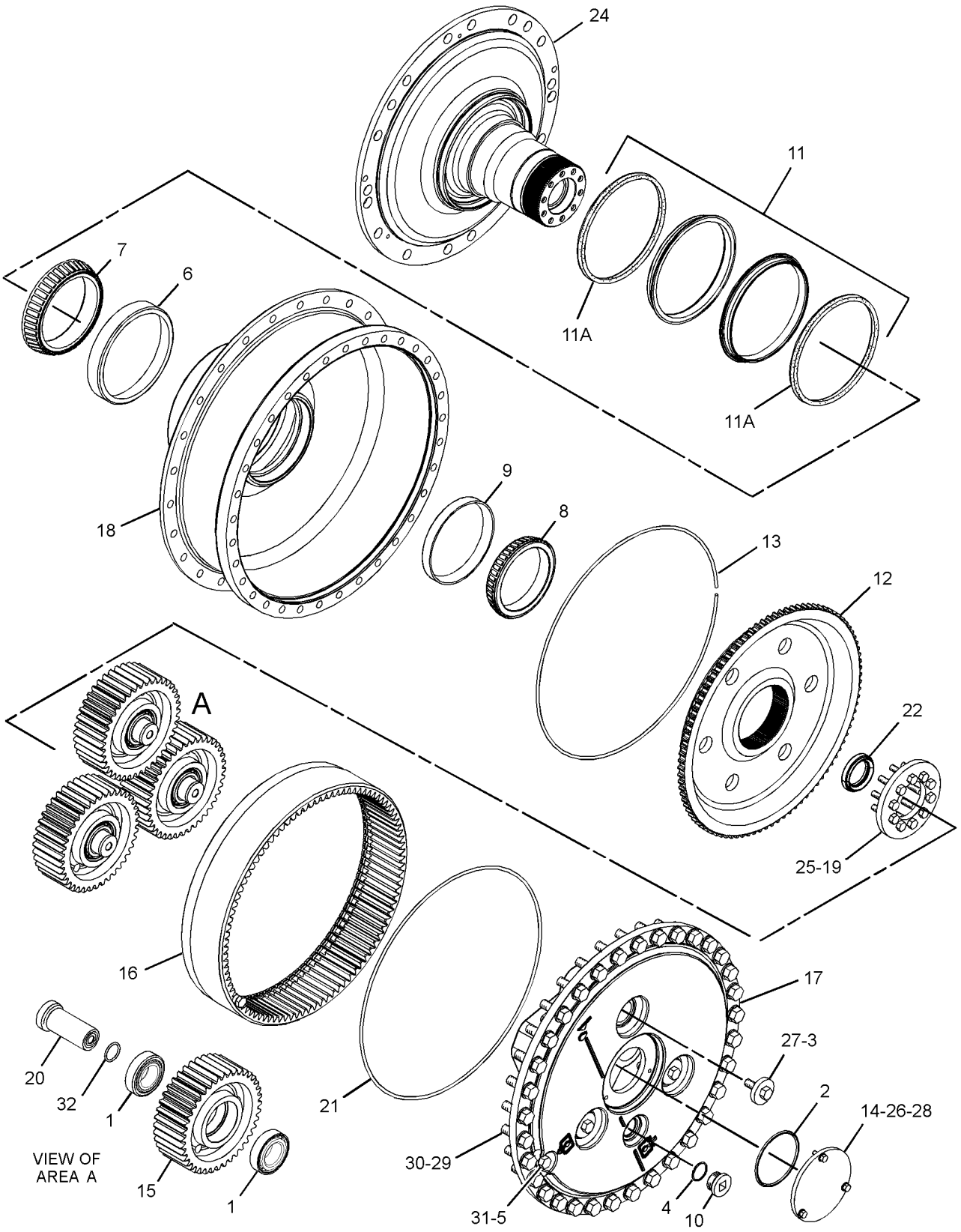

GRAPHIC #1 **<END>** g03652552

260-6652 DRIVE GP-FINAL

S/N: TTT1-UP
PART OF 389-3256 DRIVE AR-FINAL
AN ATTACHMENT

SMCS-4050 **i06224731**

NOTE	REF NO	GRAPHIC REF	PART NUMBER	QTY	PART NAME 1 2 3 4 5 6 (PRODUCT LEVEL)	SEE PAGE
	1	1	**1P-9005**	1	SEAL-O-RING	
	2	1	**2P-3696**	3	RETAINER	
	3	1	**2S-4078**	1	SEAL-O-RING	
	4	1	**3K-0360**	1	SEAL-O-RING	
	5	1	**6V-0327**	1	CUP-BEARING (TAPERED ROLLER)	
	6	1	**6V-0328**	1	CONE-BEARING (TAPERED ROLLER)	
	7	1	**6V-0329**	1	CONE-BEARING (TAPERED ROLLER)	
	8	1	**6V-0330**	1	CUP-BEARING (TAPERED ROLLER)	
	9	1	**6V-0439**	1	PLUG-MAGNETIC (FINAL DRIVE, OIL FILL)	
	10	1	**6Y-0859**	1	SEAL GP-DUO-CONE	
	10A	1	**1M-9011**	2	RING-TORIC	
	11	1	**8E-2748**	1	HUB-REACTION	
	12	1	**8G-8844**	1	RING-LOCK	
	13	1	**8G-8845**	1	COVER	
	14	1	**9G-8638**	3	GEAR-PLANETARY (40-TEETH)	
	15	1	**9G-9175**	1	CARRIER	
	16	1	**9G-9181**	1	RETAINER	
	17	1	**9H-3360**	1	SEAL-O-RING	
	18	1	**137-4490**	2	RETAINER	
	19	1	**137-9810**	2	SEAL-PACKING	
	20	1	**180-7910**	1	HUB AS	
		1	**137-4488**	1	GUARD	
	21	1	**260-6644**	1	SPINDLE AS	
	21A	1	**137-4489**	1	GUARD	
	22	1	**419-4175**	1	SEAL-LIP TYPE	
	23	1	**333-9410**	3	SHAFT	
	24	1	**335-6121**	1	GEAR-RING (94-TEETH)	
	25	1	**343-6237**	6	BEARING	
	26	1	**1H-9696**	3	SEAL-O-RING	
	27	1	**2B-0947**	10	BOLT (1/2-13X2.25-IN)	
	28	1	**4L-6454**	3	BOLT (3/8-16X1-IN)	
	29	1	**7X-0346**	3	BOLT (5/8-11X2-IN)	
	30	1	**8C-6561**	16	BOLT (5/16-18X1.375-IN)	
	31	1	**8T-4224**	16	WASHER-HARD (8.8X16X2-MM THK)	
	32	1	**8T-4896**	3	WASHER-HARD (10.2X18.5X2.5-MM THK)	
	33	1	**8T-4994**	33	WASHER-HARD (20X36.5X3.5-MM THK)	
	34	1	**8T-9399**	33	BOLT (3/4-10X2.25-IN)	
	35	1	**9S-4185**	1	PLUG (FINAL DRIVE, OIL DRAIN)	
					PARTS SHOWN IN GRAPHIC(S) WITHOUT A REFERENCE NUMBER ARE NOT SERVICED SEPARATELY	

260-6652 **DRIVE GP-FINAL (*contd.*)** **i06224731**

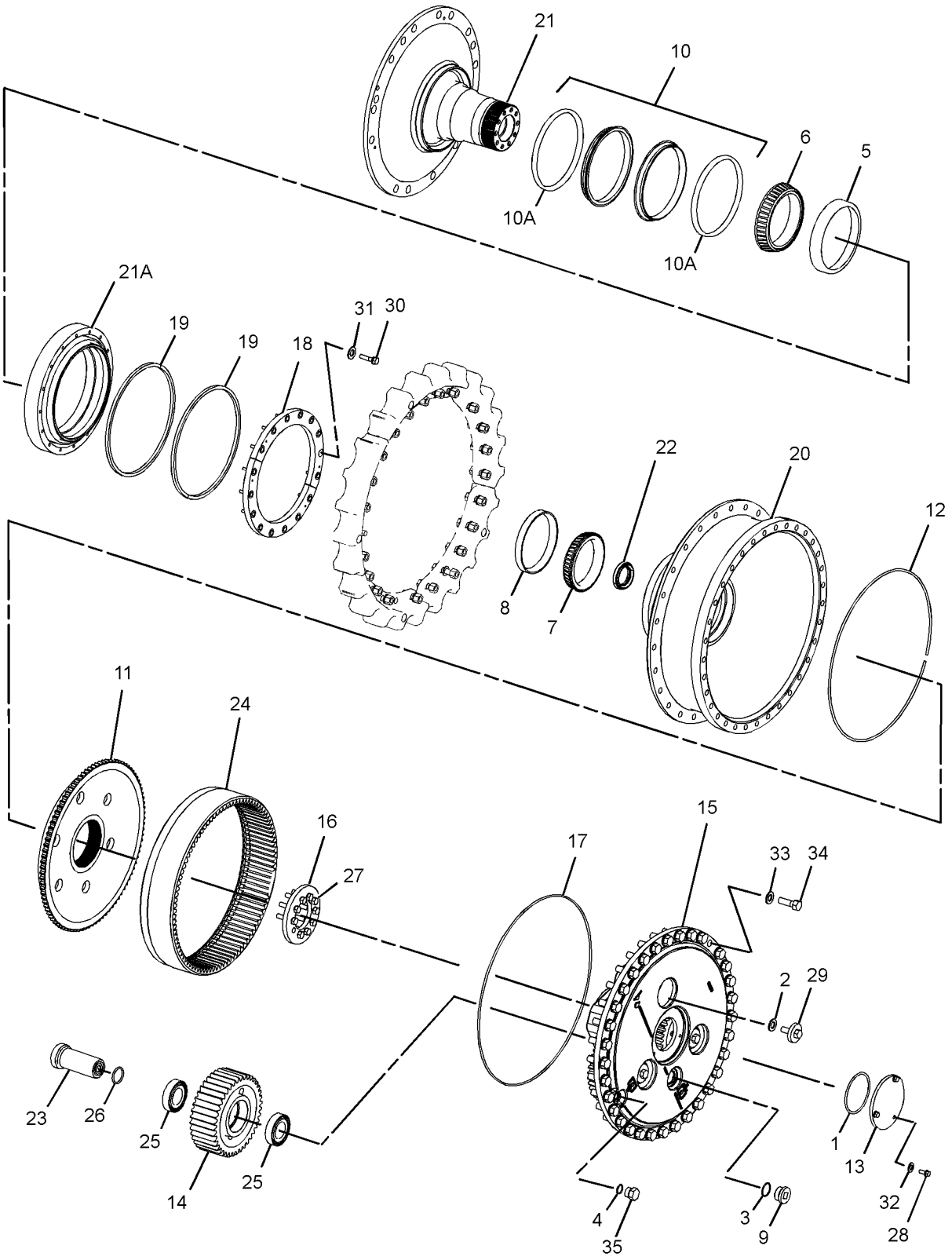

GRAPHIC #1 **<END>** g03708473

260-6653 DRIVE GP-FINAL—COLD WEATHER

S/N: SSS1-UP; TTT1-UP
PART OF 389-3254 DRIVE AR-FINAL
AN ATTACHMENT

SMCS-4050 **i05612809**

NOTE	REF NO	GRAPHIC REF	PART NUMBER	QTY	PART NAME 1 2 3 4 5 6 (PRODUCT LEVEL)	SEE PAGE
	1	1	**343-6237**	6	BEARING	
	2	1	**1P-9005**	1	SEAL-O-RING	
	3	1	**2P-3696**	3	RETAINER	
	4	1	**2R-0098**	1	SEAL-O-RING	
	5	1	**2S-4078**	1	SEAL-O-RING	
	6	1	**3K-0360**	1	SEAL-O-RING	
	7	1	**6V-0327**	1	CUP-BEARING (TAPERED ROLLER)	
	8	1	**6V-0328**	1	CONE-BEARING (TAPERED ROLLER)	
	9	1	**6V-0329**	1	CONE-BEARING (TAPERED ROLLER)	
	10	1	**6V-0330**	1	CUP-BEARING (TAPERED ROLLER)	
	11	1	**6V-0439**	1	PLUG-MAGNETIC (FINAL DRIVE, OIL FILL)	
	12	1	**6Y-6277**	1	SEAL GP-DUO-CONE	
	12A	1	**5P-1606**	2	RING-TORIC	
	13	1	**8E-2748**	1	HUB-REACTION	
	14	1	**8G-8844**	1	RING-LOCK	
	15	1	**8G-8845**	1	COVER	
	16	1	**9G-8638**	3	GEAR-PLANETARY (40-TEETH)	
	17	1	**335-6121**	1	GEAR-RING (94-TEETH)	
	18	1	**9G-9175**	1	CARRIER	
	19	1	**9G-9180**	1	HUB-SPROCKET	
	20	1	**9G-9181**	1	RETAINER	
	21	1	**333-9410**	3	SHAFT	
	22	1	**9H-3360**	1	SEAL-O-RING	
Y	24	1	*188-0908*	1	SEGMENT GP-SPROCKET	333
	25	1	**260-6642**	1	SPINDLE	
	26	1	**2B-0947**	10	BOLT (1/2-13X2.25-IN)	
	27	1	**4L-6454**	3	BOLT (3/8-16X1-IN)	
	28	1	**7X-0346**	3	BOLT (5/8-11X2-IN)	
	29	1	**8T-4223**	2	WASHER-HARD (13.5X25.5X3-MM THK)	
	30	1	**8T-4896**	3	WASHER-HARD (10.2X18.5X2.5-MM THK)	
	31	1	**8T-4994**	33	WASHER-HARD (20X36.5X3.5-MM THK)	
	32	1	**8T-8919**	2	BOLT (1/2-13X1.75-IN)	
	33	1	**8T-9399**	33	BOLT (3/4-10X2.25-IN)	
	34	1	**9S-4185**	1	PLUG-O-RING (FINAL DRIVE, OIL DRAIN)	
	35	1	**269-4739**	1	SEAL-LIP TYPE	
	36	1	**1H-9696**	3	SEAL-O-RING	

PARTS SHOWN IN GRAPHIC(S) WITHOUT A REFERENCE NUMBER ARE NOT SERVICED SEPARATELY

Y - SEPARATE ILLUSTRATION

260-6653 **DRIVE GP-FINAL (*contd.*)** **i05612809**

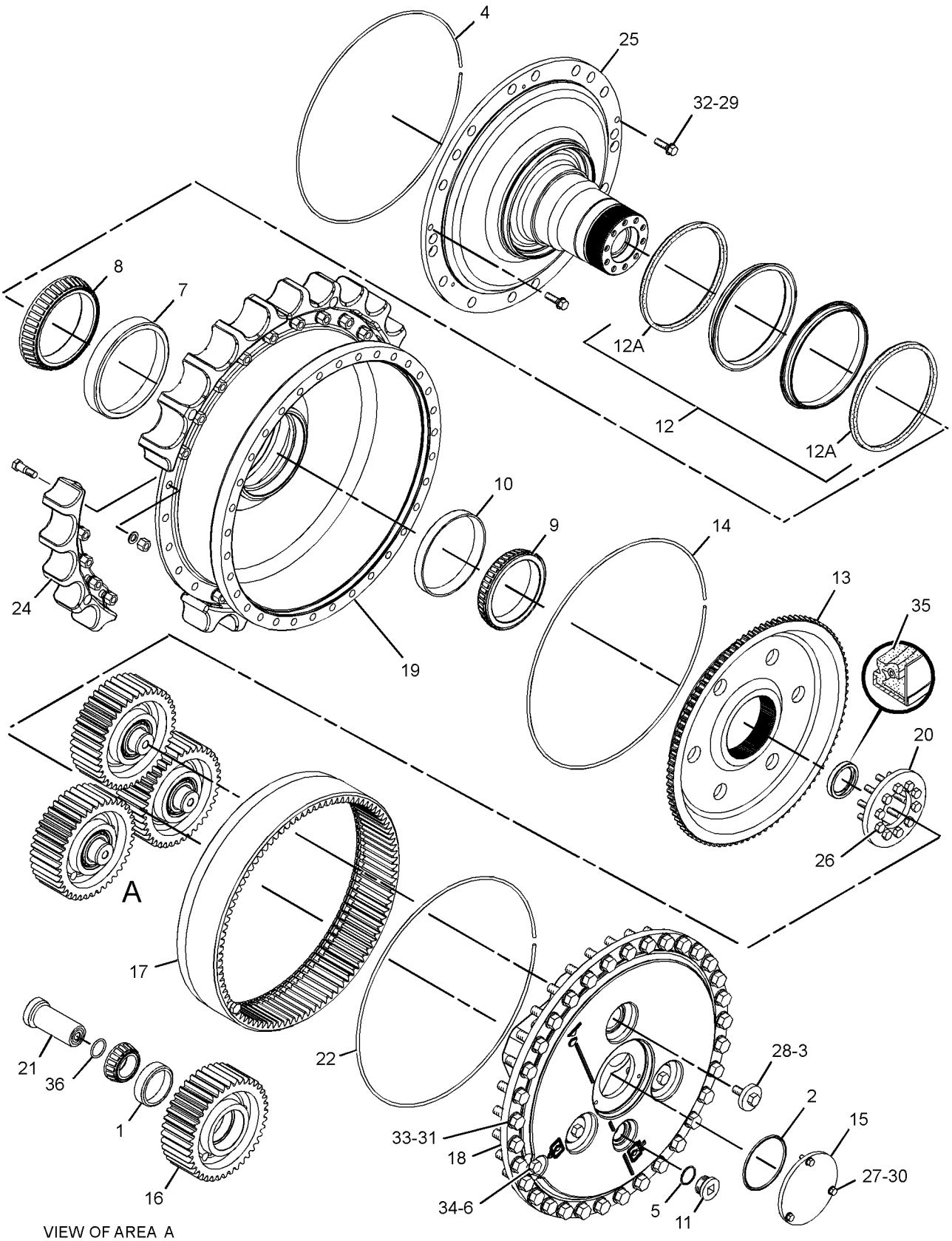

VIEW OF AREA A

GRAPHIC #1 **<END>** g03321173

265-2299 DRIVE GP-FINAL

S/N: PPP1-UP

PART OF 389-3253 DRIVE AR-FINAL

AN ATTACHMENT

SMCS-4050 **i06146548**

NOTE	REF NO	GRAPHIC REF	PART NUMBER	QTY	PART NAME 1 2 3 4 5 6 (PRODUCT LEVEL)	SEE PAGE
	1	1	**1H-9696**	3	SEAL-O-RING	
	2	1	**1P-9005**	1	SEAL-O-RING	
	3	1	**2P-3696**	3	RETAINER	
	4	1	**2S-4078**	1	SEAL-O-RING	
	5	1	**3K-0360**	1	SEAL-O-RING	
	6	1	**6V-0327**	1	CUP-BEARING (TAPERED ROLLER)	
	7	1	**6V-0328**	1	CONE-BEARING (TAPERED ROLLER)	
	8	1	**6V-0329**	1	CONE-BEARING (TAPERED ROLLER)	
	9	1	**6V-0330**	1	CUP-BEARING (TAPERED ROLLER)	
	10	1	**6V-0439**	1	PLUG-MAGNETIC (FINAL DRIVE, OIL FILL)	
	11	1	**6Y-0859**	1	SEAL GP-DUO-CONE	
	11A	1	**1M-9011**	2	RING-TORIC	
	12	1	**8E-2748**	1	HUB-REACTION	
	13	1	**8G-8844**	1	RING-LOCK	
	14	1	**8G-8845**	1	COVER	
	15	1	**9G-8638**	3	GEAR-PLANETARY (40-TEETH)	
	16	1	**335-6121**	1	GEAR-RING (94-TEETH)	
	17	1	**9G-9175**	1	CARRIER	
	18	1	**9G-9180**	1	HUB-SPROCKET	
	19	1	**9G-9181**	1	RETAINER	
	20	1	**333-9410**	3	SHAFT	
	21	1	**9H-3360**	1	SEAL-O-RING	
	22	1	**419-4175**	1	SEAL-LIP TYPE	
	23	1	**343-6237**	6	BEARING	
	24	1	**222-9219**	1	SPINDLE	
	25	1	**2B-0947**	10	BOLT (1/2-13X2.25-IN)	
	26	1	**4L-6454**	3	BOLT (3/8-16X1-IN)	
	27	1	**7X-0346**	3	BOLT (5/8-11X2-IN)	
	28	1	**8T-4896**	3	WASHER-HARD (10.2X18.5X2.5-MM THK)	
	29	1	**8T-4994**	33	WASHER-HARD (20X36.5X3.5-MM THK)	
	30	1	**8T-9399**	33	BOLT (3/4-10X2.25-IN)	
	31	1	**9S-4185**	1	PLUG (FINAL DRIVE, OIL DRAIN)	
					PARTS SHOWN IN GRAPHIC(S) WITHOUT A REFERENCE NUMBER ARE NOT SERVICED SEPARATELY	

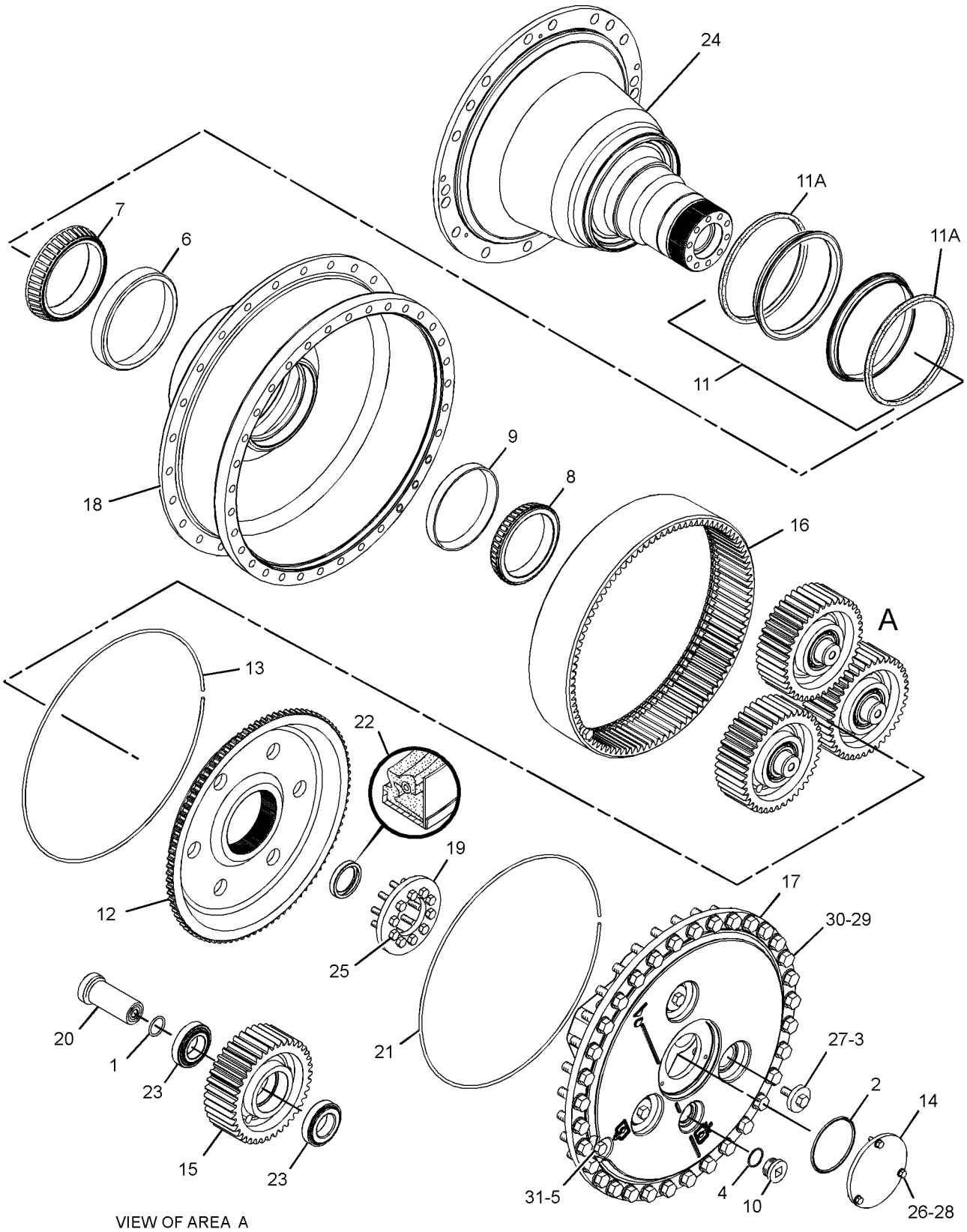

VIEW OF AREA A

GRAPHIC #1 **<END>** g02332068

379-2916 DRIVE GP-FINAL—COLD WEATHER

S/N: PPP1-UP

PART OF 389-3255 DRIVE AR-FINAL

AN ATTACHMENT

SMCS-4050 **i06146549**

NOTE	REF NO	GRAPHIC REF	PART NUMBER	QTY	PART NAME 1 2 3 4 5 6 (PRODUCT LEVEL)	SEE PAGE
	1	1	**1H-9696**	3	SEAL-O-RING	
	2	1	**1P-9005**	1	SEAL-O-RING	
	3	1	**2P-3696**	3	RETAINER	
	4	1	**2S-4078**	1	SEAL-O-RING	
	5	1	**3K-0360**	1	SEAL-O-RING	
	6	1	**6V-0327**	1	CUP-BEARING (TAPERED ROLLER)	
	7	1	**6V-0328**	1	CONE-BEARING (TAPERED ROLLER)	
	8	1	**6V-0329**	1	CONE-BEARING (TAPERED ROLLER)	
	9	1	**6V-0330**	1	CUP-BEARING (TAPERED ROLLER)	
	10	1	**6V-0439**	1	PLUG-MAGNETIC (FINAL DRIVE, OIL FILL)	
	11	1	**6Y-6277**	1	SEAL GP-DUO-CONE	
		1	**5P-1606**	2	RING-TORIC	
	12	1	**8E-2748**	1	HUB-REACTION	
	13	1	**8G-8844**	1	RING-LOCK	
	14	1	**8G-8845**	1	COVER	
	15	1	**9G-8638**	3	GEAR-PLANETARY (40-TEETH)	
	16	1	**335-6121**	1	GEAR-RING (94-TEETH)	
	17	1	**9G-9175**	1	CARRIER	
	18	1	**9G-9180**	1	HUB-SPROCKET	
	19	1	**9G-9181**	1	RETAINER	
	20	1	**333-9410**	3	SHAFT	
	21	1	**9H-3360**	1	SEAL-O-RING	
	22	1	**9X-7363**	1	SEAL-LIP TYPE	
	23	1	**343-6237**	6	BEARING	
	24	1	**222-9219**	1	SPINDLE	
	25	1	**2B-0947**	10	BOLT (1/2-13X2.25-IN)	
	26	1	**4L-6454**	3	BOLT (3/8-16X1-IN)	
	27	1	**7X-0346**	3	BOLT (5/8-11X2-IN)	
	28	1	**8T-4896**	3	WASHER-HARD (10.2X18.5X2.5-MM THK)	
	29	1	**8T-4994**	33	WASHER-HARD (20X36.5X3.5-MM THK)	
	30	1	**8T-9399**	33	BOLT (3/4-10X2.25-IN)	
	31	1	**9S-4185**	1	PLUG (FINAL DRIVE, OIL DRAIN)	
					PARTS SHOWN IN GRAPHIC(S) WITHOUT A REFERENCE NUMBER ARE NOT SERVICED SEPARATELY	

379-2916 **DRIVE GP-FINAL (*contd.*)** **i06146549**

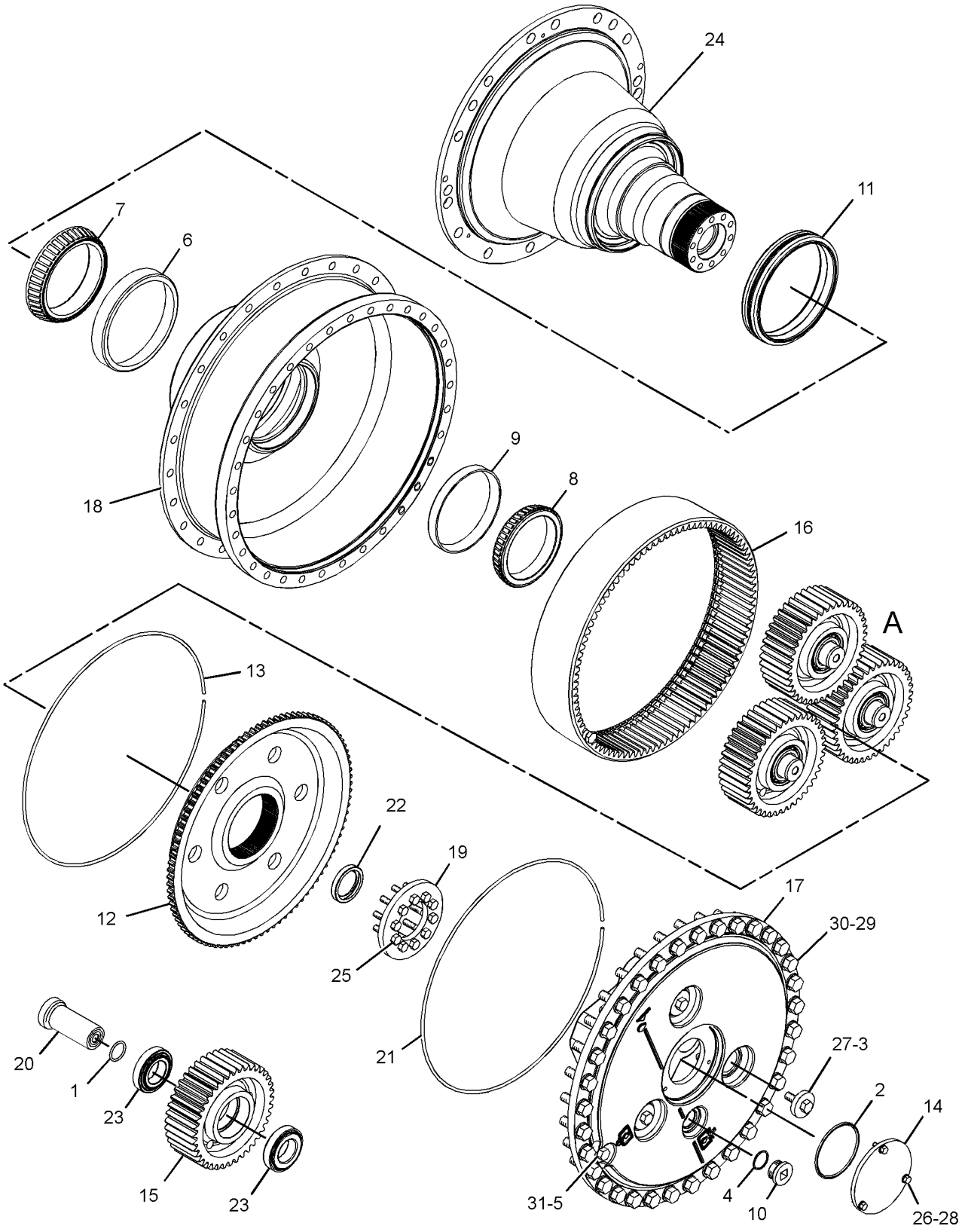

VIEW OF AREA A

GRAPHIC #1 **<END>** g03236363

332-8833 FILTER GP-OIL—MEDIUM PRESSURE

S/N: PPP1-UP; SSS1-UP; TTT1-UP
HYDRAULIC, TRANSMISSION
PART OF 398-4487 LINES GP-POWER TRAIN OIL
ALSO AN ATTACHMENT

SMCS-3004, 3067

i06123999

NOTE	REF NO	GRAPHIC REF	PART NUMBER	QTY	PART NAME 1 2 3 4 5 6 (PRODUCT LEVEL)	SEE PAGE
	1	1	**332-8832**	1	BASE AS-OIL FILTER	
		1	**5P-7701**	1	SEAL-O-RING	
		1	**9S-4181**	1	PLUG (5/16-12-THD)	
		1	**114-0561**	1	PLUG	
		1	**206-9292**	1	SEAL-O-RING	
Y	2	1	**440-0257**	1	SWITCH GP-PRESSURE (POWER TRAIN OIL)	247
Y	3	1	**353-4688**	1	FILTER GP-OIL (POWER TRAIN)	306

Y - SEPARATE ILLUSTRATION

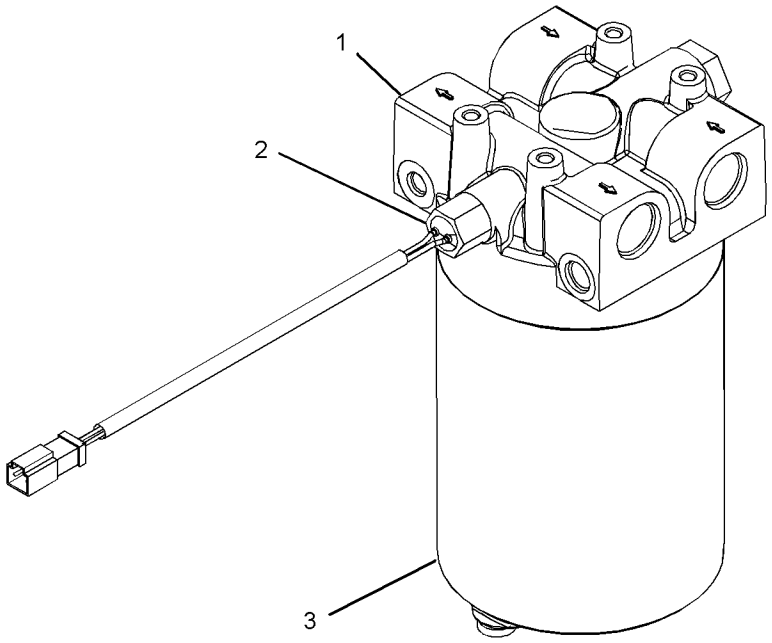

GRAPHIC #1

<END>

g03842928

353-4688 FILTER GP-OIL

S/N: PPP1-UP; SSS1-UP; TTT1-UP
TRANSMISSION
PART OF 332-8833 FILTER GP-OIL
ALSO AN ATTACHMENT

SMCS-3004, 3067 **i05895964**

NOTE	REF NO	GRAPHIC REF	PART NUMBER	QTY	PART NAME 1 2 3 4 5 6 (PRODUCT LEVEL)	SEE PAGE
	1	1	**9S-8005**	1	PLUG-O-RING	
	2	1	**337-5270**	1	FILTER ELEMENT AS-OIL (POWER TRAIN)	
	2A	1	**095-1678**	1	SEAL-O-RING	
	3	1	**347-7407**	1	TUBE-CENTER	
	4	1	**8L-2786**	1	SEAL-O-RING	
					PARTS SHOWN IN GRAPHIC(S) WITHOUT A REFERENCE NUMBER ARE NOT SERVICED SEPARATELY	

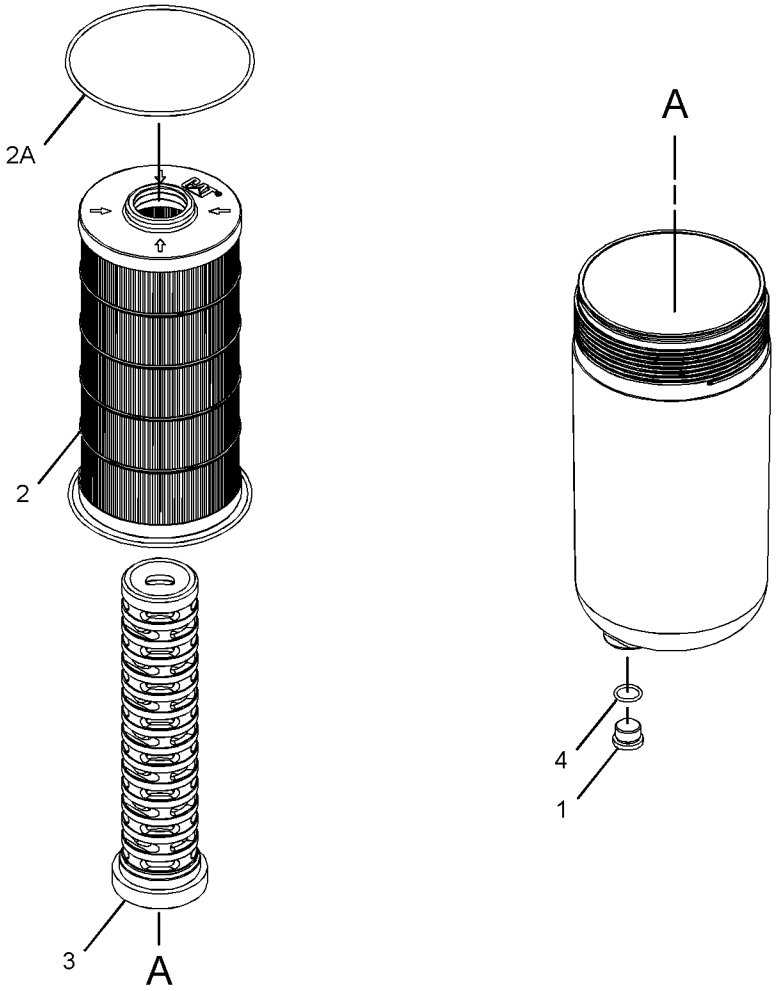

GRAPHIC #1 **<END>** g02308153

166-3485 GEAR GP-BEVEL & TRANSFER

S/N: 6R21-UP
PART OF 417-8818 TRANSMISSION AR
AN ATTACHMENT

SMCS-3011 **i06231080**

NOTE	REF NO	GRAPHIC REF	PART NUMBER	QTY	PART NAME 1 2 3 4 5 6 (PRODUCT LEVEL)	SEE PAGE
	1	1	**422-6929**	1	CASE AS	
		1	**2D-6642**	1	BALL	
	2	1	**160-7616**	1	GEAR (50-TEETH)	
B	3	1	**9P-1922**	1	SHIM PACK (INCLUDES 14-SHIMS)	
	4	1	**9W-2992**	1	CAGE-BEARING	
	5	1	**3T-6742**	1	RETAINER	
	6	1	**0S-1569**	1	BOLT (5/8-11X4-IN)	
	7	1	**7H-7628**	1	BEARING	
	8	1	**0S-1591**	4	BOLT (3/8-16X1.5-IN)	
	9	1	**5M-2894**	4	WASHER-HARD (10.2X18.5X2.5-MM THK)	
	10	2	**7D-1649**	2	WASHER-HARD (13.5X32X5-MM THK)	
	11	1	**6I-8507**	1	PLATE-RETAINER	
	12	1	**6I-8511**	1	CAGE-BEARING	
B	13	1	**9P-1921**	1	SHIM PACK (INCLUDES 14-SHIMS)	
	14	1	**216-0273**	1	SEAL-LIP TYPE	
	15	1	**160-7614**	1	GEAR-TRANSFER (44-TEETH)	
	16	1	**8D-1817**	2	CUP-BEARING	
	17	1	**8D-1819**	2	CONE-BEARING	
	18	1	**6S-2829**	2	CONE-BEARING	
	19	1	**6S-2828**	2	CUP-BEARING	
	20	1	**9W-3660**	1	PINION-BEVEL (20-TEETH)	
	21	1,2	**7B-3235**	24	BOLT (1/2-13X1.375-IN)	
	22	1,2	**5P-8245**	24	WASHER-HARD (13.5X25.5X3-MM THK)	
	23	1	**0L-1169**	12	BOLT (5/8-11X3.75-IN)	
	24	1,2	**5P-8247**	16	WASHER-HARD (17X32X3.5-MM THK)	
	25	2	**9W-1570**	1	CAGE AS-BEARING	
		2	**4B-9880**	1	BALL	
		2	**9W-1569**	1	PLUG-ORIFICE	
B	26	2	**9P-1478**	2	SHIM PACK (INCLUDES 14-SHIMS)	
	27	2	**1L-6957**	1	LOCKNUT-BEARING	
	28	2	**6T-0364**	1	RING-RETAINING	
	29	2	**9W-8612**	1	SPACER-BEARING	
	30	2	**1P-3934**	2	CUP-BEARING	
	31	2	**1P-3935**	2	CONE-BEARING	
	32	2	**9W-5150**	1	SHAFT-BEVEL GEAR	
	33	2	**0S-1897**	12	BOLT (3/4-16X2.25-IN)	
	34	2	**1S-1860**	12	NUT-TRACK (3/4-16-THD)	
	35	2	**9P-1925**	1	GEAR-BEVEL (35-TEETH)	
	36	2	**9G-0832**	1	DOWEL	
	37	2	**7T-9946**	1	CAGE-BEARING	
	38	2	**6J-3473**	1	RING-SNAP	
	39	2	**5P-7592**	1	RACE-ROLLER BEARING	
	40	2	**4H-0019**	1	RACE & ROLLER AS	
	41	2	**9P-7072**	1	WASHER (90.6X115X2.5-MM THK)	
	42	2	**6V-2404**	1	LOCKWASHER-BEARING	
	43	2	**7T-1475**	1	BRACKET-ROLLER	
	44	2	**7T-1474**	1	BRACKET-ROLLER	
	45	2	**1D-4601**	4	BOLT (5/8-11X8.5-IN)	
	46	2	**6T-3853**	2	SLEEVE	
	47	2	**6T-3852**	2	ROLLER	
	48	2	**1A-5822**	2	BOLT (1/2-13X2.75-IN)	

B - USE AS REQUIRED

166-3485 **GEAR GP-BEVEL & TRANSFER (*contd.*)** **i06231080**

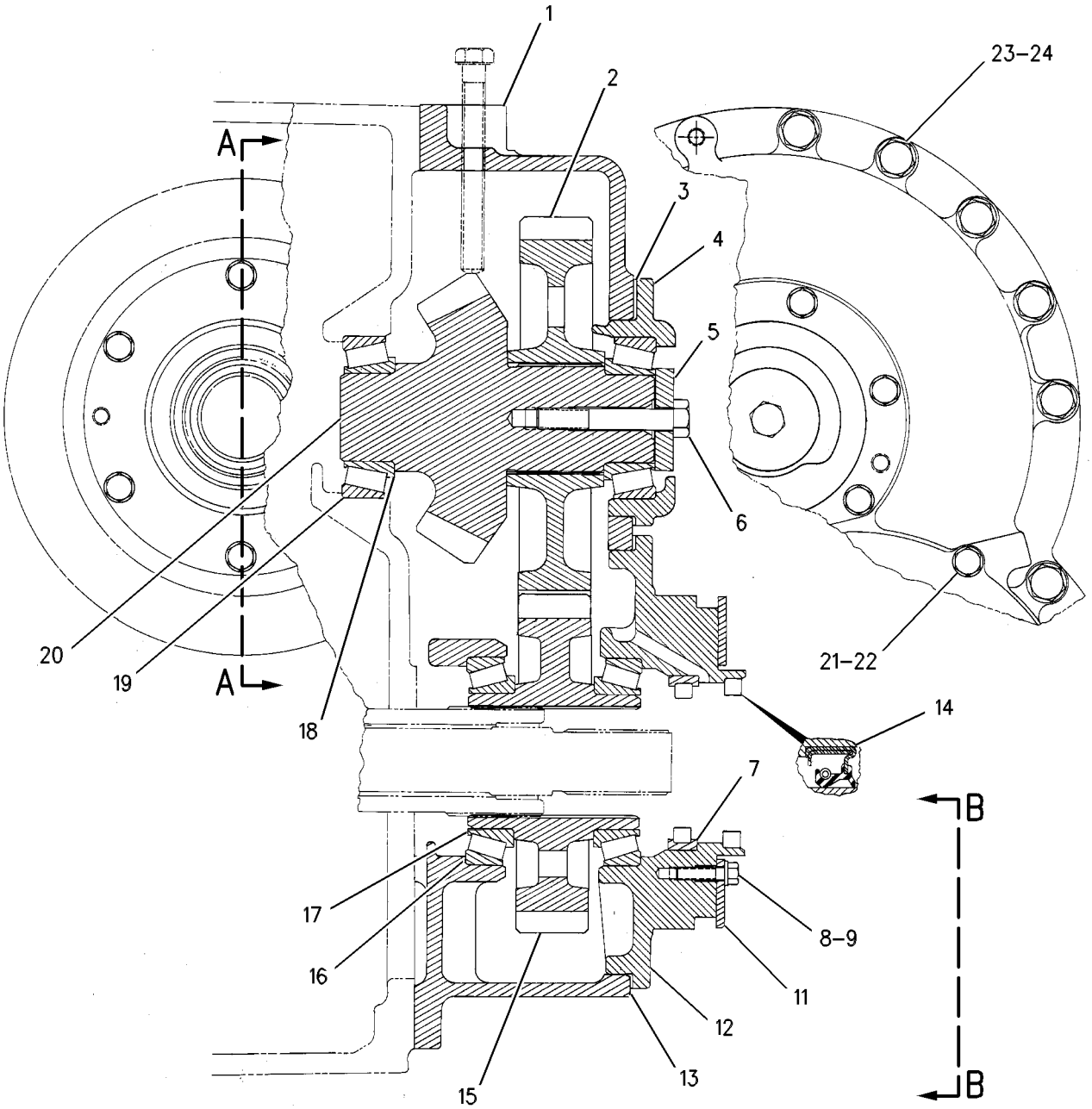

REFER TO ALL ILLUSTRATIONS OF
THIS GROUP FOR AUXILIARY VIEWS

GRAPHIC #1

g00615278

166-3485 **GEAR GP-BEVEL & TRANSFER (*contd.*)** **i06231080**

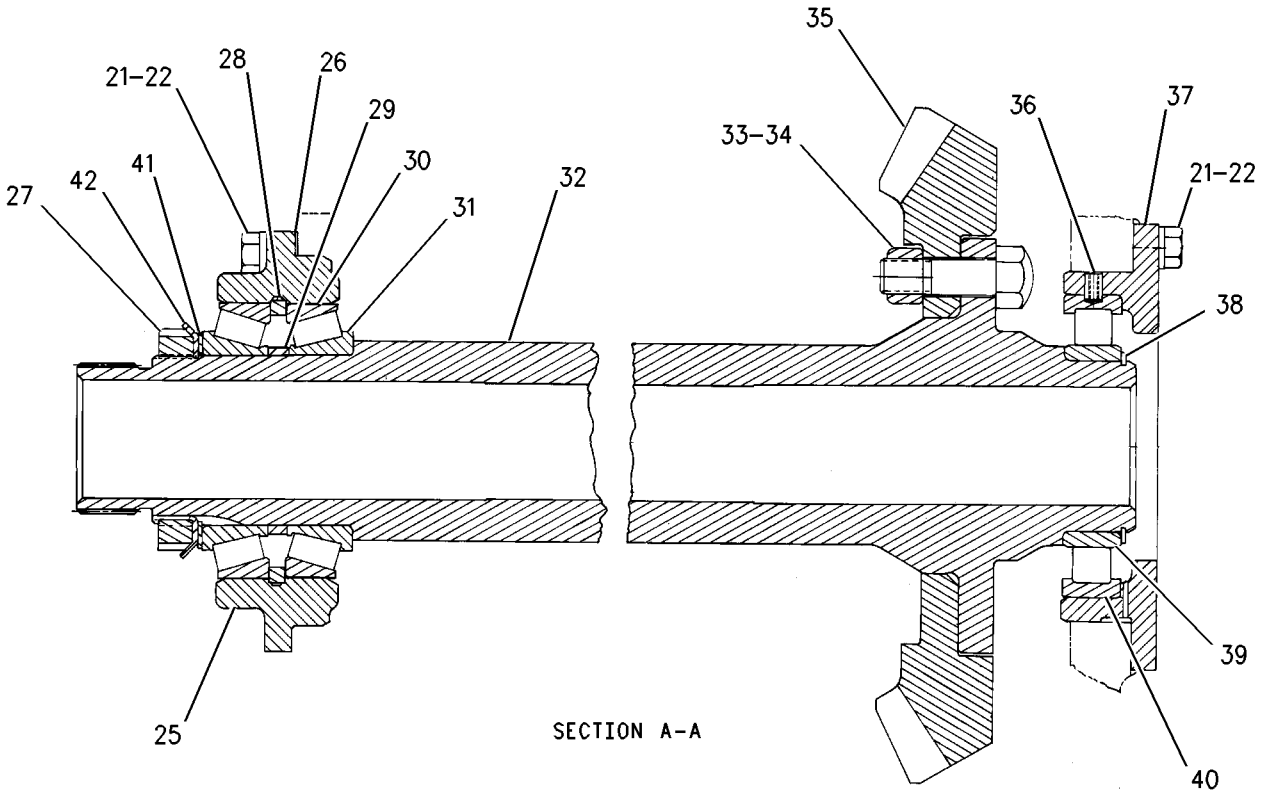

SECTION A-A

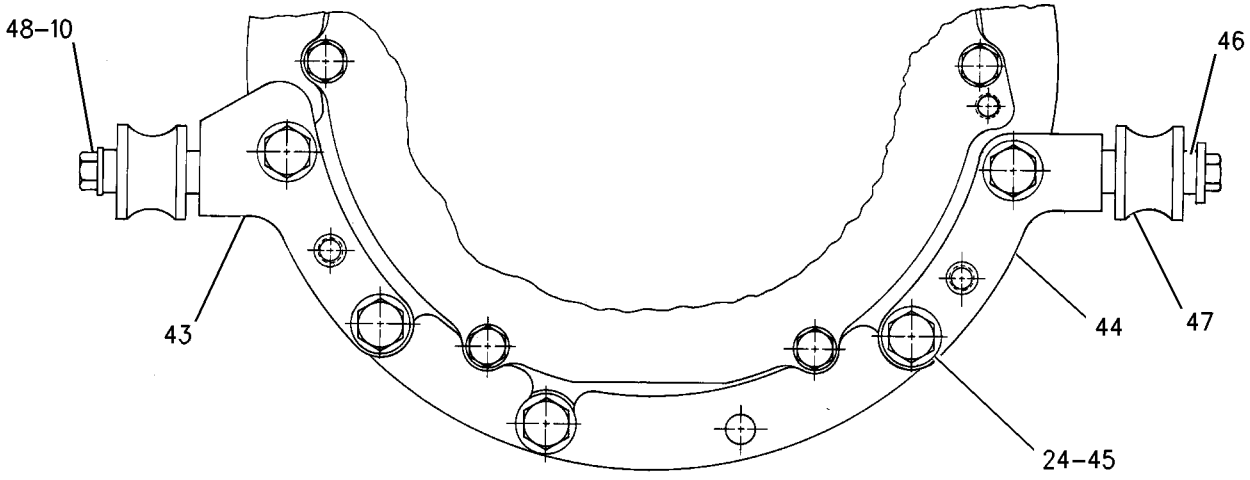

VIEW B-B

GRAPHIC #2 **<END>** g00744115

244-2616 GEAR GP-BEVEL & TRANSFER

S/N: 6R31-UP

PART OF 417-8819 TRANSMISSION AR

AN ATTACHMENT

SMCS-3011 **i06147746**

NOTE	REF NO	GRAPHIC REF	PART NUMBER	QTY	PART NAME 1 2 3 4 5 6 (PRODUCT LEVEL)	SEE PAGE
	1	1	**422-6929**	1	CASE AS	
		1	**2D-6642**	1	BALL	
B	2	1	**9P-1922**	1	SHIM PACK (INCLUDES 14-SHIMS)	
	3	1	**9W-2992**	1	CAGE-BEARING	
	4	1	**6S-2828**	2	CUP-BEARING	
	5	1	**6S-2829**	2	CONE-BEARING	
	6	1	**248-0849**	1	GEAR-TRANSFER (49-TEETH)	
	7	1	**9W-3660**	1	PINION-BEVEL (20-TEETH)	
B	8	1	**9P-1921**	1	SHIM PACK (INCLUDES 14-SHIMS)	
	9	1	**6I-8511**	1	CAGE-BEARING	
	10	1	**248-0848**	1	GEAR-TRANSFER (45-TEETH)	
	11	1	**7H-7628**	1	BEARING	
	12	1	**8D-1817**	2	CUP-BEARING	
	13	1	**8D-1819**	2	CONE-BEARING	
	14	1	**216-0273**	1	SEAL-LIP TYPE	
	15	1	**7T-1474**	1	BRACKET-ROLLER	
	16	1	**6T-3852**	2	ROLLER	
	17	1	**6T-3853**	2	SLEEVE	
	18	1	**6I-8507**	1	PLATE-RETAINER	
	19	1	**5M-2894**	4	WASHER-HARD (10.2X18.5X2.5-MM THK)	
	20	1	**0S-1591**	4	BOLT (3/8-16X1.5-IN)	
	21	1	**7D-1649**	2	WASHER-HARD (13.5X32X5-MM THK)	
	22	1	**1A-5822**	2	BOLT (1/2-13X2.75-IN)	
	23	1	**7T-1475**	1	BRACKET-ROLLER	
	24	1	**5P-8247**	16	WASHER-HARD (17X32X3.5-MM THK)	
	25	1	**1D-4601**	4	BOLT (5/8-11X8.5-IN)	
	26	1,2	**5P-8245**	24	WASHER-HARD (13.5X25.5X3-MM THK)	
	27	1,2	**7B-3235**	24	BOLT (1/2-13X1.375-IN)	
	28	1	**0L-1169**	12	BOLT (5/8-11X3.75-IN)	
	29	2	**9W-5150**	1	SHAFT-BEVEL GEAR	
	30	2	**9P-1925**	1	GEAR-BEVEL (35-TEETH)	
	31	2	**5P-7592**	1	RACE-ROLLER BEARING	
	32	2	**4H-0019**	1	RACE & ROLLER AS	
	33	2	**6J-3473**	1	RING-SNAP	
	34	2	**7T-9946**	1	CAGE-BEARING	
	35	2	**9G-0832**	1	DOWEL	
	36	2	**0S-1897**	12	BOLT (3/4-16X2.25-IN)	
	37	2	**1S-1860**	12	NUT-TRACK (3/4-16-THD)	
	38	2	**1P-3935**	2	CONE-BEARING	
	39	2	**9W-8612**	1	SPACER-BEARING	
	40	2	**6T-0364**	1	RING-RETAINING	
	41	2	**1P-3934**	2	CUP-BEARING	
	42	2	**9P-7072**	1	WASHER (90.6X115X2.5-MM THK)	
	43	2	**9W-1570**	1	CAGE AS-BEARING	
		2	**4B-9880**	1	BALL	
		2	**9W-1569**	1	PLUG-ORIFICE	
	44	2	**6V-2404**	1	LOCKWASHER-BEARING	
	45	2	**1L-6957**	1	LOCKNUT-BEARING	
B	46	2	**9P-1478**	2	SHIM PACK (INCLUDES 14-SHIMS)	
	47	1	**3T-6742**	1	RETAINER	
	48	1	**0S-1569**	1	BOLT (5/8-11X4-IN)	

B - USE AS REQUIRED

244-2616 **GEAR GP-BEVEL & TRANSFER (*contd.*)** **i06147746**

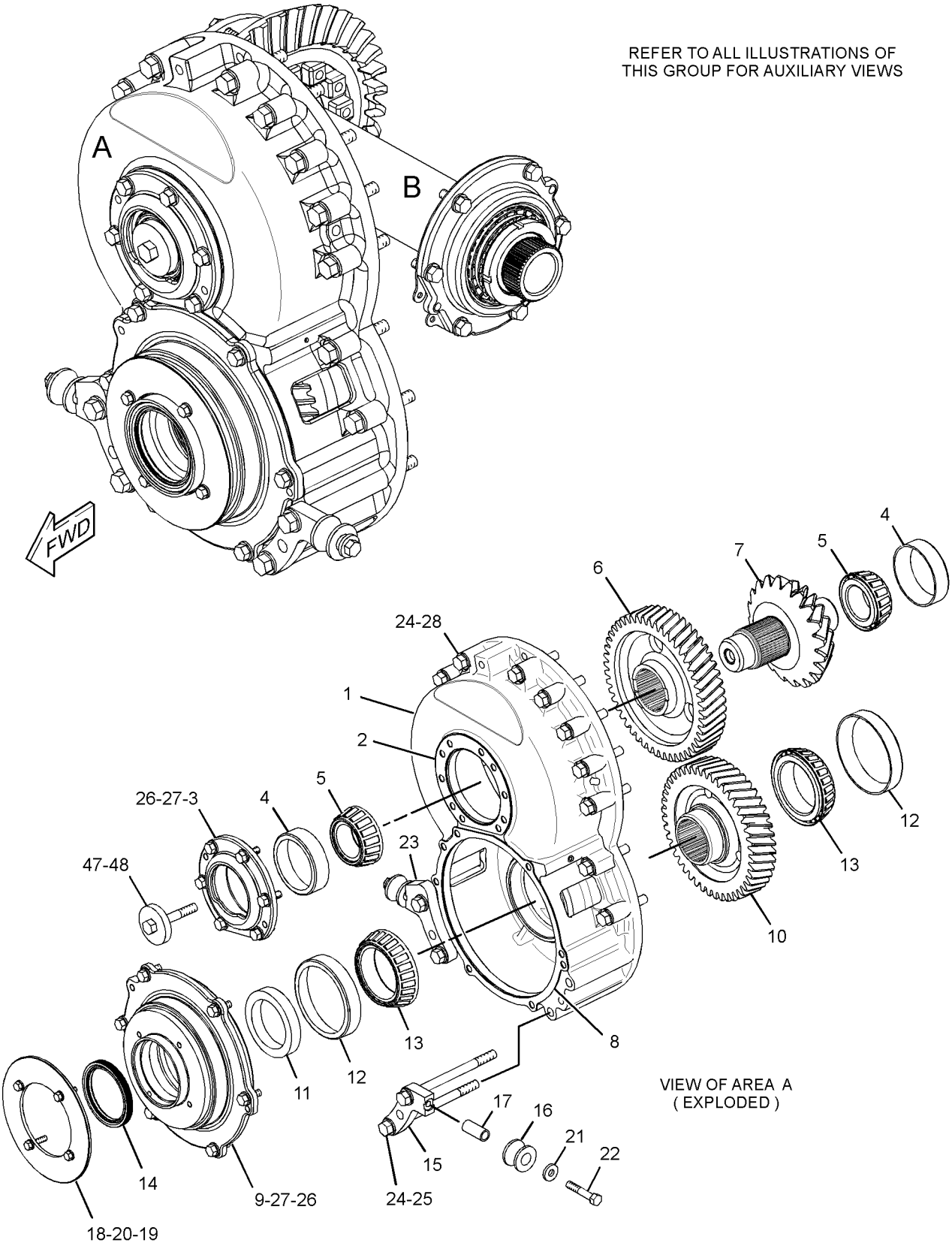

GRAPHIC #1 g03425711

244-2616 **GEAR GP-BEVEL & TRANSFER (*contd.*)** **i06147746**

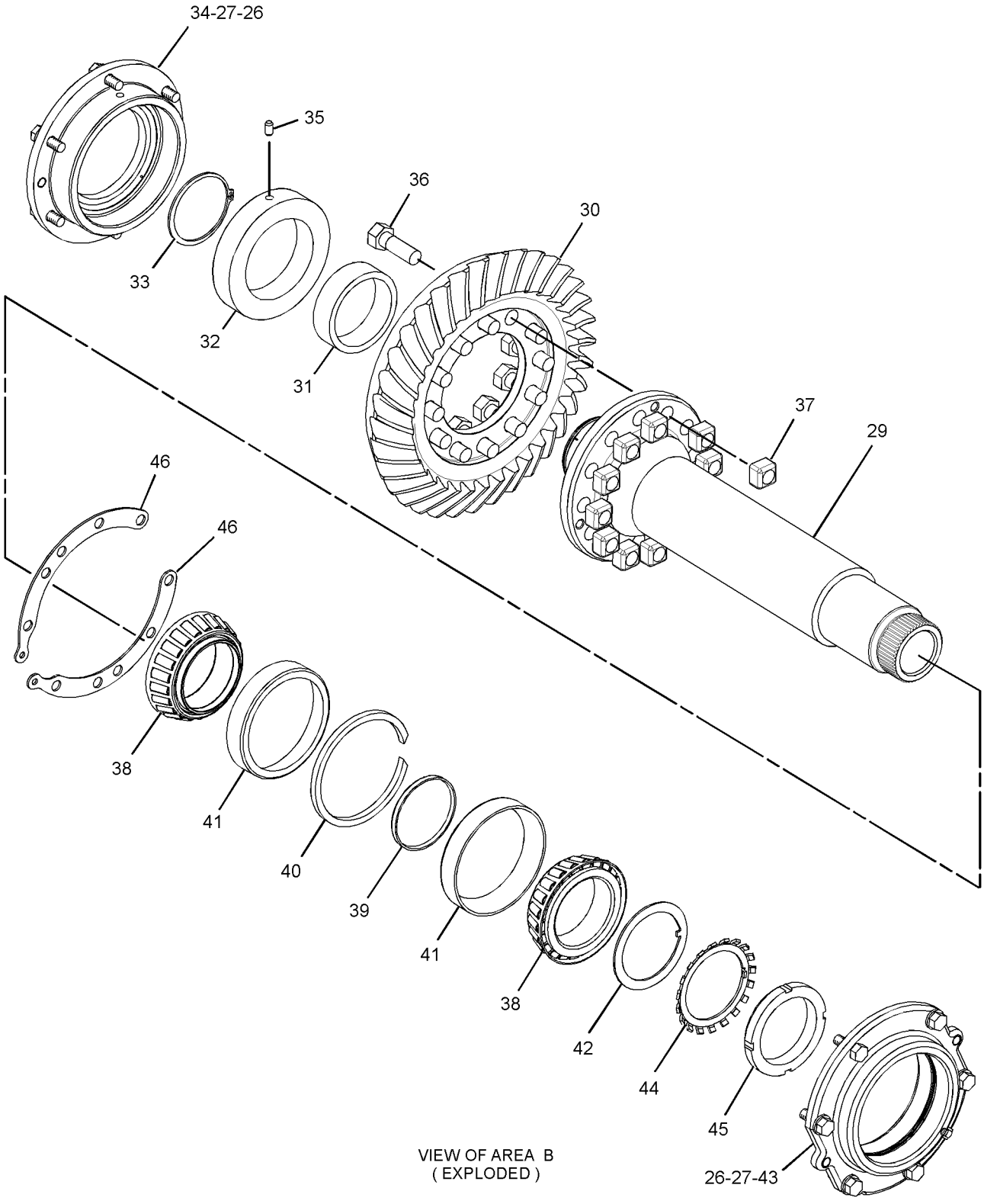

VIEW OF AREA B
(EXPLODED)

GRAPHIC #2 **<END>** g03426026

398-4487 LINES GP-POWER TRAIN OIL

S/N: PPP1-UP; SSS1-UP; TTT1-UP
PART OF 398-4284, 398-4285 POWER TRAIN AR
ALSO AN ATTACHMENT

SMCS-3016 **i06216349**

NOTE	REF NO	GRAPHIC REF	PART NUMBER	QTY	PART NAME 1 2 3 4 5 6 (PRODUCT LEVEL)	SEE PAGE
Y	1	1	*332-8833*	1	FILTER GP-OIL (MEDIUM PRESSURE)	305
	2	1	*153-6243*	1	TEE AS	
		1	**2S-4078**	1	SEAL-O-RING	
		1	**5K-9090**	1	SEAL-O-RING	
		1	**6V-9746**	1	SEAL-O-RING	
		1	**8T-1120**	1	TEE-O-RING PORT	
	3	3	**3T-6471**	1	SCREEN AS (TORQUE CONVERTER SCAVENGE)	
		3	**3T-6469**	1	WASHER (19X26X1.6-MM THK)	
	4	3	**6Y-5439**	1	FLANGE	
	5	3	**7V-8532**	1	SPACER	
	6	1	**8C-3447**	1	CAP-DUST (TRANSMISSION OIL)	
	7	1	**8G-5654**	1	GASKET	
	8	1	**8T-9905**	1	PLATE-IDENTIFICATION (TRANSMISSION OIL FILL TUBE)	
	9	1	**9D-7924**	3	MOUNTING AS	
	10	2	**9G-5127**	1	BREATHER AS (POWER TRAIN OIL)	
	11	3	**9P-0214**	1	SCREEN AS (TORQUE CONVERTER SCAVENGE)	
	12	1	**068-4497**	1	CAP-OIL FILLER (ENGINE)	
	13	4	**148-1928**	1	VALVE-RELIEF (TORQUE CONVERTER INLET)	
	14	3	*148-8336*	1	CONNECTOR AS	
		3	**3J-1907**	1	SEAL-O-RING	
		3	**6V-8397**	1	SEAL-O-RING	
		3	**6V-8636**	1	CONNECTOR	
	15	3	**159-5988**	1	FITTING	
	16	4	*169-5863*	1	ADAPTER AS	
		4	**4J-5477**	1	SEAL-O-RING	
		4	**7X-7945**	1	ADAPTER	
	17	2	*196-2036*	1	TEE AS	
		2	**3K-0360**	1	SEAL-O-RING	
		2	**6V-8398**	1	SEAL-O-RING	
		2	**9X-2492**	1	TEE-O-RING	
Y	18	3	**220-1418**	1	VALVE GP-RELIEF (TORQUE CONVERTER COOLER)	350
	19	3	*241-6215*	1	ELBOW AS	
		3	**3J-1907**	1	SEAL-O-RING	
		3	**6V-8076**	1	ELBOW	
	20	1	*296-7059*	1	FITTING AS	
		1	**3K-0360**	1	SEAL-O-RING	
		1	**178-5883**	1	FITTING	
Y	21	1	*331-7020*	1	ACCUMULATOR GP-HYDRAULIC (CHARGED)	541
	22	3	**339-0078**	1	ADAPTER	
	23	1	**344-1950**	1	CLIP (SLOT)	
	24	4	**426-2434**	1	TUBE AS	
I	25	1	**426-2444**	1	HOSE AS	
I	26	1	**426-2445**	1	HOSE AS	
I	27	2	**426-2446**	1	HOSE AS	
I	28	2	**426-2447**	1	HOSE AS	
I	29	3	**426-2450**	1	HOSE AS	
I	30	3	**426-2451**	1	HOSE AS	
I	31	4	**426-2452**	1	HOSE AS	
I	32	4	**426-2453**	1	HOSE AS	
I	33	1	**426-2456**	1	HOSE AS	
	34	3	**426-2457**	1	TUBE AS	
	35	3	**426-2458**	1	TUBE AS	
Y	36	2	**428-9024**	1	PUMP GP-GEAR (TRANSMISSION, TORQUE CONVERTER)	332
	37	1	**431-4846**	1	TUBE AS	
	38	1	**431-4851**	1	GAUGE (POWER TRAIN OIL)	
I	39	3	**431-4857**	1	HOSE AS	
I	40	4	**431-4858**	1	HOSE AS	

398-4487 **LINES GP-POWER TRAIN OIL (*contd.*)** **i06216349**

NOTE	REF NO	GRAPHIC REF	PART NUMBER	QTY	PART NAME 1 2 3 4 5 6 (PRODUCT LEVEL)	SEE PAGE
I	41	3	**431-4859**	1	HOSE AS	
	42	1	**431-4860**	1	TUBE	
	43	4	**461-5039**	1	MANIFOLD	
	44	2	**472-0593**	1	HOSE AS	
	45	4	**033-6034**	1	SEAL-O-RING	
	46	3	**061-7540**	1	SEAL-O-RING	
	47	1	*148-8339*	2	CONNECTOR AS	
					(EACH INCLUDES)	
		1	**6V-8716**	1	CONNECTOR (STRAIGHT)	
		1	**6V-9746**	1	SEAL-O-RING	
		1	**7M-8485**	1	SEAL-O-RING	
	48	1	*148-8364*	1	ELBOW AS	
		1	**3K-0360**	1	SEAL-O-RING	
		1	**6V-8398**	1	SEAL-O-RING	
		1	**6V-8625**	1	ELBOW	
	49	4	*148-8368*	1	ELBOW AS	
		4	**3J-1907**	1	SEAL-O-RING	
		4	**4J-5477**	1	SEAL-O-RING	
		4	**6V-8627**	1	ELBOW	
	50	3	*148-8378*	1	ELBOW AS	
		3	**3J-1907**	1	SEAL-O-RING	
		3	**6V-8397**	1	SEAL-O-RING	
		3	**6V-8724**	1	ELBOW	
	51	1	*148-8395*	1	PLUG AS	
		1	**3K-0360**	1	SEAL-O-RING	
		1	**9S-8005**	1	PLUG-O-RING	
	52	1	*148-8406*	1	PLUG AS	
		1	**7M-8485**	1	SEAL-O-RING	
		1	**9S-9334**	1	PLUG-O-RING	
	53	3	*150-3065*	1	ELBOW AS	
		3	**3J-1907**	1	SEAL-O-RING	
		3	**6V-0484**	1	ELBOW	
	54	3	*153-6252*	1	CONNECTOR AS	
		3	**6V-8398**	1	SEAL-O-RING	
		3	**7M-8485**	1	SEAL-O-RING	
		3	**9X-8408**	1	CONNECTOR	
	55	1	*162-0177*	2	PLUG AS	
					(EACH INCLUDES)	
		1	**3J-1907**	1	SEAL-O-RING	
		1	**9S-8004**	1	PLUG	
	56	1	**162-9523**	2	GROMMET	
	57	3,4	*164-5567*	3	COUPLER AS-QUICK DISCONNECT (MALE)	
					(EACH INCLUDES)	
		3,4	**6V-3965**	1	FITTING (QUICK DISCONNECT)	
		3,4	**214-7568**	1	SEAL-O-RING	
	58	1	*164-5590*	1	VALVE GP-FLUID SAMPLING (POWER TRAIN OIL)	
		1	**3J-7354**	1	SEAL-O-RING	
		1	**8C-3446**	1	VALVE-SAMPLING	
	59	1	*169-7397*	1	ADAPTER AS	
		1	**3K-0360**	1	SEAL-O-RING	
		1	**3P-1932**	1	ADAPTER	
	60	3	**180-4362**	2	SEAL-RECTANGULAR	
	61	3	**1H-7339**	1	SEAL-O-RING	
	62	2,3,4	**1P-4578**	12	FLANGE-HALF	
	63	3	**1P-4582**	2	FLANGE-HALF	
	64	3,4	**1P-4584**	4	FLANGE-HALF	
	65	3	**1V-7753**	1	SPACER (0.546X0.841X1.75-IN THK)	
	66	3	**290-6891**	1	CLIP-2 PIECE	
	67	3	**290-6892**	1	CLIP	
	68	4	**2P-1279**	1	LOCKNUT (9/16-18-THD)	
	69	2	*326-0315*	1	ADAPTER AS	
		2	**3J-1907**	1	SEAL-O-RING	
		2	**5P-3501**	1	ADAPTER	

398-4487 **LINES GP-POWER TRAIN OIL (*contd.*)** **i06216349**

NOTE	REF NO	GRAPHIC REF	PART NUMBER	QTY	PART NAME 1 2 3 4 5 6 (PRODUCT LEVEL)	SEE PAGE
	70	1	**344-1951**	1	CLIP (TAB)	
M	71	3	**344-5675**	2	NUT (M10X1.5-THD)	
	72	3	**3J-1907**	1	SEAL-O-RING	
	73	2,3	**4J-0520**	4	SEAL-O-RING	
	74	2,3,4	**4J-0522**	6	SEAL-O-RING	
	75	4	**4J-0524**	1	SEAL-O-RING	
	76	4	**4J-0527**	1	SEAL-O-RING	
	77	1	**4J-5267**	1	SEAL-O-RING	
	78	2	**5F-3106**	1	SEAL-O-RING	
	79	4	**5P-4268**	1	SEAL-O-RING	
	80	3	**5P-7085**	1	SEAL-RECTANGULAR	
	81	4	**5P-8210**	3	SEAL-O-RING	
	82	4	**6J-2680**	2	SEAL-O-RING	
	83	3,4	**6V-0852**	3	CAP-DUST	
	84	1	**6V-1572**	2	CLIP (SLOT)	
	85	1	**6V-1573**	2	CLIP (TAB)	
	86	1	**6V-1889**	1	CLIP	
	87	3	**6V-4365**	1	SEAL-O-RING	
	88	3	**7G-3832**	1	GROMMET	
	89	3	**7G-3833**	1	CLIP (TAB)	
	90	3	**7G-3834**	1	CLIP (SLOT)	
	91	1	**7S-8920**	1	CLIP (SLOT)	
	92	1	**7S-8921**	1	CLIP (TAB)	
	93	4	**7X-0510**	1	WASHER-HARD (15.5X29X3-MM THK)	
	94	3	**7X-0584**	8	WASHER-HARD (13.5X20.5X2-MM THK)	
	95	3	**7X-7729**	1	WASHER (11X25X3-MM THK)	
	96	1,3	**8C-3206**	4	FLANGE-HALF	
	97	3	**8L-2786**	1	SEAL-O-RING	
	98	4	**8M-2772**	1	CLIP	
	99	3	**8M-4986**	2	SEAL-O-RING	
	100	3,4	**8S-0023**	2	CLIP (SLOT)	
	101	3,4	**8S-0024**	2	CLIP (TAB)	
	102	1,2,3,4	**8T-4121**	55	WASHER-HARD (11X21X2.5-MM THK)	
M	103	1	**8T-4136**	2	BOLT (M10X1.5X25-MM)	
M	104	1,4	**8T-4137**	2	BOLT (M10X1.5X20-MM)	
M	105	3	**8T-4183**	9	BOLT (M12X1.75X40-MM)	
M	106	3,4	**8T-4184**	8	BOLT (M12X1.75X45-MM)	
M	107	3	**8T-4186**	8	BOLT (M10X1.5X40-MM)	
M	108	1,3	**8T-4195**	5	BOLT (M10X1.5X30-MM)	
M	109	1,2,3,4	**8T-4196**	24	BOLT (M10X1.5X35-MM)	
M	110	4	**8T-4198**	2	BOLT (M10X1.5X100-MM)	
	111	3,4	**8T-4223**	14	WASHER-HARD (13.5X25.5X3-MM THK)	
	112	1	**8T-4226**	6	WASHER-PLATED (10.5X45X3-MM THK)	
M	113	4	**8T-4648**	1	BOLT (M12X1.75X70-MM)	
M	114	3	**8T-4910**	4	BOLT (M12X1.75X60-MM)	
M	115	3	**8T-5005**	8	BOLT (M10X1.5X70-MM)	
M	116	1,4	**8T-6466**	5	BOLT (M10X1.5X60-MM)	
M	117	2	**8T-7338**	2	BOLT (M16X2X45-MM)	
	118	1	**9F-6656**	1	RING-RETAINING	
	119	2	**9X-8257**	2	WASHER (17.5X30X3.5-MM THK)	

I - REFER TO HYDRAULIC INFORMATION SYSTEM
M - METRIC PART
Y - SEPARATE ILLUSTRATION

398-4487 **LINES GP-POWER TRAIN OIL (*contd.*)** **i06216349**

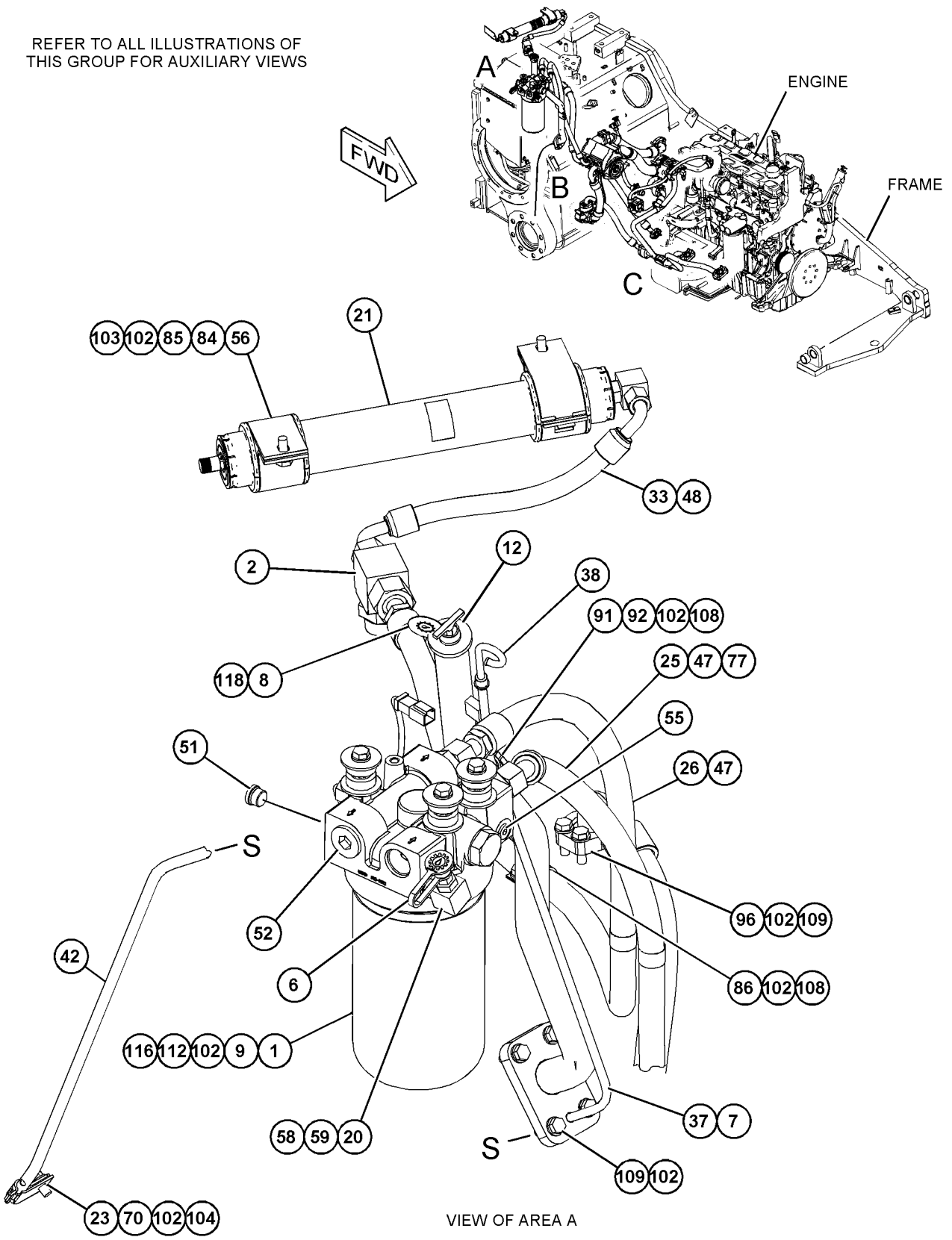

GRAPHIC #1 g03863820

398-4487 **LINES GP-POWER TRAIN OIL (*contd.*)** **i06216349**

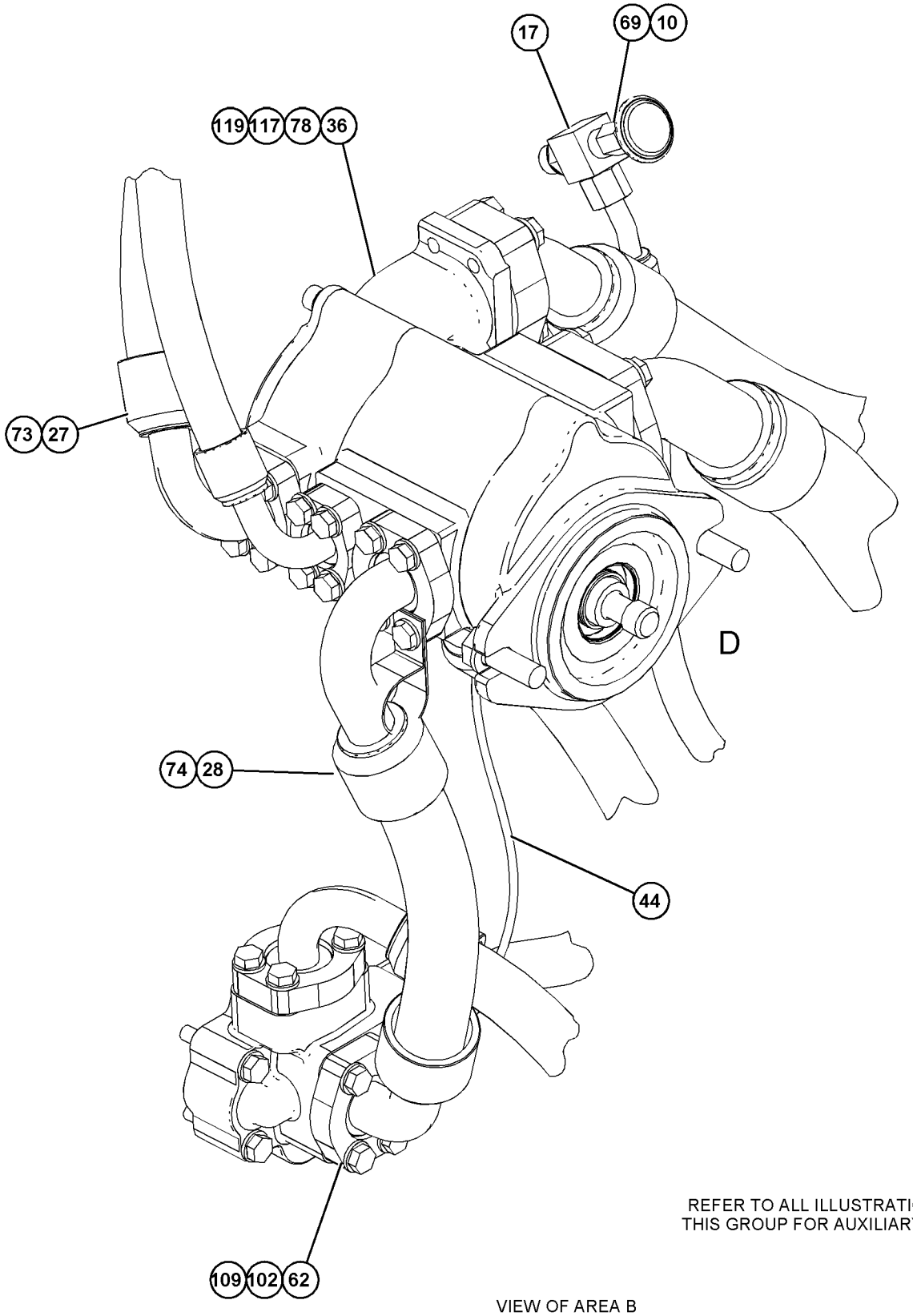

REFER TO ALL ILLUSTRATIONS OF
THIS GROUP FOR AUXILIARY VIEWS

VIEW OF AREA B

GRAPHIC #2

g03863822

398-4487 **LINES GP-POWER TRAIN OIL (*contd.*)** **i06216349**

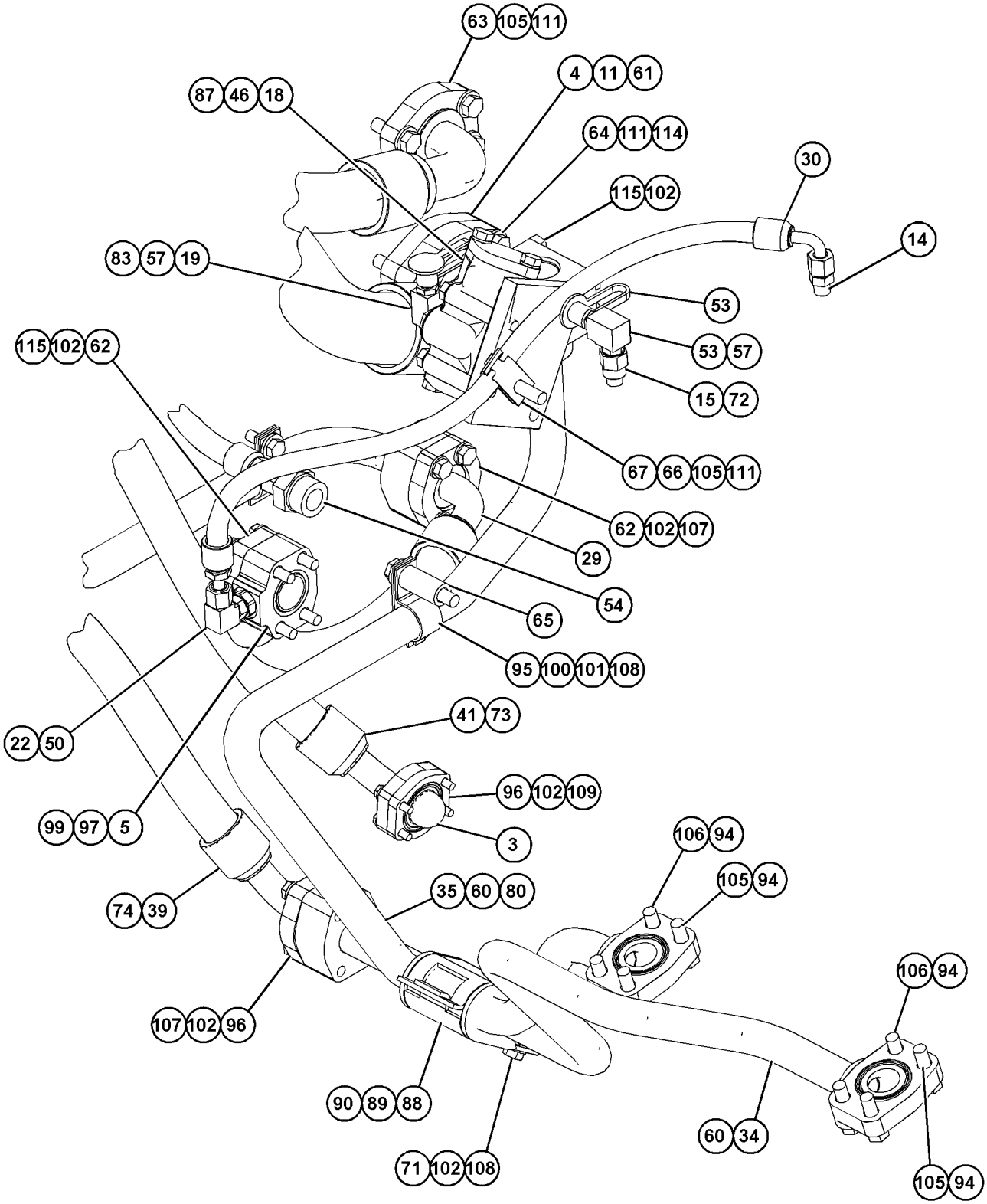

VIEW OF AREA C

GRAPHIC #3 g03863823

398-4487 **LINES GP-POWER TRAIN OIL (*contd.*)** **i06216349**

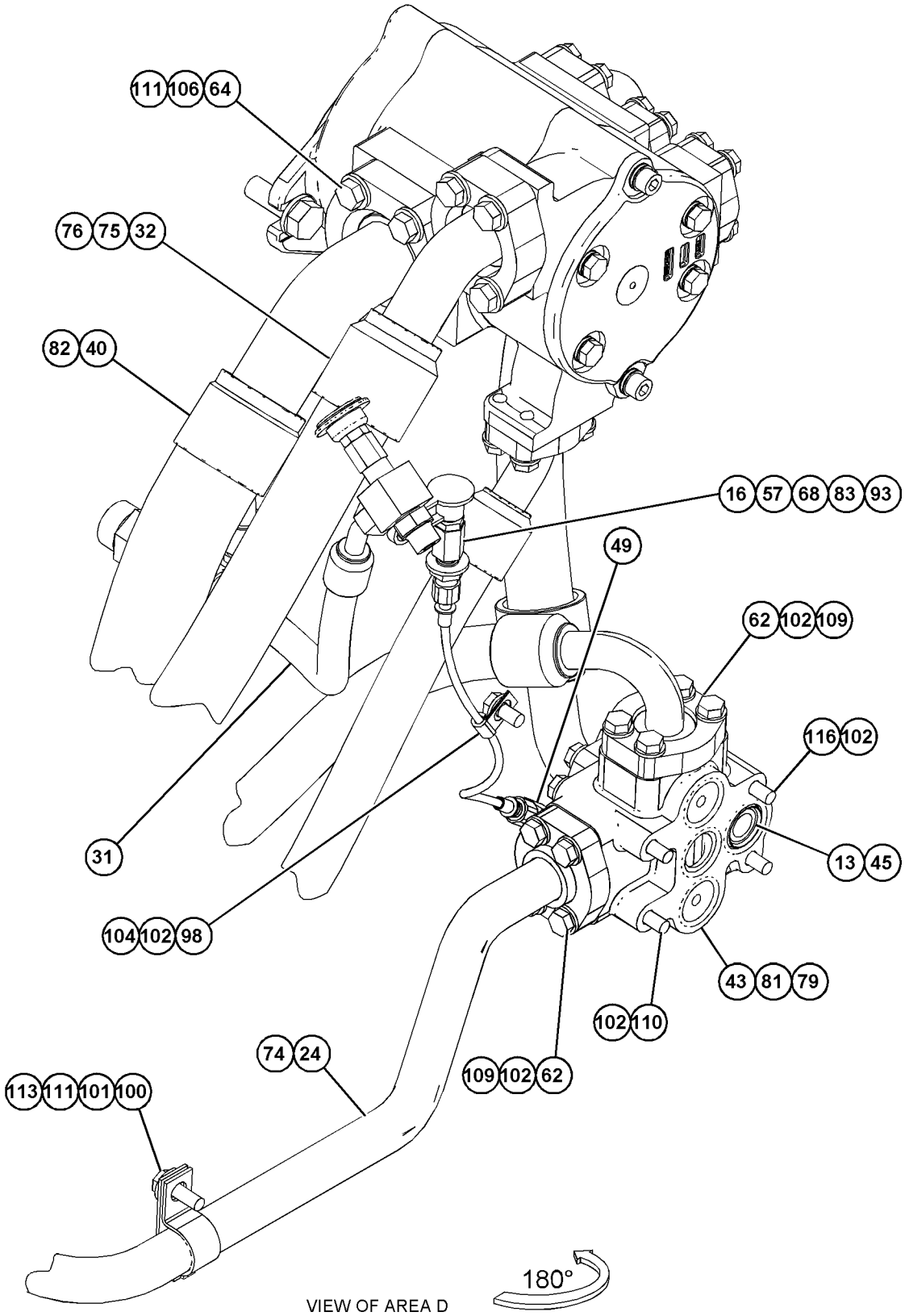

GRAPHIC #4 **<END>** g03863824

259-3119 MOUNTING GP-FINAL DRIVE

S/N: PPP1-UP; SSS1-UP; TTT1-UP
PART OF 398-4284, 398-4285 POWER TRAIN AR
ALSO AN ATTACHMENT

SMCS-4050 **i05636909**

NOTE	REF NO	GRAPHIC REF	PART NUMBER	QTY	PART NAME 1 2 3 4 5 6 (PRODUCT LEVEL)	SEE PAGE
	1	1	**8D-4771**	2	SEAL-O-RING	
	2	1	**219-4481**	32	BOLT (M22X2.5X85-MM)	
	3	1	**2R-0098**	2	SEAL-O-RING	
	4	1	**6F-6673**	4	SEAL-O-RING	
	5	1	**8C-6913**	32	WASHER-HARD (24X41.5X4-MM THK)	
M	6	1	**8T-4182**	4	BOLT (M10X1.5X45-MM)	
	7	1	**8T-4223**	4	WASHER-HARD (13.5X25.5X3-MM THK)	
	8	1	**8T-8919**	4	BOLT (1/2-13X1.75-IN)	
	9	1	**9X-2027**	4	WASHER (11X18X2-MM THK)	

M - METRIC PART

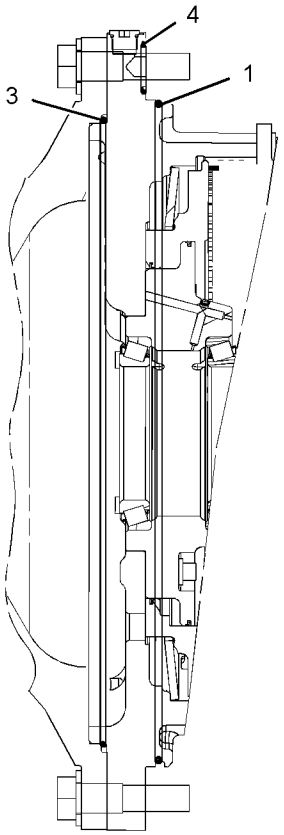

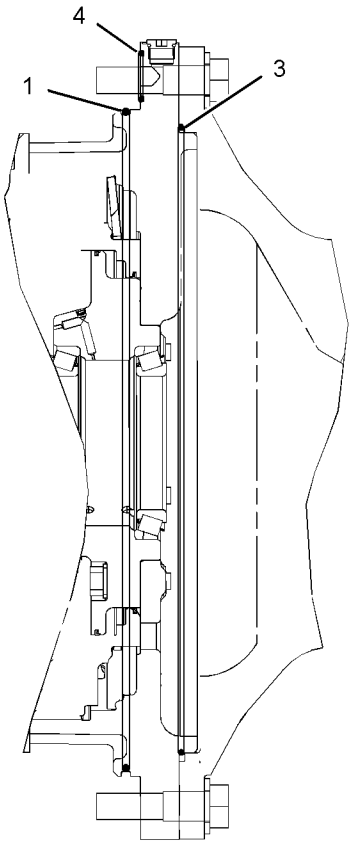

VIEW B-B
(BOTH SIDES)

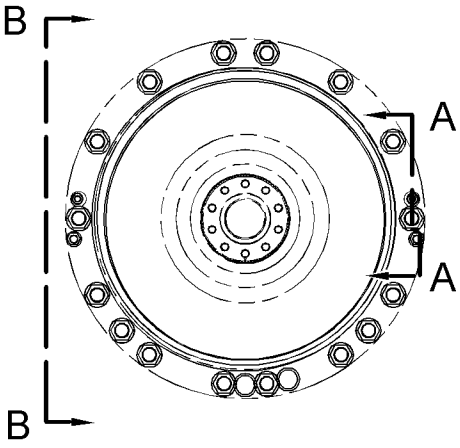

FRONT VIEW

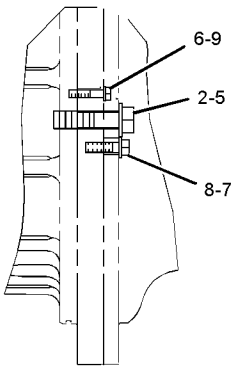

SECTION A-A

GRAPHIC #1

<END>

g02187413

227-0165 MOUNTING GP-TRANSMISSION

S/N: PPP1-UP; SSS1-UP; TTT1-UP
PART OF 398-4284, 398-4285 POWER TRAIN AR
ALSO AN ATTACHMENT

SMCS-3082 **i06147141**

NOTE	REF NO	GRAPHIC REF	PART NUMBER	QTY	PART NAME 1 2 3 4 5 6 (PRODUCT LEVEL)	SEE PAGE
	1	1	**8G-9880**	2	TUBE AS	
	2	1	**1M-9011**	1	RING-TORIC	
	3	1	**2D-6506**	1	SEAL-O-RING	
	4	1	**8M-4390**	1	SEAL-O-RING	
	5	1	**8T-4121**	8	WASHER-HARD (11X21X2.5-MM THK)	
M	6	1	**6V-7744**	4	LOCKNUT (M10X1.5-THD)	
M	7	1	**8T-4196**	4	BOLT (M10X1.5X35-MM)	
	8	1	**8T-4223**	22	WASHER-HARD (13.5X25.5X3-MM THK)	
M	9	1	**8T-4648**	19	BOLT (M12X1.75X70-MM)	
M	10	1	**8T-5041**	3	BOLT (M12X1.75X120-MM)	
	11	1	**9M-7002**	2	SEAL-O-RING	

M - METRIC PART

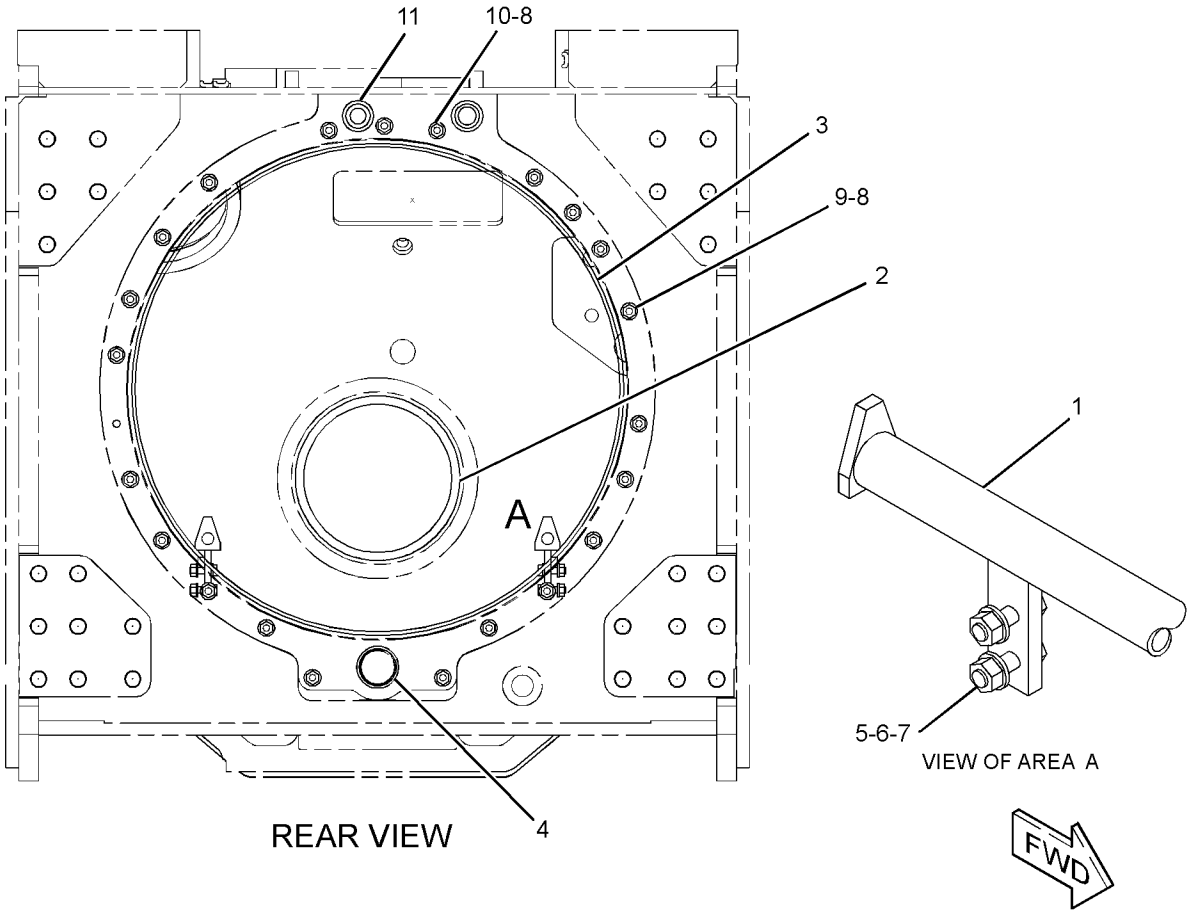

GRAPHIC #1 **<END>** g01206341

387-6727 PLANETARY GP-TRANSMISSION

S/N: 6R21-UP; 6R31-UP

PART OF 417-8818, 417-8819 TRANSMISSION AR

AN ATTACHMENT

SMCS-3160 **i06230954**

NOTE	REF NO	GRAPHIC REF	PART NUMBER	QTY	PART NAME 1 2 3 4 5 6 (PRODUCT LEVEL)	SEE PAGE
	1	1	**3T-4377**	2	SEAL-RING	
	2	2,3	**382-6924**	20	SPRING	
	3	1	**5D-2989**	3	BEARING	
	4	3	**5M-6126**	6	BEARING AS-ROLLER	
	5	3	**5P-3930**	3	BEARING AS-ROLLER	
	6	4	**5P-8194**	1	RING-RETAINING	
R	7	1,2,3	**6I-8500**	9	PLATE-CLUTCH	
	8	1	**6T-7882**	3	GEAR-PLANETARY (25-TEETH)	
	9	1,3	**6V-0473**	3	RING-RETAINING	
	10	4	**6V-2478**	1	RING-RETAINING	
	11	1	**6Y-1602**	1	COUPLING	
	12	1	**6Y-4819**	1	CARRIER-PLANETARY	
	13	3	**7G-2516**	6	GEAR-PLANETARY (24-TEETH)	
	14	4	**7G-2830**	2	RING-SEAL	
	15	2	**7G-6355**	1	GEAR-RING (90-TEETH)	
	16	3	**7G-7218**	1	CARRIER-PLANETARY	
	17	2	**7H-7658**	10	SPRING	
	18	2	**7T-3950**	1	GEAR (83-TEETH)	
	19	1	**7T-9272**	1	GEAR-SUN (34-TEETH)	
	20	3	**7T-9370**	1	GEAR-SUN (51-TEETH)	
	21	3	**8E-8299**	6	DISC-THRUST	
	22	3	**8E-8304**	12	DISC-THRUST	
	23	1	**8E-8305**	6	DISC-THRUST	
	24	3	**8P-1916**	3	GEAR-PLANETARY (20-TEETH)	
R	25	4	**8P-1964**	2	PLATE-CLUTCH	
	27	3	**8P-2053**	1	SEAL-RING	
	28	3	**9G-0289**	3	SHAFT-PLANETARY	
	29	4	**9G-0290**	1	HUB-CLUTCH	
	30	4	**9G-8020**	1	PLATE-RETAINER	
	31	2	**9M-4355**	10	DAMPER-BOLT	
	33	3	**9P-7757**	1	GEAR-SUN (42-TEETH)	
	34	3	**9P-8614**	1	GEAR-RING (90-TEETH)	
	35	1	**9P-8623**	3	SHAFT-PLANETARY	
	36	3	**9P-8626**	1	GEAR-SUN (42-TEETH)	
	37	4	**9U-9550**	1	PLATE-CLUTCH	
	38	4	**9W-8270**	1	GEAR-RING (90-TEETH)	
	39	4	**105-8183**	1	HOUSING AS	
		4	**6B-6863**	1	PIN-SPRING	
		4	**6P-7704**	1	CARRIER-RING	
	40	3	**112-4511**	3	PIN-SPRING	
	41	3	**112-5585**	3	SHAFT-PLANETARY	
	42	3	**112-8041**	1	CARRIER-PLANETARY	
	43	1	**131-4091**	1	SEAL-RING	
	44	1,2,3	**144-4284**	3	RING-LOCK	
	45	4	**191-8304**	1	SENSOR GP-SPEED (TRANSMISSION OUTPUT 1)	
	46	4	**191-8305**	1	SENSOR GP-SPEED (TRANSMISSION OUTPUT 2)	
					(EACH SENSOR GP INCLUDES)	
		4	**137-6645**	1	PAD-CONNECTOR	
	47	1	**231-8855**	1	SHAFT AS-INPUT	
		1	**156-4406**	1	PLUG-PIPE	
	48	3	**234-9994**	1	SHAFT AS-OUTPUT	
	48A	3	**3T-8729**	1	BUSHING	
	48B	3	**9G-6744**	1	BUSHING	
	49	4	**237-2209**	1	ROTOR	
	50	4	**237-9601**	1	BRACKET AS	
		4	**8M-8489**	2	DOWEL	
	51	1,2	**321-5718**	2	PISTON	

387-6727 **PLANETARY GP-TRANSMISSION (*contd.*)** **i06230954**

NOTE	REF NO	GRAPHIC REF	PART NUMBER	QTY	PART NAME 1 2 3 4 5 6 (PRODUCT LEVEL)	SEE PAGE
	52	3	**321-5719**	1	PISTON	
	53	4	**321-5720**	1	PISTON	
	54	2	**321-5721**	1	PISTON	
	55	1,2,3	**370-9775**	13	DISC-FRICTION	
	56	4	**370-9778**	3	DISC-FRICTION	
	57	2	**348-7859**	1	HOUSING-CLUTCH	
	58	4	**348-7861**	1	MANIFOLD	
	59	2	**349-4846**	1	PLATE AS	
		2	**5H-6202**	2	PIN	
	60	1	**354-0158**	1	HOUSING AS	
		1	**3F-5022**	1	PLUG-CUP	
	61	3	**354-0168**	1	HOUSING AS-CLUTCH	
		3	**1A-2223**	4	DOWEL	
		3	**4K-8603**	1	PLUG-CUP	
	62	1,3	**061-6711**	2	RING-RETAINING	
	63	1	**068-8093**	2	RING-RETAINING	
	64	4	**0S-1619**	2	BOLT (3/8-16X3-IN)	
	65	4	**117-1385**	2	SEAL-O-RING	
	66	2	**1A-5183**	2	BOLT (3/8-16X4.75-IN)	
	67	4	**1L-7388**	1	RING-RETAINING	
	68	4	**1M-8657**	4	BOLT (1/2-13X15.69-IN)	
	69	4	**2H-3755**	2	BOLT (5/16-18X0.43-IN)	
	70	4	**3E-4352**	2	WASHER-HARD (8.8X20.5X2.5-MM THK)	
	71	2,3	**3K-2511**	10	DOWEL-REACTION	
	72	1,3	**3S-2708**	6	PIN-SPRING	
	73	4	**4M-2442**	6	BOLT (1/2-13X12.32-IN)	
	74	4	**5M-2894**	2	WASHER-HARD (10.2X18.5X2.5-MM THK)	
	75	1,3	**5M-3038**	2	SEAL-O-RING	
	76	4	**4F-2129**	1	BALL BEARING	
	77	3,4	**5P-5296**	4	RING-RETAINING	
	78	4	**5P-5297**	1	RING-RETAINING (EXTERNAL)	
	79	1,2,3	**5P-7530**	5	SEAL-O-RING	
	80	4	**5P-8245**	10	WASHER-HARD (13.5X25.5X3-MM THK)	
	81	4	**7G-2343**	3	SPRING-DISC	
	82	1,3	**7T-8816**	3	BALL BEARING	
	83	4	**8D-9739**	1	SEAL-RING	
	84	1	**8H-5352**	2	BALL BEARING	
	85	1	**8M-5010**	2	SEAL-O-RING	
	86	4	**8M-5255**	1	SEAL-O-RING	
	87	1,2,3	**8P-2019**	3	RING-SEAL	
	88	1,2,3	**8P-2022**	4	RING-SEAL	
	89	4	**8P-2023**	1	RING-SEAL	
	90	2	**9G-0286**	1	RING-SEAL	

R - REMFG PART MAY BE AVAILABLE

387-6727 **PLANETARY GP-TRANSMISSION (*contd.*)** **i06230954**

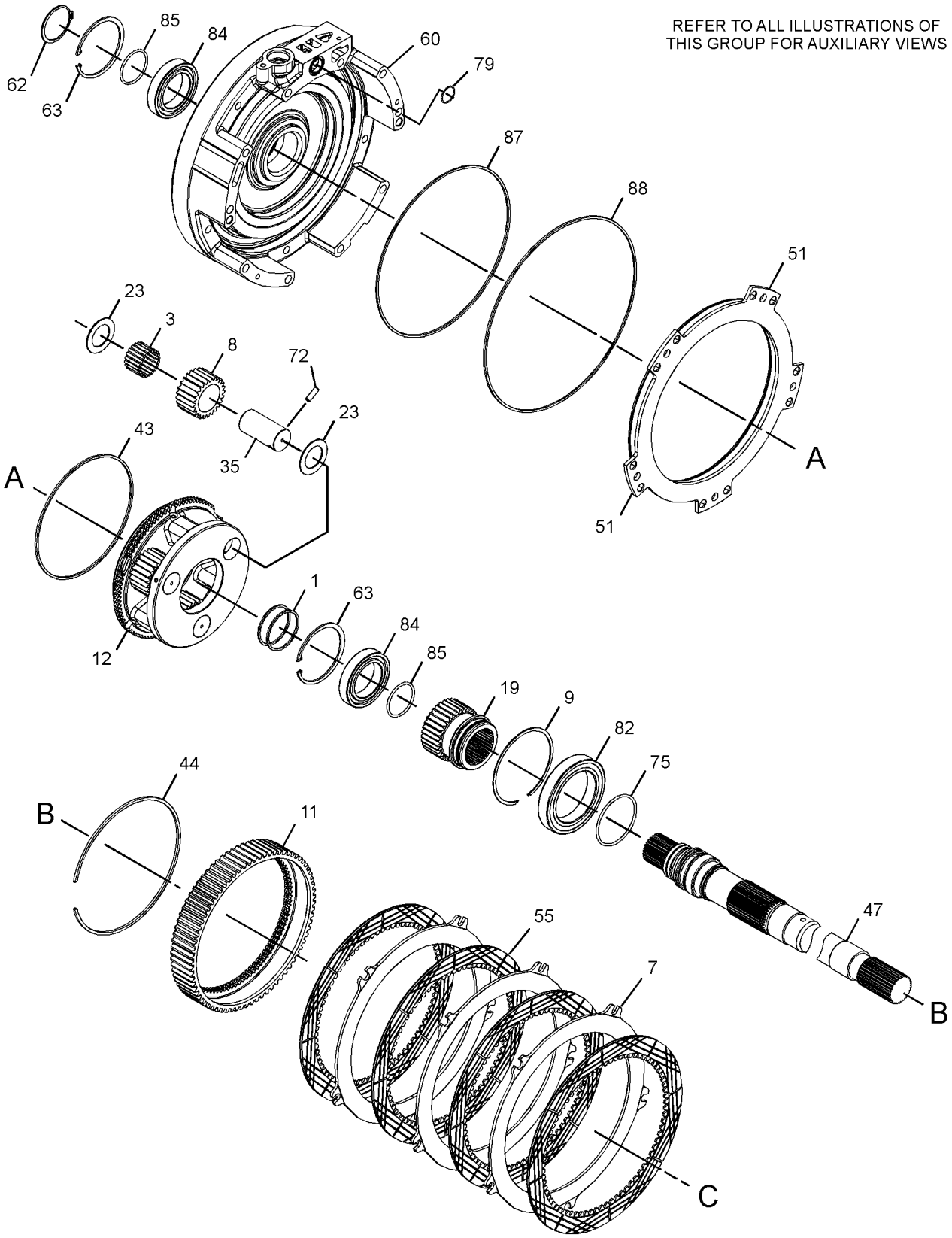

GRAPHIC #1 g03643648

387-6727 **PLANETARY GP-TRANSMISSION (*contd.*)** **i06230954**

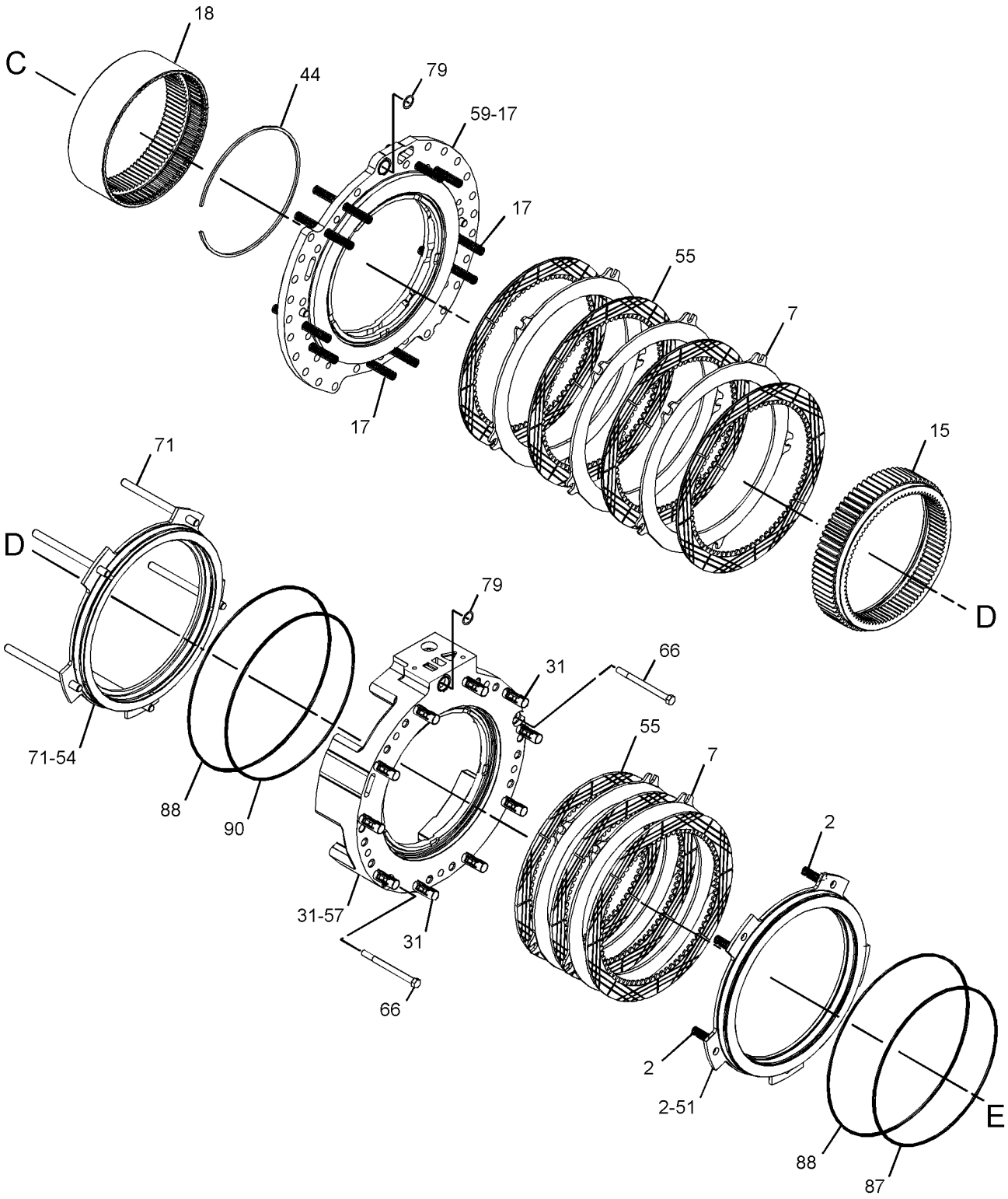

REFER TO ALL ILLUSTRATIONS OF
THIS GROUP FOR AUXILIARY VIEWS

GRAPHIC #2 g03643650

387-6727 **PLANETARY GP-TRANSMISSION (*contd.*)** **i06230954**

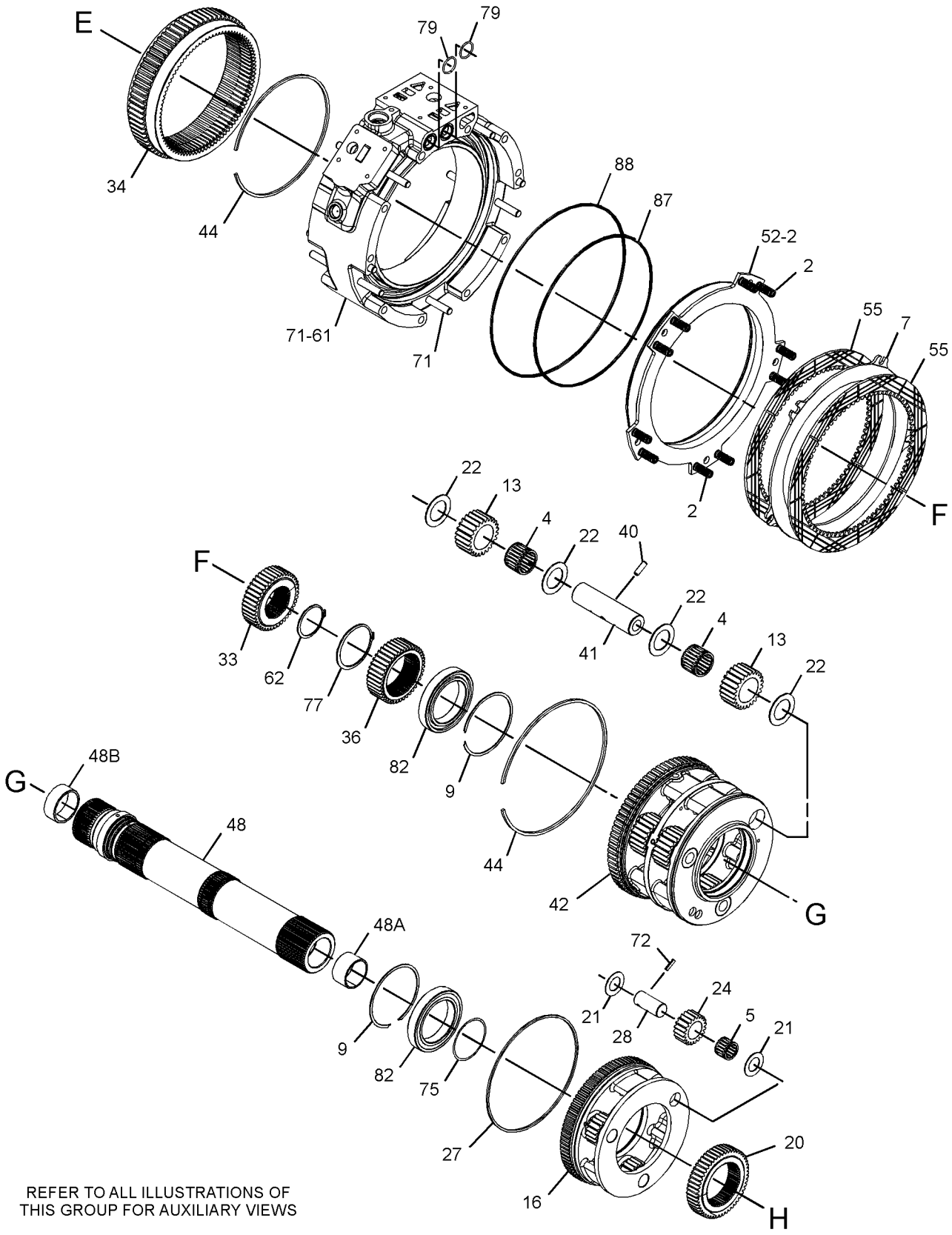

REFER TO ALL ILLUSTRATIONS OF
THIS GROUP FOR AUXILIARY VIEWS

GRAPHIC #3 g03643652

387-6727 **PLANETARY GP-TRANSMISSION (*contd.*)** **i06230954**

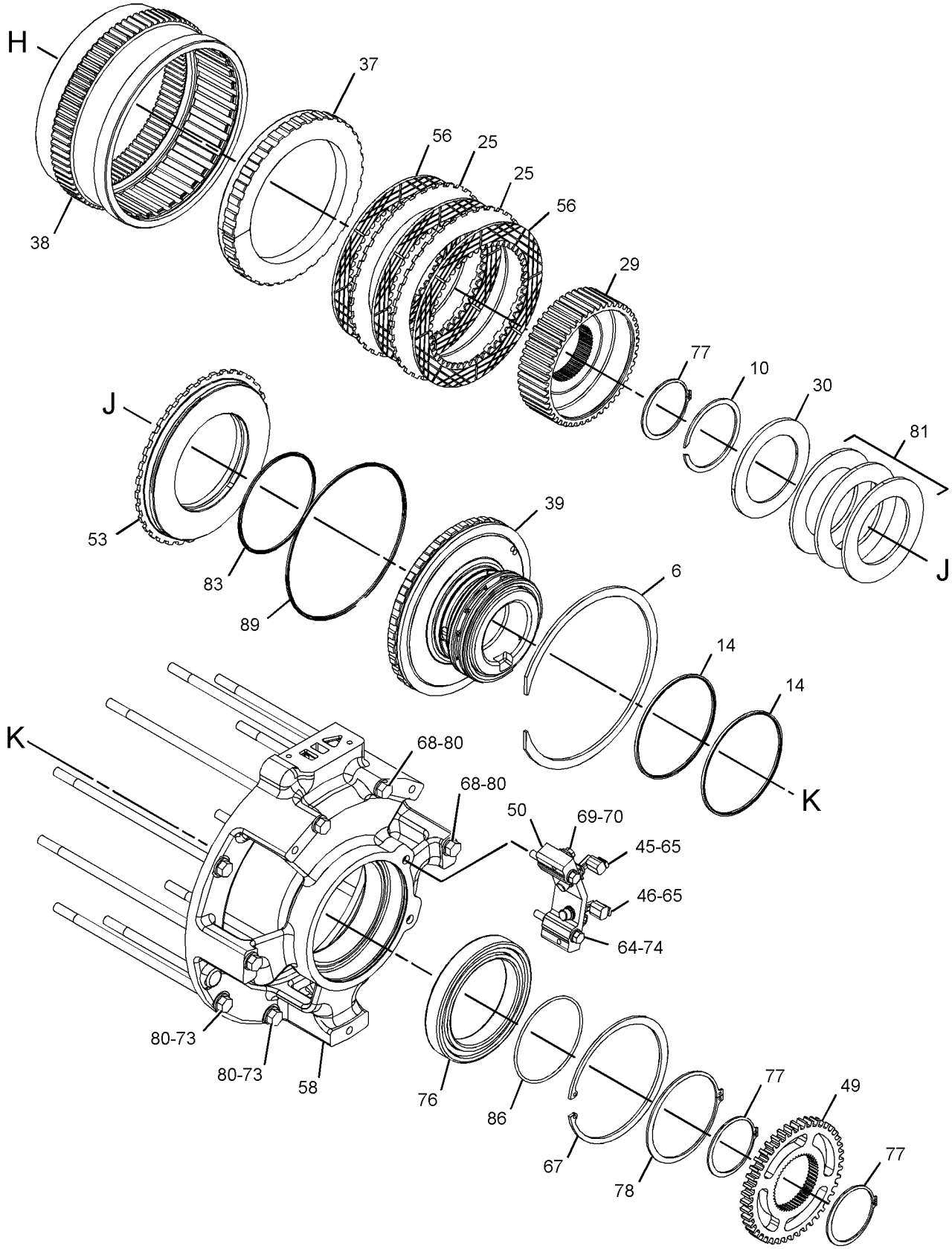

GRAPHIC #4 **<END>** g03643655

398-4284 POWER TRAIN AR

S/N: SSS1-UP; TTT1-UP
PART OF 398-4278, 398-4279 COMMON AR
ALSO AN ATTACHMENT

SMCS-3000, 4000 **i06215496**

NOTE	PART NUMBER	QTY	PART NAME 1 2 3 4 5 6 (PRODUCT LEVEL)	SEE PAGE
Y	*3W-6550*	1	AXLE GP	271
Y	**231-5969**	1	BRAKE & DIFFERENTIAL DRIVE GP	273
Y	*231-5990*	1	BRAKE & PLANETARY GP	277
Y	*398-4487*	1	LINES GP-POWER TRAIN OIL	313
Y	*259-3119*	1	MOUNTING GP-FINAL DRIVE	320
Y	*227-0165*	1	MOUNTING GP-TRANSMISSION	321
Y	*398-1955*	1	SHAFT GP-DRIVE	334
Y	*398-4501*	1	VALVE & MOUNTING GP	619

Y - SEPARATE ILLUSTRATION

<END>

398-4285 POWER TRAIN AR

S/N: PPP1-UP
PART OF 398-4280 COMMON AR

SMCS-3000, 4000 **i06217090**

NOTE	PART NUMBER	QTY	PART NAME 1 2 3 4 5 6 (PRODUCT LEVEL)	SEE PAGE
Y	*223-0565*	1	AXLE GP	272
Y	**231-5969**	1	BRAKE & DIFFERENTIAL DRIVE GP	273
Y	*231-5990*	1	BRAKE & PLANETARY GP	277
Y	*398-4487*	1	LINES GP-POWER TRAIN OIL	313
Y	*259-3119*	1	MOUNTING GP-FINAL DRIVE	320
Y	*227-0165*	1	MOUNTING GP-TRANSMISSION	321
Y	*398-1955*	1	SHAFT GP-DRIVE	334
Y	*398-4501*	1	VALVE & MOUNTING GP	619

Y - SEPARATE ILLUSTRATION

<END>

398-4318 POWER TRAIN AR

S/N: PPP1-UP; SSS1-UP; TTT1-UP
PART OF 398-4313, 398-4316 ENGINE AR, 398-4312 INSTALLATION AR-ENGINE
AN ATTACHMENT

SMCS-3000, 4000 **i06219030**

NOTE	PART NUMBER	QTY	PART NAME 1 2 3 4 5 6 (PRODUCT LEVEL)	SEE PAGE
Y	*424-4553*	1	TORQUE CONVERTER & HOUSING GP	336
Y	**417-8819**	1	TRANSMISSION AR	349

Y - SEPARATE ILLUSTRATION

<END>

398-4319 POWER TRAIN AR

S/N: PPP1-UP; SSS1-UP; TTT1-UP

PART OF 398-4317 ENGINE AR, 398-4315 GENERAL AR, 398-4314 INSTALLATION AR-ENGINE AN ATTACHMENT

SMCS-3000, 4000

i06219031

NOTE	PART NUMBER	QTY	PART NAME 1 2 3 4 5 6 (PRODUCT LEVEL)	SEE PAGE
Y	*424-4550*	1	TORQUE CONVERTER & HOUSING GP	335
Y	**417-8818**	1	TRANSMISSION AR	348

Y - SEPARATE ILLUSTRATION

<END>

420-0748 PUMP GP-GEAR—TRANSMISSION, TORQUE CONVERTER

S/N: PPP1-UP; SSS1-UP; TTT1-UP
PART OF 428-9024 PUMP GP-GEAR
ALSO AN ATTACHMENT

SMCS-3066, 3115, 5073

i06216428

NOTE	REF NO	GRAPHIC REF	PART NUMBER	QTY	PART NAME 1 2 3 4 5 6 (PRODUCT LEVEL)	SEE PAGE
	1	1	**3T-8757**	2	GEAR (12-TEETH)	
	2	1	**6Y-5010**	8	WASHER (10.16X19X0.84-MM THK)	
	3	1	**8E-7864**	2	GEAR (8-TEETH)	
	4	1	**160-7428**	1	COVER-OIL PUMP	
	5	1	**161-8068**	3	SEAL-O-RING	
	6	1	**420-0749**	1	COVER AS-PUMP	
	6A	1	**379-5808**	2	BUSHING	
		1	**8M-8489**	2	DOWEL	
	7	1	*420-0751*	1	BODY AS-PUMP	
	7A	1	**379-5808**	2	BUSHING	
		1	**8M-8489**	2	DOWEL	
	8	1	**421-6476**	1	MANIFOLD AS-PUMP	
	8A	1	**379-5808**	2	BUSHING	
	9	1	**423-3794**	1	GEAR AS-PUMP	
	10	1	**423-3796**	1	GEAR AS-PUMP	
					(EACH GEAR AS INCLUDES)	
	10A	1	**2B-9373**	1	KEY-WOODRUFF	
		1	**6I-9056**	1	GEAR (12-TEETH)	
M	12	1	**095-0665**	2	BOLT-SOCKET HEAD	
	13	1	**1B-8705**	1	KEY-WOODRUFF	
	15	1	**353-3679**	2	SEAL-LIP TYPE	
	16	1	**3J-8500**	1	RING-RETAINING	
	17	1	**3S-0004**	6	WASHER (0.406X0.728X0.09-IN THK)	
M	18	1	**6E-5293**	4	BOLT (M10X1.5X210-MM)	

M - METRIC PART

420-0748 **PUMP GP-GEAR (*contd.*)** **i06216428**

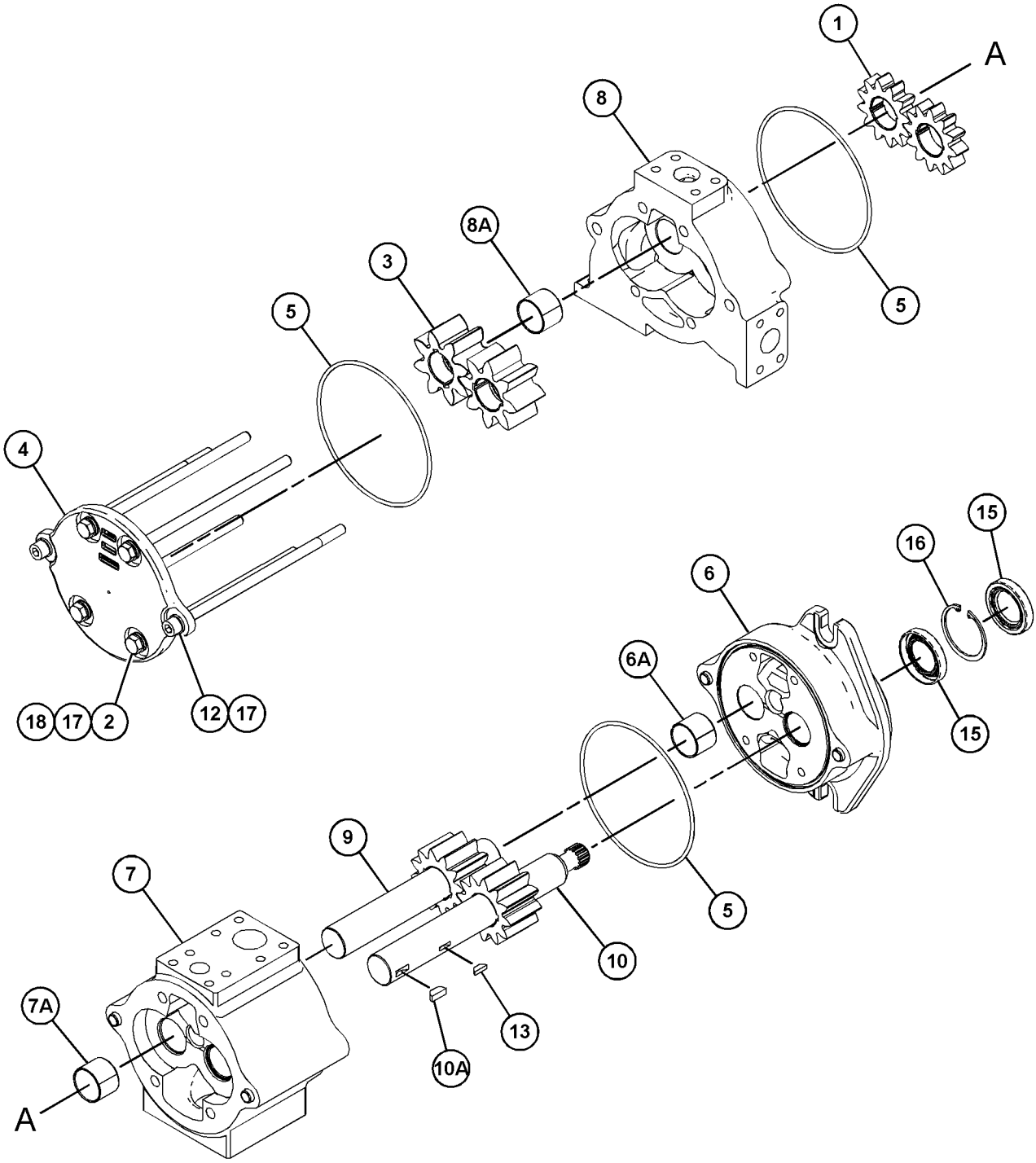

GRAPHIC #1 **<END>** g03862015

428-9024 PUMP GP-GEAR–TRANSMISSION, TORQUE CONVERTER

S/N: PPP1-UP; SSS1-UP; TTT1-UP
PART OF 398-4487 LINES GP-POWER TRAIN OIL
ALSO AN ATTACHMENT

SMCS-3066, 3115, 5073

i06216411

NOTE	REF NO	GRAPHIC REF	PART NUMBER	QTY	PART NAME 1 2 3 4 5 6 (PRODUCT LEVEL)	SEE PAGE
M	1	1	**8T-4183**	4	BOLT (M12X1.75X40-MM)	
M	2	1	**8T-4196**	16	BOLT (M10X1.5X35-MM)	
	3	1	**1P-4578**	2	FLANGE-HALF	
	4	1	**1P-4579**	2	FLANGE-HALF	
	5	1	**4D-2886**	1	CLIP	
Y	6	1	**420-0748**	1	PUMP GP-GEAR (TRANSMISSION, TORQUE CONVERTER)	330
	7	1	**8C-3205**	2	FLANGE-HALF	
	8	1	**8C-3206**	4	FLANGE-HALF	
	9	1	**8T-4121**	16	WASHER-HARD (11X21X2.5-MM THK)	
	10	1	**8T-4223**	4	WASHER-HARD (13.5X25.5X3-MM THK)	

M - METRIC PART
Y - SEPARATE ILLUSTRATION

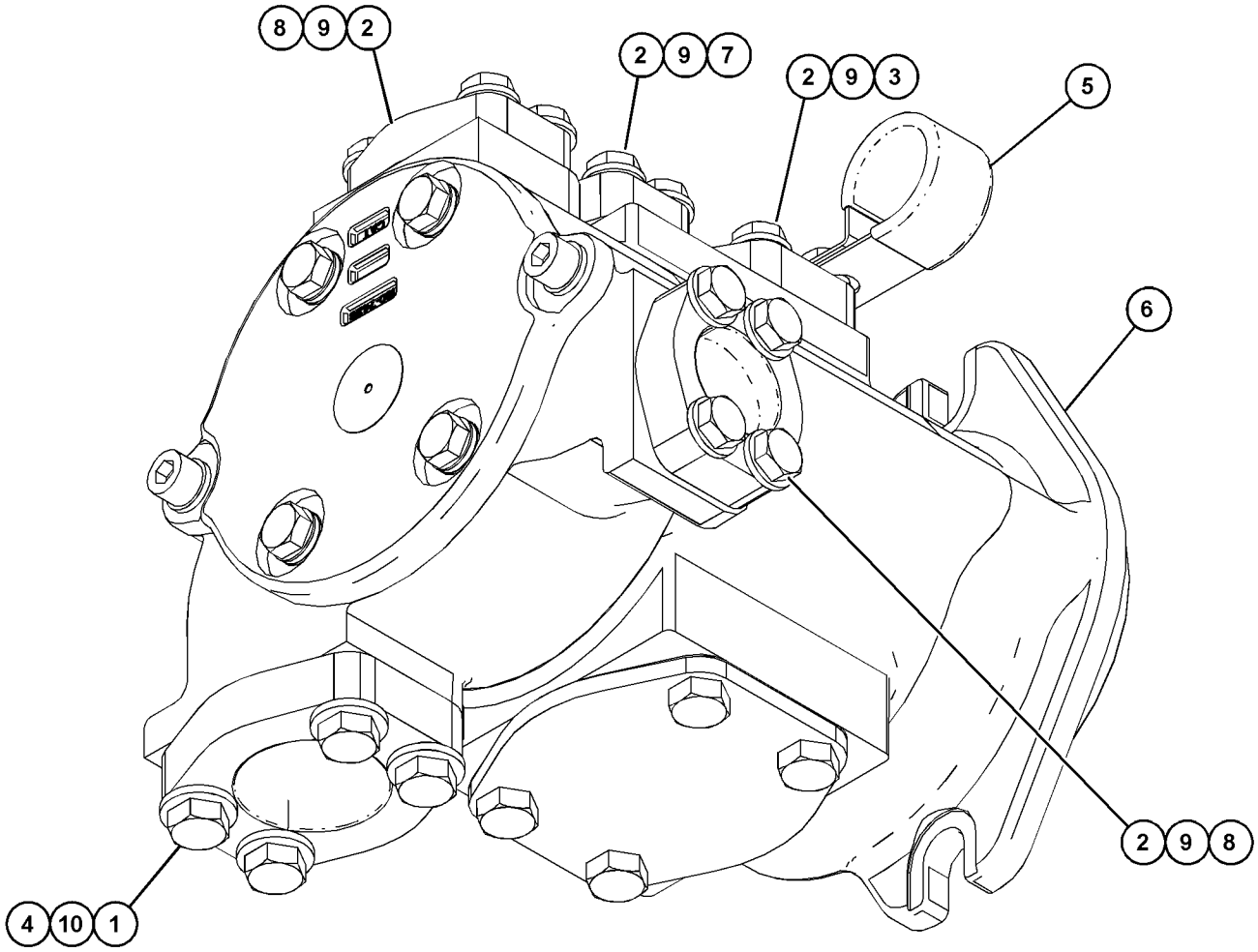

GRAPHIC #1 **<END>** g03859225

188-0908 SEGMENT GP-SPROCKET

S/N: PPP1-UP; SSS1-UP; TTT1-UP

PART OF 260-6653 DRIVE GP-FINAL, 415-1300, 415-1301, 457-6209, 457-6210, 457-6211, 457-7966, 457-7967, 457-7968, 457-7969, 457-7970, 457-7971, 457-7972, 457-7973, 457-7974, 457-7975 UNDERCARRIAGE AR

AN ATTACHMENT

SMCS-4155 **i05612820**

NOTE	REF NO	GRAPHIC REF	PART NUMBER	QTY	PART NAME 1 2 3 4 5 6 (PRODUCT LEVEL)	SEE PAGE
	1	1	**173-0946**	5	SEGMENT-SPROCKET	
	2	1	**6V-0937**	25	BOLT (5/8-18X2.1-IN)	
	3	1	**2S-5658**	25	WASHER-HARD (17X29X3-MM THK)	
	4	1	**7H-3607**	25	NUT (5/8-18-THD)	

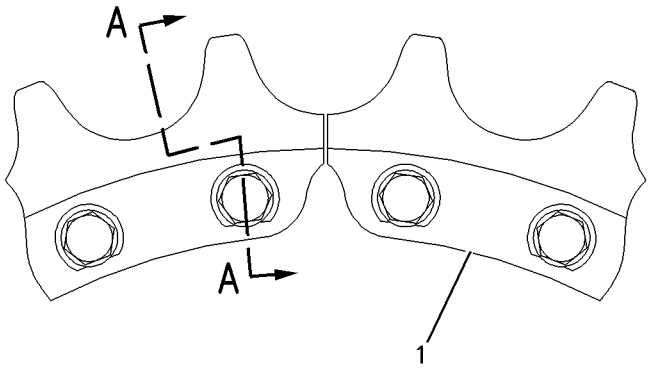

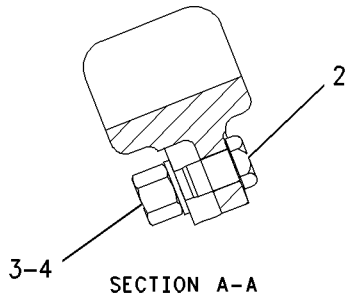

SECTION A–A

GRAPHIC #1 **<END>** g00856173

398-1955 SHAFT GP-DRIVE

S/N: PPP1-UP; SSS1-UP; TTT1-UP
PART OF 398-4284, 398-4285 POWER TRAIN AR
ALSO AN ATTACHMENT

SMCS-3253 **i06147560**

NOTE	REF NO	GRAPHIC REF	PART NUMBER	QTY	PART NAME 1 2 3 4 5 6 (PRODUCT LEVEL)	SEE PAGE
	1	1	**3T-8305**	1	YOKE AS	
		1	**7D-1677**	1	RACE-BEARING INNER	
		1	**8H-2768**	1	PLUG-CUP	
	2	1	**423-3780**	1	UNIVERSAL JOINT GP	
	2A	1	**7G-9555**	2	SPIDER & BEARING AS	
	2B	1	**0L-0478**	8	BOLT (3/8-24X1.75-IN)	
	3	1	**7X-7477**	8	BOLT (3/8-24X1.75-IN)	

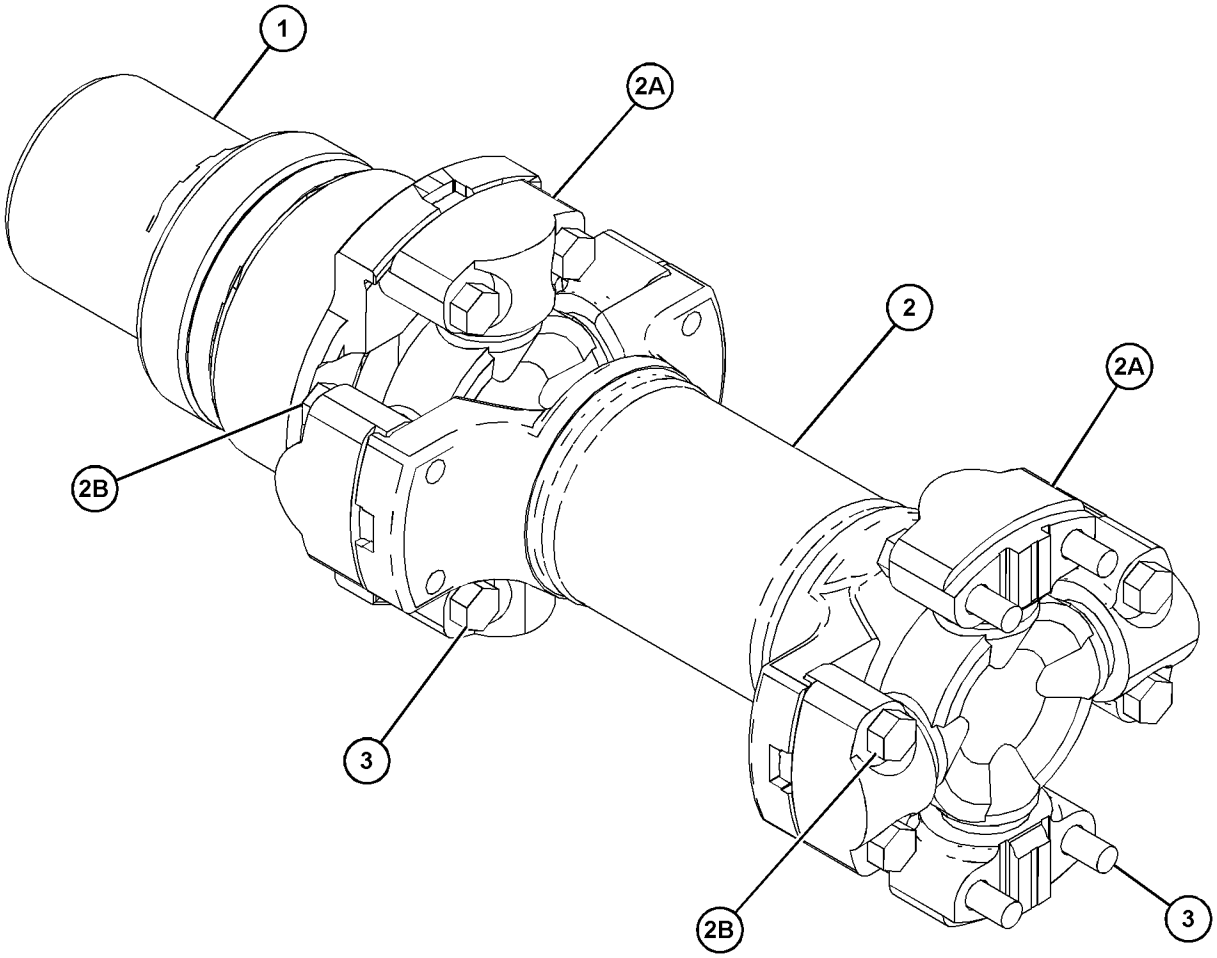

GRAPHIC #1 **<END>** g03831326

424-4550 TORQUE CONVERTER & HOUSING GP

S/N: PPP1-UP; SSS1-UP; TTT1-UP
PART OF 398-4319 POWER TRAIN AR
AN ATTACHMENT

SMCS-3101, 3105

i06219036

NOTE	REF NO	GRAPHIC REF	PART NUMBER	QTY	PART NAME 1 2 3 4 5 6 (PRODUCT LEVEL)	SEE PAGE
	1	1	**8S-9008**	1	SLEEVE	
	2	1	**9P-3709**	1	GEAR-SUN (35-TEETH)	
	3	1	**393-7780**	1	ELBOW	
Y	4	1	*453-1091*	1	TORQUE CONVERTER & HOUSING GP	337
	5	1	**165-4854**	2	SEAL-O-RING	
	6	1	**1S-9799**	1	SEAL-O-RING	
	7	1	**2D-1523**	1	RING-RETAINING	
M	8	1	**8T-0441**	2	BOLT (M10X1.5X45-MM)	
	9	1	**8T-4121**	2	WASHER-HARD (11X21X2.5-MM THK)	
M	10	1	**8T-4139**	12	BOLT (M12X1.75X30-MM)	
	11	1	**8T-4223**	12	WASHER-HARD (13.5X25.5X3-MM THK)	
	12	1	**9H-0846**	1	SEAL-O-RING	
	13	1	**9H-8712**	1	BEARING AS	
	14	1	**9M-1976**	1	RING-RETAINING	

M - METRIC PART
Y - SEPARATE ILLUSTRATION

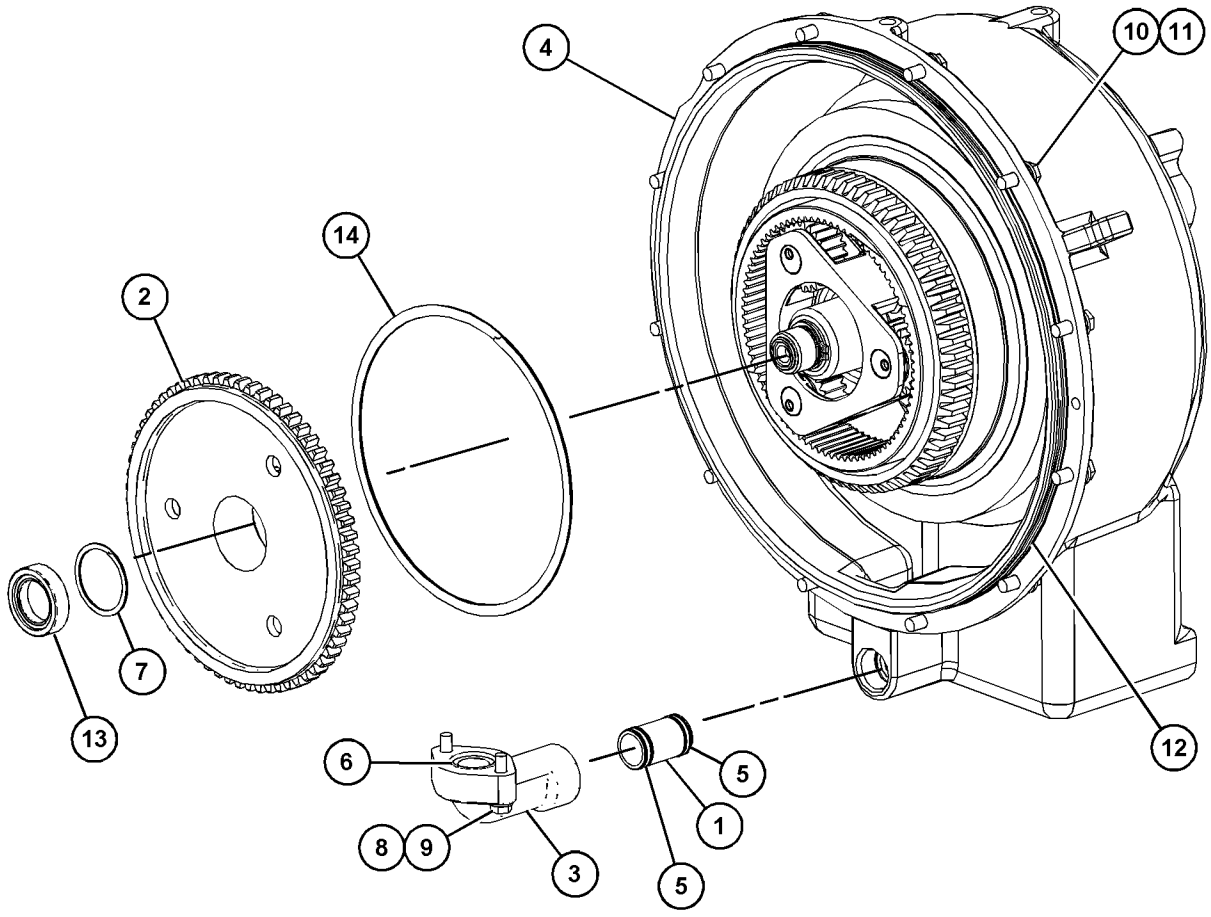

GRAPHIC #1

<END>

g03861040

424-4553 TORQUE CONVERTER & HOUSING GP

S/N: PPP1-UP; SSS1-UP; TTT1-UP
PART OF 398-4318 POWER TRAIN AR
AN ATTACHMENT

SMCS-3101, 3105 **i06219033**

NOTE	REF NO	GRAPHIC REF	PART NUMBER	QTY	PART NAME 1 2 3 4 5 6 (PRODUCT LEVEL)	SEE PAGE
	1	1	**8S-9008**	1	SLEEVE	
	2	1	**9P-3709**	1	GEAR-SUN (35-TEETH)	
	3	1	**393-7780**	1	ELBOW	
Y	4	1	*453-7175*	1	TORQUE CONVERTER & HOUSING GP	338
	5	1	**165-4854**	2	SEAL-O-RING	
	6	1	**1S-9799**	1	SEAL-O-RING	
	7	1	**2D-1523**	1	RING-RETAINING	
M	8	1	**8T-0441**	2	BOLT (M10X1.5X45-MM)	
	9	1	**8T-4121**	2	WASHER-HARD (11X21X2.5-MM THK)	
M	10	1	**8T-4139**	12	BOLT (M12X1.75X30-MM)	
	11	1	**8T-4223**	12	WASHER-HARD (13.5X25.5X3-MM THK)	
	12	1	**9H-0846**	1	SEAL-O-RING	
	13	1	**9H-8712**	1	BEARING AS	
	14	1	**9M-1976**	1	RING-RETAINING	

M - METRIC PART
Y - SEPARATE ILLUSTRATION

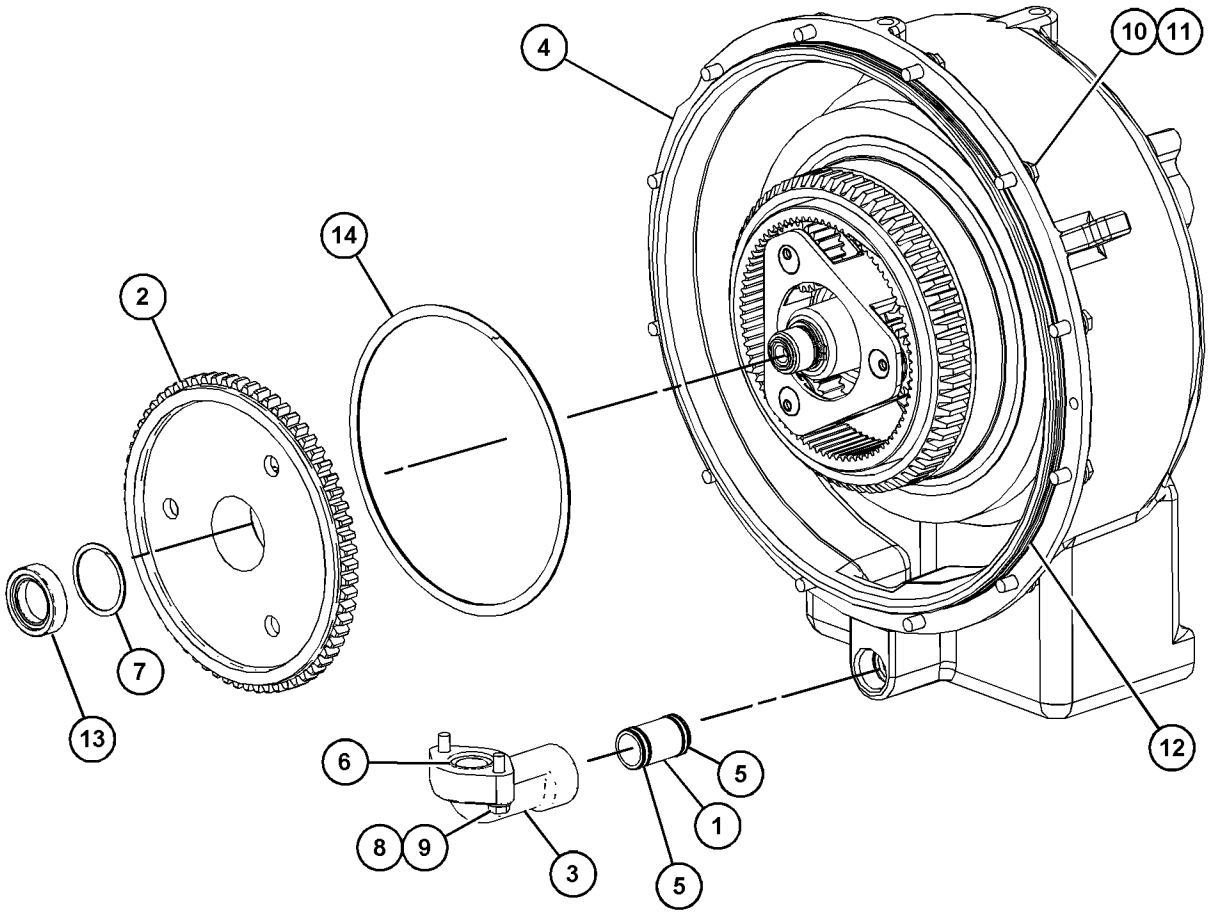

GRAPHIC #1 **<END>** g03861040

453-1091 TORQUE CONVERTER & HOUSING GP

S/N: PPP1-UP; SSS1-UP; TTT1-UP
PART OF 424-4550 TORQUE CONVERTER & HOUSING GP
AN ATTACHMENT

SMCS-3101, 3105 **i05637710**

NOTE	REF NO	GRAPHIC REF	PART NUMBER	QTY	PART NAME 1 2 3 4 5 6 (PRODUCT LEVEL)	SEE PAGE
	1	1	**108-6954**	1	YOKE-UNIVERSAL JOINT	
	2	1	**223-3400**	1	HOUSING-TORQUE CONVERTER	
Y	3	1	**317-7051**	1	TORQUE CONVERTER GP (WITH DIVIDER)	342
	4	1	**110-0510**	1	COVER	
	5	1	**136-2216**	1	SEAL-LIP TYPE	
	6	1	**155-5161**	1	SEAL-OIL	
	7	1	**232-6411**	1	RETAINER-SHAFT	
	8	1	**2S-2251**	1	SEAL-O-RING	
	9	1	**3K-0360**	1	SEAL-O-RING	
	10	1	**6F-4718**	1	SEAL-O-RING	
	11	1	**8H-9818**	1	GASKET	
	12	1	**8T-4121**	10	WASHER-HARD (11X21X2.5-MM THK)	
M	13	1	**8T-4137**	2	BOLT (M10X1.5X20-MM)	
M	14	1	**8T-4176**	1	BOLT (M12X1.75X90-MM)	
M	15	1	**8T-4195**	8	BOLT (M10X1.5X30-MM)	
	16	1	**9S-4185**	1	PLUG	

M - METRIC PART
Y - SEPARATE ILLUSTRATION

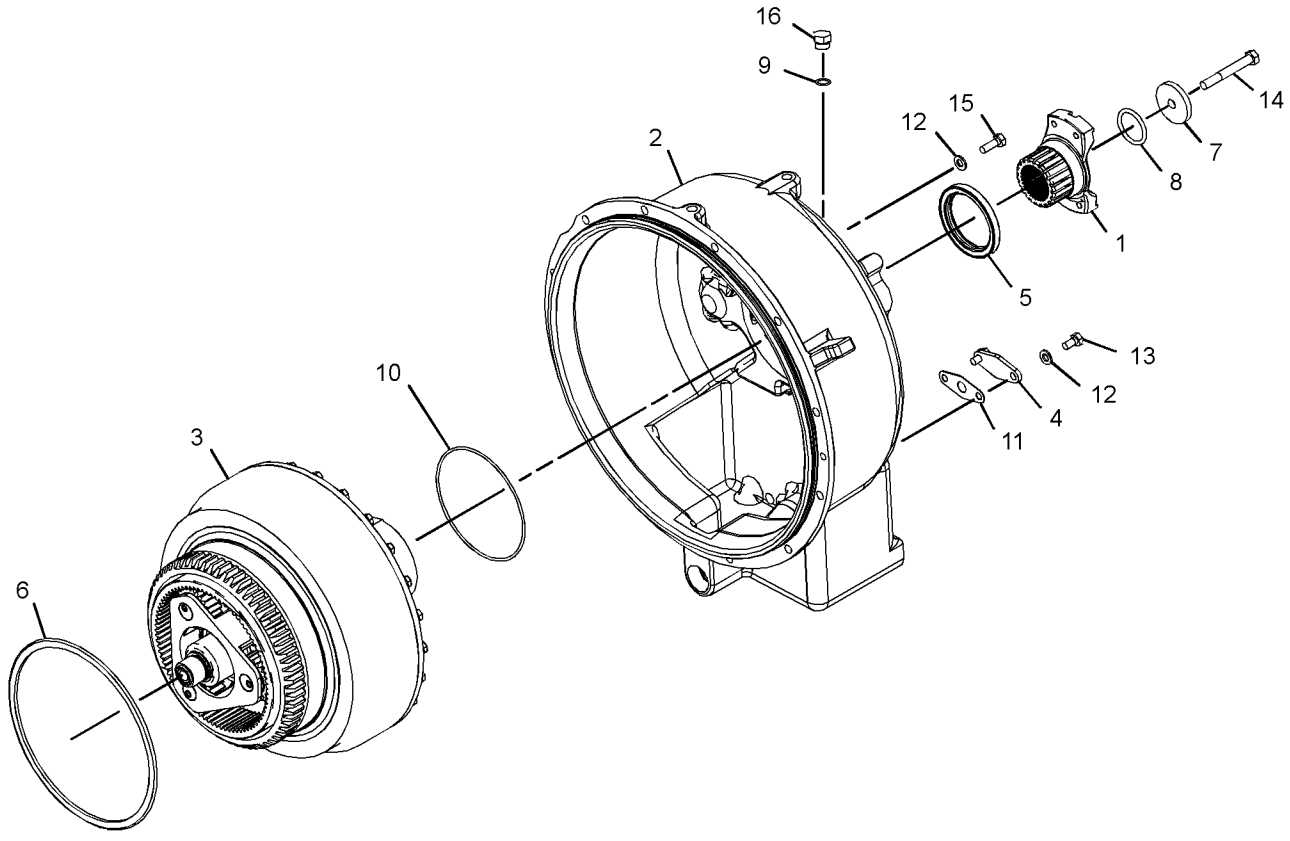

GRAPHIC #1 **<END>** g03582189

453-7175 TORQUE CONVERTER & HOUSING GP

S/N: PPP1-UP; SSS1-UP; TTT1-UP
PART OF 424-4553 TORQUE CONVERTER & HOUSING GP
AN ATTACHMENT

SMCS-3101, 3105

i06219034

NOTE	REF NO	GRAPHIC REF	PART NUMBER	QTY	PART NAME 1 2 3 4 5 6 (PRODUCT LEVEL)	SEE PAGE
	1	1	**108-6954**	1	YOKE-UNIVERSAL JOINT	
	2	1	**223-3400**	1	HOUSING-TORQUE CONVERTER	
Y	3	1	**338-0944**	1	TORQUE CONVERTER GP	346
	4	1	**110-0510**	1	COVER	
	5	1	**136-2216**	1	SEAL-LIP TYPE	
	6	1	**155-5161**	1	SEAL-OIL	
	7	1	**232-6411**	1	RETAINER-SHAFT	
	8	1	**2S-2251**	1	SEAL-O-RING	
	9	1	**3K-0360**	1	SEAL-O-RING	
	10	1	**6F-4718**	1	SEAL-O-RING	
	11	1	**8H-9818**	1	GASKET	
	12	1	**8T-4121**	10	WASHER-HARD (11X21X2.5-MM THK)	
M	13	1	**8T-4137**	2	BOLT (M10X1.5X20-MM)	
M	14	1	**8T-4176**	1	BOLT (M12X1.75X90-MM)	
M	15	1	**8T-4195**	8	BOLT (M10X1.5X30-MM)	
	16	1	**9S-4185**	1	PLUG	

M - METRIC PART
Y - SEPARATE ILLUSTRATION

453-7175 **TORQUE CONVERTER & HOUSING GP (*contd.*)** **i06219034**

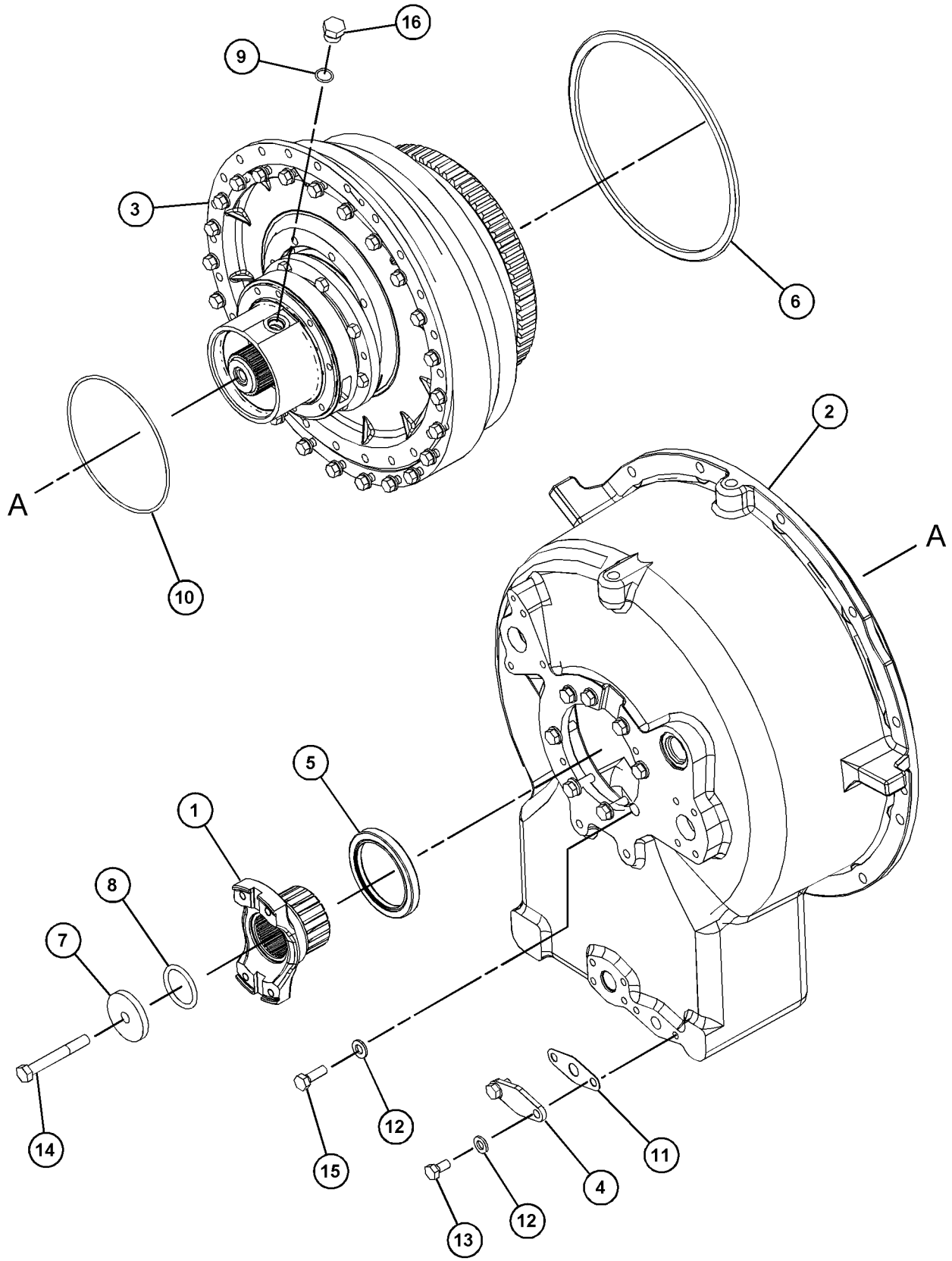

GRAPHIC #1 **<END>** g03862550

1T-2084 TORQUE CONVERTER GP

S/N: EBA1-UP

PART OF 317-7051 TORQUE CONVERTER GP

AN ATTACHMENT

SMCS-3101 **i05637754**

NOTE	REF NO	GRAPHIC REF	PART NUMBER	QTY	PART NAME 1 2 3 4 5 6 (PRODUCT LEVEL)	SEE PAGE
	1	1	**1T-0097**	1	RING-METAL SEAL	
	2	1	**1T-0438**	1	RETAINER-BEARING	
	3	1	**1T-0446**	6	BOLT (3/8-16X0.75-IN)	
	4	1	**1T-0447**	1	CARRIER-RING	
	5	1	**1T-0599**	1	SPACER (65.1X85X9.52-MM THK)	
	6	1	**1T-1993**	1	WHEEL-TURBINE	
	7	1	**1T-2052**	1	STATOR AS	
	8	1	**1T-2069**	1	CARRIER-BEARING	
	9	1	**1T-2070**	1	RETAINER-BEARING	
	10	1	**1T-2080**	1	HOUSING-ROTATING	
	11	1	**336-2433**	1	CARRIER AS-STATOR	
		1	**4S-8537**	1	DOWEL	
	12	1	**1T-2086**	1	FLANGE AS-OUTPUT	
	12A	1	**1T-0902**	2	BUSHING	
	13	1	**1T-2089**	1	IMPELLER	
	14	1	**304-9651**	1	BALL BEARING	
	15	1	**1T-0069**	1	RING-METAL SEAL	
	16	1	**1A-2029**	24	BOLT (3/8-16X1.125-IN)	
	17	1	**1A-2209**	8	BOLT (3/8-24X1.25-IN)	
	18	1	**1T-0414**	8	BOLT-12 POINT HEAD (5/16-18X1-IN)	
	19	1	**1T-0441**	1	BALL BEARING	
	20	1	**3F-3727**	1	RING-SNAP	
	21	1	**4H-1440**	6	PIN-SPRING	
	22	1	**5B-0582**	1	DOWEL	
	23	1	**5M-2894**	24	WASHER-HARD (10.2X18.5X2.5-MM THK)	

1T-2084 **TORQUE CONVERTER GP (*contd.*)** **i05637754**

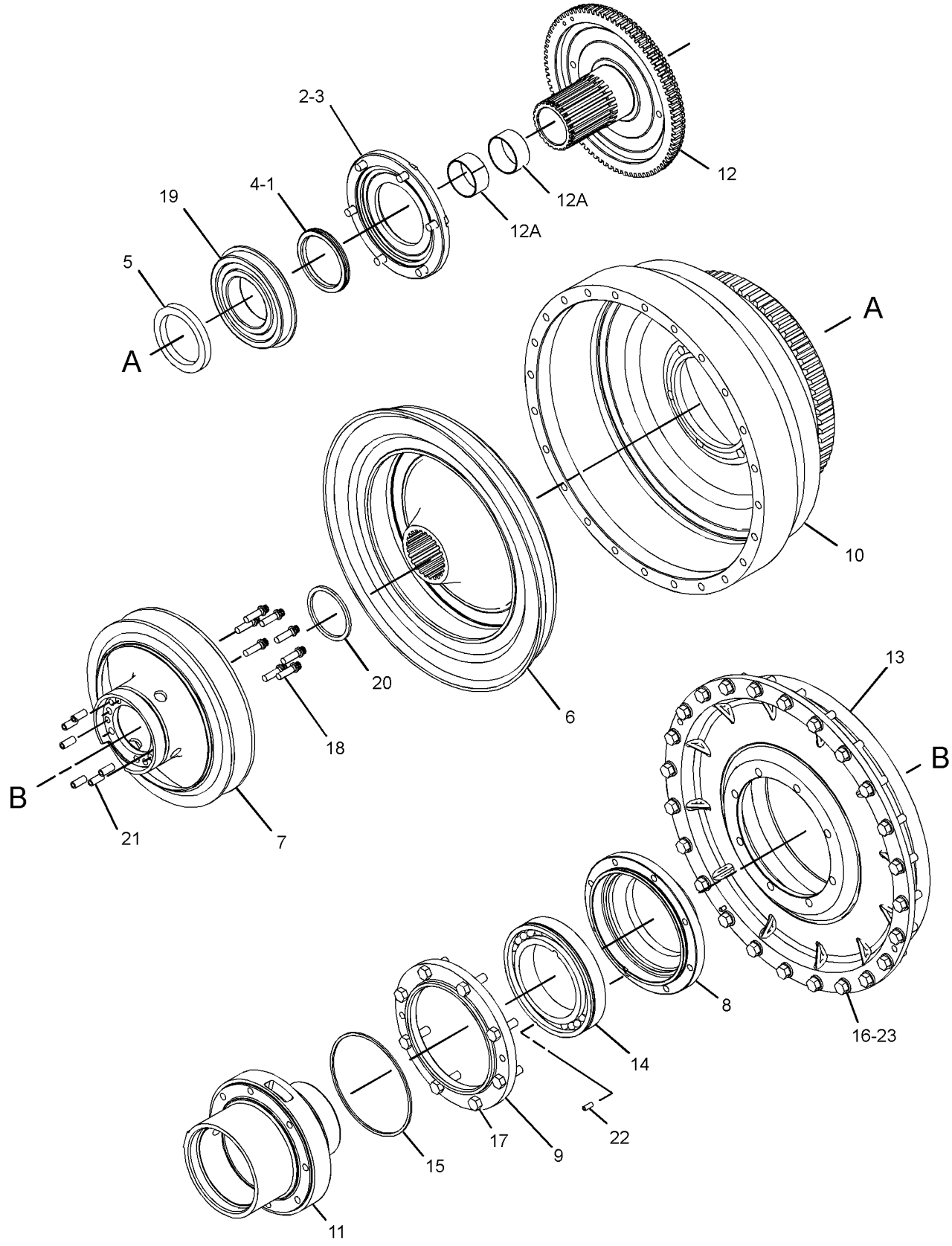

GRAPHIC #1 **<END>** g02176430

317-7051 TORQUE CONVERTER GP

S/N: EBA1-UP

PART OF 453-1091 TORQUE CONVERTER & HOUSING GP

AN ATTACHMENT

SMCS-3101 **i05637738**

NOTE	REF NO	GRAPHIC REF	PART NUMBER	QTY	PART NAME 1 2 3 4 5 6 (PRODUCT LEVEL)	SEE PAGE
Y	1	1	*1T-2084*	1	TORQUE CONVERTER GP	340
	2	1	**5M-7878**	1	RING-SNAP	
	3	1	**3T-4009**	1	GEAR-RING (82-TEETH)	
	4	1	**3T-4008**	3	GEAR-PLANETARY (23-TEETH)	
	5	1	**5P-3930**	3	BEARING AS-ROLLER	
	6	1	**3T-4011**	3	SHAFT AS-PLANETARY	
					(EACH INCLUDES)	
		1	**2A-3746**	1	PLUG-CUP	
	7	1	**8E-8300**	6	DISC-THRUST	
	8	1	**3S-2708**	3	PIN-SPRING	
	9	1	**5P-7679**	1	RACE-SPECIAL ROLLER BEARING	
	10	1	**6K-3630**	1	RING	
	11	1	**3T-4013**	1	RETAINER-CARRIER	
	12	1	**3T-4007**	1	CARRIER-PLANETARY	
	13	1	**2K-5986**	2	PIN-SPRING	
	14	1	**9M-2008**	1	RING-METAL SEAL	
	15	1	**2D-5658**	1	BALL BEARING	
	16	1	**5J-3964**	1	RING-LOCK	
	17	1	**233-0668**	1	SHAFT AS	
		1	**5J-7386**	1	PLUG-ORIFICE	
	18	1	**6V-4583**	1	RING-RETAINING	

Y - SEPARATE ILLUSTRATION

317-7051 **TORQUE CONVERTER GP (*contd.*)** **i05637738**

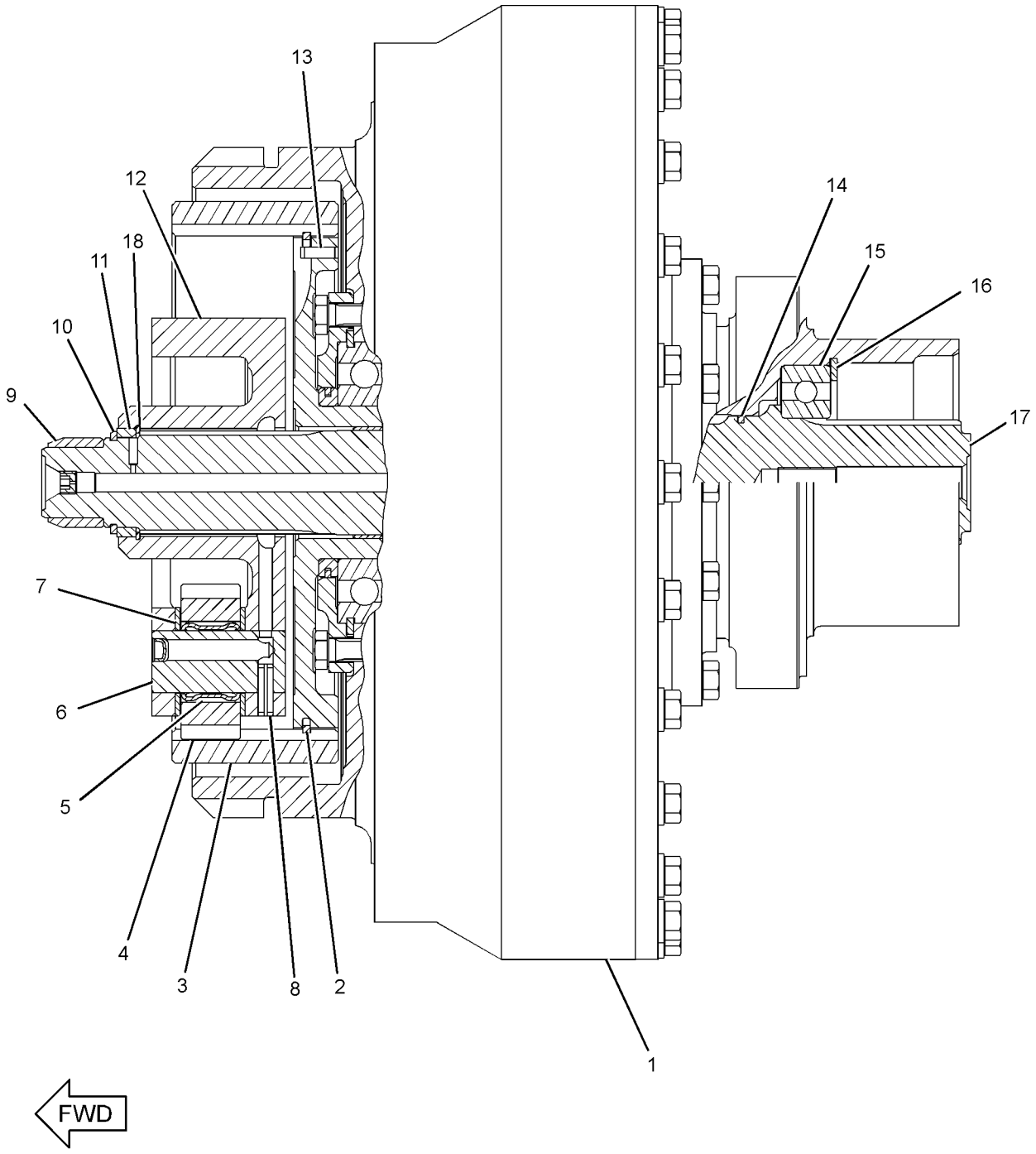

GRAPHIC #1 **<END>** g01209147

338-0942 TORQUE CONVERTER GP

S/N: RHC1-UP

PART OF 338-0944 TORQUE CONVERTER GP

AN ATTACHMENT

SMCS-3101 **i05963507**

NOTE	REF NO	GRAPHIC REF	PART NUMBER	QTY	PART NAME 1 2 3 4 5 6 (PRODUCT LEVEL)	SEE PAGE
	1	1	**1T-0069**	1	RING-METAL SEAL	
	2	1	**1T-0097**	1	RING-METAL SEAL	
	3	1	**1T-0438**	1	RETAINER-BEARING	
	4	1	**1T-0446**	6	BOLT (3/8-16X0.75-IN)	
	5	1	**1T-0447**	1	CARRIER-RING	
	6	1	**1T-0599**	1	SPACER (65.1X85X9.52-MM THK)	
	7	1	**1T-1993**	1	WHEEL-TURBINE	
	8	1	**1T-2052**	1	STATOR AS	
	9	1	**1T-2069**	1	CARRIER-BEARING	
	10	1	**1T-2070**	1	RETAINER-BEARING	
	11	1	**1T-2079**	1	IMPELLER-CONVERTER	
	12	1	**1T-2080**	1	HOUSING-ROTATING	
	13	1	**1T-2086**	1	FLANGE AS-OUTPUT	
	13A	1	**1T-0902**	2	BUSHING	
	14	1	**304-9651**	1	BALL BEARING	
	15	1	**336-2433**	1	CARRIER AS-STATOR	
		1	**4S-8537**	1	DOWEL	
	16	1	**1A-2029**	24	BOLT (3/8-16X1.125-IN)	
	17	1	**1A-2209**	8	BOLT (3/8-24X1.25-IN)	
	18	1	**1T-0414**	8	BOLT-12 POINT HEAD (5/16-18X1-IN)	
	19	1	**1T-0441**	1	BALL BEARING	
	20	1	**3F-3727**	1	RING-SNAP	
	21	1	**4H-1440**	6	PIN-SPRING	
	22	1	**5B-0582**	1	DOWEL	
	23	1	**5M-2894**	24	WASHER-HARD (10.2X18.5X2.5-MM THK)	

338-0942 **TORQUE CONVERTER GP (*contd.*)** **i05963507**

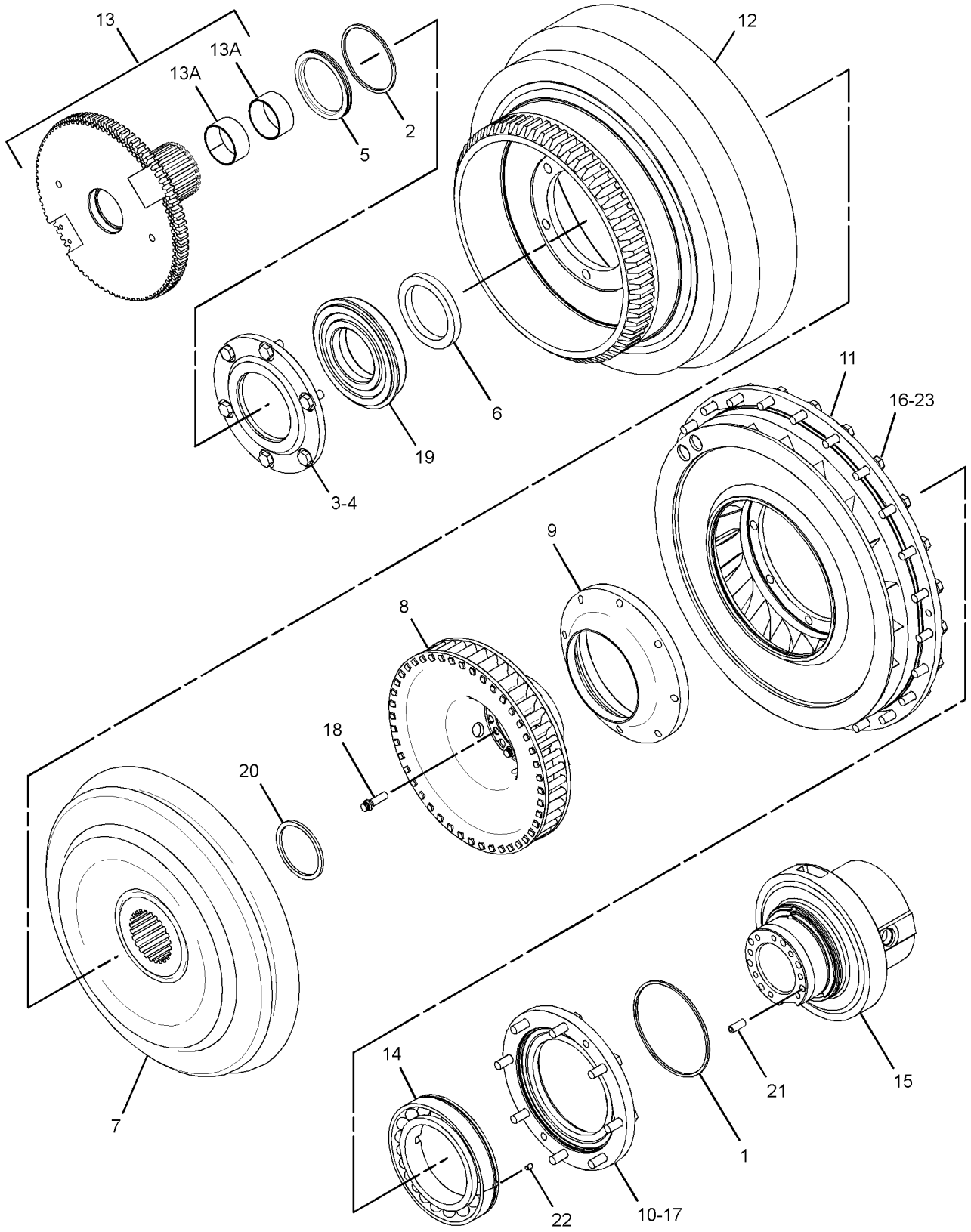

GRAPHIC #1 **<END>** g02833037

338-0944 TORQUE CONVERTER GP

S/N: RHC1-UP

PART OF 453-7175 TORQUE CONVERTER & HOUSING GP

AN ATTACHMENT

SMCS-3101 **i06230968**

NOTE	REF NO	GRAPHIC REF	PART NUMBER	QTY	PART NAME 1 2 3 4 5 6 (PRODUCT LEVEL)	SEE PAGE
	1	1	**3T-4007**	1	CARRIER-PLANETARY	
	2	1	**3T-4008**	3	GEAR-PLANETARY (23-TEETH)	
	3	1	**3T-4009**	1	GEAR-RING (82-TEETH)	
	4	1	**3T-4011**	3	SHAFT AS-PLANETARY	
					(EACH INCLUDES)	
		1	**2A-3746**	1	PLUG-CUP	
	5	1	**3T-4013**	1	RETAINER-CARRIER	
	6	1	**5M-7878**	1	RING-SNAP	
	7	1	**5P-3930**	3	BEARING AS-ROLLER	
	8	1	**8E-8300**	6	DISC-THRUST	
	9	1	**9M-2008**	1	RING-METAL SEAL	
	10	1	**233-0668**	1	SHAFT AS	
		1	**5J-7386**	1	PLUG-ORIFICE	
Y	11	1	*338-0942*	1	TORQUE CONVERTER GP	344
	12	1	**2D-5658**	1	BALL BEARING	
	13	1	**2K-5986**	2	PIN-SPRING	
	14	1	**3S-2708**	3	PIN-SPRING	
	15	1	**5J-3964**	1	RING-LOCK	
	16	1	**5P-7679**	1	RACE-SPECIAL ROLLER BEARING	
	17	1	**6K-3630**	1	RING	
	18	1	**6V-4583**	1	RING-RETAINING	

Y - SEPARATE ILLUSTRATION

338-0944 **TORQUE CONVERTER GP (*contd.*)** **i06230968**

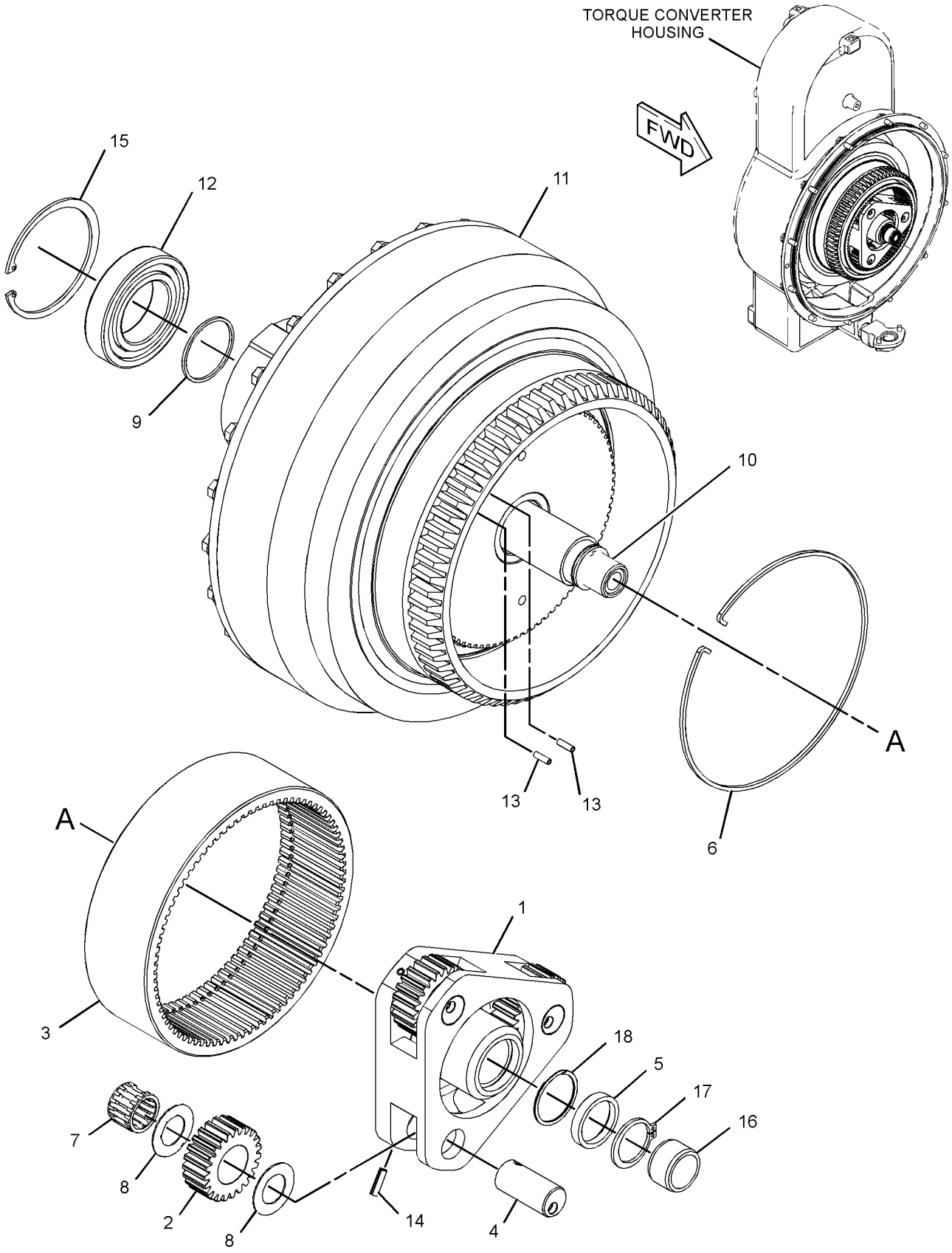

GRAPHIC #1 **<END>** g02282914

417-8818 TRANSMISSION AR

S/N: 6R21-UP
PART OF 398-4319 POWER TRAIN AR
AN ATTACHMENT

SMCS-3030 **i06211750**

NOTE	REF NO	GRAPHIC REF	PART NUMBER	QTY	PART NAME 1 2 3 4 5 6 (PRODUCT LEVEL)	SEE PAGE
Y	1	1	*387-6727*	1	PLANETARY GP-TRANSMISSION	322
Y	2	1	*447-6642*	1	CONTROL GP-TRANSMISSION HYD	283
Y	3	1	*166-3485*	1	GEAR GP-BEVEL & TRANSFER	307
Y	4	1	*354-0153*	1	CASE & PARTS GP-PLANETARY	279

Y - SEPARATE ILLUSTRATION

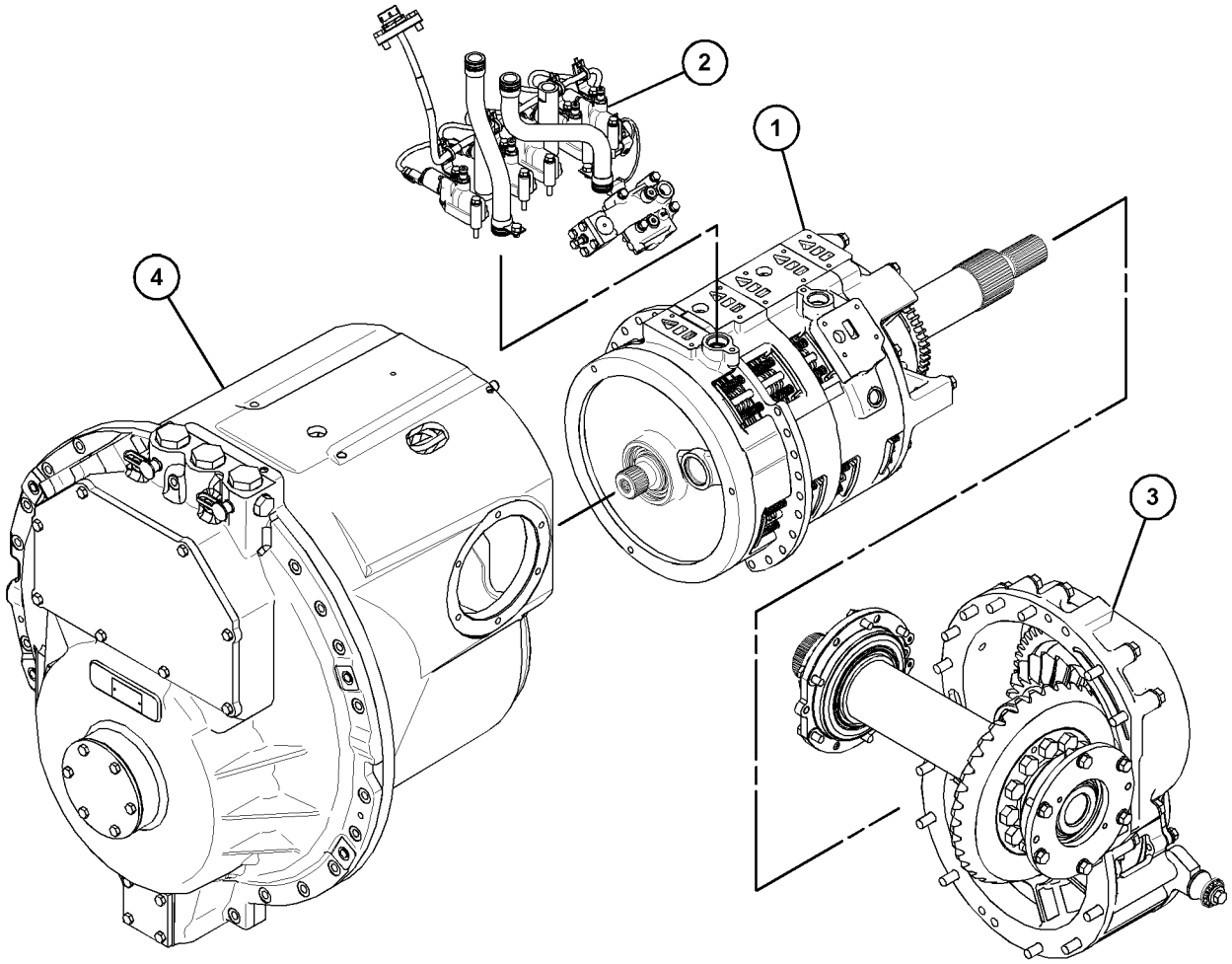

GRAPHIC #1 **<END>** g03859412

417-8819 TRANSMISSION AR

S/N: 6R31-UP
PART OF 398-4318 POWER TRAIN AR
AN ATTACHMENT

SMCS-3030 **i06212332**

NOTE	REF NO	GRAPHIC REF	PART NUMBER	QTY	PART NAME 1 2 3 4 5 6 (PRODUCT LEVEL)	SEE PAGE
Y	1	1	*354-0153*	1	CASE & PARTS GP-PLANETARY	279
Y	2	1	*387-6727*	1	PLANETARY GP-TRANSMISSION	322
Y	3	1	*447-6642*	1	CONTROL GP-TRANSMISSION HYD	283
Y	4	1	*244-2616*	1	GEAR GP-BEVEL & TRANSFER	310

Y - SEPARATE ILLUSTRATION

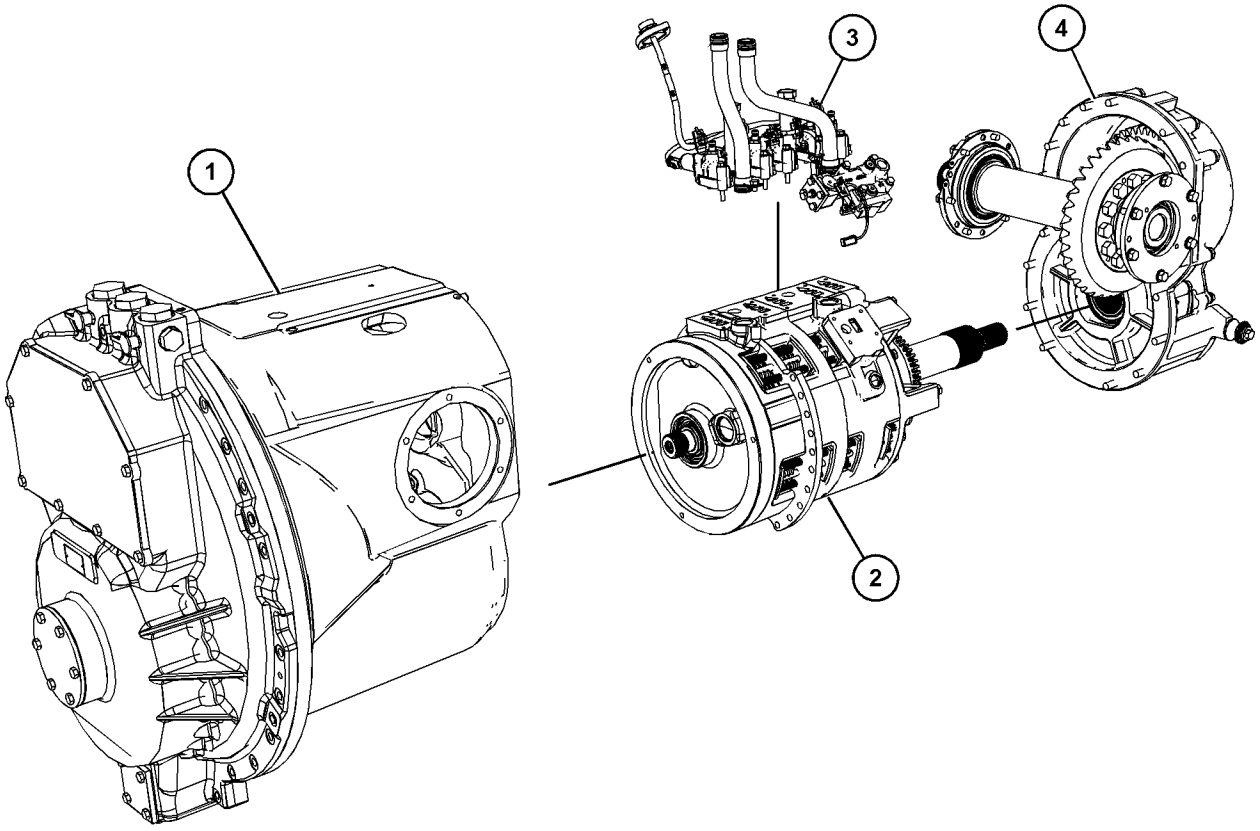

GRAPHIC #1 **<END>** g03856831

220-1418 VALVE GP-RELIEF

S/N: PPP1-UP; SSS1-UP; TTT1-UP
PART OF 398-4487 LINES GP-POWER TRAIN OIL
ALSO AN ATTACHMENT

SMCS-3133, 3182 **i05637182**

NOTE	REF NO	GRAPHIC REF	PART NUMBER	QTY	PART NAME 1 2 3 4 5 6 (PRODUCT LEVEL)	SEE PAGE
	1	1	**225-6363**	1	HOUSING AS-RELIEF VALVE	
		1	**7M-1377**	1	STOP-VALVE	
	2	1	**4M-8239**	2	COVER	
	3	1	**7M-1296**	1	VALVE-RELIEF	
B	4	1	**5M-9623**	5	SHIM (0.9-MM THK)	
M	5	1	**8T-4136**	4	BOLT (M10X1.5X25-MM)	
	6	1	**9X-2027**	7	WASHER (11X18X2-MM THK)	
	7	1	**7M-1297**	1	SPRING	
	8	1	**8M-4986**	2	SEAL-O-RING	
	11	1	**9W-5595**	1	SPRING	
M	12	1	**8T-4172**	3	BOLT (M10X1.5X80-MM)	

B - USE AS REQUIRED
M - METRIC PART

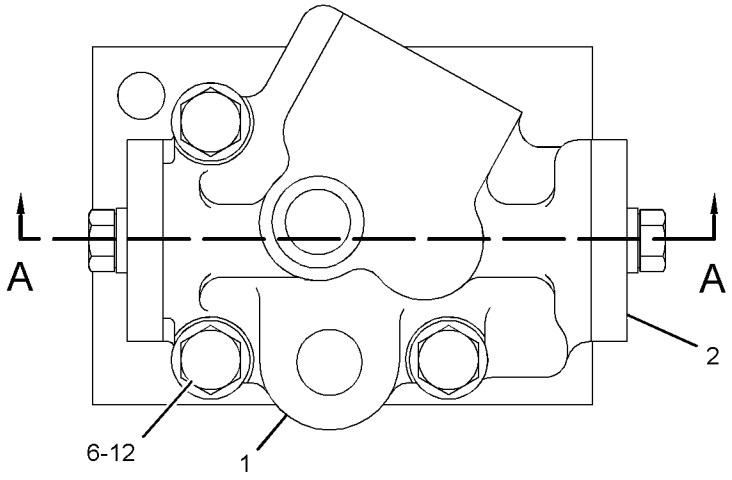

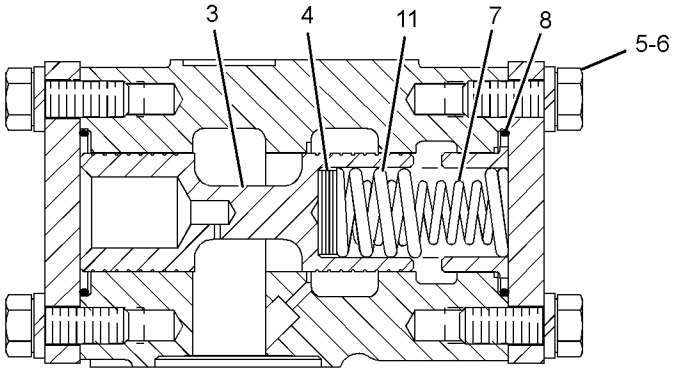

SECTION A-A

GRAPHIC #1 **<END>** g01206826

378-7912 BAR AR-STRIKER

S/N: TTT1-UP
559-MM (22-IN) TRACK SHOE
AN ATTACHMENT

SMCS-7180 **i06223412**

NOTE	REF NO	GRAPHIC REF	PART NUMBER	QTY	PART NAME 1 2 3 4 5 6 (PRODUCT LEVEL)	SEE PAGE
	1	1	**8T-5361**	36	WASHER-HARD (28X49X5-MM THK)	
	2	1	**281-4586**	1	PLATE AS	
	3	1	**281-4587**	1	PLATE AS	
	4	1	**281-4588**	1	PLATE AS	
	5	1	**281-4589**	1	PLATE AS	
	6	1	**281-8934**	1	PLATE AS	
	7	1	**281-8935**	1	PLATE AS	
	8	1	**7X-0402**	24	BOLT (1-8X2-IN)	
	9	1	**7X-0406**	12	BOLT (1-8X3-IN)	
					PARTS SHOWN IN GRAPHIC(S) WITHOUT A REFERENCE NUMBER ARE NOT SERVICED SEPARATELY	

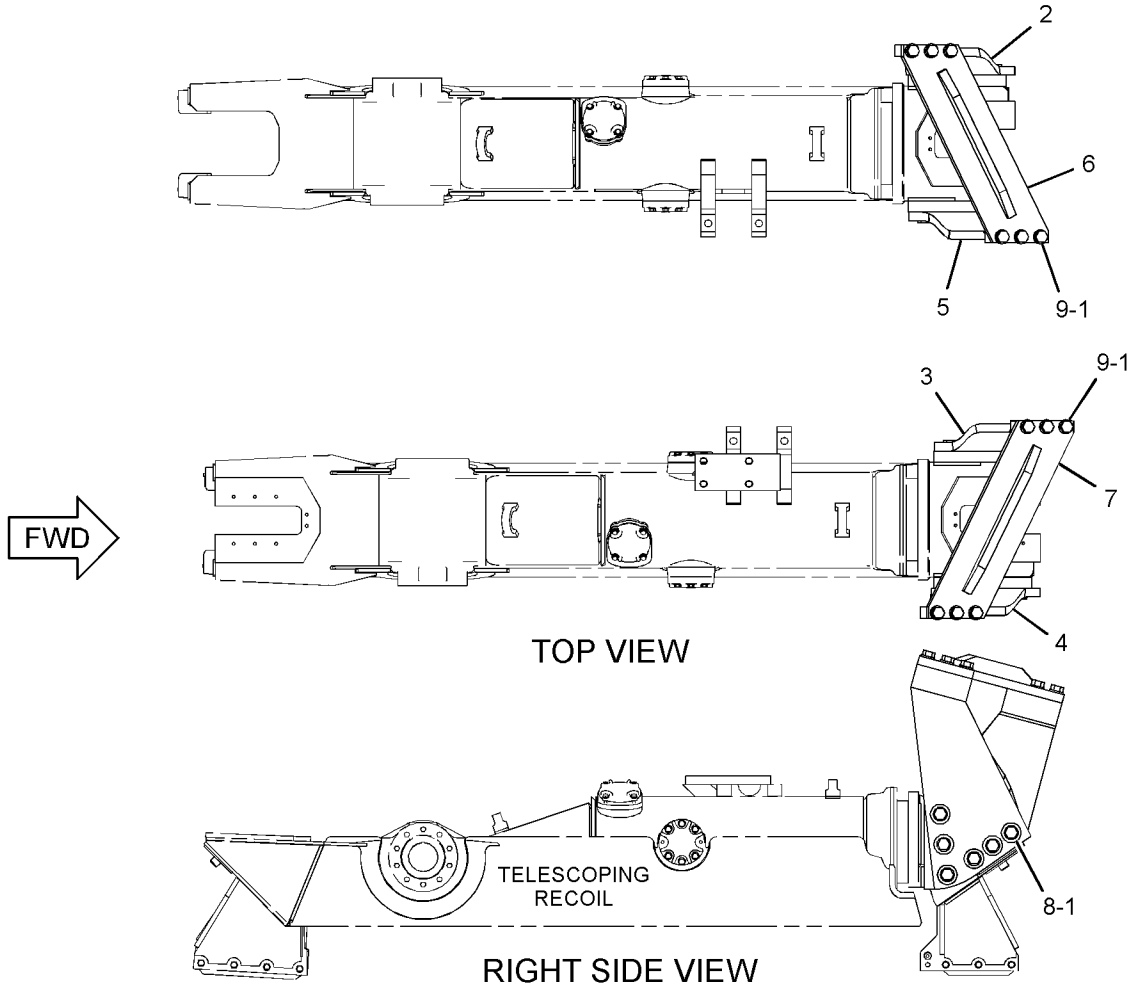

GRAPHIC #1

<END>

g03325413

378-7914 BAR AR-STRIKER

S/N: PPP1-UP
915-MM (36-IN) TRACK SHOE
FOR USE WITH 415-1301—PAGE: 525
CANNOT BE USED WITH TRACK GPS OVER 36-INCHES
AN ATTACHMENT

SMCS-7180 **i06223424**

NOTE	REF NO	GRAPHIC REF	PART NUMBER	QTY	PART NAME 1 2 3 4 5 6 (PRODUCT LEVEL)	SEE PAGE
	1	1	**7X-0402**	28	BOLT (1-8X2-IN)	
	2	1	**192-7919**	1	PLATE AS	
	3	1	**7X-0406**	12	BOLT (1-8X3-IN)	
	4	1	**8T-5361**	40	WASHER-HARD (28X49X5-MM THK)	
	5	1	**192-7915**	1	PLATE AS	
	6	1	**192-7913**	1	PLATE AS	
	7	1	**191-1654**	1	PLATE AS	
	8	1	**192-7918**	1	PLATE AS	
	9	1	**191-1652**	1	PLATE AS	

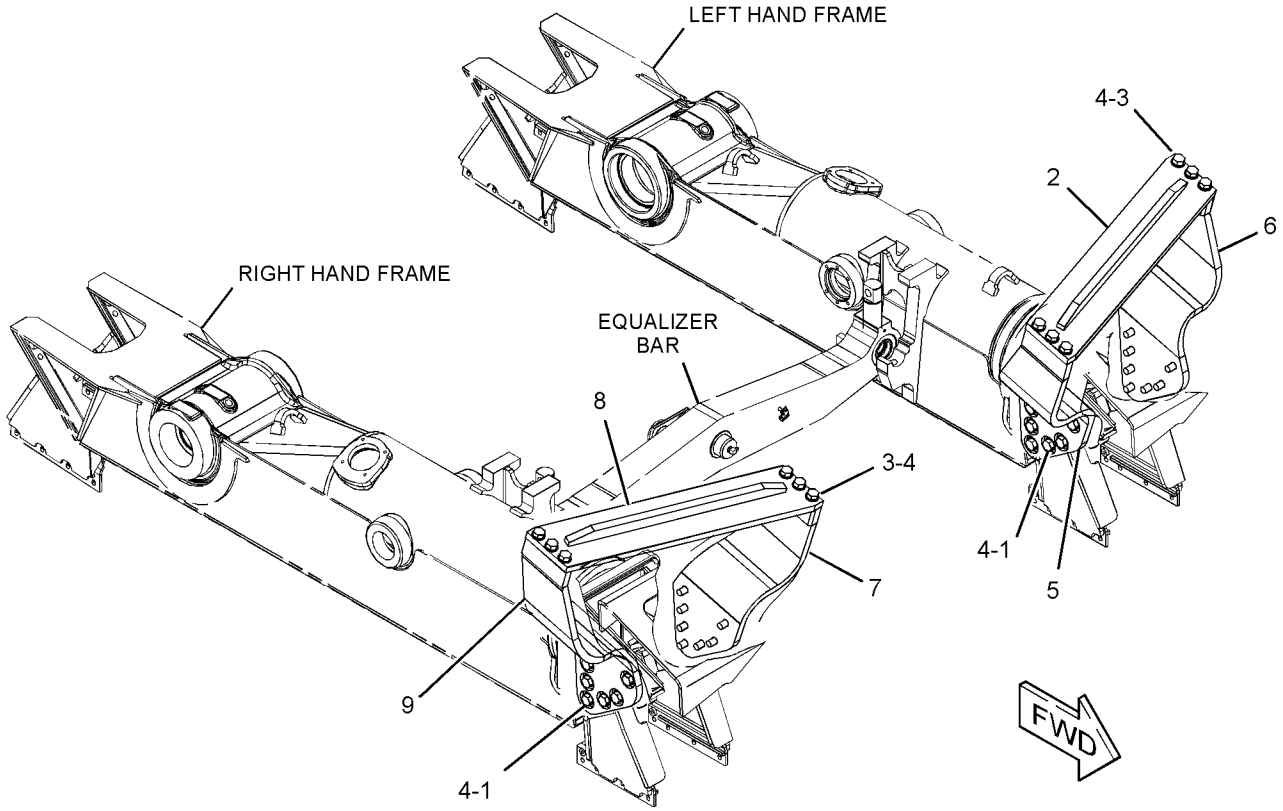

GRAPHIC #1 **<END>** g03330309

465-7896 BAR GP-STRIKER–REAR

S/N: TTT1-UP
PART OF 456-6007 STRIKER GP-REAR
AN ATTACHMENT

SMCS-7180 **i06225493**

NOTE	REF NO	GRAPHIC REF	PART NUMBER	QTY	PART NAME 1 2 3 4 5 6 (PRODUCT LEVEL)	SEE PAGE
	1	1	**1Z-9932**	2	HINGE AS	
	2	1	**1Z-9933**	2	HINGE AS	
	3	1	**8F-3556**	4	SPACER (0.75X1.25X1-IN THK)	
	4	1	**8T-1579**	1	PLATE	
Y	5	1	**8Y-6400**	1	LATCH GP (T-BAR, COMPARTMENT)	399
	6	1	**9Z-9211**	2	PLATE	
	7	1	**9Z-9214**	2	ROD AS	
					(EACH INCLUDES)	
		1	**1Z-9787**	1	BOSS	
	8	1	**198-8858**	1	PLATE	
	11	1	**223-8076**	1	DOOR AS	
	12	1	**225-8558**	1	DOOR AS	
	20	1	**1L-4418**	2	SPRING-SHUTOFF	
	21	1	**1P-2841**	2	SPACER (0.531X1X0.69-IN THK)	
	22	1	**2K-4973**	2	LOCKNUT (3/8-16-THD)	
	23	1	**3B-4617**	4	PIN-COTTER	
	24	1	**5P-1076**	4	WASHER-HARD (13.5X30X4-MM THK)	
	25	1	**5S-7382**	2	BOLT (3/8-16X1.375-IN)	
	26	1	**7B-9665**	1	PLUG	
	27	1	**8T-2501**	4	BOLT (3/8-16X2-IN)	
M	28	1	**8T-4183**	8	BOLT (M12X1.75X40-MM)	
	29	1	**8T-4223**	8	WASHER-HARD (13.5X25.5X3-MM THK)	
	30	1	**8T-4896**	6	WASHER-HARD (10.2X18.5X2.5-MM THK)	
	31	1	**8T-9496**	2	LOCKNUT (9/16-18-THD)	

M - METRIC PART
Y - SEPARATE ILLUSTRATION

465-7896 **BAR GP-STRIKER (*contd.*)** **i06225493**

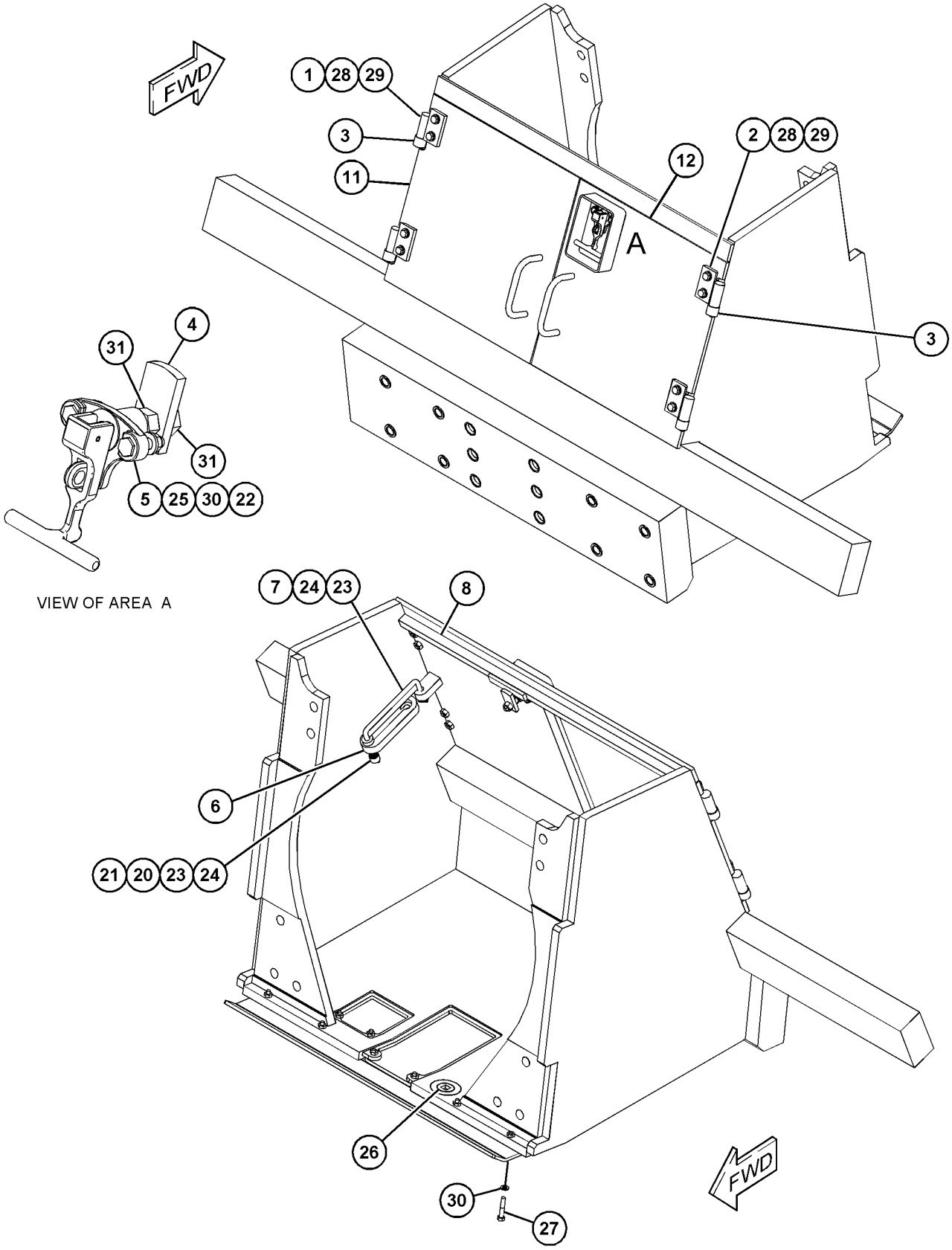

GRAPHIC #1 **<END>** g03862882

465-7898 BAR GP-STRIKER–REAR

S/N: PPP1-UP
PART OF 456-6009 STRIKER GP-REAR
AN ATTACHMENT

SMCS-7180 **i06225498**

NOTE	REF NO	GRAPHIC REF	PART NUMBER	QTY	PART NAME 1 2 3 4 5 6 (PRODUCT LEVEL)	SEE PAGE
	1	1	**1Z-9932**	2	HINGE AS	
	2	1	**1Z-9933**	2	HINGE AS	
	3	1	**8F-3556**	4	SPACER (0.75X1.25X1-IN THK)	
	4	1	**8T-1579**	1	PLATE	
Y	5	1	**8Y-6400**	1	LATCH GP (T-BAR, COMPARTMENT)	399
	6	1	**9Z-9211**	2	PLATE	
	7	1	**9Z-9214**	2	ROD AS	
					(EACH INCLUDES)	
		1	**1Z-9787**	1	BOSS	
	8	1	**198-8858**	2	PLATE	
	11	1	**223-8076**	1	DOOR AS	
	12	1	**225-8558**	1	DOOR AS	
	20	1	**1L-4418**	2	SPRING-SHUTOFF	
	21	1	**1P-2841**	2	SPACER (0.531X1X0.69-IN THK)	
	22	1	**3B-4617**	4	PIN-COTTER	
	23	1	**5P-1076**	4	WASHER-HARD (13.5X30X4-MM THK)	
	24	1	**7B-9665**	1	PLUG	
M	25	1	**8T-0389**	2	LOCKNUT (M10X1.5-THD)	
	26	1	**8T-4121**	6	WASHER-HARD (11X21X2.5-MM THK)	
M	27	1	**8T-4183**	8	BOLT (M12X1.75X40-MM)	
M	28	1	**8T-4185**	4	BOLT (M10X1.5X50-MM)	
M	29	1	**8T-4196**	2	BOLT (M10X1.5X35-MM)	
	30	1	**8T-4223**	8	WASHER-HARD (13.5X25.5X3-MM THK)	
	31	1	**8T-9496**	2	LOCKNUT (9/16-18-THD)	

M - METRIC PART
Y - SEPARATE ILLUSTRATION

465-7898 **BAR GP-STRIKER (*contd.*)** **i06225498**

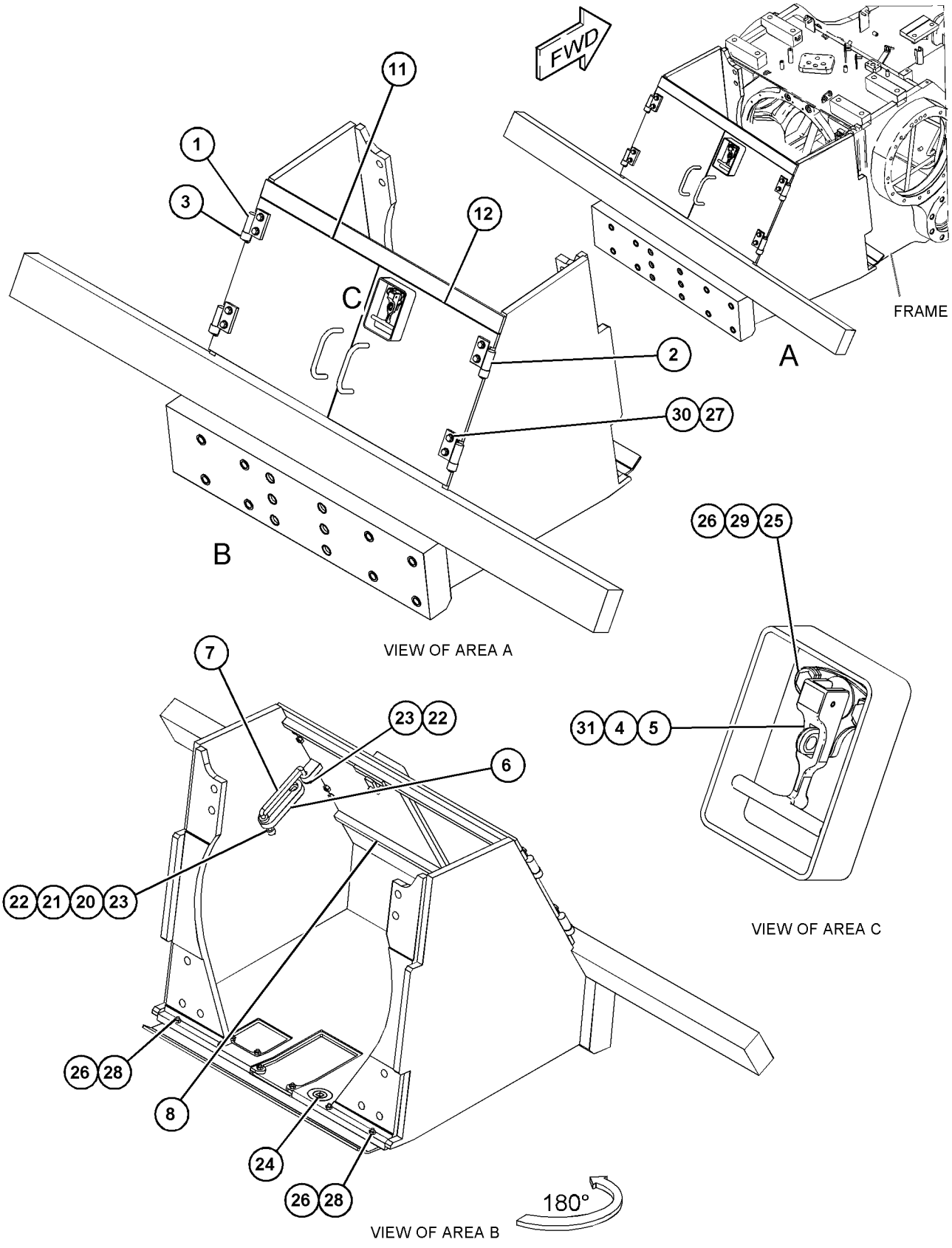

GRAPHIC #1

<END>

g03863610

398-4538 BOX GP-BATTERY

S/N: PPP1-UP; SSS1-UP; TTT1-UP
PART OF 398-4281 CHASSIS AR
ALSO AN ATTACHMENT

SMCS-7257 **i06199432**

NOTE	REF NO	GRAPHIC REF	PART NUMBER	QTY	PART NAME 1 2 3 4 5 6 (PRODUCT LEVEL)	SEE PAGE
	1	1	**6Y-3973**	1	LINK	
	2	1	**8E-7561**	1	KNOB AS	
	3	1	**9M-3835**	1	LATCH-RUBBER	
	4	1	**9S-8230**	1	PLATE AS	
		1	**1F-0750**	1	NUT-WELD (3/8-16-THD)	
	5	1	**415-1334**	1	COVER	
	6	1	**472-0615**	1	COVER GP-BATTERY	
		1	**6C-3681**	8	RIVET-POP	
	7	1	**472-0619**	1	HINGE AS	
	8	1	**476-0460**	1	SUPPORT AS	
	9	1	**2M-5795**	1	PIN-CLEVIS	
	10	1	**4H-1641**	1	PIN-SPRING	
	11	1	**5V-1496**	1	RETAINER	
	12	1	**6V-9197**	2	LOCK PIN	
	13	1	**7X-7729**	20	WASHER (11X25X3-MM THK)	
M	14	1	**8T-4136**	20	BOLT (M10X1.5X25-MM)	
	15	1	**8T-4222**	3	WASHER-PLATED (11X32X2.5-MM THK)	

M - METRIC PART

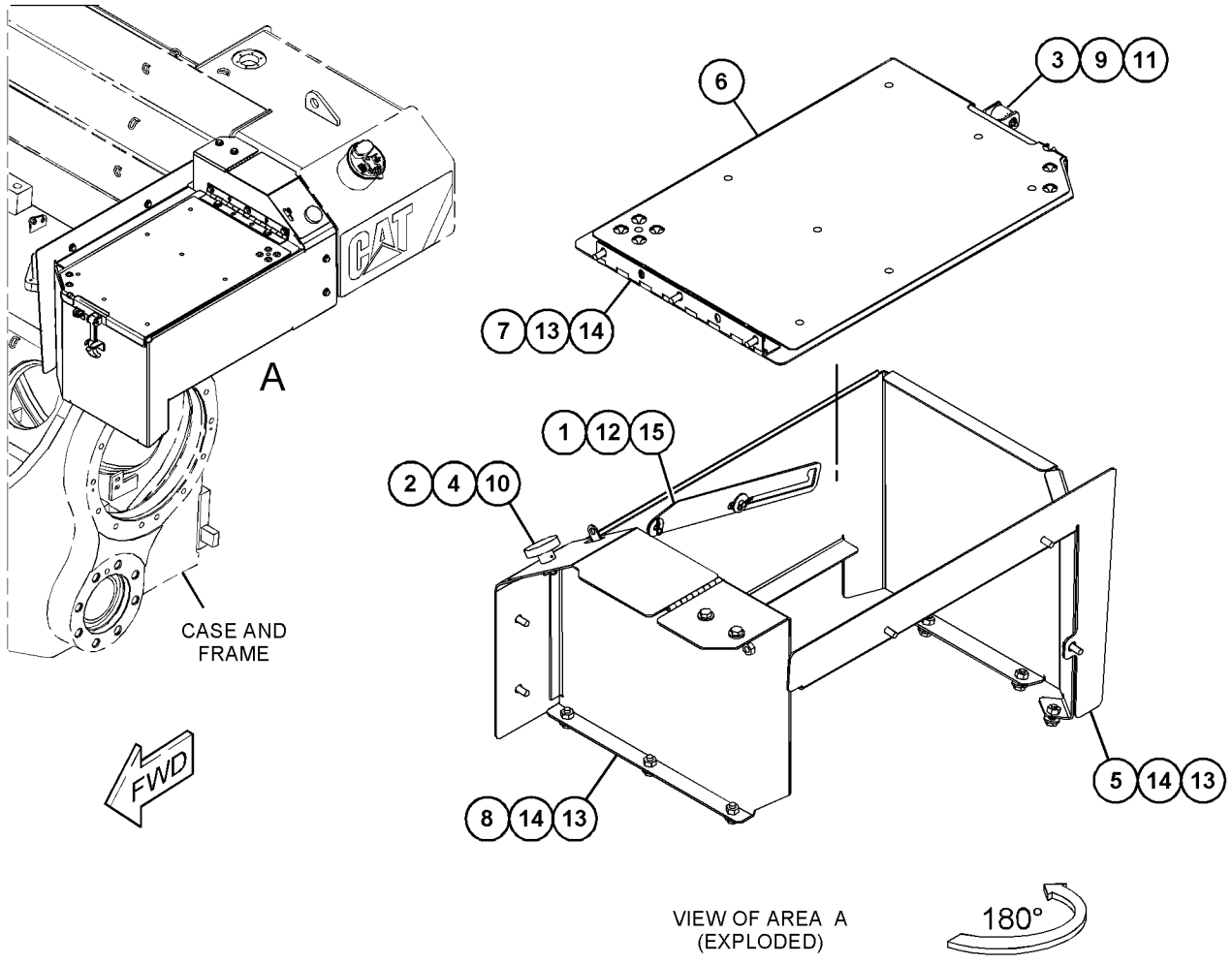

GRAPHIC #1 **<END>** g03852234

398-4386 CASE & FRAME GP

S/N: PPP1-UP; SSS1-UP; TTT1-UP
PART OF 398-4281 CHASSIS AR
ALSO AN ATTACHMENT

SMCS-7051 **i06199208**

NOTE	REF NO	GRAPHIC REF	PART NUMBER	QTY	PART NAME 1 2 3 4 5 6 (PRODUCT LEVEL)	SEE PAGE
	1	1	**106-8186**	1	VALVE AS-DRAIN (ECOLOGY)	
		1	**077-3241**	1	SEAL-O-RING	
	2	1	**106-8187**	1	PLUG-DRAIN (TRANSMISSION CASE)	
Y	3	1	*398-4391*	1	CASE & FRAME GP	359
M	4	1	**133-7810**	2	STUD-TAPERLOCK (M10X1.5X45-MM)	
	5	1	**3T-0996**	2	BUSHING	
	6	1	**6F-0711**	1	SEAL-O-RING	
	7	1	**258-2305**	4	BUSHING	

M - METRIC PART
Y - SEPARATE ILLUSTRATION

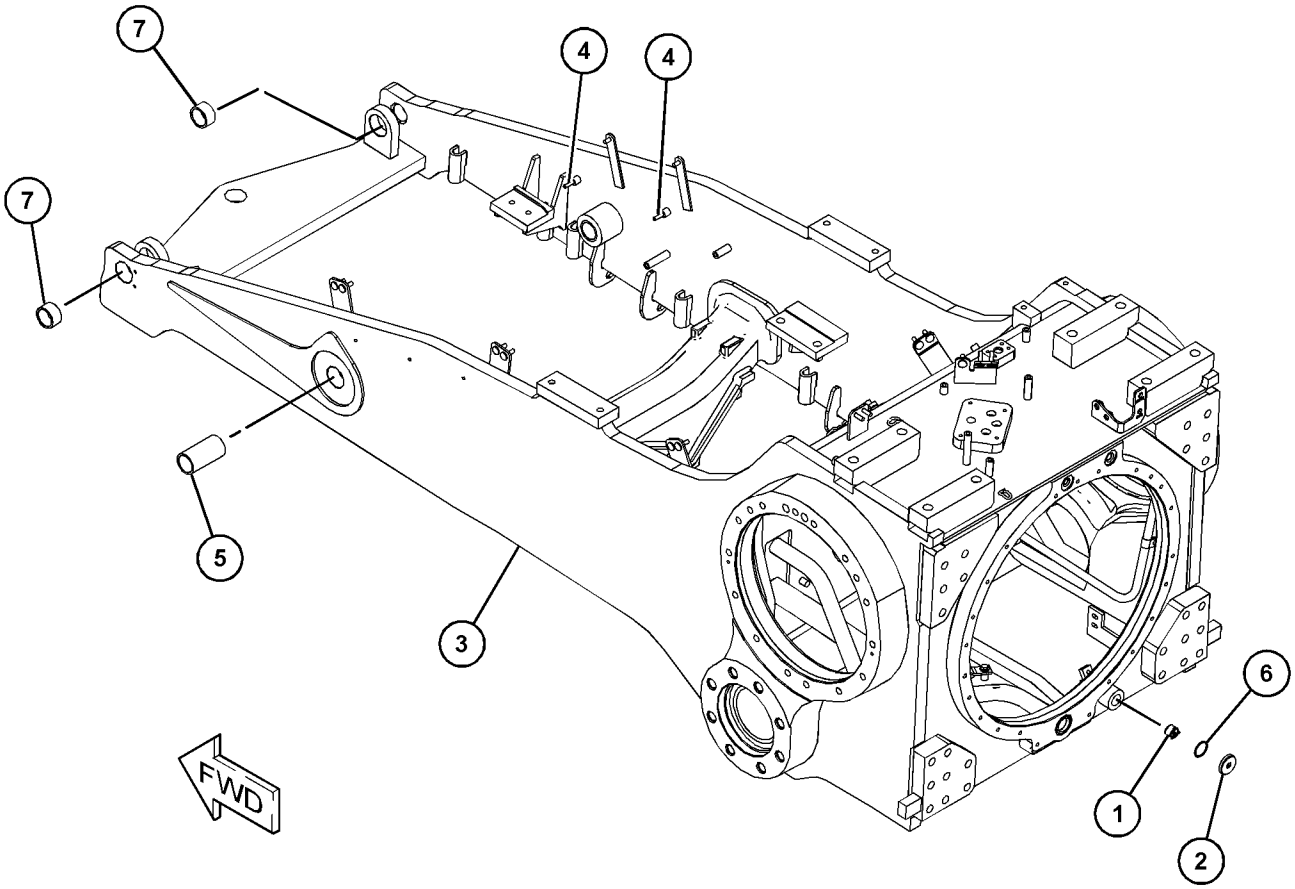

GRAPHIC #1 **<END>** g03857085

398-4391 CASE & FRAME GP

S/N: PPP1-UP; SSS1-UP; TTT1-UP
PART OF 398-4386 CASE & FRAME GP
ALSO AN ATTACHMENT

SMCS-7051 **i06211349**

NOTE	REF NO	GRAPHIC REF	PART NUMBER	QTY	PART NAME 1 2 3 4 5 6 (PRODUCT LEVEL)	SEE PAGE
	1	1	*398-4392*	1	CASE & FRAME AS	
M		1	**7Y-6338**	1	BOSS (M10X1.5X70-MM)	
M		1	**9R-3761**	3	BOSS (M10X1.5X51-MM)	
		1	**102-8706**	1	PLATE AS	
M		1	**175-1540**	1	BOSS-GROUND (M10X1.5-MM THD)	
		1	**224-2674**	1	SUPPORT	
		1	**7T-1099**	1	LINK	
M		1	**8Y-4489**	1	BOSS (M10X1.5-THD)	
M		1	**9R-2613**	3	BOSS-WELD (M10X1.5X25-MM)	
	2	1	**398-4427**	1	TUBE	
	3	1	**398-4431**	1	TUBE AS	
M	4	1	**8T-4196**	1	BOLT (M10X1.5X35-MM)	
M	5	1	**8T-4137**	3	BOLT (M10X1.5X20-MM)	
	6	1	**8G-5247**	2	SLEEVE	
	7	1	**8G-4386**	10	SLEEVE	
	8	1	**7X-7729**	5	WASHER (11X25X3-MM THK)	
	9	1	**5R-0940**	1	CLIP (SLOT)	
	10	1	**5R-0939**	1	CLIP (TAB)	
M	11	1	**344-5675**	1	NUT (M10X1.5-THD)	
	12	1	**5K-0461**	1	CLIP	

M - METRIC PART

398-4391 **CASE & FRAME GP (*contd.*)** **i06211349**

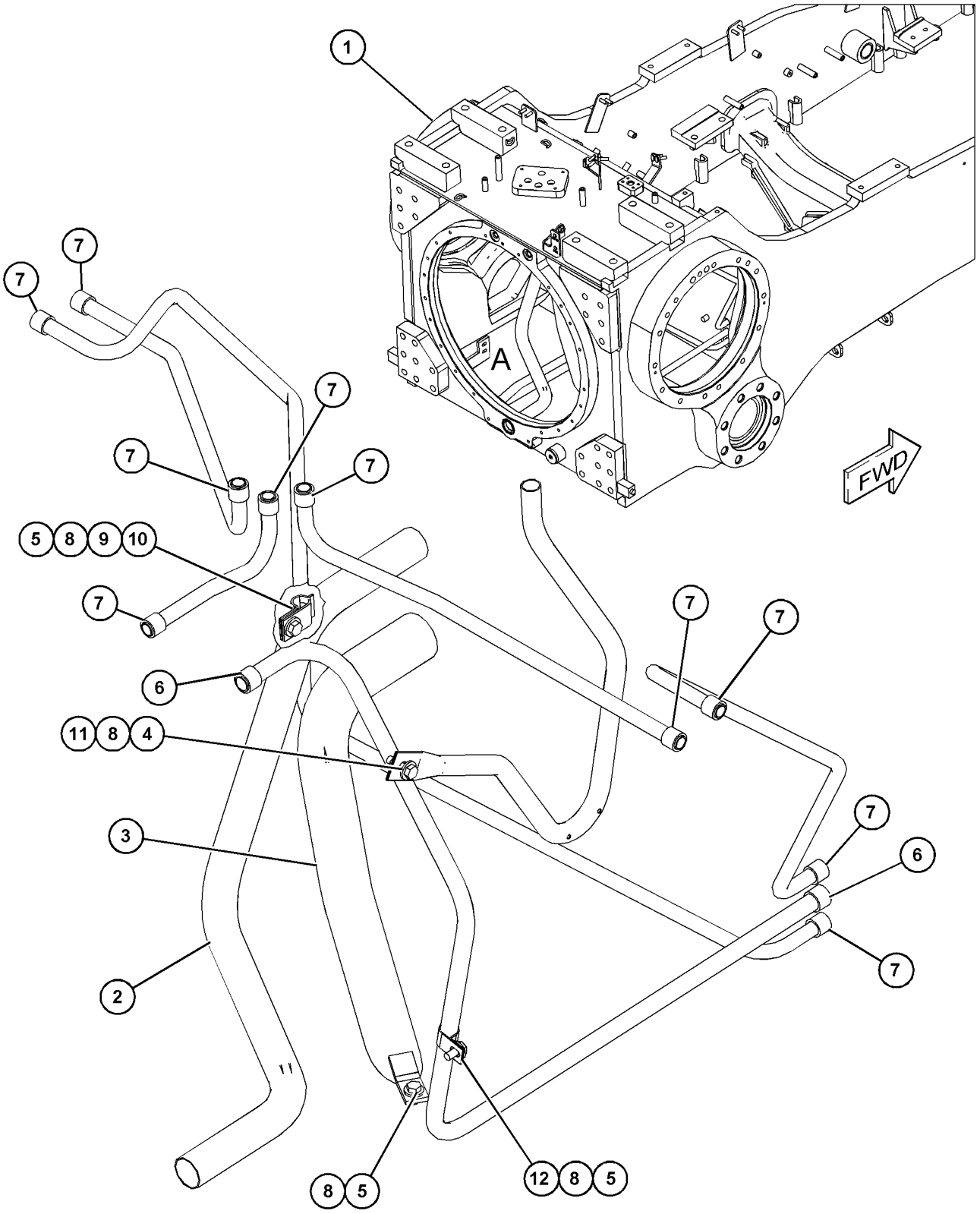

VIEW OF AREA A
(FRAME REMOVED FOR CLARITY)

GRAPHIC #1 **<END>** g03857457

456-5986 COUNTERWEIGHT AR

S/N: PPP1-UP; SSS1-UP; TTT1-UP
CANNOT BE USED WITH 456-5987—PAGE: 395
AN ATTACHMENT

SMCS-7056 **i06203570**

NOTE	REF NO	GRAPHIC REF	PART NUMBER	QTY	PART NAME 1 2 3 4 5 6 (PRODUCT LEVEL)	SEE PAGE
	1	1	**3W-6867**	1	DRAWBAR AS	
	2	1	**7B-0863**	1	LATCH-PIN	
	3	1	**7F-9547**	1	PIN AS-DRAWBAR	
		1	**7F-9543**	1	COLLAR	
	4	1	**7X-7644**	1	FILM-IDENTIFICATION (TIE-DOWN)	
	5	1	**193-5918**	2	PLUG	
	6	1	**356-2197**	1	FILM-INFORMATION (DRAWBAR, READ OMM)	
Y	7	1	*462-9985*	1	COUNTERWEIGHT GP	364
M	8	1	**7X-2576**	10	BOLT (M24X3X70-MM)	
	9	1	**8T-1482**	10	WASHER-HARD (26X50X8-MM THK)	
M	10	1	**8T-4140**	1	BOLT (M16X2X60-MM)	
M	11	1	**8T-4778**	1	LOCKNUT (M16X2-THD)	

M - METRIC PART
Y - SEPARATE ILLUSTRATION

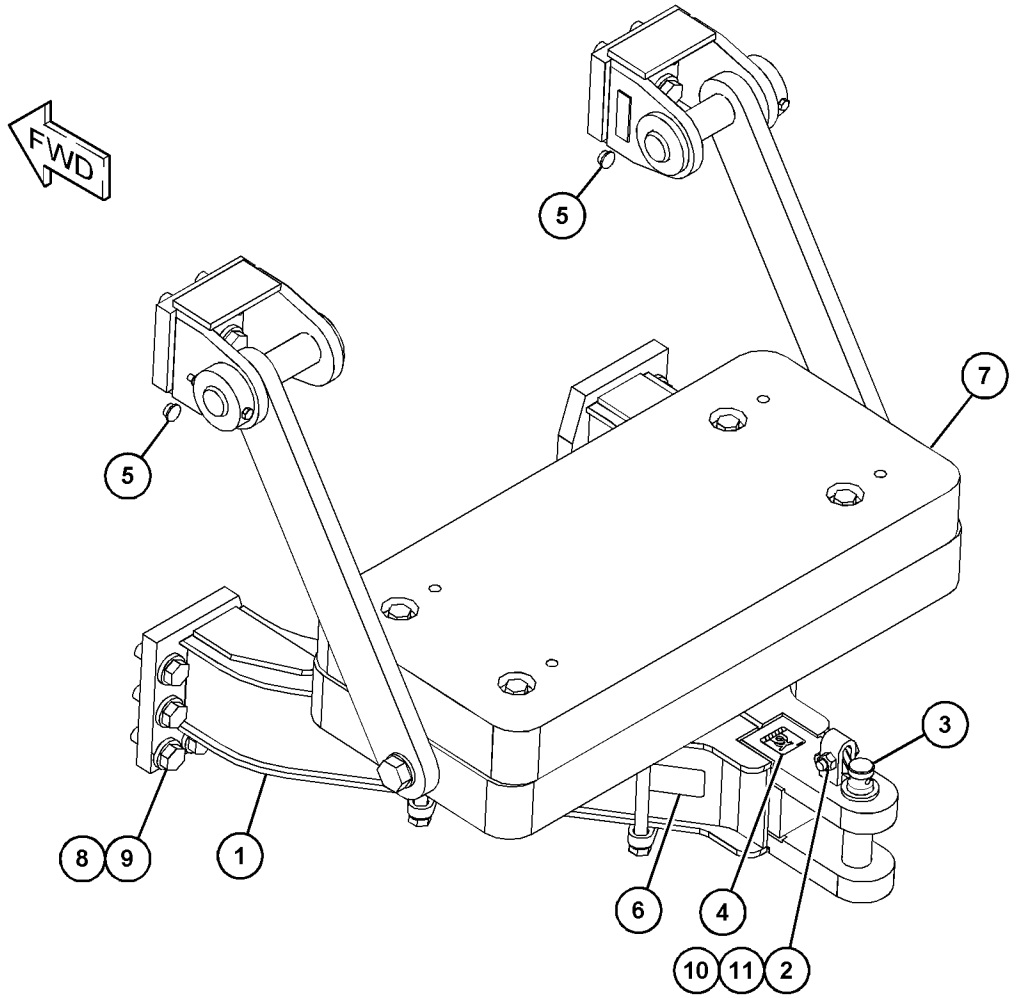

GRAPHIC #1 **<END>** g03863339

238-1177 COUNTERWEIGHT GP

S/N: PPP1-UP; TTT1-UP
305-KG (672-LB)
FOR USE WITH BAR GP-STRIKER
AN ATTACHMENT

SMCS-7056 **i05323026**

NOTE	REF NO	GRAPHIC REF	PART NUMBER	QTY	PART NAME 1 2 3 4 5 6 (PRODUCT LEVEL)	SEE PAGE
	1	1	**238-1178**	1	PLATE	
M	2	1	**7X-2584**	8	BOLT (M30X3.5X140-MM)	
	3	1	**9X-8258**	8	WASHER (33X56X6-MM THK)	

M - METRIC PART

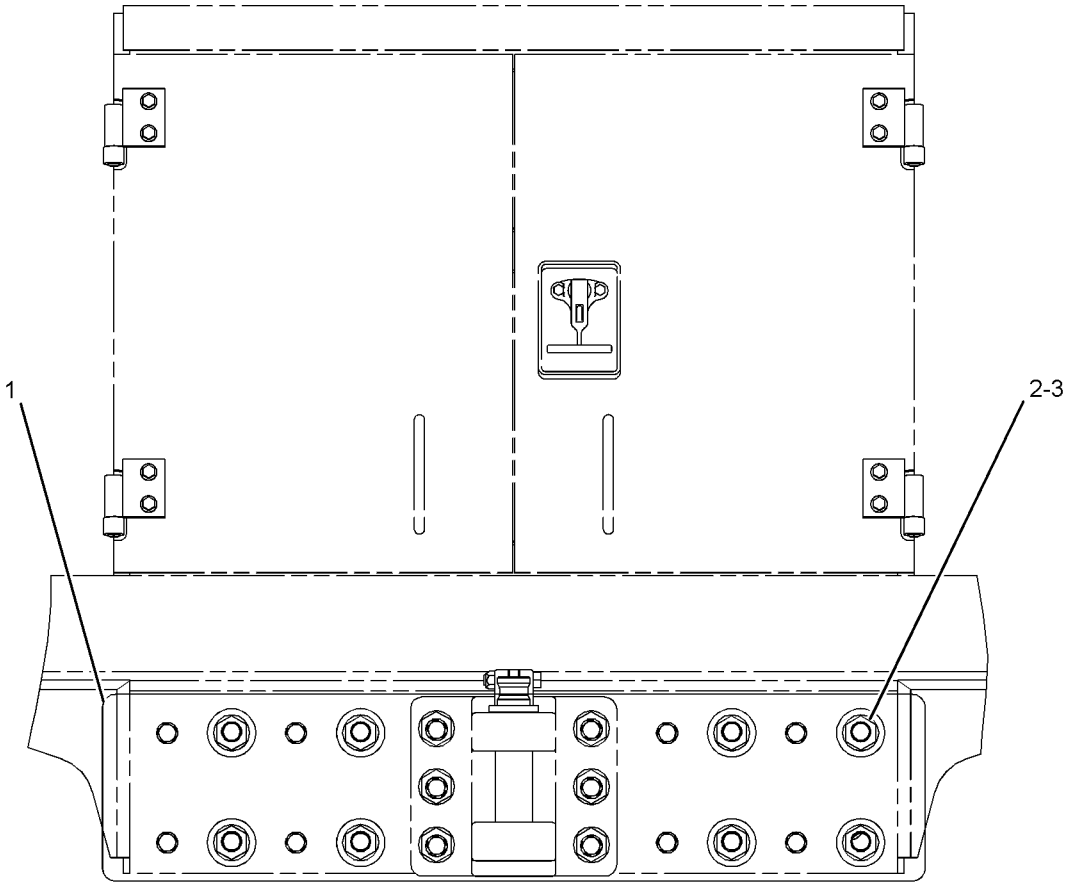

REAR VIEW

GRAPHIC #1 **<END>** g01022370

462-9984 COUNTERWEIGHT GP

S/N: PPP1-UP; SSS1-UP; TTT1-UP
339-KG (747-LB)
FOR USE WITH REAR COUNTERWEIGHT
AN ATTACHMENT

SMCS-7056 **i06203552**

NOTE	REF NO	GRAPHIC REF	PART NUMBER	QTY	PART NAME 1 2 3 4 5 6 (PRODUCT LEVEL)	SEE PAGE
	1	1	**462-9982**	1	PLATE	
M	2	1	**7X-2566**	4	BOLT (M20X2.5X110-MM)	
	3	1	**8T-4123**	4	WASHER (3.62X5.75X0.375-MM THK)	

M - METRIC PART

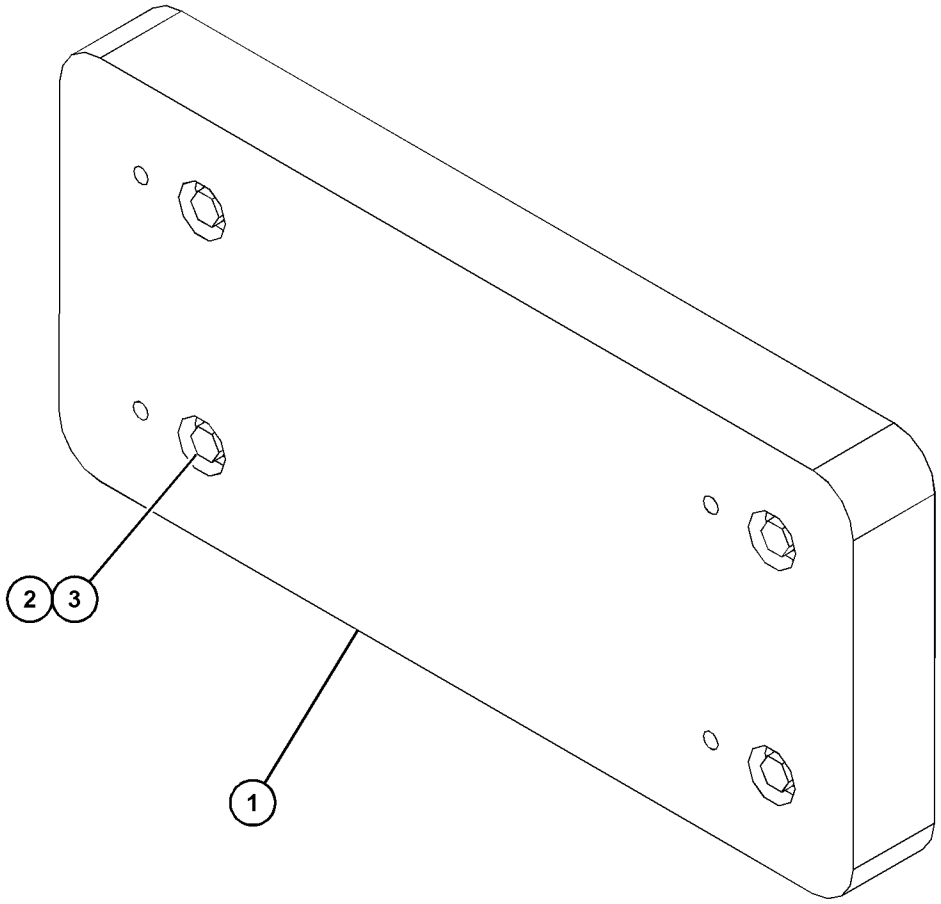

GRAPHIC #1 **<END>** g03853140

462-9985 COUNTERWEIGHT GP

S/N: PPP1-UP; SSS1-UP; TTT1-UP
725-KG (1598-LB)
PART OF 456-5986 COUNTERWEIGHT AR
AN ATTACHMENT

SMCS-7056 **i06203594**

NOTE	REF NO	GRAPHIC REF	PART NUMBER	QTY	PART NAME 1 2 3 4 5 6 (PRODUCT LEVEL)	SEE PAGE
	1	1	**1U-0301**	2	BRACKET AS	
	2	1	**117-5691**	2	PLATE	
	3	1	**117-5692**	2	PLATE	
	4	1	**117-5693**	2	PLATE	
	5	1	**462-9982**	1	PLATE	
	6	1	**462-9983**	1	PLATE	
	7	1	**1U-0612**	2	PIN	
M	8	1	**6V-7744**	2	LOCKNUT (M10X1.5-THD)	
M	9	1	**7X-2543**	2	BOLT (M10X1.5X120-MM)	
M	10	1	**7X-2571**	8	BOLT (M20X2.5X240-MM)	
M	11	1	**7X-2576**	8	BOLT (M24X3X70-MM)	
M	12	1	**7X-2580**	2	BOLT (M30X3.5X90-MM)	
	13	1	**8T-1482**	8	WASHER-HARD (26X50X8-MM THK)	
	14	1	**8T-4123**	12	WASHER (3.62X5.75X0.375-MM THK)	
M	15	1	**8T-6381**	4	BOLT (M20X2.5X120-MM)	
	16	1	**9X-8258**	2	WASHER (33X56X6-MM THK)	

M - METRIC PART

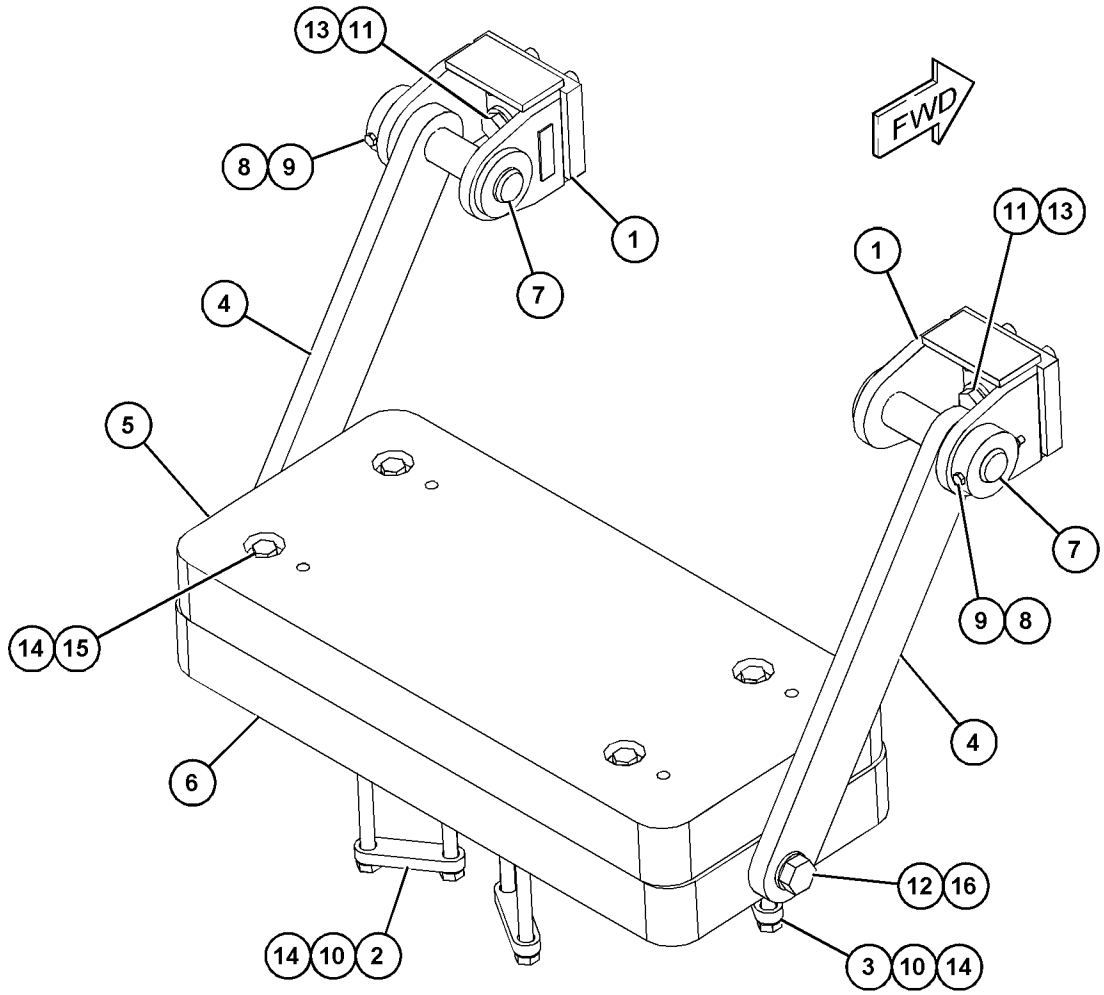

GRAPHIC #1 **<END>** g03858283

434-8125 DRAWBAR GP

S/N: PPP1-UP; SSS1-UP; TTT1-UP

AN ATTACHMENT

SMCS-7105, 7119 **i06147525**

NOTE	REF NO	GRAPHIC REF	PART NUMBER	QTY	PART NAME 1 2 3 4 5 6 (PRODUCT LEVEL)	SEE PAGE
	1	1	**3W-6867**	1	DRAWBAR AS	
	2	1	**7B-0863**	1	LATCH-PIN	
	3	1	**7F-9547**	1	PIN AS-DRAWBAR	
		1	**7F-9543**	1	COLLAR	
	4	1	**7X-7644**	1	FILM-IDENTIFICATION (TIE-DOWN)	
	5	1	**193-5918**	10	PLUG	
	6	1	**356-2197**	1	FILM-INFORMATION (DRAWBAR, READ OMM)	
M	7	1	**7X-2576**	10	BOLT (M24X3X70-MM)	
	8	1	**8T-1482**	10	WASHER-HARD (26X50X8-MM THK)	
M	9	1	**8T-4140**	1	BOLT (M16X2X60-MM)	
M	10	1	**8T-4778**	1	LOCKNUT (M16X2-THD)	

M - METRIC PART

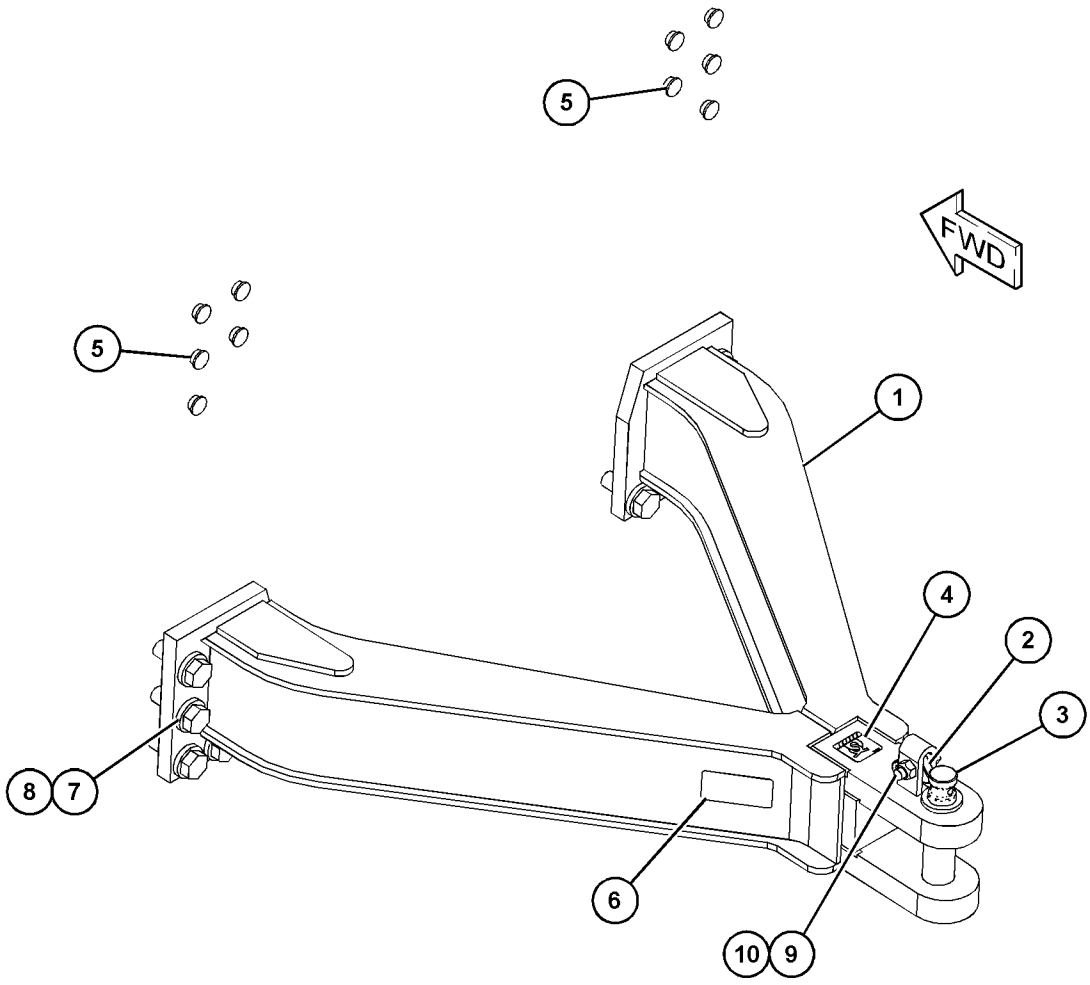

GRAPHIC #1 **<END>** g03834274

398-4306 ENCLOSURE AR

S/N: PPP1-UP; SSS1-UP; TTT1-UP
HIGH DEBRIS
FOR USE WITH 446-5049—PAGE: 154, 398-4543—PAGE: 389, WASTE HANDLING APPLICATIONS
AN ATTACHMENT

SMCS-7000, 7155, 7251, 7263 **i06223381**

NOTE	PART NUMBER	QTY	PART NAME 1 2 3 4 5 6 (PRODUCT LEVEL)	SEE PAGE
Y	*398-4548*	1	ENCLOSURE GP-ENGINE	369
Y	*398-4545*	1	FENDER GP	380
Y	*446-5050*	1	MUFFLER GP	122
Y	*398-4547*	1	SEAL GP-WASTE HANDLING	401
	456-6002	1	BAR AS	
	456-6003	1	BAR AS	

Y - SEPARATE ILLUSTRATION

<END>

398-4305 ENCLOSURE GP-ENGINE

S/N: PPP1-UP; SSS1-UP; TTT1-UP
CANNOT BE USED WITH 398-4304—PAGE: 856, 398-4316—PAGE: 4, 398-4317—PAGE: 4
PART OF 481-9508 DISTRIBUTION AR
AN ATTACHMENT

SMCS-7263 **i06203709**

NOTE	PART NUMBER	QTY	PART NAME 1 2 3 4 5 6 (PRODUCT LEVEL)	SEE PAGE
Y	*398-4546*	1	ENCLOSURE GP-ENGINE	367
Y	*398-4545*	1	FENDER GP	380
Y	*418-2403*	1	MUFFLER GP	121

Y - SEPARATE ILLUSTRATION

<END>

398-4307 ENCLOSURE GP-ENGINE

S/N: PPP1-UP; SSS1-UP; TTT1-UP
SOLID HOOD
FOR USE WITH COLD WEATHER
AN ATTACHMENT

SMCS-7263 **i06206069**

NOTE	PART NUMBER	QTY	PART NAME 1 2 3 4 5 6 (PRODUCT LEVEL)	SEE PAGE
Y	*398-4549*	1	ENCLOSURE GP-ENGINE	371
Y	*398-4545*	1	FENDER GP	380
Y	*418-2403*	1	MUFFLER GP	121

Y - SEPARATE ILLUSTRATION

<END>

398-4546 ENCLOSURE GP-ENGINE

S/N: PPP1-UP; SSS1-UP; TTT1-UP
PART OF 398-4305 ENCLOSURE GP-ENGINE
AN ATTACHMENT

SMCS-7263 **i06215454**

NOTE	REF NO	GRAPHIC REF	PART NUMBER	QTY	PART NAME 1 2 3 4 5 6 (PRODUCT LEVEL)	SEE PAGE
	1	1	**6T-9927**	2	SLIDE	
	2	1	**8G-4014**	2	RETAINER	
	3	1	**9P-3066**	2	MOUNTING	
	4	1	**317-7071**	4	SPACER	
	5	1	**394-2157**	1	SHIELD AS	
	6	1	**394-2158**	1	SHIELD AS	
Y	7	1	*423-2947*	1	ENCLOSURE GP-ENGINE (LH)	373
Y	8	1	*423-2958*	1	ENCLOSURE GP-ENGINE (RH)	375
	9	1	**431-0367**	1	COVER	
Y	10	1	**476-0462**	1	HOOD AS	398
	11	1	**476-0493**	1	PLATE AS	
		1	**8Y-3465**	2	BOSS (M10X1.5X12-MM)	
	12	1	**484-1422**	1	PLATE AS	
	13	1	**190-7971**	2	WASHER-HARD (11X64X6-MM THK)	
	14	1	**3W-3819**	2	PLATE	
	15	1	**6P-8269**	1	WASHER (20.5X88X6-MM THK)	
M	16	1	**6V-7357**	2	BOLT (M6X1X25-MM)	
M	17	1	**6V-7743**	2	LOCKNUT (M6X1-THD)	
	18	1	**7X-3391**	6	WASHER-HARD (13.5X32X6-MM THK)	
	19	1	**7X-7729**	14	WASHER (11X25X3-MM THK)	
	20	1	**8T-4121**	6	WASHER-HARD (11X21X2.5-MM THK)	
M	21	1	**8T-4136**	22	BOLT (M10X1.5X25-MM)	
M	22	1	**8T-4139**	10	BOLT (M12X1.75X30-MM)	
M	23	1	**8T-4175**	1	BOLT (M16X2X90-MM)	
M	24	1	**8T-4195**	4	BOLT (M10X1.5X30-MM)	
	25	1	**8T-4205**	4	WASHER-HARD (7.2X14.5X2-MM THK)	
	26	1	**8T-4223**	4	WASHER-HARD (13.5X25.5X3-MM THK)	
	27	1	**9X-8257**	1	WASHER (17.5X30X3.5-MM THK)	

M - METRIC PART
Y - SEPARATE ILLUSTRATION

398-4546 **ENCLOSURE GP-ENGINE (*contd.*)** **i06215454**

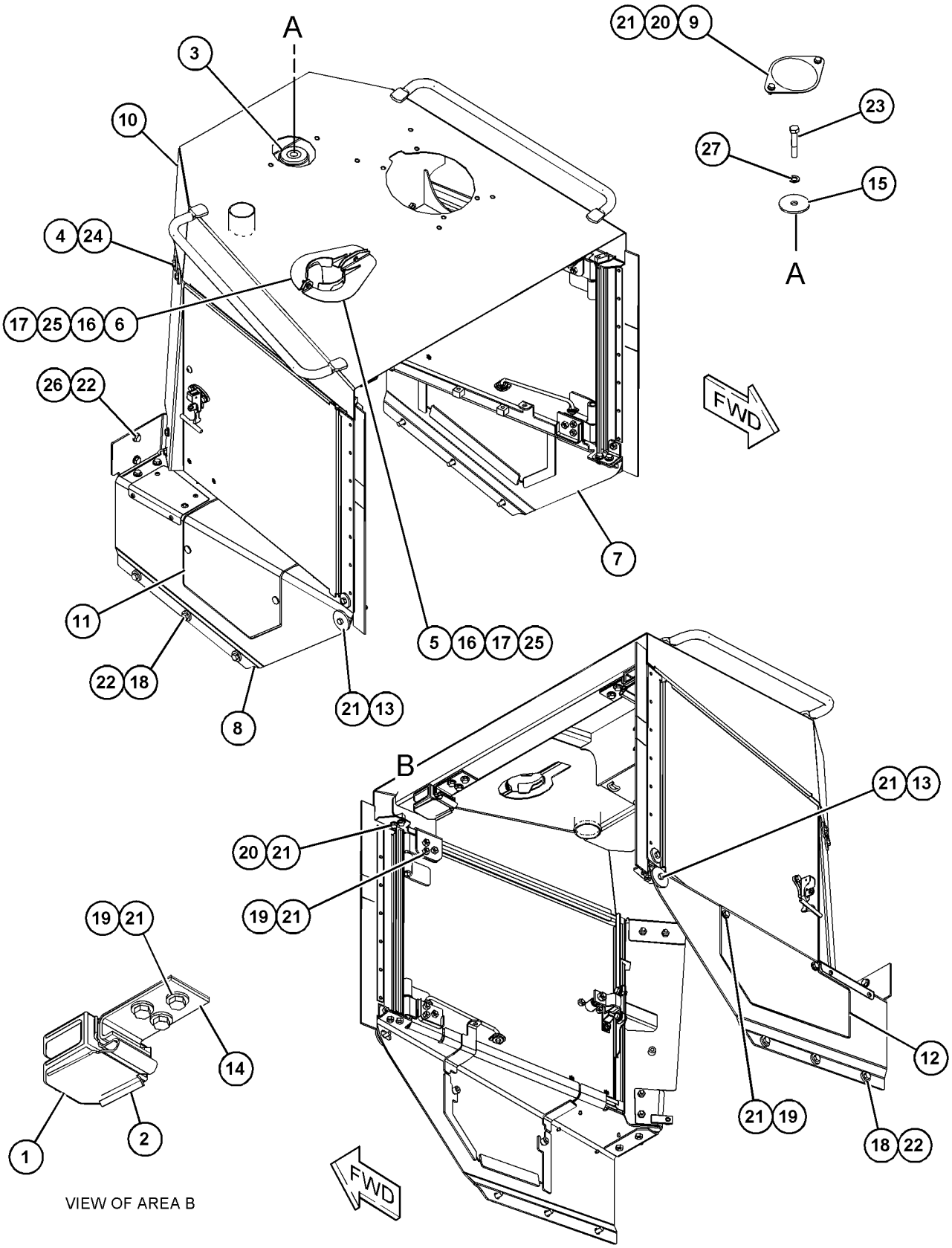

GRAPHIC #1 **<END>** g03859898

398-4548 ENCLOSURE GP-ENGINE

S/N: PPP1-UP; SSS1-UP; TTT1-UP
PART OF 398-4306 ENCLOSURE AR
AN ATTACHMENT

SMCS-7263 **i06225672**

NOTE	REF NO	GRAPHIC REF	PART NUMBER	QTY	PART NAME 1 2 3 4 5 6 (PRODUCT LEVEL)	SEE PAGE
	1	1	**6T-9927**	2	SLIDE	
	2	1	**8G-4014**	2	RETAINER	
	3	1	**9P-3066**	2	MOUNTING	
	4	1	**317-7071**	4	SPACER	
Y	5	1	*423-2947*	1	ENCLOSURE GP-ENGINE (LH)	373
Y	6	1	*423-2958*	1	ENCLOSURE GP-ENGINE (RH)	375
	7	1	**476-0493**	1	PLATE AS	
		1	**8Y-3465**	2	BOSS (M10X1.5X12-MM)	
	8	1	*476-0497*	1	COVER AS	
		1	**431-0367**	1	COVER	
	9	1	*476-9771*	1	SHIELD AS	
		1	**394-2157**		SHIELD AS	
	10	1	*476-9772*	1	SHIELD AS	
		1	**394-2158**	1	SHIELD AS	
	11	1	**476-9775**	1	HOOD GP	
	12	1	**484-1422**	1	PLATE AS	
	13	1	**190-7971**	2	WASHER-HARD (11X64X6-MM THK)	
	14	1	**3W-3819**	2	PLATE	
	15	1	**6P-8269**	1	WASHER (20.5X88X6-MM THK)	
M	16	1	**6V-7357**	2	BOLT (M6X1X25-MM)	
M	17	1	**6V-7743**	2	LOCKNUT (M6X1-THD)	
	18	1	**7X-3391**	6	WASHER-HARD (13.5X32X6-MM THK)	
	19	1	**7X-7729**	14	WASHER (11X25X3-MM THK)	
	20	1	**8T-4121**	6	WASHER-HARD (11X21X2.5-MM THK)	
M	21	1	**8T-4136**	22	BOLT (M10X1.5X25-MM)	
M	22	1	**8T-4139**	10	BOLT (M12X1.75X30-MM)	
M	23	1	**8T-4175**	1	BOLT (M16X2X90-MM)	
M	24	1	**8T-4195**	4	BOLT (M10X1.5X30-MM)	
	25	1	**8T-4205**	4	WASHER-HARD (7.2X14.5X2-MM THK)	
	26	1	**8T-4223**	4	WASHER-HARD (13.5X25.5X3-MM THK)	
	27	1	**9X-8257**	1	WASHER (17.5X30X3.5-MM THK)	

M - METRIC PART
Y - SEPARATE ILLUSTRATION

398-4548 **ENCLOSURE GP-ENGINE (*contd.*)** **i06225672**

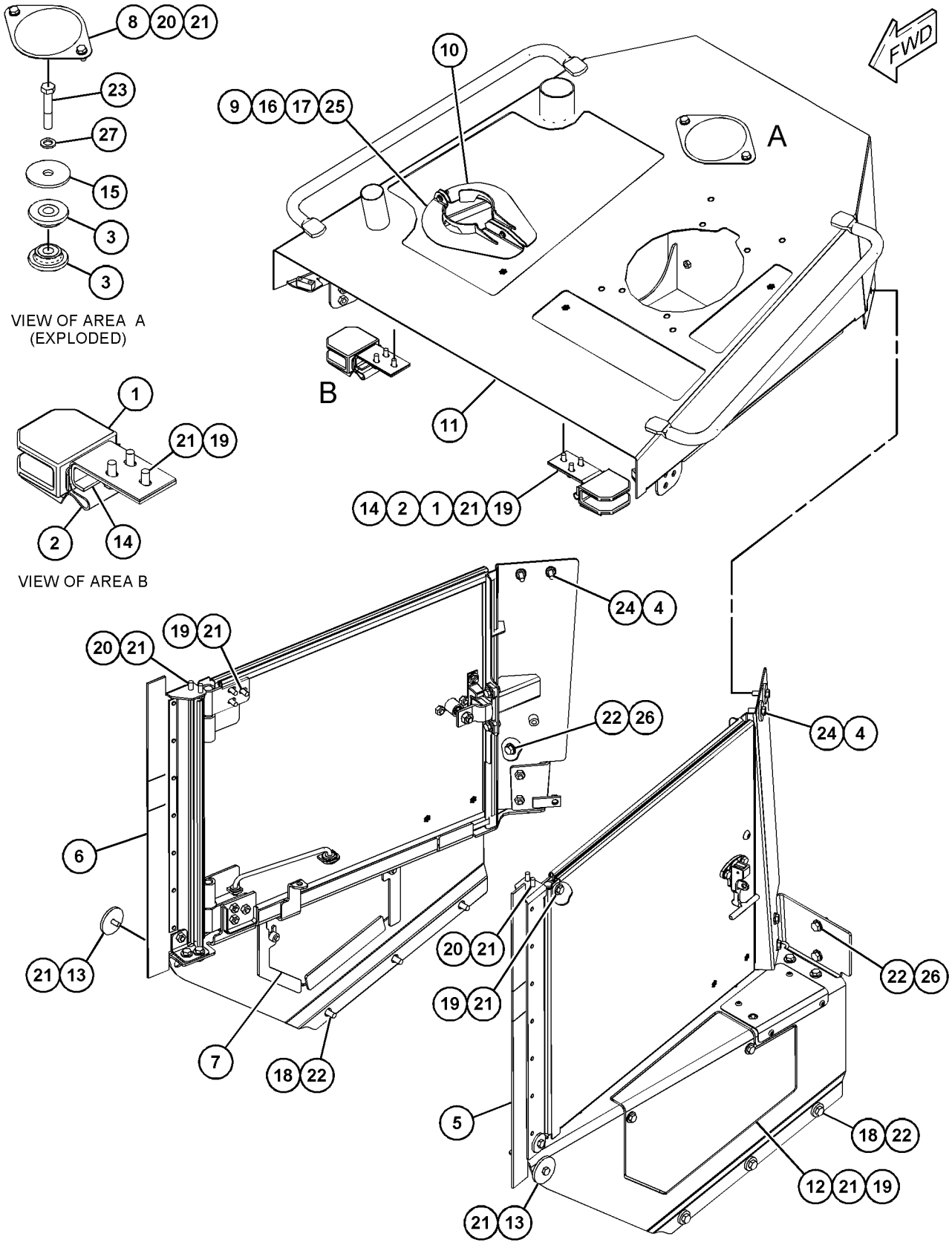

GRAPHIC #1 **<END>** g03863126

398-4549 ENCLOSURE GP-ENGINE

S/N: PPP1-UP; SSS1-UP; TTT1-UP
PART OF 398-4307 ENCLOSURE GP-ENGINE
AN ATTACHMENT

SMCS-7263 **i06206133**

NOTE	REF NO	GRAPHIC REF	PART NUMBER	QTY	PART NAME 1 2 3 4 5 6 (PRODUCT LEVEL)	SEE PAGE
	1	1	**6T-9927**	2	SLIDE	
	2	1	**8G-4014**	2	RETAINER	
	3	1	**9P-3066**	2	MOUNTING	
	4	1	**317-7071**	4	SPACER	
	5	1	**394-2157**	1	SHIELD AS	
	6	1	**394-2158**	1	SHIELD AS	
Y	7	1	*423-2947*	1	ENCLOSURE GP-ENGINE (LH)	373
Y	8	1	*423-2958*	1	ENCLOSURE GP-ENGINE (RH)	375
	9	1	**431-0367**	1	COVER	
	10	1	**476-0493**	1	PLATE AS	
		1	**8Y-3465**	2	BOSS (M10X1.5X12-MM)	
	11	1	**476-0498**	1	HOOD AS	
	12	1	**484-1422**	1	PLATE AS	
	13	1	**190-7971**	2	WASHER-HARD (11X64X6-MM THK)	
	14	1	**3W-3819**	2	PLATE	
	15	1	**6P-8269**	1	WASHER (20.5X88X6-MM THK)	
M	16	1	**6V-7357**	2	BOLT (M6X1X25-MM)	
M	17	1	**6V-7743**	2	LOCKNUT (M6X1-THD)	
	18	1	**7X-3391**	6	WASHER-HARD (13.5X32X6-MM THK)	
	19	1	**7X-7729**	14	WASHER (11X25X3-MM THK)	
	20	1	**8T-4121**	6	WASHER-HARD (11X21X2.5-MM THK)	
M	21	1	**8T-4136**	22	BOLT (M10X1.5X25-MM)	
M	22	1	**8T-4139**	10	BOLT (M12X1.75X30-MM)	
M	23	1	**8T-4175**	1	BOLT (M16X2X90-MM)	
M	24	1	**8T-4195**	4	BOLT (M10X1.5X30-MM)	
	25	1	**8T-4205**	4	WASHER-HARD (7.2X14.5X2-MM THK)	
	26	1	**8T-4223**	4	WASHER-HARD (13.5X25.5X3-MM THK)	
	27	1	**9X-8257**	1	WASHER (17.5X30X3.5-MM THK)	

M - METRIC PART
Y - SEPARATE ILLUSTRATION

398-4549 **ENCLOSURE GP-ENGINE (*contd.*)** **i06206133**

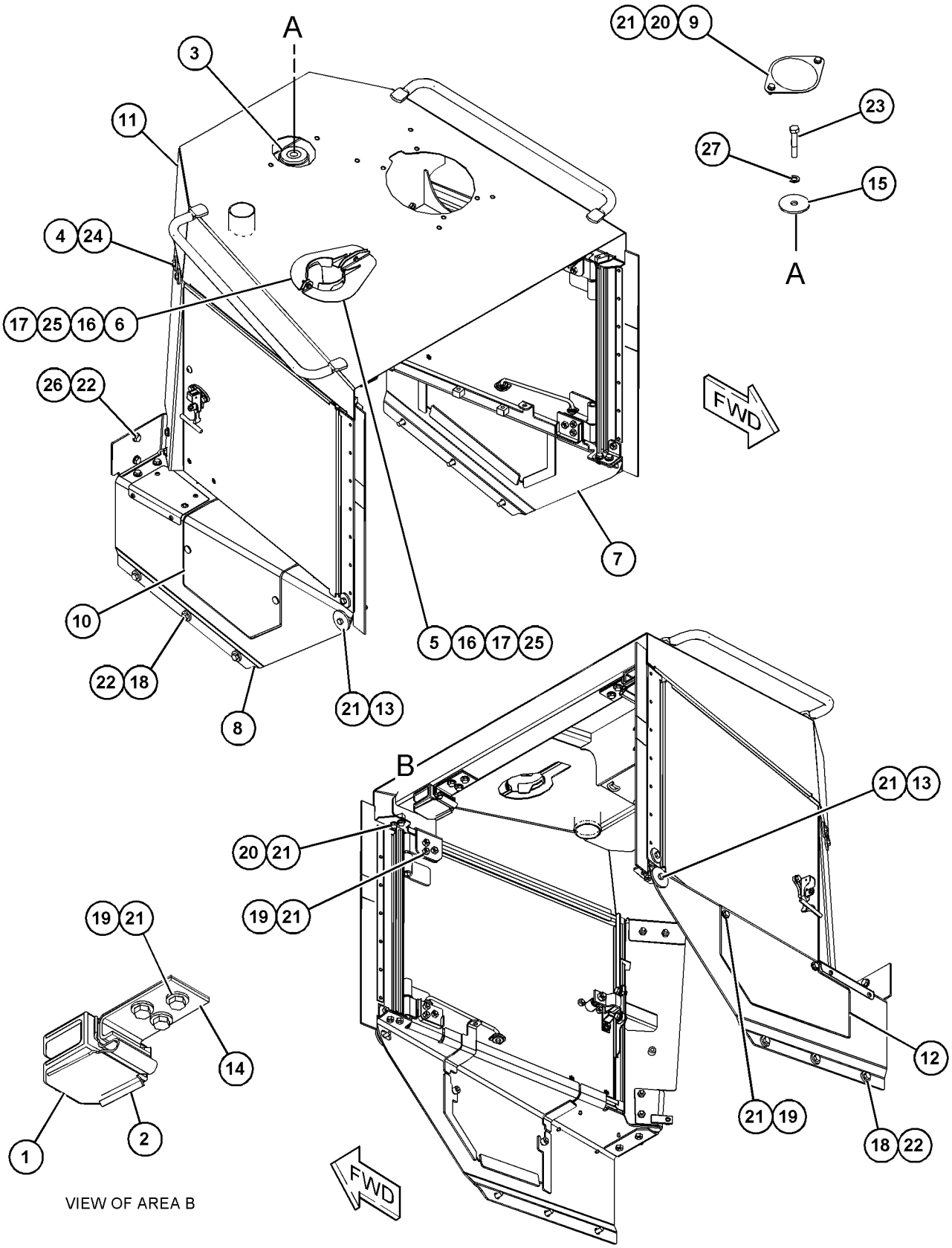

GRAPHIC #1 **<END>** g03857617

423-2947 ENCLOSURE GP-ENGINE–LH

S/N: PPP1-UP; SSS1-UP; TTT1-UP
PART OF 398-4546, 398-4548, 398-4549 ENCLOSURE GP-ENGINE
AN ATTACHMENT

SMCS-7263 **i06167944**

NOTE	REF NO	GRAPHIC REF	PART NUMBER	QTY	PART NAME 1 2 3 4 5 6 (PRODUCT LEVEL)	SEE PAGE
	1	1	**3B-4605**	1	PIN-COTTER	
	2	1	**3V-9399**	1	ROD AS	
		1	**4B-4278**	2	WASHER (10.2X20.5X1.6-MM THK)	
	3	1	**8C-8584**	1	PAWL-T-BAR LATCH	
	4	1	**8T-9496**	2	LOCKNUT (9/16-18-THD)	
	5	1	**8Y-4000**	1	LATCH AS (T-BAR, COMPARTMENT)	
	6	1	**317-7071**	1	SPACER	
	7	1	**329-1798**	1	GUIDE	
	8	1	**356-1032**	1	HINGE AS (RH)	
	9	1	**356-1033**	1	HINGE AS (LH)	
	10	1	**423-2943**	1	PLATE AS	
M		1	**8T-3490**	4	NUT-WELD (M10X1.5-THD)	
	11	1	**476-0470**	1	DOOR AS	
M		1	**8T-3490**	2	NUT-WELD (M10X1.5-THD)	
	12	1	**476-0474**	1	SUPPORT AS	
M		1	**8T-3490**	2	NUT-WELD (M10X1.5-THD)	
	13	1	**476-0475**	1	PLATE AS	
		1	**6B-4594**	7	RIVET	
	14	1	**476-0477**	1	PLATE AS	
M		1	**8T-3490**	1	NUT-WELD (M10X1.5-THD)	
	15	1	*476-7630*	1	GUARD GP-ENGINE	
		1	**162-2480**	4	RIVET	
		1	**423-2929**	1	PLATE-TREAD	
		1	**476-7629**	1	GUARD AS	
	16	1	**4H-2558**	1	GROMMET	
	17	1	**4M-7470**	1	GROMMET	
M	18	1	**6V-7744**	2	LOCKNUT (M10X1.5-THD)	
	19	1	**7X-7729**	13	WASHER (11X25X3-MM THK)	
	20	1	**8E-4832**	1	STRIKER	
	21	1	**8T-4121**	2	WASHER-HARD (11X21X2.5-MM THK)	
	22	1	**8T-4123**	1	WASHER (3.62X5.75X0.375-MM THK)	
M	23	1	**8T-4136**	14	BOLT (M10X1.5X25-MM)	
	24	1	**9X-2027**	1	WASHER (11X18X2-MM THK)	
M	25	1	**9X-2041**	2	SCREW-TRUSS HEAD (M10X1.5X20-MM)	
D	26	1	**5P-7211**		SEAL (0.7-M EACH)	
D	27	1	**5P-7483**		SEAL (0.8-M EACH)	

D - ORDER BY THE METER
M - METRIC PART

423-2947 **ENCLOSURE GP-ENGINE (*contd.*)** **i06167944**

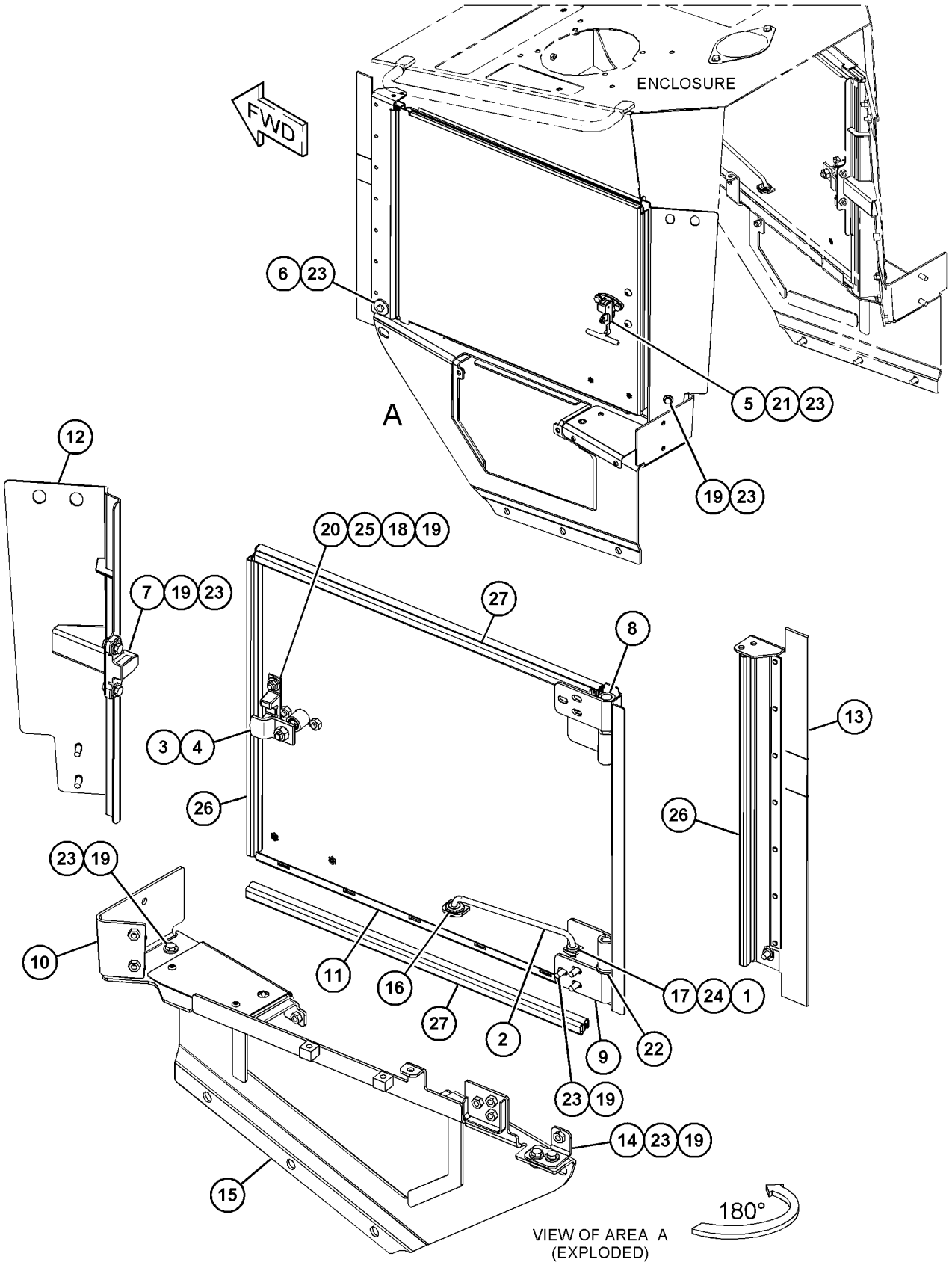

GRAPHIC #1 **<END>** g03857339

423-2958 ENCLOSURE GP-ENGINE–RH

S/N: PPP1-UP; SSS1-UP; TTT1-UP
PART OF 398-4546, 398-4548, 398-4549 ENCLOSURE GP-ENGINE
AN ATTACHMENT

SMCS-7263 **i06206153**

NOTE	REF NO	GRAPHIC REF	PART NUMBER	QTY	PART NAME 1 2 3 4 5 6 (PRODUCT LEVEL)	SEE PAGE
	1	1	**3B-4605**	1	PIN-COTTER	
	2	1	**3V-9399**	1	ROD AS	
	3	1	**8C-8584**	1	PAWL-T-BAR LATCH	
	4	1	**8T-9496**	2	LOCKNUT (9/16-18-THD)	
	5	1	**8Y-4000**	1	LATCH AS (T-BAR, COMPARTMENT)	
	6	1	**317-7071**	1	SPACER	
	7	1	**329-1798**	1	GUIDE	
	8	1	**356-1032**	1	HINGE AS (RH)	
	9	1	**356-1033**	1	HINGE AS (LH)	
	10	1	**423-2954**	1	PLATE AS	
M		1	**8T-3490**	5	NUT-WELD (M10X1.5-THD)	
	11	1	*476-0478*	1	GUARD GP-ENGINE	
		1	**162-2480**	4	RIVET	
		1	**423-2950**	1	PLATE-TREAD	
		1	**476-0479**	1	GUARD AS	
M		1	**8T-3490**	5	NUT-WELD (M10X1.5-THD)	
	12	1	**476-0485**	1	DOOR AS	
M		1	**8T-3490**	2	NUT-WELD (M10X1.5-THD)	
	13	1	**476-0488**	1	SUPPORT AS	
M		1	**8T-3490**	2	NUT-WELD (M10X1.5-THD)	
M		1	**9R-2821**	1	BOSS (M10X1.5X15-MM)	
	14	1	**476-0490**	1	PLATE AS	
		1	**6B-4594**	7	RIVET	
	15	1	**476-0492**	1	PLATE AS	
M		1	**8T-3490**	1	NUT-WELD (M10X1.5-THD)	
	16	1	**4H-2558**	1	GROMMET	
	17	1	**4M-7470**	1	GROMMET	
M	18	1	**6V-7744**	2	LOCKNUT (M10X1.5-THD)	
	19	1	**7X-7729**	13	WASHER (11X25X3-MM THK)	
	20	1	**8E-4832**	1	STRIKER	
	21	1	**8T-4121**	2	WASHER-HARD (11X21X2.5-MM THK)	
	22	1	**8T-4123**	1	WASHER (3.62X5.75X0.375-MM THK)	
M	23	1	**8T-4136**	14	BOLT (M10X1.5X25-MM)	
	24	1	**9X-2027**	1	WASHER (11X18X2-MM THK)	
M	25	1	**9X-2041**	2	SCREW-TRUSS HEAD (M10X1.5X20-MM)	
D	26	1	**5P-7211**		SEAL (0.7-M EACH)	
D	27	1	**5P-7483**		SEAL (0.8-M EACH)	

D - ORDER BY THE METER
M - METRIC PART

423-2958 **ENCLOSURE GP-ENGINE (*contd.*)** **i06206153**

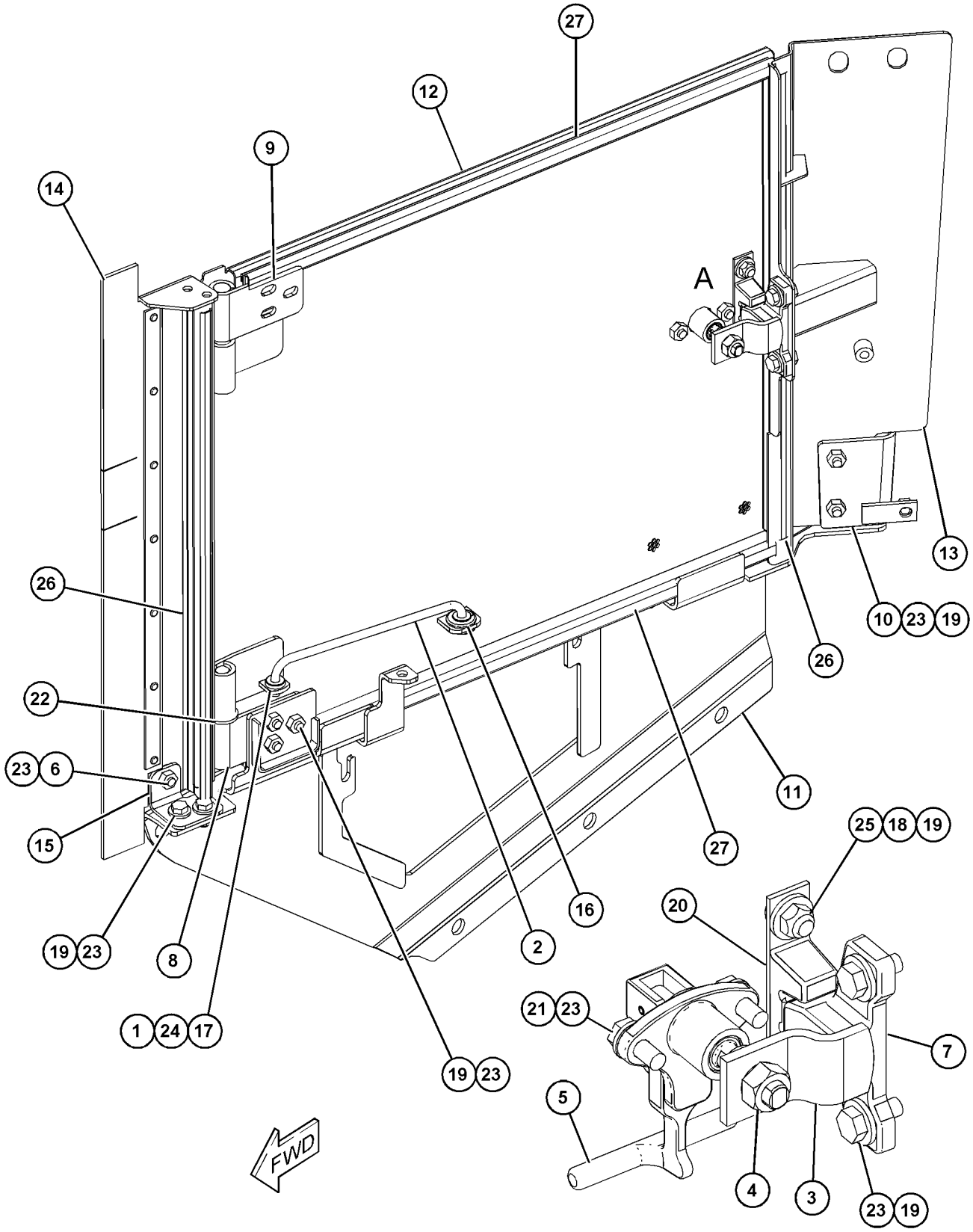

VIEW OF AREA A

GRAPHIC #1 **<END>** g03857629

398-4539 ENCLOSURE GP-HYDRAULIC TANK

S/N: PPP1-UP; SSS1-UP; TTT1-UP
PART OF 398-4281 CHASSIS AR
ALSO AN ATTACHMENT

SMCS-5056 **i06205889**

NOTE	REF NO	GRAPHIC REF	PART NUMBER	QTY	PART NAME 1 2 3 4 5 6 (PRODUCT LEVEL)	SEE PAGE
	1	1	**8E-7561**	1	KNOB AS	
	2	1	**9S-8230**	1	PLATE AS	
		1	**1F-0750**	1	NUT-WELD (3/8-16-THD)	
	3	1	**398-4558**	1	DOOR-ACCESS	
	4	1	**426-2423**	1	BRACKET	
	5	1	**472-0604**	1	COVER AS-ACCESS	
	6	1	**472-0607**	1	SUPPORT AS	
	7	1	**472-0609**	1	BRACKET AS	
	8	1	**164-0758**	1	BOLT (9/16-18X2-IN)	
	9	1	**4H-1641**	1	PIN-SPRING	
	10	1	**7X-7729**	14	WASHER (11X25X3-MM THK)	
M	11	1	**8T-4136**	14	BOLT (M10X1.5X25-MM)	
D	12	1	**5P-5681**		SEAL (0.02-M EACH)	

D - ORDER BY THE METER
M - METRIC PART

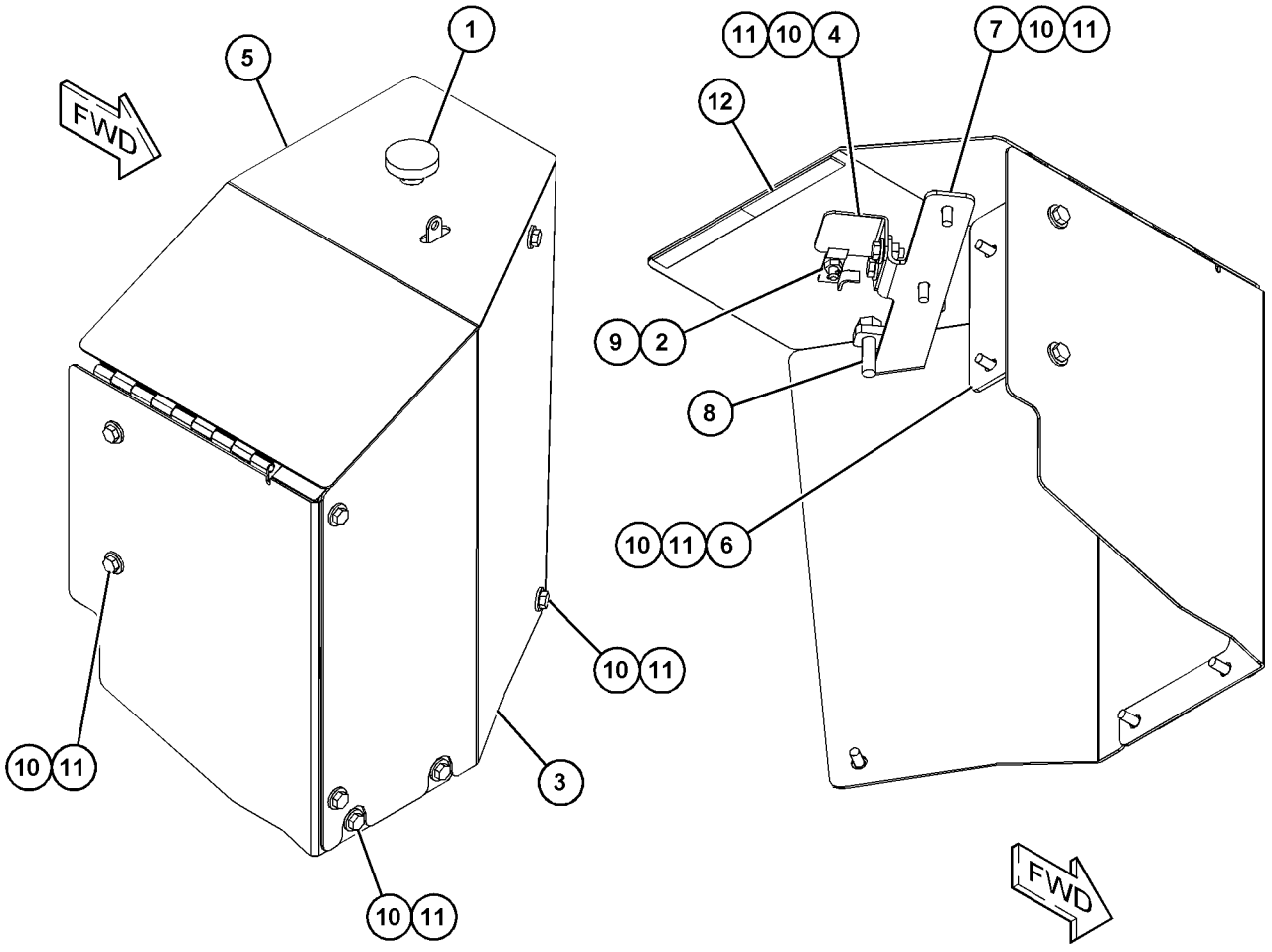

GRAPHIC #1 **<END>** g03857490

472-0621 FENDER AS–LH

S/N: PPP1-UP; SSS1-UP; TTT1-UP
PART OF 398-4545 FENDER GP
AN ATTACHMENT

SMCS-7252 **i06229863**

NOTE	REF NO	GRAPHIC REF	PART NUMBER	QTY	PART NAME 1 2 3 4 5 6 (PRODUCT LEVEL)	SEE PAGE
	1	1	**162-2480**	15	RIVET	
	2	1	**472-0623**	1	PLATE-TREAD (LH)	
	3	1	**472-0624**	1	PLATE-TREAD (LH)	
	4	1	**476-0445**	1	FENDER AS (LH)	
		1	**7T-1099**	10	LINK	
M		1	**8T-3490**	13	NUT-WELD (M10X1.5-THD)	
M		1	**8T-3597**	10	NUT-WELD (M12X1.75-THD)	
M		1	**8T-3612**	2	NUT-WELD (M8X1.25-THD)	
M		1	**8Y-4489**	2	BOSS (M10X1.5-THD)	
M		1	**9C-7929**	1	BLOCK (M10X1.5-MM)	
M		1	**9R-2613**	6	BOSS-WELD (M10X1.5X25-MM)	
M		1	**9R-3761**	2	BOSS (M10X1.5X51-MM)	
M		1	**127-3387**	1	BOSS (M10X1.5X80-MM)	
		1	**272-3757**	1	BOSS	

M - METRIC PART

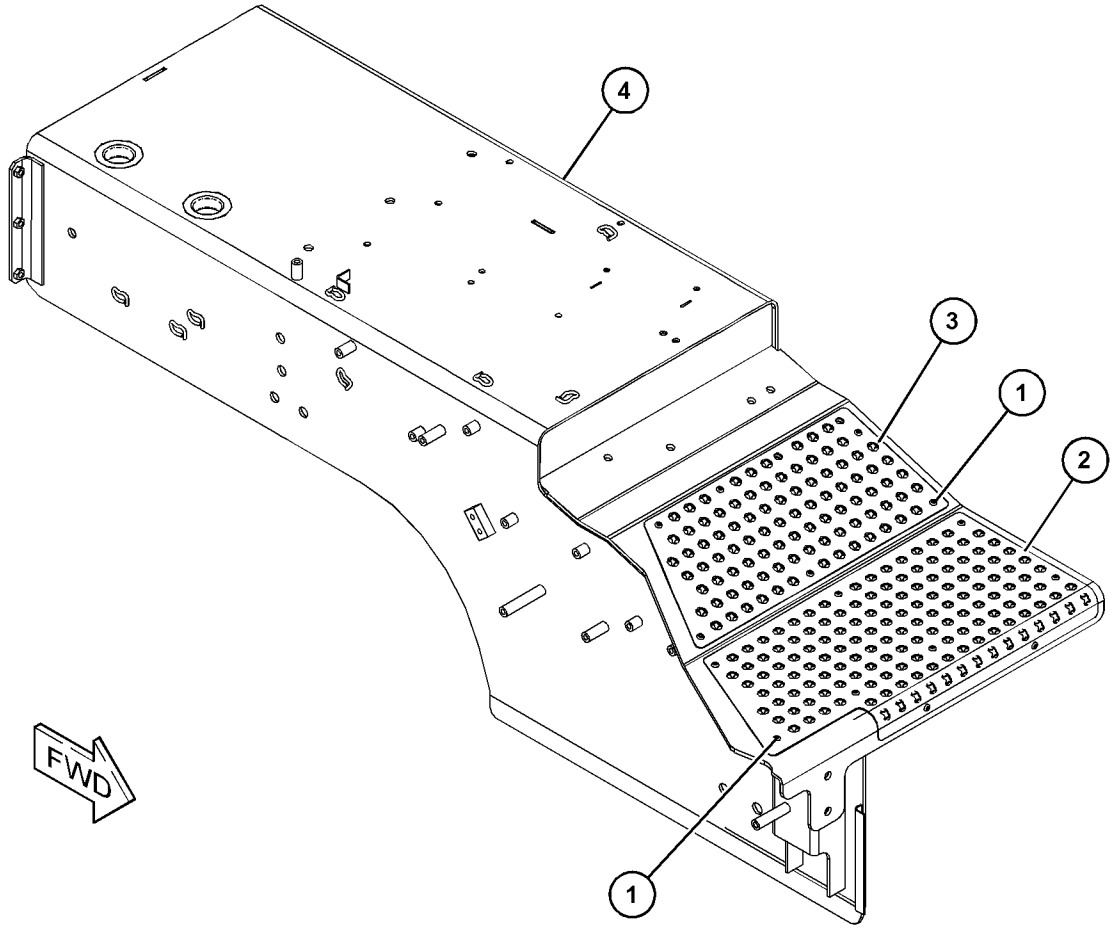

GRAPHIC #1 **<END>** g03863869

472-0622 FENDER AS–RH

S/N: PPP1-UP; SSS1-UP; TTT1-UP
PART OF 398-4545 FENDER GP
AN ATTACHMENT

SMCS-7252 **i06193620**

NOTE	REF NO	GRAPHIC REF	PART NUMBER	QTY	PART NAME 1 2 3 4 5 6 (PRODUCT LEVEL)	SEE PAGE
	1	1	**162-2480**	15	RIVET	
	2	1	**476-0451**	1	PLATE-TREAD	
	3	1	**476-0452**	1	PLATE-TREAD	
	4	1	**476-0505**	1	FENDER AS (RH)	
M		1	**7Y-6338**	1	BOSS (M10X1.5X70-MM)	
M		1	**8T-3490**	11	NUT-WELD (M10X1.5-THD)	
M		1	**8T-3597**	11	NUT-WELD (M12X1.75-THD)	
		1	**102-8706**	1	PLATE AS	
M		1	**171-2419**	2	STUD-WELD (M10X1.5X35-MM)	
		1	**272-3757**	1	BOSS	

M - METRIC PART

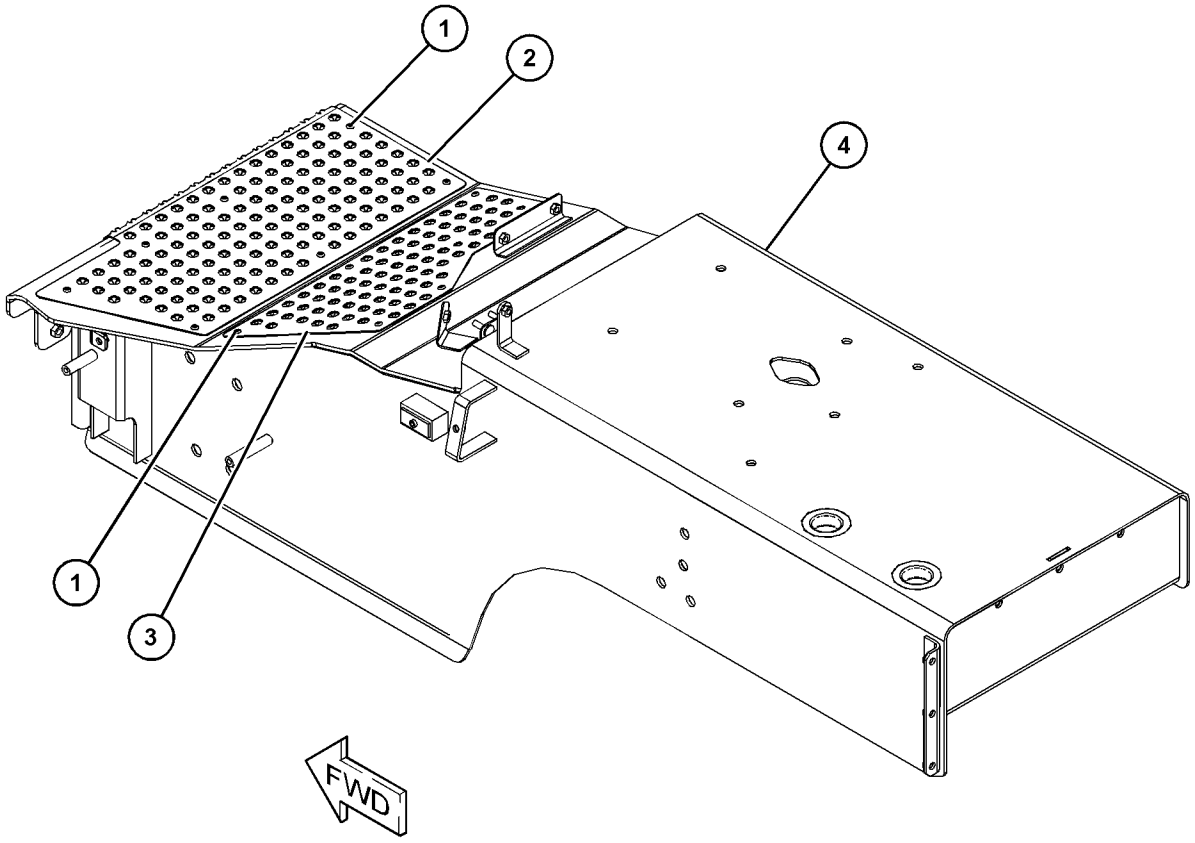

GRAPHIC #1 **<END>** g03849701

398-4545 FENDER GP

S/N: PPP1-UP; SSS1-UP; TTT1-UP

PART OF 398-4306 ENCLOSURE AR, 398-4305, 398-4307 ENCLOSURE GP-ENGINE

AN ATTACHMENT

SMCS-7252 **i06206189**

NOTE	REF NO	GRAPHIC REF	PART NUMBER	QTY	PART NAME 1 2 3 4 5 6 (PRODUCT LEVEL)	SEE PAGE
	1	1	**398-4564**	1	PLATE AS (LH)	
	2	1	**398-4581**	1	PLATE AS (RH)	
	3	1	**415-1377**	1	COVER	
Y	4	1	**472-0621**	1	FENDER AS (LH)	378
Y	5	1	**472-0622**	1	FENDER AS (RH)	379
	6	1	**198-4781**	16	WASHER-HARD (22X40X10-MM THK)	
	7	1	**3E-9411**	6	WASHER-HARD (17.5X38X6-MM THK)	
	8	1	**4P-8134**	1	CLIP	
	9	1	**7X-0513**	6	WASHER-HARD (17X30X5-MM THK)	
M	10	1	**7X-2553**	6	BOLT (M16X2X40-MM)	
M	11	1	**7X-2554**	5	BOLT (M16X2X70-MM)	
M	12	1	**7X-2555**	1	BOLT (M16X2X80-MM)	
	13	1	**7X-7729**	4	WASHER (11X25X3-MM THK)	
	14	1	**8T-4121**	1	WASHER-HARD (11X21X2.5-MM THK)	
M	15	1	**8T-4191**	1	BOLT (M10X1.5X16-MM)	
M	16	1	**8T-4195**	4	BOLT (M10X1.5X30-MM)	
M	17	1	**8T-6430**	16	BOLT (M20X2.5X50-MM)	

M - METRIC PART
Y - SEPARATE ILLUSTRATION

398-4545 **FENDER GP (*contd.*)** **i06206189**

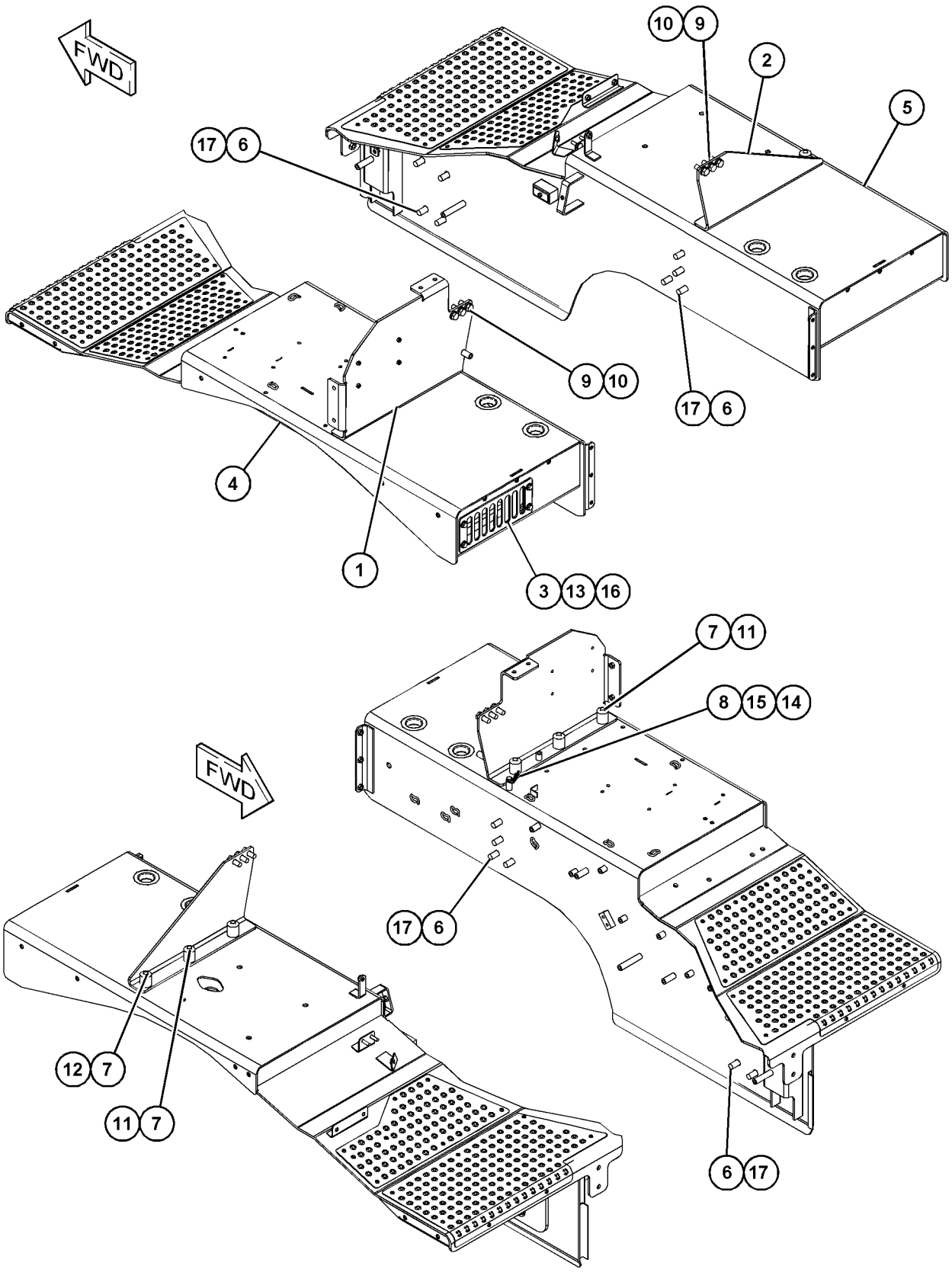

GRAPHIC #1 **<END>** g03857007

398-4357 GRID GP-SAND BLAST ERODING

S/N: PPP1-UP; SSS1-UP; TTT1-UP
PART OF 481-9508 DISTRIBUTION AR
AN ATTACHMENT

SMCS-7179 **i06231063**

NOTE	REF NO	GRAPHIC REF	PART NUMBER	QTY	PART NAME 1 2 3 4 5 6 (PRODUCT LEVEL)	SEE PAGE
	1	1	**180-6692**	1	GRID AS	
	2	1	**398-4382**	2	BRACKET (LH)	
	3	1	**398-4383**	2	BRACKET (RH)	
	4	1	**7X-7729**	16	WASHER (11X25X3-MM THK)	
M	5	1	**8T-4136**	8	BOLT (M10X1.5X25-MM)	
M	6	1	**8T-4195**	4	BOLT (M10X1.5X30-MM)	

M - METRIC PART

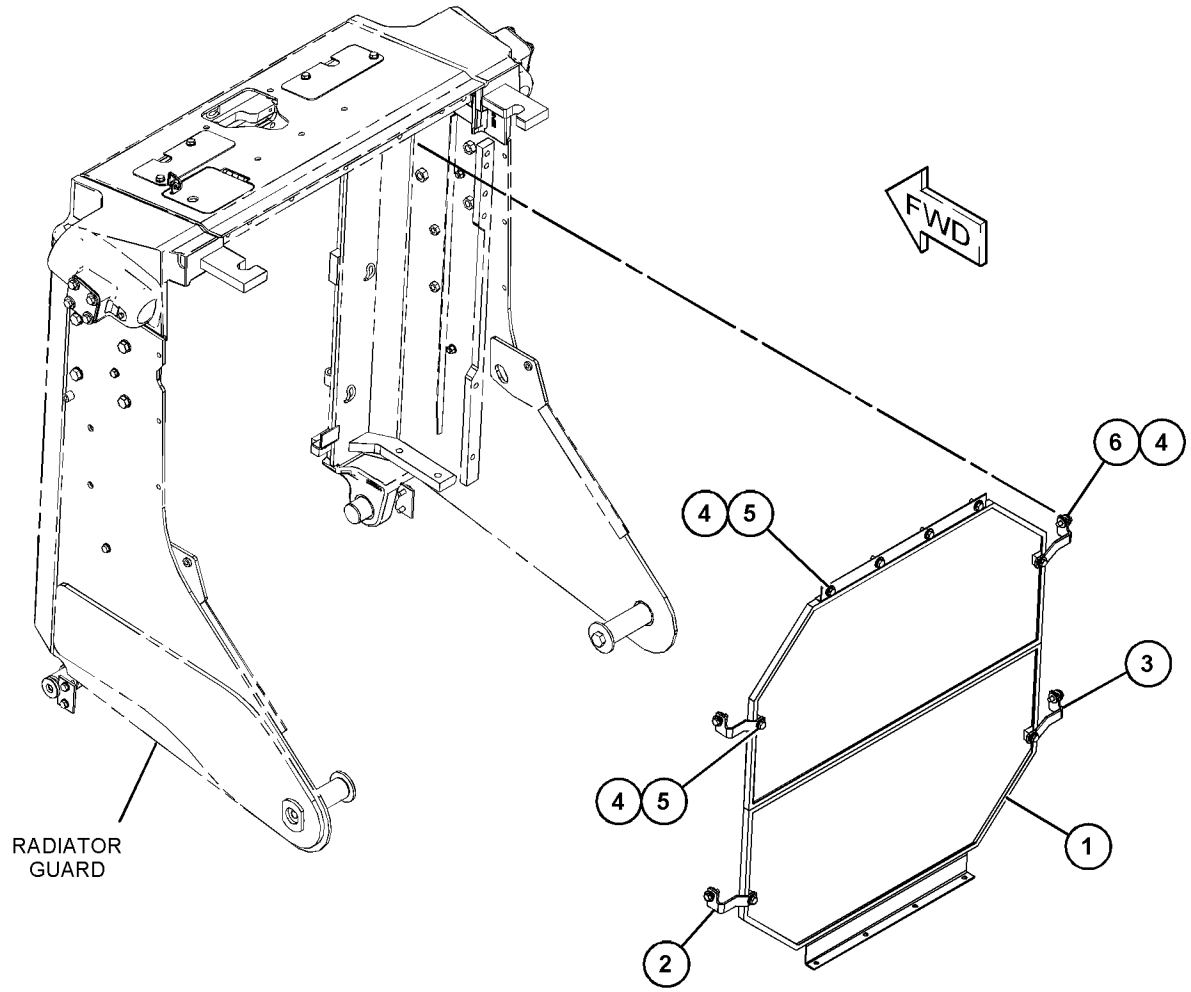

GRAPHIC #1 **<END>** g03861193

424-1730 GRILL AR-RADIATOR

S/N: PPP1-UP; SSS1-UP; TTT1-UP
PART OF 481-9508 DISTRIBUTION AR
AN ATTACHMENT

SMCS-7170 **i06231059**

NOTE	PART NUMBER	QTY	PART NAME 1 2 3 4 5 6 (PRODUCT LEVEL)	SEE PAGE
Y	*424-1750*	1	GRILL GP-RADIATOR	384
Y	*389-3297*	1	HANDHOLD GP	396

Y - SEPARATE ILLUSTRATION

<END>

424-1731 GRILL AR-RADIATOR—HEAVY-DUTY

S/N: PPP1-UP; SSS1-UP; TTT1-UP
AN ATTACHMENT

SMCS-7170 **i06212554**

NOTE	PART NUMBER	QTY	PART NAME 1 2 3 4 5 6 (PRODUCT LEVEL)	SEE PAGE
Y	*424-1751*	1	GRILL GP-RADIATOR	385
Y	*389-3298*	1	HANDHOLD GP	397

Y - SEPARATE ILLUSTRATION

<END>

424-1750 GRILL GP-RADIATOR

S/N: PPP1-UP; SSS1-UP; TTT1-UP
PART OF 424-1730 GRILL AR-RADIATOR
AN ATTACHMENT

SMCS-7170 **i06231066**

NOTE	REF NO	GRAPHIC REF	PART NUMBER	QTY	PART NAME 1 2 3 4 5 6 (PRODUCT LEVEL)	SEE PAGE
	1	1	**9W-2822**	1	ROD	
	2	1	**415-1314**	1	PLATE AS	
	3	1	**424-1746**	1	GRILL AS	
	4	1	**198-4780**	2	WASHER-HARD (17.5X32X8-MM THK)	
	5	1	**265-9596**	4	WASHER-HARD (13.5X30X9-MM THK)	
	6	1	**3B-4615**	2	PIN-COTTER	
M	7	1	**7X-2553**	2	BOLT (M16X2X40-MM)	
M	8	1	**8T-4910**	4	BOLT (M12X1.75X60-MM)	

M - METRIC PART

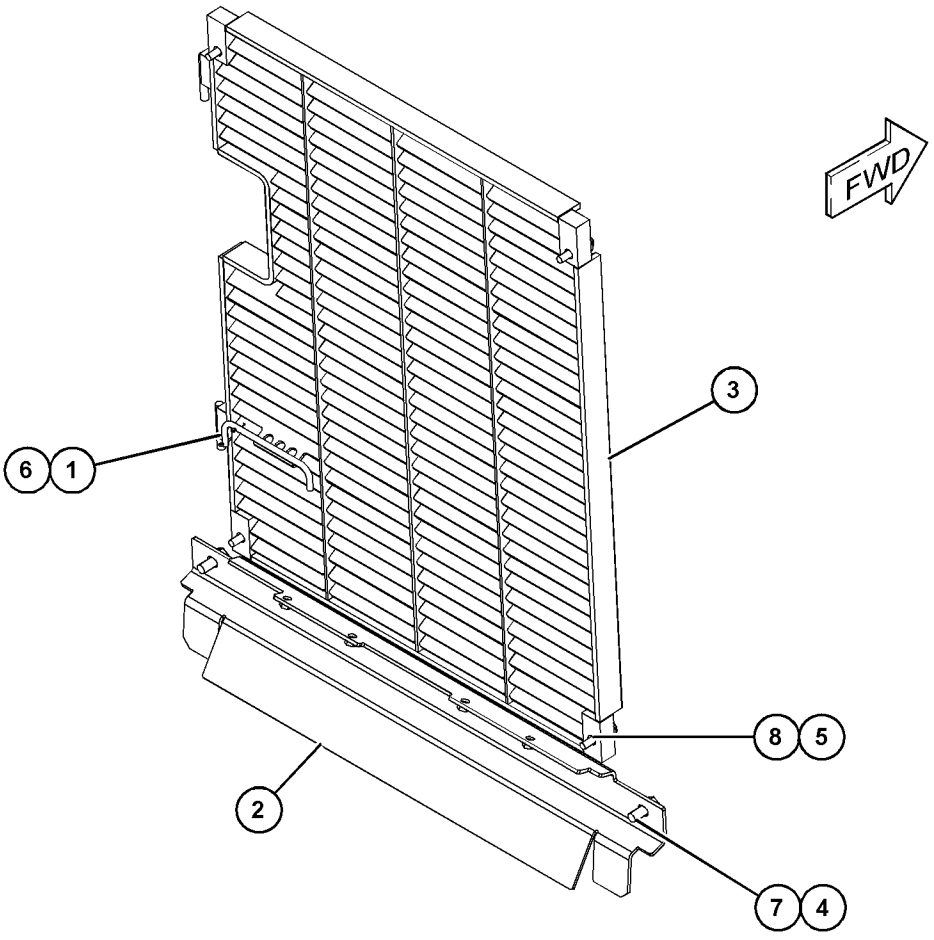

GRAPHIC #1 **<END>** g03860606

424-1751 GRILL GP-RADIATOR—HEAVY-DUTY

S/N: PPP1-UP; SSS1-UP; TTT1-UP
PART OF 424-1731 GRILL AR-RADIATOR
AN ATTACHMENT

SMCS-7170 **i06212515**

NOTE	REF NO	GRAPHIC REF	PART NUMBER	QTY	PART NAME 1 2 3 4 5 6 (PRODUCT LEVEL)	SEE PAGE
	1	1	**3W-1944**	1	GRILL AS (RH)	
	2	1	**9W-2822**	2	ROD	
	3	1	**415-1316**	1	PLATE AS	
	4	1	**424-1748**	1	GRILL AS (LH)	
	5	1	**198-4780**	2	WASHER-HARD (17.5X32X8-MM THK)	
	6	1	**265-9596**	4	WASHER-HARD (13.5X30X9-MM THK)	
	7	1	**3B-4615**	4	PIN-COTTER	
	8	1	**5P-1076**	4	WASHER-HARD (13.5X30X4-MM THK)	
M	9	1	**8T-4194**	4	BOLT (M12X1.75X50-MM)	
M	10	1	**8T-6868**	4	BOLT (M12X1.75X80-MM)	
M	11	1	**8T-7338**	2	BOLT (M16X2X45-MM)	

M - METRIC PART

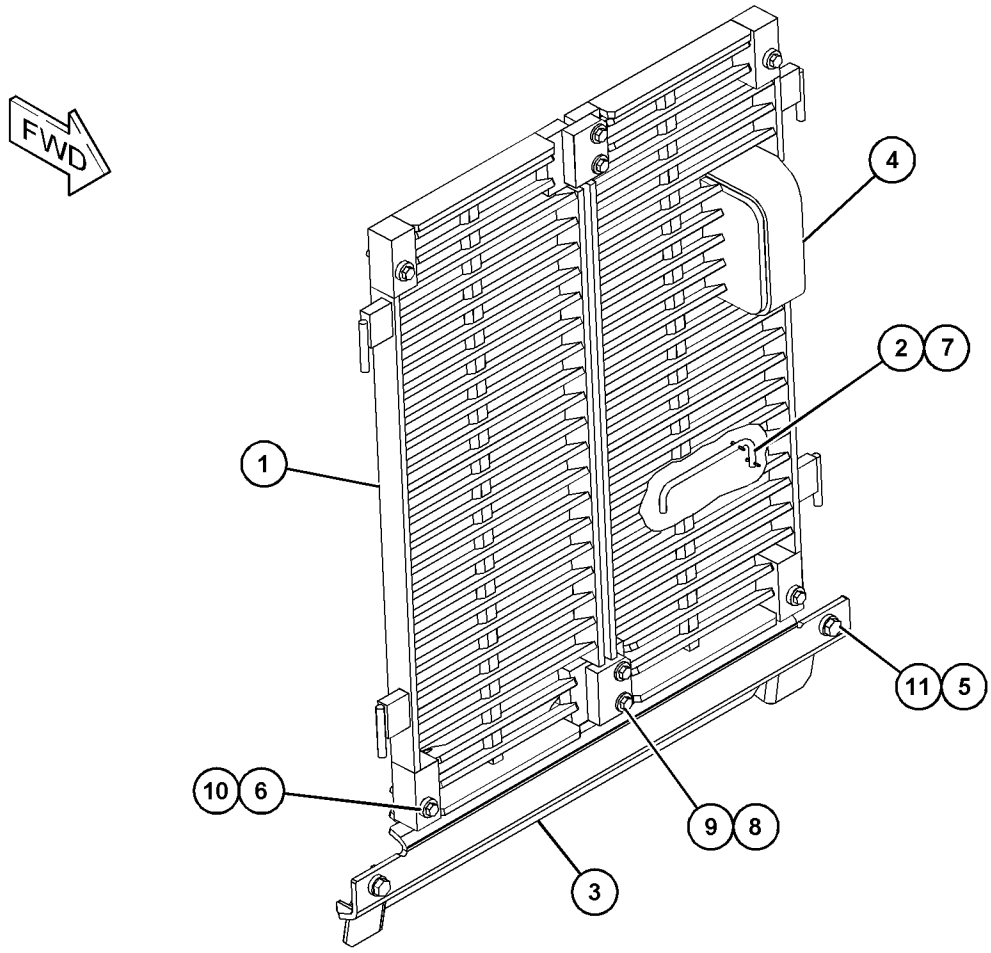

GRAPHIC #1 **<END>** g03856982

475-6561 GUARD GP-BOTTOM

S/N: PPP1-UP; SSS1-UP; TTT1-UP

AN ATTACHMENT

SMCS-7153 **i06219371**

NOTE	REF NO	GRAPHIC REF	PART NUMBER	QTY	PART NAME 1 2 3 4 5 6 (PRODUCT LEVEL)	SEE PAGE
	1	1	**217-3655**	14	RETAINER	
	2	1	**227-8802**	1	GUARD AS	
	3	1	**475-6562**	1	GUARD AS	
	4	1	**475-6563**	1	GUARD AS	
	5	1	**475-6574**	1	PLATE	
	6	1	**3B-4629**	4	PIN-COTTER	
	7	1	**4J-2036**	4	PIN	
	8	1	**7X-0594**	8	WASHER-HARD (20X38X3-MM THK)	
	9	1	**7X-7729**	4	WASHER (11X25X3-MM THK)	
M	10	1	**8C-8478**	14	BOLT (M20X2.5X140-MM)	
M	11	1	**8T-4131**	14	NUT (M20X2.5-THD)	
M	12	1	**8T-4195**	4	BOLT (M10X1.5X30-MM)	
	13	1	**8T-5439**	14	WASHER-HARD (21.5X45X6-MM THK)	

M - METRIC PART

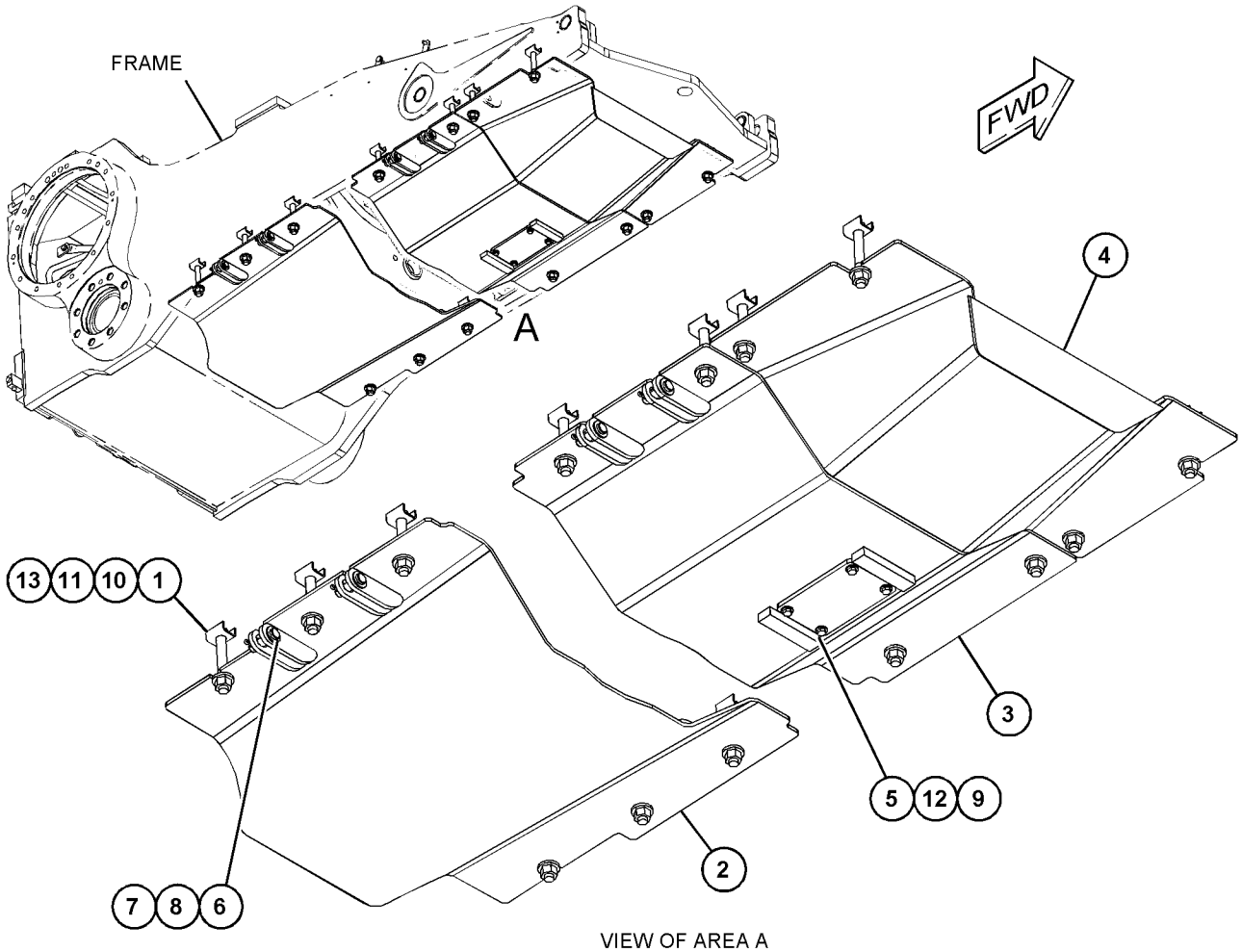

VIEW OF AREA A

GRAPHIC #1 **<END>** g03862745

475-6568 GUARD GP-BOTTOM—HEAVY-DUTY

S/N: PPP1-UP; SSS1-UP; TTT1-UP
SEALED
PART OF 481-9508 DISTRIBUTION AR
AN ATTACHMENT

SMCS-7153 **i06219368**

NOTE	REF NO	GRAPHIC REF	PART NUMBER	QTY	PART NAME 1 2 3 4 5 6 (PRODUCT LEVEL)	SEE PAGE
	1	1	**217-3655**	14	RETAINER	
	2	1	**258-6949**	1	GUARD AS	
	3	1	**475-6565**	1	GUARD AS	
	4	1	**475-6566**	1	GUARD AS	
	5	1	**475-6574**	1	PLATE	
	6	1	**3B-4629**	4	PIN-COTTER	
	7	1	**4J-2036**	4	PIN	
	8	1	**7X-0594**	8	WASHER-HARD (20X38X3-MM THK)	
	9	1	**7X-7729**	4	WASHER (11X25X3-MM THK)	
M	10	1	**8C-8478**	14	BOLT (M20X2.5X140-MM)	
M	11	1	**8T-4131**	14	NUT (M20X2.5-THD)	
M	12	1	**8T-4195**	4	BOLT (M10X1.5X30-MM)	
	13	1	**8T-5439**	14	WASHER-HARD (21.5X45X6-MM THK)	
D	14	1	**5P-5755**		SEAL (1.1-M)	
D	15	1	**5P-7483**		SEAL (0.2-M EACH)	
D	15A	1	**5P-7483**		SEAL (1.2-M)	
D	16	1	**5P-7514**		SEAL (1.1-M EACH)	
E	17	1	**9X-8699**		SEAL (100-CM)	

D - ORDER BY THE METER
E - ORDER BY THE CENTIMETER
M - METRIC PART

475-6568 **GUARD GP-BOTTOM (*contd.*)** **i06219368**

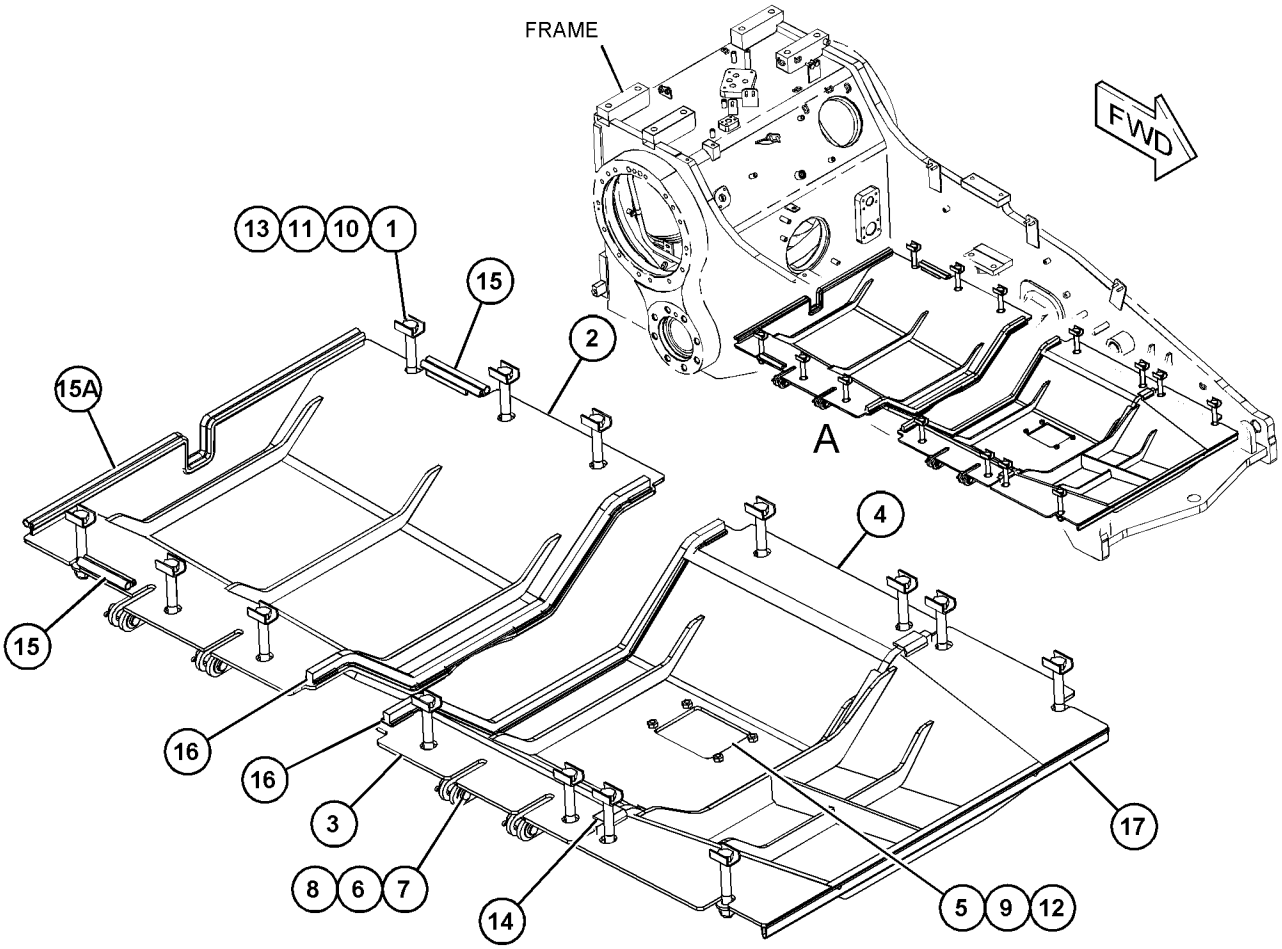

VIEW OF AREA A

GRAPHIC #1 **<END>** g03863152

398-4543 GUARD GP-FUEL TANK

S/N: PPP1-UP; SSS1-UP; TTT1-UP

AN ATTACHMENT

SMCS-1273, 7150 **i06224242**

NOTE	REF NO	GRAPHIC REF	PART NUMBER	QTY	PART NAME 1 2 3 4 5 6 (PRODUCT LEVEL)	SEE PAGE
M	1	1	**329-3356**	2	NUT (M12X1.75-THD)	
	2	1	**423-2970**	1	GUARD AS-REAR	
	3	1	**423-2972**	1	GUARD AS-REAR	
	4	1	**423-2974**	1	PLATE	
	5	1	**423-2979**	1	PLATE AS	
	6	1	**5P-1076**	31	WASHER-HARD (13.5X30X4-MM THK)	
	7	1	**7X-0632**	4	WASHER-HARD (11X36X6-MM THK)	
	8	1	**7X-7729**	2	WASHER (11X25X3-MM THK)	
M	9	1	**8T-4183**	23	BOLT (M12X1.75X40-MM)	
M	10	1	**8T-4186**	6	BOLT (M10X1.5X40-MM)	
M	11	1	**8T-4910**	6	BOLT (M12X1.75X60-MM)	
	12	1	**472-0610**	1	GUARD AS (LH)	
	13	1	**472-0612**	1	GUARD AS (RH)	
	14	1	**487-7096**	1	PLATE AS	
	15	1	**487-7097**	2	BRACKET AS	

M - METRIC PART

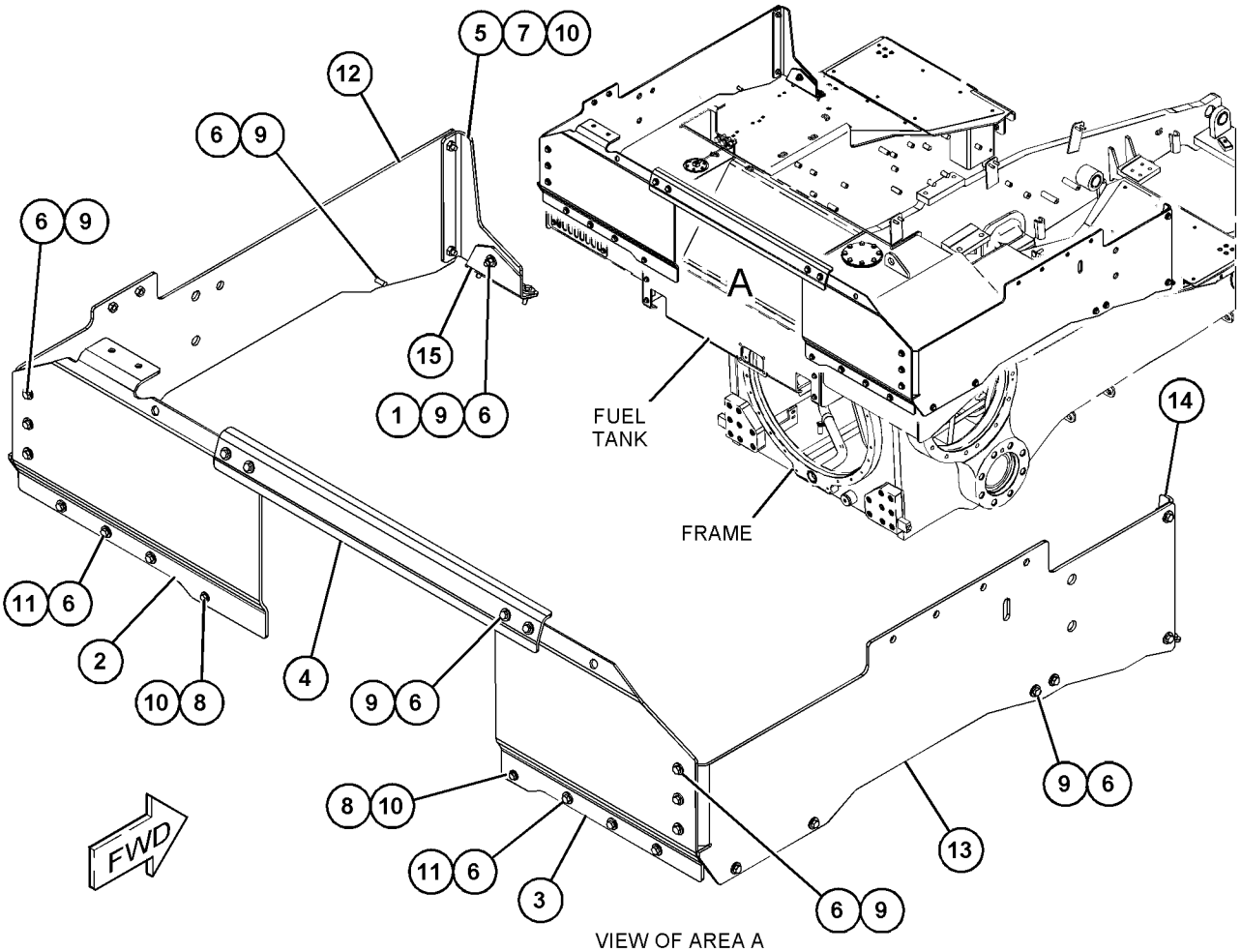

VIEW OF AREA A

GRAPHIC #1 **<END>** g03862476

398-4544 GUARD GP-FUEL TANK

S/N: PPP1-UP; SSS1-UP; TTT1-UP
FOR USE WITH 398-4543—PAGE: 389
AN ATTACHMENT

SMCS-1273, 7150

i06220809

NOTE	REF NO	GRAPHIC REF	PART NUMBER	QTY	PART NAME 1 2 3 4 5 6 (PRODUCT LEVEL)	SEE PAGE
	1	1	**8E-1356**	1	KNOB AS	
		1	**8E-1205**	1	KNOB	
		1	**8T-7566**	1	PIN-SPRING	
	2	1	**9S-8230**	1	PLATE AS	
	3	1	**423-2983**	1	GUARD AS	
	4	1	**484-1425**	1	PLATE AS	
	5	1	**4H-1641**	1	PIN-SPRING	
	6	1	**5P-1076**	8	WASHER-HARD (13.5X30X4-MM THK)	
	7	1	**7X-7729**	1	WASHER (11X25X3-MM THK)	
M	8	1	**8T-4186**	1	BOLT (M10X1.5X40-MM)	
M	9	1	**8T-4956**	8	BOLT (M12X1.75X35-MM)	
	10	1	**9G-8140**	1	SPACER (10.5X25X15-MM THK)	

M - METRIC PART

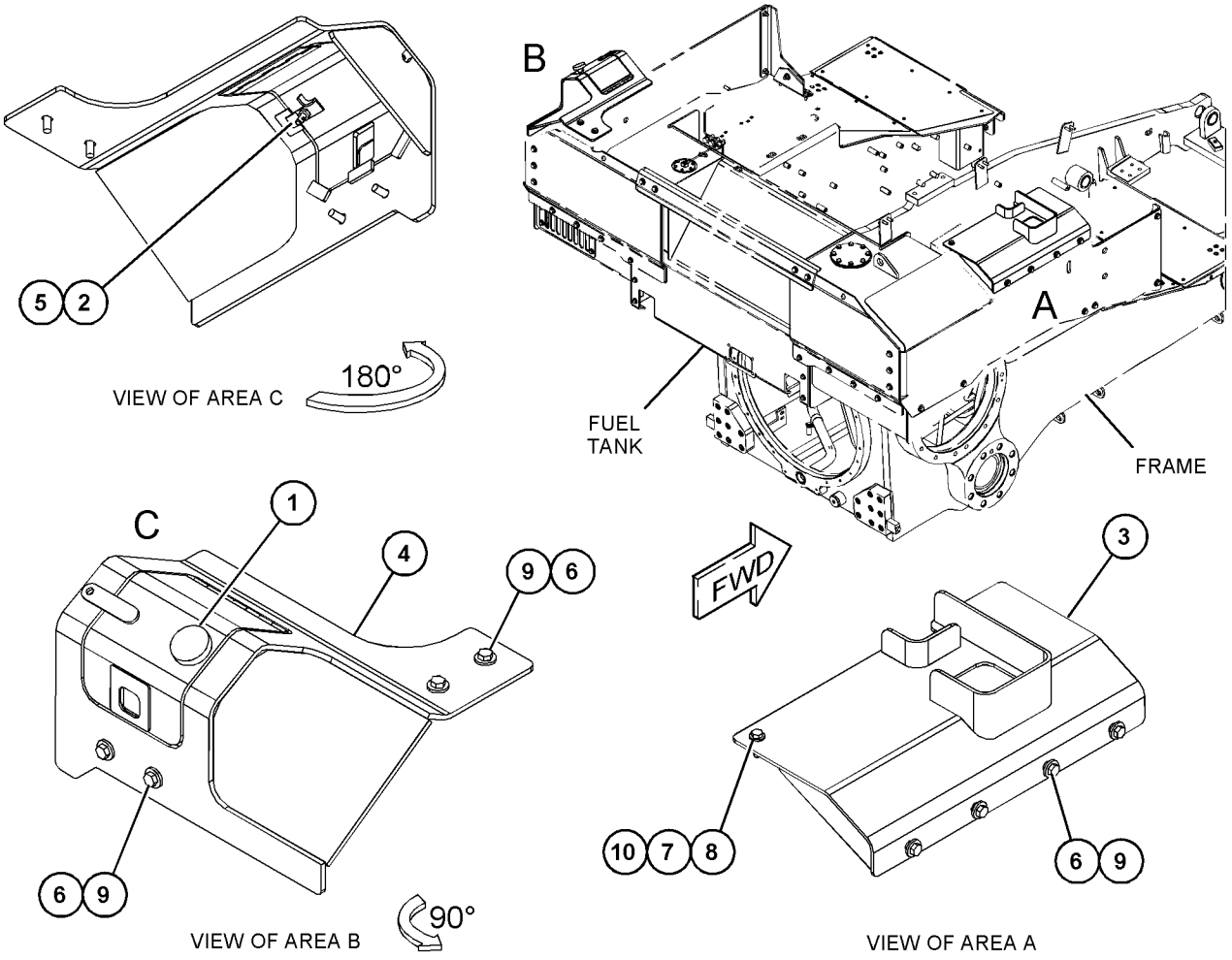

GRAPHIC #1

<END>

g03861143

398-4385 GUARD GP-RADIATOR

S/N: PPP1-UP; SSS1-UP; TTT1-UP
PART OF 398-4281 CHASSIS AR
ALSO AN ATTACHMENT

SMCS-7155 **i06212619**

NOTE	REF NO	GRAPHIC REF	PART NUMBER	QTY	PART NAME 1 2 3 4 5 6 (PRODUCT LEVEL)	SEE PAGE
	1	1	**5G-9973**	2	COVER	
	2	1	**5G-9974**	2	GASKET	
	3	1	**7K-1181**	1	STRAP-CABLE	
	4	1	**170-8592**	2	PIN	
	5	1	**227-3149**	2	PIN	
	6	1	**415-1288**	1	GUARD AS	
	6A	1	**258-2303**	2	BUSHING	
	6B	1	**258-2307**	2	BUSHING	
	7	1	**415-1296**	2	COVER	
	8	1	**454-5385**	2	WASHER-HARD (22X76X6-MM THK)	
	9	1	**2G-9245**	2	PLATE	
M	10	1	**344-5675**	4	NUT (M10X1.5-THD)	
	11	1	**5P-1076**	16	WASHER-HARD (13.5X30X4-MM THK)	
M	12	1	**7X-2488**	2	BOLT (M20X2.5X160-MM)	
	13	1	**8T-4121**	16	WASHER-HARD (11X21X2.5-MM THK)	
M	14	1	**8T-4136**	12	BOLT (M10X1.5X25-MM)	
M	15	1	**8T-4139**	16	BOLT (M12X1.75X30-MM)	

M - METRIC PART

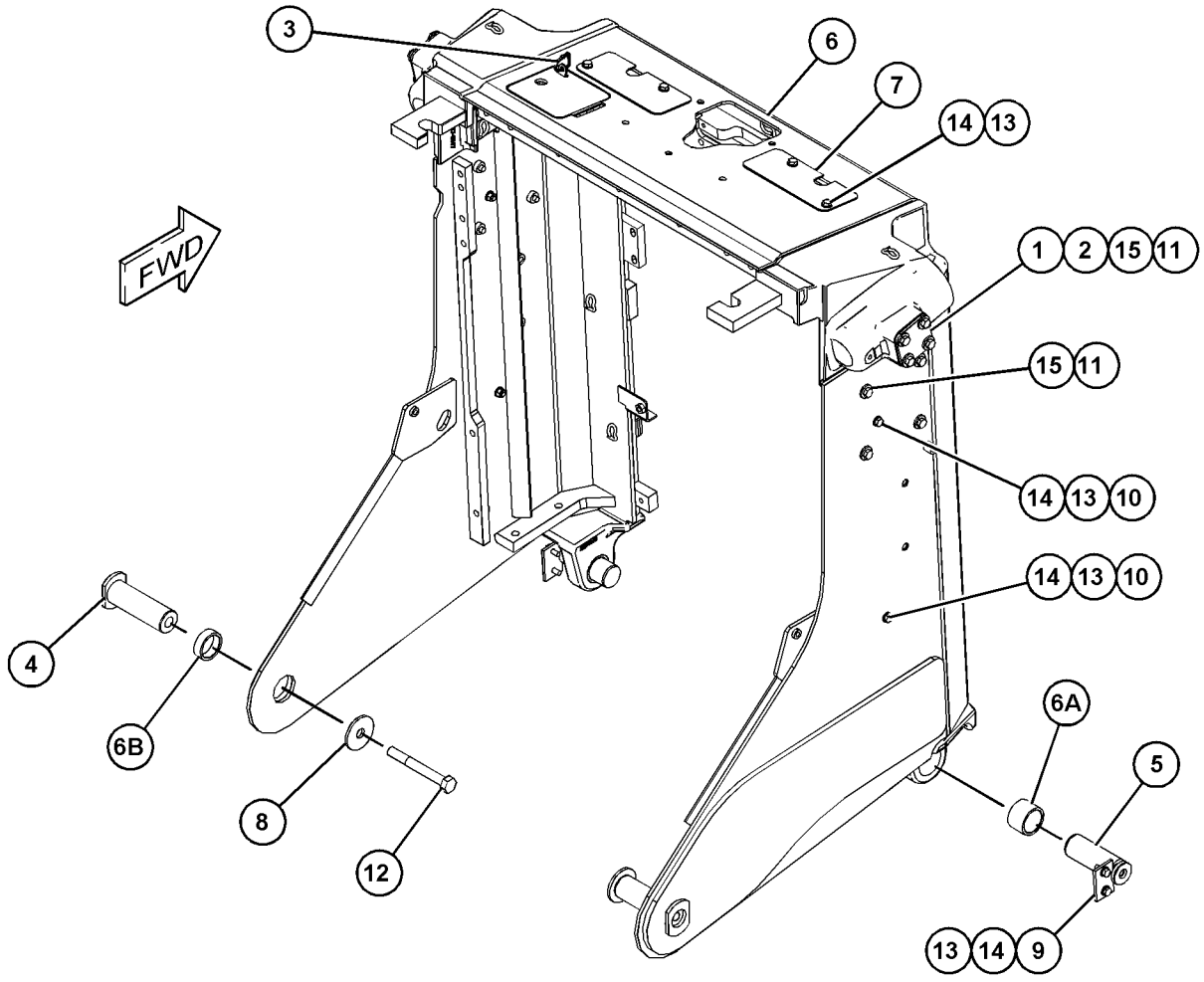

GRAPHIC #1 **<END>** g03856917

398-4541 GUARD GP-REAR

S/N: PPP1-UP; SSS1-UP; TTT1-UP
CANNOT BE USED WITH RIPPER
PART OF 398-4291 HYDRAULIC AR
AN ATTACHMENT

SMCS-7187 **i06218994**

NOTE	REF NO	GRAPHIC REF	PART NUMBER	QTY	PART NAME 1 2 3 4 5 6 (PRODUCT LEVEL)	SEE PAGE
	1	1	**415-1342**	1	GUARD	
	2	1	**7X-7729**	6	WASHER (11X25X3-MM THK)	
M	3	1	**8T-4195**	6	BOLT (M10X1.5X30-MM)	

M - METRIC PART

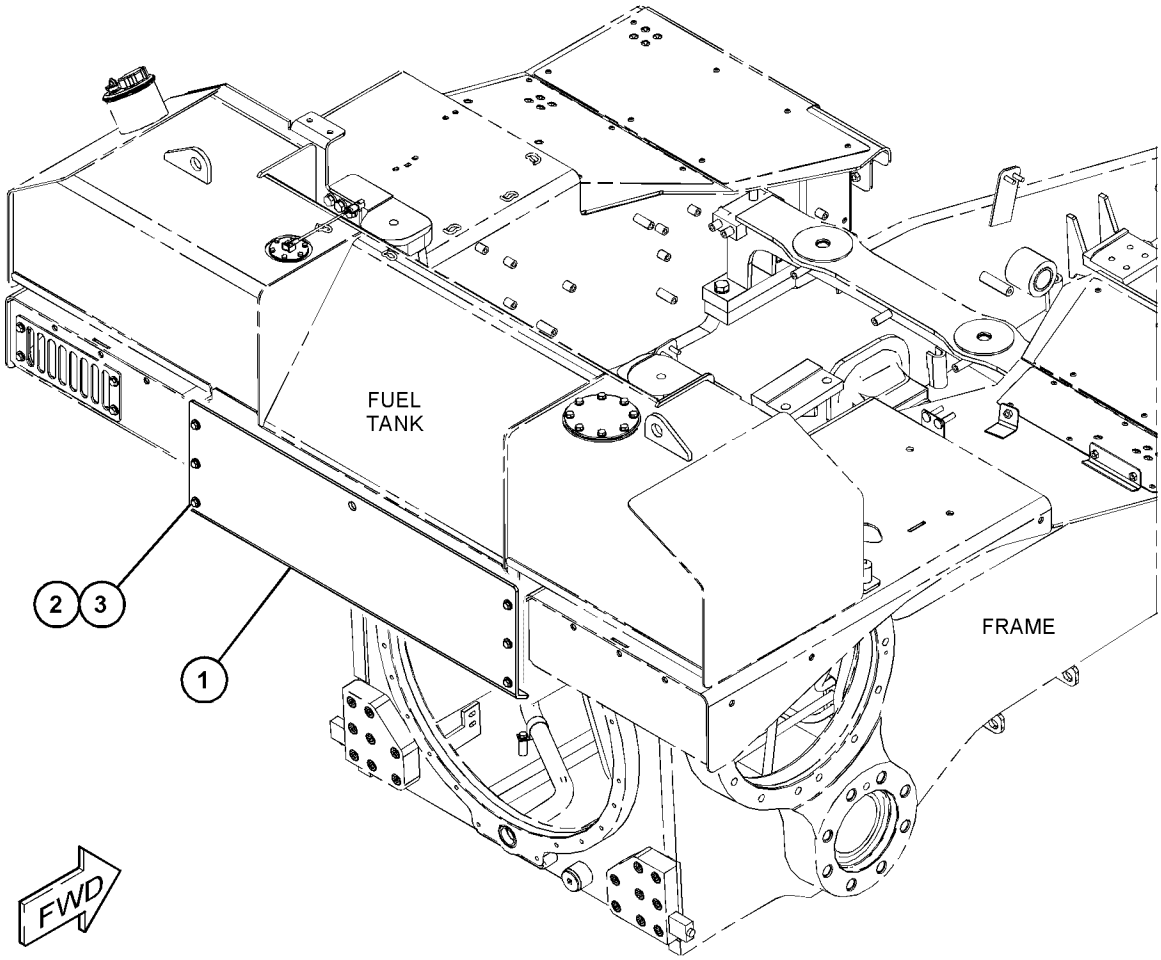

GRAPHIC #1 **<END>** g03861001

398-4542 GUARD GP-REAR

S/N: PPP1-UP; SSS1-UP; TTT1-UP
FOR USE WITH RIPPER
PART OF 398-4292 HYDRAULIC AR
AN ATTACHMENT

SMCS-7187 **i06219024**

NOTE	REF NO	GRAPHIC REF	PART NUMBER	QTY	PART NAME 1 2 3 4 5 6 (PRODUCT LEVEL)	SEE PAGE
	1	1	**426-2412**	1	GUARD	
	2	1	**7X-7729**	6	WASHER (11X25X3-MM THK)	
M	3	1	**8T-4195**	6	BOLT (M10X1.5X30-MM)	

M - METRIC PART

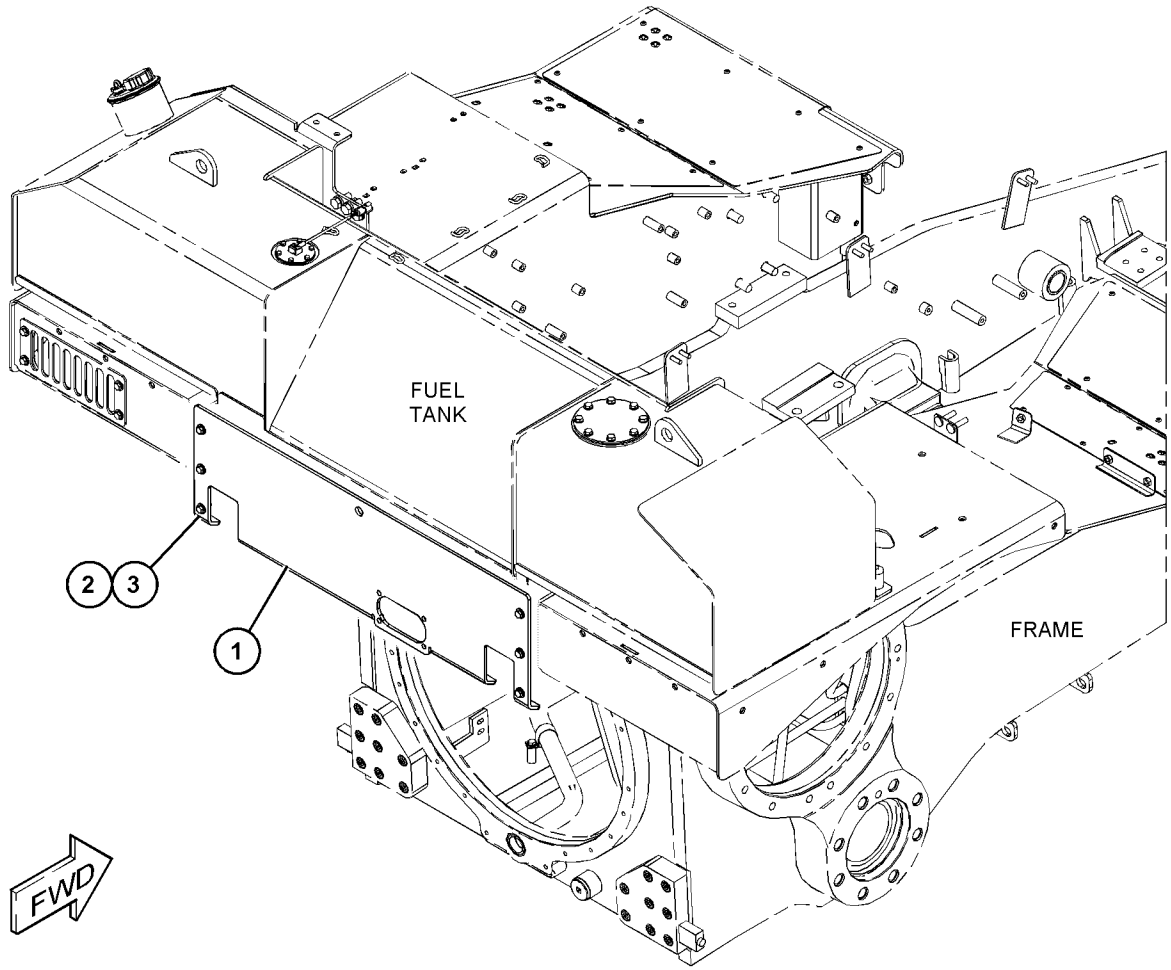

GRAPHIC #1 **<END>** g03861067

434-8128 GUARD GP-TRANSMISSION

S/N: RTZ1-UP
PART OF 434-8126 RIPPER AR
AN ATTACHMENT

SMCS-7153 **i06147509**

NOTE	REF NO	GRAPHIC REF	PART NUMBER	QTY	PART NAME 1 2 3 4 5 6 (PRODUCT LEVEL)	SEE PAGE
	1	1	**452-6152**	1	GUARD AS	
		1	**7X-7729**	2	WASHER (11X25X3-MM THK)	
M		1	**8T-4196**	2	BOLT (M10X1.5X35-MM)	
		1	**451-1573**	1	PLATE AS	
		1	**451-1935**	1	COVER AS	
	2	1	**8T-1482**	4	WASHER-HARD (26X50X8-MM THK)	
M	3	1	**8T-5379**	4	BOLT (M24X3X50-MM)	

M - METRIC PART

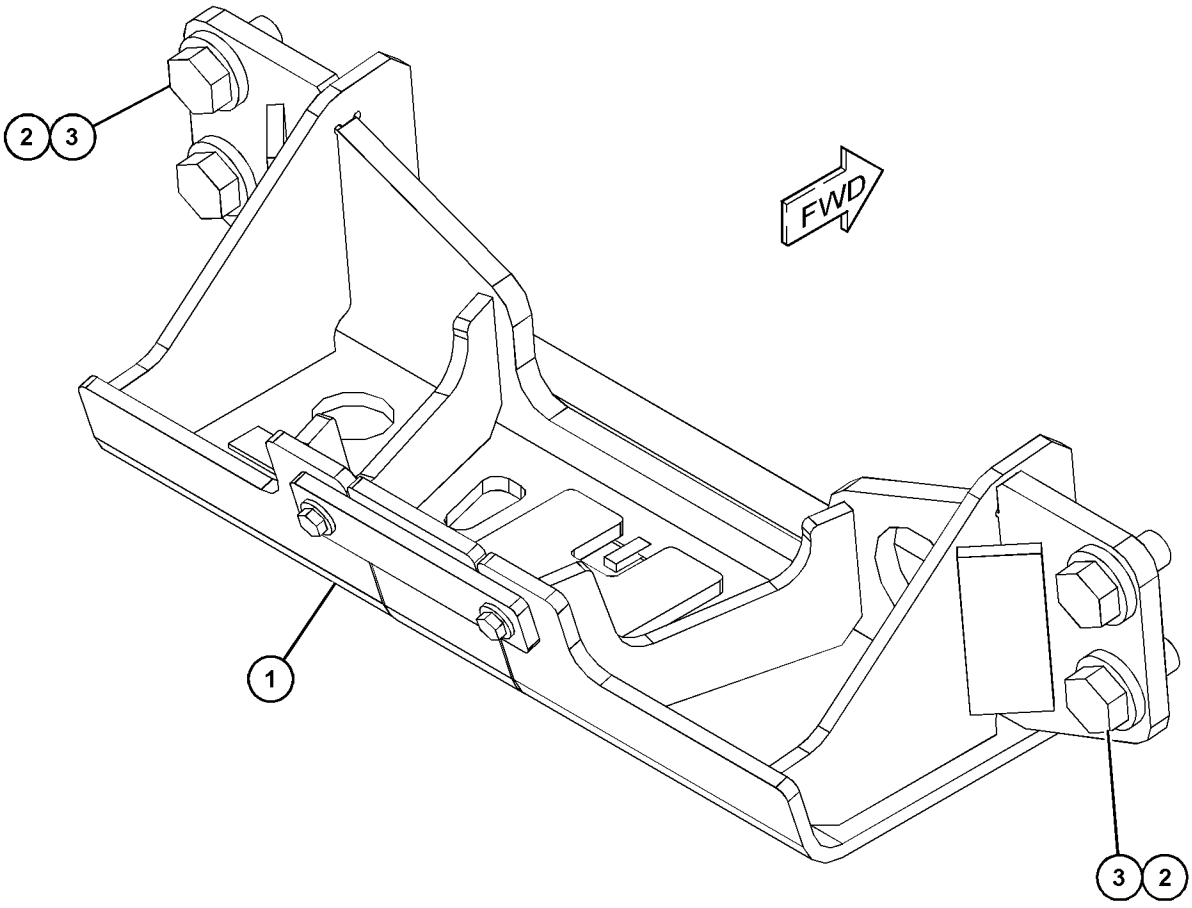

GRAPHIC #1 **<END>** g03841154

456-5987 GUARD GP-TRANSMISSION–HEAVY-DUTY

S/N: PPP1-UP; SSS1-UP; TTT1-UP

CANNOT BE USED WITH RIPPER AR, REAR COUNTERWEIGHT GP, REAR STRIKER BAR GP AN ATTACHMENT

SMCS-7153 **i06219391**

NOTE	REF NO	GRAPHIC REF	PART NUMBER	QTY	PART NAME 1 2 3 4 5 6 (PRODUCT LEVEL)	SEE PAGE
	1	1	**1K-8850**	1	SPRING	
	2	1	**2P-8514**	4	SPACER (1.062X2X1-IN THK)	
	3	1	**460-6479**	1	GUARD AS-TRANSMISSION	
	4	1	**267-3507**	4	WASHER-HARD (26X47X12-MM THK)	
M	5	1	**7X-2576**	4	BOLT (M24X3X70-MM)	

M - METRIC PART

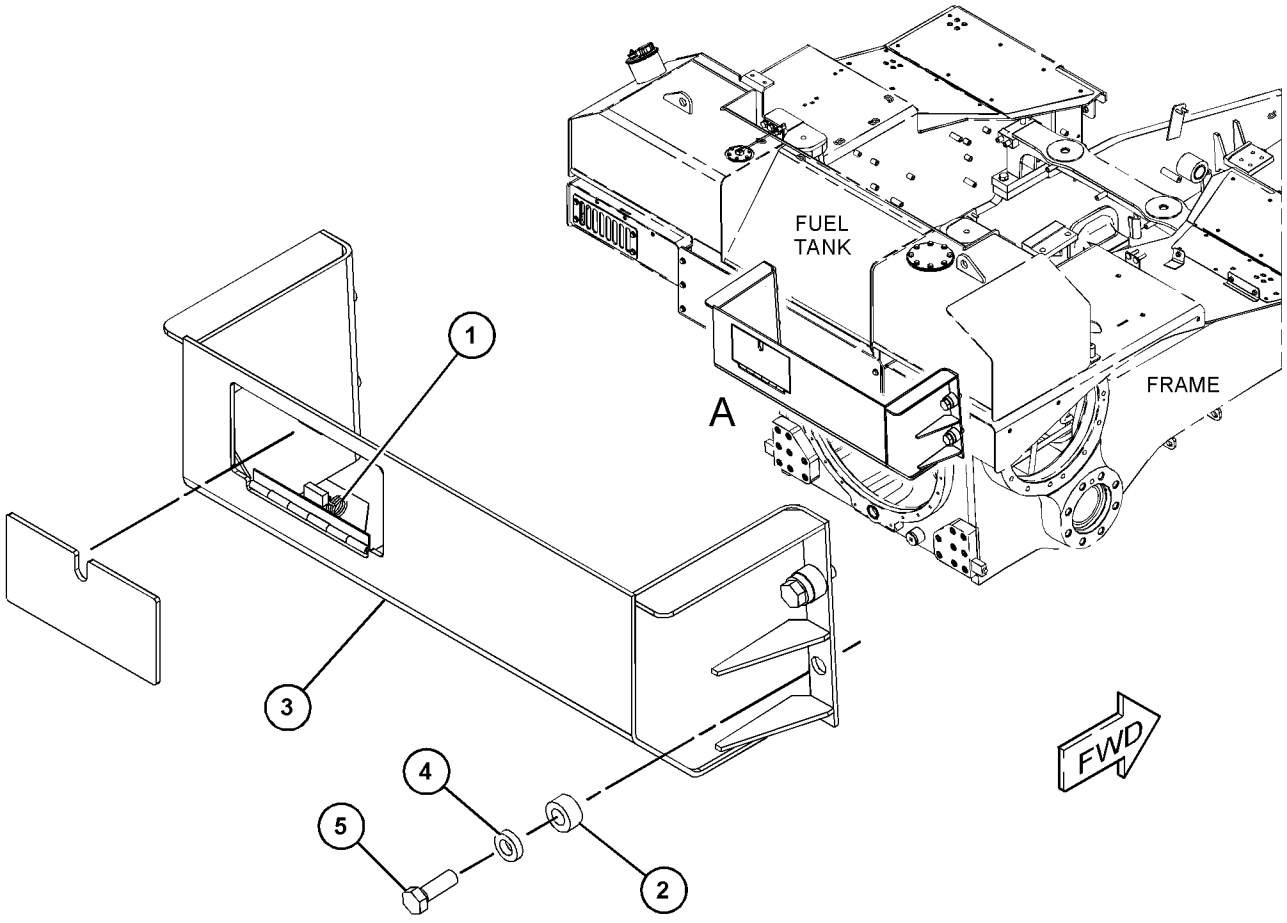

VIEW OF AREA A

GRAPHIC #1 **<END>** g03861004

389-3297 HANDHOLD GP

S/N: PPP1-UP; SSS1-UP; TTT1-UP
PART OF 424-1730 GRILL AR-RADIATOR
AN ATTACHMENT

SMCS-7256 **i05833418**

NOTE	REF NO	GRAPHIC REF	PART NUMBER	QTY	PART NAME 1 2 3 4 5 6 (PRODUCT LEVEL)	SEE PAGE
	1	1	**3W-3896**	4	HANDHOLD	
	2	1	**5P-1076**	8	WASHER-HARD (13.5X30X4-MM THK)	
M	3	1	**8T-4910**	4	BOLT (M12X1.75X60-MM)	
M	4	1	**8T-4139**	4	BOLT (M12X1.75X30-MM)	

M - METRIC PART

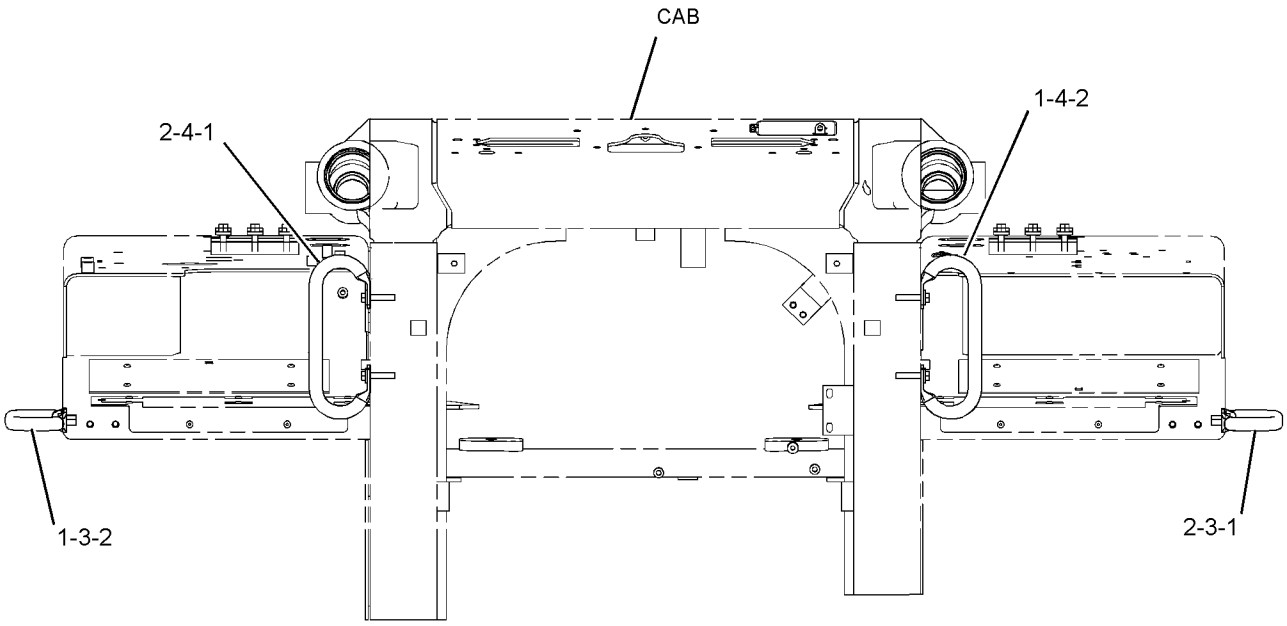

FRONT VIEW

GRAPHIC #1 **<END>** g03566550

389-3298 HANDHOLD GP–HEAVY-DUTY

S/N: PPP1-UP; SSS1-UP; TTT1-UP
PART OF 424-1731 GRILL AR-RADIATOR
AN ATTACHMENT

SMCS-7256 **i06050434**

NOTE	REF NO	GRAPHIC REF	PART NUMBER	QTY	PART NAME 1 2 3 4 5 6 (PRODUCT LEVEL)	SEE PAGE
	1	1	**1Q-2423**	2	HANDLE AS (RH, LH)	
	2	1	**288-2507**	1	HANDLE AS (LH)	
	3	1	**288-2508**	1	HANDLE AS (RH)	
M	4	1	**8T-4910**	4	BOLT (M12X1.75X60-MM)	
M	5	1	**8T-4183**	4	BOLT (M12X1.75X40-MM)	
	6	1	**8T-4223**	8	WASHER-HARD (13.5X25.5X3-MM THK)	
	7	1	**8T-7971**	4	WASHER-HARD (13.5X25.5X5-MM THK)	

M - METRIC PART

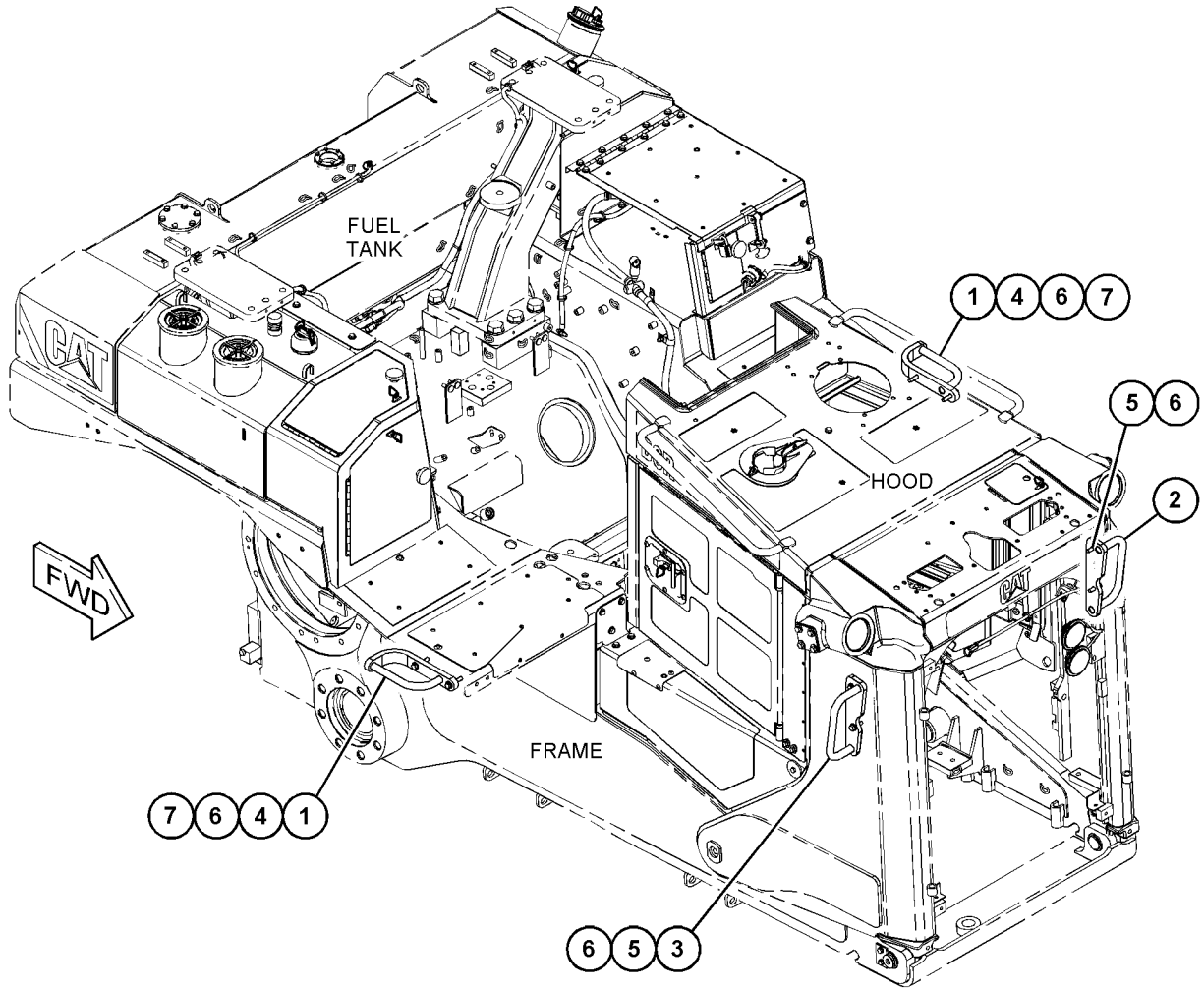

GRAPHIC #1 **<END>** g03798483

476-0462 HOOD AS

S/N: PPP1-UP; SSS1-UP; TTT1-UP
PART OF 398-4546 ENCLOSURE GP-ENGINE
AN ATTACHMENT

SMCS-7251 **i06167469**

NOTE	REF NO	GRAPHIC REF	PART NUMBER	QTY	PART NAME 1 2 3 4 5 6 (PRODUCT LEVEL)	SEE PAGE
	1	1	**126-7975**	2	HANDRAIL	
M	2	1	**178-7023**	1	BOSS (M10X1.5X30-MM)	
	3	1	**7T-1099**	3	LINK	
M	4	1	**8T-3490**	32	NUT-WELD (M10X1.5-THD)	
M	5	1	**8T-3612**	7	NUT-WELD (M8X1.25-THD)	
M	6	1	**8Y-3795**	1	BOSS (M10X1.5X39-MM)	
M	7	1	**9R-2672**	1	BOSS-THREADED (M10X1.5-THD)	

M - METRIC PART

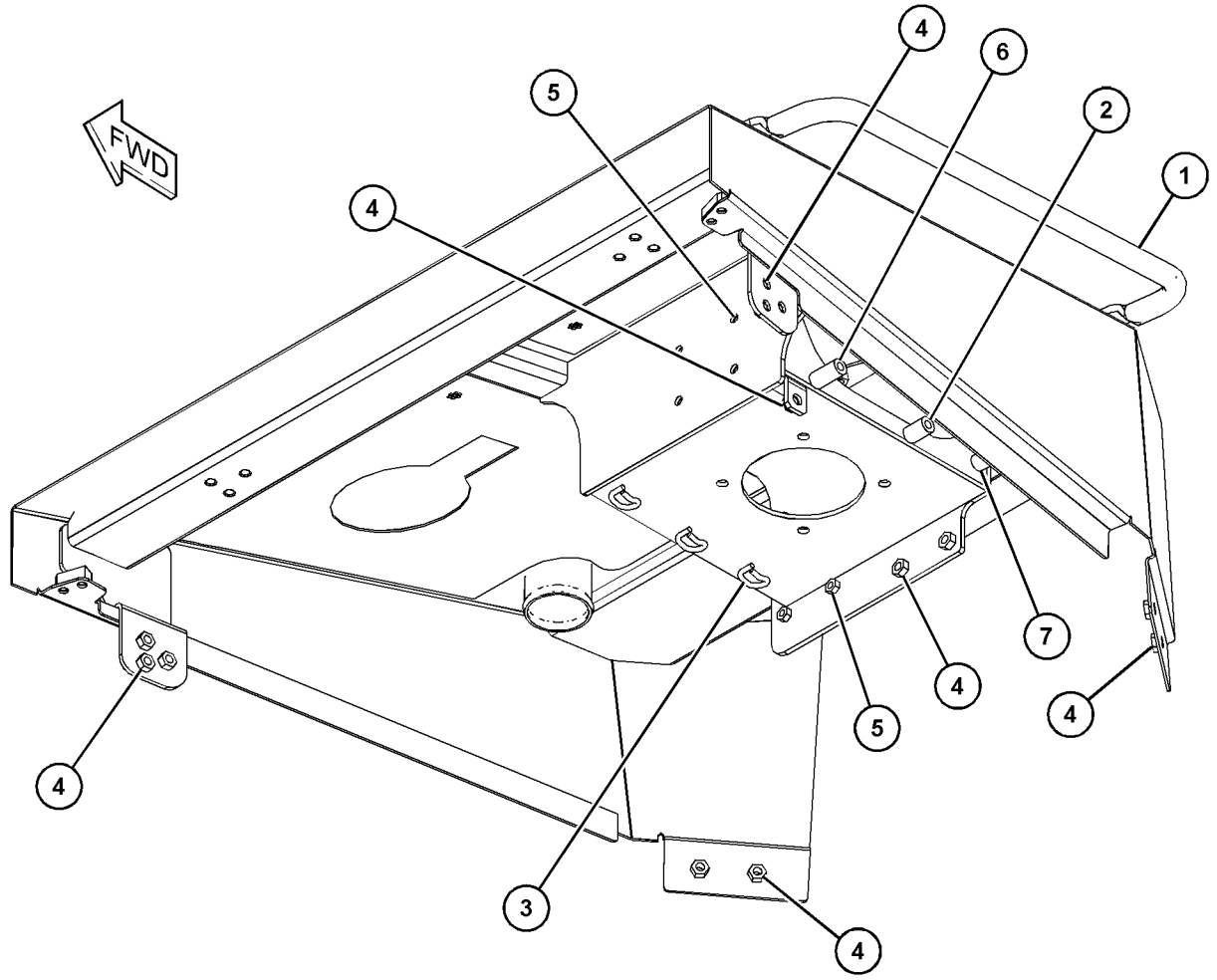

GRAPHIC #1 **<END>** g03841241

8Y-6400 LATCH GP

S/N: PPP1-UP; TTT1-UP
PART OF 465-7896, 465-7898 BAR GP-STRIKER
AN ATTACHMENT

SMCS-7251 **i05321301**

NOTE	REF NO	GRAPHIC REF	PART NUMBER	QTY	PART NAME 1 2 3 4 5 6 (PRODUCT LEVEL)	SEE PAGE
	1	1	**7X-0766**	1	SPRING-LATCH	
	2	1	**8Y-5747**	1	BRACKET-MOUNTING	
	3	1	**8Y-3998**	1	HANDLE-LATCH	
	4	1	**8Y-3966**	1	WASHER (14.7X35X1.57-MM THK)	
	5	1	**8Y-8306**	1	SHAFT-LATCH	
	6	1	**6H-3956**	1	PIN	

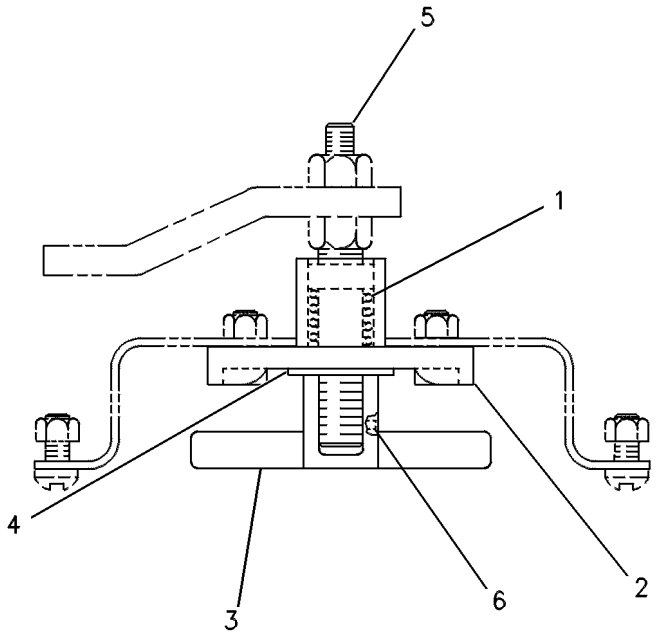

GRAPHIC #1 **<END>** g00236353

456-5989 PLUG GP

S/N: PPP1-UP; SSS1-UP; TTT1-UP

AN ATTACHMENT

SMCS-7051 **i06219032**

NOTE	REF NO	GRAPHIC REF	PART NUMBER	QTY	PART NAME 1 2 3 4 5 6 (PRODUCT LEVEL)	SEE PAGE
	1	1	**193-5918**	26	PLUG	

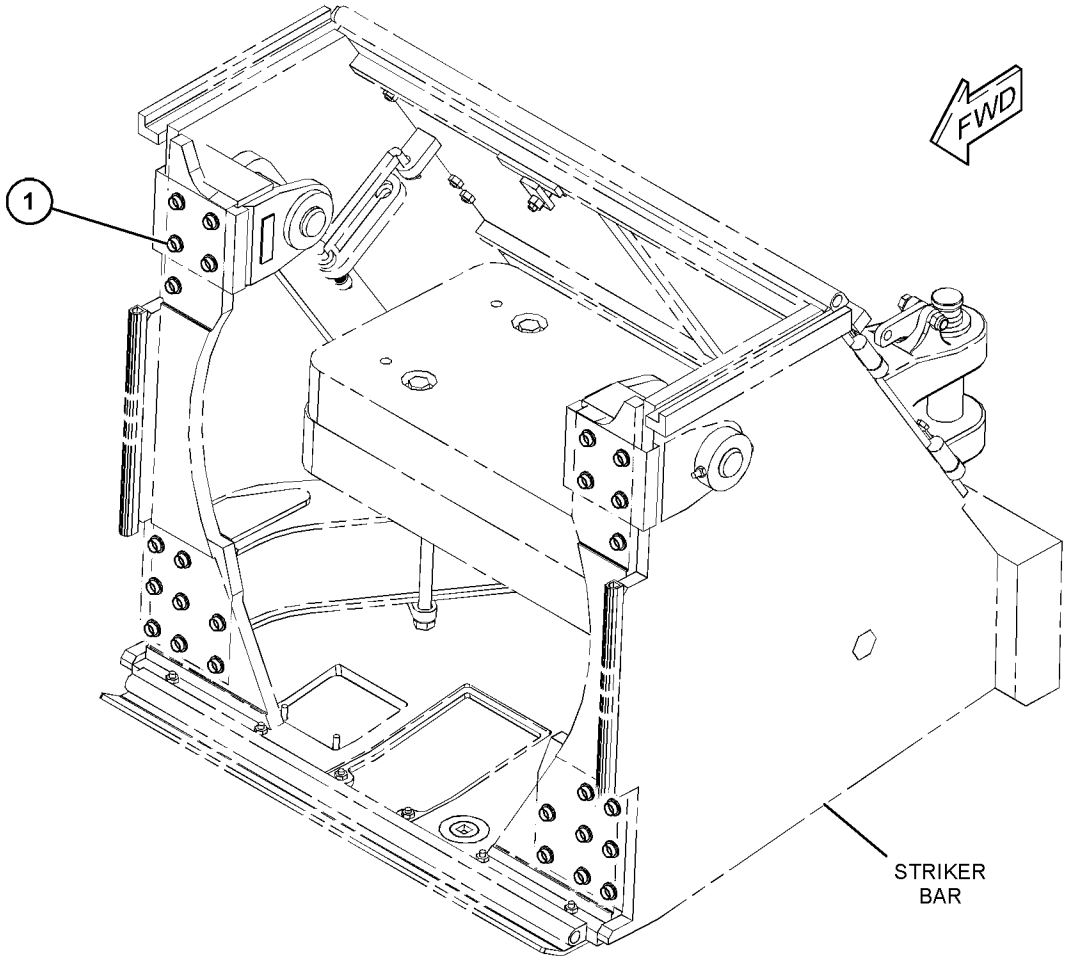

GRAPHIC #1 **<END>** g03863093

398-4547 SEAL GP-WASTE HANDLING

S/N: PPP1-UP; SSS1-UP; TTT1-UP
PART OF 398-4306 ENCLOSURE AR
AN ATTACHMENT

SMCS-7555 **i06225667**

NOTE	REF NO	GRAPHIC REF	PART NUMBER	QTY	PART NAME 1 2 3 4 5 6 (PRODUCT LEVEL)	SEE PAGE
	1	1	**269-0209**	1	BAFFLE	
	2	1	**269-0210**	1	BAFFLE	
D	3	1	**5P-7483**		SEAL (0.6-M)	
D	4	1	**5P-5649**		SEAL-BULK (0.6-M)	
D	4A	1	**5P-5649**		SEAL-BULK (0.4-M)	
D	5	1	**5P-7211**		SEAL (0.1-M EACH)	
D	5A	1	**5P-7211**		SEAL (0.2-M)	
D	5B	1	**5P-7211**		SEAL (0.4-M EACH)	
D	5C	1	**5P-7211**		SEAL (0.6-M EACH)	
D	5D	1	**5P-7211**		SEAL (0.4-M EACH)	
D	6	1	**6V-1359**		SEAL (0.2-M EACH)	
D	6A	1	**6V-1359**		SEAL (0.9-M)	
D	6B	1	**6V-1359**		SEAL (0.4-M EACH)	
D	6C	1	**6V-1359**		SEAL (0.7-M)	
D	6D	1	**6V-1359**		SEAL (0.1-M)	
E	7	1	**149-5933**		SEAL (194-CM)	
E	7A	1	**149-5933**		SEAL (100-CM EACH)	
E	7B	1	**149-5933**		SEAL (176-CM)	
E	8	1	**238-9166**		SEAL (88-CM)	
E	8A	1	**238-9166**		SEAL (35-CM EACH)	
E	8B	1	**238-9166**		SEAL (95-CM)	
E	8C	1	**238-9166**		SEAL (100-CM)	
E	8D	1	**238-9166**		SEAL (31-CM)	
E	8E	1	**238-9166**		SEAL (134-CM)	
E	8F	1	**238-9166**		SEAL (55-CM)	
E	8G	1	**238-9166**		SEAL (71-CM)	
E	9	1	**132-8502**		SEAL (119-CM)	

D - ORDER BY THE METER
E - ORDER BY THE CENTIMETER

398-4547 **SEAL GP-WASTE HANDLING (*contd.*)** **i06225667**

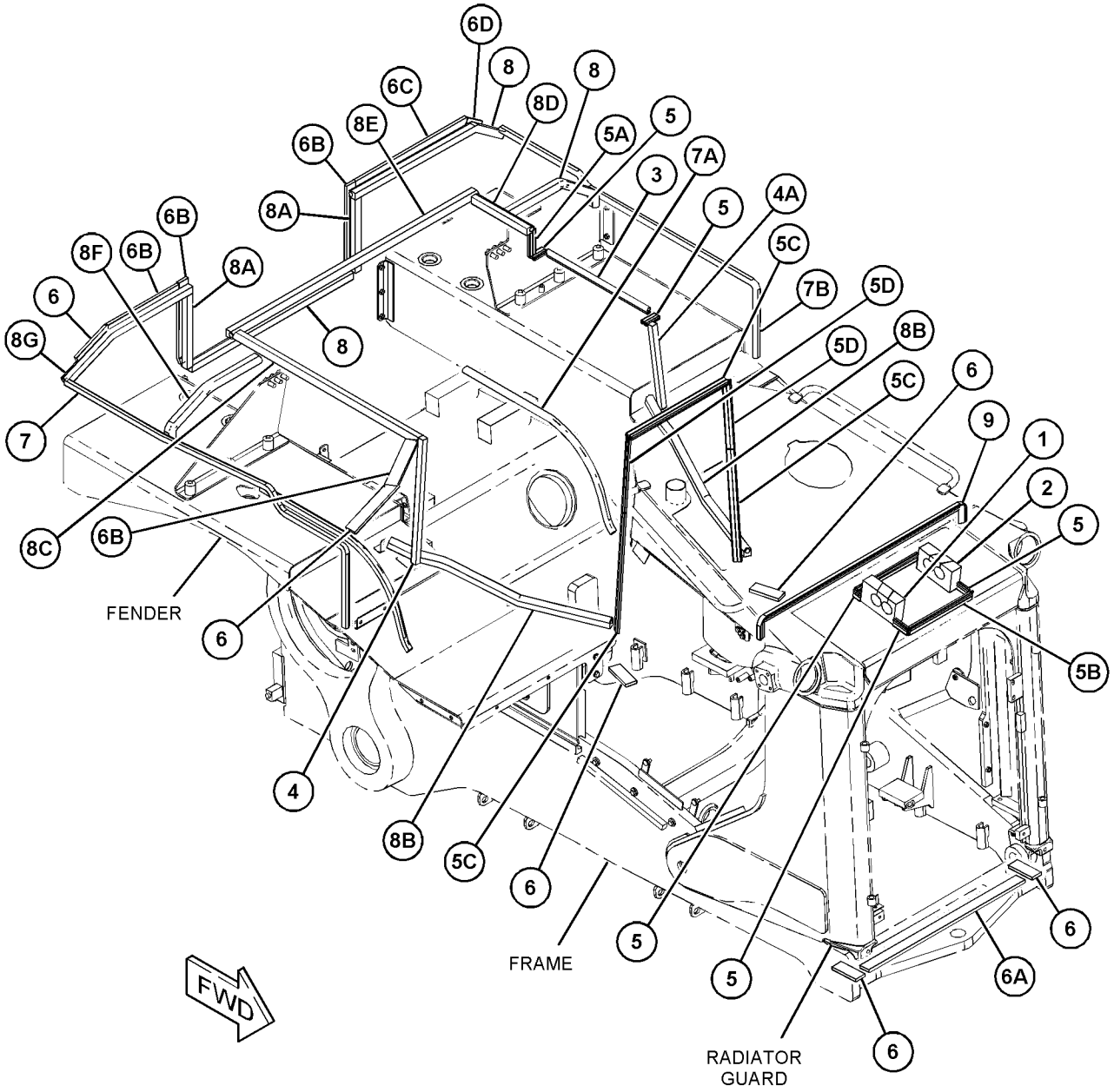

GRAPHIC #1 **<END>** g03863285

398-4550 SWEEP GP

S/N: PPP1-UP; SSS1-UP; TTT1-UP
FOR USE WITH 398-4444—PAGE: 201
AN ATTACHMENT

SMCS-7162 **i06229267**

NOTE	REF NO	GRAPHIC REF	PART NUMBER	QTY	PART NAME 1 2 3 4 5 6 (PRODUCT LEVEL)	SEE PAGE
	1	1	**6T-1698**	8	MOUNT	
	2	1	**235-0544**	8	PLATE	
	3	1	**332-2788**	4	FILM-WARNING (DO NOT LIFT, READ OMM)	
	4	1	**337-7619**	2	MOUNT AS	
	5	1	**357-4339**	4	PLATE	
	6	1	**415-1329**	2	BRACKET AS	
	7	1	**424-8002**	1	GUARD AS-REAR	
	8	1	**438-2277**	4	PLATE	
	9	1	**459-4094**	2	BRACKET AS	
					(EACH INCLUDES)	
		1	**459-1795**	1	MOUNTING	
	10	1	**472-0634**	1	GUARD AS-FRONT	
	11	1	**475-9623**	2	BOLT (M24X3X120-MM)	
	12	1	**475-9624**	2	BOLT (M24X3X160-MM)	
	13	1	**317-1117**	4	LOCKNUT (M24X3-THD)	
	14	1	**5P-1076**	16	WASHER-HARD (13.5X30X4-MM THK)	
M	15	1	**7X-2565**	4	BOLT (M20X2.5X100-MM)	
	16	1	**8P-5244**	4	WASHER (33.3X69.8X6.35-MM THK)	
	17	1	**8T-4123**	12	WASHER (3.62X5.75X0.375-MM THK)	
M	18	1	**8T-4131**	4	NUT (M20X2.5-THD)	
	19	1	**8T-4167**	4	WASHER-HARD (26X44X4-MM THK)	
M	20	1	**8T-4170**	4	BOLT (M20X2.5X150-MM)	
M	21	1	**8T-4184**	8	BOLT (M12X1.75X45-MM)	
M	22	1	**8T-4194**	8	BOLT (M12X1.75X50-MM)	

M - METRIC PART

398-4550 **SWEEP GP (*contd.*)** **i06229267**

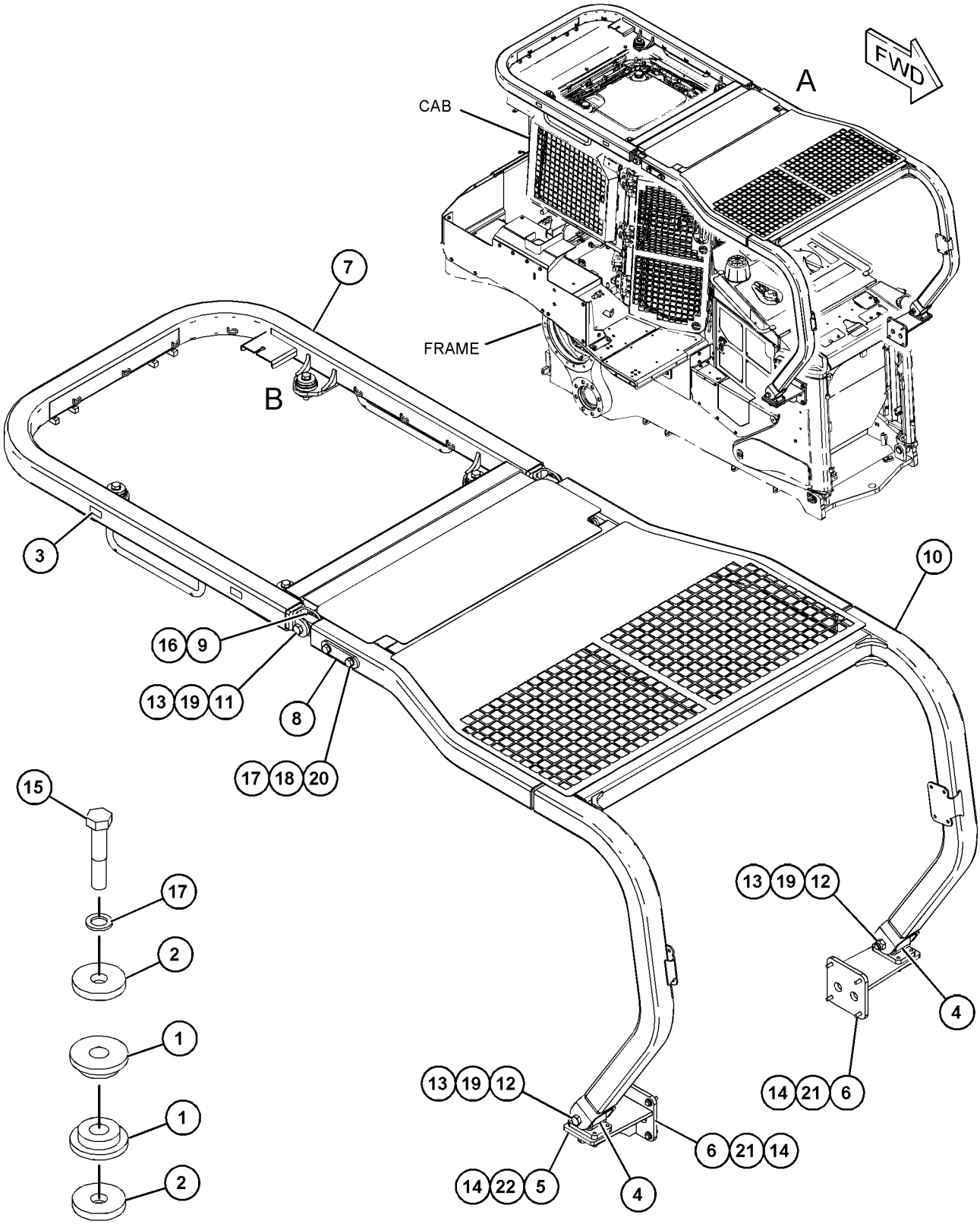

VIEW OF AREA B

VIEW OF AREA A

GRAPHIC #1

<END>

g03857740

216-8127 BAR GP-EQUALIZER

S/N: PPP1-UP

PART OF 415-1301, 457-7971, 457-7972, 457-7973, 457-7974, 457-7975 UNDERCARRIAGE AR AN ATTACHMENT

SMCS-7206 **i06197850**

NOTE	REF NO	GRAPHIC REF	PART NUMBER	QTY	PART NAME 1 2 3 4 5 6 (PRODUCT LEVEL)	SEE PAGE
	1	1	**3B-8489**	1	FITTING-GREASE (1/8-27 PTF)	
	2	1	**3W-9678**	1	SPACER (27.5X55X12-MM THK)	
I	3	1	**5T-4374**	1	HOSE AS	
	4	1	**228-4093**	1	PIN AS	
	5	1	**228-4678**	2	SPACER (71.4X94X7-MM THK)	
Y	6	1	**281-8491**	1	BAR GP-EQUALIZER	409
	7	1	**318-6247**	4	GUARD	
	8	1	**030-7946**	1	ELBOW	
	9	1	**124-0174**	1	CLIP	
	10	1	**3J-7354**	1	SEAL-O-RING	
	11	1	**8T-4167**	8	WASHER-HARD (26X44X4-MM THK)	
	12	1	**456-2442**	1	WASHER-HARD (28X85X8-MM THK)	
M	13	1	**8T-4001**	4	NUT (M24X3-THD)	
M	14	1	**7X-2575**	1	BOLT (M24X3X60-MM)	
	15	1	**7X-7729**	1	WASHER (11X25X3-MM THK)	
	16	1	**8L-6557**	1	CONNECTOR	
M	17	1	**7X-2476**	4	BOLT (M24X3X220-MM)	
M	18	1	**8T-4136**	1	BOLT (M10X1.5X25-MM)	

I - REFER TO HYDRAULIC INFORMATION SYSTEM
M - METRIC PART
Y - SEPARATE ILLUSTRATION

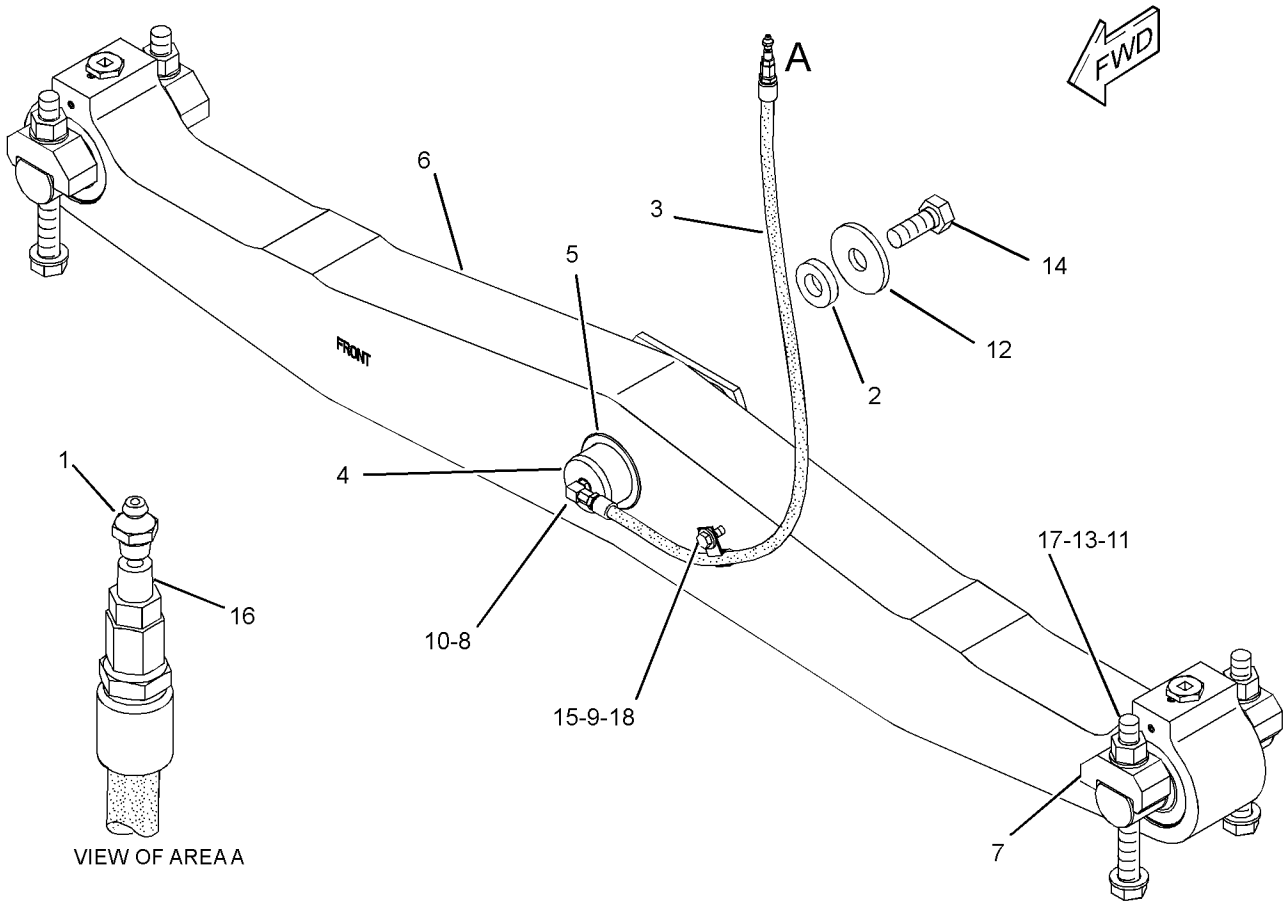

GRAPHIC #1 **<END>** g01219629

229-7373 BAR GP-EQUALIZER

S/N: SSS1-UP; TTT1-UP

PART OF 415-1300, 457-6209, 457-6210, 457-6211, 457-7966, 457-7967, 457-7968, 457-7969, 457-7970 UNDERCARRIAGE AR

AN ATTACHMENT

SMCS-7206 **i06197909**

NOTE	REF NO	GRAPHIC REF	PART NUMBER	QTY	PART NAME 1 2 3 4 5 6 (PRODUCT LEVEL)	SEE PAGE
	1	1	**3B-8489**	1	FITTING-GREASE (1/8-27 PTF)	
	2	1	**3W-9678**	1	SPACER (27.5X55X12-MM THK)	
I	3	1	**5T-4374**	1	HOSE AS	
	4	1	**228-4093**	1	PIN AS	
	5	1	**228-4678**	2	SPACER (71.4X94X7-MM THK)	
YR	6	1	**281-8488**	1	BAR GP-EQUALIZER	408
	7	1	**318-6247**	4	GUARD	
	8	1	**030-7946**	1	ELBOW	
	9	1	**124-0174**	1	CLIP	
	10	1	**3J-7354**	1	SEAL-O-RING	
	11	1	**8T-4167**	8	WASHER-HARD (26X44X4-MM THK)	
	12	1	**456-2442**	1	WASHER-HARD (28X85X8-MM THK)	
M	13	1	**8T-4001**	4	NUT (M24X3-THD)	
M	14	1	**7X-2575**	1	BOLT (M24X3X60-MM)	
	15	1	**7X-7729**	1	WASHER (11X25X3-MM THK)	
	16	1	**8L-6557**	1	CONNECTOR	
M	17	1	**7X-2476**	4	BOLT (M24X3X220-MM)	
M	18	1	**8T-4136**	1	BOLT (M10X1.5X25-MM)	

I - REFER TO HYDRAULIC INFORMATION SYSTEM
M - METRIC PART
R - REMFG PART MAY BE AVAILABLE
Y - SEPARATE ILLUSTRATION

229-7373 **BAR GP-EQUALIZER (*contd.*)** **i06197909**

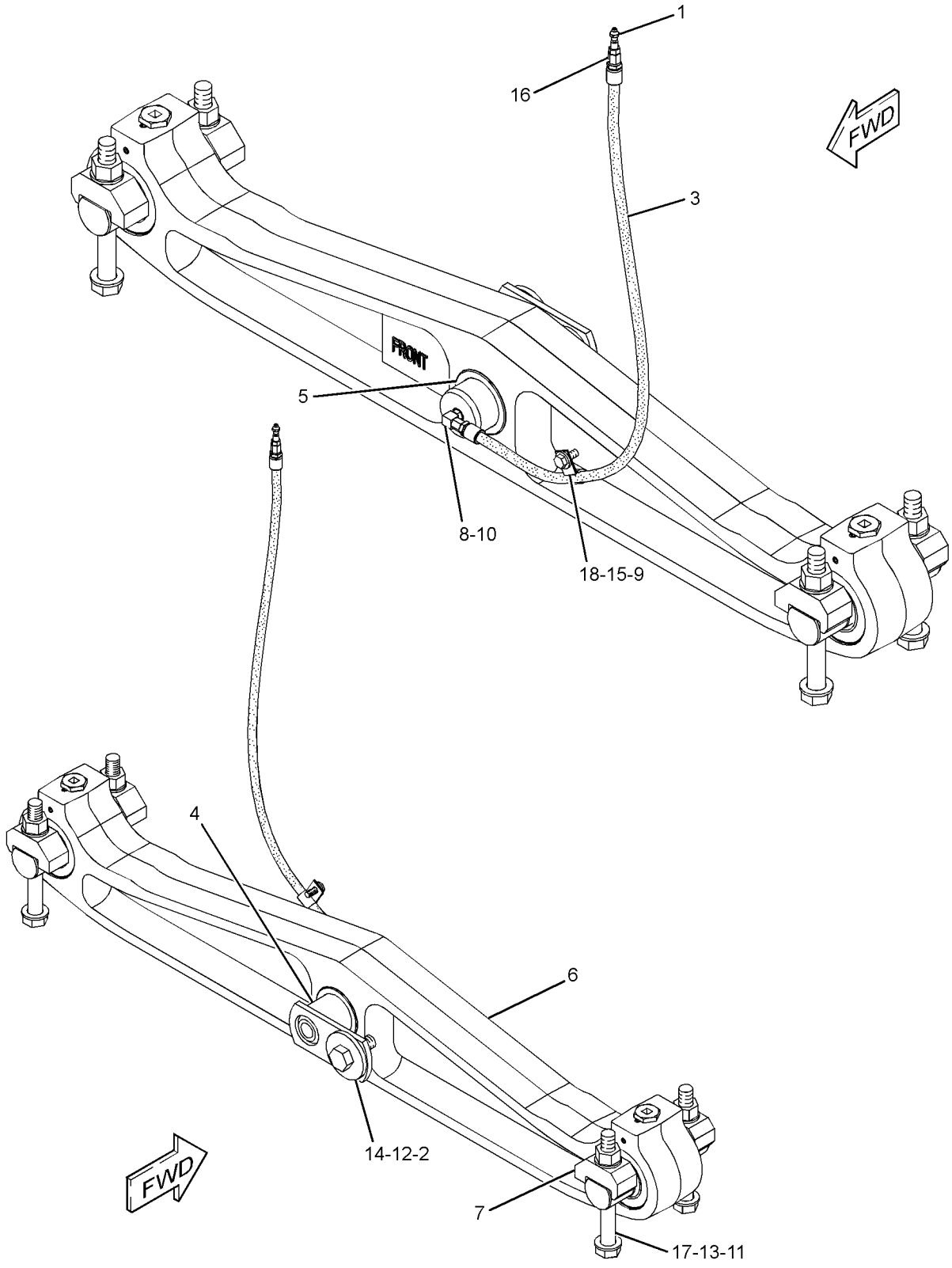

GRAPHIC #1 **<END>** g01210441

281-8488 BAR GP-EQUALIZER*R

S/N: SSS1-UP; TTT1-UP
1880-MM(74-IN) GAUGE
PART OF 229-7373 BAR GP-EQUALIZER
AN ATTACHMENT

SMCS-7206 **i05680333**

NOTE	REF NO	GRAPHIC REF	PART NUMBER	QTY	PART NAME 1 2 3 4 5 6 (PRODUCT LEVEL)	SEE PAGE
	1	1	**3B-8489**	2	FITTING-GREASE	
	2	1	**8G-4189**	2	BEARING-SELF-ALIGNING	
	3	1	**133-5631**	2	PLUG	
	4	1	**139-0566**	4	SEAL AS	
					(EACH INCLUDES)	
		1	**139-0567**	1	RING-SEAL	
	5	1	**229-8352**	2	BUSHING	
	6	1	**229-9323**	2	SEAL-PIN	
Z	7	1		1	BAR-EQUALIZER	
	8	1	**1J-6472**	4	RING-RETAINING	
	9	1	**2F-5326**	8	SETSCREW (3/8-16X0.375-IN)	
	10	1	**5F-1678**	2	SEAL-O-RING	
	11	1	**281-4015**	2	PIN	

Z - NOT SERVICED SEPARATELY

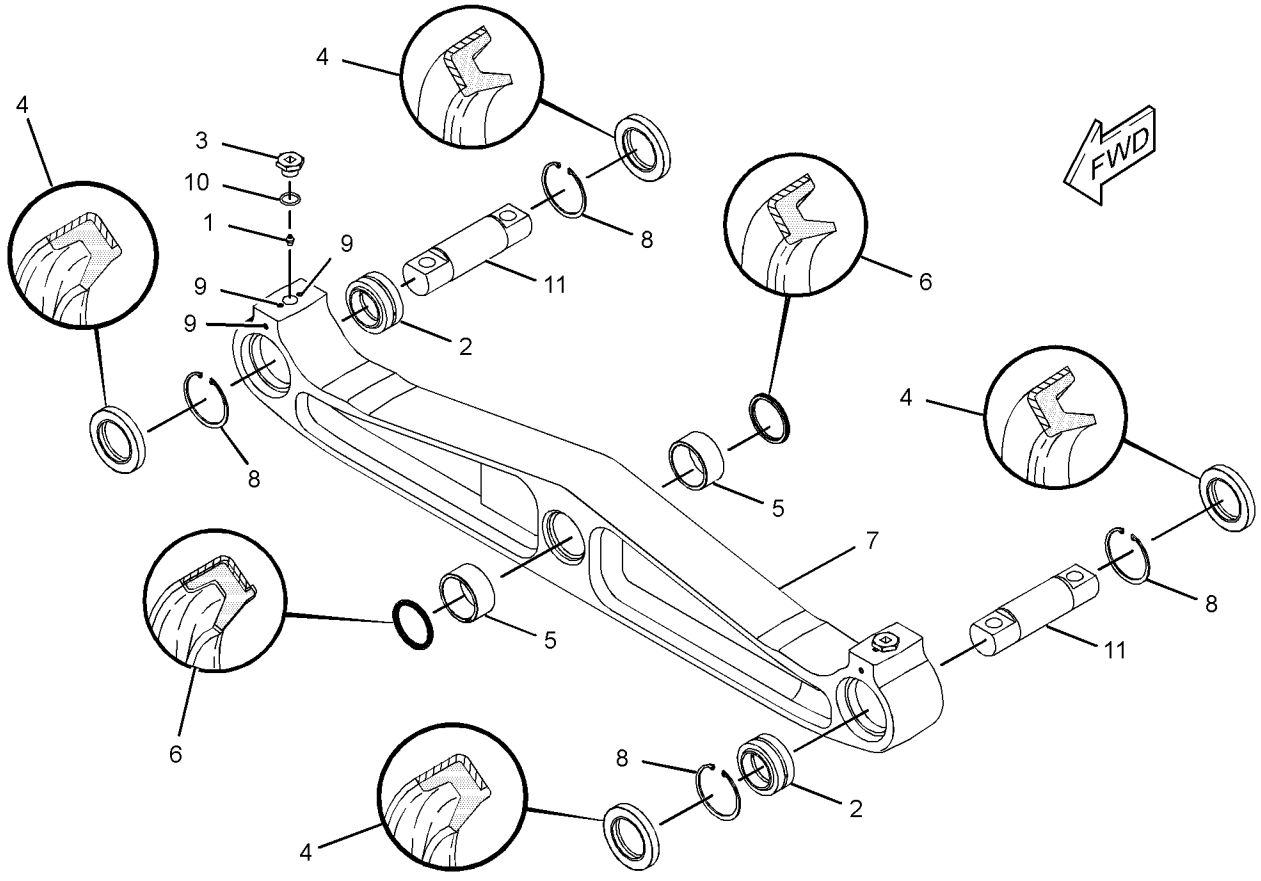

GRAPHIC #1 **<END>** g01210395

281-8491 BAR GP-EQUALIZER

S/N: PPP1-UP
PART OF 216-8127 BAR GP-EQUALIZER
AN ATTACHMENT

SMCS-7206 **i06155258**

NOTE	REF NO	GRAPHIC REF	PART NUMBER	QTY	PART NAME 1 2 3 4 5 6 (PRODUCT LEVEL)	SEE PAGE
	1	1	**3B-8489**	2	FITTING-GREASE (1/8-27 PTF)	
	2	1	**8G-4189**	2	BEARING-SELF-ALIGNING	
	3	1	**133-5631**	2	PLUG	
	4	1	**139-0566**	4	SEAL AS	
					(EACH INCLUDES)	
		1	**139-0567**	1	RING-SEAL	
	5	1	**229-8352**	2	BUSHING	
	6	1	**229-9323**	2	SEAL-PIN	
	7	1	**281-4015**	2	PIN	
Z	8	1		1	BAR-EQUALIZER	
	9	1	**1J-6472**	4	RING-RETAINING	
	10	1	**2F-5326**	8	SETSCREW (3/8-16X0.375-IN)	
	11	1	**5F-1678**	2	SEAL-O-RING	

Z - NOT SERVICED SEPARATELY

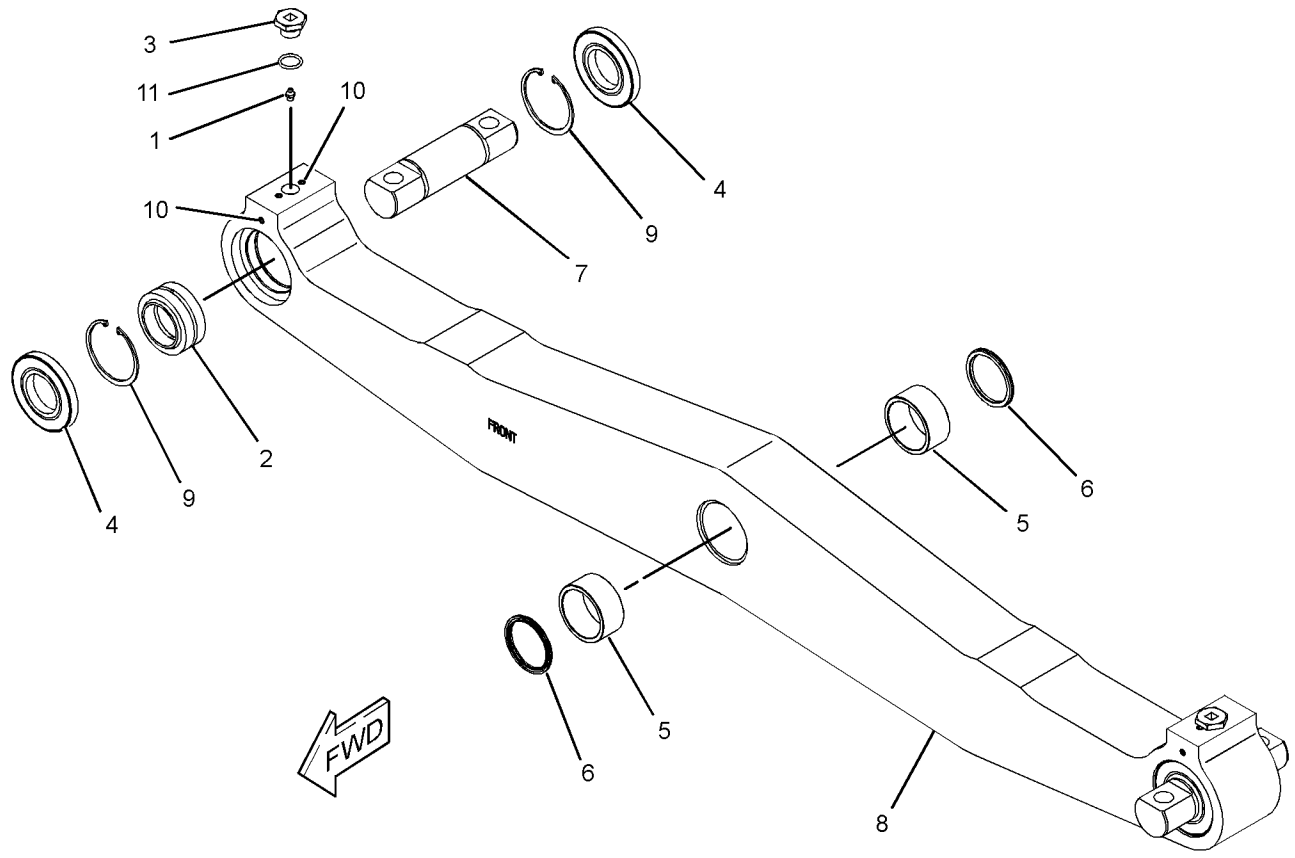

GRAPHIC #1 **<END>** g01220152

108-1091 CAP GP-TRACK IDLER

S/N: PPP1-UP; SSS1-UP; TTT1-UP

PART OF 415-1300, 415-1301, 457-6209, 457-6210, 457-6211, 457-7966, 457-7967, 457-7968, 457-7972, 457-7973, 457-7974 UNDERCARRIAGE AR

AN ATTACHMENT

SMCS-4159 **i05633795**

NOTE	REF NO	GRAPHIC REF	PART NUMBER	QTY	PART NAME 1 2 3 4 5 6 (PRODUCT LEVEL)	SEE PAGE
	1	1	**165-6946**	1	BLOCK-TRACK IDLER	
	2	1	**152-3421**	1	CAP AS-TRACK IDLER	
	2A	1	**1T-0068**	1	PIN-SPRING	
	3	1	**8T-3282**	2	WASHER-HARD (22X35X3.5-MM THK)	
M	4	1	**6V-9167**	2	BOLT (M20X2.5X140-MM)	

M - METRIC PART

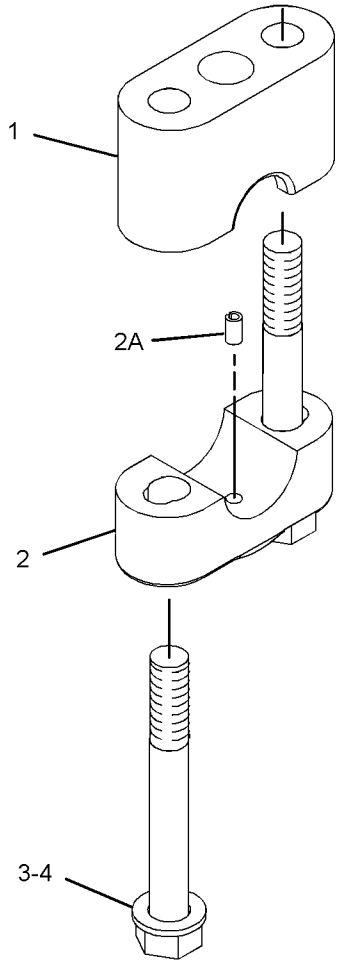

GRAPHIC #1 **<END>** g02175274

233-4847 CAP GP-TRACK IDLER–SYSTEMONE

S/N: PPP1-UP

PART OF 457-7971, 457-7975 UNDERCARRIAGE AR

AN ATTACHMENT

SMCS-4159 **i06143627**

NOTE	REF NO	GRAPHIC REF	PART NUMBER	QTY	PART NAME 1 2 3 4 5 6 (PRODUCT LEVEL)	SEE PAGE
	1	1	**156-5342**	1	SHIM (10-MM THK)	
	2	1	**159-3662**	1	CAP AS	
		1	**1T-0068**	1	PIN-SPRING	
	3	1	**233-4848**	1	BLOCK-TRACK IDLER	
	4	1	**153-5044**	2	WASHER-HARD (21.5X45X6-MM THK)	
M	5	1	**8T-0657**	2	BOLT (M20X2.5X160-MM)	

M - METRIC PART

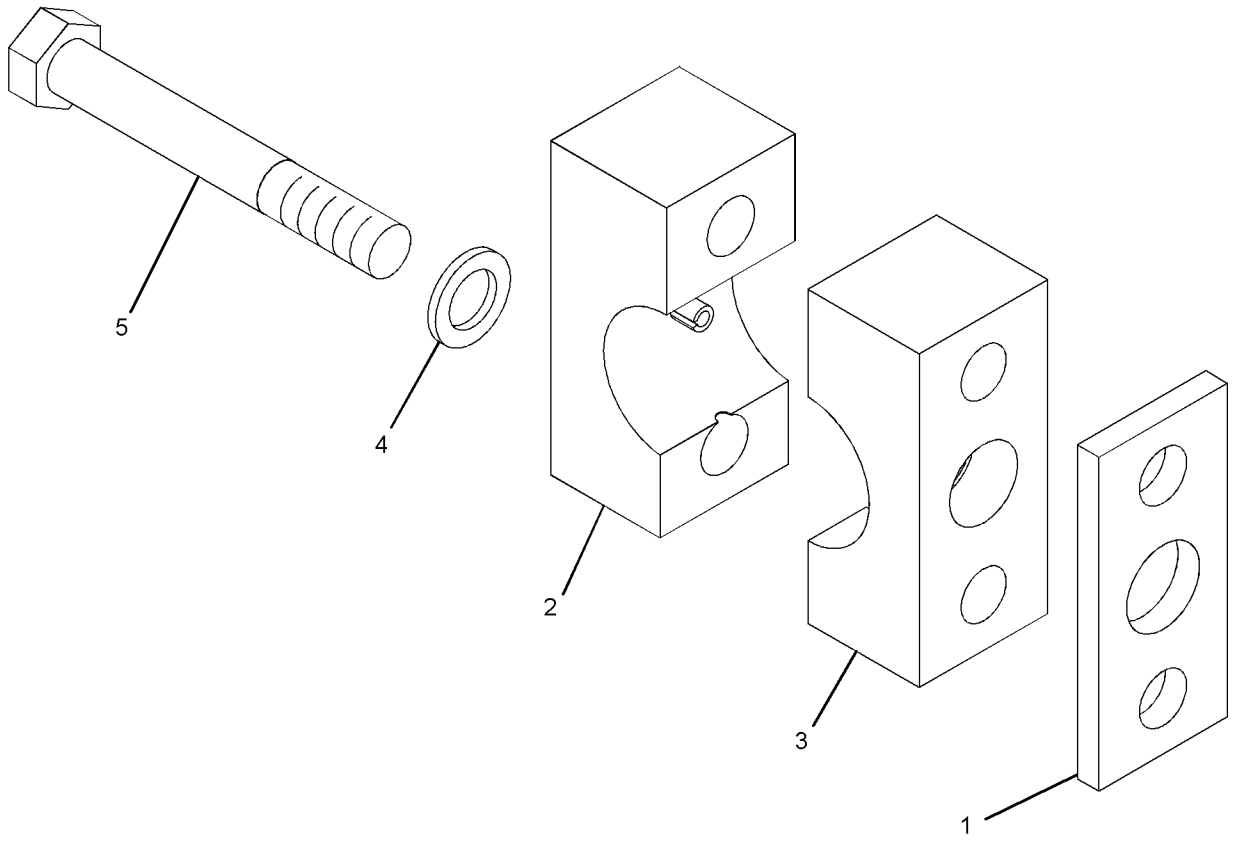

GRAPHIC #1 **<END>** g01333596

233-4849 CAP GP-TRACK IDLER–SYSTEMONE

S/N: PPP1-UP

PART OF 457-7971, 457-7975 UNDERCARRIAGE AR

AN ATTACHMENT

SMCS-4159 **i06143628**

NOTE	REF NO	GRAPHIC REF	PART NUMBER	QTY	PART NAME 1 2 3 4 5 6 (PRODUCT LEVEL)	SEE PAGE
	1	1	**156-5342**	1	SHIM (10-MM THK)	
	2	1	**160-6910**	1	CAP AS	
		1	**1T-0068**	1	PIN-SPRING	
	3	1	**233-4851**	1	BLOCK-TRACK IDLER	
	4	1	**153-5044**	2	WASHER-HARD (21.5X45X6-MM THK)	
M	5	1	**8T-0657**	2	BOLT (M20X2.5X160-MM)	

M - METRIC PART

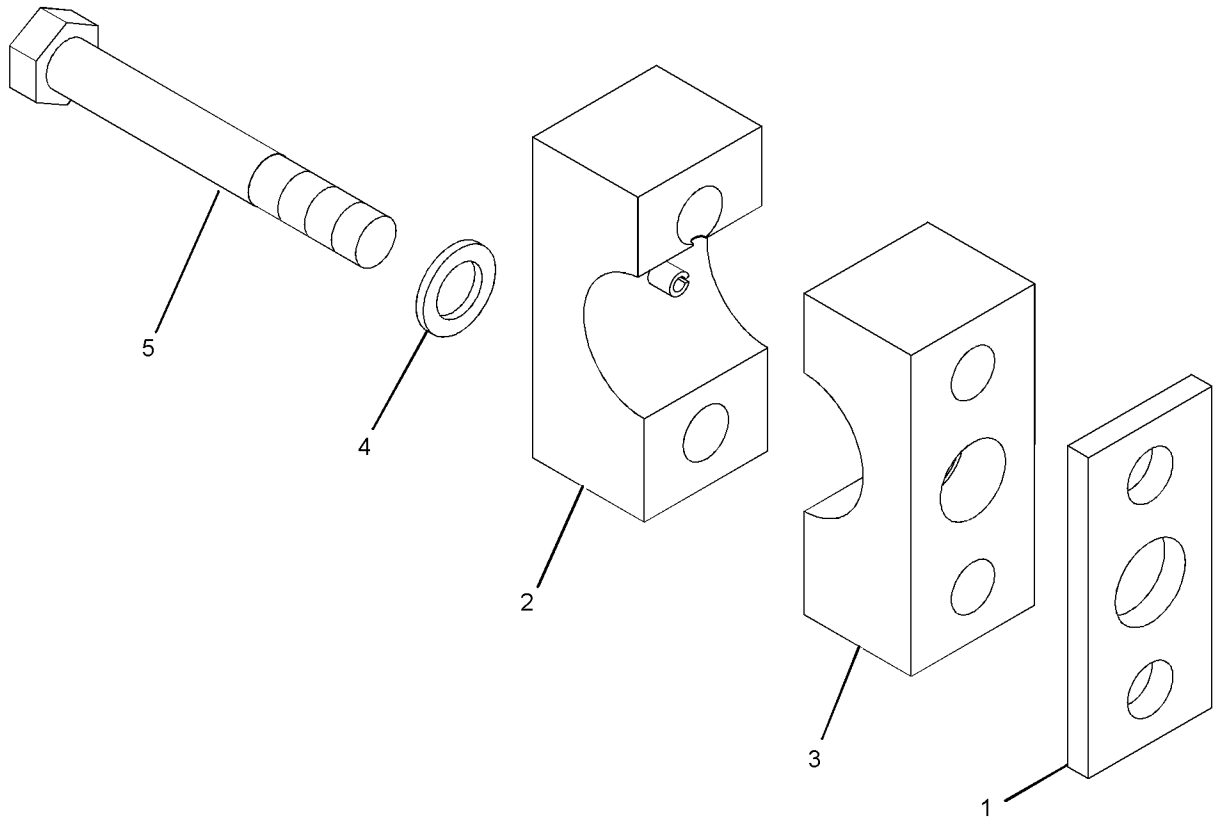

GRAPHIC #1 **<END>** g01333609

236-2591 CAP GP-TRACK IDLER–SYSTEMONE

S/N: PPP1-UP

PART OF 457-7971, 457-7975 UNDERCARRIAGE AR

AN ATTACHMENT

SMCS-4159 **i06143630**

NOTE	REF NO	GRAPHIC REF	PART NUMBER	QTY	PART NAME 1 2 3 4 5 6 (PRODUCT LEVEL)	SEE PAGE
	1	1	**174-8783**	1	CAP AS	
		1	**1T-0068**	1	PIN-SPRING	
	2	1	**174-8788**	1	BLOCK	
	3	1	**174-8790**	1	SHIM (10-MM THK)	
	4	1	**153-5044**	2	WASHER-HARD (21.5X45X6-MM THK)	
M	5	1	**8T-0657**	2	BOLT (M20X2.5X160-MM)	

M - METRIC PART

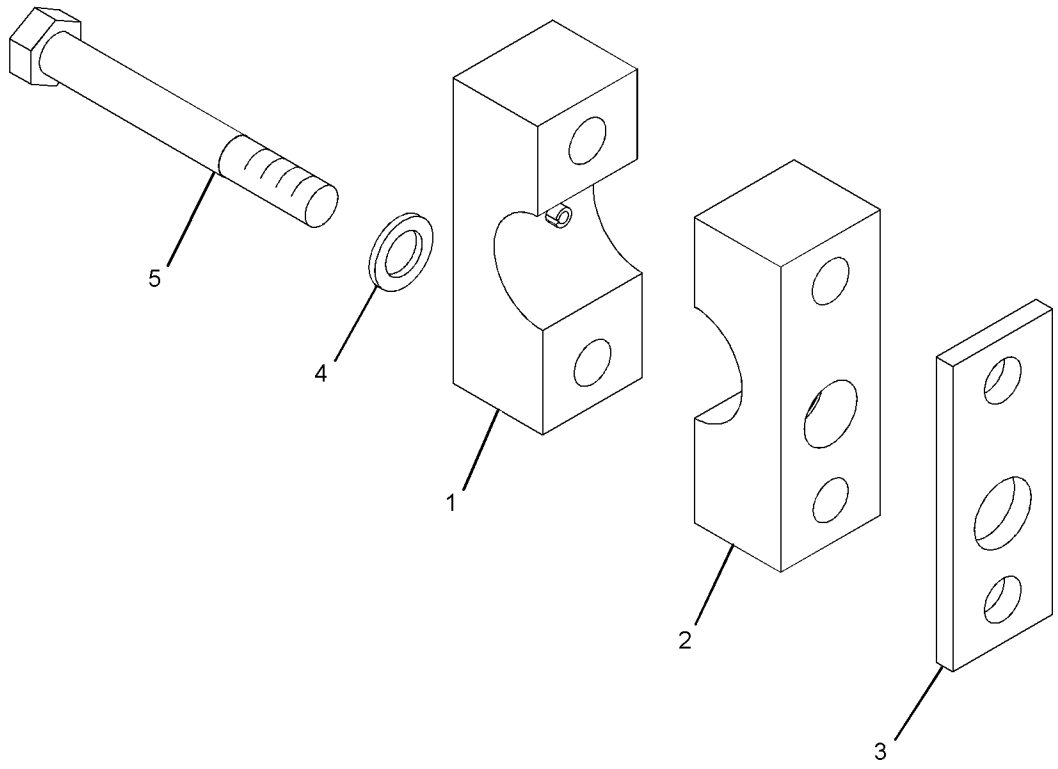

GRAPHIC #1 **<END>** g01333650

236-2592 CAP GP-TRACK IDLER–SYSTEMONE

S/N: PPP1-UP

PART OF 457-7971, 457-7975 UNDERCARRIAGE AR

AN ATTACHMENT

SMCS-4159 **i06143632**

NOTE	REF NO	GRAPHIC REF	PART NUMBER	QTY	PART NAME 1 2 3 4 5 6 (PRODUCT LEVEL)	SEE PAGE
	1	1	**174-8786**	1	CAP AS	
		1	**1T-0068**	1	PIN-SPRING	
	2	1	**174-8789**	1	BLOCK	
	3	1	**174-8790**	1	SHIM (10-MM THK)	
	4	1	**153-5044**	2	WASHER-HARD (21.5X45X6-MM THK)	
M	5	1	**8T-0657**	2	BOLT (M20X2.5X160-MM)	

M - METRIC PART

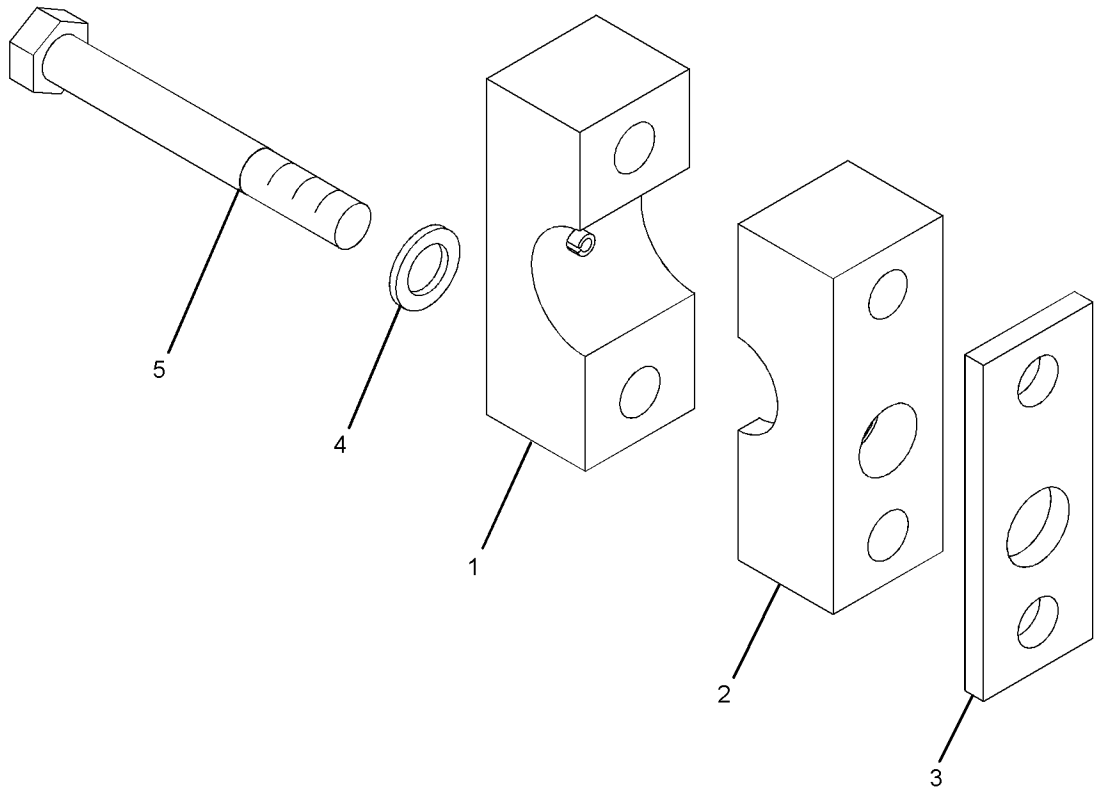

GRAPHIC #1 **<END>** g01333621

267-4746 CAP GP-TRACK IDLER–SYSTEMONE

S/N: TTT1-UP

PART OF 457-7969, 457-7970 UNDERCARRIAGE AR

AN ATTACHMENT

SMCS-4159 **i05641248**

NOTE	REF NO	GRAPHIC REF	PART NUMBER	QTY	PART NAME 1 2 3 4 5 6 (PRODUCT LEVEL)	SEE PAGE
	1	1	**152-3421**	1	CAP AS-TRACK IDLER	
		1	**1T-0068**	1	PIN-SPRING	
	2	1	**165-6946**	1	BLOCK-TRACK IDLER	
	3	1	**153-5044**	2	WASHER-HARD (21.5X45X6-MM THK)	
M	4	1	**8T-0656**	2	BOLT (M20X2.5X150-MM)	

M - METRIC PART

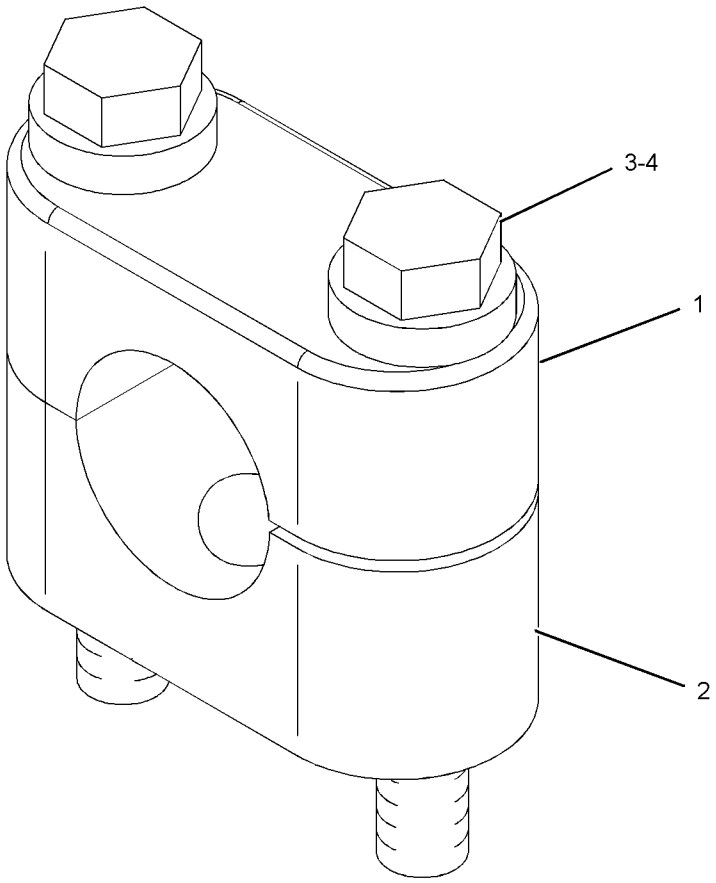

GRAPHIC #1 **<END>** g01145277

450-7089 FRAME GP-TELESCOPING RECOIL—HEAVY-DUTY, LH

S/N: SSS1-UP

PART OF 457-6209, 457-6210, 457-7966 UNDERCARRIAGE AR

AN ATTACHMENT

SMCS-4151 **i05633950**

NOTE	REF NO	GRAPHIC REF	PART NUMBER	QTY	PART NAME 1 2 3 4 5 6 (PRODUCT LEVEL)	SEE PAGE
	1	1	**9X-4582**	1	SEAL AS	
	3	1	**224-4120**	1	FRAME AS (FRONT)	
	3A	1	**4B-4158**	4	SCREW-DRIVE (NO 4X0.25-IN)	
	3B	1	**254-1686**	1	PLATE-WARNING (RECOIL SPRING)	
	3C	1	**3T-1162**	1	BUSHING	
	4	1	**335-2351**	1	FRAME AS (LH)	
	4A	1	**221-3197**	1	BUSHING	
	4B	1	**221-3200**	1	BUSHING	
	5	1	**160-4103**	2	STRIP	
	6	1	**268-9709**	2	GUIDE AS	
					(EACH INCLUDES)	
	6A	1	**241-3720**	1	FILM-WARNING (RECOIL SPRING)	
	7	1	**268-9710**	1	COVER AS	
	7A	1	**7B-3028**	4	SCREW-DRIVE (NO 4X 3/16-IN)	
	7B	1	**8E-1211**	1	COVER	
	7C	1	**253-1346**	1	PLATE-WARNING (HIGH PRESSURE CYLINDER)	
	8	1	**189-3032**	2	STRIP	
	9	1	**1B-5174**	1	PLUG-PIPE	
	10	1	**3T-2077**	1	BEARING	
	11	1	**3W-1852**	1	RING-RETAINING	
	12	1	**5H-6734**	1	SEAL-O-RING	
	13	1	**8T-4223**	28	WASHER-HARD (13.5X25.5X3-MM THK)	
	14	1	**8T-4121**	4	WASHER-HARD (11X21X2.5-MM THK)	
M	15	1	**8T-4136**	4	BOLT (M10X1.5X25-MM)	
M	16	1	**8T-4184**	12	BOLT (M12X1.75X45-MM)	
M	17	1	**8T-4139**	16	BOLT (M12X1.75X30-MM)	
M	18	1	**7X-2572**	4	BOLT (M24X3X35-MM)	
	19	1	**8T-4167**	6	WASHER-HARD (26X44X4-MM THK)	

PARTS SHOWN IN GRAPHIC(S) WITHOUT A REFERENCE NUMBER ARE NOT SERVICED SEPARATELY

M - METRIC PART

450-7089 **FRAME GP-TELESCOPING RECOIL (*contd.*)** **i05633950**

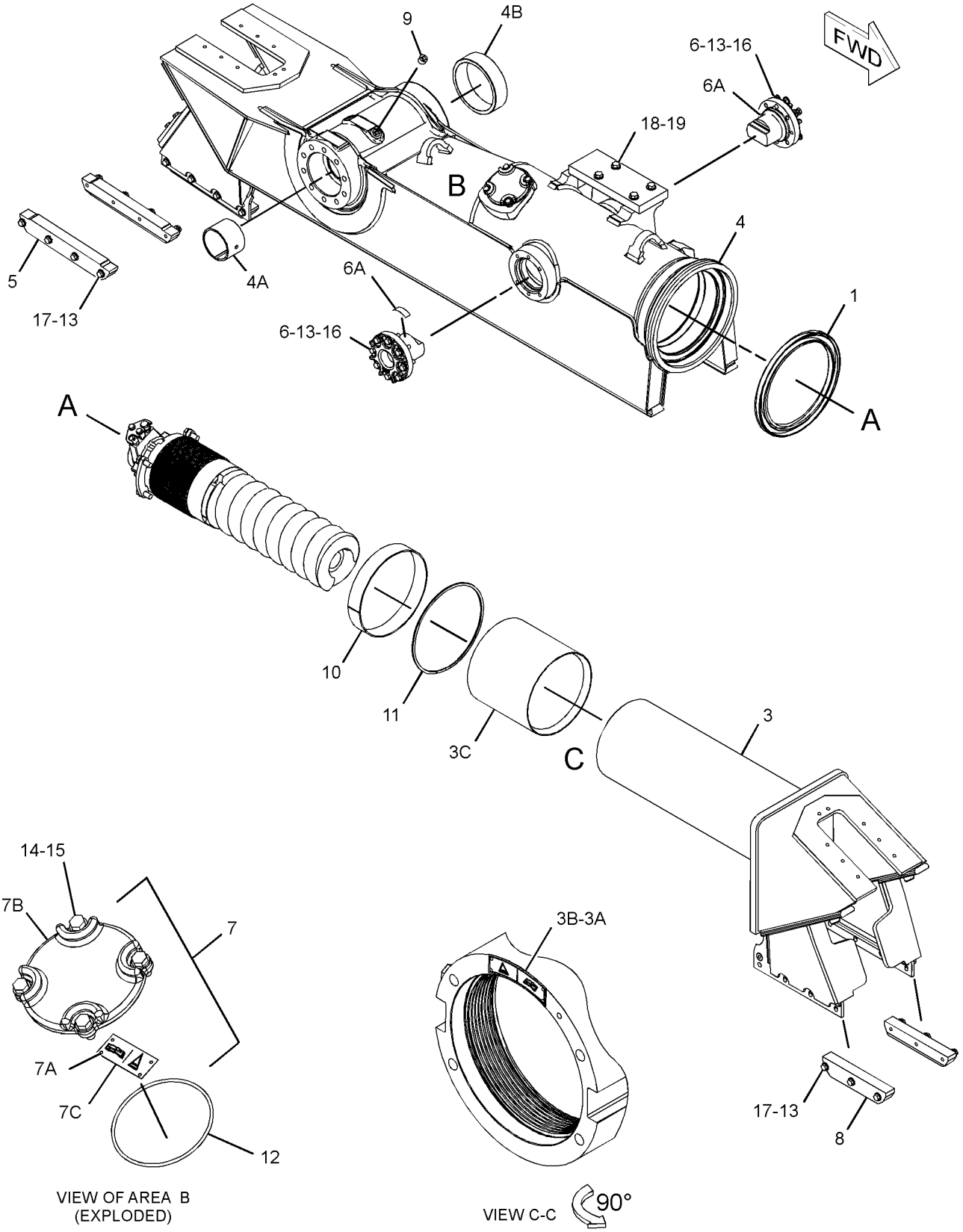

GRAPHIC #1 **<END>** g03580676

450-7090 FRAME GP-TELESCOPING RECOIL—HEAVY-DUTY, RH

S/N: SSS1-UP

PART OF 457-6209, 457-6210, 457-7966 UNDERCARRIAGE AR

AN ATTACHMENT

SMCS-4151 **i05634329**

NOTE	REF NO	GRAPHIC REF	PART NUMBER	QTY	PART NAME 1 2 3 4 5 6 (PRODUCT LEVEL)	SEE PAGE
	1	1	**9X-4582**	1	SEAL AS	
	3	1	**224-4120**	1	FRAME AS (FRONT)	
	3A	1	**4B-4158**	4	SCREW-DRIVE (NO 4X0.25-IN)	
	3B	1	**254-1686**	1	PLATE-WARNING (RECOIL SPRING)	
	3C	1	**3T-1162**	1	BUSHING	
	4	1	**335-2350**	1	FRAME AS (RH)	
	4A	1	**221-3197**	1	BUSHING	
	4B	1	**221-3200**	1	BUSHING	
	5	1	**160-4103**	2	STRIP	
	6	1	**268-9709**	2	GUIDE AS	
					(EACH INCLUDES)	
	6A	1	**241-3720**	1	FILM-WARNING (RECOIL SPRING)	
	7	1	**268-9710**	1	COVER AS	
	7A	1	**7B-3028**	4	SCREW-DRIVE (NO 4X 3/16-IN)	
	7B	1	**8E-1211**	1	COVER	
	7C	1	**253-1346**	1	PLATE-WARNING (HIGH PRESSURE CYLINDER)	
	8	1	**189-3032**	2	STRIP	
	9	1	**1B-5174**	1	PLUG-PIPE	
	10	1	**3T-2077**	1	BEARING	
	11	1	**3W-1852**	1	RING-RETAINING	
	12	1	**5H-6734**	1	SEAL-O-RING	
	13	1	**8T-4223**	28	WASHER-HARD (13.5X25.5X3-MM THK)	
	14	1	**8T-4121**	4	WASHER-HARD (11X21X2.5-MM THK)	
M	15	1	**8T-4136**	4	BOLT (M10X1.5X25-MM)	
M	16	1	**8T-4184**	12	BOLT (M12X1.75X45-MM)	
M	17	1	**8T-4139**	16	BOLT (M12X1.75X30-MM)	
M	18	1	**7X-2572**	4	BOLT (M24X3X35-MM)	
	19	1	**8T-4167**	6	WASHER-HARD (26X44X4-MM THK)	

PARTS SHOWN IN GRAPHIC(S) WITHOUT A REFERENCE NUMBER ARE NOT SERVICED SEPARATELY

M - METRIC PART

450-7090 **FRAME GP-TELESCOPING RECOIL (*contd.*)** **i05634329**

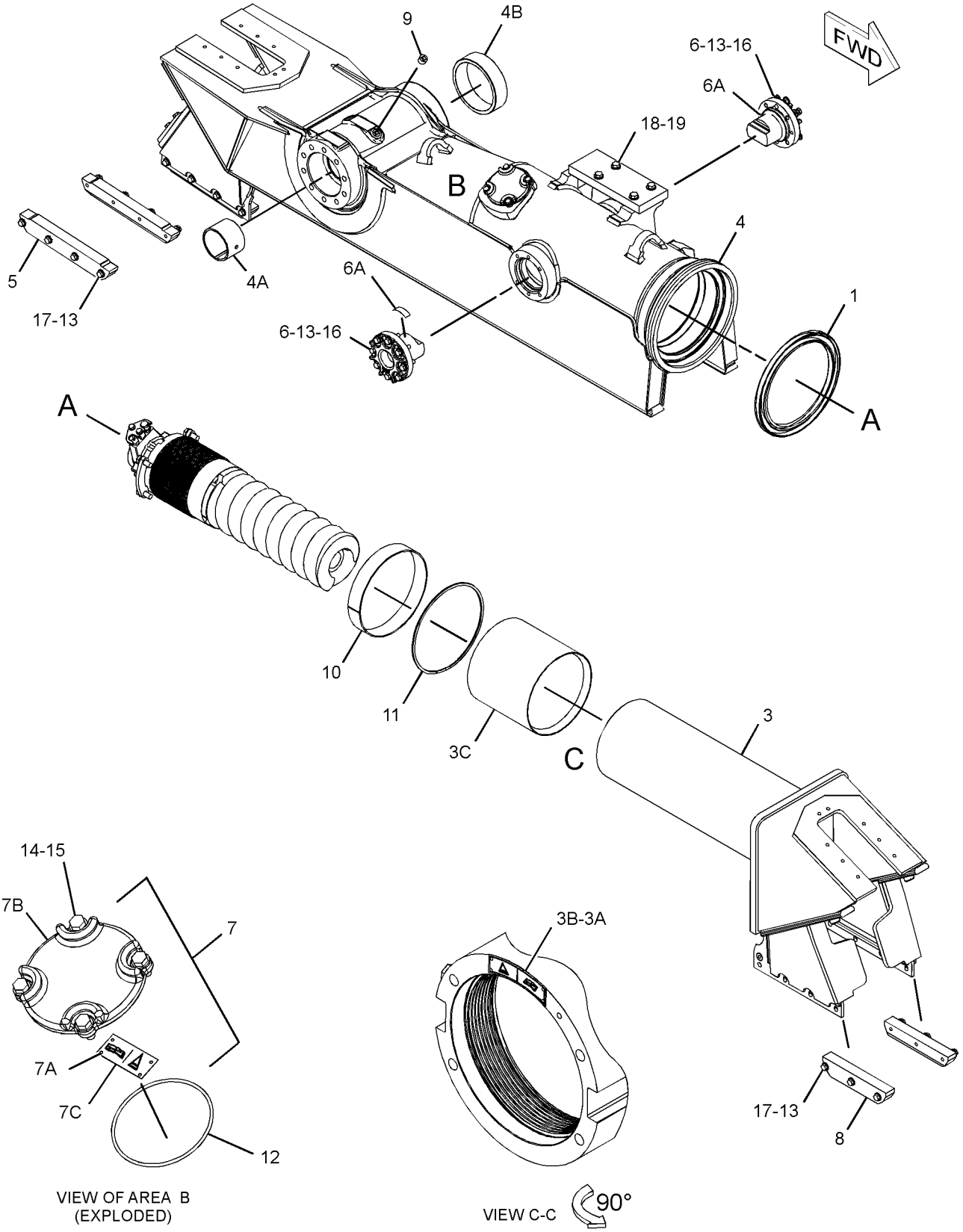

GRAPHIC #1 **<END>** g03580676

450-7093 FRAME GP-TELESCOPING RECOIL—HEAVY-DUTY, LH

S/N: TTT1-UP

PART OF 457-6211, 457-7967, 457-7968 UNDERCARRIAGE AR

AN ATTACHMENT

SMCS-4151 **i05641149**

NOTE	REF NO	GRAPHIC REF	PART NUMBER	QTY	PART NAME 1 2 3 4 5 6 (PRODUCT LEVEL)	SEE PAGE
	1	1	**9X-4582**	1	SEAL AS	
	2	1	**189-3032**	2	STRIP	
	3	1	**268-9709**	2	GUIDE AS	
					(EACH INCLUDES)	
	3A	1	**241-3720**	1	FILM-WARNING (RECOIL SPRING)	
	4	1	**279-2570**	2	STRIP-WEAR	
	5	1	**364-9652**	1	COVER AS	
	5A	1	**7B-3028**	4	SCREW-DRIVE (NO 4X 3/16-IN)	
	5B	1	**253-1346**	1	PLATE-WARNING (HIGH PRESSURE CYLINDER)	
	6	1	**389-2099**	1	FRAME AS (LH)	
	6A	1	**221-3197**	1	BUSHING	
	6B	1	**221-3200**	1	BUSHING	
Y	7	1	*450-7176*	1	FRAME GP-TELESCOPING RECOIL (LH)	424
	8	1	**1B-5174**	1	PLUG-PIPE	
	9	1	**3T-2077**	1	BEARING	
	10	1	**3W-1852**	1	RING-RETAINING	
	11	1	**5H-6734**	1	SEAL-O-RING	
	12	1	**8T-4121**	4	WASHER-HARD (11X21X2.5-MM THK)	
M	13	1	**8T-4136**	4	BOLT (M10X1.5X25-MM)	
M	14	1	**8T-4139**	14	BOLT (M12X1.75X30-MM)	
M	15	1	**8T-4184**	12	BOLT (M12X1.75X45-MM)	
	16	1	**8T-4223**	26	WASHER-HARD (13.5X25.5X3-MM THK)	

M - METRIC PART
Y - SEPARATE ILLUSTRATION

450-7093 **FRAME GP-TELESCOPING RECOIL (*contd.*)** **i05641149**

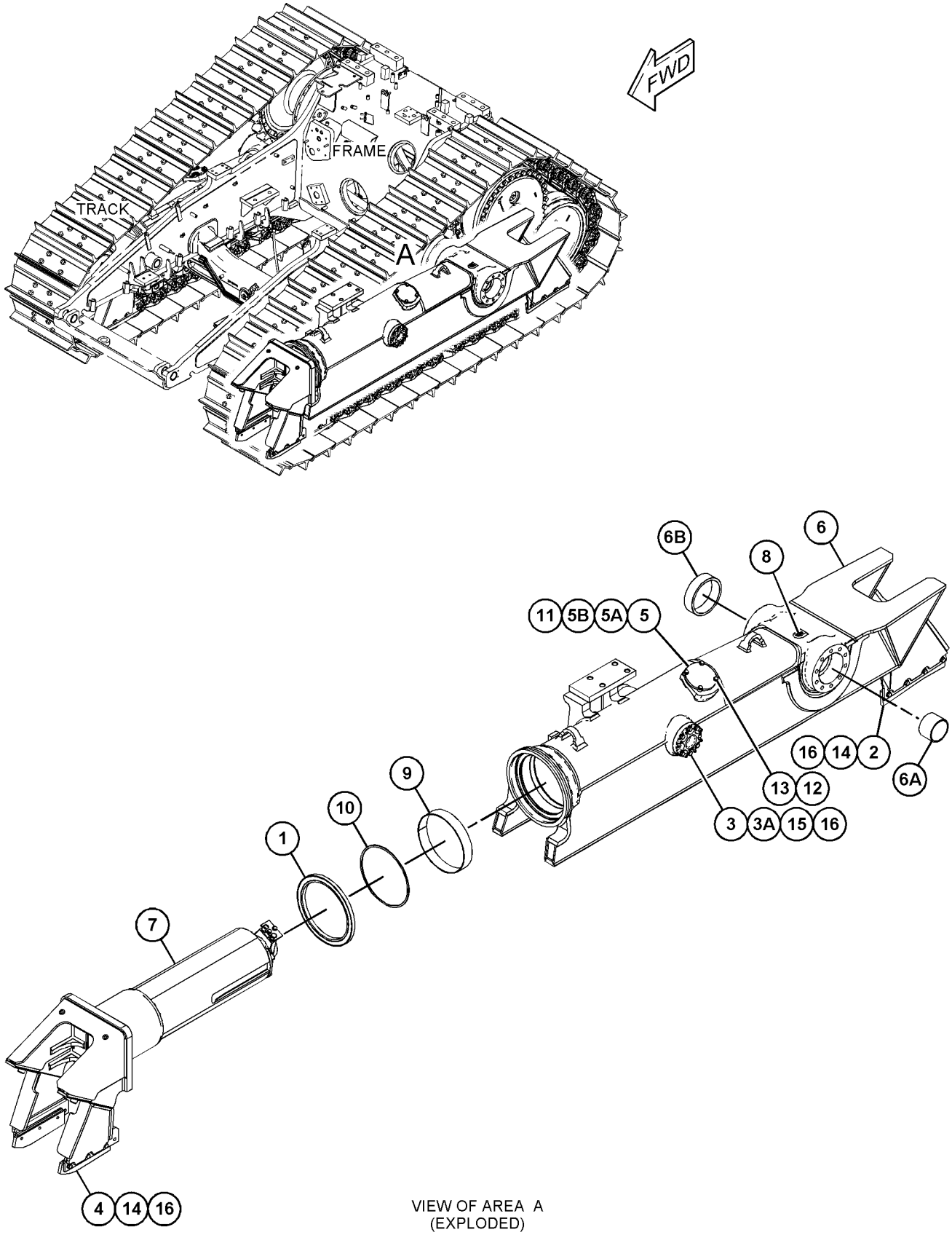

VIEW OF AREA A
(EXPLODED)

GRAPHIC #1

<END>

g03582996

450-7094 FRAME GP-TELESCOPING RECOIL—HEAVY-DUTY, RH

S/N: TTT1-UP

PART OF 457-6211, 457-7967, 457-7968 UNDERCARRIAGE AR

AN ATTACHMENT

SMCS-4151 **i06222622**

NOTE	REF NO	GRAPHIC REF	PART NUMBER	QTY	PART NAME 1 2 3 4 5 6 (PRODUCT LEVEL)	SEE PAGE
	1	1	**9X-4582**	1	SEAL AS	
	2	1	**189-3032**	2	STRIP	
	3	1	**268-9709**	2	GUIDE AS	
					(EACH INCLUDES)	
	3A	1	**241-3720**	1	FILM-WARNING (RECOIL SPRING)	
	4	1	**279-2570**	2	STRIP-WEAR	
	5	1	**364-9652**	1	COVER AS	
	5A	1	**7B-3028**	4	SCREW-DRIVE (NO 4X 3/16-IN)	
	5B	1	**253-1346**	1	PLATE-WARNING (HIGH PRESSURE CYLINDER)	
	6	1	**389-2098**	1	FRAME AS (RH)	
	6A	1	**221-3197**	1	BUSHING	
	6B	1	**221-3200**	1	BUSHING	
Y	7	1	*450-7177*	1	FRAME GP-TELESCOPING RECOIL (RH)	425
	8	1	**1B-5174**	1	PLUG-PIPE	
	9	1	**3T-2077**	1	BEARING	
	10	1	**3W-1852**	1	RING-RETAINING	
	11	1	**5H-6734**	1	SEAL-O-RING	
	12	1	**8T-4121**	4	WASHER-HARD (11X21X2.5-MM THK)	
M	13	1	**8T-4136**	4	BOLT (M10X1.5X25-MM)	
M	14	1	**8T-4139**	14	BOLT (M12X1.75X30-MM)	
M	15	1	**8T-4184**	12	BOLT (M12X1.75X45-MM)	
	16	1	**8T-4223**	26	WASHER-HARD (13.5X25.5X3-MM THK)	

M - METRIC PART
Y - SEPARATE ILLUSTRATION

450-7094 **FRAME GP-TELESCOPING RECOIL (*contd.*)** **i06222622**

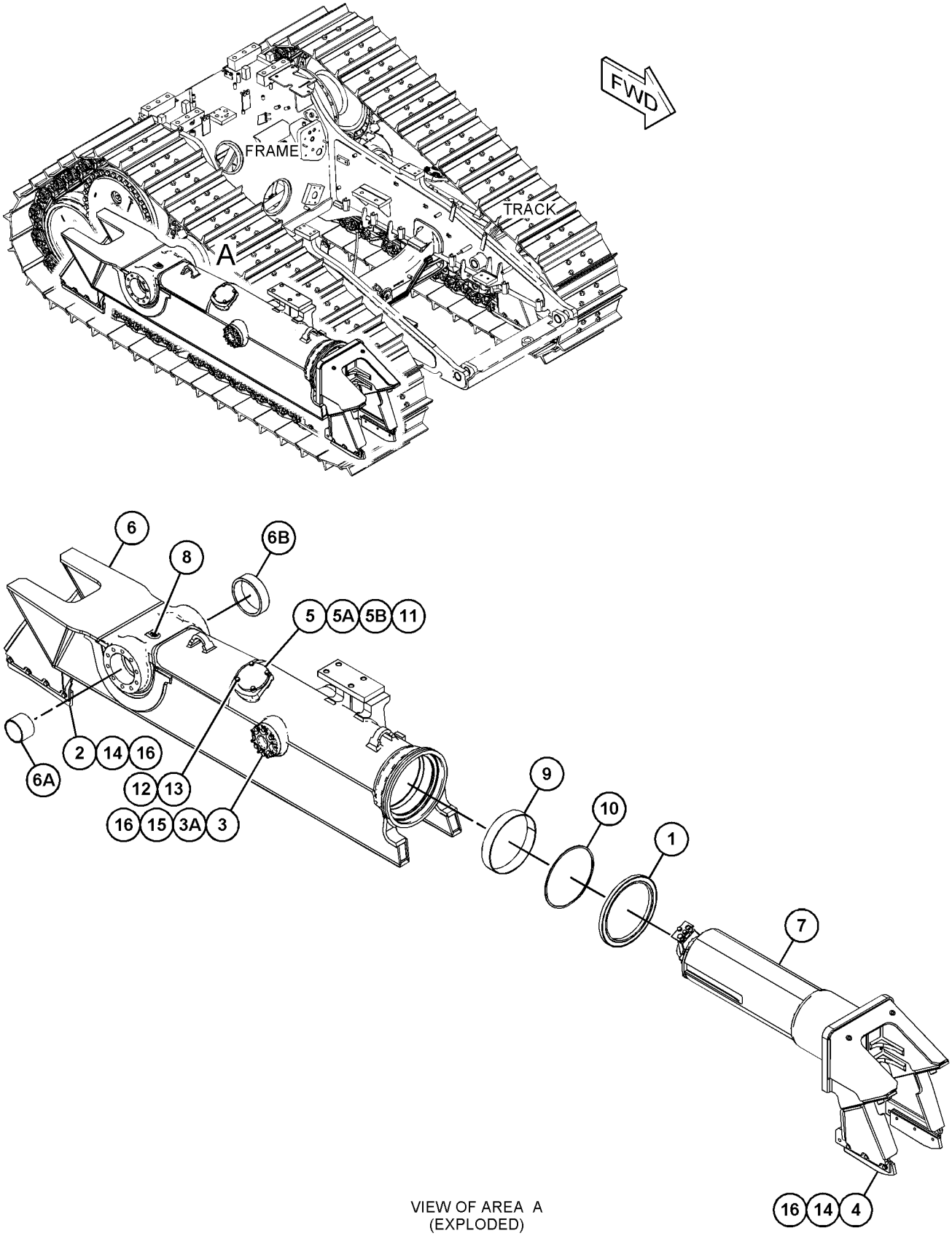

VIEW OF AREA A
(EXPLODED)

GRAPHIC #1

<END>

g03583023

450-7176 FRAME GP-TELESCOPING RECOIL—LH

S/N: TTT1-UP

PART OF 450-7093, 456-5993 FRAME GP-TELESCOPING RECOIL

AN ATTACHMENT

SMCS-4151 **i05641177**

NOTE	REF NO	GRAPHIC REF	PART NUMBER	QTY	PART NAME 1 2 3 4 5 6 (PRODUCT LEVEL)	SEE PAGE
	1	1	**315-7785**	1	FRAME AS (FRONT)	
	1A	1	**3T-1162**	1	BUSHING	
	1B	1	**4B-4158**	4	SCREW-DRIVE (NO 4X0.25-IN)	
	1C	1	**254-1686**	1	PLATE-WARNING (RECOIL SPRING)	
Y	2	1	*315-7786*	1	TRACK ADJUSTER & RECOIL GP	495

Y - SEPARATE ILLUSTRATION

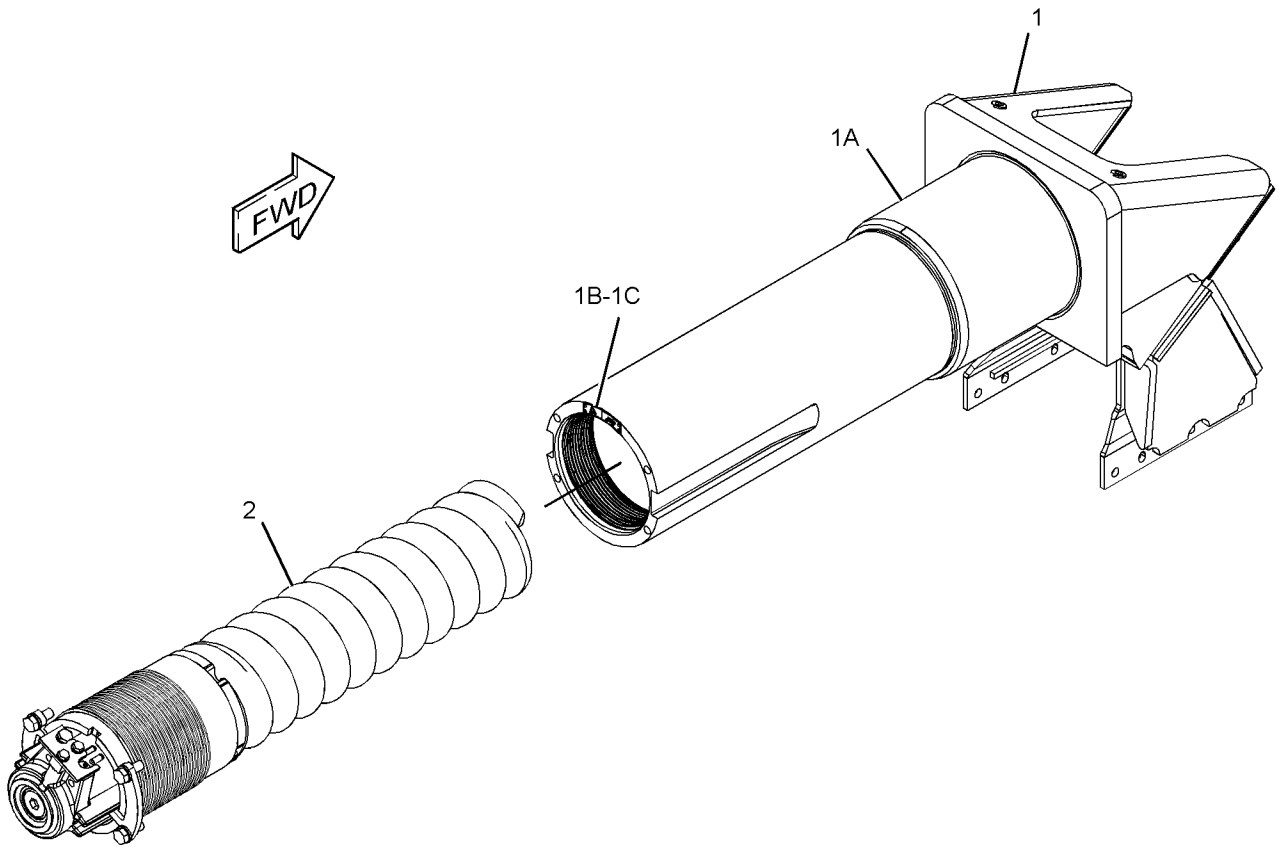

GRAPHIC #1 **<END>** g03583691

450-7177 FRAME GP-TELESCOPING RECOIL–RH

S/N: TTT1-UP

PART OF 450-7094, 456-5994 FRAME GP-TELESCOPING RECOIL

AN ATTACHMENT

SMCS-4151 **i06222611**

NOTE	REF NO	GRAPHIC REF	PART NUMBER	QTY	PART NAME 1 2 3 4 5 6 (PRODUCT LEVEL)	SEE PAGE
	1	1	**315-7785**	1	FRAME AS (FRONT)	
	1A	1	**3T-1162**	1	BUSHING	
	1B	1	**4B-4158**	4	SCREW-DRIVE (NO 4X0.25-IN)	
	1C	1	**254-1686**	1	PLATE-WARNING (RECOIL SPRING)	
Y	2	1	*315-7786*	1	TRACK ADJUSTER & RECOIL GP	495

Y - SEPARATE ILLUSTRATION

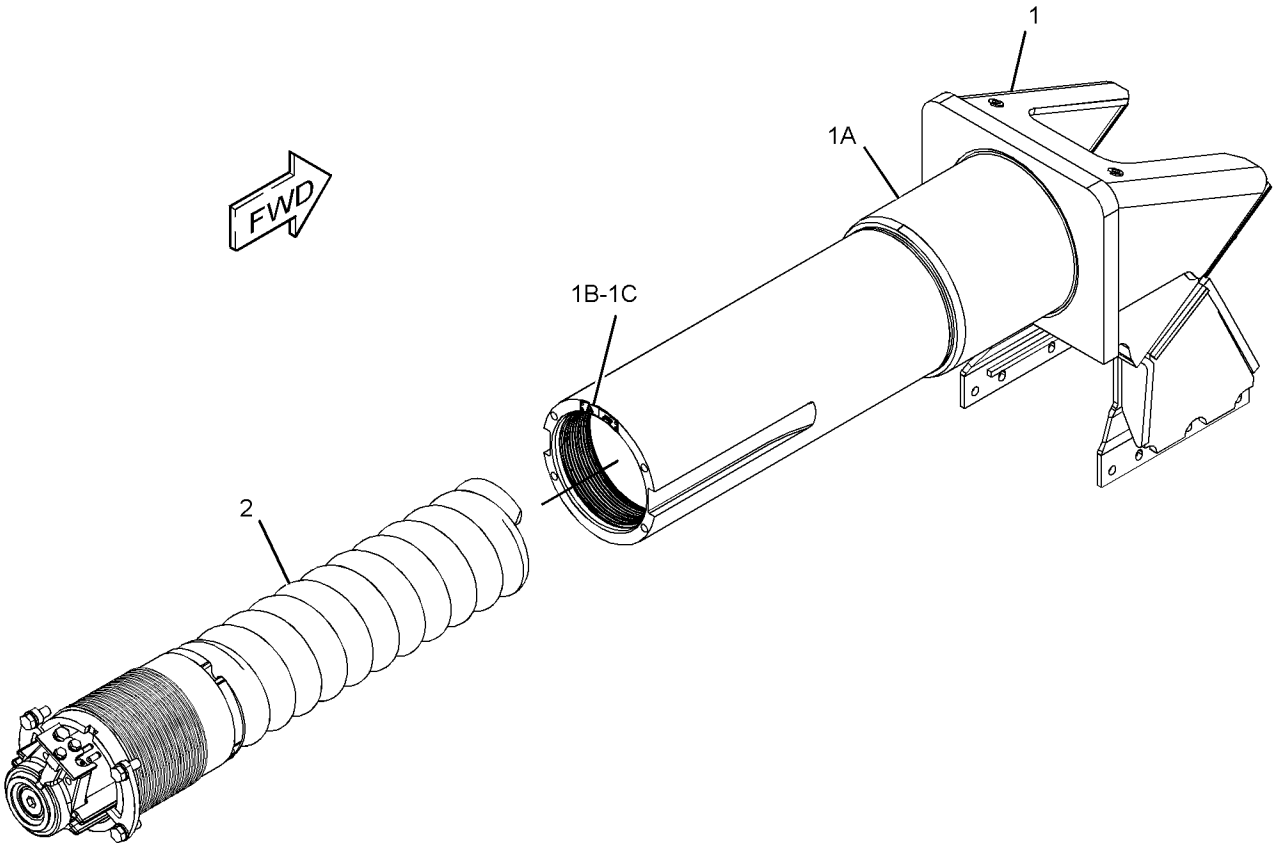

GRAPHIC #1 **<END>** g03583691

450-7178 FRAME GP-TELESCOPING RECOIL—SYSTEMONE, LH

S/N: TTT1-UP

PART OF 457-7969, 457-7970 UNDERCARRIAGE AR

AN ATTACHMENT

SMCS-4151 **i05641523**

NOTE	REF NO	GRAPHIC REF	PART NUMBER	QTY	PART NAME 1 2 3 4 5 6 (PRODUCT LEVEL)	SEE PAGE
	1	1	**9X-4582**	1	SEAL AS	
	2	1	**260-7733**	2	STRIP	
	3	1	**261-3257**	2	STRIP	
	4	1	**268-9709**	2	GUIDE AS	
					(EACH INCLUDES)	
	4A	1	**241-3720**	1	FILM-WARNING (RECOIL SPRING)	
	5	1	**282-4017**	4	PLATE-SCRAPER	
	6	1	**364-9652**	1	COVER AS	
	6A	1	**7B-3028**	4	SCREW-DRIVE (NO 4X 3/16-IN)	
	6B	1	**253-1346**	1	PLATE-WARNING (HIGH PRESSURE CYLINDER)	
	7	1	**389-2089**	1	FRAME AS (LH)	
	7A	1	**221-3197**	1	BUSHING	
	7B	1	**221-3200**	1	BUSHING	
Y	8	1	*450-7180*	1	FRAME GP-TELESCOPING RECOIL	430
	9	1	**1B-5174**	1	PLUG-PIPE	
	10	1	**3T-2077**	1	BEARING	
	11	1	**3W-1852**	1	RING-RETAINING	
	12	1	**5H-6734**	1	SEAL-O-RING	
	13	1	**5P-1076**	12	WASHER-HARD (13.5X30X4-MM THK)	
	14	1	**8T-4121**	4	WASHER-HARD (11X21X2.5-MM THK)	
M	15	1	**8T-4136**	4	BOLT (M10X1.5X25-MM)	
M	16	1	**8T-4184**	12	BOLT (M12X1.75X45-MM)	
M	17	1	**8T-4194**	12	BOLT (M12X1.75X50-MM)	
	18	1	**8T-4223**	26	WASHER-HARD (13.5X25.5X3-MM THK)	
M	19	1	**8T-4956**	14	BOLT (M12X1.75X35-MM)	

M - METRIC PART
Y - SEPARATE ILLUSTRATION

450-7178 **FRAME GP-TELESCOPING RECOIL (*contd.*)** **i05641523**

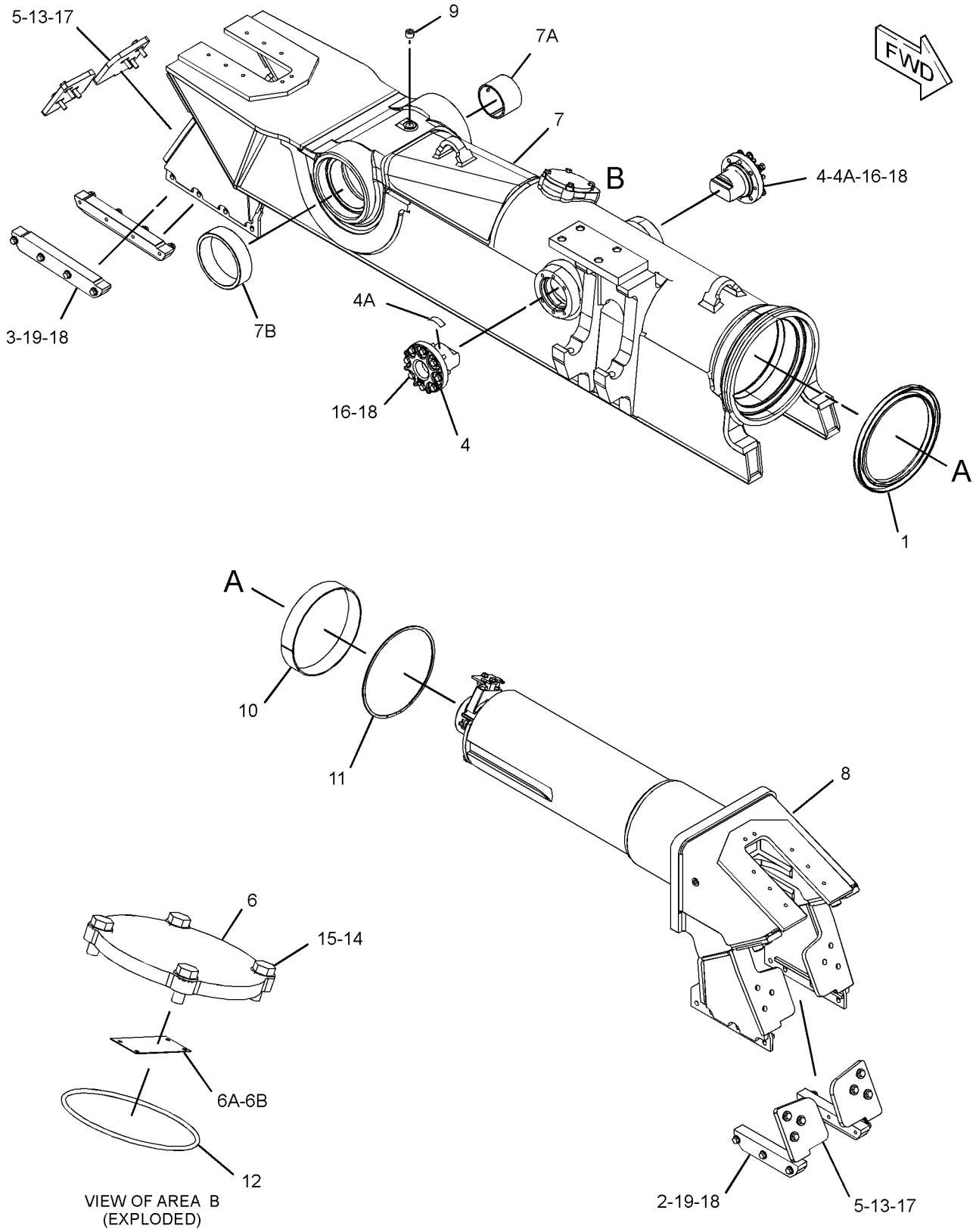

GRAPHIC #1 **<END>** g03583661

450-7179 FRAME GP-TELESCOPING RECOIL—SYSTEMONE, RH

S/N: TTT1-UP

PART OF 457-7969, 457-7970 UNDERCARRIAGE AR

AN ATTACHMENT

SMCS-4151 **i05641539**

NOTE	REF NO	GRAPHIC REF	PART NUMBER	QTY	PART NAME 1 2 3 4 5 6 (PRODUCT LEVEL)	SEE PAGE
	1	1	**9X-4582**	1	SEAL AS	
	2	1	**260-7733**	2	STRIP	
	3	1	**261-3257**	2	STRIP	
	4	1	**268-9709**	2	GUIDE AS	
					(EACH INCLUDES)	
	4A	1	**241-3720**	1	FILM-WARNING (RECOIL SPRING)	
	5	1	**282-4017**	4	PLATE-SCRAPER	
	6	1	**364-9652**	1	COVER AS	
	6A	1	**7B-3028**	4	SCREW-DRIVE (NO 4X 3/16-IN)	
	6B	1	**253-1346**	1	PLATE-WARNING (HIGH PRESSURE CYLINDER)	
	7	1	**389-2088**	1	FRAME AS (RH)	
	7A	1	**221-3197**	1	BUSHING	
	7B	1	**221-3200**	1	BUSHING	
Y	8	1	*450-7181*	1	FRAME GP-TRACK ROLLER (FRONT, RH)	455
	9	1	**1B-5174**	1	PLUG-PIPE	
	10	1	**3T-2077**	1	BEARING	
	11	1	**3W-1852**	1	RING-RETAINING	
	12	1	**5H-6734**	1	SEAL-O-RING	
	13	1	**5P-1076**	12	WASHER-HARD (13.5X30X4-MM THK)	
	14	1	**8T-4121**	4	WASHER-HARD (11X21X2.5-MM THK)	
M	15	1	**8T-4136**	4	BOLT (M10X1.5X25-MM)	
M	16	1	**8T-4184**	12	BOLT (M12X1.75X45-MM)	
M	17	1	**8T-4194**	12	BOLT (M12X1.75X50-MM)	
	18	1	**8T-4223**	26	WASHER-HARD (13.5X25.5X3-MM THK)	
M	19	1	**8T-4956**	14	BOLT (M12X1.75X35-MM)	

M - METRIC PART
Y - SEPARATE ILLUSTRATION

450-7179 **FRAME GP-TELESCOPING RECOIL (*contd.*)** **i05641539**

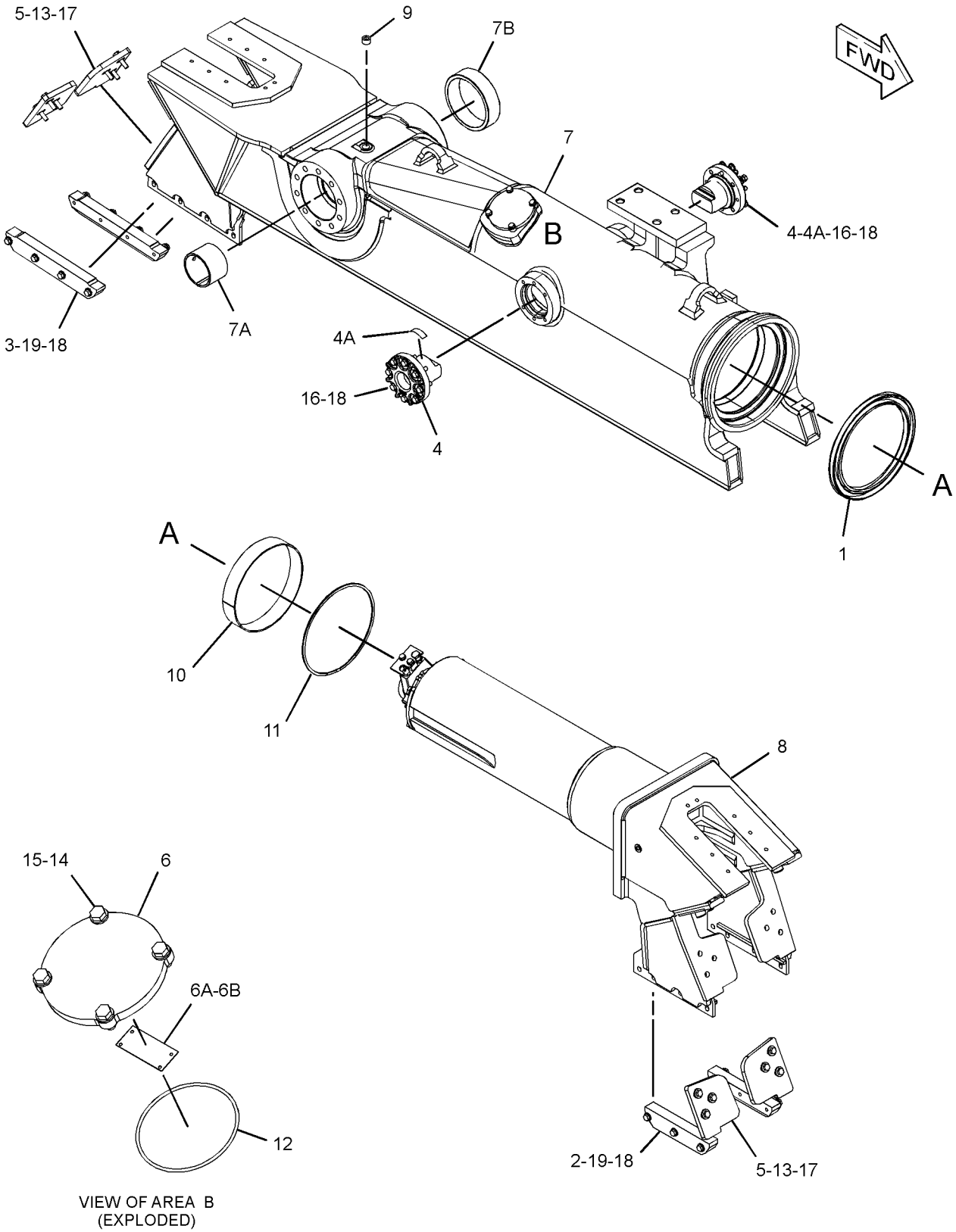

VIEW OF AREA B
(EXPLODED)

GRAPHIC #1 **<END>** g03583210

450-7180 FRAME GP-TELESCOPING RECOIL—LH

S/N: TTT1-UP

PART OF 450-7178 FRAME GP-TELESCOPING RECOIL

AN ATTACHMENT

SMCS-4151 **i05641569**

NOTE	REF NO	GRAPHIC REF	PART NUMBER	QTY	PART NAME 1 2 3 4 5 6 (PRODUCT LEVEL)	SEE PAGE
	1	1	**315-7783**	1	FRAME GP-TRACK ROLLER (FRONT)	
	1A	1	**3T-1162**	1	BUSHING	
	1B	1	**4B-4158**	4	SCREW-DRIVE (NO 4X0.25-IN)	
	1C	1	**254-1686**	1	PLATE-WARNING (RECOIL SPRING)	
Y	2	1	*315-7786*	1	TRACK ADJUSTER & RECOIL GP	495

Y - SEPARATE ILLUSTRATION

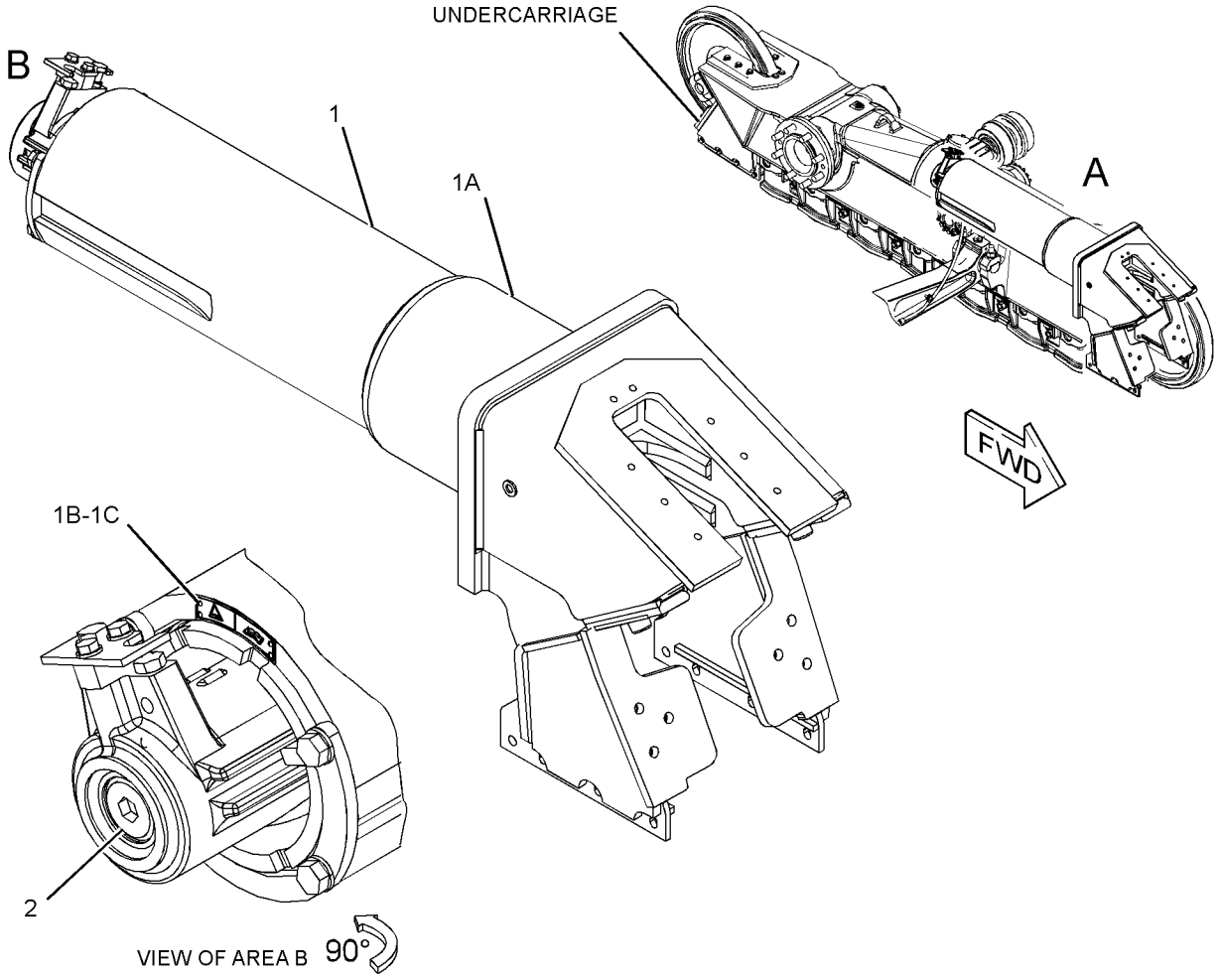

GRAPHIC #1 **<END>** g03584737

450-7182 FRAME GP-TELESCOPING RECOIL—SYSTEMONE, RH

S/N: PPP1-UP

PART OF 457-7971, 457-7975 UNDERCARRIAGE AR

AN ATTACHMENT

SMCS-4151 **i06143638**

NOTE	REF NO	GRAPHIC REF	PART NUMBER	QTY	PART NAME 1 2 3 4 5 6 (PRODUCT LEVEL)	SEE PAGE
	1	1	**9X-4582**	1	SEAL AS	
	2	1	**261-3257**	4	STRIP	
	3	1	**268-9709**	2	GUIDE AS	
					(EACH INCLUDES)	
		1	**241-3720**	1	FILM-WARNING (RECOIL SPRING)	
	4	1	**282-4017**	4	PLATE-SCRAPER	
	5	1	**357-3538**	1	FRAME AS (RH)	
	5A	1	**221-3197**	1	BUSHING	
	5B	1	**221-3200**	1	BUSHING	
	6	1	**364-9652**	1	COVER AS	
		1	**7B-3028**	4	SCREW-DRIVE (NO 4X 3/16-IN)	
		1	**253-1346**	1	PLATE-WARNING (HIGH PRESSURE CYLINDER)	
Y	7	1	*450-7184*	1	FRAME GP-TELESCOPING RECOIL (RH)	435
	8	1	**1B-5174**	2	PLUG-PIPE	
	9	1	**3T-2077**	1	BEARING	
	10	1	**3W-1852**	1	RING-RETAINING	
	11	1	**5H-6734**	1	SEAL-O-RING	
	12	1	**5P-1076**	12	WASHER-HARD (13.5X30X4-MM THK)	
	13	1	**8T-4121**	4	WASHER-HARD (11X21X2.5-MM THK)	
M	14	1	**8T-4136**	4	BOLT (M10X1.5X25-MM)	
M	15	1	**8T-4184**	12	BOLT (M12X1.75X45-MM)	
M	16	1	**8T-4194**	12	BOLT (M12X1.75X50-MM)	
	17	1	**8T-4223**	28	WASHER-HARD (13.5X25.5X3-MM THK)	
M	18	1	**8T-4956**	16	BOLT (M12X1.75X35-MM)	

M - METRIC PART
Y - SEPARATE ILLUSTRATION

450-7182 **FRAME GP-TELESCOPING RECOIL (*contd.*)** **i06143638**

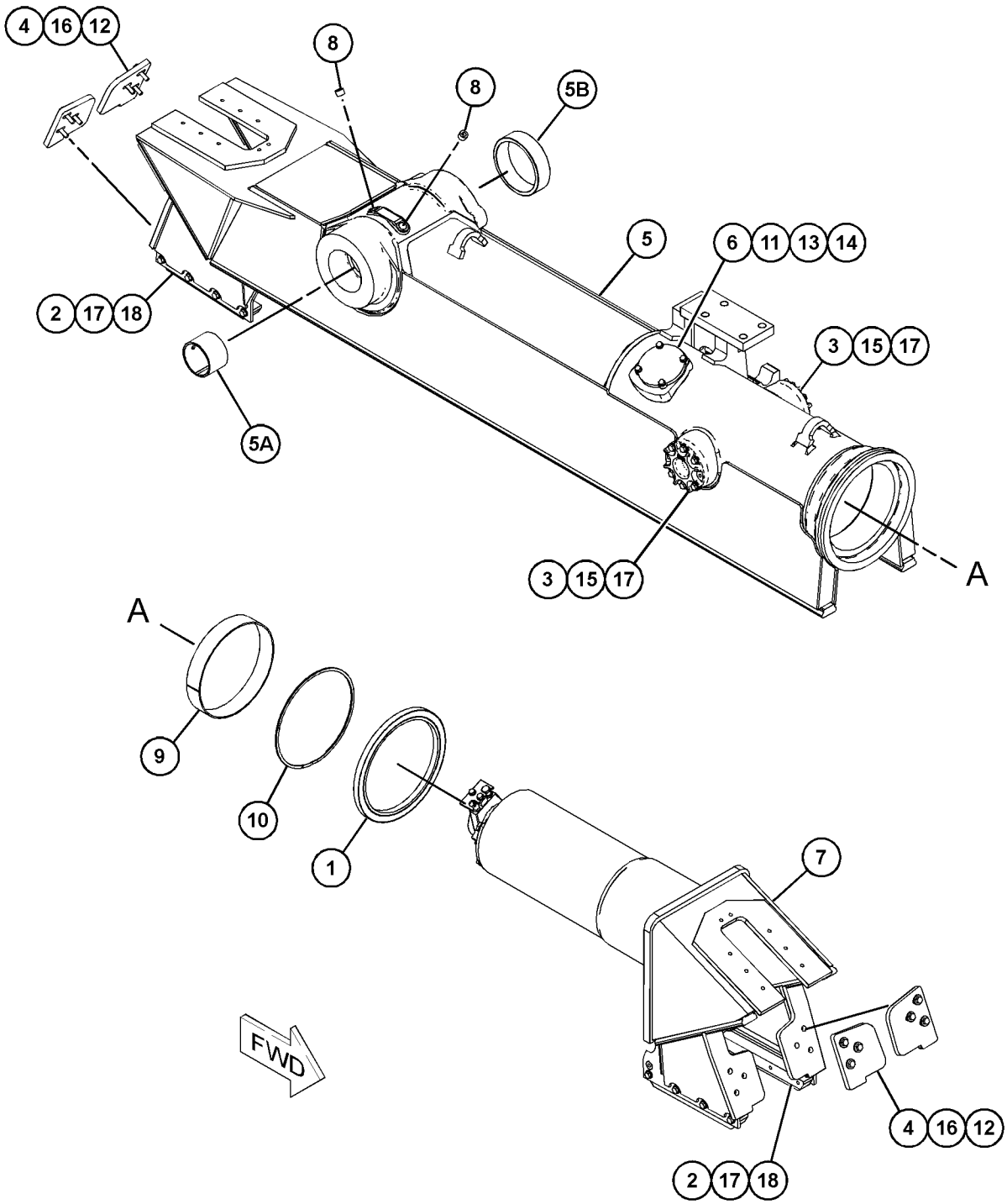

GRAPHIC #1 **<END>** g03828765

450-7183 FRAME GP-TELESCOPING RECOIL—LH

S/N: PPP1-UP

PART OF 457-7971, 457-7975 UNDERCARRIAGE AR

AN ATTACHMENT

SMCS-4151 **i06143649**

NOTE	REF NO	GRAPHIC REF	PART NUMBER	QTY	PART NAME 1 2 3 4 5 6 (PRODUCT LEVEL)	SEE PAGE
	1	1	**9X-4582**	1	SEAL AS	
	2	1	**261-3257**	4	STRIP	
	3	1	**268-9709**	2	GUIDE AS	
					(EACH INCLUDES)	
		1	**241-3720**	1	FILM-WARNING (RECOIL SPRING)	
	4	1	**282-4017**	4	PLATE-SCRAPER	
	5	1	**357-3539**	1	FRAME AS (LH)	
	5A	1	**221-3197**	1	BUSHING	
	5B	1	**221-3200**	1	BUSHING	
	6	1	**364-9652**	1	COVER AS	
		1	**7B-3028**	4	SCREW-DRIVE (NO 4X 3/16-IN)	
		1	**253-1346**	1	PLATE-WARNING (HIGH PRESSURE CYLINDER)	
Y	7	1	*450-7185*	1	FRAME GP-TELESCOPING RECOIL (LH)	436
	8	1	**1B-5174**	2	PLUG-PIPE	
	9	1	**3T-2077**	1	BEARING	
	10	1	**3W-1852**	1	RING-RETAINING	
	11	1	**5H-6734**	1	SEAL-O-RING	
	12	1	**5P-1076**	12	WASHER-HARD (13.5X30X4-MM THK)	
	13	1	**8T-4121**	4	WASHER-HARD (11X21X2.5-MM THK)	
M	14	1	**8T-4136**	4	BOLT (M10X1.5X25-MM)	
M	15	1	**8T-4184**	12	BOLT (M12X1.75X45-MM)	
M	16	1	**8T-4194**	12	BOLT (M12X1.75X50-MM)	
	17	1	**8T-4223**	28	WASHER-HARD (13.5X25.5X3-MM THK)	
M	18	1	**8T-4956**	16	BOLT (M12X1.75X35-MM)	

M - METRIC PART
Y - SEPARATE ILLUSTRATION

450-7183 **FRAME GP-TELESCOPING RECOIL (*contd.*)** **i06143649**

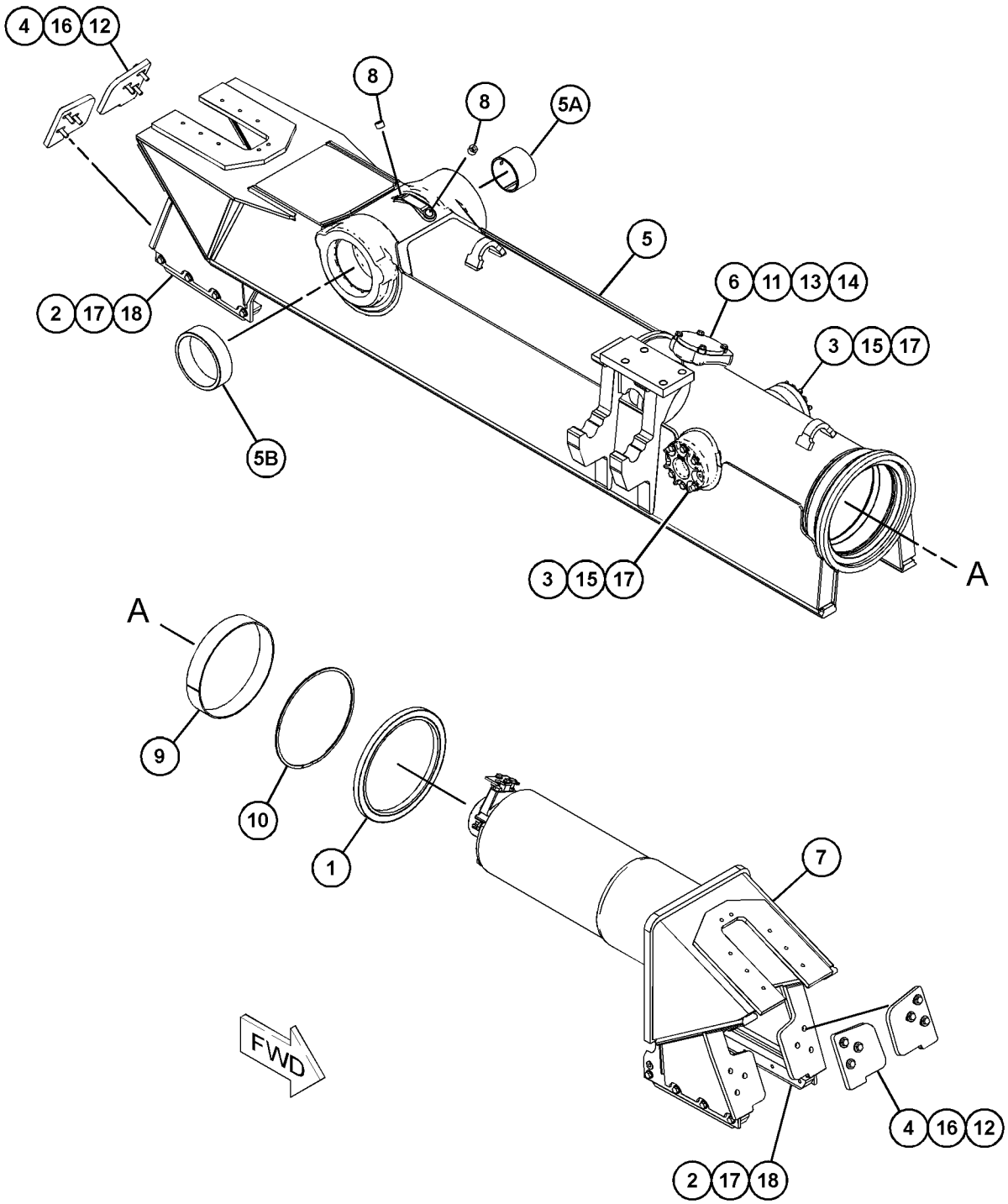

GRAPHIC #1 **<END>** g03828696

450-7184 FRAME GP-TELESCOPING RECOIL–RH

S/N: PPP1-UP

PART OF 450-7182 FRAME GP-TELESCOPING RECOIL

AN ATTACHMENT

SMCS-4151 **i06143641**

NOTE	REF NO	GRAPHIC REF	PART NUMBER	QTY	PART NAME 1 2 3 4 5 6 (PRODUCT LEVEL)	SEE PAGE
Y	1	1	*223-0659*	1	TRACK ADJUSTER & RECOIL GP	493
	2	1	**244-6113**	1	FRAME GP-TRACK ROLLER (FRONT)	
	2A	1	**3T-1162**	1	BUSHING	
		1	**4B-4158**	4	SCREW-DRIVE (NO 4X0.25-IN)	
		1	**254-1686**	1	PLATE-WARNING (RECOIL SPRING)	

Y - SEPARATE ILLUSTRATION

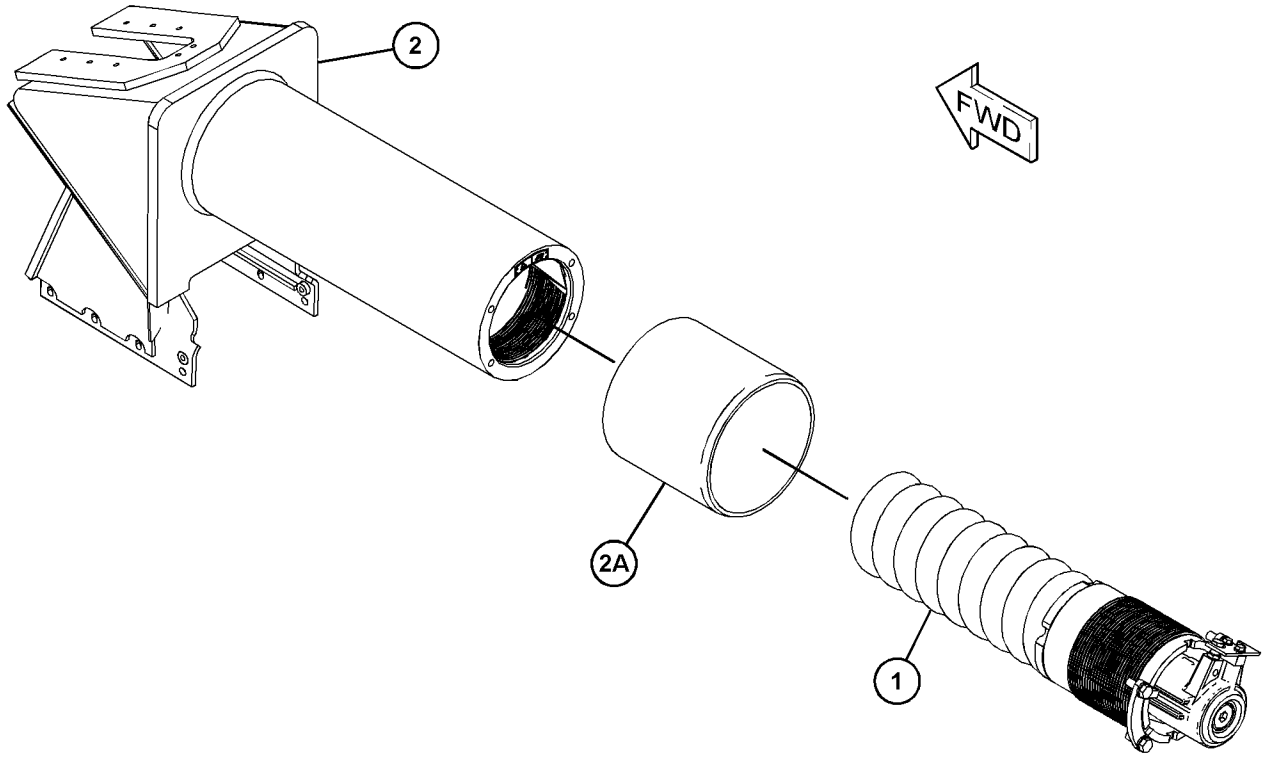

GRAPHIC #1 **<END>** g03827574

450-7185 FRAME GP-TELESCOPING RECOIL—LH

S/N: PPP1-UP

PART OF 450-7183 FRAME GP-TELESCOPING RECOIL

AN ATTACHMENT

SMCS-4151 **i06143650**

NOTE	REF NO	GRAPHIC REF	PART NUMBER	QTY	PART NAME 1 2 3 4 5 6 (PRODUCT LEVEL)	SEE PAGE
Y	1	1	*223-0659*	1	TRACK ADJUSTER & RECOIL GP	493
	2	1	**244-6113**	1	FRAME GP-TRACK ROLLER (FRONT)	
	2A	1	**3T-1162**	1	BUSHING	
		1	**4B-4158**	4	SCREW-DRIVE (NO 4X0.25-IN)	
		1	**254-1686**	1	PLATE-WARNING (RECOIL SPRING)	

Y - SEPARATE ILLUSTRATION

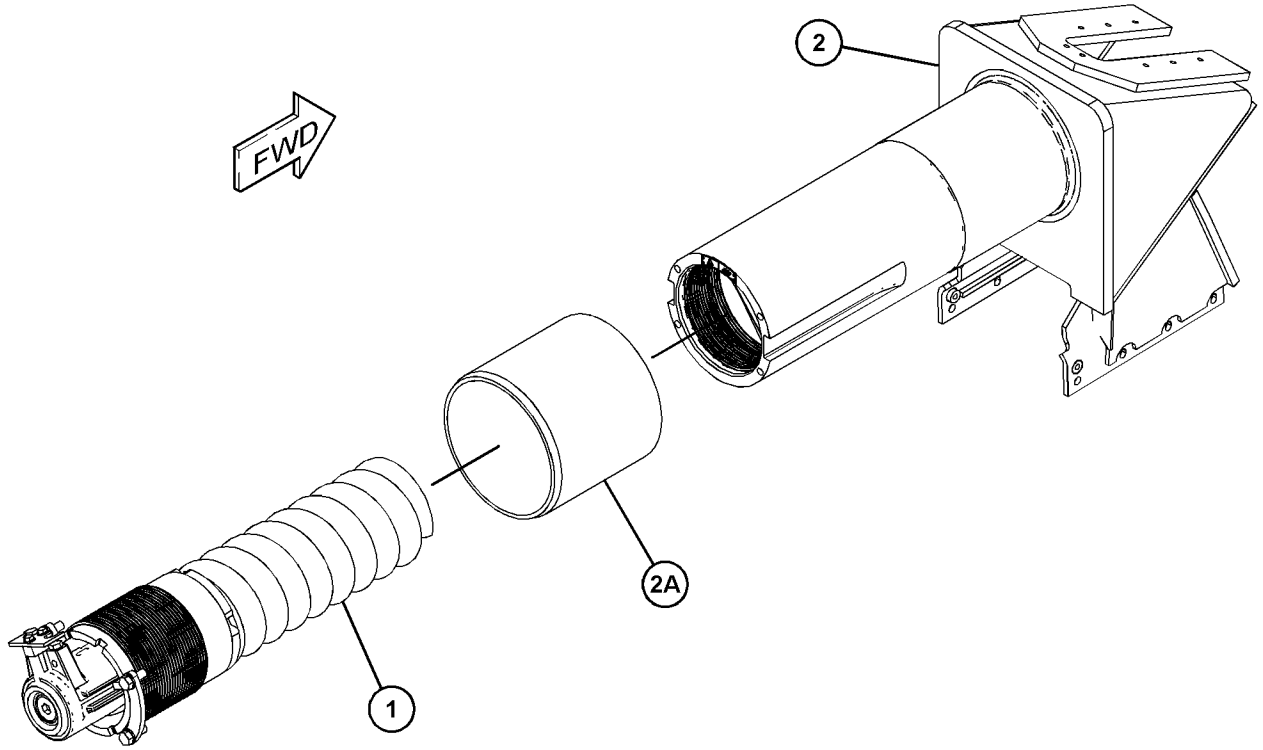

GRAPHIC #1 **<END>** g03827253

450-7186 FRAME GP-TELESCOPING RECOIL—HEAVY-DUTY, RH

S/N: PPP1-UP

PART OF 457-7972, 457-7973, 457-7974 UNDERCARRIAGE AR

AN ATTACHMENT

SMCS-4151 **i06231143**

NOTE	REF NO	GRAPHIC REF	PART NUMBER	QTY	PART NAME 1 2 3 4 5 6 (PRODUCT LEVEL)	SEE PAGE
	1	1	**9X-4582**	1	SEAL AS	
	2	1	**160-4103**	2	STRIP	
	3	1	**189-3032**	2	STRIP	
	4	1	**268-9709**	2	GUIDE AS	
					(EACH INCLUDES)	
		1	**241-3720**	1	FILM-WARNING (RECOIL SPRING)	
	5	1	**357-3554**	1	FRAME AS (RH)	
	5A	1	**221-3197**	1	BUSHING	
	5B	1	**221-3200**	1	BUSHING	
	6	1	**364-9652**	1	COVER AS	
		1	**7B-3028**	4	SCREW-DRIVE (NO 4X 3/16-IN)	
		1	**253-1346**	1	PLATE-WARNING (HIGH PRESSURE CYLINDER)	
Y	7	1	*450-7188*	1	FRAME GP-TELESCOPING RECOIL (RH)	441
	8	1	**1B-5174**	2	PLUG-PIPE	
	9	1	**3T-2077**	1	BEARING	
	10	1	**3W-1852**	1	RING-RETAINING	
	11	1	**5H-6734**	1	SEAL-O-RING	
	12	1	**8T-4121**	4	WASHER-HARD (11X21X2.5-MM THK)	
M	13	1	**8T-4136**	4	BOLT (M10X1.5X25-MM)	
M	14	1	**8T-4139**	16	BOLT (M12X1.75X30-MM)	
M	15	1	**8T-4184**	12	BOLT (M12X1.75X45-MM)	
	16	1	**8T-4223**	28	WASHER-HARD (13.5X25.5X3-MM THK)	

M - METRIC PART
Y - SEPARATE ILLUSTRATION

450-7186 **FRAME GP-TELESCOPING RECOIL (*contd.*)** **i06231143**

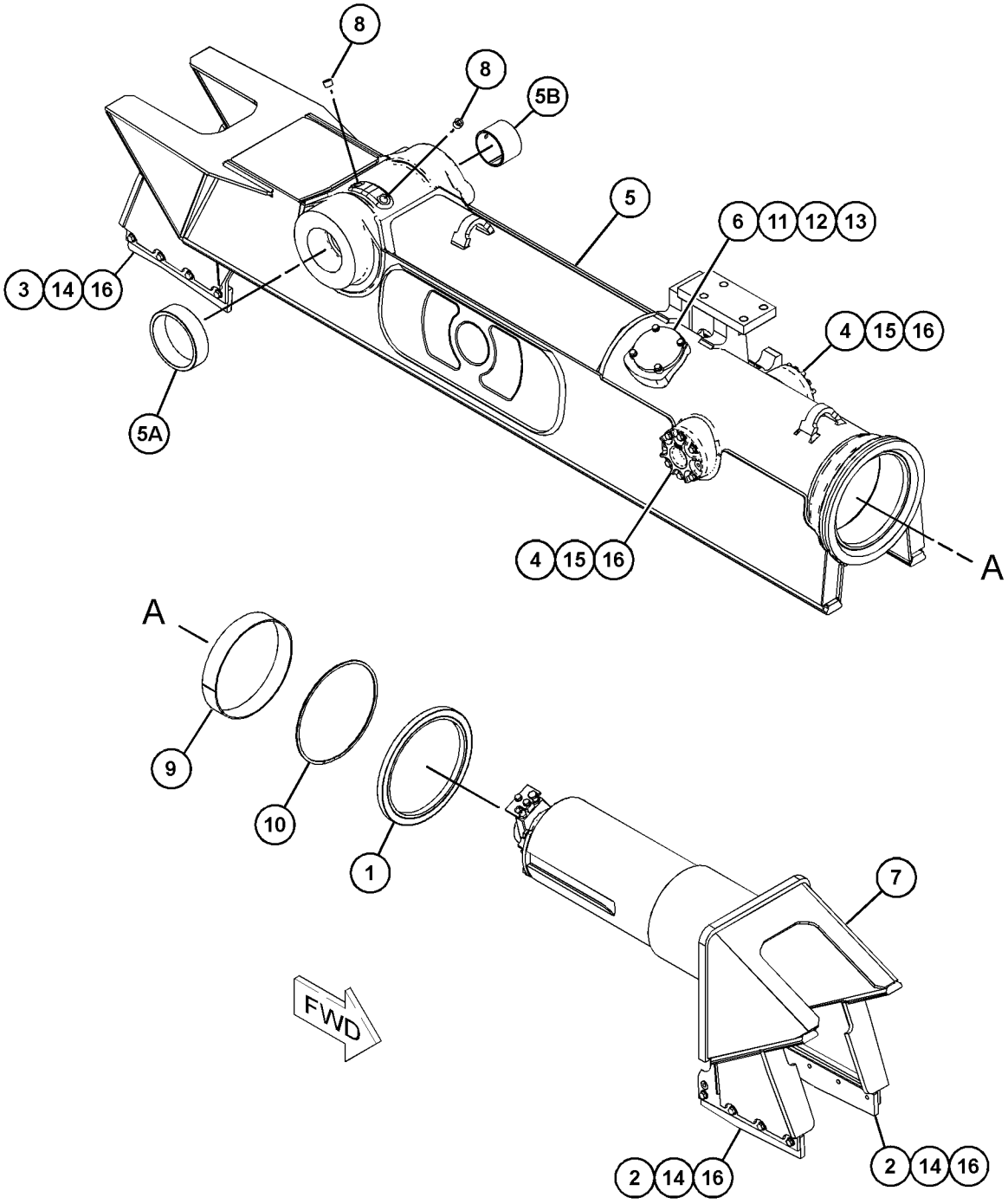

GRAPHIC #1 **<END>** g03828643

450-7187 FRAME GP-TELESCOPING RECOIL—HEAVY-DUTY, LH

S/N: PPP1-UP

PART OF 457-7972, 457-7973, 457-7974 UNDERCARRIAGE AR

AN ATTACHMENT

SMCS-4151 **i06143656**

NOTE	REF NO	GRAPHIC REF	PART NUMBER	QTY	PART NAME 1 2 3 4 5 6 (PRODUCT LEVEL)	SEE PAGE
	1	1	**9X-4582**	1	SEAL AS	
	2	1	**160-4103**	2	STRIP	
	3	1	**189-3032**	2	STRIP	
	4	1	**268-9709**	2	GUIDE AS	
					(EACH INCLUDES)	
		1	**241-3720**	1	FILM-WARNING (RECOIL SPRING)	
	5	1	**357-3555**	1	FRAME AS	
	5A	1	**221-3197**	1	BUSHING	
	5B	1	**221-3200**	1	BUSHING	
	6	1	**364-9652**	1	COVER AS	
		1	**7B-3028**	4	SCREW-DRIVE (NO 4X 3/16-IN)	
		1	**253-1346**	1	PLATE-WARNING (HIGH PRESSURE CYLINDER)	
Y	7	1	*450-7189*	1	FRAME GP-TELESCOPING RECOIL	442
	8	1	**1B-5174**	2	PLUG-PIPE	
	9	1	**3T-2077**	1	BEARING	
	10	1	**3W-1852**	1	RING-RETAINING	
	11	1	**5H-6734**	1	SEAL-O-RING	
	12	1	**8T-4121**	4	WASHER-HARD (11X21X2.5-MM THK)	
M	13	1	**8T-4136**	4	BOLT (M10X1.5X25-MM)	
M	14	1	**8T-4139**	16	BOLT (M12X1.75X30-MM)	
M	15	1	**8T-4184**	12	BOLT (M12X1.75X45-MM)	
	16	1	**8T-4223**	28	WASHER-HARD (13.5X25.5X3-MM THK)	

M - METRIC PART
Y - SEPARATE ILLUSTRATION

450-7187 **FRAME GP-TELESCOPING RECOIL (*contd.*)** **i06143656**

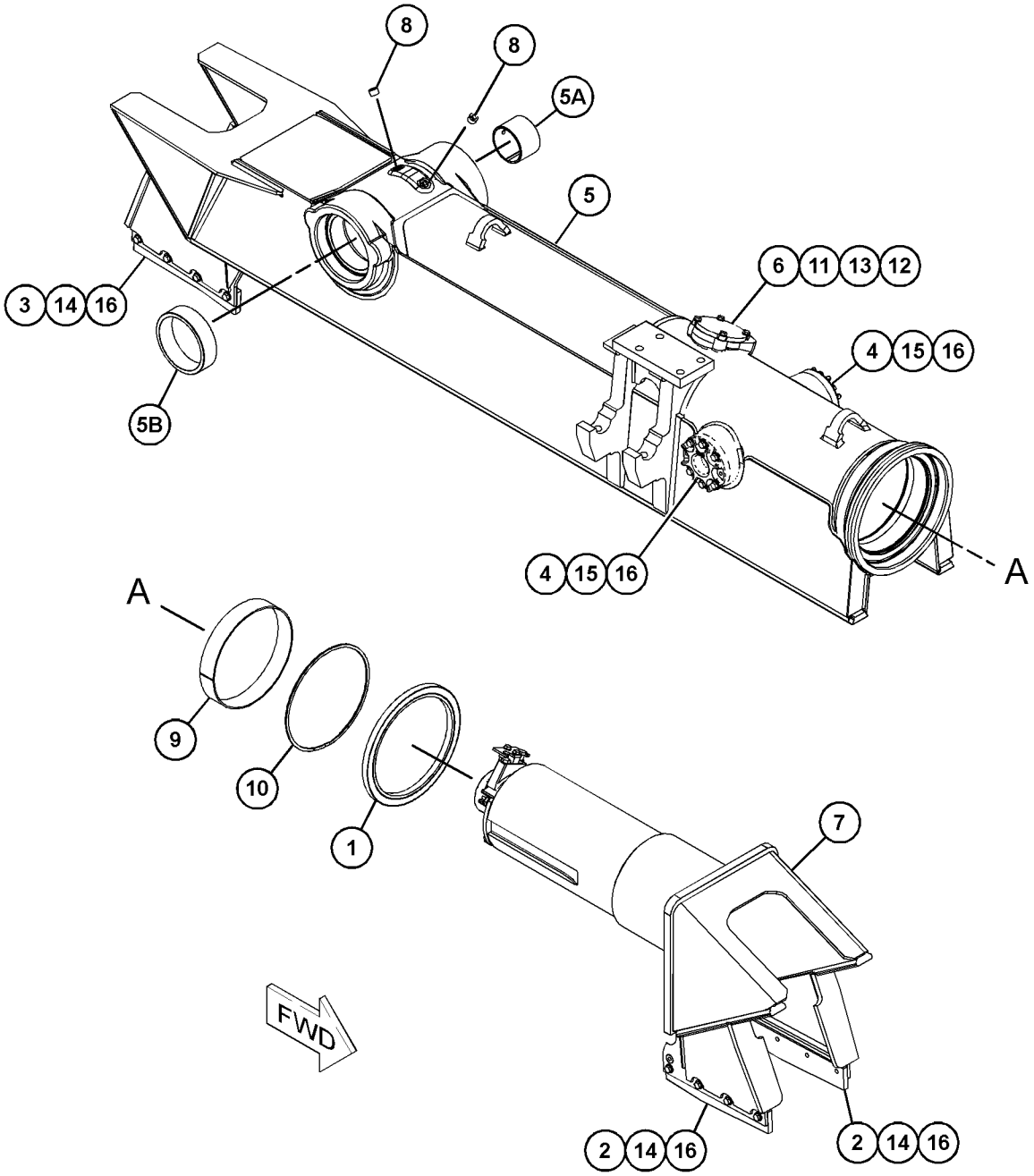

GRAPHIC #1 **<END>** g03828583

450-7188 FRAME GP-TELESCOPING RECOIL–RH

S/N: PPP1-UP

PART OF 450-7186, 456-5998 FRAME GP-TELESCOPING RECOIL

AN ATTACHMENT

SMCS-4151 **i06143655**

NOTE	REF NO	GRAPHIC REF	PART NUMBER	QTY	PART NAME 1 2 3 4 5 6 (PRODUCT LEVEL)	SEE PAGE
Y	1	1	*223-0659*	1	TRACK ADJUSTER & RECOIL GP	493
R	2	1	**224-4122**	1	FRAME AS (FRONT)	
	2A	1	**3T-1162**	1	BUSHING	
		1	**4B-4158**	4	SCREW-DRIVE (NO 4X0.25-IN)	
		1	**254-1686**	1	PLATE-WARNING (RECOIL SPRING)	

R - REMFG PART MAY BE AVAILABLE
Y - SEPARATE ILLUSTRATION

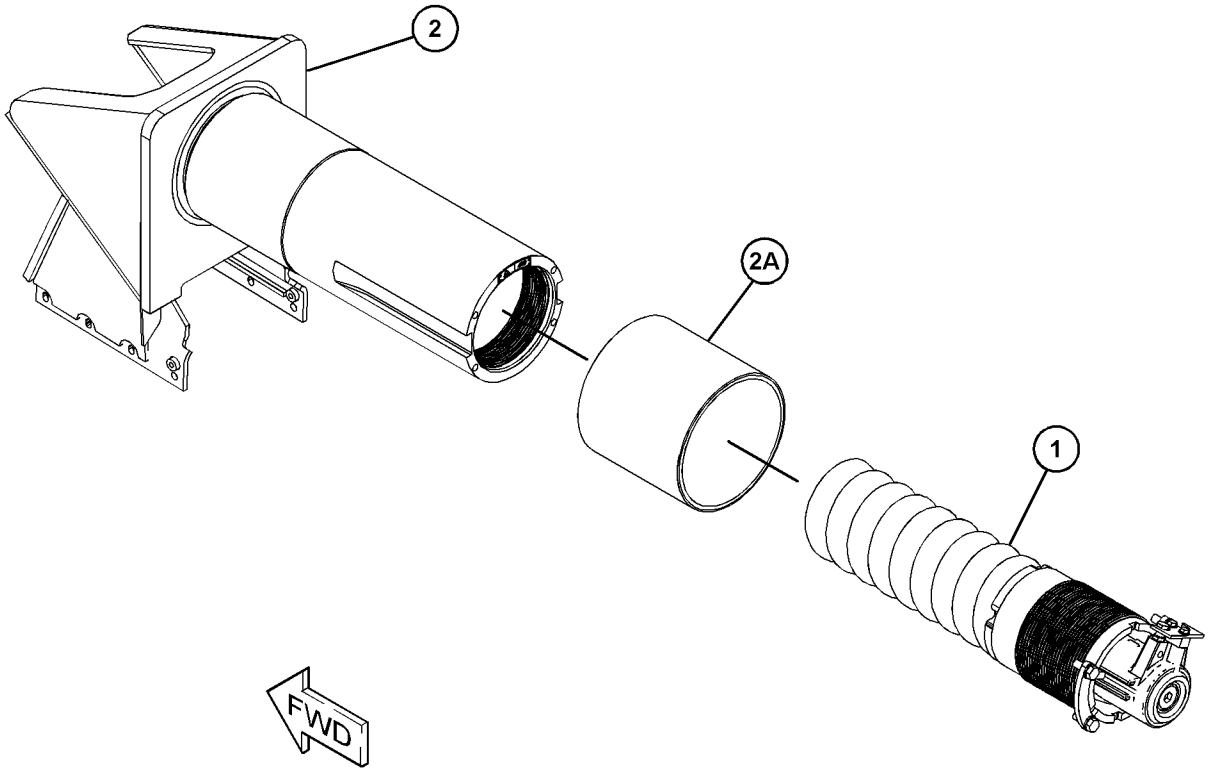

GRAPHIC #1 **<END>** g03827296

450-7189 FRAME GP-TELESCOPING RECOIL—LH

S/N: PPP1-UP

PART OF 450-7187, 456-5997 FRAME GP-TELESCOPING RECOIL

AN ATTACHMENT

SMCS-4151 **i06143657**

NOTE	REF NO	GRAPHIC REF	PART NUMBER	QTY	PART NAME 1 2 3 4 5 6 (PRODUCT LEVEL)	SEE PAGE
Y	1	1	*223-0659*	1	TRACK ADJUSTER & RECOIL GP	493
R	2	1	**224-4122**	1	FRAME AS (FRONT)	
	2A	1	**3T-1162**	1	BUSHING	
		1	**4B-4158**	4	SCREW-DRIVE (NO 4X0.25-IN)	
		1	**254-1686**	1	PLATE-WARNING (RECOIL SPRING)	

R - REMFG PART MAY BE AVAILABLE
Y - SEPARATE ILLUSTRATION

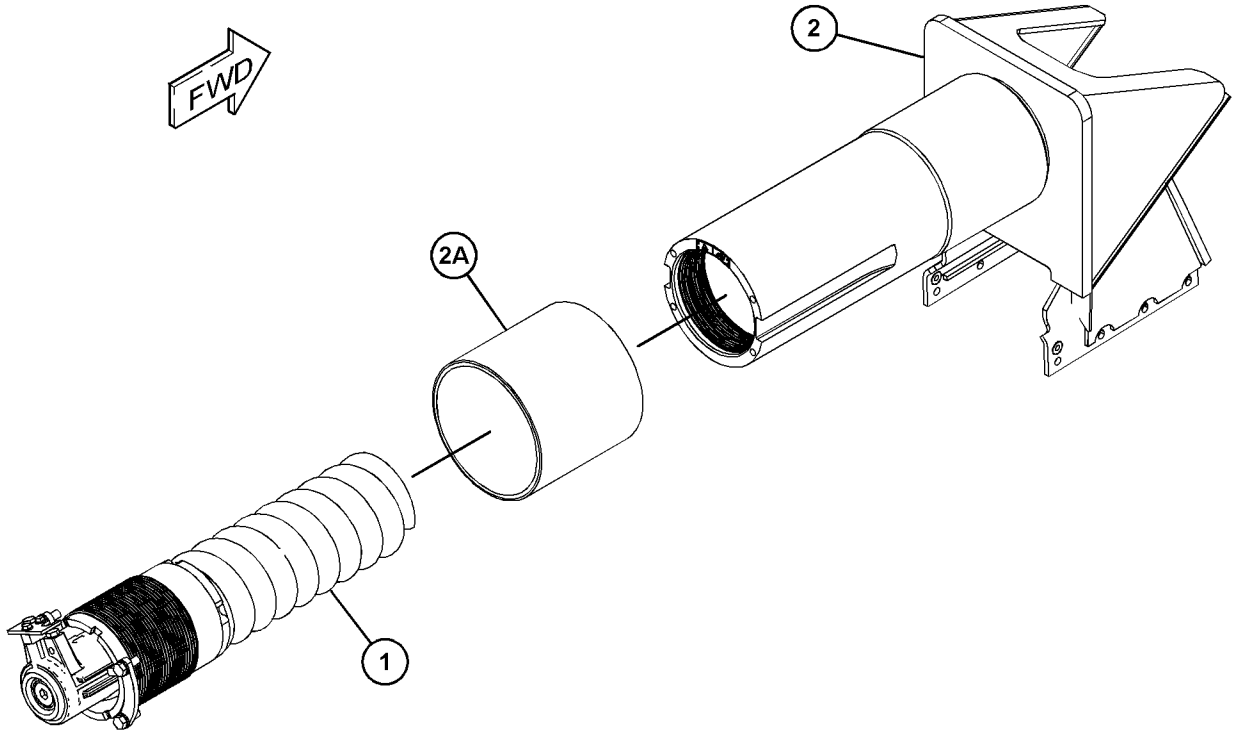

GRAPHIC #1 **<END>** g03827566

456-5991 FRAME GP-TELESCOPING RECOIL—HEAVY-DUTY, LH

S/N: TTT1-UP
WASTE HANDLING
PART OF 415-1300 UNDERCARRIAGE AR
AN ATTACHMENT

SMCS-4151 **i06218971**

NOTE	REF NO	GRAPHIC REF	PART NUMBER	QTY	PART NAME 1 2 3 4 5 6 (PRODUCT LEVEL)	SEE PAGE
	1	1	**9X-4582**	1	SEAL AS	
	2	1	**189-3032**	2	STRIP	
	3	1	**268-9709**	2	GUIDE AS	
					(EACH INCLUDES)	
	3A	1	**241-3720**	1	FILM-WARNING (RECOIL SPRING)	
	4	1	**279-2570**	2	STRIP-WEAR	
	5	1	**364-9652**	1	COVER AS	
	5A	1	**7B-3028**	4	SCREW-DRIVE (NO 4X 3/16-IN)	
	5B	1	**253-1346**	1	PLATE-WARNING (HIGH PRESSURE CYLINDER)	
	6	1	**389-2099**	1	FRAME AS (LH)	
	6A	1	**221-3197**	1	BUSHING	
	6B	1	**221-3200**	1	BUSHING	
Y	7	1	*456-5993*	1	FRAME GP-TELESCOPING RECOIL (HEAVY-DUTY, LH)	447
	8	1	**1B-5174**	1	PLUG-PIPE	
	9	1	**3T-2077**	1	BEARING	
	10	1	**3W-1852**	1	RING-RETAINING	
	11	1	**5H-6734**	1	SEAL-O-RING	
	12	1	**8T-4121**	4	WASHER-HARD (11X21X2.5-MM THK)	
M	13	1	**8T-4136**	4	BOLT (M10X1.5X25-MM)	
M	14	1	**8T-4139**	14	BOLT (M12X1.75X30-MM)	
M	15	1	**8T-4184**	12	BOLT (M12X1.75X45-MM)	
	16	1	**8T-4223**	26	WASHER-HARD (13.5X25.5X3-MM THK)	

M - METRIC PART
Y - SEPARATE ILLUSTRATION

456-5991 **FRAME GP-TELESCOPING RECOIL (*contd.*)** **i06218971**

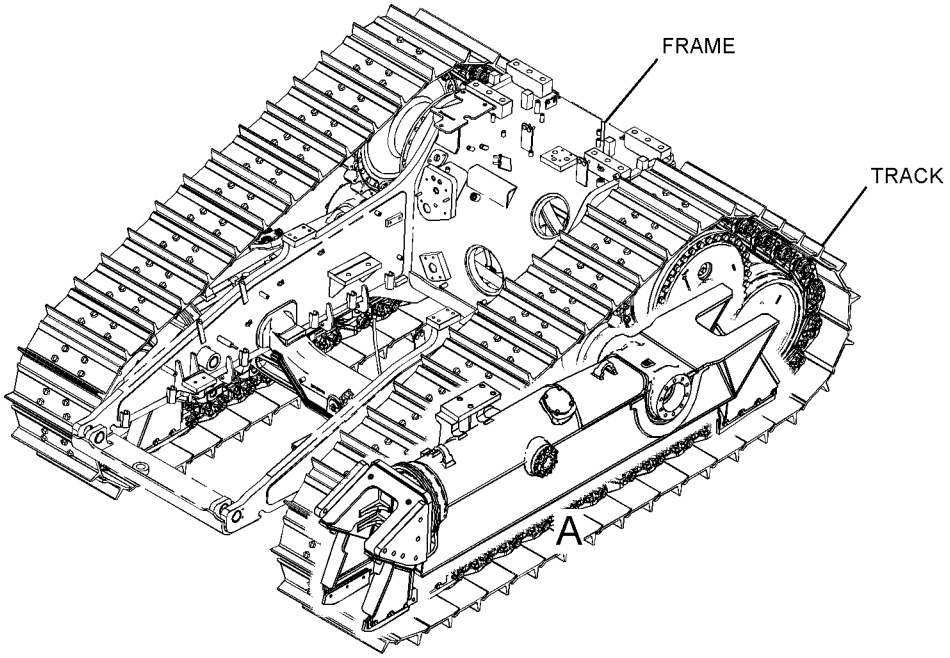

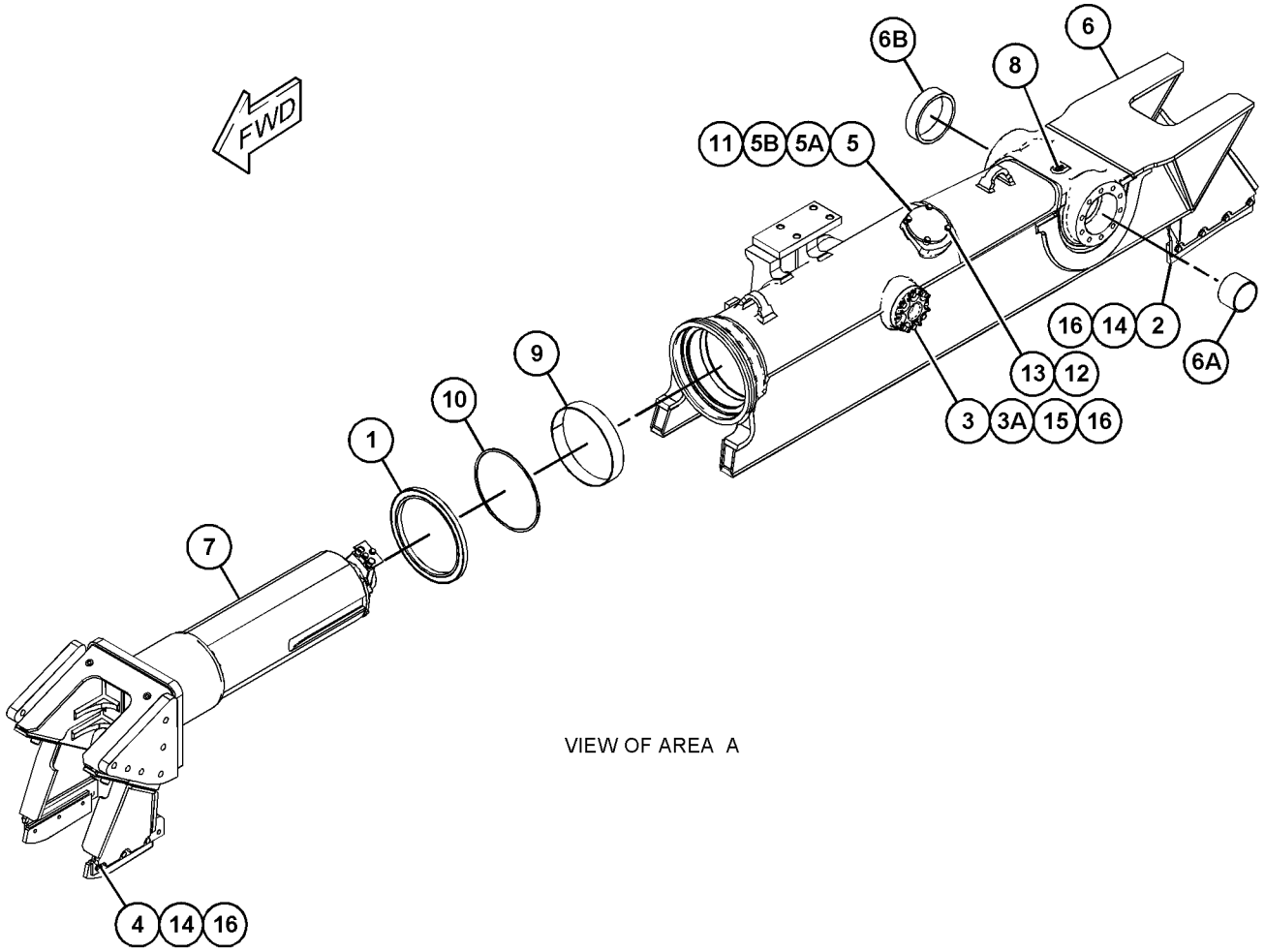

VIEW OF AREA A

GRAPHIC #1 **<END>** g03860668

456-5992 FRAME GP-TELESCOPING RECOIL—HEAVY-DUTY, RH

S/N: TTT1-UP
WASTE HANDLING
PART OF 415-1300 UNDERCARRIAGE AR
AN ATTACHMENT

SMCS-4151 **i06218972**

NOTE	REF NO	GRAPHIC REF	PART NUMBER	QTY	PART NAME 1 2 3 4 5 6 (PRODUCT LEVEL)	SEE PAGE
	1	1	**9X-4582**	1	SEAL AS	
	2	1	**189-3032**	2	STRIP	
	3	1	**268-9709**	2	GUIDE AS	
					(EACH INCLUDES)	
	3A	1	**241-3720**	1	FILM-WARNING (RECOIL SPRING)	
	4	1	**279-2570**	2	STRIP-WEAR	
	5	1	**364-9652**	1	COVER AS	
	5A	1	**7B-3028**	4	SCREW-DRIVE (NO 4X 3/16-IN)	
	5B	1	**253-1346**	1	PLATE-WARNING (HIGH PRESSURE CYLINDER)	
	6	1	**389-2098**	1	FRAME AS (RH)	
	6A	1	**221-3197**	1	BUSHING	
	6B	1	**221-3200**	1	BUSHING	
Y	7	1	*456-5994*	1	FRAME GP-TELESCOPING RECOIL (HEAVY-DUTY, RH)	448
	8	1	**1B-5174**	1	PLUG-PIPE	
	9	1	**3T-2077**	1	BEARING	
	10	1	**3W-1852**	1	RING-RETAINING	
	11	1	**5H-6734**	1	SEAL-O-RING	
	12	1	**8T-4121**	4	WASHER-HARD (11X21X2.5-MM THK)	
M	13	1	**8T-4136**	4	BOLT (M10X1.5X25-MM)	
M	14	1	**8T-4139**	14	BOLT (M12X1.75X30-MM)	
M	15	1	**8T-4184**	12	BOLT (M12X1.75X45-MM)	
	16	1	**8T-4223**	26	WASHER-HARD (13.5X25.5X3-MM THK)	

M - METRIC PART
Y - SEPARATE ILLUSTRATION

456-5992 **FRAME GP-TELESCOPING RECOIL (*contd.*)** **i06218972**

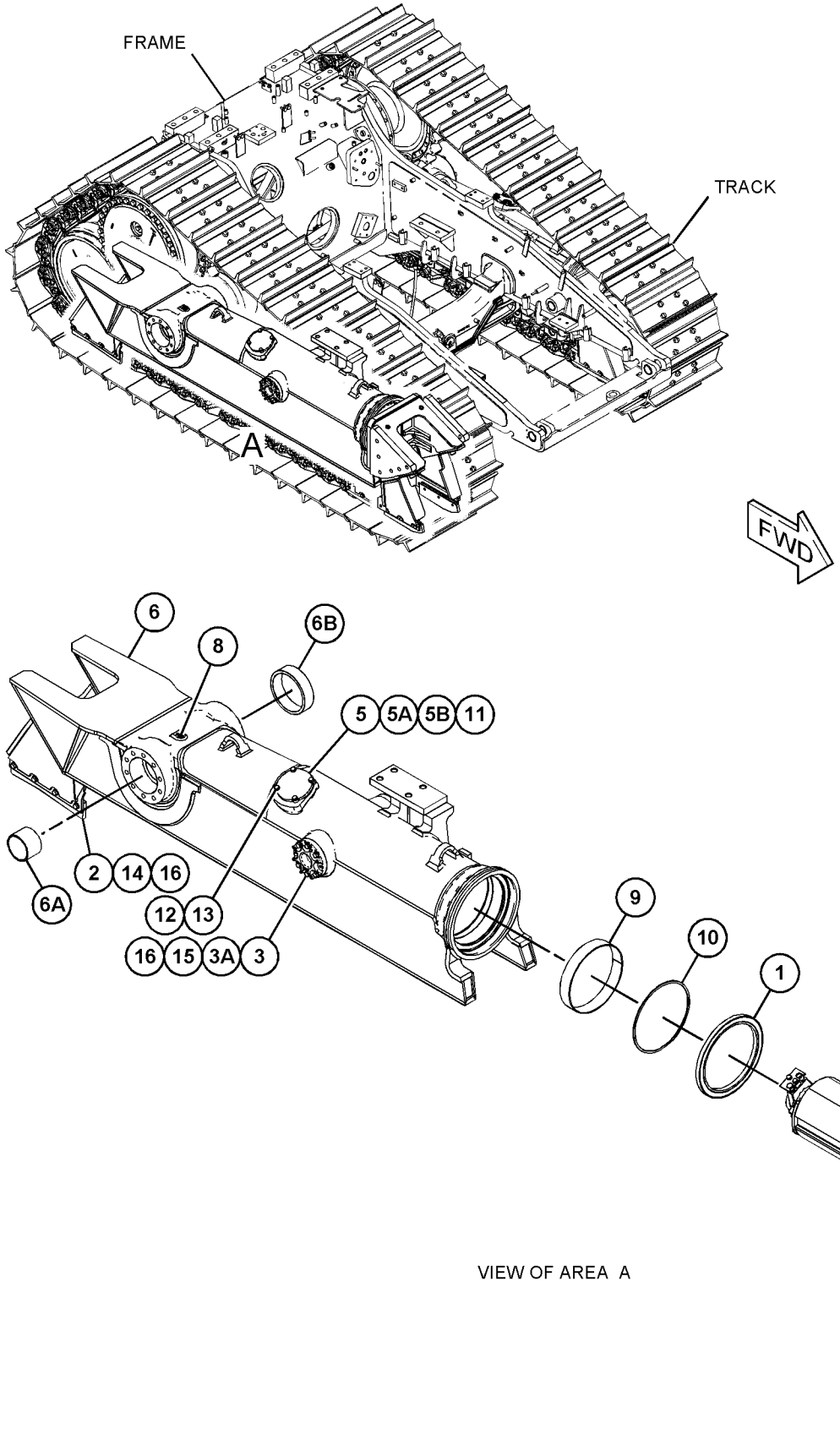

VIEW OF AREA A

GRAPHIC #1 **<END>** g03860630

456-5993 FRAME GP-TELESCOPING RECOIL—HEAVY-DUTY, LH

S/N: TTT1-UP
WASTE HANDLING
PART OF 456-5991 FRAME GP-TELESCOPING RECOIL
AN ATTACHMENT

SMCS-4151 **i06222658**

NOTE	REF NO	GRAPHIC REF	PART NUMBER	QTY	PART NAME 1 2 3 4 5 6 (PRODUCT LEVEL)	SEE PAGE
	1	1	**281-4521**	1	PLATE	
	2	1	**281-4522**	1	PLATE	
Y	3	1	*450-7176*	1	FRAME GP-TELESCOPING RECOIL (LH)	424

Y - SEPARATE ILLUSTRATION

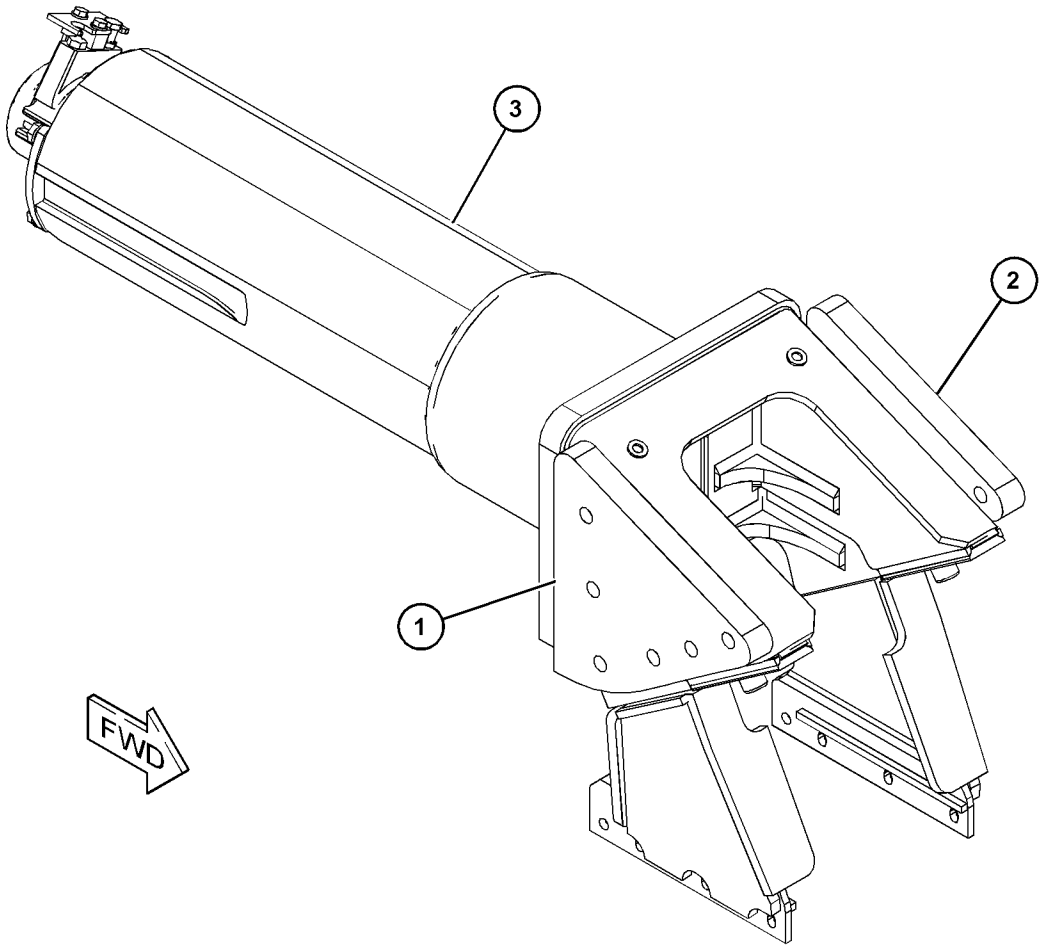

GRAPHIC #1 **<END>** g03860614

456-5994 FRAME GP-TELESCOPING RECOIL—HEAVY-DUTY, RH

S/N: TTT1-UP
WASTE HANDLING
PART OF 456-5992 FRAME GP-TELESCOPING RECOIL
AN ATTACHMENT

SMCS-4151 **i06218993**

NOTE	REF NO	GRAPHIC REF	PART NUMBER	QTY	PART NAME 1 2 3 4 5 6 (PRODUCT LEVEL)	SEE PAGE
	1	1	**281-4521**	1	PLATE	
	2	1	**281-4522**	1	PLATE	
Y	3	1	*450-7177*	1	FRAME GP-TELESCOPING RECOIL (RH)	425

Y - SEPARATE ILLUSTRATION

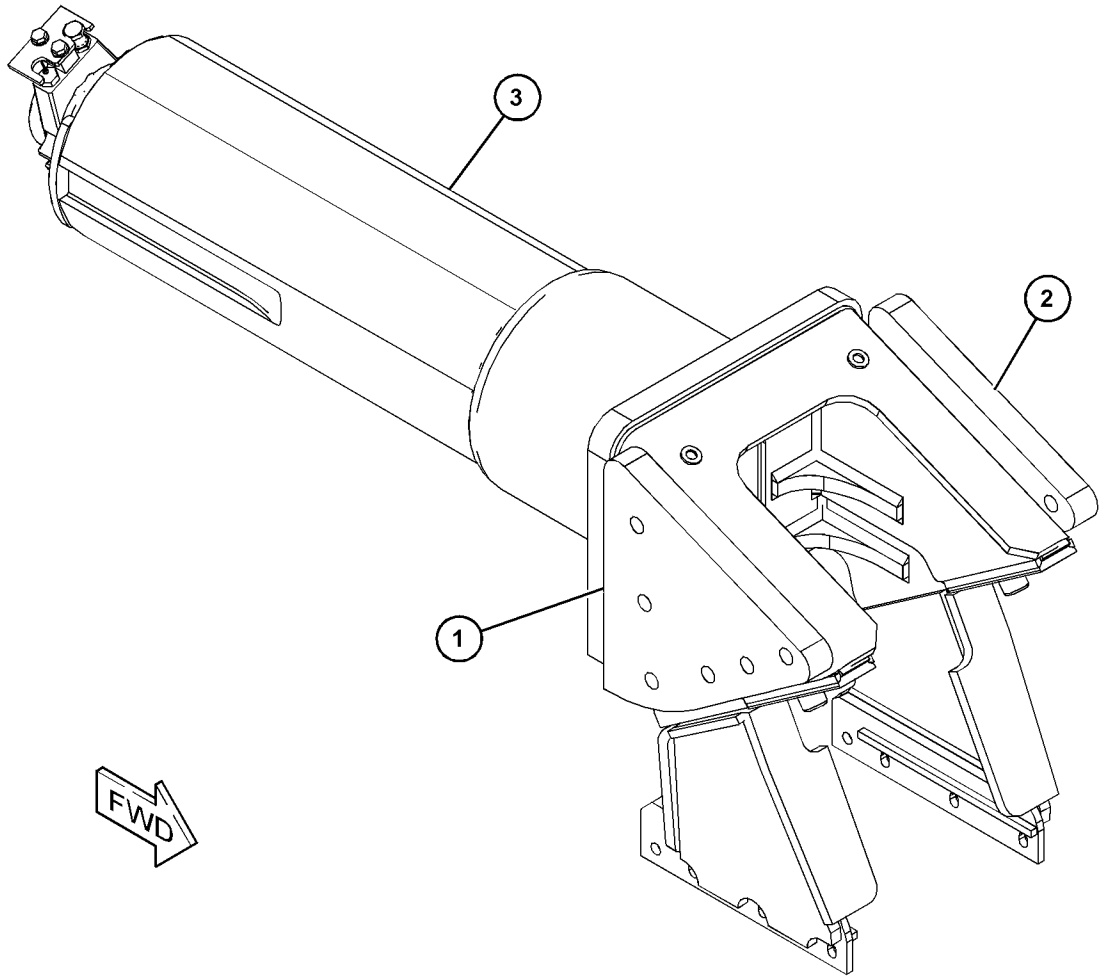

GRAPHIC #1 **<END>** g03860626

456-5995 FRAME GP-TELESCOPING RECOIL—HEAVY-DUTY, LH

S/N: PPP1-UP
WASTE HANDLING
PART OF 415-1301 UNDERCARRIAGE AR
AN ATTACHMENT

SMCS-4151 **i06219015**

NOTE	REF NO	GRAPHIC REF	PART NUMBER	QTY	PART NAME 1 2 3 4 5 6 (PRODUCT LEVEL)	SEE PAGE
	1	1	**9X-4582**	1	SEAL AS	
	2	1	**160-4103**	2	STRIP	
	3	1	**189-3032**	2	STRIP	
	4	1	**268-9709**	2	GUIDE AS	
					(EACH INCLUDES)	
	4A	1	**241-3720**	1	FILM-WARNING (RECOIL SPRING)	
	5	1	**357-3555**	1	FRAME AS	
	5A	1	**221-3197**	1	BUSHING	
	5B	1	**221-3200**	1	BUSHING	
	6	1	**364-9652**	1	COVER AS	
	6A	1	**7B-3028**	4	SCREW-DRIVE (NO 4X 3/16-IN)	
	6B	1	**253-1346**	1	PLATE-WARNING (HIGH PRESSURE CYLINDER)	
Y	7	1	*456-5997*	1	FRAME GP-TELESCOPING RECOIL (HEAVY-DUTY, LH)	453
	8	1	**1B-5174**	2	PLUG-PIPE	
	9	1	**3T-2077**	1	BEARING	
	10	1	**3W-1852**	1	RING-RETAINING	
	11	1	**5H-6734**	1	SEAL-O-RING	
	12	1	**8T-4121**	4	WASHER-HARD (11X21X2.5-MM THK)	
M	13	1	**8T-4136**	4	BOLT (M10X1.5X25-MM)	
M	14	1	**8T-4139**	16	BOLT (M12X1.75X30-MM)	
M	15	1	**8T-4184**	12	BOLT (M12X1.75X45-MM)	
	16	1	**8T-4223**	28	WASHER-HARD (13.5X25.5X3-MM THK)	

M - METRIC PART
Y - SEPARATE ILLUSTRATION

456-5995 **FRAME GP-TELESCOPING RECOIL (*contd.*)** **i06219015**

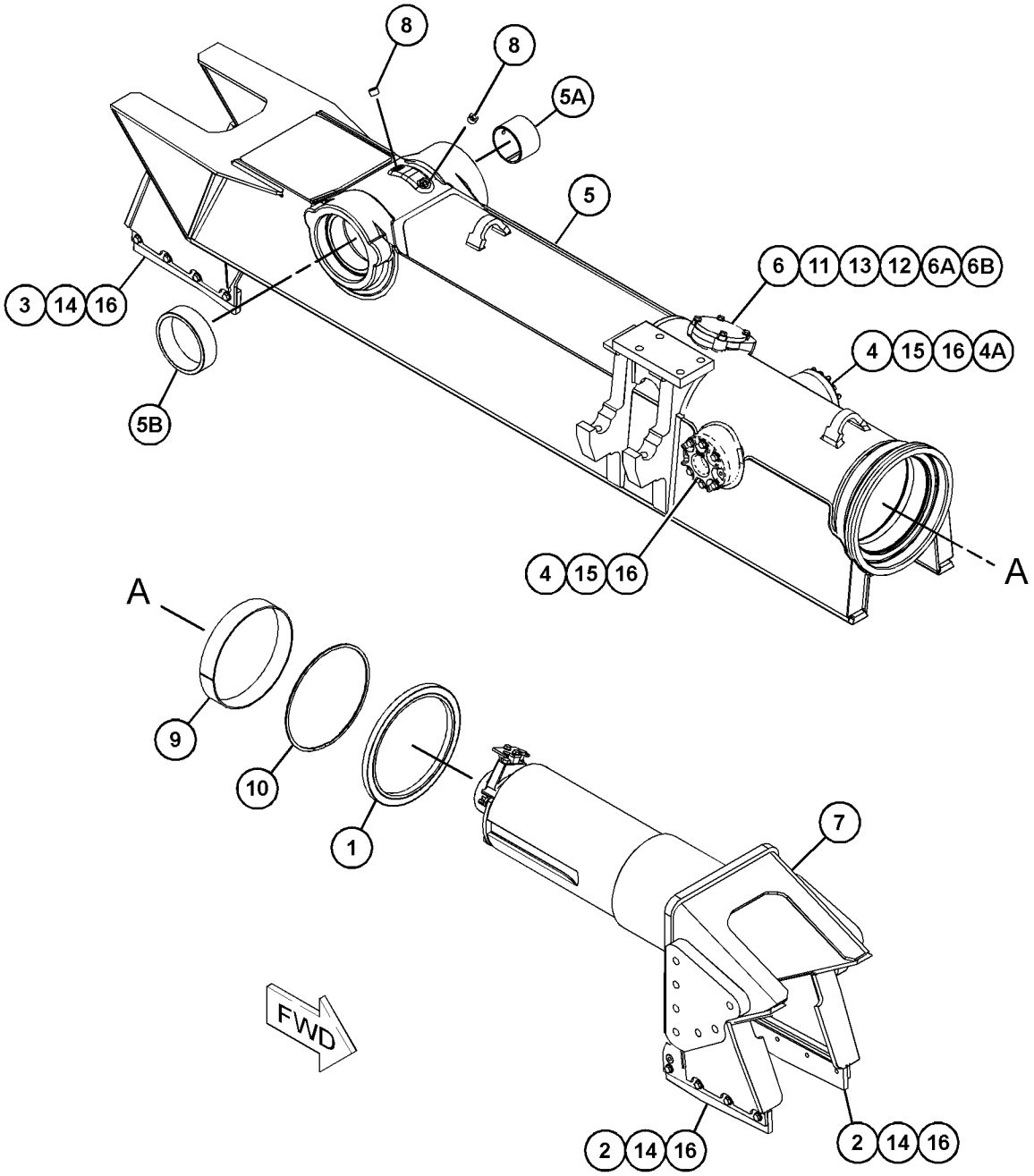

GRAPHIC #1 **<END>** g03861307

456-5996 FRAME GP-TELESCOPING RECOIL—HEAVY-DUTY, RH

S/N: PPP1-UP
WASTE HANDLING
PART OF 415-1301 UNDERCARRIAGE AR
AN ATTACHMENT

SMCS-4151 **i06219011**

NOTE	REF NO	GRAPHIC REF	PART NUMBER	QTY	PART NAME 1 2 3 4 5 6 (PRODUCT LEVEL)	SEE PAGE
	1	1	**9X-4582**	1	SEAL AS	
	2	1	**160-4103**	2	STRIP	
	3	1	**189-3032**	2	STRIP	
	4	1	**268-9709**	2	GUIDE AS	
					(EACH INCLUDES)	
	4A	1	**241-3720**	1	FILM-WARNING (RECOIL SPRING)	
	5	1	**357-3554**	1	FRAME AS (RH)	
	5A	1	**221-3197**	1	BUSHING	
	5B	1	**221-3200**	1	BUSHING	
	6	1	**364-9652**	1	COVER AS	
	6A	1	**7B-3028**	4	SCREW-DRIVE (NO 4X 3/16-IN)	
	6B	1	**253-1346**	1	PLATE-WARNING (HIGH PRESSURE CYLINDER)	
Y	7	1	*456-5998*	1	FRAME GP-TELESCOPING RECOIL (HEAVY-DUTY, RH) (HEAVY-DUTY, RH)	454
	8	1	**1B-5174**	2	PLUG-PIPE	
	9	1	**3T-2077**	1	BEARING	
	10	1	**3W-1852**	1	RING-RETAINING	
	11	1	**5H-6734**	1	SEAL-O-RING	
	12	1	**8T-4121**	4	WASHER-HARD (11X21X2.5-MM THK)	
M	13	1	**8T-4136**	4	BOLT (M10X1.5X25-MM)	
M	14	1	**8T-4139**	16	BOLT (M12X1.75X30-MM)	
M	15	1	**8T-4184**	12	BOLT (M12X1.75X45-MM)	
	16	1	**8T-4223**	28	WASHER-HARD (13.5X25.5X3-MM THK)	

M - METRIC PART
Y - SEPARATE ILLUSTRATION

456-5996 **FRAME GP-TELESCOPING RECOIL (*contd.*)** **i06219011**

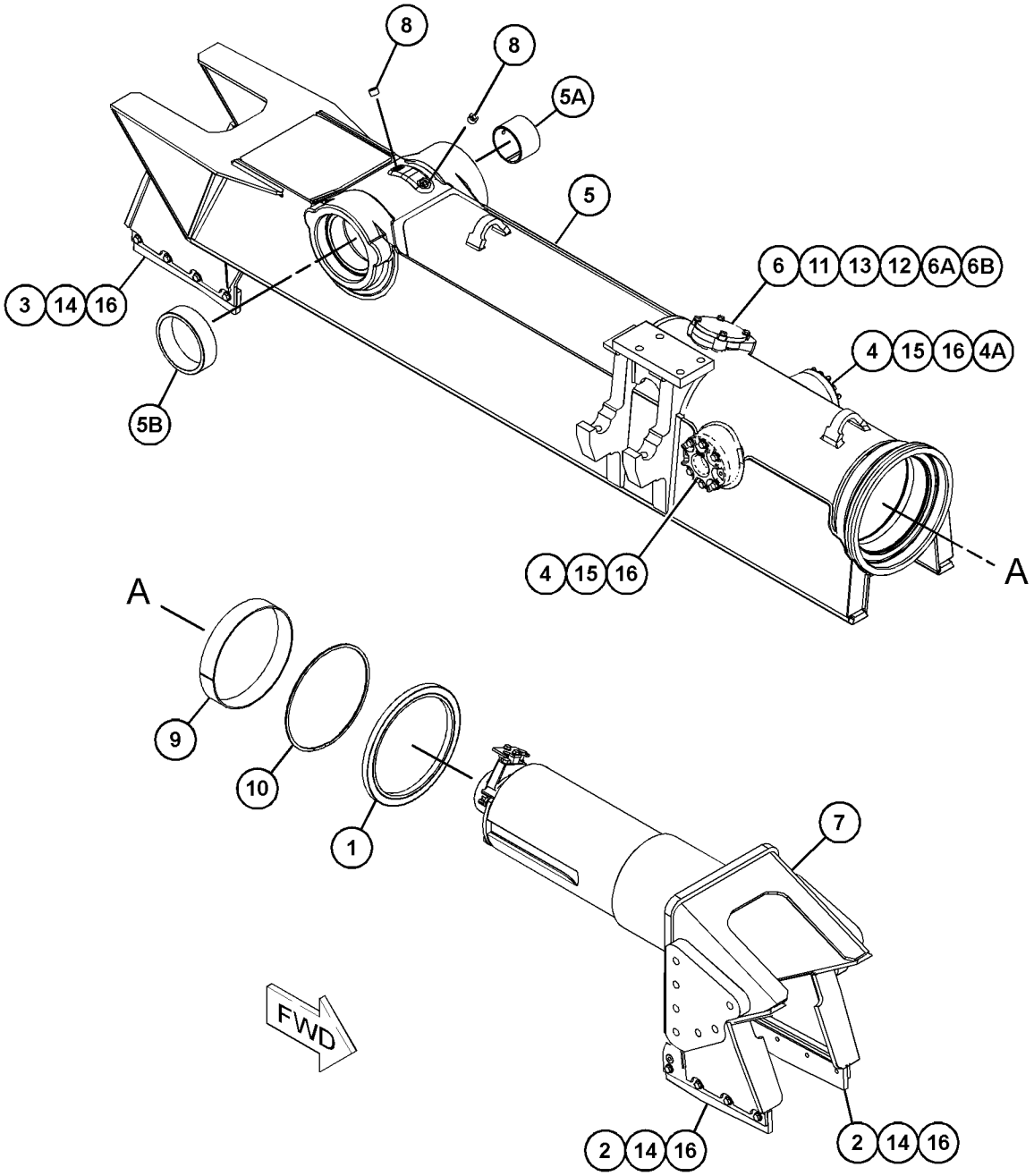

GRAPHIC #1 **<END>** g03861307

456-5997 FRAME GP-TELESCOPING RECOIL—HEAVY-DUTY, LH

S/N: PPP1-UP
WASTE HANDLING
PART OF 456-5995 FRAME GP-TELESCOPING RECOIL
AN ATTACHMENT

SMCS-4151 **i06222666**

NOTE	REF NO	GRAPHIC REF	PART NUMBER	QTY	PART NAME 1 2 3 4 5 6 (PRODUCT LEVEL)	SEE PAGE
Y	1	1	*450-7189*	1	FRAME GP-TELESCOPING RECOIL (LH)	442
					PARTS SHOWN IN GRAPHIC(S) WITHOUT A REFERENCE NUMBER ARE NOT SERVICED SEPARATELY	

Y - SEPARATE ILLUSTRATION

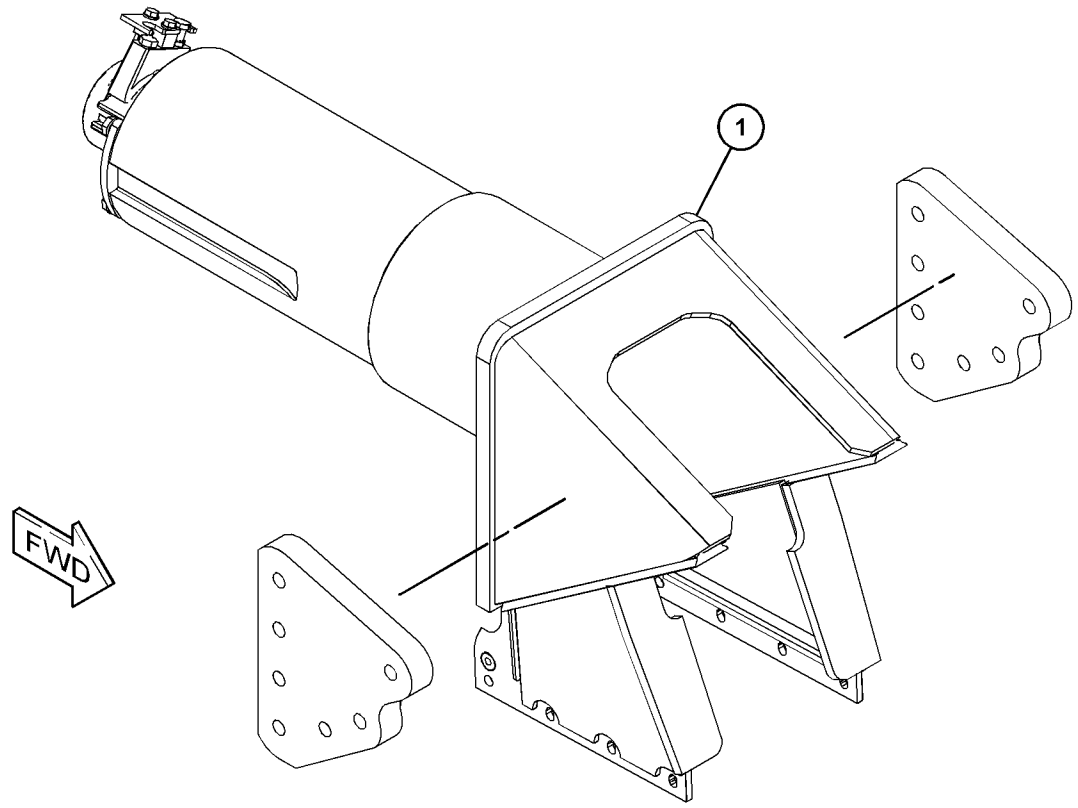

GRAPHIC #1 **<END>** g03860624

456-5998 FRAME GP-TELESCOPING RECOIL—HEAVY-DUTY, RH

S/N: PPP1-UP
WASTE HANDLING
PART OF 456-5996 FRAME GP-TELESCOPING RECOIL
AN ATTACHMENT

SMCS-4151 **i06222665**

NOTE	REF NO	GRAPHIC REF	PART NUMBER	QTY	PART NAME 1 2 3 4 5 6 (PRODUCT LEVEL)	SEE PAGE
Y	1	1	*450-7188*	1	FRAME GP-TELESCOPING RECOIL (RH)	441

PARTS SHOWN IN GRAPHIC(S) WITHOUT A REFERENCE NUMBER ARE NOT SERVICED SEPARATELY

Y - SEPARATE ILLUSTRATION

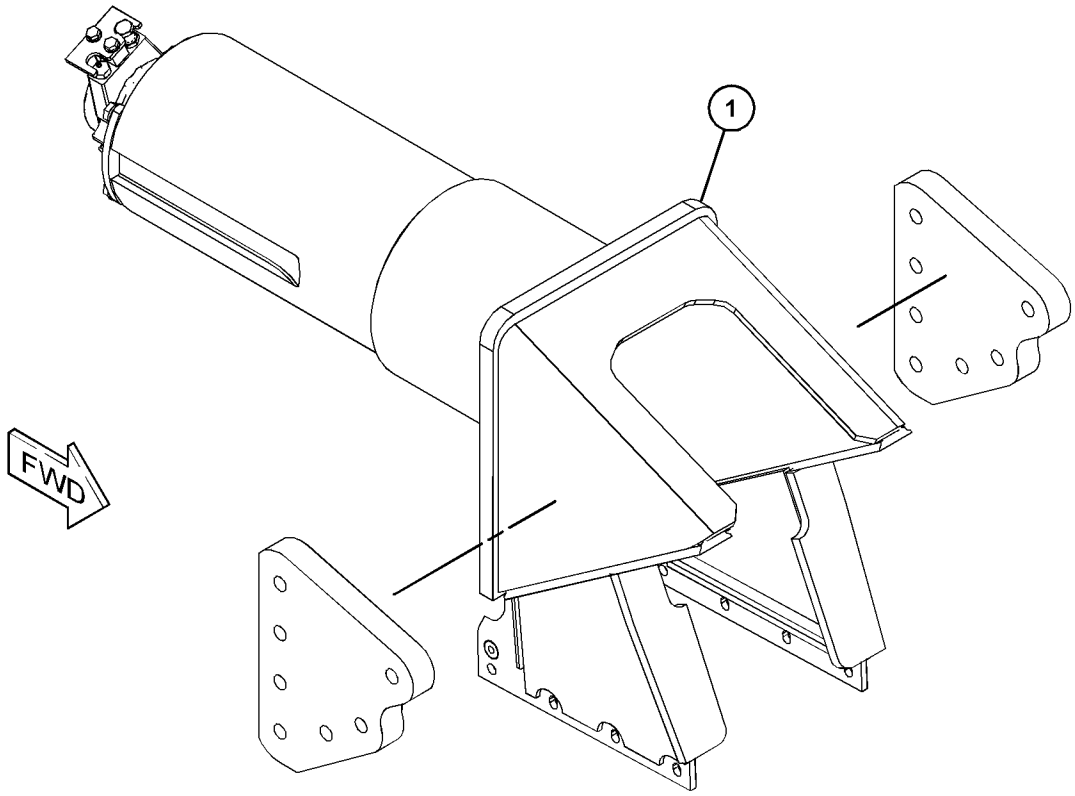

GRAPHIC #1 **<END>** g03860607

450-7181 FRAME GP-TRACK ROLLER–RH

S/N: TTT1-UP

PART OF 450-7179 FRAME GP-TELESCOPING RECOIL

AN ATTACHMENT

SMCS-4151 **i05680335**

NOTE	REF NO	GRAPHIC REF	PART NUMBER	QTY	PART NAME 1 2 3 4 5 6 (PRODUCT LEVEL)	SEE PAGE
	1	1	**315-7783**	1	FRAME GP-TRACK ROLLER (FRONT)	
	1A	1	**3T-1162**	1	BUSHING	
	1B	1	**4B-4158**	4	SCREW-DRIVE (NO 4X0.25-IN)	
	1C	1	**254-1686**	1	PLATE-WARNING (RECOIL SPRING)	
Y	2	1	*315-7786*	1	TRACK ADJUSTER & RECOIL GP	495

Y - SEPARATE ILLUSTRATION

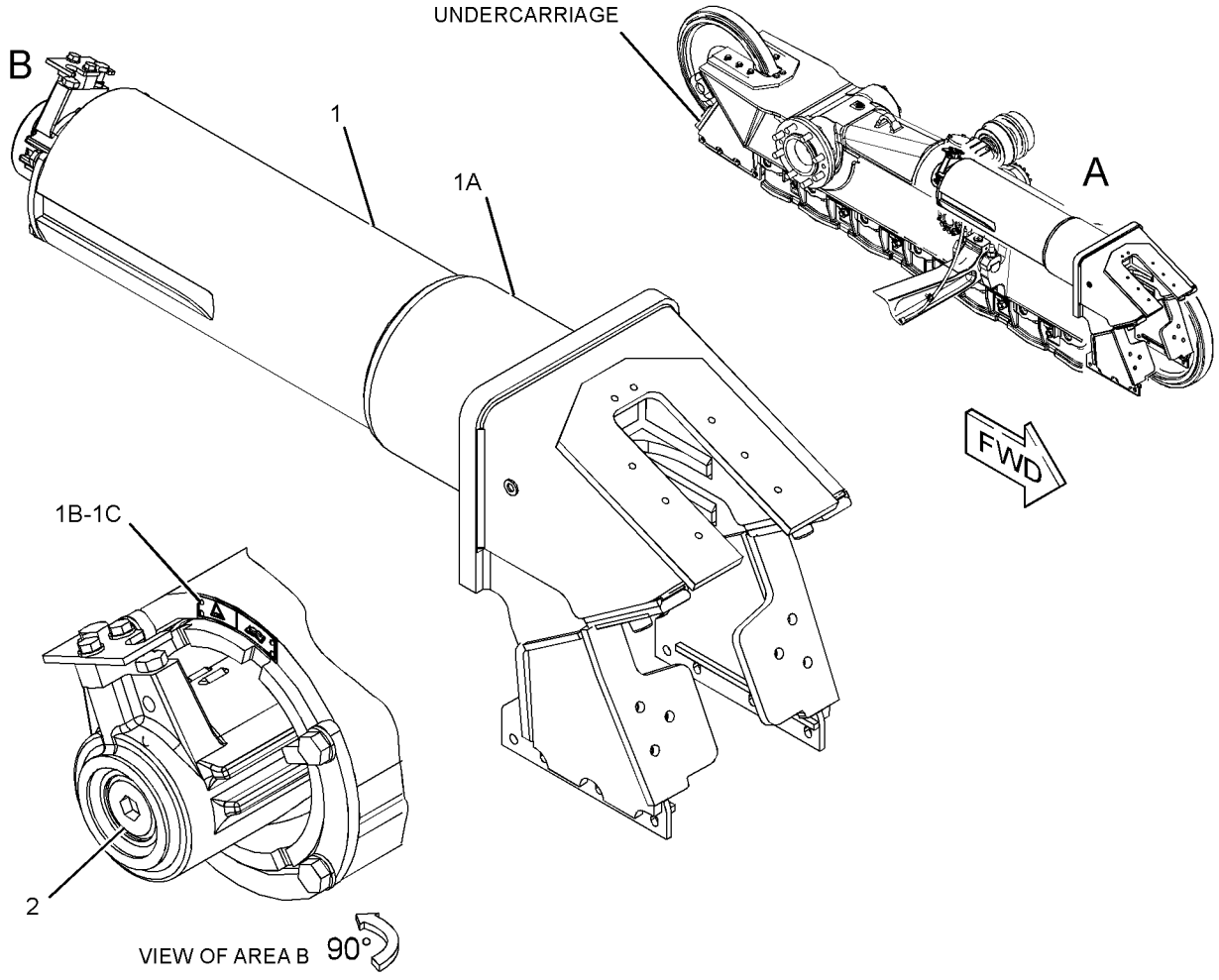

GRAPHIC #1 **<END>** g03584737

164-0406 GUARD GP-TRACK GUIDE—HEAVY-DUTY

S/N: PPP1-UP; SSS1-UP; TTT1-UP

PART OF 415-1300, 415-1301, 457-6209, 457-7967, 457-7972, 457-7973 UNDERCARRIAGE AR AN ATTACHMENT

SMCS-4177 **i05635175**

NOTE	REF NO	GRAPHIC REF	PART NUMBER	QTY	PART NAME 1 2 3 4 5 6 (PRODUCT LEVEL)	SEE PAGE
	1	1	**166-2287**	8	SPACER (22X40X20-MM THK)	
	2	1	**268-5945**	2	GUARD AS	
					(EACH INCLUDES)	
		1	**164-0403**	1	GUARD	
		1	**164-4611**	1	GUARD	
M	3	1	**173-9685**	8	BOLT (M20X2.5X70-MM)	

M - METRIC PART

QUANTITIES SHOWN ARE THOSE REQUIRED FOR BOTH LH AND RH SIDES

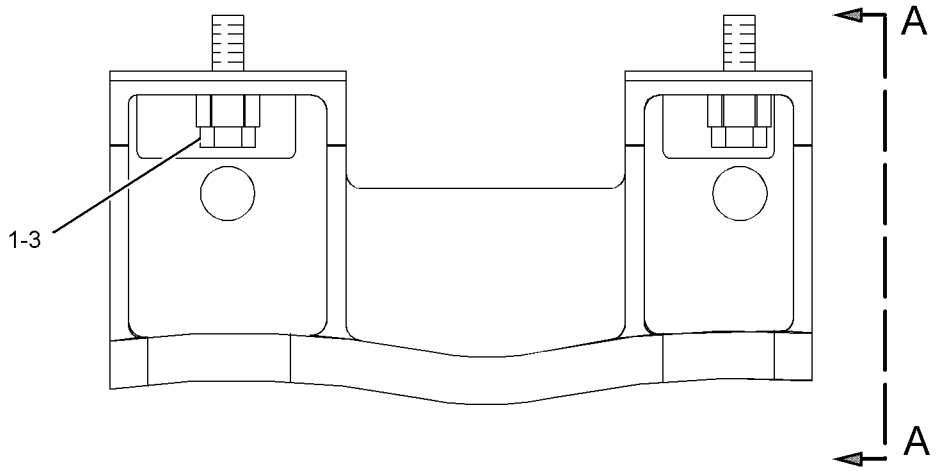

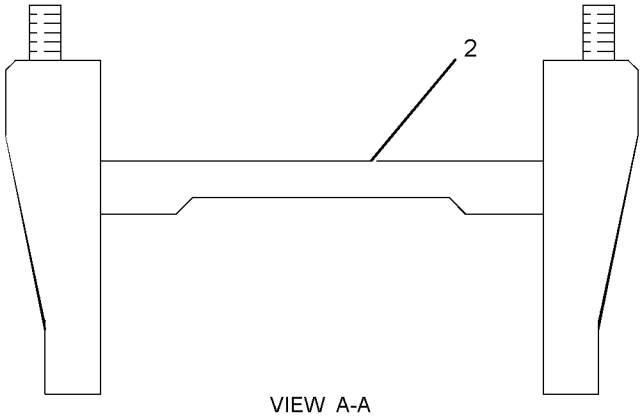

VIEW A-A

GRAPHIC #1 **<END>** g01210245

206-8836 GUARD GP-TRACK GUIDE–SYSTEMONE

S/N: PPP1-UP
PART OF 457-7975 UNDERCARRIAGE AR
AN ATTACHMENT

SMCS-4177 **i06144018**

NOTE	REF NO	GRAPHIC REF	PART NUMBER	QTY	PART NAME 1 2 3 4 5 6 (PRODUCT LEVEL)	SEE PAGE
	1	1	**166-2287**	8	SPACER (22X40X20-MM THK)	
	2	1	**206-8837**	2	GUARD AS-TRACK GUIDE	
M	3	1	**173-9685**	8	BOLT (M20X2.5X70-MM)	

M - METRIC PART

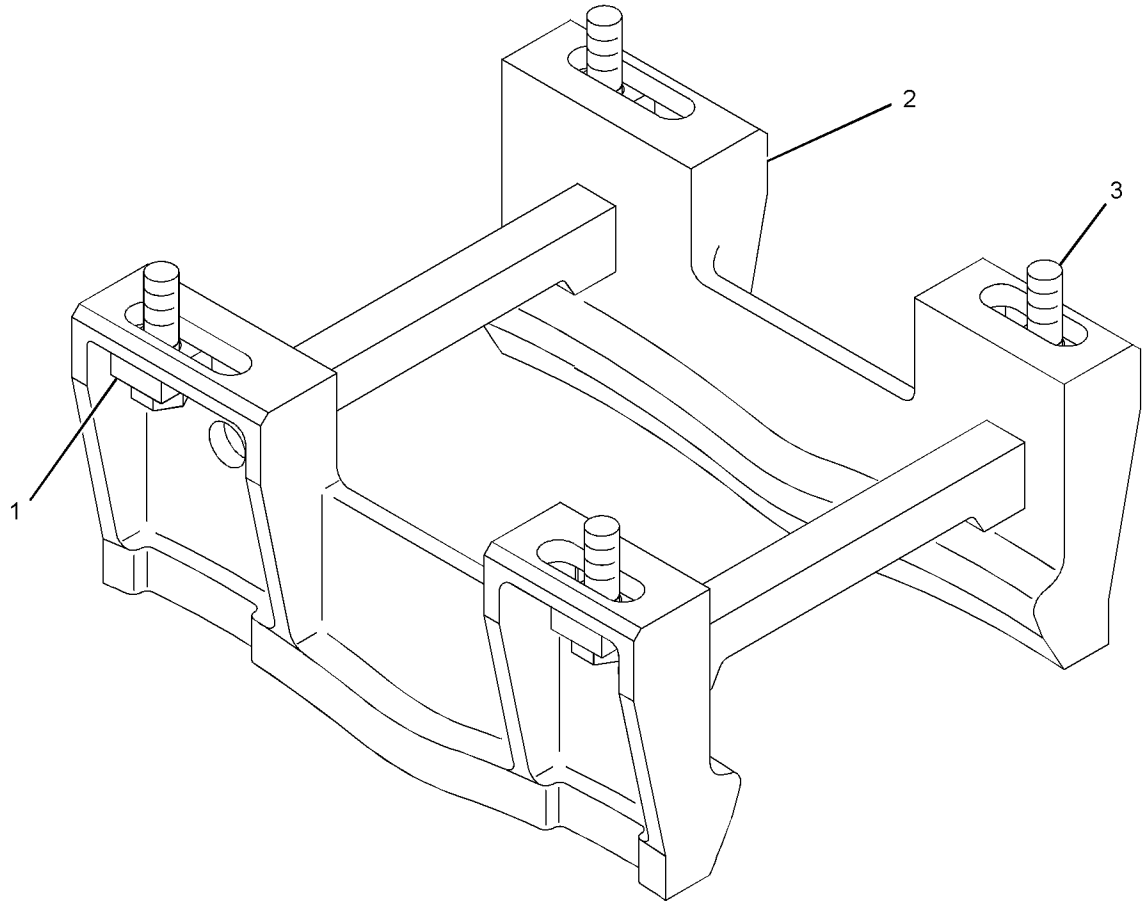

GRAPHIC #1 **<END>** g01152803

314-3283 GUARD GP-TRACK GUIDE–SYSTEMONE

S/N: TTT1-UP
PART OF 457-7969 UNDERCARRIAGE AR
AN ATTACHMENT

SMCS-4177 **i05641351**

NOTE	REF NO	GRAPHIC REF	PART NUMBER	QTY	PART NAME 1 2 3 4 5 6 (PRODUCT LEVEL)	SEE PAGE
	1	1	**166-2287**	16	SPACER (22X40X20-MM THK)	
	2	1	**310-4269**	4	GUARD AS	
M	3	1	**173-9685**	16	BOLT (M20X2.5X70-MM)	

M - METRIC PART
QUANTITIES SHOWN ARE THOSE REQUIRED FOR BOTH LH AND RH SIDES

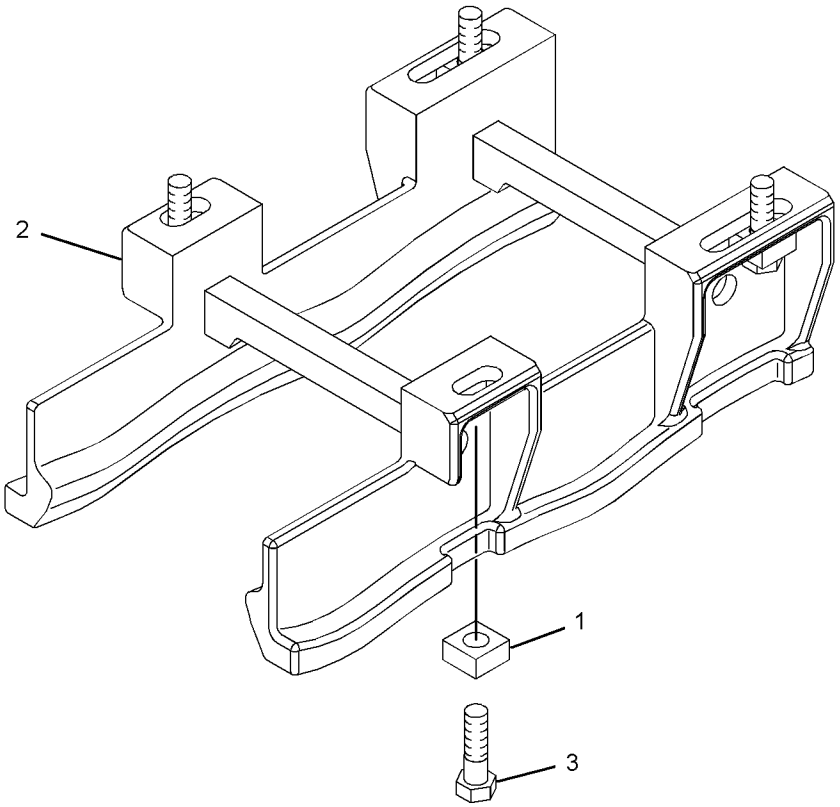

GRAPHIC #1 **<END>** g01410977

134-9429 GUARD GP-TRACK ROLLER–HEAVY-DUTY

S/N: TTT1-UP
PART OF 457-7968 UNDERCARRIAGE AR
AN ATTACHMENT

SMCS-7152 **i05640949**

NOTE	REF NO	GRAPHIC REF	PART NUMBER	QTY	PART NAME 1 2 3 4 5 6 (PRODUCT LEVEL)	SEE PAGE
	1	1	**134-5366**	12	TUBE	
	2	1	**134-5368**	12	ROD	
	3	1	**134-9431**	4	GUARD	
	4	1	**134-9432**	4	GUARD	
	5	1	**166-2287**	24	SPACER (22X40X20-MM THK)	
M	6	1	**7Y-5233**	24	LOCKNUT (M24X3-THD)	
M	7	1	**173-9685**	24	BOLT (M20X2.5X70-MM)	
	8	1	**8T-4167**	24	WASHER-HARD (26X44X4-MM THK)	

M - METRIC PART
QUANTITIES SHOWN ARE THOSE REQUIRED FOR BOTH LH AND RH SIDES

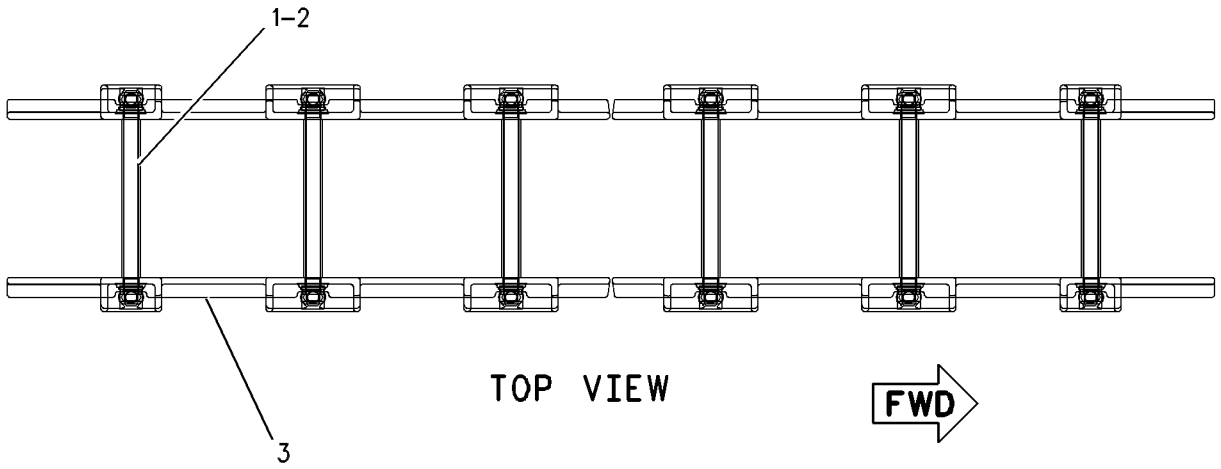

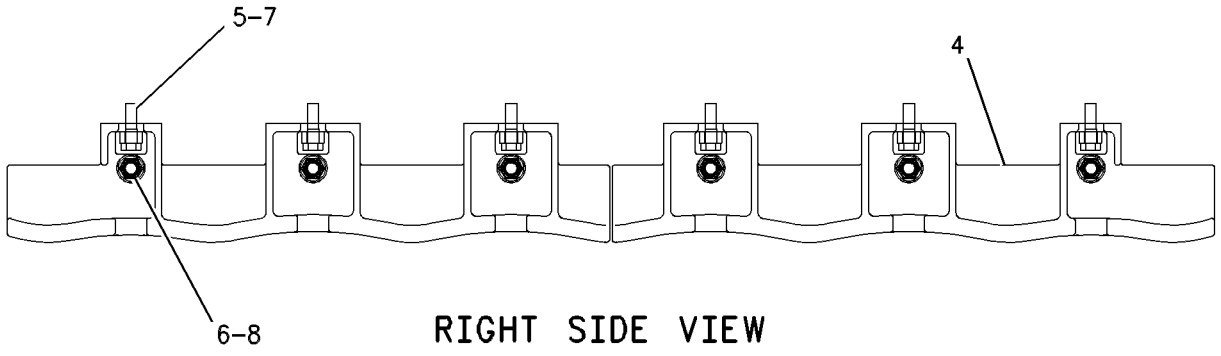

GRAPHIC #1 **<END>** g00603925

378-3790 GUARD GP-TRACK ROLLER–SYSTEMONE

S/N: TTT1-UP

PART OF 457-7970 UNDERCARRIAGE AR

AN ATTACHMENT

SMCS-7152 **i05641411**

NOTE	REF NO	GRAPHIC REF	PART NUMBER	QTY	PART NAME 1 2 3 4 5 6 (PRODUCT LEVEL)	SEE PAGE
	1	1	**134-5366**	12	TUBE	
	2	1	**134-5368**	12	ROD	
	3	1	**166-2287**	24	SPACER (22X40X20-MM THK)	
	4	1	**229-9558**	4	GUARD	
	5	1	**229-9559**	4	GUARD	
M	6	1	**7Y-5233**	24	LOCKNUT (M24X3-THD)	
M	7	1	**173-9685**	24	BOLT (M20X2.5X70-MM)	
	8	1	**8T-4167**	24	WASHER-HARD (26X44X4-MM THK)	

M - METRIC PART

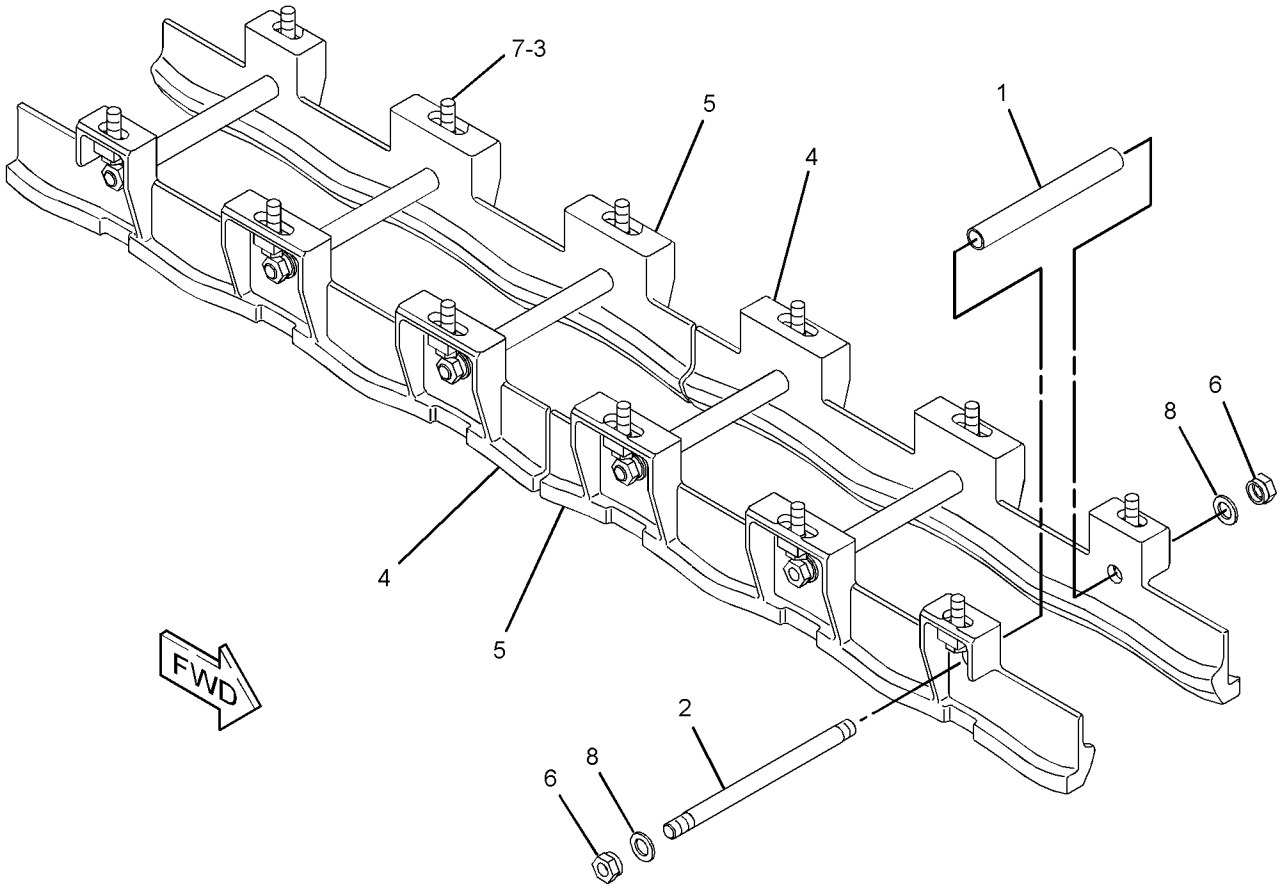

GRAPHIC #1 **<END>** g01165766

378-3791 GUARD GP-TRACK ROLLER–HEAVY-DUTY

S/N: PPP1-UP
PART OF 457-7974 UNDERCARRIAGE AR
AN ATTACHMENT

SMCS-7152 **i06144009**

NOTE	REF NO	GRAPHIC REF	PART NUMBER	QTY	PART NAME 1 2 3 4 5 6 (PRODUCT LEVEL)	SEE PAGE
	1	1	**8E-9932**	4	PLATE	
	2	1	**134-5366**	14	TUBE	
	3	1	**134-5368**	14	ROD	
	4	1	**134-6403**	4	GUARD	
	5	1	**134-6404**	4	GUARD	
	6	1	**166-2287**	28	SPACER (22X40X20-MM THK)	
M	7	1	**7Y-5233**	28	LOCKNUT (M24X3-THD)	
M	8	1	**8T-4139**	4	BOLT (M12X1.75X30-MM)	
M	9	1	**173-9685**	28	BOLT (M20X2.5X70-MM)	
	10	1	**8T-4167**	28	WASHER-HARD (26X44X4-MM THK)	
	11	1	**8T-4223**	8	WASHER-HARD (13.5X25.5X3-MM THK)	
M	12	1	**8T-4956**	4	BOLT (M12X1.75X35-MM)	

M - METRIC PART

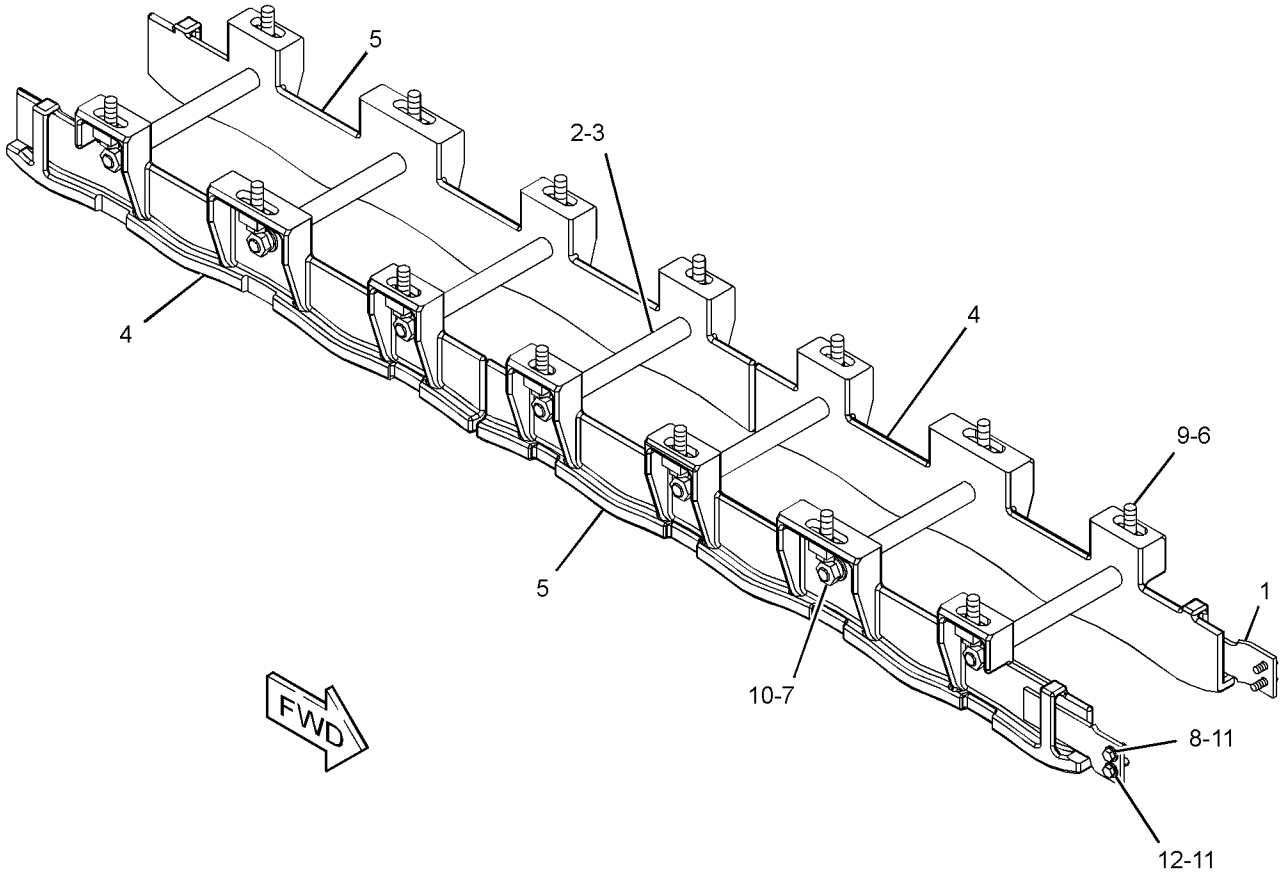

GRAPHIC #1 **<END>** g01228552

378-3804 GUARD GP-TRACK ROLLER–SYSTEMONE

S/N: PPP1-UP

PART OF 457-7971 UNDERCARRIAGE AR

AN ATTACHMENT

SMCS-7152 **i06143651**

NOTE	REF NO	GRAPHIC REF	PART NUMBER	QTY	PART NAME 1 2 3 4 5 6 (PRODUCT LEVEL)	SEE PAGE
	1	1	**8E-9932**	4	PLATE	
	2	1	**134-5366**	14	TUBE	
	3	1	**134-5368**	14	ROD	
	4	1	**166-2287**	28	SPACER (22X40X20-MM THK)	
	5	1	**229-9568**	4	GUARD	
	6	1	**229-9569**	4	GUARD	
M	7	1	**7Y-5233**	28	LOCKNUT (M24X3-THD)	
M	8	1	**8T-4139**	4	BOLT (M12X1.75X30-MM)	
M	9	1	**173-9685**	28	BOLT (M20X2.5X70-MM)	
	10	1	**8T-4167**	28	WASHER-HARD (26X44X4-MM THK)	
	11	1	**8T-4223**	8	WASHER-HARD (13.5X25.5X3-MM THK)	
M	12	1	**8T-4184**	4	BOLT (M12X1.75X45-MM)	

M - METRIC PART

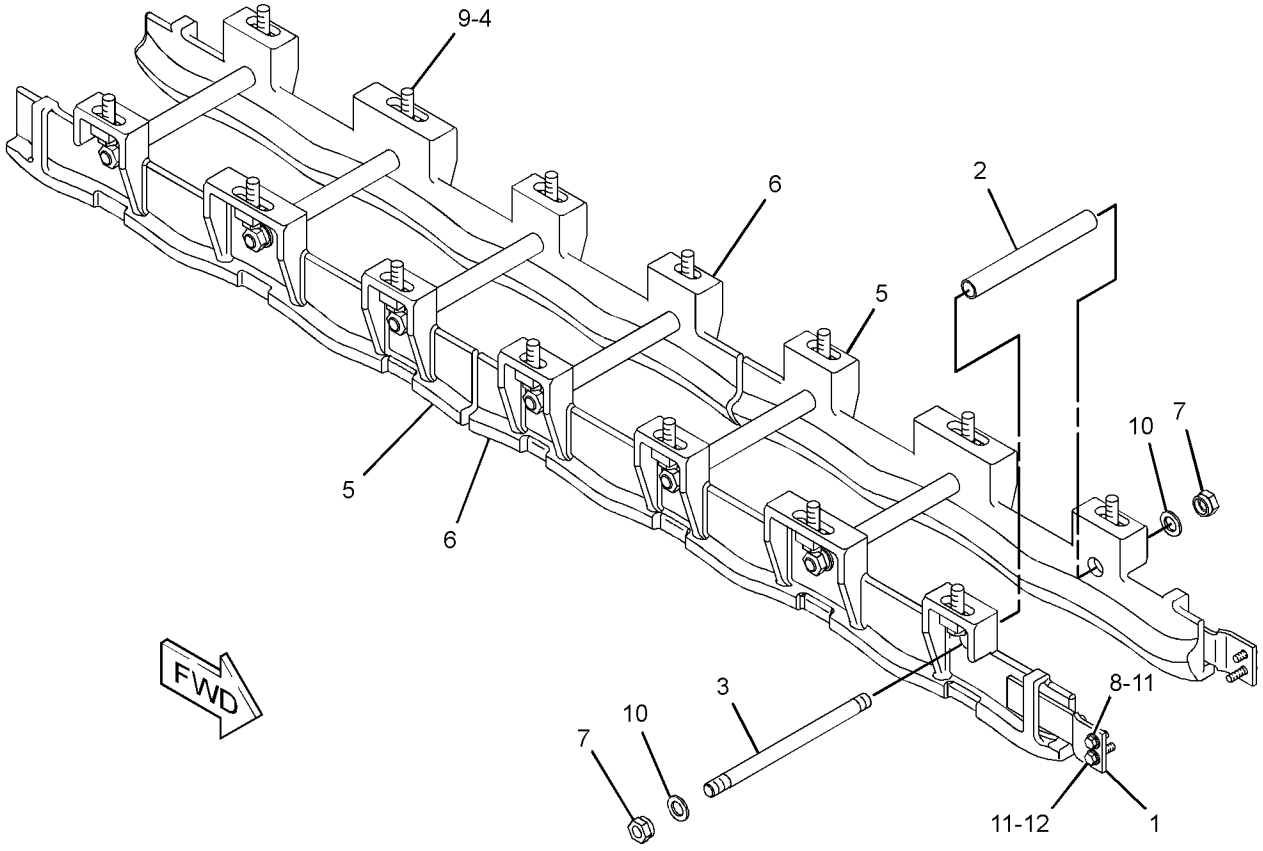

GRAPHIC #1 **<END>** g01416963

389-6120 GUARD GP-TRACK ROLLER–HEAVY-DUTY

S/N: SSS1-UP
FULL LENGTH GUIDES
PART OF 457-6210 UNDERCARRIAGE AR
AN ATTACHMENT

SMCS-7152 **i05635809**

NOTE	REF NO	GRAPHIC REF	PART NUMBER	QTY	PART NAME 1 2 3 4 5 6 (PRODUCT LEVEL)	SEE PAGE
	1	1	**8E-9932**	4	PLATE	
	2	1	**134-5364**	4	GUARD	
	3	1	**134-5365**	4	GUARD	
	4	1	**134-5366**	10	TUBE	
	5	1	**134-5368**	10	ROD	
	6	1	**166-2287**	20	SPACER (22X40X20-MM THK)	
M	7	1	**7Y-5233**	20	LOCKNUT (M24X3-THD)	
M	8	1	**8T-4139**	4	BOLT (M12X1.75X30-MM)	
M	9	1	**8T-4141**	20	BOLT (M20X2.5X70-MM)	
	10	1	**8T-4167**	20	WASHER-HARD (26X44X4-MM THK)	
	11	1	**8T-4223**	4	WASHER-HARD (13.5X25.5X3-MM THK)	
M	12	1	**8T-4956**	4	BOLT (M12X1.75X35-MM)	

M - METRIC PART

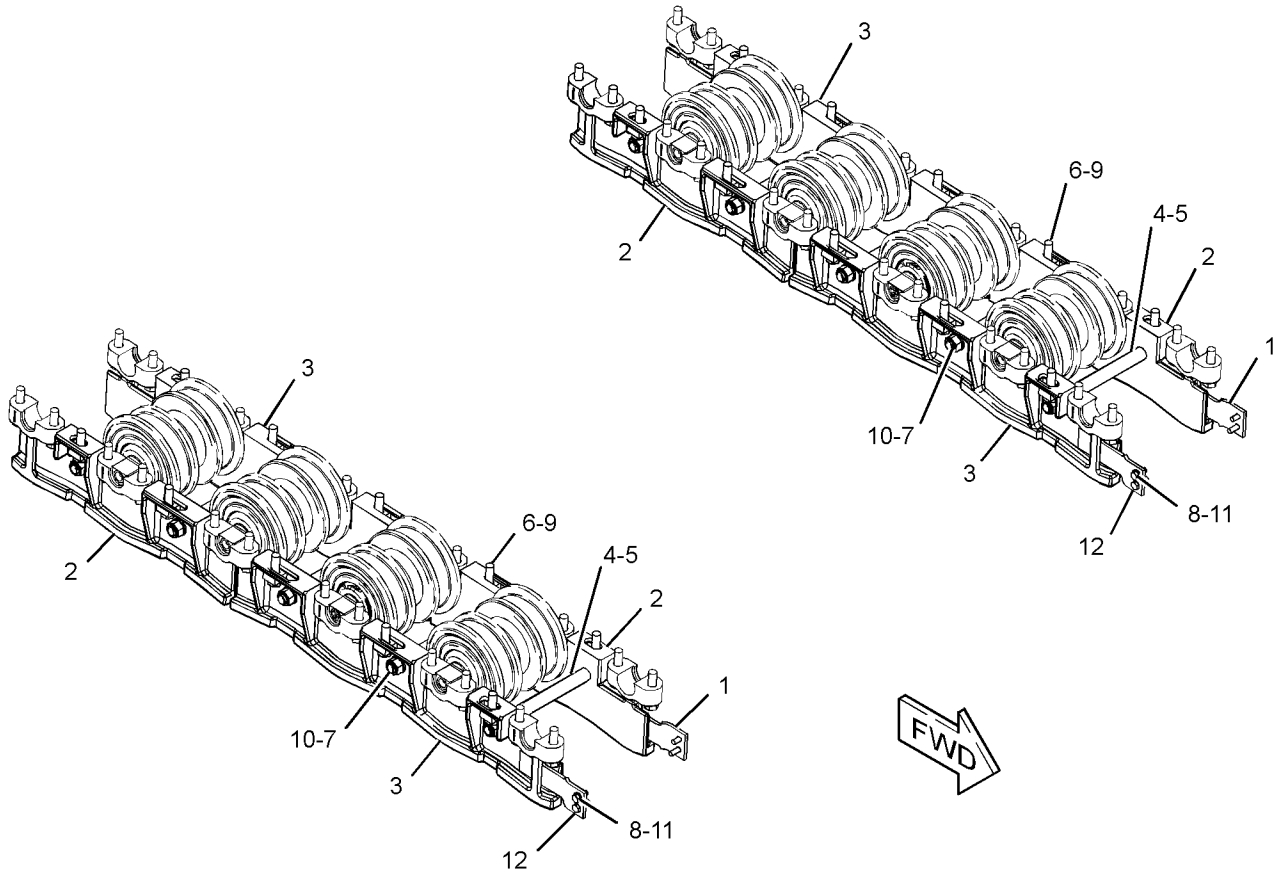

GRAPHIC #1 **<END>** g03581783

202-4296 IDLER GP-TRACK

S/N: PPP1-UP

PART OF 457-7972, 457-7973, 457-7974 UNDERCARRIAGE AR

AN ATTACHMENT

SMCS-4159 **i06205877**

NOTE	REF NO	GRAPHIC REF	PART NUMBER	QTY	PART NAME 1 2 3 4 5 6 (PRODUCT LEVEL)	SEE PAGE
	1	1	**4M-0189**	2	SEAL-O-RING	
	2	1	*8E-2139*	1	STOP AS	
	2A	1	**6Y-0473**	1	PLUG-CLEAR	
	2B	1	**9G-5664**	1	STOPPER-RUBBER	
	3	1	**107-3945**	2	COLLAR-SEAL	
	4	1	**106-7691**	2	WASHER-THRUST (86X113.93X4.52-MM THK)	
	5	1	**320-8917**	2	SEAL GP-DUO-CONE	
					(EACH INCLUDES)	
	5A	1	**162-2166**	2	RING-TORIC	
	6	1	**149-2494**	1	SHAFT-TRACK IDLER	
	7	1	**149-2495**	2	RETAINER	
	8	1	**7J-2036**	2	SEAL-O-RING	
	9	1	**202-4295**	1	IDLER & BEARING AS	
	9A	1	**9P-2245**	2	BUSHING	
	10	1	**1T-0765**	24	BOLT (3/8-16X1-IN)	
	11	1	**5M-2894**	24	WASHER-HARD (10.2X18.5X2.5-MM THK)	

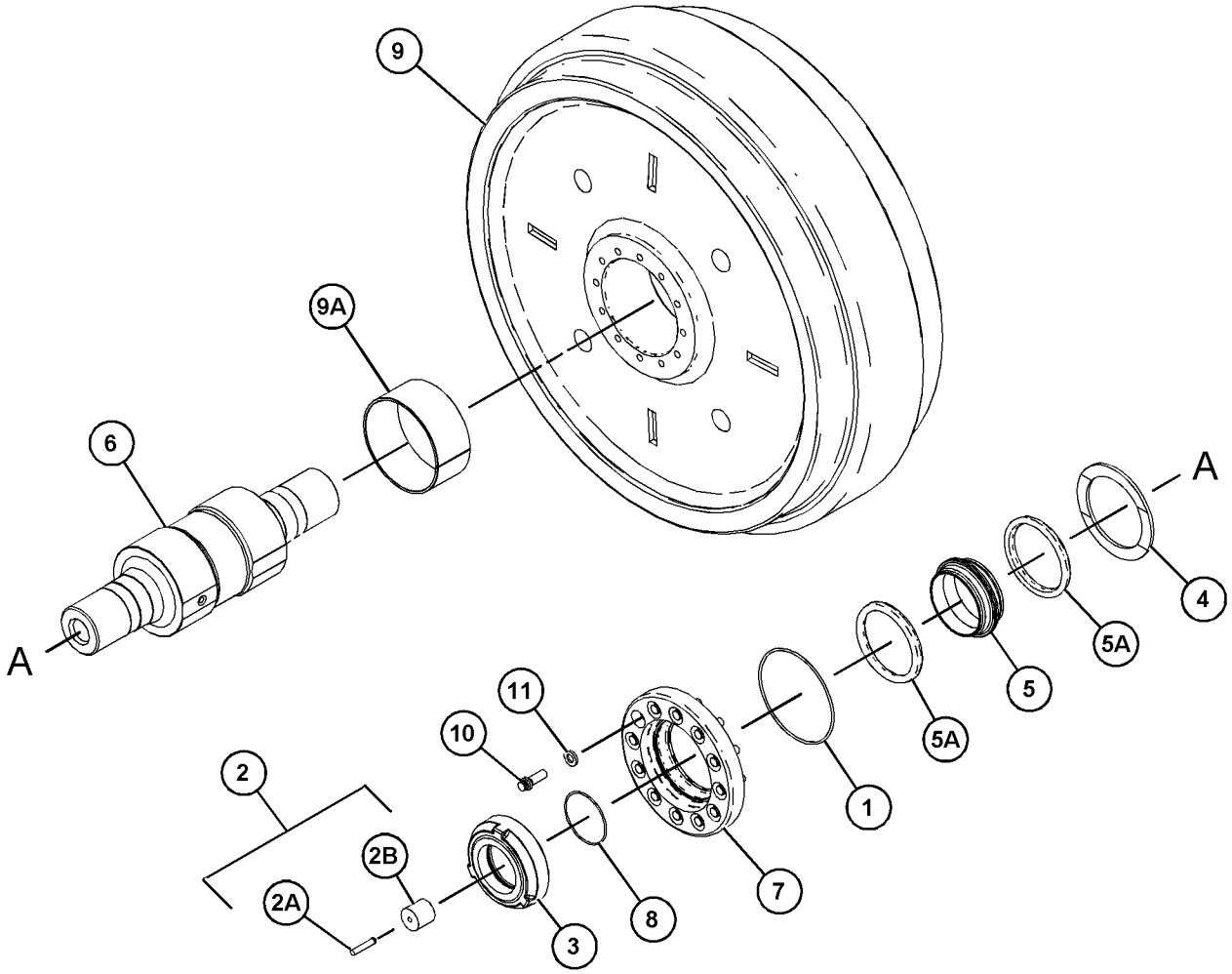

GRAPHIC #1 **<END>** g03857505

202-4304 IDLER GP-TRACK

S/N: SSS1-UP; TTT1-UP

PART OF 457-6209, 457-6210, 457-6211, 457-7966, 457-7967, 457-7968 UNDERCARRIAGE AR AN ATTACHMENT

SMCS-4159 **i06176784**

NOTE	REF NO	GRAPHIC REF	PART NUMBER	QTY	PART NAME 1 2 3 4 5 6 (PRODUCT LEVEL)	SEE PAGE
	1	1	**4M-0189**	2	SEAL-O-RING	
	2	1	**202-4303**	1	IDLER & BEARING AS	
		1	**9P-2245**	2	BUSHING	
	3	1	**7J-2036**	2	SEAL-O-RING	
	4	1	**6Y-0473**	1	PLUG-CLEAR	
		1	**9G-5664**	1	STOPPER-RUBBER	
	5	1	**106-7691**	2	WASHER-THRUST (86X113.93X4.52-MM THK)	
	6	1	**107-3945**	2	COLLAR-SEAL	
	7	1	**149-2494**	1	SHAFT-TRACK IDLER	
	8	1	**149-2495**	2	RETAINER	
	9	1	**320-8917**	2	SEAL GP-DUO-CONE	
					(EACH INCLUDES)	
		1	**162-2166**	2	RING-TORIC	
	10	1	**1T-0765**	24	BOLT (3/8-16X1-IN)	
	11	1	**5M-2894**	24	WASHER-HARD (10.2X18.5X2.5-MM THK)	

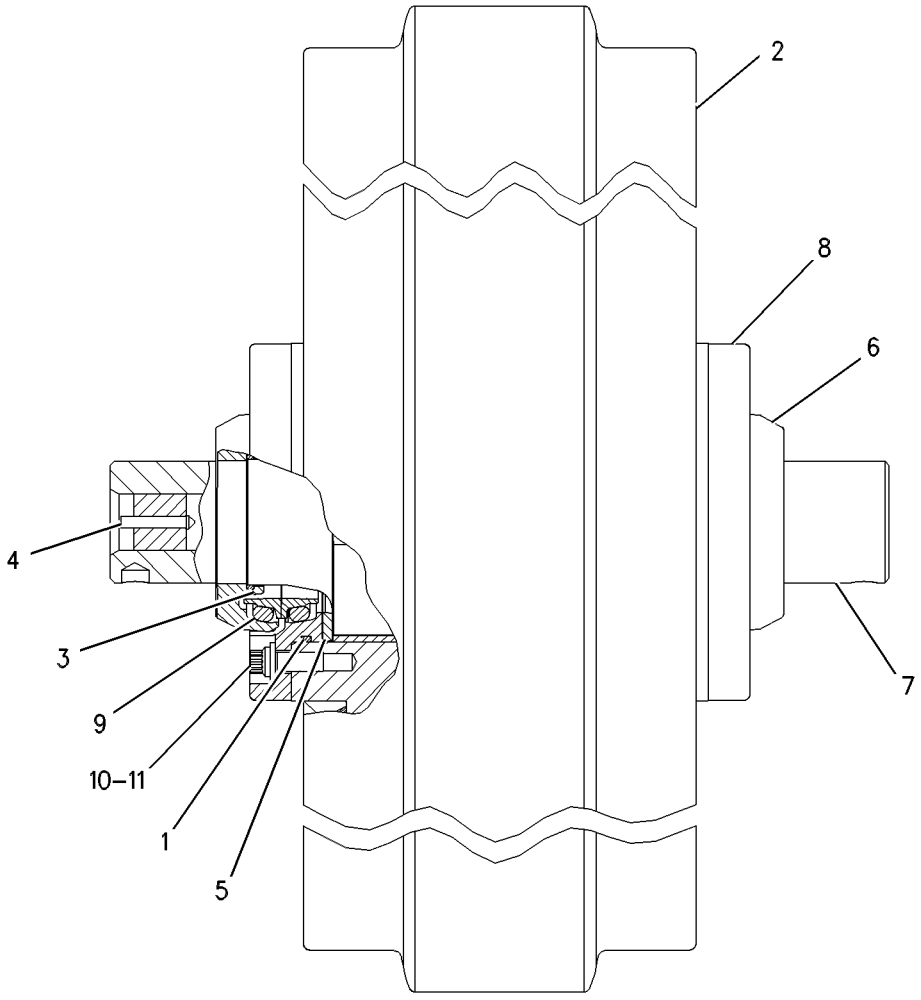

GRAPHIC #1 **<END>** g00579901

206-1895 IDLER GP-TRACK

S/N: TTT1-UP
PART OF 415-1300 UNDERCARRIAGE AR
AN ATTACHMENT

SMCS-4159 **i06218968**

NOTE	REF NO	GRAPHIC REF	PART NUMBER	QTY	PART NAME 1 2 3 4 5 6 (PRODUCT LEVEL)	SEE PAGE
	1	1	**4M-0189**	2	SEAL-O-RING	
	2	1	**7J-2036**	2	SEAL-O-RING	
	3	1	*8E-2139*	1	STOP AS	
		1	**6Y-0473**	1	PLUG-CLEAR	
		1	**9G-5664**	1	STOPPER-RUBBER	
	4	1	**106-7691**	2	WASHER-THRUST (86X113.93X4.52-MM THK)	
	5	1	**149-2494**	1	SHAFT-TRACK IDLER	
	6	1	**320-8917**	2	SEAL GP-DUO-CONE	
					(EACH INCLUDES)	
		1	**162-2166**	2	RING-TORIC	
	7	1	**167-1950**	2	RETAINER	
	8	1	**167-1951**	2	COLLAR	
	9	1	**167-1952**	2	SEAL	
	10	1	**170-0792**	2	RING	
	11	1	**202-4303**	1	IDLER & BEARING AS	
	11A	1	**9P-2245**	2	BUSHING	
	12	1	**8T-4896**	24	WASHER-HARD (10.2X18.5X2.5-MM THK)	
	13	1	**9B-7237**	24	BOLT (3/8-16X1.25-IN)	

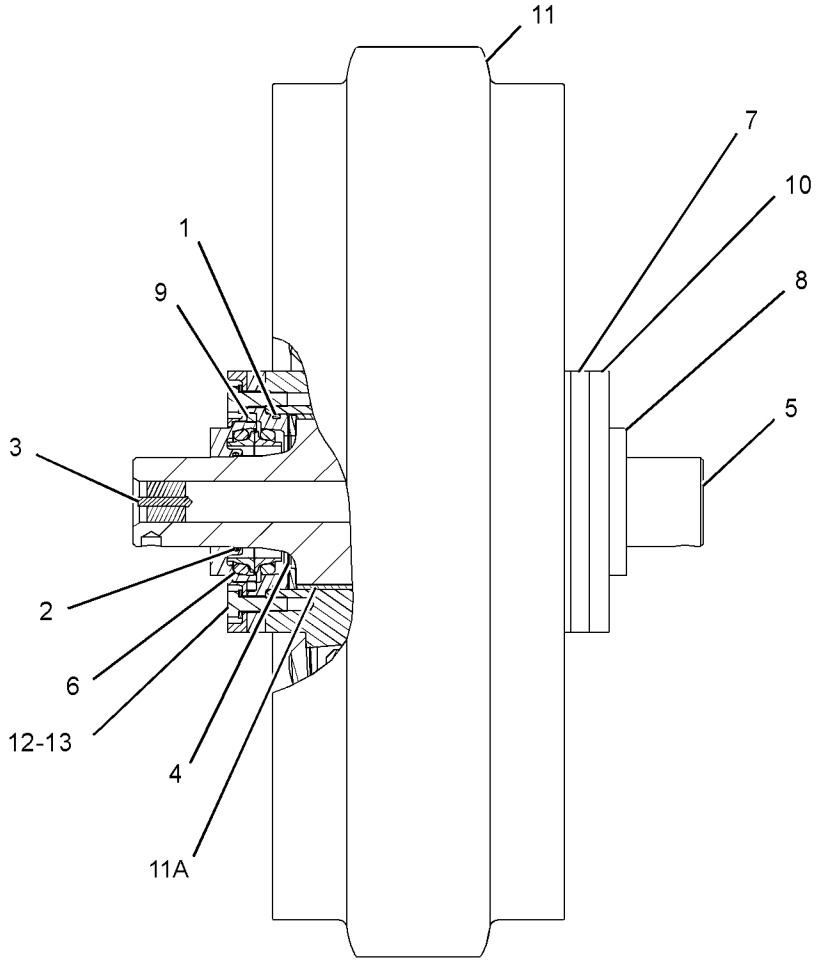

GRAPHIC #1 **<END>** g03841152

206-1897 IDLER GP-TRACK

S/N: PPP1-UP
PART OF 415-1301 UNDERCARRIAGE AR
AN ATTACHMENT

SMCS-4159 **i06219006**

NOTE	REF NO	GRAPHIC REF	PART NUMBER	QTY	PART NAME 1 2 3 4 5 6 (PRODUCT LEVEL)	SEE PAGE
	1	1	**4M-0189**	2	SEAL-O-RING	
	2	1	**7J-2036**	2	SEAL-O-RING	
	3	1	*8E-2139*	1	STOP AS	
		1	**6Y-0473**	1	PLUG-CLEAR	
		1	**9G-5664**	1	STOPPER-RUBBER	
	4	1	**106-7691**	2	WASHER-THRUST (86X113.93X4.52-MM THK)	
	5	1	**149-2494**	1	SHAFT-TRACK IDLER	
	6	1	**320-8917**	2	SEAL GP-DUO-CONE	
					(EACH INCLUDES)	
		1	**162-2166**	2	RING-TORIC	
	7	1	**167-1950**	2	RETAINER	
	8	1	**167-1951**	2	COLLAR	
	9	1	**167-1952**	2	SEAL	
	10	1	**170-0792**	2	RING	
	11	1	**202-4295**	1	IDLER & BEARING AS	
	11A	1	**9P-2245**	2	BUSHING	
	12	1	**8T-4896**	24	WASHER-HARD (10.2X18.5X2.5-MM THK)	
	13	1	**9B-7237**	24	BOLT (3/8-16X1.25-IN)	

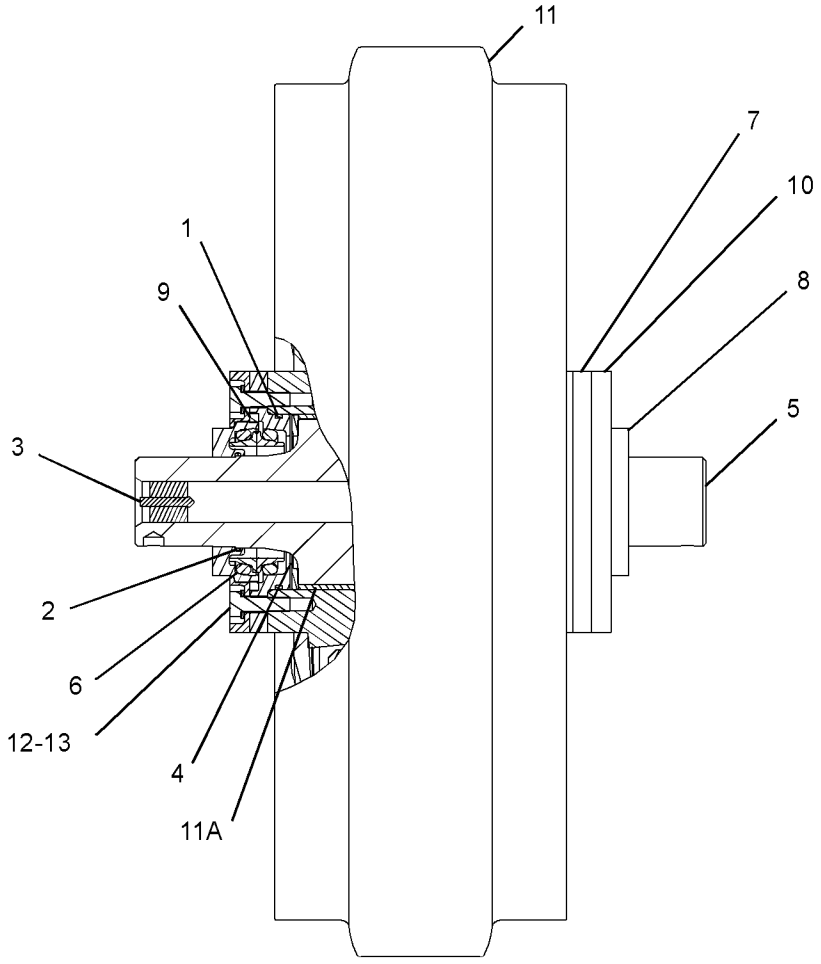

GRAPHIC #1 **<END>** g03860536

323-1170 IDLER GP-TRACK–SYSTEMONE

S/N: PPP1-UP; TTT1-UP

PART OF 457-7969, 457-7970, 457-7971, 457-7975 UNDERCARRIAGE AR

AN ATTACHMENT

SMCS-4159 **i06221451**

NOTE	REF NO	GRAPHIC REF	PART NUMBER	QTY	PART NAME 1 2 3 4 5 6 (PRODUCT LEVEL)	SEE PAGE
	1	1	**4M-0189**	2	SEAL-O-RING	
	2	1	**7J-2036**	2	SEAL-O-RING	
	3	1	**6Y-0473**	1	PLUG-CLEAR	
	3A	1	**9G-5664**	1	STOPPER-RUBBER	
	4	1	**106-7691**	2	WASHER-THRUST (86X113.93X4.52-MM THK)	
	5	1	**149-2494**	1	SHAFT-TRACK IDLER	
	6	1	**149-2495**	2	RETAINER	
	7	1	**162-7862**	2	SEAL GP-DUO-CONE	
					(EACH INCLUDES)	
	7A	1	**162-2166**	2	RING-TORIC	
	8	1	**323-1171**	1	IDLER & BEARING AS	
	8A	1	**9P-2245**	2	BUSHING	
	9	1	**107-3945**	2	COLLAR-SEAL	
	10	1	**1T-0765**	24	BOLT (3/8-16X1-IN)	
	11	1	**5M-2894**	24	WASHER-HARD (10.2X18.5X2.5-MM THK)	

PARTS SHOWN IN GRAPHIC(S) WITHOUT A REFERENCE NUMBER ARE NOT SERVICED SEPARATELY

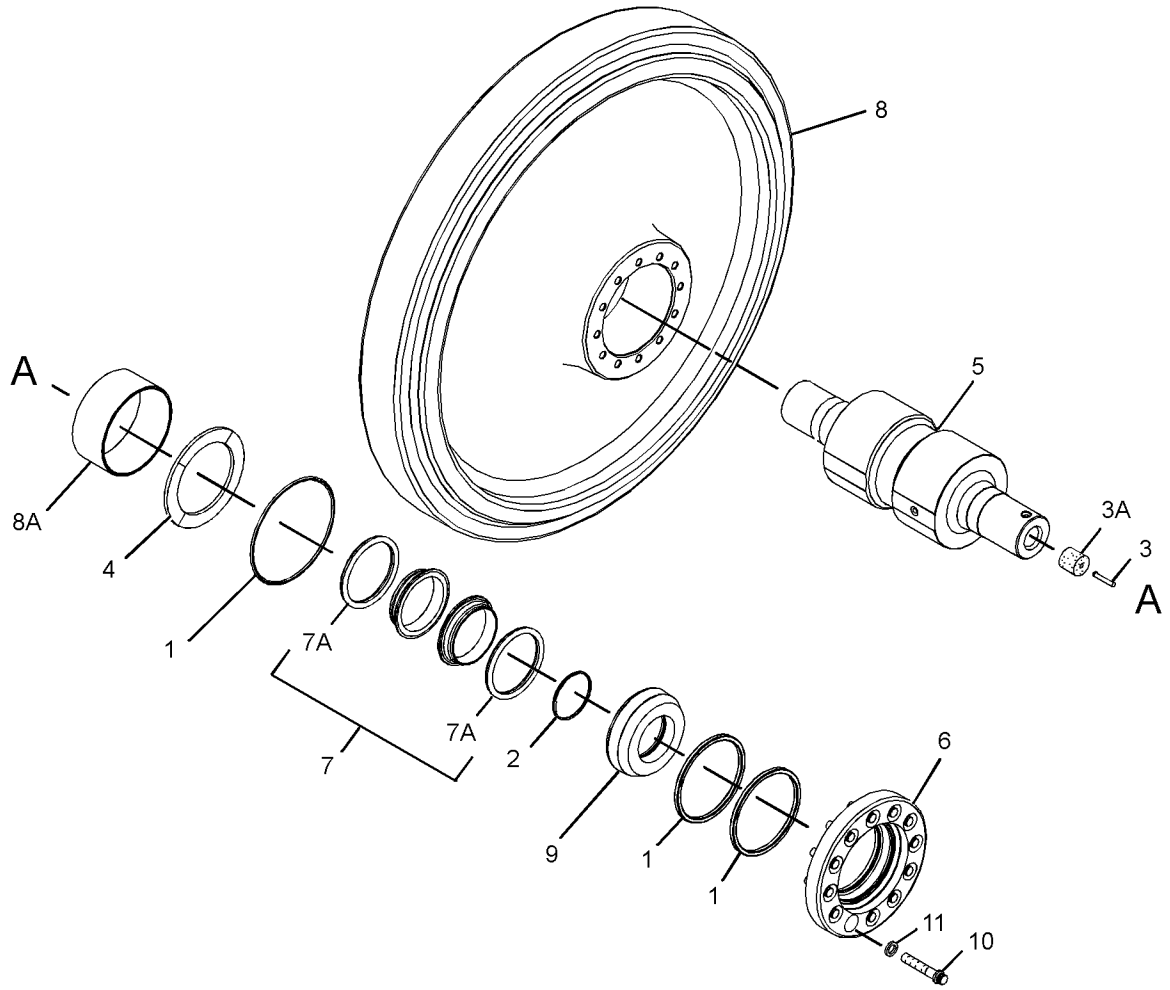

GRAPHIC #1 **<END>** g02025149

351-0957 LINK AS-TRACK–SYSTEMONE, OFFSET

S/N: PPP1-UP
45-JOINTS. SEALED, LUBRICATED
FOR USE WITH SYSTEMONE ROLLERS, GUARDS, GUIDESTRIPS, SHOES
PART OF 385-7740 TRACK GP
AN ATTACHMENT

SMCS-4169, 4171 **i06144140**

NOTE	REF NO	GRAPHIC REF	PART NUMBER	QTY	PART NAME 1 2 3 4 5 6 (PRODUCT LEVEL)	SEE PAGE
	1	1	**234-9699**	42	LINK-TRACK	
Y	2	1	**351-0955**	21	LINK AS-TRACK BOX (LINK BOX)	474
Y	3	1	**351-0956**	1	LINK AS-TRACK BOX (LINK BOX, OFFSET)	475

Y - SEPARATE ILLUSTRATION

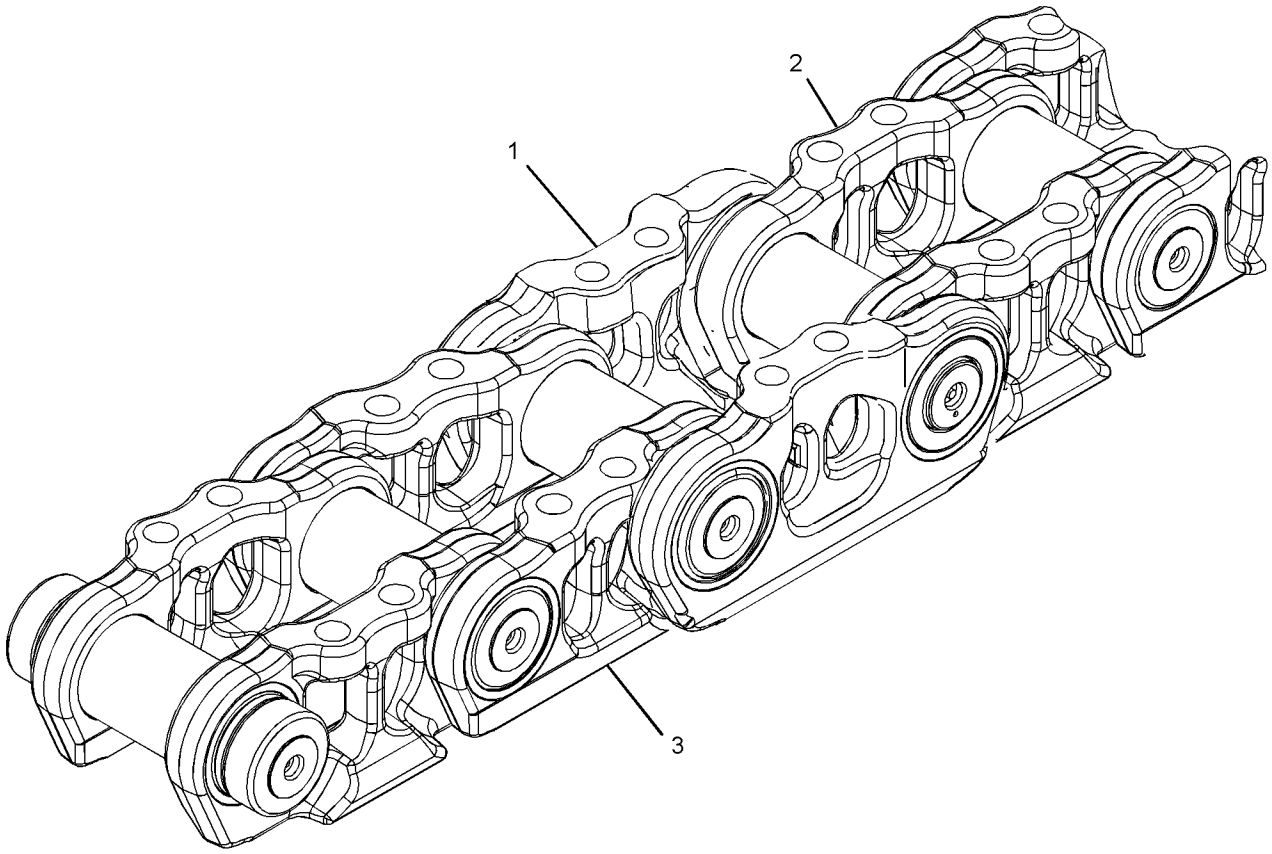

GRAPHIC #1 **<END>** g01793333

351-0958 LINK AS-TRACK–SYSTEMONE, OFFSET

S/N: TTT1-UP
41-JOINTS. SEALED, LUBRICATED
FOR USE WITH SYSTEMONE ROLLERS, GUARDS, GUIDESTRIPS, SHOES
PART OF 385-2666, 385-2679 TRACK GP
AN ATTACHMENT

SMCS-4169, 4171 **i05508631**

NOTE	REF NO	GRAPHIC REF	PART NUMBER	QTY	PART NAME 1 2 3 4 5 6 (PRODUCT LEVEL)	SEE PAGE
	1	1	**234-9699**	38	LINK-TRACK	
Y	2	1	**351-0955**	19	LINK AS-TRACK BOX (LINK BOX)	474
Y	3	1	**351-0956**	1	LINK AS-TRACK BOX (LINK BOX, OFFSET)	475

Y - SEPARATE ILLUSTRATION

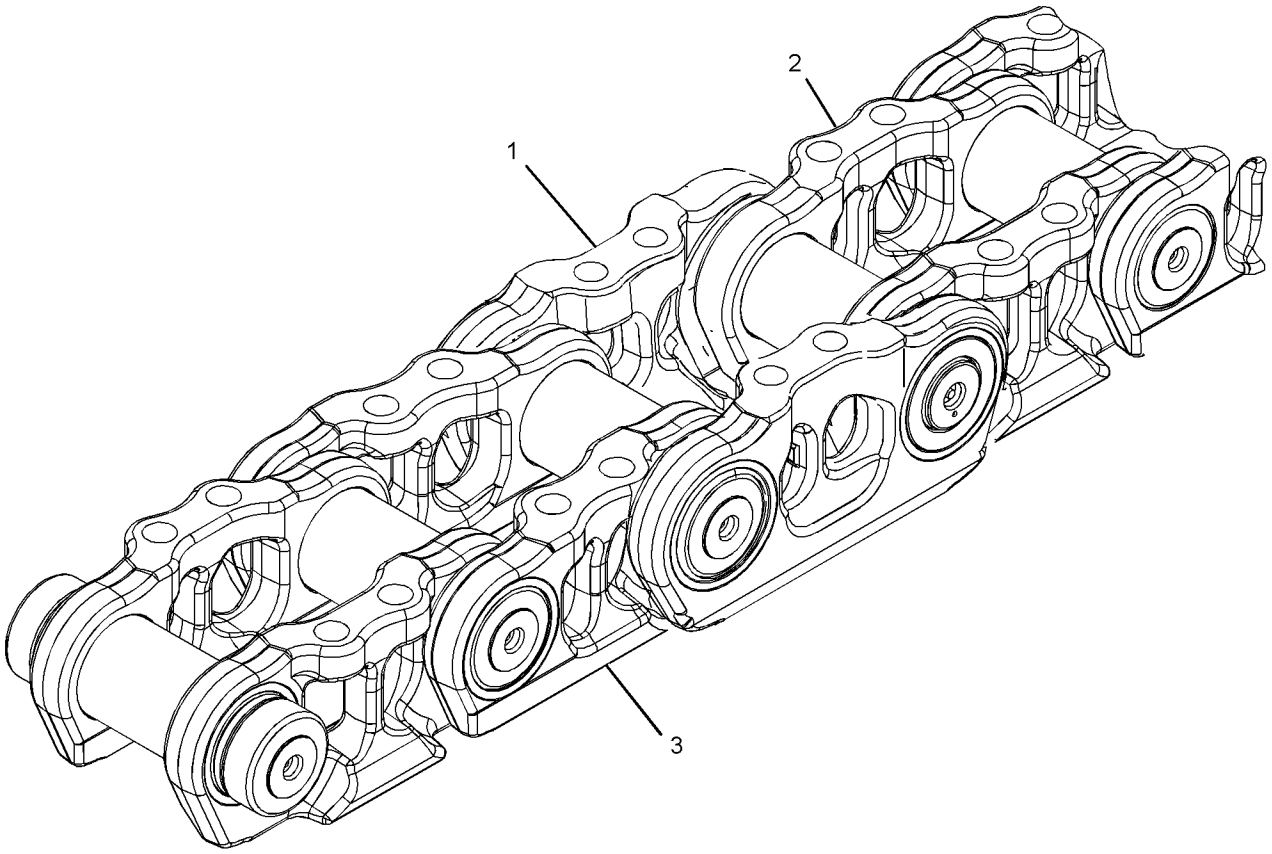

GRAPHIC #1 **<END>** g01793333

424-0842 LINK AS-TRACK–HEAVY-DUTY

S/N: SSS1-UP
39-JOINTS. SEALED, LUBRICATED
FOR USE WITH HEAVY-DUTY ROLLERS, GUARDS, GUIDESTRIPS, CONVENTIONAL IDLERS
PART OF 385-5450, 385-5458, 6I-9641 TRACK GP
AN ATTACHMENT

SMCS-4169, 4171 **i06231171**

NOTE	REF NO	GRAPHIC REF	PART NUMBER	QTY	PART NAME 1 2 3 4 5 6 (PRODUCT LEVEL)	SEE PAGE
	1	1	**378-8242**	38	LINK-TRACK (LH)	
	2	1	*6Y-1198*	39	STOP AS	
					(EACH INCLUDES)	
		1	**5G-2247**	1	STOPPER-RUBBER	
		1	**6Y-0473**	1	PLUG-CLEAR	
	3	1	**8E-7222**	39	BUSHING-TRACK	
	4	1	**8E-7407**	1	LINK-TRACK MASTER (PIN END, RH)	
	5	1	**8E-7408**	1	LINK-TRACK MASTER (PIN END, LH)	
	6	1	**8E-7409**	1	LINK-TRACK MASTER (BUSHING END, RH)	
	7	1	**8E-7410**	1	LINK-TRACK MASTER (BUSHING END, LH)	
	8	1	**152-8071**	78	RING-THRUST	
	9	1	**160-7820**	39	PIN-TRACK	
	10	1	**207-0544**	78	SEAL AS	
	11	1	**378-8241**	38	LINK-TRACK (RH)	

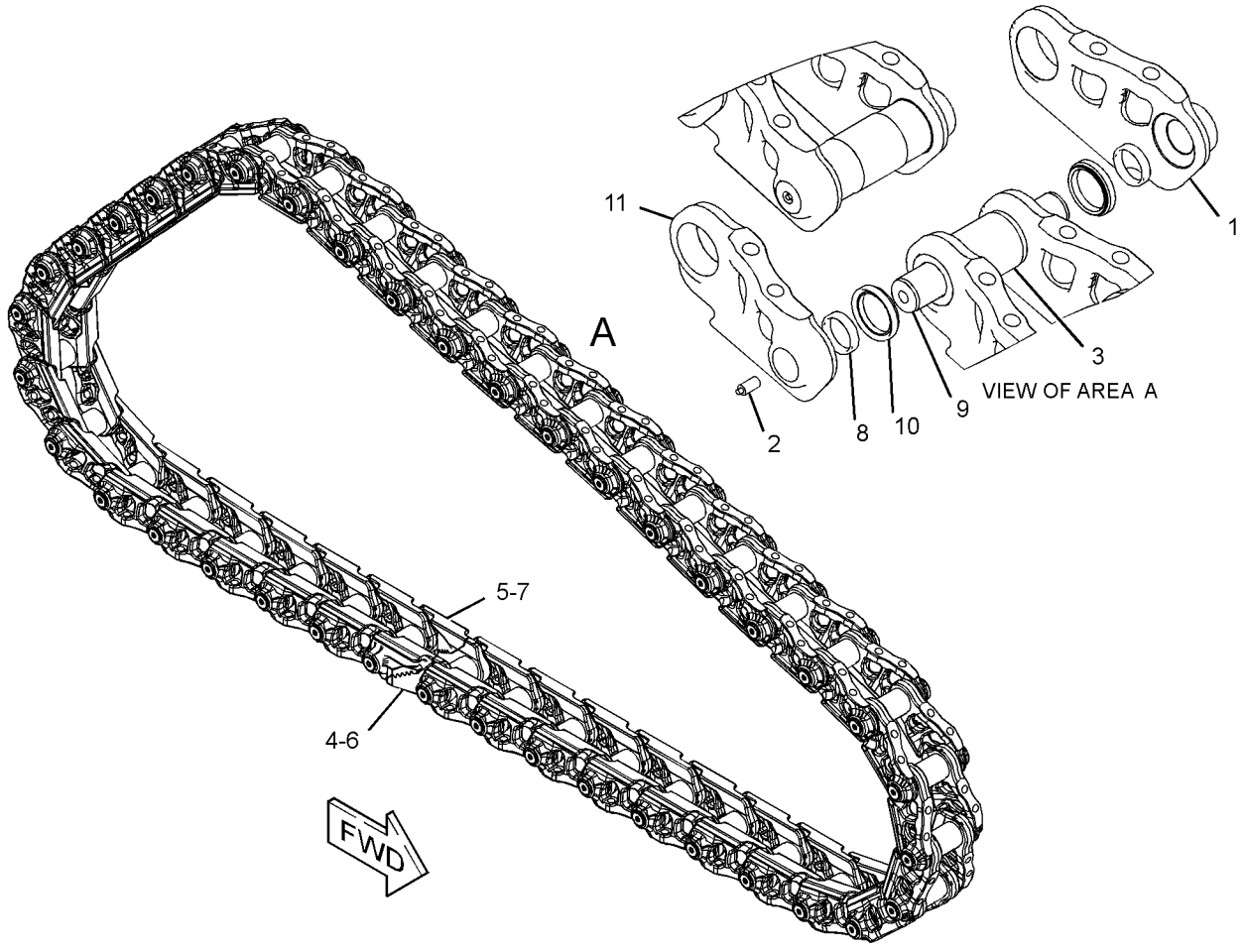

GRAPHIC #1 **<END>** g03381401

424-0844 LINK AS-TRACK–HEAVY-DUTY

S/N: TTT1-UP
41-JOINTS. SEALED, LUBRICATED
FOR USE WITH HEAVY-DUTY ROLLERS, GUARDS, GUIDESTRIPS, CONVENTIONAL IDLERS
PART OF 385-2672, 385-2675, 385-2678, 385-2682, 391-3923 TRACK GP
AN ATTACHMENT

SMCS-4169, 4171 **i05508751**

NOTE	REF NO	GRAPHIC REF	PART NUMBER	QTY	PART NAME 1 2 3 4 5 6 (PRODUCT LEVEL)	SEE PAGE
	1	1	*6Y-1198*	41	STOP AS	
					(EACH INCLUDES)	
	1A	1	**5G-2247**	1	STOPPER-RUBBER	
	1B	1	**6Y-0473**	1	PLUG-CLEAR	
	2	1	**8E-7222**	41	BUSHING-TRACK	
	3	1	**8E-7407**	1	LINK-TRACK MASTER (PIN END, RH)	
	4	1	**8E-7408**	1	LINK-TRACK MASTER (PIN END, LH)	
	5	1	**8E-7409**	1	LINK-TRACK MASTER (BUSHING END, RH)	
	6	1	**8E-7410**	1	LINK-TRACK MASTER (BUSHING END, LH)	
	7	1	**152-8071**	82	RING-THRUST	
	8	1	**160-7820**	41	PIN-TRACK	
	9	1	**207-0544**	82	SEAL AS	
	10	1	**378-8241**	40	LINK-TRACK (RH)	
	11	1	**378-8242**	40	LINK-TRACK (LH)	

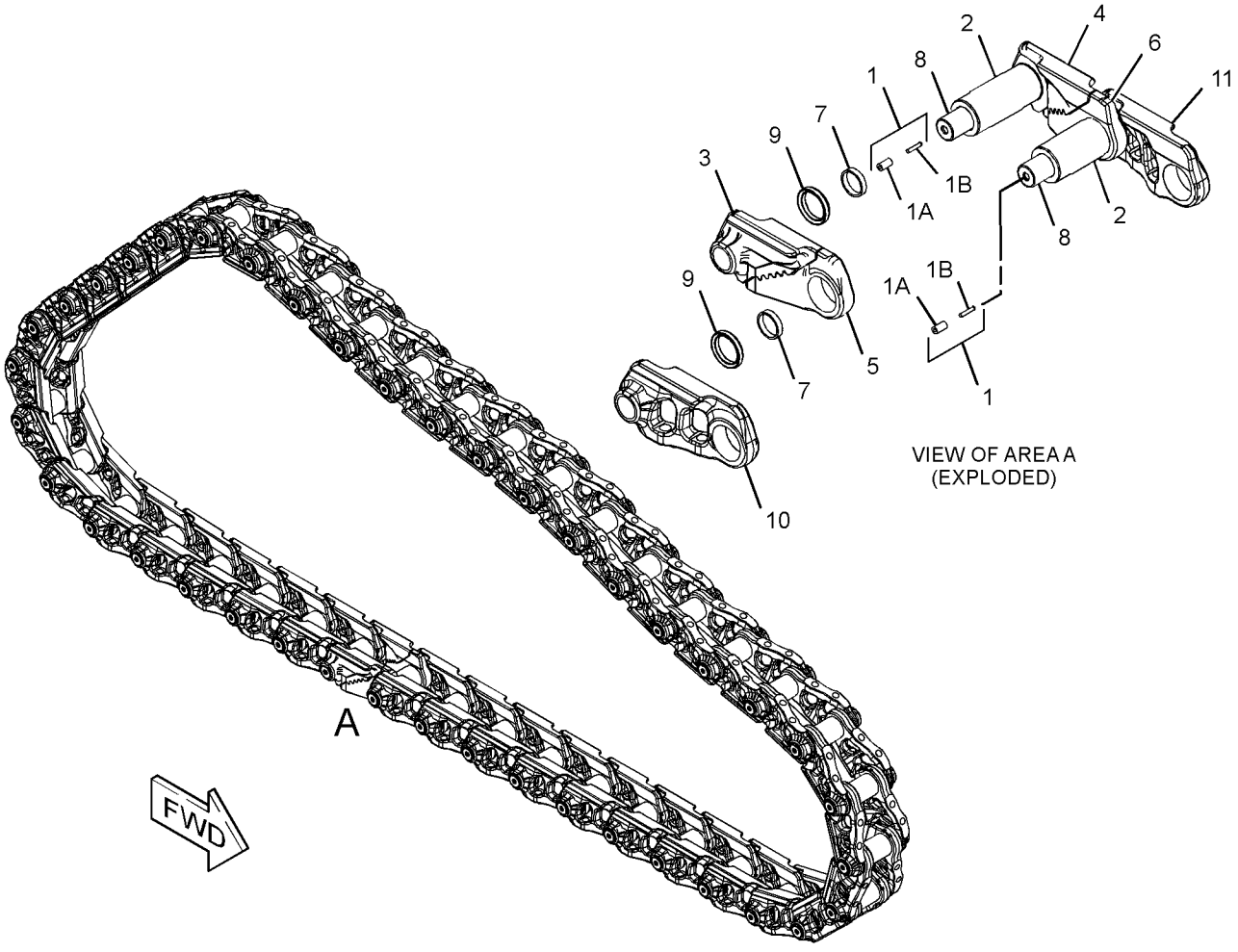

GRAPHIC #1 **<END>** g03338911

424-0847 LINK AS-TRACK–HEAVY-DUTY

S/N: PPP1-UP
45-JOINTS. SEALED, LUBRICATED
FOR USE WITH HEAVY-DUTY ROLLERS, GUARDS, GUIDESTRIPS, CONVENTIONAL IDLERS
PART OF 385-7739, 385-7742, 385-7744 TRACK GP
AN ATTACHMENT

SMCS-4169, 4171 **i06144117**

NOTE	REF NO	GRAPHIC REF	PART NUMBER	QTY	PART NAME 1 2 3 4 5 6 (PRODUCT LEVEL)	SEE PAGE
	1	1	**378-8242**	44	LINK-TRACK (LH)	
	2	1	*6Y-1198*	45	STOP AS	
					(EACH INCLUDES)	
		1	**5G-2247**	1	STOPPER-RUBBER	
		1	**6Y-0473**	1	PLUG-CLEAR	
	3	1	**8E-7222**	45	BUSHING-TRACK	
	4	1	**8E-7407**	1	LINK-TRACK MASTER (PIN END, RH)	
	5	1	**8E-7408**	1	LINK-TRACK MASTER (PIN END, LH)	
	6	1	**8E-7409**	1	LINK-TRACK MASTER (BUSHING END, RH)	
	7	1	**8E-7410**	1	LINK-TRACK MASTER (BUSHING END, LH)	
	8	1	**152-8071**	90	RING-THRUST	
	9	1	**160-7820**	45	PIN-TRACK	
	10	1	**207-0544**	90	SEAL AS	
	11	1	**378-8241**	44	LINK-TRACK (RH)	

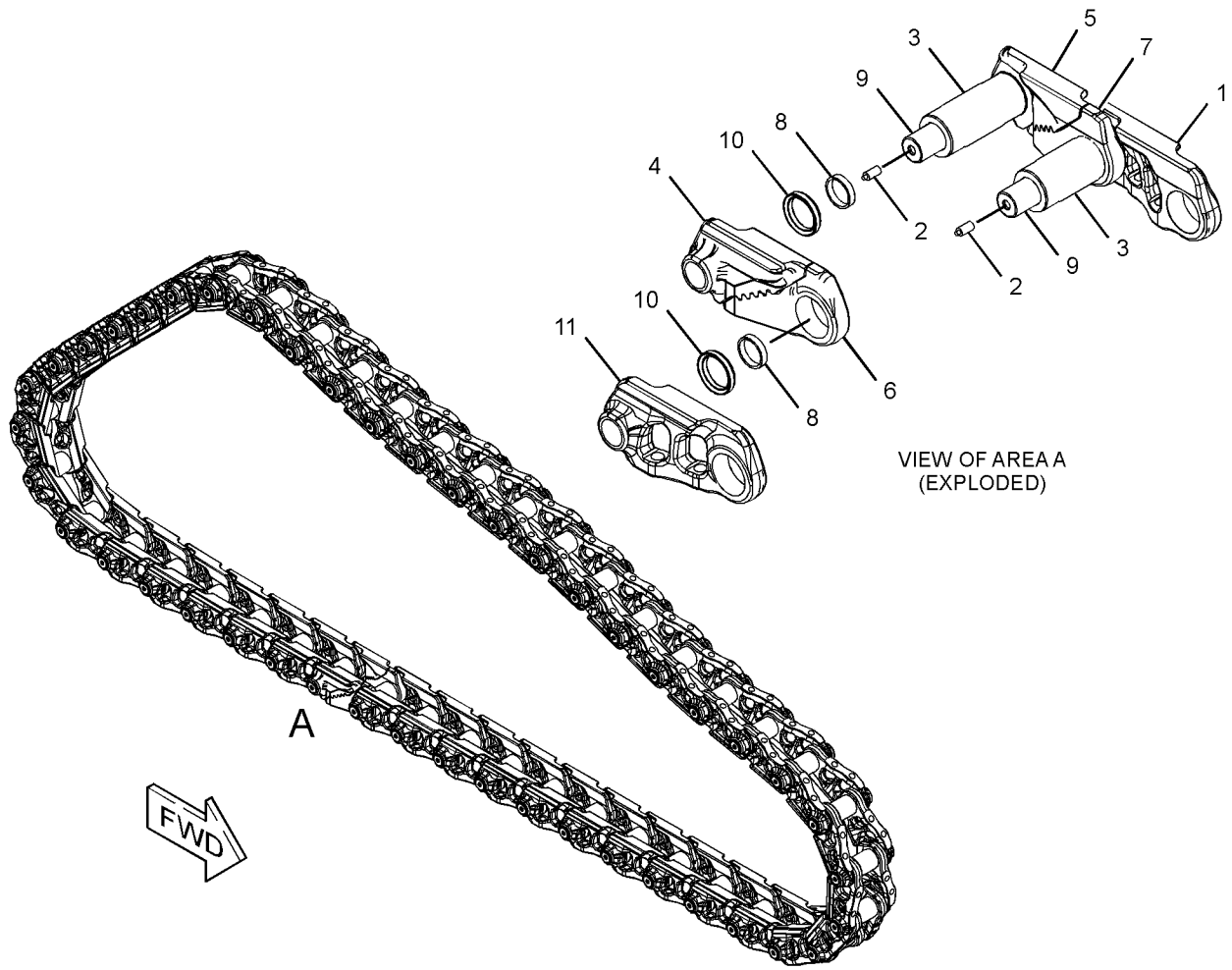

GRAPHIC #1 **<END>** g03341516

351-0955 LINK AS-TRACK BOX—LINK BOX, SYSTEMONE

S/N: PPP1-UP; TTT1-UP

SEALED, LUBRICATED, FOR FIELD REPLACEMENT OF LINK AS THAT IS MORE THAN 40% WORN, ORDER 351-0963

PART OF 351-0957, 351-0958 LINK AS-TRACK, 351-0956 LINK AS-TRACK BOX AN ATTACHMENT

SMCS-4169 **i06230054**

NOTE	REF NO	GRAPHIC REF	PART NUMBER	QTY	PART NAME 1 2 3 4 5 6 (PRODUCT LEVEL)	SEE PAGE
	1	1	**234-9699**	2	LINK-TRACK	
	2	1	*447-9948*	2	CARTRIDGE AS	
					(EACH INCLUDES)	
		1	**6Y-0473**	2	PLUG-CLEAR	
		1	**9G-1642**	2	STOPPER-RUBBER	

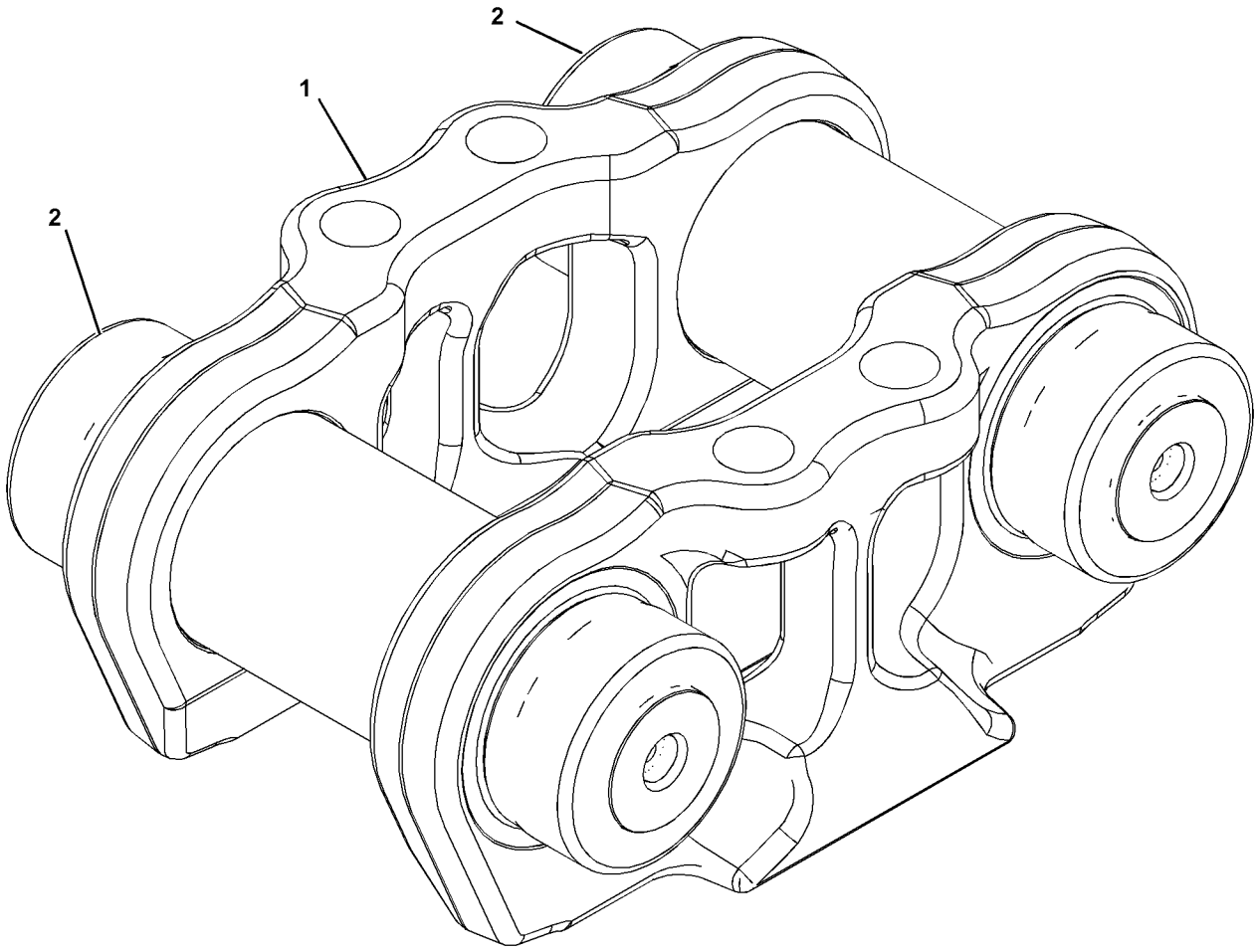

GRAPHIC #1 **<END>** g01378067

351-0956 LINK AS-TRACK BOX—SYSTEMONE, OFFSET

S/N: PPP1-UP; TTT1-UP

SEALED, LUBRICATED, FOR FIELD REPLACEMENT OF LINK AS THAT IS MORE THAN 40% WORN, ORDER 351-0964

PART OF 351-0957, 351-0958 LINK AS-TRACK AN ATTACHMENT

SMCS-4169 **i06230056**

NOTE	REF NO	GRAPHIC REF	PART NUMBER	QTY	PART NAME 1 2 3 4 5 6 (PRODUCT LEVEL)	SEE PAGE
Y	1	1	**351-0955**	1	LINK AS-TRACK BOX (LINK BOX)	474
	2	1	*447-9948*	1	CARTRIDGE AS	
		1	**9G-1642**	2	STOPPER-RUBBER	
		1	**6Y-0473**	2	PLUG-CLEAR	
					PARTS SHOWN IN GRAPHIC(S) WITHOUT A REFERENCE NUMBER ARE NOT SERVICED SEPARATELY	

Y - SEPARATE ILLUSTRATION

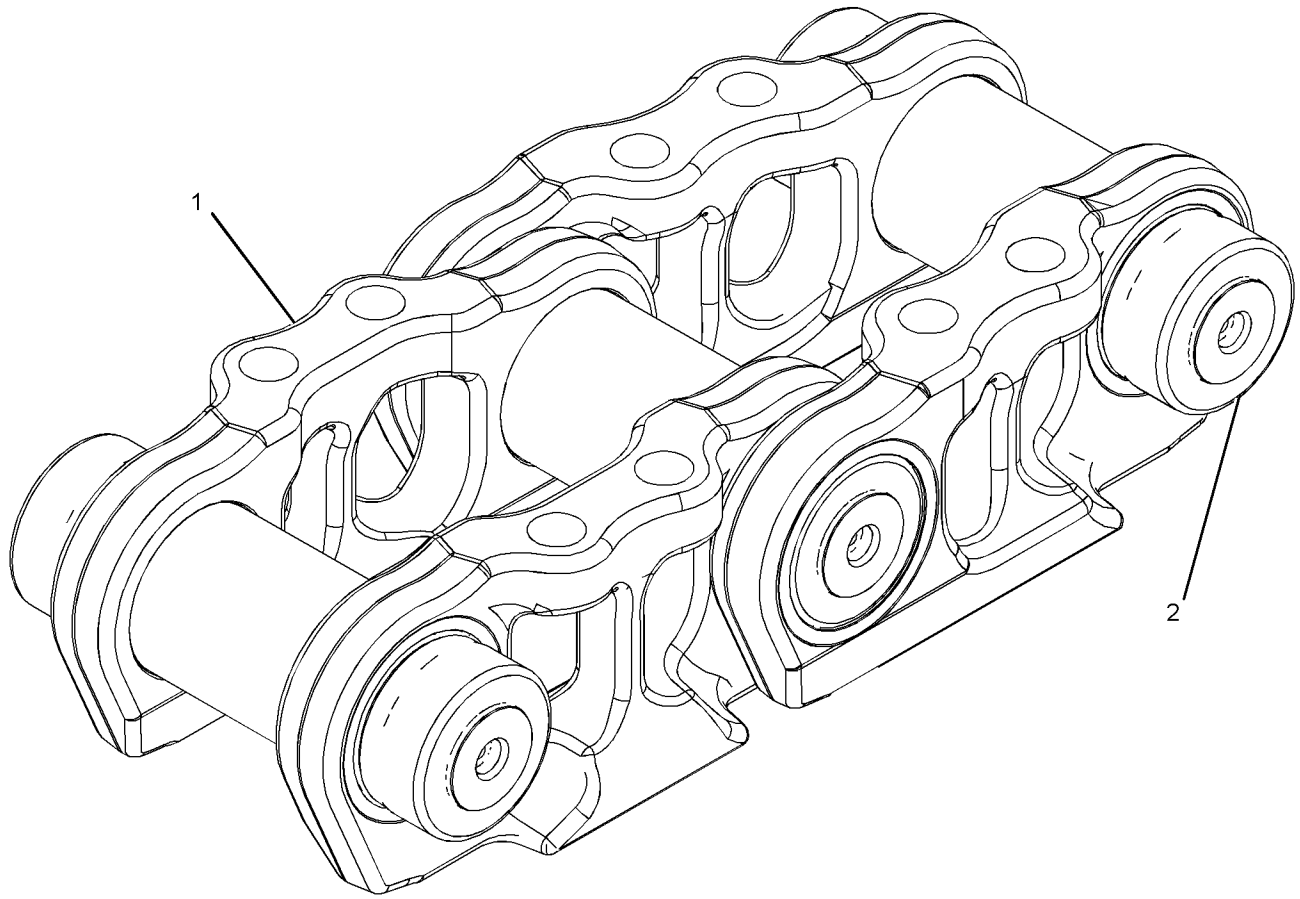

GRAPHIC #1 **<END>** g02020975

169-4368 MOUNTING GP-CARRIER ROLLER

S/N: PPP1-UP; TTT1-UP

PART OF 415-1300, 415-1301, 457-6211, 457-7967, 457-7968, 457-7969, 457-7970, 457-7971, 457-7972, 457-7973, 457-7974, 457-7975 UNDERCARRIAGE AR AN ATTACHMENT

SMCS-4154 **i05502953**

NOTE	REF NO	GRAPHIC REF	PART NUMBER	QTY	PART NAME 1 2 3 4 5 6 (PRODUCT LEVEL)	SEE PAGE
M	1	1	**7X-2575**	4	BOLT (M24X3X60-MM)	
M	2	1	**8T-4187**	2	BOLT (M20X2.5X80-MM)	
	3	1	**8T-4123**	2	WASHER (3.62X5.75X0.375-MM THK)	
	4	1	**171-0808**	1	BRACKET	
	5	1	**8T-4167**	4	WASHER-HARD (26X44X4-MM THK)	

M - METRIC PART

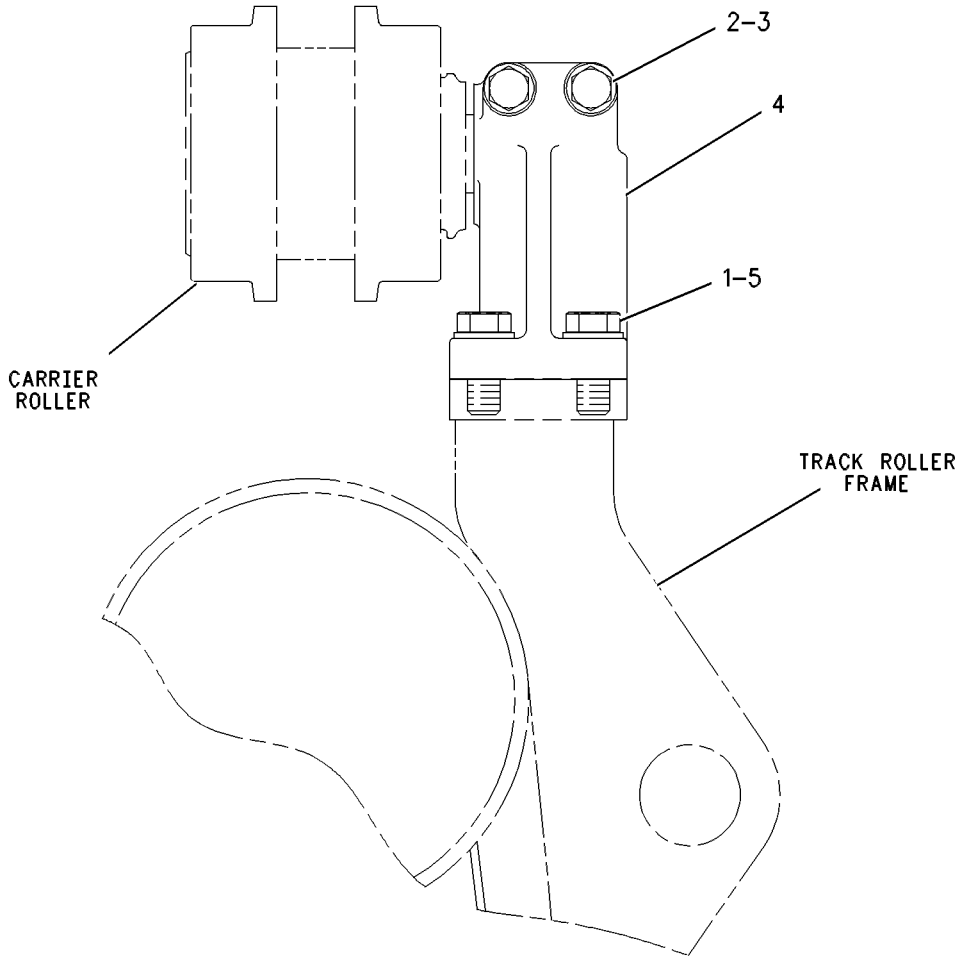

GRAPHIC #1 **<END>** g00607917

332-4789 PIVOT BAR GP

S/N: SSS1-UP; TTT1-UP
1880-MM (74-IN) GAUGE
PART OF 415-1300, 457-6209, 457-6210, 457-6211, 457-7966, 457-7967, 457-7968, 457-7969, 457-7970 UNDERCARRIAGE AR
AN ATTACHMENT

SMCS-4153 **i06143485**

NOTE	REF NO	GRAPHIC REF	PART NUMBER	QTY	PART NAME 1 2 3 4 5 6 (PRODUCT LEVEL)	SEE PAGE
	1	1	**5G-8993**	2	RETAINER	
	2	1	**5G-9842**	2	SEAL	
	3	1	**5G-9843**	2	PLATE	
	4	1	**238-4520**	2	PLATE AS	
	5	1	**332-4788**	2	SHAFT AS-PIVOT	
					(EACH INCLUDES)	
		1	**5G-9841**	1	RING	
M	6	1	**7X-2580**	16	BOLT (M30X3.5X90-MM)	
	7	1	**8E-1900**	2	WASHER-THRUST (112X150X6.35-MM THK)	
M	8	1	**8T-0375**	12	BOLT (M16X2X45-MM)	
	9	1	**8T-4123**	10	WASHER (3.62X5.75X0.375-MM THK)	
M	10	1	**8T-5460**	10	BOLT (M20X2.5X40-MM)	
	11	1	**365-8408**	2	SEAL-D-RING	

M - METRIC PART

2A 2 5G9842/001 ARRUELA

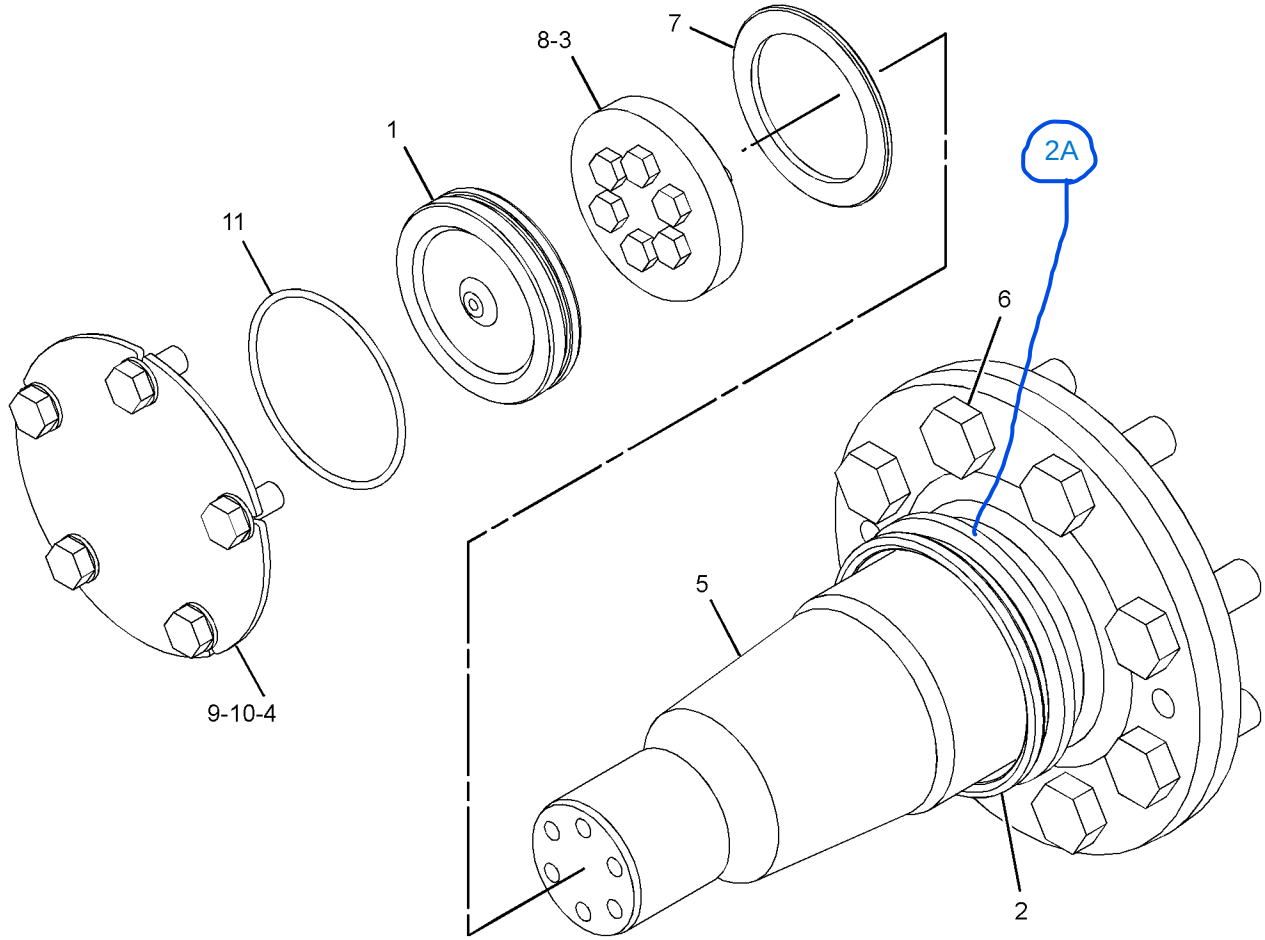

GRAPHIC #1 **<END>** g02284013

332-4798 PIVOT BAR GP

S/N: PPP1-UP

PART OF 415-1301, 457-7971, 457-7972, 457-7973, 457-7974, 457-7975 UNDERCARRIAGE AR AN ATTACHMENT

SMCS-4153 **i06143652**

NOTE	REF NO	GRAPHIC REF	PART NUMBER	QTY	PART NAME 1 2 3 4 5 6 (PRODUCT LEVEL)	SEE PAGE
	1	1	**3T-2051**	2	COVER	
	2	1	**5G-8993**	2	RETAINER	
	3	1	**5G-9842**	2	SEAL	
	4	1	**5G-9843**	2	PLATE	
	5	1	**332-4797**	2	SHAFT AS	
					(EACH INCLUDES)	
		1	**5G-9841**	1	RING	
M	6	1	**7X-2582**	16	BOLT (M30X3.5X110-MM)	
	7	1	**8E-1900**	2	WASHER-THRUST (112X150X6.35-MM THK)	
M	8	1	**8T-0375**	12	BOLT (M16X2X45-MM)	
	9	1	**8T-4123**	10	WASHER (3.62X5.75X0.375-MM THK)	
M	10	1	**8T-6430**	10	BOLT (M20X2.5X50-MM)	
	11	1	**365-8408**	2	SEAL-D-RING	

M - METRIC PART

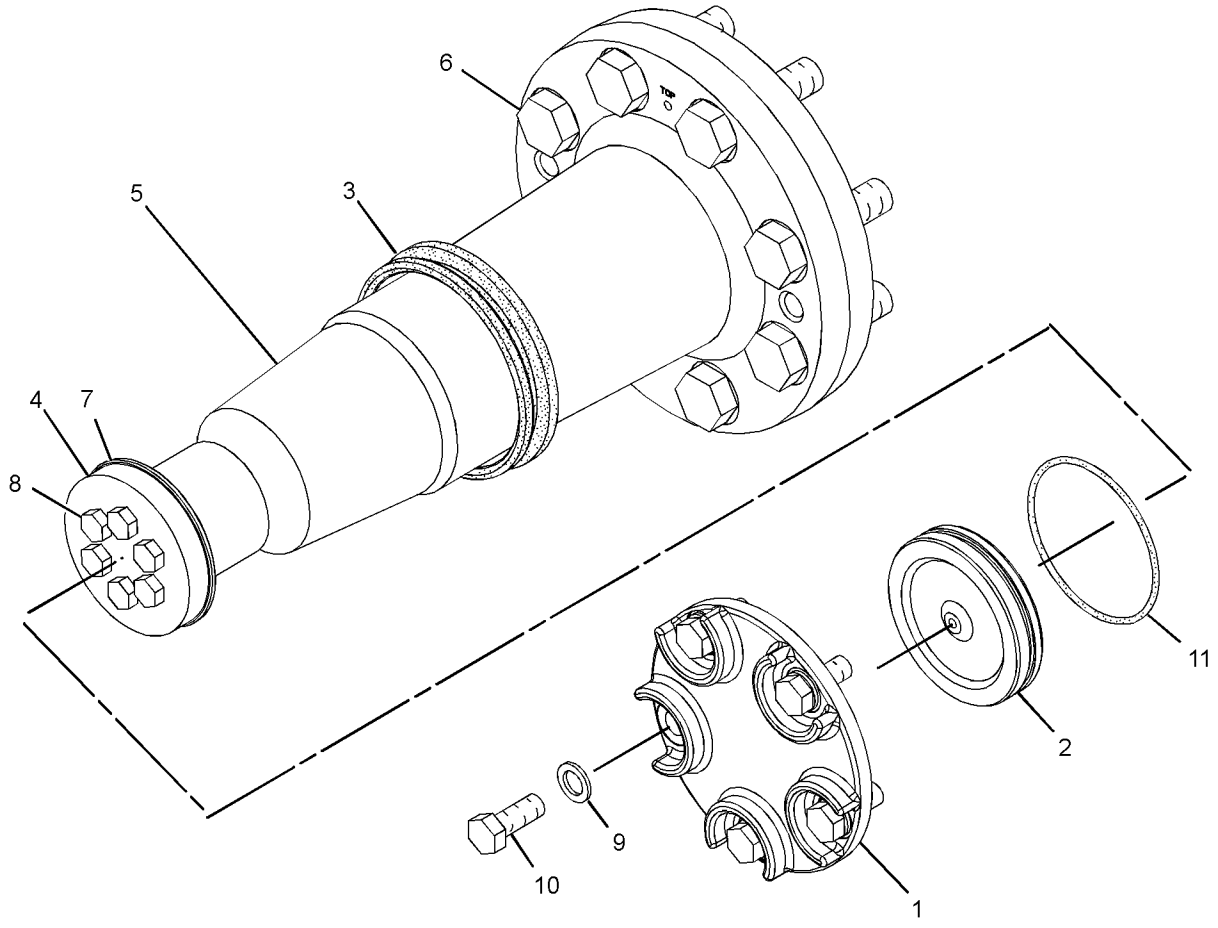

GRAPHIC #1 **<END>** g02264653

235-5974 ROLLER GP-TRACK CARRIER

S/N: PPP1-UP; TTT1-UP

PART OF 415-1300, 415-1301, 457-6211, 457-7967, 457-7968, 457-7969, 457-7970, 457-7971, 457-7972, 457-7973, 457-7974, 457-7975 UNDERCARRIAGE AR AN ATTACHMENT

SMCS-4154 **i05906874**

NOTE	REF NO	GRAPHIC REF	PART NUMBER	QTY	PART NAME 1 2 3 4 5 6 (PRODUCT LEVEL)	SEE PAGE
					(INDIVIDUAL PARTS ARE NOT SERVICED SEPARATELY)	

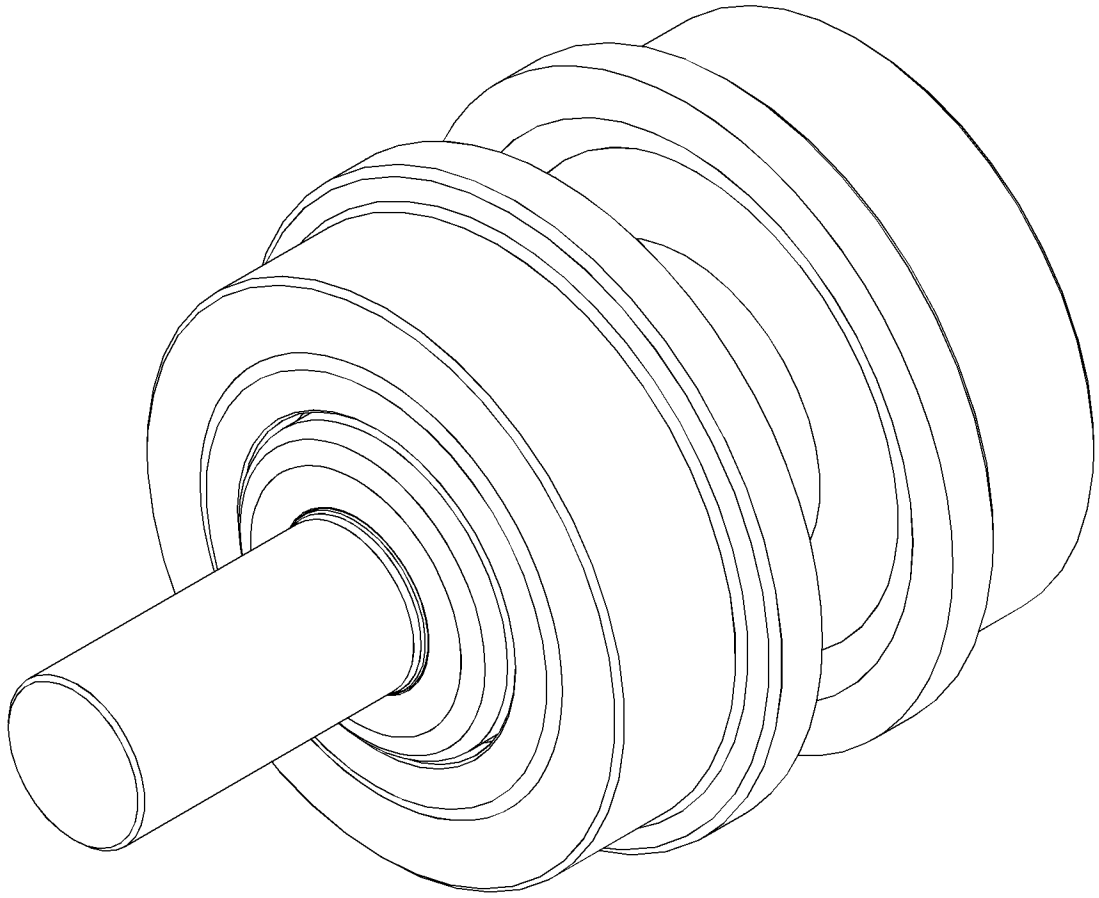

GRAPHIC #1 **<END>** g01395978

125-4176 ROLLER GP-TRACK-DOUBLE FLANGE

S/N: PPP1-UP; SSS1-UP; TTT1-UP
PART OF 457-6211, 457-7966, 457-7972 UNDERCARRIAGE AR
AN ATTACHMENT

SMCS-4180 **i05634933**

NOTE	REF NO	GRAPHIC REF	PART NUMBER	QTY	PART NAME 1 2 3 4 5 6 (PRODUCT LEVEL)	SEE PAGE
Y	1	1	**288-0935**	1	ROLLER GP-TRACK-DOUBLE FLANGE	481
	2	1	**317-9080**	2	CAP-TRACK ROLLER	
M	3	1	**8T-0360**	4	BOLT (M20X2.5X90-MM)	
	4	1	**8T-3282**	4	WASHER-HARD (22X35X3.5-MM THK)	

M - METRIC PART
Y - SEPARATE ILLUSTRATION

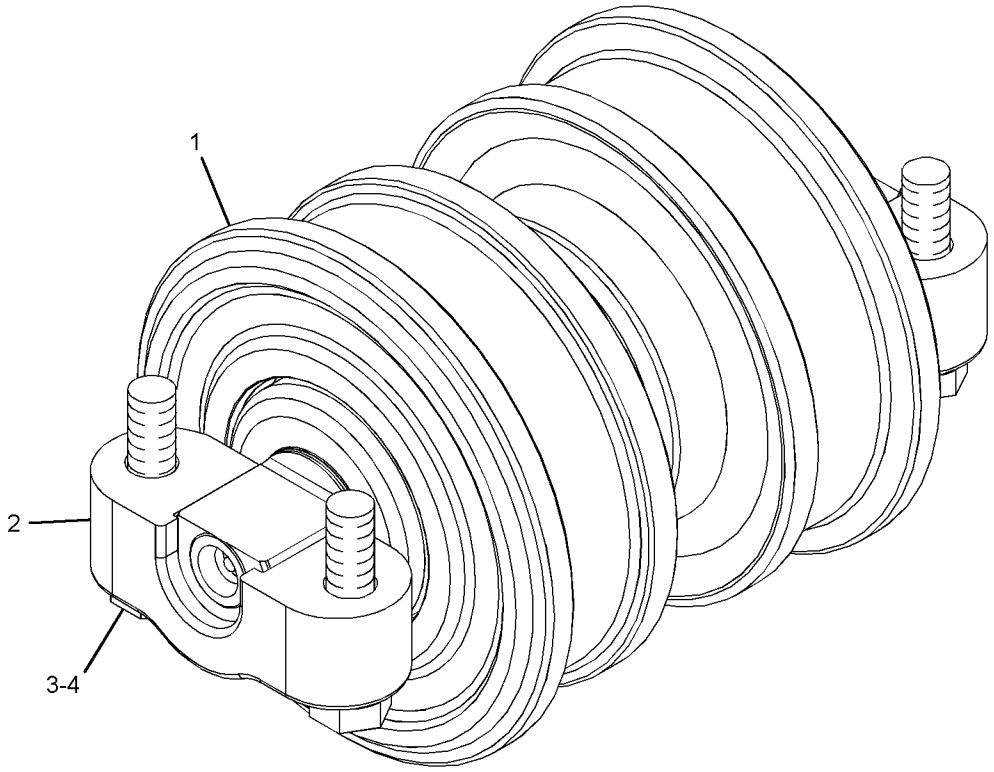

GRAPHIC #1 **<END>** g01425518

288-0935 ROLLER GP-TRACK-DOUBLE FLANGE

S/N: PPP1-UP; SSS1-UP; TTT1-UP
FOR USE WITH SEALED, LUBRICATED, HEAVY-DUTY, HYBRID, ROTATING BUSHING TRACK
CANNOT BE USED WITH SYSTEMONE TRACK
PART OF 125-4176 ROLLER GP-TRACK-DOUBLE FLANGE
AN ATTACHMENT

SMCS-4180 **i05634935**

NOTE	REF NO	GRAPHIC REF	PART NUMBER	QTY	PART NAME 1 2 3 4 5 6 (PRODUCT LEVEL)	SEE PAGE
					(INDIVIDUAL PARTS ARE NOT SERVICED SEPARATELY)	

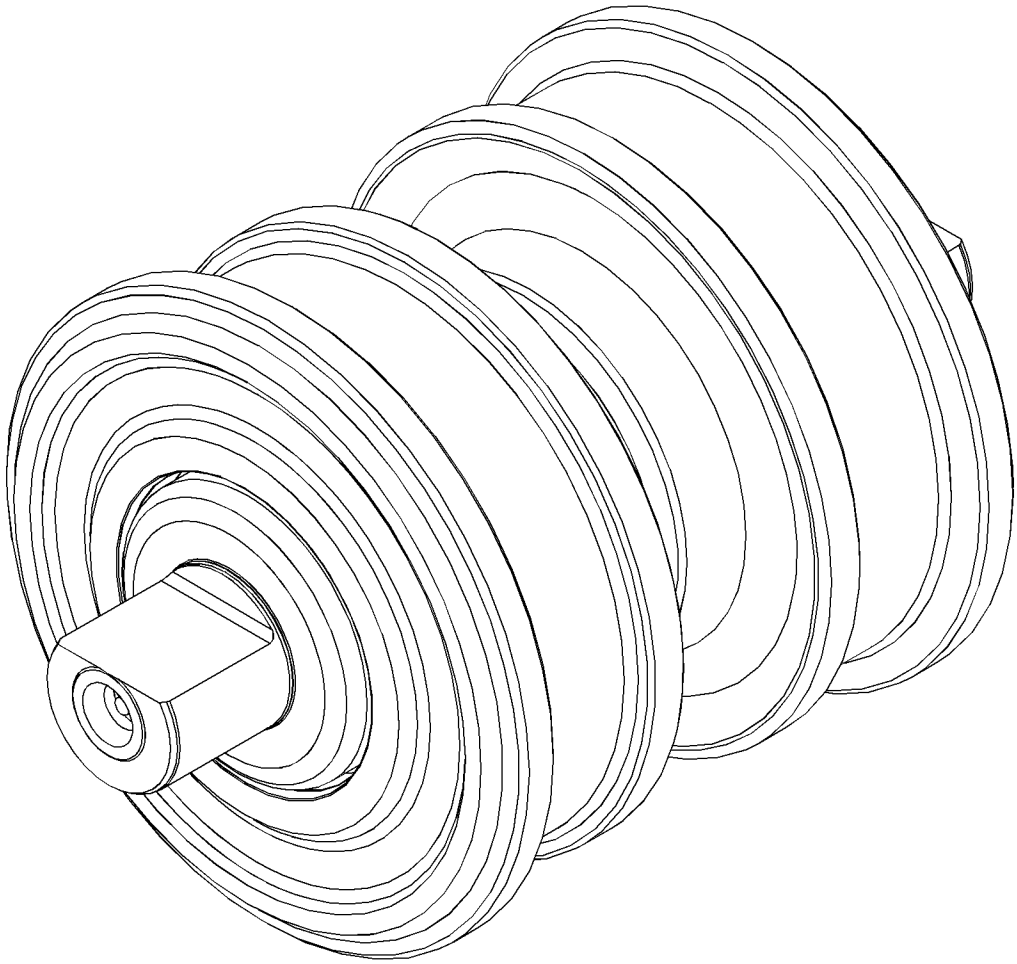

GRAPHIC #1 **<END>** g01395970

288-0936 ROLLER GP-TRACK-DOUBLE FLANGE

S/N: PPP1-UP; SSS1-UP; TTT1-UP
FOR USE WITH SEALED, LUBRICATED, HEAVY-DUTY, HYBRID, ROTATING BUSHING TRACK
CANNOT BE USED WITH SYSTEMONE TRACK
PART OF 384-3277 ROLLER GP-TRACK-DOUBLE FLANGE
AN ATTACHMENT

SMCS-4180 **i05635230**

NOTE	REF NO	GRAPHIC REF	PART NUMBER	QTY	PART NAME 1 2 3 4 5 6 (PRODUCT LEVEL)	SEE PAGE
					(INDIVIDUAL PARTS ARE NOT SERVICED SEPARATELY)	

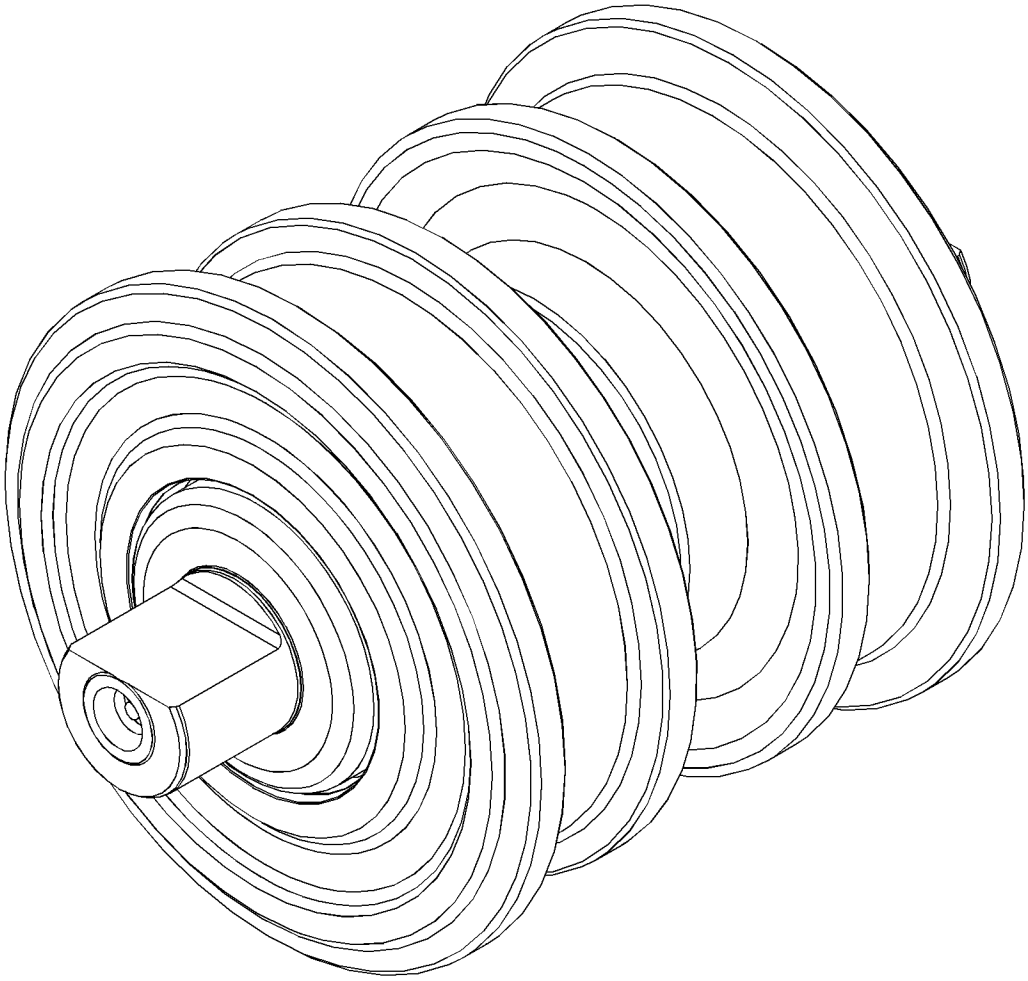

GRAPHIC #1 **<END>** g01395934

384-3277 ROLLER GP-TRACK-DOUBLE FLANGE

S/N: PPP1-UP; SSS1-UP; TTT1-UP
PART OF 415-1300, 415-1301, 457-6209, 457-6210, 457-7967, 457-7968, 457-7973, 457-7974 UNDERCARRIAGE AR
AN ATTACHMENT

SMCS-4180 **i05635190**

NOTE	REF NO	GRAPHIC REF	PART NUMBER	QTY	PART NAME 1 2 3 4 5 6 (PRODUCT LEVEL)	SEE PAGE
Y	1	1	**288-0936**	1	ROLLER GP-TRACK-DOUBLE FLANGE (TALL)	482
	2	1	**317-9080**	2	CAP-TRACK ROLLER	
M	3	1	**8T-0360**	4	BOLT (M20X2.5X90-MM)	
	4	1	**8T-3282**	4	WASHER-HARD (22X35X3.5-MM THK)	

M - METRIC PART
Y - SEPARATE ILLUSTRATION

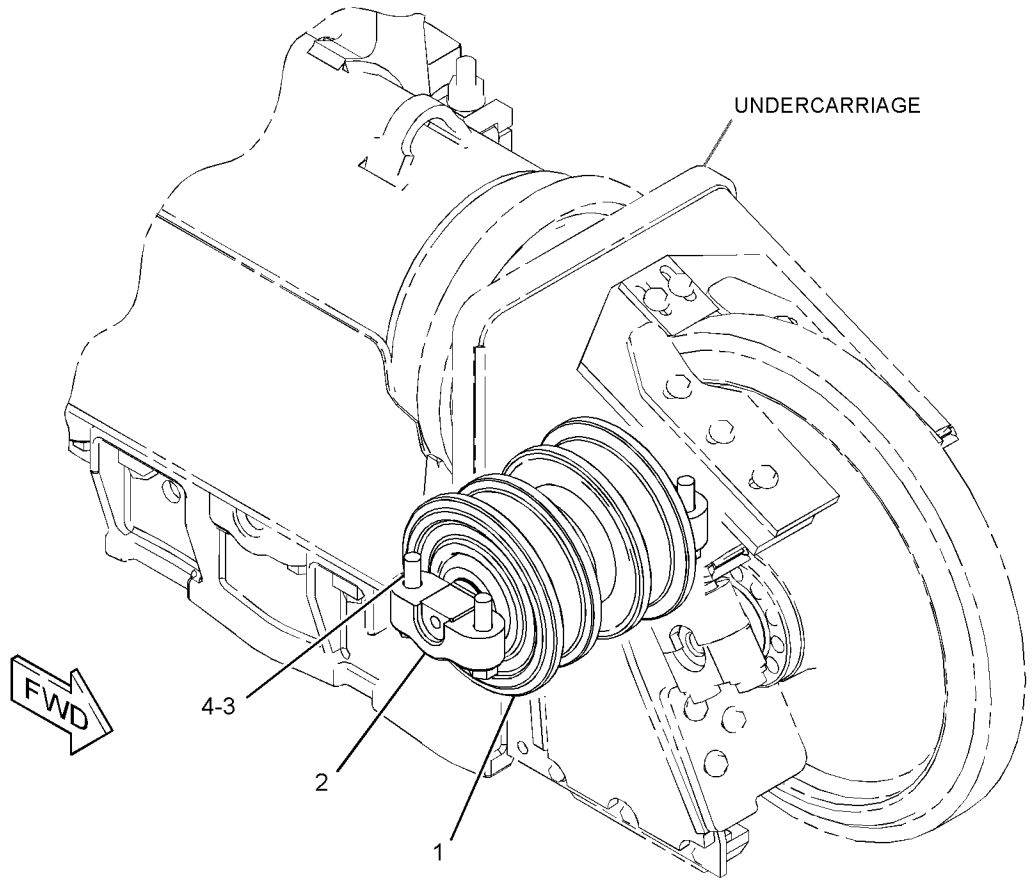

GRAPHIC #1 **<END>** g03320638

125-4175 ROLLER GP-TRACK-SINGLE FLANGE

S/N: PPP1-UP; SSS1-UP; TTT1-UP

PART OF 415-1300, 415-1301, 457-6209, 457-6210, 457-6211, 457-7966, 457-7967, 457-7968, 457-7972, 457-7973, 457-7974 UNDERCARRIAGE AR

AN ATTACHMENT

SMCS-4180 **i05634715**

NOTE	REF NO	GRAPHIC REF	PART NUMBER	QTY	PART NAME 1 2 3 4 5 6 (PRODUCT LEVEL)	SEE PAGE
Y	1	1	**288-0934**	1	ROLLER GP-TRACK-SINGLE FLANGE	486
	2	1	**317-9080**	2	CAP-TRACK ROLLER	
M	3	1	**8T-0360**	4	BOLT (M20X2.5X90-MM)	
	4	1	**8T-3282**	4	WASHER-HARD (22X35X3.5-MM THK)	

M - METRIC PART
Y - SEPARATE ILLUSTRATION

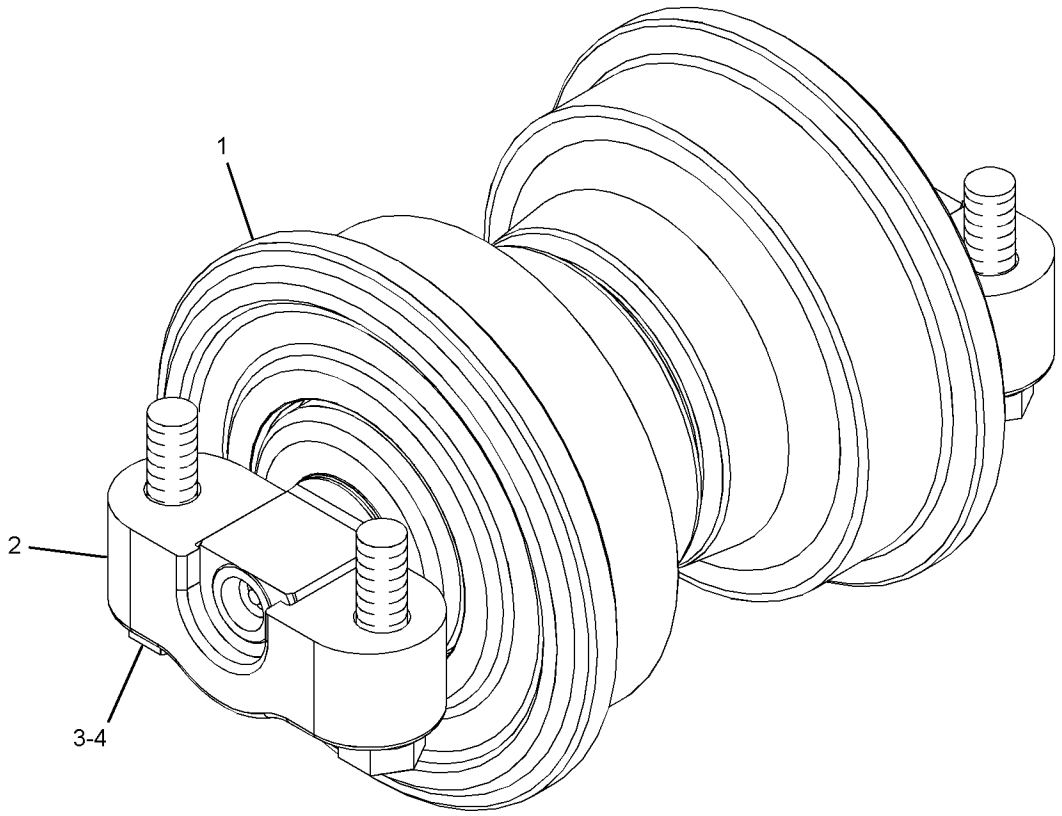

GRAPHIC #1 **<END>** g01425446

235-4157 ROLLER GP-TRACK-SINGLE FLANGE–SYSTEMONE

S/N: PPP1-UP; TTT1-UP

PART OF 292-2175 ROLLER GP-TRACK-SINGLE FLANGE

AN ATTACHMENT

SMCS-4180 **i05641307**

NOTE	REF NO	GRAPHIC REF	PART NUMBER	QTY	PART NAME 1 2 3 4 5 6 (PRODUCT LEVEL)	SEE PAGE
					(INDIVIDUAL PARTS ARE NOT SERVICED SEPARATELY)	

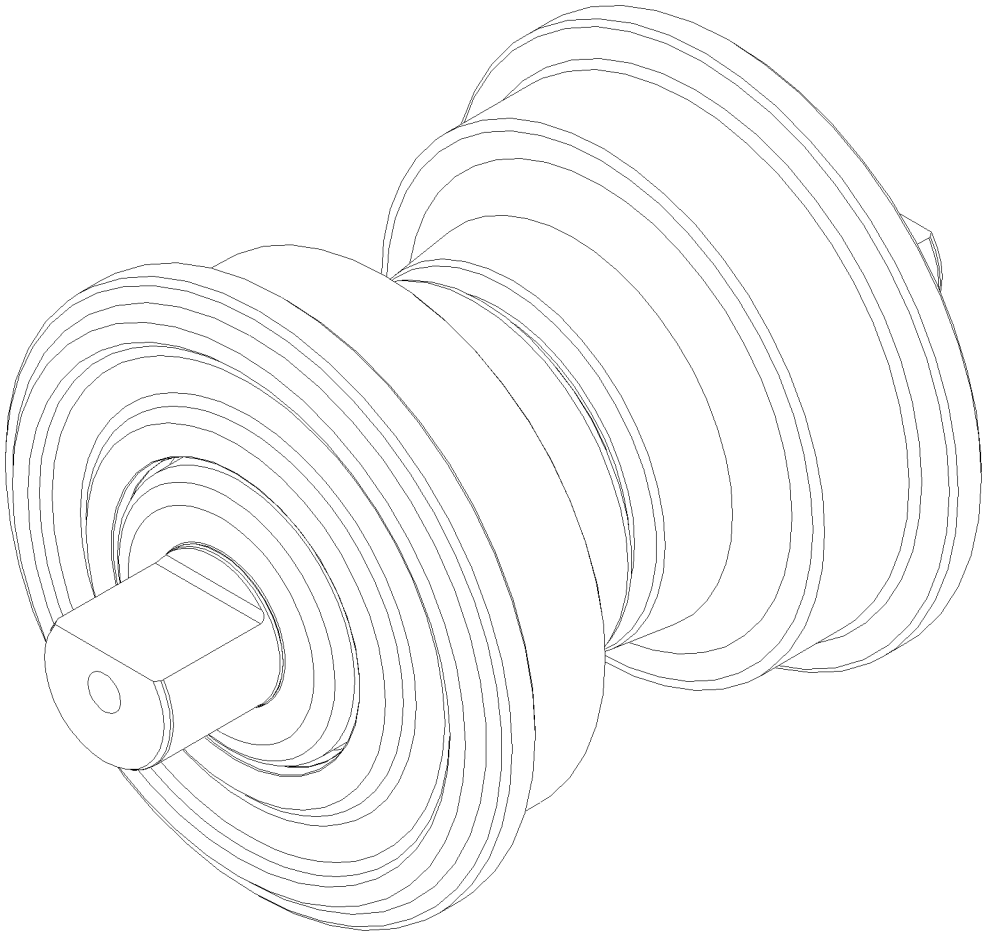

GRAPHIC #1 **<END>** g01395989

288-0934 ROLLER GP-TRACK-SINGLE FLANGE

S/N: PPP1-UP; SSS1-UP; TTT1-UP
FOR USE WITH SEALED, LUBRICATED, HEAVY-DUTY, HYBRID, & ROTATING BUSHING TRACK
CANNOT BE USED WITH SYSTEMONE TRACK
PART OF 125-4175 ROLLER GP-TRACK-SINGLE FLANGE
AN ATTACHMENT

SMCS-4180 **i05634851**

NOTE	REF NO	GRAPHIC REF	PART NUMBER	QTY	PART NAME 1 2 3 4 5 6 (PRODUCT LEVEL)	SEE PAGE
					(INDIVIDUAL PARTS ARE NOT SERVICED SEPARATELY)	

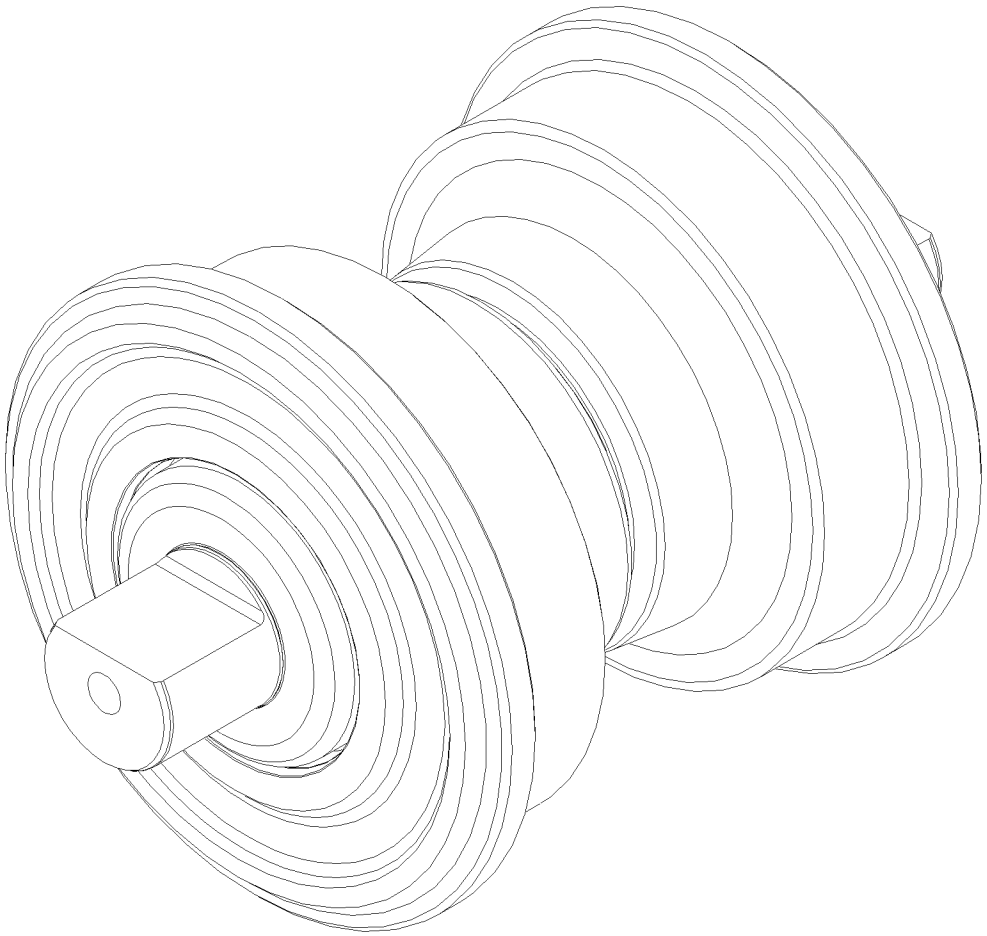

GRAPHIC #1 **<END>** g01395989

292-2175 ROLLER GP-TRACK-SINGLE FLANGE–SYSTEMONE

S/N: PPP1-UP; TTT1-UP

PART OF 457-7969, 457-7970, 457-7971, 457-7975 UNDERCARRIAGE AR

AN ATTACHMENT

SMCS-4180 **i05641267**

NOTE	REF NO	GRAPHIC REF	PART NUMBER	QTY	PART NAME 1 2 3 4 5 6 (PRODUCT LEVEL)	SEE PAGE
Y	1	1	**235-4157**	1	ROLLER GP-TRACK-SINGLE FLANGE (SYSTEMONE)	485
	2	1	**317-9080**	2	CAP-TRACK ROLLER	
M	3	1	**8T-0360**	4	BOLT (M20X2.5X90-MM)	
	4	1	**8T-3282**	4	WASHER-HARD (22X35X3.5-MM THK)	

M - METRIC PART
Y - SEPARATE ILLUSTRATION

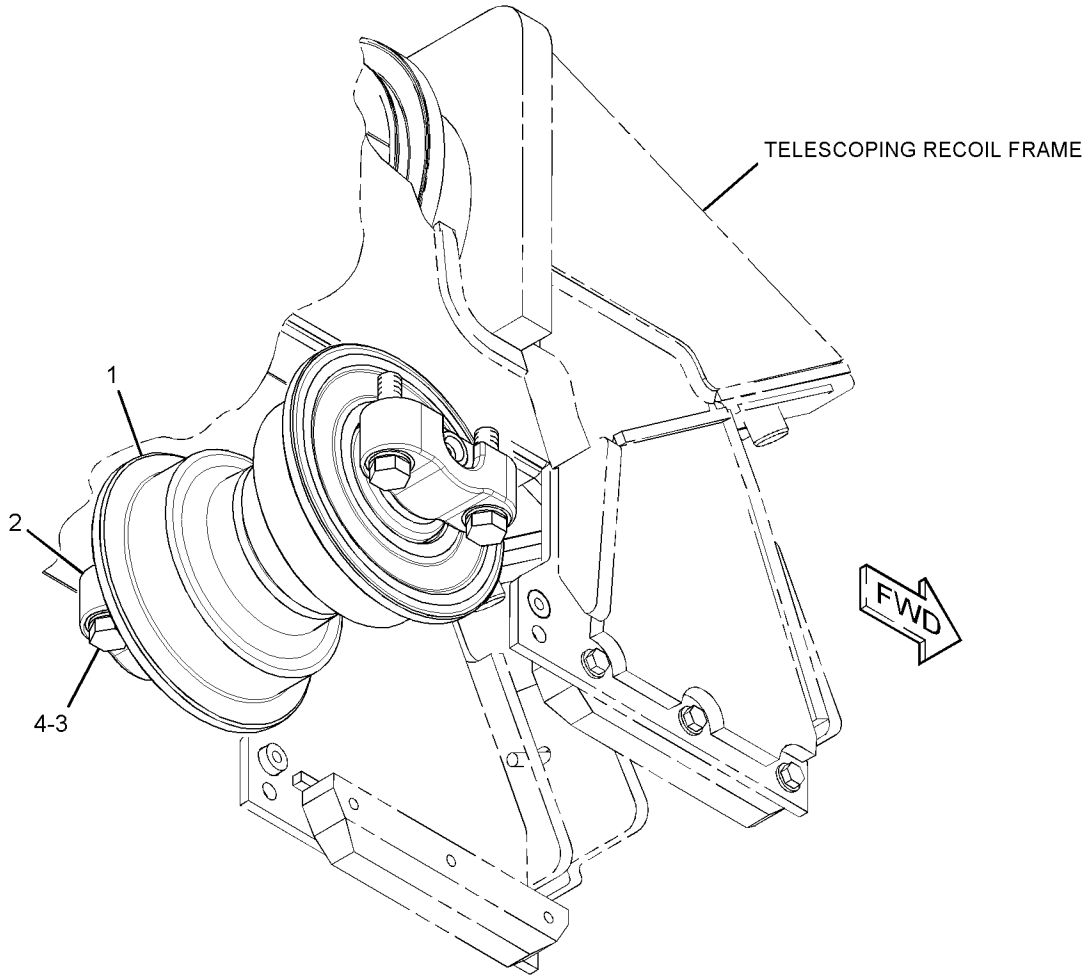

GRAPHIC #1 **<END>** g01432955

238-0451 SCRAPER GP-IDLER

S/N: PPP1-UP; TTT1-UP

PART OF 457-7969, 457-7970, 457-7971, 457-7975 UNDERCARRIAGE AR

AN ATTACHMENT

SMCS-4152 **i05641237**

NOTE	REF NO	GRAPHIC REF	PART NUMBER	QTY	PART NAME 1 2 3 4 5 6 (PRODUCT LEVEL)	SEE PAGE
	1	1	**355-6555**	4	SCRAPER	
	2	1	**435-3112**	2	SCRAPER	
	3	1	**5P-1076**	16	WASHER-HARD (13.5X30X4-MM THK)	
M	4	1	**8T-4139**	16	BOLT (M12X1.75X30-MM)	

M - METRIC PART

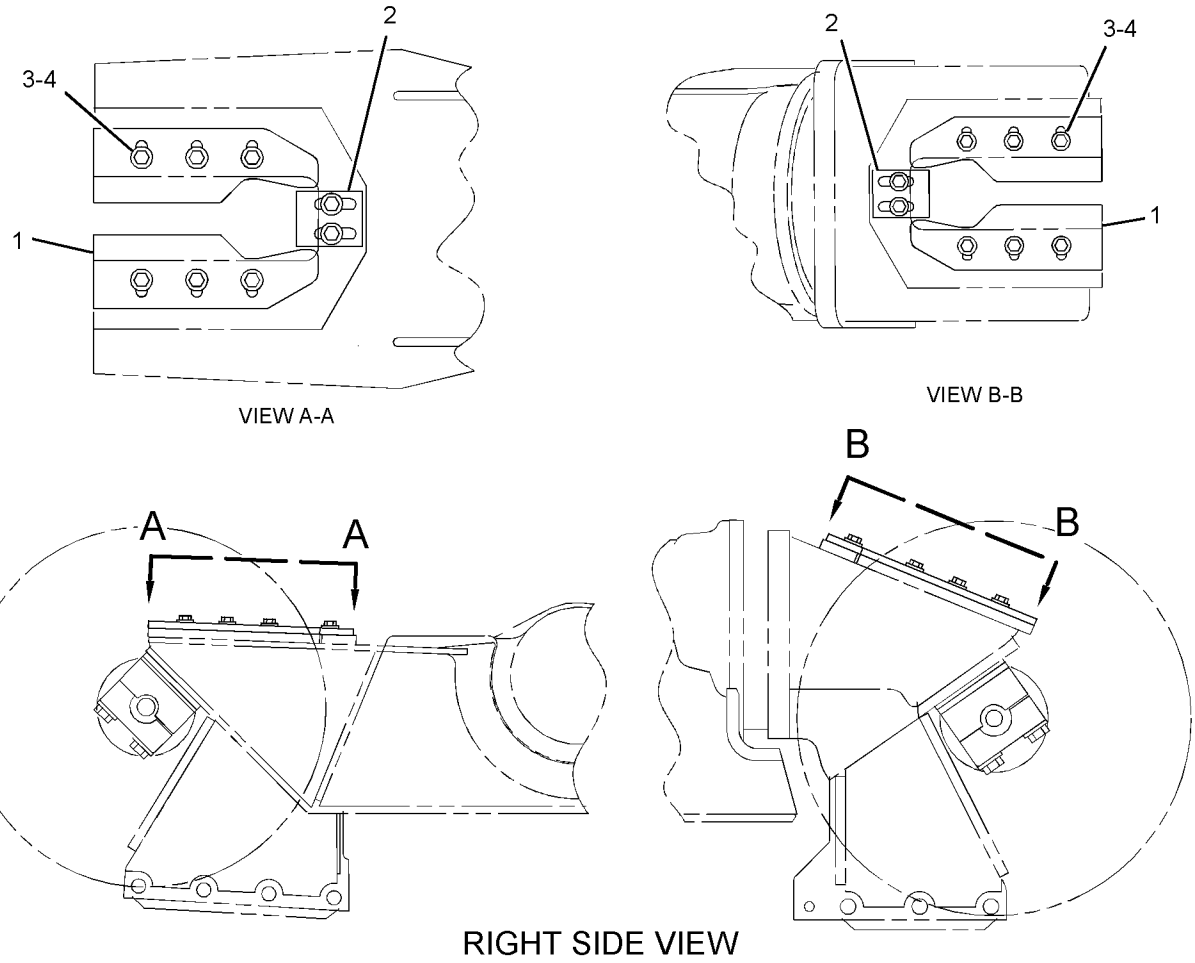

GRAPHIC #1 **<END>** g02153671

456-6006 STRIKER GP-REAR

S/N: TTT1-UP
CANNOT BE USED WITH REAR TRANSMISSION GUARD
AN ATTACHMENT

SMCS-4150 **i06230674**

NOTE	REF NO	GRAPHIC REF	PART NUMBER	QTY	PART NAME 1 2 3 4 5 6 (PRODUCT LEVEL)	SEE PAGE
	1	1	**1H-4106**	1	PIN AS-DRAWBAR	
	2	1	**7G-6623**	1	HITCH	
	3	1	**8E-9289**	1	LATCH	
Y	4	1	**456-6007**	1	STRIKER GP-REAR	490
M	5	1	**176-5311**	1	LOCKNUT (M16X2-THD)	
M	6	1	**7X-2555**	1	BOLT (M16X2X80-MM)	
M	7	1	**7X-2576**	10	BOLT (M24X3X70-MM)	
M	8	1	**7X-2585**	6	BOLT (M30X3.5X160-MM)	
	9	1	**8T-1482**	10	WASHER-HARD (26X50X8-MM THK)	
	10	1	**9X-8258**	6	WASHER (33X56X6-MM THK)	
E	11	1	**149-5933**		SEAL (43-CM EACH)	
E	12	1	**238-9166**		SEAL (112-CM)	
E	12A	1	**238-9166**		SEAL (100-CM)	

E - ORDER BY THE CENTIMETER
M - METRIC PART
Y - SEPARATE ILLUSTRATION

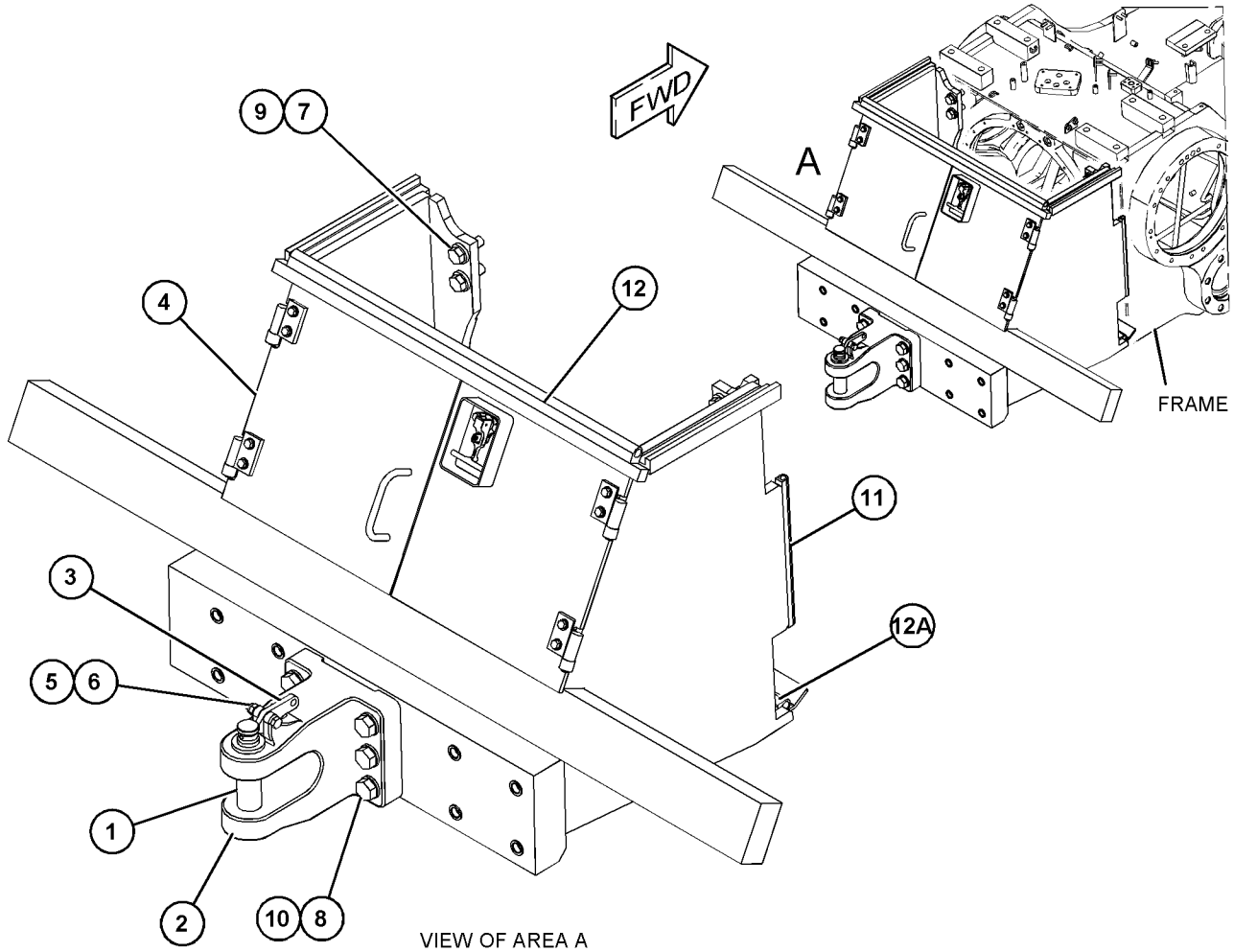

VIEW OF AREA A

GRAPHIC #1 **<END>** g03862660

456-6007 STRIKER GP-REAR

S/N: TTT1-UP

PART OF 456-6006 STRIKER GP-REAR

AN ATTACHMENT

SMCS-4150 **i06230676**

NOTE	REF NO	GRAPHIC REF	PART NUMBER	QTY	PART NAME 1 2 3 4 5 6 (PRODUCT LEVEL)	SEE PAGE
Y	1	1	**465-7896**	1	BAR GP-STRIKER (REAR)	353

Y - SEPARATE ILLUSTRATION

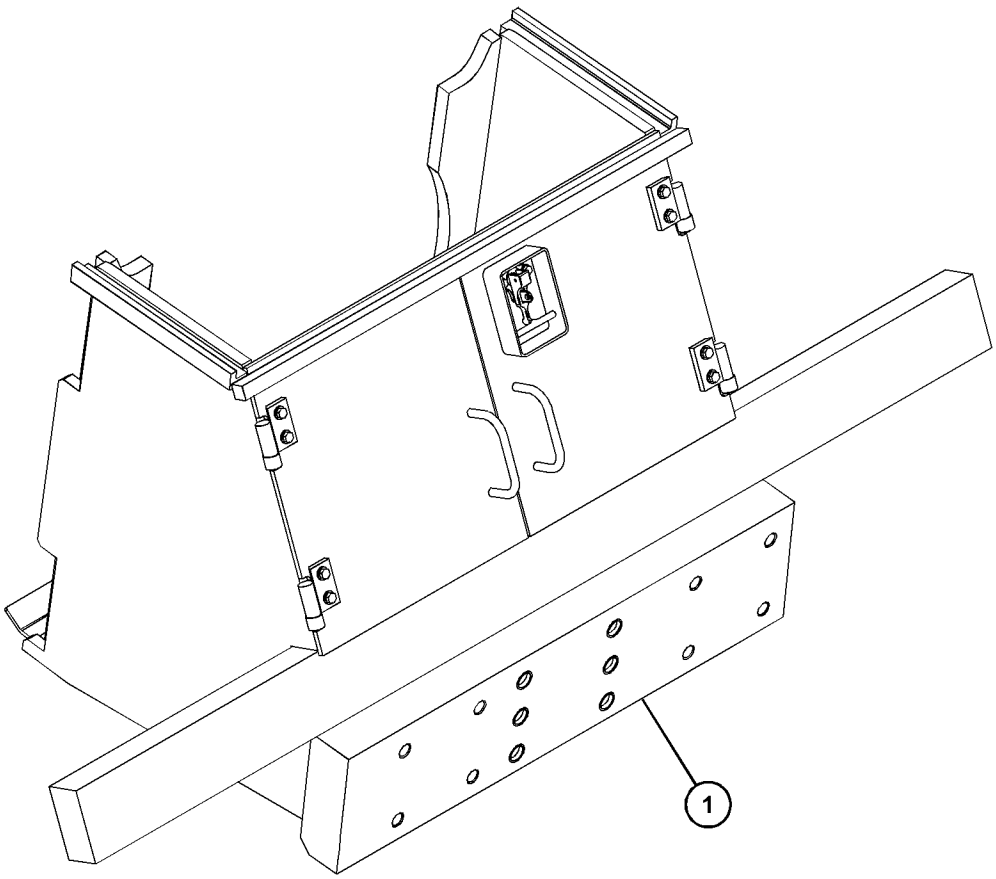

GRAPHIC #1 **<END>** g03864517

456-6008 STRIKER GP-REAR

S/N: PPP1-UP
CANNOT BE USED WITH REAR TRANSMISSION GUARD
AN ATTACHMENT

SMCS-4150 **i06230675**

NOTE	REF NO	GRAPHIC REF	PART NUMBER	QTY	PART NAME 1 2 3 4 5 6 (PRODUCT LEVEL)	SEE PAGE
	1	1	**1H-4106**	1	PIN AS-DRAWBAR	
	2	1	**7G-6623**	1	HITCH	
	3	1	**8E-9289**	1	LATCH	
Y	4	1	**456-6009**	1	STRIKER GP-REAR	492
M	5	1	**176-5311**	1	LOCKNUT (M16X2-THD)	
M	6	1	**7X-2555**	1	BOLT (M16X2X80-MM)	
M	7	1	**7X-2576**	10	BOLT (M24X3X70-MM)	
M	8	1	**7X-2585**	6	BOLT (M30X3.5X160-MM)	
	9	1	**8T-1482**	10	WASHER-HARD (26X50X8-MM THK)	
	10	1	**9X-8258**	6	WASHER (33X56X6-MM THK)	
E	11	1	**238-9166**		SEAL (112-CM)	
	11A	1	**238-9166**		SEAL (100-CM)	
E	12	1	**149-5933**		SEAL (43-CM EACH)	

E - ORDER BY THE CENTIMETER
M - METRIC PART
Y - SEPARATE ILLUSTRATION

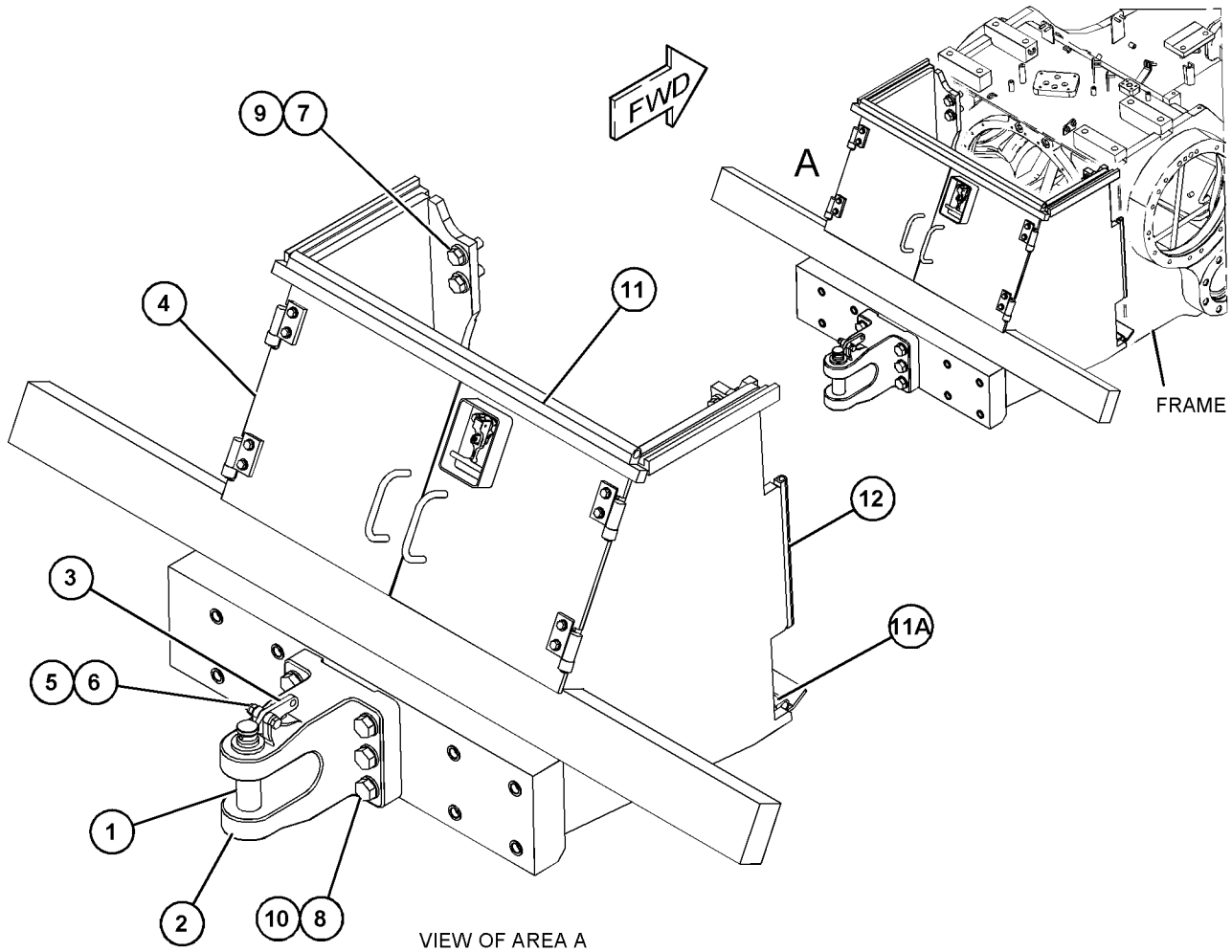

VIEW OF AREA A

GRAPHIC #1 **<END>** g03862669

456-6009 STRIKER GP-REAR

S/N: PPP1-UP
PART OF 456-6008 STRIKER GP-REAR
AN ATTACHMENT

SMCS-4150 **i06230677**

NOTE	REF NO	GRAPHIC REF	PART NUMBER	QTY	PART NAME 1 2 3 4 5 6 (PRODUCT LEVEL)	SEE PAGE
Y	1	1	**465-7898**	1	BAR GP-STRIKER (REAR)	355

Y - SEPARATE ILLUSTRATION

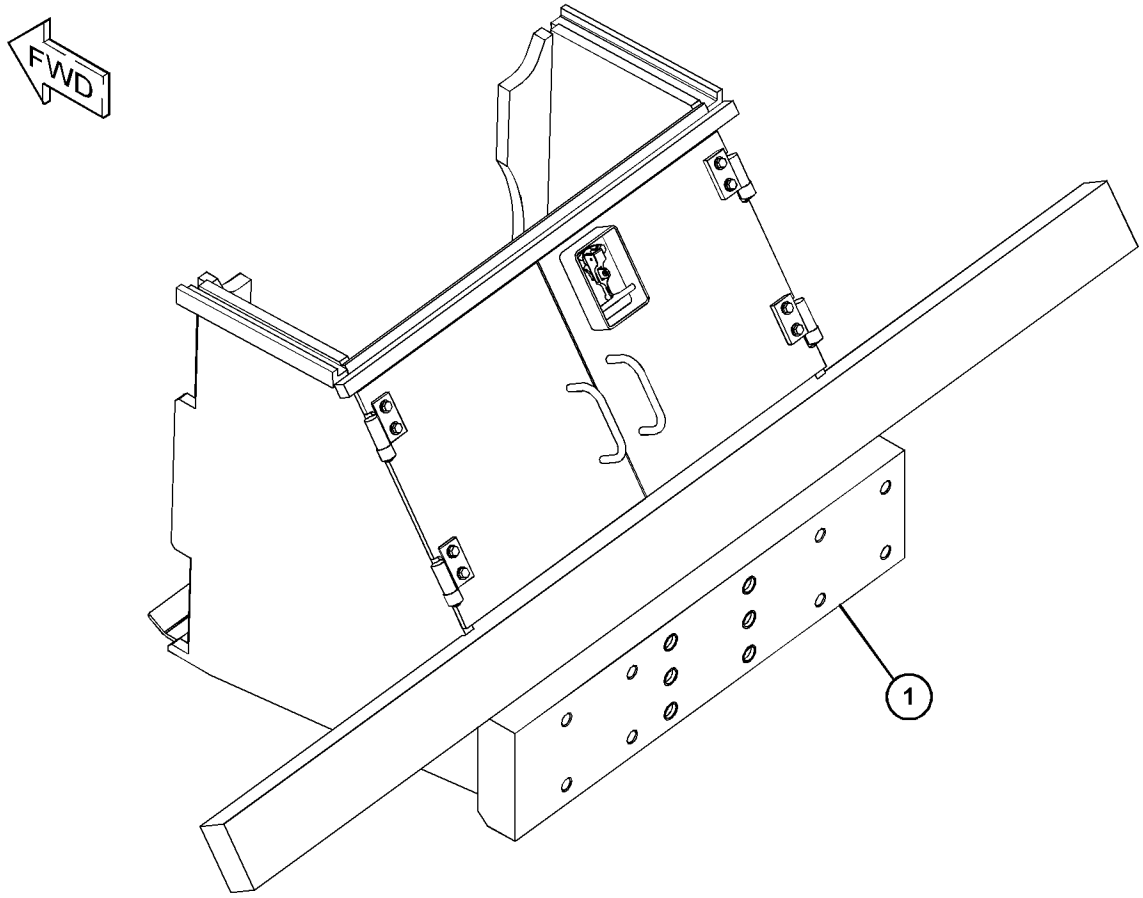

GRAPHIC #1 **<END>** g03864518

223-0659 TRACK ADJUSTER & RECOIL GP

S/N: PPP1-UP

PART OF 450-7184, 450-7185, 450-7188, 450-7189 FRAME GP-TELESCOPING RECOIL

AN ATTACHMENT

SMCS-4157, 4158

i06143642

NOTE	REF NO	GRAPHIC REF	PART NUMBER	QTY	PART NAME 1 2 3 4 5 6 (PRODUCT LEVEL)	SEE PAGE
	1	1	**2S-5926**	1	VALVE-RELIEF	
	2	1	**3T-0598**	1	TUBE	
	3	1	**3W-0640**	1	PISTON	
	4	1	**3W-2369**	1	PLATE AS	
	5	1	**6Y-5799**	2	LOCK	
	6	1	**314-7923**	1	CYLINDER	
	7	1	**190-8609**	1	VALVE-FILL	
	8	1	**214-9080**	1	PLATE AS	
		1	**3W-0329**	1	PLATE	
	9	1	**226-1340**	1	SPRING-RECOIL	
	10	1	**167-2323**	1	SEAL-U-CUP	
	11	1	**2J-6274**	1	SEAL-O-RING	
	12	1	**2S-4078**	1	SEAL-O-RING	
M	13	1	**7X-2553**	4	BOLT (M16X2X40-MM)	
	14	1	**8T-4121**	2	WASHER-HARD (11X21X2.5-MM THK)	
M	15	1	**8T-4182**	2	BOLT (M10X1.5X45-MM)	
	16	1	**9S-8010**	1	PLUG	
	17	1	**9X-8257**	4	WASHER (17.5X30X3.5-MM THK)	

M - METRIC PART

223-0659 **TRACK ADJUSTER & RECOIL GP (*contd.*)** **i06143642**

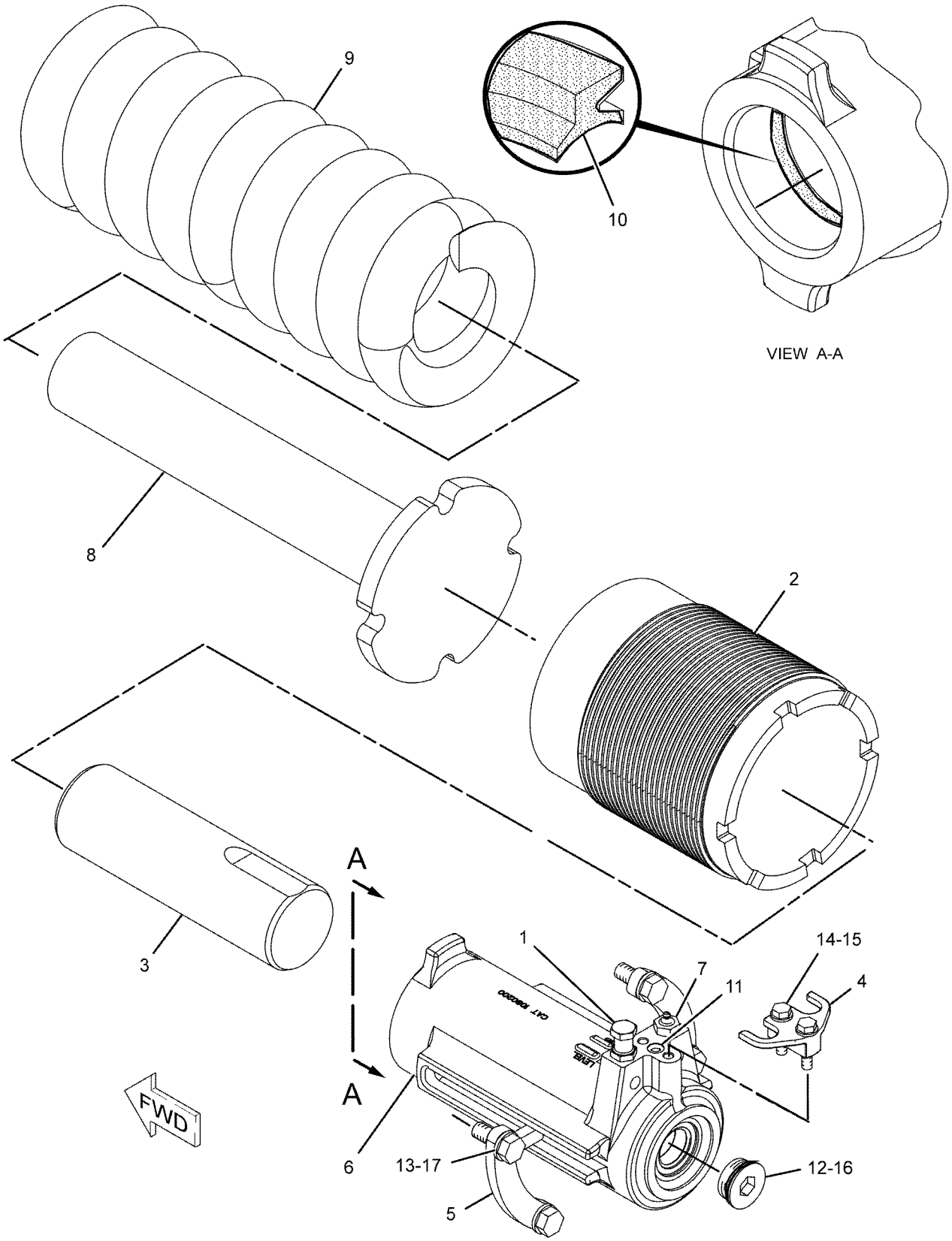

GRAPHIC #1 **<END>** g01145563

315-7786 TRACK ADJUSTER & RECOIL GP

S/N: TTT1-UP

PART OF 450-7176, 450-7177, 450-7180 FRAME GP-TELESCOPING RECOIL, 450-7181 FRAME GP-TRACK ROLLER

AN ATTACHMENT

SMCS-4157, 4158 **i05641607**

NOTE	REF NO	GRAPHIC REF	PART NUMBER	QTY	PART NAME 1 2 3 4 5 6 (PRODUCT LEVEL)	SEE PAGE
	1	1	**2S-5926**	1	VALVE-RELIEF (TRACK TENSION CYLINDER)	
	2	1	**3T-0598**	1	TUBE	
	3	1	**3W-0640**	1	PISTON	
	4	1	**3W-2369**	1	PLATE AS	
	5	1	**6Y-5799**	2	LOCK	
	6	1	**314-7923**	1	CYLINDER	
	7	1	**190-8609**	1	VALVE-FILL (RECOIL SPRING OIL)	
	8	1	**314-2516**	1	PLATE AS	
		1	**3W-0329**	1	PLATE	
	9	1	**314-2518**	1	SPRING	
	10	1	**167-2323**	1	SEAL-U-CUP	
	11	1	**2J-6274**	1	SEAL-O-RING	
	12	1	**2S-4078**	1	SEAL-O-RING	
M	13	1	**7X-2553**	4	BOLT (M16X2X40-MM)	
	14	1	**8T-4121**	2	WASHER-HARD (11X21X2.5-MM THK)	
M	15	1	**8T-4182**	2	BOLT (M10X1.5X45-MM)	
	16	1	**9S-8010**	1	PLUG	
	17	1	**9X-8257**	4	WASHER (17.5X30X3.5-MM THK)	

M - METRIC PART

315-7786 **TRACK ADJUSTER & RECOIL GP (*contd.*)** **i05641607**

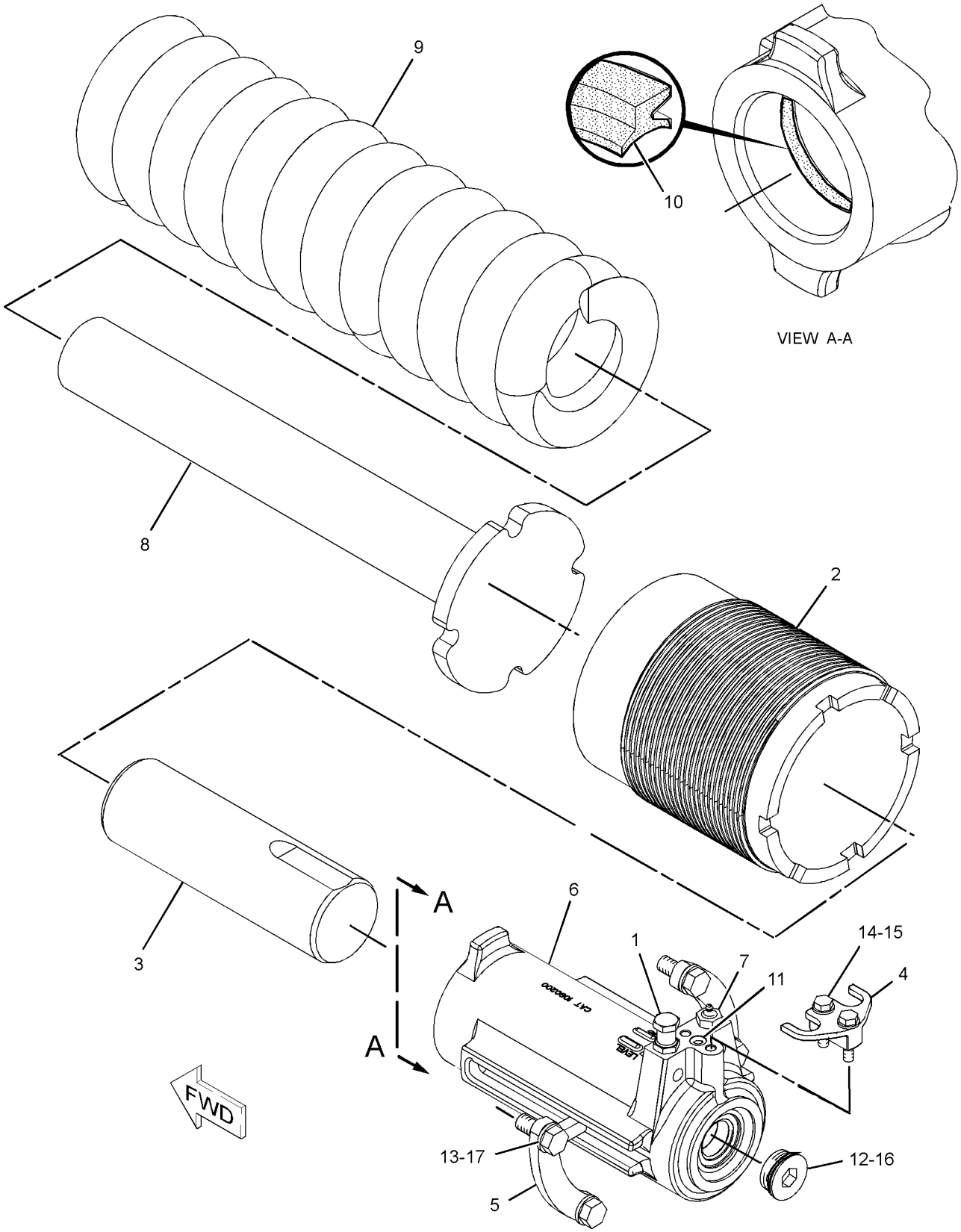

GRAPHIC #1 **<END>** g01960808

384-1713 TRACK AR–SYSTEMONE

S/N: TTT1-UP

560-MM (22-IN) GROUSER SHOE. SEALED, LUBRICATED, EXTREME SERVICE, CLAMP MASTER
FOR USE WITH SYSTEMONE ROLLERS, GUARDS, & GUIDESTRIPS
AN ATTACHMENT

SMCS-4170 **i06231185**

NOTE	REF NO	GRAPHIC REF	PART NUMBER	QTY	PART NAME 1 2 3 4 5 6 (PRODUCT LEVEL)	SEE PAGE
Y	1	1	**385-2666**	2	TRACK GP	512

Y - SEPARATE ILLUSTRATION

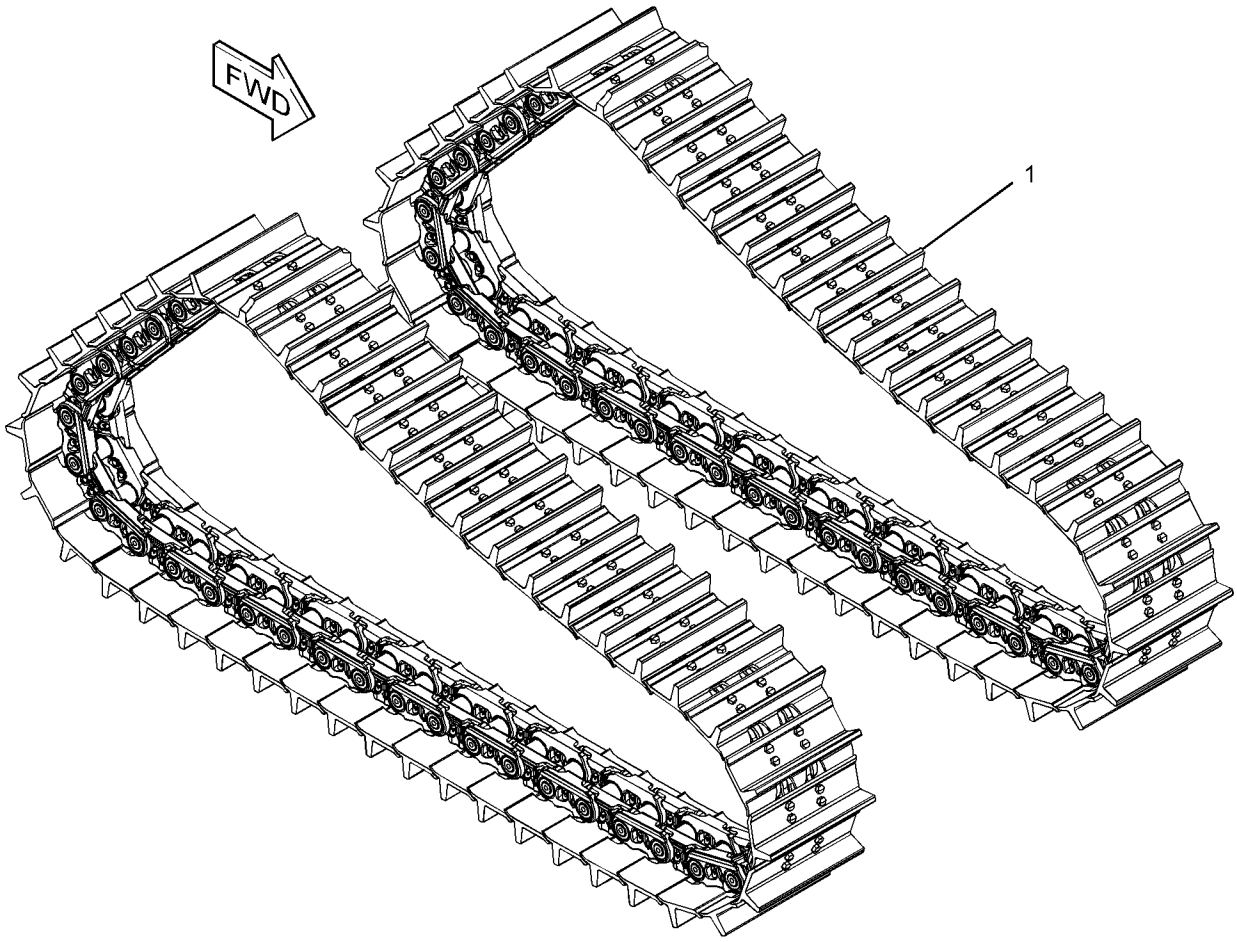

GRAPHIC #1 **<END>** g02784500

385-2689 TRACK AR–HEAVY-DUTY

S/N: TTT1-UP

560-MM (22-IN) GROUSER SHOE. SEALED, LUBRICATED. MODERATE SERVICE
FOR USE WITH HEAVY-DUTY ROLLERS, GUARDS, GUIDESTRIPS, CONVENTIONAL IDLERS
AN ATTACHMENT

SMCS-4170 **i05508730**

NOTE	REF NO	GRAPHIC REF	PART NUMBER	QTY	PART NAME 1 2 3 4 5 6 (PRODUCT LEVEL)	SEE PAGE
Y	1	1	**385-2672**	2	TRACK GP	513

Y - SEPARATE ILLUSTRATION

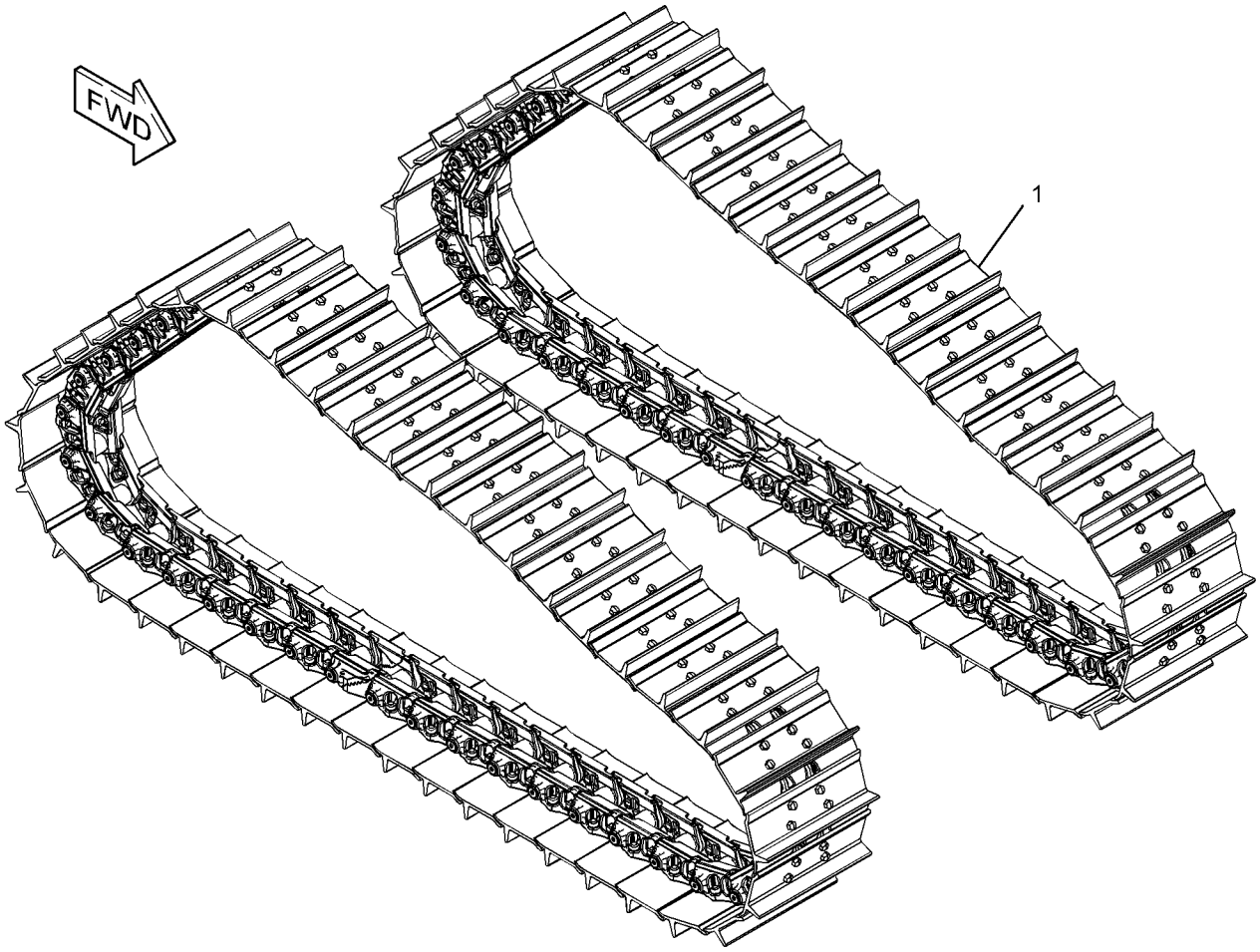

GRAPHIC #1 **<END>** g03327865

385-2691 TRACK AR–HEAVY-DUTY

S/N: TTT1-UP

560-MM (22-IN) GROUSER SHOE. SEALED, LUBRICATED. EXTREME SERVICE
FOR USE WITH HEAVY-DUTY ROLLERS, GUARDS, GUIDESTRIPS, CONVENTIONAL IDLERS
AN ATTACHMENT

SMCS-4170 **i05509342**

NOTE	REF NO	GRAPHIC REF	PART NUMBER	QTY	PART NAME 1 2 3 4 5 6 (PRODUCT LEVEL)	SEE PAGE
Y	1	1	**385-2675**	2	TRACK GP	514

Y - SEPARATE ILLUSTRATION

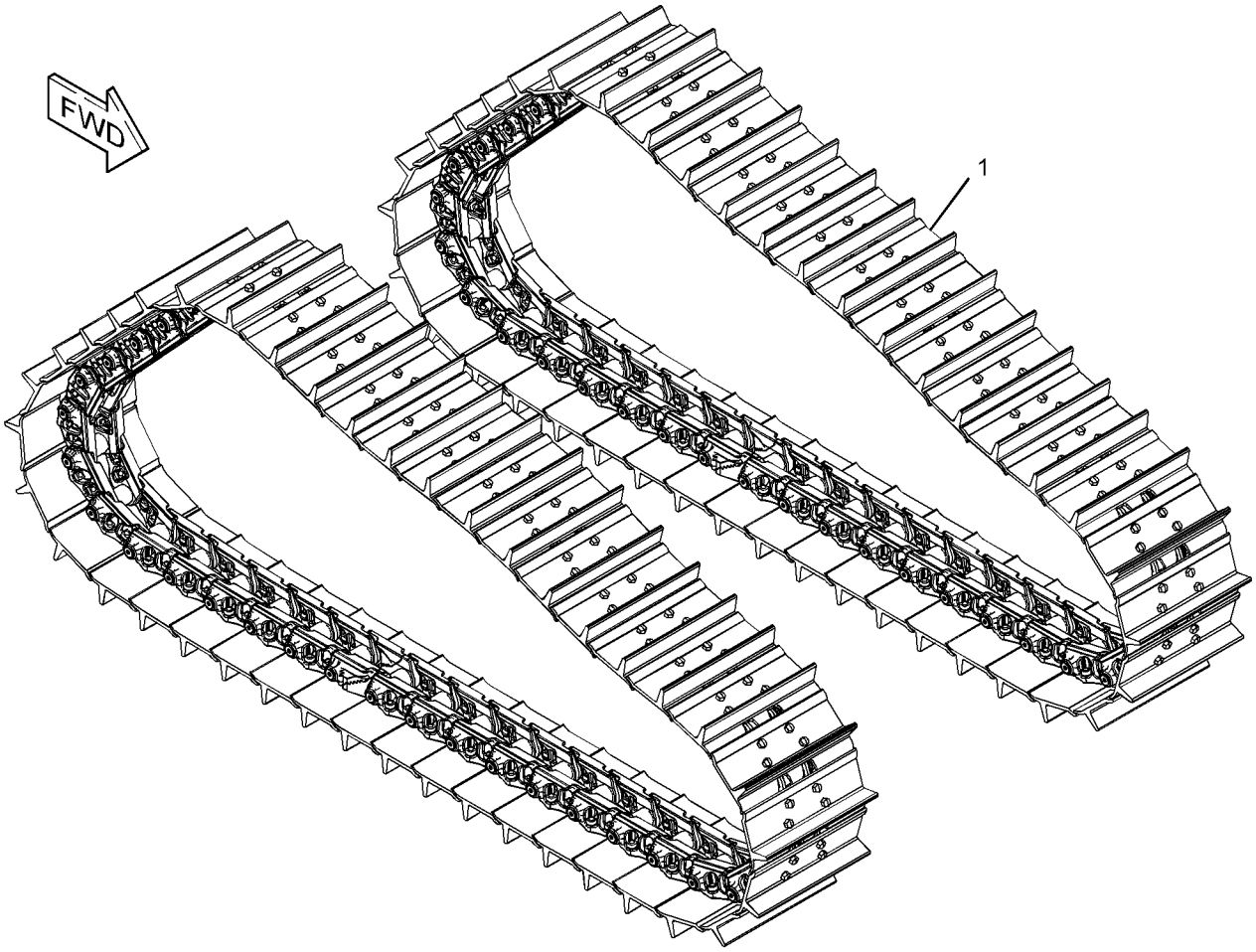

GRAPHIC #1 **<END>** g03327948

385-2694 TRACK AR–HEAVY-DUTY

S/N: TTT1-UP

610-MM (24-IN) GROUSER SHOE. SEALED, LUBRICATED. MODERATE SERVICE

FOR USE WITH HEAVY-DUTY ROLLERS, GUARDS, GUIDESTRIPS, CONVENTIONAL IDLERS

AN ATTACHMENT

SMCS-4170 **i05510989**

NOTE	REF NO	GRAPHIC REF	PART NUMBER	QTY	PART NAME 1 2 3 4 5 6 (PRODUCT LEVEL)	SEE PAGE
Y	1	1	**385-2678**	2	TRACK GP	515

Y - SEPARATE ILLUSTRATION

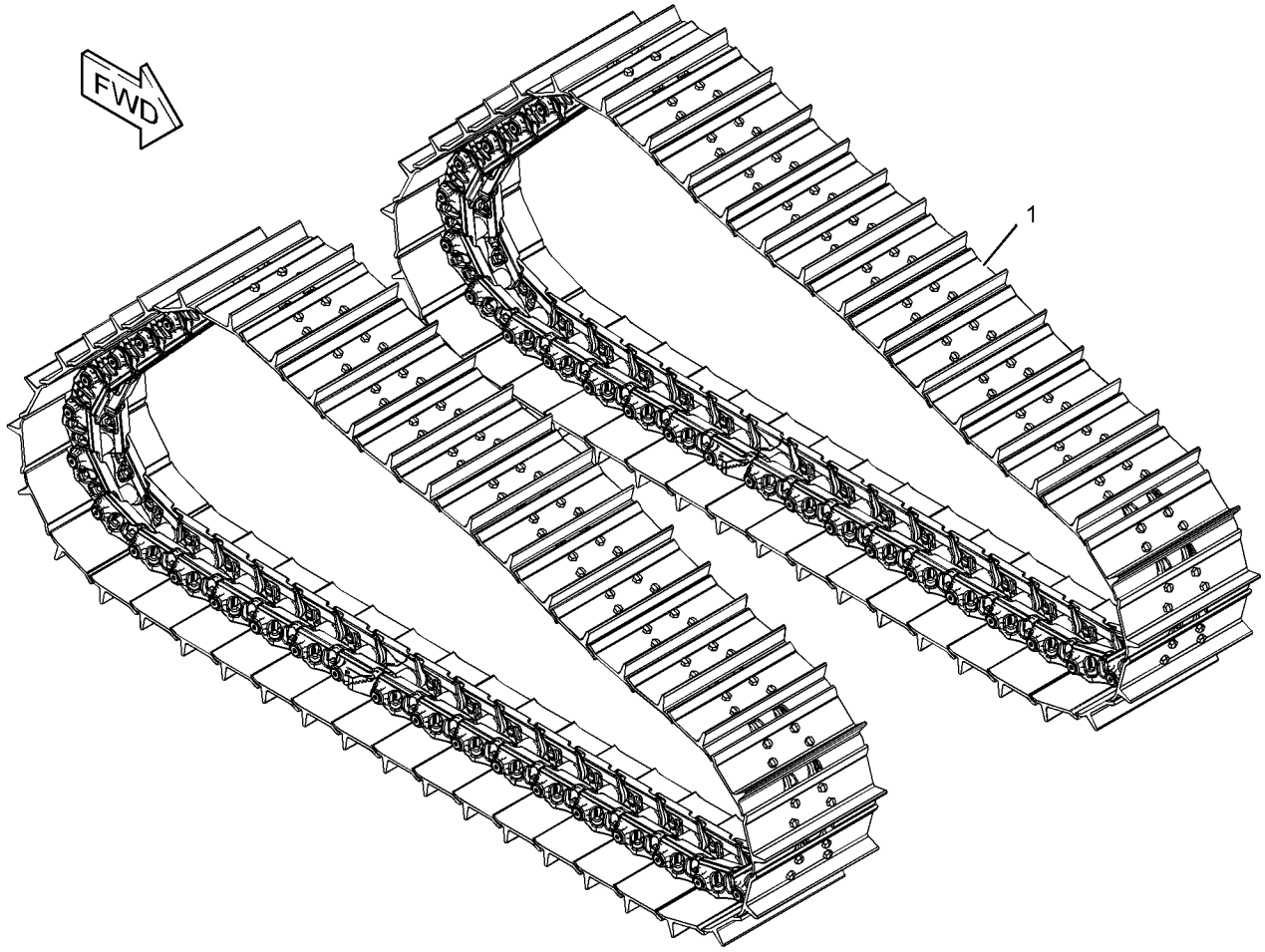

GRAPHIC #1 **<END>** g03327942

385-2695 TRACK AR–SYSTEMONE

S/N: TTT1-UP

610-MM (24-IN) GROUSER SHOE. SEALED, LUBRICATED, EXTREME SERVICE, CLAMP MASTER

FOR USE WITH SYSTEMONE ROLLERS, GUARDS, GUIDESTRIPS

AN ATTACHMENT

SMCS-4170 **i05511169**

NOTE	REF NO	GRAPHIC REF	PART NUMBER	QTY	PART NAME 1 2 3 4 5 6 (PRODUCT LEVEL)	SEE PAGE
Y	1	1	*385-2679*	2	TRACK GP	516

Y - SEPARATE ILLUSTRATION

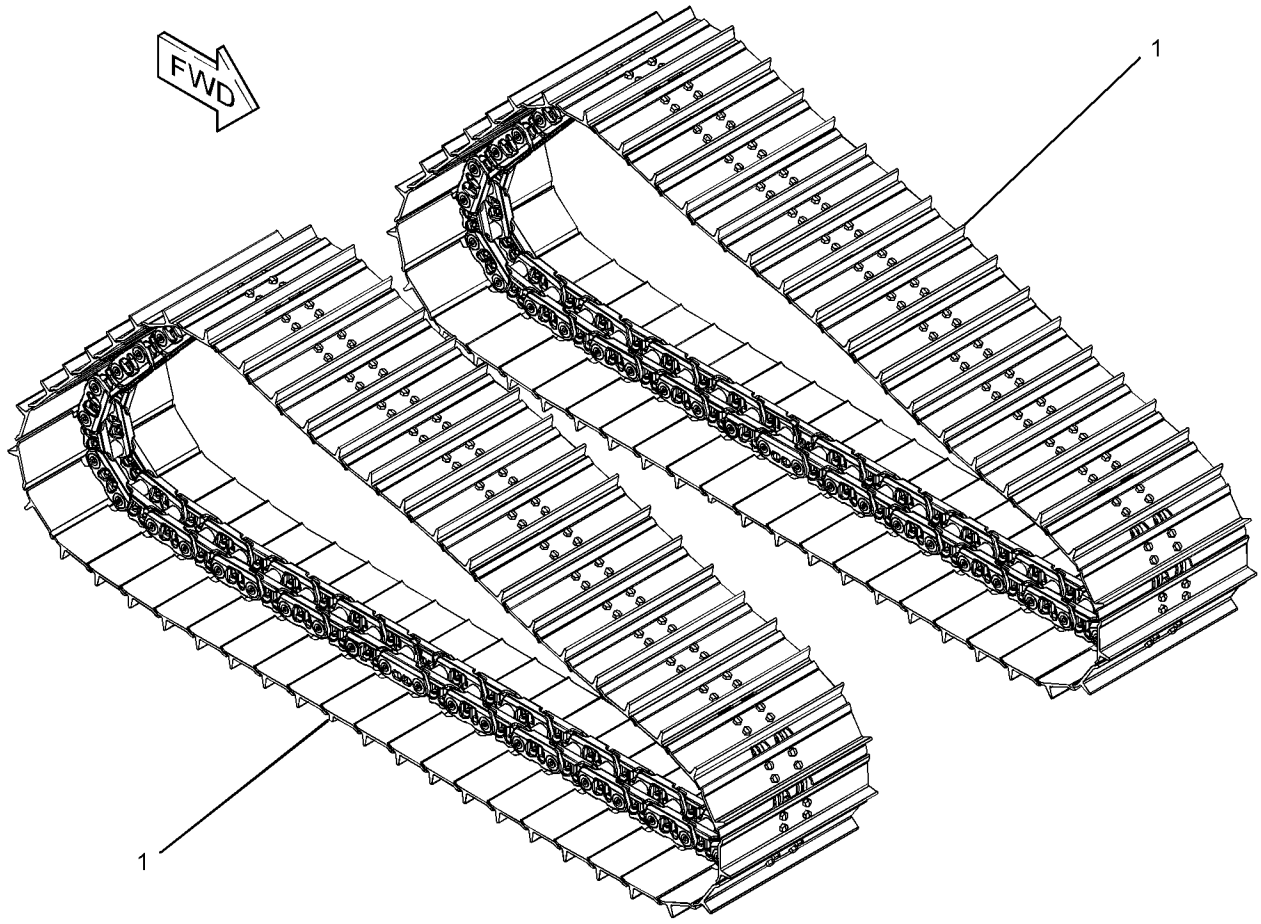

GRAPHIC #1 **<END>** g02812379

385-2698 TRACK AR–HEAVY-DUTY

S/N: TTT1-UP

610-MM (24-IN) GROUSER SHOE. SEALED, LUBRICATED. EXTREME SERVICE. TRAPEZOIDAL FOR USE WITH HEAVY-DUTY ROLLERS, GUARDS, GUIDESTRIPS, CONVENTIONAL IDLERS AN ATTACHMENT

SMCS-4170 **i06144180**

NOTE	REF NO	GRAPHIC REF	PART NUMBER	QTY	PART NAME 1 2 3 4 5 6 (PRODUCT LEVEL)	SEE PAGE
Y	1	1	*385-2682*	2	TRACK GP	517

Y - SEPARATE ILLUSTRATION

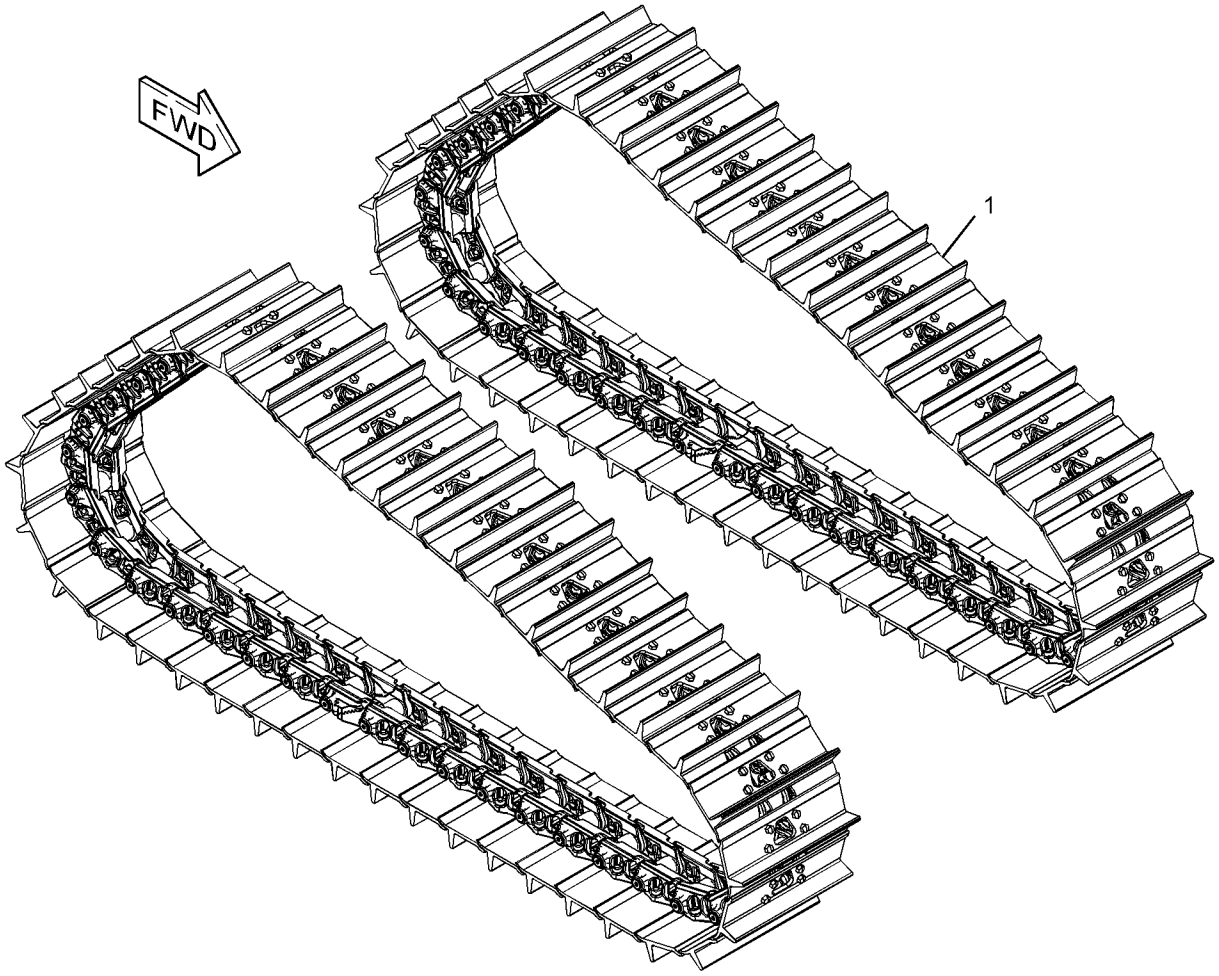

GRAPHIC #1 **<END>** g03327921

385-5447 TRACK AR–HEAVY-DUTY

S/N: SSS1-UP

560-MM (22-IN) GROUSER SHOE. SEALED, LUBRICATED, MODERATE SERVICE
FOR USE WITH HEAVY DUTY ROLLERS, GUARDS, GUIDESTRIPS, CONVENTIONAL IDLERS
AN ATTACHMENT

SMCS-4170 **i05505873**

NOTE	REF NO	GRAPHIC REF	PART NUMBER	QTY	PART NAME 1 2 3 4 5 6 (PRODUCT LEVEL)	SEE PAGE
Y	1	1	**6I-9641**	2	TRACK GP	511

Y - SEPARATE ILLUSTRATION

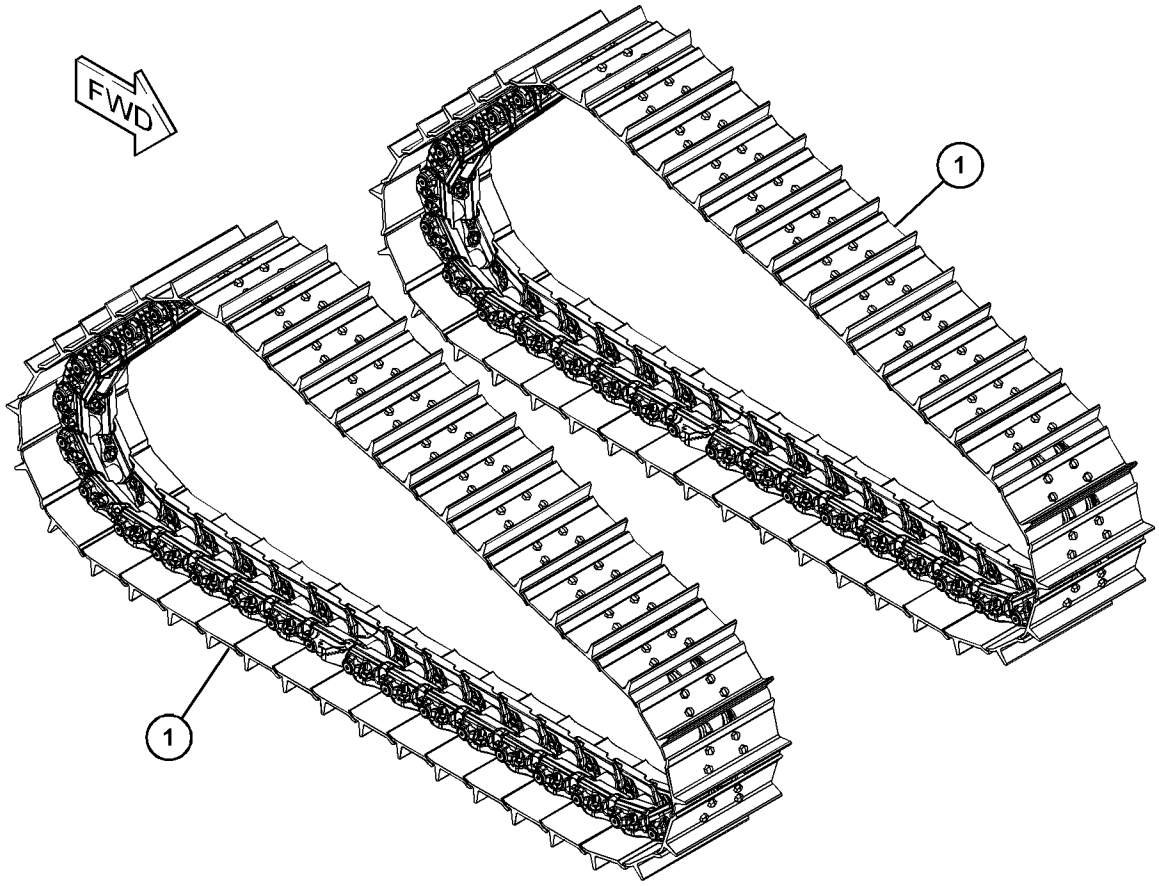

GRAPHIC #1 **<END>** g03531878

385-5459 TRACK AR–HEAVY-DUTY

S/N: SSS1-UP
560-MM (22-IN) GROUSER SHOE. SEALED, LUBRICATED, EXTREME SERVICE
FOR USE WITH HEAVY DUTY ROLLERS, GUARDS, GUIDESTRIPS, CONVENTIONAL IDLERS
PART OF 481-9508 DISTRIBUTION AR
AN ATTACHMENT

SMCS-4170 **i05505934**

NOTE	REF NO	GRAPHIC REF	PART NUMBER	QTY	PART NAME 1 2 3 4 5 6 (PRODUCT LEVEL)	SEE PAGE
Y	1	1	**385-5458**	2	TRACK GP	519

Y - SEPARATE ILLUSTRATION

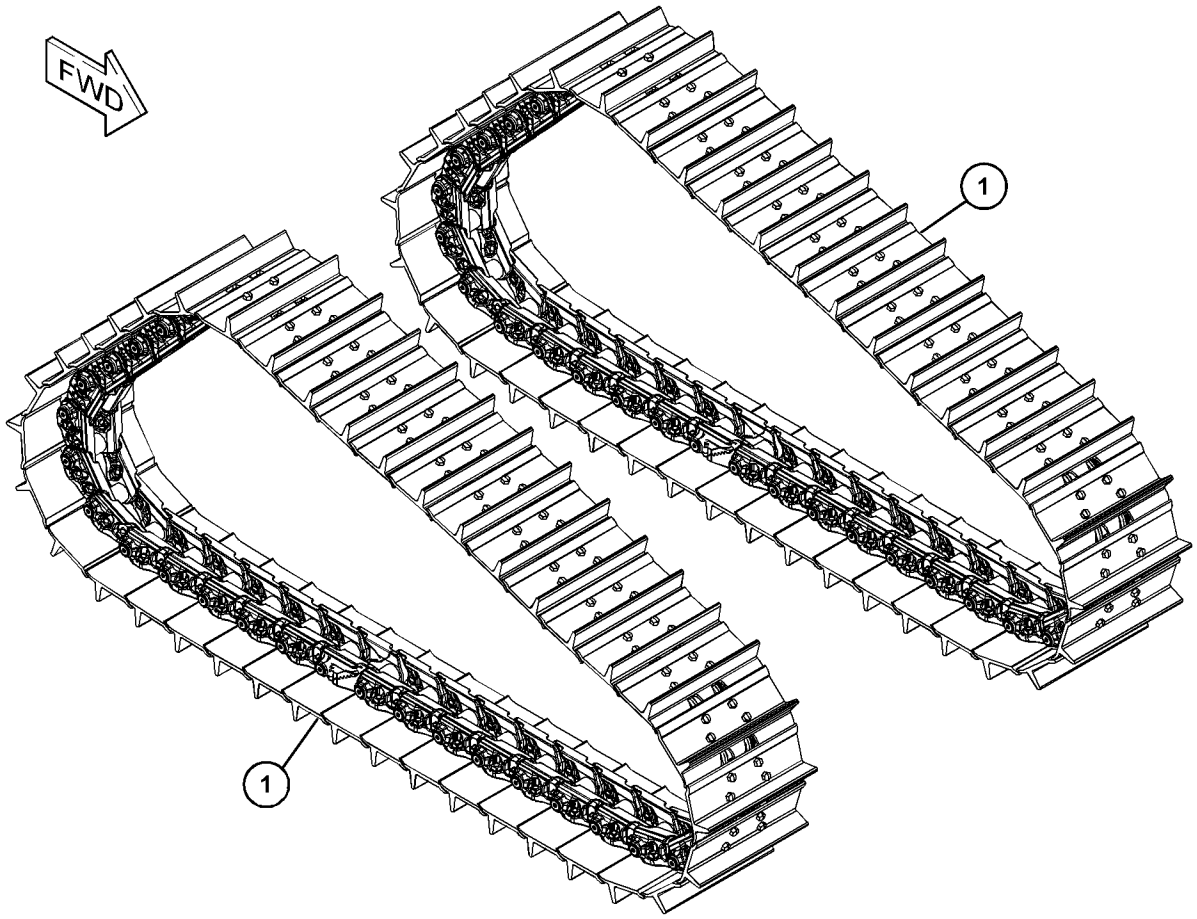

GRAPHIC #1 **<END>** g03532557

385-5462 TRACK AR–HEAVY-DUTY

S/N: SSS1-UP

610-MM (24-IN) GROUSER SHOE. SEALED, LUBRICATED, MODERATE SERVICE
FOR USE WITH HEAVY DUTY ROLLERS, GUARDS, GUIDESTRIPS, CONVENTIONAL IDLERS
AN ATTACHMENT

SMCS-4170 **i05508549**

NOTE	REF NO	GRAPHIC REF	PART NUMBER	QTY	PART NAME 1 2 3 4 5 6 (PRODUCT LEVEL)	SEE PAGE
Y	1	1	*385-5450*	2	TRACK GP	518

Y - SEPARATE ILLUSTRATION

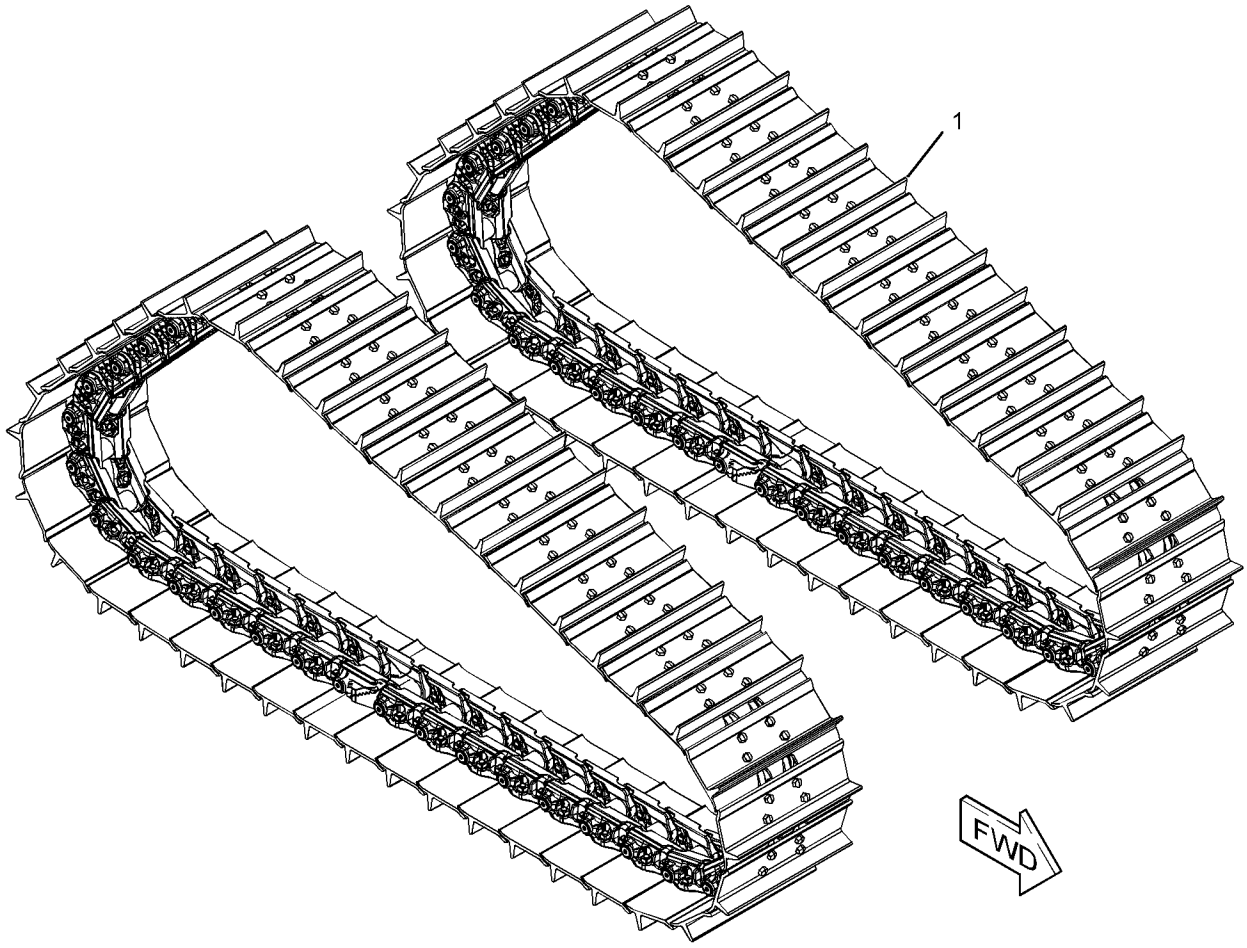

GRAPHIC #1 **<END>** g03535318

385-7759 TRACK AR–HEAVY-DUTY

S/N: PPP1-UP

915-MM (36-IN) GROUSER SHOE. SEALED, LUBRICATED, MODERATE SERVICE
FOR USE WITH HEAVY DUTY ROLLERS, GUARDS, GUIDESTRIPS, CONVENTIONAL IDLERS
AN ATTACHMENT

SMCS-4170 **i06144166**

NOTE	REF NO	GRAPHIC REF	PART NUMBER	QTY	PART NAME 1 2 3 4 5 6 (PRODUCT LEVEL)	SEE PAGE
Y	1	1	**385-7739**	2	TRACK GP	520

Y - SEPARATE ILLUSTRATION

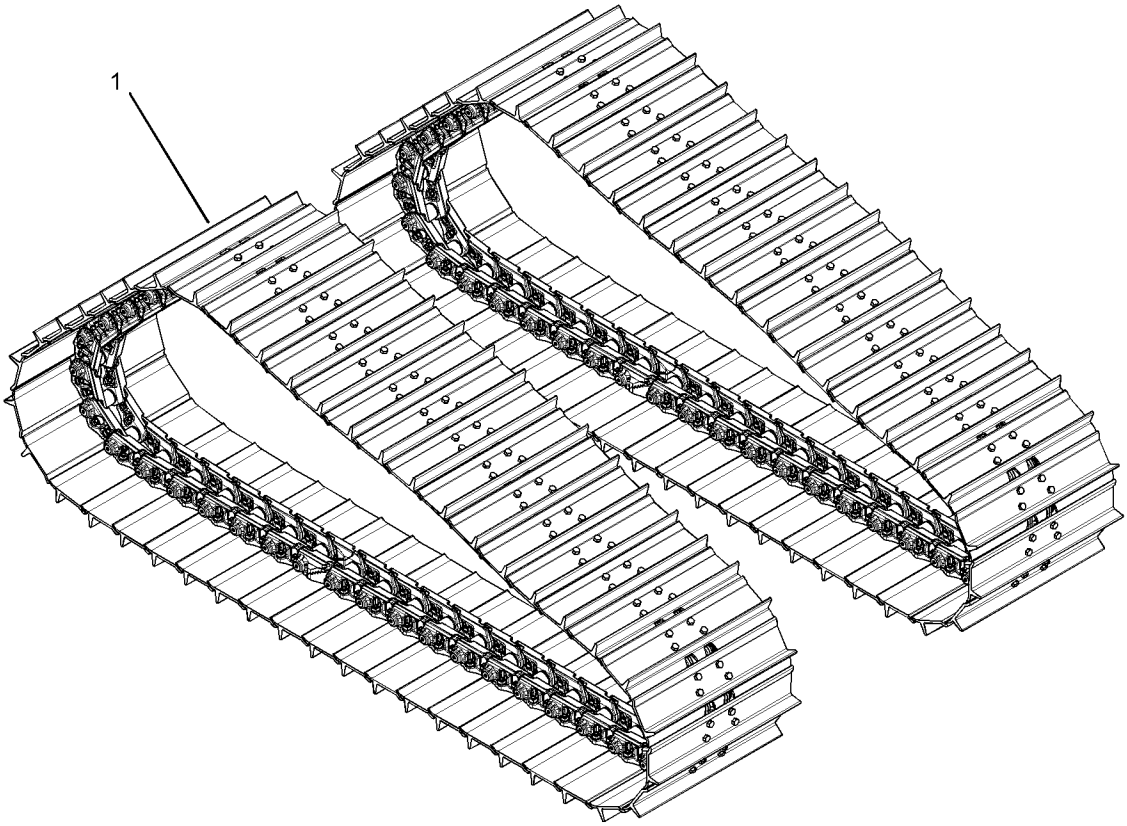

GRAPHIC #1 **<END>** g03343170

385-7760 TRACK AR–SYSTEMONE

S/N: PPP1-UP

915-MM (36-IN) GROUSER SHOE. SEALED, LUBRICATED. EXTREME SERVICE. CLAMP MASTER FOR USE WITH SYSTEMONE ROLLERS, GUARDS, GUIDESTRIPS AN ATTACHMENT

SMCS-4170 **i06144121**

NOTE	REF NO	GRAPHIC REF	PART NUMBER	QTY	PART NAME 1 2 3 4 5 6 (PRODUCT LEVEL)	SEE PAGE
Y	1	1	**385-7740**	2	TRACK GP	521

Y - SEPARATE ILLUSTRATION

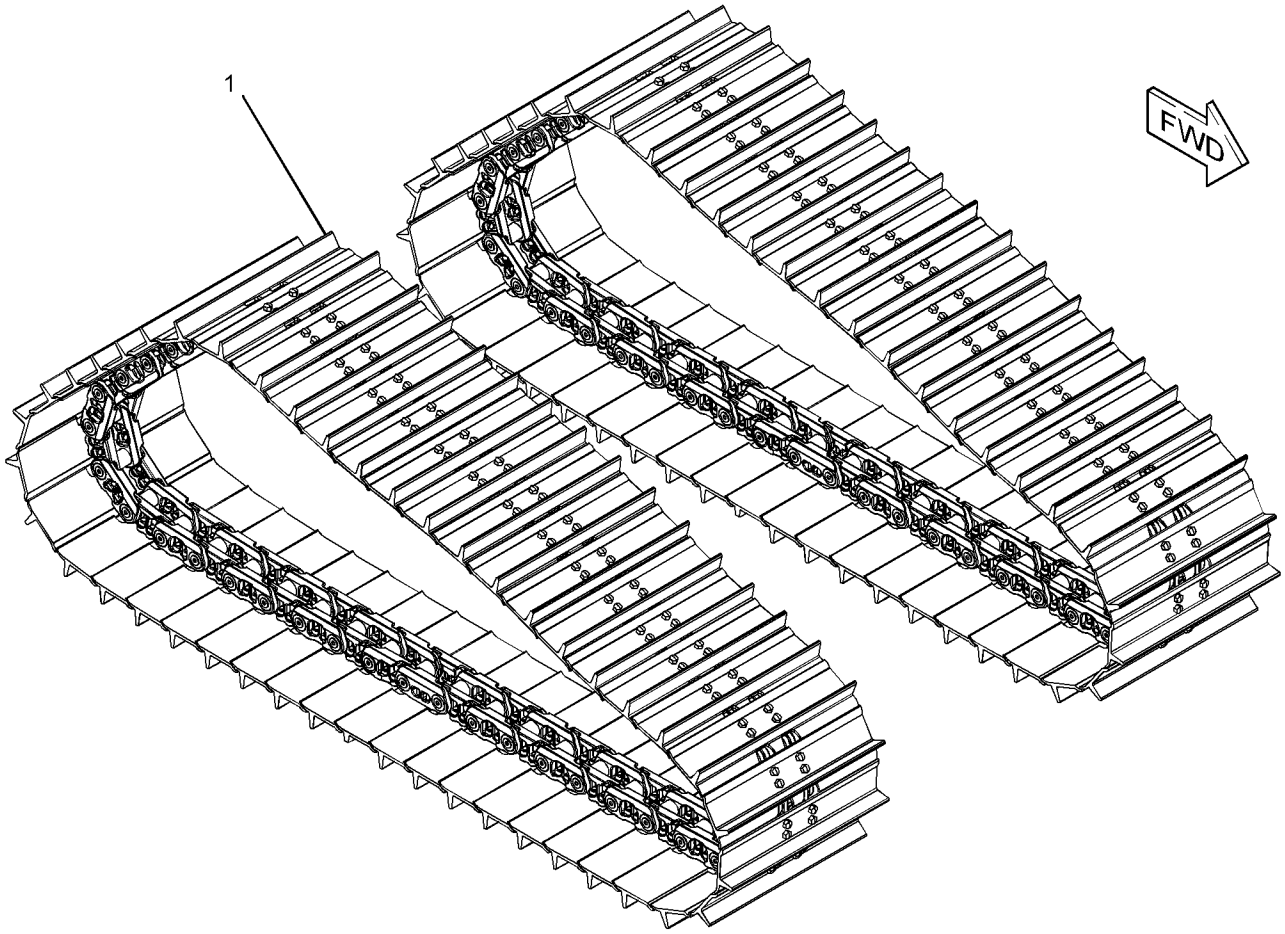

GRAPHIC #1 **<END>** g03342398

385-7762 TRACK AR–HEAVY-DUTY

S/N: PPP1-UP

915-MM (36-IN) GROUSER SHOE. SEALED, LUBRICATED. EXTREME SERVICE. TRAPEZOIDAL FOR USE WITH HEAVY-DUTY ROLLERS, GUARDS, GUIDESTRIPS, CONVENTIONAL IDLERS AN ATTACHMENT

SMCS-4170 **i06224750**

NOTE	REF NO	GRAPHIC REF	PART NUMBER	QTY	PART NAME 1 2 3 4 5 6 (PRODUCT LEVEL)	SEE PAGE
Y	1	1	**385-7742**	2	TRACK GP	522

Y - SEPARATE ILLUSTRATION

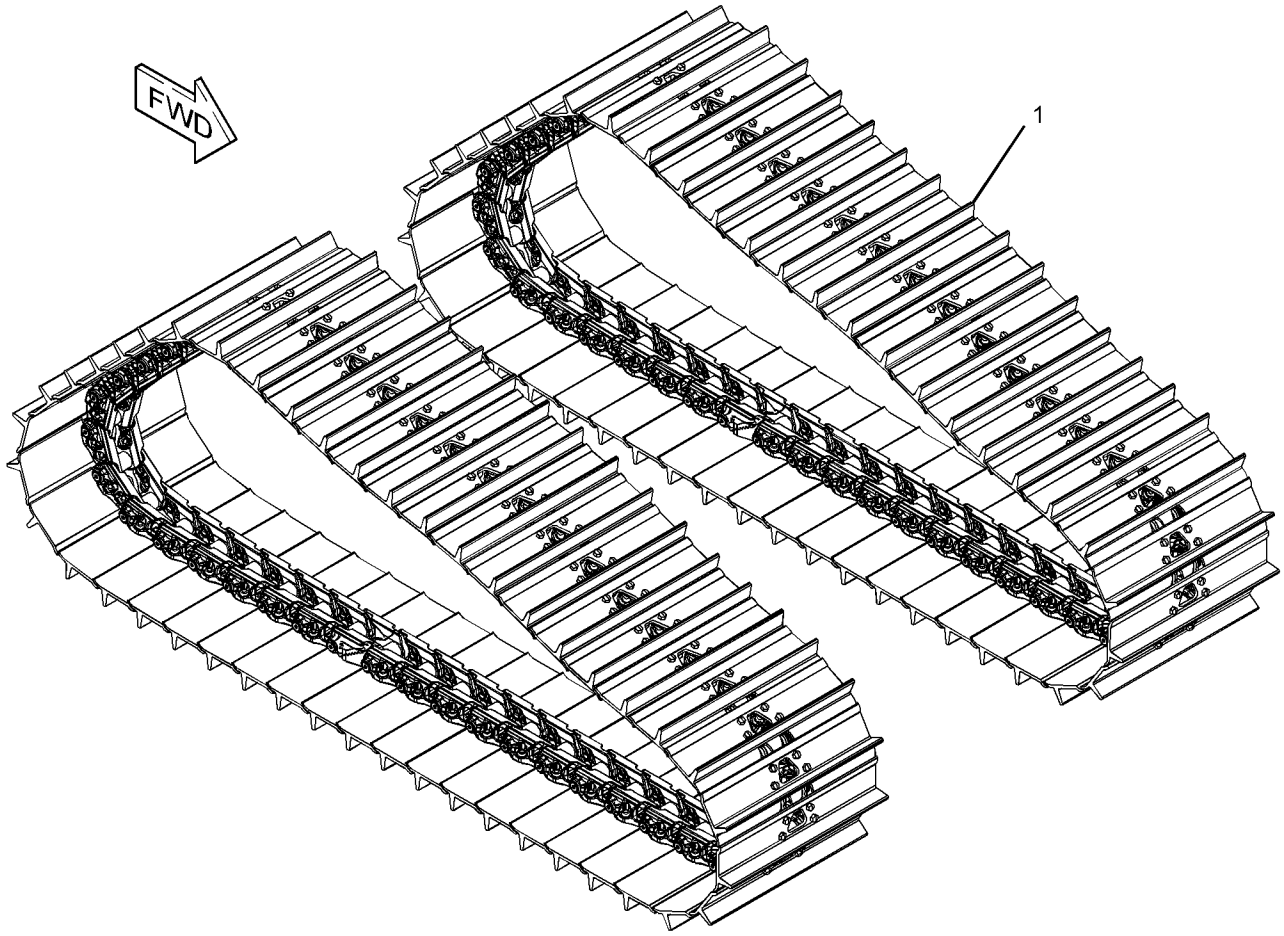

GRAPHIC #1 **<END>** g03327364

385-7764 TRACK AR—HEAVY-DUTY

S/N: PPP1-UP

1000-MM (39-IN) SELF-CLEANING SHOE. SEALED, LUBRICATED

FOR USE WITH HEAVY-DUTY ROLLERS, GUARDS, GUIDESTRIPS, CONVENTIONAL IDLERS

AN ATTACHMENT

SMCS-4170 **i06144090**

NOTE	PART NUMBER	QTY	PART NAME 1 2 3 4 5 6 (PRODUCT LEVEL)	SEE PAGE
Y	*385-7744*	2	TRACK GP	523

Y - SEPARATE ILLUSTRATION

<END>

391-3922 TRACK AR–HEAVY-DUTY

S/N: TTT1-UP

560-MM (22-IN) GROUSER SHOE. SEALED, LUBRICATED. EXTREME SERVICE. TRAPEZOIDAL FOR USE WITH HEAVY-DUTY ROLLERS, GUARDS, GUIDESTRIPS, CONVENTIONAL IDLERS AN ATTACHMENT

SMCS-4170 **i06144065**

NOTE	REF NO	GRAPHIC REF	PART NUMBER	QTY	PART NAME 1 2 3 4 5 6 (PRODUCT LEVEL)	SEE PAGE
Y	1	1	*391-3923*	2	TRACK GP	524

Y - SEPARATE ILLUSTRATION

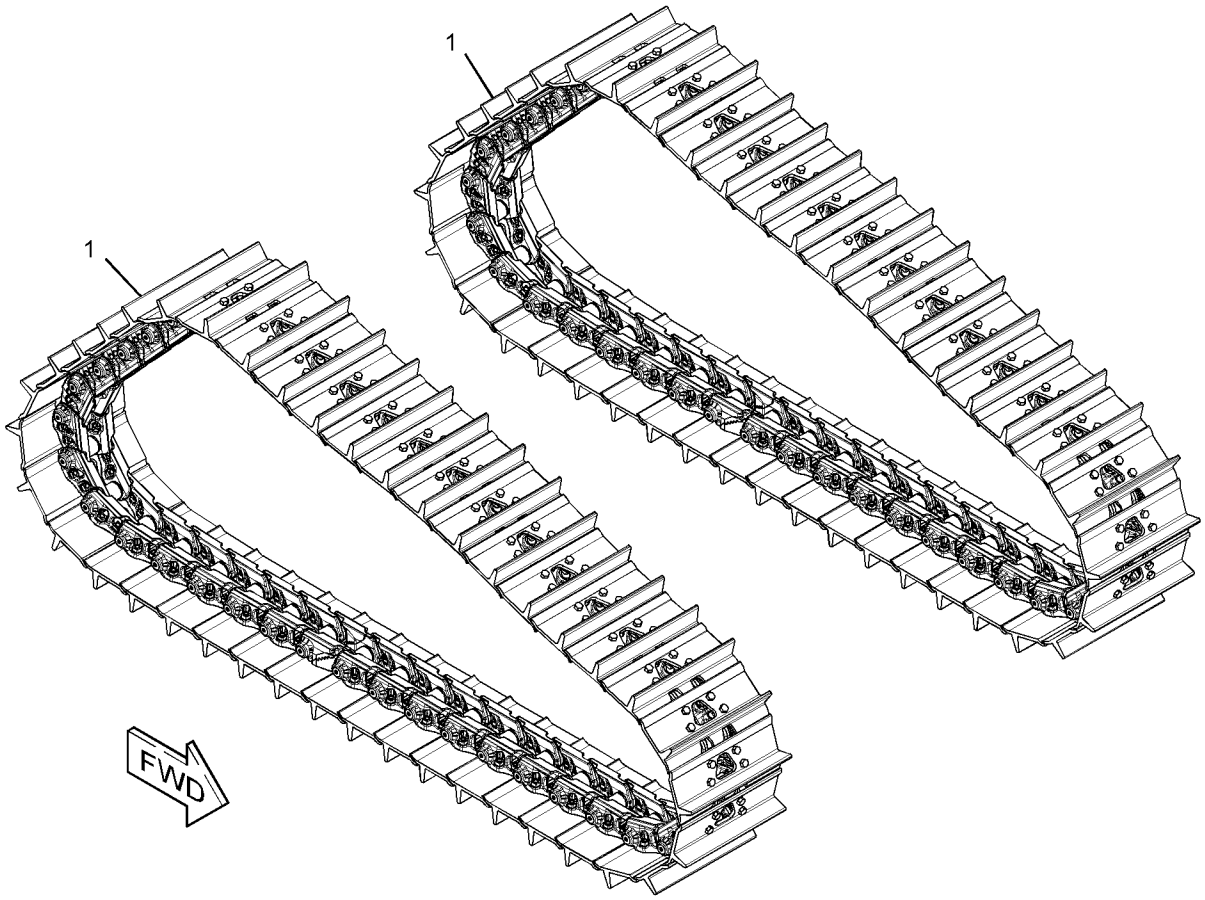

GRAPHIC #1 **<END>** g03340487

6I-9641 TRACK GP–2-REQUIRED, HEAVY-DUTY

S/N: SSS1-UP
560-MM (22-IN) GROUSER SHOE. SEALED, LUBRICATED, MODERATE SERVICE
FOR USE WITH HEAVY-DUTY ROLLERS, GUARDS, GUIDESTRIPS, CONVENTIONAL IDLERS
PART OF 385-5447 TRACK AR
AN ATTACHMENT

SMCS-4170 **i05505877**

NOTE	REF NO	GRAPHIC REF	PART NUMBER	QTY	PART NAME 1 2 3 4 5 6 (PRODUCT LEVEL)	SEE PAGE
Y	1	1	**424-0842**	1	LINK AS-TRACK	471
	2	1	**1S-1860**	152	NUT-TRACK (3/4-16-THD)	
	3	1	**6V-1792**	152	BOLT-TRACK (3/4-16X2.4-IN)	
	4	1	**6Y-6286**	38	SHOE-TRACK	
	5	1	**6Y-6294**	1	SHOE-TRACK MASTER	
	6	1	**9S-1838**	4	BOLT-TRACK MASTER (3/4-16X4.13-IN)	

Y - SEPARATE ILLUSTRATION

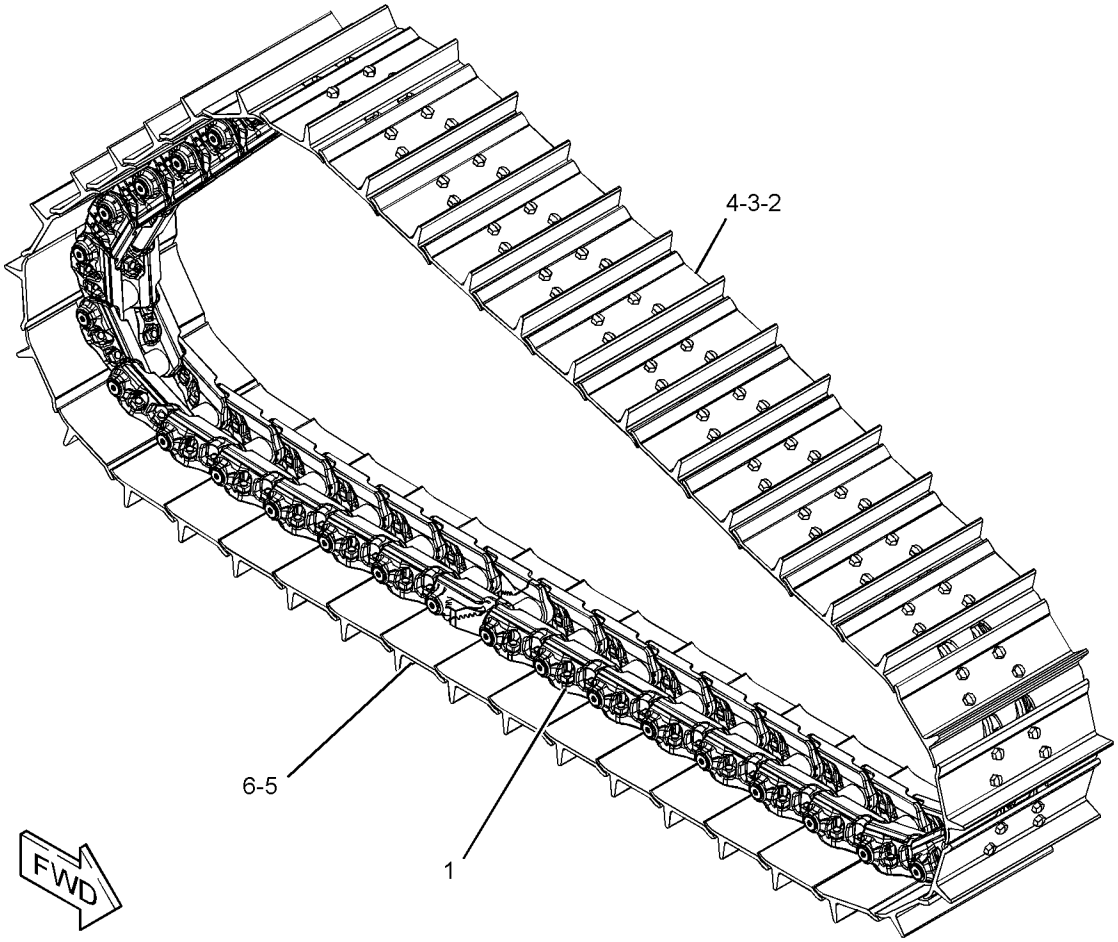

GRAPHIC #1 **<END>** g03422742

385-2666 TRACK GP–2-REQUIRED, SYSTEMONE

S/N: TTT1-UP
560-MM (22-IN) GROUSER SHOE. SEALED, LUBRICATED, EXTREME SERVICE, CLAMP MASTER
FOR USE WITH SYSTEMONE ROLLERS, GUARDS, GUIDESTRIPS
PART OF 384-1713 TRACK AR
AN ATTACHMENT

SMCS-4170 **i05508613**

NOTE	REF NO	GRAPHIC REF	PART NUMBER	QTY	PART NAME 1 2 3 4 5 6 (PRODUCT LEVEL)	SEE PAGE
	1	1	**318-1064**	2	LINK-TRACK MASTER (CLAMP)	
Y	2	1	**351-0958**	1	LINK AS-TRACK (SYSTEMONE)	470
	3	1	**246-5140**	40	SHOE-TRACK	
	4	1	**254-0224**	4	BOLT-TRACK MASTER (M22X1.5X108-MM)	
	5	1	**254-4473**	1	SHOE-TRACK MASTER	
M	6	1	**6Y-9024**	160	BOLT-TRACK (M22X1.5X67-MM)	
M	7	1	**9W-4381**	160	NUT-TRACK (M22X1.5-THD)	

M - METRIC PART
Y - SEPARATE ILLUSTRATION

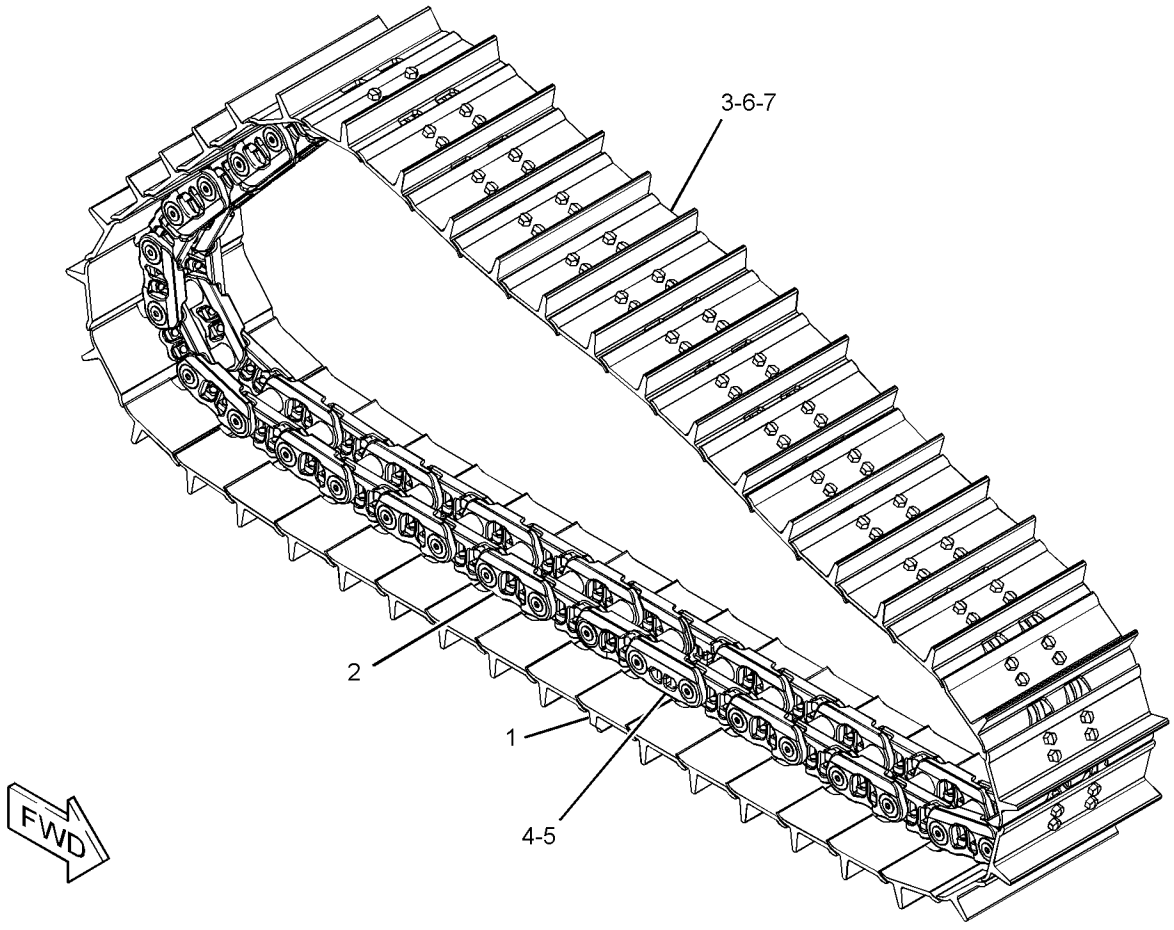

GRAPHIC #1 **<END>** g02923723

385-2672 TRACK GP–2-REQUIRED, HEAVY-DUTY

S/N: TTT1-UP

560-MM (22-IN) SINGLE GROUSER SHOE. SEALED, LUBRICATED, MODERATE SERVICE
FOR USE WITH HEAVY DUTY ROLLERS, GUARDS, GUIDESTRIPS & CONVENTIONAL IDLERS
PART OF 385-2689 TRACK AR
AN ATTACHMENT

SMCS-4170 **i05508742**

NOTE	REF NO	GRAPHIC REF	PART NUMBER	QTY	PART NAME 1 2 3 4 5 6 (PRODUCT LEVEL)	SEE PAGE
Y	1	1	**424-0844**	1	LINK AS-TRACK	472
	2	1	**1S-1860**	160	NUT-TRACK (3/4-16-THD)	
	3	1	**6V-1792**	160	BOLT-TRACK (3/4-16X2.4-IN)	
	4	1	**6Y-6286**	40	SHOE-TRACK	
	5	1	**6Y-6294**	1	SHOE-TRACK MASTER	
	6	1	**9S-1838**	4	BOLT-TRACK MASTER (3/4-16X4.13-IN)	

Y - SEPARATE ILLUSTRATION

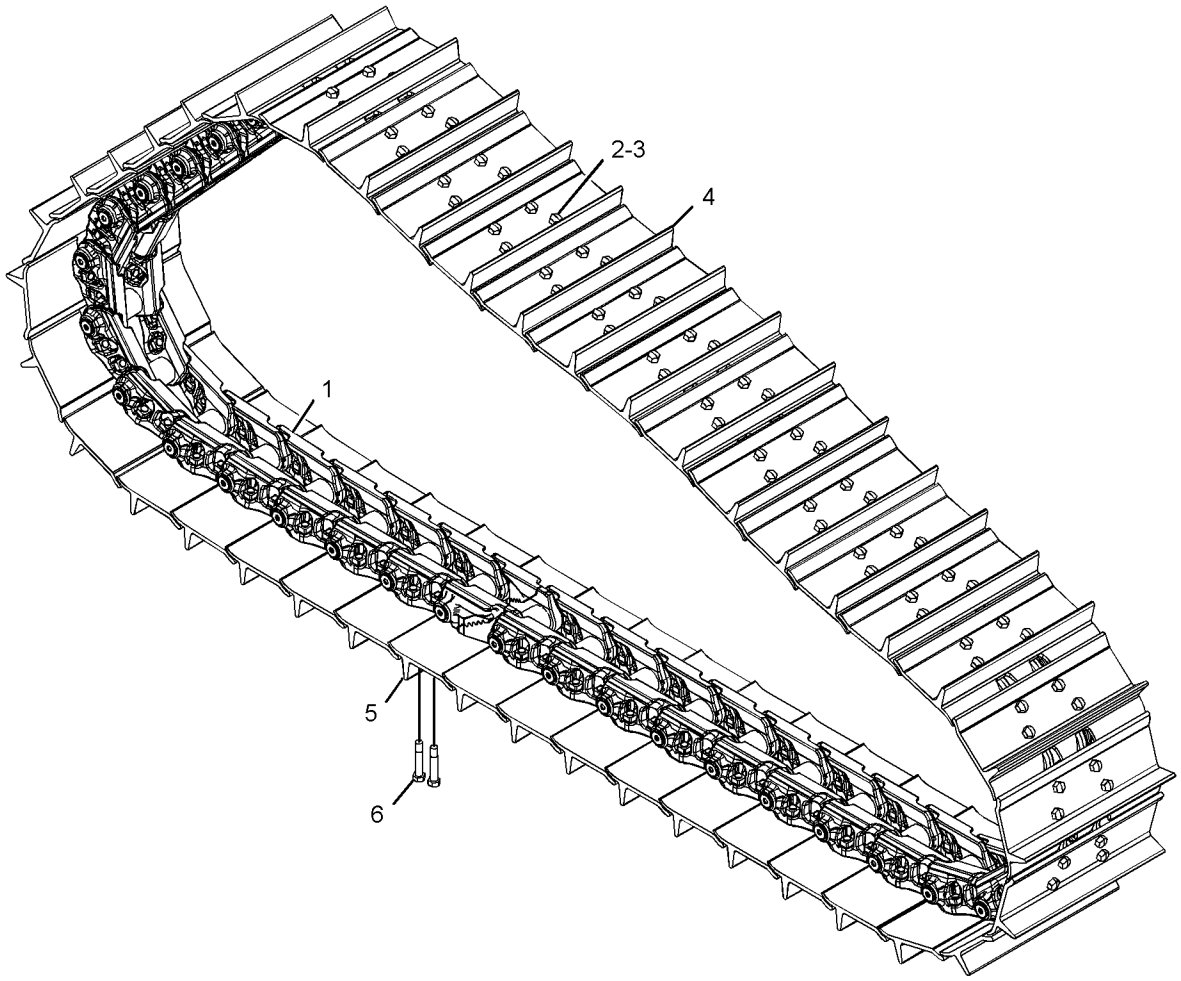

GRAPHIC #1 **<END>** g03360121

385-2675 TRACK GP–2-REQUIRED, HEAVY-DUTY

S/N: TTT1-UP
560-MM (22-IN) SINGLE GROUSER SHOE. SEALED, LUBRICATED, EXTREME SERVICE
FOR USE WITH HEAVY DUTY ROLLERS, GUARDS, GUIDESTRIPS & CONVENTIONAL IDLERS
PART OF 385-2691 TRACK AR
AN ATTACHMENT

SMCS-4170 **i05509391**

NOTE	REF NO	GRAPHIC REF	PART NUMBER	QTY	PART NAME 1 2 3 4 5 6 (PRODUCT LEVEL)	SEE PAGE
Y	1	1	**424-0844**	1	LINK AS-TRACK	472
	2	1	**1S-1860**	160	NUT-TRACK (3/4-16-THD)	
	3	1	**6V-1792**	160	BOLT-TRACK (3/4-16X2.4-IN)	
	4	1	**6Y-6389**	40	SHOE-TRACK	
	5	1	**6Y-6412**	1	SHOE-TRACK MASTER	
	6	1	**9S-1838**	4	BOLT-TRACK MASTER (3/4-16X4.13-IN)	

Y - SEPARATE ILLUSTRATION

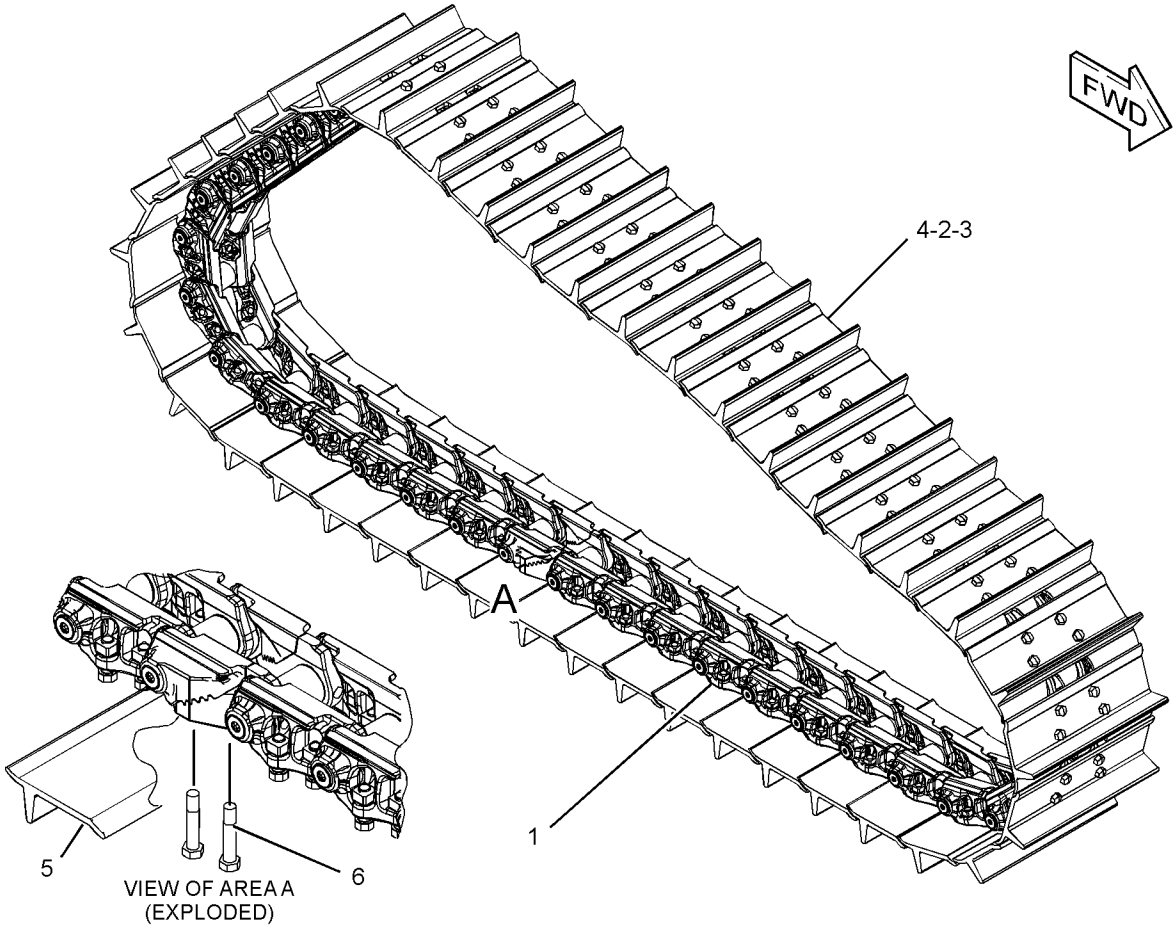

GRAPHIC #1 **<END>** g03359759

385-2678 TRACK GP–2-REQUIRED, HEAVY-DUTY

S/N: TTT1-UP
610-MM (24-IN) GROUSER SHOE. SEALED, LUBRICATED. MODERATE SERVICE
FOR USE WITH HEAVY-DUTY ROLLERS, GUARDS, GUIDESTRIPS, CONVENTIONAL IDLERS
PART OF 385-2694 TRACK AR
AN ATTACHMENT

SMCS-4170 **i05511012**

NOTE	REF NO	GRAPHIC REF	PART NUMBER	QTY	PART NAME 1 2 3 4 5 6 (PRODUCT LEVEL)	SEE PAGE
Y	1	1	**424-0844**	1	LINK AS-TRACK	472
	2	1	**1S-1860**	160	NUT-TRACK (3/4-16-THD)	
	3	1	**6V-1792**	160	BOLT-TRACK (3/4-16X2.4-IN)	
	4	1	**6Y-6287**	40	SHOE-TRACK	
	5	1	**6Y-6296**	1	SHOE-TRACK MASTER	
	6	1	**9S-1838**	4	BOLT-TRACK MASTER (3/4-16X4.13-IN)	

Y - SEPARATE ILLUSTRATION

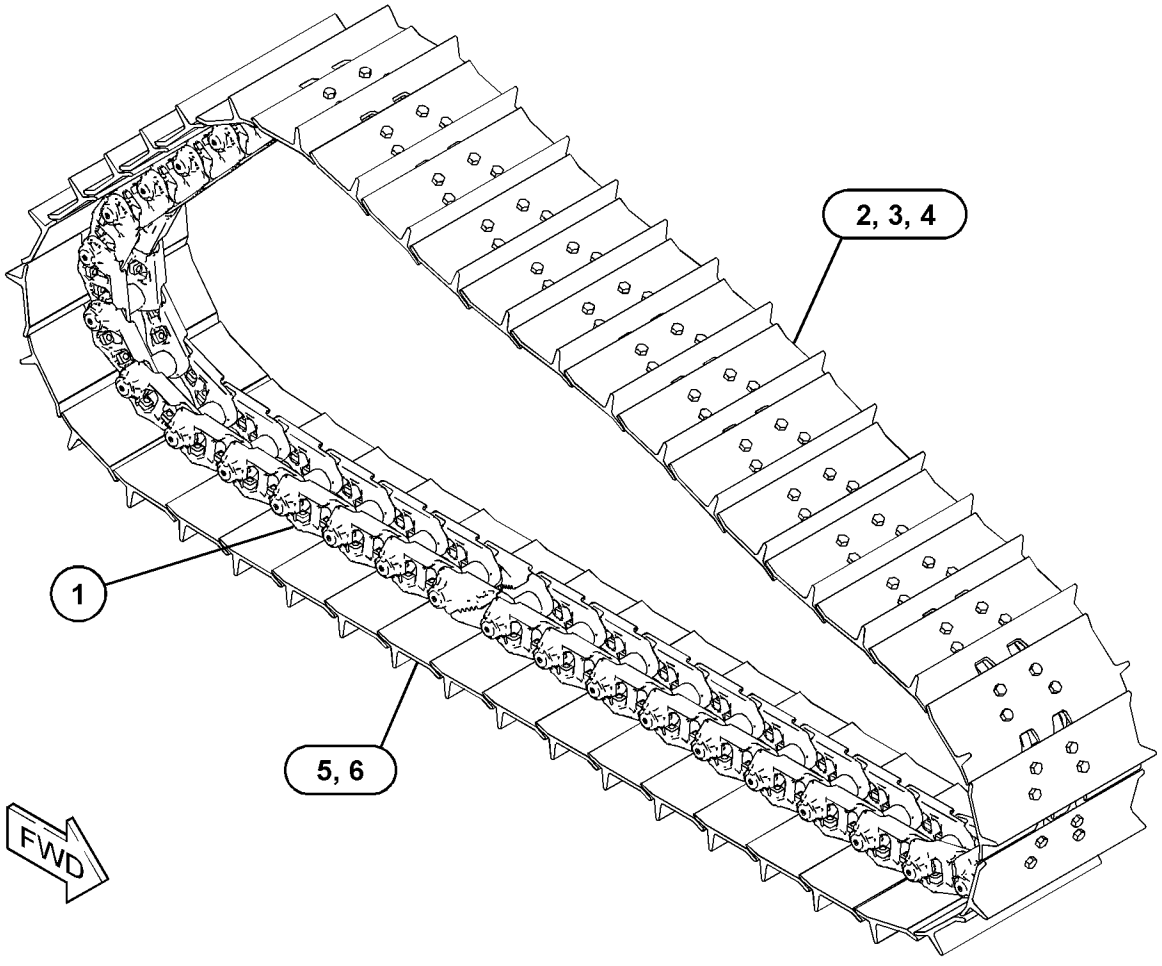

GRAPHIC #1 **<END>** g03304677

385-2679 TRACK GP–2-REQUIRED, SYSTEMONE

S/N: TTT1-UP
610-MM (24-IN) GROUSER SHOE. SEALED, LUBRICATED, EXTREME SERVICE, CLAMP MASTER
FOR USE WITH SYSTEMONE ROLLERS, GUARDS, GUIDESTRIPS
PART OF 385-2695 TRACK AR
AN ATTACHMENT

SMCS-4170 **i05511189**

NOTE	REF NO	GRAPHIC REF	PART NUMBER	QTY	PART NAME 1 2 3 4 5 6 (PRODUCT LEVEL)	SEE PAGE
	1	1	**318-1064**	2	LINK-TRACK MASTER (CLAMP)	
Y	2	1	**351-0958**	1	LINK AS-TRACK	470
	3	1	**246-5203**	40	SHOE-TRACK	
	4	1	**254-0224**	4	BOLT-TRACK MASTER (M22X1.5X108-MM)	
	5	1	**254-4471**	1	SHOE-TRACK MASTER	
M	6	1	**6Y-9024**	160	BOLT-TRACK (M22X1.5X67-MM)	
M	7	1	**9W-4381**	160	NUT-TRACK (M22X1.5-THD)	

M - METRIC PART
Y - SEPARATE ILLUSTRATION

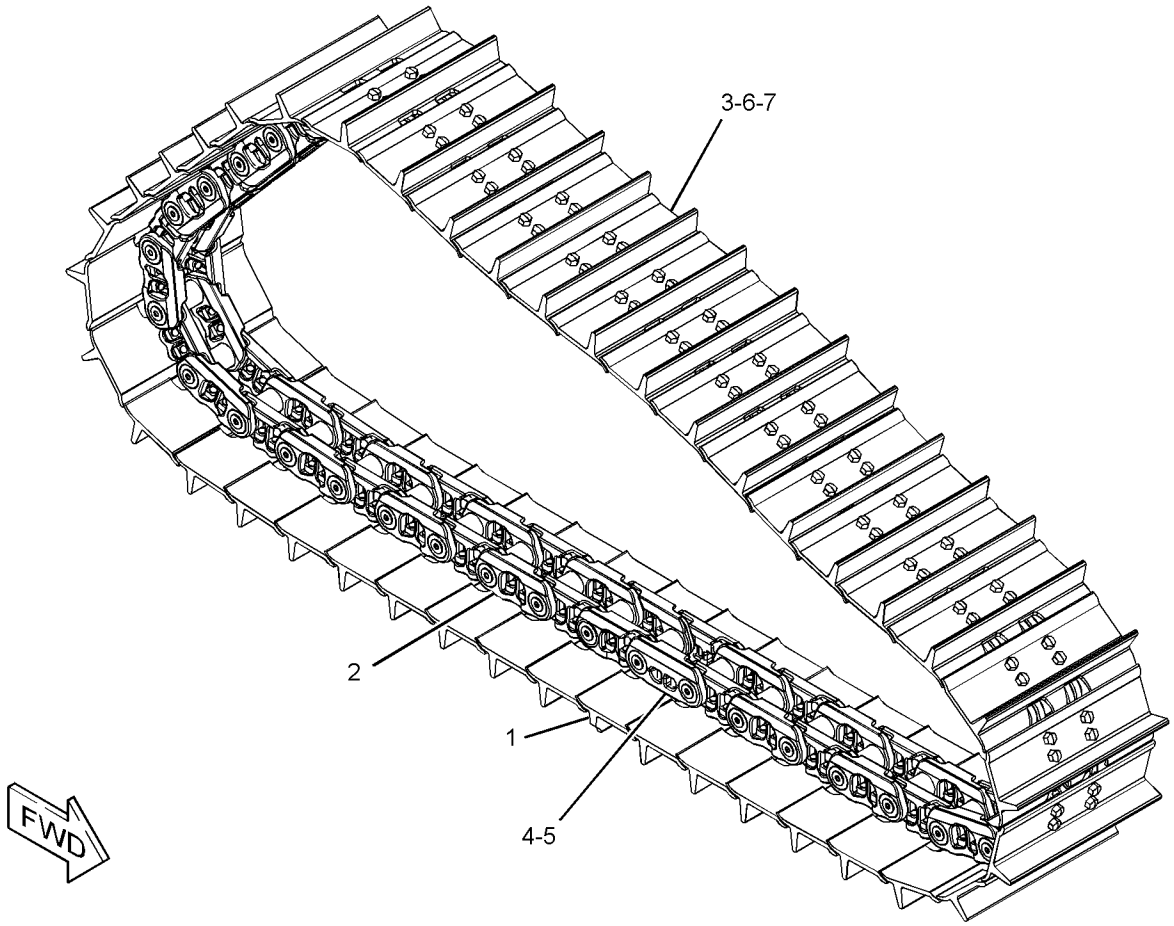

GRAPHIC #1 **<END>** g02923723

385-2682 TRACK GP–2-REQUIRED, HEAVY-DUTY

S/N: TTT1-UP

610-MM (24-IN) GROUSER SHOE. SEALED, LUBRICATED. EXTREME SERVICE . TRAPEZOIDAL
FOR USE WITH HEAVY-DUTY ROLLERS, GUARDS, GUIDESTRIPS, CONVENTIONAL IDLERS
PART OF 385-2698 TRACK AR
AN ATTACHMENT

SMCS-4170 **i06144182**

NOTE	REF NO	GRAPHIC REF	PART NUMBER	QTY	PART NAME 1 2 3 4 5 6 (PRODUCT LEVEL)	SEE PAGE
Y	1	1	**424-0844**	1	LINK AS-TRACK	472
	2	1	**157-1373**	40	SHOE-TRACK	
	3	1	**157-1374**	1	SHOE-TRACK MASTER	
	4	1	**1S-1860**	160	NUT-TRACK (3/4-16-THD)	
	5	1	**6V-1792**	160	BOLT-TRACK (3/4-16X2.4-IN)	
	6	1	**9S-1838**	4	BOLT-TRACK MASTER (3/4-16X4.13-IN)	

Y - SEPARATE ILLUSTRATION

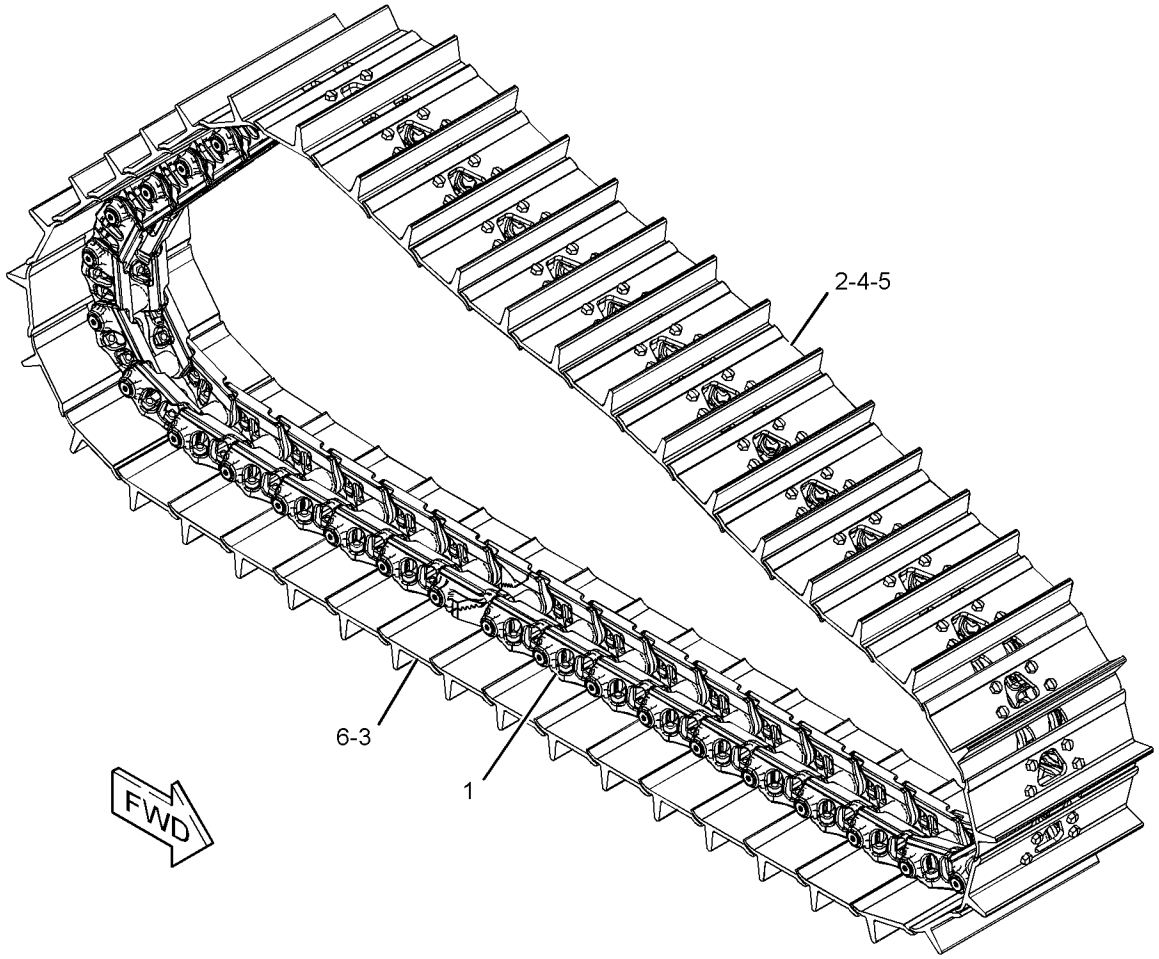

GRAPHIC #1 **<END>** g03327920

385-5450 TRACK GP–2-REQUIRED, HEAVY-DUTY

S/N: SSS1-UP

610-MM (24-IN) GROUSER SHOE. SEALED, LUBRICATED, MODERATE SERVICE

FOR USE WITH HEAVY DUTY ROLLERS, GUARDS, GUIDESTRIPS, CONVENTIONAL IDLERS

PART OF 385-5462 TRACK AR

AN ATTACHMENT

SMCS-4170 **i05508572**

NOTE	REF NO	GRAPHIC REF	PART NUMBER	QTY	PART NAME 1 2 3 4 5 6 (PRODUCT LEVEL)	SEE PAGE
Y	1	1	**424-0842**	1	LINK AS-TRACK (HEAVY-DUTY)	471
	2	1	**1S-1860**	152	NUT-TRACK (3/4-16-THD)	
	3	1	**6V-1792**	152	BOLT-TRACK (3/4-16X2.4-IN)	
	4	1	**6Y-6287**	38	SHOE-TRACK	
	5	1	**6Y-6296**	1	SHOE-TRACK MASTER	
	6	1	**9S-1838**	4	BOLT-TRACK MASTER (3/4-16X4.13-IN)	

Y - SEPARATE ILLUSTRATION

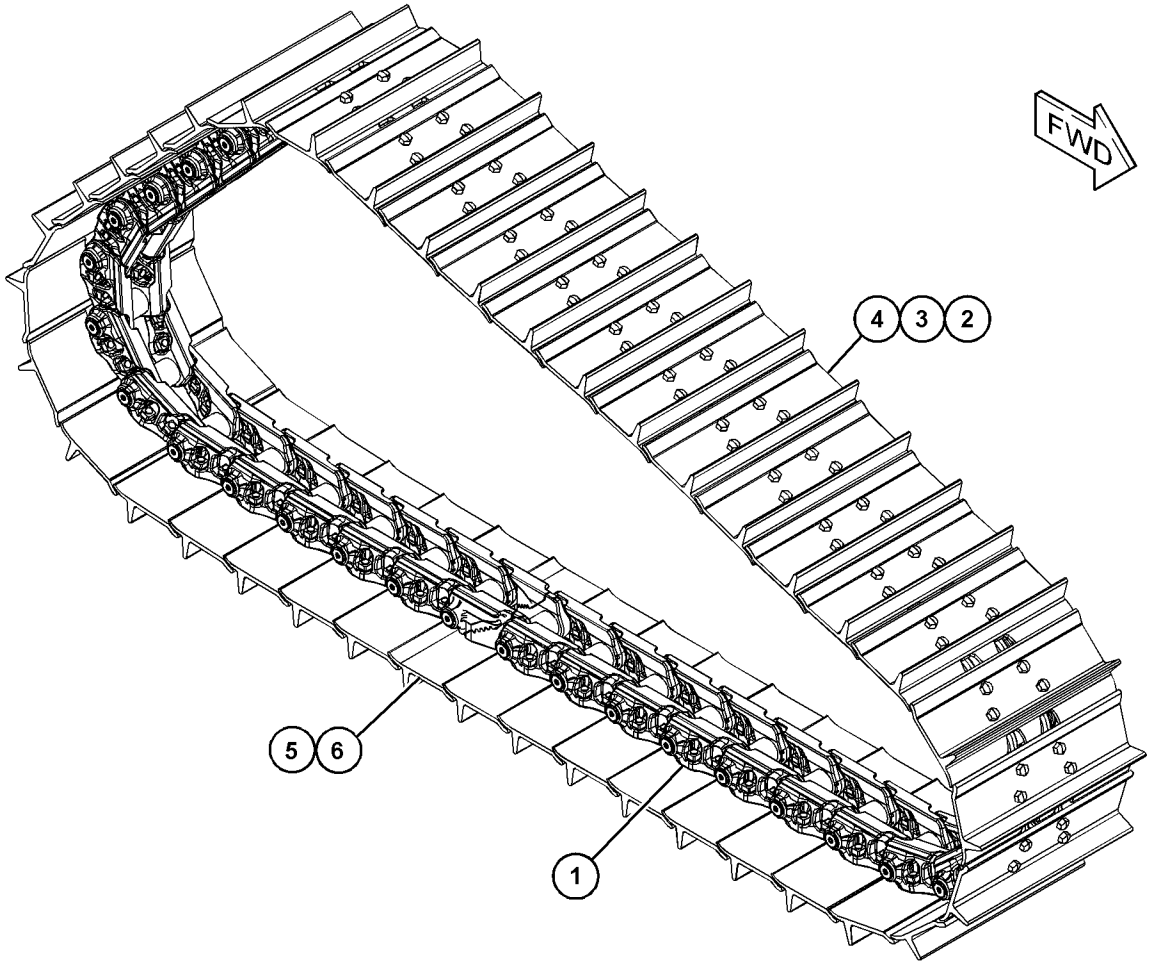

GRAPHIC #1 **<END>** g03533389

385-5458 TRACK GP–2-REQUIRED, HEAVY-DUTY

S/N: SSS1-UP

560-MM (22-IN) GROUSER SHOE. SEALED, LUBRICATED. EXTREME SERVICE

FOR USE WITH HEAVY-DUTY ROLLERS, GUARDS, GUIDESTRIPS, CONVENTIONAL IDLERS

PART OF 385-5459 TRACK AR

AN ATTACHMENT

SMCS-4170 **i05505942**

NOTE	REF NO	GRAPHIC REF	PART NUMBER	QTY	PART NAME 1 2 3 4 5 6 (PRODUCT LEVEL)	SEE PAGE
Y	1	1	**424-0842**	1	LINK AS-TRACK	471
	2	1	**6Y-6412**	1	SHOE-TRACK MASTER	
	3	1	**1S-1860**	152	NUT-TRACK (3/4-16-THD)	
	4	1	**6V-1792**	152	BOLT-TRACK (3/4-16X2.4-IN)	
	5	1	**6Y-6389**	38	SHOE-TRACK	
	6	1	**9S-1838**	4	BOLT-TRACK MASTER (3/4-16X4.13-IN)	

Y - SEPARATE ILLUSTRATION

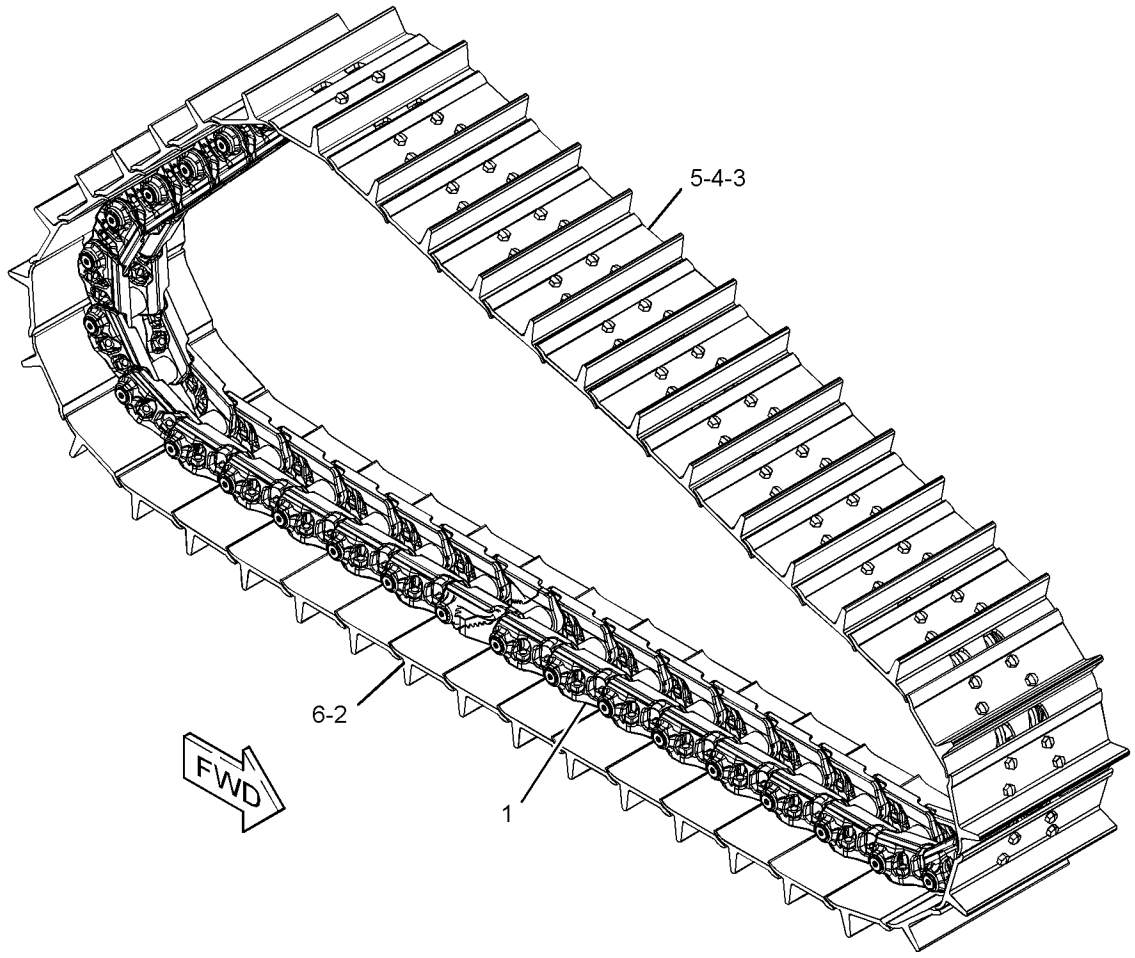

GRAPHIC #1 **<END>** g03381374

385-7739 TRACK GP–2-REQUIRED, HEAVY-DUTY

S/N: PPP1-UP
915-MM (36-IN) GROUSER SHOE. SEALED, LUBRICATED, MODERATE SERVICE
FOR USE WITH HEAVY-DUTY ROLLERS, GUARDS, GUIDESTRIPS, CONVENTIONAL IDLERS
PART OF 385-7759 TRACK AR
AN ATTACHMENT

SMCS-4170 **i06144176**

NOTE	REF NO	GRAPHIC REF	PART NUMBER	QTY	PART NAME 1 2 3 4 5 6 (PRODUCT LEVEL)	SEE PAGE
Y	1	1	**424-0847**	1	LINK AS-TRACK	473
	2	1	**196-1236**	1	SHOE-TRACK MASTER	
	3	1	**196-7839**	44	SHOE-TRACK	
	4	1	**1S-1860**	176	NUT-TRACK (3/4-16-THD)	
	5	1	**6V-1792**	176	BOLT-TRACK (3/4-16X2.4-IN)	
	6	1	**9S-1838**	4	BOLT-TRACK MASTER (3/4-16X4.13-IN)	

Y - SEPARATE ILLUSTRATION

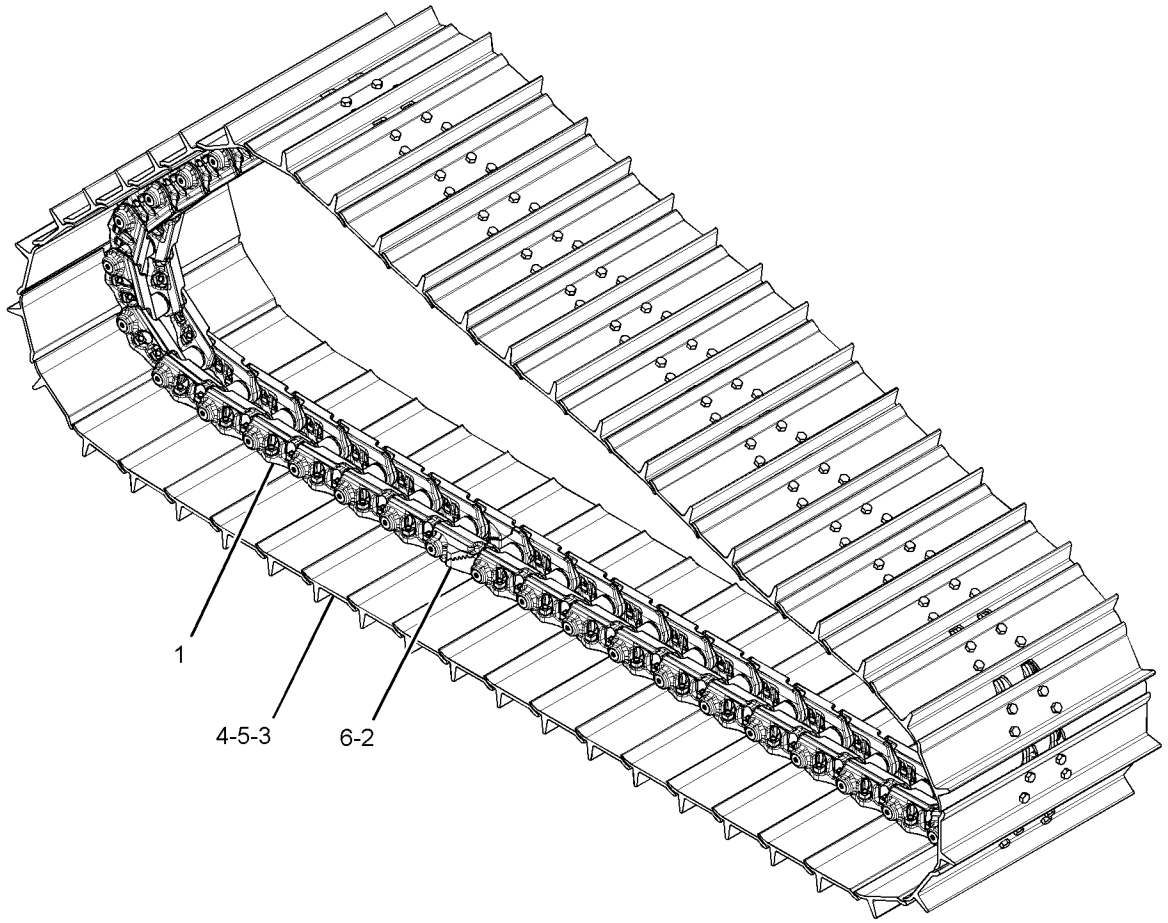

GRAPHIC #1 **<END>** g03343061

385-7740 TRACK GP–2-REQUIRED, SYSTEMONE

S/N: PPP1-UP

915-MM (36-IN) GROUSER SHOE. SEALED, LUBRICATED. EXTREME SERVICE. CLAMP MASTER
FOR USE WITH SYSTEMONE ROLLERS, GUARDS, GUIDESTRIPS
PART OF 385-7760 TRACK AR
AN ATTACHMENT

SMCS-4170 **i06144135**

NOTE	REF NO	GRAPHIC REF	PART NUMBER	QTY	PART NAME 1 2 3 4 5 6 (PRODUCT LEVEL)	SEE PAGE
	1	1	**318-1064**	2	LINK-TRACK MASTER (CLAMP)	
Y	2	1	**351-0957**	1	LINK AS-TRACK (SYSTEMONE)	469
	3	1	**242-8904**	44	SHOE-TRACK	
	4	1	**254-0224**	4	BOLT-TRACK MASTER (M22X1.5X108-MM)	
	5	1	**254-0234**	1	SHOE-TRACK MASTER	
M	6	1	**6Y-9024**	176	BOLT-TRACK (M22X1.5X67-MM)	
M	7	1	**9W-4381**	176	NUT-TRACK (M22X1.5-THD)	

M - METRIC PART
Y - SEPARATE ILLUSTRATION

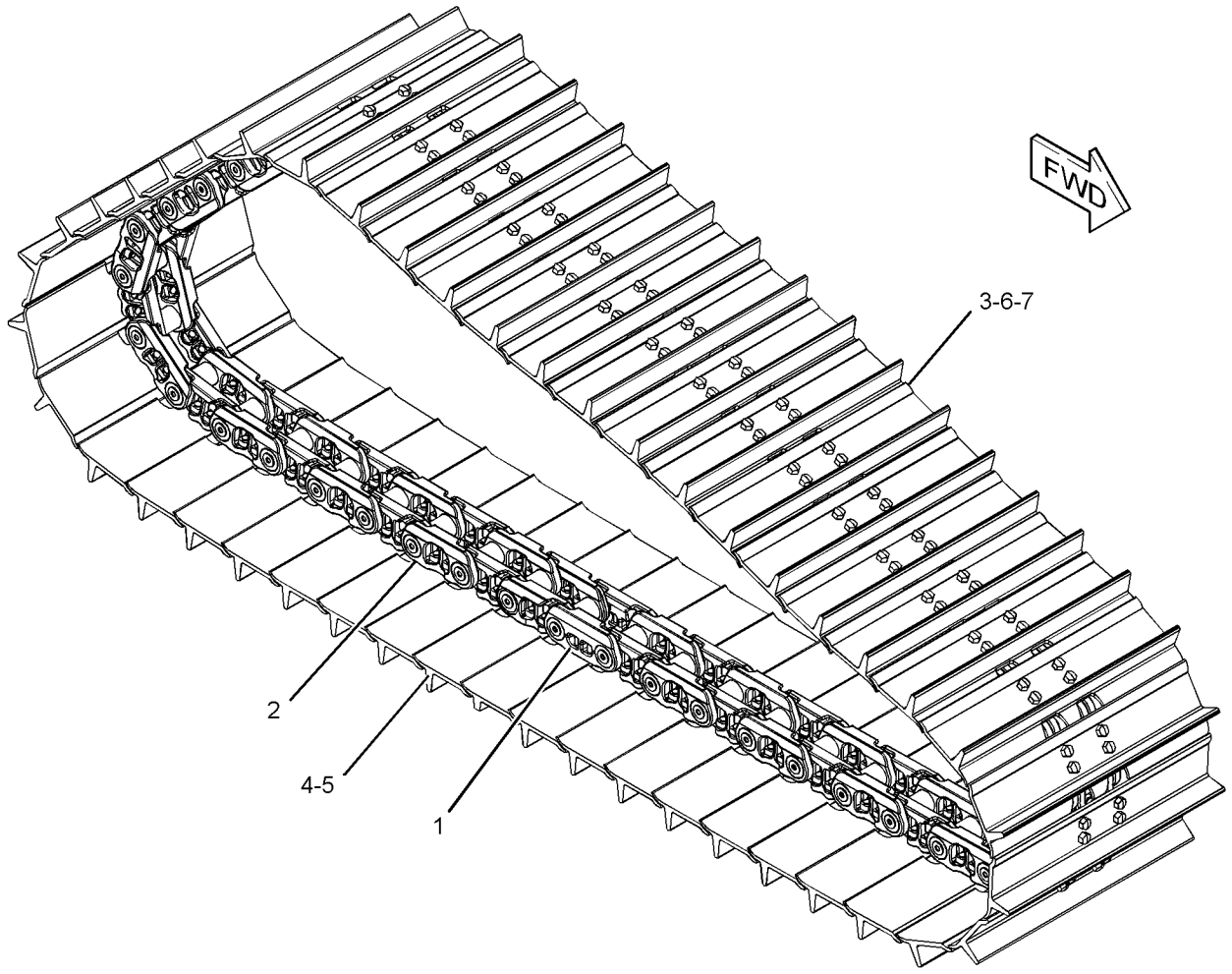

GRAPHIC #1 **<END>** g03342772

385-7742 TRACK GP–2-REQUIRED, HEAVY-DUTY

S/N: PPP1-UP

915-MM (36-IN) GROUSER SHOE. SEALED, LUBRICATED. EXTREME SERVICE. TRAPEZOIDAL
FOR USE WITH HEAVY-DUTY ROLLERS, GUARDS, GUIDESTRIPS, CONVENTIONAL IDLERES
PART OF 385-7762 TRACK AR
AN ATTACHMENT

SMCS-4170 **i06224754**

NOTE	REF NO	GRAPHIC REF	PART NUMBER	QTY	PART NAME 1 2 3 4 5 6 (PRODUCT LEVEL)	SEE PAGE
Y	1	1	**424-0847**	1	LINK AS-TRACK	473
	2	1	**1Q-4728**	44	SHOE-TRACK	
	3	1	**1Q-4729**	1	SHOE-TRACK MASTER	
	4	1	**1S-1860**	176	NUT-TRACK (3/4-16-THD)	
	5	1	**6V-1792**	176	BOLT-TRACK (3/4-16X2.4-IN)	
	6	1	**9S-1838**	4	BOLT-TRACK MASTER (3/4-16X4.13-IN)	

Y - SEPARATE ILLUSTRATION

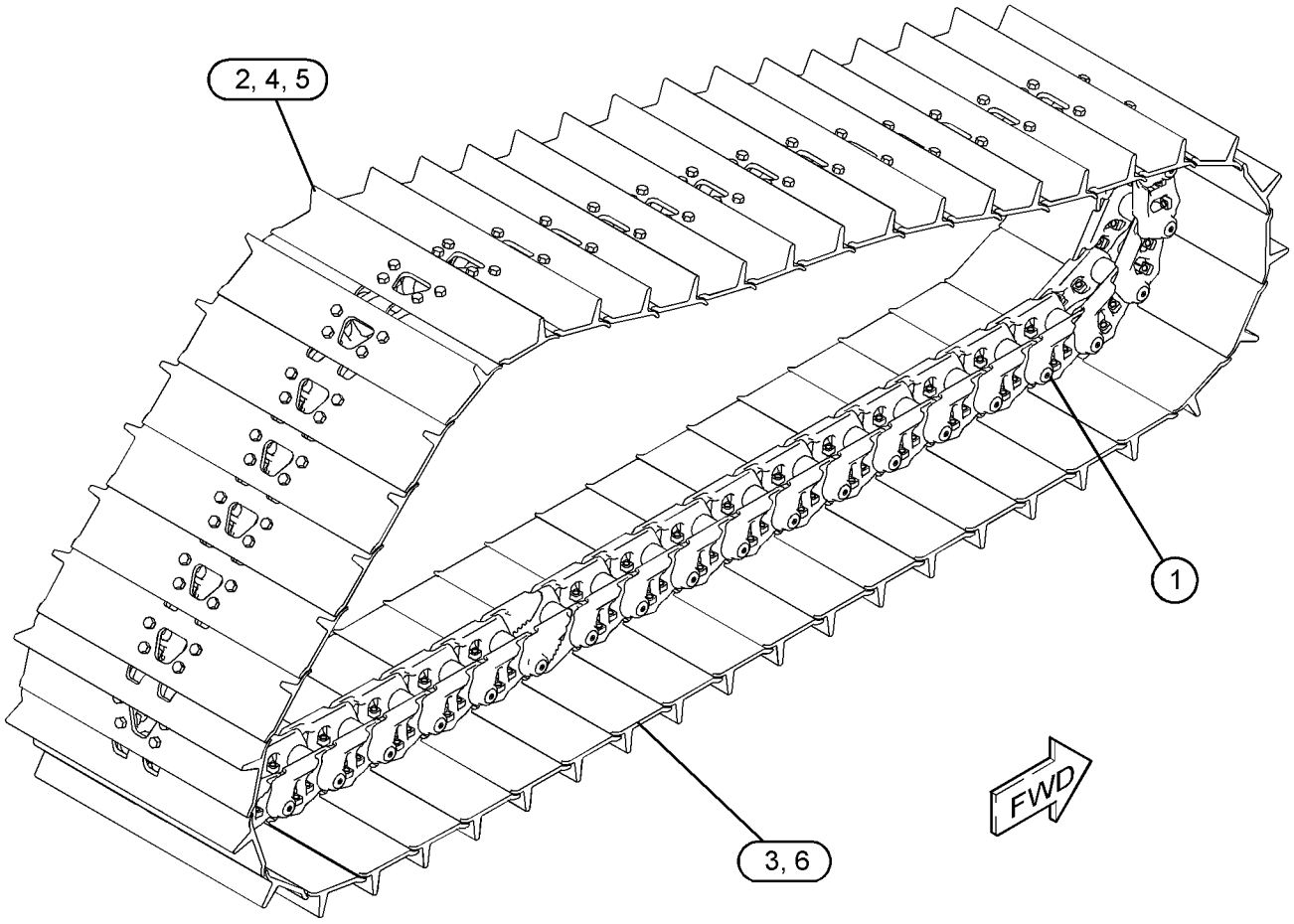

GRAPHIC #1 **<END>** g03679481

385-7744 TRACK GP–2-REQUIRED, HEAVY-DUTY

S/N: PPP1-UP
1000-MM (39-IN) SELF-CLEANING SHOE. SEALED, LUBRICATED
FOR USE WITH HEAVY-DUTY ROLLERS, GUARDS, GUIDESTRIPS, CONVENTIONAL IDLERS
PART OF 385-7764 TRACK AR
AN ATTACHMENT

SMCS-4170 **i06144093**

NOTE	PART NUMBER	QTY	PART NAME 1 2 3 4 5 6 (PRODUCT LEVEL)	SEE PAGE
Y	**424-0847**	1	LINK AS-TRACK	473
	3P-1111	2	BOLT-TRACK (3/4-16X5.47-IN)	
	6T-2162	88	BOLT-TRACK (3/4-16X4.13-IN)	
	6V-1792	88	BOLT-TRACK (3/4-16X2.4-IN)	
	9S-1838	2	BOLT-TRACK MASTER (3/4-16X4.13-IN)	
	1S-1860	176	NUT-TRACK (3/4-16-THD)	
	116-8545	44	SHOE-TRACK	
	116-8548	1	SHOE-TRACK MASTER	

Y - SEPARATE ILLUSTRATION

<END>

391-3923 TRACK GP–2-REQUIRED, HEAVY-DUTY

S/N: TTT1-UP

560-MM (22-IN) GROUSER SHOE. SEALED, LUBRICATED. EXTREME SERVICE. TRAPEZOIDAL
FOR USE WITH HEAVY-DUTY ROLLERS, GUARDS, GUIDESTRIPS, CONVENTIONAL IDLERS
PART OF 391-3922 TRACK AR
AN ATTACHMENT

SMCS-4170 **i06144074**

NOTE	REF NO	GRAPHIC REF	PART NUMBER	QTY	PART NAME 1 2 3 4 5 6 (PRODUCT LEVEL)	SEE PAGE
Y	1	1	**424-0844**	1	LINK AS-TRACK	472
	2	1	**1Q-4625**	40	SHOE-TRACK	
	3	1	**1Q-4626**	1	SHOE-TRACK MASTER	
	4	1	**1S-1860**	160	NUT-TRACK (3/4-16-THD)	
	5	1	**6V-1792**	160	BOLT-TRACK (3/4-16X2.4-IN)	
	6	1	**9S-1838**	4	BOLT-TRACK MASTER (3/4-16X4.13-IN)	

Y - SEPARATE ILLUSTRATION

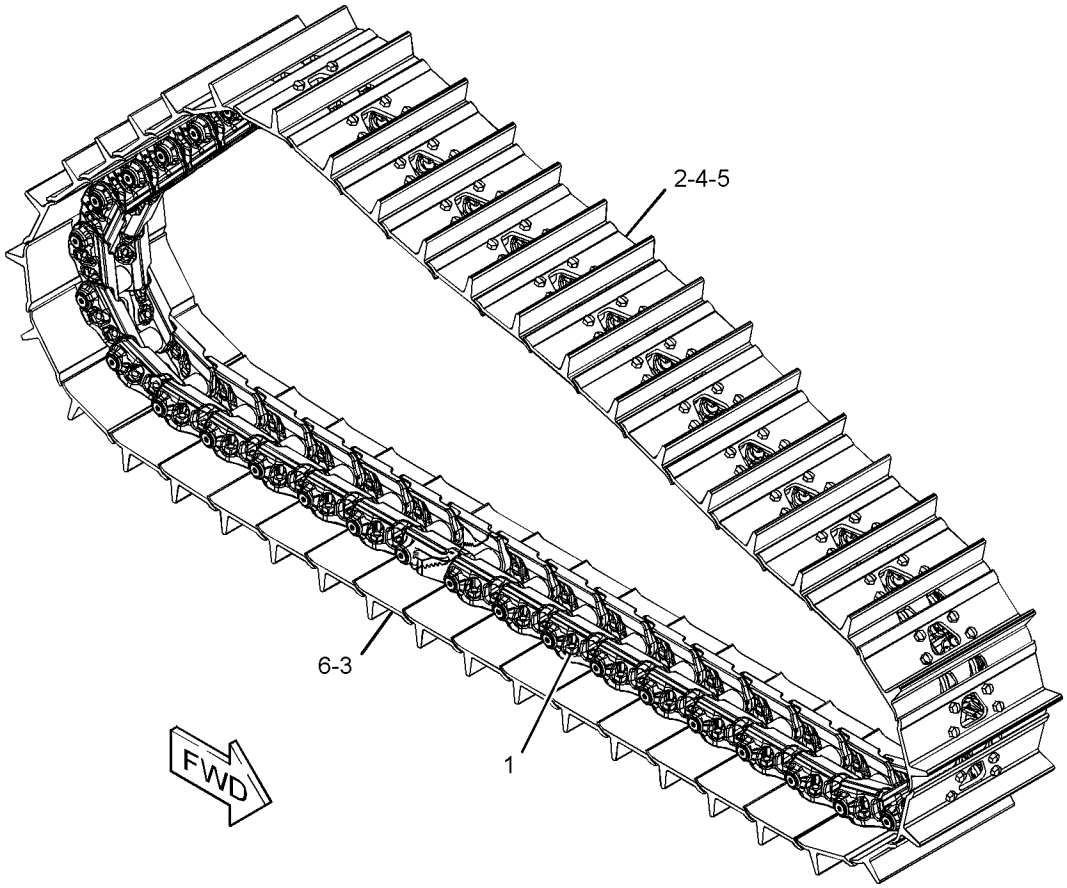

GRAPHIC #1 **<END>** g03340461

415-1300 UNDERCARRIAGE AR—HEAVY-DUTY, WASTE HANDLING

S/N: TTT1-UP
FOR USE WITH STRIKER BAR GP (FRONT)
AN ATTACHMENT

SMCS-4150 **i06218931**

NOTE	PART NUMBER	QTY	PART NAME 1 2 3 4 5 6 (PRODUCT LEVEL)	SEE PAGE
Y	*229-7373*	1	BAR GP-EQUALIZER	406
Y	*108-1091*	8	CAP GP-TRACK IDLER	410
Y	*456-5991*	1	FRAME GP-TELESCOPING RECOIL (LH)	443
Y	*456-5992*	1	FRAME GP-TELESCOPING RECOIL (RH)	445
Y	*164-0406*	2	GUARD GP-TRACK GUIDE	456
Y	**206-1895**	4	IDLER GP-TRACK	466
Y	*169-4368*	2	MOUNTING GP-CARRIER ROLLER	476
Y	*332-4789*	1	PIVOT BAR GP	477
Y	**235-5974**	2	ROLLER GP-TRACK CARRIER	479
Y	*384-3277*	10	ROLLER GP-TRACK-DOUBLE FLANGE	483
Y	*125-4175*	4	ROLLER GP-TRACK-SINGLE FLANGE	484
Y	*188-0908*	2	SEGMENT GP-SPROCKET	333
B	**8G-9530**	4	SHIM (8-MM THK)	

B - USE AS REQUIRED
Y - SEPARATE ILLUSTRATION

<END>

415-1301 UNDERCARRIAGE AR—HEAVY-DUTY, WASTE HANDLING

S/N: PPP1-UP
FOR USE WITH STRIKER BAR GP (FRONT)
AN ATTACHMENT

SMCS-4150 **i06218998**

NOTE	PART NUMBER	QTY	PART NAME 1 2 3 4 5 6 (PRODUCT LEVEL)	SEE PAGE
Y	*216-8127*	1	BAR GP-EQUALIZER	405
Y	*108-1091*	8	CAP GP-TRACK IDLER	410
Y	*456-5995*	1	FRAME GP-TELESCOPING RECOIL (LH)	449
Y	*456-5996*	1	FRAME GP-TELESCOPING RECOIL (RH)	451
Y	*164-0406*	2	GUARD GP-TRACK GUIDE	456
Y	**206-1897**	4	IDLER GP-TRACK	467
Y	*169-4368*	2	MOUNTING GP-CARRIER ROLLER	476
Y	*332-4798*	1	PIVOT BAR GP	478
Y	**235-5974**	2	ROLLER GP-TRACK CARRIER	479
Y	*384-3277*	12	ROLLER GP-TRACK-DOUBLE FLANGE	483
Y	*125-4175*	4	ROLLER GP-TRACK-SINGLE FLANGE	484
Y	*188-0908*	2	SEGMENT GP-SPROCKET	333
B	**8G-9530**	4	SHIM (8-MM THK)	

B - USE AS REQUIRED
Y - SEPARATE ILLUSTRATION

<END>

457-6209 UNDERCARRIAGE AR—HEAVY-DUTY

S/N: SSS1-UP
CANNOT BE USED WITH STRIKER BAR GP (FRONT)
AN ATTACHMENT

SMCS-4150 **i06143454**

NOTE	PART NUMBER	QTY	PART NAME 1 2 3 4 5 6 (PRODUCT LEVEL)	SEE PAGE
Y	*229-7373*	1	BAR GP-EQUALIZER	406
Y	*108-1091*	8	CAP GP-TRACK IDLER	410
Y	*450-7089*	1	FRAME GP-TELESCOPING RECOIL (HEAVY-DUTY, LH)	416
Y	*450-7090*	1	FRAME GP-TELESCOPING RECOIL (HEAVY-DUTY, RH)	418
Y	*164-0406*	2	GUARD GP-TRACK GUIDE	456
Y	**202-4304**	4	IDLER GP-TRACK	465
Y	*332-4789*	1	PIVOT BAR GP	477
Y	*384-3277*	8	ROLLER GP-TRACK-DOUBLE FLANGE	483
Y	*125-4175*	4	ROLLER GP-TRACK-SINGLE FLANGE	484
Y	*188-0908*	2	SEGMENT GP-SPROCKET	333
	8G-9530	4	SHIM (8-MM THK)	

Y - SEPARATE ILLUSTRATION

<END>

457-6210 UNDERCARRIAGE AR—HEAVY-DUTY

S/N: SSS1-UP
CANNOT BE USED WITH STRIKER BAR GP (FRONT)
AN ATTACHMENT

SMCS-4150 **i06143492**

NOTE	PART NUMBER	QTY	PART NAME 1 2 3 4 5 6 (PRODUCT LEVEL)	SEE PAGE
Y	*229-7373*	1	BAR GP-EQUALIZER	406
Y	*108-1091*	8	CAP GP-TRACK IDLER	410
Y	*450-7089*	1	FRAME GP-TELESCOPING RECOIL (HEAVY-DUTY, LH)	416
Y	*450-7090*	1	FRAME GP-TELESCOPING RECOIL (HEAVY-DUTY, RH)	418
Y	*389-6120*	1	GUARD GP-TRACK ROLLER (FULL LENGTH)	463
Y	**202-4304**	4	IDLER GP-TRACK	465
Y	*332-4789*	1	PIVOT BAR GP	477
Y	*384-3277*	8	ROLLER GP-TRACK-DOUBLE FLANGE	483
Y	*125-4175*	4	ROLLER GP-TRACK-SINGLE FLANGE	484
Y	*188-0908*	2	SEGMENT GP-SPROCKET	333
	8G-9530	4	SHIM (8-MM THK)	

Y - SEPARATE ILLUSTRATION

<END>

457-6211 UNDERCARRIAGE AR—HEAVY-DUTY

S/N: TTT1-UP
CANNOT BE USED WITH STRIKER BAR GP (FRONT)
AN ATTACHMENT

SMCS-4150 **i06143504**

NOTE	PART NUMBER	QTY	PART NAME 1 2 3 4 5 6 (PRODUCT LEVEL)	SEE PAGE
Y	*229-7373*	1	BAR GP-EQUALIZER	406
Y	*108-1091*	8	CAP GP-TRACK IDLER	410
Y	*450-7093*	1	FRAME GP-TELESCOPING RECOIL (LH)	420
Y	*450-7094*	1	FRAME GP-TELESCOPING RECOIL (RH)	422
Y	**202-4304**	4	IDLER GP-TRACK	465
Y	*169-4368*	2	MOUNTING GP-CARRIER ROLLER	476
Y	*332-4789*	1	PIVOT BAR GP	477
Y	**235-5974**	2	ROLLER GP-TRACK CARRIER	479
Y	*125-4176*	6	ROLLER GP-TRACK-DOUBLE FLANGE	480
Y	*125-4175*	8	ROLLER GP-TRACK-SINGLE FLANGE	484
Y	*188-0908*	2	SEGMENT GP-SPROCKET	333
	8G-9530	4	SHIM (8-MM THK)	

Y - SEPARATE ILLUSTRATION

<END>

457-7966 UNDERCARRIAGE AR—HEAVY-DUTY

S/N: SSS1-UP
CANNOT BE USED WITH STRIKER BAR GP (FRONT)
PART OF 481-9508 DISTRIBUTION AR
AN ATTACHMENT

SMCS-4150 **i06143541**

NOTE	PART NUMBER	QTY	PART NAME 1 2 3 4 5 6 (PRODUCT LEVEL)	SEE PAGE
Y	*229-7373*	1	BAR GP-EQUALIZER	406
Y	*108-1091*	8	CAP GP-TRACK IDLER	410
Y	*450-7089*	1	FRAME GP-TELESCOPING RECOIL (HEAVY-DUTY, LH)	416
Y	*450-7090*	1	FRAME GP-TELESCOPING RECOIL (HEAVY-DUTY, RH)	418
Y	**202-4304**	4	IDLER GP-TRACK	465
Y	*332-4789*	1	PIVOT BAR GP	477
Y	*125-4176*	4	ROLLER GP-TRACK-DOUBLE FLANGE	480
Y	*125-4175*	8	ROLLER GP-TRACK-SINGLE FLANGE	484
Y	*188-0908*	2	SEGMENT GP-SPROCKET	333
	8G-9530	4	SHIM (8-MM THK)	

Y - SEPARATE ILLUSTRATION

<END>

457-7967 UNDERCARRIAGE AR—HEAVY-DUTY

S/N: TTT1-UP

CANNOT BE USED WITH STRIKER BAR GP (FRONT)

AN ATTACHMENT

SMCS-4150 **i06143563**

NOTE	PART NUMBER	QTY	PART NAME 1 2 3 4 5 6 (PRODUCT LEVEL)	SEE PAGE
Y	*229-7373*	1	BAR GP-EQUALIZER	406
Y	*108-1091*	8	CAP GP-TRACK IDLER	410
Y	*450-7093*	1	FRAME GP-TELESCOPING RECOIL (LH)	420
Y	*450-7094*	1	FRAME GP-TELESCOPING RECOIL (RH)	422
Y	*164-0406*	2	GUARD GP-TRACK GUIDE	456
Y	**202-4304**	4	IDLER GP-TRACK	465
Y	*169-4368*	2	MOUNTING GP-CARRIER ROLLER	476
Y	*332-4789*	1	PIVOT BAR GP	477
Y	**235-5974**	2	ROLLER GP-TRACK CARRIER	479
Y	**384-3277**	10	ROLLER GP-TRACK-DOUBLE FLANGE	483
Y	*125-4175*	4	ROLLER GP-TRACK-SINGLE FLANGE	484
Y	*188-0908*	2	SEGMENT GP-SPROCKET	333
	8G-9530	4	SHIM (8-MM THK)	

Y - SEPARATE ILLUSTRATION

<END>

457-7968 UNDERCARRIAGE AR—HEAVY-DUTY

S/N: TTT1-UP

CANNOT BE USED WITH STRIKER BAR GP (FRONT)

AN ATTACHMENT

SMCS-4150 **i06143581**

NOTE	PART NUMBER	QTY	PART NAME 1 2 3 4 5 6 (PRODUCT LEVEL)	SEE PAGE
Y	*229-7373*	1	BAR GP-EQUALIZER	406
Y	*108-1091*	8	CAP GP-TRACK IDLER	410
Y	*450-7093*	1	FRAME GP-TELESCOPING RECOIL (LH)	420
Y	*450-7094*	1	FRAME GP-TELESCOPING RECOIL (RH)	422
Y	*134-9429*	1	GUARD GP-TRACK ROLLER	459
Y	**202-4304**	4	IDLER GP-TRACK	465
Y	*169-4368*	2	MOUNTING GP-CARRIER ROLLER	476
Y	*332-4789*	1	PIVOT BAR GP	477
Y	**235-5974**	2	ROLLER GP-TRACK CARRIER	479
Y	**384-3277**	10	ROLLER GP-TRACK-DOUBLE FLANGE	483
Y	*125-4175*	4	ROLLER GP-TRACK-SINGLE FLANGE	484
Y	*188-0908*	2	SEGMENT GP-SPROCKET	333
	8G-9530	4	SHIM (8-MM THK)	

Y - SEPARATE ILLUSTRATION

<END>

457-7969 UNDERCARRIAGE AR—SYSTEMONE

S/N: TTT1-UP
CANNOT BE USED WITH STRIKER BAR GP (FRONT)
AN ATTACHMENT

SMCS-4150 **i06143607**

NOTE	PART NUMBER	QTY	PART NAME 1 2 3 4 5 6 (PRODUCT LEVEL)	SEE PAGE
Y	*229-7373*	1	BAR GP-EQUALIZER	406
Y	*267-4746*	8	CAP GP-TRACK IDLER (SYSTEMONE)	415
Y	*450-7178*	1	FRAME GP-TELESCOPING RECOIL (LH)	426
Y	*450-7179*	1	FRAME GP-TELESCOPING RECOIL (RH)	428
Y	*314-3283*	1	GUARD GP-TRACK GUIDE (SYSTEMONE)	458
Y	**323-1170**	4	IDLER GP-TRACK (SYSTEMONE)	468
Y	*169-4368*	2	MOUNTING GP-CARRIER ROLLER	476
Y	*332-4789*	1	PIVOT BAR GP	477
Y	**235-5974**	2	ROLLER GP-TRACK CARRIER	479
Y	*292-2175*	14	ROLLER GP-TRACK-SINGLE FLANGE (SYSTEMONE)	487
Y	*238-0451*	2	SCRAPER GP-IDLER	488
Y	*188-0908*	2	SEGMENT GP-SPROCKET	333
	156-5342	4	SHIM (10-MM THK)	
	233-4846	4	SHIM (6-MM THK)	

Y - SEPARATE ILLUSTRATION

<END>

457-7970 UNDERCARRIAGE AR—SYSTEMONE

S/N: TTT1-UP
CANNOT BE USED WITH STRIKER BAR GP (FRONT)
AN ATTACHMENT

SMCS-4150 **i06143601**

NOTE	PART NUMBER	QTY	PART NAME 1 2 3 4 5 6 (PRODUCT LEVEL)	SEE PAGE
Y	*229-7373*	1	BAR GP-EQUALIZER	406
Y	*267-4746*	8	CAP GP-TRACK IDLER (SYSTEMONE)	415
Y	*450-7178*	1	FRAME GP-TELESCOPING RECOIL (LH)	426
Y	*450-7179*	1	FRAME GP-TELESCOPING RECOIL (RH)	428
Y	*378-3790*	1	GUARD GP-TRACK ROLLER (SYSTEMONE)	460
Y	**323-1170**	4	IDLER GP-TRACK (SYSTEMONE)	468
Y	*169-4368*	2	MOUNTING GP-CARRIER ROLLER	476
Y	*332-4789*	1	PIVOT BAR GP	477
Y	**235-5974**	2	ROLLER GP-TRACK CARRIER	479
Y	*292-2175*	14	ROLLER GP-TRACK-SINGLE FLANGE (SYSTEMONE)	487
Y	*238-0451*	2	SCRAPER GP-IDLER	488
Y	*188-0908*	2	SEGMENT GP-SPROCKET	333
	156-5342	4	SHIM (10-MM THK)	
	233-4846	4	SHIM (6-MM THK)	

Y - SEPARATE ILLUSTRATION

<END>

457-7971 UNDERCARRIAGE AR—SYSTEMONE

S/N: PPP1-UP
CANNOT BE USED WITH STRIKER BAR GP (FRONT)
AN ATTACHMENT

SMCS-4150 **i06143616**

NOTE	PART NUMBER	QTY	PART NAME 1 2 3 4 5 6 (PRODUCT LEVEL)	SEE PAGE
Y	*216-8127*	1	BAR GP-EQUALIZER	405
Y	*233-4847*	2	CAP GP-TRACK IDLER	411
Y	*233-4849*	2	CAP GP-TRACK IDLER	412
Y	*236-2591*	2	CAP GP-TRACK IDLER	413
Y	*236-2592*	2	CAP GP-TRACK IDLER	414
Y	*450-7182*	1	FRAME GP-TELESCOPING RECOIL (RH)	431
Y	*450-7183*	1	FRAME GP-TELESCOPING RECOIL (LH)	433
Y	*378-3804*	1	GUARD GP-TRACK ROLLER	462
Y	**323-1170**	4	IDLER GP-TRACK (SYSTEMONE)	468
Y	*169-4368*	2	MOUNTING GP-CARRIER ROLLER	476
Y	*332-4798*	1	PIVOT BAR GP	478
Y	**235-5974**	2	ROLLER GP-TRACK CARRIER	479
Y	*292-2175*	16	ROLLER GP-TRACK-SINGLE FLANGE (SYSTEMONE)	487
Y	*238-0451*	2	SCRAPER GP-IDLER	488
Y	*188-0908*	2	SEGMENT GP-SPROCKET	333

Y - SEPARATE ILLUSTRATION

<END>

457-7972 UNDERCARRIAGE AR—HEAVY-DUTY

S/N: PPP1-UP
CANNOT BE USED WITH STRIKER BAR GP (FRONT)
AN ATTACHMENT

SMCS-4150 **i06143653**

NOTE	PART NUMBER	QTY	PART NAME 1 2 3 4 5 6 (PRODUCT LEVEL)	SEE PAGE
Y	*216-8127*	1	BAR GP-EQUALIZER	405
Y	*108-1091*	8	CAP GP-TRACK IDLER	410
Y	*450-7186*	1	FRAME GP-TELESCOPING RECOIL (RH)	437
Y	*450-7187*	1	FRAME GP-TELESCOPING RECOIL (LH)	439
Y	*164-0406*	1	GUARD GP-TRACK GUIDE	456
Y	**202-4296**	4	IDLER GP-TRACK	464
Y	*169-4368*	2	MOUNTING GP-CARRIER ROLLER	476
Y	*332-4798*	1	PIVOT BAR GP	478
Y	**235-5974**	2	ROLLER GP-TRACK CARRIER	479
Y	*125-4176*	8	ROLLER GP-TRACK-DOUBLE FLANGE	480
Y	*125-4175*	8	ROLLER GP-TRACK-SINGLE FLANGE	484
Y	*188-0908*	2	SEGMENT GP-SPROCKET	333
	8G-9530	4	SHIM (8-MM THK)	

Y - SEPARATE ILLUSTRATION

<END>

457-7973 UNDERCARRIAGE AR—HEAVY-DUTY

S/N: PPP1-UP
CANNOT BE USED WITH STRIKER BAR GP (FRONT)
AN ATTACHMENT

SMCS-4150 **i06143980**

NOTE	PART NUMBER	QTY	PART NAME 1 2 3 4 5 6 (PRODUCT LEVEL)	SEE PAGE
Y	*216-8127*	1	BAR GP-EQUALIZER	405
Y	*108-1091*	8	CAP GP-TRACK IDLER	410
Y	*450-7186*	1	FRAME GP-TELESCOPING RECOIL (RH)	437
Y	*450-7187*	1	FRAME GP-TELESCOPING RECOIL (LH)	439
Y	*164-0406*	2	GUARD GP-TRACK GUIDE	456
Y	**202-4296**	4	IDLER GP-TRACK	464
Y	*169-4368*	2	MOUNTING GP-CARRIER ROLLER	476
Y	*332-4798*	1	PIVOT BAR GP	478
Y	**235-5974**	2	ROLLER GP-TRACK CARRIER	479
Y	*384-3277*	12	ROLLER GP-TRACK-DOUBLE FLANGE	483
Y	*125-4175*	4	ROLLER GP-TRACK-SINGLE FLANGE	484
Y	*188-0908*	2	SEGMENT GP-SPROCKET	333
	8G-9530	4	SHIM (8-MM THK)	

Y - SEPARATE ILLUSTRATION

<END>

457-7974 UNDERCARRIAGE AR—HEAVY-DUTY

S/N: PPP1-UP
CANNOT BE USED WITH STRIKER BAR GP (FRONT)
AN ATTACHMENT

SMCS-4150 **i06144000**

NOTE	PART NUMBER	QTY	PART NAME 1 2 3 4 5 6 (PRODUCT LEVEL)	SEE PAGE
Y	*216-8127*	1	BAR GP-EQUALIZER	405
Y	*108-1091*	8	CAP GP-TRACK IDLER	410
Y	*450-7186*	1	FRAME GP-TELESCOPING RECOIL (RH)	437
Y	*450-7187*	1	FRAME GP-TELESCOPING RECOIL (LH)	439
Y	*378-3791*	1	GUARD GP-TRACK ROLLER	461
Y	**202-4296**	4	IDLER GP-TRACK	464
Y	*169-4368*	2	MOUNTING GP-CARRIER ROLLER	476
Y	*332-4798*	1	PIVOT BAR GP	478
Y	**235-5974**	2	ROLLER GP-TRACK CARRIER	479
Y	*384-3277*	12	ROLLER GP-TRACK-DOUBLE FLANGE	483
Y	*125-4175*	4	ROLLER GP-TRACK-SINGLE FLANGE	484
Y	*188-0908*	2	SEGMENT GP-SPROCKET	333
	8G-9530	4	SHIM (8-MM THK)	

Y - SEPARATE ILLUSTRATION

<END>

457-7975 UNDERCARRIAGE AR–SYSTEMONE

S/N: PPP1-UP

CANNOT BE USED WITH STRIKER BAR GP (FRONT)

AN ATTACHMENT

SMCS-4150 **i06144028**

NOTE	PART NUMBER	QTY	PART NAME 1 2 3 4 5 6 (PRODUCT LEVEL)	SEE PAGE
Y	*216-8127*	1	BAR GP-EQUALIZER	405
Y	*233-4847*	2	CAP GP-TRACK IDLER	411
Y	*233-4849*	2	CAP GP-TRACK IDLER	412
Y	*236-2591*	2	CAP GP-TRACK IDLER	413
Y	*236-2592*	2	CAP GP-TRACK IDLER	414
Y	*450-7182*	1	FRAME GP-TELESCOPING RECOIL (RH)	431
Y	*450-7183*	1	FRAME GP-TELESCOPING RECOIL (LH)	433
Y	*206-8836*	2	GUARD GP-TRACK GUIDE (SYSTEMONE)	457
Y	**323-1170**	4	IDLER GP-TRACK (SYSTEMONE)	468
Y	*169-4368*	2	MOUNTING GP-CARRIER ROLLER	476
Y	*332-4798*	1	PIVOT BAR GP	478
Y	**235-5974**	2	ROLLER GP-TRACK CARRIER	479
Y	*292-2175*	16	ROLLER GP-TRACK-SINGLE FLANGE (SYSTEMONE)	487
Y	*238-0451*	2	SCRAPER GP-IDLER	488
Y	*188-0908*	2	SEGMENT GP-SPROCKET	333

Y - SEPARATE ILLUSTRATION

<END>

223-2115 CONTROL GP-PARKING BRAKE

S/N: PPP1-UP; SSS1-UP; TTT1-UP
PART OF 337-6853 CONTROL GP-HANDLE
AN ATTACHMENT

SMCS-4267, 4284

i06207087

NOTE	REF NO	GRAPHIC REF	PART NUMBER	QTY	PART NAME 1 2 3 4 5 6 (PRODUCT LEVEL)	SEE PAGE
	1	1	**2R-5001**	1	DOWEL	
	2	1	**3B-4605**	2	PIN-COTTER	
	3	1	**7H-9737**	1	PIN-COTTER	
	4	1	**9S-1305**	2	PIN-CLEVIS	
	5	1	**242-5206**	1	SPACER (6.4X12.5X0.76-MM THK)	
	6	1	**1W-6448**	1	DOWEL	
	7	1	**4V-6981**	2	SCREW-BUTTON HEAD (1/4-20X0.75-IN)	
	8	1	**6V-8185**	2	NUT (1/4-20-THD)	
	9	1	**8T-0328**	2	WASHER-HARD (5.5X10X1-MM THK)	
	10	1	**8T-4205**	1	WASHER-HARD (7.2X14.5X2-MM THK)	
					PARTS SHOWN IN GRAPHIC(S) WITHOUT A REFERENCE NUMBER ARE NOT SERVICED SEPARATELY	

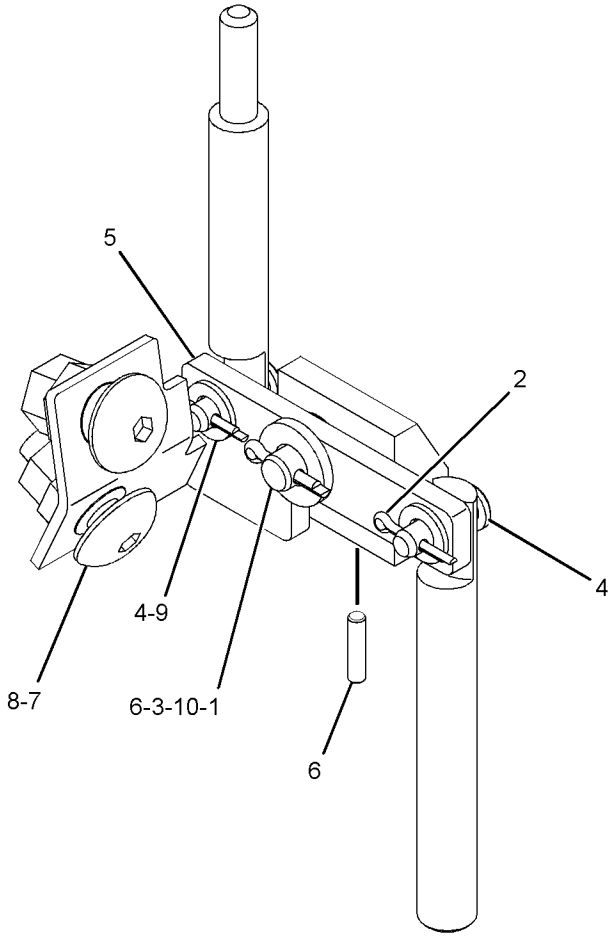

GRAPHIC #1

<END>

g01150038

421-5950 CONTROL GP-STEERING & XMSN

S/N: PPP1-UP; SSS1-UP; TTT1-UP

PART OF 393-6480 CAB AR, 393-6485 CAB AR-ENCLOSED ROPS, 393-6475 CANOPY AR

AN ATTACHMENT

SMCS-3033 **i06207052**

NOTE	REF NO	GRAPHIC REF	PART NUMBER	QTY	PART NAME 1 2 3 4 5 6 (PRODUCT LEVEL)	SEE PAGE
	1	1	**421-5951**	1	GASKET	
Y	2	1	**424-8511**	1	CONTROL GP-JOYSTICK (STEERING, TRANSMISSION)	703
	3	1	**430-9355**	1	GUARD	
M	4	1	**127-2170**	4	SCREW-TRUSS HEAD (M8X1.25X20-MM)	
	5	1	**8T-4121**	2	WASHER-HARD (11X21X2.5-MM THK)	
M	6	1	**9X-2041**	2	SCREW-TRUSS HEAD (M10X1.5X20-MM)	

M - METRIC PART
Y - SEPARATE ILLUSTRATION

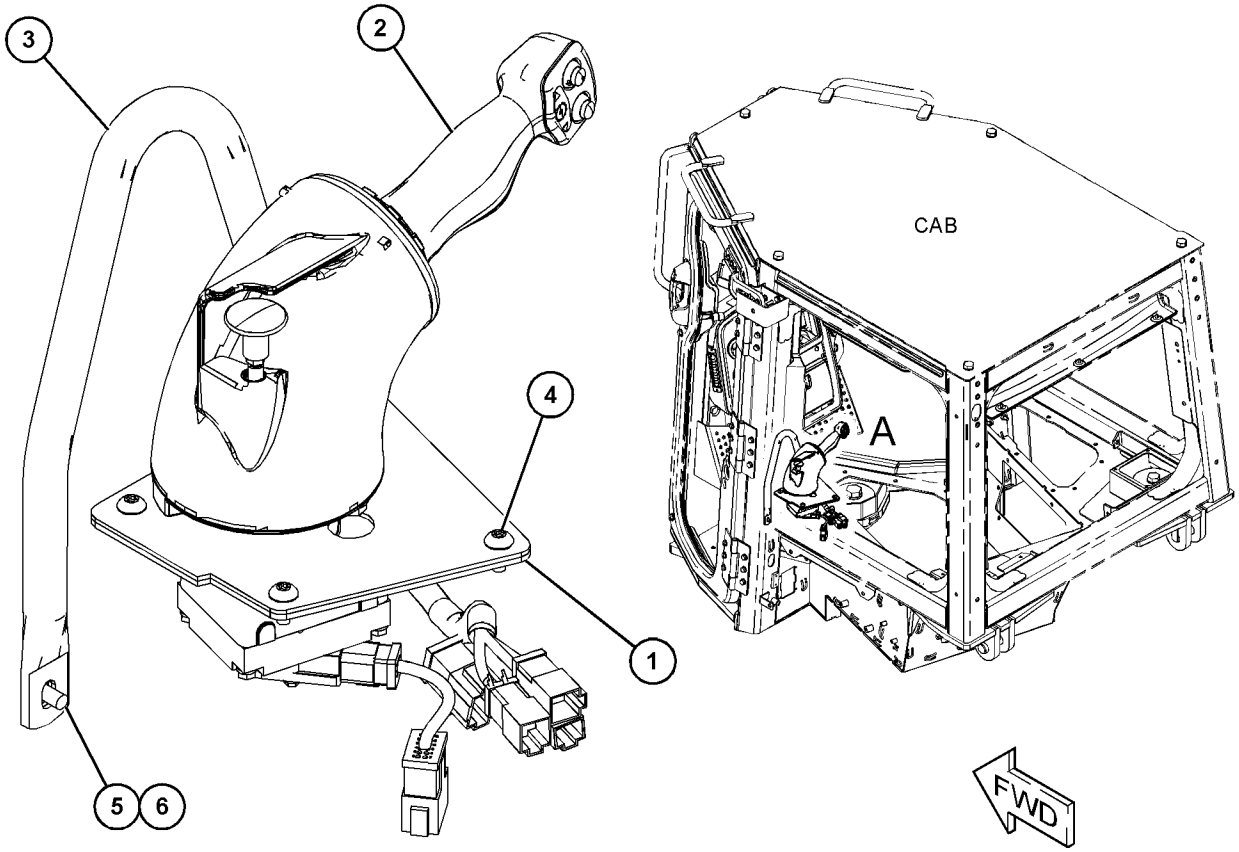

VIEW OF AREA A

GRAPHIC #1 **<END>** g03856945

341-1330 FILTER GP-OIL

S/N: PPP1-UP; SSS1-UP; TTT1-UP
PART OF 398-4500 LINES GP-STEERING
ALSO AN ATTACHMENT

SMCS-5068 **i05897221**

NOTE	REF NO	GRAPHIC REF	PART NUMBER	QTY	PART NAME 1 2 3 4 5 6 (PRODUCT LEVEL)	SEE PAGE
	1	1	**126-1818**	1	FILTER-OIL (ULTRA HIGH EFFICIENCY)	
	2	1	**227-6744**	1	SWITCH GP-PRESSURE (STEERING CHARGE)	
		1	**102-8802**	4	KIT-RECEPTACLE (2-PIN)	
					(EACH INCLUDES RECEPTACLE AS & WEDGE)	
		1	**3J-1907**	1	SEAL-O-RING	
		1	**5F-9144**	1	SEAL-O-RING	
		1	**8T-8729**	2	PIN-CONNECTOR (16-GA TO 18-GA)	
E		1	**9X-1813**		SLEEVE (14-CM)	
	3	1	**3J-1907**	1	SEAL-O-RING	
	4	1	**5F-9144**	1	SEAL-O-RING	

E - ORDER BY THE CENTIMETER

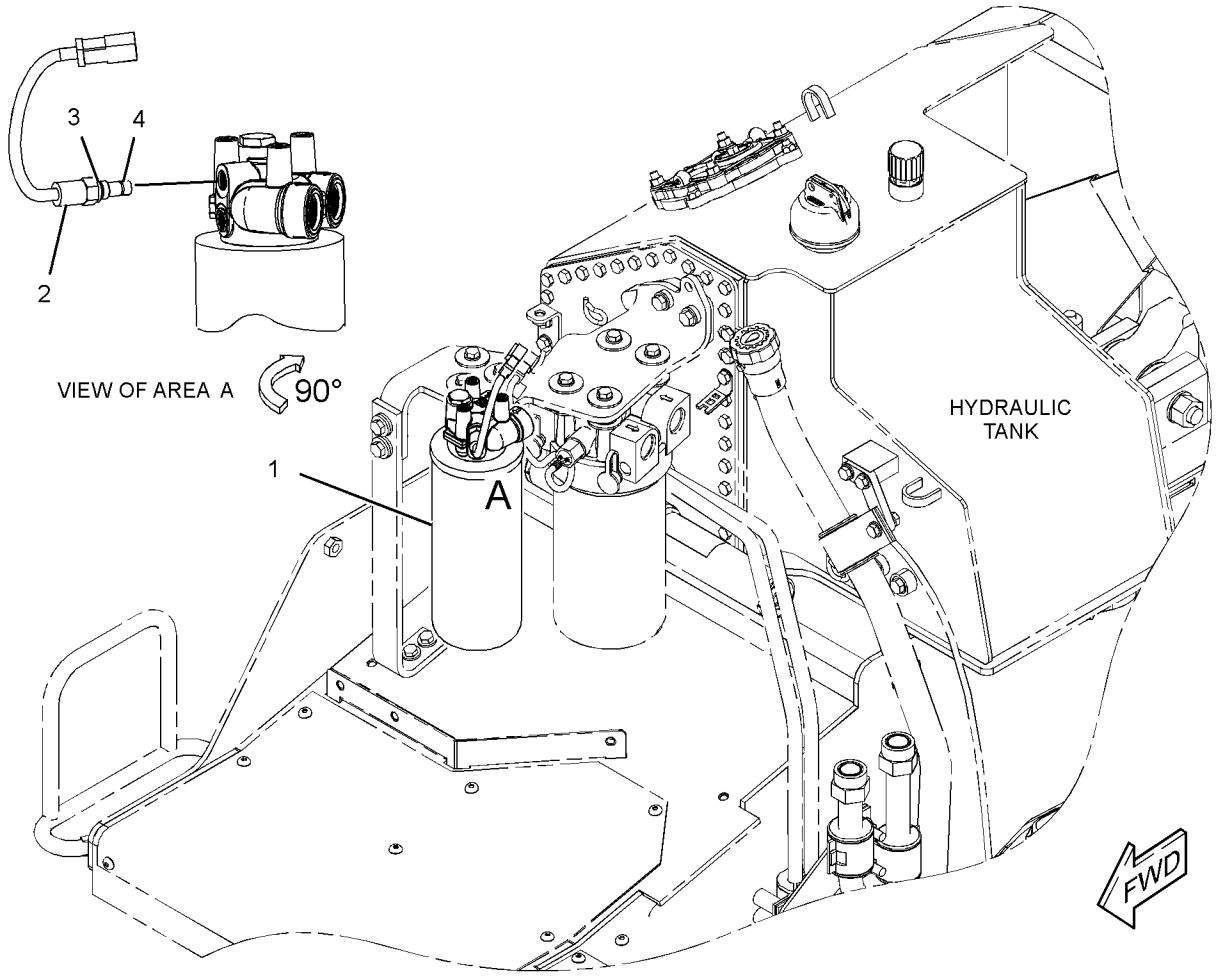

GRAPHIC #1 **<END>** g02422141

398-4500 LINES GP-STEERING

S/N: PPP1-UP; SSS1-UP; TTT1-UP
PART OF 398-4286, 398-4331 HYDRAULIC AR
ALSO AN ATTACHMENT

SMCS-4104, 4133, 4304 **i06215125**

NOTE	REF NO	GRAPHIC REF	PART NUMBER	QTY	PART NAME 1 2 3 4 5 6 (PRODUCT LEVEL)	SEE PAGE
	1	1	**6V-0852**	2	CAP-DUST	
	2	1	**8C-3451**	1	CAP-DUST	
	3	1	**9D-7924**	3	MOUNTING AS	
	4	1	*205-4132*	1	CONNECTOR AS	
		1	**2S-4078**	1	SEAL-O-RING	
		1	**8T-0315**	1	SEAL-O-RING	
		1	**8T-8985**	1	CONNECTOR	
	5	1	*262-0481*	1	CLAMP GP-HYDRAULIC LINES	
		1	**8I-6686**	1	CLAMP	
		1	**262-0482**	1	CLAMP-DOUBLE	
	6	1	**338-1295**	1	CONNECTOR	
Y	7	1	**341-1330**	1	FILTER GP-OIL (STEERING CHARGE)	535
	8	1	*357-4452*	1	ELBOW AS	
		1	**2S-4078**	1	SEAL-O-RING	
		1	**8T-0315**	1	SEAL-O-RING	
		1	**158-7594**	1	ELBOW	
I	9	1	**426-2425**	1	HOSE AS	
I	10	1	**426-2426**	1	HOSE AS	
I	11	1	**426-2427**	1	HOSE AS	
I	12	1	**426-2428**	1	HOSE AS	
I	13	1	**426-2429**	1	HOSE AS	
I	14	1	**426-2430**	1	HOSE AS	
I	15	1	**426-2431**	1	HOSE AS	
I	16	1	**426-2432**	1	HOSE AS	
	17	1	**099-3001**	9	CLIP	
	18	1	*148-8327*	2	CONNECTOR AS	
					(EACH INCLUDES)	
		1	**3D-2824**	1	SEAL-O-RING	
		1	**6V-8637**	1	CONNECTOR	
		1	**6V-9746**	1	SEAL-O-RING	
	19	1	*148-8339*	1	CONNECTOR AS	
		1	**6V-8716**	1	CONNECTOR (STRAIGHT)	
		1	**6V-9746**	1	SEAL-O-RING	
		1	**7M-8485**	1	SEAL-O-RING	
	20	1	*148-8347*	1	ELBOW AS	
		1	**3D-2824**	1	SEAL-O-RING	
		1	**6V-9007**	1	ELBOW	
		1	**6V-9746**	1	SEAL-O-RING	
	21	1	*148-8388*	1	ELBOW AS	
		1	**2M-9780**	1	SEAL-O-RING	
		1	**6V-8629**	1	ELBOW	
		1	**6V-9746**	1	SEAL-O-RING	
	22	1	*148-8392*	1	ELBOW AS	
		1	**6V-9746**	1	SEAL-O-RING	
		1	**6V-9853**	1	ELBOW	
	23	1	*148-8422*	1	TEE AS	
		1	**5K-9090**	1	SEAL-O-RING	
		1	**6V-9746**	1	SEAL-O-RING	
		1	**7M-8485**	1	SEAL-O-RING	
		1	**8T-6356**	1	TEE-O-RING PORT	
	24	1	*153-6244*	1	ELBOW AS	
		1	**2M-9780**	1	SEAL-O-RING	
		1	**6V-9746**	1	SEAL-O-RING	
		1	**8T-5389**	1	ELBOW	
	25	1	**164-4227**	1	CLIP	
	26	1	*164-5567*	2	COUPLER AS-QUICK DISCONNECT (MALE)	
					(EACH INCLUDES)	
		1	**6V-3965**	1	FITTING (QUICK DISCONNECT)	

398-4500 **LINES GP-STEERING (*contd.*)** **i06215125**

NOTE	REF NO	GRAPHIC REF	PART NUMBER	QTY	PART NAME 1 2 3 4 5 6 (PRODUCT LEVEL)	SEE PAGE
		1	**214-7568**	1	SEAL-O-RING	
	27	1	**183-7264**	1	VALVE AS-FLUID SAMPLING	
		1	**3J-1907**	1	SEAL-O-RING	
	28	1	**1P-3703**	2	SEAL-RECTANGULAR	
	29	1	**1P-3704**	2	SEAL-RECTANGULAR	
	30	1	**1P-5767**	4	FLANGE-HALF	
	31	1	**2M-9780**	1	SEAL-O-RING	
M	32	1	**344-5675**	4	NUT (M10X1.5-THD)	
	33	1	**6V-0400**	4	FLANGE-HALF	
	34	1	**6V-9746**	1	SEAL-O-RING	
	35	1	**7G-3833**	1	CLIP (TAB)	
	36	1	**7G-3834**	1	CLIP (SLOT)	
	37	1	**7X-7729**	2	WASHER (11X25X3-MM THK)	
	38	1	**8C-3174**	1	GROMMET	
	39	1	**8T-4121**	11	WASHER-HARD (11X21X2.5-MM THK)	
M	40	1	**8T-4136**	2	BOLT (M10X1.5X25-MM)	
M	41	1	**8T-4137**	4	BOLT (M10X1.5X20-MM)	
M	42	1	**8T-4184**	8	BOLT (M12X1.75X45-MM)	
M	43	1	**8T-4192**	1	BOLT (M12X1.75X25-MM)	
M	44	1	**8T-4194**	8	BOLT (M12X1.75X50-MM)	
	45	1	**8T-4223**	17	WASHER-HARD (13.5X25.5X3-MM THK)	
	46	1	**8T-4226**	6	WASHER-PLATED (10.5X45X3-MM THK)	
M	47	1	**8T-6466**	3	BOLT (M10X1.5X60-MM)	

I - REFER TO HYDRAULIC INFORMATION SYSTEM
M - METRIC PART
Y - SEPARATE ILLUSTRATION

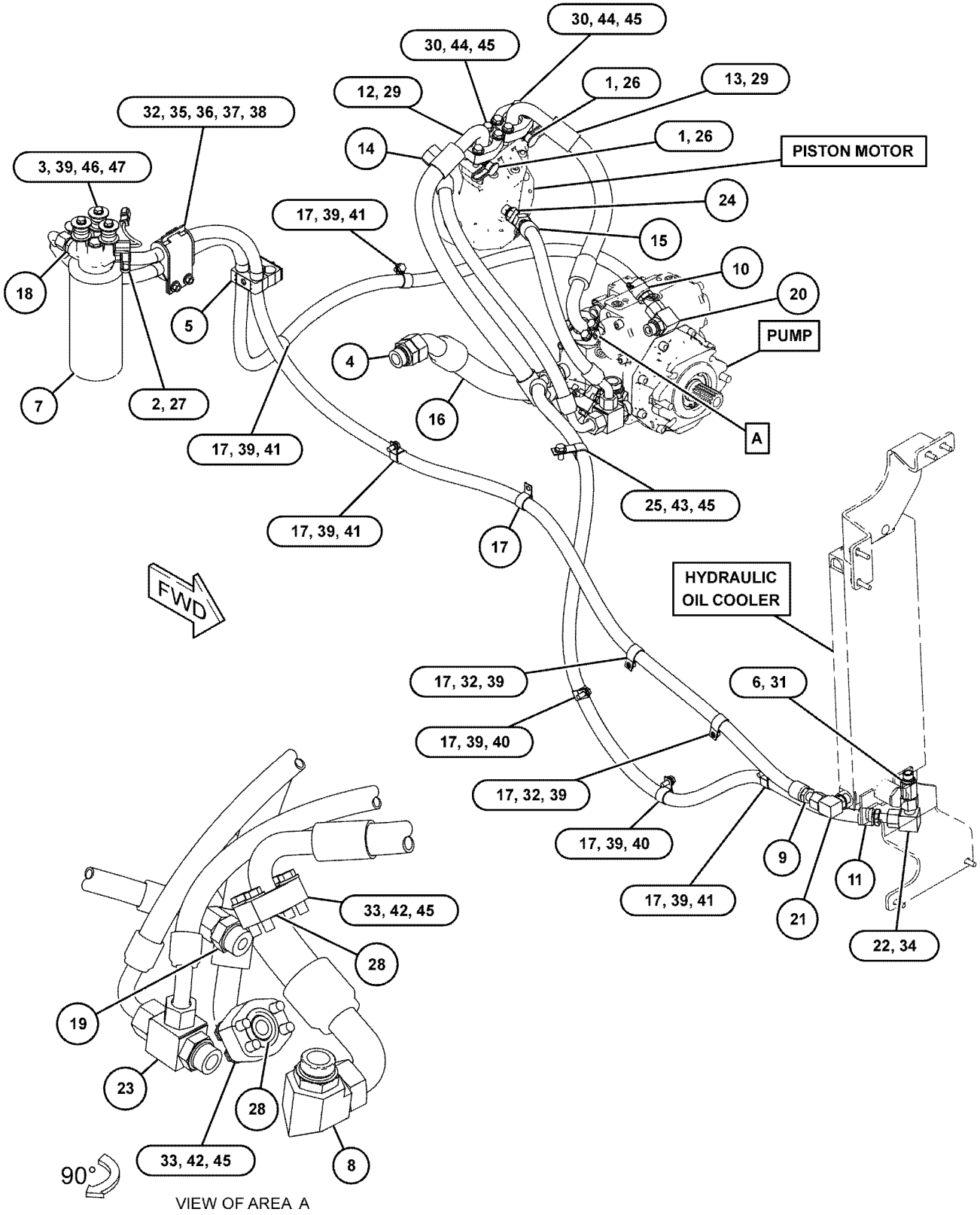

VIEW OF AREA A

GRAPHIC #1 **<END>** g03859335

179-9387 ACCUMULATOR GP-HYDRAULIC—UNCHARGED

S/N: PPP1-UP; SSS1-UP; TTT1-UP

FIELD REPLACEMENT FOR 200-0750—PAGE: 544

SMCS-5077 **i05561032**

NOTE	REF NO	GRAPHIC REF	PART NUMBER	QTY	PART NAME 1 2 3 4 5 6 (PRODUCT LEVEL)	SEE PAGE
	1	1	**204-8758**	2	FILM-WARNING (HIGH PRESSURE CYLINDER)	

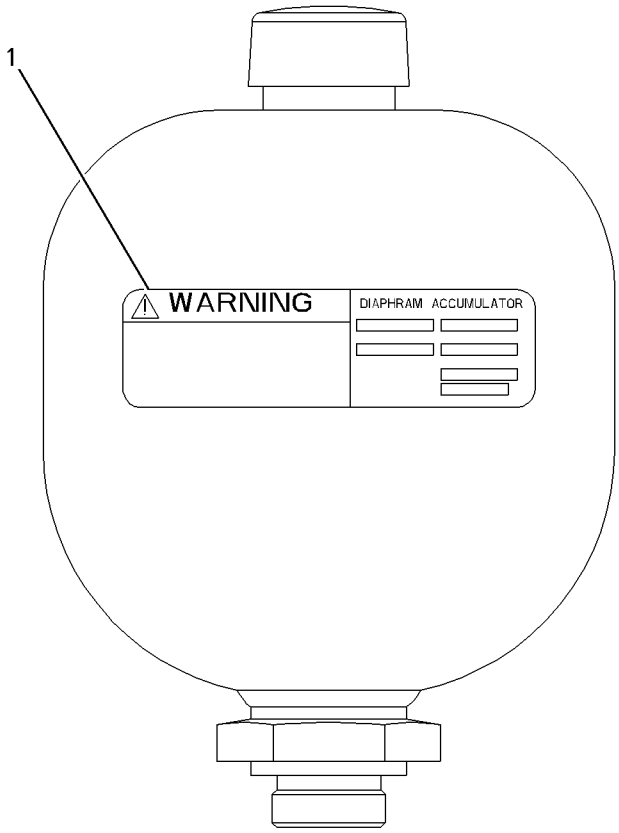

GRAPHIC #1 **<END>** g01004085

331-6006 ACCUMULATOR GP-HYDRAULIC—UNCHARGED

S/N: PPP1-UP; SSS1-UP; TTT1-UP

COLD WEATHER

FIELD REPLACEMENT FOR 331-7020—PAGE: 541

SMCS-5077 **i06231286**

NOTE	REF NO	GRAPHIC REF	PART NUMBER	QTY	PART NAME 1 2 3 4 5 6 (PRODUCT LEVEL)	SEE PAGE
	1	1	**224-5132**	1	CAP (GAS VALVE)	
	2	1	**224-5152**	1	VALVE-GAS	
	3	1	**3J-7354**	1	SEAL-O-RING	
	4	1	**1J-9671**	1	SEAL-O-RING	
	5	1	**241-0037**	1	FILM-WARNING (HIGH PRESSURE, READ OMM)	

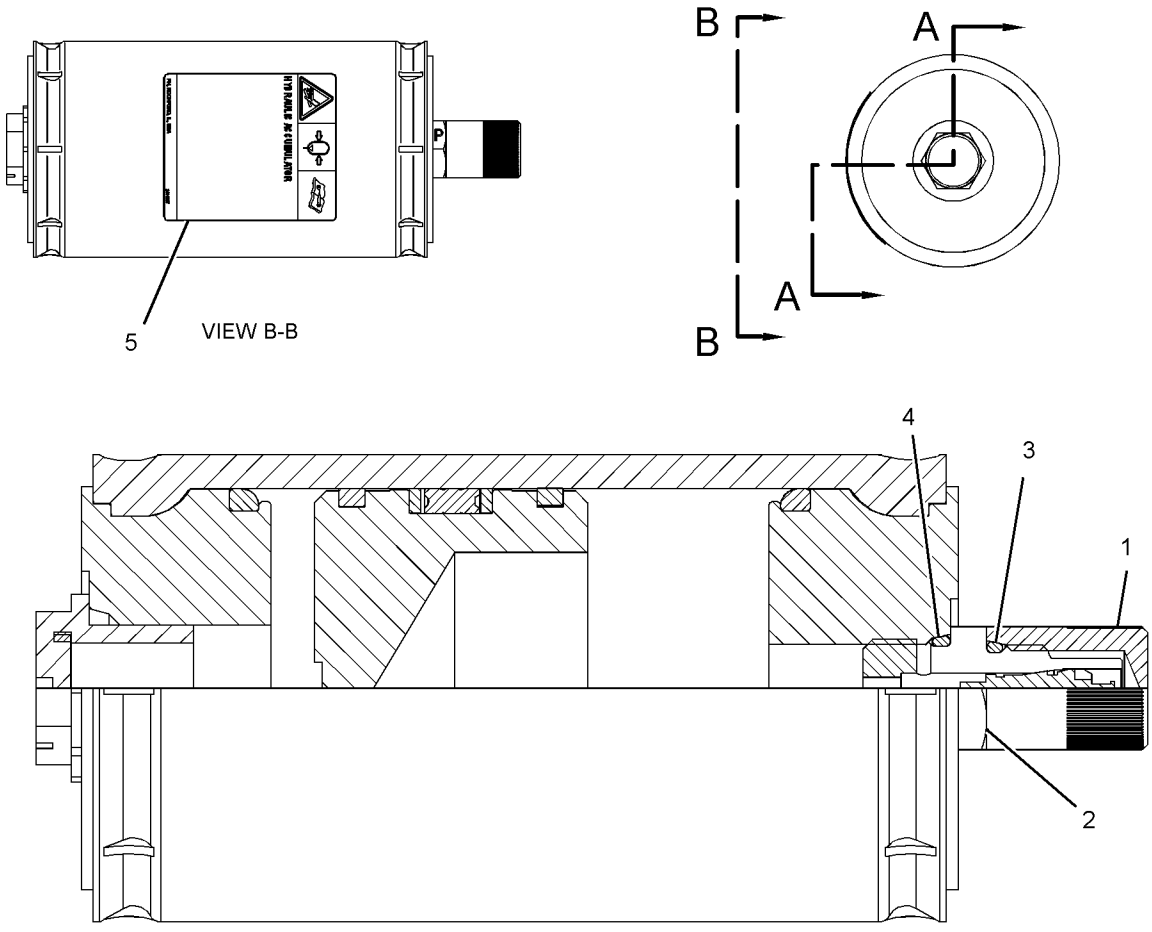

GRAPHIC #1 **<END>** g02228315

331-7020 ACCUMULATOR GP-HYDRAULIC—CHARGED

S/N: PPP1-UP; SSS1-UP; TTT1-UP
FIELD REPLACEMENT ORDER 331-7021—PAGE: 542
OPTIONAL FIELD REPLACEMENT ORDER 331-6006—PAGE: 540
PART OF 398-4487 LINES GP-POWER TRAIN OIL
ALSO AN ATTACHMENT

SMCS-5077 **i06216348**

NOTE	REF NO	GRAPHIC REF	PART NUMBER	QTY	PART NAME 1 2 3 4 5 6 (PRODUCT LEVEL)	SEE PAGE
	1	1	**224-5132**	1	CAP (GAS VALVE)	
	2	1	**224-5152**	1	VALVE-GAS	
	3	1	**3J-7354**	1	SEAL-O-RING	
	4	1	**1J-9671**	1	SEAL-O-RING	
	5	1	**241-0037**	1	FILM-WARNING (HIGH PRESSURE, READ OMM)	

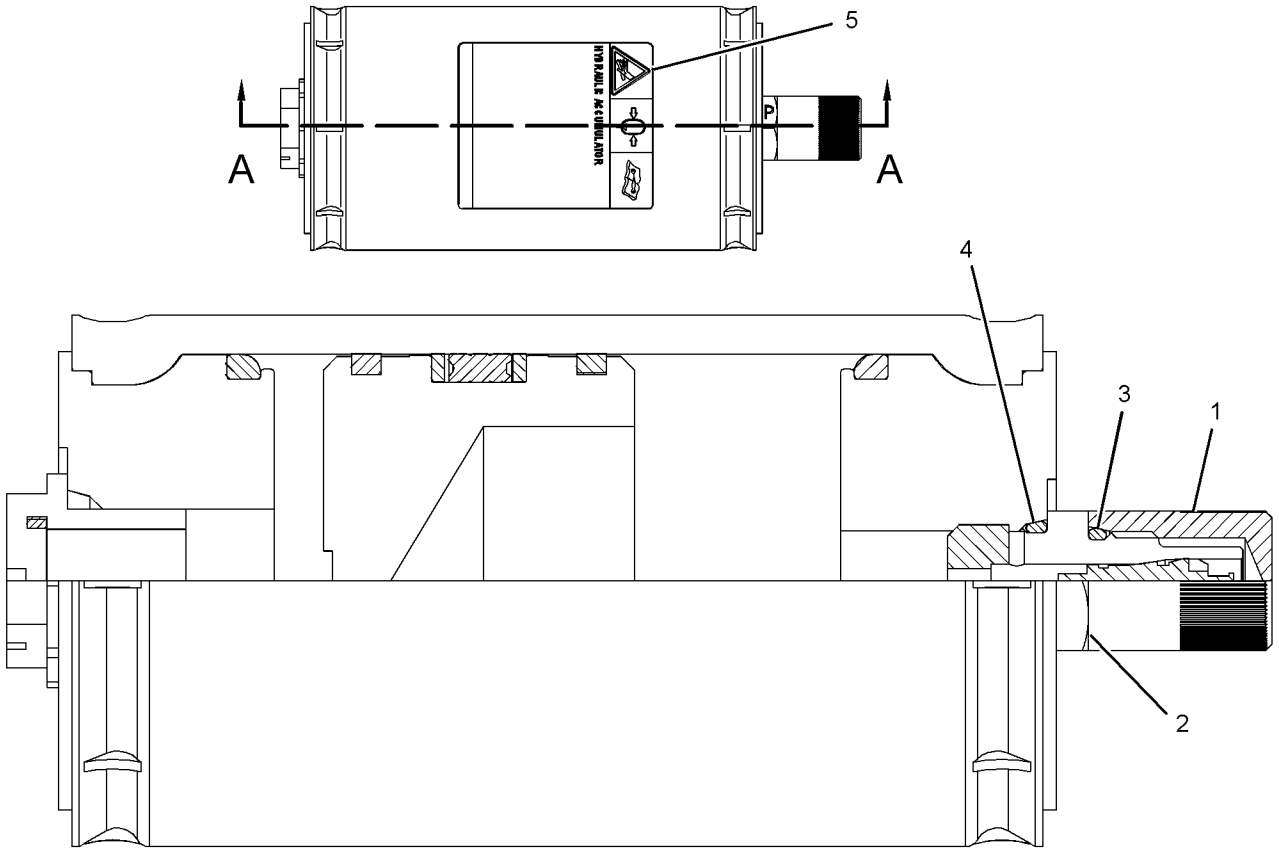

SECTION A-A

GRAPHIC #1 **<END>** g02076383

331-7021 ACCUMULATOR GP-HYDRAULIC–UNCHARGED

S/N: PPP1-UP; SSS1-UP; TTT1-UP

FIELD REPLACEMENT FOR 331-7020–PAGE: 541

SMCS-5077 **i06231285**

NOTE	REF NO	GRAPHIC REF	PART NUMBER	QTY	PART NAME 1 2 3 4 5 6 (PRODUCT LEVEL)	SEE PAGE
	1	1	**224-5132**	1	CAP (GAS VALVE)	
	2	1	**224-5152**	1	VALVE-GAS	
	3	1	**3J-7354**	1	SEAL-O-RING	
	4	1	**1J-9671**	1	SEAL-O-RING	
	5	1	**241-0037**	1	FILM-WARNING (HIGH PRESSURE, READ OMM)	

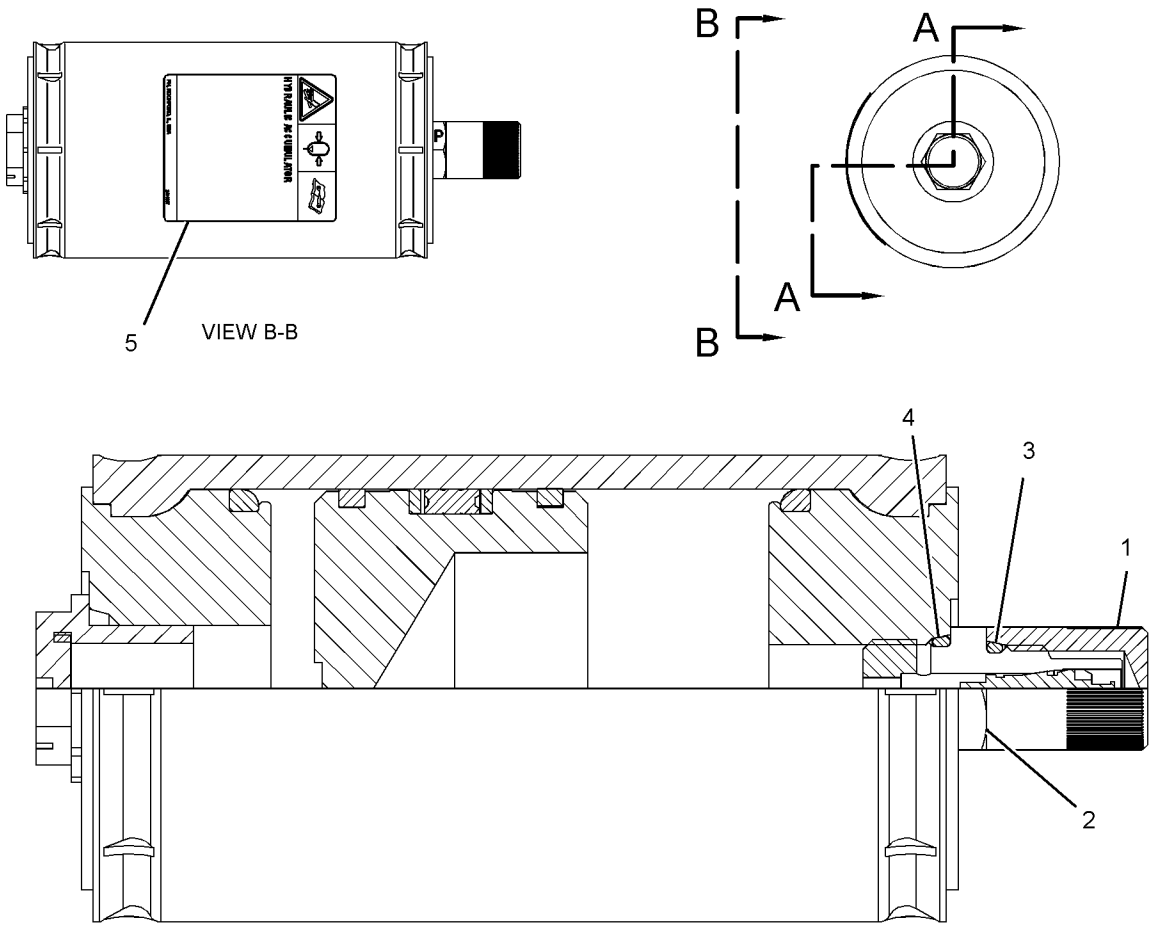

GRAPHIC #1 **<END>** g02228315

351-0320 ACCUMULATOR GP-HYDRAULIC—UNCHARGED

S/N: PPP1-UP; SSS1-UP; TTT1-UP

FIELD REPLACEMENT FOR 200-0750—PAGE: 544

SMCS-5077 **i05897799**

NOTE	REF NO	GRAPHIC REF	PART NUMBER	QTY	PART NAME 1 2 3 4 5 6 (PRODUCT LEVEL)	SEE PAGE
	1	1	**312-1139**	1	CAP	
M	2	1	**222-3785**	1	SCREW-VENT (M8X1.5-THD)	
	3	1	**222-5765**	1	SEAL-RING	
	4	1	**232-3317**	2	FILM-IDENTIFICATION (HYDRAULIC ACCUMULATOR)	

M - METRIC PART



GRAPHIC #1 **<END>** g02078353

200-0750 ACCUMULATOR GP-PILOT OIL–CHARGED

S/N: PPP1-UP; SSS1-UP; TTT1-UP
FIELD REPLACEMENT ORDER 351-0320–PAGE: 543
PART OF 398-4497, 398-4505 LINES GP-PILOT
AN ATTACHMENT

SMCS-5077 **i05897776**

NOTE	REF NO	GRAPHIC REF	PART NUMBER	QTY	PART NAME 1 2 3 4 5 6 (PRODUCT LEVEL)	SEE PAGE
	1	1	**232-3317**	2	FILM-IDENTIFICATION (HYDRAULIC ACCUMULATOR)	

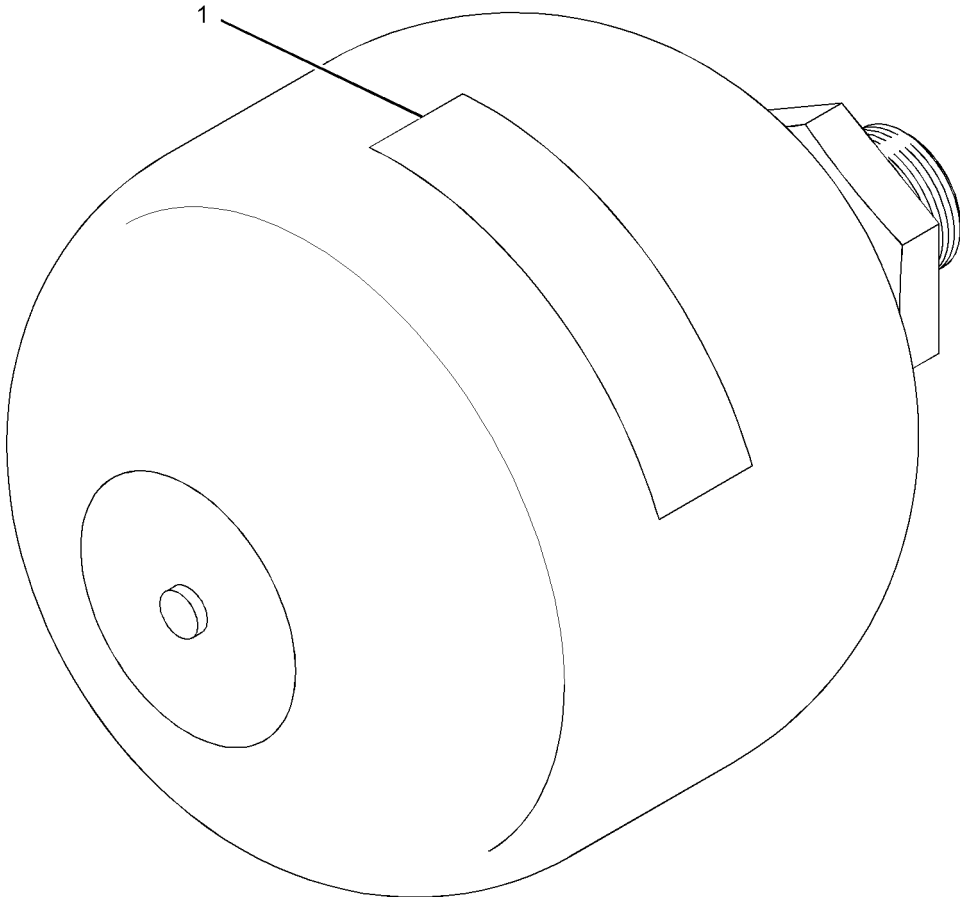

GRAPHIC #1 **<END>** g01034166

462-0496 ACTUATOR GP-PUMP

S/N: PPP1-UP; SSS1-UP; TTT1-UP
PART OF 433-9811 PUMP GP-PISTON
ALSO AN ATTACHMENT

SMCS-5070, 5078

i06215074

NOTE	REF NO	GRAPHIC REF	PART NUMBER	QTY	PART NAME 1 2 3 4 5 6 (PRODUCT LEVEL)	SEE PAGE
	1	1	**462-0495**	1	PISTON	
M	2	1	**161-7614**	1	NUT (M16X1.5-THD)	
	3	1	**462-0494**	1	COVER	
M	4	1	**8T-3957**	6	BOLT-SOCKET HEAD (M12X1.75X30-MM)	
	5	1	**5P-0908**	2	SEAL-O-RING	
	6	1	**462-0493**	1	COVER	

M - METRIC PART

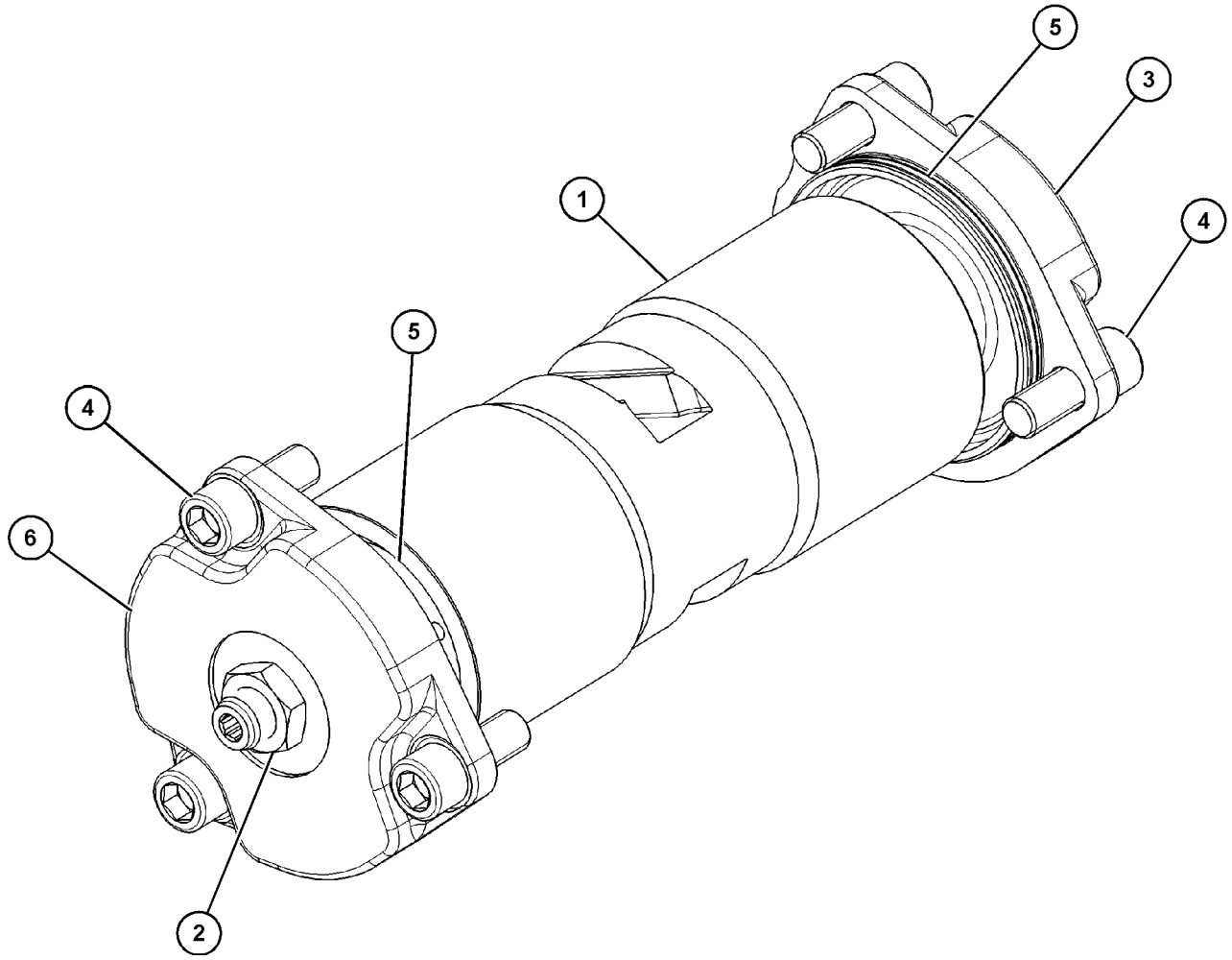

GRAPHIC #1 **<END>** g03859111

229-5421 ADAPTER GP-MOTOR

S/N: PPP1-UP; SSS1-UP; TTT1-UP
PART OF 398-4286, 398-4331 HYDRAULIC AR
ALSO AN ATTACHMENT

SMCS-5058 **i05640355**

NOTE	REF NO	GRAPHIC REF	PART NUMBER	QTY	PART NAME 1 2 3 4 5 6 (PRODUCT LEVEL)	SEE PAGE
	1	1	**216-8585**	1	ADAPTER (MOTOR)	
	2	1	**3N-0759**	1	RING-SEALING	
	3	1	**7K-6058**	6	BOLT-12 POINT HEAD (1/2-13X2.5-IN)	
	4	1	**8C-6857**	2	BOLT (3/4-10X2.75-IN)	
	5	1	**8T-4994**	2	WASHER-HARD (20X36.5X3.5-MM THK)	
	6	1	**8T-7568**	1	SEAL-O-RING	

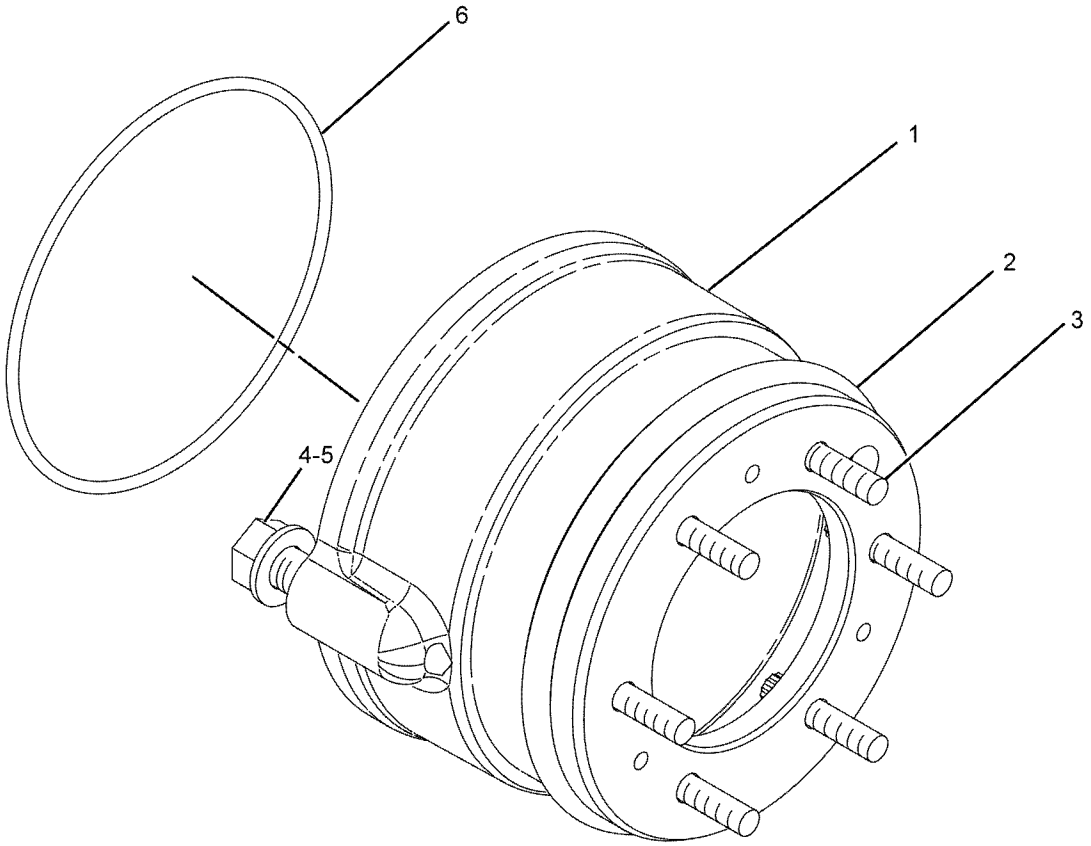

GRAPHIC #1 **<END>** g01126503

398-4347 COOLER GP-HYDRAULIC OIL

S/N: PPP1-UP; SSS1-UP; TTT1-UP
PART OF 398-4287 INSTALLATION AR-ENGINE
ALSO AN ATTACHMENT

SMCS-1374 **i06163516**

NOTE	REF NO	GRAPHIC REF	PART NUMBER	QTY	PART NAME 1 2 3 4 5 6 (PRODUCT LEVEL)	SEE PAGE
	1	1	**393-9051**	1	BRACKET AS (BOTTOM)	
M		1	**171-2419**	2	STUD-WELD (M10X1.5X35-MM)	
	2	1	**393-9052**	1	BRACKET AS (UPPER)	
M		1	**171-2419**	2	STUD-WELD (M10X1.5X35-MM)	
	3	1	**393-9054**	1	CORE AS-OIL COOLER (HYDRAULIC)	
		1	**360-5604**	1	VALVE AS-CONTROL	
		1	**238-5085**	1	SEAL-O-RING	
M	4	1	**344-5675**	4	NUT (M10X1.5-THD)	
	5	1	**7X-7729**	10	WASHER (11X25X3-MM THK)	
M	6	1	**8T-4182**	2	BOLT (M10X1.5X45-MM)	
M	7	1	**8T-4196**	4	BOLT (M10X1.5X35-MM)	

M - METRIC PART

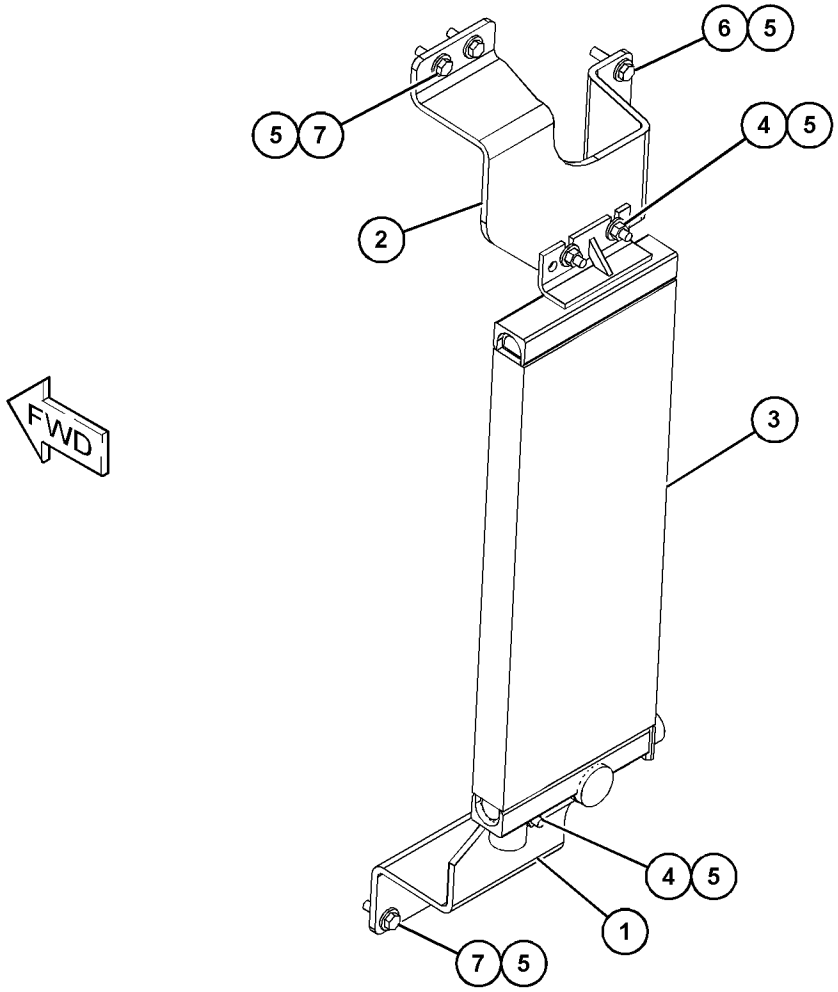

GRAPHIC #1 **<END>** g03839038

362-4539 CYLINDER & LINES GP-LIFT–RH

S/N: SSS1-UP; TTT1-UP
PART OF 398-4512 CYLINDER AR-LIFT
ALSO AN ATTACHMENT

SMCS-5102 **i06188547**

NOTE	REF NO	GRAPHIC REF	PART NUMBER	QTY	PART NAME 1 2 3 4 5 6 (PRODUCT LEVEL)	SEE PAGE
I	1	1	**128-2569**	1	HOSE AS	
I	2	1	**128-2570**	1	HOSE AS	
	3	1	*153-6251*	1	CONNECTOR AS	
		1	**9X-8260**	1	CONNECTOR	
		1	**4K-1388**	1	SEAL-O-RING	
		1	**6V-8400**	1	SEAL-O-RING	
Y	4	1	**417-6242**	1	CYLINDER GP-BULLDOZER LIFT	562
	5	1	**384-4638**	1	GUARD AS	
	6	1	**9U-9121**	1	CLAMP	
	7	1	**9U-9122**	1	CLAMP	
	8	1	**227-4303**	1	TUBE AS	
	9	1	*148-8391*	1	ELBOW AS	
		1	**8T-8987**	1	ELBOW	
		1	**2S-4078**	1	SEAL-O-RING	
		1	**5K-9090**	1	SEAL-O-RING	
	10	1	**4J-0520**	3	SEAL-O-RING	
	11	1	**8T-4121**	12	WASHER-HARD (11X21X2.5-MM THK)	
	12	1	**7S-8920**	1	CLIP (SLOT)	
	13	1	**7S-8921**	1	CLIP (TAB)	
	14	1	**8C-3206**	2	FLANGE-HALF	
	15	1	**8S-0023**	1	CLIP (SLOT)	
	16	1	**8S-0024**	1	CLIP (TAB)	
M	17	1	**344-5675**	2	NUT (M10X1.5-THD)	
M	18	1	**8T-4136**	4	BOLT (M10X1.5X25-MM)	
M	19	1	**8T-4196**	6	BOLT (M10X1.5X35-MM)	

I - REFER TO HYDRAULIC INFORMATION SYSTEM
M - METRIC PART
Y - SEPARATE ILLUSTRATION

362-4539 **CYLINDER & LINES GP-LIFT (*contd.*)** **i06188547**

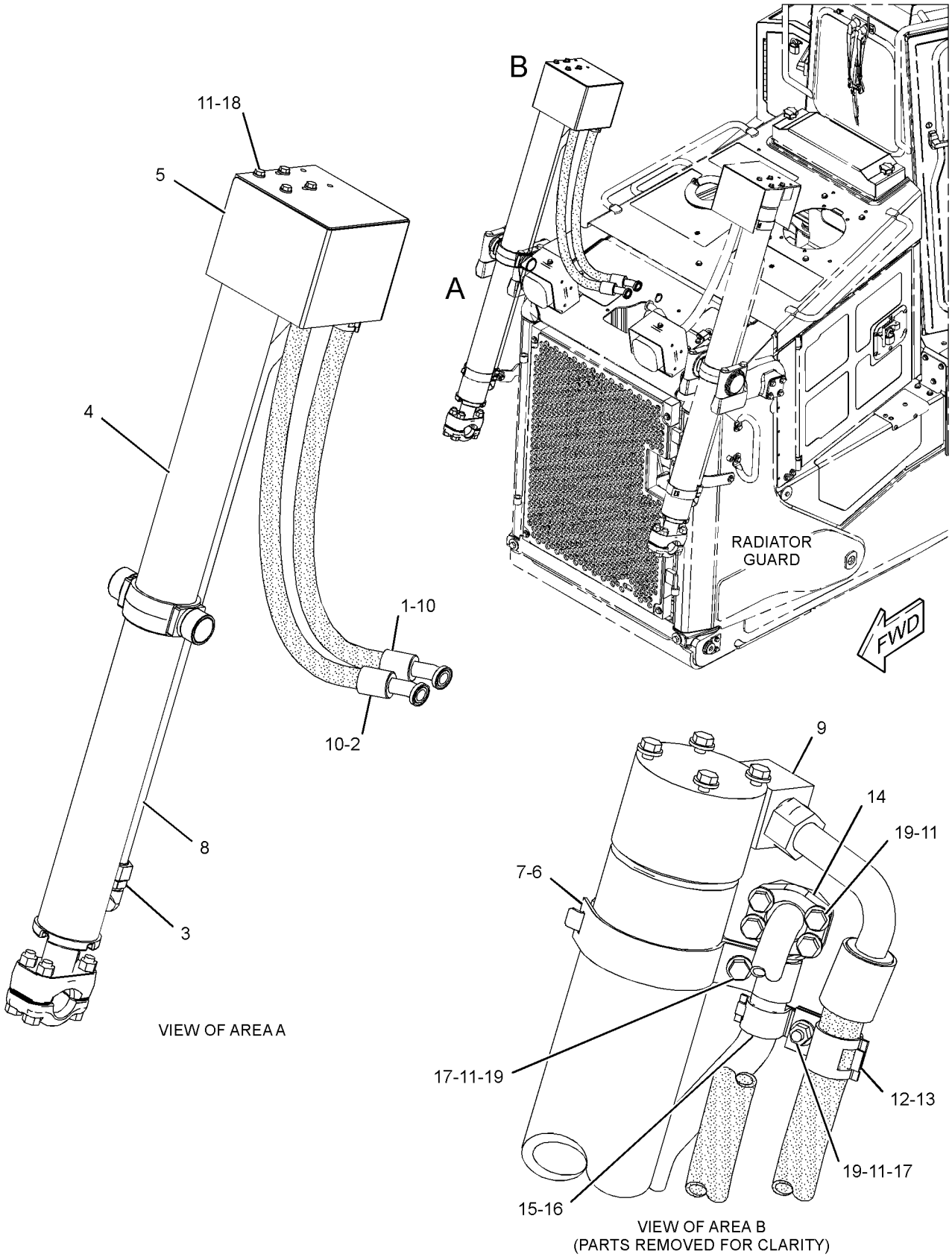

GRAPHIC #1 **<END>** g02193134

362-4544 CYLINDER & LINES GP-LIFT–LH

S/N: SSS1-UP; TTT1-UP
PART OF 398-4512 CYLINDER AR-LIFT
ALSO AN ATTACHMENT

SMCS-5102 **i06188537**

NOTE	REF NO	GRAPHIC REF	PART NUMBER	QTY	PART NAME 1 2 3 4 5 6 (PRODUCT LEVEL)	SEE PAGE
I	1	1	**128-2571**	1	HOSE AS	
	2	1	**9U-9121**	1	CLAMP	
	3	1	**9U-9122**	1	CLAMP	
I	4	1	**128-2572**	1	HOSE AS	
	5	1	**384-4638**	1	GUARD AS	
	6	1	*153-6251*	1	CONNECTOR AS	
		1	**9X-8260**	1	CONNECTOR	
		1	**4K-1388**	1	SEAL-O-RING	
		1	**6V-8400**	1	SEAL-O-RING	
Y	7	1	**417-6242**	1	CYLINDER GP-BULLDOZER LIFT	562
	8	1	**227-4304**	1	TUBE AS	
	9	1	*148-8391*	1	ELBOW AS	
		1	**8T-8987**	1	ELBOW	
		1	**2S-4078**	1	SEAL-O-RING	
		1	**5K-9090**	1	SEAL-O-RING	
	10	1	**4J-0520**	3	SEAL-O-RING	
	11	1	**8T-4121**	12	WASHER-HARD (11X21X2.5-MM THK)	
	12	1	**7S-8920**	1	CLIP (SLOT)	
	13	1	**7S-8921**	1	CLIP (TAB)	
	14	1	**8C-3206**	2	FLANGE-HALF	
	15	1	**8S-0023**	1	CLIP (SLOT)	
	16	1	**8S-0024**	1	CLIP (TAB)	
M	17	1	**344-5675**	2	NUT (M10X1.5-THD)	
M	18	1	**8T-4136**	4	BOLT (M10X1.5X25-MM)	
M	19	1	**8T-4196**	6	BOLT (M10X1.5X35-MM)	

I - REFER TO HYDRAULIC INFORMATION SYSTEM
M - METRIC PART
Y - SEPARATE ILLUSTRATION

362-4544 **CYLINDER & LINES GP-LIFT (*contd.*)** **i06188537**

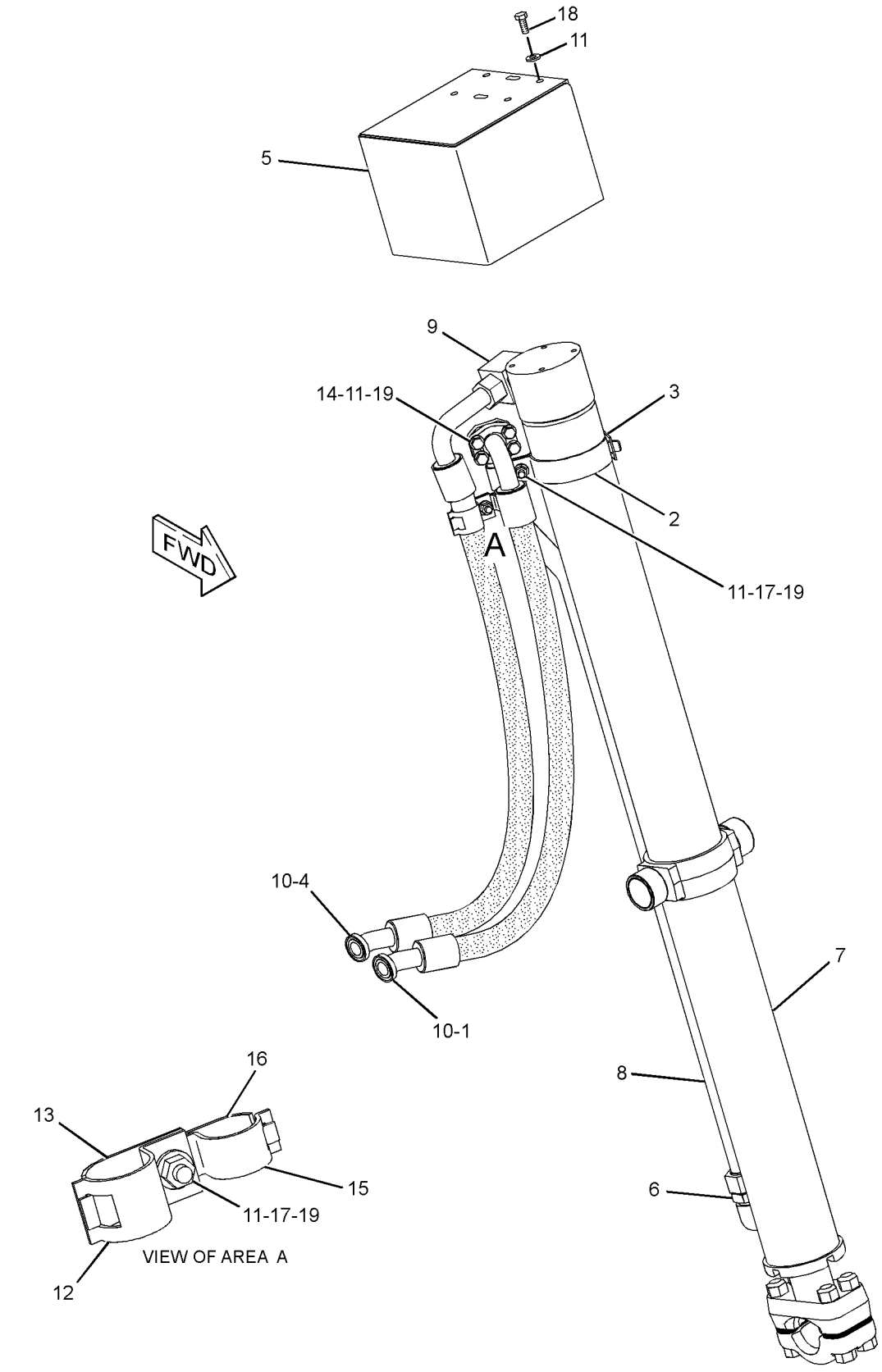

GRAPHIC #1 **<END>** g01209139

362-4546 CYLINDER & LINES GP-LIFT–RH

S/N: PPP1-UP

PART OF 398-4530 CYLINDER AR-LIFT

SMCS-5102 **i06165668**

NOTE	REF NO	GRAPHIC REF	PART NUMBER	QTY	PART NAME 1 2 3 4 5 6 (PRODUCT LEVEL)	SEE PAGE
I	1	1	**128-2573**	1	HOSE AS	
I	2	1	**128-2574**	1	HOSE AS	
	3	1	*153-6251*	1	CONNECTOR AS	
		1	**4K-1388**	1	SEAL-O-RING	
		1	**6V-8400**	1	SEAL-O-RING	
		1	**9X-8260**	1	CONNECTOR	
	4	1	**9U-9121**	1	CLAMP	
	5	1	**9U-9122**	1	CLAMP	
	6	1	*362-4543*	1	TUBE AS	
		1	**227-4303**	1	TUBE AS	
	7	1	**384-4638**	1	GUARD AS	
Y	8	1	**417-6241**	1	CYLINDER GP-BULLDOZER LIFT	562
	9	1	*148-8391*	1	ELBOW AS	
		1	**2S-4078**	1	SEAL-O-RING	
		1	**5K-9090**	1	SEAL-O-RING	
		1	**8T-8987**	1	ELBOW	
M	10	1	**344-5675**	2	NUT (M10X1.5-THD)	
	11	1	**4J-0520**	3	SEAL-O-RING	
	12	1	**7S-8920**	1	CLIP (SLOT)	
	13	1	**7S-8921**	1	CLIP (TAB)	
	14	1	**8C-3206**	2	FLANGE-HALF	
	15	1	**8S-0023**	1	CLIP (SLOT)	
	16	1	**8S-0024**	1	CLIP (TAB)	
	17	1	**8T-4121**	12	WASHER-HARD (11X21X2.5-MM THK)	
M	18	1	**8T-4136**	4	BOLT (M10X1.5X25-MM)	
M	19	1	**8T-4196**	6	BOLT (M10X1.5X35-MM)	

I - REFER TO HYDRAULIC INFORMATION SYSTEM
M - METRIC PART
Y - SEPARATE ILLUSTRATION

362-4546 **CYLINDER & LINES GP-LIFT (*contd.*)** **i06165668**

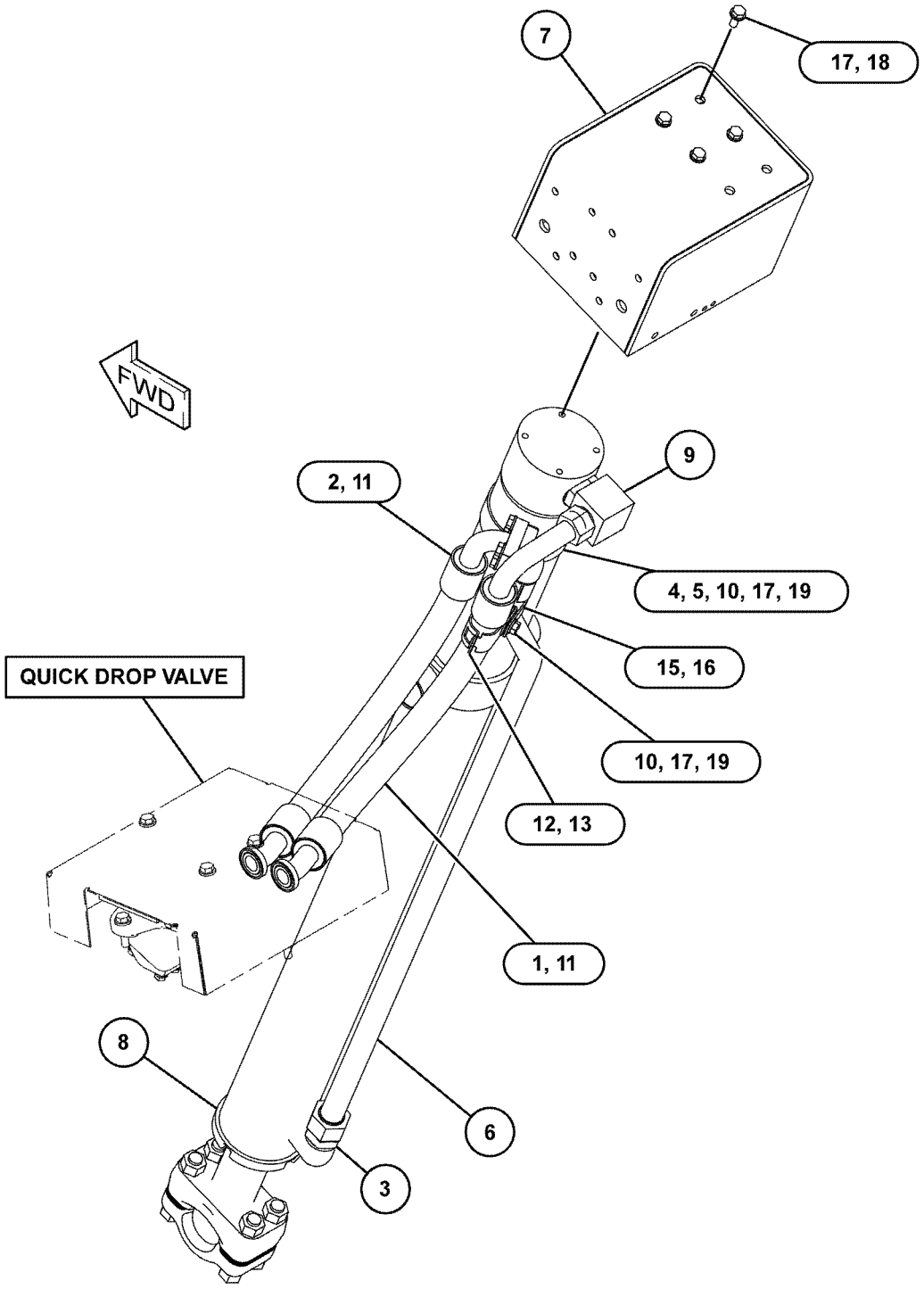

GRAPHIC #1 **<END>** g03834638

362-4553 CYLINDER & LINES GP-LIFT–LH

S/N: PPP1-UP

PART OF 398-4530 CYLINDER AR-LIFT

SMCS-5102 **i06147723**

NOTE	REF NO	GRAPHIC REF	PART NUMBER	QTY	PART NAME 1 2 3 4 5 6 (PRODUCT LEVEL)	SEE PAGE
I	1	1	**128-2575**	1	HOSE AS	
I	2	1	**128-2576**	1	HOSE AS	
	3	1	*153-6251*	1	CONNECTOR AS	
		1	**4K-1388**	1	SEAL-O-RING	
		1	**6V-8400**	1	SEAL-O-RING	
		1	**9X-8260**	1	CONNECTOR	
	4	1	**9U-9121**	1	CLAMP	
	5	1	**9U-9122**	1	CLAMP	
	6	1	*362-4545*	1	TUBE AS	
		1	**227-4304**	1	TUBE AS	
	7	1	**384-4638**	1	GUARD AS	
Y	8	1	**417-6241**	1	CYLINDER GP-BULLDOZER LIFT	562
	9	1	*148-8391*	1	ELBOW AS	
		1	**2S-4078**	1	SEAL-O-RING	
		1	**5K-9090**	1	SEAL-O-RING	
		1	**8T-8987**	1	ELBOW	
M	10	1	**344-5675**	2	NUT (M10X1.5-THD)	
	11	1	**4J-0520**	3	SEAL-O-RING	
	12	1	**7S-8920**	1	CLIP (SLOT)	
	13	1	**7S-8921**	1	CLIP (TAB)	
	14	1	**8C-3206**	2	FLANGE-HALF	
	15	1	**8S-0023**	1	CLIP (SLOT)	
	16	1	**8S-0024**	1	CLIP (TAB)	
	17	1	**8T-4121**	12	WASHER-HARD (11X21X2.5-MM THK)	
M	18	1	**8T-4136**	4	BOLT (M10X1.5X25-MM)	
M	19	1	**8T-4196**	6	BOLT (M10X1.5X35-MM)	

I - REFER TO HYDRAULIC INFORMATION SYSTEM
M - METRIC PART
Y - SEPARATE ILLUSTRATION

362-4553 **CYLINDER & LINES GP-LIFT (*contd.*)** **i06147723**

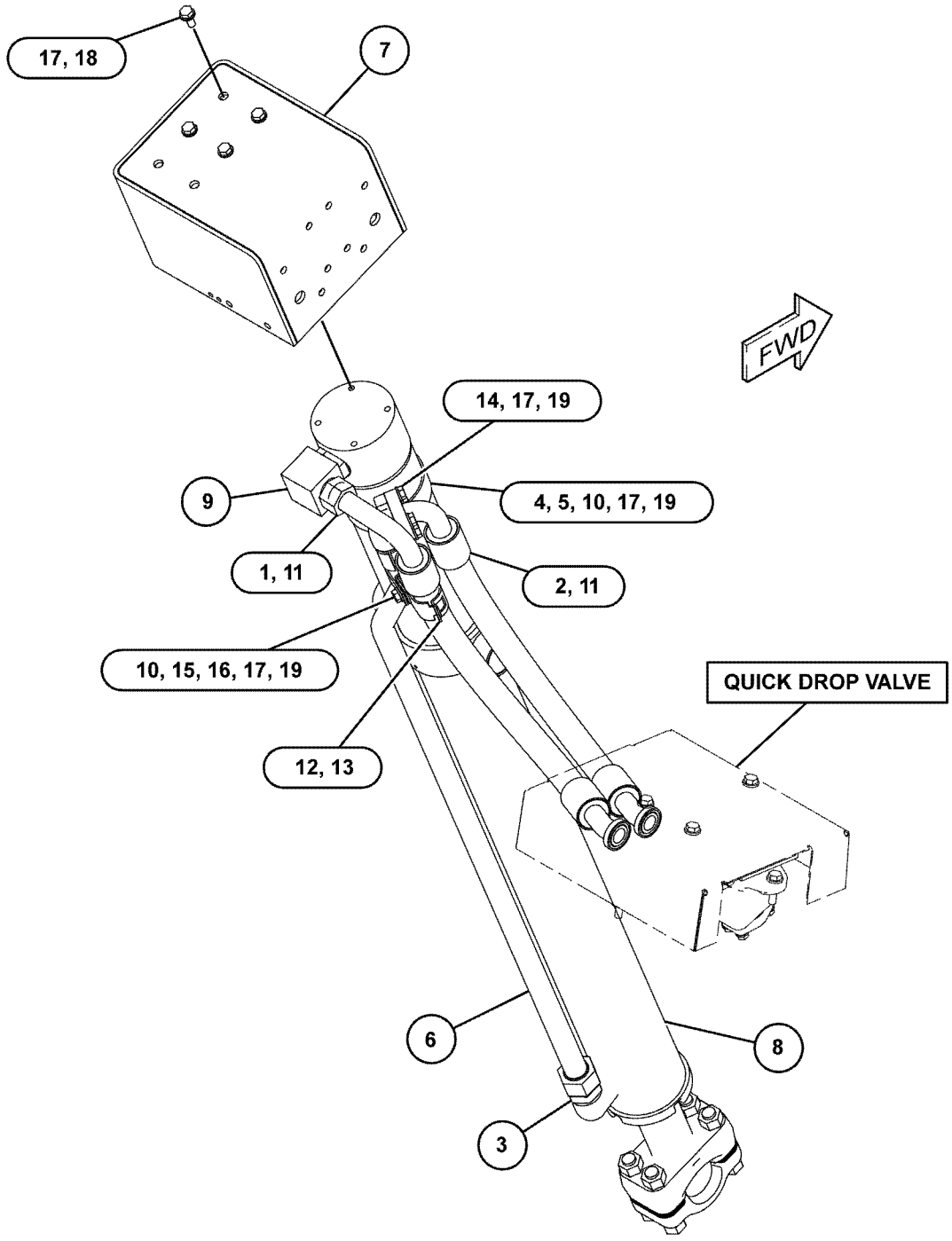

GRAPHIC #1 **<END>** g03834605

398-4512 CYLINDER AR-LIFT

S/N: SSS1-UP; TTT1-UP
PART OF 398-4286 HYDRAULIC AR
ALSO AN ATTACHMENT

SMCS-5102 **i06195661**

NOTE	REF NO	GRAPHIC REF	PART NUMBER	QTY	PART NAME 1 2 3 4 5 6 (PRODUCT LEVEL)	SEE PAGE
Y	1	1	*362-4539*	1	CYLINDER & LINES GP-LIFT (RH)	548
Y	2	1	*362-4544*	1	CYLINDER & LINES GP-LIFT (LH)	550
Y	3	1	*362-4548*	1	MOUNTING GP-CYLINDER	600

Y - SEPARATE ILLUSTRATION

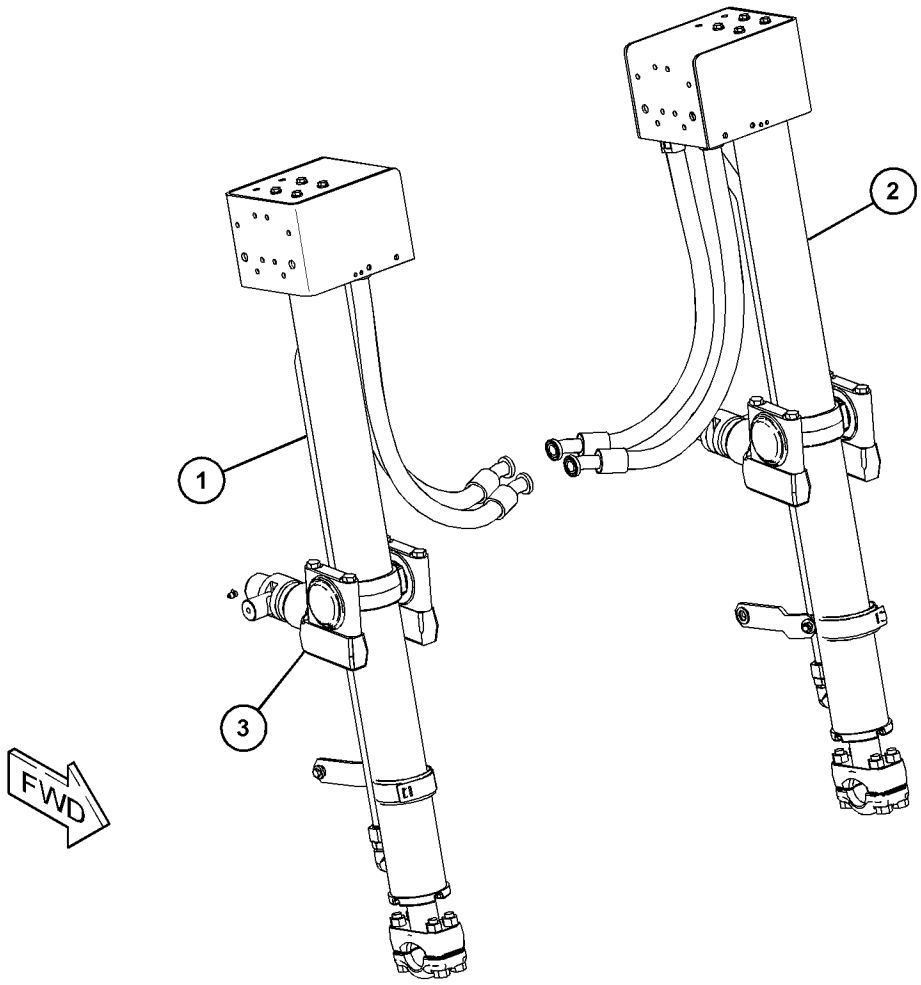

GRAPHIC #1 **<END>** g03851529

398-4530 CYLINDER AR-LIFT

S/N: PPP1-UP

PART OF 398-4331 HYDRAULIC AR

SMCS-5102 **i06203754**

NOTE	REF NO	GRAPHIC REF	PART NUMBER	QTY	PART NAME 1 2 3 4 5 6 (PRODUCT LEVEL)	SEE PAGE
Y	1	1	*362-4546*	1	CYLINDER & LINES GP-LIFT (RH)	552
Y	2	1	*362-4548*	1	MOUNTING GP-CYLINDER	600
Y	3	1	*362-4553*	1	CYLINDER & LINES GP-LIFT (LH)	554

Y - SEPARATE ILLUSTRATION

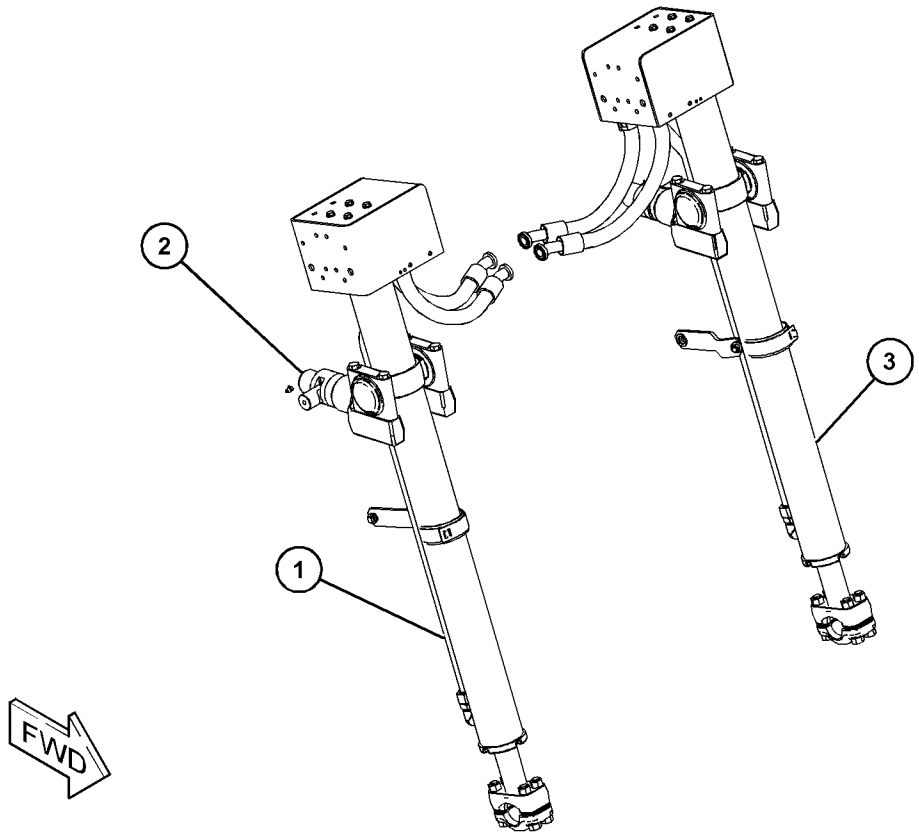

GRAPHIC #1 **<END>** g03853455

227-0843 CYLINDER GP-BULLDOZER LIFT

S/N: PPP1-UP
101.6-MM (4-IN) BORE X 1262-MM (49.7-IN) STROKE
PART OF 417-6241 CYLINDER GP-BULLDOZER LIFT

SMCS-5102 **i06146504**

NOTE	REF NO	GRAPHIC REF	PART NUMBER	QTY	PART NAME 1 2 3 4 5 6 (PRODUCT LEVEL)	SEE PAGE
	1	1	**3G-8742**	1	WASHER (39.3X63.5X6-MM THK)	
	2	1	**4J-0121**	1	CAP AS-BEARING	
B		1	**8E-9212**	14	SHIM (0.8-MM THK)	
B	3	1	**8E-9212**	26	SHIM (0.8-MM THK)	
	4	1	**9T-3885**	1	PISTON AS	
H		1	**8C-9160**	1	SEAL AS	
R	5	1	**364-4115**	1	ROD AS	
	6	1	**172-9981**	1	HEAD	
	7	1	**439-6471**	1	CYLINDER AS-LIFT	
	7A	1	**4J-6374**	2	BUSHING	
	7B	1	**9T-8958**	1	TRUNNION	
H	8	1	**289-2937**	1	SEAL AS-BUFFER	
H	9	1	**289-2948**	1	SEAL-U-CUP	
H	10	1	**175-7900**	1	SEAL-O-RING	
	11	1	**1F-6762**	1	BOLT (1-1/2-12X4.5-IN)	
H	12	1	**1M-1571**	1	RING-WEAR	
H	13	1	**225-3281**	1	SEAL-WIPER	
H	14	1	**2K-6830**	1	RING-BACKUP	
M	15	1	**6V-7742**	4	NUT-FULL (M20X2.5-THD)	
M	16	1	**8T-0362**	4	BOLT (M20X2.5X110-MM)	
H	17	1	**8T-0785**	1	RING-WEAR	
					AVAILABLE REPAIR KIT(S):	
H			**229-2626**	1	KIT-SEAL	
					(INCLUDES SEAL AS, SEALS, & RINGS)	

B - USE AS REQUIRED
H - KIT MARKED H SERVICES PARTS MARKED H
M - METRIC PART
R - REMFG PART MAY BE AVAILABLE

227-0843 **CYLINDER GP-BULLDOZER LIFT (*contd.*)** **i06146504**

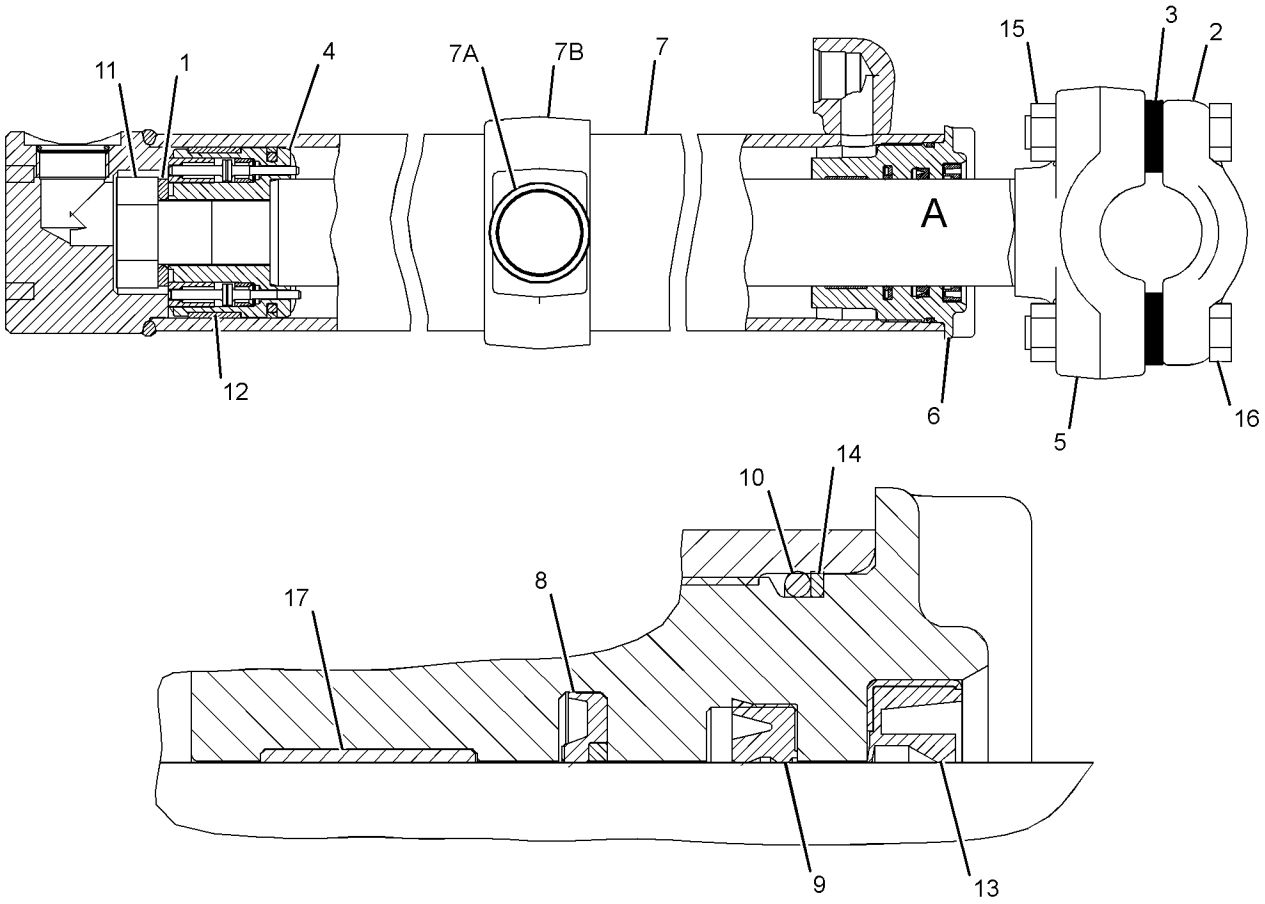

VIEW OF AREA A

GRAPHIC #1 **<END>** g03410441

227-0844 CYLINDER GP-BULLDOZER LIFT

S/N: SSS1-UP; TTT1-UP
101.6-MM (4-IN) BORE X 1262-MM (49.7-IN) STROKE
PART OF 417-6242 CYLINDER GP-BULLDOZER LIFT
ALSO AN ATTACHMENT

SMCS-5102 **i05640409**

NOTE	REF NO	GRAPHIC REF	PART NUMBER	QTY	PART NAME 1 2 3 4 5 6 (PRODUCT LEVEL)	SEE PAGE
	1	1	**3G-8742**	1	WASHER (39.3X63.5X6-MM THK)	
	2	1	**9T-3885**	1	PISTON AS	
H	2A	1	**8C-9160**	1	SEAL AS	
R	3	1	**364-4115**	1	ROD AS	
	4	1	**172-9981**	1	HEAD	
	5	1	**439-6470**	1	CYLINDER AS-LIFT	
	5A	1	**4J-6374**	2	BUSHING	
	5B	1	**9T-8958**	1	TRUNNION	
H	6	1	**289-2937**	1	SEAL AS-BUFFER	
H	7	1	**289-2948**	1	SEAL-U-CUP	
H	8	1	**175-7900**	1	SEAL-O-RING	
	9	1	**1F-6762**	1	BOLT (1-1/2-12X4.5-IN)	
H	10	1	**1M-1571**	1	RING-WEAR	
H	11	1	**225-3281**	1	SEAL-WIPER	
H	12	1	**2K-6830**	1	RING-BACKUP	
	13	1	**4J-0121**	1	CAP AS-BEARING	
B		1	**8E-9212**	14	SHIM (0.8-MM THK)	
M	14	1	**6V-7742**	4	NUT-FULL (M20X2.5-THD)	
B	15	1	**8E-9212**	26	SHIM (0.8-MM THK)	
M	16	1	**8T-0362**	4	BOLT (M20X2.5X110-MM)	
H	17	1	**8T-0785**	1	RING-WEAR	
					AVAILABLE REPAIR KIT(S):	
H			**229-2626**	1	KIT-SEAL	
					(INCLUDES SEAL AS, SEALS, & RINGS)	

B - USE AS REQUIRED
H - KIT MARKED H SERVICES PARTS MARKED H
M - METRIC PART
R - REMFG PART MAY BE AVAILABLE

227-0844 **CYLINDER GP-BULLDOZER LIFT (*contd.*)** **i05640409**

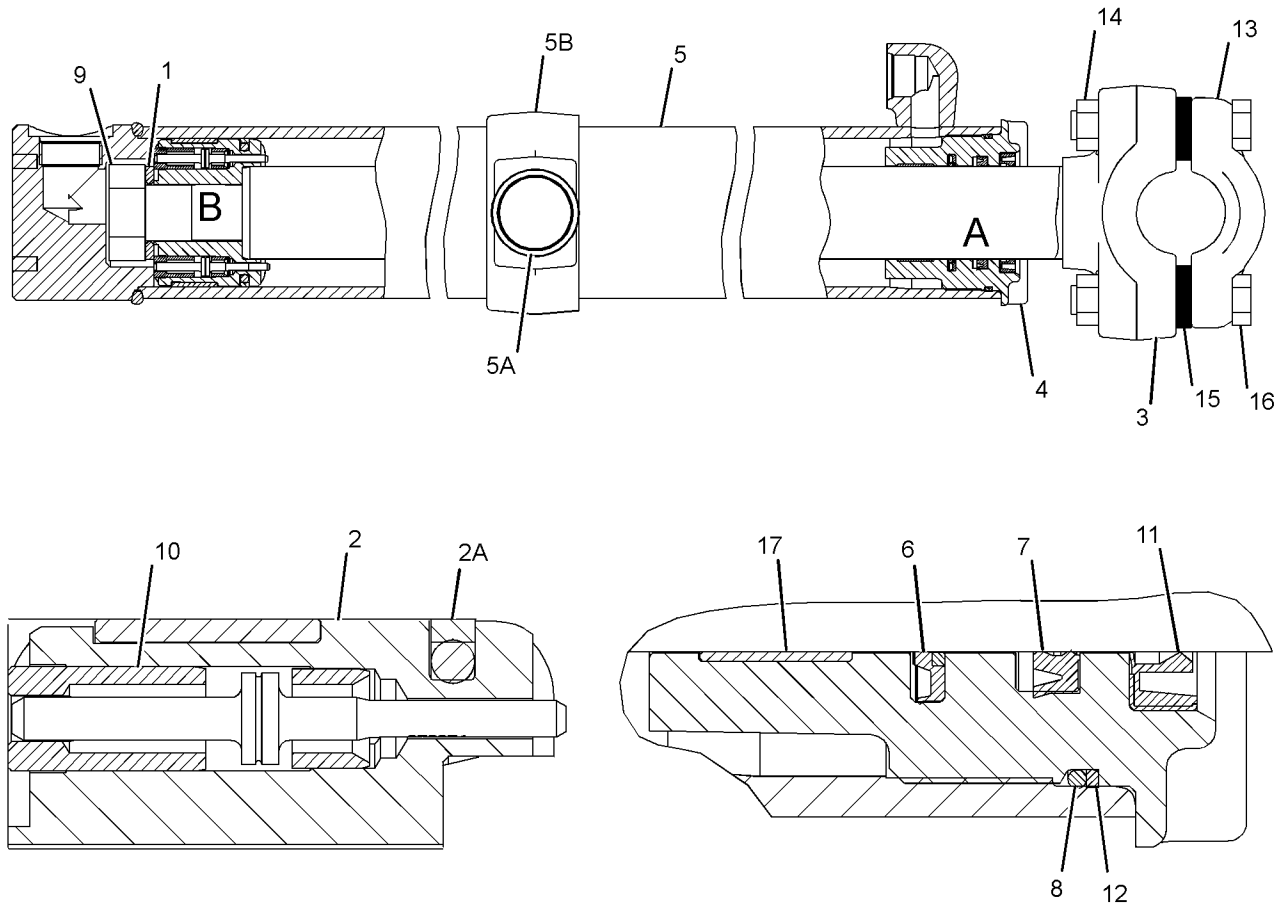

VIEW OF AREA B

VIEW OF AREA A

GRAPHIC #1 **<END>** g03410450

417-6241 CYLINDER GP-BULLDOZER LIFT

S/N: PPP1-UP
101.6-MM (4-IN) BORE X 1262-MM (49.7-IN) STROKE
PART OF 362-4546, 362-4553 CYLINDER & LINES GP-LIFT

SMCS-5102 **i06146501**

NOTE	PART NUMBER	QTY	PART NAME 1 2 3 4 5 6 (PRODUCT LEVEL)	SEE PAGE
Y	**227-0843**	1	CYLINDER GP-BULLDOZER LIFT	558

Y - SEPARATE ILLUSTRATION

<END>

417-6242 CYLINDER GP-BULLDOZER LIFT

S/N: SSS1-UP; TTT1-UP
101.6-MM (4-IN) BORE X 1262-MM (49.7-IN) STROKE
PART OF 362-4539, 362-4544 CYLINDER & LINES GP-LIFT
ALSO AN ATTACHMENT

SMCS-5102 **i05640398**

NOTE	PART NUMBER	QTY	PART NAME 1 2 3 4 5 6 (PRODUCT LEVEL)	SEE PAGE
Y	**227-0844**	1	CYLINDER GP-BULLDOZER LIFT	560

Y - SEPARATE ILLUSTRATION

<END>

384-5351 CYLINDER GP-RIPPER–LIFT

S/N: RTZ1-UP
130 MM (5.2-IN) BORE X 405.5 MM (16-IN) STROKE
PART OF 434-8126 RIPPER AR
AN ATTACHMENT

SMCS-5352, 5356 **i05682410**

NOTE	REF NO	GRAPHIC REF	PART NUMBER	QTY	PART NAME 1 2 3 4 5 6 (PRODUCT LEVEL)	SEE PAGE
	1	1	**5J-5731**	1	LOCKNUT (1-3/4-12-THD)	
	2	1	**8C-9200**	1	RING-WEAR	
	3	1	**118-4019**	1	RING	
	4	1	**266-9397**	1	PISTON	
	5	1	**278-2324**	1	SEAL-WIPER	
	6	1	**355-4712**	1	HEAD	
	7	1	**384-8724**	1	CYLINDER AS	
	8	1	**384-8725**	1	ROD AS	
	9	1	**167-2235**	1	SEAL AS-BUFFER	
	10	1	**167-2299**	1	SEAL-U-CUP	
	11	1	**175-7903**	1	SEAL-O-RING	
	12	1	**175-7904**	1	SEAL-O-RING	
	13	1	**2K-4096**	1	RING-BACKUP	
	14	1	**9X-3595**	1	SEAL AS	

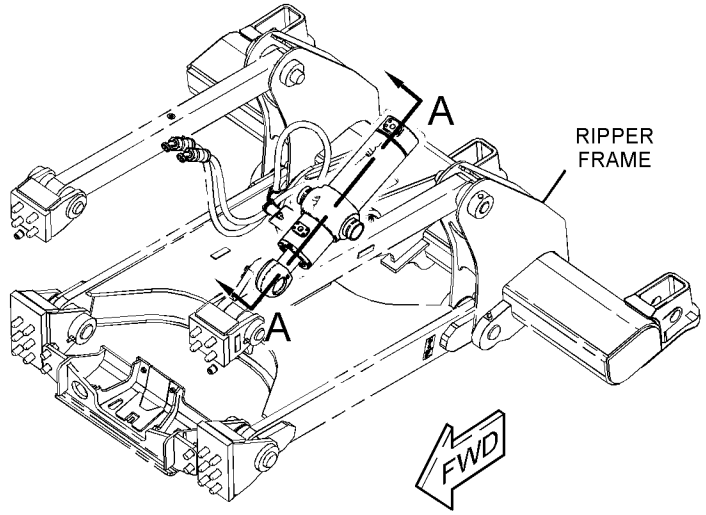

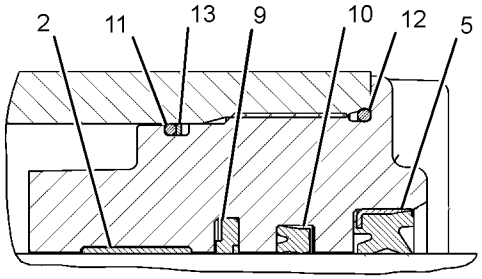

VIEW OF AREA B

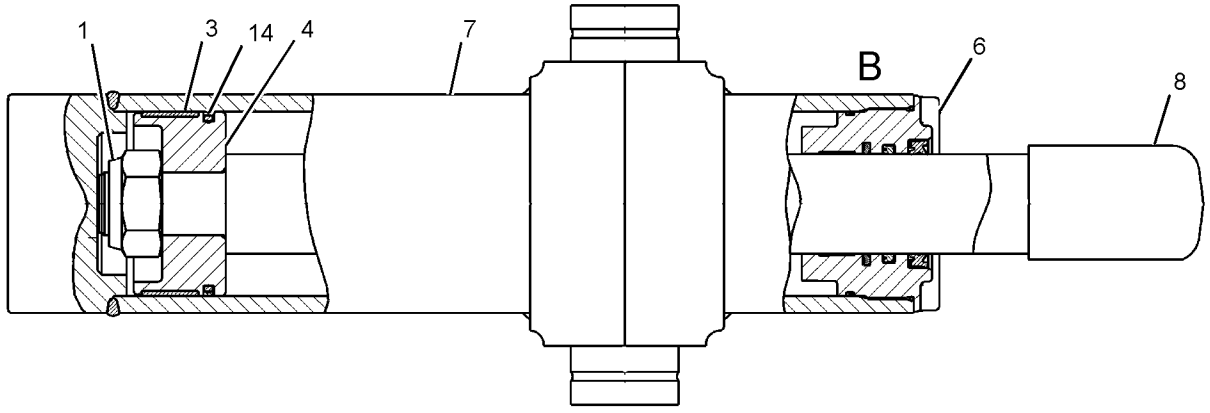

SECTION A-A

GRAPHIC #1 **<END>** g03582269

227-0841 CYLINDER GP-TILT

S/N: SSS1-UP; TTT1-UP
152.4-MM (6-IN) BORE X 108.3-MM (4.3-IN) STROKE
PART OF 251-9814 BRACE GP-BULLDOZER
AN ATTACHMENT

SMCS-5104 **i05628057**

NOTE	REF NO	GRAPHIC REF	PART NUMBER	QTY	PART NAME 1 2 3 4 5 6 (PRODUCT LEVEL)	SEE PAGE
J	1	1	**1J-0708**	1	RING-WEAR	
	2	1	**5J-4989**	1	SEAL AS	
		1	**5J-4418**	1	SEAL	
		1	**5J-4419**	1	RING-EXPANDER	
R	3	1	**9T-6093**	1	ROD-PISTON	
	4	1	**118-1170**	1	PISTON AS	
		1	**1J-8569**	2	INSERT-PISTON	
	5	1	**132-1249**	2	WASHER (44X84X6.35-MM THK)	
	6	1	**230-7887**	1	HEAD AS	
		1	**225-3281**	1	SEAL-WIPER	
	7	1	**230-7892**	1	CYLINDER AS	
		1	**2J-8489**	1	BEARING	
J	8	1	**289-2937**	1	SEAL AS-BUFFER	
J	9	1	**289-2948**	1	SEAL-U-CUP	
M	10	1	**173-9779**	4	BOLT (M24X3X80-MM)	
J	11	1	**225-3281**	1	SEAL-WIPER	
J	12	1	**2K-3258**	1	RING-BACKUP	
J	13	1	**5H-3252**	1	SEAL-O-RING	
	14	1	**5J-5731**	1	LOCKNUT (1-3/4-12-THD)	
	15	1	**6V-8237**	4	WASHER (26X44X4-MM THK)	
J	16	1	**8T-5668**	1	RING-WEAR	
					AVAILABLE REPAIR KIT(S):	
J			**243-0388**	1	KIT-HYDRAULIC CYLINDER	

J - KIT MARKED J SERVICES PARTS MARKED J
M - METRIC PART
R - REMFG PART MAY BE AVAILABLE

227-0841 **CYLINDER GP-TILT (*contd.*)** **i05628057**

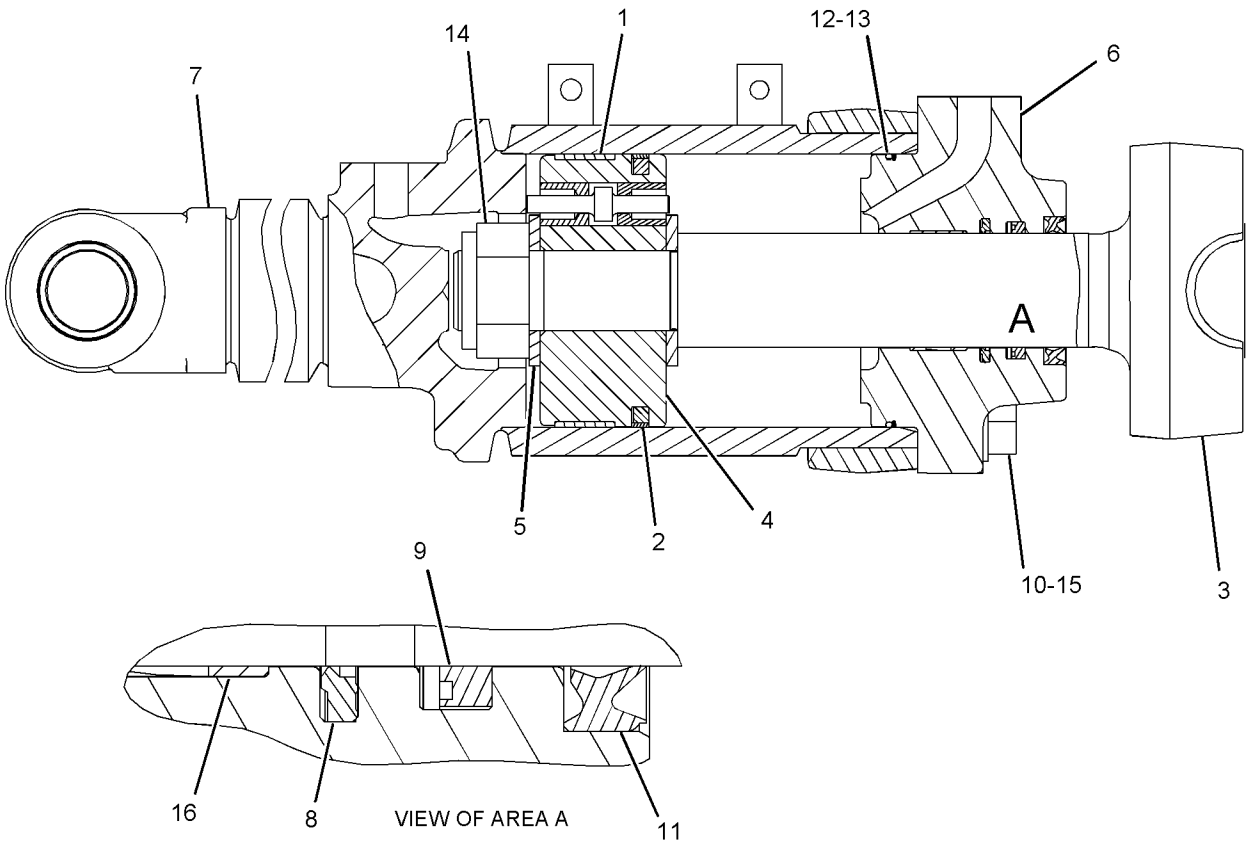

GRAPHIC #1 **<END>** g01207944

367-9478 CYLINDER GP-TILT

S/N: PPP1-UP; SSS1-UP; TTT1-UP
165.1-MM (6.5-IN) BORE X 128-MM (5-IN) STROKE
PART OF 223-4004, 230-5554, 252-5853 PUSH ARM GP
AN ATTACHMENT

SMCS-5104 **i05627992**

NOTE	REF NO	GRAPHIC REF	PART NUMBER	QTY	PART NAME 1 2 3 4 5 6 (PRODUCT LEVEL)	SEE PAGE
	1	1	**2J-0564**	1	LOCKNUT (2-12-THD)	
	2	1	**5J-4991**	1	SEAL AS	
B	3	1	**8E-5703**	24	SHIM (0.8-MM THK)	
	4	1	**8J-2880**	1	CAP-BEARING	
	5	1	**233-9135**	1	CYLINDER AS	
	5A	1	**2J-8489**	1	BEARING	
	6	1	**233-9138**	1	HEAD-CYLINDER	
	7	1	**312-4247**	1	SEAL-WIPER	
	8	1	**312-4248**	1	SEAL AS-BUFFER	
	9	1	**364-4416**	1	ROD AS	
B		1	**3J-6572**	14	SHIM (0.5-MM THK)	
	10	1	**367-9479**	1	PISTON	
	11	1	**312-4245**	1	SEAL-U-CUP	
	12	1	**3J-9703**	1	RING-WEAR	
M	13	1	**6V-7742**	4	NUT-FULL (M20X2.5-THD)	
M	14	1	**6V-8133**	4	BOLT (M24X3X80-MM)	
	15	1	**6V-8237**	4	WASHER (26X44X4-MM THK)	
M	16	1	**6V-9167**	4	BOLT (M20X2.5X140-MM)	
	17	1	**7J-8955**	1	RING-BACKUP	
	18	1	**7J-8956**	1	SEAL-O-RING	
	19	1	**8T-8379**	1	SEAL-HEAD	
	20	1	**9T-0094**	1	RING-WEAR	

B - USE AS REQUIRED
M - METRIC PART

367-9478 **CYLINDER GP-TILT (*contd.*)** **i05627992**

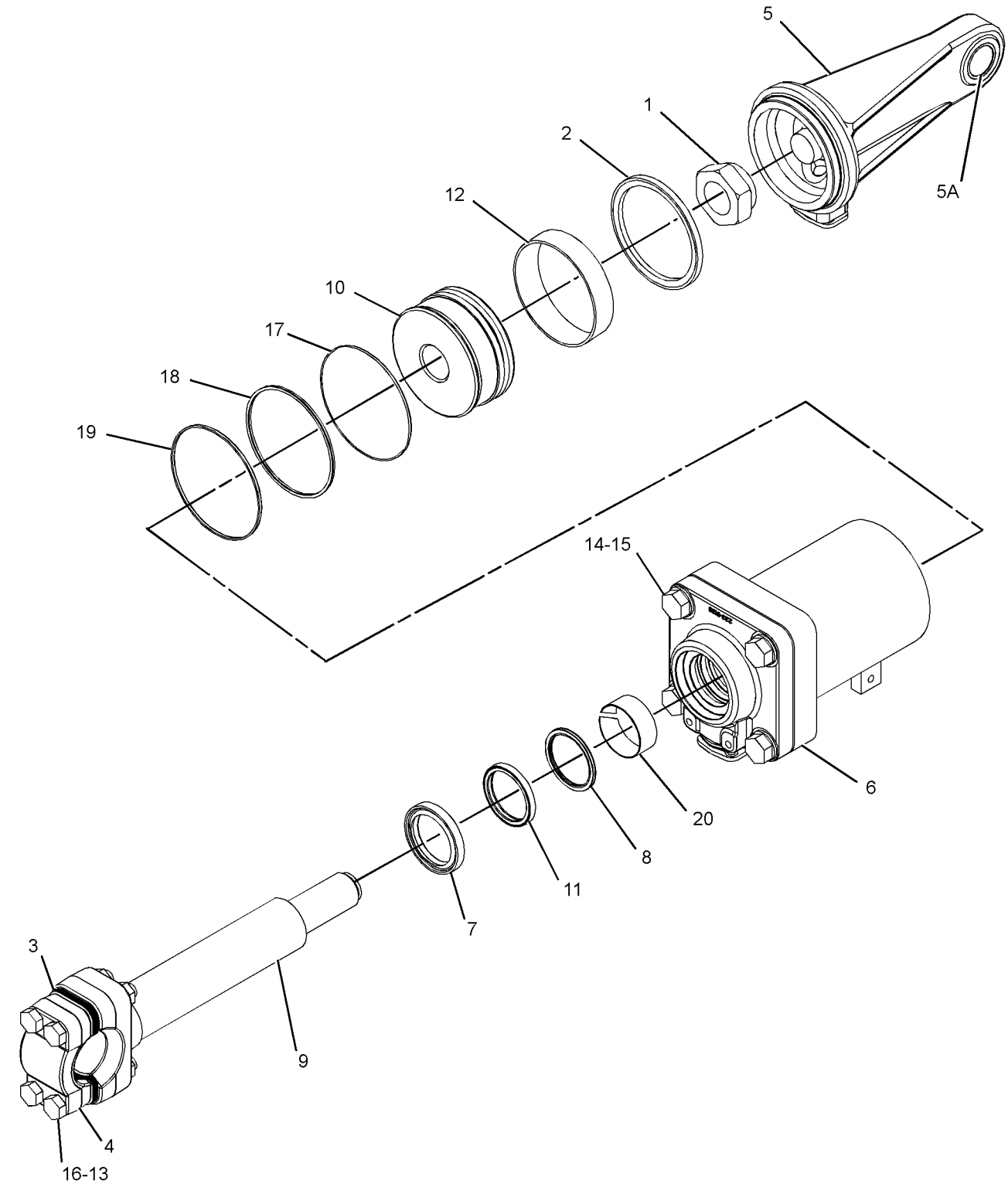

GRAPHIC #1 **<END>** g03243797

398-4286 HYDRAULIC AR

S/N: SSS1-UP; TTT1-UP
PART OF 398-4278, 398-4279 COMMON AR
ALSO AN ATTACHMENT

SMCS-5050 **i06195659**

NOTE	PART NUMBER	QTY	PART NAME 1 2 3 4 5 6 (PRODUCT LEVEL)	SEE PAGE
Y	*229-5421*	1	ADAPTER GP-MOTOR	546
Y	*398-4512*	1	CYLINDER AR-LIFT	556
Y	*398-4490*	1	LINES GP-LIFT CYLINDER	570
Y	*398-4491*	1	LINES GP-PUMP	579
Y	*398-4500*	1	LINES GP-STEERING	536
Y	*398-4492*	1	LINES GP-TILT CYLINDER	592
Y	**325-9776**	1	MOTOR GP-PISTON (STEERING)	599
Y	*398-4488*	1	PUMP & MOUNTING GP (IMPLEMENT)	602
Y	*398-4499*	1	PUMP & MOUNTING GP (STEERING)	603
Y	*398-4489*	1	TANK & MTG GP-HYDRAULIC	618
Y	*222-1160*	1	VALVE GP-QUICK-DROP	644

Y - SEPARATE ILLUSTRATION

<END>

398-4291 HYDRAULIC AR—IMPLEMENT CONTROLS

S/N: PPP1-UP; SSS1-UP; TTT1-UP
AN ATTACHMENT

SMCS-5050 **i06218978**

NOTE	PART NUMBER	QTY	PART NAME 1 2 3 4 5 6 (PRODUCT LEVEL)	SEE PAGE
Y	*398-4494*	1	CONTROL GP-PILOT OPERATED HYD	704
Y	*398-4541*	1	GUARD GP-REAR	392
Y	*398-4505*	1	LINES GP-PILOT	576
Y	*398-4493*	1	VALVE & MTG GP-IMPLEMENT CONT (BLADE LIFT, TILT)	620

Y - SEPARATE ILLUSTRATION

<END>

398-4292 HYDRAULIC AR—IMPLEMENT CONTROLS

S/N: PPP1-UP; SSS1-UP; TTT1-UP
PART OF 481-9508 DISTRIBUTION AR
AN ATTACHMENT

SMCS-5050 **i06219018**

NOTE	PART NUMBER	QTY	PART NAME 1 2 3 4 5 6 (PRODUCT LEVEL)	SEE PAGE
Y	*398-4496*	1	CONTROL GP-PILOT OPERATED HYD	705
Y	*398-4542*	1	GUARD GP-REAR	393
Y	*398-4497*	1	LINES GP-PILOT	572
Y	*398-4498*	1	LINES GP-RIPPER	583
Y	*398-4495*	1	VALVE & MTG GP-IMPLEMENT CONT (BLADE, RIPPER LIFT, TILT)	621

Y - SEPARATE ILLUSTRATION

<END>

398-4331 HYDRAULIC AR

S/N: PPP1-UP

PART OF 398-4280 COMMON AR

SMCS-5050 **i06217094**

NOTE	PART NUMBER	QTY	PART NAME 1 2 3 4 5 6 (PRODUCT LEVEL)	SEE PAGE
Y	*229-5421*	1	ADAPTER GP-MOTOR	546
Y	*398-4530*	1	CYLINDER AR-LIFT	557
Y	*398-4490*	1	LINES GP-LIFT CYLINDER	570
Y	*398-4491*	1	LINES GP-PUMP	579
Y	*398-4500*	1	LINES GP-STEERING	536
Y	*398-4492*	1	LINES GP-TILT CYLINDER	592
Y	**325-9776**	1	MOTOR GP-PISTON (STEERING)	599
Y	*398-4488*	1	PUMP & MOUNTING GP (IMPLEMENT)	602
Y	*398-4499*	1	PUMP & MOUNTING GP (STEERING)	603
Y	*398-4489*	1	TANK & MTG GP-HYDRAULIC	618
Y	*222-1160*	1	VALVE GP-QUICK-DROP	644

Y - SEPARATE ILLUSTRATION

<END>

398-4490 LINES GP-LIFT CYLINDER

S/N: PPP1-UP; SSS1-UP; TTT1-UP
PART OF 398-4286, 398-4331 HYDRAULIC AR
ALSO AN ATTACHMENT

SMCS-5057, 5102 **i06148707**

NOTE	REF NO	GRAPHIC REF	PART NUMBER	QTY	PART NAME 1 2 3 4 5 6 (PRODUCT LEVEL)	SEE PAGE
I	1	1	**431-4806**	1	HOSE AS	
	2	1	**431-4807**	1	TUBE AS	
I	3	1	**431-4808**	1	HOSE AS	
	4	1	**431-4809**	1	TUBE AS	
I	5	1	**431-4810**	1	HOSE AS	
	6	1	**431-4811**	1	TUBE AS	
I	7	1	**431-4812**	1	HOSE AS	
	8	1	**431-4813**	1	TUBE AS	
	9	1	**1L-4684**	8	CLAMP-HOSE	
	10	1	**1P-3704**	2	SEAL-RECTANGULAR	
M	11	1	**344-5675**	2	NUT (M10X1.5-THD)	
	12	1	**4J-0520**	4	SEAL-O-RING	
	13	1	**5K-9090**	4	SEAL-O-RING	
	14	1	**7G-5984**	1	CLIP (TAB)	
	15	1	**7G-5985**	1	CLIP (SLOT)	
	16	1	**7G-5986**	1	GROMMET	
	17	1	**7X-7729**	2	WASHER (11X25X3-MM THK)	
	18	1	**8C-3206**	4	FLANGE-HALF	
	19	1	**8T-4121**	20	WASHER-HARD (11X21X2.5-MM THK)	
M	20	1	**8T-4185**	8	BOLT (M10X1.5X50-MM)	
M	21	1	**8T-4195**	4	BOLT (M10X1.5X30-MM)	
M	22	1	**8T-4196**	8	BOLT (M10X1.5X35-MM)	

I - REFER TO HYDRAULIC INFORMATION SYSTEM
M - METRIC PART

398-4490 **LINES GP-LIFT CYLINDER (*contd.*)** **i06148707**

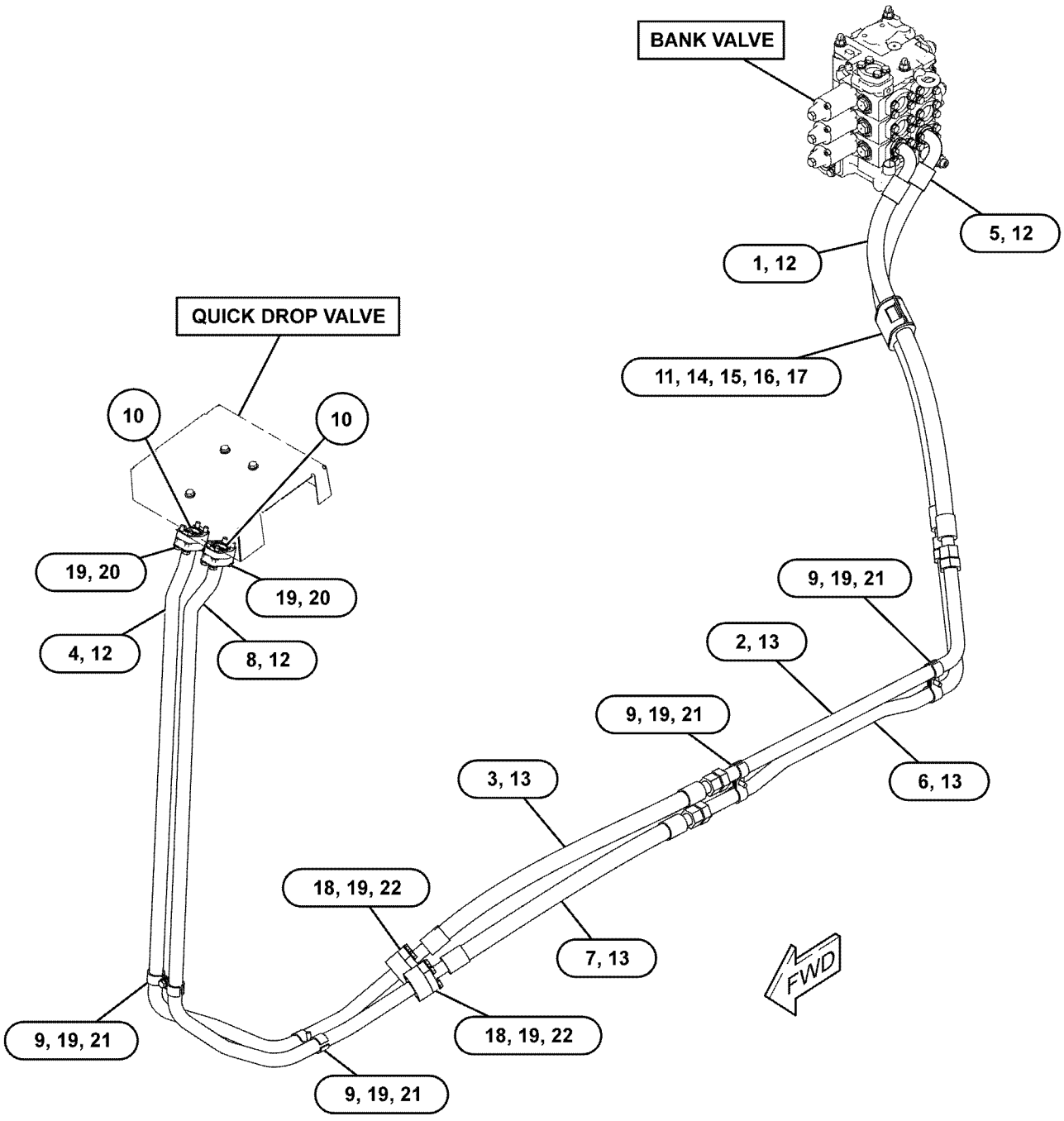

GRAPHIC #1 **<END>** g03831966

398-4497 LINES GP-PILOT

S/N: PPP1-UP; SSS1-UP; TTT1-UP
PART OF 398-4292 HYDRAULIC AR
AN ATTACHMENT

SMCS-5057 **i06219022**

NOTE	REF NO	GRAPHIC REF	PART NUMBER	QTY	PART NAME 1 2 3 4 5 6 (PRODUCT LEVEL)	SEE PAGE
	1	1	*148-8434*	1	TEE AS	
		1	**6V-8397**	2	SEAL-O-RING	
		1	**6V-9843**	1	TEE	
	2	1	*148-8435*	2	TEE AS	
					(EACH INCLUDES)	
		1	**3J-1907**	1	SEAL-O-RING	
		1	**6V-8397**	2	SEAL-O-RING	
		1	**6V-8781**	1	TEE	
	3	1	**6V-0852**	2	CAP-DUST	
	4	1	**8Y-7452**	1	TEE-O-RING	
	5	1	**109-5826**	1	ELBOW	
	6	1	**126-0814**	1	FITTING AS (SWIVEL)	
		1	**6V-0852**	1	CAP-DUST	
	7	1	*148-8336*	1	CONNECTOR AS	
		1	**3J-1907**	1	SEAL-O-RING	
		1	**6V-8397**	1	SEAL-O-RING	
		1	**6V-8636**	1	CONNECTOR	
	8	1	*169-5863*	2	ADAPTER AS	
					(EACH INCLUDES)	
		1	**4J-5477**	1	SEAL-O-RING	
		1	**7X-7945**	1	ADAPTER	
Y	9	1	*200-0750*	1	ACCUMULATOR GP-PILOT OIL (CHARGED)	544
Y	10	1	**226-4751**	1	MANIFOLD GP-CONTROL (IMPLEMENT PILOT PRESSURE)	597
I	11	1	**398-4513**	1	HOSE AS	
I	12	1	**398-4514**	1	HOSE AS	
I	13	1	**398-4515**	1	HOSE AS	
I	14	1	**398-4517**	1	HOSE AS	
I	15	1	**398-4518**	1	HOSE AS	
I	16	1	**398-4519**	1	HOSE AS	
I	17	1	**398-4533**	1	HOSE AS	
	18	1	**398-4537**	1	BRACKET AS	
M		1	**6V-9632**	2	NUT-WELD (M6X1-THD)	
		1	**7T-1099**	1	LINK	
	19	1	**472-0586**	1	HOSE AS	
I	20	1	**472-0587**	1	HOSE AS	
I	21	1	**472-0588**	1	HOSE AS	
I	22	1	**472-0589**	1	HOSE AS	
I	23	1	**472-0590**	1	HOSE AS	
I	24	1	**472-0591**	1	HOSE AS	
I	25	1	**475-4070**	1	HOSE AS	
	26	1	**475-4071**	2	HOSE AS	
	27	1	*148-8316*	1	CONNECTOR AS	
		1	**3J-7354**	1	SEAL-O-RING	
		1	**4J-5477**	1	SEAL-O-RING	
		1	**6V-8647**	1	CONNECTOR	
	28	1	*148-8318*	1	CONNECTOR AS	
		1	**3K-0360**	1	SEAL-O-RING	
		1	**6V-8397**	1	SEAL-O-RING	
		1	**6V-8634**	1	CONNECTOR	
	29	1	*148-8325*	3	CONNECTOR AS	
					(EACH INCLUDES)	
		1	**3J-1907**	1	SEAL-O-RING	
		1	**4J-5477**	1	SEAL-O-RING	
		1	**6V-8641**	1	CONNECTOR	
	30	1	*148-8351*	1	ELBOW AS	
		1	**4J-5477**	1	SEAL-O-RING	
		1	**6V-9849**	1	ELBOW	
	31	1	*148-8361*	1	ELBOW AS	

398-4497 **LINES GP-PILOT (*contd.*)** **i06219022**

NOTE	REF NO	GRAPHIC REF	PART NUMBER	QTY	PART NAME 1 2 3 4 5 6 (PRODUCT LEVEL)	SEE PAGE
		1	**3J-7354**	1	SEAL-O-RING	
		1	**6V-8397**	1	SEAL-O-RING	
		1	**6V-9200**	1	ELBOW	
	32	1	*148-8368*	9	ELBOW AS	
					(EACH INCLUDES)	
		1	**3J-1907**	1	SEAL-O-RING	
		1	**4J-5477**	1	SEAL-O-RING	
		1	**6V-8627**	1	ELBOW	
	33	1	*148-8369*	1	ELBOW AS	
		1	**3J-7354**	1	SEAL-O-RING	
		1	**4J-5477**	1	SEAL-O-RING	
		1	**6V-8628**	1	ELBOW	
	34	1	*148-8374*	1	ELBOW AS	
		1	**3K-0360**	1	SEAL-O-RING	
		1	**6V-8397**	1	SEAL-O-RING	
		1	**6V-8723**	1	ELBOW	
	35	1	*148-8378*	2	ELBOW AS	
					(EACH INCLUDES)	
		1	**3J-1907**	1	SEAL-O-RING	
		1	**6V-8397**	1	SEAL-O-RING	
		1	**6V-8724**	1	ELBOW	
	36	1	*150-3033*	1	ELBOW AS	
		1	**3J-1907**	1	SEAL-O-RING	
		1	**4J-5477**	1	SEAL-O-RING	
		1	**8T-0164**	1	ELBOW	
	37	1	*164-5567*	2	COUPLER AS-QUICK DISCONNECT (MALE)	
					(EACH INCLUDES)	
		1	**6V-3965**	1	FITTING (QUICK DISCONNECT)	
		1	**214-7568**	1	SEAL-O-RING	
	38	1	*164-7908*	1	ELBOW AS	
		1	**3J-7354**	1	SEAL-O-RING	
		1	**6V-8397**	1	SEAL-O-RING	
		1	**8T-7546**	1	ELBOW	
	39	1	**1P-3703**	1	SEAL-RECTANGULAR	
	40	1	*260-9171*	1	CONNECTOR AS	
		1	**3J-1907**	1	SEAL-O-RING	
		1	**6V-8397**	1	SEAL-O-RING	
		1	**8T-9041**	1	CONNECTOR	
	41	1	**2P-1279**	2	LOCKNUT (9/16-18-THD)	
	42	1	*330-9732*	1	ADAPTER AS	
		1	**5P-6944**	1	ADAPTER	
		1	**238-5080**	1	SEAL-O-RING	
	43	1	**3D-2824**	1	SEAL-O-RING	
	44	1	**3J-7354**	1	SEAL-O-RING	
	45	1	**4J-0520**	1	SEAL-O-RING	
	46	1	**4J-5477**	2	SEAL-O-RING	
	47	1	**5K-3294**	1	CLIP	
	48	1	**6H-7062**	1	SPACER (13.5X25X19-MM THK)	
	49	1	**6K-5967**	2	CLIP	
	50	1	**6K-8179**	2	CLIP	
	51	1	**6V-8934**	1	ADAPTER	
	52	1	**6V-9746**	1	SEAL-O-RING	
	53	1	**7X-0510**	2	WASHER-HARD (15.5X29X3-MM THK)	
M	54	1	**7X-2535**	2	BOLT (M6X1X60-MM)	
	55	1	**8T-1887**	1	CLIP (SLOT)	
	56	1	**8T-1888**	1	CLIP (TAB)	
	57	1	**8T-4121**	8	WASHER-HARD (11X21X2.5-MM THK)	
M	58	1	**8T-4136**	1	BOLT (M10X1.5X25-MM)	
M	59	1	**8T-4179**	2	BOLT (M12X1.75X20-MM)	
M	60	1	**8T-4183**	1	BOLT (M12X1.75X40-MM)	
M	61	1	**8T-4195**	3	BOLT (M10X1.5X30-MM)	
	62	1	**8T-4223**	3	WASHER-HARD (13.5X25.5X3-MM THK)	
M	63	1	**8T-6466**	4	BOLT (M10X1.5X60-MM)	

398-4497 **LINES GP-PILOT (*contd.*)** **i06219022**

NOTE	REF NO	GRAPHIC REF	PART NUMBER	QTY	PART NAME 1 2 3 4 5 6 (PRODUCT LEVEL)	SEE PAGE
	64	1	**9X-8256**	2	WASHER (6.6X12X2-MM THK)	
E	65	1	**211-5358**		CONDUIT-FLEXIBLE (16-CM)	

E - ORDER BY THE CENTIMETER
I - REFER TO HYDRAULIC INFORMATION SYSTEM
M - METRIC PART
Y - SEPARATE ILLUSTRATION

398-4497 **LINES GP-PILOT (*contd.*)** **i06219022**

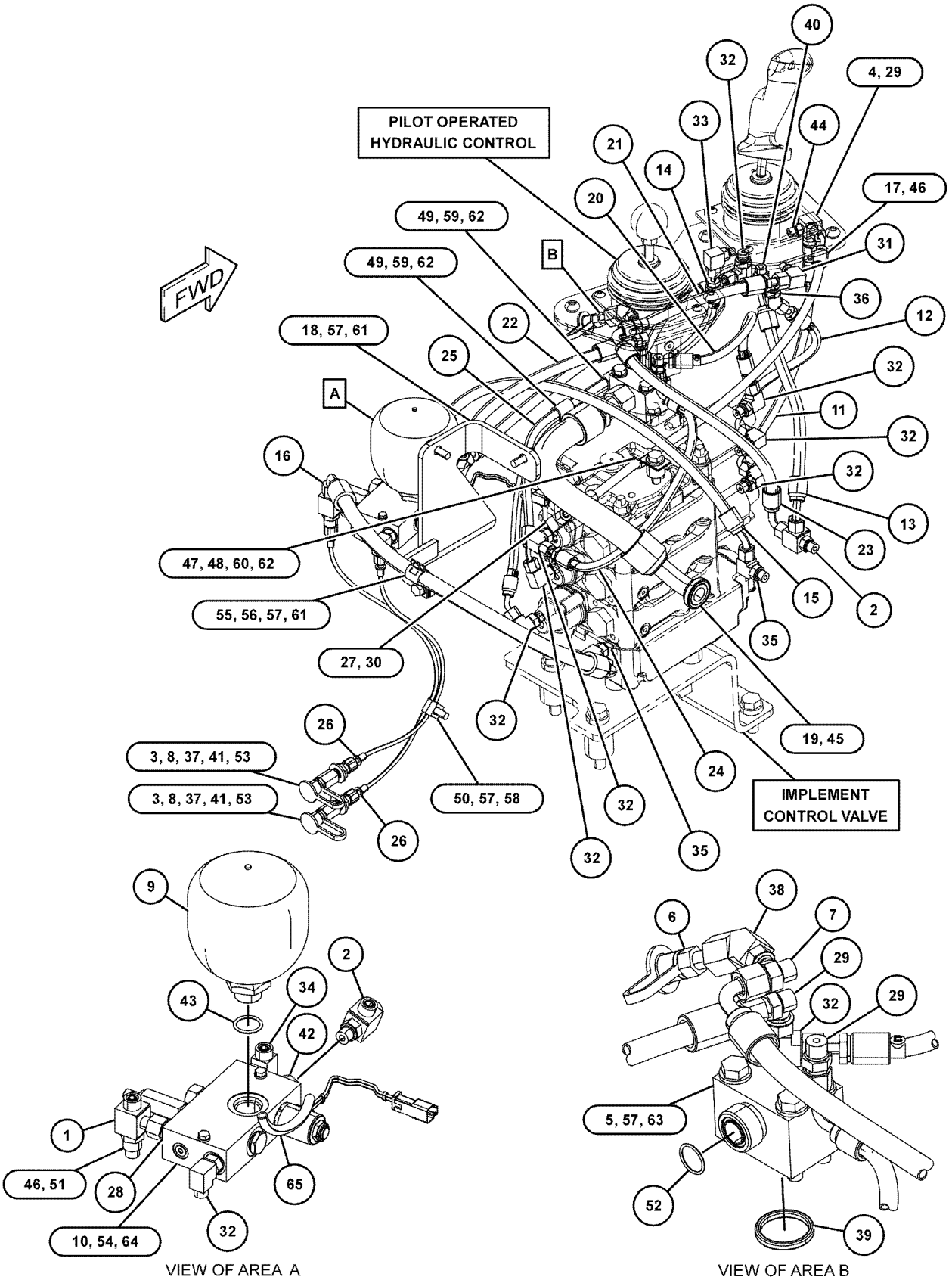

VIEW OF AREA A

VIEW OF AREA B

GRAPHIC #1 **<END>** g03863445

398-4505 LINES GP-PILOT

S/N: PPP1-UP; SSS1-UP; TTT1-UP
PART OF 398-4291 HYDRAULIC AR
AN ATTACHMENT

SMCS-5057 **i06163559**

NOTE	REF NO	GRAPHIC REF	PART NUMBER	QTY	PART NAME 1 2 3 4 5 6 (PRODUCT LEVEL)	SEE PAGE
	1	1	*148-8434*	1	TEE AS	
			6V-8397	2	SEAL-O-RING	
			6V-9843	1	TEE	
	2	1	*148-8435*	1	TEE AS	
			3J-1907	1	SEAL-O-RING	
			6V-8397	2	SEAL-O-RING	
			6V-8781	1	TEE	
	3	1	**6V-0852**	2	CAP-DUST	
	4	1	**8Y-7452**	1	TEE-O-RING	
	5	1	**126-0814**	1	FITTING AS (SWIVEL)	
			6V-0852	1	CAP-DUST	
	6	1	*169-5863*	2	ADAPTER AS	
					(EACH INCLUDES)	
			4J-5477	1	SEAL-O-RING	
			7X-7945	1	ADAPTER	
Y	7	1	*200-0750*	1	ACCUMULATOR GP-PILOT OIL (CHARGED)	544
Y	8	1	**226-4751**	1	MANIFOLD GP-CONTROL (IMPLEMENT PILOT PRESSURE)	597
I	9	1	**398-4513**	1	HOSE AS	
I	10	1	**398-4514**	1	HOSE AS	
I	11	1	**398-4515**	1	HOSE AS	
I	12	1	**398-4517**	1	HOSE AS	
I	13	1	**398-4518**	1	HOSE AS	
I	14	1	**398-4519**	1	HOSE AS	
I	15	1	**398-4533**	1	HOSE AS	
	16	1	**398-4537**	1	BRACKET AS	
M			**6V-9632**	2	NUT-WELD (M6X1-THD)	
			7T-1099	1	LINK	
I	17	1	**426-2433**	1	HOSE AS	
I	18	1	**431-4834**	1	HOSE AS	
I	19	1	**475-4070**	1	HOSE AS	
	20	1	**475-4071**	2	HOSE AS	
	21	1	*148-8316*	1	CONNECTOR AS	
			3J-7354	1	SEAL-O-RING	
			4J-5477	1	SEAL-O-RING	
			6V-8647	1	CONNECTOR	
	22	1	*148-8318*	1	CONNECTOR AS	
			3K-0360	1	SEAL-O-RING	
			6V-8397	1	SEAL-O-RING	
			6V-8634	1	CONNECTOR	
	23	1	*148-8325*	1	CONNECTOR AS	
			3J-1907	1	SEAL-O-RING	
			4J-5477	1	SEAL-O-RING	
			6V-8641	1	CONNECTOR	
	24	1	*148-8351*	1	ELBOW AS	
			4J-5477	1	SEAL-O-RING	
			6V-9849	1	ELBOW	
	25	1	*148-8368*	6	ELBOW AS	
					(EACH INCLUDES)	
			3J-1907	1	SEAL-O-RING	
			4J-5477	1	SEAL-O-RING	
			6V-8627	1	ELBOW	
	26	1	*148-8369*	1	ELBOW AS	
			3J-7354	1	SEAL-O-RING	
			4J-5477	1	SEAL-O-RING	
			6V-8628	1	ELBOW	
	27	1	*148-8374*	1	ELBOW AS	
			3K-0360	1	SEAL-O-RING	
			6V-8397	1	SEAL-O-RING	

398-4505 **LINES GP-PILOT (*contd.*)** **i06163559**

NOTE	REF NO	GRAPHIC REF	PART NUMBER	QTY	PART NAME 1 2 3 4 5 6 (PRODUCT LEVEL)	SEE PAGE
			6V-8723	1	ELBOW	
	28	1	*148-8378*	3	ELBOW AS	
					(EACH INCLUDES)	
			3J-1907	1	SEAL-O-RING	
			6V-8397	1	SEAL-O-RING	
			6V-8724	1	ELBOW	
	29	1	*150-3033*	1	ELBOW AS	
			3J-1907	1	SEAL-O-RING	
			4J-5477	1	SEAL-O-RING	
			8T-0164	1	ELBOW	
	30	1	*164-5567*	2	COUPLER AS-QUICK DISCONNECT (MALE)	
					(EACH INCLUDES)	
			6V-3965	1	FITTING (QUICK DISCONNECT)	
			214-7568	1	SEAL-O-RING	
	31	1	*164-7908*	1	ELBOW AS	
			3J-7354	1	SEAL-O-RING	
			6V-8397	1	SEAL-O-RING	
			8T-7546	1	ELBOW	
	32	1	*260-9171*	1	CONNECTOR AS	
			3J-1907	1	SEAL-O-RING	
			6V-8397	1	SEAL-O-RING	
			8T-9041	1	CONNECTOR	
	33	1	**2P-1279**	2	LOCKNUT (9/16-18-THD)	
	34	1	*330-9732*	1	ADAPTER AS	
			5P-6944	1	ADAPTER	
			238-5080	1	SEAL-O-RING	
	35	1	**3D-2824**	1	SEAL-O-RING	
	36	1	**3J-7354**	1	SEAL-O-RING	
	37	1	**4J-0520**	2	SEAL-O-RING	
	38	1	**4J-5477**	2	SEAL-O-RING	
	39	1	**5K-3294**	1	CLIP	
	40	1	**6H-7062**	1	SPACER (13.5X25X19-MM THK)	
	41	1	**6K-5967**	2	CLIP	
	42	1	**6K-8179**	2	CLIP	
	43	1	**6V-8934**	1	ADAPTER	
	44	1	**7X-0510**	2	WASHER-HARD (15.5X29X3-MM THK)	
M	45	1	**7X-2535**	2	BOLT (M6X1X60-MM)	
	46	1	**8T-1887**	1	CLIP (SLOT)	
	47	1	**8T-1888**	1	CLIP (TAB)	
	48	1	**8T-4121**	4	WASHER-HARD (11X21X2.5-MM THK)	
M	49	1	**8T-4136**	1	BOLT (M10X1.5X25-MM)	
M	50	1	**8T-4179**	2	BOLT (M12X1.75X20-MM)	
M	51	1	**8T-4183**	1	BOLT (M12X1.75X40-MM)	
M	52	1	**8T-4195**	3	BOLT (M10X1.5X30-MM)	
	53	1	**8T-4223**	3	WASHER-HARD (13.5X25.5X3-MM THK)	
	54	1	**9X-8256**	2	WASHER (6.6X12X2-MM THK)	
E	55	1	**211-5358**		CONDUIT-FLEXIBLE (16-CM)	

E - ORDER BY THE CENTIMETER
I - REFER TO HYDRAULIC INFORMATION SYSTEM
M - METRIC PART
Y - SEPARATE ILLUSTRATION

398-4505 **LINES GP-PILOT (*contd.*)** **i06163559**

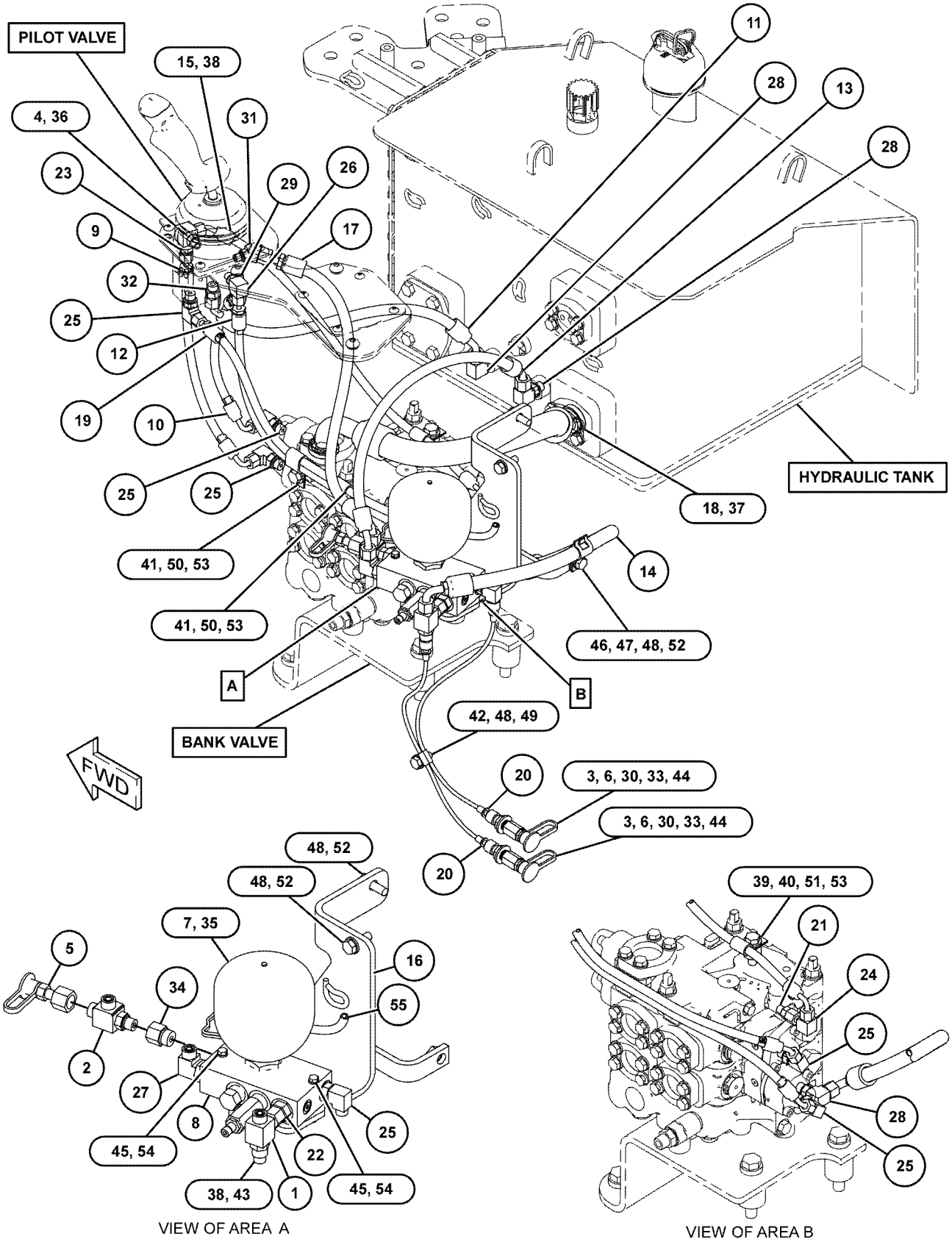

GRAPHIC #1 **<END>** g03853293

398-4491 LINES GP-PUMP

S/N: PPP1-UP; SSS1-UP; TTT1-UP
PART OF 398-4286, 398-4331 HYDRAULIC AR
ALSO AN ATTACHMENT

SMCS-5057 **i06147018**

NOTE	REF NO	GRAPHIC REF	PART NUMBER	QTY	PART NAME 1 2 3 4 5 6 (PRODUCT LEVEL)	SEE PAGE
	1	1	**126-0814**	1	FITTING AS (SWIVEL)	
		1	**6V-0852**	1	CAP-DUST	
	2	1	*241-6202*	1	ADAPTER AS	
		1	**2M-9780**	1	SEAL-O-RING	
		1	**219-8136**	1	ADAPTER	
	3	1	*241-6208*	1	ELBOW AS	
		1	**2M-9780**	1	SEAL-O-RING	
		1	**5K-9090**	1	SEAL-O-RING	
		1	**119-6220**	1	ELBOW	
	4	1	*241-6215*	1	ELBOW AS	
		1	**3J-1907**	1	SEAL-O-RING (1)	
		1	**6V-8076**	1	ELBOW	
	5	1	*268-1621*	1	FITTING AS	
		1	**3D-2824**	1	SEAL-O-RING	
		1	**6V-9746**	1	SEAL-O-RING	
		1	**124-1212**	1	FITTING	
	6	1	*357-4517*	1	TEE AS	
		1	**3J-7354**	1	SEAL-O-RING	
		1	**6V-8397**	2	SEAL-O-RING	
		1	**6V-9161**	1	TEE	
	7	1	*360-3572*	1	ELBOW AS	
		1	**6V-8397**	1	SEAL-O-RING	
		1	**8C-8988**	1	ELBOW	
I	8	1	**426-2435**	1	HOSE AS	
I	9	1	**426-2437**	1	HOSE AS	
	10	1	**426-2438**	1	ELBOW	
I	11	1	**426-2441**	1	HOSE AS	
	12	1	**426-2443**	1	HOSE	
I	13	1	**472-0594**	1	HOSE AS	
	14	1	*148-8313*	1	ADAPTER AS	
		1	**3K-0360**	1	SEAL-O-RING	
		1	**5P-6944**	1	ADAPTER	
	15	1	*148-8378*	1	ELBOW AS	
		1	**3J-1907**	1	SEAL-O-RING (1)	
		1	**6V-8397**	1	SEAL-O-RING	
		1	**6V-8724**	1	ELBOW	
	16	1	*164-5567*	1	COUPLER AS-QUICK DISCONNECT (MALE)	
		1	**6V-3965**	1	FITTING (QUICK DISCONNECT)	
		1	**214-7568**	1	SEAL-O-RING	
	17	1	**184-5394**	1	CLIP	
	18	1	**1P-4578**	2	FLANGE-HALF	
	19	1	*241-6209*	1	UNION AS-CROSS	
		1	**5K-9090**	3	SEAL-O-RING	
		1	**117-5208**	1	CROSS	
M	20	1	**344-5675**	1	NUT (M10X1.5-THD)	
	21	1	**4J-0520**	2	SEAL-O-RING	
	22	1	**4J-0522**	1	SEAL-O-RING	
	23	1	**5P-7468**	3	CLIP (SLOT)	
	24	1	**5P-7469**	3	CLIP (TAB)	
	25	1	**5P-8444**	3	GROMMET (37-MM ID)	
	26	1	**6J-2680**	1	SEAL-O-RING	
	27	1	**6V-0852**	1	CAP-DUST	
	28	1	**8T-4121**	12	WASHER-HARD (11X21X2.5-MM THK)	
M	29	1	**8T-4136**	1	BOLT (M10X1.5X25-MM)	
M	30	1	**8T-4137**	4	BOLT (M10X1.5X20-MM)	
M	31	1	**8T-4195**	1	BOLT (M10X1.5X30-MM)	
M	32	1	**8T-4196**	5	BOLT (M10X1.5X35-MM)	

398-4491 **LINES GP-PUMP (*contd.*)** **i06147018**

NOTE	REF NO	GRAPHIC REF	PART NUMBER	QTY	PART NAME 1 2 3 4 5 6 (PRODUCT LEVEL)	SEE PAGE
	33	1	**8T-4223**	4	WASHER-HARD (13.5X25.5X3-MM THK)	
M	34	1	**8T-4956**	2	BOLT (M12X1.75X35-MM)	
	35	1	**8T-4984**	2	CLAMP-HOSE	
	36	1	**8T-4985**	2	CLAMP-HOSE	
M	37	1	**8T-5041**	2	BOLT (M12X1.75X120-MM)	
	38	1	**9M-8406**	4	CLIP	

I - REFER TO HYDRAULIC INFORMATION SYSTEM
M - METRIC PART

398-4491 **LINES GP-PUMP (*contd.*)** **i06147018**

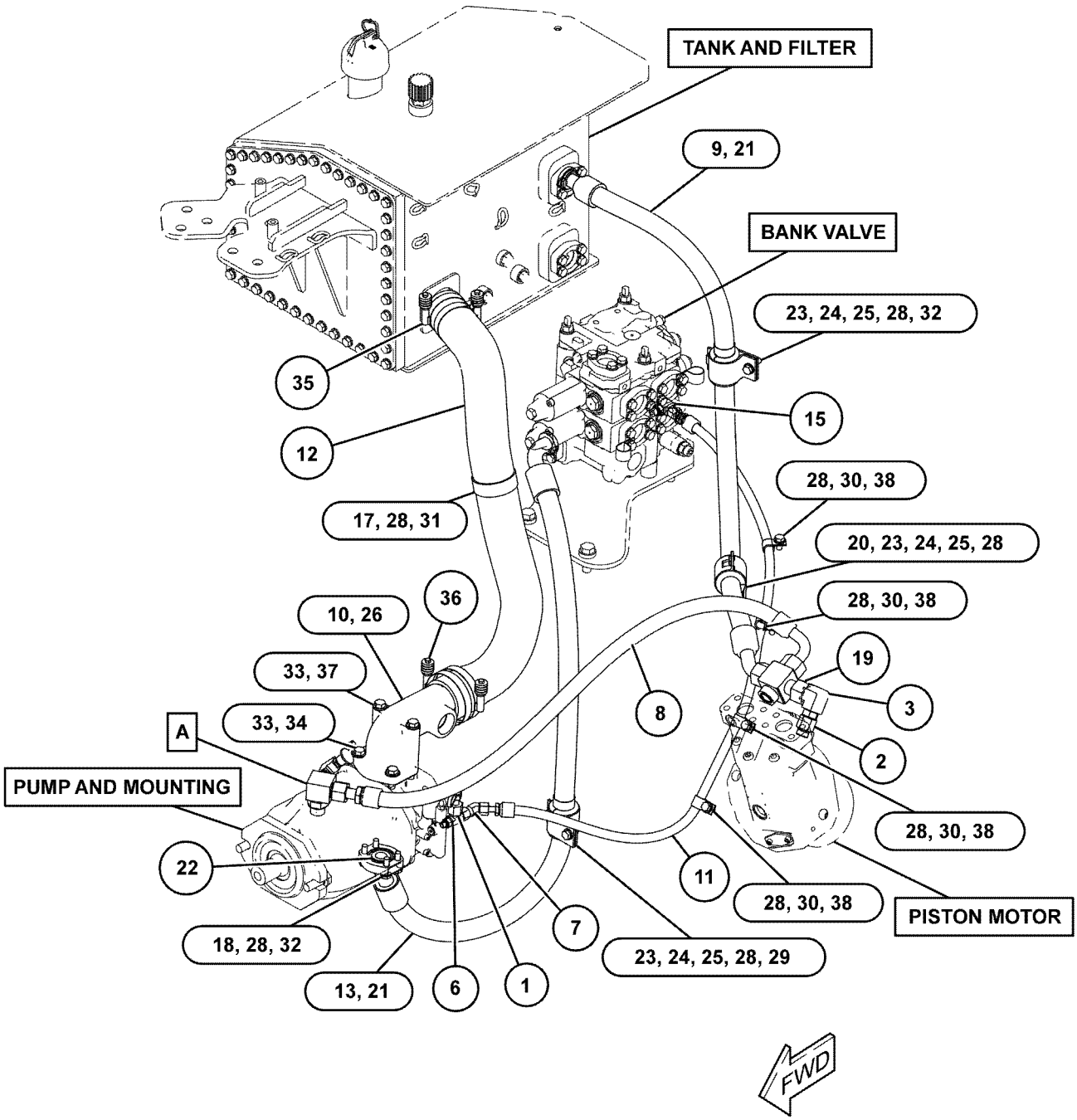

GRAPHIC #1 **<END>** g03832090

387-1759 LINES GP-RIPPER

S/N: RTZ1-UP
PART OF 434-8126 RIPPER AR
AN ATTACHMENT

SMCS-5057, 5352, 5356 **i05636020**

NOTE	REF NO	GRAPHIC REF	PART NUMBER	QTY	PART NAME 1 2 3 4 5 6 (PRODUCT LEVEL)	SEE PAGE
	1	1	**130-1977**	8	SHIELD	
	2	1	**130-9192**	4	GROMMET	
	3	1	**208-6727**	1	SHIELD	
	4	1	**381-8734**	4	GROMMET	
I	5	1	**392-9664**	1	HOSE AS	
I	6	1	**392-9665**	1	HOSE AS	
	7	1	**433-4027**	1	SHIELD	
	8	1	**4J-5267**	4	SEAL-O-RING	
	9	1	**5P-7464**	2	CLIP (SLOT)	
	10	1	**5P-7465**	2	CLIP (TAB)	
	11	1	**6V-1249**	2	GROMMET (22-MM ID)	
	12	1	**8C-3205**	4	FLANGE-HALF	
	13	1	**8T-4121**	8	WASHER-HARD (11X21X2.5-MM THK)	
M	14	1	**8T-4183**	1	BOLT (M12X1.75X40-MM)	
M	15	1	**8T-4186**	8	BOLT (M10X1.5X40-MM)	
	16	1	**8T-4223**	2	WASHER-HARD (13.5X25.5X3-MM THK)	
M	17	1	**8T-4244**	1	NUT (M12X1.75-THD)	
	18	1	**9M-2904**	8	CLAMP-HOSE	

I - REFER TO HYDRAULIC INFORMATION SYSTEM
M - METRIC PART

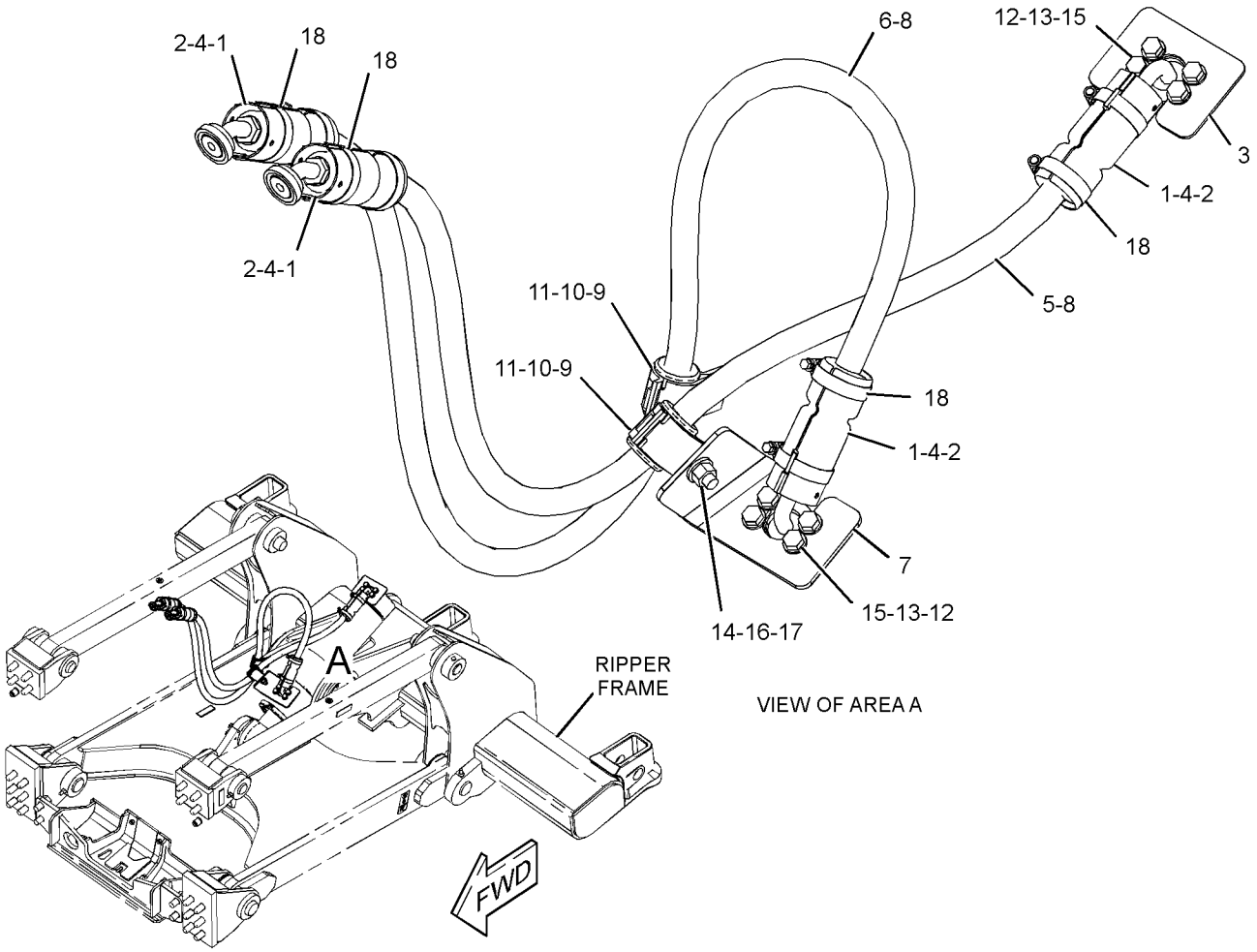

GRAPHIC #1 **<END>** g03582395

398-4498 LINES GP-RIPPER

S/N: PPP1-UP; SSS1-UP; TTT1-UP
PART OF 398-4292 HYDRAULIC AR
AN ATTACHMENT

SMCS-5057, 5352, 5356 **i06219023**

NOTE	REF NO	GRAPHIC REF	PART NUMBER	QTY	PART NAME 1 2 3 4 5 6 (PRODUCT LEVEL)	SEE PAGE
	1	1	**217-6887**	1	MANIFOLD	
I	2	1	**426-2472**	1	HOSE AS	
I	3	1	**426-2473**	1	HOSE AS	
	4	1	**4J-0520**	2	SEAL-O-RING	
	5	1	**4J-5267**	4	SEAL-O-RING	
	6	1	**5H-4018**	2	COVER	
	7	1	**7G-3832**	1	GROMMET	
	8	1	**7G-3833**	1	CLIP (TAB)	
	9	1	**7G-3834**	1	CLIP (SLOT)	
	10	1	**8C-3205**	8	FLANGE-HALF	
	11	1	**8T-4121**	20	WASHER-HARD (11X21X2.5-MM THK)	
M	12	1	**8T-4136**	4	BOLT (M10X1.5X25-MM)	
M	13	1	**8T-4196**	16	BOLT (M10X1.5X35-MM)	
	14	1	**8T-4223**	2	WASHER-HARD (13.5X25.5X3-MM THK)	
M	15	1	**8T-4956**	2	BOLT (M12X1.75X35-MM)	

I - REFER TO HYDRAULIC INFORMATION SYSTEM
M - METRIC PART

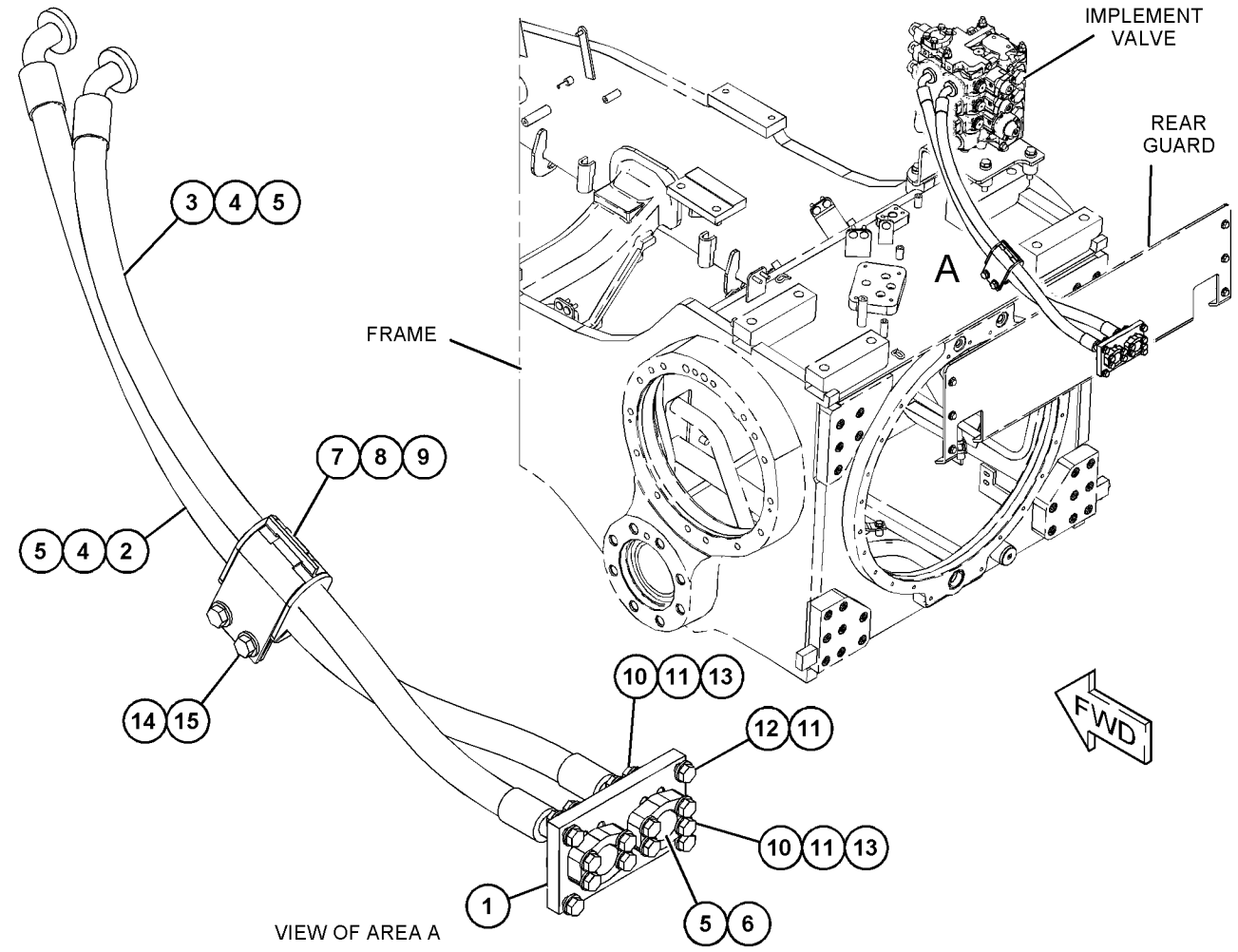

GRAPHIC #1 **<END>** g03861166

389-6159 LINES GP-TILT CYLINDER

S/N: TTT1-UP

PART OF 389-6131 INSTALLATION AR-BULLDOZER

AN ATTACHMENT

SMCS-5057, 5104

i05628073

NOTE	REF NO	GRAPHIC REF	PART NUMBER	QTY	PART NAME 1 2 3 4 5 6 (PRODUCT LEVEL)	SEE PAGE
	1	1	**3Y-5405**	2	RUBBER	
I	2	1	**9Z-8212**	1	HOSE AS	
	3	1	**145-5181**	4	SPACER (13.5X25X12-MM THK)	
I	4	1	**177-7983**	1	HOSE AS	
	5	1	**213-2282**	2	GUARD	
I	6	1	**308-6038**	1	HOSE AS	
I	7	1	**308-6039**	1	HOSE AS	
	8	1	**4J-5267**	4	SEAL-O-RING	
	9	1	**4T-1563**	1	GUARD AS	
	10	1	**6V-8398**	4	SEAL-O-RING	
	11	1	**6V-8981**	2	ELBOW	
	12	1	**6V-9169**	2	NUT (13/16-16-THD)	
	13	1	**8C-3205**	4	FLANGE-HALF	
	14	1	**8T-4121**	8	WASHER-HARD (11X21X2.5-MM THK)	
M	15	1	**8T-4139**	4	BOLT (M12X1.75X30-MM)	
M	16	1	**8T-4196**	8	BOLT (M10X1.5X35-MM)	
	17	1	**8T-4223**	4	WASHER-HARD (13.5X25.5X3-MM THK)	
M	18	1	**8T-4956**	4	BOLT (M12X1.75X35-MM)	

I - REFER TO HYDRAULIC INFORMATION SYSTEM
M - METRIC PART

389-6159 **LINES GP-TILT CYLINDER (*contd.*)** **i05628073**

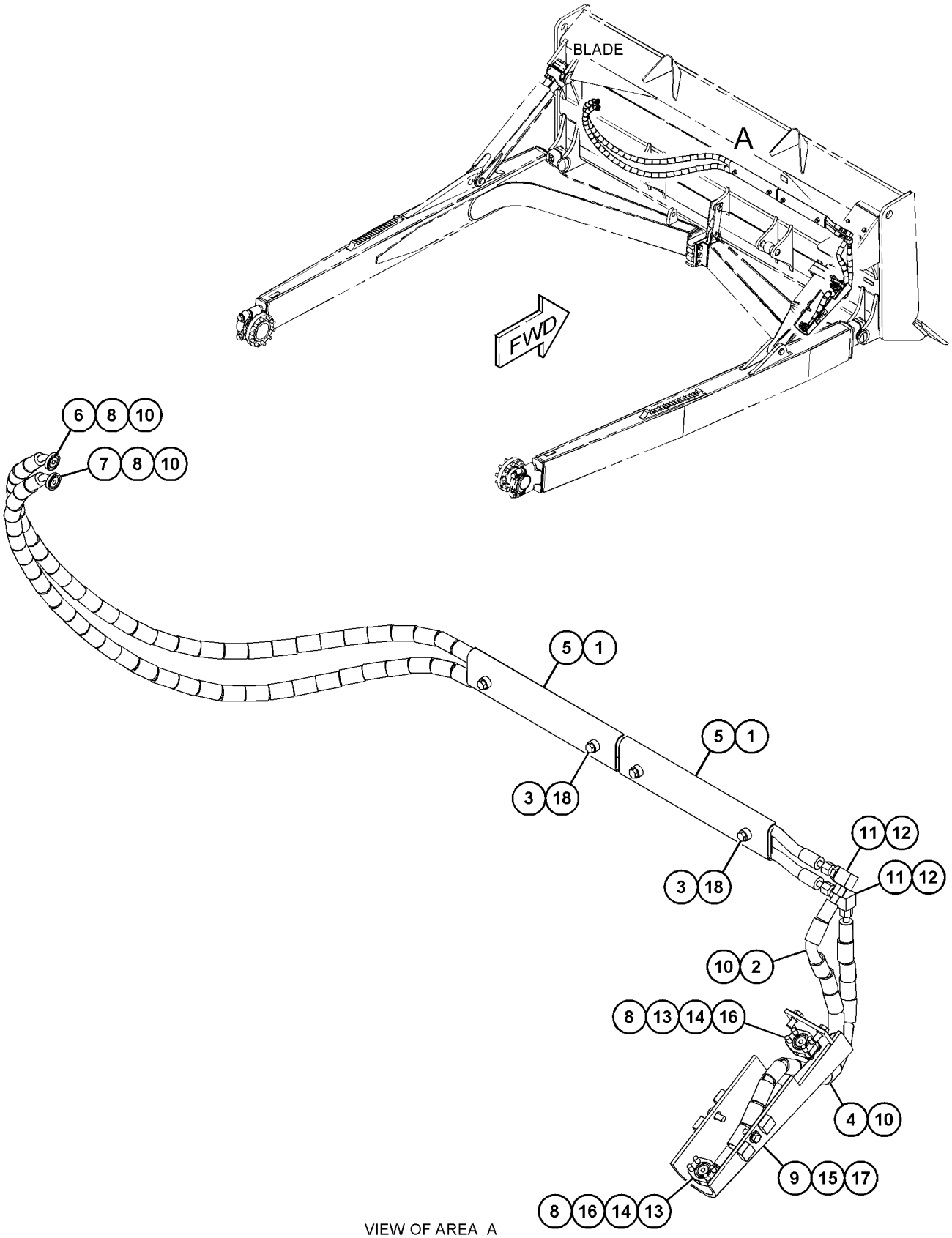

VIEW OF AREA A

GRAPHIC #1

<END>

g03581903

391-2580 LINES GP-TILT CYLINDER

S/N: SSS1-UP

PART OF 389-6128 INSTALLATION AR-BULLDOZER

AN ATTACHMENT

SMCS-5057, 5104

i05628029

NOTE	REF NO	GRAPHIC REF	PART NUMBER	QTY	PART NAME 1 2 3 4 5 6 (PRODUCT LEVEL)	SEE PAGE
	1	1	**4T-1563**	1	GUARD AS	
I	2	1	**7T-6934**	1	HOSE AS	
	3	1	**145-5181**	4	SPACER (13.5X25X12-MM THK)	
I	4	1	**168-2599**	1	HOSE AS	
	5	1	**213-2282**	2	GUARD	
I	6	1	**308-6024**	1	HOSE AS	
I	7	1	**308-6025**	1	HOSE AS	
	8	1	**3Y-5405**	2	RUBBER	
	9	1	**4J-5267**	4	SEAL-O-RING	
	10	1	**6V-8398**	4	SEAL-O-RING	
	11	1	**6V-8981**	2	ELBOW	
	12	1	**6V-9169**	2	NUT (13/16-16-THD)	
	13	1	**8C-3205**	4	FLANGE-HALF	
	14	1	**8T-4121**	8	WASHER-HARD (11X21X2.5-MM THK)	
M	15	1	**8T-4139**	4	BOLT (M12X1.75X30-MM)	
M	16	1	**8T-4196**	8	BOLT (M10X1.5X35-MM)	
	17	1	**8T-4223**	4	WASHER-HARD (13.5X25.5X3-MM THK)	
M	18	1	**8T-4956**	4	BOLT (M12X1.75X35-MM)	

I - REFER TO HYDRAULIC INFORMATION SYSTEM
M - METRIC PART

391-2580 **LINES GP-TILT CYLINDER (*contd.*)** **i05628029**

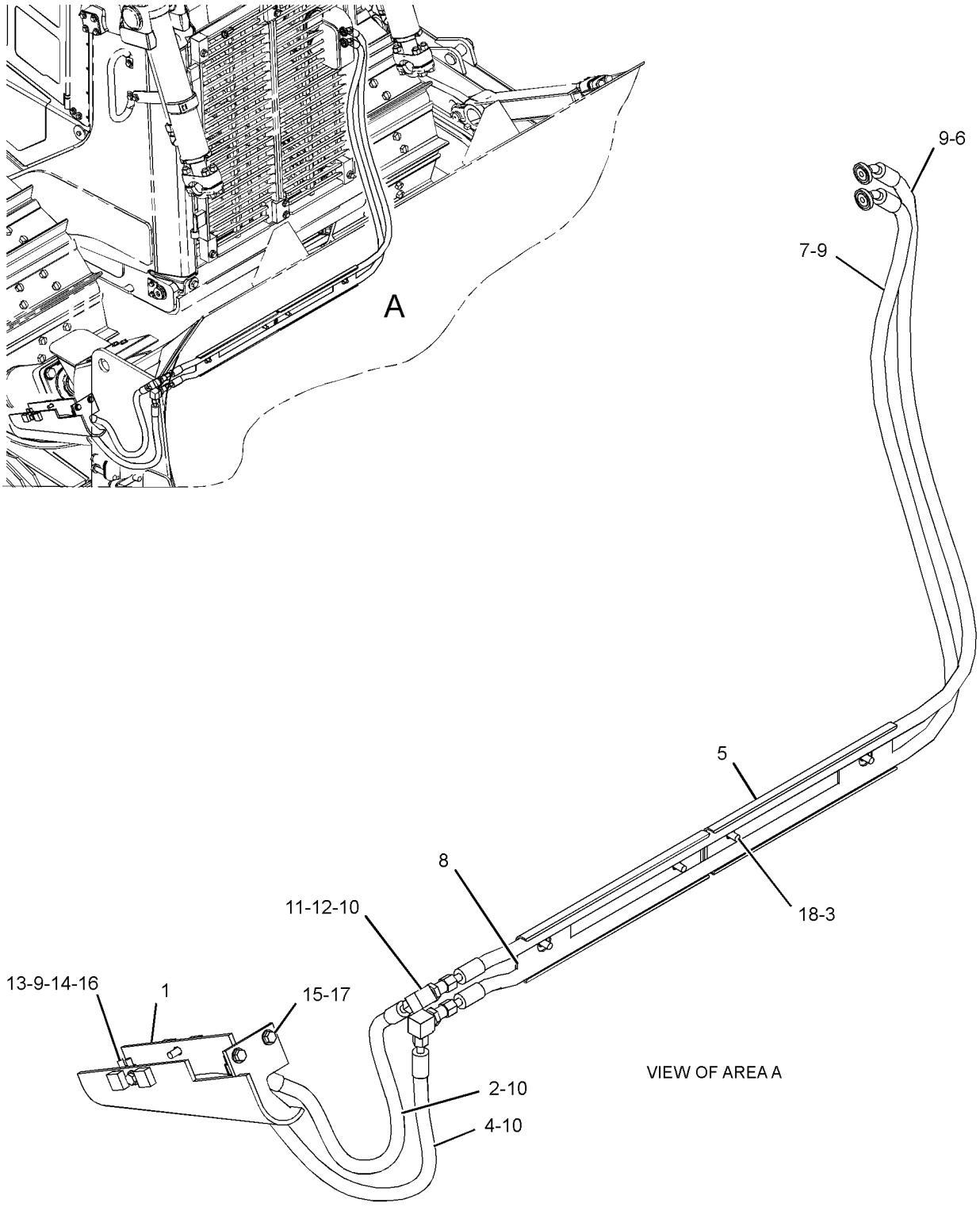

GRAPHIC #1 **<END>** g03579038

391-2581 LINES GP-TILT CYLINDER

S/N: TTT1-UP

PART OF 389-6129 INSTALLATION AR-BULLDOZER

AN ATTACHMENT

SMCS-5057, 5104

i05628071

NOTE	REF NO	GRAPHIC REF	PART NUMBER	QTY	PART NAME 1 2 3 4 5 6 (PRODUCT LEVEL)	SEE PAGE
	1	1	**3Y-5405**	2	RUBBER	
I	2	1	**7T-6934**	1	HOSE AS	
	3	1	**145-5181**	4	SPACER (13.5X25X12-MM THK)	
I	4	1	**168-2599**	1	HOSE AS	
	5	1	**213-2282**	2	GUARD	
I	6	1	**308-6022**	1	HOSE AS	
I	7	1	**308-6023**	1	HOSE AS	
	8	1	**4J-5267**	4	SEAL-O-RING	
	9	1	**4T-1563**	1	GUARD AS	
	10	1	**6V-8398**	4	SEAL-O-RING	
	11	1	**6V-8981**	2	ELBOW	
	12	1	**6V-9169**	2	NUT (13/16-16-THD)	
	13	1	**8C-3205**	4	FLANGE-HALF	
	14	1	**8T-4121**	8	WASHER-HARD (11X21X2.5-MM THK)	
M	15	1	**8T-4139**	4	BOLT (M12X1.75X30-MM)	
M	16	1	**8T-4196**	8	BOLT (M10X1.5X35-MM)	
	17	1	**8T-4223**	4	WASHER-HARD (13.5X25.5X3-MM THK)	
M	18	1	**8T-4956**	4	BOLT (M12X1.75X35-MM)	

I - REFER TO HYDRAULIC INFORMATION SYSTEM
M - METRIC PART

391-2581 **LINES GP-TILT CYLINDER (*contd.*)** **i05628071**

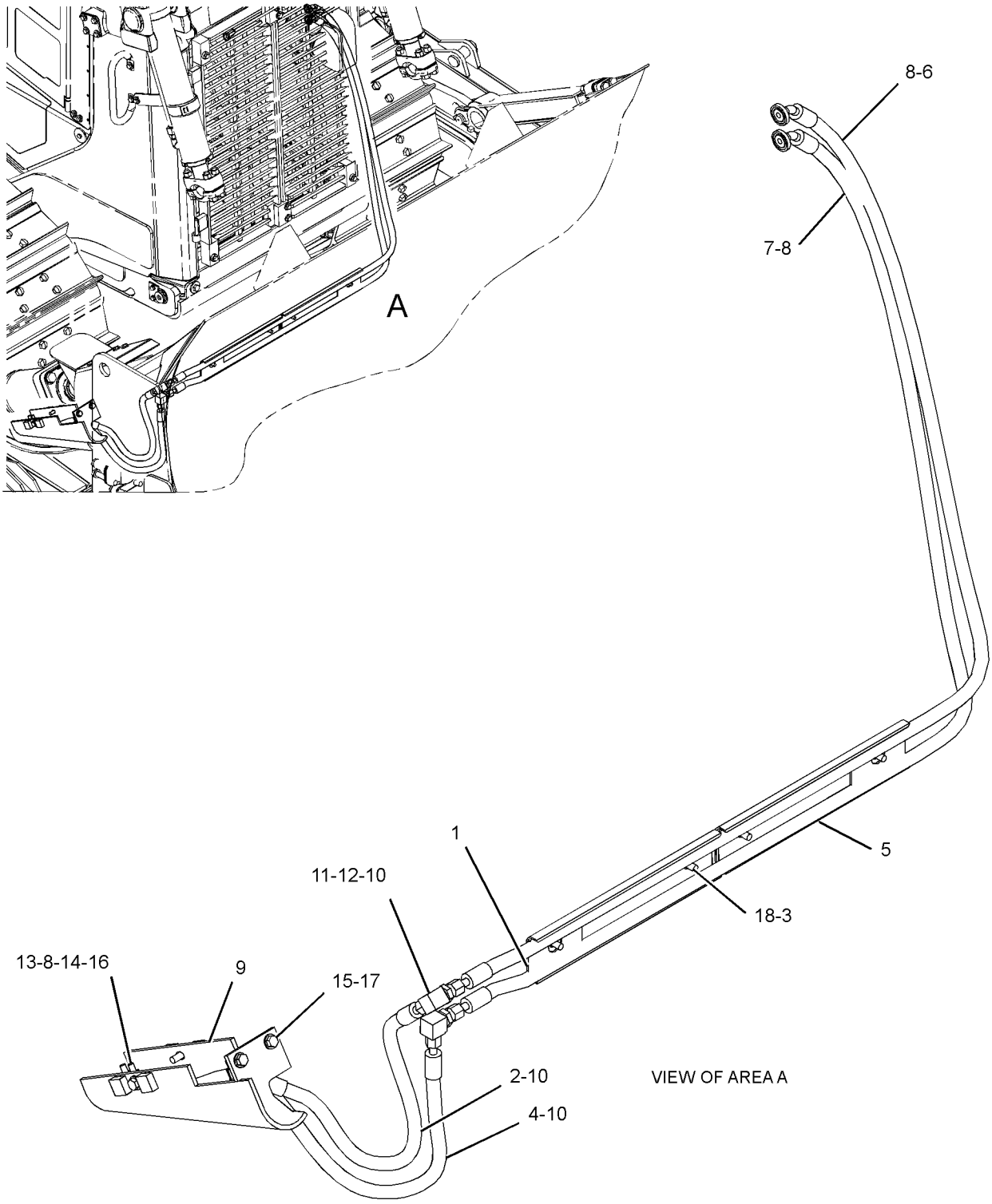

GRAPHIC #1 **<END>** g03580603

391-2583 LINES GP-TILT CYLINDER

S/N: SSS1-UP; TTT1-UP

PART OF 389-6133, 389-6134 INSTALLATION AR-BULLDOZER

AN ATTACHMENT

SMCS-5057, 5104

i05628072

NOTE	REF NO	GRAPHIC REF	PART NUMBER	QTY	PART NAME 1 2 3 4 5 6 (PRODUCT LEVEL)	SEE PAGE
	1	1	**2P-6588**	2	HEAD-ADAPTER	
	2	1	**5S-8709**	1	GUARD-CENTER	
	3	1	**5S-8712**	6	BLOCK	
	4	1	**5S-8765**	1	GUARD (RH)	
	5	1	**5S-8766**	1	GUARD (LH)	
	6	1	**6Y-0596**	1	GUARD AS (LH)	
	7	1	**6Y-0597**	1	GUARD AS (RH)	
I	8	1	**9W-9082**	2	HOSE AS	
I	9	1	**9W-9083**	2	HOSE AS	
	10	1	**245-4230**	1	BRACKET AS (RH)	
	11	1	**245-4231**	1	BRACKET AS (LH)	
	12	1	**251-9840**	2	TUBE AS	
	13	1	**251-9841**	1	TUBE AS	
I	14	1	**308-6026**	1	HOSE AS	
I	15	1	**308-6027**	1	HOSE AS	
	16	1	**3G-8047**	1	GROMMET	
	17	1	**3G-8054**	1	CLIP (TAB)	
	18	1	**3G-8057**	1	CLIP (SLOT)	
	19	1	**3K-0360**	2	SEAL-O-RING	
	20	1	**4J-5267**	12	SEAL-O-RING	
	21	1	**5P-7464**	2	CLIP (SLOT)	
	22	1	**5P-7465**	2	CLIP (TAB)	
	23	1	**6V-1249**	2	GROMMET (22-MM ID)	
	24	1	**6V-8398**	2	SEAL-O-RING	
	25	1	**6V-8625**	2	ELBOW	
	26	1	**8C-3205**	20	FLANGE-HALF	
	27	1	**8T-4121**	48	WASHER-HARD (11X21X2.5-MM THK)	
M	28	1	**8T-4139**	10	BOLT (M12X1.75X30-MM)	
M	29	1	**8T-4182**	6	BOLT (M10X1.5X45-MM)	
M	30	1	**8T-4195**	42	BOLT (M10X1.5X30-MM)	
	31	1	**8T-4223**	16	WASHER-HARD (13.5X25.5X3-MM THK)	
M	32	1	**8T-4910**	6	BOLT (M12X1.75X60-MM)	

I - REFER TO HYDRAULIC INFORMATION SYSTEM
M - METRIC PART

391-2583 **LINES GP-TILT CYLINDER (*contd.*)** **i05628072**

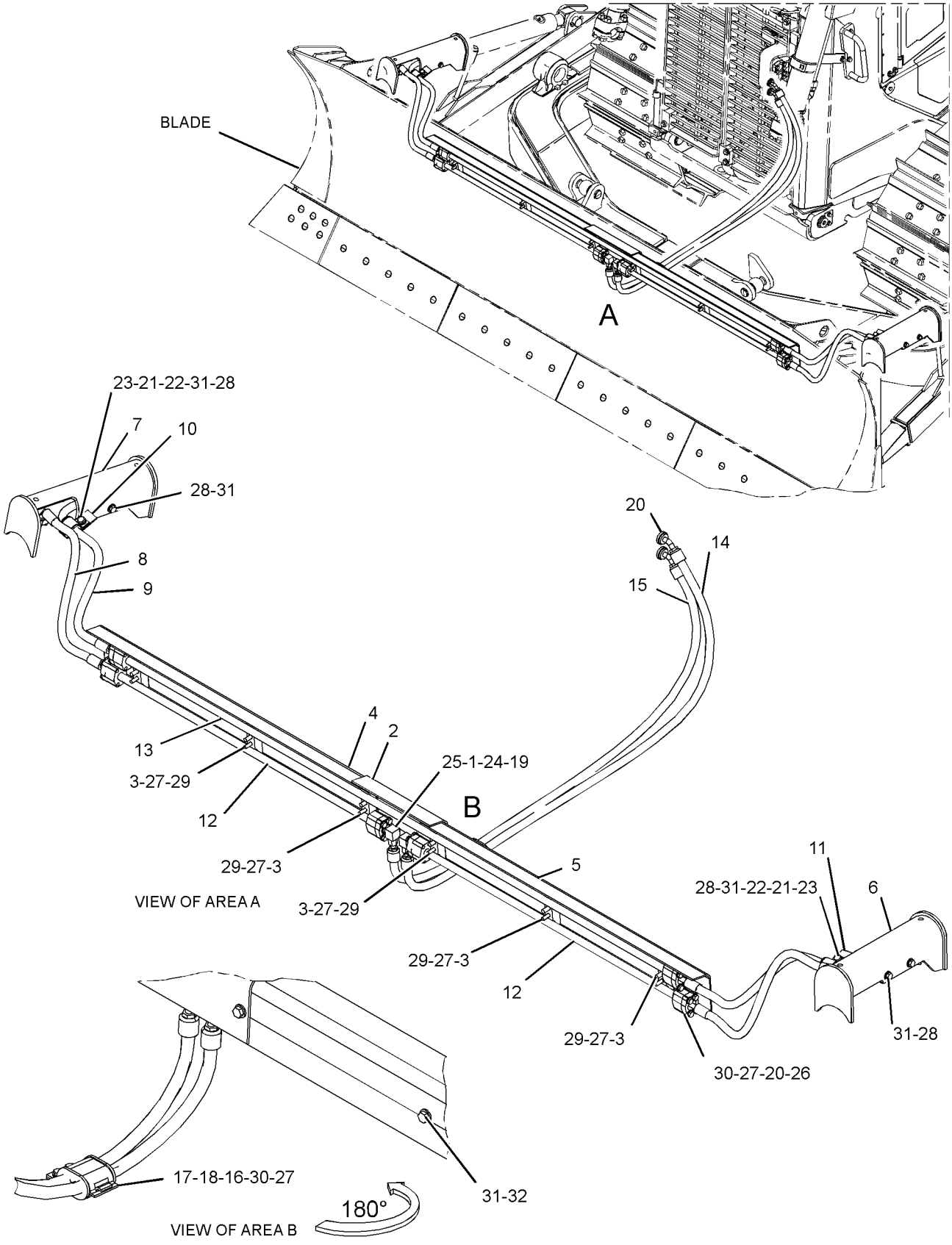

GRAPHIC #1 **<END>** g03581694

398-4492 LINES GP-TILT CYLINDER

S/N: PPP1-UP; SSS1-UP; TTT1-UP
PART OF 398-4286, 398-4331 HYDRAULIC AR
ALSO AN ATTACHMENT

SMCS-5057, 5104 **i06193601**

NOTE	REF NO	GRAPHIC REF	PART NUMBER	QTY	PART NAME 1 2 3 4 5 6 (PRODUCT LEVEL)	SEE PAGE
	1	1	**226-7906**	1	MANIFOLD	
I	2	1	**431-4828**	1	HOSE AS	
I	3	1	**431-4829**	1	HOSE AS	
	4	1	**431-4830**	2	CLAMP	
M	5	1	**344-5675**	10	NUT (M10X1.5-THD)	
	6	1	**3G-8047**	6	GROMMET	
	7	1	**3G-8054**	6	CLIP (TAB)	
	8	1	**3G-8057**	6	CLIP (SLOT)	
	9	1	**4J-0520**	2	SEAL-O-RING	
	10	1	**4J-5267**	4	SEAL-O-RING	
	11	1	**5H-4018**	2	COVER	
	12	1	**6D-1641**	1	CLIP	
	13	1	**8C-3205**	8	FLANGE-HALF	
	14	1	**8T-4121**	31	WASHER-HARD (11X21X2.5-MM THK)	
M	15	1	**8T-4136**	2	BOLT (M10X1.5X25-MM)	
M	16	1	**8T-4137**	1	BOLT (M10X1.5X20-MM)	
M	17	1	**8T-4182**	2	BOLT (M10X1.5X45-MM)	
M	18	1	**8T-4196**	16	BOLT (M10X1.5X35-MM)	

I - REFER TO HYDRAULIC INFORMATION SYSTEM
M - METRIC PART

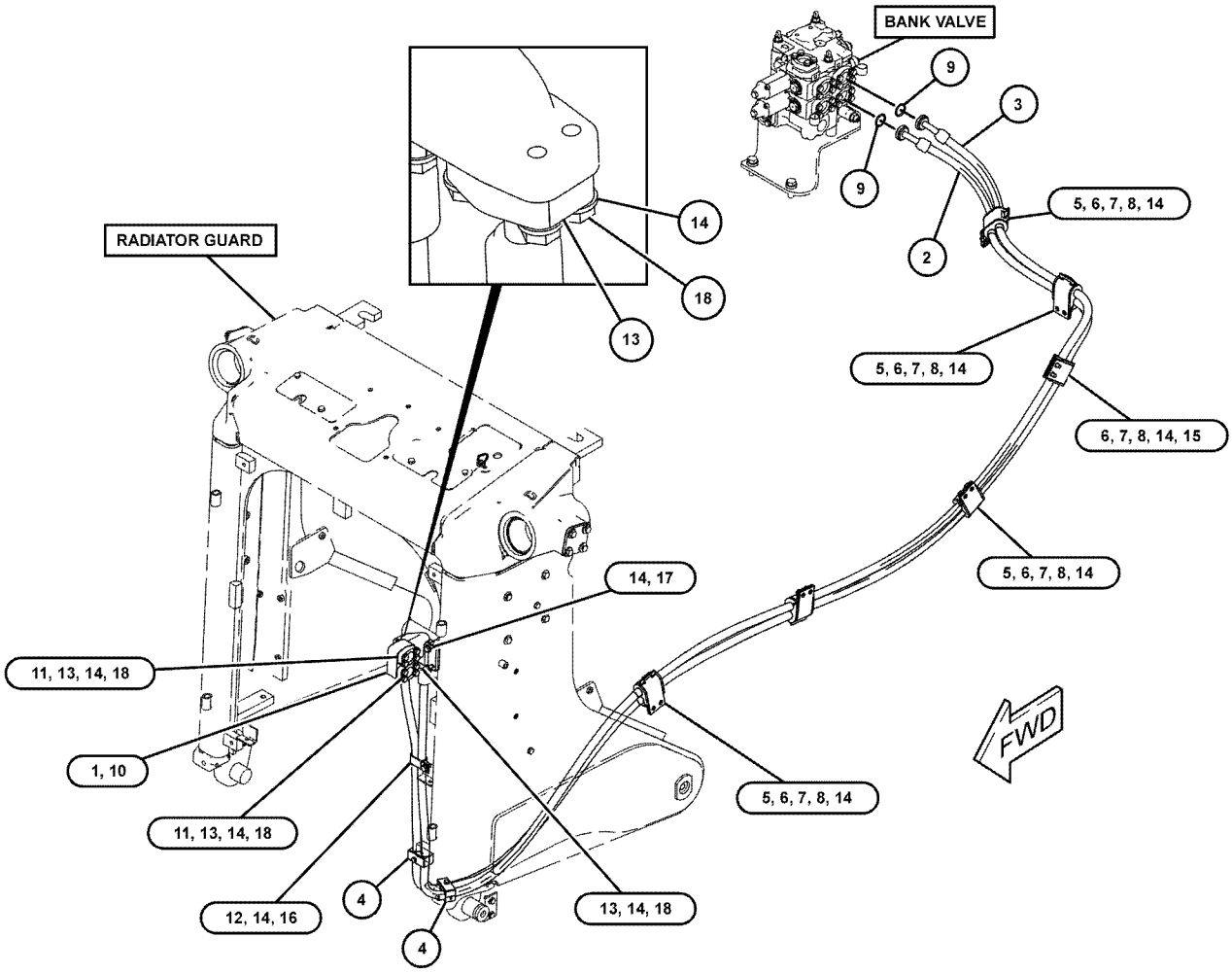

GRAPHIC #1 **<END>** g03853001

460-4938 LINES GP-TILT CYLINDER

S/N: PPP1-UP

PART OF 475-4154 INSTALLATION AR-BULLDOZER

AN ATTACHMENT

SMCS-5057, 5104 **i06155317**

NOTE	REF NO	GRAPHIC REF	PART NUMBER	QTY	PART NAME 1 2 3 4 5 6 (PRODUCT LEVEL)	SEE PAGE
	1		**334-1799**	1	GUARD AS	
	2		**442-8016**	1	COVER	
I	3		**464-7880**	1	HOSE AS	
I	4		**464-7881**	1	HOSE AS	
I	5		**475-3334**	1	HOSE AS	
I	6		**475-3335**	1	HOSE AS	
	7		*148-8376*	2	ELBOW AS	
					(EACH INCLUDES)	
			6V-8983	1	ELBOW	
			6V-9746	2	SEAL-O-RING	
	8		**2P-1293**	2	LOCKNUT (1-3/16-12-THD)	
M	9		**329-3356**	4	NUT (M12X1.75-THD)	
	10		**4J-5267**	4	SEAL-O-RING	
	11		**7G-3833**	4	CLIP (TAB)	
	12		**7G-3834**	4	CLIP (SLOT)	
	13		**8C-3174**	4	GROMMET	
	14		**8C-3205**	4	FLANGE-HALF	
	15		**8T-4121**	8	WASHER-HARD (11X21X2.5-MM THK)	
M	16		**8T-4139**	6	BOLT (M12X1.75X30-MM)	
M	17		**8T-4183**	6	BOLT (M12X1.75X40-MM)	
M	18		**8T-4196**	8	BOLT (M10X1.5X35-MM)	
	19		**8T-4223**	16	WASHER-HARD (13.5X25.5X3-MM THK)	

I - REFER TO HYDRAULIC INFORMATION SYSTEM
M - METRIC PART

460-4938 **LINES GP-TILT CYLINDER (*contd.*)** **i06155317**

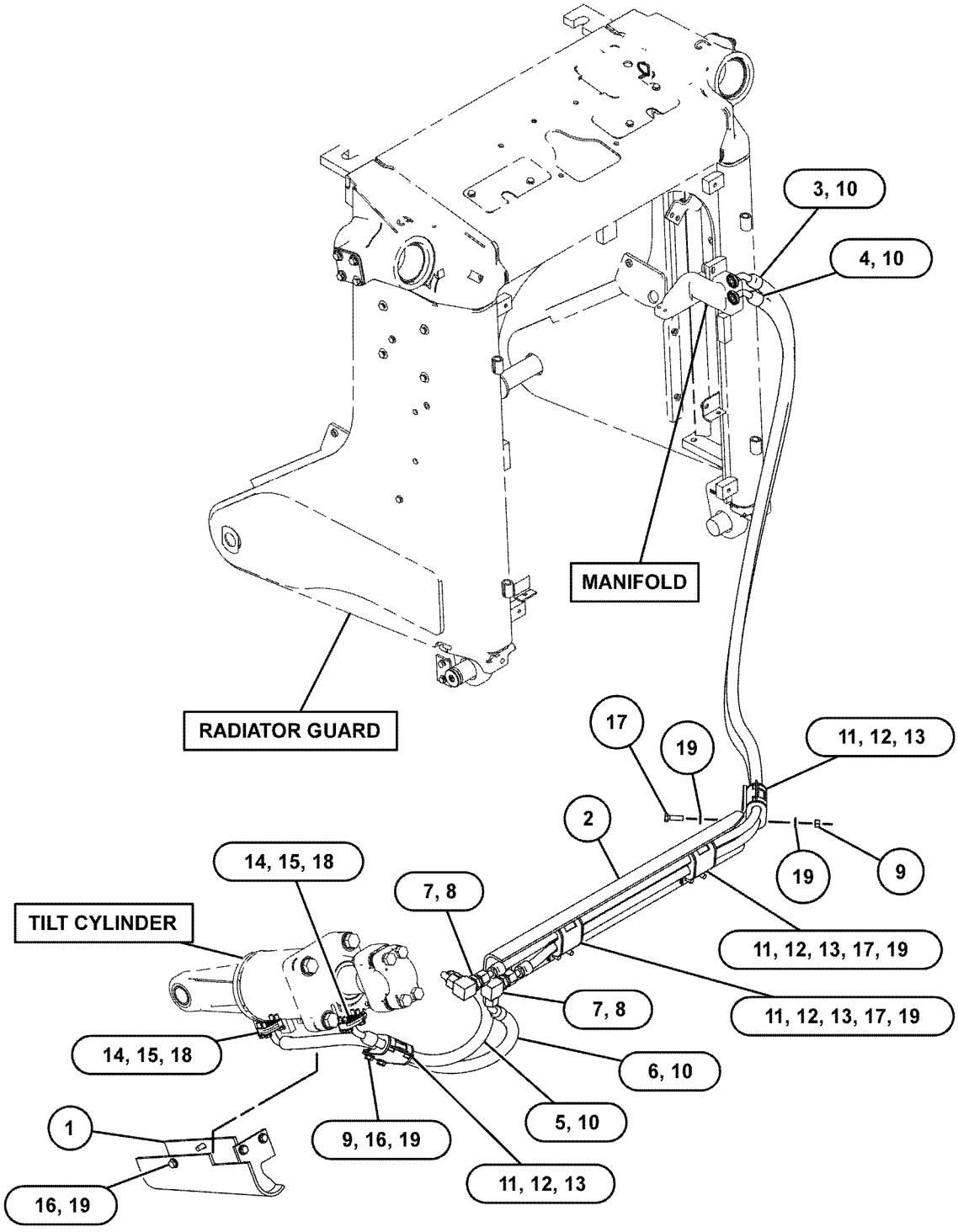

GRAPHIC #1 **<END>** g03837973

475-3336 LINES GP-TILT CYLINDER

S/N: PPP1-UP

PART OF 475-4155 INSTALLATION AR-BULLDOZER

AN ATTACHMENT

SMCS-5057, 5104 **i06219379**

NOTE	REF NO	GRAPHIC REF	PART NUMBER	QTY	PART NAME 1 2 3 4 5 6 (PRODUCT LEVEL)	SEE PAGE
	1	1	**334-1799**	1	GUARD AS	
	2	1	**442-8016**	1	COVER	
I	3	1	**475-3337**	1	HOSE AS	
I	4	1	**475-3338**	1	HOSE AS	
I	5	1	**475-3339**	1	HOSE AS	
I	6	1	**475-3340**	1	HOSE AS	
	7	1	*148-8376*	2	ELBOW AS	
					(EACH INCLUDES)	
		1	**6V-8983**	1	ELBOW	
		1	**6V-9746**	2	SEAL-O-RING	
	8	1	**2P-1293**	2	LOCKNUT (1-3/16-12-THD)	
M	9	1	**329-3356**	4	NUT (M12X1.75-THD)	
	10	1	**4J-5267**	4	SEAL-O-RING	
	11	1	**7G-3833**	4	CLIP (TAB)	
	12	1	**7G-3834**	4	CLIP (SLOT)	
	13	1	**8C-3174**	4	GROMMET	
	14	1	**8C-3205**	4	FLANGE-HALF	
	15	1	**8T-4121**	8	WASHER-HARD (11X21X2.5-MM THK)	
M	16	1	**8T-4139**	6	BOLT (M12X1.75X30-MM)	
M	17	1	**8T-4183**	6	BOLT (M12X1.75X40-MM)	
M	18	1	**8T-4196**	8	BOLT (M10X1.5X35-MM)	
	19	1	**8T-4223**	16	WASHER-HARD (13.5X25.5X3-MM THK)	

I - REFER TO HYDRAULIC INFORMATION SYSTEM
M - METRIC PART

475-3336 **LINES GP-TILT CYLINDER (*contd.*)** **i06219379**

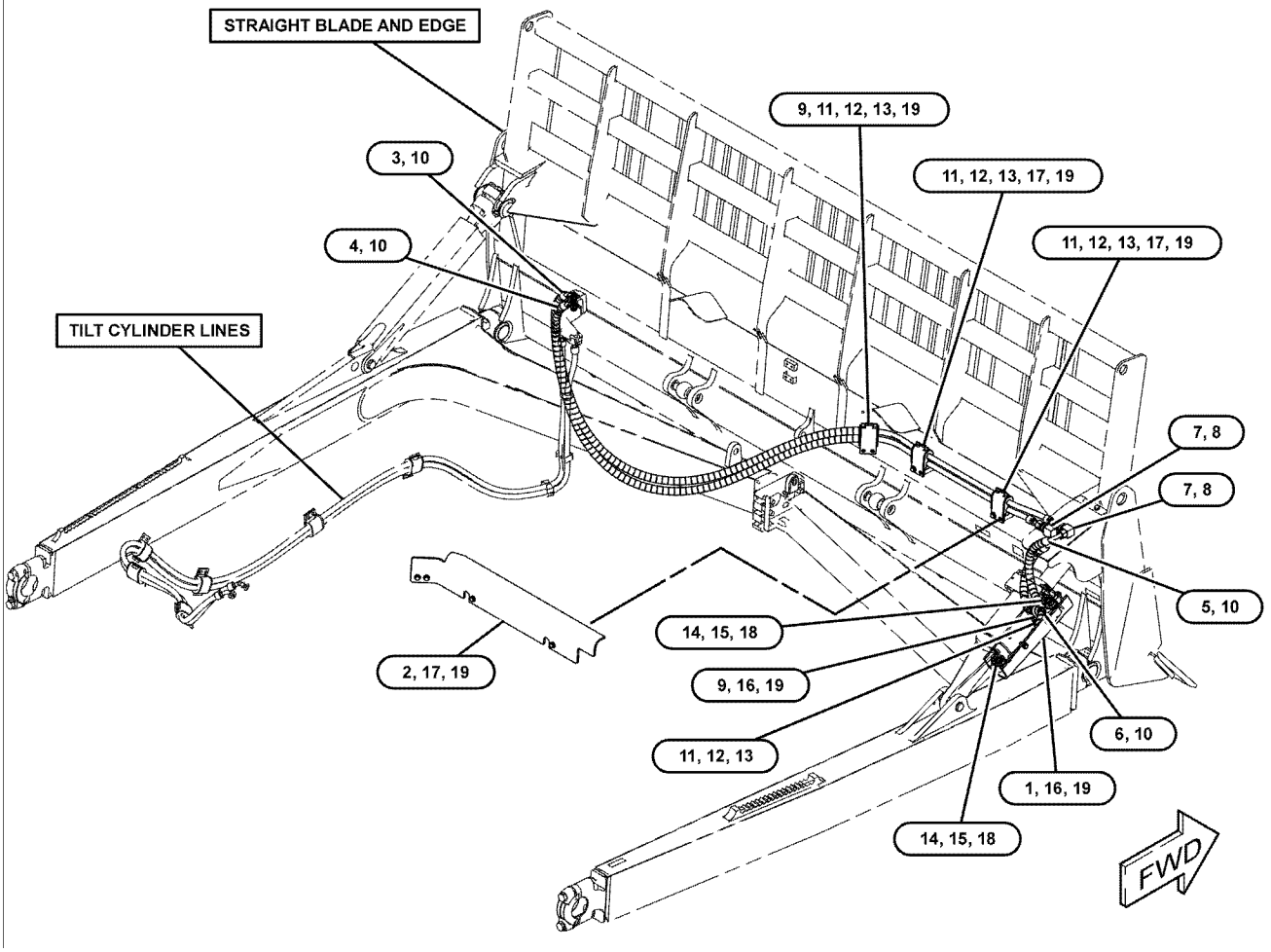

GRAPHIC #1 **<END>** g03862382

226-4751 MANIFOLD GP-CONTROL

S/N: PPP1-UP; SSS1-UP; TTT1-UP
PART OF 398-4497, 398-4505 LINES GP-PILOT
AN ATTACHMENT

SMCS-5264 **i05552873**

NOTE	REF NO	GRAPHIC REF	PART NUMBER	QTY	PART NAME 1 2 3 4 5 6 (PRODUCT LEVEL)	SEE PAGE
Y	1	1	**158-9956**	1	VALVE GP-CHECK (PILOT PRESSURE SUPPLY)	626
Y	2	1	**170-3357**	1	VALVE GP-PRESSURE REDUCING (IMPLEMENT PILOT OIL)	640
Y	3	1	**225-8026**	1	VALVE GP-RELIEF (IMPLEMENT PILOT OIL)	648
Y	4	1	**201-0950**	1	VALVE GP-SOLENOID (HYDRAULIC LOCKOUT)	654
	5	1	**6E-5066**	1	SCREEN (IMPLEMENT PILOT OIL)	
	6	1	**9S-8002**	1	PLUG	
	7	1	**9S-8004**	1	PLUG	
	8	1	**3J-7354**	1	SEAL-O-RING	
	9	1	**3J-1907**	1	SEAL-O-RING	

Y - SEPARATE ILLUSTRATION

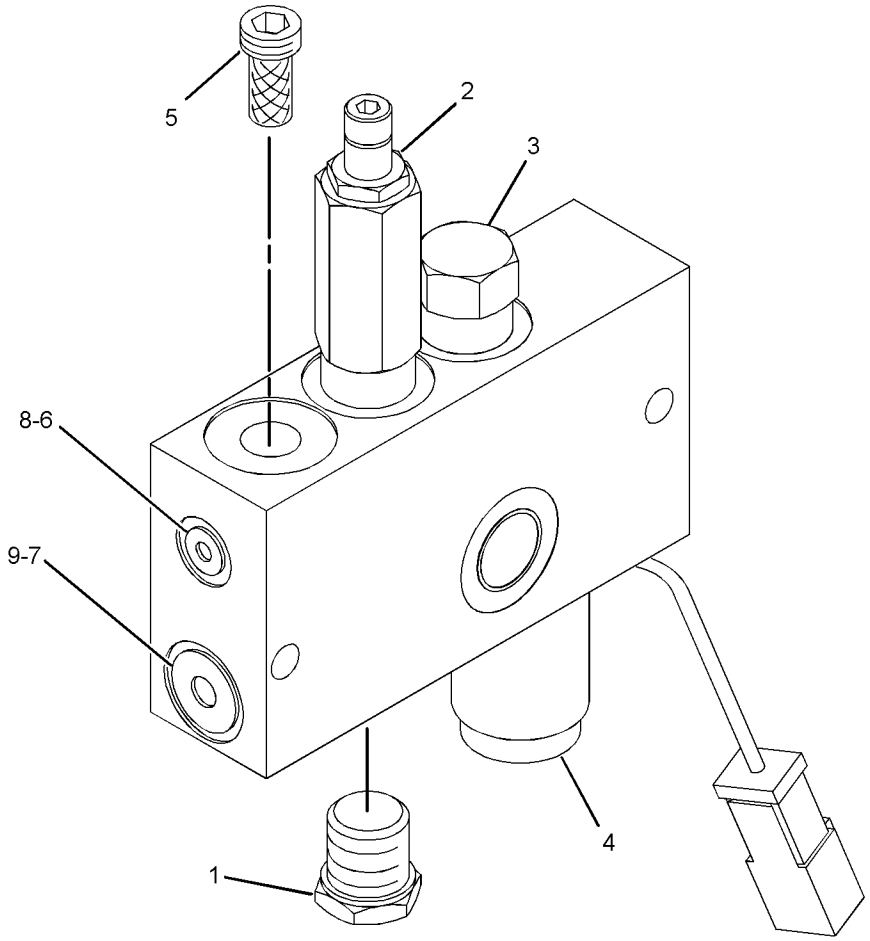

GRAPHIC #1 **<END>** g01205803

273-2156 MANIFOLD GP-VALVE

S/N: PPP1-UP; SSS1-UP; TTT1-UP
PART OF 269-8161 VALVE GP-BANK 2, 269-8160 VALVE GP-BANK 3
AN ATTACHMENT

SMCS-5264 **i06146535**

NOTE	REF NO	GRAPHIC REF	PART NUMBER	QTY	PART NAME 1 2 3 4 5 6 (PRODUCT LEVEL)	SEE PAGE
Y	1	1	**4T-4932**	1	VALVE GP-RELIEF (MAIN)	647
	3	1	**8C-3206**	2	FLANGE-HALF	
	4	1	**8T-4121**	4	WASHER-HARD (11X21X2.5-MM THK)	
M	5	1	**8T-4196**	4	BOLT (M10X1.5X35-MM)	
					PARTS SHOWN IN GRAPHIC(S) WITHOUT A REFERENCE NUMBER ARE NOT SERVICED SEPARATELY	

M - METRIC PART
Y - SEPARATE ILLUSTRATION

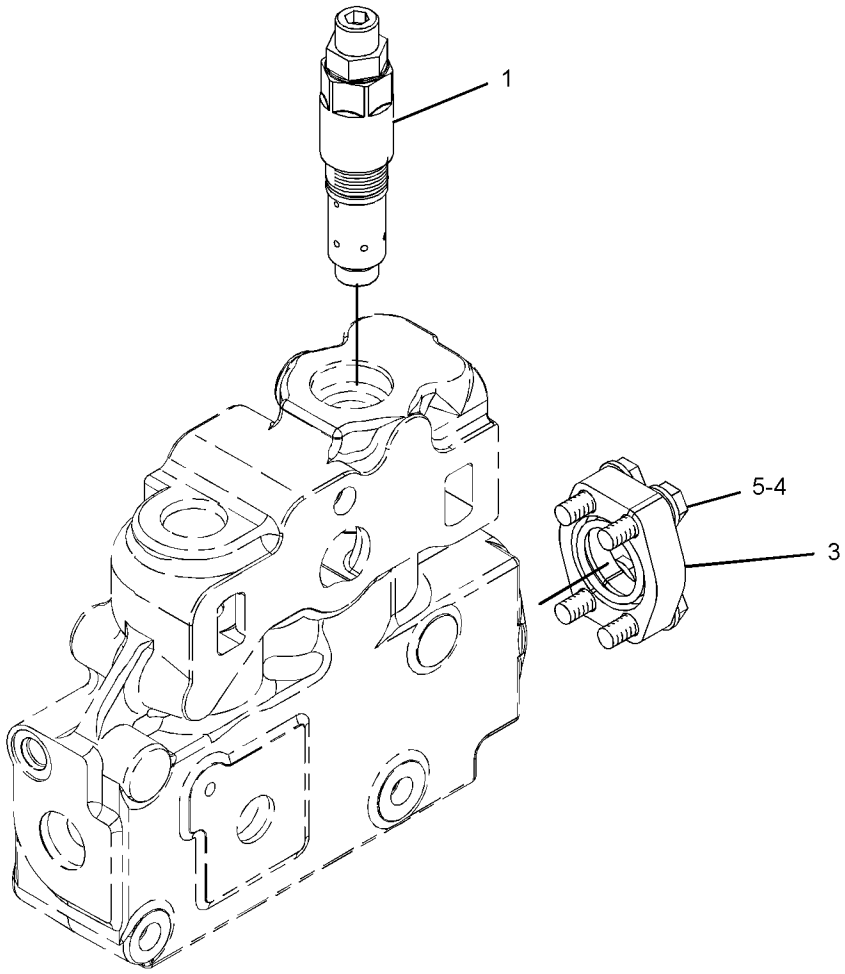

GRAPHIC #1 **<END>** g01357238

325-9776 MOTOR GP-PISTON—STEERING

S/N: PPP1-UP; SSS1-UP; TTT1-UP
PART OF 398-4286, 398-4331 HYDRAULIC AR
ALSO AN ATTACHMENT

SMCS-5058 **i06146540**

NOTE	REF NO	GRAPHIC REF	PART NUMBER	QTY	PART NAME 1 2 3 4 5 6 (PRODUCT LEVEL)	SEE PAGE
Y	1	1	**355-2410**	1	ROTATING GP-MOTOR (STEERING)	611
	2	1	**252-9203**	1	HEAD	
M	3	1	**8T-3957**	6	BOLT-SOCKET HEAD (M12X1.75X30-MM)	
	4	1	**8T-4231**	1	DOWEL	
	5	1	**2H-3934**	1	SEAL-O-RING	

M - METRIC PART
Y - SEPARATE ILLUSTRATION

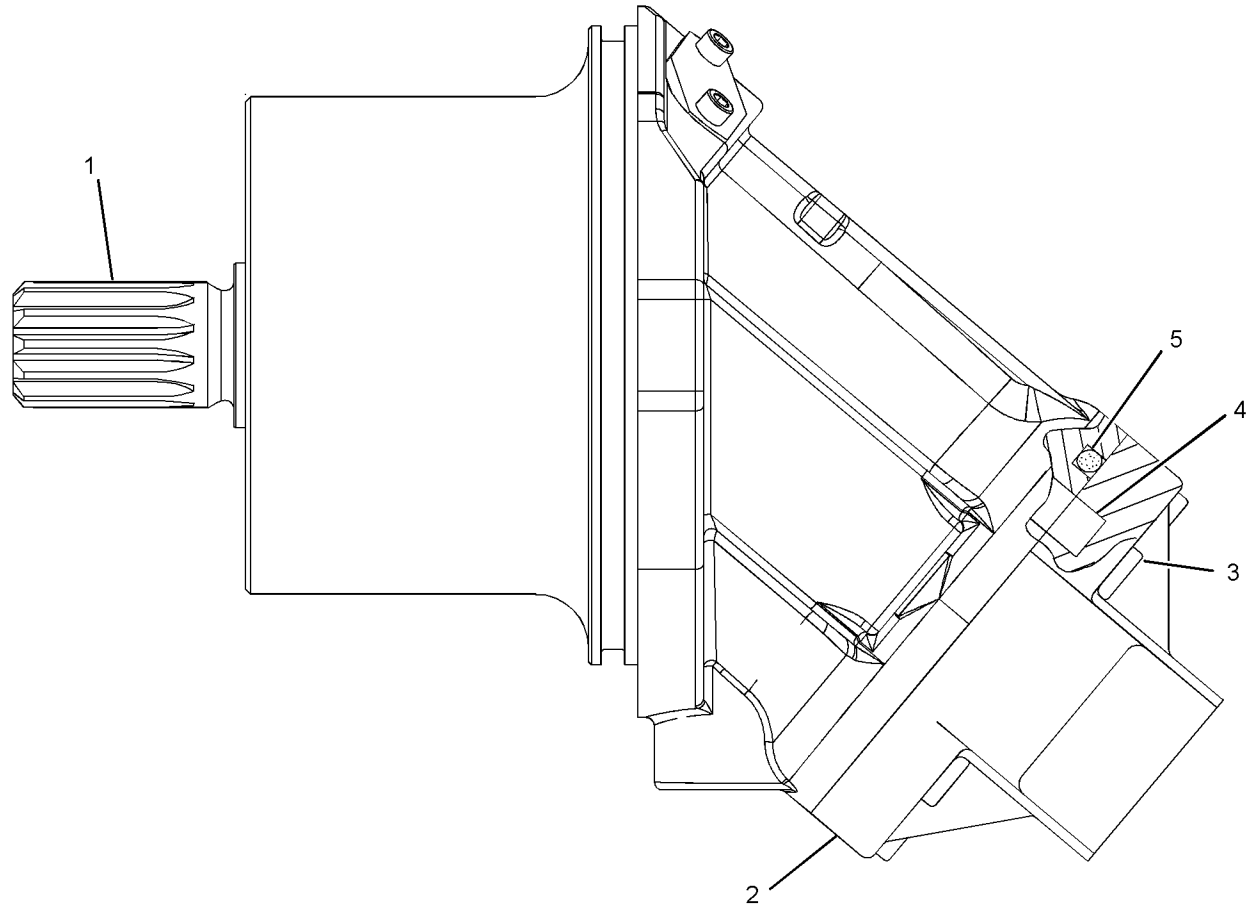

GRAPHIC #1 **<END>** g02275819

362-4548 MOUNTING GP-CYLINDER

S/N: PPP1-UP; SSS1-UP; TTT1-UP
PART OF 398-4512, 398-4530 CYLINDER AR-LIFT
ALSO AN ATTACHMENT

SMCS-7562 **i06135719**

NOTE	REF NO	GRAPHIC REF	PART NUMBER	QTY	PART NAME 1 2 3 4 5 6 (PRODUCT LEVEL)	SEE PAGE
	1	1	**3B-8489**	2	FITTING-GREASE (1/8-27 PTF)	
	2	1	**4T-4875**	2	PIN	
	3	1	**5P-2671**	2	SEAL-LIP TYPE	
	4	1	**9J-4782**	2	PROTECTOR	
	5	1	**9N-4233**	2	STRAP	
	6	1	*362-4549*	4	CAP AS	
					(EACH INCLUDES)	
		1	**3G-9405**	1	CAP AS	
	6A	1	**3G-9402**	1	BUSHING	
	7	1	**299-5344**	2	YOKE	
C	8	1	**6Y-9280**	2	CLAMP (TAB)	
C	9	1	**6Y-9281**	2	CLAMP (SLOT)	
	10	1	**5P-1076**	4	WASHER-HARD (13.5X30X4-MM THK)	
M	11	1	**7X-2557**	8	BOLT (M16X2X140-MM)	
C	12	1	**7X-7729**	2	WASHER (11X25X3-MM THK)	
C	13	1	**8T-4123**	2	WASHER (3.62X5.75X0.375-MM THK)	
CM	14	1	**8T-4137**	2	BOLT (M10X1.5X20-MM)	
M	15	1	**8T-4183**	2	BOLT (M12X1.75X40-MM)	
M	16	1	**329-3356**	2	NUT (M12X1.75-THD)	
CD	17	1	**5P-5908**		SEAL (0.35-M EACH)	

C - CHANGE FROM PREVIOUS TYPE
D - ORDER BY THE METER
M - METRIC PART

362-4548 **MOUNTING GP-CYLINDER (*contd.*)** **i06135719**

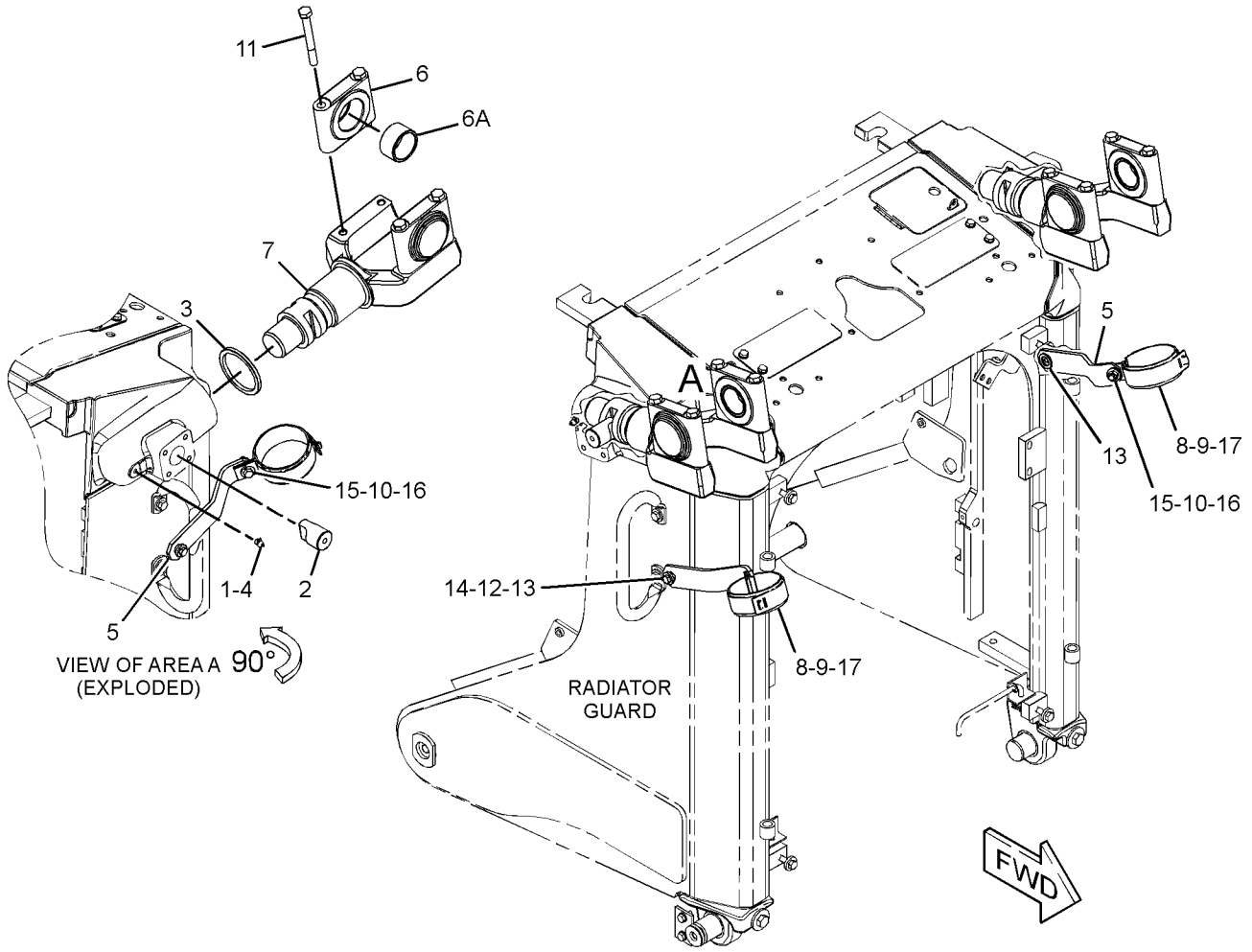

GRAPHIC #1 **<END>** g03324766

398-4488 PUMP & MOUNTING GP–IMPLEMENT

S/N: PPP1-UP; SSS1-UP; TTT1-UP
PART OF 398-4286, 398-4331 HYDRAULIC AR
ALSO AN ATTACHMENT

SMCS-5084 **i06193607**

NOTE	REF NO	GRAPHIC REF	PART NUMBER	QTY	PART NAME 1 2 3 4 5 6 (PRODUCT LEVEL)	SEE PAGE
Y	1	1	**476-6616**	1	PUMP GP-PISTON (IMPLEMENT)	609
	2	1	**5F-3106**	1	SEAL-O-RING	
M	3	1	**8T-7338**	2	BOLT (M16X2X45-MM)	
	4	1	**9X-8257**	2	WASHER (17.5X30X3.5-MM THK)	

M - METRIC PART
Y - SEPARATE ILLUSTRATION

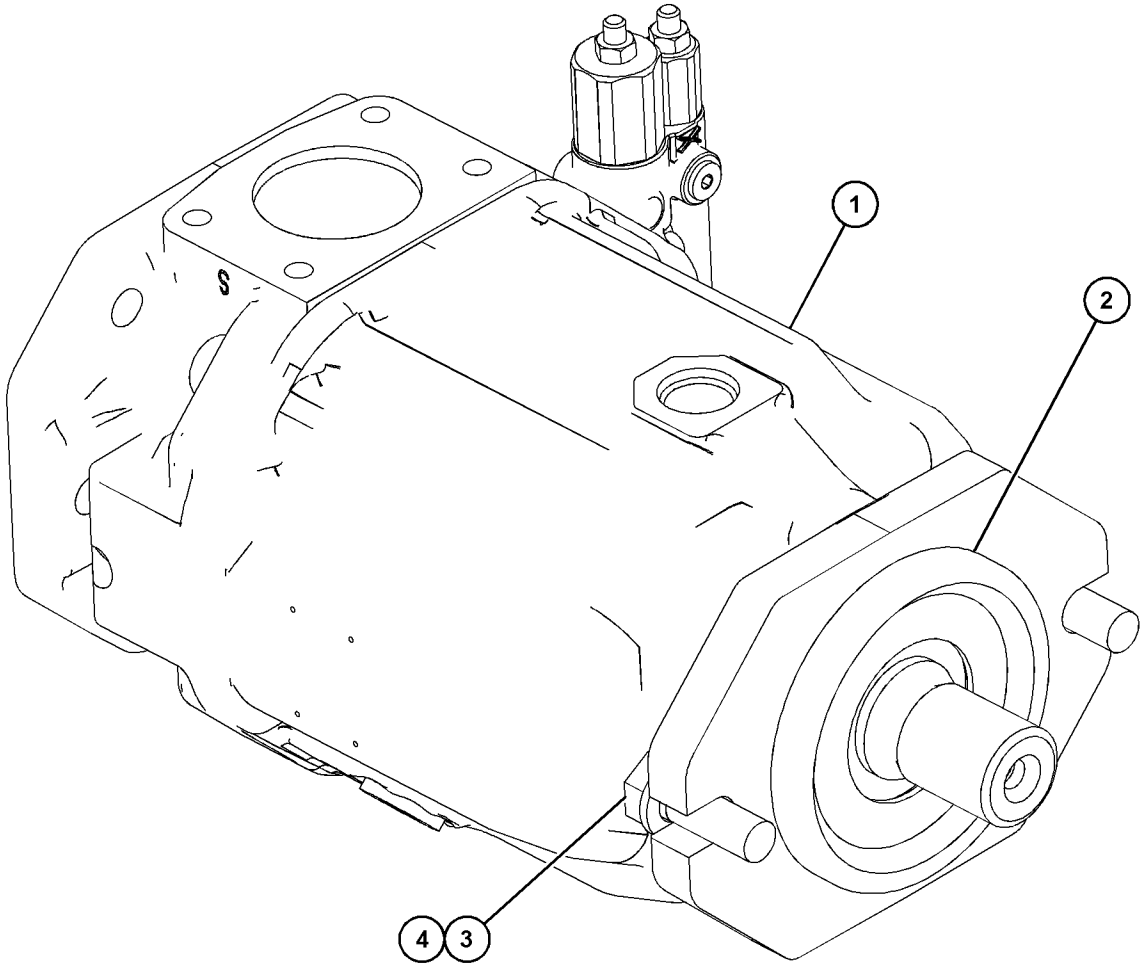

GRAPHIC #1 **<END>** g03851254

398-4499 PUMP & MOUNTING GP

S/N: PPP1-UP; SSS1-UP; TTT1-UP
PART OF 398-4286, 398-4331 HYDRAULIC AR
ALSO AN ATTACHMENT

SMCS-5084 **i06214942**

NOTE	REF NO	GRAPHIC REF	PART NUMBER	QTY	PART NAME 1 2 3 4 5 6 (PRODUCT LEVEL)	SEE PAGE
Y	1	1	**433-9811**	1	PUMP GP-PISTON (STEERING)	605
	2	1	**5F-3106**	1	SEAL-O-RING	
M	3	1	**8T-7338**	2	BOLT (M16X2X45-MM)	
	4	1	**9X-8257**	2	WASHER (17.5X30X3.5-MM THK)	

M - METRIC PART
Y - SEPARATE ILLUSTRATION

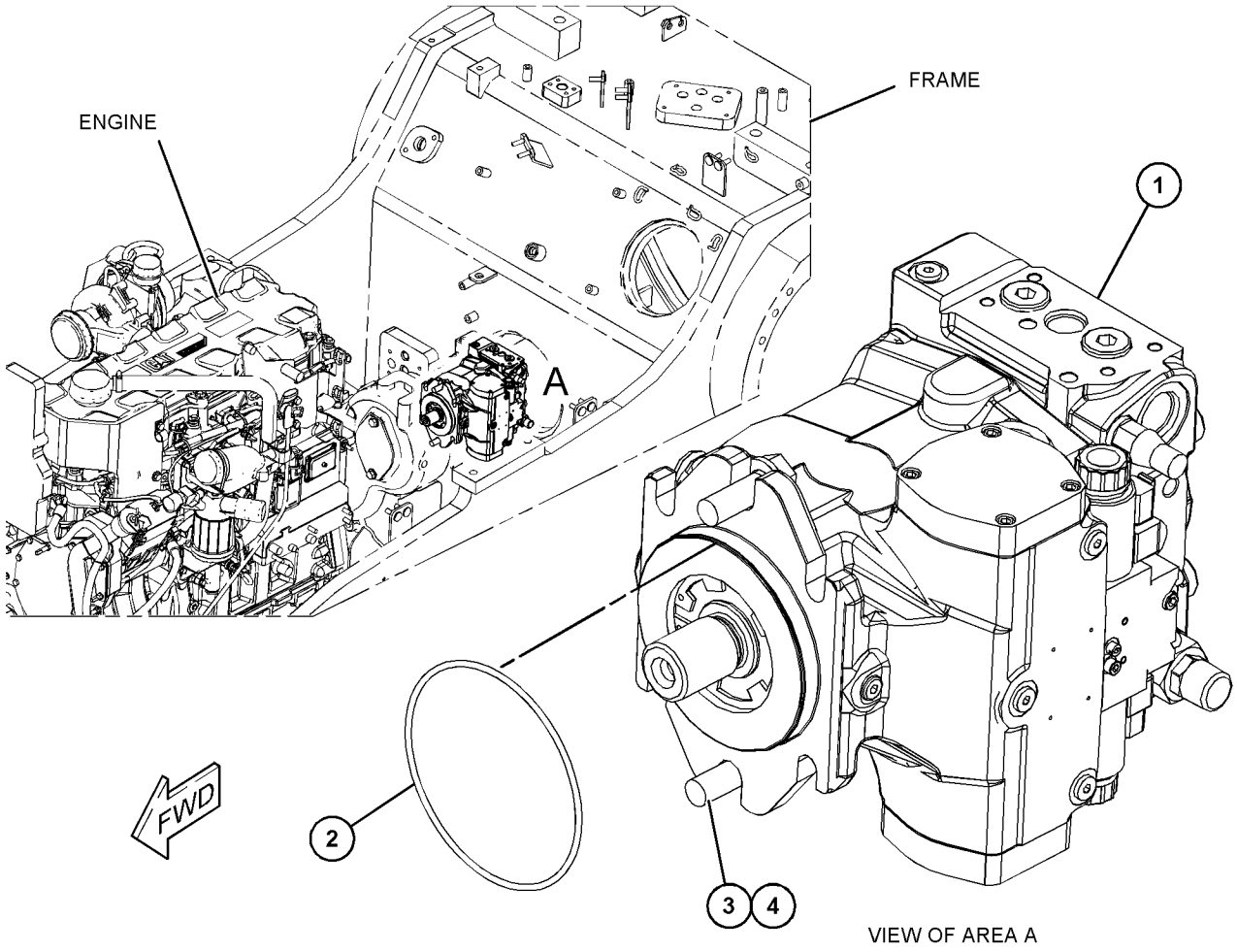

GRAPHIC #1 **<END>** g03858177

462-0673 PUMP GP-CHARGE–STEERING

S/N: PPP1-UP; SSS1-UP; TTT1-UP
PART OF 433-9811 PUMP GP-PISTON
ALSO AN ATTACHMENT

SMCS-3204 **i06215106**

NOTE	REF NO	GRAPHIC REF	PART NUMBER	QTY	PART NAME 1 2 3 4 5 6 (PRODUCT LEVEL)	SEE PAGE
	1	1	**462-0670**	1	SHAFT	
M	2	1	**6V-3938**	8	BOLT (M10X1.5X20-MM)	
	3	1	**8T-2150**	1	RING	
	4	1	**221-1489**	1	SEAL-O-RING	
	5	1	**199-3676**	1	RING-RETAINING	
	6	1	**462-0660**	1	SEAL-RING	
	7	1	**462-0460**	1	GEAR AS	
	8	1	**462-0502**	1	HOUSING	
	9	1	**462-0492**	1	BEARING-SLEEVE	
	10	1	**462-0501**	1	PLATE-WEAR	
	11	1	**447-7909**	2	PLUG	

M - METRIC PART

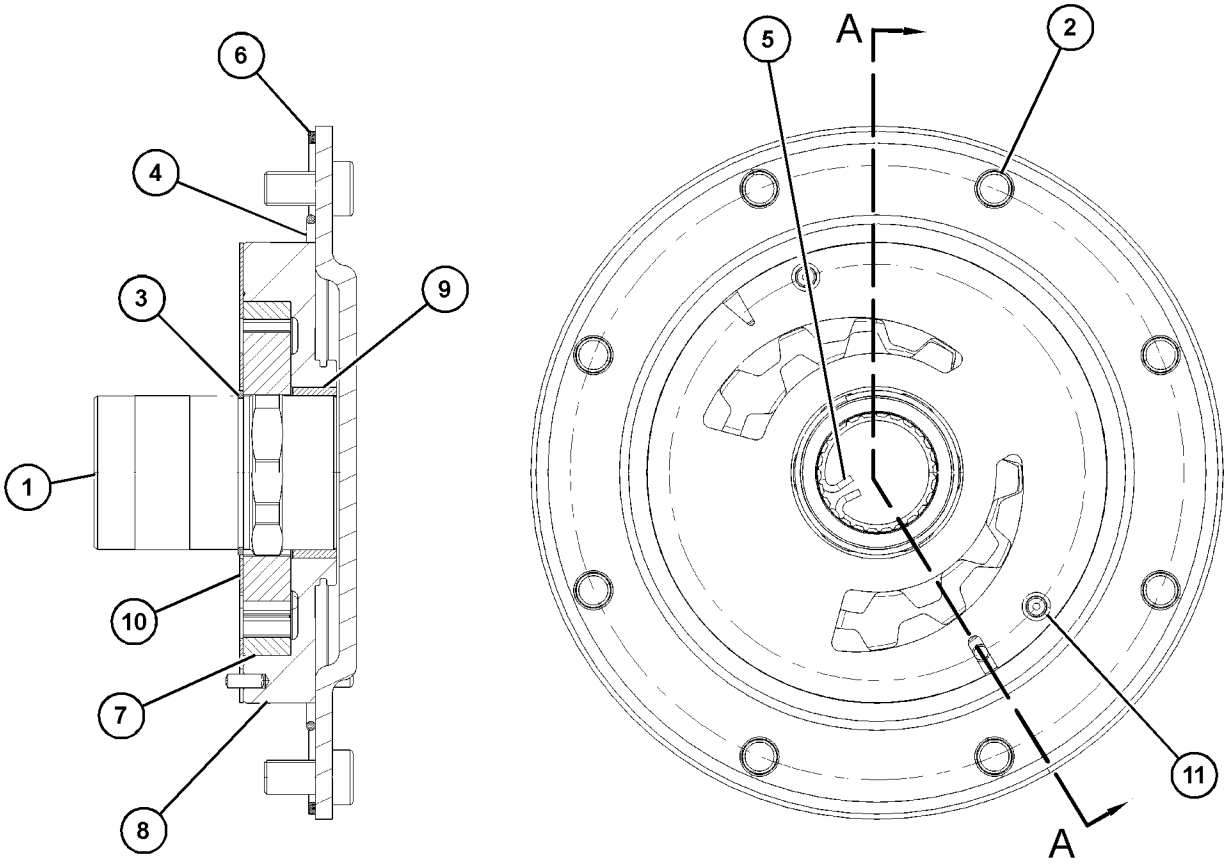

SECTION A-A

GRAPHIC #1 **<END>** g03859106

433-9811 PUMP GP-PISTON—STEERING

S/N: PPP1-UP; SSS1-UP; TTT1-UP
PART OF 398-4499 PUMP & MOUNTING GP
ALSO AN ATTACHMENT AND FIELD INSTALLATION

SMCS-5070 **i06214956**

NOTE	REF NO	GRAPHIC REF	PART NUMBER	QTY	PART NAME 1 2 3 4 5 6 (PRODUCT LEVEL)	SEE PAGE
Y	1	1	**462-0461**	1	ROTATING GP-PUMP	613
Y	2	1	**462-0496**	1	ACTUATOR GP-PUMP	545
Y	3	1	**462-0673**	1	PUMP GP-CHARGE (STEERING)	604
Y	4	1	**462-0698**	1	VALVE GP-PUMP CONTROL	642
Y	5	1	**462-0713**	1	VALVE GP-RELIEF (COLD START)	651
	6	1	**462-0497**	2	RING-GUIDE	
	7	1	**9S-8004**	8	PLUG	
	8	1	**3J-1907**	8	SEAL-O-RING	
	9	1	**9S-8007**	1	PLUG	
	10	1	**7J-0204**	1	SEAL-O-RING	
	11	1	**9S-8005**	2	PLUG-O-RING	
	12	1	**3K-0360**	2	SEAL-O-RING	
	13	1	**9S-8006**	1	PLUG	
	14	1	**2M-9780**	1	SEAL-O-RING	
	15	1	**462-0503**	1	BEARING-BUSHING	
	16	1	**462-0702**	1	BUSHING	
	17	1	**462-0492**	1	BEARING-SLEEVE	
	18	1	**382-9259**	3	FILTER (SCREEN)	
	19	1	**458-9684**	2	PIN	
	20	1	**458-9676**	2	VALVE GP-RELIEF	
					(EACH INCLUDES)	
		1	**6V-8399**	1	SEAL-O-RING	
		1	**033-6036**	1	SEAL-O-RING	
	21	1	**382-9244**	1	VALVE GP-RELIEF	
		1	**6V-5326**	1	SEAL-O-RING	
	22	1	**382-9245**	1	VALVE GP-RELIEF	
		1	**8U-6850**	1	SEAL-O-RING	
		1	**258-0144**	1	LOCKNUT-SCREW	
	23	1	**458-9679**	1	VALVE AS-RELIEF	
		1	**4J-5309**	1	SEAL-O-RING	
		1	**6V-5142**	1	SEAL-O-RING	
	24	1	**462-0703**	1	FLANGE-BEARING	
	25	1	**1J-2176**	1	SEAL-O-RING	
M	26	1	**8T-3957**	8	BOLT-SOCKET HEAD (M12X1.75X30-MM)	
	27	1	**462-0701**	2	PIN-CYLINDER	
	28	1	**462-0498**	2	KIT-SEAL	
					(INCLUDES CARRIER-SEAL & SEAL-O-RING)	

M - METRIC PART
Y - SEPARATE ILLUSTRATION

433-9811 **PUMP GP-PISTON (*contd.*)** **i06214956**

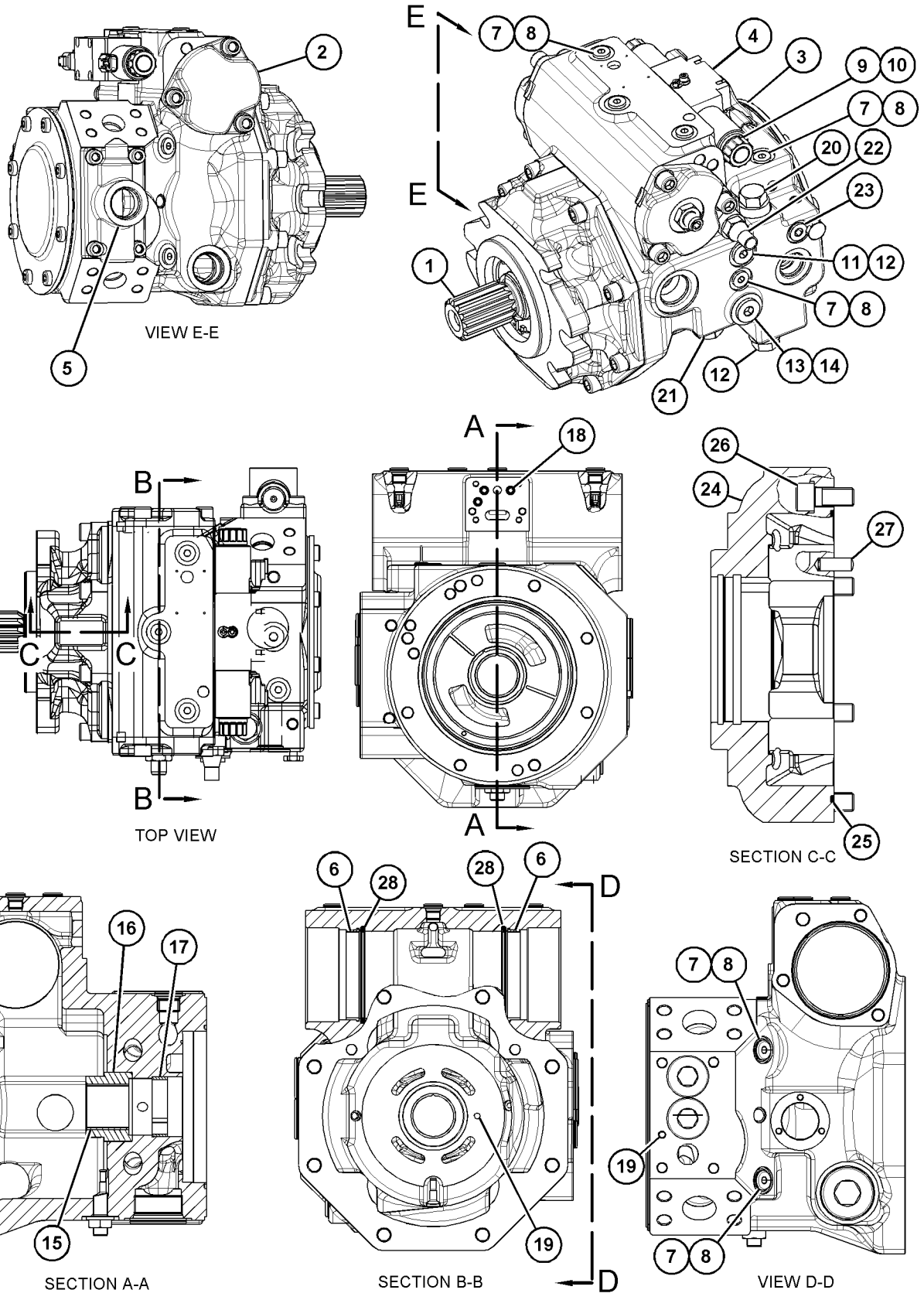

GRAPHIC #1 **<END>** g03863664

464-2354 PUMP GP-PISTON

S/N: PPP1-UP; SSS1-UP; TTT1-UP
IMPLEMENT
FIELD INSTALLATION

SMCS-5070 **i06156190**

NOTE	REF NO	GRAPHIC REF	PART NUMBER	QTY	PART NAME 1 2 3 4 5 6 (PRODUCT LEVEL)	SEE PAGE
	1	1	**8T-9598**	1	RING-RETAINING	
	2	1	**105-1642**	2	BEARING	
	3	1	**9S-8002**	1	PLUG	
Y	4	1	**226-1224**	1	ROTATING GP-PUMP (IMPLEMENT)	612
	5	1	**8U-5951**	4	SEAL-O-RING	
M	6	1	**6V-8201**	4	BOLT-SOCKET HEAD (M16X2X45-MM)	
	7	1	**105-3033**	1	CUP-BEARING	
	8	1	**105-3032**	1	CONE-BEARING	
	9	1	**194-6848**	1	COUPLER	
	10	1	**105-1638**	1	SPACER (30X38X3-MM THK)	
	11	1	**162-9997**	1	SEAL-O-RING	
	12	1	**105-1636**	1	CYLINDER-CONTROL	
	13	1	**105-1635**	1	SPRING	
	14	1	**105-1634**	1	PLUNGER	
	15	1	**9S-4183**	1	PLUG	
	16	1	**3D-2824**	1	SEAL-O-RING	
	17	1	**194-6847**	1	SHAFT	
	18	1	**3B-2263**	1	CUP-BEARING	
	19	1	**105-3031**	1	CONE-BEARING	
	20	1	**133-8739**	1	SEAL-LIP TYPE	
	21	1	**301-9279**	1	SWASHPLATE AS	
	22	1	**105-1640**	1	PISTON-CONTROL	
	23	1	**105-1639**	1	GUIDE-CONTROL	
	24	1	**3J-7354**	1	SEAL-O-RING	
	25	1	**120-4394**	1	PLUG-BREAK OFF	
	26	1	**9X-8979**	1	DOWEL	
	27	1	**143-7052**	1	SLEEVE-STOP	
	28	1	**118-3122**	1	SEAL-O-RING	
M	29	1	**8T-3957**	2	BOLT-SOCKET HEAD (M12X1.75X30-MM)	
	30	1	**8T-4223**	2	WASHER-HARD (13.5X25.5X3-MM THK)	
Y	31	1	**347-0612**	1	VALVE GP-PUMP CONTROL (FLOW COMPENSATOR)	641
	32	1	**9X-7680**	3	SEAL-O-RING	
M	33	1	**8T-8442**	4	BOLT-SOCKET HEAD (M6X1X30-MM)	

M - METRIC PART
Y - SEPARATE ILLUSTRATION

464-2354 **PUMP GP-PISTON (*contd.*)** **i06156190**

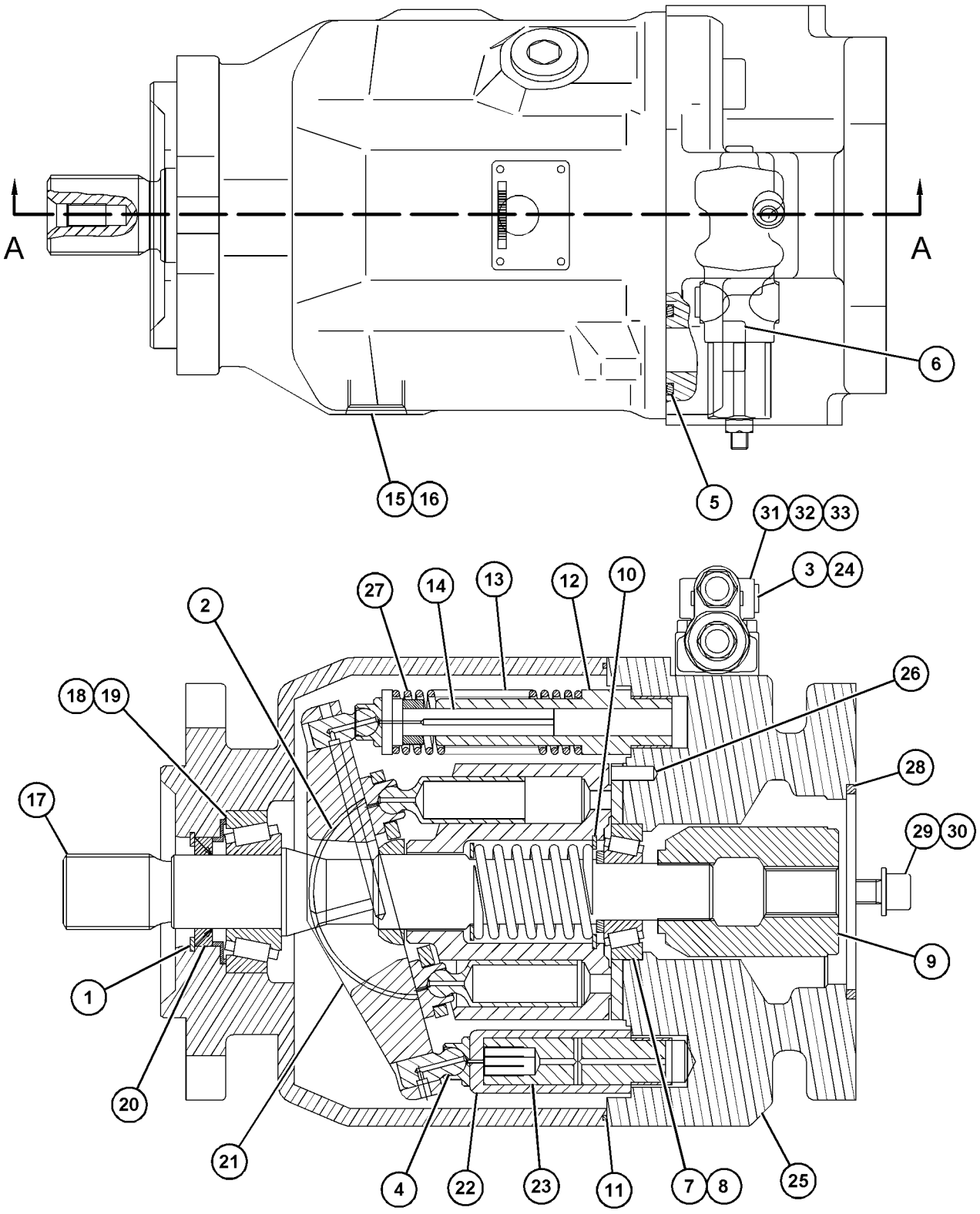

SECTION A-A

GRAPHIC #1 **<END>** g03834374

476-6616 PUMP GP-PISTON

S/N: PPP1-UP; SSS1-UP; TTT1-UP
PART OF 398-4488 PUMP & MOUNTING GP
ALSO AN ATTACHMENT

SMCS-5070 **i06193614**

NOTE	REF NO	GRAPHIC REF	PART NUMBER	QTY	PART NAME 1 2 3 4 5 6 (PRODUCT LEVEL)	SEE PAGE
	1	1	**8T-9598**	1	RING-RETAINING	
	2	1	**105-1642**	2	BEARING	
	3	1	**9S-8002**	1	PLUG	
Y	4	1	**226-1224**	1	ROTATING GP-PUMP (IMPLEMENT)	612
	5	1	**8U-5951**	4	SEAL-O-RING	
M	6	1	**6V-8201**	4	BOLT-SOCKET HEAD (M16X2X45-MM)	
	7	1	**105-3033**	1	CUP-BEARING	
	8	1	**105-3032**	1	CONE-BEARING	
	9	1	**194-6848**	1	COUPLER	
	10	1	**105-1638**	1	SPACER (30X38X3-MM THK)	
	11	1	**162-9997**	1	SEAL-O-RING	
	12	1	**105-1636**	1	CYLINDER-CONTROL	
	13	1	**105-1635**	1	SPRING	
	14	1	**105-1634**	1	PLUNGER	
	15	1	**9S-4183**	1	PLUG	
	16	1	**3D-2824**	1	SEAL-O-RING	
	17	1	**194-6847**	1	SHAFT	
	18	1	**3B-2263**	1	CUP-BEARING	
	19	1	**105-3031**	1	CONE-BEARING	
	20	1	**133-8739**	1	SEAL-LIP TYPE	
	21	1	**301-9279**	1	SWASHPLATE AS	
	22	1	**105-1640**	1	PISTON-CONTROL	
	23	1	**105-1639**	1	GUIDE-CONTROL	
	24	1	**3J-7354**	1	SEAL-O-RING	
	25	1	**120-4394**	1	PLUG-BREAK OFF	
	26	1	**9X-8979**	1	DOWEL	
	27	1	**143-7052**	1	SLEEVE-STOP	
	28	1	**118-3122**	1	SEAL-O-RING	
M	29	1	**8T-3957**	2	BOLT-SOCKET HEAD (M12X1.75X30-MM)	
	30	1	**8T-4223**	2	WASHER-HARD (13.5X25.5X3-MM THK)	
Y	31	1	**347-0612**	1	VALVE GP-PUMP CONTROL (FLOW COMPENSATOR)	641
	32	1	**9X-7680**	3	SEAL-O-RING	
M	33	1	**8T-8442**	4	BOLT-SOCKET HEAD (M6X1X30-MM)	

M - METRIC PART
Y - SEPARATE ILLUSTRATION

476-6616 **PUMP GP-PISTON (*contd.*)** **i06193614**

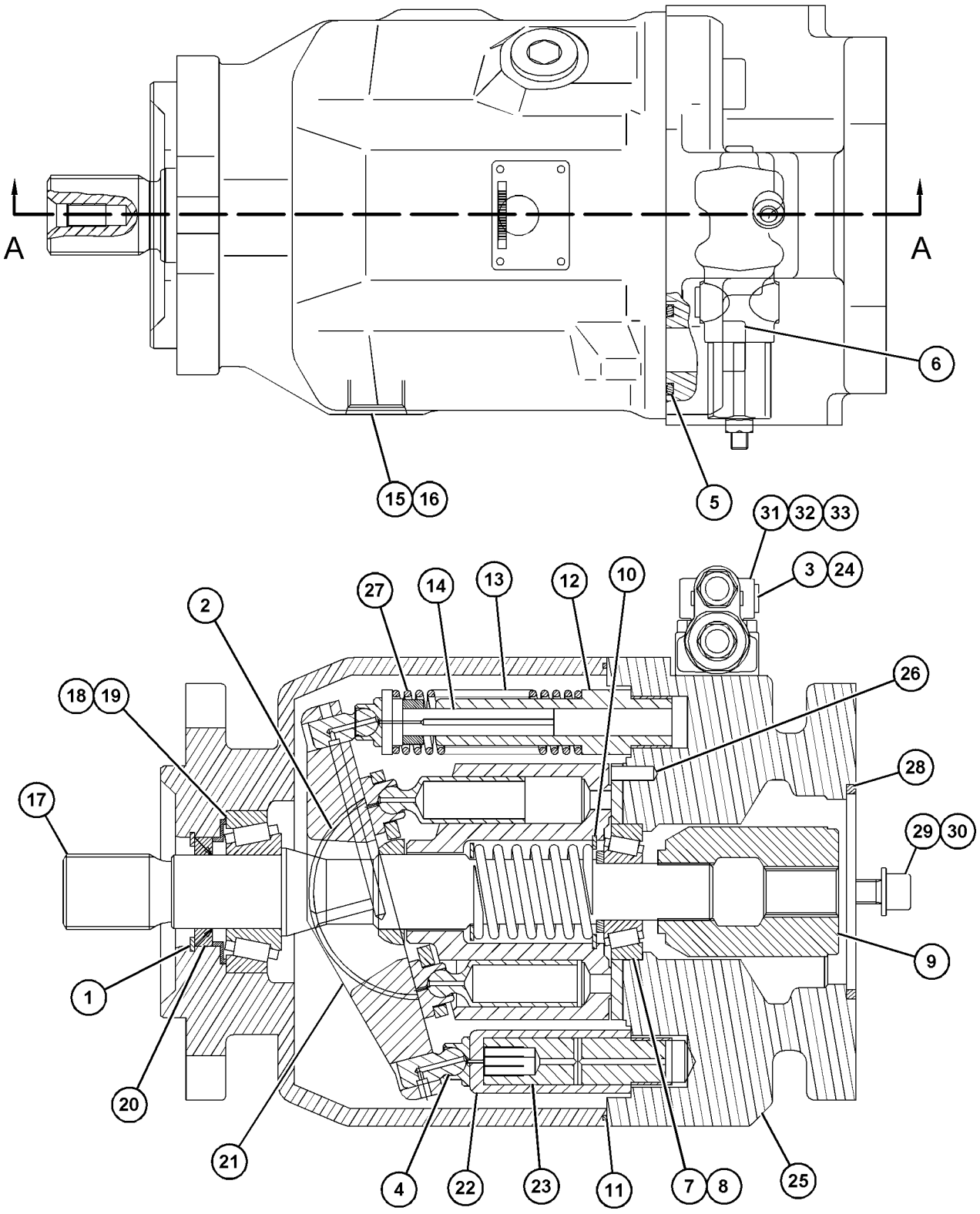

SECTION A-A

GRAPHIC #1 **<END>** g03834374

355-2410 ROTATING GP-MOTOR

S/N: PPP1-UP; SSS1-UP; TTT1-UP
PART OF 325-9776 MOTOR GP-PISTON
ALSO AN ATTACHMENT

SMCS-5058 **i06146542**

NOTE	REF NO	GRAPHIC REF	PART NUMBER	QTY	PART NAME 1 2 3 4 5 6 (PRODUCT LEVEL)	SEE PAGE
	1	1	**171-3061**	1	SPRING	
	2	1	**171-5989**	1	KIT-BEARING	
	3	1	**9T-1642**	1	PLATE-RETAINING	
	4	1	**165-6969**	7	PISTON AS	
	5	1	**9T-1687**	1	BARREL-CYLINDER	
	6	1	**284-9697**	1	VALVE GP-FLUSHING	
B	7	1	**171-3060**	1	SHIM (3.6-MM THK)	
B	8	1	**171-3059**	1	SHIM (3.7-MM THK)	
B	9	1	**171-3058**	1	SHIM (3.8-MM THK)	
B	10	1	**171-3057**	1	SHIM (3.9-MM THK)	
B	11	1	**171-3055**	1	SHIM (4-MM THK)	
	12	1	**171-3054**	1	PIN-CENTER	
	13	1	**256-3863**	7	SCREW-PAN HEAD	
	14	1	**5D-5958**	1	SEAL-O-RING	
	15	1	**3E-4334**	1	RING-RETAINING	
	16	1	**9T-1637**	1	COVER-FRONT	
	17	1	**123-5748**	1	SEAL-SHAFT	
	18	1	**355-2411**	1	SHAFT AS	
	19	1	**9T-1643**	1	DISC-RETAINING	
	20	1	**284-9698**	1	WASHER (1-MM THK)	

B - USE AS REQUIRED

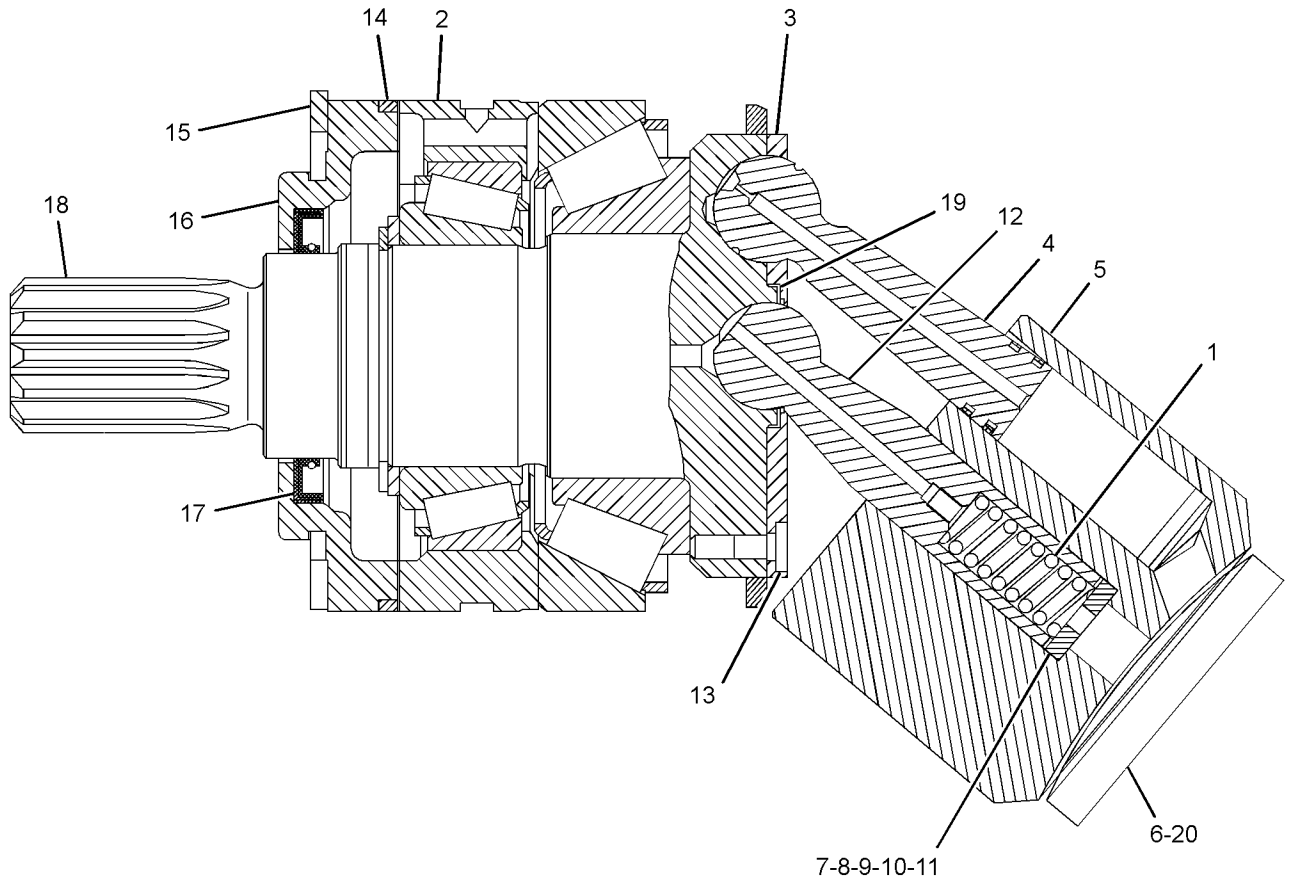

GRAPHIC #1 **<END>** g03362183

226-1224 ROTATING GP-PUMP

S/N: PPP1-UP; SSS1-UP; TTT1-UP
PART OF 464-2354, 476-6616 PUMP GP-PISTON
ALSO AN ATTACHMENT

SMCS-5070 **i06156229**

NOTE	REF NO	GRAPHIC REF	PART NUMBER	QTY	PART NAME 1 2 3 4 5 6 (PRODUCT LEVEL)	SEE PAGE
	1	1	**105-1646**	9	PISTON AS-PUMP	
	2	1	**188-9637**	1	PLATE-RETRACTION	
	3	1	**105-1648**	1	BEARING	
	4	1	**105-1653**	3	PIN-RETRACTION	
	5	1	**226-1227**	1	BARREL	
	6	1	**105-1650**	1	SPACER	
	7	1	**105-1651**	1	SPRING	
	8	1	**180-6213**	1	RING-RETAINING	
	9	1	**245-7350**	1	PLATE	

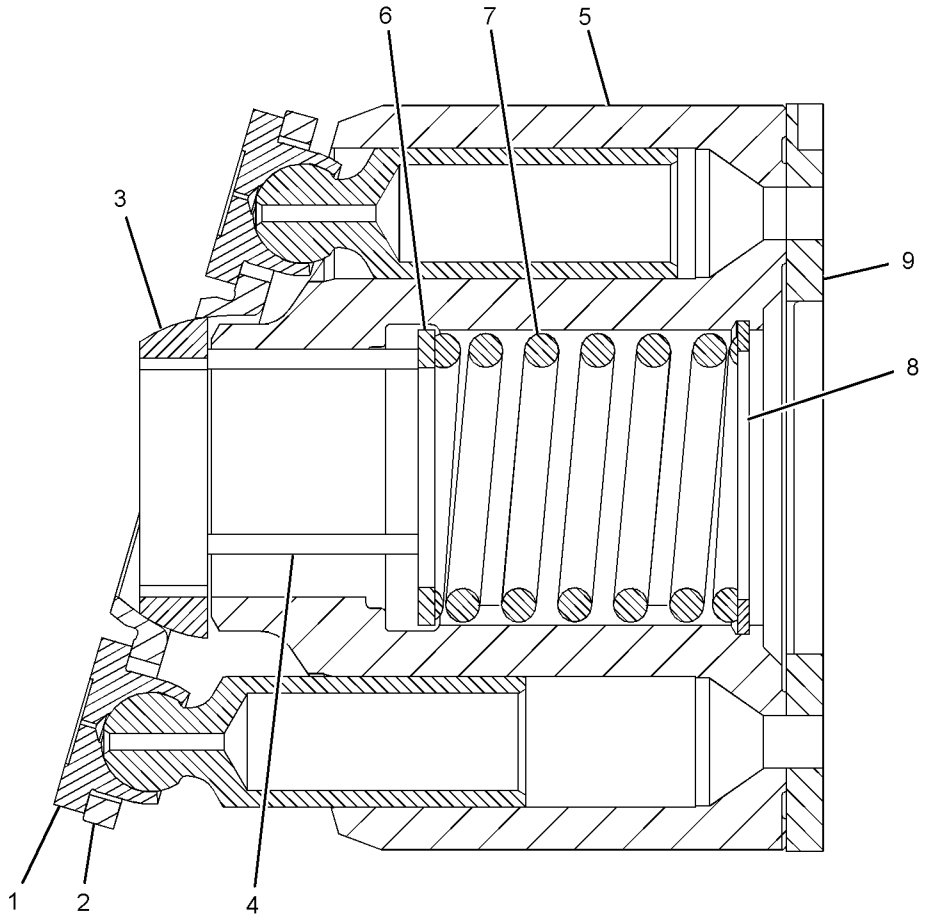

GRAPHIC #1 **<END>** g01136182

462-0461 ROTATING GP-PUMP—STEERING

S/N: PPP1-UP; SSS1-UP; TTT1-UP
PART OF 433-9811 PUMP GP-PISTON
ALSO AN ATTACHMENT

SMCS-5070 **i06215038**

NOTE	REF NO	GRAPHIC REF	PART NUMBER	QTY	PART NAME 1 2 3 4 5 6 (PRODUCT LEVEL)	SEE PAGE
	1	1	**462-0458**	1	PLATE-CONTROL	
	2	1	**462-0447**	1	SHAFT-DRIVE	
	3	1	**462-0001**	1	BEARING-ROLLER	
	4	1	**6V-5201**	1	RING-RETAINING	
	5	1	**462-0440**	1	HOUSING	
	6	1	**462-0435**	1	BAR-SLIDE	
	7	1	**462-0434**	1	LINER-BEARING	
	8	1	**462-0433**	1	BEARING-CRADLE	
	9	1	**462-0431**	1	BARREL	
	10	1	**462-0429**	9	PISTON	
	11	1	**462-0423**	1	SPRING	
B	12	1	**462-0420**	1	SHIM	
B	13	1	**462-0419**	1	SHIM	
B	14	1	**462-0296**	1	SHIM	
B	15	1	**462-0293**	1	SHIM	
	16	1	**462-0291**	1	PLATE-RETAINING	
	17	1	**462-0020**	1	BEARING-SPHERICAL	
B	18	1	**462-0015**	2	SHIM	
	19	1	**462-0010**	1	SPRING-COIL	
	20	1	**352-4406**	1	RING-RETAINING	

PARTS SHOWN IN GRAPHIC(S) WITHOUT A REFERENCE NUMBER ARE NOT SERVICED SEPARATELY

B - USE AS REQUIRED

462-0461 **ROTATING GP-PUMP (*contd.*)** **i06215038**

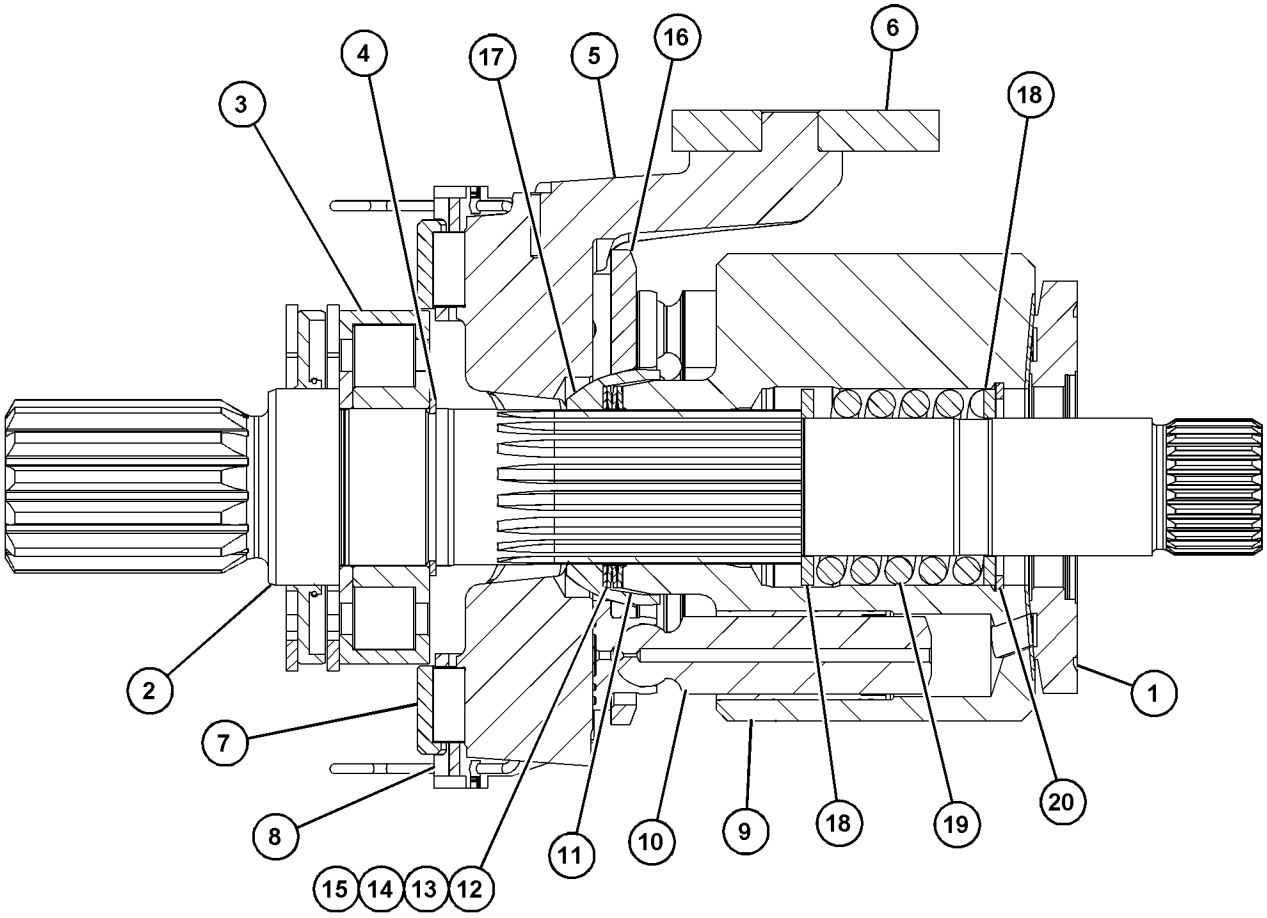

GRAPHIC #1 **<END>** g03860994

454-9316 TANK & FILTER GP-HYDRAULIC

S/N: PPP1-UP; SSS1-UP; TTT1-UP
PART OF 398-4489 TANK & MTG GP-HYDRAULIC
ALSO AN ATTACHMENT

SMCS-5056, 5068

i06193545

NOTE	REF NO	GRAPHIC REF	PART NUMBER	QTY	PART NAME 1 2 3 4 5 6 (PRODUCT LEVEL)	SEE PAGE
	1	2	**1U-2827**	1	GUIDE-VALVE	
	2	1	**2D-4202**	1	PLATE	
	3	1	**4J-8251**	1	GROMMET	
	4	1	**4J-8252**	1	GAUGE-SIGHT	
	5	1	**5D-1911**	1	COVER-HYDRAULIC CAP	
	6	1	**5D-7927**	1	STRAINER AS-OIL (HYDRAULIC)	
	7	2	**5M-2057**	1	SEAL-O-RING	
	8	2	**6E-1752**	2	SCREEN (HYDRAULIC TANK)	
	9	2	**7F-8267**	2	SEAL-O-RING	
	10	1	**7H-1447**	1	CAP-FILLER (HYDRAULIC OIL)	
	11	2	**8C-3206**	4	FLANGE-HALF	
	12	1	**8J-6913**	1	RETAINER	
	13	2	**8J-8782**	1	BODY-DRAIN VALVE	
	14	2	**8J-8783**	1	VALVE-DRAIN	
	15	1	**8T-2275**	1	BALL	
	16	2	**8T-3298**	1	SEAL-RECTANGULAR	
	17	1	**9H-6454**	1	GASKET	
	18	2	**9J-7031**	1	PLUG-DRAIN	
	19	1	**9M-7394**	1	LEVER	
	20	1	**187-9194**	1	PLATE (SIGHT GLASS)	
	21	2	**418-0890**	1	TUBE AS	
	22	2	**418-9228**	1	TUBE AS	
	24	1	**454-9324**	1	COVER AS	
		1	**7T-1099**	2	LINK	
M		1	**8Y-4489**	2	BOSS (M10X1.5-THD)	
M		1	**9R-2613**	2	BOSS-WELD (M10X1.5X25-MM)	
	25	1	**455-9976**	1	GASKET	
	26	1	**1L-5072**	1	DOWEL	
	27	1	**2J-7761**	1	RING-RETAINING	
	28	1	**6H-9361**	1	RING-RETAINING	
	29	1	**6V-5839**	4	WASHER (11X21X2.5-MM THK)	
M	30	2	**6V-7732**	10	BOLT (M10X1.5X25-MM)	
M	31	1,2	**6V-7744**	6	LOCKNUT (M10X1.5-THD)	
	32	2	**7B-3039**	1	SPRING	
	33	1,2	**8T-4121**	53	WASHER-HARD (11X21X2.5-MM THK)	
M	34	1	**8T-4136**	43	BOLT (M10X1.5X25-MM)	
M	35	2	**8T-4196**	8	BOLT (M10X1.5X35-MM)	

M - METRIC PART

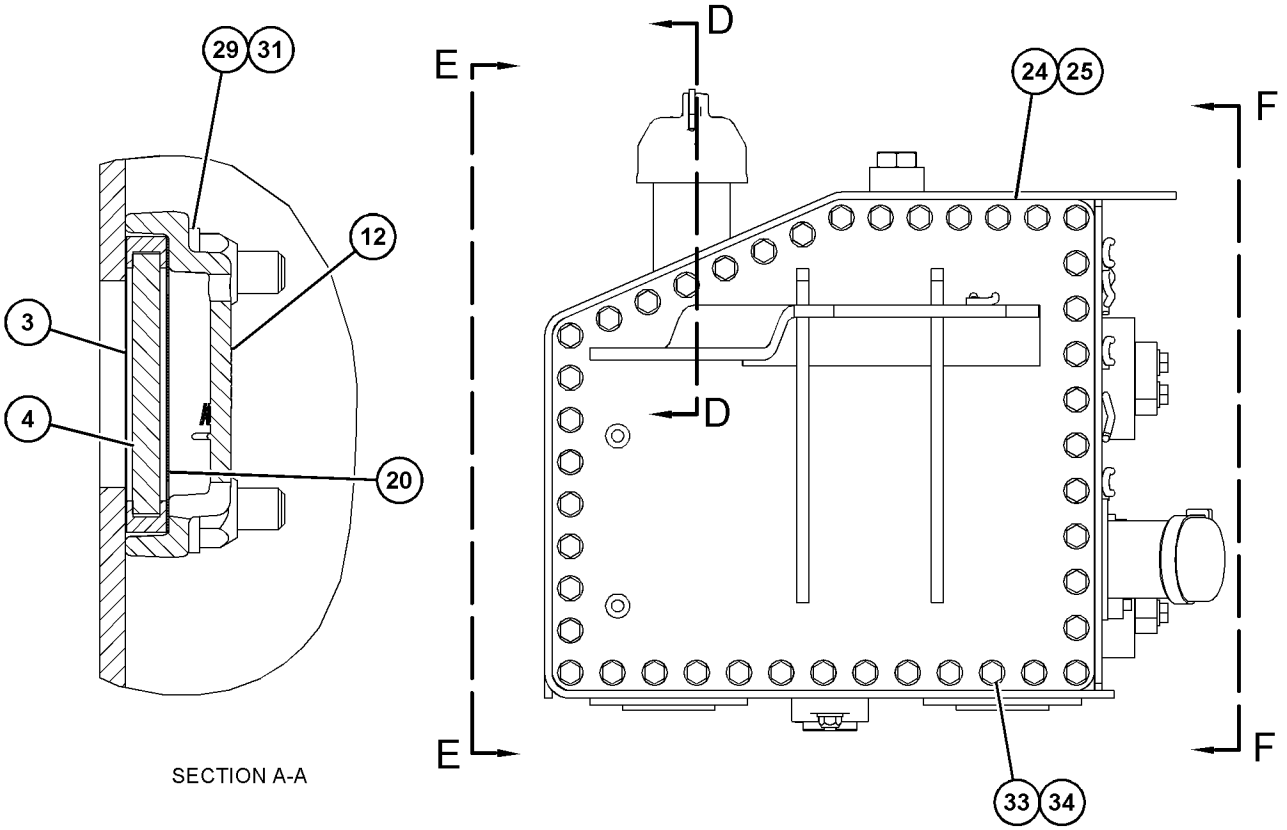

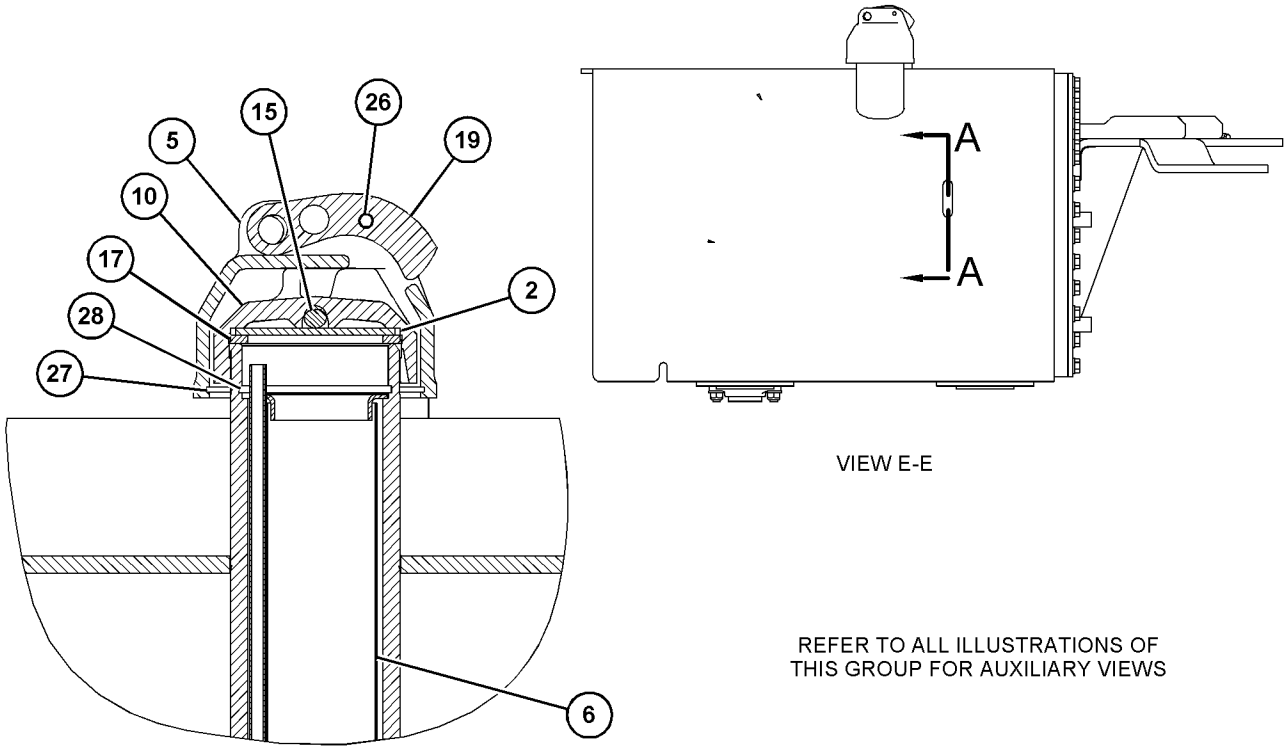

REFER TO ALL ILLUSTRATIONS OF
THIS GROUP FOR AUXILIARY VIEWS

GRAPHIC #1

g03855048

454-9316 **TANK & FILTER GP-HYDRAULIC (*contd.*)** **i06193545**

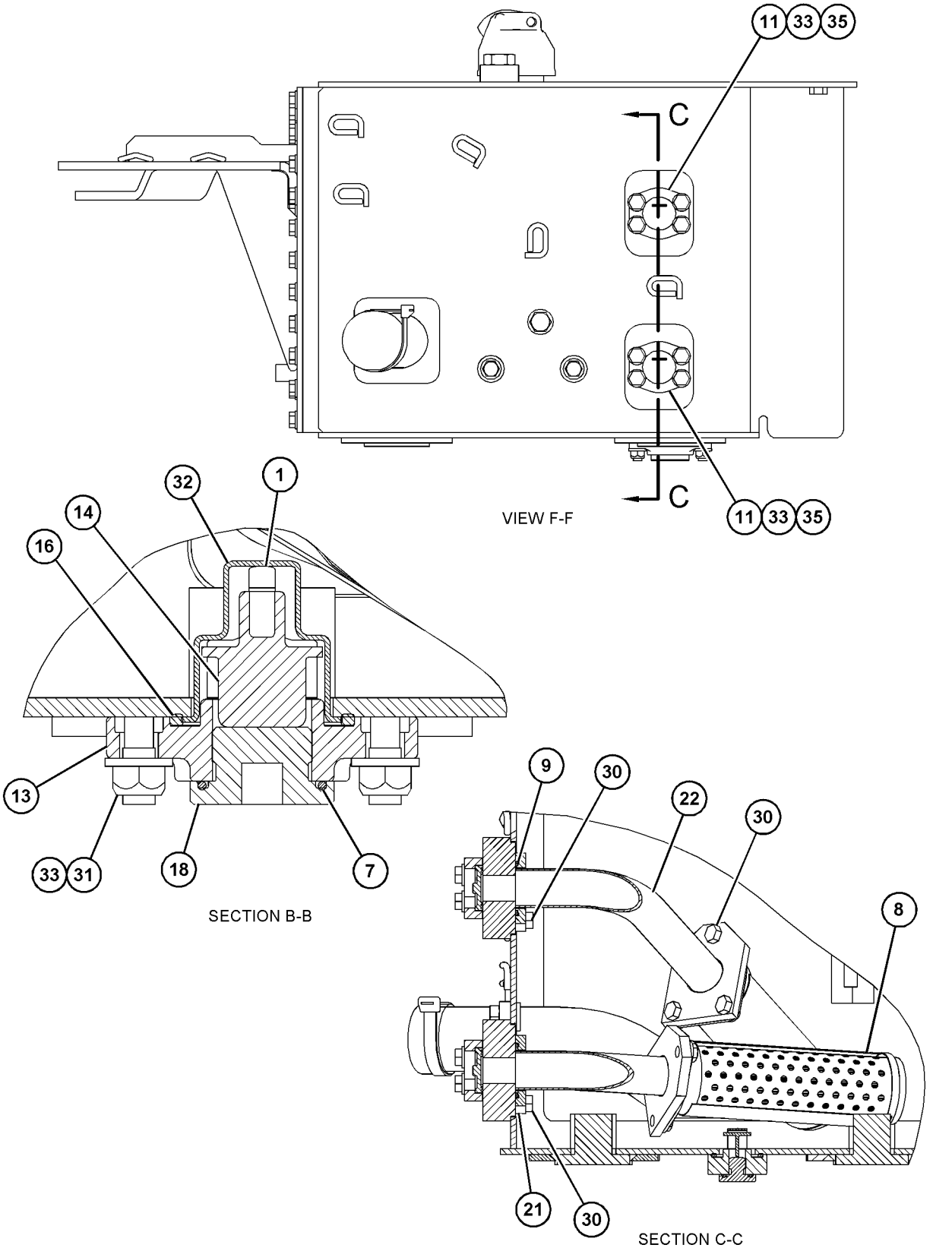

GRAPHIC #2 **<END>** g03849483

398-4489 TANK & MTG GP-HYDRAULIC

S/N: PPP1-UP; SSS1-UP; TTT1-UP
PART OF 398-4286, 398-4331 HYDRAULIC AR
ALSO AN ATTACHMENT

SMCS-5056 **i06197808**

NOTE	REF NO	GRAPHIC REF	PART NUMBER	QTY	PART NAME 1 2 3 4 5 6 (PRODUCT LEVEL)	SEE PAGE
	1	1	**7K-1181**	1	STRAP-CABLE	
	2	1	**116-2810**	1	VALVE (BREAKER RELIEF VALVE)	
Y	3	1	*454-9316*	1	TANK & FILTER GP-HYDRAULIC	615
	4	1	**3D-2824**	1	SEAL-O-RING	
M	5	1	**8T-4779**	4	BOLT (M16X2X35-MM)	
	6	1	**9X-8257**	4	WASHER (17.5X30X3.5-MM THK)	
B	7	1	**8W-6591**	3	SHIM (17X71X0.7-MM THK)	

B - USE AS REQUIRED
M - METRIC PART
Y - SEPARATE ILLUSTRATION

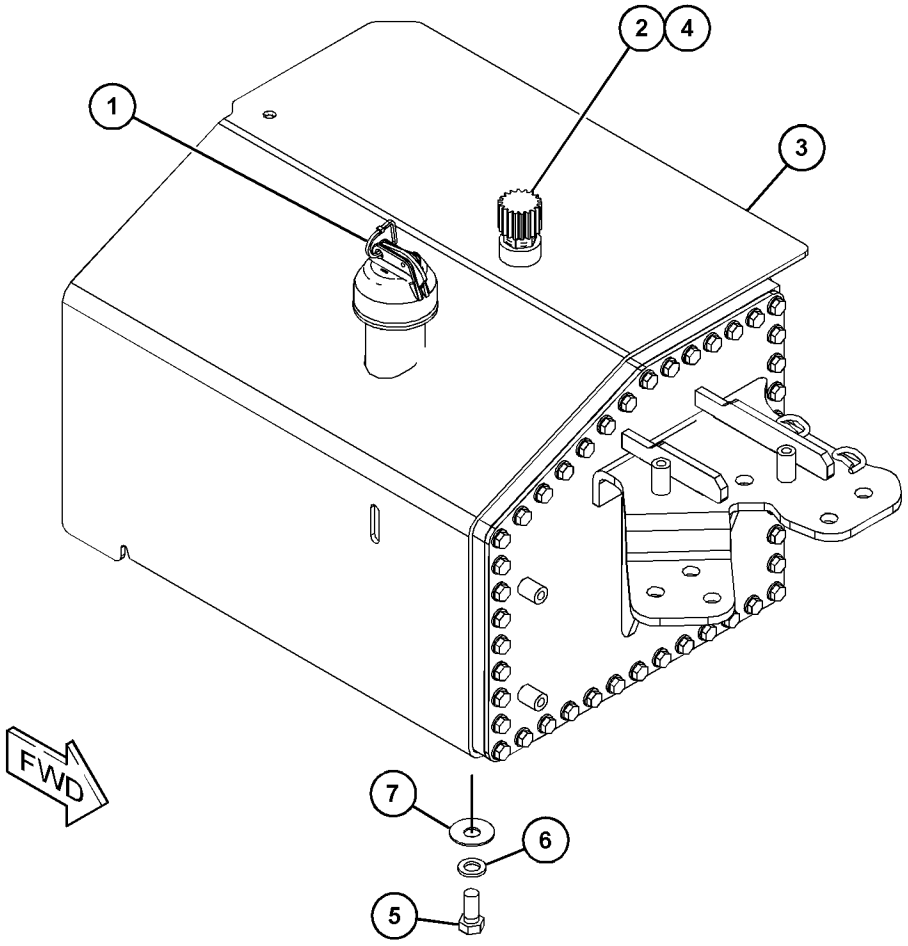

GRAPHIC #1 **<END>** g03851641

398-4501 VALVE & MOUNTING GP–BRAKE

S/N: PPP1-UP; SSS1-UP; TTT1-UP
PART OF 398-4284, 398-4285 POWER TRAIN AR
ALSO AN ATTACHMENT

SMCS-5051 **i06216446**

NOTE	REF NO	GRAPHIC REF	PART NUMBER	QTY	PART NAME 1 2 3 4 5 6 (PRODUCT LEVEL)	SEE PAGE
Y	1	1	**389-1531**	1	VALVE GP-CONTROL (BRAKE)	634
	2	1	*164-5567*	1	COUPLER AS-QUICK DISCONNECT (MALE)	
		1	**6V-3965**	1	FITTING (QUICK DISCONNECT)	
		1	**214-7568**	1	SEAL-O-RING	
	3	1	*241-6215*	1	ELBOW AS	
		1	**3J-1907**	1	SEAL-O-RING	
		1	**6V-8076**	1	ELBOW	
	4	1	**6V-0852**	1	CAP-DUST	
M	5	1	**7X-2543**	4	BOLT (M10X1.5X120-MM)	
	6	1	**8M-5254**	4	SEAL-O-RING	
	7	1	**8T-4121**	4	WASHER-HARD (11X21X2.5-MM THK)	

M - METRIC PART
Y - SEPARATE ILLUSTRATION

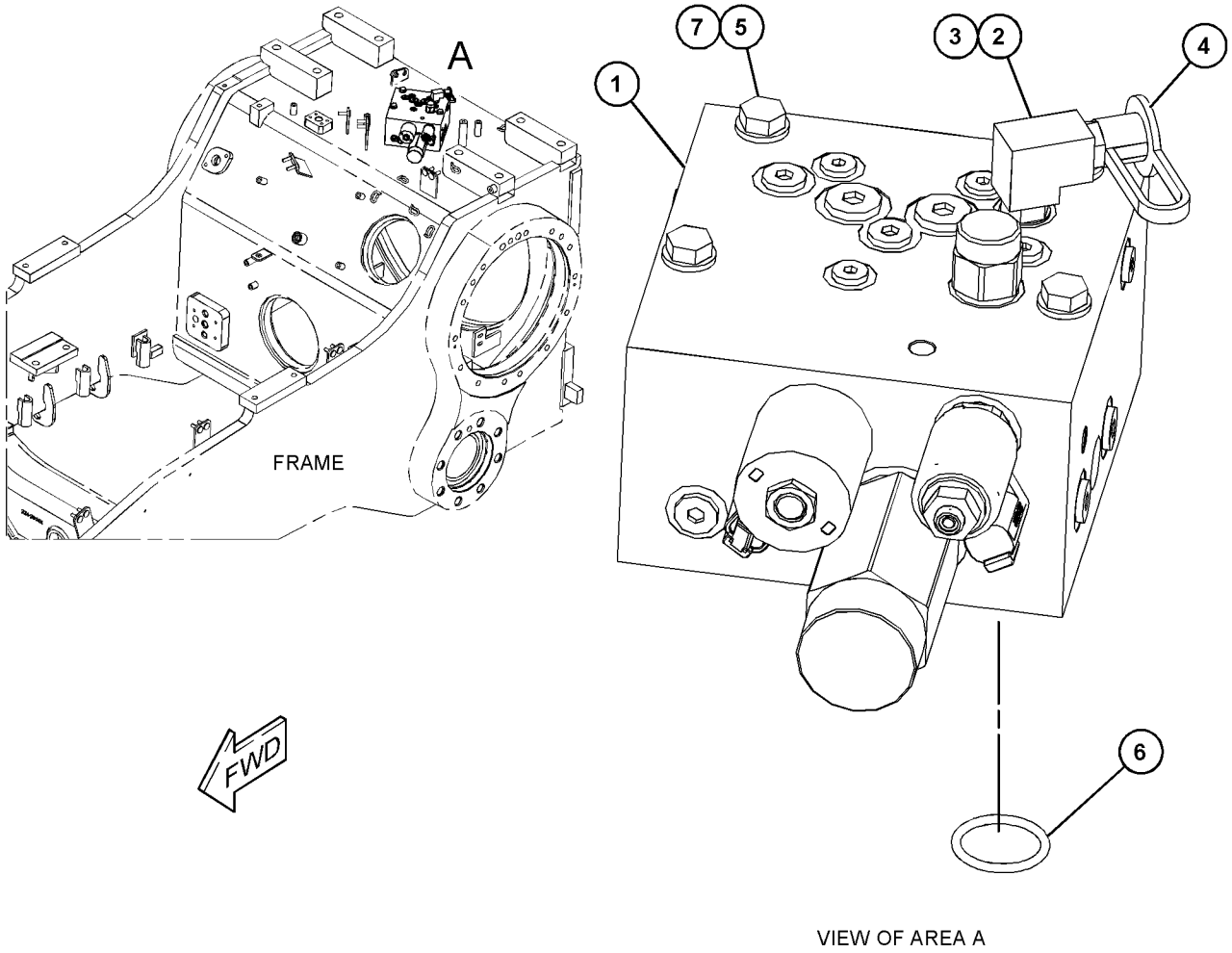

VIEW OF AREA A

GRAPHIC #1 **<END>** g03859315

398-4493 VALVE & MTG GP-IMPLEMENT CONT–BLADE LIFT, TILT

S/N: PPP1-UP; SSS1-UP; TTT1-UP
PART OF 398-4291 HYDRAULIC AR
AN ATTACHMENT

SMCS-5051 **i06218991**

NOTE	REF NO	GRAPHIC REF	PART NUMBER	QTY	PART NAME 1 2 3 4 5 6 (PRODUCT LEVEL)	SEE PAGE
Y	1	1	**269-8161**	1	VALVE GP-BANK 2 (BULLDOZER LIFT, TILT)	622
	2	1	**426-2461**	1	BRACKET AS	
	3	1	**198-4780**	4	WASHER-HARD (17.5X32X8-MM THK)	
M	4	1	**8T-4175**	2	BOLT (M16X2X90-MM)	
	5	1	**8T-4223**	3	WASHER-HARD (13.5X25.5X3-MM THK)	
M	6	1	**8T-4910**	3	BOLT (M12X1.75X60-MM)	
M	7	1	**8T-7338**	2	BOLT (M16X2X45-MM)	

M - METRIC PART
Y - SEPARATE ILLUSTRATION

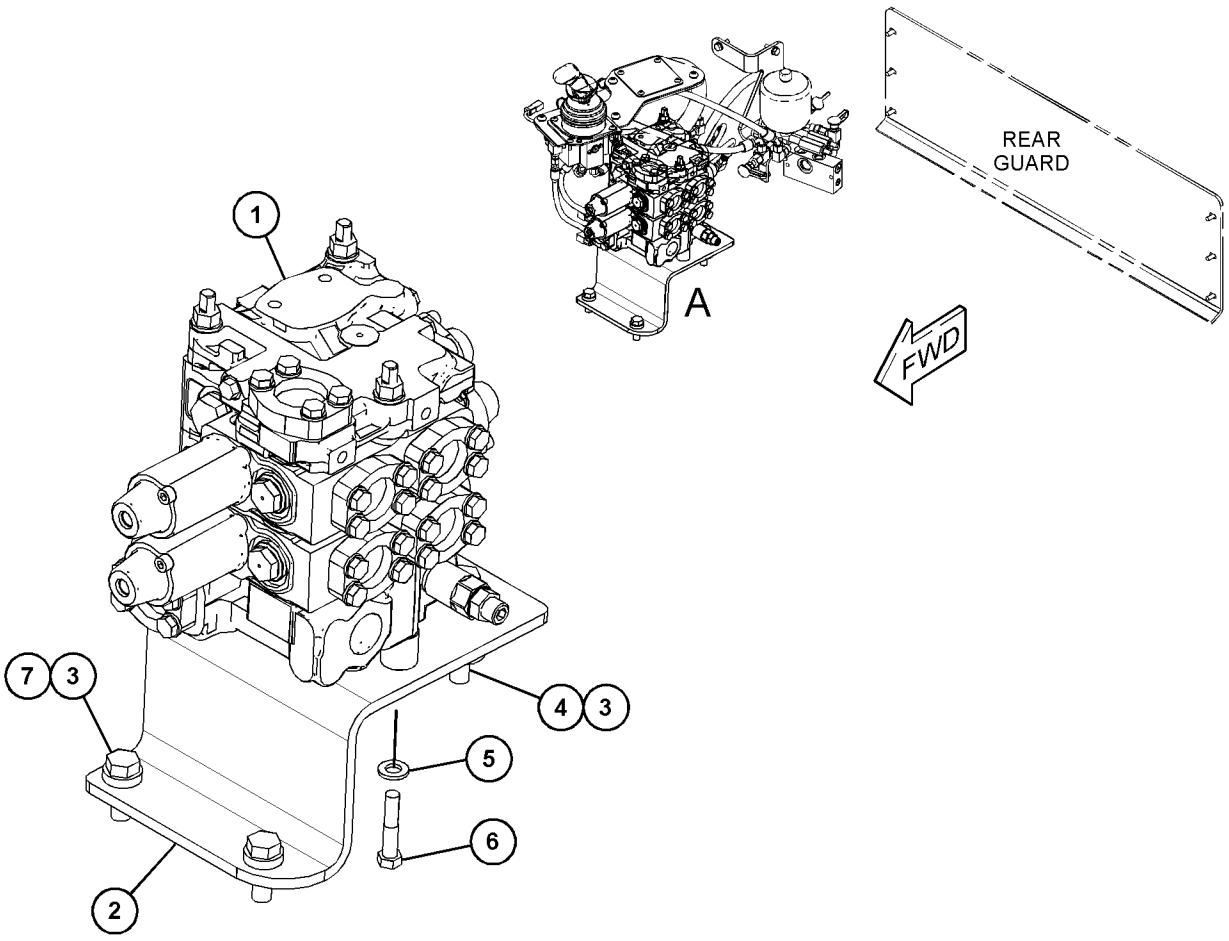

VIEW OF AREA A

GRAPHIC #1 **<END>** g03860638

398-4495 VALVE & MTG GP-IMPLEMENT CONT–BLADE, RIPPER LIFT, TILT

S/N: PPP1-UP; SSS1-UP; TTT1-UP
PART OF 398-4292 HYDRAULIC AR
AN ATTACHMENT

SMCS-5051 **i06219020**

NOTE	REF NO	GRAPHIC REF	PART NUMBER	QTY	PART NAME 1 2 3 4 5 6 (PRODUCT LEVEL)	SEE PAGE
Y	1	1	**269-8160**	1	VALVE GP-BANK 3 (BULLDOZER LIFT, TILT, RIPPER)	624
	2	1	**426-2461**	1	BRACKET AS	
	3	1	**198-4780**	4	WASHER-HARD (17.5X32X8-MM THK)	
M	4	1	**8T-4175**	2	BOLT (M16X2X90-MM)	
	5	1	**8T-4223**	3	WASHER-HARD (13.5X25.5X3-MM THK)	
M	6	1	**8T-4910**	3	BOLT (M12X1.75X60-MM)	
M	7	1	**8T-7338**	2	BOLT (M16X2X45-MM)	

M - METRIC PART
Y - SEPARATE ILLUSTRATION

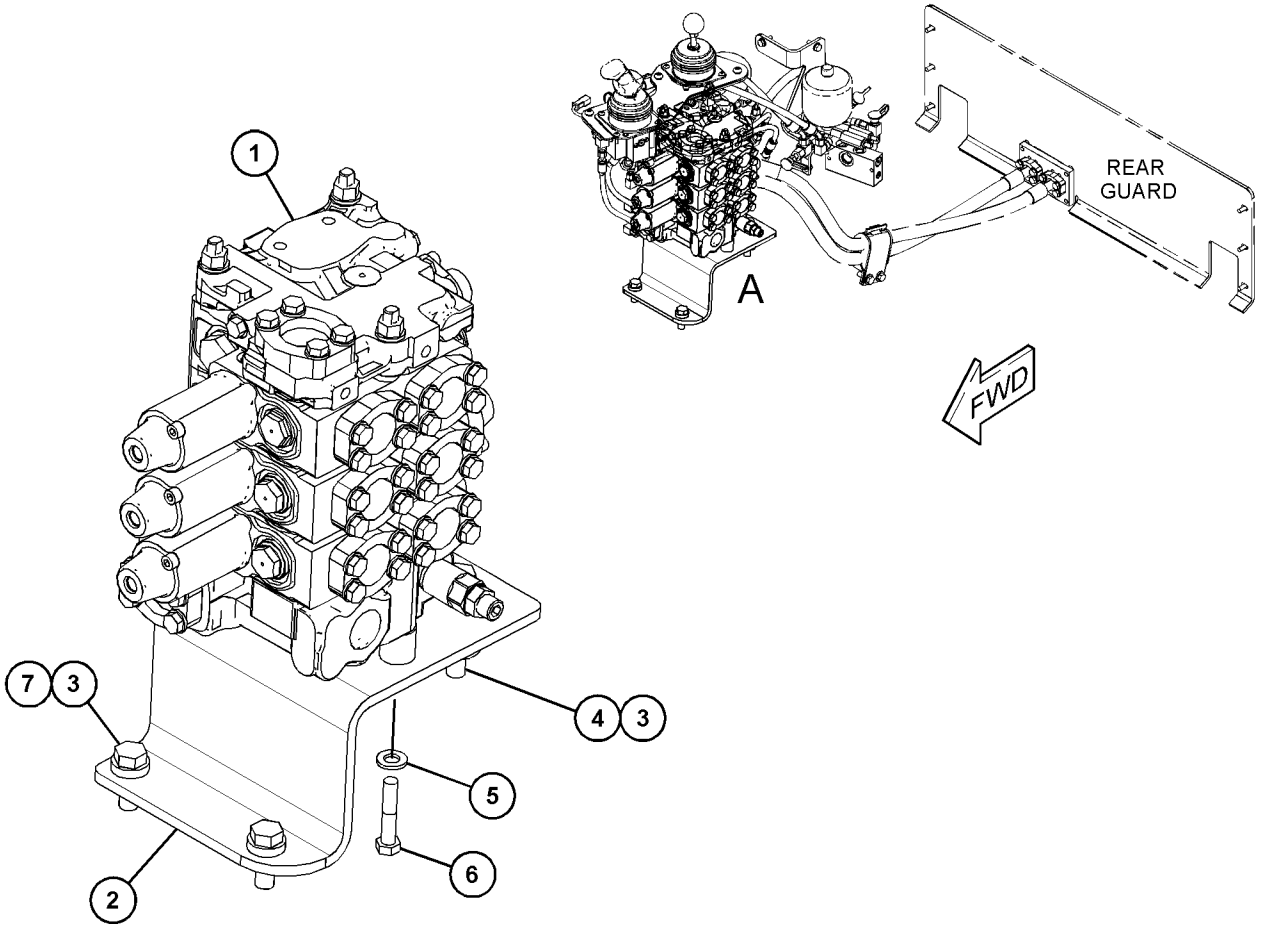

VIEW OF AREA A

GRAPHIC #1 **<END>** g03860500

269-8161 VALVE GP-BANK 2

S/N: PPP1-UP; SSS1-UP; TTT1-UP
PART OF 398-4493 VALVE & MTG GP-IMPLEMENT CONT
AN ATTACHMENT

SMCS-5051 **i06146539**

NOTE	REF NO	GRAPHIC REF	PART NUMBER	QTY	PART NAME 1 2 3 4 5 6 (PRODUCT LEVEL)	SEE PAGE
	1	1	*148-8407*	1	PLUG AS	
		1	**9S-4191**	1	PLUG (9/16-18-THD)	
		1	**3J-1907**	1	SEAL-O-RING	
	2	1	**6V-8188**	3	NUT (1/2-13-THD)	
	3	1	**164-7678**	3	ROD	
	4	1	**235-0399**	1	COVER	
Y	5	1	**269-8154**	1	VALVE GP-CONTROL (BULLDOZER TILT)	629
Y	6	1	**269-8155**	1	VALVE GP-CONTROL (BULLDOZER LIFT)	631
Y	8	1	**273-2156**	1	MANIFOLD GP-VALVE (INLET)	598
	9	1	*155-3624*	2	PLUG AS	
					(EACH INCLUDES)	
		1	**9S-4182**	1	PLUG (7/16-20-THD)	
		1	**3J-7354**	1	SEAL-O-RING	
	10	1	**1P-3702**	1	SEAL-RECTANGULAR	
	11	1	**1P-4578**	2	FLANGE-HALF	
	12	1	*207-7899*	1	PLUG AS	
		1	**9S-4188**	1	PLUG	
		1	**4K-1388**	1	SEAL-O-RING	
	13	1	**4J-0522**	9	SEAL-O-RING	
	14	1	**4J-8997**	2	SEAL-O-RING	
	15	1	**6V-5555**	9	SEAL-O-RING	
	16	1	**8C-3206**	10	FLANGE-HALF	
	17	1	**8T-4121**	24	WASHER-HARD (11X21X2.5-MM THK)	
M	18	1	**8T-4196**	24	BOLT (M10X1.5X35-MM)	
	19	1	**8T-4223**	3	WASHER-HARD (13.5X25.5X3-MM THK)	

M - METRIC PART
Y - SEPARATE ILLUSTRATION

269-8161 **VALVE GP-BANK 2 (*contd.*)** **i06146539**

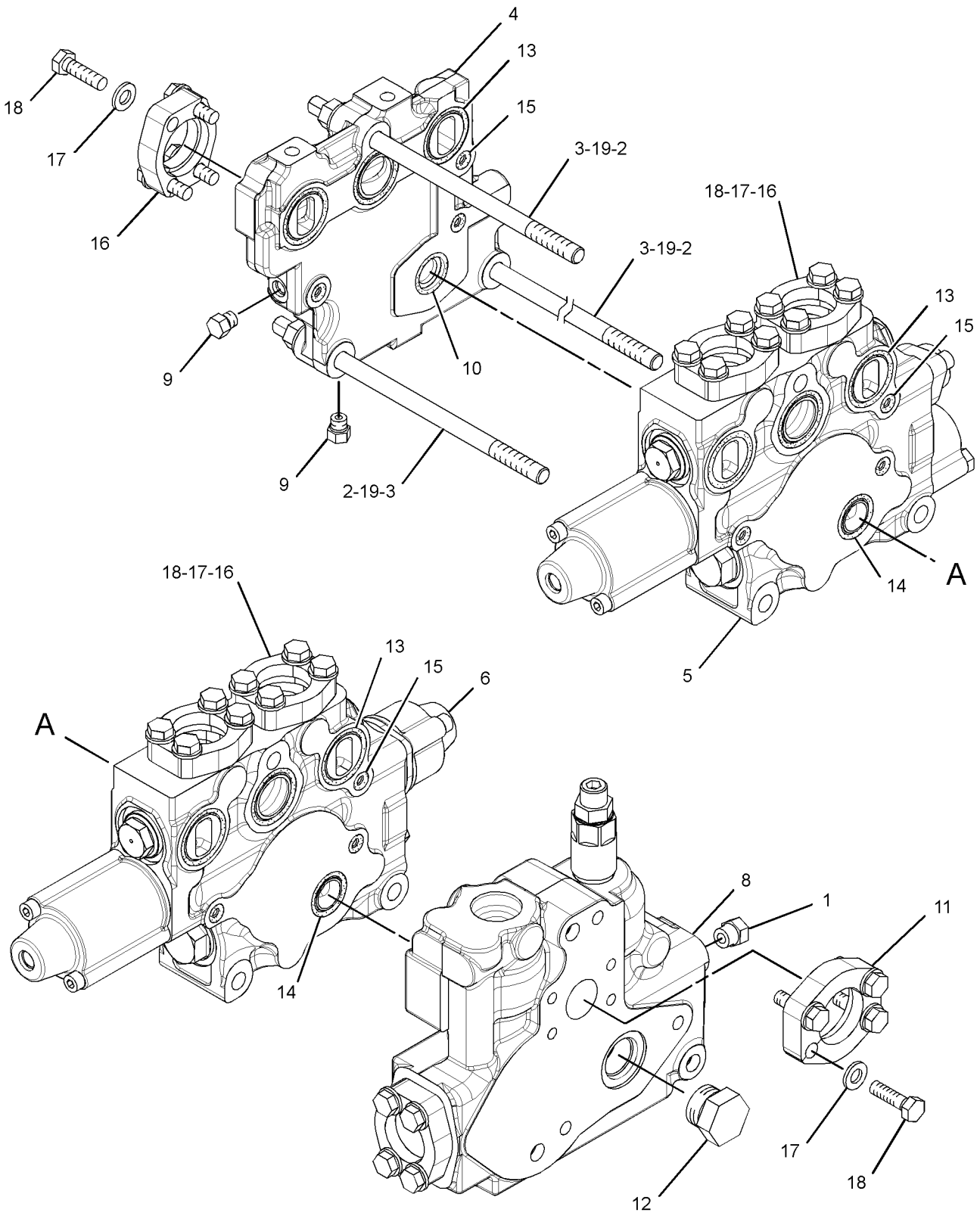

GRAPHIC #1 **<END>** g03367601

269-8160 VALVE GP-BANK 3

S/N: PPP1-UP; SSS1-UP; TTT1-UP
PART OF 398-4495 VALVE & MTG GP-IMPLEMENT CONT
AN ATTACHMENT

SMCS-5051 **i06146533**

NOTE	REF NO	GRAPHIC REF	PART NUMBER	QTY	PART NAME 1 2 3 4 5 6 (PRODUCT LEVEL)	SEE PAGE
	1	1	*148-8407*	1	PLUG AS	
		1	**9S-4191**	1	PLUG (9/16-18-THD)	
		1	**3J-1907**	1	SEAL-O-RING	
	2	1	**164-7677**	3	ROD	
	3	1	**235-0399**	1	COVER	
Y	4	1	**269-8153**	1	VALVE GP-CONTROL (RIPPER LIFT)	627
Y	5	1	**269-8154**	1	VALVE GP-CONTROL (BULLDOZER TILT)	629
Y	6	1	**269-8155**	1	VALVE GP-CONTROL (BULLDOZER LIFT)	631
Y	8	1	**273-2156**	1	MANIFOLD GP-VALVE (INLET)	598
	9	1	*155-3624*	2	PLUG AS	
					(EACH INCLUDES)	
		1	**9S-4182**	1	PLUG (7/16-20-THD)	
		1	**3J-7354**	1	SEAL-O-RING	
	10	1	**1P-3702**	1	SEAL-RECTANGULAR	
	11	1	**1P-4578**	2	FLANGE-HALF	
	12	1	*207-7899*	1	PLUG AS	
		1	**9S-4188**	1	PLUG	
		1	**4K-1388**	1	SEAL-O-RING	
	13	1	**4J-0522**	13	SEAL-O-RING	
	14	1	**4J-8997**	3	SEAL-O-RING	
	15	1	**5H-4020**	1	COVER	
	16	1	**6V-5555**	12	SEAL-O-RING	
	17	1	**6V-8188**	3	NUT (1/2-13-THD)	
	18	1	**8C-3206**	14	FLANGE-HALF	
	19	1	**8T-4121**	32	WASHER-HARD (11X21X2.5-MM THK)	
M	20	1	**8T-4196**	32	BOLT (M10X1.5X35-MM)	
	21	1	**8T-4223**	3	WASHER-HARD (13.5X25.5X3-MM THK)	

M - METRIC PART
Y - SEPARATE ILLUSTRATION

269-8160 **VALVE GP-BANK 3 (*contd.*)** **i06146533**

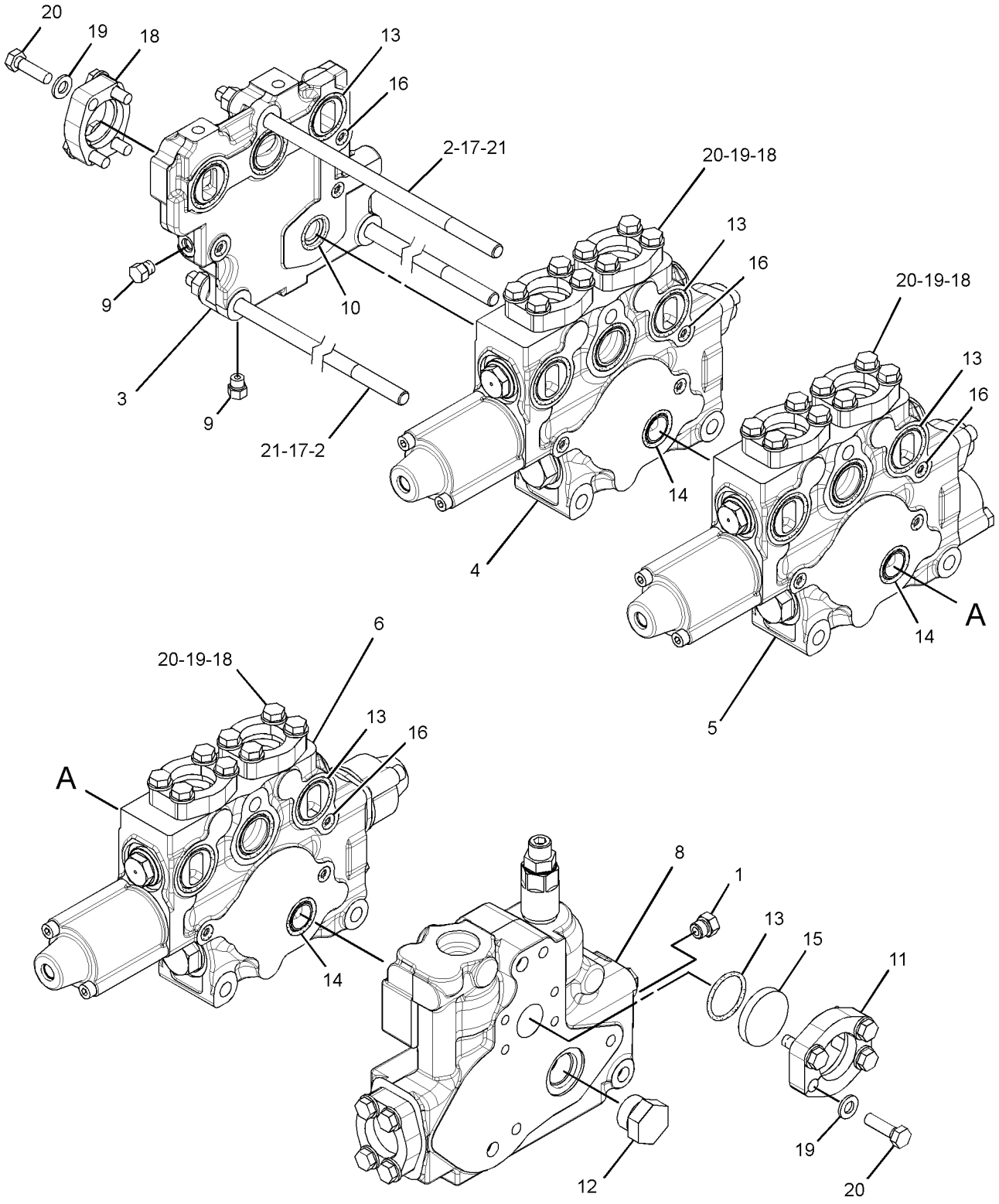

GRAPHIC #1 **<END>** g03368156

158-9956 VALVE GP-CHECK

S/N: PPP1-UP; SSS1-UP; TTT1-UP
PART OF 226-4751 MANIFOLD GP-CONTROL
AN ATTACHMENT

SMCS-5067 **i05552971**

NOTE	REF NO	GRAPHIC REF	PART NUMBER	QTY	PART NAME 1 2 3 4 5 6 (PRODUCT LEVEL)	SEE PAGE
	1	1	**3K-0360**	1	SEAL-O-RING	
	2	1	**161-6154**	1	SEAL-O-RING	
	3	1	**6E-0381**	1	RING-BACKUP	

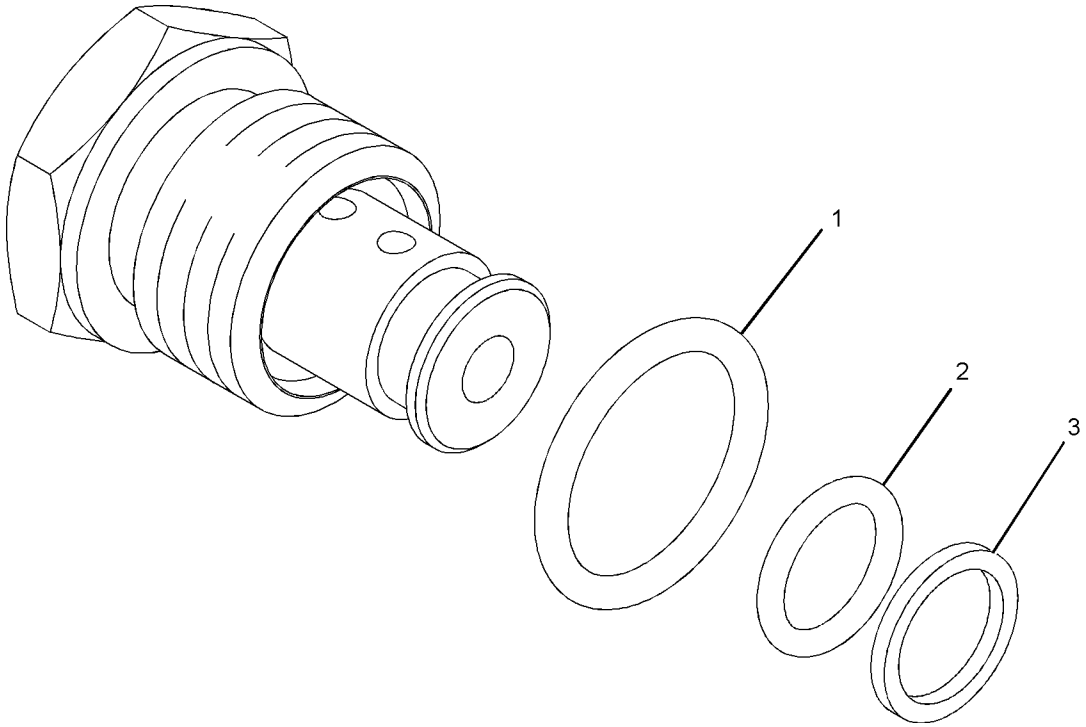

GRAPHIC #1 **<END>** g01016882

269-8153 VALVE GP-CONTROL

S/N: PPP1-UP; SSS1-UP; TTT1-UP
PART OF 269-8160 VALVE GP-BANK 3
AN ATTACHMENT

SMCS-5051 **i06146532**

NOTE	REF NO	GRAPHIC REF	PART NUMBER	QTY	PART NAME 1 2 3 4 5 6 (PRODUCT LEVEL)	SEE PAGE
	1	1	**2S-2596**	1	SPRING	
	3	1	**4T-1108**	2	PLUG	
Y	4	1	**4T-1860**	1	VALVE GP-SHUTTLE	652
B	5	1	**4T-4628**	5	SHIM (0.5-MM THK)	
	6	1	**4T-4631**	1	SPRING	
	7	1	**100-8010**	1	VALVE-CHECK	
	8	1	**100-8011**	1	PLUG	
	9	1	**153-6976**	1	SPRING	
	10	1	**153-7067**	1	RETAINER	
	11	1	**153-7551**	1	RETAINER	
	12	1	**161-2684**	1	SCREW (3/8-24X2.48-IN)	
	14	1	**173-0511**	1	HOUSING	
	15	1	**173-0514**	1	COVER	
M	18	1	**102-7365**	2	BOLT-SOCKET HEAD (M8X1.25X100-MM)	
	19	1	*164-4180*	1	PLUG AS	
		1	**9S-4181**	1	PLUG (5/16-12-THD)	
		1	**7M-8485**	1	SEAL-O-RING	
	20	1	*173-3993*	2	PLUG AS	
					(EACH INCLUDES)	
		1	**9S-8001**	1	PLUG	
		1	**4J-7533**	1	SEAL-O-RING	
	21	1	*183-7263*	1	PLUG AS	
		1	**9S-8002**	1	PLUG	
		1	**3J-7354**	1	SEAL-O-RING	
B	22	1	**2J-2866**	2	SHIM (0.12-MM THK)	
	23	1	**3D-4603**	1	PLUG-PIPE	
	24	1	**4J-5351**	2	SEAL-O-RING	
	25	1	**291-8148**	2	SEAL-O-RING	
	26	1	**4T-5072**	2	RING-BACKUP	
	27	1	**4T-5073**	2	RING-BACKUP	
	28	1	**5K-0227**	1	SEAL-O-RING	
	29	1	**5M-2057**	1	SEAL-O-RING	
M	30	1	**6V-5192**	2	BOLT-SOCKET HEAD (M8X1.25X30-MM)	
	31	1	**7J-0204**	1	SEAL-O-RING	
	32	1	**7J-9933**	2	SEAL-O-RING	
	33	1	**7M-8485**	1	SEAL-O-RING	

PARTS SHOWN IN GRAPHIC(S) WITHOUT A REFERENCE NUMBER ARE NOT SERVICED SEPARATELY

B - USE AS REQUIRED
M - METRIC PART
Y - SEPARATE ILLUSTRATION

269-8153 **VALVE GP-CONTROL (*contd.*)** **i06146532**

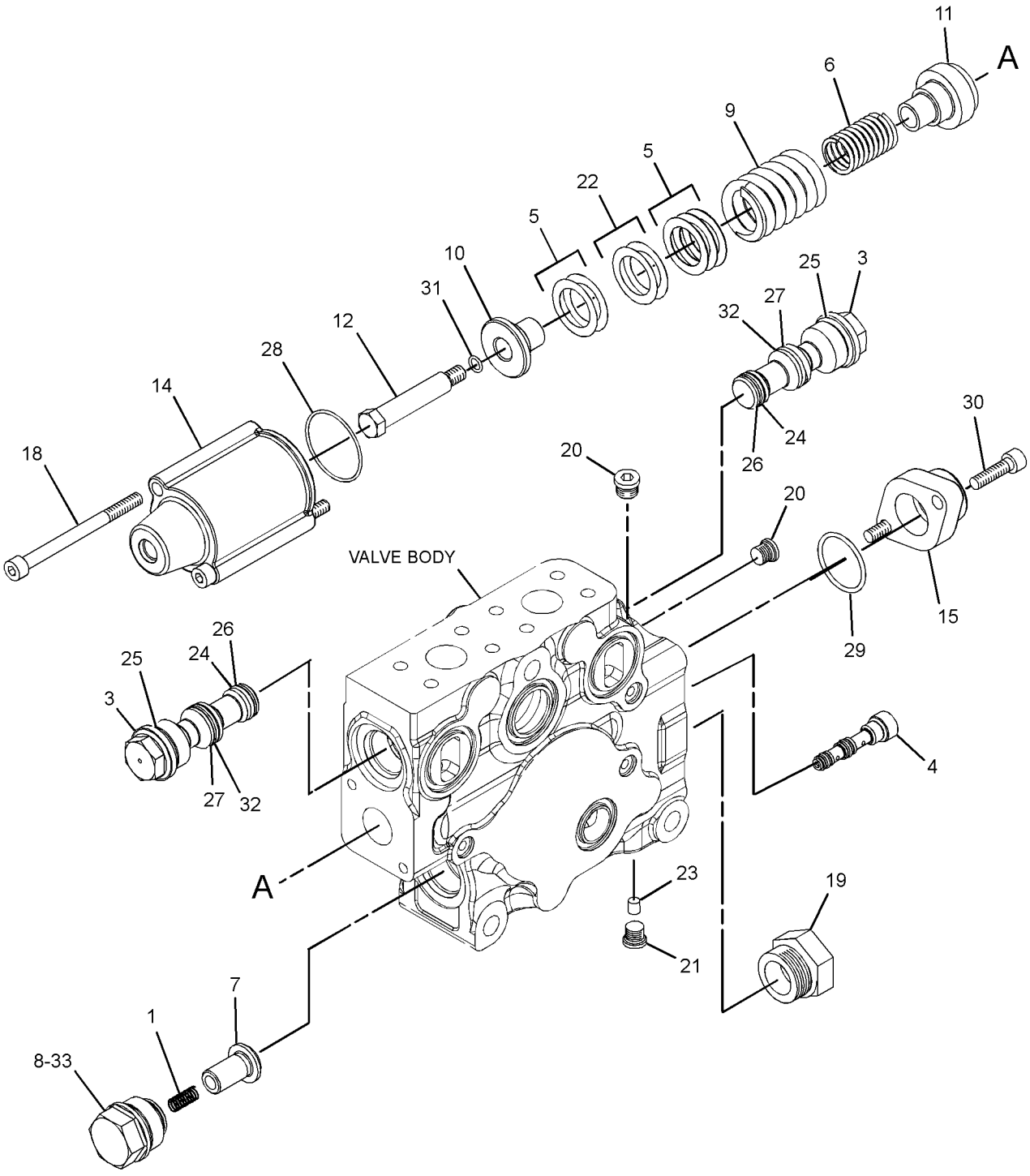

GRAPHIC #1 **<END>** g01363148

269-8154 VALVE GP-CONTROL

S/N: PPP1-UP; SSS1-UP; TTT1-UP
PART OF 269-8161 VALVE GP-BANK 2, 269-8160 VALVE GP-BANK 3
AN ATTACHMENT

SMCS-5051 **i06146531**

NOTE	REF NO	GRAPHIC REF	PART NUMBER	QTY	PART NAME 1 2 3 4 5 6 (PRODUCT LEVEL)	SEE PAGE
	1	1	**2S-2596**	1	SPRING	
B	3	1	**4B-4278**	5	WASHER (10.2X20.5X1.6-MM THK)	
	4	1	**4T-1108**	2	PLUG	
	5	1	**4T-1649**	1	HOUSING	
	6	1	**4T-1701**	1	SPRING	
Y	7	1	**4T-1860**	1	VALVE GP-SHUTTLE (BULLDOZER TILT)	652
	8	1	**4T-4511**	1	SLEEVE	
B	9	1	**4T-4628**	6	SHIM (0.5-MM THK)	
	10	1	**4T-4631**	1	SPRING	
	12	1	**100-8010**	1	VALVE-CHECK (BULLDOZER TILT)	
	13	1	**100-8011**	1	PLUG	
	14	1	**153-6976**	1	SPRING	
	15	1	**153-7067**	1	RETAINER	
	16	1	**153-7551**	1	RETAINER	
	17	1	**161-2684**	1	SCREW (3/8-24X2.48-IN)	
	19	1	**173-0511**	1	HOUSING	
	20	1	**173-0514**	1	COVER	
M	23	1	**102-7365**	2	BOLT-SOCKET HEAD (M8X1.25X100-MM)	
	24	1	*173-3993*	2	PLUG AS	
					(EACH INCLUDES)	
		1	**9S-8001**	1	PLUG	
		1	**4J-7533**	1	SEAL-O-RING	
	25	1	*183-7263*	1	PLUG AS	
		1	**9S-8002**	1	PLUG	
		1	**3J-7354**	1	SEAL-O-RING	
B	26	1	**2J-2866**	2	SHIM (0.12-MM THK)	
	27	1	**4J-5351**	2	SEAL-O-RING	
	28	1	**4K-1388**	2	SEAL-O-RING	
	29	1	**4T-5072**	2	RING-BACKUP	
	30	1	**4T-5073**	2	RING-BACKUP	
	31	1	**366-4972**	1	RING-BACKUP	
	32	1	**5K-0227**	1	SEAL-O-RING	
	33	1	**5M-2057**	2	SEAL-O-RING	
M	34	1	**6V-5192**	2	BOLT-SOCKET HEAD (M8X1.25X30-MM)	
	35	1	**6V-5556**	1	SEAL-O-RING	
	36	1	**7J-0204**	1	SEAL-O-RING	
	37	1	**7J-9933**	2	SEAL-O-RING	
	38	1	**7M-8485**	1	SEAL-O-RING	
M	39	1	**8T-4185**	2	BOLT (M10X1.5X50-MM)	
	40	1	**9J-8126**	1	PLUG-ORIFICE	

B - USE AS REQUIRED
M - METRIC PART
Y - SEPARATE ILLUSTRATION

269-8154 **VALVE GP-CONTROL (*contd.*)** **i06146531**

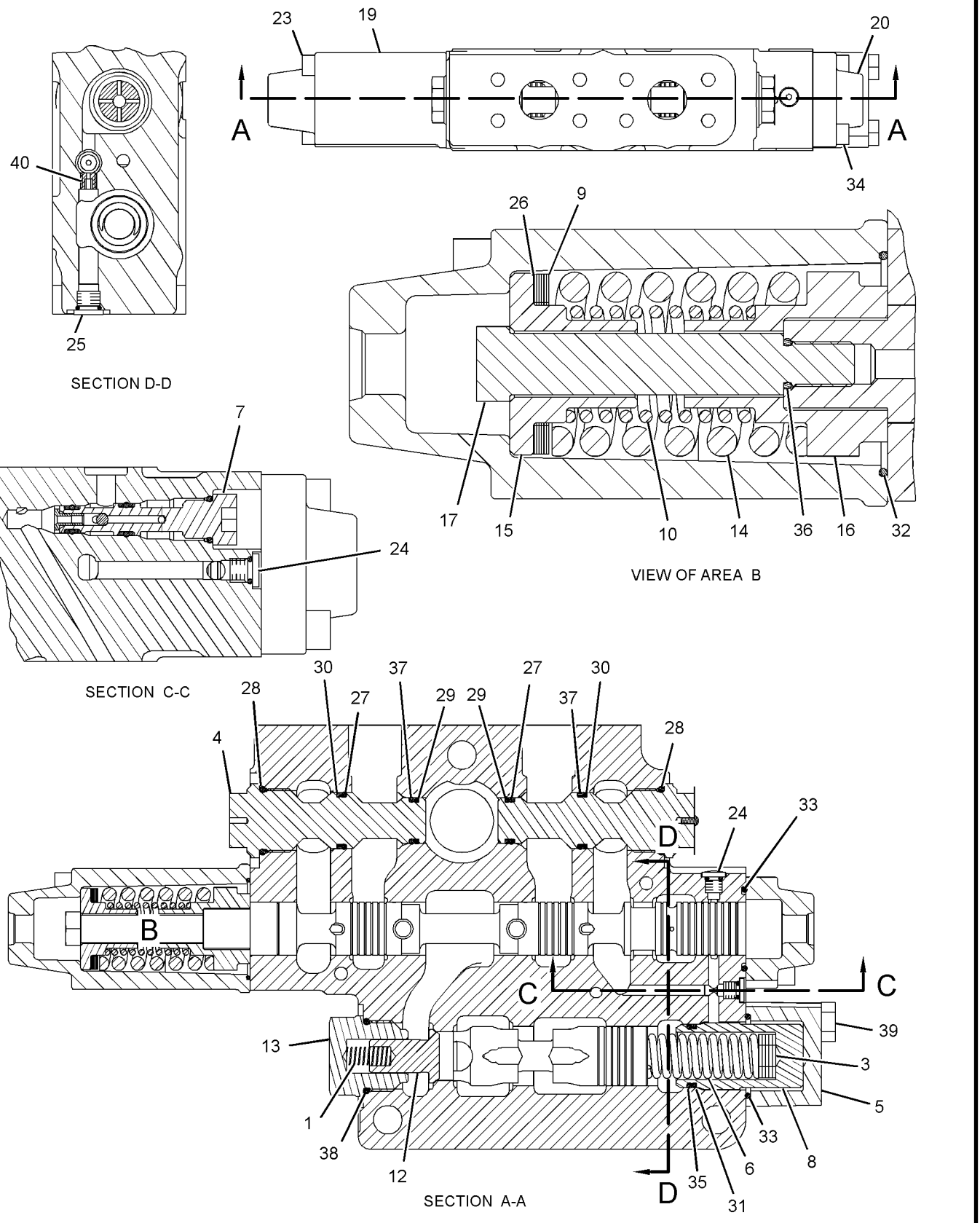

GRAPHIC #1 **<END>** g01357845

269-8155 VALVE GP-CONTROL

S/N: PPP1-UP; SSS1-UP; TTT1-UP
PART OF 269-8161 VALVE GP-BANK 2, 269-8160 VALVE GP-BANK 3
AN ATTACHMENT

SMCS-5051 **i06146525**

NOTE	REF NO	GRAPHIC REF	PART NUMBER	QTY	PART NAME 1 2 3 4 5 6 (PRODUCT LEVEL)	SEE PAGE
	1	1,2	**2S-2596**	2	SPRING	
	3	1	**4T-1108**	1	PLUG	
Y	4	2	**4T-1860**	1	VALVE GP-SHUTTLE (BULLDOZER LIFT)	652
B	5	1	**4T-4628**	5	SHIM (0.5-MM THK)	
	6	1	**4T-5072**	1	RING-BACKUP	
	7	1,2	**100-8010**	2	VALVE-CHECK (BULLDOZER LIFT)	
	8	1	**100-8011**	1	PLUG	
	9	2	**100-8012**	1	BODY	
	10	1	**153-7067**	1	RETAINER	
	11	2	**153-7549**	1	RETAINER	
	12	1	**153-7550**	1	RETAINER	
	13	2	**153-7553**	1	SPRING	
	14	1	**161-2685**	1	SCREW (3/8-24-THD)	
	15	2	**163-5671**	1	WASHER (17X39X2-MM THK)	
	16	1	**164-0938**	1	SPRING	
	18	1	**170-4001**	1	SPRING	
	19	1	**173-0511**	1	HOUSING	
	20	2	**173-0512**	1	HOUSING	
	21	2	**173-0515**	1	SPACER	
M	24	1	**102-7365**	2	BOLT-SOCKET HEAD (M8X1.25X100-MM)	
	25	2	*164-4180*	1	PLUG AS	
		2	**9S-4181**	1	PLUG (5/16-12-THD)	
		2	**7M-8485**	1	SEAL-O-RING	
	26	2	*173-3993*	2	PLUG AS	
					(EACH INCLUDES)	
		2	**9S-8001**	1	PLUG	
		2	**4J-7533**	1	SEAL-O-RING	
	27	2	*183-7263*	1	PLUG AS	
		2	**9S-8002**	1	PLUG	
		2	**3J-7354**	1	SEAL-O-RING	
B	28	1	**2J-2866**	3	SHIM (0.12-MM THK)	
	29	2	**3D-4603**	1	PLUG-PIPE	
	30	1	**4J-5351**	1	SEAL-O-RING	
	31	1,2	**4K-1388**	2	SEAL-O-RING	
	32	1,2	**4T-5073**	2	RING-BACKUP	
	33	1,2	**5K-0227**	2	SEAL-O-RING	
	34	2	**5M-2057**	1	SEAL-O-RING	
	35	1	**7J-0204**	1	SEAL-O-RING	
	36	1,2	**7J-9933**	2	SEAL-O-RING	
	37	1	**7M-8485**	1	SEAL-O-RING	
M	38	2	**9X-6154**	2	BOLT-SOCKET HEAD (M8X1.25-THD)	

PARTS SHOWN IN GRAPHIC(S) WITHOUT A REFERENCE NUMBER ARE NOT SERVICED SEPARATELY

B - USE AS REQUIRED
M - METRIC PART
Y - SEPARATE ILLUSTRATION

269-8155 **VALVE GP-CONTROL (*contd.*)** **i06146525**

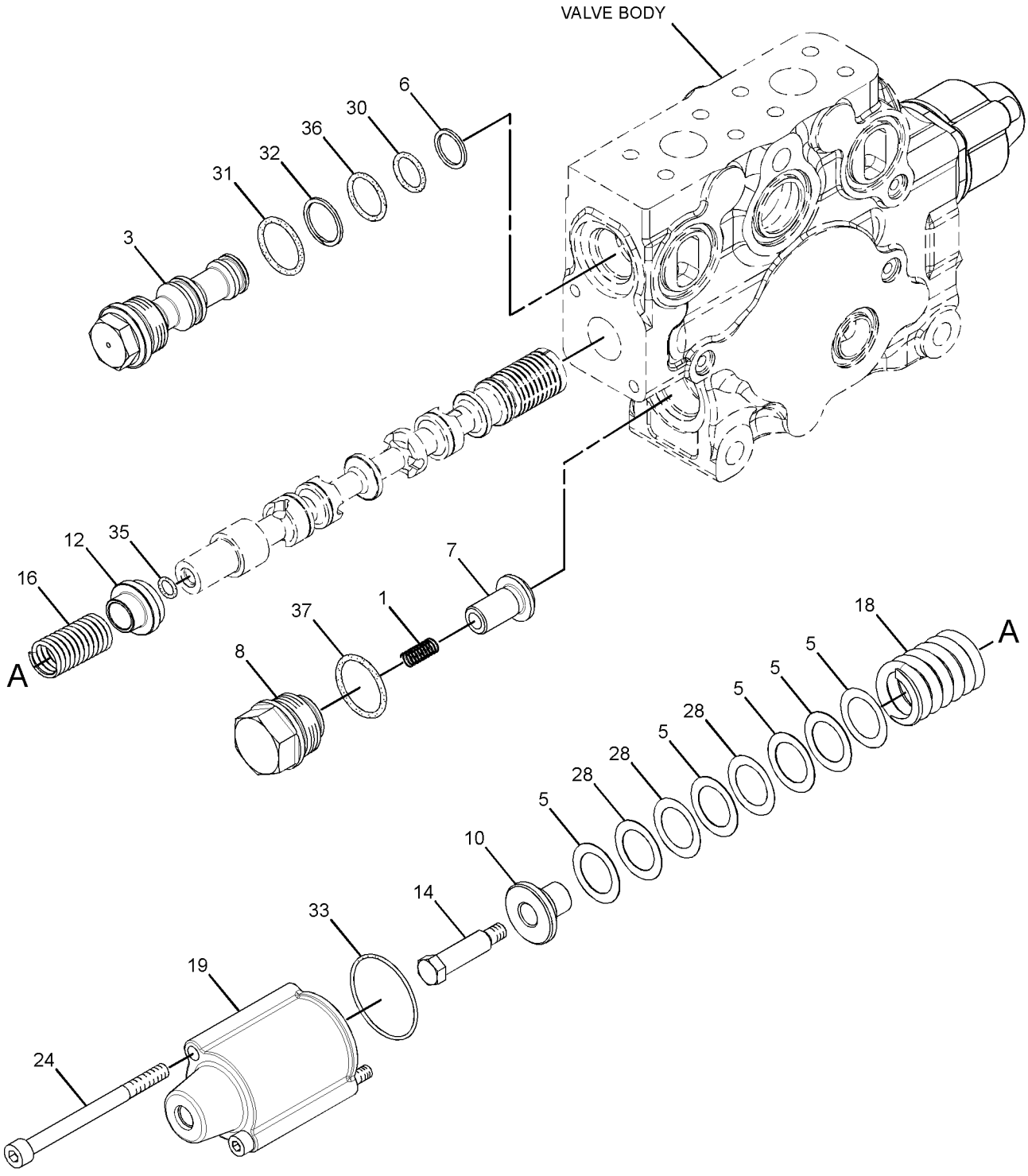

GRAPHIC #1 g01358558

269-8155 **VALVE GP-CONTROL (*contd.*)** **i06146525**

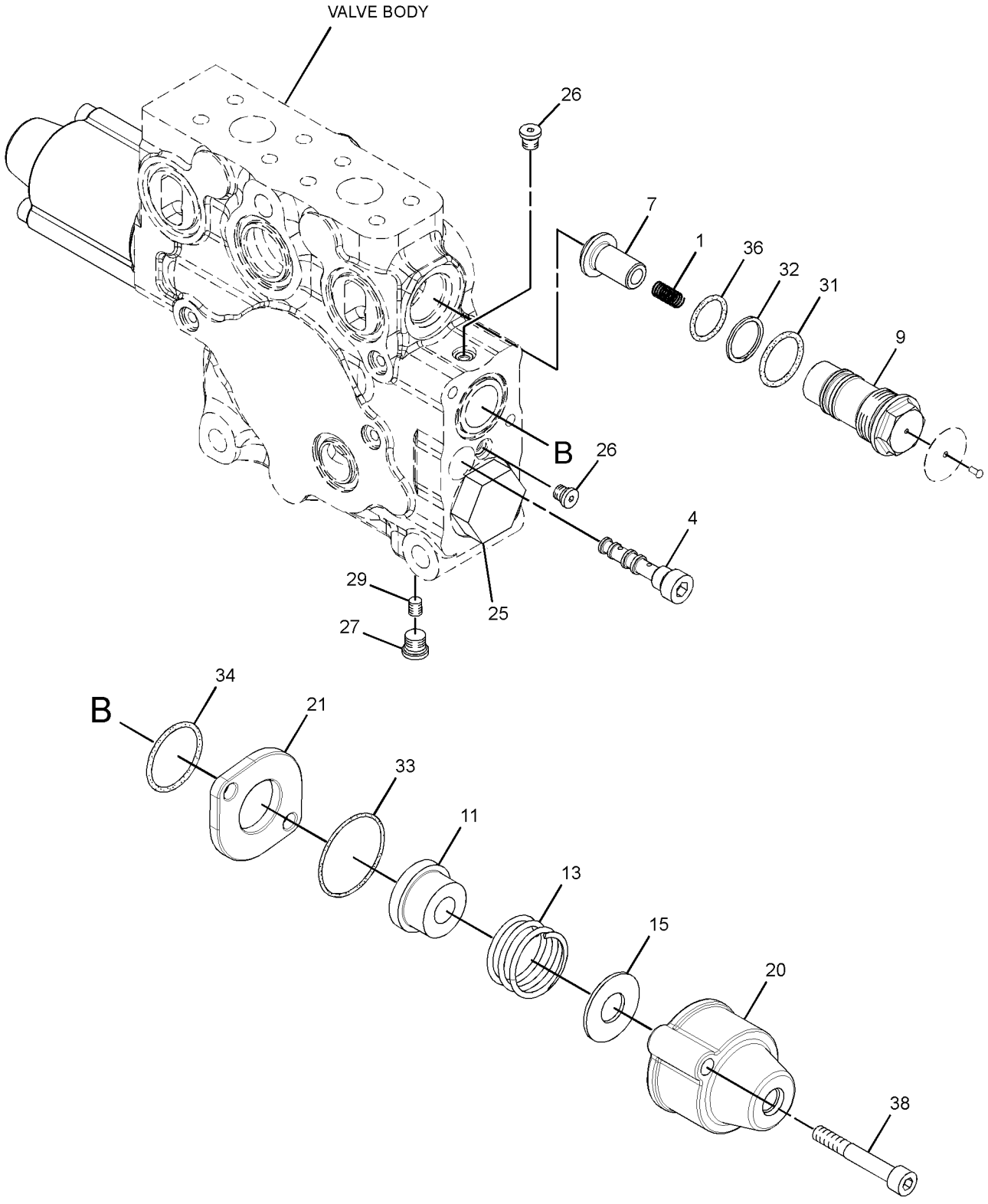

GRAPHIC #2 **<END>** g01358559

389-1531 VALVE GP-CONTROL–BRAKE

S/N: PPP1-UP; SSS1-UP; TTT1-UP
PART OF 398-4501 VALVE & MOUNTING GP
ALSO AN ATTACHMENT

SMCS-5051 **i06216470**

NOTE	REF NO	GRAPHIC REF	PART NUMBER	QTY	PART NAME 1 2 3 4 5 6 (PRODUCT LEVEL)	SEE PAGE
Y	1	1	**174-4909**	1	VALVE GP-SOLENOID (BRAKE)	653
	2	1	**251-3269**	1	CARTRIDGE AS-VALVE (SCREEN)	
J	3	1	**382-0936**	2	VALVE GP-PRESSURE REDUCING (BRAKE)	
L	4	1	**382-0937**	1	ACCUMULATOR GP (BRAKE)	
	5	1	**382-0938**	1	VALVE GP-CONTROL (IMPLEMENT, STEERING, BRAKE)	
		1	**033-6027**	1	SEAL-O-RING	
		1	**033-6043**	1	SEAL-O-RING	
		1	**169-1616**	2	RING-BACKUP	
N	6	1	**268-8210**	1	VALVE GP-SOLENOID (24-VOLT) (HYDRAULIC LOCKOUT)	
					AVAILABLE REPAIR KIT(S):	
J			**166-0321**	1	KIT-SEAL (PARKING BRAKE)	
					(INCLUDES SEALS)	
L			**172-7753**	1	KIT-SEAL (BRAKE ACCUMULATOR)	
					(INCLUDES BUNA O-RINGS & BACKUP RING)	
N			**227-5509**	1	KIT-SEAL (SOLENOID VALVE)	
					(INCLUDES SEALS)	

J - KIT MARKED J SERVICES PARTS MARKED J
L - KIT MARKED L SERVICES PARTS MARKED L
N - KIT MARKED N SERVICES PARTS MARKED N
Y - SEPARATE ILLUSTRATION

389-1531 **VALVE GP-CONTROL (*contd.*)** **i06216470**

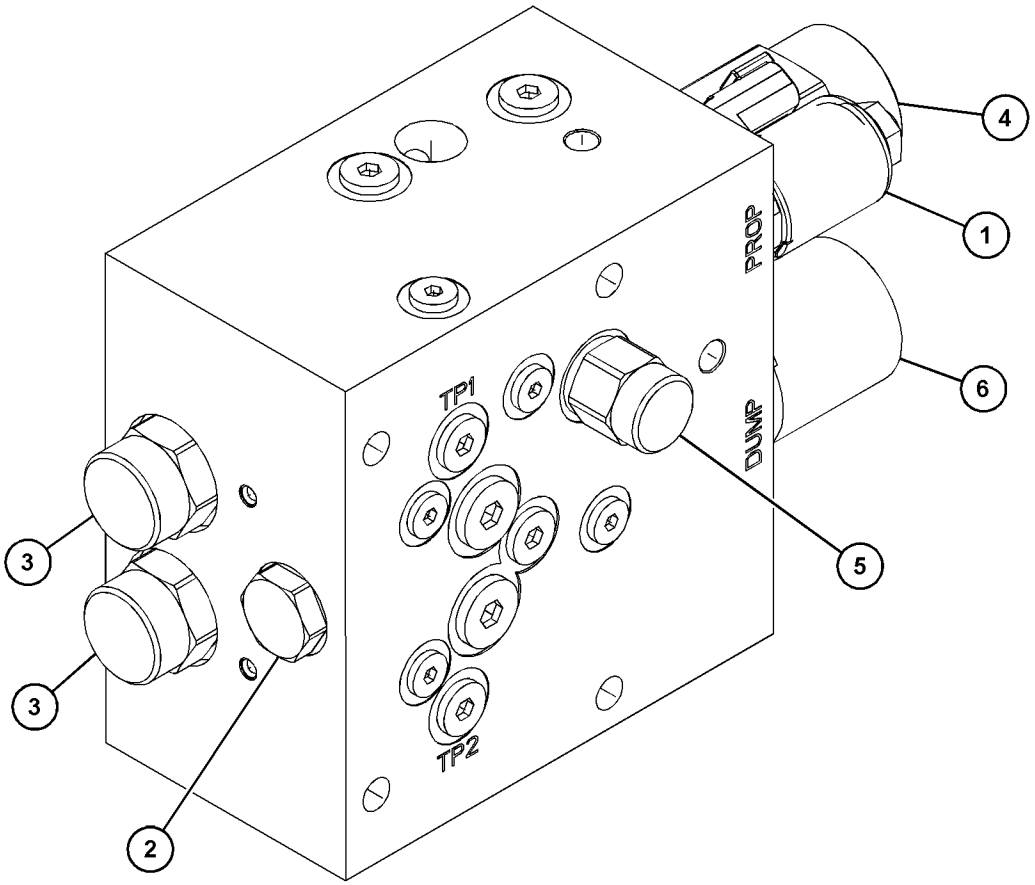

GRAPHIC #1 **<END>** g03548136

200-0189 VALVE GP-PILOT

S/N: PPP1-UP; SSS1-UP; TTT1-UP
PART OF 398-4494, 398-4496 CONTROL GP-PILOT OPERATED HYD
AN ATTACHMENT

SMCS-5059 **i05558652**

NOTE	REF NO	GRAPHIC REF	PART NUMBER	QTY	PART NAME 1 2 3 4 5 6 (PRODUCT LEVEL)	SEE PAGE
Y	1	1	**194-5033**	1	VALVE GP-PILOT CARTRIDGE (BLADE TILT RIGHT)	639
	2	1	**141-4852**	1	BOOT	
	3	1	**145-2334**	1	ADAPTER	
	4	1	**163-5512**	2	GROMMET	
	5	1	**213-6657**	1	PLATE AS	
	6	1	**180-6152**	1	RETAINER	
Y	7	1	**194-5032**	1	VALVE GP-PILOT CARTRIDGE (BULLDOZER LIFT)	638
Y	8	1	**194-5033**	1	VALVE GP-PILOT CARTRIDGE (BLADE TILT LEFT)	639
	9	1	**196-5515**	1	LEVER AS	
	9A	1	**146-6315**	3	PIN-ADJUSTMENT	
	9B	1	**199-7834**	1	DETENT AS	
		1	**8S-7499**	2	PIN-SPRING	
	9C	1	**146-6317**	1	RETAINER	
	9D	1	**159-3781**	1	SPRING	
M	9E	1	**5C-2890**	3	NUT (M6X1-THD)	
M	9F	1	**191-8920**	2	BOLT-SOCKET HEAD (M6X1X12-MM)	
	10	1	**206-2800**	1	PLATE-DETENT	
	11	1	*162-0177*	3	PLUG AS	
					(EACH INCLUDES)	
		1	**3J-1907**	1	SEAL-O-RING	
		1	**9S-8004**	1	PLUG-O-RING	
	12	1	**200-5003**	8	SHIM (0.25-MM THK)	
	13	1	**136-9297**	1	PLATE	
	14	1	**136-9298**	1	RETAINER	
	15	1	**137-9755**	1	COIL AS-DETENT (24-VOLT)	
D		1	**6V-2689**		TUBE-HEAT SHRINK (6.35-MM DIA) (0.2-M)	
		1	**186-3735**	2	PIN-CONNECTOR (16-GA TO 18-GA)	
	16	1	**149-5470**	1	PLATE	
M	17	1	**191-8921**	4	BOLT-SOCKET HEAD (M6X1X25-MM)	
	18	1	**102-8802**	1	KIT-RECEPTACLE (2-PIN)	
					(INCLUDES RECEPTACLE AS & WEDGE)	
	22	1	**8L-2786**	1	SEAL-O-RING	
	23	1	*183-7263*	5	PLUG AS	
					(EACH INCLUDES)	
		1	**3J-7354**	1	SEAL-O-RING	
		1	**9S-8002**	1	PLUG-O-RING	
Y	24	1	**194-5032**	1	VALVE GP-PILOT CARTRIDGE (BULLDOZER LOWER)	638

D - ORDER BY THE METER
M - METRIC PART
Y - SEPARATE ILLUSTRATION

200-0189 **VALVE GP-PILOT (*contd.*)** **i05558652**

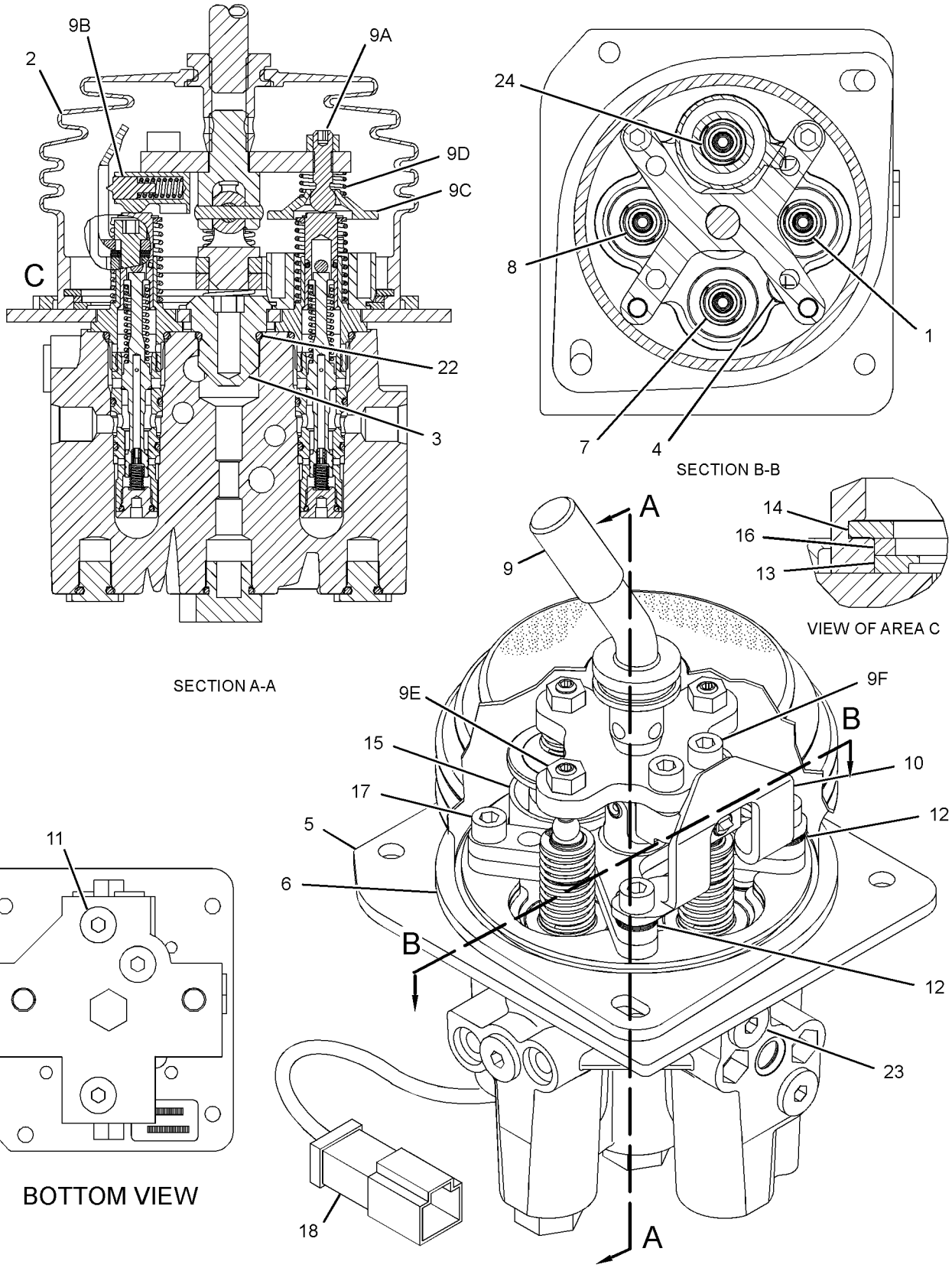

GRAPHIC #1 **<END>** g01946058

194-5032 VALVE GP-PILOT CARTRIDGE

S/N: PPP1-UP; SSS1-UP; TTT1-UP
PART OF 200-0189 VALVE GP-PILOT
AN ATTACHMENT

SMCS-5059 **i05558743**

NOTE	REF NO	GRAPHIC REF	PART NUMBER	QTY	PART NAME 1 2 3 4 5 6 (PRODUCT LEVEL)	SEE PAGE
	1	1	**3K-0360**	1	SEAL-O-RING	
	2	1	**4K-2039**	1	SEAL-O-RING	
	3	1	**6M-5062**	1	SEAL-O-RING	

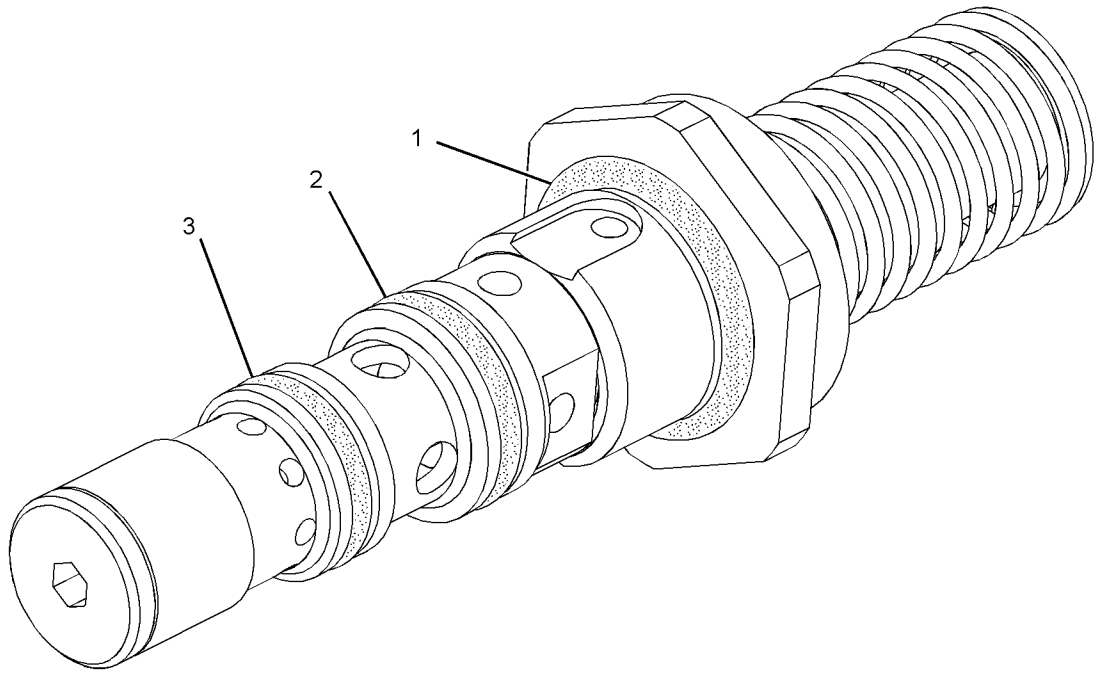

GRAPHIC #1 **<END>** g01218398

194-5033 VALVE GP-PILOT CARTRIDGE

S/N: PPP1-UP; SSS1-UP; TTT1-UP
PART OF 200-0189 VALVE GP-PILOT
AN ATTACHMENT

SMCS-5059 **i05558750**

NOTE	REF NO	GRAPHIC REF	PART NUMBER	QTY	PART NAME 1 2 3 4 5 6 (PRODUCT LEVEL)	SEE PAGE
	1	1	**3K-0360**	1	SEAL-O-RING	
	2	1	**4K-2039**	1	SEAL-O-RING	
	3	1	**6M-5062**	1	SEAL-O-RING	

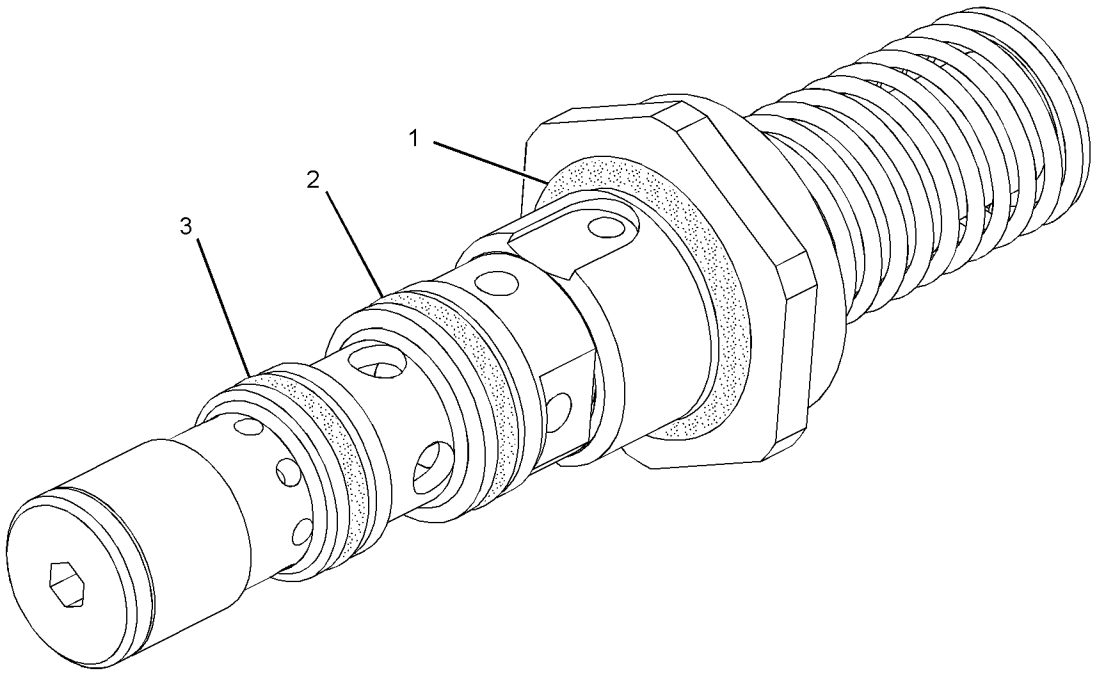

GRAPHIC #1 **<END>** g01218398

170-3357 VALVE GP-PRESSURE REDUCING

S/N: PPP1-UP; SSS1-UP; TTT1-UP
PART OF 226-4751 MANIFOLD GP-CONTROL
AN ATTACHMENT

SMCS-5117 **i05552989**

NOTE	REF NO	GRAPHIC REF	PART NUMBER	QTY	PART NAME 1 2 3 4 5 6 (PRODUCT LEVEL)	SEE PAGE
	1	1	**3K-0360**	1	SEAL-O-RING	
	2	1	**161-6149**	1	SEAL-O-RING	
	3	1	**095-1750**	1	SEAL-O-RING	
	4	1	**161-6161**	2	RING-BACKUP	
	5	1	**187-0541**	2	RING-BACKUP	

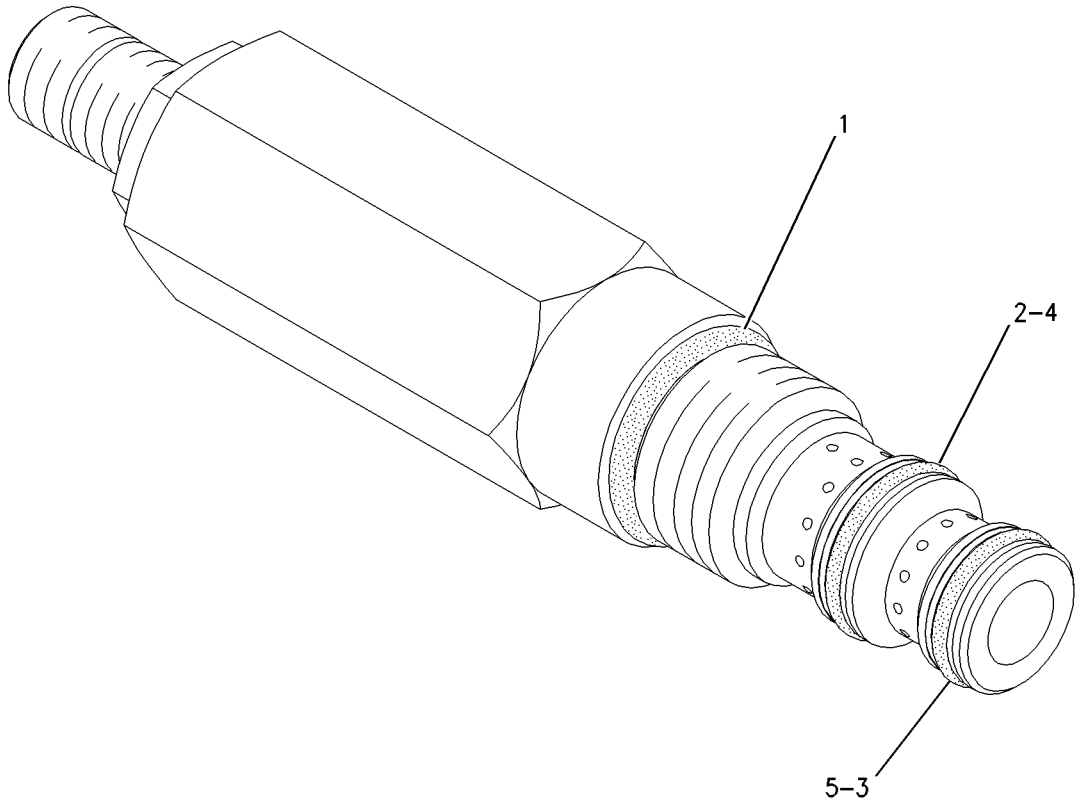

GRAPHIC #1 **<END>** g00777733

347-0612 VALVE GP-PUMP CONTROL–FLOW COMPENSATOR

S/N: PPP1-UP; SSS1-UP; TTT1-UP
PART OF 464-2354, 476-6616 PUMP GP-PISTON
ALSO AN ATTACHMENT

SMCS-5455 **i06156224**

NOTE	REF NO	GRAPHIC REF	PART NUMBER	QTY	PART NAME 1 2 3 4 5 6 (PRODUCT LEVEL)	SEE PAGE
M	1	1	**8T-8442**	4	BOLT-SOCKET HEAD (M6X1X30-MM)	
	2	1	**280-7870**	1	GASKET	
	3	1	**6E-6528**	2	SEAL	
	4	1	**200-5362**	2	SEAL-O-RING	
	5	1	**200-5363**	2	RING-THRUST	
	6	1	**033-6043**	1	SEAL-O-RING	
	7	1	**6V-8352**	1	SEAL-O-RING	

M - METRIC PART

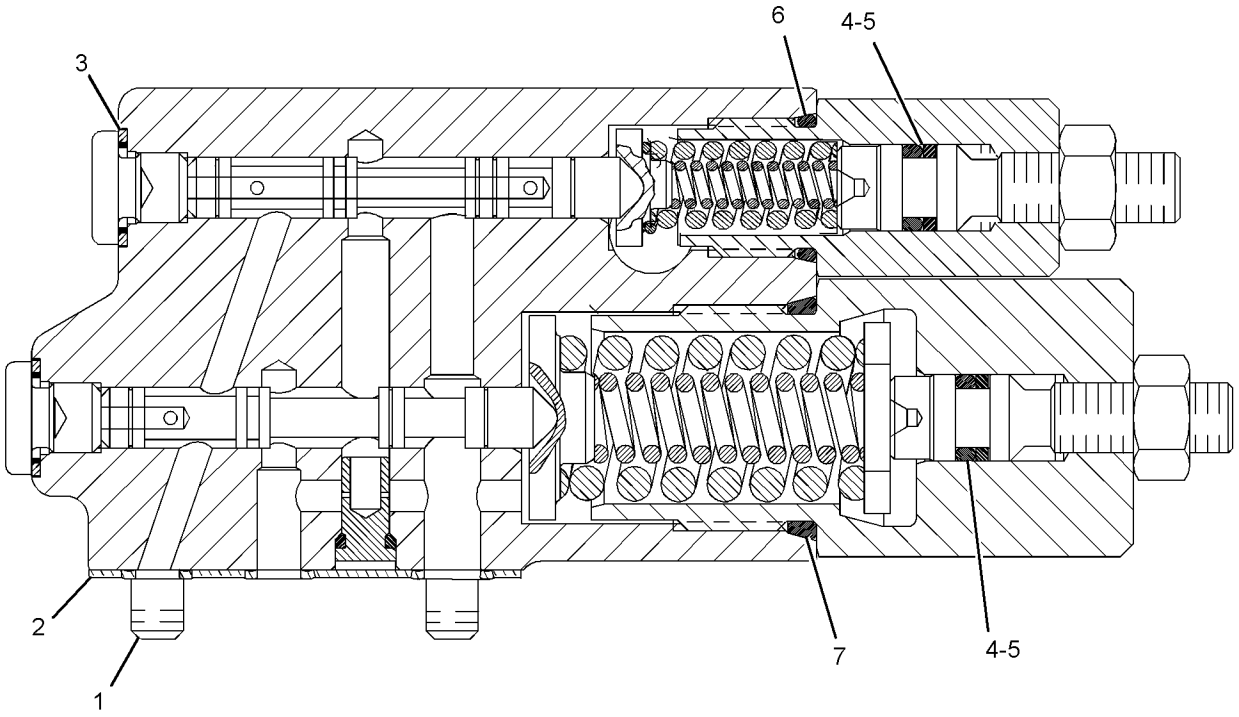

GRAPHIC #1 **<END>** g03833872

462-0698 VALVE GP-PUMP CONTROL

S/N: PPP1-UP; SSS1-UP; TTT1-UP
PART OF 433-9811 PUMP GP-PISTON
ALSO AN ATTACHMENT

SMCS-5455 **i06215113**

NOTE	REF NO	GRAPHIC REF	PART NUMBER	QTY	PART NAME 1 2 3 4 5 6 (PRODUCT LEVEL)	SEE PAGE
	1	1	**316-5999**	2	SOLENOID AS (PUMP CONTROL VALVE)	
	2	1	**462-0697**	1	CONTROL-PISTON	
	3	1	**6H-9691**	1	SEAL-O-RING	
	4	1	**462-0689**	1	PIN-ECCENTRIC	
	5	1	**462-0687**	1	SPRING-PRESSURE	
	6	1	**462-0686**	1	LEVER-FEEDBACK	
	7	1	**382-9274**	1	GASKET	
	8	1	**462-0683**	1	SPRING-COIL	
	9	1	**382-9276**	1	GASKET	
	10	1	**258-0085**	4	BOLT	
	11	1	**202-6535**	2	PIN	
	12	1	**215-8011**	1	BOLT-SPECIAL	
B	13	1	**233-9808**	1	SHIM (0.6-MM THK)	
B	14	1	**216-4553**	1	SHIM (1.2-MM THK)	
B	15	1	**216-4552**	1	SHIM (1-MM THK)	
B	16	1	**216-4555**	1	SHIM (1.6-MM THK)	
B	17	1	**216-4554**	1	SHIM (1.4-MM THK)	
B	18	1	**216-4551**	1	SHIM (0.8-MM THK)	
	19	1	**462-0691**	1	KIT-LEVER (INCLUDES LEVERS)	

B - USE AS REQUIRED

462-0698 **VALVE GP-PUMP CONTROL (*contd.*)** **i06215113**

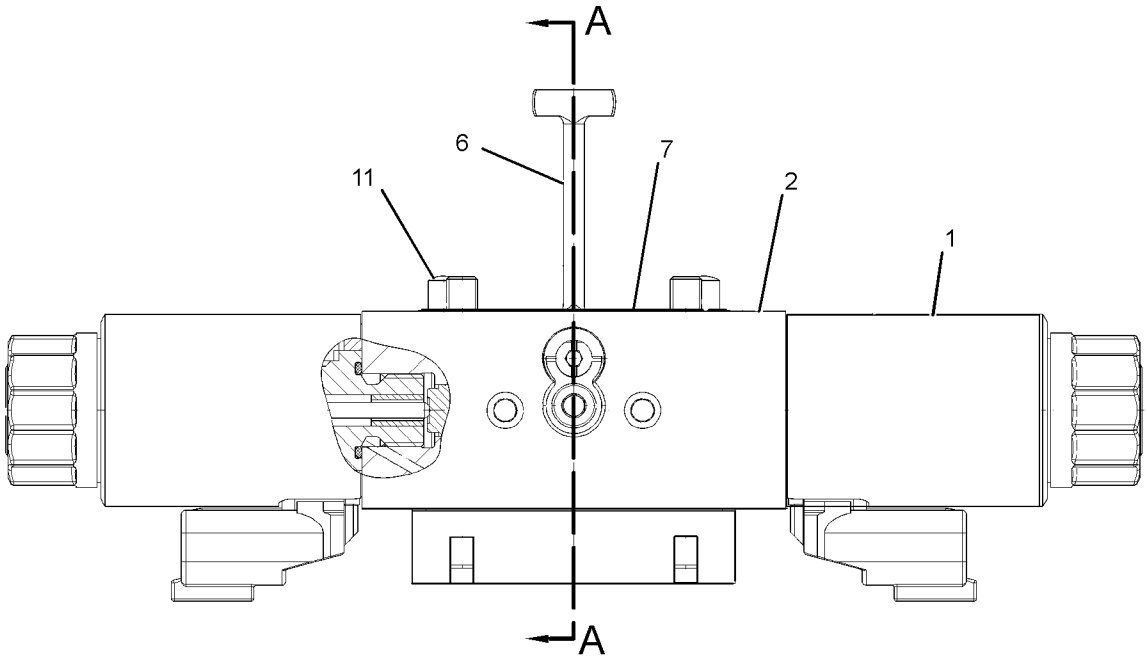

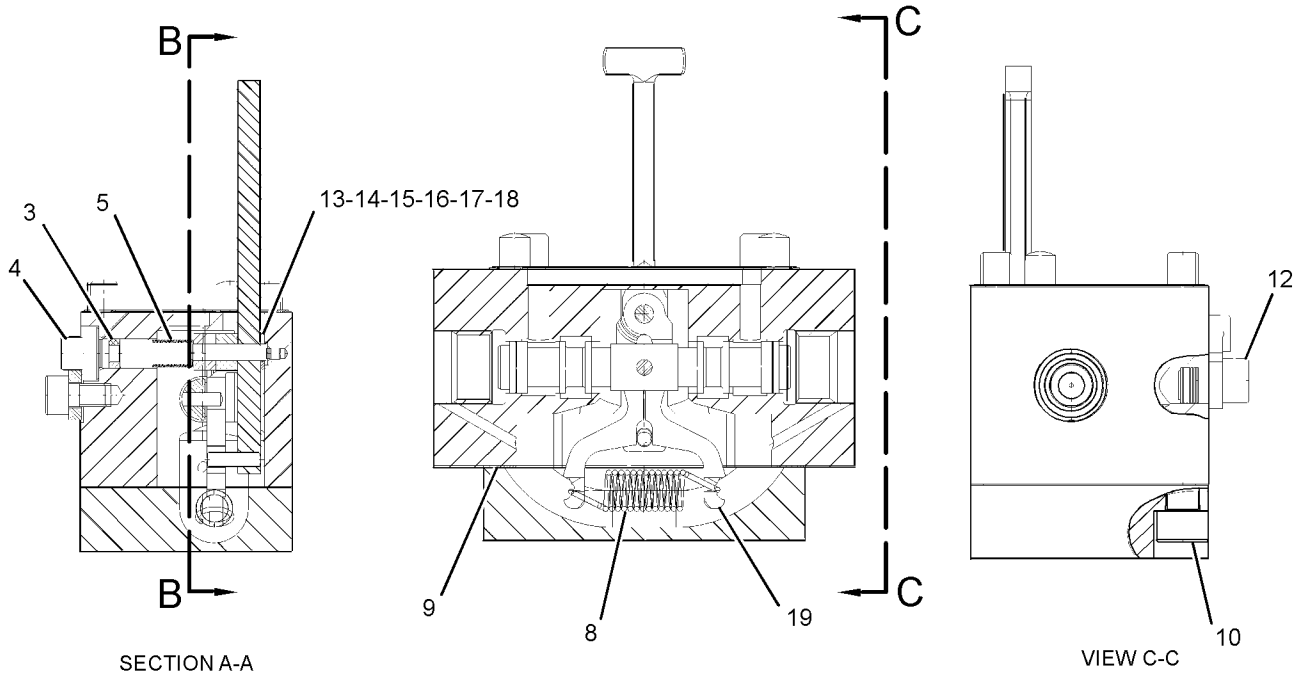

GRAPHIC #1 **<END>** g03859126

222-1160 VALVE GP-QUICK-DROP

S/N: PPP1-UP; SSS1-UP; TTT1-UP
PART OF 398-4286, 398-4331 HYDRAULIC AR
ALSO AN ATTACHMENT

SMCS-5110 **i06146547**

NOTE	REF NO	GRAPHIC REF	PART NUMBER	QTY	PART NAME 1 2 3 4 5 6 (PRODUCT LEVEL)	SEE PAGE
	1	1	**8E-8434**	1	GUARD	
Y	2	1	**227-0831**	1	VALVE GP-QUICK-DROP	645
	3	1	**8T-4121**	6	WASHER-HARD (11X21X2.5-MM THK)	
M	4	1	**8T-4186**	3	BOLT (M10X1.5X40-MM)	
M	5	1	**8T-4191**	3	BOLT (M10X1.5X16-MM)	

M - METRIC PART
Y - SEPARATE ILLUSTRATION

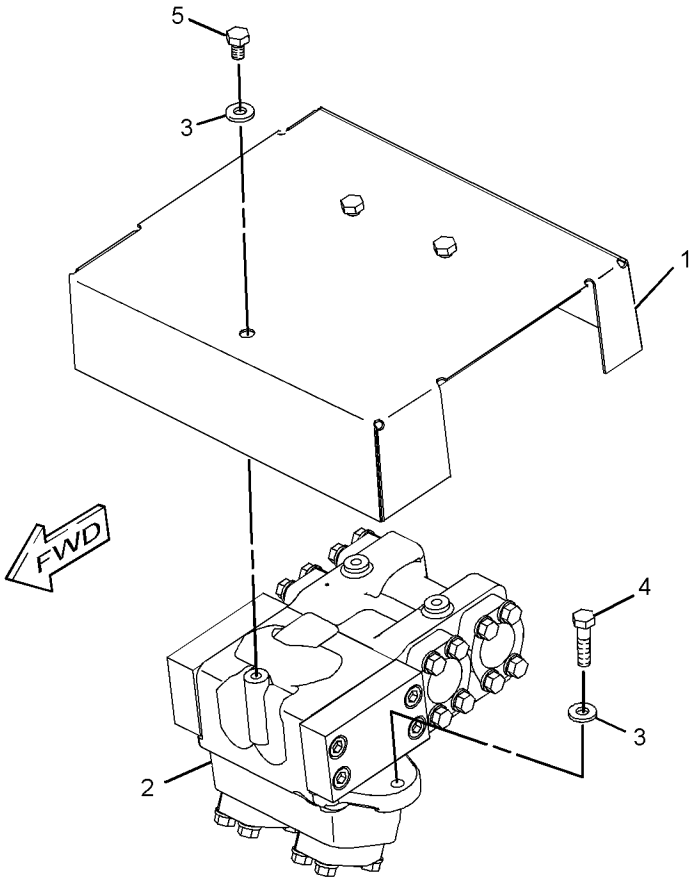

(MOUNTS TO TOP OF RADIATOR GUARD)

GRAPHIC #1 **<END>** g01206278

227-0831 VALVE GP-QUICK-DROP

S/N: PPP1-UP; SSS1-UP; TTT1-UP
PART OF 222-1160 VALVE GP-QUICK-DROP
ALSO AN ATTACHMENT

SMCS-5110 **i05640310**

NOTE	REF NO	GRAPHIC REF	PART NUMBER	QTY	PART NAME 1 2 3 4 5 6 (PRODUCT LEVEL)	SEE PAGE
	1	1	*3J-3679*	2	PLUG AS	
					(EACH INCLUDES)	
		1	**9S-8003**	1	PLUG	
		1	**1J-9671**	1	SEAL-O-RING	
B	3	1	**4T-4659**	3	SHIM (0.8-MM THK)	
	4	1	**6E-4907**	1	STOP	
	5	1	**9T-9836**	1	SLEEVE-ORIFICE	
B	6	1	**083-7784**	2	SHIM (2-MM THK)	
	7	1	**100-6211**	1	PISTON	
	8	1	**108-1847**	1	SPRING	
Z	9	1		1	STEM AS	
	10	1	**234-3043**	1	COVER	
Z	11	1		1	BODY	
	12	1	**234-3451**	1	COVER	
	14	1	**164-5619**	1	PLUG AS	
		1	**9S-8006**	1	PLUG-O-RING	
		1	**2M-9780**	1	SEAL-O-RING	
	15	1	**1P-3706**	2	SEAL-RECTANGULAR	
	16	1	**3L-3813**	1	PIN	
B	17	1	**4M-6980**	3	SHIM (0.25-MM THK)	
	18	1	**6K-8162**	1	RING-RETAINING	
M	19	1	**6V-8200**	8	BOLT-SOCKET HEAD (M12X1.75X35-MM)	
	20	1	**8C-3206**	12	FLANGE-HALF	
	21	1	**8T-4121**	24	WASHER-HARD (11X21X2.5-MM THK)	
M	22	1	**8T-4196**	24	BOLT (M10X1.5X35-MM)	

B - USE AS REQUIRED
M - METRIC PART
Z - NOT SERVICED SEPARATELY

227-0831 **VALVE GP-QUICK-DROP (*contd.*)** **i05640310**

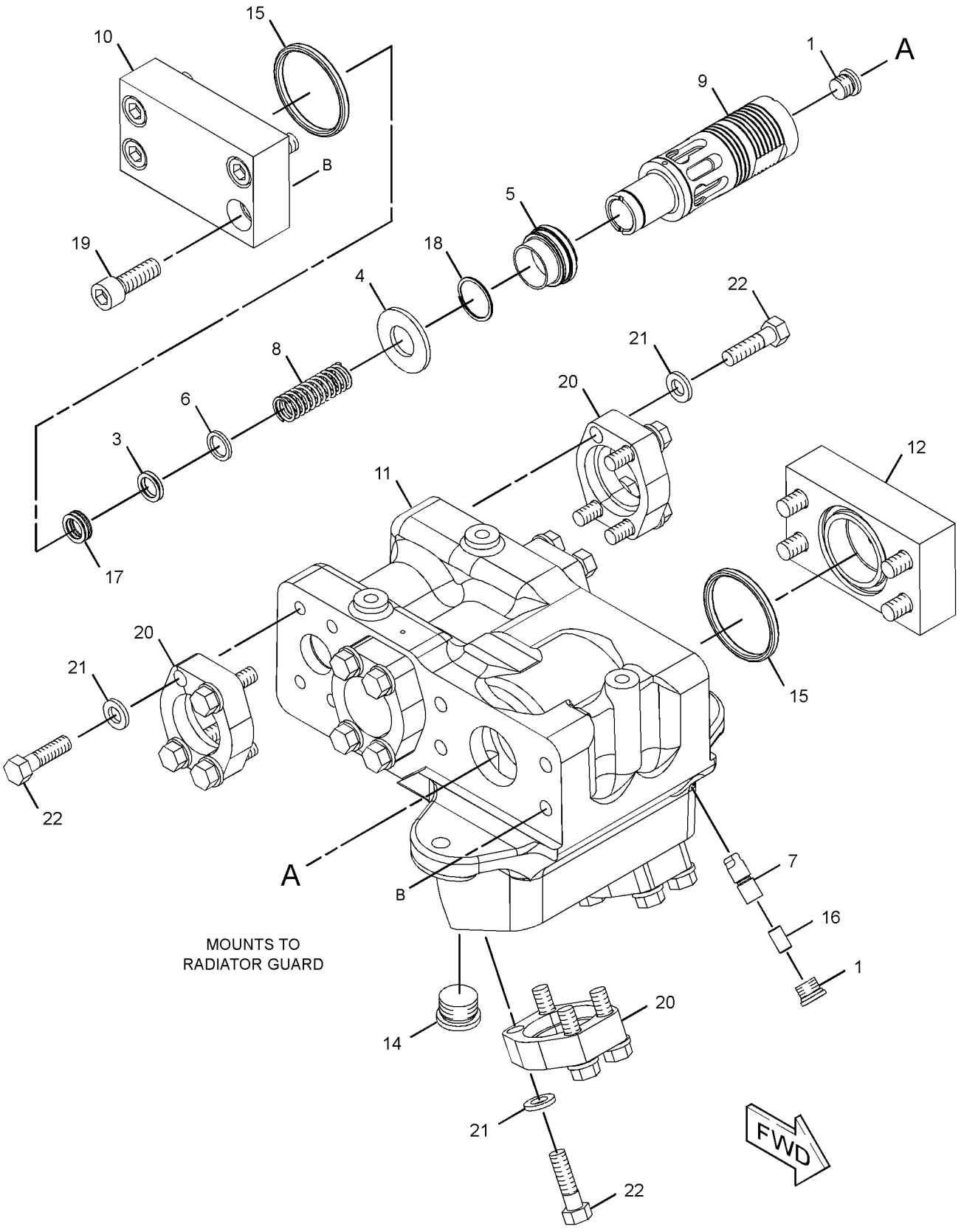

GRAPHIC #1 **<END>** g01210614

4T-4932 VALVE GP-RELIEF

S/N: PPP1-UP; SSS1-UP; TTT1-UP
DIRECT OPERATED
PART OF 273-2156 MANIFOLD GP-VALVE
AN ATTACHMENT

SMCS-5069, 5117 **i06146538**

NOTE	REF NO	GRAPHIC REF	PART NUMBER	QTY	PART NAME 1 2 3 4 5 6 (PRODUCT LEVEL)	SEE PAGE
Y	1	1	*346-3796*	1	VALVE GP-RELIEF	649
	2	1	**3K-0360**	2	SEAL-O-RING	
	3	1	**7J-9933**	1	SEAL-O-RING	

Y - SEPARATE ILLUSTRATION

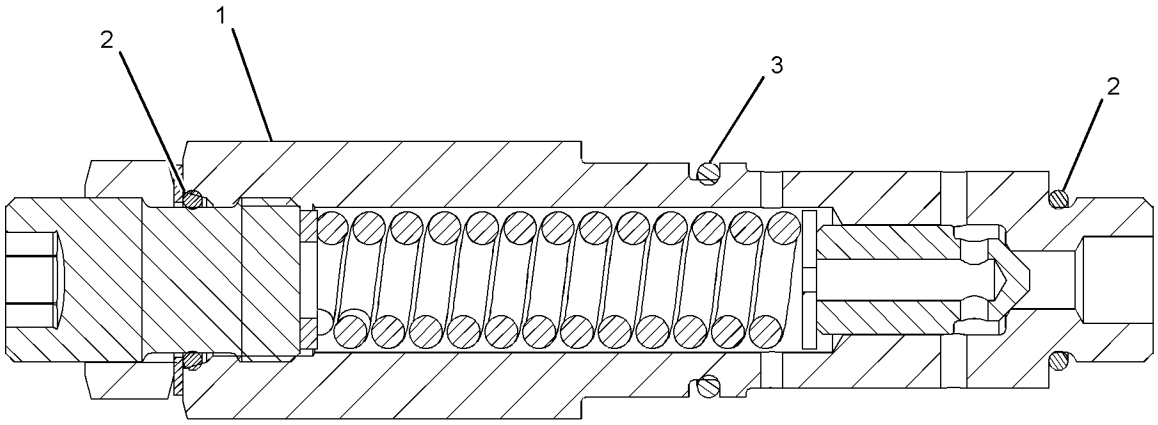

GRAPHIC #1 **<END>** g02989506

225-8026 VALVE GP-RELIEF

S/N: PPP1-UP; SSS1-UP; TTT1-UP
DIRECT OPERATED
PART OF 226-4751 MANIFOLD GP-CONTROL
AN ATTACHMENT

SMCS-5069, 5117 **i05552997**

NOTE	REF NO	GRAPHIC REF	PART NUMBER	QTY	PART NAME 1 2 3 4 5 6 (PRODUCT LEVEL)	SEE PAGE
J	1	1	**161-6149**	1	SEAL-O-RING	
J	2	1	**161-6161**	2	RING-BACKUP	
J	3	1	**2M-9780**	1	SEAL-O-RING	
					AVAILABLE REPAIR KIT(S):	
J			**133-5545**	1	KIT-SEAL (RELIEF VALVE)	
					(INCLUDES O-RING SEALS, BACKUP RING)	

J - KIT MARKED J SERVICES PART(S) MARKED J

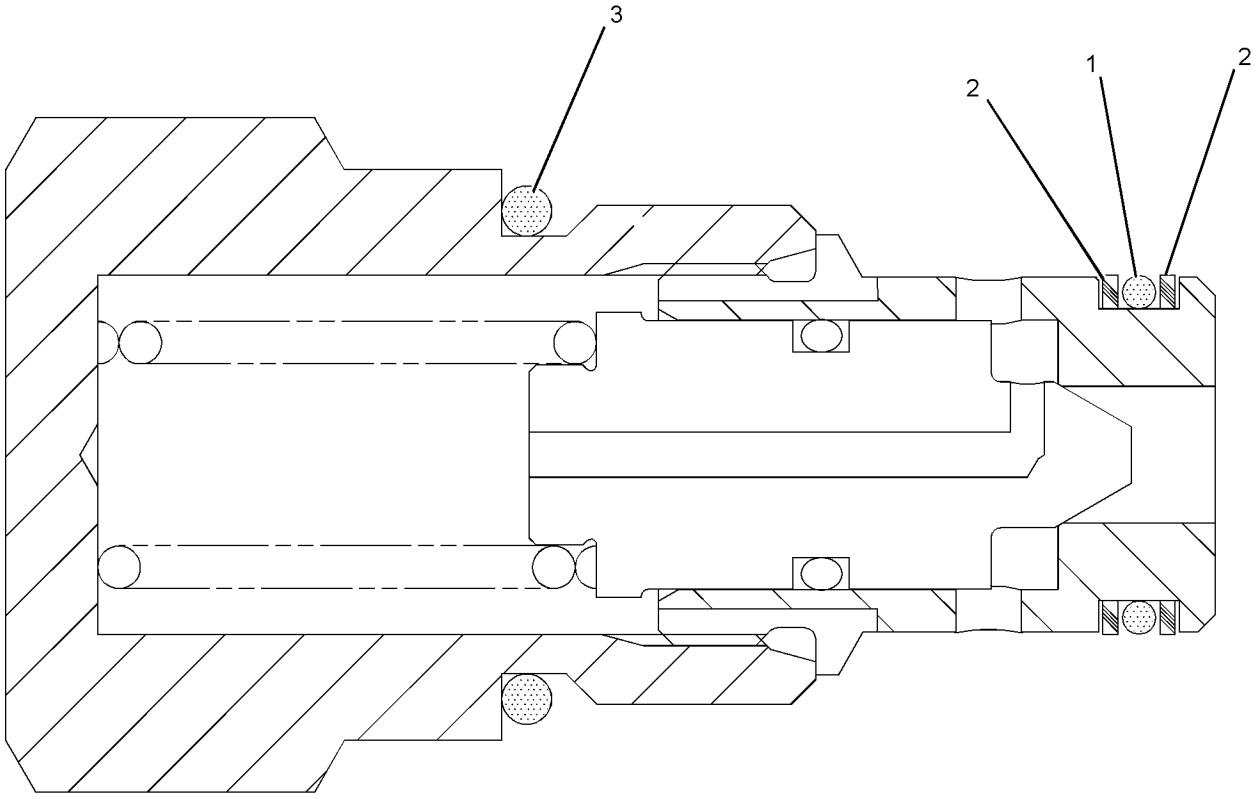

GRAPHIC #1 **<END>** g01019745

346-3796 VALVE GP-RELIEF

S/N: PPP1-UP; SSS1-UP; TTT1-UP
PART OF 4T-4932 VALVE GP-RELIEF
AN ATTACHMENT

SMCS-5069, 5117

i04931963

NOTE	REF NO	GRAPHIC REF	PART NUMBER	QTY	PART NAME 1 2 3 4 5 6 (PRODUCT LEVEL)	SEE PAGE
	1	1	**8T-4224**	1	WASHER-HARD (8.8X16X2-MM THK)	
	2	1	**4T-2741**	1	SPRING	
	3	1	**4T-7571**	1	PLATE	
	4	1	**6E-1835**	1	RETAINER AS	
	5	1	**6J-6439**	1	VALVE-POPPET	
	6	1	**9X-6395**	1	NUT (3/4-16-THD)	
	7	1	**3K-0360**	2	SEAL-O-RING	
	8	1	**7J-9933**	1	SEAL-O-RING	

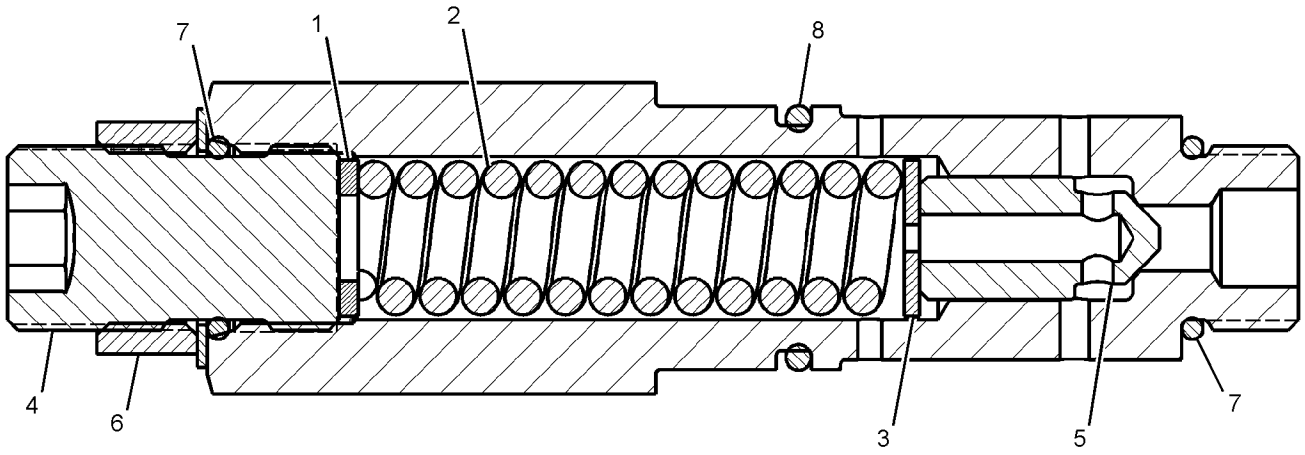

GRAPHIC #1

<END>

g02640305

354-0164 VALVE GP-RELIEF

S/N: 6R21-UP; 6R31-UP
PART OF 447-6642 CONTROL GP-TRANSMISSION HYD
AN ATTACHMENT

SMCS-5069, 5117 **i06147737**

NOTE	REF NO	GRAPHIC REF	PART NUMBER	QTY	PART NAME 1 2 3 4 5 6 (PRODUCT LEVEL)	SEE PAGE
	1	1	**1M-9351**	1	SPRING	
	2	1	**2S-5835**	1	PISTON-LOAD	
	3	1	**8E-1143**	1	SLUG	
	4	1	**9U-8668**	1	SPOOL AS	
		1	**3D-8317**	1	RING-RETAINING	
		1	**4B-9880**	1	BALL	
		1	**4M-2381**	1	SPRING	
		1	**9V-8668**	1	PLATE	
		1	**9U-8669**	1	RETAINER	
	5	1	**202-2005**	1	COVER	
	6	1	**355-2381**	1	SCREW-ADJUSTING (5/16-24X1.5-IN)	
	7	1	*162-0177*	2	PLUG AS	
					(EACH INCLUDES)	
		1	**3J-1907**	1	SEAL-O-RING	
		1	**9S-8004**	1	PLUG	
	8	1	**4F-2294**	1	NUT-JAM (5/16-24-THD)	
M	9	1	**6V-3940**	4	BOLT (M8X1.25X25-MM)	
	10	1	**9M-1974**	1	WASHER-HARD (8.8X16X2-MM THK)	

M - METRIC PART

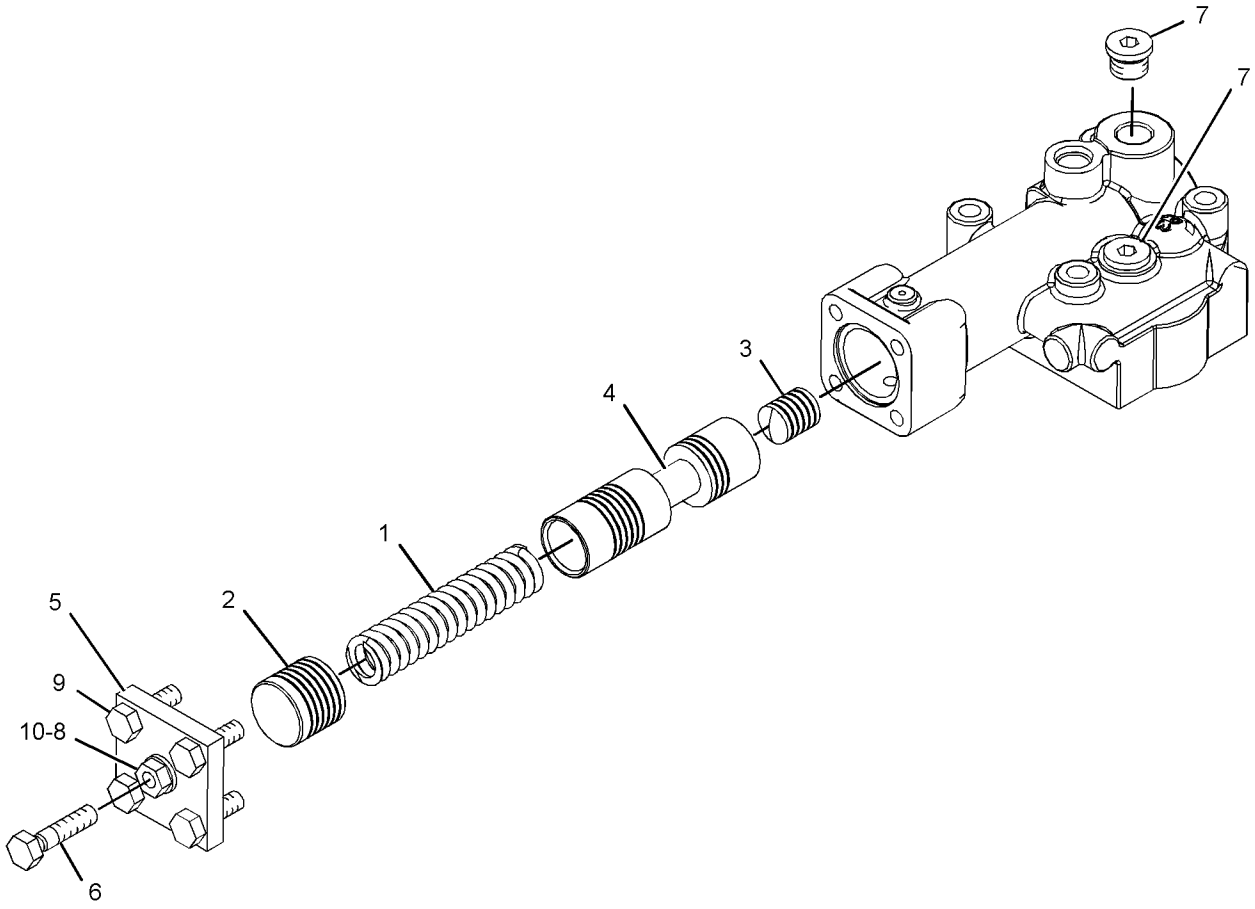

GRAPHIC #1 **<END>** g02416237

462-0713 VALVE GP-RELIEF

S/N: PPP1-UP; SSS1-UP; TTT1-UP
COLD START
PART OF 433-9811 PUMP GP-PISTON
ALSO AN ATTACHMENT

SMCS-5069, 5117

i06215494

NOTE	REF NO	GRAPHIC REF	PART NUMBER	QTY	PART NAME 1 2 3 4 5 6 (PRODUCT LEVEL)	SEE PAGE
	1	1	**462-0728**	1	SEAT-POPPET	
	2	1	**462-0712**	1	SPRING-PRESSURE	
	3	1	**6V-8351**	1	SEAL-O-RING	
	4	1	**6V-3922**	1	SEAL-O-RING	
M	5	1	**8T-1159**	4	BOLT-SOCKET HEAD (M10X1.5X25-MM)	
	6	1	**6V-8978**	3	SEAL-O-RING	
	7	1	**8C-3312**	1	RING-RETAINING	

M - METRIC PART

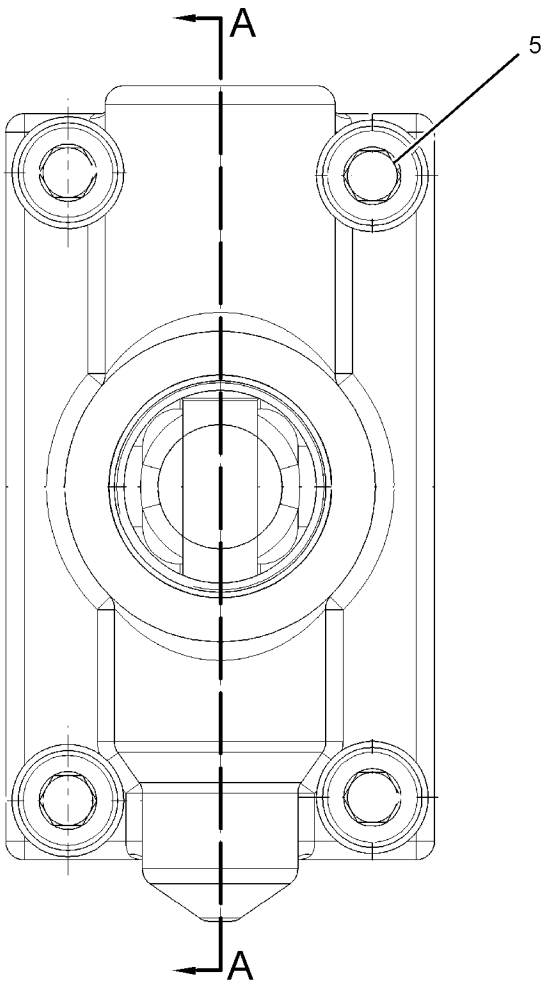

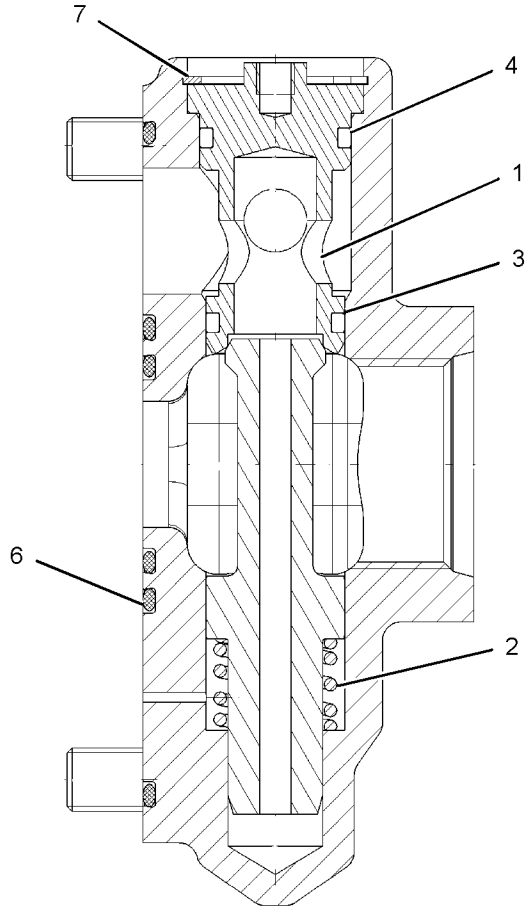

SECTION A-A

GRAPHIC #1

<END>

g03859187

4T-1860 VALVE GP-SHUTTLE

S/N: PPP1-UP; SSS1-UP; TTT1-UP

PART OF 269-8153, 269-8154, 269-8155 VALVE GP-CONTROL

AN ATTACHMENT

SMCS-5079 **i05559540**

NOTE	REF NO	GRAPHIC REF	PART NUMBER	QTY	PART NAME 1 2 3 4 5 6 (PRODUCT LEVEL)	SEE PAGE
	1	1	**147-6605**	2	RING-BACKUP	
	2	1	**1M-6718**	1	BALL	
	3	1	**4T-0928**	1	VALVE	
	4	1	**6V-5324**	1	SEAL-O-RING	
	5	1	**147-6603**	1	SEAL-O-RING	
	6	1	**3J-1907**	1	SEAL-O-RING (1)	
	7	1	**147-6604**	2	RING-BACKUP	

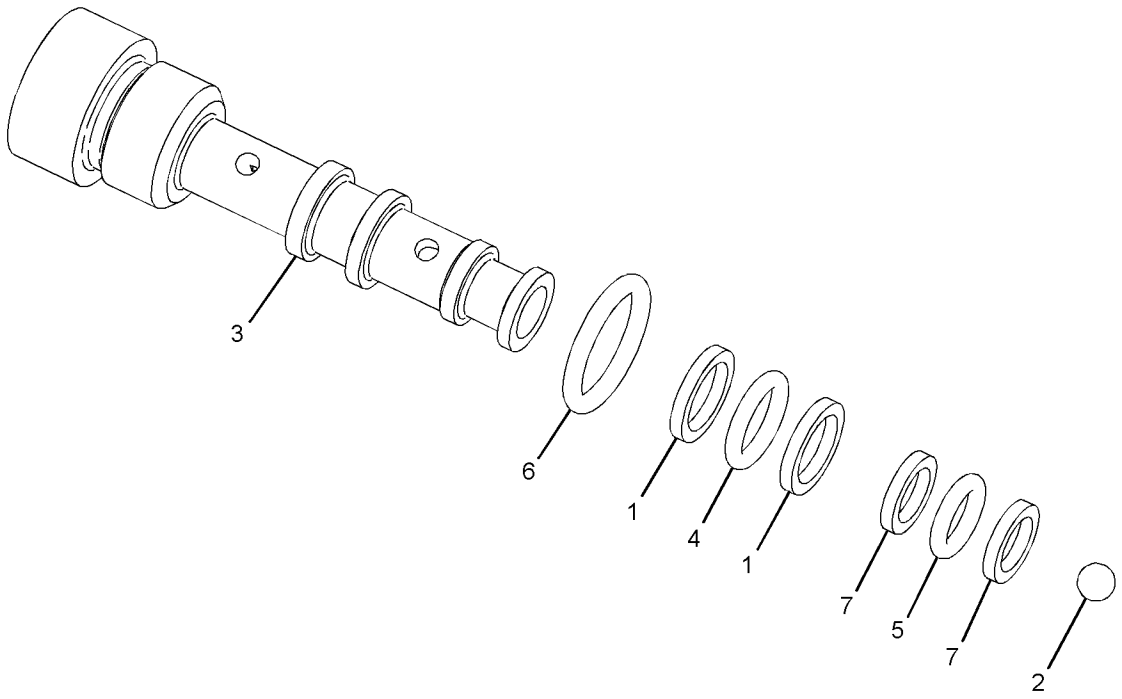

GRAPHIC #1 **<END>** g03523998

174-4909 VALVE GP-SOLENOID

S/N: PPP1-UP; SSS1-UP; TTT1-UP
PART OF 389-1531 VALVE GP-CONTROL
ALSO AN ATTACHMENT

SMCS-5479 **i06216515**

NOTE	REF NO	GRAPHIC REF	PART NUMBER	QTY	PART NAME 1 2 3 4 5 6 (PRODUCT LEVEL)	SEE PAGE
	1	1	**226-9622**	1	COIL AS-SOLENOID (24-VOLT)	
	2	1	**164-2108**	1	WASHER (13.03X25.4X2.38-MM THK)	
	3	1	**218-2373**	1	NUT (1/2-28-THD)	
F			**6V-4589**	1	SEAL-O-RING	
F			**8L-2746**	1	SEAL-O-RING	

F - NOT SHOWN

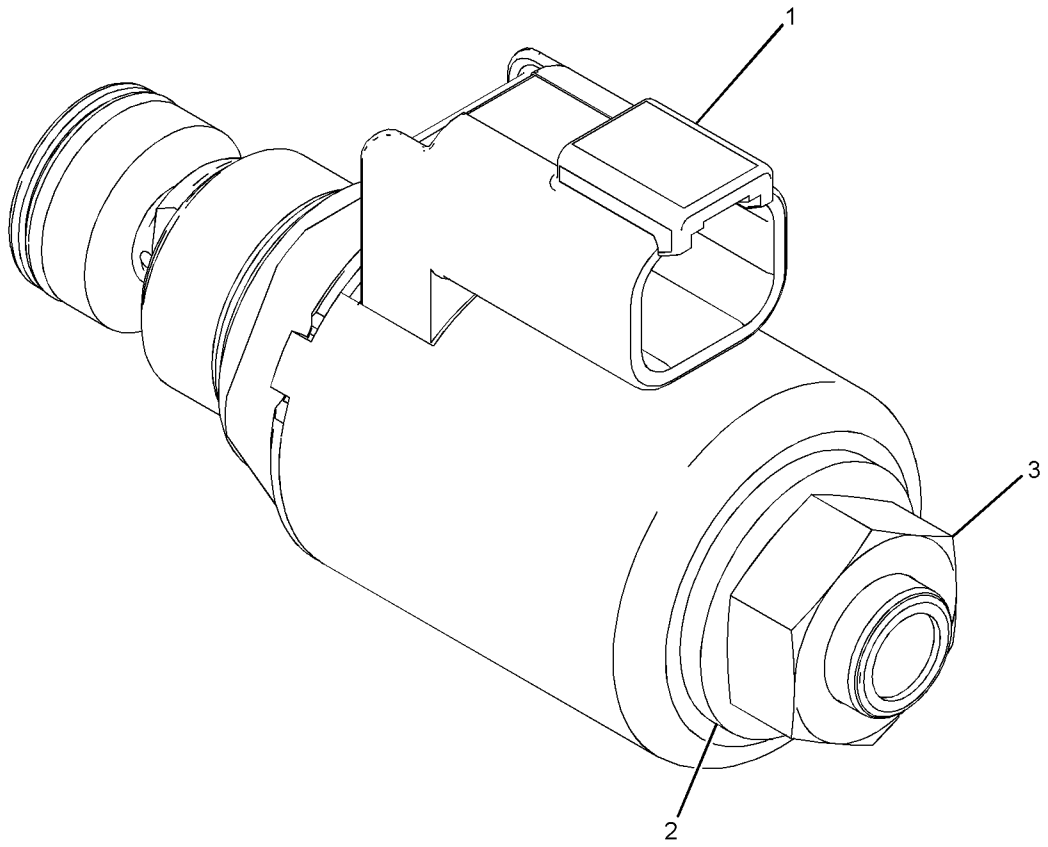

GRAPHIC #1 **<END>** g01139934

201-0950 VALVE GP-SOLENOID

S/N: PPP1-UP; SSS1-UP; TTT1-UP
24-VOLT. PARKING BRAKE
PART OF 226-4751 MANIFOLD GP-CONTROL
AN ATTACHMENT

SMCS-5479 **i05552991**

NOTE	REF NO	GRAPHIC REF	PART NUMBER	QTY	PART NAME 1 2 3 4 5 6 (PRODUCT LEVEL)	SEE PAGE
	1	1	**122-1133**	1	COIL AS (24-VOLT)	
		1	**1S-9593**	2	STRAP-CABLE	
		1	**8T-8729**	2	PIN-CONNECTOR (16-GA TO 18-GA)	
		1	**102-8802**	1	KIT-RECEPTACLE (2-PIN)	
					(INCLUDES RECEPTACLE AS & WEDGE)	
	2	1	**156-5970**	1	NUT (1/2-20-THD)	
J	3	1	**171-8772**	1	VALVE AS-SOLENOID	
		1	**156-5970**	1	NUT (1/2-20-THD)	
					AVAILABLE REPAIR KIT(S):	
J			**195-7430**		KIT-SEAL (SOLENOID VALVE)	
					(INCLUDES O-RING SEALS & BACKUP RINGS)	

J - KIT MARKED J SERVICES PART MARKED J

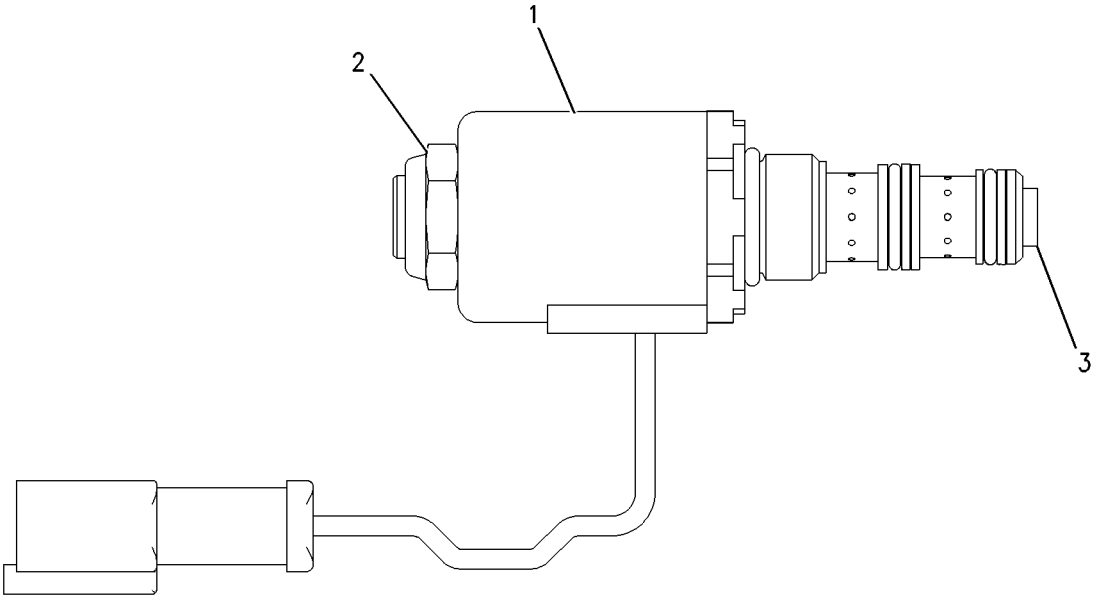

GRAPHIC #1 **<END>** g00888488

251-9814 BRACE GP-BULLDOZER

S/N: SSS1-UP; TTT1-UP
PART OF 389-6133, 389-6134 INSTALLATION AR-BULLDOZER
AN ATTACHMENT

SMCS-6074 **i05628050**

NOTE	REF NO	GRAPHIC REF	PART NUMBER	QTY	PART NAME 1 2 3 4 5 6 (PRODUCT LEVEL)	SEE PAGE
	1	1	**1U-1176**	2	PIN	
	2	1	**3B-4626**	2	PIN-COTTER	
	3	1	**3J-6573**	2	SCREW-ADJUSTMENT	
	4	1	**4F-0255**	2	PIN	
	5	1	**4F-1252**	2	PIN	
	6	1	**4T-5495**	2	STUD-BALL	
B	7	1	**8E-5701**	52	SHIM (0.8-MM THK)	
	8	1	**160-6306**	2	CAP-BEARING	
Y	9	1	**227-0841**	2	CYLINDER GP-TILT	564
	10	1	**251-9815**	1	ARM AS (LH)	
	11	1	**251-9816**	1	ARM AS (RH)	
					(EACH ARM ASSEMBLY INCLUDES)	
		1	**1U-1173**	1	BRACKET (RH)	
		1	**1U-1174**	1	BRACKET (LH)	
		1	**1U-1175**	2	PLATE	
		1	**3Y-3866**	1	NUT (2-3/4-8-THD)	
		1	**4B-4098**	1	PLUG-CUP	
		1	**251-9817**	1	BEARING	
	12	1	**251-9828**	4	CAP-BEARING	
B	13	1	**251-9834**	104	SHIM (0.8-MM THK)	
M	14	1	**7X-2564**	8	BOLT (M20X2.5X90-MM)	
	15	1	**8T-4123**	8	WASHER (3.62X5.75X0.375-MM THK)	
M	16	1	**8T-4187**	4	BOLT (M20X2.5X80-MM)	
M	17	1	**8T-6381**	8	BOLT (M20X2.5X120-MM)	
	18	1	**3J-1770**	2	LOCK PIN	

B - USE AS REQUIRED
M - METRIC PART
Y - SEPARATE ILLUSTRATION

251-9814 **BRACE GP-BULLDOZER (*contd.*)** **i05628050**

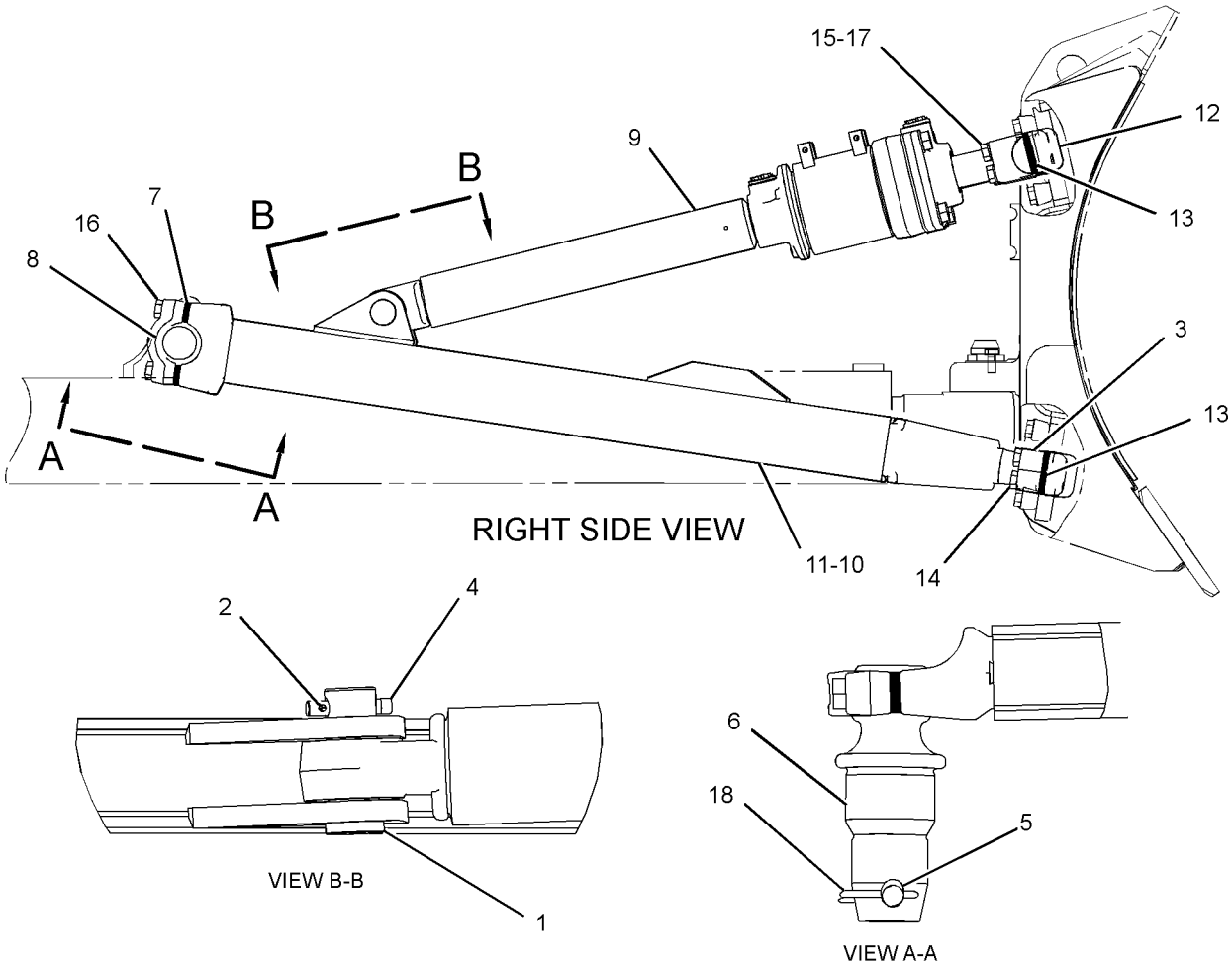

GRAPHIC #1 **<END>** g01262216

431-9791 BRACE GP-BULLDOZER—HYDRAULIC TILT

S/N: SSS1-UP; TTT1-UP

PART OF 447-3469, 447-3470 INSTALLATION AR-BULLDOZER

AN ATTACHMENT

SMCS-6074 **i06195643**

NOTE	REF NO	GRAPHIC REF	PART NUMBER	QTY	PART NAME 1 2 3 4 5 6 (PRODUCT LEVEL)	SEE PAGE
	1	1	**1U-0928**	2	SCREW-ADJUSTMENT	
	2	1	**1U-0929**	2	SCREW-ADJUSTMENT	
	3	1	**1U-1176**	2	PIN	
	4	1	**1U-1267**	2	BRACE AS	
					(EACH INCLUDES)	
		1	**3F-4854**	1	KNOB	
		1	**6F-3908**	1	HANDLE	
		1	**8J-4866**	1	LUG	
	5	1	**3B-4626**	2	PIN-COTTER	
	6	1	**3B-8489**	4	FITTING-GREASE (1/8-27 PTF)	
	7	1	**3J-1770**	2	LOCK PIN	
	8	1	**3J-6573**	2	SCREW-ADJUSTMENT	
	9	1	**4F-0255**	2	PIN	
	10	1	**4F-1252**	2	PIN	
	11	1	**4T-5495**	2	STUD-BALL	
B	12	1	**8E-5701**	52	SHIM (0.8-MM THK)	
	13	1	**160-6306**	2	CAP-BEARING	
	14	1	**251-9815**	1	ARM AS (LH)	
	15	1	**251-9816**	1	ARM AS (RH)	
					(EACH ARM ASSEMBLY INCLUDES)	
		1	**1U-1173**	1	BRACKET (RH)	
		1	**1U-1174**	1	BRACKET (LH)	
		1	**1U-1175**	2	PLATE	
		1	**3Y-3866**	1	NUT (2-3/4-8-THD)	
		1	**4B-4098**	1	PLUG-CUP	
	16	1	**251-9828**	4	CAP-BEARING	
B	17	1	**251-9834**	104	SHIM (0.8-MM THK)	
M	18	1	**7X-2564**	16	BOLT (M20X2.5X90-MM)	
M	19	1	**8T-4187**	4	BOLT (M20X2.5X80-MM)	

B - USE AS REQUIRED
M - METRIC PART

431-9791 **BRACE GP-BULLDOZER (*contd.*)** **i06195643**

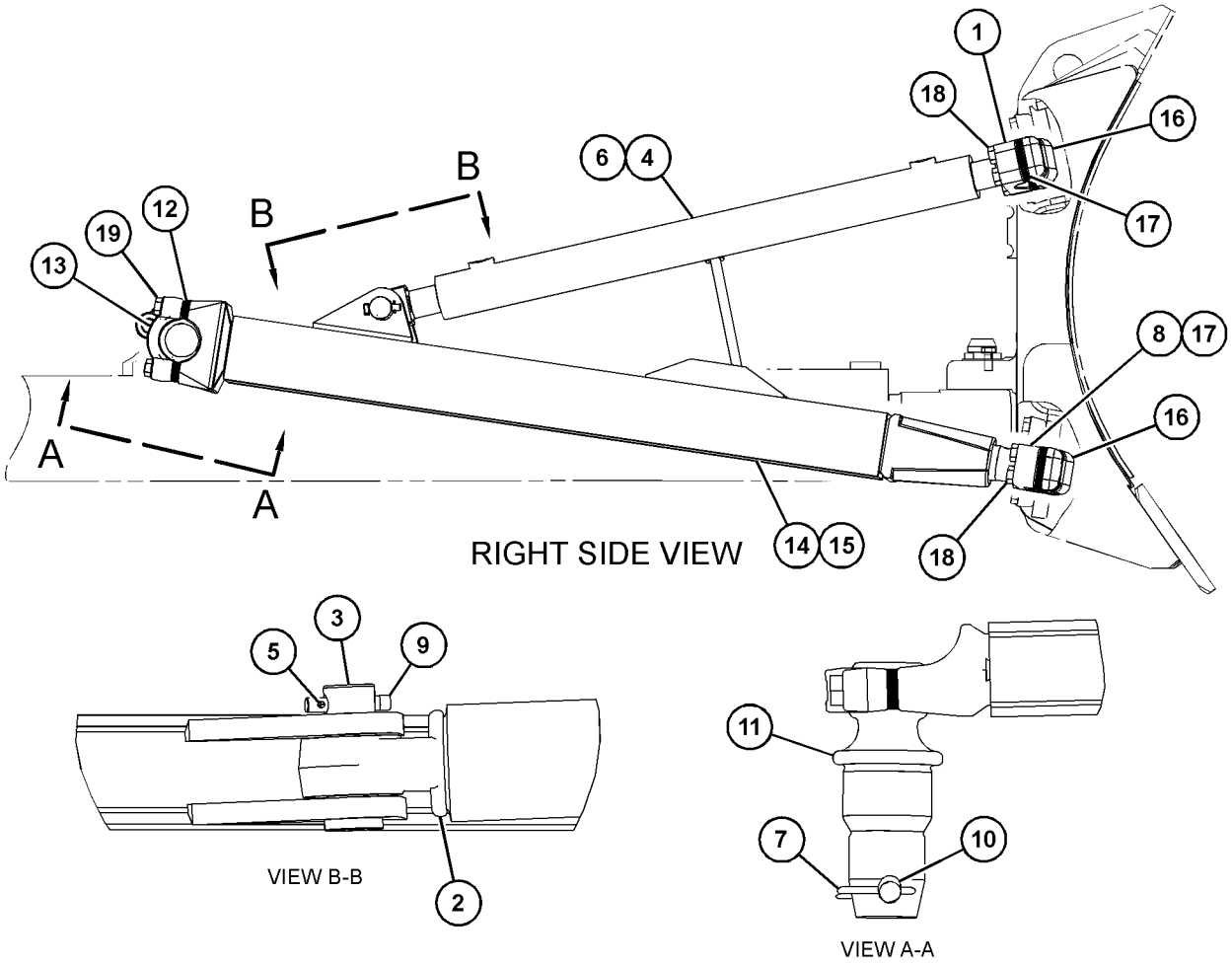

GRAPHIC #1 **<END>** g03434496

255-8952 C-FRAME AS

S/N: SSS1-UP
PART OF 255-8951 C-FRAME GP
AN ATTACHMENT

SMCS-6063 **i06140657**

NOTE	REF NO	GRAPHIC REF	PART NUMBER	QTY	PART NAME 1 2 3 4 5 6 (PRODUCT LEVEL)	SEE PAGE
	1	1	**6J-9187**	1	BRACKET AS (RH)	
	2	1	**6J-9188**	1	BRACKET AS (LH)	
					(EACH BRACKET AS INCLUDES)	
		1	**4J-2414**	1	TRUNNION	
		1	**7J-2595**	2	BRACKET	
	3	1	**8P-9770**	1	PLATE	
	4	1	**9W-4897**	6	BRACKET AS	
					(EACH INCLUDES)	
		1	**3J-2682**	1	BRACKET	
		1	**8F-4387**	2	PLATE	
	5	1	**9W-5375**	2	BAR	
	6	1	**9W-9000**	1	ADAPTER AS	
		1	**5M-6214**	1	PLUG-PIPE	
		1	**8E-5486**	2	BUSHING	
	7	1	**251-9835**	2	BEARING	

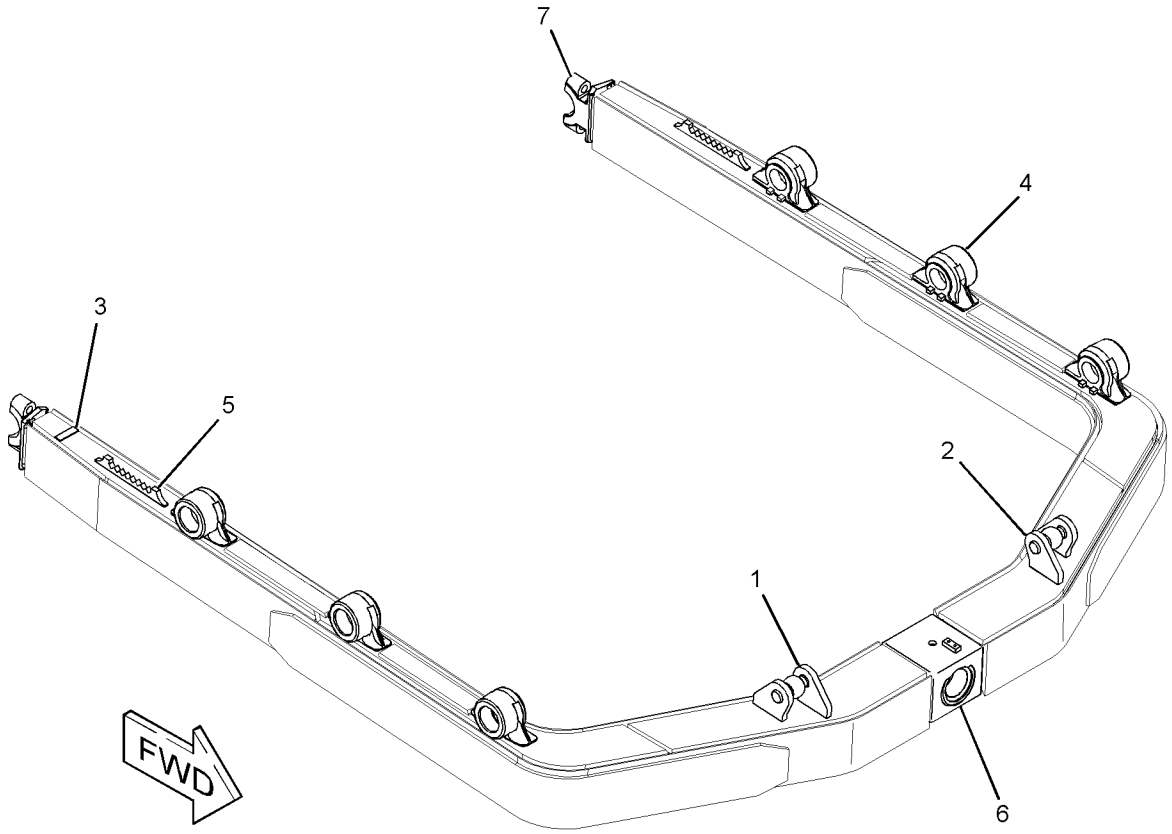

GRAPHIC #1 **<END>** g01207457

251-9830 C-FRAME GP

S/N: TTT1-UP

PART OF 389-6134, 447-3470 INSTALLATION AR-BULLDOZER

AN ATTACHMENT

SMCS-6063 **i05628189**

NOTE	REF NO	GRAPHIC REF	PART NUMBER	QTY	PART NAME 1 2 3 4 5 6 (PRODUCT LEVEL)	SEE PAGE
	1	1	**1U-0725**	1	RETAINER	
B	2	1	**4T-4866**	52	SHIM (0.8-MM THK)	
M	3	1	**251-8203**	4	NUT-SQUARE (M24X3-THD)	
	4	1	**251-9831**	1	C-FRAME AS	
		1	**4J-2414**	1	TRUNNION	
		1	**8E-5486**	2	BEARING-SLEEVE	
		1	**251-9835**	2	BEARING	
	5	1	**251-9832**	1	PIN-PIVOT	
	6	1	**251-9836**	2	CAP-BEARING	
M	7	1	**7X-2562**	2	BOLT (M20X2.5X45-MM)	
M	8	1	**7X-2567**	4	BOLT (M24X3X160-MM)	
	9	1	**8T-4167**	4	WASHER-HARD (26X44X4-MM THK)	

B - USE AS REQUIRED
M - METRIC PART

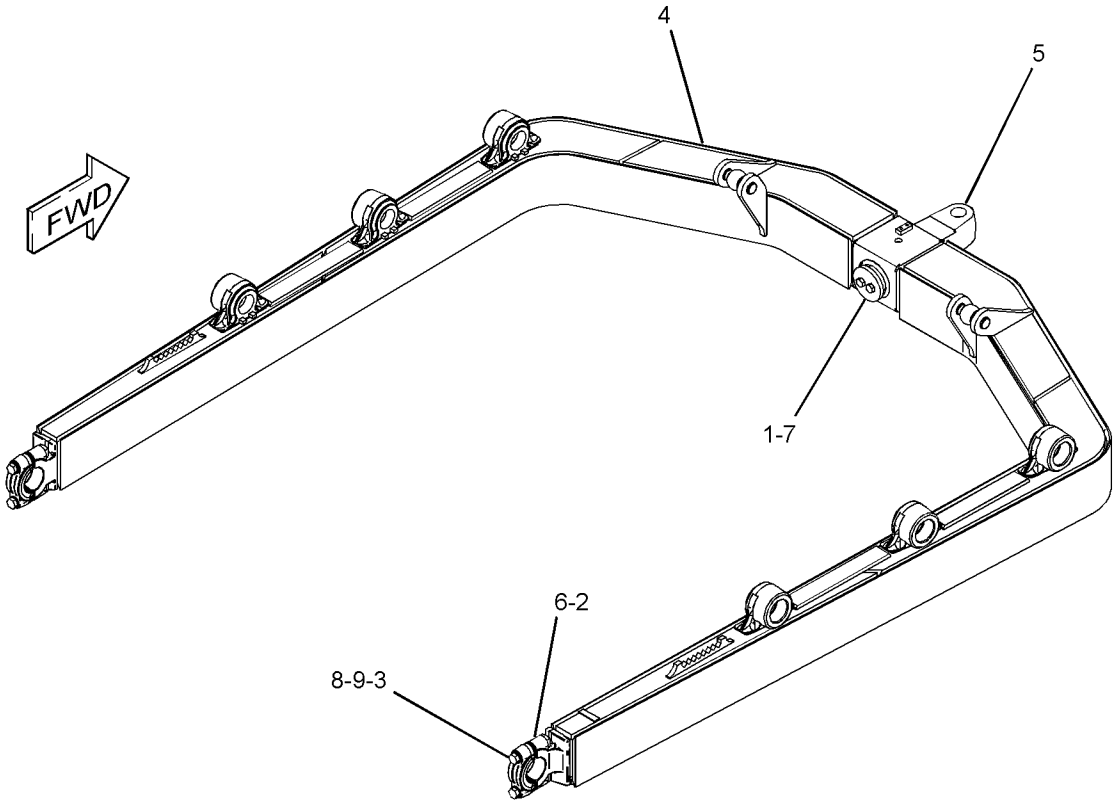

GRAPHIC #1 **<END>** g01212417

255-8951 C-FRAME GP

S/N: SSS1-UP

PART OF 389-6133, 447-3469 INSTALLATION AR-BULLDOZER

AN ATTACHMENT

SMCS-6063 **i05628058**

NOTE	REF NO	GRAPHIC REF	PART NUMBER	QTY	PART NAME 1 2 3 4 5 6 (PRODUCT LEVEL)	SEE PAGE
	1	1	**1U-0725**	1	RETAINER	
M	2	1	**251-8203**	4	NUT-SQUARE (M24X3-THD)	
	3	1	**251-9832**	1	PIN-PIVOT	
	4	1	**251-9836**	2	CAP-BEARING	
Y	5	1	**255-8952**	1	C-FRAME AS	659
M	6	1	**7X-2562**	2	BOLT (M20X2.5X45-MM)	
M	7	1	**7X-2567**	4	BOLT (M24X3X160-MM)	
	8	1	**8T-4167**	4	WASHER-HARD (26X44X4-MM THK)	
B	9	1	**4T-4866**	52	SHIM (0.8-MM THK)	

B - USE AS REQUIRED
M - METRIC PART
Y - SEPARATE ILLUSTRATION

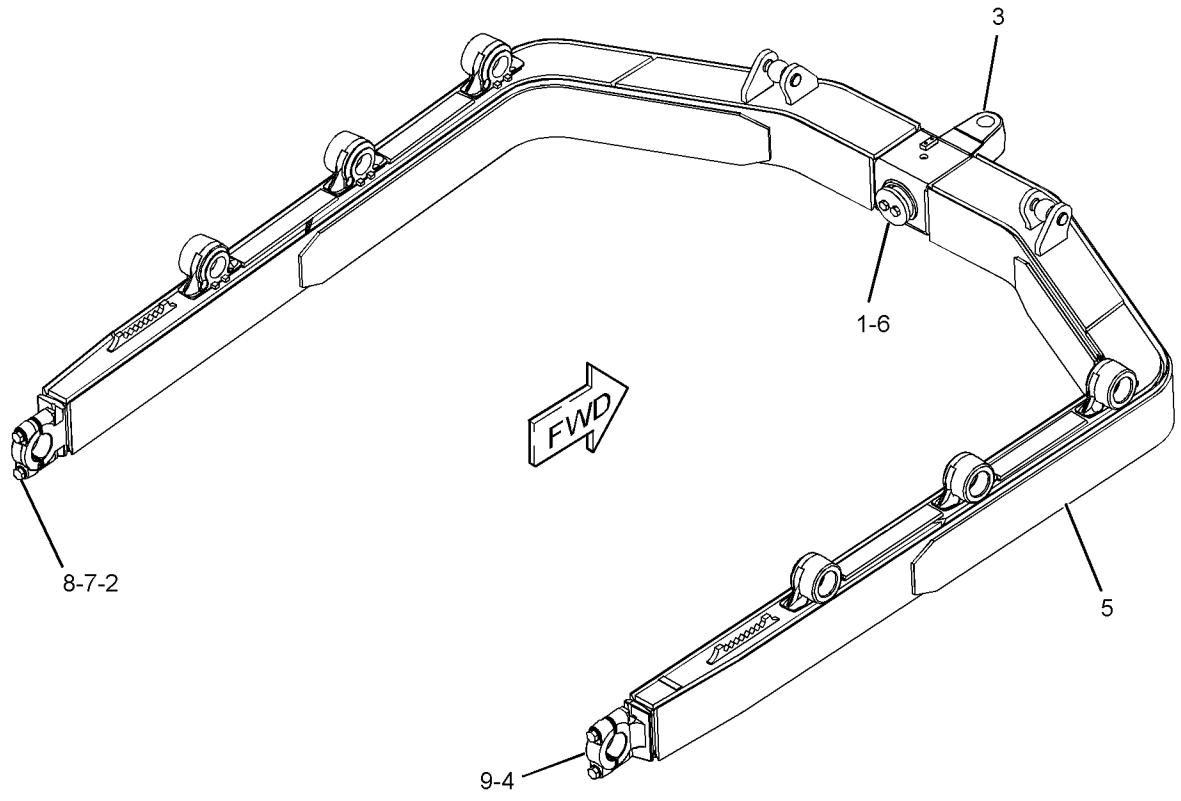

GRAPHIC #1 **<END>** g01207710

389-6128 INSTALLATION AR-BULLDOZER

S/N: SSS1-UP

FOR USE WITH SEMI-UNIVERSAL & STRAIGHT BLADE AN ATTACHMENT

SMCS-6050 **i05673870**

NOTE	REF NO	GRAPHIC REF	PART NUMBER	QTY	PART NAME 1 2 3 4 5 6 (PRODUCT LEVEL)	SEE PAGE
	1	1	**4T-1481**	1	LINK AS	
Y	2	1	*109-1352*	1	TRUNNION GP-BULLDOZER	677
Y	3	1	*391-2580*	1	LINES GP-TILT CYLINDER	586
Y	4	1	*252-5853*	1	PUSH ARM GP	675
	5	1	**3B-4632**	2	PIN-COTTER	
	6	1	**8H-8898**	2	PIN	
	7	1	*288-3925*	1	GUARD GP-TILT CYLINDER	
M		1	**8T-4192**	1	BOLT (M12X1.75X25-MM)	
		1	**4Y-9398**	1	GUARD AS	
		1	**5P-1076**	4	WASHER-HARD (13.5X30X4-MM THK)	

M - METRIC PART
Y - SEPARATE ILLUSTRATION

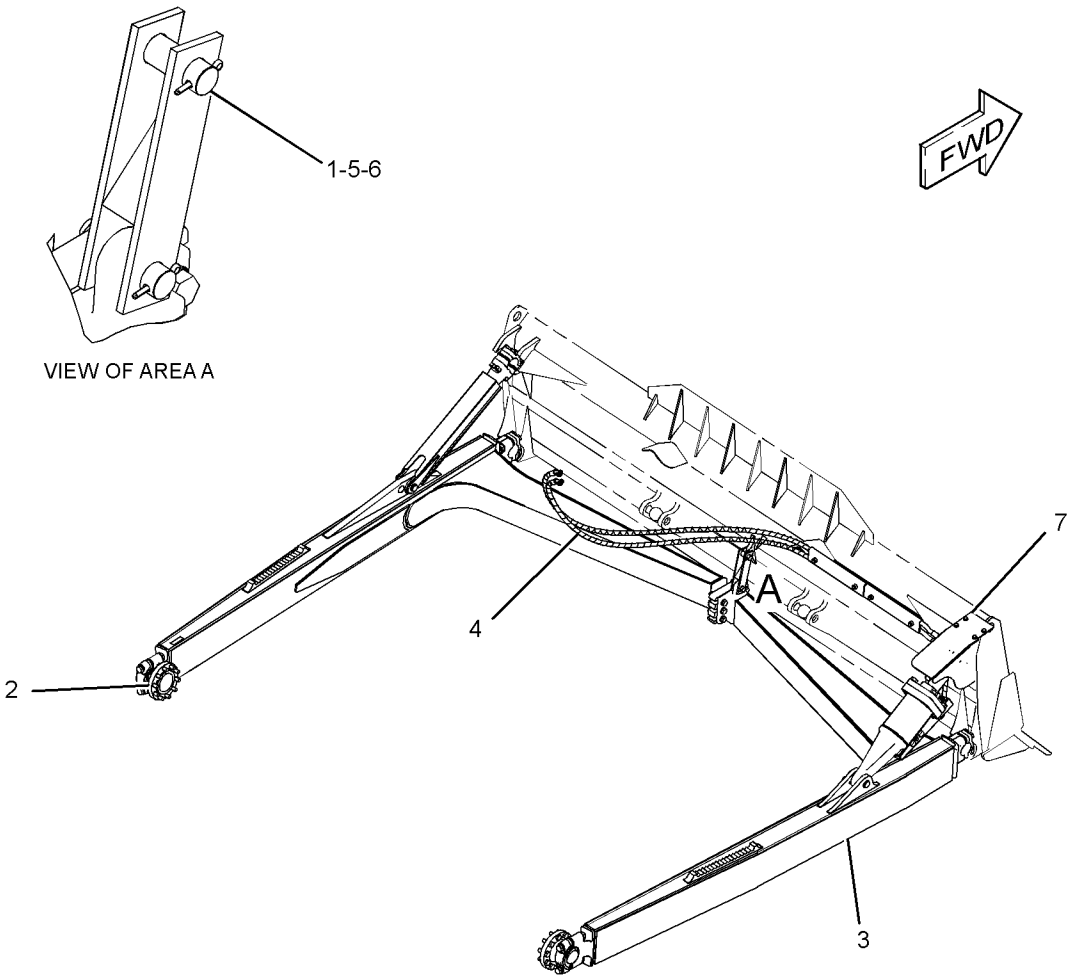

GRAPHIC #1 **<END>** g03177872

389-6129 INSTALLATION AR-BULLDOZER

S/N: TTT1-UP

FOR USE WITH SEMI-UNIVERSAL & STRAIGHT BLADE

AN ATTACHMENT

SMCS-6050 **i05673989**

NOTE	REF NO	GRAPHIC REF	PART NUMBER	QTY	PART NAME 1 2 3 4 5 6 (PRODUCT LEVEL)	SEE PAGE
	1	1	**4T-1481**	1	LINK AS	
Y	2	1	*109-1352*	1	TRUNNION GP-BULLDOZER	677
Y	3	1	*230-5554*	1	PUSH ARM GP	673
	4	1	*288-3925*	1	GUARD GP-TILT CYLINDER	
		1	**4Y-9398**	1	GUARD AS	
		1	**5P-1076**	4	WASHER-HARD (13.5X30X4-MM THK)	
M		1	**8T-4192**	4	BOLT (M12X1.75X25-MM)	
Y	5	1	*391-2581*	1	LINES GP-TILT CYLINDER	588
	6	1	**3B-4632**	2	PIN-COTTER	
	7	1	**8H-8898**	2	PIN	

M - METRIC PART
Y - SEPARATE ILLUSTRATION

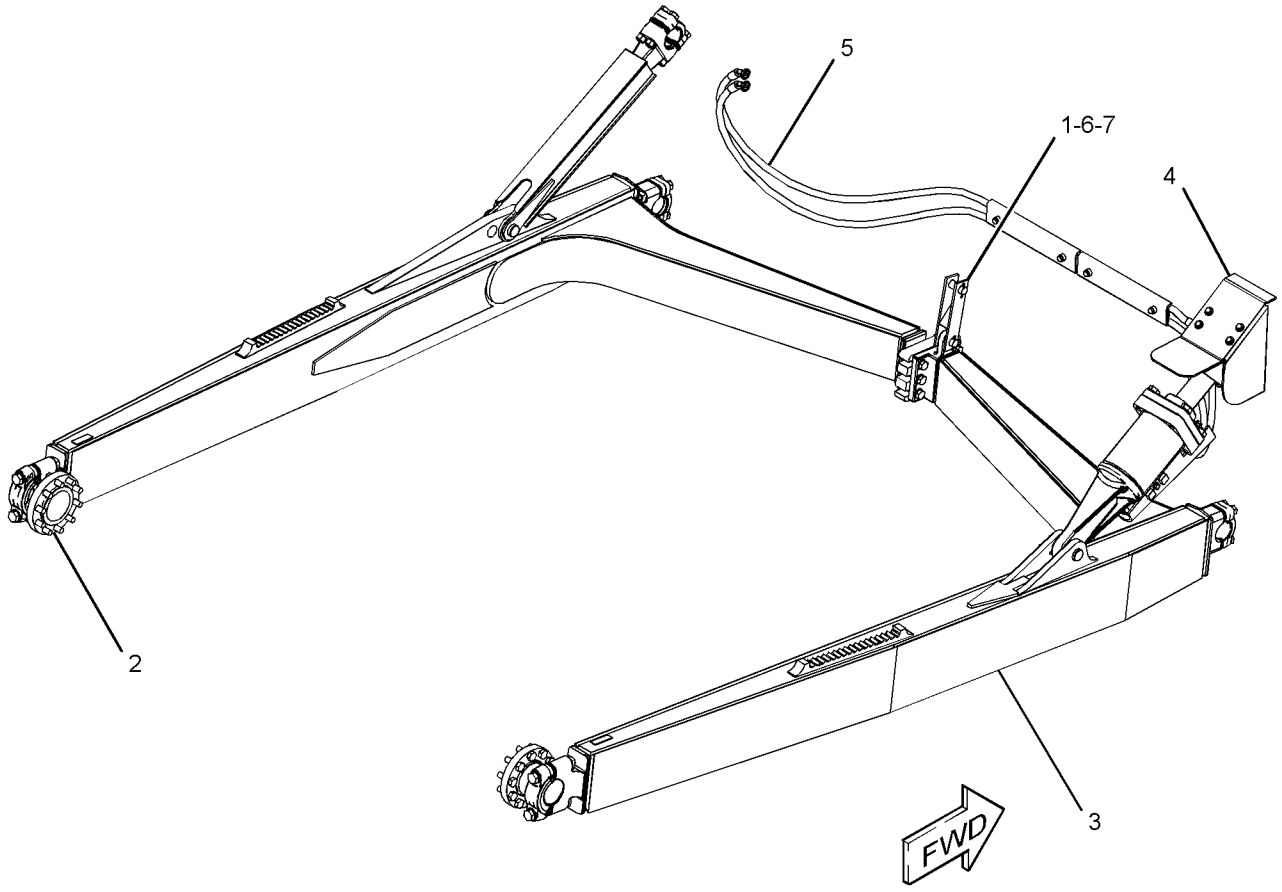

GRAPHIC #1 **<END>** g03579062

389-6131 INSTALLATION AR-BULLDOZER

S/N: TTT1-UP

FOR USE WITH SEMI-UNIVERSAL & STRAIGHT BLADE

AN ATTACHMENT

SMCS-6050 **i05673990**

NOTE	REF NO	GRAPHIC REF	PART NUMBER	QTY	PART NAME 1 2 3 4 5 6 (PRODUCT LEVEL)	SEE PAGE
	1	1	**4T-1481**	1	LINK AS	
Y	2	1	*109-1352*	1	TRUNNION GP-BULLDOZER	677
Y	3	1	*230-5554*	1	PUSH ARM GP (SEMI-UNIVERSAL BULLDOZER)	673
	4	1	*288-3925*	1	GUARD GP-TILT CYLINDER	
		1	**4Y-9398**	1	GUARD AS	
		1	**5P-1076**	4	WASHER-HARD (13.5X30X4-MM THK)	
M		1	**8T-4192**	4	BOLT (M12X1.75X25-MM)	
Y	5	1	*389-6159*	1	LINES GP-TILT CYLINDER	584
	6	1	**3B-4632**	2	PIN-COTTER	
	7	1	**8H-8898**	2	PIN	

M - METRIC PART
Y - SEPARATE ILLUSTRATION

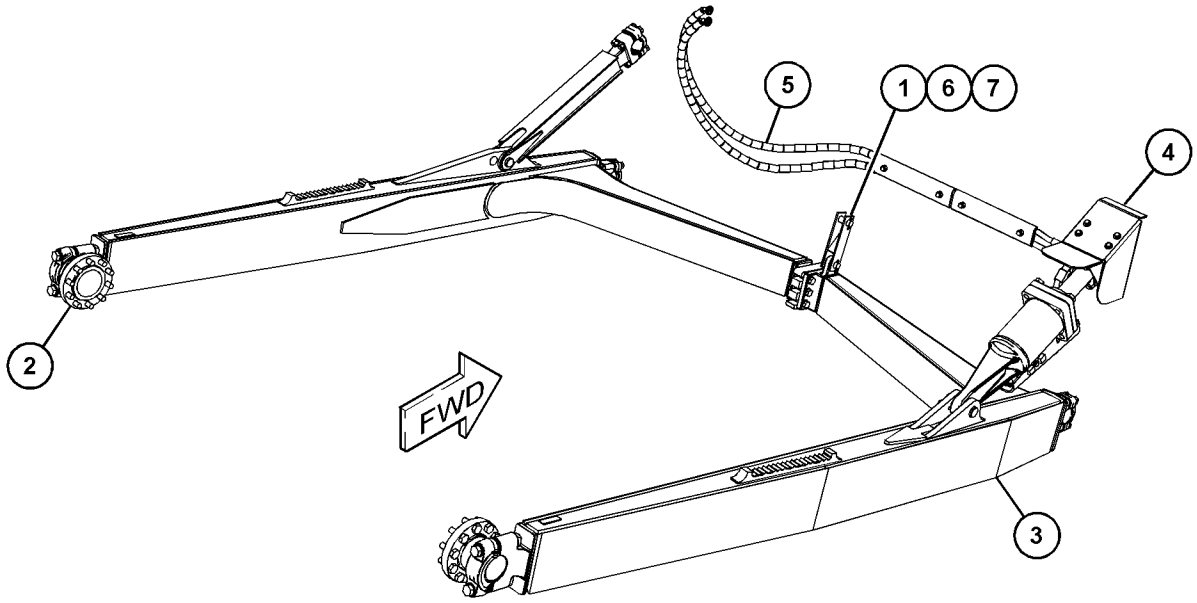

GRAPHIC #1 **<END>** g03578916

389-6133 INSTALLATION AR-BULLDOZER

S/N: SSS1-UP
FOR USE WITH ANGLE BLADE
AN ATTACHMENT

SMCS-6050 **i05674010**

NOTE	REF NO	GRAPHIC REF	PART NUMBER	QTY	PART NAME 1 2 3 4 5 6 (PRODUCT LEVEL)	SEE PAGE
	1	1	**6Y-6751**	1	PIN	
Y	2	1	*109-1352*	1	TRUNNION GP-BULLDOZER	677
Y	3	1	*251-9814*	1	BRACE GP-BULLDOZER (HYDRAULIC TILT)	655
	4	1	**251-9827**	4	TRUNNION	
	5	1	**251-9829**	1	RETAINER	
Y	6	1	*255-8951*	1	C-FRAME GP	661
Y	7	1	*391-2583*	1	LINES GP-TILT CYLINDER	590
M	8	1	**7X-2553**	1	BOLT (M16X2X40-MM)	
M	9	1	**7X-2563**	16	BOLT (M20X2.5X60-MM)	

M - METRIC PART
Y - SEPARATE ILLUSTRATION

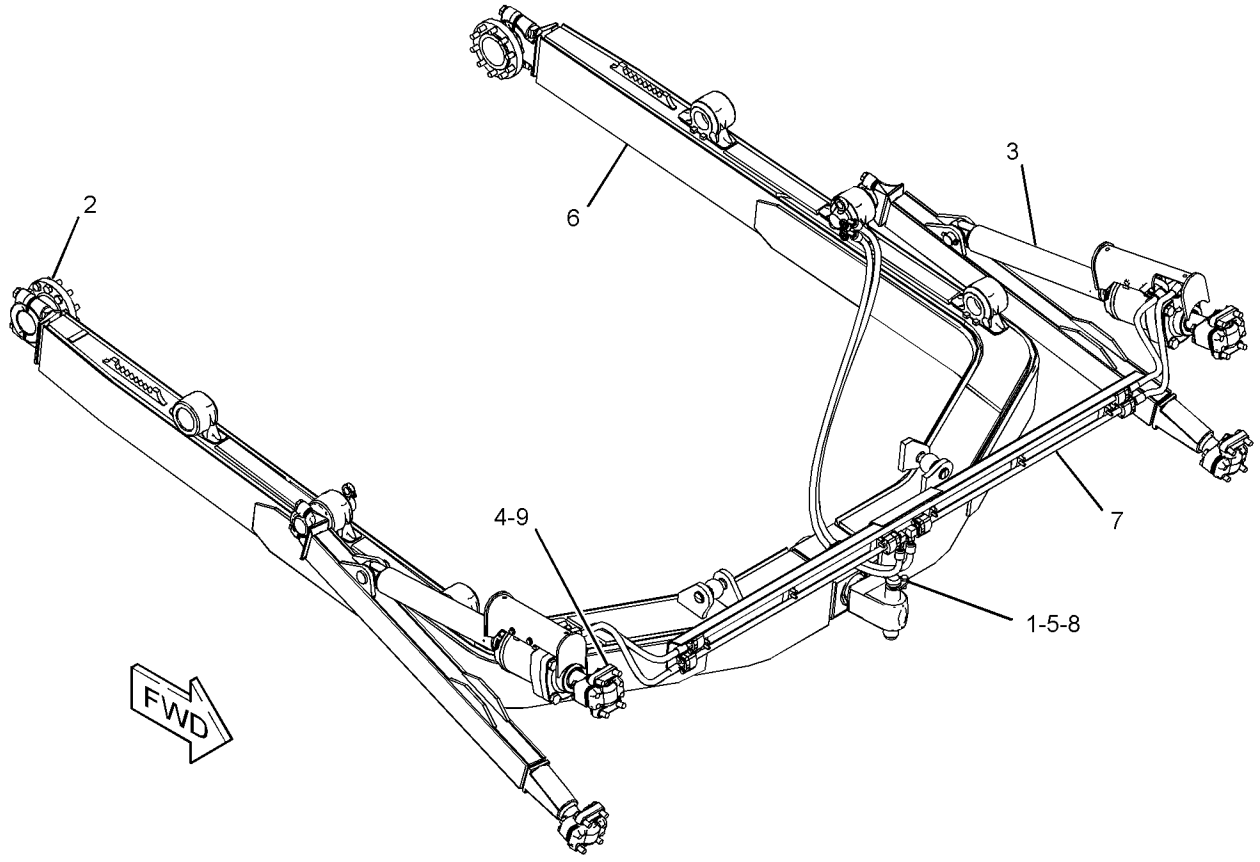

GRAPHIC #1 **<END>** g03579201

389-6134 INSTALLATION AR-BULLDOZER

S/N: TTT1-UP
FOR USE WITH ANGLE BLADE
AN ATTACHMENT

SMCS-6050 **i05682718**

NOTE	REF NO	GRAPHIC REF	PART NUMBER	QTY	PART NAME 1 2 3 4 5 6 (PRODUCT LEVEL)	SEE PAGE
	1	1	**6Y-6751**	1	PIN	
Y	2	1	*109-1352*	1	TRUNNION GP-BULLDOZER	677
Y	3	1	*251-9814*	1	BRACE GP-BULLDOZER (HYDRAULIC TILT)	655
	4	1	**251-9827**	4	TRUNNION	
	5	1	**251-9829**	1	RETAINER	
Y	6	1	*251-9830*	1	C-FRAME GP	660
Y	7	1	*391-2583*	1	LINES GP-TILT CYLINDER	590
M	8	1	**7X-2553**	1	BOLT (M16X2X40-MM)	
M	9	1	**7X-2563**	16	BOLT (M20X2.5X60-MM)	

M - METRIC PART
Y - SEPARATE ILLUSTRATION

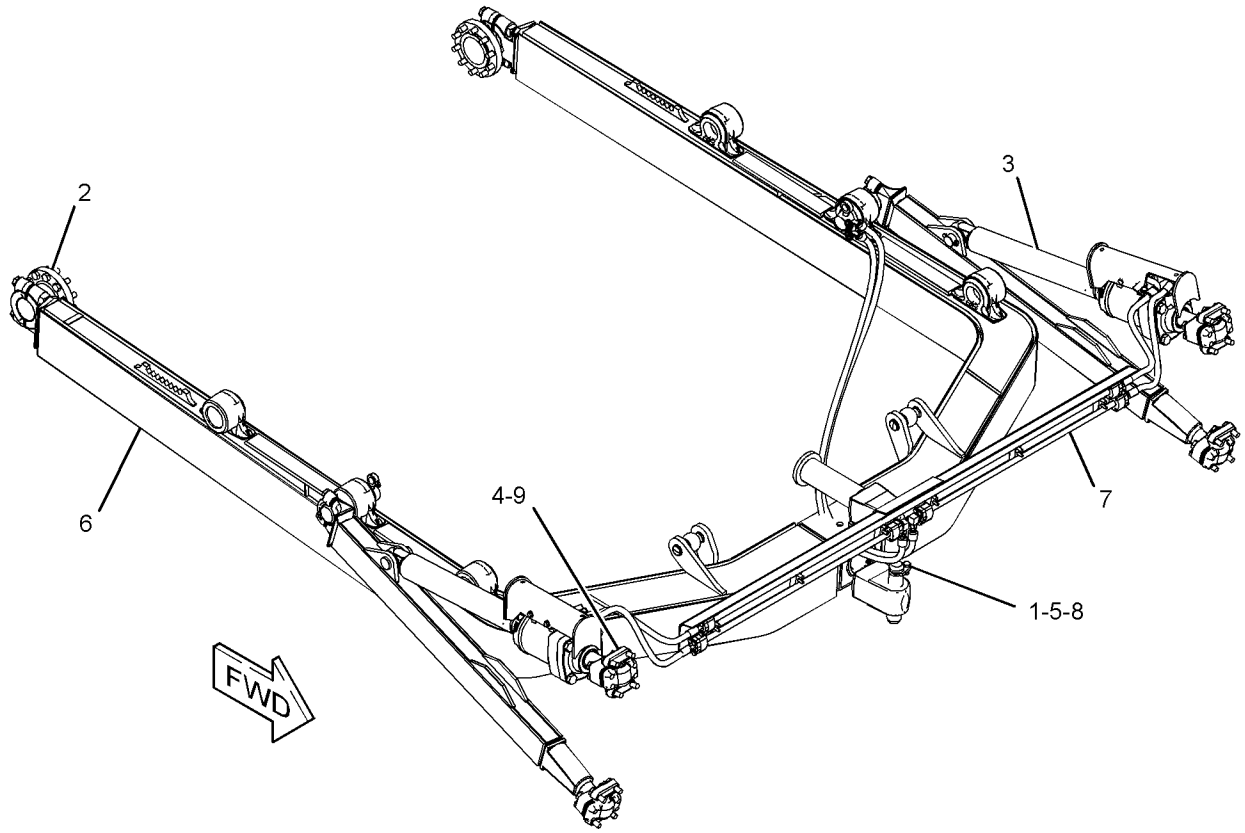

GRAPHIC #1 **<END>** g03581629

447-3469 INSTALLATION AR-BULLDOZER

S/N: SSS1-UP
FOR USE WITH ANGLING BLADE
AN ATTACHMENT

SMCS-6050 **i06210510**

NOTE	REF NO	GRAPHIC REF	PART NUMBER	QTY	PART NAME 1 2 3 4 5 6 (PRODUCT LEVEL)	SEE PAGE
	1	1	**6Y-6751**	1	PIN	
Y	2	1	*109-1352*	1	TRUNNION GP-BULLDOZER	677
	3	1	**251-9827**	4	TRUNNION	
	4	1	**251-9829**	1	RETAINER	
Y	5	1	*255-8951*	1	C-FRAME GP	661
Y	6	1	*431-9791*	1	BRACE GP-BULLDOZER	657
M	7	1	**7X-2553**	1	BOLT (M16X2X40-MM)	
M	8	1	**7X-2563**	16	BOLT (M20X2.5X60-MM)	

M - METRIC PART
Y - SEPARATE ILLUSTRATION

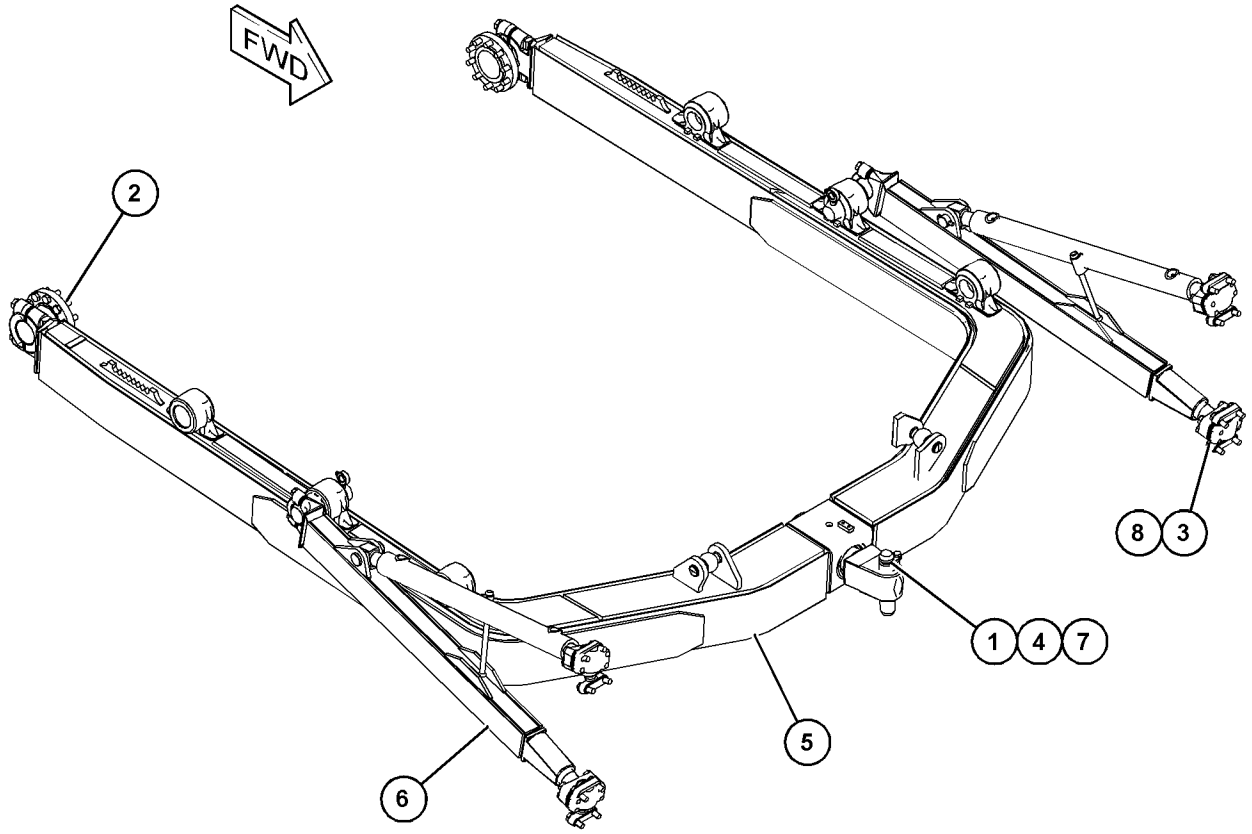

GRAPHIC #1 **<END>** g03858243

447-3470 INSTALLATION AR-BULLDOZER

S/N: TTT1-UP

AN ATTACHMENT

SMCS-6050 **i06140662**

NOTE	REF NO	GRAPHIC REF	PART NUMBER	QTY	PART NAME 1 2 3 4 5 6 (PRODUCT LEVEL)	SEE PAGE
	1	1	**6Y-6751**	1	PIN	
Y	2	1	*109-1352*	1	TRUNNION GP-BULLDOZER	677
	3	1	**251-9827**	4	TRUNNION	
	4	1	**251-9829**	1	RETAINER	
Y	5	1	*251-9830*	1	C-FRAME GP	660
Y	6	1	*431-9791*	1	BRACE GP-BULLDOZER	657
M	7	1	**7X-2553**	1	BOLT (M16X2X40-MM)	
M	8	1	**7X-2563**	16	BOLT (M20X2.5X60-MM)	

M - METRIC PART
Y - SEPARATE ILLUSTRATION

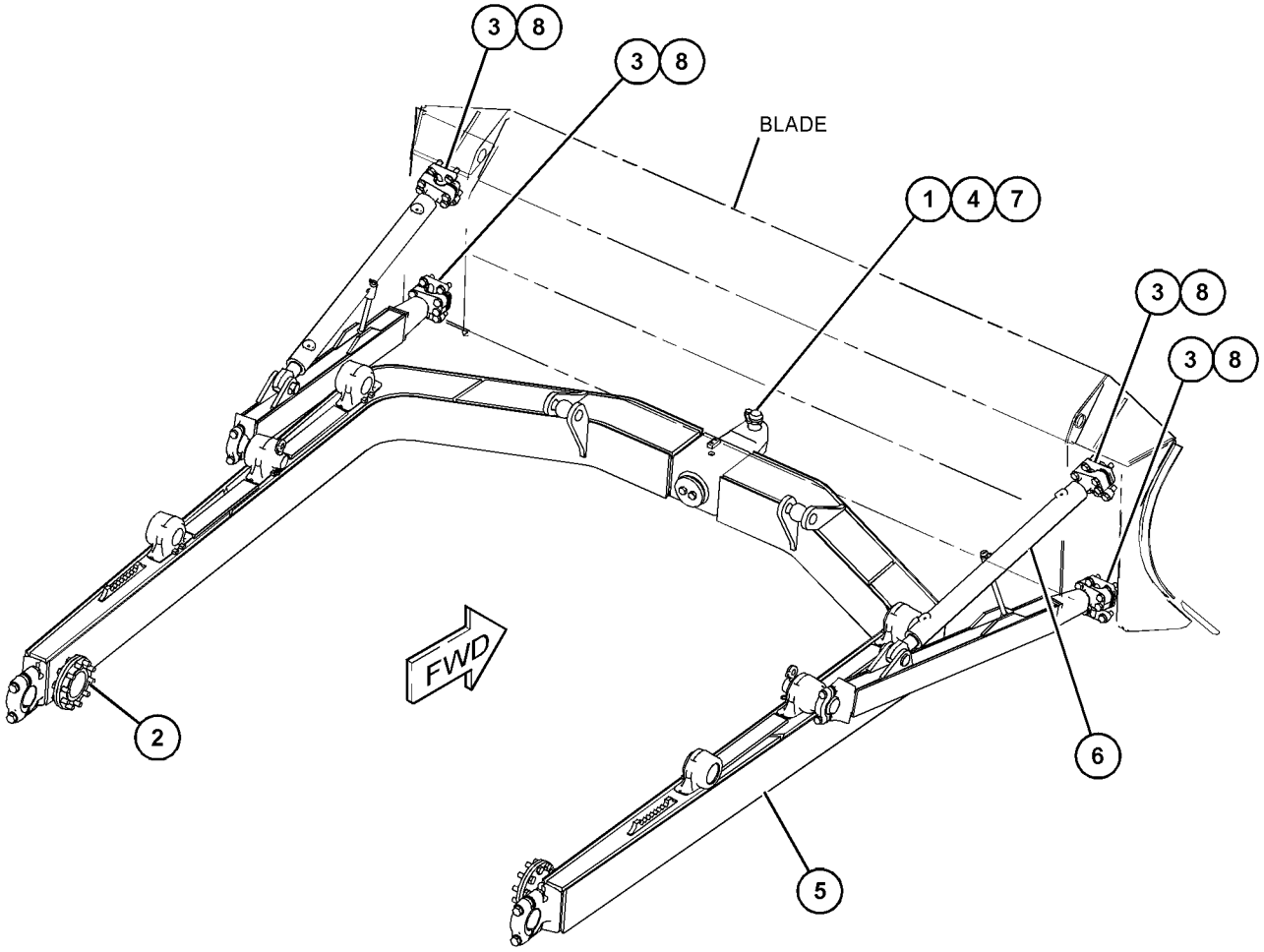

GRAPHIC #1 **<END>** g03854068

475-4154 INSTALLATION AR-BULLDOZER

S/N: PPP1-UP

AN ATTACHMENT

SMCS-6050 **i06219375**

NOTE	REF NO	GRAPHIC REF	PART NUMBER	QTY	PART NAME 1 2 3 4 5 6 (PRODUCT LEVEL)	SEE PAGE
	1	1	**4T-1481**	1	LINK AS	
Y	2	1	*109-1353*	1	TRUNNION GP-BULLDOZER	678
Y	3	1	*223-4004*	1	PUSH ARM GP (STRAIGHT BULLDOZER)	671
	4	1	*380-0985*	1	GUARD GP-TILT CYLINDER	
M		1	**8T-4192**	5	BOLT (M12X1.75X25-MM)	
		1	**8T-4223**	5	WASHER-HARD (13.5X25.5X3-MM THK)	
		1	**380-0986**	1	GUARD AS	
Y	5	1	*460-4938*	1	LINES GP-TILT CYLINDER	593
	6	1	**3B-4632**	2	PIN-COTTER	
	7	1	**8H-8898**	2	PIN	

M - METRIC PART
Y - SEPARATE ILLUSTRATION

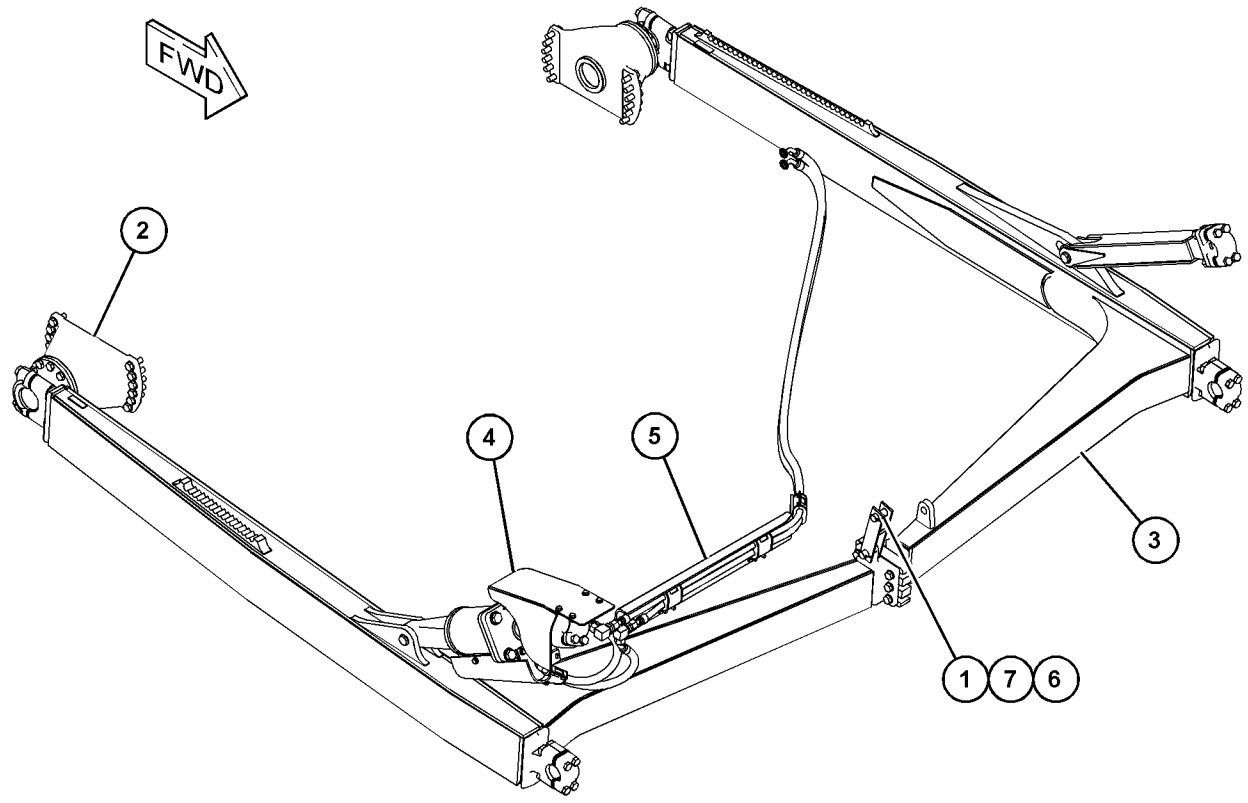

GRAPHIC #1 **<END>** g03863114

475-4155 INSTALLATION AR-BULLDOZER—WASTE HANDLING

S/N: PPP1-UP

AN ATTACHMENT

SMCS-6050 **i06229482**

NOTE	REF NO	GRAPHIC REF	PART NUMBER	QTY	PART NAME 1 2 3 4 5 6 (PRODUCT LEVEL)	SEE PAGE
	1	1	**4T-1481**	1	LINK AS	
Y	2	1	*109-1353*	1	TRUNNION GP-BULLDOZER	678
Y	3	1	*223-4004*	1	PUSH ARM GP	671
Y	4	1	*475-3336*	1	LINES GP-TILT CYLINDER	595
	5	1	*475-4153*	1	GUARD GP-TILT CYLINDER	
M		1	**8T-4192**	3	BOLT (M12X1.75X25-MM)	
		1	**8T-4223**	3	WASHER-HARD (13.5X25.5X3-MM THK)	
		1	**380-0990**	1	GUARD AS	
	6	1	**3B-4632**	2	PIN-COTTER	
	7	1	**8H-8898**	2	PIN	

M - METRIC PART
Y - SEPARATE ILLUSTRATION

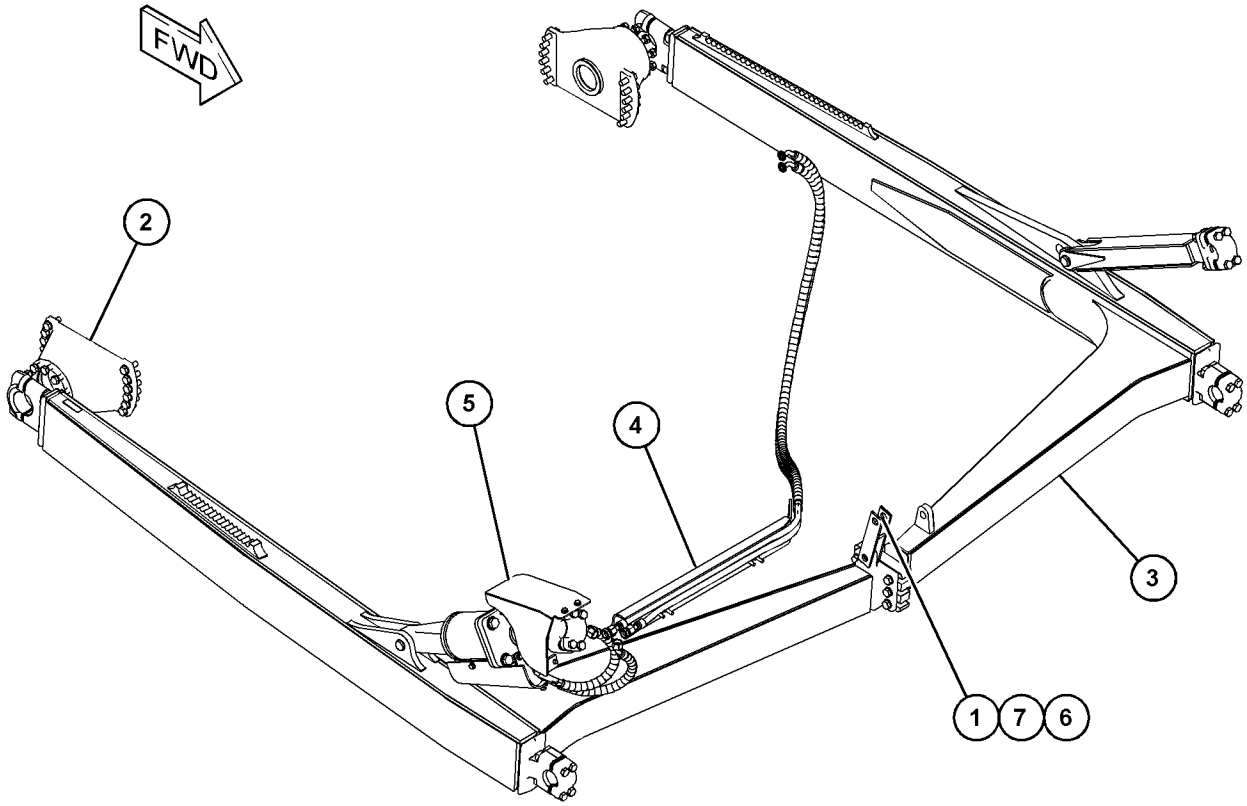

GRAPHIC #1 **<END>** g03863104

223-4004 PUSH ARM GP

S/N: PPP1-UP

PART OF 475-4154, 475-4155 INSTALLATION AR-BULLDOZER

AN ATTACHMENT

SMCS-6061 **i06146554**

NOTE	REF NO	GRAPHIC REF	PART NUMBER	QTY	PART NAME 1 2 3 4 5 6 (PRODUCT LEVEL)	SEE PAGE
	1	1	**4T-1520**	1	CAGE AS	
	1A	1	**6J-5383**	1	BEARING	
B	2	1	**4T-4866**	52	SHIM (0.8-MM THK)	
M	3	1	**7Y-5235**	4	BOLT (M24X3X190-MM)	
B	4	1	**8E-5703**	78	SHIM (0.8-MM THK)	
	5	1	**8J-2880**	3	CAP-BEARING	
	6	1	**124-9672**	1	BRACE AS-TILT	
	7	1	**160-6305**	2	CAP-BEARING	
	8	1	**223-4005**	1	PUSH ARM AS (LH)	
	8A	1	**4T-0780**	1	TRUNNION	
	8B	1	**124-9666**	1	BRACKET	
	8C	1	**179-6152**	1	BEARING	
	8D	1	**179-6153**	1	BEARING	
	8E	1	**209-2152**	1	BAR	
	9	1	**223-4006**	1	PUSH ARM AS (RH)	
	9A	1	**4T-0732**	1	BRACKET	
	9B	1	**9W-2579**	1	PLATE	
	9C	1	**179-6152**	1	BEARING	
	9D	1	**179-6153**	1	BEARING	
	9E	1	**209-2152**	1	BAR	
Y	10	1	**367-9478**	1	CYLINDER GP-TILT	566
M	11	1	**251-8202**	8	NUT-SQUARE (M20X2.5-THD)	
M	12	1	**251-8203**	4	NUT-SQUARE (M24X3-THD)	
	13	1	**290-8226**	2	PIN	
	14	1	**282-9090**	2	RETAINER	
M	15	1	**7X-2566**	6	BOLT (M20X2.5X110-MM)	
M	16	1	**8C-8478**	12	BOLT (M20X2.5X140-MM)	
	17	1	**8T-4123**	6	WASHER (3.62X5.75X0.375-MM THK)	
M	18	1	**8T-4131**	10	NUT (M20X2.5-THD)	
	19	1	**8T-4167**	4	WASHER-HARD (26X44X4-MM THK)	
M	20	1	**8T-4779**	2	BOLT (M16X2X35-MM)	
	21	1	**8T-5439**	6	WASHER-HARD (21.5X45X6-MM THK)	
	22	1	**9X-8257**	2	WASHER (17.5X30X3.5-MM THK)	

B - USE AS REQUIRED
M - METRIC PART
Y - SEPARATE ILLUSTRATION

223-4004 **PUSH ARM GP (*contd.*)** **i06146554**

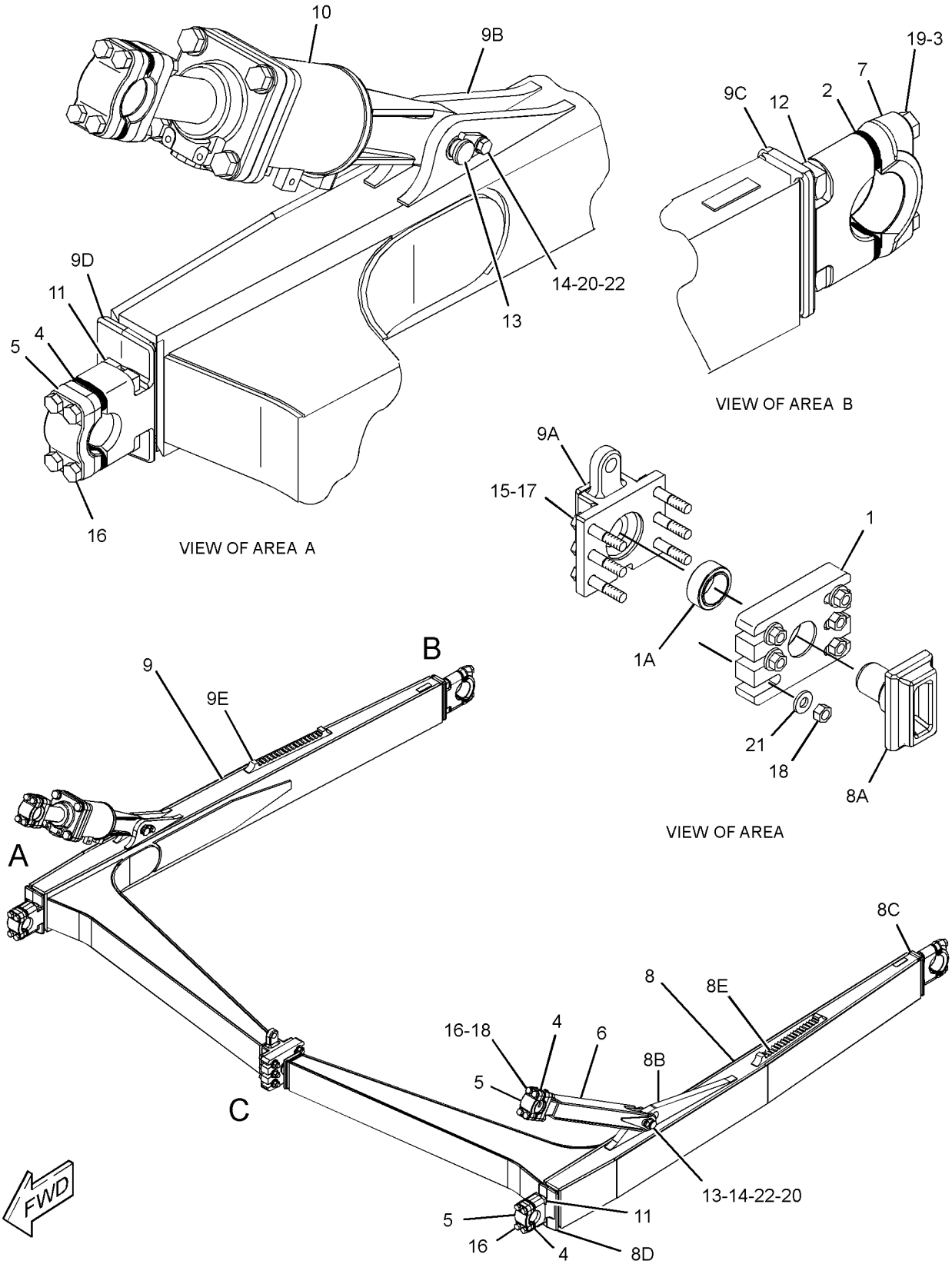

GRAPHIC #1 **<END>** g01368504

230-5554 PUSH ARM GP

S/N: TTT1-UP

PART OF 389-6129, 389-6131 INSTALLATION AR-BULLDOZER

AN ATTACHMENT

SMCS-6061 **i05628044**

NOTE	REF NO	GRAPHIC REF	PART NUMBER	QTY	PART NAME 1 2 3 4 5 6 (PRODUCT LEVEL)	SEE PAGE
	1	1	**282-9090**	2	RETAINER	
	2	1	**4T-1520**	1	CAGE AS	
	2A	1	**6J-5383**	1	BEARING	
B	3	1	**4T-4866**	52	SHIM (0.8-MM THK)	
M	4	1	**7Y-5235**	4	BOLT (M24X3X190-MM)	
B	5	1	**8E-5703**	78	SHIM (0.8-MM THK)	
	6	1	**8J-2880**	3	CAP-BEARING	
	7	1	**124-9672**	1	BRACE AS-TILT	
	8	1	**160-6305**	2	CAP-BEARING	
	9	1	**194-0935**	1	PUSH ARM AS (LH)	
	10	1	**194-0936**	1	PUSH ARM AS (RH)	
Y	11	1	**367-9478**	1	CYLINDER GP-TILT	566
M	12	1	**251-8202**	8	NUT-SQUARE (M20X2.5-THD)	
M	13	1	**251-8203**	4	NUT-SQUARE (M24X3-THD)	
M	14	1	**8T-4779**	2	BOLT (M16X2X35-MM)	
	15	1	**290-8226**	2	PIN	
M	16	1	**7X-2566**	6	BOLT (M20X2.5X110-MM)	
M	17	1	**8C-8478**	12	BOLT (M20X2.5X140-MM)	
	18	1	**8T-4123**	6	WASHER (3.62X5.75X0.375-MM THK)	
M	19	1	**8T-4131**	10	NUT (M20X2.5-THD)	
	20	1	**8T-4167**	4	WASHER-HARD (26X44X4-MM THK)	
	21	1	**8T-5439**	6	WASHER-HARD (21.5X45X6-MM THK)	
	22	1	**9X-8257**	2	WASHER (17.5X30X3.5-MM THK)	

B - USE AS REQUIRED
M - METRIC PART
Y - SEPARATE ILLUSTRATION

230-5554 **PUSH ARM GP (*contd.*)** **i05628044**

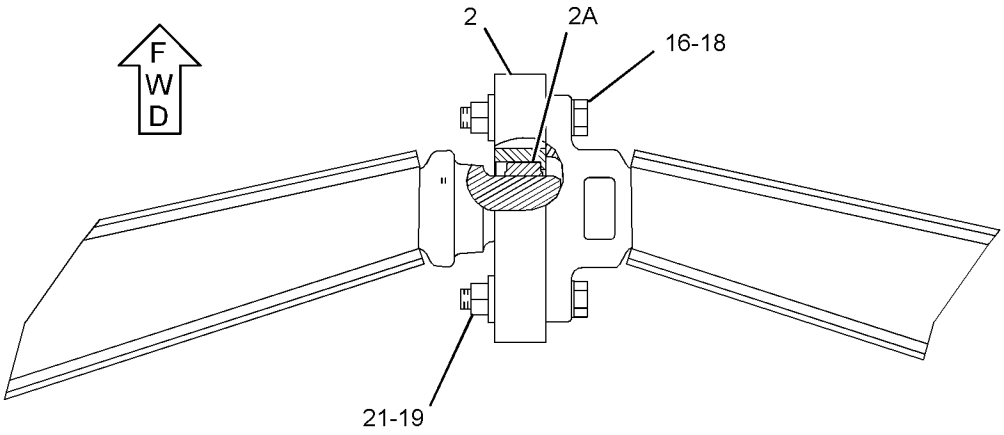

VIEW A-A

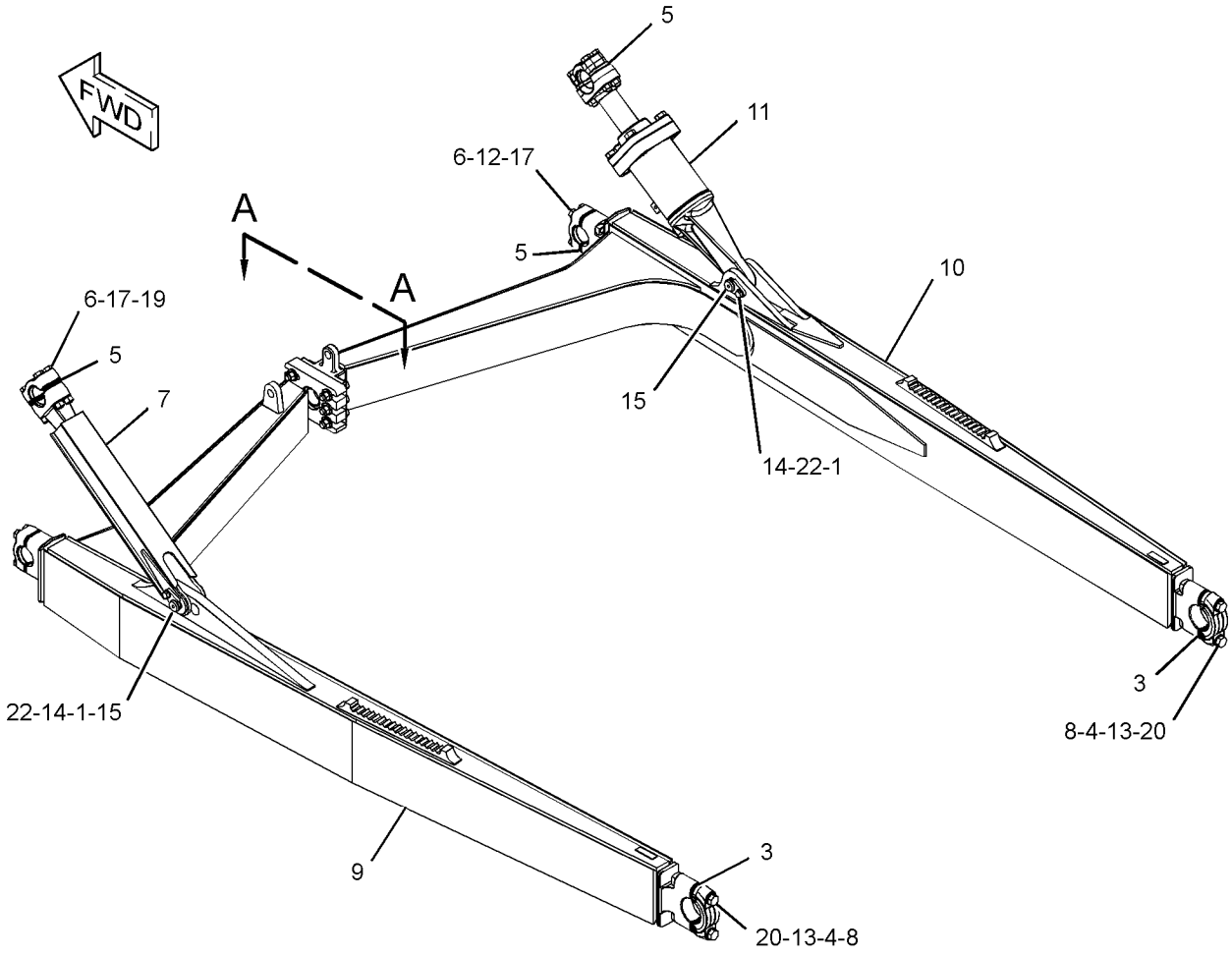

GRAPHIC #1 **<END>** g03317084

252-5853 PUSH ARM GP

S/N: SSS1-UP

PART OF 389-6128 INSTALLATION AR-BULLDOZER

AN ATTACHMENT

SMCS-6061 **i05627952**

NOTE	REF NO	GRAPHIC REF	PART NUMBER	QTY	PART NAME 1 2 3 4 5 6 (PRODUCT LEVEL)	SEE PAGE
	1	1	**4T-1520**	1	CAGE AS	
	1A	1	**6J-5383**	1	BEARING	
B	2	1	**4T-4866**	52	SHIM (0.8-MM THK) (EACH)	
M	3	1	**7Y-5235**	4	BOLT (M24X3X190-MM)	
B	4	1	**8E-5703**	78	SHIM (0.8-MM THK) (EACH)	
	5	1	**8J-2880**	3	CAP-BEARING	
	6	1	**124-9672**	1	BRACE AS-TILT	
	7	1	**160-6305**	2	CAP-BEARING	
Y	8	1	**367-9478**	1	CYLINDER GP-TILT	566
	9	1	**179-6151**	1	PUSH ARM AS (LH)	
	9A	1	**4T-0780**	1	TRUNNION	
	9B	1	**8P-9770**	1	PLATE	
	9C	1	**124-9666**	1	BRACKET	
	9D	1	**179-6152**	1	BEARING	
	9E	1	**179-6153**	1	BEARING	
	9F	1	**209-2152**	1	BAR	
	10	1	**179-6162**	1	PUSH ARM AS (RH)	
	10A	1	**4T-0732**	1	BRACKET	
	10B	1	**8P-9770**	1	PLATE	
	10C	1	**9W-2579**	2	PLATE	
	10D	1	**179-6152**	1	BEARING	
	10E	1	**179-6153**	1	BEARING	
	10F	1	**209-2152**	1	BAR	
M	11	1	**251-8202**	8	NUT-SQUARE (M20X2.5-THD)	
M	12	1	**251-8203**	4	NUT-SQUARE (M24X3-THD)	
	13	1	**290-8226**	2	PIN	
	14	1	**282-9090**	2	RETAINER	
M	15	1	**7X-2566**	6	BOLT (M20X2.5X110-MM)	
M	16	1	**8C-8478**	12	BOLT (M20X2.5X140-MM)	
	17	1	**8T-4123**	6	WASHER (3.62X5.75X0.375-MM THK)	
M	18	1	**8T-4131**	10	NUT (M20X2.5-THD)	
	19	1	**8T-4167**	4	WASHER-HARD (26X44X4-MM THK)	
M	20	1	**8T-4779**	2	BOLT (M16X2X35-MM)	
	21	1	**8T-5439**	6	WASHER-HARD (21.5X45X6-MM THK)	
	22	1	**9X-8257**	2	WASHER (17.5X30X3.5-MM THK)	

B - USE AS REQUIRED
M - METRIC PART
Y - SEPARATE ILLUSTRATION

252-5853 **PUSH ARM GP (*contd.*)** **i05627952**

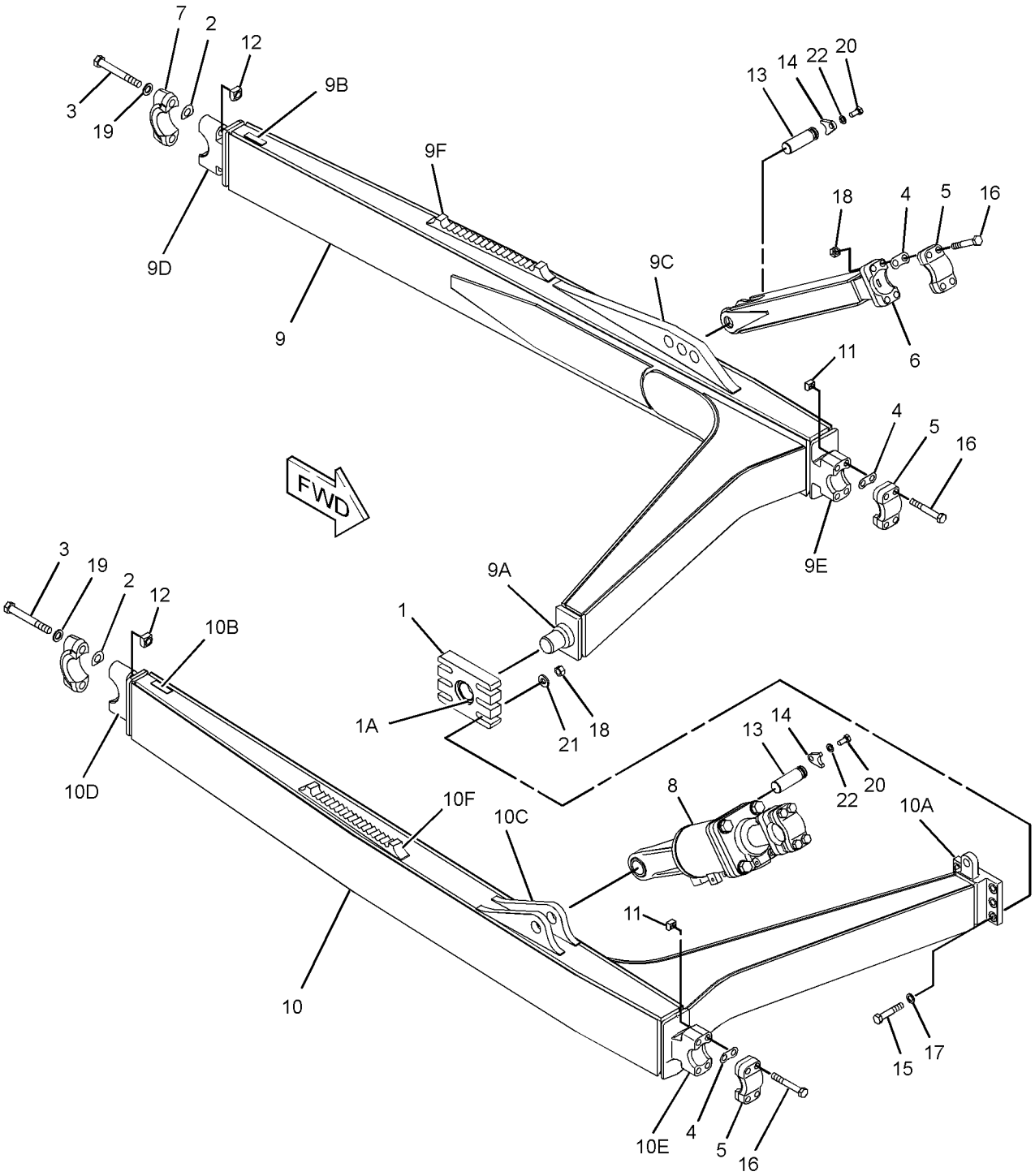

GRAPHIC #1 **<END>** g01225461

109-1352 TRUNNION GP-BULLDOZER

S/N: SSS1-UP; TTT1-UP
PART OF 389-6128, 389-6129, 389-6131, 389-6133, 389-6134, 447-3469, 447-3470 INSTALLATION AR-BULLDOZER
AN ATTACHMENT

SMCS-6069 **i05627946**

NOTE	REF NO	GRAPHIC REF	PART NUMBER	QTY	PART NAME 1 2 3 4 5 6 (PRODUCT LEVEL)	SEE PAGE
	1	1	**285-0852**	2	TRUNNION	
M	2	1	**7X-2563**	20	BOLT (M20X2.5X60-MM)	

M - METRIC PART
QUANTITIES SHOWN ARE THOSE REQUIRED FOR BOTH LH AND RH SIDES

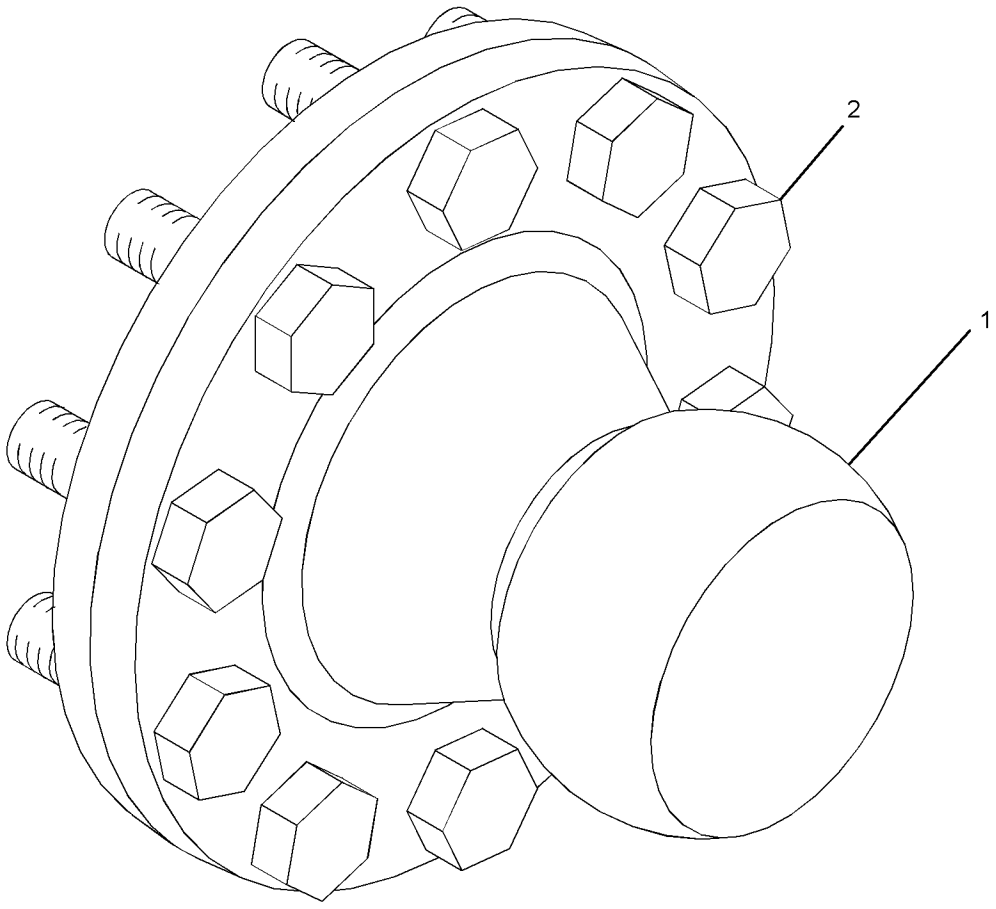

GRAPHIC #1 **<END>** g01360146

109-1353 TRUNNION GP-BULLDOZER

S/N: PPP1-UP

PART OF 475-4154, 475-4155 INSTALLATION AR-BULLDOZER

AN ATTACHMENT

SMCS-6069 **i06146556**

NOTE	REF NO	GRAPHIC REF	PART NUMBER	QTY	PART NAME 1 2 3 4 5 6 (PRODUCT LEVEL)	SEE PAGE
	1	1	**285-0852**	2	TRUNNION	
	2	1	**109-1354**	2	SUPPORT	
M	3	1	**7X-2563**	44	BOLT (M20X2.5X60-MM)	
	4	1	**8T-4123**	24	WASHER (3.62X5.75X0.375-MM THK)	

M - METRIC PART

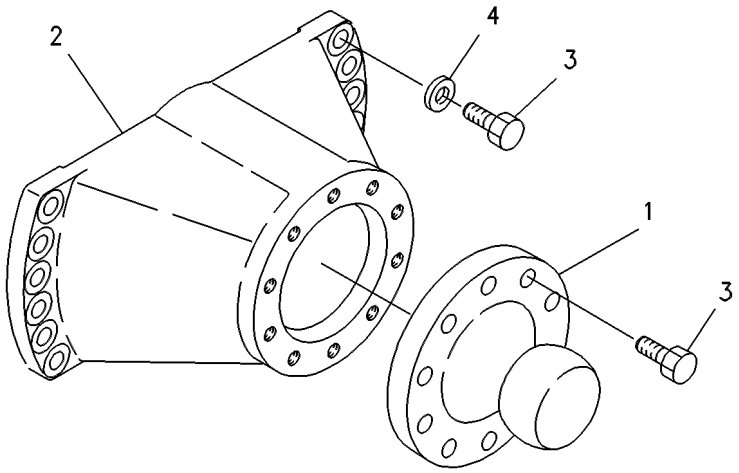

GRAPHIC #1 **<END>** g00264798

173-1028 ADJUSTER GP-SEAT

S/N: PPP1-UP; SSS1-UP; TTT1-UP
PART OF 178-0603, 180-7304 SEAT GP
AN ATTACHMENT

SMCS-7321 **i05332866**

NOTE	REF NO	GRAPHIC REF	PART NUMBER	QTY	PART NAME 1 2 3 4 5 6 (PRODUCT LEVEL)	SEE PAGE
	1	1	**4V-8256**	4	SPRING	
	2	1	**117-4492**	1	ROD	
	3	1	**136-1544**	1	LATCH AS (LH)	
	4	1	**156-5545**	1	LATCH AS (RH)	
	5	1	**164-4531**	1	ROD	
	6	1	**170-1112**	1	PLATE AS	
	7	1	**170-1114**	1	HANDLE (SLIDE ADJUSTMENT)	
	8	1	**170-1115**	1	HANDLE (TILT ADJUSTMENT)	
	9	1	**132-0338**	2	WASHER-PLASTIC (13X31.7X0.8-MM THK)	
	10	1	**2K-4973**	2	LOCKNUT (3/8-16-THD)	
	11	1	**7X-0608**	2	WASHER-HARD (10.2X16X2-MM THK)	

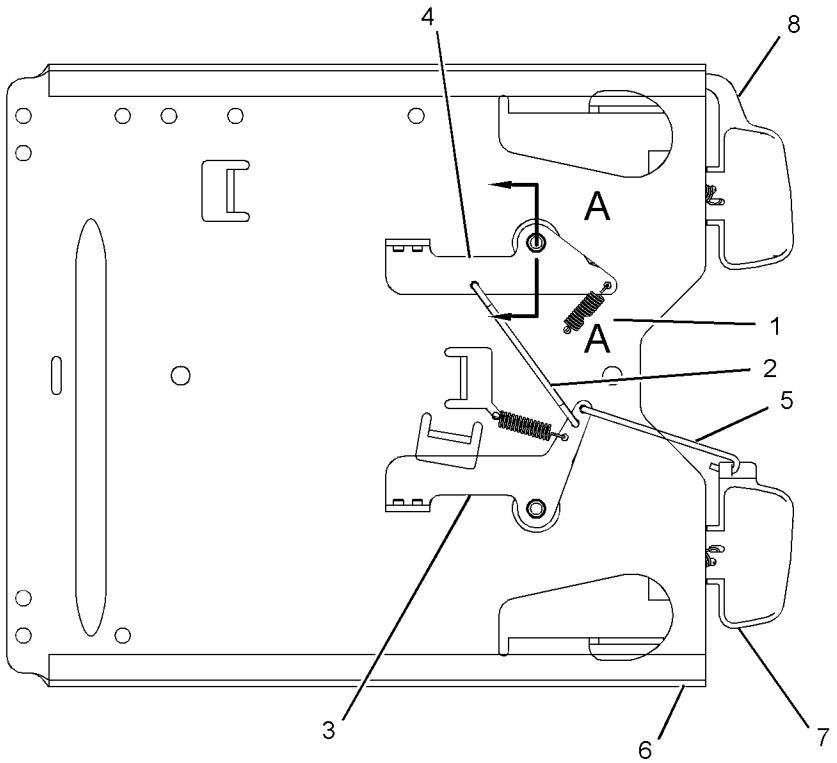

BOTTOM VIEW

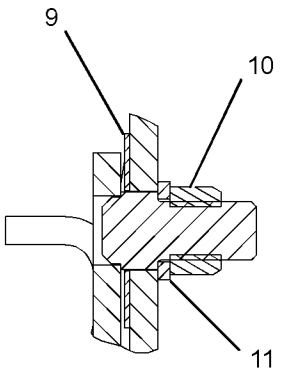

SECTION A-A

GRAPHIC #1 **<END>** g01191495

387-5701 AIR CONDITIONER & MOUNTING GP

S/N: PPP1-UP; SSS1-UP; TTT1-UP
PART OF 393-6475 CANOPY AR
AN ATTACHMENT

SMCS-7320 **i05901617**

NOTE	REF NO	GRAPHIC REF	PART NUMBER	QTY	PART NAME 1 2 3 4 5 6 (PRODUCT LEVEL)	SEE PAGE
	1	1	**8C-5682**	1	TEE	
	2	1	**112-7448**	1	FILTER ELEMENT-CAB AIR (STANDARD EFFICIENCY)	
	3	1	**228-6089**	1	PLUG (ROCKER SWITCH)	
	4	1	**240-8917**	1	FILM-CIRCUIT BREAKER	
	5	1	**267-5243**	1	PANEL AS (AIR CONDITIONER, HEATER CONT)	
		1	**271-7312**	1	KNOB (TEMPERATURE CONTROL)	
		1	**285-7415**	1	KNOB (BLOWER FAN SPEED)	
	6	1	**273-5924**	2	KNOB (ADJUSTMENT CONTROL)	
	7	1	**323-5864**	1	VALVE (CONDENSATION DRAIN)	
	8	1	**335-6983**	5	CLAMP-BAND	
Y	9	1	*375-0350*	1	AIR CONDITIONER GP	682
Y	10	1	**387-1410**	1	HARNESS AS-DASH (RH)	170
	11	1	**388-5571**	1	WIRE AS	
	12	1	**392-7232**	1	PLATE	
	13	1	**068-4209**	2	SCREW (8-32X0.75-IN)	
	14	1	**276-1326**	3	BOLT (M10X1.5X55-MM)	
M	15	1	**344-5675**	3	NUT (M10X1.5-THD)	
	16	1	**6T-3643**	1	CIRCUIT BREAKER AS (15-AMPERE)	
		1	**6V-8376**	2	SCREW-MACHINE (8-32X0.25-IN)	
		1	**9B-7233**	2	LOCKWASHER	
	17	1	**8T-4121**	6	WASHER-HARD (11X21X2.5-MM THK)	
M	18	1	**9X-2045**	2	SCREW-TRUSS HEAD (M6X1X20-MM)	
M	19	1	**9X-6485**	1	STUD	
D	20	1	**5P-6129**		TUBE (0.25-M)	
D	20A	1	**5P-6129**		TUBE (0.55-M)	
D	20B	1	**5P-6129**		TUBE (0.5-M)	

D - ORDER BY THE METER
M - METRIC PART
Y - SEPARATE ILLUSTRATION

387-5701 **AIR CONDITIONER & MOUNTING GP (*contd.*)** **i05901617**

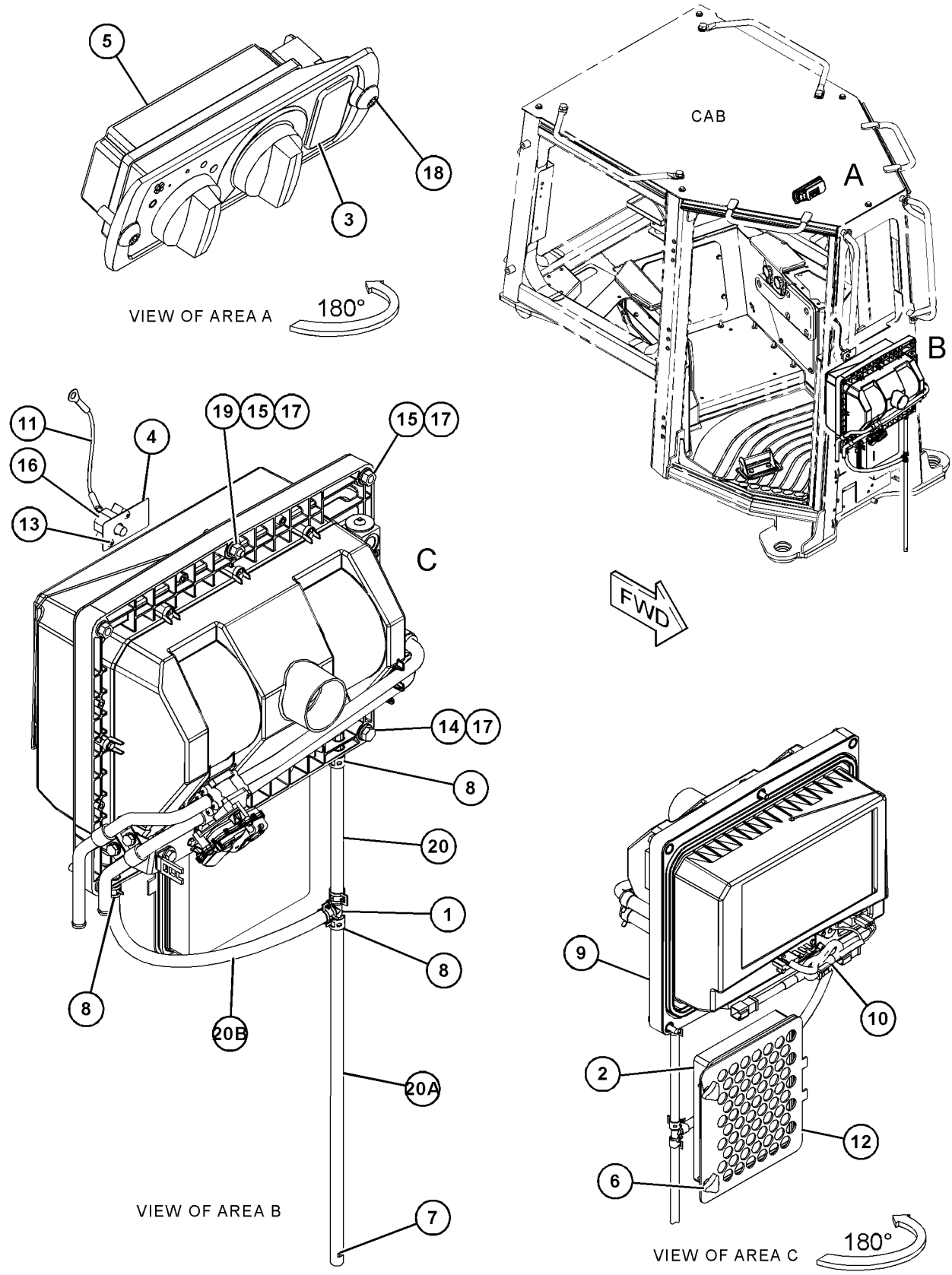

GRAPHIC #1 **<END>** g03722632

375-0350 AIR CONDITIONER GP

S/N: PPP1-UP; SSS1-UP; TTT1-UP

PART OF 387-5701 AIR CONDITIONER & MOUNTING GP, 375-7911 HEATER & MTG GP-CAB

AN ATTACHMENT

SMCS-7320 **i06231268**

NOTE	REF NO	GRAPHIC REF	PART NUMBER	QTY	PART NAME 1 2 3 4 5 6 (PRODUCT LEVEL)	SEE PAGE
	1	1	**119-9631**	1	SWITCH-TEMPERATURE (HVAC) (AIR CONDITIONER)	
	2	1	**131-3093**	1	BUSHING	
	3	1	**212-3416**	3	SCREW-PAN HEAD (8-16X0.5-IN)	
	4	1	**257-5030**	1	GUARD	
	5	1	**268-8769**	1	VALVE & MOUNTING AS-WATER	
	6	1	**275-6706**	1	MOTOR AS-BLOWER (24-VOLT) (HEATER, A/C)	
		1	**102-8802**	1	KIT-RECEPTACLE (2-PIN)	
					(INCLUDES RECEPTACLE AS & WEDGE)	
		1	**9W-0852**	2	PIN-CONNECTOR (14-GA TO 16-GA)	
	7	1	**279-0850**	1	ACTUATOR (ELECTRONIC) (WATER VALVE)	
	8	1	**327-0282**	1	SEAL-INTEGRAL (1/2-IN) (REFRIGERANT, HIGH SIDE)	
	9	1	**327-0283**	1	SEAL-INTEGRAL (3/4-IN) (REFRIGERANT, LOW SIDE)	
	10	1	**349-5830**	2	GASKET	
	11	1	**349-5835**	1	RESISTOR AS	
	12	1	**371-1679**	2	SCREW-FORMING	
	13	1	**375-0341**	1	COIL AS-EVAPORATOR	
	14	1	**375-0342**	1	CASE	
	15	1	**375-0343**	1	CASE	
	16	1	**375-0345**	1	CASE	
	17	1	**375-0346**	1	SEAL	
	18	1	**387-5659**	1	PLATE	
	19	1	**387-5661**	1	PAN-DRAIN	
	20	1	**387-5665**	1	BRACKET AS	
	21	1	**387-5671**	1	TUBE	
	22	1	**387-5672**	1	TUBE	
	23	1	**387-5674**	1	TUBE	
	24	1	**387-5681**	1	VALVE-EXPANSION	
	25	1	**396-3856**	1	GROMMET	
Y	26	1	**399-7895**	1	HARNESS AS-PLATFORM	175
M	27	1	**151-6282**	2	BOLT-SOCKET HEAD (M6X1X40-MM)	
	28	1	**172-4702**	4	CLAMP	
M	29	1	**174-9194**	3	BOLT (M8X1.25X16-MM)	
	30	1	**1P-6524**	2	SCREW-FORMING (10-16X0.625-IN)	
	31	1	**206-1345**	1	RETAINER AS	
	32	1	**248-6772**	8	SCREW-MACHINE (8-16X7.75-IN)	
	33	1	**2M-1444**	4	SCREW-TAPPING (8-18X0.3-IN)	
	34	1	**311-3520**	21	SCREW-HEX HEAD (8-16X0.5-IN)	
	35	1	**4D-2297**	2	SEAL-O-RING	
	36	1	**9M-8406**	3	CLIP	
E	37	1	**136-1953**		HOSE (10.5-CM EACH)	
E	38	1	**126-8472**		SEAL (156-CM)	

E - ORDER BY THE CENTIMETER
M - METRIC PART
Y - SEPARATE ILLUSTRATION

375-0350 **AIR CONDITIONER GP (*contd.*)** **i06231268**

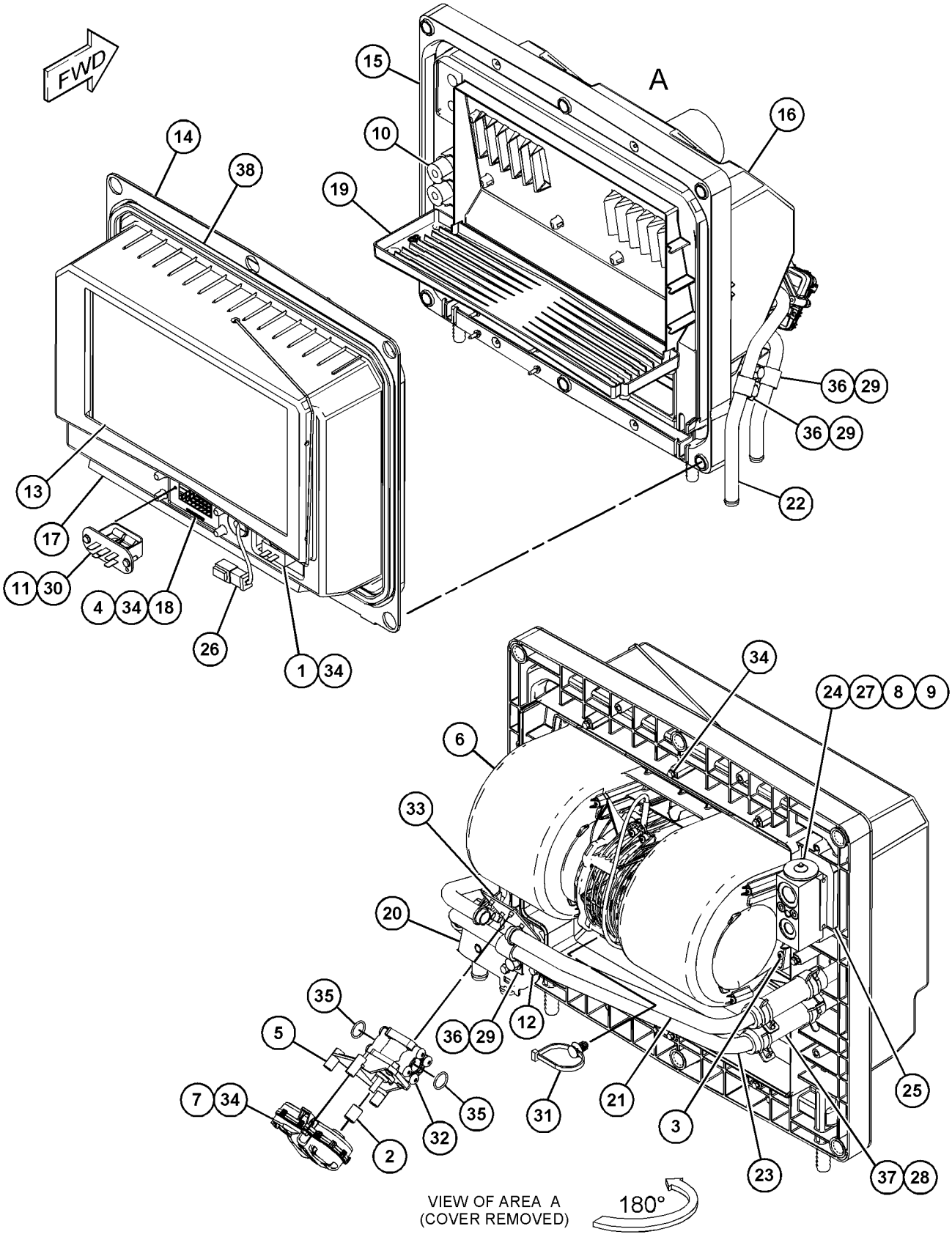

GRAPHIC #1

<END>

g03719736

222-5374 ARM GP-WINDOW WIPER–DOOR, RH

S/N: PPP1-UP; SSS1-UP; TTT1-UP
PART OF 374-4733 WIPER GP-WINDOW
AN ATTACHMENT

SMCS-7305 **i05901623**

NOTE	REF NO	GRAPHIC REF	PART NUMBER	QTY	PART NAME 1 2 3 4 5 6 (PRODUCT LEVEL)	SEE PAGE
	1	1	**305-9194**	1	NOZZLE AS-WASHER	
E	2	1	**194-5171**		HOSE (33-CM)	

E - ORDER BY THE CENTIMETER

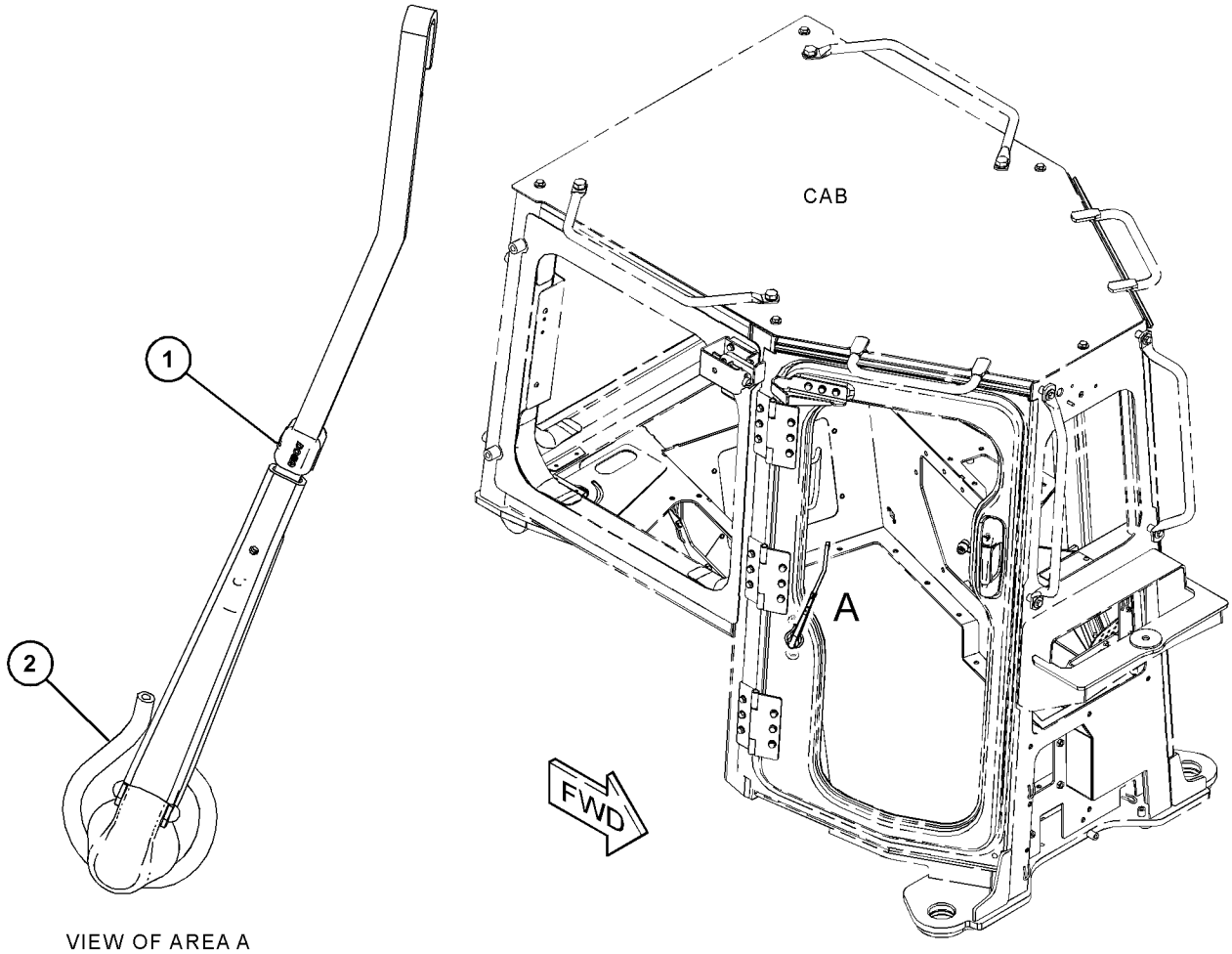

VIEW OF AREA A

GRAPHIC #1 **<END>** g03719954

222-5378 ARM GP-WINDOW WIPER–DOOR, LH

S/N: PPP1-UP; SSS1-UP; TTT1-UP
PART OF 374-4733 WIPER GP-WINDOW
AN ATTACHMENT

SMCS-7305 **i05900254**

NOTE	REF NO	GRAPHIC REF	PART NUMBER	QTY	PART NAME 1 2 3 4 5 6 (PRODUCT LEVEL)	SEE PAGE
	1	1	**305-9195**	1	NOZZLE AS-WASHER	
E	2	1	**194-5171**		HOSE (33-CM)	

E - ORDER BY THE CENTIMETER

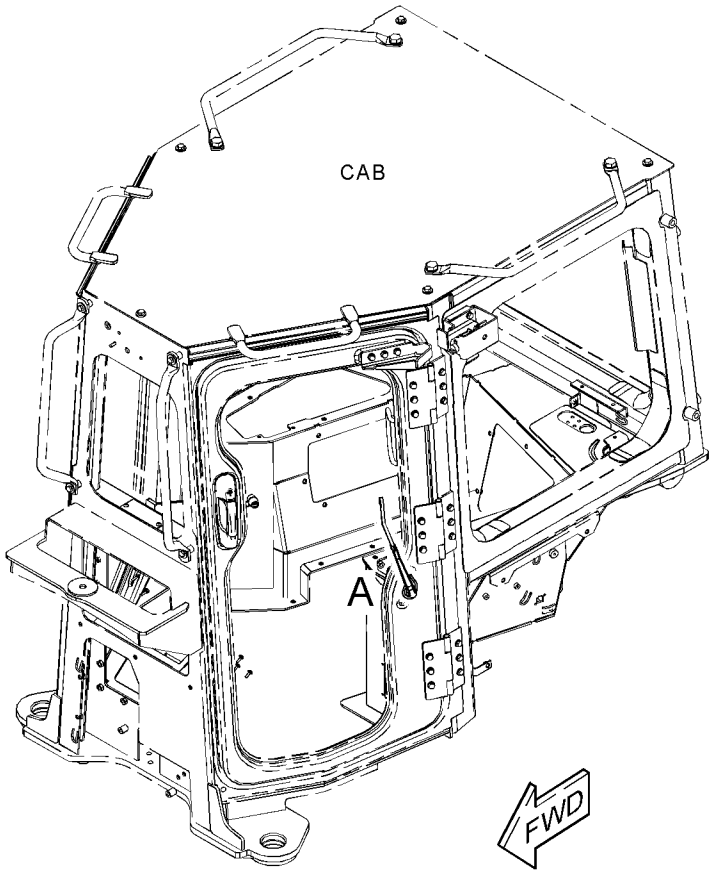

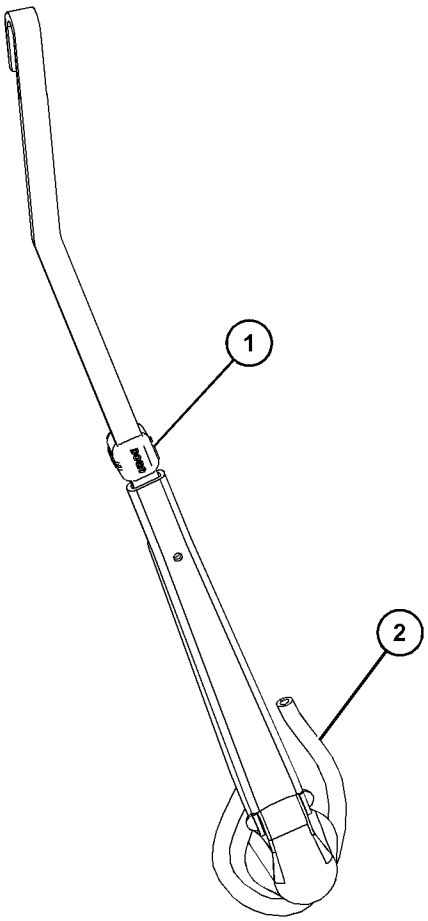

VIEW OF AREA A

GRAPHIC #1 **<END>** g03719977

293-0754 ARM GP-WINDOW WIPER

S/N: PPP1-UP; SSS1-UP; TTT1-UP
PART OF 374-4733 WIPER GP-WINDOW
AN ATTACHMENT

SMCS-7305 **i05331115**

NOTE	REF NO	GRAPHIC REF	PART NUMBER	QTY	PART NAME 1 2 3 4 5 6 (PRODUCT LEVEL)	SEE PAGE
	1	1	**305-9192**	1	NOZZLE AS-WASHER	
E	2	1	**194-5171**		HOSE (35-CM)	
					PARTS SHOWN IN GRAPHIC(S) WITHOUT A REFERENCE NUMBER ARE NOT SERVICED SEPARATELY	

E - ORDER BY THE CENTIMETER

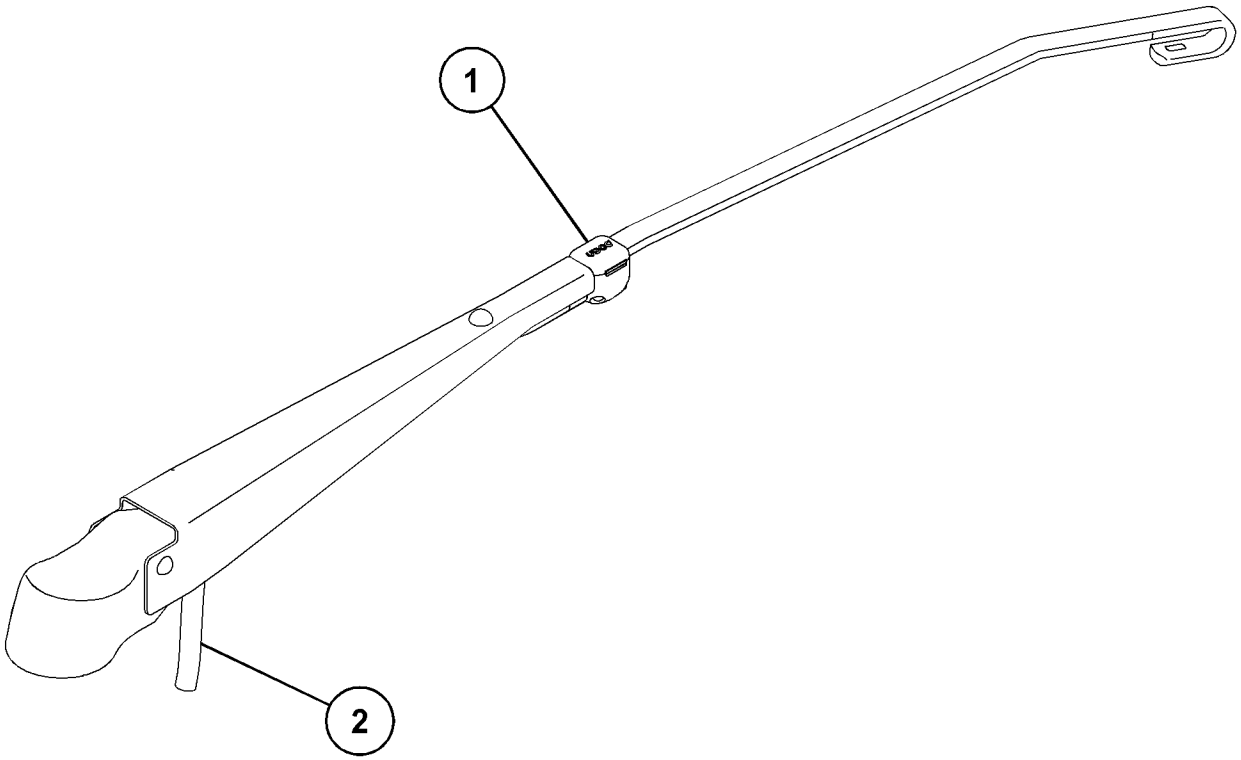

GRAPHIC #1 **<END>** g03312598

393-8112 ARM GP-WINDOW WIPER–FRONT

S/N: PPP1-UP; SSS1-UP; TTT1-UP
PART OF 374-4733 WIPER GP-WINDOW
AN ATTACHMENT

SMCS-7305 **i05900248**

NOTE	REF NO	GRAPHIC REF	PART NUMBER	QTY	PART NAME 1 2 3 4 5 6 (PRODUCT LEVEL)	SEE PAGE
	1	1	**136-3189**	3	CLIP	
	2	1	**136-3191**	1	NOZZLE AS-WASHER	
E	3	1	**194-5171**		HOSE (50-CM)	

E - ORDER BY THE CENTIMETER

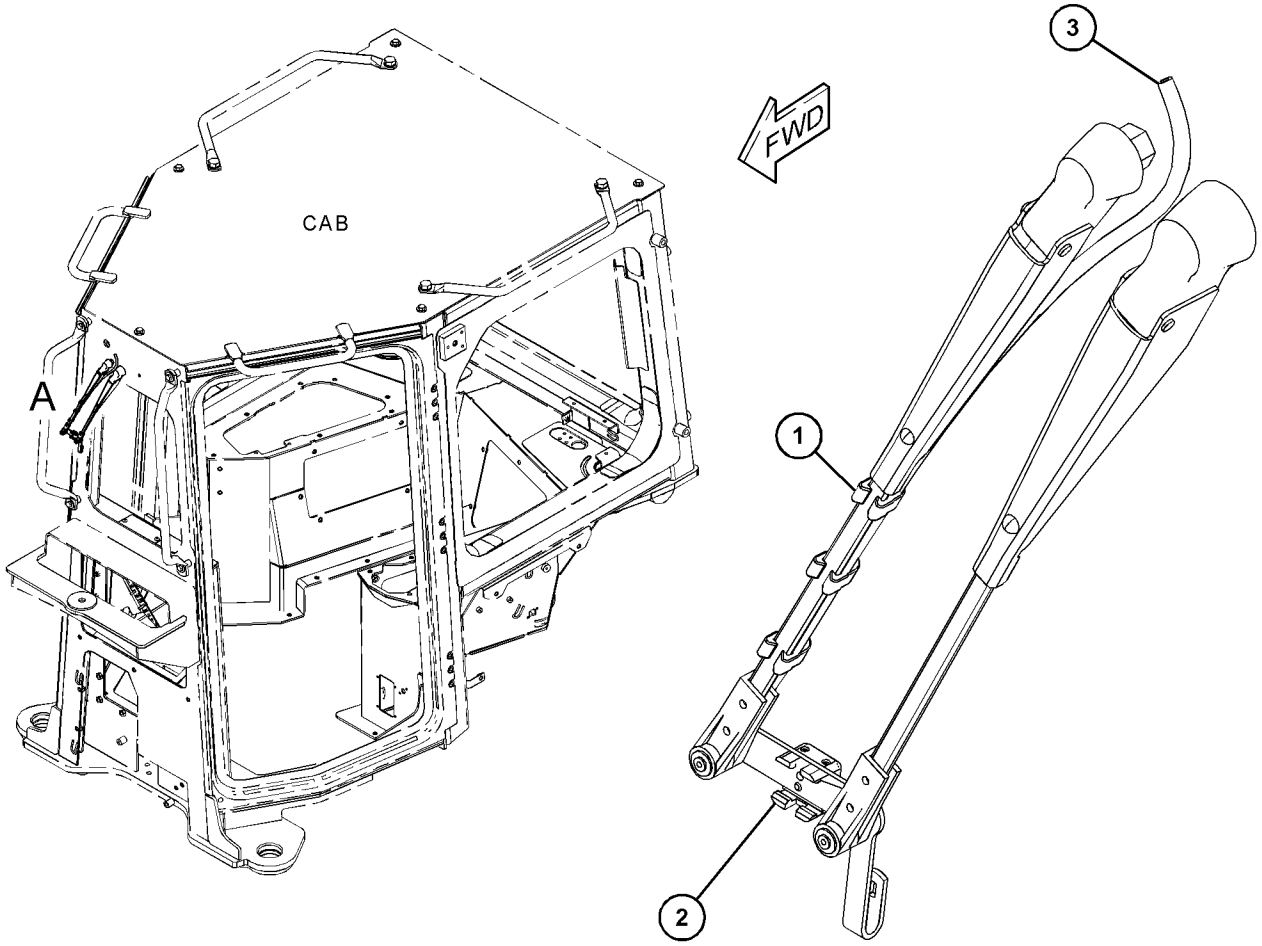

VIEW OF AREA A

GRAPHIC #1 **<END>** g03720015

OPERATOR STATION

393-6480 CAB AR

S/N: PPP1-UP; SSS1-UP; TTT1-UP
SINGLE PANE
PART OF 398-4297 CAB AR
AN ATTACHMENT

SMCS-7301 **i06214142**

NOTE	PART NUMBER	QTY	PART NAME 1 2 3 4 5 6 (PRODUCT LEVEL)	SEE PAGE
Y	*326-4855*	1	CONTROL & MTG GP-PEDAL (GOVERNOR, BRAKE)	696
Y	*421-5950*	1	CONTROL GP-STEERING & XMSN	534
Y	*398-0423*	1	DOOR GP-CAB (RH)	714
Y	*398-0416*	1	DOOR GP-CAB (LH)	712
Y	*398-4296*	1	FILM GP	843
Y	*375-7911*	1	HEATER & MTG GP-CAB	720
Y	*375-7906*	1	INSTALLATION GP-RADIO	724
Y	*424-8524*	1	LINER GP-CAB	730
Y	*105-9659*	1	MIRROR GP-REAR VIEW (INTERIOR)	740
Y	*393-6481*	1	ROPS GP	755
Y	*383-6866*	1	WINDOW GP-CAB	794
Y	*374-4733*	1	WIPER GP-WINDOW	804
Y	*415-4252*	1	WIRING GP-CAB	251

Y - SEPARATE ILLUSTRATION

<END>

398-4297 CAB AR

S/N: PPP1-UP; SSS1-UP; TTT1-UP
SINGLE PANE
CANNOT BE USED WITH LIGHTING GP-CANOPY, SCREEN GP-CANOPY
PART OF 481-9508 DISTRIBUTION AR
AN ATTACHMENT

SMCS-7301 **i06229434**

NOTE	PART NUMBER	QTY	PART NAME 1 2 3 4 5 6 (PRODUCT LEVEL)	SEE PAGE
Y	*393-6480*	1	CAB AR	688
Y	*446-5033*	1	COMPRESSOR GP-REFRIGERANT	692
Y	*386-3966*	1	CONDENSER & MTG GP-REFRIGERANT	694
Y	*393-6494*	1	COVER GP-CAB	710
Y	*393-6483*	1	FILTER GP-CAB AIR	719
Y	*398-4511*	1	LINES GP-AIR CONDITIONER	735
Y	*393-6479*	1	MOUNTING GP-ROPS	747
Y	*375-7921*	1	TANK GP-WINDOW WASHER	791
	6V-1970	1	LITERATURE GP (STANDARD CAB)	
	5P-8500	2	KEY	
	5P-7958	1	SLEEVE-CABLE SPLICE	

Y - SEPARATE ILLUSTRATION

<END>

OPERATOR STATION

398-4300 CAB AR—DUAL PANE GLASS

S/N: PPP1-UP; SSS1-UP; TTT1-UP
FOR USE WITH COLD WEATHER
CANNOT BE USED WITH LIGHTING GP-CANOPY, SCREEN GP-CANOPY
AN ATTACHMENT

SMCS-7301 **i06206749**

NOTE	PART NUMBER	QTY	PART NAME 1 2 3 4 5 6 (PRODUCT LEVEL)	SEE PAGE
Y	*393-6485*	1	CAB AR	689
Y	*446-5033*	1	COMPRESSOR GP-REFRIGERANT	692
Y	*386-3966*	1	CONDENSER & MTG GP-REFRIGERANT	694
Y	*393-6494*	1	COVER GP-CAB	710
Y	*391-4062*	1	FAN GP-CIRCULATING	717
Y	*393-6483*	1	FILTER GP-CAB AIR	719
Y	*398-4511*	1	LINES GP-AIR CONDITIONER	735
Y	*393-6479*	1	MOUNTING GP-ROPS	747
Y	*375-7921*	1	TANK GP-WINDOW WASHER	791
	6V-1970	1	LITERATURE GP (STANDARD CAB)	
	5P-8500	2	KEY	
	5P-7958	1	SLEEVE-CABLE SPLICE	

Y - SEPARATE ILLUSTRATION

<END>

393-6485 CAB AR-ENCLOSED ROPS

S/N: PPP1-UP; SSS1-UP; TTT1-UP
DUAL PANE
PART OF 398-4300 CAB AR
AN ATTACHMENT

SMCS-7301 **i06207001**

NOTE	PART NUMBER	QTY	PART NAME 1 2 3 4 5 6 (PRODUCT LEVEL)	SEE PAGE
Y	*326-4855*	1	CONTROL & MTG GP-PEDAL (GOVERNOR, BRAKE)	696
Y	*421-5950*	1	CONTROL GP-STEERING & XMSN	534
Y	*398-0416*	1	DOOR GP-CAB	712
Y	*398-0423*	1	DOOR GP-CAB	714
Y	*398-4296*	1	FILM GP	843
Y	*375-7911*	1	HEATER & MTG GP-CAB	720
Y	*375-7906*	1	INSTALLATION GP-RADIO	724
Y	*424-8524*	1	LINER GP-CAB	730
Y	*105-9659*	1	MIRROR GP-REAR VIEW (INTERIOR)	740
Y	*393-6481*	1	ROPS GP	755
Y	*389-1414*	1	WINDOW GP-CAB (DUAL PANE)	798
Y	*374-4733*	1	WIPER GP-WINDOW	804
Y	*415-4252*	1	WIRING GP-CAB	251

Y - SEPARATE ILLUSTRATION

<END>

OPERATOR STATION

393-6475 CANOPY AR–HEATED

S/N: PPP1-UP; SSS1-UP; TTT1-UP
PART OF 398-4295 CANOPY AR
AN ATTACHMENT

SMCS-7302 **i06214164**

NOTE	PART NUMBER	QTY	PART NAME 1 2 3 4 5 6 (PRODUCT LEVEL)	SEE PAGE
Y	*387-5701*	1	AIR CONDITIONER & MOUNTING GP	680
Y	*326-4855*	1	CONTROL & MTG GP-PEDAL (GOVERNOR, BRAKE)	696
Y	*421-5950*	1	CONTROL GP-STEERING & XMSN	534
Y	*398-4296*	1	FILM GP	843
Y	*425-6167*	1	LINER GP-CAB	733
Y	*105-9659*	1	MIRROR GP-REAR VIEW (INTERIOR)	740
Y	*393-6476*	1	ROPS GP	754
Y	*420-1160*	1	WIRING GP-CAB	256

Y - SEPARATE ILLUSTRATION

<END>

398-4295 CANOPY AR–HEATED

S/N: PPP1-UP; SSS1-UP; TTT1-UP
AN ATTACHMENT

SMCS-7302 **i06214165**

NOTE	PART NUMBER	QTY	PART NAME 1 2 3 4 5 6 (PRODUCT LEVEL)	SEE PAGE
Y	*393-6475*	1	CANOPY AR	690
Y	*393-6484*	1	COVER GP-CAB	707
Y	*393-6483*	1	FILTER GP-CAB AIR	719
Y	*317-8767*	1	MOUNTING GP-BRACKET	746
Y	*393-6479*	1	MOUNTING GP-ROPS	747
	6V-1970	1	LITERATURE GP (STANDARD CAB)	
	5P-8500	2	KEY	
	5P-7958	1	SLEEVE-CABLE SPLICE	

Y - SEPARATE ILLUSTRATION

<END>

106-5122 COMPRESSOR GP-REFRIGERANT

S/N: PPP1-UP; SSS1-UP; TTT1-UP
PART OF 446-5033 COMPRESSOR GP-REFRIGERANT
AN ATTACHMENT

SMCS-1802 **i05596552**

NOTE	REF NO	GRAPHIC REF	PART NUMBER	QTY	PART NAME 1 2 3 4 5 6 (PRODUCT LEVEL)	SEE PAGE
	1	1	**126-1767**	2	PIN-CONNECTOR (14-GA TO 16-GA)	
					—OR—	
		1	**9X-3401**	2	PIN-CONNECTOR (16-GA TO 18-GA)	
	2	1	**314-4018**	1	VALVE AS-PRESSURE RELIEF (REFRIGERANT COMPRESSOR)	
	3	1	**7T-4532**	1	PLUG AS	
	4	1	**9X-7385**	2	SEAL-O-RING	
	5	1	**102-8802**	1	KIT-RECEPTACLE (2-PIN)	
					(INCLUDES RECEPTACLE AS & WEDGE)	

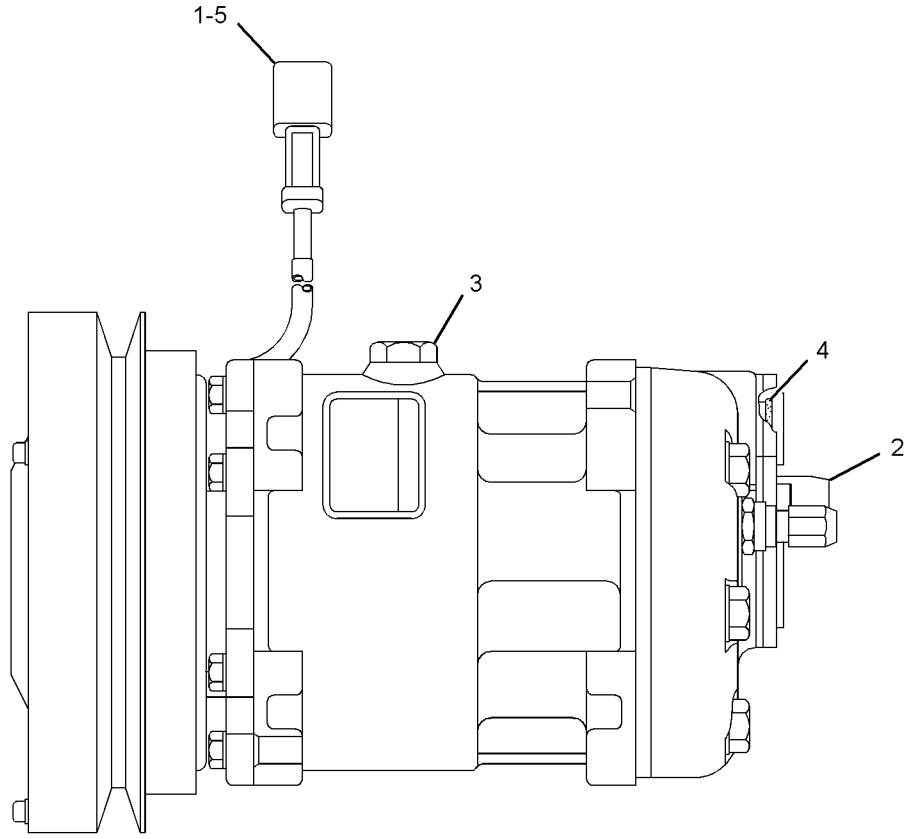

GRAPHIC #1 **<END>** g01951663

446-5033 COMPRESSOR GP-REFRIGERANT

S/N: PPP1-UP; SSS1-UP; TTT1-UP
PART OF 398-4297, 398-4300 CAB AR
AN ATTACHMENT

SMCS-1802 **i06206809**

NOTE	REF NO	GRAPHIC REF	PART NUMBER	QTY	PART NAME 1 2 3 4 5 6 (PRODUCT LEVEL)	SEE PAGE
	1	1	**8S-5383**	1	BLOCK	
Y	2	1	**106-5122**	1	COMPRESSOR GP-REFRIGERANT (AIR CONDITIONER)	691
	3	1	**188-1013**	1	PLATE	
	4	1	**216-0349**	1	V-BELT (REFRIGERANT COMPRESSOR)	
	5	1	**446-5034**	1	BRACKET	
	6	1	**446-5044**	1	GUARD AS	
	7	1	**214-9492**	1	ROD-ADJUSTMENT	
M	8	1	**344-5675**	1	NUT (M10X1.5-THD)	
	9	1	**8T-4121**	8	WASHER-HARD (11X21X2.5-MM THK)	
M	10	1	**8T-4132**	2	NUT (M16X2-THD)	
M	11	1	**8T-4182**	1	BOLT (M10X1.5X45-MM)	
M	12	1	**8T-4185**	3	BOLT (M10X1.5X50-MM)	
M	13	1	**8T-4186**	2	BOLT (M10X1.5X40-MM)	
M	14	1	**8T-4193**	1	BOLT (M16X2X50-MM)	
	15	1	**8T-4223**	2	WASHER-HARD (13.5X25.5X3-MM THK)	
M	16	1	**8T-4244**	1	NUT (M12X1.75-THD)	
M	17	1	**8T-4910**	1	BOLT (M12X1.75X60-MM)	
M	18	1	**8T-5436**	1	BOLT (M10X1.5X130-MM)	
	19	1	**9X-8257**	3	WASHER (17.5X30X3.5-MM THK)	

M - METRIC PART
Y - SEPARATE ILLUSTRATION

446-5033 **COMPRESSOR GP-REFRIGERANT (*contd.*)** **i06206809**

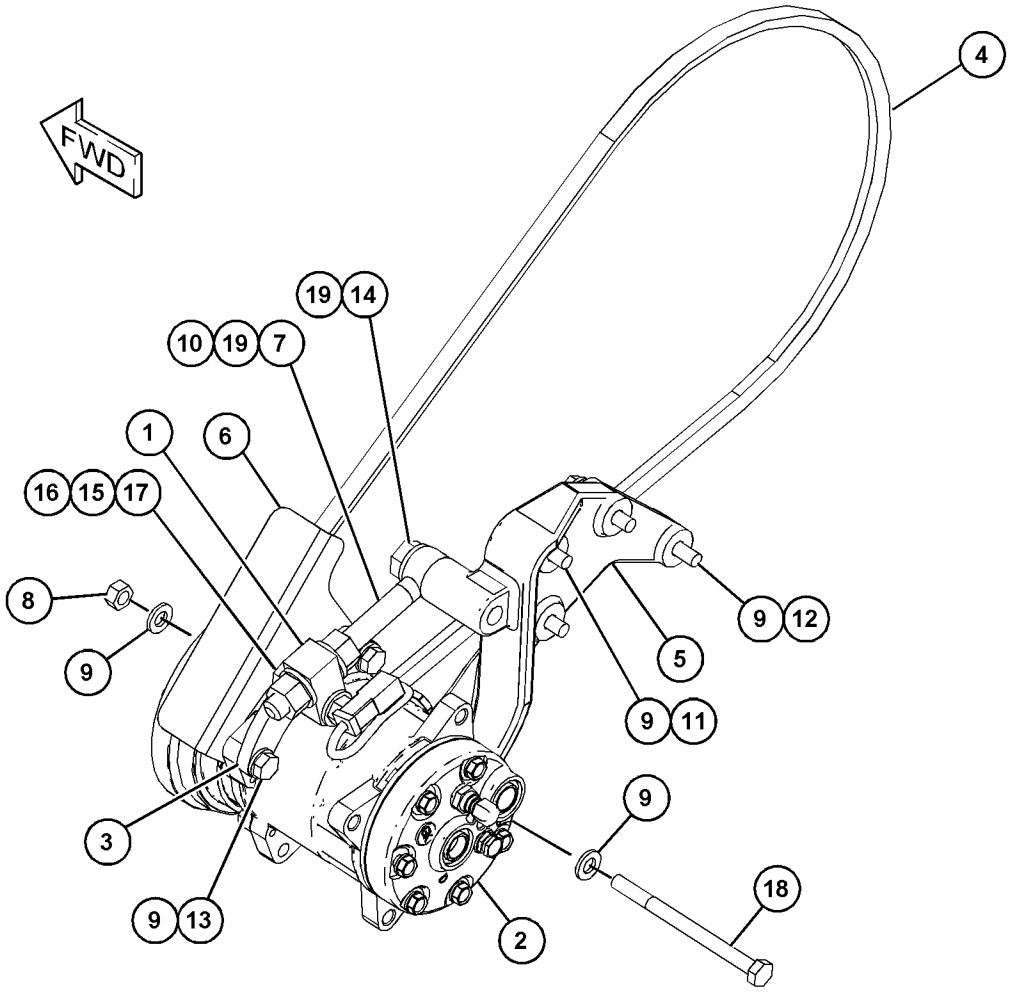

GRAPHIC #1 **<END>** g03857458

386-3966 CONDENSER & MTG GP-REFRIGERANT

S/N: PPP1-UP; SSS1-UP; TTT1-UP
PART OF 398-4297, 398-4300 CAB AR
AN ATTACHMENT

SMCS-1805 **i05903113**

NOTE	REF NO	GRAPHIC REF	PART NUMBER	QTY	PART NAME 1 2 3 4 5 6 (PRODUCT LEVEL)	SEE PAGE
	1	1	**7K-1181**	2	STRAP-CABLE	
	2	1	**386-3830**	1	PLATE AS	
	3	1	**391-4066**	1	PLATE	
	4	1	**391-4068**	1	PLATE AS	
Y	5	1	**394-6377**	1	CONDENSER GP-REFRIGERANT	695
	6	1	**425-9033**	1	PLATE	
	7	1	**7X-7729**	30	WASHER (11X25X3-MM THK)	
M	8	1	**8T-4136**	24	BOLT (M10X1.5X25-MM)	
M	9	1	**8T-4196**	6	BOLT (M10X1.5X35-MM)	

M - METRIC PART
Y - SEPARATE ILLUSTRATION

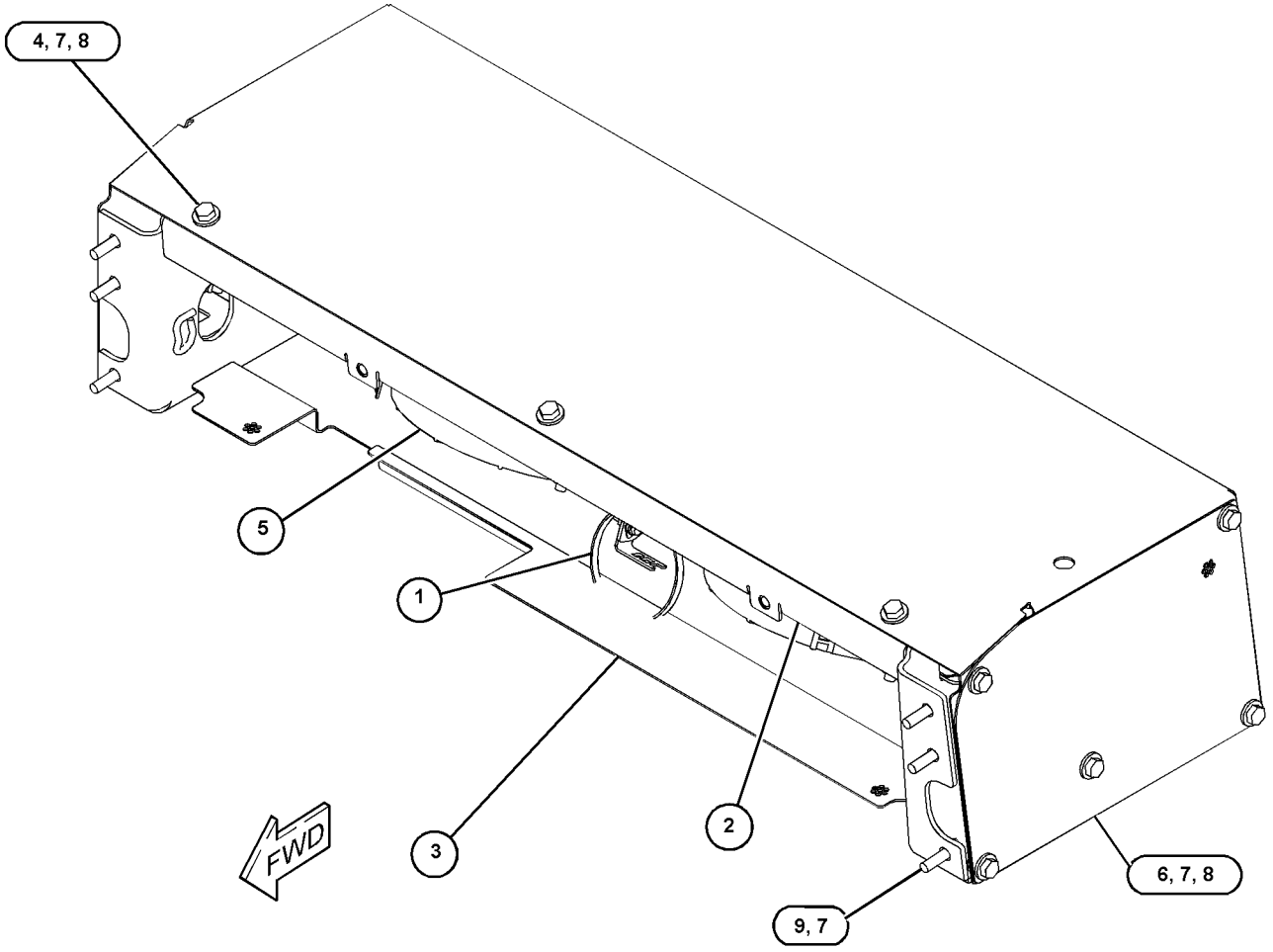

GRAPHIC #1 **<END>** g03720864

394-6377 CONDENSER GP-REFRIGERANT

S/N: PPP1-UP; SSS1-UP; TTT1-UP
PART OF 386-3966 CONDENSER & MTG GP-REFRIGERANT
AN ATTACHMENT

SMCS-1805 **i06165654**

NOTE	REF NO	GRAPHIC REF	PART NUMBER	QTY	PART NAME 1 2 3 4 5 6 (PRODUCT LEVEL)	SEE PAGE
	1	1	**3E-5239**	2	RELAY AS (24-VOLT) (CONDENSER)	
	2	1	**8C-3756**	1	FILM-IDENTIFICATION (GROUP NO., SEQUENCE NO.)	
Y	3	1	**245-5891**	1	HARNESS AS-HEATER & AIR COND	173
	4	1	**320-2151**	1	COIL AS	
		1	**2D-6403**	1	PIN-SPRING	
		1	**325-4416**	2	STUD	
	5	1	**394-6378**	1	CASE AS	
	6	1	**132-5789**	1	CLIP	
	7	1	**156-6175**	4	CLIP	
M	8	1	**342-9920**	8	BOLT-FLANGE HEAD (M8X1.25X20-MM)	
	9	1	**3S-2093**	2	STRAP-CABLE	
M	10	1	**5C-2890**	1	NUT (M6X1-THD)	
M	11	1	**5C-9553**	7	BOLT (M6X1X16-MM)	
M	12	1	**6V-7357**	4	BOLT (M6X1X25-MM)	
	13	1	**8T-4205**	12	WASHER-HARD (7.2X14.5X2-MM THK)	
	14	1	**454-2948**	2	FAN AS-CONDENSER (24-VOLT)	

M - METRIC PART
Y - SEPARATE ILLUSTRATION

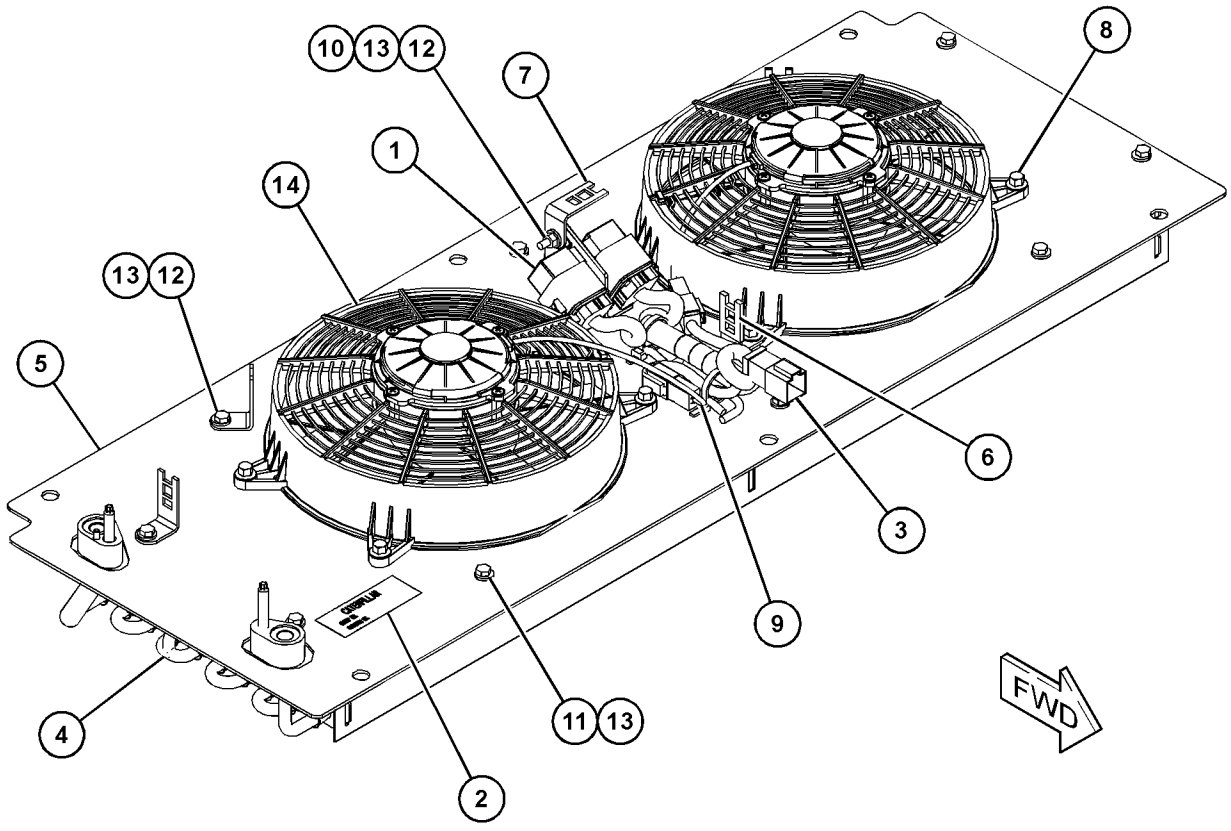

GRAPHIC #1 **<END>** g03721479

326-4855 CONTROL & MTG GP-PEDAL–GOVERNOR, BRAKE

S/N: PPP1-UP; SSS1-UP; TTT1-UP

PART OF 393-6480 CAB AR, 393-6485 CAB AR-ENCLOSED ROPS, 393-6475 CANOPY AR

AN ATTACHMENT

SMCS-5462 **i06171956**

NOTE	REF NO	GRAPHIC REF	PART NUMBER	QTY	PART NAME 1 2 3 4 5 6 (PRODUCT LEVEL)	SEE PAGE
	1	1	**171-7077**	2	ROD-THREADED	
Y	2	1	**329-5766**	1	PEDAL GP-GOVERNOR & BRAKE	752
	3	1	**8T-4121**	4	WASHER-HARD (11X21X2.5-MM THK)	
M	4	1	**8T-4133**	2	NUT (M10X1.5-THD)	
M	5	1	**8T-4136**	2	BOLT (M10X1.5X25-MM)	

M - METRIC PART
Y - SEPARATE ILLUSTRATION

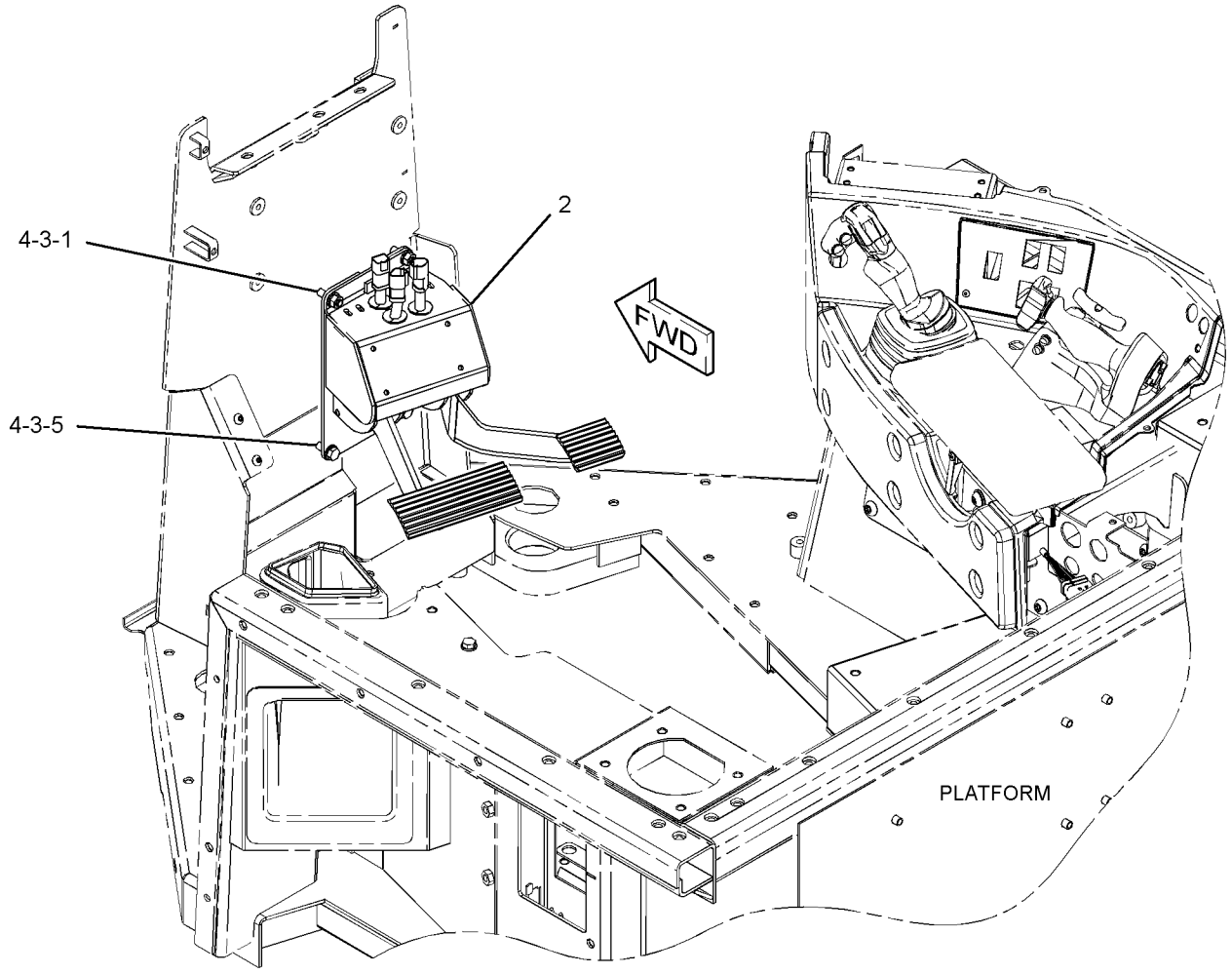

GRAPHIC #1 **<END>** g02427997

350-3036 CONTROL GP-AIR & TEMPERATURE

S/N: PPP1-UP; SSS1-UP; TTT1-UP
PART OF 375-7911 HEATER & MTG GP-CAB
AN ATTACHMENT

SMCS-7451 **i05898342**

NOTE	REF NO	GRAPHIC REF	PART NUMBER	QTY	PART NAME 1 2 3 4 5 6 (PRODUCT LEVEL)	SEE PAGE
	1	1	**267-5243**	1	PANEL AS	
		1	**271-7312**	1	KNOB (TEMPERATURE CONTROL)	
		1	**285-7415**	1	KNOB (BLOWER FAN SPEED)	
	2	1	**284-3662**	1	SWITCH AS-ROCKER (24-VOLT) (AIR CONDITIONER ON, OFF)	
M	3	1	**9X-2045**	2	SCREW-TRUSS HEAD (M6X1X20-MM)	

M - METRIC PART

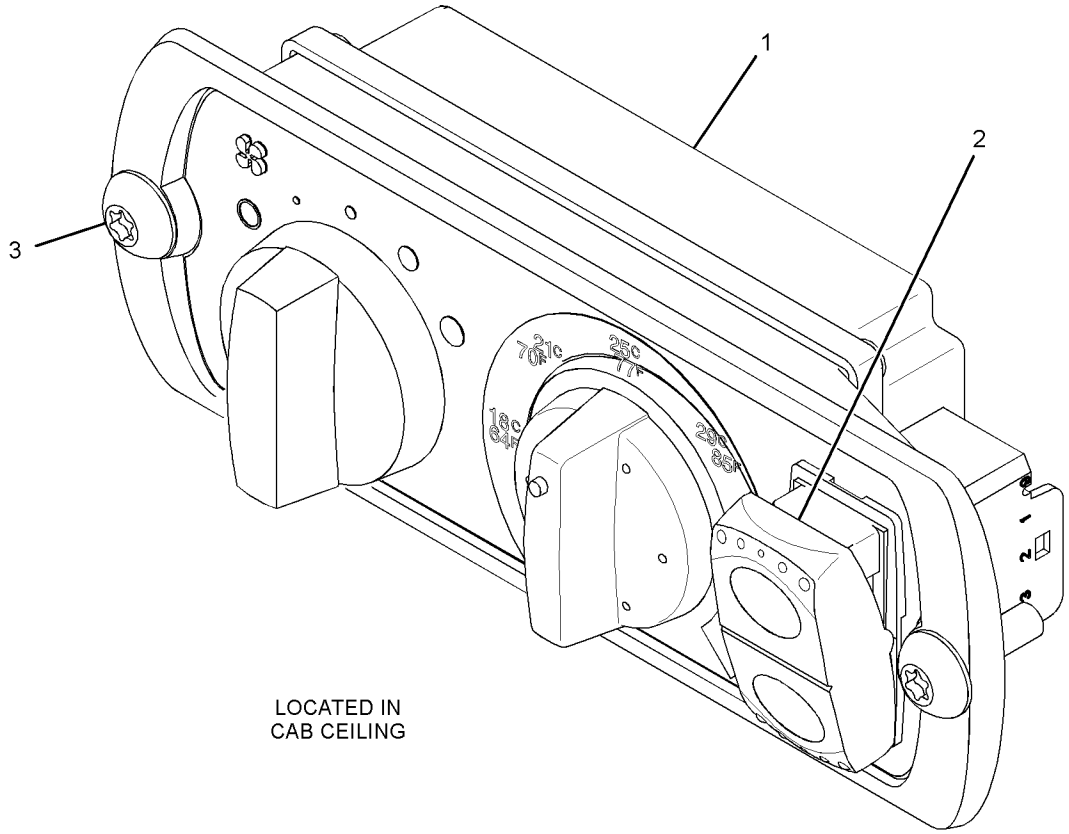

LOCATED IN
CAB CEILING

GRAPHIC #1 **<END>** g02373898

161-3615 CONTROL GP-HANDLE

S/N: PPP1-UP; SSS1-UP; TTT1-UP
PART OF 398-4494, 398-4496 CONTROL GP-PILOT OPERATED HYD
AN ATTACHMENT

SMCS-5063, 5705

i05558635

NOTE	REF NO	GRAPHIC REF	PART NUMBER	QTY	PART NAME 1 2 3 4 5 6 (PRODUCT LEVEL)	SEE PAGE
	1	1	**188-1079**	1	CONTROL GP-HANDLE (BULLDOZER)	
	2	1	**4B-9808**	2	SETSCREW (1/4-20X0.5-IN)	

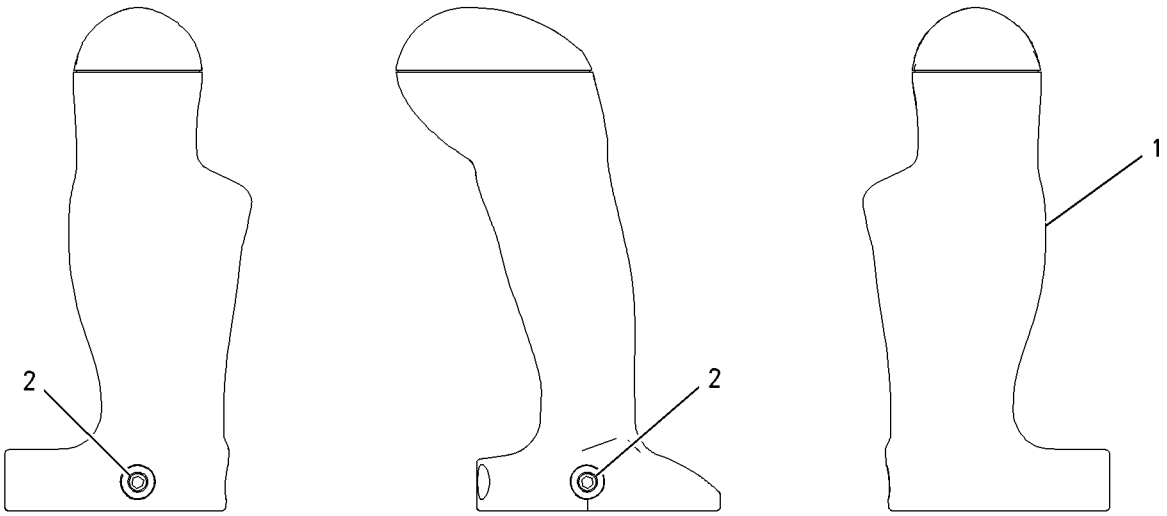

GRAPHIC #1

<END>

g00763645

337-6853 CONTROL GP-HANDLE

S/N: PPP1-UP; SSS1-UP; TTT1-UP
PART OF 424-8511 CONTROL GP-JOYSTICK
AN ATTACHMENT

SMCS-5063, 5705 **i06207070**

NOTE	REF NO	GRAPHIC REF	PART NUMBER	QTY	PART NAME 1 2 3 4 5 6 (PRODUCT LEVEL)	SEE PAGE
	1	1	**1N-5724**	2	BOLT (6-32X0.5-IN)	
	2	1	**112-0858**	2	BEARING	
	3	1	**208-9647**	1	KNOB (PARKING BRAKE)	
	4	1	**214-1962**	1	HOUSING	
	5	1	**216-0380**	1	PLATE	
Y	6	1	**223-2115**	1	CONTROL GP-PARKING BRAKE	533
	7	1	**225-3195**	1	GASKET	
	8	1	**257-7285**	1	SWITCH AS-ROCKER (PARKING BRAKE ON, OFF)	
		1	**102-8806**	1	KIT-RECEPTACLE (8-PIN)	
					(INCLUDES RECEPTACLE AS & WEDGE)	
		1	**8T-8737**	2	PLUG-SEAL	
		1	**9X-3401**	6	PIN-CONNECTOR (16-GA TO 18-GA)	
Y	9	1	**337-6855**	1	CONTROL GP-HANDLE (STEERING, TRANSMISSION)	701
M	10	1	**166-3777**	3	SCREW-BUTTON HEAD (M6X1X28-MM)	
M	11	1	**5C-2890**	1	NUT (M6X1-THD)	
M	12	1	**8T-4138**	2	BOLT (M6X1X20-MM)	
	13	1	**8T-5410**	1	SEAL-LIP TYPE	
E	14	1	**307-2338**		SLEEVE (47-CM)	
B	15	1	**372-2547**		TAPE-ELECTRICAL	

B - USE AS REQUIRED
E - ORDER BY THE CENTIMETER
M - METRIC PART
Y - SEPARATE ILLUSTRATION

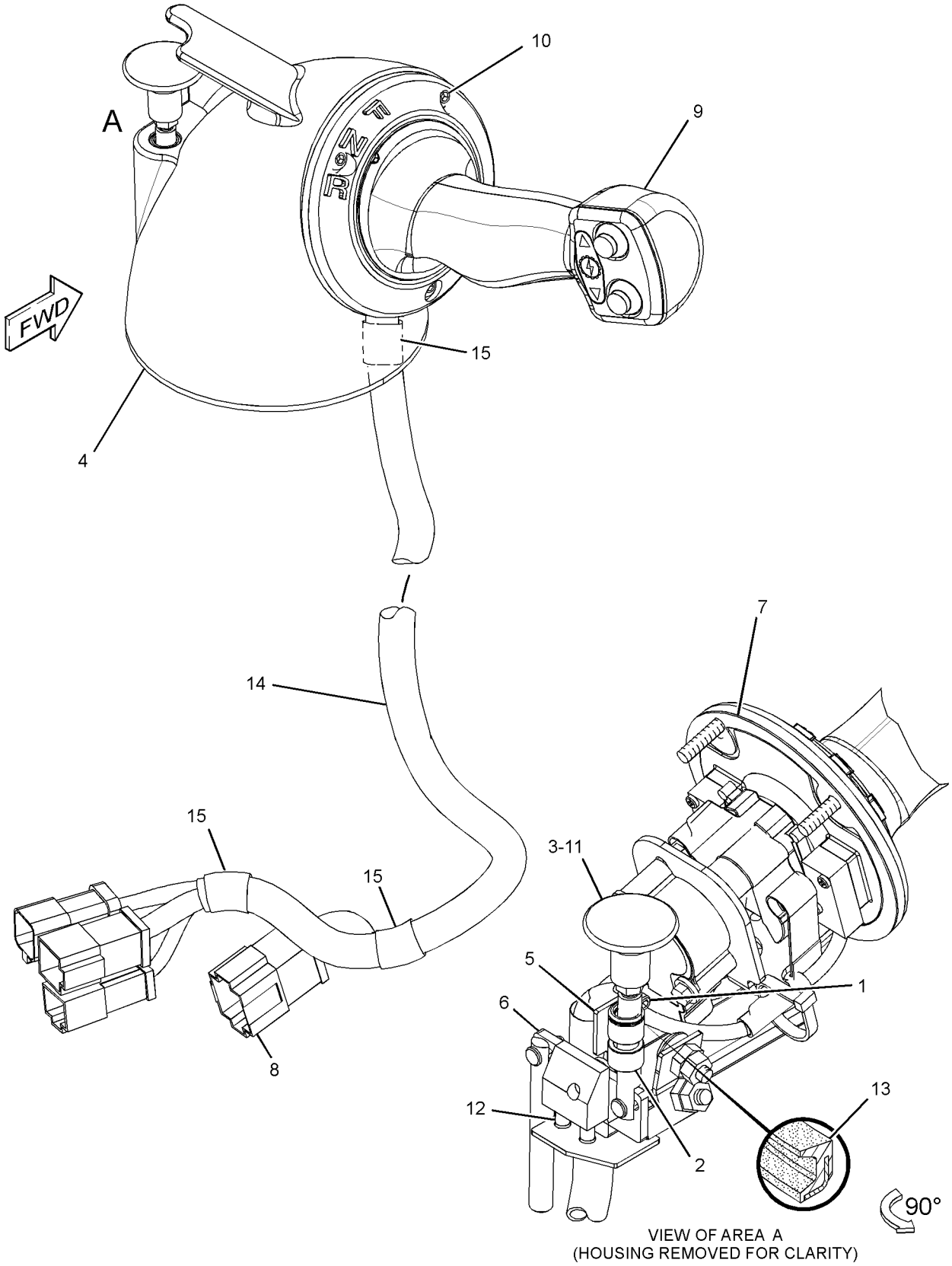

VIEW OF AREA A
(HOUSING REMOVED FOR CLARITY)

GRAPHIC #1 **<END>** g01963159

337-6855 CONTROL GP-HANDLE

S/N: PPP1-UP; SSS1-UP; TTT1-UP
PART OF 337-6853 CONTROL GP-HANDLE
AN ATTACHMENT

SMCS-5063, 5705

i06207088

NOTE	REF NO	GRAPHIC REF	PART NUMBER	QTY	PART NAME 1 2 3 4 5 6 (PRODUCT LEVEL)	SEE PAGE
	1	1	**151-9275**	1	KIT-RECEPTACLE (6-PIN)	
					(INCLUDES RECEPTACLE AS & WEDGE)	
	2	1	**3S-2093**	2	STRAP-CABLE	
	3	1	**6V-3545**	1	BEARING-ROLLER	
	4	1	**186-3735**	6	PIN-CONNECTOR (16-GA TO 18-GA)	
	5	1	**9W-1464**	2	SCREW (1/4-20X1-IN)	
	6	1	**9X-4610**	1	SEAL-V-RING	
M	7	1	**130-3265**	1	SCREW (M6X1X20-MM)	
	8	1	**131-0447**	2	NUT-SPECIAL	
	9	1	**132-7419**	1	SWITCH AS-PUSH BUTTON (DOWNSHIFT)	
		1	**144-0331**	1	CAP-PUSH BUTTON (YELLOW)	
	10	1	**132-7450**	1	SWITCH AS-PUSH BUTTON (UPSHIFT)	
		1	**144-0331**	1	CAP-PUSH BUTTON (YELLOW)	
	12	1	**158-2734**	2	SPRING	
	13	1	**158-2735**	1	BASE	
	17	1	**242-5202**	1	FILM-IDENTIFICATION (JOYSTICK CONTROL) (TRANSMISSION CONTROL)	
	18	1	**226-9423**	2	SPRING	
	19	1	**266-1476**	1	SENSOR GP-POSITION (FORWARD, NEUTRAL, REVERSE)	
		1	**102-8804**	1	KIT-RECEPTACLE (4-PIN)	
					(INCLUDES RECEPTACLE AS & WEDGE)	
		1	**8T-8737**	1	PLUG-SEAL	
		1	**180-9339**	3	PIN-CONNECTOR (14-GA TO 18-GA)	
	20	1	**334-1953**	1	ANGLE	
	21	1	**337-9001**	1	SWITCH GP-LIMIT (STEERING)	
		1	**102-8805**	1	KIT-RECEPTACLE (6-PIN)	
					(INCLUDES RECEPTACLE AS & WEDGE)	
D		1	**6V-2689**		TUBE-HEAT SHRINK (6.35-MM DIA) (0.1-M)	
		1	**186-3735**	6	PIN-CONNECTOR (16-GA TO 18-GA)	
	22	1	**103-6262**	4	SCREW-MACHINE (4-40X0.63-IN)	
	23	1	**5H-9899**	1	RING-RETAINING (EXTERNAL)	
	24	1	**6V-1051**	1	SCREW-BUTTON HEAD (10-24X19.05-MM)	
	25	1	**6V-1232**	2	SCREW-BUTTON HEAD (8-32X9.52-MM)	
M	26	1	**6V-2314**	2	BOLT (M5X0.8X35-MM)	
	27	1	**7X-0584**	1	WASHER-HARD (13.5X20.5X2-MM THK)	
M	28	1	**7Y-5226**	2	NUT (M5X0.8-THD)	
	29	1	**8T-4205**	2	WASHER-HARD (7.2X14.5X2-MM THK)	
	30	1	**9X-8256**	5	WASHER (6.6X12X2-MM THK)	
D	31	1	**6V-2689**		TUBE-HEAT SHRINK (6.35-MM DIA) (0.2-M)	

D - ORDER BY THE METER
M - METRIC PART

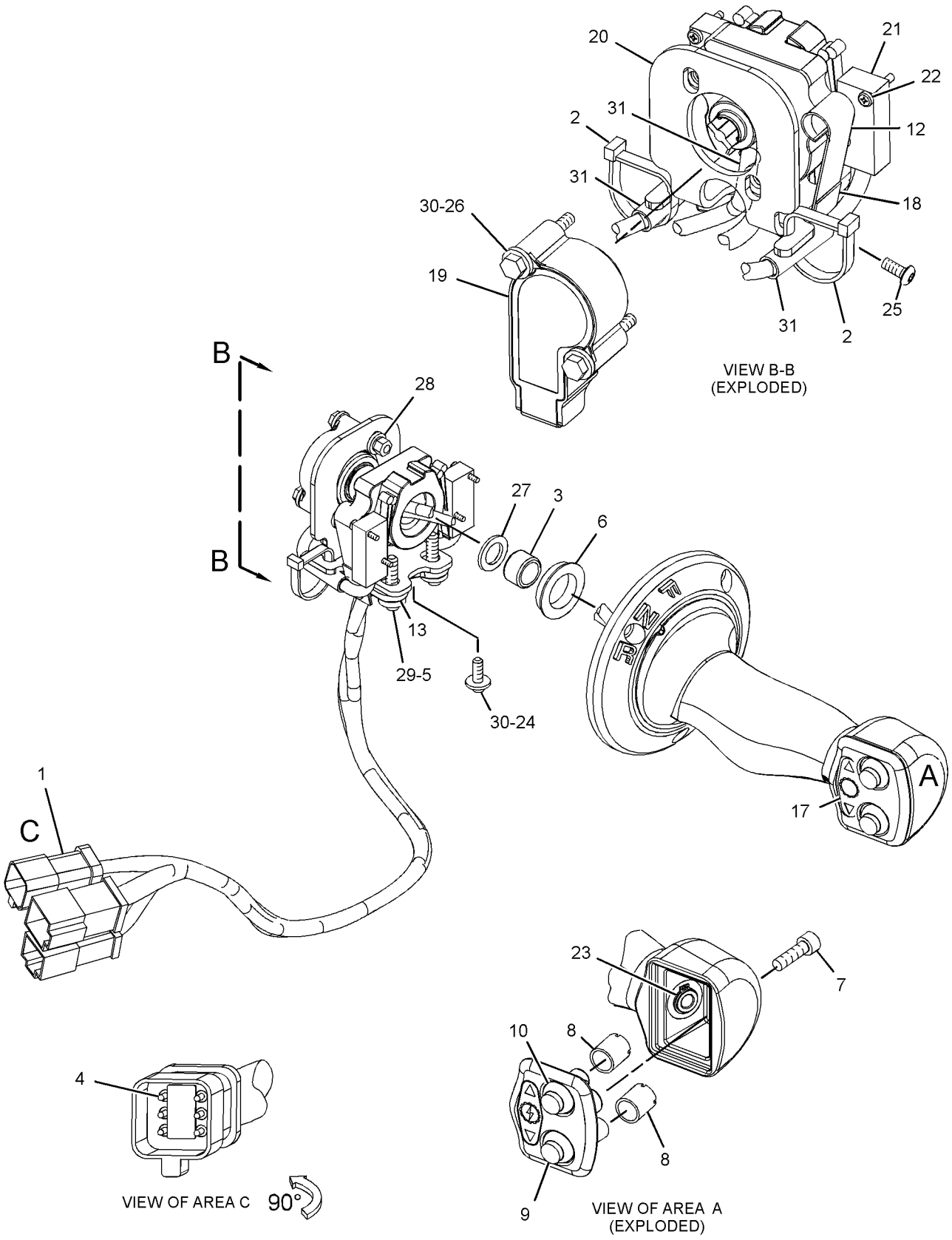

GRAPHIC #1 **<END>** g01959977

424-8511 CONTROL GP-JOYSTICK–STEERING, TRANSMISSION

S/N: PPP1-UP; SSS1-UP; TTT1-UP
PART OF 421-5950 CONTROL GP-STEERING & XMSN
AN ATTACHMENT

SMCS-5705 **i06207066**

NOTE	REF NO	GRAPHIC REF	PART NUMBER	QTY	PART NAME 1 2 3 4 5 6 (PRODUCT LEVEL)	SEE PAGE
	1	1	**268-4737**	1	COVER AS	
M		1	**9X-2546**	2	BOLT (M6X1X20-MM)	
Y	2	1	**337-6853**	1	CONTROL GP-HANDLE (STEERING, TRANSMISSION)	699
Y	3	1	**356-5425**	1	SENSOR GP-POSITION (STEERING)	223
	4	1	**358-6190**	1	SENSOR GP-POSITION (STEERING)	
B	5	1	**1P-0810**		TAPE-ELECTRICAL	
	6	1	**338-2845**	1	GROMMET	
M	7	1	**6V-2314**	2	BOLT (M5X0.8X35-MM)	
	8	1	**8T-4121**	2	WASHER-HARD (11X21X2.5-MM THK)	
M	9	1	**8T-4186**	1	BOLT (M10X1.5X40-MM)	
M	10	1	**8T-4189**	3	BOLT (M8X1.25X20-MM)	
M	11	1	**8T-4195**	2	BOLT (M10X1.5X30-MM)	
	12	1	**8T-4224**	3	WASHER-HARD (8.8X16X2-MM THK)	
	13	1	**9X-8256**	2	WASHER (6.6X12X2-MM THK)	

B - USE AS REQUIRED
M - METRIC PART
Y - SEPARATE ILLUSTRATION

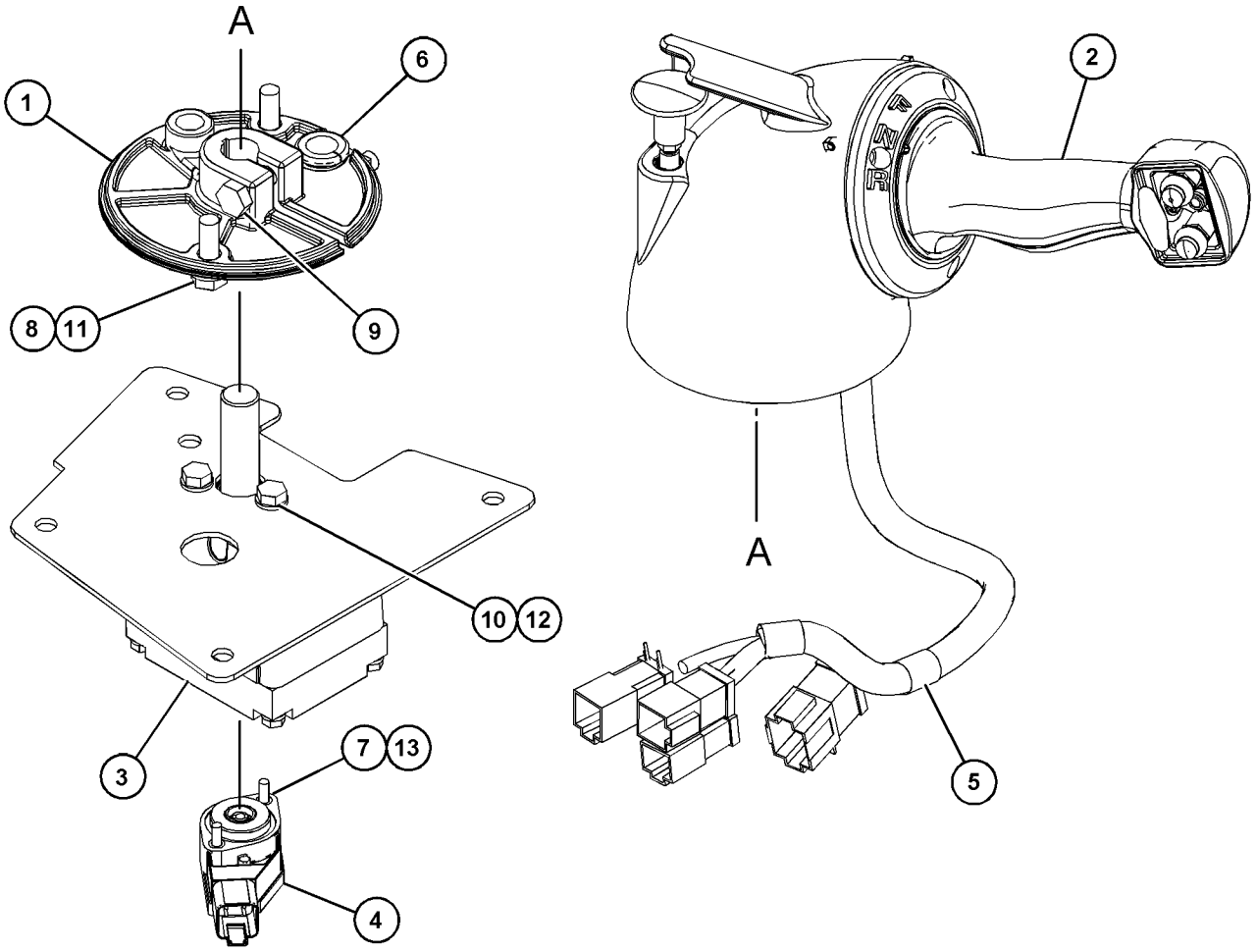

GRAPHIC #1 **<END>** g03857700

398-4494 CONTROL GP-PILOT OPERATED HYD–BULLDOZER

S/N: PPP1-UP; SSS1-UP; TTT1-UP
PART OF 398-4291 HYDRAULIC AR
AN ATTACHMENT

SMCS-5059, 5063, 5705 **i06218992**

NOTE	REF NO	GRAPHIC REF	PART NUMBER	QTY	PART NAME 1 2 3 4 5 6 (PRODUCT LEVEL)	SEE PAGE
Y	1	1	*161-3615*	1	CONTROL GP-HANDLE (BULLDOZER)	698
	2	1	**450-4134**	1	PLATE	
	3	1	**466-7564**	1	PLATE AS	
	4	1	**466-7565**	1	GASKET	
M	5	1	**111-4627**	4	SCREW-MACHINE (M6X1X30-MM)	
Y	6	1	**200-0189**	1	VALVE GP-PILOT (BULLDOZER CONTROL)	636
M	7	1	**3E-8020**	4	SCREW-TRUSS HEAD (M6X1X25-MM)	
	8	1	**8T-4121**	4	WASHER-HARD (11X21X2.5-MM THK)	
M	9	1	**9X-2040**	4	SCREW-TRUSS HEAD (M10X1.5X25-MM)	

M - METRIC PART
Y - SEPARATE ILLUSTRATION

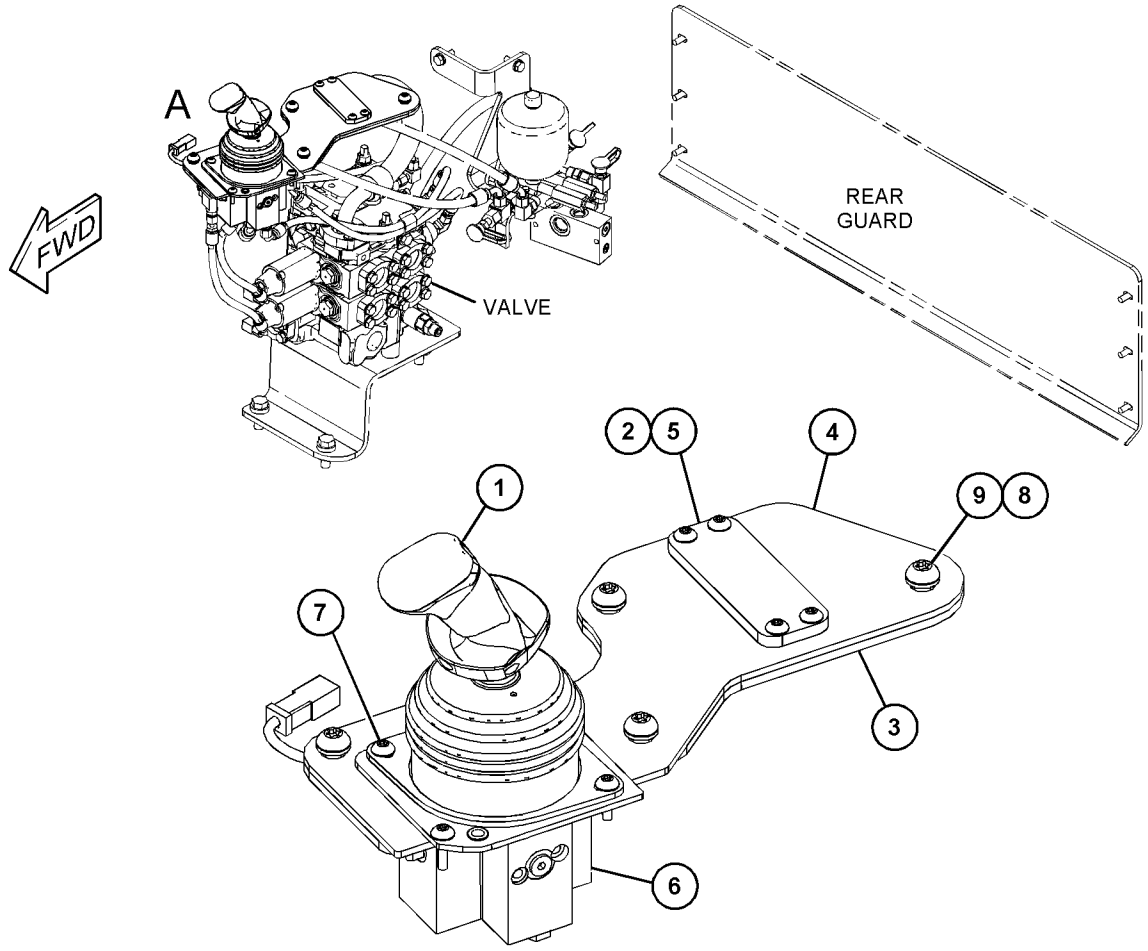

VIEW OF AREA A

GRAPHIC #1 **<END>** g03860551

398-4496 CONTROL GP-PILOT OPERATED HYD—BULLDOZER, RIPPER

S/N: PPP1-UP; SSS1-UP; TTT1-UP
PART OF 398-4292 HYDRAULIC AR
AN ATTACHMENT

SMCS-5059, 5063, 5705 **i06219021**

NOTE	REF NO	GRAPHIC REF	PART NUMBER	QTY	PART NAME 1 2 3 4 5 6 (PRODUCT LEVEL)	SEE PAGE
	1	1	**102-9478**	1	FILM-INSTRUCTION (RIPPER CONTROL)	
Y	2	1	*161-3615*	1	CONTROL GP-HANDLE (BULLDOZER)	698
	3	1	**466-7564**	1	PLATE AS	
	4	1	**466-7565**	1	GASKET	
	5	1	**467-4703**	1	VALVE GP-PILOT (RIPPER CONTROL)	
M	6	1	**111-4627**	4	SCREW-MACHINE (M6X1X30-MM)	
Y	7	1	**200-0189**	1	VALVE GP-PILOT (BULLDOZER CONTROL)	636
M	8	1	**3E-8020**	4	SCREW-TRUSS HEAD (M6X1X25-MM)	
	9	1	**8T-4121**	4	WASHER-HARD (11X21X2.5-MM THK)	
M	10	1	**9X-2040**	4	SCREW-TRUSS HEAD (M10X1.5X25-MM)	

M - METRIC PART
Y - SEPARATE ILLUSTRATION

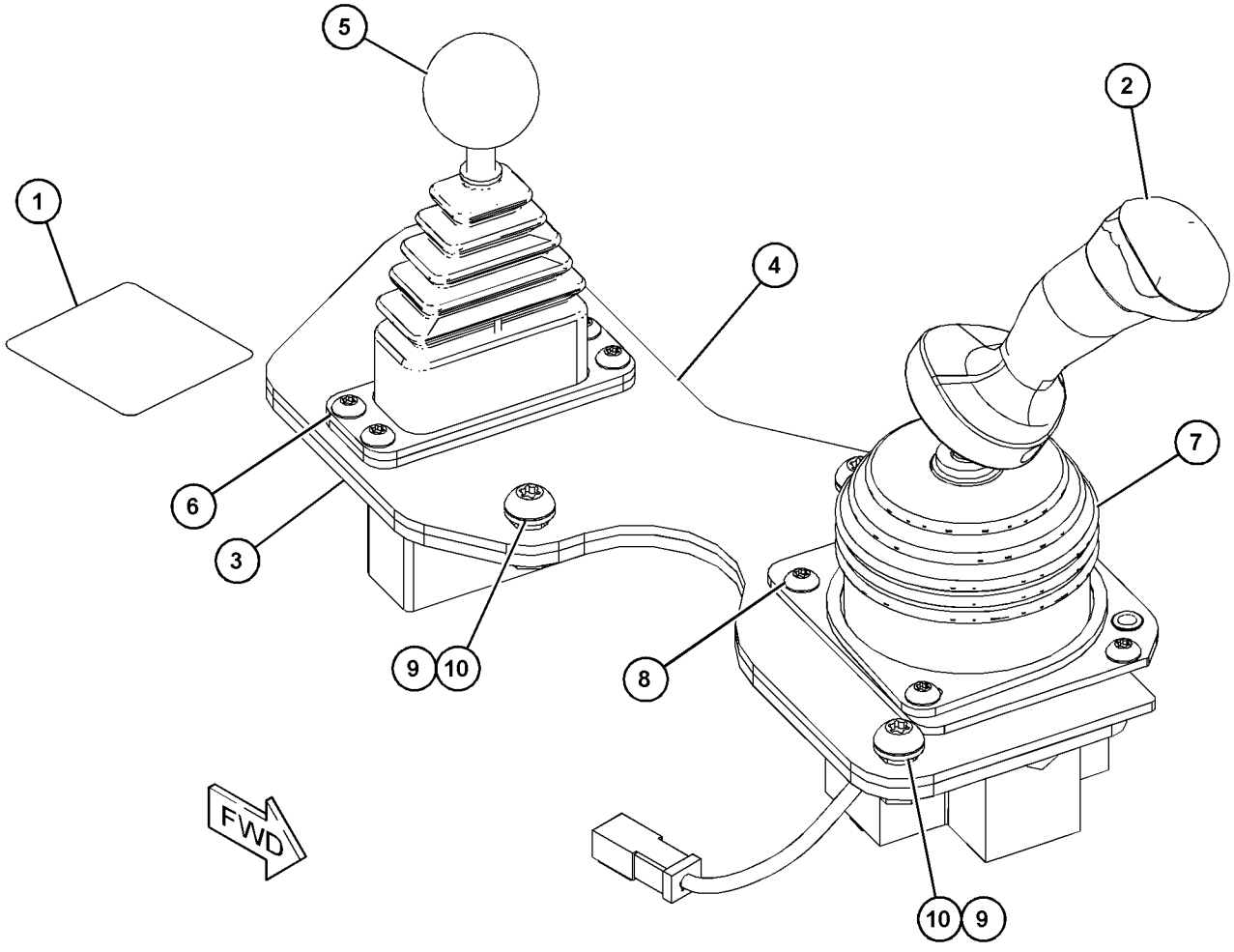

GRAPHIC #1 **<END>** g03863164

449-9291 CONTROL GP-THROTTLE

S/N: PPP1-UP; SSS1-UP; TTT1-UP
PART OF 481-9508 DISTRIBUTION AR
AN ATTACHMENT

SMCS-1265 **i06165527**

NOTE	REF NO	GRAPHIC REF	PART NUMBER	QTY	PART NAME 1 2 3 4 5 6 (PRODUCT LEVEL)	SEE PAGE
	1	1	**428-9165**	1	SWITCH AS (SPEED CONTROL)	
M	2	1	**9X-2045**	2	SCREW-TRUSS HEAD (M6X1X20-MM)	

M - METRIC PART

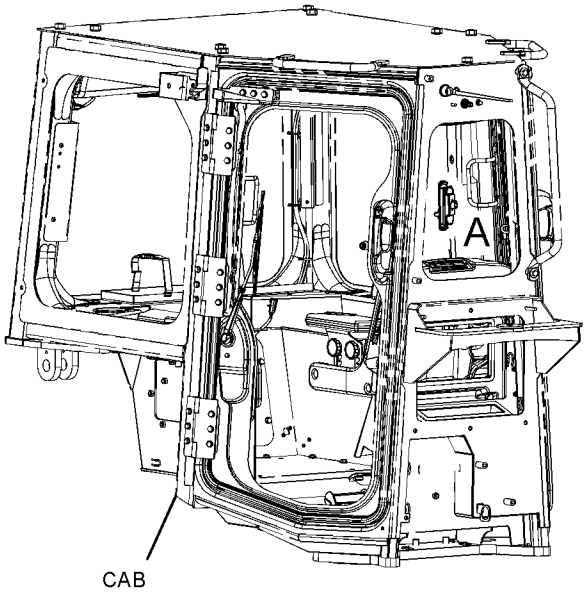

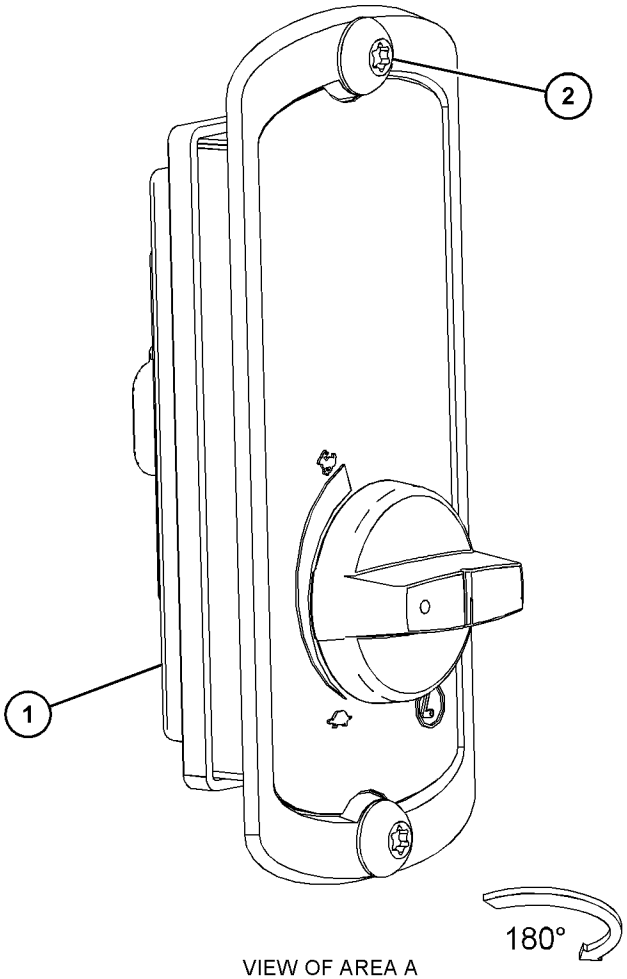

VIEW OF AREA A

GRAPHIC #1 **<END>** g03854067

393-6484 COVER GP-CAB

S/N: PPP1-UP; SSS1-UP; TTT1-UP
PART OF 398-4295 CANOPY AR
AN ATTACHMENT

SMCS-7301 **i06214163**

NOTE	REF NO	GRAPHIC REF	PART NUMBER	QTY	PART NAME 1 2 3 4 5 6 (PRODUCT LEVEL)	SEE PAGE
	1	2	**7G-4824**	1	STRAP	
	2	2	**8E-7791**	1	STRAP	
	3	2	**115-1867**	1	HOLDER-CUP	
	4	2	**228-6089**	1	PLUG (ROCKER SWITCH)	
	5	1	**339-3566**	2	SUPPORT AS	
	6	1	**384-8283**	1	GASKET	
	7	1	**384-8284**	1	PLATE AS	
	8	1	**384-8285**	1	GASKET	
	9	1	**384-8286**	1	PLATE AS	
	10	2	**384-8287**	1	GASKET	
	11	2	**384-8289**	1	GASKET	
	12	1	**384-8292**	1	GASKET	
	13	1	**384-8293**	1	PLATE	
	14	2	**386-4043**	1	PLATE AS	
	15	1	**387-5639**	1	CUSHION AS	
	16	1	**387-5640**	1	BRACKET	
	17	2	**387-6883**	1	BRACKET	
	18	1	**387-7116**	1	GASKET	
	19	1	**388-3944**	1	CUSHION AS	
	20	2	**388-6319**	1	PLATE AS	
	21	2	**388-7142**	1	CUSHION AS	
	22	2	**391-4060**	1	PLATE AS	
	23	2	**391-4071**	1	PLATE AS	
	24	2	**391-4072**	1	PLATE	
	25	1,2	**393-1075**	3	KNOB	
	26	2	**393-1188**	1	CUSHION AS	
	27	1	**393-4752**	1	FLOOR MAT AS	
	28	2	**425-9030**	1	BOX-STORAGE	
	29	1	**425-9039**	1	PLATE AS	
	30	2	**425-9049**	1	GASKET	
	31	2	**425-9052**	1	HOLDER AS	
	32	1	**7X-7729**	8	WASHER (11X25X3-MM THK)	
	33	1,2	**8T-4121**	47	WASHER-HARD (11X21X2.5-MM THK)	
M	34	1,2	**8T-4136**	21	BOLT (M10X1.5X25-MM)	
M	35	2	**8T-4137**	4	BOLT (M10X1.5X20-MM)	
M	36	1,2	**8T-4195**	20	BOLT (M10X1.5X30-MM)	
M	37	1	**8T-4196**	4	BOLT (M10X1.5X35-MM)	
	38	2	**8T-4896**	1	WASHER-HARD (10.2X18.5X2.5-MM THK)	
M	39	2	**9X-2040**	8	SCREW-TRUSS HEAD (M10X1.5X25-MM)	
M	40	1,2	**9X-2043**	8	SCREW-TRUSS HEAD (M6X1X14-MM)	
M	41	2	**9X-2045**	11	SCREW-TRUSS HEAD (M6X1X20-MM)	
E	42	2	**7X-7877**		STRIP-EDGE (7-CM)	

E - ORDER BY THE CENTIMETER
M - METRIC PART

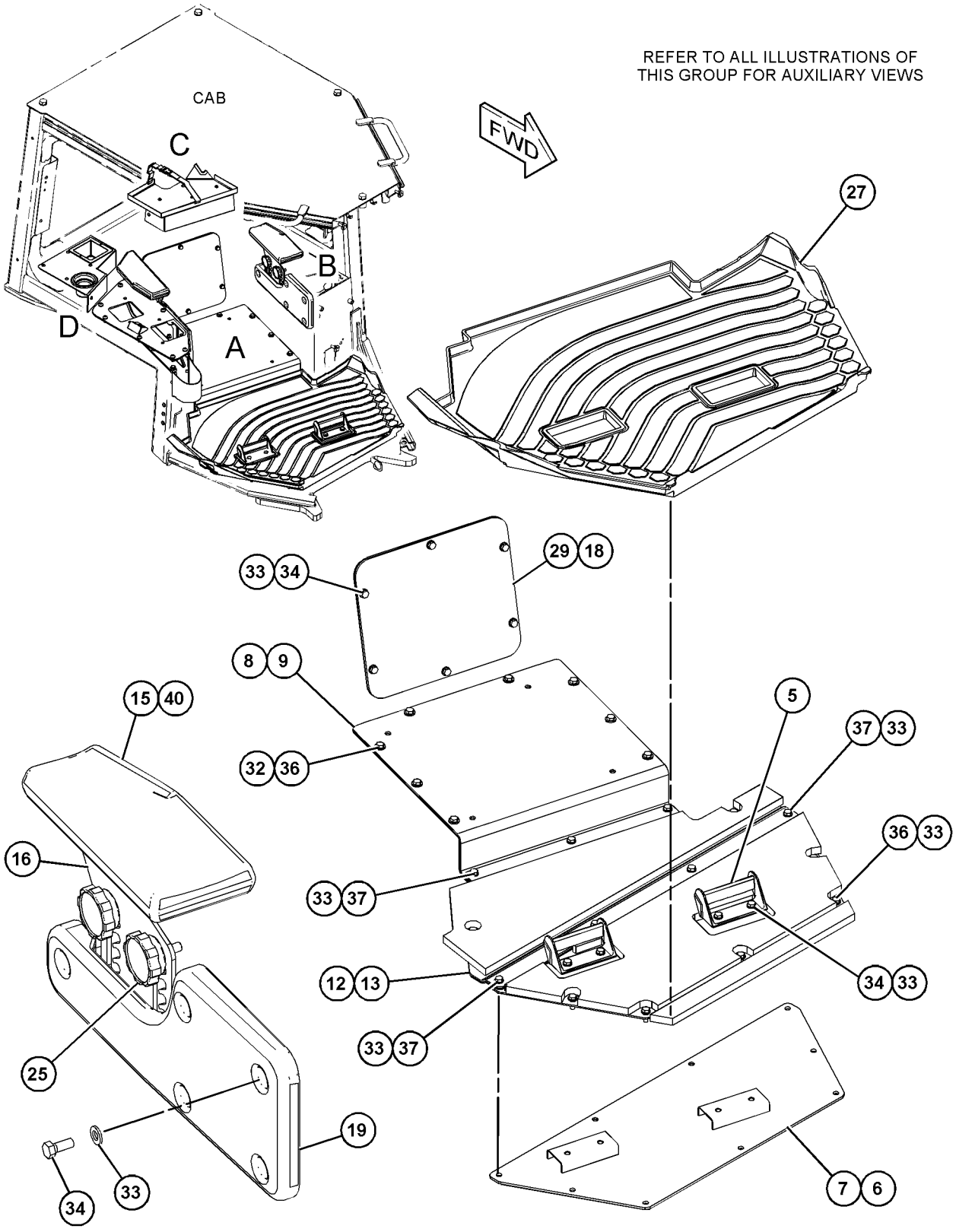

VIEW OF AREA B

VIEW OF AREA A

GRAPHIC #1 g03859697

393-6484 **COVER GP-CAB (*contd.*)** **i06214163**

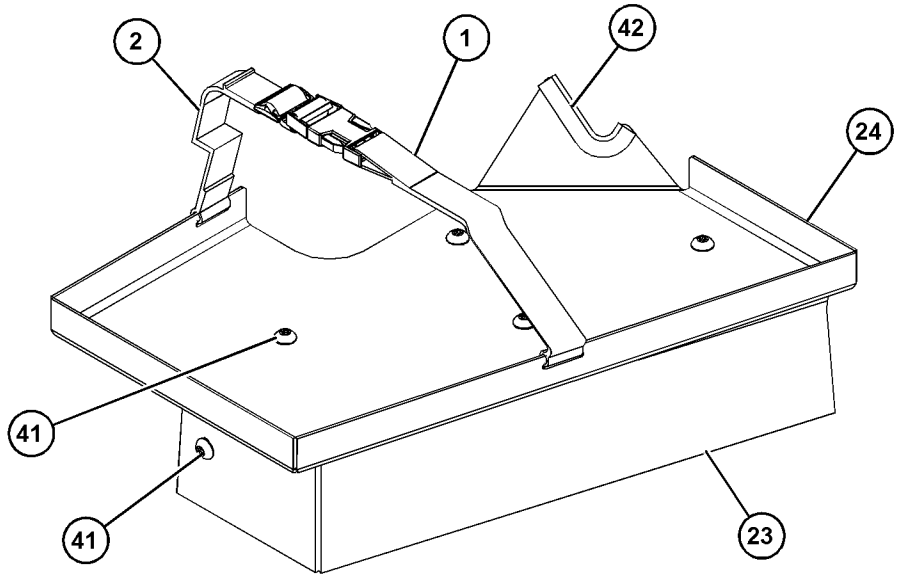

VIEW OF AREA C

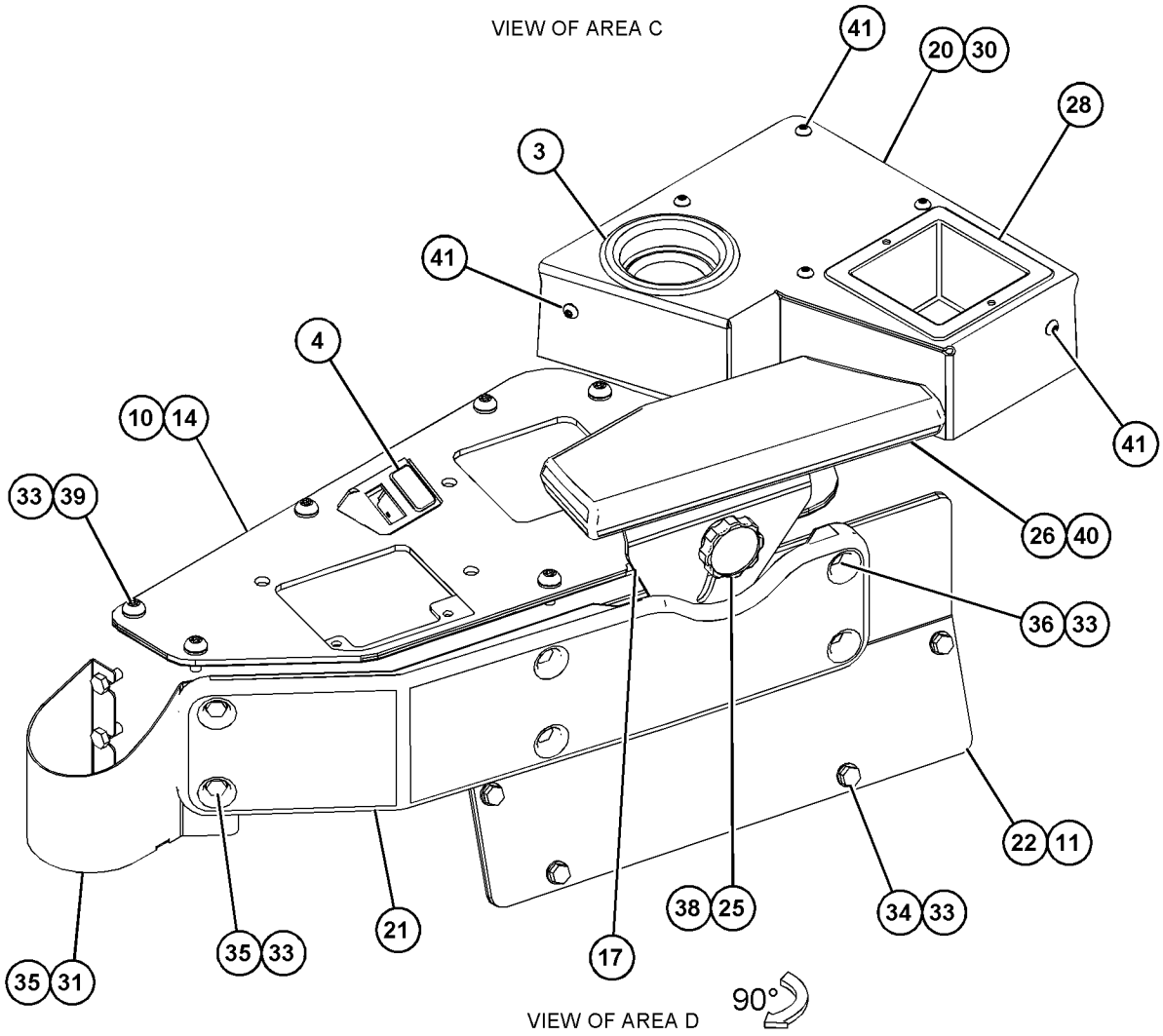

VIEW OF AREA D

GRAPHIC #2 **<END>** g03859698

OPERATOR STATION

393-6494 COVER GP-CAB

S/N: PPP1-UP; SSS1-UP; TTT1-UP
PART OF 398-4297, 398-4300 CAB AR
AN ATTACHMENT

SMCS-7301 **i06203876**

NOTE	REF NO	GRAPHIC REF	PART NUMBER	QTY	PART NAME 1 2 3 4 5 6 (PRODUCT LEVEL)	SEE PAGE
	1	1	**7G-4824**	1	STRAP	
	2	1	**8E-7791**	1	STRAP	
	3	1	**108-3588**	1	HOLDER-CUP	
	4	1	**228-6089**	1	PLUG (ROCKER SWITCH)	
	5	1	**339-3566**	2	SUPPORT AS	
	6	1	**384-8283**	1	GASKET	
	7	1	**384-8284**	1	PLATE AS	
	8	1	**384-8285**	1	GASKET	
	9	1	**384-8286**	1	PLATE AS	
	10	1	**384-8287**	1	GASKET	
	11	1	**384-8289**	1	GASKET	
	12	1	**384-8293**	1	PLATE	
	13	1	**387-5639**	1	CUSHION AS	
	14	1	**387-5640**	1	BRACKET	
	15	1	**387-6883**	1	BRACKET	
	16	1	**387-7116**	1	GASKET	
	17	1	**388-3944**	1	CUSHION AS	
	18	1	**388-6319**	1	PLATE AS	
	19	1	**388-7142**	1	CUSHION AS	
	20	1	**391-4060**	1	PLATE AS	
	21	1	**391-4071**	1	PLATE AS	
	22	1	**391-4072**	1	PLATE	
	23	1	**393-1075**	3	KNOB	
	24	1	**393-1188**	1	CUSHION AS	
	25	1	**393-4752**	1	FLOOR MAT AS	
	26	1	**425-9030**	1	BOX-STORAGE	
	27	1	**425-9035**	2	HANDHOLD	
	28	1	**425-9049**	1	GASKET	
	29	1	**425-9052**	1	HOLDER AS	
	30	1	**425-9054**	1	PLATE AS	
	31	1	**466-6957**	1	GASKET	
	32	1	**475-5698**	1	PLATE AS	
	33	1	**7X-7729**	12	WASHER (11X25X3-MM THK)	
	34	1	**8T-4121**	50	WASHER-HARD (11X21X2.5-MM THK)	
M	35	1	**8T-4136**	21	BOLT (M10X1.5X25-MM)	
M	36	1	**8T-4137**	2	BOLT (M10X1.5X20-MM)	
M	37	1	**8T-4195**	20	BOLT (M10X1.5X30-MM)	
M	38	1	**8T-4196**	8	BOLT (M10X1.5X35-MM)	
M	39	1	**9X-2040**	8	SCREW-TRUSS HEAD (M10X1.5X25-MM)	
M	40	1	**9X-2041**	2	SCREW-TRUSS HEAD (M10X1.5X20-MM)	
M	41	1	**9X-2043**	8	SCREW-TRUSS HEAD (M6X1X14-MM)	
M	42	1	**9X-2045**	13	SCREW-TRUSS HEAD (M6X1X20-MM)	
E	43	1	**7X-7877**		STRIP-EDGE (7-CM)	

E - ORDER BY THE CENTIMETER
M - METRIC PART

393-6494 **COVER GP-CAB (*contd.*)** **i06203876**

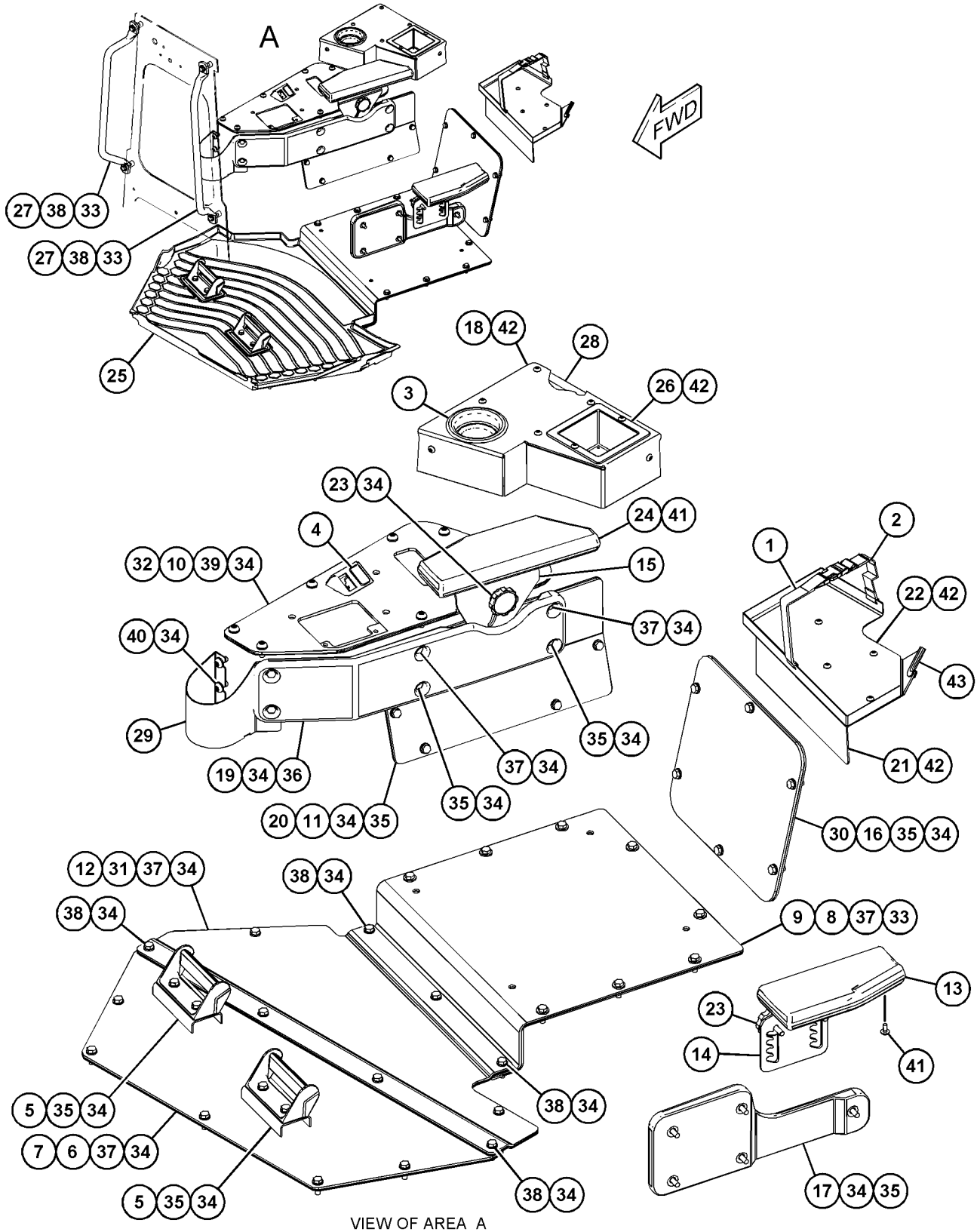

VIEW OF AREA A
(EXPLODED)
(FLOORMAT REMOVED)

GRAPHIC #1 **<END>** g03854940

398-0416 DOOR GP-CAB—LH

S/N: PPP1-UP; SSS1-UP; TTT1-UP

PART OF 393-6480 CAB AR, 393-6485 CAB AR-ENCLOSED ROPS

AN ATTACHMENT

SMCS-7308 **i06214160**

NOTE	REF NO	GRAPHIC REF	PART NUMBER	QTY	PART NAME 1 2 3 4 5 6 (PRODUCT LEVEL)	SEE PAGE
	1	1	**3S-2093**	2	STRAP-CABLE	
	2	1	**5G-8655**	1	LEVER	
	3	1	**6I-9386**	1	BRACKET AS	
	4	1	**7K-1181**	1	STRAP-CABLE	
	5	1	**8C-3442**	1	SPRING-COIL	
	6	1	**218-7119**	1	GASKET	
	7	1	**336-6672**	1	HANDLE AS (PULL)	
	8	1	**368-6992**	3	HINGE AS	
					(EACH INCLUDES)	
	8A	1	**372-5042**	2	BUSHING	
	9	1	**379-6658**	1	LATCH AS (LH)	
Y	10	1	**384-1825**	1	HARNESS AS-CAB	164
	11	1	**386-7346**	1	BRACKET (LH)	
	12	1	**387-4502**	1	HANDLE AS	
	13	1	**390-0448**	1	ROD	
	14	1	**390-9086**	2	PLATE	
	15	1	**391-3950**	1	STRIKER AS	
	16	1	**434-1899**	1	DOOR GP-CAB (LH)	
	17	1	**457-4683**	1	BUMPER	
	18	1	**130-8360**	2	GROMMET	
	19	1	**1B-8735**	1	KEY-WOODRUFF	
	20	1	**313-5638**	2	BOLT (5/16-18X1-IN)	
	21	1	**4K-3533**	1	WASHER (9.7X17.5X1.6-MM THK)	
M	22	1	**5C-7261**	2	NUT (M8X1.25-THD)	
	23	1	**5M-8500**	1	KNOB	
	24	1	**6V-8189**	1	NUT (5/16-18-THD)	
	25	1	**7X-7729**	2	WASHER (11X25X3-MM THK)	
M	26	1	**7Y-9099**	2	SCREW-TRUSS HEAD (M8X1.25X25-MM)	
M	27	1	**8C-8992**	3	BOLT-LOCKING (M12X1.75X30-MM)	
M	28	1	**8T-0722**	9	BOLT-LOCKING (M10X1.5X30-MM)	
	29	1	**8T-4121**	24	WASHER-HARD (11X21X2.5-MM THK)	
M	30	1	**8T-4136**	6	BOLT (M10X1.5X25-MM)	
M	31	1	**8T-4181**	3	BOLT (M6X1X20-MM)	
M	32	1	**8T-4196**	9	BOLT (M10X1.5X35-MM)	
	33	1	**8T-4205**	3	WASHER-HARD (7.2X14.5X2-MM THK)	
	34	1	**8T-4223**	3	WASHER-HARD (13.5X25.5X3-MM THK)	
	35	1	**8T-4224**	1	WASHER-HARD (8.8X16X2-MM THK)	
M	36	1	**9X-2040**	2	SCREW-TRUSS HEAD (M10X1.5X25-MM)	
M	37	1	**9X-2043**	4	SCREW-TRUSS HEAD (M6X1X14-MM)	
M	38	1	**9X-2045**	4	SCREW-TRUSS HEAD (M6X1X20-MM)	
E	39	1	**292-2896**		CONDUIT (108-CM)	
E	40	1	**144-0195**		HOSE (117-CM)	
E	41	1	**341-9763**		SEAL (410-CM)	

E - ORDER BY THE CENTIMETER
M - METRIC PART
Y - SEPARATE ILLUSTRATION

398-0416 **DOOR GP-CAB (*contd.*)** **i06214160**

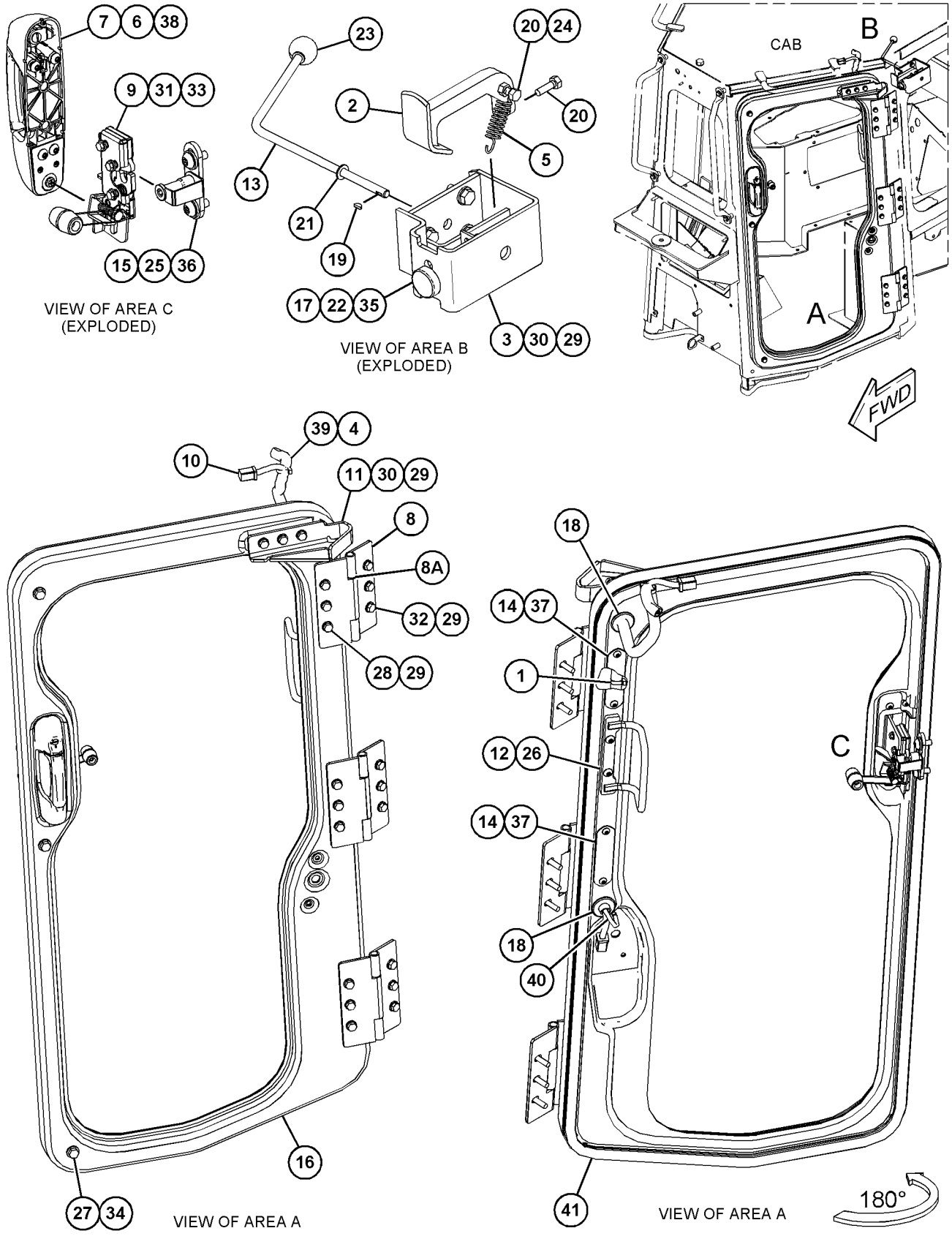

GRAPHIC #1 **<END>** g03861153

398-0423 DOOR GP-CAB–RH

S/N: PPP1-UP; SSS1-UP; TTT1-UP
PART OF 393-6480 CAB AR, 393-6485 CAB AR-ENCLOSED ROPS
AN ATTACHMENT

SMCS-7308 **i06218736**

NOTE	REF NO	GRAPHIC REF	PART NUMBER	QTY	PART NAME 1 2 3 4 5 6 (PRODUCT LEVEL)	SEE PAGE
	1	2	**3S-2093**	2	STRAP-CABLE	
	2	1	**5G-8655**	1	LEVER	
	3	1	**6I-9386**	1	BRACKET AS	
	4	1	**7K-1181**	1	STRAP-CABLE	
	5	1	**8C-3442**	1	SPRING-COIL	
	6	1	**218-7119**	1	GASKET	
	7	1	**336-6672**	1	HANDLE AS (PULL)	
	8	1	**368-6992**	3	HINGE AS	
					(EACH INCLUDES)	
	8A	1	**372-5042**	2	BUSHING	
	9	2	**383-1431**	1	LATCH AS	
Y	10	1	**384-1825**	1	HARNESS AS-CAB	164
	11	1	**386-7345**	1	BRACKET (RH)	
	12	2	**387-4502**	1	HANDLE AS	
	13	1	**390-0448**	1	ROD	
	14	2	**390-9086**	2	PLATE	
	15	2	**391-3950**	1	STRIKER AS	
	16	2	**434-1901**	1	DOOR AS-CAB	
	17	1	**457-4683**	1	BUMPER	
	18	2	**130-8360**	2	GROMMET	
	19	1	**1B-8735**	1	KEY-WOODRUFF	
	20	1	**313-5638**	2	BOLT (5/16-18X1-IN)	
	21	1	**4K-3533**	1	WASHER (9.7X17.5X1.6-MM THK)	
M	22	1	**5C-7261**	2	NUT (M8X1.25-THD)	
	23	1	**5M-8500**	1	KNOB	
	24	1	**6V-8189**	1	NUT (5/16-18-THD)	
	25	2	**7X-7729**	2	WASHER (11X25X3-MM THK)	
M	26	2	**7Y-9099**	2	SCREW-TRUSS HEAD (M8X1.25X25-MM)	
M	27	1	**8C-8992**	3	BOLT-LOCKING (M12X1.75X30-MM)	
M	28	1	**8T-0722**	9	BOLT-LOCKING (M10X1.5X30-MM)	
	29	1	**8T-4121**	24	WASHER-HARD (11X21X2.5-MM THK)	
M	30	1	**8T-4136**	6	BOLT (M10X1.5X25-MM)	
M	31	2	**8T-4181**	3	BOLT (M6X1X20-MM)	
M	32	1	**8T-4196**	9	BOLT (M10X1.5X35-MM)	
	33	2	**8T-4205**	3	WASHER-HARD (7.2X14.5X2-MM THK)	
	34	1	**8T-4223**	3	WASHER-HARD (13.5X25.5X3-MM THK)	
	35	1	**8T-4224**	1	WASHER-HARD (8.8X16X2-MM THK)	
M	36	2	**9X-2040**	2	SCREW-TRUSS HEAD (M10X1.5X25-MM)	
M	37	2	**9X-2043**	4	SCREW-TRUSS HEAD (M6X1X14-MM)	
M	38	2	**9X-2045**	4	SCREW-TRUSS HEAD (M6X1X20-MM)	
E	39	2	**292-2896**		CONDUIT (108-CM)	
E	40	2	**144-0195**		HOSE (117-CM)	
BE	41	2	**341-9763**		SEAL (407-CM)	

B - USE AS REQUIRED
E - ORDER BY THE CENTIMETER
M - METRIC PART
Y - SEPARATE ILLUSTRATION

398-0423 **DOOR GP-CAB (*contd.*)** **i06218736**

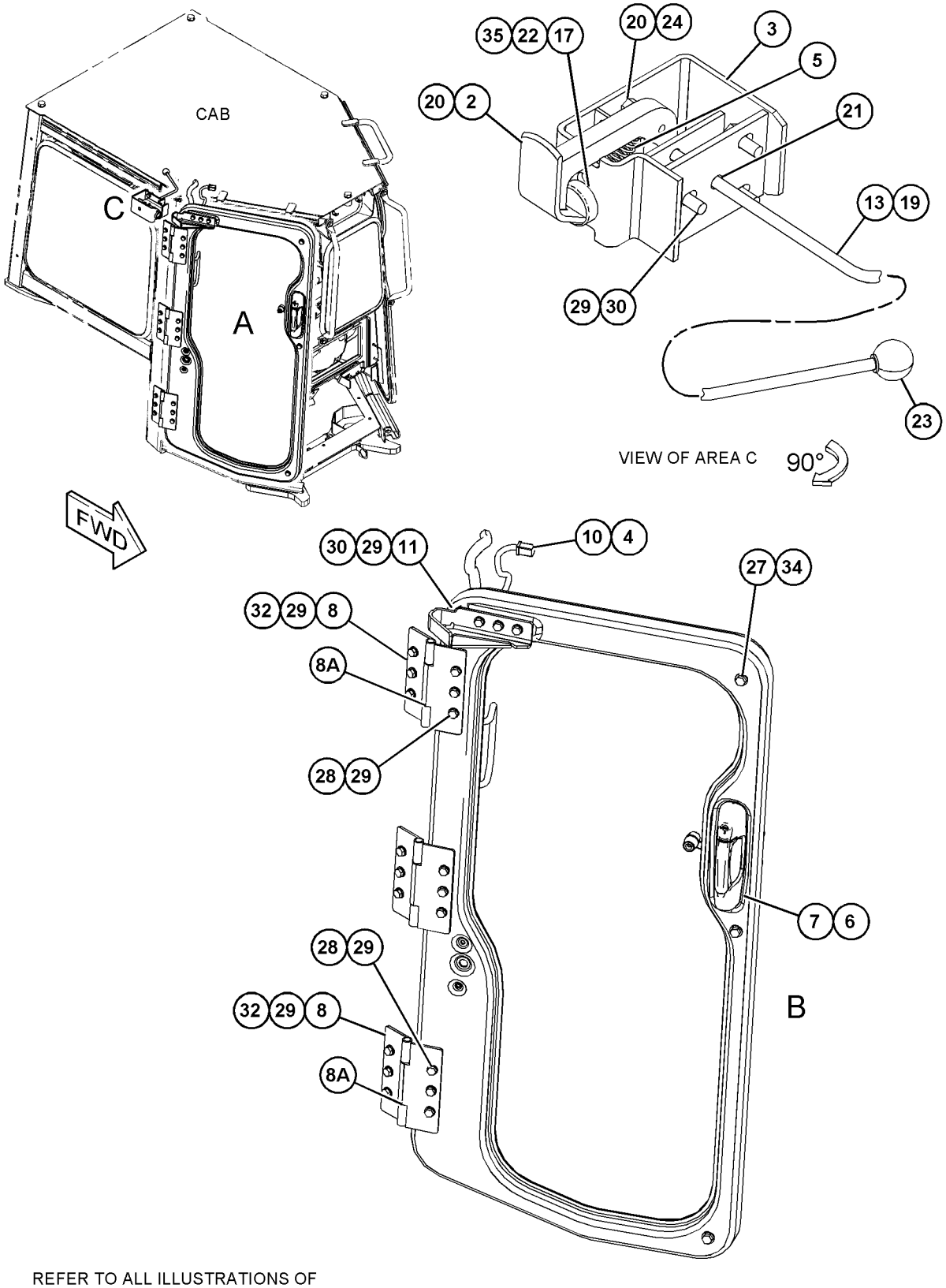

REFER TO ALL ILLUSTRATIONS OF THIS GROUP FOR AUXILIARY VIEWS

GRAPHIC #1 g03862174

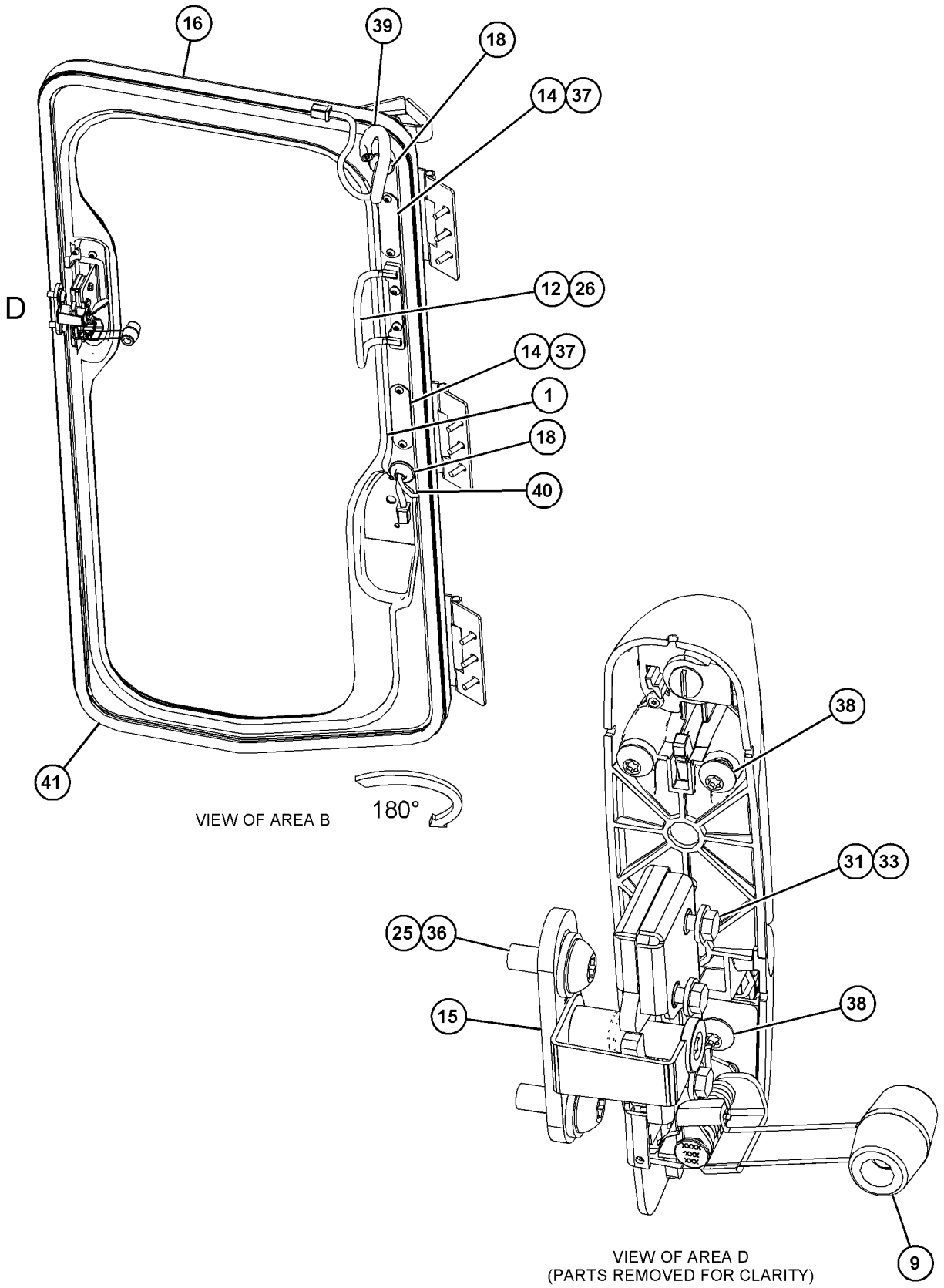

GRAPHIC #2 **<END>** g03862175

391-4062 FAN GP-CIRCULATING

S/N: PPP1-UP; SSS1-UP; TTT1-UP
PART OF 398-4300 CAB AR
AN ATTACHMENT

SMCS-7316 **i05899842**

NOTE	REF NO	GRAPHIC REF	PART NUMBER	QTY	PART NAME 1 2 3 4 5 6 (PRODUCT LEVEL)	SEE PAGE
	1	1	**180-5316**	1	FAN GP-CIRCULATING (24-VOLT)	
		1	**3S-2093**	1	STRAP-CABLE	
		1	**9X-3401**	2	PIN-CONNECTOR (16-GA TO 18-GA)	
		1	**102-8802**	1	KIT-RECEPTACLE (2-PIN)	
					(INCLUDES RECEPTACLE AS & WEDGE)	
	2	1	**391-4065**	1	PLATE AS	
M	3	1	**198-9706**	4	SCREW-TRUSS HEAD (M5X0.8X16-MM)	
M	4	1	**9X-2043**	4	SCREW-TRUSS HEAD (M6X1X14-MM)	

M - METRIC PART

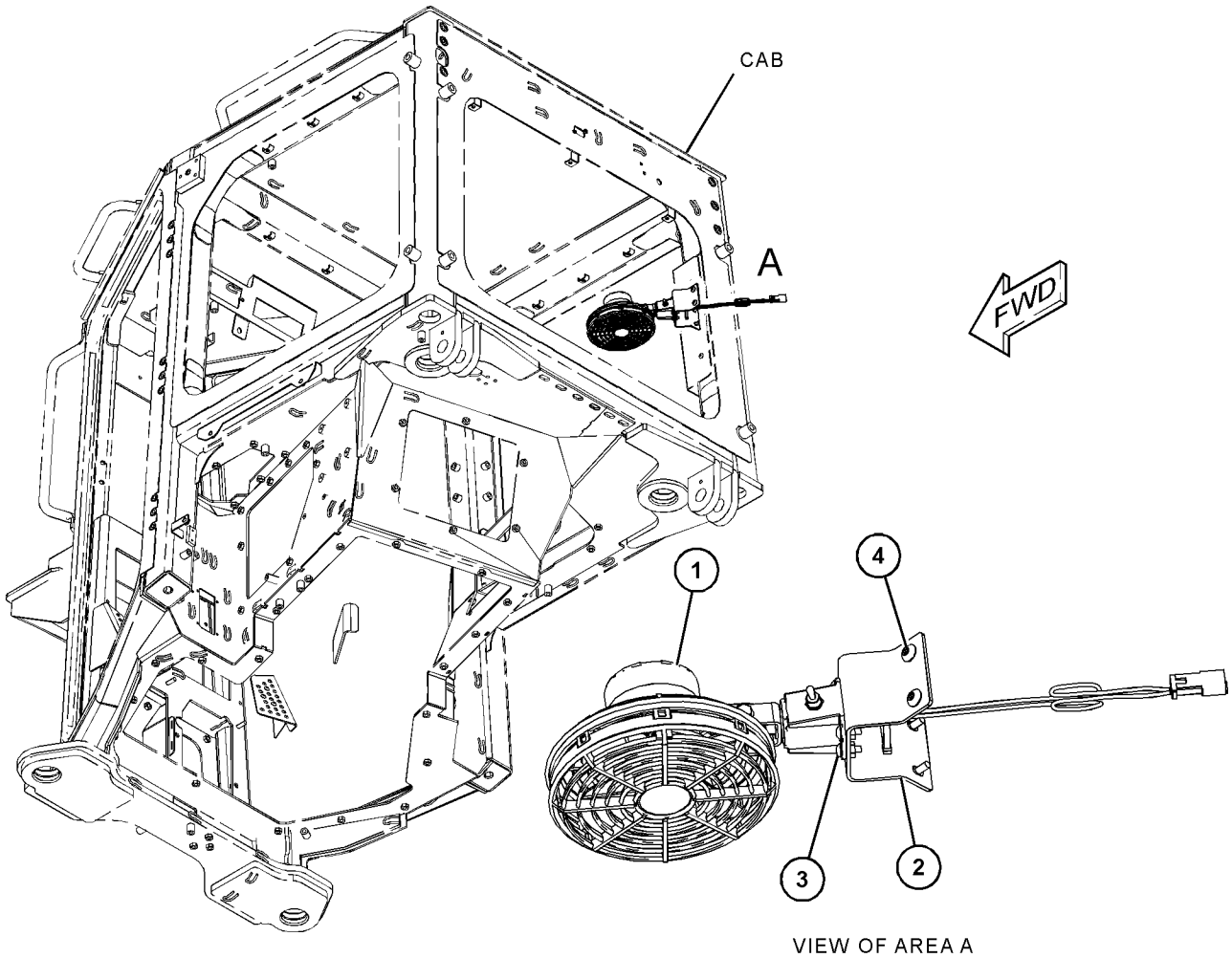

VIEW OF AREA A

GRAPHIC #1 **<END>** g03719884

389-3067 FILTER GP-CAB AIR

S/N: PPP1-UP; SSS1-UP; TTT1-UP
PART OF 393-6483 FILTER GP-CAB AIR
AN ATTACHMENT

SMCS-7342 **i05899826**

NOTE	REF NO	GRAPHIC REF	PART NUMBER	QTY	PART NAME 1 2 3 4 5 6 (PRODUCT LEVEL)	SEE PAGE
	1	1	**396-7087**	1	FILTER GP-CAB AIR	
	2	1	**451-1872**	1	CLAMP AS	
					PARTS SHOWN IN GRAPHIC(S) WITHOUT A REFERENCE NUMBER ARE NOT SERVICED SEPARATELY	

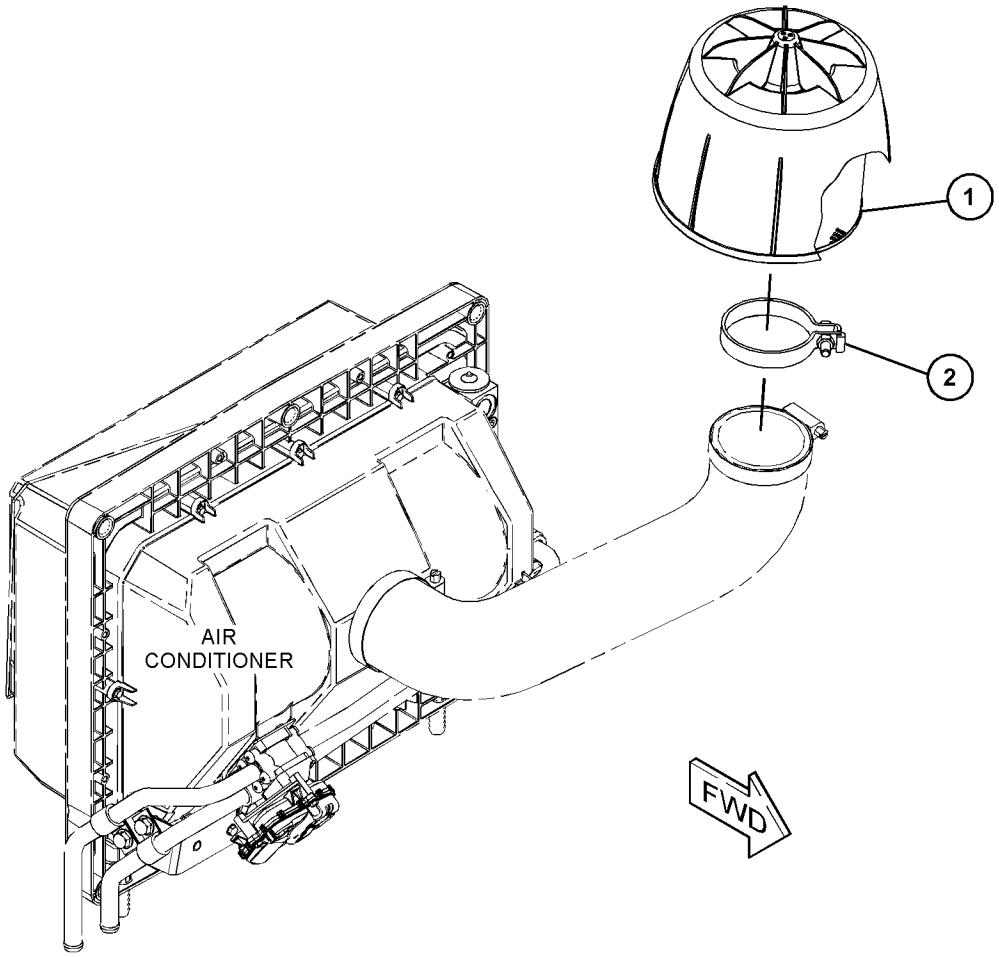

GRAPHIC #1 **<END>** g03719953

393-6483 FILTER GP-CAB AIR

S/N: PPP1-UP; SSS1-UP; TTT1-UP
PART OF 398-4297, 398-4300 CAB AR, 398-4295 CANOPY AR
AN ATTACHMENT

SMCS-7342 **i06199996**

NOTE	REF NO	GRAPHIC REF	PART NUMBER	QTY	PART NAME 1 2 3 4 5 6 (PRODUCT LEVEL)	SEE PAGE
	1	1	**3E-7404**	2	CLAMP-HOSE	
Y	2	1	**389-3067**	1	FILTER GP-CAB AIR	718
	3	1	**425-9036**	1	HOSE	

Y - SEPARATE ILLUSTRATION

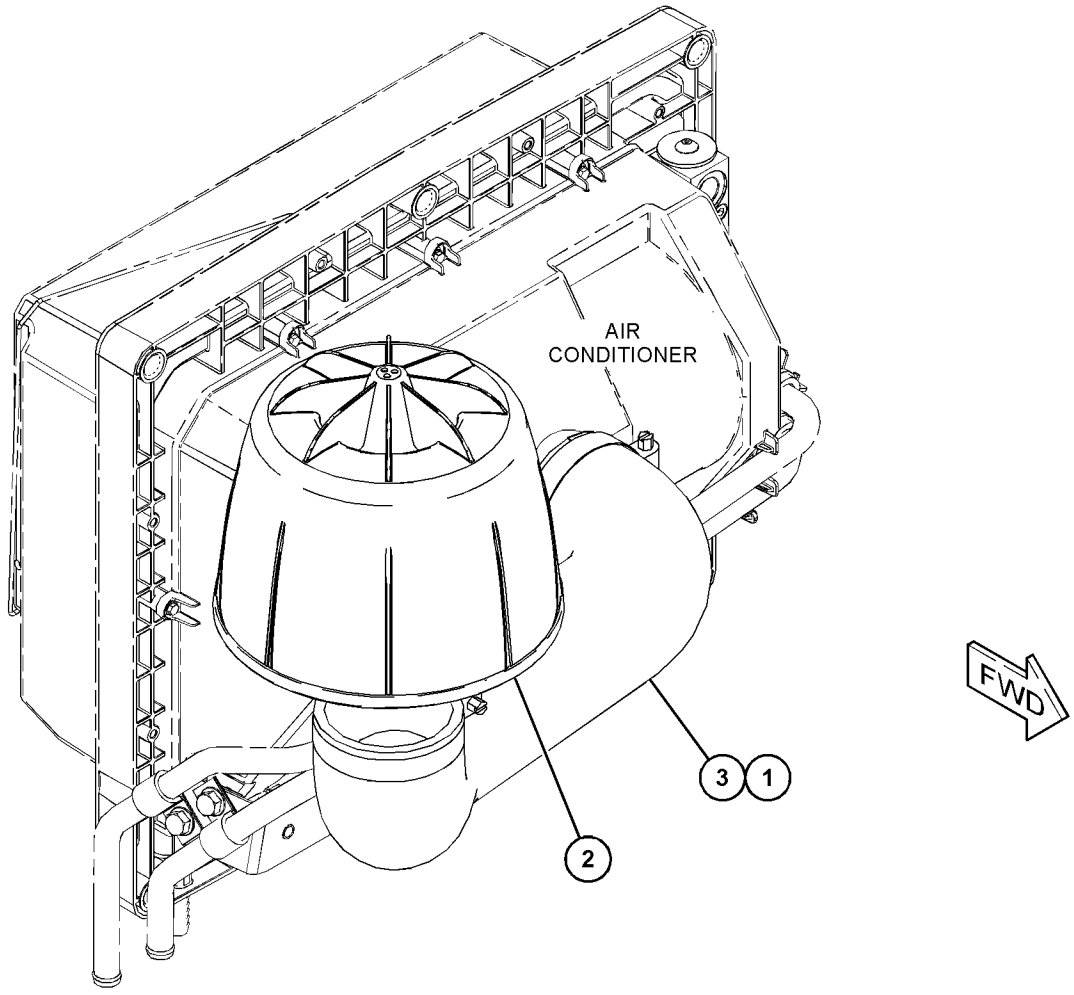

GRAPHIC #1 **<END>** g03852444

OPERATOR STATION

375-7911 HEATER & MTG GP-CAB

S/N: PPP1-UP; SSS1-UP; TTT1-UP

PART OF 393-6480 CAB AR, 393-6485 CAB AR-ENCLOSED ROPS

AN ATTACHMENT

SMCS-7304 **i06218768**

NOTE	REF NO	GRAPHIC REF	PART NUMBER	QTY	PART NAME 1 2 3 4 5 6 (PRODUCT LEVEL)	SEE PAGE
	1	1	**8C-5682**	1	TEE	
	2	1	**112-7448**	1	FILTER ELEMENT-CAB AIR (STANDARD EFFICIENCY)	
	3	1	**240-8917**	1	FILM-CIRCUIT BREAKER	
	4	1	**273-5924**	2	KNOB (ADJUSTMENT CONTROL)	
	5	1	**323-5864**	1	VALVE	
	6	1	**335-6983**	5	CLAMP-BAND	
Y	7	1	*350-3036*	1	CONTROL GP-AIR & TEMPERATURE	697
Y	8	1	**375-0350**	1	AIR CONDITIONER GP	682
Y	9	1	**387-1410**	1	HARNESS AS-DASH	170
	10	1	**388-5571**	1	WIRE AS	
	11	1	**392-7232**	1	PLATE	
	12	1	**068-4209**	2	SCREW (8-32X0.75-IN)	
	13	1	**276-1326**	3	BOLT (M10X1.5X55-MM)	
M	14	1	**344-5675**	3	NUT (M10X1.5-THD)	
	15	1	**6T-3643**	1	CIRCUIT BREAKER AS (15-AMPERE) (AIR CONDITIONER)	
		1	**6V-8376**	2	SCREW-MACHINE (8-32X0.25-IN)	
		1	**9B-7233**	2	LOCKWASHER	
	16	1	**8T-4121**	6	WASHER-HARD (11X21X2.5-MM THK)	
M	17	1	**9X-6485**	1	STUD	
D	18	1	**5P-6129**		TUBE (0.6-M)	
D	18A	1	**5P-6129**		TUBE (0.3-M)	
D	18B	1	**5P-6129**		TUBE (1.1-M)	

D - ORDER BY THE METER
M - METRIC PART
Y - SEPARATE ILLUSTRATION

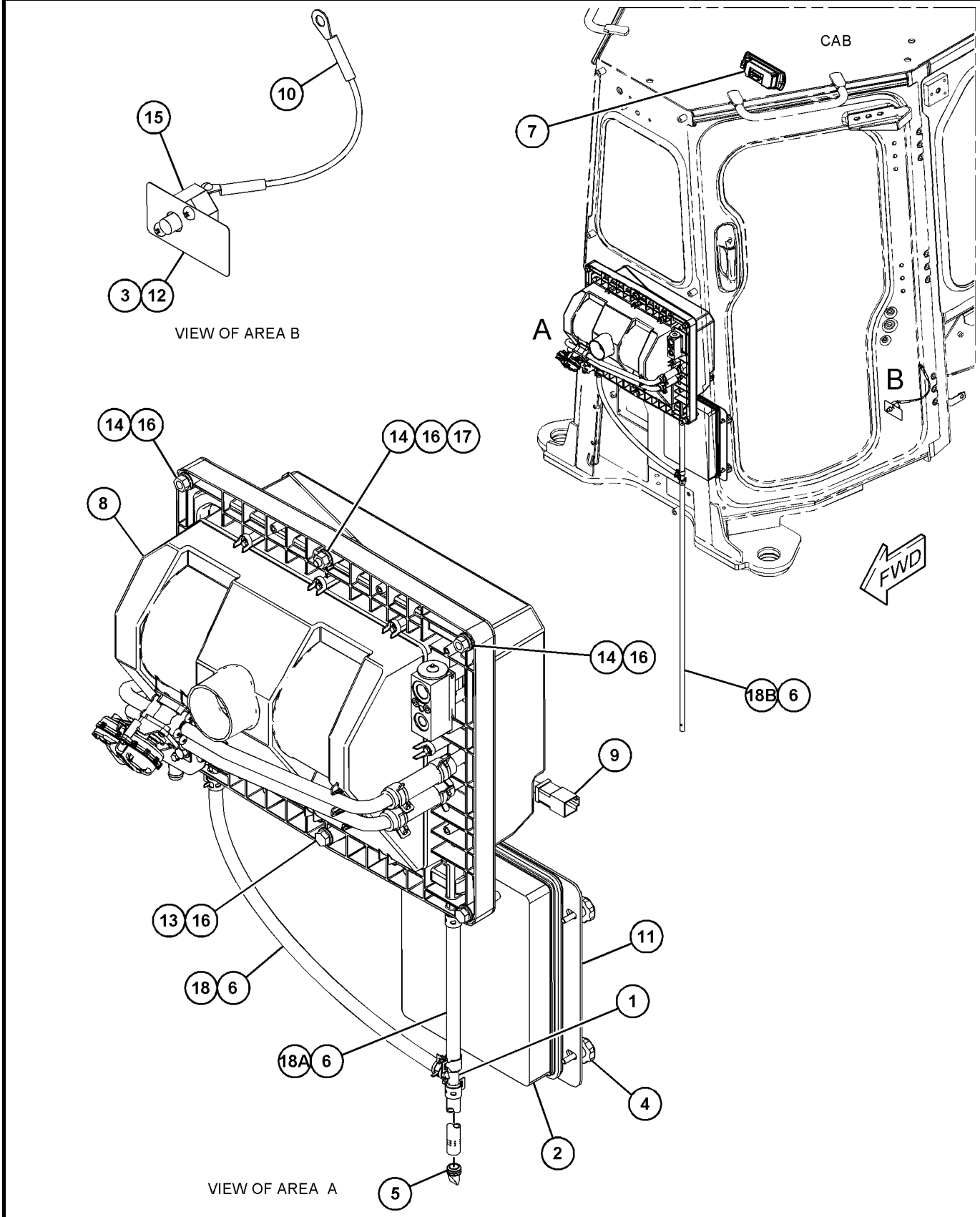

GRAPHIC #1 **<END>** g03860587

174-2231 HOUSING GP-SEAT SUSPENSION

S/N: PPP1-UP; SSS1-UP; TTT1-UP
PART OF 160-7165 SUSPENSION GP-SEAT
AN ATTACHMENT

SMCS-7321 **i05333520**

NOTE	REF NO	GRAPHIC REF	PART NUMBER	QTY	PART NAME 1 2 3 4 5 6 (PRODUCT LEVEL)	SEE PAGE
	1	1	**1Y-7927**	1	PIN	
	2	1	**2D-6235**	2	LOCKNUT (1/4-20-THD)	
	3	1	**2M-7819**	4	RING-RETAINING	
	4	1	**3D-2975**	2	RING-RETAINING	
	5	1	**4B-5059**	6	WASHER (15X29.5X2.5-MM THK)	
	6	1	**4N-2927**	2	RACE-THRUST BEARING	
	7	1	**5D-4822**	2	RING-RETAINING	
	8	1	**5P-8445**	4	RING-RETAINING	
	9	1	**5V-0770**	2	BOLT-CARRIAGE (1/4-20X0.74-IN)	
	10	1	**7M-7219**	1	BEARING-THRUST	
	11	1	**7V-5191**	2	SPACER (28X10X7.1-MM THK)	
	12	1	**8L-8413**	2	STRAP-CABLE	
	13	1	**8S-7803**	4	RING-RETAINING	
	14	1	**8Y-6041**	1	ARM AS	
	15	1	**8Y-6045**	1	CAM	
	16	1	**8Y-6046**	1	PIN	
	17	1	**8Y-6047**	2	PIN	
	18	1	**8Y-6060**	2	ROLLER	
	19	1	**8Y-6062**	1	LINK-ACTUATOR (RH)	
	20	1	**8Y-6063**	1	LINK-ACTUATOR (LH)	
	21	1	**8Y-6064**	2	ROLLER-SLIDER	
	22	1	**8Y-6066**	1	SPRING	
	23	1	**8Y-6067**	1	SPACER (10.54-MM THK)	
	24	1	**8Y-6068**	1	NUT (3/8X16-THD)	
	25	1	**8Y-6069**	1	ADJUSTER AS	
	26	1	**9X-8918**	3	SCREW-FLAT HEAD (8-32X0.5-IN)	
	27	1	**095-0878**	1	PIN-SPRING	
	28	1	**131-4242**	1	BOLT (3/8-16X5.18-IN)	
	29	1	**131-5167**	1	KNOB AS-ADJUSTMENT (WEIGHT)	
	30	1	**161-5967**	1	SHAFT	
	31	1	**174-2237**	1	FRAME AS-SUSPENSION	
					AVAILABLE REPAIR KIT(S):	
			8Y-5945	1	KIT-SUSPENSION KNOB (HEIGHT ADJUSTMENT)	
					(INCLUDES KNOBS)	
			8Y-6859	1	KIT-SPRING (SUSPENSION SEAT)	
					(INCLUDES SPRINGS, BUSHINGS & RINGS)	
			8Y-6860	1	KIT-SPRING (HEIGHT ADJUSTMENT) (SUSPENSION SEAT)	
					(INCLUDES SPRINGS, BUSHINGS, RODS & SPACERS)	
			100-3224	1	KIT-INDICATOR (WEIGHT ADJUSTMENT) (SUSPENSION SEAT)	
					(INCLUDES TAPE, GUIDE & STRAPS)	
			100-5179	1	KIT-BUMPER (WEIGHT ADJUSTMENT) (SUSPENSION SEAT)	
					(INCLUDES BUMPERS)	
			108-4086	1	KIT-FOLLOWER (SUSPENSION SEAT)	
					(INCLUDES FOLLOWER & PIN)	
			108-4087	1	KIT-FOLLOWER (SUSPENSION SEAT)	
					(INCLUDES FOLLOWER & PIN)	
			108-4103	1	KIT-BEARING (SUSPENSION SEAT)	
					(INCLUDES ROLLER ASSEMBLIES)	

174-2231 **HOUSING GP-SEAT SUSPENSION (*contd.*)** **i05333520**

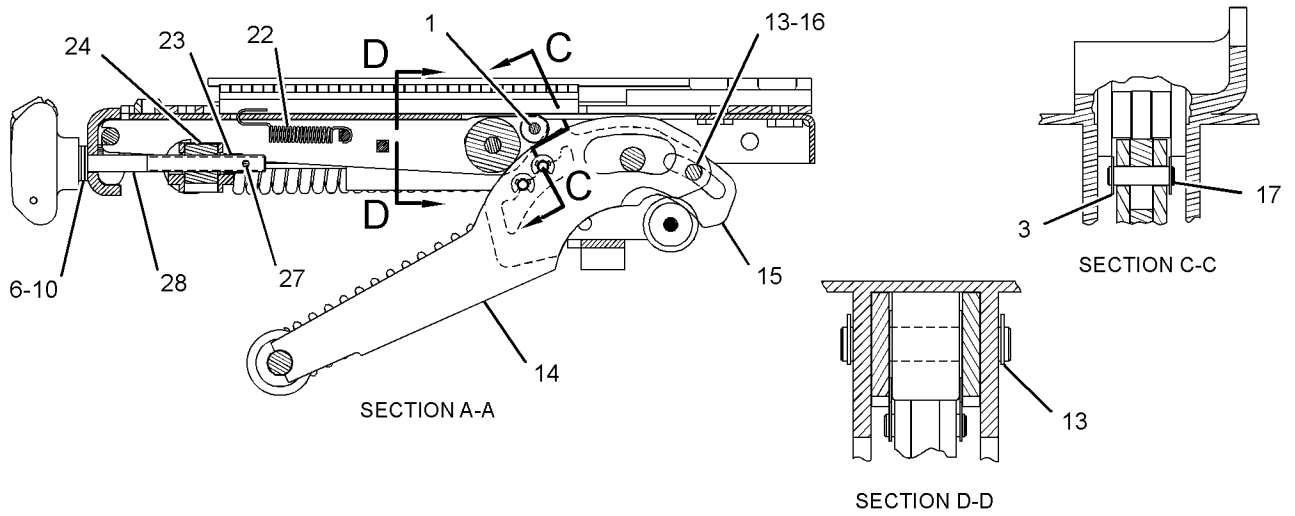

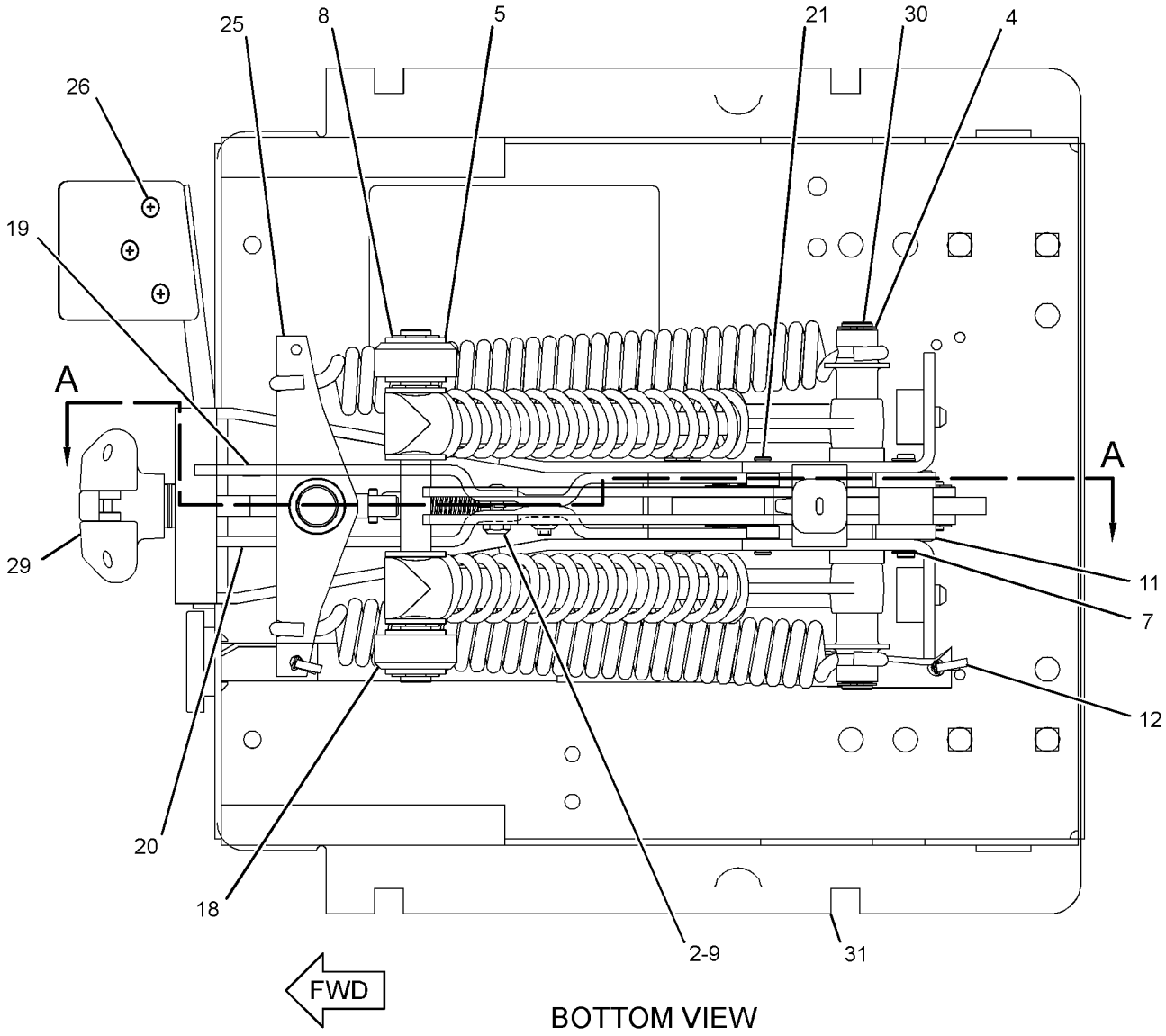

GRAPHIC #1 **<END>** g01923320

375-7906 INSTALLATION GP-RADIO

S/N: PPP1-UP; SSS1-UP; TTT1-UP
PART OF 393-6480 CAB AR, 393-6485 CAB AR-ENCLOSED ROPS
AN ATTACHMENT

SMCS-7338 **i05898333**

NOTE	REF NO	GRAPHIC REF	PART NUMBER	QTY	PART NAME 1 2 3 4 5 6 (PRODUCT LEVEL)	SEE PAGE
	1	1	**8E-1118**	1	ANTENNA AS (RADIO)	
	2	1	**9U-8263**	1	COVER	
	3	1	**9U-8746**	1	CABLE AS-COAXIAL	
	4	1	**101-3055**	2	COVER-SPEAKER	
	5	1	**168-8772**	2	SPEAKER AS-RADIO	
M	6	1	**123-0708**	8	SCREW-HEX SOCKET (M4X0.7X30-MM)	

M - METRIC PART

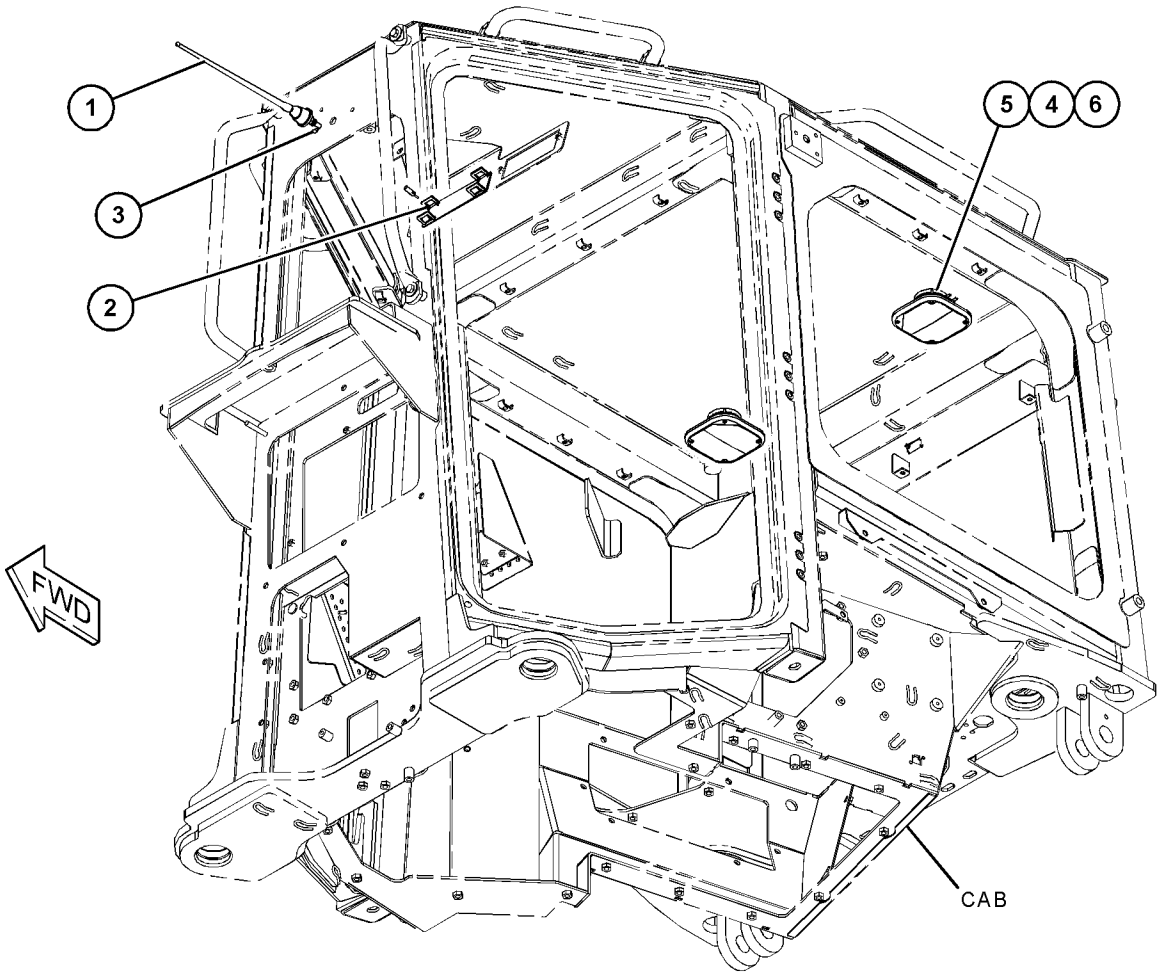

GRAPHIC #1 **<END>** g03719837

443-8573 KIT-HANDLE

S/N: PPP1-UP; SSS1-UP; TTT1-UP
PART OF 443-8222 SEAT GP
AN ATTACHMENT

SMCS-7312 **i06213914**

NOTE	REF NO	GRAPHIC REF	PART NUMBER	QTY	PART NAME 1 2 3 4 5 6 (PRODUCT LEVEL)	SEE PAGE
	1	1	**5T-7486**	2	RETAINER-SPRING	
	2	1	**7Y-0468**	2	PIN-SPRING	
	3	1	**9T-5241**	4	WASHER (9.53X18X1-MM THK)	

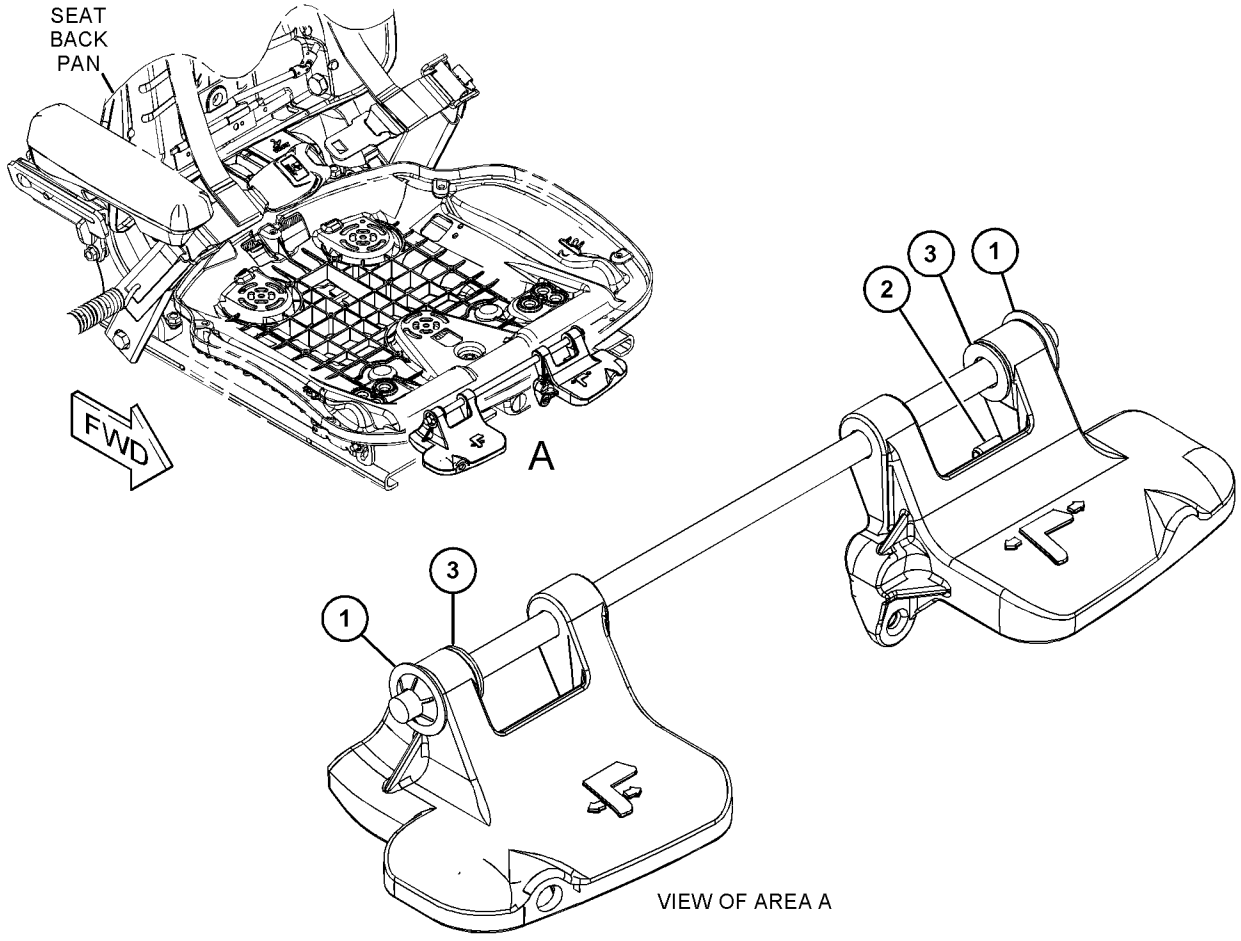

GRAPHIC #1 **<END>** g03850471

452-6716 KIT-SEAT AIR COMPRESSOR

S/N: PPP1-UP; SSS1-UP; TTT1-UP
PART OF 191-2933 SUSPENSION GP-SEAT
AN ATTACHMENT

SMCS-731K, 7324

i06264720

NOTE	PART NUMBER	QTY	PART NAME 1 2 3 4 5 6 (PRODUCT LEVEL)	SEE PAGE
	372-2158	1	BRACKET-MOUNTING	
	370-9894	1	COMPRESSOR AS	
	186-5107	2	SCREW-DRIVE (NO 8-16X1.25-IN)	
	8L-8413	6	STRAP-CABLE (WHITE)	

<END>

446-0649 KIT-SEAT CUSHION–DELUXE

S/N: PPP1-UP; SSS1-UP; TTT1-UP
PART OF 443-8222 SEAT GP
AN ATTACHMENT

SMCS-7312 **i06210441**

NOTE	REF NO	GRAPHIC REF	PART NUMBER	QTY	PART NAME 1 2 3 4 5 6 (PRODUCT LEVEL)	SEE PAGE
	1	1	**357-5170**	1	CUSHION AS-BACK	
	2	1	**443-8576**	1	CUSHION AS	
	3	1	**385-0229**	7	SCREW-FORMING (12-16X0.75-IN)	
	4	1	**385-0230**	2	SCREW-FORMING (1/4-15-1-IN)	
					(KIT ALSO INCLUDES SEAT PAN, HEATER PAD & VENT FAN HARNESS AND OPERATOR STATION HARNESS)	

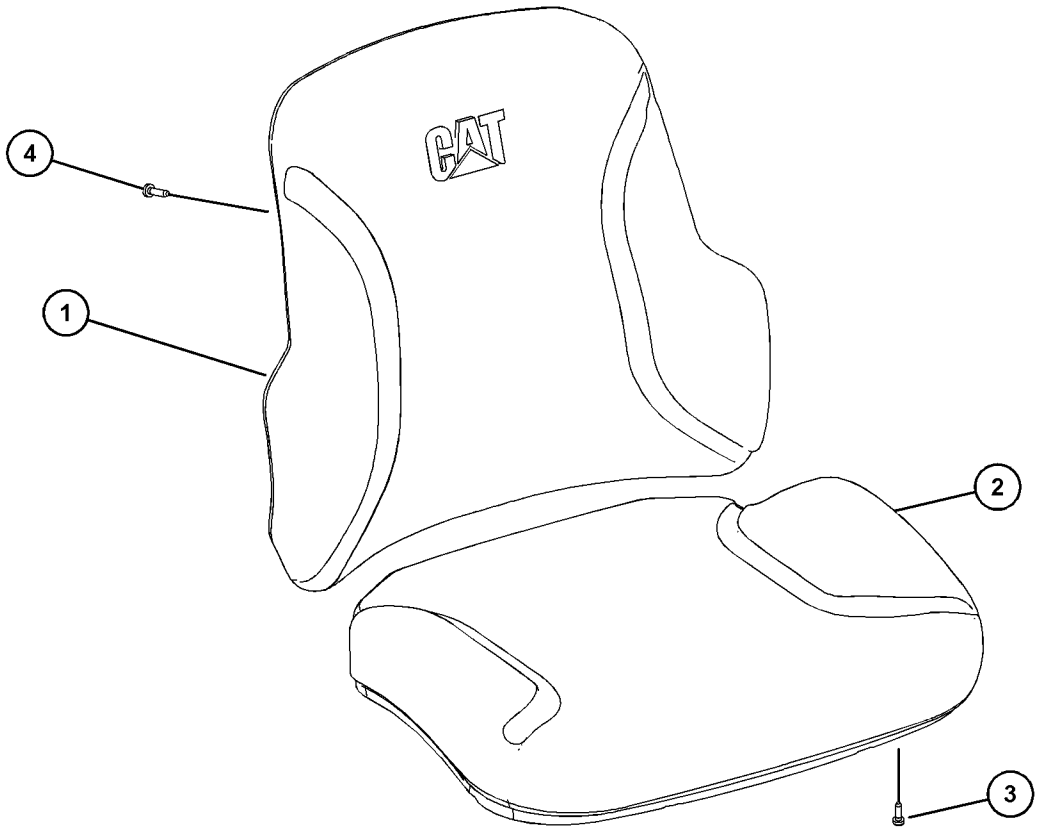

GRAPHIC #1 **<END>** g03855002

OPERATOR STATION

212-7779 KIT-SHOCK ABSORBER

S/N: PPP1-UP; SSS1-UP; TTT1-UP
PART OF 191-2933 SUSPENSION GP-SEAT
AN ATTACHMENT

SMCS-7324 **i06250884**

NOTE	REF NO	GRAPHIC REF	PART NUMBER	QTY	PART NAME 1 2 3 4 5 6 (PRODUCT LEVEL)	SEE PAGE
	1	1	**3S-2093**	1	STRAP-CABLE	
	2	1	**7D-6922**	1	LOCKNUT (6-32-THD)	
	3	1	**114-5157**	2	ADJUSTER	
	4	1	**138-8885**	1	BOLT-SOCKET HEAD (6-32X0.5-IN)	
	5	1	**163-1137**	2	BEARING	
	6	1	**192-7811**	2	WASHER (13X22X2-MM THK)	
	7	1	**192-7812**	1	BOLT-SPECIAL	
	8	1	**192-7813**	1	BOLT-SPECIAL	
	9	1	**212-7780**	1	ABSORBER AS-SHOCK	
	10	1	**212-7783**	1	KIT-PULLEY	
					(INCLUDES PARTS MARKED "H" IN GRAPHIC)	
	11	1	**213-4754**	1	KNOB	
	12	1	**9M-2904**	1	CLAMP-HOSE	
	13	1	**377-3141**	1	CABLE AS	
	14	1	**138-8886**	1	BOLT-SOCKET HEAD (1/4-20X1.5-IN)	
	15	1	**2D-6235**	3	LOCKNUT (1/4-20-THD)	
	16	1	**2D-6642**	1	BALL	
	17	1	**2K-4973**	1	LOCKNUT (3/8-16-THD)	
	18	1	**3J-4818**	1	LOCKWASHER	
					PARTS SHOWN IN GRAPHIC(S) WITHOUT A REFERENCE NUMBER ARE NOT SERVICED SEPARATELY	

212-7779 **KIT-SHOCK ABSORBER (*contd.*)** **i06250884**

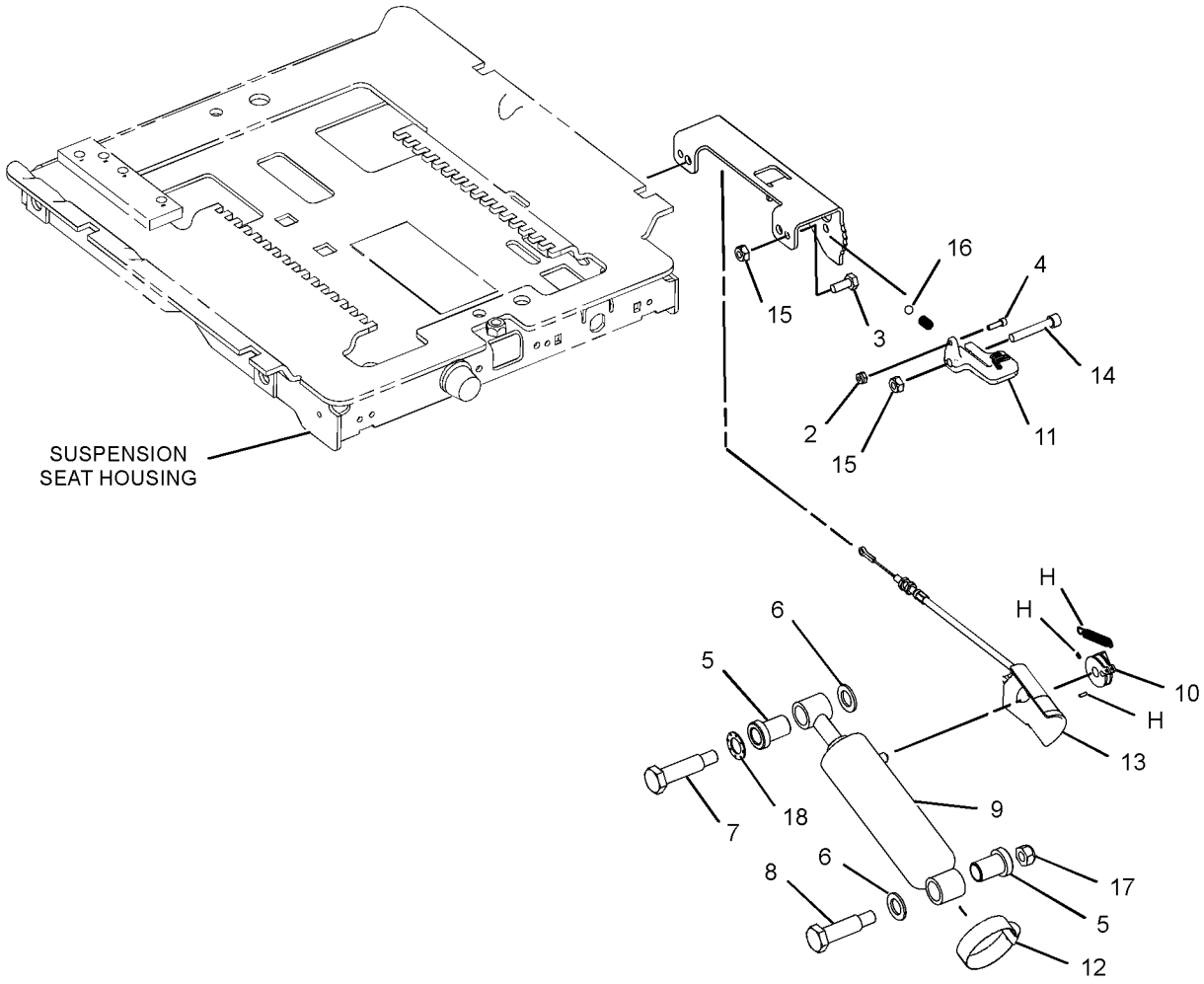

GRAPHIC #1 **<END>** g03662307

424-8524 LINER GP-CAB

S/N: PPP1-UP; SSS1-UP; TTT1-UP

PART OF 393-6480 CAB AR, 393-6485 CAB AR-ENCLOSED ROPS

AN ATTACHMENT

SMCS-7329 **i06218740**

NOTE	REF NO	GRAPHIC REF	PART NUMBER	QTY	PART NAME 1 2 3 4 5 6 (PRODUCT LEVEL)	SEE PAGE
	1	1	**6V-8928**	1	HOOK-COAT	
	2	1	**154-8079**	19	NUT-RETAINER (U-TYPE)	
	3	2	**385-7840**	1	PLATE AS	
M		2	**6V-9632**	4	NUT-WELD (M6X1-THD)	
	4	2	**385-7845**	1	COVER-LATCH (LH)	
	5	2	**385-7851**	1	COVER (LH)	
	6	2	**386-0513**	1	COVER-LATCH (RH)	
	7	1	**386-0516**	1	LINER AS-CAB (FRONT)	
	8	1	**386-0517**	1	LINER AS-CAB (REAR)	
	9	2	**390-3829**	1	DUCT AS	
	10	2	**390-3831**	1	COVER-DASH	
	11	2	**392-7769**	1	PLATE	
	12	2	**392-9663**	1	DOOR AS	
	13	2	**392-9829**	1	SEAL	
	14	2	**393-2286**	1	LATCH AS	
	15	2	**396-2352**	4	LOUVER AS	
	16	2	**422-2152**	2	LOUVER AS-VENT	
	17	2	**422-6177**	2	SEAL	
	18	2	**422-6201**	1	COVER (RH)	
	19	2	**424-4574**	3	LOUVER AS	
	20	2	**426-0972**	2	BUMPER	
	21	2	**427-5774**	2	HINGE AS	
	22	2	**431-7856**	1	SEAL	
	23	2	**450-1843**	1	COVER AS (LH)	
M		2	**3E-4304**	2	INSERT-THREADED (M6X1-THD)	
	24	2	**104-2091**	10	SCREW-FLAT HEAD (6-20X0.5-IN)	
	25	2	**234-0091**	4	RIVET	
M	26	1	**3E-8020**	1	SCREW-TRUSS HEAD (M6X1X25-MM)	
M	27	1,2	**172-8591**	26	NUT-SPRING (M6X1-THD)	
M	28	2	**7Y-7388**	12	SCREW-BUTTON HEAD (M5X0.8X12-MM)	
	29	1,2	**9X-2038**	32	WASHER (7X19X2-MM THK)	
M	30	2	**9X-2042**	6	SCREW-TRUSS HEAD (M6X1X12-MM)	
M	31	1,2	**9X-2044**	30	SCREW-TRUSS HEAD (M6X1X16-MM)	
M	32	2	**9X-2046**	6	SCREW-TRUSS HEAD (M6X1X35-MM)	

M - METRIC PART

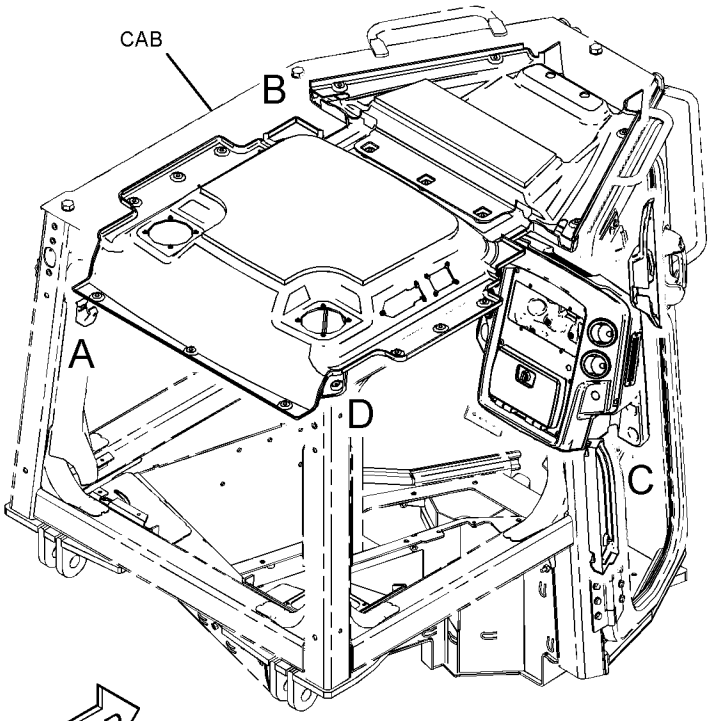

REFER TO ALL ILLUSTRATIONS OF
THIS GROUP FOR AUXILIARY VIEWS

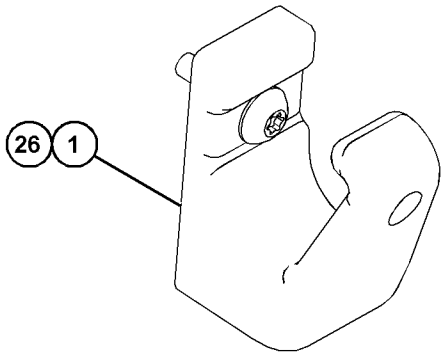

VIEW OF AREA A

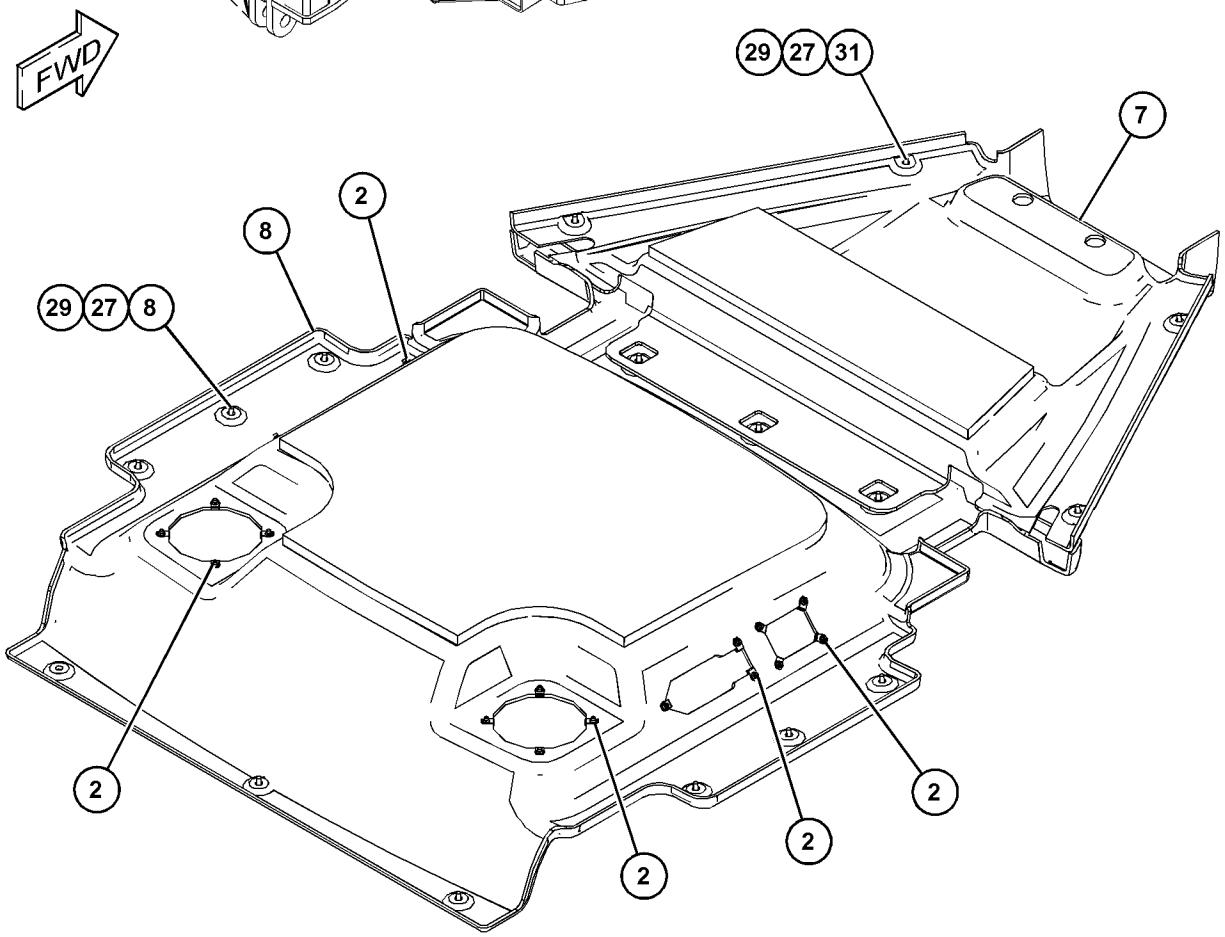

VIEW OF AREA B

GRAPHIC #1 g03861985

424-8524 **LINER GP-CAB (*contd.*)** **i06218740**

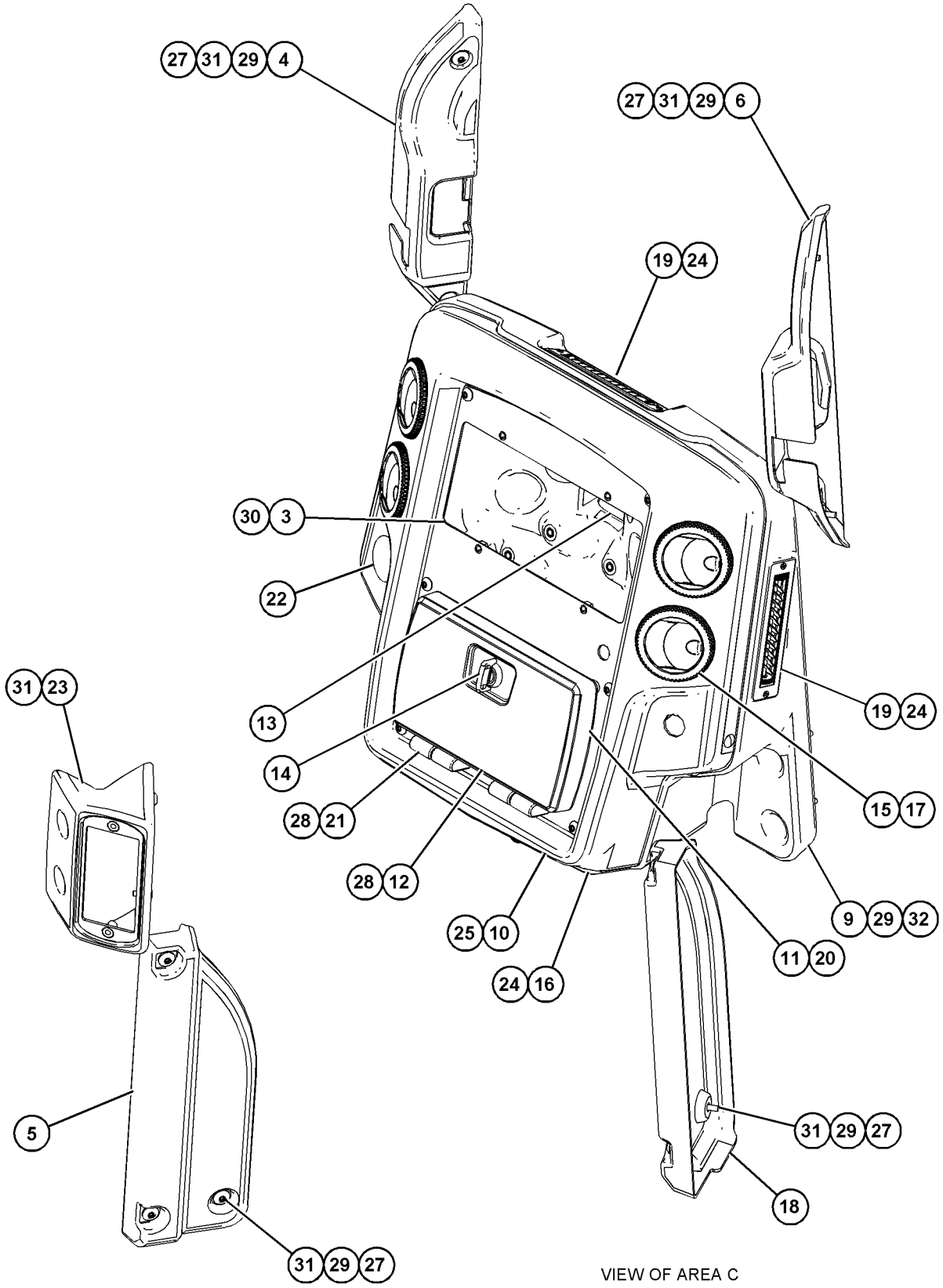

GRAPHIC #2 **<END>** g03861986

425-6167 LINER GP-CAB

S/N: PPP1-UP; SSS1-UP; TTT1-UP
PART OF 393-6475 CANOPY AR
AN ATTACHMENT

SMCS-7329 **i06212831**

NOTE	REF NO	GRAPHIC REF	PART NUMBER	QTY	PART NAME 1 2 3 4 5 6 (PRODUCT LEVEL)	SEE PAGE
M	1	1	**314-3025**	2	SCREW-THUMB (M6X1X16-MM)	
	2	1	**6V-8928**	1	HOOK-COAT	
	3	1	**154-8079**	7	NUT-RETAINER (U-TYPE)	
J	4	1	**226-0295**	1	LOCK AS	
	5	1	**226-0340**	1	CAM	
	6	1	**389-2146**	1	LINER AS-CAB (FRONT)	
	7	1	**389-2148**	1	LINER AS-CAB (MAIN)	
	8	1	**390-3831**	1	COVER-DASH	
	9	1	**391-4073**	1	PLATE AS	
	10	1	**391-4074**	1	PLATE AS	
	11	1	**392-9829**	1	SEAL	
	12	1	**393-4749**	1	DUCT AS	
	13	1	**396-2352**	4	LOUVER AS	
	14	1	**422-2152**	2	LOUVER AS-VENT	
	15	1	**422-6177**	2	SEAL	
	16	1	**431-7856**	1	SEAL	
	17	1	**450-1843**	1	COVER AS	
M		1	**3E-4304**	2	INSERT-THREADED (M6X1-THD)	
	18	1	**104-2091**	4	SCREW-FLAT HEAD (6-20X0.5-IN)	
	19	1	**234-0091**	4	RIVET	
	20	1	**275-6710**	2	RETAINER	
M	21	1	**172-8591**	5	NUT-SPRING (M6X1-THD)	
	22	1	**9X-2038**	22	WASHER (7X19X2-MM THK)	
M	23	1	**9X-2043**	2	SCREW-TRUSS HEAD (M6X1X14-MM)	
M	24	1	**9X-2044**	18	SCREW-TRUSS HEAD (M6X1X16-MM)	
M	25	1	**9X-2045**	7	SCREW-TRUSS HEAD (M6X1X20-MM)	
M	26	1	**9X-2046**	6	SCREW-TRUSS HEAD (M6X1X35-MM)	

J - REQUIRES CORPORATE KEY
M - METRIC PART

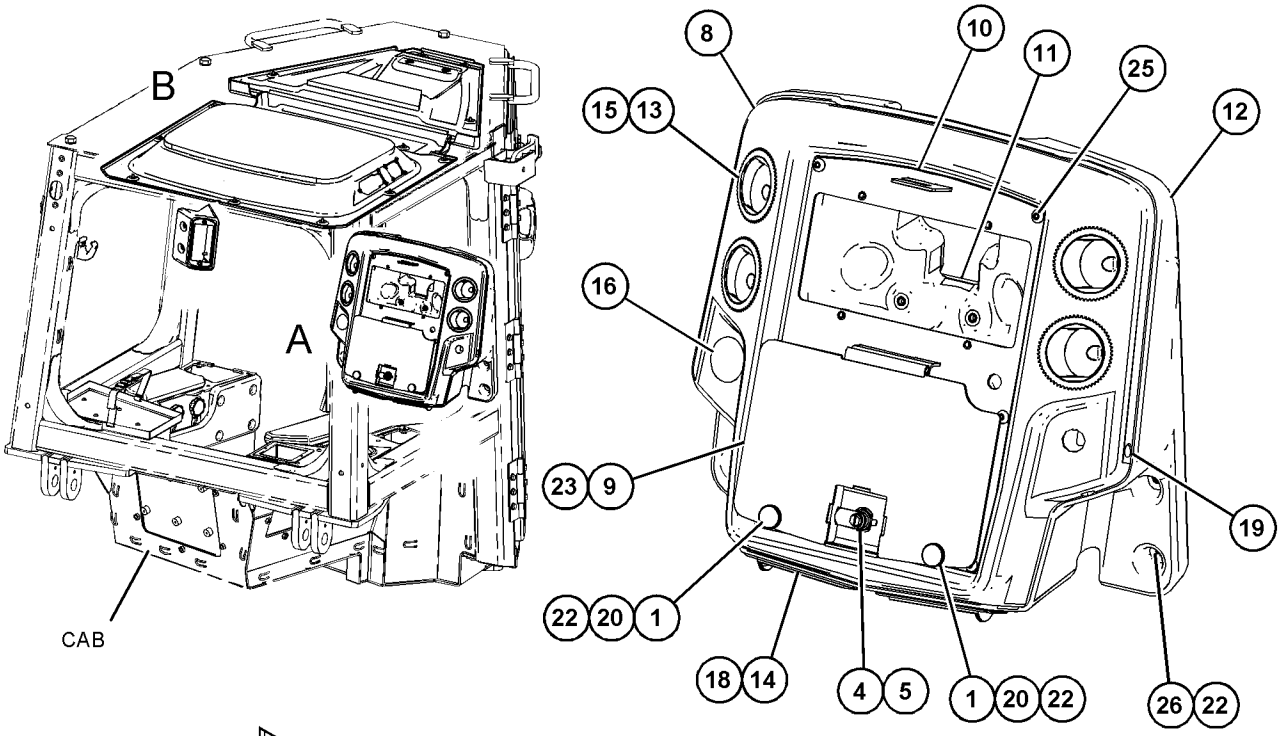

VIEW OF AREA A

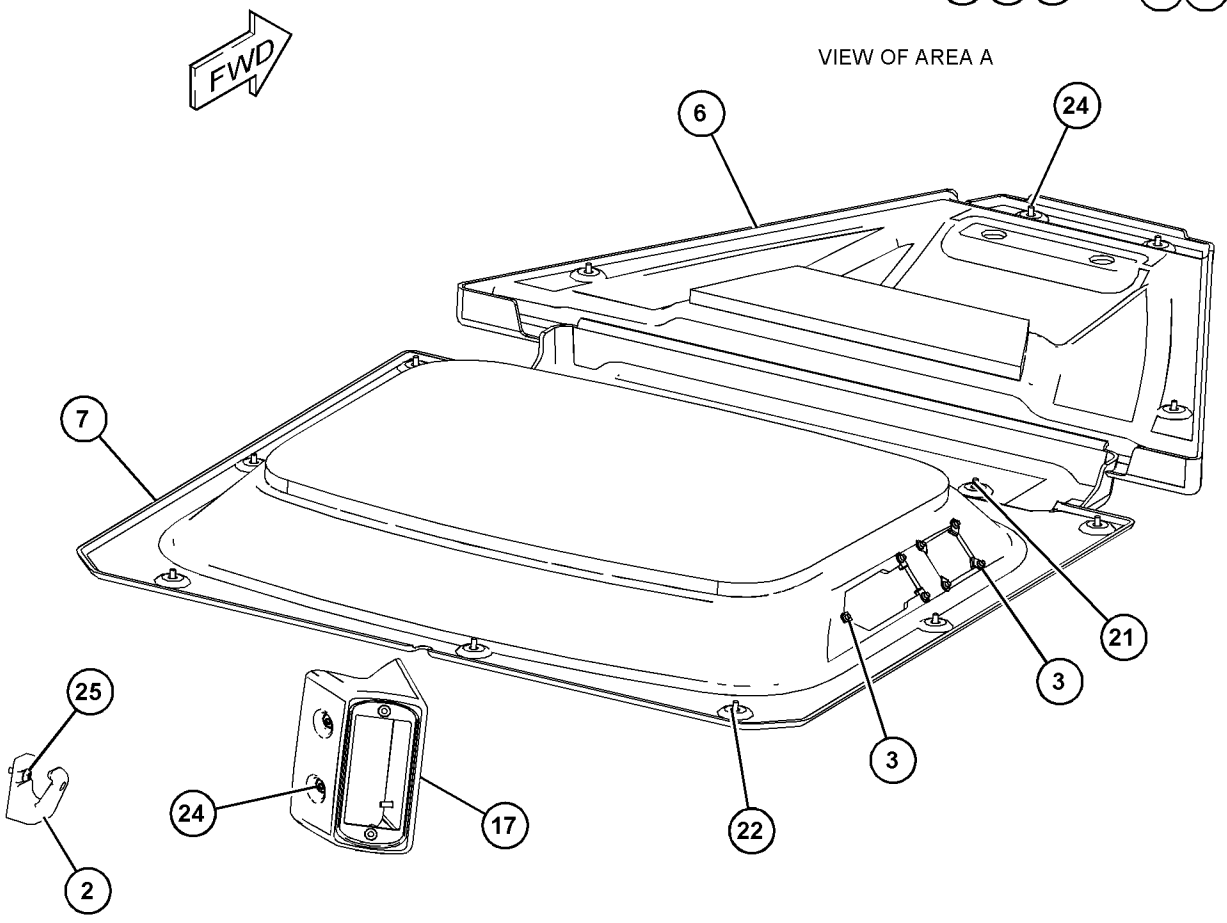

VIEW OF AREA B

GRAPHIC #1 **<END>** g03859806

398-4511 LINES GP-AIR CONDITIONER—ROPS MOUNTED

S/N: PPP1-UP; SSS1-UP; TTT1-UP
PART OF 398-4297, 398-4300 CAB AR
AN ATTACHMENT

SMCS-1808 **i06231269**

NOTE	REF NO	GRAPHIC REF	PART NUMBER	QTY	PART NAME 1 2 3 4 5 6 (PRODUCT LEVEL)	SEE PAGE
	1	2	**1P-6356**	1	PLATE	
	2	1	**7K-1181**	2	STRAP-CABLE	
	3	1	**106-5534**	1	DRYER-REFRIGERANT (RECEIVER)	
	4	1	**110-6393**	1	PLATE-INSTRUCTION (AIR CONDITIONER)	
					(ON LH SIDE OF DASH IN FRONT OF DASH REAR EDGE)	
	5	2	**183-4273**	1	HARNESS AS-WIRING (AIR CONDITIONER COMPRESSOR)	
E		2	**114-8843**		SLEEVE-PLASTIC (20-CM)	
E		2	**114-8845**		SLEEVE-PLASTIC (60-CM)	
E		2	**119-3662**		TUBE-HEAT SHRINK (10.85-MM DIA) (13-CM)	
		2	**126-1768**	8	SOCKET-CONNECTOR (14-GA TO 16-GA)	
		2	**155-2270**	4	KIT-CONNECTING PLUG (2-PIN)	
					(EACH PLUG KIT INCLUDES PLUG AS, WEDGE & INTERFACE SEAL)	
	6	2	**189-3158**	1	SUPPRESSOR-ARC	
	7	1	**195-0882**	1	BRACKET AS	
	8	1	**203-2789**	2	BRACKET AS	
	9	1	**226-3492**	1	BRACKET AS	
	10	1	**290-5562**	1	MOUNT (DUAL SWIVEL)	
	11	1	**327-0282**	3	SEAL-INTEGRAL (1/2-IN)	
	12	1	**327-0283**	1	SEAL-INTEGRAL (3/4-IN)	
	13	2	**351-4945**	1	FITTING AS-AIR CONDITIONER	
		2	**3E-4052**	1	CAP-SEAL (HIGH SIDE CHARGE PORT)	
		2	**3E-4058**	1	VALVE AS (REFRIGERANT, HIGH SIDE)	
	14	1	**355-1790**	1	CLAMP	
	15	2	**355-3148**	1	SWITCH AS-PRESSURE (HIGH, LOW)	
		2	**8T-8729**	2	PIN-CONNECTOR (16-GA TO 18-GA)	
		2	**102-8802**	1	KIT-RECEPTACLE (2-PIN)	
					(INCLUDES RECEPTACLE AS & WEDGE)	
	16	1	**431-4819**	1	BRACKET AS	
M		1	**8T-3490**	1	NUT-WELD (M10X1.5-THD)	
I	17	1	**431-4821**	1	HOSE AS	
I	18	1	**431-4823**	1	HOSE AS	
	19	1	**431-4826**	1	BRACKET AS	
M		1	**8T-3490**	1	NUT-WELD (M10X1.5-THD)	
I	20	1	**472-0600**	1	HOSE AS	
I	21	1	**472-0601**	1	HOSE AS	
	22	1	**472-0602**	1	HOSE AS	
	23	1	**472-0603**	1	HOSE AS	
	24	1	**100-4336**	9	CLIP	
	25	1	**149-7738**	2	CLIP	
M	26	1	**178-3336**	2	NUT-HEX FLANGE (M8X1.25-THD)	
	27	1	**297-1546**	1	CLIP	
	28	1	**2P-4556**	2	CLIP	
M	29	2	**344-5675**	1	NUT (M10X1.5-THD)	
	30	2	**3E-4054**	1	FITTING AS-AIR CONDITIONER	
		2	**3E-4051**	1	CAP-SEAL (LOW SIDE CHARGE PORT)	
		2	**3E-4057**	1	VALVE AS (REFRIGERANT, LOW SIDE)	
	31	2	**3S-2093**	3	STRAP-CABLE	
	32	2	**4P-7429**	1	CLIP	
	33	2	**4P-8134**	1	CLIP	
	34	1	**6D-1641**	5	CLIP	
	35	1	**6D-3479**	1	CLIP	
	36	1	**8M-2773**	2	CLIP	
	37	1,2	**8T-4121**	19	WASHER-HARD (11X21X2.5-MM THK)	
M	38	1	**8T-4136**	5	BOLT (M10X1.5X25-MM)	
M	39	1	**8T-4137**	10	BOLT (M10X1.5X20-MM)	

398-4511 **LINES GP-AIR CONDITIONER (*contd.*)** **i06231269**

NOTE	REF NO	GRAPHIC REF	PART NUMBER	QTY	PART NAME 1 2 3 4 5 6 (PRODUCT LEVEL)	SEE PAGE
M	40	1	**8T-4191**	2	BOLT (M10X1.5X16-MM)	
M	41	1	**8T-4195**	1	BOLT (M10X1.5X30-MM)	
M	42	2	**8T-4196**	1	BOLT (M10X1.5X35-MM)	
	43	1	**8T-4224**	2	WASHER-HARD (8.8X16X2-MM THK)	
M	44	1	**8T-4908**	2	BOLT (M8X1.25X25-MM)	
M	45	2	**8T-6466**	1	BOLT (M10X1.5X60-MM)	
	46	2	**8T-7934**	1	WASHER-HARD (11X21X5-MM THK)	
	47	2	**9X-7378**	1	SEAL-O-RING	
	48	1	**9X-7380**	2	SEAL-O-RING	
	49	1	**9X-7381**	3	SEAL-O-RING	
	50	1	**9X-7382**	1	SEAL-O-RING	
	51	2	**9X-7385**	2	SEAL-O-RING	
D	52	1	**6V-2495**		SEAL (0.15-M EACH)	

D - ORDER BY THE METER
E - ORDER BY THE CENTIMETER
I - REFER TO HYDRAULIC INFORMATION SYSTEM
M - METRIC PART

398-4511 **LINES GP-AIR CONDITIONER (*contd.*)** **i06231269**

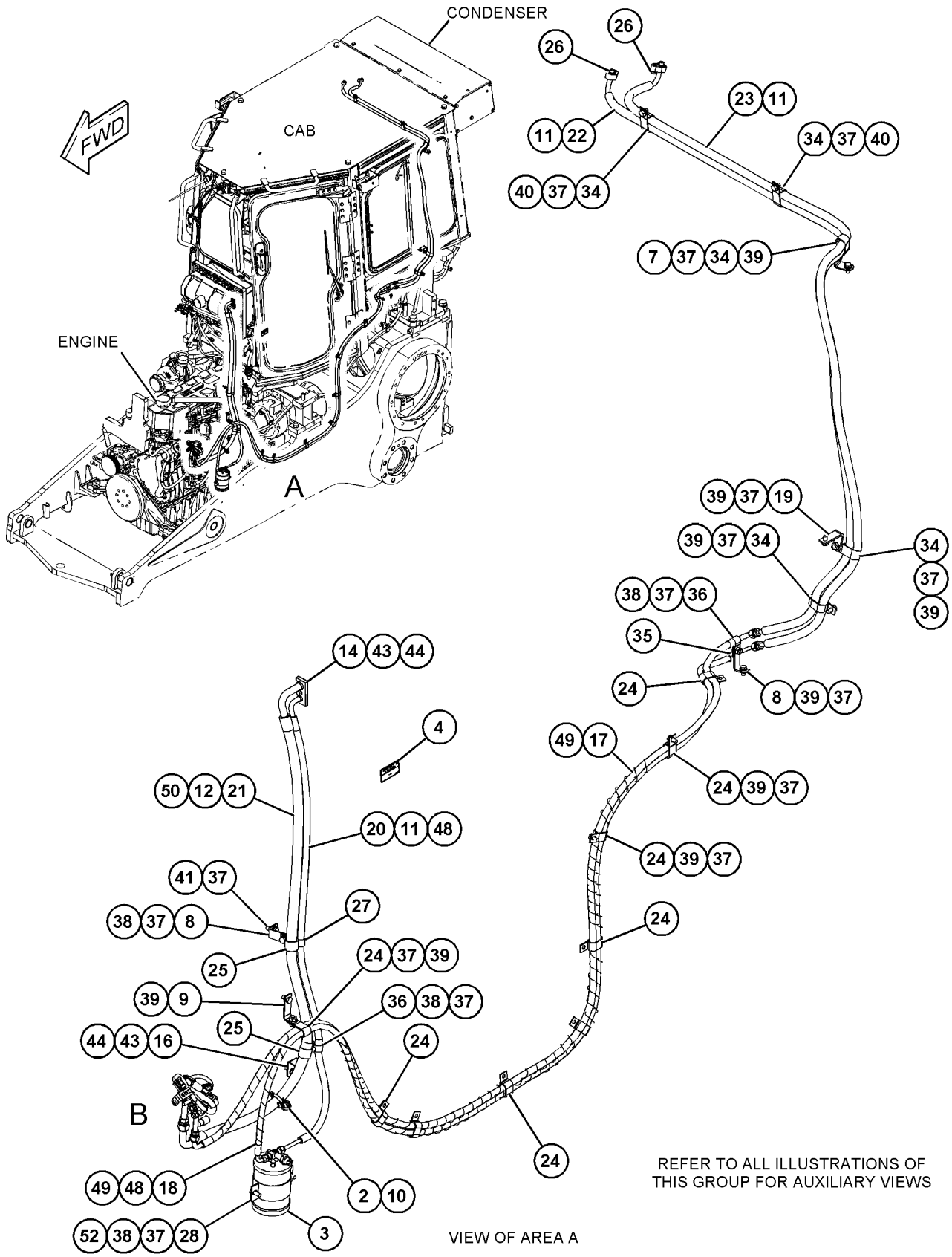

GRAPHIC #1 g03858099

398-4511 **LINES GP-AIR CONDITIONER (*contd.*)** **i06231269**

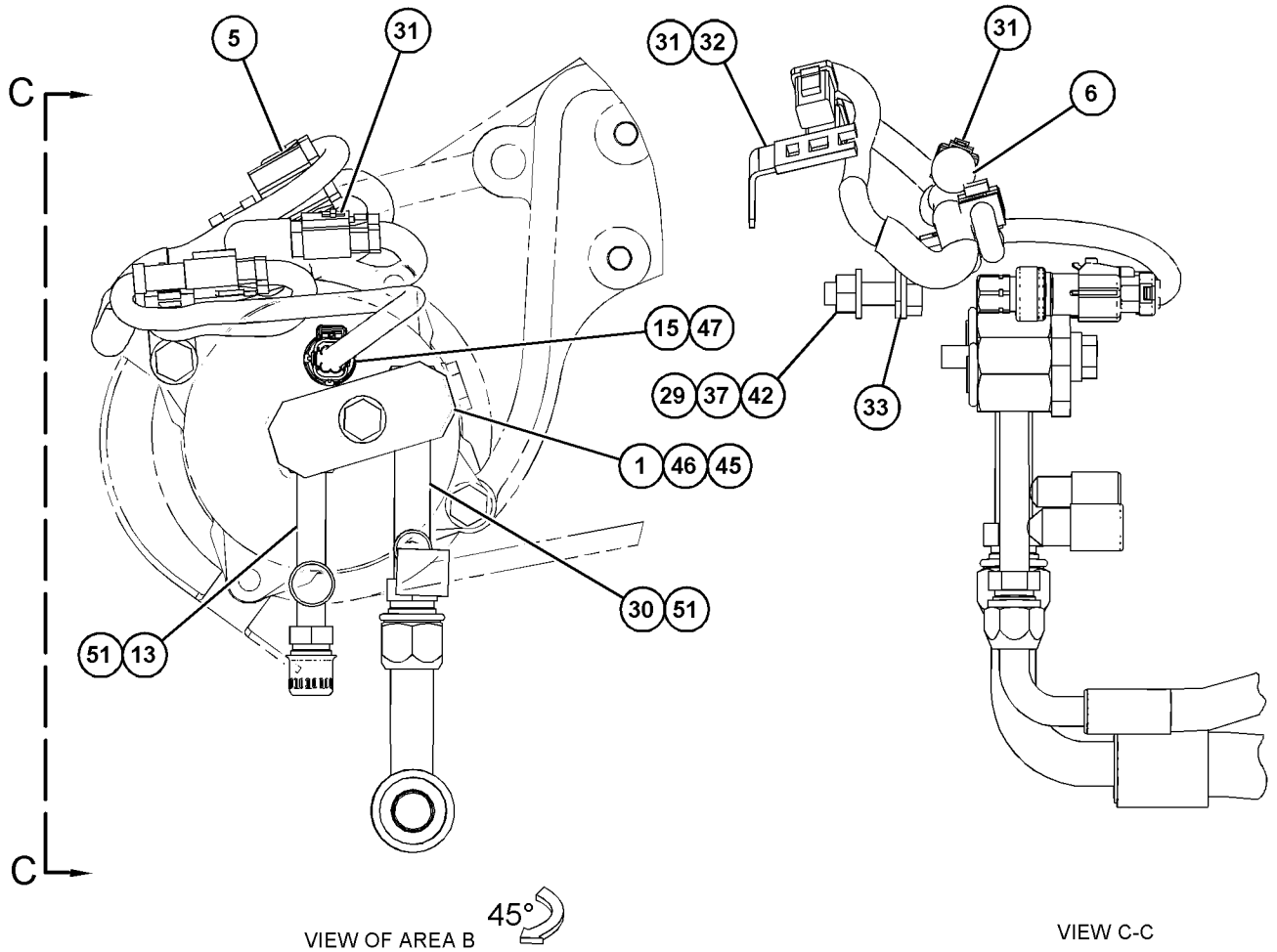

GRAPHIC #2 **<END>** g03858101

398-4502 LINES GP-HEATER

S/N: PPP1-UP; SSS1-UP; TTT1-UP
PART OF 398-4287 INSTALLATION AR-ENGINE
ALSO AN ATTACHMENT

SMCS-1380, 1812, 7304

i06231551

NOTE	REF NO	GRAPHIC REF	PART NUMBER	QTY	PART NAME 1 2 3 4 5 6 (PRODUCT LEVEL)	SEE PAGE
	1	1	**159-1503**	4	CLAMP-HOSE	
	2	1	*165-2273*	2	VALVE GP-SHUTOFF	
					(EACH INCLUDES)	
		1	**3K-0360**	1	SEAL-O-RING	
		1	**6V-7238**	1	VALVE-SHUTOFF	
	3	1	**6D-1641**	2	CLIP	
	4	1	**6D-4636**	2	CLIP	
	5	1	**8T-4121**	2	WASHER-HARD (11X21X2.5-MM THK)	
M	6	1	**8T-4136**	1	BOLT (M10X1.5X25-MM)	
M	7	1	**8T-4191**	1	BOLT (M10X1.5X16-MM)	
E	8	1	**5P-0767**		HOSE (172-CM)	
E	8A	1	**5P-0767**		HOSE (91-CM)	

E - ORDER BY THE CENTIMETER
M - METRIC PART

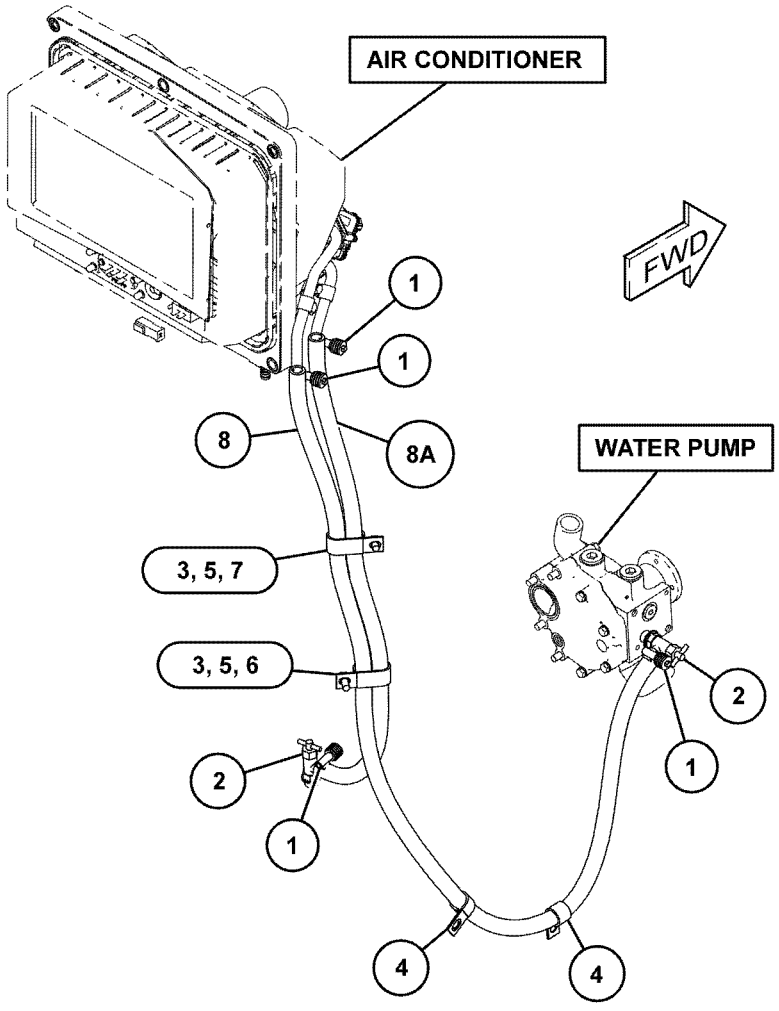

GRAPHIC #1

<END>

g03858399

105-9659 MIRROR GP-REAR VIEW

S/N: PPP1-UP; SSS1-UP; TTT1-UP

PART OF 393-6480 CAB AR, 393-6485 CAB AR-ENCLOSED ROPS, 393-6475 CANOPY AR

AN ATTACHMENT

SMCS-7319 **i05331109**

NOTE	REF NO	GRAPHIC REF	PART NUMBER	QTY	PART NAME 1 2 3 4 5 6 (PRODUCT LEVEL)	SEE PAGE
	1	1	**9P-9388**	1	KNOB (MIRROR ADJUSTMENT)	
	2	1	**5P-6874**	1	MIRROR (REAR VIEW)	
	3	1	**5K-9179**	1	BOLT-ROUND HEAD (3/8-16X11-IN)	
	4	1	**6Y-5113**	1	BRACKET	
	5	1	**8T-4121**	2	WASHER-HARD (11X21X2.5-MM THK)	
M	6	1	**8T-4195**	2	BOLT (M10X1.5X30-MM)	

M - METRIC PART

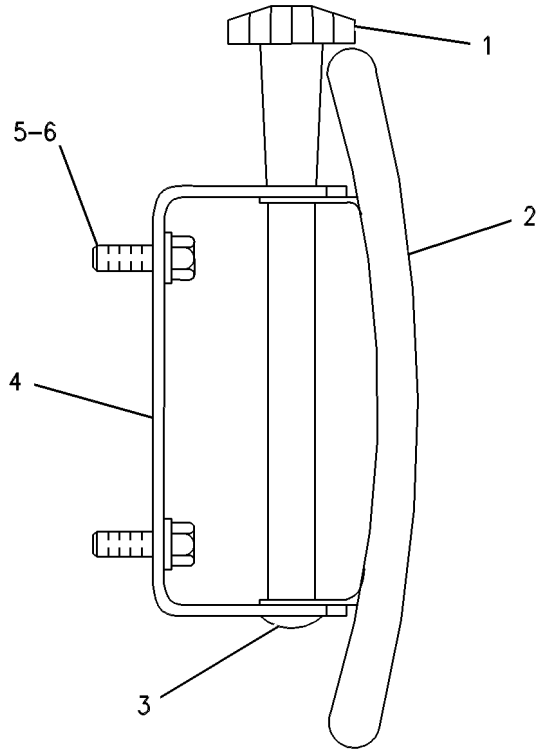

GRAPHIC #1 **<END>** g00254288

281-3997 MIRROR GP-REAR VIEW—LH

S/N: PPP1-UP; SSS1-UP; TTT1-UP

AN ATTACHMENT

SMCS-7319 **i06141277**

NOTE	REF NO	GRAPHIC REF	PART NUMBER	QTY	PART NAME 1 2 3 4 5 6 (PRODUCT LEVEL)	SEE PAGE
	1	1	**281-3998**	1	MIRROR AS	
M	2	1	**3E-8020**	1	SCREW-TRUSS HEAD (M6X1X25-MM)	

M - METRIC PART

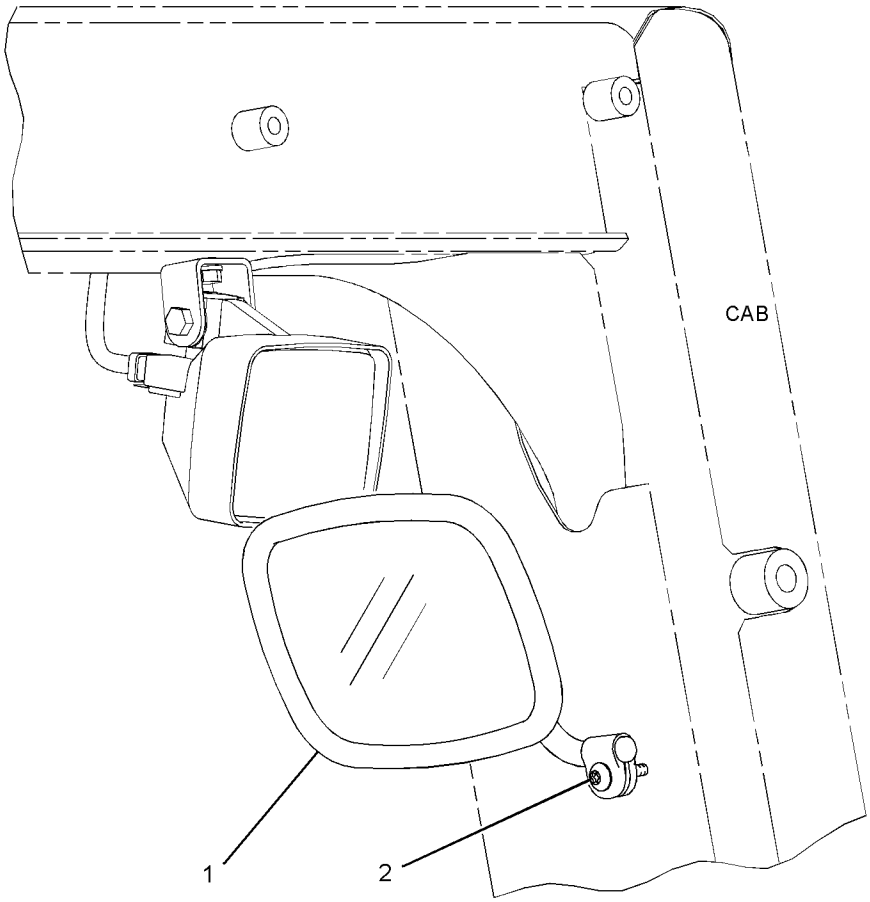

REAR VIEW
(LOWER LEFT)

GRAPHIC #1 **<END>** g01373435

330-5013 MOTOR GP-WINDOW WIPER

S/N: PPP1-UP; SSS1-UP; TTT1-UP
24-VOLT
PART OF 374-4733 WIPER GP-WINDOW
AN ATTACHMENT

SMCS-7305 **i05331117**

NOTE	REF NO	GRAPHIC REF	PART NUMBER	QTY	PART NAME 1 2 3 4 5 6 (PRODUCT LEVEL)	SEE PAGE
	1	1	**102-8805**	1	KIT-RECEPTACLE (6-PIN)	
					(INCLUDES RECEPTACLE AS & WEDGE)	
	2	1	**8T-8729**	5	PIN-CONNECTOR (16-GA TO 18-GA)	
	3	1	**8T-8737**	1	PLUG-SEAL	
M	4	1	**5C-7261**	1	NUT (M8X1.25-THD)	
	5	1	**3F-9556**	1	LOCKWASHER	
	6	1	**263-3823**	1	CAP-WIPER	

M - METRIC PART

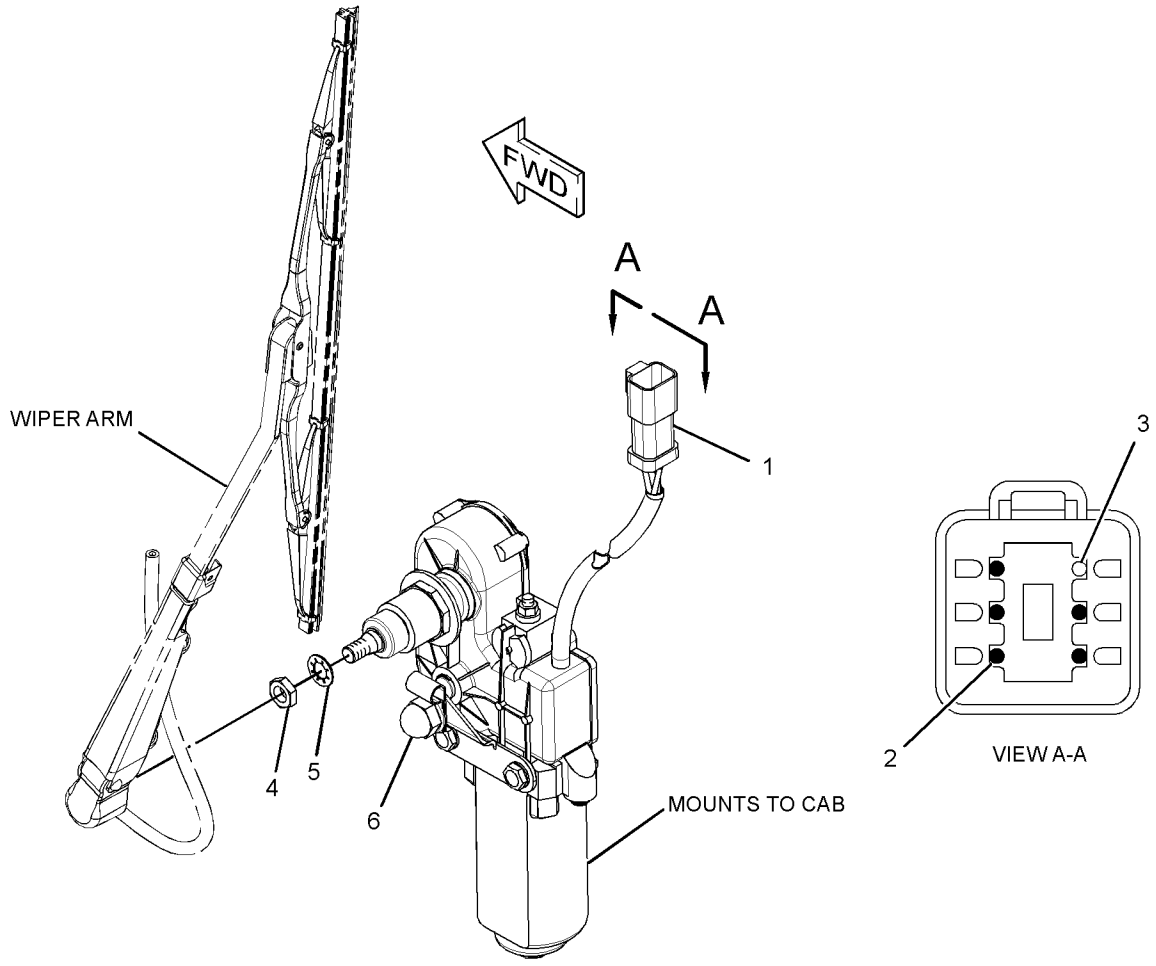

GRAPHIC #1 **<END>** g02052753

330-5014 MOTOR GP-WINDOW WIPER

S/N: PPP1-UP; SSS1-UP; TTT1-UP
24-VOLT
PART OF 374-4733 WIPER GP-WINDOW
AN ATTACHMENT

SMCS-7305 **i06231675**

NOTE	REF NO	GRAPHIC REF	PART NUMBER	QTY	PART NAME 1 2 3 4 5 6 (PRODUCT LEVEL)	SEE PAGE
	1	1	**8T-8737**	1	PLUG-SEAL	
	2	1	**102-8805**	1	KIT-RECEPTACLE (6-PIN)	
					(INCLUDES RECEPTACLE AS & WEDGE)	
	3	1	**186-3735**	5	PIN-CONNECTOR (16-GA TO 18-GA)	
	4	1	**263-3823**	1	CAP-WIPER	
	5	1	**3F-9556**	1	LOCKWASHER	
M	6	1	**5C-7261**	1	NUT (M8X1.25-THD)	

M - METRIC PART

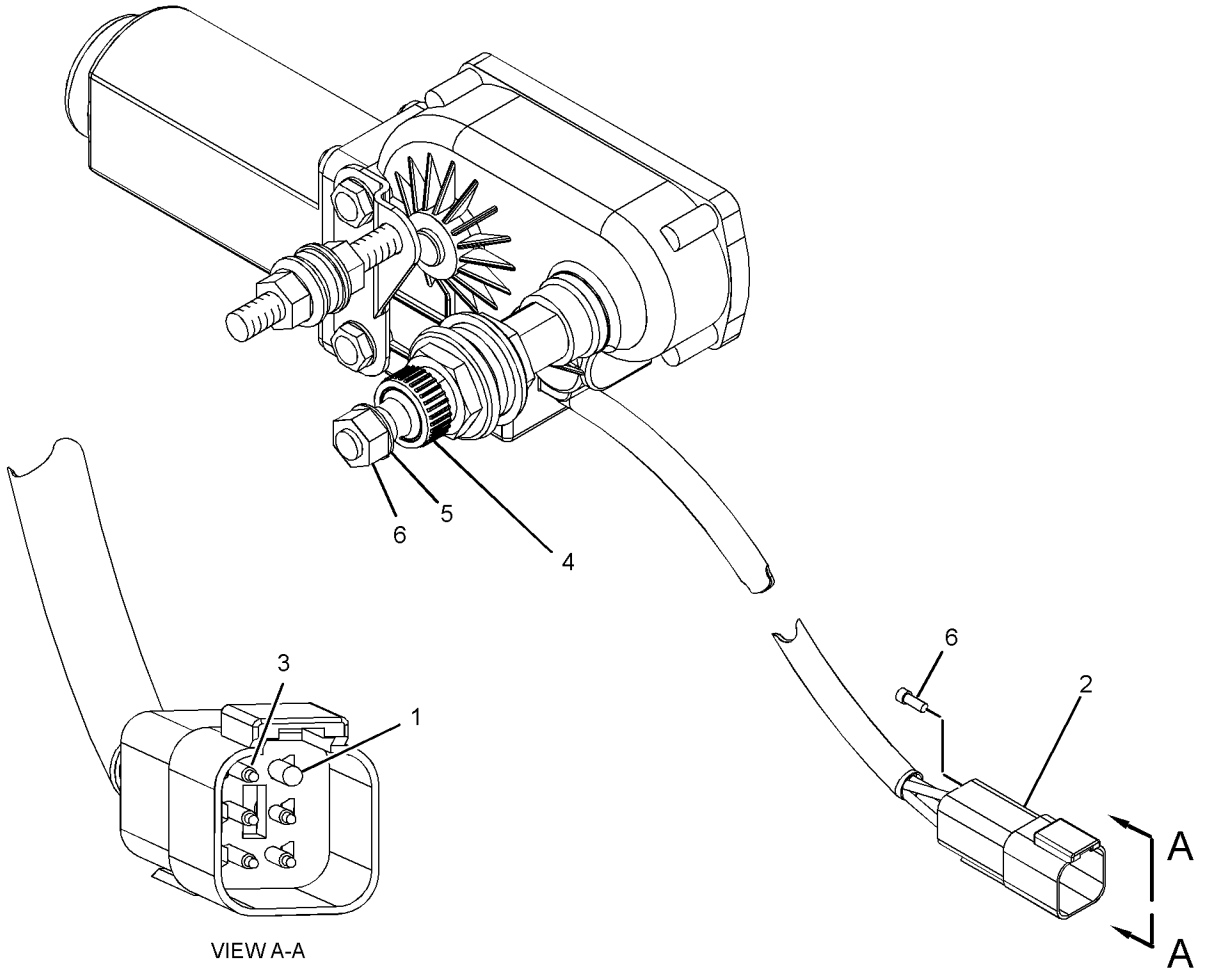

VIEW A-A

GRAPHIC #1 **<END>** g02029793

330-5017 MOTOR GP-WINDOW WIPER–REAR

S/N: PPP1-UP; SSS1-UP; TTT1-UP
24-VOLT
PART OF 374-4733 WIPER GP-WINDOW
AN ATTACHMENT

SMCS-7305 **i05331119**

NOTE	REF NO	GRAPHIC REF	PART NUMBER	QTY	PART NAME 1 2 3 4 5 6 (PRODUCT LEVEL)	SEE PAGE
	1	1	**8T-8737**	1	PLUG-SEAL	
	2	1	**102-8805**	1	KIT-RECEPTACLE (6-PIN)	
					(INCLUDES RECEPTACLE AS AND WEDGE)	
	3	1	**8T-8729**	5	PIN-CONNECTOR (16-GA TO 18-GA)	
	4	1	**263-3823**	1	CAP-WIPER	
	5	1	**3F-9556**	1	LOCKWASHER	
M	6	1	**5C-7261**	1	NUT (M8X1.25-THD)	

M - METRIC PART

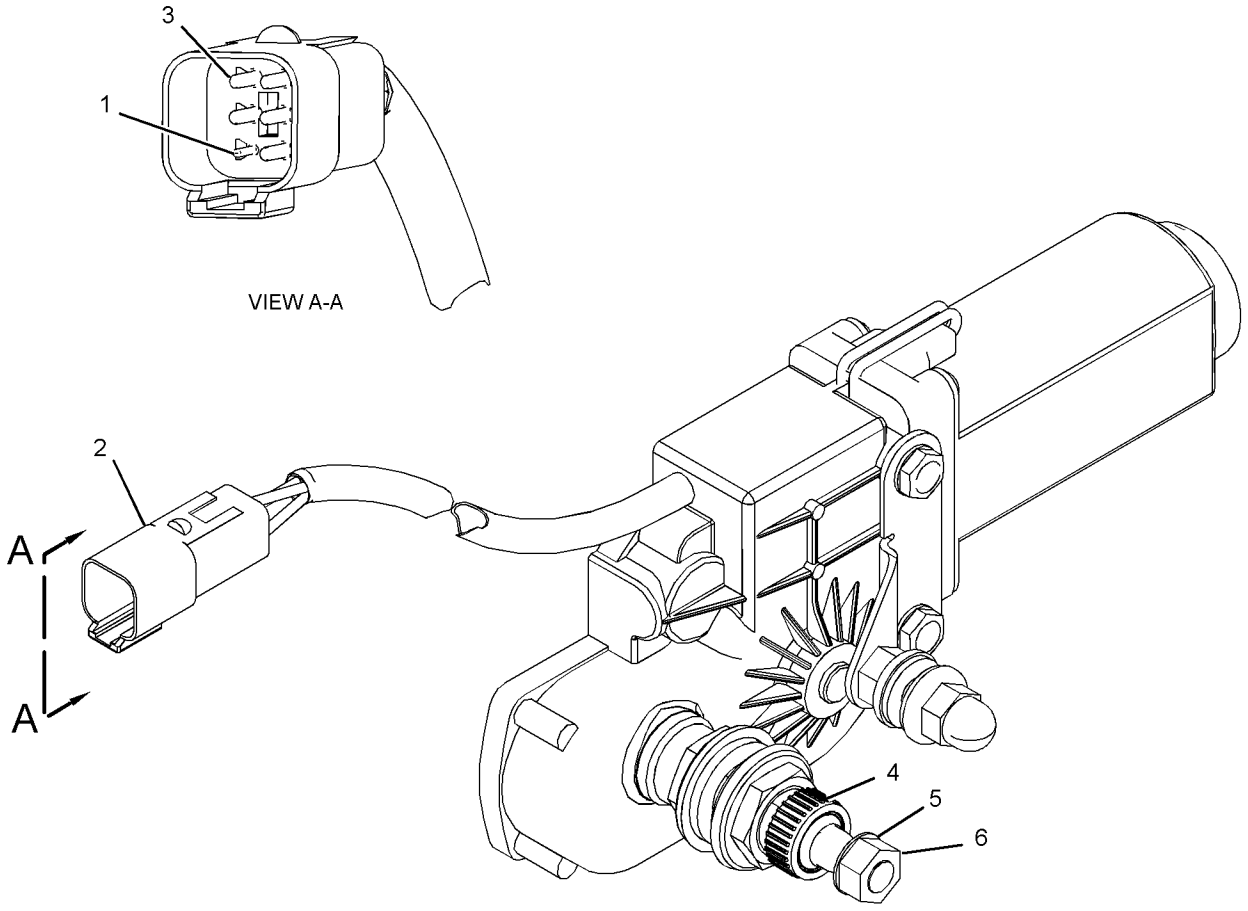

GRAPHIC #1 **<END>** g02153801

393-8111 MOTOR GP-WINDOW WIPER

S/N: PPP1-UP; SSS1-UP; TTT1-UP
24-VOLT
PART OF 374-4733 WIPER GP-WINDOW
AN ATTACHMENT

SMCS-7305 **i06231673**

NOTE	REF NO	GRAPHIC REF	PART NUMBER	QTY	PART NAME 1 2 3 4 5 6 (PRODUCT LEVEL)	SEE PAGE
	1	1	**102-8805**	1	KIT-RECEPTACLE (6-PIN)	
					(INCLUDES RECEPTACLE AS & WEDGE)	
	2	1	**8T-8729**	5	PIN-CONNECTOR (16-GA TO 18-GA)	
	3	1	**8T-8737**	1	PLUG-SEAL	
M	4	1	**5C-7261**	1	NUT (M8X1.25-THD)	
	5	1	**3F-9556**	1	LOCKWASHER	
	6	1	**263-3823**	1	CAP-WIPER	

M - METRIC PART

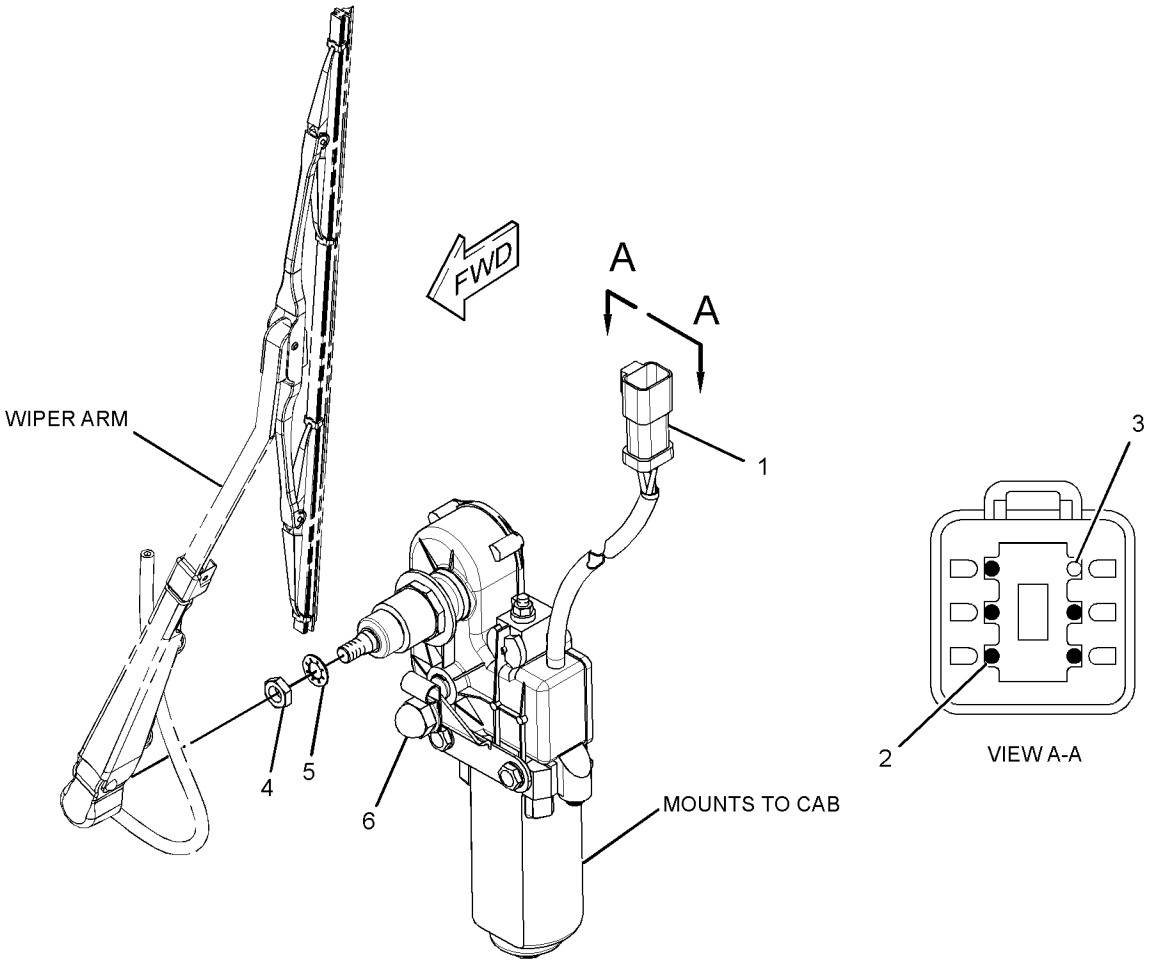

GRAPHIC #1 **<END>** g03864904

317-8767 MOUNTING GP-BRACKET

S/N: PPP1-UP; SSS1-UP; TTT1-UP
PART OF 398-4295 CANOPY AR
AN ATTACHMENT

SMCS-7604 **i05890144**

NOTE	REF NO	GRAPHIC REF	PART NUMBER	QTY	PART NAME 1 2 3 4 5 6 (PRODUCT LEVEL)	SEE PAGE
	1	1	**8T-4121**	2	WASHER-HARD (11X21X2.5-MM THK)	
M	2	1	**8T-4185**	2	BOLT (M10X1.5X50-MM)	
	3	1	**302-3908**	2	SPACER (11X20X30-MM THK)	

M - METRIC PART

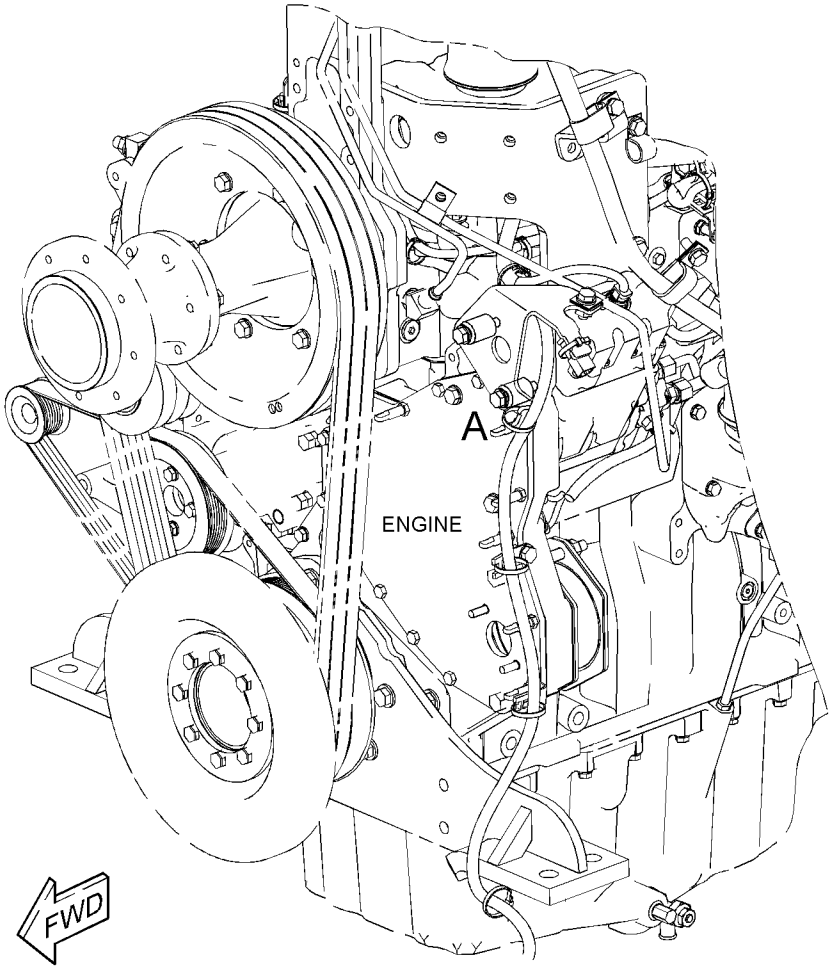

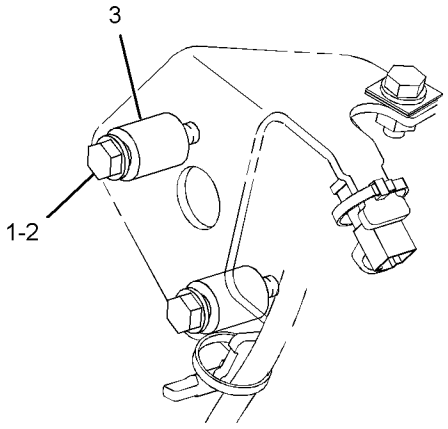

VIEW OF AREA A

GRAPHIC #1 **<END>** g01426620

OPERATOR STATION

393-6479 MOUNTING GP-ROPS

S/N: PPP1-UP; SSS1-UP; TTT1-UP
PART OF 398-4297, 398-4300 CAB AR, 398-4295 CANOPY AR
AN ATTACHMENT

SMCS-7266 **i06147599**

NOTE	REF NO	GRAPHIC REF	PART NUMBER	QTY	PART NAME 1 2 3 4 5 6 (PRODUCT LEVEL)	SEE PAGE
	1	1	**117-8131**	8	MOUNT AS	
	2	1	**387-2002**	2	PIN AS	
	3	1	**144-2179**	2	SLEEVE	
	4	1	**252-0080**	2	WASHER (25X144X12-MM THK)	
	5	1	**297-0846**	2	BOLT (M30X3.5X180-MM)	
	6	1	**3E-4888**	2	WASHER (32X144X12-MM THK)	
	7	1	**3E-4898**	2	SLEEVE	
	8	1	**7X-0593**	2	WASHER-HARD (34X57X6-MM THK)	
	9	1	**7X-7729**	2	WASHER (11X25X3-MM THK)	
M	10	1	**8C-3290**	2	BOLT (M24X3X150-MM)	
M	11	1	**8T-4136**	2	BOLT (M10X1.5X25-MM)	
	12	1	**8T-4167**	2	WASHER-HARD (26X44X4-MM THK)	

M - METRIC PART

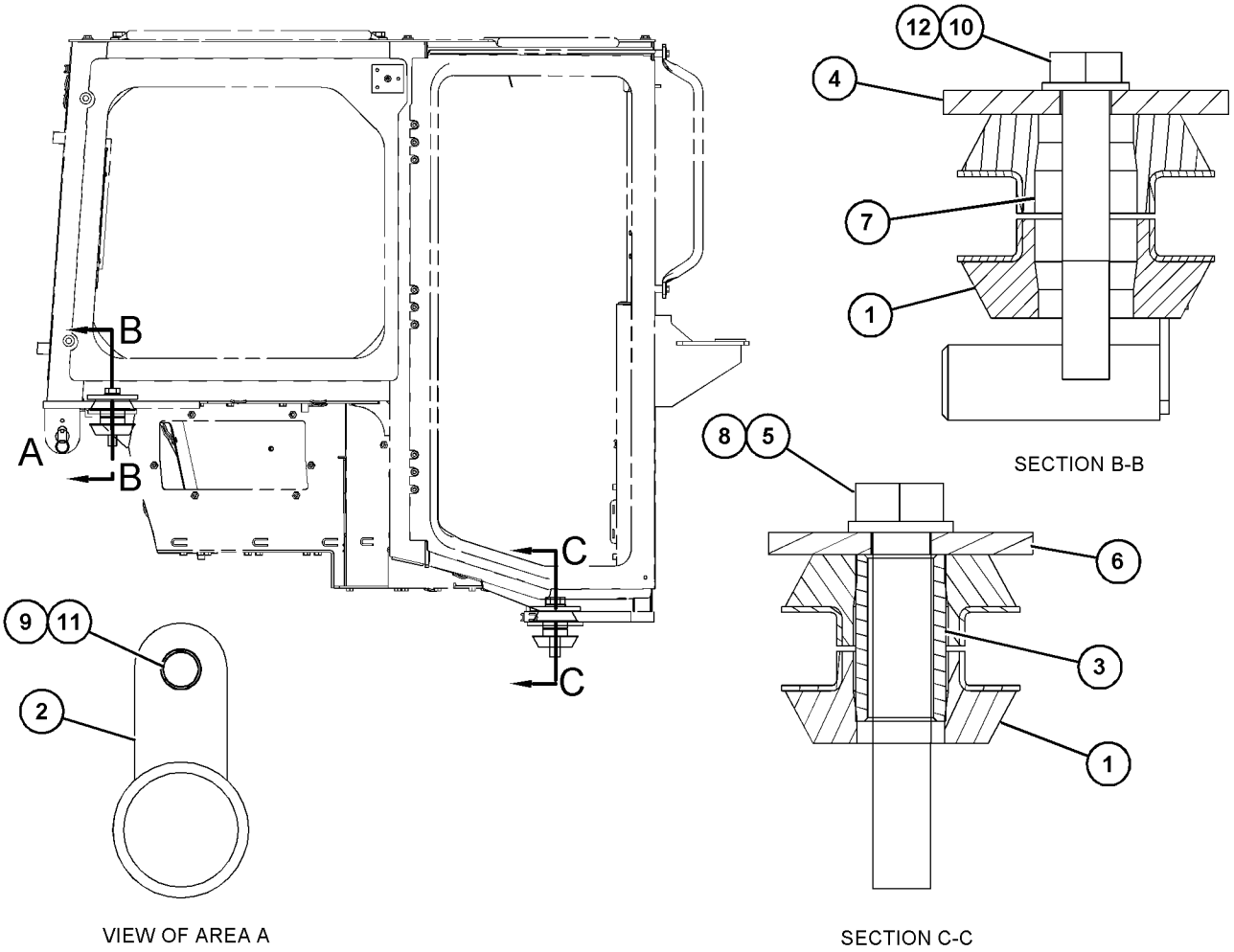

SECTION B-B

VIEW OF AREA A

SECTION C-C

GRAPHIC #1 **<END>** g03842293

424-1763 MOUNTING GP-ROPS

S/N: PPP1-UP; SSS1-UP; TTT1-UP
PART OF 398-4281 CHASSIS AR
ALSO AN ATTACHMENT

SMCS-7266 **i06218788**

NOTE	REF NO	GRAPHIC REF	PART NUMBER	QTY	PART NAME 1 2 3 4 5 6 (PRODUCT LEVEL)	SEE PAGE
	1	1	**424-1764**	1	SUPPORT AS (RH)	
	2	1	**424-1765**	1	SUPPORT AS (LH)	
	3	1	**434-8111**	1	SUPPORT AS	
	4	1	**226-4192**	4	WASHER-HARD (21.5X35X8-MM THK)	
M	5	1	**7X-2564**	4	BOLT (M20X2.5X90-MM)	
M	6	1	**7X-2580**	8	BOLT (M30X3.5X90-MM)	
	7	1	**9X-8258**	8	WASHER (33X56X6-MM THK)	

M - METRIC PART

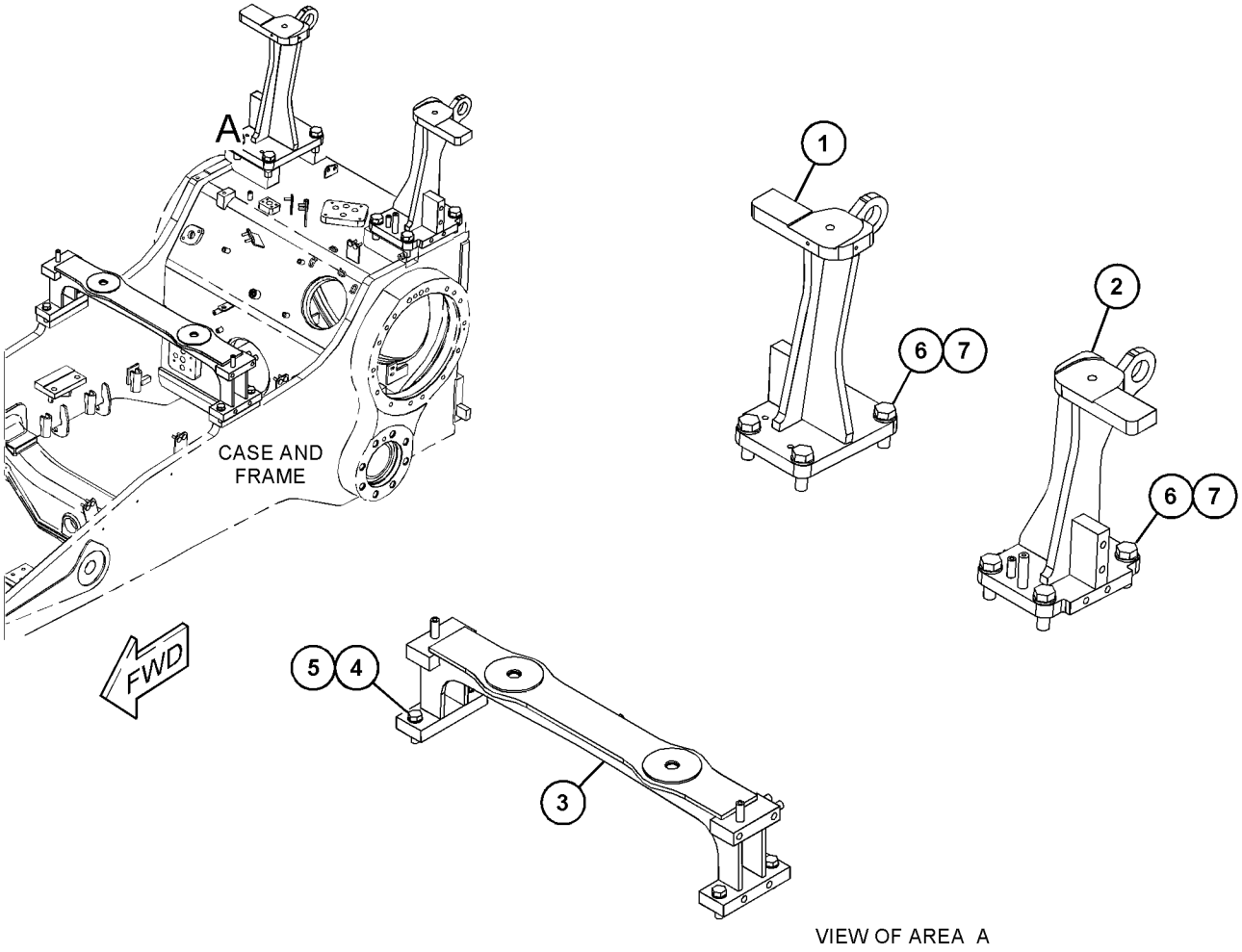

VIEW OF AREA A

GRAPHIC #1 **<END>** g03860683

292-6402 PAN GP-BACKREST

S/N: PPP1-UP; SSS1-UP; TTT1-UP
PART OF 292-9237, 292-9238 PAN GP-BACKREST
AN ATTACHMENT

SMCS-7312 **i05333518**

NOTE	REF NO	GRAPHIC REF	PART NUMBER	QTY	PART NAME 1 2 3 4 5 6 (PRODUCT LEVEL)	SEE PAGE
	1	1	**5P-7957**	1	LANYARD	
	2	1	**136-1543**	1	PLATE AS-LUMBAR	
	3	1	**173-2052**	1	RETAINER	
	4	1	**178-7907**	1	HOLDER	
	5	1	**261-5694**	1	PAN AS-BACKREST	
	6	1	**322-3161**	1	SPRING	
	7	1	**4K-9429**	8	RIVET-POP	

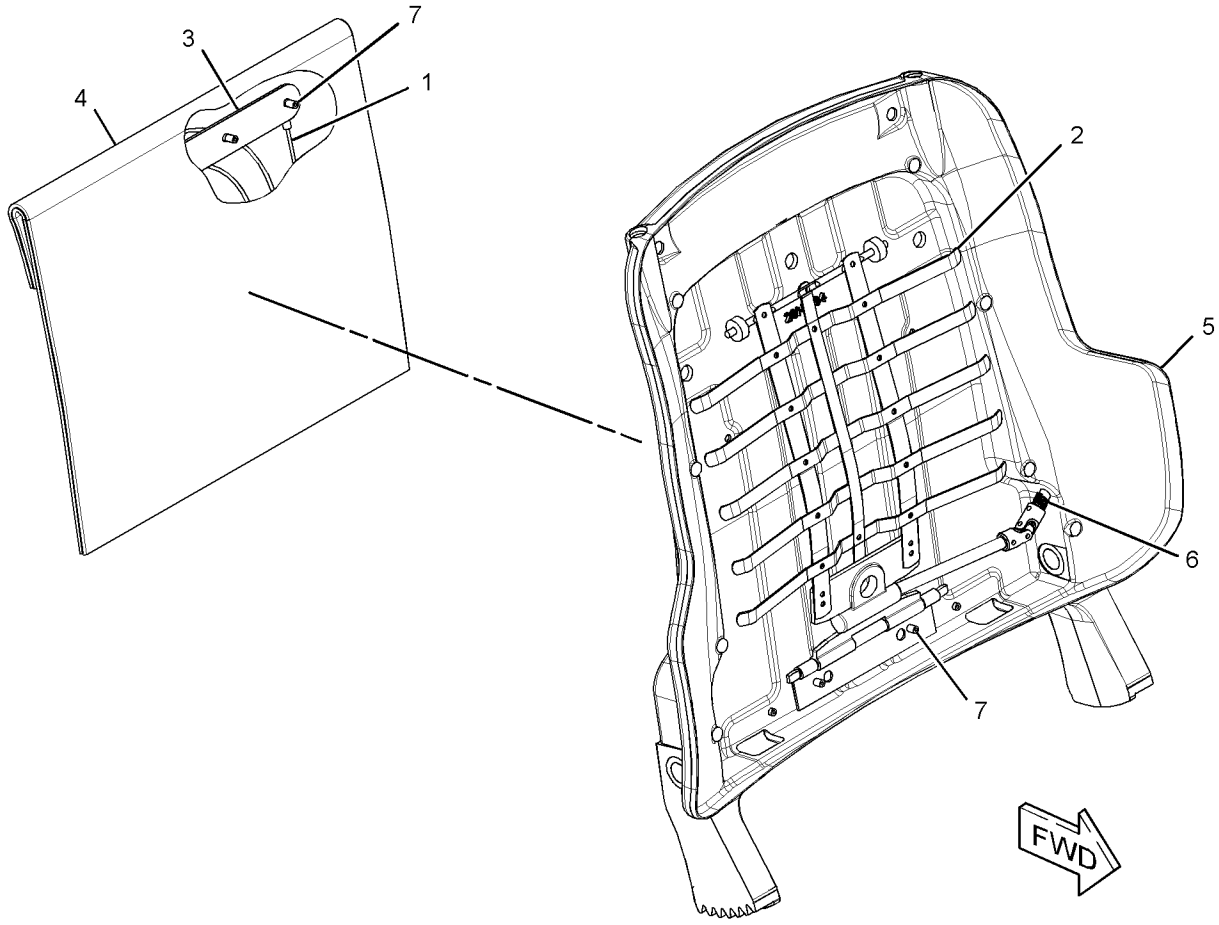

GRAPHIC #1 **<END>** g01577333

292-9237 PAN GP-BACKREST

S/N: PPP1-UP; SSS1-UP; TTT1-UP
PART OF 178-0603 SEAT GP
AN ATTACHMENT

SMCS-7312 **i05332841**

NOTE	REF NO	GRAPHIC REF	PART NUMBER	QTY	PART NAME 1 2 3 4 5 6 (PRODUCT LEVEL)	SEE PAGE
	1	1	**164-4883**	1	KNOB-LUMBAR	
	2	1	**250-4628**	3	PLUG	
	3	1	**292-6097**	1	CUSHION AS-BACK	
Y	4	1	**292-6402**	1	PAN GP-BACKREST (LUMBAR)	749
	5	1	**5P-0537**	2	WASHER-HARD (7.2X14.5X2-MM THK)	
	6	1	**6V-8969**	2	SCREW-BUTTON HEAD (1/4-20X0.5-IN)	
	7	1	**8T-7566**	1	PIN-SPRING	

Y - SEPARATE ILLUSTRATION

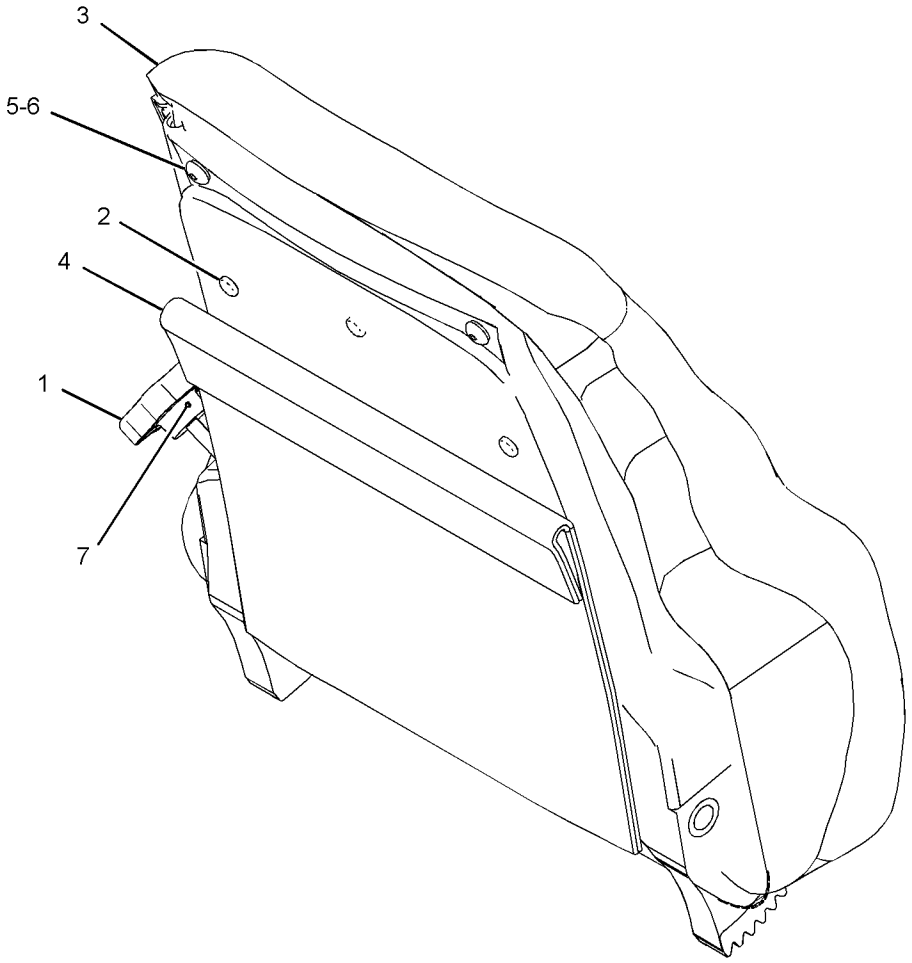

GRAPHIC #1 **<END>** g01336870

292-9238 PAN GP-BACKREST

S/N: PPP1-UP; SSS1-UP; TTT1-UP
PART OF 180-7304 SEAT GP
AN ATTACHMENT

SMCS-7312 **i05333544**

NOTE	REF NO	GRAPHIC REF	PART NUMBER	QTY	PART NAME 1 2 3 4 5 6 (PRODUCT LEVEL)	SEE PAGE
	1	1	**164-4883**	1	KNOB-LUMBAR	
	2	1	**250-4628**	3	PLUG	
	3	1	**292-6098**	1	CUSHION AS (VINYL)	
Y	4	1	*292-6402*	1	PAN GP-BACKREST (LUMBAR)	749
	5	1	**5P-0537**	2	WASHER-HARD (7.2X14.5X2-MM THK)	
	6	1	**6V-8969**	2	SCREW-BUTTON HEAD (1/4-20X0.5-IN)	
	7	1	**8T-7566**	1	PIN-SPRING	

Y - SEPARATE ILLUSTRATION

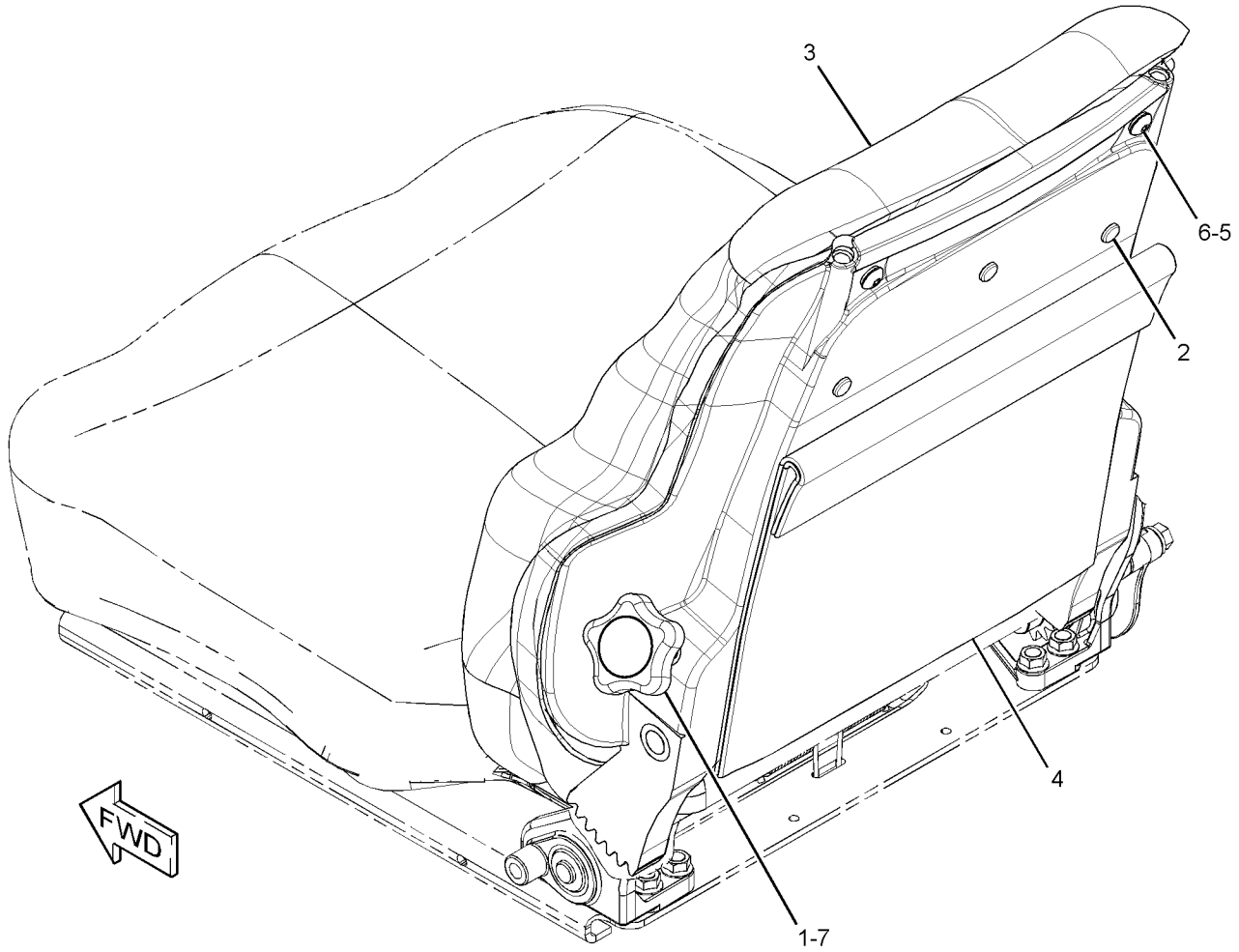

GRAPHIC #1 **<END>** g01341782

329-5766 PEDAL GP-GOVERNOR & BRAKE

S/N: PPP1-UP; SSS1-UP; TTT1-UP
PART OF 326-4855 CONTROL & MTG GP-PEDAL
AN ATTACHMENT

SMCS-4122 **i06171942**

NOTE	REF NO	GRAPHIC REF	PART NUMBER	QTY	PART NAME 1 2 3 4 5 6 (PRODUCT LEVEL)	SEE PAGE
	1	1	**132-7077**	1	SWITCH AS-LIMIT (SERVICE BRAKE PEDAL)	
		1	**6V-8376**	3	SCREW-MACHINE (8-32X0.25-IN)	
		1	**9B-7233**	3	LOCKWASHER	
Y	2	1	**266-1467**	1	SENSOR GP-POSITION (ROTARY) (SERVICE BRAKE)	221
	3	1	**102-8804**	1	KIT-RECEPTACLE (4-PIN)	
					(INCLUDES RECEPTACLE AS & WEDGE)	
	4	1	**103-1107**	2	SCREW-MACHINE (6-32X0.87-IN)	
	5	1	**168-4511**	4	SCREW-PAN HEAD (10-32X1-IN)	
Y	6	1	**269-1981**	1	SENSOR GP-POSITION (DECELERATOR)	222
	7	1	**364-8725**	1	PEDAL AS (DECELERATOR)	
	8	1	**364-8726**	1	PEDAL AS (BRAKE)	

Y - SEPARATE ILLUSTRATION

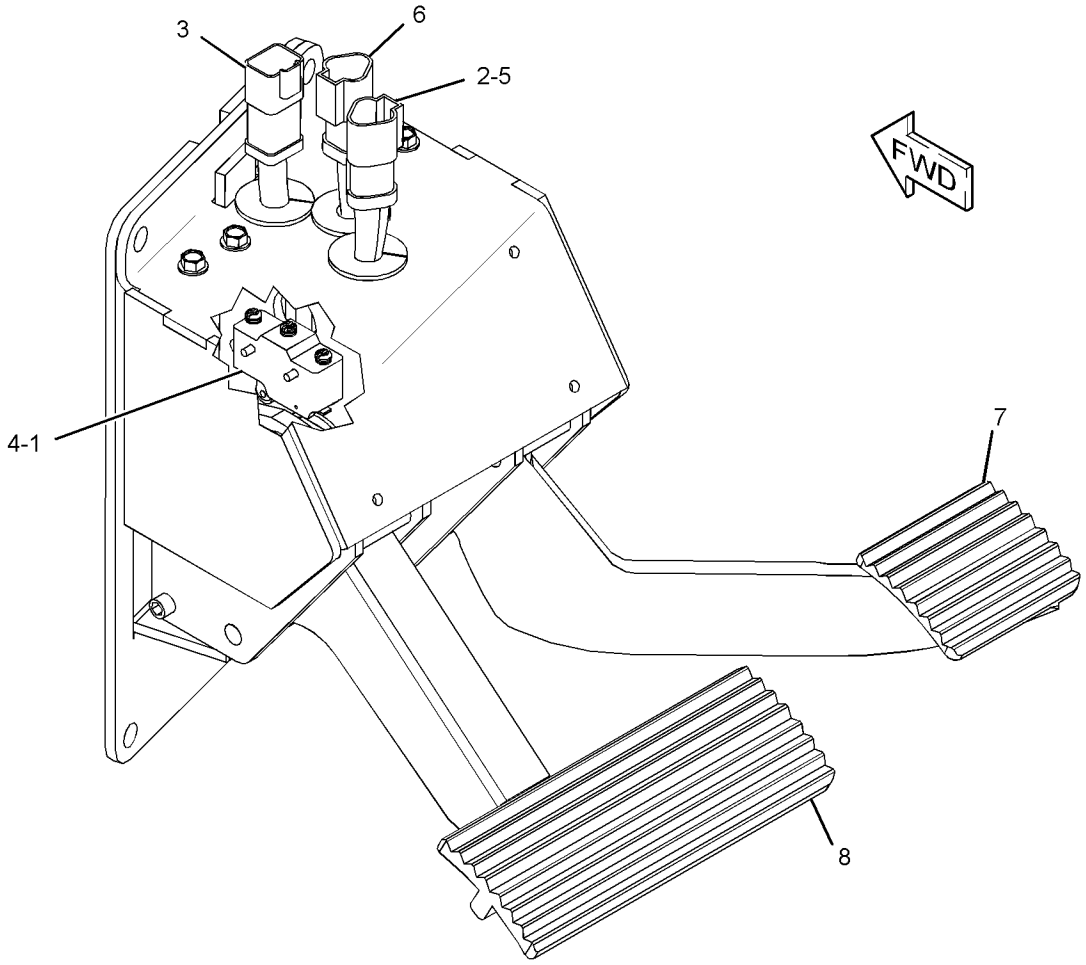

GRAPHIC #1 **<END>** g02428681

210-2270 RECLINER GP-SEAT

S/N: PPP1-UP; SSS1-UP; TTT1-UP
PART OF 178-0603, 180-7304 SEAT GP
AN ATTACHMENT

SMCS-7312 **i06231556**

NOTE	REF NO	GRAPHIC REF	PART NUMBER	QTY	PART NAME 1 2 3 4 5 6 (PRODUCT LEVEL)	SEE PAGE
	1	1	**177-1862**	1	BRACKET (SEAT BELT)	
	2	1	**210-2262**	1	BRACKET AS	
	3	1	**210-2263**	1	BRACKET AS	
	4	1	**210-2266**	1	GEAR-LOCK (14-TEETH)	
	5	1	**293-2911**	1	SHAFT AS	
		1	**2L-5893**	2	PIN-SPRING	
		1	**170-8590**	1	SPRING	
	6	1	**217-7933**	1	LATCH	
	7	1	**236-5197**	1	SPRING	
	8	1	**031-0214**	1	BOLT-LOCKING (1/4-20X0.5-IN)	
	9	1	**101-2867**	1	WASHER-HARD (7.2X25X2-MM THK)	
	10	1	**4M-6425**	1	BOLT (5/16-18X1-IN)	
	11	1	**5M-2894**	1	WASHER-HARD (10.2X18.5X2.5-MM THK)	
	12	1	**5S-7383**	1	BOLT (3/8-16X1.75-IN)	
	13	1	**8T-4224**	1	WASHER-HARD (8.8X16X2-MM THK)	

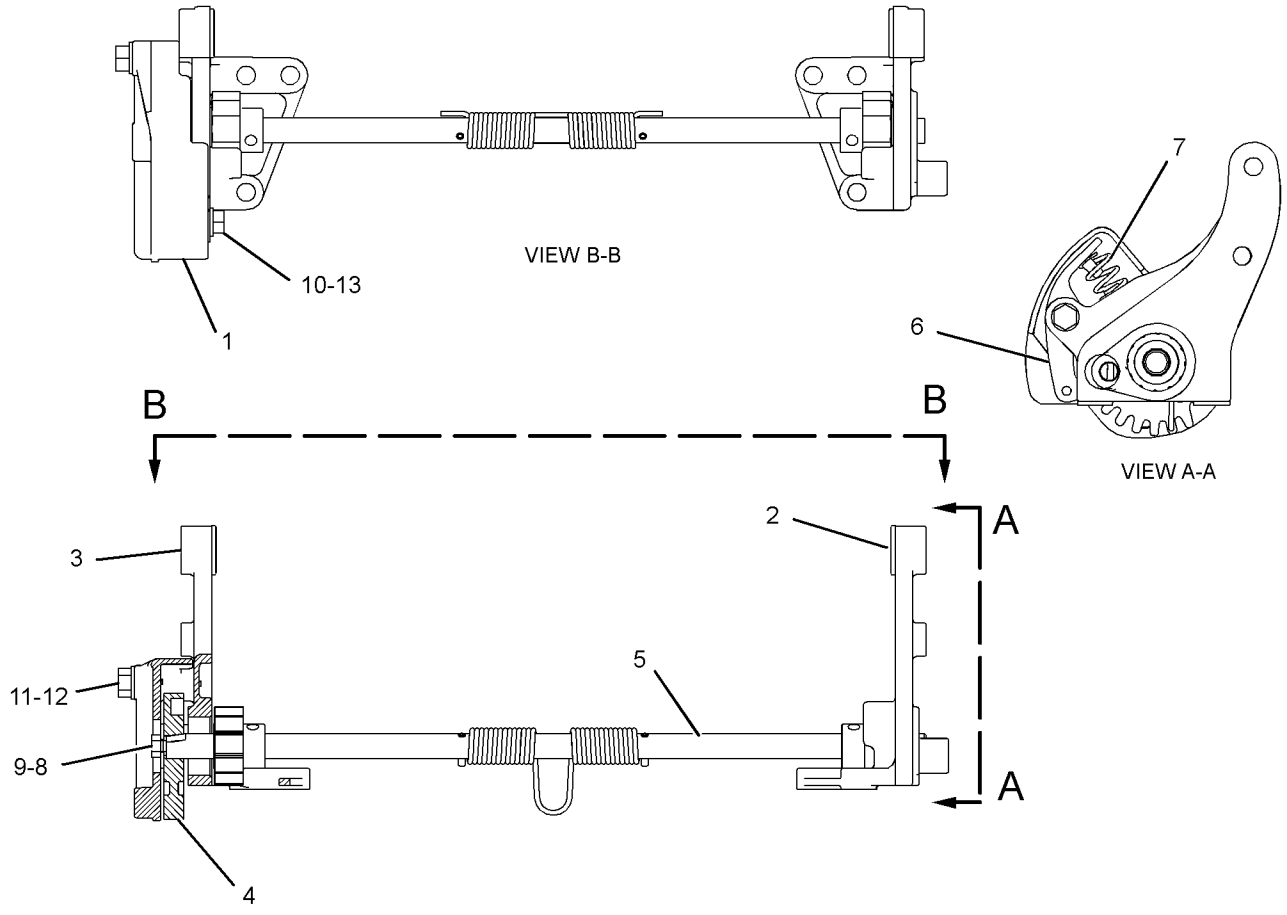

GRAPHIC #1 **<END>** g01296294

OPERATOR STATION

393-6476 ROPS GP

S/N: PPP1-UP; SSS1-UP; TTT1-UP
PART OF 393-6475 CANOPY AR
AN ATTACHMENT

SMCS-7177, 7301 **i06163814**

NOTE	REF NO	GRAPHIC REF	PART NUMBER	QTY	PART NAME 1 2 3 4 5 6 (PRODUCT LEVEL)	SEE PAGE
	1	1	**6V-3928**	1	PLUG-BUTTON	
	2	1	**391-4067**	1	PLATE AS	
	3	1	**391-4069**	1	PLATE	
	4	1	**393-6486**	1	PLATE	
	5	1	**420-8672**	1	ROPS AS	
	6	1	**425-9050**	1	COVER AS	
M		1	**6V-9632**	1	NUT-WELD (M6X1-THD)	
M	7	1	**455-1179**	8	INSERT-THREADED (M12X1.75-THD)	
	8	1	**459-7533**	24	INSERT-THREADED (M10X1.5-THD)	
M	9	1	**3E-4304**	2	INSERT-THREADED (M6X1-THD)	
	10	1	**8T-4123**	5	WASHER (3.62X5.75X0.375-MM THK)	
M	11	1	**8T-4970**	4	BOLT (M6X1X14-MM)	
M	12	1	**8T-5460**	5	BOLT (M20X2.5X40-MM)	
	13	1	**9X-2038**	4	WASHER (7X19X2-MM THK)	
M	14	1	**9X-2042**	4	SCREW-TRUSS HEAD (M6X1X12-MM)	
M	15	1	**9X-2044**	4	SCREW-TRUSS HEAD (M6X1X16-MM)	
M	16	1	**9X-2045**	3	SCREW-TRUSS HEAD (M6X1X20-MM)	
E	17	1	**7X-7877**		STRIP-EDGE (6-CM)	

E - ORDER BY THE CENTIMETER
M - METRIC PART

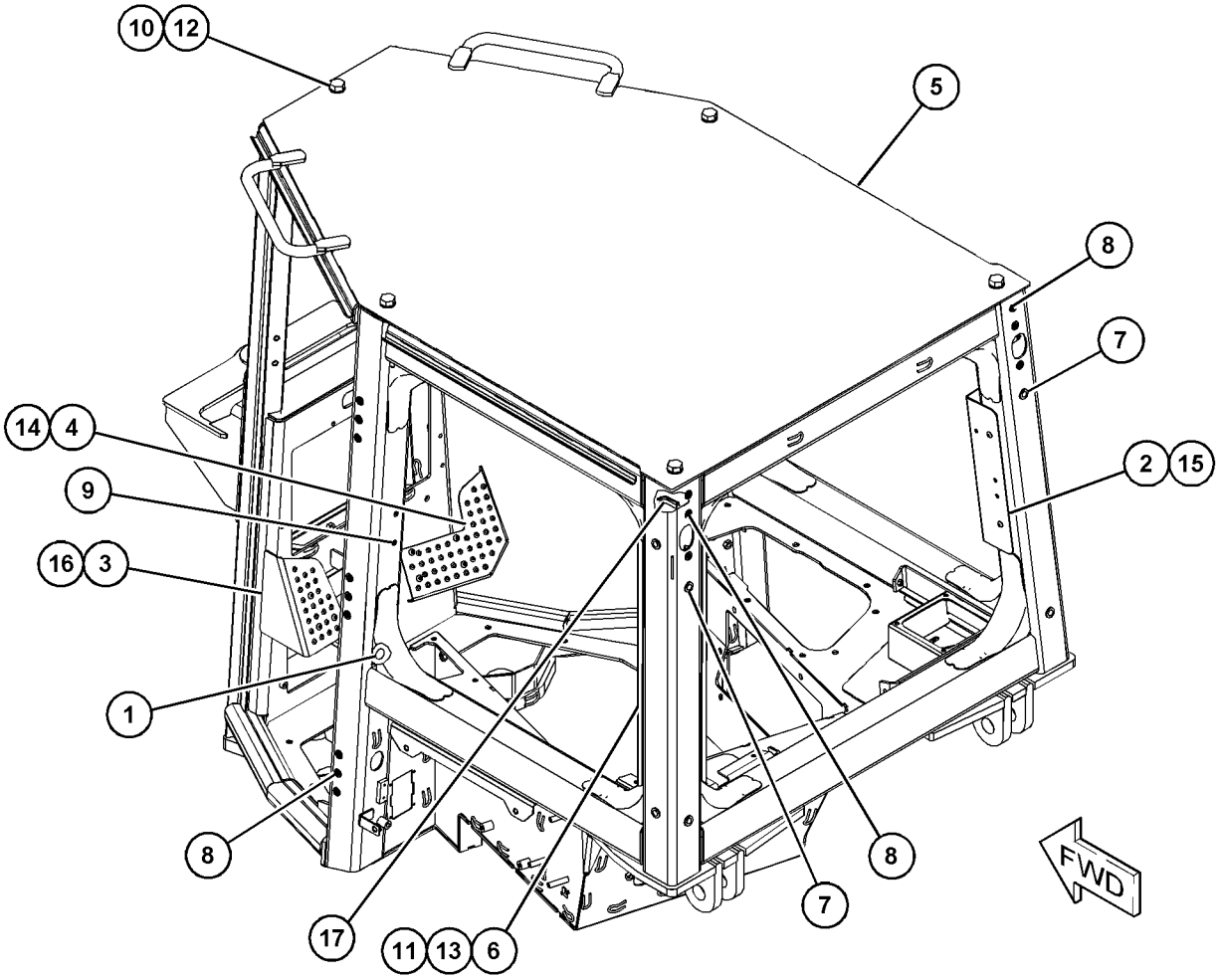

GRAPHIC #1 **<END>** g03840533

393-6481 ROPS GP

S/N: PPP1-UP; SSS1-UP; TTT1-UP
PART OF 393-6480 CAB AR, 393-6485 CAB AR-ENCLOSED ROPS
AN ATTACHMENT

SMCS-7177, 7301 **i06163685**

NOTE	REF NO	GRAPHIC REF	PART NUMBER	QTY	PART NAME 1 2 3 4 5 6 (PRODUCT LEVEL)	SEE PAGE
	1	1	**425-9047**	1	PLATE AS	
	2	1	**6V-3928**	1	PLUG-BUTTON	
	3	1	**241-6070**	2	GROMMET	
	4	1	**391-4064**	1	PLATE	
	5	1	**391-4067**	1	PLATE AS	
	6	1	**391-4069**	1	PLATE	
	7	1	**393-6486**	1	PLATE	
	8	1	**418-2469**	1	ROPS AS	
	9	1	**425-9048**	1	GASKET	
	10	1	**425-9050**	1	COVER AS	
M		1	**6V-9632**	1	NUT-WELD (M6X1-THD)	
M	11	1	**455-1179**	8	INSERT-THREADED (M12X1.75-THD)	
	12	1	**459-7533**	24	INSERT-THREADED (M10X1.5-THD)	
M	13	1	**3E-4304**	2	INSERT-THREADED (M6X1-THD)	
	14	1	**8T-4123**	5	WASHER (3.62X5.75X0.375-MM THK)	
M	15	1	**8T-4970**	4	BOLT (M6X1X14-MM)	
M	16	1	**8T-5460**	5	BOLT (M20X2.5X40-MM)	
	17	1	**9X-2038**	4	WASHER (7X19X2-MM THK)	
M	18	1	**9X-2042**	4	SCREW-TRUSS HEAD (M6X1X12-MM)	
M	19	1	**9X-2044**	6	SCREW-TRUSS HEAD (M6X1X16-MM)	
M	20	1	**9X-2045**	7	SCREW-TRUSS HEAD (M6X1X20-MM)	
E	21	1	**7X-7877**		STRIP-EDGE (6-CM)	

E - ORDER BY THE CENTIMETER
M - METRIC PART

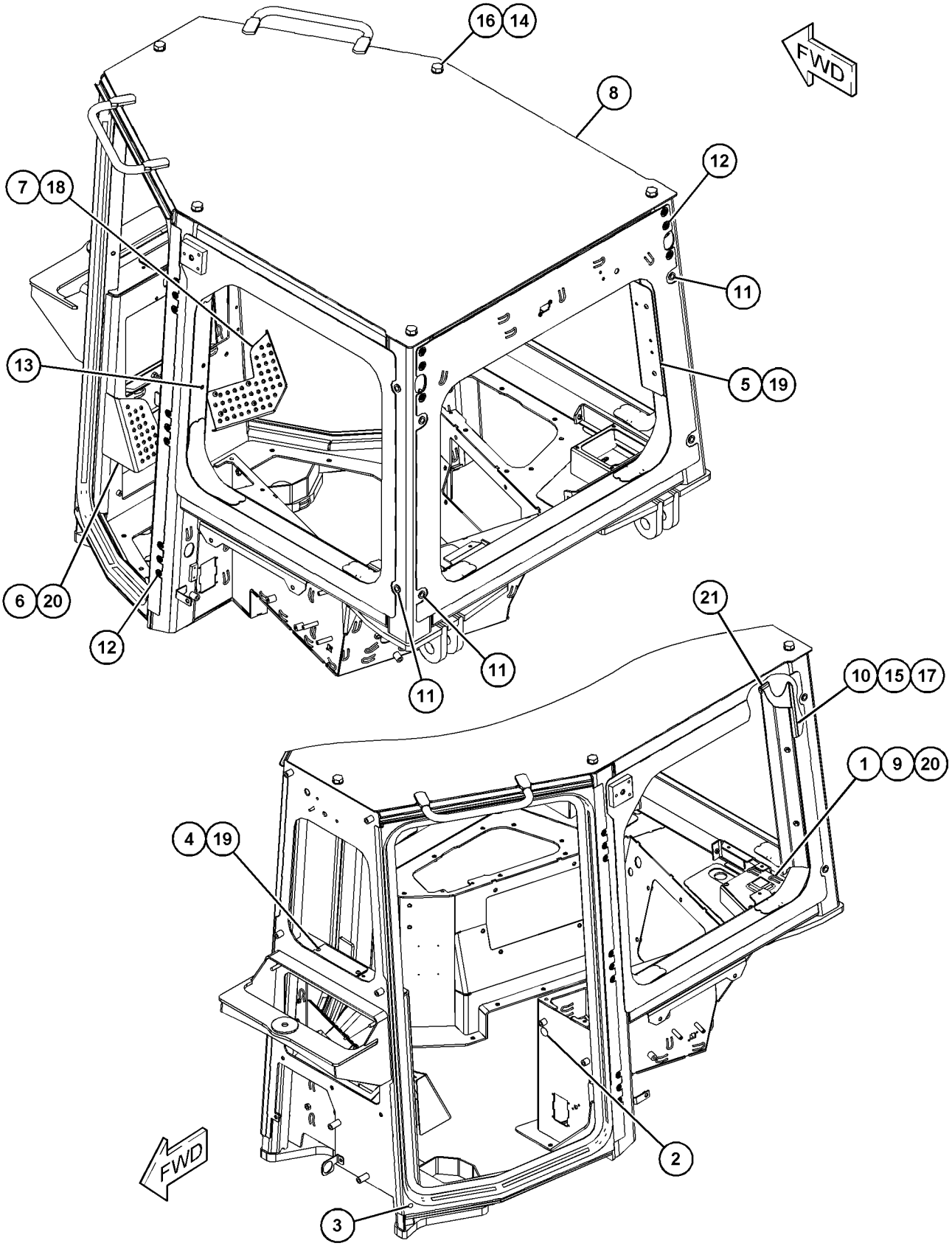

GRAPHIC #1 **<END>** g03841806

398-0407 SCREEN GP-PROTECTION—RH

S/N: PPP1-UP; SSS1-UP; TTT1-UP
FORESTRY
PART OF 453-8047 SCREEN GP-PROTECTION
AN ATTACHMENT

SMCS-7165 **i06224794**

NOTE	REF NO	GRAPHIC REF	PART NUMBER	QTY	PART NAME 1 2 3 4 5 6 (PRODUCT LEVEL)	SEE PAGE
	1	1	**178-2593**	3	BUMPER	
	2	1	**398-0394**	1	SCREEN AS-PROTECTION (RH)	
	3	1	**275-4236**	3	SCREW-WING (M12X1.75X40-MM)	
	4	1	**3B-4610**	3	PIN-COTTER	
M	5	1	**5C-7261**	3	NUT (M8X1.25-THD)	
	6	1	**6S-3859**	6	WASHER (0.562X1.75X0.063-IN THK)	

M - METRIC PART

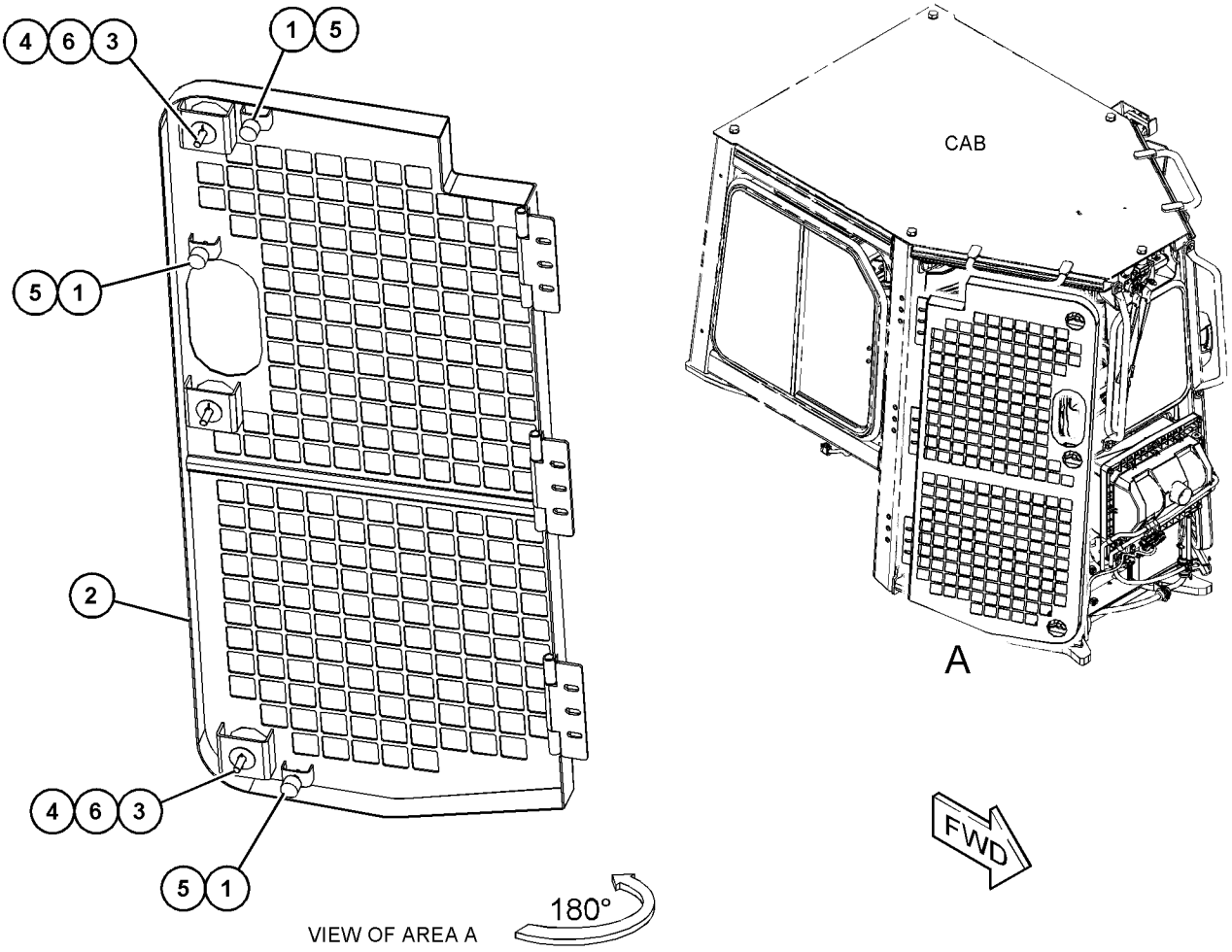

GRAPHIC #1 **<END>** g03863020

398-0408 SCREEN GP-PROTECTION–LH

S/N: PPP1-UP; SSS1-UP; TTT1-UP
FORESTRY
PART OF 453-8047 SCREEN GP-PROTECTION
AN ATTACHMENT

SMCS-7165 **i06224796**

NOTE	REF NO	GRAPHIC REF	PART NUMBER	QTY	PART NAME 1 2 3 4 5 6 (PRODUCT LEVEL)	SEE PAGE
	1	1	**178-2593**	3	BUMPER	
	2	1	**398-0393**	1	SCREEN AS-PROTECTION (LH)	
	3	1	**275-4236**	3	SCREW-WING (M12X1.75X40-MM)	
	4	1	**3B-4610**	3	PIN-COTTER	
M	5	1	**5C-7261**	3	NUT (M8X1.25-THD)	
	6	1	**6S-3859**	6	WASHER (0.562X1.75X0.063-IN THK)	

M - METRIC PART

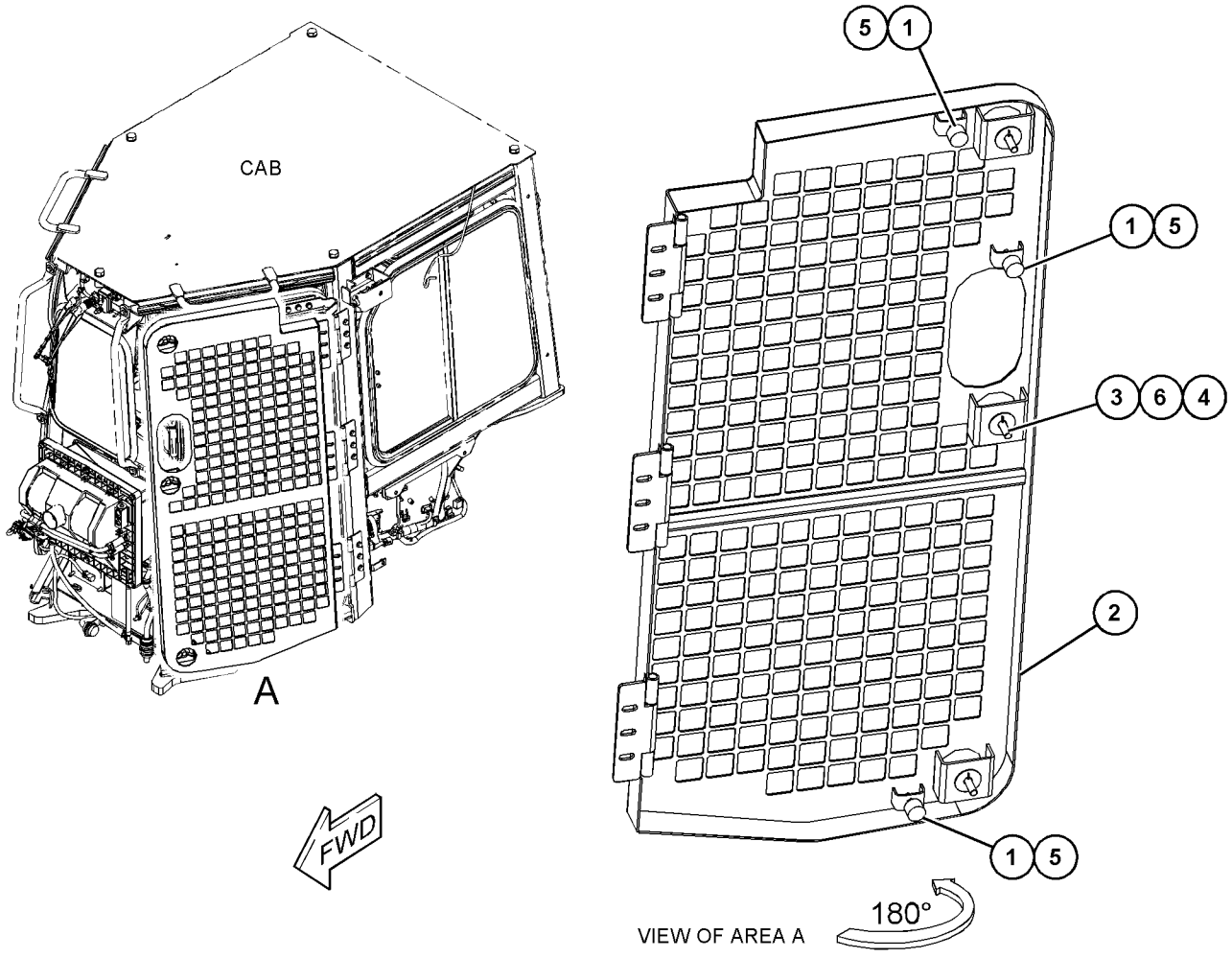

GRAPHIC #1 **<END>** g03863018

433-2758 SCREEN GP-PROTECTION

S/N: PPP1-UP; SSS1-UP; TTT1-UP
FOR USE WITH CAB
CANNOT BE USED WITH CANOPY
AN ATTACHMENT

SMCS-7165 **i06220755**

NOTE	REF NO	GRAPHIC REF	PART NUMBER	QTY	PART NAME 1 2 3 4 5 6 (PRODUCT LEVEL)	SEE PAGE
	1	1	**114-9284**	4	BUMPER	
	2	1	**129-3737**	2	STRIKER BOLT-CAB (M12X1.75X17.8-MM)	
	3	1	**172-2384**	2	LATCH AS-ROTARY	
	4	1	**434-4405**	1	SCREEN AS (LH)	
	5	1	**434-4406**	1	PLATE AS	
	6	1	**434-4407**	1	PLATE AS	
	7	1	**434-4409**	1	PLATE AS	
	8	1	**434-4414**	1	SCREEN AS (RH)	
	9	1	**434-4483**	1	PLATE AS	
M	10	1	**184-0983**	2	NUT-HEX FLANGE (M12X1.75-THD)	
	11	1	**1H-3244**	8	LOCKWASHER	
M	12	1	**5C-7261**	4	NUT (M8X1.25-THD)	
	13	1	**5P-0372**	4	LOCK PIN	
	14	1	**6S-9277**	4	PIN	
M	15	1	**6V-7357**	8	BOLT (M6X1X25-MM)	
	16	1	**8T-4121**	4	WASHER-HARD (11X21X2.5-MM THK)	
M	17	1	**8T-4183**	4	BOLT (M12X1.75X40-MM)	
M	18	1	**8T-4186**	4	BOLT (M10X1.5X40-MM)	
	19	1	**8T-4223**	4	WASHER-HARD (13.5X25.5X3-MM THK)	
	20	1	**8T-4224**	4	WASHER-HARD (8.8X16X2-MM THK)	

M - METRIC PART

433-2758 **SCREEN GP-PROTECTION (*contd.*)** **i06220755**

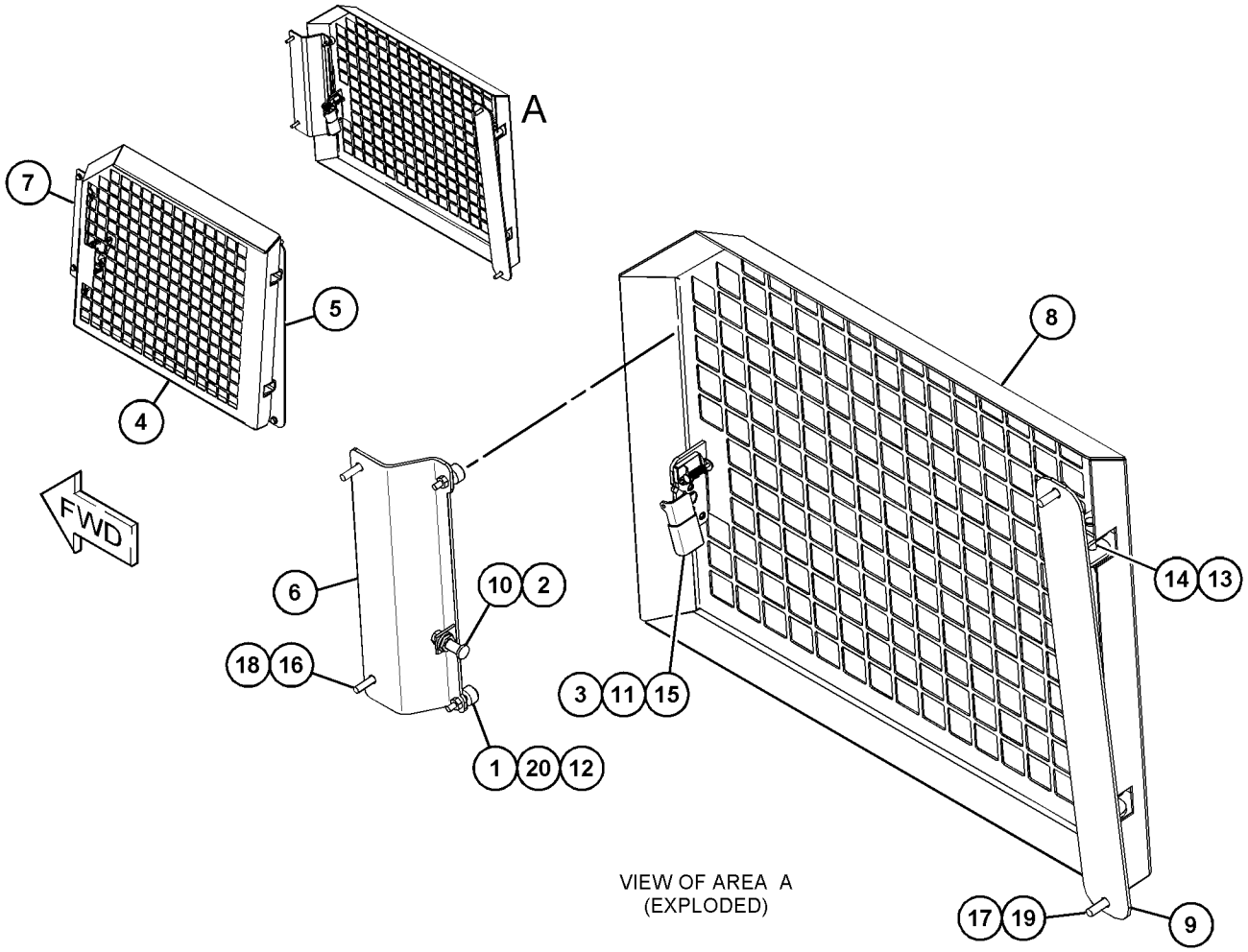

VIEW OF AREA A
(EXPLODED)

GRAPHIC #1 **<END>** g03861538

438-9381 SCREEN GP-PROTECTION

S/N: PPP1-UP; SSS1-UP; TTT1-UP
REAR
FOR USE WITH CAB
AN ATTACHMENT

SMCS-7165 **i06225187**

NOTE	REF NO	GRAPHIC REF	PART NUMBER	QTY	PART NAME 1 2 3 4 5 6 (PRODUCT LEVEL)	SEE PAGE
	1	1	**433-3028**	1	BRACKET AS	
	2	1	**433-3029**	1	BRACKET AS	
	3	1	**479-4400**	1	SCREEN AS-PROTECTION (REAR)	
	4	1	**5P-0372**	2	LOCK PIN	
	5	1	**6S-9277**	2	PIN	
	6	1	**8T-4223**	4	WASHER-HARD (13.5X25.5X3-MM THK)	
M	7	1	**8T-4183**	4	BOLT (M12X1.75X40-MM)	
M	8	1	**8T-4190**	2	BOLT (M16X2X25-MM)	
	9	1	**9X-8257**	2	WASHER (17.5X30X3.5-MM THK)	
	10	1	**479-4362**	2	PLATE	
	11	1	**8T-4224**	2	WASHER-HARD (8.8X16X2-MM THK)	
M	12	1	**6V-2317**	2	BOLT (M8X1.25X30-MM)	

M - METRIC PART

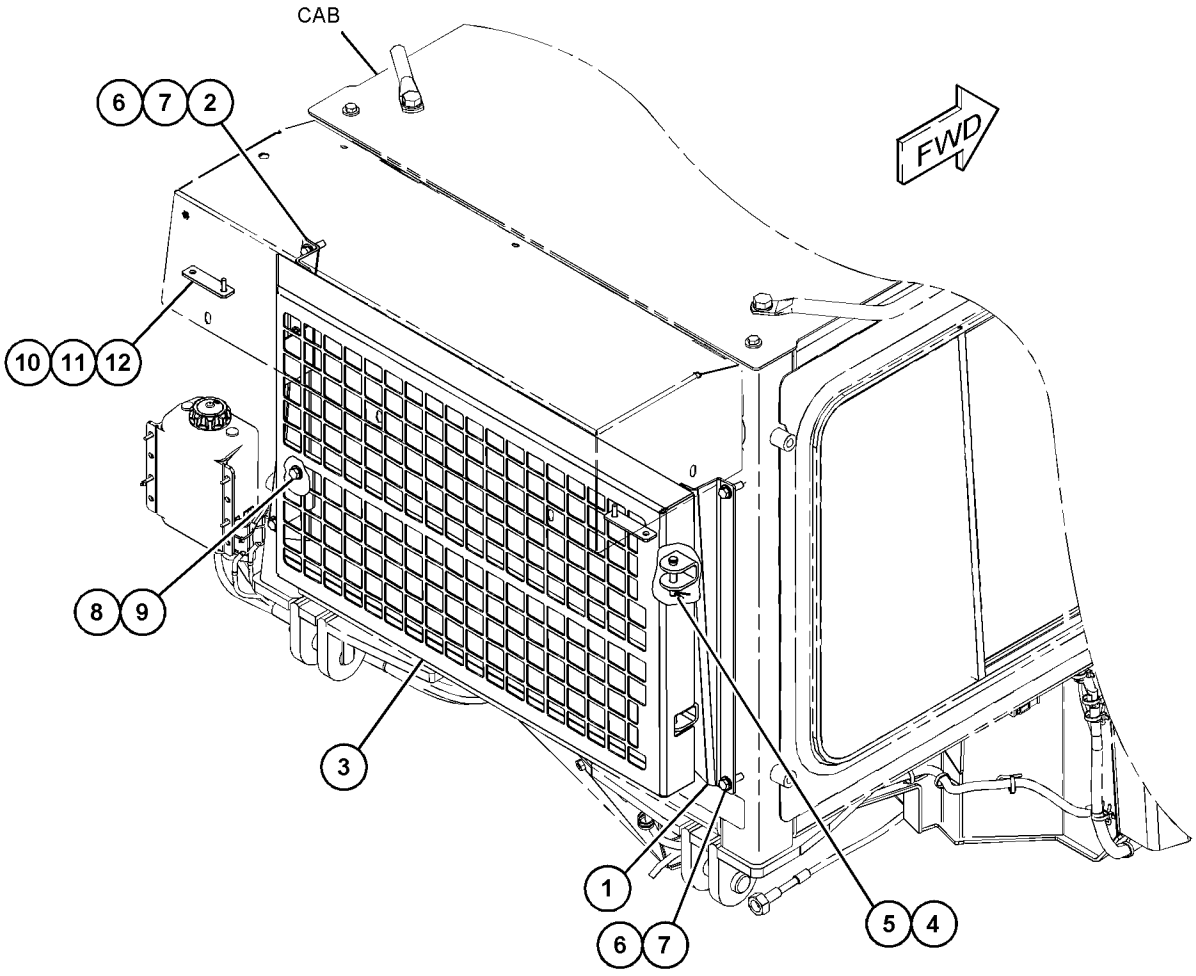

GRAPHIC #1 **<END>** g03860689

453-8044 SCREEN GP-PROTECTION

S/N: PPP1-UP; SSS1-UP; TTT1-UP
FOR USE WITH CANOPY
AN ATTACHMENT

SMCS-7165 **i06225281**

NOTE	REF NO	GRAPHIC REF	PART NUMBER	QTY	PART NAME 1 2 3 4 5 6 (PRODUCT LEVEL)	SEE PAGE
	1	1	**476-7589**	1	SCREEN AS-PROTECTION (FRONT)	
Y	2	1	*479-4357*	1	SCREEN GP-PROTECTION (RH)	767
Y	3	1	*479-4360*	1	SCREEN GP-PROTECTION (LH)	769

Y - SEPARATE ILLUSTRATION

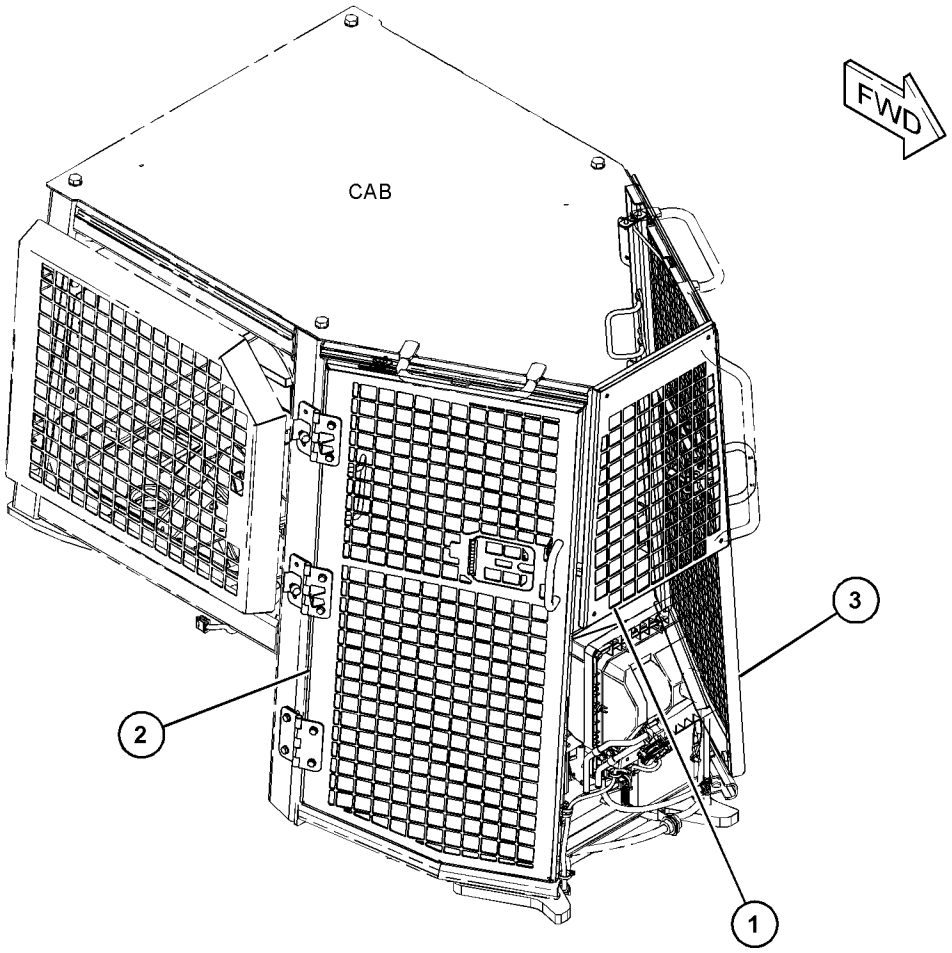

GRAPHIC #1 **<END>** g03861046

453-8045 SCREEN GP-PROTECTION

S/N: PPP1-UP; SSS1-UP; TTT1-UP
FOR USE WITH CANOPY
AN ATTACHMENT

SMCS-7165 **i06210137**

NOTE	REF NO	GRAPHIC REF	PART NUMBER	QTY	PART NAME 1 2 3 4 5 6 (PRODUCT LEVEL)	SEE PAGE
	1	1	**143-4792**	12	BUMPER	
	2	1	**479-4363**	1	SCREEN AS-PROTECTION (LH)	
	3	1	**479-4364**	1	SCREEN AS-PROTECTION (RH)	
	4	1	**8T-4121**	8	WASHER-HARD (11X21X2.5-MM THK)	
M	5	1	**8T-4184**	4	BOLT (M12X1.75X45-MM)	
M	6	1	**8T-4186**	8	BOLT (M10X1.5X40-MM)	
	7	1	**8T-4223**	4	WASHER-HARD (13.5X25.5X3-MM THK)	

M - METRIC PART

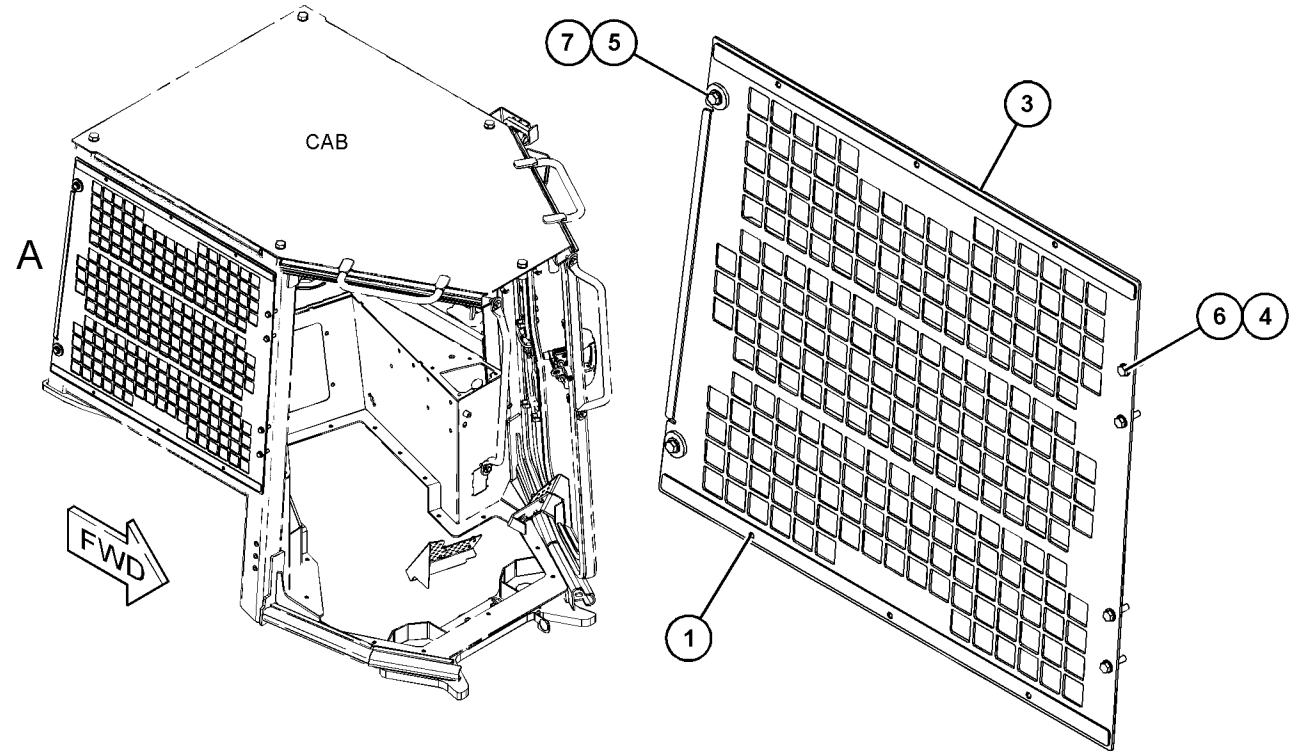

VIEW OF AREA A

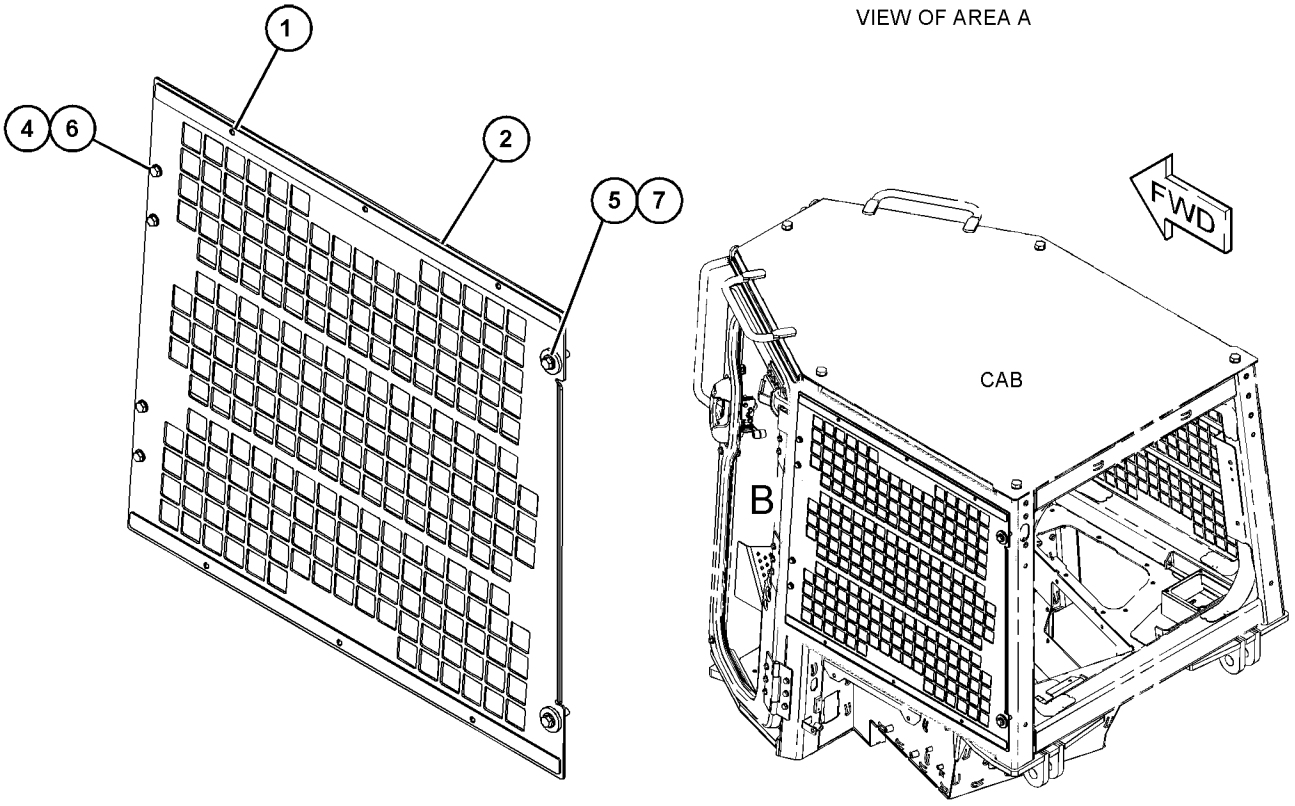

VIEW OF AREA B

GRAPHIC #1 **<END>** g03857068

453-8046 SCREEN GP-PROTECTION–REAR

S/N: PPP1-UP; SSS1-UP; TTT1-UP
FOR USE WITH CANOPY
AN ATTACHMENT

SMCS-7165 **i06224802**

NOTE	REF NO	GRAPHIC REF	PART NUMBER	QTY	PART NAME 1 2 3 4 5 6 (PRODUCT LEVEL)	SEE PAGE
	1	1	**143-4792**	1	BUMPER	
	2	1	**479-4361**	1	SCREEN AS-PROTECTION (REAR)	
	3	1	**479-4435**	1	BRACKET AS	
	4	1	**8T-4121**	6	WASHER-HARD (11X21X2.5-MM THK)	
M	5	1	**8T-4183**	2	BOLT (M12X1.75X40-MM)	
M	6	1	**8T-4184**	2	BOLT (M12X1.75X45-MM)	
M	7	1	**8T-4186**	6	BOLT (M10X1.5X40-MM)	
	8	1	**8T-4223**	4	WASHER-HARD (13.5X25.5X3-MM THK)	
	9	1	**8T-9471**	2	GROMMET	

M - METRIC PART

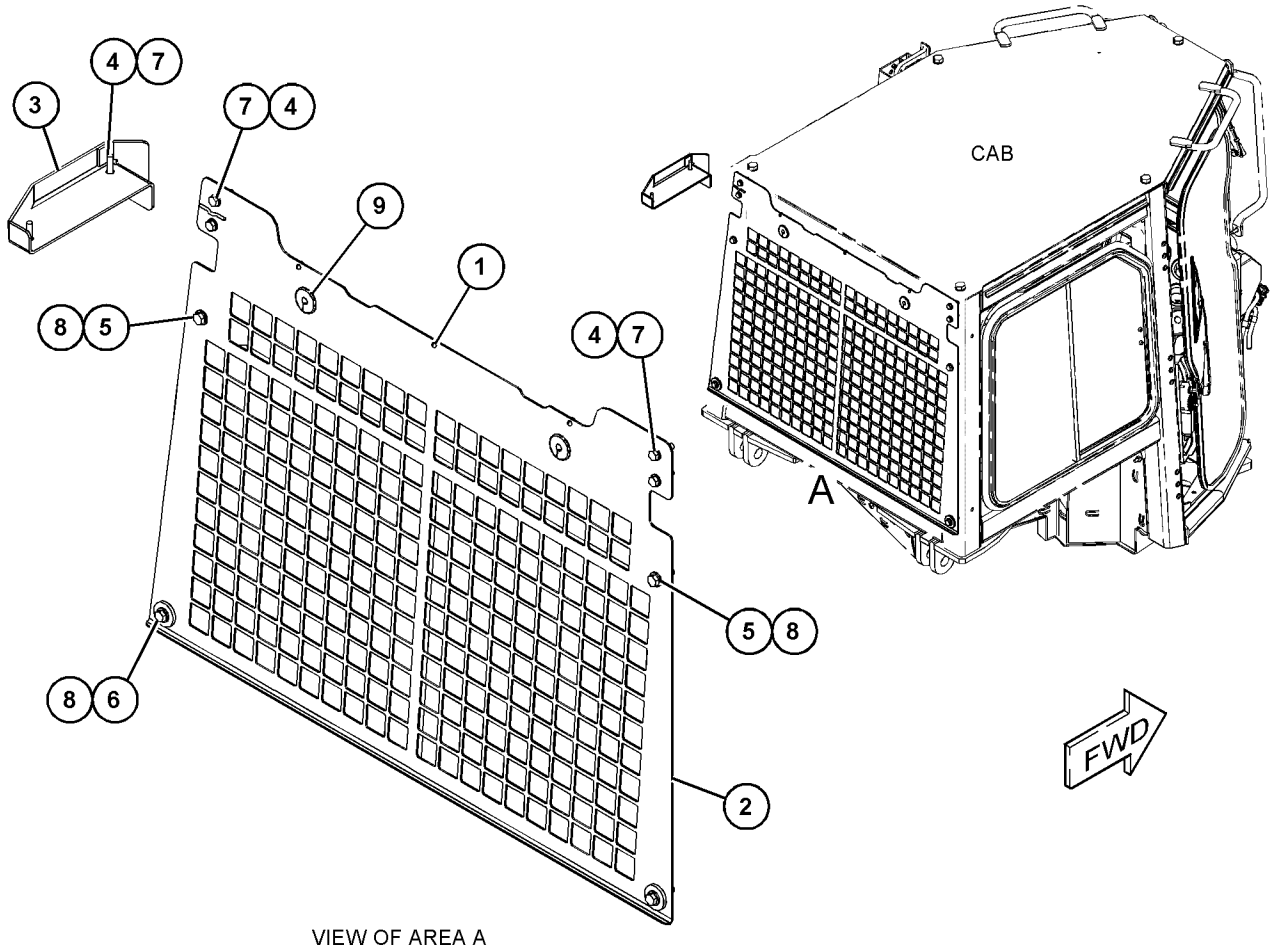

VIEW OF AREA A

GRAPHIC #1 **<END>** g03863026

453-8047 SCREEN GP-PROTECTION

S/N: PPP1-UP; SSS1-UP; TTT1-UP
FOR USE WITH CAB
AN ATTACHMENT

SMCS-7165 **i06224778**

NOTE	REF NO	GRAPHIC REF	PART NUMBER	QTY	PART NAME 1 2 3 4 5 6 (PRODUCT LEVEL)	SEE PAGE
Y	1	1	*398-0407*	1	SCREEN GP-PROTECTION (RH)	757
Y	2	1	*398-0408*	1	SCREEN GP-PROTECTION (LH)	758
	3	1	**8T-4121**	18	WASHER-HARD (11X21X2.5-MM THK)	
M	4	1	**8T-4195**	18	BOLT (M10X1.5X30-MM)	

M - METRIC PART
Y - SEPARATE ILLUSTRATION

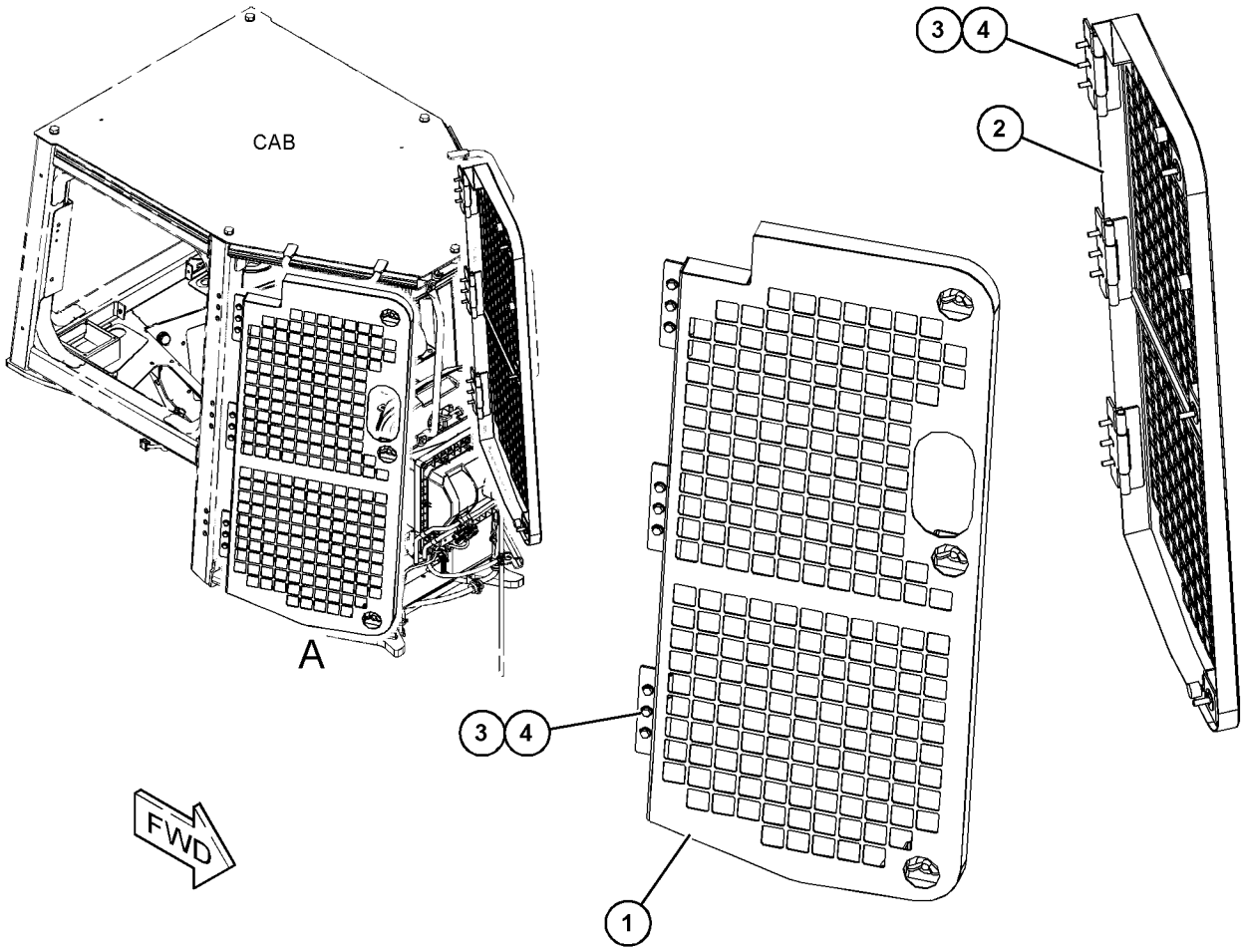

VIEW OF AREA A

GRAPHIC #1 **<END>** g03862753

479-4357 SCREEN GP-PROTECTION—RH

S/N: PPP1-UP; SSS1-UP; TTT1-UP
PART OF 453-8044 SCREEN GP-PROTECTION
AN ATTACHMENT

SMCS-7165 **i06219362**

NOTE	REF NO	GRAPHIC REF	PART NUMBER	QTY	PART NAME 1 2 3 4 5 6 (PRODUCT LEVEL)	SEE PAGE
	1	1	**1K-8850**	1	SPRING	
	2	1	**114-9284**	2	BUMPER	
	3	1	**240-6124**	1	ROD AS	
	4	1	**281-3974**	2	BUMPER	
	5	1	**387-4502**	1	HANDLE AS	
	6	1	**391-3950**	1	STRIKER AS	
	7	1	**455-8239**	1	HINGE AS	
	8	1	**461-3903**	1	LATCH AS	
	9	1	**473-6081**	1	PLATE	
	10	1	**473-6084**	2	HINGE AS	
	11	1	**476-7585**	1	PLATE	
	12	1	**479-4356**	1	SCREEN AS-PROTECTION (RH)	
M	13	1	**344-5673**	2	NUT (M6X1-THD)	
M	14	1	**344-5674**	2	NUT (M8X1.25-THD)	
M	15	1	**6V-7357**	4	BOLT (M6X1X25-MM)	
	16	1	**6V-9197**	1	LOCK PIN	
	17	1	**7X-7729**	3	WASHER (11X25X3-MM THK)	
M	18	1	**7Y-9099**	2	SCREW-TRUSS HEAD (M8X1.25X25-MM)	
	19	1	**8T-4121**	8	WASHER-HARD (11X21X2.5-MM THK)	
M	20	1	**8T-4136**	6	BOLT (M10X1.5X25-MM)	
M	21	1	**8T-4186**	2	BOLT (M10X1.5X40-MM)	
M	22	1	**8T-4189**	2	BOLT (M8X1.25X20-MM)	
M	23	1	**8T-4195**	2	BOLT (M10X1.5X30-MM)	
	24	1	**8T-4205**	4	WASHER-HARD (7.2X14.5X2-MM THK)	
	25	1	**8T-4224**	2	WASHER-HARD (8.8X16X2-MM THK)	

M - METRIC PART

479-4357 **SCREEN GP-PROTECTION (*contd.*)** **i06219362**

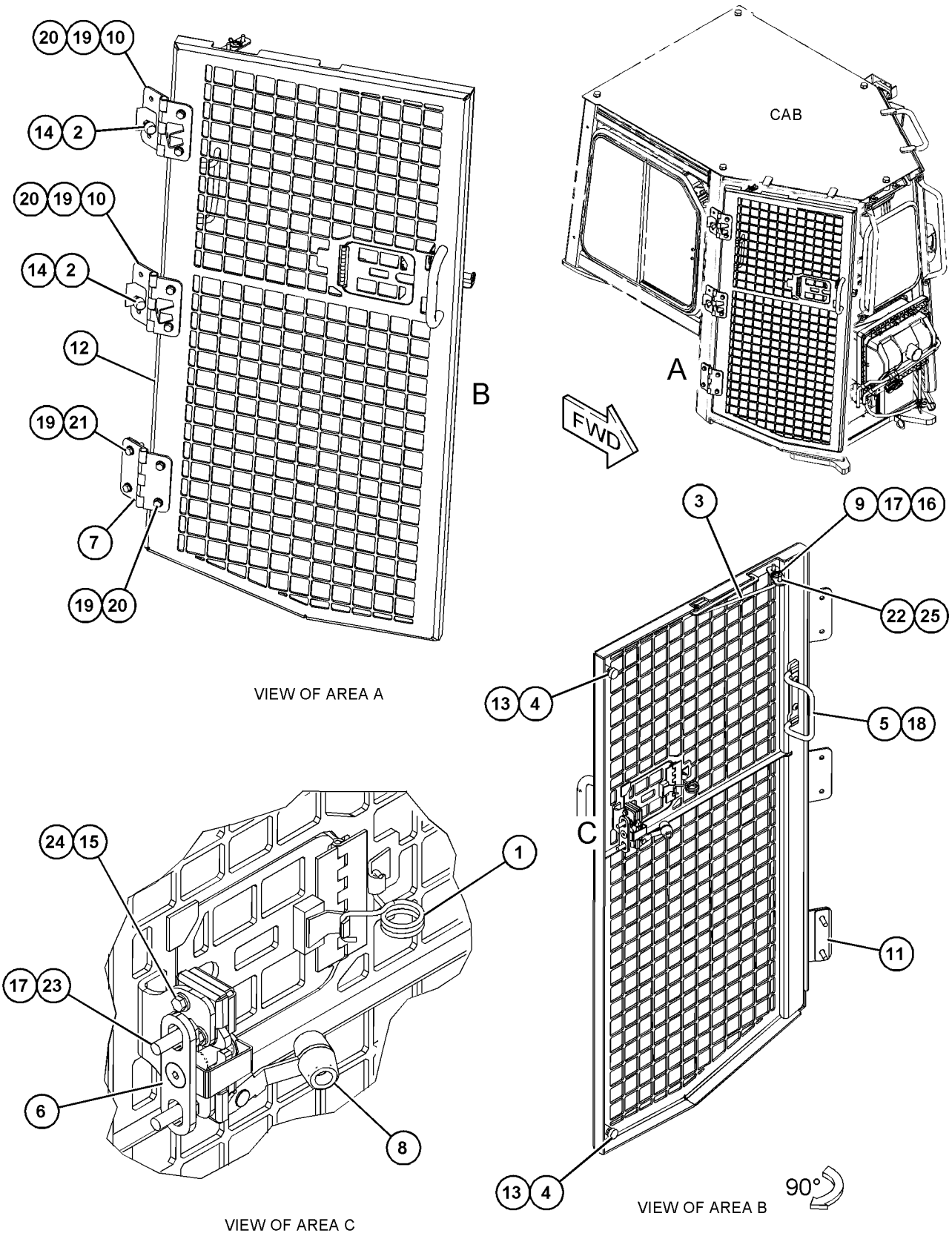

GRAPHIC #1 **<END>** g03863031

479-4360 SCREEN GP-PROTECTION—LH

S/N: PPP1-UP; SSS1-UP; TTT1-UP
PART OF 453-8044 SCREEN GP-PROTECTION
AN ATTACHMENT

SMCS-7165 **i06219358**

NOTE	REF NO	GRAPHIC REF	PART NUMBER	QTY	PART NAME 1 2 3 4 5 6 (PRODUCT LEVEL)	SEE PAGE
	1	1	**1K-8850**	1	SPRING	
	2	1	**114-9284**	2	BUMPER	
	3	1	**240-6124**	1	ROD AS	
	4	1	**281-3974**	2	BUMPER	
	5	1	**387-4502**	1	HANDLE AS	
	6	1	**391-3950**	1	STRIKER AS	
	7	1	**455-8239**	1	HINGE AS	
	8	1	**461-3904**	1	LATCH AS	
	9	1	**473-6081**	1	PLATE	
	10	1	**473-6084**	2	HINGE AS	
	11	1	**476-7585**	1	PLATE	
	12	1	**479-4359**	1	SCREEN AS-PROTECTION (LH)	
M	13	1	**344-5673**	2	NUT (M6X1-THD)	
M	14	1	**344-5674**	2	NUT (M8X1.25-THD)	
M	15	1	**6V-7357**	4	BOLT (M6X1X25-MM)	
	16	1	**6V-9197**	1	LOCK PIN	
	17	1	**7X-7729**	3	WASHER (11X25X3-MM THK)	
M	18	1	**7Y-9099**	2	SCREW-TRUSS HEAD (M8X1.25X25-MM)	
	19	1	**8T-4121**	8	WASHER-HARD (11X21X2.5-MM THK)	
M	20	1	**8T-4136**	6	BOLT (M10X1.5X25-MM)	
M	21	1	**8T-4186**	2	BOLT (M10X1.5X40-MM)	
M	22	1	**8T-4189**	2	BOLT (M8X1.25X20-MM)	
M	23	1	**8T-4195**	2	BOLT (M10X1.5X30-MM)	
	24	1	**8T-4205**	4	WASHER-HARD (7.2X14.5X2-MM THK)	
	25	1	**8T-4224**	2	WASHER-HARD (8.8X16X2-MM THK)	

M - METRIC PART

479-4360 **SCREEN GP-PROTECTION (*contd.*)** **i06219358**

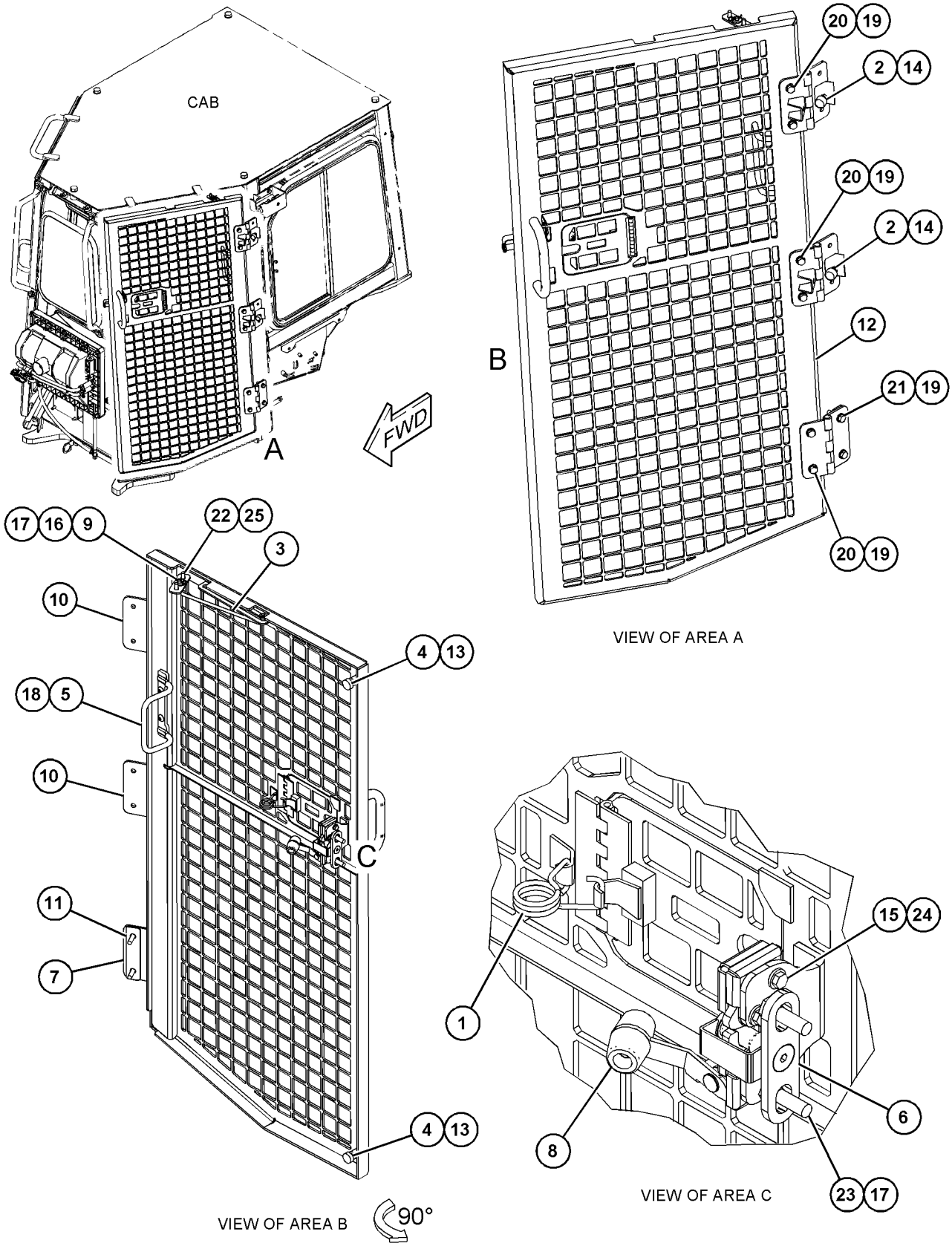

GRAPHIC #1 **<END>** g03863050

375-7899 SEAT & MOUNTING GP–VINYL

S/N: PPP1-UP; SSS1-UP; TTT1-UP

AN ATTACHMENT

SMCS-7312 **i06217445**

NOTE	REF NO	GRAPHIC REF	PART NUMBER	QTY	PART NAME 1 2 3 4 5 6 (PRODUCT LEVEL)	SEE PAGE
Y	1	1	**222-0345**	1	SEAT BELT GP (RETRACTABLE, 3-IN)	773
Y	2	1	**385-7835**	1	SEAT GP-SUSPENSION (VINYL)	785
	3	1	**7X-7729**	4	WASHER (11X25X3-MM THK)	
M	4	1	**9X-2125**	4	BOLT-LOCKING (M10X1.5X25-MM)	
	5	1	**205-6388**	1	BOLT (7/16-20X1.75-IN)	
	6	1	**177-4937**	1	SPACER (11.7X19.8X20.3-MM THK)	
	7	1	**0T-0244**	1	BOLT (7/16-20X1.25-IN)	

M - METRIC PART
Y - SEPARATE ILLUSTRATION

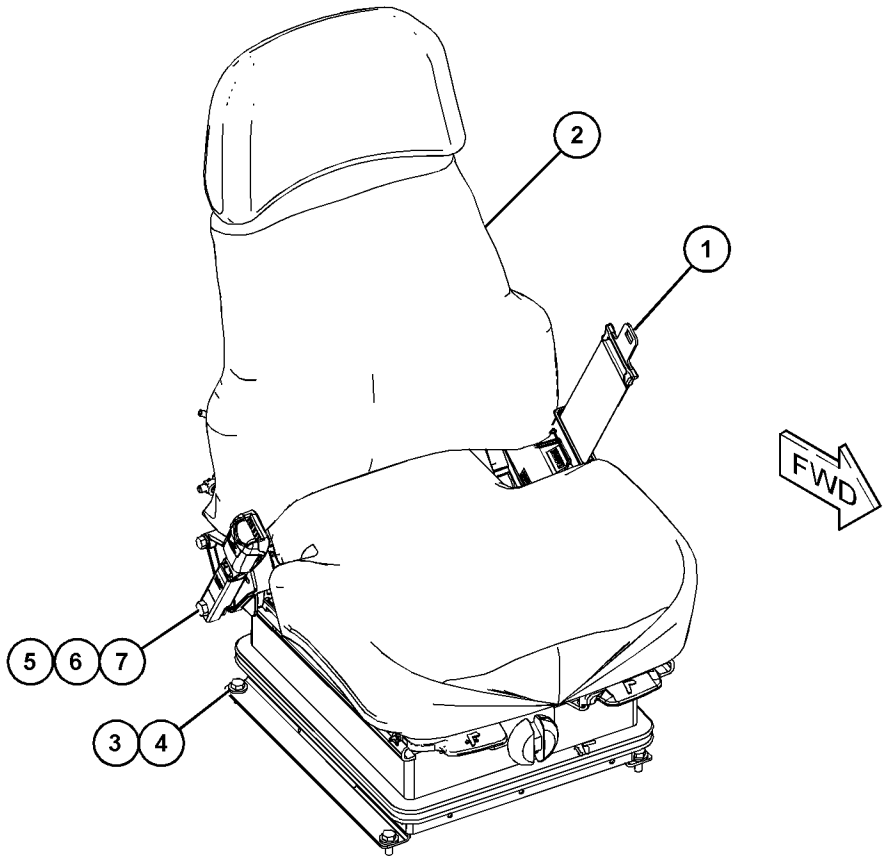

GRAPHIC #1 **<END>** g03860558

391-4061 SEAT & MOUNTING GP–CLOTH, HEATED

S/N: PPP1-UP; SSS1-UP; TTT1-UP
CANNOT BE USED WITH CANOPY
AN ATTACHMENT

SMCS-7312 **i06141355**

NOTE	REF NO	GRAPHIC REF	PART NUMBER	QTY	PART NAME 1 2 3 4 5 6 (PRODUCT LEVEL)	SEE PAGE
	1	1	**7K-1181**	1	STRAP-CABLE	
Y	2	1	**222-0345**	1	SEAT BELT GP (RETRACTABLE, 3-IN)	773
	3	1	**275-7803**	1	SPACER (11.7X19.8X25.4-MM THK)	
Y	4	1	**443-8263**	1	SEAT GP-SUSPENSION (CLOTH, HEATED, AIR)	786
Y	5	1	**390-6814**	1	HARNESS AS-WIRING (SEAT)	180
	6	1	**0T-0489**	1	BOLT (7/16-20X2-IN)	
	7	1	**205-6388**	1	BOLT (7/16-20X1.75-IN)	
	8	1	**4P-8134**	1	CLIP	
	9	1	**7X-7729**	4	WASHER (11X25X3-MM THK)	
	10	1	**8T-5360**	1	WASHER (12X22.5X2.5-MM THK)	
M	11	1	**9X-2125**	4	BOLT-LOCKING (M10X1.5X25-MM)	

M - METRIC PART
Y - SEPARATE ILLUSTRATION

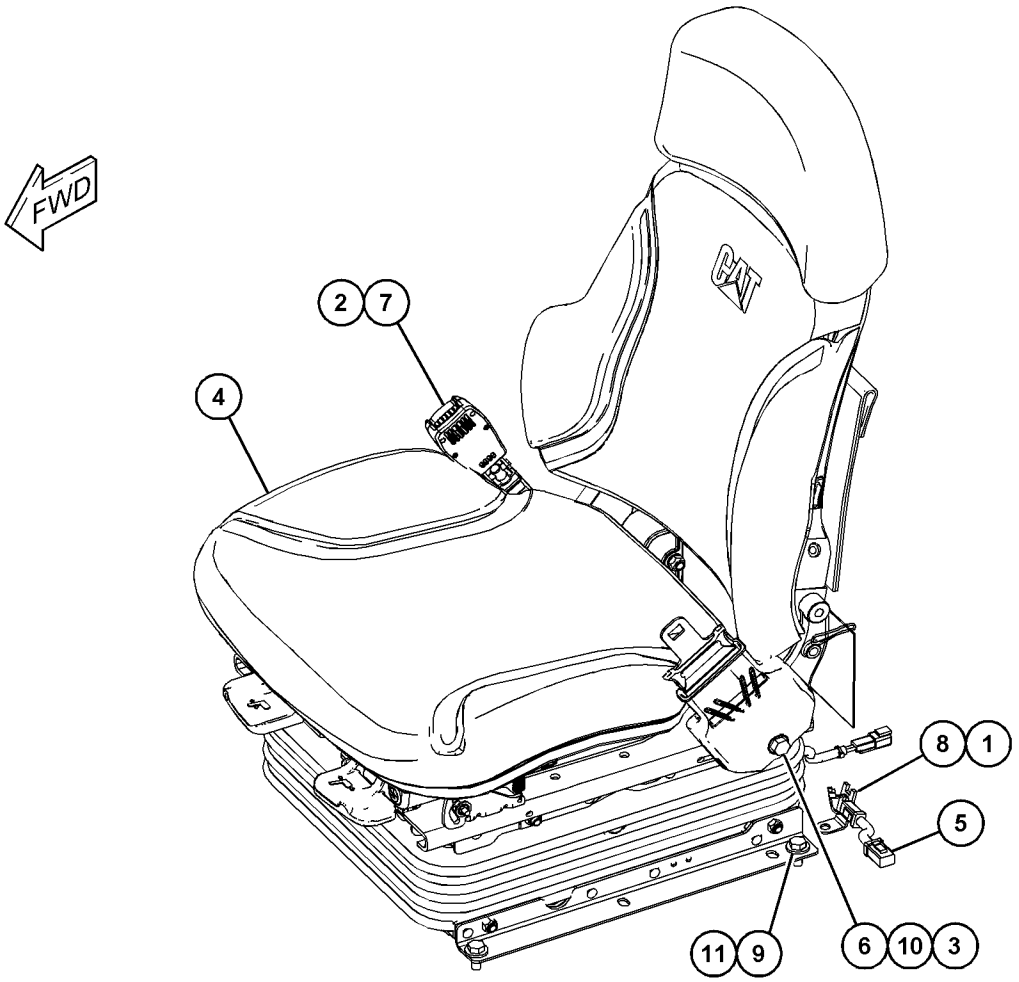

GRAPHIC #1 **<END>** g03722788

222-0345 SEAT BELT GP

S/N: PPP1-UP; SSS1-UP; TTT1-UP
PART OF 375-7899, 391-4061 SEAT & MOUNTING GP, 178-0606 SEAT GP
AN ATTACHMENT

SMCS-7327 **i05332838**

NOTE	REF NO	GRAPHIC REF	PART NUMBER	QTY	PART NAME 1 2 3 4 5 6 (PRODUCT LEVEL)	SEE PAGE
F			**0T-0244**	1	BOLT (7/16-20X1.25-IN)	
F			**205-6388**	1	BOLT (7/16-20X1.75-IN)	

F - NOT SHOWN

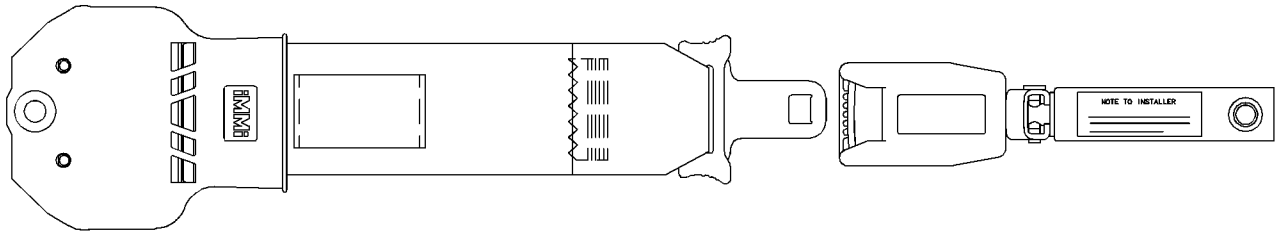

GRAPHIC #1 **<END>** g01196135

178-0603 SEAT GP—CLOTH

S/N: PPP1-UP; SSS1-UP; TTT1-UP
PART OF 178-0606 SEAT GP
AN ATTACHMENT

SMCS-7312 **i06231563**

NOTE	REF NO	GRAPHIC REF	PART NUMBER	QTY	PART NAME 1 2 3 4 5 6 (PRODUCT LEVEL)	SEE PAGE
	1	1	**218-0861**	1	PAN AS	
		1	**8T-9082**	5	RIVET-POP	
	2	1	**143-1288**	8	LOCKNUT-FLANGE (3/8-16-THD)	
	3	1	**171-1230**	6	SCREW-BUTTON HEAD (3/8-16X1-IN)	
	4	1	**171-6682**	1	BAR	
	5	1	**172-2416**	2	PIN	
Y	6	1	*173-1028*	1	ADJUSTER GP-SEAT	679
	7	1	**177-1863**	2	BOLT-PIVOT (3/8-16X2.89-IN)	
Y	8	1	*210-2270*	1	RECLINER GP-SEAT	753
Y	9	1	*292-9237*	1	PAN GP-BACKREST (CLOTH, LUMBAR)	750
	10	1	**184-2298**	1	ROD	
	11	1	**184-2299**	4	WASHER (7X25.4X2.54-MM THK)	
	12	1	**095-0843**	2	PIN-COTTER	
	13	1	**5V-1496**	2	RETAINER	
	14	1	**6V-7646**	2	WASHER-HARD (7.2X25X2-MM THK)	
	15	1	**8T-0328**	1	WASHER-HARD (5.5X10X1-MM THK)	
	16	1	**8T-4205**	1	WASHER-HARD (7.2X14.5X2-MM THK)	
	17	1	**294-5042**	2	SPACER (11.1X19.5X9.67-MM THK)	

Y - SEPARATE ILLUSTRATION

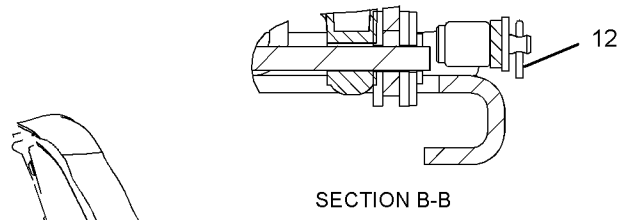

SECTION B-B

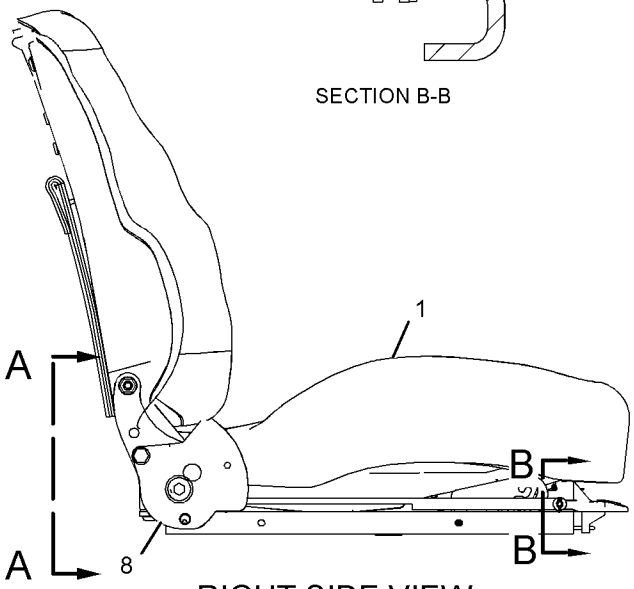

RIGHT SIDE VIEW

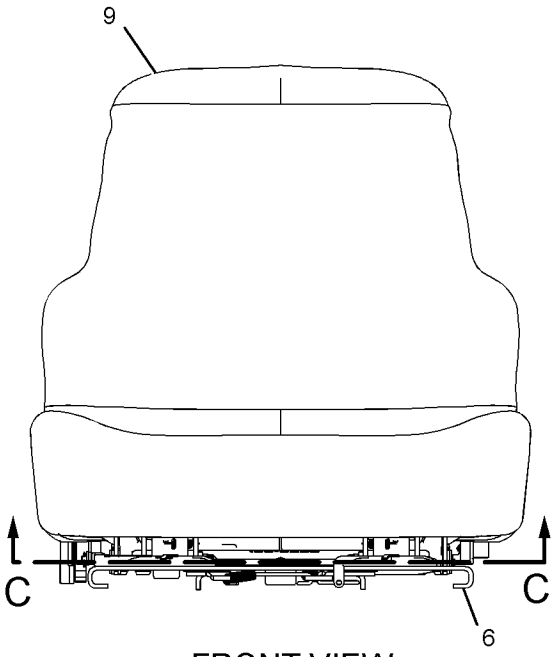

FRONT VIEW

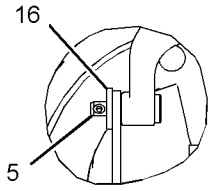

VIEW OF AREA E

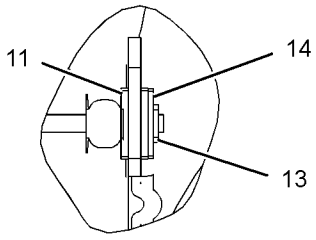

VIEW OF AREA D

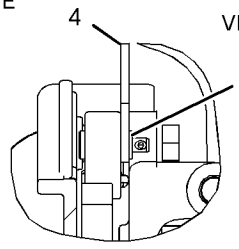

VIEW OF AREA F

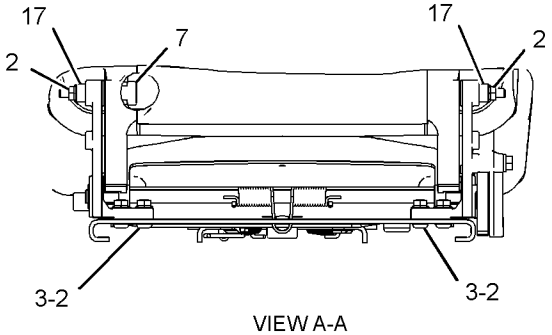

VIEW A-A

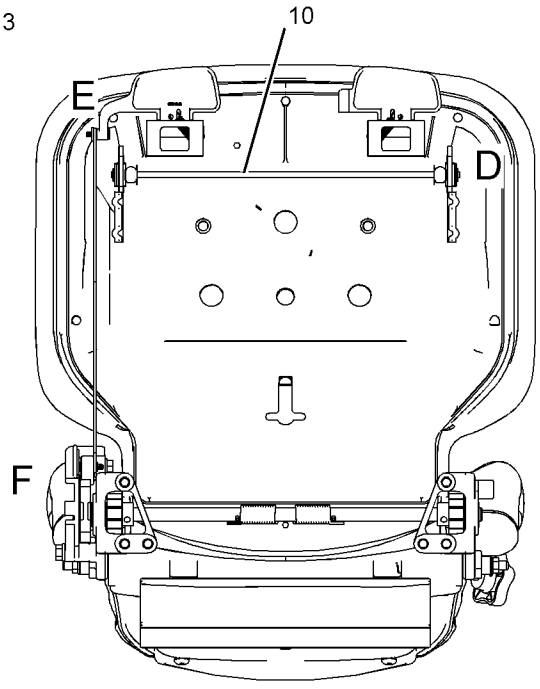

SECTION C-C

GRAPHIC #1 **<END>** g01336990

178-0606 SEAT GP—CLOTH

S/N: PPP1-UP; SSS1-UP; TTT1-UP
PART OF 160-7186 SEAT GP-SUSPENSION
AN ATTACHMENT

SMCS-7312 **i06231564**

NOTE	REF NO	GRAPHIC REF	PART NUMBER	QTY	PART NAME 1 2 3 4 5 6 (PRODUCT LEVEL)	SEE PAGE
	1	1	**177-4937**	1	SPACER (11.7X19.8X20.3-MM THK)	
Y	2	1	**178-0603**	1	SEAT GP (CLOTH)	774
Y	3	1	**222-0345**	1	SEAT BELT GP (RETRACTABLE, 3-IN)	773
	4	1	**229-1494**	1	EXTENSION GP-BACKREST (CLOTH)	
		1	**117-4491**	1	ROD	
	5	1	**0T-0244**	1	BOLT (7/16-20X1.25-IN)	
	6	1	**205-6388**	1	BOLT (7/16-20X1.75-IN)	

Y - SEPARATE ILLUSTRATION

178-0606 **SEAT GP (*contd.*)** **i06231564**

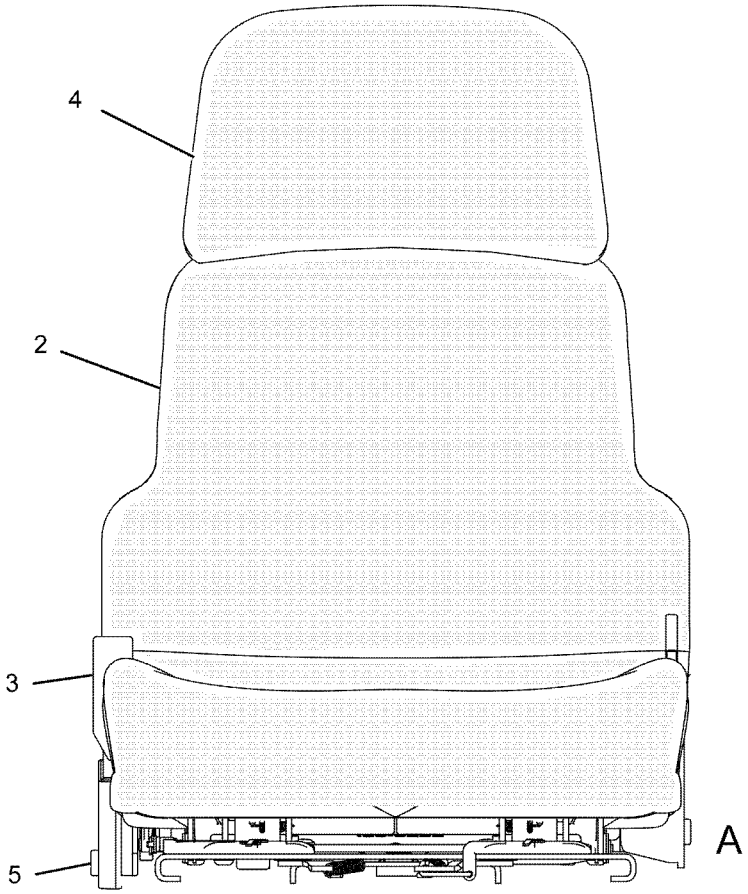

FRONT VIEW

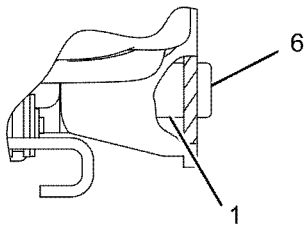

VIEW A

GRAPHIC #1 **<END>** g01084230

OPERATOR STATION

180-7304 SEAT GP—VINYL

S/N: PPP1-UP; SSS1-UP; TTT1-UP
PART OF 385-7834 SEAT GP
AN ATTACHMENT

SMCS-7312 **i06231565**

NOTE	REF NO	GRAPHIC REF	PART NUMBER	QTY	PART NAME 1 2 3 4 5 6 (PRODUCT LEVEL)	SEE PAGE
	1	1	**143-1288**	8	LOCKNUT-FLANGE (3/8-16-THD)	
	2	1	**171-1230**	6	SCREW-BUTTON HEAD (3/8-16X1-IN)	
	3	1	**171-6682**	1	BAR	
	4	1	**172-2416**	2	PIN	
Y	5	1	*173-1028*	1	ADJUSTER GP-SEAT	679
	6	1	**173-3283**	1	PAN AS (VINYL)	
		1	**169-1026**	1	CUSHION AS	
		1	**6K-3273**	5	RIVET-POP	
	7	1	**177-1863**	2	BOLT-PIVOT (3/8-16X2.89-IN)	
Y	8	1	*292-9238*	1	PAN GP-BACKREST (VINYL)	751
	9	1	**184-2298**	1	ROD	
	10	1	**184-2299**	4	WASHER (7X25.4X2.54-MM THK)	
Y	11	1	*210-2270*	1	RECLINER GP-SEAT	753
	12	1	**095-0843**	2	PIN-COTTER	
	13	1	**5V-1496**	2	RETAINER	
	14	1	**6V-7646**	2	WASHER-HARD (7.2X25X2-MM THK)	
	15	1	**8T-0328**	1	WASHER-HARD (5.5X10X1-MM THK)	
	16	1	**8T-4205**	1	WASHER-HARD (7.2X14.5X2-MM THK)	
	17	1	**294-5042**	2	SPACER (11.1X19.5X9.67-MM THK)	

Y - SEPARATE ILLUSTRATION

180-7304 **SEAT GP (*contd.*)** **i06231565**

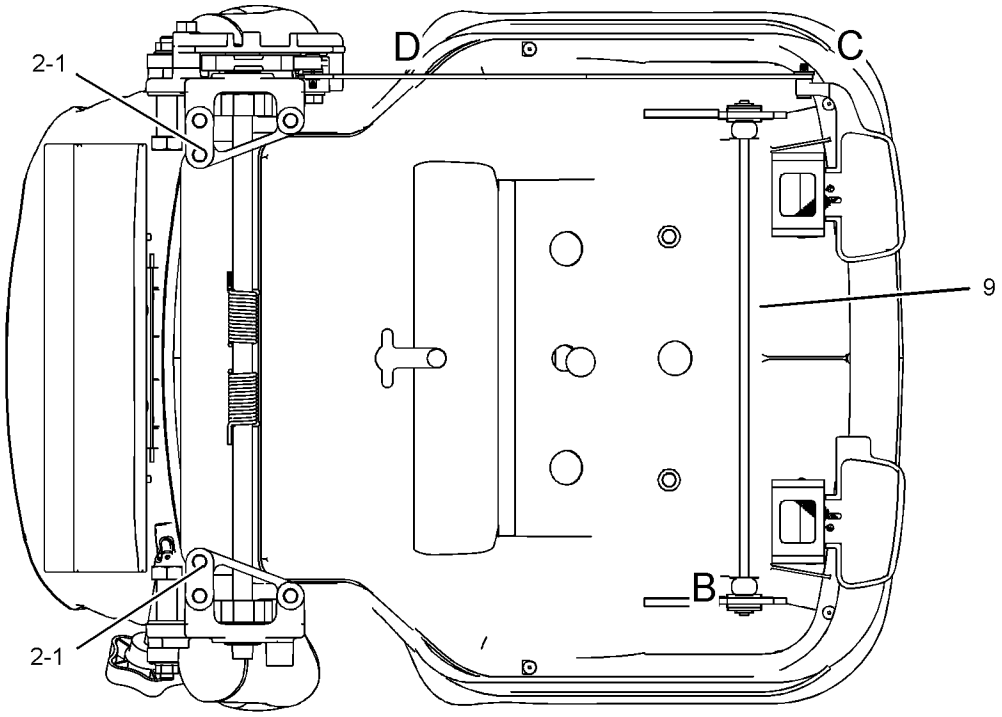

SECTION A-A

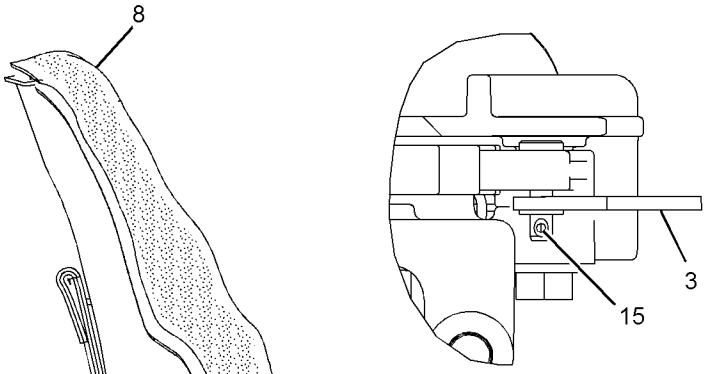

VIEW OF AREA D

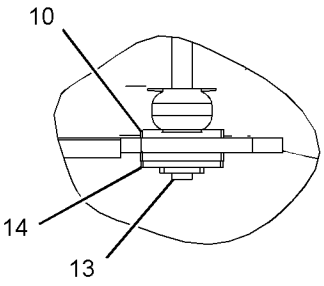

VIEW OF AREA B

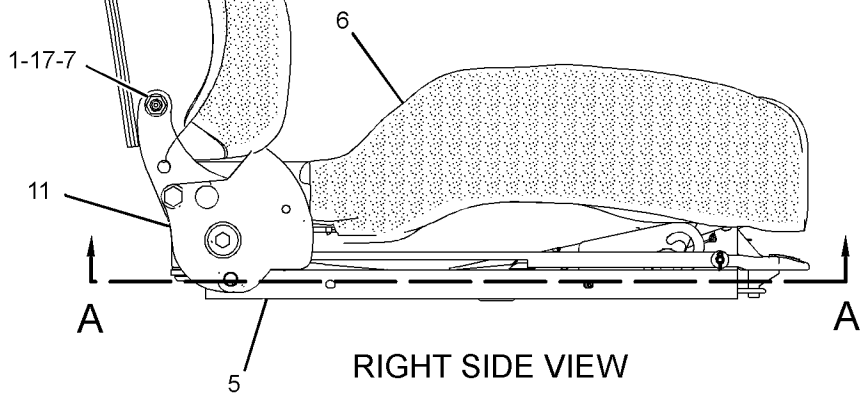

RIGHT SIDE VIEW

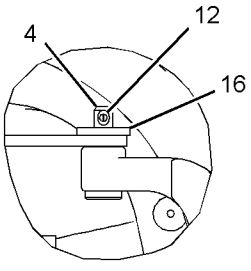

VIEW OF AREA C

GRAPHIC #1 **<END>** g01451635

374-5771 SEAT GP–CLOTH

S/N: PPP1-UP; SSS1-UP; TTT1-UP
PART OF 481-9508 DISTRIBUTION AR
AN ATTACHMENT

SMCS-7312 **i05906525**

NOTE	REF NO	GRAPHIC REF	PART NUMBER	QTY	PART NAME 1 2 3 4 5 6 (PRODUCT LEVEL)	SEE PAGE
Y	1	1	**160-7186**	1	SEAT GP-SUSPENSION (CLOTH)	784
	2	1	**7X-7729**	4	WASHER (11X25X3-MM THK)	
M	3	1	**9X-2125**	4	BOLT-LOCKING (M10X1.5X25-MM)	

M - METRIC PART
Y - SEPARATE ILLUSTRATION

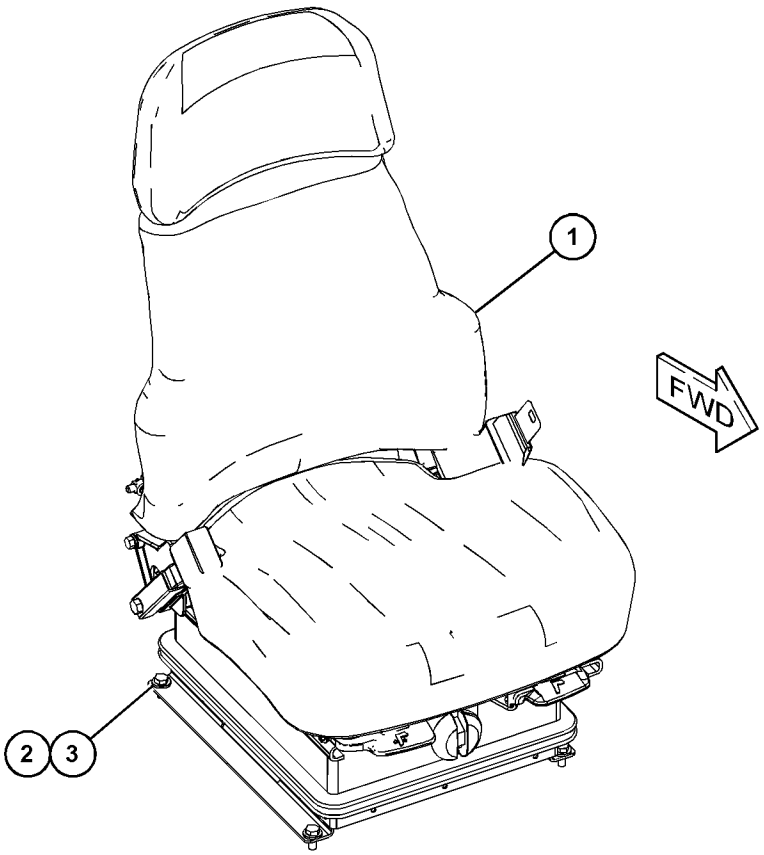

GRAPHIC #1 **<END>** g03719321

385-7834 SEAT GP–VINYL

S/N: PPP1-UP; SSS1-UP; TTT1-UP
PART OF 385-7835 SEAT GP-SUSPENSION
AN ATTACHMENT

SMCS-7312 **i05897971**

NOTE	REF NO	GRAPHIC REF	PART NUMBER	QTY	PART NAME 1 2 3 4 5 6 (PRODUCT LEVEL)	SEE PAGE
	1	1	**173-3083**	1	EXTENSION GP-BACKREST (VINYL)	
		1	**117-4491**	1	ROD	
Y	2	1	**180-7304**	1	SEAT GP (VINYL)	778

Y - SEPARATE ILLUSTRATION

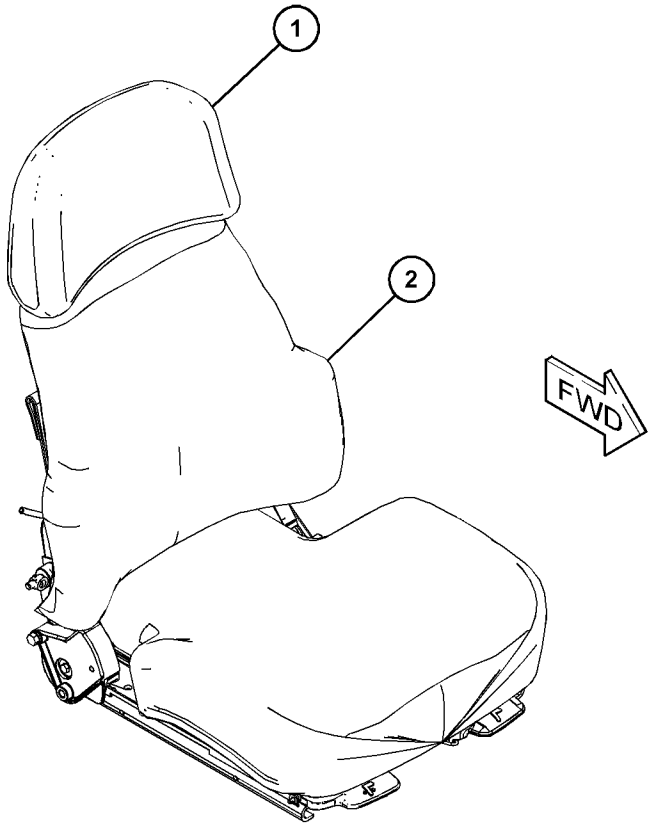

GRAPHIC #1 **<END>** g03719265

443-8222 SEAT GP–CLOTH, HEATED

S/N: PPP1-UP; SSS1-UP; TTT1-UP
24-VOLT
PART OF 443-8263 SEAT GP-SUSPENSION
AN ATTACHMENT

SMCS-7312 **i06208827**

NOTE	REF NO	GRAPHIC REF	PART NUMBER	QTY	PART NAME 1 2 3 4 5 6 (PRODUCT LEVEL)	SEE PAGE
	1	1	**143-1288**	8	LOCKNUT-FLANGE (3/8-16-THD)	
	2	1	**177-1863**	2	BOLT-PIVOT (3/8-16X2.89-IN)	
	3	1	**218-2529**	3	PLUG	
	4	1	**229-1494**	1	EXTENSION GP-BACKREST (CLOTH)	
		1	**117-4491**	1	ROD	
	5	1	**262-0767**	1	BRACKET AS (LH)	
	6	1	**277-8103**	1	PLUG	
	7	1	**314-5162**	1	BRACKET AS (RH)	
Y	8	1	**446-0649**	1	KIT-SEAT CUSHION	727
					(INCLUDES CUSHIONS, HEATER PAD, SEAT PAN, SCREWS, VENT FAN HARNESS & OPERATOR STATION HARNESS)	
	9	1	**355-3016**	1	PLATE AS	
	10	1	**365-3532**	1	PAN AS-BACK (24-VOLT)	
	11	1	**369-9004**	1	CABLE AS	
	12	1	**389-0879**	1	PAN-SEAT BACK	
	13	1	**451-5453**	1	HARNESS AS-SWITCH (WITH SWITCH) (SEAT HEATER)	
	14	1	**171-1230**	6	SCREW-BUTTON HEAD (3/8-16X1-IN)	
	15	1	**294-5042**	2	SPACER (11.1X19.5X9.67-MM THK)	
	16	1	**9F-5975**	1	BOLT (5/16-18X0.75-IN)	
	17	1	**436-1687**	1	KIT-LATCH	
					(INCLUDES BOLTS, LATCHES, RODS, SPRINGS & WASHERS)	
	18	1	**436-1688**	1	KIT-SEAT	
					(INCLUDES RETAINERS, SPRINGS, WASHERS & ROD)	
	19	1	**442-5287**	1	KIT-SHAFT	
Y	20	1	**443-8573**	1	KIT-HANDLE (SEAT ADJUSTMENT)	725
					(INCLUDES LEVERS, RETAINER-SPRINGS, PIN-SPRINGS, WASHERS & ROD)	

Y - SEPARATE ILLUSTRATION

443-8222 **SEAT GP (*contd.*)** **i06208827**

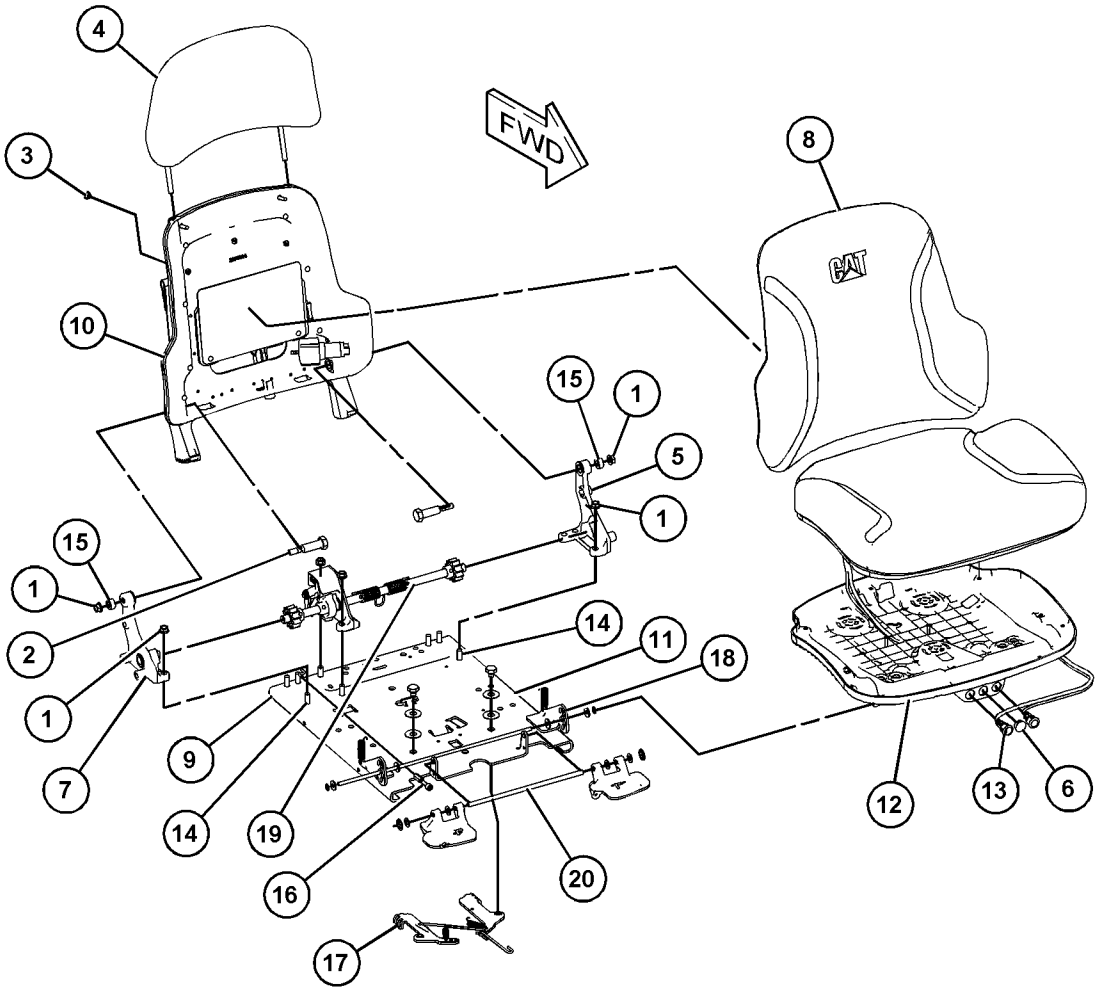

GRAPHIC #1 **<END>** g03820438

160-7186 SEAT GP-SUSPENSION–CLOTH

S/N: PPP1-UP; SSS1-UP; TTT1-UP
PART OF 374-5771 SEAT GP
AN ATTACHMENT

SMCS-7321, 7324, 7336 **i05332309**

NOTE	REF NO	GRAPHIC REF	PART NUMBER	QTY	PART NAME 1 2 3 4 5 6 (PRODUCT LEVEL)	SEE PAGE
Y	1	1	**160-7165**	1	SUSPENSION GP-SEAT	787
Y	2	1	**178-0606**	1	SEAT GP (CLOTH)	776
J	3	1	**173-5787**	4	SETSCREW (1/4-20-THD)	
J	4	1	**4F-4879**	1	BOLT (3/8-16X0.5-IN)	
J	5	1	**203-7703**	2	WASHER-HARD (10.2X22.22X2.38-MM THK)	
					AVAILABLE REPAIR KIT(S):	
J			**173-7035**	1	KIT-SLIDER BLOCK (SUSPENSION SEAT)	
					(INCLUDES SLIDER BLOCKS)	

J - (KIT MARKED J SERVICES PARTS MARKED J)
Y - SEPARATE ILLUSTRATION

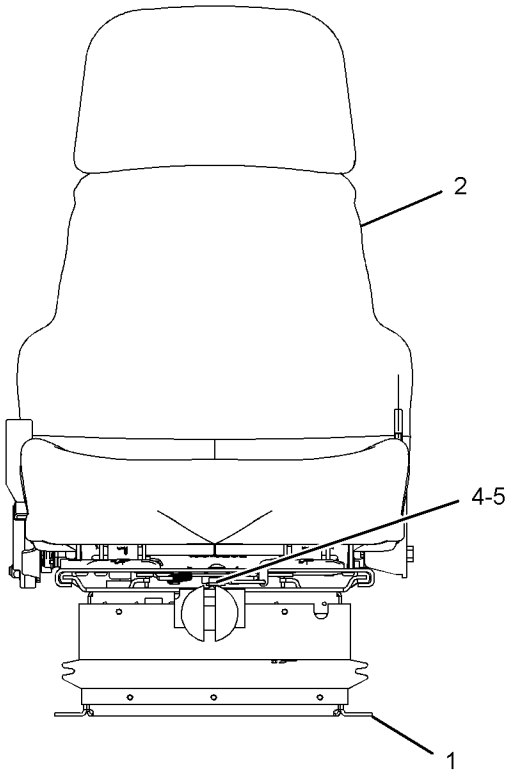

FRONT VIEW

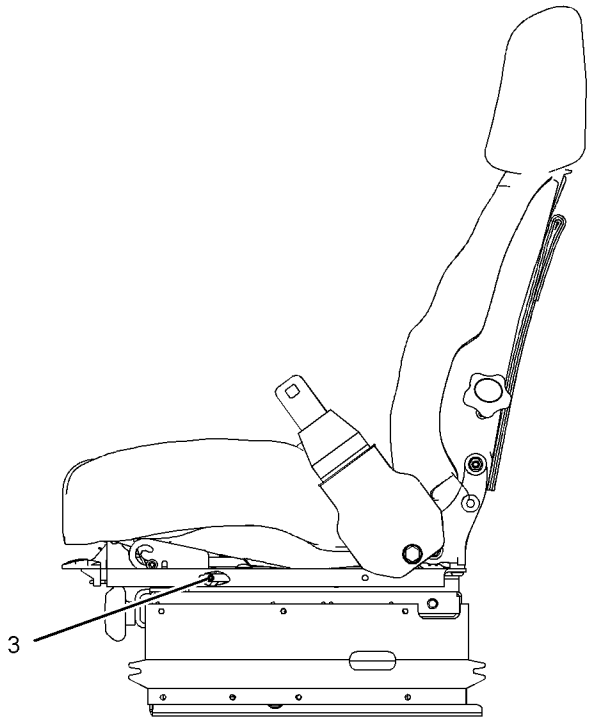

LEFT SIDE VIEW

GRAPHIC #1 **<END>** g01909213

385-7835 SEAT GP-SUSPENSION–VINYL

S/N: PPP1-UP; SSS1-UP; TTT1-UP
PART OF 375-7899 SEAT & MOUNTING GP
AN ATTACHMENT

SMCS-7321, 7324, 7336

i05897944

NOTE	REF NO	GRAPHIC REF	PART NUMBER	QTY	PART NAME 1 2 3 4 5 6 (PRODUCT LEVEL)	SEE PAGE
Y	1	1	**160-7165**	1	SUSPENSION GP-SEAT (AIR)	787
Y	2	1	**385-7834**	1	SEAT GP (VINYL)	781
					AVAILABLE REPAIR KIT(S):	
			173-7035	1	KIT-SLIDER BLOCK (SUSPENSION SEAT)	
					(INCLUDES WASHERS, BOLTS, SLIDER BLOCKS & SETSCREWS)	

Y - SEPARATE ILLUSTRATION

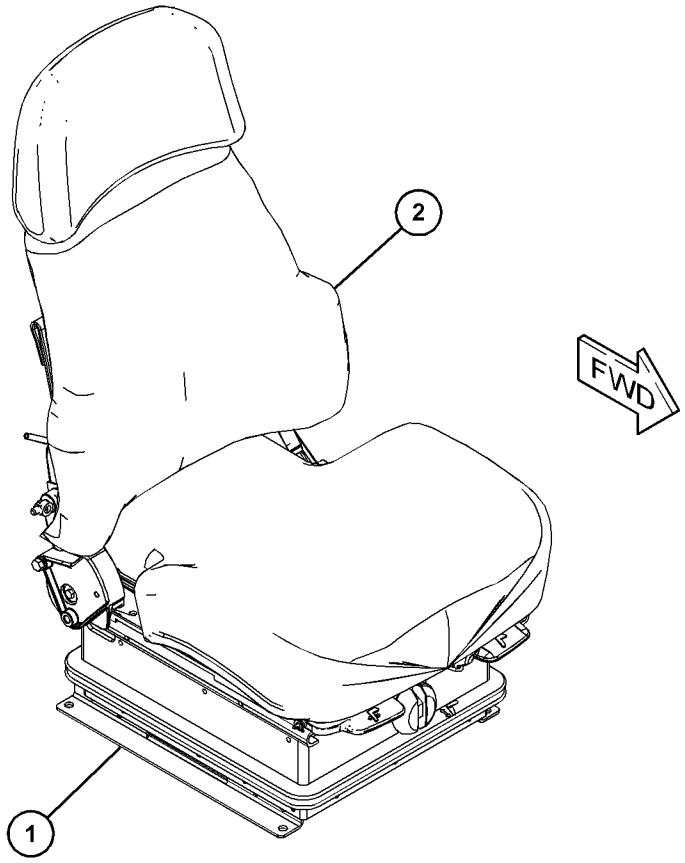

GRAPHIC #1

<END>

g03719303

443-8263 SEAT GP-SUSPENSION—CLOTH, HEATED, AIR

S/N: PPP1-UP; SSS1-UP; TTT1-UP
24-VOLT
PART OF 391-4061 SEAT & MOUNTING GP
AN ATTACHMENT

SMCS-7321, 7324, 7336 **i06141380**

NOTE	REF NO	GRAPHIC REF	PART NUMBER	QTY	PART NAME 1 2 3 4 5 6 (PRODUCT LEVEL)	SEE PAGE
Y	1	1	**191-2933**	1	SUSPENSION GP-SEAT (AIR)	789
	2	1	**365-3536**	1	HARNESS AS-HEATER	
Y	3	1	**443-8222**	1	SEAT GP (CLOTH, HEATED)	782
	4	1	**173-7035**	1	KIT-SLIDER BLOCK (SUSPENSION SEAT)	
					(INCLUDES WASHERS, BLOCK-SLIDERS, SETSCREWS & BOLT)	

Y - SEPARATE ILLUSTRATION

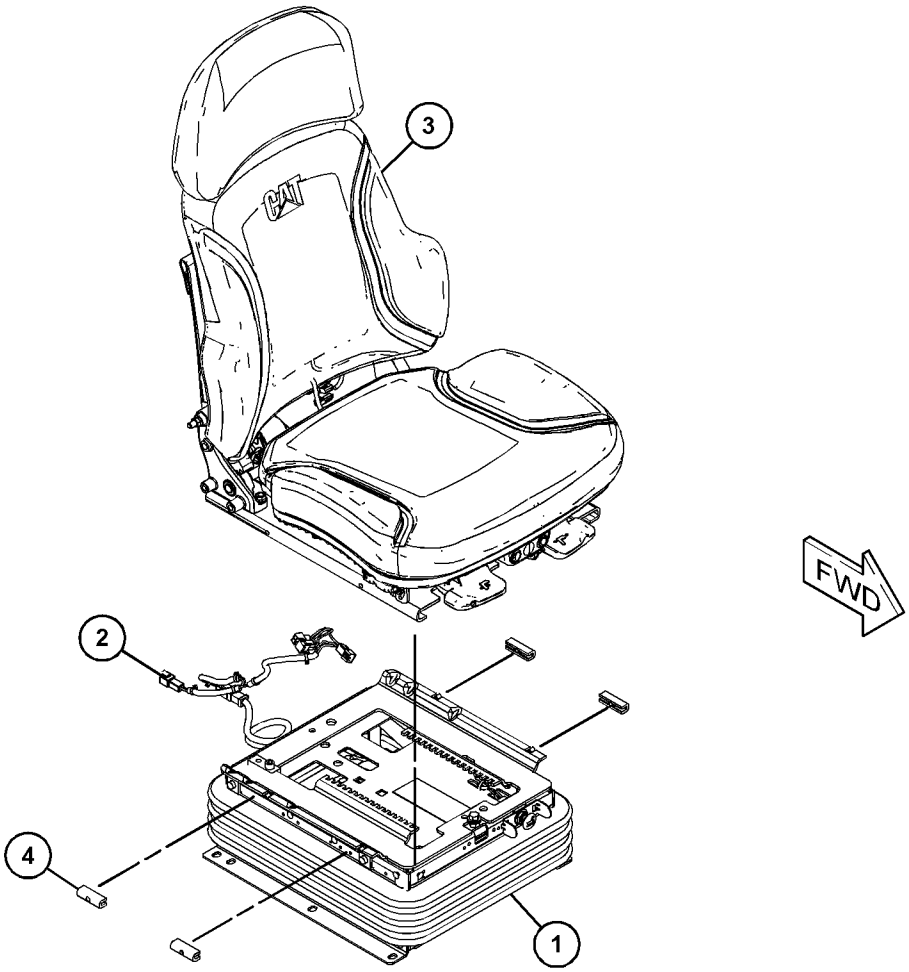

GRAPHIC #1 **<END>** g03813916

160-7165 SUSPENSION GP-SEAT

S/N: PPP1-UP; SSS1-UP; TTT1-UP
PART OF 160-7186, 385-7835 SEAT GP-SUSPENSION
AN ATTACHMENT

SMCS-7324 **i05332282**

NOTE	REF NO	GRAPHIC REF	PART NUMBER	QTY	PART NAME 1 2 3 4 5 6 (PRODUCT LEVEL)	SEE PAGE
	1	1	**2K-4973**	2	LOCKNUT (3/8-16-THD)	
	2	1	**4V-7884**	2	BEARING	
	3	1	**4V-8577**	4	BEARING	
	4	1	**5V-1497**	1	RETAINER	
	5	1	**8Y-5965**	1	ABSORBER AS-SHOCK	
	6	1	**8Y-6012**	1	ARM AS-SUSPENSION	
	7	1	**8Y-6014**	1	HOUSING AS (LOWER)	
	8	1	**8Y-6024**	2	SHAFT AS	
J	9	1	**101-0003**	20	FASTENER	
J	10	1	**166-6781**	6	FASTENER	
J	11	1	**163-1146**	3	FASTENER	
	12	1	**145-0326**	1	FILM-INSTRUCTION (SEAT ADJUSTMENT)	
	13	1	**169-7380**	1	BOLT-SOCKET HEAD (3/8-16X0.375-IN)	
Y	14	1	**174-2231**	1	HOUSING GP-SEAT SUSPENSION	722
J	15	1	**197-7689**	3	FASTENER	
					AVAILABLE REPAIR KIT(S):	
J			**8Y-5944**	1	KIT-SUSPENSION BOOT (SEAT)	
					(INCLUDES BOOT, RETAINER & FASTENERS)	
			101-4194	1	KIT-TETHER BELT (SUSPENSION SEAT)	
					(INCLUDES 2 BELTS)	
			101-4195	1	KIT-SUSPENSION ROLLER (SUSPENSION SEAT)	
					(INCLUDES 4 ROLLERS)	

J - KIT MARKED J INCLUDES PARTS MARKED J
Y - SEPARATE ILLUSTRATION

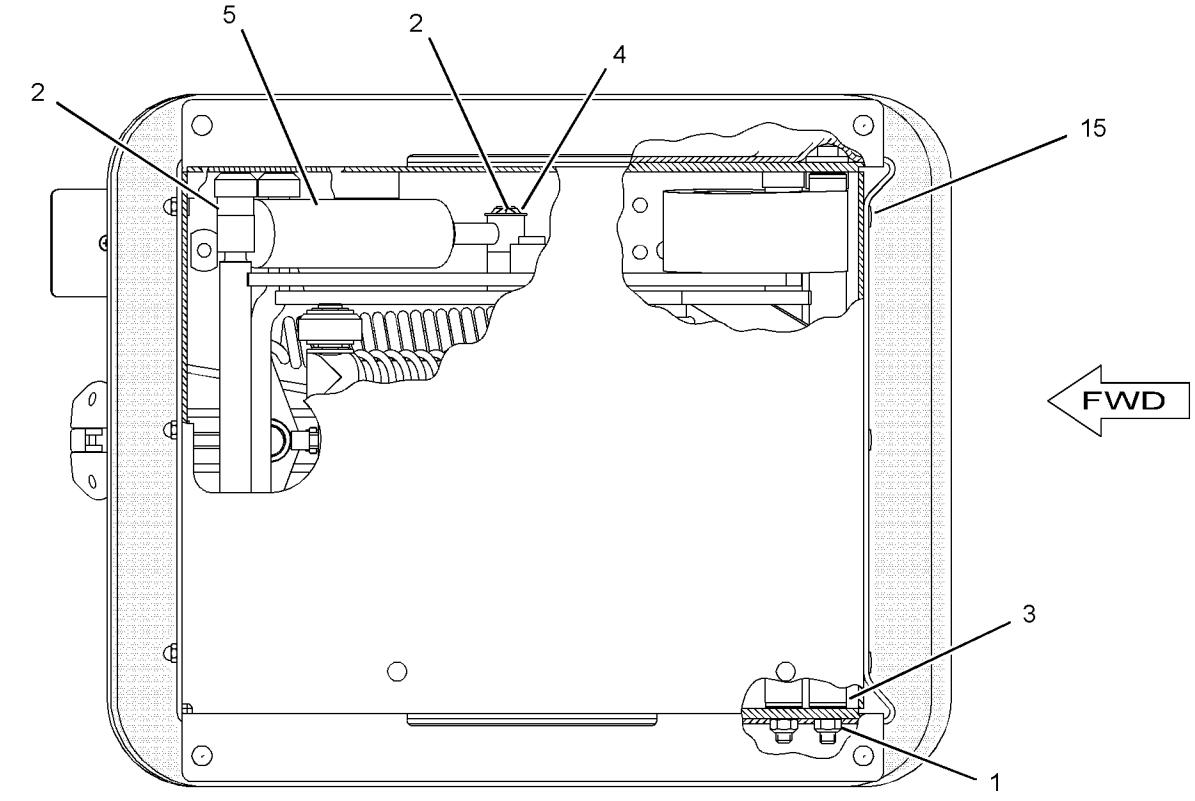

BOTTOM VIEW

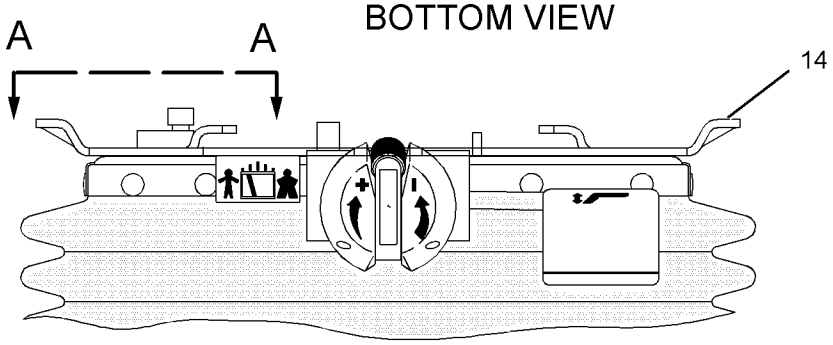

FRONT VIEW

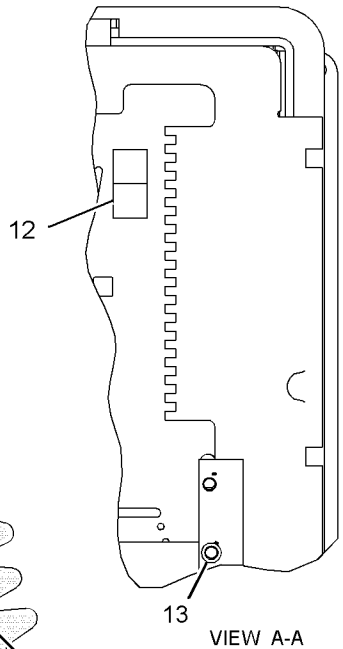

VIEW A-A

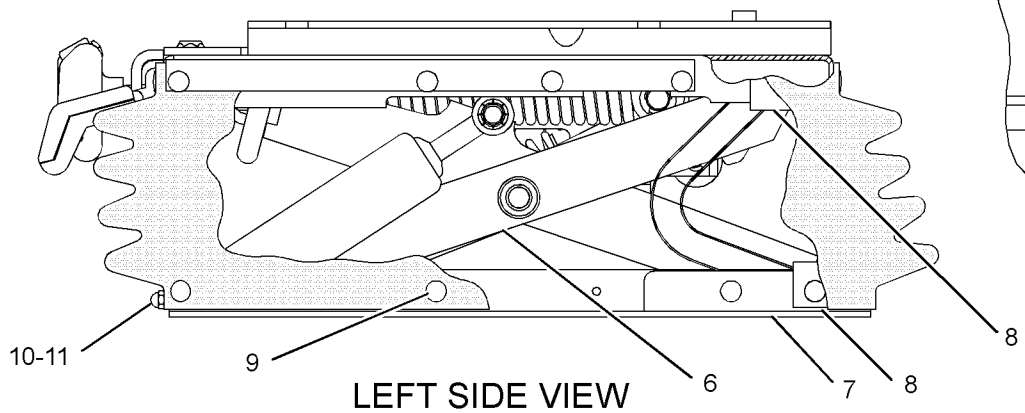

LEFT SIDE VIEW

GRAPHIC #1 **<END>** g01445578

191-2933 SUSPENSION GP-SEAT—AIR

S/N: PPP1-UP; SSS1-UP; TTT1-UP
PART OF 443-8263 SEAT GP-SUSPENSION
AN ATTACHMENT

SMCS-7324 **i06141432**

NOTE	REF NO	GRAPHIC REF	PART NUMBER	QTY	PART NAME 1 2 3 4 5 6 (PRODUCT LEVEL)	SEE PAGE
	1	1	**3P-9900**	5	WASHER (10.5X30X3-MM THK)	
	2	1	**4B-4278**	2	WASHER (10.2X20.5X1.6-MM THK)	
	3	1	**4V-8577**	12	BEARING	
	5	1	**145-0326**	1	FILM-INSTRUCTION (SEAT ADJUSTMENT)	
	6	1	**164-1234**	1	PLATE	
	7	1	**101-0003**	26	FASTENER	
	8	1	**169-7380**	1	BOLT-SOCKET HEAD (3/8-16X0.375-IN)	
	10	1	**192-7752**	4	SHAFT AS	
	11	1	**192-7755**	1	HOUSING AS (LOWER)	
	12	1	**314-5274**	1	SHAFT (INNER)	
	13	1	**192-7767**	1	SCISSORS AS	
	14	1	**192-7783**	1	TOGGLE AS (WIDE)	
	15	1	**192-7787**	1	TOGGLE AS (NARROW)	
	16	1	**192-7790**	1	HOUSING AS (UPPER)	
	17	1	**192-7795**	1	BOOT	
Y	18	1	**433-5754**	1	HARNESS AS-WIRING (SEAT AIR COMPRESSOR)	180
	19	1	**192-7810**	1	SPRING AS-AIR	
		1	**5P-4423**	1	ELBOW	
		1	**163-1135**	1	SPRING	
	20	1	**192-7812**	1	BOLT-SPECIAL	
	21	1	**192-7820**	3	BUMPER	
	22	1	**314-5275**	1	SHAFT (OUTER)	
	25	1	**108-4311**	1	SCREW-MACHINE (3/8-16X0.75-IN)	
	26	1	**2K-4973**	8	LOCKNUT (3/8-16-THD)	
	27	1	**3J-4818**	1	LOCKWASHER	
M	28	1	**5C-2890**	3	NUT (M6X1-THD)	
	29	1	**8T-9371**	1	BOLT (3/8-16X0.5-IN)	
CE	30	1	**211-5358**		CONDUIT-FLEXIBLE (29-CM)	
CE	30A	1	**211-5358**		CONDUIT-FLEXIBLE (43-CM)	
	32	1	**442-8151**	1	CLIP-CABLE	
C	33	1	**3S-2093**	5	STRAP-CABLE	
					AVAILABLE REPAIR KIT(S):	
			192-7799	1	KIT-AIR VALVE (SUSPENSION SEAT)	
					(INCLUDES KNOB AS, NUT, VALVE, LOCKWASHER & FITTING)	
			192-7848	1	KIT-SHOCK ABSORBER (SUSPENSION SEAT)	
					(INCLUDES LOCKNUT, LOCKWASHER, SHOCK ABSORBER, BEARINGS, WASHER & BOLTS)	
			211-9294	1	KIT-TETHER (SUSPENSION SEAT)	
					(INCLUDES TETHERS)	
AB			**213-5170**	1	KIT-SEAT ADJUSTER (SEAT ADJUSTMENT)	
					(INCLUDES BOLTS, NUTS, ROD, ARM & HOUSING)	
ABY			**212-7779**	1	KIT-SHOCK ABSORBER (SUSPENSION SEAT) (ADJUSTABLE SEAT)	728
AB			**346-4360**	1	KIT-SHOCK ABSORBER (SUSPENSION SEAT) (HEAVY-DUTY)	
					(INCLUDES SHOCK ABSORBER, BEARINGS, WASHERS, BOLTS, LOCKNUT, & LOCKWASHER)	
CY			**452-6716**	1	KIT-SEAT AIR COMPRESSOR (SUSPENSION SEAT)	726
					(INCLUDES SCREWS, COMPRESSOR AS, BRACKET, STRAPS & HOSE)	

A - NOT PART OF THIS GROUP
B - USE AS REQUIRED
C - CHANGE FROM PREVIOUS TYPE
E - ORDER BY THE CENTIMETER
M - METRIC PART
Y - SEPARATE ILLUSTRATION

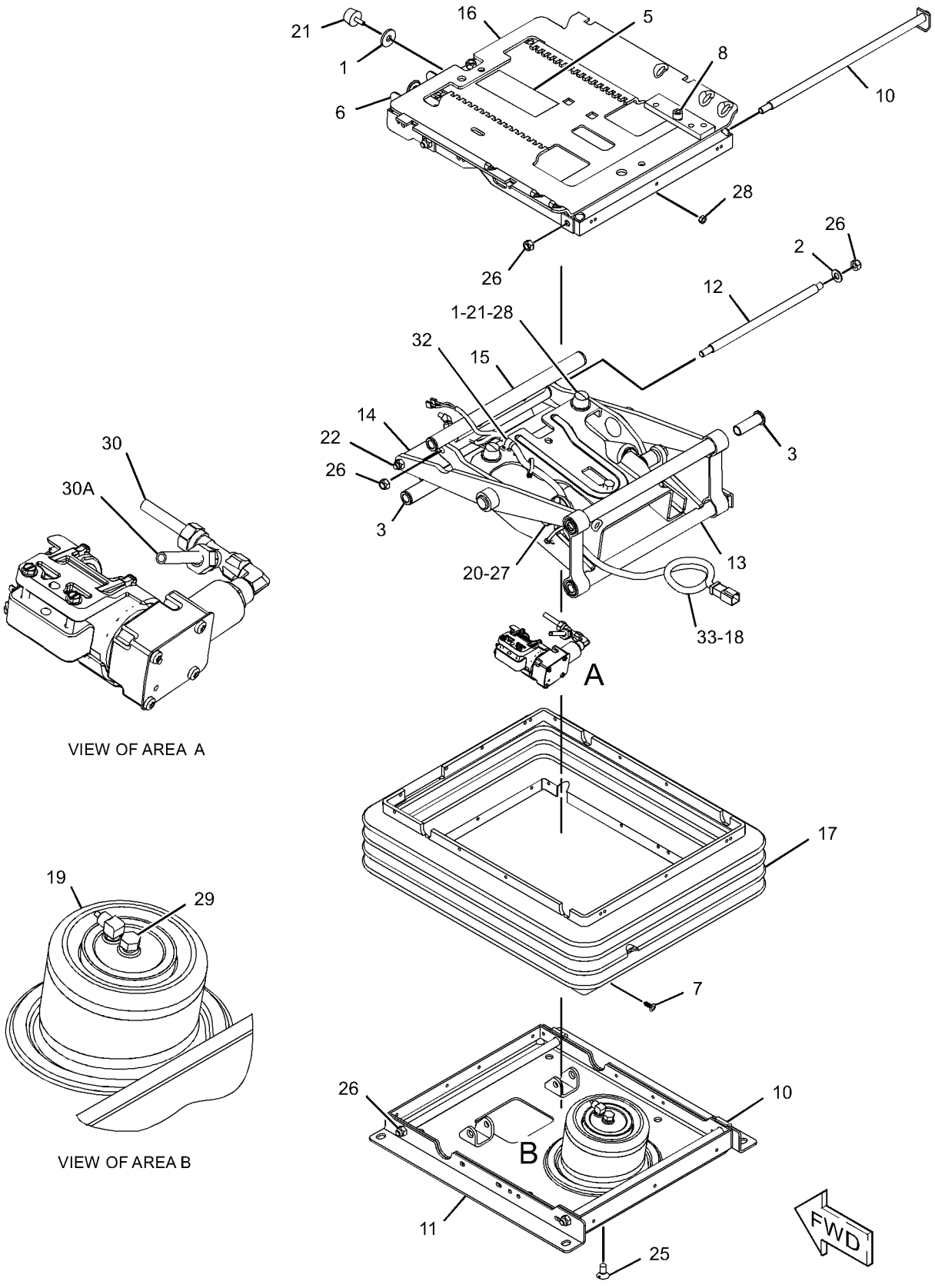

GRAPHIC #1 **<END>** g03802066

375-7921 TANK GP-WINDOW WASHER

S/N: PPP1-UP; SSS1-UP; TTT1-UP
PART OF 398-4297, 398-4300 CAB AR
AN ATTACHMENT

SMCS-7306 **i05899837**

NOTE	REF NO	GRAPHIC REF	PART NUMBER	QTY	PART NAME 1 2 3 4 5 6 (PRODUCT LEVEL)	SEE PAGE
	1	1	**3S-2093**	1	STRAP-CABLE	
	2	1	**7Y-3474**	4	VALVE AS-CHECK (WINDOW WASHER)	
Y	3	1	**375-7927**	1	TANK GP-WINDOW WASHER	792
	4	1	**4P-7581**	1	CLIP	
M	5	1	**6V-7357**	4	BOLT (M6X1X25-MM)	
	6	1	**8T-4121**	1	WASHER-HARD (11X21X2.5-MM THK)	
M	7	1	**8T-4137**	1	BOLT (M10X1.5X20-MM)	
	8	1	**8T-4205**	4	WASHER-HARD (7.2X14.5X2-MM THK)	

M - METRIC PART
Y - SEPARATE ILLUSTRATION

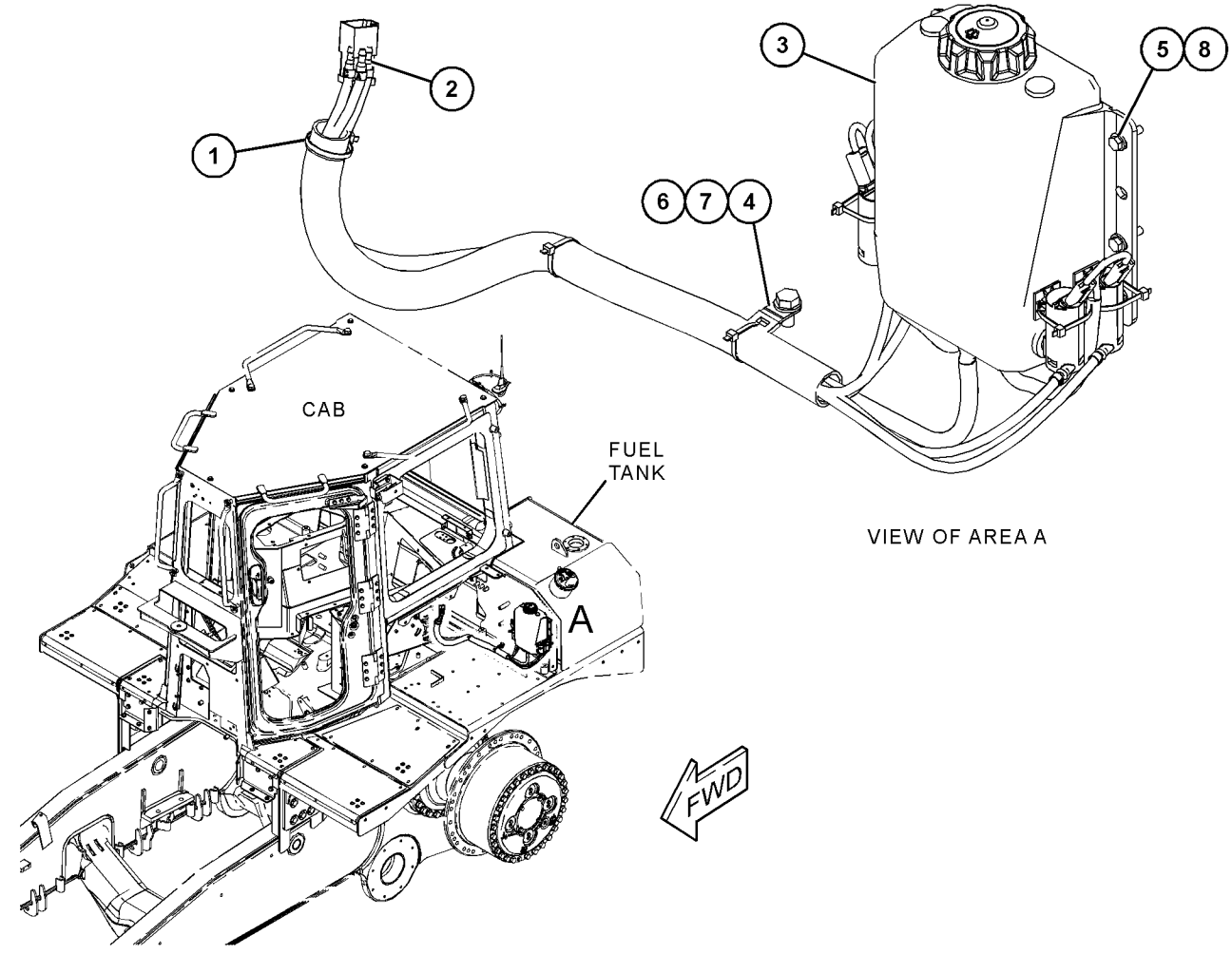

GRAPHIC #1 **<END>** g03722515

375-7927 TANK GP-WINDOW WASHER

S/N: PPP1-UP; SSS1-UP; TTT1-UP
PART OF 375-7921 TANK GP-WINDOW WASHER
AN ATTACHMENT

SMCS-7306 **i06231622**

NOTE	REF NO	GRAPHIC REF	PART NUMBER	QTY	PART NAME 1 2 3 4 5 6 (PRODUCT LEVEL)	SEE PAGE
	1	1	**3S-2093**	7	STRAP-CABLE	
	2	1	**3V-3263**	2	CONNECTOR (HOSE)	
	3	1	**267-8715**	4	GROMMET	
	4	1	**322-4964**	1	CAP-VENTED (WINDOW WASHER TANK)	
	5	1	**322-4965**	4	ANCHOR-TIE	
	6	1	**339-9915**	4	PUMP-WASHER	
	7	1	**340-5693**	2	HOSE-ELBOW	
Y	8	1	**389-3056**	1	HARNESS AS-WIRING (WINDOW WASHER)	179
D	9	1	**6V-5817**		CONDUIT-FLEXIBLE (26.1-MM ID, SPLIT) (1-M)	
E	10	1	**144-0195**		HOSE (80-CM)	
E	10A	1	**144-0195**		HOSE (78-CM)	
E	10B	1	**144-0195**		HOSE (95-CM)	
E	10C	1	**144-0195**		HOSE (101-CM)	
E	11	1	**7X-7927**		TAPE-IDENTIFICATION (LETTER A) (6-CM EACH)	
E	12	1	**7X-7928**		TAPE-IDENTIFICATION (LETTER B) (6-CM EACH)	
E	13	1	**7X-7929**		TAPE-IDENTIFICATION (LETTER C) (6-CM EACH)	
E	14	1	**7X-7930**		TAPE-IDENTIFICATION (LETTER D) (6-CM EACH)	

D - ORDER BY THE METER
E - ORDER BY THE CENTIMETER
Y - SEPARATE ILLUSTRATION

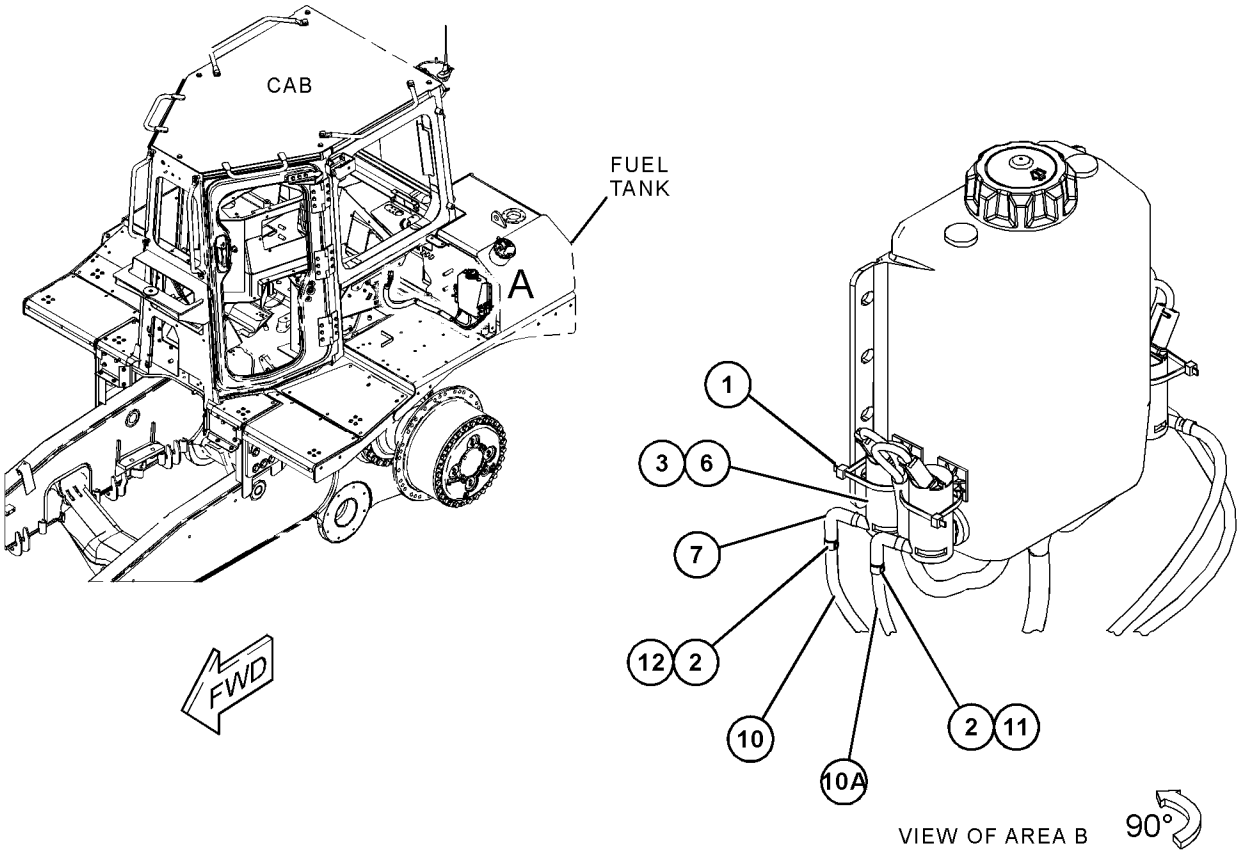

GRAPHIC #1

<END>

g03722583

383-6866 WINDOW GP-CAB

S/N: PPP1-UP; SSS1-UP; TTT1-UP
PART OF 393-6480 CAB AR
AN ATTACHMENT

SMCS-7310 **i05900856**

NOTE	REF NO	GRAPHIC REF	PART NUMBER	QTY	PART NAME 1 2 3 4 5 6 (PRODUCT LEVEL)	SEE PAGE
	1	1	**379-6657**	2	GLASS (DOOR)	
	2	1	**383-6864**	1	GLASS-FRONT	
	3	1	**383-6865**	1	GLASS-REAR	
Y	4	1	*384-0859*	1	WINDOW GP-CAB (LH)	796
Y	5	1	*384-0860*	1	WINDOW GP-CAB (RH)	797
D	6	1	**5P-5768**		SEAL (1.8-M)	
D	7	1	**5P-6605**		SEAL (3.1-M EACH)	
D	7A	1	**5P-6605**		SEAL (3.3-M)	
E	8	1	**353-7114**		SEAL (358-CM EACH)	

D - ORDER BY THE METER
E - ORDER BY THE CENTIMETER
Y - SEPARATE ILLUSTRATION

383-6866 **WINDOW GP-CAB (*contd.*)** **i05900856**

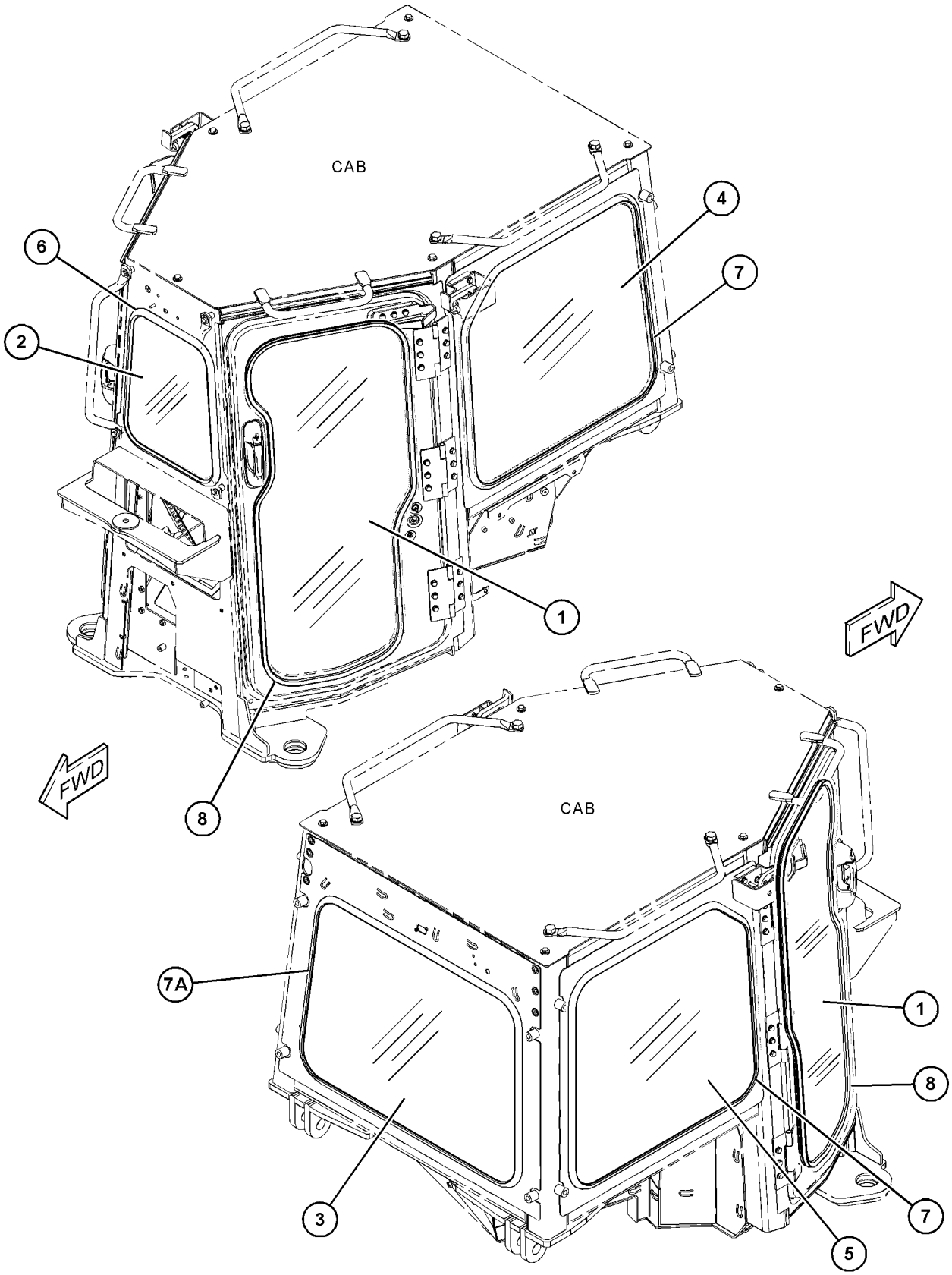

GRAPHIC #1 **<END>** g03721604

384-0859 WINDOW GP-CAB—LH

S/N: PPP1-UP; SSS1-UP; TTT1-UP
PART OF 383-6866 WINDOW GP-CAB
AN ATTACHMENT

SMCS-7310 **i05900980**

NOTE	REF NO	GRAPHIC REF	PART NUMBER	QTY	PART NAME 1 2 3 4 5 6 (PRODUCT LEVEL)	SEE PAGE
	1	1	**352-4897**	1	LOCK AS	
	2	1	**447-0302**	1	PILLAR	
	3	1	**447-0304**	1	SEAL	
	4	1	**447-0305**	1	SEAL	
	5	1	**447-0307**	1	SEAL	
	6	1	**447-0314**	1	GLASS-FIXED	
Y	7	1	*447-0315*	1	WINDOW GP-CAB	802
E	8	1	**447-0306**		SEAL (139-CM)	
E	9	1	**425-0242**		SEAL (75-CM)	
E	9A	1	**425-0242**		SEAL (73-CM)	

E - ORDER BY THE CENTIMETER
Y - SEPARATE ILLUSTRATION

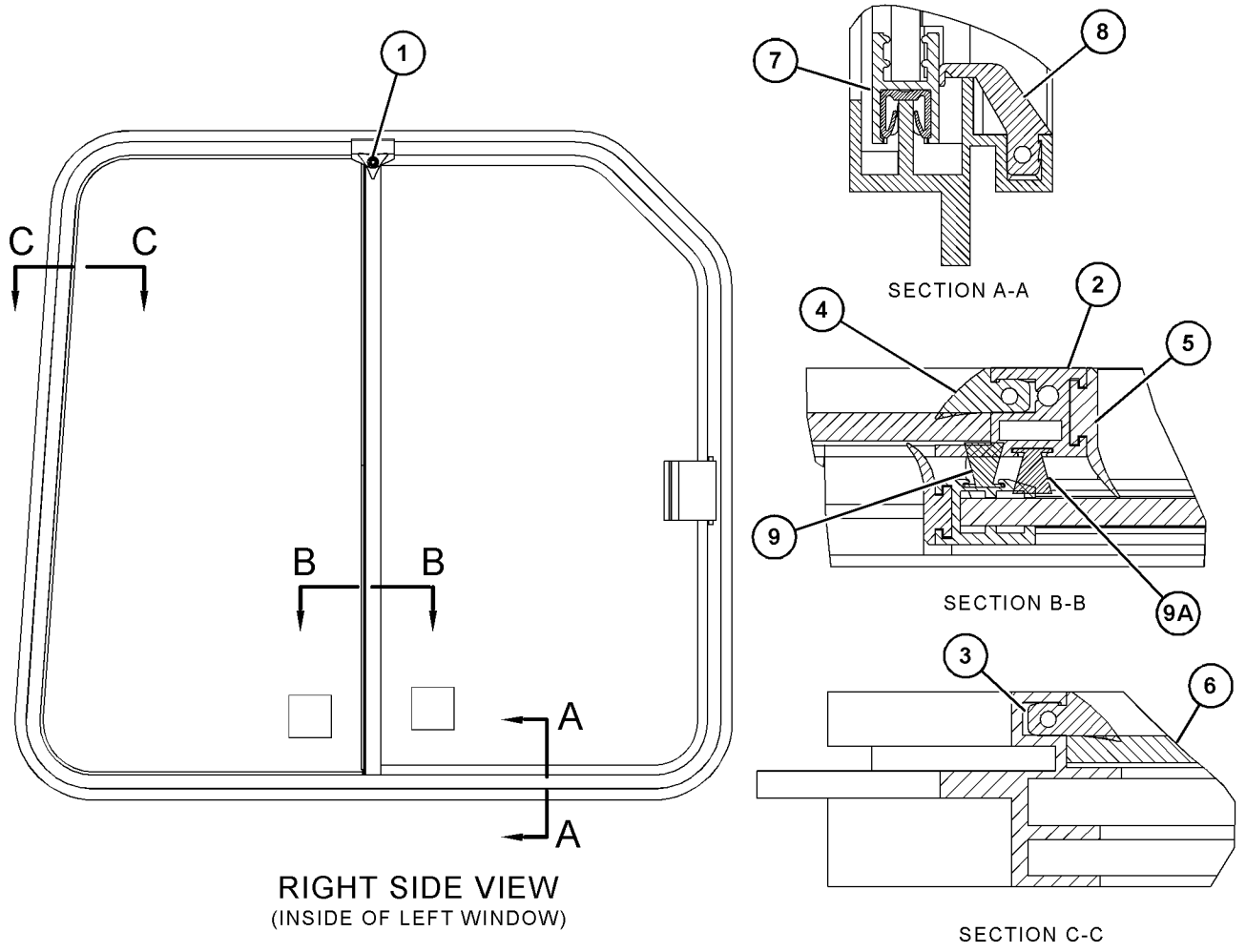

GRAPHIC #1 **<END>** g03721582

384-0860 WINDOW GP-CAB—RH

S/N: PPP1-UP; SSS1-UP; TTT1-UP
PART OF 383-6866 WINDOW GP-CAB
AN ATTACHMENT

SMCS-7310 **i05901187**

NOTE	REF NO	GRAPHIC REF	PART NUMBER	QTY	PART NAME 1 2 3 4 5 6 (PRODUCT LEVEL)	SEE PAGE
	1	1	**352-4897**	1	LOCK AS	
Y	2	1	*447-0299*	1	WINDOW GP-CAB	800
	3	1	**447-0301**	1	GLASS-FIXED	
	4	1	**447-0302**	1	PILLAR	
	5	1	**447-0304**	1	SEAL	
	6	1	**447-0305**	1	SEAL	
	7	1	**447-0307**	1	SEAL	
E	8	1	**447-0306**		SEAL (139-CM)	
E	9	1	**425-0242**		SEAL (75-CM)	
E	9A	1	**425-0242**		SEAL (73-CM)	

E - ORDER BY THE CENTIMETER
Y - SEPARATE ILLUSTRATION

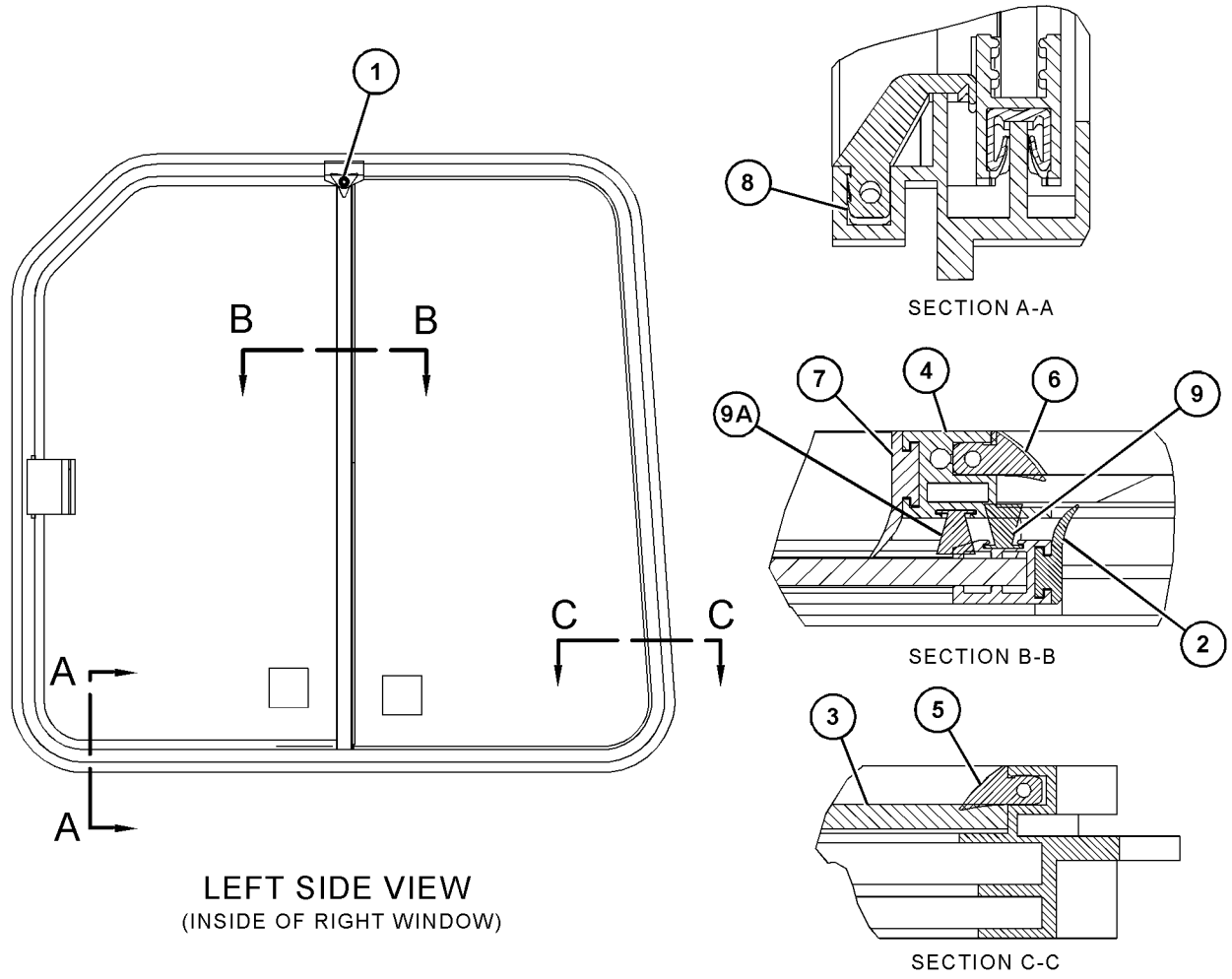

GRAPHIC #1 **<END>** g03721581

389-1414 WINDOW GP-CAB

S/N: PPP1-UP; SSS1-UP; TTT1-UP
DUAL PANE
PART OF 393-6485 CAB AR-ENCLOSED ROPS
AN ATTACHMENT

SMCS-7310 **i05899841**

NOTE	REF NO	GRAPHIC REF	PART NUMBER	QTY	PART NAME 1 2 3 4 5 6 (PRODUCT LEVEL)	SEE PAGE
	1	1	**389-0855**	1	GLASS AS-DOOR (LH)	
	2	1	**389-0856**	1	GLASS AS-DOOR (RH)	
	3	1	**390-3151**	1	GLASS AS-FRONT	
	4	1	**390-3152**	1	GLASS AS (LH) (SIDE)	
	5	1	**390-3153**	1	GLASS AS (RH) (SIDE)	
	6	1	**390-3154**	1	GLASS AS-REAR	
D	7	1	**5P-5768**		SEAL (1.78-M)	
D	8	1	**5P-6605**		SEAL (3.27-M)	
D	8A	1	**5P-6605**		SEAL (3.1-M EACH)	
E	9	1	**353-7114**		SEAL (357.5-CM EACH)	

D - ORDER BY THE METER
E - ORDER BY THE CENTIMETER

389-1414 **WINDOW GP-CAB (*contd.*)** **i05899841**

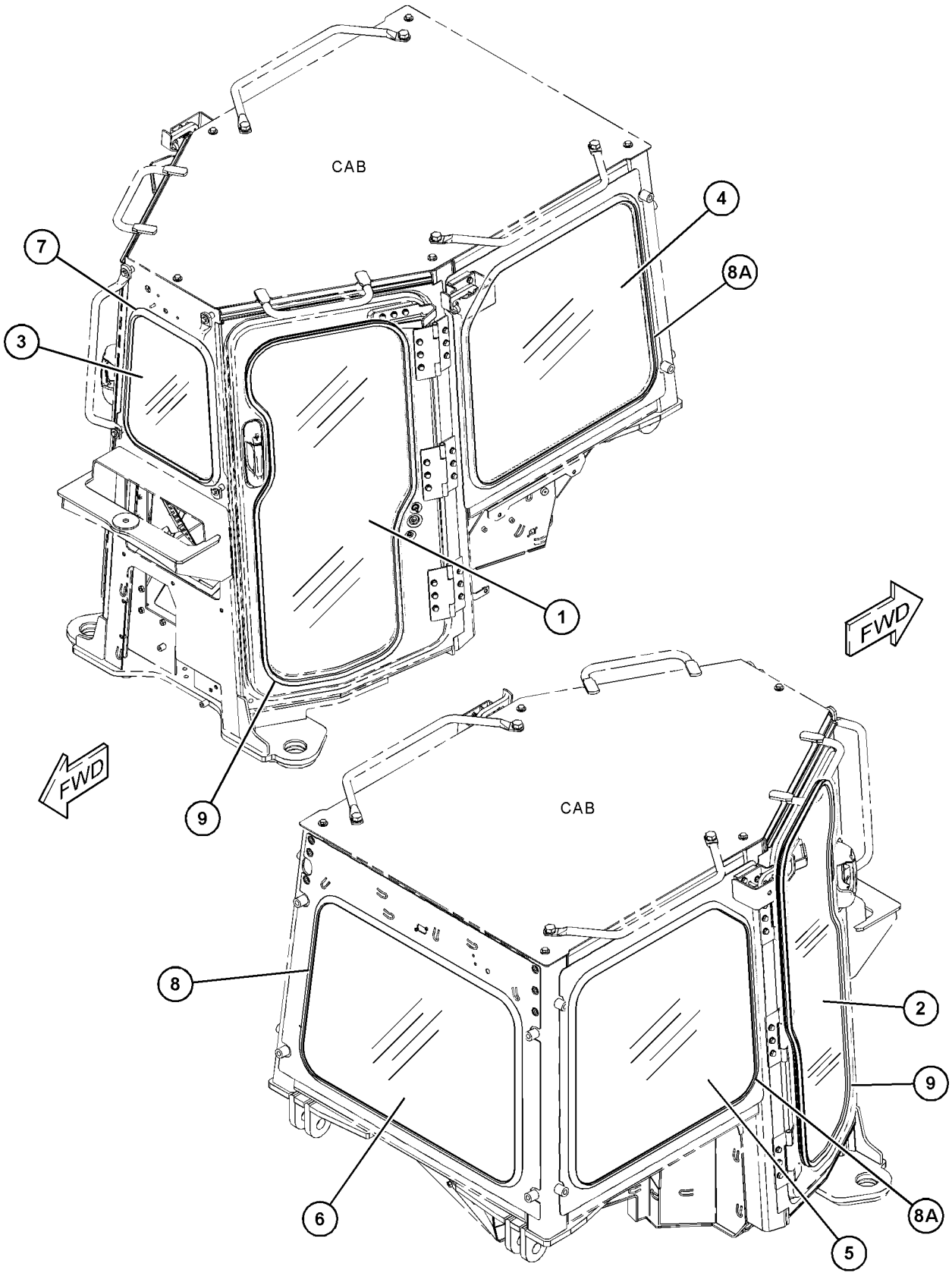

GRAPHIC #1 **<END>** g03720684

447-0299 WINDOW GP-CAB—RH

S/N: PPP1-UP; SSS1-UP; TTT1-UP
PART OF 384-0860 WINDOW GP-CAB
AN ATTACHMENT

SMCS-7310 **i05901249**

NOTE	REF NO	GRAPHIC REF	PART NUMBER	QTY	PART NAME 1 2 3 4 5 6 (PRODUCT LEVEL)	SEE PAGE
	1	1	**302-2136**	1	CATCH AS	
	2	1	**447-0300**	4	SLIPPER	
	3	1	**447-0308**	1	SEAL	
	4	1	**447-0310**	1	GLASS-SLIDING	
	5	1	**447-0311**	1	FRAME	
	6	1	**447-0312**	1	PILLAR	
E	7	1	**447-0313**		SEAL (91-CM)	
E	7A	1	**447-0313**		SEAL (24-CM)	
E	7B	1	**447-0313**		SEAL (14-CM)	

E - ORDER BY THE CENTIMETER

447-0299 **WINDOW GP-CAB (*contd.*)** **i05901249**

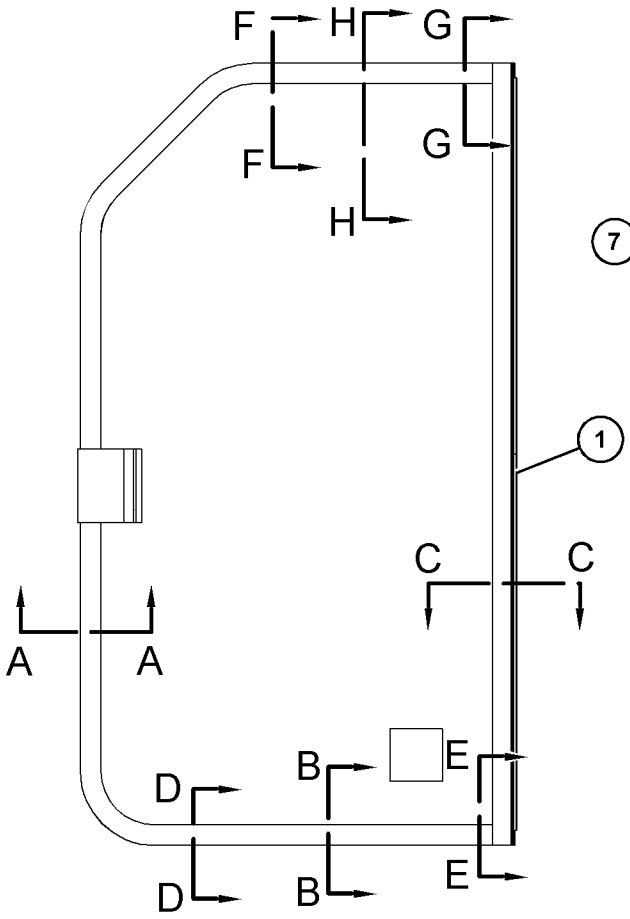

LEFT SIDE VIEW
(INSIDE OF RIGHT WINDOW)

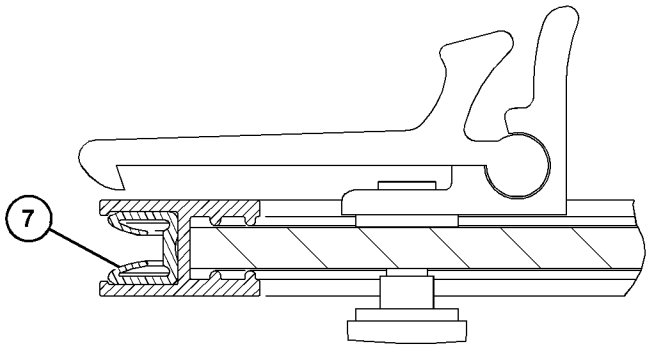

SECTION A-A

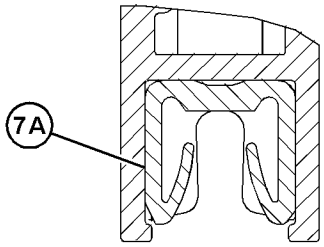

SECTION B-B

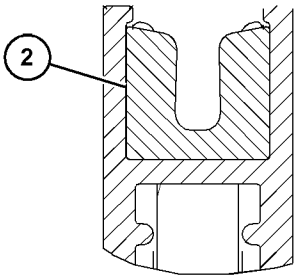

SECTION G-G

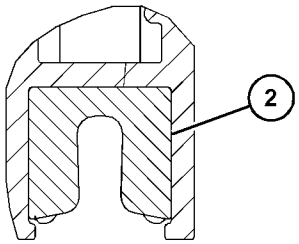

SECTION E-E

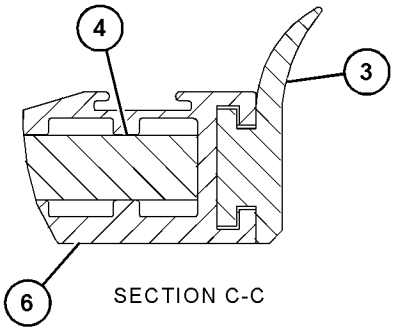

SECTION C-C

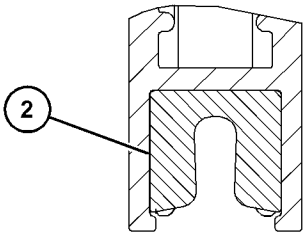

SECTION D-D

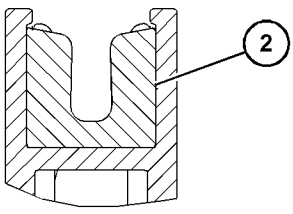

SECTION F-F

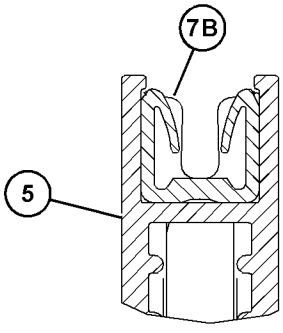

SECTION H-H

GRAPHIC #1 **<END>** g03721601

447-0315 WINDOW GP-CAB—LH

S/N: PPP1-UP; SSS1-UP; TTT1-UP
PART OF 384-0859 WINDOW GP-CAB
AN ATTACHMENT

SMCS-7310 **i05901106**

NOTE	REF NO	GRAPHIC REF	PART NUMBER	QTY	PART NAME 1 2 3 4 5 6 (PRODUCT LEVEL)	SEE PAGE
	1	1	**302-2136**	1	CATCH AS	
	2	1	**447-0300**	4	SLIPPER	
	3	1	**447-0308**	1	SEAL	
	4	1	**447-0311**	1	FRAME	
	5	1	**447-0312**	1	PILLAR	
	6	1	**447-0316**	1	GLASS-SLIDING	
E	7	1	**447-0313**		SEAL (91-CM)	
E	7A	1	**447-0313**		SEAL (24-CM)	
E	7B	1	**447-0313**		SEAL (14-CM)	

E - ORDER BY THE CENTIMETER

447-0315 **WINDOW GP-CAB (*contd.*)** **i05901106**

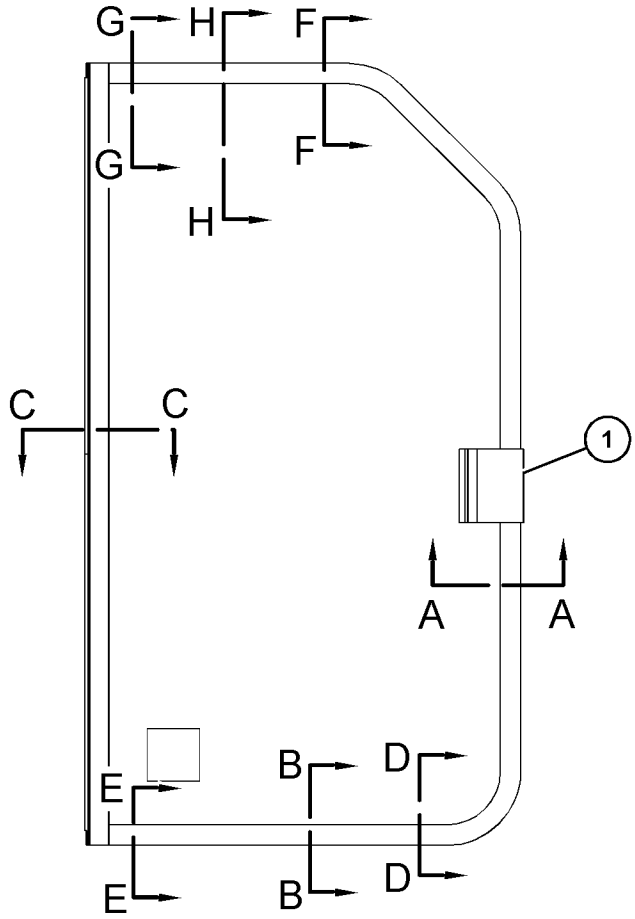

RIGHT SIDE VIEW
(INSIDE OF LEFT WINDOW)

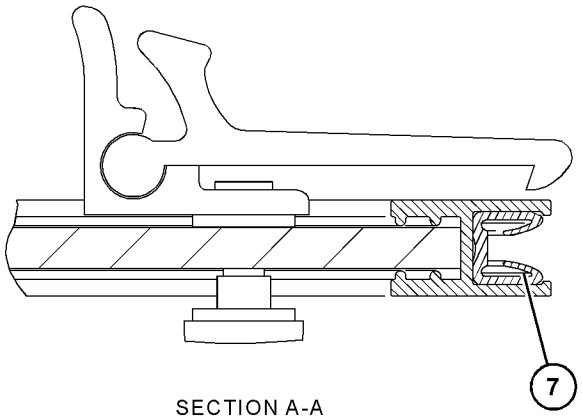

SECTION A-A

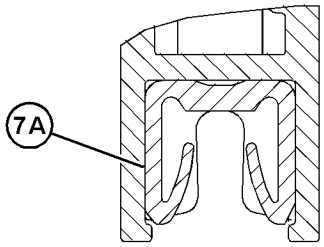

SECTION B-B

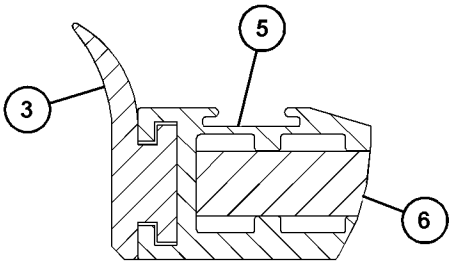

SECTION C-C

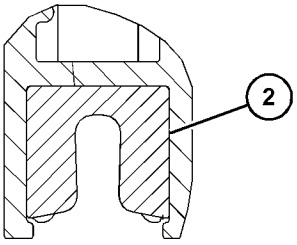

SECTION E-E

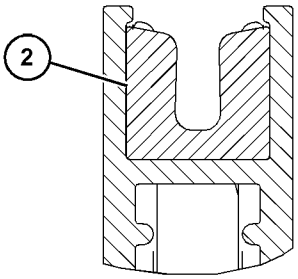

SECTION G-G

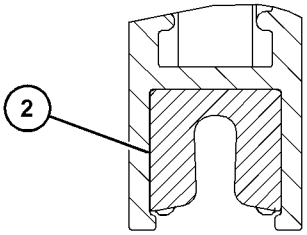

SECTION D-D

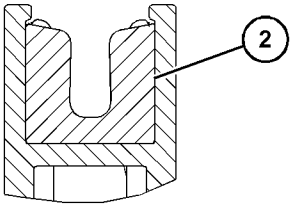

SECTION F-F

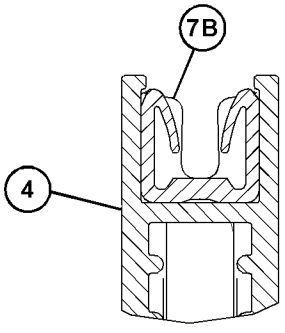

SECTION H-H

GRAPHIC #1 **<END>** g03721583

374-4733 WIPER GP-WINDOW

S/N: PPP1-UP; SSS1-UP; TTT1-UP
PART OF 393-6480 CAB AR, 393-6485 CAB AR-ENCLOSED ROPS
AN ATTACHMENT

SMCS-7305 **i05898297**

NOTE	REF NO	GRAPHIC REF	PART NUMBER	QTY	PART NAME 1 2 3 4 5 6 (PRODUCT LEVEL)	SEE PAGE
	1	1	**3S-2093**	24	STRAP-CABLE	
	2	1	**3V-3263**	2	CONNECTOR (HOSE)	
	3	2	**6V-5849**	3	BLADE AS-WIPER (350-MM)	
					(EACH INCLUDES)	
		2	**8C-5060**	1	KIT-WIPER BLADE (INCLUDES 2-BLADES)	
	4	1,2	**8T-5400**	8	CONNECTOR AS	
	5	2	**146-6433**	1	BLADE AS-WIPER (500-MM)	
Y	6	2	**222-5374**	1	ARM GP-WINDOW WIPER (DOOR, RH)	684
Y	7	2	**222-5378**	1	ARM GP-WINDOW WIPER (DOOR, LH)	685
Y	8	2	**293-0754**	1	ARM GP-WINDOW WIPER (REAR)	686
Y	9	2	**330-5013**	1	MOTOR GP-WINDOW WIPER (DOOR, LH)	742
Y	10	2	**330-5014**	1	MOTOR GP-WINDOW WIPER (DOOR, RH)	743
Y	11	2	**330-5017**	1	MOTOR GP-WINDOW WIPER (REAR)	744
Y	12	2	**393-8111**	1	MOTOR GP-WINDOW WIPER (FRONT SIDE)	745
Y	13	2	**393-8112**	1	ARM GP-WINDOW WIPER (FRONT SIDE)	687
M	14	2	**344-5674**	1	NUT (M8X1.25-THD)	
E	15	1	**144-0195**		HOSE (197-CM)	
E	15A	1	**144-0195**		HOSE (292-CM)	
E	15B	1	**144-0195**		HOSE (319-CM)	
E	15C	1	**144-0195**		HOSE (227-CM)	
E	15D	1	**144-0195**		HOSE (46-CM)	
E	15E	1	**144-0195**		HOSE (47-CM EACH)	
E	15F	1	**144-0195**		HOSE (49-CM)	
E	16	1	**7X-7927**		TAPE-IDENTIFICATION (LETTER A) (6-CM)	
E	17	1	**7X-7928**		TAPE-IDENTIFICATION (LETTER B) (6-CM)	
E	18	1	**7X-7929**		TAPE-IDENTIFICATION (LETTER C) (6-CM)	
E	19	1	**7X-7930**		TAPE-IDENTIFICATION (LETTER D) (6-CM)	

E - ORDER BY THE CENTIMETER
M - METRIC PART
Y - SEPARATE ILLUSTRATION

374-4733 **WIPER GP-WINDOW (*contd.*)** **i05898297**

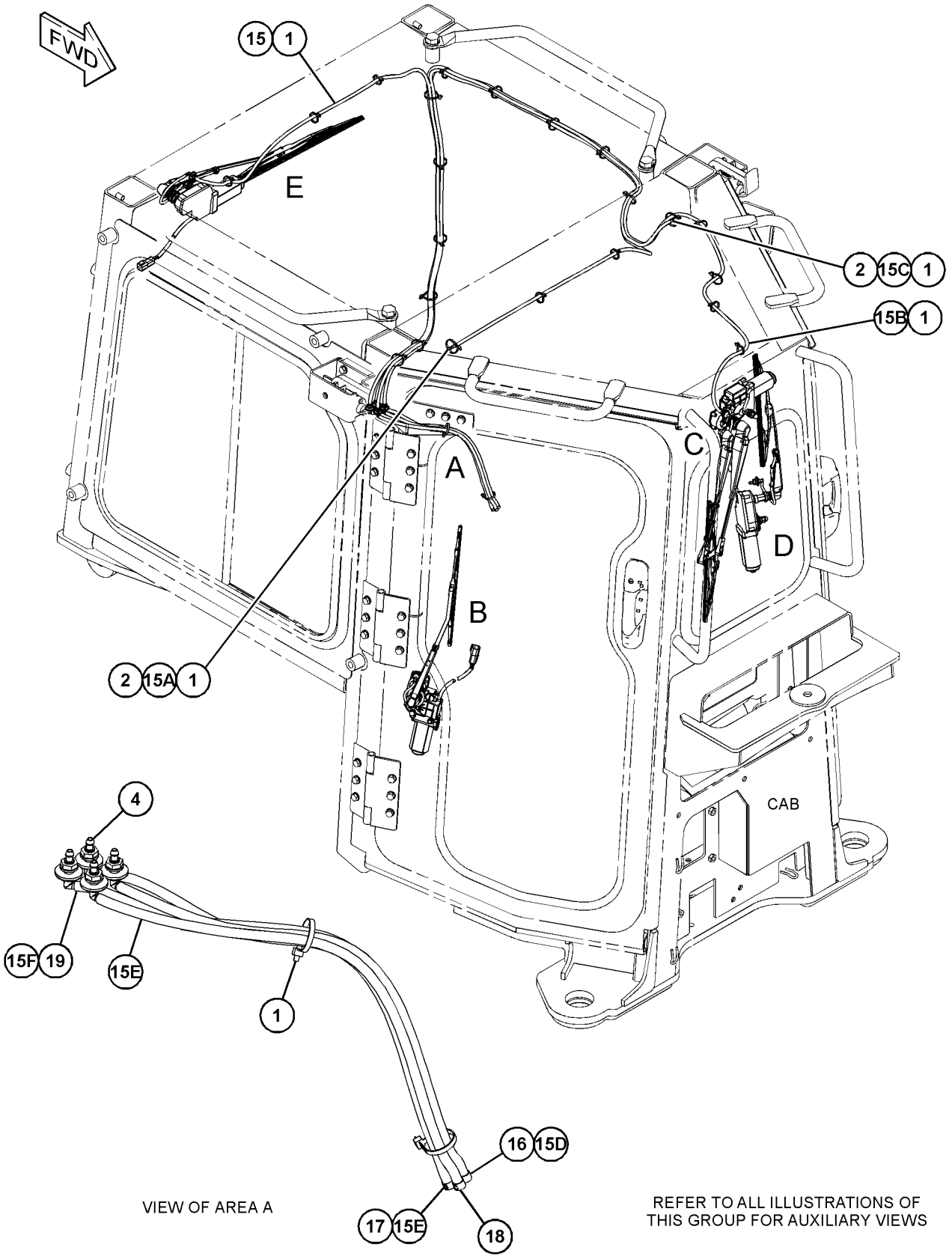

GRAPHIC #1 g03722552

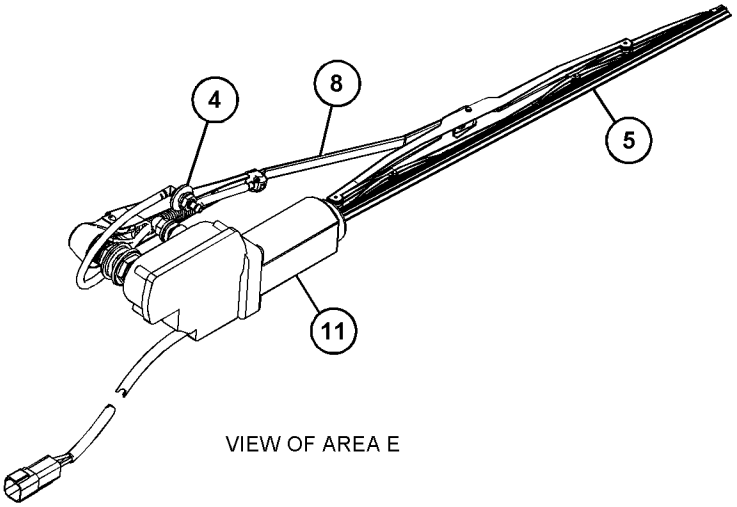

VIEW OF AREA E

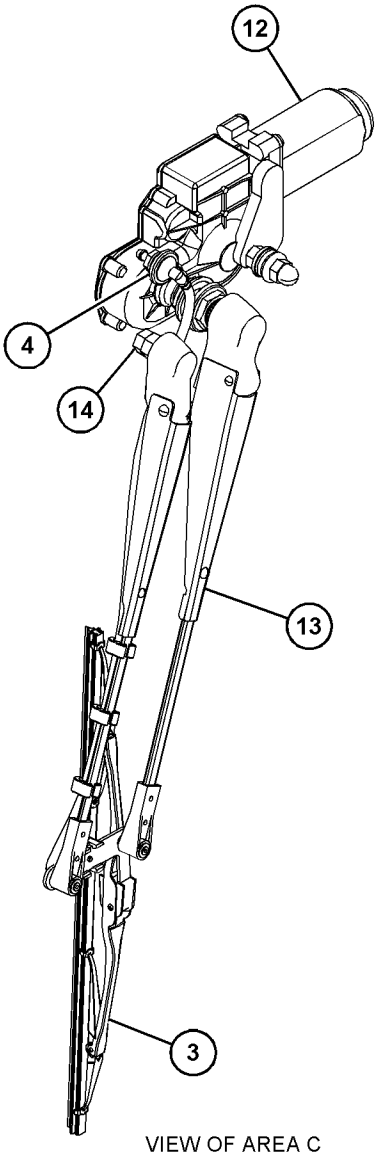

VIEW OF AREA C

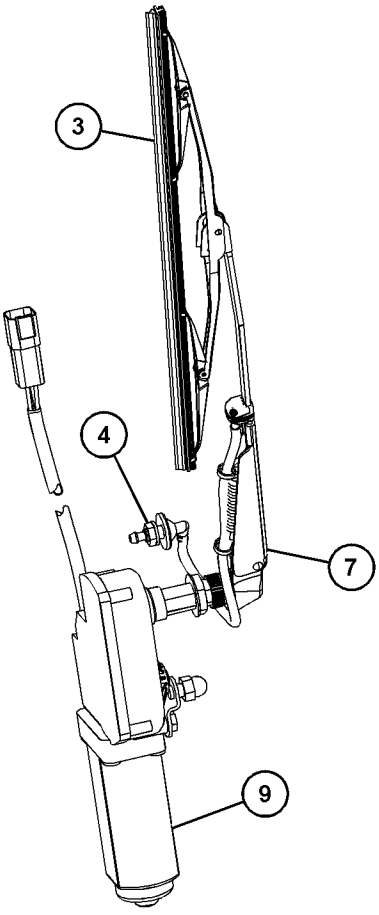

VIEW OF AREA D

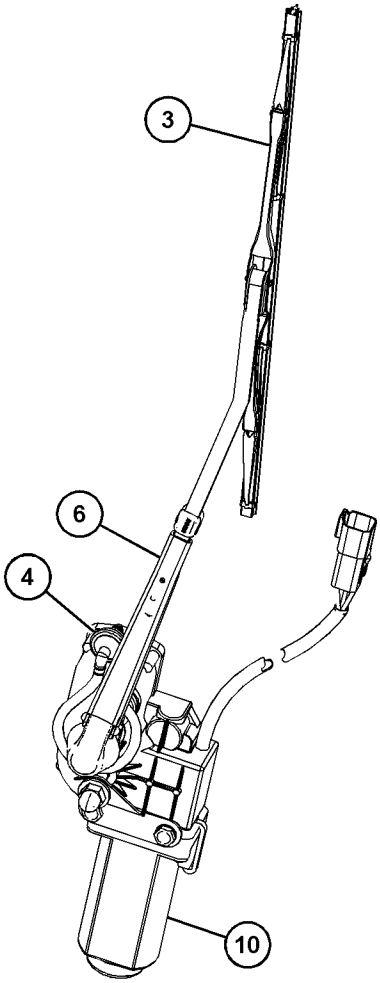

VIEW OF AREA B

GRAPHIC #2 **<END>** g03722555

453-3902 BLADE & EDGE GP-ANGLING

S/N: RTH1-UP

AN ATTACHMENT

SMCS-6060 **i05683012**

NOTE	REF NO	GRAPHIC REF	PART NUMBER	QTY	PART NAME 1 2 3 4 5 6 (PRODUCT LEVEL)	SEE PAGE
Y	1	1	*6Y-2039*	1	EDGE GP-BIT & CUTTING (ANGLING)	832
	2	1	**419-0093**	1	PLATE AS-IDENTIFICATION (SERIAL NUMBER) (BLADE)	
		1	**2Y-9790**	1	PLATE-SERIAL NUMBER (BLADE)	
					(FOR CBL USE)	
		1	**8T-7371**	1	PLATE-SERIAL NUMBER (BLADE)	
					(FOR CRTT USE)	
Y	3	1	**251-9820**	1	BLADE AS (ANGLING)	817
	4	1	**4B-4158**	2	SCREW-DRIVE (NO 4XO.25-IN)	

Y - SEPARATE ILLUSTRATION

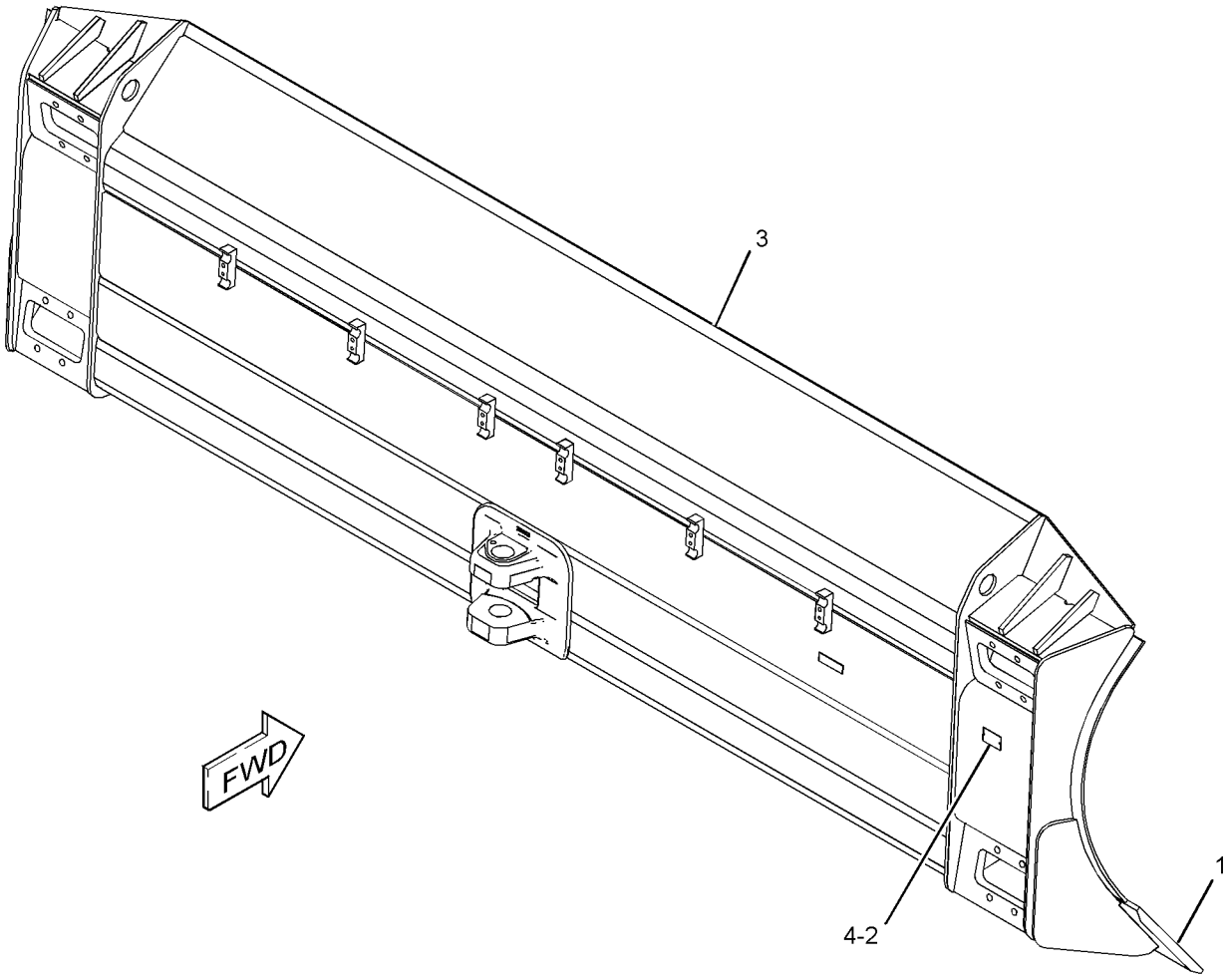

GRAPHIC #1 **<END>** g03581693

453-3903 BLADE & EDGE GP-ANGLING—FORESTRY

S/N: TTT1-UP

AN ATTACHMENT

SMCS-6060 **i05643918**

NOTE	REF NO	GRAPHIC REF	PART NUMBER	QTY	PART NAME 1 2 3 4 5 6 (PRODUCT LEVEL)	SEE PAGE
	1	1	**4B-4158**	2	SCREW-DRIVE (NO 4X0.25-IN)	
	2	1	**419-0093**	1	PLATE AS-IDENTIFICATION (SERIAL NUMBER) (BLADE)	
		1	**2Y-9790**	1	PLATE-SERIAL NUMBER (BLADE)	
					(FOR CBL USE)	
		1	**8T-7371**	1	PLATE-SERIAL NUMBER (BLADE)	
					(FOR CRTT USE)	
Y	3	1	**430-7854**	1	BLADE AS-ANGLING	819
Y	4	1	*434-6371*	1	EDGE GP-BIT & CUTTING	835

Y - SEPARATE ILLUSTRATION

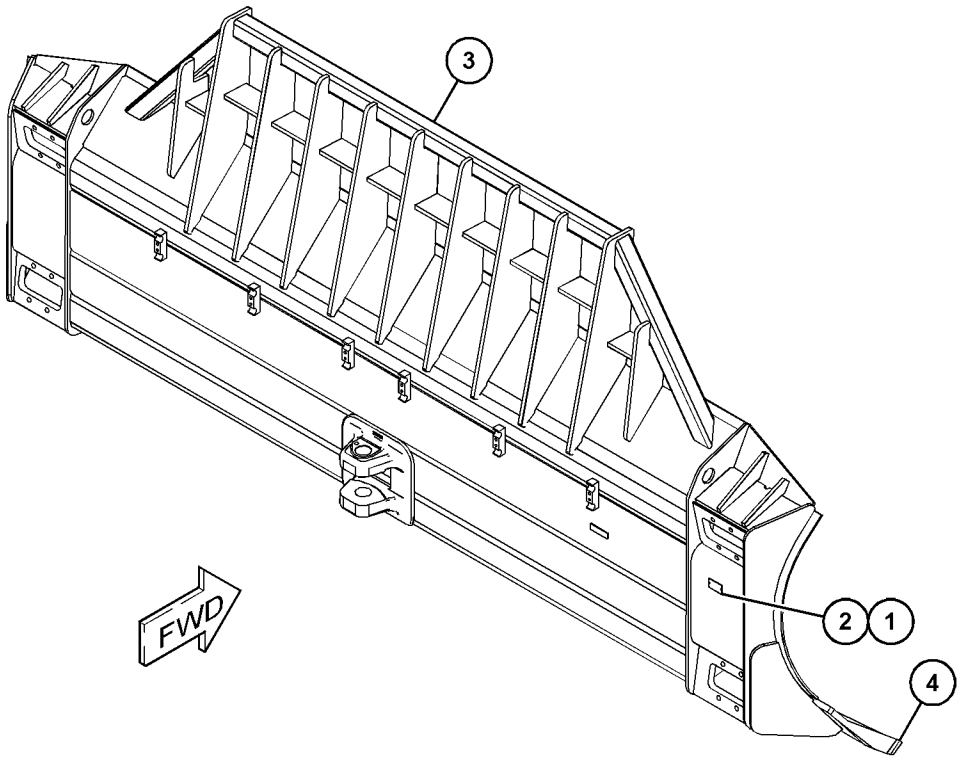

GRAPHIC #1 **<END>** g03582670

448-4621 BLADE & EDGE GP-SEMI-UNIVERSAL

S/N: RTE1-UP

AN ATTACHMENT

SMCS-6060 **i05643915**

NOTE	REF NO	GRAPHIC REF	PART NUMBER	QTY	PART NAME 1 2 3 4 5 6 (PRODUCT LEVEL)	SEE PAGE
	1	1	**4B-4158**	2	SCREW-DRIVE (NO 4X0.25-IN)	
	2	1	**419-0093**	1	PLATE AS-IDENTIFICATION (SERIAL NUMBER) (BLADE)	
		1	**2Y-9790**	1	PLATE-SERIAL NUMBER (FOR CBL USE)	
		1	**8T-7371**	1	PLATE-SERIAL NUMBER (FOR CRTT USE)	
Y	3	1	**449-7091**	1	BLADE AS-SEMI-UNIVERSAL	823
Y	4	1	*450-6401*	1	EDGE GP-BIT & CUTTING	836

Y - SEPARATE ILLUSTRATION

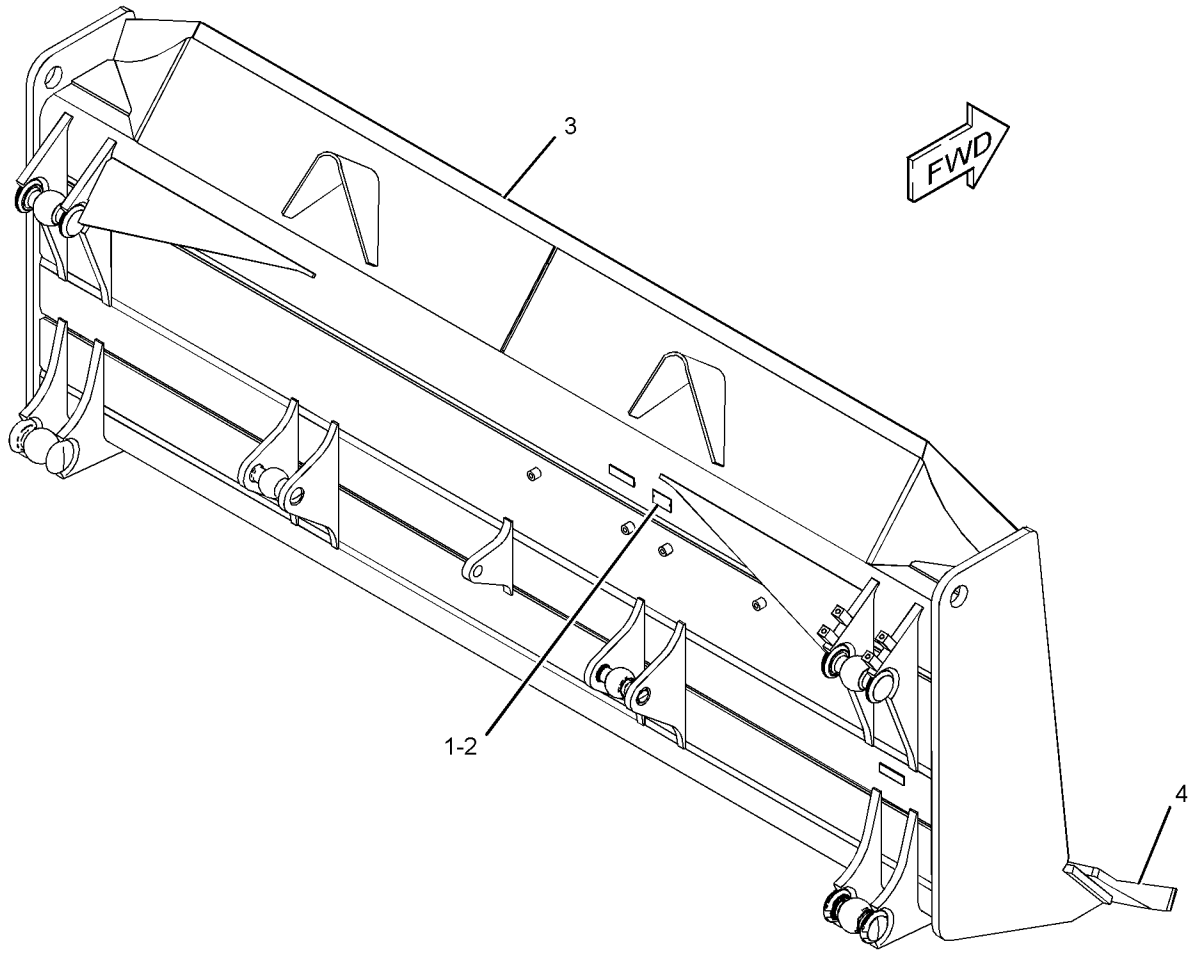

GRAPHIC #1 **<END>** g03582993

448-4622 BLADE & EDGE GP-SEMI-UNIVERSAL

S/N: RTF1-UP

AN ATTACHMENT

SMCS-6060 **i05740958**

NOTE	REF NO	GRAPHIC REF	PART NUMBER	QTY	PART NAME 1 2 3 4 5 6 (PRODUCT LEVEL)	SEE PAGE
Y	1	1	**449-7092**	1	BLADE AS-SEMI-UNIVERSAL	824
Y	2	1	*450-6401*	1	EDGE GP-BIT & CUTTING	836
	3	1	**4B-4158**	2	SCREW-DRIVE (NO 4X0.25-IN)	
	4	1	**419-0093**	1	PLATE AS-IDENTIFICATION (SERIAL NUMBER)	
		1	**2Y-9790**	1	PLATE-SERIAL NUMBER	
					(FOR CBL USE)	
		1	**8T-7371**	1	PLATE-SERIAL NUMBER	
					(FOR CRTT USE)	

Y - SEPARATE ILLUSTRATION

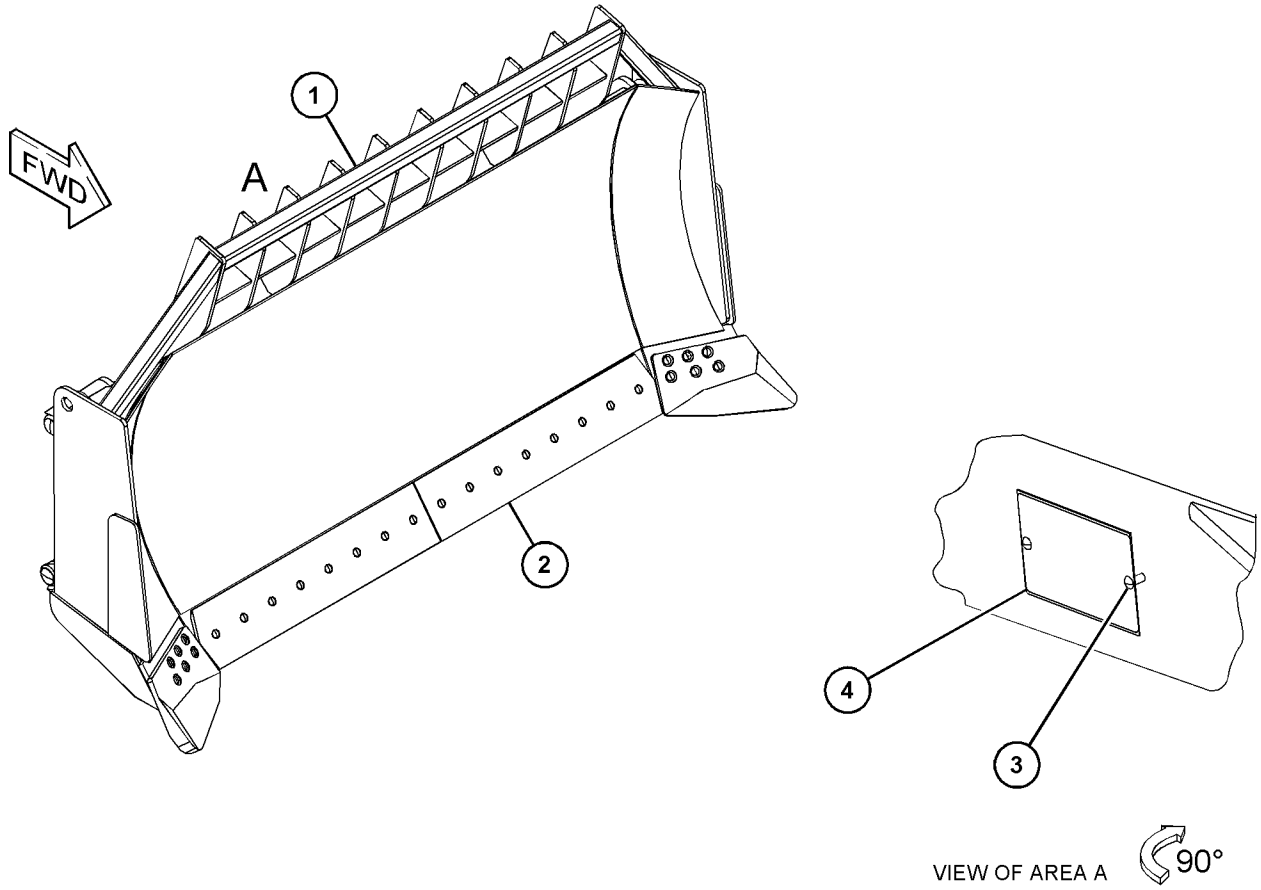

GRAPHIC #1 **<END>** g03654709

453-3901 BLADE & EDGE GP-SEMI-UNIVERSAL

S/N: RTE1-UP

AN ATTACHMENT

SMCS-6060 **i06231682**

NOTE	REF NO	GRAPHIC REF	PART NUMBER	QTY	PART NAME 1 2 3 4 5 6 (PRODUCT LEVEL)	SEE PAGE
	1	1	**419-0093**	1	PLATE AS-IDENTIFICATION (SERIAL NUMBER) (BLADE)	
		1	**2Y-9790**	1	PLATE-SERIAL NUMBER (FOR CBL USE)	
		1	**8T-7371**	1	PLATE-SERIAL NUMBER (FOR CRTT USE)	
Y	2	1	*9W-3762*	1	EDGE GP-BIT & CUTTING (SEMI-UNIVERSAL)	833
Y	3	1	**453-7506**	1	BLADE AS-SEMI-UNIVERSAL	825
	4	1	**4B-4158**	2	SCREW-DRIVE (NO 4XO.25-IN)	

Y - SEPARATE ILLUSTRATION

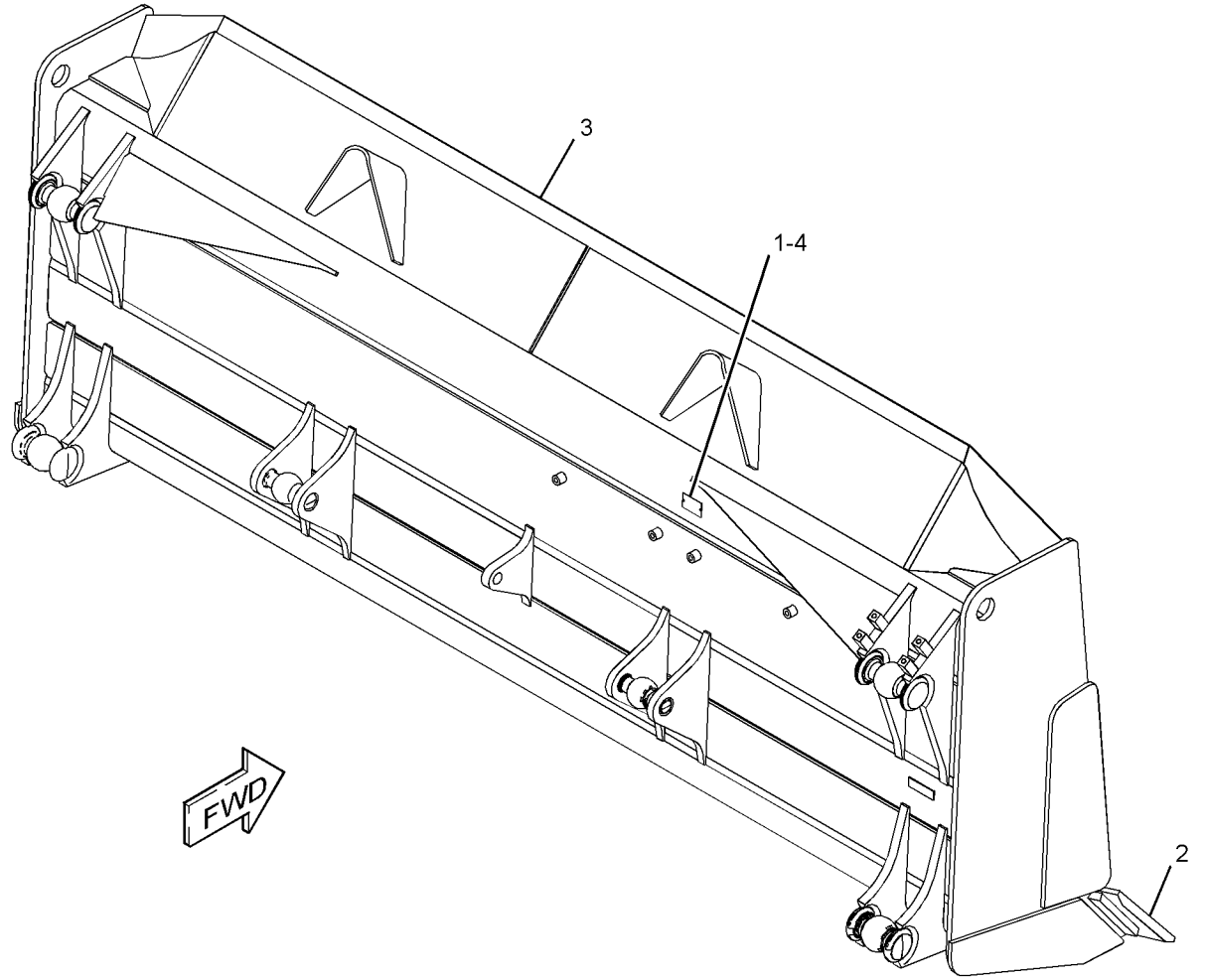

GRAPHIC #1 **<END>** g03581705

453-3904 BLADE & EDGE GP-SEMI-UNIVERSAL

S/N: RTF1-UP

AN ATTACHMENT

SMCS-6060 **i05643919**

NOTE	REF NO	GRAPHIC REF	PART NUMBER	QTY	PART NAME 1 2 3 4 5 6 (PRODUCT LEVEL)	SEE PAGE
	1	1	**4B-4158**	2	SCREW-DRIVE (NO 4X0.25-IN)	
Y	2	1	*9W-3762*	1	EDGE GP-BIT & CUTTING	833
	3	1	**419-0093**	1	PLATE AS-IDENTIFICATION (SERIAL NUMBER) (BLADE)	
		1	**2Y-9790**	1	PLATE-SERIAL NUMBER	
					(FOR CBL USE)	
		1	**8T-7371**	1	PLATE-SERIAL NUMBER	
					(FOR CRTT USE)	
Y	4	1	**453-7507**	1	BLADE AS-SEMI-UNIVERSAL	826

Y - SEPARATE ILLUSTRATION

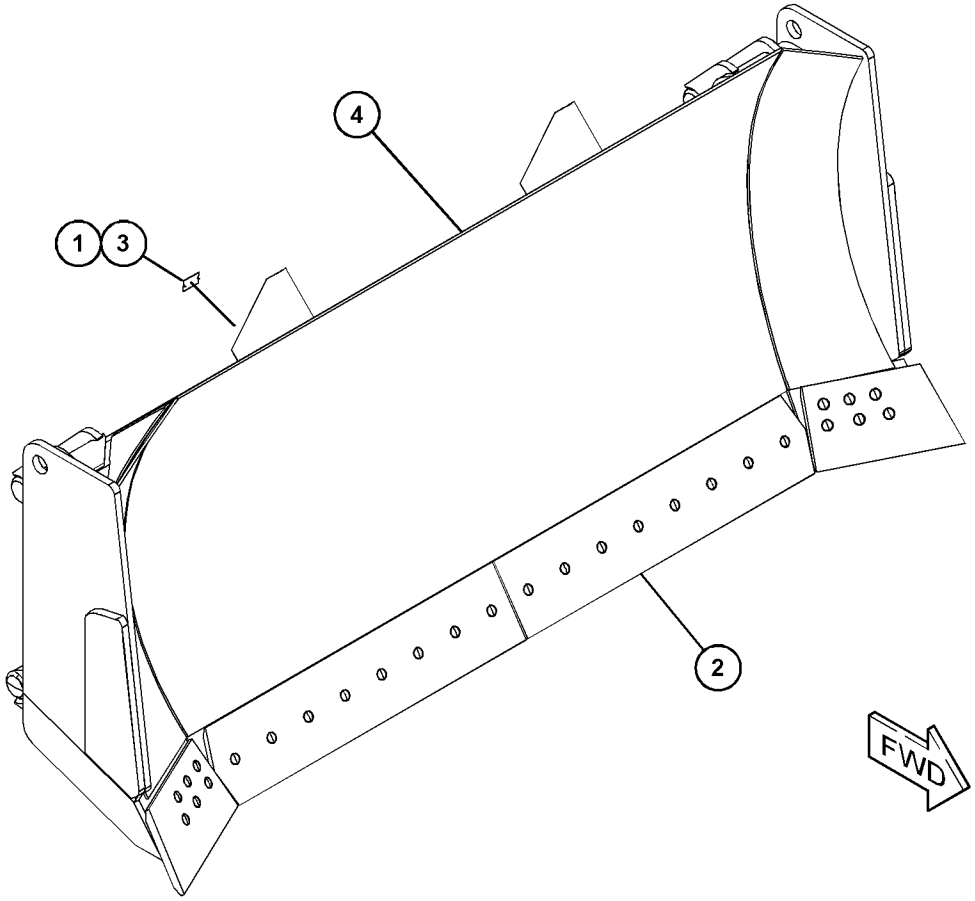

GRAPHIC #1 **<END>** g03583700

456-5982 BLADE & EDGE GP-SEMI-UNIVERSAL—WASTE HANDLING

S/N: RTF1-UP

AN ATTACHMENT

SMCS-6060 **i06224178**

NOTE	REF NO	GRAPHIC REF	PART NUMBER	QTY	PART NAME 1 2 3 4 5 6 (PRODUCT LEVEL)	SEE PAGE
	1	1	**4B-4158**	2	SCREW-DRIVE (NO 4X0.25-IN)	
Y	2	1	*9W-3762*	1	EDGE GP-BIT & CUTTING	833
	3	1	**8T-7371**	1	PLATE-SERIAL NUMBER (BLADE)	
Y	4	1	**456-5983**	1	BLADE AS-SEMI-UNIVERSAL	827

Y - SEPARATE ILLUSTRATION

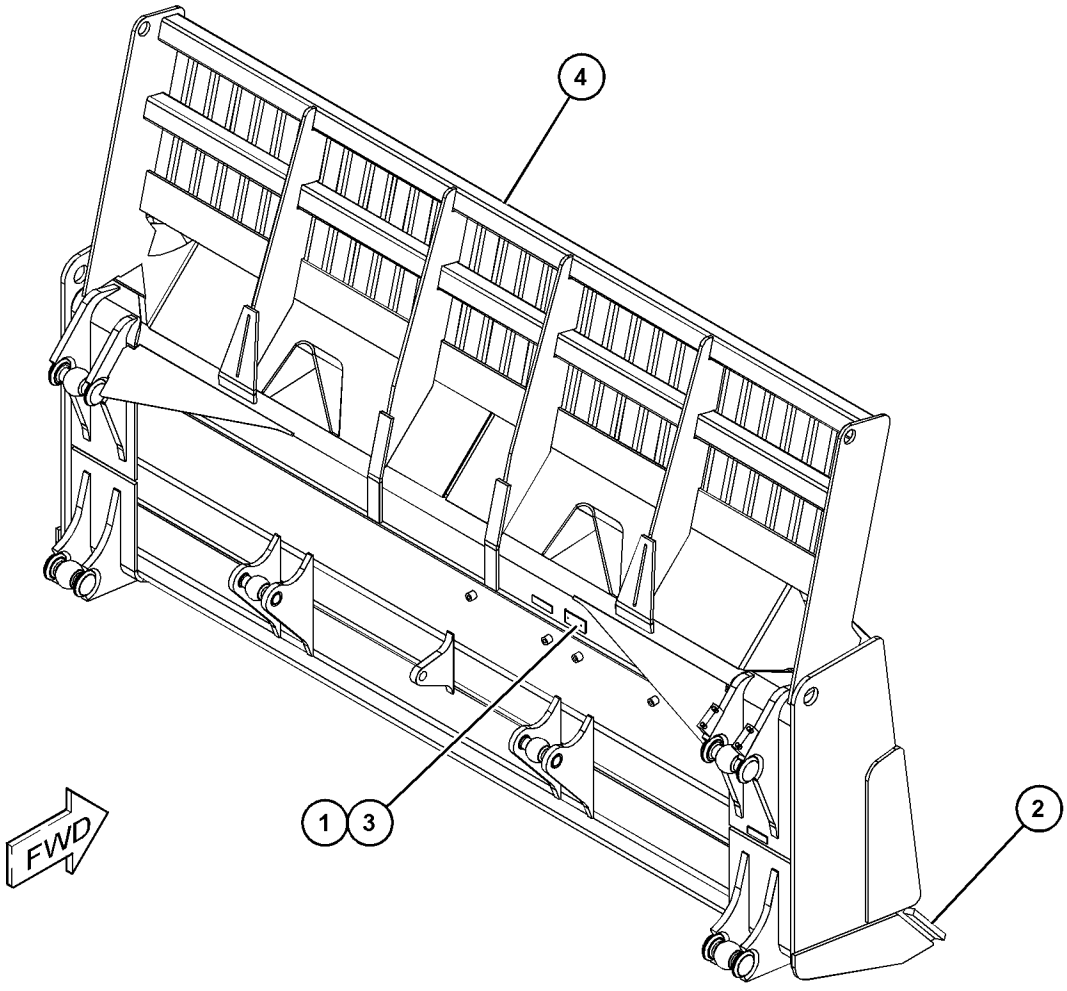

GRAPHIC #1 **<END>** g03862505

456-5977 BLADE & EDGE GP-STRAIGHT

S/N: RTS1-UP

AN ATTACHMENT

SMCS-6051 **i06139830**

NOTE	REF NO	GRAPHIC REF	PART NUMBER	QTY	PART NAME 1 2 3 4 5 6 (PRODUCT LEVEL)	SEE PAGE
	1	1	**4B-4158**	2	SCREW-DRIVE (NO 4X0.25-IN)	
Y	2	1	*6Y-1744*	1	EDGE GP-BIT & CUTTING	831
	3	1	**8T-7371**	1	PLATE-SERIAL NUMBER (BLADE)	
Y	4	1	**456-5979**	1	BLADE AS-STRAIGHT	829

Y - SEPARATE ILLUSTRATION

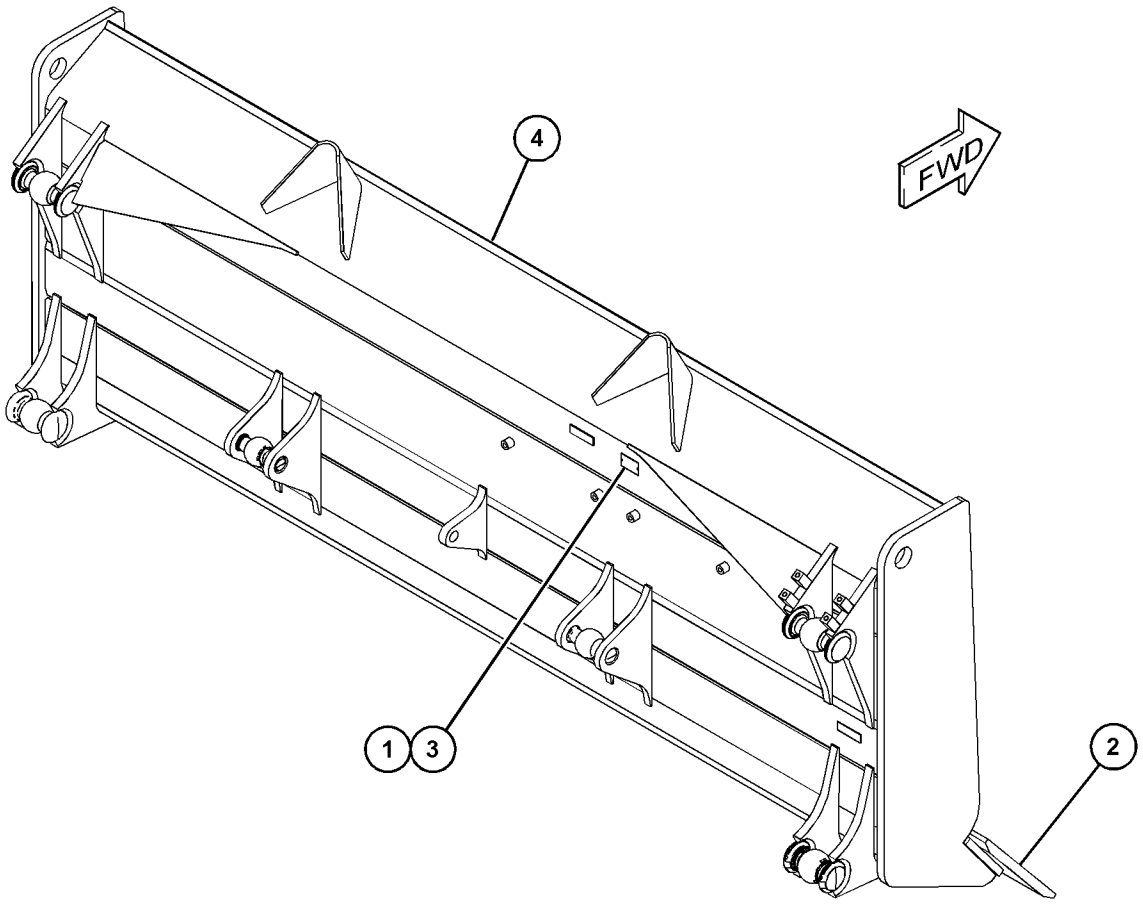

GRAPHIC #1 **<END>** g03827804

462-7253 BLADE & EDGE GP-STRAIGHT

S/N: R6L1-UP

AN ATTACHMENT

SMCS-6051 **i06231687**

NOTE	REF NO	GRAPHIC REF	PART NUMBER	QTY	PART NAME 1 2 3 4 5 6 (PRODUCT LEVEL)	SEE PAGE
	1	1	**4B-4158**	2	SCREW-DRIVE (NO 4X0.25-IN)	
Y	2	1	*229-6957*	1	EDGE GP-BIT & CUTTING	834
	3	1	**8T-7371**	1	PLATE-SERIAL NUMBER (BLADE)	
	4	1	**462-7254**	1	BLADE AS-STRAIGHT	
	4A	1	**7J-5131**	2	TRUNNION	
	4B	1	**4J-1641**	2	TRUNNION	
	4C	1	**4T-1504**	2	TRUNNION	

Y - SEPARATE ILLUSTRATION

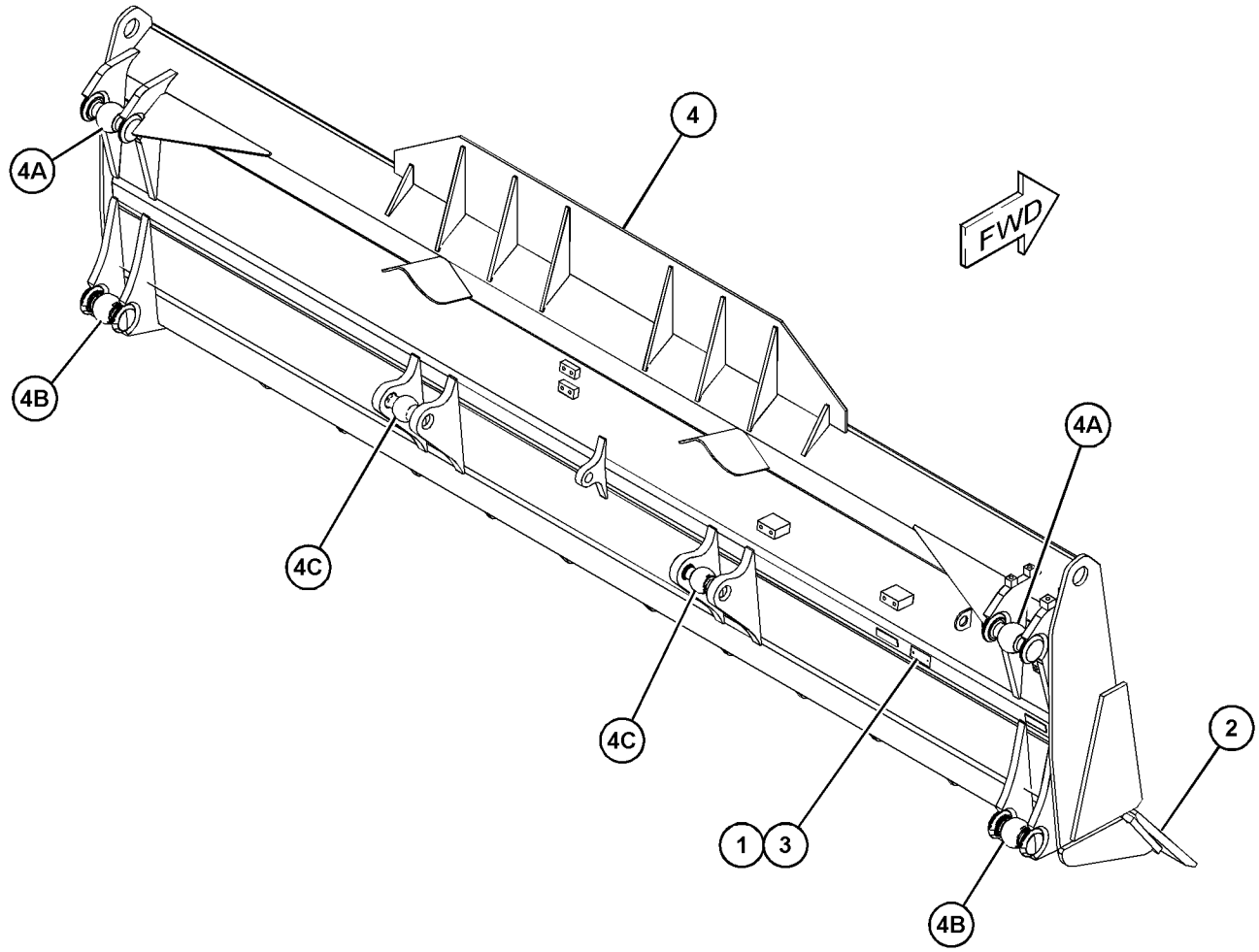

GRAPHIC #1 **<END>** g03852399

475-4130 BLADE & EDGE GP-STRAIGHT–WASTE HANDLING

S/N: R6L1-UP

AN ATTACHMENT

SMCS-6051 **i06224264**

NOTE	REF NO	GRAPHIC REF	PART NUMBER	QTY	PART NAME 1 2 3 4 5 6 (PRODUCT LEVEL)	SEE PAGE
	1	1	**4B-4158**	2	SCREW-DRIVE (NO 4X0.25-IN)	
Y	2	1	*229-6957*	1	EDGE GP-BIT & CUTTING	834
	3	1	**8T-7371**	1	PLATE-SERIAL NUMBER (BLADE)	
Y	4	1	**475-4142**	1	BLADE AS-STRAIGHT (WASTE HANDLING)	830

Y - SEPARATE ILLUSTRATION

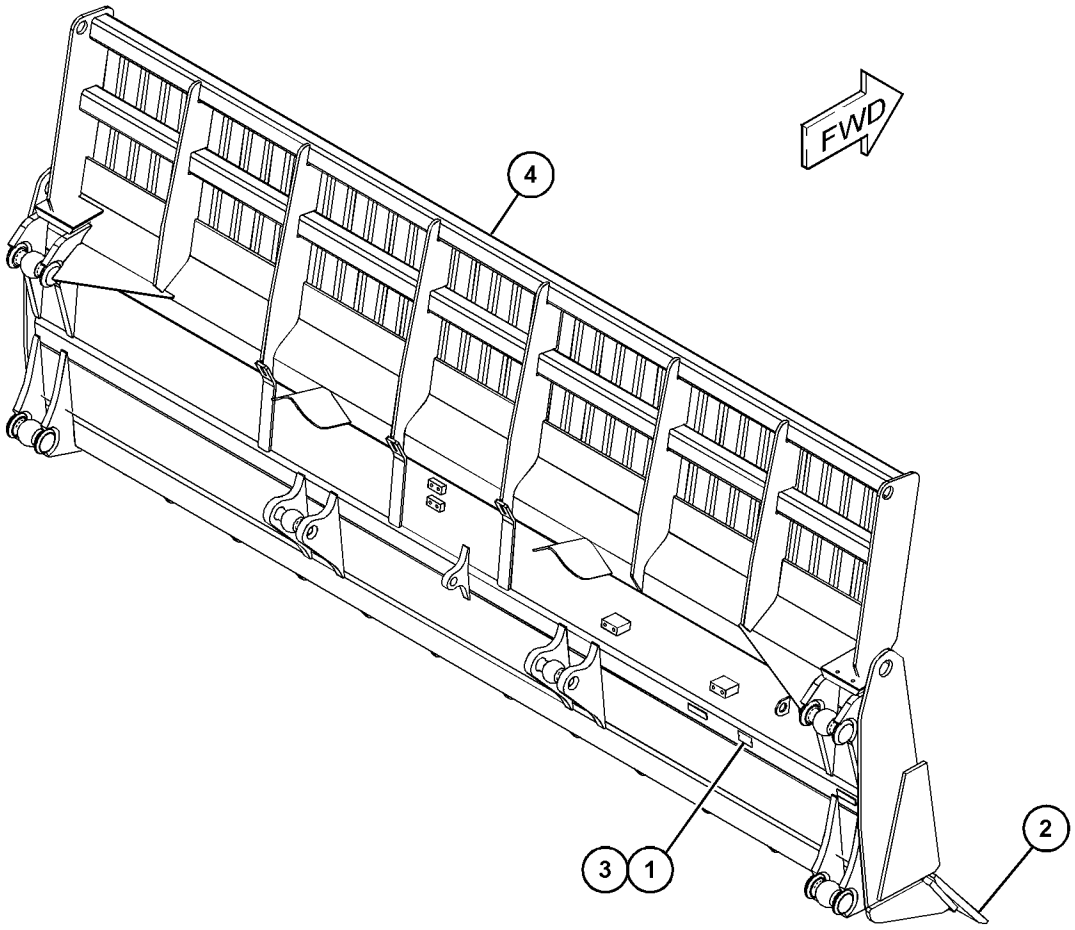

GRAPHIC #1 **<END>** g03862769

251-9820 BLADE AS–ANGLING

S/N: RTH1-UP
PART OF 453-3902 BLADE & EDGE GP-ANGLING
AN ATTACHMENT

SMCS-6060 **i05629249**

NOTE	REF NO	GRAPHIC REF	PART NUMBER	QTY	PART NAME 1 2 3 4 5 6 (PRODUCT LEVEL)	SEE PAGE
	1	1	**251-9821**	1	BRACKET	
	2	1	**8P-9770**	1	PLATE	

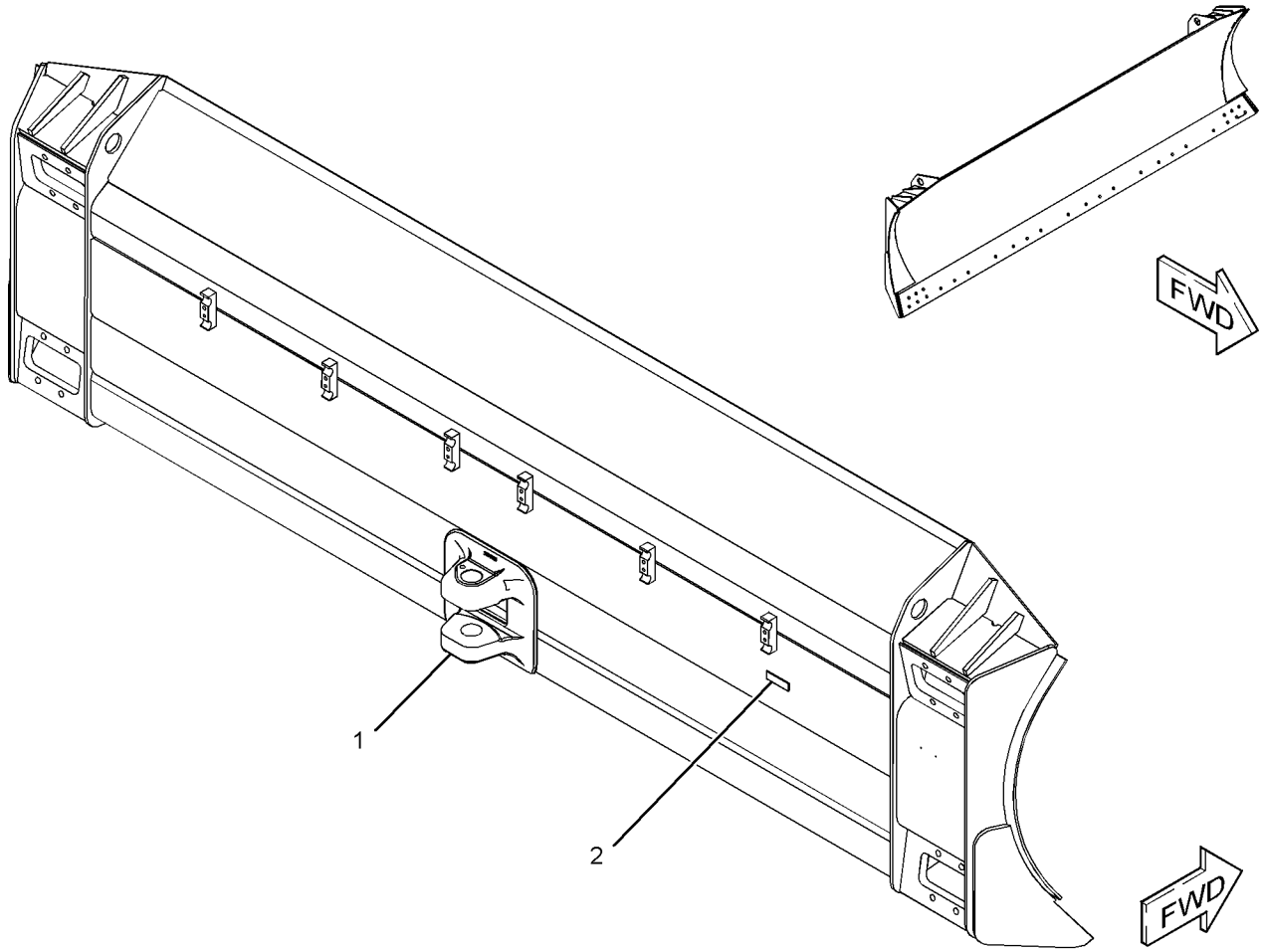

GRAPHIC #1 **<END>** g02319715

364-5488 BLADE AS-ANGLING

S/N: TTT1-UP
PART OF 430-7854 BLADE AS-ANGLING
AN ATTACHMENT

SMCS-6060 **i05644575**

NOTE	REF NO	GRAPHIC REF	PART NUMBER	QTY	PART NAME 1 2 3 4 5 6 (PRODUCT LEVEL)	SEE PAGE
	1	1	**8P-9770**	1	PLATE	
	2	1	**251-9820**	1	BLADE AS	

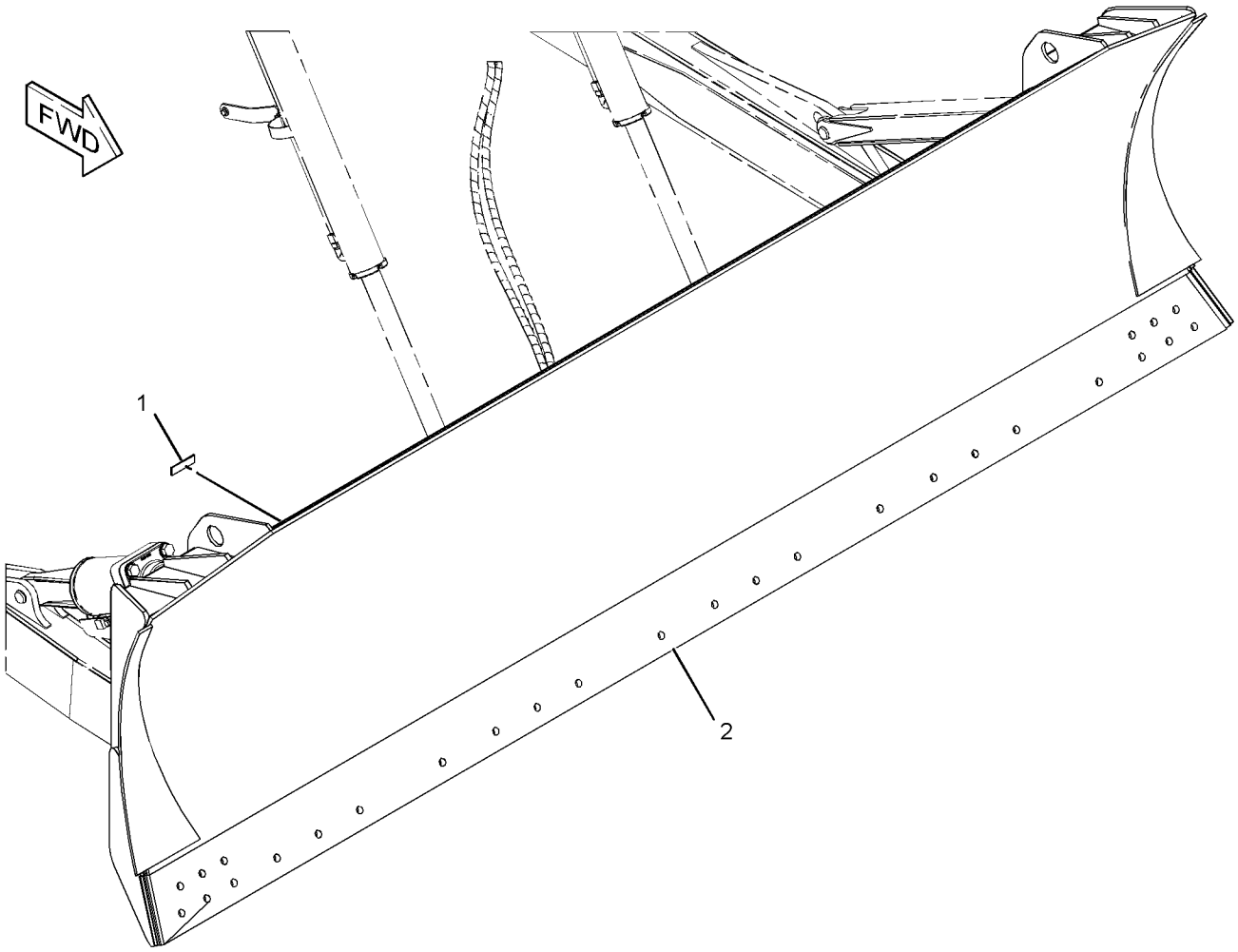

GRAPHIC #1 **<END>** g02196939

430-7854 BLADE AS-ANGLING

S/N: TTT1-UP

PART OF 453-3903 BLADE & EDGE GP-ANGLING

AN ATTACHMENT

SMCS-6060 **i05838311**

NOTE	REF NO	GRAPHIC REF	PART NUMBER	QTY	PART NAME 1 2 3 4 5 6 (PRODUCT LEVEL)	SEE PAGE
Y	1	1	**364-5488**	1	BLADE AS-ANGLING	818

Y - SEPARATE ILLUSTRATION

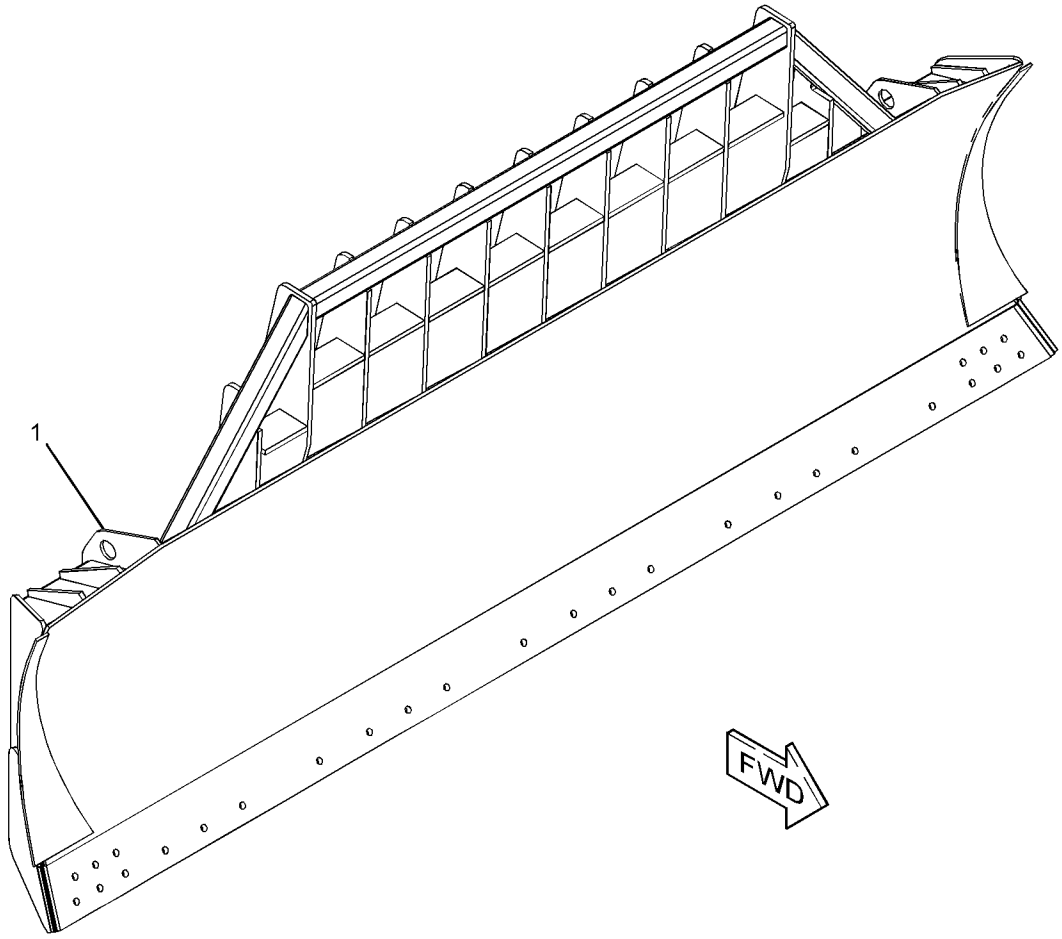

GRAPHIC #1 **<END>** g03582979

230-5556 BLADE AS-SEMI-UNIVERSAL

S/N: RTF1-UP

PART OF 449-7092, 453-7507, 456-5983 BLADE AS-SEMI-UNIVERSAL

AN ATTACHMENT

SMCS-6060 **i06105547**

NOTE	REF NO	GRAPHIC REF	PART NUMBER	QTY	PART NAME 1 2 3 4 5 6 (PRODUCT LEVEL)	SEE PAGE
	1	1	**1U-0183**	2	DEFLECTOR	
	2	1	**6Y-1390**	1	SUPPORT	
	3	1	**8E-5205**	2	SUPPORT	
	4	1	**8P-9770**	1	PLATE	
	5	1	**9W-6381**	1	PLATE	
	6	1	**135-2964**	1	BRACKET AS (LH)	
	6A	1	**7J-5131**	1	TRUNNION	
	7	1	**135-2966**	1	BRACKET AS (RH)	
	7A	1	**7J-5131**	1	TRUNNION	
	8	1	*135-3084*	2	BRACKET AS	
					(EACH INCLUDES)	
	8A	1	**4J-1641**	1	TRUNNION	
	9	1	**142-2328**	1	BRACKET	
	10	1	**142-9643**	2	BRACKET AS	
					(EACH INCLUDES)	
	10A	1	**4T-1504**	1	TRUNNION	
	11	1	**6Y-1370**	1	MOLDBOARD (CENTER)	
	12	1	**6Y-1371**	1	MOLDBOARD (LH)	
	13	1	**6Y-1372**	1	MOLDBOARD (RH)	

230-5556 **BLADE AS-SEMI-UNIVERSAL (*contd.*)** **i06105547**

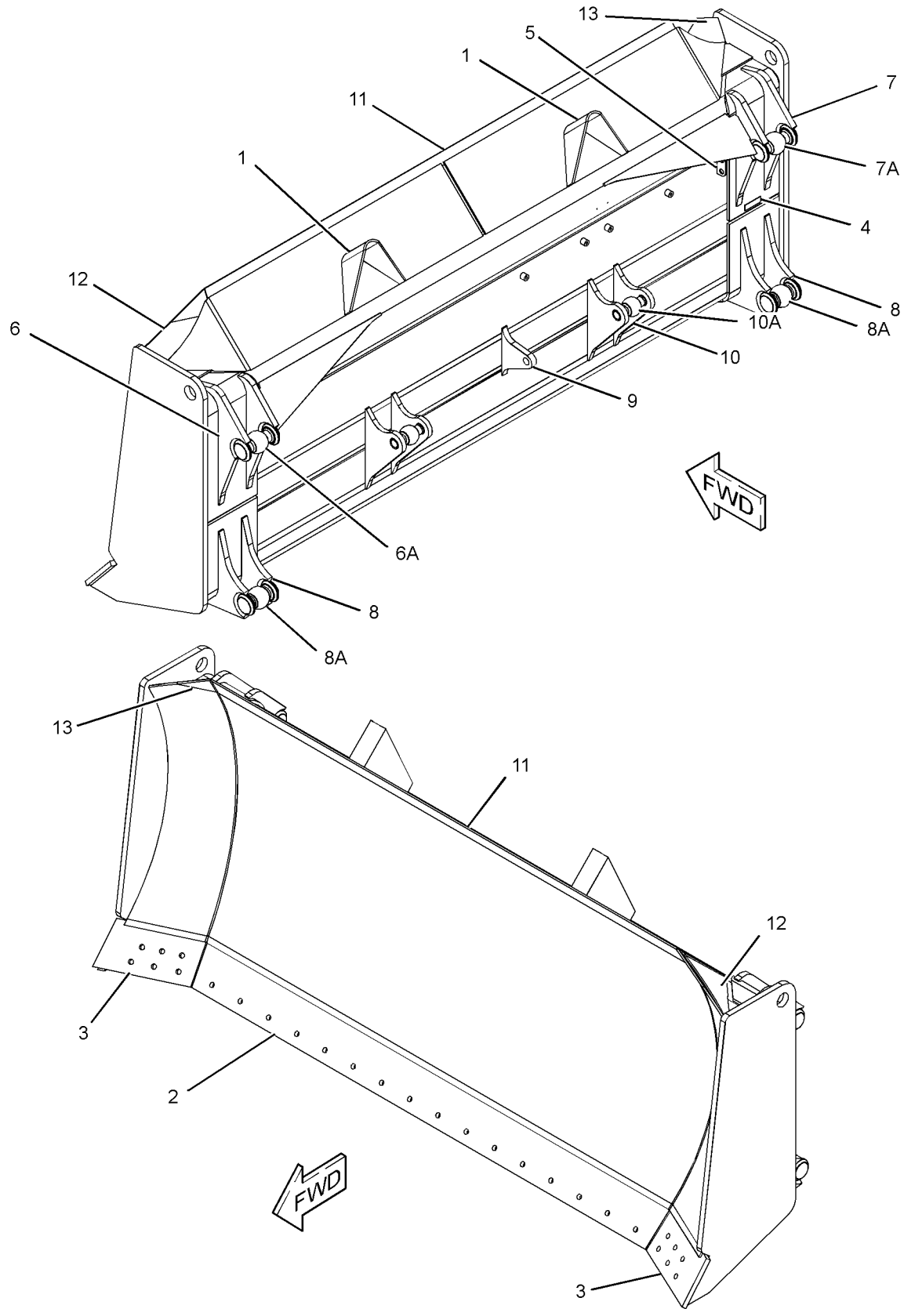

GRAPHIC #1 **<END>** g03812512

252-5858 BLADE AS-SEMI-UNIVERSAL

S/N: RTE1-UP

PART OF 449-7091, 453-7506 BLADE AS-SEMI-UNIVERSAL

AN ATTACHMENT

SMCS-6060 **i06231693**

NOTE	REF NO	GRAPHIC REF	PART NUMBER	QTY	PART NAME 1 2 3 4 5 6 (PRODUCT LEVEL)	SEE PAGE
	1	1	**1U-0183**	2	DEFLECTOR	
	2	1	**8P-9770**	1	PLATE	
	3	1	**9W-6381**	1	PLATE	
	4	1	*8E-5188*	2	BRACKET AS	
					(EACH INCLUDES)	
	4A	1	**7J-5131**	1	TRUNNION	
	5	1	**6Y-1387**	1	PLATE	
	6	1	*8E-5190*	2	BRACKET AS	
					(EACH INCLUDES)	
	6A	1	**4T-1504**	1	TRUNNION	
	7	1	**6Y-1390**	1	SUPPORT	
	8	1	**8E-5194**	1	BRACKET	
	9	1	*8E-5192*	2	BRACKET AS	
					(EACH INCLUDES)	
	9A	1	**4J-1641**	1	TRUNNION	
	10	1	**8E-5205**	2	SUPPORT	

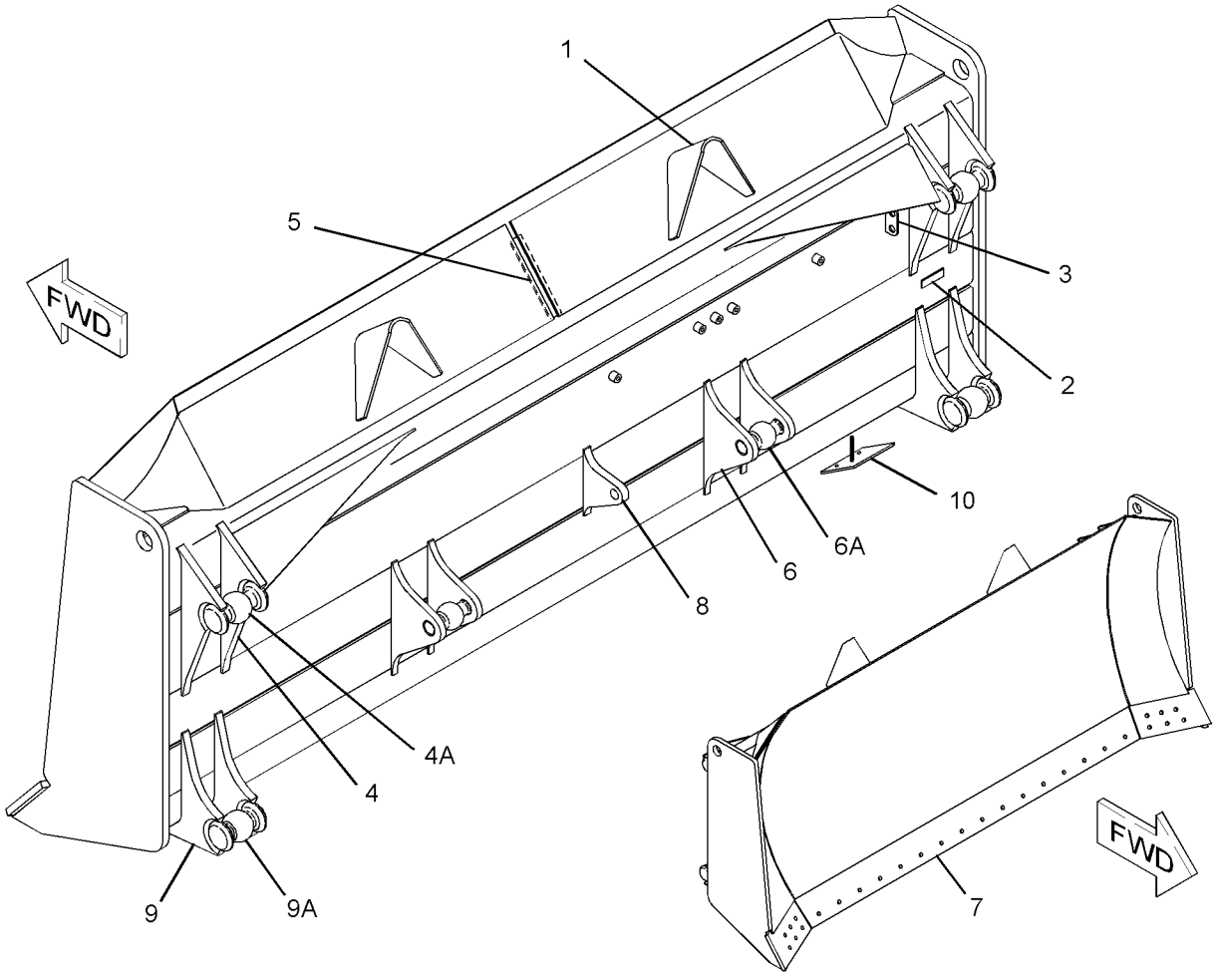

GRAPHIC #1 **<END>** g01205475

449-7091 BLADE AS-SEMI-UNIVERSAL

S/N: RTE1-UP

PART OF 448-4621 BLADE & EDGE GP-SEMI-UNIVERSAL

AN ATTACHMENT

SMCS-6060 **i05643927**

NOTE	REF NO	GRAPHIC REF	PART NUMBER	QTY	PART NAME 1 2 3 4 5 6 (PRODUCT LEVEL)	SEE PAGE
	1	1	**8P-9770**	1	PLATE	
Y	2	1	**252-5858**	1	BLADE AS-SEMI-UNIVERSAL	822

Y - SEPARATE ILLUSTRATION

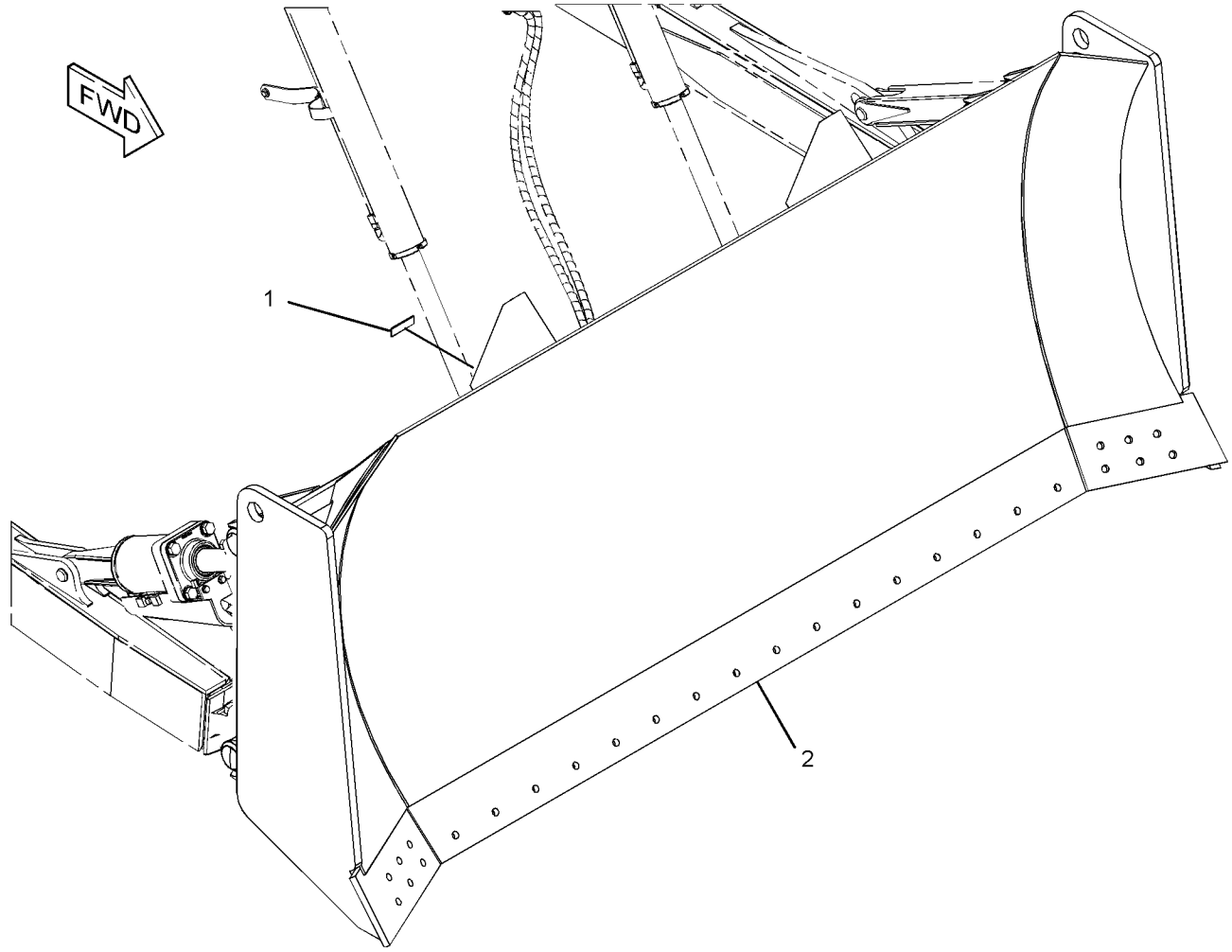

GRAPHIC #1 **<END>** g02196936

449-7092 BLADE AS-SEMI-UNIVERSAL

S/N: RTF1-UP

PART OF 448-4622 BLADE & EDGE GP-SEMI-UNIVERSAL

AN ATTACHMENT

SMCS-6060 **i05644550**

NOTE	REF NO	GRAPHIC REF	PART NUMBER	QTY	PART NAME 1 2 3 4 5 6 (PRODUCT LEVEL)	SEE PAGE
	1	1	**8P-9770**	1	PLATE	
Y	2	1	**230-5556**	1	BLADE AS-SEMI-UNIVERSAL	820

Y - SEPARATE ILLUSTRATION

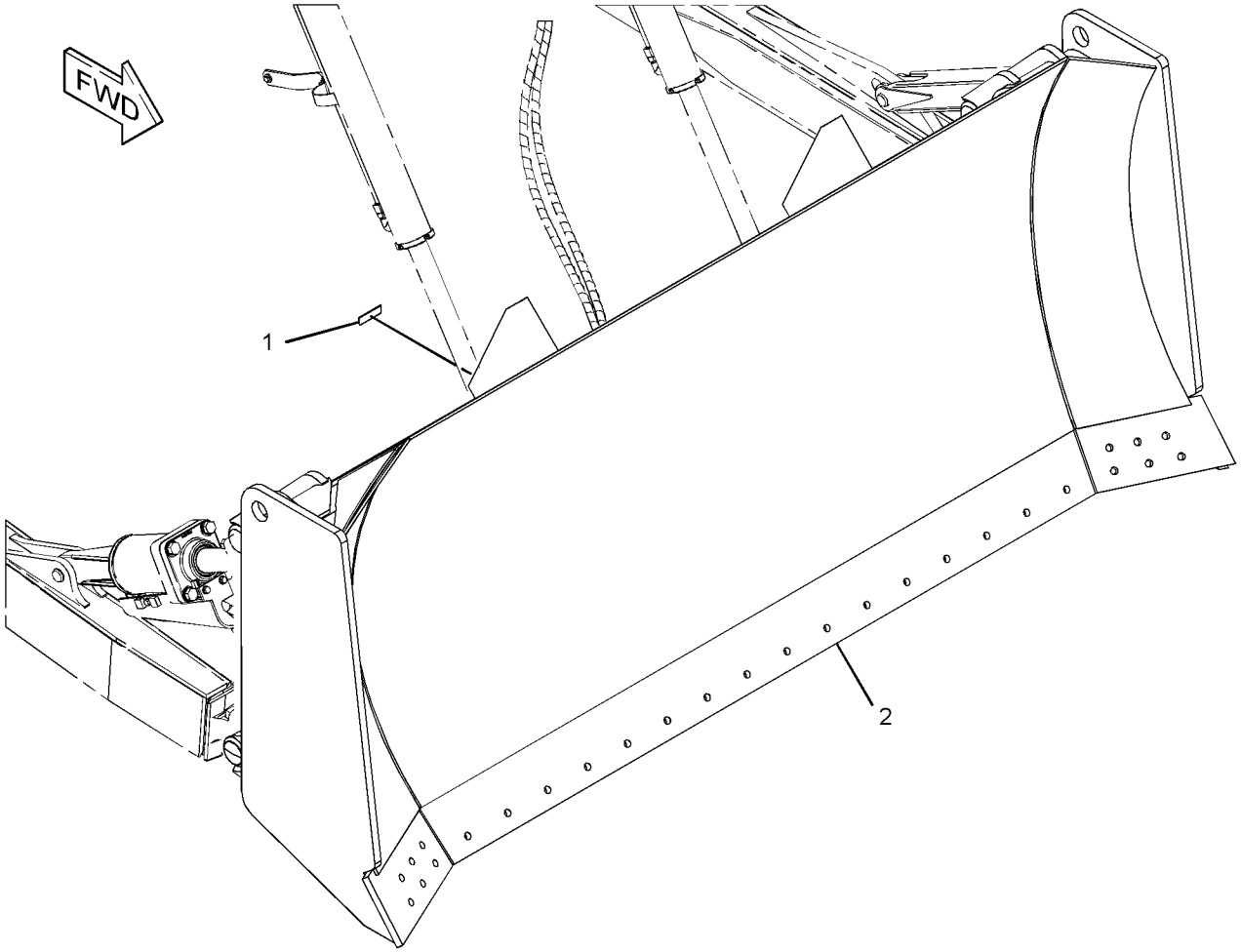

GRAPHIC #1 **<END>** g02196942

453-7506 BLADE AS-SEMI-UNIVERSAL

S/N: RTE1-UP

PART OF 453-3901 BLADE & EDGE GP-SEMI-UNIVERSAL

AN ATTACHMENT

SMCS-6060 **i06231724**

NOTE	REF NO	GRAPHIC REF	PART NUMBER	QTY	PART NAME 1 2 3 4 5 6 (PRODUCT LEVEL)	SEE PAGE
	1	1	**8P-9770**	1	PLATE	
Y	2	1	**252-5858**	1	BLADE AS-SEMI-UNIVERSAL	822

Y - SEPARATE ILLUSTRATION

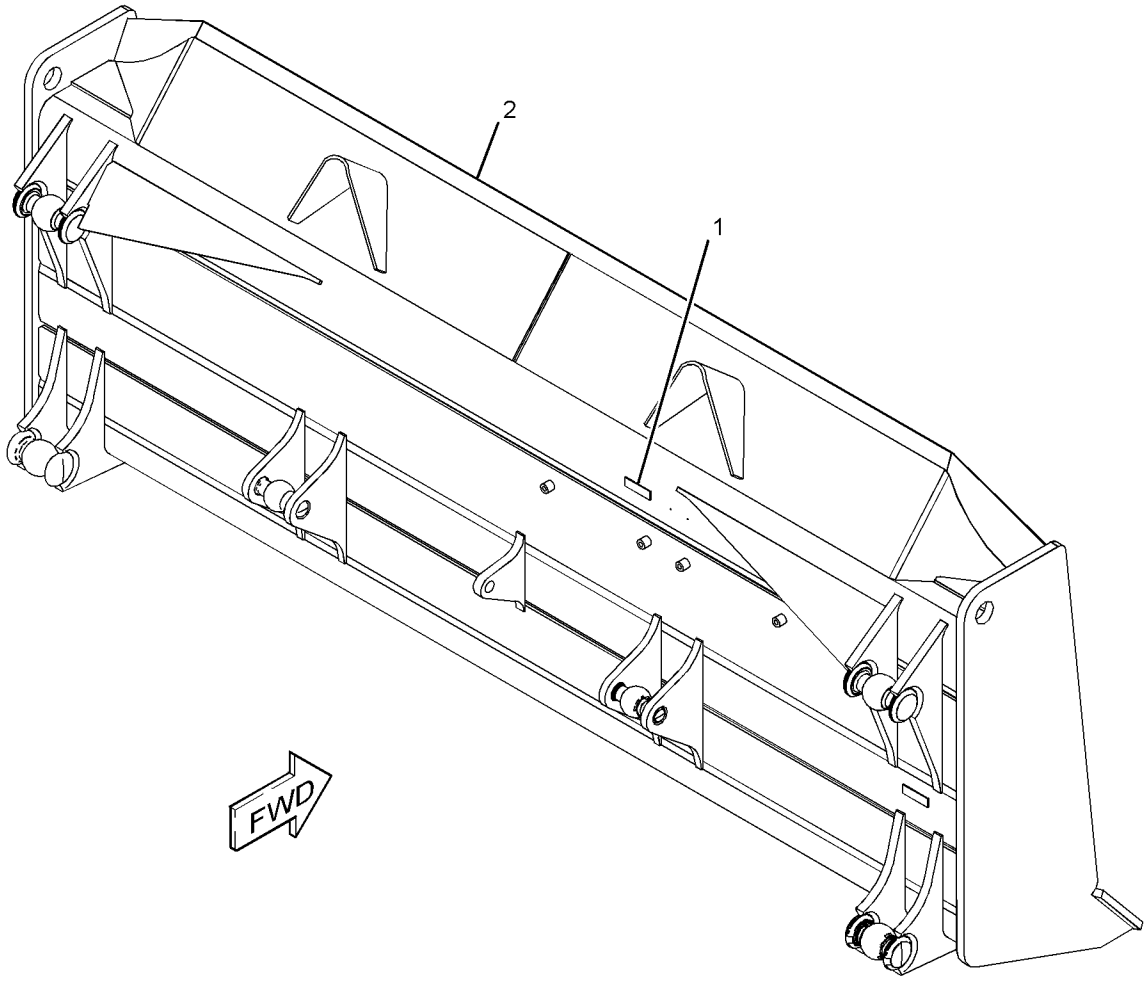

GRAPHIC #1 **<END>** g03582962

453-7507 BLADE AS-SEMI-UNIVERSAL

S/N: RTF1-UP

PART OF 453-3904 BLADE & EDGE GP-SEMI-UNIVERSAL

AN ATTACHMENT

SMCS-6060 **i05833500**

NOTE	REF NO	GRAPHIC REF	PART NUMBER	QTY	PART NAME 1 2 3 4 5 6 (PRODUCT LEVEL)	SEE PAGE
	1	1	**8P-9770**	1	PLATE	
Y	2	1	**230-5556**	1	BLADE AS-SEMI-UNIVERSAL	820

Y - SEPARATE ILLUSTRATION

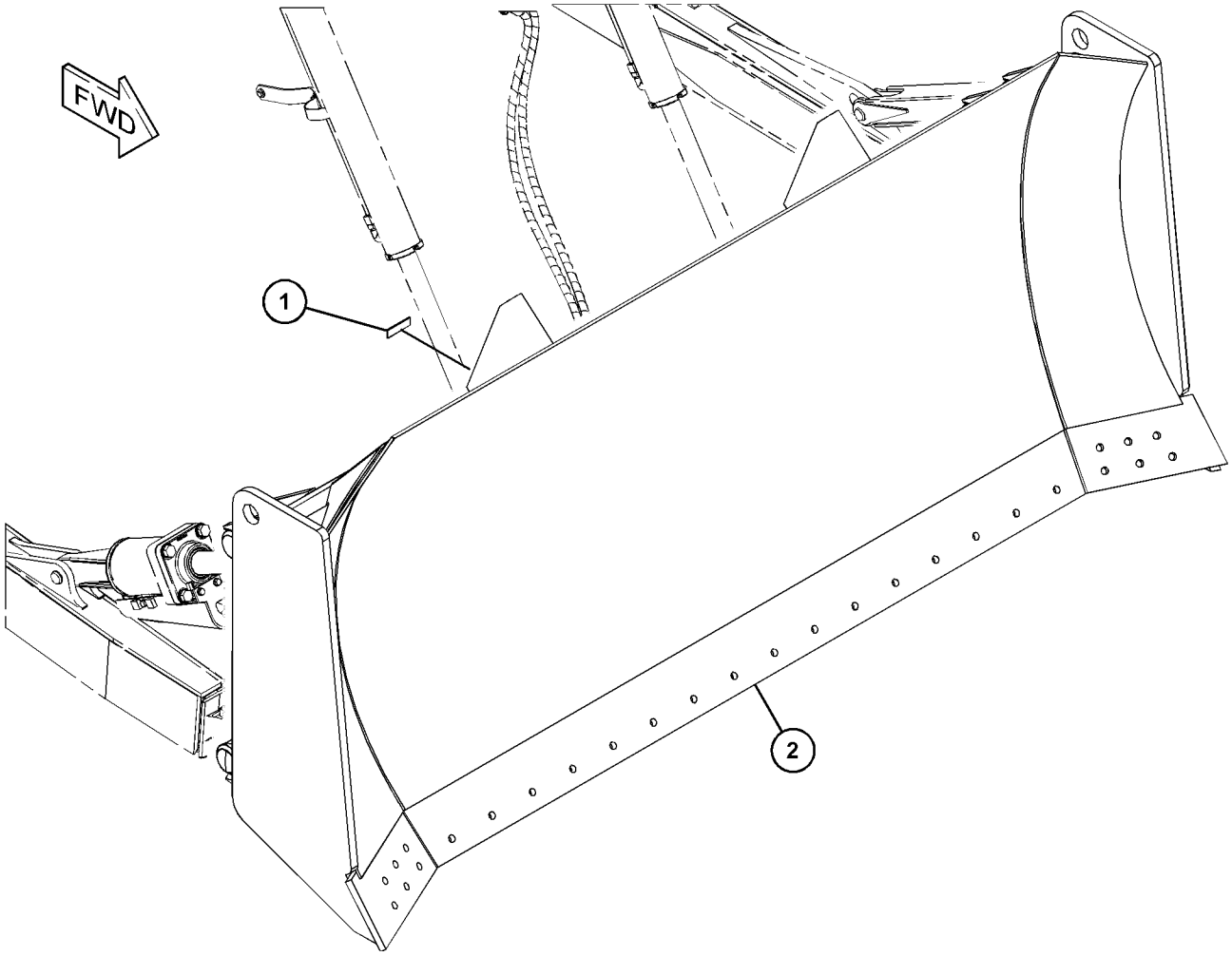

GRAPHIC #1 **<END>** g03582672

456-5983 BLADE AS-SEMI-UNIVERSAL—WASTE HANDLING

S/N: RTF1-UP

PART OF 456-5982 BLADE & EDGE GP-SEMI-UNIVERSAL

AN ATTACHMENT

SMCS-6060 **i06224198**

NOTE	REF NO	GRAPHIC REF	PART NUMBER	QTY	PART NAME 1 2 3 4 5 6 (PRODUCT LEVEL)	SEE PAGE
	1	1	**8P-9770**	1	PLATE	
Y	2	1	**230-5556**	1	BLADE AS-SEMI-UNIVERSAL	820

Y - SEPARATE ILLUSTRATION

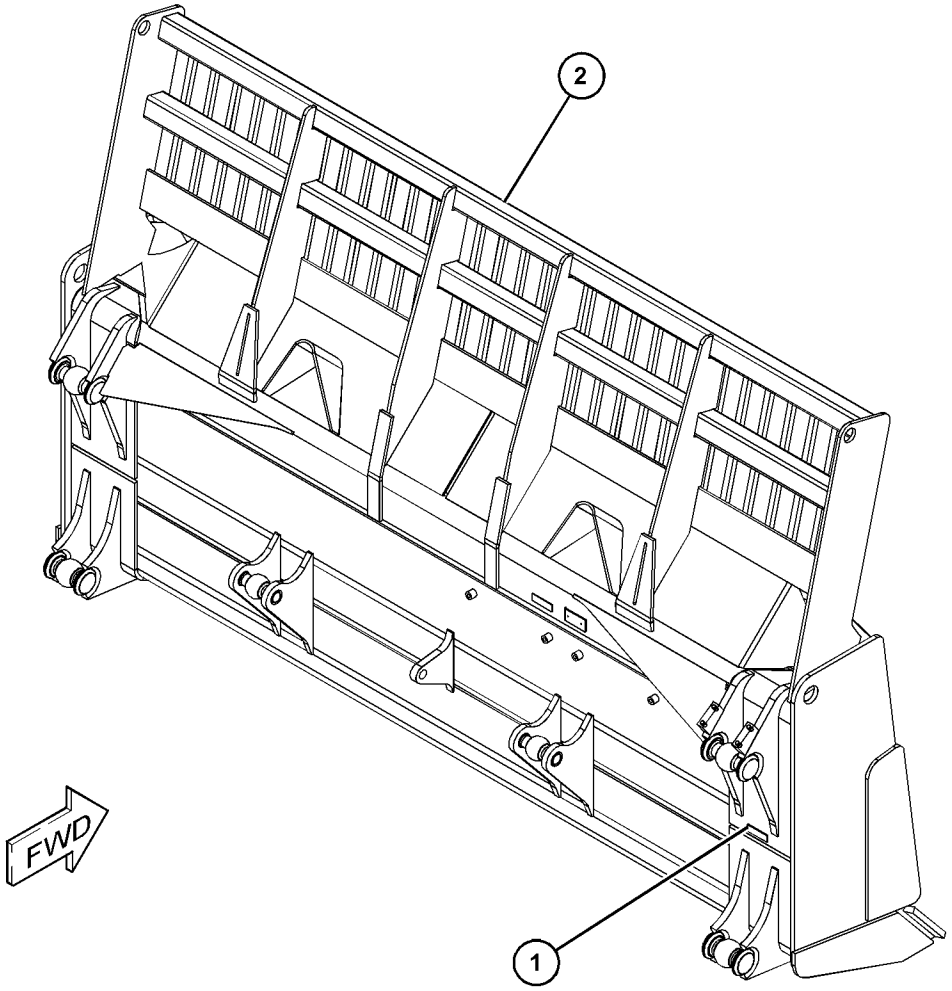

GRAPHIC #1 **<END>** g03863079

252-5852 BLADE AS-STRAIGHT

S/N: RTS1-UP

PART OF 456-5979 BLADE AS-STRAIGHT

AN ATTACHMENT

SMCS-6051, 6060

i06231701

NOTE	REF NO	GRAPHIC REF	PART NUMBER	QTY	PART NAME 1 2 3 4 5 6 (PRODUCT LEVEL)	SEE PAGE
	1	1	**9W-6381**	1	PLATE	
	2	1	*8E-5188*	2	BRACKET AS	
					(EACH INCLUDES)	
	2A	1	**7J-5131**	1	TRUNNION	
	3	1	**8P-9770**	1	PLATE	
	4	1	*8E-5192*	2	BRACKET AS	
					(EACH INCLUDES)	
	4A	1	**4J-1641**	1	TRUNNION	
	5	1	*8E-5190*	2	BRACKET AS	
					(EACH INCLUDES)	
	5A	1	**4T-1504**	1	TRUNNION	
	6	1	**8E-5194**	1	BRACKET	
	7	1	**1U-0183**	2	DEFLECTOR	
	8	1	**8E-5199**	1	SUPPORT	

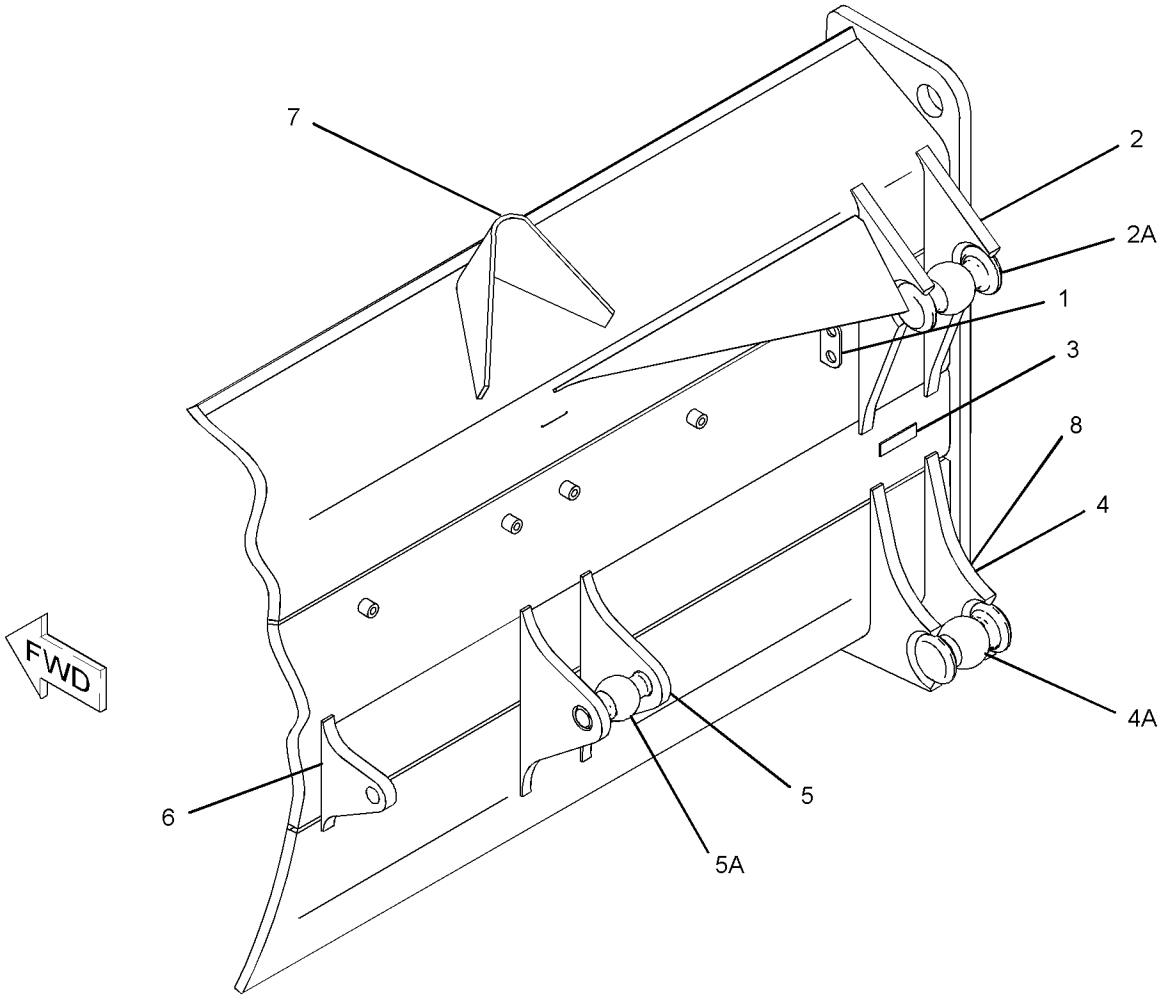

GRAPHIC #1

<END>

g01211465

456-5979 BLADE AS-STRAIGHT

S/N: RTS1-UP
PART OF 456-5977 BLADE & EDGE GP-STRAIGHT
AN ATTACHMENT

SMCS-6051, 6060

i06139865

NOTE	REF NO	GRAPHIC REF	PART NUMBER	QTY	PART NAME 1 2 3 4 5 6 (PRODUCT LEVEL)	SEE PAGE
	1	1	**8P-9770**	1	PLATE	
Y	2	1	**252-5852**	1	BLADE AS-STRAIGHT	828

Y - SEPARATE ILLUSTRATION

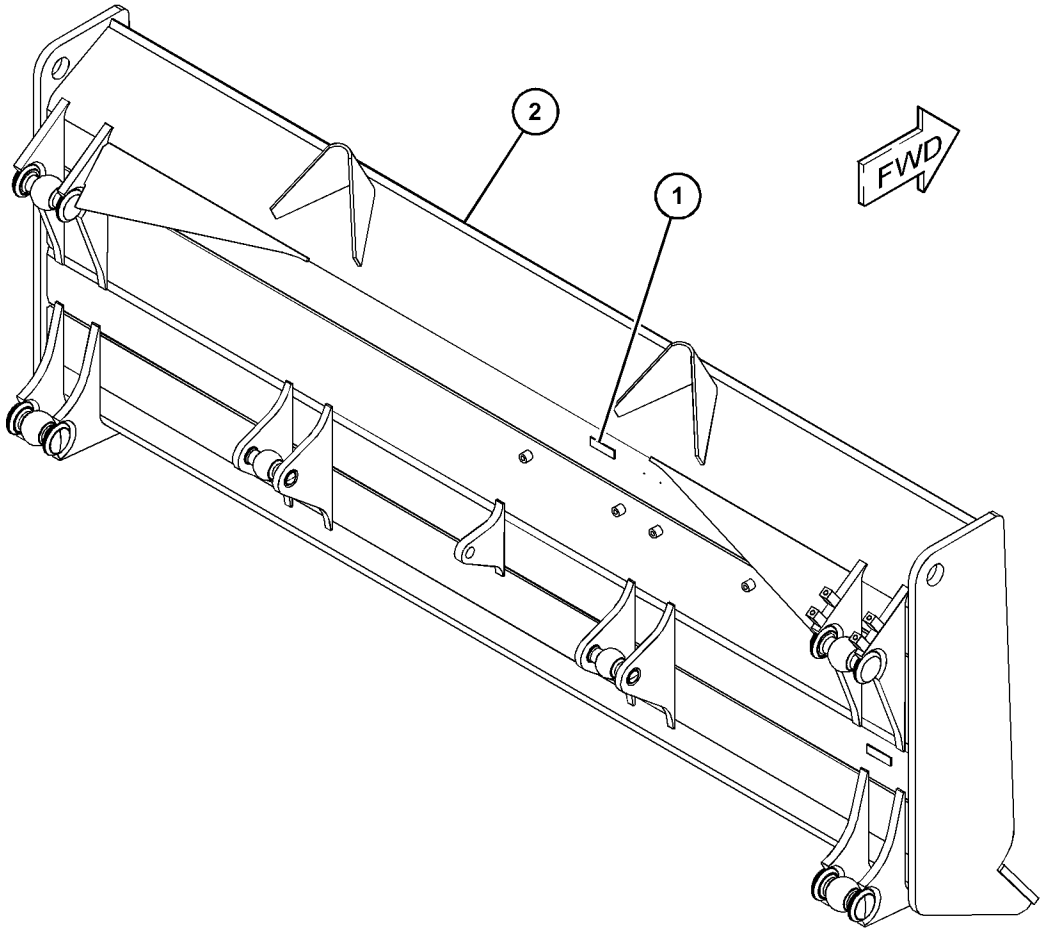

GRAPHIC #1

<END>

g03827811

475-4142 BLADE AS-STRAIGHT—WASTE HANDLING

S/N: R6L1-UP

PART OF 475-4130 BLADE & EDGE GP-STRAIGHT

AN ATTACHMENT

SMCS-6051, 6060

i06224277

NOTE	REF NO	GRAPHIC REF	PART NUMBER	QTY	PART NAME 1 2 3 4 5 6 (PRODUCT LEVEL)	SEE PAGE
	1	1	**8P-9770**	1	PLATE	
	2	1	*387-8370*	1	BLADE AS-STRAIGHT	
	2A	1	**7J-5131**	2	TRUNNION	
	2B	1	**4J-1641**	2	TRUNNION	
	2C	1	**4T-1504**	2	TRUNNION	

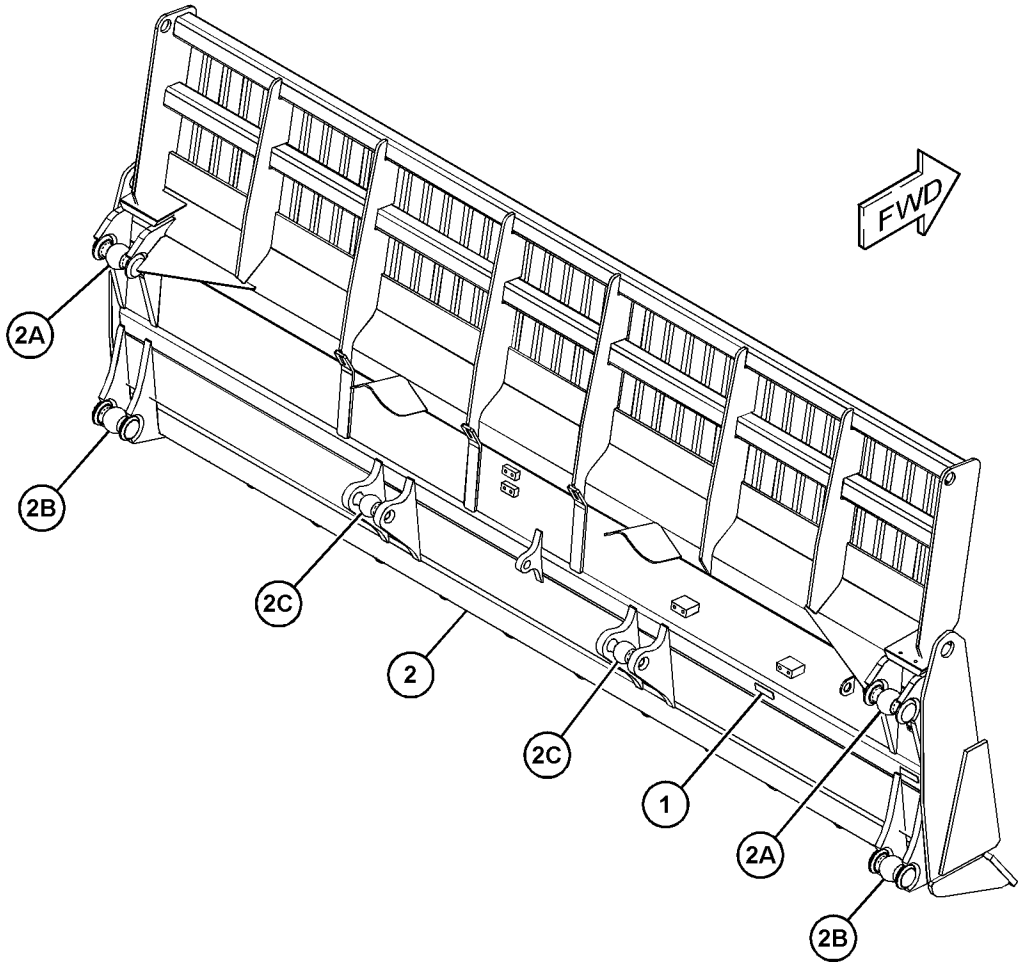

GRAPHIC #1

<END>

g03862758

6Y-1744 EDGE GP-BIT & CUTTING

S/N: RTS1-UP

PART OF 456-5977 BLADE & EDGE GP-STRAIGHT

AN ATTACHMENT

SMCS-6801, 6804

i06139888

NOTE	REF NO	GRAPHIC REF	PART NUMBER	QTY	PART NAME 1 2 3 4 5 6 (PRODUCT LEVEL)	SEE PAGE
	1	1	**9W-8874**	1	BIT-END (RH)	
		1	**9W-8875**	1	BIT-END (LH)	
	2	1	**5J-4773**	27	BOLT-PLOW (3/4-10X2.5-IN)	
		1	**2J-3506**	27	NUT-FULL (3/4-10-THD)	
		1	**5P-8248**	27	WASHER-HARD (20X36.5X3.5-MM THK)	
	3	1	**4T-2952**	3	EDGE-CUTTING	

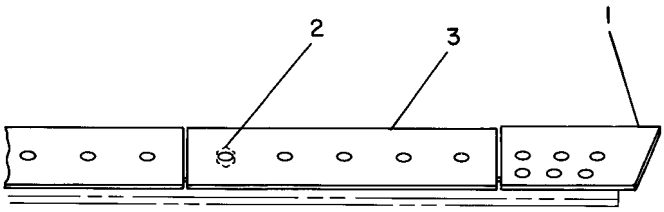

GRAPHIC #1

<END>

g00195337

6Y-2039 EDGE GP-BIT & CUTTING

S/N: RTH1-UP

PART OF 453-3902 BLADE & EDGE GP-ANGLING

AN ATTACHMENT

SMCS-6801, 6804 **i05633596**

NOTE	REF NO	GRAPHIC REF	PART NUMBER	QTY	PART NAME 1 2 3 4 5 6 (PRODUCT LEVEL)	SEE PAGE
	1	1	**9W-8874**	1	BIT-END	
		1	**9W-8875**	1	BIT-END	
	2	1	**5J-4773**	32	BOLT-PLOW (3/4-10X2.5 IN)	
		1	**5P-8248**	32	WASHER-HARD (20X36.5X3.5MM THK)	
		1	**2J-3506**	32	NUT-FULL (3/4-10 THD)	
	3	1	**4T-2952**	4	EDGE-CUTTING	

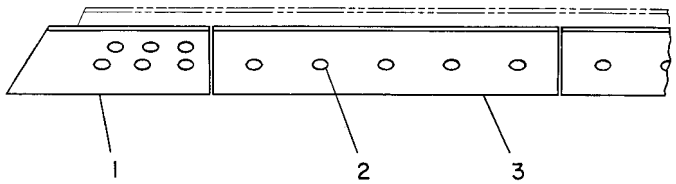

GRAPHIC #1 **<END>** g00195495

9W-3762 EDGE GP-BIT & CUTTING

S/N: RTE1-UP; RTF1-UP

PART OF 453-3901, 453-3904, 456-5982 BLADE & EDGE GP-SEMI-UNIVERSAL

AN ATTACHMENT

SMCS-6801, 6804 **i05633512**

NOTE	REF NO	GRAPHIC REF	PART NUMBER	QTY	PART NAME 1 2 3 4 5 6 (PRODUCT LEVEL)	SEE PAGE
	1	1	**9W-8874**	1	BIT-END (RH)	
	2	1	**9W-8875**	1	BIT-END (LH)	
	3	1	**9W-1878**	2	EDGE-CUTTING	
	4	1	**5J-4773**	28	BOLT-PLOW (3/4-10X2.5-IN)	
	5	1	**5P-8248**	28	WASHER-HARD (20X36.5X3.5-MM THK)	
	6	1	**2J-3506**	28	NUT-FULL (3/4-10-THD)	

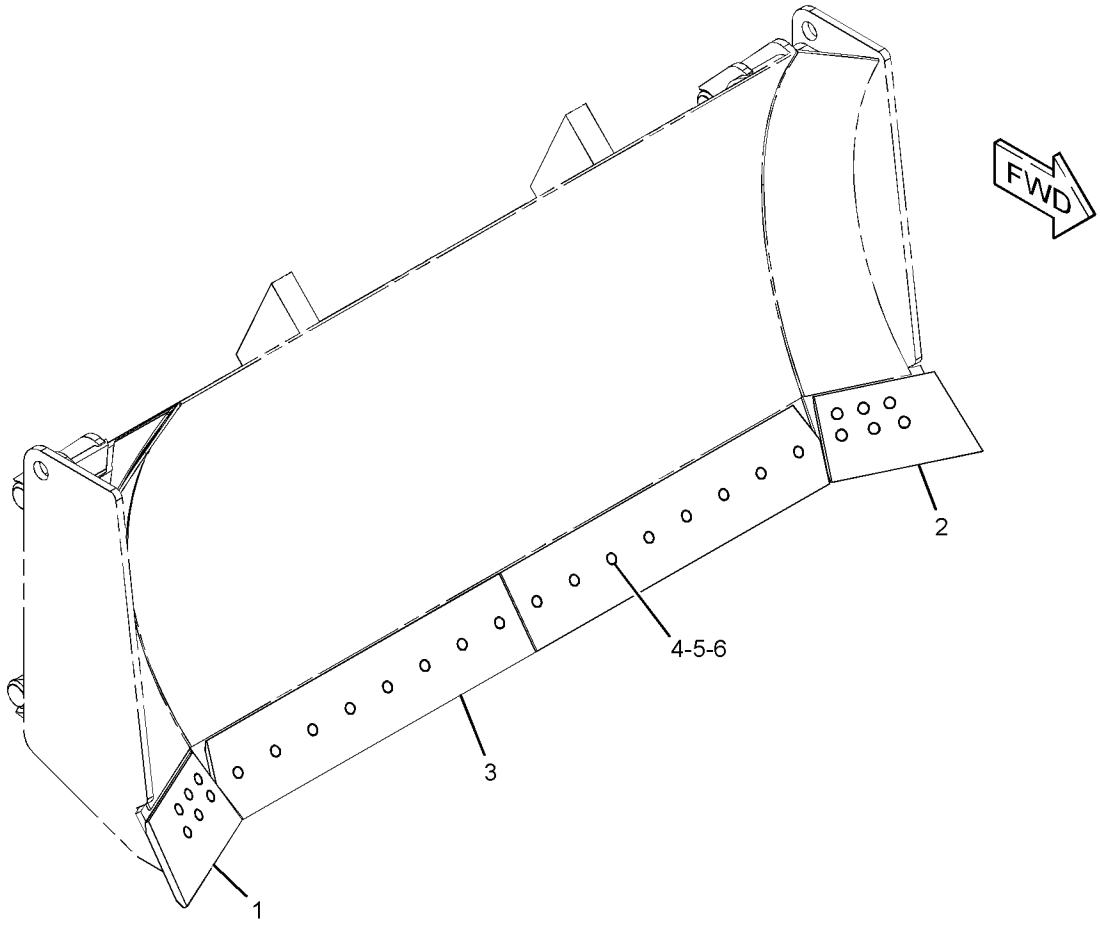

GRAPHIC #1 **<END>** g01225785

229-6957 EDGE GP-BIT & CUTTING

S/N: R6L1-UP

PART OF 462-7253, 475-4130 BLADE & EDGE GP-STRAIGHT

AN ATTACHMENT

SMCS-6801, 6804

i06158730

NOTE	REF NO	GRAPHIC REF	PART NUMBER	QTY	PART NAME 1 2 3 4 5 6 (PRODUCT LEVEL)	SEE PAGE
	1	1	**9W-8874**	1	BIT-END (RH)	
	2	1	**9W-8875**	1	BIT-END (LH)	
	3	1	**4T-2950**	2	EDGE-CUTTING	
	4	1	**5J-4773**	32	BOLT-PLOW (3/4-10X2.5-IN)	
	5	1	**2J-3506**	32	NUT-FULL (3/4-10-THD)	

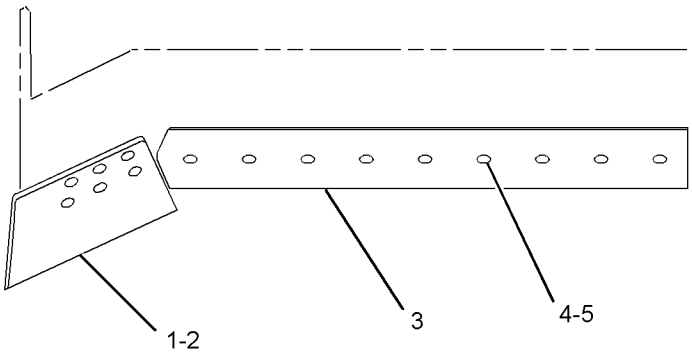

GRAPHIC #1

<END>

g01343107

434-6371 EDGE GP-BIT & CUTTING

S/N: TTT1-UP

PART OF 453-3903 BLADE & EDGE GP-ANGLING

AN ATTACHMENT

SMCS-6801, 6804

i05643968

NOTE	REF NO	GRAPHIC REF	PART NUMBER	QTY	PART NAME 1 2 3 4 5 6 (PRODUCT LEVEL)	SEE PAGE
	1	1	**4T-2952**	4	EDGE-CUTTING	
	2	1	**6Y-4410**	1	BIT-END (LH)	
	3	1	**6Y-4411**	1	BIT-END (RH)	
	4	1	**2J-3506**	32	NUT-FULL (3/4-10-THD)	
	5	1	**5J-4773**	32	BOLT-PLOW (3/4-10X2.5-IN)	
	6	1	**5P-8248**	32	WASHER-HARD (20X36.5X3.5-MM THK)	

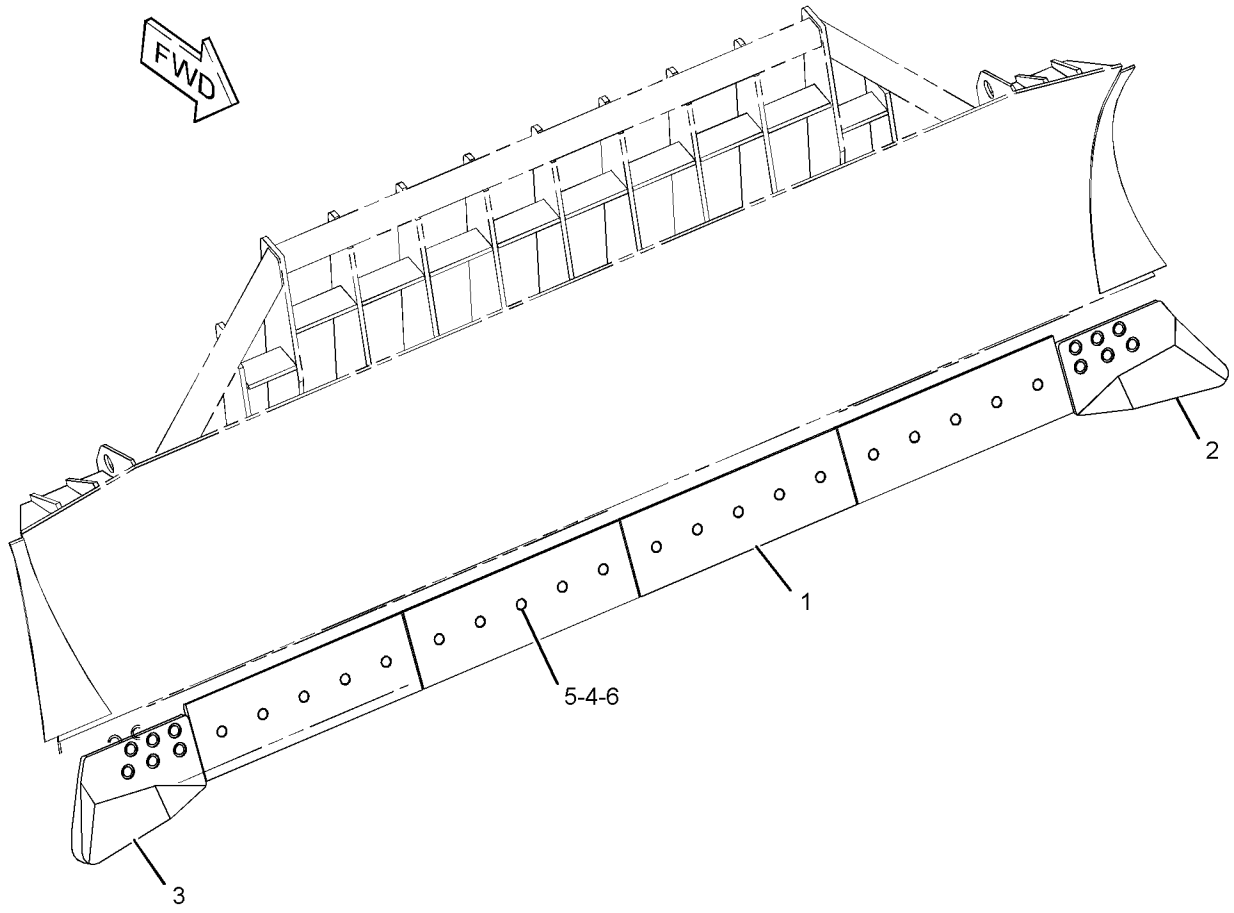

GRAPHIC #1

<END>

g03582983

450-6401 EDGE GP-BIT & CUTTING

S/N: RTE1-UP; RTF1-UP

PART OF 448-4621, 448-4622 BLADE & EDGE GP-SEMI-UNIVERSAL

AN ATTACHMENT

SMCS-6801, 6804 **i05643926**

NOTE	REF NO	GRAPHIC REF	PART NUMBER	QTY	PART NAME 1 2 3 4 5 6 (PRODUCT LEVEL)	SEE PAGE
	1	1	**6Y-4411**	1	BIT-END (RH)	
	2	1	**6Y-4410**	1	BIT-END (LH)	
	3	1	**9W-1878**	2	EDGE-CUTTING	
	4	1	**5J-4773**	28	BOLT-PLOW (3/4-10X2.5-IN)	
	5	1	**5P-8248**	28	WASHER-HARD (20X36.5X3.5-MM THK)	
	6	1	**2J-3506**	28	NUT-FULL (3/4-10-THD)	

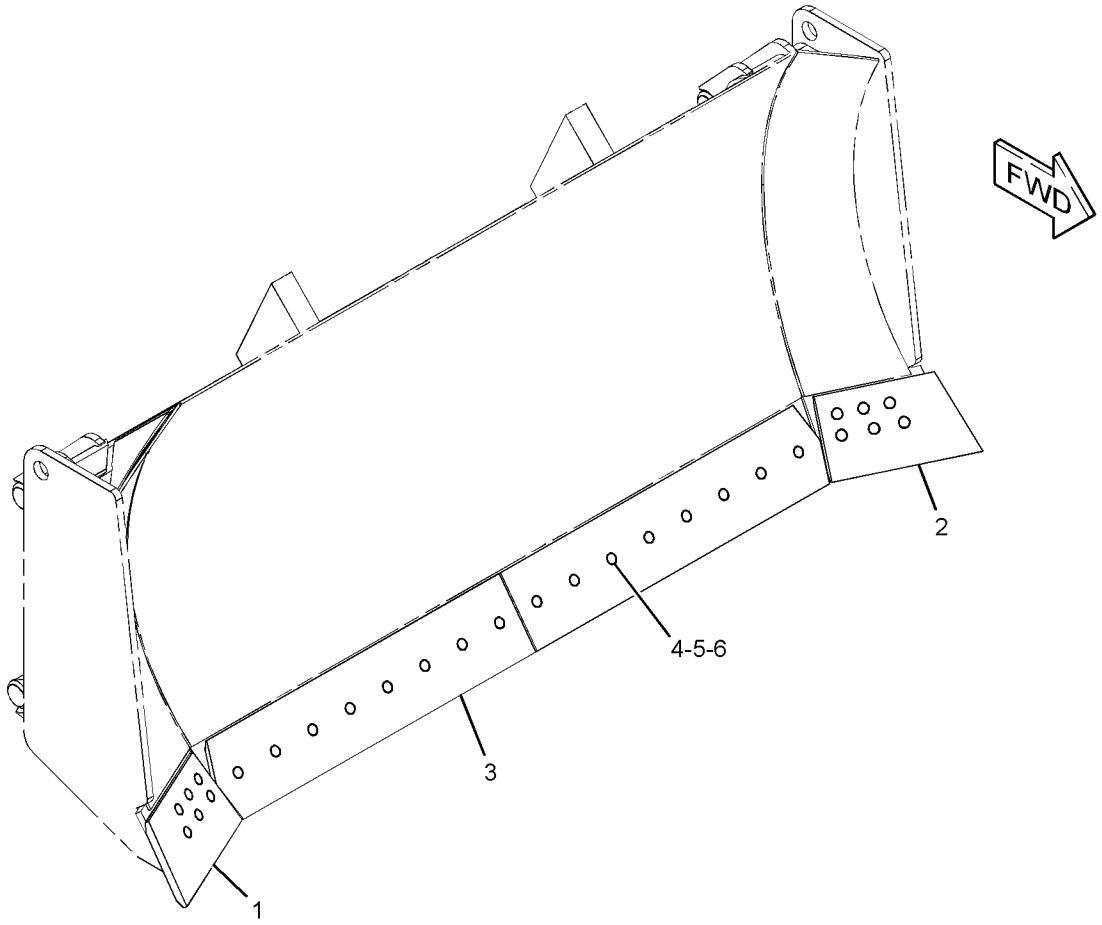

GRAPHIC #1 **<END>** g01225785

434-8127 MOUNTING GP-RIPPER

S/N: RTZ1-UP
PART OF 434-8126 RIPPER AR
AN ATTACHMENT

SMCS-6165, 6310, 6324 **i06147514**

NOTE	REF NO	GRAPHIC REF	PART NUMBER	QTY	PART NAME 1 2 3 4 5 6 (PRODUCT LEVEL)	SEE PAGE
	1	1	**1U-0300**	1	BRACKET AS	
		1	**3G-9995**	2	PLATE	
	2	1	**1U-0301**	2	BRACKET AS	
					(EACH INCLUDES)	
		1	**2K-6279**	1	BOSS	
	3	1	**7T-1975**	1	BRACKET AS	
		1	**3G-9995**	2	PLATE	
B	4	1	**9N-4449**	12	SPACER (68X121X1.5-MM THK)	
B	5	1	**9N-4450**	4	SPACER (68X120X5-MM THK)	
	6	1	**9W-0609**	2	SPACER (53X100X35-MM THK)	
	7	1	**1U-0159**	2	PIN	
	8	1	**1U-0612**	2	PIN	
M	9	1	**6V-7687**	2	LOCKNUT (M12X1.75-THD)	
M	10	1	**6V-7744**	2	LOCKNUT (M10X1.5-THD)	
M	11	1	**7X-2543**	2	BOLT (M10X1.5X120-MM)	
M	12	1	**7X-2576**	20	BOLT (M24X3X70-MM)	
	13	1	**8T-1482**	20	WASHER-HARD (26X50X8-MM THK)	
M	14	1	**8T-5412**	2	BOLT (M12X1.75X140-MM)	

B - USE AS REQUIRED
M - METRIC PART

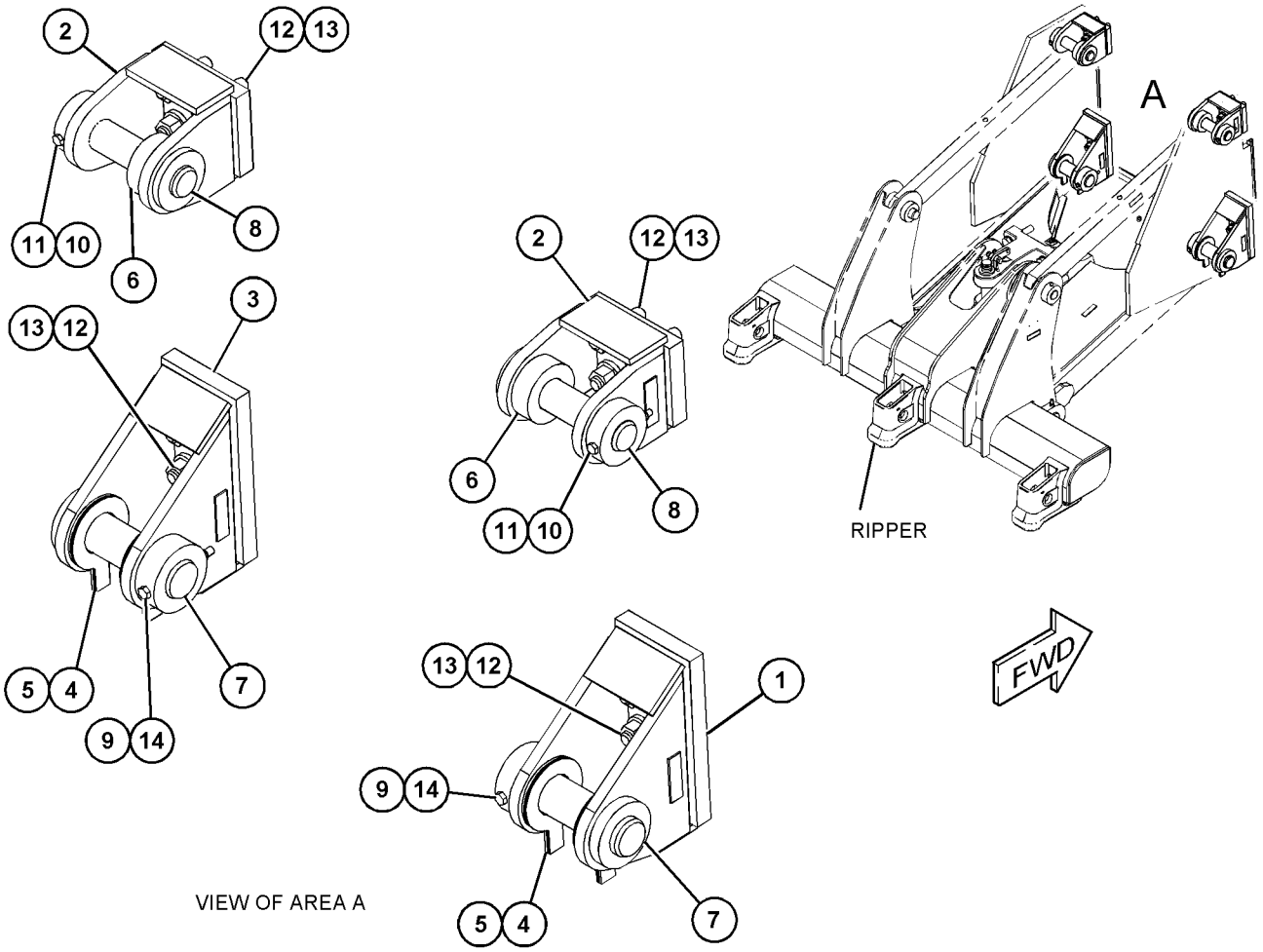

GRAPHIC #1 **<END>** g03841140

434-8126 RIPPER AR

S/N: RTZ1-UP
FOR USE WITH 398-4292—PAGE: 568
CANNOT BE USED WITH 456-5987—PAGE: 395
PART OF 481-9508 DISTRIBUTION AR
AN ATTACHMENT

SMCS-6310 **i06148616**

NOTE	REF NO	GRAPHIC REF	PART NUMBER	QTY	PART NAME 1 2 3 4 5 6 (PRODUCT LEVEL)	SEE PAGE
	1	1	**7X-1456**	2	PLUG	
	2	1	**193-5918**	2	PLUG	
Y	3	1	*381-2594*	1	PLATE & FILM GP	850
Y	4	1	**384-5351**	1	CYLINDER GP-RIPPER	563
Y	5	1	*387-1088*	1	RIPPER GP	839
Y	6	1	*387-1759*	1	LINES GP-RIPPER	582
Y	7	1	*434-8127*	1	MOUNTING GP-RIPPER	837
Y	8	1	*434-8128*	1	GUARD GP-TRANSMISSION	394

Y - SEPARATE ILLUSTRATION

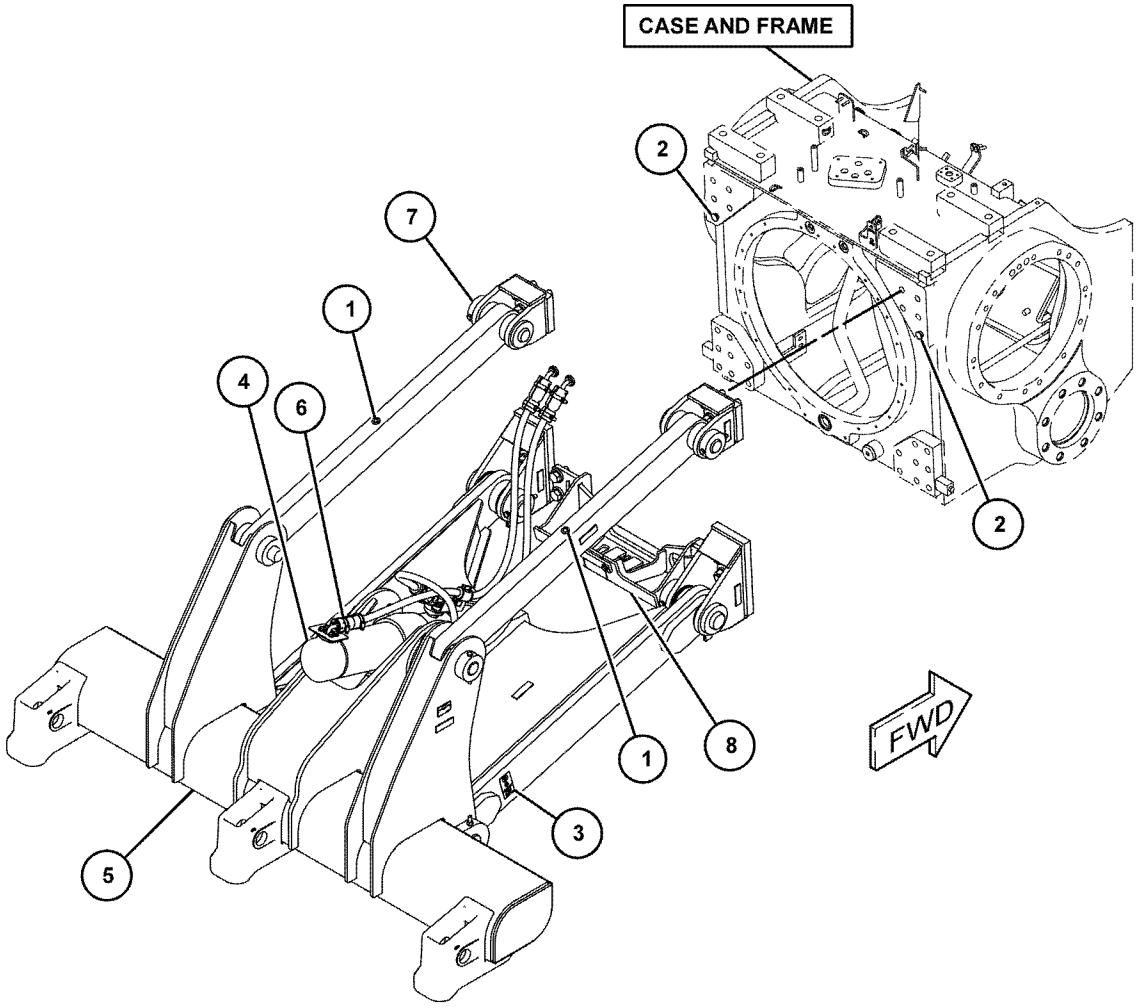

GRAPHIC #1 **<END>** g03831968

387-1088 RIPPER GP

S/N: RTZ1-UP
PART OF 434-8126 RIPPER AR
AN ATTACHMENT

SMCS-6310, 6325

i05636022

NOTE	REF NO	GRAPHIC REF	PART NUMBER	QTY	PART NAME 1 2 3 4 5 6 (PRODUCT LEVEL)	SEE PAGE
	1	1	**2K-0703**	1	BAR	
	2	1	**3K-8510**	1	PIN	
	3	1	**4K-3004**	2	BEARING-TRUNNION SUPPLEMENTARY	
B	4	1	**9N-4449**	2	SPACER (68X121X1.5-MM THK)	
B	5	1	**9N-4450**	4	SPACER (68X120X5-MM THK)	
	6	1	**387-1089**	1	CARRIAGE AS	
	7	1	**387-1136**	1	FRAME AS	
		1	**3G-2580**	4	BEARING	
	8	1	**433-3272**	2	LINK AS-BEARING	
					(EACH INCLUDES)	
		1	**3G-2579**	2	BEARING	
	9	1	**1U-0159**	2	PIN	
	10	1	**1U-0612**	2	PIN	
M	11	1	**329-3356**	8	NUT (M12X1.75-THD)	
	12	1	**3B-8489**	3	FITTING-GREASE (1/8-27 PTF)	
M	13	1	**6V-7687**	2	LOCKNUT (M12X1.75-THD)	
M	14	1	**6V-7744**	2	LOCKNUT (M10X1.5-THD)	
	15	1	**7K-9203**	8	SEAL-LIP TYPE	
	16	1	**7K-9205**	8	SEAL-LIP TYPE	
M	17	1	**7X-2543**	2	BOLT (M10X1.5X120-MM)	
M	18	1	**8T-4139**	2	BOLT (M12X1.75X30-MM)	
	19	1	**8T-4223**	18	WASHER-HARD (13.5X25.5X3-MM THK)	
M	20	1	**8T-4648**	7	BOLT (M12X1.75X70-MM)	
M	21	1	**8T-6868**	1	BOLT (M12X1.75X80-MM)	
M	22	1	**8T-7929**	2	BOLT (M12X1.75X180-MM)	

B - USE AS REQUIRED
M - METRIC PART

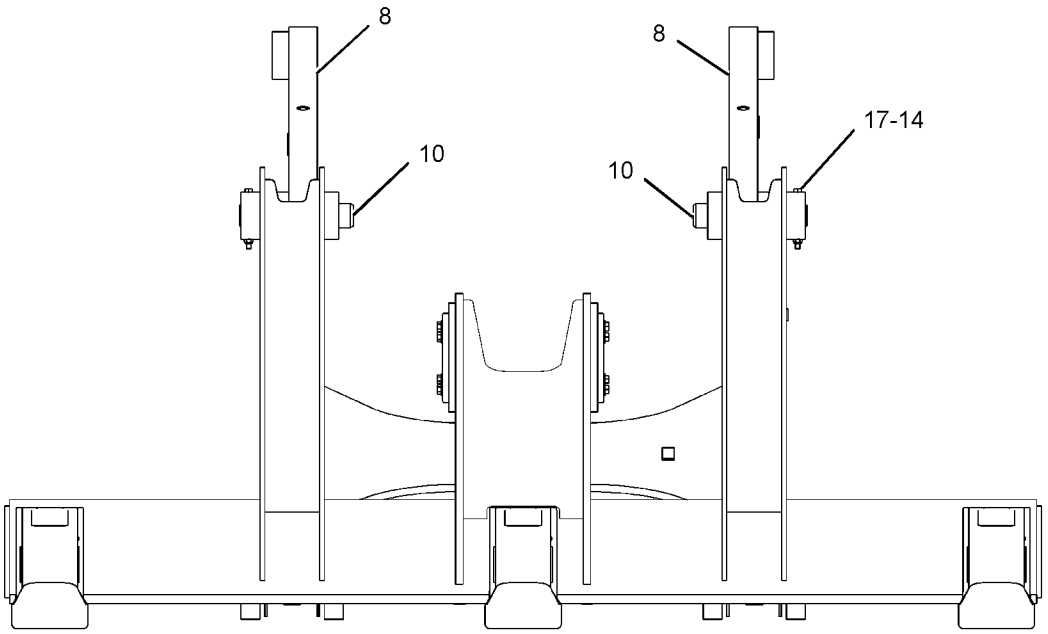

REAR VIEW

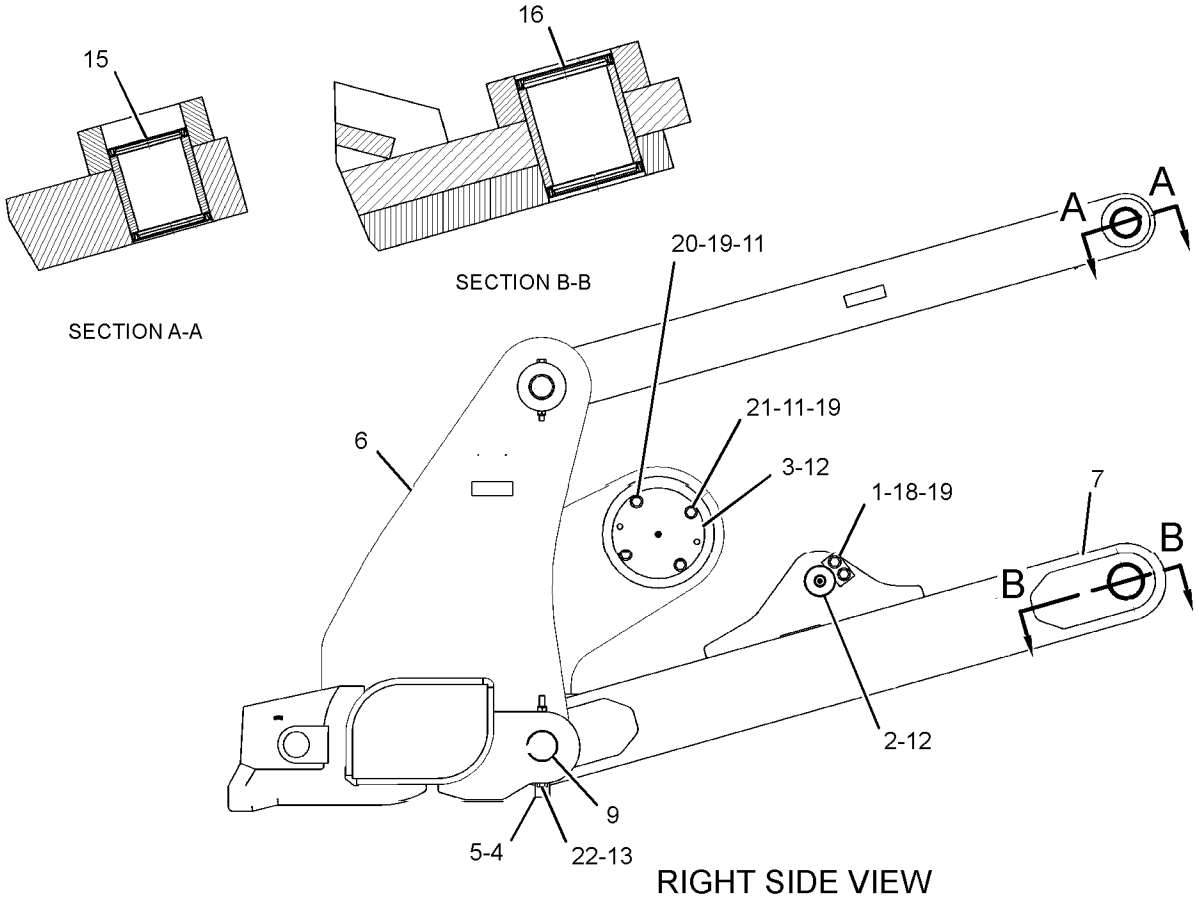

RIGHT SIDE VIEW

GRAPHIC #1 **<END>** g03582328

8J-2189 TOOTH GP-RIPPER

S/N: PPP1-UP; SSS1-UP; TTT1-UP

AN ATTACHMENT

SMCS-6808, 6810 **i05498884**

NOTE	REF NO	GRAPHIC REF	PART NUMBER	QTY	PART NAME 1 2 3 4 5 6 (PRODUCT LEVEL)	SEE PAGE
	1	1	**3B-5325**	2	PIN-COTTER	
	2	1	**8J-2190**	1	PIN	
	3	1	**9J-3139**	1	SHANK-RIPPER	
	4	1	**114-0358**	1	PIN	
		1	**114-0359**	1	RETAINER AS	
	5	1	**6Y-0359**	1	TIP-RIPPER	

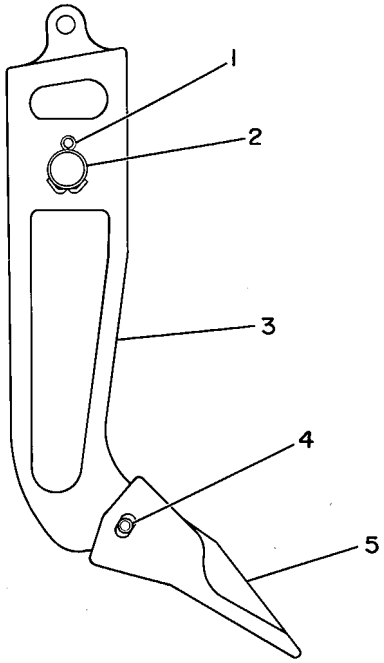

GRAPHIC #1 **<END>** g00081660

9J-8926 TOOTH GP-RIPPER—CURVED

S/N: PPP1-UP; SSS1-UP; TTT1-UP
PART OF 481-9508 DISTRIBUTION AR
AN ATTACHMENT

SMCS-6808, 6810

i05499220

NOTE	REF NO	GRAPHIC REF	PART NUMBER	QTY	PART NAME 1 2 3 4 5 6 (PRODUCT LEVEL)	SEE PAGE
	1	1	**3B-5325**	2	PIN-COTTER	
	2	1	**8J-2190**	1	PIN	
	3	1	**9J-8923**	1	SHANK-RIPPER	
	4	1	**114-0358**	1	PIN	
	5	1	**6Y-0352**	1	TIP-RIPPER	
	6	1	**114-0359**	1	RETAINER AS	

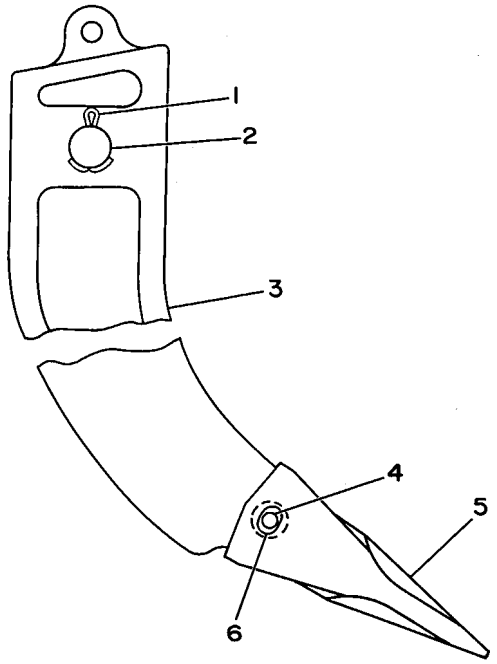

GRAPHIC #1

<END>

g00174183

398-4296 FILM GP

S/N: PPP1-UP; SSS1-UP; TTT1-UP

PART OF 393-6480 CAB AR, 393-6485 CAB AR-ENCLOSED ROPS, 393-6475 CANOPY AR

AN ATTACHMENT

SMCS-7000 **i06156471**

NOTE	REF NO	GRAPHIC REF	PART NUMBER	QTY	PART NAME 1 2 3 4 5 6 (PRODUCT LEVEL)	SEE PAGE
	1	1	**169-2876**	1	FILM-IDENTIFICATION (POWER RECEPTACLE, 12-VOLT)	
	2	1	**219-0302**	1	FILM-WARNING (NO WELD, NO DRILL, READ OMM)	
	3	1	**224-0672**	1	FILM-WARNING (HIGH PRESSURE, READ OMM, INTL)	
	4	1	**241-4167**	1	FILM-INSTRUCTION (READ OMM, STEERING)	
	5	1	**247-6876**	1	FILM-WARNING (DO NOT OPERATE, READ OMM)	
	6	1	**247-6878**	1	FILM-WARNING (SEAT BELT)	
	7	1	**309-9690**	1	FILM-INFORMATION (READ OMM)	

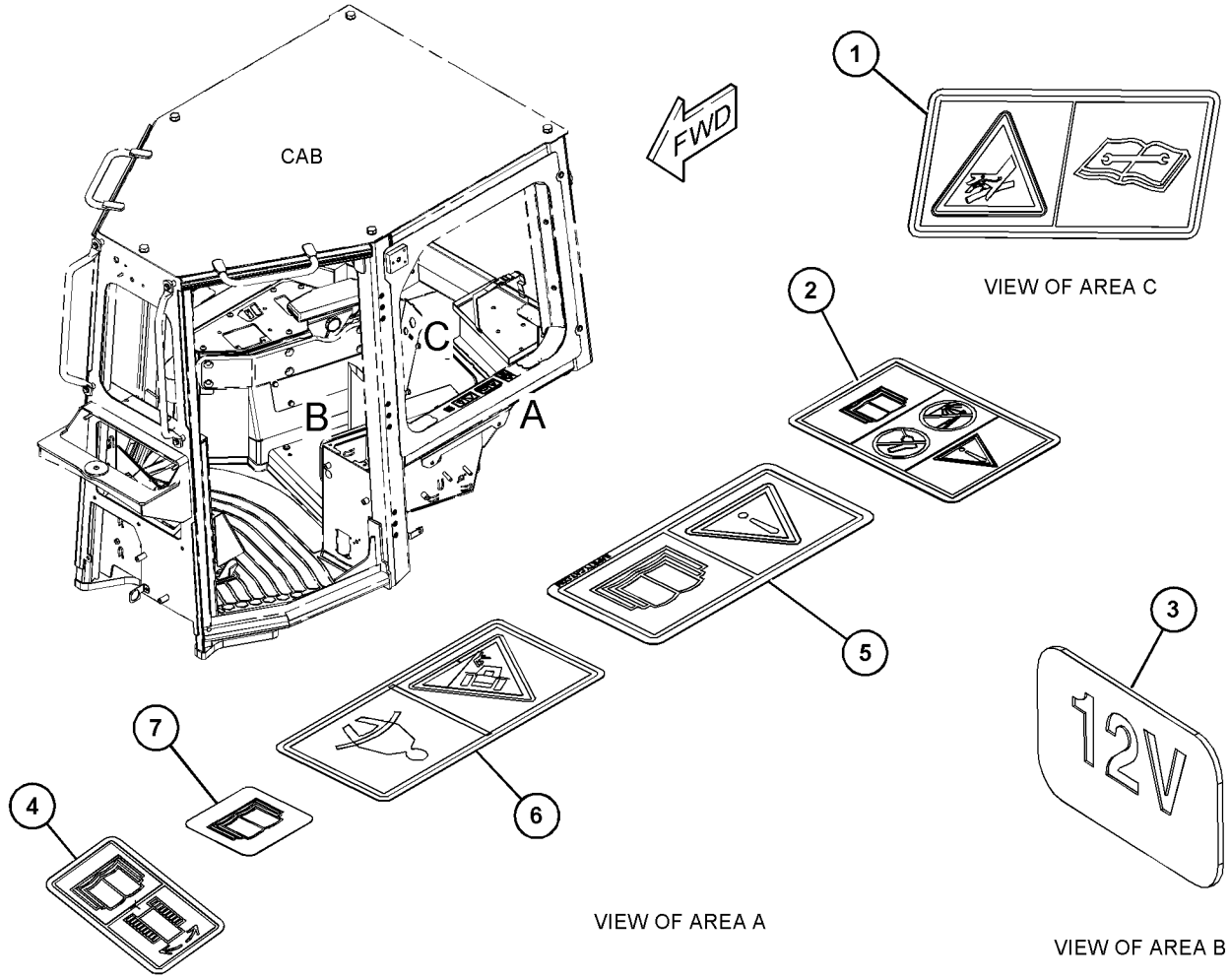

GRAPHIC #1

<END>

g03840561

483-3859 FILM GP

S/N: SSS1-UP
PART OF 398-4278 COMMON AR
ALSO AN ATTACHMENT

SMCS-7000 **i06217080**

NOTE	REF NO	GRAPHIC REF	PART NUMBER	QTY	PART NAME 1 2 3 4 5 6 (PRODUCT LEVEL)	SEE PAGE
	1	1	**331-7779**	1	FILM-IDENTIFICATION (CAT)	
	2	1	**392-7132**	1	FILM-IDENTIFICATION (CAT)	
	3	1	**436-9921**	1	FILM-IDENTIFICATION (CAT) (LH)	
	4	1	**436-9922**	1	FILM-IDENTIFICATION (CAT) (RH)	
	5	1	**483-2831**	1	FILM-IDENTIFICATION (D6R2, LH)	
	6	1	**483-2832**	1	FILM-IDENTIFICATION (D6R2, RH)	

483-3859 **FILM GP (*contd.*)** **i06217080**

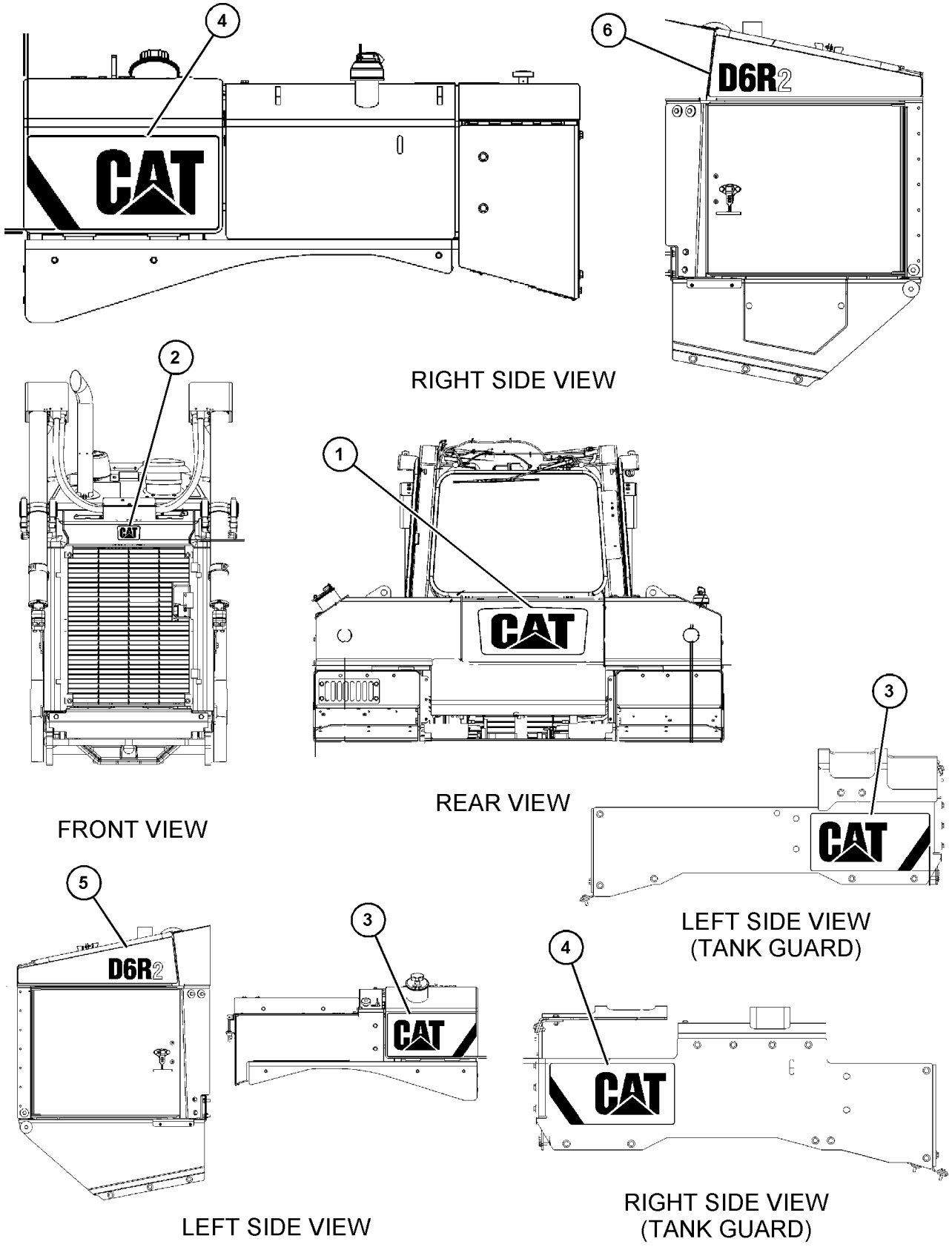

GRAPHIC #1 **<END>** g03862502

483-3860 FILM GP

S/N: TTT1-UP
PART OF 398-4279 COMMON AR
ALSO AN ATTACHMENT

SMCS-7000 **i06217085**

NOTE	REF NO	GRAPHIC REF	PART NUMBER	QTY	PART NAME 1 2 3 4 5 6 (PRODUCT LEVEL)	SEE PAGE
	1	1	**331-7779**	1	FILM-IDENTIFICATION (CAT) (REAR)	
	2	1	**392-7132**	1	FILM-IDENTIFICATION (CAT) (FRONT)	
	3	1	**436-9921**	1	FILM-IDENTIFICATION (CAT) (LH)	
	4	1	**436-9922**	1	FILM-IDENTIFICATION (CAT) (RH)	
	5	1	**483-2833**	1	FILM-IDENTIFICATION (D6R2 XL, LH)	
	6	1	**483-2834**	1	FILM-IDENTIFICATION (D6R2 XL, RH)	

483-3860 **FILM GP (*contd.*)** **i06217085**

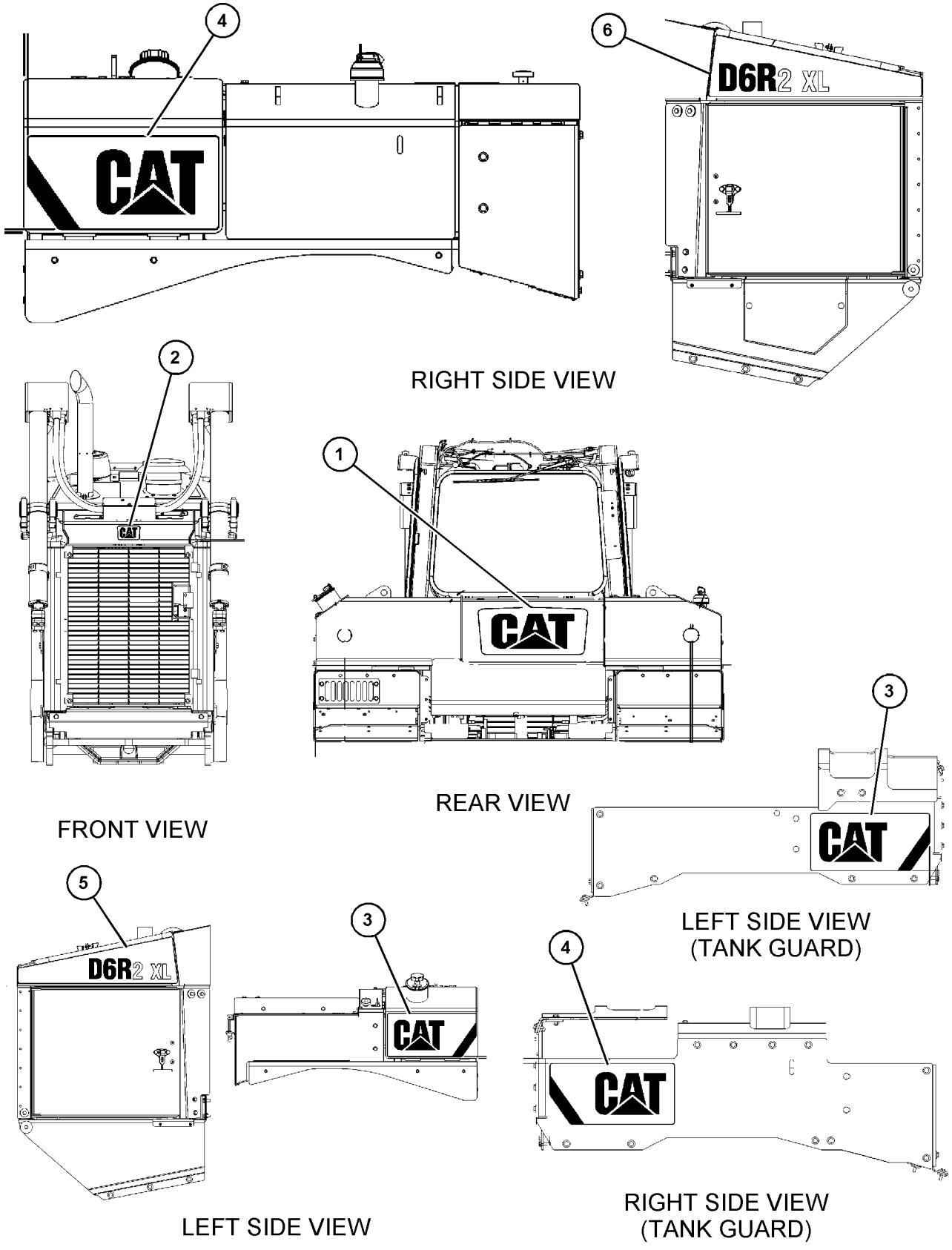

GRAPHIC #1 **<END>** g03862498

483-3861 FILM GP

S/N: PPP1-UP

PART OF 398-4280 COMMON AR

SMCS-7000 **i06218722**

NOTE	REF NO	GRAPHIC REF	PART NUMBER	QTY	PART NAME 1 2 3 4 5 6 (PRODUCT LEVEL)	SEE PAGE
	1	1	**331-7779**	1	FILM-IDENTIFICATION (CAT) (REAR)	
	2	1	**392-7132**	1	FILM-IDENTIFICATION (CAT) (FRONT)	
	3	1	**436-9921**	1	FILM-IDENTIFICATION (CAT) (LH)	
	4	1	**436-9922**	1	FILM-IDENTIFICATION (CAT) (RH)	
	5	1	**483-2835**	1	FILM-IDENTIFICATION (D6R2 LGP, LH)	
	6	1	**483-2836**	1	FILM-IDENTIFICATION (D6R2 LGP, RH)	

483-3861 **FILM GP (*contd.*)** **i06218722**

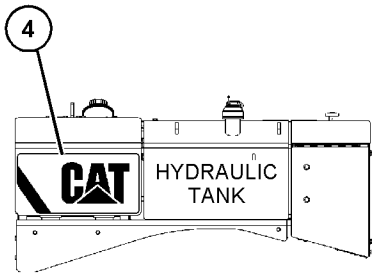

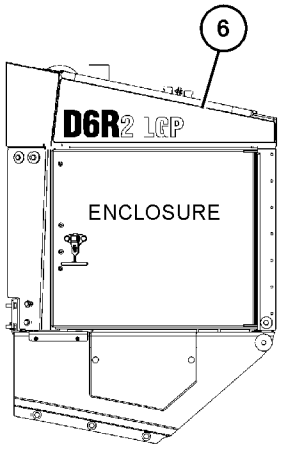

RIGHT SIDE VIEW

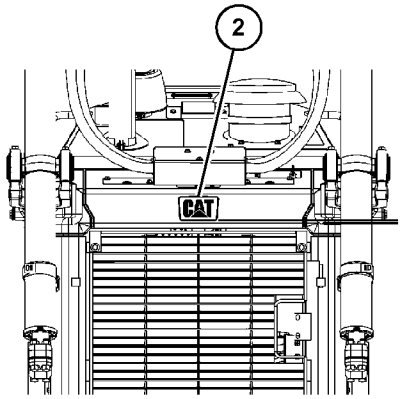

FRONT VIEW

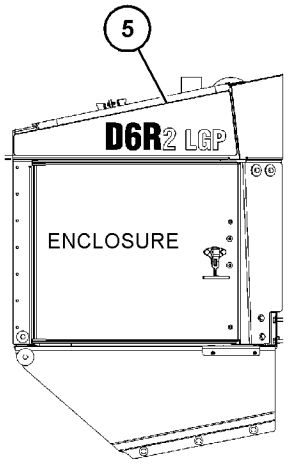

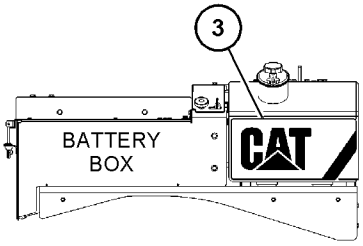

LEFT SIDE VIEW

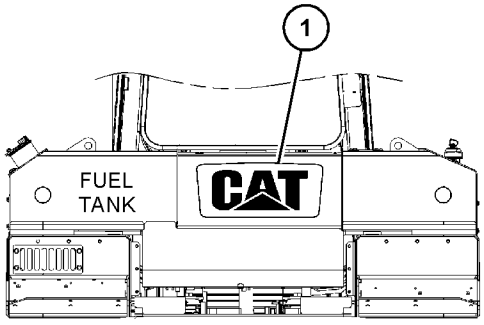

REAR VIEW

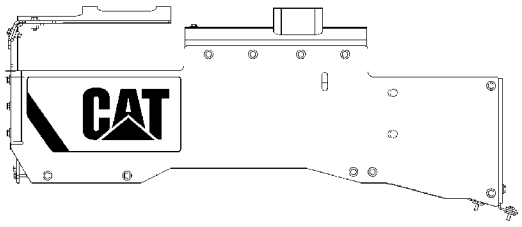

RIGHT SIDE VIEW
(TANK GUARD)

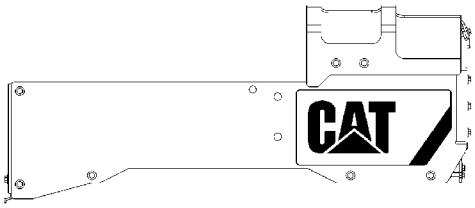

LEFT SIDE VIEW
(TANK GUARD)

GRAPHIC #1 **<END>** g03862165

SERVICE EQUIPMENT AND SUPPLIES

381-2594 PLATE & FILM GP–RIPPER

S/N: RTZ1-UP
PART OF 434-8126 RIPPER AR
AN ATTACHMENT

SMCS-7557, 7563

i05636021

NOTE	PART NUMBER	QTY	PART NAME 1 2 3 4 5 6 (PRODUCT LEVEL)	SEE PAGE
	7X-3229	2	FILM-IDENTIFICATION (LIFT EYE, TIE-DOWN LOCATION)	
			(ON RIPPER FRAME JUST FORWARD OF PIN JOINT TO RIPPER CARRIAGE, ONE FILM ON LH AND RH SIDE)	
	8M-3494	1	PLATE-SERIAL NUMBER (RIPPER)	
	4B-4158	2	SCREW-DRIVE (NO 4X0.25-IN)	

<END>

385-1747 PLATE & FILM GP

S/N: TXD1-UP

PART OF 420-1872, 420-1873, 423-8456, 423-8457 ENGINE AR, 423-8455, 423-8458 ENGINE AR-CORE

AN ATTACHMENT

SMCS-7557, 7563 **i05555510**

NOTE	REF NO	GRAPHIC REF	PART NUMBER	QTY	PART NAME 1 2 3 4 5 6 (PRODUCT LEVEL)	SEE PAGE
	1	1	**293-9659**	2	FILM-WARNING (UNIVERSAL, READ OMM)	
	2	1	**3N-3469**	1	TAG-INSTRUCTION (ENGINE PRESTART)	
	3	1	**297-8989**	1	PLATE-IDENTIFICATION (CAT C9)	
	4	1	**8L-8413**	1	STRAP-CABLE	
	5	1	**136-9066**	1	FILM-INFORMATION (ENGINE OIL)	

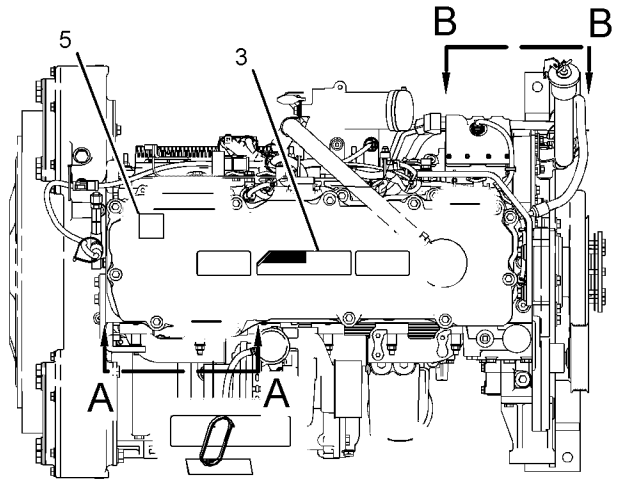

TOP VIEW OF ENGINE

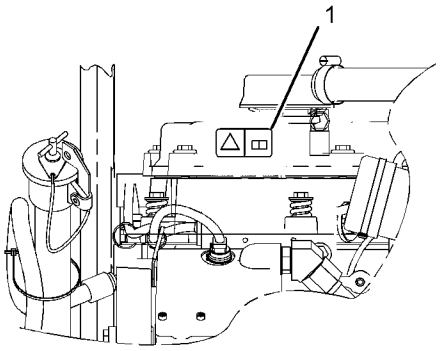

VIEW B-B

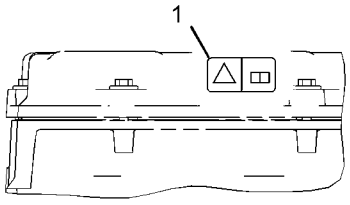

VIEW A-A

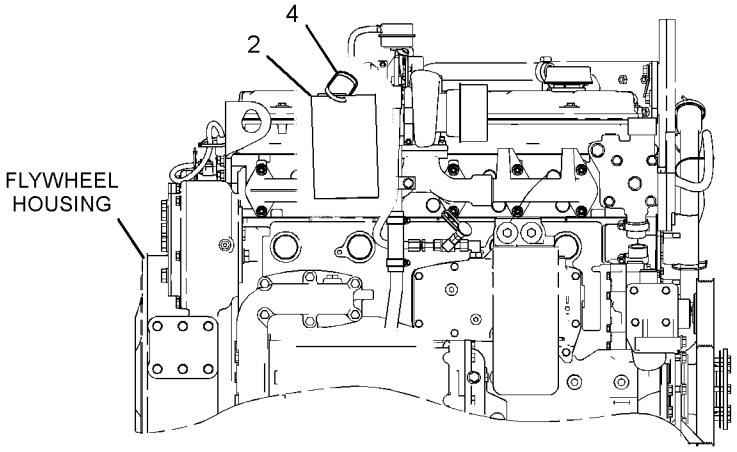

RIGHT SIDE VIEW OF ENGINE

GRAPHIC #1 **<END>** g03508016

398-4302 PLATE & FILM GP

S/N: PPP1-UP; SSS1-UP; TTT1-UP
PART OF 481-9508 DISTRIBUTION AR
AN ATTACHMENT

SMCS-7557, 7563

i06217202

NOTE	PART NUMBER	QTY	PART NAME 1 2 3 4 5 6 (PRODUCT LEVEL)	SEE PAGE
	430-7600	1	PLATE-IDENTIFICATION (SERVICE INFORMATION NUMBERS)	
			(ON FORWARD VERTICAL FACE OF RH CONSOLE BELOW BLADE CONTROL HANDLE)	
	239-6986	1	PLATE-SERIAL NUMBER (MACHINE)	
			(ATTACH PLATE TO ROPS MOUNTING PAD ON TRANSMISSION)	
A	**4W-1413**	1	PLATE-SERIAL NUMBER (ENGINE)	
			(ON LH SIDE OF CYLINDER BLOCK TOWARD TOP & REAR FLAT AREA)	
	323-3309	10	CAP	
	211-8073	7	CAP-PROTECTION	
	9N-1995	4	RIVET-POP	
	246-2641	2	PADLOCK GP	
			(EACH INCLUDES)	
	5P-8500	1	KEY	
			(1-ON FUEL DRAIN VALVE AT REAR OF TRACTOR)	
			(1-MAIN ELECTRICAL DISCONNECT COMPARTMENT)	
	452-6262	1	FILM-CERTIFICATION (ROPS, FOPS, READ OMM)	
			(ON RH ROLLER B POST)	
	7X-3229	4	FILM-IDENTIFICATION (LIFT EYE, TIE-DOWN LOCATION)	
			(BETWEEN FRONT ROLLER & IDLER & BETWEEN REAR ROLLER & IDLER. 2 EACH SIDE)	
			(BETWEEN FRONT ROLLER & IDLER & ON SIDE OF LOWER RIPPER FRAME BY REAR PIN. 2 EACH SIDE)	
	7X-7644	3	FILM-IDENTIFICATION (TIE-DOWN)	
			(1-ON FRONT TOWING EYE)	
			(2-ON TRACK ROLLER FRAME AT CENTER BETWEEN FRONT & REAR IDLER)	
	190-5386	2	FILM-IDENTIFICATION (ROUND RED REFLECTIVE)	
			(ON REAR, FRONT & SIDE OF MACHINE IN COMMON AR)	
	245-8456	1	FILM-IDENTIFICATION (FUEL PUMP)	
			(PLACE NEXT TO FUEL PRIMING PUMP SWITCH)	
	455-1084	1	FILM-IDENTIFICATION (CAT)	
			(ON BOTTOM OF BATTERY BOX COVER)	
	134-7258	1	FILM-INFORMATION (EXTENDED LIFE COOLANT)	
			(TO UNDER SIDE OF RADIATOR FILL COVER)	
	146-6747	1	FILM-INFORMATION (24-VOLT)	
			(ON BOTTOM OF BATTERY BOX COVER)	
	229-0887	1	FILM-INFORMATION (AIR CLEANER)	
			(CENTER ON EXTERIOR OF AIR CLEANER COVER)	
	334-4603	1	FILM-INFORMATION (HYDO ADVANCED 10)	
			(ON FRONT OF HYD TANK FILLER SUPPORT)	
	8T-4999	1	FILM-INSTRUCTION (BATTERY DISCONNECT)	
			(ON FACE OF DISCONNECT SWITCH)	
	9X-6340	1	FILM-INSTRUCTION (ENGINE OIL)	
			(ON ENGINE OIL FILL TUBE)	
	102-2913	1	FILM-INSTRUCTION (BULLDOZER CONTROL)	
			(ON CAB POST NEAR CONTROL LEVER)	
	321-6091	1	FILM-NOTICE (SHIPPING, LIFTING, TIE-DOWN)	
			(ON RH SIDE OF ENGINE SIDE GUARD - CENTERED ON ACCESS COVER)	
	225-0312	1	FILM-WARNING (JUMP START, READ OMM, INTL)	

398-4302 **PLATE & FILM GP (*contd.*)** **i06217202**

NOTE	PART NUMBER	QTY	PART NAME 1 2 3 4 5 6 (PRODUCT LEVEL)	SEE PAGE
			(ON BOTTOM OF BATTERY BOX COVER)	
	225-4257	1	FILM-WARNING (HOT FLUID UNDER PRESS)	
			(UNDER SIDE OF RADIATOR FILL COVER)	

A - NOT PART OF THIS GROUP

<END>

398-4303 PLATE & FILM GP–HIGH AMBIENT

S/N: PPP1-UP; SSS1-UP; TTT1-UP

AN ATTACHMENT

SMCS-7557, 7563 **i06217210**

NOTE	PART NUMBER	QTY	PART NAME 1 2 3 4 5 6 (PRODUCT LEVEL)	SEE PAGE
	354-8706	1	PLATE-IDENTIFICATION (YEAR OF MANUFACTURE)	
	430-7600	1	PLATE-IDENTIFICATION (SERVICE INFORMATION NUMBERS)	
			(ON FORWARD VERTICAL FACE OF RH CONSOLE BELOW BLADE CONTROL HANDLE)	
	239-6986	1	PLATE-SERIAL NUMBER (MACHINE)	
			(ON ROPS MOUNTING PAD ON TRANSMISSION)	
A	**4W-1413**	1	PLATE-SERIAL NUMBER (ENGINE)	
			(ON LH SIDE OF CYLINDER BLOCK TOWARD TOP & REAR FLAT AREA)	
	9N-1995	4	RIVET-POP	
			(ON FORWARD VERTICAL FACE OF LH CONSOLE BELOW STEERING CONTROL HANDLE USED TO MOUNT PLATE)	
	323-3309	10	CAP	
	211-8073	7	CAP-PROTECTION	
	246-2641	2	PADLOCK GP	
			(EACH INCLUDES)	
	5P-8500	1	KEY	
			(1-ON FUEL DRAIN VALVE AT REAR OF TRACTOR)	
			(1-ON MAIN ELECTRICAL DISCONNECT SWITCH COMPARTMENT)	
	452-6262	1	FILM-CERTIFICATION (ROPS, FOPS, READ OMM)	
			(ON RH ROLLOVER B POST)	
	7X-3229	4	FILM-IDENTIFICATION (LIFT EYE, TIE-DOWN LOCATION)	
			WITHOUT RIPPER	
			4-(ON SIDE OF TRACK ROLLER BETWEEN FRONT ROLLER & IDLER & BETWEEN REAR ROLLER & IDLER(2 EACH SIDE))	
			WITH RIPPER	
			4-(ON SIDE OF TRACK ROLLER FRAME BETWEEN FRONT ROLLER & IDLER,ON SIDE OF LOWER RIPPER FRAME BY REAR PIN (2 EACH SIDE))	
	7X-7644	3	FILM-IDENTIFICATION (TIE-DOWN)	
			(1-ON FRONT TOWING EYE)	
			(2-ON TRACK ROLLER FRAME AT CENTER BETWEEN FRONT & REAR IDLER)	
	190-5386	2	FILM-IDENTIFICATION (ROUND RED REFLECTIVE)	
			(ON REAR, FRONT AND SIDE OF MACHINE)	
	245-8456	1	FILM-IDENTIFICATION (FUEL PUMP)	
			(NEXT TO FUEL PRIMING PUMP SWITCH)	
	158-7864	1	FILM-IDENTIFICATION (HYDRAULIC OIL)	
			(ON FRONT OF HYD TANK FILLER SPOUT)	
	455-1084	1	FILM-IDENTIFICATION (CAT)	
			(ON BOTTOM OF BATTERY BOX COVER)	
	134-7258	1	FILM-INFORMATION (EXTENDED LIFE COOLANT)	
			(TO UNDER SIDE OF RADIATOR FILL COVER)	
	141-1511	1	FILM-INFORMATION (FUEL FILTER)	
			(ON SECONDARY FUEL FILTER)	
	146-6747	1	FILM-INFORMATION (24-VOLT)	
			(ON BOTTOM OF BATTERY BOX COVER)	
	229-0887	1	FILM-INFORMATION (AIR CLEANER)	
			(CENTER ON EXTERIOR OF AIR CLEANER COVER)	
	344-7132	1	FILM-INFORMATION (TRANSMISSION FILTER)	
			(ON PTO FILTER CANISTER INSIDE ENCLOSURE ON RH FENDER)	

398-4303 **PLATE & FILM GP (*contd.*)** **i06217210**

NOTE	PART NUMBER	QTY	PART NAME 1 2 3 4 5 6 (PRODUCT LEVEL)	SEE PAGE
	8T-4999	1	FILM-INSTRUCTION (BATTERY DISCONNECT)	
			(ON FACE OF DISCONNECT SWITCH)	
	9X-6340	1	FILM-INSTRUCTION (ENGINE OIL)	
			(ON ENGINE OIL FILL TUBE)	
	102-2913	1	FILM-INSTRUCTION (BULLDOZER CONTROL)	
			(ON CAB POST NEAR CONTROL LEVER)	
	321-6091	1	FILM-NOTICE (SHIPPING, LIFTING, TIE-DOWN)	
			(ON RH SIDE OF ENGINE GUARD - CENTERED ON ACCESS COVER)	
	225-0312	1	FILM-WARNING (JUMP START, READ OMM, INTL)	
			(ON BOTTOM OF BATTERY BOX COVER)	
	225-4257	1	FILM-WARNING (HOT FLUID UNDER PRESS)	
			(TO UNDER SIDE OF RADIATOR FILL COVER)	

A - NOT PART OF THIS GROUP

<END>

SERVICE EQUIPMENT AND SUPPLIES

398-4304 PLATE & FILM GP—COLD WEATHER

S/N: PPP1-UP; SSS1-UP; TTT1-UP

AN ATTACHMENT

SMCS-7557, 7563 **i06217215**

NOTE	PART NUMBER	QTY	PART NAME 1 2 3 4 5 6 (PRODUCT LEVEL)	SEE PAGE
	430-7600	1	PLATE-IDENTIFICATION (SERVICE INFORMATION NUMBERS)	
			(ON FORWARD VERTICAL FACE OF RH CONSOLE BELOW BLADE CONTROL HANDLE)	
	239-6986	1	PLATE-SERIAL NUMBER (MACHINE)	
			(ATTACH TO ROPS MOUNTING PAD ON TRANSMISSION)	
A	**4W-1413**	1	PLATE-SERIAL NUMBER (ENGINE)	
			(ON LH SIDE OF CYLINDER BLOCK TOWARD TOP & REAR FLAT AREA)	
	9N-1995	4	RIVET-POP	
			(USE 4 TO MOUNT PLATE TO FORWARD VERTICAL FACE OF LH CONSOLE BELOW STEERING CONTROL HANDLE)	
	323-3309	10	CAP	
	211-8073	7	CAP-PROTECTION	
	246-2641	2	PADLOCK GP	
			(EACH INCLUDES)	
	5P-8500	1	KEY	
			(1-ON FUEL DRAIN VALVE AT REAR OF TRACTOR)	
			(1-ON MAIN ELECTRICAL DISCONNECT SWITCH COMPARTMENT)	
	452-6262	1	FILM-CERTIFICATION (ROPS, FOPS, READ OMM)	
			(PASTE ON RH ROLLOVER B POST)	
	7X-3229	4	FILM-IDENTIFICATION (LIFT EYE, TIE-DOWN LOCATION)	
			(WITH RIPPER ON SIDE OF TRACK ROLLER FRAME BETWEEN FRONT ROLLER & IDLER & ON SIDE OF RIPPER FRAME BY REAR PIN, 2 SIDES)	
			(WITHOUT RIPPER ON SIDE OF TRACK ROLLER FRAME BETWEEN FRONT ROLLER & IDLER & REAR ROLLER & IDLER, 2 SIDES)	
	158-7864	1	FILM-IDENTIFICATION (HYDRAULIC OIL)	
			(ON FRONT OF HYD TANK FILLER SPOUT)	
	7X-7644	3	FILM-IDENTIFICATION (TIE-DOWN)	
			(1-ON FRONT TOWING EYE)	
			(2-ON TRACK ROLLER FRAME AT CENTER BETWEEN FRONT & REAR IDLER)	
	190-5386	2	FILM-IDENTIFICATION (ROUND RED REFLECTIVE)	
			(LOCATED ON REAR, FRONT AND SIDE OF MACHINE)	
	245-8456	1	FILM-IDENTIFICATION (FUEL PUMP)	
			(NEXT TO FUEL PRIMING PUMP SWITCH)	
	455-1084	1	FILM-IDENTIFICATION (CAT)	
			(ON BOTTOM OF BATTERY BOX COVER)	
	134-7258	1	FILM-INFORMATION (EXTENDED LIFE COOLANT)	
			(UNDER SIDE OF RADIATOR FILL COVER)	
	146-6747	1	FILM-INFORMATION (24-VOLT)	
			(ON BOTTOM OF BATTERY BOX COVER)	
	229-0887	1	FILM-INFORMATION (AIR CLEANER)	
			(CENTER ON EXTERIOR OF AIR CLEANER COVER)	
	344-7132	1	FILM-INFORMATION (TRANSMISSION FILTER)	
			(PLACE ON PTO FILTER CANISTER INSIDE ENCLOSURE ON RH FENDER)	
	8T-4999	1	FILM-INSTRUCTION (BATTERY DISCONNECT)	
			(ON FACE OF DISCONNECT SWITCH)	
	9X-6340	1	FILM-INSTRUCTION (ENGINE OIL)	
			(ON ENGINE OIL FILL TUBE)	

398-4304 **PLATE & FILM GP (*contd.*)** **i06217215**

NOTE	PART NUMBER	QTY	PART NAME 1 2 3 4 5 6 (PRODUCT LEVEL)	SEE PAGE
	102-2913	1	FILM-INSTRUCTION (BULLDOZER CONTROL)	
			(ON CAB POST NEAR CONTROL LEVER)	
	321-6091	1	FILM-NOTICE (SHIPPING, LIFTING, TIE-DOWN)	
			(RH SIDE OF ENGINE SIDE GUARD - CENTERED ON ACCESS COVER)	
	225-0312	1	FILM-WARNING (JUMP START, READ OMM, INTL)	
			(ON BOTTOM OF BATTERY BOX COVER)	
	225-4257	1	FILM-WARNING (HOT FLUID UNDER PRESS)	
			(UNDER SIDE OF RADIATOR FILL COVER)	

A - NOT PART OF THIS GROUP

<END>

473-9244 PLATE & FILM GP–CHINESE

S/N: PPP1-UP; SSS1-UP; TTT1-UP

AN ATTACHMENT

SMCS-7557, 7563 **i06229041**

NOTE	REF NO	GRAPHIC REF	PART NUMBER	QTY	PART NAME 1 2 3 4 5 6 (PRODUCT LEVEL)	SEE PAGE
	1	1	**473-9246**	1	PLATE-IDENTIFICATION (MACHINE)	

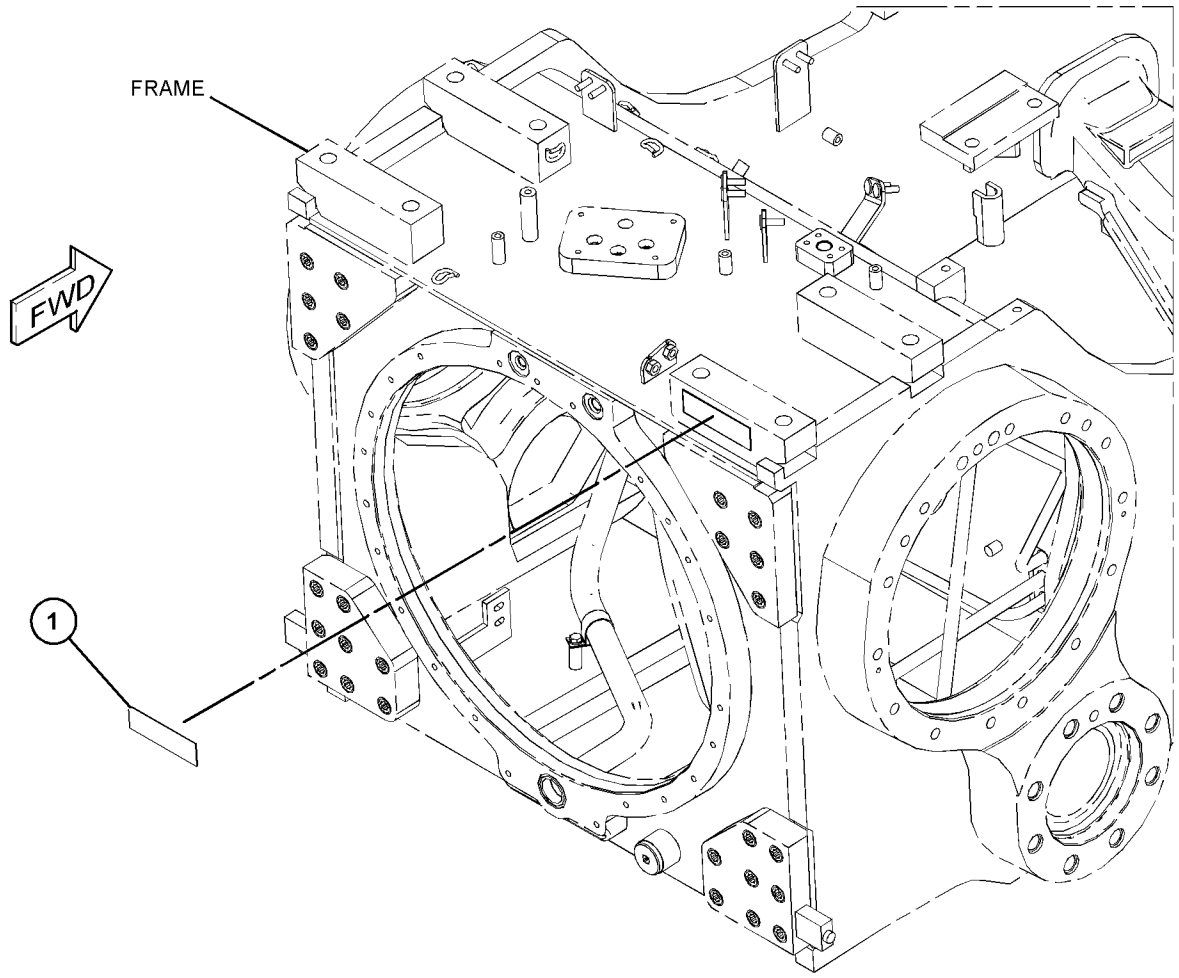

GRAPHIC #1 **<END>** g03862483

465-2737 PLATE GP-CERTIFICATION

S/N: PPP1-UP; SSS1-UP; TTT1-UP

AN ATTACHMENT

SMCS-7405, 7557 **i06250058**

NOTE	PART NUMBER	QTY	PART NAME 1 2 3 4 5 6 (PRODUCT LEVEL)	SEE PAGE
	479-3043	1	PLATE-CERTIFICATION (MACHINE)	

<END>

PART NUMBER INDEX

Part	Page
0	
0L-0478	334
0L-1026	22
0L-1143	273
0L-1169	307
	310
0S-0519	24
0S-1569	307
	310
0S-1585	277
	279
0S-1591	307
	310
0S-1594	282
0S-1597	239
0S-1614	273
0S-1619	323
0S-1620	282
0S-1621	283
0S-1897	307
	310
0T-0102	279
0T-0244	771
	773
	776
0T-0489	772
1	
1A-1460	273
	274
	277
1A-2029	273
	277
	340
	344
1A-2209	340
	344
1A-2223	273
	323
1A-2610	282
1A-5183	323
1A-5822	307
	310
1B-5174	416
	418
	420
	422
	426
	428
	431
	433
	437
	439
	443
	445
	449
	451
1B-8705	16
	21
	330
1B-8706	223
1B-8735	712
	714
1C-0569	277
1D-4539	283
1D-4540	283
1D-4601	307
	310
1F-0750	357
	377
1F-6762	558
	560
1H-1023	239
1H-2629	239
1H-3244	167
	252
	256
	759
1H-4106	489
	491
1H-7339	77
	314
1H-8128	149
1H-9696	293
	295
	297
	299
	301
	303
1J-0708	564
1J-2176	605
1J-6472	408
	409
1J-8569	564
1J-9671	540
	541
	542
	645
1K-8850	395
	767
	769
1L-4418	353
	355
1L-4684	570
1L-5072	615
1L-6957	307
	310
1L-7388	323
1M-1571	558
	560
1M-6119	156
	158
	263
	264
1M-6120	156
	158
	263
	264
1M-6718	652
1M-8657	323
1M-9011	293
	295
	297
	301
	321
1M-9351	650
1M-9968	239
1M-9971	239
1N-5724	699
1N-5999	96
	100
1P-0810	165
	166
	167
	168
	177
	180
	263
	264
	268
	703
1P-2841	353
	355
1P-3702	622
	624
1P-3703	537
	573
1P-3704	537
	570
1P-3706	645
1P-3934	307
	310
1P-3935	307
	310
1P-4278	102
	104
1P-4578	314
	332
	579
	622
	624
1P-4579	332
1P-4582	314
1P-4584	314
1P-5767	537
1P-6356	735
1P-6524	682
1P-9005	293
	295
	297
	299
	301
	303
1Q-2423	397
1Q-4625	524
1Q-4626	524
1Q-4728	522
1Q-4729	522
1R-0762	132
1R-1808	67
1S-0724	74
1S-0994	132
	136
	264
	268
1S-0996	138
	140
1S-1860	307
	310
	511
	513
	514
	515
	517
	518
	519
	520
	522
	523
	524
1S-4915	263
	268
1S-7251	263
1S-7252	263
	264
1S-7446	239
1S-9593	171
	654
1S-9799	335
	336
1T-0068	410
	411
	412
	413
	414
	415
1T-0069	340
	344
1T-0097	340
	344
1T-0414	340
	344
1T-0438	340
	344
1T-0441	340
	344
1T-0446	340
	344
1T-0447	340
	344
1T-0599	340
	344
1T-0765	464
	465
	468
1T-0808	239
1T-0902	340
	344
1T-1993	340
	344
1T-2052	340
	344
1T-2069	340
	344
1T-2070	340
	344
1T-2079	344
1T-2080	340
	344
1T-2084	►340
	342
1T-2086	340
	344
1T-2089	340
1U-0159	837
	839
1U-0183	820
	822
	828
1U-0300	837
1U-0301	364
	837
1U-0612	364
	837
	839
1U-0725	660
	661
1U-0928	657
1U-0929	657
1U-1173	655
	657
1U-1174	655
	657
1U-1175	655
	657
1U-1176	655
	657
1U-1267	657
1U-2827	615
1U-8846	48
	49
	115
	274
	277
1V-7753	314
1W-2431	117
	119
1W-2715	29
1W-4738	45
1W-4877	112
1W-6448	223
	533

► **PRIMARY REFERENCE**

PART NUMBER INDEX

Part	Page
1W-8407	24
1Y-7927	722
1Z-9787	353
	355
1Z-9932	353
	355
1Z-9933	353
	355
2	
2A-1162	47
2A-3746	31
	342
	346
2A-4429	29
2A-4639	274
2B-0858	289
2B-0947	293
	297
	299
	301
	303
2B-9373	330
2D-1523	335
	336
2D-4202	615
2D-5658	342
	346
2D-6235	722
	728
2D-6392	239
2D-6403	695
2D-6506	321
2D-6642	307
	310
	728
2F-5326	408
	409
2F-6678	239
2G-9245	391
2H-3429	239
2H-3755	323
2H-3920	249
2H-3922	245
	248
2H-3931	289
2H-3934	599
2H-9445	223
2J-0564	566
2J-2866	627
	629
	631
2J-3506	831
	832
	833
	834
	835
	836
2J-6274	493
	495
2J-6356	223
2J-7761	615
2J-8163	239
2J-8489	564
	566
2K-0703	839
2K-3258	564
2K-4096	563
2K-4973	353
	679
	728
	787
	789
2K-5066	295
2K-5069	273
2K-5986	342
	346
2K-6279	837
2K-6830	558
	560
2K-9295	273
2L-5893	753
2L-6679	215
2L-8069	165
	166
	168
2L-8071	172
2L-8075	163
	166
2L-8078	163
2L-8079	166
	167
2M-1444	682
2M-5795	357
2M-7819	722
2M-9780	138
	140
	536
	537
	579
	605
	645
	648
2P-1279	314
	573
	577
2P-1286	77
2P-1293	593
	595
2P-2717	66
2P-3696	293
	295
	297
	299
	301
	303
2P-4304	67
2P-4358	48
2P-4556	735
2P-6588	590
2P-8514	395
2R-0098	299
	320
2R-5001	533
2S-0795	285
2S-2251	337
	338
2S-2596	627
	629
	631
2S-4078	293
	295
	297
	299
	301
	303
	313
	493
	495
	536
	548
	550
	552
	554
2S-5658	333
2S-5835	650
2S-5926	493
	495
2V-2043	77
2V-4868	102
	104
2V-8260	175
2W-5825	85
2W-7381	32
2W-8147	21
2Y-5829	58
	59
	74
	76
2Y-9790	807
	808
	809
	810
	811
	812
3	
3B-0623	22
3B-2263	607
	609
3B-4124	273
3B-4501	248
3B-4605	373
	375
	533
3B-4610	757
	758
3B-4615	384
	385
3B-4617	353
	355
3B-4626	655
	657
3B-4629	386
	387
3B-4632	662
	663
	664
	669
	670
3B-5325	841
	842
3B-8489	405
	406
	408
	409
	600
	657
	839
3D-2824	77
	87
	93
	536
	573
	577
	579
	607
	609
	618
3D-2975	722
3D-4603	627
	631
3D-8317	650
3E-3365	248
3E-3371	172
	251
	256
3E-3377	169
	176
3E-3383	170
	179
3E-3389	179
3E-4051	735
3E-4052	735
3E-4054	735
3E-4057	735
3E-4058	735
3E-4304	730
	733
	754
	755
3E-4334	611
3E-4352	33
	115
	218
	219
	323
3E-4353	50
3E-4354	277
3E-4888	747
3E-4898	747
3E-5239	251
	257
	695
3E-6328	►150
	251
	257
3E-6389	►188
	251
	257
3E-7404	719
3E-7410	136
3E-8005	17
3E-8017	120
	129
	131
3E-8020	704
	705
	730
	741
3E-9375	221
3E-9411	380
3E-9867	89
3E-9868	89
3F-3442	282
3F-3727	340
	344
3F-4854	657
3F-5022	323
3F-9556	742
	743
	744
	745
3G-2579	839
3G-2580	839
3G-8047	590
	592
3G-8054	590
	592
3G-8057	590
	592
3G-8742	558
	560
3G-9402	600
3G-9405	600
3G-9995	837
3H-0702	223
3J-1770	655
	657
3J-1907	237

► PRIMARY REFERENCE

PART NUMBER INDEX

Part	Page
	313
	314
	315
	535
	537
	572
	573
	576
	577
	579
	597
	605
	619
	622
	624
	636
	650
	652
3J-2682	659
3J-3679	645
3J-4818	728
	789
3J-6572	566
3J-6573	655
	657
3J-7354	89
	102
	104
	268
	314
	405
	406
	540
	541
	542
	572
	573
	576
	577
	579
	597
	607
	609
	622
	624
	627
	629
	631
	636
3J-8500	330
3J-9703	566
3K-0360	93
	138
	140
	264
	274
	277
	293
	295
	297
	299
	301
	303
	313
	314
	337
	338
	572
	573
	576
	579
	590
	605
	626
	638
	639
	640
	647
	649
	739
3K-0835	251
	256
3K-2511	323
3K-8510	839
3L-3380	239
3L-3813	645
3M-7045	77
3N-0759	546
3N-3469	851
3N-3763	239
3P-1111	523
3P-1932	314
3P-9900	789
3R-8797	239
3R-8801	239
	240
3S-0004	330
3S-2093	102
	104
	132
	136
	166
	172
	178
	252
	263
	266
	695
	701
	712
	714
	717
	728
	735
	789
	791
	792
	804
3S-2708	273
	277
	323
	342
	346
3S-6049	263
3S-7781	279
3S-9643	86
3T-0598	493
	495
3T-0996	358
3T-1162	416
	418
	424
	425
	430
	435
	436
	441
	442
	455
3T-2051	478
3T-2077	416
	418
	420
	422
	426
	428
	431
	433
	437
	439
	443
	445
	449
	451
3T-3418	239
3T-3422	239
3T-3423	239
3T-3424	239
3T-3434	240
3T-4007	342
	346
3T-4008	342
	346
3T-4009	342
	346
3T-4011	342
	346
3T-4013	342
	346
3T-4377	322
3T-4568	273
3T-4709	215
3T-4710	215
3T-4824	273
3T-5021	273
3T-5200	273
3T-5807	277
3T-5851	271
	272
3T-6469	313
3T-6471	313
3T-6742	307
	310
3T-6963	273
3T-8305	334
3T-8729	322
3T-8757	330
3T-9272	273
3T-9494	215
	239
3T-9524	239
3T-9525	►215
	239
3V-3263	792
	804
3V-9399	373
	375
3W-0329	493
	495
3W-0640	493
	495
3W-1852	416
	418
	420
	422
	426
	428
	431
	433
	437
	439
	443
	445
	449
	451
3W-1944	385
3W-2369	493
	495
3W-2568	96
	100
3W-3819	367
	369
	371
3W-3896	396
3W-6550	►271
	328
3W-6551	271
3W-6867	361
	365
3W-9678	405
	406
3Y-2888	237
3Y-3866	655
	657
3Y-5405	584
	586
	588
4	
4B-2049	239
4B-4098	35
	655
	657
4B-4158	416
	418
	424
	425
	430
	435
	436
	441
	442
	455
	807
	808
	809
	810
	811
	812
	813
	814
	815
	816
	850
4B-4278	373
	629
	789
4B-5059	722
4B-9782	282
4B-9785	282
4B-9808	698
4B-9880	307
	310
	650
4C-9612	53
4D-2297	682
4D-2886	332
4D-6716	94
	98
4D-7388	70
4D-7733	132
4F-0255	655
	657
4F-1252	655
	657
4F-2129	323
4F-2294	246
	650
4F-4879	784
4F-5695	22
4F-6024	45
4G-4972	24
4H-0019	307

► **PRIMARY REFERENCE**

PART NUMBER INDEX

Part	Page
	310
4H-1440	340
	344
4H-1641	357
	377
	390
4H-2558	204
	206
	210
	373
	375
4H-5440	279
4J-0121	558
	560
4J-0520	315
	548
	550
	552
	554
	570
	573
	577
	579
	583
	592
4J-0522	315
	579
	622
	624
4J-0524	315
4J-0527	315
4J-1641	815
	820
	822
	828
	830
4J-2036	386
	387
4J-2414	659
	660
4J-5267	315
	582
	583
	584
	586
	588
	590
	592
	593
	595
4J-5309	605
4J-5351	627
	629
	631
4J-5477	313
	314
	572
	573
	576
	577
4J-6374	558
	560
4J-7533	627
	629
	631
4J-8251	615
4J-8252	615
4J-8997	622
	624
4K-1388	548
	550
	552
	554
	622
	624
	629
	631
4K-2039	638
	639
4K-3004	839
4K-3533	712
	714
4K-8603	323
4K-9429	749
4L-2729	239
4L-6454	293
	295
	297
	299
	301
	303
4M-0189	48
	464
	465
	466
	467
	468
4M-1831	239
4M-1853	239
4M-1854	239
4M-1896	240
4M-2381	650
4M-2442	323
4M-5281	153
	154
4M-6425	753
4M-6980	645
4M-7470	373
	375
4M-8239	350
4N-2514	42
4N-2927	722
4N-3808	288
4N-6045	66
4P-2102	6
	7
	8
	9
	10
	11
	33
4P-4369	120
4P-5524	109
4P-7428	50
	126
	178
	181
	201
	268
4P-7429	181
	268
	735
4P-7581	71
	140
	181
	195
	198
	204
	206
	208
	210
	252
	257
	264
	266
	268
	791
4P-8134	178
	181
	252
	257
	264
	266
	268
	380
	735
	772
4R-9999	60
4S-1962	264
4S-8537	340
	344
4S-9191	86
4T-0732	671
	675
4T-0780	671
	675
4T-0928	652
4T-1108	627
	629
	631
4T-1481	662
	663
	664
	669
	670
4T-1504	815
	820
	822
	828
	830
4T-1520	671
	673
	675
4T-1563	584
	586
	588
4T-1649	629
4T-1701	629
4T-1860	627
	629
	631
	652
4T-2741	649
4T-2950	834
4T-2952	831
	832
	835
4T-4511	629
4T-4628	627
	629
	631
4T-4631	627
	629
4T-4659	645
4T-4866	660
	661
	671
	673
	675
4T-4875	600
4T-4932	598
	647
4T-5072	627
	629
	631
4T-5073	627
	629
	631
4T-5495	655
	657
4T-7571	649
4V-6981	533
4V-7884	787
4V-8256	679
4V-8577	787
	789
4W-1203	35
4W-1204	35
4W-1413	852
	854
	856
4W-2026	18
4Y-9398	662
	663
	664
5	
5B-0582	340
	344
5C-2874	153
	154
5C-2890	167
	252
	257
	636
	695
	699
	789
5C-7261	192
	193
	712
	714
	742
	743
	744
	745
	757
	758
	759
5C-9553	148
	695
5D-1026	138
	140
5D-1911	615
5D-2989	322
5D-4822	722
5D-5958	611
5D-7927	615
5D-9344	45
5F-0304	47
5F-1678	408
	409
5F-3106	315
	602
	603
5F-9144	535
5F-9757	195
	198
	201
	204
	206
	208
	210
	212
	252
	257
5G-2247	471
	472
	473
5G-3676	268
5G-8655	712
	714
5G-8993	477

PART NUMBER INDEX

Part	Page
	478
5G-9841	477
	478
5G-9842	477
	478
5G-9843	477
	478
5G-9973	391
5G-9974	391
5H-3252	564
5H-4018	583
	592
5H-4020	624
5H-6202	323
5H-6734	416
	418
	420
	422
	426
	428
	431
	433
	437
	439
	443
	445
	449
	451
5H-9899	701
5I-8304	156
	158
5J-3964	342
	346
5J-4418	564
5J-4419	564
5J-4773	831
	832
	833
	834
	835
	836
5J-4989	564
5J-4991	566
5J-5314	239
5J-5731	563
	564
5J-7386	342
	346
5K-0227	627
	629
	631
5K-0461	359
5K-3294	573
	577
5K-5120	283
5K-9090	313
	536
	548
	550
	552
	554
	570
	579
5K-9107	274
5K-9179	740
5K-9246	279
5K-9988	279
5L-7200	248
5M-0578	273
	277
5M-1179	223
5M-2057	615
	627
	629
	631
5M-2894	274
	277
	279
	307
	310
	323
	340
	344
	464
	465
	468
	753
5M-3034	239
5M-3038	323
5M-5689	87
5M-6126	322
5M-6214	659
5M-7878	342
	346
5M-7925	273
5M-8500	712
	714
5M-9623	350
5N-4185	17
5P-0372	759
	761
5P-0492	181
5P-0537	750
	751
5P-0597	154
5P-0599	112
5P-0695	264
	268
5P-0767	94
	98
	739
5P-0908	545
5P-1075	195
	198
	201
	204
	206
	208
	210
5P-1076	198
	208
	353
	355
	385
	389
	390
	391
	396
	403
	426
	428
	431
	433
	488
	600
	662
	663
	664
5P-1230	102
	104
5P-1465	102
	104
5P-1606	299
	303
5P-2671	600
5P-2817	113
	114
5P-3454	251
	252
	256
	257
5P-3501	314
5P-3860	112
5P-3930	322
	342
	346
5P-4057	279
5P-4116	126
	156
	195
	198
	201
	208
	212
	252
	257
	264
5P-4268	315
5P-4423	789
5P-4536	128
5P-4571	165
	170
	179
	180
5P-5296	323
5P-5297	323
5P-5623	179
5P-5649	401
5P-5681	377
5P-5755	387
5P-5768	794
	798
5P-5777	264
	268
5P-5846	279
5P-5908	600
5P-6001	169
5P-6006	163
5P-6129	680
	720
5P-6298	215
5P-6436	73
5P-6605	794
	798
5P-6874	740
5P-6944	573
	577
	579
5P-7085	315
5P-7162	252
	257
5P-7211	373
	375
	401
5P-7464	582
	590
5P-7465	582
	590
5P-7468	579
5P-7469	579
5P-7483	373
	375
	387
	401
5P-7514	387
5P-7530	74
	76
	323
5P-7592	307
	310
5P-7679	342
	346
5P-7701	305
5P-7957	749
5P-7958	688
	689
	690
5P-7970	66
	266
5P-8194	322
5P-8210	315
5P-8245	18
	48
	50
	62
	63
	64
	273
	274
	277
	279
	282
	283
	307
	310
	323
5P-8247	307
	310
5P-8248	831
	832
	833
	835
	836
5P-8309	94
	98
	102
	104
	107
5P-8444	579
5P-8445	722
5P-8500	688
	689
	690
	852
	854
	856
5P-8522	195
	198
	204
	206
	208
	210
	264
5P-8939	252
	257
5P-8998	279
5P-9085	195
	198
	201
	204
	206
	208
	210
5P-9297	76
5P-9617	67
5P-9658	288
5R-0939	359
5R-0940	359
5S-7379	264
5S-7382	353
5S-7383	753
5S-8709	590
5S-8712	590
5S-8765	590
5S-8766	590
5S-9062	35

► **PRIMARY REFERENCE**

PART NUMBER INDEX

Part	Page
5T-4374	405
	406
5T-7486	725
5V-0770	722
5V-1496	357
	774
	778
5V-1497	787
6	
6A-5591	48
6B-4594	373
	375
6B-6863	322
6C-3681	357
6D-1641	592
	735
	739
6D-3479	735
6D-4246	138
	140
6D-4636	739
6D-5801	145
6D-7128	87
6E-0381	626
6E-1752	615
6E-1835	649
6E-4907	645
6E-5066	597
6E-5293	330
6E-6528	641
6F-0253	251
	256
6F-0711	358
6F-3908	657
6F-4718	337
	338
6F-6673	320
6F-7045	245
6F-7062	285
6H-3956	399
6H-7062	573
	577
6H-9361	615
6H-9691	642
6I-1418	251
	257
6I-2435	96
	100
	107
6I-2501	109
6I-2502	109
6I-4464	109
6I-8500	322
6I-8507	307
	310
6I-8511	307
	310
6I-8724	273
6I-9056	330
6I-9386	712
	714
6I-9641	503
	511
6J-2680	315
	579
6J-3473	307
	310
6J-5383	671
	673
	675
6J-6439	649
6J-9187	659
6J-9188	659
6K-3273	778
6K-3630	342
	346
6K-4934	195
	198
	204
	206
	208
	210
6K-4935	195
	198
	204
	206
	208
	210
6K-5967	573
	577
6K-8162	645
6K-8179	573
	577
6K-8498	279
6L-3483	172
6M-5062	638
	639
6N-1558	117
	119
6N-2944	94
	98
6N-2985	66
6N-3279	239
6N-3826	239
6N-7523	148
6P-1735	273
6P-1736	273
6P-5317	274
	277
6P-7704	322
6P-8269	367
	369
	371
6S-2828	307
	310
6S-2829	307
	310
6S-3859	757
	758
6S-9277	759
	761
6T-0062	273
6T-0064	273
6T-0363	215
6T-0364	307
	310
6T-0371	215
6T-0372	215
6T-0850	273
6T-1698	148
	403
6T-2162	523
6T-3643	680
	720
6T-3764	181
6T-3852	307
	310
6T-3853	307
	310
6T-6505	170
6T-6506	170
6T-7882	322
6T-9927	367
	369
	371
6V-0327	293
	297
	299
	301
	303
6V-0328	293
	297
	299
	301
	303
6V-0329	293
	297
	299
	301
	303
6V-0330	293
	295
	297
	299
	301
	303
6V-0400	537
6V-0439	293
	295
	297
	299
	301
	303
6V-0473	322
6V-0484	314
6V-0852	81
	132
	279
	315
	536
	572
	576
	579
	619
6V-0855	273
6V-0937	333
6V-1051	701
6V-1232	701
6V-1249	582
	590
6V-1322	239
	289
6V-1355	102
	104
6V-1359	401
6V-1572	315
6V-1573	315
6V-1625	94
	98
6V-1720	279
6V-1792	511
	513
	514
	515
	517
	518
	519
	520
	522
	523
	524
6V-1819	79
	80
6V-1820	48
	50
6V-1889	315
6V-1970	688
	689
	690
6V-2314	154
	701
	703
6V-2317	36
	39
	761
6V-2369	251
	252
	256
	257
6V-2404	307
	310
6V-2478	322
6V-2495	736
6V-2689	636
	701
6V-3250	87
	94
	98
	285
6V-3265	132
6V-3349	45
6V-3538	24
6V-3545	701
6V-3668	285
6V-3822	45
6V-3823	285
6V-3918	17
	49
	53
	93
6V-3922	651
6V-3928	754
	755
6V-3938	604
6V-3940	16
	17
	54
	73
	74
	76
	218
	219
	650
6V-3965	81
	132
	279
	283
	314
	536
	573
	577
	579
	619
6V-4248	70
	76
	136
6V-4249	32
	51
	117
	119
6V-4292	138
	140
6V-4365	315
6V-4369	266
6V-4583	342
	346
6V-4589	653
6V-5063	102
	104
6V-5064	285
6V-5142	605
6V-5192	627

PART NUMBER INDEX

Part	Page
	629
6V-5201	613
6V-5217	49
	73
	266
6V-5218	33
	67
	74
	76
6V-5219	67
6V-5220	67
6V-5230	74
6V-5324	652
6V-5326	605
6V-5555	622
	624
6V-5556	629
6V-5684	50
6V-5696	18
	63
	285
6V-5817	792
6V-5839	32
	45
	48
	51
	70
	74
	76
	79
	80
	117
	119
	120
	136
	142
	266
	615
6V-5842	45
6V-5843	43
6V-5849	804
6V-6609	29
	86
	233
	236
	285
6V-7238	739
6V-7357	152
	186
	367
	369
	371
	695
	759
	767
	769
	791
6V-7604	27
6V-7646	273
	774
	778
6V-7673	35
6V-7687	837
	839
6V-7732	615
6V-7742	558
	560
	566
6V-7743	367
	369
	371
6V-7744	321
	364
	373
	375
	615
	837
	839
6V-7981	142
6V-8001	48
6V-8076	132
	313
	579
	619
6V-8077	67
6V-8133	566
6V-8149	18
6V-8185	533
6V-8188	239
	622
	624
6V-8189	712
	714
6V-8197	48
	50
6V-8200	645
6V-8201	607
	609
6V-8237	564
	566
6V-8245	102
	104
6V-8336	48
6V-8351	651
6V-8352	641
6V-8369	249
6V-8370	248
6V-8376	680
	720
	752
6V-8397	87
	138
	140
	313
	314
	572
	573
	576
	577
	579
6V-8398	138
	140
	313
	314
	584
	586
	588
	590
6V-8399	605
6V-8400	548
	550
	552
	554
6V-8625	314
	590
6V-8627	314
	573
	576
6V-8628	573
	576
6V-8629	536
6V-8634	138
	140
	572
	576
6V-8636	74
	76
	87
	132
	136
	142
	313
	572
6V-8637	536
6V-8639	138
	140
6V-8641	572
	576
6V-8647	572
	576
6V-8675	50
	62
	285
6V-8715	132
6V-8716	314
	536
6V-8721	138
	140
6V-8723	67
	573
	577
6V-8724	132
	136
	314
	573
	577
	579
6V-8781	572
	576
6V-8801	111
	195
	198
	201
	204
	206
6V-8928	730
	733
6V-8934	573
	577
6V-8969	750
	751
6V-8978	651
6V-8981	584
	586
	588
6V-8983	593
	595
6V-9001	136
6V-9004	77
6V-9007	77
	536
6V-9027	102
	104
6V-9028	94
	98
6V-9161	579
6V-9167	410
	566
6V-9169	584
	586
	588
6V-9189	190
	191
6V-9197	357
	767
	769
6V-9200	573
6V-9632	572
	576
	730
	754
	755
6V-9746	77
	313
	314
	536
	537
	573
	579
	593
	595
6V-9748	35
6V-9843	572
	576
6V-9849	572
	576
6V-9853	536
6W-6005	156
6Y-0352	842
6Y-0359	841
6Y-0473	464
	465
	466
	467
	468
	471
	472
	473
	474
	475
6Y-0596	590
6Y-0597	590
6Y-0859	293
	295
	297
	301
6Y-0926	273
6Y-0984	273
6Y-1198	471
	472
	473
6Y-1370	820
6Y-1371	820
6Y-1372	820
6Y-1387	822
6Y-1390	820
	822
6Y-1602	322
6Y-1744	814
	831
6Y-2039	807
	832
6Y-2704	273
	277
6Y-3973	357
6Y-4410	835
	836
6Y-4411	835
	836
6Y-4819	322
6Y-5010	330
6Y-5113	740
6Y-5439	313
6Y-5799	493
	495
6Y-6277	299
	303
6Y-6286	511
	513
6Y-6287	515
	518
6Y-6294	511
	513
6Y-6296	515
	518
6Y-6389	514

► **PRIMARY REFERENCE**

PART NUMBER INDEX

Part	Page
	519
6Y-6412	514
	519
6Y-6751	665
	666
	667
	668
6Y-9024	512
	516
	521
6Y-9280	600
6Y-9281	600
6Y-9373	273
	277
7	
7B-0863	361
	365
7B-1597	279
7B-3028	416
	418
	420
	422
	426
	428
	431
	433
	437
	439
	443
	445
	449
	451
7B-3039	615
7B-3235	307
	310
7B-9665	353
	355
7C-1493	67
7C-3567	52
7C-4354	76
7C-6670	128
7C-6672	128
7C-7431	129
	131
7C-8634	35
7D-1649	50
	285
	307
	310
7D-1677	334
7D-6922	728
7D-7111	149
7D-7233	102
	104
	154
7F-0560	264
	268
7F-3488	239
7F-3525	215
7F-8267	615
7F-9543	361
	365
7F-9547	361
	365
7G-1596	273
7G-2343	323
7G-2516	322
7G-2830	322
7G-3832	315
	583
7G-3833	315
	537
	583
	593
	595
7G-3834	315
	537
	583
	593
	595
7G-4824	707
	710
7G-5186	94
	98
7G-5984	570
7G-5985	570
7G-5986	570
7G-6355	322
7G-6623	489
	491
7G-7218	322
7G-9555	334
7H-1447	615
7H-3607	333
7H-4566	273
7H-7628	307
	310
7H-7658	322
7H-9737	533
7I-2272	153
	154
	266
7J-0204	96
	100
	605
	627
	629
	631
7J-2036	464
	465
	466
	467
	468
7J-2595	659
7J-5131	815
	820
	822
	828
	830
7J-8611	279
7J-8955	566
7J-8956	566
7J-9108	77
7J-9933	627
	629
	631
	647
	649
7K-1181	71
	87
	102
	104
	132
	136
	140
	154
	172
	179
	181
	182
	184
	186
	195
	198
	201
	204
	206
	208
	210
	212
	237
	252
	257
	263
	268
	391
	618
	694
	712
	714
	735
	772
7K-6058	546
7K-9203	839
7K-9205	839
7L-2894	239
7M-0324	239
7M-0325	239
7M-0326	239
7M-0327	239
7M-1201	282
7M-1296	350
7M-1297	350
7M-1377	350
7M-7219	722
7M-8485	77
	102
	104
	181
	264
	268
	314
	536
	627
	629
	631
7M-8651	239
7N-0296	237
7N-0718	►245
	264
7N-2059	237
7N-5683	24
7N-9017	172
	244
7N-9801	250
7N-9943	188
7P-4190	223
7S-8920	315
	548
	550
	552
	554
7S-8921	315
	548
	550
	552
	554
7S-9396	111
7T-0020	188
	189
7T-1099	50
	121
	122
	359
	378
	398
	572
	576
	615
7T-1474	307
	310
7T-1475	307
	310
7T-1885	273
	277
7T-1975	837
7T-3950	322
7T-3974	239
7T-4532	691
7T-6799	251
	256
7T-6934	586
	588
7T-6994	273
	277
7T-8130	273
7T-8136	277
7T-8816	323
7T-8875	279
7T-8876	279
7T-9031	277
7T-9272	322
7T-9370	322
7T-9515	248
7T-9788	273
7T-9832	273
7T-9837	273
	277
7T-9946	307
	310
7V-5191	722
7V-6571	264
7V-8532	313
7W-6534	274
7X-0346	293
	295
	297
	299
	301
	303
7X-0402	351
	352
7X-0406	351
	352
7X-0510	315
	573
	577
7X-0513	380
7X-0562	239
7X-0579	132
7X-0584	315
	701
7X-0593	747
7X-0594	386
	387
7X-0608	679
7X-0632	389
7X-0766	399
7X-0818	252
	257
7X-1456	838
7X-2476	405
	406
7X-2488	391
7X-2535	573
	577
7X-2539	132
7X-2543	285
	364
	619
	837
	839

► PRIMARY REFERENCE

PART NUMBER INDEX

Part	Page
7X-2553	380
	384
	493
	495
	665
	666
	667
	668
7X-2554	380
7X-2555	380
	489
	491
7X-2557	600
7X-2562	660
	661
7X-2563	665
	666
	667
	668
	677
	678
7X-2564	148
	655
	657
	748
7X-2565	403
7X-2566	363
	671
	673
	675
7X-2567	660
	661
7X-2571	364
7X-2572	416
	418
7X-2575	405
	406
	476
7X-2576	361
	364
	365
	395
	489
	491
	837
7X-2580	364
	477
	748
7X-2582	478
7X-2584	362
7X-2585	489
	491
7X-2908	54
7X-3229	850
	852
	854
	856
7X-3373	239
7X-3391	367
	369
	371
7X-6315	163
7X-7477	334
7X-7644	361
	365
	852
	854
	856
7X-7729	85
	89
	94
	96
	98
	100
	102
	104
	112
	114
	118
	121
	122
	127
	132
	156
	158
	204
	206
	210
	315
	357
	359
	367
	369
	371
	373
	375
	377
	380
	382
	386
	387
	389
	390
	392
	393
	394
	405
	406
	537
	547
	570
	600
	694
	707
	710
	712
	714
	747
	767
	769
	771
	772
	780
7X-7877	154
	252
	257
	707
	710
	754
	755
7X-7927	792
	804
7X-7928	792
	804
7X-7929	792
	804
7X-7930	792
	804
7X-7945	313
	572
	576
7Y-0468	725
7Y-3474	791
7Y-5226	701
7Y-5233	459
	460
	461
	462
	463
7Y-5235	671
	673
	675
7Y-6338	359
	379
7Y-7388	252
	257
	730
7Y-9099	712
	714
	767
	769
8	
8B-1931	102
	104
8C-3089	239
8C-3174	537
	593
	595
8C-3205	332
	582
	583
	584
	586
	588
	590
	592
	593
	595
8C-3206	315
	332
	548
	550
	552
	554
	570
	598
	615
	622
	624
	645
8C-3290	747
8C-3312	651
8C-3334	282
8C-3442	712
	714
8C-3445	67
8C-3446	67
	89
	314
8C-3447	313
8C-3451	536
8C-3681	102
	104
8C-3756	695
8C-4984	37
8C-5060	804
8C-5607	186
8C-5608	186
8C-5682	680
	720
8C-5917	158
8C-5918	156
8C-6358	264
8C-6561	293
	297
8C-6857	546
8C-6913	320
8C-6959	133
8C-8451	186
8C-8478	386
	387
	671
	673
	675
8C-8514	163
8C-8584	373
	375
8C-8988	579
8C-8992	712
	714
8C-9160	558
	560
8C-9200	563
8C-9660	239
8D-1817	307
	310
8D-1819	307
	310
8D-4771	320
8D-9739	323
8E-1118	724
8E-1143	650
8E-1205	390
8E-1211	416
	418
8E-1356	390
8E-1900	477
	478
8E-2139	464
	466
	467
8E-2748	293
	295
	297
	299
	301
	303
8E-4832	373
	375
8E-5188	822
	828
8E-5190	822
	828
8E-5192	822
	828
8E-5194	822
	828
8E-5199	828
8E-5205	820
	822
8E-5486	659
	660
8E-5701	655
	657
8E-5703	566
	671
	673
	675
8E-7222	471
	472
	473
8E-7407	471
	472
	473
8E-7408	471
	472
	473
8E-7409	471
	472
	473
8E-7410	471
	472

► **PRIMARY REFERENCE**

PART NUMBER INDEX

Part	Page
	473
8E-7561	357
	377
8E-7791	707
	710
8E-7864	330
8E-8299	322
8E-8300	342
	346
8E-8304	322
8E-8305	322
8E-8307	273
	277
8E-8310	273
8E-8434	644
8E-9212	558
	560
8E-9289	489
	491
8E-9932	461
	462
	463
8F-1434	239
8F-3556	353
	355
8F-4387	659
8F-6575	64
8F-7702	223
8G-4014	367
	369
	371
8G-4189	408
	409
8G-4386	359
8G-5247	359
8G-5654	313
8G-8844	293
	297
	299
	301
	303
8G-8845	293
	295
	297
	299
	301
	303
8G-9530	525
	526
	527
	528
	530
	531
8G-9880	321
8H-0901	295
8H-0902	295
8H-2758	110
	111
8H-2768	334
8H-5303	245
8H-5306	245
8H-5352	323
8H-8898	662
	663
	664
	669
	670
8H-9818	289
	337
	338
8I-6686	536
8J-2189	►841
8J-2190	841
	842
8J-2880	566
	671
	673
	675
8J-4866	657
8J-6913	615
8J-8782	615
8J-8783	615
8K-1433	182
	184
	186
8K-8517	96
	100
8L-2746	653
8L-2786	268
	306
	315
	636
8L-5008	102
	104
8L-6557	405
	406
8L-8413	156
	158
	263
	264
	722
	726
	851
8M-2530	279
8M-2772	315
8M-2773	132
	735
8M-3494	850
8M-4390	321
8M-4432	283
8M-4438	274
	277
8M-4986	315
	350
8M-5010	323
8M-5254	619
8M-5255	323
8M-5860	27
8M-8489	322
	330
8M-9307	285
8M-9315	47
8N-1725	263
8N-4617	109
8N-6849	33
8N-6854	33
	77
8P-0058	279
8P-1916	322
8P-1964	322
8P-2019	323
8P-2022	323
8P-2023	323
8P-2053	322
8P-5244	403
8P-5411	154
8P-8357	274
	277
8P-9770	659
	675
	817
	818
	820
	822
	823
	824
	825
	826
	827
	828
	829
	830
8R-3857	214
8S-0023	315
	548
	550
	552
	554
8S-0024	315
	548
	550
	552
	554
8S-0527	277
8S-0948	268
8S-3020	263
8S-4304	285
8S-5383	692
8S-7499	636
8S-7803	722
8S-9008	335
	336
8S-9130	279
8T-0072	273
8T-0100	39
	41
8T-0119	138
	140
8T-0164	573
	577
8T-0267	264
8T-0292	73
8T-0315	536
8T-0328	239
	266
	533
	774
	778
8T-0360	480
	483
	484
	487
8T-0362	558
	560
8T-0375	477
	478
8T-0389	156
	158
	355
8T-0404	77
8T-0441	335
	336
8T-0640	223
8T-0643	51
8T-0644	86
	91
8T-0646	64
8T-0656	415
8T-0657	411
	412
	413
	414
8T-0722	712
	714
8T-0785	558
	560
8T-1120	313
8T-1159	651
8T-1482	361
	364
	365
	394
	489
	491
	837
8T-1579	353
	355
8T-1887	268
	573
	577
8T-1888	268
	573
	577
8T-1889	87
	268
8T-1890	87
	268
8T-2150	604
8T-2225	264
	268
8T-2275	615
8T-2501	353
8T-3282	410
	480
	483
	484
	487
8T-3298	615
8T-3425	264
8T-3490	62
	89
	94
	96
	98
	100
	121
	122
	127
	158
	263
	373
	375
	378
	379
	398
	735
8T-3518	264
	268
8T-3597	378
	379
8T-3612	378
	398
8T-3957	545
	599
	605
	607
	609
8T-4001	405
	406
8T-4121	34
	56
	57
	77
	83
	84
	85
	87
	89
	94
	96
	98
	100
	102
	104
	107
	110

► PRIMARY REFERENCE

PART NUMBER INDEX

Part	Page	Part	Page	Part	Page	Part	Page
	111		592		138		153
	112		593		140		154
	118		595		149		156
	132		598		154		158
	138		615		195		186
	140		619		198		237
	149		622		201		252
	152		624		204		257
	153		644		206		264
	154		645		208		266
	158		680		210		268
	186		692		212		315
	195		696		252		337
	198		703		257		338
	201		704		264		359
	204		705		268		537
	206		707		289		579
	208		710		315		592
	210		712		350		600
	212		714		357		707
	237		720		367		710
	243		735		369		735
	244		739		371		791
	252		740		373	8T-4138	145
	257		746		375		182
	264		759		377		184
	268		763		382		699
	315		765		391	8T-4139	201
	321		766		405		212
	332		767		406		335
	335		769		416		336
	336		791		418		367
	337	8T-4123	52		420		369
	338		363		422		371
	355		364		426		391
	367		373		428		396
	369		375		431		416
	371		403		433		418
	373		476		437		420
	375		477		439		422
	380		478		443		437
	391		600		445		439
	416		655		449		443
	418		671		451		445
	420		673		537		449
	422		675		548		451
	426		678		550		461
	428		754		552		462
	431		755		554		463
	433	8T-4131	386		573		488
	437		387		577		584
	439		403		579		586
	443		671		583		588
	445		673		592		590
	449		675		615		593
	451	8T-4132	692		694		595
	493	8T-4133	118		696		839
	495		252		707	8T-4140	52
	534		257		710		361
	537		696		712		365
	548	8T-4136	77		714	8T-4141	463
	550		83		735	8T-4149	77
	552		84		739	8T-4154	192
	554		85		747	8T-4167	403
	570		87		767		405
	573		94		769		406
	577		96	8T-4137	77		416
	579		98		85		418
	582		100		87		459
	583		110		89		460
	584		111		132		461
	586		112		138		462
	588		127		140		463
	590		132		152		476

► **PRIMARY REFERENCE**

PART NUMBER INDEX

Part	Page
	660
	661
	671
	673
	675
	747
8T-4170	52
	403
8T-4171	252
	257
8T-4172	350
8T-4175	367
	369
	371
	620
	621
8T-4176	96
	100
	337
	338
8T-4179	138
	140
	181
	573
	577
8T-4181	712
	714
8T-4182	34
	83
	84
	264
	269
	320
	493
	495
	547
	590
	592
	692
8T-4183	315
	332
	353
	355
	389
	397
	573
	577
	582
	593
	595
	600
	759
	761
	765
8T-4184	315
	403
	416
	418
	420
	422
	426
	428
	431
	433
	437
	439
	443
	445
	449
	451
	462
	537
	763
	765
8T-4185	94
	107
	110
	111
	289
	355
	570
	629
	692
	746
8T-4186	56
	57
	85
	89
	94
	98
	114
	315
	389
	390
	582
	644
	692
	703
	759
	763
	765
	767
	769
8T-4187	476
	655
	657
8T-4189	87
	89
	126
	195
	198
	201
	208
	212
	237
	703
	767
	769
8T-4190	269
	761
8T-4191	94
	98
	243
	244
	269
	380
	644
	736
	739
8T-4192	537
	662
	663
	664
	669
	670
8T-4193	692
8T-4194	385
	403
	426
	428
	431
	433
	537
8T-4195	94
	96
	98
	100
	102
	104
	121
	122
	132
	264
	269
	315
	337
	338
	367
	369
	371
	380
	382
	386
	387
	392
	393
	570
	573
	577
	579
	590
	703
	707
	710
	736
	740
	766
	767
	769
8T-4196	77
	83
	84
	85
	89
	107
	118
	204
	206
	210
	279
	315
	321
	332
	355
	359
	394
	547
	548
	550
	552
	554
	570
	579
	583
	584
	586
	588
	592
	593
	595
	598
	615
	622
	624
	645
	694
	707
	710
	712
	714
	736
8T-4198	152
	153
	154
	315
8T-4200	252
	257
8T-4205	167
	239
	252
	257
	266
	367
	369
	371
	533
	695
	701
	712
	714
	767
	769
	774
	778
	791
8T-4222	83
	84
	357
8T-4223	138
	140
	181
	201
	212
	299
	315
	320
	321
	332
	335
	336
	353
	355
	367
	369
	371
	397
	416
	418
	420
	422
	426
	428
	431
	433
	437
	439
	443
	445
	449
	451
	461
	462
	463
	537
	573
	577
	580
	582
	583
	584
	586
	588
	590
	593
	595
	607

PART NUMBER INDEX

Part	Page
	609
	620
	621
	622
	624
	669
	670
	692
	712
	714
	759
	761
	763
	765
	839
8T-4224	40
	87
	89
	190
	191
	192
	193
	237
	269
	293
	297
	649
	703
	712
	714
	736
	753
	759
	761
	767
	769
8T-4226	156
	315
	537
8T-4231	599
8T-4244	582
	692
8T-4648	198
	208
	315
	321
	839
8T-4778	361
	365
8T-4779	618
	671
	673
	675
8T-4896	293
	295
	297
	299
	301
	303
	353
	466
	467
	707
8T-4908	87
	156
	264
	736
8T-4910	96
	100
	315
	384
	389
	396
	397
	590
	620
	621
	692
8T-4956	390
	426
	428
	431
	433
	461
	463
	580
	583
	584
	586
	588
8T-4970	754
	755
8T-4984	89
	96
	100
	580
8T-4985	580
8T-4986	117
	119
8T-4994	223
	293
	295
	297
	299
	301
	303
	546
8T-4999	852
	855
	856
8T-5005	237
	315
8T-5041	321
	580
8T-5043	87
8T-5360	772
8T-5361	351
	352
8T-5379	394
8T-5389	142
	536
8T-5400	804
8T-5410	699
8T-5412	837
8T-5413	214
8T-5436	692
8T-5439	148
	386
	387
	671
	673
	675
8T-5451	266
8T-5460	477
	754
	755
8T-5668	564
8T-6342	178
8T-6356	536
8T-6381	364
	655
8T-6430	52
	380
	478
8T-6466	87
	315
	537
	573
	736
8T-6663	87
8T-6703	89
8T-6723	138
	140
8T-6724	138
	140
8T-6757	29
8T-6761	285
8T-6762	86
8T-6764	285
8T-6854	285
8T-6868	77
	385
	839
8T-6869	133
8T-6912	40
	191
	237
8T-7044	120
8T-7338	315
	385
	602
	603
	620
	621
8T-7371	807
	808
	809
	810
	811
	812
	813
	814
	815
	816
8T-7546	573
	577
8T-7547	87
	193
8T-7566	390
	750
	751
8T-7568	546
8T-7811	45
8T-7929	839
8T-7934	110
	111
	736
8T-7971	397
8T-8379	566
8T-8442	607
	609
	641
8T-8729	150
	176
	179
	188
	189
	247
	249
	250
	251
	256
	263
	268
	535
	654
	735
	742
	744
	745
8T-8730	173
	174
8T-8737	136
	164
	165
	166
	167
	168
	169
	171
	172
	173
	174
	175
	176
	177
	178
	179
	180
	182
	184
	186
	249
	268
	699
	701
	742
	743
	744
	745
8T-8799	251
	257
8T-8827	252
	256
	263
8T-8902	67
8T-8919	299
	320
8T-8985	536
8T-8987	548
	550
	552
	554
8T-9041	573
	577
8T-9082	774
8T-9371	789
8T-9399	293
	295
	297
	299
	301
	303
8T-9471	765
8T-9496	353
	355
	373
	375
8T-9598	607
	609
8T-9655	132
	160
	251
	257
8T-9756	156
8T-9757	158
	264
8T-9905	313
8U-5951	607
	609
8U-6850	605
8V-0622	158

► **PRIMARY REFERENCE**

PART NUMBER INDEX

Part	Page
8V-9708	198
	208
8W-0327	77
8W-6591	618
8X-5489	269
8X-9618	152
	153
	154
8Y-3465	367
	369
	371
8Y-3795	398
8Y-3966	399
8Y-3998	399
8Y-4000	373
	375
8Y-4489	359
	378
	615
8Y-5747	399
8Y-5944	787
8Y-5945	722
8Y-5965	787
8Y-6012	787
8Y-6014	787
8Y-6024	787
8Y-6041	722
8Y-6045	722
8Y-6046	722
8Y-6047	722
8Y-6060	722
8Y-6062	722
8Y-6063	722
8Y-6064	722
8Y-6066	722
8Y-6067	722
8Y-6068	722
8Y-6069	722
8Y-6400	353
	355
	399
8Y-6859	722
8Y-6860	722
8Y-7452	572
	576
8Y-8306	399

9

Part	Page
9B-0576	273
9B-7233	680
	720
	752
9B-7237	466
	467
9C-7929	378
9D-6196	89
9D-6197	89
9D-7924	313
	536
9F-4446	17
9F-5599	215
9F-5644	245
9F-5975	782
9F-6656	315
9G-0002	156
9G-0003	158
	264
9G-0004	158
9G-0005	156
9G-0286	323
9G-0289	322
9G-0290	322
9G-0832	307
	310
9G-1642	474
	475
9G-3695	173
9G-4101	239
9G-4336	252
	256
	257
9G-5127	313
9G-5664	464
	465
	466
	467
	468
9G-6744	322
9G-8020	322
9G-8140	390
9G-8615	279
9G-8637	271
9G-8638	293
	295
	297
	299
	301
	303
9G-8909	264
9G-9175	293
	295
	297
	299
	301
	303
9G-9180	295
	299
	301
	303
9G-9181	293
	295
	297
	299
	301
	303
9H-0846	335
	336
9H-3360	293
	295
	297
	299
	301
	303
9H-3757	239
9H-6454	615
9H-8712	335
	336
9J-3139	841
9J-4782	600
9J-7031	615
9J-8126	629
9J-8923	842
9J-8926	2
	842
9L-9132	274
9M-0164	71
	114
9M-1974	17
	36
	37
	49
	53
	66
	67
	73
	74
	76
	93
	115
	160
	214
	266
	283
	650
9M-1976	335
	336
9M-2008	342
	346
9M-2904	113
	582
	728
9M-3835	357
9M-4355	322
9M-7002	321
9M-7394	615
9M-7958	70
9M-8406	580
	682
9N-0869	41
	160
	251
	257
9N-1995	852
	854
	856
9N-4233	600
9N-4449	837
	839
9N-4450	837
	839
9N-4685	74
9P-0214	313
9P-1478	307
	310
9P-1921	307
	310
9P-1922	307
	310
9P-1925	307
	310
9P-2245	464
	465
	466
	467
	468
9P-3066	367
	369
	371
9P-3709	335
	336
9P-7072	307
	310
9P-7121	149
9P-7757	322
9P-8614	322
9P-8623	322
9P-8626	322
9P-9388	740
9R-2160	214
9R-2613	359
	378
	615
9R-2672	398
9R-2821	214
	375
9R-3761	359
	378
9S-1305	533
9S-1838	511
	513
	514
	515
	517
	518
	519
	520
	522
	523
	524
9S-2544	239
9S-4167	132
9S-4181	305
	627
	631
9S-4182	622
	624
9S-4183	279
	607
	609
9S-4185	293
	295
	297
	299
	301
	303
	337
	338
9S-4188	622
	624
9S-4191	622
	624
9S-4200	87
9S-4497	96
	100
9S-6130	279
9S-6758	110
9S-7710	279
9S-8001	627
	629
	631
9S-8002	47
	145
	597
	607
	609
	627
	629
	631
	636
9S-8003	47
	645
9S-8004	47
	132
	314
	597
	605
	636
	650
9S-8005	47
	93
	274
	277
	306
	314
	605
9S-8006	132
	605
	645
9S-8007	605
9S-8008	93
9S-8010	493
	495
9S-8230	357

PART NUMBER INDEX

Part	Page
	377
	390
9S-8752	110
9S-9334	314
9T-0094	566
9T-1637	611
9T-1642	611
9T-1643	611
9T-1687	611
9T-3885	558
	560
9T-5241	725
9T-6093	564
9T-8958	558
	560
9T-9836	645
9U-8263	724
9U-8668	650
9U-8669	650
9U-8746	724
9U-9121	548
	550
	552
	554
9U-9122	548
	550
	552
	554
9U-9550	322
9V-8668	650
9W-0609	837
9W-0844	170
	173
	174
	175
	176
	180
	201
	263
9W-0852	170
	173
	175
	201
	263
	682
9W-1464	701
9W-1569	307
	310
9W-1570	307
	310
9W-1571	273
9W-1878	833
	836
9W-2579	671
	675
9W-2822	384
	385
9W-2853	273
9W-2992	307
	310
9W-3660	307
	310
9W-3762	811
	812
	813
	833
9W-4159	279
9W-4361	195
	198
	201
	204
	206
	208
	210
9W-4381	512
	516
	521
9W-4897	659
9W-5150	307
	310
9W-5334	279
9W-5375	659
9W-5595	350
9W-6102	273
9W-6103	273
9W-6381	820
	822
	828
9W-7925	277
9W-7926	277
9W-8270	322
9W-8612	307
	310
9W-8874	831
	832
	833
	834
9W-8875	831
	832
	833
	834
9W-9000	659
9W-9082	590
9W-9083	590
9X-0194	179
9X-0196	166
9X-0199	248
9X-0261	136
	218
	219
9X-0262	218
	219
9X-1046	252
	257
9X-1054	165
	168
	173
9X-1056	165
	168
	173
9X-1813	224
	225
	227
	232
	247
	263
	535
9X-2027	320
	350
	373
	375
9X-2038	152
	153
	154
	730
	733
	754
	755
9X-2040	704
	705
	707
	710
	712
	714
9X-2041	373
	375
	534
	710
9X-2042	730
	754
	755
9X-2043	707
	710
	712
	714
	717
	733
9X-2044	252
	257
	730
	733
	754
	755
9X-2045	162
	680
	697
	706
	707
	710
	712
	714
	733
	754
	755
9X-2046	730
	733
9X-2053	42
9X-2099	39
9X-2109	178
9X-2125	279
	283
	771
	772
	780
9X-2492	313
9X-2546	703
9X-2646	118
9X-2647	118
9X-3401	136
	148
	165
	166
	168
	169
	172
	177
	179
	180
	220
	221
	222
	232
	244
	248
	266
	691
	699
	717
9X-3402	164
	165
	166
	167
	168
	169
	171
	172
	174
	175
	177
	178
	179
	180
	263
9X-3595	563
9X-4244	190
	191
	192
	193
9X-4582	416
	418
	420
	422
	426
	428
	431
	433
	437
	439
	443
	445
	449
	451
9X-4610	701
9X-6154	631
9X-6165	186
9X-6340	852
	855
	856
9X-6395	649
9X-6458	282
9X-6485	680
	720
9X-6772	166
	169
9X-7363	303
9X-7378	736
9X-7380	736
9X-7381	736
9X-7382	736
9X-7385	691
	736
9X-7680	607
	609
9X-8256	140
	153
	154
	182
	184
	186
	223
	252
	257
	574
	577
	701
	703
9X-8257	243
	269
	315
	367
	369
	371
	493
	495
	602
	603
	618
	671
	673
	675
	692
	761
9X-8258	362
	364
	489
	491

► **PRIMARY REFERENCE**

PART NUMBER INDEX

Part	Page
	748
9X-8260	548
	550
	552
	554
9X-8267	145
9X-8268	22
	38
	42
9X-8408	314
9X-8699	387
9X-8918	722
9X-8979	607
	609
9X-9825	268
9Y-0810	21
9Y-6089	243
	244
9Y-9236	102
	104
9Z-8212	584
9Z-9211	353
	355
9Z-9214	353
	355
0	
005-4834	273
030-1705	268
030-2135	273
030-7946	405
	406
031-0214	753
031-0218	283
033-6027	634
033-6032	73
033-6033	247
033-6034	314
033-6036	605
033-6043	634
	641
045-4065	240
061-6711	323
061-7540	314
061-9455	66
	279
065-5071	170
067-2551	138
	140
068-4209	680
	720
068-4497	313
068-8093	323
069-4269	70
077-3241	358
083-7784	645
091-0081	87
091-9035	114
	268
092-7385	94
	98
095-0665	330
095-0843	774
	778
095-0878	722
095-1678	306
095-1750	640
097-7234	165
	180
099-3001	77
	536
1	
100-3224	722
100-3320	171
100-4336	735
100-5179	722
100-6211	645
100-8010	627
	629
	631
100-8011	627
	629
	631
100-8012	631
101-0003	787
	789
101-2867	753
101-3055	724
101-3128	160
101-4194	787
101-4195	787
102-2913	852
	855
	857
102-7365	627
	629
	631
102-8706	359
	379
102-8801	166
	168
	180
102-8802	148
	150
	166
	172
	175
	177
	179
	180
	195
	198
	201
	204
	206
	208
	210
	232
	247
	248
	250
	263
	535
	636
	654
	682
	691
	717
	735
102-8803	136
	166
	172
	188
	189
	221
	251
	256
	263
	268
102-8804	166
	169
	176
	220
	251
	256
	701
	752
102-8805	165
	170
	173
	179
	701
	742
	743
	744
	745
102-8806	136
	179
	249
	699
102-9478	705
103-1107	752
103-6262	701
104-2091	730
	733
104-6202	268
104-6729	283
104-6730	283
105-1634	607
	609
105-1635	607
	609
105-1636	607
	609
105-1638	607
	609
105-1639	607
	609
105-1640	607
	609
105-1642	607
	609
105-1646	612
105-1648	612
105-1650	612
105-1651	612
105-1653	612
105-3031	607
	609
105-3032	607
	609
105-3033	607
	609
105-8183	322
105-9659	688
	689
	690
	▶740
106-4150	▶288
	289
106-5122	▶691
	692
106-5534	735
106-7691	464
	465
	466
	467
	468
106-8186	358
106-8187	358
107-3786	252
107-3945	464
	465
	468
107-7694	16
108-1091	▶410
	525
	526
	527
	528
	530
	531
108-1847	645
108-3588	710
108-4086	722
108-4087	722
108-4103	722
108-4311	789
108-6259	178
108-6954	337
	338
109-1352	662
	663
	664
	665
	666
	667
	668
	▶677
109-1353	669
	670
	▶678
109-1354	678
109-3207	135
109-5826	572
109-9549	289
110-0510	337
	338
110-2445	102
	104
	154
110-6393	735
110-8319	77
110-8827	77
111-2416	171
111-4627	704
	705
112-0858	699
112-4511	322
112-5585	322
112-6174	▶249
	251
112-7448	680
	720
112-8041	322
113-5336	33
113-6069	43
113-8490	251
	256
113-8491	251
	256
114-0358	841
	842
114-0359	841
	842
114-0561	305
114-5157	728
114-8843	166
	195
	198
	204
	206
	208
	210
	735
114-8845	735
114-9284	759
	767
	769
115-1867	707
115-2422	156
115-4072	43

PART NUMBER INDEX

Part	Page
115-4219	43
116-2810	618
116-3715	120
116-6332	32
116-8545	523
116-8548	523
117-1385	323
117-4491	776
	781
	782
117-4492	679
117-5208	579
117-5691	364
117-5692	364
117-5693	364
117-8131	747
118-1170	564
118-1727	6
	7
	8
	9
	10
	11
	►18
118-3122	607
	609
118-4019	563
119-3662	172
	173
	263
	735
119-6220	579
119-9631	682
120-4394	607
	609
121-2844	268
121-4344	87
122-1133	654
123-0708	724
123-0790	153
	154
123-0791	152
123-1373	156
	158
123-5748	611
124-0174	74
	405
	406
124-1212	579
124-9401	282
124-9666	671
	675
124-9672	671
	673
	675
125-4175	►484
	525
	526
	527
	528
	530
	531
125-4176	►480
	527
	530
125-6535	240
125-7874	165
	166
	167
	168
	169
	170
	171
	172
	173
	174
	175
	176
	177
	179
	201
	263
125-7875	165
	166
	168
	173
	174
	176
	179
	263
125-7876	169
	251
	252
	257
126-0814	572
	576
	579
126-1683	33
126-1757	19
126-1767	136
	165
	166
	168
	169
	172
	177
	179
	180
	195
	198
	204
	206
	208
	210
	221
	222
	232
	244
	266
	691
126-1768	165
	166
	167
	168
	169
	171
	172
	174
	175
	177
	178
	179
	180
	195
	198
	204
	206
	208
	210
	263
	735
126-1774	166
	169
	172
126-1818	535
126-5011	171
126-7975	398
126-8472	682
127-2170	534
127-3387	378
127-8178	114
128-2569	548
128-2570	548
128-2571	550
128-2572	550
128-2573	552
128-2574	552
128-2575	554
128-2576	554
128-4123	166
128-6841	142
129-3737	759
130-1977	582
130-3265	701
130-3280	123
130-5300	264
130-8360	712
	714
130-9192	582
131-0447	701
131-3093	682
131-4091	322
131-4242	722
131-5167	722
132-0338	679
132-1249	564
132-5789	126
	195
	198
	201
	208
	212
	252
	256
	268
	695
132-7077	752
132-7419	701
132-7450	701
132-8502	401
133-5545	648
133-5631	408
	409
133-7810	358
133-8739	607
	609
133-9405	251
	256
134-2540	166
	172
134-4126	163
134-5364	463
134-5365	463
134-5366	459
	460
	461
	462
	463
134-5368	459
	460
	461
	462
	463
134-6403	461
134-6404	461
134-7258	852
	854
	856
134-9429	►459
	528
134-9431	459
134-9432	459
135-2964	820
135-2966	820
135-3084	820
135-5009	182
	184
	186
135-9819	18
136-0822	19
136-1543	749
136-1544	679
136-1595	273
136-1953	682
136-2216	337
	338
136-3189	687
136-3191	687
136-4183	43
136-4192	140
136-9066	851
136-9297	636
136-9298	636
137-1602	130
137-4488	293
	297
137-4489	293
	297
137-4490	293
	297
137-6645	235
	236
	322
137-9755	636
137-9810	293
	297
138-8885	728
138-8886	728
139-0566	408
	409
139-0567	408
	409
141-1511	854
141-1668	94
	98
141-4852	636
142-2328	820
142-9643	820
143-1288	774
	778
	782
143-4792	763
	765
143-7052	607
	609
143-9392	160
144-0195	712
	714
	792
	804
144-0331	701
144-2179	747
144-4284	322
145-0326	787
	789
145-2334	636
145-5181	584
	586
	588
145-6669	123
146-0414	94
	98
146-6315	636
146-6317	636
146-6433	804
146-6669	282

► **PRIMARY REFERENCE**

PART NUMBER INDEX

Part	Page
146-6670	282
146-6747	852
	854
	856
147-0182	91
147-1445	166
	169
147-1446	166
147-3150	268
147-6603	652
147-6604	652
147-6605	652
148-1928	313
148-2903	135
148-8306	264
	268
148-8313	579
148-8316	572
	576
148-8318	138
	140
	572
	576
148-8325	572
	576
148-8327	536
148-8336	313
	572
148-8339	314
	536
148-8340	138
	140
148-8347	77
	536
148-8351	572
	576
148-8361	572
148-8364	314
148-8368	314
	573
	576
148-8369	573
	576
148-8372	138
	140
148-8374	573
	576
148-8376	593
	595
148-8378	314
	573
	577
	579
148-8382	77
148-8388	536
148-8391	548
	550
	552
	554
148-8392	536
148-8395	314
148-8406	314
148-8407	622
	624
148-8422	536
148-8434	572
	576
148-8435	572
	576
149-2494	464
	465
	466
	467
	468
149-2495	464
	465
	468
149-5240	135
149-5470	636
149-5933	401
	489
	491
149-7738	735
150-3026	138
	140
150-3033	573
	577
150-3065	314
150-4049	77
151-2939	21
151-6282	682
151-9275	701
152-3421	410
	415
152-8071	471
	472
	473
153-1277	123
153-5044	411
	412
	413
	414
	415
153-5710	158
153-6237	77
153-6243	313
153-6244	536
153-6251	548
	550
	552
	554
153-6252	314
153-6976	627
	629
153-7067	627
	629
	631
153-7549	631
153-7550	631
153-7551	627
	629
153-7553	631
154-8079	730
	733
155-2255	165
	166
	168
	169
	173
	174
	175
	176
	178
155-2256	166
	169
155-2258	169
	173
	174
	175
	176
	178
155-2259	177
155-2260	165
	166
	167
	168
	172
	224
	225
	227
	268
155-2265	165
	166
	171
	177
	182
	184
	186
155-2270	165
	166
	168
	170
	171
	172
	173
	174
	175
	176
	177
	178
	179
	180
	195
	198
	201
	204
	206
	208
	210
	212
	246
	263
	735
155-2271	166
	167
	172
	177
	180
	201
	212
155-2274	164
	165
	166
	167
	173
	174
	175
	176
	177
155-3624	622
	624
155-5161	337
	338
156-4406	322
156-5342	411
	412
	529
156-5545	679
156-5970	654
156-6175	252
	256
	695
157-0670	89
157-1373	517
157-1374	517
158-2734	701
158-2735	701
158-6072	128
	130
158-6632	▶248
	251
	256
	268
158-7594	536
158-7864	854
	856
158-9956	597
	▶626
159-1503	94
	98
	739
159-3042	50
159-3662	411
159-3781	636
159-5988	313
159-8049	156
	158
	263
	264
	268
159-8050	263
	264
159-9322	166
	169
	172
160-0526	20
160-2182	156
160-4103	416
	418
	437
	439
	449
	451
160-6305	671
	673
	675
160-6306	655
	657
160-6910	412
160-7165	784
	785
	▶787
160-7186	780
	▶784
160-7428	330
160-7614	307
160-7616	307
160-7689	172
160-7820	471
	472
	473
160-8124	171
	172
160-8184	45
160-8194	54
160-8197	54
160-8199	54
161-1099	251
161-1703	226
161-1704	218
161-1705	218
161-2684	627
	629
161-2685	631
161-3398	120
161-3406	12
	▶24
161-3411	120
161-3615	▶698
	704
	705
161-5967	722
161-6149	640
	648
161-6154	626
161-6161	640

PART NUMBER INDEX

Part	Page
	648
161-6963	128
	130
161-7614	545
161-8068	330
161-9926	▶224
	268
162-0177	314
	636
	650
162-2165	283
162-2166	464
	465
	466
	467
	468
162-2222	145
162-2480	373
	375
	378
	379
162-3148	115
162-7862	468
162-9523	314
162-9997	607
	609
163-1135	789
163-1137	728
163-1146	787
163-1201	263
163-2445	64
163-2447	58
163-2459	64
163-2478	29
163-5512	636
163-5671	631
164-0403	456
164-0406	▶456
	525
	526
	528
	530
	531
164-0758	377
164-0938	631
164-1234	789
164-2108	653
164-4180	627
	631
164-4227	536
164-4531	679
164-4611	456
164-4883	750
	751
164-5567	81
	132
	279
	283
	314
	536
	573
	577
	579
	619
164-5590	314
164-5619	645
164-5669	64
164-5798	154
164-6148	12
	▶21
164-7556	190
	191
	192
	193
164-7677	624
164-7678	622
164-7908	573
	577
165-2273	739
165-3929	110
	111
165-4445	6
	7
	8
	9
	10
	11
	▶120
165-4459	6
	7
	8
	9
	10
	11
	▶53
165-4461	6
	7
	8
	9
	10
	11
	▶86
165-4854	335
	336
165-6946	410
	415
165-6969	611
166-0321	634
166-1784	6
	7
	8
	9
	10
	11
	▶50
166-1790	6
	7
	8
	9
	10
	11
	▶62
166-1792	6
	7
	8
	9
	10
	11
	▶63
166-2287	456
	457
	458
	459
	460
	461
	462
	463
166-3485	▶307
	348
166-3648	54
166-3777	699
166-5229	165
166-6781	787
167-0024	26
167-0168	74
167-0172	120
167-1950	466
	467
167-1951	466
	467
167-1952	466
	467
167-2235	563
167-2299	563
167-2323	493
	495
167-3583	263
167-3692	165
	166
	168
	177
167-3693	166
	167
	172
168-2599	586
	588
168-4511	752
168-8772	724
169-1026	778
169-1616	634
169-2876	843
169-3796	96
	100
169-3883	117
	119
169-3899	62
169-4368	▶476
	525
	527
	528
	529
	530
	531
	532
169-5863	313
	572
	576
169-7380	787
	789
169-7397	314
170-0792	466
	467
170-1112	679
170-1114	679
170-1115	679
170-3357	597
	▶640
170-4001	631
170-8590	753
170-8592	391
171-0808	476
171-1230	774
	778
	782
171-2419	214
	379
	547
171-3054	611
171-3055	611
171-3057	611
171-3058	611
171-3059	611
171-3060	611
171-3061	611
171-5349	232
171-5989	611
171-6682	774
	778
171-7077	696
171-8772	654
172-2384	759
172-2416	774
	778
172-4702	682
172-4864	263
172-6062	171
172-7753	634
172-8591	730
	733
172-9981	558
	560
173-0511	627
	629
	631
173-0512	631
173-0514	627
	629
173-0515	631
173-0946	333
173-1016	145
173-1028	▶679
	774
	778
173-2052	749
173-3083	781
173-3283	778
173-3993	627
	629
	631
173-5787	784
173-7035	784
	785
	786
173-9685	456
	457
	458
	459
	460
	461
	462
173-9779	564
174-0503	166
	172
174-2231	▶722
	787
174-2237	722
174-3847	53
174-4909	634
	▶653
174-5415	123
174-7599	132
174-7875	264
174-8131	252
	256
174-8783	413
174-8786	414
174-8788	413
174-8789	414
174-8790	413
	414
174-9169	237
174-9194	682
174-9690	57
175-0454	22
175-1540	359
175-3721	48
175-4168	163
175-4291	190
	191
	192
	193
175-4292	190
	191
	192
	193
175-7900	558

▶ **PRIMARY REFERENCE**

PART NUMBER INDEX

Part	Page
	560
175-7903	563
175-7904	563
175-9106	136
176-5311	489
	491
176-5913	64
176-5914	64
177-1044	93
177-1050	92
177-1056	92
177-1058	92
177-1862	753
177-1863	774
	778
	782
177-4937	771
	776
177-7983	584
178-0603	▶774
	776
178-0606	▶776
	784
178-2593	757
	758
178-3336	214
	735
178-5883	313
178-7023	398
178-7907	749
179-6151	675
179-6152	671
	675
179-6153	671
	675
179-6162	675
179-7400	145
179-9387	▶539
180-3907	285
180-4362	314
180-5316	717
180-6152	636
180-6213	612
180-6692	382
180-7304	▶778
	781
180-7910	293
	297
180-9339	701
180-9340	225
	227
183-2097	6
	7
	8
	9
	10
	11
	▶67
183-3399	74
	76
	132
	136
	142
183-3407	47
	132
183-4273	735
183-7263	627
	629
	631
	636
183-7264	537
183-9374	52
184-0983	759
184-2298	774
	778
184-2299	774
	778
184-5394	579
185-1047	94
	98
185-1860	165
	166
	168
185-1861	165
	168
185-3159	20
186-3735	636
	701
	743
186-5107	726
187-0541	640
187-1315	31
187-1679	149
187-3523	285
187-8196	45
187-9194	615
188-0908	299
	▶333
	525
	526
	527
	528
	529
	530
	531
	532
188-1013	692
188-1017	50
188-1079	698
188-3034	102
	104
188-3826	6
	7
	8
	9
	10
	11
	▶82
188-7536	145
188-7541	145
188-9637	612
189-3032	416
	418
	420
	422
	437
	439
	443
	445
	449
	451
189-3158	166
	735
189-9306	6
	7
	8
	9
	10
	11
	▶60
190-2278	279
	▶282
190-5386	852
	854
	856
190-6114	53
190-6115	29
190-6117	29
190-7614	166
	169
190-7971	367
	369
	371
190-8609	493
	495
191-1652	352
191-1654	352
191-1782	132
191-1783	132
191-2933	786
	▶789
191-4457	86
191-7823	266
191-8304	322
191-8305	322
191-8920	636
191-8921	140
	252
	256
	636
192-7752	789
192-7755	789
192-7767	789
192-7783	789
192-7787	789
192-7790	789
192-7795	789
192-7799	789
192-7810	789
192-7811	728
192-7812	728
	789
192-7813	728
192-7820	789
192-7848	789
192-7913	352
192-7915	352
192-7918	352
192-7919	352
193-5918	361
	365
	400
	838
194-0935	673
194-0936	673
194-2903	138
	140
194-5032	636
	▶638
194-5033	636
	▶639
194-5171	684
	685
	686
	687
194-5226	224
194-5227	224
194-6725	136
	▶225
194-6847	607
	609
194-6848	607
	609
195-0452	73
195-0601	96
	100
	102
	104
	107
195-0882	735
195-1117	156
	158
195-7430	654
195-8098	12
	▶79
	▶80
196-1236	520
196-2036	313
196-5515	636
196-7839	520
196-8884	282
197-7565	166
197-7689	787
197-8393	218
	▶226
197-8419	74
	76
197-9367	54
198-0921	6
	7
	8
	9
	10
	11
	▶81
198-1319	6
	7
	8
	9
	10
	11
	▶73
198-3462	285
198-4780	52
	384
	385
	620
	621
198-4781	380
198-8858	353
	355
198-9706	717
199-3676	604
199-7834	636
2	
200-0189	▶636
	704
	705
200-0750	▶544
	572
	576
200-4495	43
200-5003	636
200-5362	641
200-5363	641
201-0950	597
	▶654
201-1260	118
202-0314	166
202-2005	650
202-4295	464
	467
202-4296	▶464
	530
	531
202-4303	465
	466
202-4304	▶465
	526
	527
	528
202-5397	165

PART NUMBER INDEX

Part	Page
	166
	168
202-6535	642
202-6614	190
	191
	192
	193
203-2789	735
203-3237	29
203-3238	29
203-5805	22
203-6090	22
203-7703	784
203-7775	120
203-9007	252
	256
204-1297	165
	166
	168
204-2281	252
	256
	264
204-4444	20
204-8758	539
205-1320	43
205-1321	12
	▶43
205-4132	536
205-5285	17
205-5314	277
205-6388	771
	772
	773
	776
205-8674	▶109
	110
	111
	112
206-1345	682
206-1895	▶466
	525
206-1897	▶467
	525
206-2800	636
206-3719	60
206-5887	66
206-8836	▶457
	532
206-8837	457
206-9292	305
206-9295	247
207-0544	471
	472
	473
207-6087	73
207-7899	622
	624
208-6055	118
208-6727	582
208-9282	73
208-9619	32
208-9647	699
209-0760	19
209-0762	19
209-2152	671
	675
209-6692	92
209-7193	277
209-7290	67
209-7293	82
209-8622	47
209-8624	45
210-2262	753
210-2263	753
210-2266	753
210-2270	▶753
	774
	778
211-0052	252
	256
211-1812	12
	▶91
211-2134	29
211-5358	574
	577
	789
211-6807	171
211-8073	852
	854
	856
211-9294	789
212-3416	682
212-4936	126
212-5839	35
212-5844	35
212-7002	22
212-7779	▶728
	789
212-7780	728
212-7783	728
212-8917	27
212-8926	▶64
	65
213-2282	584
	586
	588
213-3190	54
213-4363	31
	▶37
213-4754	728
213-5170	789
213-6657	636
213-8516	73
213-9100	263
213-9320	▶58
	64
214-1645	117
214-1962	699
214-3573	273
	277
214-6277	32
214-7566	24
	47
	67
	136
	218
	219
214-7567	47
	228
	229
214-7568	29
	47
	55
	67
	74
	76
	81
	94
	98
	115
	132
	136
	142
	147
	218
	219
	220
	226
	230
	279
	283
	314
	537
	573
	577
	579
	619
214-9080	493
214-9389	181
214-9492	692
215-3251	13
	▶34
215-4441	17
215-8011	642
216-0273	307
	310
216-0349	692
216-0380	699
216-4551	642
216-4552	642
216-4553	642
216-4554	642
216-4555	642
216-4591	277
216-5586	22
216-6371	273
216-8127	▶405
	525
	530
	531
216-8585	546
217-0609	29
217-2293	273
217-3655	386
	387
217-5200	86
217-6887	583
217-7933	753
217-8669	6
	7
	8
	9
	10
	11
	▶19
218-0651	251
	256
218-0861	774
218-2373	653
218-2529	782
218-7119	712
	714
219-0302	843
219-0669	94
	98
219-4481	320
219-6485	▶190
219-6487	▶191
219-8136	579
219-8675	50
219-8681	6
	7
	8
	9
	10
	11
	▶39
220-1418	313
	▶350
220-1952	24
	▶26
221-0144	79
	80
221-1489	604
221-3197	416
	418
	420
	422
	426
	428
	431
	433
	437
	439
	443
	445
	449
	451
221-3200	416
	418
	420
	422
	426
	428
	431
	433
	437
	439
	443
	445
	449
	451
222-0345	771
	772
	▶773
	776
222-1160	568
	569
	▶644
222-1783	6
	7
	8
	9
	10
	11
	▶20
222-3785	543
222-3901	93
222-5374	▶684
	804
222-5378	▶685
	804
222-5765	543
222-9219	301
	303
223-0565	▶272
	328
223-0566	272
223-0567	272
223-0659	435
	436
	441
	442
	▶493
223-2115	▶533
	699
223-3400	337
	338
223-4004	669
	670
	▶671
223-4005	671
223-4006	671
223-8076	353
	355

▶ **PRIMARY REFERENCE**

PART NUMBER INDEX

Part	Page
224-0672	843
224-2228	136
224-2674	359
224-3247	16
224-4120	416
	418
224-4122	441
	442
224-4536	▶227
	228
224-5132	540
	541
	542
224-5152	540
	541
	542
224-9772	140
225-0312	852
	855
	857
225-3195	699
225-3281	558
	560
	564
225-4257	853
	855
	857
225-6363	350
225-8026	597
	▶648
225-8558	353
	355
226-0295	733
226-0340	733
226-1224	607
	609
	▶612
226-1227	612
226-1340	493
226-3492	735
226-4192	748
226-4462	273
226-4464	273
226-4751	572
	576
	▶597
226-4909	154
226-5611	121
226-7473	160
	▶161
226-7906	592
226-9423	701
226-9622	653
226-9670	263
227-0165	▶321
	328
227-0831	644
	▶645
227-0841	▶564
	655
227-0843	▶558
	562
227-0844	▶560
	562
227-1200	27
227-2451	273
227-3149	391
227-4303	548
	552
227-4304	550
	554
227-5509	634
227-5904	142
227-6744	535
227-8802	386
228-3621	32
228-4093	405
	406
228-4678	405
	406
228-4947	231
228-6089	680
	707
	710
228-7089	67
	74
	76
	132
	136
	142
228-7092	142
228-7096	29
	279
229-0887	852
	854
	856
229-1494	776
	782
229-2626	558
	560
229-2913	▶128
	129
229-2914	128
229-5421	▶546
	568
	569
229-6957	815
	816
	▶834
229-7373	▶406
	525
	526
	527
	528
	529
229-8352	408
	409
229-9323	408
	409
229-9558	460
229-9559	460
229-9568	462
229-9569	462
229-9601	122
230-1341	182
	184
	186
230-4011	171
	172
	180
	263
230-4012	179
	242
	244
230-4013	167
	171
230-4014	222
230-5008	179
230-5040	67
230-5554	663
	664
	▶673
230-5556	▶820
	824
	826
	827
230-7887	564
230-7892	564
230-9796	71
231-1978	12
	▶218
231-5969	▶273
	328
231-5990	▶277
	328
231-8855	322
232-0343	136
	▶147
232-0897	182
	184
	186
232-1693	160
232-3317	543
	544
232-6411	337
	338
233-0423	6
	7
	8
	9
	10
	11
	▶41
233-0668	342
	346
233-0891	160
233-4846	529
233-4847	▶411
	530
	532
233-4848	411
233-4849	▶412
	530
	532
233-4851	412
233-9135	566
233-9138	566
233-9808	642
234-0091	730
	733
234-1496	87
234-3043	645
234-3451	645
234-5012	219
	▶233
234-5013	219
	▶234
	268
234-7526	76
234-9699	469
	470
	474
234-9994	322
235-0399	622
	624
235-0544	403
235-4123	165
	166
	168
235-4157	▶485
	487
235-5974	▶479
	525
	527
	528
	529
	530
	531
	532
235-9651	144
236-2591	▶413
	530
	532
236-2592	▶414
	530
	532
236-4545	237
236-5197	753
236-6220	218
	▶228
236-6221	218
	219
	▶231
236-6717	145
236-7315	6
	7
	8
	9
	10
	11
	▶40
236-8191	52
236-8239	32
236-8240	36
237-0145	223
237-0227	171
237-0229	42
237-2041	8
	11
	▶129
237-2209	322
237-2708	119
237-9251	112
	▶123
237-9252	123
237-9254	123
237-9255	123
237-9601	322
238-0303	268
238-0451	▶488
	529
	530
	532
238-1116	6
	7
	8
	9
	10
	11
	▶285
238-1117	285
238-1177	▶362
238-1178	362
238-4520	477
238-5079	96
	100
238-5080	47
	55
	67
	94
	98
	234
	235
	573
	577
238-5081	67
	132
	142
238-5082	55
	70
	142
	279
238-5085	67
	547
238-9166	401
	489

▶ PRIMARY REFERENCE

PART NUMBER INDEX

Part	Page
	491
239-1134	237
	▶250
239-6986	852
	854
	856
240-0041	17
240-6124	767
	769
240-8917	680
	720
241-0037	540
	541
	542
241-2501	148
241-3718	6
	7
	8
	9
	10
	11
	▶42
241-3719	6
	7
	8
	9
	10
	11
	▶70
241-3720	416
	418
	420
	422
	426
	428
	431
	433
	437
	439
	443
	445
	449
	451
241-4167	843
241-4194	237
241-6070	755
241-6202	579
241-6208	579
241-6209	579
241-6215	313
	579
	619
241-8368	▶246
	251
	256
241-8383	29
241-8384	29
241-8385	29
241-8386	29
241-8387	29
241-8388	27
241-8390	29
242-0328	59
242-0329	▶59
	64
242-0447	12
	▶65
242-0673	16
242-0674	12
	▶16
242-3360	128
	130
242-3864	67
242-5202	701
242-5206	533
242-8904	521
243-0388	564
243-2076	96
	100
243-2310	51
243-6716	21
244-2310	277
244-2616	▶310
	349
244-4500	41
244-5891	65
244-6113	435
	436
245-3261	49
245-3262	6
	7
	8
	9
	10
	11
	▶49
245-4230	590
245-4231	590
245-4630	231
245-5891	▶173
	695
245-7339	60
245-7350	612
245-7434	165
	166
	168
245-8456	852
	854
	856
245-9941	96
	100
246-0596	6
	7
	8
	9
	10
	11
	▶115
246-0597	115
246-0599	6
	7
	8
	9
	10
	11
	▶72
246-2641	852
	854
	856
246-3150	21
246-4736	293
246-4737	292
	▶293
246-5140	512
246-5203	516
246-6036	74
	76
246-7899	72
246-9365	6
	7
	8
	9
	10
	11
	▶55
252-5165	▶130
	131
252-5852	▶828
	829
252-5853	662
	▶675
252-5858	▶822
	823
	825
252-6922	156
252-7803	29
252-9203	599
253-1346	416
	418
	420
	422
	426
	428
	431
	433
	437
	439
	443
	445
	449
	451
254-0224	512
	516
	521
254-0234	521
254-1686	416
	418
	424
	425
	430
	435
	436
	441
	442
	455
254-3941	29
254-3942	29
254-3946	27
254-3947	27
254-4471	516
254-4473	512
254-8155	▶192
	195
	198
	201
	204
	206
	212
255-8674	65
255-8951	▶661
	665
	667
255-8952	▶659
	661
256-3863	611
256-6453	233
	234
	263
257-5030	682
257-5858	74
	76
257-7285	699
258-0085	642
258-0144	605
258-2303	391
258-2305	358
258-2307	391
258-6949	387
259-3119	▶320
	328

▶ **PRIMARY REFERENCE**

PART NUMBER INDEX

Part	Page
259-5829	29
260-4856	29
260-6642	295
	299
260-6644	297
260-6650	291
	▶295
260-6652	292
	▶297
260-6653	291
	▶299
260-7524	58
	59
260-7733	426
	428
260-9171	573
	577
261-1544	21
261-3162	72
261-3257	426
	428
	431
	433
261-5694	749
261-7990	251
	256
262-0481	536
262-0482	536
262-0767	782
262-2870	130
262-5901	6
	7
	9
	10
	▶131
263-2915	38
263-3464	74
	76
263-3823	742
	743
	744
	745
263-6556	251
	256
263-7731	136
264-4297	235
	236
264-5732	171
264-6156	65
264-7029	171
264-7030	171
264-7963	14
	▶126
264-7964	126
265-1400	12
	▶54
265-2299	291
	▶301
265-9596	384
	385
266-1467	▶221
	752
266-1476	701
266-9397	563
266-9810	6
	7
	9
	10
	▶74
266-9811	8
	11
	▶76
267-1402	219
	▶229
267-3507	395
267-4746	▶415
	529
267-5243	680
	697
267-8715	792
267-9715	12
	▶144
268-1621	579
268-3490	20
268-4737	703
268-5582	48
268-5945	456
268-8210	634
268-8769	682
268-9709	416
	418
	420
	422
	426
	428
	431
	433
	437
	439
	443
	445
	449
	451
268-9710	416
	418
269-0209	401
269-0210	401
269-1981	▶222
	752
269-4739	299
269-7050	223
269-7680	140
	264
269-8153	624
	▶627
269-8154	622
	624
	▶629
269-8155	622
	624
	▶631
269-8160	621
	▶624
269-8161	620
	▶622
270-2679	251
	256
271-7312	680
	697
271-7442	29
272-1889	▶151
	153
	154
272-2379	163
272-3757	378
	379
272-6641	▶193
	201
	212
273-2156	▶598
	622
	624
273-5924	680
	720
274-3774	165
	167
	168
	173
	174
	175
	176
	251
	256
	263
	266
274-3775	167
274-3776	167
274-3777	167
	173
	175
	176
	251
	256
274-3778	165
	251
	256
274-3779	168
	251
	256
274-6719	219
274-7395	218
	▶235
274-7396	218
	▶236
275-4236	757
	758
275-6706	682
275-6710	733
275-7803	772
275-7877	167
276-1326	680
	720
276-1786	268
276-6793	219
277-8103	782
278-2324	563
279-0850	682
279-2570	420
	422
	443
	445
279-8859	237
280-6794	86
280-7870	641
281-3974	767
	769
281-3997	▶741
281-3998	741
281-4015	408
	409
281-4521	447
	448
281-4522	447
	448
281-4586	351
281-4587	351
281-4588	351
281-4589	351
281-5984	142
281-8488	406
	▶408
281-8491	405
	▶409
281-8934	351
281-8935	351
282-1771	21
282-1772	21
282-4017	426
	428
	431
	433
282-9090	671
	673
	675
283-8650	153
	154
284-3502	74
	76
284-3623	251
	256
284-3662	697
284-3664	251
	256
284-9697	611
284-9698	611
285-0852	677
	678
285-4074	60
	▶61
285-4106	20
285-5093	35
285-6396	34
	▶35
285-7415	680
	697
286-0322	251
	256
286-0323	251
286-5303	45
286-5304	45
286-6192	237
288-0934	484
	▶486
288-0935	480
	▶481
288-0936	▶482
	483
288-2507	397
288-2508	397
288-3925	662
	663
	664
288-7324	171
289-2937	558
	560
	564
289-2948	558
	560
	564
289-5150	171
289-5151	171
290-3970	89
290-5562	87
	132
	735
290-5792	▶232
	268
290-6884	37
	▶38
290-6891	314
290-6892	314
290-8226	671
	673
	675
290-9849	273
291-8148	627
292-2016	273
292-2175	▶487
	529
	530
	532
292-2896	712
	714
292-6097	750
292-6098	751
292-6402	▶749

PART NUMBER INDEX

Part	Page
	750
	751
292-9237	▶750
	774
292-9238	▶751
	778
293-0303	153
293-0730	135
293-0754	▶686
	804
293-2911	753
293-9123	251
	256
293-9367	82
293-9659	851
294-3342	102
	106
294-5042	774
	778
	782
294-5076	268
295-1771	70
295-1803	136
296-2649	251
	256
296-7059	313
296-8060	230
297-0846	747
297-1546	735
297-7964	94
	98
297-8989	851
299-3437	243
	244
299-5344	600
299-9092	263

3

Part	Page
301-0091	264
	268
301-7791	264
301-7792	264
301-9279	607
	609
302-2136	800
	802
302-3908	746
303-3357	219
	▶230
304-9465	136
304-9651	340
	344
305-5362	171
305-9192	686
305-9194	684
305-9195	685
306-0278	277
306-0348	167
306-0351	167
306-6687	243
	244
307-0047	182
	184
	186
307-0649	251
307-2338	699
307-2671	47
307-2673	47
307-6264	14
307-8428	266
308-6022	588
308-6023	588
308-6024	586
308-6025	586
308-6026	590
308-6027	590
308-6038	584
308-6039	584
308-7112	122
309-5131	132
309-9690	843
310-0674	252
	256
310-4269	458
310-7255	27
310-7257	27
311-3520	682
311-8096	63
312-1139	543
312-4245	566
312-4247	566
312-4248	566
313-5638	712
	714
314-2516	495
314-2518	495
314-3025	733
314-3283	▶458
	529
314-4018	691
314-5162	782
314-5274	789
314-5275	789
314-7923	493
	495
315-7783	430
	455
315-7785	424
	425
315-7786	424
	425
	430
	455
	▶495
315-9840	67
316-5999	642
317-1117	403
317-1204	171
317-3239	251
	252
	257
317-3240	251
	252
	257
317-7051	337
	▶342
317-7071	367
	369
	371
	373
	375
317-7210	27
317-7211	27
317-7212	27
317-7213	27
317-8767	690
	▶746
317-9080	480
	483
	484
	487
318-1064	512
	516
	521
318-6247	405
	406
319-6208	67
319-6231	279
319-6237	29
320-2151	695
320-8917	464
	465
	466
	467
321-1291	158
321-5718	322
321-5719	323
321-5720	323
321-5721	323
321-6091	852
	855
	857
321-8642	47
321-8649	67
321-8657	132
321-8665	289
321-8666	289
321-8667	289
322-3161	749
322-4964	792
322-4965	792
323-1170	▶468
	529
	530
	532
323-1171	468
323-3309	852
	854
	856
323-5864	680
	720
323-9140	▶171
	266
324-7380	54
325-3915	▶22
	26
325-4416	695
325-9776	568
	569
	▶599
326-0315	314
326-0316	279
326-4855	688
	689
	690
	▶696
327-0282	682
	735
327-0283	682
	735
329-1798	373
	375
329-3356	201
	212
	389
	593
	595
	600
	839
329-3734	180
329-5451	136
	218
	219
329-5511	67
329-5766	696
	▶752
330-5013	▶742
	804
330-5014	▶743
	804
330-5017	▶744
	804
330-6034	12
	▶219
330-9732	573
	577
330-9750	136
331-4226	178
331-6006	▶540
331-7020	313
	▶541
331-7021	▶542
331-7779	844
	846
	848
331-8905	80
331-8906	80
331-9864	107
331-9866	107
332-2788	403
332-3619	▶27
	29
332-4788	477
332-4789	▶477
	525
	526
	527
	528
	529
332-4797	478
332-4798	▶478
	525
	530
	531
	532
332-8832	305
332-8833	▶305
	313
333-1207	51
333-9410	293
	295
	297
	299
	301
	303
334-1799	593
	595
334-1953	701
334-4603	852
335-2350	418
335-2351	416
335-5365	251
	256
335-6121	293
	297
	299
	301
	303
335-6983	680
	720
336-2433	340
	344
336-6672	712
	714
337-5270	306
337-6853	▶699
	703
337-6855	699
	▶701
337-7619	403
337-8766	96
	100
337-8767	96

▶ **PRIMARY REFERENCE**

PART NUMBER INDEX

Part	Page
	100
337-9001	701
338-0942	▶344
	346
338-0944	338
	▶346
338-1295	536
338-2845	703
338-3453	240
339-0078	313
339-3566	707
	710
339-9915	792
340-2566	167
340-2567	167
340-5693	792
340-7161	251
	256
341-0979	20
341-1330	▶535
	536
341-9763	712
	714
342-9920	695
343-6237	293
	295
	297
	299
	301
	303
344-1950	313
344-1951	315
344-2149	▶29
	31
344-5081	152
344-5673	767
	769
344-5674	87
	156
	158
	268
	767
	769
	804
344-5675	110
	111
	154
	195
	198
	204
	206
	208
	210
	268
	315
	359
	391
	537
	547
	548
	550
	552
	554
	570
	579
	592
	680
	692
	720
	735
344-7132	854
	856
346-3796	647
	▶649
346-4360	789
347-0612	607
	609
	▶641
347-2380	54
347-2381	54
347-2382	54
347-3110	92
347-3148	86
347-4428	67
347-7407	306
347-7963	51
348-5792	285
348-7859	323
348-7861	323
349-4846	323
349-5830	682
349-5835	682
349-6123	▶92
	93
349-6255	239
349-6530	▶239
	244
349-7059	149
350-2536	91
	▶93
350-3036	▶697
	720
350-5417	92
350-7735	149
351-0261	102
	104
351-0273	102
	104
351-0276	94
	98
351-0320	▶543
351-0955	469
	470
	▶474
	475
351-0956	469
	470
	▶475
351-0957	▶469
	521
351-0958	▶470
	512
	516
351-1904	264
351-4945	735
351-9918	190
	191
	192
	193
352-3964	264
352-3968	186
352-4406	613
352-4897	796
	797
352-6498	67
352-7994	240
352-8839	67
353-3679	330
353-4688	305
	▶306
353-5112	218
	219
353-6988	20
353-7114	794
	798
354-0153	▶279
	348
	349
354-0155	283
354-0156	283
354-0158	323
354-0164	283
	▶650
354-0166	279
354-0168	323
354-8706	854
355-1790	735
355-2381	650
355-2410	599
	▶611
355-2411	611
355-3016	782
355-3148	735
355-4712	563
355-6555	488
356-1032	373
	375
356-1033	373
	375
356-2197	361
	365
356-4232	156
	158
356-4254	201
356-4259	201
356-5425	▶223
	703
356-5426	223
356-5428	223
356-5429	223
357-3538	431
357-3539	433
357-3554	437
	451
357-3555	439
	449
357-4339	403
357-4452	536
357-4517	579
357-5170	727
358-2399	263
358-4889	250
358-6190	703
358-7872	20
358-7876	20
360-3572	579
360-3677	24
360-3679	29
	55
	115
	142
360-3680	29
	55
	67
360-3681	67
360-3682	55
360-3684	285
360-3692	285
360-3693	86
	285
360-5604	547
361-1045	182
	184
	186
361-5188	107
361-6052	179
362-4539	▶548
	556
362-4543	552
362-4544	▶550
	556
362-4545	554
362-4546	▶552
	557
362-4548	556
	557
	▶600
362-4549	600
362-4553	▶554
	557
363-4122	148
364-4115	558
	560
364-4416	566
364-5488	▶818
	819
364-8277	252
364-8725	752
364-8726	752
364-9652	420
	422
	426
	428
	431
	433
	437
	439
	443
	445
	449
	451
365-3532	782
365-3536	786
365-6773	251
	256
365-8408	477
	478
366-4687	87
366-4972	629
367-7223	214
367-7314	6
	7
	8
	9
	10
	11
	▶214
367-9478	▶566
	671
	673
	675
367-9479	566
368-6992	712
	714
369-6662	147
369-9004	782
370-6297	132
370-9775	323
370-9778	323
370-9894	726
371-1679	682
371-2443	96
371-7185	94
	98
371-7193	87
371-7194	87
371-8094	102
	104
	154
372-2158	726
372-2547	699
372-2905	161
372-3740	283
372-4485	100
372-5042	712
	714

PART NUMBER INDEX

Part	Page
372-6387	96
	100
374-4733	688
	689
	▶804
374-5771	2
	▶780
374-7463	174
	212
374-7466	174
375-0341	682
375-0342	682
375-0343	682
375-0345	682
375-0346	682
375-0350	680
	▶682
	720
375-1478	▶189
375-3216	52
375-7899	▶771
375-7906	688
	689
	▶724
375-7911	688
	689
	▶720
375-7921	688
	689
	▶791
375-7927	791
	▶792
375-7929	251
375-9257	251
	256
377-3141	728
378-3790	▶460
	529
378-3791	▶461
	531
378-3804	▶462
	530
378-7912	▶351
378-7914	▶352
378-8241	471
	472
	473
378-8242	471
	472
	473
379-2916	291
	▶303
379-5808	330
379-6657	794
379-6658	712
380-0985	669
380-0986	669
380-0990	670
381-2594	838
	▶850
381-8734	582
382-0936	634
382-0937	634
382-0938	634
382-2001	132
	▶220
382-6924	322
382-9244	605
382-9245	605
382-9259	605
382-9274	642
382-9276	642
383-1431	714
383-1731	201
	212
383-6864	794
383-6865	794
383-6866	688
	▶794
383-8634	▶194
	208
	210
384-0071	195
	198
	201
	204
	206
	208
	210
	212
384-0859	794
	▶796
384-0860	794
	▶797
384-1713	▶497
384-1825	▶164
	712
	714
384-3277	▶483
	525
	526
	528
	531
384-4638	548
	550
	552
	554
384-5351	▶563
	838
384-5590	12
	▶31
384-8283	707
	710
384-8284	707
	710
384-8285	707
	710
384-8286	707
	710
384-8287	707
	710
384-8289	707
	710
384-8292	707
384-8293	707
	710
384-8724	563
384-8725	563
384-9220	70
384-9223	94
	98
384-9992	91
385-0229	727
385-0230	727
385-1657	54
385-1747	4
	5
	13
	▶851
385-2666	497
	▶512
385-2672	498
	▶513
385-2675	499
	▶514
385-2678	500
	▶515
385-2679	501
	▶516
385-2682	502
	▶517
385-2689	▶498
385-2691	▶499
385-2694	▶500
385-2695	▶501
385-2698	▶502
385-5447	▶503
385-5450	505
	▶518
385-5458	504
	▶519
385-5459	2
	▶504
385-5462	▶505
385-7276	26
385-7302	195
	198
	204
	206
	208
	210
385-7739	506
	▶520
385-7740	507
	▶521
385-7742	508
	▶522
385-7744	509
	▶523
385-7759	▶506
385-7760	▶507
385-7762	▶508
385-7764	▶509
385-7834	▶781
	785
385-7835	771
	▶785
385-7840	730
385-7845	730
385-7851	730
385-8201	182
	184
	186
386-0513	730
386-0516	730
386-0517	730
386-3830	694
386-3966	688
	689
	▶694
386-4043	707
386-7345	714
386-7346	712
386-9710	195
	198
	204
	206
	208
	210
387-1088	838
	▶839
387-1089	839
387-1136	839
387-1410	▶170
	680
	720
387-1759	▶582
	838
387-2002	747
387-2867	283
387-4502	712
	714
	767
	769
387-5639	707
	710
387-5640	707
	710
387-5659	682
387-5661	682
387-5665	682
387-5671	682
387-5672	682
387-5674	682
387-5681	682
387-5701	▶680
	690
387-6727	▶322
	348
	349
387-6883	707
	710
387-7116	707
	710
387-7154	142
387-7159	142
387-8370	830
387-8618	5
	▶12
	13
387-8619	4
	5
	▶12
	13
387-8622	12
	▶142
387-9434	▶135
	144
388-3944	707
	710
388-4887	6
	7
	8
	9
	10
	11
	▶17
388-5571	680
	720
388-6319	707
	710
388-7012	113
	114
	121
388-7142	707
	710
389-0855	798
389-0856	798
389-0879	782
389-1414	689
	▶798
389-1531	619
	▶634
389-2088	428
389-2089	426
389-2098	422
	445
389-2099	420
	443
389-2146	733
389-2148	733
389-3056	▶179
	792
389-3067	▶718
	719
389-3252	2

▶ **PRIMARY REFERENCE**

PART NUMBER INDEX

Part	Page
	▶291
389-3253	▶291
389-3254	▶291
389-3255	▶291
389-3256	▶292
389-3257	▶292
389-3297	383
	▶396
389-3298	383
	▶397
389-3708	29
	55
	115
	142
389-3709	55
389-6120	▶463
	526
389-6128	▶662
389-6129	▶663
389-6131	▶664
389-6133	▶665
389-6134	▶666
389-6159	▶584
	664
389-6164	▶289
389-8270	6
	7
	8
	9
	10
	11
	▶66
390-0448	712
	714
390-0788	▶242
	243
390-3151	798
390-3152	798
390-3153	798
390-3154	798
390-3829	730
390-3831	730
	733
390-4679	▶145
	146
390-6814	▶180
	772
390-6840	132
	▶146
390-9086	712
	714
391-2580	▶586
	662
391-2581	▶588
	663
391-2583	▶590
	665
	666
391-3922	▶510
391-3923	510
	▶524
391-3950	712
	714
	767
	769
391-4060	707
	710
391-4061	▶772
391-4062	689
	▶717
391-4064	755
391-4065	717
391-4066	694
391-4067	754
	755
391-4068	694
391-4069	754
	755
391-4071	707
	710
391-4072	707
	710
391-4073	733
391-4074	733
391-6256	▶177
	251
	256
392-0818	86
	285
392-4771	251
	257
392-7132	844
	846
	848
392-7232	680
	720
392-7769	730
392-9663	730
392-9664	582
392-9665	582
392-9829	730
	733
392-9884	251
	256
393-1075	707
	710
393-1188	707
	710
393-2286	730
393-3962	251
	257
393-4749	733
393-4752	707
	710
393-4915	287
393-6475	▶690
	733
393-6476	690
	▶754
393-6479	688
	689
	690
	▶747
393-6480	▶688
	714
393-6481	688
	689
	▶755
393-6483	688
	689
	690
	▶719
393-6484	690
	▶707
393-6485	▶689
393-6486	754
	755
393-6494	688
	689
	▶710
393-7780	335
	336
393-8111	▶745
	804
393-8112	▶687
	804
393-9001	279
	▶287
393-9040	94
	98
393-9041	2
	▶83
393-9042	▶85
393-9043	▶84
393-9044	14
	▶94
393-9045	94
	▶96
393-9046	96
	100
393-9048	96
	100
393-9049	107
393-9050	96
	100
393-9051	547
393-9052	547
393-9054	547
394-2157	367
	369
	371
394-2158	367
	369
	371
394-6377	694
	▶695
394-6378	695
395-4184	204
395-4185	204
395-4186	206
	210
395-4187	206
	210
395-7861	252
	257
396-0385	136
396-0386	136
396-0390	142
396-0393	24
396-0405	29
396-2352	730
	733
396-3856	682
396-6022	79
396-7087	718
397-5040	6
	7
	8
	9
	10
	11
	▶136
398-0393	758
398-0394	757
398-0407	▶757
	766
398-0408	▶758
	766
398-0416	688
	689
	▶712
398-0423	688
	689
	▶714
398-1955	328
	▶334
398-4278	▶1
	2
398-4279	▶1
398-4280	▶2
398-4281	▶1
	2
398-4284	1
	▶328
398-4285	2
	▶328
398-4286	1
	▶568
398-4287	1
	2
	▶13
398-4291	▶568
398-4292	2
	▶568
398-4295	▶690
398-4296	688
	689
	690
	▶843
398-4297	2
	▶688
398-4300	▶689
398-4302	2
	▶852
398-4303	▶854
398-4304	▶856
398-4305	2
	▶366
398-4306	▶366
398-4307	▶366
398-4308	3
	4
	▶14
	15
398-4309	4
	▶14
398-4312	▶14
398-4313	▶4
398-4314	2
	▶15
398-4315	▶3
398-4316	▶4
398-4317	▶4
398-4318	4
	14
	▶328
398-4319	3
	4
	15
	▶329
398-4331	2
	▶569
398-4334	13
	▶132
398-4336	▶56
398-4337	2
	▶57
398-4338	▶108
398-4339	2
	▶108
398-4340	14
	▶89
398-4341	14
	▶102
398-4343	14
	▶104
398-4344	14
	▶87
398-4345	▶181
398-4346	▶237
398-4347	13
	▶547
398-4348	13

PART NUMBER INDEX

Part	Page
	►71
398-4349	108
	►113
398-4350	►152
398-4351	14
	►117
398-4356	13
	►52
398-4357	2
	►382
398-4358	117
	119
398-4360	89
398-4361	89
398-4362	89
398-4363	89
398-4364	89
398-4365	102
	106
398-4368	102
	104
398-4369	102
	104
398-4373	2
	►153
398-4374	156
	►243
398-4375	158
	►244
398-4376	244
398-4378	►177
	237
398-4380	237
398-4381	112
398-4382	382
398-4383	382
398-4385	1
	►391
398-4386	1
	►358
398-4391	358
	►359
398-4392	359
398-4427	359
398-4431	359
398-4434	1
	►263
398-4435	13
	►268
398-4439	►195
398-4440	2
	►198
398-4444	►201
398-4445	►176
	201
	212
398-4446	201
	212
398-4454	2
	►156
398-4455	►158
398-4459	201
398-4480	263
398-4483	268
398-4487	►313
	328
398-4488	568
	569
	►602
398-4489	568
	569
	►618
398-4490	568
	569
	►570
398-4491	568
	569
	►579
398-4492	568
	569
	►592
398-4493	568
	►620
398-4494	568
	►704
398-4495	568
	►621
398-4496	568
	►705
398-4497	568
	►572
398-4498	568
	►583
398-4499	568
	569
	►603
398-4500	►536
	568
	569
398-4501	328
	►619
398-4502	13
	►739
398-4503	2
	►138
398-4504	►140
398-4505	568
	►576
398-4511	688
	689
	►735
398-4512	►556
	568
398-4513	572
	576
398-4514	572
	576
398-4515	572
	576
398-4517	572
	576
398-4518	572
	576
398-4519	572
	576
398-4530	►557
	569
398-4533	572
	576
398-4537	572
	576
398-4538	1
	►357
398-4539	1
	►377
398-4540	1
	►148
398-4541	►392
	568
398-4542	►393
	568
398-4543	►389
398-4544	►390
398-4545	366
	►380
398-4546	366
	►367
398-4547	366
	►401
398-4548	366
	►369
398-4549	366
	►371
398-4550	►403
398-4558	377
398-4564	380
398-4581	380
398-5596	55
	67
398-5599	285
398-5601	67
398-5614	285
398-5641	87
399-7895	►175
	682
4	
415-1288	391
415-1296	391
415-1300	►525
415-1301	►525
415-1314	384
415-1316	385
415-1329	403
415-1334	357
415-1342	392
415-1343	148
	►149
415-1377	380
415-2089	►165
	252
415-2090	►166
	167
415-2091	►167
	252
	256
415-2092	►167
	252
	256
415-4252	►251
	688
	689
416-0654	287
417-4722	►163
	186
417-6241	552
	554
	►562
417-6242	548
	550
	►562
417-8818	329
	►348
417-8819	328
	►349
418-0890	615
418-2403	►121
	366
418-2404	13
	►118
418-2405	108
	►110
418-2407	108
	►111
418-2408	►125
418-2469	755
418-7969	85
418-7970	84
418-9228	615
419-0093	807
	808
	809
	810
	811
	812
419-0841	266
419-4175	293
	295
	297
	301
420-0748	►330
	332
420-0749	330
420-0751	330
420-1153	252
	256
420-1154	►173
	198
420-1156	►174
	206
	210
420-1157	►176
	204
420-1159	►168
	256
420-1160	►256
	690
420-1870	►6
	15
420-1871	3
	►7
420-1872	►4
	6
420-1873	►5
	7
420-8672	754
421-5950	►534
	688
	689
	690
421-5951	534
421-6476	330
422-2152	730
	733
422-6177	730
	733
422-6201	730
422-6929	307
	310
422-8984	45
422-8986	45
423-1983	138
	140
423-2929	373
423-2943	373
423-2947	367
	369
	371
	►373
423-2950	375
423-2954	375
423-2958	367
	369
	371
	►375
423-2970	389
423-2972	389
423-2974	389
423-2979	389
423-2983	390
423-3780	334
423-3794	330
423-3796	330

► **PRIMARY REFERENCE**

PART NUMBER INDEX

Part	Page
423-3991	13
	▶107
423-3993	14
	▶98
423-3996	94
	98
423-3997	94
	98
423-3998	94
	98
423-4003	98
	▶100
423-4004	96
423-4005	100
423-4026	96
	100
423-4028	83
423-5797	110
	111
423-6535	283
423-7330	252
	256
423-8451	4
	▶8
423-8452	▶9
	14
423-8453	4
	▶10
423-8454	4
	▶11
423-8455	8
	▶13
423-8456	▶5
	9
423-8457	▶5
	10
423-8458	11
	▶13
423-8860	148
423-9049	242
424-0842	▶471
	511
	518
	519
424-0844	▶472
	513
	514
	515
	517
	524
424-0847	▶473
	520
	522
	523
424-1730	2
	▶383
424-1731	▶383
424-1746	384
424-1748	385
424-1750	383
	▶384
424-1751	383
	▶385
424-1763	1
	▶748
424-1764	748
424-1765	748
424-4550	329
	▶335
424-4553	328
	▶336
424-4574	730
424-6097	181
424-7007	83
	84
424-8002	403
424-8511	534
	▶703
424-8524	688
	689
	▶730
425-0242	796
	797
425-6167	690
	▶733
425-9030	707
	710
425-9033	694
425-9035	710
425-9036	719
425-9039	707
425-9047	755
425-9048	755
425-9049	707
	710
425-9050	754
	755
425-9052	707
	710
425-9054	710
426-0972	730
426-2412	393
426-2423	377
426-2425	536
426-2426	536
426-2427	536
426-2428	536
426-2429	536
426-2430	536
426-2431	536
426-2432	536
426-2433	576
426-2434	313
426-2435	579
426-2437	579
426-2438	579
426-2441	579
426-2443	579
426-2444	313
426-2445	313
426-2446	313
426-2447	313
426-2450	313
426-2451	313
426-2452	313
426-2453	313
426-2456	313
426-2457	313
426-2458	313
426-2461	620
	621
426-2469	140
426-2470	140
426-2472	583
426-2473	583
426-4101	94
	98
426-4143	94
	98
426-4986	89
426-4988	83
	84
426-4989	85
426-5000	14
	▶127
426-5009	118
426-5011	127
426-5014	89
426-5018	14
	▶119
427-5774	730
428-9024	313
	▶332
428-9165	706
428-9166	162
430-4097	▶174
	208
430-7600	852
	854
	856
430-7854	808
	▶819
430-9355	534
431-0367	367
	369
	371
431-4806	570
431-4807	570
431-4808	570
431-4809	570
431-4810	570
431-4811	570
431-4812	570
431-4813	570
431-4819	735
431-4821	735
431-4823	735
431-4826	735
431-4828	592
431-4829	592
431-4830	592
431-4834	576
431-4844	77
431-4846	313
431-4851	313
431-4857	313
431-4858	313
431-4859	314
431-4860	314
431-7734	198
431-7735	198
431-7856	730
	733
431-9791	▶657
	667
	668
433-2463	263
433-2466	268
433-2468	▶204
433-2469	▶206
433-2471	▶178
	263
433-2472	263
433-2473	263
433-2474	▶179
	264
433-2475	264
433-2476	▶172
	268
433-2477	268
433-2478	268
433-2479	268
433-2480	▶180
	264
433-2481	▶208
433-2482	▶210
433-2758	▶759
433-3028	761
433-3029	761
433-3272	839
433-4027	582
433-5754	▶180
	789
433-9811	603
	▶605
434-1899	712
434-1901	714
434-4405	759
434-4406	759
434-4407	759
434-4409	759
434-4414	759
434-4483	759
434-6371	808
	▶835
434-8111	748
434-8125	▶365
434-8126	2
	▶838
434-8127	▶837
	838
434-8128	▶394
	838
435-3112	488
435-6590	264
436-1687	782
436-1688	782
436-8983	145
436-9921	844
	846
	848
436-9922	844
	846
	848
437-5964	▶77
438-0935	6
	7
	8
	9
	10
	11
	▶51
438-0955	6
	7
	8
	9
	10
	11
	▶45
438-0956	45
438-1109	▶47
	48
438-1110	6
	7
	8
	9
	10
	11
	▶48
438-2277	403
438-3435	6
	7
	8
	9
	10
	11
	▶266
438-5386	146
438-8213	94
	98
438-9381	▶761
439-4571	266
439-6470	560
439-6471	558
440-0257	▶247
	305

PART NUMBER INDEX

Part	Page
440-0881	266
440-2105	184
	186
	▶216
441-0459	45
441-6655	164
442-4658	6
	7
	8
	9
	10
	11
	▶32
442-5287	782
442-7199	182
	186
	▶217
442-8016	593
	595
442-8151	789
443-8222	▶782
	786
443-8263	772
	▶786
443-8462	182
	184
	186
443-8573	▶725
	782
443-8576	727
444-9617	45
446-0649	▶727
	782
446-5031	▶114
	125
446-5032	▶112
	125
446-5033	688
	689
	▶692
446-5034	692
446-5035	56
446-5036	57
446-5039	77
446-5040	77
446-5041	77
446-5042	77
446-5043	77
446-5044	692
446-5045	132
446-5049	▶154
446-5050	▶122
	366
446-5051	87
446-5052	87
446-5053	87
446-5054	104
	▶106
446-5055	87
446-5057	121
	122
446-5058	153
	154
446-5060	154
446-5569	178
446-5811	▶178
	283
447-0299	797
	▶800
447-0300	800
	802
447-0301	797
447-0302	796
	797
447-0304	796
	797
447-0305	796
	797
447-0306	796
	797
447-0307	796
	797
447-0308	800
	802
447-0310	800
447-0311	800
	802
447-0312	800
	802
447-0313	800
	802
447-0314	796
447-0315	796
	▶802
447-0316	802
447-3469	▶667
447-3470	▶668
447-6642	▶283
	348
	349
447-7206	145
447-7909	604
447-9948	474
	475
448-2114	▶175
	195
448-2858	283
448-4621	▶809
448-4622	▶810
448-9004	87
449-7091	809
	▶823
449-7092	810
	▶824
449-7301	216
449-7303	217
449-9291	2
	▶706
449-9303	▶162
450-1843	730
	733
450-2194	252
	256
450-2733	182
	184
	186
450-2736	▶182
450-2737	2
	▶184
450-3389	▶186
450-4134	704
450-6401	809
	810
	▶836
450-7089	▶416
	526
	527
450-7090	▶418
	526
	527
450-7093	▶420
	527
	528
450-7094	▶422
	527
	528
450-7176	420
	▶424
	447
450-7177	422
	▶425
	448
450-7178	▶426
	529
450-7179	▶428
	529
450-7180	426
	▶430
450-7181	428
	▶455
450-7182	▶431
	530
	532
450-7183	▶433
	530
	532
450-7184	431
	▶435
450-7185	433
	▶436
450-7186	▶437
	530
	531
450-7187	▶439
	530
	531
450-7188	437
	▶441
	454
450-7189	439
	▶442
	453
451-1573	394
451-1872	718
451-1935	394
451-5453	782
452-6152	394
452-6262	852
	854
	856
452-6716	▶726
	789
453-1091	335
	▶337
453-3901	▶811
453-3902	▶807
453-3903	▶808
453-3904	▶812
453-5998	65
453-7175	336
	▶338
453-7506	811
	▶825
453-7507	812
	▶826
453-8044	▶762
453-8045	▶763
453-8046	▶765
453-8047	▶766
454-2948	695
454-5385	391
454-7920	181
454-9316	▶615
	618
454-9324	615
455-0704	172
	180
	263
455-0705	167
455-0706	179
455-1084	852
	854
	856
455-1179	754
	755
455-3677	56
455-8239	767
	769
455-9568	252
	256
455-9976	615
456-2442	405
	406
456-5977	▶814
456-5979	814
	▶829
456-5982	▶813
456-5983	813
	▶827
456-5986	▶361
456-5987	▶395
456-5989	▶400
456-5991	▶443
	525
456-5992	▶445
	525
456-5993	443
	▶447
456-5994	445
	▶448
456-5995	▶449
	525
456-5996	▶451
	525
456-5997	449
	▶453
456-5998	451
	▶454
456-6002	366
456-6003	366
456-6006	▶489
456-6007	489
	▶490
456-6008	▶491
456-6009	491
	▶492
456-7041	295
457-1045	208
	210
457-4683	712
	714
457-6209	▶526
457-6210	▶526
457-6211	▶527
457-7966	2
	▶527
457-7967	▶528
457-7968	▶528
457-7969	▶529
457-7970	▶529
457-7971	▶530
457-7972	▶530
457-7973	▶531
457-7974	▶531
457-7975	▶532
458-9676	605
458-9679	605
458-9684	605
459-0786	163
459-1795	403
459-4062	51
459-4094	403
459-7533	754
	755
460-2435	132
460-4938	▶593

▶ **PRIMARY REFERENCE**

PART NUMBER INDEX

Part	Page
	669
460-6479	395
461-3903	767
461-3904	769
461-5039	314
461-5232	158
461-9930	295
462-0001	613
462-0010	613
462-0015	613
462-0020	613
462-0291	613
462-0293	613
462-0296	613
462-0419	613
462-0420	613
462-0423	613
462-0429	613
462-0431	613
462-0433	613
462-0434	613
462-0435	613
462-0440	613
462-0447	613
462-0458	613
462-0460	604
462-0461	605
	▶613
462-0492	604
	605
462-0493	545
462-0494	545
462-0495	545
462-0496	▶545
	605
462-0497	605
462-0498	605
462-0501	604
462-0502	604
462-0503	605
462-0660	604
462-0670	604
462-0673	▶604
	605
462-0683	642
462-0686	642
462-0687	642
462-0689	642
462-0691	642
462-0697	642
462-0698	605
	▶642
462-0701	605
462-0702	605
462-0703	605
462-0712	651
462-0713	605
	▶651
462-0728	651
462-1601	242
462-1602	242
462-1603	242
462-1605	242
462-1606	242
462-1607	242
462-1608	242
462-1609	242
462-1611	242
462-1613	242
462-1615	242
462-1616	242
462-1618	242
462-7253	▶815
462-7254	815
462-7790	164
462-7808	164
462-9982	363
	364
462-9983	364
462-9984	▶363
462-9985	361
	▶364
464-2354	▶607
464-7880	593
464-7881	593
465-2737	▶859
465-2789	▶169
	182
	184
465-2806	▶169
	186
465-3467	252
	256
465-7896	▶353
	490
465-7898	▶355
	492
466-6957	710
466-7564	704
	705
466-7565	704
	705
467-2513	217
467-2514	216
467-4196	295
467-4243	65
467-4703	705
467-8535	251
	256
469-2274	1
	2
	▶164
472-0586	572
472-0587	572
472-0588	572
472-0589	572
472-0590	572
472-0591	572
472-0593	314
472-0594	579
472-0595	138
	140
472-0596	138
	140
472-0598	138
472-0599	140
472-0600	735
472-0601	735
472-0602	735
472-0603	735
472-0604	377
472-0607	377
472-0609	377
472-0610	389
472-0612	389
472-0615	357
472-0619	357
472-0621	▶378
	380
472-0622	▶379
	380
472-0623	378
472-0624	378
472-0634	403
472-5696	4
472-5723	5
472-5727	13
472-5729	5
472-5734	5
472-5736	13
472-6304	85
472-6305	85
472-6306	94
472-6307	94
472-6308	94
472-6309	94
472-6310	94
472-6311	94
472-6312	94
473-6081	767
	769
473-6084	767
	769
473-9244	▶858
473-9246	858
475-3334	593
475-3335	593
475-3336	▶595
	670
475-3337	595
475-3338	595
475-3339	595
475-3340	595
475-4070	572
	576
475-4071	572
	576
475-4130	▶816
475-4142	816
	▶830
475-4153	670
475-4154	▶669
475-4155	▶670
475-5698	710
475-6561	▶386
475-6562	386
475-6563	386
475-6565	387
475-6566	387
475-6568	2
	▶387
475-6574	386
	387
475-9623	403
475-9624	403
476-0065	85
476-0066	118
476-0068	132
476-0070	132
476-0071	132
476-0072	118
476-0073	98
476-0074	83
	84
476-0075	83
	84
476-0077	98
476-0078	98
476-0079	98
476-0080	98
476-0445	378
476-0451	379
476-0452	379
476-0460	357
476-0462	367
	▶398
476-0470	373
476-0474	373
476-0475	373
476-0477	373
476-0478	375
476-0479	375
476-0485	375
476-0488	375
476-0490	375
476-0492	375
476-0493	367
	369
	371
476-0497	369
476-0498	371
476-0505	379
476-0541	242
476-6616	602
	▶609
476-7585	767
	769
476-7589	762
476-7629	373
476-7630	373
476-8769	142
476-9771	369
476-9772	369
476-9775	369
478-4186	113
	114
479-0024	216
479-0025	217
479-3043	859
479-4356	767
479-4357	762
	▶767
479-4359	769
479-4360	762
	▶769
479-4361	765
479-4362	761
479-4363	763
479-4364	763
479-4400	761
479-4435	765
481-8427	208
481-8428	208
481-9508	▶2
483-2831	844
483-2832	844
483-2833	846
483-2834	846
483-2835	848
483-2836	848
483-3859	1
	▶844
483-3860	1
	▶846
483-3861	2
	▶848
484-1422	367
	369
	371
484-1425	390
484-5856	132
484-5859	132
487-0190	98
487-0191	98
487-7096	389
487-7097	389
488-2530	▶212

▶ PRIMARY REFERENCE



©2015 Caterpillar
All Rights Reserved

CAT, CATERPILLAR, their respective logos, “Caterpillar Yellow”, and the POWER EDGE trade dress as well as corporate and product identity used herein, are trademarks of Caterpillar and may not be used without permission.

SEBP7236-01

D6R2 TRACK-TYPE TRACTOR

PPP1-UP
SSS1-UP
TTT1-UP