CATERPILLAR®

SEBP3513
February 2002

RUTHZIL TRATOR COMERCIAL DE PEÇAS LTDA 11 97083-6812 ROLANDO CITRANGULO

Parts Manual

SIS

See "General Information" for New Parts Manual Features.

D6R SERIES II TRACK-TYPE TRACTOR

BLE1-Up (Machine)
BMJ1-Up (Machine)
4ZF1-Up (Engine)
BSG1-Up (Transmission)
BSR1-Up (Transmission)
3EP1-Up (Bulldozer)
3FP1-Up (Bulldozer)
3GP1-Up (Bulldozer)
4AP1-Up (Bulldozer)
4BP1-Up (Bulldozer)
3SH1-Up (Ripper)
3XT1-Up (Torque Converter)

Powered By C-9 Engine

Product and Dealer Information

Note: For product identification plate locations, see the section “Product Identification Information” in the Operation and Maintenance Manual.

Delivery Date: _____

Product Information

Model: _____

Product Identification Number: _____

Engine Serial Number: _____

Transmission Serial Number: _____

Generator Serial Number: _____

Attachment Serial Numbers: _____

Attachment Information: _____

Customer Equipment Number: _____

Dealer Equipment Number: _____

Dealer Information

Name: _____ Branch: _____

Address: _____

_____

_____

	Dealer Contact	Phone Number	Hours
Sales:	_____	_____	_____
Parts:	_____	_____	_____
Service:	_____	_____	_____

Informations produit et concessionnaire

Nota: Voir l'emplacement de la plaque signalétique du produit au chapitre "Informations produit" du guide d'utilisation et d'entretien.

Date de livraison: _____

Informations produit

Modèle: _____

Numéro d'identification produit: _____

Numéro de série du moteur: _____

Numéro de série de la boîte de vitesses: _____

Numéro de série de l'alternateur: _____

Numéros de série d'équipement: _____

Informations sur l'équipement: _____

Numéro matériel client: _____

Numéro matériel concessionnaire: _____

Informations concessionnaire

Nom: _____ Agence: _____

Adresse: _____

_____

_____

	Contact concessionnaire	Numéro de téléphone	Heures
Ventes:			
Pièces:			
Service:			

Información del Producto/Distribuidor

Nota: Para saber la ubicación de las placas de identificación del producto, ver la sección “Información sobre identificación del producto” en el Manual de Operación y Mantenimiento.

Fecha de entrega: _____

Información del producto

Modelo: _____

Número de identificación del producto: _____

Número de serie del motor: _____

Número de serie de la transmisión: _____

Número de serie del generador: _____

Números de serie de los accesorios: _____

Información sobre los accesorios: _____

Número del equipo del cliente: _____

Número del equipo del distribuidor: _____

Información del distribuidor

Nombre: _____ Sucursal: _____

Dirección: _____

_____

_____

	Comunicación con el distribuidor	Número de teléfono	Horas
Ventas:	_____	_____	_____
Piezas:	_____	_____	_____
Servicio:	_____	_____	_____

Informações Sobre Produto e Revendedor

Nota: Para localizações da placa de identificação do produto, consulte a seção, “Informações Sobre Identificação do Produto” no Manual de Operação e Manutenção.

Data de Entrega: _____

Informações Sobre o Produto

Modelo: _____

Número de Identificação do Produto: _____

Número de Série do Motor: _____

Número de Série da Transmissão: _____

Número de Série do Gerador: _____

Números de Série de Acessórios: _____

Informações Sobre Acessórios: _____

Número do Equipamento do Cliente: _____

Número do Equipamento do Revendedor: _____

Informações Sobre o Revendedor

Nome: _____ Filial: _____

Endereço: _____

_____

_____

	Contato do Revendedor	Telefone	Horas
Vendas:	_____	_____	_____
Peças:	_____	_____	_____
Serviço:	_____	_____	_____

Produkt- und Händlerinformation

Anmerkung: Für die Lage der Produkt-Identnummer und Seriennummern siehe Abschnitt "Produkt-Identinformation" im Betriebs- und Wartungshandbuch.

Lieferdatum: _____

Produkt-Identinformation

Modell: _____

Produkt-Identnummer: _____

Seriennummer des Motors: _____

Seriennummer des Getriebes: _____

Seriennummer des Generators: _____

Seriennummern der Arbeitsgeräte: _____

Arbeitsgeräteinformation: _____

Kundennummer: _____

Händlernummer: _____

Händlerinformation

Name: _____ Niederlassung: _____

Adresse: _____

_____

_____

	Kontaktperson beim Händler	Telefon	Dienststunden
Verkauf:	_____	_____	_____
Ersatzteile:	_____	_____	_____
Service:	_____	_____	_____

MEMORANDA

TABLE OF CONTENTS

Name	Page
GENERAL INFORMATION	A21
REPAIR ALTERNATIVES	A40
SUPPLEMENTAL COOLANT ADDITIVES	A45
MAINTENANCE PARTS	A50
INDEX	A70
MACHINE ARRANGEMENT	1
ELECTRONICS AR-MACHINE	1
GENERAL AR	2
GRADER AR-FINE	4
SUPPRESSION AR-SOUND	5
WASTE HANDLING AR	7
WASTE HANDLING GP	8
ENGINE ARRANGEMENT	9
ENGINE AR	9
ENGINE AR-CORE	13
INSTALLATION AR-ENGINE	15
BASIC ENGINE	16
CAMSHAFT GP	16
COVER GP-CYLINDER BLOCK	18
COVER GP-FRONT HOUSING	20
COVER GP-VALVE MECHANISM	24
CRANKSHAFT GP	25
CYLINDER BLOCK AS	26
CYLINDER BLOCK GP	28
CYLINDER HEAD AS	30
CYLINDER HEAD GP	32
DAMPER & PULLEY GP	35
DRAIN GP-ENGINE OIL	36
DRIVE GP-FAN	38
DRIVE GP-PUMP	41
FASTENER GP-CYLINDER HEAD	42
FASTENER GP-FRONT HOUSING	43
FITTING GP	44
FLYWHEEL GP	45
GEAR GP-FRONT	46
GEAR GP-REAR	47
HOUSING GP-FLYWHEEL	48
HOUSING GP-FRONT	50
LIFTING GP-ENGINE	51
MOUNTING GP-ALTERNATOR	52
MOUNTING GP-ENGINE FLEXIBLE	53
MOUNTING GP-FAN DRIVE	54
PAN GP-OIL	55
PISTON & ROD GP	56
PISTON GP	57
PLUG GP-ENGINE	58
PULLEY GP-CRANKSHAFT	59
PULLEY GP-FAN & ALT DRIVE	60
ROCKER ARM GP	62
SEAL GP-CRANKSHAFT	64
SEAL GP-FUEL INJECTOR	65
SUPPORT GP-ENGINE	66
TRUNNION GP-ENGINE	67
VALVE MECHANISM GP	68
YOKE GP	70
LUBRICATION SYSTEM	72
FILTER GP-ENGINE OIL	72
FUMES DISPOSAL GP	74
GAUGE GP-OIL LEVEL (DIPSTICK)	75
LINES GP-ENGINE OIL	76
LINES GP-TURBOCHARGER OIL	77
PUMP GP-ENGINE OIL	78
COOLING SYSTEM	79
COOLER GP-ENGINE OIL	79
FAN GP	80
FAN GP-BLOWER	81
LINES GP-WATER	82
PUMP GP-WATER	86
RADIATOR GP	90
TANK GP-COOLANT	94
TANK GP-WATER	96
AIR INLET AND EXHAUST SYSTEM	98
AFTERCOOLER GP-AIR	98
AIR CLEANER GP	99
DUST EJECTOR GP	102
ELBOW GP-AIR INLET	103
GUARD GP-PRECLEANER	104
LINES GP-AIR	105
MANIFOLD GP-EXHAUST	108
MUFFLER GP	109
SHIELD GP-EXHAUST	110
TURBOCHARGER GP	111
FUEL SYSTEM	113
FILTER GP-WATER SEP & FUEL	113
LINES GP-FUEL	114
LINES GP-FUEL FILTER	117
PUMP GP-FUEL	118
PUMP GP-UNIT INJECTION	120
PUMP GP-UNIT INJECTOR HYD	122
TANK GP-FUEL	124
ELECTRICAL AND STARTING SYSTEM	126
ALARM GP	126
ALTERNATOR GP-CHARGING	128
BATTERY & WIRING GP	138
BATTERY GP	145
CONTROL & MTG GP-ELECTRONIC	146
CONTROL & MTG GP-ENGINE ELEK	147

TABLE OF CONTENTS

Name	Page
CONTROL GP-ELECTRONIC	148
CONTROL GP-ENGINE ELECTRONIC	149
CONTROL GP-MONITOR	150
CONTROL GP-UNPROGRAMMED	151
CONVERTER GP-ELECTRICAL	152
ELECTRONICS GP-MACHINE	153
ELECTRONICS GP-MONITOR	154
HEATER GP-AIR INLET	155
HEATER GP-JACKET WATER	156
INSTALLATION AR-COMMUNICATION	158
INSTALLATION GP-COMMUNICATION	160
LAMP GP-DOME	162
LAMP GP-FLOOD	163
LIGHTING GP-FLOOD	164
MODULE GP-DISPLAY	166
PANEL GP-FUSE	168
PLUG AS-WIRING	170
SENSOR GP-ELECTRONIC	172
SENSOR GP-POSITION	174
SENSOR GP-PRESSURE	177
SENSOR GP-SPEED	179
SENSOR GP-TEMPERATURE	181
SERVICE GP-POWER TRAIN	183
STARTING MOTOR GP-ELECTRIC	184
SWITCH GP-BYPASS	196
SWITCH GP-DISCONNECT	197
SWITCH GP-MAGNETIC	198
WIRING GP-ELECTRONIC CONTROL	200
WIRING GP-PLATFORM	202
WIRING GP-THROTTLE	205
POWER TRAIN	206
AXLE GP-POWER TRAIN	206
CASE & PARTS GP-PLANETARY	208
CONTROL & MTG GP-PEDAL	211
CONTROL GP-STEERING & TMSN	212
CONTROL GP-TRANSMISSION HYD	218
COOLER GP-TRANSMISSION OIL	220
COUPLING & GUARD GP	222
DRAIN GP-ECOLOGY	223
FILTER GP-OIL	225
FINAL DRIVE GP	226
GEAR GP-BEVEL & TRANSFER	232
GUARD GP-TRANSMISSION	235
LINES GP-POWER TRAIN OIL	236
MANIFOLD & VALVE GP	242
MOUNTING GP-TRANSMISSION	244
PEDAL GP-GOVERNOR & BRAKE	246
PLANETARY GP-TRANSMISSION	248
POWER TRAIN AR	259
PUMP GP-GEAR	261
SCREEN GP-MAGNETIC	264
SEGMENT GP-SPROCKET	265
SHAFT GP-MAIN DRIVE	266
TORQUE CONVERTER GP	268
TRANSMISSION AR	275
UNIVERSAL JOINT GP	277
VALVE & MTG GP-PILOT	278
VALVE GP-CONTROL	280
VALVE GP-MODULATING	282
VALVE GP-PRIORITY	284
VALVE GP-RELIEF	286
VALVE GP-SOLENOID	289
VALVE GP-TRANSMISSION CONTROL	292
FRAME AND BODY	294
BATTERY BOX GP	294
CASE & FRAME GP	298
CHASSIS AR	302
COVER GP	304
DRAWBAR GP	305
ENCLOSURE GP-ENGINE	308
ENCLOSURE GP-FENDER	316
FENDER GP	318
GRID GP-SAND BLAST ERODING	320
GRILL GP	321
GUARD AS-RADIATOR	324
GUARD GP-BOTTOM	328
GUARD GP-FUEL TANK	334
GUARD GP-RADIATOR	336
GUARD GP-REAR	338
GUARD GP-TRACK GUIDE	339
GUARD GP-TRACK ROLLER	341
HOOD & GUARD GP	344
HOOK GP-FRONT PULL	346
SEAL GP-HOOD	348
SWEEP GP	350
UNDERCARRIAGE	353
CAP GP-TRACK IDLER	353
EQUALIZER BAR GP	354
FRAME GP-TELESCOPING RECOIL	360
GUIDING AR-UNDERCARRIAGE	376
IDLER GP-TRACK	380
LINK AS-TRACK	382
MOUNTING GP-CARRIER ROLLER	387
PIVOT BAR GP	389
ROLLER AR	390
ROLLER AR-TRACK	391
ROLLER GP-TRACK CARRIER	394
ROLLER GP-TRACK-DOUBLE FLANGE	396
ROLLER GP-TRACK-SINGLE FLANGE	399
TRACK ADJUSTER & RECOIL GP	402
TRACK GP	404
UNDERCARRIAGE AR	417

TABLE OF CONTENTS

Name	Page
STEERING AND BRAKING SYSTEM	420
ADJUSTER GP-STEER & TMSN CONT	420
CLUTCH & BRAKE GP-STEERING	424
CONTROL GP-PARKING BRAKE	427
DETENT GP	428
GEAR GP-STEERING	430
SUPPORT GP-CONTROL	434
HYDRAULIC SYSTEM	435
CONTROL AR-HYDRAULIC	435
CONTROL AR-PILOT HYDRAULIC	436
CYLINDER & LINES GP-LIFT	438
CYLINDER AR-TILT	446
CYLINDER GP-BULLDOZER LIFT	448
CYLINDER GP-LIFT	450
CYLINDER GP-RIPPER LIFT	452
CYLINDER GP-TILT	454
HYDRAULIC AR	458
LINES GP-LIFT CYLINDER	460
LINES GP-PILOT	464
LINES GP-PUMP	476
LINES GP-RIPPER	480
LINES GP-TILT & TIP CYLINDER	484
LINES GP-TILT CYLINDER	486
MANIFOLD GP-INLET	494
MOUNTING GP-CONTROL VALVE	495
MOUNTING GP-VALVE	496
PUMP GP-PISTON	498
ROTATING GP-PUMP	500
SWASHPLATE GP	501
TANK & FILTER GP-HYDRAULIC	502
VALVE GP-CHECK	506
VALVE GP-CONTROL	508
VALVE GP-MANIFOLD & REDUCING	518
VALVE GP-PILOT	520
VALVE GP-PILOT CARTRIDGE	524
VALVE GP-PRESS & FLOW CMPNSTR	526
VALVE GP-PRESSURE REDUCING	527
VALVE GP-QUICK-DROP	528
VALVE GP-RELIEF	530
VALVE GP-SHUTTLE	533
IMPLEMENTS	534
BRACE GP-BULLDOZER	534
BULLDOZER AR	536
BULLDOZER AR-ANGLING	537
BULLDOZER AR-SEMI-UNIVERSAL	541
BULLDOZER AR-STRAIGHT	545
BULLDOZER AS	547
BULLDOZER GP	548
C-FRAME AS	549
C-FRAME GP	552
MODIFICATION AR-BULLDOZER	555
MOUNTING GP-CYLINDER	558
MOUNTING GP-RIPPER	560
PUSH ARM GP	562
RIPPER AR	566
TRUNNION GP-BULLDOZER	567
WORK TOOLS	569
BIT & CUTTING EDGE GP	569
BLADE & EDGE GP	573
BLADE AR-SEMI-UNIVERSAL	577
BLADE AS	578
BLADE AS-SEMI-UNIVERSAL	580
BLADE AS-STRAIGHT	582
BLADE GP-ANGLING	583
BLADE GP-LOGGING	585
BLADE GP-SEMI-UNIVERSAL	586
BLADE GP-STRAIGHT	590
BLADE GP-WASTE HANDLING	592
RIPPER GP	594
TOOTH GP-RIPPER	596
OPERATOR STATION	598
ADJUSTER GP-SEAT	598
AIR CONDITIONER AR	599
AIR CONDITIONER GP	600
BLOWER GP-CAB	602
CAB AR	604
CAB GP	606
COMPRESSOR GP-REFRIGERANT	609
CONDENSER & MTG GP-REFRIGERANT	612
CONDENSER GP-REFRIGERANT	614
CONTROL GP-IMPLEMENT	616
CONVERSION AR	617
COVER GP-CONSOLE	618
HANDHOLD GP	620
HEATER GP-CAB	622
HOUSING GP-SEAT SUSPENSION	624
INSTALLATION GP-RADIO	627
INSTRUMENT GP	628
LINER GP-CAB	636
LINES GP-AIR CONDITIONER	640
LINES GP-HEATER	646
MIRROR GP-REAR VIEW	649
MODULE GP-QUAD GAUGE	651
MOTOR AS-WINDOW WIPER	652
MOTOR GP-WINDOW WIPER	654
MOUNTING GP-CAB	656
MOUNTING GP-ROPS	657
PAN GP-BACKREST	658
PLATFORM GP	662
PLATFORM GP-CAB	666
PLUG AS	670
PRESSURIZER GP-CAB	672
RECLINER GP-SEAT	675
ROPS GP	676

TABLE OF CONTENTS

Name	Page	Name	Page
SCREEN GP-PROTECTION	679		
SEAT GP	681		
SEAT GP-SUSPENSION	691		
SUSPENSION GP-SEAT	694		
TANK GP-WINDOW WASHER	698		
WASHER GP-WINDOW	702		
WINDOW AS-SLIDING	704		
WINDOW GP-CAB	707		
WIPER GP-WINDOW	724		
WIPER PIVOT GP	726		
SERVICE EQUIPMENT AND SUPPLIES	727		
FILM GP	727		
PLATE & FILM GP	730		
PART NUMBER INDEX	B1		

TABLE DES MATIÈRES

Désignation	Page
GÉNÉRALITÉS	A24
OPTIONS DE RÉPARATION	A41
ADDITIFS POUR LIQUIDE DE REFROIDISSEMENT	A46
PIÈCES DE RECHANGE	A53
INDEX	A80
VERSION DE MACHINE	1
COMPOSANTS ÉLECTRONIQUES DE LA MACHINE (VERSION)	1
VUE DU MODÈLE	2
FINISSAGE TRÈS SOIGNÉ (VERSION)	4
INSONORISATION (VERSION)	5
ÉLIMINATION DES DÉCHETS (VERSION)	7
TRAITEMENT DES DÉCHETS (ASS)	8
VERSION DE MOTEUR	9
MOTEUR (VERSION)	9
MOTEUR - PARTIE CENTRALE (VERSION)	13
MONTAGE DE MOTEUR (VERSION)	15
MOTEUR STANDARD	16
ARBRE A CAMES (ASS)	16
BLOC-CYLINDRES - COUVERCLE (ASS)	18
COUVERCLE DE CARTER AV (ASS)	20
CACHE-SOUPAPES (ASS)	24
VILEBREQUIN (ASS)	25
BLOC-CYLINDRES (ENS)	26
BLOC-CYLINDRES (ASS)	28
CULASSE (ENS)	30
CULASSE (ASS)	32
AMORTISSEUR DE VIBRATIONS ET POULIE (ASS)	35
VIDANGE-HUILE DE MOTEUR (ASS)	36
ENTRAÎNEMENT DE VENTILATEUR (ASS)	38
ENTRAÎNEMENT DE POMPE (ASS)	41
BOULONNERIE DE LA CULASSE (ASS)	42
BOULONNERIE DE CARTER AV (ASS)	43
RACCORD (ASS)	44
VOLANT MOTEUR (ASS)	45
PIGNONNERIE AV (ASS)	46
PIGNON AR (ASS)	47
CARTER DE VOLANT (ASS)	48
CARTER AV (ASS)	50
OEILLETONS DE LEVAGE MOTEUR (ASS)	51
MONTAGE D'ALTERNATEUR (ASS)	52
MONTAGE SOUPLE DU MOTEUR (ASS)	53
MONTAGE D'ENTRAÎNEMENT DE VENTILATEUR (ASS)	54
HUILE MOTEUR - CARTER (ASS)	55
PISTON ET BIELLE (ASS)	56
PISTON (ASS)	57
BOUCHON DE MOTEUR (ASS)	58
VILEBREQUIN - POULIE (ASS)	59
POULIE - ENTRAÎNEMENT D'ALTERNA. ET DE VENTI.	60
AXE DE CULBUTEUR (ASS)	62
JOINT DE VILEBREQUIN (ASS)	64
JOINT DE L'INJECTEUR DE CARBURANT (ASS)	65
SUPPORT DE MOTEUR (ASS)	66
TOURILLON DE MOTEUR (ASS)	67
CULBUTERIE (ASS)	68
ETRIER (ASS)	70
CIRCUIT DE GRAISSAGE	72
FILTRE À HUILE MOTEUR (ASS)	72
DISPOSITIF D'EVACUATION DES VAPEURS DE CARTER	74
JAUGE D'HUILE MOTEUR (BAIONNETTE) (ASS)	75
CANALISATIONS D'HUILE MOTEUR (ASS)	76
CANALISATIONS D'HUILE DE TURBOCOMPRESSEUR (ASS)	77
POMPE A HUILE MOTEUR (ASS)	78
CIRCUIT DE REFROIDISSEMENT	79
REFROIDISSEUR D'HUILE MOTEUR (ASS)	79
VENTILATEUR (ASS)	80
VENTILATEUR SOUFFLANT (ASS)	81
CANALISATIONS D'EAU (ASS)	82
POMPE A EAU (ASS)	86
RADIATEUR (ASS)	90
RÉSERVOIR DU LIQUIDE DE REFROIDISSEMENT (ASS)	94
RÉSERVOIR D'EAU (ASS)	96
CIRCUIT D'ADMISSION D'AIR ET D'ECHAPPEMENT	98
REFROIDISSEUR D'ADMISSION D'AIR (ASS)	98
FILTRE A AIR (ASS)	99
ÉJECTEUR AUTOMATIQUE DE POUSSIÈRE (ASS)	102
COUDE D'ADMISSION D'AIR (ASS)	103

TABLE DES MATIÈRES

Désignation	Page
PROTECTION DE PRÉFILTRE (ASS)	104
CANALISATIONS D'AIR (ASS)	105
COLLECTEUR D'ÉCHAPPEMENT (ASS)	108
SILENCIEUX (ASS)	109
DEFLECTEUR D'ECHAPPEMENT (ASS)	110
TURBOCOMPRESSEUR (ASS)	111
CIRCUIT DE CARBURANT	113
FILTRE DE SÉPARATEUR D'EAU ET DE CARBURANT (ASS)	113
CANALISATIONS DE CARBURANT (ASS)	114
CANALISATIONS DU FILTRE A CARBURANT (ASS)	117
POMPE À CARBURANT (ASS)	118
POMPE D'INJECTION (ASS)	120
INJECTEURS-POMPES HYDRAULIQUES (ENS)	122
RÉSERVOIR DE CARBURANT (ASS)	124
CIRCUIT DE DÉMARRAGE ET ÉLECTRIQUE	126
AVERTISSEUR (ASS)	126
ALTERNATEUR DE CHARGE (ASS)	128
BATTERIE ET CÂBLAGE	138
BATTERIE (ASS)	145
COMMANDE ELECTRONIQUE ET MONTAGE (ASS)	146
COMMANDE ET MONTAGE - MOTEUR	147
COMMANDE ELECTRONIQUE DE BOITE (ASS)	148
COMMANDE ELECTRONIQUE DE MOTEUR (ASS)	149
GROUPE DE CONTROLE	150
COMMANDE NON PROGRAMMEE (ASS)	151
TRANSFORMATION ELECTRIQUE (ASS)	152
ÉLECTRONIQUE - MACHINE (ENS)	153
ÉLECTRONIQUE-MONITEUR (ASS)	154
CHAUFFAGE - ENTRÉE D'AIR (ASS)	155
EAU DES CHEMISES - RECHAUFFEUR (ASS)	156
VERSION DE MONTAGE-COMMUNICATION	158
MONTAGE-COMMUNICATION (ASS)	160
PLAFONNIER (ASS)	162
LAMPE - PHARE (ASS)	163
ÉCLAIRAGE - PROJECTEURS (ASS)	164
MODULE D'AFFICHAGE (ASS)	166
PANNEAU - FUSIBLES (ASS)	168
BOUCHON - CABLAGE (ENS)	170
CAPTEUR ELECTRONIQUE (ASS)	172
SONDE - CIRCUIT DE CARBURANT	174
CAPTEUR DE PRESSION (ASS)	177
CAPTEUR DE VITESSE (ASS)	179
CAPTEUR DE TEMPERATURE (ASS)	181
ENTRETIEN DE LA TRANSMISSION (ASS)	183
DÉMARREUR ÉLECTRIQUE (ASS)	184
INTERRUPTEUR - DÉRIVATION (ASS)	196
ROBINET DE BATTERIE (ASS)	197
CONTACTEUR MAGNETIQUE (ASS)	198
COMMANDE ÉLECTRONIQUE - CABLAGE	200
CABLAGE - PLATE-FORME (ASS)	202
CABLAGE (ASS)-ACCELERATEUR	205
TRANSMISSION	206
ARBRE DE TRANSMISSION (ASS)	206
TRAINS PLANÉTAIRES - CARTER ET PIÈCES	208
COMMANDE ET MONTAGE DE PÉDALE (ASS)	211
COMMANDE DE DIRECTION ET BOITE DE VITESSES	212
COMMANDE HYDRAULIQUE DE BOÎTE (ASS)	218
REFROIDISSEUR D'HUILE DE BOÎTE (ASS)	220
RACCORD ET PROTECTION (ASS)	222
VIDANGE-ÉCOLOGIE (ASS)	223
FILTRE A HUILE (ASS)	225
RÉDUCTEURS (ASS)	226
COURONNE ET ENGRENAGES DE TRANSFERT (ASS)	232
BLINDAGE DE TRANSMISSION	235
CANALISATIONS D'HUILE DE TRANSMISSION (ASS)	236
COLLECTEUR ET SOUPAPE (ASS)	242
REDUCTEUR MARIN - MONTAGE (ASS)	244
PÉDALE DE RÉGULATEUR ET DE FREIN (ASS)	246
BOÎTE PLANÉTAIRE (ASS)	248
TRANSMISSION (VERSION)	259
POMPE A ENGRENAGES (ASS)	261
ÉCRAN MAGNÉTIQUE (ASS)	264
SEGMENT DE BARBOTIN (ASS)	265
ARBRE D'ENTRAINEMENT PRINCIPAL	266
CONVERTISSEUR DE COUPLE (ASS)	268
BOÎTE DE VITESSES (VERSION)	275
JOINT UNIVERSEL (ASS)	277
SOUPAPE PILOTE ET MONTAGE (ASS)	278
DISTRIBUTEUR (ASS)	280

TABLE DES MATIÈRES

Désignation	Page
SOUPAPE DE MODULATION (ASS)	282
SOUPAPE DE PRIORITE (ASS)	284
CLAPET DE DECHARGE (ASS)	286
SOUPAPE - SOLÉNOÏDE (ASS)	289
DISTRIBUTEUR DE BOITE (ASS)	292
CHÂSSIS ET BENNE	294
COFFRE DE BATTERIE (ASS)	294
CHÂSSIS ET CARTER (ASS)	298
VERSION DE CHASSIS	302
COUVERCLE (ASS)	304
BARRE D'ATTELAGE (ASS)	305
CARENAGE DE MOTEUR (ASS)	308
CARENAGE - GARDE-BOUE (ASS)	316
GARDE-BOUE (ASS)	318
DEFLECTEUR PARE-SABLE (ASS)	320
GRILLE (ASS)	321
PROTÈGE-RADIATEUR	324
BLINDAGE INFÉRIEUR (ASS)	328
PROTECTION DU RÉSERVOIR DE CARBURANT (ASS)	334
PROTÈGE-RADIATEUR (ASS)	336
BLINDAGE AR	338
GUIDE PROTECTEUR DE CHAÎNE (ASS)	339
PROTEGE-GALETS (ASS)	341
CAPOT ET PROTECTION (ASS)	344
CROCHET DE HALAGE AV (ASS)	346
JOINT - CAPOT (ASS)	348
ARCEAUX DE DÉBARDAGE (ASS)	350
TRAIN DE ROULEMENT	353
CHAPEAU DE ROUE AV (CHAINE) (ASS)	353
BALANCIER DE SUSPENSION (ASS)	354
CARTER TELESCOPIQUE DE MECANISME AMORTISSEUR	360
VERSION DE GUIDAGE DE TRAIN DE ROULEMENT	376
ROUE AV - CHAINES (ASS)	380
MAILLON DE CHAINE (ENS)	382
MONTAGE DE GALET SUPÉRIEUR	387
TRAVERSE PIVOT (ASS)	389
GALET (VERSION)	390
GALET INFÉRIEUR (VERSION)	391
GALET SUPERIEUR (ASS)	394
GALET A BOUDIN DOUBLE (ASS)	396
GALET A BOUDIN SIMPLE (ASS)	399
MECANISME AMORTISSEUR ET REGLAGE DE CHAINES (ASS)	402
CHAINES (ASS)	404
TRAIN DE ROULEMENT	417

Désignation	Page
CIRCUIT DE DIRECTION ET DE FREIN	420
RÉGLAGE DE COMMANDE DE DIRECT. ET DE BOÎTE	420
EMBRAYAGE ET FREIN DE DIRECTION (ASS)	424
COMMANDE DE FREIN DE STATIONNEMENT (ASS)	427
DISPOSITIF D'ARRÊT	428
ENGRENAGE DE DIRECTION (ASS)	430
SUPPORT - COMMANDE (ASS)	434
CIRCUIT HYDRAULIQUE	435
COMMANDE HYDRAULIQUE (VERSION)	435
VERSION DE COMMANDE HYDRAULIQUE PILOTE	436
VÉRIN DE LEVAGE ET CANALISATIONS (ASS)	438
VÉRIN D'INCLINAISON (VERSION)	446
VÉRIN DE LEVAGE DE LAME DE BULLDOZER (ASS)	448
VÉRIN DE LEVAGE (ASS)	450
VERIN DE LEVAGE DE RIPPER (ASS)	452
VÉRIN D'INCLINAISON (ASS)	454
VERSION HYDRAULIQUE	458
CANALISATIONS DE VÉRIN DE LEVAGE (ASS)	460
CANALISATIONS A COMMANDE PILOTE (ASS)	464
CANALISATIONS DE POMPE (ASS)	476
CANALISATIONS DU RIPPER (ASS)	480
CANALISATIONS DE VÉRIN D'INCLIN. ET D'INCIDENCE	484
CANALISATIONS DU VÉRIN D'INCLINAISON (ASS)	486
COLLECTEUR D'ADMISSION (ASS)	494
DISTRIBUTEUR ET MONTAGE (ASS)	495
MONTAGE DE SOUPAPE (ASS)	496
POMPE A PISTONS (ASS)	498
GROUPE DE ROTATION DE POMPE	500
PLATEAU OSCILLANT (ASS)	501
RÉSERVOIR HYDRAULIQUE ET FILTRE (ASS)	502
CLAPET DE RETENUE (ENS)	506
DISTRIBUTEUR (ASS)	508
SOUPAPE RÉDUCTRICE ET COLLECTEUR (ASS)	518
SOUPAPE PILOTE (ASS)	520
SOUPAPE - CARTOUCHE PILOTE (ASS)	524
SOUPAPE RÉGULATRICE DE PRESSION ET DÉBIT	526
SOUPAPE RÉDUCTRICE DE PRESSION (ASS)	527

TABLE DES MATIÈRES

Désignation	Page
SOUPAPE D'ABAISSEMENT RAPIDE (ASS)	528
CLAPET DE DECHARGE (ASS)	530
VANNE PILOTE (ASS)	533
ÉQUIPEMENTS	534
TIRANT DE BULLDOZER (ASS)	534
VERSION DE BULLDOZER	536
BULLDOZER À ORIENTATION (VERSION)	537
LAME DE BULLDOZER SEMI-UNIVERSELLE (VERSION)	541
LAME DE BULLDOZER DROITE (VERSION)	545
LAME POUR LE REFOULEMENT (ENS)	547
BULLDOZER (ASS)	548
BATI EN C (ENS)	549
BATI EN C (ASS)	552
MODIFICATION -BULLDOZER	555
MONTAGE DE VÉRIN (ASS)	558
MONTAGE DE RIPPER (ASS)	560
BRAS DE POUSSÉE (ASS)	562
RIPPER (VERSION)	566
TOURILLON DE BULLDOZER (ASS)	567
OUTILS DE TRAVAIL	569
EMBOUT ET LAME DE COUPE (ASS)	569
LAME DE COUPE (ASS)	573
VERSION DE LAME SEMI-UNIVERSELLE	577
BALAI D'ESSUIE-GLACE (ENS)	578
LAME SEMI-UNIVERSELLE (ENS)	580
LAME DROITE (ENS)	582
LAME À ORIENTATION (ASS)	583
LAME À BOIS (ASS)	585
LAME SEMI-UNIVERSELLE (ASS)	586
LAME DROITE (ASS)	590
LAME POUR TRAITEMENT DES DÉCHETS (ASS)	592
RIPPER (ASS)	594
DENT DE RIPPER (ASS)	596
POSTE DE CONDUITE	598
REGLAGE DE SIEGE (ASS)	598
CLIMATISEUR (VERSION)	599
CLIMATISEUR (ASS)	600
VENTILATEUR SOUFFLANT DE CABINE (ASS)	602
CABINE (VERSION)	604
CABINE (ASS)	606
COMPRESSEUR DE REFRIGERANT (ASS)	609
CONDENSATEUR ET MONTAGE (RÉFRIGÉRANT)	612
CONDENSEUR DE RÉFRIGÉRANT	614
COMMANDE D'EQUIPEMENT (ASS)	616
VERSION DE TRANSFORMATION	617
COUVERCLE DE LA CONSOLE (ASS)	618
POIGNÉE	620
CHAUFFAGE DE CABINE (ASS)	622
SUSPENSION DE SIEGE - CARTER (ASS)	624
MONTAGE DE RADIO (ASS)	627
TABLEAU DE BORD (ASS)	628
CABINE - REVÊTEMENT (ASS)	636
CANALISATIONS DE CLIMATISEUR (ASS)	640
CANALISATIONS DE CHAUFFAGE (ASS)	646
RÉTROVISEUR (ASS)	649
MODULE - QUATRE INSTRUMENTS (ASS)	651
MOTEUR ESSUIE-GLACE	652
MOTEUR D'ESSUIE-GLACE (ASS)	654
MONTAGE DE CABINE (ASS)	656
MONTAGE DU TOIT ROPS (ASS)	657
COUVERCLE INFÉRIEUR-DOSSIER (ASS)	658
PLATE-FORME (ASS)	662
PLATE-FORME - CABINE (ASS)	666
PRISE (ENS)	670
SURPRESSEUR (ASS)	672
SIÈGE INCLINABLE (ASS)	675
TOIT ROPS (ASS)	676
GRILLE DE PROTECTION (ASS)	679
SIÈGE (ASS)	681
SIÈGE AVEC SUSPENSION (ASS)	691
RÉSERVOIR - LAVE-GLACE (ASS)	698
LAVE-GLACE - VITRE (ASS)	702
VITRE COULISSANTE (ENS)	704
VITRE DE CABINE (ASS)	707
ESSUIE-GLACE (ASS)	724
PIVOT D'ESSUIE-GLACE (ASS)	726
MATÉRIEL ET FOURNITURES D'ENTRETIEN	727
PLAQUE SIGNALÉTIQUE (ASS)	727
PLAQUES SIGNALETIQUES ET AUTOCOLLANTS (ASS)	730
INDEX DE NUMÉROS DE PIÈCES	B1

CONTENIDO

Nombre	Página
INFORMACIÓN GENERAL	A28
ALTERNATIVAS DE REPARACIÓN	A42
ADITIVOS DE REFRIGERANTE SUPLEMENTARIOS	A47
PIEZAS DE MANTENIMIENTO	A58
INDICE	A91
CONFIGURACIÓN DE MÁQUINA	1
CONFIGURACIÓN ELECTRÓNICA DE LA MÁQUINA	1
CONFIGURACIÓN GENERAL	2
NIVELADORA DE FINOS (CONFIG)	4
INSONORIZADOR (CONFIG)	5
CONFIGURACIÓN DE ELIMINACIÓN DE BASURAS	7
MANIPULACIÓN DE BASURA (GR)	8
CONFIGURACIÓN DE MOTOR	9
CONFIGURACIÓN DE MOTORES	9
MOTOR - NÚCLEO (CONFIG)	13
CONFIGURACIÓN DE INSTALACIÓN DEL MOTOR	15
MOTOR BÁSICO	16
ÁRBOL DE LEVAS (GR)	16
TAPA DEL BLOQUE MOTOR (GR)	18
TAPA DE LA CAJA DELANTERA (GR)	20
TAPA DEL MECANISMO DE VÁLVULAS (GR)	24
CIGÜEÑAL (GR)	25
BLOQUE MOTOR (CONJ)	26
BLOQUE MOTOR (GR)	28
CULATA DE CILINDROS (CONJ)	30
CULATA DE CILINDROS (GR)	32
AMORTIGUADOR Y POLEA (GR)	35
DRENAJE DEL ACEITE DE MOTOR	36
IMPULSOR DE VENTILADOR (GR)	38
MANDO DE BOMBA (GR)	41
CULATA DE CILINDROS - TORNILLERÍA DE LA (GR)	42
CAJA DELANTERA - TORNILLERÍA DE LA (GR)	43
CONEXIÓN (GR)	44
VOLANTE (GR)	45
ENGRANAJE DELANTERO (GR)	46
ENGRANAJE TRASERO (GR)	47
VOLANTE - CAJA DE (GR)	48
CAJA DELANTERA (GR)	50
CÁNCAMOS DE LEVANTAMIENTO DEL MOTOR (GR)	51
MONTAJE DEL ALTERNADOR (GR)	52
MONTAJE FLEXIBLE DEL MOTOR (GR)	53
MONTAJE DEL MANDO DE VENTILADOR (GR)	54
CÁRTER - COLECTOR DEL (GR)	55
PISTÓN Y BIELA (GR)	56
PISTON (GR)	57
TAPÓN DEL MOTOR (GR)	58
CIGÜEÑAL - POLEA DE (GR)	59
POLEA DE MANDO DEL ALTERNADOR Y VENTILADOR (GR)	60
BALANCÍN (GR)	62
SELLO DE CIGÜEÑAL (GR)	64
SELLO DEL INYECTOR DEL COMBUSTIBLE (GR)	65
MOTOR - SOPORTE DEL (GR)	66
MUÑÓN DEL MOTOR (GR)	67
MECANISMO DE VÁLVULAS (GR)	68
YUGO (GR)	70
SISTEMA DE LUBRICACIÓN	72
FILTRO DE ACEITE DEL MOTOR (GR)	72
ESCAPE DE GASES (GR)	74
INDICADOR DEL NIVEL DE ACEITE (VARILLA) (GR)	75
TUBERÍAS DE ACEITE DEL MOTOR (GR)	76
TURBOCOMPRESOR - TUBERÍAS DE ACEITE DEL (GR)	77
BOMBA DE ACEITE DEL MOTOR (GR)	78
SISTEMA DE ENFRIAMIENTO	79
ENFRIADOR DE ACEITE DEL MOTOR (GR)	79
VENTILADOR (GR)	80
SOPLADOR - VENTILADOR (GR)	81
TUBERÍAS DEL AGUA (GR)	82
BOMBA DE AGUA (GR)	86
RADIADOR (GR)	90
TANQUE DE REFRIGERANTE (GR)	94
TANQUE DEL AGUA (GR)	96
SISTEMA DE ADMISIÓN Y ESCAPE DE AIRE	98
POSENFRIADOR DE AIRE (GR)	98
FILTRO DE AIRE (GR)	99
EXPULSOR DE POLVO (GR)	102
CODO DE ADMISIÓN DE AIRE (GR)	103
PROTECTOR DEL ANTEFILTRO (GR)	104
AIRE - TUBERÍAS DE (GR)	105
MÚLTIPLE DE ESCAPE (GR)	108
SILENCIADOR (GR)	109
PROTECTOR DEL ESCAPE (GR)	110
TURBOCOMPRESOR (GR)	111

CONTENIDO

Nombre	Página
SISTEMA DE COMBUSTIBLE	113
FILTRO DE COMBUSTIBLE Y SEPARADOR DE AGUA (GR)	113
TUBERÍAS DE COMBUSTIBLE (GR)	114
TUBERÍAS DEL FILTRO DE COMBUSTIBLE	117
BOMBA DE COMBUSTIBLE (GR)	118
BOMBA DE INYECCIÓN UNITARIA (GR)	120
BOMBA HIDRÁULICA DEL INYECTOR UNITARIO (GR)	122
COMBUSTIBLE - TANQUE DE (GR)	124
SISTEMA ELÉCTRICO Y DE ARRANQUE	126
ALARMA (GR)	126
CARGA - ALTERNADOR DE (GR)	128
BATERÍA Y CABLES (GR)	138
BATERÍA (GR)	145
CONTROL ELECTRÓNICO Y MONTAJE (GR)	146
CONTROL ELECTRÓNICO DEL MOTOR Y MONTAJE	147
CONTROL ELECTRÓNICO (GR)	148
CONTROL ELECTRÓNICO DEL MOTOR (GR)	149
CONTROL DE MONITOR (GR)	150
CONTROL NO PROGRAMADO (GR)	151
CONVERTIDOR ELÉCTRICO (GR)	152
ELECTRONICA DE LA MAQUINA (GR)	153
ELECTRONICA DE MONITOR (GR)	154
CALEFACCIÓN - ADMISIÓN DE AIRE DE LA (GR)	155
AGUA DE LAS CAMISAS - CALENTADOR DEL (GR)	156
INSTALACION DE COMUNICATION (CONFIG)	158
INSTALACION DE COMUNICACION (GR)	160
LÁMPARA DEL TECHO (GR)	162
REFLECTOR (GR)	163
LUCES DE REFLECTOR (GR)	164
MODULO DE LA PANTALLA (GR)	166
PANEL DE FUSIBLES (GR)	168
CABLES DEL TAPÓN (CONJ)	170
DETECTOR ELECTRÓNICO	172
DETECTOR DE POSICIÓN (SISTEMA DE COMBUST.) (GR)	174
SENSOR DE PRESIÓN (GR)	177
SENSOR DE VELOCIDAD (GR)	179
SENSOR DE TEMPERATURA (GR)	181
SERVICIO DE TREN DE FUERZA (GR)	183
MOTOR DE ARRANQUE ELÉCTRICO (GR)	184
INTERRUPTOR DE DERIVACIÓN	196
DISYUNTOR (GR)	197
INTERRUPTOR MAGNÉTICO (GR)	198
CABLES DEL CONTROL ELECTRÓNICO (GR)	200
CABLES DE LA PLATAFORMA (GR)	202
ALAMBRADO DE ACELERADOR (GR)	205
TREN DE FUERZA	206
EJE DEL TREN DE FUERZA (GR)	206
CAJA Y PIEZAS DE LOS PLANETARIOS	208
PEDAL-GRUPO DE CONTROL Y MONTAJE	211
CONTROL DE DIRECCIÓN Y TRANSMISIÓN (GR)	212
CONTROL HIDRÁULICO DE LA TRANSMISIÓN (GR)	218
ENFRIADOR DE ACEITE DE LA TRANSMISIÓN (GR)	220
ACOPLAMIENTO Y PROTECCION (GR)	222
DRENAJE DE SEGURIDAD ECOLÓGICA (GR)	223
FILTRO DE ACEITE (GR)	225
MANDO FINAL (GR)	226
ENGRANAJE DE TRANSFERENCIA Y CORONA (GR)	232
PROTECTOR DE LA TRANSMISIÓN (GR)	235
TUBERÍAS DE ACEITE DEL TREN DE FUERZA (GR)	236
MÚLTIPLE Y VÁLVULA (GR)	242
MONTAJE DE LA TRANSMISIÓN (GR)	244
REGULADOR Y PEDAL DEL FRENO (GR)	246
TRANSMISIÓN PLANETARIA (GR)	248
TREN DE FUERZA (CONFIG)	259
BOMBA DE ENGRANAJES (GR)	261
REJILLA MAGNÉTICA (GR)	264
SEGMENTO DE RUEDA MOTRIZ (GR)	265
EJE DE MANDO PRINCIPAL (GR)	266
CONVERTIDOR DE PAR (GR)	268
TRANSMISION (CONFIG)	275
JUNTA UNIVERSAL (GR)	277
VALVULA PILOTO Y MONTAJE (GR)	278
VÁLVULA DE CONTROL (GR)	280
VÁLVULA DE MODULACIÓN (GR)	282
PRIORIDAD - VÁLVULA DE (GR)	284
VÁLVULA DE ALIVIO (GR)	286
VÁLVULA DE SOLENOIDE (GR)	289
VÁLVULA DE CONTROL DE LA TRANSMISIÓN (GR)	292
BASTIDOR Y CAJA	294
CAJA DE LA BATERÍA (GR)	294

CONTENIDO

Nombre	Página
CAJA Y BASTIDOR (GR)	298
CHASIS (CONFIG)	302
TAPA (GR)	304
BARRA DE TIRO (GR)	305
COMPARTIMIENTO DEL MOTOR (GR)	308
CONTENIDO DEL GRUPO DE GUARDABARROS	316
GUARDABARROS (GR)	318
PROTECTOR CONTRA ARENA (GR)	320
PARRILLA (GR)	321
PROTECTOR DEL RADIADOR (CONJ)	324
PROTECTOR INFERIOR (GR)	328
PROTECTOR DEL TANQUE DE COMBUSTIBLE (GR)	334
PROTECTOR DEL RADIADOR (GR)	336
PROTECTOR POSTERIOR (GR)	338
PROTECTOR GUÍA DE CADENA (GR)	339
PROTECTOR DE RODILLOS INFERIORES (GR)	341
CAPO Y PROTECTOR (GR)	344
GANCHO DE TIRO DELANTERO (GR)	346
GRUPO DE SELLOS DEL CAPO	348
PROTECTORES DE RAMAS (GR)	350
TREN DE RODAJE	353
TAPA DE RUEDA GUÍA (GR)	353
BARRA COMPENSADORA (GR)	354
BASTIDOR TELESCÓPICO DEL RESORTE TENSOR (GR)	360
GUIAJE DE TREN DE RODAJE (CONFIG)	376
RUEDA GUÍA DE CADENA (GR)	380
ESLABÓN DE CADENA (CONJ)	382
MONTAJE DE RODILLOS SUPERIORES (GR)	387
BARRA PIVOTE (GR)	389
RODILLO (CONFIG)	390
RODILLO DE CADENA (CONFIG)	391
RODILLO SUPERIOR DE CADENAS (GR)	394
RODILLOS DE PESTAÑA DOBLE (GR)	396
RODILLOS DE PESTAÑA SIMPLE (GR)	399
RESORTE TENSOR Y AJUSTADOR DE LA CADENA (GR)	402
CADENAS (GR)	404
TREN DE RODAJE (CONFIG)	417
SISTEMA DE FRENOS Y DIRECCIÓN	420
AJUSTADOR DEL CONTROL DE DIRECCIÓN Y TRANSMISIÓN (GR)	420
FRENO Y EMBRAGUE DE DIRECCIÓN (GR)	424
CONTROL DEL FRENO DE ESTACIONAMIENTO	427
TOPE (GR)	428
ENGRANAJE DE DIRECCIÓN (GR)	430
SOPORTE DE CONTROL (GR)	434
SISTEMA HIDRÁULICO	435
CONTROL HIDRÁULICO (CONFIG)	435
CONTROL PILOTO HIDRAULICO (CONFIG)	436
CILINDRO DE LEVANTAMIENTO Y TUBERÍAS (GR)	438
CILINDRO DE INCLINACIÓN (GR)	446
CILINDRO DE LEVANTAMIENTO DE LA HOJA TOPADORA (GR)	448
CILINDRO DE LEVANTAMIENTO (GR)	450
CILINDRO DE LEVANTAMIENTO DEL DESGARRADOR (GR)	452
INCLINACIÓN HORIZONTAL - CILINDRO DE (GR)	454
HIDRÁULICA (CONFIG)	458
CILINDRO DE LEVANTAMIENTO - TUBERÍAS DEL (GR)	460
TUBERÍAS CON SERVOMANDO (GR)	464
BOMBA - TUBERÍAS DE (GR)	476
TUBERÍAS DEL DESGARRADOR (GR)	480
TUBERÍAS DEL CILINDRO DE INCL. HORIZ. Y VERTICAL	484
TUBERÍAS DEL CILINDRO DE INCLINACIÓN (GR)	486
MÚLTIPLE DE ADMISIÓN (GR)	494
MONTAJE DE LA VÁLVULA DE CONTROL (GR)	495
VÁLVULA - MONTAJE DE LA (GR)	496
BOMBA DE PISTONES (GR)	498
GRUPO GIRATORIO DE BOMBA	500
PLATO OSCILANTE (GR)	501
TANQUE Y FILTRO HIDRÁULICOS (GR)	502
VÁLVULA DE RETENCIÓN (GR)	506
VÁLVULA DE CONTROL (GR)	508
VALVULA DISTRIBUIDORA Y REDUCTORA (GR)	518
VÁLVULA PILOTO (GR)	520
VALVULA PILOTO DE CARTUCHO (GR)	524
VÁLVULA COMPENSADORA DE FLUJO Y PRESIÓN (GR)	526
VÁLVULA REDUCTORA DE PRESIÓN (GR)	527
VÁLVULA DE CAÍDA RÁPIDA (GR)	528
VÁLVULA DE ALIVIO (GR)	530
VÁLVULA DE LANZADERA (GR)	533
IMPLEMENTOS	534
SOPORTE DE LA HOJA TOPADORA	534

CONTENIDO

Nombre	Página
HOJA TOPADORA (CONFIG)	536
HOJA TOPADORA ORIENTABLE (CONFIG)	537
HOJA TOPADORA SEMIUNIVERSAL	541
HOJA TOPADORA DERECHA (CONFIG)	545
HOJA TOPADORA (CONJ)	547
HOJA TOPADORA (GR)	548
BASTIDOR EN C (CONJ)	549
BASTIDOR EN C (GR)	552
MODIFICACIÓN DEL TRACTOR TOPADOR (CONFIG)	555
MONTAJE DE CILINDRO (GR)	558
MONTAJE DEL DESGARRADOR (GR)	560
BRAZO DE EMPUJE (GR)	562
DESGARRADOR (CONFIG)	566
MUÑÓN DE LA HOJA TOPADORA (GR)	567
HERRAMIENTAS	569
CANTONERA Y CUCHILLA (GR)	569
HOJA Y CUCHILLA (GR)	573
CONFIGURACIÓN DE HOJA SEMIUNIVERSAL	577
HOJA DE LIMPIAPARABRISAS (CONJ)	578
HOJA SEMIUNIVERSAL (CONJ)	580
HOJA RECTA (CONJ)	582
HOJA ORIENTABLE (GR)	583
GRUPO DE HOJA, EXPLOTACIÓN FORESTAL	585
HOJA SEMIUNIVERSAL (GR)	586
HOJA DERECHA (GR)	590
GRUPO DE HOJA, MANIPULACIÓN DE BASURA	592
DESGARRADOR (GR)	594
DIENTE DE DESGARRADOR (GR)	596
CABINA DEL OPERADOR	598
AJUSTADOR DEL ASIENTO (GR)	598
ACONDICIONADOR DE AIRE (CONFIG)	599
ACONDICIONADOR DE AIRE (GR)	600
VENTILADOR SOPLADOR DE LA CABINA (GR)	602
CABINA (CONFIG)	604
CABINA (GR)	606
COMPRESOR DE REFRIGERANTE (GR)	609
CONDENSADOR DEL REFRIGERANTE Y MONTAJE (GR)	612
CONDENSADOR DE REFRIGERANTE (GR)	614
CONTROL DE IMPLEMENTOS (GR)	616
CONFIGURACIÓN DE TRANSFORMACIÓN	617
TAPA DE LA CONSOLA (GR)	618
PASAMANOS (GR)	620
CALEFACCIÓN DE LA CABINA (GR)	622
CAJA DE LA SUSPENSIÓN DEL ASIENTO (GR)	624
INSTALACIÓN DE RADIO (GR)	627
INSTRUMENTOS (GR)	628
REVESTIMIENTO DE LA CABINA (GR)	636
TUBERÍAS DE ACONDICIONADOR DE AIRE (GR)	640
TUBERÍAS DE LA CALEFACCIÓN (GR)	646
RETROVISOR (GR)	649
MODULO ELECTRÓNICO DE CUATRO INDICADORES (GR)	651
MOTOR DEL LIMPIADOR	652
MOTOR-LIMPIAPARABRISAS (GR)	654
GRUPO DE MONTAJE DE LA CABINA	656
MONTAJE DE LA ESTRUCTURA ROPS (GR)	657
SOPORTE DEL RESPALDO (GR)	658
PLATAFORMA (GR)	662
PLATAFORMA DE LA CABINA (GR)	666
ENCHUFE (CONJ)	670
PRESURIZADOR (GR)	672
RECLINACION DE ASIENTO (GR)	675
ESTRUCTURA ROPS (GR)	676
REJILLA PROTECTORA (GR)	679
ASIENTO (GR)	681
SUSPENSIÓN - ASIENTO CON (GR)	691
ASIENTO CON SUSPENSIÓN (GR)	694
TANQUE DEL LAVAPARABRISAS (GR)	698
LAVAPARABRISAS DE LA VENTANA (GR)	702
VENTANA CORREDIZA (CONJ)	704
VENTANA DE LA CABINA (GR)	707
LIMPIAPARABRISAS DE LA VENTANA (GR)	724
PIVOTE DEL LIMPIADOR (GR)	726
EQUIPOS Y SUMINISTRO DE SERVICIOS	727
ETIQUETA DE ADVERTENCIA (GR)	727
CALCOMANÍAS Y PLACAS DE IDENTIFICACIÓN (GR)	730
INDICE DE NUMEROS DE PIEZA	B1

ÍNDICE

Designação	Página
INFORMAÇÃO GERAL	A32
ALTERNATIVAS DE REPARO	A43
ADITIVOS SUPLEMENTARES DO LÍQUIDO ARREFECEDOR	A48
PEÇAS DE MANUTENÇÃO	A62
ÍNDICE	A102
MÁQUINA - ARRANJO	1
SISTEMA ELETRÔNICO - MÁQUINA	1
ARRANJO GERAL	2
LÂMINA DE ACABAMENTO	4
RUÍDO - ARRANJO PARA SUPRESSÃO	5
ATERRO SANITÁRIO	7
MANIPULAÇÃO DE RESÍDUOS	8
MOTOR - ARRANJO	9
MOTOR	9
MOTOR - NÚCLEO	13
GRUPO DE INSTALAÇÃO - MOTOR	15
MOTOR BÁSICO	16
EIXO-COMANDO DE VÁLVULA	16
TAMPA - BLOCO DO MOTOR	18
TAMPA - CAIXA DIANTEIRA	20
TAMPA - MECANISMO DAS VÁLVULAS	24
VIRABREQUIM	25
BLOCO DO MOTOR	26
CABEÇOTE DO MOTOR	30
AMORTECEDOR DE VIBRAÇÕES E POLIA	35
DRENO - ÓLEO DO MOTOR	36
COMANDO DO VENTILADOR	38
COMANDO DA BOMBA	41
FIXADORES - CABEÇOTE DO MOTOR	42
FIXADORES - CAIXA DIANTEIRA	43
CONEXÃO	44
VOLANTE DO MOTOR	45
ENGRENAGENS DE DISTRIBUIÇÃO	46
ENGRENAGENS DE COMANDO TRASEIRO	47
CAIXA DO VOLANTE DO MOTOR	48
CAIXA DIANTEIRA	50
LEVANTAMENTO DO MOTOR	51
MONTAGEM - ALTERNADOR	52
MONTAGEM FLEXÍVEL DO MOTOR	53
MONTAGEM - COMANDO DO VENTILADOR	54
CÁRTER DO ÓLEO DO MOTOR	55
PISTÃO E BIELA	56
PISTÃO	57
BUJÃO DO MOTOR	58
POLIA DO VIRABREQUIM	59
POLIA - VENTILADOR E COMANDO DO ALTERNADOR	60
BALANCIM	62
RETENTOR DO VIRABREQUIM	64
RETENTOR - INJETOR DE COMBUSTÍVEL	65
SUPORTE DO MOTOR	66
MUNHÃO DO MOTOR	67
MECANISMO DAS VÁLVULAS	68
GARFO	70
SISTEMA DE LUBRIFICAÇÃO	72
FILTRO - ÓLEO DO MOTOR	72
ELIMINAÇÃO DE VAPORES DO CÁRTER	74
INDICADOR - NÍVEL DO ÓLEO (VARETA)	75
TUBOS - ÓLEO DO MOTOR	76
TUBOS - ÓLEO DO TURBOALIMENTADOR	77
BOMBA DE ÓLEO - MOTOR	78
SISTEMA DE ARREFECIMENTO	79
ARREFECEDOR - ÓLEO DO MOTOR	79
VENTILADOR	80
VENTILADOR DE SOPRO	81
TUBOS - ÁGUA	82
BOMBA DE ÁGUA	86
RADIADOR	90
TANQUE - LÍQUIDO ARREFECEDOR	94
TANQUE DE ÁGUA	96
SISTEMA DA ADMISSÃO DE AR E DE ESCAPE	98
PÓS-ARREFECEDOR DA ADMISSÃO DE AR	98
PURIFICADOR DE AR	99
EJETOR DE POEIRA	102
COTOVELO DE ADMISSÃO DE AR	103
PROTETOR - PRÉ-PURIFICADOR	104
TUBOS - AR	105
COLETOR DE ESCAPE	108
SILENCIADOR	109
BLINDAGEM DO COLETOR DE ESCAPE	110
TURBOALIMENTADOR	111
SISTEMA DE COMBUSTÍVEL	113
FILTRO DE COMBUSTÍVEL E SEPARADOR DE ÁGUA	113
TUBOS - COMBUSTÍVEL	114

ÍNDICE

Designação	Página
TUBOS - FILTRO DO COMBUSTÍVEL	117
BOMBA DE COMBUSTÍVEL	118
BOMBA DA UNIDADE INJETORA	120
BOMBA HIDRÁULICA - UNIDADE INJETORA	122
TANQUE DE COMBUSTÍVEL	124
SISTEMA ELÉTRICO E DE PARTIDA	126
ALARME	126
ALTERNADOR DE CORRENTE	128
BATERIA E CABOS / FIOS ELÉTRICOS	138
BATERIA	145
CONTROLE ELETRÔNICO E MONTAGEM	146
CONTROLE ELETRÔNICO E MONTAGEM - MOTOR	147
CONTROLE ELETRÔNICO	148
CONTROLE ELETRÔNICO - MOTOR	149
CONTROLE DO PAINEL MONITOR	150
CONTROLE - NÃO PROGRAMADO	151
CONVERSOR ELÉTRICO	152
SISTEMA ELETRÔNICO - MÁQUINA	153
SISTEMA ELETRÔNICO - MONITOR	154
AQUECEDOR DE AR DE ADMISSÃO	155
AQUECEDOR DA ÁGUA DO MOTOR	156
INSTALAÇÃO-COMUNICAÇÃO	158
LÂMPADA - TETO	162
LÂMPADA - FAROL	163
SISTEMA DE ILUMINAÇÃO - FARÓIS	164
MÓDULO DO VISOR	166
PAINEL DE FUSÍVEIS	168
BUJÃO - CABOS/FIOS ELÉTRICOS	170
SENSOR ELETRÔNICO	172
EMISSOR - POSIÇÃO	174
SENSOR - PRESSÃO	177
SENSOR DE VELOCIDADE	179
SENSOR - TEMPERATURA	181
GR. DE SERVICO - TREM DE FORÇA	183
MOTOR ELÉTRICO DE PARTIDA	184
INTERRUPTOR DE DERIVAÇÃO	196
CHAVE GERAL	197
INTERRUPTOR - MAGNÉTICO	198
CABOS/FIOS ELÉTRICOS - CONTROLE ELETRÔNICO	200
CABOS/FIOS ELÉTRICOS - PLATAFORMA	202
CABOS / FIOS ELÉTRICOS-ACELERADOR	205
TREM DE FORÇA	206
SEMI-EIXO - TREM DE FORÇA	206
CARCAÇA DAS ENGRENAGENS PLANETÁRIAS E COMPONENTES	208
CONTROLE DO PEDAL E MONTAGEM	211
CONTROLE DE DIREÇÃO E TRANSMISSÃO	212
CONTROLE HIDRÁULICO DA TRANSMISSÃO	218
ARREFECEDOR DE ÓLEO DA TRANSMISSÃO	220
ACOPLAMENTO E PROTETOR	222
DRENO - ECOLOGIA	223
FILTRO - ÓLEO	225
COMANDO FINAL	226
COROA E ENGRENAGEM DE TRANFERÊNCIA	232
PROTETOR - TRANSMISSÃO	235
TUBOS - ÓLEO DA TRANSMISSÃO	236
COLETOR E VÁLVULA	242
MONTAGEM - TRANSMISSÃO	244
PEDAL - GOVERNADOR E FREIO	246
ENGRENAGENS PLANETÁRIAS - TRANSMISSÃO	248
TREM DE FORÇA	259
BOMBA DE ENGRENAGENS	261
FILTRO - MAGNÉTICO	264
SEGMENTO DA RODA MOTRIZ	265
EIXO DA TRANSMISSÃO	266
CONVERSOR DE TORQUE	268
TRANSMISSÃO	275
JUNTA UNIVERSAL	277
VÁLVULA PILOTO E MONTAGEM	278
VÁLVULA DE CONTROLE	280
VÁLVULA DE MODULAÇÃO	282
VÁLVULA DE PRIORIDADE	284
VÁLVULA DE ALÍVIO	286
VÁLVULA SOLENÓIDE	289
VÁLVULA DE CONTROLE - TRANSMISSÃO	292
CHASSI E CARROCERIA	294
CAIXA DA BATERIA	294
CAIXA E CHASSI	298
CHASSI	302
TAMPA	304
BARRA DE TRAÇÃO	305
COBERTURA DO MOTOR	308
COBERTURA - PÁRA-LAMA	316
PÁRA-LAMA	318
GRADE DO RADIADOR CONTRA EROSÃO	320
GRADE	321
PROTETOR DO RADIADOR	324
PROTETOR INFERIOR	328
PROTETOR - TANQUE DE COMBUSTÍVEL	334
PROTETOR - RADIADOR	336
PROTETOR - TRASEIRO	338

ÍNDICE

Designação	Página
PROTETOR - GUIA DOS ROLETES DAS ESTEIRAS	339
PROTETOR - ROLETES DAS ESTEIRAS	341
CAPÔ E PROTETOR	344
GANCHO DIANTEIRO	346
RETENTOR - CAPÔ	348
BARRAS DE PROTEÇÃO DO CAPÔ	350
MATERIAL RODANTE	353
TAMPA DA RODA-GUIA	353
BARRA EQUALIZADORA	354
ARMAÇÃO TELESCÓPICA DA MOLA TENSORA	360
GUIA-MATERIAL RODANTE	376
RODA-GUIA DAS ESTEIRAS	380
ELO DA ESTEIRA	382
MONTAGEM - ROLETE SUPERIOR	387
BARRA DE ARTICULAÇÃO	389
ROLETE	390
ROLETE DAS ESTEIRAS	391
ROLETE SUPERIOR DA ESTEIRA	394
ROLETE DE ESTEIRA DE FLANGE DUPLO	396
ROLETE DE ESTEIRA DE FLANGE SIMPLES	399
AJUSTADOR DE ESTEIRAS E MOLA TENSORA	402
ESTEIRA	404
MATERIAL RODANTE	417
SISTEMA DE DIREÇÃO E DE FREIO	420
AJUSTADOR DO CONTROLE DA DIREÇÃO E TRANSMISSÃO	420
EMBREAGEM DE DIREÇÃO E FREIOS	424
CONTROLE DO FREIO DE ESTACIONAMENTO	427
RETEM	428
MECANISMO DE DIREÇÃO	430
SUPORTE - CONTROLE	434
SISTEMA HIDRÁULICO	435
CONTROLE HIDRÁULICO	435
CONTROLE PILOTO HIDRÁULICO	436
CILINDRO DE LEVANTAMENTO E TUBOS	438
CILINDRO DE INCLINAÇÃO	446
CILINDRO - LEVANTAMENTO DA LÂMINA	448
CILINDRO DE LEVANTAMENTO	450
CILINDRO DE LEVANTAMENTO DO RIPER	452
CILINDRO DE INCLINAÇÃO	454
COMANDO HIDRÁULICO	458
TUBOS - CILINDRO DE LEVANTAMENTO	460
TUBOS - CIRCUITO PILOTO	464
TUBOS - BOMBA	476
TUBOS - RIPER	480
TUBOS - CILINDRO DE INCLINAÇÃO E TOMBAMENTO	484
TUBOS - CILINDRO DE INCLINAÇÃO	486
COLETOR DE ADMISSÃO	494
MONTAGEM - VÁLVULA DE CONTROLE	495
MONTAGEM - VÁLVULA	496
BOMBA DE PISTÃO	498
GRUPO ROTATIVO DA BOMBA	500
PLACA BASCULANTE	501
TANQUE HIDRÁULICO E FILTRO	502
VÁLVULA DE RETENÇÃO	506
VÁLVULA DE CONTROLE	508
VALVULA REDUTORA E COLETOR	518
VÁLVULA DE CONTROLE PILOTO	520
VÁLVULA DO CARTUCHO PILOTO	524
VÁLVULA DE CONTROLE - PRESSÃO E COMPENSAÇÃO DE FLUXO	526
VÁLVULA DE REDUÇÃO DE PRESSÃO	527
VÁLVULA DE QUEDA RÁPIDA	528
VÁLVULA DE ALÍVIO	530
VÁLVULA DE SEPARAÇÃO	533
ACESSÓRIOS	534
TIRANTE DA LÂMINA	534
LÂMINA	536
LÂMINA ANGULÁVEL	537
LÂMINA SEMI-UNIVERSAL	541
LÂMINA RETA	545
LÂMINA	547
LAMINA BULLDOZER	548
ARMAÇÃO C	549
GRUPO DE CONVERSÃO - LÂMINA	555
MONTAGEM - CILINDRO	558
MONTAGEM - RIPER	560
BRAÇO DE EMPUXO	562
RIPER	566
MUNHÃO DA LÂMINA	567
FERRAMENTAS DE TRABALHO	569
CANTO E BORDA CORTANTE	569
LÂMINA E BORDA CORTANTE	573
LÂMINA - SEMI-UNIVERSAL	577
LÂMINA	578
LÂMINA SEMI-UNIVERSAL	580
LÂMINA RETA	582
LÂMINA ANGULÁVEL	583
LÂMINA - TORAS	585
LÂMINA SEMI-UNIVERSAL	586

ÍNDICE

Designação	Página
LÂMINA RETA	590
LÂMINA- MANIPULAÇÃO DE RESÍDUOS	592
RIPER	594
DENTE DO RÍPER	596
POSTO DO OPERADOR	598
AJUSTADOR DO ASSENTO	598
CONDICIONADOR DE AR	599
VENTILADOR DA CABINE	602
CABINE	604
COMPRESSOR DE REFRIGERANTE	609
CONDENSADOR DO REFRIGERANTE E MONTAGEM	612
CONDENSADOR DE REFRIGERANTE	614
CONTROLE DO ACESSÓRIO	616
GR. DE CONVERSÃO	617
TAMPA - CONSOLO	618
PEGA-MÃO	620
AQUECEDOR DA CABINE	622
CAIXA - SUSPENSÃO DO ASSENTO	624
INSTALAÇÃO DO RÁDIO	627
INSTRUMENTOS	628
REVESTIMENTO DA CABINE	636
TUBOS - AR CONDICIONADO	640
TUBOS - AQUECEDOR	646
ESPELHO RETROVISOR	649
MÓDULO ELETRÔNICO DE QUATRO INDICADORES	651
MOTOR DO LIMPADOR	652
MOTOR - LIMPADOR DO VIDRO	654
MONTAGEM - CABINE	656
MONTAGEM - ESTRUTURA ROPS	657
FUNDO - ENCOSTO	658
PLATAFORMA	662
PLATAFORMA DA CABINE	666
BUJÃO	670
PRESSURIZADOR	672
RECLINAÇÃO - ASSENTO	675
ESTRUTURA ROPS	676
TELA DE PROTEÇÃO	679
ASSENTO	681
ASSENTO COM SUSPENSÃO	691
SUSPENSÃO - ASSENTO	694
TANQUE - LAVADOR DE JANELA	698
LAVADOR DO VIDRO	702
JANELA DESLIZANTE	704
JANELA DA CABINE	707
LIMPADOR DO VIDRO	724
PIVÔ DO LIMPADOR	726
EQUIPAMENTO DE SERVIÇO E SUPRIMENTOS	727
DECALQUE	727
PLACA E DECALQUE	730
ÍNDICE DE NÚMERO DE PEÇA	B1

INHALTSVERZEICHNIS

Bezeichnung	Seite
ALLGEMEINE HINWEISE	A36
REPARATURALTERNATIVEN	A44
KÜHLMITTELZUSATZ	A49
WARTUNGSTEILE	A66
STICHWORTVERZEICHNIS	A112
MASCHINE	1
ELEKTRONIK - MASCHINE	1
GRUNDAUSFÜHRUNG	2
FEINGRADER	4
SCHALLDÄMPFUNG	5
ABFALLBESEITIGUNGSMONTAGE	7
ABFALLBESEITIGUNGSSATZ	8
MOTORAUSFÜHRUNG	9
MOTORAUSFÜHRUNG	9
MOTORKÜHLERBLOCK	13
MOTOR-EINBAUSATZ	15
MOTOR (GRUNDAUSFÜHRUNG)	16
NOCKENWELLE	16
MOTORBLOCKDECKEL	18
STIRNRADGEHÄUSEDECKEL	20
VENTILDECKEL	24
KURBELWELLE	25
MOTORBLOCK	26
ZYLINDERKOPF	30
DÄMPFER UND RIEMENSCHEIBE	35
MOTORÖLABLASS	36
LÜFTERANTRIEB	38
PUMPENANTRIEB	41
ZYLINDERKOPF-HALTETEILE	42
STIRNRADGEHÄUSE-HALTETEILE	43
FITTING	44
SCHWUNGRAD	45
STIRNRAD	46
ZAHNRADVORGELEGE	47
SCHWUNGRADGEHÄUSE	48
STIRNRADGEHÄUSE	50
MOTORHUBÖSE	51
DREHSTROMGENERATOR - BEFESTIGUNG	52
MOTORAUFHÄNGUNG, ELASTISCH	53
LÜFTERANTRIEBSAUFHÄNGUNG	54
ÖLWANNE	55
PLEUELSTANGE UND KOLBEN	56
KOLBEN	57
MOTORSTOPFEN	58
KURBELWELLEN-RIEMENSCHEIBE	59
RIEMENSCHEIBE - LÜFTER- U. DREHSTROMGENERATOR	60
VENTILKIPPHEBEL	62
KURBELWELLENDICHTUNG	64
EINSPRITZDÜSENDICHTUNG	65
MOTORAUFHÄNGUNG	66
MONTAGEZAPFEN	67
VENTILSTEUERUNG	68
JOCHSATZ	70
SCHMIERSYSTEM	72
ÖLFILTER	72
ENTDUNSTER	74
ÖLMESSSTAB	75
MOTORÖLLEITUNGEN	76
TURBOLADERÖLLEITUNGEN	77
SCHMIERPUMPE	78
KÜHLSYSTEM	79
MOTORÖLKÜHLER	79
LÜFTER	80
DRUCKLÜFTER	81
KÜHLWASSERLEITUNGEN	82
KÜHLWASSERPUMPE	86
KÜHLER	90
KÜHLMITTELBEHÄLTER	94
WASSERTANK	96
LUFTEINLASS- UND ABGASSYSTEM	98
LADELUFTKÜHLER	98
LUFTREINIGER	99
STAUBAUSWERFER	102
LUFTEINLASSBOGEN	103
VORREINIGERSCHUTZ	104
DRUCKLUFTLEITUNGEN	105
AUSPUFFKRÜMMER	108
SCHALLDÄMPFER	109
AUSPUFFABSCHIRMUNG	110
TURBOLADER	111
KRAFTSTOFFSYSTEM	113
WASSERABSCHEIDER- U. KRAFTSTOFFILTER	113
KRAFTSTOFFLEITUNGEN	114
KRAFTSTOFFILTERLEITUNGEN	117
KRAFTSTOFFPUMPE	118
EINSPRITZDÜSENPUMPE	120
PUMPENDÜSE, HYDRAULISCH	122
KRAFTSTOFFTANK	124
ELEKTRISCHE ANLAGE UND STARTSYSTEM	126
WARNVORRICHTUNG	126
DREHSTROMGENERATOR	128
BATTERIE UND VERDRAHTUNG	138
BATTERIE	145

INHALTSVERZEICHNIS

Bezeichnung	Seite
ELEKTRON. STEUERUNG UND ANBAUSATZ	146
STEUERUNGSEINHEIT, ELEKTRON. FÜR MOTOR UND BEFEST.	147
STEUERUNG, ELEKTRON.	148
MOTORSTEUERUNG, ELEKTRON.	149
MONITORSTEUERUNG	150
STEUERUNG - NICHT PROGRAMMIERT	151
ELEKTR. UMFORMER	152
ELEKTRONIK - MASCHINE	153
ELEKTRONIK - MONITOR	154
LUFTEINLASSVORWÄRMER	155
UMLAUFKÜHLWASSERHEIZUNG	156
ÜBERTRAGUNGSEINBAUSATZ	158
KOMMUNIKATIONSEINBAUSATZ	160
FAHRERHAUSBELEUCHTUNG	162
ARBEITSLEUCHTEN	163
ANZEIGEMODUL	166
INSTRUMENTENTAFEL-SICHERUNG	168
GLÜHKERZENVERDRAHTUNG	170
SENSOR, ELEKTRON.	172
STELLUNGSSENSOR	174
DRUCKSENSOR	177
DREHZAHLSENSOR	179
TEMPERATURSENSOR	181
ANTRIEBSSTRANG-WARTUNGSSATZ	183
STARTERMOTOR	184
UMGEHUNGSSCHALTER	196
TRENNSCHALTER	197
MAGNETSCHALTER	198
VERDRAHTUNG (ELEKTRON. STEUERUNG)	200
FAHRERPLATTFORMVERDRAHTUNG	202
GASREGELUNG - VERDRAHTUNG	205
KRAFTÜBERTRAGUNG	206
KRAFTÜBERTRAGUNGSACHSE	206
PLANETENANTRIEBSGEHÄUSE U. TEILE	208
STEUERPEDAL U. BEFESTIGUNG	211
LENK- UND GETRIEBESTEUERUNG	212
GETRIEBEHYDRAULIK	218
GETRIEBEÖLKÜHLER	220
KUPPLUNG UND VERKLEIDUNG	222
ABLASS (UMWELTFREUNDLICH)	223
ÖLFILTER	225
SEITENANTRIEB	226
TELLERRAD- UND VORGELEGERADSATZ	232
GETRIEBESCHUTZ	235
ÖLLEITUNGEN - KRAFTÜBERTRAGUNG	236
KRÜMMER UND VENTIL	242
GETRIEBEAUFLAGER	244
GAS- U. BREMSPEDAL	246
PLANETENGETRIEBE	248
KRAFTÜBERTRAGUNG	259
ZAHNRADPUMPE	261
MAGNETSIEB	264
KETTENRADSEGMENT	265
HAUPTANTRIEBSWELLE	266
DREHMOMENTWANDLER	268
GETRIEBE	275
KREUZGELENK	277
VORSTEUERVENTIL UND BEFESTIGUNGSTEILE	278
STEUERVENTIL	280
MODULATORVENTIL	282
VORRANGVENTIL	284
ÜBERDRUCKVENTIL	286
MAGNETVENTIL	289
GETRIEBESTEUERVENTIL	292
RAHMEN UND AUFBAU	294
BATTERIEKASTEN	294
RAHMEN UND GEHÄUSE	298
FAHRWERK	302
DECKEL	304
ZUGHAKEN	305
MOTORVERKLEIDUNG	308
SCHUTZBLECHVERKLEIDUNG	316
SCHUTZBLECHE	318
SANDSTRAHLSCHUTZGITTER	320
KÜHLERGRILL	321
KÜHLERVERKLEIDUNG	324
PANZERWANNE	328
KRAFTSTOFFTANKVERKLEIDUNG	334
KÜHLERSCHUTZ	336
HECKVERKLEIDUNG	338
KETTENFÜHRUNGSSCHUTZ	339
LAUFROLLENSCHUTZ	341
MOTORHAUBE UND VERKLEIDUNG	344
FRONTZUGHAKEN	346
MOTORHAUBENDICHTUNG	348
SCHUTZBÜGEL	350
LAUFWERK	353
LEITRADAUFSATZ	353
QUERTRAVERSE	354
LAUFROLLENRAHMEN (TELESKOPRÜCKLAUF)	360
LAUFWERKFÜHRUNG	376
LEITRAD	380
KETTENGLIEDER	382
TRAGROLLENAUFHÄNGUNG	387
ACHSWELLE	389
LAUFROLLE	390

INHALTSVERZEICHNIS

Bezeichnung	Seite
TRAGROLLE	394
DOPPELFLANSCHROLLEN	396
EINZELFLANSCHROLLEN	399
KETTENSPANNER UND -FEDERRÜCK-LAUF	402
LAUFWERKSKETTE	404
LAUFWERKSRAHMEN	417
LENK- UND BREMSSYSTEM	420
LENK- UND GETRIEBEEINSTELLER	420
LENKKUPPLUNG UND BREMSE	424
FESTSTELLBREMSGESTÄNGE	427
SPERRE	428
LENKTRIEB	430
STÜTZGRUPPE - STEUERUNG	434
HYDRAULIKSYSTEM	435
HYDRAULIKSTEUERUNG	435
VORSTEUERHYDRAULIKSTEUE-RUNG	436
HUBZYLINDER U. LEITUNGEN	438
KIPPZYLINDER	446
PLANIERSCHILDHUBZYLINDER	448
HUBZYLINDER	450
AUFREISSERHUBZYLINDER	452
KIPPZYLINDER	454
HYDRAULIKSYSTEM	458
HUBZYLINDERLEITUNGEN	460
VORSTEUERLEITUNGEN	464
HYDRAULIKPUMPE UND LEITUN-GEN	476
AUFREISSERLEITUNGEN	480
SCHWENK- UND KIPPZYLINDERLEITUN-GEN	484
NEIGEZYLINDERLEITUNGEN	486
ANSAUGKRÜMMER	494
STEUERVENTILBEFESTIGUNG	495
VENTILAUFHÄNGUNG	496
KOLBENPUMPE	498
KOLBENPUMPENUMLAUFSATZ	500
SCHWENKSCHEIBE	501
HYDRAULIKTANK UND SCHMIERFIL-TER	502
SPERRVENTIL	506
STEUERVENTIL	508
VERTEILER- UND REDUZIERVENTIL	518
VORSTEUERVENTIL	520
EINBAUVORSTEUERVENTIL	524
DRUCK- U. STROMAUSGLEICHSVEN-TIL	526
DRUCKREDUZIERVENTIL	527
SCHNELLSENKVENTIL	528
ÜBERDRUCKVENTIL	530
PENDELVENTIL	533

Bezeichnung	Seite
ARBEITSGERÄTE	534
SCHILDSTREBE	534
PLANIEREINRICHTUNG	536
SCHWENKPLANIERSCHILD	537
SU-SCHILD	541
STARRSCHILD	545
PLANIERSCHILD	547
C-RAHMEN	549
PLANIERSCHILD-UMRÜSTSATZ	555
ZYLINDERAUFHÄNGUNG	558
AUFREISSERBEFESTIGUNG	560
SCHUBARM	562
AUFREISSER - TEILLISTE	566
MONTAGEZAPFEN (PLANIERSCHILDEIN-RICHTUNG)	567
ARBEITSGERÄTE	569
ECK- UND SCHNEIDMESSER	569
SCHILD UND SCHNEIDMESSER	573
SEMI-U-SCHILD	577
SCHEIBENWISCHERBLATT	578
SU-SCHILD	580
S-SCHILD	582
SCHWENKSCHILD	583
SCHILD - FORSTAUSFÜHRUNG	585
SU-SCHILD	586
STARRSCHILD	590
SCHILD - ABFALLBESEITIGUNGSAUSFÜH-RUNG	592
AUFREISSER	594
AUFREISSERZAHN	596
FAHRERHAUS	598
FAHRERSITZVERSTELLER	598
KLIMAANLAGE	599
FAHRERHAUS-DRUCKLÜFTER	602
FAHRERHAUS	604
KÄLTEMITTELKOMPRESSOR	609
KÄLTEMITTELKONDENSATOR U. BEFESTIGUNGSTEILE	612
KÄLTEMITTELKONDENSATOR	614
ARBEITSGERÄTESTEUERUNG	616
UMBAUSATZ	617
STEUERKONSOLENABDECKUNG	618
HALTEGRIFF	620
FAHRERHAUSHEIZUNG	622
FAHRERSITZFEDERUNGSGEHÄUSE	624
RADIOEINBAUSATZ	627
INSTRUMENTENSATZ	628
FAHRERHAUSAUSKLEIDUNG	636
KLIMAANLAGENLEITUNGEN	640
HEIZUNGSLEITUNGEN	646
RÜCKSPIEGEL	649
MODUL - VIER ELEKTRON. ANZEIGEN	651

INHALTSVERZEICHNIS

Bezeichnung	Seite
SCHEIBENWISCHERMOTOR	652
FAHRERHAUSANBAUSATZ	656
ÜBERROLLSCHUTZAUFLAGER	657
SCHALE - RÜCKENLEHNE	658
PLATTFORM	662
FAHRERPLATTFORM	666
STECKERSATZ	670
FAHRERHAUSBELÜFTUNG	672
VERSTELLBARER SITZ	675
ÜBERROLLSCHUTZ	676
SCHUTZGITTER	679
FAHRERSITZ	681
SCHWINGSITZ	691
FAHRERSITZFEDERUNG	694
SCHEIBENWASCHMITTELBEHÄLTER	698
SCHEIBENWASCHANLAGE	702
SCHIEBEFENSTER	704
FAHRERHAUSFENSTER	707
SCHEIBENWISCHER	724
WISCHERARM	726
WARTUNGSAUSRÜSTUNG UND -ZUBEHÖR	727
AUFKLEBER	727
SCHILD UND AUFKLEBER	730
ERSATZTEILNUMMERNINDEX	B1

GENERAL INFORMATION

1. MACHINE IDENTIFICATION

Caterpillar machines are identified by Product Identification Numbers (PIN). Some components included in a machine may be identified by Serial Numbers (S/N). Typical components that will be serialized include engines, transmissions, bulldozers, and rippers. The machine and engine are further identified by arrangement numbers and in some cases modification numbers. These numbers are shown on the product identification plate(s) and on the master plate in the operator's compartment.

Caterpillar dealers need all of these numbers to determine accurate parts identification.

SIS ***New Feature***

Effective First Quarter 2001 the Caterpillar Product Identification Number (PIN) will change from 8 to 17 characters. In an effort to provide uniform equipment identification, Caterpillar and other construction equipment manufacturers are moving to comply with the latest version of the product identification numbering standard. Non-road machine PINs are defined by ISO 10261. The new PIN format will apply to all Caterpillar machines and generator sets. The PIN plates and frame marking will display the 17 character PIN. The new format will look like the following:

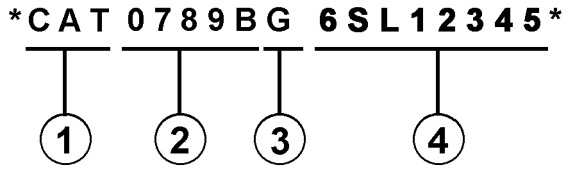

Where:

1. Caterpillar's World Manufacturing Code (characters 1-3)

2. Machine Descriptor (characters 4-8)

3. Check Character (character 9)

4. Machine Indicator Section (MIS) or Product Sequence Number (characters 10-17). These were previously referred to as the Serial Number.

Machines and generator sets produced before First Quarter 2001 will maintain their 8 character PIN format.

Components such as engines, transmissions, axles, etc. and work tools will continue to use an 8 character Serial Number (S/N).

2. ORDERING PARTS

⚠ WARNING

When replacement parts are required for this product Caterpillar recommends using Caterpillar replacement parts or parts with equivalent specifications including, but not limited to, physical dimensions, type, strength and material.

Failure to heed this warning can lead to premature failures, product damage, personal injury or death.

Quality Caterpillar replacement parts are available from Caterpillar dealers throughout the world. Their parts inventories are up to date and include all parts normally required to protect your investment in Caterpillar machines. Dealers may offer repair kits or remanufactured parts to allow selection of the most effective repair alternative for a particular situation. When ordering parts, your order should specify the quantity, part number, part name, and the serial number/product identification number of the machine for which the parts are needed.

3. PARTS MANUAL ORGANIZATION

Product information in this manual is presented as "information elements" that represent all of the components for the specific model. Engine Arrangement and Seat Group are examples of information elements. The information elements are organized alphabetically by part name and secondarily by part number within each major section of the manual.

4. TABLE OF CONTENTS

SIS ***New Feature***

A table of contents (TOC) is found at the beginning of the manual. The TOC lists each section of the manual with a complete list of all information elements organized as they appear in the manual. Page numbers are provided for quick reference to detailed parts identification illustrations and serviceable consist lists.

5. MAINTENANCE PARTS INDEX

The Maintenance Parts Index, located near the beginning of the manual, references most frequently used maintenance part numbers, providing description, quantity, usage and page number. This information is organized alphabetically by part description.

6. INDEX

The index located near the front of the manual is an alphabetical listing of all information elements included in the manual. Page numbers are provided for quick reference to detailed parts identification illustrations and serviceable consist lists.

7. PART NUMBER INDEX

A numerical index listing all part numbers and the corresponding page number(s) appears at the back of the manual.

8. CAPTIONS

Captions located at the top of each page of an information element identify the part number and part name along with additional descriptive information. PIN and S/N information found in each caption should be used to select correct information for a specific machine. Field replacement options, identification of optional attachment components, and where used ("part of") information is also provided.

SIS ***New Feature***

The first line of a caption is shown in larger type font to indicate the beginning of an information element. Captions for additional pages that may be required to illustrate an information element will be shown in standard type font and will include the term *(contd.)* .

9. NON-SERVICED PARTS

SIS ***New Feature***

In some instances it is necessary to display non-serviced parts that are a link to a lower level serviceable consist lists. These non-serviced part numbers are shown in *italic* type indicating that they are not available.

10. PARTS LIST REFERENCE NUMBERS

SIS ***New Feature***

Numbers shown in the Ref No column correspond to numbers used in the associated graphic(s). An alphabetic suffix may be added to a reference number to identify lower level consist items. Numbers shown in the Graphic Ref column refer to the graphic number identifier displayed in the lower left corner of each illustration. The Graphic Ref number may be used in combination with the item Ref No to determine the correct part number. There may be intentional omission of a Ref No in a consist list as information is updated to reflect the latest serviceable part numbers.

11. INDENTED PART NAMES

When a part name is indented in a parts list, it is part of (included in) the group or assembly under which it is indented.

12. ILLUSTRATION REFERENCE LETTERS

When necessary, illustrations contain reference letters (A, B, C etc.) that are intended to track lines and harnesses from one point to another. They are also used to show where to reconnect illustrations that have been separated.

13. ABBREVIATIONS AND SYMBOLS

O.D. – Outside Diameter
I.D. – Inside Diameter
A – Not Part Of This Group
B – Use As Required
C – Change From Previous Type
D – Order By The Meter
E – Order By The Centimeter
F – Not Shown
G – Order By The Inch
I – See Hose Fabrication Guide
M – Metric Part
R – Remfg Part May Be Available
Y – Separate Illustration
Z – Not Serviced Separately

NOTE:

Continuing improvement and advancement of product design may cause changes to your machine which may not be included in this publication. Whenever a question arises regarding your Caterpillar product or this publication, please consult your Caterpillar dealer for the latest available information.

FRAME AND BODY

8E-3299 PLATFORM GP-CAB

PIN 38K1-09999

SMCS-7253 100090751

NOTE	REF NO	GRAPHIC REF	PART NUMBER	QTY	PART NAME (1 2 3 4 5 6 PRODUCT LEVEL)	SEE PAGE
	1	1	3T-3953	1	PLATE AS	
	2	1	5B-2992	25	BOLT (3/8-16X.750IN)	
	3	1	5P-1075	41	WASHER-HARD (3MM THK)	
	4	1	9P-1444	2	SUPPORT AS-FOOT	
	5	1	9P-2229	19	BOLT (1/2-13X1IN)	
		1	5P-[illegible]4	19	WASHER-HARD (4MM THK)	
	6	1	9E-9136	1	COVER AS-LH	
		1	9F-2979	6	NUT-WELD (3/8-16 THD)	
		1	1P-0188	1	CLIP	
	7	1	7S-3411	4	COVER	
	8	1	6J-0488	18	SCREW-HEAD (3/8-16X.875IN)	
	9	1	[illegible]-4474	1	COVER	
		1	9E-9[illegible]7		GASKET	
	10	1	9E-3249	1	[illegible]	
		1	9E-3250	1	GASKET	
	11	1	3T-3935	1	HANDHOLD	
	12	1	9E-9078	1	COVER AS	
		1	9F-2979	8	NUT-WELD (3/8-16 THD)	
		1	9E-9079	1	GASKET	
	13	1	7T-0131	1	FLOORPLATE AS	
		1	1F-0748	4	NUT-WELD (1/2-13 THD)	
	14	1	7Y-9087	1	PLUG-BUTTON	
	15	1	7T-0136	1	PLATE AS	
		1	9F-2979	6	NUT-WELD (3/8-16 THD)	
	16	1	7T-9096	1	COVER	
		1	7T-9779	1	GASKET	
	17	1	3T-3981	1	PLATE AS	
	18	1	6T-9364	4	BOLT (1/4-20X.625IN)	
M		1	6T-4205	4	WASHER-HARD (2MM THK)	
	19	1	6L-9484	1	FLOOR MAT	
	20	1	9E-9946	1	MODULE AS-OPERATOR	
	21	1	3T-3934	1	HANDHOLD	
	22	1	9P-8571	2	PLUG	
	23	2	6T-9364	4	BOLT (1/4-20X.625IN)	
M		2	6T-4205	4	WASHER-HARD (2MM THK)	
	24	2	5B-3062	17	BOLT (3/8-16X.750IN)	
	26	2	5P-1075	21	WASHER-HARD (3MM THK)	
	26	2	7T-9126	1	SEAL	
	27	2	7X-9378	2	BOLT (3/4-10X5IN)	
		2	7X-0662	2	WASHER-HARD (5MM THK)	
	28	2	3T-3462	2	PLATE	
	29	2	3T-5290	1	PLATE AS	
		2	7S-0028	8	SPACER	
	30	2	3T-5281	1	SEAL	
	31	2	7S-9017	1	GASKET	
	32	2	7S-9016	1	COVER AS	
		2	2R-2276	2	WASHER	
		2	6P-9028	2	SCREW-KNURLED	
	33	2	9W-3429	1	COVER	
	34	2	9E-9697	1	COVER	
	35	2	9D-3031	8	SCREW-SOCKET HEAD	
	36	2	9W-3142	8	MOUNTING	
	37	2	9W-9027	2	PLATE	
	38	2	7X-0390	2	BOLT (7/8-9X5IN)	
		2	7X-0672	2	WASHER-HARD	
	39	2	4L-9454	4	BOLT (3/8-16X1.0IN)	
	40	2	3T-4788	1	COVER	

FRAME AND BODY

8E-3299 PLATFORM GP-CAB (contd.)

100090751

NOTE	REF NO	GRAPHIC REF	PART NUMBER	QTY	PART NAME (1 2 3 4 5 6 PRODUCT LEVEL)	SEE PAGE
	41	2	8E-3515	1	COVER	
	42	2	7T-0134	1	PLATE	
	43	2	7T-0139	1	GASKET	
	44	2	7S-9724	1	GASKET	
	45	2	7S-9723	1	COVER	
	46	2	6V-1969	2	PLUG-BUTTON	

M-METRIC PART

FRAME AND BODY

8E-3299 PLATFORM GP-CAB (contd.)

100090751

TOP VIEW

GRAPHIC #1 g00036729

FRAME AND BODY

8E-3299 PLATFORM GP-CAB (contd.)

100090751

SECTION A-A VIEW D-D SECTION G-G

SECTION B-B VIEW E-E SECTION H-H

SECTION C-C SECTION F-F SECTION J-J

GRAPHIC #2 g00105874

1. IDENTIFICATION DE LA MACHINE

Toutes les machines Caterpillar portent un numéro d'identification (PIN). Certains composants des machines peuvent porter des numéros de série (S/N). En général, parmi les composants qui portent des numéros de série il y a les moteurs, les transmissions, les bulldozers et les rippers. En plus, la machine et le moteur peuvent recevoir des numéros de version, et dans certains cas, de modification. Ces numéros figurent sur les plaques de numéro de série et sur la plaque signalétique principale qui se trouve dans le poste de conduite.

Les concessionnaires Caterpillar doivent connaître tous ces numéros pour identifier correctement les pièces.

SIS ***Nouvelle Caractéristique***

À partir du premier trimestre 2001, le numéro d'identification produit (PIN) Caterpillar passe de 8 à 17 caractères. Afin de permettre une identification uniforme des matériels, Caterpillar et d'autres constructeurs de machines de travaux publics s'efforcent de se conformer à la norme la plus récente portant sur les numéros d'identification des produits. Les numéros d'identification (PIN) de machines de chantier sont définis par la norme ISO 10261. Le nouveau format du numéro d'identification est valable pour toutes les machines et tous les groupes électrogènes Caterpillar. Le numéro d'identification produit (PIN) figurant sur la plaque et sur le châssis se composera de 17 caractères. Le nouveau format ressemblera à ceci:

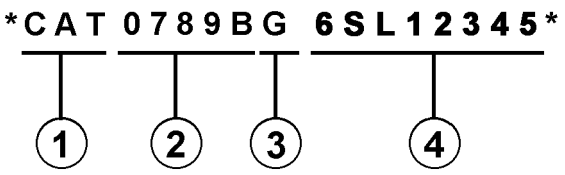

Il se décomposera de la façon suivante:

1. Code international de fabrication de Caterpillar (caractères 1 à 3)

2. Descriptif de la machine (caractères 4 à 8)

3. Contrôle (caractère 9)

4. Indicateur machine (MIS) ou numéro de séquence produit (caractères 10 à 17). Ceux-ci étaient auparavant désignés sous le terme de numéro de série.

Les machines et les groupes électrogènes construits avant le premier trimestre 2001 garderont le format à 8 caractères du numéro d'identification produit (PIN).

Les organes tels que les moteurs, les boîtes de vitesses, les essieux, etc., continueront d'être désignés par un numéro de série (S/N) à 8 caractères.

2. COMMANDE DE PIÈCES

⚠ DANGER

Lorsqu'il faut remplacer des pièces de rechange pour ce produit Caterpillar recommande d'utiliser les pièces de rechange Caterpillar ou les pièces qui ont des spécifications équivalentes dont les dimensions physiques, le type, la force et le matériau. Ces équivalences ne se limitent pas à l'énoncé précédent.

L'inobservation de cette mise en garde peut entraîner des défaillances prématurées, des dommages au produit, des blessures ou même la mort.

Les concessionnaires Caterpillar fournissent dans le monde entier des pièces de rechange de qualité Caterpillar. Leurs stocks de pièces sont constamment réapprovisionnés et comptent toutes les pièces nécessaires pour assurer la bonne marche de vos machines Caterpillar. Certains concessionnaires proposent également des kits de réparation ou des pièces rénovées, ce qui permet de choisir la solution la plus économique dans une situation donnée. Lors des commandes de pièces, mentionner la quantité, le numéro et la désignation des pièces ainsi que le numéro de série ou le numéro d'identification (PIN) de la machine pour laquelle ces pièces sont requises.

3. ORGANISATION DU CATALOGUE DE PIÈCES

Les renseignements sur les produits sont présentés sous forme de "Information element" (élément d'information) représentant tous les composants d'un modèle donné. "Engine Arrangement" (version de moteur) et "Seat Group" (assemblage de siège)" sont des exemples d'éléments d'information. Les éléments d'information sont classés par ordre alphabétique par la désignation standard des pièces et par numéros de pièces dans chaque partie importante du manuel.

4. TABLE DES MATIÈRES

Nouvelle Caractéristique

La table des matières se trouve au début du manuel. La table des matières fournit la liste de tous les chapitres du manuel avec une liste complète de tous les éléments d'information classés par ordre d'apparition dans le manuel. Les numéros de page sont fournis afin que l'utilisateur puisse trouver rapidement les illustrations détaillées concernant l'identification des pièces et les listes des pièces d'entretien.

5. INDEX DES PIÈCES D'ENTRETIEN

La rubrique "Index des pièces d'entretien" qui se trouve au début du manuel renvoie aux pièces d'entretien les plus fréquemment utilisées en précisant la désignation, la quantité, là où la pièce est utilisée et le numéro de page. Ces pièces sont classés par ordre alphabétique.

6. INDEX

L'index qui se trouve vers le début du manuel est une liste alphabétique de tous les éléments d'information du manuel. Les numéros de page sont fournis afin que l'utilisateur puisse trouver rapidement les illustrations détaillées concernant l'identification des pièces et les listes des pièces d'entretien.

7. INDEX DES NUMÉROS DE PIÈCES

Une liste numérique de tous les numéros de pièces et des pages correspondantes se trouve à la fin du manuel.

8. LÉGENDES

Les légendes qui se trouvent en haut de chaque page de chaque élément d'information fournissent le numéro de pièce, la désignation ainsi que des renseignements supplémentaires sur les pièces. Les renseignements concernant les numéros de série (S/N) qui se trouvent dans chaque légende doivent être utilisés pour sélectionner les informations correctes pour un moteur donné. Les informations concernant les options de remplacement sur le chantier, l'identification des composants des équipements offerts en option et les lieux d'application sont aussi fournies.

Nouvelle Caractéristique

Les lettres de la première ligne d'une légende sont présentées en police plus grande afin d'indiquer le début d'une unité d'information. Les légendes qui pourraient être requises pour des pages supplémentaires afin d'illustrer une unité d'information seront présentées en police standard et comprendront le terme (à suivre).

9. PIÈCES NON FOURNIES

Nouvelle Caractéristique

Dans certains cas, il est nécessaire d'indiquer les pièces non fournies qui sont en aval de la liste des pièces d'entretien. Les numéros des pièces non fournies dans la liste des pièces et les légendes seront en italique pour signaler qu'ils ne sont pas disponibles.

10. NUMÉROS DE RÉFÉRENCE DE LA LISTE DES PIÈCES

Nouvelle Caractéristique

Les numéros indiqués dans la colonne des numéros de références correspondent aux numéros utilisés dans les illustrations auxquelles ils sont associés. Un suffixe alphabétique peut être ajouté à un numéro de référence pour identifier la liste des articles en aval. Les numéros indiqués dans la colonne de référence de l'illustration renvoient à l'identification du numéro affiché dans le coin inférieur gauche de chaque illustration. Le numéro de référence de l'illustration pourrait être utilisé avec le numéro de référence de l'article pour déterminer le numéro de pièce correct. Il peut y avoir une omission intentionnelle d'un numéro de référence dans une liste de pièces suite à la mise à jour des informations en vue de refléter les numéros de pièces les plus récentes.

11. DÉSIGNATIONS DE PIÈCES EN RETRAIT

Lorsqu'une désignation de pièce est en retrait, cela veut dire que l'article en regard fait partie de l'ensemble sous lequel il figure.

12. LETTRES DE RÉFÉRENCE DES ILLUSTRATIONS

Quand cela est nécessaire, les illustrations comportent des lettres de référence (A, B, C, etc.) pour montrer le trajet des canalisations et faisceaux de câbles d'un point à l'autre. Elles sont utilisées également pour indiquer où relier les illustrations séparées auparavant.

13. ABRÉVIATIONS ET SYMBOLES

O.D. – Diamètre extérieur
I.D. – Diamètre intérieur
A – Ne fait pas partie de ce groupe
B – Utiliser selon besoin
C – Modification
D – Commander par mètre
E – Commander par centimètre
F – Non représenté
G – Commander par pouce
I – Voir "Hose Fabrication Guide"
M – Pièce métrique
R – Pièce rénovée éventuellement disponible
Y – Illustration séparée
Z – Non fourni séparément

NOTA:

En raison du progrès technique et des améliorations continuelles apportées au matériel, votre machine comporte peut-être des modifications qui n'apparaissent pas dans la présente publication. En cas de doute sur un détail de votre machine Caterpillar ou sur le texte de la présente publication, adressez-vous à votre concessionnaire Caterpillar.

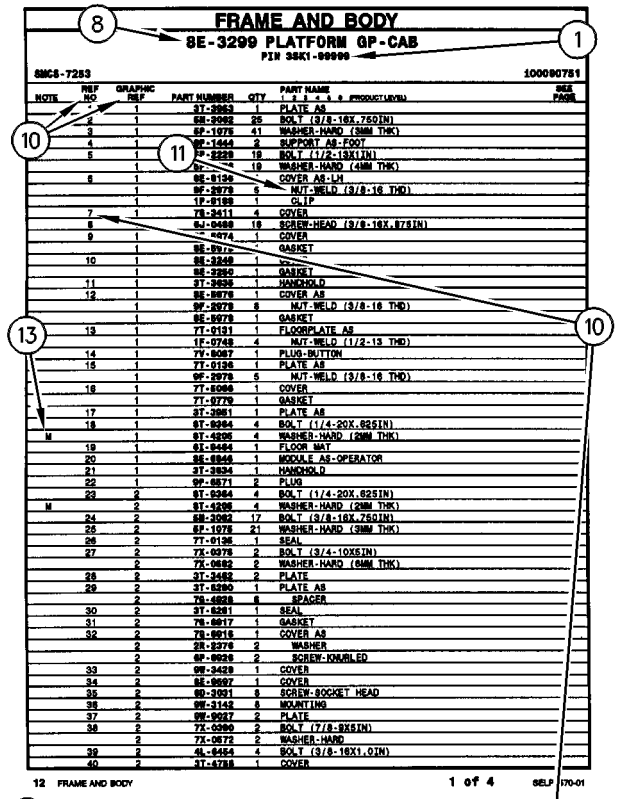

FRAME AND BODY

8E-3299 PLATFORM GP-CAB

PIN 38K1-09999

SMCS-7253 100090751

NOTE	REF NO	GRAPHIC REF	PART NUMBER	QTY	PART NAME (1 2 3 4 5 6 PRODUCT LEVEL)	SEE PAGE
	1	1	3T-3963	1	PLATE AS	
	2	1	5B-2992	25	BOLT (3/8-16X.750IN)	
	3	1	6P-1075	41	WASHER-HARD (3MM THK)	
	4	1	8P-1444	2	SUPPORT AS-FOOT	
	5	1	8P-2229	19	BOLT (1/2-13X1IN)	
		1	8P-[illegible]4	19	WASHER-HARD (4MM THK)	
	6	1	8E-8136	1	COVER AS-LH	
		1	8F-2978	6	NUT-WELD (3/8-16 THD)	
		1	1P-8188	1	CLIP	
	7	1	7S-3411	4	COVER	
	8	1	6J-0488	18	SCREW-HEAD (3/8-16X.875IN)	
	9	1	[illegible]-4474	1	COVER	
		1	8E-8[illegible]7	1	GASKET	
	10	1	8E-3248	1	[illegible]	
		1	8E-3250	1	GASKET	
	11	1	3T-3835	1	HANDHOLD	
	12	1	8E-8878	1	COVER AS	
		1	8F-2978	8	NUT-WELD (3/8-16 THD)	
		1	8E-8078	1	GASKET	
	13	1	7T-0131	1	FLOORPLATE AS	
		1	1F-0748	4	NUT-WELD (1/2-13 THD)	
	14	1	7Y-8087	1	PLUG-BUTTON	
	15	1	7T-0136	1	PLATE AS	
		1	8F-2978	6	NUT-WELD (3/8-16 THD)	
	16	1	7T-8086	1	COVER	
		1	7T-8779	1	GASKET	
	17	1	3T-3981	1	PLATE AS	
	18	1	6T-9364	4	BOLT (1/4-20X.625IN)	
M		1	6T-4205	4	WASHER-HARD (2MM THK)	
	19	1	6L-8484	1	FLOOR MAT	
	20	1	9E-8946	1	MODULE AS-OPERATOR	
	21	1	3T-3834	1	HANDHOLD	
	22	1	9P-8571	2	PLUG	
	23	2	6T-9364	4	BOLT (1/4-20X.625IN)	
M		2	6T-4205	4	WASHER-HARD (2MM THK)	
	24	2	5B-3062	17	BOLT (3/8-16X.750IN)	
	25	2	6F-1075	21	WASHER-HARD (3MM THK)	
	26	2	7T-0135	1	SEAL	
	27	2	7X-0378	2	BOLT (3/4-10X5IN)	
		2	7X-0682	2	WASHER-HARD (6MM THK)	
	28	2	3T-3482	2	PLATE	
	29	2	3T-8280	1	PLATE AS	
		2	7S-0038	8	SPACER	
	30	2	3T-8281	1	SEAL	
	31	2	7S-8017	1	GASKET	
	32	2	7S-8018	1	COVER AS	
		2	2R-2276	2	WASHER	
		2	6P-0028	2	SCREW-KNURLED	
	33	2	9W-3429	1	COVER	
	34	2	8E-8697	1	COVER	
	35	2	9D-3031	8	SCREW-SOCKET HEAD	
	36	2	9W-3142	8	MOUNTING	
	37	2	9W-9027	2	PLATE	
	38	2	7X-0390	2	BOLT (7/8-9X5IN)	
		2	7X-0672	2	WASHER-HARD	
	39	2	4L-8454	4	BOLT (3/8-16X1.0IN)	
	40	2	3T-4788	1	COVER	

12 FRAME AND BODY 1 of 4 SELP4570-01

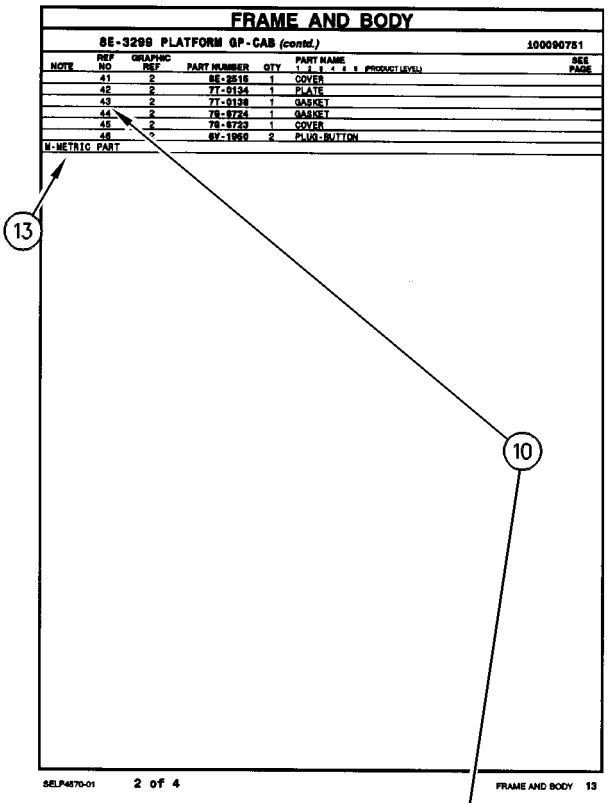

FRAME AND BODY

8E-3299 PLATFORM GP-CAB (contd.) 100090751

NOTE	REF NO	GRAPHIC REF	PART NUMBER	QTY	PART NAME (1 2 3 4 5 6 PRODUCT LEVEL)	SEE PAGE
	41	2	8E-3515	1	COVER	
	42	2	7T-0134	1	PLATE	
	43	2	7T-0139	1	GASKET	
	44	2	7S-8724	1	GASKET	
	45	2	7S-8723	1	COVER	
	46	2	6Y-1969	2	PLUG-BUTTON	

M-METRIC PART

SELP4570-01 2 of 4 FRAME AND BODY 13

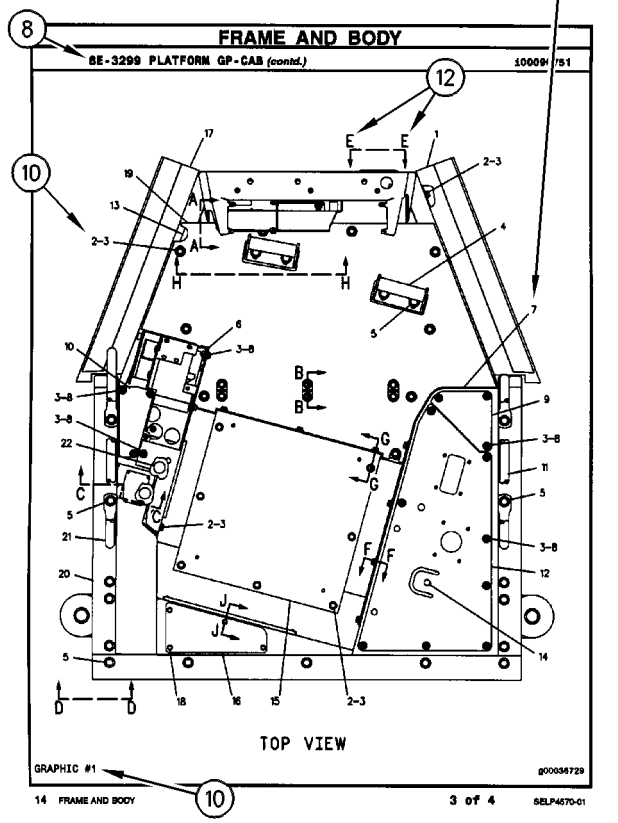

FRAME AND BODY

8E-3299 PLATFORM GP-CAB (contd.) 100090751

GRAPHIC #1 g00036729

TOP VIEW

14 FRAME AND BODY 3 of 4 SELP4570-01

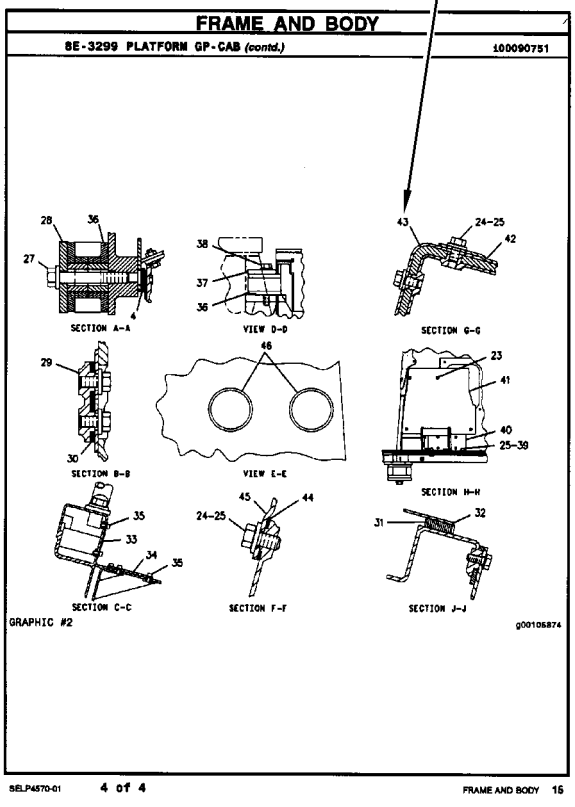

FRAME AND BODY

8E-3299 PLATFORM GP-CAB (contd.) 100090751

SECTION A-A

VIEW D-D

SECTION G-G

SECTION B-B

VIEW E-E

SECTION H-H

SECTION C-C

SECTION F-F

SECTION J-J

GRAPHIC #2 g00105874

SELP4570-01 4 of 4 FRAME AND BODY 15

1. MÁQUINAS

Las máquinas Caterpillar se identifican con Números de Identificación del Producto (PIN). Algunos componentes incluídos en la máquina pueden estar identificados con Números de Serie (N/S). Los componentes que tienen típicamente esta identificación incluyen motores, transmisiones, hojas topadoras y desgarradores. La máquina y el motor se identifican además con Números de Configuración y en algunos casos, Números de Modificación. Estos números están en las placas de identificación del producto o en la placa principal en la cabina del operador.

Los distribuidores Caterpillar necesitan estos números para identificar con exactitud los números de piezas de repuesto.

SIS ***Nueva Característica***

A partir del primer trimestre del 2001, el Número de Identificación de Producto (PIN) de Caterpillar cambiará de 8 a 17 caracteres. Para hacer más uniforme el método de identificación de equipos, Caterpillar y otros fabricantes de equipo de construcción han tomado medidas para cumplir con la versión más reciente de la norma de numeración de identificación de productos. Los Números de Identificación de Producto para máquinas que no se operan en carreteras son definidos por la norma ISO 10261. El nuevo formato PIN corresponderá a todas las máquinas y grupos electrógenos Caterpillar. Las placas y los caracteres PIN estampados en el bastidor mostrarán el PIN de 17 caracteres. El nuevo formato tendrá la apariencia siguiente:

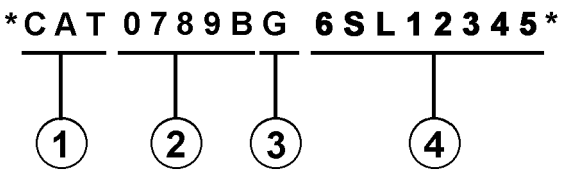

Significado de los caracteres:

1. Código de Fabricación Mundial de Caterpillar (caracteres 1-3)

2. Sección Descriptor de la Máquina (caracteres 4-8)

3. Carácter de Verificación (carácter 9)

4. Sección Indicador de la Máquina (MIS) o Número de Secuencia de Producto (caracteres 10-17). Anteriormente, estos caracteres constituían el Número de Serie.

Las máquinas y grupos electrógenos producidos antes del primer semestre del 2001 mantendrán su formato PIN de 8 caracteres.

Los componentes como motores, transmisiones, ejes, herramientas de trabajo, etc., continuarán usando un Número de Serie (S/N) de 8 caracteres.

2. COMO PEDIR REPUESTOS

⚠ ADVERTENCIA

Cuando se necesiten piezas de repuesto para este producto, Caterpillar recomienda usar piezas de repuesto Caterpillar o piezas que tengan especificaciones equivalentes incluyendo, pero sin estar limitadas a, dimensiones físicas, tipo, fortaleza y material.

El no hacer caso de esta advertencia puede llevar a fallas prematuras, daños al producto y lesiones graves o mortales.

Las piezas de repuesto Caterpillar de calidad están a la disposición de los distribuidores Caterpillar en todo el mundo. Sus existencias actualizadas incluyen todas las piezas normalmente requeridas para proteger su inversión en máquinas Caterpillar. Los distribuidores pueden tener juegos de reparación o piezas remanufacturadas para permitir la selección de la mejor alternativa de reparación en un caso en particular. Al pedir piezas de repuesto, especifique en su pedido la cantidad, el número de pieza, el nombre de la pieza y el número de serie/número de identificación del producto, de la máquina para la cual se necesitan estas piezas.

3. ORGANIZACION DEL MANUAL DE PIEZAS

La información sobre el producto, se presenta en este manual, como "elementos de información" que representan todos los componentes de un modelo específico. Las configuraciones de motores y los grupos de asientos son ejemplos de elementos de información. Los elementos de información están organizados primeramente por nombres de piezas en orden alfabético y en segundo lugar, por el número de pieza dentro de cada sección principal del manual.

4. CONTENIDO

SIS *Nueva Característica*

La página de Contenido se encuentra al principio del manual. El Contenido indica cada sección del manual con una lista completa de todos los elementos de información organizados en el orden que aparecen en el manual. Los números de página proporcionan una referencia rápida a las ilustraciones detalladas de identificación de piezas y a las listas de componentes de repuesto de dichas piezas.

5. ÍNDICE DE PIEZAS DE MANTENIMIENTO

Al principio de este catálogo se encuentra un índice de los números de piezas utilizadas más frecuentemente para el mantenimiento, que incluye descripción, cantidad necesaria, lugar de utilización y número de página. Esta información está organizada alfabéticamente, por descripción de la pieza.

6. ÍNDICE

El Índice, ubicado cerca del principio del manual, es una lista en orden alfabético de todos los elementos de información incluídos en el manual. Los números de página proporcionan una referencia rápida a las ilustraciones detalladas de identificación de piezas y a las listas de componentes de repuesto de dichas piezas.

7. INDICE NUMÉRICO DE PIEZAS

Un índice numérico de piezas con el correspondiente número de página aparece al final de este catálogo.

8. TÍTULOS

Los títulos ubicados en la parte superior de cada página de elementos de información identifican el número y el nombre de la pieza junto con información descriptiva adicional para ayudar al usuario a determinar las piezas necesarias para una máquina en particular. También se suministra información sobre las opciones de reparación en el campo, la identificación de componentes de accesorios optativos y el lugar de ubicación de la pieza ("es parte de").

SIS *Nueva Característica*

La primera línea del título se muestra con un tipo de letra más grande para indicar el comienzo de un elemento de información. Si se requieren páginas adicionales para ilustrar un elemento de información, los títulos se muestran con un tipo de letra normal y la continuación se indica entre paréntesis.

9. PIEZAS QUE NO SE SUMINISTRAN COMO REPUESTO

SIS *Nueva Característica*

En algunos casos es necesario indicar piezas que no se suministran como repuesto pero que pueden estar conectadas a listas de componentes de otras piezas de repuesto. En tal caso, dichas piezas se muestran en cursiva para indicar que no son piezas disponibles.

10. NÚMEROS DE REFERENCIA

SIS *Nueva Característica*

Los números en la columna de No. de Referencia corresponden a los números indicados en la ilustración que pertenece a ese número de pieza. Los números que tienen un sufijo alfabético identifican artículos de las listas de componentes de piezas. Los números en la columna de Referencia de la ilustración se identifican en la esquina inferior izquierda de cada ilustración. Para determinar el número de pieza correcto se puede utilizar tanto el No. de Referencia de la ilustración como el No. de Referencia del artículo. A medida que se actualiza la información para indicar los más recientes números de piezas de repuesto, puede omitirse intencionalmente un No. de Referencia en una lista de componentes de piezas.

11. NOMBRES DE PIEZA SANGRADOS

Cuando el nombre de una pieza está sangrado en una lista, significa que esta pieza forma parte del grupo o conjunto del renglón inmediatamente superior.

12. LETRAS DE REFERENCIA DE ILUSTRACIONES

Las ilustraciones contienen algunas veces letras de referencia (A, B, C etc.) cuyo propósito es seguir el trayecto de líneas y mazos de cables de un punto a otro. También se utilizan para mostrar dónde volver a unir ilustraciones que se habían separado.

13. ABREVIATURAS Y SIMBOLOS

O.D. – Diámetro exterior
I.D. – Diámetro interior
A – No es pieza de este grupo
B – Utilizado según la demanda
C – Indica cambio
D – Se pide por metro
E – Se pide por centímetro
F – No se muestra
G – Se pide por pulgada
I – Ver "Hose Fabrication Guide"
M – Pieza métrica
R – Puede estar disponible como pieza remanufacturada
Y – Ilustración separada
Z – No se suministra por separado

NOTA:

Las contínuas mejoras y adelantos en diseño podrían originar cambios a su máquina que no se incluyen en esta publicación. Cuando tenga alguna pregunta acerca de su producto Caterpillar o de esta publicación, consulte al distribuidor Caterpillar para obtener la información más reciente.

FRAME AND BODY

8E-3299 PLATFORM GP-CAB

PIN 3SK1-09999

SMCS-7253 100090751

NOTE	REF NO	GRAPHIC REF	PART NUMBER	QTY	PART NAME (1 2 3 4 5 6 PRODUCT LEVEL)	SEE PAGE
	1	1	3T-3953	1	PLATE AS	
	2	1	5B-2992	25	BOLT (3/8-16X.750IN)	
	3	1	6P-1075	41	WASHER-HARD (3MM THK)	
	4	1	9P-1444	2	SUPPORT AS-FOOT	
	5	1	9P-2229	19	BOLT (1/2-13X1IN)	
		1	6P-[illegible]4	19	WASHER-HARD (4MM THK)	
	6	1	8E-8136	1	COVER AS-LH	
		1	9F-2979	6	NUT-WELD (3/8-16 THD)	
		1	1P-8188	1	CLIP	
	7	1	7B-3411	4	COVER	
	8	1	6J-0488	18	SCREW-HEAD (3/8-16X.875IN)	
	9	1	[illegible]-4474	1	COVER	
		1	8E-8[illegible]7		GASKET	
	10	1	8E-3248	1	[illegible]	
		1	8E-3250	1	GASKET	
	11	1	3T-3835	1	HANDHOLD	
	12	1	8E-8678	1	COVER AS	
		1	9F-2979	8	NUT-WELD (3/8-16 THD)	
		1	8E-8678	1	GASKET	
	13	1	7T-0131	1	FLOORPLATE AS	
		1	1F-0748	4	NUT-WELD (1/2-13 THD)	
	14	1	7Y-8087	1	PLUG-BUTTON	
	15	1	7T-0136	1	PLATE AS	
		1	9F-2978	6	NUT-WELD (3/8-16 THD)	
	16	1	7T-8086	1	COVER	
		1	7T-8779	1	GASKET	
	17	1	3T-3981	1	PLATE AS	
	18	1	6T-9364	4	BOLT (1/4-20X.625IN)	
M		1	6T-4205	4	WASHER-HARD (2MM THK)	
	19	1	6L-8484	1	FLOOR MAT	
	20	1	9E-8946	1	MODULE AS-OPERATOR	
	21	1	3T-3834	1	HANDHOLD	
	22	1	9P-8571	2	PLUG	
	23	2	6T-9364	4	BOLT (1/4-20X.625IN)	
M		2	6T-4205	4	WASHER-HARD (2MM THK)	
	24	2	5B-3062	17	BOLT (3/8-16X.750IN)	
	26	2	6F-1075	21	WASHER-HARD (3MM THK)	
	26	2	7T-0135	1	SEAL	
	27	2	7X-0378	2	BOLT (3/4-10X5IN)	
		2	7X-0682	2	WASHER-HARD (6MM THK)	
	28	2	3T-3482	2	PLATE	
	29	2	3T-8280	1	PLATE AS	
		2	7B-4028	8	SPACER	
	30	2	3T-8281	1	SEAL	
	31	2	7B-8017	1	GASKET	
	32	2	7B-8018	1	COVER AS	
		2	2R-2276	2	WASHER	
		2	6P-8028	2	SCREW-KNURLED	
	33	2	9W-3429	1	COVER	
	34	2	8E-8697	1	COVER	
	35	2	9D-3031	8	SCREW-SOCKET HEAD	
	36	2	9W-3142	8	MOUNTING	
	37	2	9W-9027	2	PLATE	
	38	2	7X-0390	2	BOLT (7/8-9X5IN)	
		2	7X-0672	2	WASHER-HARD	
	39	2	4L-8454	4	BOLT (3/8-16X1.0IN)	
	40	2	3T-4788	1	COVER	

12 FRAME AND BODY 1 of 4 SELP4570-01

FRAME AND BODY

8E-3299 PLATFORM GP-CAB (contd.)

100090751

NOTE	REF NO	GRAPHIC REF	PART NUMBER	QTY	PART NAME (1 2 3 4 5 6 PRODUCT LEVEL)	SEE PAGE
	41	2	8E-3515	1	COVER	
	42	2	7T-0134	1	PLATE	
	43	2	7T-0139	1	GASKET	
	44	2	7B-8724	1	GASKET	
	45	2	7B-8723	1	COVER	
	46	2	6V-1969	2	PLUG-BUTTON	

M-METRIC PART

SELP4570-01 2 of 4 FRAME AND BODY 13

FRAME AND BODY

8E-3299 PLATFORM GP-CAB (contd.)

100090751

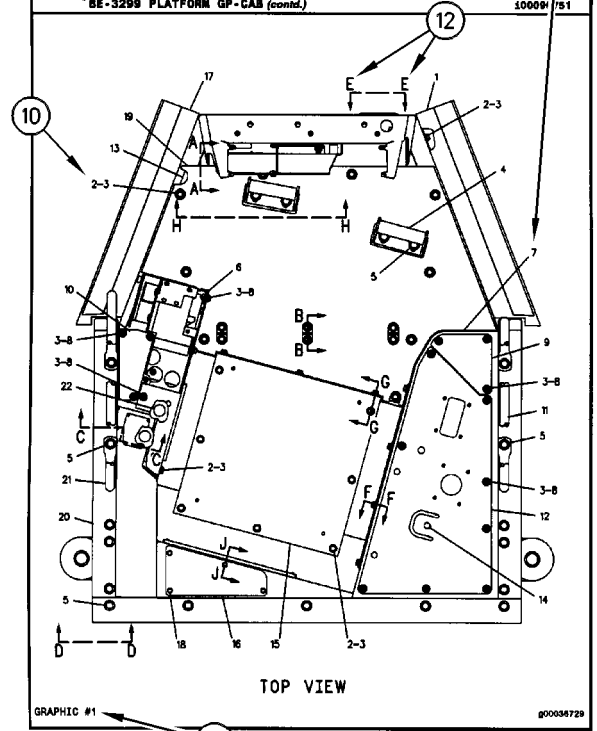

GRAPHIC #1 g00036729

14 FRAME AND BODY 3 of 4 SELP4570-01

FRAME AND BODY

8E-3299 PLATFORM GP-CAB (contd.)

100090751

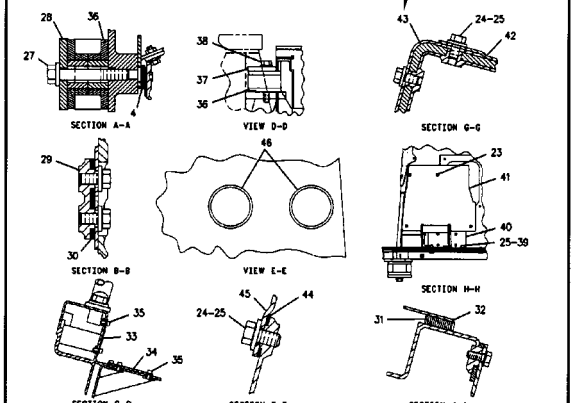

GRAPHIC #2 g00105874

SELP4570-01 4 of 4 FRAME AND BODY 15

INFORMAÇÃO GERAL

1. IDENTIFICAÇÃO DA MÁQUINA

As máquinas Caterpillar são identificadas pelos Números de Informação do Produto (PIN). Alguns componentes incluídos numa máquina podem ser identificados por Números de Série (S/N). Componentes típicos que serão enumerados com números de série incluem motores, transmissões, lâminas e ríperes. Além do número de série, a máquina e o motor são ainda identificados por números de arranjo e, em alguns casos, números de modificações. Tais números encontram-se na(s) placa(s) de identificação do produto e na placa mestre no compartimento do operador.

SIS ***Novidades***

A partir do primeiro trimestre de 2001 o Número de Identificação de Produto da Caterpillar (PIN) vai mudar de 8 para 17 caracteres. Esforçando-se para fornecer uma identificação uniforme de equipamentos, a Caterpillar e outros fabricantes de equipamento de construção estão mudando para atender a versão mais atualizada do padrão de identificação de produtos. Os números de PIN para produtos de aplicações não rodoviárias são definidos pela ISO 10261. O novo formato de número PIN será adotado em todas as máquinas e grupos geradores Caterpillar. As placas e as marcações do chassi mostrarão os 17 dígitos de PIN. O novo formato terá a seguinte disposição:

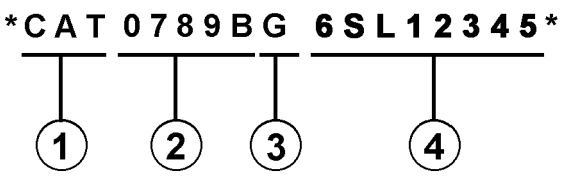

Onde:

1. Código de Fabricação Mundial da Caterpillar (dígitos 1-3)

2. Descrição da Máquina (dígitos 4-8)

3. Dígito de Verificação (dígito 9)

4. Seção de Indicador da Máquina (MIS) ou Número de Seqüência de Produto (dígitos 10-17). Estes eram anteriormente chamados de Número de Série.

Máquinas e grupos geradores produzidos antes do primeiro trimestre de 2001 manterão o formato de 8 caracteres de PIN.

Componentes como motores, transmissões, eixos, ferramentas de trabalho, etc. continuarão a usar Número de Série (S/N) com oito caracteres.

2. COMO OBTER PEÇAS

⚠ CUIDADO

Quando peças de substituição são exigidas para este produto, a Caterpillar recomenda a utilização de peças de substituição Caterpillar ou peças com as especificações equivalentes incluindo, mas não limitadas, à dimensões físicas, tipos, resistência e materiais.

A inobservância desta advertência poderá resultar em falhas prematuras, danos ao produto, ferimentos ou morte.

As Peças de Reposição de Qualidade Caterpillar encontram-se disponíveis nos revendedores Caterpillar no mundo inteiro. Seus estoques de peças são atualizados e incluem todas as peças normalmente necessárias para proteger seu investimento em máquinas Caterpillar. Alguns revendedores podem oferecer jogos de reparo ou peças de troca/remanufaturadas disponíveis como uma opção da alternativa de reparo mais eficaz para uma situação específica. Ao encomendar peças, seu pedido deve especificar a quantidade, o número e o nome da peça e o número de série/número de identificação do produto referentes à máquina para a qual as peças se destinam.

3. ORGANIZAÇÃO DO MANUAL DE PEÇAS

A informação do produto neste manual é apresentada em forma de "elementos de informação" que representam todos os componentes para o modelo específico. Arranjo de Motor e Grupo de Assento são exemplos de elementos de informação. Os elementos de informação são organizados em ordem alfabética por nome de peça ou secundariamente, por número de peça incluído em cada seção principal do manual.

4. LISTA DE CONTEÚDOS

SIS ***Novidades***

A Lista de Conteúdos (TOC) se encontra no princípio do manual. A Lista de Conteúdos (TOC) relaciona em cada seção do manual uma lista completa com todos os elementos de informação organizados conforme aparecem no manual. Números de página são fornecidos para que se tenha referência rápida de ilustrações de peças detalhadas e listas de conteúdos que podem receber serviço de manutenção.

5. ÍNDICE DE PEÇAS DE MANUTENÇÃO

O Índice de Peças de Manutenção, localizado perto do princípio do manual, faz referência aos números de peça de manutenção usados com maior frequência, fornecendo uma descrição, a quantidade, o uso e o número de página. Esta informação é organizada com a descrição da peça em ordem alfabética.

6. ÍNDICE

O Índice localizado perto do princípio do manual, consiste de uma lista em ordem alfabética de todos os elementos de informação incluídos no manual. Números de página são fornecidos para que se tenha referência rápida de ilustrações de peças detalhadas e listas de conteúdos que podem receber serviço de manutenção.

7. ÍNDICE DE NÚMERO DE PEÇA

Um índice numérico relacionando todos os números de peça e a(s) página(s) correspondentes, aparece no final do manual.

8. LEGENDAS

As legendas localizadas na parte de cima de cada página de um elemento de informação identifica o número de peça e o nome da peça, juntamente com informação descritiva adicional. Informações sobre o Número de Informação do Produto (PIN) e o Número de Série (S/N) encontradas em cada legenda devem ser usadas para selecionar a informação correta sobre uma máquina específica. Opções de substituição no campo, identificação de componentes de acessórios opcionais e informações sobre onde são utilizados ("parte de") são também fornecidas.

SIS ***Novidades***

A primeira linha de uma legenda é indicada em tipo maior para indicar o princípio de um elemento de informação. Legendas para páginas adicionais que podem ser necessárias para ilustrar um elemento de informação serão apresentadas em tipo padrão e incluirão o termo *(continua)* .

9. NÃO DISPONÍVEL SEPARADAMENTE

SIS ***Novidades***

Em alguns casos, é necessário mostrar peças não disponíveis separadamente que têm uma ligação com listas de conteúdos de nível inferior que podem receber serviço de manutenção. Os números de peça destes componentes não disponíveis aparecerão em *itálico* , a fim de indicar que não estão disponíveis.

10. NÙMEROS DE REFERÊNCIA À LISTA DE PEÇAS

SIS ***Novidades***

Os números indicados na coluna Ref No (No. de Referência) correspondem-se aos números usados no(s) gráfico(s) correspondente(s). Um sufixo com letras pode ser acrescentado a um número de referência para identificar itens de conteúdo de nível inferior. Os números indicados na coluna Graphic Ref (Referência de Gráfico) referem-se ao identificador de número de gráfico presente no canto esquerdo inferior de cada ilustração. O número de Referência de Gráfico pode ser usado em combinação com o item Ref No para determinar-se o número de peça correto. Poderá haver omissão intencional de um número de referência (Ref No) de uma lista de conteúdos uma vez que as informações são atualizadas para refletir os números de peça mais recentes que podem receber serviço de manutenção.

11. NOMES DE PEÇAS DESALINHADOS

Quando um nome de peça encontra-se desalinhado numa lista de peças, significa que tal item faz parte do (está incluído no) grupo ou conjunto sob o qual está relacionado.

12. LETRAS DE REFERÊNCIA NAS ILUSTRAÇÕES

Quando necessário, as ilustrações contêm letras de referência (A, B, C, etc.) que são utilizadas para seguir tubulações e cabos elétricos de um ponto a outro. Também foram utilizadas para indicar onde se pode reconectar as ilustrações que foram separadas.

13. ABREVIAÇÕES E SÍMBOLOS

O.D. – "Outside Diameter" (Diâmetro Externo)
I.D. – "Inside Diameter" (Diâmetro Interno)
A – Não faz parte deste grupo
B – Use conforme necessário
C – Indica modificação
D – Vendido por metro
E – Vendido por centímetro
F – Não ilustrado
G – Vendido por polegada
I – Consulte o seu revendedor quanto a mangueira
M – Peça métrica
R – Peça remanufaturada pode estar disponível; consulte o seu revendedor Cat
Y – Ilustração separada
Z – Não disponível separadamente

NOTA:

Os contínuos aperfeiçoamentos e avanços no projeto do produto podem ocasionar modificações em sua máquina que talvez ainda não estejam incluídas nesta publicação. Sempre que surgirem dúvidas quanto a um produto Caterpillar ou quanto à presente publicação, consulte o seu revendedor Caterpillar para obter as informações mais recentes disponíveis.

FRAME AND BODY

8E-3299 PLATFORM GP-CAB

PIN 38K1-09999

SMCS-7253 100090751

NOTE	REF NO	GRAPHIC REF	PART NUMBER	QTY	PART NAME (1 2 3 4 5 6 PRODUCT LEVEL)	SEE PAGE
	1	1	3T-3963	1	PLATE AS	
	2	1	5B-2992	25	BOLT (3/8-16X.750IN)	
	3	1	6P-1075	41	WASHER-HARD (38M THK)	
	4	1	9P-1444	2	SUPPORT AS-FOOT	
	5	1	9P-2229	19	BOLT (1/2-13X1IN)	
		1	5C-[illegible]4	19	WASHER-HARD (41MM THK)	
	6	1	9E-9136	1	COVER AS-LH	
		1	9F-2979	6	NUT-WELD (3/8-16 THD)	
		1	1P-0188	1	CLIP	
	7	1	7S-3411	4	COVER	
	8	1	6J-0488	18	SCREW-HEAD (3/8-16X.875IN)	
	9	1	[illegible]-4474	1	COVER	
		1	9E-9[illegible]7		GASKET	
	10	1	9E-3249	1	[illegible]	
		1	9E-3250	1	GASKET	
	11	1	3T-3935	1	HANDHOLD	
	12	1	9E-9078	1	COVER AS	
		1	9F-2979	8	NUT-WELD (3/8-16 THD)	
		1	9E-9079	1	GASKET	
	13	1	7T-0131	1	FLOORPLATE AS	
		1	1F-0748	4	NUT-WELD (1/2-13 THD)	
	14	1	7Y-9087	1	PLUG-BUTTON	
	15	1	7T-0136	1	PLATE AS	
		1	9F-2979	6	NUT-WELD (3/8-16 THD)	
	16	1	7T-9096	1	COVER	
		1	7T-9779	1	GASKET	
	17	1	3T-3981	1	PLATE AS	
	18	1	6T-9364	4	BOLT (1/4-20X.625IN)	
M		1	6T-4205	4	WASHER-HARD (28M THK)	
	19	1	6L-9484	1	FLOOR MAT	
	20	1	9E-9946	1	MODULE AS-OPERATOR	
	21	1	3T-3934	1	HANDHOLD	
	22	1	9P-8571	2	PLUG	
	23	2	6T-9364	4	BOLT (1/4-20X.625IN)	
M		2	6T-4205	4	WASHER-HARD (28M THK)	
	24	2	5B-3062	17	BOLT (3/8-16X.750IN)	
	26	2	6F-1075	21	WASHER-HARD (38M THK)	
	26	2	7T-0135	1	SEAL	
	27	2	7X-0378	2	BOLT (3/4-10X5IN)	
		2	7X-0682	2	WASHER-HARD (54M THK)	
	28	2	3T-3482	2	PLATE	
	29	2	3T-5290	1	PLATE AS	
		2	7S-0038	8	SPACER	
	30	2	3T-5281	1	SEAL	
	31	2	7S-0017	1	GASKET	
	32	2	7S-9018	1	COVER AS	
		2	2R-2276	2	WASHER	
		2	6P-9028	2	SCREW-KNURLED	
	33	2	9W-3429	1	COVER	
	34	2	9E-9697	1	COVER	
	35	2	9D-3031	8	SCREW-SOCKET HEAD	
	36	2	9W-3142	8	MOUNTING	
	37	2	9W-9027	2	PLATE	
	38	2	7X-0390	2	BOLT (7/8-9X5IN)	
		2	7X-0672	2	WASHER-HARD	
	39	2	4L-9454	4	BOLT (3/8-16X1.0IN)	
	40	2	3T-4788	1	COVER	

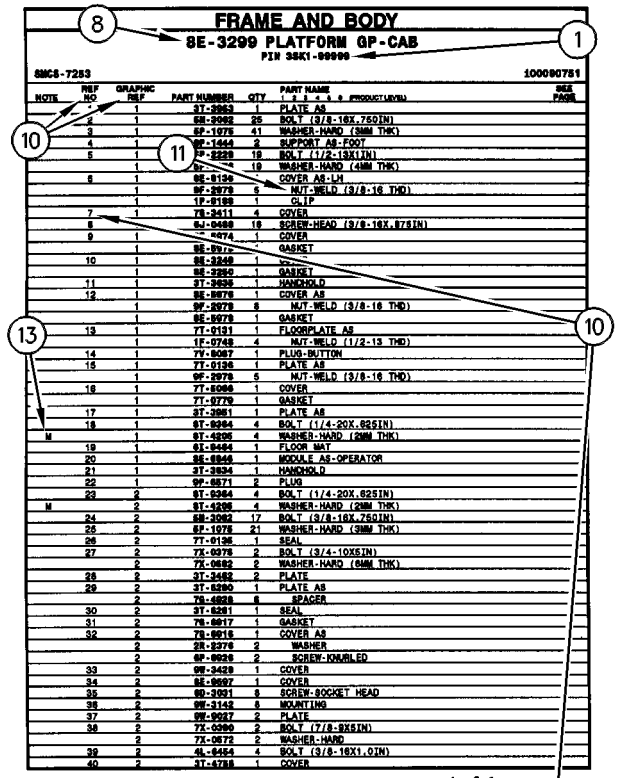

FRAME AND BODY

8E-3299 PLATFORM GP-CAB (contd.)

100090751

NOTE	REF NO	GRAPHIC REF	PART NUMBER	QTY	PART NAME (1 2 3 4 5 6 PRODUCT LEVEL)	SEE PAGE
	41	2	8E-3515	1	COVER	
	42	2	7T-0134	1	PLATE	
	43	2	7T-0139	1	GASKET	
	44	2	7S-9724	1	GASKET	
	45	2	7S-9723	1	COVER	
	46	2	6V-1969	2	PLUG-BUTTON	

M-METRIC PART

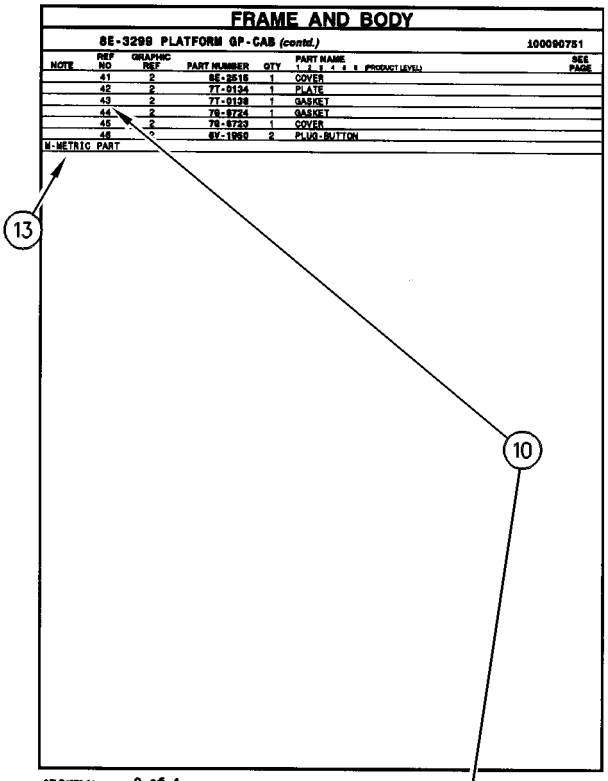

FRAME AND BODY

8E-3299 PLATFORM GP-CAB (contd.)

100090751

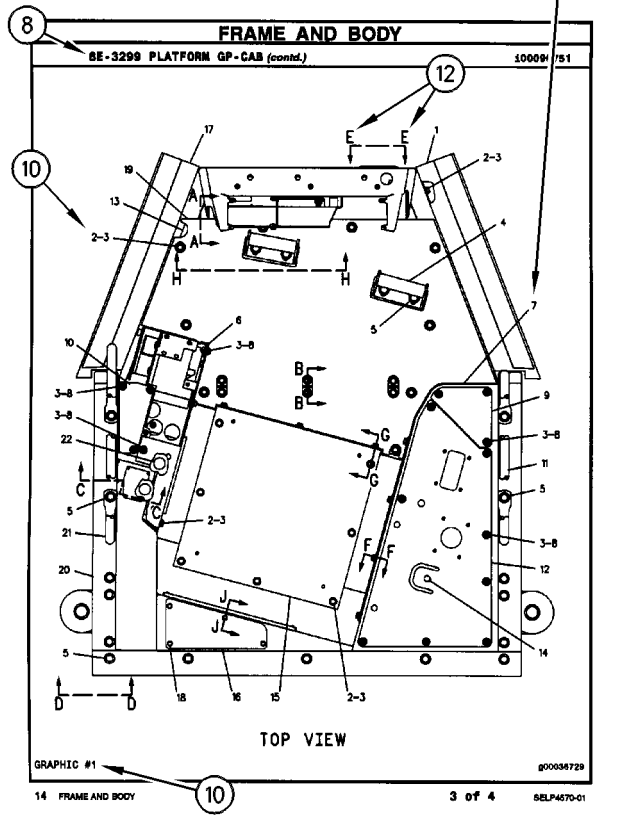

FRAME AND BODY

8E-3299 PLATFORM GP-CAB (contd.)

100090751

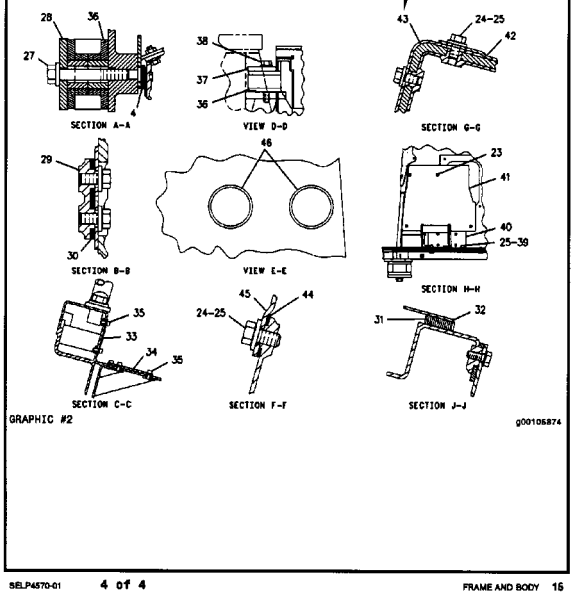

ALLGEMEINE HINWEISE

1. MASCHINENKENNZEICHNUNG

Caterpillar-Maschinen sind mit PRODUCT IDENTIFICATION NUMBERS (PIN) (Produkt-Identnummern) gekennzeichnet. Einige Baugruppen, z.B. Motoren, Getriebe, Planierschilde und Aufreißer, sind mit SERIAL NUMBERS (S/N) (Seriennummern) gekennzeichnet. An der Maschine und am Motor befinden sich außerdem ARRANGEMENT NUMBERS (Ausrüstungsnummern) sowie in einigen Fällen MODIFICATION NUMBERS (Änderungsnummern). Sie befinden sich auf den PIN-Schildern und auf dem Typenschild im Fahrerhaus.

Bei Ersatzteilbestellungen müssen dem Händler alle diese Nummern zur Verfügung gestellt werden.

SIS ***Neu im Parts Manual***

Vom ersten Quartal 2001 ab wird die Caterpillar Produkt-Identnummer (PIN) von 8 auf 17 Zeichen geändert. Um zur Standardisierung der Produkt-Identnummer beizutragen, sind Caterpillar und andere Baumaschinenhersteller bestrebt, die aktuellste Norm zur Produkt-Identnummerierung einzuführen. Produkt-Identnummern für Baumaschinen sind durch ISO 10261 definiert. Das neue Format der Produkt-Identnummern gilt für alle Caterpillar-Maschinen und -Stromaggregate. Die Produkt-Identschilder und -Identrahmenmarkierung enthalten die aus 17 Zeichen bestehende Identnummer. Das neue Format hat folgende Abschnitte:

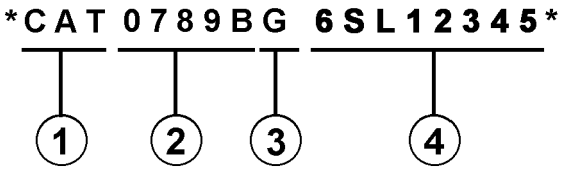

Abschnitte:

1. Caterpillars weltweiter Herstellungscode (Zeichen 1-3)

2. Modell (Zeichen 4-8)

3. Kontrollzeichen (Zeichen 9)

4. Maschinenspezifische Kennung (MIS) oder Produktsequenznummer (Zeichen 10-17). Diese wurde früher als Seriennummer bezeichnet.

Für vor dem ersten Quartal 2001 hergestellte Maschinen und Stromaggregate wird das aus 8 Zeichen bestehende PIN-Format beibehalten.

Bauteile wie z.B. Motoren, Getriebe, Achsen sowie Arbeitsgeräte werden weiterhin eine aus 8 Zeichen bestehende Seriennummer (S/N) aufweisen.

2. BESTELLEN VON ERSATZTEILEN

⚠ WARNUNG

Wenn für diese Maschine Ersatzteile benötigt werden, empfiehlt Caterpillar, ausschließlich Caterpillar-Ersatzteile oder solche zu verwenden, die die gleichen technischen Merkmale hinsichtlich Typ, Festigkeit, Werkzeugeigenschaften und die gleichen Maße aufweisen.

Bei Nichtbeachtung dieser Warnung besteht Verletzungs- oder sogar Lebensgefahr! Ferner kann Nichtbeachtung vorzeitige Ausfälle der Teile und Beschädigung der Maschine zur Folge haben.

Original Caterpillar-Ersatzteile können weltweit bei jedem Caterpillar-Händlern bestellt werden. Die umfangreichen Händlerlager enthalten normalerweise alle Teile, die Sie für Ihre Caterpillar-Maschine benötigen. Einige Händler bieten Reparatursätze, Austausch- oder werküberholte Teile an, so daß Sie eine Auswahl unter verschiedenen Reparaturmöglichkeiten treffen können. Ihre Bestellung muß folgende Angaben enthalten: Anzahl der benötigten Teile, Bestellnummer, Bezeichnung des Teils, Serien-Nr./Produkt-Ident-Nr., Ausrüstungs-Nr. und Änderungs-Nr. der Maschine, für die diese Teile benötigt werden.

3. AUFBAU DES PARTS MANUAL

Die Produktinformationen für alle Komponenten eines bestimmten Modells sind in INFORMATION ELEMENTS (Informationseinheiten) gegliedert. ENGINE ARRANGEMENT (Motorausführung) und SEAT GROUP (Fahrersitz) sind Beispiele für solche Informationseinheiten. Sie sind innerhalb jeder Gruppe alphabetisch, entsprechend der Ersatzteilbezeichnung, und zusätzlich numerisch, entsprechend der Ersatzteilnummer, geordnet.

4. INHALTSVERZEICHNIS

SIS *Neu im Parts Manual*

Das Inhaltsverzeichnis befindet sich am Anfang des Buches. Im Inhaltsverzeichnis werden die einzelnen Abschnitte des Buches aufgeführt. Die Abschnitte enthalten eine vollständige Aufstellung aller Informationseinheiten. Diese sind entsprechend ihrem Erscheinen im Buch geordnet. Das Inhaltsverzeichnis enthält Seitenangaben für Schnellverweise auf detaillierte Abbildungen und Teillisten.

5. INDEX FÜR WARTUNGSTEILE

Der Index für Wartungsteile vorn im Buch enthält die Bestellnummern, Seitenangaben, Mengenangaben und Informationen über den Einsatzbereich für die am häufigsten benötigten Ersatzteile. Die Angaben sind alphabetisch entsprechend der Teilebezeichnung geordnet.

6. INDEX

Der Index vorn im Buch enthält eine alphabetische Liste aller Informationseinheiten. Er enthält Seitenangaben für Schnellverweise auf detaillierte Abbildungen und Teillisten.

7. INDEX FÜR BESTELLNUMMERN

Hinten im Buch befindet sich ein numerischer Index, mit allen Bestellnummern und dem Hinweis auf die Seite, auf der sich die betreffende Abbildung befindet.

8. ÜBERSCHRIFTEN

Die Überschriften, die sich oben auf den Seiten der Informationseinheiten befinden, enthalten Bestellnummern, Ersatzteilbezeichnungen und zusätzliche beschreibende Informationen. Produkt-Ident- und Seriennummern in den Überschriften sollten zur Auswahl der richtigen Informationen für die betreffende Maschine verwendet werden. Die Überschriften enthalten außerdem Informationen über möglichen Außendienstersatz, mögliche Baugerätekomponenten und die Baugruppe, zu der das Teil gehört.

SIS *Neu im Parts Manual*

Die erste Zeile einer Überschrift erscheint in einer größeren Schriftart, um den Anfang einer Informationseinheit zu kennzeichnen. Überschriften für zusätzliche Seiten, die zur Erläuterung einer Informationseinheit notwendig sind, erscheinen in normaler Schriftart und enthalten den Begriff "(contd.)".

9. NICHT EINZELN LIEFERBARE TEILE

SIS *Neu im Parts Manual*

In einigen Fällen ist es notwendig nicht lieferbare Teile, die selbst mit einer eigenen Teilliste im Buch vertreten sind, aufzuführen. Die Bestellnummern dieser nicht einzeln lieferbaren Teile erscheinen kursiv, wodurch angezeigt wird, daß sie nur in Verbindung mit anderen Teilen lieferbar sind.

10. REFERENZNUMMER FÜR ERSATZTEILE

SIS *Neu im Parts Manual*

Die Zahlen, die in der Spalte "Ref No" aufgeführt sind, stimmen mit den Zahlen in den beigefügten Abbildungen überein. Ein Buchstaben-Suffix kann zu einer Referenznummer hinzugefügt werden, um zu kennzeichnen, daß das Teil mit einer eigenen Teilliste im Buch aufgeführt ist. Die in der Spalte "Graphic Ref" angeführten Zahlen verweisen auf die Identifikationsnummer der Abbildung, die sich in der linken unteren Ecke der Abbildung befindet. Diese Nummer kann zusammen mit der Referenznummer des Teils angegeben werden, um die richtige Ersatzteilnummer zu ermitteln. Referenznummern können absichtlich weggelassen werden, da die Nummern der lieferbaren Ersatzteile ständig aktualisiert werden.

11. EINGERÜCKTE BEZEICHNUNGEN

Wenn eine Bezeichnung eingerückt ist, wird dadurch angezeigt, daß das Teil zu einer Baugruppe gehört, unter deren Bezeichnung es eingerückt ist.

12. REFERENZBUCHSTABEN

Falls erforderlich sind in den Abbildungen Referenzbuchstaben enthalten (z.B. A, B, C, usw.), die Leitungen und Kabelbäume von einem Punkt zum anderen verfolgen. Außerdem geben sie die Stelle an, an der getrennte Abbildungen fortgesetzt werden.

13. ABKÜRZUNGEN UND SYMBOLE

O.D. – Außendurchmesser
I.D. – Innendurchmesser
A – kein Teil dieser Gruppe
B – nach Bedarf verwenden
C – Hinweis auf eine Änderung
D – in Meter-Länge bestellen
E – in Zentimeter-Länge bestellen
F – nicht gezeigt
G – in Zoll-Länge bestellen
I – siehe "Hose Fabrication Guide"
M – metrisches Teil
R – werküberholtes Teil unter Umständen lieferbar
Y – separate Abbildung
Z – nicht einzeln lieferbar

ANMERKUNG:

Ständig vorgenommene Verbesserungen und Weiterentwicklungen an Ihrer Maschine können Änderungen verursachen, die in der vorliegenden Ausgabe noch nicht berücksichtigt sind. Fragen zu Ihrer Caterpillar-Maschine oder diesem Ersatzteilbuch beantwortet Ihr Caterpillar-Händler.

ALLGEMEINE HINWEISE

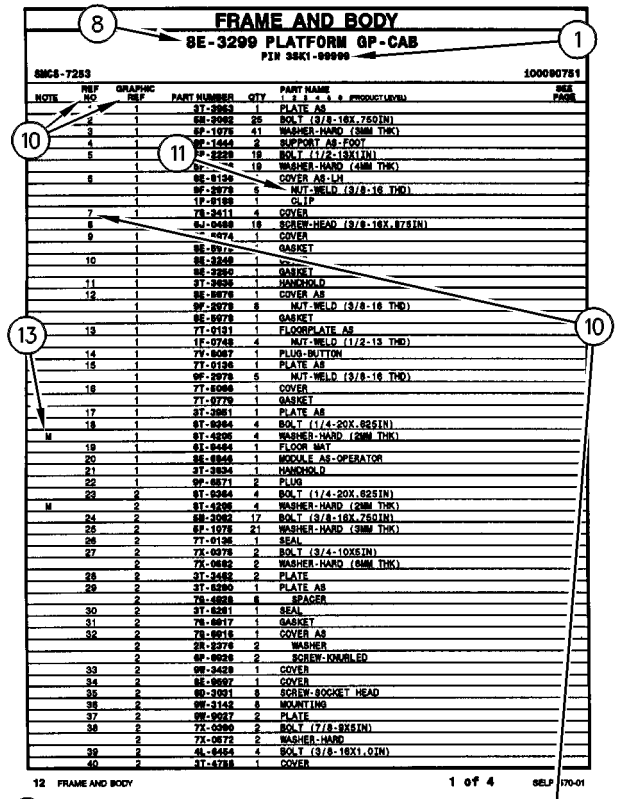

FRAME AND BODY

8E-3299 PLATFORM GP-CAB

PIN 38K1-09999

SMCS-7253 100090751

NOTE	REF NO	GRAPHIC REF	PART NUMBER	QTY	PART NAME (1 2 3 4 5 6 PRODUCT LEVEL)	SEE PAGE
	1	1	3T-2953	1	PLATE AS	
	2	1	5B-2992	25	BOLT (3/8-16X.750IN)	
	3	1	9P-1075	41	WASHER-HARD (3MM THK)	
	4	1	9P-1444	2	SUPPORT AS-FOOT	
	5	1	9P-2229	19	BOLT (1/2-13X1IN)	
		1	9P-[illegible]4	19	WASHER-HARD (4MM THK)	
	6	1	9E-9136	1	COVER AS-LH	
		1	9F-2979	6	NUT-WELD (3/8-16 THD)	
		1	1P-0188	1	CLIP	
	7	1	7S-3411	4	COVER	
	8	1	6J-0488	18	SCREW-HEAD (3/8-16X.875IN)	
	9	1	[illegible]-4474	1	COVER	
		1	9E-9[illegible]7	1	GASKET	
	10	1	9E-3249	1	[illegible]	
		1	9E-3250	1	GASKET	
	11	1	3T-3635	1	HANDHOLD	
	12	1	9E-9078	1	COVER AS	
		1	9F-2979	8	NUT-WELD (3/8-16 THD)	
		1	9E-9079	1	GASKET	
	13	1	7T-0131	1	FLOORPLATE AS	
		1	1F-0748	4	NUT-WELD (1/2-13 THD)	
	14	1	7Y-9087	1	PLUG-BUTTON	
	15	1	7T-0136	1	PLATE AS	
		1	9F-2979	6	NUT-WELD (3/8-16 THD)	
	16	1	7T-9096	1	COVER	
		1	7T-9779	1	GASKET	
	17	1	3T-3981	1	PLATE AS	
	18	1	6T-9364	4	BOLT (1/4-20X.625IN)	
M		1	6T-4205	4	WASHER-HARD (2MM THK)	
	19	1	6L-9484	1	FLOOR MAT	
	20	1	9E-9946	1	MODULE AS-OPERATOR	
	21	1	3T-3634	1	HANDHOLD	
	22	1	9P-8571	2	PLUG	
	23	2	6T-9364	4	BOLT (1/4-20X.625IN)	
M		2	6T-4205	4	WASHER-HARD (2MM THK)	
	24	2	5B-3062	17	BOLT (3/8-16X.750IN)	
	26	2	9P-1075	21	WASHER-HARD (3MM THK)	
	26	2	7T-9126	1	SEAL	
	27	2	7X-9378	2	BOLT (3/4-10X5IN)	
		2	7X-0482	2	WASHER-HARD (5MM THK)	
	28	2	3T-3482	2	PLATE	
	29	2	3T-5290	1	PLATE AS	
		2	7S-0028	8	SPACER	
	30	2	3T-5281	1	SEAL	
	31	2	7S-9017	1	GASKET	
	32	2	7S-9016	1	COVER AS	
		2	2R-2276	2	WASHER	
		2	6P-9028	2	SCREW-KNURLED	
	33	2	9W-3429	1	COVER	
	34	2	9E-9097	1	COVER	
	35	2	9D-3031	8	SCREW-SOCKET HEAD	
	36	2	9W-3142	8	MOUNTING	
	37	2	9W-9027	2	PLATE	
	38	2	7X-0390	2	BOLT (7/8-9X5IN)	
		2	7X-0672	2	WASHER-HARD	
	39	2	4L-9454	4	BOLT (3/8-16X1.0IN)	
	40	2	3T-4788	1	COVER	

12 FRAME AND BODY 1 of 4 SELP4570-01

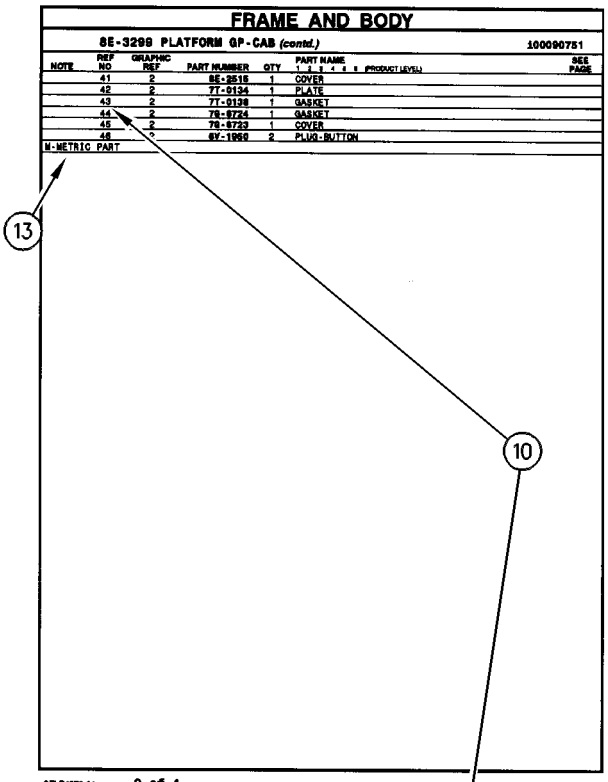

FRAME AND BODY

8E-3299 PLATFORM GP-CAB (contd.) 100090751

NOTE	REF NO	GRAPHIC REF	PART NUMBER	QTY	PART NAME (1 2 3 4 5 6 PRODUCT LEVEL)	SEE PAGE
	41	2	8E-3515	1	COVER	
	42	2	7T-0134	1	PLATE	
	43	2	7T-0139	1	GASKET	
	44	2	7S-9724	1	GASKET	
	45	2	7S-9723	1	COVER	
	46	2	6V-1969	2	PLUG-BUTTON	

M-METRIC PART

SELP4570-01 2 of 4 FRAME AND BODY 13

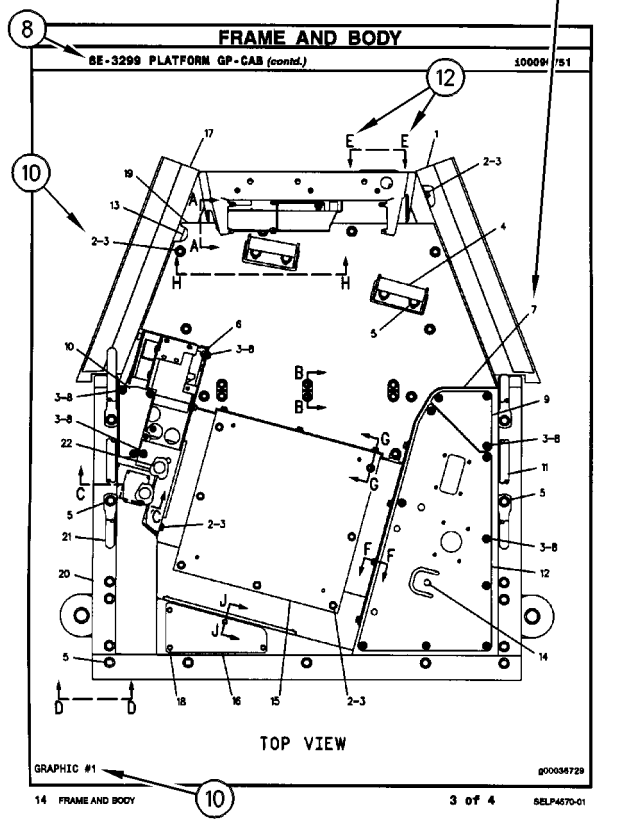

FRAME AND BODY

8E-3299 PLATFORM GP-CAB (contd.) 100090751

TOP VIEW

GRAPHIC #1 g00036729

14 FRAME AND BODY 3 of 4 SELP4570-01

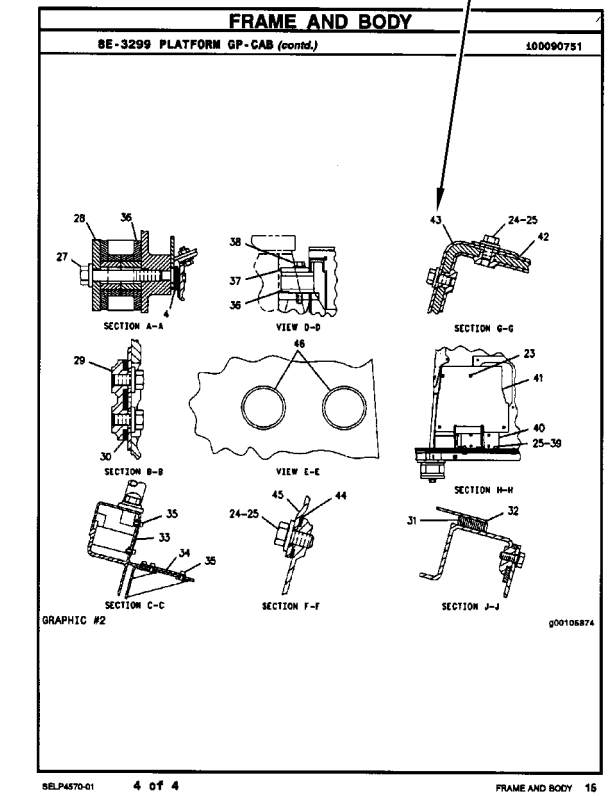

FRAME AND BODY

8E-3299 PLATFORM GP-CAB (contd.) 100090751

SECTION A-A

VIEW D-D

SECTION G-G

SECTION B-B

VIEW E-E

SECTION H-H

SECTION C-C

SECTION F-F

SECTION J-J

GRAPHIC #2 g00105874

SELP4570-01 4 of 4 FRAME AND BODY 15

REMANUFACTURED COMPONENTS

As an option when making repairs consider Caterpillar Remanufactured Components. Components that are available through the Caterpillar Remanufactured Program are identified three ways in the parts book:

- with the letter R in the note field of the parts list
- with an R* at the beginning of the first line of the caption
- with an *R at the end of the first line of the caption

Typical components included in the Remanufacturing Program include:

ALTERNATORS
CONNECTING RODS
CRANKSHAFTS - UNDERSIZE
CRANKSHAFTS - UPGRADE TO NEW
CYLINDER HEADS
ELECTRONIC CONTROL MODULES (ECM)
ELECTRONIC SENSORS
FUEL INJECTORS
FUEL NOZZLES
FUEL PUMPS
GOVERNORS
OIL PUMPS
PISTONS
SHORT BLOCKS
STARTERS
TURBOCHARGERS - COMPLETE
TURBOCHARGER CARTRIDGES
WATER PUMPS

Caterpillar Remanufactured engines for many engine arrangements are also available.

COMPOSANTS RÉNOVÉS

Comme option de réparation, considérer les composants rénovés Caterpillar. Les composants disponibles dans le cadre du programme Caterpillar de composants rénovés sont identifiés de trois façons dans le catalogue de pièces:

- avec la lettre "R" dans l'espace note de la liste des pièces
- avec R* au début de la première ligne des légendes
- avec *R à la fin de la première ligne des légendes

Les composants suivants figurent parmi les composants typiques du programme de rénovation:

ALTERNATEURS
BIELLES
VILEBREQUINS - SOUS-DIMENSIONNÉS
VILEBREQUINS - REMIS À NEUF
CULASSES
MODULES DE COMMANDE ÉLECTRONIQUE (ECM)
CAPTEURS ÉLECTRONIQUES
INJECTEURS
TÊTES D'INJECTEURS
POMPES À CARBURANT
RÉGULATEURS
POMPES À HUILE
PISTONS
BLOCS EMBIELLÉS
DÉMARREURS
TURBOCOMPRESSEURS - COMPLETS
CARTOUCHES DE TURBOCOMPRESSEUR
POMPES À EAU

Des moteurs rénovés sont aussi disponibles pour plusieurs versions de moteur.

ALTERNATIVAS DE REPARACIÓN

COMPONENTES REMANUFACTURADOS

Al hacer reparaciones, tenga en cuenta la opción de Componentes Remanufacturados Caterpillar. Los componentes que están disponibles por medio del programa de Productos Remanufacturados Caterpillar se identifican de tres maneras en el manual de piezas:

- con la letra R en el espacio de Nota de la lista de piezas
- con una R* al comienzo de la primera línea de la leyenda
- con una *R al final de la primera línea de la leyenda

Los componentes que se incluyen típicamente en el Programa de Productos Remanufacturados son:

ALTERNADORES
BIELAS
CIGÜEÑALES - BAJOMEDIDA
CIGÜEÑALES - REMANUFACTURADOS A NUEVO
CULATAS
MÓDULOS DE CONTROL ELECTRÓNICO (ECM)
SENSORES ELECTRONICOS
INYECTORES
BOQUILLAS
BOMBAS DE COMBUSTIBLE
REGULADORES
BOMBAS DE ACEITE
PISTONES
MONOBLOQUES
MOTORES DE ARRANQUE
TURBOCOMPRESORES - COMPLETOS
NÚCLEOS DE TURBOCOMPRESOR
BOMBAS DE AGUA

También hay disponibles motores Remanufacturados Caterpillar para muchas de las configuraciones de motores.

COMPONENTES REMANUFATURADOS

Considere o uso de Componentes Remanufaturados Caterpillar ao efetuar reparos. Os componentes disponíveis através do Programa de Remanufatura Caterpillar são identificados de três formas no manual de peças:

- com um R na área da nota da lista de peças
- com um R* no princípio da primeira linha da legenda
- com um *R no final da primeira linha da legenda

Os componentes típicos que constam no Programa de Remanufatura incluem:

ALTERNADORES
BIELAS
VIRABREQUINS - SUBMEDIDAS
VIRABREQUINS - ATUALIZAÇÃO
CABEÇOTES
MÓDULOS DE CONTROLE ELETRÔNICO (ECM)
SENSORES ELETRÔNICOS
INJETORES DE COMBUSTÍVEL
BICOS DE ABASTECIMENTO DE COMBUSTÍVEL
BOMBAS DE COMBUSTÍVEL
GOVERNADORES
BOMBAS DE ÓLEO
PISTÕES
BLOCOS BÁSICOS DO MOTOR
MOTORES DE PARTIDA
TURBOALIMENTADORES - COMPLETOS
CARTUCHOS DE TURBOALIMENTADORES
BOMBAS D'ÁGUA

Motores Remanufaturados Caterpillar também encontram-se disponíveis para diversos arranjos de motor.

REPARATURALTERNATIVEN

WERKÜBERHOLTE AT-PRODUKTE

Bei Reparaturen sollten werküberholte AT-Produkte von Caterpillar in Betracht gezogen werden. Die durch das AT-Programm von Caterpillar erhältlichen Teile sind im Parts Book auf drei verschiedene Arten gekennzeichnet:

- mit dem Buchstaben R in der Spalte NOTE der Ersatzteilliste
- mit einem R* am Anfang der ersten Zeile der Überschrift
- mit einem *R am Ende der ersten Zeile der Überschrift

Das AT-Programm umfaßt u.a. folgende Produkte:

DREHSTROMGENERATOREN
PLEUELSTANGEN
KURBELWELLEN - MIT UNTERMASS
KURBELWELLEN - MIT ORIGINALMASS
ZYLINDERKÖPFE
ELEKTRONISCHE STEUEREINHEITEN (EMC)
ELEKTRONISCHE SENSOREN
PUMPENDÜSEN
EINSPRITZDÜSEN
KRAFTSTOFFPUMPEN
DREHZAHLREGLER
ÖLPUMPEN
KOLBEN
TEILMOTOREN
ANLASSER
TURBOLADER - KOMPLETT
TURBOLADERLAUFZEUGE
KÜHLWASSERPUMPEN

Viele Motoren können durch werküberholte AT-Motoren von Caterpillar ersetzt werden.

SUPPLEMENTAL COOLANT ADDITIVES

CUSTOMER BENEFITS:

Protects against cavitation, foam, erosion, corrosion, and scale buildup in cooling systems.

- Provides measured coolant conditioner.

DESCRIPTION:

Additives deplete from the coolant with normal operation. For this reason, Supplemental Coolant Additives (SCA) must be added to all heavy duty coolants at regular intervals. In addition, when not using a fully formulated, pre-charged antifreeze, like Caterpillar's DEAC, an initial charge of SCA must be added to the cooling system. The amount of SCA added to the system is dependent on the capacity of the system.

The SCA for initial fill is provided as a liquid. SCA's for maintenance intervals are available in liquid form and as a spin-on element. (No Spin-on available for 3600 Family of Engines)

NOTE:

The amount of SCA added at initial fill is not the same as the amount added at maintenance intervals.

The coolant additive elements can be used with any ethylene or propylene glycol type antifreeze which meets ASTM D4985 or ASTM D5345 Specifications.

NOTE:

For use with standard heavy duty coolant only, not for use with Extended Life Coolant.

PARTS NEEDED:

Cooling System Capacity		Liquid SCA at Initial Fill	Liquid SCA at Maintenance*	Spin-on SCA Maintenance Element*
Liters	Gallons			
22-30	(6-8)	3P-2044 (1)	6V-3542 (1)	111-2370 (1)
30-38	(8-10)	3P-2044 (1) 6V-3542 (1)	111-2372 (1)	111-2369 (1)
38-49	(10-13)	3P-2044 (1) 8T-1589 (1)	111-2372 (1)	111-2369 (1)
49-64	(13-17)	3P-2044 (2)	8T-1589 (1)	9N-3368 (1)
64-83	(17-22)	3P-2044 (2) 8T-1589 (1)	111-2372 (1) 6V-3542 (1)	111-2371 (1)
83-114	(22-30)	3P-2044 (3) 8T-1589 (1)	3P-2044 (1)	9N-3718 (1)
114-163	(30-43)	3P-2044 (5)	3P-2044 (1) 6V-3542 (1)	111-2371 (2)
163-242	(43-64)	3P-2044 (8)	3P-2044 (2)	9N-3718 (2)

** Normal maintenance period is 250 hrs. See your Operation and Maintenance Manual for complete coolant maintenance instructions.*

( ) Indicates quantity required.

ADDITIFS POUR LIQUIDE DE REFROIDISSEMENT

AVANTAGES POUR LE CLIENT

L'additif protège contre la cavitation, la mousse, l'érosion, la corrosion et l'accumulation de dépôts dans le circuit de refroidissement.

- L'additif complémentaire fournit une quantité mesurée d'additif.

DESCRIPTION:

Les additifs s'épuisent pendant l'utilisation du moteur. C'est pourquoi l'on doit ajouter de l'additif au liquide de refroidissement/antigel pour moteurs diesel à intervalles réguliers. En plus, si l'on n'utilise pas de l'antigel entièrement formulé et pré-chargé comme le liquide de refroidissement/antigel Caterpillar pour moteurs diesel, une quantité initiale d'additif doit être ajoutée au circuit de refroidissement. La quantité d'additif à ajouter au circuit dépend de la contenance du circuit.

L'additif pour le remplissage initial est fourni sous forme liquide. L'additif pour l'entretien ultérieur est disponible sous forme liquide et sous forme d'élément à visser. (Il n'y a pas d'élément à visser pour les moteurs de la famille 3600).

NOTA:

La quantité d'additif à ajouter au remplissage initial diffère de la quantité à ajouter aux intervalles d'entretien.

Les éléments d'additif peuvent être utilisés avec tout antigel de type éthylène ou propylène-glycol conforme à la norme ASTM D4985 ou ASTM D5345.

NOTA:

A utiliser uniquement avec du liquide de refroidissement pour moteurs diesel et non avec le liquide de refroidissement longue durée.

PIÈCES NÉCESSAIRES:

Contenance du circuit de refroidissement		Additif liquide au remplissage initial	Additif liquide aux intervalles d'entretien*	Elément d'additif à visser aux intervalles d'entretien*
Litres	Gallons U.S.			
22-30	(6-8)	3P-2044 (1)	6V-3542 (1)	111-2370 (1)
30-38	(8-10)	3P-2044 (1) 6V-3542 (1)	111-2372 (1)	111-2369 (1)
38-49	(10-13)	3P-2044 (1) 8T-1589 (1)	111-2372 (1)	111-2369 (1)
49-64	(13-17)	3P-2044 (2)	8T-1589 (1)	9N-3368 (1)
64-83	(17-22)	3P-2044 (2) 8T-1589 (1)	111-2372 (1) 6V-3542 (1)	111-2371 (1)
83-114	(22-30)	3P-2044 (3) 8T-1589 (1)	3P-2044 (1)	9N-3718 (1)
114-163	(30-43)	3P-2044 (5)	3P-2044 (1) 6V-3542 (1)	111-2371 (2)
163-242	(43-64)	3P-2044 (8)	3P-2044 (2)	9N-3718 (2)

** L'intervalle d'entretien normal est de 250 heures-service. Voir le Guide d'utilisation et d'entretien pour de plus amples renseignements concernant l'entretien du circuit de refroidissement.*

( ) Indique la quantité exigée.

ADITIVOS DE REFRIGERANTE SUPLEMENTARIOS

VENTAJAS PARA EL USUARIO:

Protegen contra la cavitación, la formación de espuma, la corrosión y la acumulación de escamas en los sistemas de enfriamiento.

- Suministra un acondicionador dosificado de refrigerante.

DESCRIPCIÓN:

Los aditivos en el refrigerante se agotan con la operación normal. Por esta razón, se debe agregar Aditivo de refrigerante suplementario (SCA) a todos los refrigerantes para servicio pesado, a intervalos regulares. Además, cuando no se usa un anticongelante de precarga completo, tal como el DEAC de Caterpillar, es necesario agregar una cantidad de aditivo de refrigerante suplementario inicial al sistema de enfriamiento. La cantidad de aditivo que se debe agregar depende de la capacidad del sistema.

El SCA de llenado inicial es líquido. El que se usa para el mantenimiento está disponible tanto en líquido como en un elemento enroscable. (No hay elemento enroscable disponible para la Familia de Motores 3600).

NOTA:

La cantidad de aditivo de llenado inicial no es la misma que se agrega en los intervalos de mantenimiento.

Los elementos de aditivo de refrigerante se pueden usar con cualquier anticongelante de tipo glicol etilénico o propílico que esté de acuerdo con las especificaciones de las normas ASTM D4985 o ASTM D5345.

NOTA:

Se debe utilizar únicamente con refrigerante estándar para servicio pesado; no se debe usar con Refrigerante de Larga Duración.

PIEZAS NECESARIAS:

Capacidad del Sistema de Enfriamiento		SCA líquido de llenado inicial	SCA líquido de mantenimiento*	Elemento de mantenimiento enroscable*
litros	gal EE.UU.			
22-30	6-8	3P-2044 (1)	6V-3542 (1)	111-2370 (1)
30-38	8-10	3P-2044 (1) 6V-3542 (1)	111-2372 (1)	111-2369 (1)
38-49	10-13	3P-2044 (1) 8T-1589 (1)	111-2372 (1)	111-2369 (1)
49-64	13-17	3P-2044 (2)	8T-1589 (1)	9N-3368 (1)
64-83	17-22	3P-2044 (2) 8T-1589 (1)	111-2372 (1) 6V-3542 (1)	111-2371 (1)
83-114	22-30	3P-2044 (3) 8T-1589 (1)	3P-2044 (1)	9N-3718 (1)
114-163	30-43	3P-2044 (5)	3P-2044 (1) 6V-3542 (1)	111-2371 (2)
163-242	43-64	3P-2044 (8)	3P-2044 (2)	9N-3718 (2)

** El período normal de mantenimiento es de 250 horas. Para ver las instrucciones completas sobre el mantenimiento del refrigerante, consulte el Manual de Operación y Mantenimiento.*

( ) Indica la cantidad necesaria.

ADITIVOS SUPLEMENTARES DO LÍQUIDO ARREFECEDOR

BENEFÍCIOS PARA O CLIENTE:

Protege contra cavitação, espuma, erosão, corrosão e acúmulo de crostas nos sistemas de arrefecimento.

- Fornece uma quantidade pré-determinada de condicionador de arrefecimento.

DESCRIÇÃO:

Com a operação normal, os aditivos se esgotam do líquido arrefecedor. Por isso, Aditivos Suplementares do Líquido Arrefecedor (SCA) devem ser acrescentados a todos os líquidos arrefecedores para serviço pesado em intervalos regulares. Além disso, quando um anticongelante pré-carregado, totalmente formulado não for usado, como o DEAC Caterpillar, uma carga inicial de SCA deve ser acrescentada ao sistema de arrefecimento. A quantidade de SCA acrescentada ao sistema depende da capacidade do sistema.

O SCA para abastecimento inicial é fornecido em forma de líquido. Os aditivos suplementares (SCA) para intervalos de manutenção estão à disposição em forma líquida e como um elemento com roscas. (Exceto os Motores da Família 3600)

NOTA:

A quantidade de SCA adicionada no abastecimento inicial não é a mesma que a acrescentada nos intervalos de manutenção.

Os elementos do aditivo do líquido arrefecedor podem ser usados com qualquer tipo de anticongelante etileno ou propileno que satisfaz as Especificações ASTM D4985 ou ASTM D5345.

NOTA:

Para uso apenas com líquido arrefecedor para serviço pesado padrão, não deve ser usado com Líquido Arrefecedor de Vida Longa.

PEÇAS NECESSÁRIAS:

Capacidade do Sistema de Arrefecimento		Líquido SCA Durante Abastecimento Inicial	Líquido SCA Durante Manutenção*	Elemento de Manutenção de SCA com Roscas*
Litros	Galões			
22-30	6-8	3P-2044 (1)	6V-3542 (1)	111-2370 (1)
30-38	8-10	3P-2044 (1) 6V-3542 (1)	111-2372 (1)	111-2369 (1)
38-49	10-13	3P-2044 (1) 8T-1589 (1)	111-2372 (1)	111-2369 (1)
49-64	13-17	3P-2044 (2)	8T-1589 (1)	9N-3368 (1)
64-83	17-22	3P-2044 (2) 8T-1589 (1)	111-2372 (1) 6V-3542 (1)	111-2371 (1)
83-114	22-30	3P-2044 (3) 8T-1589 (1)	3P-2044 (1)	9N-3718 (1)
114-163	30-43	3P-2044 (5)	3P-2044 (1) 6V-3542 (1)	111-2371 (2)
163-242	43-64	3P-2044 (8)	3P-2044 (2)	9N-3718 (2)

** O período normal de manutenção é de 250 horas. Consulte o Manual de Operação e Manutenção para obter instruções completas quanto à manutenção do líquido arrefecedor.*

( ) Indica a quantidade exigida.

KÜHLMITTELZUSATZ

VORTEILE FÜR DEN KUNDEN:

Schutz gegen Kavitation, Schaumbildung, Erosion, Korrosion und Kesselsteinbildung in Kühlsystemen.

- Richtig dosierter Kühlmittelzusatz

BESCHREIBUNG:

Additive erschöpfen sich während des Motorbetriebs. Deshalb muß allen HD-Kühlmitteln regelmäßig Kühlmittelzusatz beigefügt werden. Wenn bei Erstfüllung kein vollwertiges Fertigkühlmittel, wie das Frostschutz- und Kühlmittel für Dieselmotoren von Caterpiller (DEAC), verwendet wird, muß bei Erstfüllung Kühlmittelzusatz beigefügt werden. Wieviel Kühlmittelzusatz beigefügt werden muß, hängt vom Inhalt des Kühlsystems ab.

Für Erstfüllung ist Kühlmittelzusatz nur in flüssiger Form erhältlich. Für Wartungsintervalle ist Kühlmittelzusatz in flüssiger Form und als Zusatzelement erhältlich. (Für die Motorbaureihe 3600 sind keine Zusatzelemente erhältlich.)

ANMERKUNG:

Die Kühlmittelmenge bei Erstfüllung ist nicht die gleiche Menge, die bei Wartungsintervallen beigefügt werden muß.

Die Kühlmittelzusatzelemente können mit allen Frostschutzmitteln auf Ethylen- oder Propylenglykolbasis verwendet werden, die den Standards nach ASTM D4985 oder ASTM D5345 entsprechen.

ANMERKUNG:

Den Kühlmittelzusatz nicht mit Langzeitkühlmittel (ELC) von Caterpillar verwenden. Der Kühlmittelzusatz ist nur für HD-Kühlmittel bestimmt.

TEILEBEZEICHNUNG:

Kühlsysteminhalt		Kühlmittelzusatz bei Erstfüllung	Flüssiger Kühlmittelzusatz bei Wartung*	Kühlmittelzusatzelement bei Wartung*
Liter	US-Gall.			
22-30	(6-8)	3P-2044 (1)	6V-3542 (1)	111-2370 (1)
30-38	(8-10)	3P-2044 (1) 6V-3542 (1)	111-2372 (1)	111-2369 (1)
38-49	(10-13)	3P-2044 (1) 8T-1589 (1)	111-2372 (1)	111-2369 (1)
49-64	(13-17)	3P-2044 (2)	8T-1589 (1)	9N-3368 (1)
64-83	(17-22)	3P-2044 (2) 8T-1589 (1)	111-2372 (1) 6V-3542 (1)	111-2371 (1)
83-114	(22-30)	3P-2044 (3) 8T-1589 (1)	3P-2044 (1)	9N-3718 (1)
114-163	(30-43)	3P-2044 (5)	3P-2044 (1) 6V-3542 (1)	111-2371 (2)
163-242	(43-64)	3P-2044 (8)	3P-2044 (2)	9N-3718 (2)

** Der normale Wartungsintervall beträgt 250 Betriebsstunden. Für vollständige Anweisungen zur Wartung des Kühlsystems, siehe Betriebs- und Wartungshandbuch.*

( ) Erforderliche Anzahl

MAINTENANCE PARTS

DESCRIPTION	PART NUMBER	QTY	WHERE USED	PAGE
AIR INLET AND EXHAUST SYSTEM				
FILTER ELEMENT AS-AIR (PRIMARY)	6I-2501	1	AIR CLEANER GP	99
FILTER ELEMENT AS-AIR (SECONDARY)	6I-2502	1	AIR CLEANER GP	99
BASIC ENGINE				
CAP-DUST	6V-0852	1	FITTING GP	44
ELEMENT	185-3159	1	COVER GP-VALVE MECHANISM	24
PLUG-DRAIN	5F-0304	1	HOUSING GP-FLYWHEEL	49
	126-1683	1	DRAIN GP-ENGINE OIL	36
V-BELT SET (ALTERNATOR)	130-3216	1	PULLEY GP-FAN & ALT DRIVE	60
COOLING SYSTEM				
CAP AS-RADIATOR	031-1119	1	TANK GP-COOLANT	94
CAP-DUST	157-0670	1	LINES GP-WATER	84
REGULATOR-WATER TEMPERATURE (92 DEG C.)	4W-4794	1	LINES GP-WATER	82
ELECTRICAL AND STARTING SYSTEM				
BATTERY	153-5710	2	BATTERY GP	145
BATTERY (12 VOLT)(WET)	115-2422	2	BATTERY & WIRING GP	140
BRUSH AS (STARTING MOTOR)	3T-9524	6	STARTING MOTOR GP-ELECTRIC	184
CIRCUIT BREAKER AS (135 AMP)	171-2213	1	PANEL GP-FUSE	168
CIRCUIT BREAKER AS (15 AMP)	3T-2662	2	CONVERTER GP-ELECTRICAL	152
	6T-3643	3	PANEL GP-FUSE	168
CONVERTER-POWER (20 AMP)	184-3579	1	CONVERTER GP-ELECTRICAL	152
ELEMENT AS-JACKET WATER HEATER (120 VOLTS/1500 WATTS)	9G-6655	1	HEATER GP-JACKET WATER	156
FUSE (10 AMP)	9W-1442	5	PANEL GP-FUSE	168
FUSE (15 AMP)	9W-1441	11	PANEL GP-FUSE	168
FUSE (20 AMP)	9W-1446	3	PANEL GP-FUSE	168
FUSE (5 AMP)	139-5345	1	PANEL GP-FUSE	168
KEY	8H-5306	1	SWITCH GP-DISCONNECT	197
LAMP (24 VOLT)	3E-8825	1	LIGHTING GP-FLOOD	164
		2	WIRING GP-PLATFORM	202
	7N-1996	1	WIRING GP-PLATFORM	202
	9X-3463	1	LAMP GP-FLOOD	163
LAMP (28 VOLT)	7N-9943	1	LAMP GP-DOME	162
LENS AS (FLOODLIGHT)	158-0248	1	LAMP GP-FLOOD	163
LENS-DOME LAMP	7T-0020	1	LAMP GP-DOME	162
LENS-RED	6T-7058	1	WIRING GP-PLATFORM	202
SPRING	3T-9494	1	STARTING MOTOR GP-ELECTRIC	184
SPRING (STARTING MOTOR)	3T-9494	6	STARTING MOTOR GP-ELECTRIC	185
ENGINE ARRANGEMENT				
KEY	5P-8500	1	INSTALLATION AR-ENGINE	15
PADLOCK GP	5P-8502	1	INSTALLATION AR-ENGINE	15

MAINTENANCE PARTS

DESCRIPTION	PART NUMBER	QTY	WHERE USED	PAGE
FRAME AND BODY				
KEY	5P-8500	1	ENCLOSURE GP-ENGINE	308
		1	ENCLOSURE GP-ENGINE	312
		1	GUARD GP-RADIATOR	336
PADLOCK GP	5P-8502	2	BATTERY BOX GP	294
		1	ENCLOSURE GP-ENGINE	308
		2	ENCLOSURE GP-ENGINE	312
		1	GUARD GP-RADIATOR	336
PLUG	106-8187	1	CASE & FRAME GP	298
		1	CASE & FRAME GP	300
FUEL SYSTEM				
FILTER AS-FUEL	1R-0762	1	PUMP GP-FUEL	118
FILTER AS-WATER SEP & FUEL	1R-0770	1	FILTER GP-WATER SEP & FUEL	113
KEY	5P-8500	1	TANK GP-FUEL	124
PADLOCK GP	5P-8502	1	TANK GP-FUEL	124
SCREEN-SUMP (FUEL TANK)	5G-4109	1	LINES GP-FUEL	114
STRAINER-FUEL	9P-7121	1	TANK GP-FUEL	124
HYDRAULIC SYSTEM				
CAP-DUST	6V-0852	1	LINES GP-PILOT	466
		2	LINES GP-PUMP	476
	8C-3451	1	LINES GP-PILOT	464
		1	LINES GP-PILOT	470
		1	TANK & FILTER GP-HYDRAULIC	502
CAP-FILLER	7H-1447	1	TANK & FILTER GP-HYDRAULIC	502
FILTER ELEMENT AS-OIL (HYDRAULIC) (HIGHER PERFORMANCE)	139-1537	1	TANK & FILTER GP-HYDRAULIC	502
FILTER ELEMENT AS-OIL (HYDRAULIC/REVERSE FLOW)	1R-0735	1	TANK & FILTER GP-HYDRAULIC	502
FILTER ELEMENT AS-OIL (REVERSE FLOW) (FIRE RESISTANT)	104-6931	1	TANK & FILTER GP-HYDRAULIC	502
KEY	5P-8500	1	HYDRAULIC AR	458
PADLOCK GP	5P-8502	1	HYDRAULIC AR	458
PLUG-DRAIN	9J-7031	1	TANK & FILTER GP-HYDRAULIC	502
SCREEN	6E-5066	1	VALVE GP-MANIFOLD & REDUCING	518
SCREEN AS	3G-3267	1	TANK & FILTER GP-HYDRAULIC	502
STRAINER AS	5D-7927	1	TANK & FILTER GP-HYDRAULIC	502
IMPLEMENTS				
FITTING-GREASE (1/8-27 THD)	3B-8489	4	BRACE GP-BULLDOZER	534
		2	MOUNTING GP-CYLINDER	558
LUBRICATION SYSTEM				
CAP-DUST	8C-3445	1	FILTER GP-ENGINE OIL	72
FILTER AS-ENGINE OIL	1R-0716	1	FILTER GP-ENGINE OIL	72

MAINTENANCE PARTS

DESCRIPTION	PART NUMBER	QTY	WHERE USED	PAGE
OPERATOR STATION				
BLADE AS-WIPER (FRONT & REAR)	6V-5851	2	WIPER GP-WINDOW	724
BLADE AS-WIPER (RH & LH DOORS)	6V-5849	2	WIPER GP-WINDOW	724
CAP-VENTED	8E-8292	1	TANK GP-WINDOW WASHER	700
FILTER-AIR (CAB FRESH AIR)	6T-0988	1	PRESSURIZER GP-CAB	672
FILTER AS (CAB REC AIR)	6T-5068	1	PRESSURIZER GP-CAB	672
LAMP-DIODE (LED)	165-5674	1	AIR CONDITIONER AR	599
LAMP (24 VOLT)	3E-8825	2	AIR CONDITIONER AR	599
	115-1748	1	INSTRUMENT GP	628
		1	INSTRUMENT GP	632
	123-9294	4	INSTRUMENT GP	628
		4	INSTRUMENT GP	632
LIGHT-DASH PANEL	159-9257	1	INSTRUMENT GP	628
		1	INSTRUMENT GP	632
SCREEN AS	109-5498	1	CONDENSER & MTG GP-REFRIGERANT	612
SEAT BELT GP	183-3648	1	SEAT GP	686
		1	SEAT GP	690
V-BELT	216-0349	1	COMPRESSOR GP-REFRIGERANT	610
POWER TRAIN				
BREATHER AS	185-6684	1	LINES GP-POWER TRAIN OIL	236
CAP AS	191-5517	1	LINES GP-POWER TRAIN OIL	236
CAP-DUST	6V-0852	1	CASE & PARTS GP-PLANETARY	208
		3	LINES GP-POWER TRAIN OIL	236
		4	VALVE & MTG GP-PILOT	278
		2	VALVE GP-PRIORITY	284
		1	VALVE GP-RELIEF	286
	8C-3447	1	LINES GP-POWER TRAIN OIL	236
FILTER ELEMENT AS-OIL	132-8876	1	FILTER GP-OIL	225
		1	LINES GP-POWER TRAIN OIL	236
KEY	5P-8500	1	LINES GP-POWER TRAIN OIL	236
PADLOCK GP	5P-8502	2	LINES GP-POWER TRAIN OIL	236
PLUG-DRAIN	8M-9307	1	COOLER GP-TRANSMISSION OIL	220
PLUG-DRAIN (7/8-14 THD)	4B-7739	1	DRAIN GP-ECOLOGY	224
PLUG-MAGNETIC	6V-0439	1	FINAL DRIVE GP	226
		1	FINAL DRIVE GP	230
SCREEN AS	3T-6471	1	LINES GP-POWER TRAIN OIL	236
SCREEN GP-MAGNETIC	3T-5298	1	LINES GP-POWER TRAIN OIL	236
SCREEN-SUCTION	4S-8598	1	SCREEN GP-MAGNETIC	264
	8S-9130	1	CASE & PARTS GP-PLANETARY	208
UNDERCARRIAGE				
FITTING-GREASE (1/8-27 THD)	3B-8489	2	EQUALIZER BAR GP	354
		2	EQUALIZER BAR GP	356
FITTING-GREASE (1/8-27 THD)(45 DEGREE)	3B-8485	1	EQUALIZER BAR GP	354
		1	EQUALIZER BAR GP	356
WORK TOOLS				
FITTING-GREASE (1/8-27 THD)	3B-8489	4	RIPPER GP	594

PIÈCES DE RECHANGE

DESCRIPTION	NUMÉRO DE PIECÈS	QTÉ	DOMAINE D'APPLICATION	PAGE
CHÂSSIS ET BENNE				
BOUCHON FILETÉ	106-8187	1	CHÂSSIS ET CARTER (ASS)	298
		1	CHÂSSIS ET CARTER (ASS)	300
CADENAS (ASS)	5P-8502	1	CARENAGE DE MOTEUR (ASS)	308
		2	CARENAGE DE MOTEUR (ASS)	312
		2	COFFRE DE BATTERIE (ASS)	294
		1	PROTÈGE-RADIATEUR (ASS)	336
CLÉ	5P-8500	1	CARENAGE DE MOTEUR (ASS)	308
		1	CARENAGE DE MOTEUR (ASS)	312
		1	PROTÈGE-RADIATEUR (ASS)	336
CIRCUIT D'ADMISSION D'AIR ET D'ECHAPPEMENT				
ÉLÉMENT DE FILTRE À AIR (ENS) (PRINCIPAL)	6I-2501	1	FILTRE A AIR (ASS)	99
ÉLÉMENT DE FILTRE À AIR (ENS) (SECONDAIRE)	6I-2502	1	FILTRE A AIR (ASS)	99
CIRCUIT DE CARBURANT				
CADENAS (ASS)	5P-8502	1	RÉSERVOIR DE CARBURANT (ASS)	124
CLÉ	5P-8500	1	RÉSERVOIR DE CARBURANT (ASS)	124
FILTRE - SÉPARATEUR D'EAU ET DE CARBURANT (ENS)	1R-0770	1	FILTRE DE SÉPARATEUR D'EAU ET DE CARBURANT (ASS)	113
FILTRE À CARBURANT	9P-7121	1	RÉSERVOIR DE CARBURANT (ASS)	124
FILTRE A CARBURANT (ENS)	1R-0762	1	POMPE À CARBURANT (ASS)	118
TAMIS DE CARTER (RÉSERVOIR DE CARBURANT)	5G-4109	1	CANALISATIONS DE CARBURANT (ASS)	114

PIÈCES DE RECHANGE

DESCRIPTION	NUMÉRO DE PIECÈS	QTÉ	DOMAINE D'APPLICATION	PAGE
CIRCUIT DE DÉMARRAGE ET ÉLECTRIQUE				
AMPOULE (24 VOLTS)	3E-8825	2	CABLAGE - PLATE-FORME (ASS)	202
		1	ÉCLAIRAGE - PROJECTEURS (ASS)	164
	7N-1996	1	CABLAGE - PLATE-FORME (ASS)	202
	9X-3463	1	LAMPE - PHARE (ASS)	163
AMPOULE (28 VOLTS)	7N-9943	1	PLAFONNIER (ASS)	162
BATTERIE	153-5710	2	BATTERIE (ASS)	145
BATTERIE (12 VOLTS)(HUMIDE)	115-2422	2	BATTERIE ET CÂBLAGE	140
BROSSE (ENS) (DÉMARREUR)	3T-9524	6	DÉMARREUR ÉLECTRIQUE (ASS)	184
CLÉ	8H-5306	1	ROBINET DE BATTERIE (ASS)	197
DISJONCTEUR (ENS) (135A)	171-2213	1	PANNEAU - FUSIBLES (ASS)	168
DISJONCTEUR (ENS) (15A)	3T-2662	2	TRANSFORMATION ELECTRIQUE (ASS)	152
	6T-3643	3	PANNEAU - FUSIBLES (ASS)	168
ÉLÉMENT DU RÉCHAUFFEUR D'EAU DES CHEMISES (ENS) (120 VOLTS/1500 WATTS)	9G-6655	1	EAU DES CHEMISES - RECHAUFFEUR (ASS)	156
FUSIBLE (10A)	9W-1442	5	PANNEAU - FUSIBLES (ASS)	168
FUSIBLE (15A)	9W-1441	11	PANNEAU - FUSIBLES (ASS)	168
FUSIBLE (20 A)	9W-1446	3	PANNEAU - FUSIBLES (ASS)	168
FUSIBLE (5A)	139-5345	1	PANNEAU - FUSIBLES (ASS)	168
LENTILLE DE PLAFONNIER	7T-0020	1	PLAFONNIER (ASS)	162
LENTILLE (ENS) (PLAFONNIER)	158-0248	1	LAMPE - PHARE (ASS)	163
LENTILLE ROUGE	6T-7058	1	CABLAGE - PLATE-FORME (ASS)	202
RESSORT	3T-9494	1	DÉMARREUR ÉLECTRIQUE (ASS)	184
RESSORT (DÉMARREUR)	3T-9494	6	DÉMARREUR ÉLECTRIQUE (ASS)	185
TRANSFORMATEUR DE PUISSANCE (20 A)	184-3579	1	TRANSFORMATION ELECTRIQUE (ASS)	152
CIRCUIT DE GRAISSAGE				
FILTRE A HUILE MOTEUR (ENS)	1R-0716	1	FILTRE À HUILE MOTEUR (ASS)	72
PARE-POUSSIERE	8C-3445	1	FILTRE À HUILE MOTEUR (ASS)	72
CIRCUIT DE REFROIDISSEMENT				
BOUCHON DE RADIATEUR (ENS)	031-1119	1	RÉSERVOIR DU LIQUIDE DE REFROIDISSEMENT (ASS)	94
PARE-POUSSIERE	157-0670	1	CANALISATIONS D'EAU (ASS)	84
THERMOSTAT-TEMPÉRATURE D'EAU (92 DEGRÉS C)	4W-4794	1	CANALISATIONS D'EAU (ASS)	82

PIÈCES DE RECHANGE

DESCRIPTION	NUMÉRO DE PIECÈS	QTÉ	DOMAINE D'APPLICATION	PAGE
CIRCUIT HYDRAULIQUE				
BOUCHON DE GOULOTTE DE REMPLISSAGE	7H-1447	1	RÉSERVOIR HYDRAULIQUE ET FILTRE (ASS)	502
BOUCHON DE VIDANGE	9J-7031	1	RÉSERVOIR HYDRAULIQUE ET FILTRE (ASS)	502
CADENAS (ASS)	5P-8502	1	VERSION HYDRAULIQUE	458
CLÉ	5P-8500	1	VERSION HYDRAULIQUE	458
CREPINE (ENS)	5D-7927	1	RÉSERVOIR HYDRAULIQUE ET FILTRE (ASS)	502
ÉCRAN	6E-5066	1	SOUPAPE RÉDUCTRICE ET COLLECTEUR (ASS)	518
ÉCRAN (ENS)	3G-3267	1	RÉSERVOIR HYDRAULIQUE ET FILTRE (ASS)	502
ÉLÉMENT DE FILTRE À HUILE (ENS) (DÉBIT HYDRAULIQUE/RETOUR DE DÉBIT)	1R-0735	1	RÉSERVOIR HYDRAULIQUE ET FILTRE (ASS)	502
ÉLÉMENT DE FILTRE À HUILE (ENS) (HYDRAULIQUE) (HAUTES PERFORMANCES)	139-1537	1	RÉSERVOIR HYDRAULIQUE ET FILTRE (ASS)	502
ÉLÉMENT DE FILTRE À HUILE (ENS) (RETOUR DE DÉBIT) (ININFLAMMABLE)	104-6931	1	RÉSERVOIR HYDRAULIQUE ET FILTRE (ASS)	502
PARE-POUSSIERE	6V-0852	1	CANALISATIONS A COMMANDE PILOTE (ASS)	466
		2	CANALISATIONS DE POMPE (ASS)	476
	8C-3451	1	CANALISATIONS A COMMANDE PILOTE (ASS)	464
		1	CANALISATIONS A COMMANDE PILOTE (ASS)	470
		1	RÉSERVOIR HYDRAULIQUE ET FILTRE (ASS)	502
ÉQUIPEMENTS				
GRAISSEUR (FILET 1/8-27)	3B-8489	2	MONTAGE DE VÉRIN (ASS)	558
		4	TIRANT DE BULLDOZER (ASS)	534
MOTEUR STANDARD				
BOUCHON DE VIDANGE	5F-0304	1	CARTER DE VOLANT (ASS)	49
	126-1683	1	VIDANGE-HUILE DE MOTEUR (ASS)	36
ÉLÉMENT	185-3159	1	CACHE-SOUPAPES (ASS)	24
JEU DE COURROIES TRAPEZOIDALES (ALTERNATEUR)	130-3216	1	POULIE - ENTRAÎNEMENT D'ALTERNA. ET DE VENTI.	60
PARE-POUSSIERE	6V-0852	1	RACCORD (ASS)	44
OUTILS DE TRAVAIL				
GRAISSEUR (FILET 1/8-27)	3B-8489	3	RIPPER (ASS)	594

PIÈCES DE RECHANGE

DESCRIPTION	NUMÉRO DE PIECÈS	QTÉ	DOMAINE D'APPLICATION	PAGE
POSTE DE CONDUITE				
AMPOULE (24 VOLTS)	3E-8825	2	CLIMATISEUR (VERSION)	599
	115-1748	1	TABLEAU DE BORD (ASS)	628
		1	TABLEAU DE BORD (ASS)	632
	123-9294	4	TABLEAU DE BORD (ASS)	628
		4	TABLEAU DE BORD (ASS)	632
BALAI D'ESSUIE-GLACE (ENS) (AVANT ET ARRIERE)	6V-5851	2	ESSUIE-GLACE (ASS)	724
BALAI D'ESSUIE-GLACE (ENS) (PORTIERES DROITE ET GAUCHE)	6V-5849	2	ESSUIE-GLACE (ASS)	724
BOUCHON À ÉVENT	8E-8292	1	RÉSERVOIR - LAVE-GLACE (ASS)	700
CEINTURE DE SECURITE (ASS)	183-3648	1	SIÈGE (ASS)	686
		1	SIÈGE (ASS)	690
COURROIE TRAPEZOIDALE	216-0349	1	COMPRESSEUR DE REFRIGERANT (ASS)	610
ECLAIRAGE TABLEAU DE BORD	159-9257	1	TABLEAU DE BORD (ASS)	628
		1	TABLEAU DE BORD (ASS)	632
ÉCRAN (ENS)	109-5498	1	CONDENSATEUR ET MONTAGE (RÉFRIGÉRANT)	612
FILTRE À AIR (AIR FRAIS DE CABINE)	6T-0988	1	SURPRESSEUR (ASS)	672
FILTRE (ENS) (RECIRCULATION D'AIR DE CABINE)	6T-5068	1	SURPRESSEUR (ASS)	672
LAMPE-DIODE (LED)	165-5674	1	CLIMATISEUR (VERSION)	599
TRAIN DE ROULEMENT				
GRAISSEUR (FILET 1/8-27)	3B-8489	2	BALANCIER DE SUSPENSION (ASS)	354
		2	BALANCIER DE SUSPENSION (ASS)	356
GRAISSEUR (FILETAGE 1/8-27)(45 DEGRÉS)	3B-8485	1	BALANCIER DE SUSPENSION (ASS)	354
		1	BALANCIER DE SUSPENSION (ASS)	356

PIÈCES DE RECHANGE

DESCRIPTION	NUMÉRO DE PIECÈS	QTÉ	DOMAINE D'APPLICATION	PAGE
TRANSMISSION				
BOUCHON AIMANTÉ	6V-0439	1	RÉDUCTEURS (ASS)	226
		1	RÉDUCTEURS (ASS)	230
BOUCHON DE VIDANGE	8M-9307	1	REFROIDISSEUR D'HUILE DE BOÎTE (ASS)	220
BOUCHON DE VIDANGE (FILETS DE 7/8-14)	4B-7739	1	VIDANGE-ÉCOLOGIE (ASS)	224
CADENAS (ASS)	5P-8502	2	CANALISATIONS D'HUILE DE TRANSMISSION (ASS)	236
CHAPEAU (ENS)	191-5517	1	CANALISATIONS D'HUILE DE TRANSMISSION (ASS)	236
CLÉ	5P-8500	1	CANALISATIONS D'HUILE DE TRANSMISSION (ASS)	236
ÉCRAN (ENS)	3T-6471	1	CANALISATIONS D'HUILE DE TRANSMISSION (ASS)	236
ÉCRAN MAGNÉTIQUE (ASS)	3T-5298	1	CANALISATIONS D'HUILE DE TRANSMISSION (ASS)	236
ÉLÉMENT DE FILTRE À HUILE (ENS)	132-8876	1	CANALISATIONS D'HUILE DE TRANSMISSION (ASS)	236
		1	FILTRE A HUILE (ASS)	225
PARE-POUSSIERE	6V-0852	3	CANALISATIONS D'HUILE DE TRANSMISSION (ASS)	236
		1	CLAPET DE DECHARGE (ASS)	286
		2	SOUPAPE DE PRIORITE (ASS)	284
		4	SOUPAPE PILOTE ET MONTAGE (ASS)	278
		1	TRAINS PLANÉTAIRES - CARTER ET PIÈCES	208
	8C-3447	1	CANALISATIONS D'HUILE DE TRANSMISSION (ASS)	236
RENIFLARD (ENS)	185-6684	1	CANALISATIONS D'HUILE DE TRANSMISSION (ASS)	236
TAMIS D'ASPIRATION	4S-8598	1	ÉCRAN MAGNÉTIQUE (ASS)	264
	8S-9130	1	TRAINS PLANÉTAIRES - CARTER ET PIÈCES	208
VERSION DE MOTEUR				
CADENAS (ASS)	5P-8502	1	MONTAGE DE MOTEUR (VERSION)	15
CLÉ	5P-8500	1	MONTAGE DE MOTEUR (VERSION)	15

PIEZAS DE MANTENIMIENTO

DESCRIPCION	NUMERO DE PIEZA	CANT	SE UTILIZA EN	PAGINA
BASTIDOR Y CAJA				
CANDADO (GR)	5P-8502	2	CAJA DE LA BATERÍA (GR)	294
		1	COMPARTIMIENTO DEL MOTOR (GR)	308
		2	COMPARTIMIENTO DEL MOTOR (GR)	312
		1	PROTECTOR DEL RADIADOR (GR)	336
LLAVE	5P-8500	1	COMPARTIMIENTO DEL MOTOR (GR)	308
		1	COMPARTIMIENTO DEL MOTOR (GR)	312
		1	PROTECTOR DEL RADIADOR (GR)	336
TAPÓN	106-8187	1	CAJA Y BASTIDOR (GR)	298
		1	CAJA Y BASTIDOR (GR)	300
CABINA DEL OPERADOR				
CINTURÓN DE SEGURIDAD (GR)	183-3648	1	ASIENTO (GR)	686
		1	ASIENTO (GR)	690
CORREA TRAPEZOIDAL	216-0349	1	COMPRESOR DE REFRIGERANTE (GR)	610
FILTRO (CONJ) (AIRE RECIRCULADO DE LA CABINA)	6T-5068	1	PRESURIZADOR (GR)	672
FILTRO DE AIRE (AIRE FRESCO PARA LA CABINA)	6T-0988	1	PRESURIZADOR (GR)	672
HOJA DE LIMPIAPARABRISAS (CONJ) (DELANTERO Y TRASERO)	6V-5851	2	LIMPIAPARABRISAS DE LA VENTANA (GR)	724
HOJA DE LIMPIAPARABRISAS (CONJ) (PUERTAS DE LADOS DERECHO E IZQ.)	6V-5849	2	LIMPIAPARABRISAS DE LA VENTANA (GR)	724
LAMPARA DE DIODO (LED)	165-5674	1	ACONDICIONADOR DE AIRE (CONFIG)	599
LÁMPARA (24 VOLTIOS)	3E-8825	2	ACONDICIONADOR DE AIRE (CONFIG)	599
	115-1748	1	INSTRUMENTOS (GR)	628
		1	INSTRUMENTOS (GR)	632
	123-9294	4	INSTRUMENTOS (GR)	628
		4	INSTRUMENTOS (GR)	632
LUZ DE TABLERO DE INSTRUMENTOS	159-9257	1	INSTRUMENTOS (GR)	628
		1	INSTRUMENTOS (GR)	632
PANTALLA (CONJ)	109-5498	1	CONDENSADOR DEL REFRIGERANTE Y MONTAJE (GR)	612
TAPA CON RESPIRADERO	8E-8292	1	TANQUE DEL LAVAPARABRISAS (GR)	700
CONFIGURACIÓN DE MOTOR				
CANDADO (GR)	5P-8502	1	CONFIGURACIÓN DE INSTALACIÓN DEL MOTOR	15
LLAVE	5P-8500	1	CONFIGURACIÓN DE INSTALACIÓN DEL MOTOR	15
HERRAMIENTAS				
CONEXIÓN DE ENGRASE (ROSCA DE 1/8-27)	3B-8489	3	DESGARRADOR (GR)	594
IMPLEMENTOS				
CONEXIÓN DE ENGRASE (ROSCA DE 1/8-27)	3B-8489	2	MONTAJE DE CILINDRO (GR)	558
		4	SOPORTE DE LA HOJA TOPADORA	534

PIEZAS DE MANTENIMIENTO

DESCRIPCION	NUMERO DE PIEZA	CANT	SE UTILIZA EN	PAGINA
MOTOR BÁSICO				
ELEMENTO	185-3159	1	TAPA DEL MECANISMO DE VÁLVULAS (GR)	24
JUEGO DE CORREAS TRAPEZOIDALES (ALTERNADOR)	130-3216	1	POLEA DE MANDO DEL ALTERNADOR Y VENTILADOR (GR)	60
TAPA CONTRA EL POLVO	6V-0852	1	CONEXIÓN (GR)	44
TAPÓN DE DRENAJE	5F-0304	1	VOLANTE - CAJA DE (GR)	49
	126-1683	1	DRENAJE DEL ACEITE DE MOTOR	36
SISTEMA DE ADMISIÓN Y ESCAPE DE AIRE				
ELEMENTO DEL FILTRO DE AIRE (CONJ) (PRIMARIO)	6I-2501	1	FILTRO DE AIRE (GR)	99
ELEMENTO DEL FILTRO DE AIRE (CONJ) (SECUNDARIO)	6I-2502	1	FILTRO DE AIRE (GR)	99
SISTEMA DE COMBUSTIBLE				
CANDADO (GR)	5P-8502	1	COMBUSTIBLE - TANQUE DE (GR)	124
COLADOR DE COMBUSTIBLE	9P-7121	1	COMBUSTIBLE - TANQUE DE (GR)	124
FILTRO DE COMBUSTIBLE (CONJ)	1R-0762	1	BOMBA DE COMBUSTIBLE (GR)	118
FILTRO DE COMBUSTIBLE Y SEPARADOR DE AGUA (CONJ)	1R-0770	1	FILTRO DE COMBUSTIBLE Y SEPARADOR DE AGUA (GR)	113
LLAVE	5P-8500	1	COMBUSTIBLE - TANQUE DE (GR)	124
REJILLA DE SUMIDERO (TANQUE DE COMBUSTIBLE)	5G-4109	1	TUBERÍAS DE COMBUSTIBLE (GR)	114
SISTEMA DE ENFRIAMIENTO				
REGULADOR DE TEMPERATURA DEL AGUA (92 GR C)	4W-4794	1	TUBERÍAS DEL AGUA (GR)	82
TAPA CONTRA EL POLVO	157-0670	1	TUBERÍAS DEL AGUA (GR)	84
TAPA DE RADIADOR (CONJ)	031-1119	1	TANQUE DE REFRIGERANTE (GR)	94
SISTEMA DE LUBRICACIÓN				
FILTRO DE ACEITE DEL MOTOR (CONJ)	1R-0716	1	FILTRO DE ACEITE DEL MOTOR (GR)	72
TAPA CONTRA EL POLVO	8C-3445	1	FILTRO DE ACEITE DEL MOTOR (GR)	72

PIEZAS DE MANTENIMIENTO

DESCRIPCION	NUMERO DE PIEZA	CANT	SE UTILIZA EN	PAGINA
SISTEMA ELÉCTRICO Y DE ARRANQUE				
BATERÍA	153-5710	2	BATERÍA (GR)	145
BATERÍA (12 VOLTIOS)(HUMEDA)	115-2422	2	BATERÍA Y CABLES (GR)	140
CONVERTIDOR DE VOLTAJE (20 A)	184-3579	1	CONVERTIDOR ELÉCTRICO (GR)	152
DISYUNTOR (CONJ) (135 AMP)	171-2213	1	PANEL DE FUSIBLES (GR)	168
DISYUNTOR (CONJ) (15 A)	3T-2662	2	CONVERTIDOR ELÉCTRICO (GR)	152
	6T-3643	3	PANEL DE FUSIBLES (GR)	168
ELEMENTO DEL CALENTADOR DEL AGUA DE LAS CAMISAS (120 VOLTIOS/1500 VATIOS)	9G-6655	1	AGUA DE LAS CAMISAS - CALENTADOR DEL (GR)	156
ESCOBILLA (CONJ) (MOTOR DE ARRANQUE)	3T-9524	6	MOTOR DE ARRANQUE ELÉCTRICO (GR)	184
FUSIBLE (10 A)	9W-1442	5	PANEL DE FUSIBLES (GR)	168
FUSIBLE (15 A)	9W-1441	11	PANEL DE FUSIBLES (GR)	168
FUSIBLE (20 A)	9W-1446	3	PANEL DE FUSIBLES (GR)	168
FUSIBLE (5 AMP)	139-5345	1	PANEL DE FUSIBLES (GR)	168
LÁMPARA (24 VOLTIOS)	3E-8825	2	CABLES DE LA PLATAFORMA (GR)	202
		1	LUCES DE REFLECTOR (GR)	164
	7N-1996	1	CABLES DE LA PLATAFORMA (GR)	202
	9X-3463	1	REFLECTOR (GR)	163
LÁMPARA (28 VOLTIOS)	7N-9943	1	LÁMPARA DEL TECHO (GR)	162
LENTE DE LAMPARA DEL TECHO	7T-0020	1	LÁMPARA DEL TECHO (GR)	162
LENTE-ROJO	6T-7058	1	CABLES DE LA PLATAFORMA (GR)	202
LLAVE	8H-5306	1	DISYUNTOR (GR)	197
RESORTE	3T-9494	1	MOTOR DE ARRANQUE ELÉCTRICO (GR)	184
RESORTE (MOTOR DE ARRANQUE)	3T-9494	6	MOTOR DE ARRANQUE ELÉCTRICO (GR)	185
VIDRIO (CONJ) (REFLECTOR)	158-0248	1	REFLECTOR (GR)	163
SISTEMA HIDRÁULICO				
CANDADO (GR)	5P-8502	1	HIDRÁULICA (CONFIG)	458
COLADOR (CONJ)	5D-7927	1	TANQUE Y FILTRO HIDRÁULICOS (GR)	502
ELEMENTO DE FILTRO DE ACEITE (CONJ) (FLUJO INVERSO) (RESISTENTE AL FUEGO)	104-6931	1	TANQUE Y FILTRO HIDRÁULICOS (GR)	502
ELEMENTO DE FILTRO DE ACEITE (CONJ) (HIDRAULICO) (RENDIMIENTO SUPERIOR)	139-1537	1	TANQUE Y FILTRO HIDRÁULICOS (GR)	502
ELEMENTO DE FILTRO DE ACEITE (CONJ) (HIDRAULICO/FLUJO INVERSO)	1R-0735	1	TANQUE Y FILTRO HIDRÁULICOS (GR)	502
LLAVE	5P-8500	1	HIDRÁULICA (CONFIG)	458
PANTALLA (CONJ)	3G-3267	1	TANQUE Y FILTRO HIDRÁULICOS (GR)	502
REJILLA	6E-5066	1	VALVULA DISTRIBUIDORA Y REDUCTORA (GR)	518
TAPA CONTRA EL POLVO	6V-0852	2	BOMBA - TUBERÍAS DE (GR)	476
		1	TUBERÍAS CON SERVOMANDO (GR)	466
	8C-3451	1	TANQUE Y FILTRO HIDRÁULICOS (GR)	502
		1	TUBERÍAS CON SERVOMANDO (GR)	464
		1	TUBERÍAS CON SERVOMANDO (GR)	470
TAPA DEL TUBO DE LLENADO	7H-1447	1	TANQUE Y FILTRO HIDRÁULICOS (GR)	502
TAPÓN DE DRENAJE	9J-7031	1	TANQUE Y FILTRO HIDRÁULICOS (GR)	502

PIEZAS DE MANTENIMIENTO

DESCRIPCION	NUMERO DE PIEZA	CANT	SE UTILIZA EN	PAGINA
TREN DE FUERZA				
CANDADO (GR)	5P-8502	2	TUBERÍAS DE ACEITE DEL TREN DE FUERZA (GR)	236
ELEMENTO DE FILTRO DE ACEITE (CONJ)	132-8876	1	FILTRO DE ACEITE (GR)	225
		1	TUBERÍAS DE ACEITE DEL TREN DE FUERZA (GR)	236
LLAVE	5P-8500	1	TUBERÍAS DE ACEITE DEL TREN DE FUERZA (GR)	236
PANTALLA (CONJ)	3T-6471	1	TUBERÍAS DE ACEITE DEL TREN DE FUERZA (GR)	236
REJILLA DE SUCCIÓN	4S-8598	1	REJILLA MAGNÉTICA (GR)	264
	8S-9130	1	CAJA Y PIEZAS DE LOS PLANETARIOS	208
REJILLA MAGNÉTICA (GR)	3T-5298	1	TUBERÍAS DE ACEITE DEL TREN DE FUERZA (GR)	236
RESPIRADERO (CONJ)	185-6684	1	TUBERÍAS DE ACEITE DEL TREN DE FUERZA (GR)	236
TAPA CONTRA EL POLVO	6V-0852	1	CAJA Y PIEZAS DE LOS PLANETARIOS	208
		2	PRIORIDAD - VÁLVULA DE (GR)	284
		3	TUBERÍAS DE ACEITE DEL TREN DE FUERZA (GR)	236
		1	VÁLVULA DE ALIVIO (GR)	286
		4	VALVULA PILOTO Y MONTAJE (GR)	278
	8C-3447	1	TUBERÍAS DE ACEITE DEL TREN DE FUERZA (GR)	236
TAPÓN (CONJ)	191-5517	1	TUBERÍAS DE ACEITE DEL TREN DE FUERZA (GR)	236
TAPÓN DE DRENAJE	8M-9307	1	ENFRIADOR DE ACEITE DE LA TRANSMISIÓN (GR)	220
TAPÓN DE DRENAJE (ROSCA 7/8-14)	4B-7739	1	DRENAJE DE SEGURIDAD ECOLÓGICA (GR)	224
TAPÓN MAGNÉTICO	6V-0439	1	MANDO FINAL (GR)	226
		1	MANDO FINAL (GR)	230
TREN DE RODAJE				
CONEXIÓN DE ENGRASE (ROSCA DE 1/8-27)	3B-8489	2	BARRA COMPENSADORA (GR)	354
		2	BARRA COMPENSADORA (GR)	356
CONEXIÓN DE ENGRASE (ROSCA 1/8-27)(45 GRADO)	3B-8485	1	BARRA COMPENSADORA (GR)	354
		1	BARRA COMPENSADORA (GR)	356

PEÇAS DE MANUTENÇÃO

DESCRIÇÃO	NÚMERO DE PEÇA	QUANT	UTILIZADA EM	PÁGINA
ACESSÓRIOS				
GRAXEIRA (ROSCA 1/8-27 POL)	3B-8489	2	MONTAGEM - CILINDRO	558
		4	TIRANTE DA LÂMINA	534
CHASSI E CARROCERIA				
CADEADO	5P-8502	2	CAIXA DA BATERIA	294
		1	COBERTURA DO MOTOR	308
		2	COBERTURA DO MOTOR	312
		1	PROTETOR - RADIADOR	336
CHAVE	5P-8500	1	COBERTURA DO MOTOR	308
		1	COBERTURA DO MOTOR	312
		1	PROTETOR - RADIADOR	336
TAMPÃO	106-8187	1	CAIXA E CHASSI	298
		1	CAIXA E CHASSI	300
FERRAMENTAS DE TRABALHO				
GRAXEIRA (ROSCA 1/8-27 POL)	3B-8489	4	RIPER	594
MATERIAL RODANTE				
GRAXEIRA (ROSCA 1/8-27 POL)	3B-8489	2	BARRA EQUALIZADORA	354
		2	BARRA EQUALIZADORA	356
GRAXEIRA (ROSCA 1/8-27 45 GRAUS)	3B-8485	1	BARRA EQUALIZADORA	354
		1	BARRA EQUALIZADORA	356
MOTOR - ARRANJO				
CADEADO	5P-8502	1	GRUPO DE INSTALAÇÃO - MOTOR	15
CHAVE	5P-8500	1	GRUPO DE INSTALAÇÃO - MOTOR	15
MOTOR BÁSICO				
BUJÃO DO DRENO	5F-0304	1	CAIXA DO VOLANTE DO MOTOR	49
	126-1683	1	DRENO - ÓLEO DO MOTOR	36
ELEMENTO	185-3159	1	TAMPA - MECANISMO DAS VÁLVULAS	24
JOGO DE CORREIAS EM V (ALTERNADOR)	130-3216	1	POLIA - VENTILADOR E COMANDO DO ALTERNADOR	60
TAMPA CONTRA POEIRA	6V-0852	1	CONEXÃO	44

PEÇAS DE MANUTENÇÃO

DESCRIÇÃO	NÚMERO DE PEÇA	QUANT	UTILIZADA EM	PÁGINA
POSTO DO OPERADOR				
CINTO DE SEGURANÇA	183-3648	1	ASSENTO	686
		1	ASSENTO	690
CORREIA EM V	216-0349	1	COMPRESSOR DE REFRIGERANTE	610
FILTRO - AR (CABINE - AR LIVRE)	6T-0988	1	PRESSURIZADOR	672
FILTRO (AR DE RECIRCULAÇÃO DA CABINE)	6T-5068	1	PRESSURIZADOR	672
LÂMINA DO LIMPADOR DE PÁRA-BRISA (DIANTEIRO E TRASEIRO)	6V-5851	2	LIMPADOR DO VIDRO	724
LÂMINA DO LIMPADOR DE PÁRA-BRISA (PORTAS-LADO DIREITO & LADO ESQUERDO)	6V-5849	2	LIMPADOR DO VIDRO	724
LÂMPADA - DIODO (VISOR LED)	165-5674	1	CONDICIONADOR DE AR	599
LÂMPADA (24 V)	3E-8825	2	CONDICIONADOR DE AR	599
	115-1748	1	INSTRUMENTOS	628
		1	INSTRUMENTOS	632
	123-9294	4	INSTRUMENTOS	628
		4	INSTRUMENTOS	632
LUZ DO PAINEL DE INSTRUMENTOS	159-9257	1	INSTRUMENTOS	628
		1	INSTRUMENTOS	632
TAMPA COM RESPIRO	8E-8292	1	TANQUE - LAVADOR DE JANELA	700
TELA FILTRANTE	109-5498	1	CONDENSADOR DO REFRIGERANTE E MONTAGEM	612
SISTEMA DA ADMISSÃO DE AR E DE ESCAPE				
ELEMENTO DO FILTRO DE AR (PRIMÁRIO)	6I-2501	1	PURIFICADOR DE AR	99
ELEMENTO DO FILTRO DE AR (SECUNDÁRIO)	6I-2502	1	PURIFICADOR DE AR	99
SISTEMA DE ARREFECIMENTO				
REGULADOR DE TEMPERATURA DA ÁGUA (92 GRAUS CENTÍGRADOS)	4W-4794	1	TUBOS - ÁGUA	82
TAMPA - RADIADOR	031-1119	1	TANQUE - LÍQUIDO ARREFECEDOR	94
TAMPA CONTRA POEIRA	157-0670	1	TUBOS - ÁGUA	84
SISTEMA DE COMBUSTÍVEL				
CADEADO	5P-8502	1	TANQUE DE COMBUSTÍVEL	124
CHAVE	5P-8500	1	TANQUE DE COMBUSTÍVEL	124
FILTRO - COMBUSTÍVEL	1R-0762	1	BOMBA DE COMBUSTÍVEL	118
	9P-7121	1	TANQUE DE COMBUSTÍVEL	124
FILTRO - SEPARADOR DE ÁGUA E COMBUSTÍVEL	1R-0770	1	FILTRO DE COMBUSTÍVEL E SEPARADOR DE ÁGUA	113
TELA - RESERVATÓRIO (TANQUE DE COMBUSTÍVEL)	5G-4109	1	TUBOS - COMBUSTÍVEL	114
SISTEMA DE LUBRIFICAÇÃO				
FILTRO - ÓLEO DO MOTOR	1R-0716	1	FILTRO - ÓLEO DO MOTOR	72
TAMPA CONTRA POEIRA	8C-3445	1	FILTRO - ÓLEO DO MOTOR	72

PEÇAS DE MANUTENÇÃO

DESCRIÇÃO	NÚMERO DE PEÇA	QUANT	UTILIZADA EM	PÁGINA
SISTEMA ELÉTRICO E DE PARTIDA				
BATERIA	153-5710	2	BATERIA	145
BATERIA (12 VOLT)(ÚMIDO)	115-2422	2	BATERIA E CABOS / FIOS ELÉTRICOS	140
CHAVE	8H-5306	1	CHAVE GERAL	197
CONVERSOR DE POTÊNCIA (20 A)	184-3579	1	CONVERSOR ELÉTRICO	152
DISJUNTOR AUTOMÁTICO DE CIRCUITO (135 AMP.)	171-2213	1	PAINEL DE FUSÍVEIS	168
DISJUNTOR AUTOMÁTICO DE CIRCUITO (15 A)	3T-2662	2	CONVERSOR ELÉTRICO	152
	6T-3643	3	PAINEL DE FUSÍVEIS	168
ELEMENTO - AQUECEDOR DE ÁGUA DA CAMISA (120 VOLTS/1500 WATTS)	9G-6655	1	AQUECEDOR DA ÁGUA DO MOTOR	156
ESCOVA (MOTOR DE PARTIDA)	3T-9524	6	MOTOR ELÉTRICO DE PARTIDA	184
FUSÍVEL (10 A)	9W-1442	5	PAINEL DE FUSÍVEIS	168
FUSÍVEL (15 A)	9W-1441	11	PAINEL DE FUSÍVEIS	168
FUSÍVEL (20 A)	9W-1446	3	PAINEL DE FUSÍVEIS	168
FUSÍVEL (5 AMP)	139-5345	1	PAINEL DE FUSÍVEIS	168
LÂMPADA (24 V)	3E-8825	2	CABOS/FIOS ELÉTRICOS - PLATAFORMA	202
		1	SISTEMA DE ILUMINAÇÃO - FARÓIS	164
	7N-1996	1	CABOS/FIOS ELÉTRICOS - PLATAFORMA	202
	9X-3463	1	LÂMPADA - FAROL	163
LÂMPADA (28 V)	7N-9943	1	LÂMPADA - TETO	162
LENTE DA LÂMPADO DO TETO	7T-0020	1	LÂMPADA - TETO	162
LENTE (HOLOFOTE)	158-0248	1	LÂMPADA - FAROL	163
LENTE VERMELHA	6T-7058	1	CABOS/FIOS ELÉTRICOS - PLATAFORMA	202
MOLA	3T-9494	1	MOTOR ELÉTRICO DE PARTIDA	184
MOLA (MOTOR DE PARTIDA)	3T-9494	6	MOTOR ELÉTRICO DE PARTIDA	185
SISTEMA HIDRÁULICO				
BUJÃO DO DRENO	9J-7031	1	TANQUE HIDRÁULICO E FILTRO	502
CADEADO	5P-8502	1	COMANDO HIDRÁULICO	458
CHAVE	5P-8500	1	COMANDO HIDRÁULICO	458
ELEMENTO FILTRANTE - ÓLEO (FLUXO HIDRÁULICO/REVERSO)	1R-0735	1	TANQUE HIDRÁULICO E FILTRO	502
ELEMENTO FILTRANTE - ÓLEO (FLUXO INVERSO) (RESISTENTE A FOGO)	104-6931	1	TANQUE HIDRÁULICO E FILTRO	502
ELEMENTO FILTRANTE - ÓLEO (HIDRÁULICO) (MAIOR DESEMPENHO)	139-1537	1	TANQUE HIDRÁULICO E FILTRO	502
TAMPA - BOCAL DE ENCHIMENTO	7H-1447	1	TANQUE HIDRÁULICO E FILTRO	502
TAMPA CONTRA POEIRA	6V-0852	2	TUBOS - BOMBA	476
		1	TUBOS - CIRCUITO PILOTO	466
	8C-3451	1	TANQUE HIDRÁULICO E FILTRO	502
		1	TUBOS - CIRCUITO PILOTO	464
		1	TUBOS - CIRCUITO PILOTO	470
TELA FILTRANTE	3G-3267	1	TANQUE HIDRÁULICO E FILTRO	502
	5D-7927	1	TANQUE HIDRÁULICO E FILTRO	502
	6E-5066	1	VALVULA REDUTORA E COLETOR	518

PEÇAS DE MANUTENÇÃO

DESCRIÇÃO	NÚMERO DE PEÇA	QUANT	UTILIZADA EM	PÁGINA
TREM DE FORÇA				
BUJÃO DO DRENO	8M-9307	1	ARREFECEDOR DE ÓLEO DA TRANSMISSÃO	220
BUJÃO DO DRENO (ROSCA 7/8-14)	4B-7739	1	DRENO - ECOLOGIA	224
BUJÃO MAGNÉTICO	6V-0439	1	COMANDO FINAL	226
		1	COMANDO FINAL	230
CADEADO	5P-8502	2	TUBOS - ÓLEO DA TRANSMISSÃO	236
CHAVE	5P-8500	1	TUBOS - ÓLEO DA TRANSMISSÃO	236
ELEMENTO FILTRANTE - ÓLEO	132-8876	1	FILTRO - ÓLEO	225
		1	TUBOS - ÓLEO DA TRANSMISSÃO	236
FILTRO - MAGNÉTICO	3T-5298	1	TUBOS - ÓLEO DA TRANSMISSÃO	236
RESPIRO	185-6684	1	TUBOS - ÓLEO DA TRANSMISSÃO	236
TAMPA	191-5517	1	TUBOS - ÓLEO DA TRANSMISSÃO	236
TAMPA CONTRA POEIRA	6V-0852	1	CARCAÇA DAS ENGRENAGENS PLANETÁRIAS E COMPONENTES	208
		3	TUBOS - ÓLEO DA TRANSMISSÃO	236
		1	VÁLVULA DE ALÍVIO	286
		2	VÁLVULA DE PRIORIDADE	284
		4	VÁLVULA PILOTO E MONTAGEM	278
	8C-3447	1	TUBOS - ÓLEO DA TRANSMISSÃO	236
TELA DE SUCÇÃO	4S-8598	1	FILTRO - MAGNÉTICO	264
	8S-9130	1	CARCAÇA DAS ENGRENAGENS PLANETÁRIAS E COMPONENTES	208
TELA FILTRANTE	3T-6471	1	TUBOS - ÓLEO DA TRANSMISSÃO	236

WARTUNGSTEILE

BESCHREIBUNG	ERSATZTEIL-NUMMER	MENGE	VERWENDET IN	SEITE
ARBEITSGERÄTE				
SCHMIERNIPPEL (1/8-27-GEWINDE)	3B-8489	4	AUFREISSER	594
		4	SCHILDSTREBE	534
		2	ZYLINDERAUFHÄNGUNG	558
ELEKTRISCHE ANLAGE UND STARTSYSTEM				
ABDECKGLAS (ARBEITSSCHEIN-WERFER)	158-0248	1	ARBEITSLEUCHTEN	163
BATTERIE	153-5710	2	BATTERIE	145
BATTERIE (12 V)(NASS)	115-2422	2	BATTERIE UND VERDRAHTUNG	140
BÜRSTENSATZ (STARTERMOTOR)	3T-9524	6	STARTERMOTOR	184
ELEKTR. UMFORMER (20 A)	184-3579	1	ELEKTR. UMFORMER	152
FAHRERHAUSLEUCHTENLINSE	7T-0020	1	FAHRERHAUSBELEUCHTUNG	162
FEDER	3T-9494	1	STARTERMOTOR	184
FEDER (STARTERMOTOR)	3T-9494	6	STARTERMOTOR	185
LEUCHTE (24 V)	3E-8825	1	ARBEITSLEUCHTEN	164
		2	FAHRERPLATTFORMVERDRAHTUNG	202
	7N-1996	1	FAHRERPLATTFORMVERDRAHTUNG	202
	9X-3463	1	ARBEITSLEUCHTEN	163
LEUCHTE (28 V)	7N-9943	1	FAHRERHAUSBELEUCHTUNG	162
LINSE - ROT	6T-7058	1	FAHRERPLATTFORMVERDRAHTUNG	202
SCHLÜSSEL	8H-5306	1	TRENNSCHALTER	197
SICHERUNG (10 A)	9W-1442	5	INSTRUMENTENTAFEL-SICHERUNG	168
SICHERUNG (15 A)	9W-1441	11	INSTRUMENTENTAFEL-SICHERUNG	168
SICHERUNG (20 A)	9W-1446	3	INSTRUMENTENTAFEL-SICHERUNG	168
SICHERUNG (5 A)	139-5345	1	INSTRUMENTENTAFEL-SICHERUNG	168
UMLAUFKÜHLWASSERHEIZUNGS-ELEMENT (120 V/1500 W)	9G-6655	1	UMLAUFKÜHLWASSERHEIZUNG	156
UNTERBRECHER (135 A)	171-2213	1	INSTRUMENTENTAFEL-SICHERUNG	168
UNTERBRECHER (15 A)	6T-3643	3	INSTRUMENTENTAFEL-SICHERUNG	168
	3T-2662	2	ELEKTR. UMFORMER	152

WARTUNGSTEILE

BESCHREIBUNG	ERSATZTEIL-NUMMER	MENGE	VERWENDET IN	SEITE
FAHRERHAUS				
DIODENLEUCHTE (LED)	165-5674	1	KLIMAANLAGE	599
FILTERSATZ (FAHRERHAUS-UM-LUFTFILTER)	6T-5068	1	FAHRERHAUSBELÜFTUNG	672
INSTRUMENTENTAFELBELEUCHTUNG	159-9257	1	INSTRUMENTENSATZ	628
		1	INSTRUMENTENSATZ	632
KAPPE MIT ENTLÜFTER	8E-8292	1	SCHEIBENWASCHMITTELBEHÄLTER	700
KEILRIEMEN	216-0349	1	KÄLTEMITTELKOMPRESSOR	610
LEUCHTE (24 V)	3E-8825	2	KLIMAANLAGE	599
	115-1748	1	INSTRUMENTENSATZ	628
		1	INSTRUMENTENSATZ	632
	123-9294	4	INSTRUMENTENSATZ	628
		4	INSTRUMENTENSATZ	632
LUFTFILTER (FAHRERHAUS-FRISCHLUFTFILTER)	6T-0988	1	FAHRERHAUSBELÜFTUNG	672
SCHEIBENWISCHERBLATT (RECHTE U. LINKE TÜREN)	6V-5849	2	SCHEIBENWISCHER	724
SCHEIBENWISCHERBLATT (VORNE U. HINTEN)	6V-5851	2	SCHEIBENWISCHER	724
SICHERHEITSGURT	183-3648	1	FAHRERSITZ	686
		1	FAHRERSITZ	690
SIEB	109-5498	1	KÄLTEMITTELKONDENSATOR U. BEFESTIGUNGSTEILE	612
HYDRAULIKSYSTEM				
ABLASSSTOPFEN	9J-7031	1	HYDRAULIKTANK UND SCHMIERFILTER	502
EINFÜLLSTUTZENKAPPE	7H-1447	1	HYDRAULIKTANK UND SCHMIERFILTER	502
FILTERSIEB	5D-7927	1	HYDRAULIKTANK UND SCHMIERFILTER	502
ÖLFILTERELEMENT (HYDRAULIK/STROMUMKEHRUNG)	1R-0735	1	HYDRAULIKTANK UND SCHMIERFILTER	502
ÖLFILTERELEMENT (HYDRAULISCH) (HOCHLEISTUNG)	139-1537	1	HYDRAULIKTANK UND SCHMIERFILTER	502
ÖLFILTERELEMENT (RÜCKFLUSS) (SCHWER ENTFLAMMBAR)	104-6931	1	HYDRAULIKTANK UND SCHMIERFILTER	502
SCHLÜSSEL	5P-8500	1	HYDRAULIKSYSTEM	458
SCREEN	6E-5066	1	VERTEILER- UND REDUZIERVENTIL	518
SIEB	3G-3267	1	HYDRAULIKTANK UND SCHMIERFILTER	502
STAUBKAPPE	6V-0852	2	HYDRAULIKPUMPE UND LEITUNGEN	476
		1	VORSTEUERLEITUNGEN	466
	8C-3451	1	HYDRAULIKTANK UND SCHMIERFILTER	502
		1	VORSTEUERLEITUNGEN	464
		1	VORSTEUERLEITUNGEN	470
VORHÄNGESCHLOSS	5P-8502	1	HYDRAULIKSYSTEM	458

WARTUNGSTEILE

BESCHREIBUNG	ERSATZTEIL-NUMMER	MENGE	VERWENDET IN	SEITE
KRAFTSTOFFSYSTEM				
KRAFTSTOFFILTER	1R-0762	1	KRAFTSTOFFPUMPE	118
KRAFTSTOFFSIEB	9P-7121	1	KRAFTSTOFFTANK	124
SCHLÜSSEL	5P-8500	1	KRAFTSTOFFTANK	124
SUMPFSIEB (KRAFTSTOFFTANK)	5G-4109	1	KRAFTSTOFFLEITUNGEN	114
VORHÄNGESCHLOSS	5P-8502	1	KRAFTSTOFFTANK	124
WASSERABSCHEIDER UND KRAFTSTOFFILTER	1R-0770	1	WASSERABSCHEIDER- U. KRAFTSTOFFILTER	113
KRAFTÜBERTRAGUNG				
ABLASSSTOPFEN	8M-9307	1	GETRIEBEÖLKÜHLER	220
ABLASSSTOPFEN (7/8-14 GEWINDE)	4B-7739	1	ABLASS (UMWELTFREUNDLICH)	224
ANSAUGSIEB	4S-8598	1	MAGNETSIEB	264
	8S-9130	1	PLANETENANTRIEBSGEHÄUSE U. TEILE	208
ENTLÜFTER	185-6684	1	ÖLLEITUNGEN - KRAFTÜBERTRAGUNG	236
KAPPE	191-5517	1	ÖLLEITUNGEN - KRAFTÜBERTRAGUNG	236
MAGNETSIEB	3T-5298	1	ÖLLEITUNGEN - KRAFTÜBERTRAGUNG	236
MAGNETSTOPFEN	6V-0439	1	SEITENANTRIEB	226
		1	SEITENANTRIEB	230
ÖLFILTERELEMENT	132-8876	1	ÖLFILTER	225
		1	ÖLLEITUNGEN - KRAFTÜBERTRAGUNG	236
SCHLÜSSEL	5P-8500	1	ÖLLEITUNGEN - KRAFTÜBERTRAGUNG	236
SIEB	3T-6471	1	ÖLLEITUNGEN - KRAFTÜBERTRAGUNG	236
STAUBKAPPE	6V-0852	3	ÖLLEITUNGEN - KRAFTÜBERTRAGUNG	236
		1	PLANETENANTRIEBSGEHÄUSE U. TEILE	208
		1	ÜBERDRUCKVENTIL	286
		2	VORRANGVENTIL	284
		4	VORSTEUERVENTIL UND BEFESTIGUNGSTEILE	278
	8C-3447	1	ÖLLEITUNGEN - KRAFTÜBERTRAGUNG	236
VORHÄNGESCHLOSS	5P-8502	2	ÖLLEITUNGEN - KRAFTÜBERTRAGUNG	236
KÜHLSYSTEM				
KÜHLERKAPPE	031-1119	1	KÜHLMITTELBEHÄLTER	94
STAUBKAPPE	157-0670	1	KÜHLWASSERLEITUNGEN	84
WASSERTEMPERATURREGLER (92 GRAD CELSIUS)	4W-4794	1	KÜHLWASSERLEITUNGEN	82

WARTUNGSTEILE

BESCHREIBUNG	ERSATZTEIL-NUMMER	MENGE	VERWENDET IN	SEITE
LAUFWERK				
SCHMIERNIPPEL (1/8-27-GEWINDE)	3B-8489	2	QUERTRAVERSE	354
		2	QUERTRAVERSE	356
SCHMIERNIPPEL (1/8-27 GEWINDE(45 GRAD)	3B-8485	1	QUERTRAVERSE	354
		1	QUERTRAVERSE	356
LUFTEINLASS- UND ABGASSYSTEM				
LUFTFILTER (HAUPTFILTER)	6I-2501	1	LUFTREINIGER	99
LUFTFILTER (SICHERHEITSFILTER)	6I-2502	1	LUFTREINIGER	99
MOTOR (GRUNDAUSFÜHRUNG)				
ABLASSSTOPFEN	5F-0304	1	SCHWUNGRADGEHÄUSE	49
	126-1683	1	MOTORÖLABLASS	36
ELEMENT	185-3159	1	VENTILDECKEL	24
KEILRIEMENSATZ (DREHSTROMGENERATOR)	130-3216	1	RIEMENSCHEIBE - LÜFTER- U. DREHSTROMGENERATOR	60
STAUBKAPPE	6V-0852	1	FITTING	44
MOTORAUSFÜHRUNG				
SCHLÜSSEL	5P-8500	1	MOTOR-EINBAUSATZ	15
VORHÄNGESCHLOSS	5P-8502	1	MOTOR-EINBAUSATZ	15
RAHMEN UND AUFBAU				
SCHLÜSSEL	5P-8500	1	KÜHLERSCHUTZ	336
		1	MOTORVERKLEIDUNG	308
		1	MOTORVERKLEIDUNG	312
SCHRAUBE	106-8187	1	RAHMEN UND GEHÄUSE	298
		1	RAHMEN UND GEHÄUSE	300
VORHÄNGESCHLOSS	5P-8502	2	BATTERIEKASTEN	294
		1	KÜHLERSCHUTZ	336
		1	MOTORVERKLEIDUNG	308
		2	MOTORVERKLEIDUNG	312
SCHMIERSYSTEM				
ÖLFILTER	1R-0716	1	ÖLFILTER	72
STAUBKAPPE	8C-3445	1	ÖLFILTER	72

INDEX

Name	Page
A	
ACCUMULATOR AS	470
ACCUMULATOR GP-PILOT OIL	464
ACCUMULATOR-REFRIGERANT	640
ADJUSTER GP-SEAT	598
ADJUSTER GP-STEER & TMSN CONT	420
AFTERCOOLER GP-AIR	98
AIR CLEANER GP	99
	100
AIR CONDITIONER AR	599
AIR CONDITIONER GP	600
ALARM GP	126
ALTERNATOR GP-CHARGING	128
	132
	134
	136
AXLE GP-POWER TRAIN	206
B	
BATTERY	145
BATTERY & WIRING GP	138
BATTERY BOX GP	294
	296
BATTERY GP	145
BATTERY (12 VOLT)(WET)	140
BEARING-SLEEVE (CAMSHAFT)	26
BIT & CUTTING EDGE GP	569
	570
	571
	572
BLADE & EDGE GP	573
	574
	575
	576
BLADE AR-SEMI-UNIVERSAL	577
BLADE AS	578
	579
BLADE AS-SEMI-UNIVERSAL	580
	581
BLADE AS-STRAIGHT	582
BLADE AS-WIPER (FRONT & REAR)	724
BLADE AS-WIPER (RH & LH DOORS)	724
BLADE GP-ANGLING	583
	584
BLADE GP-LOGGING	585
BLADE GP-SEMI-UNIVERSAL	586
	587
	588
	589
BLADE GP-STRAIGHT	590
	591
BLADE GP-WASTE HANDLING	592
	593
BLOWER GP-CAB	602
	672
BODY AS-OIL PUMP (CONVERTER CHARGING)	262
BODY AS-OIL PUMP (TMSN & CONVERTER SCAVENGE)	262
BODY AS-OIL PUMP (TRANSMISSION CHARGING)	262
BRACE GP-BULLDOZER	534
BREATHER AS	236
BRUSH AS (STARTING MOTOR)	184
BULLDOZER AR	536
BULLDOZER AR-ANGLING	537
	538
	539
	540
BULLDOZER AR-SEMI-UNIVERSAL	541
	542
	543
	544
BULLDOZER AR-STRAIGHT	545
	546
BULLDOZER AS	547
BULLDOZER GP	548
C	
C-FRAME AS	549
	550
	551
C-FRAME GP	552
	554
CAB AR	604
	605
CAB GP	606
CAMSHAFT GP	16
CAP AS	236
CAP AS-RADIATOR	94
CAP-DUST	44
	72
	84
	208
	236
	278
	284
	286
	464
	466
	470
	476
	502
CAP-FILLER	502
CAP GP-FUEL TANK (LOCKABLE)	125
CAP GP-TRACK IDLER	353
CAP-PUSH ON	312

INDEX

Name	Page
	672
CAP-VENTED	700
CARTRIDGE GP-TURBOCHARGER	112
CASE & FRAME GP	298
	300
CASE & PARTS GP-PLANETARY	208
CHASSIS AR	302
	303
CIRCUIT BREAKER AS (135 AMP)	168
CIRCUIT BREAKER AS (15 AMP)	152
	168
CLUTCH & BRAKE GP-STEERING	424
COMPRESSOR GP-REFRIGERANT	609
	610
CONDENSER & MTG GP-REFRIGERANT	612
CONDENSER GP-REFRIGERANT	614
CONTROL & MTG GP-ELECTRONIC	146
CONTROL & MTG GP-ENGINE ELEK	147
CONTROL & MTG GP-PEDAL	211
CONTROL AR-HYDRAULIC	435
CONTROL AR-PILOT HYDRAULIC	436
	437
CONTROL GP-COMMUNICATION (PRODUCT LINK)	158
	160
CONTROL GP-ELECTRONIC	148
CONTROL GP-ENGINE ELECTRONIC	149
CONTROL GP-HANDLE (DOZER)	616
CONTROL GP-IMPLEMENT	616
CONTROL GP-MONITOR	150
CONTROL GP-MONITOR (CATERPILLAR MONITORING SYSTEM)	148
	628
	632
CONTROL GP-PARKING BRAKE	427
CONTROL GP-STEERING & TMSN	212
	214
	216
CONTROL GP-TRANSMISSION HYD	218
CONTROL GP-UNPROGRAMMED	146
	151
	183
CONVERSION AR	617
CONVERTER GP-ELECTRICAL	152
CONVERTER-POWER (20 AMP)	152
CONVERTER-POWER (24 VOLTS TO 12 VOLTS)	202
COOLER GP-ENGINE OIL	79
COOLER GP-TRANSMISSION OIL	220
COUPLING & GUARD GP	222
COVER GP	304
COVER GP-CONSOLE	618
COVER GP-CYLINDER BLOCK	18
COVER GP-FRONT HOUSING	20
	22
COVER GP-VALVE MECHANISM	24
CRANKSHAFT GP	25
CYLINDER & LINES GP-LIFT–LH	440
	444
CYLINDER & LINES GP-LIFT–RH	438
	442
CYLINDER & LINES GP-LIFT (LH)	536
	537
	539
	541
	543
	545
CYLINDER & LINES GP-LIFT (RH)	536
	537
	539
	541
	543
	545
CYLINDER AR-TILT	446
CYLINDER BLOCK AS	26
CYLINDER BLOCK GP	28
	29
CYLINDER GP-BULLDOZER LIFT	448
CYLINDER GP-LIFT	450
CYLINDER GP-RIPPER LIFT	452
CYLINDER GP-TILT	454
	456
CYLINDER HEAD AS	30
CYLINDER HEAD GP	32
	34

D

DAMPER & PULLEY GP	35
DETENT GP	428
DRAIN GP-ECOLOGY	223
	224
DRAIN GP-ENGINE OIL	36
DRAWBAR GP	305
	306
DRIVE GP-FAN	38
	40
DRIVE GP-PUMP	41
DUST EJECTOR GP	102

E

ELBOW GP-AIR INLET	103
ELECTRONICS AR-MACHINE	1
ELECTRONICS GP-MACHINE	153
ELECTRONICS GP-MONITOR	154
ELEMENT	24
ELEMENT AS-JACKET WATER HEATER (120 VOLTS/1500 WATTS)	156
ENCLOSURE GP-ENGINE	308

INDEX

Name	Page
	312
ENCLOSURE GP-FENDER	316
ENGINE AR	9
	10
	11
	12
ENGINE AR-CORE	13
	14
EQUALIZER BAR GP	354
	356
	358
EXTENSION GP-BACKREST	690
EXTENSION GP-BACKREST (FABRIC)	686
F	
FAN-ALTERNATOR	128
FAN GP–REVERSIBLE	80
FAN GP-BLOWER	81
FASTENER GP-CYLINDER HEAD	42
FASTENER GP-FRONT HOUSING	43
FENDER GP	318
FILM	216
	427
FILM (EXTERIOR SOUND)	6
FILM GP	727
	728
	729
FILM-IDENTIFICATION	628
	632
	638
	731
	733
FILM-IDENTIFICATION (GROUP & SEQUENCE NO.)	602
	614
FILM-IDENTIFICATION (12 VOLT)	731
	733
FILM-INSTRUCTION	168
	566
FILM-INSTRUCTION (DOZER CONTROL)	730
	733
FILM-INSTRUCTION (RIPPER)	435
FILM-INSTRUCTION (SEAT ADJUSTMENT)	694
FILM-MONITOR	731
	733
FILM-NOTICE (RADIO)	627
FILM-OPERATOR	6
FILM (SEAT CUSHION IDENTIFICATION)	660
FILM-STRIPE (LH)	335
FILM-STRIPE (LH SIDE)	334
FILM-STRIPE (RH)	335
FILM-STRIPE (RH SIDE)	334
FILM-WARNING	360
	362
	364
	366
	368
	370
FILM-WARNING (PARKING BRAKE CYLINDER)	372
	374
FILM-WARNING (PRODUCT LINK RADIO)	158
	160
FILM (WATER HEATER)	156
FILTER-AIR (CAB FRESH AIR)	672
FILTER AS (CAB REC AIR)	672
FILTER AS-ENGINE OIL	72
FILTER AS-FUEL	118
FILTER AS-WATER SEP & FUEL	113
FILTER ELEMENT AS-AIR (PRIMARY)	99
FILTER ELEMENT AS-AIR (SECONDARY)	99
FILTER ELEMENT AS-OIL	225
	236
FILTER ELEMENT AS-OIL (HYDRAULIC) (HIGHER PERFORMANCE)	502
FILTER ELEMENT AS-OIL (HYDRAULIC/REVERSE FLOW)	502
FILTER ELEMENT AS-OIL (REVERSE FLOW) (FIRE RESISTANT)	502
FILTER GP-ENGINE OIL	72
FILTER GP-OIL	225
	502
FILTER GP-OIL (TRANSMISSION)	236
FILTER GP-WATER SEP & FUEL	113
FINAL DRIVE GP	226
	230
FITTING GP	44
FITTING-GREASE (1/8-27 THD)	354
	356
	534
	558
	594
FITTING-GREASE (1/8-27 THD)(45 DEGREE)	354
	356
FLOOR MAT	618
	666
FLYWHEEL GP	45
FRAME GP-TELESCOPING RECOIL	360
	362
FRAME GP-TELESCOPING RECOIL–LH	366
	368
	374
FRAME GP-TELESCOPING RECOIL–RH	364
	370
	372
FRAME GP-TELESCOPING RECOIL (LH)	390
	417
	418
FRAME GP-TELESCOPING RECOIL (RH)	390

INDEX

Name	Page
	417
	418
FUMES DISPOSAL GP	74
FUSE (10 AMP)	168
FUSE (15 AMP)	168
FUSE (20 AMP)	168
FUSE (5 AMP)	168

G

GAUGE GP-OIL LEVEL (DIPSTICK)	75
GEAR GP-BEVEL & TRANSFER	232
GEAR GP-FRONT	46
GEAR GP-REAR	47
GEAR GP-STEERING	430
	432
GENERAL AR	2
	3
GLASS	606
GLASS-FIXED-LH (TINTED)	714
GLASS-FIXED-RH (TINTED)	713
GLASS-REAR SLIDER (TINTED)	720
GLASS-SLIDER (LH) (TINTED)	716
GLASS-SLIDER-RH (TINTED)	718
GLASS (TINTED)	606
	708
	709
	710
GRADER AR-FINE	4
GRID GP-SAND BLAST ERODING	320
GRILL GP	321
	322
GUARD AS-RADIATOR	324
	326
GUARD GP-BOTTOM	328
	329
	330
	332
GUARD GP-FUEL TANK	334
	335
GUARD GP-PRECLEANER	104
GUARD GP-RADIATOR	336
GUARD GP-REAR	338
GUARD GP-TRACK GUIDE	339
	340
GUARD GP-TRACK ROLLER	341
	342
	343
GUARD GP-TRANSMISSION	235
GUIDING AR-UNDERCARRIAGE	376
	377
	378
	379

H

HANDHOLD GP	620
	621
HARNESS AS (FOR 14 GA WIRE)	177
HARNESS AS (FOR 16-18 GA WIRE)	177
HARNESS AS (SOCKET)	200
HARNESS AS (SOCKET) (16-18 GA WIRE)	182
HARNESS AS (14 GA WIRE)	182
HEATER GP-AIR INLET	155
HEATER GP-CAB	622
HEATER GP-JACKET WATER	156
HOOD & GUARD GP	344
HOOK GP-FRONT PULL	346
	347
HORN AS (24 VOLT)(HIGH TONE)	139
HORN AS (24 VOLT)(LOW TONE)	139
HOUSING GP-FLYWHEEL	48
	49
HOUSING GP-FRONT	50
HOUSING GP-SEAT SUSPENSION	624
HYDRAULIC AR	458

I

IDLER GP-TRACK	380
	381
INDICATOR AS	628
	632
INSTALLATION AR-COMMUNICATION	158
INSTALLATION AR-ENGINE	15
INSTALLATION GP-COMMUNICATION	160
INSTALLATION GP-RADIO	627
INSTRUMENT GP	628
	632

K

KEY	15
	124
	197
	236
	308
	312
	336
	458
KIT-AIR CLEANER CLAMP	99
KIT-BEARING	136
	625
KIT-BEARING (STARTING MOTOR)	188
KIT-BELT TETHER	694
KIT-BIAS PISTON	498
KIT-BRUSH (STARTING MOTOR)	188
	194
KIT-BUMPER	624

INDEX

Name	Page
KIT-BUSHING (STARTING MOTOR)	194
KIT-CATCH	716
	718
	720
KIT-CONNECTING PLUG (2 PIN)	182
	200
KIT-CONNECTING PLUG (2 PIN) (INCLUDES PLUG AS, WEDGE & SEAL)	198
KIT-CONNECTING PLUG (3 PIN)	178
	200
KIT-CONNECTING PLUG (3 PIN) (PRESSURE SENSOR)	177
KIT-CONNECTING PLUG (6 PINS)	702
KIT-CONNECTING PLUG (8 PIN)	171
	670
KIT-CONTROL PISTON	498
KIT-DIAL SENSOR	124
KIT-DIODE JUNCTION STUD	129
KIT-FASTENER (SEAT SUSPENSION)	696
KIT-FOLLOWER	625
KIT-HARDWARE	136
KIT-HARDWARE (STARTING MOTOR)	188
KIT-INDICATOR	624
KIT-INSULATOR (STARTING MOTOR)	194
KIT-LEAF SPRING	713
	714
	722
KIT-LEVER (STARTING MOTOR)	194
KIT-OUTPUT TERMINAL	128
KIT-POSITIVE DIODE	129
KIT-RECEPTACLE (12 PIN)	427
KIT-RECEPTACLE (2 PIN)	124
	126
	138
	139
	172
	180
	196
	202
	291
	522
	602
	614
	632
	640
KIT-RECEPTACLE (3 PIN)	162
	174
	175
	176
	181
	200
	464
	470
	628
	629
	632
	633
KIT-RECEPTACLE (4 PIN)	289
	464
	470
KIT-RECEPTACLE (6 PIN)	166
	170
	434
	628
	651
	652
	653
	654
	655
KIT-RECEPTACLE (8 PIN)	628
	632
KIT-RELAY TERMINAL	128
KIT-RETAINING BOLT	151
KIT-ROLLER	696
KIT-RUNNER GUIDE	716
	718
	720
KIT-SEAL	289
	291
	532
KIT-SHAFT SHIM (17 SHIMS)	498
KIT-SLIDER BLOCK	691
	692
	693
KIT-SPRING	624
KIT-STARTING MOTOR PIN	188
KIT-STARTING MOTOR SEAL	188
KIT-STOP RAIL	722
KIT-SUSPENSION BOOT	694
KIT-SUSPENSION KNOB	624
KIT-SUSPENSION ROLLER	694
KIT-TERMINAL	136
KIT-TERMINAL (STARTING MOTOR)	185
KIT-TETHER	696
KIT-WASHER (STARTING MOTOR)	188
KIT-WIPER BLADE	724
KIT-WIRING HARNESS	696
KNOB	420
	606
	682
KNOB AS	464
	470
KNOB-CONTROL	600
KNOB-HORN	138
	202
KNOB-LUMBAR	658
	660

INDEX

Name	Page
L	
LAMP-DIODE (LED)	599
LAMP GP-DOME	162
LAMP GP-FLOOD	163
LAMP (24 VOLT)	163 164 202 599 628 632
LAMP (28 VOLT)	162
LENS AS (FLOODLIGHT)	163
LENS-DOME LAMP	162
LENS-RED	202
LIFTING GP-ENGINE	51
LIGHT-DASH PANEL	628 632
LIGHTING GP-FLOOD	164
LINER GP-CAB	636 638
LINES GP-AIR	105 106
LINES GP-AIR CONDITIONER	640
LINES GP-ENGINE OIL	76
LINES GP-FUEL	114
LINES GP-FUEL FILTER	117
LINES GP-HEATER	646
LINES GP-LIFT CYLINDER	460
LINES GP-PILOT	464 470
LINES GP-POWER TRAIN OIL	236
LINES GP-PUMP	476
LINES GP-RIPPER	480 482
LINES GP-TILT & TIP CYLINDER	484
LINES GP-TILT CYLINDER	486 488 490 492
LINES GP-TURBOCHARGER OIL	77
LINES GP-WATER	82 84
LINK AS-TRACK	382 383 384 385 386
M	
MANIFOLD & VALVE GP	242 243
MANIFOLD GP-EXHAUST	108
MANIFOLD GP-INLET	494
MIRROR	649 650
MIRROR GP-REAR VIEW	649 650
MODIFICATION AR-BULLDOZER	555 556
MODULE GP-DISPLAY	166
MODULE GP-QUAD GAUGE	651
MOTOR AS-WINDOW WIPER	652 653 724
MOTOR GP-ELECTRIC	614
MOTOR GP-WINDOW WIPER	654 655
MOUNTING GP-ALTERNATOR	52
MOUNTING GP-CAB	656
MOUNTING GP-CARRIER ROLLER	387 388
MOUNTING GP-CONTROL VALVE	495
MOUNTING GP-CYLINDER	558
MOUNTING GP-ENGINE FLEXIBLE	53
MOUNTING GP-FAN DRIVE	54
MOUNTING GP-GRILL	322
MOUNTING GP-RIPPER	560
MOUNTING GP-ROPS	657
MOUNTING GP-TRANSMISSION	244
MOUNTING GP-VALVE	496 497
MUFFLER GP	109
P	
PADLOCK GP	15 124 236 294 308 312 336 458
PAN GP-BACKREST	658 659 660
PAN GP-OIL	55
PANEL GP-FUSE	168
PEDAL GP-GOVERNOR & BRAKE	246
PISTON & ROD GP	56
PISTON GP	57
PIVOT BAR GP	389
PLANETARY GP-TRANSMISSION	248 254
PLATE & FILM GP	730 732
PLATE-WARNING (RECOIL SPRING)	370
PLATFORM GP	662

INDEX

Name	Page
PLATFORM GP-CAB	666
PLUG	298
	300
PLUG AS	670
PLUG AS-WIRING	170
	171
PLUG-DRAIN	36
	49
	220
	502
PLUG-DRAIN (7/8-14 THD)	224
PLUG GP-ENGINE	58
PLUG-MAGNETIC	226
	230
PLUG-SEAL	289
POWER TRAIN AR	259
	260
PRESSURIZER GP-CAB	672
PULLEY GP-CRANKSHAFT	59
PULLEY GP-FAN & ALT DRIVE	60
PUMP GP-ENGINE OIL	78
PUMP GP-FUEL	118
PUMP GP-GEAR	261
	262
PUMP GP-GEAR (3 SECTION) (TMSN & CONV CHARGING & SCAV)	261
PUMP GP-GEROTOR	78
PUMP GP-PISTON	498
PUMP GP-UNIT INJECTION	120
	121
PUMP GP-UNIT INJECTOR HYD	122
	123
PUMP GP-WATER	86
	87
	88
PUSH ARM GP	562
	564

R

Name	Page
RADIATOR GP	90
	92
RECEIVER-DRYER GP (REFRIGERANT)	640
RECEPTACLE AS-POWER (12 VOLT)	202
RECLINER GP-SEAT	675
REGULATOR-WATER TEMPERATURE (92 DEG C.)	82
RIM AS-DOUBLE FLANGE	396
	397
RIM AS-SINGLE FLANGE	399
RIPPER AR	566
RIPPER GP	594
ROCKER ARM GP	62
	63
ROLLER AR	390
ROLLER AR-TRACK	391
	392
ROLLER GP-TRACK CARRIER	394
ROLLER GP-TRACK-DOUBLE FLANGE	396
	397
	398
ROLLER GP-TRACK-SINGLE FLANGE	399
	400
ROPS GP	676
	678
ROTATING GP-PUMP	500

S

Name	Page
SCREEN	518
SCREEN AS	236
	502
	612
SCREEN GP-MAGNETIC	236
	264
SCREEN GP-PROTECTION	679
	680
SCREEN-SUCTION	208
	264
SCREEN-SUMP (FUEL TANK)	114
SCREW-DRIVE (NO 4X3/16 IN)	368
	370
SCREW-DRIVE (3/16 X 1/4 IN)	370
SEAL GP-CRANKSHAFT	64
SEAL GP-FUEL INJECTOR	65
SEAL GP-HOOD	348
SEALANT	155
SEALANT-GASKET	50
	55
	103
SEAT BELT GP	686
	690
SEAT GP	681
	682
	686
	688
	690
SEAT GP–FABRIC	684
SEAT GP-SUSPENSION	691
	692
	693
SEGMENT GP-SPROCKET	265
SENDER AS-FUEL LEVEL	124
SENDER-TEMPERATURE	138
SENSOR GP-ELECTRONIC	172
SENSOR GP-POSITION	174
	175
	176
SENSOR GP-POSITION (SPRINGLESS)	214
SENSOR GP-PRESSURE	177

INDEX

Name	Page
	178
SENSOR GP-PRESSURE (ATMOSPHERIC)	172
SENSOR GP-PRESSURE (INJECTION ACTUATION)	172
SENSOR GP-PRESSURE (OIL PRESSURE)	172
SENSOR GP-PRESSURE (TURBO INLET)	138
SENSOR GP-PRESSURE (TURBO OUTLET)	172
SENSOR GP-SPEED	179
	180
SENSOR GP-SPEED (ENGINE)	139
SENSOR GP-SPEED (MAGNETIC-HIGH OUTPUT)	255
SENSOR GP-SPEED (TRANSMISSION)	139
SENSOR GP-TEMPERATURE	181
	182
SENSOR GP-TEMPERATURE (COOLANT)	172
SENSOR GP-TEMPERATURE (INLET AIR)	172
SENSOR GP-TEMPERATURE (TRANSMISSION)	138
SERVICE GP-POWER TRAIN	183
SHAFT GP-MAIN DRIVE	266
SHIELD GP-EXHAUST	110
SLIDE	707
	711
	712
SOFTWARE GP-MONITOR	148
	154
SOLENOID AS (STARTING MOTOR 24 VOLT)	185
SOLENOID AS (24 VOLT)	188
SPRING	184
SPRING (STARTING MOTOR)	185
STARTING MOTOR GP-ELECTRIC	184
	188
	190
	191
	192
	194
STRAINER AS	502
STRAINER-FUEL	124
SUPPORT GP-CONTROL	434
SUPPORT GP-ENGINE	66
SUPPRESSION AR-SOUND	5
	6
SUSPENSION GP-SEAT	694
	696
SWASHPLATE GP	501
SWEEP GP	350
SWITCH AS	164
	599
SWITCH AS (BLOWER)	628
SWITCH AS-HORN	138
	202
SWITCH AS-KEY START	632
SWITCH AS-KEY START (IGNITION)	628
SWITCH AS (LIGHT)	628
SWITCH AS (LIGHT SWITCH)	632
SWITCH AS-LIMIT	214
	246
	464
	470
SWITCH AS-MAGNETIC (24 VOLT) (INLET AIR HEATER)	138
SWITCH AS-PRESSURE (A/C)	640
SWITCH AS-PUSH BUTTON (AUTO KICK DOWN)	629
	633
SWITCH AS-PUSH BUTTON (BY DIRECTIONAL MODE)	629
SWITCH AS-PUSH BUTTON (BY-DIRECTIONAL MODE)	633
SWITCH AS-PUSH BUTTON (DEFAULT DISPLAY)	632
SWITCH AS-PUSH BUTTON (DISPLAY MODE)	628
SWITCH AS-PUSH BUTTON (DOWNSHIFT)	434
SWITCH AS-PUSH BUTTON (UPSHIFT)	434
SWITCH AS-ROCKER	164
	599
SWITCH AS-ROCKER (PARKING BRAKE)	427
SWITCH AS-ROCKER (24 VOLT)(SEALED)(ILLUMINATED)	202
SWITCH AS-ROTARY (WIPER/WASHER) (FRONT)	638
SWITCH AS-ROTARY (WIPER/WASHER) (LH DOOR)	638
SWITCH AS-ROTARY (WIPER/WASHER) (REAR)	638
SWITCH AS-ROTARY (WIPER/WASHER) (RH DOOR)	638
SWITCH AS-THERMOSTAT	600
SWITCH AS (24 VOLT)(ILLUMINATED) (THROTTLE)	202
SWITCH GP-BYPASS	196
SWITCH GP-BYPASS (POWERTRAIN FILTER)	138
SWITCH GP-DISCONNECT	197
SWITCH GP-MAGNETIC	198
SWITCH GP-MAGNETIC (START RELAY)	168

T

Name	Page
TANK & FILTER GP-HYDRAULIC	502
TANK GP-COOLANT	94
TANK GP-FUEL	124
	125
TANK GP-WATER	96
TANK GP-WINDOW WASHER	698
	700
TOOTH GP-RIPPER	596
	597

INDEX

Name	Page
TORQUE CONVERTER GP	268
	270
	272
TRACK ADJUSTER & RECOIL GP	402
TRACK GP–2 REQUIRED	404
	405
	406
	407
	408
	409
	410
	411
	412
	413
	414
	415
	416
TRANSMISSION AR	275
	276
TRUNNION GP-BULLDOZER	567
	568
TRUNNION GP-ENGINE	67
TURBOCHARGER GP	111
	112

U

UNDERCARRIAGE AR	417
	418
UNIVERSAL JOINT GP	277

V

V-BELT	610
V-BELT SET (ALTERNATOR)	60
VALVE	502
VALVE & MTG GP-PILOT	278
VALVE AS	640
VALVE AS-AIR CONDITIONER (HIGH SIDE)	640
VALVE AS-AIR CONDITIONER (LOW SIDE)	640
VALVE AS-CHECK (WIPER/WASHER SYSTEM)	698
VALVE AS-RELIEF	284
VALVE AS-WATER	622
VALVE-BALL	114
VALVE-BREAKER RELIEF	476
VALVE-BYPASS	72
VALVE-CHECK	292
VALVE-DRAIN	298
	300
VALVE-FILL	402
VALVE GP	528
	531
VALVE GP-BALL	464
	470
VALVE GP-CHECK	494
	506
VALVE GP-CONTROL	280
	508
	510
	512
	514
	516
VALVE GP-FLUID SAMPLING	72
	84
	237
	466
	472
	502
VALVE GP-MANIFOLD & REDUCING	518
VALVE GP-MODULATING	218
	282
VALVE GP-PILOT	520
	522
VALVE GP-PILOT CARTRIDGE	524
	525
VALVE GP-PILOT CARTRIDGE (DOZER LOWER)	522
VALVE GP-PILOT CARTRIDGE (DOZER RAISE)	522
VALVE GP-PILOT CARTRIDGE (DOZER TILT LEFT)	522
VALVE GP-PILOT CARTRIDGE (DOZER TILT RIGHT)	522
VALVE GP-PILOT CARTRIDGE (RIPPER LIFT)	520
VALVE GP-PILOT CARTRIDGE (RIPPER LOWER)	520
VALVE GP-PRESS & FLOW CMPNSTR	526
VALVE GP-PRESSURE REDUCING	518
	527
VALVE GP-PRIORITY	284
VALVE GP-QUICK-DROP	528
VALVE GP-RELIEF	286
	288
	518
	530
	531
	532
VALVE GP-SHUTOFF	646
VALVE GP-SHUTTLE	533
VALVE GP-SOLENOID	289
	290
	291
VALVE GP-TRANSMISSION CONTROL	292
VALVE MECHANISM GP	68
	69
VALVE-POPPET	530
VALVE (RELIEF)	402
VALVE-RELIEF	286

INDEX

Name	Page
VALVE-SHUTOFF	90

W

WASHER GP-WINDOW	702
WASTE HANDLING AR	7
WASTE HANDLING GP	8
WEATHERSTRIP	716
	718
	720
WINDOW AS-SLIDING–LH	706
WINDOW AS-SLIDING–REAR	704
WINDOW AS-SLIDING–RH	705
WINDOW GP-CAB	713
WINDOW GP-CAB–LH	710
	712
	714
	716
WINDOW GP-CAB–REAR	707
	708
	720
	722
WINDOW GP-CAB–RH	709
	711
	713
	718
WINDOW GP-CAB (LH)	710
WINDOW GP-CAB (LH) (SLIDING)	706
WINDOW GP-CAB (REAR)	708
WINDOW GP-CAB (REAR)(SLIDING)	704
WINDOW GP-CAB (RH)	709
WINDOW GP-CAB (RH) (SLIDING)	705
WIPER GP-WINDOW	724
WIPER PIVOT GP	726
WIRING GP-ELECTRONIC CONTROL	200
WIRING GP-PLATFORM	202
WIRING GP-THROTTLE	205

Y

YOKE GP	70

INDEX

Désignation	Page

A

ACCUMULATEUR - HUILE PILOTE (ASS)	464
ACCUMULATEUR - RÉFRIGÉRANT	640
ACCUMULATEUR (ENS)	470
ALTERNATEUR DE CHARGE (ASS)	132
	134
	136
ALTERNATEUR DE CHARGE (ASS)	128
ALTERNATEUR-VENTILATEUR	128
AMORTISSEUR DE VIBRATIONS ET POULIE (ASS)	35
AMPOULE (24 VOLTS)	163
	164
	202
	599
	628
	632
AMPOULE (28 VOLTS)	162
ARBRE A CAMES (ASS)	16
ARBRE DE TRANSMISSION (ASS)	206
ARBRE D'ENTRAINEMENT PRINCIPAL	266
ARCEAUX DE DÉBARDAGE (ASS)	350
AUTOCOLLANT	216
	427
AUTOCOLLANT - CONDUCTEUR	6
AUTOCOLLANT DE MISE EN GARDE	360
	362
	364
	366
	368
	370
AUTOCOLLANT DE MISE EN GARDE (CYLINDRE DE FREIN DE STATIONNEMENT)	372
	374
AUTOCOLLANT DE MISE EN GARDE (RADIO DE LIAISON DE PRODUIT)	158
	160
AUTOCOLLANT D'IDENTIFICATION	628
	632
	638
	731
	733
AUTOCOLLANT D'IDENTIFICATION (ASSEMBLAGE ET NO DE SÉQUENCE)	602
	614
AUTOCOLLANT D'IDENTIFICATION (12 VOLTS)	731
	733
AUTOCOLLANT (IDENTIFICATION DU COUSSIN DE SIÈGE)	660
AUTOCOLLANT (NIVEAU SONORE EXTÉRIEUR)	6
AUTOCOLLANT (RÉCHAUFFEUR D'EAU)	156
AVERTISSEUR (ASS)	126
AXE DE CULBUTEUR (ASS)	62
	63

B

BAGUE (ARBRE À CAMES)	26
BALAI D'ESSUIE-GLACE (ENS)	578
	579
BALAI D'ESSUIE-GLACE (ENS) (AVANT ET ARRIERE)	724
BALAI D'ESSUIE-GLACE (ENS) (PORTIERES DROITE ET GAUCHE)	724
BALANCIER DE SUSPENSION (ASS)	356
	358
BALANCIER DE SUSPENSION (ASS)	354
BANDE AUTOCOLLANTE (CÔTÉ DROIT)	334
BANDE AUTOCOLLANTE (CÔTÉ GAUCHE)	334
BANDE AUTOCOLLANTE (DROITE)	335
BANDE AUTOCOLLANTE (GAUCHE)	335
BANDE MÉTÉOROLOGIQUE	716
	718
	720
BARRE D'ATTELAGE (ASS)	305
	306
BATI EN C (ASS)	552
	554
BATI EN C (ENS)	549
	550
	551
BATTERIE	145
BATTERIE (ASS)	145
BATTERIE ET CÂBLAGE	138
BATTERIE (12 VOLTS)(HUMIDE)	140
BLINDAGE AR	338
BLINDAGE DE TRANSMISSION	235
BLINDAGE INFÉRIEUR (ASS)	328
	329
	330
	332
BLOC-CYLINDRES - COUVERCLE (ASS)	18
BLOC-CYLINDRES (ASS)	28
	29
BLOC-CYLINDRES (ENS)	26
BOÎTE DE VITESSES (VERSION)	275
	276
BOÎTE PLANÉTAIRE (ASS)	248
	254
BOUCHON - CABLAGE (ENS)	171
BOUCHON - CABLAGE (ENS)	170
BOUCHON À ÉVENT	700
BOUCHON À VISSER	312
	672
BOUCHON AIMANTÉ	226
	230

INDEX

Désignation	Page
BOUCHON DE GOULOTTE DE REMPLISSAGE	502
BOUCHON DE MOTEUR (ASS)	58
BOUCHON DE RADIATEUR (ENS)	94
BOUCHON DE RÉSERVOIR À CARBURANT (ASS) (VERROUILLABLE)	125
BOUCHON DE VIDANGE	36
	49
	220
	502
BOUCHON DE VIDANGE (FILETS DE 7/8-14)	224
BOUCHON FILETÉ	298
	300
BOUCHON-JOINT	289
BOULONNERIE DE CARTER AV (ASS)	43
BOULONNERIE DE LA CULASSE (ASS)	42
BOUTON	420
	606
	682
BOUTON-AVERTISSEUR	138
	202
BOUTON DE COMMANDE	600
BOUTON-LOMBAIRE	658
	660
BRAS DE POUSSÉE (ASS)	562
	564
BROSSE (ENS) (DÉMARREUR)	184
BULLDOZER À ORIENTATION (VERSION)	537
	538
	539
	540
BULLDOZER (ASS)	548

C

CABINE - REVÊTEMENT (ASS)	636
	638
CABINE (ASS)	606
CABINE (VERSION)	604
	605
CABLAGE - PLATE-FORME (ASS)	202
CABLAGE (ASS)-ACCELERATEUR	205
CACHE-SOUPAPES (ASS)	24
CADENAS (ASS)	15
	124
	236
	294
	308
	312
	336
	458
CANALISATIONS A COMMANDE PILOTE (ASS)	464
	470
CANALISATIONS D'AIR (ASS)	105
	106
CANALISATIONS DE CARBURANT (ASS)	114
CANALISATIONS DE CHAUFFAGE (ASS)	646
CANALISATIONS DE CLIMATISEUR (ASS)	640
CANALISATIONS DE POMPE (ASS)	476
CANALISATIONS DE VÉRIN DE LEVAGE (ASS)	460
CANALISATIONS DE VÉRIN D'INCLIN. ET D'INCIDENCE	484
CANALISATIONS D'EAU (ASS)	82
	84
CANALISATIONS D'HUILE DE TRANSMISSION (ASS)	236
CANALISATIONS D'HUILE DE TURBOCOMPRESSEUR (ASS)	77
CANALISATIONS D'HUILE MOTEUR (ASS)	76
CANALISATIONS DU FILTRE A CARBURANT (ASS)	117
CANALISATIONS DU RIPPER (ASS)	480
	482
CANALISATIONS DU VÉRIN D'INCLINAISON (ASS)	486
	488
	490
	492
CAPOT ET PROTECTION (ASS)	344
CAPTEUR DE PRESSION (ASS)	177
CAPTEUR DE PRESSION (ASS)	178
CAPTEUR DE PRESSION (ASS) (ADMISSION DE TURBOCOMPRESSEUR)	138
CAPTEUR DE PRESSION (ASS) (ATMOSPHÉRIQUE)	172
CAPTEUR DE PRESSION (ASS) (COMMANDE D'INJECTION)	172
CAPTEUR DE PRESSION (ASS) (PRESSION D'HUILE)	172
CAPTEUR DE PRESSION (ASS) (SORTIE DE TURBOCOMPRESSEUR)	172
CAPTEUR DE TEMPERATURE (ASS)	181
	182
CAPTEUR DE TEMPERATURE (ASS) (ADMISION D'AIR)	172
CAPTEUR DE TEMPERATURE (ASS) (BOÎTE DE VITESSES)	138
CAPTEUR DE TEMPERATURE (ASS) (LIQUIDE DE REFROIDISSEMENT)	172
CAPTEUR DE VITESSE (ASS)	179
	180
CAPTEUR DE VITESSE (ASS) (BOÎTE DE VITESSES)	139
CAPTEUR DE VITESSE (ASS) (MAGNÉTIQUE - RENDEMENT ÉLEVÉ)	255
CAPTEUR DE VITESSE (ASS) (MOTEUR)	139
CAPTEUR ELECTRONIQUE (ASS)	172
CARENAGE - GARDE-BOUE (ASS)	316

INDEX

Désignation	Page
CARENAGE DE MOTEUR (ASS)	308
	312
CARTER AV (ASS)	50
CARTER DE VOLANT (ASS)	48
	49
CARTER TELESCOPIQUE DE MECANISME AMORTISSEUR	360
	362
	364
	366
	368
	370
	372
	374
CARTER TELESCOPIQUE DE MECANISME AMORTISSEUR (DROITE)	390
	417
	418
CARTER TELESCOPIQUE DE MECANISME AMORTISSEUR (GAUCHE)	390
	417
	418
CEINTURE DE SECURITE (ASS)	686
	690
CHAINES (ASS)	404
	405
	406
	407
	408
	409
	410
	411
	412
	413
	414
	415
	416
CHAPEAU DE ROUE AV (CHAINE) (ASS)	353
CHAPEAU (ENS)	236
CHÂSSIS ET CARTER (ASS)	298
	300
CHAUFFAGE - ENTRÉE D'AIR (ASS)	155
CHAUFFAGE DE CABINE (ASS)	622
CLAPET	502
CLAPET A BILLE	114
CLAPET ANTI-RETOUR	292
CLAPET (ASS)	528
	531
CLAPET CHAMPIGNON	530
CLAPET DE DECHARGE	284
	286
CLAPET DE DECHARGE (ASS)	286
	288
	518
	530
	531
	532
CLAPET DE DÉCHARGE HYDRAULIQUE	476
CLAPET DE RETENUE (ENS)	494
	506
CLAPET DE RETENUE (ENS) (SYSTÈME D'ESSUIE GLACE/LAVE-GLACE)	698
CLAPET (DÉTENTE)	402
CLAPET (ENS)	640
CLÉ	15
	124
	197
	236
	308
	312
	336
	458
CLIMATISEUR (ASS)	600
CLIMATISEUR (VERSION)	599
COFFRE DE BATTERIE (ASS)	294
	296
COLLECTEUR D'ADMISSION (ASS)	494
COLLECTEUR D'ÉCHAPPEMENT (ASS)	108
COLLECTEUR ET SOUPAPE (ASS)	242
	243
COMMANDE DE COMMUNICATION (ASS) (LIAISON DE PRODUIT)	158
	160
COMMANDE DE DIRECTION ET BOITE DE VITESSES	212
	214
	216
COMMANDE DE FREIN DE STATIONNEMENT (ASS)	427
COMMANDE DE POIGNÉE (ASS) (BULLDOZER)	616
COMMANDE D'EQUIPEMENT (ASS)	616
COMMANDE ÉLECTRONIQUE - CABLAGE	200
COMMANDE ELECTRONIQUE DE BOITE (ASS)	148
COMMANDE ELECTRONIQUE DE MOTEUR (ASS)	149
COMMANDE ELECTRONIQUE ET MONTAGE (ASS)	146
COMMANDE ET MONTAGE - MOTEUR	147
COMMANDE ET MONTAGE DE PÉDALE (ASS)	211
COMMANDE HYDRAULIQUE DE BOÎTE (ASS)	218
COMMANDE HYDRAULIQUE (VERSION)	435
COMMANDE NON PROGRAMMEE (ASS)	146
	151
	183
COMPOSANTS ÉLECTRONIQUES DE LA MACHINE (VERSION)	1

INDEX

Désignation	Page
COMPRESSEUR DE REFRIGERANT (ASS)	609, 610
CONDENSATEUR ET MONTAGE (RÉFRIGÉRANT)	612
CONDENSEUR DE RÉFRIGÉRANT	614
CONTACTEUR DE DÉMARRAGE À CLÉ (ENS)	632
CONTACTEUR DE DÉMARRAGE À CLÉ (ENS) (ALLUMAGE)	628
CONTACTEUR (ENS)	164, 599
CONTACTEUR (ENS) (ÉCLAIRAGE)	628
CONTACTEUR (ENS) (INTERRUPTEUR D'ÉCLAIRAGE)	632
CONTACTEUR (ENS) (SOUFFLANT)	628
CONTACTEUR (ENS) (24 VOLTS) (ILLUMINÉ) (ACCÉLÉRATEUR)	202
CONTACTEUR MAGNETIQUE (ASS)	198
CONTACTEUR MAGNETIQUE (ASS) (RELAIS DE DÉMARRAGE)	168
CONTACTEUR MAGNETIQUE (ENS) (24 VOLTS) (RÉCHAUFFEUR D'AIR D'ADMISSION)	138
CONVERTISSEUR DE COUPLE (ASS)	268, 270, 272
CORPS-POMPE À HUILE (ENS) (CHARGE DE BOÎTE DE VITESSES)	262
CORPS-POMPE À HUILE (ENS) (CHARGE DE CONVERTISSEUR)	262
CORPS-POMPE À HUILE (ENS) (REPRISE DE BOÎTE ET GAVAGE DE CONVERTISSEUR)	262
COUDE D'ADMISSION D'AIR (ASS)	103
COURONNE ET ENGRENAGES DE TRANSFERT (ASS)	232
COURROIE TRAPEZOIDALE	610
COUVERCLE (ASS)	304
COUVERCLE DE CARTER AV (ASS)	20, 22
COUVERCLE DE LA CONSOLE (ASS)	618
COUVERCLE INFÉRIEUR-DOSSIER (ASS)	658, 659, 660
CREPINE (ENS)	502
CROCHET DE HALAGE AV (ASS)	346, 347
CULASSE (ASS)	32, 34
CULASSE (ENS)	30
CULBUTERIE (ASS)	68, 69

D

Désignation	Page
DEFLECTEUR D'ECHAPPEMENT (ASS)	110
DEFLECTEUR PARE-SABLE (ASS)	320
DÉMARREUR ÉLECTRIQUE (ASS)	188
DÉMARREUR ÉLECTRIQUE (ASS)	184, 190, 191, 192, 194
DENT DE RIPPER (ASS)	596, 597
DISJONCTEUR DE SECURITE (ENS)	214, 246, 464, 470
DISJONCTEUR DE SECURITE (ENS)	464
DISJONCTEUR (ENS) (135A)	168
DISJONCTEUR (ENS) (15A)	152, 168
DISPOSITIF D'ARRÊT	428
DISPOSITIF D'EVACUATION DES VAPEURS DE CARTER	74
DISTRIBUTEUR (ASS)	280, 508, 510, 512, 514, 516
DISTRIBUTEUR DE BOITE (ASS)	292
DISTRIBUTEUR ET MONTAGE (ASS)	495

E

Désignation	Page
EAU DES CHEMISES - RECHAUFFEUR (ASS)	156
ÉCLAIRAGE - PROJECTEURS (ASS)	164
ECLAIRAGE TABLEAU DE BORD	628, 632
ÉCRAN	518
ÉCRAN (ENS)	236, 502, 612
ÉCRAN MAGNÉTIQUE (ASS)	236, 264
ÉJECTEUR AUTOMATIQUE DE POUSSIÈRE (ASS)	102
ÉLECTRONIQUE - MACHINE (ENS)	153
ÉLECTRONIQUE-MONITEUR (ASS)	154
ÉLÉMENT	24
ÉLÉMENT DE FILTRE À AIR (ENS) (PRINCIPAL)	99
ÉLÉMENT DE FILTRE À AIR (ENS) (SECONDAIRE)	99
ÉLÉMENT DE FILTRE À HUILE (ENS)	225, 236
ÉLÉMENT DE FILTRE À HUILE (ENS) (DÉBIT HYDRAULIQUE/RETOUR DE DÉBIT)	502

INDEX

Désignation	Page
ÉLÉMENT DE FILTRE À HUILE (ENS) (HYDRAULIQUE) (HAUTES PERFORMANCES)	502
ÉLÉMENT DE FILTRE À HUILE (ENS) (RETOUR DE DÉBIT) (ININFLAMMABLE)	502
ÉLÉMENT DU RÉCHAUFFEUR D'EAU DES CHEMISES (ENS) (120 VOLTS/1500 WATTS)	156
ÉLIMINATION DES DÉCHETS (VERSION)	7
EMBOUT ET LAME DE COUPE (ASS)	569 570 571 572
EMBRAYAGE ET FREIN DE DIRECTION (ASS)	424
ENGRENAGE DE DIRECTION (ASS)	430 432
ENTRAÎNEMENT DE POMPE (ASS)	41
ENTRAÎNEMENT DE VENTILATEUR (ASS)	38 40
ENTRETIEN DE LA TRANSMISSION (ASS)	183
ESSUIE-GLACE (ASS)	724
ETRIER (ASS)	70

F

FAISCEAU DE CABLES (ENS) (DOUILLE)	200
FAISCEAU DE CABLES (ENS) (DOUILLE) (FIL 16-18)	182
FAISCEAU DE CABLES (ENS) (FIL 14)	182
FAISCEAU DE CABLES (ENS) (POUR FIL DE CALIBRE 14)	177
FAISCEAU DE CABLES (ENS) (POUR FIL DE CALIBRE 16-18)	177
FILTRE - SÉPARATEUR D'EAU ET DE CARBURANT (ENS)	113
FILTRE À AIR (AIR FRAIS DE CABINE)	672
FILTRE A AIR (ASS)	99 100
FILTRE À CARBURANT	124
FILTRE A CARBURANT (ENS)	118
FILTRE A HUILE (ASS)	502
FILTRE A HUILE (ASS)	225
FILTRE A HUILE (ASS) (BOÎTE DE VITESSES)	236
FILTRE À HUILE MOTEUR (ASS)	72
FILTRE A HUILE MOTEUR (ENS)	72
FILTRE DE SÉPARATEUR D'EAU ET DE CARBURANT (ASS)	113
FILTRE (ENS) (RECIRCULATION D'AIR DE CABINE)	672
FINISSAGE TRÈS SOIGNÉ (VERSION)	4
FUSIBLE (10A)	168
FUSIBLE (15A)	168
FUSIBLE (20 A)	168
FUSIBLE (5A)	168

G

GALET A BOUDIN DOUBLE (ASS)	397 398
GALET A BOUDIN DOUBLE (ASS)	396
GALET A BOUDIN SIMPLE (ASS)	399 400
GALET INFÉRIEUR (VERSION)	391 392
GALET SUPERIEUR (ASS)	394
GALET (VERSION)	390
GARDE-BOUE (ASS)	318
GEROTOR - POMPE	78
GLISSIÈRE	707 711 712
GRAISSEUR (FILET 1/8-27)	354 356 534 558 594
GRAISSEUR (FILETAGE 1/8-27)(45 DEGRÉS)	354 356
GRILLE (ASS)	321 322
GRILLE DE PROTECTION (ASS)	679 680
GROUPE DE CONTROLE	150
GROUPE DE CONTROLE (SYSTÈME DE SURVEILLANCE CATERPILLAR)	148 628 632
GROUPE DE ROTATION DE POMPE	500
GUIDE PROTECTEUR DE CHAÎNE (ASS)	339 340

H

HUILE MOTEUR - CARTER (ASS)	55

I

INDICATEUR (ENS)	628 632
INJECTEURS-POMPES HYDRAULIQUES (ENS)	122 123
INSONORISATION (VERSION)	5 6
INTERRUPTEUR - BOUTON-POUSSOIR (ENS) (AFFICHAGE DES ANOMALIES)	632

INDEX

Désignation	Page
INTERRUPTEUR - BOUTON-POUSSOIR (ENS) (CHANG. DE VITESSE)	434
INTERRUPTEUR - BOUTON-POUSSOIR (ENS) (MODE BIDIRECTIONNEL)	629
INTERRUPTEUR - BOUTON-POUSSOIR (ENS) (MODE D'AFFICHAGE)	628
INTERRUPTEUR - BOUTON-POUSSOIR (ENS) (MODE DE SENS DE MARCHE)	633
INTERRUPTEUR - BOUTON-POUSSOIR (ENS) (PASSAGE DE VITESSE)	434
INTERRUPTEUR - BOUTON-POUSSOIR (ENS) (RÉTROGRADAGE AUTOMATIQUE)	629 633
INTERRUPTEUR - DÉRIVATION (ASS)	196
INTERRUPTEUR - DÉRIVATION (ASS) (FILTRE - TRANSMISSION)	138
INTERRUPTEUR BALANCIER (ENS)	164
INTERRUPTEUR BALANCIER (ENS)	599
INTERRUPTEUR BALANCIER (ENS) (FREIN DE STATIONNEMENT)	427
INTERRUPTEUR BALANCIER (ENS) (24 VOLTS)(SCELLÉ)(ALLUMÉ)	202
INTERRUPTEUR DE KLAXON (ENS)	138
INTERRUPTEUR DE KLAXON (ENS)	202
INTERRUPTEUR DE THERMOSTAT (ENS)	600
INTERRUPTEUR ROTATIF (ENS) (ESSUIE-GLACE/LAVE-GLACE) (ARRIÈRE)	638
INTERRUPTEUR ROTATIF (ENS) (ESSUIE-GLACE/LAVE-GLACE) (AVANT)	638
INTERRUPTEUR ROTATIF (ENS) (ESSUIE-GLACE/LAVE-GLACE) (PORTE GAUCHE)	638
INTERRUPTEUR ROTATIF (ENS) (ESSUIE-GLACE/LAVE-GLACE) (PORTIERE DROITE)	638

J

Désignation	Page
JANTE À BRIDE UNIQUE (ENS)	399
JANTE À DOUBLE BRIDE (ENS)	396 397
JAUGE D'HUILE MOTEUR (BAIONNETTE) (ASS)	75
JEU DE COURROIES TRAPEZOIDALES (ALTERNATEUR)	60
JOINT - CAPOT (ASS)	348
JOINT DE L'INJECTEUR DE CARBURANT (ASS)	65
JOINT DE VILEBREQUIN (ASS)	64
JOINT-PÂTE	50 55 103
JOINT UNIVERSEL (ASS)	277

K

Désignation	Page
KIT D'ATTACHE	696
KIT D'ATTACHE DE CEINTURE DE SECURITE	694
KIT DE BAGUE (DÉMARREUR)	194
KIT DE BALAI D'ESSUIE-GLACE	724
KIT DE BALAIS (DÉMARREUR)	188 194
KIT DE BEC	716 718 720
KIT DE BLOC COULISSANT	691 692 693
KIT DE BORNE	136
KIT DE BORNE DE RELAIS	128
KIT DE BORNE DE SORTIE	128
KIT DE BORNE (DÉMARREUR)	185
KIT DE BOUGIE (2 BROCHES)	182 200
KIT DE BOUGIE (2 BROCHES) (COMPREND BOUCHON, COIN ET JOINT (ENS))	198
KIT DE BOUGIE (3 BROCHES)	178 200
KIT DE BOUGIE (3 BROCHES) (CAPTEUR DE PRESSION)	177
KIT DE BOUGIE (6 BROCHES)	702
KIT DE BOUGIE (8 BROCHES)	171 670
KIT DE BOULONNERIE	136
KIT DE BOULONNERIE (DÉMARREUR)	188
KIT DE BOULONNERIE (SUSPENSION DU SIÈGE)	696
KIT DE BOUTON	624
KIT DE BRIDE DE FIXATION DE FILTRE A AIR	99
KIT DE BROCHE DE DÉMARREUR	188
KIT DE BUTÉE	722
KIT DE CALE D'ÉPAISSEUR D'ARBRE (17 CALES)	498
KIT DE CAPTEUR À CADRAN	124
KIT DE COUSSINET	136 625
KIT DE COUSSINET (DÉMARREUR)	188
KIT DE DIODE POSITIF	129
KIT DE FAISCEAU DE CABLAGE	696
KIT DE GAINE	694
KIT DE GUIDE	716 718 720
KIT DE JOINT DE DÉMARREUR	188
KIT DE JOINTS	289 291 532

INDEX

Désignation	Page
KIT DE LEVIER (DÉMARREUR)	194
KIT DE PARE-CHOCS	624
KIT DE PISTON DE COMMANDE	498
KIT DE PISTON EXCENTRIQUE	498
KIT DE PLOT DE CONNEXION DE DIODE	129
KIT DE POUSSOIR	625
KIT DE PRISE FEMELLE (12 BROCHES)	427
KIT DE PRISE FEMELLE (2 BROCHES)	124
	126
	138
	139
	172
	180
	196
	202
	291
	522
	602
	614
	632
	640
KIT DE PRISE FEMELLE (3 BROCHES)	162
	174
	175
	176
	181
	200
	464
	470
	628
	629
	632
	633
KIT DE PRISE FEMELLE (4 BROCHES)	289
	464
	470
KIT DE PRISE FEMELLE (6 BROCHES)	166
	170
	434
	628
	651
	652
	653
	654
	655
KIT DE PRISE FEMELLE (8 BROCHES)	628
	632
KIT DE RESSORT	713
	714
	722
KIT DE RESSORTS	624
KIT DE RONDELLE (DÉMARREUR)	188
KIT DE ROULEAU	694
	696
KIT DE VIS DE RETENUE	151
KIT D'INDICATEUR	624
KIT D'ISOLANT (DÉMARREUR)	194
KLAXON (ENS) (24 VOLTS)(TON FAIBLE)	139
KLAXON (ENS) (24 VOLTS)(TON FORT)	139

L

LAME À BOIS (ASS)	585
LAME À ORIENTATION (ASS)	583
	584
LAME DE BULLDOZER DROITE (VERSION)	545
LAME DE BULLDOZER DROITE (VERSION)	546
LAME DE BULLDOZER SEMI-UNIVERSELLE (VERSION)	541
	542
	543
	544
LAME DE COUPE (ASS)	573
	574
	575
	576
LAME DROITE (ASS)	590
	591
LAME DROITE (ENS)	582
LAME POUR LE REFOULEMENT (ENS)	547
LAME POUR TRAITEMENT DES DÉCHETS (ASS)	592
	593
LAME SEMI-UNIVERSELLE (ASS)	586
	587
	588
	589
LAME SEMI-UNIVERSELLE (ENS)	580
	581
LAMPE - PHARE (ASS)	163
LAMPE-DIODE (LED)	599
LAVE-GLACE - VITRE (ASS)	702
LENTILLE DE PLAFONNIER	162
LENTILLE (ENS) (PLAFONNIER)	163
LENTILLE ROUGE	202
LOGICIEL - ÉLECTROMODULE (ASS)	148
LOGICIEL - ÉLECTROMODULE (ASS)	154
LOGICIEL-MONITEUR (ASS)	154

M

MAILLON DE CHAINE (ENS)	382
	383
	384
	385
	386
MANOCONTACT (ENS) (CLIMATISEUR)	640
MECANISME AMORTISSEUR ET REGLAGE DE CHAINES (ASS)	402
MIROIR	649

INDEX

Désignation	Page
	650
MODIFICATION -BULLDOZER	555
	556
MODULE - QUATRE INSTRUMENTS (ASS)	651
MODULE D'AFFICHAGE (ASS)	166
MONTAGE-COMMUNICATION (ASS)	160
MONTAGE D'ALTERNATEUR (ASS)	52
MONTAGE DE CABINE (ASS)	656
MONTAGE DE GALET SUPÉRIEUR	387
	388
MONTAGE DE GRILLE (ASS)	322
MONTAGE DE MOTEUR (VERSION)	15
MONTAGE DE RADIO (ASS)	627
MONTAGE DE RIPPER (ASS)	560
MONTAGE DE SOUPAPE (ASS)	496
	497
MONTAGE DE VÉRIN (ASS)	558
MONTAGE D'ENTRAÎNEMENT DE VENTILATEUR (ASS)	54
MONTAGE DU TOIT ROPS (ASS)	657
MONTAGE SOUPLE DU MOTEUR (ASS)	53
MOTEUR - PARTIE CENTRALE (VERSION)	13
	14
MOTEUR D'ESSUIE-GLACE (ASS)	654
	655
MOTEUR ELECTRIQUE (ASS)	614
MOTEUR ESSUIE-GLACE	652
	653
	724
MOTEUR (VERSION)	9
	10
	11
	12

O

OEILLETONS DE LEVAGE MOTEUR (ASS)	51

P

PANNEAU - FUSIBLES (ASS)	168
PARE-POUSSIERE	44
	72
	84
	208
	236
	278
	284
	286
	464
	466
	470
	476
	502
PÉDALE DE RÉGULATEUR ET DE FREIN (ASS)	246
PIGNON AR (ASS)	47
PIGNONNERIE AV (ASS)	46
PISTON (ASS)	57
PISTON ET BIELLE (ASS)	56
PIVOT D'ESSUIE-GLACE (ASS)	726
PLAFONNIER (ASS)	162
PLAQUE - AVERTISSEMENT (RESSORT AMORTISSEUR)	370
PLAQUE SIGNALÉTIQUE (ASS)	727
	728
	729
PLAQUE SIGNALÉTIQUE DE CONTROLEUR	731
	733
PLAQUE SIGNALÉTIQUE (REMARQUE) (RADIO)	627
PLAQUES SIGNALETIQUES ET AUTOCOLLANTS (ASS)	730
PLAQUES SIGNALETIQUES ET AUTOCOLLANTS (ASS)	732
PLATE-FORME - CABINE (ASS)	666
PLATE-FORME (ASS)	662
PLATEAU OSCILLANT (ASS)	501
POIGNEE	464
	470
POIGNÉE	620
	621
POMPE À CARBURANT (ASS)	118
POMPE A EAU (ASS)	86
	87
	88
POMPE A ENGRENAGES (ASS)	261
POMPE A ENGRENAGES (ASS)	262
POMPE A ENGRENAGES (ASS) (3 ÉLÉMENTS) (REPRISE DE BOÎTE ET GAVAGE DE CONVERTISSEUR ET CHARGE)	261
POMPE A HUILE MOTEUR (ASS)	78
POMPE A PISTONS (ASS)	498
POMPE D'INJECTION (ASS)	120
	121
POULIE - ENTRAÎNEMENT D'ALTERNA. ET DE VENTI.	60
PRISE DE COURANT (ENS) (12 VOLTS)	202
PRISE (ENS)	670
PRODUIT D'ETANCHEITE	155
PROTECTION DE PRÉFILTRE (ASS)	104
PROTECTION DU RÉSERVOIR DE CARBURANT (ASS)	334
	335
PROTEGE-GALETS (ASS)	341
	342
	343
PROTÈGE-RADIATEUR	324
	326

INDEX

Désignation	Page
PROTÈGE-RADIATEUR (ASS)	336
R	
RACCORD (ASS)	44
RACCORD ET PROTECTION (ASS)	222
RADIATEUR (ASS)	90
RADIATEUR (ASS)	92
RALLONGE DU DOSSIER DE SIEGE	690
RALLONGE DU DOSSIER DE SIEGE (TISSU)	686
RÉCEPTEUR-DÉSHYDRATEUR (ASS) (RÉFRIGÉRANT)	640
REDUCTEUR MARIN - MONTAGE (ASS)	244
RÉDUCTEURS (ASS)	226, 230
REFROIDISSEUR D'ADMISSION D'AIR (ASS)	98
REFROIDISSEUR D'HUILE DE BOÎTE (ASS)	220
REFROIDISSEUR D'HUILE MOTEUR (ASS)	79
RÉGLAGE DE COMMANDE DE DIRECT. ET DE BOÎTE	420
REGLAGE DE SIEGE (ASS)	598
RENIFLARD (ENS)	236
RÉSERVOIR - LAVE-GLACE (ASS)	698
RÉSERVOIR - LAVE-GLACE (ASS)	700
RÉSERVOIR DE CARBURANT (ASS)	124, 125
RÉSERVOIR D'EAU (ASS)	96
RÉSERVOIR DU LIQUIDE DE REFROIDISSEMENT (ASS)	94
RÉSERVOIR HYDRAULIQUE ET FILTRE (ASS)	502
RESSORT	184
RESSORT (DÉMARREUR)	185
RÉTROVISEUR (ASS)	649, 650
RIPPER (ASS)	594
RIPPER (VERSION)	566
RIVET TARAUDEUR (NO 4X3/16 POUCES)	368, 370
RIVET TARAUDEUR (3/16 X 1/4 POUCE)	370
ROBINET DE BATTERIE (ASS)	197
ROBINET DE REMPLISSAGE	402
ROBINET-PRÉLÈVEMENT D'ÉCHANTILLON DE LIQUIDE (ASS)	72, 84, 466, 472
ROBINET-PRÉLÈVEMENT D'ÉCHANTILLON DE LIQUIDE (ASS)	502
ROBINET-PRÉLÈVEMENT D'ÉCHANTILLON DE LIQUIDE (ASS)	237
ROTATION DE LA ROUE DU VENTILATEUR SOUFFLANT	168, 566
ROTATION DE LA ROUE DU VENTILATEUR SOUFFLANT (COMMANDE DE BULLDOZER)	730, 733
ROTATION DE LA ROUE DU VENTILATEUR SOUFFLANT (RÉGLAGE DU SIÈGE)	694
ROTATION DE LA ROUE DU VENTILATEUR SOUFFLANT (RIPPER)	435
ROUE AV - CHAINES (ASS)	380, 381
S	
SEGMENT DE BARBOTIN (ASS)	265
SIÈGE (ASS)	681, 682, 684, 686, 688, 690
SIÈGE AVEC SUSPENSION (ASS)	696
SIÈGE AVEC SUSPENSION (ASS)	691, 692, 693, 694
SIÈGE INCLINABLE (ASS)	675
SILENCIEUX (ASS)	109
SOLÉNOÏDE (ENS) (DÉMARREUR 24 VOLTS)	185
SOLÉNOÏDE (ENS) (24 VOLTS)	188
SONDE - CIRCUIT DE CARBURANT	174, 175, 176
SONDE - CIRCUIT DE CARBURANT (SANS RESSORT)	214
SONDE - NIVEAU DE CARBURANT (ENS)	124
SONDE THERMIQUE	138
SOUPAPE - CARTOUCHE PILOTE (ASS)	524, 525
SOUPAPE - CARTOUCHE PILOTE (ASS) (ABAISSEMENT DU BULLDOZER)	522
SOUPAPE - CARTOUCHE PILOTE (ASS) (INCLINAISON À DROITE DU BULLDOZER)	522
SOUPAPE - CARTOUCHE PILOTE (ASS) (INCLINAISON À GAUCHE DU BULLDOZER)	522
SOUPAPE - CARTOUCHE PILOTE (ASS) (LEVAGE DE RIPPER)	520
SOUPAPE - CARTOUCHE PILOTE (ASS) (RELEVAGE DE BULLDOZER)	522
SOUPAPE - CARTOUCHE PILOTE (ASS) (RIPPER-ABAISSEMENT)	520
SOUPAPE - CLIMATISEUR (ENS) (COTÉ BAS)	640

INDEX

Désignation	Page
SOUPAPE - CLIMATISEUR (ENS) (COTÉ ÉLEVÉ)	640
SOUPAPE - EAU	622
SOUPAPE - SOLÉNOÏDE (ASS)	290
	291
SOUPAPE - SOLÉNOÏDE (ASS)	289
SOUPAPE D'ABAISSEMENT RAPIDE (ASS)	528
SOUPAPE D'ARRÊT	90
SOUPAPE D'ARRÊT (ASS)	646
SOUPAPE DE DÉRIVATION	72
SOUPAPE DE MODULATION (ASS)	218
SOUPAPE DE MODULATION (ASS)	282
SOUPAPE DE PRIORITE (ASS)	284
SOUPAPE DE VIDANGE	298
	300
SOUPAPE PILOTE (ASS)	522
SOUPAPE PILOTE (ASS)	520
SOUPAPE PILOTE ET MONTAGE (ASS)	278
SOUPAPE RÉDUCTRICE DE PRESSION (ASS)	518
	527
SOUPAPE RÉDUCTRICE ET COLLECTEUR (ASS)	518
SOUPAPE RÉGULATRICE DE PRESSION ET DÉBIT	526
SOUPAPE SPHÉRIQUE (ASS)	464
	470
SUPPORT - COMMANDE (ASS)	434
SUPPORT DE MOTEUR (ASS)	66
SURPRESSEUR (ASS)	672
SUSPENSION DE SIEGE - CARTER (ASS)	624

T

TABLEAU DE BORD (ASS)	628
TABLEAU DE BORD (ASS)	632
TAMIS D'ASPIRATION	208
	264
TAMIS DE CARTER (RÉSERVOIR DE CARBURANT)	114
TAPIS DE PLANCHER	618
	666
THERMOSTAT-TEMPÉRATURE D'EAU (92 DEGRÉS C)	82
TIRANT DE BULLDOZER (ASS)	534
TOIT ROPS (ASS)	676
	678
TOURILLON DE BULLDOZER (ASS)	567
	568
TOURILLON DE MOTEUR (ASS)	67
TRAIN DE ROULEMENT	417
	418
TRAINS PLANÉTAIRES - CARTER ET PIÈCES	208
TRAITEMENT DES DÉCHETS (ASS)	8
TRANSFORMATEUR DE PUISSANCE (20 A)	152
TRANSFORMATEUR DE PUISSANCE (24 VOLTS À 12 VOLTS)	202
TRANSFORMATION ELECTRIQUE (ASS)	152
TRANSMISSION (VERSION)	259
	260
TRAVERSE PIVOT (ASS)	389
TURBOCOMPRESSEUR - CARTOUCHE (ASS)	112
TURBOCOMPRESSEUR (ASS)	111
	112

V

VANNE PILOTE (ASS)	533
VENTILATEUR (ASS)	80
VENTILATEUR SOUFFLANT (ASS)	81
VENTILATEUR SOUFFLANT DE CABINE (ASS)	602
VENTILATEUR SOUFFLANT DE CABINE (ASS)	672
VÉRIN DE LEVAGE (ASS)	450
VÉRIN DE LEVAGE DE LAME DE BULLDOZER (ASS)	448
VERIN DE LEVAGE DE RIPPER (ASS)	452
VÉRIN DE LEVAGE ET CANALISATIONS (ASS)	438
	440
	442
	444
VÉRIN DE LEVAGE ET CANALISATIONS (ASS) (DROITE)	536
	537
	539
	541
	543
	545
VÉRIN DE LEVAGE ET CANALISATIONS (ASS) (GAUCHE)	536
	537
	539
	541
	543
	545
VÉRIN D'INCLINAISON (ASS)	454
	456
VÉRIN D'INCLINAISON (VERSION)	446
VERSION DE BULLDOZER	536
VERSION DE CHASSIS	302
	303
VERSION DE COMMANDE HYDRAULIQUE PILOTE	436
	437
VERSION DE GUIDAGE DE TRAIN DE ROULEMENT	376

INDEX

Désignation	Page
	377
	378
	379
VERSION DE LAME SEMI-UNIVERSELLE	577
VERSION DE MONTAGE-COMMUNICATION	158
VERSION DE TRANSFORMATION	617
VERSION HYDRAULIQUE	458
VIDANGE-ÉCOLOGIE (ASS)	223
	224
VIDANGE-HUILE DE MOTEUR (ASS)	36
VILEBREQUIN - POULIE (ASS)	59
VILEBREQUIN (ASS)	25
VITRE	606
VITRE COULISSANTE (ENS)	704
	705
	706
VITRE DE CABINE (ASS)	707
	708
	709
	710
	711
	712
	713
VITRE DE CABINE (ASS)	714
	716
	720
VITRE DE CABINE (ASS)	722
VITRE DE CABINE (ASS)	718
VITRE DE CABINE (ASS) (ARRIÈRE)	708
VITRE DE CABINE (ASS) (ARRIÈRE)(COULISSANT)	704
VITRE DE CABINE (ASS) (DROITE)	709
VITRE DE CABINE (ASS) (DROITE) (COULISSANT)	705
VITRE DE CABINE (ASS) (GAUCHE)	710
VITRE DE CABINE (ASS) (GAUCHE) (COULISSANT)	706
VITRE-FIXE-DROITE (TEINTÉ)	713
VITRE-FIXE-GAUCHE (TEINTÉ)	714
VITRE-PATIN ARRIÈRE (TEINTÉ)	720
VITRE-PATIN-DROIT (TEINTÉ)	718
VITRE-PATIN (GAUCHE) (TEINTÉ)	716
VITRE (TEINTÉ)	606
	708
	709
	710
VOLANT MOTEUR (ASS)	45
VUE DU MODÈLE	2
	3

INDICE

Nombre	Página

A

ACONDICIONADOR DE AIRE (CONFIG) 599
ACONDICIONADOR DE AIRE (GR) 600
ACOPLAMIENTO Y PROTECCION (GR) 222
ACUMULADOR (CONJ) 470
ACUMULADOR DE ACEITE PILOTO (GR) 464
ACUMULADOR DE REFRIGERANTE 640
AGUA DE LAS CAMISAS - CALENTADOR DEL (GR) 156
AIRE - TUBERÍAS DE (GR) 105
106
AJUSTADOR DEL ASIENTO (GR) 598
AJUSTADOR DEL CONTROL DE DIRECCIÓN Y TRANSMISIÓN (GR) 420
ALAMBRADO DE ACELERADOR (GR) 205
ALARMA (GR) 126
ALFOMBRILLA DEL PISO 618
666
AMORTIGUADOR Y POLEA (GR) 35
ÁRBOL DE LEVAS (GR) 16
ARO DE PESTAÑA DOBLE (CONJ) 396
397
ARO DE PESTAÑA SOLA (CONJ) 399
ASIENTO CON SUSPENSIÓN (GR) 694
696
ASIENTO (GR) 681
682
684
686
688
690

B

BALANCÍN (GR) 62
63
BARRA COMPENSADORA (GR) 354
356
358
BARRA DE TIRO (GR) 305
306
BARRA PIVOTE (GR) 389
BASTIDOR EN C (CONJ) 549
550
551
BASTIDOR EN C (GR) 552
554
BASTIDOR TELESCÓPICO DEL RESORTE TENSOR (GR) 360
362
364
366
368
BASTIDOR TELESCÓPICO DEL RESORTE TENSOR (GR) 374
BASTIDOR TELESCÓPICO DEL RESORTE TENSOR (GR) 370
372
BASTIDOR TELESCÓPICO DEL RESORTE TENSOR (GR) (IZQUIERDO) 390
BASTIDOR TELESCÓPICO DEL RESORTE TENSOR (GR) (LADO DERECHO) 390
417
418
BASTIDOR TELESCÓPICO DEL RESORTE TENSOR (GR) (LADO IZQUIERDO) 417
418
BATERÍA 145
BATERÍA (GR) 145
BATERÍA Y CABLES (GR) 138
BATERÍA (12 VOLTIOS)(HUMEDA) 140
BLOQUE DESLIZANTE-JUEGO 691
692
693
BLOQUE MOTOR (CONJ) 26
BLOQUE MOTOR (GR) 28
29
BOCINA (CONJ) (24 VOLTIOS)(TONO ALTO) . . . 139
BOCINA (CONJ) (24 VOLTIOS)(TONO BAJO) . . . 139
BOLA DE VÁLVULA (GR) 464
470
BOMBA - TUBERÍAS DE (GR) 476
BOMBA DE ACEITE DEL MOTOR (GR) 78
BOMBA DE AGUA (GR) 86
87
88
BOMBA DE COMBUSTIBLE (GR) 118
BOMBA DE ENGRANAJES (GR) 261
BOMBA DE ENGRANAJES (GR) 262
BOMBA DE ENGRANAJES (GR) (3 SECCIONES) (BARRIDO Y CARGADO DE CONVERTIDOR Y TRANS.) 261
BOMBA DE INYECCIÓN UNITARIA (GR) 120
121
BOMBA DE LUBRICACIÓN (GR) 78
BOMBA DE PISTONES (GR) 498
BOMBA HIDRÁULICA DEL INYECTOR UNITARIO (GR) 122
123
BRAZO DE EMPUJE (GR) 562
564

C

CABINA (CONFIG) 604
605
CABINA (GR) 606
CABLES DE LA PLATAFORMA (GR) 202

INDICE

Nombre	Página
CABLES DEL CONTROL ELECTRÓNICO (GR)	200
CABLES DEL TAPÓN (CONJ)	171
CABLES DEL TAPÓN (CONJ)	170
CADENAS (GR)	404
	405
	406
	407
	408
	409
	410
	411
	412
	413
	414
	415
	416
CAJA DE LA BATERÍA (GR)	294
	296
CAJA DE LA BOMBA DEL ACEITE (CONJ) (BARRIDO DE CONVERTIDOR Y TRANSMISION)	262
CAJA DE LA BOMBA DEL ACEITE (CONJ) (CARGADO DE CONVERTIDOR)	262
CAJA DE LA BOMBA DEL ACEITE (CONJ) (CARGADO DE TRANSMISION)	262
CAJA DE LA SUSPENSIÓN DEL ASIENTO (GR)	624
CAJA DELANTERA - TORNILLERÍA DE LA (GR)	43
CAJA DELANTERA (GR)	50
CAJA Y BASTIDOR (GR)	298
	300
CAJA Y PIEZAS DE LOS PLANETARIOS	208
CALCOMANÍA	216
	427
CALCOMANÍA (CALENTADOR DE AGUA)	156
CALCOMANÍA DE ADVERTENCIA	168
	360
	362
	364
	366
	368
	370
	566
CALCOMANÍA DE ADVERTENCIA (ASIENTO AJUSTABLE)	694
CALCOMANÍA DE ADVERTENCIA (CILINDRO DE FRENO DE ESTACIONAMIENTO)	372
	374
CALCOMANÍA DE ADVERTENCIA (CONTROL DE HOJA TOPADORA)	730
	733
CALCOMANÍA DE ADVERTENCIA (DESGARRADOR)	435
CALCOMANÍA DE ADVERTENCIA (RADIO)	627
CALCOMANÍA DE ADVERTENCIA (RADIO PRODUCT LINK)	158
	160
CALCOMANÍA DE IDENTIFICACIÓN	628
	632
	638
	731
	733
CALCOMANÍA DE IDENTIFICACIÓN (NUMERO DE GRUPO Y SECUENCIA)	602
	614
CALCOMANÍA DE IDENTIFICACIÓN (12 VOLTIOS)	731
	733
CALCOMANÍA DE RAYAS (LADO DERECHO)	334
	335
CALCOMANÍA DE RAYAS (LADO IZQUIERDO)	334
	335
CALCOMANÍA DEL TABLERO	6
CALCOMANÍA (IDENTIFICACION DE COJIN DE ASIENTO)	660
CALCOMANÍA (SONIDO EXTERIOR)	6
CALCOMANÍAS Y PLACAS DE IDENTIFICACIÓN (GR)	730
CALCOMANÍAS Y PLACAS DE IDENTIFICACIÓN (GR)	732
CALEFACCIÓN - ADMISIÓN DE AIRE DE LA (GR)	155
CALEFACCIÓN DE LA CABINA (GR)	622
CÁNCAMOS DE LEVANTAMIENTO DEL MOTOR (GR)	51
CANDADO (GR)	15
	124
	236
	294
	308
	312
	336
CANDADO (GR)	458
CANTONERA Y CUCHILLA (GR)	569
	570
	571
	572
CAPO Y PROTECTOR (GR)	344
CARGA - ALTERNADOR DE (GR)	132
	134
	136
CARGA - ALTERNADOR DE (GR)	128
CÁRTER - COLECTOR DEL (GR)	55
CHASIS (CONFIG)	302
	303
CIGÜEÑAL - POLEA DE (GR)	59
CIGÜEÑAL (GR)	25

INDICE

Nombre	Página
CILINDRO DE INCLINACIÓN (GR)	446
CILINDRO DE LEVANTAMIENTO - TUBERÍAS DEL (GR)	460
CILINDRO DE LEVANTAMIENTO DE LA HOJA TOPADORA (GR)	448
CILINDRO DE LEVANTAMIENTO DEL DESGARRADOR (GR)	452
CILINDRO DE LEVANTAMIENTO (GR)	450
CILINDRO DE LEVANTAMIENTO Y TUBERÍAS (GR)	438
	440
	442
	444
CILINDRO DE LEVANTAMIENTO Y TUBERÍAS (GR) (IZQUIERDO)	537
	543
CILINDRO DE LEVANTAMIENTO Y TUBERÍAS (GR) (LADO DERECHO)	536
	537
	539
	541
	543
	545
CILINDRO DE LEVANTAMIENTO Y TUBERÍAS (GR) (LADO IZQUIERDO)	536
	539
	541
	545
CINTA AISLANTE	716
	718
	720
CINTURÓN DE SEGURIDAD (GR)	686
	690
CODO DE ADMISIÓN DE AIRE (GR)	103
COJINETE (LEVA)	26
COLADOR (CONJ)	502
COLADOR DE COMBUSTIBLE	124
COMBUSTIBLE - TANQUE DE (GR)	124
	125
COMPARTIMIENTO DEL MOTOR (GR)	308
	312
COMPRESOR DE REFRIGERANTE (GR)	609
	610
CONDENSADOR DE REFRIGERANTE (GR)	614
CONDENSADOR DEL REFRIGERANTE Y MONTAJE (GR)	612
CONEXIÓN DE ENGRASE (ROSCA DE 1/8-27)	354
	356
	534
	558
	594
CONEXIÓN DE ENGRASE (ROSCA 1/8-27)(45 GRADO)	354
	356
CONEXIÓN (GR)	44
CONFIGURACIÓN DE ELIMINACIÓN DE BASURAS	7
CONFIGURACIÓN DE HOJA SEMIUNIVERSAL	577
CONFIGURACIÓN DE INSTALACIÓN DEL MOTOR	15
CONFIGURACIÓN DE MOTORES	9
	10
	11
	12
CONFIGURACIÓN DE TRANSFORMACIÓN	617
CONFIGURACIÓN ELECTRÓNICA DE LA MÁQUINA	1
CONFIGURACIÓN GENERAL	2
	3
CONJUNTO DE VÁLVULA DEL ACONDICIONADOR DE AIRE (LADO ALTO)	640
CONJUNTO DE VÁLVULA DEL ACONDICIONADOR DE AIRE (LADO BAJO)	640
CONTENIDO DEL GRUPO DE GUARDABARROS	316
CONTROL DE COMUNICACION (GR) (ESLABON DE PRODUCTO)	158
	160
CONTROL DE DIRECCIÓN Y TRANSMISIÓN (GR)	216
CONTROL DE DIRECCIÓN Y TRANSMISIÓN (GR)	212
	214
CONTROL DE IMPLEMENTOS (GR)	616
CONTROL DE LA PERILLA	600
CONTROL DE MANIJA (GR) (HOJA TOPADORA)	616
CONTROL DE MONITOR (GR)	150
CONTROL DE MONITOR (GR) (SISTEMA MONITOR CATERPILLAR)	148
	628
	632
CONTROL DEL FRENO DE ESTACIONAMIENTO	427
CONTROL ELECTRÓNICO DEL MOTOR (GR)	149
CONTROL ELECTRÓNICO DEL MOTOR Y MONTAJE	147
CONTROL ELECTRÓNICO (GR)	148
CONTROL ELECTRÓNICO Y MONTAJE (GR)	146
CONTROL HIDRÁULICO (CONFIG)	435
CONTROL HIDRÁULICO DE LA TRANSMISIÓN (GR)	218
CONTROL NO PROGRAMADO (GR)	146
	151
	183

INDICE

Nombre	Página
CONTROL PILOTO HIDRAULICO (CONFIG)	436
	437
CONVERTIDOR DE PAR (GR)	268
	270
	272
CONVERTIDOR DE VOLTAJE (DE 24 VOLTIOS A 12 VOLTIOS)	202
CONVERTIDOR DE VOLTAJE (20 A)	152
CONVERTIDOR ELÉCTRICO (GR)	152
CORREA TRAPEZOIDAL	610
CULATA DE CILINDROS - TORNILLERÍA DE LA (GR)	42
CULATA DE CILINDROS (CONJ)	30
CULATA DE CILINDROS (GR)	32
	34
D	
DESGARRADOR (CONFIG)	566
DESGARRADOR (GR)	594
DESLIZANTE	707
	711
	712
DETECTOR DE NIVEL DEL COMBUSTIBLE	124
DETECTOR DE POSICIÓN (SISTEMA DE COMBUST.) (GR)	174
DETECTOR DE POSICIÓN (SISTEMA DE COMBUST.) (GR)	175
	176
DETECTOR DE POSICIÓN (SISTEMA DE COMBUST.) (GR) (SIN RESORTE)	214
DETECTOR DE TEMPERATURA	138
DETECTOR ELECTRÓNICO	172
DIENTE DE DESGARRADOR (GR)	596
	597
DISYUNTOR (CONJ) (135 AMP)	168
DISYUNTOR (CONJ) (15 A)	152
	168
DISYUNTOR (GR)	197
DRENAJE DE SEGURIDAD ECOLÓGICA (GR)	223
	224
DRENAJE DEL ACEITE DE MOTOR	36
E	
EJE DE MANDO PRINCIPAL (GR)	266
EJE DEL TREN DE FUERZA (GR)	206
ELECTRONICA DE LA MAQUINA (GR)	153
ELECTRONICA DE MONITOR (GR)	154
ELEMENTO	24
ELEMENTO DE FILTRO DE ACEITE (CONJ)	236
ELEMENTO DE FILTRO DE ACEITE (CONJ)	225
ELEMENTO DE FILTRO DE ACEITE (CONJ) (FLUJO INVERSO) (RESISTENTE AL FUEGO)	502
ELEMENTO DE FILTRO DE ACEITE (CONJ) (HIDRAULICO) (RENDIMIENTO SUPERIOR)	502
ELEMENTO DE FILTRO DE ACEITE (CONJ) (HIDRAULICO/FLUJO INVERSO)	502
ELEMENTO DEL CALENTADOR DEL AGUA DE LAS CAMISAS (120 VOLTIOS/1500 VATIOS)	156
ELEMENTO DEL FILTRO DE AIRE (CONJ) (PRIMARIO)	99
ELEMENTO DEL FILTRO DE AIRE (CONJ) (SECUNDARIO)	99
ENCHUFE (CONJ)	670
ENFRIADOR DE ACEITE DE LA TRANSMISIÓN (GR)	220
ENFRIADOR DE ACEITE DEL MOTOR (GR)	79
ENGRANAJE DE DIRECCIÓN (GR)	430
	432
ENGRANAJE DE TRANSFERENCIA Y CORONA (GR)	232
ENGRANAJE DELANTERO (GR)	46
ENGRANAJE TRASERO (GR)	47
ESCAPE DE GASES (GR)	74
ESCOBILLA (CONJ) (MOTOR DE ARRANQUE)	184
ESLABÓN DE CADENA (CONJ)	382
	383
	384
	385
	386
ESPEJO RETROVISOR	649
	650
ESTRUCTURA ROPS (GR)	676
	678
ETIQUETA DE ADVERTENCIA (GR)	727
	728
	729
EXPULSOR DE POLVO (GR)	102
EXTENSIÓN DEL RESPALDO (GR)	690
EXTENSIÓN DEL RESPALDO (GR) (TELA)	686
F	
FILTRO (CONJ) (AIRE RECIRCULADO DE LA CABINA)	672
FILTRO DE ACEITE DEL MOTOR (CONJ)	72
FILTRO DE ACEITE DEL MOTOR (GR)	72
FILTRO DE ACEITE (GR)	225
FILTRO DE ACEITE (GR)	502
FILTRO DE ACEITE (GR) (TRANSMISION)	236
FILTRO DE AIRE (AIRE FRESCO PARA LA CABINA)	672

INDICE

Nombre	Página
FILTRO DE AIRE (GR)	99, 100
FILTRO DE COMBUSTIBLE (CONJ)	118
FILTRO DE COMBUSTIBLE Y SEPARADOR DE AGUA (CONJ)	113
FILTRO DE COMBUSTIBLE Y SEPARADOR DE AGUA (GR)	113
FRENO Y EMBRAGUE DE DIRECCIÓN (GR)	424
FUSIBLE (10 A)	168
FUSIBLE (15 A)	168
FUSIBLE (20 A)	168
FUSIBLE (5 AMP)	168
G	
GANCHO DE TIRO DELANTERO (GR)	346, 347
GRUPO DE HOJA, EXPLOTACIÓN FORESTAL	585
GRUPO DE HOJA, MANIPULACIÓN DE BASURA	592, 593
GRUPO DE MONTAJE DE LA CABINA	656
GRUPO DE MONTAJE, REJILLA	322
GRUPO DE SELLOS DEL CAPO	348
GRUPO DE VÁLVULAS	528, 531
GRUPO GIRATORIO DE BOMBA	500
GUARDABARROS (GR)	318
GUIAJE DE TREN DE RODAJE (CONFIG)	376, 377, 378, 379
H	
HIDRÁULICA (CONFIG)	458
HOJA DE LIMPIAPARABRISAS (CONJ)	578, 579
HOJA DE LIMPIAPARABRISAS (CONJ) (DELANTERO Y TRASERO)	724
HOJA DE LIMPIAPARABRISAS (CONJ) (PUERTAS DE LADOS DERECHO E IZQ.)	724
HOJA DERECHA (GR)	590, 591
HOJA ORIENTABLE (GR)	583, 584
HOJA RECTA (CONJ)	582
HOJA SEMIUNIVERSAL (CONJ)	580, 581
HOJA SEMIUNIVERSAL (GR)	586, 587, 588, 589
HOJA TOPADORA (CONFIG)	536
HOJA TOPADORA (CONJ)	547
HOJA TOPADORA DERECHA (CONFIG)	545, 546
HOJA TOPADORA (GR)	548
HOJA TOPADORA ORIENTABLE (CONFIG)	537, 538, 539, 540
HOJA TOPADORA SEMIUNIVERSAL	541, 542, 543, 544
HOJA Y CUCHILLA (GR)	573, 574, 575, 576
I	
IMPULSOR DE VENTILADOR (GR)	38, 40
INCLINACIÓN HORIZONTAL - CILINDRO DE (GR)	454, 456
INDICADOR (CONJ)	628, 632
INDICADOR DEL NIVEL DE ACEITE (VARILLA) (GR)	75
INSONORIZADOR (CONFIG)	5, 6
INSTALACION DE COMUNICACION (GR)	160
INSTALACION DE COMUNICATION (CONFIG)	158
INSTALACIÓN DE RADIO (GR)	627
INSTRUMENTOS (GR)	628, 632
INTERRUPTOR (CONJ)	164, 599
INTERRUPTOR (CONJ) (ILUMINADO CON 24 VOLTIOS) (ACELERACIÓN)	202
INTERRUPTOR (CONJ) (INTERRUPTOR DE LUZ)	632
INTERRUPTOR (CONJ) (LÁMPARA)	628
INTERRUPTOR (CONJ) (VENTILADOR SOPLADOR)	628
INTERRUPTOR DE ARRANQUE CON LLAVE (CONJ)	632
INTERRUPTOR DE ARRANQUE CON LLAVE (CONJ) (ENCENDIDO)	628
INTERRUPTOR DE DERIVACIÓN	196
INTERRUPTOR DE DERIVACIÓN (FILTRO DE TREN DE FUERZA)	138
INTERRUPTOR DE LA BOCINA (CONJ)	138
INTERRUPTOR DE LA BOCINA (CONJ)	202

INDICE

Nombre	Página
INTERRUPTOR DE LÍMITE (CONJ)	214, 246, 464, 470
INTERRUPTOR DE LÍMITE (CONJ)	464, 470
INTERRUPTOR DE PRESIÓN (CONJ) (A/A)	640
INTERRUPTOR DE VOLQUETE (CONJ)	599
INTERRUPTOR DE VOLQUETE (CONJ)	164
INTERRUPTOR DE VOLQUETE (CONJ) (FRENO DE ESTACIONAMIENTO)	427
INTERRUPTOR DE VOLQUETE (CONJ) (24 VOLTIOS)(SELLADO)(ILUMINADO)	202
INTERRUPTOR DEL TERMOSTATO (CONJ)	600
INTERRUPTOR MAGNÉTICO (CONJ) (24 VOLTIOS) (CALENTADOR DEL AIRE DE ADMISION)	138
INTERRUPTOR MAGNÉTICO (GR)	198
INTERRUPTOR MAGNÉTICO (GR) (RELÉ DE ARRANQUE)	168
INTERRUPTOR PULSADOR (CONJ) (CAMBIAR A UNA MARCHA SUPERIOR)	434
INTERRUPTOR PULSADOR (CONJ) (CAMBIO DESCENDENTE)	434
INTERRUPTOR PULSADOR (CONJ) (DESCONECCIÓN AUTOMÁTICA)	629, 633
INTERRUPTOR PULSADOR (CONJ) (MODALIDAD DE VISUALIZACIÓN)	628
INTERRUPTOR PULSADOR (CONJ) (MODALIDAD DERIVADA-DIRECCIONAL)	633
INTERRUPTOR PULSADOR (CONJ) (OMISIÓN, PANTALLA)	632
INTERRUPTOR PULSADOR (CONJ) (POR MODULO DIRECCIONAL)	629
INTERRUPTOR ROTATIVO (CONJ) (LIMPIA/LAVAPARABRISAS) (FRENTE)	638
INTERRUPTOR ROTATIVO (CONJ) (LIMPIA/LAVAPARABRISAS) (PARTE TRASERA)	638
INTERRUPTOR ROTATIVO (CONJ) (LIMPIA/LAVAPARABRISAS) (PUERTA DE LADO DERECHO)	638
INTERRUPTOR ROTATIVO (CONJ) (LIMPIA/LAVAPARABRISAS) (PUERTA IZQUIERDA)	638

J

Nombre	Página
JUEGO (AISLADOR) (MOTOR DE ARRANQUE)	194
JUEGO DE ABRAZADERA DEL FILTRO DE AIRE	99
JUEGO DE ALDABA	716, 718, 720
JUEGO DE ARANDELA (MOTOR DE ARRANQUE)	188
JUEGO DE ATADURA	696
JUEGO DE BOTÓN	624
JUEGO DE BUJES (MOTOR DE ARRANQUE)	194
JUEGO DE CALCE DE EJE (17 CALCES)	498
JUEGO DE COJINETES	136, 625
JUEGO DE COJINETES (MOTOR DE ARRANQUE)	188
JUEGO DE CONTROL DE PISTÓN	498
JUEGO DE CORREAS TRAPEZOIDALES (ALTERNADOR)	60
JUEGO DE DIODO POSITIVO	129
JUEGO DE DIODOS DEL PRISIONERO DE EMPALME	129
JUEGO DE ENCHUFE (2 CLAVIJAS)	182, 200
JUEGO DE ENCHUFE (2 CLAVIJAS) (INCLUYE TAPÓN, CUÑA Y SELLO (CONJ))	198
JUEGO DE ENCHUFE (3 CLAVIJAS)	178, 200
JUEGO DE ENCHUFE (3 CLAVIJAS) (SENSOR DE LA PRESIÓN)	177
JUEGO DE ENCHUFE (6 CLAVIJAS)	702
JUEGO DE ENCHUFE (8 CLAVIJAS)	171, 670
JUEGO DE ESCOBILLAS (MOTOR DE ARRANQUE)	188, 194
JUEGO DE FUNDA DE LA SUSPENSIÓN DEL ASIENTO	694
JUEGO DE GUÍA	716, 718, 720
JUEGO DE HOJA DE LIMPIAPARABRISAS	724
JUEGO DE INDICADOR	624
JUEGO DE MAZO DE CABLES	696
JUEGO DE PALANCA (MOTOR DE ARRANQUE)	194
JUEGO DE PARAGOLPES	624
JUEGO DE PASADOR DEL MOTOR DE ARRANQUE	188
JUEGO DE PERNO RETENEDOR	151
JUEGO DE PISTÓN	498
JUEGO DE RECEPTÁCULO (12 CLAVIJAS)	427
JUEGO DE RECEPTÁCULO (2 CLAVIJAS)	124, 126, 138, 139, 172, 180, 196, 202

INDICE

Nombre	Página
	291
	522
	602
	614
	632
	640
JUEGO DE RECEPTÁCULO (3 CLAVIJAS)	162
	174
	175
	176
	181
	200
	464
	470
	628
	629
	632
	633
JUEGO DE RECEPTÁCULO (4 CLAVIJAS)	289
	464
	470
JUEGO DE RECEPTÁCULO (6 CLAVIJAS)	166
	170
	434
	628
	651
	652
	653
	654
	655
JUEGO DE RECEPTÁCULO (8 CLAVIJAS)	628
	632
JUEGO DE RESORTE DE HOJA DE BALLESTA	713
	714
	722
JUEGO DE RESORTES	624
JUEGO DE RESTRICCIÓN DEL CINTURÓN	694
JUEGO DE RIEL DE TOPE	722
JUEGO DE RODILLO	694
	696
JUEGO DE SEGUIDOR	625
JUEGO DE SELLO DEL MOTOR DE ARRANQUE	188
JUEGO DE SELLOS	289
	291
	532
JUEGO DE SENSOR DE DIAL	124
JUEGO DE TERMINAL	136
JUEGO DE TERMINAL DE RELÉ	128
JUEGO DE TERMINAL DE SALIDA	128
JUEGO DE TERMINAL (MOTOR DE ARRANQUE)	185
JUEGO DE TORNILLERÍA	136
JUEGO DE TORNILLERÍA (MOTOR DE ARRANQUE)	188
JUEGO DE TORNILLERÍA (SUSPENSION DE ASIENTO)	696
JUNTA UNIVERSAL (GR)	277

L

Nombre	Página
LAMPARA DE DIODO (LED)	599
LÁMPARA DEL TECHO (GR)	162
LÁMPARA (24 VOLTIOS)	163
	164
	202
	599
	628
	632
LÁMPARA (28 VOLTIOS)	162
LAVAPARABRISAS DE LA VENTANA (GR)	702
LENTE DE LAMPARA DEL TECHO	162
LENTE-ROJO	202
LIMPIAPARABRISAS DE LA VENTANA (GR)	724
LLAVE	15
	124
	197
	236
	308
	312
	336
	458
LUCES DE REFLECTOR (GR)	164
LUZ DE TABLERO DE INSTRUMENTOS	628
	632

M

Nombre	Página
MANDO DE BOMBA (GR)	41
MANDO FINAL (GR)	226
	230
MANIPULACIÓN DE BASURA (GR)	8
MAZO DE CABLES (CABLE CALIBRE 14)	182
MAZO DE CABLES (PARA CABLES CALIBRE 14)	177
MAZO DE CABLES (PARA CABLES CLIBRE 16-18)	177
MAZO DE CABLES (RECEPTÁCULO)	200
MAZO DE CABLES (RECEPTÁCULO) (CABLE CALIBRE 16-18)	182
MECANISMO DE VÁLVULAS (GR)	68
	69
MODIFICACIÓN DEL TRACTOR TOPADOR (CONFIG)	555
	556
MODULO DE LA PANTALLA (GR)	166
MODULO ELECTRÓNICO DE CUATRO INDICADORES (GR)	651

INDICE

Nombre	Página
MONTAJE DE CILINDRO (GR)	558
MONTAJE DE LA ESTRUCTURA ROPS (GR)	657
MONTAJE DE LA TRANSMISIÓN (GR)	244
MONTAJE DE LA VÁLVULA DE CONTROL (GR)	495
MONTAJE DE RODILLOS SUPERIORES (GR)	387
	388
MONTAJE DEL ALTERNADOR (GR)	52
MONTAJE DEL DESGARRADOR (GR)	560
MONTAJE DEL MANDO DE VENTILADOR (GR)	54
MONTAJE FLEXIBLE DEL MOTOR (GR)	53
MOTOR - NÚCLEO (CONFIG)	13
	14
MOTOR - SOPORTE DEL (GR)	66
MOTOR DE ARRANQUE ELÉCTRICO (GR)	188
	190
	191
	192
	194
MOTOR DE ARRANQUE ELÉCTRICO (GR)	184
MOTOR DEL LIMPIADOR	652
	653
	724
MOTOR ELÉCTRICO (GR)	614
MOTOR-LIMPIAPARABRISAS (GR)	654
	655
MÚLTIPLE DE ADMISIÓN (GR)	494
MÚLTIPLE DE ESCAPE (GR)	108
MÚLTIPLE Y VÁLVULA (GR)	242
	243
MUÑÓN DE LA HOJA TOPADORA (GR)	567
	568
MUÑÓN DEL MOTOR (GR)	67
PERILLA (CONJ)	464
	470
PERILLA DE BOCINA	138
	202
PERILLA LUMBAR	658
	660
PISTON (GR)	57
PISTÓN Y BIELA (GR)	56
PIVOTE DEL LIMPIADOR (GR)	726
PLACA DE ADVERTENCIA (RESORTE DE AMORTIGUACION)	370
PLACA DE CONTROL	731
	733
PLATAFORMA DE LA CABINA (GR)	666
PLATAFORMA (GR)	662
PLATO OSCILANTE (GR)	501
POLEA DE MANDO DEL ALTERNADOR Y VENTILADOR (GR)	60
POSENFRIADOR DE AIRE (GR)	98
PRESURIZADOR (GR)	672
PRIORIDAD - VÁLVULA DE (GR)	284
PROTECTOR CONTRA ARENA (GR)	320
PROTECTOR DE LA TRANSMISIÓN (GR)	235
PROTECTOR DE RODILLOS INFERIORES (GR)	341
	342
	343
PROTECTOR DEL ANTEFILTRO (GR)	104
PROTECTOR DEL ESCAPE (GR)	110
PROTECTOR DEL RADIADOR (CONJ)	324
	326
PROTECTOR DEL RADIADOR (GR)	336
PROTECTOR DEL TANQUE DE COMBUSTIBLE (GR)	335
PROTECTOR DEL TANQUE DE COMBUSTIBLE (GR)	334
PROTECTOR GUÍA DE CADENA (GR)	339
	340
PROTECTOR INFERIOR (GR)	328
	329
	330
	332
PROTECTOR POSTERIOR (GR)	338
PROTECTORES DE RAMAS (GR)	350
PANEL DE FUSIBLES (GR)	168
PANTALLA (CONJ)	236
	502
	612
PARRILLA (GR)	321
	322
PASAMANOS (GR)	620
	621
PEDAL-GRUPO DE CONTROL Y MONTAJE	211
PERILLA	420
	606
	682
RADIADOR (GR)	90
	92
RECEPTACULO DE POTENCIA (CONJ) (12 VOLTIOS)	202
RECEPTOR-SECADOR (GR) (REFRIGERANTE)	640
RECLINACION DE ASIENTO (GR)	675
REFLECTOR (GR)	163
NIVELADORA DE FINOS (CONFIG)	4
NÚCLEO DE TURBOCOMPRESOR (GR)	112

N

P

R

INDICE

Nombre	Página
REGULADOR DE TEMPERATURA DEL AGUA (92 GR C)	82
REGULADOR Y PEDAL DEL FRENO (GR)	246
REJILLA	518
REJILLA DE SUCCIÓN	208
	264
REJILLA DE SUMIDERO (TANQUE DE COMBUSTIBLE)	114
REJILLA MAGNÉTICA (GR)	236
	264
REJILLA PROTECTORA (GR)	679
	680
RESORTE	184
RESORTE (MOTOR DE ARRANQUE)	185
RESORTE TENSOR Y AJUSTADOR DE LA CADENA (GR)	402
RESPIRADERO (CONJ)	236
RETROVISOR (GR)	649
	650
REVESTIMIENTO DE LA CABINA (GR)	636
	638
RODILLO (CONFIG)	390
RODILLO DE CADENA (CONFIG)	391
	392
RODILLO SUPERIOR DE CADENAS (GR)	394
RODILLOS DE PESTAÑA DOBLE (GR)	396
	397
	398
RODILLOS DE PESTAÑA SIMPLE (GR)	399
RODILLOS DE PESTAÑA SIMPLE (GR)	400
RUEDA GUÍA DE CADENA (GR)	380
	381
SENSOR DE TEMPERATURA (GR)	181
	182
SENSOR DE TEMPERATURA (GR) (AIRE DE ADMISIÓN)	172
SENSOR DE TEMPERATURA (GR) (REFRIGERANTE)	172
SENSOR DE TEMPERATURA (GR) (TRANSMISION)	138
SENSOR DE VELOCIDAD (GR)	179
	180
SENSOR DE VELOCIDAD (GR) (MAGNETICO-DE ALTA SALIDA)	255
SENSOR DE VELOCIDAD (GR) (MOTOR)	139
SENSOR DE VELOCIDAD (GR) (TRANSMISION)	139
SERVICIO DE TREN DE FUERZA (GR)	183
SILENCIADOR (GR)	109
SOFTWARE DE MONITOR (GR)	154
SOFTWARE DEL MONITOR (GR)	148
SOFTWARE DEL MONITOR (GR)	154
SOLENOIDE (CONJ) (MOTOR DE ARRANQUE 24 VOLTIOS)	185
SOLENOIDE (CONJ) (24 VOLTIOS)	188
SOPLADOR - VENTILADOR (GR)	81
SOPORTE DE CONTROL (GR)	434
SOPORTE DE LA HOJA TOPADORA	534
SOPORTE DEL RESPALDO (GR)	658
	659
	660
SUSPENSIÓN - ASIENTO CON (GR)	691
	692
	693

S

SEGMENTO DE RUEDA MOTRIZ (GR)	265
SELLANTE	155
SELLANTE DE EMPAQUETADURA	50
	55
	103
SELLO DE CIGÜEÑAL (GR)	64
SELLO DEL INYECTOR DEL COMBUSTIBLE (GR)	65
SENSOR DE PRESIÓN (GR)	178
SENSOR DE PRESIÓN (GR)	177
SENSOR DE PRESIÓN (GR) (ACCIONAMIENTO DE INYECCION)	172
SENSOR DE PRESIÓN (GR) (ATMOSFERICA)	172
SENSOR DE PRESIÓN (GR) (ENTRADA DE TURBOCOMPRESOR)	138
SENSOR DE PRESIÓN (GR) (PRESIÓN DEL ACEITE)	172
SENSOR DE PRESIÓN (GR) (SALIDA DE TURBOCOMPRESOR)	172

T

TANQUE DE REFRIGERANTE (GR)	94
TANQUE DEL AGUA (GR)	96
TANQUE DEL LAVAPARABRISAS (GR)	698
TANQUE DEL LAVAPARABRISAS (GR)	700
TANQUE Y FILTRO HIDRÁULICOS (GR)	502
TAPA CON RESPIRADERO	700
TAPA CONTRA EL POLVO	44
	72
	84
	208
	236
	278
	284
	286
	464
	466
	470
	476
	502
TAPA DE LA CAJA DELANTERA (GR)	20

INDICE

Nombre	Página
	22
TAPA DE LA CONSOLA (GR)	618
TAPA DE RADIADOR (CONJ)	94
TAPA DE RUEDA GUÍA (GR)	353
TAPA DEL BLOQUE MOTOR (GR)	18
TAPA DEL MECANISMO DE VÁLVULAS (GR)	24
TAPA DEL TUBO DE LLENADO	502
TAPA ENROSCABLE	312
	672
TAPA (GR)	304
TAPA, TANQUE DE COMBUSTIBLE (GR) (TRABABLE)	125
TAPÓN	298
	300
TAPÓN (CONJ)	236
TAPÓN DE DRENAJE	36
	49
	220
	502
TAPÓN DE DRENAJE (ROSCA 7/8-14)	224
TAPON DE SELLO	289
TAPÓN DEL MOTOR (GR)	58
TAPÓN MAGNÉTICO	226
	230
TOPE (GR)	428
TORNILLO DE MANDO (NO. 4X3/16 PULG.)	368
	370
TORNILLO DE MANDO (3/16 X 1/4 PULG.)	370
TRANSMISION (CONFIG)	275
	276
TRANSMISIÓN PLANETARIA (GR)	248
	254
TREN DE FUERZA (CONFIG)	259
	260
TREN DE RODAJE (CONFIG)	418
TREN DE RODAJE (CONFIG)	417
TUBERÍAS CON SERVOMANDO (GR)	464
	470
TUBERÍAS DE ACEITE DEL MOTOR (GR)	76
TUBERÍAS DE ACEITE DEL TREN DE FUERZA (GR)	236
TUBERÍAS DE ACONDICIONADOR DE AIRE (GR)	640
TUBERÍAS DE COMBUSTIBLE (GR)	114
TUBERÍAS DE LA CALEFACCIÓN (GR)	646
TUBERÍAS DEL AGUA (GR)	82
	84
TUBERÍAS DEL CILINDRO DE INCL. HORIZ. Y VERTICAL	484
TUBERÍAS DEL CILINDRO DE INCLINACIÓN (GR)	486
	488
	490
	492
TUBERÍAS DEL DESGARRADOR (GR)	480
	482
TUBERÍAS DEL FILTRO DE COMBUSTIBLE	117
TURBOCOMPRESOR - TUBERÍAS DE ACEITE DEL (GR)	77
TURBOCOMPRESOR (GR)	111
	112

V

VALVULA	284
	292
VÁLVULA	502
VÁLVULA - ESFERA	114
VÁLVULA - MONTAJE DE LA (GR)	496
	497
VÁLVULA COMPENSADORA DE FLUJO Y PRESIÓN (GR)	526
VÁLVULA (CONJ)	640
VÁLVULA DE AGUA (CONJ)	622
VALVULA DE ALIVIO	286
VÁLVULA DE ALIVIO DEL FRENO	476
VÁLVULA DE ALIVIO (GR)	286
	288
	518
	530
	531
	532
VÁLVULA DE CAÍDA RÁPIDA (GR)	528
VÁLVULA DE CONTROL DE LA TRANSMISIÓN (GR)	292
VÁLVULA DE CONTROL (GR)	280
	508
	510
	512
	514
	516
VÁLVULA DE CORTE	90
VÁLVULA DE CORTE (GR)	646
VALVULA DE DERIVACION	72
VALVULA DE DISCO	530
VÁLVULA DE DRENAJE	298
	300
VÁLVULA DE LANZADERA (GR)	533
VALVULA DE LLENADO	402
VÁLVULA DE MODULACIÓN (GR)	218
VÁLVULA DE MODULACIÓN (GR)	282
VÁLVULA DE MUESTREO (GR)	237
VÁLVULA DE MUESTREO (GR)	72
	84
	466
	472
	502
VÁLVULA DE RETENCIÓN (CONJ) (SISTEMA DE LIMPIA/LAVAPARABRISAS)	698
VÁLVULA DE RETENCIÓN (GR)	494

INDICE

Nombre	Página
VÁLVULA DE RETENCIÓN (GR)	506
VÁLVULA DE SOLENOIDE (GR)	289
VÁLVULA DE SOLENOIDE (GR)	290
	291
VALVULA DISTRIBUIDORA Y REDUCTORA (GR)	518
VALVULA PILOTO DE CARTUCHO (GR)	524
	525
VALVULA PILOTO DE CARTUCHO (GR) (BAJADA DE DESGARRADOR)	520
VALVULA PILOTO DE CARTUCHO (GR) (BAJAR HOJA TOPADORA)	522
VALVULA PILOTO DE CARTUCHO (GR) (INCLINAR HOJA TOPADORA HACIA DERECHO)	522
VALVULA PILOTO DE CARTUCHO (GR) (INCLINAR HOJA TOPADORA HACIA IZQ.)	522
VALVULA PILOTO DE CARTUCHO (GR) (LEVANTAR HOJA TOPADORA)	522
VALVULA PILOTO DE CARTUCHO (GR) (SUBIR EL DESGARRADOR)	520
VÁLVULA PILOTO (GR)	522
VÁLVULA PILOTO (GR)	520
VALVULA PILOTO Y MONTAJE (GR)	278
VÁLVULA REDUCTORA DE PRESIÓN (GR)	518
	527
VÁLVULA (VACIADO)	402
VENTANA CORREDIZA (CONJ)	705
	706
VENTANA CORREDIZA (CONJ)	704
VENTANA DE LA CABINA (GR)	716
	718
	720
	722
VENTANA DE LA CABINA (GR)	714
VENTANA DE LA CABINA (GR)	707
	708
	709
	710
	711
	712
	713
VENTANA DE LA CABINA (GR) (IZQUIERDO) (DESLIZANTE)	706
VENTANA DE LA CABINA (GR) (LADO DERECHO)	709
VENTANA DE LA CABINA (GR) (LADO DERECHO) (DESLIZANTE)	705
VENTANA DE LA CABINA (GR) (LADO IZQUIERDO)	710
VENTANA DE LA CABINA (GR) (PARTE TRASERA)	708
VENTANA DE LA CABINA (GR) (TRASERA)(DESLIZANTE)	704
VENTILADOR DE ALTERNADOR	128
VENTILADOR (GR)	80
VENTILADOR SOPLADOR DE LA CABINA (GR)	672
VENTILADOR SOPLADOR DE LA CABINA (GR)	602
VIDRIO	606
VIDRIO (AHUMADO)	606
	708
	709
	710
VIDRIO (CONJ) (REFLECTOR)	163
VIDRIO-DESLIZANTE-DERECHO (AHUMADO)	718
VIDRIO-DESLIZANTE (IZQUIERDO) (AHUMADO)	716
VIDRIO-DESLIZANTE TRASERO (AHUMADO)	720
VIDRIO-FIJO-DERECHO (AHUMADO)	713
VIDRIO-FIJO-LADO IZQUIERDO (AHUMADO)	714
VOLANTE - CAJA DE (GR)	48
	49
VOLANTE (GR)	45

Y

YUGO (GR)	70

ÍNDICE

Designação	Página

A

ACOPLAMENTO E PROTETOR 222
ACUMULADOR 470
ACUMULADOR - REFRIGERANTE 640
ACUMULADOR D ÓLEO - PILOTO 464
AJUSTADOR DE ESTEIRAS E MOLA TENSORA 402
AJUSTADOR DO ASSENTO 598
AJUSTADOR DO CONTROLE DA DIREÇÃO E TRANSMISSÃO 420
ALARME 126
ALTERNADOR DE CORRENTE 128, 132, 134, 136
AMORTECEDOR DE VIBRAÇÕES E POLIA 35
AQUECEDOR DA ÁGUA DO MOTOR 156
AQUECEDOR DA CABINE 622
AQUECEDOR DE AR DE ADMISSÃO 155
ARMAÇÃO C 549, 550, 551, 552, 554
ARMAÇÃO TELESCÓPICA DA MOLA TENSORA 360, 362, 364, 366, 368, 370, 372, 374
ARMAÇÃO TELESCÓPICA DA MOLA TENSORA (DIREITO) 417, 418
ARMAÇÃO TELESCÓPICA DA MOLA TENSORA (ESQUERDO) 417, 418
ARMAÇÃO TELESCÓPICA DA MOLA TENSORA (LADO DIREITO) 390
ARMAÇÃO TELESCÓPICA DA MOLA TENSORA (LADO ESQUERDO) 390
ARO DE FLANGE DUPLA 396, 397
ARO DE FLANGE SIMPLES 399
ARRANJO GERAL 2, 3
ARREFECEDOR - ÓLEO DO MOTOR 79
ARREFECEDOR DE ÓLEO DA TRANSMISSÃO 220
ASSENTO 681, 682, 684, 686, 688, 690
ASSENTO COM SUSPENSÃO 691, 692, 693
ATERRO SANITÁRIO 7

B

BALANCIM 62, 63
BARRA DE ARTICULAÇÃO 389
BARRA DE TRAÇÃO 305, 306
BARRA EQUALIZADORA 354, 356, 358
BARRAS DE PROTEÇÃO DO CAPÔ 350
BATERIA 145
BATERIA E CABOS / FIOS ELÉTRICOS 138
BATERIA (12 VOLT)(ÚMIDO) 140
BLINDAGEM DO COLETOR DE ESCAPE 110
BLOCO DO MOTOR 26, 28, 29
BOMBA - GEROTOR 78
BOMBA DA UNIDADE INJETORA 120, 121
BOMBA DE ÁGUA 86, 87, 88
BOMBA DE COMBUSTÍVEL 118
BOMBA DE ENGRENAGENS 261, 262
BOMBA DE ENGRENAGENS (3 SEÇÕES) (CARGA & RETORNO DO CONVERSOR & TRANSMISSÃO) 261
BOMBA DE ÓLEO - MOTOR 78
BOMBA DE PISTÃO 498
BOMBA HIDRÁULICA - UNIDADE INJETORA . . . 122, 123
BOTÃO 420, 464, 470
BOTÃO - CHICOTE 138, 202
BOTÃO - LOMBAR 658, 660
BRAÇO DE EMPUXO 562, 564
BRONZINA TIPO LUVA (EIXO-COMANDO DE VÁLVULAS) 26
BUJÃO 670
BUJÃO - CABOS/FIOS ELÉTRICOS 170

ÍNDICE

Designação	Página
	171
BUJÃO DO DRENO	36
	49
	220
	502
BUJÃO DO DRENO (ROSCA 7/8-14)	224
BUJÃO DO MOTOR	58
BUJÃO MAGNÉTICO	226
	230
BUJÃO-RETENTOR	289
BUZINA (24 VOLTS - ALTA TONALIDADE)	139
BUZINA (24 VOLTS)(TONALIDADE BAIXA)	139
C	
CABEÇOTE DO MOTOR	30
	32
	34
CABINE	604
	605
	606
CABO - CONTROLE	600
CABOS / FIOS ELÉTRICOS-ACELERADOR	205
CABOS/FIOS ELÉTRICOS - CONTROLE ELETRÔNICO	200
CABOS/FIOS ELÉTRICOS - PLATAFORMA	202
CADEADO	15
	124
	236
	294
	308
	312
	336
	458
CAIXA - SUSPENSÃO DO ASSENTO	624
CAIXA DA BATERIA	294
	296
CAIXA DIANTEIRA	50
CAIXA DO VOLANTE DO MOTOR	48
	49
CAIXA E CHASSI	298
	300
CANTO E BORDA CORTANTE	569
	570
	571
	572
CAPÔ E PROTETOR	344
CARCAÇA DAS ENGRENAGENS PLANETÁRIAS E COMPONENTES	208
CÁRTER DO ÓLEO DO MOTOR	55
CARTUCHO DO TURBOALIMENTADOR	112
CHASSI	302
	303
CHAVE	15
	124
	197
	236
	308
	312
	336
	458
CHAVE DE FENDA (NO. 4X3/16 POL)	368
	370
CHAVE DE FENDA (3/16 X 1/4 POL)	370
CHAVE GERAL	197
CHAVE INTERRUPTORA DE PARTIDA	632
CHAVE INTERRUPTORA DE PARTIDA (IGNIÇÃO)	628
CHICOTE (FIO DE BITOLA 14)	182
CHICOTE (PARA FIAÇÃO 14)	177
CHICOTE (PARA FIAÇÃO 16-18)	177
CHICOTE (TOMADA)	200
CHICOTE (TOMADA) (FIO DE BITOLA 16-18)	182
CILINDRO - LEVANTAMENTO DA LÂMINA	448
CILINDRO DE INCLINAÇÃO	446
	454
	456
CILINDRO DE LEVANTAMENTO	450
CILINDRO DE LEVANTAMENTO DO RIPER	452
CILINDRO DE LEVANTAMENTO E TUBOS	438
	440
	442
	444
CILINDRO DE LEVANTAMENTO E TUBOS (DIREITO)	536
	539
	541
	545
CILINDRO DE LEVANTAMENTO E TUBOS (ESQUERDO)	536
	539
	541
	545
CILINDRO DE LEVANTAMENTO E TUBOS (LADO DIREITO)	537
	543
CILINDRO DE LEVANTAMENTO E TUBOS (LADO ESQUERDO)	537
	543
CINTO DE SEGURANÇA	686
	690
COBERTURA - PÁRA-LAMA	316
COBERTURA DO MOTOR	308
	312
COLETOR DE ADMISSÃO	494
COLETOR DE ESCAPE	108
COLETOR E VÁLVULA	242
	243
COMANDO DA BOMBA	41
COMANDO DO VENTILADOR	38

ÍNDICE

Designação	Página
	40
COMANDO FINAL	226
	230
COMANDO HIDRÁULICO	458
COMPRESSOR DE REFRIGERANTE	609
	610
CONDENSADOR DE REFRIGERANTE	614
CONDENSADOR DO REFRIGERANTE E MONTAGEM	612
CONDICIONADOR DE AR	599
	600
CONEXÃO	44
CONJUNTO DESLIZADOR	707
	711
	712
CONTROLE - NÃO PROGRAMADO	146
	151
	183
CONTROLE-CABO (LÂMINA)	616
CONTROLE-COMUNICAÇÃO (PRODUCT LINK)	158
	160
CONTROLE DE DIREÇÃO E TRANSMISSÃO	212
	214
	216
CONTROLE DO ACESSÓRIO	616
CONTROLE DO FREIO DE ESTACIONAMENTO	427
CONTROLE DO PAINEL MONITOR	150
CONTROLE DO PAINEL MONITOR (SISTEMA DE MONITORIZAÇÃO CATERPILLAR)	628
	632
CONTROLE DO PAINEL MONITOR (SISTEMA DE MONITORIZAÇÃO CATERPILLAR)	148
CONTROLE DO PEDAL E MONTAGEM	211
CONTROLE ELETRÔNICO	148
CONTROLE ELETRÔNICO - MOTOR	149
CONTROLE ELETRÔNICO E MONTAGEM	146
CONTROLE ELETRÔNICO E MONTAGEM - MOTOR	147
CONTROLE HIDRÁULICO	435
CONTROLE HIDRÁULICO DA TRANSMISSÃO	218
CONTROLE PILOTO HIDRÁULICO	436
	437
CONVERSOR DE POTÊNCIA (DE 24 VOLTS A 12 VOLTS)	202
CONVERSOR DE POTÊNCIA (20 A)	152
CONVERSOR DE TORQUE	268
	270
	272
CONVERSOR ELÉTRICO	152
COROA E ENGRENAGEM DE TRANFERÊNCIA	232
CORREIA EM V	610
COTOVELO DE ADMISSÃO DE AR	103

D

Designação	Página
DECALQUE	216
	427
	727
	728
	729
DECALQUE - ADVERTÊNCIA	360
	362
	364
	366
	368
	370
DECALQUE - ADVERTÊNCIA (CILINDRO DE FREIO DE ESTACIONAMENTO)	372
	374
DECALQUE - ADVERTÊNCIA (RAIO DE ARTICULAÇÃO DO PRODUTO)	158
	160
DECALQUE - AVISO (RÁDIO)	627
DECALQUE - IDENTIFICAÇÃO	628
	632
	638
	731
	733
DECALQUE - IDENTIFICAÇÃO (NO. DE SEQÜÊNCIA E GRUPO)	602
	614
DECALQUE - IDENTIFICAÇÃO (12 V)	731
	733
DECALQUE - INSTRUÇÃO	168
	566
DECALQUE - INSTRUÇÃO (AJUSTE DO ASSENTO)	694
DECALQUE - INSTRUÇÃO (CONTROLE DO BULDÔZER)	730
	733
DECALQUE - INSTRUÇÃO (RIPER)	435
DECALQUE - INSTRUÇÕES	6
DECALQUE - TIRA (DIREITO)	335
DECALQUE - TIRA (ESQUERDO)	335
DECALQUE - TIRA (LADO DIREITO)	334
DECALQUE - TIRA (LADO ESQUERDO)	334
DECALQUE (ALMOFADA DO ASSENTO - IDENTIFICAÇÃO)	660
DECALQUE (AQUECEDOR DE ÁGUA)	156
DECALQUE MONITOR	731
	733
DECALQUE (RUÍDO EXTERNO)	6
DENTE DO RÍPER	596
	597
DESLIZADOR DO VIDRO - LADO DIREITO (MATIZADO)	718

ÍNDICE

Designação	Página
DISJUNTOR AUTOMÁTICO DE CIRCUITO (135 AMP.)	168
DISJUNTOR AUTOMÁTICO DE CIRCUITO (15 A)	152
	168
DRENO - ECOLOGIA	223
	224
DRENO - ÓLEO DO MOTOR	36

E

EIXO-COMANDO DE VÁLVULA	16
EIXO DA TRANSMISSÃO	266
EJETOR DE POEIRA	102
ELEMENTO	24
ELEMENTO - AQUECEDOR DE ÁGUA DA CAMISA (120 VOLTS/1500 WATTS)	156
ELEMENTO DO FILTRO DE AR (PRIMÁRIO)	99
ELEMENTO DO FILTRO DE AR (SECUNDÁRIO)	99
ELEMENTO FILTRANTE - ÓLEO	225
	236
ELEMENTO FILTRANTE - ÓLEO (FLUXO HIDRÁULICO/REVERSO)	502
ELEMENTO FILTRANTE - ÓLEO (FLUXO INVERSO) (RESISTENTE A FOGO)	502
ELEMENTO FILTRANTE - ÓLEO (HIDRÁULICO) (MAIOR DESEMPENHO)	502
ELIMINAÇÃO DE VAPORES DO CÁRTER	74
ELO DA ESTEIRA	382
	383
	384
	385
	386
EMBREAGEM DE DIREÇÃO E FREIOS	424
EMISSOR - NÍVEL DO COMBUSTÍVEL	124
EMISSOR - POSIÇÃO	174
	175
	176
EMISSOR - POSIÇÃO (SEM MOLA)	214
EMISSOR - TEMPERATURA	138
ENGRENAGENS DE COMANDO TRASEIRO	47
ENGRENAGENS DE DISTRIBUIÇÃO	46
ENGRENAGENS PLANETÁRIAS - TRANSMISSÃO	248
	254
ESCOVA (MOTOR DE PARTIDA)	184
ESPELHO RETROVISOR	649
	650
ESTEIRA	404
	405
	406
	407
	408
	409
	410
	411
	412
	413
	414
	415
	416
ESTRUTURA - BOMBA DE ÓLEO (CARREGAMENTO DA TRANSMISSÃO)	262
ESTRUTURA - BOMBA DE ÓLEO (CARREGAMENTO DO CONVERSOR)	262
ESTRUTURA - BOMBA DE ÓLEO (RETORNO DO CONVERSOR & TRANSMISSÃO)	262
ESTRUTURA ROPS	676
	678
EXTENSÃO - ENCOSTO	690
EXTENSÃO - ENCOSTO (TECIDO)	686

F

FILTRO - AR (CABINE - AR LIVRE)	672
FILTRO - COMBUSTÍVEL	118
	124
FILTRO - MAGNÉTICO	236
	264
FILTRO - ÓLEO	225
	502
FILTRO - ÓLEO DO MOTOR	72
FILTRO - ÓLEO (TRANSMISSÃO)	236
FILTRO - SEPARADOR DE ÁGUA E COMBUSTÍVEL	113
FILTRO (AR DE RECIRCULAÇÃO DA CABINE)	672
FILTRO DE COMBUSTÍVEL E SEPARADOR DE ÁGUA	113
FIXADORES - CABEÇOTE DO MOTOR	42
FIXADORES - CAIXA DIANTEIRA	43
FUNDO - ENCOSTO	658
	659
	660
FUSÍVEL (10 A)	168
FUSÍVEL (15 A)	168
FUSÍVEL (20 A)	168
FUSÍVEL (5 AMP)	168

G

GANCHO DIANTEIRO	346
	347
GARFO	70
GR. DE CONVERSÃO	617
GR. DE SERVICO - TREM DE FORÇA	183
GRADE	321
	322

ÍNDICE

Designação	Página
GRADE DO RADIADOR CONTRA EROSÃO	320
GRAXEIRA (ROSCA 1/8-27 POL)	354
	356
	534
	558
	594
GRAXEIRA (ROSCA 1/8-27 45 GRAUS)	354
	356
GRUPO DE CONVERSÃO - LÂMINA	555
	556
GRUPO DE INSTALAÇÃO - MOTOR	15
GRUPO ROTATIVO DA BOMBA	500
GUIA-MATERIAL RODANTE	376
	377
	378
	379
I	
INDICADOR	628
	632
INDICADOR - NÍVEL DO ÓLEO (VARETA)	75
INSTALAÇÃO-COMUNICAÇÃO	158
	160
INSTALAÇÃO DO RÁDIO	627
INSTRUMENTOS	628
	632
INTERRUPTOR	164
	599
INTERRUPTOR - BALANCIM	164
	599
INTERRUPTOR - BALANCIM (FREIO DE ESTACIONAMENTO)	427
INTERRUPTOR - BALANCIM (24 VOLTS)(VEDADO)(ILUMINADO)	202
INTERRUPTOR - BOTÃO (DESLIGAMENTO AUTOMÁTICO)	629
	633
INTERRUPTOR - BOTÃO (MODO BIDIRECIONAL)	629
INTERRUPTOR - BOTÃO (MODO DIRECIONAL)	633
INTERRUPTOR - BOTÃO (MODO DO VISOR)	628
INTERRUPTOR - BOTÃO (MUDANÇA MARCHAS ACIMA)	434
INTERRUPTOR - BOTÃO (REDUÇÃO DE MARCHA)	434
INTERRUPTOR - BOTÃO (VISOR PADRÃO)	632
INTERRUPTOR - BUZINA	138
	202
INTERRUPTOR - LIMITADOR	214
	246
	464
	470
INTERRUPTOR - MAGNÉTICO	198
INTERRUPTOR - MAGNÉTICO (RELÉ DE PARTIDA)	168
INTERRUPTOR - MAGNÉTICO (24 V) (AQUECEDOR DO AR DE ADMISSÃO)	138
INTERRUPTOR - PRESSÃO (AR CONDICIONADO)	640
INTERRUPTOR - ROTATIVO (LIMPADOR / LAVADOR) (DIANTEIRO)	638
INTERRUPTOR - ROTATIVO (LIMPADOR / LAVADOR) (PORTA - LADO ESQUERDO)	638
INTERRUPTOR - ROTATIVO (LIMPADOR / LAVADOR) (PORTA-LADO DIREITO)	638
INTERRUPTOR - ROTATIVO (LIMPADOR / LAVADOR) (TRASEIRO)	638
INTERRUPTOR - TERMOSTATO	600
INTERRUPTOR DE DERIVAÇÃO	196
INTERRUPTOR DE DERIVAÇÃO (FILTRO DO TREM DE FORÇA)	138
INTERRUPTOR (INTERRUPTOR - LUZ)	632
INTERRUPTOR (LUZ)	628
INTERRUPTOR (VENTILADOR)	628
INTERRUPTOR (24 VOLT)(ILUMINADO) (ACELERADOR)	202
J	
JANELA DA CABINE	707
	708
	709
	710
	711
	712
	713
	714
	716
	718
	720
	722
JANELA DA CABINE (DIREITO)	709
JANELA DA CABINE (ESQUERDO)	710
JANELA DA CABINE (LADO DIREITO) (DESLIZANTE)	705
JANELA DA CABINE (LADO ESQUERDO) (DESLIZANTE)	706
JANELA DA CABINE (TRASEIRO)	708
JANELA DA CABINE (TRASEIRO - DESLIZANTE)	704
JANELA DESLIZANTE	704
	705
	706
JOGO DE ABRAÇADEIRA DO PURIFICADOR DE AR	99
JOGO DE ALAVANCA (MOTOR DE PARTIDA)	194

ÍNDICE

Designação	Página
JOGO DE ARRUELA (MOTOR DE PARTIDA)	188
JOGO DE BLOCO DESLIZADOR	691
	692
	693
JOGO DE BOTÃO DE SUSPENSÃO	624
JOGO DE BUCHA (MOTOR DE PARTIDA)	194
JOGO DE CALÇO (17 CALÇOS)	498
JOGO DE CHICOTE	696
JOGO DE COIFA DE SUSPENSÃO	694
JOGO DE CORDÃO	696
JOGO DE CORREIAS EM V (ALTERNADOR)	60
JOGO DE DIODO POSITIVO	129
JOGO DE ESCOVA (MOTOR DE PARTIDA)	188
	194
JOGO DE FIXADOR DE CORREIA	694
JOGO DE FIXADORES	136
JOGO DE FIXADORES (MOTOR DE PARTIDA)	188
JOGO DE FIXADORES (SUSPENSÃO DO ASSENTO)	696
JOGO DE GUIA DE TRILHO	716
	718
	720
JOGO DE INDICADOR	624
JOGO DE ISOLADOR (MOTOR DE PARTIDA)	194
JOGO DE LÂMINA DO LIMPADOR DE PÁRA-BRISA	724
JOGO DE MANCAL	136
	625
JOGO DE MANCAL (MOTOR DE PARTIDA)	188
JOGO DE MOLA	624
JOGO DE MOLA DE FOLHA	713
	714
	722
JOGO DE PÁRA-CHOQUE	624
JOGO DE PARAFUSO DE RETENÇÃO	151
JOGO DE PINO DO MOTOR DE PARTIDA	188
JOGO DE PISTÃO	498
JOGO DE PISTÃO DE CONTROLE	498
JOGO DE PRISIONEIRO - DIODO DE JUNÇÃO	129
JOGO DE RECEPTÁCULO (12 PINOS)	427
JOGO DE RECEPTÁCULO (2 PINOS)	124
	126
	138
	139
	172
	180
	196
	202
	291
	522
	602
	614
	632
	640
JOGO DE RECEPTÁCULO (3 PINOS)	162
	174
	175
	176
	181
	200
	464
	470
	628
	629
	632
	633
JOGO DE RECEPTÁCULO (4 PINOS)	289
	464
	470
JOGO DE RECEPTÁCULO (6 PINOS)	166
	170
	434
	628
	651
	652
	653
	654
	655
JOGO DE RECEPTÁCULO (8 PINOS)	628
	632
JOGO DE RETENTOR	289
	291
	532
JOGO DE RETENTOR DO MOTOR DE PARTIDA	188
JOGO DE ROLETE DE SUSPENSÃO	694
JOGO DE ROLO	696
JOGO DE SEGUIDOR	625
JOGO DE SENSOR DE DIAL	124
JOGO DE TERMINAL	136
JOGO DE TERMINAL DE SAÍDA	128
JOGO DE TERMINAL (MOTOR DE PARTIDA)	185
JOGO DE TERMINAL RELÉ	128
JOGO DE TOMADA DE CONEXÃO (2 PINOS)	182
	200
JOGO DE TOMADA DE CONEXÃO (2 PINOS) (INCLUI TOMADA, BORDA E RETENTOR)	198
JOGO DE TOMADA DE CONEXÃO (3 PINOS)	178
	200
JOGO DE TOMADA DE CONEXÃO (3 PINOS) (SENSOR DE PRESSÃO)	177
JOGO DE TOMADA DE CONEXÃO (6 PINOS)	702
JOGO DE TOMADA DE CONEXÃO (8 PINOS)	171
	670
JOGO DE TRILHO DE PARADA	722
JOGO DE TRINCO	716
	718
	720

ÍNDICE

Designação	Página
JUNTA UNIVERSAL	277

L

LÂMINA	536 547 578 579
LÂMINA - SEMI-UNIVERSAL	577
LÂMINA - TORAS	585
LÂMINA- MANIPULAÇÃO DE RESÍDUOS	592 593
LÂMINA ANGULÁVEL	537 538 539 540 583 584
LAMINA BULLDOZER	548
LÂMINA DE ACABAMENTO	4
LÂMINA DO LIMPADOR DE PÁRA-BRISA (DIANTEIRO E TRASEIRO)	724
LÂMINA DO LIMPADOR DE PÁRA-BRISA (PORTAS-LADO DIREITO & LADO ESQUERDO)	724
LÂMINA E BORDA CORTANTE	573 574 575 576
LÂMINA RETA	545 546 582 590 591
LÂMINA SEMI-UNIVERSAL	541 542 543 544 580 581 586 587 588 589
LÂMPADA - DIODO (VISOR LED)	599
LÂMPADA - FAROL	163
LÂMPADA - TETO	162
LÂMPADA (24 V)	163 164 202 599 628 632
LÂMPADA (28 V)	162
LAVADOR DO VIDRO	702
LENTE DA LÂMPADO DO TETO	162
LENTE (HOLOFOTE)	163
LENTE VERMELHA	202
LEVANTAMENTO DO MOTOR	51
LIMPADOR DO VIDRO	724
LUZ DO PAINEL DE INSTRUMENTOS	628 632

M

MAÇANETA	606 682
MANIPULAÇÃO DE RESÍDUOS	8
MATERIAL RODANTE	417 418
MECANISMO DAS VÁLVULAS	68 69
MECANISMO DE DIREÇÃO	430 432
MÓDULO DO VISOR	166
MÓDULO ELETRÔNICO DE QUATRO INDICADORES	651
MOLA	184
MOLA (MOTOR DE PARTIDA)	185
MONITOR - SOFTWARE	154
MONTAGEM - ALTERNADOR	52
MONTAGEM - CABINE	656
MONTAGEM - CILINDRO	558
MONTAGEM - COMANDO DO VENTILADOR	54
MONTAGEM - ESTRUTURA ROPS	657
MONTAGEM - GRELHA	322
MONTAGEM - RIPER	560
MONTAGEM - ROLETE SUPERIOR	387 388
MONTAGEM - TRANSMISSÃO	244
MONTAGEM - VÁLVULA	496 497
MONTAGEM - VÁLVULA DE CONTROLE	495
MONTAGEM FLEXÍVEL DO MOTOR	53
MOTOR	9 10 11 12
MOTOR - LIMPADOR DO VIDRO	654 655
MOTOR - NÚCLEO	13 14
MOTOR DO LIMPADOR	652 653 724
MOTOR ELÉTRICO	614
MOTOR ELÉTRICO DE PARTIDA	184 188 190 191

ÍNDICE

Designação	Página
	192
	194
MUNHÃO DA LÂMINA	567
	568
MUNHÃO DO MOTOR	67

P

PAINEL DE FUSÍVEIS	168
PÁRA-LAMA	318
PEDAL - GOVERNADOR E FREIO	246
PEGA-MÃO	620
	621
PISTÃO	57
PISTÃO E BIELA	56
PIVÔ DO LIMPADOR	726
PLACA BASCULANTE	501
PLACA DE ADVERTÊNCIA (MOLA TENSORA)	370
PLACA E DECALQUE	730
	732
PLATAFORMA	662
PLATAFORMA DA CABINE	666
POLIA - VENTILADOR E COMANDO DO ALTERNADOR	60
POLIA DO VIRABREQUIM	59
PÓS-ARREFECEDOR DA ADMISSÃO DE AR	98
PRESSURIZADOR	672
PROTETOR - GUIA DOS ROLETES DAS ESTEIRAS	339
	340
PROTETOR - PRÉ-PURIFICADOR	104
PROTETOR - RADIADOR	336
PROTETOR - ROLETES DAS ESTEIRAS	341
	342
	343
PROTETOR - TANQUE DE COMBUSTÍVEL	334
	335
PROTETOR - TRANSMISSÃO	235
PROTETOR - TRASEIRO	338
PROTETOR DO RADIADOR	324
	326
PROTETOR INFERIOR	328
	329
	330
	332
PURIFICADOR DE AR	99
	100

R

RADIADOR	90
	92
RECEPTÁCULO PARA ENERGIA (12 V)	202
RECEPTOR - SECADOR (REFRIGERANTE)	640
RECLINAÇÃO - ASSENTO	675
REGULADOR DE TEMPERATURA DA ÁGUA (92 GRAUS CENTÍGRADOS)	82
RESPIRO	236
RETEM	428
RETENTOR - CAPÔ	348
RETENTOR - INJETOR DE COMBUSTÍVEL	65
RETENTOR DO VIRABREQUIM	64
REVESTIMENTO DA CABINE	636
	638
RIPER	566
	594
RODA-GUIA DAS ESTEIRAS	380
	381
ROLETE	390
ROLETE DAS ESTEIRAS	391
	392
ROLETE DE ESTEIRA DE FLANGE DUPLO	396
	397
	398
ROLETE DE ESTEIRA DE FLANGE SIMPLES	399
	400
ROLETE SUPERIOR DA ESTEIRA	394
RUÍDO - ARRANJO PARA SUPRESSÃO	5
	6

S

SEGMENTO DA RODA MOTRIZ	265
SEMI-EIXO - TREM DE FORÇA	206
SENSOR - PRESSÃO	177
	178
SENSOR - PRESSÃO (ACIONAMENTO DA INJEÇÃO)	172
SENSOR - PRESSÃO (ATMOSFÉRICA)	172
SENSOR - PRESSÃO (ENTRADA DO TURBOALIMENTADOR)	138
SENSOR - PRESSÃO (PRESSÃO DO ÓLEO)	172
SENSOR - PRESSÃO (SAÍDA DO TURBOALIMENTADOR)	172
SENSOR - TEMPERATURA	181
	182
SENSOR - TEMPERATURA (ENTRADA DO AR)	172
SENSOR - TEMPERATURA (LÍQUIDO ARREFECEDOR)	172
SENSOR - TEMPERATURA (TRANSMISSÃO)	138
SENSOR DE VELOCIDADE	179
	180
SENSOR DE VELOCIDADE (MAGNÉTICO - SAÍDA ALTA)	255
SENSOR DE VELOCIDADE (MOTOR)	139
SENSOR DE VELOCIDADE (TRANSMISSÃO)	139
SENSOR ELETRÔNICO	172
SILENCIADOR	109

ÍNDICE

Designação	Página
SISTEMA DE ILUMINAÇÃO - FARÓIS	164
SISTEMA ELETRÔNICO - MÁQUINA	1
	153
SISTEMA ELETRÔNICO - MONITOR	154
SOFTWARE - MONITOR	148
	154
SOLENÓIDE (MOTOR DE PARTIDA DE 24 VOLTS)	185
SOLENÓIDE (24 V)	188
SUPORTE - CONTROLE	434
SUPORTE DO MOTOR	66
SUSPENSÃO - ASSENTO	694
	696

T

TAMPA	236
	304
TAMPA - BLOCO DO MOTOR	18
TAMPA - BOCAL DE ENCHIMENTO	502
TAMPA - CAIXA DIANTEIRA	20
	22
TAMPA - CONSOLO	618
TAMPA - MECANISMO DAS VÁLVULAS	24
TAMPA - RADIADOR	94
TAMPA - TANQUE DE COMBUSTÍVEL (PODE SER TRANCADO)	125
TAMPA COM RESPIRO	700
TAMPA CONTRA POEIRA	44
	72
	84
	208
	236
	278
	284
	286
	464
	466
	470
	476
	502
TAMPA DA RODA-GUIA	353
TAMPA SEM ROSCAS	312
	672
TAMPÃO	298
	300
TANQUE - LAVADOR DE JANELA	698
	700
TANQUE - LÍQUIDO ARREFECEDOR	94
TANQUE DE ÁGUA	96
TANQUE DE COMBUSTÍVEL	124
	125
TANQUE HIDRÁULICO E FILTRO	502
TAPETE	618
	666
TELA - RESERVATÓRIO (TANQUE DE COMBUSTÍVEL)	114
TELA DE PROTEÇÃO	679
	680
TELA DE SUCÇÃO	208
	264
TELA FILTRANTE	236
	502
	518
	612
TIRA	716
	718
	720
TIRANTE DA LÂMINA	534
TRANSMISSÃO	275
	276
TREM DE FORÇA	259
	260
TUBOS - ÁGUA	82
	84
TUBOS - AQUECEDOR	646
TUBOS - AR	105
	106
TUBOS - AR CONDICIONADO	640
TUBOS - BOMBA	476
TUBOS - CILINDRO DE INCLINAÇÃO	486
	488
	490
	492
TUBOS - CILINDRO DE INCLINAÇÃO E TOMBAMENTO	484
TUBOS - CILINDRO DE LEVANTAMENTO	460
TUBOS - CIRCUITO PILOTO	464
	470
TUBOS - COMBUSTÍVEL	114
TUBOS - FILTRO DO COMBUSTÍVEL	117
TUBOS - ÓLEO DA TRANSMISSÃO	236
TUBOS - ÓLEO DO MOTOR	76
TUBOS - ÓLEO DO TURBOALIMENTADOR	77
TUBOS - RIPER	480
	482
TURBOALIMENTADOR	111
	112

V

VÁLVULA	502
	528
	531
	640
VÁLVULA - CONDICIONADOR DE AR (LADO ALTO)	640
VÁLVULA - CONDICIONADOR DE AR (LADO BAIXO)	640
VÁLVULA - ESFERA	114

ÍNDICE

Designação	Página
VÁLVULA (ALÍVIO)	402
VÁLVULA DE ÁGUA	622
VÁLVULA DE ALÍVIO	284
	286
	288
	518
	530
	531
	532
VÁLVULA DE CONTROLE	280
	508
	510
	512
	514
	516
VÁLVULA DE CONTROLE - PRESSÃO E COMPENSAÇÃO DE FLUXO	526
VÁLVULA DE CONTROLE - TRANSMISSÃO	292
VÁLVULA DE CONTROLE PILOTO	520
	522
VÁLVULA DE DESVIO	72
VÁLVULA DE DRENAGEM	298
	300
VÁLVULA DE GATILHO	530
VÁLVULA DE MODULAÇÃO	218
	282
VÁLVULA DE PARADA	90
	646
VÁLVULA DE PRIORIDADE	284
VÁLVULA DE QUEDA RÁPIDA	528
VÁLVULA DE REDUÇÃO DE PRESSÃO	518
	527
VÁLVULA DE RETENÇÃO	292
	494
	506
VÁLVULA DE RETENÇÃO (SISTEMA DO LAVADOR E LIMPADOR)	698
VÁLVULA DE SEPARAÇÃO	533
VÁLVULA DISJUNTORA	476
VÁLVULA DO CARTUCHO PILOTO	524
	525
VÁLVULA DO CARTUCHO PILOTO (ABAIXAMENTO DA LÂMINA)	522
VÁLVULA DO CARTUCHO PILOTO (BAIXAR RIPER)	520
VÁLVULA DO CARTUCHO PILOTO (INCLINAÇÃO DA LÂMINA-DIREITA)	522
VÁLVULA DO CARTUCHO PILOTO (INCLINAÇÃO DA LÂMINA-ESQUERDA)	522
VÁLVULA DO CARTUCHO PILOTO (LEVANTAMENTO DA LÂMINA)	522
VÁLVULA DO CARTUCHO PILOTO (LEVANTAMENTO DO RÍPER)	520
VÁLVULA-ENCHIMENTO	402
VÁLVULA ESFÉRICA	464
	470
VÁLVULA PARA TIRAR AMOSTRAS DE FLUIDOS	72
	84
	237
	466
	472
	502
VÁLVULA PILOTO E MONTAGEM	278
VALVULA REDUTORA E COLETOR	518
VÁLVULA SOLENÓIDE	289
	290
	291
VEDADOR ADESIVO ISOLANTE	155
VEDADOR DE JUNTA	50
	55
	103
VENTILADOR	80
VENTILADOR - ALTERNADOR	128
VENTILADOR DA CABINE	602
	672
VENTILADOR DE SOPRO	81
VIDRO	606
VIDRO - DESLIZADOR (LADO ESQUERDO) (MATIZADO)	716
VIDRO - DESLIZADOR TRASEIRO (MATIZADO)	720
VIDRO FIXO - LADO DIREITO (MATIZADO)	713
VIDRO FIXO - LADO ESQUERDO (MATIZADO)	714
VIDRO (MATIZADO)	606
	708
	709
	710
VIRABREQUIM	25
VOLANTE DO MOTOR	45

STICHWORTVERZEICHNIS

Bezeichnung	Seite
A	
ABDECKGLAS (ARBEITSSCHEINWERFER)	163
ABFALLBESEITIGUNGSMONTAGE	7
ABFALLBESEITIGUNGSSATZ	8
ABLASS (UMWELTFREUNDLICH)	223, 224
ABLASSSTOPFEN	36, 49, 220, 502
ABLASSSTOPFEN (7/8-14 GEWINDE)	224
ABLASSVENTIL	298, 300
ABSPERRVENTIL	90, 646
ACHSWELLE	389
ANSAUGKRÜMMER	494
ANSAUGSIEB	208, 264
ANSCHLUSSKLEMMENSATZ	136
ANSCHLUSSKLEMMENSATZ (STARTERMOTOR)	185
ANTRIEBSSTRANG-WARTUNGSSATZ	183
ANZEIGE	628, 632
ANZEIGEMODUL	166
ANZEIGEN-EINBAUSATZ	624
ANZUGSLEINE	696
ARBEITSGERÄTESTEUERUNG	616
ARBEITSLEUCHTEN	163, 164
ARRETIERUNGSEINBAUSATZ	716, 718, 720
AUFKLEBER	216, 427, 727, 728, 729
AUFKLEBER - MONITOR	731, 733
AUFKLEBER (AUSSENGERÄUSCH)	6
AUFKLEBER (FAHRER)	6
AUFKLEBER (LINKS)	334, 335
AUFKLEBER (RADIO)	627
AUFKLEBER (RECHTE SEITE)	334
AUFKLEBER (RECHTS)	335
AUFKLEBER (SITZKISSENKENNUNG)	660
AUFKLEBER (WASSERHEIZUNG)	156
AUFREISSER	594
AUFREISSER - TEILLISTE	566
AUFREISSERBEFESTIGUNG	560
AUFREISSERHUBZYLINDER	452
AUFREISSERLEITUNGEN	480, 482
AUFREISSERZAHN	596, 597
AUSGANGS-ANSCHLUSSKLEMMENSATZ	128
AUSPUFFABSCHIRMUNG	110
AUSPUFFKRÜMMER	108
B	
BATTERIE	145
BATTERIE UND VERDRAHTUNG	138
BATTERIE (12 V)(NASS)	140
BATTERIEKASTEN	294, 296
BEFESTIGUNGSSCHRAUBENSATZ	151
BEFESTIGUNGSTEILE	136
BEFESTIGUNGSTEILE (STARTERMOTOR)	188
BEILAGSCHEIBEN-SATZ (STARTERMOTOR)	188
BLATTFEDERSATZ	713, 714, 722
BUCHSEN-EINBAUSATZ (STARTERMOTOR)	194
BÜRSTEN-EINBAUSATZ (STARTERMOTOR)	194
BÜRSTEN-EINBAUSATZ (STARTERMOTOR)	188
BÜRSTENSATZ (STARTERMOTOR)	184
C	
C-RAHMEN	549, 550, 551, 552, 554
D	
DÄMPFER UND RIEMENSCHEIBE	35
DECKEL	304
DICHTMITTEL	155
DICHTUNG	716, 718, 720
DICHTUNGS-ABDICHTMITTEL	50, 55, 103
DICHTUNGSSATZ	289, 291, 532
DICHTUNGSSTOPFEN	289
DIODE (ANSCHLUSSSTEHBOLZEN)	129
DIODENLEUCHTE (LED)	599
DOPPELFLANSCHFELGE	396, 397
DOPPELFLANSCHROLLEN	396

STICHWORTVERZEICHNIS

Bezeichnung	Seite
	397
	398
DREHKNOPFSCHALTER (SCHEIBENWISCH- UND WASCHANLAGE) (HINTEN)	638
DREHKNOPFSCHALTER (SCHEIBENWISCH- UND WASCHANLAGE) (LINKE TÜR)	638
DREHKNOPFSCHALTER (SCHEIBENWISCH- UND WASCHANLAGE) (RECHTE TÜRY)	638
DREHKNOPFSCHALTER (SCHEIBENWISCH- UND WASCHANLAGE) (VORNE)	638
DREHMOMENTWANDLER	268
	270
	272
DREHSTROMGENERATOR	128
	132
	134
	136
DREHSTROMGENERATOR - BEFESTIGUNG	52
DREHSTROMGENERATOR-VENTILATOR	128
DREHZAHLSENSOR	179
	180
DREHZAHLSENSOR (GETRIEBE)	139
DREHZAHLSENSOR (MAGNETISCH - HOCHLEISTUNG)	255
DREHZAHLSENSOR (MOTOR)	139
DRUCK- U. STROMAUSGLEICHSVENTIL	526
DRUCKBEGRENZUNGSVENTIL	284
	286
DRUCKKNOPFSCHALTER (ANZEIGE-BETRIEBSART)	628
DRUCKKNOPFSCHALTER (HERUNTERSCHAL-TEN)	434
DRUCKKNOPFSCHALTER (HOCHSCHAL-TEN)	434
DRUCKKNOPFSCHALTER (KICKDOWN-AUTOMATIK)	629
	633
DRUCKKNOPFSCHALTER (MODUS DREHRICHTUNGSUNABHÄNGIG)	633
DRUCKKNOPFSCHALTER (RÜCKSCHALTMO-DUS)	629
DRUCKKNOPFSCHALTER (STANDARD-ANZEIGE)	632
DRUCKLÜFTER	81
DRUCKLUFTLEITUNGEN	105
	106
DRUCKREDUZIERVENTIL	518
	527
DRUCKSCHALTER (A/C)	640
DRUCKSENSOR	177
	178
DRUCKSENSOR (ATMOSPHÄRISCH)	172
DRUCKSENSOR (EINSPRITZBETÄTIGUNG)	172
DRUCKSENSOR (ÖLDRUCK)	172
DRUCKSENSOR (TURBOEINLASS)	138
DRUCKSENSOR (TURBOLADERAUSLASS)	172
DRUCKSPEICHER	470

E

ECK- UND SCHNEIDMESSER	569
	570
	571
	572
EINBAUVORSTEUERVENTIL	524
	525
EINBAUVORSTEUERVENTIL (AUFREISSER ABSENKEN)	520
EINBAUVORSTEUERVENTIL (AUFREISSER ANHEBEN)	520
EINBAUVORSTEUERVENTIL (SCHILD ABSENKEN)	522
EINBAUVORSTEUERVENTIL (SCHILD ANHEBEN)	522
EINBAUVORSTEUERVENTIL (SCHILD NACH LINKS NEIGEN)	522
EINBAUVORSTEUERVENTIL (SCHILD NACH RECHTS NEIGEN)	522
EINFACHFLANSCHFELGE	399
EINFÜLLSTUTZENKAPPE	502
EINSPRITZDÜSENDICHTUNG	65
EINSPRITZDÜSENPUMPE	120
	121
EINZELFLANSCHROLLEN	399
	400
ELEKTR. UMFORMER	152
ELEKTR. UMFORMER (20 A)	152
ELEKTR. UMFORMER (24 V ZU 12 V)	202
ELEKTRON. STEUERUNG UND ANBAUSATZ	146
ELEKTRONIK - MASCHINE	1
	153
ELEKTRONIK - MONITOR	154
ELEMENT	24
ENDSCHALTER	214
	246
	464
	470
ENTDUNSTER	74
ENTLÜFTER	236

F

FAHRERHAUS	604
	605
	606
FAHRERHAUS-DRUCKLÜFTER	602
	672
FAHRERHAUSANBAUSATZ	656
FAHRERHAUSAUSKLEIDUNG	636
	638

STICHWORTVERZEICHNIS

Bezeichnung	Seite
FAHRERHAUSBELEUCHTUNG	162
FAHRERHAUSBELÜFTUNG	672
FAHRERHAUSFENSTER	707
	708
	709
	710
	711
	712
	713
	714
	716
	718
	720
	722
FAHRERHAUSFENSTER (HINTEN)	708
FAHRERHAUSFENSTER (HINT.)(SCHIEBEF.)	704
FAHRERHAUSFENSTER (LINKS)	710
FAHRERHAUSFENSTER (LINKS) (SCHIEBEFENSTER)	706
FAHRERHAUSFENSTER (RECHTS)	709
FAHRERHAUSFENSTER (RECHTS) (SCHIEBEFENSTER)	705
FAHRERHAUSHEIZUNG	622
FAHRERHAUSLEUCHTENLINSE	162
FAHRERPLATTFORM	666
FAHRERPLATTFORMVERDRAHTUNG	202
FAHRERSITZ	681
	682
	684
	686
	688
	690
FAHRERSITZFEDERUNG	694
	696
FAHRERSITZFEDERUNGSGEHÄUSE	624
FAHRERSITZVERSTELLER	598
FAHRWERK	302
	303
FEDER	184
FEDER-EINBAUSATZ	624
FEDER (STARTERMOTOR)	185
FEDERUNGS-EINBAUSATZ (EINSTELL-KNOPF)	624
FEDERUNGS-EINBAUSATZ (MANSCHETTE)	694
FEDERUNGS-EINBAUSATZ (ROLLE)	694
FEINGRADER	4
FESTSTELLBREMSGESTÄNGE	427
FILTERSATZ (FAHRERHAUS-UMLUFTFIL-TER)	672
FILTERSIEB	502
FITTING	44
FRONTZUGHAKEN	346
	347
FÜLLVENTIL	402
FUSSMATTE	618

Bezeichnung	Seite
	666

G

GAS- U. BREMSPEDAL	246
GASREGELUNG - VERDRAHTUNG	205
GETRIEBE	275
	276
GETRIEBEAUFLAGER	244
GETRIEBEHYDRAULIK	218
GETRIEBEÖLKÜHLER	220
GETRIEBESCHUTZ	235
GETRIEBESTEUERVENTIL	292
GLAS	606
GLAS (GETÖNT)	606
	708
	709
	710
GLASSCHEIBEFENSTER, LINKS (GETÖNT)	716
GLEITLAGER (NOCKENWELLE)	26
GLEITSCHIENENBLOCK-EINBAUSATZ	691
	692
	693
GLÜHKERZENVERDRAHTUNG	170
	171
GRUNDAUSFÜHRUNG	2
	3

H

HALTEGRIFF	620
	621
HALTETEILESATZ (SITZFEDERUNG)	696
HAUPTANTRIEBSWELLE	266
HEBEL-EINBAUSATZ (STARTERMOTOR)	194
HECKVERKLEIDUNG	338
HEIZUNGSLEITUNGEN	646
HINTERES GLASSCHIEBEFENSTER (GETÖNT)	720
HUBZYLINDER	450
HUBZYLINDER U. LEITUNGEN	438
	440
	442
	444
HUBZYLINDER U. LEITUNGEN (LINKS)	536
	537
	539
	541
	543
	545
HUBZYLINDER U. LEITUNGEN (RECHTS)	536
	537
	539
	541
	543

STICHWORTVERZEICHNIS

Bezeichnung	Seite
	545
HUBZYLINDERLEITUNGEN	460
HYDRAULIKPUMPE UND LEITUNGEN	476
HYDRAULIKSTEUERUNG	435
HYDRAULIKSYSTEM	458
HYDRAULIKTANK UND SCHMIERFILTER	502
I	
IDENTIFIZIERUNGS-AUFKLEBER	628
	632
	638
	731
	733
IDENTIFIZIERUNGS-AUFKLEBER (GRUPPEN- U. SEQUENZNR.)	602
	614
IDENTIFIZIERUNGS-AUFKLEBER (12 V)	731
	733
INSTRUKTIONS-AUFKLEBER	168
	566
INSTRUKTIONS-AUFKLEBER (AUFREISSER)	435
INSTRUKTIONS-AUFKLEBER (FÜR SITZVERSTELLUNG)	694
INSTRUKTIONS-AUFKLEBER (PALNIER-SCHILDSTEUERUNG)	730
	733
INSTRUMENTENSATZ	628
	632
INSTRUMENTENTAFEL-SICHERUNG	168
INSTRUMENTENTAFELBELEUCHTUNG	628
	632
ISOLATOR-EINBAUSATZ (STARTERMOTOR)	194
J	
JOCHSATZ	70
K	
KABELSTRANG (DRAHTSTÄRKE 14)	182
KABELSTRANG (FÜR DRAHTSTÄRKE 14)	177
KABELSTRANG (FÜR DRAHTSTÄRKE 16-18)	177
KABELSTRANG (SOCKEL)	200
KABELSTRANG (SOCKEL) (DRAHTSTÄRKE 16-18)	182
KÄLTEMITTEL-DRUCKSPEICHER	640
KÄLTEMITTELKOMPRESSOR	609
	610
KÄLTEMITTELKONDENSATOR	614
KÄLTEMITTELKONDENSATOR U. BEFESTIGUNGSTEILE	612
KÄLTEMITTELTROCKNER (KÜHLMITTEL)	640
KAPPE	236
KAPPE MIT ENTLÜFTER	700
KEILRIEMEN	610
KEILRIEMENSATZ (DREHSTROMGENERATOR)	60
KETTENFÜHRUNGSSCHUTZ	339
	340
KETTENGLIEDER	382
	383
	384
	385
	386
KETTENRADSEGMENT	265
KETTENSPANNER UND -FEDERRÜCKLAUF	402
KIPPSCHALTER	164
	599
KIPPSCHALTER (FESTSTELLBREMSE)	427
KIPPSCHALTER (24 V)(ABGEDICHTET) (BELEUCHTET)	202
KIPPZYLINDER	446
	454
	456
KLIMAANLAGE	599
	600
KLIMAANLAGENLEITUNGEN	640
KLIMAANLAGENVENTIL (OBERE SEITE)	640
KLIMAANLAGENVENTIL (UNTERE SEITE)	640
KNOPF	420
	606
	682
KNOPFSATZ	464
	470
KOLBEN	57
KOLBENPUMPE	498
KOLBENPUMPENUMLAUFSATZ	500
KOMMUNIKATIONSEINBAUSATZ	160
KRAFTSTOFFILTER	118
KRAFTSTOFFILTERLEITUNGEN	117
KRAFTSTOFFLEITUNGEN	114
KRAFTSTOFFPUMPE	118
KRAFTSTOFFSIEB	124
KRAFTSTOFFSTANDGEBER	124
KRAFTSTOFFTANK	124
	125
KRAFTSTOFFTANKKAPPE (VERSCHLIESSBAR)	125
KRAFTSTOFFTANKVERKLEIDUNG	334
	335
KRAFTÜBERTRAGUNG	259
	260
KRAFTÜBERTRAGUNGSACHSE	206
KREUZGELENK	277
KRÜMMER UND VENTIL	242
	243
KUGELVENTIL	114

STICHWORTVERZEICHNIS

Bezeichnung	Seite
	464
	470
KÜHLER	90
	92
KÜHLERGRILL	321
	322
KÜHLERKAPPE	94
	312
	672
KÜHLERSCHUTZ	336
KÜHLERVERKLEIDUNG	324
	326
KÜHLMITTELBEHÄLTER	94
KÜHLWASSERLEITUNGEN	82
	84
KÜHLWASSERPUMPE	86
	87
	88
KUPPLUNG UND VERKLEIDUNG	222
KURBELWELLE	25
KURBELWELLEN-RIEMENSCHEIBE	59
KURBELWELLENDICHTUNG	64

L

Bezeichnung	Seite
LADELUFTKÜHLER	98
LAGERSATZ	136
	625
LAGERSATZ (STARTERMOTOR)	188
LAUFFÜHRUNGSSATZ	716
	718
	720
LAUFROLLE	390
	391
	392
LAUFROLLENRAHMEN (TELESKOPRÜCKLAUF)	360
	362
	364
	366
	368
	370
	374
LAUFROLLENRAHMEN (TELESKOPRÜCKLAUF)	372
LAUFROLLENRAHMEN (TELESKOPRÜCKLAUF) (LINKS)	390
	417
	418
LAUFROLLENRAHMEN (TELESKOPRÜCKLAUF) (RECHTS)	390
LAUFROLLENRAHMEN (TELESKOPRÜCKLAUF) (RECHTS)	417
	418
LAUFROLLENSCHUTZ	341
	342
	343
LAUFWERKFÜHRUNG	376
	377
	378
	379
LAUFWERKSKETTE	404
	405
	406
	407
	408
	409
	410
	411
	412
	413
	414
	415
	416
LAUFWERKSRAHMEN	417
	418
LEITRAD	380
	381
LEITRADAUFSATZ	353
LENK- UND GETRIEBEEINSTELLER	420
LENK- UND GETRIEBESTEUERUNG	212
	214
	216
LENKKUPPLUNG UND BREMSE	424
LENKTRIEB	430
	432
LEUCHTE (24 V)	163
	164
	202
	599
	628
	632
LEUCHTE (28 V)	162
LINSE - ROT	202
LUFTEINLASSBOGEN	103
LUFTEINLASSVORWÄRMER	155
LÜFTER	80
LÜFTERANTRIEB	38
	40
LÜFTERANTRIEBSAUFHÄNGUNG	54
LUFTFILTER (FAHRERHAUS-FRISCHLUFTFILTER)	672
LUFTFILTER (HAUPTFILTER)	99
LUFTFILTER (SICHERHEITSFILTER)	99
LUFTREINIGER	99
	100
LUFTREINIGERKLEMMEN-EINBAUSATZ	99

STICHWORTVERZEICHNIS

Bezeichnung	Seite
M	
MAGNETSCHALTER	198
MAGNETSCHALTER (STARTRELAIS)	168
MAGNETSCHALTER (24 V) (ANSAUGLUFT-VORWÄRMANLAGE)	138
MAGNETSIEB	236, 264
MAGNETSPULE (STARTERMOTOR 24 V)	185
MAGNETSPULE (24 V)	188
MAGNETSTOPFEN	226, 230
MAGNETVENTIL	289, 290, 291
METALLSCHRAUBE (NR. 4X3/16)	368, 370
METALLSCHRAUBE (3/16 X 1/4 ZOLL)	370
MODUL - VIER ELEKTRON. ANZEIGEN	651
MODULATORVENTIL	218, 282
MONITOR - SOFTWARE	148, 154
MONITOR-SOFTWARE	154
MONITORSTEUERUNG	150
MONITORSTEUERUNG (CATERPILLAR ÜBERWACHUNGSSYSTEM)	148, 628, 632
MONTAGEZAPFEN	67
MONTAGEZAPFEN (PLANIERSCHILDEINRICHTUNG)	567, 568
MOTOR-EINBAUSATZ	15
MOTOR, ELEKTR.	614
MOTORAUFHÄNGUNG	66
MOTORAUFHÄNGUNG, ELASTISCH	53
MOTORAUSFÜHRUNG	9, 10, 11, 12
MOTORBLOCK	26, 28, 29
MOTORBLOCKDECKEL	18
MOTORHAUBE UND VERKLEIDUNG	344
MOTORHAUBENDICHTUNG	348
MOTORHUBÖSE	51
MOTORKÜHLERBLOCK	13, 14
MOTORÖLABLASS	36
MOTORÖLKÜHLER	79
MOTORÖLLEITUNGEN	76
MOTORSTEUERUNG, ELEKTRON.	149
MOTORSTOPFEN	58
MOTORVERKLEIDUNG	308, 312
N	
NEIGEZYLINDERLEITUNGEN	486, 488, 490, 492
NOCKENWELLE	16
O	
ÖLFILTER	72, 225, 502
ÖLFILTER (GETRIEBE)	236
ÖLFILTERELEMENT	225, 236
ÖLFILTERELEMENT (HYDRAULIK/STROMUMKEHRUNG)	502
ÖLFILTERELEMENT (HYDRAULISCH) (HOCHLEISTUNG)	502
ÖLFILTERELEMENT (RÜCKFLUSS) (SCHWER ENTFLAMMBAR)	502
ÖLLEITUNGEN - KRAFTÜBERTRAGUNG	236
ÖLMESSSTAB	75
ÖLPUMPENGEHÄUSE (DREHMOMENTWANDLER-FÜLLUNG)	262
ÖLPUMPENGEHÄUSE (GETRIEBE- U. WANDLERSPÜLUNG)	262
ÖLPUMPENGEHÄUSE (GETRIEBESPEISUNG)	262
ÖLWANNE	55
P	
PANZERWANNE	328, 329, 330, 332
PENDELVENTIL	533
PLANETENANTRIEBSGEHÄUSE U. TEILE	208
PLANETENGETRIEBE	248, 254
PLANIEREINRICHTUNG	536
PLANIERSCHILD	547, 548
PLANIERSCHILD-UMRÜSTSATZ	555, 556
PLANIERSCHILDHUBZYLINDER	448
PLATTFORM	662
PLEUELSTANGE UND KOLBEN	56
PLUS-DIODEN-EINBAUSATZ	129
PROBEENTNAHMEVENTIL	72

STICHWORTVERZEICHNIS

Bezeichnung	Seite
	84
	237
	466
	472
	502
PUMPENANTRIEB	41
PUMPENDÜSE, HYDRAULISCH	122
	123

Q

QUERTRAVERSE	354
	356
	358

R

RADIOEINBAUSATZ	627
RAHMEN UND GEHÄUSE	298
	300
RECHTES SCHIEBEGLASFENSTER (GETÖNT)	718
RELAISANSCHLUSSKLEMMENSATZ	128
RIEMENSCHEIBE - LÜFTER- U. DREHSTROMGENERATOR	60
ROLLENSATZ	696
ROTORPUMPE	78
RÜCKENSTÜTZEN-EINSTELLKNOPF	658
	660
RÜCKLEHNENVERLÄNGERUNG	690
RÜCKLEHNENVERLÄNGERUNG (STOFF)	686
RÜCKSCHLAGVENTIL (GEGEN VAKUUM)	476
RÜCKSPIEGEL	649
	650

S

S-SCHILD	582
SANDSTRAHLSCHUTZGITTER	320
SCHALE - RÜCKENLEHNE	658
	659
	660
SCHALLDÄMPFER	109
SCHALLDÄMPFUNG	5
	6
SCHALTER	164
	599
SCHALTER (LEUCHTE)	628
SCHALTER (LICHTSCHALTER)	632
SCHALTER (LÜFTER)	628
SCHALTER (24 V)(ERLEUCHTET) (GASSTEUERUNG)	202
SCHEIBENWASCHANLAGE	702
SCHEIBENWASCHMITTELBEHÄLTER	698
	700
SCHEIBENWISCHER	724
SCHEIBENWISCHERBLATT	578
	579
SCHEIBENWISCHERBLATT (RECHTE U. LINKE TÜREN)	724
SCHEIBENWISCHERBLATT (VORNE U. HINTEN)	724
SCHEIBENWISCHERBLATTSATZ	724
SCHEIBENWISCHERMOTOR	652
	653
	654
	655
	724
SCHIEBEFENSTER	704
	705
	706
	707
	711
	712
SCHILD - ABFALLBESEITIGUNGSAUSFÜHRUNG	592
	593
SCHILD - FORSTAUSFÜHRUNG	585
SCHILD UND AUFKLEBER	730
	732
SCHILD UND SCHNEIDMESSER	573
	574
	575
	576
SCHILDSTREBE	534
SCHLÜSSEL	15
	124
	197
	236
	308
	312
	336
	458
SCHMIERNIPPEL (1/8-27-GEWINDE)	354
	356
	534
	558
	594
SCHMIERNIPPEL (1/8-27 GEWINDE(45 GRAD)	354
	356
SCHMIERPUMPE	78
SCHNELLSENKVENTIL	528
SCHRÄGKOLBEN-EINBAUSATZ	498
SCHRAUBE	298
	300
SCHUBARM	562
	564
SCHUTZBLECHE	318
SCHUTZBLECHVERKLEIDUNG	316

STICHWORTVERZEICHNIS

Bezeichnung	Seite
SCHUTZBÜGEL	350
SCHUTZGITTER	679
	680
SCHUTZGITTERBEFESTIGUNG	322
SCHWENK- UND KIPPZYLINDERLEITUNGEN	484
SCHWENKPLANIERSCHILD	537
	538
	539
	540
SCHWENKSCHEIBE	501
SCHWENKSCHILD	583
	584
SCHWINGSITZ	691
	692
	693
SCHWUNGRAD	45
SCHWUNGRADGEHÄUSE	48
	49
SCREEN	518
SEITENANTRIEB	226
	230
SEMI-U-SCHILD	577
SENSOR, ELEKTRON.	172
SENSORANSCHLUSSSATZ (2POLIG)	182
	200
SENSORANSCHLUSSSATZ (2POLIG) (EINSCHLI. STOPFEN, KEIL U. DICHTUNG)	198
SENSORANSCHLUSSSATZ (3POLIG)	178
	200
SENSORANSCHLUSSSATZ (3POLIG) (DRUCKSENSOR)	177
SENSORANSCHLUSSSATZ (6POLIG)	702
SENSORANSCHLUSSSATZ (8POLIG)	171
	670
SICHERHEITSGURT	686
	690
SICHERUNG (10 A)	168
SICHERUNG (15 A)	168
SICHERUNG (20 A)	168
SICHERUNG (5 A)	168
SIEB	236
	502
	612
SITZGURT-HALTESEIL	694
SPERRE	428
SPERRSCHIENENSATZ	722
SPERRVENTIL	292
	494
	506
SPERRVENTIL (SCHEIBENWISCHER- U. -WASCHERANLAGE)	698
SPIEGEL	649
	650
STARRSCHILD	545
	546
	590
	591
STARTERMOTOR	184
	188
	190
	191
	192
	194
STARTERMOTOR-DICHTUNGSSATZ	188
STARTERMOTOR-STIFTEINBAUSATZ	188
STARTSCHLÜSSELSCHALTER	632
STARTSCHLÜSSELSCHALTER (ZÜNDUNG)	628
STAUBAUSWERFER	102
STAUBKAPPE	44
	72
	84
	208
	236
	278
	284
	286
	464
	466
	470
	476
	502
STECKDOSEN - EINBAUSATZ (12POLIG)	427
STECKDOSEN - EINBAUSATZ (2POLIG)	124
	126
	138
	139
	172
	180
	196
	291
	522
	602
	614
	632
	640
STECKDOSEN - EINBAUSATZ (2POLIG)	202
STECKDOSEN - EINBAUSATZ (3POLIG)	162
	174
	175
	176
	181
	200
	464
	470
	628
	629
	632
	633

STICHWORTVERZEICHNIS

Bezeichnung	Seite
STECKDOSEN - EINBAUSATZ (4 POLIG)	289
STECKDOSEN - EINBAUSATZ (4 POLIG)	464
	470
STECKDOSEN - EINBAUSATZ (6POLIG)	166
	170
	434
	628
	651
	652
	653
	654
	655
STECKDOSEN - EINBAUSATZ (8POLIG)	628
	632
STECKERSATZ	670
STELLUNGSSENSOR	174
	175
	176
STELLUNGSSENSOR (OHNE FEDER)	214
STEUERHEBEL (PLANIERSCHILD)	616
STEUERKNOPF	600
STEUERKOLBENSATZ	498
STEUERKONSOLENABDECKUNG	618
STEUERPEDAL U. BEFESTIGUNG	211
STEUERUNG - NICHT PROGRAMMIERT	146
	151
	183
STEUERUNG, ELEKTRON.	148
STEUERUNGSEINHEIT, ELEKTRON. FÜR MOTOR UND BEFEST.	147
STEUERVENTIL	280
	508
	510
	512
	514
	516
STEUERVENTILBEFESTIGUNG	495
STIRNRAD	46
STIRNRADGEHÄUSE	50
STIRNRADGEHÄUSE-HALTETEILE	43
STIRNRADGEHÄUSEDECKEL	20
	22
STOSSSTANGEN-EINBAUSATZ	624
STROMANSCHLUSS-STECKDOSE (12 V)	202
STÜTZGRUPPE - STEUERUNG	434
SU-SCHILD	541
	542
	543
	544
	580
	581
	586
	587
	588
	589
SUMPFSIEB (KRAFTSTOFFTANK)	114

T

TELLERRAD- UND VORGELEGERADSATZ	232
TELLERVENTIL	530
TEMPERATURGEBER	138
TEMPERATURSENSOR	181
	182
TEMPERATURSENSOR (ANSAUGLUFT)	172
TEMPERATURSENSOR (GETRIEBE)	138
TEMPERATURSENSOR (KÜHLMITTEL)	172
THERMOSTATSCHALTER	600
TRAGROLLE	394
TRAGROLLENAUFHÄNGUNG	387
	388
TRENNSCHALTER	197
TURBOLADER	111
	112
TURBOLADEREINSATZ	112
TURBOLADERÖLLEITUNGEN	77

U

ÜBERDRUCKVENTIL	286
	288
	518
	530
	531
	532
ÜBERROLLSCHUTZ	676
	678
ÜBERROLLSCHUTZAUFLAGER	657
ÜBERTRAGUNGSEINBAUSATZ	158
ÜBERTRAGUNGSSTEURUNG (PRODUCT LINK RADIO)	158
	160
UMBAUSATZ	617
UMGEHUNGSSCHALTER	196
UMGEHUNGSSCHALTER (KRAFTÜBERTRAGUNGSÖLFILTER)	138
UMGEHUNGSVENTIL	72
UMLAUFKÜHLWASSERHEIZUNG	156
UMLAUFKÜHLWASSERHEIZUNGS-ELEMENT (120 V/1500 W)	156
UNTERBRECHER (135 A)	168
UNTERBRECHER (15 A)	168
UNTERBRECHER (15 A)	152

V

VENTIL	502
	528
	531
	640

STICHWORTVERZEICHNIS

Bezeichnung	Seite
VENTIL (DRUCKBEGRENZUNG)	402
VENTILAUFHÄNGUNG	496
	497
VENTILDECKEL	24
VENTILKIPPHEBEL	62
	63
VENTILSTEUERUNG	68
	69
VENTILSTÖSSELSATZ	625
VERDRAHTUNG (ELEKTRON. STEUERUNG)	200
VERDRAHTUNGSSATZ	696
VERGLASUNG, LINKS (GETÖNT)	714
VERGLASUNG, RECHTS (GETÖNT)	713
VERSTELLBARER SITZ	675
VERTEILER- UND REDUZIERVENTIL	518
VORHÄNGESCHLOSS	15
	124
	236
	294
	308
	312
	336
	458
VORRANGVENTIL	284
VORREINIGERSCHUTZ	104
VORSTEUERHYDRAULIKSTEUERUNG	436
	437
VORSTEUERLEITUNGEN	464
	470
VORSTEUERÖLDRUCKSAMMLER	464
VORSTEUERVENTIL	520
	522
VORSTEUERVENTIL UND BEFESTIGUNGSTEILE	278

W

WÄHLSENSOR	124
WARNAUFKLEBER	360
	362
	364
	366
	368
	370
WARNAUFKLEBER (FESTSTELLBREMSZYLINDER)	372
	374
WARNAUFKLEBER (PRODUCT LINK RADIO)	160
WARNAUFKLEBER (PRODUCT LINK RADIO)	158
WARNHORN (24 VOLT)(HOCHTON)	139
WARNHORN (24V)(NIEDERTON)	139
WARNHORNKNOPF	138
	202
WARNHORNSCHALTER	138
	202
WARNSCHILD (KETTENSPANNFEDER)	370
WARNVORRICHTUNG	126
WASSERABSCHEIDER- U. KRAFTSTOFFILTER	113
WASSERABSCHEIDER UND KRAFTSTOFFILTER	113
WASSERTANK	96
WASSERTEMPERATURREGLER (92 GRAD CELSIUS)	82
WASSERVENTIL	622
WELLENSCHEIBEN-EINBAUSATZ (17 BEILEGSCHEIBEN)	498
WISCHERARM	726

Z

ZAHNRADPUMPE	261
	262
ZAHNRADPUMPE (3 KAMMERN) (GETRIEBE U. WANDLER - LADE- U. SPÜLPUMPE)	261
ZAHNRADVORGELEGE	47
ZUGHAKEN	305
	306
ZYLINDERAUFHÄNGUNG	558
ZYLINDERKOPF	30
	32
	34
ZYLINDERKOPF-HALTETEILE	42

MEMORANDA

MACHINE ARRANGEMENT

157-1740 ELECTRONICS AR-MACHINE

S/N: BLE1-UP; BMJ1-UP

PART OF 211-4625, 211-4627 GENERAL AR

SMCS-7000 **i01589530**

NOTE	PART NUMBER	QTY	PART NAME 1 2 3 4 5 6 (PRODUCT LEVEL)	SEE PAGE
Y	*159-9035*	1	ELECTRONICS GP-MACHINE	153
Y	*195-5200*	1	ELECTRONICS GP-MONITOR	154

Y-SEPARATE ILLUSTRATION

MACHINE ARRANGEMENT

211-4625 GENERAL AR

S/N: BLE1-UP

SMCS-7000 **i01585478**

NOTE	PART NUMBER	QTY	PART NAME 1 2 3 4 5 6 (PRODUCT LEVEL)	SEE PAGE
Y	**164-4782**	1	CHASSIS AR	302
Y	*157-1740*	1	ELECTRONICS AR-MACHINE	1
Y	**166-0273**	1	ENGINE AR	9
Y	**164-4807**	1	HYDRAULIC AR	458
Y	**168-8371**	1	INSTALLATION AR-ENGINE	15
Y	*164-4792*	1	POWER TRAIN AR	259
Y	*194-5349*	1	UNDERCARRIAGE AR	417

Y-SEPARATE ILLUSTRATION

MACHINE ARRANGEMENT

211-4627 GENERAL AR

S/N: BMJ1-UP

SMCS-7000 **i01600742**

NOTE	PART NUMBER	QTY	PART NAME 1 2 3 4 5 6 (PRODUCT LEVEL)	SEE PAGE
Y	*164-4784*	1	CHASSIS AR	303
Y	*157-1740*	1	ELECTRONICS AR-MACHINE	1
Y	**169-3791**	1	ENGINE AR	10
Y	*164-4807*	1	HYDRAULIC AR	458
Y	**168-8371**	1	INSTALLATION AR-ENGINE	15
Y	*164-4794*	1	POWER TRAIN AR	260
Y	*194-5350*	1	UNDERCARRIAGE AR	418

Y-SEPARATE ILLUSTRATION

MACHINE ARRANGEMENT

139-8344 GRADER AR-FINE

S/N: BMJ1-UP

FOR USE WITH 139-8346—PAGE 536

AN ATTACHMENT

SMCS-7000 **i01629798**

NOTE	PART NUMBER	QTY	PART NAME 1 2 3 4 5 6 (PRODUCT LEVEL)	SEE PAGE
Y	*108-0158*	1	FRAME GP-TELESCOPING RECOIL (LH)	374
Y	*108-0157*	1	FRAME GP-TELESCOPING RECOIL (RH)	372
Y	*108-0178*	1	GUARD GP-TRACK GUIDE	339
Y	**202-4296**	4	IDLER GP-TRACK	380
Y	*125-4176*	2	ROLLER GP-TRACK-DOUBLE FLANGE	398
Y	*6I-9109*	2	TRACK GP	404

Y-SEPARATE ILLUSTRATION

MACHINE ARRANGEMENT

164-4796 SUPPRESSION AR-SOUND

S/N: BLE1-UP

AN ATTACHMENT

SMCS-7000 **i01633963**

NOTE	PART NUMBER	QTY	PART NAME 1 2 3 4 5 6 (PRODUCT LEVEL)	SEE PAGE
Y	**169-0772**	1	ENCLOSURE GP-ENGINE	312
Y	**176-9269**	1	ENGINE AR	12
Y	**190-5481**	1	GUARD GP-BOTTOM	332
Y	**195-8709**	1	PLUG AS	670
	188-1010	1	MUFFLER AS	
	7E-3870	1	CLAMP	
M	**8T-3490**	2	NUT-WELD (M10X1.5 THD)	
	9P-2553	1	SPACER (10.28MM THK)	
	208-8368	6	CORE AS	
	112-7673	1	EJECTOR AS	

M-METRIC PART
Y-SEPARATE ILLUSTRATION

MACHINE ARRANGEMENT

164-4797 SUPPRESSION AR-SOUND

S/N: BMJ1-UP

AN ATTACHMENT

SMCS-7000 **i01667981**

NOTE	PART NUMBER	QTY	PART NAME 1 2 3 4 5 6 (PRODUCT LEVEL)	SEE PAGE
Y	*169-0772*	1	ENCLOSURE GP-ENGINE	312
Y	**176-5509**	1	ENGINE AR	11
Y	*190-5481*	1	GUARD GP-BOTTOM	332
Y	**195-8709**	1	PLUG AS	670
	208-8368	6	CORE AS	
	112-7673	1	EJECTOR AS	
	183-4224	1	CLAMP-BENT BOLT	
	205-3239	1	FILM (EXTERIOR SOUND)	
			LOCATE FILM ON RH SIDE OF DASH ABOVE LOUVER. LOCATE TO BE SEEN THRU CAB DOOR.	
	130-5097	1	FILM-OPERATOR	
			LOCATE FILM ON RH SIDE OF DASH ABOVE LOUVER. LOCATE TO BE SEEN THRU CAB DOOR.	
	188-1010	1	MUFFLER AS	
	7E-3870	1	CLAMP	

Y-SEPARATE ILLUSTRATION

MACHINE ARRANGEMENT

216-3233 WASTE HANDLING AR

S/N: BLE1-UP; BMJ1-UP
AN ATTACHMENT

SMCS-7000 **i01663444**

NOTE	PART NUMBER	QTY	PART NAME 1 2 3 4 5 6 (PRODUCT LEVEL)	SEE PAGE
Y	**216-7293**	1	CASE & FRAME GP	300
Y	**1Q-2275**	2	FINAL DRIVE GP	226
Y	**216-7294**	1	WASTE HANDLING GP	8

Y-SEPARATE ILLUSTRATION

MACHINE ARRANGEMENT

216-7294 WASTE HANDLING GP

S/N: BLE1-UP; BMJ1-UP
PART OF 216-3233 WASTE HANDLING AR
AN ATTACHMENT

SMCS-7000 **i01663038**

NOTE	PART NUMBER	QTY	PART NAME 1 2 3 4 5 6 (PRODUCT LEVEL)	SEE PAGE
Y	*205-7590*	1	FILM GP	729
Y	*217-0047*	1	GRILL GP	322
Y	**205-0576**	1	GUARD AS-RADIATOR	324
Y	**205-0586**	1	GUARD AS-RADIATOR	326
Y	*1Z-0742*	1	HANDHOLD GP	620
	205-1481	1	GUARD AS	
	205-1674	1	STRIP	
	205-1482	1	GUARD AS	
	205-1674	1	STRIP	
I	**4Z-8917**	1	HOSE AS	
I	**4Z-8918**	1	HOSE AS	
I	**9Z-8212**	1	HOSE AS	
I	**9Z-8213**	1	HOSE AS	
	8N-1978	1	PRESCREENER AS	
	8S-2384	1	STACK AS-AIR	

I-SEE HOSE FABRICATION GUIDE
Y-SEPARATE ILLUSTRATION

ENGINE ARRANGEMENT

166-0273 ENGINE AR

S/N: 4ZF1-UP

PART OF 211-4625 GENERAL AR

SMCS-1000 **i01588382**

NOTE	PART NUMBER	QTY	PART NAME 1 2 3 4 5 6 (PRODUCT LEVEL)	SEE PAGE
Y	*165-4468*	1	CONTROL & MTG GP-ENGINE ELEK	147
Y	*157-0133*	1	COOLER GP-TRANSMISSION OIL	220
Y	*197-8602*	1	COVER GP-CYLINDER BLOCK	18
Y	*206-6923*	1	COVER GP-FRONT HOUSING	22
Y	*118-1727*	1	COVER GP-FRONT HOUSING	20
Y	*204-5208*	1	COVER GP-VALVE MECHANISM	24
Y	*211-2179*	1	DAMPER & PULLEY GP	35
Y	*4P-2102*	1	DRAIN GP-ENGINE OIL	36
Y	*210-8550*	1	DRIVE GP-PUMP	41
Y	*173-6107*	1	ELBOW GP-AIR INLET	103
Y	*166-0270*	1	ENGINE AR-CORE	13
Y	*194-5052*	1	FASTENER GP-FRONT HOUSING	43
Y	*183-2097*	1	FILTER GP-ENGINE OIL	72
Y	*198-0921*	1	FITTING GP	44
Y	*195-4590*	1	FLYWHEEL GP	45
Y	*197-6648*	1	FUMES DISPOSAL GP	74
Y	*169-3109*	1	GAUGE GP-OIL LEVEL (DIPSTICK)	75
Y	*175-6260*	1	GEAR GP-REAR	47
Y	*118-7284*	1	HEATER GP-AIR INLET	155
Y	*165-4455*	1	HOUSING GP-FLYWHEEL	48
Y	*166-1784*	1	LIFTING GP-ENGINE	51
Y	*198-1319*	1	LINES GP-ENGINE OIL	76
Y	*165-4466*	1	LINES GP-FUEL FILTER	117
Y	*167-0169*	1	LINES GP-TURBOCHARGER OIL	77
Y	*165-4461*	1	LINES GP-WATER	82
Y	*165-4445*	1	MANIFOLD GP-EXHAUST	108
Y	*211-2029*	1	MOUNTING GP-ALTERNATOR	52
Y	*187-3966*	1	MOUNTING GP-FAN DRIVE	54
Y	*165-4459*	1	PAN GP-OIL	55
Y	*198-0922*	1	PLUG GP-ENGINE	58
Y	*215-3673*	1	PULLEY GP-CRANKSHAFT	59
Y	*211-1812*	1	PUMP GP-WATER	88
Y	*189-9306*	1	SEAL GP-CRANKSHAFT	64
Y	*205-1244*	1	SENSOR GP-ELECTRONIC	172
Y	*166-1790*	1	SUPPORT GP-ENGINE	66
Y	*166-1792*	1	TRUNNION GP-ENGINE	67
Y	*198-1320*	1	WIRING GP-ELECTRONIC CONTROL	200
			GASKET KITS WILL BE PROVIDED WHEN AVAILABLE	

Y-SEPARATE ILLUSTRATION

ENGINE ARRANGEMENT

169-3791 ENGINE AR

S/N: 4ZF1-UP

PART OF 211-4627 GENERAL AR

SMCS-1000 **i01646788**

NOTE	PART NUMBER	QTY	PART NAME 1 2 3 4 5 6 (PRODUCT LEVEL)	SEE PAGE
Y	*165-4468*	1	CONTROL & MTG GP-ENGINE ELEK	147
Y	*157-0133*	1	COOLER GP-TRANSMISSION OIL	220
Y	*197-8602*	1	COVER GP-CYLINDER BLOCK	18
Y	*118-1727*	1	COVER GP-FRONT HOUSING	20
Y	*206-6923*	1	COVER GP-FRONT HOUSING	22
Y	*204-5208*	1	COVER GP-VALVE MECHANISM	24
Y	*211-2179*	1	DAMPER & PULLEY GP	35
Y	*4P-2102*	1	DRAIN GP-ENGINE OIL	36
Y	*210-8550*	1	DRIVE GP-PUMP	41
Y	*173-6107*	1	ELBOW GP-AIR INLET	103
Y	*169-3788*	1	ENGINE AR-CORE	14
Y	*194-5052*	1	FASTENER GP-FRONT HOUSING	43
Y	*183-2097*	1	FILTER GP-ENGINE OIL	72
Y	*198-0921*	1	FITTING GP	44
Y	*195-4590*	1	FLYWHEEL GP	45
Y	*197-6648*	1	FUMES DISPOSAL GP	74
Y	*169-3109*	1	GAUGE GP-OIL LEVEL (DIPSTICK)	75
Y	*175-6260*	1	GEAR GP-REAR	47
Y	*118-7284*	1	HEATER GP-AIR INLET	155
Y	*165-4455*	1	HOUSING GP-FLYWHEEL	48
Y	*166-1784*	1	LIFTING GP-ENGINE	51
Y	*198-1319*	1	LINES GP-ENGINE OIL	76
Y	*165-4466*	1	LINES GP-FUEL FILTER	117
Y	*167-0169*	1	LINES GP-TURBOCHARGER OIL	77
Y	*165-4461*	1	LINES GP-WATER	82
Y	*165-4445*	1	MANIFOLD GP-EXHAUST	108
Y	*211-2029*	1	MOUNTING GP-ALTERNATOR	52
Y	*187-3966*	1	MOUNTING GP-FAN DRIVE	54
Y	*165-4459*	1	PAN GP-OIL	55
Y	*198-0922*	1	PLUG GP-ENGINE	58
Y	*215-3673*	1	PULLEY GP-CRANKSHAFT	59
Y	*211-1812*	1	PUMP GP-WATER	88
Y	*189-9306*	1	SEAL GP-CRANKSHAFT	64
Y	*205-1244*	1	SENSOR GP-ELECTRONIC	172
Y	*166-1790*	1	SUPPORT GP-ENGINE	66
Y	*166-1792*	1	TRUNNION GP-ENGINE	67
Y	*198-1320*	1	WIRING GP-ELECTRONIC CONTROL	200
			GASKET KITS WILL BE PROVIDED WHEN AVAILABLE	

Y-SEPARATE ILLUSTRATION

ENGINE ARRANGEMENT

176-5509 ENGINE AR

S/N: 4ZF1-UP
PART OF 164-4797 SUPPRESSION AR-SOUND
AN ATTACHMENT

SMCS-1000 **i01647496**

NOTE	PART NUMBER	QTY	PART NAME 1 2 3 4 5 6 (PRODUCT LEVEL)	SEE PAGE
Y	*165-4468*	1	CONTROL & MTG GP-ENGINE ELEK	147
Y	*157-0133*	1	COOLER GP-TRANSMISSION OIL	220
Y	*197-8602*	1	COVER GP-CYLINDER BLOCK	18
Y	*118-1727*	1	COVER GP-FRONT HOUSING	20
Y	*206-6923*	1	COVER GP-FRONT HOUSING	22
Y	*204-5208*	1	COVER GP-VALVE MECHANISM	24
Y	*211-2179*	1	DAMPER & PULLEY GP	35
Y	*4P-2102*	1	DRAIN GP-ENGINE OIL	36
Y	*210-8550*	1	DRIVE GP-PUMP	41
Y	*173-6107*	1	ELBOW GP-AIR INLET	103
Y	*169-3788*	1	ENGINE AR-CORE	14
Y	*194-5052*	1	FASTENER GP-FRONT HOUSING	43
Y	*183-2097*	1	FILTER GP-ENGINE OIL	72
Y	*198-0921*	1	FITTING GP	44
Y	*195-4590*	1	FLYWHEEL GP	45
Y	*197-6648*	1	FUMES DISPOSAL GP	74
Y	*169-3109*	1	GAUGE GP-OIL LEVEL (DIPSTICK)	75
Y	*175-6260*	1	GEAR GP-REAR	47
Y	*118-7284*	1	HEATER GP-AIR INLET	155
Y	*165-4455*	1	HOUSING GP-FLYWHEEL	48
Y	*166-1784*	1	LIFTING GP-ENGINE	51
Y	*198-1319*	1	LINES GP-ENGINE OIL	76
Y	*165-4466*	1	LINES GP-FUEL FILTER	117
Y	*167-0169*	1	LINES GP-TURBOCHARGER OIL	77
Y	*165-4461*	1	LINES GP-WATER	82
Y	*165-4445*	1	MANIFOLD GP-EXHAUST	108
Y	*211-2029*	1	MOUNTING GP-ALTERNATOR	52
Y	*187-3966*	1	MOUNTING GP-FAN DRIVE	54
Y	*165-4459*	1	PAN GP-OIL	55
Y	*198-0922*	1	PLUG GP-ENGINE	58
Y	*215-3673*	1	PULLEY GP-CRANKSHAFT	59
Y	*211-1812*	1	PUMP GP-WATER	88
Y	*189-9306*	1	SEAL GP-CRANKSHAFT	64
Y	*205-1244*	1	SENSOR GP-ELECTRONIC	172
Y	*166-1790*	1	SUPPORT GP-ENGINE	66
Y	*166-1792*	1	TRUNNION GP-ENGINE	67
Y	*198-1320*	1	WIRING GP-ELECTRONIC CONTROL	200

Y-SEPARATE ILLUSTRATION

ENGINE ARRANGEMENT

176-9269 ENGINE AR

S/N: 4ZF1-UP

PART OF 164-4796 SUPPRESSION AR-SOUND

AN ATTACHMENT

SMCS-1000 **i01646664**

NOTE	PART NUMBER	QTY	PART NAME 1 2 3 4 5 6 (PRODUCT LEVEL)	SEE PAGE
Y	*165-4468*	1	CONTROL & MTG GP-ENGINE ELEK	147
Y	*157-0133*	1	COOLER GP-TRANSMISSION OIL	220
Y	*197-8602*	1	COVER GP-CYLINDER BLOCK	18
Y	*118-1727*	1	COVER GP-FRONT HOUSING	20
Y	*206-6923*	1	COVER GP-FRONT HOUSING	22
Y	*204-5208*	1	COVER GP-VALVE MECHANISM	24
Y	*211-2179*	1	DAMPER & PULLEY GP	35
Y	*4P-2102*	1	DRAIN GP-ENGINE OIL	36
Y	*210-8550*	1	DRIVE GP-PUMP	41
Y	*173-6107*	1	ELBOW GP-AIR INLET	103
Y	*166-0270*	1	ENGINE AR-CORE	13
Y	*194-5052*	1	FASTENER GP-FRONT HOUSING	43
Y	*183-2097*	1	FILTER GP-ENGINE OIL	72
Y	*198-0921*	1	FITTING GP	44
Y	*195-4590*	1	FLYWHEEL GP	45
Y	*197-6648*	1	FUMES DISPOSAL GP	74
Y	*169-3109*	1	GAUGE GP-OIL LEVEL (DIPSTICK)	75
Y	*175-6260*	1	GEAR GP-REAR	47
Y	*118-7284*	1	HEATER GP-AIR INLET	155
Y	*165-4455*	1	HOUSING GP-FLYWHEEL	48
Y	*166-1784*	1	LIFTING GP-ENGINE	51
Y	*198-1319*	1	LINES GP-ENGINE OIL	76
Y	*165-4466*	1	LINES GP-FUEL FILTER	117
Y	*167-0169*	1	LINES GP-TURBOCHARGER OIL	77
Y	*165-4461*	1	LINES GP-WATER	82
Y	*165-4445*	1	MANIFOLD GP-EXHAUST	108
Y	*211-2029*	1	MOUNTING GP-ALTERNATOR	52
Y	*187-3966*	1	MOUNTING GP-FAN DRIVE	54
Y	*165-4459*	1	PAN GP-OIL	55
Y	*198-0922*	1	PLUG GP-ENGINE	58
Y	*215-3673*	1	PULLEY GP-CRANKSHAFT	59
Y	*211-1812*	1	PUMP GP-WATER	88
Y	*189-9306*	1	SEAL GP-CRANKSHAFT	64
Y	*205-1244*	1	SENSOR GP-ELECTRONIC	172
Y	*166-1790*	1	SUPPORT GP-ENGINE	66
Y	*166-1792*	1	TRUNNION GP-ENGINE	67
Y	*198-1320*	1	WIRING GP-ELECTRONIC CONTROL	200

Y-SEPARATE ILLUSTRATION

ENGINE ARRANGEMENT

166-0270 ENGINE AR-CORE

S/N: 4ZF1-UP
PART OF 166-0273, 176-9269 ENGINE AR
ALSO AN ATTACHMENT

SMCS-1000 **i01649656**

NOTE	PART NUMBER	QTY	PART NAME 1 2 3 4 5 6 (PRODUCT LEVEL)	SEE PAGE
Y	*164-6100*	1	CAMSHAFT GP	16
Y	*188-3826*	1	COOLER GP-ENGINE OIL	79
Y	*164-6148*	1	CRANKSHAFT GP	25
Y	*161-3406*	1	CYLINDER BLOCK GP	28
Y	*210-5987*	1	CYLINDER HEAD GP	34
	206-5990	1	ELECTRONICS GP	
Y	*155-7918*	1	GEAR GP-FRONT	46
Y	*165-4446*	1	HOUSING GP-FRONT	50
Y	*177-7878*	1	PISTON GP	57
Y	*195-8098*	1	PUMP GP-ENGINE OIL	78
Y	*166-1759*	1	PUMP GP-UNIT INJECTION	120
Y	*165-4450*	1	PUMP GP-UNIT INJECTOR HYD	122
Y	*169-3122*	1	TURBOCHARGER GP	111
Y	*155-7927*	1	VALVE MECHANISM GP	68

Y-SEPARATE ILLUSTRATION

ENGINE ARRANGEMENT

169-3788 ENGINE AR-CORE

S/N: 4ZF1-UP
PART OF 169-3791, 176-5509 ENGINE AR
ALSO AN ATTACHMENT

SMCS-1000 **i01646976**

NOTE	PART NUMBER	QTY	PART NAME 1 2 3 4 5 6 (PRODUCT LEVEL)	SEE PAGE
Y	*164-6100*	1	CAMSHAFT GP	16
Y	*188-3826*	1	COOLER GP-ENGINE OIL	79
Y	*164-6148*	1	CRANKSHAFT GP	25
Y	*161-3406*	1	CYLINDER BLOCK GP	28
Y	*210-5987*	1	CYLINDER HEAD GP	34
	204-8673	1	ELECTRONICS GP-ENGINE RATINGS	
Y	*155-7918*	1	GEAR GP-FRONT	46
Y	*165-4446*	1	HOUSING GP-FRONT	50
Y	*177-7878*	1	PISTON GP	57
Y	*195-8098*	1	PUMP GP-ENGINE OIL	78
Y	*166-1759*	1	PUMP GP-UNIT INJECTION	120
Y	*165-4450*	1	PUMP GP-UNIT INJECTOR HYD	122
Y	*169-3122*	1	TURBOCHARGER GP	111
Y	*155-7927*	1	VALVE MECHANISM GP	68

Y-SEPARATE ILLUSTRATION

ENGINE ARRANGEMENT

168-8371 INSTALLATION AR-ENGINE

S/N: BLE1-UP; BMJ1-UP

PART OF 211-4625, 211-4627 GENERAL AR

SMCS-1000 **i01669338**

NOTE	PART NUMBER	QTY	PART NAME 1 2 3 4 5 6 (PRODUCT LEVEL)	SEE PAGE
Y	*169-3803*	1	AFTERCOOLER GP-AIR	98
Y	*206-9000*	1	AIR CLEANER GP	100
Y	*168-8373*	1	ALTERNATOR GP-CHARGING	132
Y	*215-3251*	1	DRIVE GP-FAN	40
Y	*188-1018*	1	DUST EJECTOR GP	102
Y	*168-8376*	1	FAN GP-BLOWER	81
Y	*168-8377*	1	LINES GP-AIR	105
Y	*169-3804*	1	LINES GP-AIR	106
Y	*168-8378*	1	LINES GP-WATER	84
Y	*173-5623*	1	MOUNTING GP-ENGINE FLEXIBLE	53
Y	*168-8382*	1	MUFFLER GP	109
	5P-8502	1	PADLOCK GP	
A	**8Y-6364**	1	SLEEVE	
A	**5P-8500**	1	KEY	
Y	*168-8383*	1	PULLEY GP-FAN & ALT DRIVE	60
Y	*206-9001*	1	PUMP GP-FUEL	118
Y	*168-8384*	1	RADIATOR GP	90
Y	*168-8387*	1	SHIELD GP-EXHAUST	110
Y	*199-7837*	1	STARTING MOTOR GP-ELECTRIC	191
Y	*170-1100*	1	TANK GP-WATER	96
Y	*196-9997*	1	YOKE GP	70

A-NOT PART OF THIS GROUP
Y-SEPARATE ILLUSTRATION

164-6100 CAMSHAFT GP

S/N: 4ZF1-UP
PART OF 166-0270, 169-3788 ENGINE AR-CORE
ALSO AN ATTACHMENT

SMCS-1210, 1211, 1212 **i01593297**

NOTE	REF NO	GRAPHIC REF	PART NUMBER	QTY	PART NAME 1 2 3 4 5 6 (PRODUCT LEVEL)	SEE PAGE
	1	1	**107-7694**	1	PLATE-THRUST	
	2	1	**205-1201**	1	CAMSHAFT AS	
	2A	1	**1B-8705**	1	KEY-WOODRUFF	
	2B	1	**107-7809**	1	GEAR-CAMSHAFT (100 TEETH)	
M	3	1	**6V-3940**	2	BOLT (M8X1.25X25MM)	

M-METRIC PART

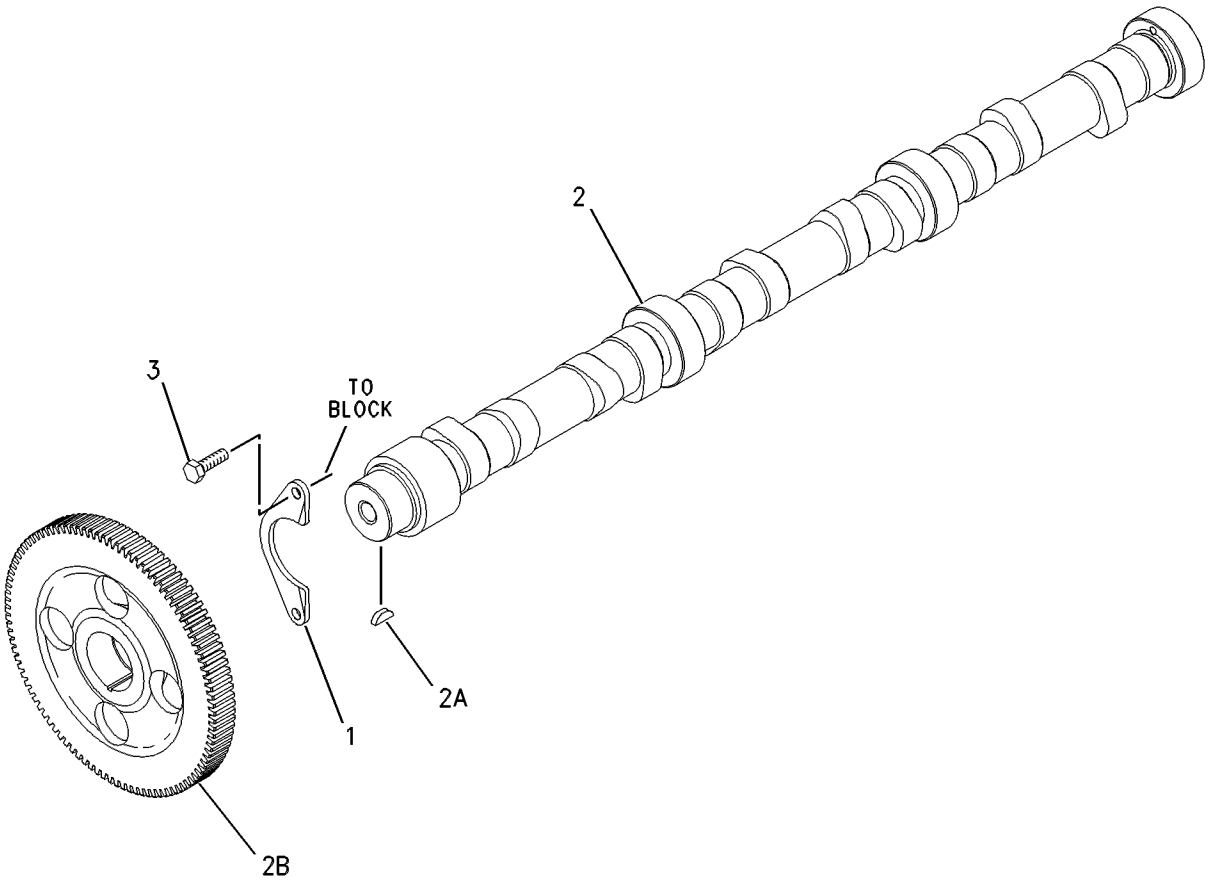

GRAPHIC #1 g00626400

MEMORANDA

BASIC ENGINE

197-8602 COVER GP-CYLINDER BLOCK

S/N: 4ZF1-UP

PART OF 166-0273, 169-3791, 176-5509, 176-9269 ENGINE AR

ALSO AN ATTACHMENT

SMCS-1201 **i01644372**

NOTE	REF NO	GRAPHIC REF	PART NUMBER	QTY	PART NAME 1 2 3 4 5 6 (PRODUCT LEVEL)	SEE PAGE
	1	1	**205-5285**	1	GASKET	
	2	1	**209-3777**	1	COVER	
M	4	1	**3E-8005**	1	BOLT (M8X1.25X160MM)	
M	5	1	**6V-3918**	2	BOLT (M8X1.25X50MM)	
M	6	1	**6V-3940**	9	BOLT (M8X1.25X25MM)	
	7	1	**9F-4446**	1	SEAL-O-RING	
	8	1	**9M-1974**	12	WASHER-HARD (8.8X16X2MM THK)	

M-METRIC PART

197-8602 **COVER GP-CYLINDER BLOCK** ***(contd.)*** **i01644372**

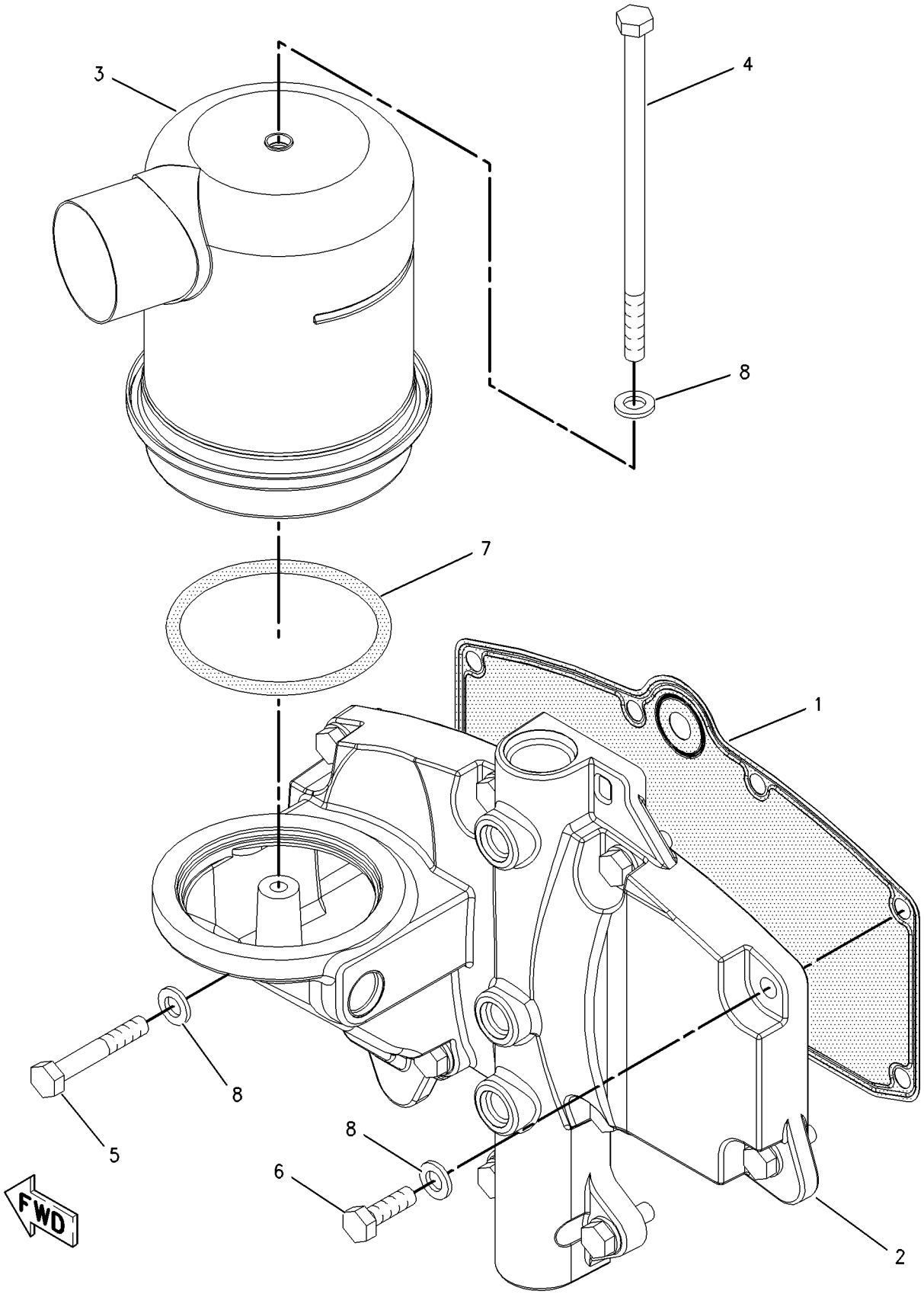

GRAPHIC #1 g00851801

118-1727 COVER GP-FRONT HOUSING

S/N: 4ZF1-UP

PART OF 166-0273, 169-3791, 176-5509, 176-9269 ENGINE AR

ALSO AN ATTACHMENT

SMCS-1151, 1162, 1166 **i01367161**

NOTE	REF NO	GRAPHIC REF	PART NUMBER	QTY	PART NAME 1 2 3 4 5 6 (PRODUCT LEVEL)	SEE PAGE
	1	1	**5P-8245**	4	WASHER-HARD (3MM THK)	
M	2	1	**6V-5696**	2	BOLT (M12X1.75X80MM)	
	3	1	**4W-2026**	1	COVER	
	4	1	**135-9819**	1	SEAL	
M	5	1	**6V-8149**	2	NUT (M12X1.75 THD)	

M-METRIC PART

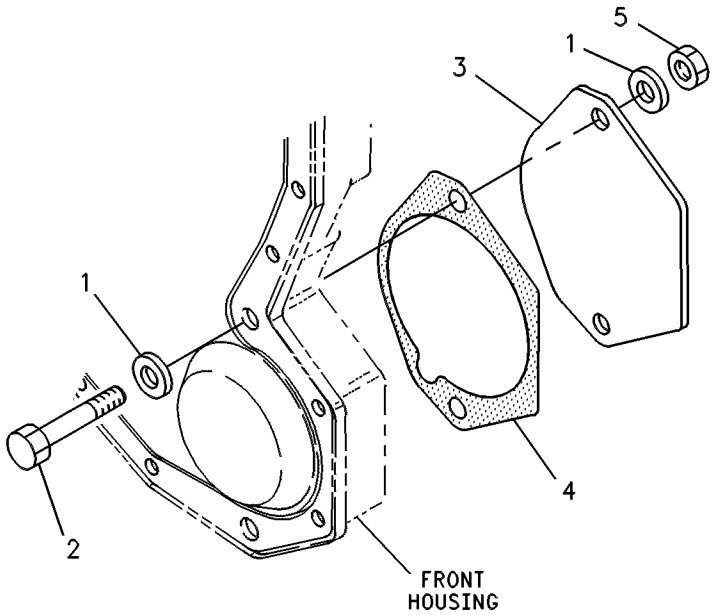

GRAPHIC #1 g00245495

MEMORANDA

206-6923 COVER GP-FRONT HOUSING

S/N: 4ZF1-UP

PART OF 166-0273, 169-3791, 176-5509, 176-9269 ENGINE AR

ALSO AN ATTACHMENT

SMCS-1151, 1162, 1166 **i01644387**

NOTE	REF NO	GRAPHIC REF	PART NUMBER	QTY	PART NAME 1 2 3 4 5 6 (PRODUCT LEVEL)	SEE PAGE
	1	1	**166-1776**	1	COVER AS-FRONT	
	1A	1	**126-1757**	2	WASHER	
	1B	1	**136-0822**	2	STUD	
	2	1	**166-1781**	1	GASKET	
	3	1	**206-5887**	1	TUBE AS	
	4	1	**061-9455**	1	SEAL-O-RING	
M	5	1	**5C-7261**	4	NUT (M8X1.25 THD)	
M	6	1	**6V-2317**	5	BOLT (M8X1.25X30MM)	
M	7	1	**8T-0100**	1	BOLT (M8X1.25X60MM)	
	8	1	**8T-4224**	4	WASHER-HARD (8.8X16X2MM THK)	

M-METRIC PART

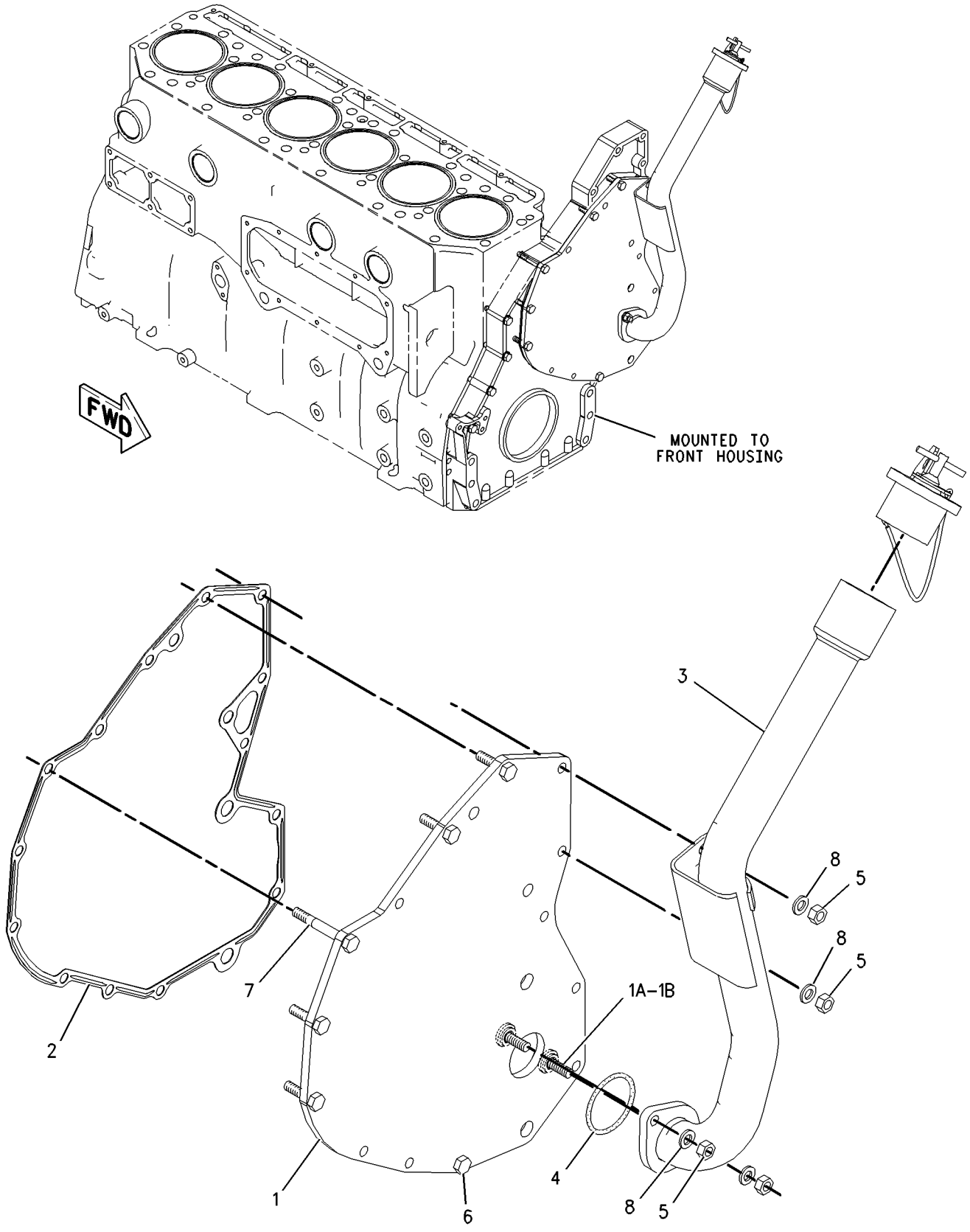

GRAPHIC #1 g00850139

204-5208 COVER GP-VALVE MECHANISM

S/N: 4ZF1-UP

PART OF 166-0273, 169-3791, 176-5509, 176-9269 ENGINE AR

ALSO AN ATTACHMENT

SMCS-1107, 1120 **i01649736**

NOTE	REF NO	GRAPHIC REF	PART NUMBER	QTY	PART NAME 1 2 3 4 5 6 (PRODUCT LEVEL)	SEE PAGE
	1	1	**208-0039**	9	FASTENER AS	
	2	1	**191-4531**	1	COVER AS	
	3	1	**201-1571**	1	COVER-BASE	
	4	1	**204-4444**	1	BREATHER AS	
		1	**124-0506**	1	SEAL	
		1	**160-0526**	1	SEAL-O-RING	
		1	**185-3159**	1	ELEMENT	
	5	1	**205-5164**	1	SEAL	
M	6	1	**6V-5219**	11	BOLT (M8X1.25X40MM)	
	7	1	**9M-1974**	11	WASHER-HARD (8.8X16X2MM THK)	

M-METRIC PART

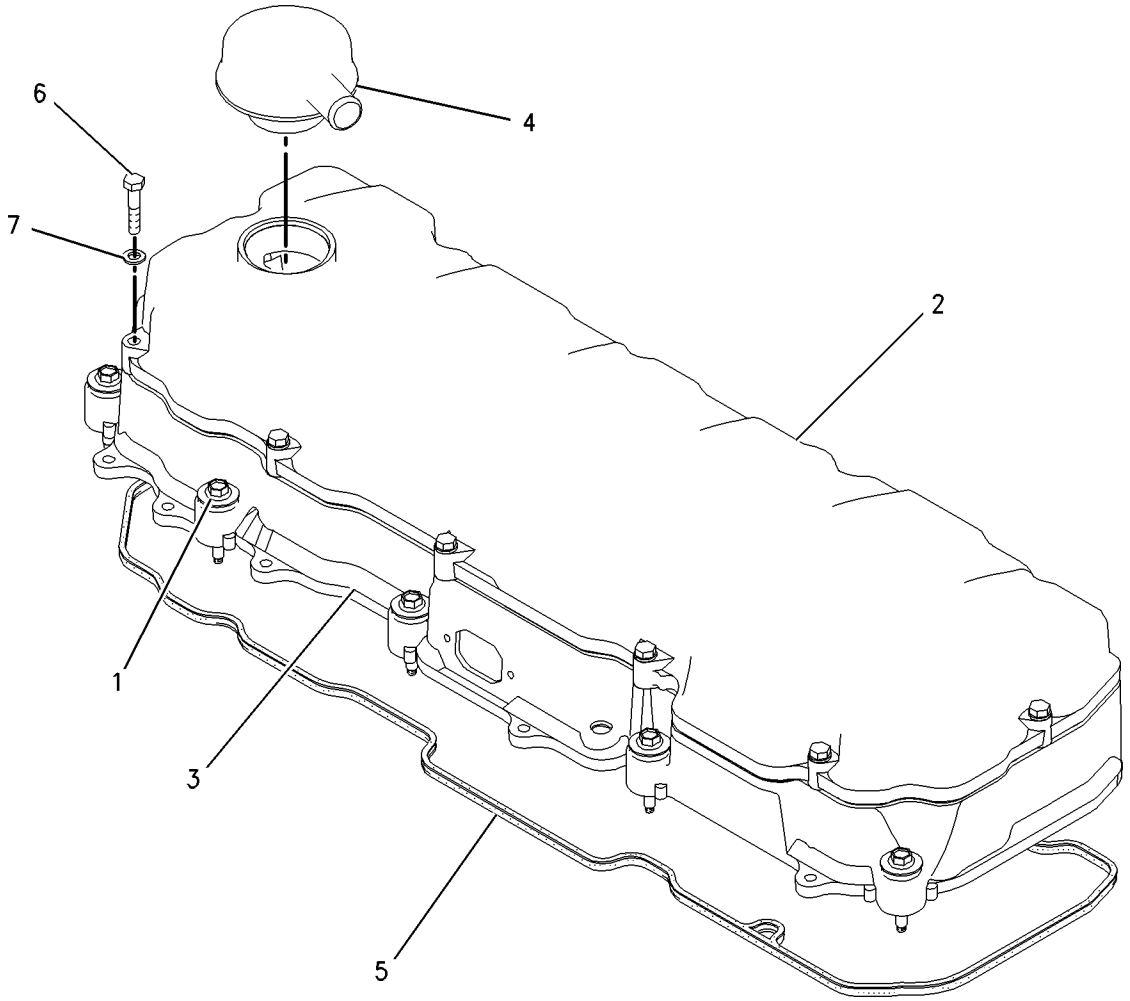

GRAPHIC #1 g00797873

BASIC ENGINE

164-6148 CRANKSHAFT GP

S/N: 4ZF1-UP
PART OF 166-0270, 169-3788 ENGINE AR-CORE
ALSO AN ATTACHMENT

SMCS-1202, 1203, 1204, 1230, 1231, 1232 **i01391852**

NOTE	REF NO	GRAPHIC REF	PART NUMBER	QTY	PART NAME 1 2 3 4 5 6 (PRODUCT LEVEL)	SEE PAGE
	1	1	**151-2939**	7	BEARING-MAIN	
	2	1	**160-8147**	1	CRANKSHAFT AS	
	2A	1	**1B-8705**	1	KEY-WOODRUFF	
	2B	1	**2W-8147**	1	GEAR (50 TEETH)	
	3	1	**160-8166**	2	PLATE-THRUST	

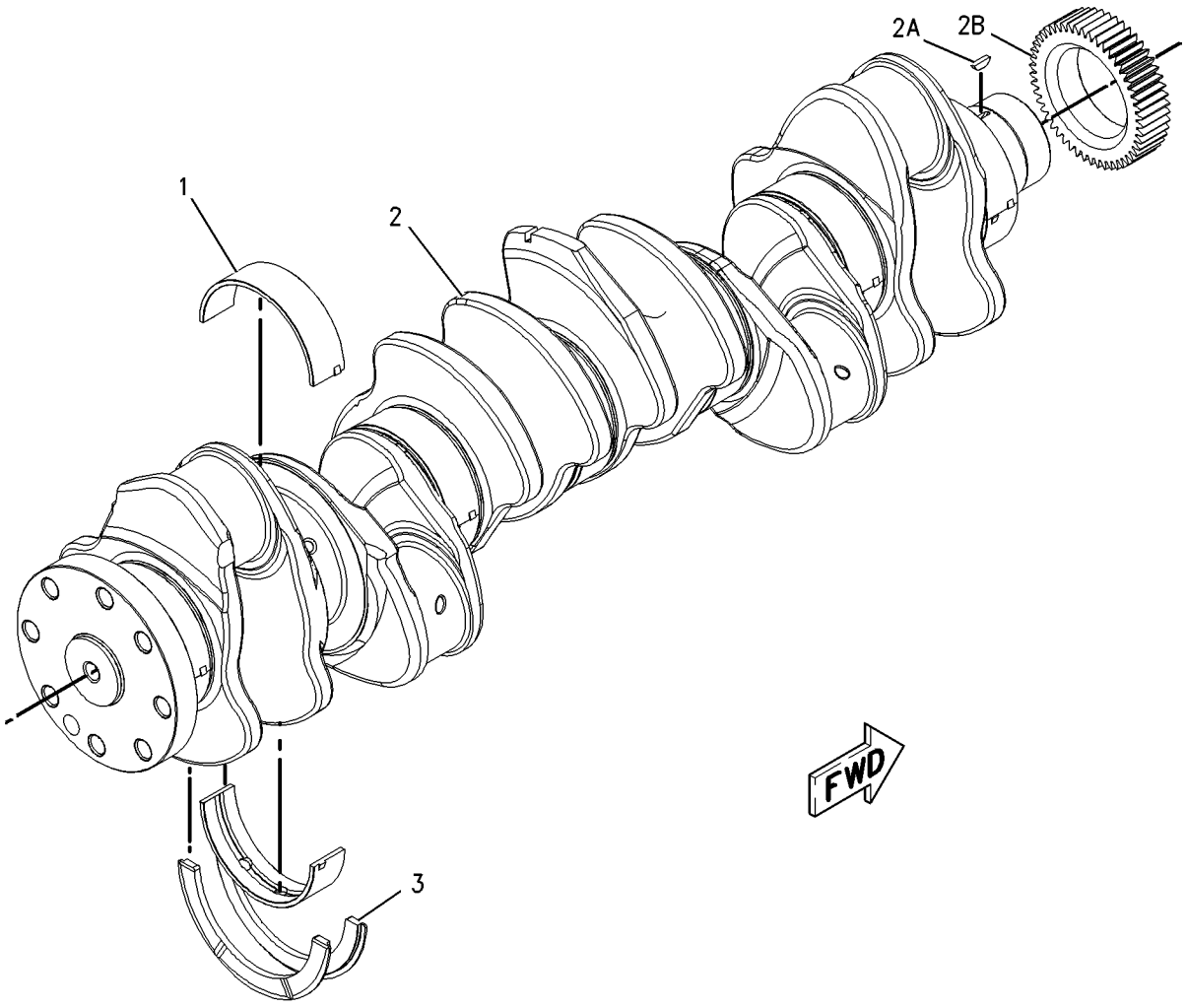

GRAPHIC #1 g00738316

204-9538 CYLINDER BLOCK AS

S/N: 4ZF1-UP
PART OF 204-9539 CYLINDER BLOCK GP
ALSO AN ATTACHMENT

SMCS-1117, 1201, 1211, 1216, 1217, 1221, 1222, 1223, 1224, 1238, 1239, 1240, 1331

i01649807

NOTE	REF NO	GRAPHIC REF	PART NUMBER	QTY	PART NAME 1 2 3 4 5 6 (PRODUCT LEVEL)	SEE PAGE
	1	1	**0L-1026**	2	PLUG-CUP	
	2	1	**2W-7211**	1	BEARING-SLEEVE (CAMSHAFT)	
	3	1	**3B-0623**	2	PLUG-CUP	
	4	1	**4F-5695**	4	PLUG-CUP	
	5	1	**212-7002**	7	CAP-BEARING	
	6	1	**203-5805**	2	BEARING-SLEEVE	
	7	1	**203-6090**	1	BEARING-SLEEVE	
M	9	1	**175-0454**	14	BOLT-HEX HEAD	
	10	1	**9X-8268**	14	WASHER (17.5X30X3.5MM THK)	

M-METRIC PART

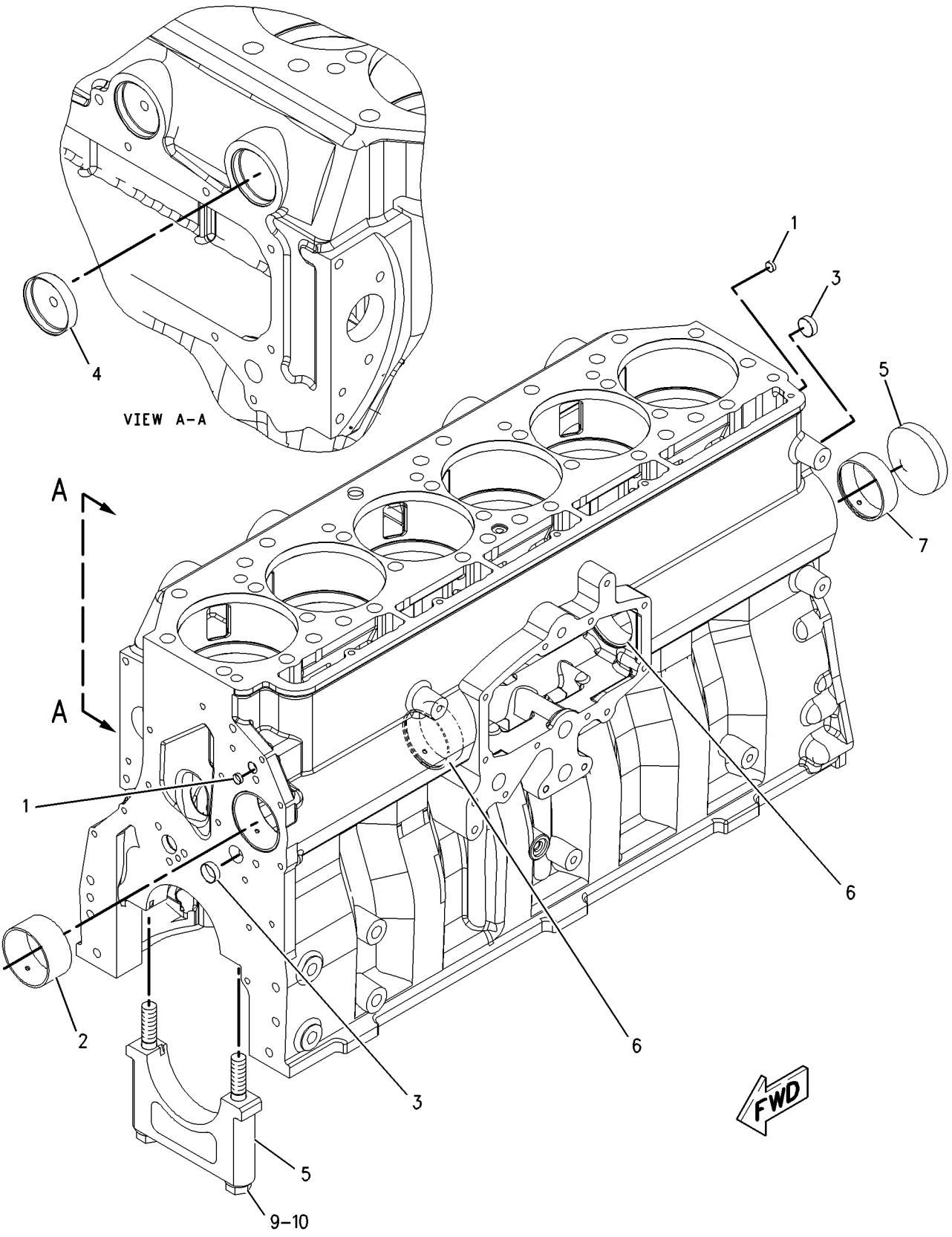

GRAPHIC #1 g00809578

BASIC ENGINE

161-3406 CYLINDER BLOCK GP

S/N: 4ZF1-UP
PART OF 166-0270, 169-3788 ENGINE AR-CORE
ALSO AN ATTACHMENT

SMCS-1201 **i01549678**

NOTE	REF NO	GRAPHIC REF	PART NUMBER	QTY	PART NAME 1 2 3 4 5 6 (PRODUCT LEVEL)	SEE PAGE
	1	1	**0S-0519**	1	PLUG-CUP	
	2	1	**1W-8407**	2	SLEEVE	
	3	1	**4G-4972**	1	SEAL-O-RING	
Y	4	1	**204-9539**	1	CYLINDER BLOCK GP	29
	5	1	**6V-3538**	2	DOWEL	
	6	1	**7N-5683**	2	DOWEL	

Y-SEPARATE ILLUSTRATION

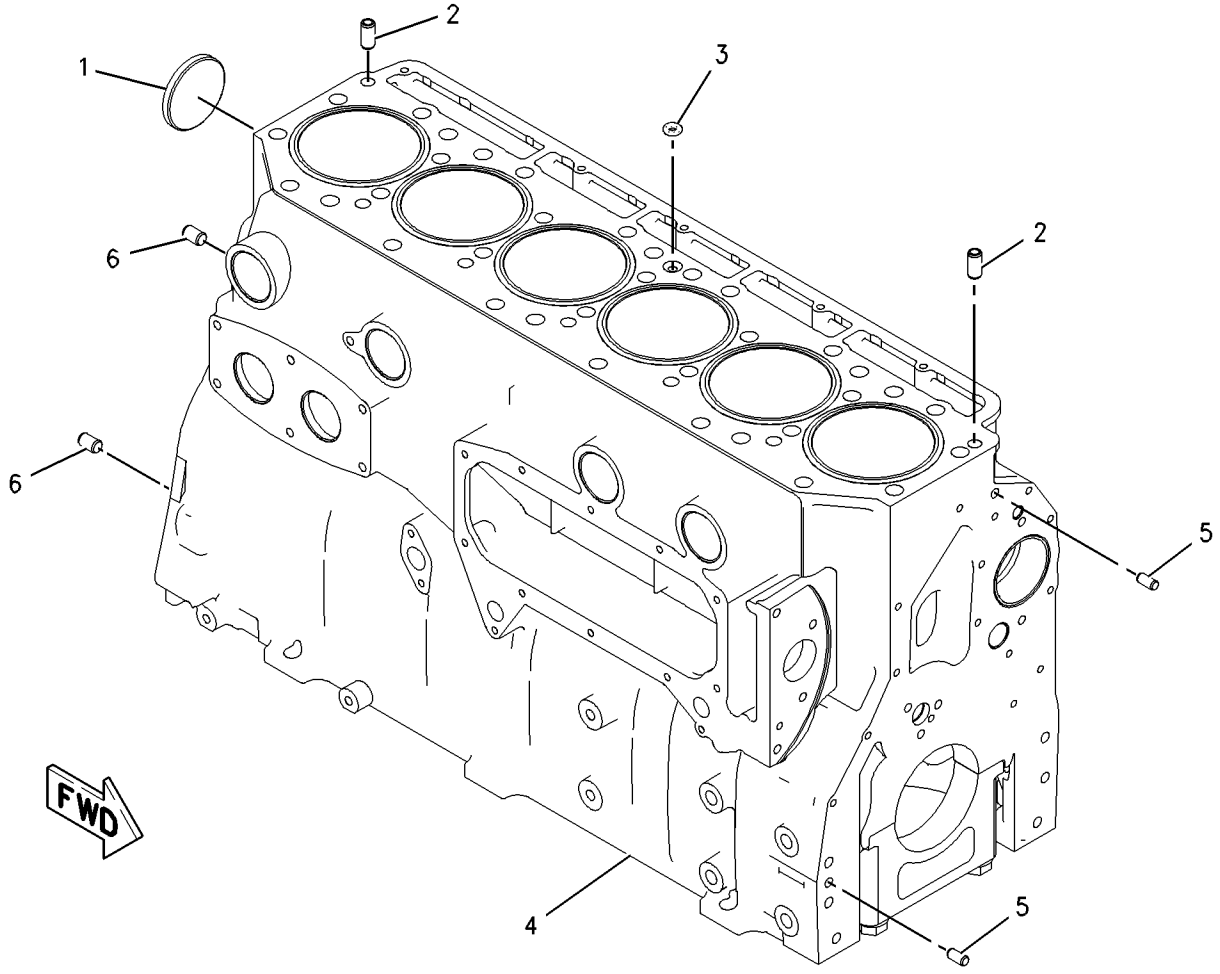

GRAPHIC #1 g00806054

204-9539 CYLINDER BLOCK GP

S/N: 4ZF1-UP
PART OF 161-3406 CYLINDER BLOCK GP
ALSO AN ATTACHMENT

SMCS-1201 **i01548047**

NOTE	REF NO	GRAPHIC REF	PART NUMBER	QTY	PART NAME 1 2 3 4 5 6 (PRODUCT LEVEL)	SEE PAGE
	1	1	**167-0024**	6	SEAL-LINER	
	2	1	**9S-8002**	1	PLUG-O-RING	
	2A	1	**033-5853**	1	SEAL-O-RING	
	3	1	**190-3562**	6	LINER-CYLINDER	
Y	4	1	**204-9538**	1	CYLINDER BLOCK AS	26

Y-SEPARATE ILLUSTRATION

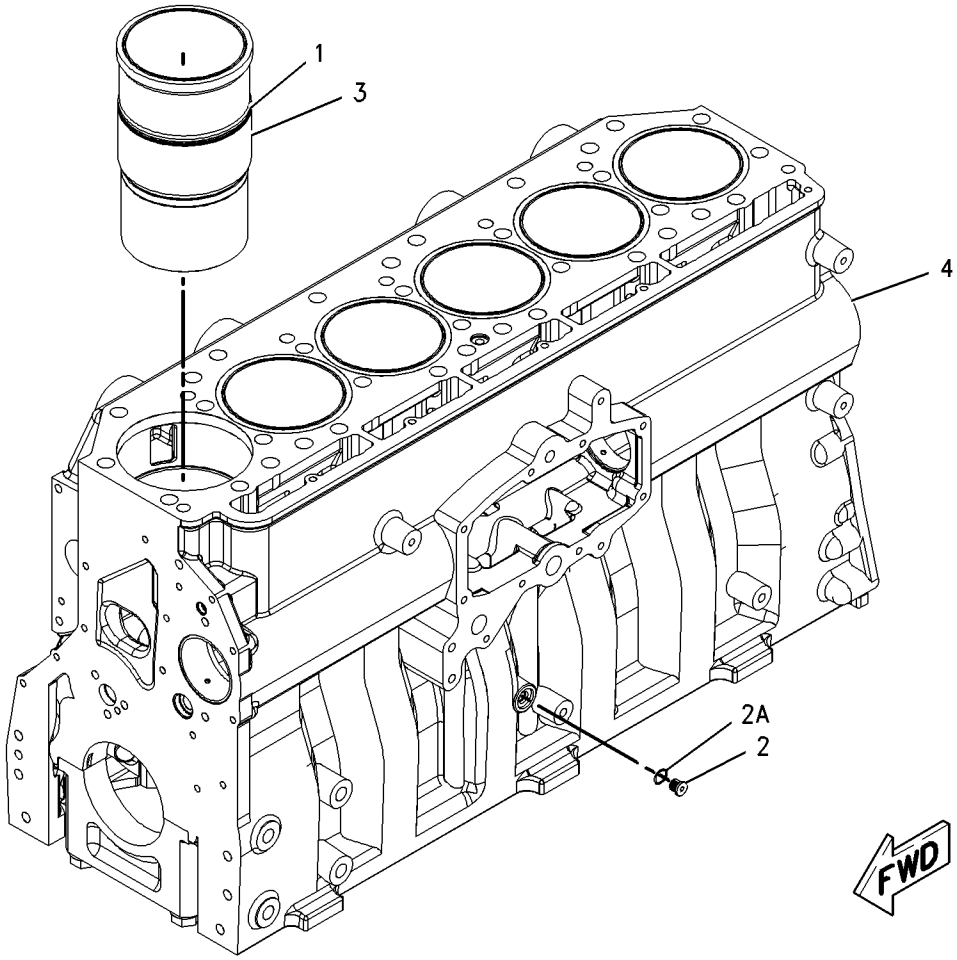

GRAPHIC #1 g00809597

210-5985 CYLINDER HEAD AS

S/N: 4ZF1-UP
PART OF 210-5984 CYLINDER HEAD GP
ALSO AN ATTACHMENT

SMCS-1100, 1101, 1103, 1104, 1105, 1106, 1108, 1109, 1115, 1117, 1121, 1124, 1125

i01612934

NOTE	REF NO	GRAPHIC REF	PART NUMBER	QTY	PART NAME 1 2 3 4 5 6 (PRODUCT LEVEL)	SEE PAGE
	1	1	**3B-0623**	6	PLUG-CUP	
	2	1	**8M-5860**	18	PLUG-CUP	
	3	1	**176-7688**	12	SEAT-VALVE (INLET)	
	4	1	**176-7690**	12	SEAT-VALVE (EXHAUST)	
	5	1	**178-5037**	6	SLEEVE-INJECTOR	

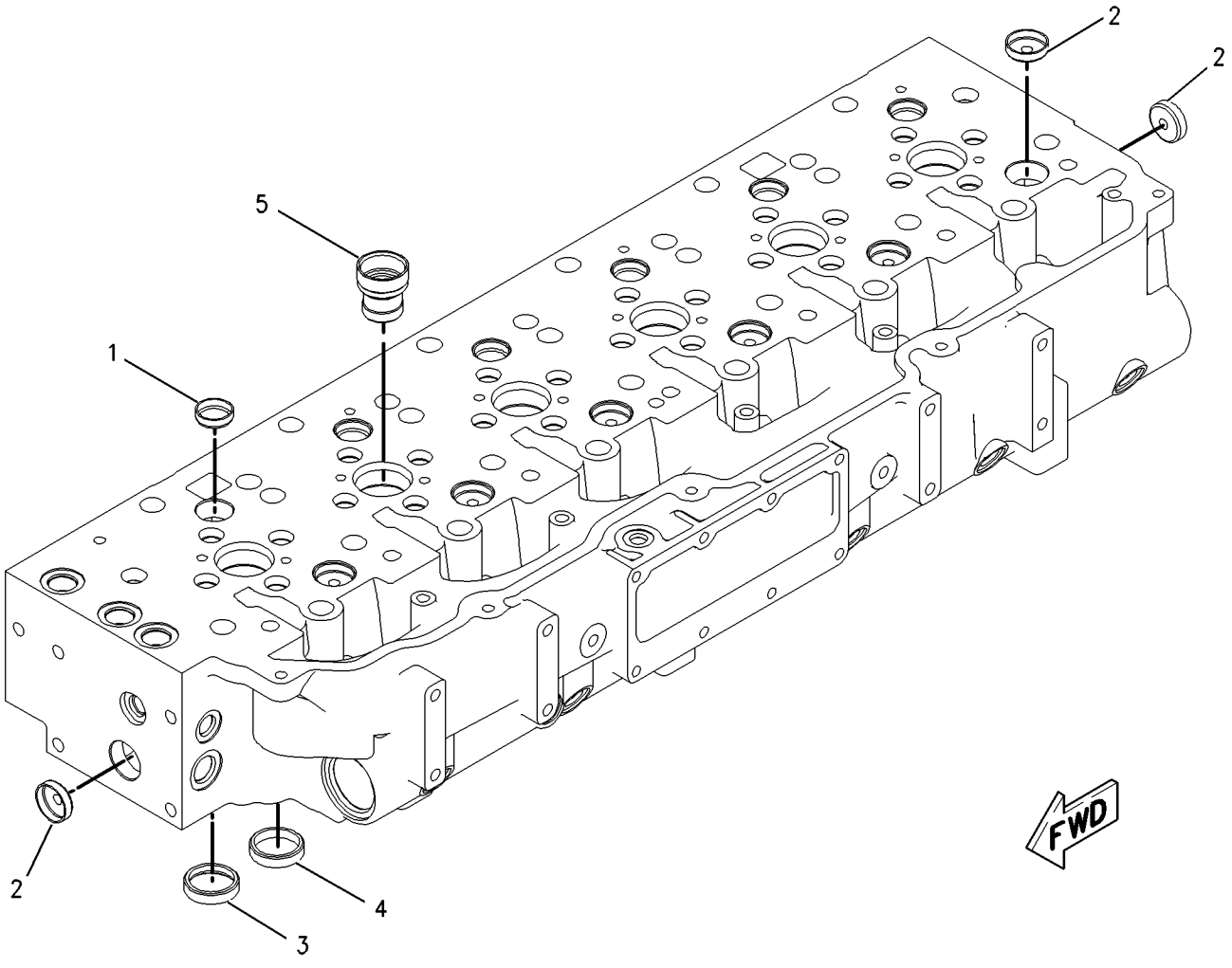

GRAPHIC #1

g00851200

MEMORANDA

210-5984 CYLINDER HEAD GP

S/N: 4ZF1-UP
PART OF 210-5987 CYLINDER HEAD GP
ALSO AN ATTACHMENT

SMCS-1100, 1103, 1104, 1105, 1106, 1108, 1109, 1115, 1117, 1121, 1124, 1125

i01654763

NOTE	REF NO	GRAPHIC REF	PART NUMBER	QTY	PART NAME 1 2 3 4 5 6 (PRODUCT LEVEL)	SEE PAGE
	1	1	**2A-4429**	48	LOCK-RETAINER	
	2	1	**211-2134**	24	RETAINER	
	3	1	**163-2442**	12	VALVE-INLET	
	4	1	**163-2444**	24	GUIDE-VALVE	
	5	1	**163-2478**	24	SEAL-VALVE STEM	
	6	1	**9S-8004**	5	PLUG	
		1	**153-4906**	5	SEAL-O-RING	
	7	1	**9S-8010**	2	PLUG	
		1	**183-2317**	2	SEAL-O-RING	
	8	1	**183-7889**	12	SEAT-VALVE SPRING	
	9	1	**188-3122**	12	VALVE-EXHAUST	
	10	1	**190-6115**	24	SPRING-VALVE (OUTER)	
	11	1	**190-6117**	24	SPRING-VALVE (INNER)	
Y	12	1	*210-5985*	1	CYLINDER HEAD AS	30
	13	1	**3K-0360**	2	SEAL-O-RING	
	13A	1	**9S-8005**	2	PLUG	
	14	1	**8T-6764**	2	PLUG-PIPE (1/2-14 NPTF THD)	

Y-SEPARATE ILLUSTRATION

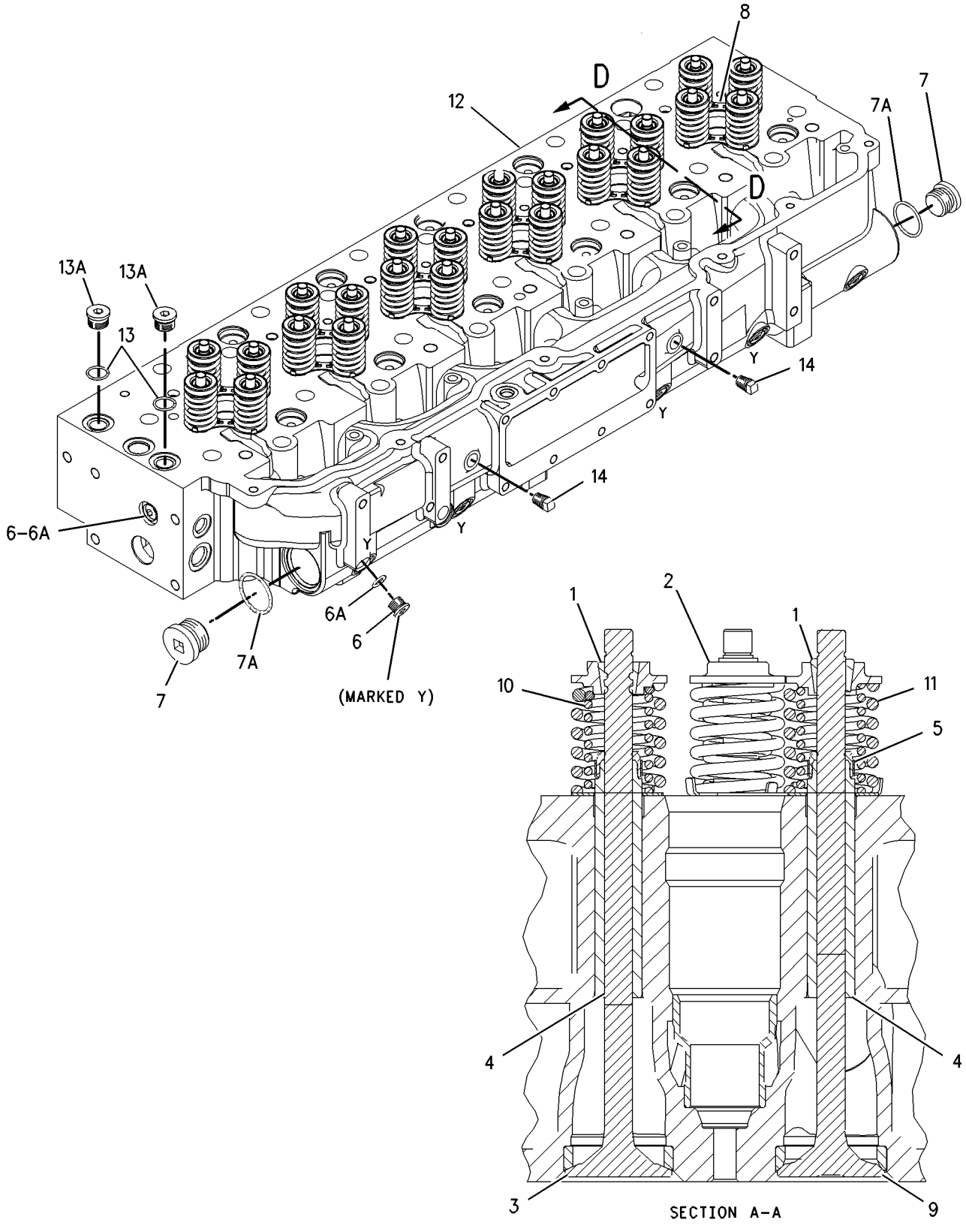

GRAPHIC #1

g00854454

210-5987 CYLINDER HEAD GP

S/N: 4ZF1-UP
PART OF 166-0270, 169-3788 ENGINE AR-CORE
ALSO AN ATTACHMENT

SMCS-1100, 1103, 1104, 1105, 1106, 1108, 1109, 1115, 1117, 1121, 1124, 1125

i01612792

NOTE	REF NO	GRAPHIC REF	PART NUMBER	QTY	PART NAME 1 2 3 4 5 6 (PRODUCT LEVEL)	SEE PAGE
Y	1	1	*167-0171*	26	FASTENER GP-CYLINDER HEAD	42
	2	1	**187-1315**	1	GASKET AS	
Y	3	1	**210-5984**	1	CYLINDER HEAD GP	32
M	4	1	**8C-4984**	5	BOLT (M8X1.25X150MM)	
	5	1	**9M-1974**	5	WASHER-HARD (8.8X16X2MM THK)	

M-METRIC PART
Y-SEPARATE ILLUSTRATION

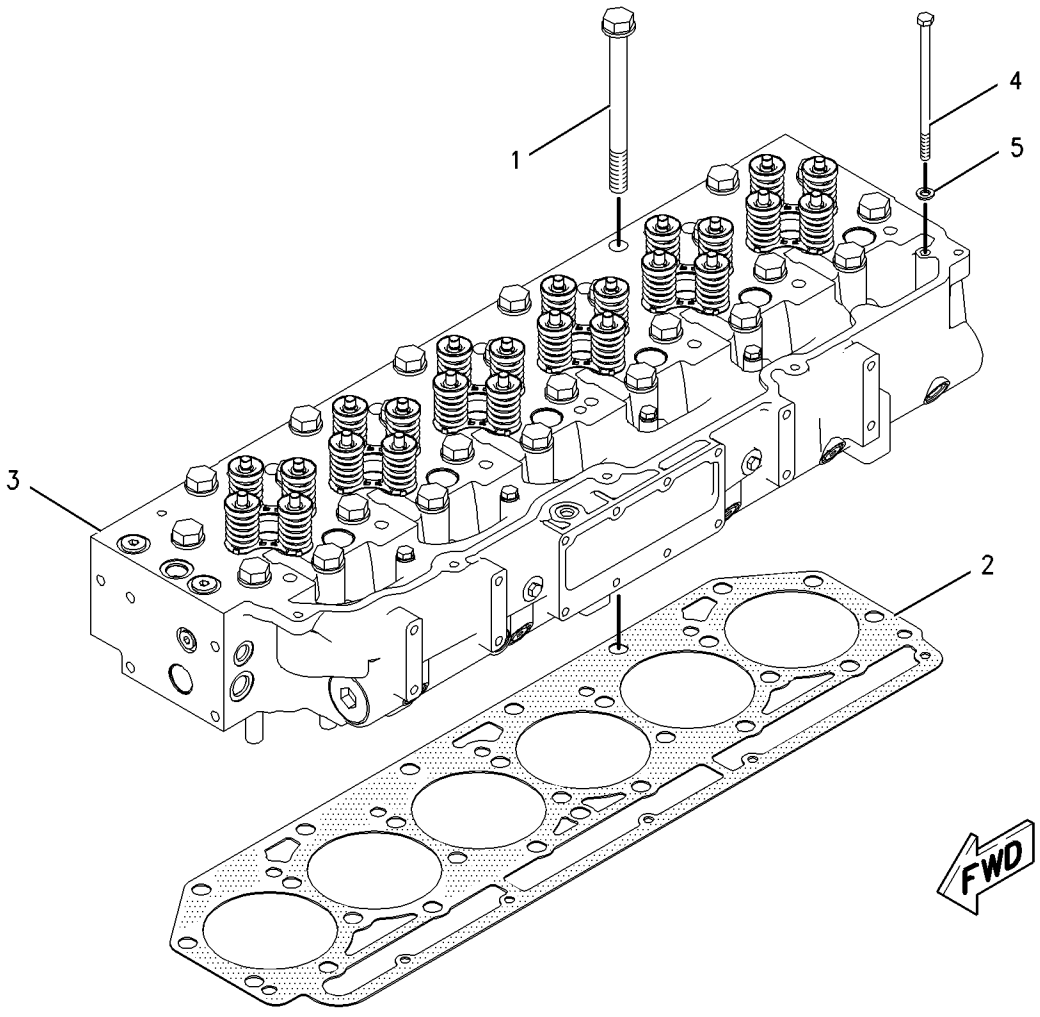

GRAPHIC #1

g00827534

211-2179 DAMPER & PULLEY GP

S/N: 4ZF1-UP
PART OF 166-0273, 169-3791, 176-5509, 176-9269 ENGINE AR
ALSO AN ATTACHMENT

SMCS-1205 **i01644415**

NOTE	REF NO	GRAPHIC REF	PART NUMBER	QTY	PART NAME 1 2 3 4 5 6 (PRODUCT LEVEL)	SEE PAGE
	1	1	**167-8121**	1	DAMPER AS	
	2	1	**6V-5839**	8	WASHER (11X21X2.5MM THK)	

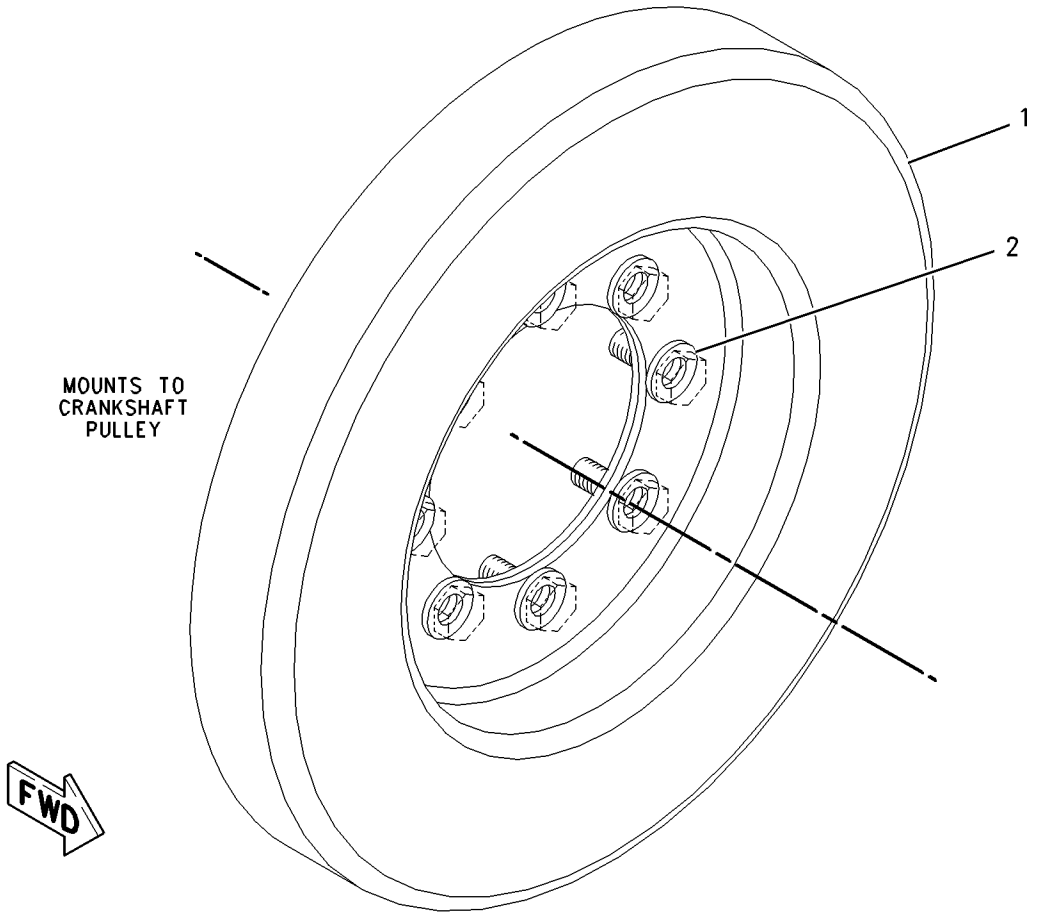

GRAPHIC #1 g00850390

4P-2102 DRAIN GP-ENGINE OIL

S/N: 4ZF1-UP
PART OF 166-0273, 169-3791, 176-5509, 176-9269 ENGINE AR
ALSO AN ATTACHMENT

SMCS-1302 **i01434666**

NOTE	REF NO	GRAPHIC REF	PART NUMBER	QTY	PART NAME 1 2 3 4 5 6 (PRODUCT LEVEL)	SEE PAGE
	1	1	**8N-6854**	1	GASKET-ADAPTER	
	2	1	**113-5336**	1	ADAPTER AS-DRAIN	
	2A	1	**126-1683**	1	PLUG-DRAIN	
		1	**8N-6849**	1	ADAPTER-PLUG	
	3	1	**5P-4116**	2	WASHER-HARD (8.8X20.5X2MM THK)	
M	4	1	**7X-2537**	2	BOLT (M8X1.25X35MM)	

M-METRIC PART

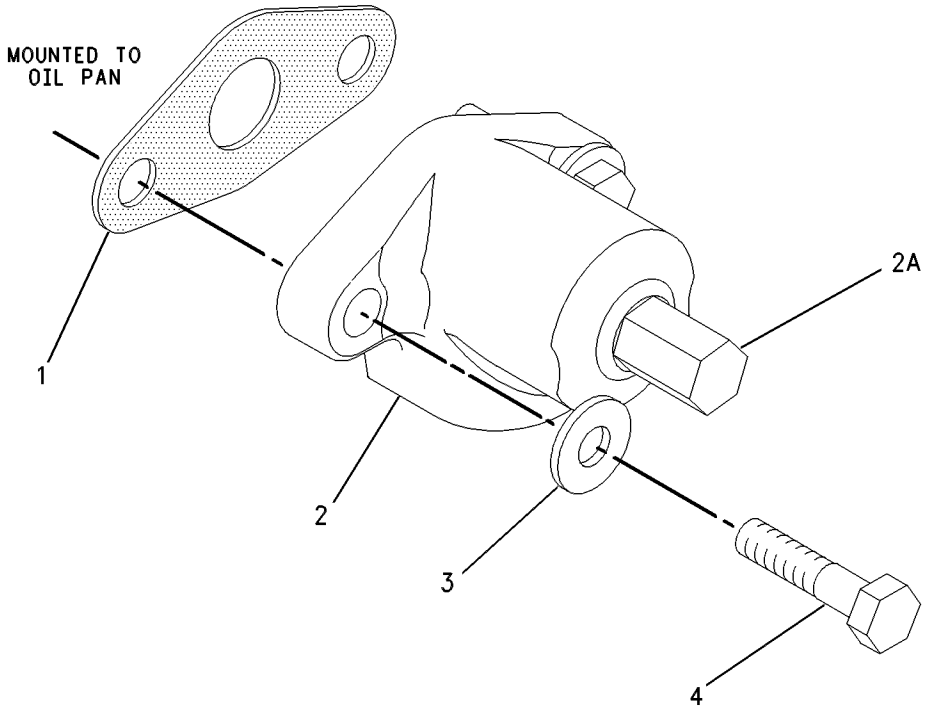

GRAPHIC #1 g00659483

MEMORANDA

215-3250 DRIVE GP-FAN

S/N: BLE1-UP; BMJ1-UP

PART OF 215-3251 DRIVE GP-FAN

SMCS-1357, 1358, 1359, 1390 **i01645976**

NOTE	REF NO	GRAPHIC REF	PART NUMBER	QTY	PART NAME 1 2 3 4 5 6 (PRODUCT LEVEL)	SEE PAGE
	1	1	**4B-4098**	1	PLUG-CUP	
	2	1	**4W-1203**	2	CUP-BEARING	
	3	1	**4W-1204**	2	CONE-BEARING	
	4	1	**7C-8634**	1	PLATE	
	5	1	**212-5839**	1	HUB	
	6	1	**212-5844**	1	SPACER	
	7	1	**215-3222**	1	BRACKET AS	
	7A	1	**215-3220**	1	SHAFT	
	8	1	**5S-9062**	1	SPACER (35.032X50.8X15.88MM THK)	
M	9	1	**6V-3668**	1	BOLT (M12X1.75X30MM)	
	10	1	**6V-9748**	1	SEAL-LIP	

M-METRIC PART

215-3250 DRIVE GP-FAN *(contd.)* **i01645976**

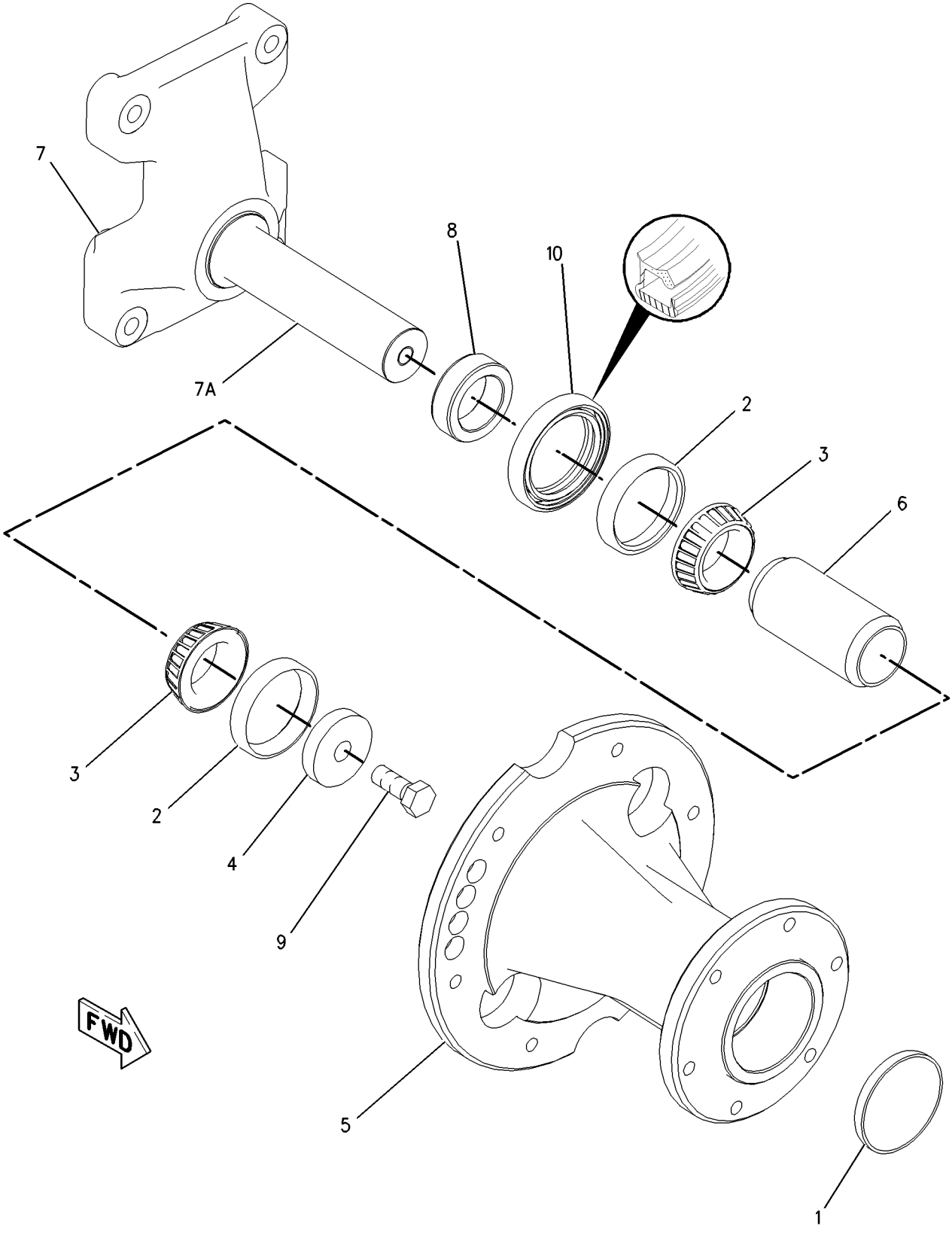

GRAPHIC #1 g00851257

215-3251 DRIVE GP-FAN

S/N: BLE1-UP; BMJ1-UP

PART OF 168-8371 INSTALLATION AR-ENGINE

SMCS-1357, 1358, 1359, 1390 **i01645408**

NOTE	REF NO	GRAPHIC REF	PART NUMBER	QTY	PART NAME 1 2 3 4 5 6 (PRODUCT LEVEL)	SEE PAGE
Y	1	1	**215-3250**	1	DRIVE GP-FAN	38
M	2	1	**8T-4182**	4	BOLT (M10X1.5X45MM)	

M-METRIC PART
Y-SEPARATE ILLUSTRATION

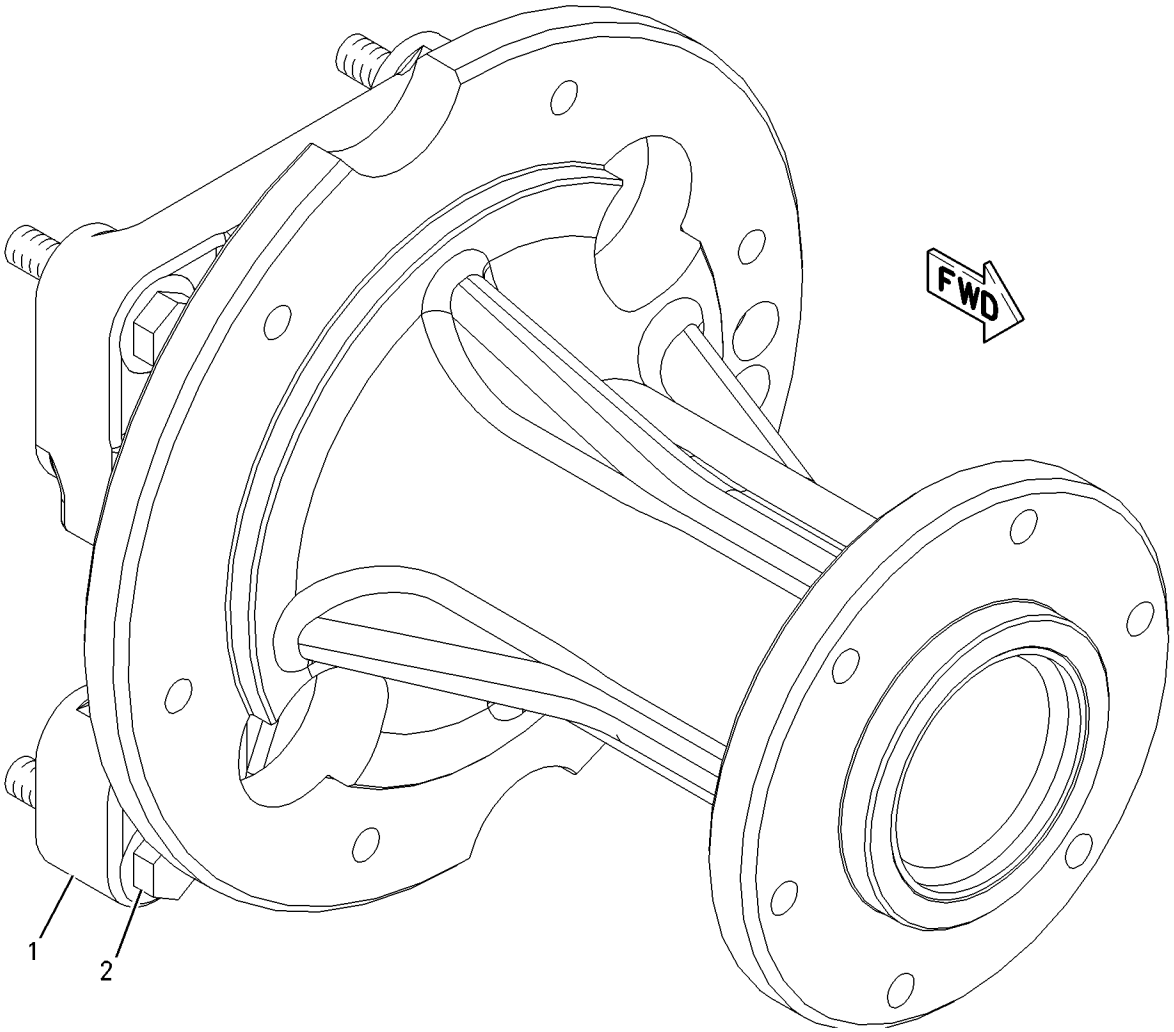

GRAPHIC #1 g00851243

210-8550 DRIVE GP-PUMP

S/N: 4ZF1-UP
PART OF 166-0273, 169-3791, 176-5509, 176-9269 ENGINE AR
ALSO AN ATTACHMENT

SMCS-3108 **i01644423**

NOTE	REF NO	GRAPHIC REF	PART NUMBER	QTY	PART NAME 1 2 3 4 5 6 (PRODUCT LEVEL)	SEE PAGE
	1	1	**209-3673**	1	PULLEY	
M	2	1	**6V-2317**	4	BOLT (M8X1.25X30MM)	
	3	1	**9M-1974**	4	WASHER-HARD (8.8X16X2MM THK)	

M-METRIC PART

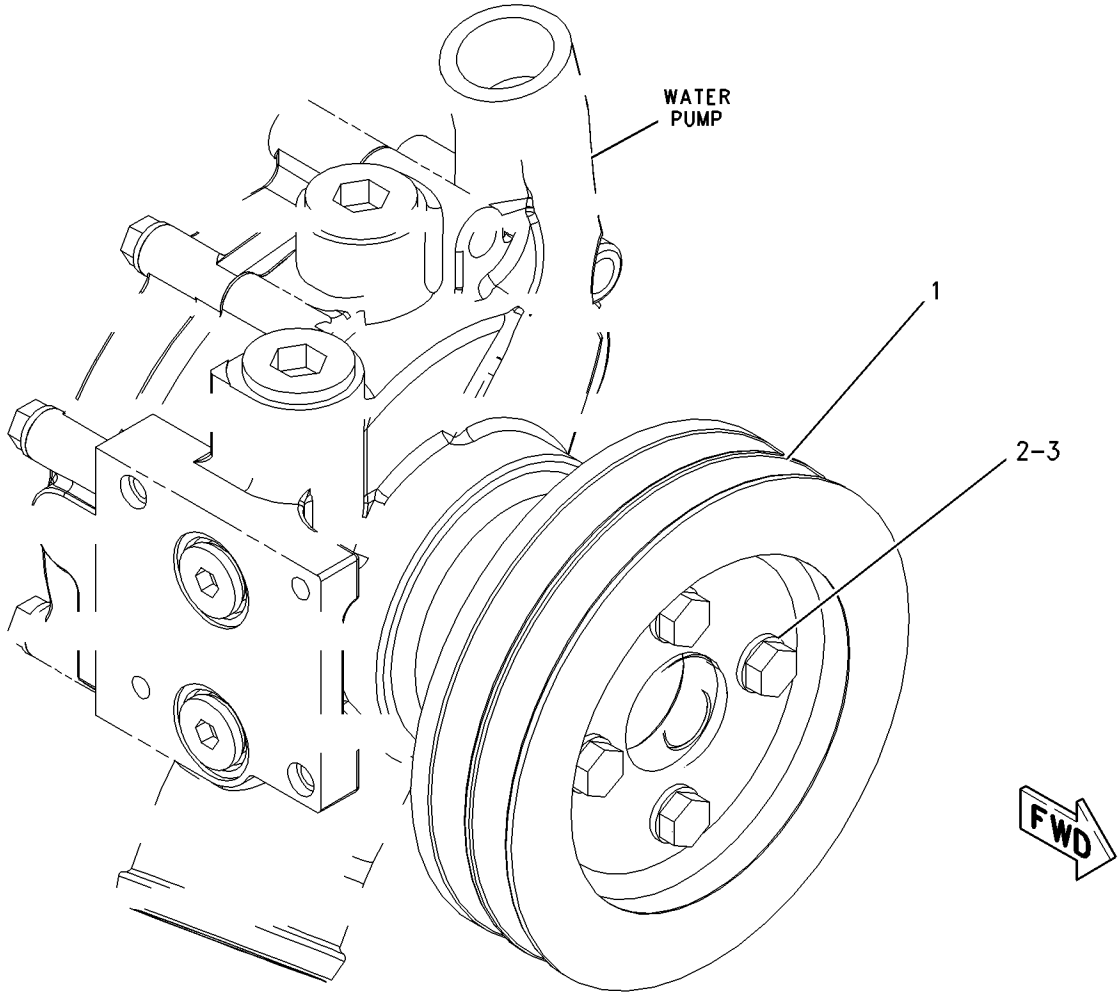

GRAPHIC #1 g00851103

167-0171 FASTENER GP-CYLINDER HEAD

S/N: 4ZF1-UP
PART OF 210-5987 CYLINDER HEAD GP
ALSO AN ATTACHMENT

SMCS-1100 **i01440854**

NOTE	REF NO	GRAPHIC REF	PART NUMBER	QTY	PART NAME 1 2 3 4 5 6 (PRODUCT LEVEL)	SEE PAGE
M	1	1	**183-5163**	1	BOLT	
	2	1	**9X-8268**	1	WASHER (17.5X30X3.5MM THK)	

M-METRIC PART

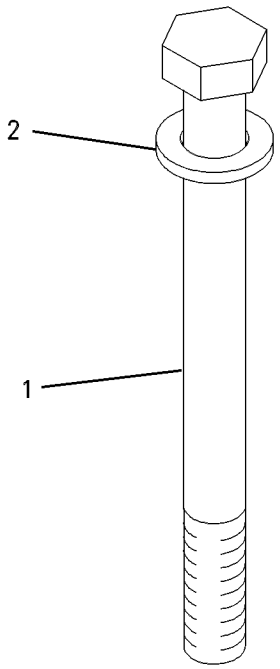

GRAPHIC #1 g00626741

194-5052 FASTENER GP-FRONT HOUSING

S/N: 4ZF1-UP
PART OF 166-0273, 169-3791, 176-5509, 176-9269 ENGINE AR
ALSO AN ATTACHMENT

SMCS-1151 **i01645246**

NOTE	REF NO	GRAPHIC REF	PART NUMBER	QTY	PART NAME 1 2 3 4 5 6 (PRODUCT LEVEL)	SEE PAGE
M	1	1	**9X-2099**	6	STUD	
M	2	1	**6V-2317**	1	BOLT (M8X1.25X30MM)	
M	3	1	**8T-0100**	1	BOLT (M8X1.25X60MM)	

M-METRIC PART

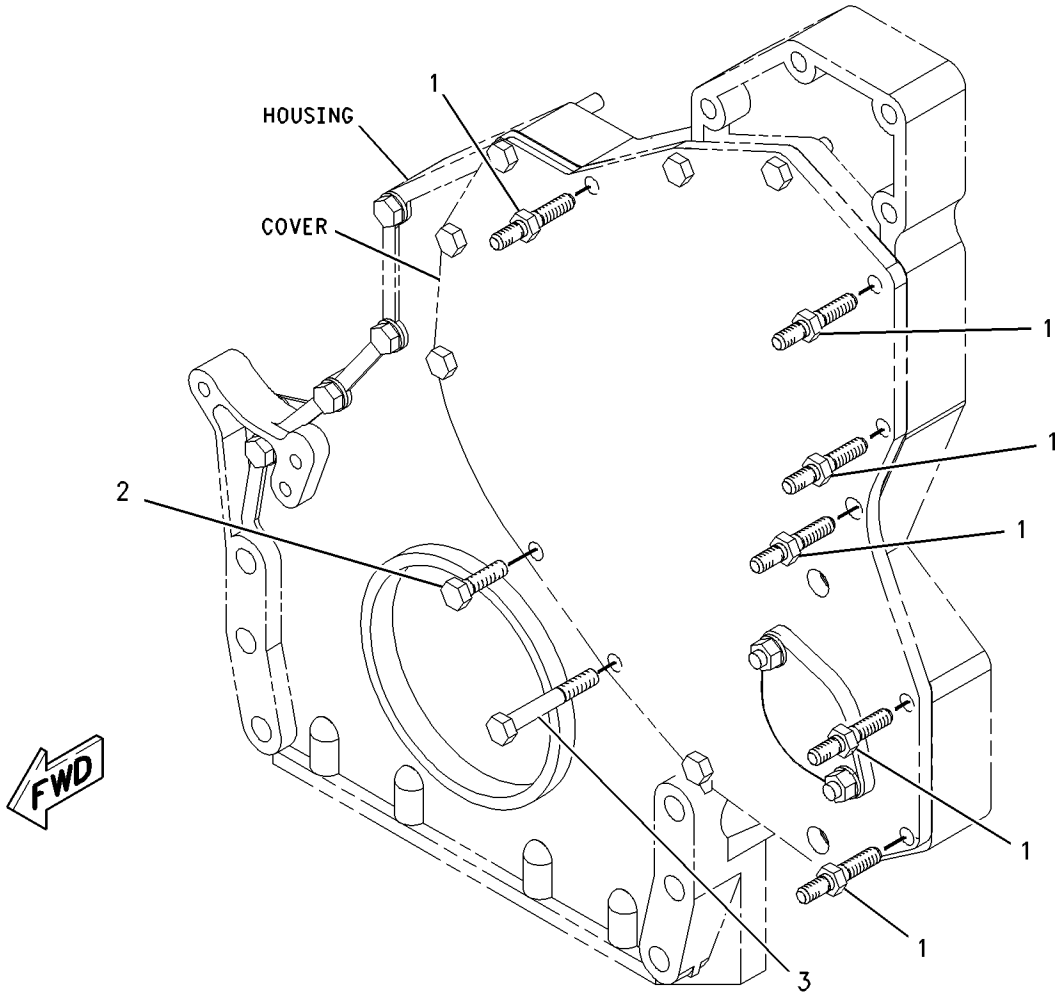

GRAPHIC #1 g00851572

BASIC ENGINE

198-0921 FITTING GP

S/N: 4ZF1-UP
PART OF 166-0273, 169-3791, 176-5509, 176-9269 ENGINE AR
ALSO AN ATTACHMENT

SMCS-1302 **i01644577**

NOTE	REF NO	GRAPHIC REF	PART NUMBER	QTY	PART NAME 1 2 3 4 5 6 (PRODUCT LEVEL)	SEE PAGE
	2	1	**6V-0852**	1	CAP-DUST	
	3	1	**6V-3965**	1	FITTING AS	
	4	1	**6V-5049**	1	SEAL-O-RING	

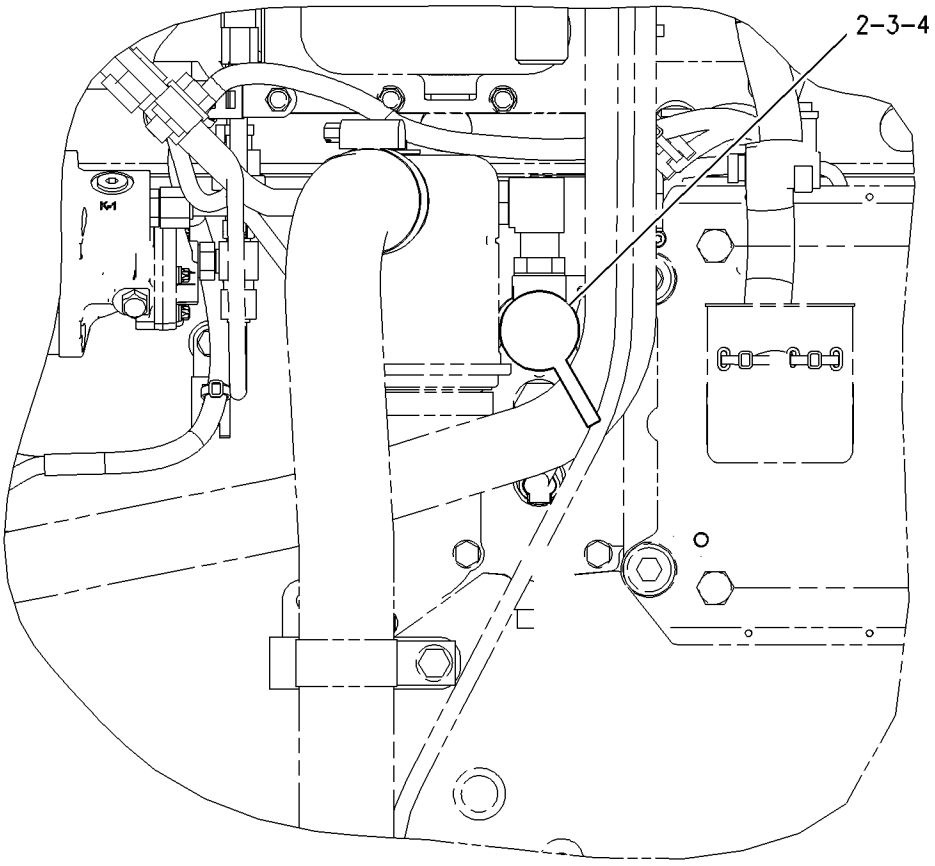

LEFT SIDE VIEW

GRAPHIC #1 g00852655

BASIC ENGINE

195-4590 FLYWHEEL GP

S/N: 4ZF1-UP
PART OF 166-0273, 169-3791, 176-5509, 176-9269 ENGINE AR
ALSO AN ATTACHMENT

SMCS-1156, 1158 **i01644586**

NOTE	REF NO	GRAPHIC REF	PART NUMBER	QTY	PART NAME 1 2 3 4 5 6 (PRODUCT LEVEL)	SEE PAGE
	1	1	**187-8949**	1	FLYWHEEL AS	
	1A	1	**4N-2514**	1	GEAR (113 TEETH)	
M	2	1	**9X-2053**	8	BOLT	
	3	1	**9X-8268**	8	WASHER (17.5X30X3.5MM THK)	

M-METRIC PART

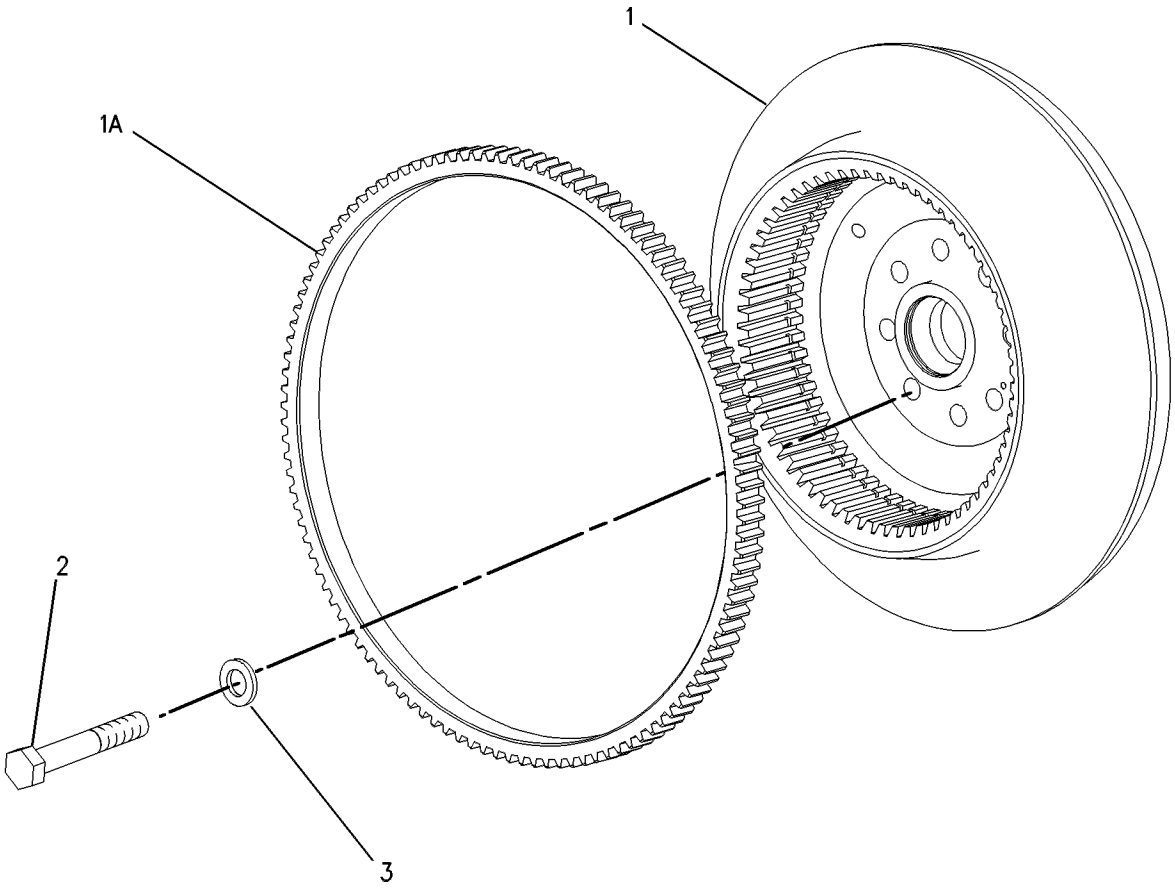

GRAPHIC #1 g00567489

155-7918 GEAR GP-FRONT

S/N: 4ZF1-UP
PART OF 166-0270, 169-3788 ENGINE AR-CORE
ALSO AN ATTACHMENT

SMCS-1206 **i01563430**

NOTE	REF NO	GRAPHIC REF	PART NUMBER	QTY	PART NAME 1 2 3 4 5 6 (PRODUCT LEVEL)	SEE PAGE
	1	1	**2W-8476**	1	GEAR AS-IDLER (50 TEETH)	
	1A	1	**2W-7566**	1	BEARING-SLEEVE	
	2	1	**101-3207**	1	SHAFT-CAM IDLER	
	3	1	**101-3208**	1	PLATE-RETAINING	
M	4	1	**6V-3822**	1	BOLT (M10X1.5X35MM)	
M	5	1	**6V-5843**	2	BOLT (M10X1.50X45MM)	

M-METRIC PART

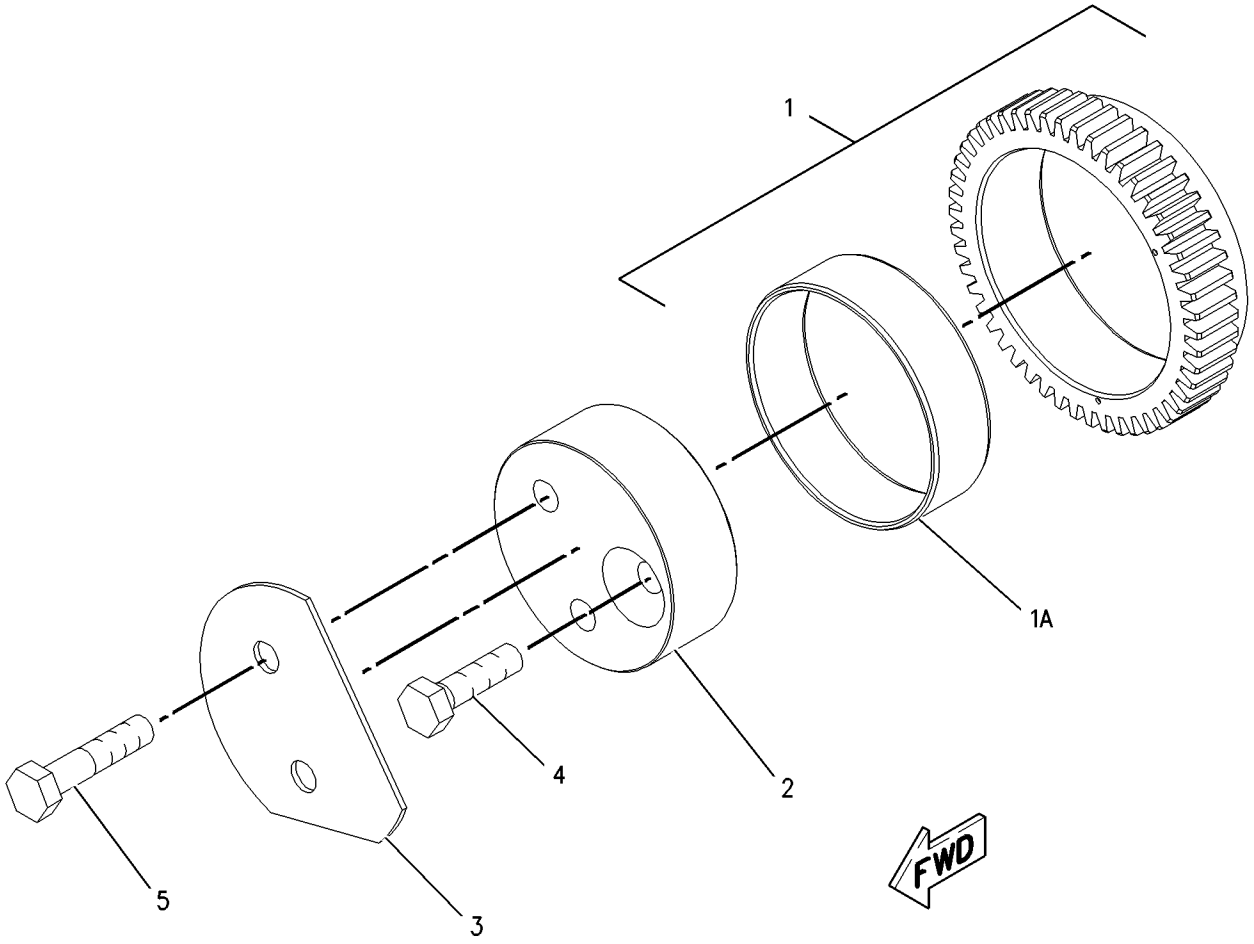

GRAPHIC #1 g00812995

BASIC ENGINE

175-6260 GEAR GP-REAR

S/N: 4ZF1-UP
PART OF 166-0273, 169-3791, 176-5509, 176-9269 ENGINE AR
ALSO AN ATTACHMENT

SMCS-1204 **i01644602**

NOTE	REF NO	GRAPHIC REF	PART NUMBER	QTY	PART NAME 1 2 3 4 5 6 (PRODUCT LEVEL)	SEE PAGE
	1	1	**187-8194**	1	GEAR AS-DRIVE (64TEETH)	
		1	**4F-6024**	1	PIN	
	2	1	**1W-4741**	2	GEAR AS-IDLER (70 TEETH)	
					(EACH INCLUDES)	
		1	**1W-4738**	1	BEARING-SLEEVE	
	3	1	**1W-4746**	2	RETAINER-GEAR	
	4	1	**187-8195**	1	GEAR AS-DRIVE (14 TEETH)	
	4A	1	**4F-6024**	1	PIN	
	5	1	**154-3358**	1	GEAR-ADAPTER (68 TEETH)	
	6	1	**187-8222**	2	ADAPTER AS-PUMP	
					(EACH INCLUDES)	
		1	**160-8184**	1	BEARING-SLEEVE	
	7	1	**4N-1230**	2	SEAL-O-RING	
M	8	1	**6V-1820**	12	BOLT (M10X1.50X30MM)	
	9	1	**6V-5839**	12	WASHER (11X21X2.5MM THK)	
M	10	1	**6V-7673**	6	BOLT (M12X1.75X50MM)	

M-METRIC PART

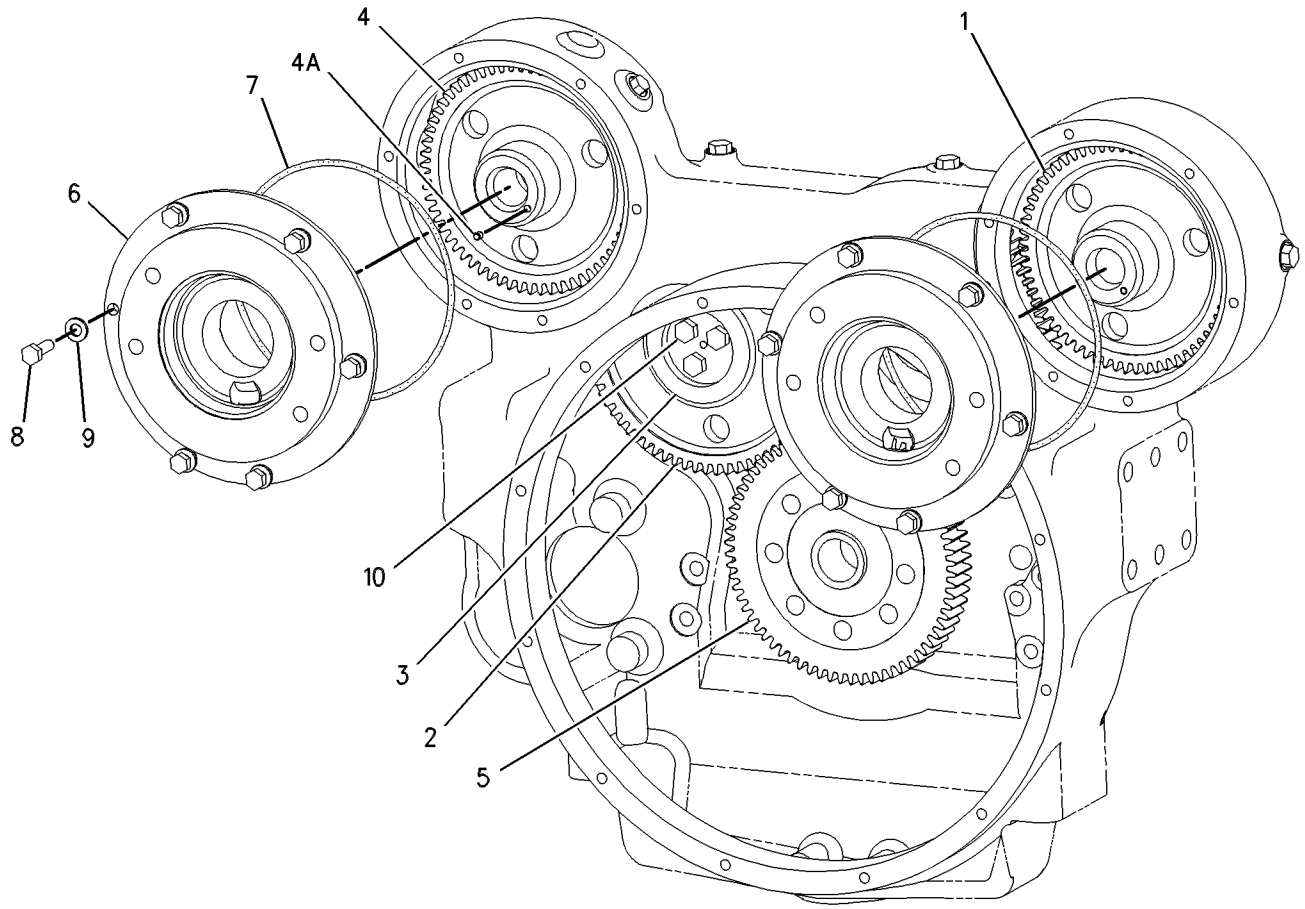

GRAPHIC #1 g00639229

BASIC ENGINE

165-4455 HOUSING GP-FLYWHEEL

S/N: 4ZF1-UP
PART OF 166-0273, 169-3791, 176-5509, 176-9269 ENGINE AR
ALSO AN ATTACHMENT

SMCS-1157 **i01644659**

NOTE	REF NO	GRAPHIC REF	PART NUMBER	QTY	PART NAME 1 2 3 4 5 6 (PRODUCT LEVEL)	SEE PAGE
B	1	1	**1U-8846**		SEALANT-GASKET	
	2	1	**195-5837**	1	COVER-DR OPENING	
Y	3	1	**166-1795**	1	HOUSING GP-FLYWHEEL	49
	4	1	**175-3721**	1	COVER	
	5	1	**4M-0189**	1	SEAL-O-RING	
	6	1	**5F-3106**	1	SEAL-O-RING	
	7	1	**5P-8245**	2	WASHER-HARD (13.5X25.5X3MM THK)	
M	8	1	**6A-5591**	2	BOLT (M12X1.75X25MM)	
M	9	1	**6V-5844**	2	BOLT (M16X2.0X35MM)	
M	10	1	**6V-8197**	9	BOLT (M12X1.75X40MM)	
M	11	1	**6V-8336**	4	BOLT (M12X1.75X70MM)	
	12	1	**9X-8268**	2	WASHER (17.5X30X3.5MM THK)	

B-USE AS REQUIRED
M-METRIC PART
Y-SEPARATE ILLUSTRATION

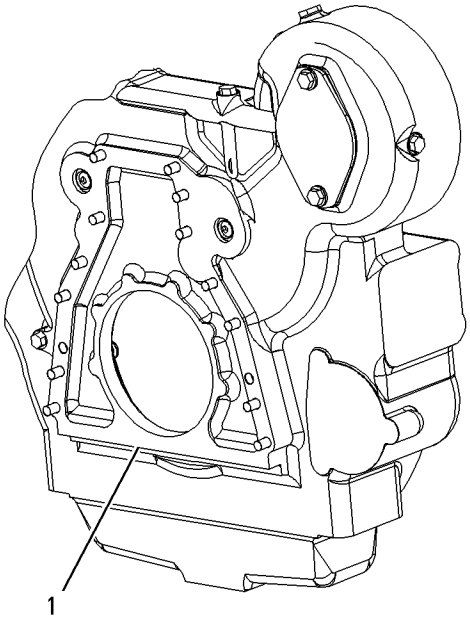

REAR VIEW

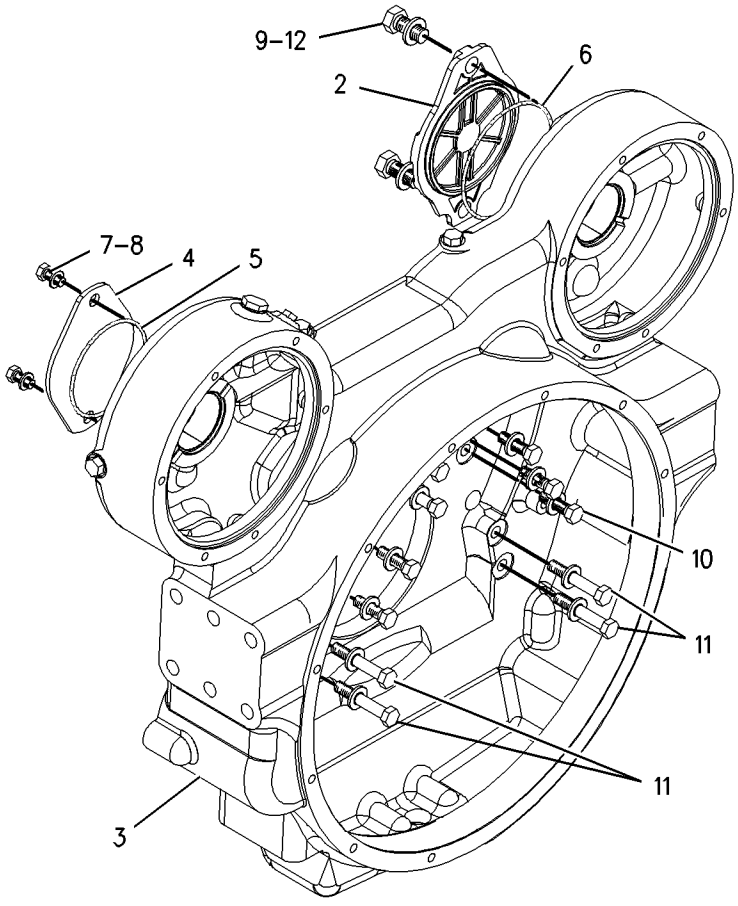

FRONT VIEW

GRAPHIC #1 g00850239

BASIC ENGINE

166-1795 HOUSING GP-FLYWHEEL

S/N: 4ZF1-UP
PART OF 165-4455 HOUSING GP-FLYWHEEL
ALSO AN ATTACHMENT

SMCS-1157 **i01645128**

NOTE	REF NO	GRAPHIC REF	PART NUMBER	QTY	PART NAME 1 2 3 4 5 6 (PRODUCT LEVEL)	SEE PAGE
	1	1	**2A-1162**	1	GASKET	
	2	1	**5F-0304**	1	PLUG-DRAIN	
	3	1	**166-1796**	1	HOUSING-FLYWHEEL	
	4	1	**1J-9671**	1	SEAL-O-RING	
	5	1	**3J-1907**	4	SEAL-O-RING	
	6	1	**3J-7354**	1	SEAL-O-RING	
	7	1	**3K-0360**	2	SEAL-O-RING	
	8	1	**3K-8460**	1	PLUG	
	9	1	**8M-9315**	2	BEARING-SLEEVE	
	10	1	**9S-4182**	1	PLUG	
	11	1	**9S-4191**	4	PLUG	
	12	1	**9S-8005**	2	PLUG	

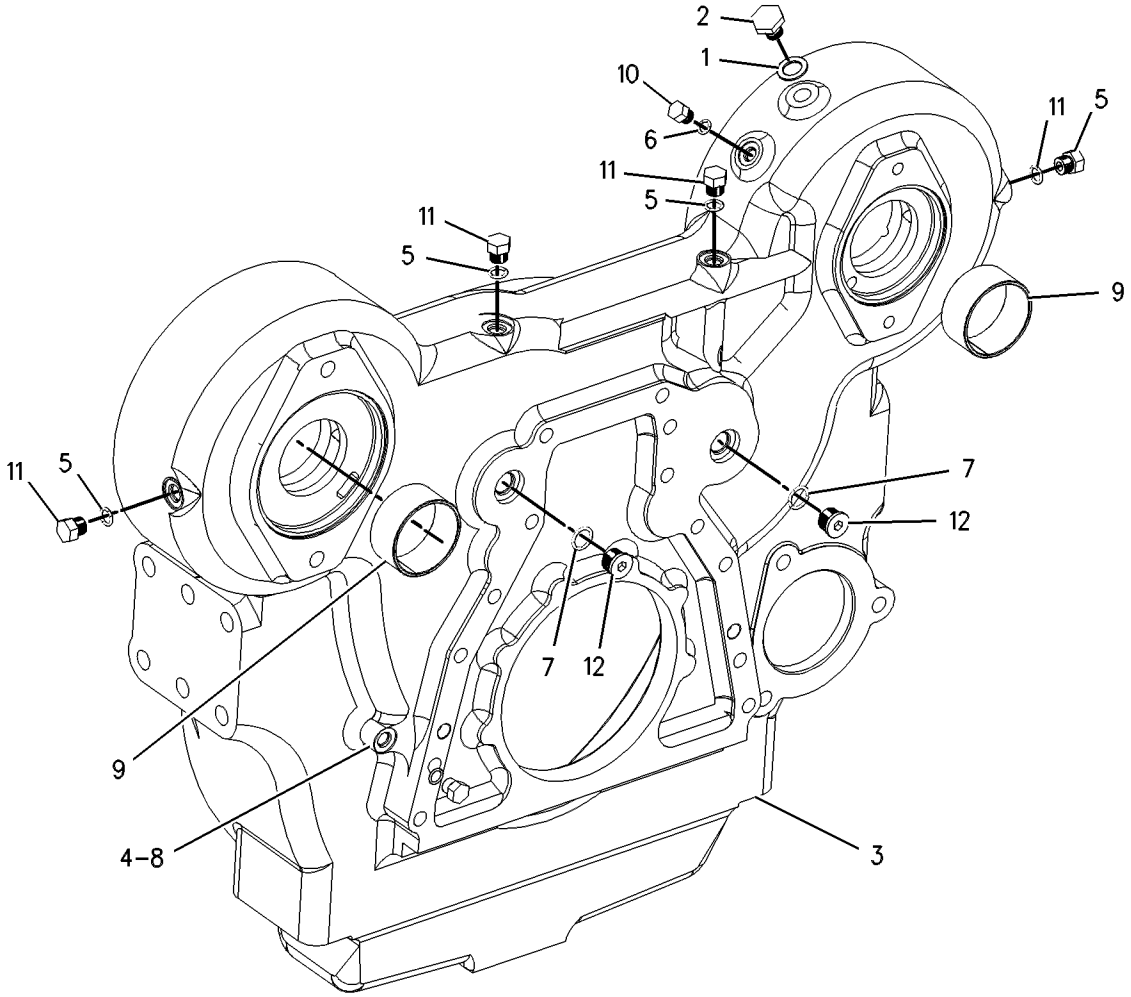

GRAPHIC #1 g00639116

BASIC ENGINE

165-4446 HOUSING GP-FRONT

S/N: 4ZF1-UP
PART OF 166-0270, 169-3788 ENGINE AR-CORE
ALSO AN ATTACHMENT

SMCS-1151, 1162, 1166 **i01392193**

NOTE	REF NO	GRAPHIC REF	PART NUMBER	QTY	PART NAME 1 2 3 4 5 6 (PRODUCT LEVEL)	SEE PAGE
	1	1	**190-5166**	1	HOUSING-FRONT	
M	2	1	**6V-3918**	4	BOLT (M8X1.25X50MM)	
M	3	1	**6V-5217**	8	BOLT (M8X1.25X20MM)	
	4	1	**9M-1974**	12	WASHER-HARD (8.8X16X2MM THK)	
B	5	1	**1U-8846**		SEALANT-GASKET	

B-USE AS REQUIRED
M-METRIC PART

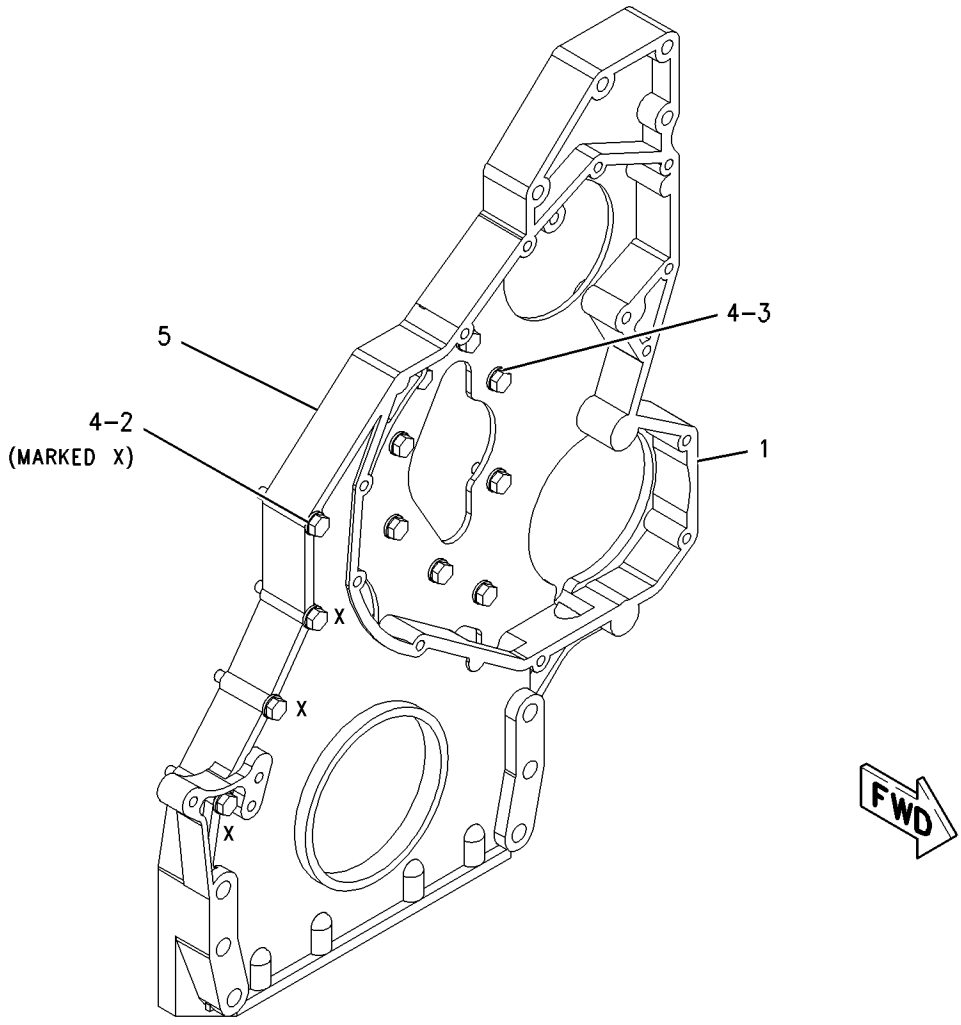

GRAPHIC #1 g00739208

166-1784 LIFTING GP-ENGINE

S/N: 4ZF1-UP
PART OF 166-0273, 169-3791, 176-5509, 176-9269 ENGINE AR
ALSO AN ATTACHMENT

SMCS-1122 **i01537065**

NOTE	REF NO	GRAPHIC REF	PART NUMBER	QTY	PART NAME 1 2 3 4 5 6 (PRODUCT LEVEL)	SEE PAGE
C	1	1	**188-1017**	1	PLATE-LIFTING	
	2	1	**205-3078**	1	BRACKET AS	
	3	1	**3E-4353**	3	WASHER-HARD (11X25X3MM THK)	
C	4	1	**4P-7428**	2	CLIP	
C	5	1	**5P-8245**	4	WASHER-HARD (13.5X25.5X3MM THK)	
M	6	1	**6V-1820**	3	BOLT (M10X1.50X30MM)	
CM	7	1	**6V-8197**	4	BOLT (M12X1.75X40MM)	
CM	8	1	**6V-8675**	4	BOLT (M12X1.75X35MM)	
C	9	1	**7D-1649**	4	WASHER-HARD (13.5X32X5MM THK)	

C-CHANGE FROM PREVIOUS TYPE
M-METRIC PART

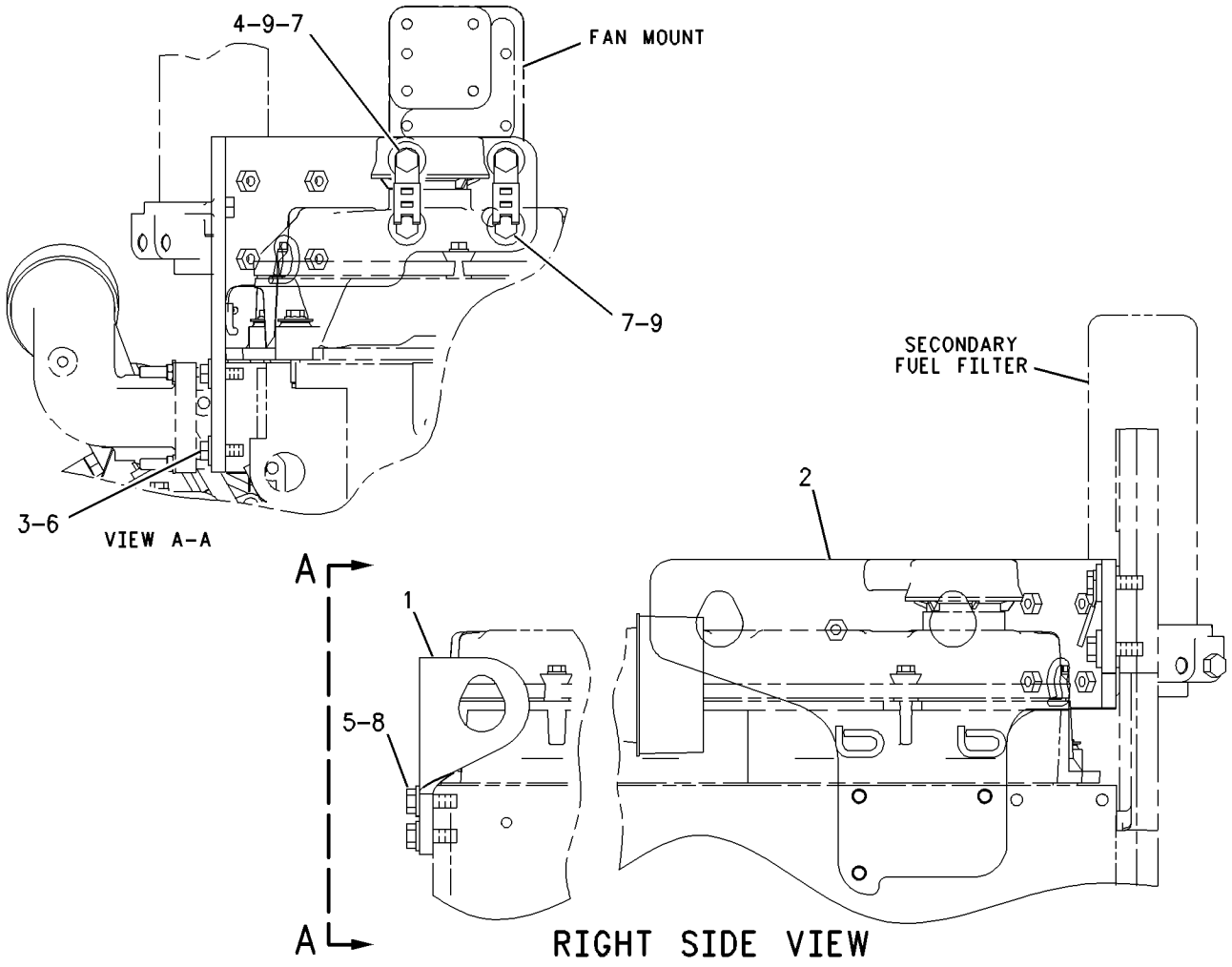

GRAPHIC #1 g00798429

211-2029 MOUNTING GP-ALTERNATOR

S/N: 4ZF1-UP
PART OF 166-0273, 169-3791, 176-5509, 176-9269 ENGINE AR
ALSO AN ATTACHMENT

SMCS-1405 **i01644689**

NOTE	REF NO	GRAPHIC REF	PART NUMBER	QTY	PART NAME 1 2 3 4 5 6 (PRODUCT LEVEL)	SEE PAGE
	1	1	**7W-3872**	2	SLEEVE	
	2	1	**209-2375**	1	BRACKET	
M	3	1	**6V-2317**	4	BOLT (M8X1.25X30MM)	
	4	1	**9M-1974**	4	WASHER-HARD (8.8X16X2MM THK)	

M-METRIC PART

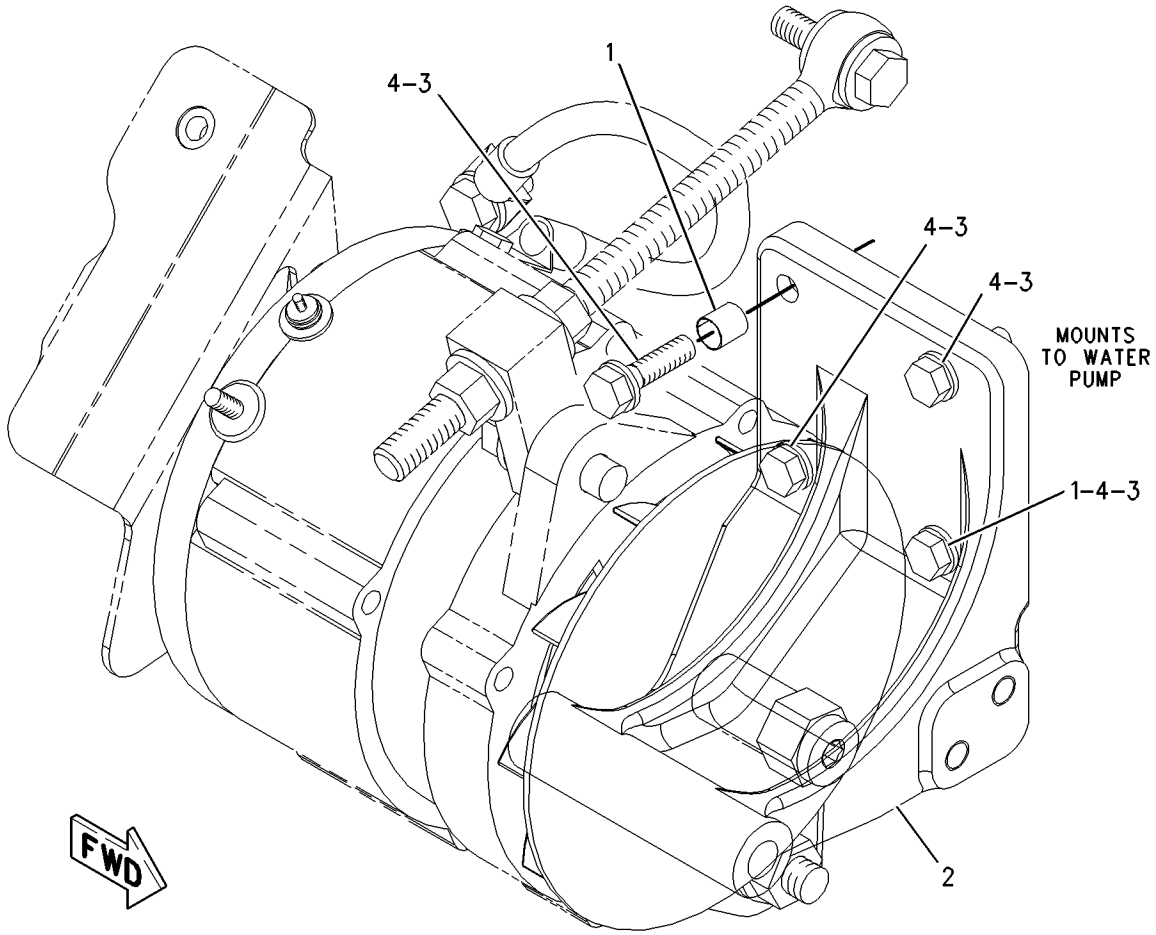

GRAPHIC #1 g00852630

173-5623 MOUNTING GP-ENGINE FLEXIBLE

S/N: BLE1-UP; BMJ1-UP

PART OF 168-8371 INSTALLATION AR-ENGINE

SMCS-1152, 1154 **i01645695**

NOTE	REF NO	GRAPHIC REF	PART NUMBER	QTY	PART NAME 1 2 3 4 5 6 (PRODUCT LEVEL)	SEE PAGE
	1	1	**7C-3567**	2	MOUNT AS	
	2	1	**183-9374**	2	BLOCK	
	3	1	**183-9575**	2	CAP	
	4	1	**7X-0366**	12	BOLT (3/4-10X2 IN)	
	5	1	**7X-0515**	4	WASHER-HARD (17X35X5MM THK)	
M	6	1	**7X-2488**	4	BOLT (M20X2.5X160MM)	
	7	1	**8T-4123**	16	WASHER-PLATED (22X35X3.5MM THK)	
M	8	1	**8T-4193**	4	BOLT (M16X2X50MM)	
	9	1	**9Y-9619**	2	SUPPORT	

M-METRIC PART

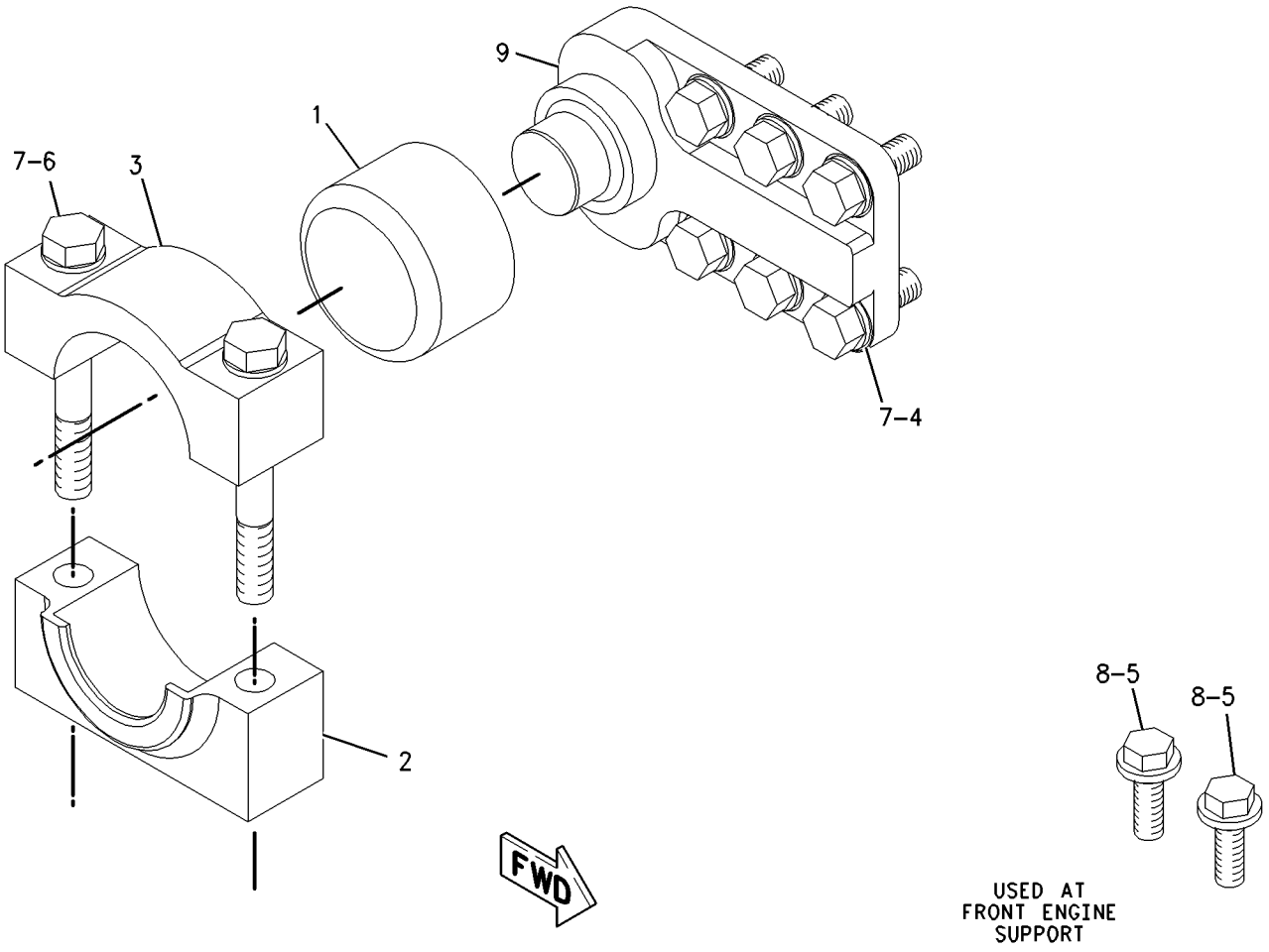

GRAPHIC #1 g00851153

187-3966 MOUNTING GP-FAN DRIVE

S/N: 4ZF1-UP
PART OF 166-0273, 169-3791, 176-5509, 176-9269 ENGINE AR
ALSO AN ATTACHMENT

SMCS-1359 **i01453466**

NOTE	REF NO	GRAPHIC REF	PART NUMBER	QTY	PART NAME 1 2 3 4 5 6 (PRODUCT LEVEL)	SEE PAGE
	1	1	**187-3962**	1	ADAPTER	
	2	1	**3E-4353**	5	WASHER-HARD (11X25X3MM THK)	
M	3	1	**6V-5843**	5	BOLT (M10X1.50X45MM)	

M-METRIC PART

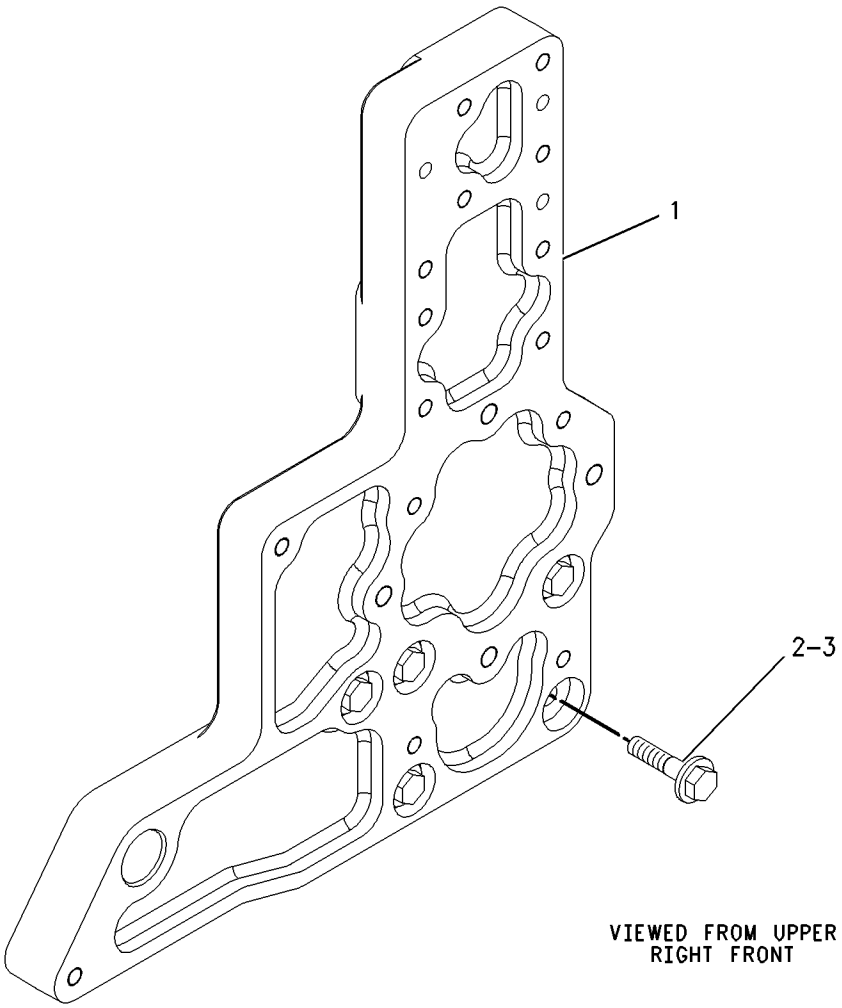

GRAPHIC #1 g00715706

BASIC ENGINE

165-4459 PAN GP-OIL

S/N: 4ZF1-UP
PART OF 166-0273, 169-3791, 176-5509, 176-9269 ENGINE AR
ALSO AN ATTACHMENT

SMCS-1302 **i01439361**

NOTE	REF NO	GRAPHIC REF	PART NUMBER	QTY	PART NAME 1 2 3 4 5 6 (PRODUCT LEVEL)	SEE PAGE
B	1	1	**1U-8846**		SEALANT-GASKET	
	2	1	**190-6114**	1	GASKET-OIL PAN	
	3	1	**174-3847**	1	PAN-OIL	
M	4	1	**6V-3918**	32	BOLT (M8X1.25X50MM)	
	5	1	**9M-1974**	32	WASHER-HARD (8.8X16X2MM THK)	

B-USE AS REQUIRED
M-METRIC PART

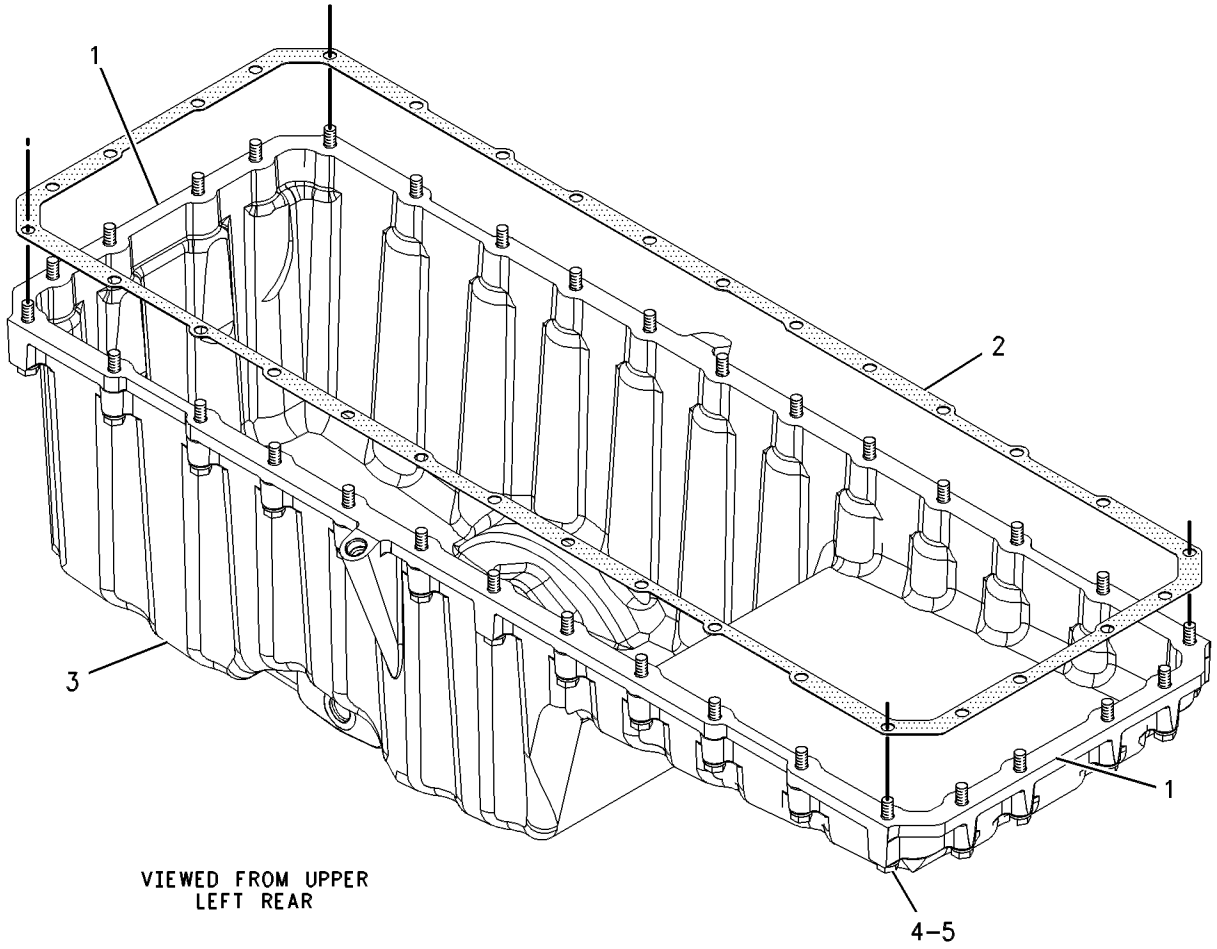

GRAPHIC #1 g00637845

188-9141 PISTON & ROD GP

S/N: 4ZF1-UP
16.1:1 RATIO
PART OF 177-7878 PISTON GP
ALSO AN ATTACHMENT

SMCS-1213, 1214, 1215, 1218, 1219, 1225, 1239 **i01655961**

NOTE	REF NO	GRAPHIC REF	PART NUMBER	QTY	PART NAME 1 2 3 4 5 6 (PRODUCT LEVEL)	SEE PAGE
	1	1	**158-0451**	1	SKIRT-PISTON	
	2	1	**160-8172**	1	BEARING-CONNECTING ROD	
	3	1	**160-8199**	1	ROD AS	
M	3A	1	**160-8197**	2	BOLT	
	4	1	**161-3425**	1	RING-PISTON-INTERMEDIATE	
	5	1	**166-3648**	1	PIN-PISTON	
	6	1	**166-3657**	1	TUBE AS-OIL JET	
	7	1	**168-7209**	1	RING-PISTON (OIL CONTROL)	
	8	1	**197-9297**	1	CROWN AS-PISTON	
	9	1	**197-9299**	1	RING-PISTON (TOP)	
M	10	1	**6V-3940**	1	BOLT (M8X1.25X25MM)	
	11	1	**7X-2908**	2	RING-RETAINING	

M-METRIC PART

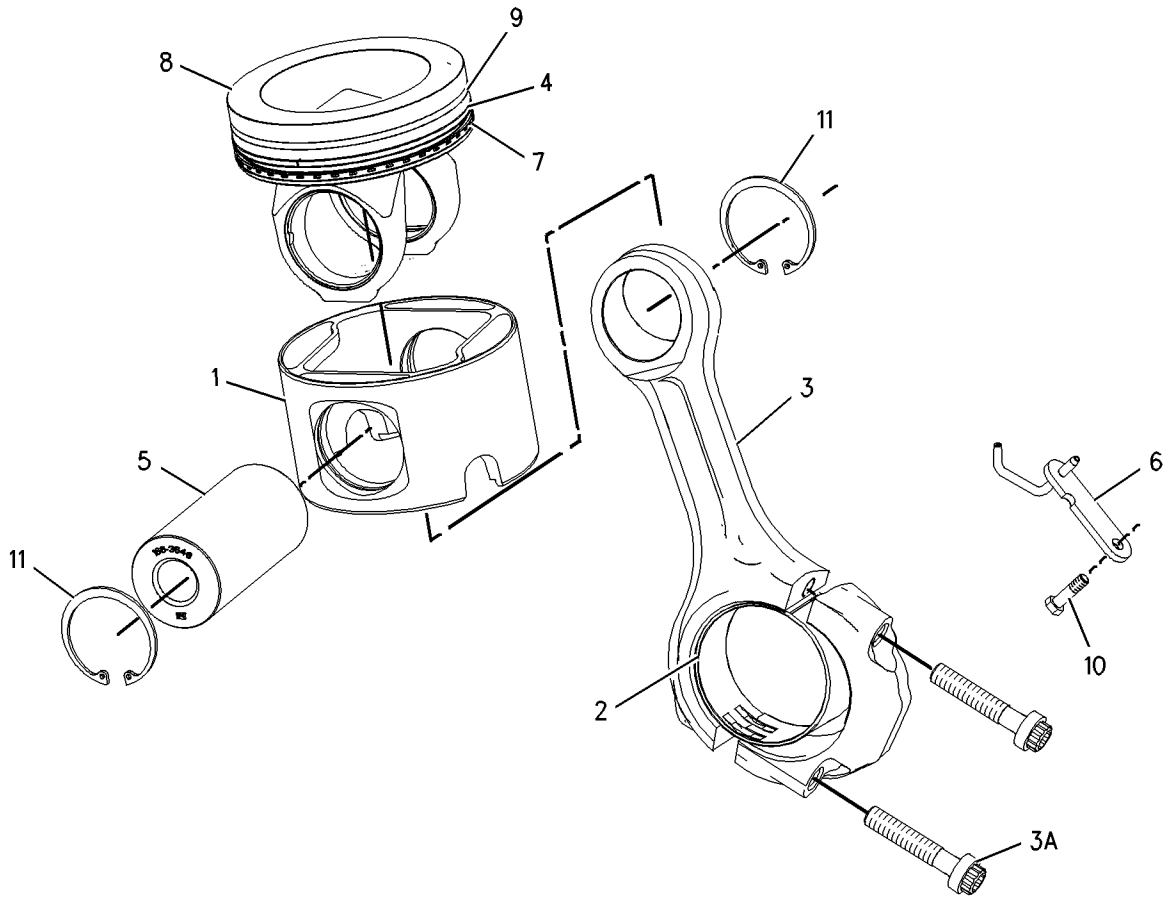

GRAPHIC #1 g00787899

BASIC ENGINE

177-7878 PISTON GP

S/N: 4ZF1-UP
FRACTURED ROD/NON EGR
PART OF 166-0270, 169-3788 ENGINE AR-CORE
ALSO AN ATTACHMENT

SMCS-1214, 1215 **i01436944**

NOTE	PART NUMBER	QTY	PART NAME 1 2 3 4 5 6 (PRODUCT LEVEL)	SEE PAGE
Y	*188-9141*	6	PISTON & ROD GP	56

Y-SEPARATE ILLUSTRATION

198-0922 PLUG GP-ENGINE

S/N: 4ZF1-UP
PART OF 166-0273, 169-3791, 176-5509, 176-9269 ENGINE AR
ALSO AN ATTACHMENT

SMCS-1000 **i01644735**

NOTE	REF NO	GRAPHIC REF	PART NUMBER	QTY	PART NAME 1 2 3 4 5 6 (PRODUCT LEVEL)	SEE PAGE
	1	1	**9S-4191**	1	PLUG	
	1A	1	**6V-5049**	1	SEAL-O-RING	
	2	1	**3D-2824**	1	SEAL-O-RING	
	3	1	**8L-2786**	2	SEAL-O-RING	
	4	1	**9S-4183**	1	PLUG	
	5	1	**9S-8005**	2	PLUG	

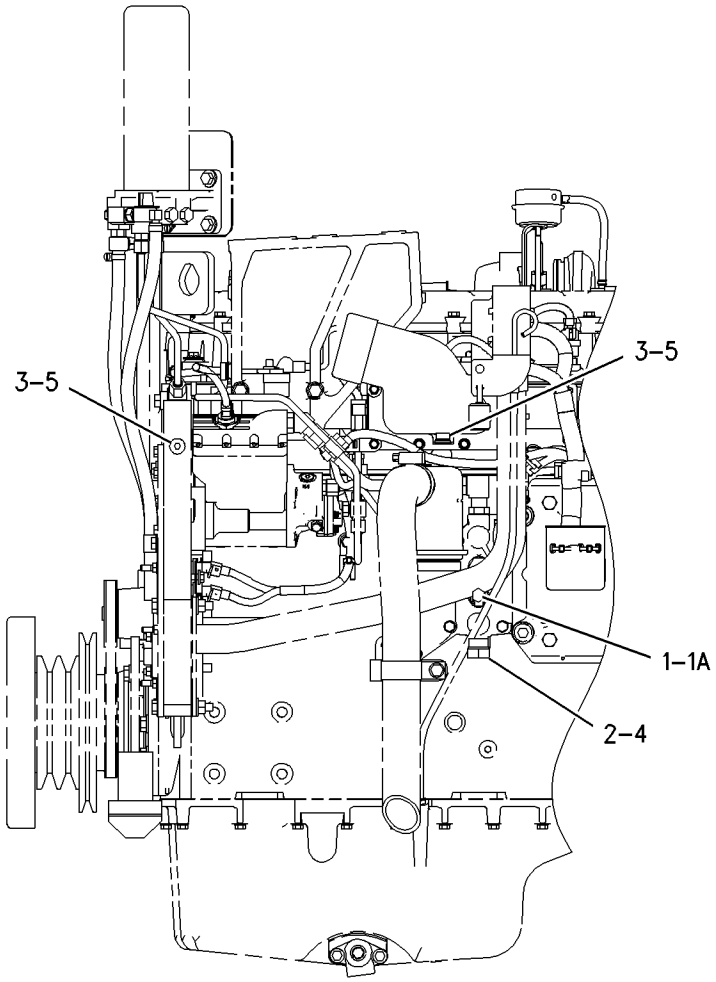

LEFT SIDE VIEW

GRAPHIC #1 g00825798

BASIC ENGINE

215-3673 PULLEY GP-CRANKSHAFT

S/N: 4ZF1-UP
PART OF 166-0273, 169-3791, 176-5509, 176-9269 ENGINE AR
ALSO AN ATTACHMENT

SMCS-1205 **i01645271**

NOTE	REF NO	GRAPHIC REF	PART NUMBER	QTY	PART NAME 1 2 3 4 5 6 (PRODUCT LEVEL)	SEE PAGE
	1	1	**2W-7381**	1	WASHER	
	2	1	**215-3363**	1	PULLEY-CRANKSHAFT	
M	3	1	**8T-3666**	4	BOLT (M14X60MM)	

M-METRIC PART

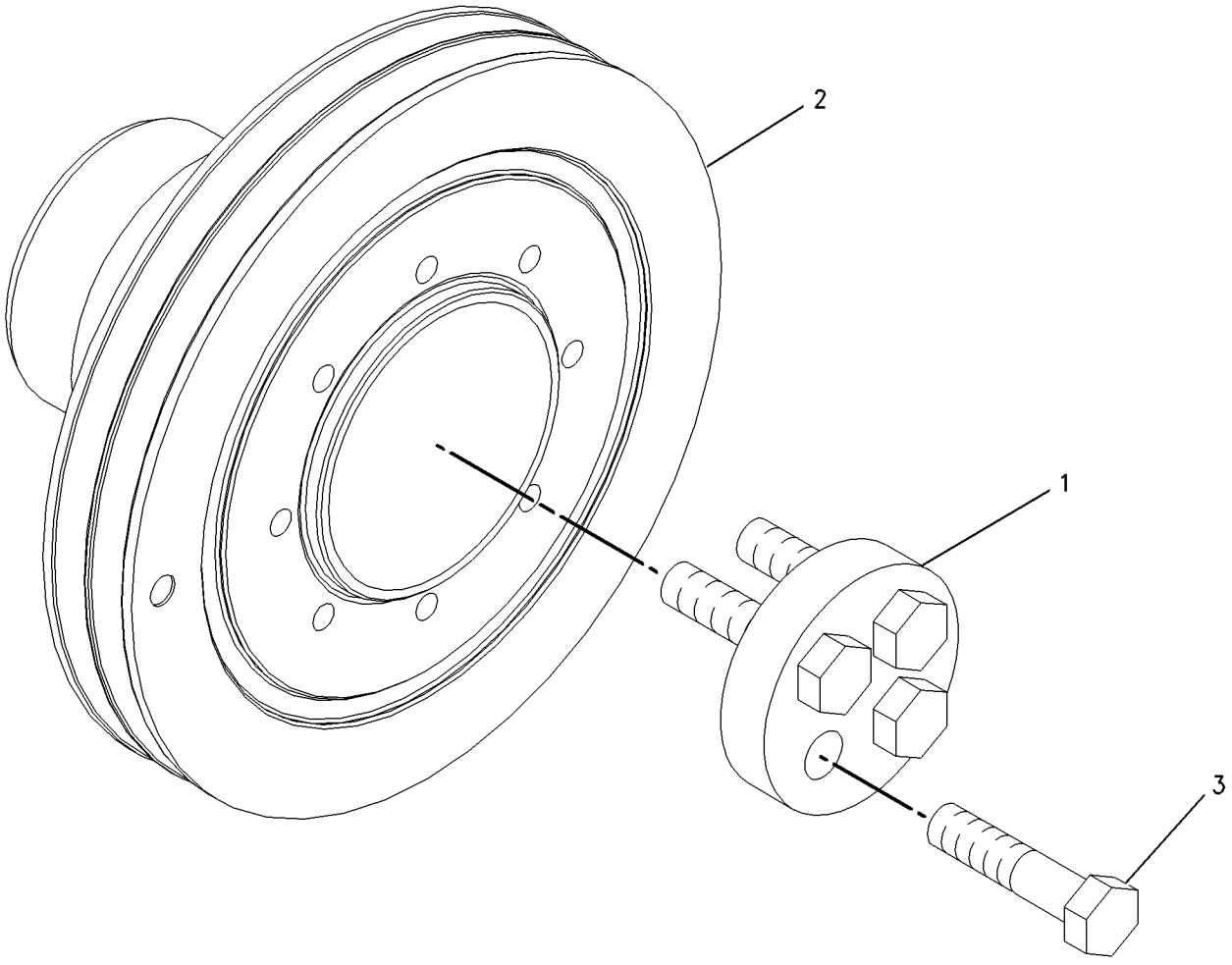

GRAPHIC #1 g00863482

BASIC ENGINE

168-8383 PULLEY GP-FAN & ALT DRIVE

S/N: BLE1-UP; BMJ1-UP

PART OF 168-8371 INSTALLATION AR-ENGINE

SMCS-1359, 1405 **i01668381**

NOTE	REF NO	GRAPHIC REF	PART NUMBER	QTY	PART NAME 1 2 3 4 5 6 (PRODUCT LEVEL)	SEE PAGE
	1	1	**1L-8545**	1	SPACER-BEARING	
	2	1	**5M-9735**	1	SEAL-LIP	
	3	1	**6B-1124**	2	BALL BEARING	
	4	1	**7C-8370**	1	CAP	
	5	1	**7M-0185**	1	V-BELT SET (FAN)	
					(INCLUDES 2 BELTS)	
	6	1	**130-3216**	1	V-BELT SET (ALTERNATOR)	
					(INCLUDES 2 BELTS)	
	7	1	**148-8510**	1	BOSS	
	8	1	**185-0837**	1	PULLEY-FAN	
	9	1	**185-0838**	1	ROD-ADJUSTING	
	10	1	**209-3672**	1	PULLEY (ALTERNATOR)	
	11	1	**214-5705**	1	ADAPTER	
	12	1	**215-3291**	1	PULLEY (BELT TIGHTENER)	
	13	1	**215-3296**	1	ARM AS	
	13A	1	**3E-4999**	1	PIN-SPRING	
	13B	1	**215-3292**	1	SHAFT	
	14	1	**215-3629**	1	PULLEY (CRANKSHAFT)	
	15	1	**5P-1076**	1	WASHER-HARD (13.5X30X4MM THK)	
	16	1	**7C-2164**	1	BLOCK	
M	17	1	**7X-2537**	6	BOLT (M8X1.25X35MM)	
	18	1	**8T-4121**	1	WASHER-HARD (11X21X2.5MM THK)	
M	19	1	**8T-4136**	1	BOLT (M10X1.5X25MM)	
M	20	1	**8T-4178**	8	BOLT (M10X1.5X90MM)	
M	21	1	**8T-4186**	1	BOLT (M10X1.5X40MM)	
M	22	1	**8T-4196**	7	BOLT (M10X1.5X35MM)	
	23	1	**8T-4223**	3	WASHER-HARD (13.5X25.5X3MM THK)	
M	24	1	**8T-4244**	2	NUT (M12X1.75 THD)	
M	25	1	**8T-4910**	1	BOLT (M12X1.75X60MM)	
M	26	1	**8T-6868**	1	BOLT (M12X1.75X80MM)	

M-METRIC PART

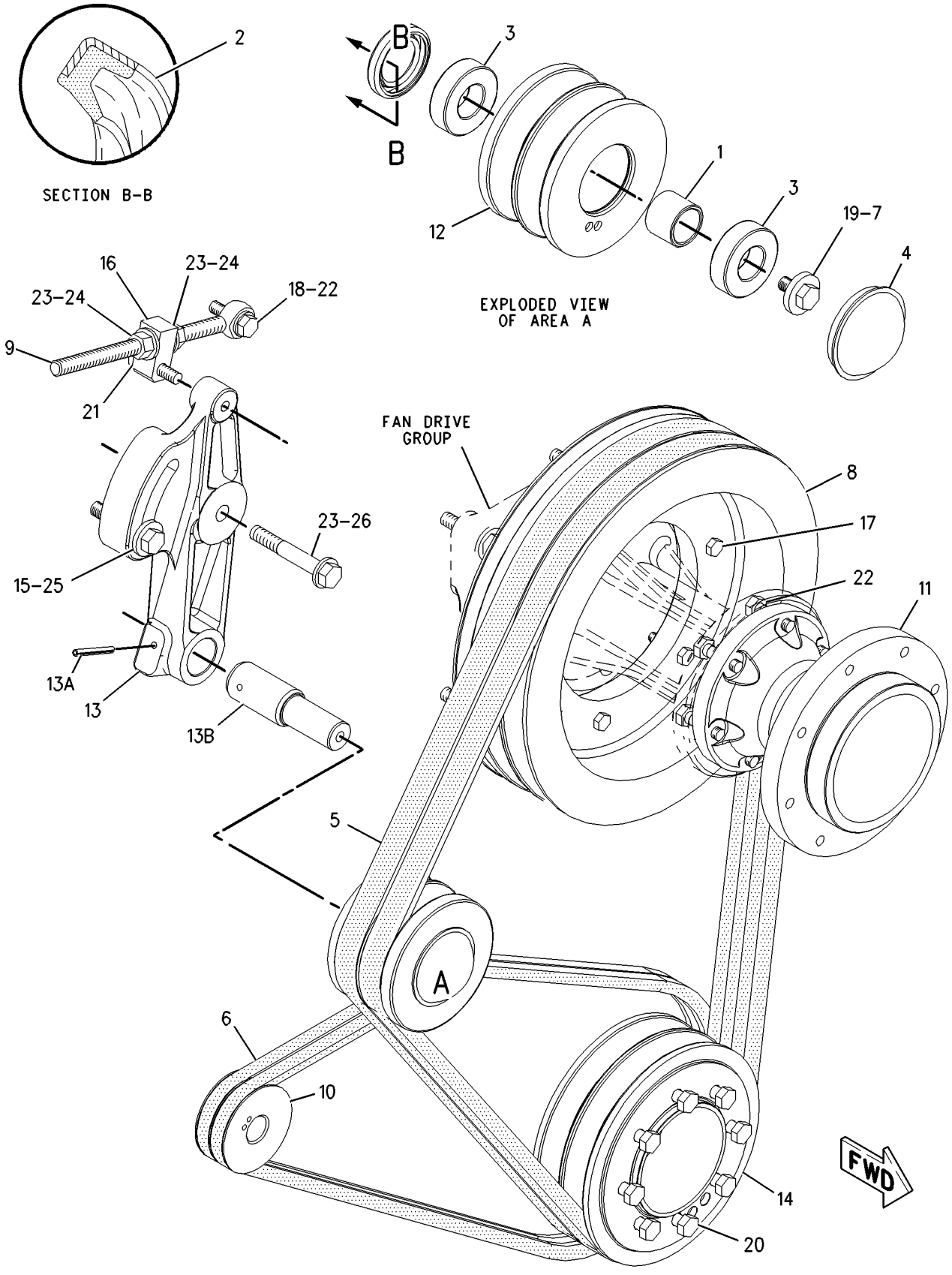

GRAPHIC #1

g00854137

213-9320 ROCKER ARM GP

S/N: 4ZF1-UP
PART OF 215-9571 VALVE MECHANISM GP
ALSO AN ATTACHMENT

SMCS-1102, 1123 **i01638854**

NOTE	REF NO	GRAPHIC REF	PART NUMBER	QTY	PART NAME 1 2 3 4 5 6 (PRODUCT LEVEL)	SEE PAGE
	1	1	**163-2447**	1	ARM AS-ROCKER	
M	2	1	**183-4365**	1	SCREW-ADJUSTING (M10X1.5 THD)	
M	3	1	**184-2515**	1	NUT-HEX FLANGE (M10X1.5 THD)	

M-METRIC PART

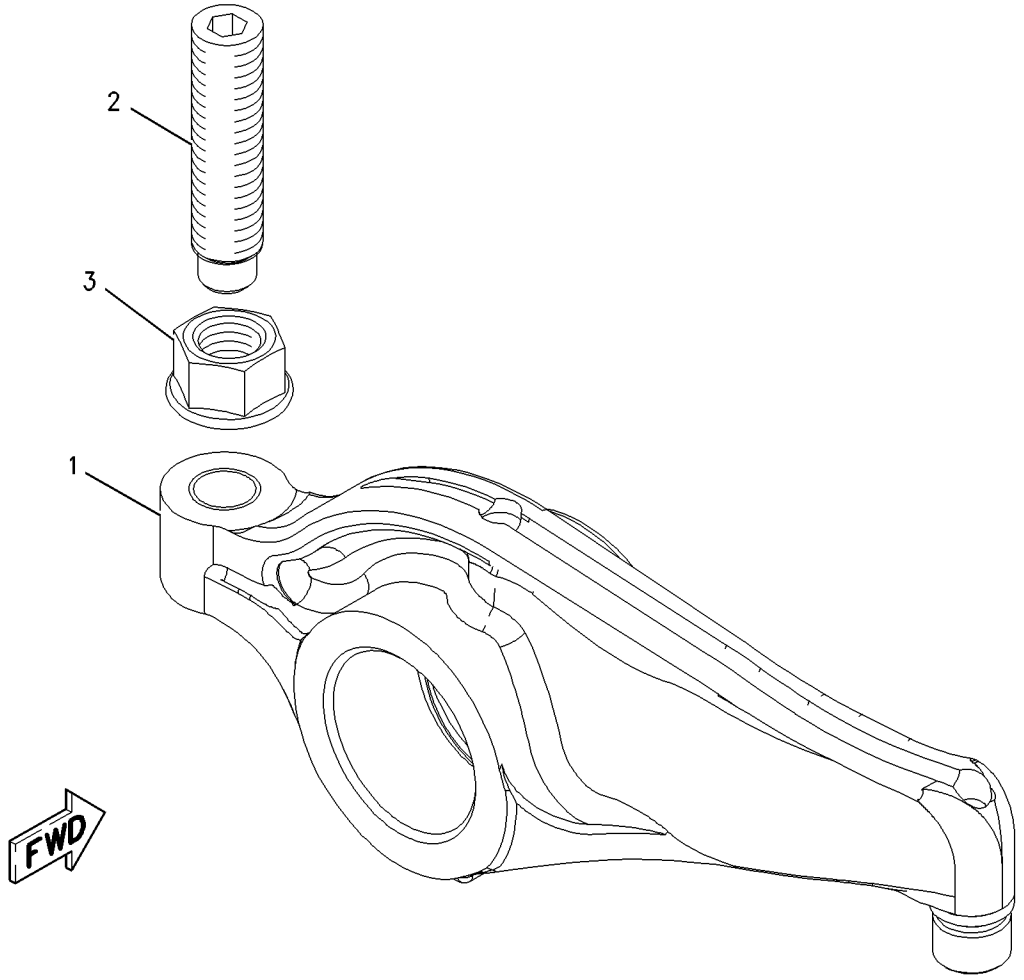

GRAPHIC #1 g00848359

213-9321 ROCKER ARM GP

S/N: 4ZF1-UP

PART OF 215-9571 VALVE MECHANISM GP

ALSO AN ATTACHMENT

SMCS-1102, 1123 **i01638857**

NOTE	REF NO	GRAPHIC REF	PART NUMBER	QTY	PART NAME 1 2 3 4 5 6 (PRODUCT LEVEL)	SEE PAGE
	1	1	**163-2449**	1	ARM AS-ROCKER	
M	2	1	**183-4365**	1	SCREW-ADJUSTING (M10X1.5 THD)	
M	3	1	**184-2515**	1	NUT-HEX FLANGE (M10X1.5 THD)	

M-METRIC PART

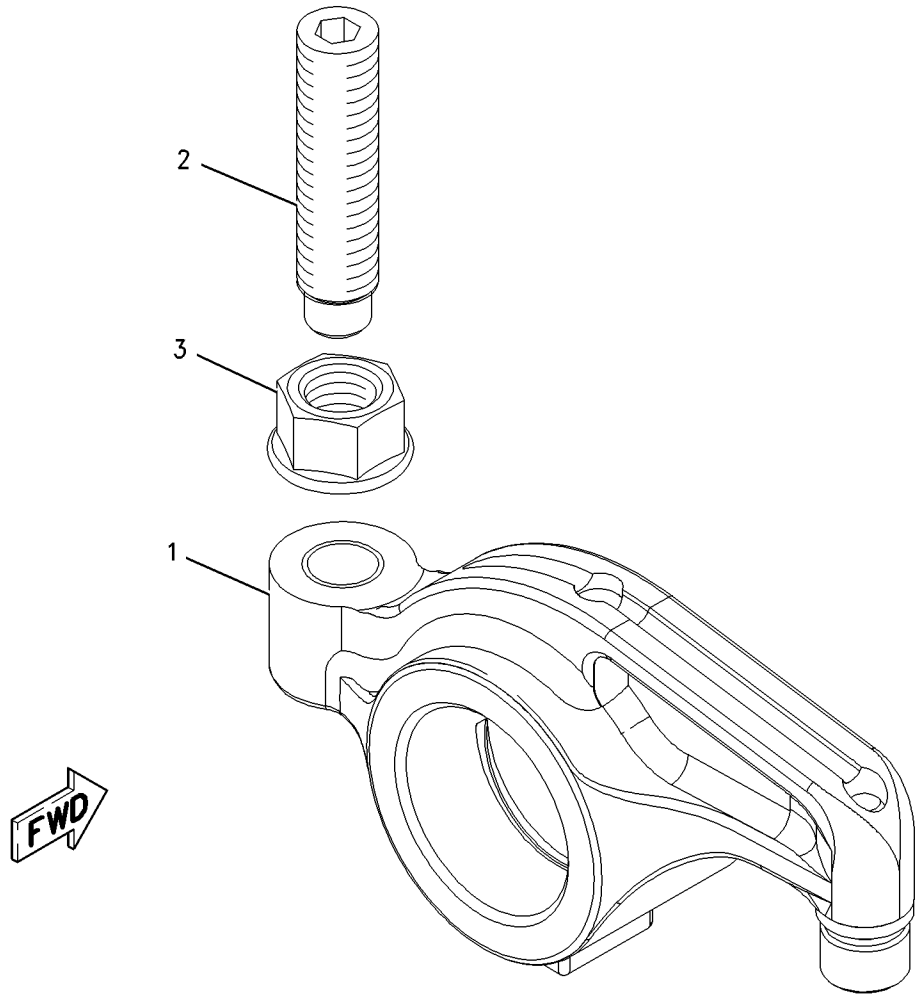

GRAPHIC #1 g00848319

189-9306 SEAL GP-CRANKSHAFT

S/N: 4ZF1-UP
PART OF 166-0273, 169-3791, 176-5509, 176-9269 ENGINE AR
ALSO AN ATTACHMENT

SMCS-1160, 1161 **i01645175**

NOTE	REF NO	GRAPHIC REF	PART NUMBER	QTY	PART NAME 1 2 3 4 5 6 (PRODUCT LEVEL)	SEE PAGE
	1	1	**4R-9999**	1	EXCLUDER-CRANKSHAFT SEAL	
	2	1	**199-6163**	1	SEAL-O-RING	
	3	1	**119-2921**	1	SEAL GP-CRANKSHAFT (FRONT)	
	4	1	**187-8971**	1	SEAL GP-CRANKSHAFT (REAR)	
	5	1	**206-3719**	9	BOLT AS	

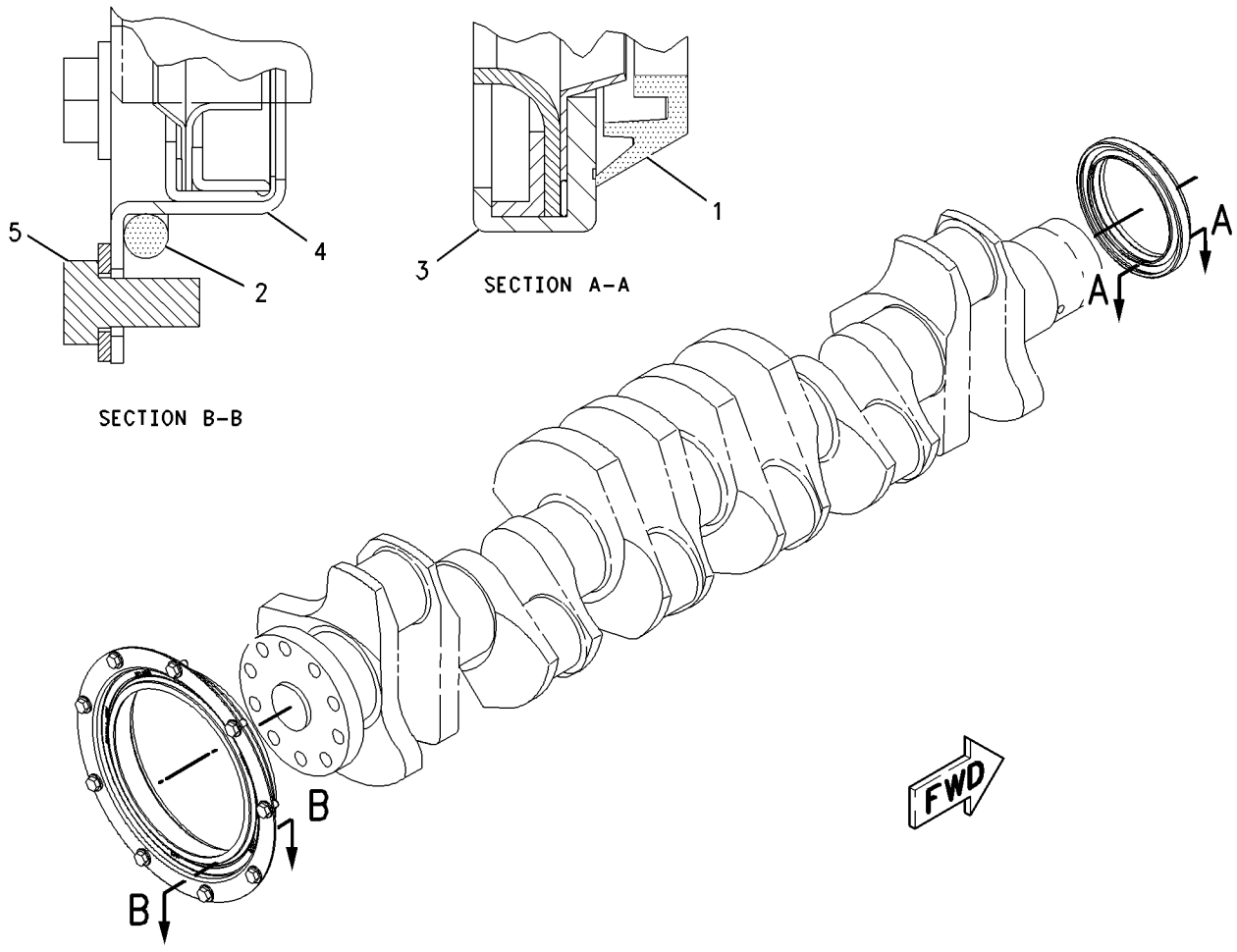

GRAPHIC #1 g00850653

167-0174 SEAL GP-FUEL INJECTOR

S/N: 4ZF1-UP
PART OF 172-5780 PUMP GP-UNIT INJECTION
ALSO AN ATTACHMENT

SMCS-1290 **i01440822**

NOTE	REF NO	GRAPHIC REF	PART NUMBER	QTY	PART NAME 1 2 3 4 5 6 (PRODUCT LEVEL)	SEE PAGE
	1	1	**149-5240**	1	RING-BACKUP	
	2	1	**169-3104**	1	RING-BACKUP	
	3	1	**169-8598**	1	SEAL	
	4	1	**109-3207**	1	SEAL-O-RING (23.39MM ID)	
	5	1	**148-2903**	1	SEAL-O-RING (31.34MM ID)	
	6	1	**169-8586**	1	RING-BACKUP	

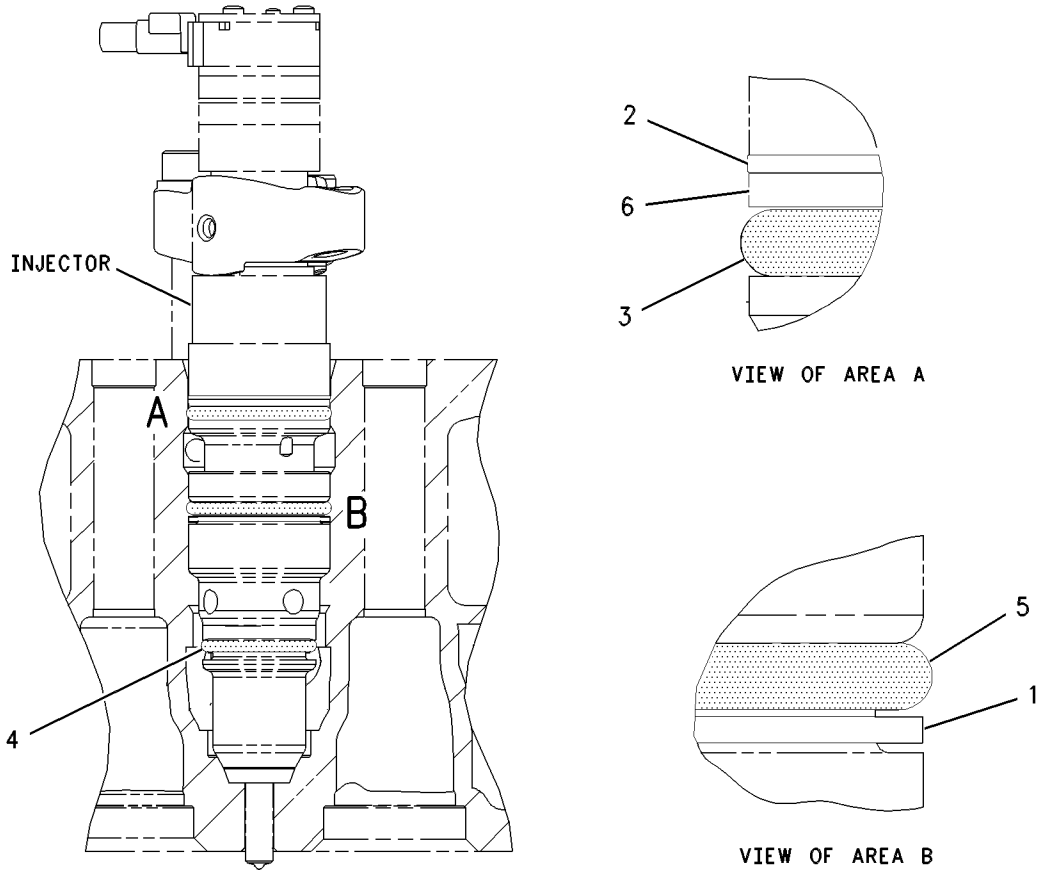

GRAPHIC #1 g00633019

166-1790 SUPPORT GP-ENGINE

S/N: 4ZF1-UP
PART OF 166-0273, 169-3791, 176-5509, 176-9269 ENGINE AR
FOR USE WITH FRONT TRUNNION
ALSO AN ATTACHMENT

SMCS-1152, 1153, 1154 **i01644308**

NOTE	REF NO	GRAPHIC REF	PART NUMBER	QTY	PART NAME 1 2 3 4 5 6 (PRODUCT LEVEL)	SEE PAGE
	1	1	**169-3899**	1	SUPPORT AS-ENGINE	
M	1A	1	**8T-3490**	4	NUT-WELD (M10X1.5 THD)	
	2	1	**5P-8245**	6	WASHER-HARD (13.5X25.5X3MM THK)	
M	3	1	**6V-8675**	6	BOLT (M12X1.75X35MM)	

M-METRIC PART

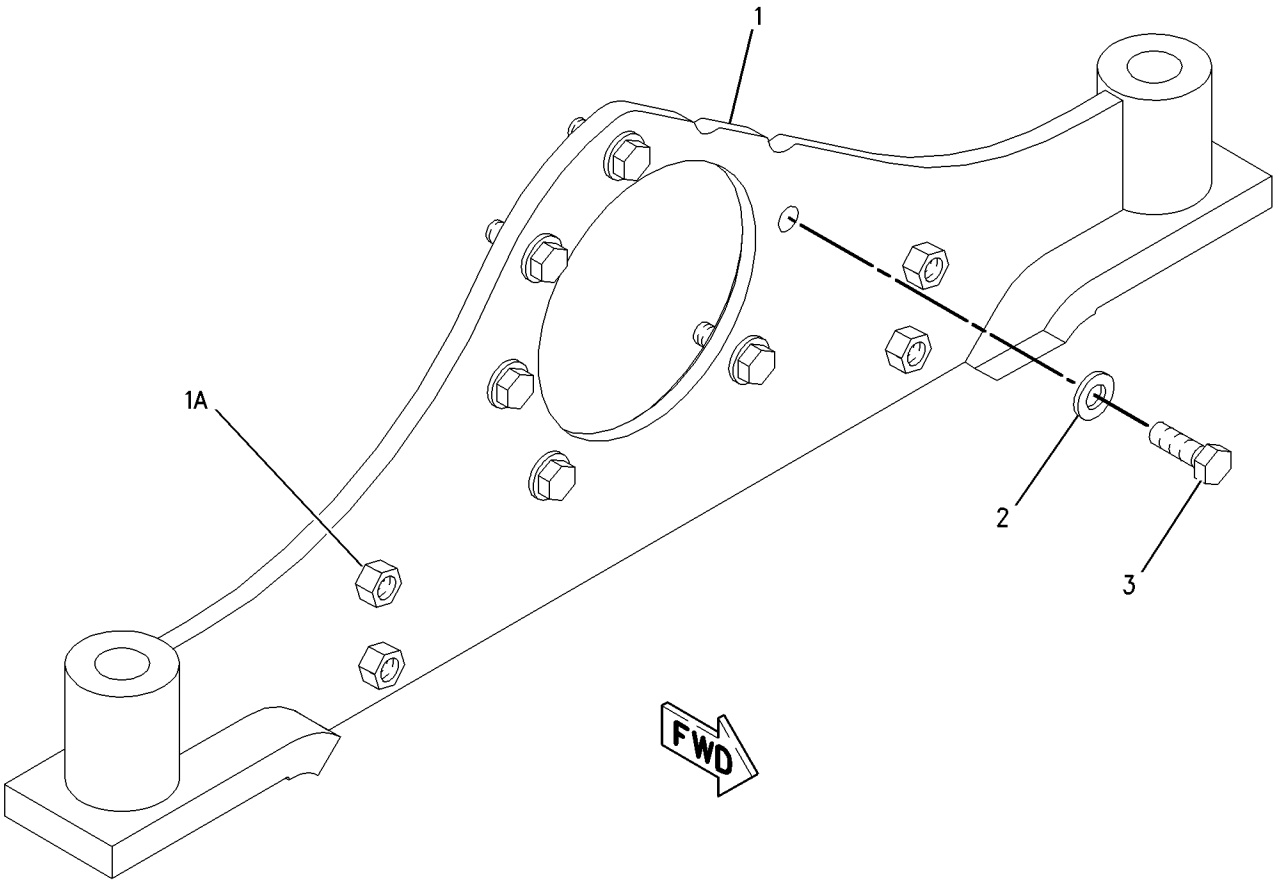

GRAPHIC #1 g00802448

BASIC ENGINE

166-1792 TRUNNION GP-ENGINE

S/N: 4ZF1-UP
PART OF 166-0273, 169-3791, 176-5509, 176-9269 ENGINE AR
ALSO AN ATTACHMENT

SMCS-1152, 1153, 1154 **i01439531**

NOTE	REF NO	GRAPHIC REF	PART NUMBER	QTY	PART NAME 1 2 3 4 5 6 (PRODUCT LEVEL)	SEE PAGE
	1	1	**169-3895**	1	TRUNNION AS	
	2	1	**5P-8245**	6	WASHER-HARD (13.5X25.5X3MM THK)	
M	3	1	**6V-5696**	6	BOLT (M12X1.75X80MM)	

M-METRIC PART

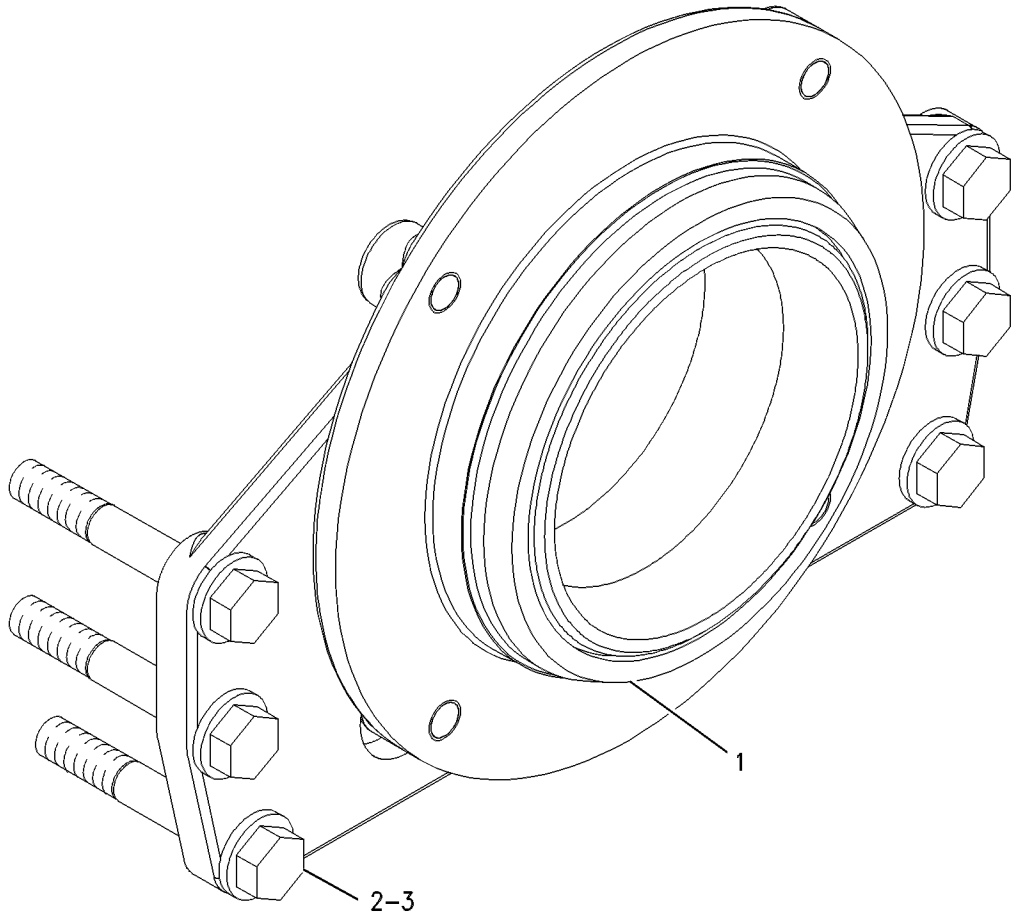

GRAPHIC #1 g00644918

155-7927 VALVE MECHANISM GP

S/N: 4ZF1-UP
PART OF 166-0270, 169-3788 ENGINE AR-CORE
ALSO AN ATTACHMENT

SMCS-1102, 1112, 1121, 1123, 1208, 1209 **i01638842**

NOTE	REF NO	GRAPHIC REF	PART NUMBER	QTY	PART NAME 1 2 3 4 5 6 (PRODUCT LEVEL)	SEE PAGE
	1	1	**216-1598**	12	GUIDE	
	2	1	**133-6379**	12	ROD-VALVE PUSH	
	3	1	**163-2437**	12	LIFTER AS-VALVE	
Y	4	1	**215-9571**	1	VALVE MECHANISM GP	69
	5	1	**175-4178**	12	BRIDGE-VALVE	

Y-SEPARATE ILLUSTRATION

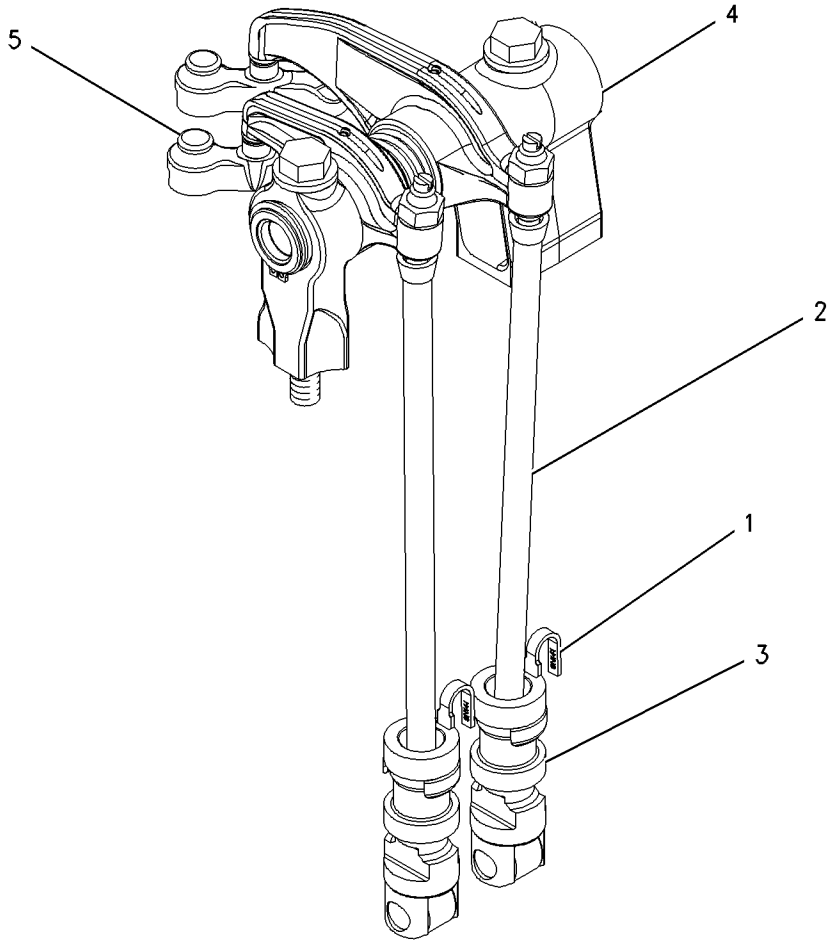

GRAPHIC #1 g00755082

215-9571 VALVE MECHANISM GP

S/N: 4ZF1-UP

PART OF 155-7927 VALVE MECHANISM GP

ALSO AN ATTACHMENT

SMCS-1102, 1112, 1121, 1123, 1208, 1209 **i01638797**

NOTE	REF NO	GRAPHIC REF	PART NUMBER	QTY	PART NAME 1 2 3 4 5 6 (PRODUCT LEVEL)	SEE PAGE
	1	1	**163-2445**	1	SHAFT AS-ROCKER ARM	
	1A	1	**8F-6575**	2	PLUG-CUP	
	2	1	**163-2459**	6	SPRING	
	3	1	**164-5669**	2	STAND	
	4	1	**176-5913**	4	STAND	
	5	1	**176-5914**	1	STAND	
Y	6	1	*213-9320*	6	ROCKER ARM GP (EXHAUST)	62
Y	7	1	*213-9321*	6	ROCKER ARM GP (INTAKE)	63
	8	1	**5P-8245**	7	WASHER-HARD (13.5X25.5X3MM THK)	
M	9	1	**8T-0646**	7	BOLT (M12X1.75X110MM)	

M-METRIC PART
Y-SEPARATE ILLUSTRATION

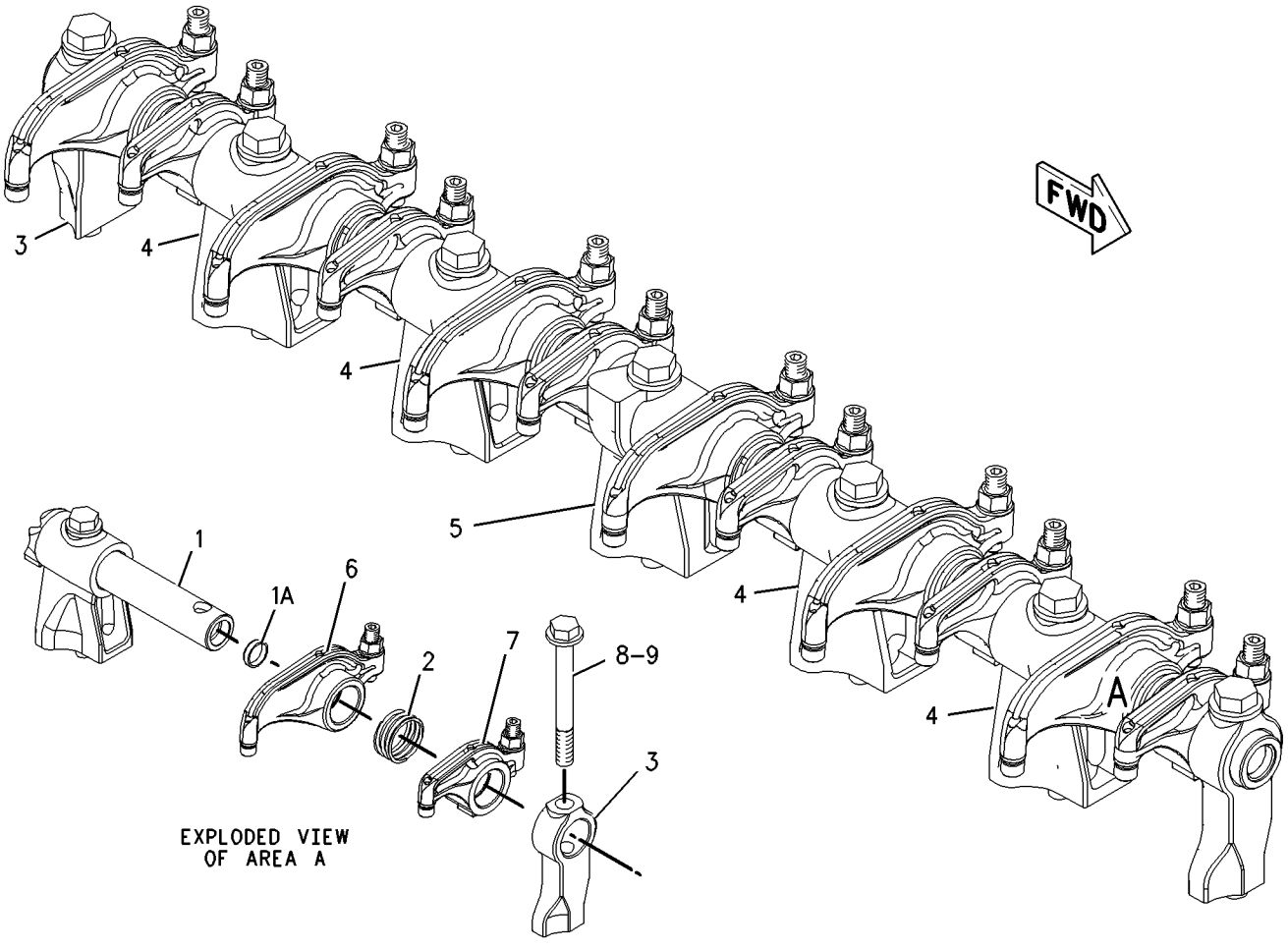

GRAPHIC #1 g00851003

BASIC ENGINE

196-9997 YOKE GP

S/N: BLE1-UP; BMJ1-UP

PART OF 168-8371 INSTALLATION AR-ENGINE

SMCS-1207, 3108 **i01646067**

NOTE	REF NO	GRAPHIC REF	PART NUMBER	QTY	PART NAME 1 2 3 4 5 6 (PRODUCT LEVEL)	SEE PAGE
	1	1	**128-3340**	1	FLANGE-STUB	
	2	1	**128-3341**	1	COVER	
	3	1	**128-3813**	1	SEAL-LIP TYPE	
	4	1	**1L-4775**	1	RING-RETAINING	
	5	1	**2S-3029**	1	BALL BEARING	
	6	1	**6V-8260**	1	SEAL-O-RING	
M	7	1	**8T-4779**	2	BOLT (M16X2X35MM)	
	8	1	**9X-8257**	2	WASHER (17.5X30X3.5MM THK)	

M-METRIC PART

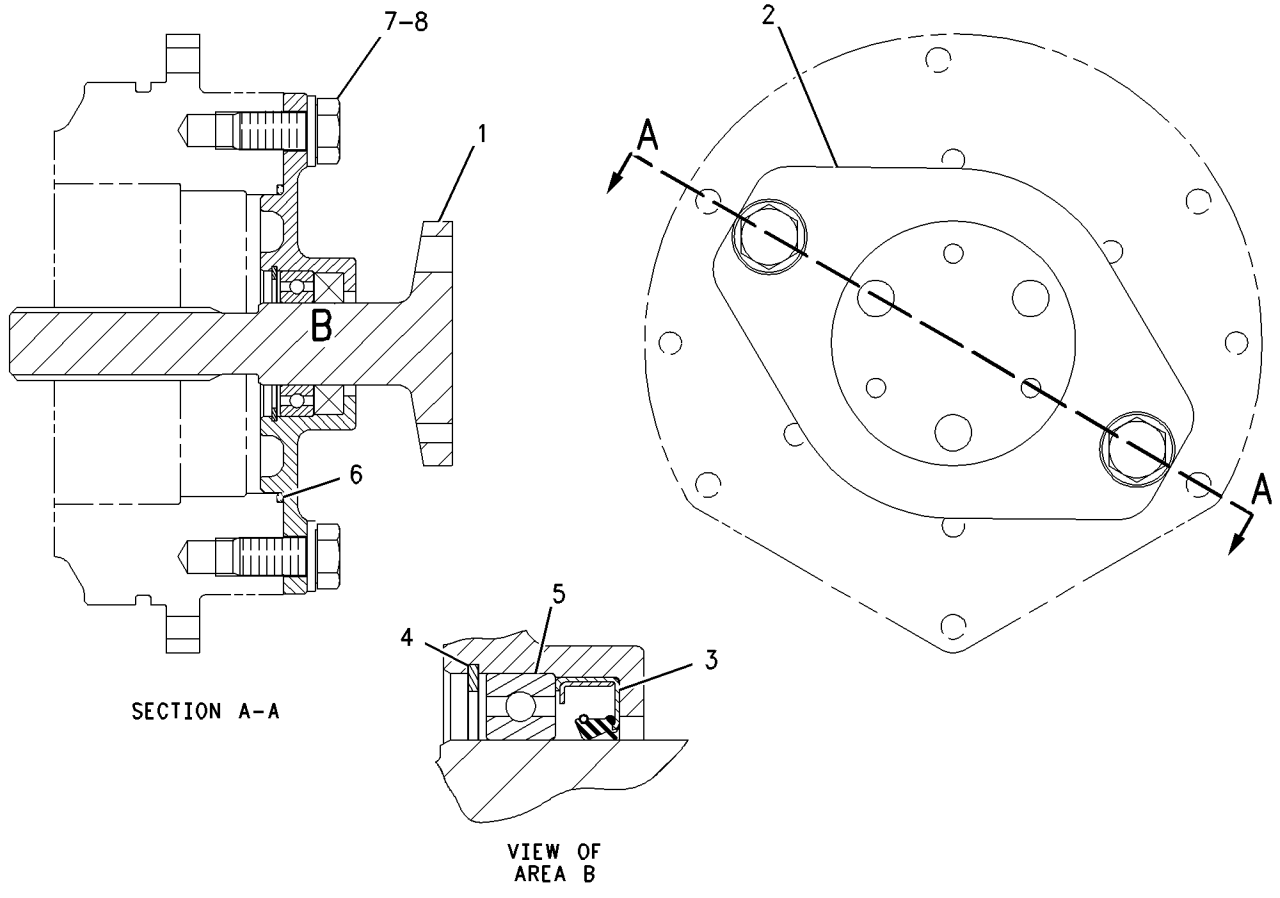

GRAPHIC #1 g00802647

MEMORANDA

183-2097 FILTER GP-ENGINE OIL

S/N: 4ZF1-UP
HIGH MOUNT
PART OF 166-0273, 169-3791, 176-5509, 176-9269 ENGINE AR
ALSO AN ATTACHMENT

SMCS-1306, 1308, 1318 **i01649640**

NOTE	REF NO	GRAPHIC REF	PART NUMBER	QTY	PART NAME 1 2 3 4 5 6 (PRODUCT LEVEL)	SEE PAGE
	1	1	**1R-0716**	1	FILTER AS-ENGINE OIL	
	2	1	**7C-1493**	2	VALVE-BYPASS	
	3	1	**8C-3445**	1	CAP-DUST	
	4	1	**8T-6338**	1	TEE-O-RING PORT	
	5	1	**9L-9188**	2	SPRING-VALVE	
	6	1	**209-5074**	1	BASE AS	
	6A	1	**2P-4304**	1	STUD-TAPERLOCK	
	7	1	**204-9662**	1	SEAL	
	8	1	**6V-4589**	3	SEAL-O-RING	
	9	1	**6V-5049**	2	SEAL-O-RING	
	10	1	**8L-2786**	2	SEAL-O-RING	
M	11	1	**5P-8196**	2	PLUG	
M	12	1	**6V-5220**	2	BOLT (M8X1.25X65MM)	
M	13	1	**6V-5218**	2	BOLT (M8X1.25X35MM)	
	14	1	**8C-3446**	2	VALVE GP-FLUID SAMPLING	
	15	1	**8L-2779**	1	SEAL-O-RING	
	16	1	**033-6033**	2	SEAL-O-RING	
	17	1	**6V-8936**	1	REDUCER	
	18	1	**6V-9851**	1	ELBOW	
M	19	1	**6V-5219**	8	BOLT (M8X1.25X40MM)	
	20	1	**9M-1974**	12	WASHER-HARD (8.8X16X2MM THK)	
	21	1	**9S-4185**	1	PLUG	
	22	1	**9S-4190**	1	PLUG	
	23	1	**5P-9617**	1	ADAPTER	
	24	1	**6V-8077**	1	ELBOW	
	25	1	**6V-5048**	1	SEAL-O-RING	

M-METRIC PART

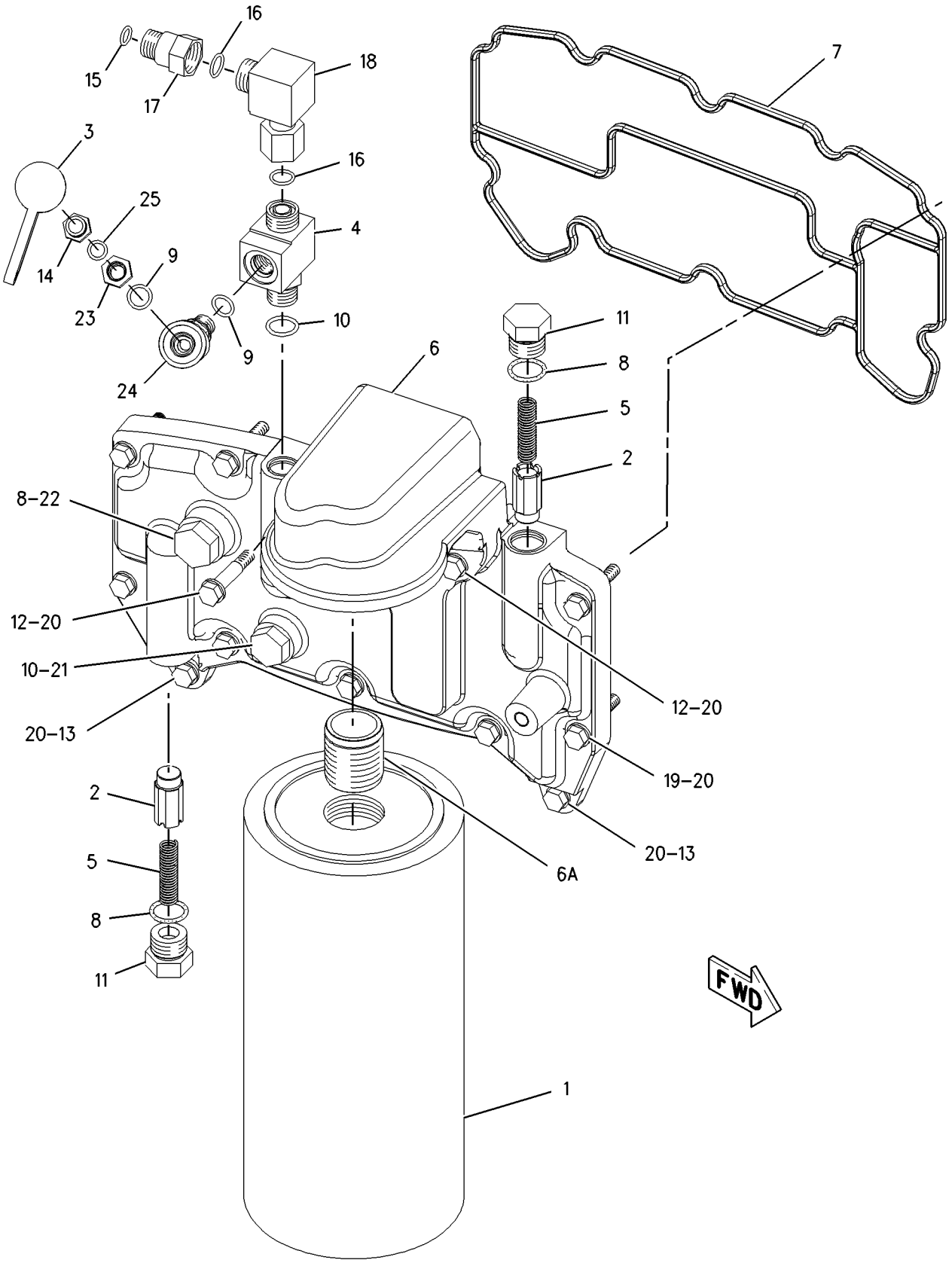

GRAPHIC #1 g00817492

LUBRICATION SYSTEM

197-6648 FUMES DISPOSAL GP

S/N: 4ZF1-UP

PART OF 166-0273, 169-3791, 176-5509, 176-9269 ENGINE AR

ALSO AN ATTACHMENT

SMCS-1317 **i01649707**

NOTE	REF NO	GRAPHIC REF	PART NUMBER	QTY	PART NAME 1 2 3 4 5 6 (PRODUCT LEVEL)	SEE PAGE
	1	1	**2S-3440**	4	CLAMP-HOSE	
	2	1	**9X-3966**	1	ELBOW	
	3	1	**204-1533**	1	TUBE AS	
	4	1	**204-1534**	1	BRACKET AS	
M		1	**6V-9632**	1	NUT-WELD (M6X1 THD)	
	5	1	**3K-0360**	2	SEAL-O-RING	
M	6	1	**5P-7970**	1	NUT (M8X1.25 THD)	
M	7	1	**6V-1820**	1	BOLT (M10X1.50X30MM)	
	8	1	**6V-5839**	1	WASHER (11X21X2.5MM THK)	
	9	1	**8T-1715**	1	ADAPTER-STRAIGHT THREAD	
	10	1	**9M-1974**	1	WASHER-HARD (8.8X16X2MM THK)	
	11	1	**5P-2094**		HOSE (9CM)	
	11A	1	**5P-2094**		HOSE (9CM)	

M-METRIC PART

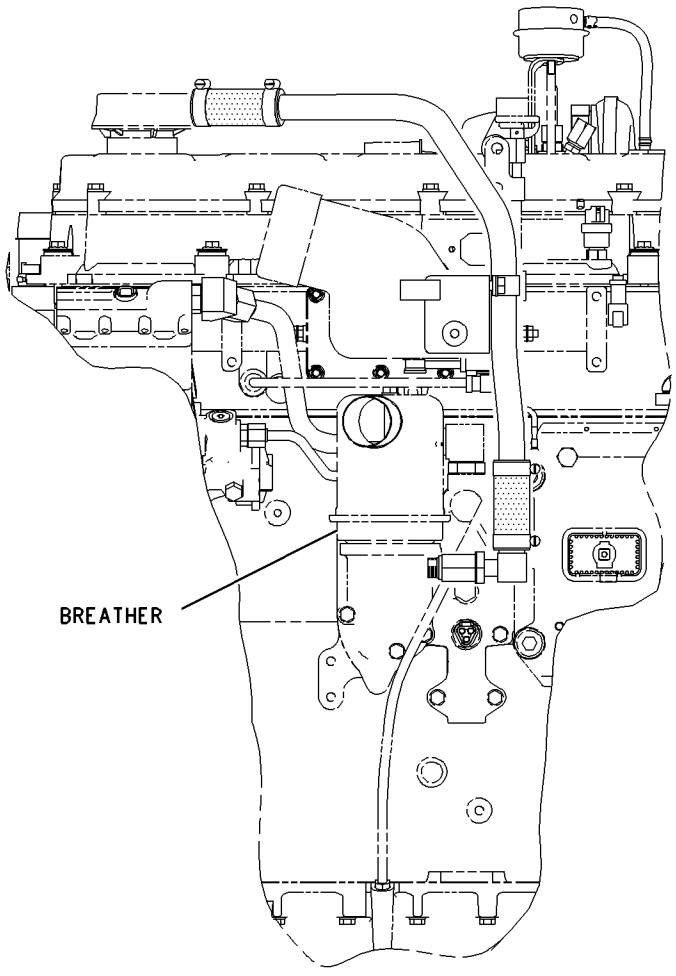

LEFT SIDE VIEW

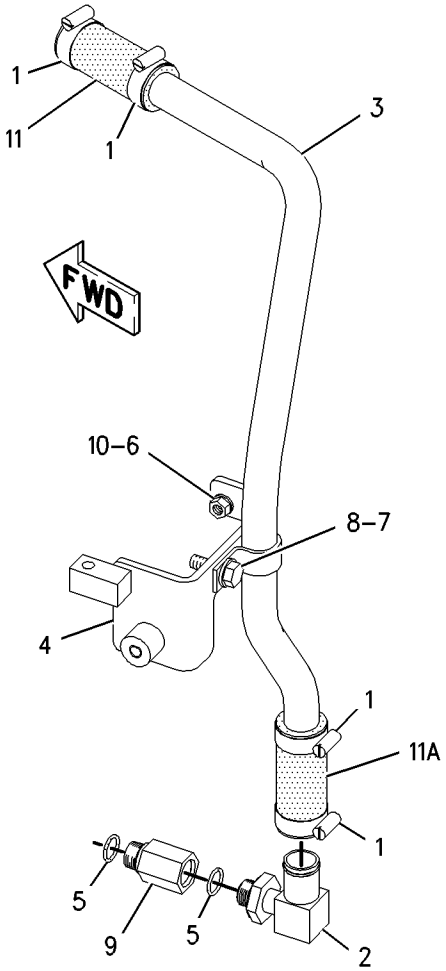

ISOMETRIC VIEW

GRAPHIC #1 g00854330

LUBRICATION SYSTEM

169-3109 GAUGE GP-OIL LEVEL (DIPSTICK)

S/N: 4ZF1-UP
PART OF 166-0273, 169-3791, 176-5509, 176-9269 ENGINE AR
ALSO AN ATTACHMENT

SMCS-1326 **i01620380**

NOTE	REF NO	GRAPHIC REF	PART NUMBER	QTY	PART NAME 1 2 3 4 5 6 (PRODUCT LEVEL)	SEE PAGE
	1	1	**197-3271**	1	GAUGE-OIL LEVEL	
	2	1	**197-3272**	1	TUBE AS-OIL GAUGE	

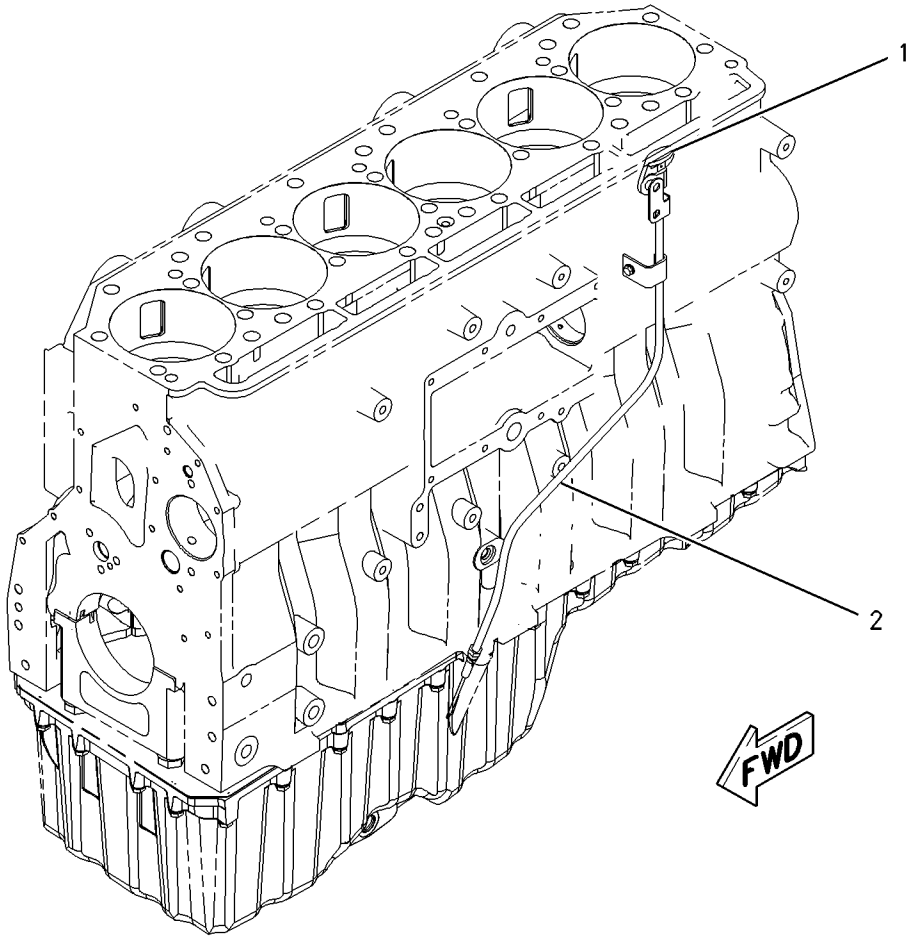

GRAPHIC #1 g00851522

198-1319 LINES GP-ENGINE OIL

S/N: 4ZF1-UP
PART OF 166-0273, 169-3791, 176-5509, 176-9269 ENGINE AR
ALSO AN ATTACHMENT

SMCS-1307 **i01646120**

NOTE	REF NO	GRAPHIC REF	PART NUMBER	QTY	PART NAME 1 2 3 4 5 6 (PRODUCT LEVEL)	SEE PAGE
	2	1	**194-4735**	1	ELBOW-OUTLET	
	3	1	**195-0452**	1	GASKET	
	4	1	**213-8516**	1	TUBE AS	
	5	1	**033-6032**	1	SEAL-O-RING	
M	7	1	**5A-3604**	2	BOLT-SOCKET HEAD (M8X1.25X25MM)	
	8	1	**5P-6436**	1	SEAL-O-RING	
M	9	1	**6V-5217**	2	BOLT (M8X1.25X20MM)	
M	11	1	**8T-0292**	1	BOLT (M8X1.25X90MM)	
M	12	1	**8T-1158**	2	BOLT-SOCKET HEAD (M8X1.25X20MM)	
	13	1	**9M-1974**	7	WASHER-HARD (8.8X16X2MM THK)	

M-METRIC PART

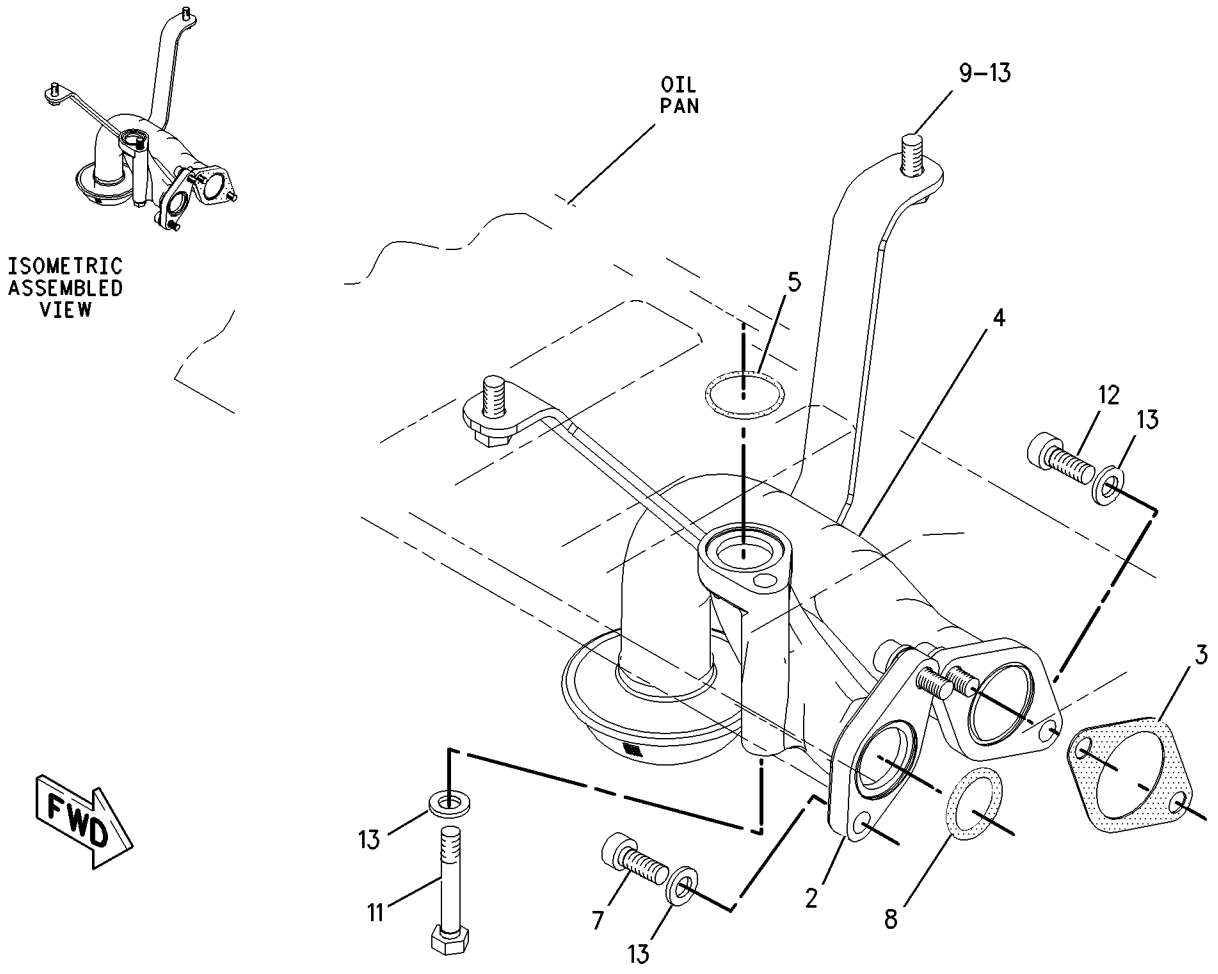

GRAPHIC #1 g00844031

LUBRICATION SYSTEM

167-0169 LINES GP-TURBOCHARGER OIL

S/N: 4ZF1-UP

PART OF 166-0273, 169-3791, 176-5509, 176-9269 ENGINE AR

ALSO AN ATTACHMENT

SMCS-1052, 1307 **i01643407**

NOTE	REF NO	GRAPHIC REF	PART NUMBER	QTY	PART NAME 1 2 3 4 5 6 (PRODUCT LEVEL)	SEE PAGE
	1	1	*9N-4685*	1	BLOCK	
	2	1	**167-0167**	1	TUBE AS-OIL DRAIN	
	3	1	**167-0168**	1	HOSE AS-OIL SUPPLY	
	4	1	**183-3398**	1	CONNECTOR AS	
		1	**6V-5049**	1	SEAL-O-RING	
		1	**8L-2779**	1	SEAL-O-RING	
	5	1	**124-0174**	1	CLIP	
M	6	1	**2Y-5829**	1	NUT (M10X1.5 THD)	
	7	1	**3P-1156**	2	SEAL-O-RING	
	8	1	**3S-8665**	1	CLIP	
M	9	1	**6V-3940**	4	BOLT (M8X1.25X25MM)	
	10	1	**6V-5839**	2	WASHER (11X21X2.5MM THK)	
M	11	1	**6V-4249**	1	BOLT (M10X1.5X50 MM)	
	12	1	**9M-1974**	4	WASHER-HARD (8.8X16X2MM THK)	

M-METRIC PART

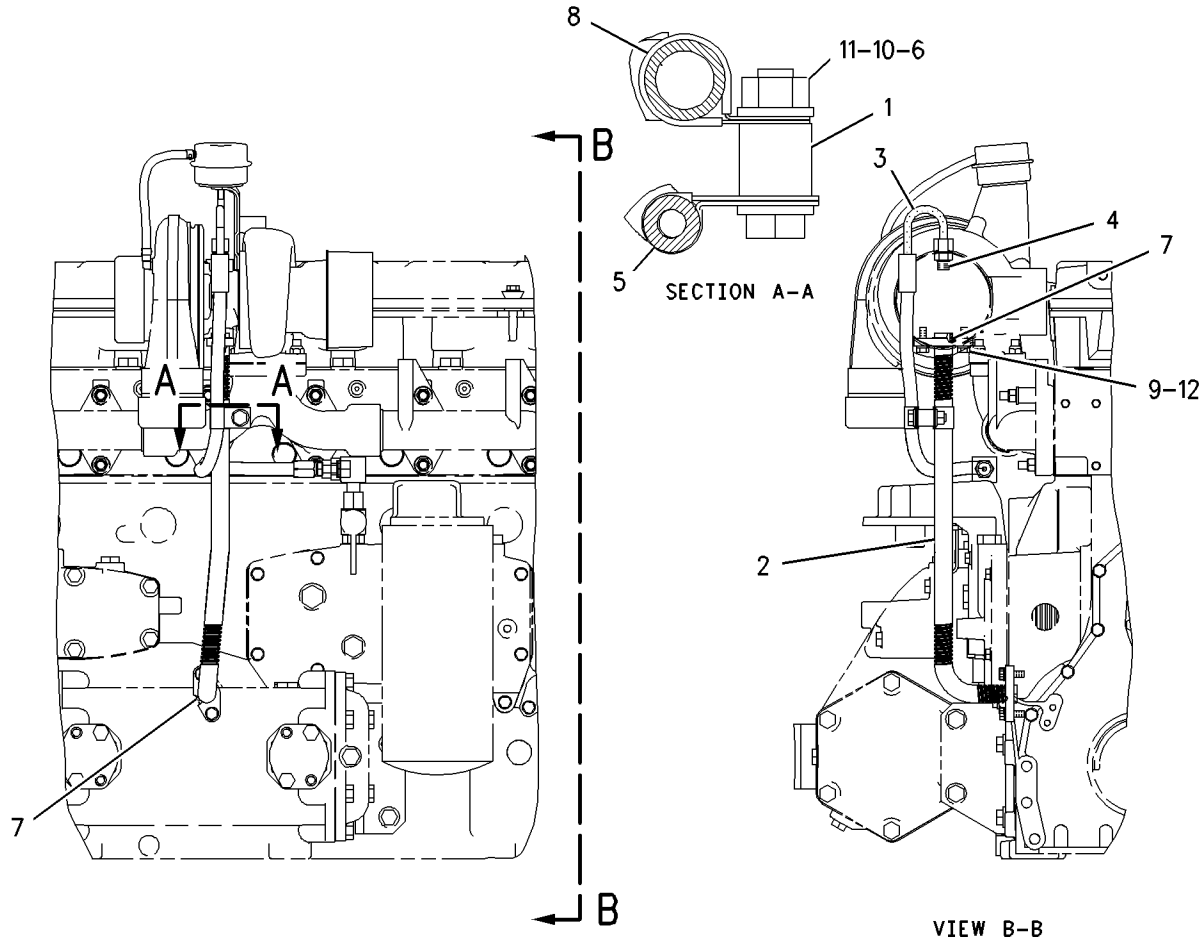

GRAPHIC #1 g00769705

LUBRICATION SYSTEM

195-8098 PUMP GP-ENGINE OIL

S/N: 4ZF1-UP
PART OF 166-0270, 169-3788 ENGINE AR-CORE
ALSO AN ATTACHMENT

SMCS-1304, 1315 **i01668139**

NOTE	REF NO	GRAPHIC REF	PART NUMBER	QTY	PART NAME 1 2 3 4 5 6 (PRODUCT LEVEL)	SEE PAGE
	1	1	**211-0546**	1	PUMP GP-GEROTOR	
M	2	1	**6V-1819**	2	BOLT (M10X1.50X100MM)	
	3	1	**6V-5839**	2	WASHER (11X21X2.5MM THK)	

M-METRIC PART

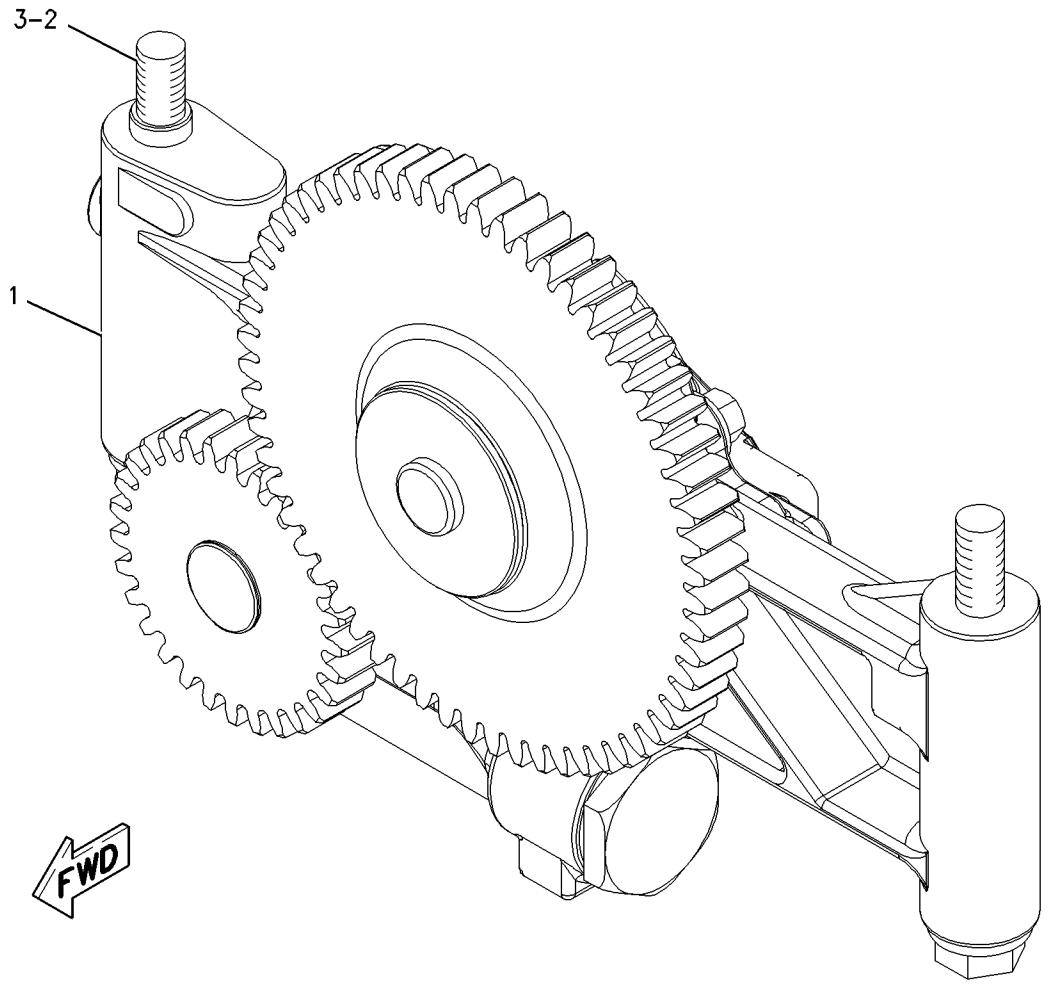

GRAPHIC #1 g00857640

COOLING SYSTEM

188-3826 COOLER GP-ENGINE OIL

S/N: 4ZF1-UP
PART OF 166-0270, 169-3788 ENGINE AR-CORE
ALSO AN ATTACHMENT

SMCS-1378 **i01551738**

NOTE	REF NO	GRAPHIC REF	PART NUMBER	QTY	PART NAME 1 2 3 4 5 6 (PRODUCT LEVEL)	SEE PAGE
	1	1	**204-9661**	1	SEAL-INTEGRAL	
	2	1	**203-9479**	1	CORE AS-OIL COOLER	

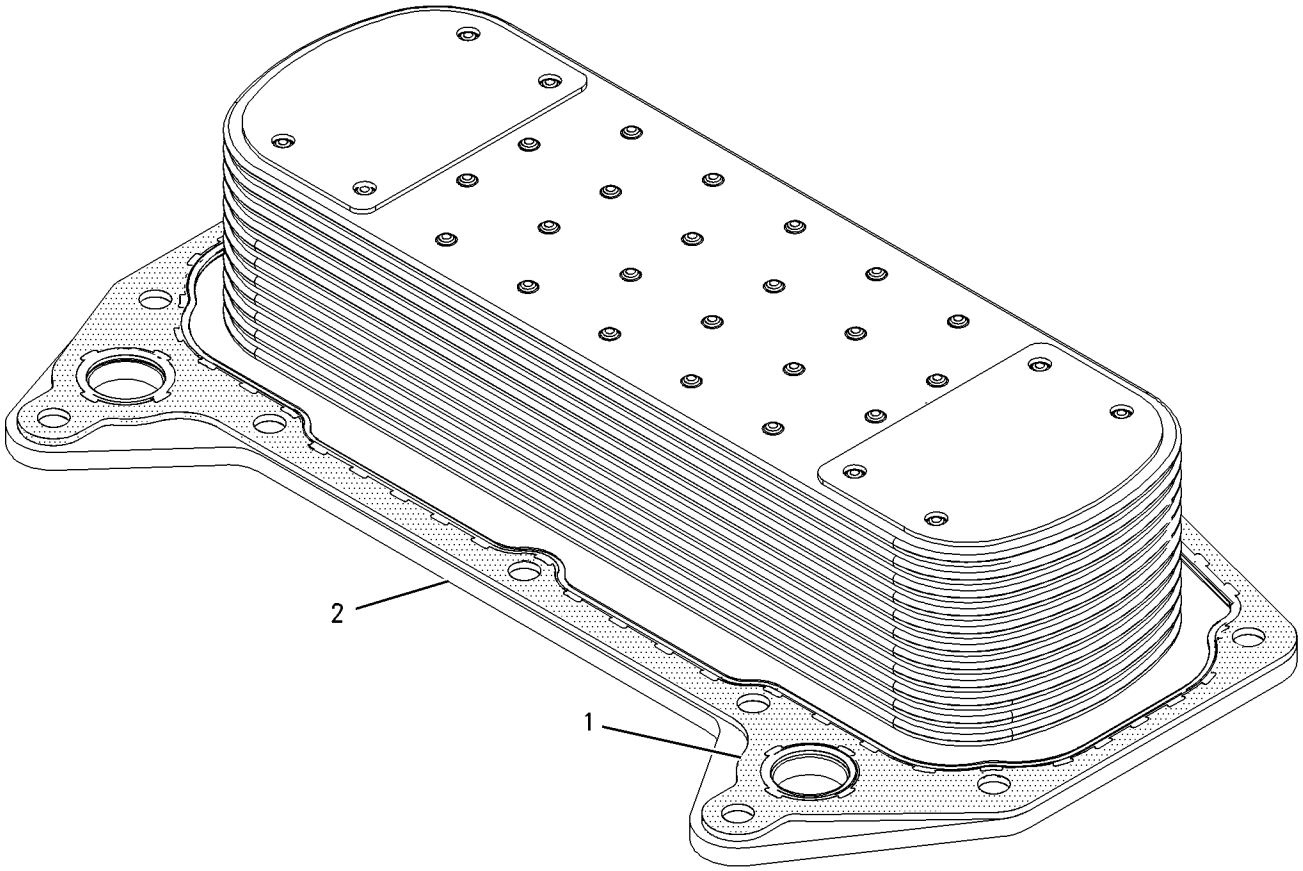

GRAPHIC #1 g00714256

COOLING SYSTEM

174-7414 FAN GP–REVERSIBLE

S/N: BLE1-UP; BMJ1-UP
AN ATTACHMENT

SMCS-1356 **i01662722**

NOTE	REF NO	GRAPHIC REF	PART NUMBER	QTY	PART NAME 1 2 3 4 5 6 (PRODUCT LEVEL)	SEE PAGE
	1	1	**125-1362**	1	FAN AS-REVERSIBLE	
	2	1	**174-7412**	1	GUARD AS	
M		1	**8T-3490**	4	NUT-WELD (M10X1.5 THD)	
		1	**211-0910**	1	BRACKET	
		1	**211-0911**	1	BRACKET	
	3	1	**2W-5825**	1	PLATE	
	4	1	**7X-7729**	2	WASHER (11X25X3MM THK)	
M	5	1	**8T-4137**	2	BOLT (M10X1.5X20MM)	
	6	1	**8T-4896**	8	WASHER-HARD (10.2X18.5X2.5MM THK)	
M	7	1	**8T-6466**	8	BOLT (M10X1.50X60MM)	

M-METRIC PART

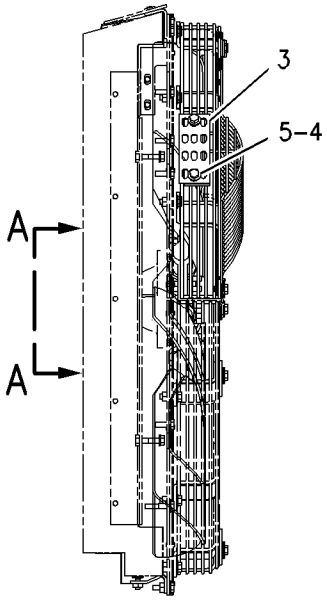

LEFT SIDE VIEW

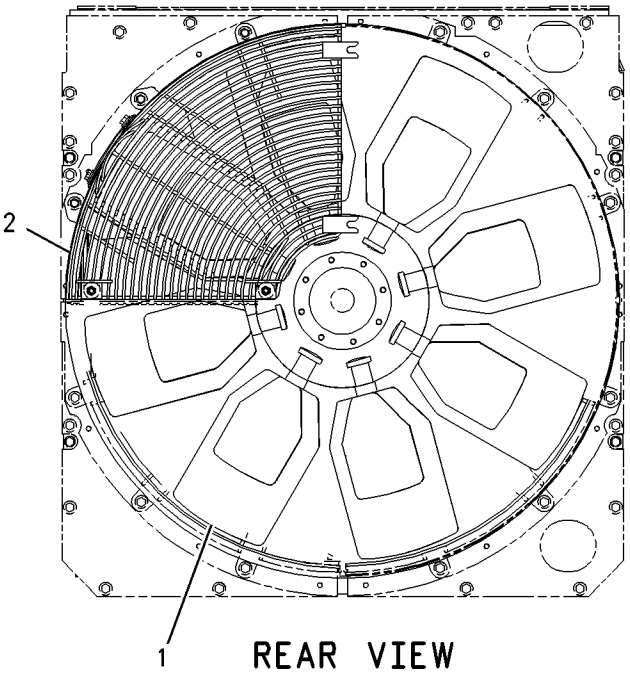

REAR VIEW

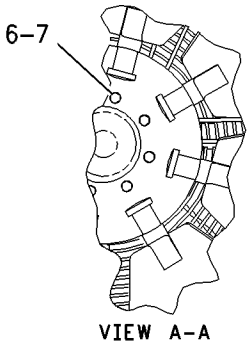

VIEW A–A

GRAPHIC #1 g00859207

168-8376 FAN GP-BLOWER

S/N: BLE1-UP; BMJ1-UP

PART OF 168-8371 INSTALLATION AR-ENGINE

SMCS-1356, 1360 **i01645476**

NOTE	REF NO	GRAPHIC REF	PART NUMBER	QTY	PART NAME 1 2 3 4 5 6 (PRODUCT LEVEL)	SEE PAGE
	1	1	**183-1350**	1	SPIDER AS-FAN	
	2	1	**195-7882**	4	GUARD AS	
	3	1	**7X-0578**	8	WASHER-HARD (10.2X32X2.5MM THK)	
	4	1	**7X-7729**	12	WASHER (11X25X3MM THK)	
M	5	1	**8T-4137**	8	BOLT (M10X1.5X20MM)	
M	6	1	**8T-4182**	2	BOLT (M10X1.5X45MM)	
M	7	1	**8T-4186**	8	BOLT (M10X1.5X40MM)	
M	8	1	**8T-4196**	10	BOLT (M10X1.5X35MM)	

M-METRIC PART

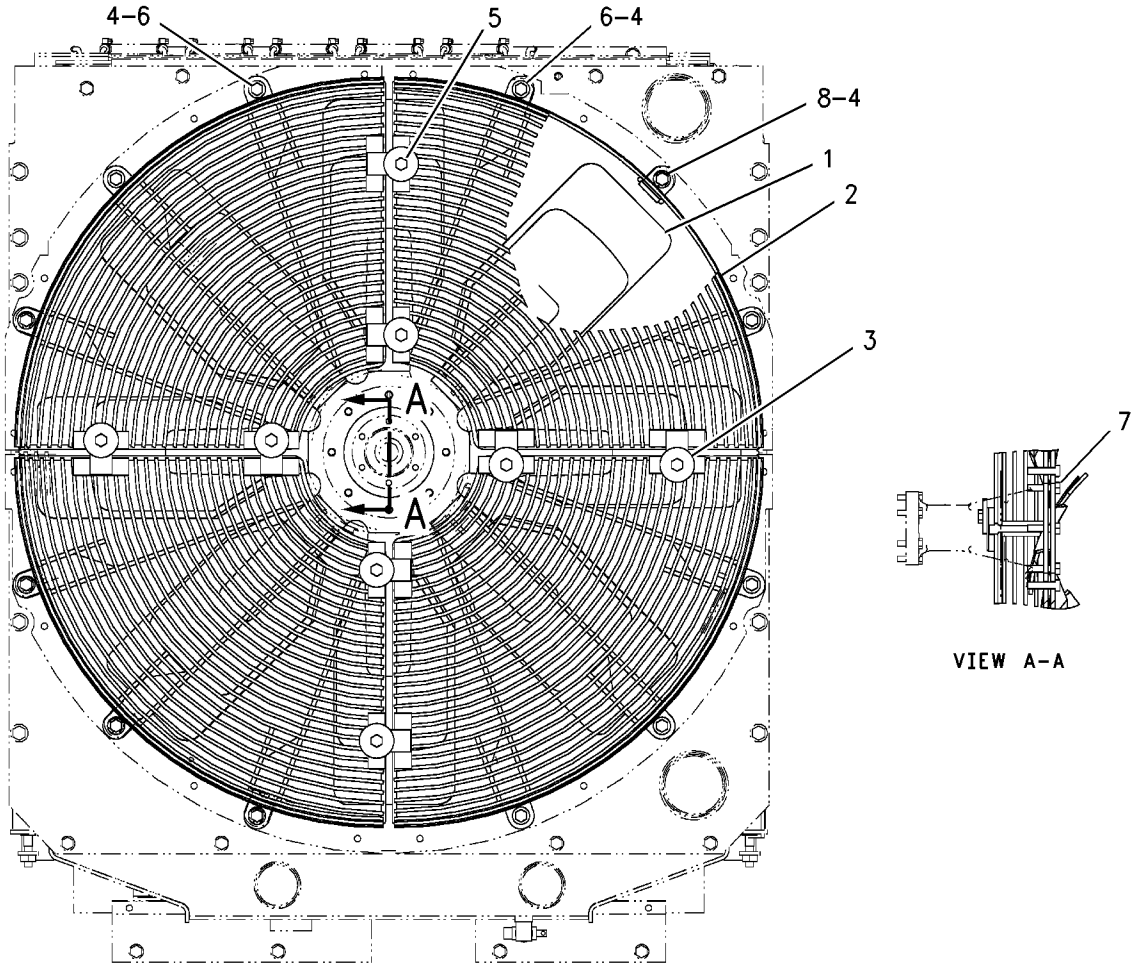

GRAPHIC #1 g00802091

COOLING SYSTEM

165-4461 LINES GP-WATER

S/N: 4ZF1-UP
PART OF 166-0273, 169-3791, 176-5509, 176-9269 ENGINE AR
ALSO AN ATTACHMENT

SMCS-1355, 1380, 1393 **i01649931**

NOTE	REF NO	GRAPHIC REF	PART NUMBER	QTY	PART NAME 1 2 3 4 5 6 (PRODUCT LEVEL)	SEE PAGE
	1	1	**4W-4794**	1	REGULATOR-WATER TEMPERATURE (92 DEG C.)	
	2	1	**8T-4983**	2	CLAMP-HOSE	
	3	1	**169-3124**	1	HOSE	
	4	1	**191-4457**	1	GASKET	
	5	1	**215-9541**	1	HOUSING AS	
	5A	1	**3S-9643**	1	SEAL-LIP	
	6	1	**9S-4185**	2	PLUG	
	6A	1	**3K-0360**	2	SEAL-O-RING	
	7	1	**4S-9191**	4	WASHER (12X22.5X5MM THK)	
M	8	1	**8T-0644**	4	BOLT (M10X1.50X90MM)	
	9	1	**8T-6762**	1	PLUG-PIPE	

M-METRIC PART

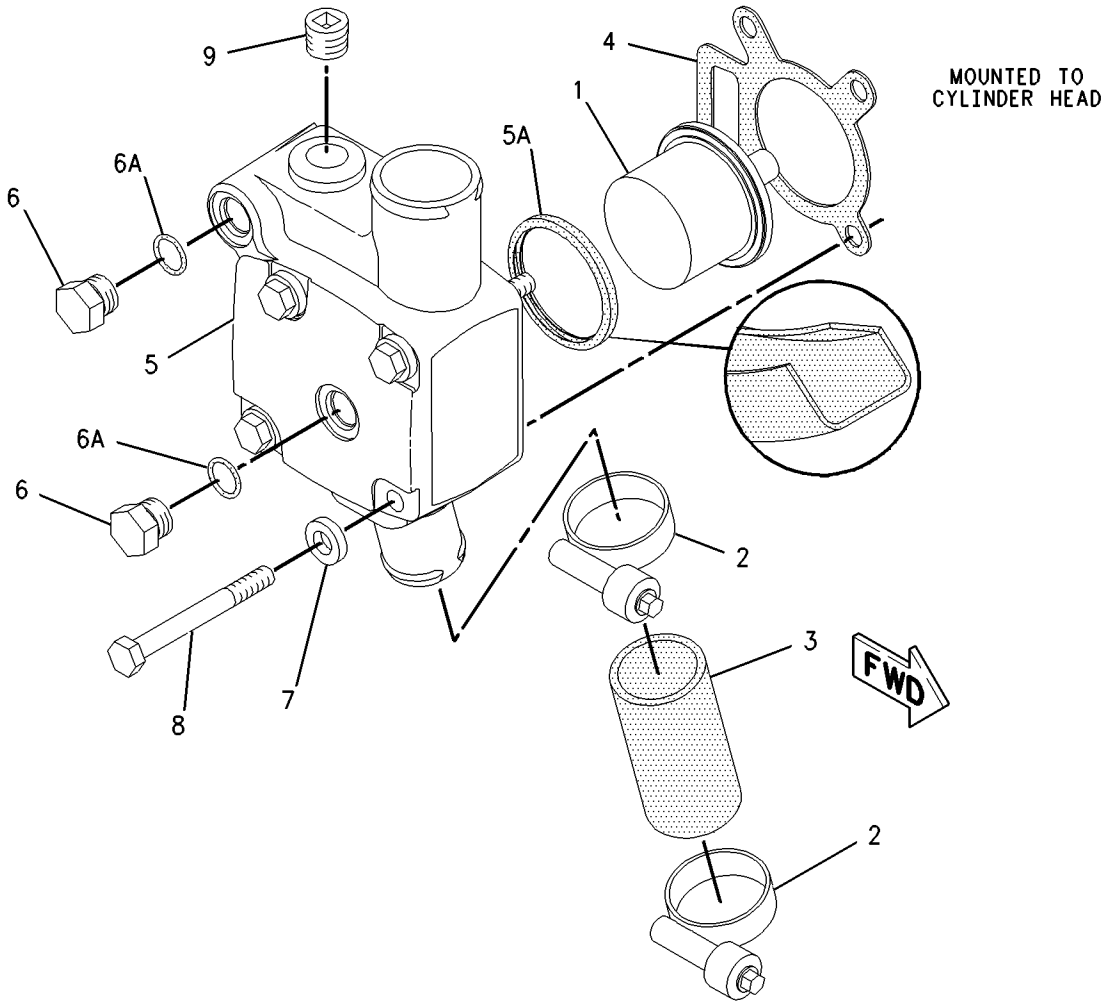

GRAPHIC #1 g00849071

MEMORANDA

COOLING SYSTEM

168-8378 LINES GP-WATER

S/N: BLE1-UP; BMJ1-UP

PART OF 168-8371 INSTALLATION AR-ENGINE

SMCS-1355, 1380, 1393 **i01645682**

NOTE	REF NO	GRAPHIC REF	PART NUMBER	QTY	PART NAME 1 2 3 4 5 6 (PRODUCT LEVEL)	SEE PAGE
	1	1	**8T-4984**	6	CLAMP-HOSE	
	2	1	**157-0670**	1	CAP-DUST	
	3	1	**185-0844**	1	HOSE	
	4	1	**185-0845**	1	TUBE AS	
	5	1	**186-5123**	1	BRACKET AS	
M		1	**8T-3490**	1	NUT-WELD (M10X1.5 THD)	
	6	1	**187-3961**	1	HOSE-RADIATOR	
	7	1	**190-7515**	1	BRACKET AS	
M		1	**8T-3490**	1	NUT-WELD (M10X1.5 THD)	
	8	1	**213-1723**	1	BRACKET AS	
	9	1	**213-1724**	1	HOSE	
	10	1	**3E-9867**	2	CLIP (SLOT)	
	11	1	**3E-9868**	2	CLIP (TAB)	
	12	1	**3J-1907**	1	SEAL-O-RING	
	13	1	**3J-7354**	1	SEAL-O-RING	
	14	1	**5P-9617**	1	ADAPTER	
	15	1	**7X-7729**	4	WASHER (11X25X3MM THK)	
	16	1	**8C-3446**	1	VALVE GP-FLUID SAMPLING	
	17	1	**8T-4121**	8	WASHER-HARD (11X21X2.5MM THK)	
M	18	1	**8T-4136**	1	BOLT (M10X1.5X25MM)	
M	19	1	**8T-4137**	2	BOLT (M10X1.5X20MM)	
M	20	1	**8T-4195**	2	BOLT (M10X1.5X30MM)	
M	21	1	**8T-4196**	7	BOLT (M10X1.5X35MM)	

M-METRIC PART

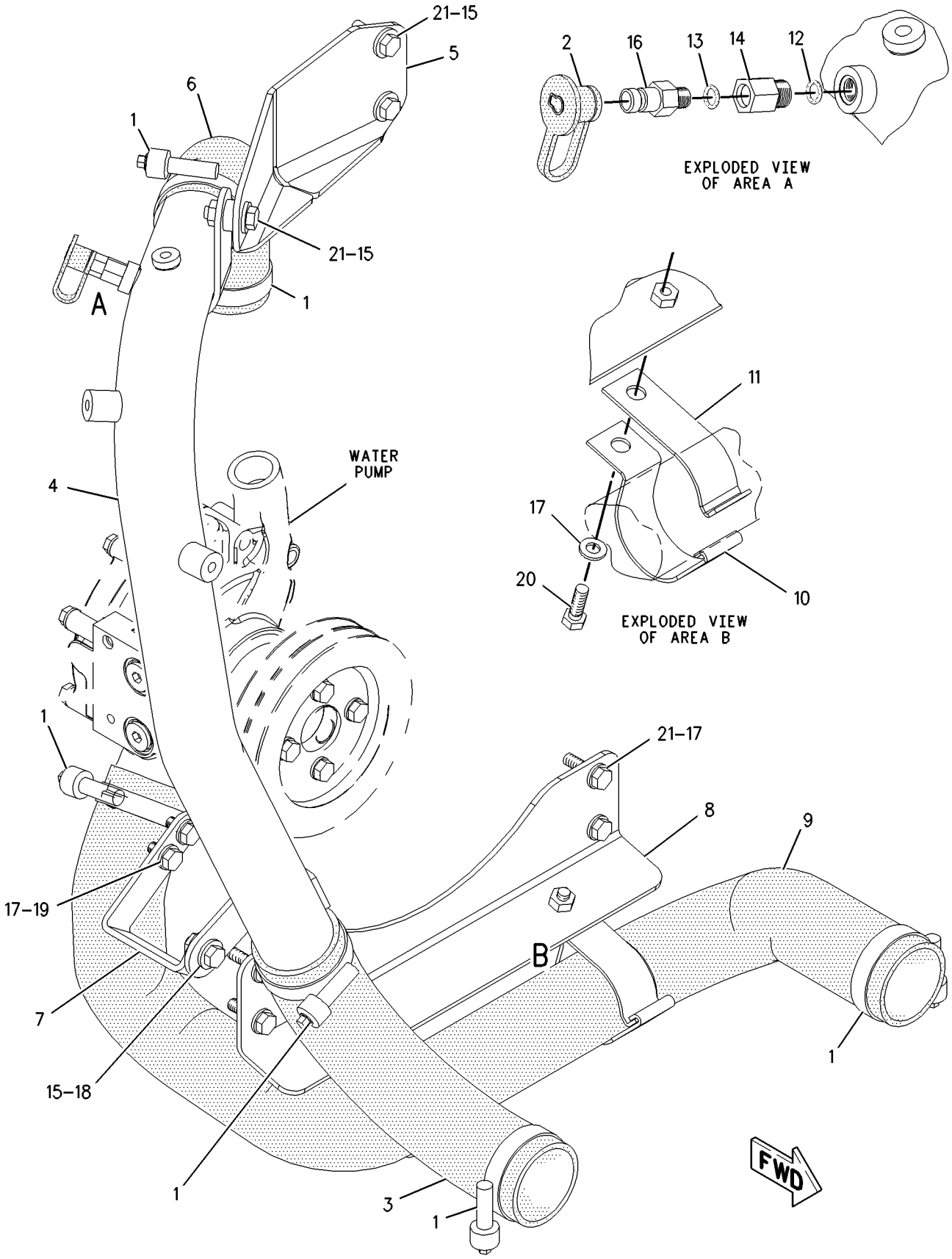

GRAPHIC #1 g00851119

COOLING SYSTEM

210-9096 PUMP GP-WATER

S/N: 4ZF1-UP
PART OF 211-1812 PUMP GP-WATER
ALSO AN ATTACHMENT

SMCS-1361, 1363, 1364, 1373, 1384, 1389, 1394 **i01671832**

NOTE	REF NO	GRAPHIC REF	PART NUMBER	QTY	PART NAME 1 2 3 4 5 6 (PRODUCT LEVEL)	SEE PAGE
	1	1	**177-1043**	1	GASKET	
	2	1	**177-1044**	1	COVER	
M	3	1	**6V-3918**	4	BOLT (M8X1.25X50MM)	
	4	1	**9M-1974**	4	WASHER-HARD (8.8X16X2MM THK)	
Y	5	1	**210-9097**	1	PUMP GP-WATER	87
	6	1	**3D-2824**	1	SEAL-O-RING	
	7	1	**3K-0360**	2	SEAL-O-RING	
	8	1	**9S-8005**	2	PLUG	
	9	1	**9S-8008**	1	PLUG	

M-METRIC PART
Y-SEPARATE ILLUSTRATION

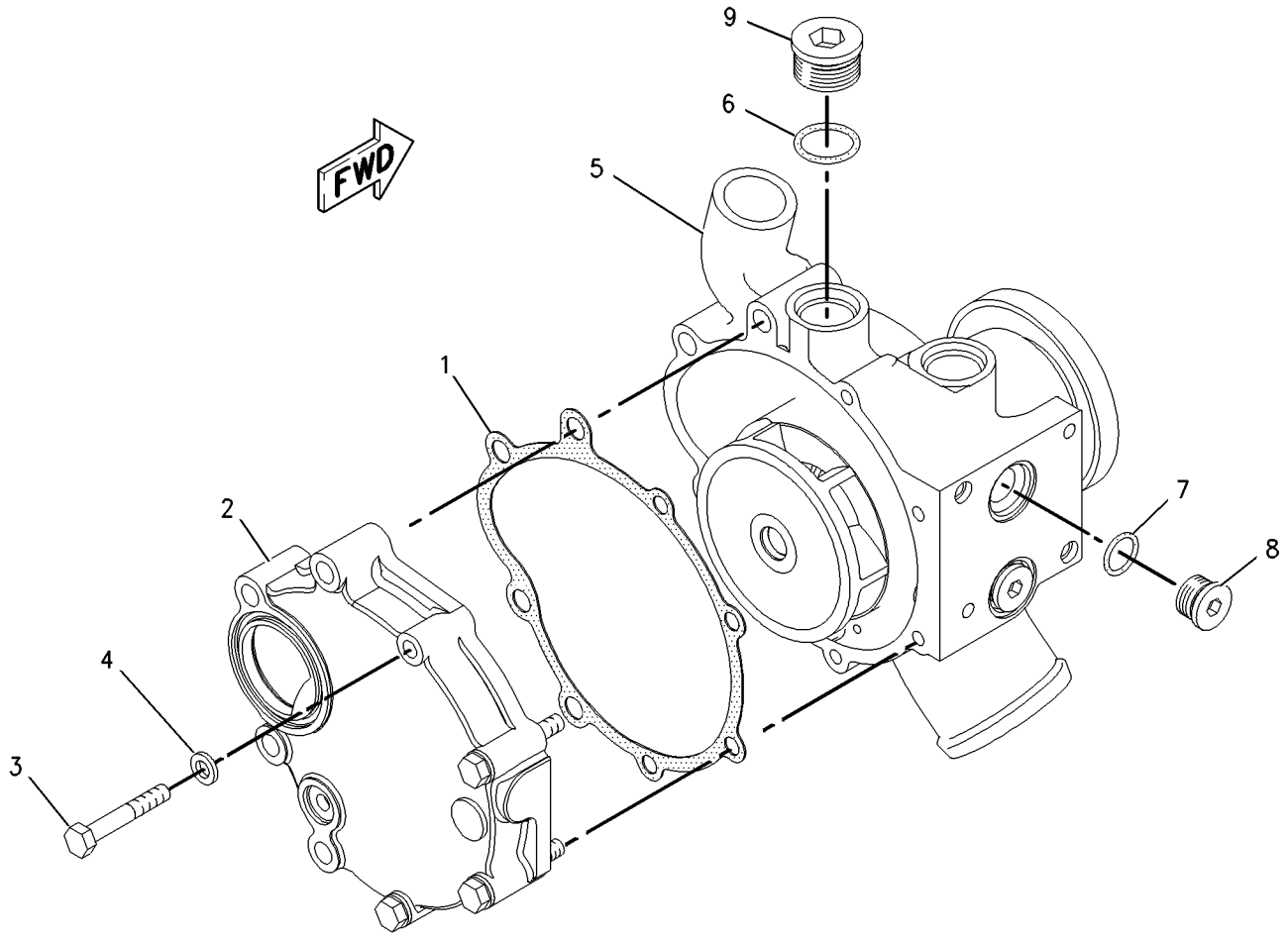

GRAPHIC #1 g00864166

210-9097 PUMP GP-WATER

S/N: 4ZF1-UP
PART OF 210-9096 PUMP GP-WATER
ALSO AN ATTACHMENT

SMCS-1361, 1363, 1364, 1373, 1384, 1389, 1394 **i01671836**

NOTE	REF NO	GRAPHIC REF	PART NUMBER	QTY	PART NAME 1 2 3 4 5 6 (PRODUCT LEVEL)	SEE PAGE
	1	1	**147-5088**	1	SEAL AS-WATER PUMP	
	2	1	**177-1050**	1	SHAFT AS	
	3	1	**177-1056**	1	IMPELLER-PUMP	
	4	1	**187-8984**	1	HOUSING-PUMP	
	5	1	**209-6692**	1	HUB	

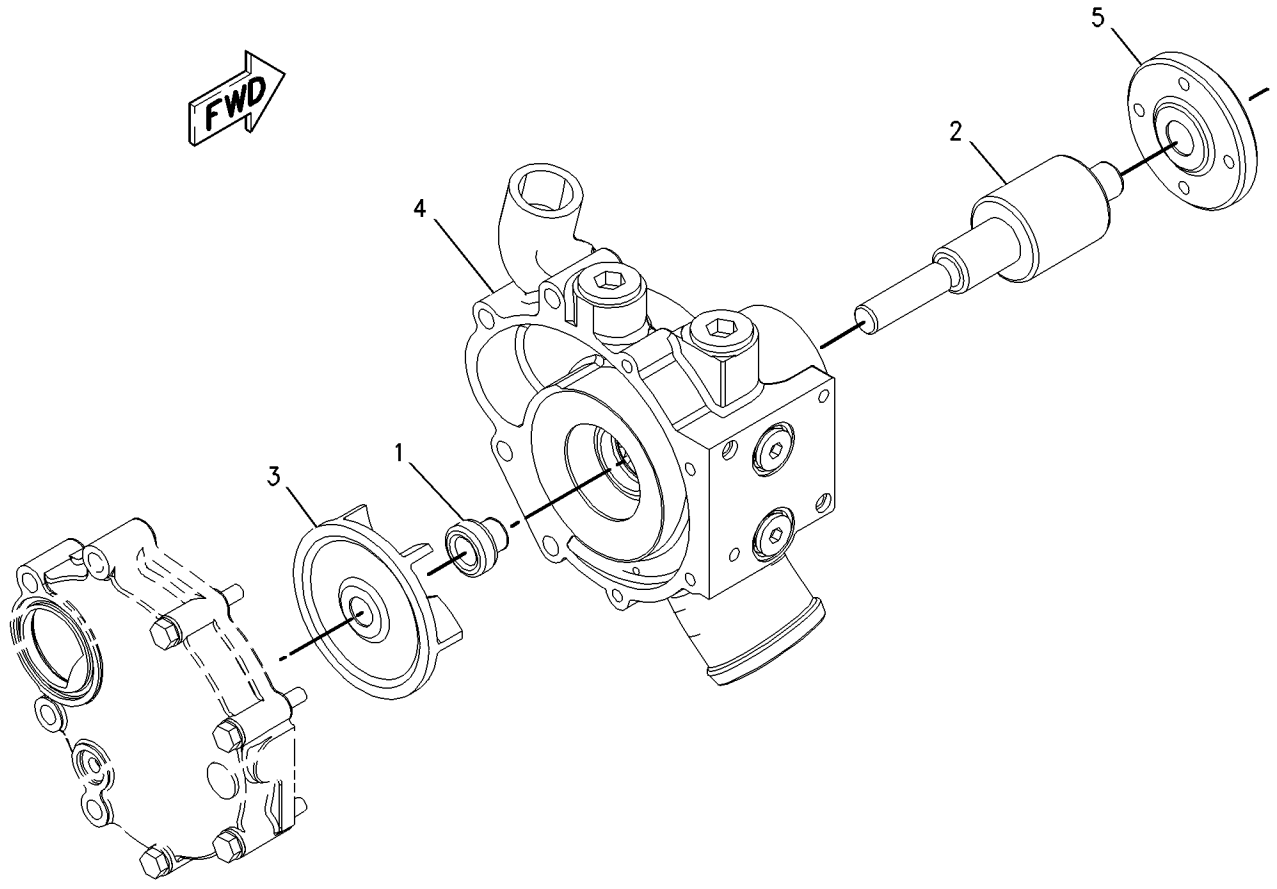

GRAPHIC #1 g00864201

211-1812 PUMP GP-WATER

S/N: 4ZF1-UP
PART OF 166-0273, 169-3791, 176-5509, 176-9269 ENGINE AR
ALSO AN ATTACHMENT

SMCS-1361, 1363, 1364, 1373, 1384, 1389, 1394 **i01645191**

NOTE	REF NO	GRAPHIC REF	PART NUMBER	QTY	PART NAME 1 2 3 4 5 6 (PRODUCT LEVEL)	SEE PAGE
	1	1	**209-9167**	1	SPACER	
Y	2	1	**210-9096**	1	PUMP GP-WATER	86
	3	1	**005-8593**	1	SEAL-O-RING	
	4	1	**117-1385**	1	SEAL-O-RING	
	5	1	**2M-4453**	1	SEAL-O-RING	
	6	1	**5F-8000**	1	SEAL-O-RING	
M	7	1	**8T-0644**	4	BOLT (M10X1.50X90MM)	

M-METRIC PART
Y-SEPARATE ILLUSTRATION

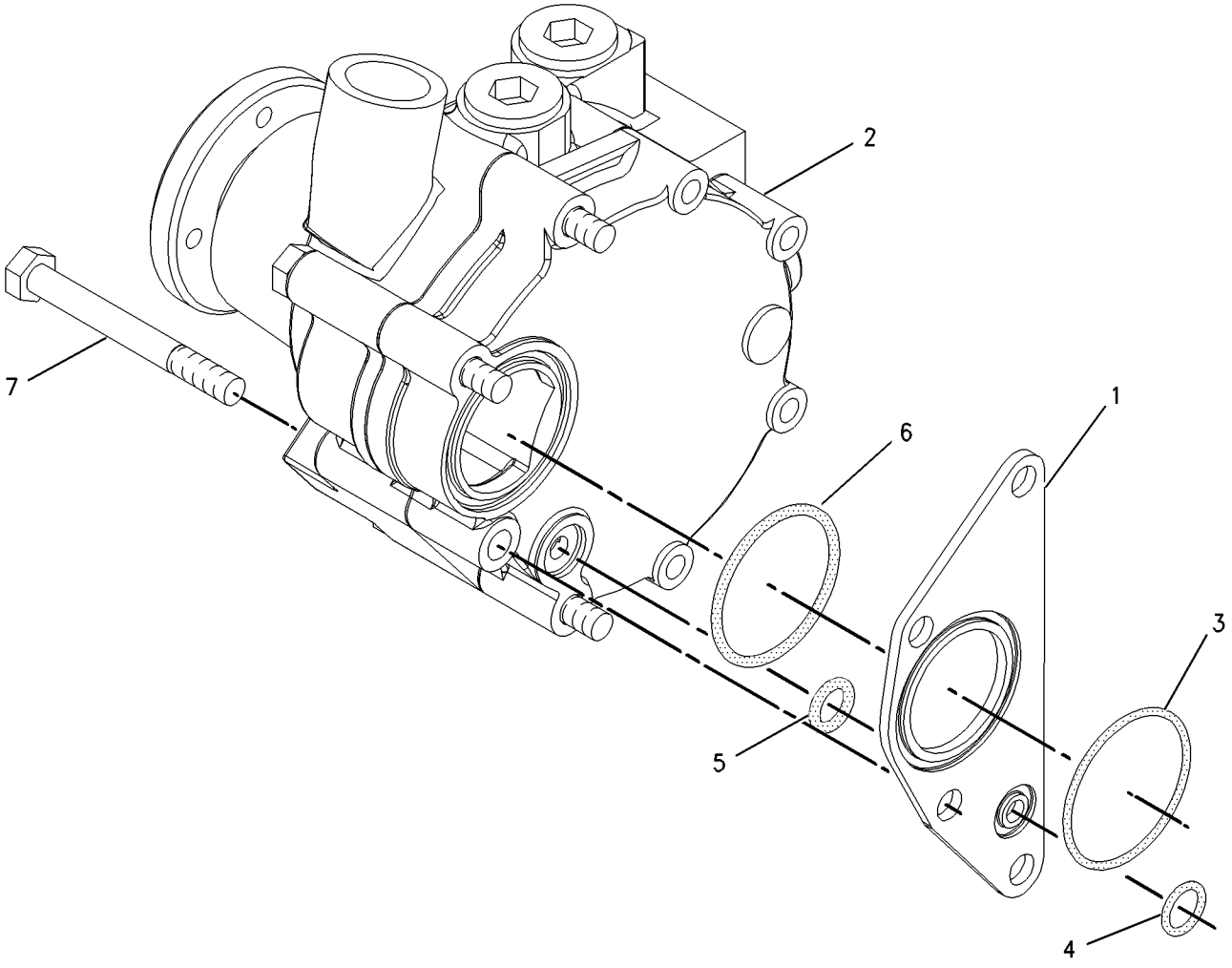

GRAPHIC #1 g00864924

MEMORANDA

COOLING SYSTEM

168-8384 RADIATOR GP

S/N: BLE1-UP; BMJ1-UP

PART OF 168-8371 INSTALLATION AR-ENGINE

SMCS-1351 **i01646014**

NOTE	REF NO	GRAPHIC REF	PART NUMBER	QTY	PART NAME 1 2 3 4 5 6 (PRODUCT LEVEL)	SEE PAGE
	1	1	**1P-4278**	10	CLAMP-HOSE	
	2	1	**1Y-7452**	1	FITTING	
	3	1	**8F-8151**	1	VALVE-SHUTOFF	
	4	1	**106-4572**	5	HOSE	
Y	5	1	*168-8385*	1	RADIATOR GP	92
	6	1	**169-3797**	1	BRACKET AS	
M		1	**8T-3490**	8	NUT-WELD (M10X1.5 THD)	
	7	1	**169-3798**	1	SHIELD AS-BOTTOM	
		1	**4D-6716**	4	RIVET-POP	
		1	**7G-5186**	3	SPACER (13X19X4.5MM THK)	
M		1	**8T-3490**	3	NUT-WELD (M10X1.5 THD)	
	8	1	**169-3799**	1	SHIELD AS-UPPER	
		1	**4D-6716**	4	RIVET-POP	
		1	**7G-5186**	3	SPACER (13X19X4.5MM THK)	
M		1	**8T-3490**	2	NUT-WELD (M10X1.5 THD)	
	9	1	**169-3800**	1	SHIELD AS-BOTTOM	
		1	**4D-6716**	4	RIVET-POP	
		1	**7G-5186**	3	SPACER (13X19X4.5MM THK)	
M		1	**8T-3490**	3	NUT-WELD (M10X1.5 THD)	
	10	1	**169-3801**	1	SHIELD AS-UPPER	
		1	**4D-6716**	4	RIVET-POP	
		1	**7G-5186**	3	SPACER (13X19X4.5MM THK)	
M		1	**8T-3490**	2	NUT-WELD (M10X1.5 THD)	
	11	1	**169-3812**	1	BRACKET AS	
M		1	**8T-3490**	1	NUT-WELD (M10X1.5 THD)	
	12	1	**169-3813**	1	BRACKET AS	
M		1	**8T-3490**	1	NUT-WELD (M10X1.5 THD)	
	13	1	**169-3814**	1	BAFFLE AS-RADIATOR	
		1	**6B-4594**	7	RIVET	
M		1	**8T-3490**	5	NUT-WELD (M10X1.5 THD)	
	14	1	**169-3815**	1	BAFFLE AS-RADIATOR	
		1	**6B-4594**	4	RIVET	
	15	1	**180-6695**	1	BAFFLE AS-RADIATOR	
		1	**6B-4594**	5	RIVET	
M		1	**8T-3490**	2	NUT-WELD (M10X1.5 THD)	
	16	1	**180-6696**	1	BAFFLE AS-RADIATOR	
		1	**6B-4594**	6	RIVET	
M		1	**8T-3490**	2	NUT-WELD (M10X1.5 THD)	
	17	1	**180-6699**	1	BAFFLE AS-RADIATOR	
		1	**6B-4594**	3	RIVET	
	18	1	**003-2143**	1	ELBOW	
	19	1	**003-9514**	1	COUPLING-PIPE	
	21	1	**7X-7729**	19	WASHER (11X25X3MM THK)	
	22	1	**8T-4121**	16	WASHER-HARD (11X21X2.5MM THK)	
M	23	1	**8T-4136**	12	BOLT (M10X1.5X25MM)	
M	24	1	**8T-4185**	5	BOLT (M10X1.5X50MM)	
M	25	1	**8T-4195**	9	BOLT (M10X1.5X30MM)	
M	26	1	**8T-4196**	9	BOLT (M10X1.5X35MM)	

M-METRIC PART
Y-SEPARATE ILLUSTRATION

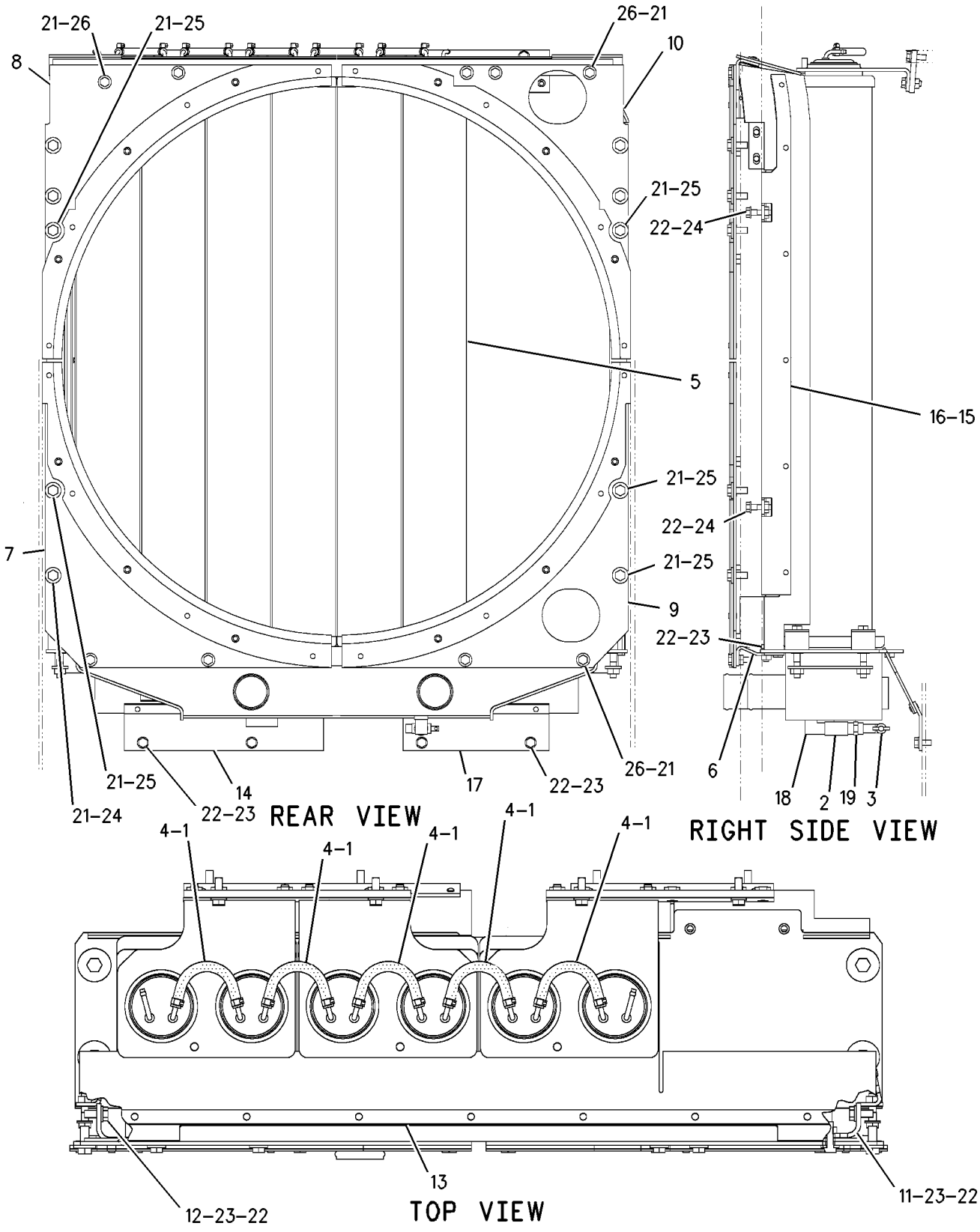

GRAPHIC #1 g00851042

168-8385 RADIATOR GP

S/N: BLE1-UP; BMJ1-UP

PART OF 168-8384 RADIATOR GP

SMCS-1351 **i01646127**

NOTE	REF NO	GRAPHIC REF	PART NUMBER	QTY	PART NAME 1 2 3 4 5 6 (PRODUCT LEVEL)	SEE PAGE
	1	1	**5R-4787**	4	PLATE	
	2	1	**6I-2431**	6	SEAL	
	3	1	**6I-2435**	6	SPACER	
	4	1	**9S-4497**	4	BLOCK-MOUNTING	
	5	1	**109-3622**	6	CORE AS-RADIATOR	
	6	1	**168-8807**	1	TANK AS-BOTTOM	
		1	**6B-7246**	1	BOSS	
M		1	**8T-3490**	4	NUT-WELD (M10X1.5 THD)	
		1	**9V-0321**	1	BLOCK	
	7	1	**169-3796**	2	PLATE AS	
					(EACH INCLUDES)	
M		1	**8T-3597**	2	NUT-WELD (M12X1.75 THD)	
	8	1	**189-5586**	1	BRACKET AS	
	9	1	**189-5587**	2	BRACKET AS	
	10	1	**189-5588**	2	PLATE AS	
					(EACH INCLUDES)	
M		1	**8T-3490**	6	NUT-WELD (M10X1.5 THD)	
	11	1	**8T-4121**	13	WASHER-HARD (11X21X2.5MM THK)	
M	12	1	**8T-4176**	4	BOLT (M12X1.75X90MM)	
M	13	1	**8T-4195**	13	BOLT (M10X1.5X30MM)	

M-METRIC PART

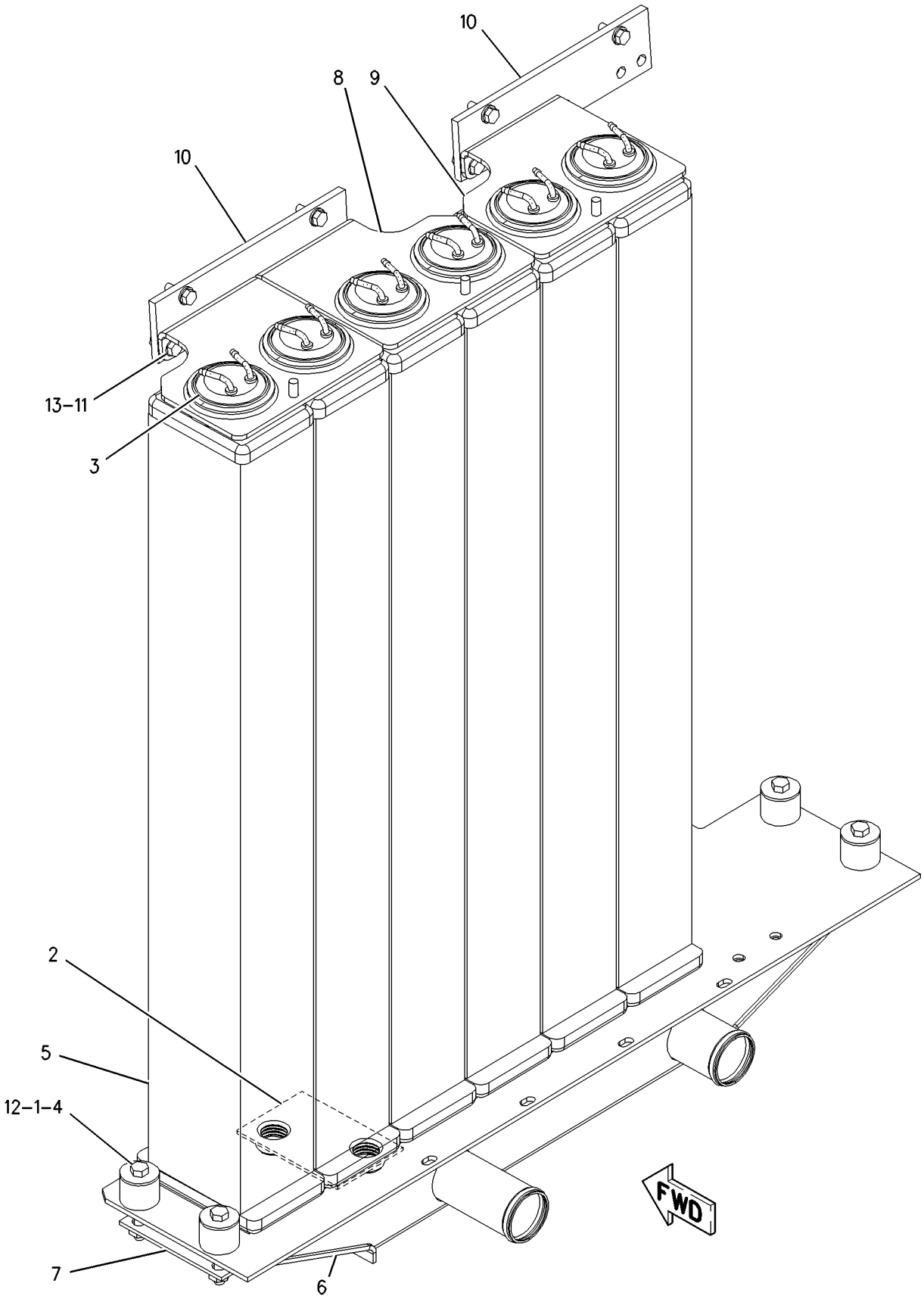

GRAPHIC #1 g00851182

COOLING SYSTEM

169-1840 TANK GP-COOLANT

S/N: BLE1-UP; BMJ1-UP

PART OF 170-1100 TANK GP-WATER

SMCS-1354, 1377 **i01646135**

NOTE	REF NO	GRAPHIC REF	PART NUMBER	QTY	PART NAME 1 2 3 4 5 6 (PRODUCT LEVEL)	SEE PAGE
	1	1	**031-1119**	1	CAP AS-RADIATOR	
	2	1	**169-1838**	1	TANK AS-EXPANSION	
		1	**3L-5893**	1	TUBE-OVERFLOW	
		1	**8N-8846**	1	NECK-FILLER	

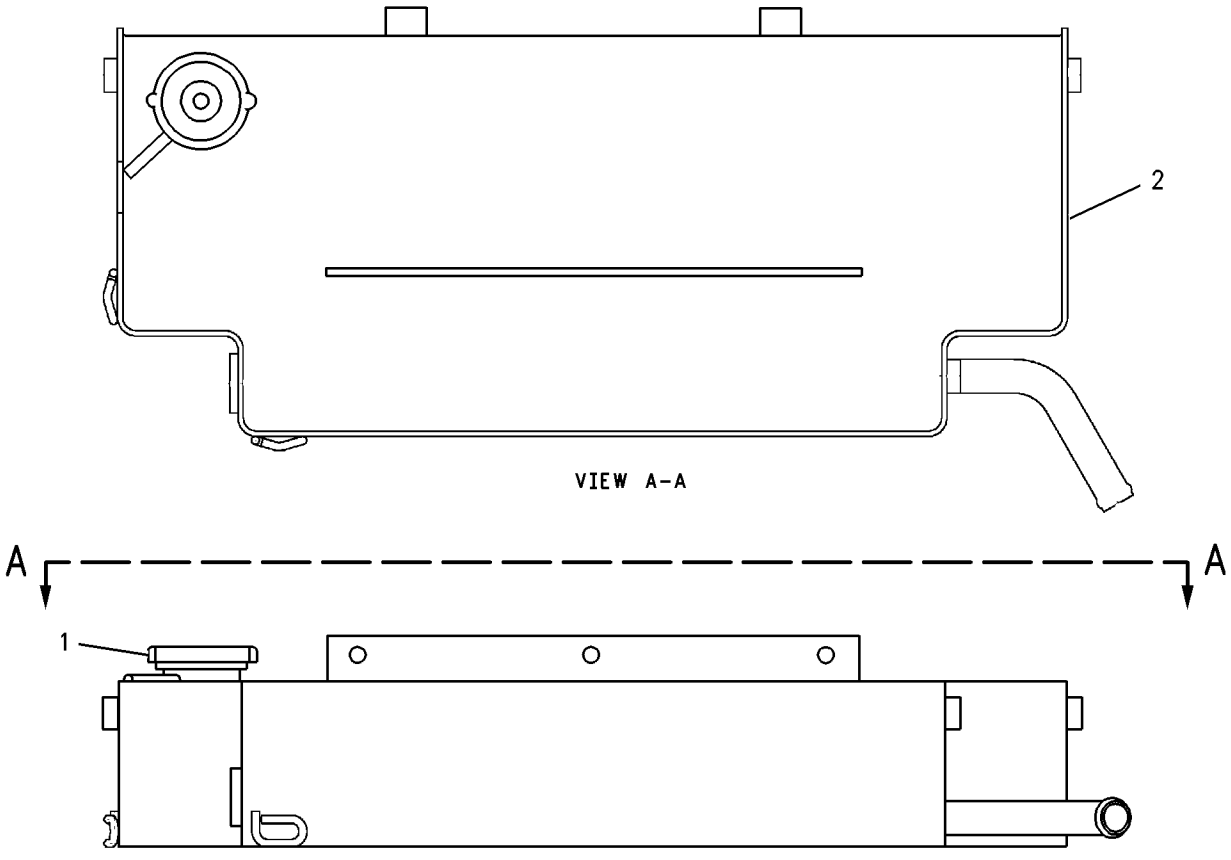

GRAPHIC #1 g00828270

MEMORANDA

COOLING SYSTEM

170-1100 TANK GP-WATER

S/N: BLE1-UP; BMJ1-UP

PART OF 168-8371 INSTALLATION AR-ENGINE

SMCS-1377 **i01668157**

NOTE	REF NO	GRAPHIC REF	PART NUMBER	QTY	PART NAME 1 2 3 4 5 6 (PRODUCT LEVEL)	SEE PAGE
	1	1	**2V-4868**	3	FITTING (1/8-27 PTF)	
	2	1	**5P-3422**	1	TEE-PIPE	
	3	1	**188-3034**	2	ELBOW AS	
					(EACH INCLUDES)	
	3A	1	**3J-7354**	1	SEAL-O-RING	
	4	1	**110-2445**	2	CLAMP-HOSE	
	5	1	**169-3826**	1	BRACKET AS	
M		1	**8T-3490**	2	NUT-WELD (M10X1.5 THD)	
	6	1	**196-9858**	1	TEE-SWIVEL	
	7	1	**5P-1838**	1	ADAPTER-O-RING	
	8	1	**069-4269**	1	STEM	
	9	1	*148-8347*	1	ELBOW GP	
	9A	1	**3D-2824**	1	SEAL-O-RING	
	9B	1	**6V-1355**	1	ELBOW	
	9C	1	**6V-9746**	1	SEAL-O-RING	
	10	1	*148-8411*	1	PLUG GP	
	10A	1	**3K-0360**	1	SEAL-O-RING (16.36MM ID)	
	10B	1	**9S-4185**	1	PLUG	
Y	11	1	**169-1840**	1	TANK GP-COOLANT	94
	12	1	**1P-4278**	8	CLAMP-HOSE	
	13	1	**3B-7721**	1	BUSHING-REDUCER	
	14	1	**3D-2824**	1	SEAL-O-RING	
	15	1	**3J-7354**	1	SEAL-O-RING	
	16	1	**4P-7429**	2	CLIP	
	17	1	**6K-0806**	5	STRAP-CABLE	
	18	1	**6K-6967**	1	ADAPTER-PIPE	
	19	1	**7D-7233**	1	CLIP	
	20	1	**7M-8485**	1	SEAL-O-RING	
	21	1	**8T-4121**	8	WASHER-HARD (11X21X2.5MM THK)	
M	22	1	**8T-4136**	8	BOLT (M10X1.5X25MM)	
	24	1	**9Y-9236**	1	BODY AS-GAUGE	
E	25	1	**5P-1251**		HOSE (103CM)	
E	26	1	**8C-3681**		HOSE (140CM)	
E	27	1	**5P-1465**		HOSE (40CM)	
	28	1	**5P-2937**	1	ADAPTER-O-RING	
	29	1	**3K-0360**	1	SEAL-O-RING (16.36MM ID)	
	30	1	**1P-9328**	1	FITTING	
E	31	1	**5P-1465**		HOSE (32CM)	
E	32	1	**5P-1465**		HOSE (32CM)	
E	33	1	**5P-1465**		HOSE (62CM)	

E-ORDER BY THE CENTIMETER
M-METRIC PART
Y-SEPARATE ILLUSTRATION

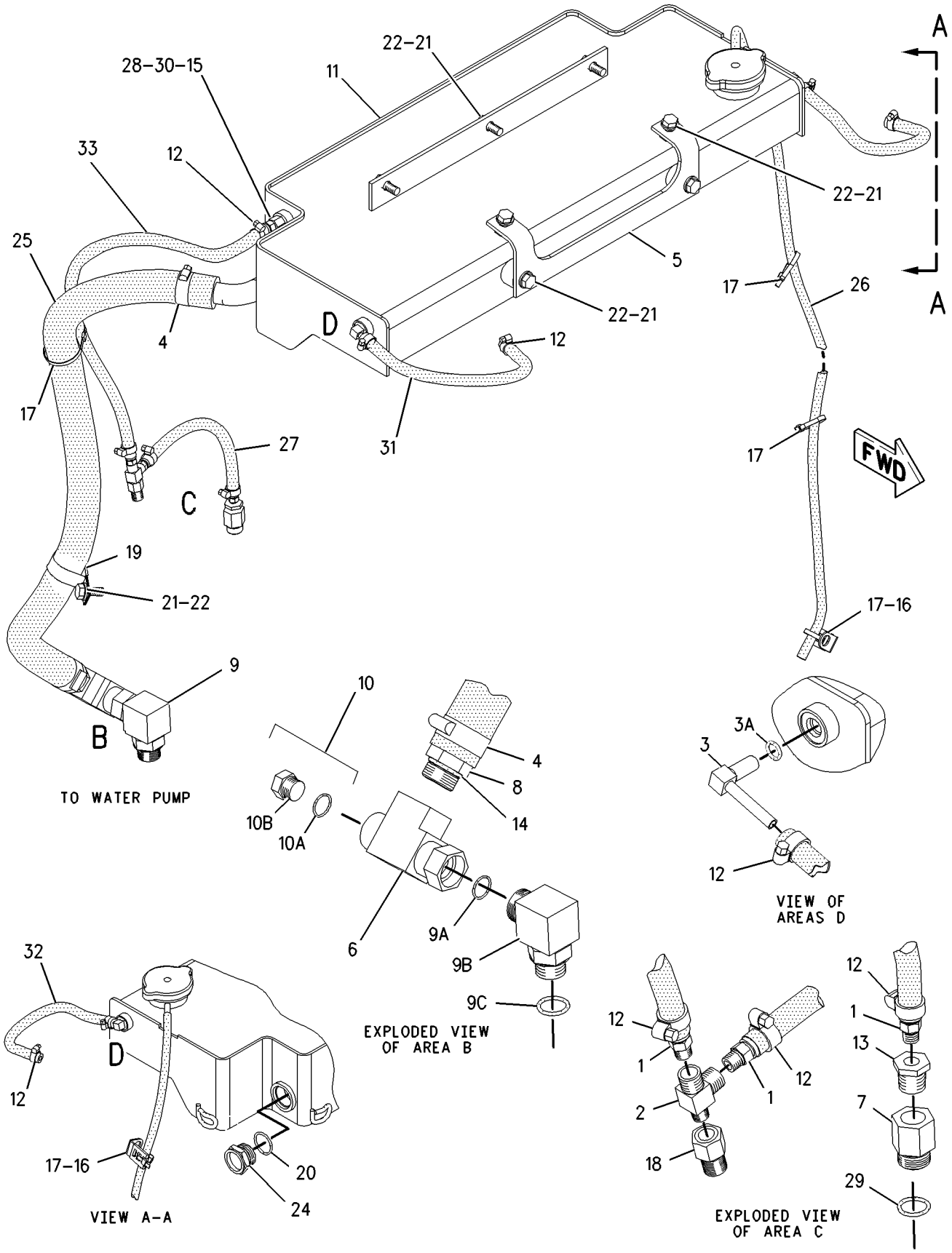

GRAPHIC #1

g00861630

AIR INLET AND EXHAUST SYSTEM

169-3803 AFTERCOOLER GP-AIR

S/N: BLE1-UP; BMJ1-UP

PART OF 168-8371 INSTALLATION AR-ENGINE

SMCS-1063 **i01645297**

NOTE	REF NO	GRAPHIC REF	PART NUMBER	QTY	PART NAME 1 2 3 4 5 6 (PRODUCT LEVEL)	SEE PAGE
	1	1	**125-7484**	4	SPACER	
	2	1	**169-3807**	1	CORE AS	
	3	1	**8T-4121**	4	WASHER-HARD (11X21X2.5MM THK)	
M	4	1	**8T-4195**	2	BOLT (M10X1.5X30MM)	
M	5	1	**8T-6466**	4	BOLT (M10X1.50X60MM)	
	6	1	**7X-7729**	2	WASHER (11X25X3MM THK)	

M-METRIC PART

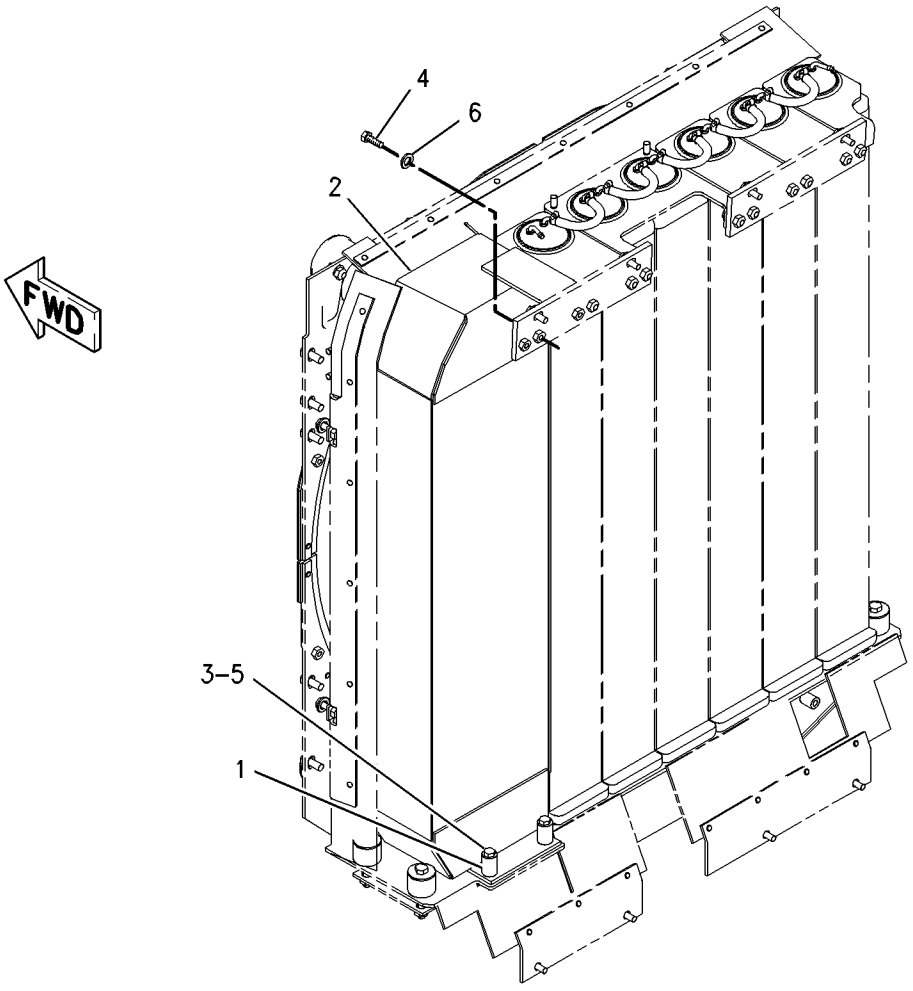

GRAPHIC #1 g00802491

AIR INLET AND EXHAUST SYSTEM

205-8674 AIR CLEANER GP

S/N: BLE1-UP; BMJ1-UP

PART OF 206-9000 AIR CLEANER GP

SMCS-1051, 1054 **i01645971**

NOTE	REF NO	GRAPHIC REF	PART NUMBER	QTY	PART NAME 1 2 3 4 5 6 (PRODUCT LEVEL)	SEE PAGE
	1	1	**6I-2501**	1	FILTER ELEMENT AS-AIR (PRIMARY)	
	2	1	**6I-2502**	1	FILTER ELEMENT AS-AIR (SECONDARY)	
	3	1	**6I-4464**	1	COVER AS-AIR CLEANER	
		1	**4P-5524**	1	SEAL-O-RING	
		1	**101-2850**	1	FILM-AIR CLEANER (RADIAL SEAL)	
	4	1	**8N-4617**	2	KIT-AIR CLEANER CLAMP	
					(EACH INCLUDES)	
		1	**1N-4403**	1	CLIP AS	
		1	**9B-2596**	1	RIVET	

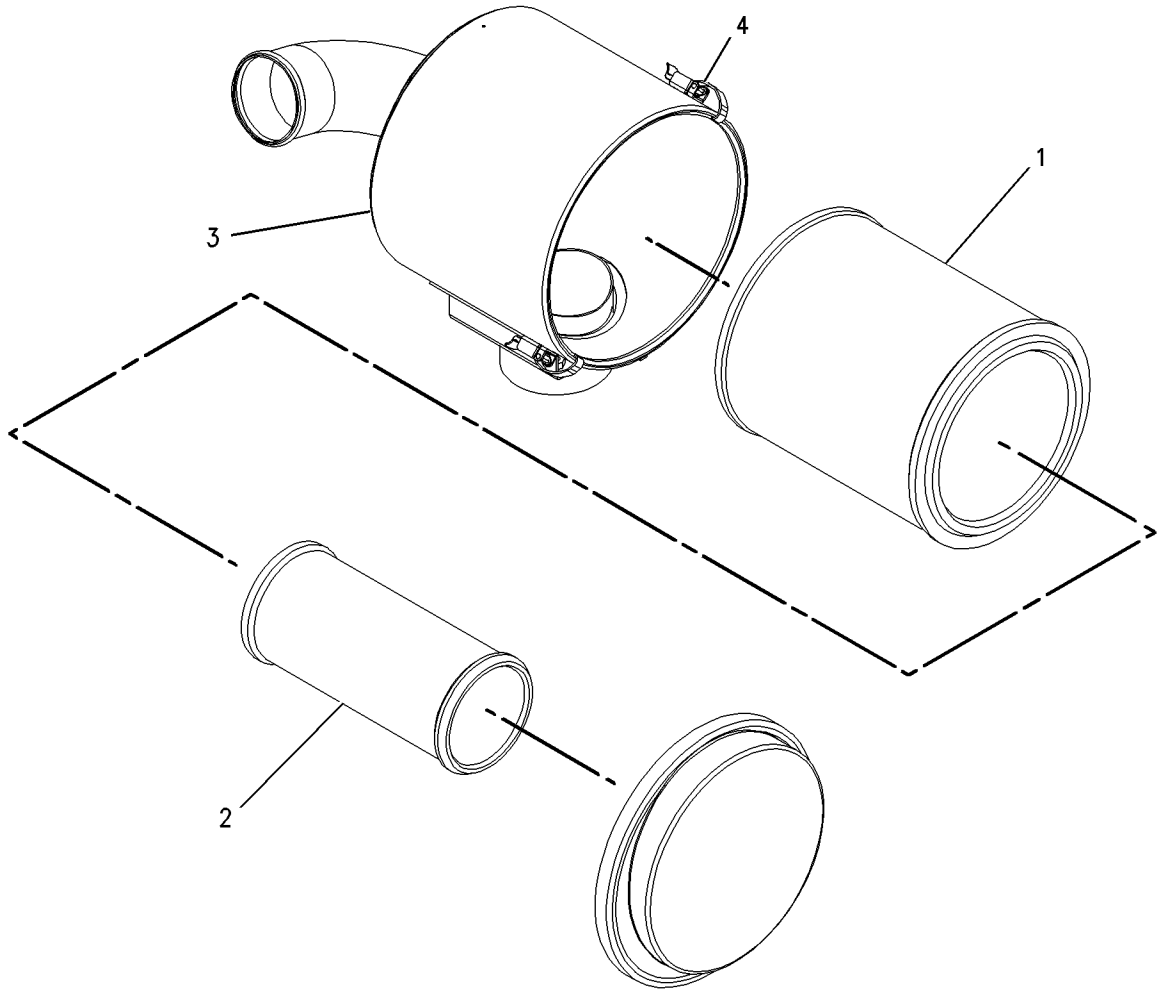

GRAPHIC #1 g00805077

AIR INLET AND EXHAUST SYSTEM

206-9000 AIR CLEANER GP

S/N: BLE1-UP; BMJ1-UP

PART OF 168-8371 INSTALLATION AR-ENGINE

SMCS-1051, 1054 **i01645356**

NOTE	REF NO	GRAPHIC REF	PART NUMBER	QTY	PART NAME 1 2 3 4 5 6 (PRODUCT LEVEL)	SEE PAGE
	1	1	**9S-6758**	1	HOOD AS	
		1	**0S-1591**	1	BOLT (3/8-16X1.5 IN)	
		1	**9S-8752**	1	NUT-FULL (3/8-16 THD)	
	2	1	**205-5307**	1	BRACKET AS	
	3	1	**205-5308**	1	BRACKET AS	
Y	4	1	**205-8674**	1	AIR CLEANER GP	99
	5	1	**205-8681**	1	BODY AS	
	6	1	**7X-7729**	6	WASHER (11X25X3MM THK)	
	7	1	**8T-4121**	8	WASHER-HARD (11X21X2.5MM THK)	
M	8	1	**8T-4133**	2	NUT (M10X1.5 THD)	
M	9	1	**8T-4136**	6	BOLT (M10X1.5X25MM)	
M	10	1	**8T-4137**	4	BOLT (M10X1.5X20MM)	
M	11	1	**8T-4195**	2	BOLT (M10X1.5X30MM)	

M-METRIC PART
Y-SEPARATE ILLUSTRATION

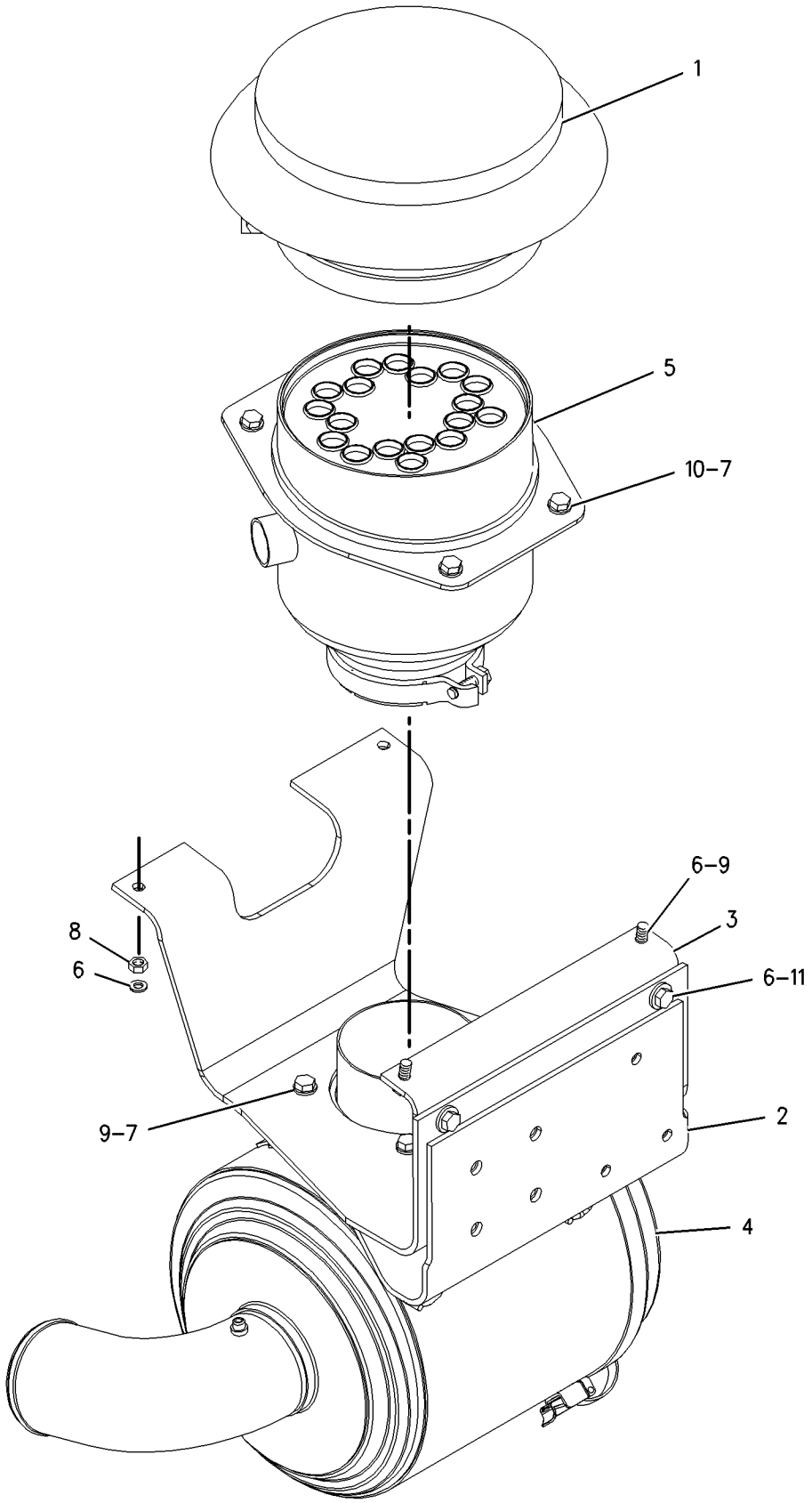

GRAPHIC #1 g00851368

AIR INLET AND EXHAUST SYSTEM

188-1018 DUST EJECTOR GP

S/N: BLE1-UP; BMJ1-UP

PART OF 168-8371 INSTALLATION AR-ENGINE

SMCS-1068 **i01645430**

NOTE	REF NO	GRAPHIC REF	PART NUMBER	QTY	PART NAME 1 2 3 4 5 6 (PRODUCT LEVEL)	SEE PAGE
	1	1	**5P-0597**	2	CLAMP-HOSE	
	2	1	**7W-5838**	1	EJECTOR AS-EXHAUST	
	2A	1	**7E-3870**	1	CLAMP	
E	3	1	**5P-2817**		HOSE (70CM)	

E-ORDER BY THE CENTIMETER

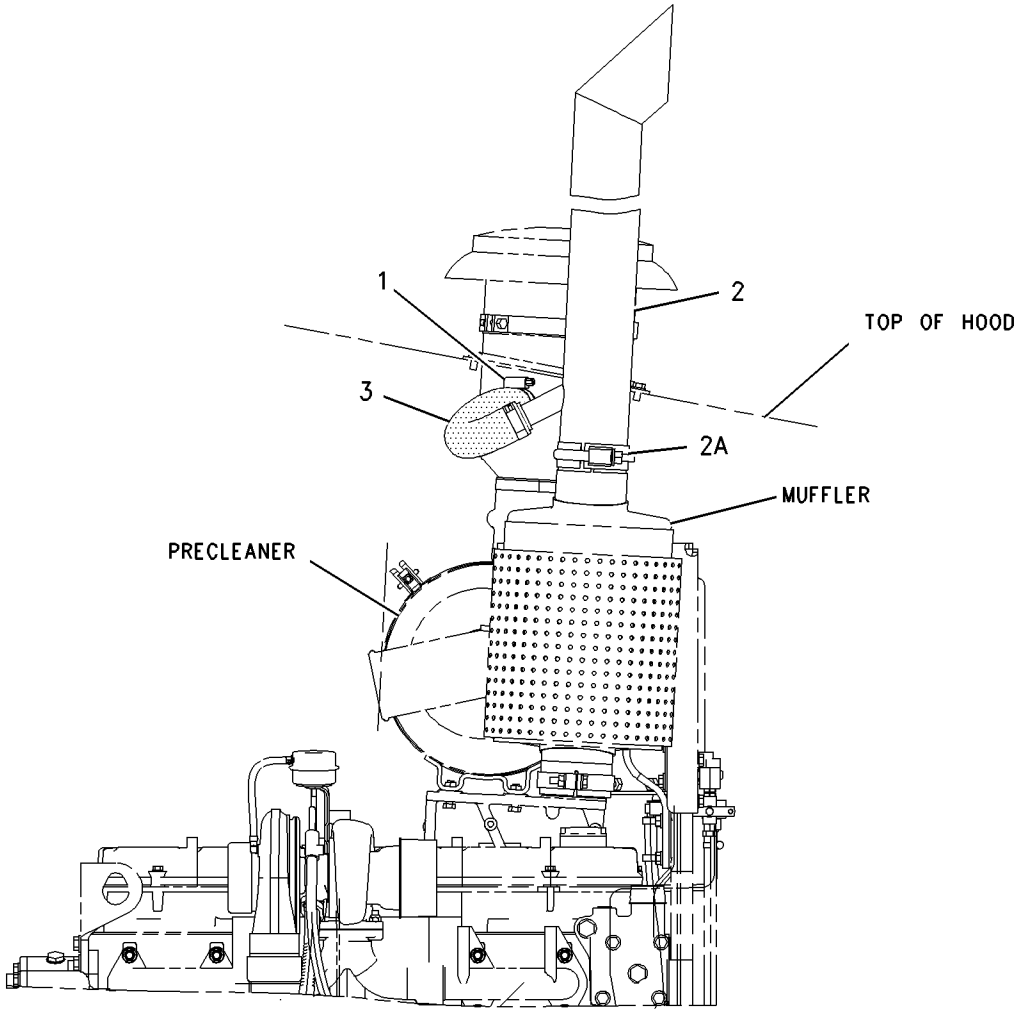

GRAPHIC #1 g00739902

AIR INLET AND EXHAUST SYSTEM

173-6107 ELBOW GP-AIR INLET

S/N: 4ZF1-UP
PART OF 166-0273, 169-3791, 176-5509, 176-9269 ENGINE AR
ALSO AN ATTACHMENT

SMCS-1087 **i01436897**

NOTE	REF NO	GRAPHIC REF	PART NUMBER	QTY	PART NAME 1 2 3 4 5 6 (PRODUCT LEVEL)	SEE PAGE
M	1	1	**131-0353**	8	STUD-BOLT	
	2	1	**187-3971**	1	ELBOW-AIR INLET	
	3	1	**3E-4352**	2	WASHER-HARD (8.8X20.5X2.5MM THK)	
	4	1	**9M-1974**	6	WASHER-HARD (8.8X16X2MM THK)	
B	5	1	**1U-8846**		SEALANT-GASKET	

B-USE AS REQUIRED
M-METRIC PART

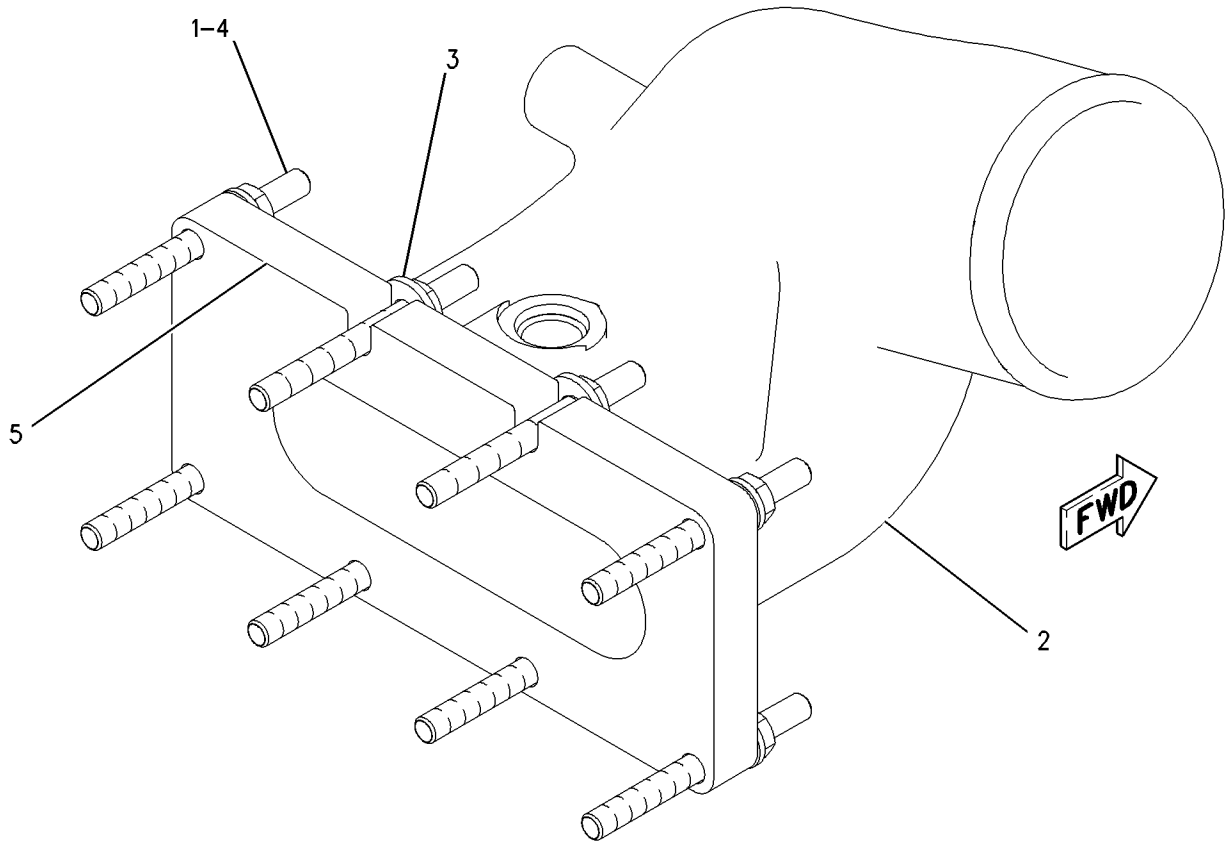

GRAPHIC #1 g00739352

AIR INLET AND EXHAUST SYSTEM

3W-1654 GUARD GP-PRECLEANER

S/N: BLE1-UP; BMJ1-UP
AN ATTACHMENT

SMCS-1055 **i01419914**

NOTE	REF NO	GRAPHIC REF	PART NUMBER	QTY	PART NAME 1 2 3 4 5 6 (PRODUCT LEVEL)	SEE PAGE
	1	1	**3W-1655**	1	GUARD AS	
C	2	1	**4L-6454**	2	BOLT (3/8-16X1 IN)	
C	3	1	**6V-8801**	4	NUT (3/8-16 THD)	
C	4	1	**5P-1075**	8	WASHER-HARD (10.2X22.5X3MM THK)	
	5	1	**8T-2501**	2	BOLT (3/8-16X2 IN)	

C-CHANGE FROM PREVIOUS TYPE

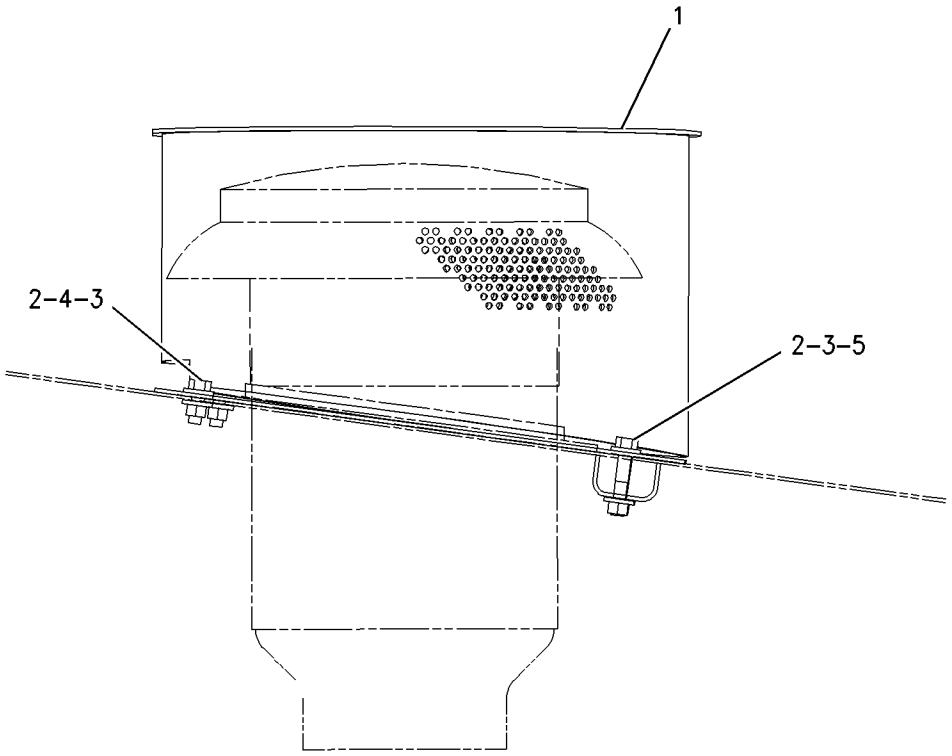

GRAPHIC #1 g00792489

AIR INLET AND EXHAUST SYSTEM

168-8377 LINES GP-AIR

S/N: BLE1-UP; BMJ1-UP

PART OF 168-8371 INSTALLATION AR-ENGINE

SMCS-1058 **i01668321**

NOTE	REF NO	GRAPHIC REF	PART NUMBER	QTY	PART NAME 1 2 3 4 5 6 (PRODUCT LEVEL)	SEE PAGE
	1	1	**1W-2431**	1	CLAMP-BAND	
		1	**8T-0193**	1	NUT-FULL (5/16-24 THD)	
	2	1	**6N-1558**	1	RING-SEAL	
	3	1	**8T-4986**	4	CLAMP-HOSE	
	4	1	**169-3883**	1	COUPLING-TURBOCHARGER	
	5	1	**214-1645**	1	ELBOW-EXHAUST	
	6	1	**215-6298**	1	HOSE AS	
M	7	1	**6V-4249**	3	BOLT (M10X1.5X50 MM)	
	8	1	**6V-5839**	3	WASHER (11X21X2.5MM THK)	

M-METRIC PART

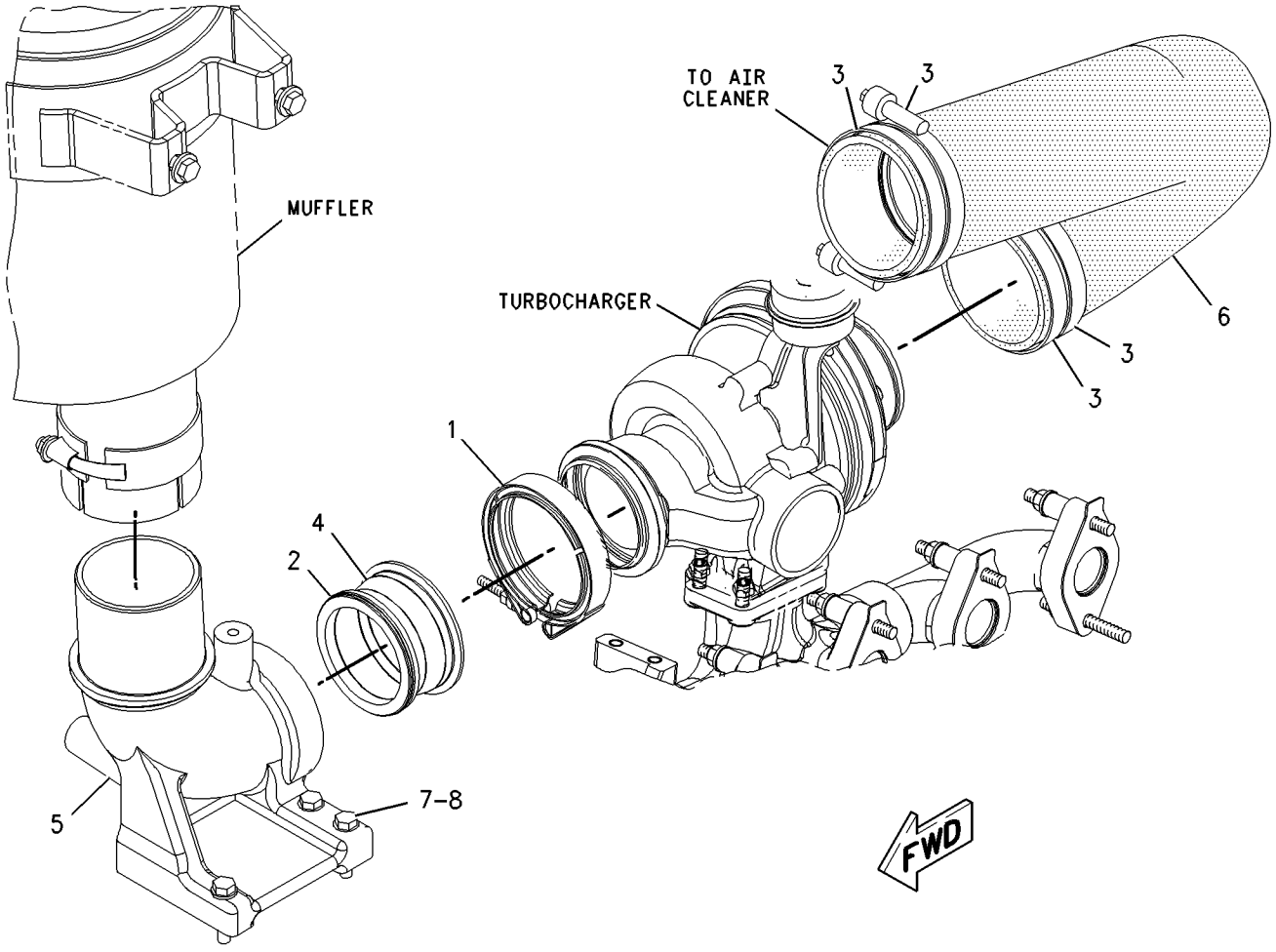

GRAPHIC #1 g00851141

AIR INLET AND EXHAUST SYSTEM

169-3804 LINES GP-AIR

S/N: BLE1-UP; BMJ1-UP

PART OF 168-8371 INSTALLATION AR-ENGINE

SMCS-1058 **i01645545**

NOTE	REF NO	GRAPHIC REF	PART NUMBER	QTY	PART NAME 1 2 3 4 5 6 (PRODUCT LEVEL)	SEE PAGE
	1	1	**8T-4985**	16	CLAMP-HOSE	
	2	1	**178-3842**	1	TUBE	
	3	1	**178-3844**	1	HOSE-HUMP	
	4	1	**186-3394**	1	HOSE	
	5	1	**188-1011**	1	TUBE AS	
	6	1	**188-1019**	2	HOSE	
	7	1	**7X-7729**	1	WASHER (11X25X3MM THK)	
	8	1	**4L-6454**	2	BOLT (3/8-16X1 IN)	
M	9	1	**8T-4195**	1	BOLT (M10X1.5X30MM)	
	10	1	**8T-4222**	2	WASHER-PLATED (11X32X2.5MM THK)	
E	11	1	**5P-0764**	2	HOSE (88.9 MM ID) (9.5CM EACH)	

E-ORDER BY THE CENTIMETER
M-METRIC PART

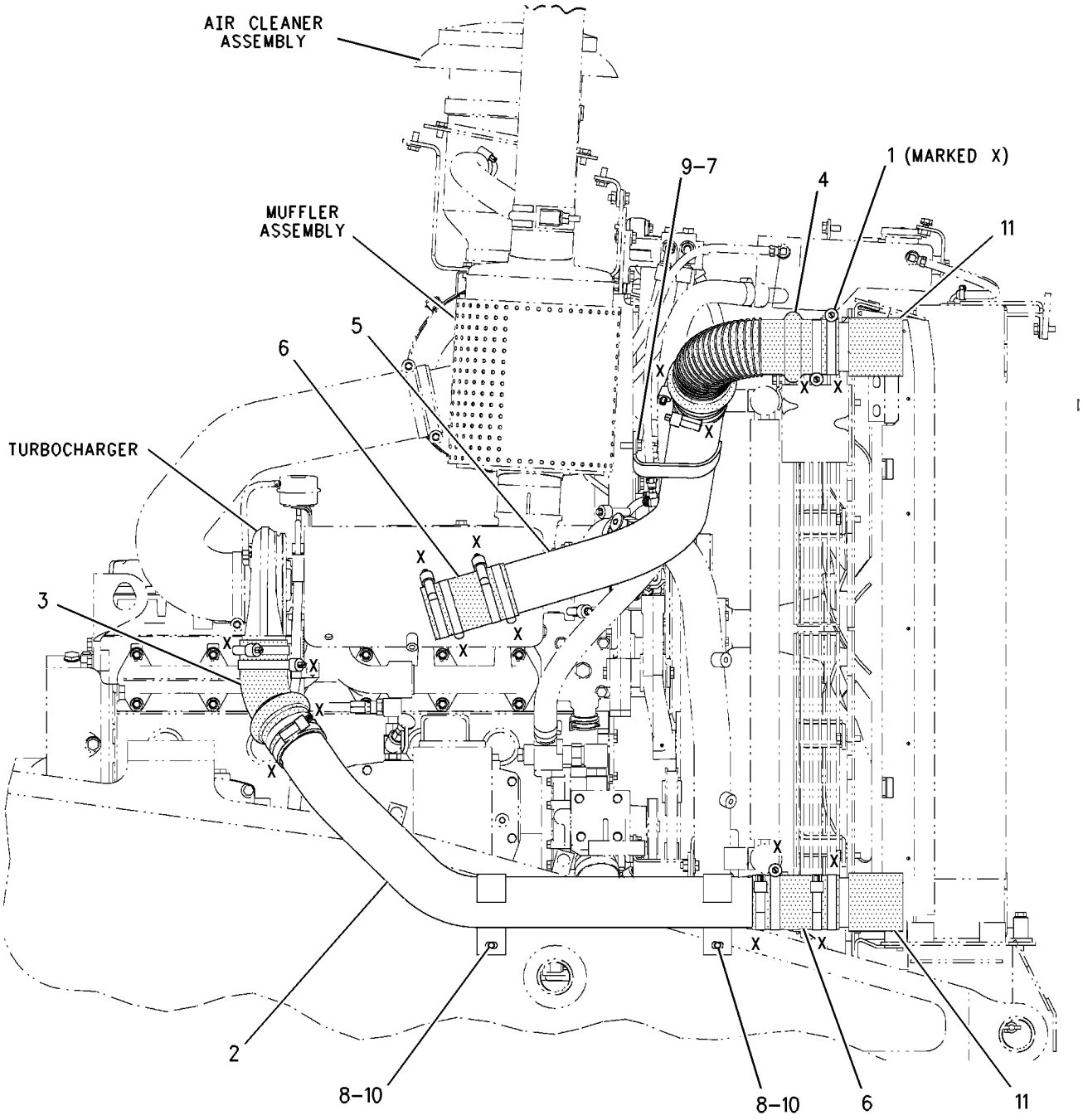

RIGHT SIDE VIEW

GRAPHIC #1

g00849449

AIR INLET AND EXHAUST SYSTEM

165-4445 MANIFOLD GP-EXHAUST

S/N: 4ZF1-UP

PART OF 166-0273, 169-3791, 176-5509, 176-9269 ENGINE AR

ALSO AN ATTACHMENT

SMCS-1059 **i01649625**

NOTE	REF NO	GRAPHIC REF	PART NUMBER	QTY	PART NAME 1 2 3 4 5 6 (PRODUCT LEVEL)	SEE PAGE
M	1	1	**3E-8017**	12	LOCKNUT (M10X1.5)	
	2	1	**161-3398**	1	MANIFOLD-EXHAUST	
	3	1	**161-3411**	6	GASKET	
	4	1	**167-0172**	1	MANIFOLD-EXHAUST	
	5	1	**203-7775**	1	MANIFOLD	
M	6	1	**116-3715**	12	STUD-TAPERLOCK (M10X1.5X85MM)	
	7	1	**4P-4369**	6	SPACER	
	8	1	**6V-5839**	12	WASHER (11X21X2.5MM THK)	
M	9	1	**8T-7044**	4	STUD-TAPERLOCK	

M-METRIC PART

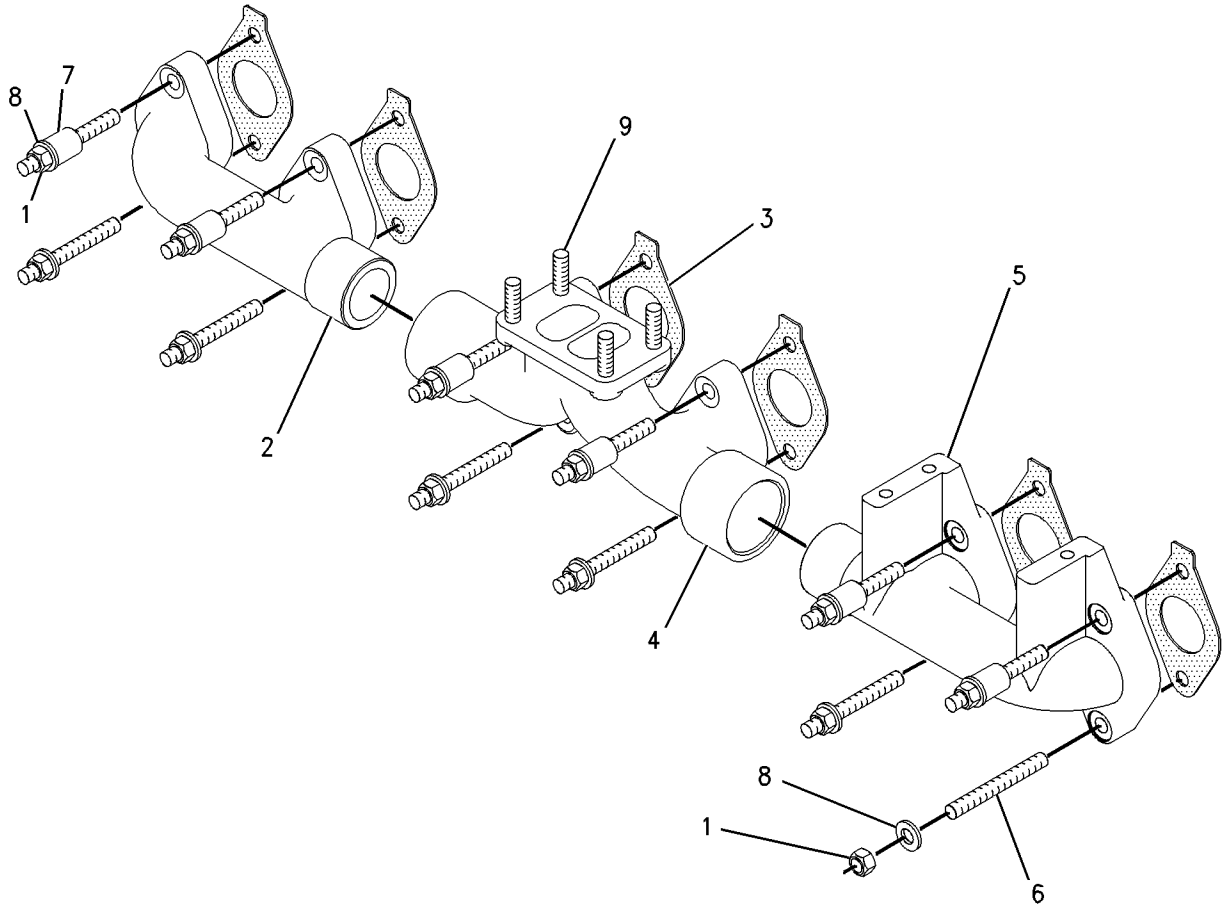

GRAPHIC #1 g00741421

AIR INLET AND EXHAUST SYSTEM

168-8382 MUFFLER GP

S/N: BLE1-UP; BMJ1-UP

PART OF 168-8371 INSTALLATION AR-ENGINE

SMCS-1062 **i01668125**

NOTE	REF NO	GRAPHIC REF	PART NUMBER	QTY	PART NAME 1 2 3 4 5 6 (PRODUCT LEVEL)	SEE PAGE
	1	1	**171-2990**	1	MUFFER AS	
	1A	1	**7E-3870**	1	CLAMP	
	2	1	**186-5120**	1	BRACKET AS	
		1	**7T-1099**	3	LINK	
M		1	**8T-3490**	5	NUT-WELD (M10X1.5 THD)	
	3	1	**3E-4353**	2	WASHER-HARD (11X25X3MM THK)	
M	4	1	**6V-1820**	2	BOLT (M10X1.50X30MM)	
	5	1	**8T-4121**	2	WASHER-HARD (11X21X2.5MM THK)	
M	6	1	**8T-4195**	2	BOLT (M10X1.5X30MM)	

M-METRIC PART

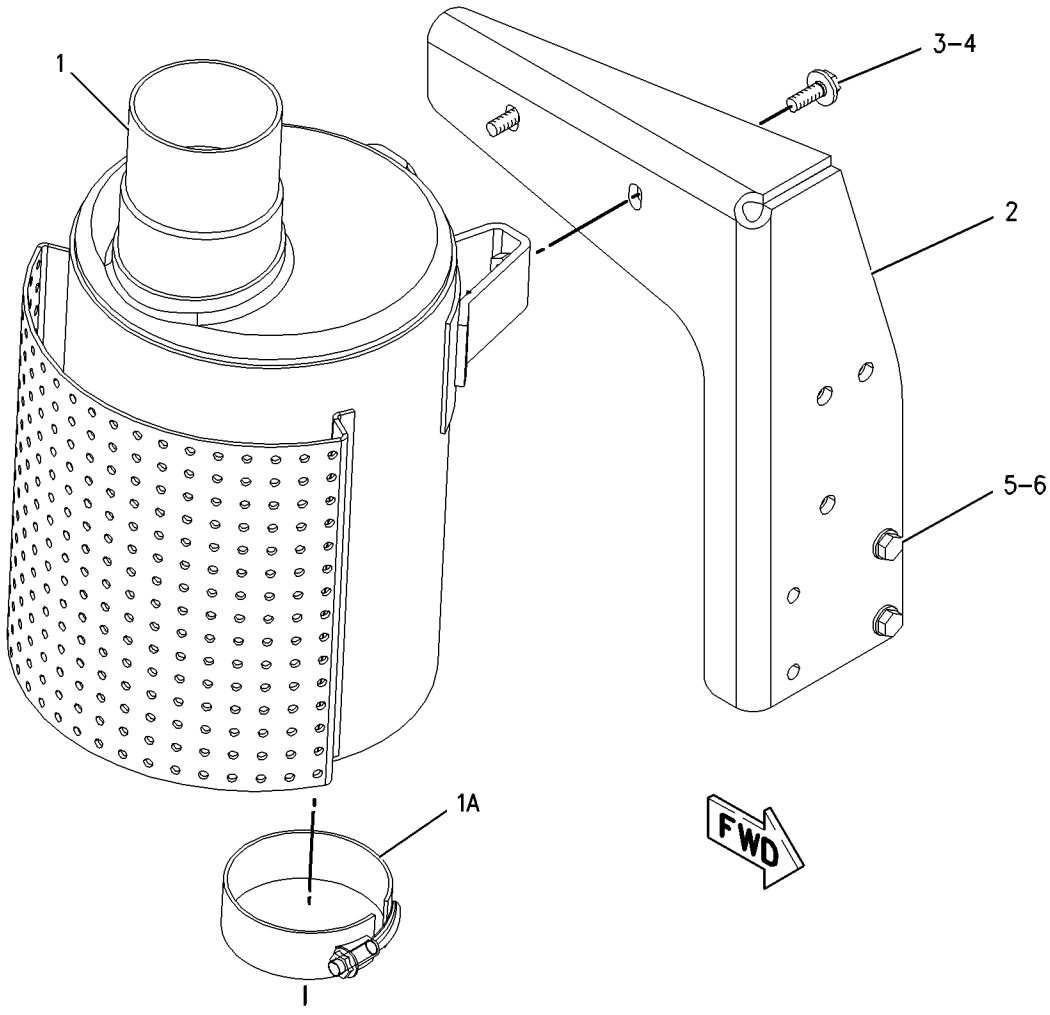

GRAPHIC #1 g00805235

AIR INLET AND EXHAUST SYSTEM

168-8387 SHIELD GP-EXHAUST

S/N: BLE1-UP; BMJ1-UP

PART OF 168-8371 INSTALLATION AR-ENGINE

SMCS-1067 **i01646024**

NOTE	REF NO	GRAPHIC REF	PART NUMBER	QTY	PART NAME 1 2 3 4 5 6 (PRODUCT LEVEL)	SEE PAGE
	1	1	**183-2100**	1	SHIELD AS	
	2	1	**3E-4353**	3	WASHER-HARD (11X25X3MM THK)	
M	3	1	**6V-4248**	3	BOLT (M10X1.50X25MM)	

M-METRIC PART

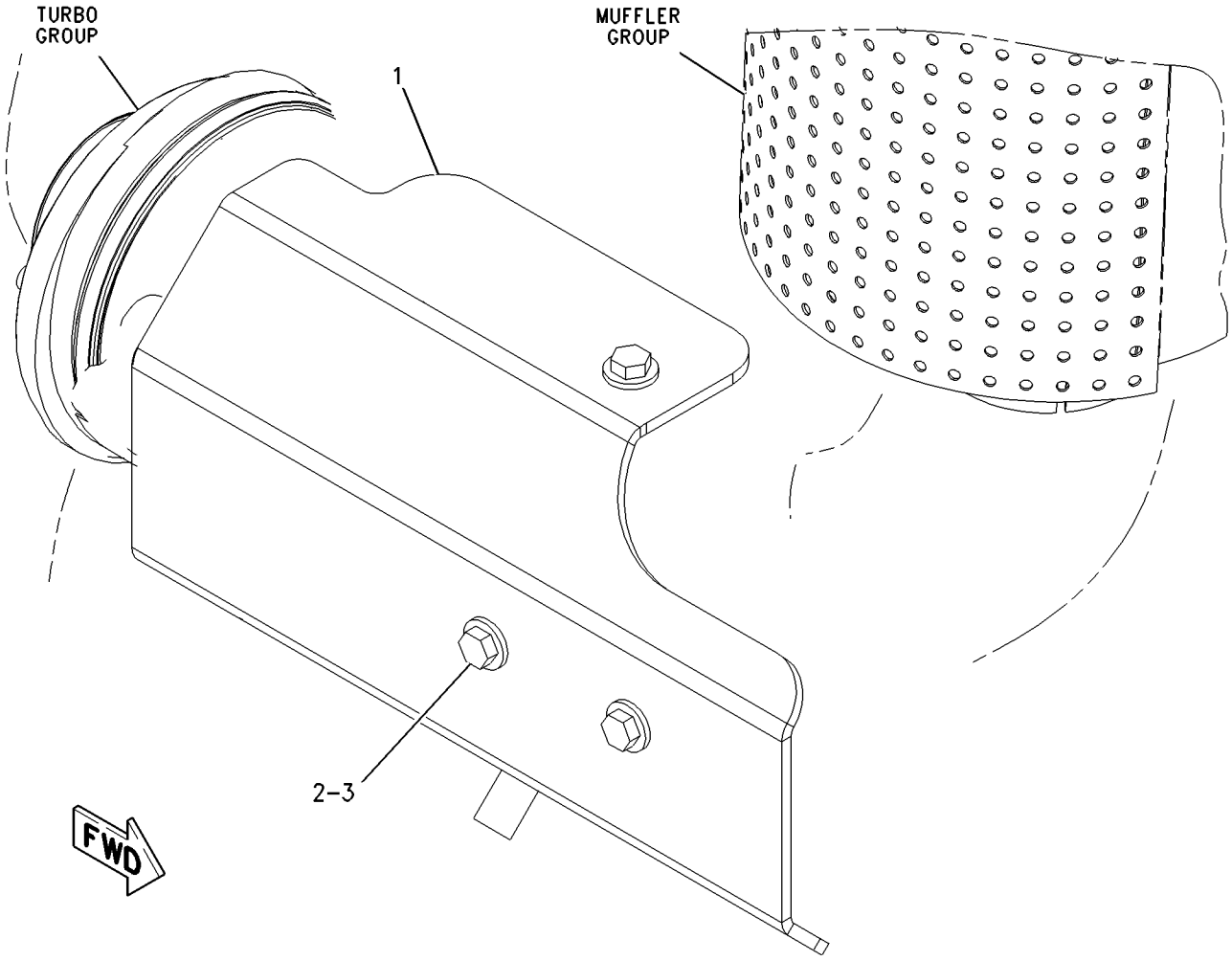

GRAPHIC #1 g00852290

AIR INLET AND EXHAUST SYSTEM

169-3122 TURBOCHARGER GP

S/N: 4ZF1-UP
PART OF 166-0270, 169-3788 ENGINE AR-CORE
ALSO AN ATTACHMENT

SMCS-1052, 1053, 1056, 1060, 1065, 1066, 1077 **i01439923**

NOTE	REF NO	GRAPHIC REF	PART NUMBER	QTY	PART NAME 1 2 3 4 5 6 (PRODUCT LEVEL)	SEE PAGE
Y	1	1	**188-5156**	1	TURBOCHARGER GP	112
M	2	1	**3E-8017**	4	LOCKNUT (M10X1.5)	
	3	1	**7C-7431**	1	GASKET-TURBOCHARGER	

M-METRIC PART
Y-SEPARATE ILLUSTRATION

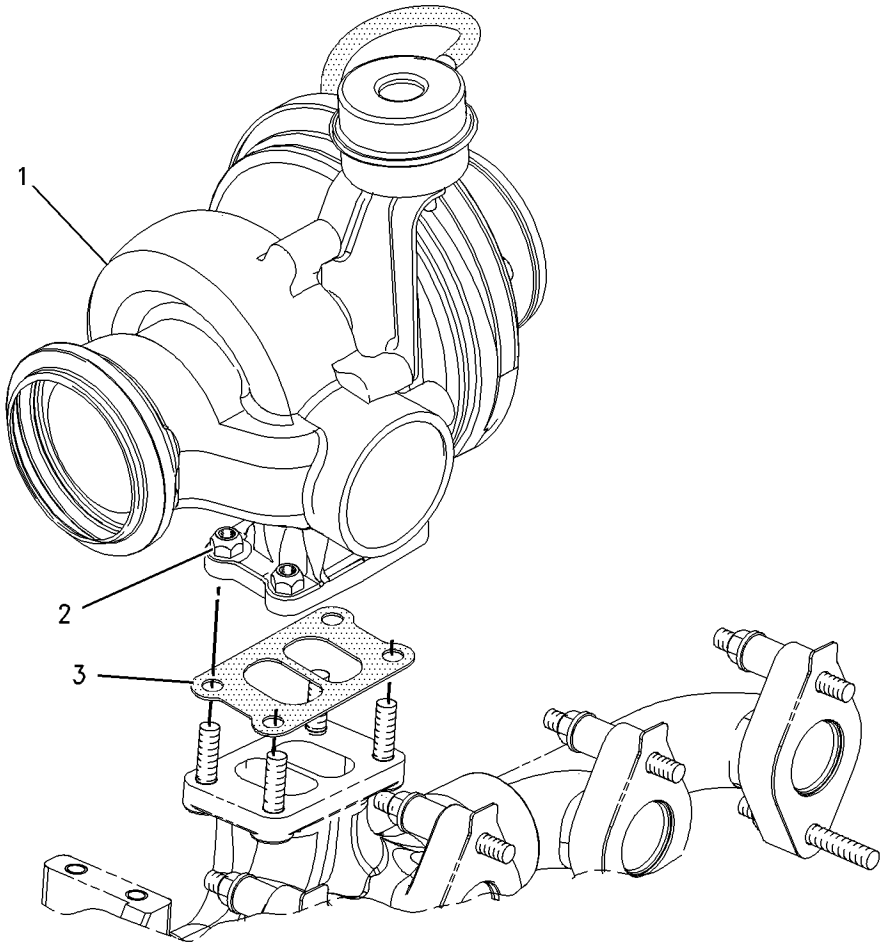

GRAPHIC #1 g00720793

AIR INLET AND EXHAUST SYSTEM

188-5156 TURBOCHARGER GP*R

S/N: 4ZF1-UP
PART OF 169-3122 TURBOCHARGER GP
ALSO AN ATTACHMENT

SMCS-1052, 1053, 1056, 1060, 1065, 1066, 1077 **i01668389**

NOTE	REF NO	GRAPHIC REF	PART NUMBER	QTY	PART NAME 1 2 3 4 5 6 (PRODUCT LEVEL)	SEE PAGE
	1	1	**4P-5866**	2	CLAMP	
	2	1	**5P-4536**	1	ELBOW	
	3	1	**6I-2353**	1	HOSE	
M	4	1	**7C-6670**	4	BOLT (M8X12.5MM)	
	5	1	**7C-6672**	2	PLATE-CLAMP	
	6	1	**7M-9918**	1	LOCKNUT (1/4-28 THD)	
	7	1	**158-6072**	1	CLAMP AS (TURBINE)	
	8	1	**196-5463**	1	CARTRIDGE GP-TURBOCHARGER	
	9	1	**196-5478**	1	HOUSING AS-TURBINE	
	10	1	**196-5962**	1	COVER-COMPRESSOR	

M-METRIC PART

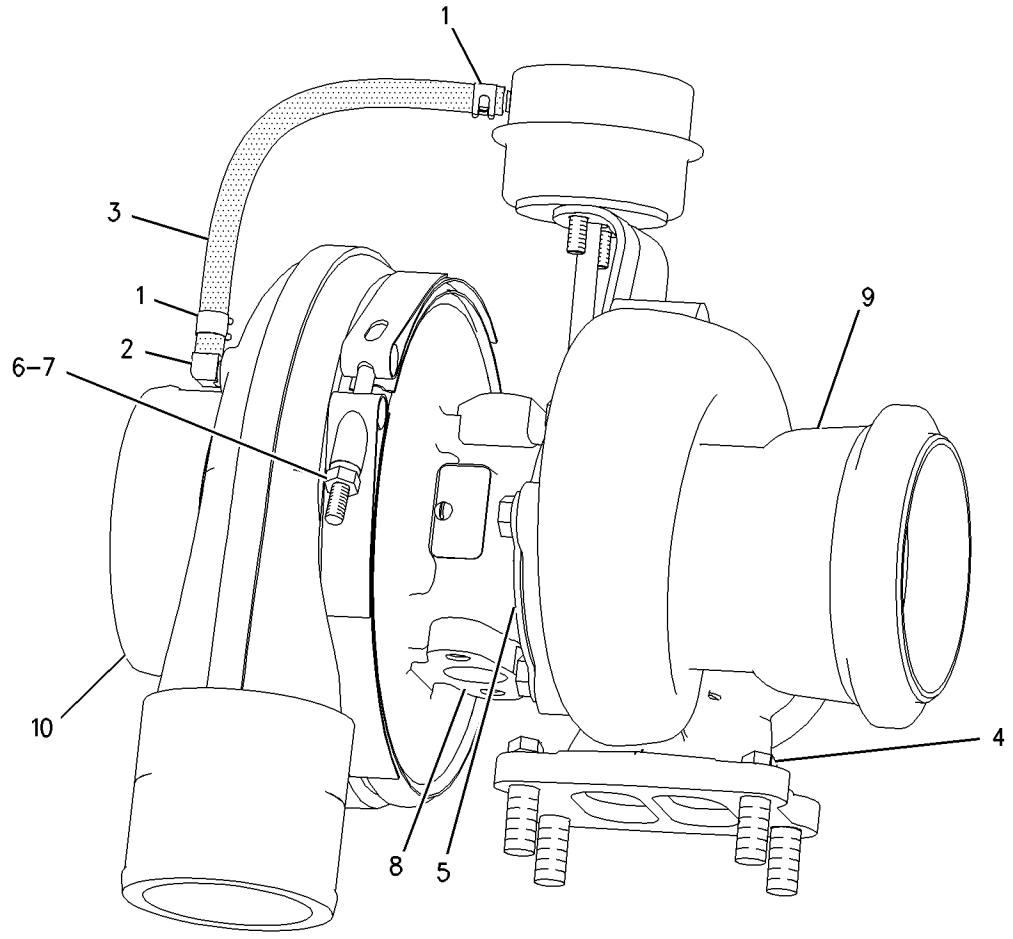

GRAPHIC #1 g00853829

FUEL SYSTEM

174-9570 FILTER GP-WATER SEP & FUEL

S/N: BLE1-UP; BMJ1-UP
PART OF 206-9001 PUMP GP-FUEL

SMCS-1261, 1263 **i01647527**

NOTE	REF NO	GRAPHIC REF	PART NUMBER	QTY	PART NAME 1 2 3 4 5 6 (PRODUCT LEVEL)	SEE PAGE
	1	1	**173-7126**	1	BOWL AS	
	1A	1	**5F-9144**	1	SEAL-O-RING	
	1B	1	**6V-5049**	1	SEAL-O-RING	
	2	1	**1R-0770**	1	FILTER AS-WATER SEP & FUEL	

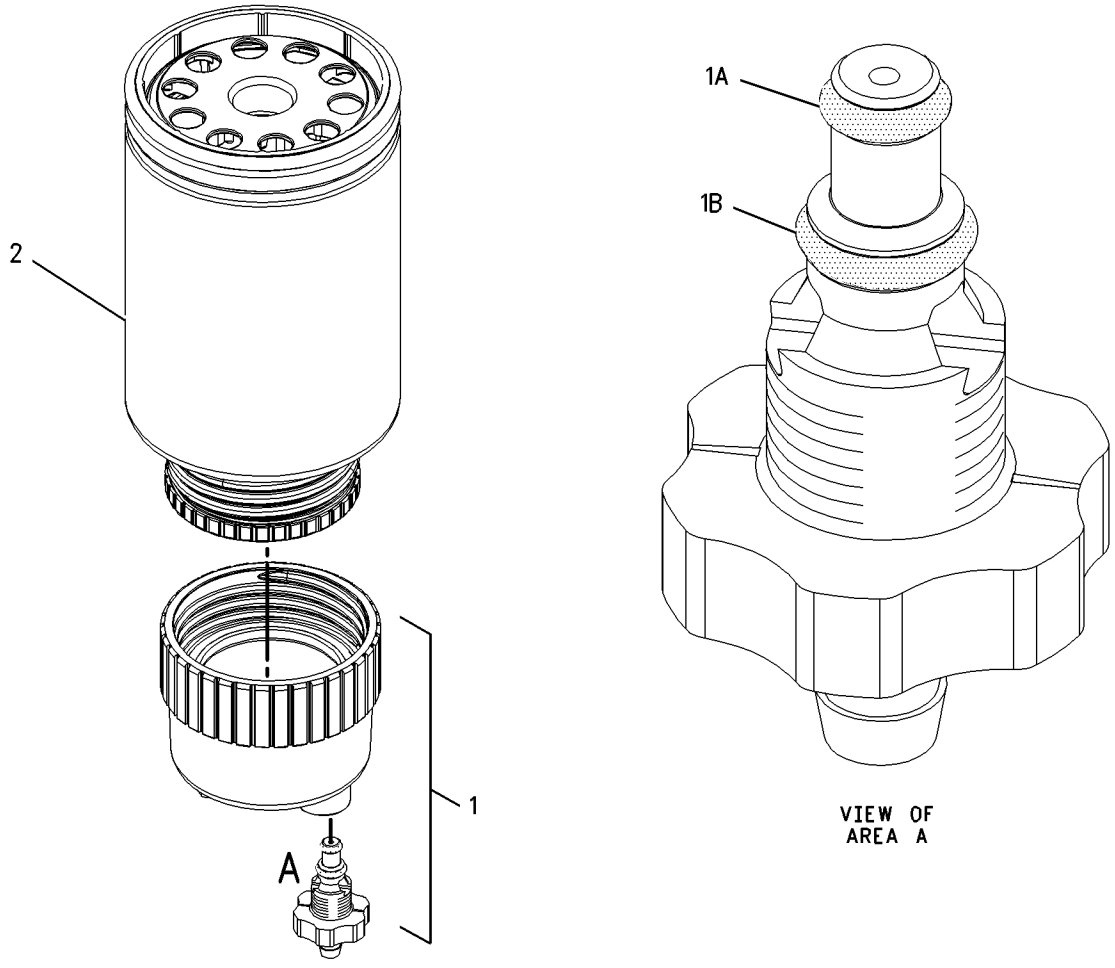

GRAPHIC #1 g00851460

FUEL SYSTEM

165-2555 LINES GP-FUEL

S/N: BLE1-UP; BMJ1-UP
PART OF 164-4782, 164-4784 CHASSIS AR

SMCS-1274 **i01668046**

NOTE	REF NO	GRAPHIC REF	PART NUMBER	QTY	PART NAME 1 2 3 4 5 6 (PRODUCT LEVEL)	SEE PAGE
	1	1	**1W-3011**	1	SPACER (10.5X22X73.5MM THK)	
	2	1	**4S-6668**	2	CLIP	
	3	2	**5G-4109**	1	SCREEN-SUMP (FUEL TANK)	
	4	2	**8T-0119**	2	ELBOW	
	5	2	**8T-6723**	1	VALVE-BALL	
	6	2	**8T-6724**	1	VALVE-BALL	
	7	2	*150-3026*	1	ELBOW AS	
		2	**3K-0360**	1	SEAL-O-RING (16.36MM ID)	
		2	**6V-4292**	1	ELBOW-O-RING	
I	8	1	**174-7592**	1	HOSE AS	
I	9	1	**174-7593**	1	HOSE AS	
I	10	2	**175-5123**	1	HOSE AS	
	11	1	**196-7771**	1	BRACKET AS	
		1	**5L-8957**	1	STUD-WELD (3/8-16X1.00 IN)	
	12	2	**067-2551**	2	CLIP	
	13	1	**100-4336**	2	CLIP	
	14	2	*148-8361*	1	ELBOW GP	
		2	**3J-7354**	1	SEAL-O-RING	
		2	**6V-8397**	1	SEAL-O-RING	
		2	**6V-9200**	1	ELBOW	
	15	2	*148-8364*	1	ELBOW GP	
		2	**3K-0360**	1	SEAL-O-RING (16.36MM ID)	
		2	**6V-8398**	1	SEAL-O-RING	
		2	**6V-8625**	1	ELBOW	
	16	1	*148-8372*	1	ELBOW GP	
		1	**2M-9780**	1	SEAL-O-RING	
		1	**6V-8398**	1	SEAL-O-RING	
		1	**6V-8721**	1	ELBOW	
	17	1	*164-5570*	1	UNION GP	
		1	**6V-8397**	2	SEAL-O-RING	
		1	**6V-8730**	1	UNION-FACE SEAL	
	18	1	**1J-8668**	1	STUD-TAPERLOCK	
	19	2	**1S-0996**	1	CLIP	
	20	2	**3K-0360**	4	SEAL-O-RING (16.36MM ID)	
	21	1	**4D-7735**	2	CLIP	
	22	1	**4L-6454**	1	BOLT (3/8-16X1 IN)	
	23	1,2	**5M-3062**	3	BOLT (3/8-16X0.75 IN)	
	24	1	**5P-1075**	1	WASHER-HARD (10.2X22.5X3MM THK)	
	25	1	**6V-8801**	4	NUT (3/8-16 THD)	
	26	1	**7X-0291**	1	BOLT (3/8-16X3.75 IN)	
	27	1	**8T-1887**	2	CLIP (SLOT)	
	28	1	**8T-1888**	2	CLIP (TAB)	
	29	1	**8T-1893**	3	CLIP (SLOT)	
	30	1	**8T-1894**	3	CLIP (TAB)	
	31	1	**8T-4121**	2	WASHER-HARD (11X21X2.5MM THK)	
M	32	1	**8T-4137**	2	BOLT (M10X1.5X20MM)	
	33	1	**8T-4223**	1	WASHER-HARD (13.5X25.5X3MM THK)	
	34	1,2	**8T-4896**	9	WASHER-HARD (10.2X18.5X2.5MM THK)	
	35	2	**8T-9384**	1	BOLT (1/2-13X0.875 IN)	
	36	1	**9B-7237**	1	BOLT (3/8-16X1.25 IN)	
E	37	2	**5P-1505**		HOSE (104CM)	
	38	1	**8M-1871**	2	STUD-TAPERLOCK	

E-ORDER BY THE CENTIMETER
I-SEE HOSE FABRICATION GUIDE
M-METRIC PART

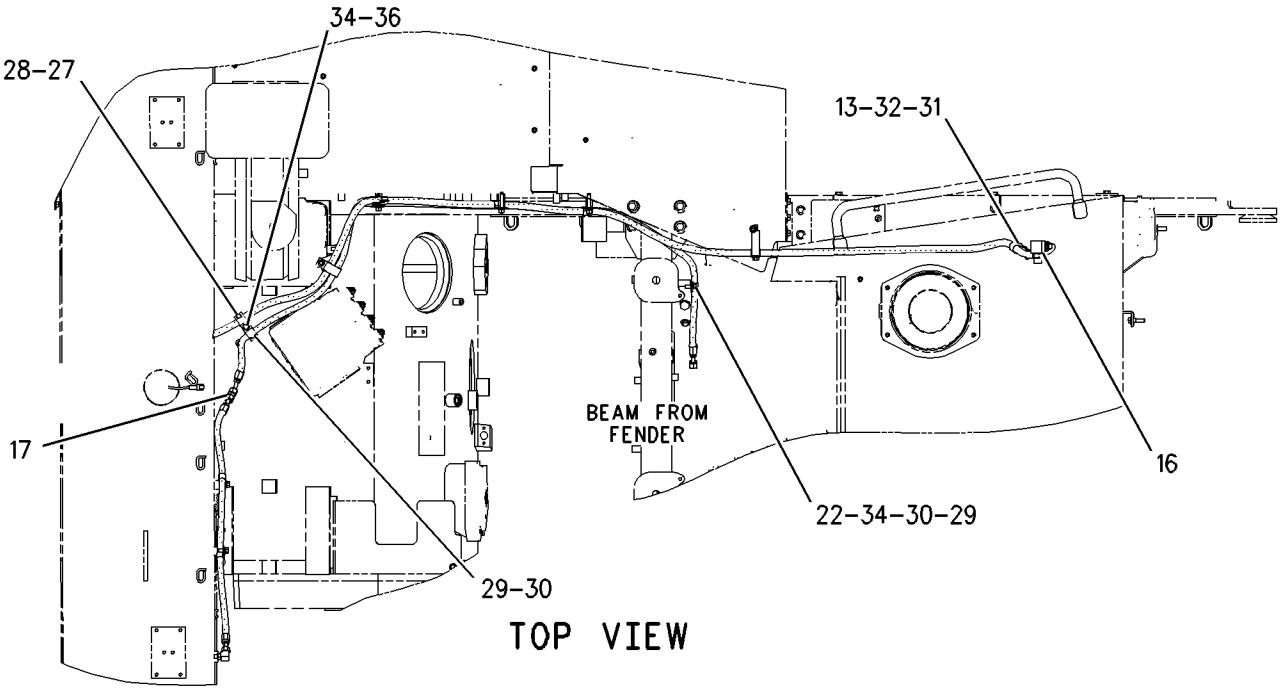

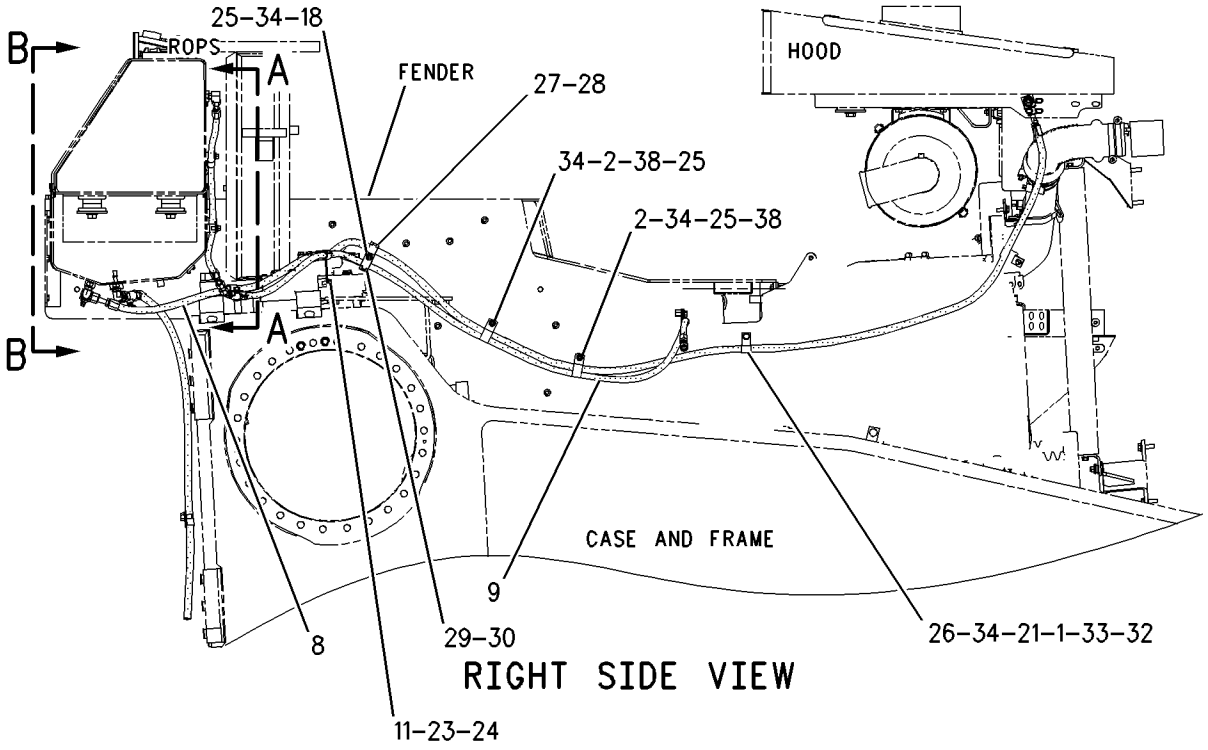

REFER TO ALL ILLUSTRATIONS OF THIS GROUP FOR AUXILIARY VIEWS

GRAPHIC #1 g00845697

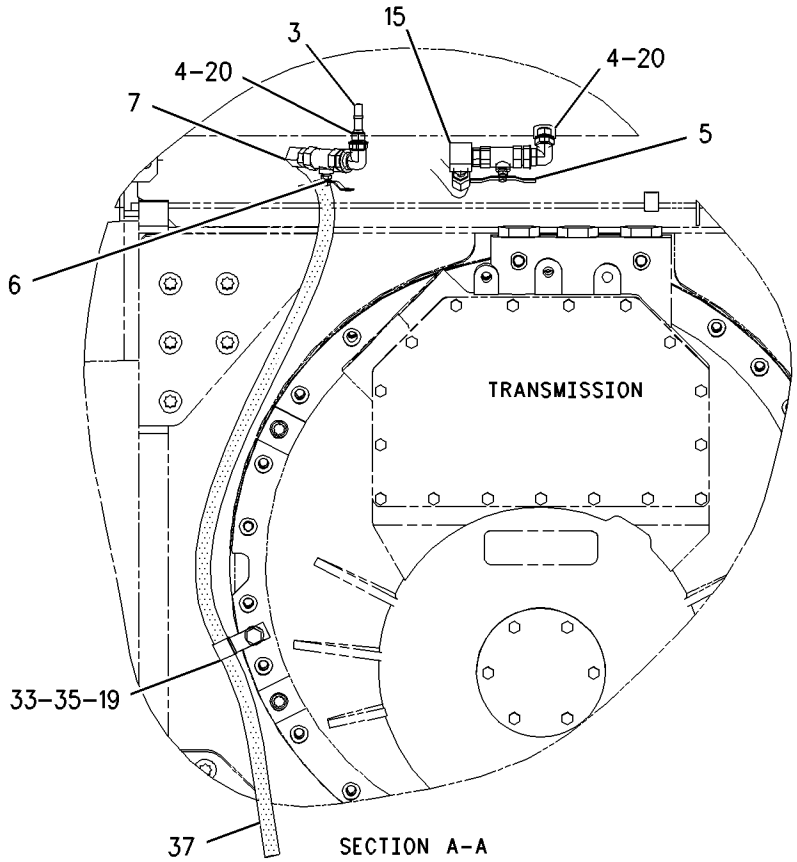

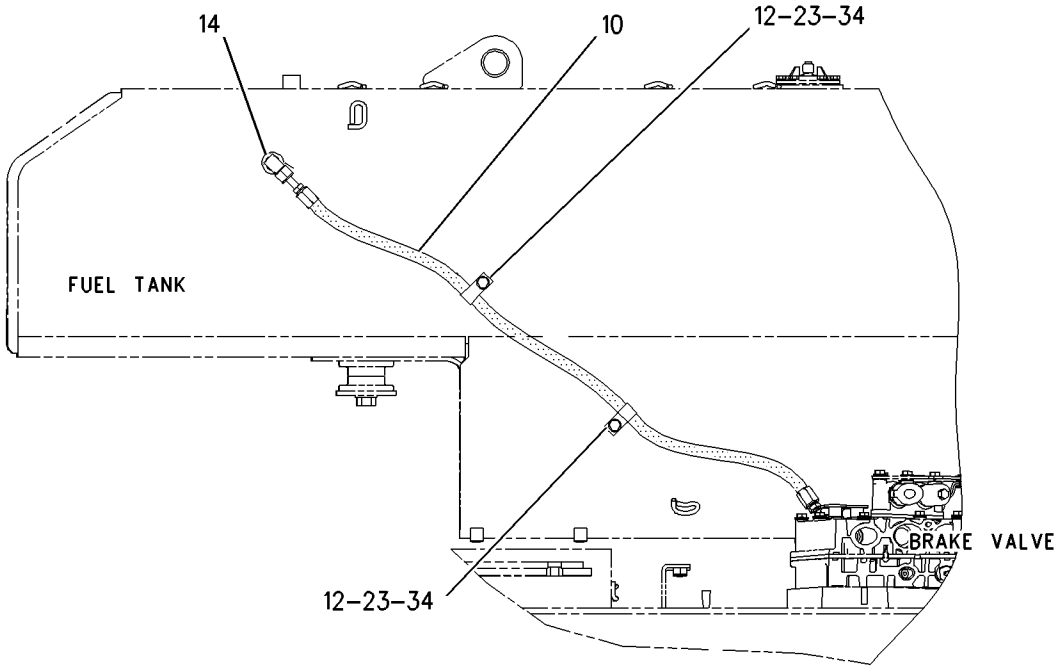

REFER TO ALL ILLUSTRATIONS OF
THIS GROUP FOR AUXILIARY VIEWS

GRAPHIC #2 g00825763

165-4466 LINES GP-FUEL FILTER

S/N: 4ZF1-UP
LEFT HAND MOUNT
PART OF 166-0273, 169-3791, 176-5509, 176-9269 ENGINE AR
ALSO AN ATTACHMENT

SMCS-1261, 1274 **i01668328**

NOTE	REF NO	GRAPHIC REF	PART NUMBER	QTY	PART NAME 1 2 3 4 5 6 (PRODUCT LEVEL)	SEE PAGE
	1	1	**176-1252**	1	REGULATOR AS	
	2	1	**183-3401**	1	ELBOW AS	
	2A	1	**6V-9001**	1	ELBOW	
	2B	1	**6V-5049**	1	SEAL-O-RING	
	2C	1	**8L-2779**	1	SEAL-O-RING	
	3	1	**1S-0994**	1	CLIP	
M	4	1	**6V-4248**	1	BOLT (M10X1.50X25MM)	
	5	1	**6V-5049**	3	SEAL-O-RING	
	6	1	**6V-5839**	1	WASHER (11X21X2.5MM THK)	
	7	1	**6V-8636**	1	CONNECTOR	
	8	1	**6V-8724**	1	ELBOW	
	9	1	**8L-2779**	3	SEAL-O-RING	

M-METRIC PART

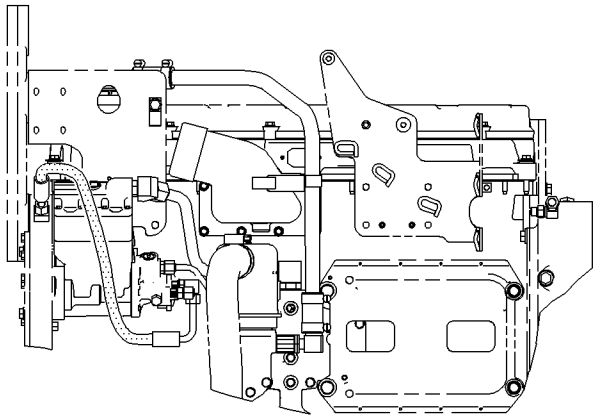

LEFT SIDE VIEW

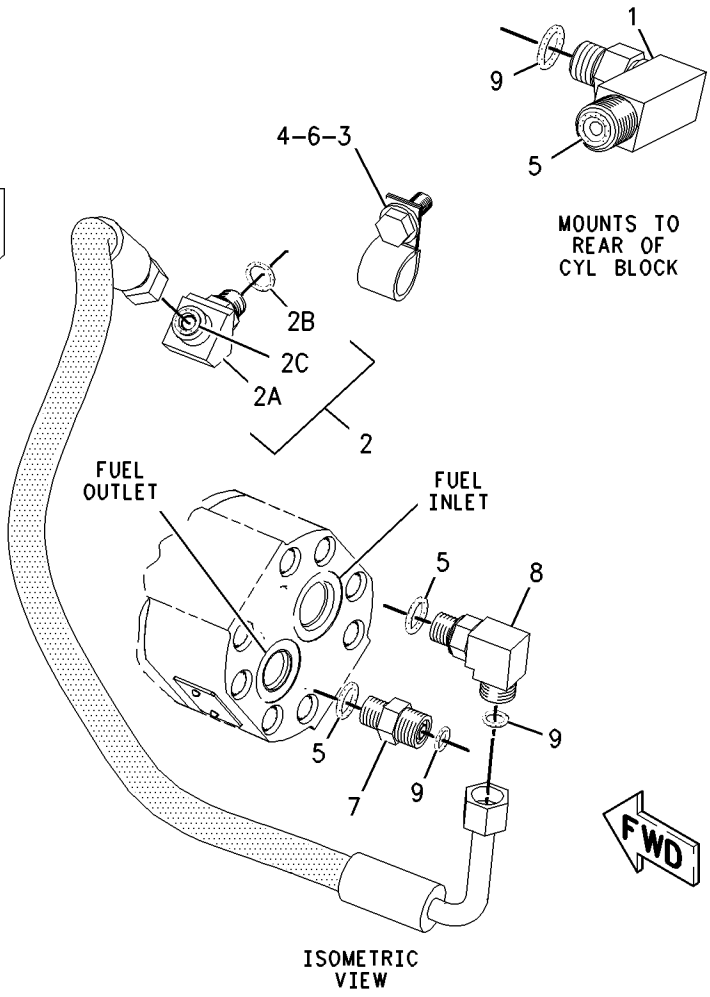

GRAPHIC #1 g00854832

206-9001 PUMP GP-FUEL

S/N: BLE1-UP; BMJ1-UP

PART OF 168-8371 INSTALLATION AR-ENGINE

SMCS-1256 **i01668450**

NOTE	REF NO	GRAPHIC REF	PART NUMBER	QTY	PART NAME 1 2 3 4 5 6 (PRODUCT LEVEL)	SEE PAGE
	1	1	**1P-4278**	1	CLAMP-HOSE	
	2	1	**1R-0762**	1	FILTER AS-FUEL	
	3	1	**8T-9655**	6	MOUNT (ISOLATION)	
	4	1	**174-7599**	1	BASE AS-FUEL	
	4A	1	**9S-4167**	1	STUD-HOLLOW	
Y	5	1	*174-9570*	1	FILTER GP-WATER SEP & FUEL	113
	6	1	**190-8970**	1	BASE AS	
	7	1	**191-1782**	1	SPACER	
	8	1	**191-1783**	2	SPACER	
	9	1	**212-9354**	1	BRACKET	
	10	1	**212-9355**	1	TUBE AS	
	11	1	**212-9356**	1	TUBE AS	
I	12	1	**212-9433**	2	HOSE AS	
	13	1	**100-4336**	1	CLIP	
	14	1	*183-3406*	5	PLUG AS	
					(EACH INCLUDES)	
		1	**6V-5049**	5	SEAL-O-RING	
		1	**9S-4191**	5	PLUG	
	15	1	**2M-9780**	1	SEAL-O-RING	
	16	1	**3J-1907**	2	SEAL-O-RING	
M	17	1	**5C-2890**	1	NUT (M6X1 THD)	
M	18	1	**6V-3822**	1	BOLT (M10X1.5X35MM)	
	19	1	**6V-4589**	2	SEAL-O-RING	
	20	1	**6V-5839**	1	WASHER (11X21X2.5MM THK)	
M	21	1	**6V-7357**	1	BOLT (M6X1.0X25MM)	
	22	1	**6V-8397**	7	SEAL-O-RING	
	23	1	**6V-8636**	2	CONNECTOR	
	24	1	**6V-8715**	1	CONNECTOR	
	25	1	**6V-8994**	2	UNION-BULKHEAD	
	26	1	**6V-9168**	2	NUT (11/16-16 THD)	
	27	1	**7E-2707**	2	CLIP	
	28	1	**7S-4244**	1	CLIP	
	29	1	**7X-0579**	6	WASHER-HARD (8.8X25.5X2MM THK)	
M	30	1	**7X-2539**	2	BOLT (M8X1.25X110MM)	
	31	1	**7X-7729**	4	WASHER (11X25X3MM THK)	
	32	1	**8T-4121**	3	WASHER-HARD (11X21X2.5MM THK)	
M	33	1	**8T-4136**	2	BOLT (M10X1.5X25MM)	
M	34	1	**8T-4137**	1	BOLT (M10X1.5X20MM)	
M	35	1	**8T-4195**	4	BOLT (M10X1.5X30MM)	
M	36	1	**8T-6869**	1	BOLT (M8X1.25X60MM)	
	37	1	**9S-4190**	2	PLUG	
	38	1	**9X-8256**	2	WASHER (6.6X12X2MM THK)	
D	39	1	**5P-5991**	1	HOSE (.7M)	

D-ORDER BY THE METER
I-SEE HOSE FABRICATION GUIDE
M-METRIC PART
Y-SEPARATE ILLUSTRATION

206-9001 **PUMP GP-FUEL** *(contd.)* **i01668450**

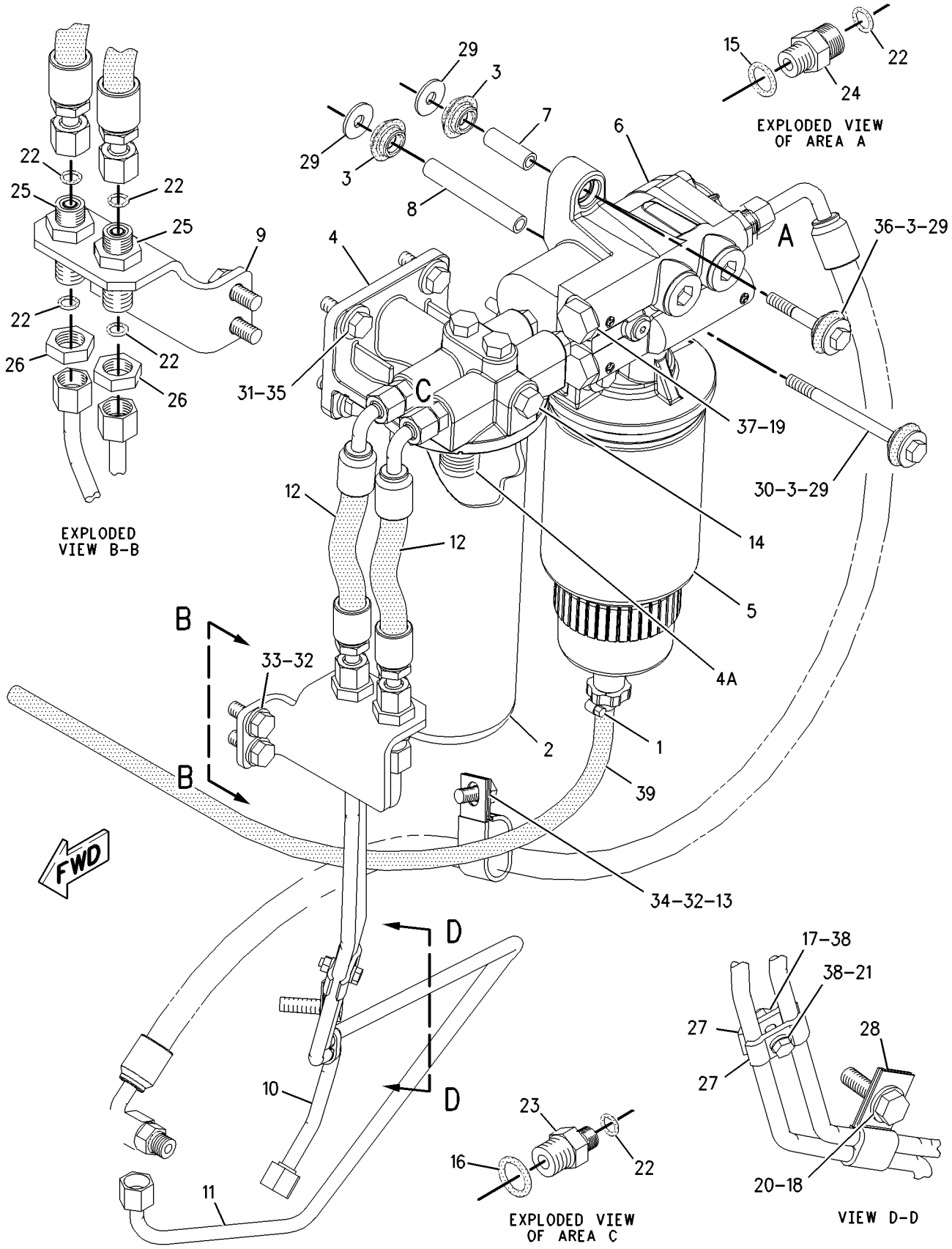

GRAPHIC #1 g00861783

166-1759 PUMP GP-UNIT INJECTION

S/N: 4ZF1-UP
PART OF 166-0270, 169-3788 ENGINE AR-CORE
ALSO AN ATTACHMENT

SMCS-1251, 1290, 1714 **i01620318**

NOTE	REF NO	GRAPHIC REF	PART NUMBER	QTY	PART NAME 1 2 3 4 5 6 (PRODUCT LEVEL)	SEE PAGE
Y	1	1	*172-5780*	6	PUMP GP-UNIT INJECTION	121

Y-SEPARATE ILLUSTRATION

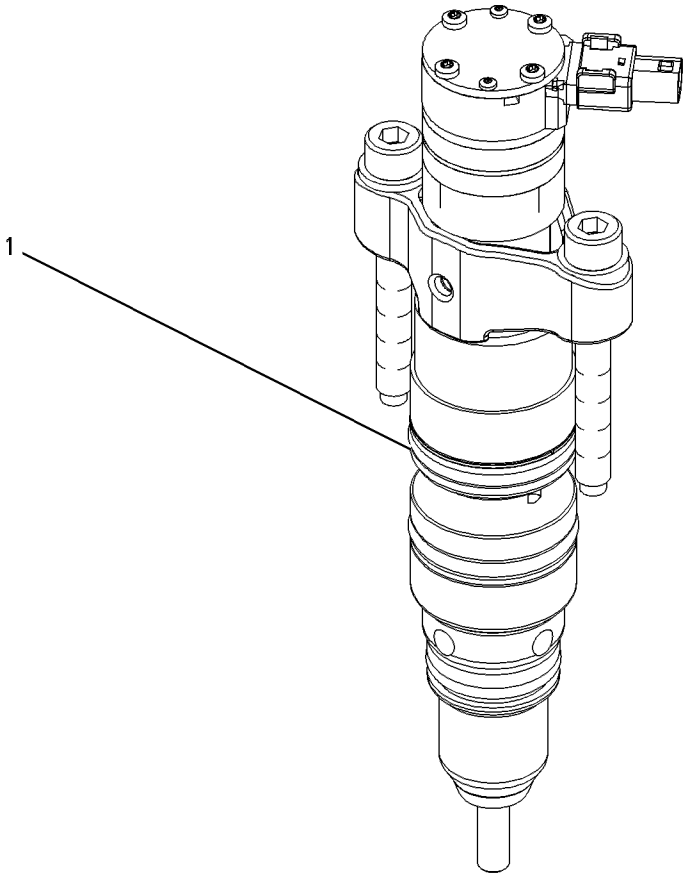

GRAPHIC #1 g00632453

172-5780 PUMP GP-UNIT INJECTION

S/N: 4ZF1-UP
PART OF 166-1759 PUMP GP-UNIT INJECTION
ALSO AN ATTACHMENT

SMCS-1251, 1290, 1714 **i01620323**

NOTE	REF NO	GRAPHIC REF	PART NUMBER	QTY	PART NAME 1 2 3 4 5 6 (PRODUCT LEVEL)	SEE PAGE
Y	1	1	*167-0174*	1	SEAL GP-FUEL INJECTOR	65
	2	1	**188-8739**	1	INJECTOR GP-FUEL	
M	3	1	**191-0920**	2	BOLT-SOCKET HEAD	

M-METRIC PART
Y-SEPARATE ILLUSTRATION

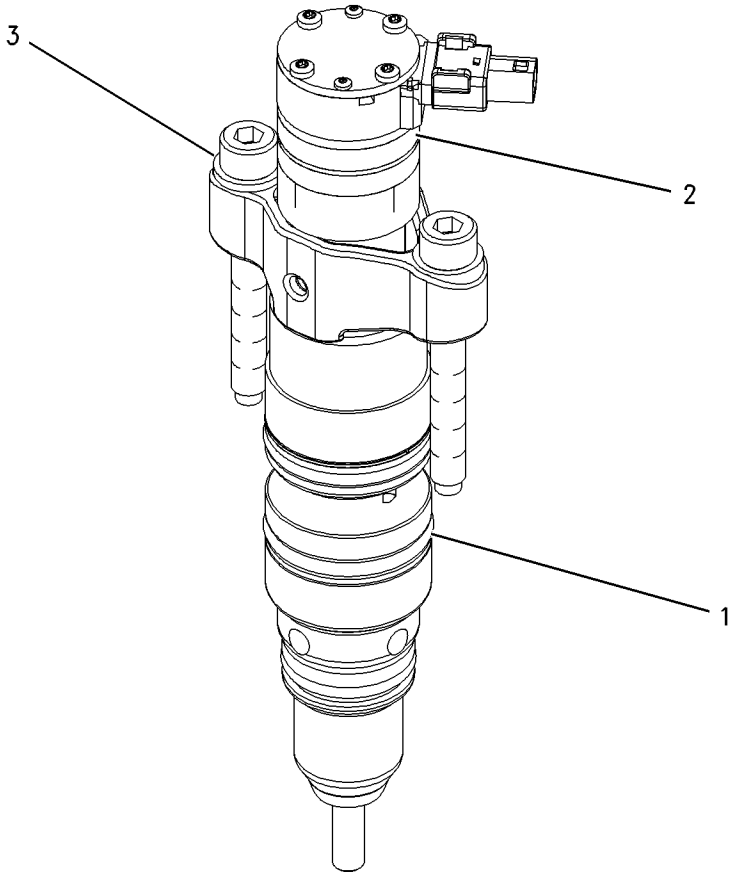

GRAPHIC #1 g00712666

165-4450 PUMP GP-UNIT INJECTOR HYD

S/N: 4ZF1-UP
PART OF 166-0270, 169-3788 ENGINE AR-CORE
ALSO AN ATTACHMENT

SMCS-1714 **i01649787**

NOTE	REF NO	GRAPHIC REF	PART NUMBER	QTY	PART NAME 1 2 3 4 5 6 (PRODUCT LEVEL)	SEE PAGE
	1	1	**9S-8004**	1	PLUG	
	2	1	**153-4906**	1	SEAL-O-RING	
	3	1	**185-3241**	1	SEAL-O-RING	
	4	1	**193-2162**	1	TUBE AS	
	5	1	**201-5469**	1	TUBE AS	
Y	6	1	**204-4944**	1	PUMP GP-UNIT INJECTOR HYD	123
	7	1	**030-7950**	1	ELBOW	
	8	1	**5P-3264**	1	ELBOW	
	9	1	**6V-4589**	1	SEAL-O-RING	
	10	1	**6V-5050**	1	SEAL-O-RING	
	11	1	**6V-5839**	2	WASHER (11X21X2.5MM THK)	
M	12	1	**6V-7981**	2	BOLT (M10X1.50X70MM)	
	13	1	**6V-8636**	2	CONNECTOR	
	14	1	**153-4907**	2	SEAL-O-RING	
	15	1	**153-4906**	2	SEAL-O-RING	

M-METRIC PART
Y-SEPARATE ILLUSTRATION

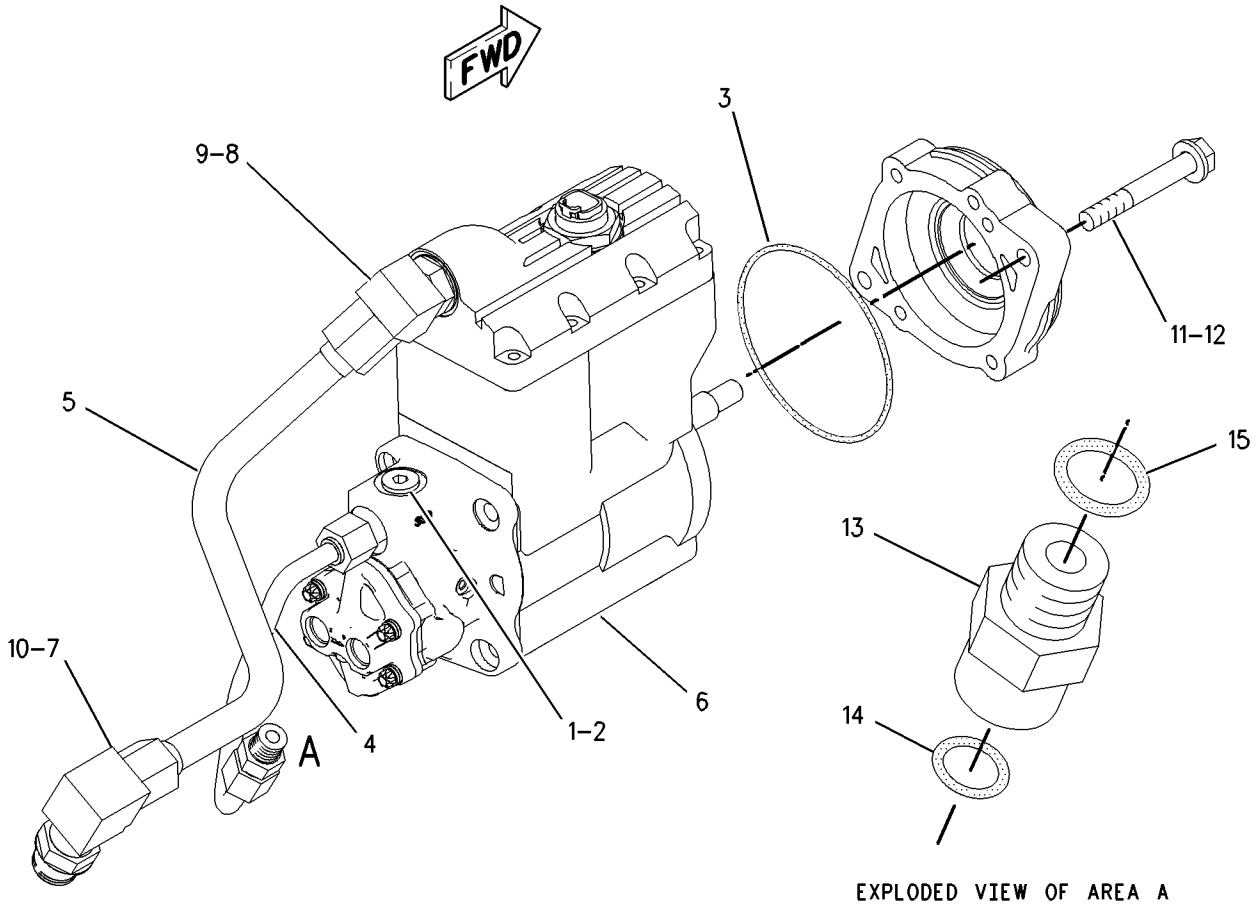

EXPLODED VIEW OF AREA A

GRAPHIC #1 g00851475

FUEL SYSTEM

204-4944 PUMP GP-UNIT INJECTOR HYD

S/N: 4ZF1-UP
PART OF 165-4450 PUMP GP-UNIT INJECTOR HYD
ALSO AN ATTACHMENT

SMCS-1714 **i01589664**

NOTE	REF NO	GRAPHIC REF	PART NUMBER	QTY	PART NAME 1 2 3 4 5 6 (PRODUCT LEVEL)	SEE PAGE
					(NO SERVICED PARTS)	

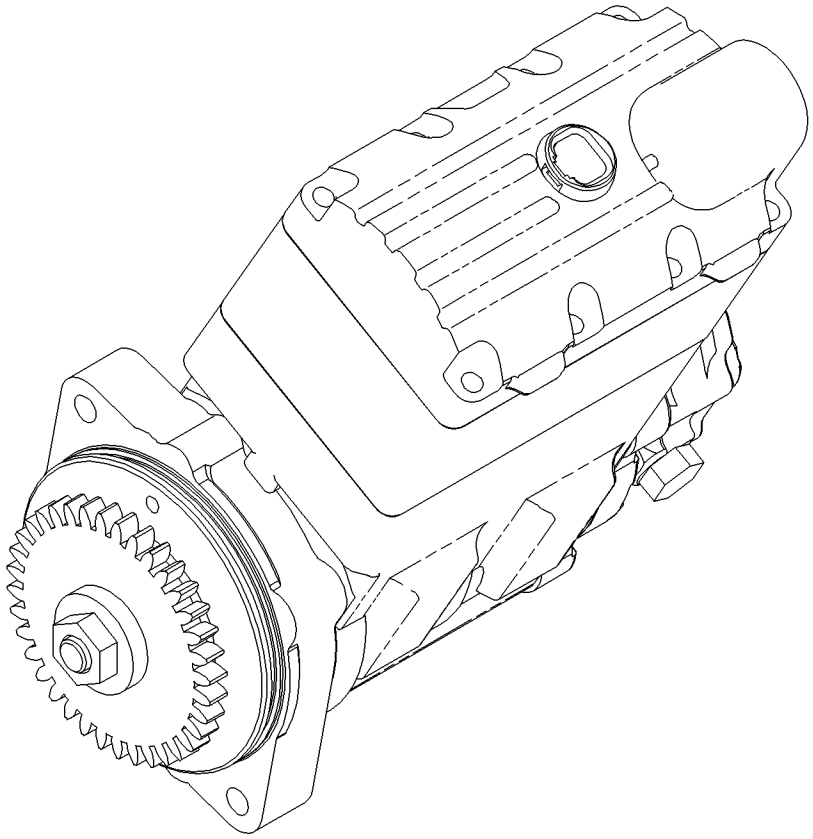

GRAPHIC #1 g00814478

FUEL SYSTEM

170-4876 TANK GP-FUEL

S/N: BLE1-UP; BMJ1-UP
PART OF 164-4782, 164-4784 CHASSIS AR

SMCS-1273 **i01590024**

NOTE	REF NO	GRAPHIC REF	PART NUMBER	QTY	PART NAME 1 2 3 4 5 6 (PRODUCT LEVEL)	SEE PAGE
	1	1	**5P-8502**	1	PADLOCK GP	
A		1	**5P-8500**	1	KEY	
A		1	**8Y-6364**	1	SLEEVE	
	2	1	**6C-3060**	1	GASKET	
	3	1	**6N-7523**	6	WASHER (6.48X11.9X1.57MM THK)	
	4	1	**8T-9396**	4	BOLT (5/8-11X3.25 IN)	
	5	1	**9P-3066**	8	MOUNTING	
	6	1	**9P-7121**	1	STRAINER-FUEL	
Y	7	1	**205-4271**	1	TANK GP-FUEL	125
	8	1	**170-9215**	1	SENDER AS-FUEL LEVEL	
		1	**138-0444**	1	KIT-DIAL SENSOR	
					(INCLUDES WEDGE AND PINS)	
		1	**102-8802**	1	KIT-RECEPTACLE (2 PIN)	
					(INCLUDES RECEPTACLE AS AND WEDGE)	
	9	1	**6P-8269**	4	WASHER (20.5X88X6MM THK)	
	10	1	**8T-4122**	4	WASHER-HARD (17X32X3.5MM THK)	
	11	1	**8T-9364**	6	BOLT (1/4-20X0.625 IN)	

A-NOT PART OF THIS GROUP
Y-SEPARATE ILLUSTRATION

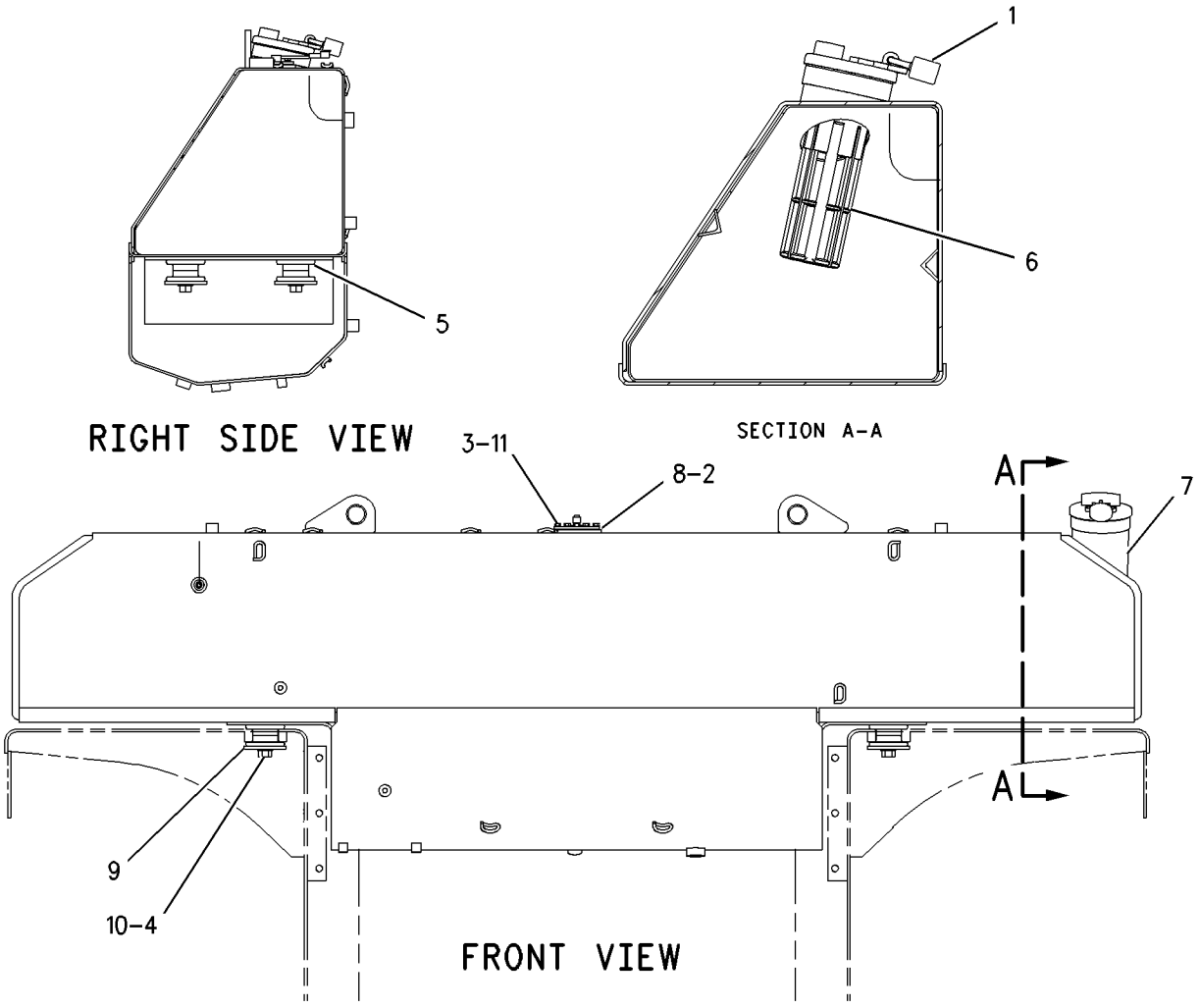

GRAPHIC #1 g00794519

FUEL SYSTEM

205-4271 TANK GP-FUEL

S/N: BLE1-UP; BMJ1-UP
PART OF 170-4876 TANK GP-FUEL

SMCS-1273 **i01590056**

NOTE	REF NO	GRAPHIC REF	PART NUMBER	QTY	PART NAME 1 2 3 4 5 6 (PRODUCT LEVEL)	SEE PAGE
	1	1	**164-4858**	1	CAP GP-FUEL TANK (LOCKABLE)	
		1	**190-9775**	1	COVER AS-FILTER	
		1	**9X-8600**	1	SEAL-O-RING	
	2	1	**170-4877**	1	TANK AS-FUEL	

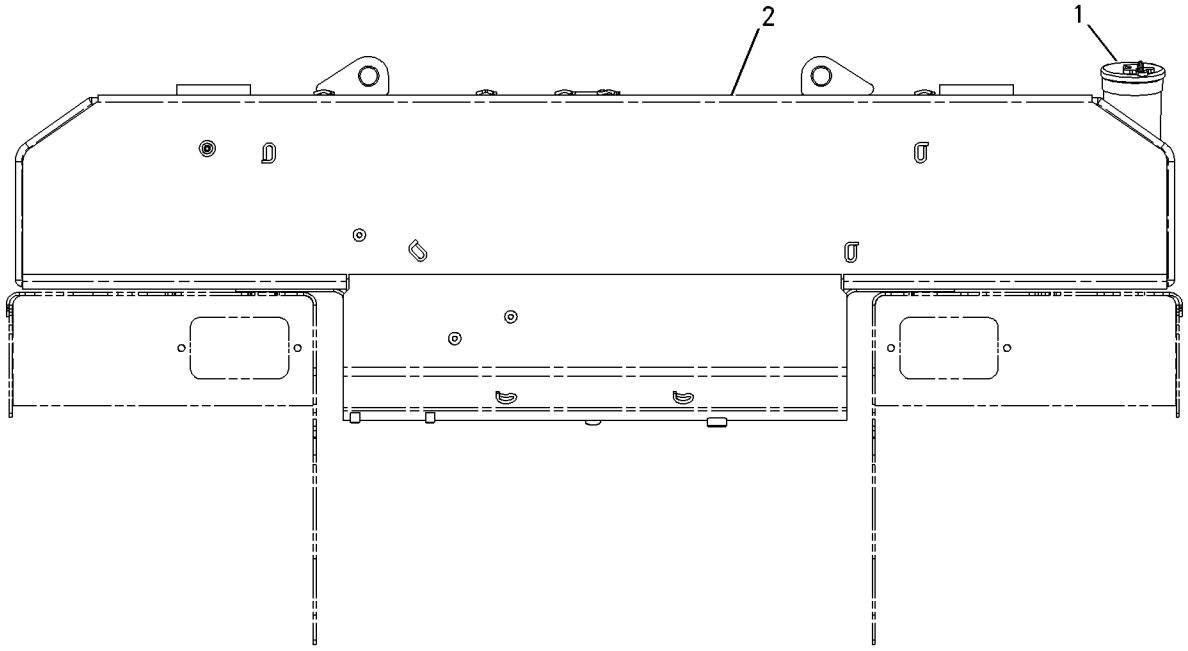

GRAPHIC #1 g00844884

3E-6328 ALARM GP

S/N: BLE1-UP; BMJ1-UP
24 VOLT
PART OF 166-7391 WIRING GP-PLATFORM

SMCS-7402 **i01507609**

NOTE	REF NO	GRAPHIC REF	PART NUMBER	QTY	PART NAME 1 2 3 4 5 6 (PRODUCT LEVEL)	SEE PAGE
	1	1	**102-8802**	1	KIT-RECEPTACLE (2 PIN)	
					(INCLUDES RECEPTACLE AS & WEDGE)	
	2	1	**3E-3365**	1	WEDGE-RECEPTACLE LOCK (2 PIN)	
	3	1	**186-3735**	2	PIN-CONNECTOR	

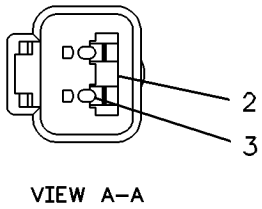

VIEW A–A

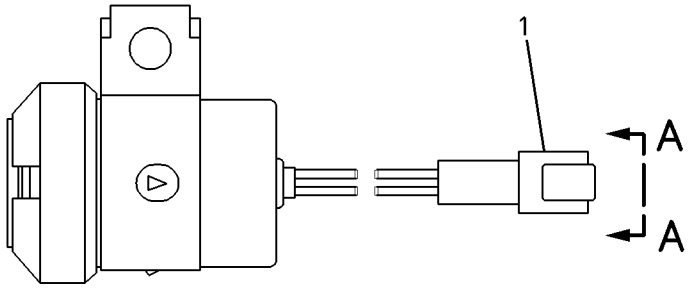

GRAPHIC #1 g00083162

MEMORANDA

ELECTRICAL AND STARTING SYSTEM

3E-7577 ALTERNATOR GP-CHARGING*R

S/N: BLE1-UP; BMJ1-UP
24 VOLT, 75 AMPERE
PART OF 173-7774 ALTERNATOR GP-CHARGING
AN ATTACHMENT

SMCS-1405, 1410, 1425 **i01573517**

NOTE	REF NO	GRAPHIC REF	PART NUMBER	QTY	PART NAME 1 2 3 4 5 6 (PRODUCT LEVEL)	SEE PAGE
	1	1	**9S-2011**	1	SCREW-MACHINE (1/4-20 X .500 IN)	
	2	1	**1H-3244**	1	LOCKWASHER	
	3	1	**2K-4821**	1	LOCKNUT (5/8-18 THD)	
	4	1	**7F-7621**	1	WASHER (0.635X1.25X0.09 IN THK)	
	5	1	**9S-2260**	1	PLATE-COVER	
	6	1	**9S-2255**	1	COVER	
	7	1	**9S-2262**	1	GASKET	
	8	1	**9S-2544**	6	SCREW-HEX HEAD (8-32X11.13MM)	
	9	1	**9B-7233**	10	LOCKWASHER	
	10	1	**9S-2437**	5	SCREW-TAPPING (10-24X19.05MM)	
	11	1	**8F-1434**	5	LOCKWASHER	
	12	1	**5P-3418**	1	BEARING-ROLLER	
	13	1	**5P-3419**	1	RACE-BEARING INNER	
	14	1	**9S-2396**	1	BUSHING-TERMINAL	
	15	1	**9S-2393**	3	DIODE-NEGATIVE	
	16	1	**9N-0943**	1	PLUG-BEARING WELL	
	17	1	**9F-2247**	1	PLUG-PIPE	
J	18	1	**9S-2292**	1	HEAT SINK AS	
	19	1	**100-6656**	1	DIODE AS-ALTERNATOR	
	20	1	**9S-9830**	4	SCREW-FORMING (#8-32 X 19.05MM)	
	21	1	**8C-9660**	4	WASHER (4.6X7.9X0.8MM THK)	
	22	1	**9S-2300**	4	INSULATOR	
	23	1	**9S-2301**	1	INSULATION	
	24	1	**9S-2248**	1	COIL & SUPPORT AS	
	25	1	**9N-3388**	3	LOCKSCREW	
	26	1	**3T-6354**	1	REGULATOR AS (24 VOLT)	
	27	1	**7N-9023**	1	SCREW AS (8-32 X 26.9MM)	
	28	1	**6N-1872**	2	SCREW AS (8-32 X 1.25 IN)	
	29	1	**4B-2043**	4	NUT (8-32 THD)	
	30	1	**100-6657**	1	PLATE-ALTERNATOR	
	31	1	**9S-2302**	1	ROTOR AS	
	32	1	**9S-2005**	1	GROMMET	
	33	1	**2L-8075**	3	TERMINAL (14-16 GA)	
	34	1	**100-6658**	1	WIRE AS-ALTERNATOR	
	35	1	**9S-2389**	1	STUD AS	
	36	1	**9L-6770**	1	CAP	
	37	1	**2P-5616**	1	FRAME-DRIVE END	
	38	1	**9S-2390**	1	RETAINER	
	39	1	**9X-2500**	4	SCREW-HEX FLANGE (10-24 X 38.1MM)	
	40	1	**9S-2009**	4	SCREW-HEAD (10-24 X 3.625 IN)	
	41	1	**100-6532**	1	COLLAR-ALTERNATOR	
	42	1	**5P-7807**	1	BALL BEARING	
	43	1	**100-6531**	1	FAN-ALTERNATOR	
	44	1	**9S-3451**	1	STATOR AS	
	45	1	**9S-2006**	1	INSULATOR	
	46	1	**9S-2005**	1	GROMMET	
	47	1	**9S-2014**	3	CLIP	
					AVAILABLE REPAIR KIT(S):	
			9S-2013	1	KIT-RELAY TERMINAL	
					(INCLUDES BUSHING, O-RING & HARDWARE)	
			9S-2012	1	KIT-OUTPUT TERMINAL	
					(INCLUDES GASKETS, TERMINALS & HARDWARE)	

3E-7577 **ALTERNATOR GP-CHARGING** *(contd.)* **i01573517**

NOTE	REF NO	GRAPHIC REF	PART NUMBER	QTY	PART NAME 1 2 3 4 5 6 (PRODUCT LEVEL)	SEE PAGE
J			**9S-2290**	3	KIT-DIODE JUNCTION STUD	
					(INCLUDES INSULATOR & STUD)	
J			**9S-2291**	3	KIT-POSITIVE DIODE	
J-REPAIR KITS ARE PART OF HEAT SINK AS						

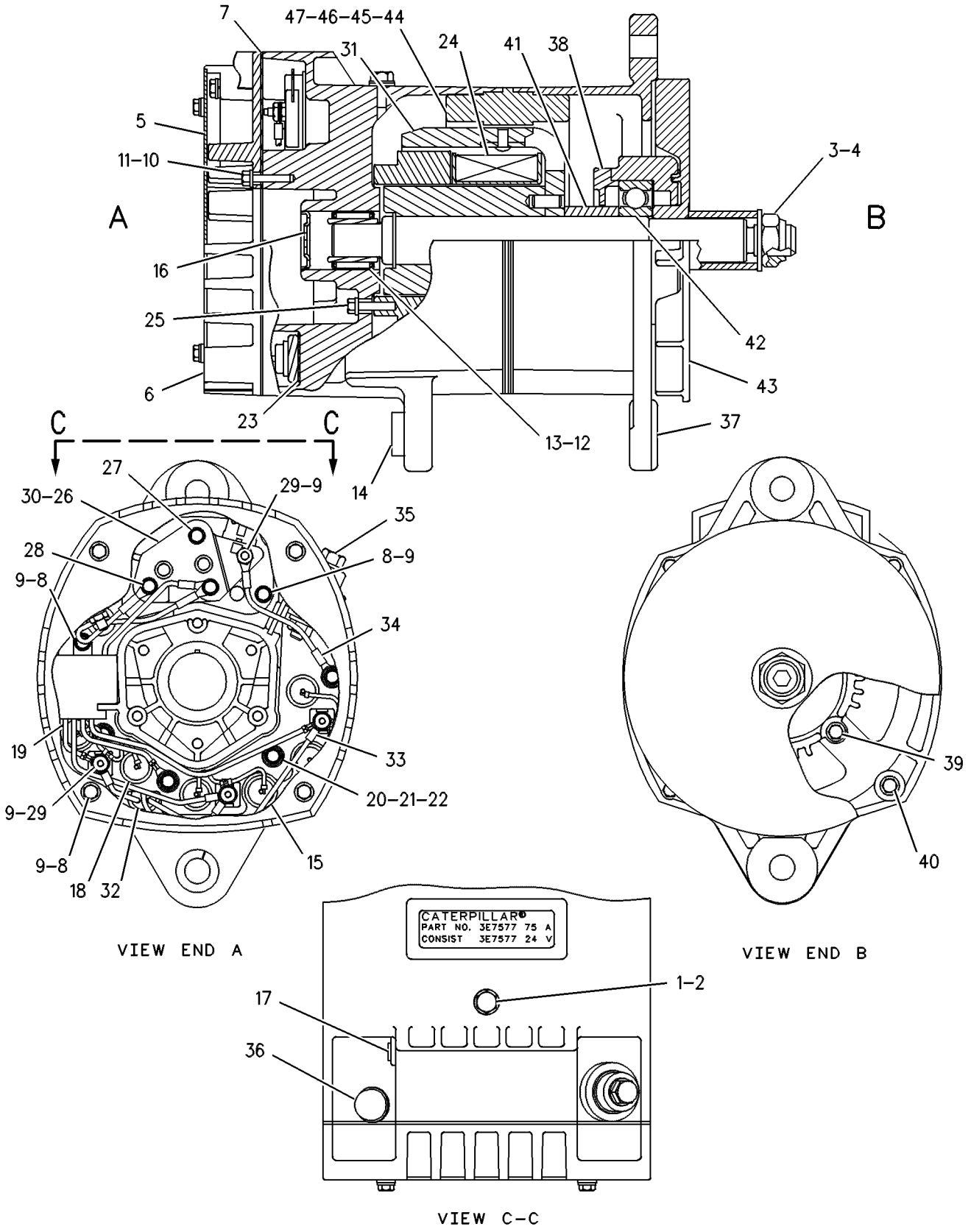

GRAPHIC #1 g00106082

MEMORANDA

168-8373 ALTERNATOR GP-CHARGING

S/N: BLE1-UP; BMJ1-UP
24 VOLT, 70 AMPERE
PART OF 168-8371 INSTALLATION AR-ENGINE

SMCS-1405, 1410, 1425 **i01645388**

NOTE	REF NO	GRAPHIC REF	PART NUMBER	QTY	PART NAME 1 2 3 4 5 6 (PRODUCT LEVEL)	SEE PAGE
	1	1	**7K-1181**	1	STRAP-CABLE	
	2	1	**9S-1240**	1	NUT AS	
	3	1	**184-5498**	1	BRACKET AS	
		1	**1F-0750**	1	NUT-WELD (3/8-16 THD)	
	4	1	**208-4622**	1	STRAP AS	
	5	1	**211-1044**	1	BLOCK	
	6	1	**214-9492**	1	ROD	
Y	7	1	**185-5294**	1	ALTERNATOR GP-CHARGING	136
	8	1	**4L-6454**	1	BOLT (3/8-16X1 IN)	
	9	1	**4P-7581**	1	CLIP	
	10	1	**4S-1962**	1	CLIP	
	11	1	**5P-1075**	1	WASHER-HARD (10.2X22.5X3MM THK)	
	12	1	**7X-0339**	1	BOLT (1/2-13X6.25 IN)	
	13	1	**8T-4121**	1	WASHER-HARD (11X21X2.5MM THK)	
M	14	1	**8T-4132**	2	NUT (M16X2 THD)	
M	15	1	**8T-4137**	1	BOLT (M10X1.5X20MM)	
M	16	1	**8T-4193**	1	BOLT (M16X2X50MM)	
	17	1	**8T-4223**	2	WASHER-HARD (13.5X25.5X3MM THK)	
	18	1	**8T-8919**	1	BOLT (1/2-13X1.75 IN)	
	19	1	**9X-8257**	3	WASHER (17.5X30X3.5MM THK)	

M-METRIC PART
Y-SEPARATE ILLUSTRATION

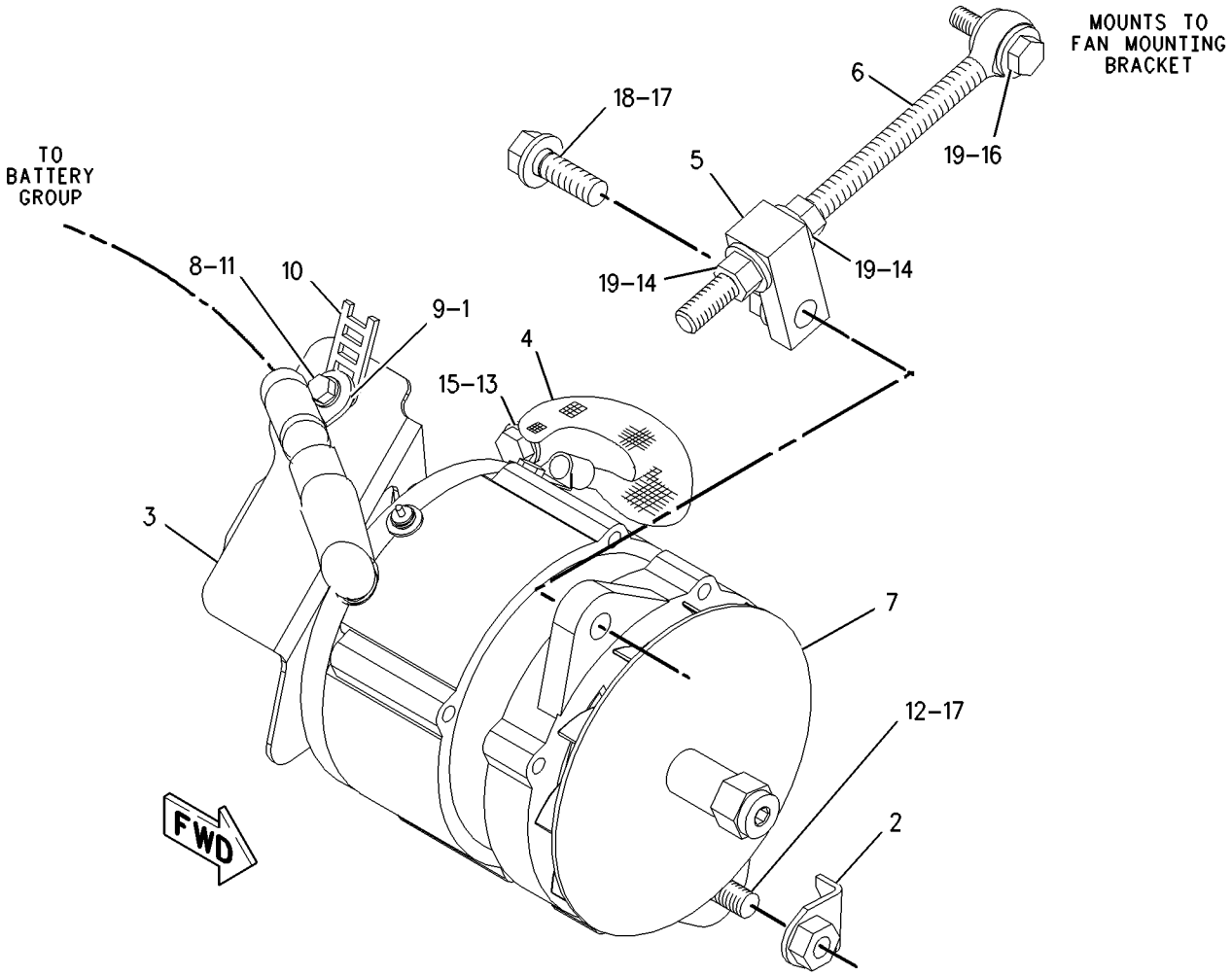

GRAPHIC #1

g00852618

ELECTRICAL AND STARTING SYSTEM

173-7774 ALTERNATOR GP-CHARGING

S/N: BLE1-UP; BMJ1-UP
24 VOLT, 75 AMP. EXTREME SERVICE
AN ATTACHMENT

SMCS-1405, 1410, 1425 **i01631768**

NOTE	REF NO	GRAPHIC REF	PART NUMBER	QTY	PART NAME 1 2 3 4 5 6 (PRODUCT LEVEL)	SEE PAGE
YR	1	1	**3E-7577**	1	ALTERNATOR GP-CHARGING	128
	2	1	**7K-1181**	1	STRAP-CABLE	
	3	1	**9S-1240**	1	NUT AS	
	4	1	**185-5897**	1	BRACKET AS	
		1	**1F-0750**	1	NUT-WELD (3/8-16 THD)	
	5	1	**194-3482**	1	ADAPTER	
	6	1	**208-4622**	1	STRAP AS	
	7	1	**211-1044**	1	BLOCK	
	8	1	**214-9492**	1	ROD	
	9	1	**4L-6454**	1	BOLT (3/8-16X1 IN)	
	10	1	**4S-1962**	1	CLIP	
	11	1	**5P-1075**	1	WASHER-HARD (10.2X22.5X3MM THK)	
	12	1	**7X-0339**	1	BOLT (1/2-13X6.25 IN)	
	13	1	**8T-4121**	1	WASHER-HARD (11X21X2.5MM THK)	
M	14	1	**8T-4132**	2	NUT (M16X2 THD)	
M	15	1	**8T-4137**	1	BOLT (M10X1.5X20MM)	
M	16	1	**8T-4193**	1	BOLT (M16X2X50MM)	
	17	1	**8T-4223**	2	WASHER-HARD (13.5X25.5X3MM THK)	
	18	1	**8T-8919**	1	BOLT (1/2-13X1.75 IN)	
	19	1	**9X-8257**	3	WASHER (17.5X30X3.5MM THK)	

M-METRIC PART
R-REMFG PART MAY BE AVAILABLE
Y-SEPARATE ILLUSTRATION

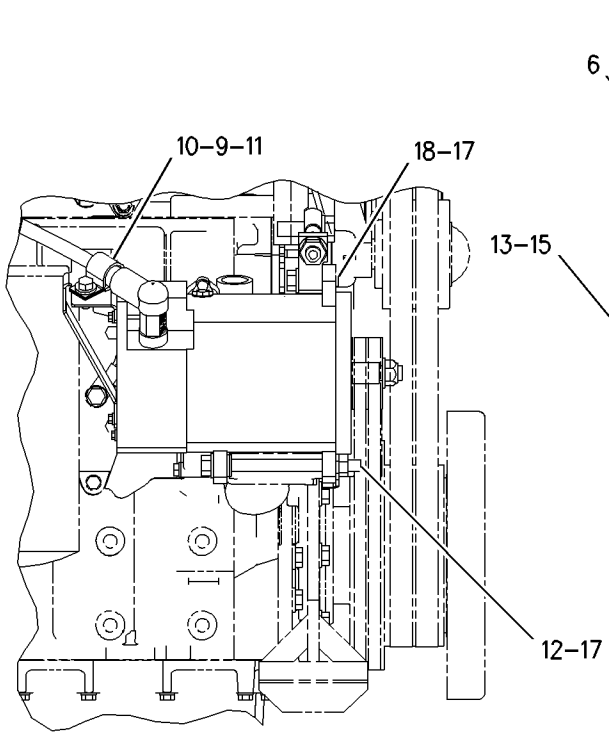

RIGHT SIDE VIEW

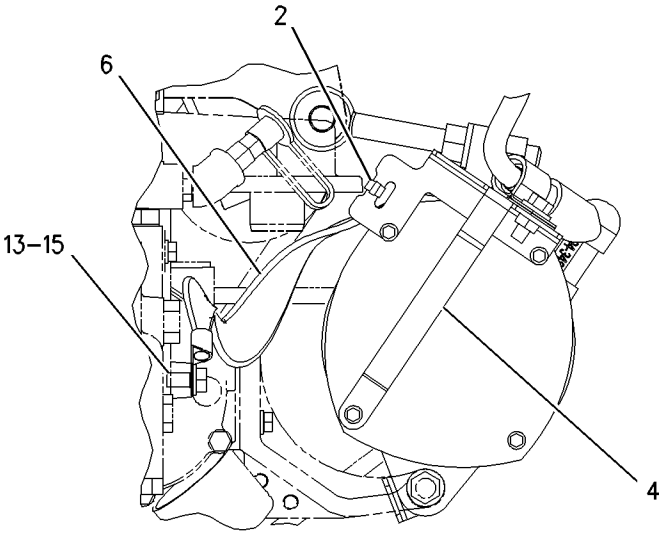

REAR VIEW

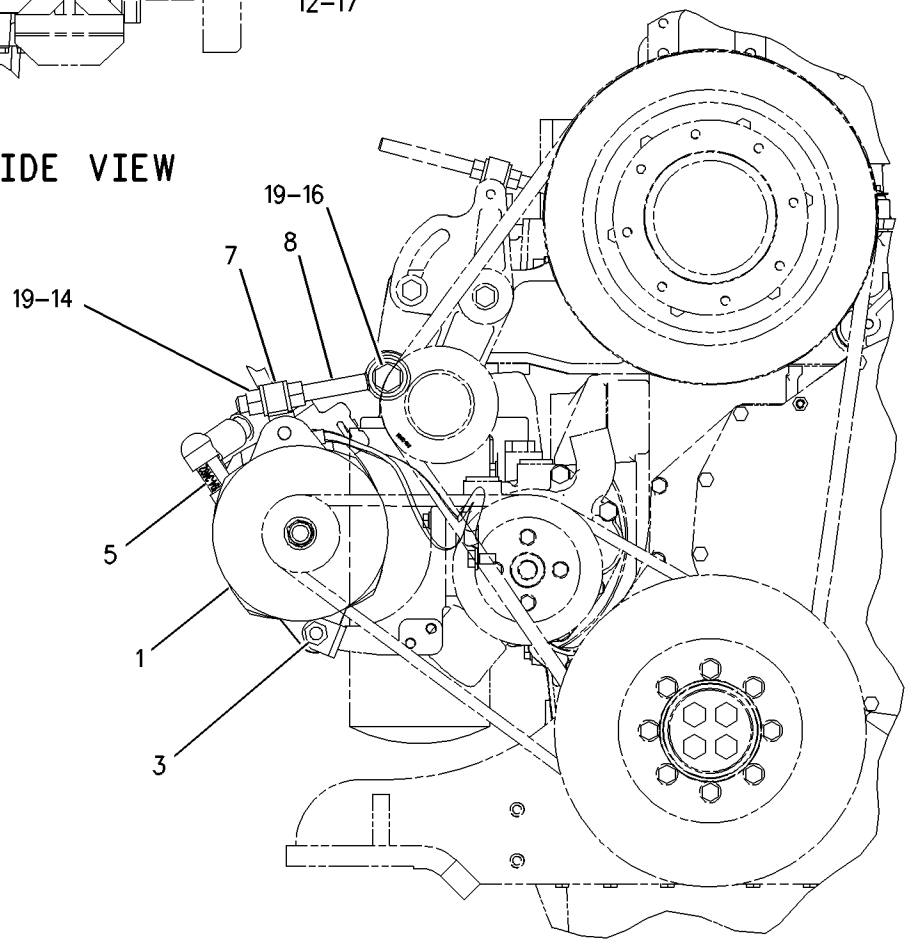

FRONT VIEW

GRAPHIC #1 g00847208

ELECTRICAL AND STARTING SYSTEM

185-5294 ALTERNATOR GP-CHARGING

S/N: BLE1-UP; BMJ1-UP
24 VOLTS, 65 AMPERE
PART OF 168-8373 ALTERNATOR GP-CHARGING

SMCS-1405, 1410, 1425 **i01571642**

NOTE	REF NO	GRAPHIC REF	PART NUMBER	QTY	PART NAME 1 2 3 4 5 6 (PRODUCT LEVEL)	SEE PAGE
	1	1	**185-2653**	1	FRAME	
	2	1	**5S-7349**	1	BOLT (1/4-20X0.5 IN)	
	3	1	**185-2639**	1	FAN AS	
	4	1	**1H-3244**	1	LOCKWASHER	
	5	1	**185-2645**	1	FRAME	
	6	1	**2K-4821**	1	LOCKNUT (5/8-18 THD)	
	7	1	**5P-8247**	1	WASHER-HARD (17X32X3.5MM THK)	
	8	1	**185-2651**	1	COVER	
	9	1	**8T-4205**	1	WASHER-HARD (7.2X14.5X2MM THK)	
	10	1	**185-2647**	1	GROMMET	
	11	1	**9L-6770**	1	CAP	
	12	1	**185-2642**	1	STATOR AS	
	13	1	**185-2638**	2	COLLAR	
	14	1	**185-2654**	1	PLATE	
	15	1	**185-2650**	1	ROTOR AS	
	16	1	**185-2644**	1	COIL AS	
	17	1	**185-2648**	1	REGULATOR AS	
	18	1	**6V-8189**	1	NUT (5/16-18 THD)	
	19	1	**8T-4224**	1	WASHER-HARD (8.8X16X2MM THK)	
	20	1	**3F-9556**	1	LOCKWASHER	
					AVAILABLE REPAIR KIT(S):	
			185-2655		KIT-BEARING	
					(INCLUDES 2 BEARINGS)	
			185-2656		KIT-TERMINAL	
					(INCLUDES HOLDER AS, PLATE, INSULATOR, PIN, BOLT, GROMMET & NUT)	
			185-2657		KIT-TERMINAL	
					(INCLUDES INSULATORS, WASHERS & NUT)	
			185-2658		KIT-HARDWARE	
					(INCLUDES BOLTS)	

185-5294 **ALTERNATOR GP-CHARGING** ***(contd.)*** **i01571642**

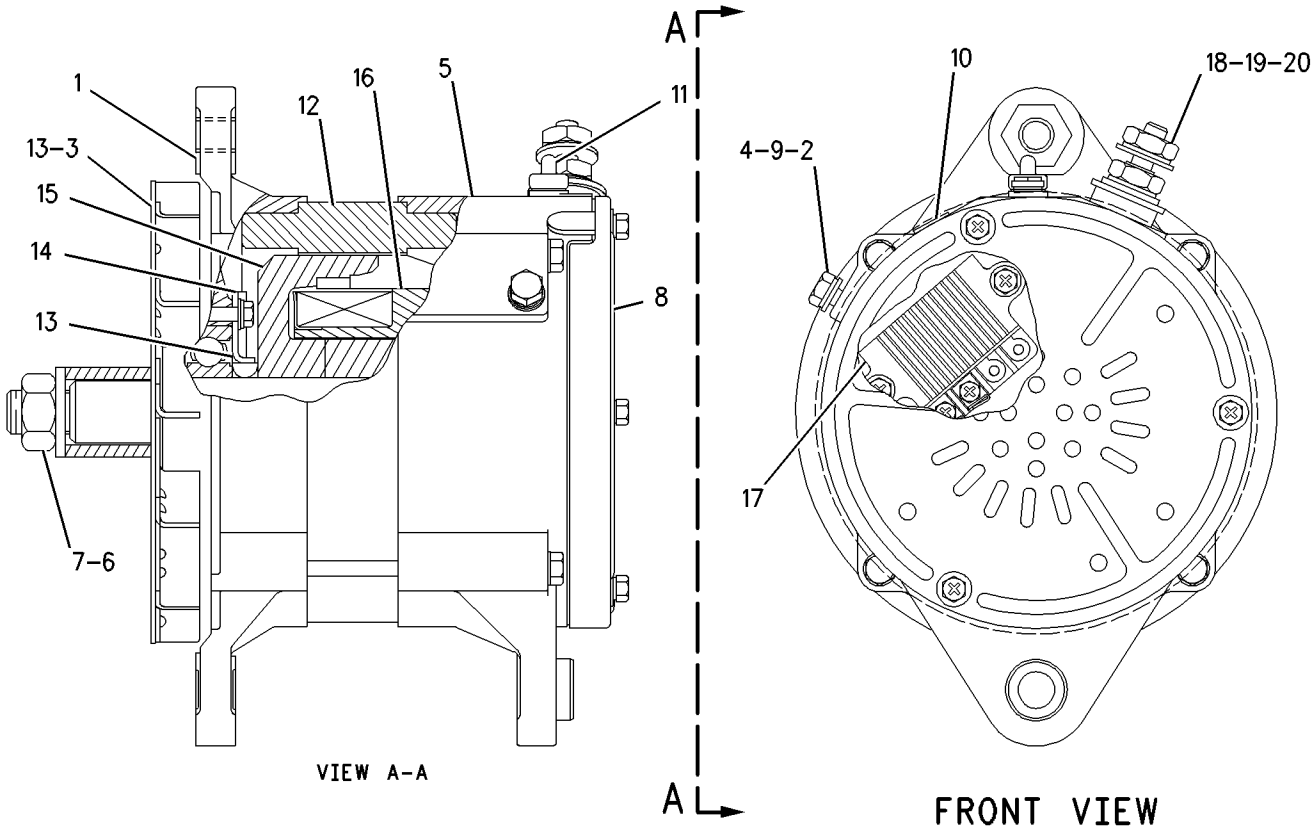

GRAPHIC #1 g00806894

ELECTRICAL AND STARTING SYSTEM

166-7390 BATTERY & WIRING GP

S/N: BLE1-UP; BMJ1-UP

PART OF 164-4782, 164-4784 CHASSIS AR

SMCS-1401, 1402, 1408 **i01589692**

NOTE	REF NO	GRAPHIC REF	PART NUMBER	QTY	PART NAME 1 2 3 4 5 6 (PRODUCT LEVEL)	SEE PAGE
	1	2,3	**4W-9972**	2	SENDER-TEMPERATURE	
					(EACH INCLUDES)	
		2,3	**4B-2049**	1	NUT (10-32 THD)	
		2,3	**8F-1434**	1	LOCKWASHER	
		2,3	**8T-0328**	1	WASHER-HARD (5.5X10X1MM THK)	
	2	1,2,3,4	**7K-1181**	71	STRAP-CABLE	
Y	3	4	**7N-0718**	1	SWITCH GP-DISCONNECT	197
	4	1	**7P-6682**	1	CABLE AS (STARTER)	
E		1	**5P-0747**		CABLE (00GA)(BLACK) (40CM)	
		1	**1S-7251**	2	TERMINAL-RING (FOR 1/2 IN BOLT)	
	5	3	**7T-9517**	1	KNOB (FUEL PRIMING)	
	6	4	**9D-3437**	1	CABLE AS (FRAME)	
		4	**2M-0913**	2	TERMINAL	
	7	1	**172-4861**	1	SPACER (13.8X25.4X15MM THK)	
	8	4	**111-7277**	1	PLATE AS	
		4	**4K-3094**	2	STUD (3/8-16X10.49 IN OAL)	
		4	**8D-8879**	2	STUD (3/8-16X30.38 IN OAL)	
	9	4	**111-7978**	1	HOLD-DOWN AS	
Y	10	1	**118-7226**	1	SENSOR GP-TEMPERATURE (TRANSMISSION)	181
	11	2	**123-6449**	1	ALARM GP	
		2	**3E-3365**	1	WEDGE-RECEPTACLE LOCK (2 PIN)	
		2	**8T-8729**	2	PIN-CONNECTOR	
D		2	**5P-5677**		WIRE-ELECTRICAL (18 GA) (BLACK)(.6M)	
		2	**102-8802**	1	KIT-RECEPTACLE (2 PIN)	
					(INCLUDES RECEPTACLE AS & WEDGE)	
	12	4	**128-0314**	1	CABLE AS (JUMPER)	
E		4	**5P-0761**		CABLE (00GA)(RED) (29CM)	
		4	**9G-0002**	1	COVER-TERMINAL	
		4	**9G-0005**	1	COVER-TERMINAL (BLACK)(RH NEG)	
		4	**8C-5918**	1	TERMINAL AS (NEG) (RH)	
		4	**8T-9756**	1	TERMINAL AS (POS) (LH)	
					(EACH TERMINAL AS INCLUDES)	
		4	**1M-6119**	1	BOLT-BATTERY TERMINAL (5/16-18X1.375 IN)	
		4	**1M-6120**	1	NUT-BATTERY TERMINAL (5/16-18 THD)	
	13	3	**148-0757**	1	SWITCH AS-MAGNETIC (24 VOLT) (INLET AIR HEATER)	
	14	3	**158-6632**	1	SWITCH AS-HORN	
		3	**2H-3922**	1	LOCKWASHER	
		3	**3B-4501**	1	LOCKWASHER	
		3	**3E-3365**	1	WEDGE-RECEPTACLE LOCK (2 PIN)	
		3	**5L-7200**	1	SCREW (8-32X0.375 IN)	
		3	**6V-8370**	1	NUT-HEX (3/4-32 THD)	
		3	**7T-9515**	1	KNOB-HORN	
		3	**9X-0199**	1	BOOT-SWITCH	
		3	**9X-3401**	2	PIN-CONNECTOR	
		3	**102-8802**	1	KIT-RECEPTACLE (2 PIN)	
					(INCLUDES RECEPTACLE AS & WEDGE)	
Y	15	3	**161-9926**	1	SENSOR GP-PRESSURE (TURBO INLET)	177
	16	2,3	**164-3744**	2	WIRE AS	
Y	17	2	**164-7577**	1	SWITCH GP-BYPASS (POWERTRAIN FILTER)	196
	18	2	**171-7215**	1	WIRE AS	
	19	3	**172-4854**	1	HARNESS AS (ENGINE)	
	20	2	**172-4856**	1	HARNESS AS (RH FENDER)	
	21	2	**172-4857**	1	HARNESS AS (FUEL TANK)	
	22	4	**172-4862**	1	CABLE AS (BATTERY)	
		4	**030-1707**	1	TERMINAL-RING (FOR 3/8IN BOLT)	
		4	**8N-1725**	1	COVER-TERMINAL (RED)	

166-7390 **BATTERY & WIRING GP** *(contd.)* **i01589692**

NOTE	REF NO	GRAPHIC REF	PART NUMBER	QTY	PART NAME 1 2 3 4 5 6 (PRODUCT LEVEL)	SEE PAGE
		4	**1S-7251**	1	TERMINAL-RING (FOR 1/2 IN BOLT)	
		4	**1M-6119**	1	BOLT-BATTERY TERMINAL (5/16-18X1.375 IN)	
		4	**1M-6120**	1	NUT-BATTERY TERMINAL (5/16-18 THD)	
		4	**1S-4915**	6	LINER-CONDUIT	
E		4	**5P-0695**		CONDUIT (263CM)	
E		4	**5P-0761**		CABLE (00GA)(RED) (251CM)	
		4	**8N-0869**	2	COVER-TERMINAL (RED)	
BE		4	**8T-2225**		TUBE-HEAT SHRINK	
	23	2	**172-4864**	1	GUARD	
	24	2	**172-4865**	1	HARNESS AS (RADIATOR GUARD)	
	25	4	**172-4866**	1	CABLE AS (ALTERNATOR)	
		4	**1S-4915**	2	LINER-CONDUIT	
E		4	**5P-0695**		CONDUIT (256CM)	
E		4	**5P-0760**		CABLE (0 GA) (282 CM)	
		4	**8N-0869**	2	COVER-TERMINAL (RED)	
BE		4	**8T-2225**		TUBE-HEAT SHRINK	
		4	**170-3794**	2	RING-TERMINAL	
	26	4	**172-4871**	1	CLAMP	
	27	4	**174-6052**	2	BRACKET AS	
	28	2	**174-7875**	1	HORN AS (24 VOLT)(HIGH TONE)	
	29	3	**183-4274**	1	BRACKET	
	30	3	**189-5746**	1	SENSOR GP-SPEED (ENGINE)	
		3	**102-8802**	1	KIT-RECEPTACLE (2 PIN)	
					(INCLUDES RECEPTACLE AS & WEDGE)	
		3	**3E-3365**	1	WEDGE-RECEPTACLE LOCK (2 PIN)	
		3	**8T-8729**	2	PIN-CONNECTOR	
BE		3	**9X-1386**		SLEEVE	
		3	**171-5349**	1	STRAP-MARKER	
	31	3	**190-3586**	1	HARNESS AS (HOOD)	
Y	32	3	**193-2550**	1	SENSOR GP-SPEED (TRANSMISSION)	180
	33	3,4	**193-3973**	14	TIE	
	34	4	**194-7664**	1	HARNESS AS (TRANSMISSION)	
	35	4	**197-0668**	1	CABLE AS (DISCONNECT SWITCH)	
		4	**1S-4915**	2	LINER-CONDUIT	
		4	**1S-7252**	1	TERMINAL-RING (FOR 3/8 IN BOLT)	
E		4	**5P-0695**		CONDUIT (69CM)	
		4	**9G-0003**	1	COVER-TERMINAL (BLACK)	
		4	**037-5197**	1	BOOT	
		4	**8T-9757**	1	TERMINAL AS-BATTERY (NEGATIVE)	
E		4	**5P-0747**		CABLE (00GA)(BLACK) (94CM)	
BE		4	**8T-2225**		TUBE-HEAT SHRINK	
		4	**8T-9757**	1	TERMINAL AS-BATTERY (NEGATIVE)	
		4	**1M-6119**	1	BOLT-BATTERY TERMINAL (5/16-18X1.375 IN)	
		4	**1M-6120**	1	NUT-BATTERY TERMINAL (5/16-18 THD)	
	36	3	**197-0754**	1	CABLE AS (INLET AIR HEATER) (STARTER)	
		3	**2L-8050**	1	TERMINAL (6 GA, 6.35MM/.25IN SCREW)	
		3	**2L-8054**	1	TERMINAL (6 GA, 12.7MM/.50IN SCREW)	
		3	**2L-8061**	1	TERMINAL (8 GA, 12.7MM/.50IN SCREW)	
		3	**2L-8058**	1	TERMINAL (8 GA, 6.35MM/.25IN SCREW)	
E		3	**119-3662**		TUBE-HEAT SHRINK (8CM)	
		3	**003-9835**	1	PROTECTOR	
	37	3	**197-0755**	1	CABLE AS (INLET AIR HEATER) (ELEMENT)	
		3	**2L-8050**	2	TERMINAL (6 GA, 6.35MM/.25IN SCREW)	
		3	**2L-8058**	2	TERMINAL (8 GA, 6.35MM/.25IN SCREW)	
E		3	**119-3662**		TUBE-HEAT SHRINK (8CM)	
		3	**003-9835**	2	PROTECTOR	
	38	3	**104-6202**	1	CLIP (LADDER)	
	39	3,4	**132-5789**	3	CLIP	
	40	2	**174-7876**	1	HORN AS (24 VOLT)(LOW TONE)	

166-7390 **BATTERY & WIRING GP** ***(contd.)*** **i01589692**

NOTE	REF NO	GRAPHIC REF	PART NUMBER	QTY	PART NAME 1 2 3 4 5 6 (PRODUCT LEVEL)	SEE PAGE
	41	2,3	**1J-8668**	4	STUD-TAPERLOCK	
	42	1,2,3	**3J-1907**	3	SEAL-O-RING	
	43	3	**3J-7354**	1	SEAL-O-RING	
	44	1	**3K-0360**	1	SEAL-O-RING	
	45	2,3,4	**3K-6060**	11	LOCKNUT (3/8-16 THD)	
	46	2	**115-2422**	2	BATTERY (12 VOLT)(WET)	
	47	2,4	**4L-6454**	4	BOLT (3/8-16X1 IN)	
	48	2	**4P-7428**	1	CLIP	
	49	2,3,4	**4P-7581**	12	CLIP	
	50	3	**4P-7582**	1	CLIP	
	51	1,3,4	**4P-8134**	5	CLIP	
	52	1	**8T-4223**	1	WASHER-HARD (13.5X25.5X3MM THK)	
M	53	3	**5C-7261**	2	NUT (M8X1.25 THD)	
M	54	3	**5C-9553**	2	BOLT (M6X1X16MM)	
	55	2,4	**5M-3062**	8	BOLT (3/8-16X0.75 IN)	
	56	2,3,4	**5P-1075**	25	WASHER-HARD (10.2X22.5X3MM THK)	
	57	2,3,4	**5P-4295**	9	CLIP	
	58	1	**5P-6944**	1	ADAPTER-STRAIGHT THREAD	
	59	2,4	**5P-8167**	3	BOLT	
	60	2,3	**6D-4247**	3	CLIP	
	61	2	**7X-0291**	2	BOLT (3/8-16X3.75 IN)	
	62	3	**7X-0342**	2	BOLT (5/8-11X0.74 IN)	
	63	3	**7X-0515**	2	WASHER-HARD (17X35X5MM THK)	
	64	3	**8T-4121**	4	WASHER-HARD (11X21X2.5MM THK)	
M	65	3	**8T-4137**	1	BOLT (M10X1.5X20MM)	
M	66	3	**8T-4191**	3	BOLT (M10X1.5X16MM)	
	67	3	**8T-4224**	2	WASHER-HARD (8.8X16X2MM THK)	
	68	2,4	**8T-4896**	9	WASHER-HARD (10.2X18.5X2.5MM THK)	
	69	2	**8T-9056**	4	BOLT (3/8-16X1.25 IN)	
	70	3	**9X-8256**	2	WASHER (6.6X12X2MM THK)	
	71	1	**8T-9384**	1	BOLT (1/2-13X0.875 IN)	

B-USE AS REQUIRED
D-ORDER BY THE METER
E-ORDER BY THE CENTIMETER
M-METRIC PART
Y-SEPARATE ILLUSTRATION

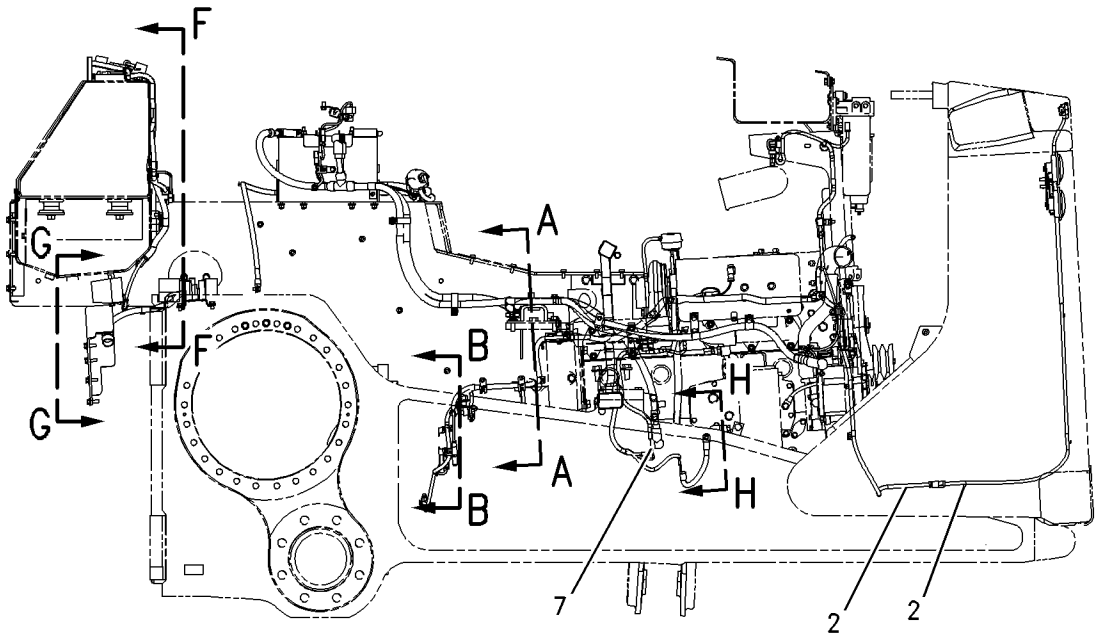

RIGHT SIDE VIEW

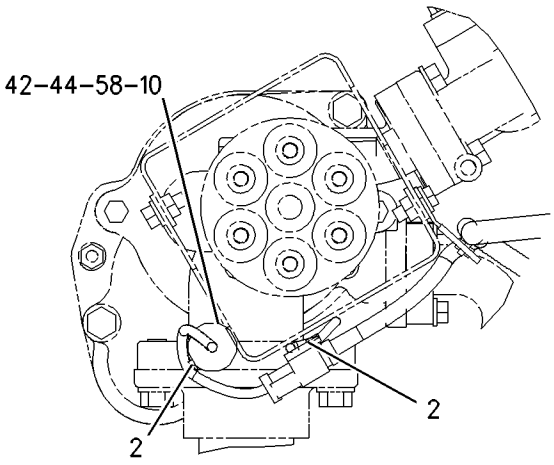

SECTION A–A

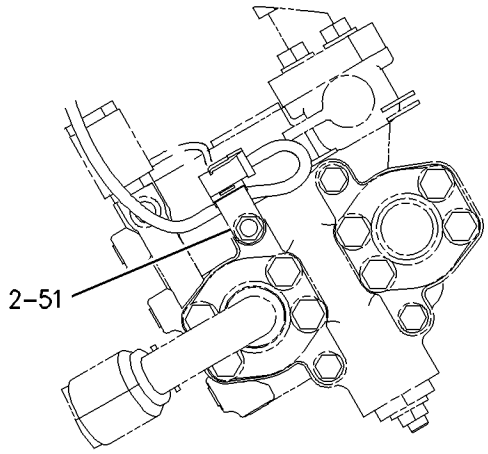

SECTION B–B

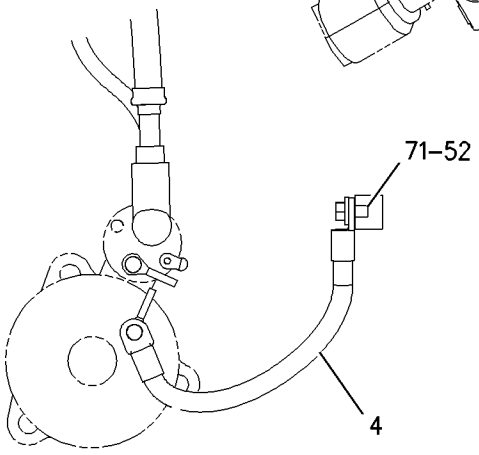

SECTION H–H

GRAPHIC #1 g00845994

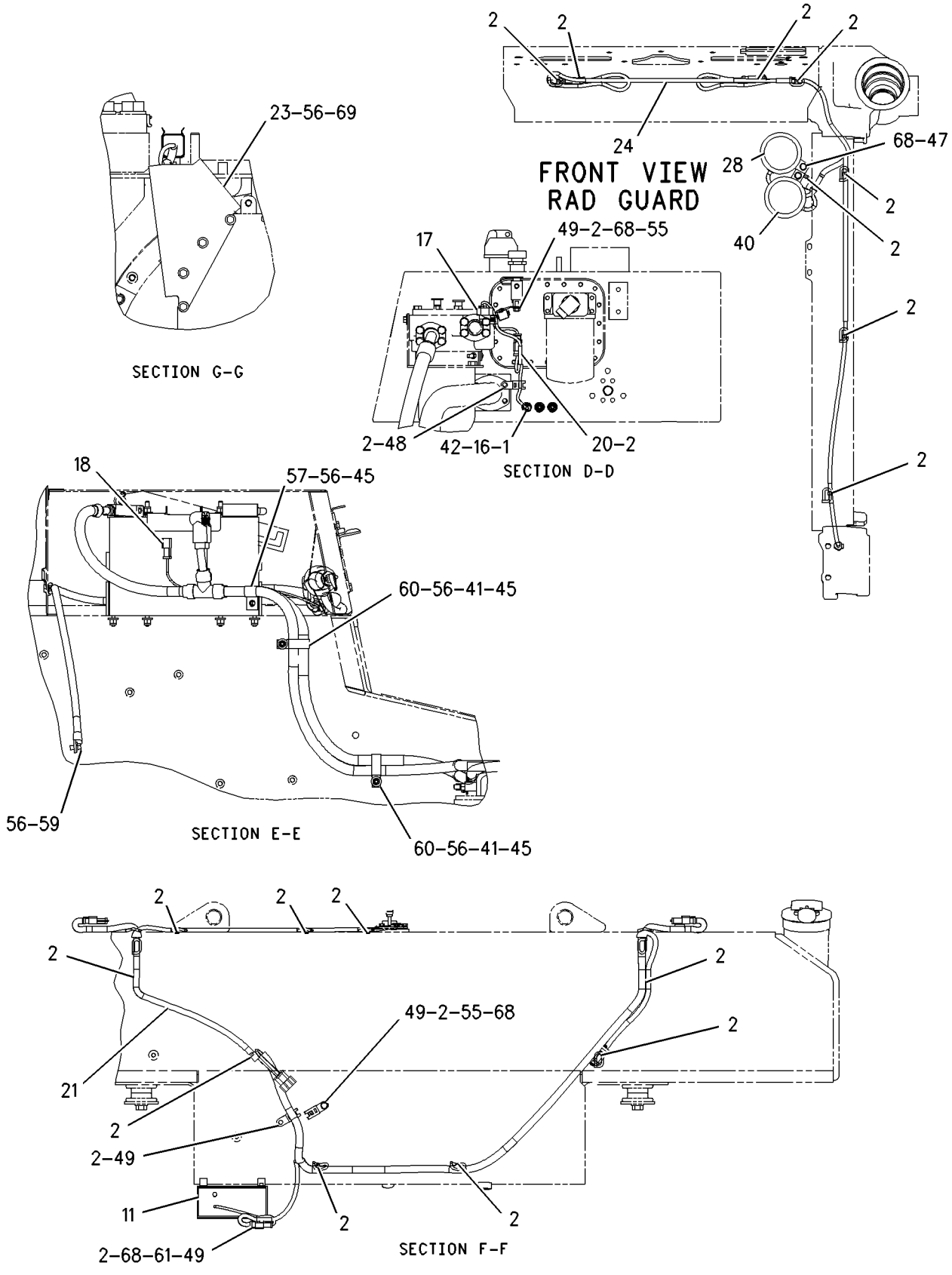

GRAPHIC #2 g00830192

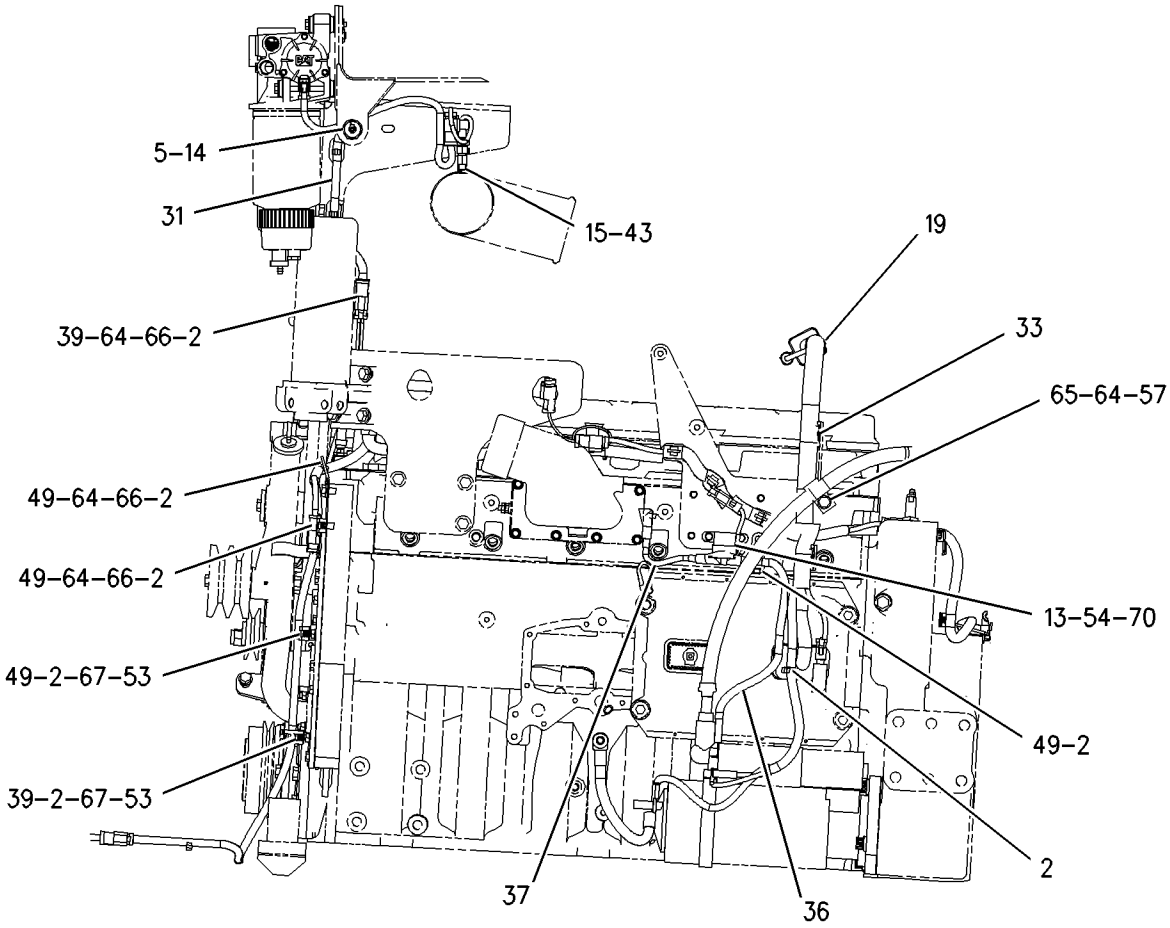

LEFT SIDE VIEW OF ENGINE

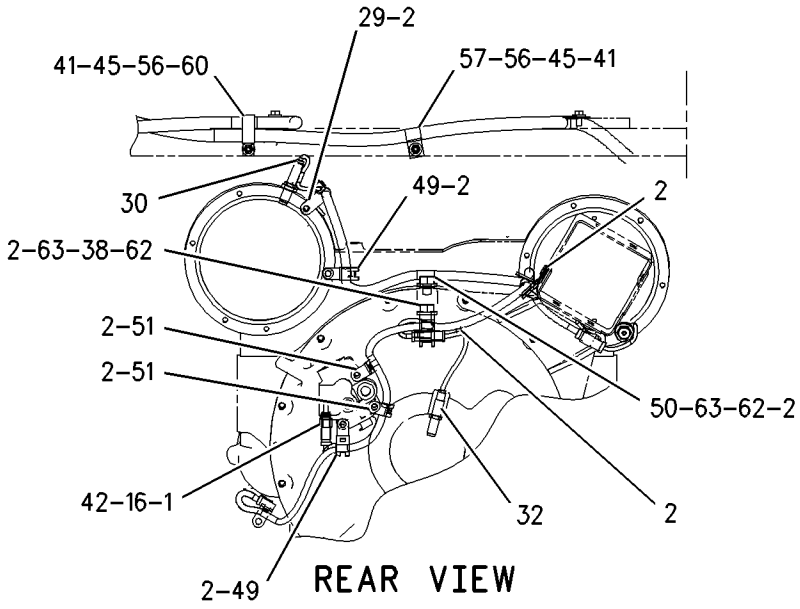

REAR VIEW

GRAPHIC #3 g00845843

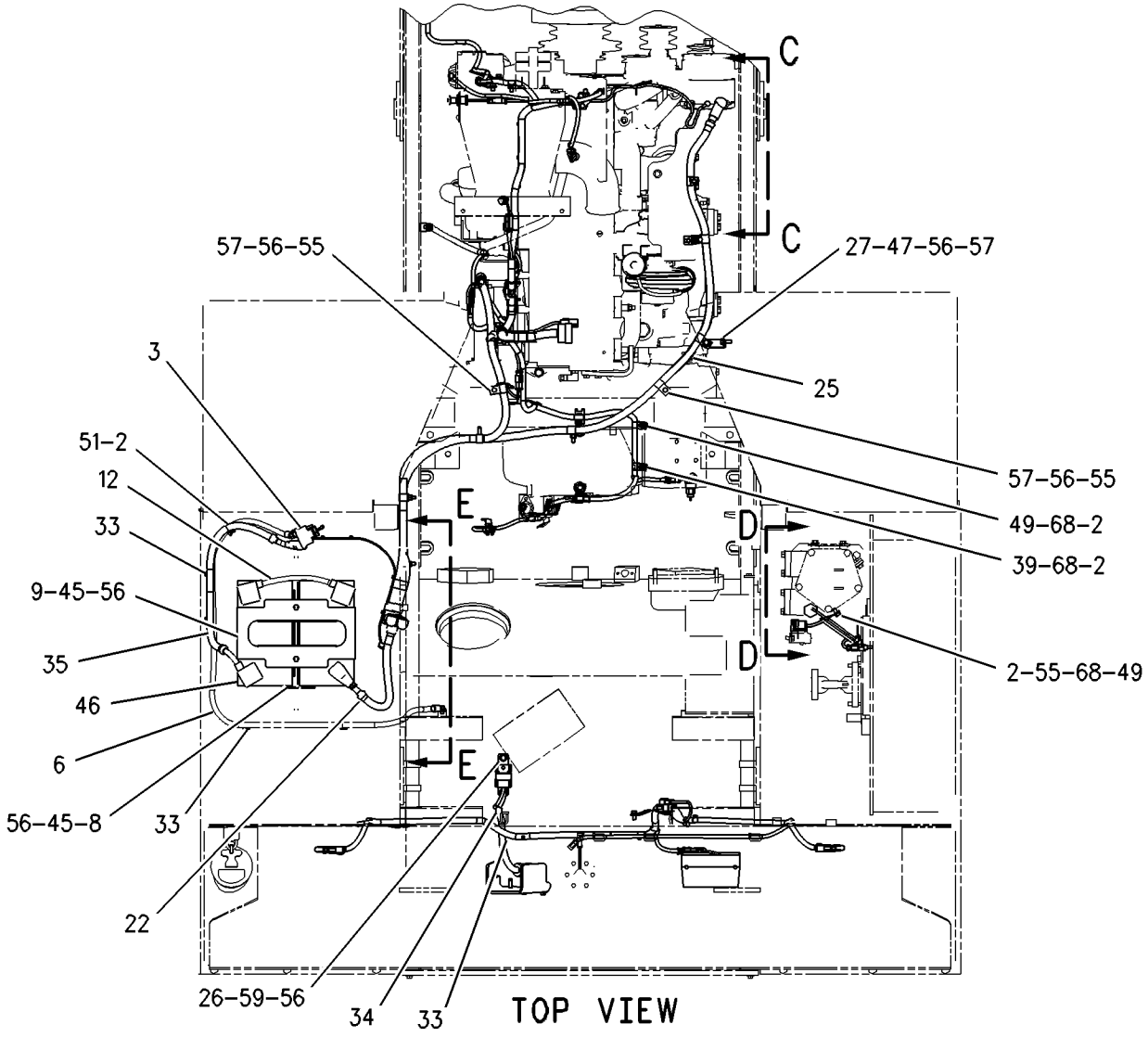

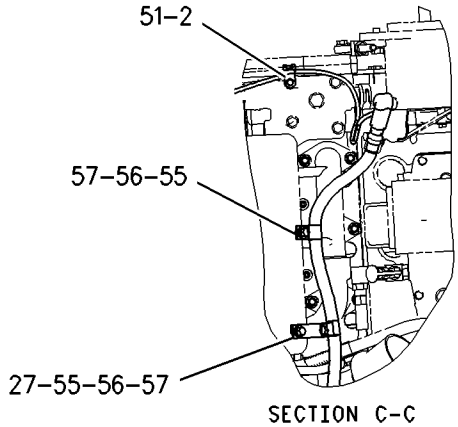

GRAPHIC #4 g00853946

213-7511 BATTERY GP

S/N: BLE1-UP; BMJ1-UP
AN ATTACHMENT

SMCS-1401 **i01631886**

NOTE	REF NO	GRAPHIC REF	PART NUMBER	QTY	PART NAME 1 2 3 4 5 6 (PRODUCT LEVEL)	SEE PAGE
	1	1	**8V-0622**	1	CABLE AS	
		1	**8C-5917**	1	TERMINAL AS-BATTERY (POSITIVE)	
		1	**1M-6119**	2	BOLT-BATTERY TERMINAL (5/16-18X1.375 IN)	
		1	**1M-6120**	2	NUT-BATTERY TERMINAL (5/16-18 THD)	
		1	**5P-0761**		CABLE (00GA)(RED) (14 CM)	
		1	**8T-9757**	1	TERMINAL AS-BATTERY (NEGATIVE)	
		1	**9G-0003**	1	COVER-TERMINAL (BLACK)	
		1	**9G-0004**	1	COVER-TERMINAL (RED)	
	2	1	**111-7276**	1	PLATE AS	
		1	**6D-3273**	2	ROD	
		1	**8D-8879**	2	STUD (3/8-16X30.38 IN OAL)	
	3	1	**153-5710**	2	BATTERY	
	4	1	**153-6281**	1	HOLD DOWN AS	
	5	1	**172-4861**	1	SPACER (13.8X25.4X15MM THK)	
Y	6	1	*186-0067*	1	STARTING MOTOR GP-ELECTRIC	190

Y-SEPARATE ILLUSTRATION

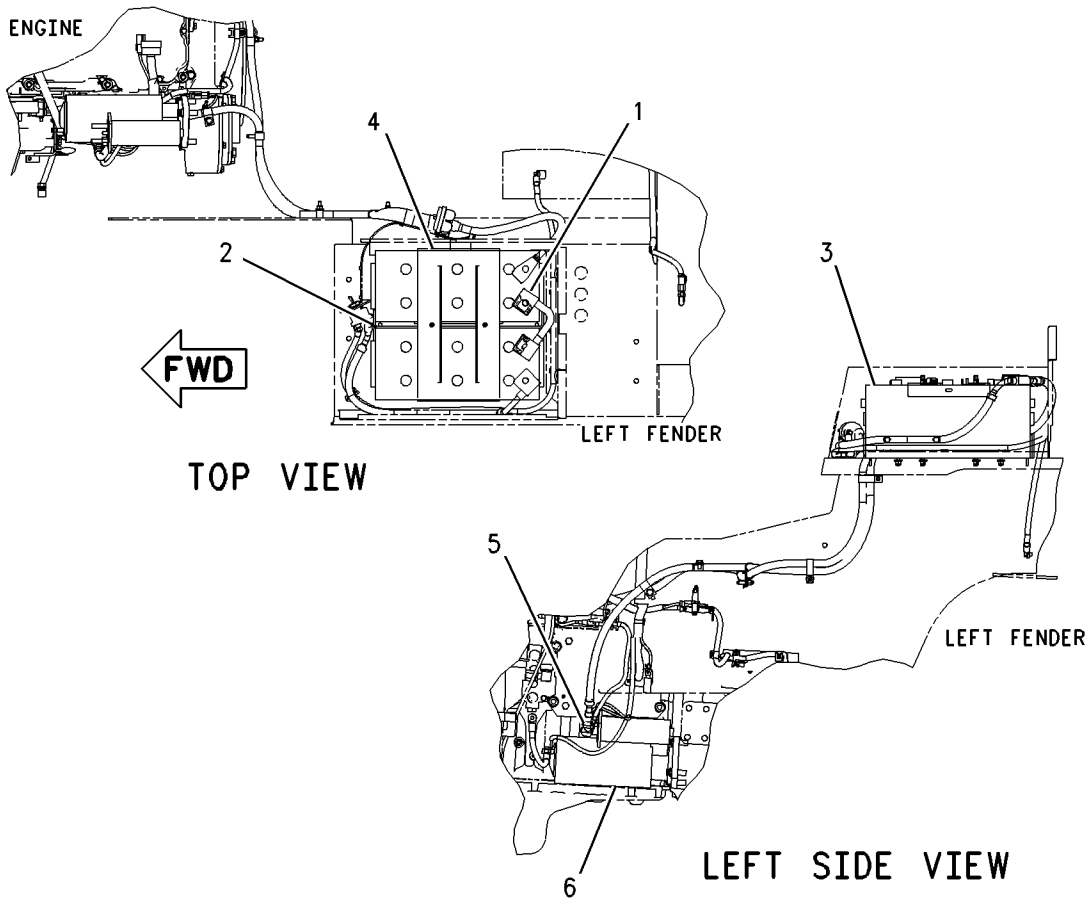

GRAPHIC #1 g00846770

158-8077 CONTROL & MTG GP-ELECTRONIC

S/N: BLE1-UP; BMJ1-UP

PART OF 164-4792, 164-4794 POWER TRAIN AR

SMCS-1901 **i01590412**

NOTE	REF NO	GRAPHIC REF	PART NUMBER	QTY	PART NAME 1 2 3 4 5 6 (PRODUCT LEVEL)	SEE PAGE
	1	1	**6I-1418**	4	SPACER (8.2X12.7X28.7MM THK)	
	2	1	**8T-9655**	8	MOUNT (ISOLATION)	
Y	3	1	**172-9389**	1	CONTROL GP-UNPROGRAMMED	151
	4	1	**8T-4224**	1	WASHER-HARD (8.8X16X2MM THK)	
	5	1	**9N-0869**	4	WASHER-HARD (8.8X25.5X2MM THK)	
M	6	1	**7X-0818**	4	BOLT (M8X1.25X45MM)	

M-METRIC PART
Y-SEPARATE ILLUSTRATION

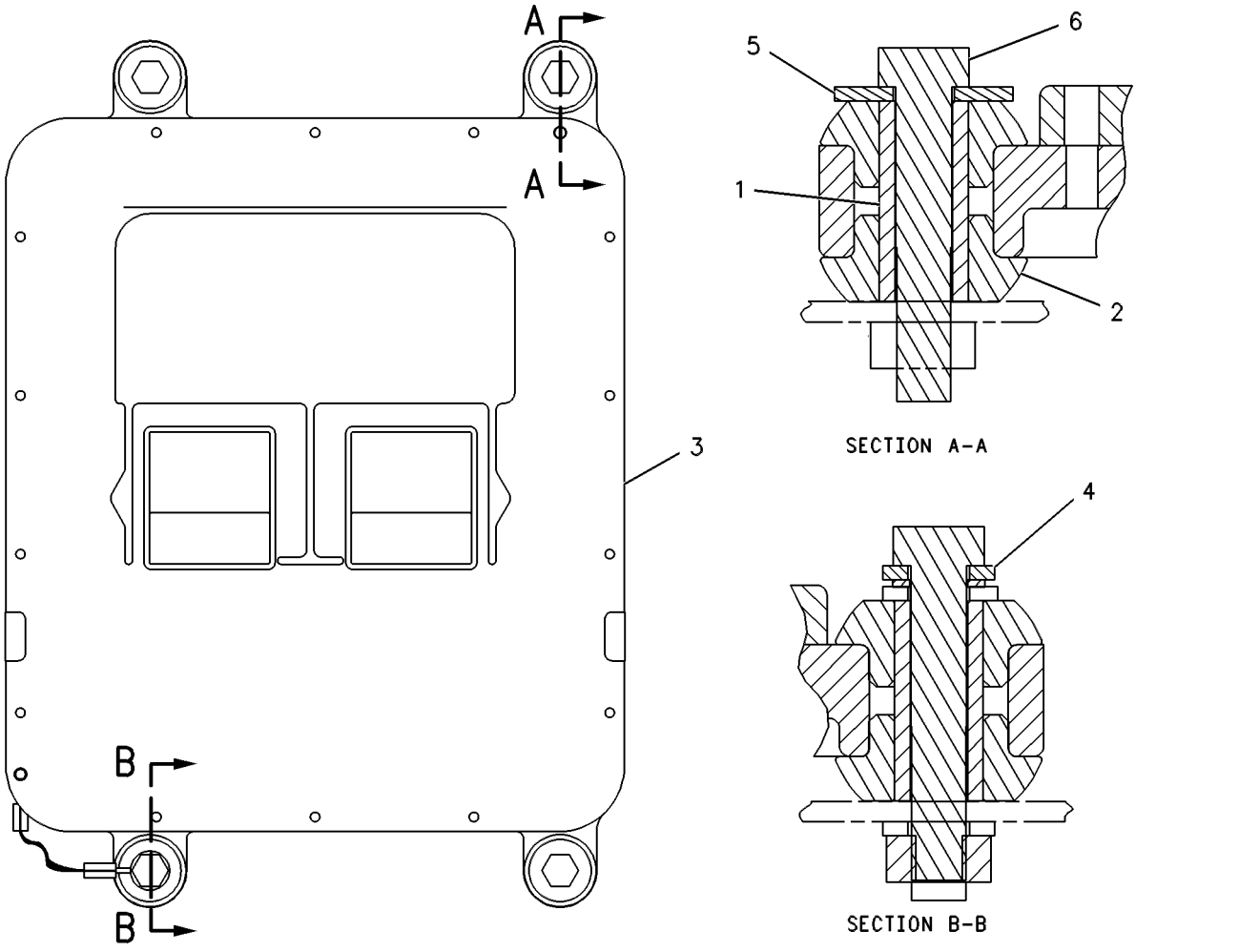

GRAPHIC #1 g00258550

165-4468 CONTROL & MTG GP-ENGINE ELEK

S/N: 4ZF1-UP
PART OF 166-0273, 169-3791, 176-5509, 176-9269 ENGINE AR
ALSO AN ATTACHMENT

SMCS-1901 **i01434182**

NOTE	REF NO	GRAPHIC REF	PART NUMBER	QTY	PART NAME 1 2 3 4 5 6 (PRODUCT LEVEL)	SEE PAGE
	1	1	**8T-9655**	8	MOUNT (ISOLATION)	
	2	1	**101-3128**	2	SPACER	
	3	1	**169-3111**	2	SPACER	
Y	4	1	*172-3353*	1	CONTROL GP-ENGINE ELECTRONIC	149
M	5	1	**5P-8347**	2	BOLT (M8X1.25X70MM)	
M	6	1	**6V-5223**	2	BOLT (M8X1.25X100MM)	
	7	1	**9M-1974**	1	WASHER-HARD (8.8X16X2MM THK)	
	8	1	**9N-0869**	4	WASHER-HARD (8.8X25.5X2MM THK)	

M-METRIC PART
Y-SEPARATE ILLUSTRATION

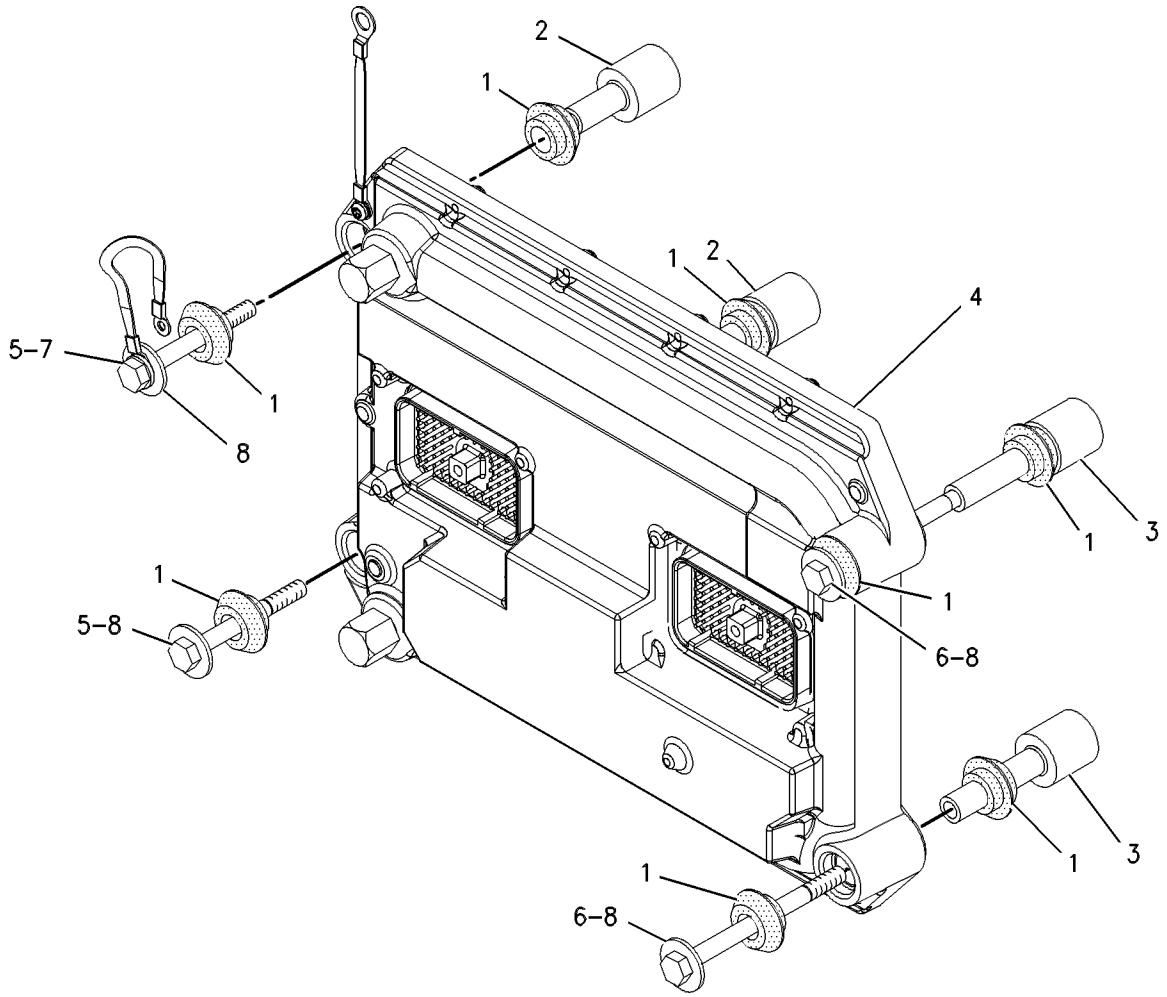

GRAPHIC #1 g00637446

186-0929 CONTROL GP-ELECTRONIC

S/N: BLE1-UP; BMJ1-UP

PART OF 195-5200 ELECTRONICS GP-MONITOR

SMCS-7490 **i01589596**

NOTE	REF NO	GRAPHIC REF	PART NUMBER	QTY	PART NAME 1 2 3 4 5 6 (PRODUCT LEVEL)	SEE PAGE
Y	1	1	**154-7443**	1	CONTROL GP-MONITOR (CATERPILLAR MONITORING SYSTEM)	150
F			**186-0928**	1	SOFTWARE GP-MONITOR	

F-NOT SHOWN
Y-SEPARATE ILLUSTRATION

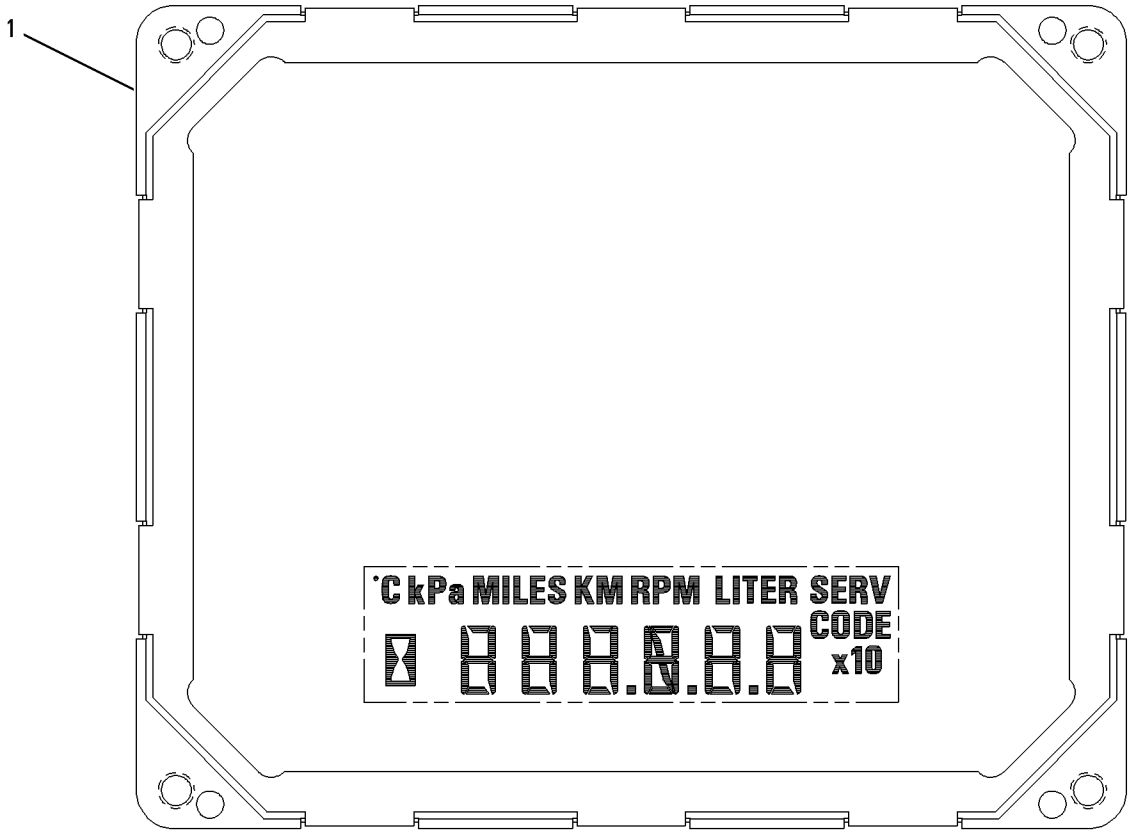

GRAPHIC #1 g00726850

ELECTRICAL AND STARTING SYSTEM

172-3353 CONTROL GP-ENGINE ELECTRONIC

S/N: 4ZF1-UP
PART OF 165-4468 CONTROL & MTG GP-ENGINE ELEK
ALSO AN ATTACHMENT

SMCS-1901 **i01434579**

NOTE	REF NO	GRAPHIC REF	PART NUMBER	QTY	PART NAME 1 2 3 4 5 6 (PRODUCT LEVEL)	SEE PAGE
	1	1	**179-9848**	1	CONTROL GP-ENGINE ELECTRONIC	
	2	1	**7X-6315**	1	STRAP-GROUNDING	
	3	1	**134-4126**	1	WASHER (0.76MM THK)	
	4	1	**184-2472**	1	SCREW-PAN HEAD (LUBRICATED)	

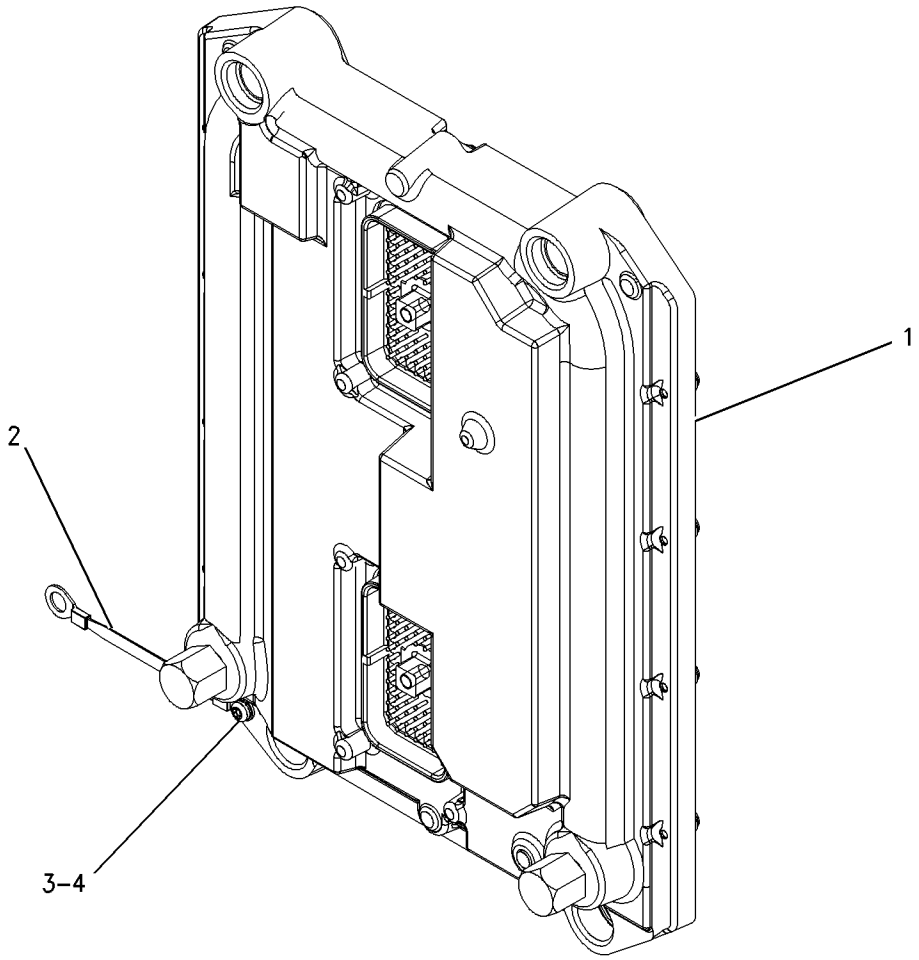

GRAPHIC #1 g00737212

ELECTRICAL AND STARTING SYSTEM

154-7443 CONTROL GP-MONITOR

S/N: BLE1-UP; BMJ1-UP

PART OF 186-0929 CONTROL GP-ELECTRONIC, 170-6613, 170-6614 INSTRUMENT GP

ALSO AN ATTACHMENT

SMCS-7490 **i01589602**

NOTE	PART NUMBER	QTY	PART NAME 1 2 3 4 5 6 (PRODUCT LEVEL)	SEE PAGE
			(NO SERVICED PARTS)	

ELECTRICAL AND STARTING SYSTEM

172-9389 CONTROL GP-UNPROGRAMMED

S/N: BLE1-UP; BMJ1-UP

PART OF 158-8077 CONTROL & MTG GP-ELECTRONIC, 207-9809 SERVICE GP-POWER TRAIN

SMCS-3030 **i01352151**

NOTE	REF NO	GRAPHIC REF	PART NUMBER	QTY	PART NAME 1 2 3 4 5 6 (PRODUCT LEVEL)	SEE PAGE
	1	1	**7X-6315**	1	STRAP-GROUNDING	
	2	1	**101-0852**	1	SCREW-PAN HEAD (NO 8 X 3/8 IN)	
M	3	1	**6V-6703**	2	KIT-RETAINING BOLT	
					(EACH INCLUDES BOLT, RING, AND SEALS)	
					FOR SOFTWARE, SEE ELECTRONICS GP	

M-METRIC PART

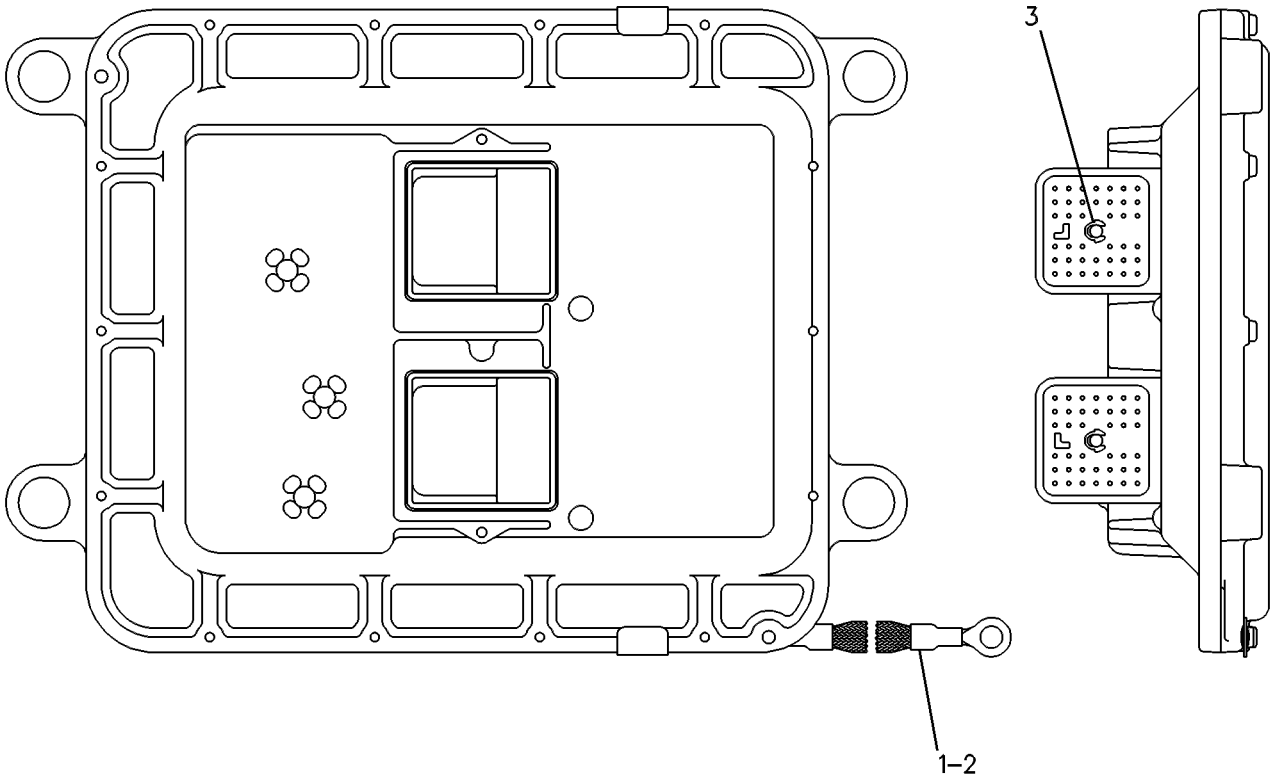

GRAPHIC #1 g00087166

167-7630 CONVERTER GP-ELECTRICAL

S/N: BLE1-UP; BMJ1-UP
20 AMP, 12 VOLT
AN ATTACHMENT

SMCS-1421 **i01662715**

NOTE	REF NO	GRAPHIC REF	PART NUMBER	QTY	PART NAME 1 2 3 4 5 6 (PRODUCT LEVEL)	SEE PAGE
	1	1	**7K-1181**	6	STRAP-CABLE	
	2	1	**184-3579**	1	CONVERTER-POWER (20 AMP)	
	3	1	**185-5628**	1	HARNESS AS (PLATFORM)	
	4	1	**192-4209**	1	PLATE	
	5	1	**068-4209**	4	SCREW (8-32X0.75 IN)	
M	6	1	**107-3786**	8	BOLT (M4X.7X12MM)	
	7	1	**3T-2662**	2	CIRCUIT BREAKER AS (15 AMP)	
					(EACH INCLUDES)	
		1	**6V-8376**	2	SCREW-MACHINE (8-32X0.25 IN)	
		1	**9B-7233**	2	LOCKWASHER	
	8	1	**8T-0328**	8	WASHER-HARD (5.5X10X1MM THK)	

M-METRIC PART

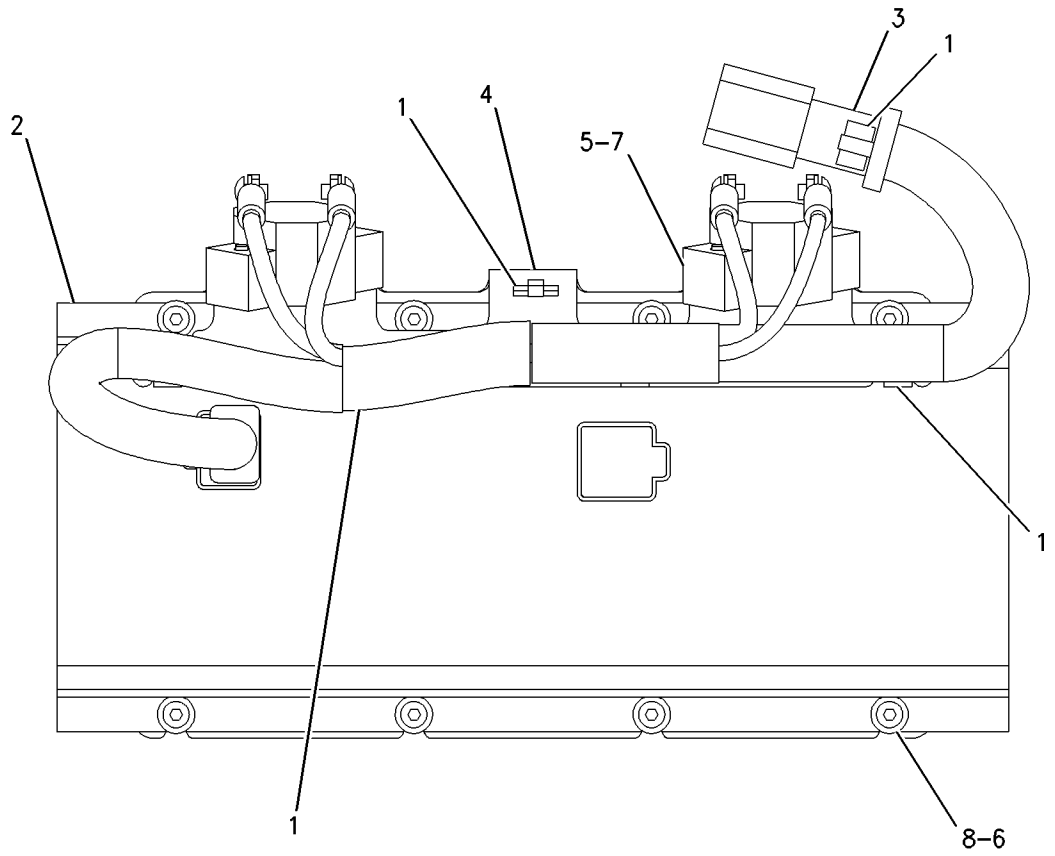

GRAPHIC #1 g00859187

ELECTRICAL AND STARTING SYSTEM

159-9035 ELECTRONICS GP-MACHINE

S/N: BLE1-UP; BMJ1-UP

PART OF 157-1740 ELECTRONICS AR-MACHINE

SMCS-7000 **i01589536**

NOTE	PART NUMBER	QTY	PART NAME 1 2 3 4 5 6 (PRODUCT LEVEL)	SEE PAGE
	207-9808	1	SOFTWARE GP-POWER TRAIN	
			(SOFTWARE ONLY)	
			—OR—	
Y	**207-9809**	1	SERVICE GP-POWER TRAIN	183
			(OPTIONAL SERVICE REPLACEMENT) (INCLUDES SOFTWARE)	

Y-SEPARATE ILLUSTRATION

ELECTRICAL AND STARTING SYSTEM

195-5200 ELECTRONICS GP-MONITOR

S/N: BLE1-UP; BMJ1-UP

PART OF 157-1740 ELECTRONICS AR-MACHINE

SMCS-7490, 7601, 7603, 7620 **i01589584**

NOTE	PART NUMBER	QTY	PART NAME 1 2 3 4 5 6 (PRODUCT LEVEL)	SEE PAGE
	186-0928	1	SOFTWARE GP-MONITOR	
			(SOFTWARE ONLY)	
			—OR—	
Y	**186-0929**	1	CONTROL GP-ELECTRONIC	148
			(OPTIONAL SERVICE REPLACEMENT) (INCLUDES SOFTWARE)	

Y-SEPARATE ILLUSTRATION

118-7284 HEATER GP-AIR INLET

S/N: 4ZF1-UP
PART OF 166-0273, 169-3791, 176-5509, 176-9269 ENGINE AR
ALSO AN ATTACHMENT

SMCS-1090 **i01354376**

NOTE	REF NO	GRAPHIC REF	PART NUMBER	QTY	PART NAME 1 2 3 4 5 6 (PRODUCT LEVEL)	SEE PAGE
B	1	1	**1U-8846**		SEALANT	
	2	1	**159-3537**	1	HEATER AS	
M	3	1	**5C-2890**	2	NUT (M6X1 THD)	

B-USE AS REQUIRED
M-METRIC PART

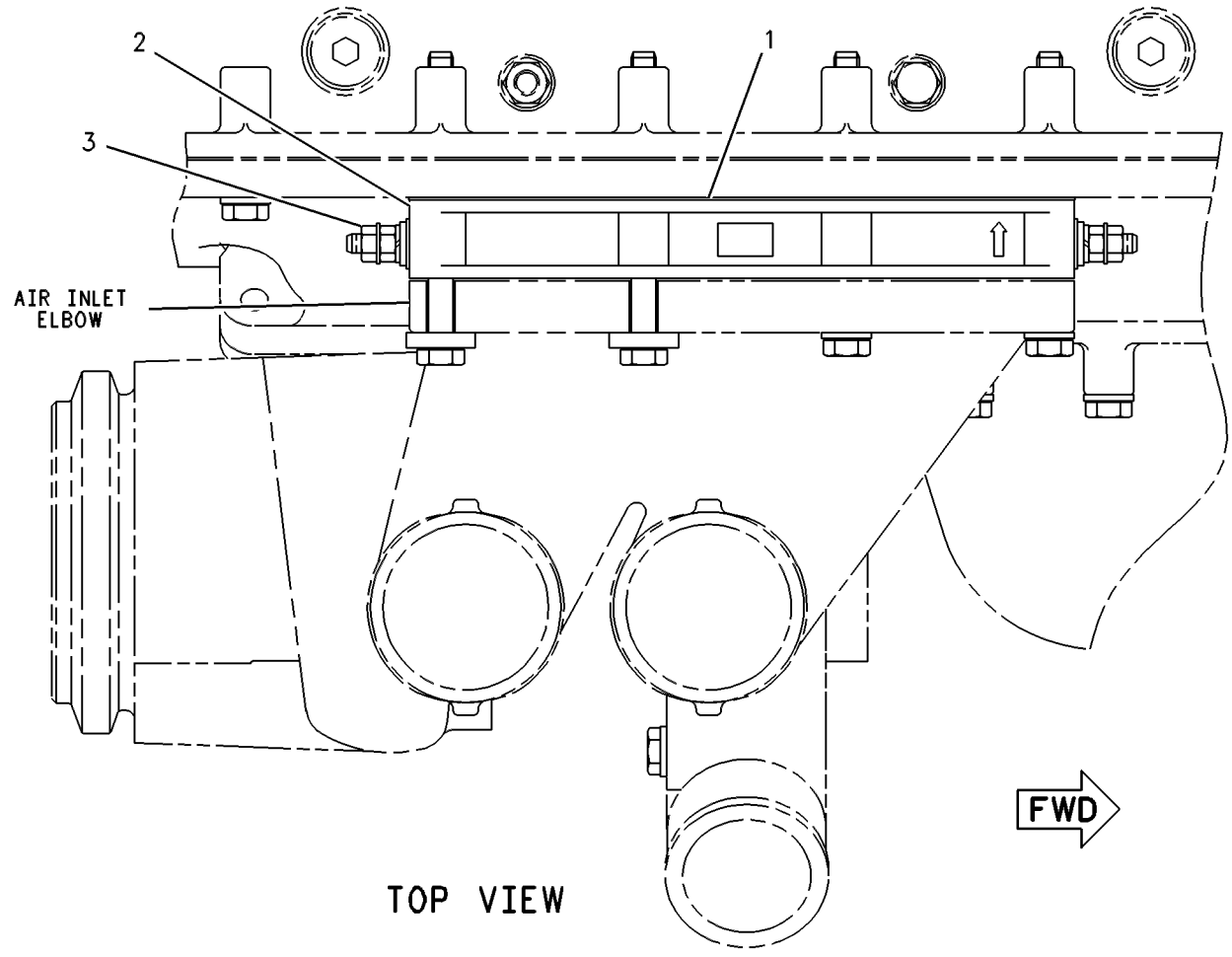

GRAPHIC #1 g00250922

197-6280 HEATER GP-JACKET WATER

S/N: BLE1-UP; BMJ1-UP
120 VOLT, 15 AMP
AN ATTACHMENT

SMCS-1383 **i01662765**

NOTE	REF NO	GRAPHIC REF	PART NUMBER	QTY	PART NAME 1 2 3 4 5 6 (PRODUCT LEVEL)	SEE PAGE
	1	1	**5P-0492**	1	ADAPTER	
	2	1	**7K-1181**	10	STRAP-CABLE	
	3	1	**9G-6655**	1	ELEMENT AS-JACKET WATER HEATER (120 VOLTS/1500 WATTS)	
	4	1	**197-6281**	1	CORD AS	
	5	1	**214-9389**	1	FILM (WATER HEATER)	
	6	1	**7M-8485**	1	SEAL-O-RING	

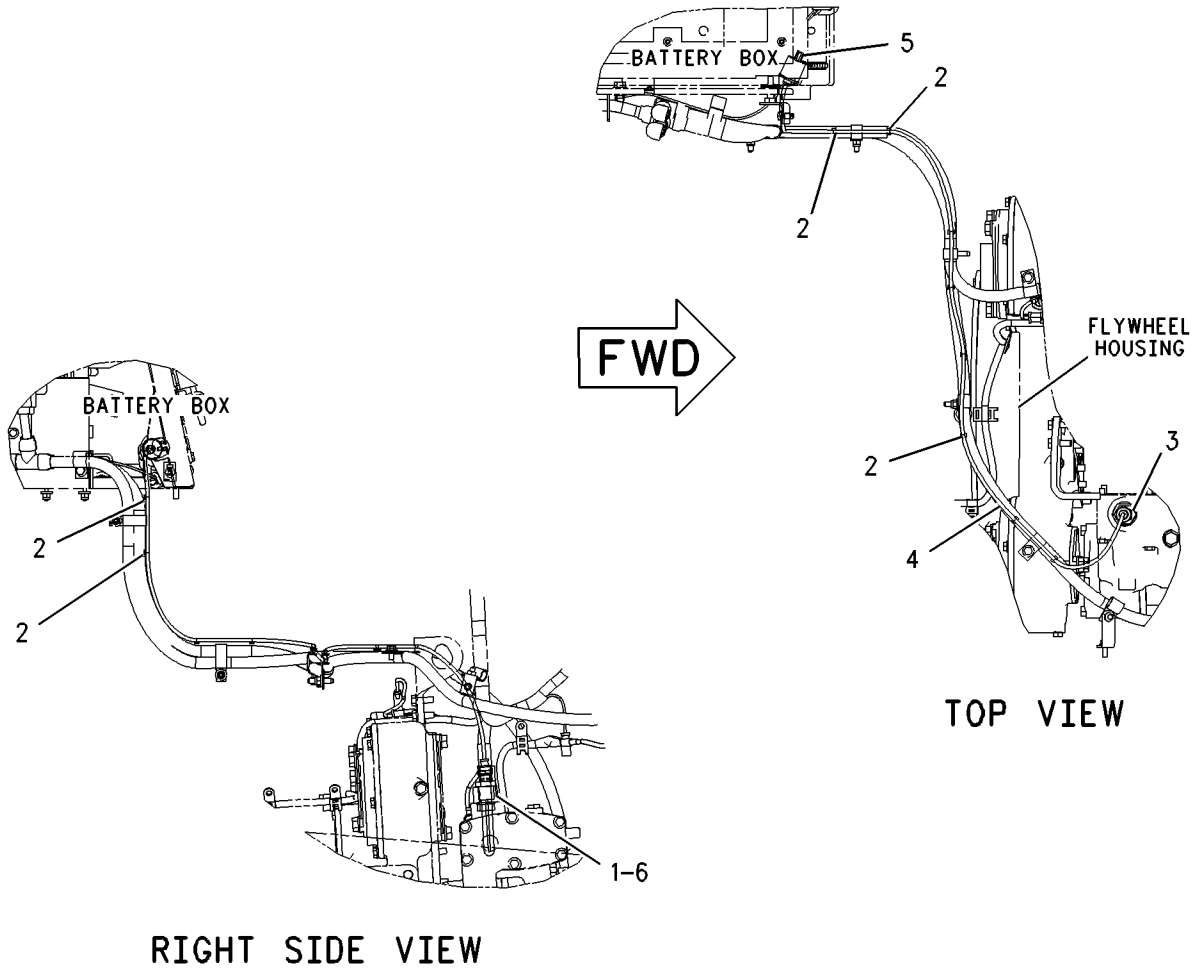

GRAPHIC #1 g00859163

MEMORANDA

211-0274 INSTALLATION AR-COMMUNICATION

S/N: BLE1-UP; BMJ1-UP

FOR USE WITH REAR PROTECTIVE SCREENS OR ROPS MOUNTED A/C

AN ATTACHMENT

SMCS-7602 **i01631878**

NOTE	REF NO	GRAPHIC REF	PART NUMBER	QTY	PART NAME 1 2 3 4 5 6 (PRODUCT LEVEL)	SEE PAGE
	1	1	**7K-1181**	12	STRAP-CABLE	
	2	1	**8C-5607**	8	MOUNT (ISOLATION)	
	3	1	**8C-5608**	4	SPACER (6.5X9.5X25.4MM THK)	
	4	1	**170-9198**	2	PLATE	
	5	1	**185-7141**	1	FILM-WARNING (PRODUCT LINK RADIO)	
	6	1	**197-7447**	1	BRACKET	
	7	1	**202-0985**	1	HARNESS AS-CONTROL (PRODUCT LINK)	
	8	1	**207-6797**	1	ANTENNA AS	
		1	**1S-9593**	2	STRAP-CABLE	
	9	1	**208-4701**	1	CABLE AS	
	10	1	**209-6417**	1	CONTROL GP-COMMUNICATION (PRODUCT LINK)	
	11	1	**132-5789**	2	CLIP	
	12	1	**4L-6454**	2	BOLT (3/8-16X1 IN)	
	13	1	**5P-1075**	4	WASHER-HARD (10.2X22.5X3MM THK)	
	14	1	**6S-1066**	1	GROMMET (41.28MM OD)	
M	15	1	**6V-7728**	4	BOLT (M6X1.0X45MM)	
	16	1	**6V-8801**	2	NUT (3/8-16 THD)	
M	17	1	**8T-0639**	4	BOLT (M6X1.00X12MM)	
	18	1	**8T-4994**	1	WASHER-HARD (20X36.5X3.5MM THK)	
	19	1	**8T-9397**	1	BOLT (3/4-10X1.25 IN)	
	20	1	**9X-6165**	6	WASHER (6.5X22X2.5MM THK)	

M-METRIC PART

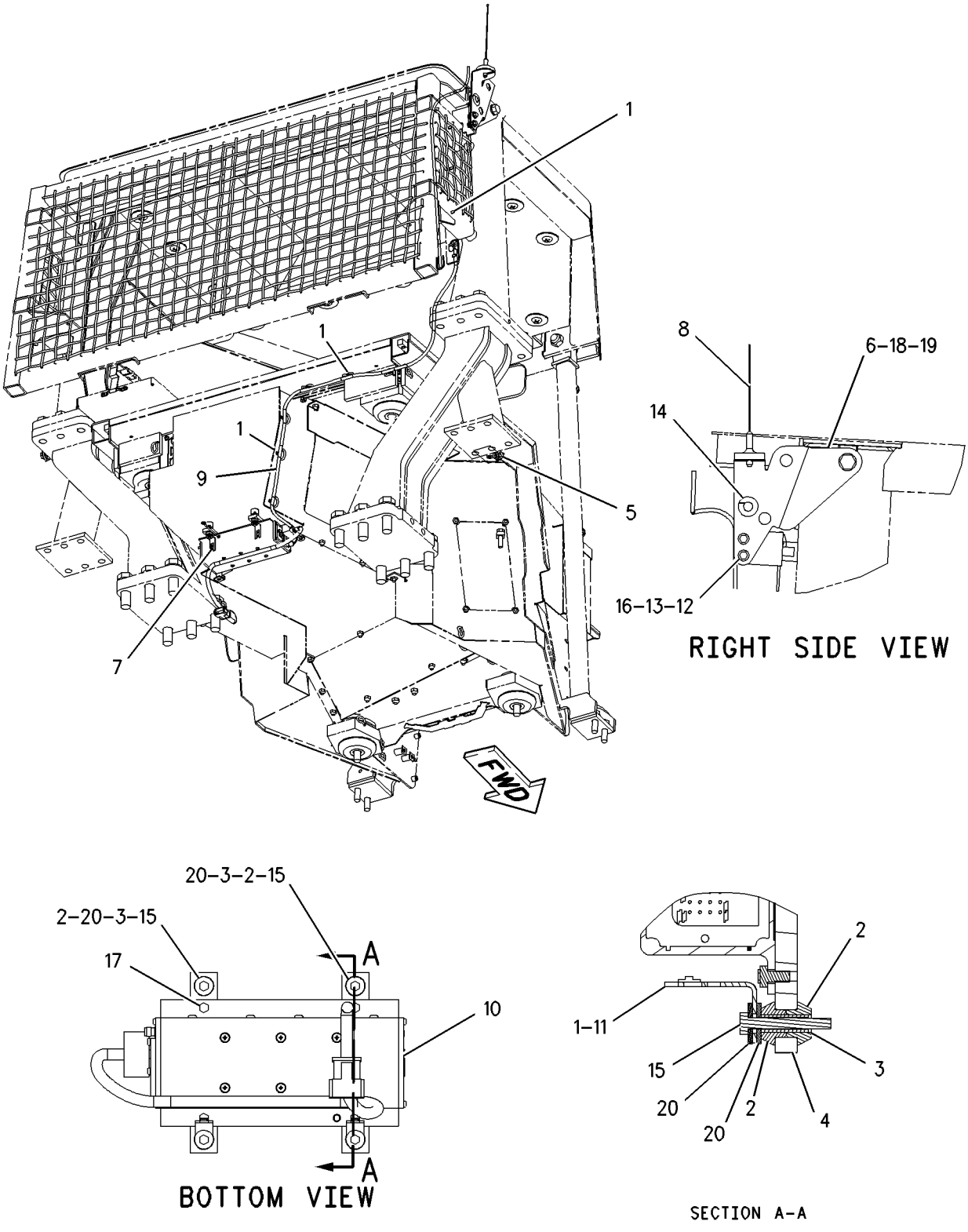

GRAPHIC #1 g00847355

210-6786 INSTALLATION GP-COMMUNICATION

S/N: BLE1-UP; BMJ1-UP

CANNOT BE USED WITH REAR PROTECTIVE SCREENS OR ROPS MOUNTED A/C AN ATTACHMENT

SMCS-7602 **i01662877**

NOTE	REF NO	GRAPHIC REF	PART NUMBER	QTY	PART NAME 1 2 3 4 5 6 (PRODUCT LEVEL)	SEE PAGE
	1	1	**7K-1181**	12	STRAP-CABLE	
	2	1	**8C-5607**	8	MOUNT (ISOLATION)	
	3	1	**8C-5608**	4	SPACER (6.5X9.5X25.4MM THK)	
	4	1	**129-8331**	1	PLATE AS	
		1	**7T-1099**	4	LINK	
	5	1	**170-9198**	2	PLATE	
	6	1	**172-4869**	1	BRACKET	
	7	1	**185-7141**	1	FILM-WARNING (PRODUCT LINK RADIO)	
	8	1	**202-0985**	1	HARNESS AS-CONTROL (PRODUCT LINK)	
	9	1	**207-6797**	1	ANTENNA AS	
		1	**1S-9593**	2	STRAP-CABLE	
	10	1	**208-4701**	1	CABLE AS	
	11	1	**208-4705**	1	BRACKET	
	12	1	**209-6417**	1	CONTROL GP-COMMUNICATION (PRODUCT LINK)	
	13	1	**132-5789**	2	CLIP	
	14	1	**9B-7237**	2	BOLT (3/8-16X1.25 IN)	
	15	1	**5P-1075**	4	WASHER-HARD (10.2X22.5X3MM THK)	
	16	1	**6S-1066**	1	GROMMET (41.28MM OD)	
M	17	1	**6V-7728**	4	BOLT (M6X1.0X45MM)	
	18	1	**6V-8801**	2	NUT (3/8-16 THD)	
	19	1	**7X-0365**	2	BOLT (3/4-10X1.5 IN)	
	20	1	**7X-0582**	2	WASHER-HARD (20X44.5X6MM THK)	
M	21	1	**8T-0639**	4	BOLT (M6X1.00X12MM)	
	22	1	**8T-4994**	1	WASHER-HARD (20X36.5X3.5MM THK)	
	23	1	**8T-9397**	1	BOLT (3/4-10X1.25 IN)	
	24	1	**9X-6165**	6	WASHER (6.5X22X2.5MM THK)	

M-METRIC PART

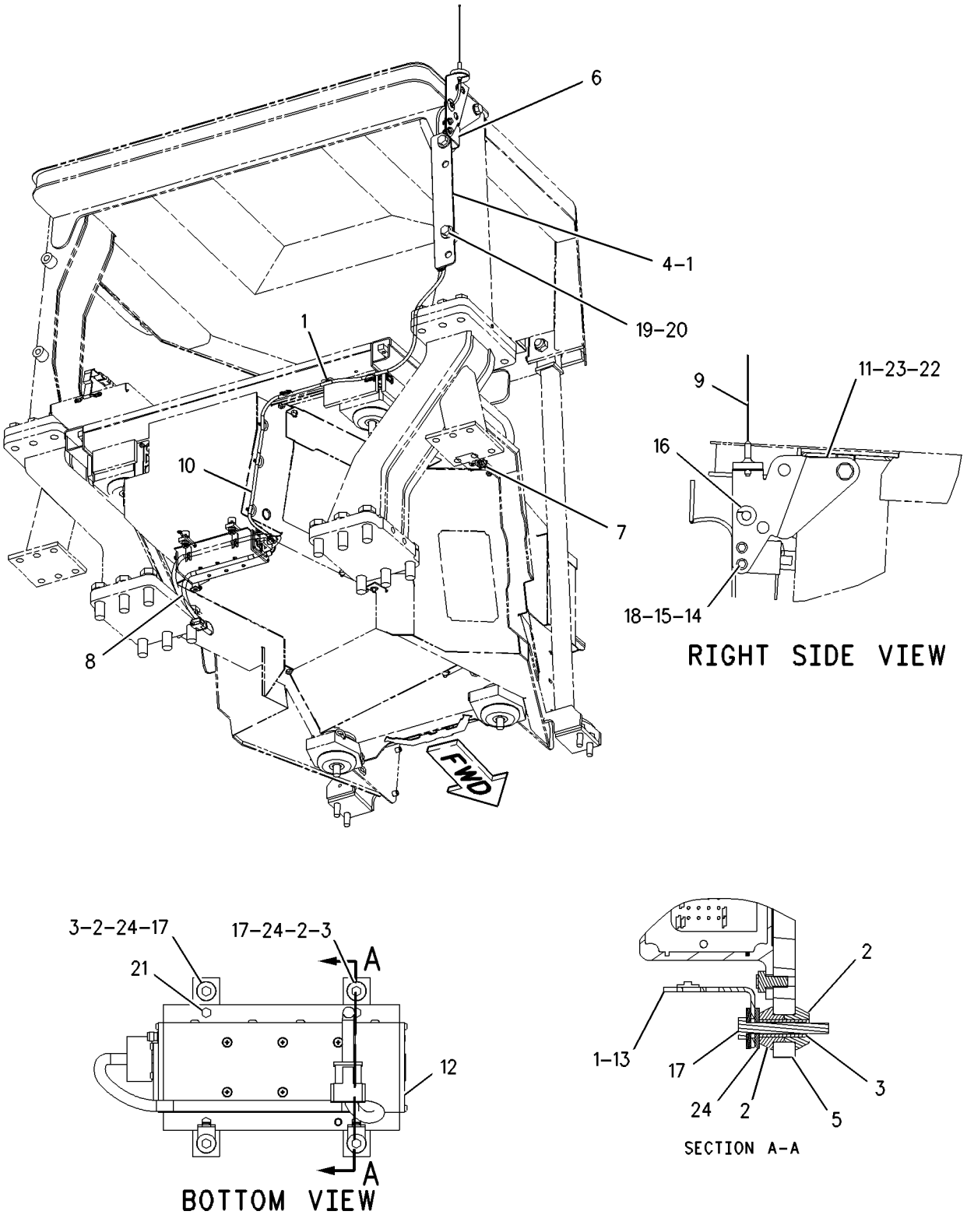

GRAPHIC #1

g00858949

3E-6389 LAMP GP-DOME

S/N: BLE1-UP; BMJ1-UP
24 VOLT. WITH SWITCH
PART OF 161-1096 LINER GP-CAB
AN ATTACHMENT

SMCS-1429 **i01231766**

NOTE	REF NO	GRAPHIC REF	PART NUMBER	QTY	PART NAME 1 2 3 4 5 6 (PRODUCT LEVEL)	SEE PAGE
	1	1	**7N-9943**	1	LAMP (28 VOLT)	
	2	1	**102-8803**	1	KIT-RECEPTACLE (3 PIN)	
					(INCLUDES RECEPTACLE AS & WEDGE)	
	3	1	**3E-3371**	1	WEDGE-RECEPTACLE LOCK	
	4	1	**8T-8729**	3	PIN-CONNECTOR	
	5	1	**7T-0020**	1	LENS-DOME LAMP	

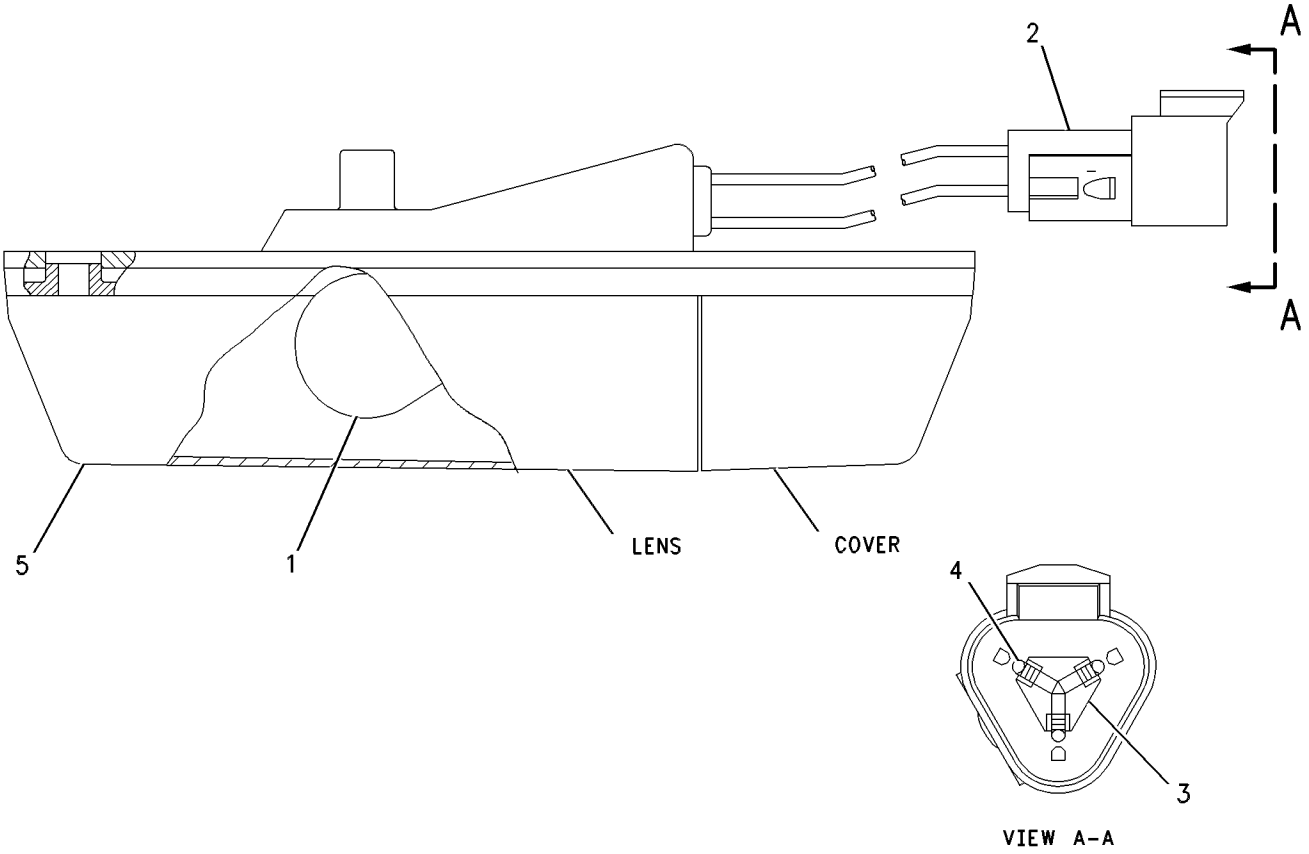

GRAPHIC #1 g00647928

147-0319 LAMP GP-FLOOD

S/N: BLE1-UP; BMJ1-UP
24 VOLT. SUSPENDED
PART OF 189-8640 LIGHTING GP-FLOOD
AN ATTACHMENT

SMCS-1434 **i01591078**

NOTE	REF NO	GRAPHIC REF	PART NUMBER	QTY	PART NAME 1 2 3 4 5 6 (PRODUCT LEVEL)	SEE PAGE
	1	1	**9X-3463**	1	LAMP (24 VOLT)	
	2	1	**158-0250**	1	BODY AS-LAMP	
	3	1	**158-0248**	1	LENS AS (FLOODLIGHT)	
	4	1	**158-0252**	1	BEZEL	
	5	1	**188-8849**	2	CLAMP	

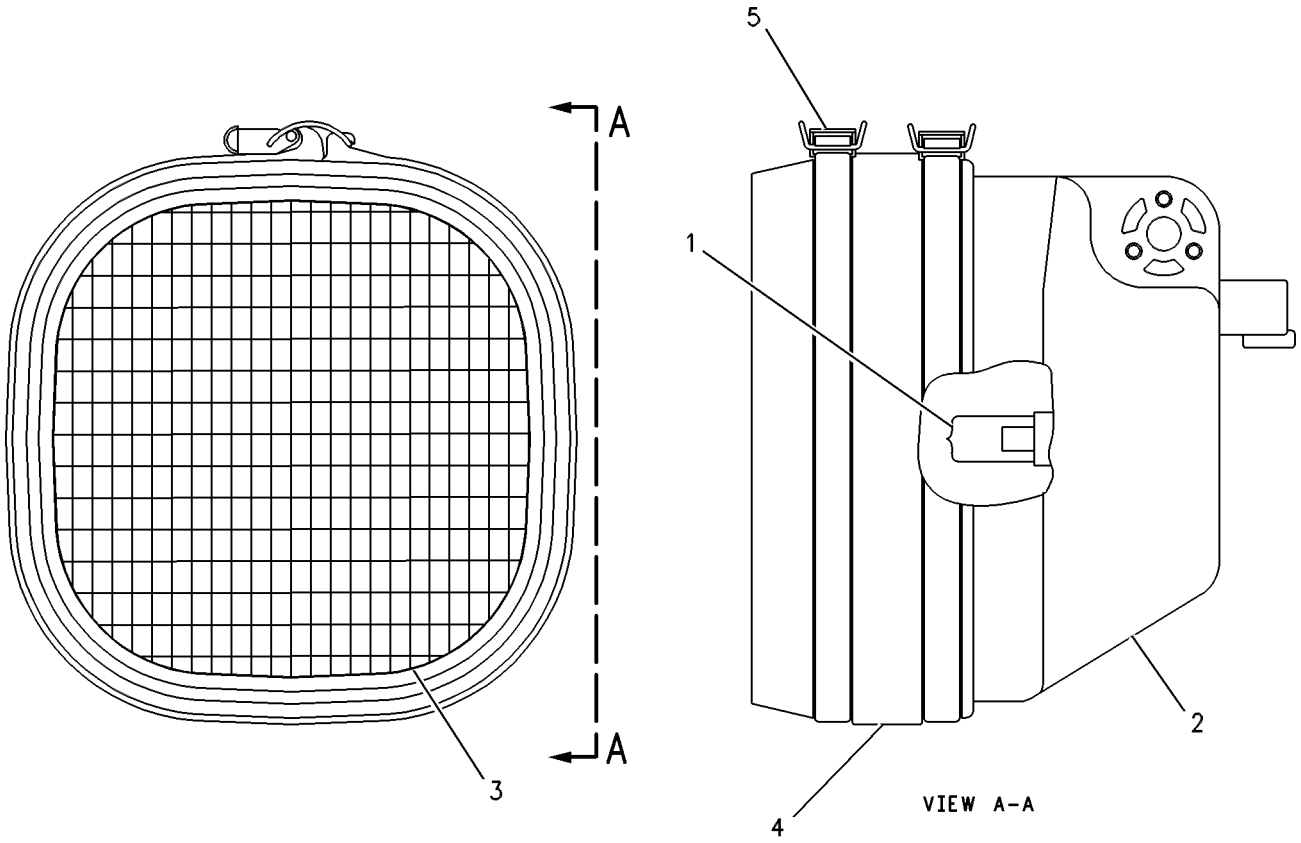

GRAPHIC #1 g00458549

ELECTRICAL AND STARTING SYSTEM

189-8640 LIGHTING GP-FLOOD

S/N: BLE1-UP; BMJ1-UP
AN ATTACHMENT

SMCS-1429 **i01592336**

NOTE	REF NO	GRAPHIC REF	PART NUMBER	QTY	PART NAME 1 2 3 4 5 6 (PRODUCT LEVEL)	SEE PAGE
	1	1	**7K-1181**	8	STRAP-CABLE	
	2	1	**111-8314**	4	BRACKET AS	
	3	1	**118-6299**	2	GUARD AS	
					(EACH INCLUDES)	
		1	**1F-0750**	4	NUT-WELD (3/8-16 THD)	
		1	**7T-1099**	1	LINK	
	4	1	**167-1884**	2	GUARD	
	5	1	**195-4989**	2	HARNESS AS (FUEL TANK LIGHTS)	
Y	6	1	**147-0319**	4	LAMP GP-FLOOD	163
	7	1	**4L-6454**	14	BOLT (3/8-16X1 IN)	
	8	1	**5M-3062**	4	BOLT (3/8-16X0.75 IN)	
	9	1	**5P-1075**	16	WASHER-HARD (10.2X22.5X3MM THK)	
	10	1	**5P-2955**	4	BOLT (5/16-18X2.50 IN)	
	11	1	**6H-4005**	2	GROMMET	
	12	1	**6V-8189**	4	NUT (5/16-18 THD)	
	13	1	**8T-4224**	8	WASHER-HARD (8.8X16X2MM THK)	
	14	1	**8T-4896**	2	WASHER-HARD (10.2X18.5X2.5MM THK)	
	15	1	**3E-9314**	1	SWITCH AS-ROCKER	
		1	**3E-9328**	1	SWITCH AS	
		1	**3E-8782**	1	ACTUATOR-ROCKER	
		1	**3E-8825**	1	LAMP (24 VOLT)	

Y-SEPARATE ILLUSTRATION

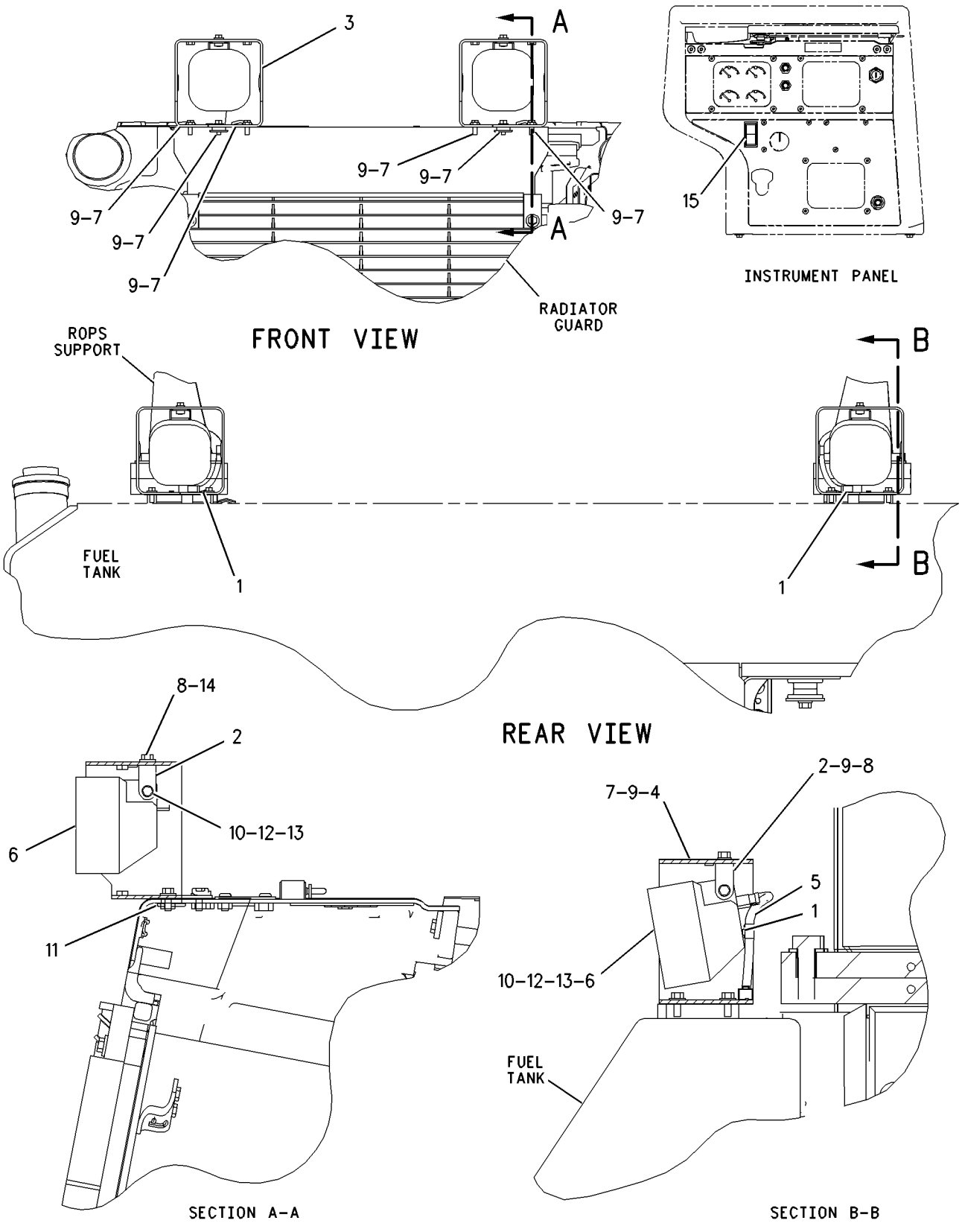

GRAPHIC #1 g00791266

168-0369 MODULE GP-DISPLAY

S/N: BLE1-UP; BMJ1-UP
PART OF 170-6613, 170-6614 INSTRUMENT GP
ALSO AN ATTACHMENT

SMCS-7490 **i01590263**

NOTE	REF NO	GRAPHIC REF	PART NUMBER	QTY	PART NAME 1 2 3 4 5 6 (PRODUCT LEVEL)	SEE PAGE
	1	1	**102-8805**	1	KIT-RECEPTACLE (6 PIN)	
					(INCLUDES RECEPTACLE AS & WEDGE)	
	2	1	**3E-3383**	1	WEDGE-RECEPTACLE LOCK	
	3	1	**8T-8729**	6	PIN-CONNECTOR	
	4	1	**179-6874**	1	CONTROL AS-ELECTRONIC	

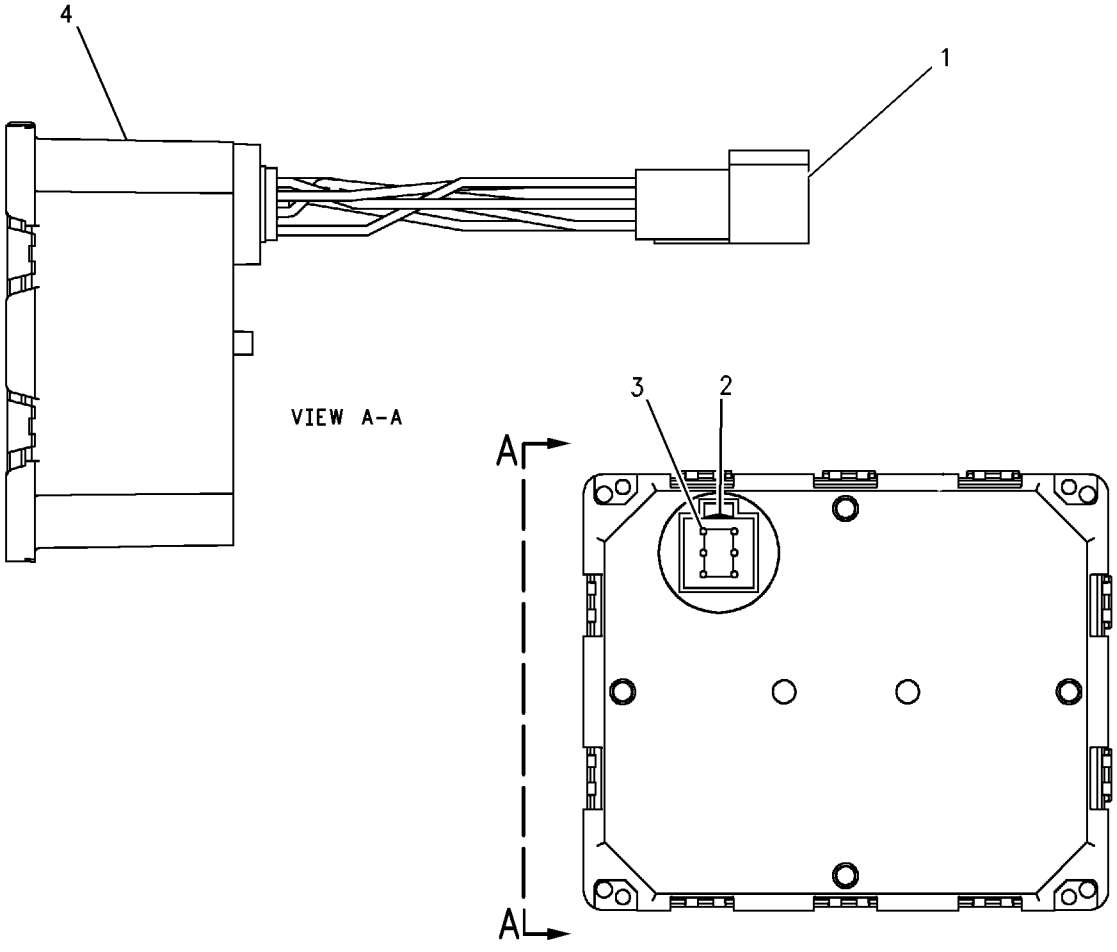

GRAPHIC #1 g00638395

MEMORANDA

164-3740 PANEL GP-FUSE

S/N: BLE1-UP; BMJ1-UP

PART OF 166-7391 WIRING GP-PLATFORM

SMCS-1417 **i01589699**

NOTE	REF NO	GRAPHIC REF	PART NUMBER	QTY	PART NAME 1 2 3 4 5 6 (PRODUCT LEVEL)	SEE PAGE
	1	1	**8T-4121**	2	WASHER-HARD (11X21X2.5MM THK)	
	2	1	**7K-1181**	4	STRAP-CABLE	
	3	1	**8T-4223**	2	WASHER-HARD (13.5X25.5X3MM THK)	
	4	1	**9W-1441**	11	FUSE (15 AMP)	
	5	1	**9W-1442**	5	FUSE (10 AMP)	
	6	1	**9W-1446**	3	FUSE (20 AMP)	
	7	1	**125-1302**	1	SWITCH GP-MAGNETIC (START RELAY)	
	8	1	**164-3739**	1	PANEL AS	
		1	**7T-1099**	3	LINK	
	9	1	**215-1362**	1	HARNESS AS (FUSE BOX)	
	10	1	**139-5345**	1	FUSE (5 AMP)	
	11	1	**164-9997**	1	FILM-INSTRUCTION	
	12	1	**166-7417**	1	STRAP	
	13	1	**166-7418**	1	STRAP	
	14	1	**166-7419**	1	STRAP	
Y	15	1	**167-0138**	1	SWITCH GP-MAGNETIC (MAIN RELAY)	198
	16	1	**169-8680**	1	STRAP	
	17	1	**169-8681**	1	STRAP	
	18	1	**172-4863**	1	JUNCTION BLOCK	
	19	1	**068-4209**	10	SCREW (8-32X0.75 IN)	
	20	1	**171-2213**	1	CIRCUIT BREAKER AS (135 AMP)	
		1	**1H-3244**	2	LOCKWASHER	
		1	**6V-8187**	2	NUT (1/4-28 THD)	
		1	**8T-4205**	2	WASHER-HARD (7.2X14.5X2MM THK)	
	21	1	**189-3158**	1	SUPPRESSOR-ARC	
	22	1	**4B-4863**	4	WASHER (4.7X11X1.2MM THK)	
M	23	1	**6V-5683**	3	BOLT (M6X1X16MM)	
M	24	1	**7X-2548**	2	BOLT (M12X1.75X16MM)	
	25	1	**6D-5801**	4	NUT (8-32 THD)	
	26	1	**6T-3643**	3	CIRCUIT BREAKER AS (15 AMP)	
					(EACH INCLUDES)	
		1	**6V-8376**	2	SCREW-MACHINE (8-32X0.25 IN)	
		1	**9B-7233**	2	LOCKWASHER	
	27	1	**6V-5645**	6	SCREW-MACHINE (10-32X0.87 IN)	
	28	1	**6V-8185**	4	NUT (1/4-20 THD)	
	29	1	**8T-4205**	4	WASHER-HARD (7.2X14.5X2MM THK)	
M	30	1	**8T-4191**	2	BOLT (M10X1.5X16MM)	

M-METRIC PART
Y-SEPARATE ILLUSTRATION

164-3740 **PANEL GP-FUSE** ***(contd.)*** **i01589699**

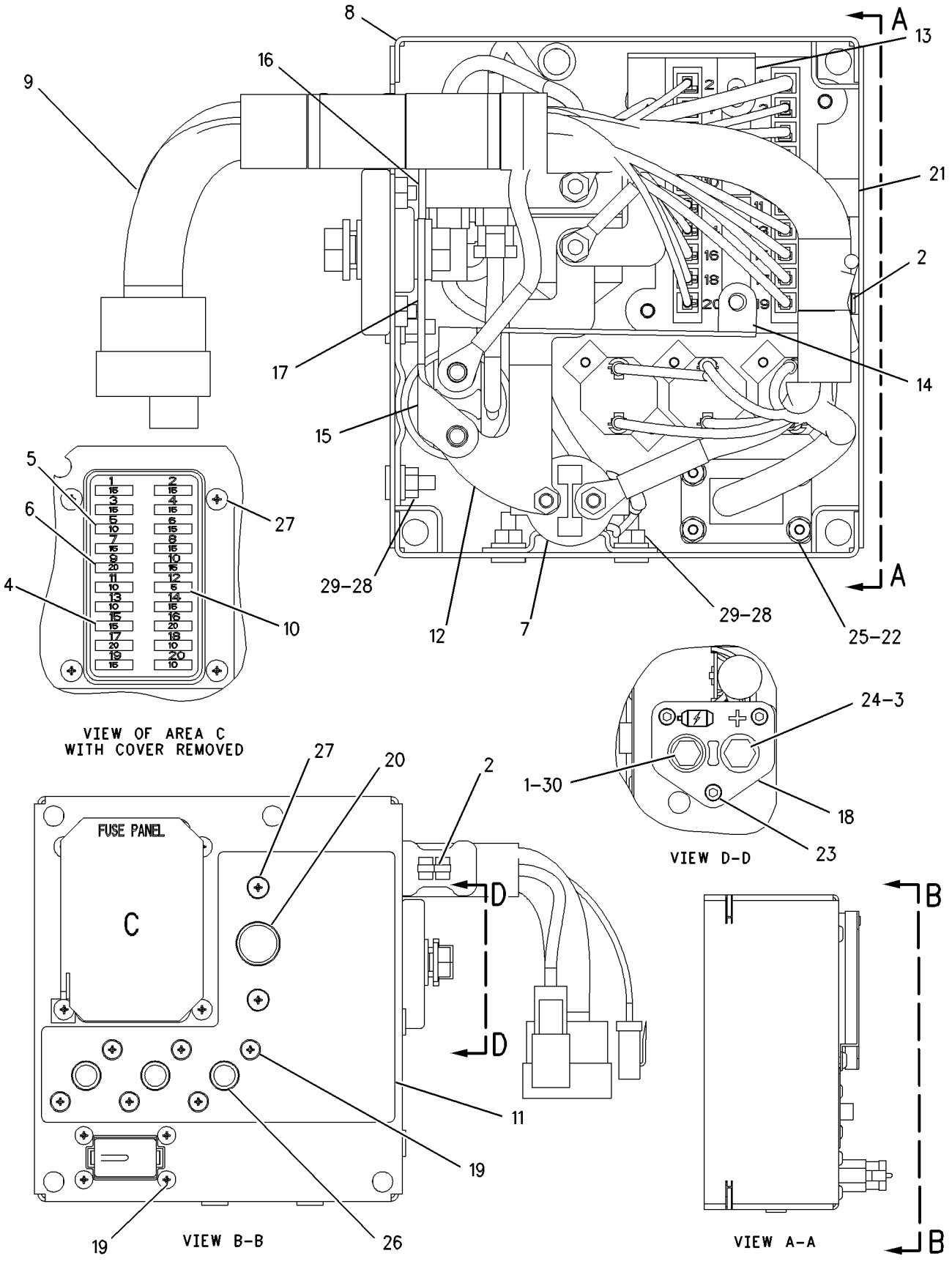

GRAPHIC #1

g00845224

111-7003 PLUG AS-WIRING

S/N: BLE1-UP; BMJ1-UP
ELECTRIC CLUTCH & BRAKES/ELECTRIC CLUTCH PRESSURE CONTROL 3-SPEED
PART OF 164-4792, 164-4794 POWER TRAIN AR

SMCS-1408 **i01355449**

NOTE	REF NO	GRAPHIC REF	PART NUMBER	QTY	PART NAME 1 2 3 4 5 6 (PRODUCT LEVEL)	SEE PAGE
BD	1	1	**5P-5677**		WIRE (18 GA)	
	2	1	**102-8805**	1	KIT-RECEPTACLE (6 PIN)	
					(INCLUDES RECEPTACLE AS & WEDGE)	
	3	1	**3E-3383**	1	WEDGE-RECEPTACLE LOCK	
	4	1	**8T-8729**	4	PIN-CONNECTOR	
	5	1	**8T-8737**	2	PLUG-SEAL	

B-USE AS REQUIRED
D-ORDER BY THE METER

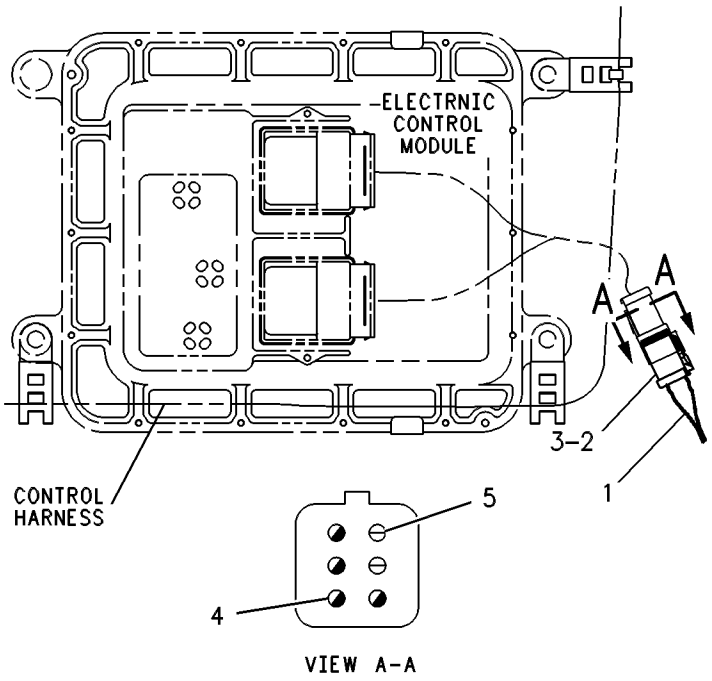

GRAPHIC #1 g00265137

184-6631 PLUG AS-WIRING

S/N: BLE1-UP; BMJ1-UP

PART OF 164-4782, 164-4784 CHASSIS AR

SMCS-1408 **i01590282**

NOTE	REF NO	GRAPHIC REF	PART NUMBER	QTY	PART NAME 1 2 3 4 5 6 (PRODUCT LEVEL)	SEE PAGE
BD	1	1	**5P-5677**		WIRE-ELECTRICAL (18 GA)	
BE		1	**119-3662**		TUBE-HEAT SHRINK	
	2	1	**155-2265**	1	KIT-CONNECTING PLUG (8 PIN)	
					(INCLUDES PLUG AS, WEDGE & INTERFACE SEAL)	
		1	**155-2259**	1	WEDGE-PLUG LOCK (8 PIN)	
		1	**9G-3695**	3	PLUG (GROMMET SEALING)	
		1	**9X-3402**	5	SOCKET-CONNECTOR	
					(FOR 16-18 GA WIRE)	
					—OR—	
		1	**126-1768**	5	SOCKET-CONNECTOR	
					(FOR 14 GA WIRE)	

B-USE AS REQUIRED
D-ORDER BY THE METER
E-ORDER BY THE CENTIMETER

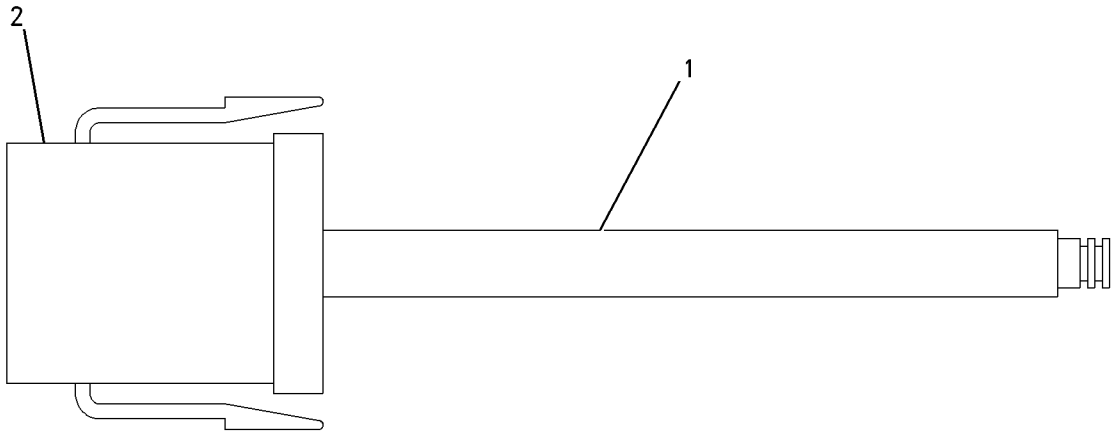

GRAPHIC #1 g00730235

205-1244 SENSOR GP-ELECTRONIC

S/N: 4ZF1-UP
PART OF 166-0273, 169-3791, 176-5509, 176-9269 ENGINE AR
ALSO AN ATTACHMENT

SMCS-1408 **i01668471**

NOTE	REF NO	GRAPHIC REF	PART NUMBER	QTY	PART NAME 1 2 3 4 5 6 (PRODUCT LEVEL)	SEE PAGE
	1	1	**9X-0262**	1	ADAPTER	
	2	1	**130-9811**	1	SENSOR GP-TEMPERATURE (INLET AIR)	
	3	1	**137-6667**	1	SEAL-O-RING	
	4	1	**159-1097**	1	ADAPTER	
	5	1	**160-8124**	1	PLUG AS	
		1	**102-8802**	1	KIT-RECEPTACLE (2 PIN)	
		1	**8T-8737**	2	PLUG-SEAL	
	6	1	**161-1703**	1	SENSOR GP-PRESSURE (ATMOSPHERIC)	
	7	1	**161-1704**	1	SENSOR GP-PRESSURE (TURBO OUTLET)	
	8	1	**161-1705**	1	SENSOR GP-PRESSURE (OIL PRESSURE)	
Y	9	1	**191-6587**	2	SENSOR GP-TEMPERATURE (HIGH PRESSURE OIL TEMP)	182
Y	10	1	**194-6726**	1	SENSOR GP-PRESSURE (INJECTION ACTUATION)	178
	11	1	**117-1385**	2	SEAL-O-RING	
	12	1	**153-4906**	4	SEAL-O-RING	
Y	13	1	**119-4142**	1	SENSOR GP-SPEED (TIMING)	179
	14	1	**3E-4352**	1	WASHER-HARD (8.8X20.5X2.5MM THK)	
M	15	1	**6V-3940**	1	BOLT (M8X1.25X25MM)	
	16	1	**6V-5048**	3	SEAL-O-RING	
	17	1	**8L-2786**	2	SEAL-O-RING	
	18	1	**130-9811**	1	SENSOR GP-TEMPERATURE (COOLANT)	

M-METRIC PART
Y-SEPARATE ILLUSTRATION

205-1244 **SENSOR GP-ELECTRONIC** *(contd.)* **i01668471**

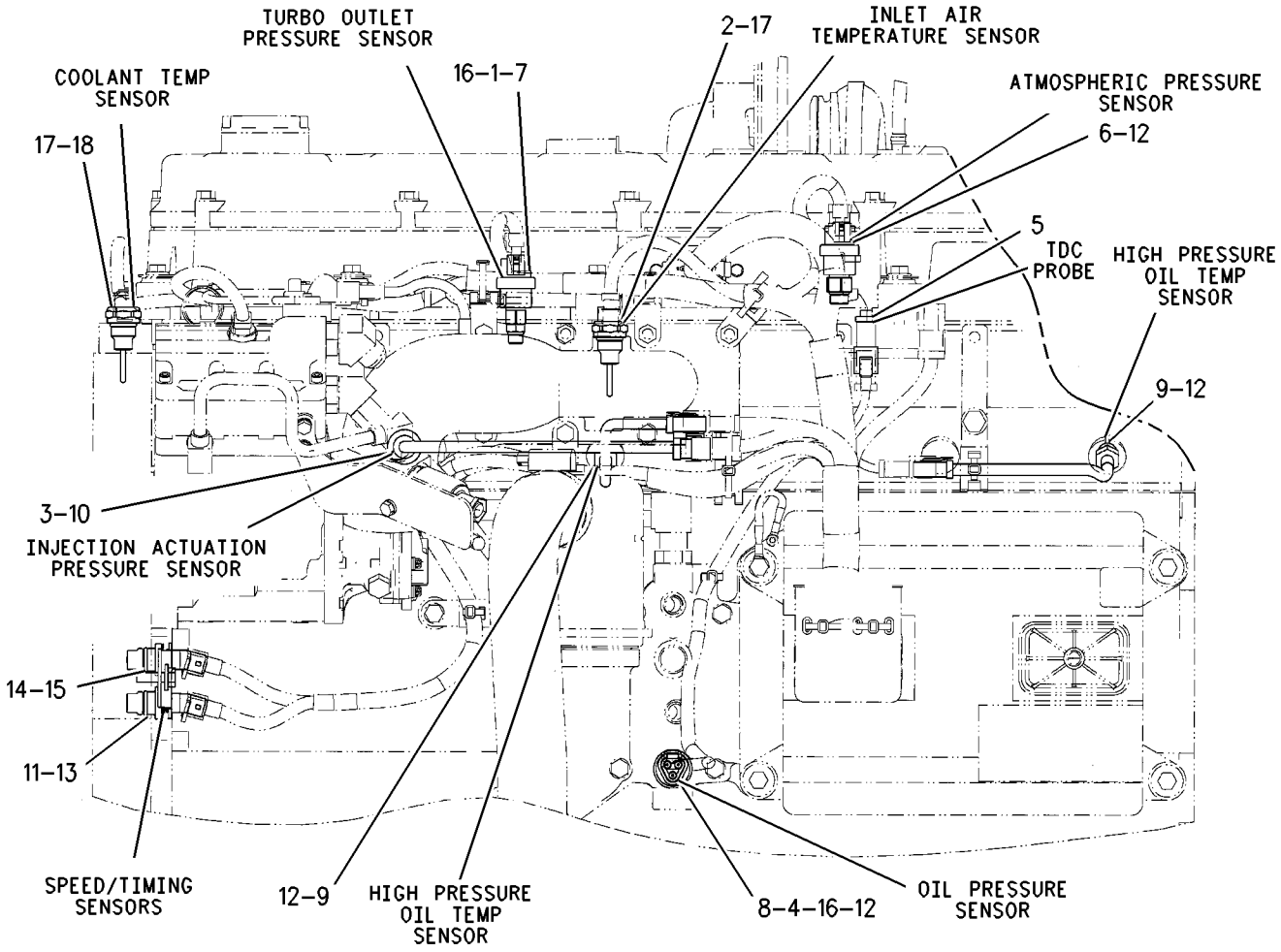

GRAPHIC #1 g00861806

147-1680 SENSOR GP-POSITION

S/N: BLE1-UP; BMJ1-UP

PART OF 206-3721 CONTROL GP-STEERING & TMSN, 158-8079 PEDAL GP-GOVERNOR & BRAKE

SMCS-1408 **i01041038**

NOTE	REF NO	GRAPHIC REF	PART NUMBER	QTY	PART NAME 1 2 3 4 5 6 (PRODUCT LEVEL)	SEE PAGE
	1	1	**102-8803**	1	KIT-RECEPTACLE (3 PIN)	
					(INCLUDES RECEPTACLE AS & WEDGE)	
	2	1	**8T-8729**	3	PIN-CONNECTOR	
	3	1	**3E-3371**	1	WEDGE-RECEPTACLE LOCK	

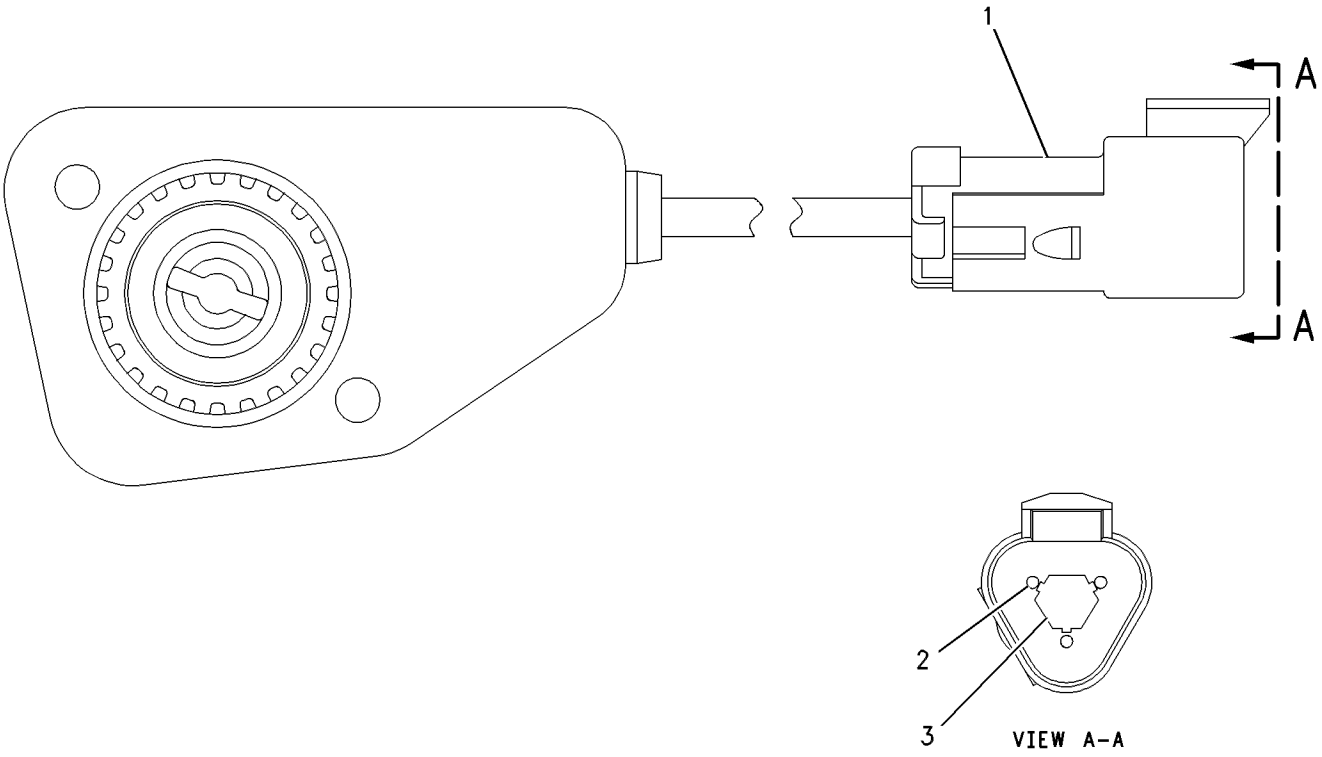

GRAPHIC #1 g00492061

160-2443 SENSOR GP-POSITION

S/N: BLE1-UP; BMJ1-UP

PART OF 158-8079 PEDAL GP-GOVERNOR & BRAKE

SMCS-1408 **i01488718**

NOTE	REF NO	GRAPHIC REF	PART NUMBER	QTY	PART NAME 1 2 3 4 5 6 (PRODUCT LEVEL)	SEE PAGE
	1	1	**102-8803**	1	KIT-RECEPTACLE (3 PIN)	
					(INCLUDES RECEPTACLE AS & WEDGE)	
	2	1	**8T-8729**	3	PIN-CONNECTOR	
	3	1	**3E-3371**	1	WEDGE-RECEPTACLE LOCK (3 PIN)	
	4	1	**160-2444**	1	SENSOR AS-POSITION	

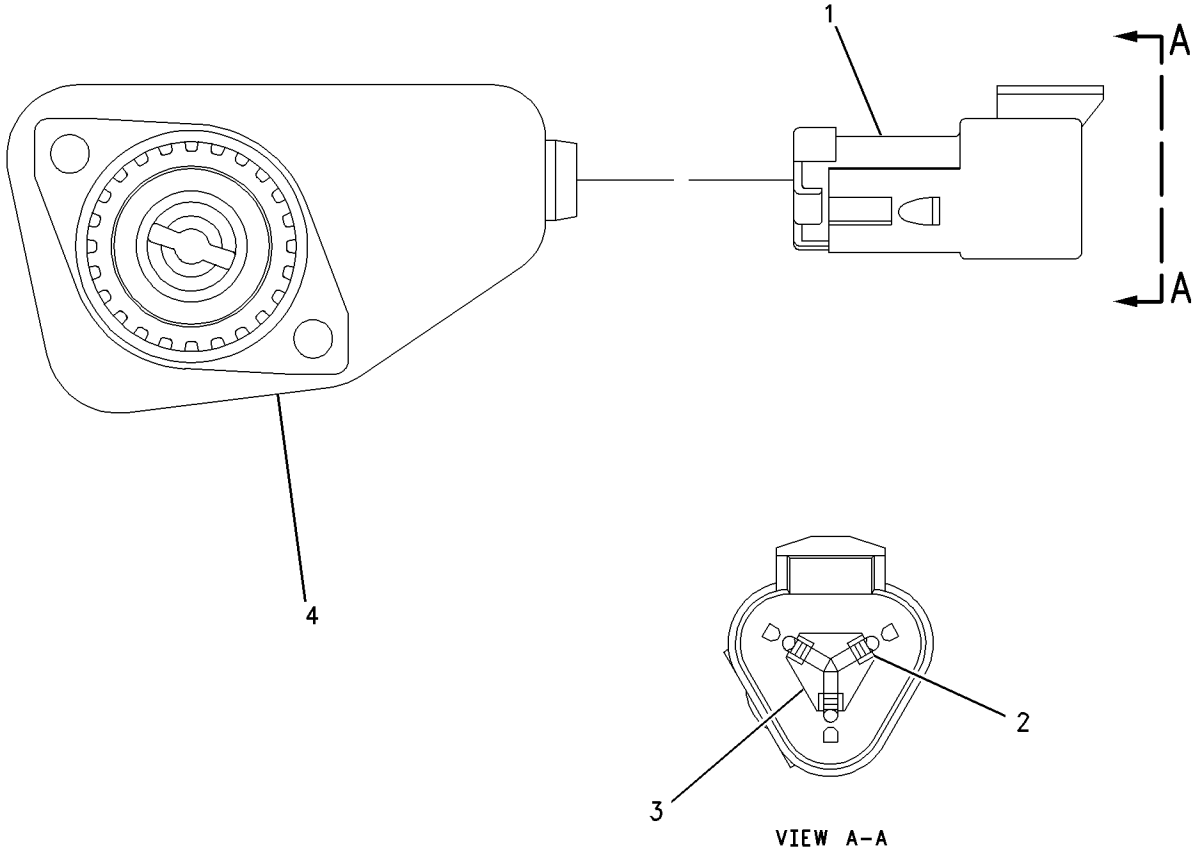

GRAPHIC #1 g00774850

161-8979 SENSOR GP-POSITION

S/N: BLE1-UP; BMJ1-UP

PART OF 206-3721 CONTROL GP-STEERING & TMSN

SMCS-1408 **i01355458**

NOTE	REF NO	GRAPHIC REF	PART NUMBER	QTY	PART NAME 1 2 3 4 5 6 (PRODUCT LEVEL)	SEE PAGE
	1	1	**102-8803**	1	KIT-RECEPTACLE (3 PIN)	
					(INCLUDES RECEPTACLE AS & WEDGE)	
	2	1	**8T-8729**	3	PIN-CONNECTOR	
	3	1	**3E-3371**	1	WEDGE-RECEPTACLE LOCK	

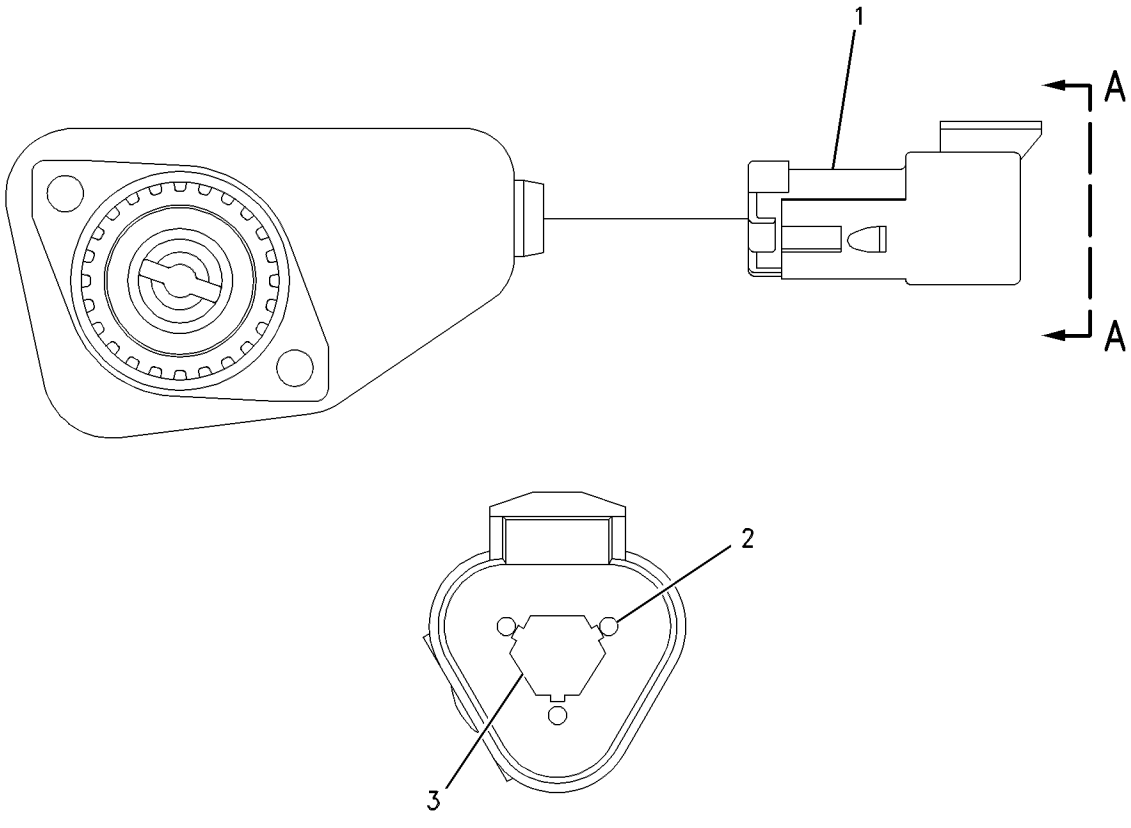

GRAPHIC #1 g00550816

161-9926 SENSOR GP-PRESSURE

S/N: BLE1-UP; BMJ1-UP

PART OF 166-7390 BATTERY & WIRING GP

SMCS-1408 **i01589693**

NOTE	REF NO	GRAPHIC REF	PART NUMBER	QTY	PART NAME 1 2 3 4 5 6 (PRODUCT LEVEL)	SEE PAGE
BE	1	1	**9X-1813**		SLEEVE	
	2	1	**155-2260**	1	KIT-CONNECTING PLUG (3 PIN) (PRESSURE SENSOR)	
					(INCLUDES PLUG AS & WEDGE)	
	3	1	**194-5226**	1	HARNESS AS (FOR 16-18 GA WIRE)	
					–OR–	
		1	**194-5227**	1	HARNESS AS (FOR 14 GA WIRE)	
	4	1	**3E-3368**	1	WEDGE-PLUG LOCK	

B-USE AS REQUIRED
E-ORDER BY THE CENTIMETER

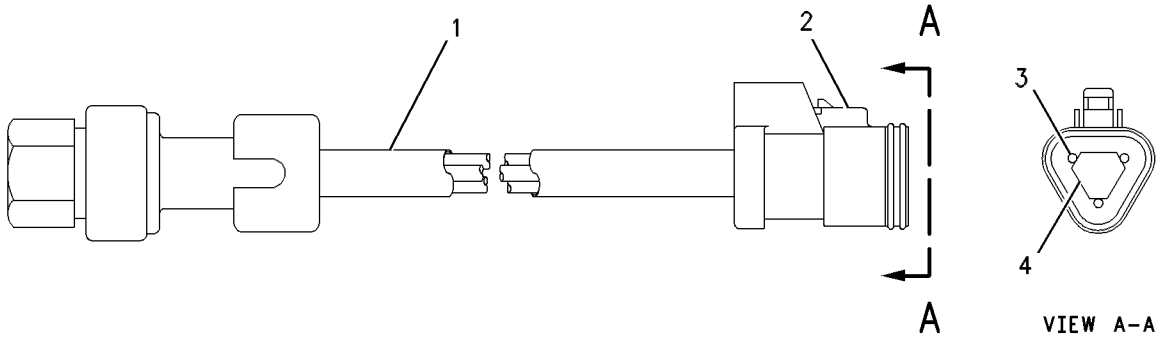

GRAPHIC #1 g00513129

194-6726 SENSOR GP-PRESSURE

S/N: 4ZF1-UP
PART OF 205-1244 SENSOR GP-ELECTRONIC
ALSO AN ATTACHMENT

SMCS-1408 **i01678330**

NOTE	REF NO	GRAPHIC REF	PART NUMBER	QTY	PART NAME 1 2 3 4 5 6 (PRODUCT LEVEL)	SEE PAGE
BE	1	1	**9X-1813**		SLEEVE (34 CM)	
	2	1	**155-2260**	1	KIT-CONNECTING PLUG (3 PIN)	
					(INCLUDES PLUG AS & WEDGE)	
	3	1	**180-9340**	3	SOCKET-CONNECTOR (FOR 16-18 GA WIRE)	
	4	1	**3E-3368**	1	WEDGE-PLUG LOCK	

B-USE AS REQUIRED
E-ORDER BY THE CENTIMETER

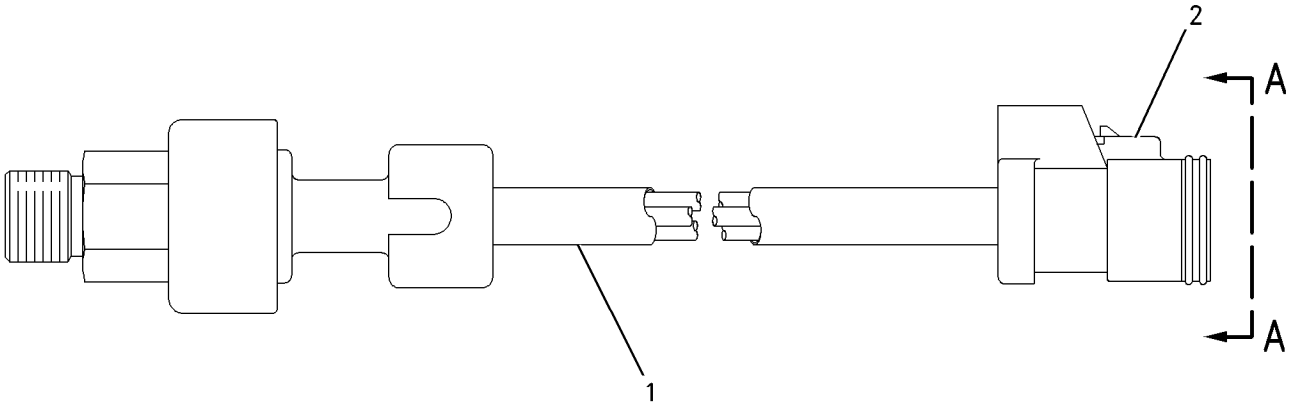

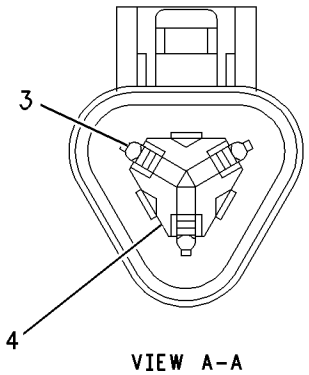

VIEW A-A

GRAPHIC #1 g00851235

119-4142 SENSOR GP-SPEED

S/N: 4ZF1-UP
PART OF 205-1244 SENSOR GP-ELECTRONIC
ALSO AN ATTACHMENT

SMCS-1408 **i01633614**

NOTE	REF NO	GRAPHIC REF	PART NUMBER	QTY	PART NAME 1 2 3 4 5 6 (PRODUCT LEVEL)	SEE PAGE
	1	1	**117-1385**	2	SEAL-O-RING	

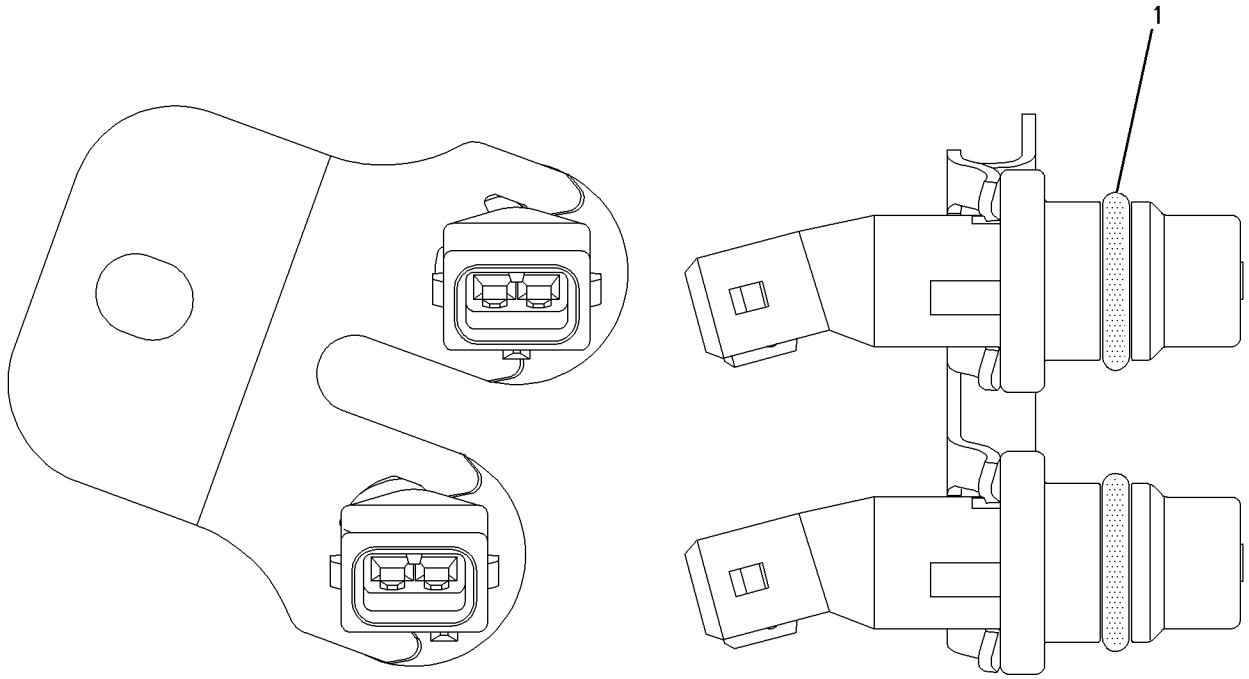

FRONT VIEW

LEFT SIDE VIEW

GRAPHIC #1 g00825060

193-2550 SENSOR GP-SPEED

S/N: BLE1-UP; BSG1-UP; BMJ1-UP; BSR1-UP

PART OF 166-7390 BATTERY & WIRING GP, 108-6984, 6I-8501 PLANETARY GP-TRANSMISSION

SMCS-1408 **i01488678**

NOTE	REF NO	GRAPHIC REF	PART NUMBER	QTY	PART NAME 1 2 3 4 5 6 (PRODUCT LEVEL)	SEE PAGE
	1	1	**171-5349**	1	STRAP-MARKER	
	2	1	**102-8802**	1	KIT-RECEPTACLE (2 PIN)	
					(INCLUDES RECEPTACLE AS & WEDGE)	
	3	1	**8T-8729**	2	PIN-CONNECTOR	
	4	1	**3E-3365**	1	WEDGE-RECEPTACLE LOCK (2 PIN)	
E	5	1	**9X-1813**		SLEEVE (14CM)	

E-ORDER BY THE CENTIMETER

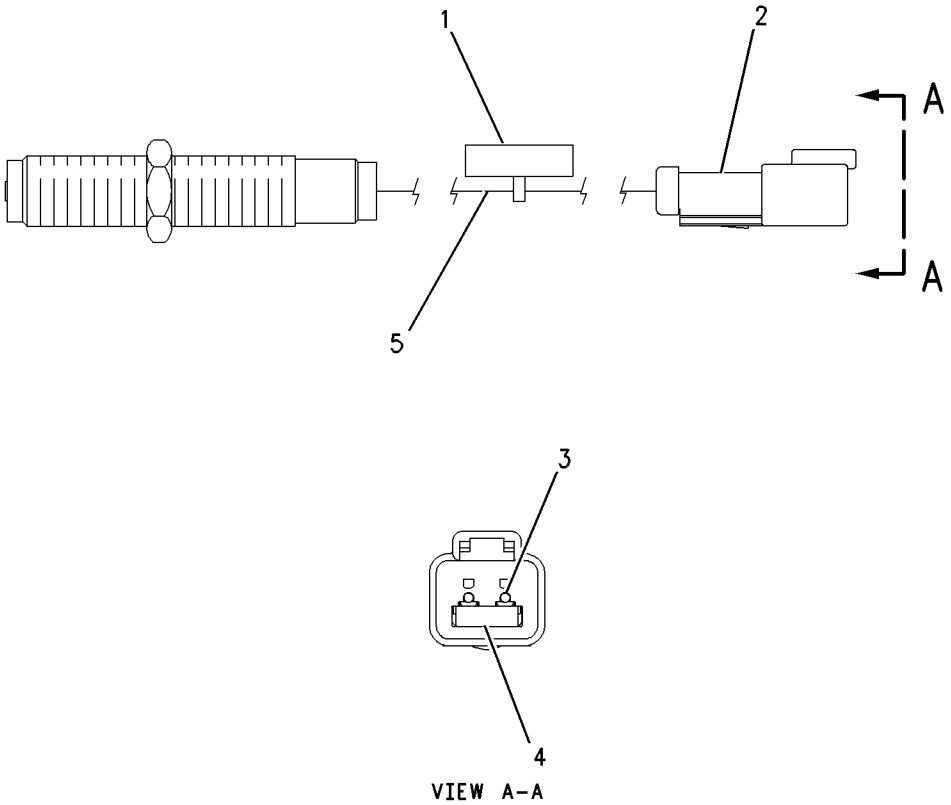

GRAPHIC #1 g00690327

118-7226 SENSOR GP-TEMPERATURE

S/N: BLE1-UP; BMJ1-UP
8 VOLT. PULSE WIDTH MODULATION
PART OF 166-7390 BATTERY & WIRING GP

SMCS-1408, 1906, 1921, 1922, 7400 **i01148007**

NOTE	REF NO	GRAPHIC REF	PART NUMBER	QTY	PART NAME 1 2 3 4 5 6 (PRODUCT LEVEL)	SEE PAGE
BE	1	1	**9X-1813**		SLEEVE	
	2	1	**102-8803**	1	KIT-RECEPTACLE (3 PIN)	
					(INCLUDES RECEPTACLE AS & WEDGE)	
	3	1	**8T-8729**	3	PIN-CONNECTOR	
	4	1	**3E-3371**	1	WEDGE-RECEPTACLE LOCK	

B-USE AS REQUIRED
E-ORDER BY THE CENTIMETER

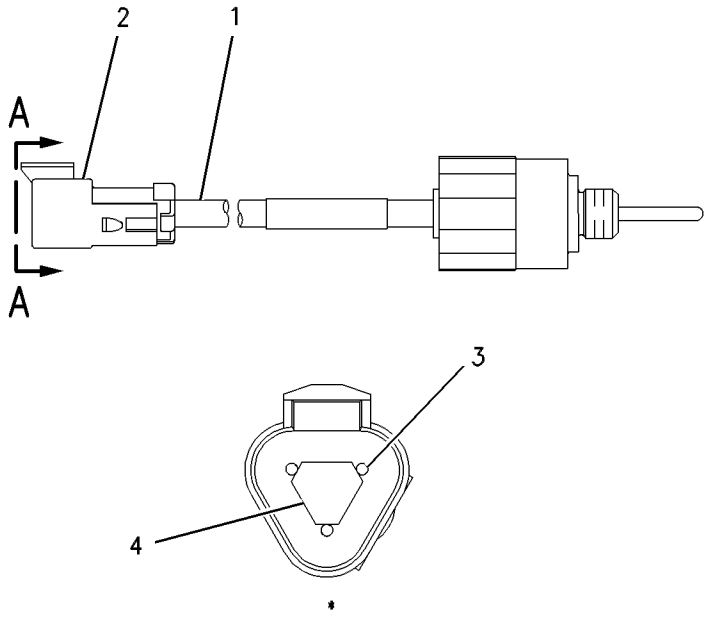

GRAPHIC #1 g00609258

191-6587 SENSOR GP-TEMPERATURE

S/N: 4ZF1-UP
PART OF 205-1244 SENSOR GP-ELECTRONIC
ALSO AN ATTACHMENT

SMCS-1408, 1906, 1921, 1922, 7400 **i01676688**

NOTE	REF NO	GRAPHIC REF	PART NUMBER	QTY	PART NAME 1 2 3 4 5 6 (PRODUCT LEVEL)	SEE PAGE
J	1	1	**153-5043**		SLEEVE (1.3DM)	
	2	1	**155-2270**	1	KIT-CONNECTING PLUG (2 PIN)	
					(INCLUDES PLUG AS & WEDGE)	
	3	1	**194-5226**	2	HARNESS AS (SOCKET) (16-18 GA WIRE)	
					—OR—	
		1	**194-5227**	2	HARNESS AS (14 GA WIRE)	
	4	1	**155-2261**	1	WEDGE-PLUG LOCK (2 PIN)	

J-ORDER BY THE DECIMETER

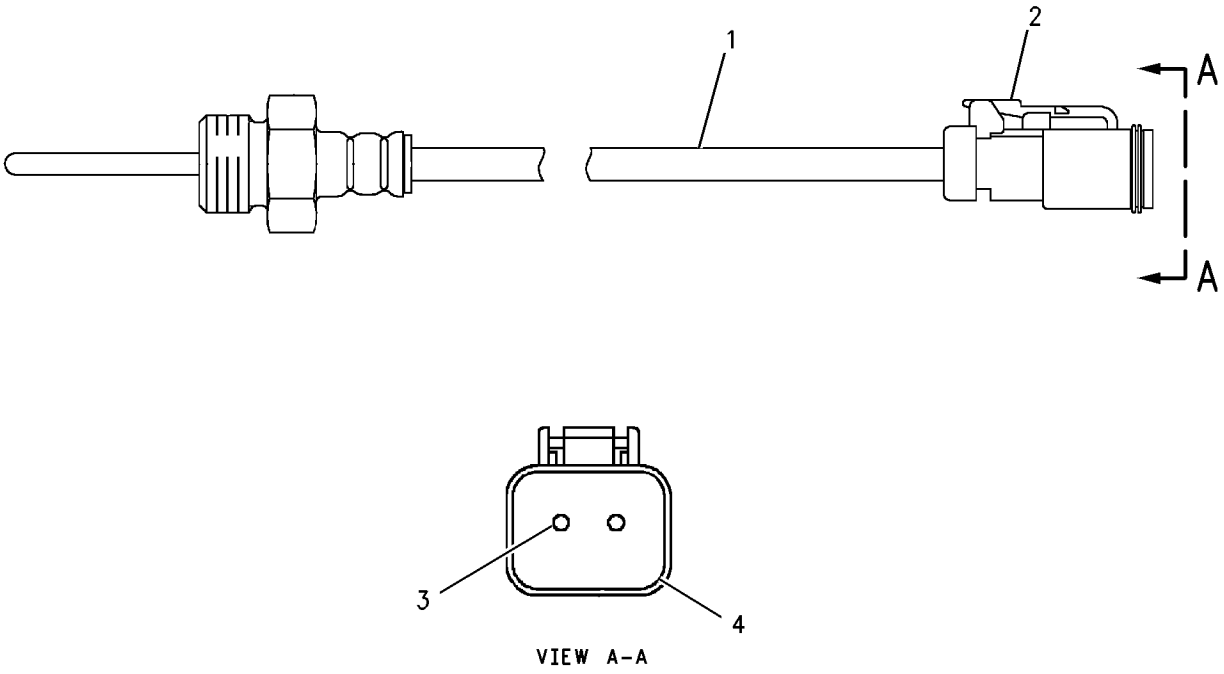

VIEW A-A

GRAPHIC #1 g00865978

207-9809 SERVICE GP-POWER TRAIN

S/N: BLE1-UP; BMJ1-UP

PART OF 159-9035 ELECTRONICS GP-MACHINE

SMCS-7610 **i01589555**

NOTE	REF NO	GRAPHIC REF	PART NUMBER	QTY	PART NAME 1 2 3 4 5 6 (PRODUCT LEVEL)	SEE PAGE
Y	1	1	**172-9389**	1	CONTROL GP-UNPROGRAMMED	151
F		1	**207-9808**	1	SOFTWARE GP-POWER TRAIN	

F-NOT SHOWN
Y-SEPARATE ILLUSTRATION

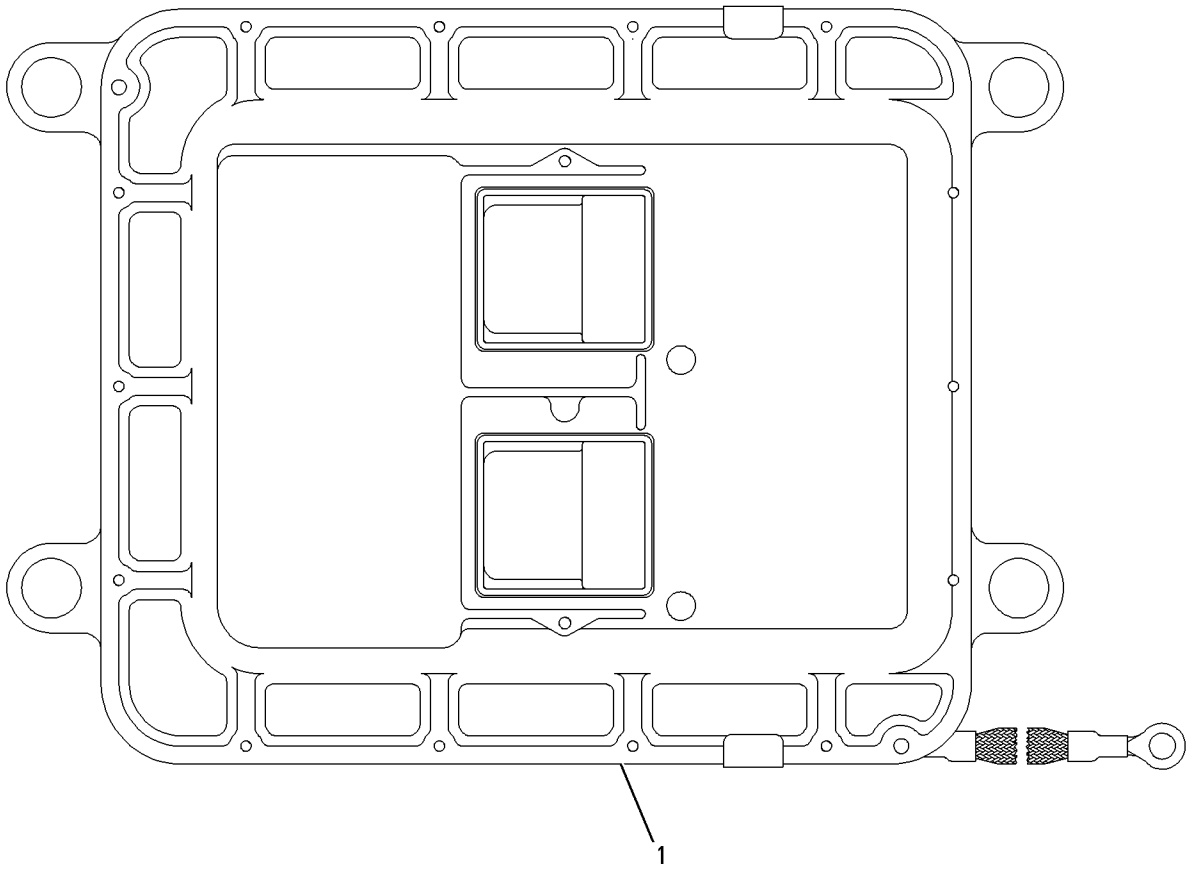

GRAPHIC #1 g00816833

ELECTRICAL AND STARTING SYSTEM

6V-0890 STARTING MOTOR GP-ELECTRIC*R

S/N: BLE1-UP; BMJ1-UP
PART OF 186-0067 STARTING MOTOR GP-ELECTRIC
AN ATTACHMENT

SMCS-1453, 1454, 1465 **i01631924**

NOTE	REF NO	GRAPHIC REF	PART NUMBER	QTY	PART NAME 1 2 3 4 5 6 (PRODUCT LEVEL)	SEE PAGE
	1	1	**7M-0326**	1	CONNECTOR	
	2	1	**9H-3757**	2	WASHER (0.516X1X0.094 IN THK)	
	3	1	**1S-7446**	3	SCREW-MACHINE (8-32X0.437 THD)	
	4	1	**8C-9660**	3	WASHER (4.6X7.9X0.8MM THK)	
	5	1	**9S-2544**	9	SCREW-HEX HEAD (8-32X11.13MM)	
	6	1	**7M-0327**	1	WASHER-THRUST (17.40X25.4X1.6MM THK)	
	7	1	**3T-3418**	1	FRAME AS-END	
		1	**3T-3423**	1	CUP	
		1	**9G-4101**	1	BUSHING-END	
		1	**3T-3424**	1	PLUG-FELT	
	8	1	**3T-9525**	1	PLATE AS-BRUSH	
		1	**6T-0371**	1	INSULATOR	
		1	**5P-6298**	12	SCREW-MACHINE (10-32X0.5 IN)	
		1	**9F-5599**	12	LOCKWASHER	
		1	**7F-3525**	6	WASHER-BUSHING (.209X.39X.09MM THK)	
		1	**6T-0363**	6	HOLDER AS-BRUSH	
					(EACH INCLUDES)	
		1	**3T-9494**	1	SPRING	
	9	1	**7F-3491**	2	WASHER (0.516X1X0.094 IN THK)	
	10	1	**3T-3422**	1	WIRE AS	
	11	1	**2J-8163**	2	SEAL-O-RING	
	12	1	**7X-3373**	1	BOLT (5/16-18X0.88 IN)	
	13	1	**3T-3434**	6	PLUG	
	14	1	**5J-5314**	5	BOLT (5/16-18X1.5 IN)	
	15	1	**3L-3380**	1	BUSHING-TERMINAL	
	16	1	**036-9821**	1	WASHER	
	17	1	**4M-1828**	1	RETAINER-SPRING	
	18	1	**4M-1829**	1	BOOT-RUBBER	
	19	1	**9M-7606**	1	PLUNGER AS	
	20	1	**9M-7609**	1	SPRING	
	21	1	**4M-1827**	1	RETAINER-SPRING	
	22	1	**8C-3089**	1	SEAL-O-RING	
	23	1	**4M-1853**	1	LEVER AS-SHIFT	
	24	1	**5M-3034**	1	LOCKNUT (5/16-24 THD)	
	25	1	**7L-2894**	4	GASKET	
	26	1	**4M-1831**	4	PLUG-LEVER HOUSING	
	27	1	**4M-1854**	1	SHAFT-LEVER	
	28	1	**1H-1023**	1	SEAL-O-RING	
	29	1	**2D-6392**	1	SEAL-O-RING	
	30	1	**7T-3974**	1	HOUSING AS-DRIVE	
	31	1	**6N-3826**	1	DRIVE AS-MOTOR	
	32	1	**2H-3429**	2	RING-RETAINING	
	33	1	**6V-1322**	4	BOLT (1/4-20X0.375 IN)	
	34	1	**8T-4205**	4	WASHER-HARD (7.2X14.5X2MM THK)	
	35	1	**6N-3279**	1	INSULATOR	
	36	1	**036-9823**	13	BOLT	
	37	1	**1M-9971**	1	SPACER (.840X1.72X1.88 IN THK)	
	38	1	**1H-2629**	3	STRIP-INSULATION	
	39	1	**7M-0324**	1	COIL AS-FIELD	
	40	1	**3F-0379**	12	SCREW-POLE SHOE (3/8-24 THD)	
	41	1	**7F-3488**	6	SHOE-POLE	
	42	1	**7M-8651**	1	ARMATURE AS	
	43	1	**7M-0325**	1	INSULATOR-COIL	
	44	1	**3T-9524**	6	BRUSH AS (STARTING MOTOR)	
	45	1	**125-6537**	1	INSULATOR	

6V-0890 **STARTING MOTOR GP-ELECTRIC** *(contd.)* **i01631924**

NOTE	REF NO	GRAPHIC REF	PART NUMBER	QTY	PART NAME 1 2 3 4 5 6 (PRODUCT LEVEL)	SEE PAGE
	46	1	**8F-1434**	2	LOCKWASHER	
	47	1	**6V-8188**	6	NUT (1/2-13 THD)	
	48	1	**7X-0562**	6	WASHER-HARD (13.5X19X0.8MM THK)	
	49	1	**4B-2049**	6	NUT (10-32 THD)	
	50	1	**8T-0328**	10	WASHER-HARD (5.5X10X1MM THK)	
	51	1	**3T-9494**	6	SPRING (STARTING MOTOR)	
	52	1	**3E-7771**	1	HOUSING AS	
	53	1	**9G-4101**	1	BUSHING-END	
	54	1	**3T-3424**	3	PLUG-FELT	
	55	1	**3T-3423**	3	CUP	
	56	1	**1M-9968**	1	BUSHING	
	57	1	**2F-6678**	1	SEAL-LIP	
	58	1	**4L-2729**	1	WASHER (0.844X1.9X0.188 IN THK)	
	59	1	**4M-1896**	1	BUSHING-TERMINAL	
	60	1	**045-4065**	4	SCREW-MACHINE (10-32X0.75 IN)	
	61	1	**6V-8373**	3	SCREW-MACHINE (6-32X0.187 IN)	
	62	1	**9G-6770**	1	CONTACT AS	
	63	1	**6T-1120**	1	BUSHING-TERMINAL	
	64	1	**4M-1815**	1	SPRING-CONTACT	
	65	1	**125-6535**	1	COVER-STARTING MOTOR	
	66	1	**7T-9123**	1	GASKET-PLATE	
	67	1	**125-6533**	1	SOLENOID AS (STARTING MOTOR 24 VOLT)	
		1	**3R-8801**	1	CLAMP	
	68	1	**125-6536**	1	TERMINAL AS	
					AVAILABLE REPAIR KIT(S):	
			3N-3763	1	KIT-TERMINAL (STARTING MOTOR)	
					(INCLUDES INSULATOR, BUSHINGS & WASHER)	

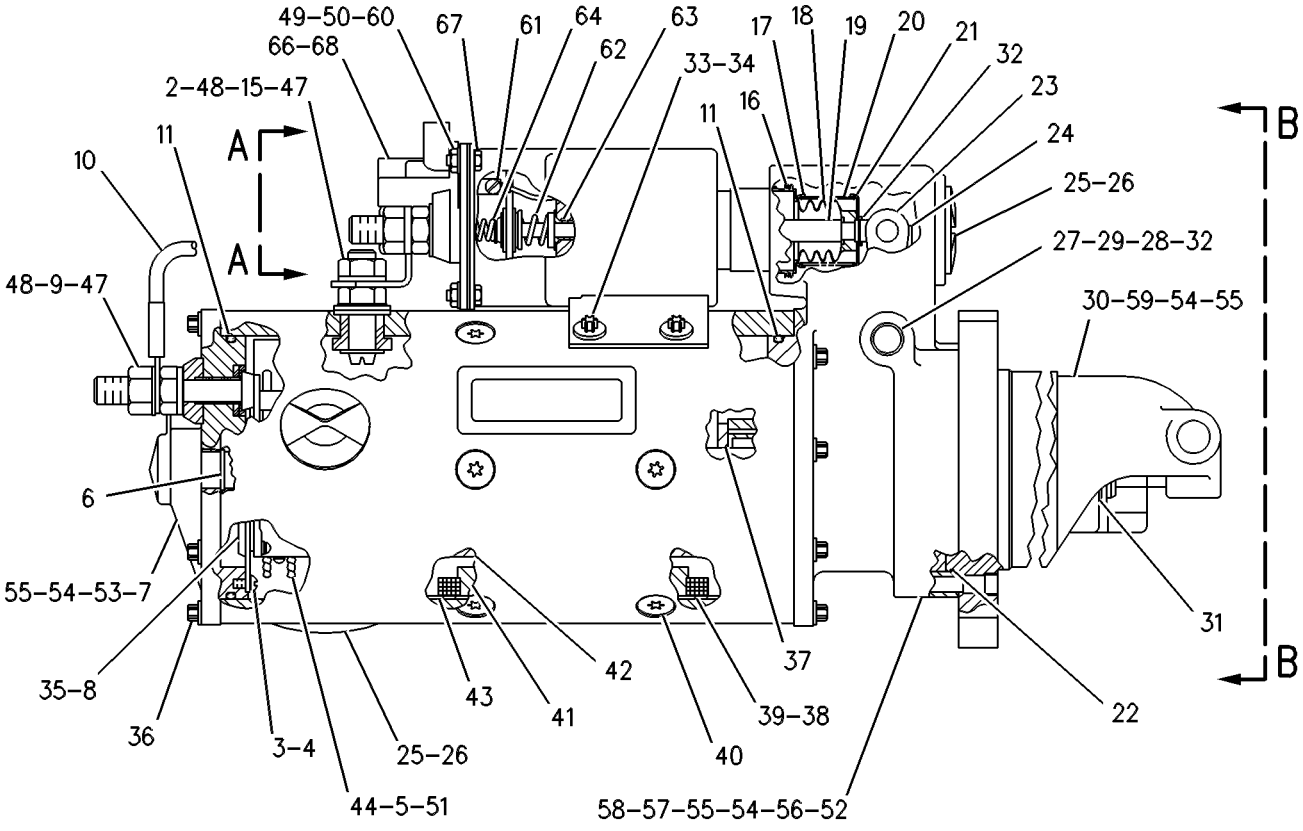

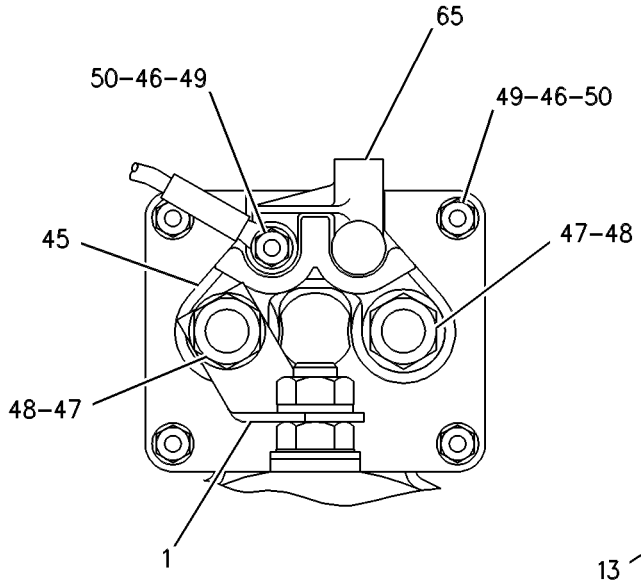

VIEW A-A

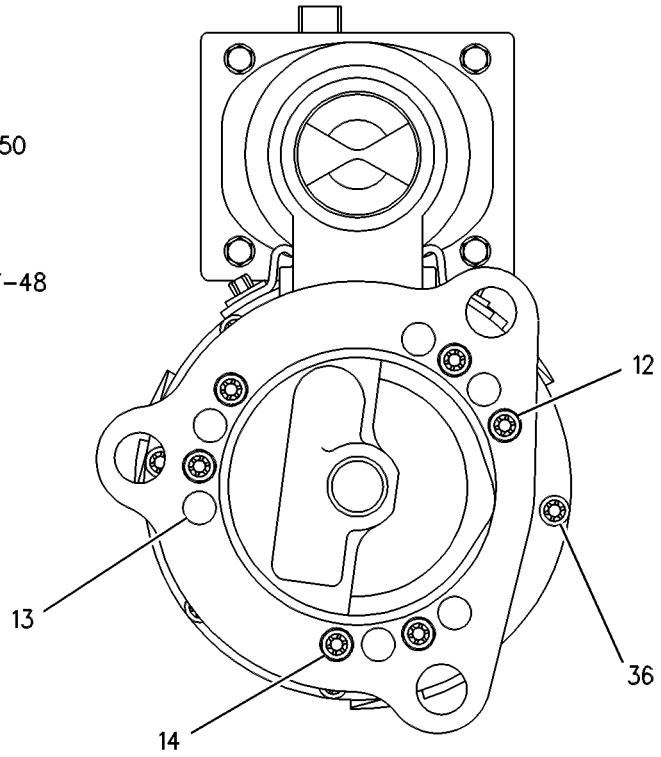

VIEW B-B

GRAPHIC #1 g00066598

MEMORANDA

6V-5582 STARTING MOTOR GP-ELECTRIC

S/N: BLE1-UP; BMJ1-UP
PART OF 207-1556 STARTING MOTOR GP-ELECTRIC
FIELD REPLACEMENT ORDER 207-1556–PAGE 192

SMCS-1453, 1454, 1465 **i01646205**

NOTE	REF NO	GRAPHIC REF	PART NUMBER	QTY	PART NAME 1 2 3 4 5 6 (PRODUCT LEVEL)	SEE PAGE
	1	1	**6V-8188**	3	NUT (1/2-13 THD)	
	2	1	**7X-0562**	3	WASHER-HARD (13.5X19X0.8MM THK)	
	3	1	**4B-2049**	1	NUT (10-32 THD)	
	4	1	**8F-1434**	1	LOCKWASHER	
	5	1	**8T-0328**	1	WASHER-HARD (5.5X10X1MM THK)	
M	6	1	**8T-4133**	1	NUT (M10X1.5 THD)	
	7	1	**8T-4121**	1	WASHER-HARD (11X21X2.5MM THK)	
	8	1	**3E-0142**	1	HOUSING AS	
	9	1	**3E-0141**	1	STOP-STARTING MOTOR	
	10	1	**4N-7521**	1	LOCK RING	
	11	1	**3E-0146**	1	DRIVE AS-STARTING MOTOR	
	12	1	**3E-0144**	1	HOUSING AS	
	13	1	**3E-0140**	1	LEVER AS-STARTER	
	14	1	**3E-0138**	1	ARMATURE AS (24 VOLT)	
	15	1	**3E-0137**	1	HOLDER AS	
	16	1	**3E-0135**	1	SOLENOID AS (24 VOLT)	
	17	1	**3E-0125**	1	COVER AS-STARTING MOTOR	
	18	1	**3E-0139**	1	HOUSING AS	
	19	1	**3E-0136**	1	HOUSING AS	
	20	1	**3E-0132**	1	CONNECTOR	
	21	1	**3E-0133**	1	WIRE AS-STARTING MOTOR	
	22	1	**3E-0134**	1	COVER-PLUNGER	
					AVAILABLE REPAIR KIT(S):	
			3E-0128	1	KIT-BRUSH (STARTING MOTOR)	
					(INCLUDES O-RINGS, SCREW, SPRING, & BRUSH)	
			3E-0131	1	KIT-WASHER (STARTING MOTOR)	
					(INCLUDES WASHERS)	
			3E-0127	1	KIT-BEARING (STARTING MOTOR)	
					(INCLUDES BEARINGS)	
			3E-0129	1	KIT-HARDWARE (STARTING MOTOR)	
					(INCLUDES WASHERS, BOLTS, LOCKWASHERS, NUTS, BUSHINGS, & PLATE)	
			3E-0130	1	KIT-STARTING MOTOR SEAL	
					(INCLUDES SEALS & O-RINGS)	
			3E-0145	1	KIT-STARTING MOTOR PIN	
					(INCLUDES O-RINGS, SHAFT, AND RING)	

M-METRIC PART

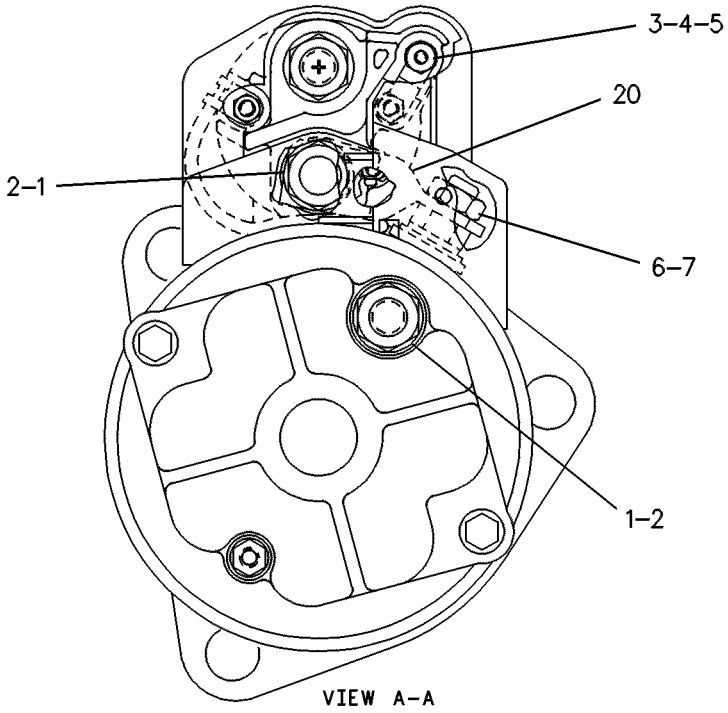

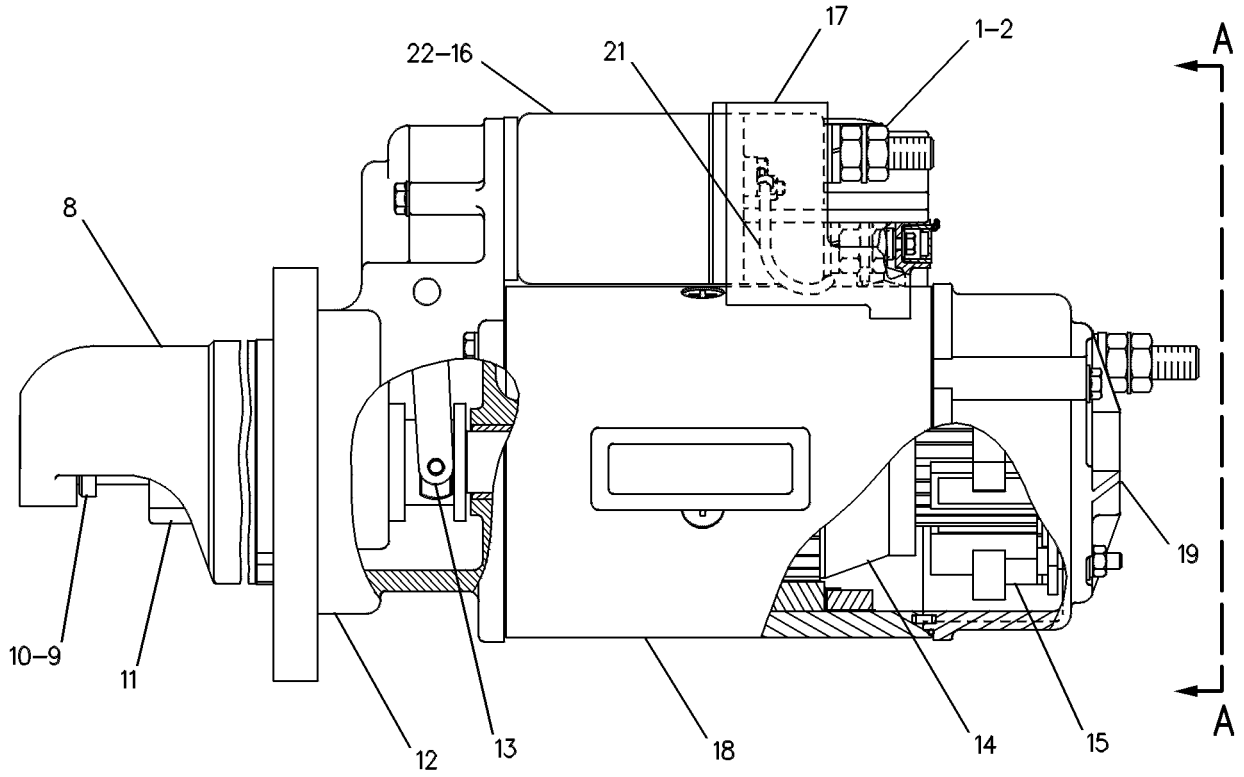

GRAPHIC #1 g00084516

ELECTRICAL AND STARTING SYSTEM

186-0067 STARTING MOTOR GP-ELECTRIC

S/N: BLE1-UP; BMJ1-UP
PART OF 213-7511 BATTERY GP
AN ATTACHMENT

SMCS-1453, 1454, 1465 **i01631914**

NOTE	REF NO	GRAPHIC REF	PART NUMBER	QTY	PART NAME 1 2 3 4 5 6 (PRODUCT LEVEL)	SEE PAGE
	1	1	**8S-2332**	3	BOLT-12 POINT HEAD (5/8-11X1.75 IN)	
YR	2	1	**6V-0890**	1	STARTING MOTOR GP-ELECTRIC	184
	3	1	**4N-1059**	1	GASKET	
	4	1	**185-6393**	1	WIRE AS	

R-REMFG PART MAY BE AVAILABLE
Y-SEPARATE ILLUSTRATION

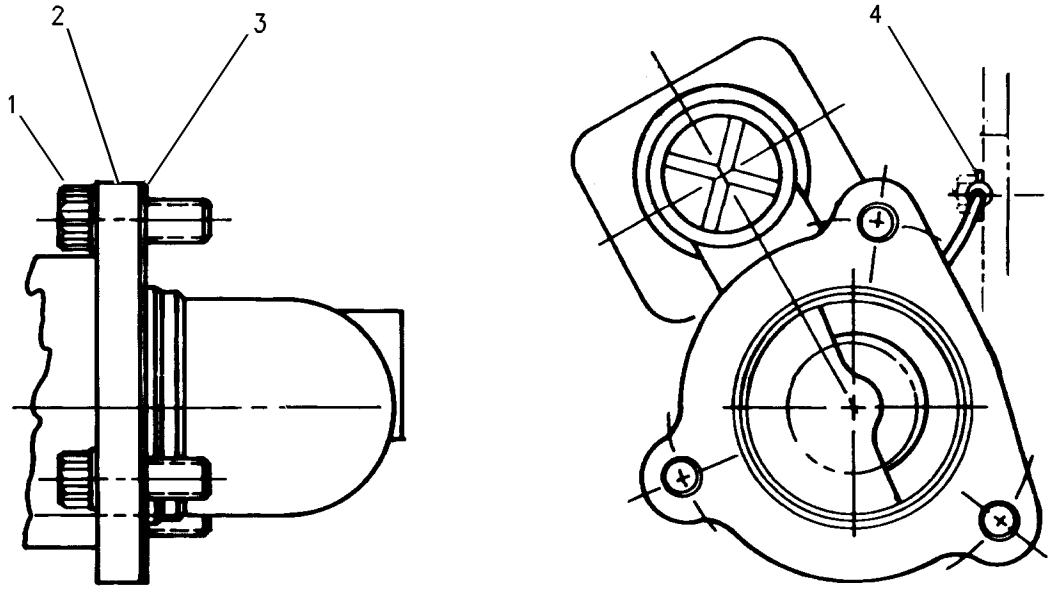

GRAPHIC #1 g00847770

199-7837 STARTING MOTOR GP-ELECTRIC

S/N: BLE1-UP; BMJ1-UP

PART OF 168-8371 INSTALLATION AR-ENGINE

SMCS-1453, 1454, 1465 **i01646034**

NOTE	REF NO	GRAPHIC REF	PART NUMBER	QTY	PART NAME 1 2 3 4 5 6 (PRODUCT LEVEL)	SEE PAGE
	1	1	**8S-2332**	3	BOLT-12 POINT HEAD (5/8-11X1.75 IN)	
YR	2	1	**207-1556**	1	STARTING MOTOR GP-ELECTRIC	192
	3	1	**4H-7869**	1	GASKET	
	4	1	**8Y-9603**	1	CABLE AS-STARTING	
		1	**1S-7251**	1	TERMINAL-RING (FOR 1/2 IN BOLT)	
		1	**1S-7252**	1	TERMINAL-RING (FOR 3/8 IN BOLT)	
BE		1	**5P-0747**		CABLE (00GA)(BLACK)	
M	5	1	**6V-8212**	1	BOLT (M10X1.50X16MM)	
	6	1	**6V-5839**	1	WASHER (11X21X2.5MM THK)	

B-USE AS REQUIRED
E-ORDER BY THE CENTIMETER
M-METRIC PART
R-REMFG PART MAY BE AVAILABLE
Y-SEPARATE ILLUSTRATION

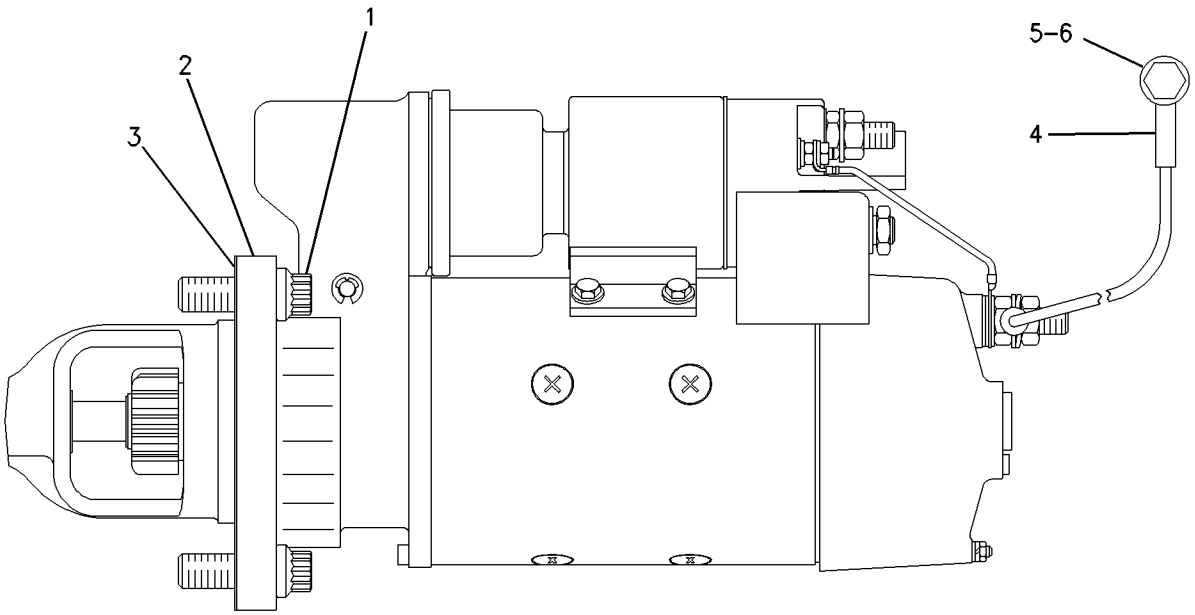

GRAPHIC #1 g00851193

207-1556 STARTING MOTOR GP-ELECTRIC*R

S/N: BLE1-UP; BMJ1-UP
24 VOLT
PART OF 199-7837 STARTING MOTOR GP-ELECTRIC
FIELD REPLACEMENT FOR 6V-5582—PAGE 188: FOR 207-1557—PAGE 194

SMCS-1453, 1454, 1465 **i01646147**

NOTE	PART NUMBER	QTY	PART NAME 1 2 3 4 5 6 (PRODUCT LEVEL)	SEE PAGE
Y	*6V-5582*	1	STARTING MOTOR GP-ELECTRIC	188
			—OR—	
Y	*207-1557*	1	STARTING MOTOR GP-ELECTRIC	194

Y-SEPARATE ILLUSTRATION

MEMORANDA

207-1557 STARTING MOTOR GP-ELECTRIC

S/N: BLE1-UP; BMJ1-UP
24 VOLT
PART OF 207-1556 STARTING MOTOR GP-ELECTRIC
FIELD REPLACEMENT ORDER 207-1556–PAGE 192

SMCS-1453, 1454, 1465 **i01646221**

NOTE	REF NO	GRAPHIC REF	PART NUMBER	QTY	PART NAME 1 2 3 4 5 6 (PRODUCT LEVEL)	SEE PAGE
	1	1	**3T-3434**	6	PLUG	
	2	1	**7T-3279**	1	HOUSING AS	
	3	1	**8T-8566**	1	TERMINAL AS	
	4	1	**6V-8188**	4	NUT (1/2-13 THD)	
	5	1	**7X-0562**	4	WASHER-HARD (13.5X19X0.8MM THK)	
	6	1	**3T-3422**	1	WIRE AS	
	7	1	**7T-3278**	1	HOLDER AS-BRUSH	
	8	1	**7T-3277**	1	COIL AS-FIELD	
	9	1	**7T-3454**	1	INSULATOR	
	10	1	**7T-3271**	1	CONNECTOR	
	11	1	**7T-3451**	1	INSULATOR-TERMINAL	
	12	1	**8T-8569**	1	INSULATOR-TERMINAL	
	13	1	**5S-7349**	4	BOLT (1/4-20X0.5 IN)	
	14	1	**8T-4205**	4	WASHER-HARD (7.2X14.5X2MM THK)	
	15	1	**8H-1141**	4	SHOE-POLE	
	16	1	**3F-0379**	8	SCREW-POLE SHOE (3/8-24 THD)	
	17	1	**7T-3276**	1	ARMATURE AS (24 VOLT)	
	18	1	**3E-7775**	1	HOUSING AS	
	19	1	**4M-1831**	1	PLUG-LEVER HOUSING	
	20	1	**7L-2894**	1	GASKET	
	21	1	**036-9823**	5	BOLT	
	22	1	**6N-3826**	1	DRIVE AS-MOTOR	
	23	1	**7T-3974**	1	HOUSING AS-DRIVE	
	24	1	**7X-3373**	6	BOLT (5/16-18X0.88 IN)	
	25	1	**193-8570**	1	SOLENOID AS	
	26	1	**6V-8378**	3	NUT (10-32 THD)	
	27	1	**8F-1434**	2	LOCKWASHER	
	28	1	**8T-0328**	3	WASHER-HARD (5.5X10X1MM THK)	
	29	1	**9X-4824**	1	COVER-STARTING MOTOR	
					AVAILABLE REPAIR KIT(S):	
			7T-3268		KIT-LEVER (STARTING MOTOR)	
					(KIT INCLUDES LEVER ASSEMBLIES, SEALS, NUT, GASKET & RETAINER)	
			7T-3267		KIT-BUSHING (STARTING MOTOR)	
					(KIT INCLUDES BUSHINGS, WICKS, CUPS, SEALS, GASKET, SCREW AS., WASHERS, SPACER & NUT)	
			8C-3655		KIT-BRUSH (STARTING MOTOR)	
					(KIT INCLUDES BRUSHES, SPRINGS, SCREWS, SCREW AS. & SEAL)	
			8T-9884		KIT-INSULATOR (STARTING MOTOR)	
					(KIT INCLUDES INSULATORS AND BUSHING)	

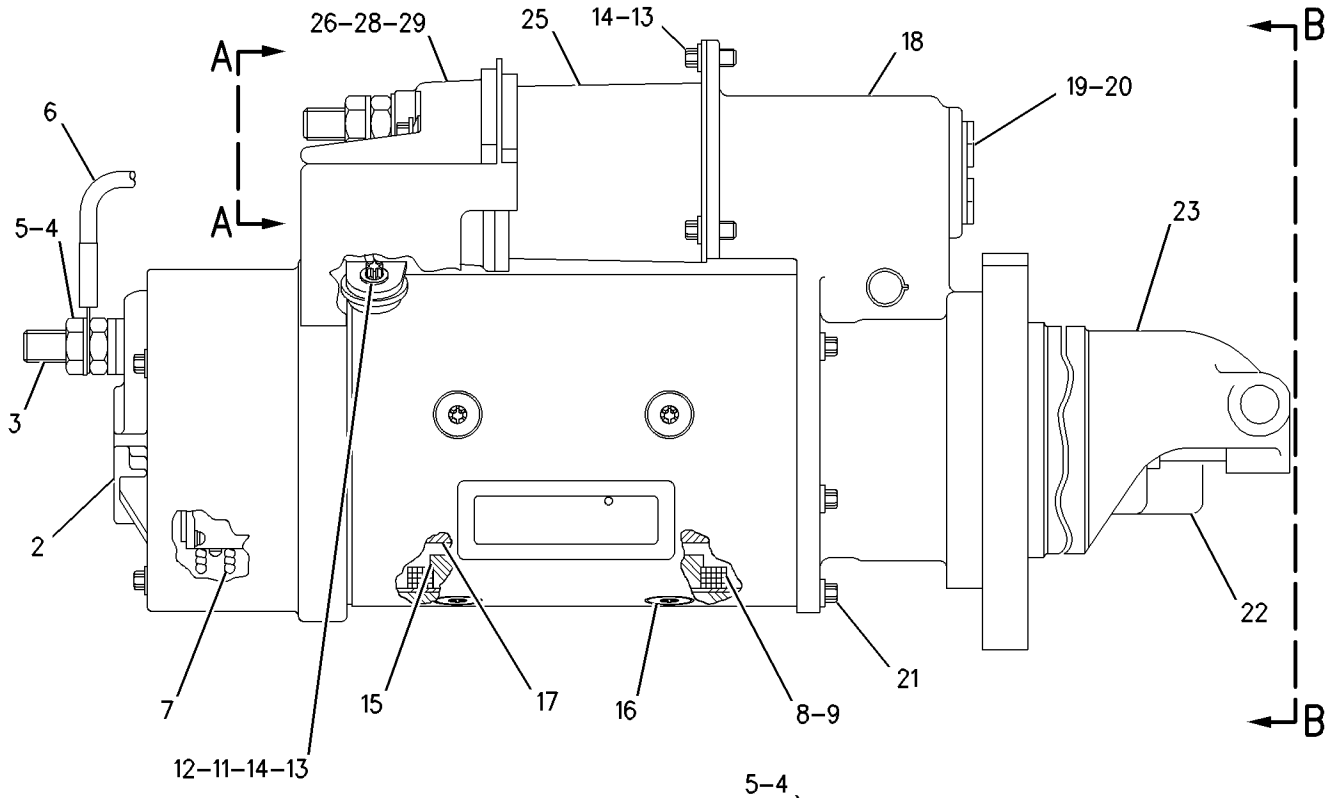

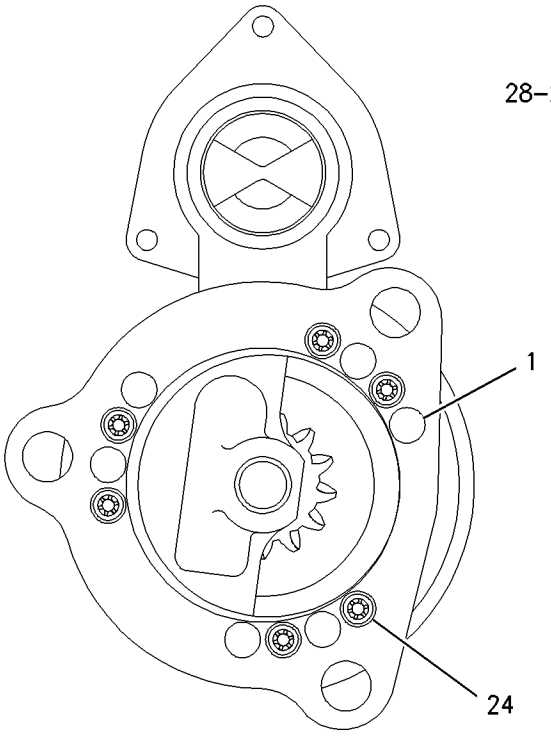

VIEW B–B

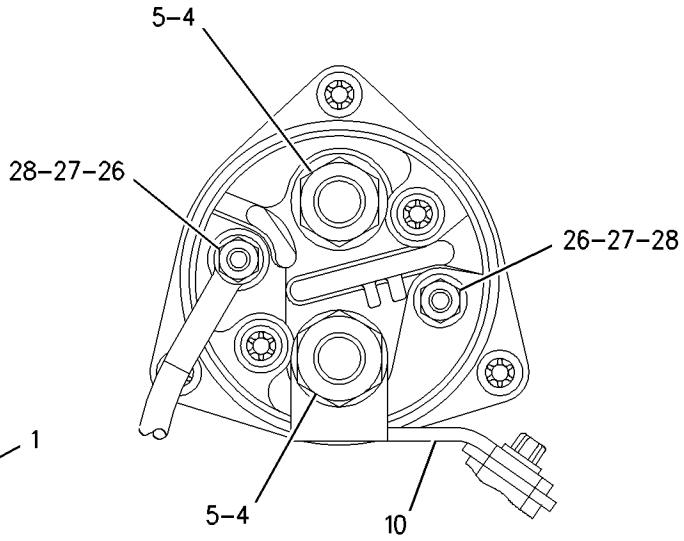

VIEW A–A

GRAPHIC #1 g00826583

164-7577 SWITCH GP-BYPASS

S/N: BLE1-UP; BMJ1-UP
PART OF 166-7390 BATTERY & WIRING GP

SMCS-1408 **i01431492**

NOTE	REF NO	GRAPHIC REF	PART NUMBER	QTY	PART NAME 1 2 3 4 5 6 (PRODUCT LEVEL)	SEE PAGE
BE	1	1	**9X-1813**		SLEEVE	
	2	1	**102-8802**	1	KIT-RECEPTACLE (2 PIN)	
					(INCLUDES RECEPTACLE AS & WEDGE)	
	3	1	**186-3735**	2	PIN-CONNECTOR	
	4	1	**3E-3365**	1	WEDGE-RECEPTACLE LOCK (2 PIN)	
	5	1	**3D-2824**	1	SEAL-O-RING (23.47MM ID)	
Z	6	1		1	SWITCH AS	

B-USE AS REQUIRED
E-ORDER BY THE CENTIMETER
Z-NOT SERVICED SEPARATELY

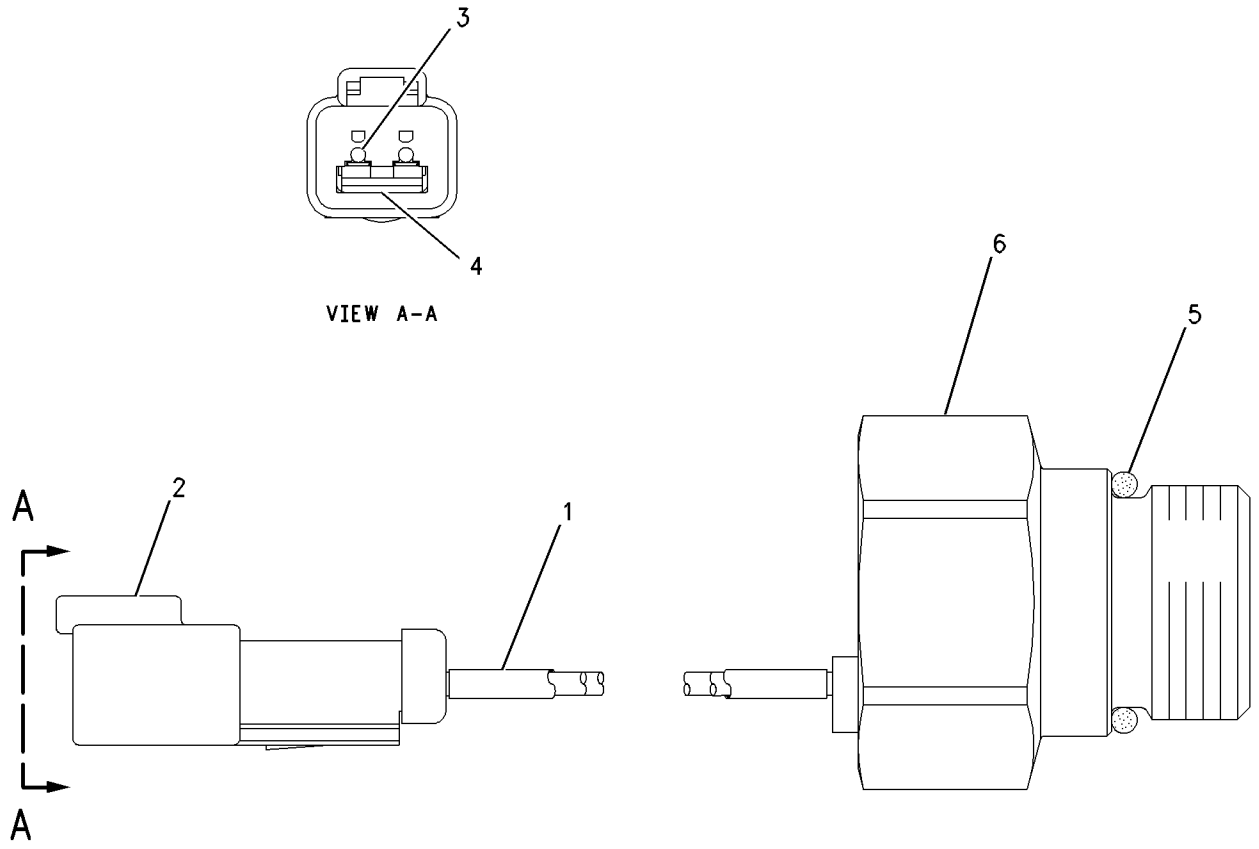

GRAPHIC #1 g00750019

7N-0718 SWITCH GP-DISCONNECT

S/N: BLE1-UP; BMJ1-UP

PART OF 166-7390 BATTERY & WIRING GP

SMCS-1411 **i01643897**

NOTE	REF NO	GRAPHIC REF	PART NUMBER	QTY	PART NAME 1 2 3 4 5 6 (PRODUCT LEVEL)	SEE PAGE
	1	1	**2H-3922**	2	LOCKWASHER	
	2	1	**8H-5303**	1	NUT (3/4-16 THD)	
	3	1	**9F-5644**	2	LOCKWASHER	
	4	1	**6F-7045**	2	NUT-FULL (3/8X24 THD)	
	5	1	**8H-5306**	1	KEY	

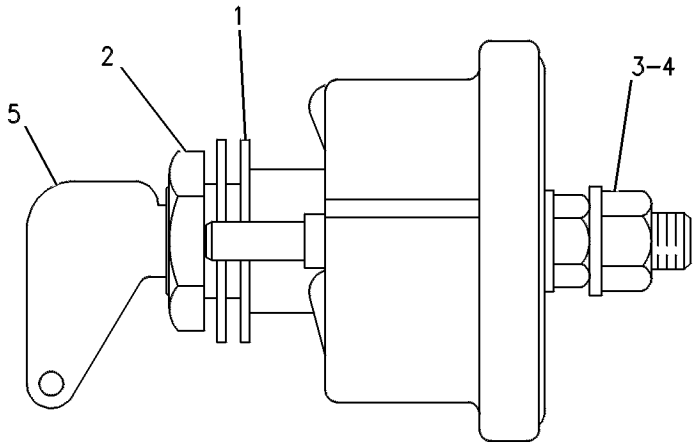

GRAPHIC #1 g00246536

167-0138 SWITCH GP-MAGNETIC

S/N: BLE1-UP; BMJ1-UP

PART OF 164-3740 PANEL GP-FUSE

SMCS-7499 **i01678868**

NOTE	REF NO	GRAPHIC REF	PART NUMBER	QTY	PART NAME 1 2 3 4 5 6 (PRODUCT LEVEL)	SEE PAGE
	1	1	**4F-2294**	2	NUT-JAM (5/16-24 THD)	
	2	1	**6V-8186**	2	NUT-FULL (5/16-24 THD)	
	3	1	**155-2270**	1	KIT-CONNECTING PLUG (2 PIN) (INCLUDES PLUG AS, WEDGE & SEAL)	
	4	1	**186-3736**	2	SOCKET-CONNECTOR	
	5	1	**155-2261**	1	WEDGE-PLUG LOCK (2 PIN)	

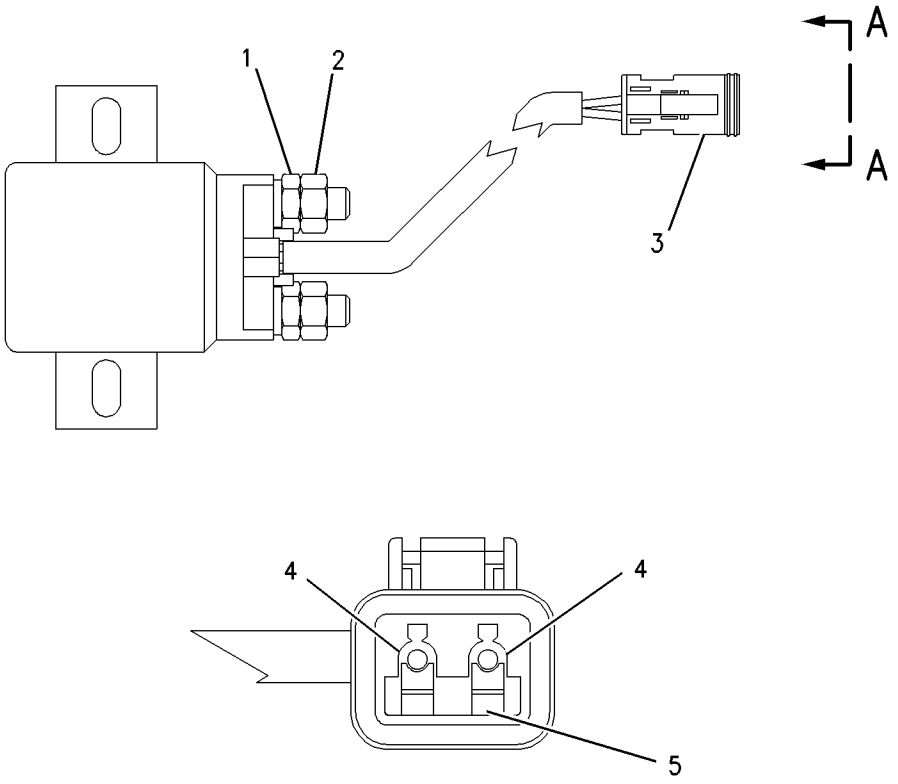

VIEW A-A

GRAPHIC #1 g00831588

MEMORANDA

ELECTRICAL AND STARTING SYSTEM

198-1320 WIRING GP-ELECTRONIC CONTROL

S/N: 4ZF1-UP

PART OF 166-0273, 169-3791, 176-5509, 176-9269 ENGINE AR

ALSO AN ATTACHMENT

SMCS-1408 **i01668476**

NOTE	REF NO	GRAPHIC REF	PART NUMBER	QTY	PART NAME 1 2 3 4 5 6 (PRODUCT LEVEL)	SEE PAGE
	1	1	**3S-2093**	17	STRAP-CABLE	
	2	1	**198-7390**	1	WIRE AS	
	3	1	**160-8124**	1	PLUG AS	
	4	1	**188-9865**	1	HARNESS AS	
	5	1	**196-9654**	1	BRACKET AS	
M		1	**6V-9632**	2	NUT-WELD (M6X1 THD)	
		1	**7T-1099**	7	LINK	
M		1	**8T-3490**	1	NUT-WELD (M10X1.5 THD)	
	6	1	**201-1283**	1	HARNESS AS (ENGINE ELECTRONIC CONTROL)	
J		1	**214-7170**	1	KIT-REPAIR (FOR EXTREME COLD CLIMATES)	
					(INCLUDES:)	
		1	**102-8803**	2	KIT-RECEPTACLE (3 PIN)	
		1	**3E-3371**	2	WEDGE-RECEPTACLE LOCK (3 PIN)	
		1	**8T-8737**	8	PLUG-SEAL	
		1	**155-2276**	3	WEDGE-PLUG LOCK (3 PIN)	
		1	**155-2260**	3	KIT-CONNECTING PLUG (3 PIN)	
		1	**194-5226**	7	HARNESS AS (SOCKET)	
		1	**102-8803**	1	KIT-RECEPTACLE (3 PIN)	
					(INCLUDES RECEPTACLE AS & WEDGE)	
		1	**100-3320**	1	PLUG AS-CONNECTOR (2 PIN)	
		1	**126-5011**	1	SEAL-CONNECTOR	
		1	**111-2416**	1	PLUG AS-CONNECTOR (2 PIN)	
		1	**126-5011**		SEAL-CONNECTOR	
		1	**155-2270**	5	KIT-CONNECTING PLUG (2 PIN)	
					(EACH INCLUDES PLUG AS & WEDGE)	
		1	**160-7690**	1	PLUG AS-CONNECTOR (70 PIN)	
		1	**159-9322**	1	SEAL-O-RING	
		1	**155-2260**	5	KIT-CONNECTING PLUG (3 PIN)	
					(EACH INCLUDES PLUG AS & WEDGE)	
	7	1	**4P-7581**	8	CLIP	
	8	1	**4P-8134**	1	CLIP	
	9	1	**6V-4369**	1	CLIP	
M	10	1	**6V-5217**	1	BOLT (M8X1.25X20MM)	
	11	1	**6V-5839**	3	WASHER (11X21X2.5MM THK)	
M	12	1	**6V-6317**	3	BOLT (M10X1.5X20MM)	
M	13	1	**7I-2272**	2	BOLT (M5X0.8X12MM)	
	14	1	**8T-0328**	2	WASHER-HARD (5.5X10X1MM THK)	
	15	1	**8T-4205**	1	WASHER-HARD (7.2X14.5X2MM THK)	
M	16	1	**8T-5451**	1	BOLT	
	17	1	**9M-1974**	1	WASHER-HARD (8.8X16X2MM THK)	

J-KIT MARKED "J" PROVIDES OIL GRADE PLUGS FOR 0W20, 10W30, 15W40 OIL GRADES
M-METRIC PART

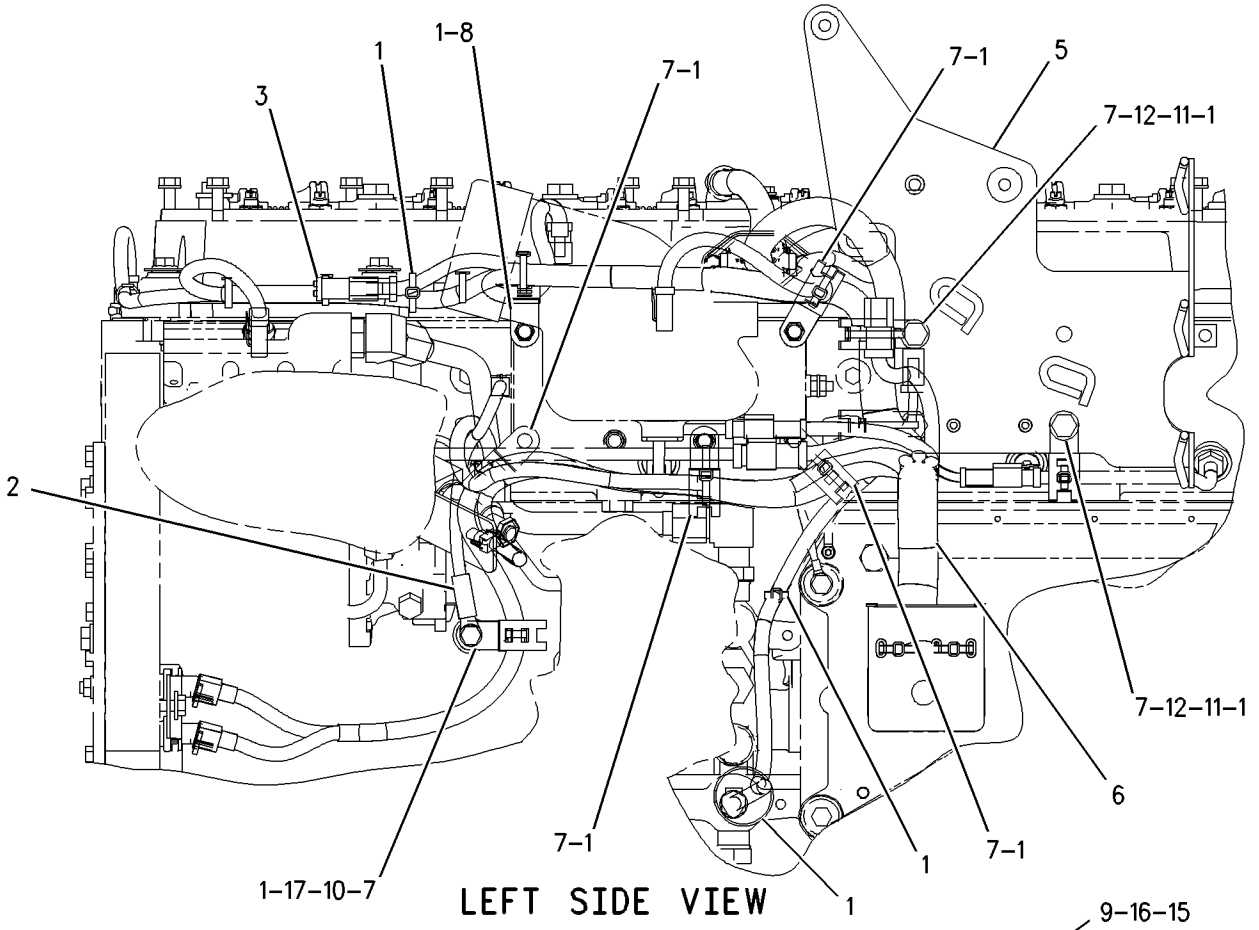

LEFT SIDE VIEW

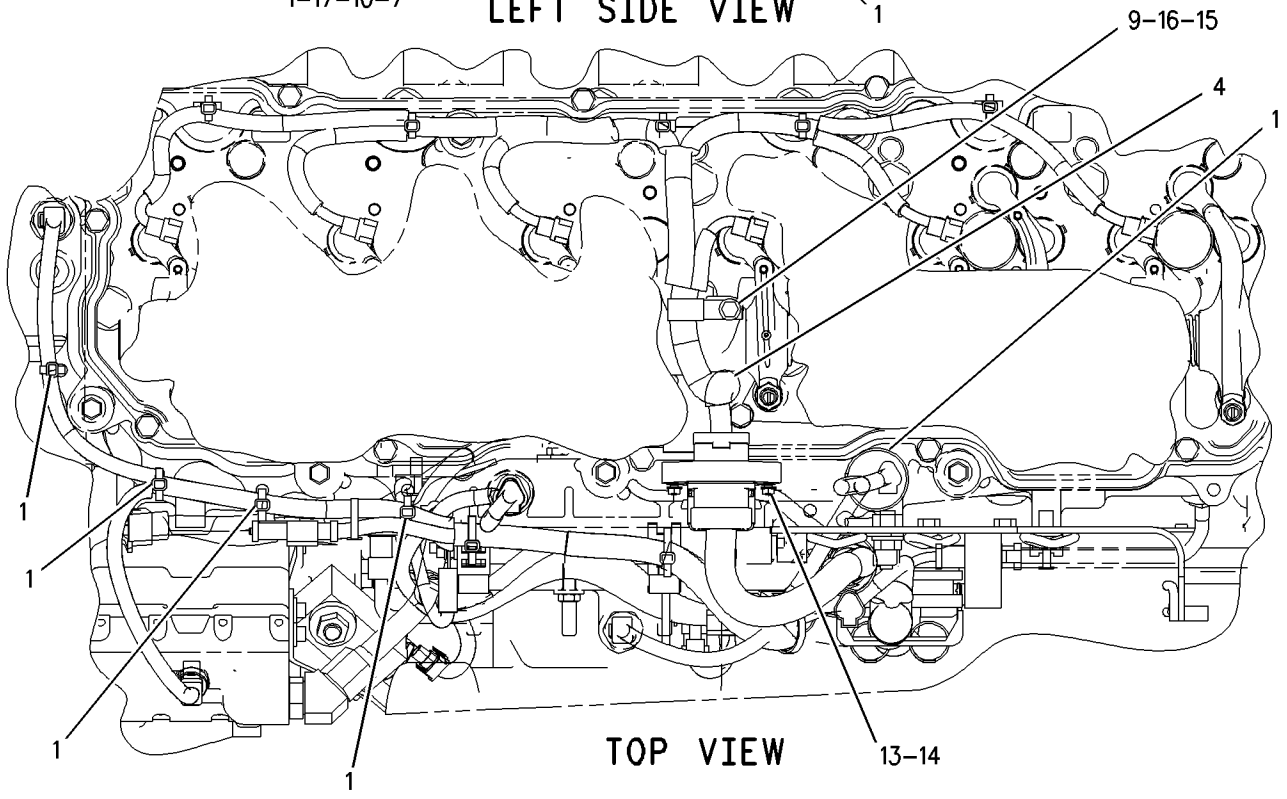

TOP VIEW

GRAPHIC #1

g00810500

ELECTRICAL AND STARTING SYSTEM

166-7391 WIRING GP-PLATFORM

S/N: BLE1-UP; BMJ1-UP

PART OF 164-4782, 164-4784 CHASSIS AR

SMCS-1408 **i01668145**

NOTE	REF NO	GRAPHIC REF	PART NUMBER	QTY	PART NAME 1 2 3 4 5 6 (PRODUCT LEVEL)	SEE PAGE
Y	1	1	**3E-6328**	1	ALARM GP	126
	2	1	**6T-7058**	1	LENS-RED	
	3	1,2	**7K-1181**	23	STRAP-CABLE	
	4	1	**7N-1996**	1	LAMP (24 VOLT)	
	5	1	**117-2311**	2	RECEPTACLE AS-POWER (12 VOLT)	
	6	1	**149-9818**	1	PLATE	
	7	1	**158-6632**	1	SWITCH AS-HORN	
		1	**2H-3922**	1	LOCKWASHER	
		1	**3B-4501**	1	LOCKWASHER	
		1	**5L-7200**	1	SCREW (8-32X0.375 IN)	
		1	**6V-8370**	1	NUT-HEX (3/4-32 THD)	
		1	**7T-9515**	1	KNOB-HORN	
		1	**9X-0199**	1	BOOT-SWITCH	
		1	**102-8802**	1	KIT-RECEPTACLE (2 PIN)	
					(INCLUDES RECEPTACLE AS & WEDGE)	
		1	**3E-3365**	1	WEDGE-RECEPTACLE LOCK (2 PIN)	
		1	**9X-3401**	2	PIN-CONNECTOR	
	8	1	**159-1549**	1	CONVERTER-POWER (24 VOLTS TO 12 VOLTS)	
	9	1	**160-5574**	1	HARNESS AS (THROTTLE)	
Y	10	1	**164-3740**	1	PANEL GP-FUSE	168
	11	1	**170-3461**	1	BASE AS-LIGHT	
	12	1	**172-4860**	1	WIRE AS	
	13	1	**172-4871**	1	CLAMP	
	14	1	**173-1566**	1	CAP AS	
	15	1	**180-1484**	1	PLATE	
	16	1,2	**204-2281**	35	TIE	
	17	1	**194-9380**	1	HARNESS AS (RH CONSOLE)	
	18	2	**196-9852**	1	PLATE AS	
	19	2	**199-4010**	1	SPACER	
	20	1	**205-3762**	1	HARNESS AS (PLATFORM)	
	21	1	**068-4209**	4	SCREW (8-32X0.75 IN)	
	22	2	**130-5300**	1	CLIP	
	23	1	**141-4976**	4	SCREW-WASHER HEAD	
	24	1	**2G-1133**	1	GROMMET	
	25	2	**2N-3476**	4	SCREW-MACHINE (6-32X0.75 IN)	
	26	1	**3E-9044**	1	SWITCH AS-ROCKER (24 VOLT)(SEALED)(ILLUMINATED)	
		1	**105-9149**	1	SWITCH AS (24 VOLT)(ILLUMINATED) (THROTTLE)	
		1	**3E-8825**	2	LAMP (24 VOLT)	
		1	**6V-1748**	1	ACTUATOR-ROCKER	
	27	1	**4B-4863**	4	WASHER (4.7X11X1.2MM THK)	
	28	2	**4P-7581**	1	CLIP	
	29	1	**4P-8134**	1	CLIP	
	30	1	**5F-9757**	1	GROMMET	
	31	1,2	**5P-1075**	8	WASHER-HARD (10.2X22.5X3MM THK)	
	32	1	**6D-5801**	4	NUT (8-32 THD)	
M	33	1	**107-3786**	6	BOLT (M4X.7X12MM)	
	34	1	**8T-0328**	6	WASHER-HARD (5.5X10X1MM THK)	
	35	1,2	**8T-4121**	6	WASHER-HARD (11X21X2.5MM THK)	
M	36	1,2	**8T-4137**	10	BOLT (M10X1.5X20MM)	
M	37	1,2	**8T-4189**	4	BOLT (M8X1.25X20MM)	
	38	1,2	**8T-4224**	4	WASHER-HARD (8.8X16X2MM THK)	
M	39	1	**8T-6685**	4	BOLT (M10X1.50X110MM)	
	40	1	**9G-2673**	1	GROMMET	

M-METRIC PART
Y-SEPARATE ILLUSTRATION

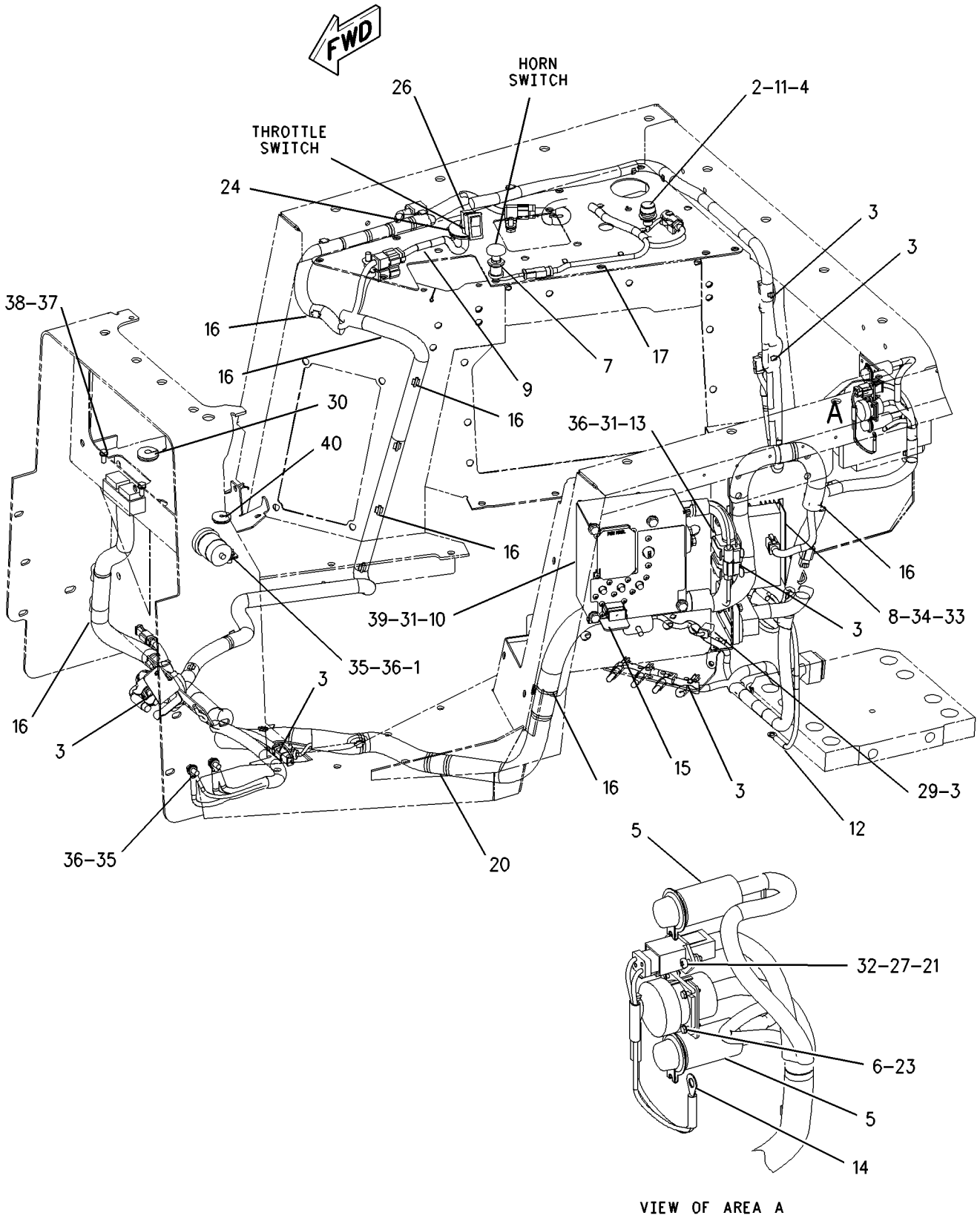

VIEW OF AREA A

GRAPHIC #1 g00845727

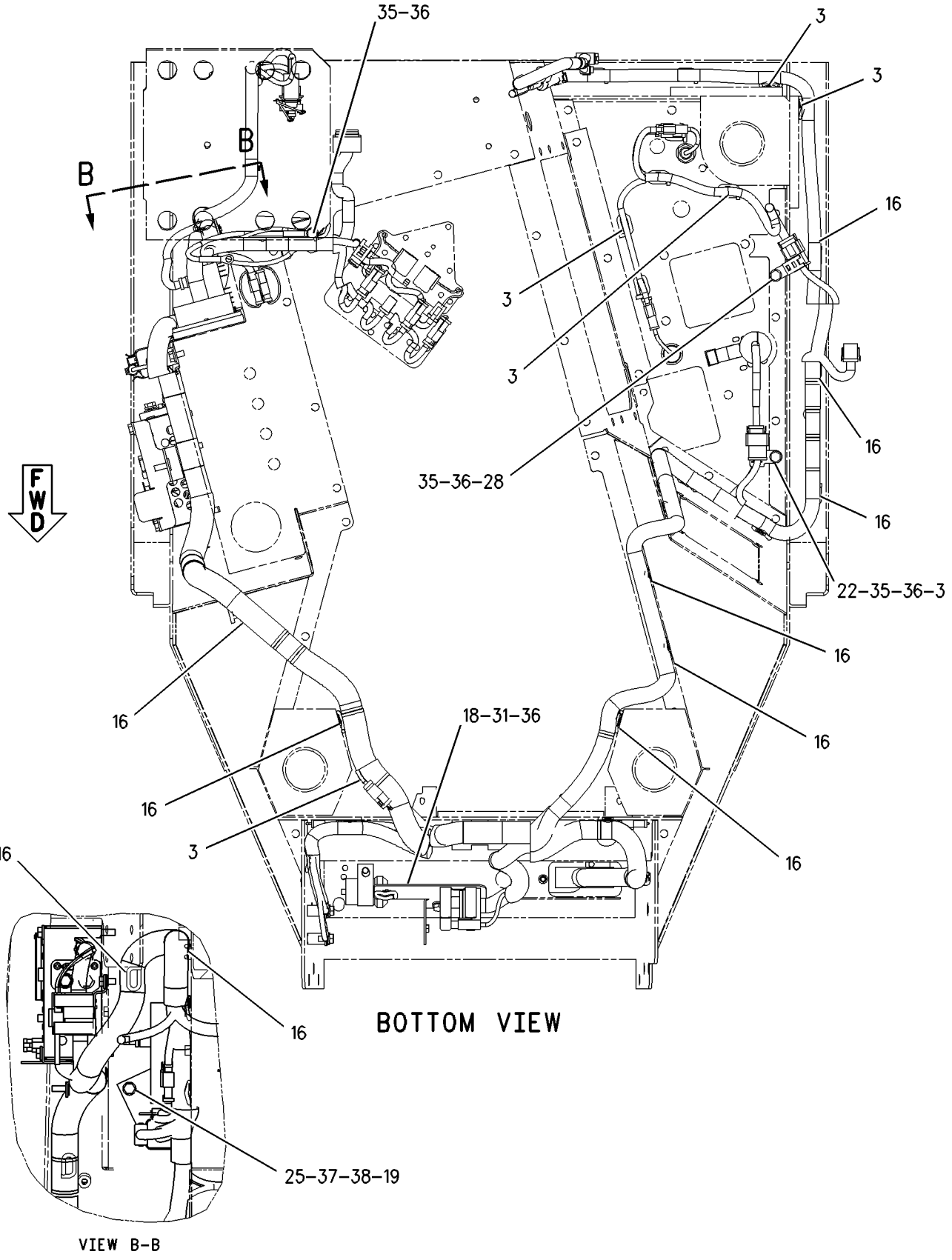

GRAPHIC #2 g00845728

194-4269 WIRING GP-THROTTLE

S/N: BLE1-UP; BMJ1-UP
PART OF 159-8371 CAB AR
AN ATTACHMENT

SMCS-1408 **i01592137**

NOTE	REF NO	GRAPHIC REF	PART NUMBER	QTY	PART NAME 1 2 3 4 5 6 (PRODUCT LEVEL)	SEE PAGE
	1	1	**194-1094**	1	HARNESS AS (EROPS THROTTLE JUMPER)	
	2	1	**194-4268**	1	PLATE AS	
M		1	**6V-9632**	2	NUT-WELD (M6X1 THD)	
	3	1	**068-4209**	4	SCREW (8-32X0.75 IN)	
	4	1	**4B-4863**	4	WASHER (4.7X11X1.2MM THK)	
M	5	1	**5C-9553**	2	BOLT (M6X1X16MM)	
	6	1	**6D-5801**	4	NUT (8-32 THD)	
	7	1	**9X-8256**	2	WASHER (6.6X12X2MM THK)	

M-METRIC PART

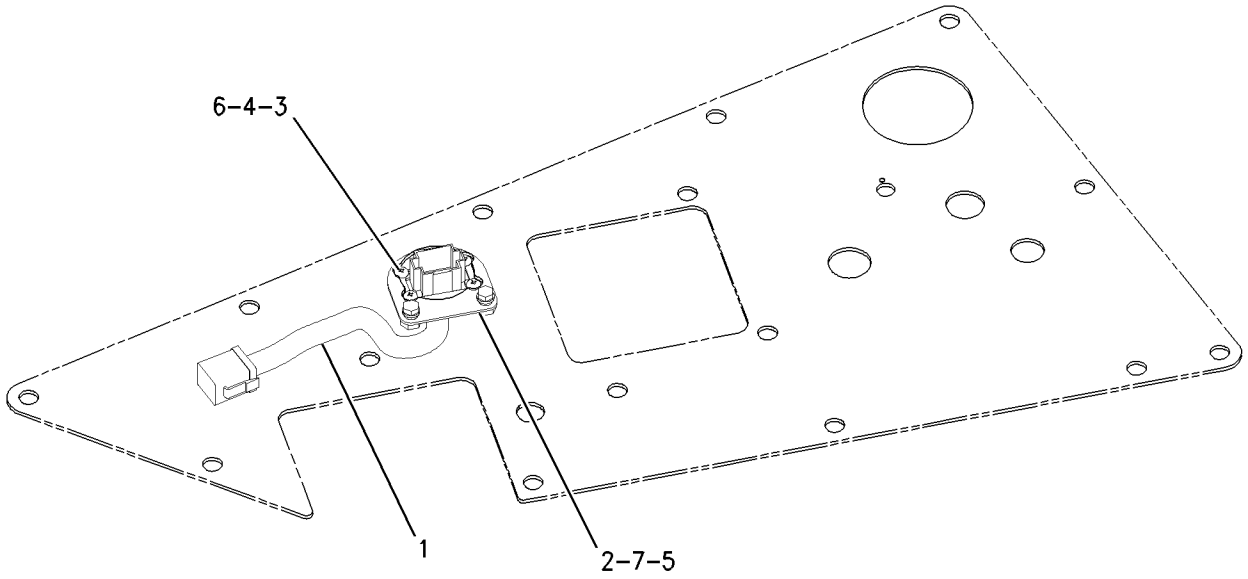

GRAPHIC #1 g00722595

107-1023 AXLE GP-POWER TRAIN

S/N: BLE1-UP; BMJ1-UP

PART OF 164-4792, 164-4794 POWER TRAIN AR

SMCS-3013, 3259, 3278 **i00576032**

NOTE	REF NO	GRAPHIC REF	PART NUMBER	QTY	PART NAME 1 2 3 4 5 6 (PRODUCT LEVEL)	SEE PAGE
	1	1	**9G-8637**	2	GEAR-SUN (11 TEETH)	
	2	1	**106-8536**	2	SHAFT	

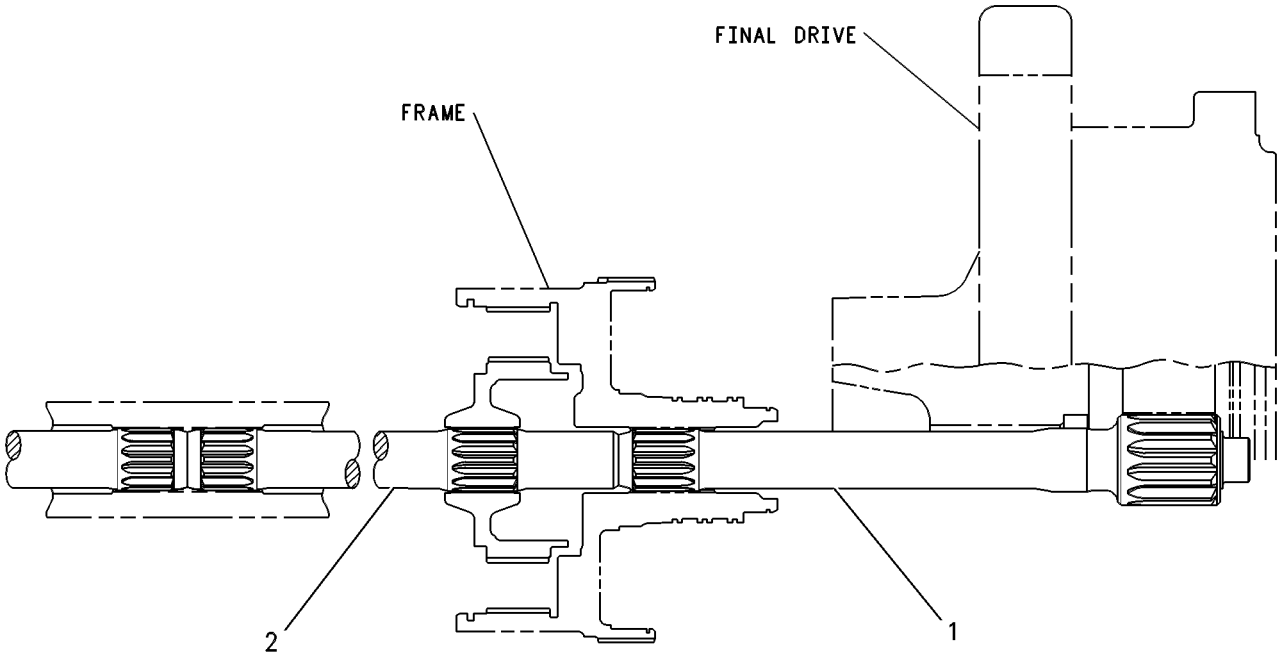

REAR VIEW

GRAPHIC #1 g00254068

MEMORANDA

POWER TRAIN

108-6983 CASE & PARTS GP-PLANETARY

S/N: BSG1-UP; BSR1-UP

PART OF 166-3328, 166-6320 TRANSMISSION AR

SMCS-3064 **i01538549**

NOTE	REF NO	GRAPHIC REF	PART NUMBER	QTY	PART NAME 1 2 3 4 5 6 (PRODUCT LEVEL)	SEE PAGE
	1	1	**108-7747**	1	COVER-TRANSMISSION	
	2	1	**9M-9647**	3	SEAL-O-RING	
	3	1	**5P-8998**	1	FITTING (1/4-18 NPTF THD)	
	4	1	**9S-7710**	1	ELBOW-FLARED	
	5	1	**7T-8875**	1	TUBE AS	
	6	1	**5K-9988**	1	TEE-INVERTED FLARED	
	7	1	**190-2278**	1	CASE AS	
	8	1	**4B-9785**	1	BALL	
	9	1	**1A-2610**	1	DOWEL	
	10	1	**7M-1201**	1	DOWEL	
	11	1	**3F-3442**	2	DOWEL	
	12	1	**4B-9782**	1	BALL	
	13	1	**146-6669**	1	GASKET	
	14	1	**146-6670**	1	COVER	
	15	1	**9X-6458**	6	WASHER-HARD (10.2X22.5X3MM THK)	
	16	1	**0S-1594**	6	BOLT (3/8-16X1 IN)	
	17	1	**7J-8611**	1	ELBOW	
	18	1	**0S-1585**	21	BOLT (1/2-13X1.50 IN)	
		1	**5P-8245**	21	WASHER-HARD (13.5X25.5X3MM THK)	
	19	1	**5P-4057**	1	SEAL-O-RING	
	20	1	**8M-5661**	1	SEAL-O-RING	
	21	1	**8S-9130**	1	SCREEN-SUCTION	
	22	1	**8M-4432**	2	SEAL-O-RING	
	23	1	**5K-5120**	1	STRIP	
	24	1	**9W-4159**	1	TUBE AS	
	25	1	**8H-1603**	1	CLIP	
	26	1	**0T-0102**	1	BOLT (3/8-16X0.625 IN)	
		1	**5M-2894**	1	WASHER-HARD (10.2X18.5X2.5MM THK)	
	27	1	**6K-8498**	1	TEE-FLARED	
	28	1	**6V-0484**	1	ADAPTER-O-RING	
	29	1	**3J-1907**	2	SEAL-O-RING	
	30	1	**6V-0852**	1	CAP-DUST	
		1	**6V-3965**	1	FITTING	
	31	1	**7T-8876**	1	TUBE AS	
	32	1	**5K-9246**	1	CONNECTOR-FLARED	
	33	1	**9W-5334**	1	TUBE AS	
	34	1	**031-0218**	1	BOLT-LOCKING	
	35	1	**9P-1475**	1	SLEEVE	
	36	2	**9S-6130**	3	PLUG-O-RING	
	37	2	**2S-4078**	3	SEAL-O-RING	
	38	2	**108-7748**	1	COVER-TRANSMISSION CASE	
		2	**3T-9922**	1	GASKET-COVER	
	39	2	**9S-4190**	1	PLUG-O-RING	
		2	**2M-9780**	1	SEAL-O-RING	
	40	2	**3J-1907**	1	SEAL-O-RING	
	41	2	**6V-0852**	1	CAP-DUST	
	42	2	**6V-3965**	1	FITTING	
	43	2	**8M-2530**	4	BOLT-12 POINT HEAD (1/2-13X1.25 IN)	
	44	2	**4H-5440**	1	COVER-PUMP INLET	
		2	**3S-7781**	1	GASKET	
	45	2	**5D-0353**	4	BOLT-LOCKING (3/8-16X1 IN)	
	46	2	**9G-8615**	1	COVER	
		2	**8P-0058**	1	GASKET-COVER	
	47	2	**030-8535**	23	BOLT-LOCKING (3/8-16X0.875 IN)	

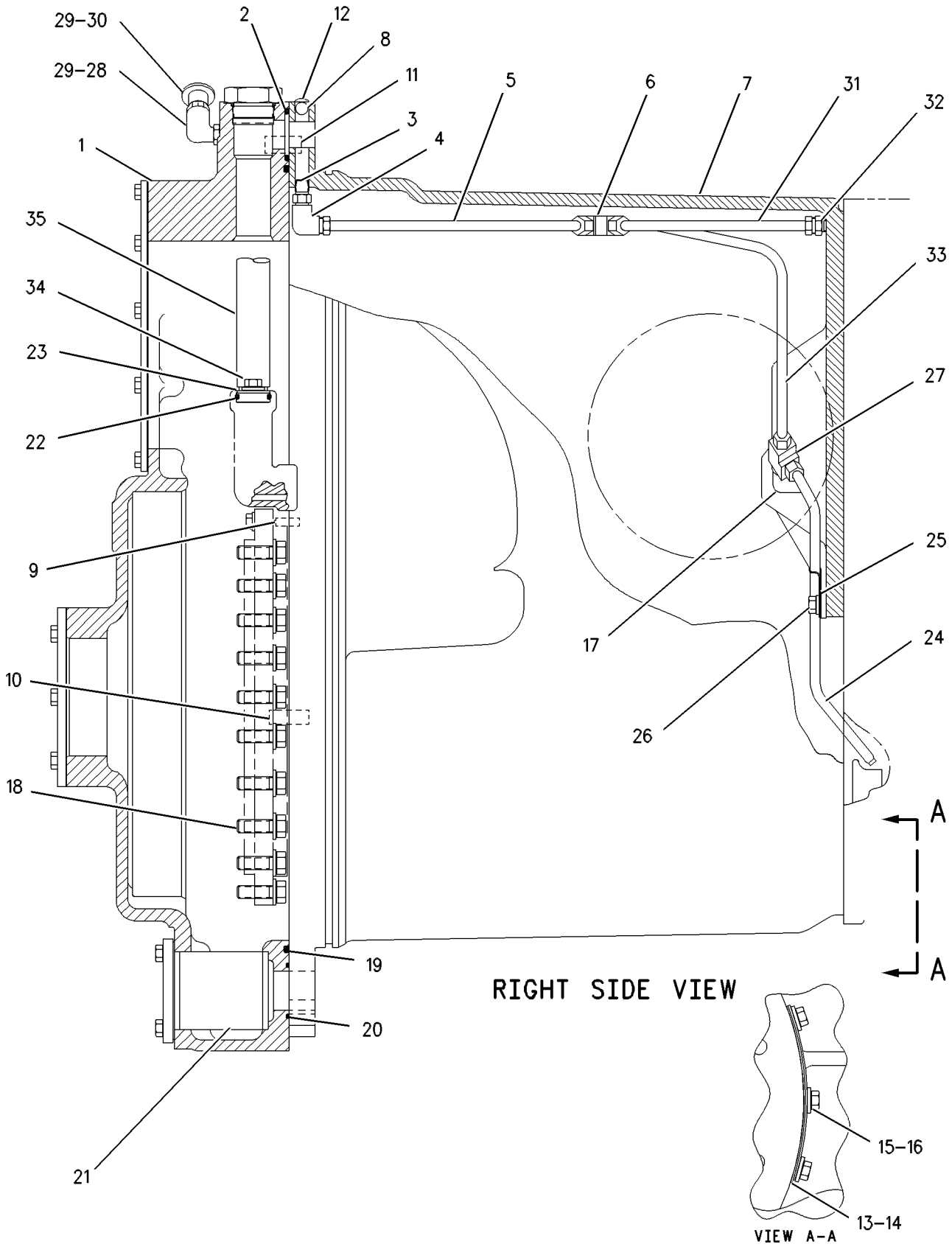

GRAPHIC #1

g00371475

108-6983 **CASE & PARTS GP-PLANETARY** ***(contd.)*** **i01538549**

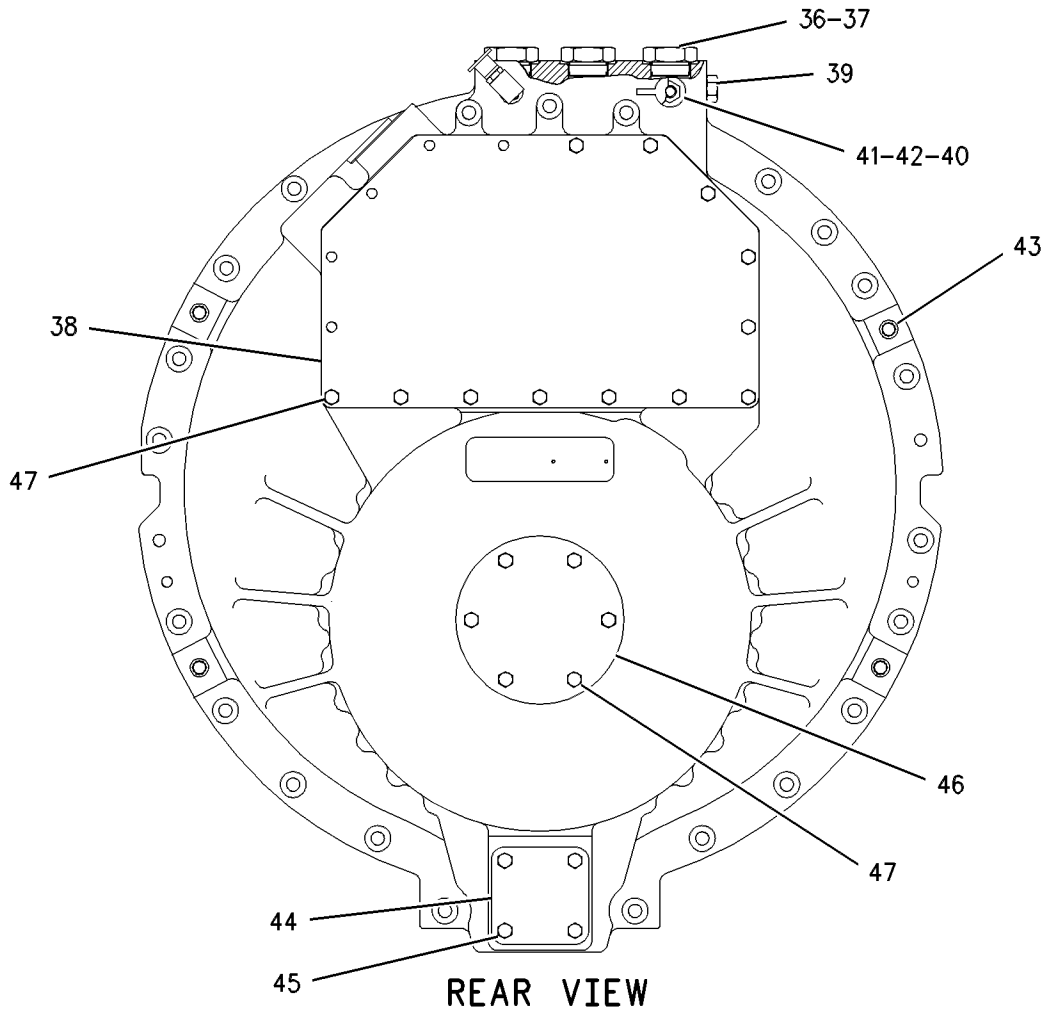

GRAPHIC #2 g00371476

172-5262 CONTROL & MTG GP-PEDAL

S/N: BLE1-UP; BMJ1-UP

PART OF 164-4792, 164-4794 POWER TRAIN AR

SMCS-1276 **i01590454**

NOTE	REF NO	GRAPHIC REF	PART NUMBER	QTY	PART NAME 1 2 3 4 5 6 (PRODUCT LEVEL)	SEE PAGE
Y	1	1	*158-8079*	1	PEDAL GP-GOVERNOR & BRAKE	246
	2	1	**171-7077**	2	ROD-THREADED	
	3	1	**8T-4121**	4	WASHER-HARD (11X21X2.5MM THK)	
M	4	1	**8T-4133**	2	NUT (M10X1.5 THD)	
M	5	1	**8T-4195**	2	BOLT (M10X1.5X30MM)	

M-METRIC PART
Y-SEPARATE ILLUSTRATION

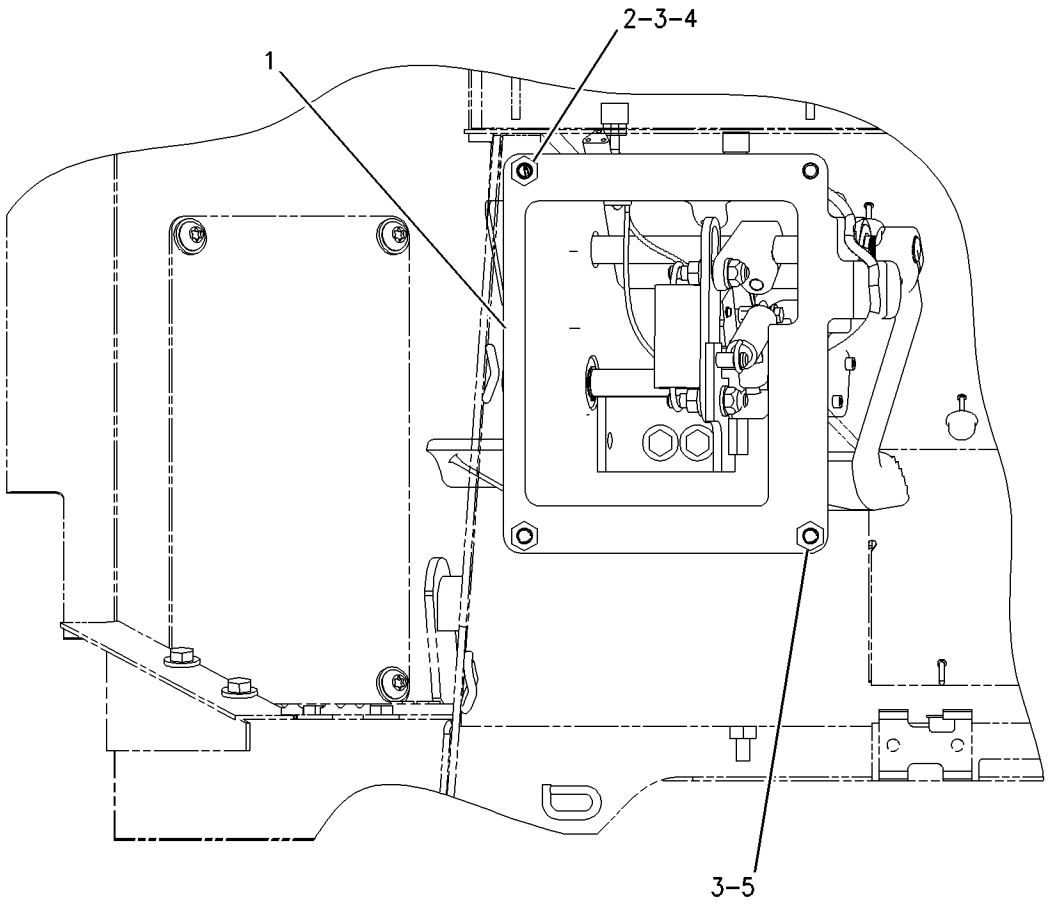

GRAPHIC #1 g00856239

164-4206 CONTROL GP-STEERING & TMSN

S/N: BLE1-UP; BMJ1-UP

PART OF 164-4792, 164-4794 POWER TRAIN AR

SMCS-3033 **i01590413**

NOTE	REF NO	GRAPHIC REF	PART NUMBER	QTY	PART NAME 1 2 3 4 5 6 (PRODUCT LEVEL)	SEE PAGE
	1	1	**3E-2954**	4	PLUG-DOMED HEAD	
	2	1	**3E-4048**	1	CAP-PLUG	
	3	1	**7X-7729**	6	WASHER (11X25X3MM THK)	
	4	1	**8T-4121**	4	WASHER-HARD (11X21X2.5MM THK)	
M	5	1	**8T-4133**	2	NUT (M10X1.5 THD)	
M	6	1	**8T-4136**	2	BOLT (M10X1.5X25MM)	
Y	7	1	**206-6548**	1	CONTROL GP-STEERING & TMSN	216
M	8	1	**124-8100**	6	SCREW-TRUSS HEAD (M10X1.5X20MM)	
	9	1	**164-4375**	1	COVER AS	
	10	1	**171-7077**	2	ROD-THREADED	

M-METRIC PART
Y-SEPARATE ILLUSTRATION

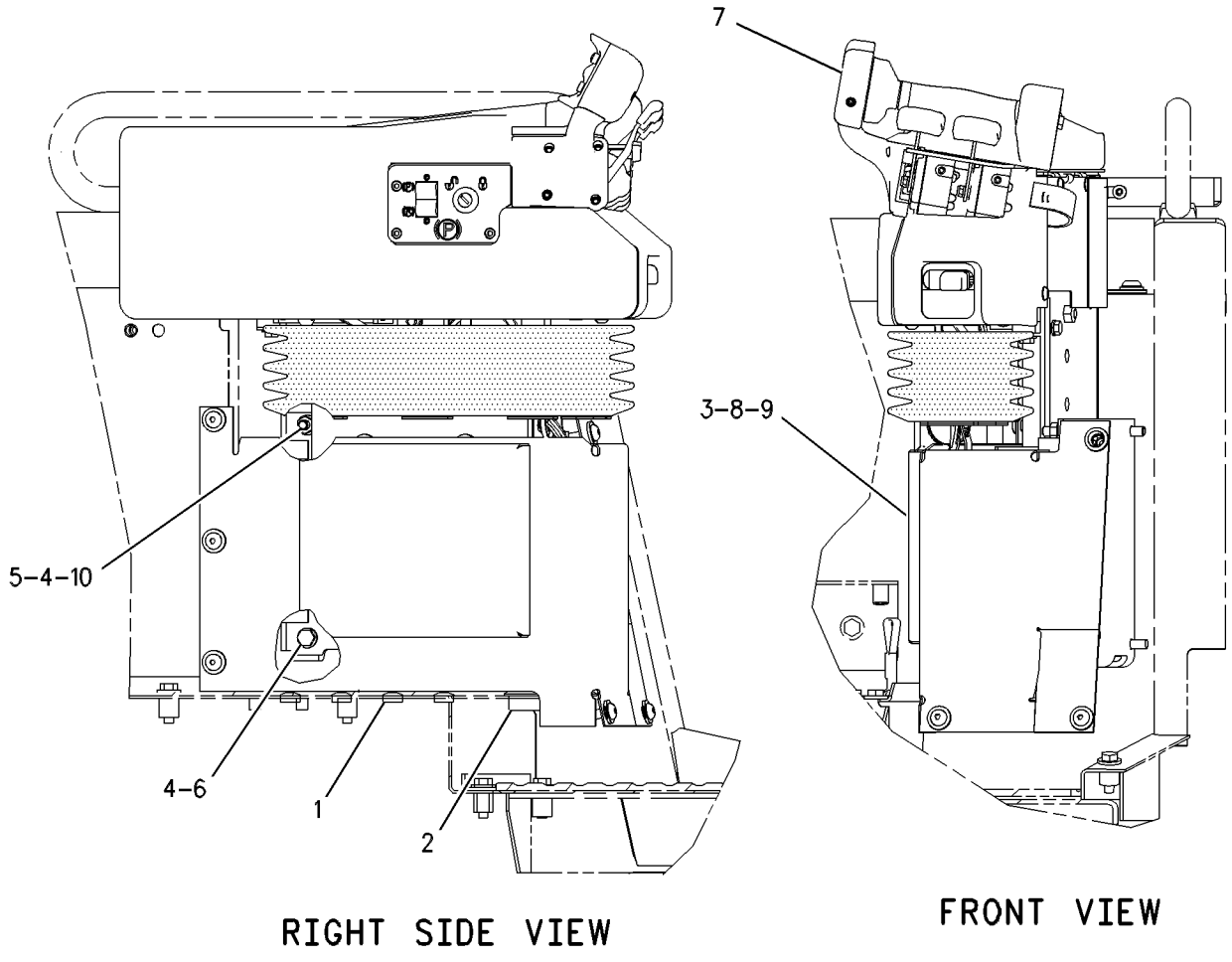

GRAPHIC #1 g00583117

MEMORANDA

206-3721 CONTROL GP-STEERING & TMSN

S/N: BLE1-UP; BMJ1-UP

PART OF 206-6548 CONTROL GP-STEERING & TMSN

SMCS-3033 **i01590419**

NOTE	REF NO	GRAPHIC REF	PART NUMBER	QTY	PART NAME 1 2 3 4 5 6 (PRODUCT LEVEL)	SEE PAGE
	1	1	**1W-6448**	2	DOWEL	
	2	1	**4B-1270**	1	SCREW-MACHINE (8-32X0.75 IN)	
	3	1	**8T-0328**	1	WASHER-HARD (5.5X10X1MM THK)	
M	4	1	**9X-6615**	6	BOLT (M5X.8X30MM)	
	5	1	**9X-6772**	6	STRAP-CABLE	
M	6	1	**9X-8902**	3	BOLT-SOCKET HEAD (M3X0.5X8MM)	
	7	1	**103-6262**	2	SCREW-MACHINE (4-40X.63 IN)	
Y	8	1	**122-7372**	1	GEAR GP-STEERING	430
	9	1	**123-3295**	1	PLATE	
	10	1	**123-3296**	1	GASKET	
	11	1	**123-3826**	1	HANDLE AS	
	12	1	**123-6377**	1	SWITCH AS-LIMIT	
	13	1	**123-6392**	1	CUSHION AS	
M		1	**8T-3490**	4	NUT-WELD (M10X1.5 THD)	
Y	14	1	*123-6446*	1	CONTROL GP-PARKING BRAKE	427
	15	1	**123-9812**	1	HANDLE AS	
Y	16	1	**125-0583**	1	SUPPORT GP-CONTROL	434
Y	17	1	*125-9664*	1	GEAR GP-STEERING	432
	18	1	**126-2487**	1	PLATE	
Y	19	1	**127-2945**	1	DETENT GP	428
M	20	1	**135-8581**	1	BOLT-SOCKET HEAD (M6X1.0X30MM)	
Y	21	1	**147-1680**	2	SENSOR GP-POSITION	174
	22	1	**159-7351**	2	CLIP	
	23	1	**159-7352**	1	PLATE AS	
		1	**4P-8134**	1	CLIP	
		1	**5D-9629**	4	ROD	
M		1	**6V-9632**	4	NUT-WELD (M6X1 THD)	
		1	**7T-1099**	1	LINK	
M		1	**8T-3612**	5	NUT-WELD (M8X1.25 THD)	
Y	24	1	**161-8979**	1	SENSOR GP-POSITION (SPRINGLESS)	176
	25	1	**206-3720**	1	HARNESS AS	
	26	1	**3K-7942**	1	CLAMP	
	27	1	**6V-0894**	3	SEAL-O-RING	
M	28	1	**7X-7888**	2	BOLT (M6X1X90MM)	
	29	1	**8M-2771**	1	CLIP	
M	30	1	**8T-0267**	1	BOLT-SOCKET HEAD (M6X1X12MM)	
	31	1	**8T-4121**	1	WASHER-HARD (11X21X2.5MM THK)	
M	32	1	**8T-4137**	4	BOLT (M10X1.5X20MM)	
M	33	1	**8T-4138**	2	BOLT (M6X1X20MM)	
	34	1	**9X-8256**	4	WASHER (6.6X12X2MM THK)	

M-METRIC PART
Y-SEPARATE ILLUSTRATION

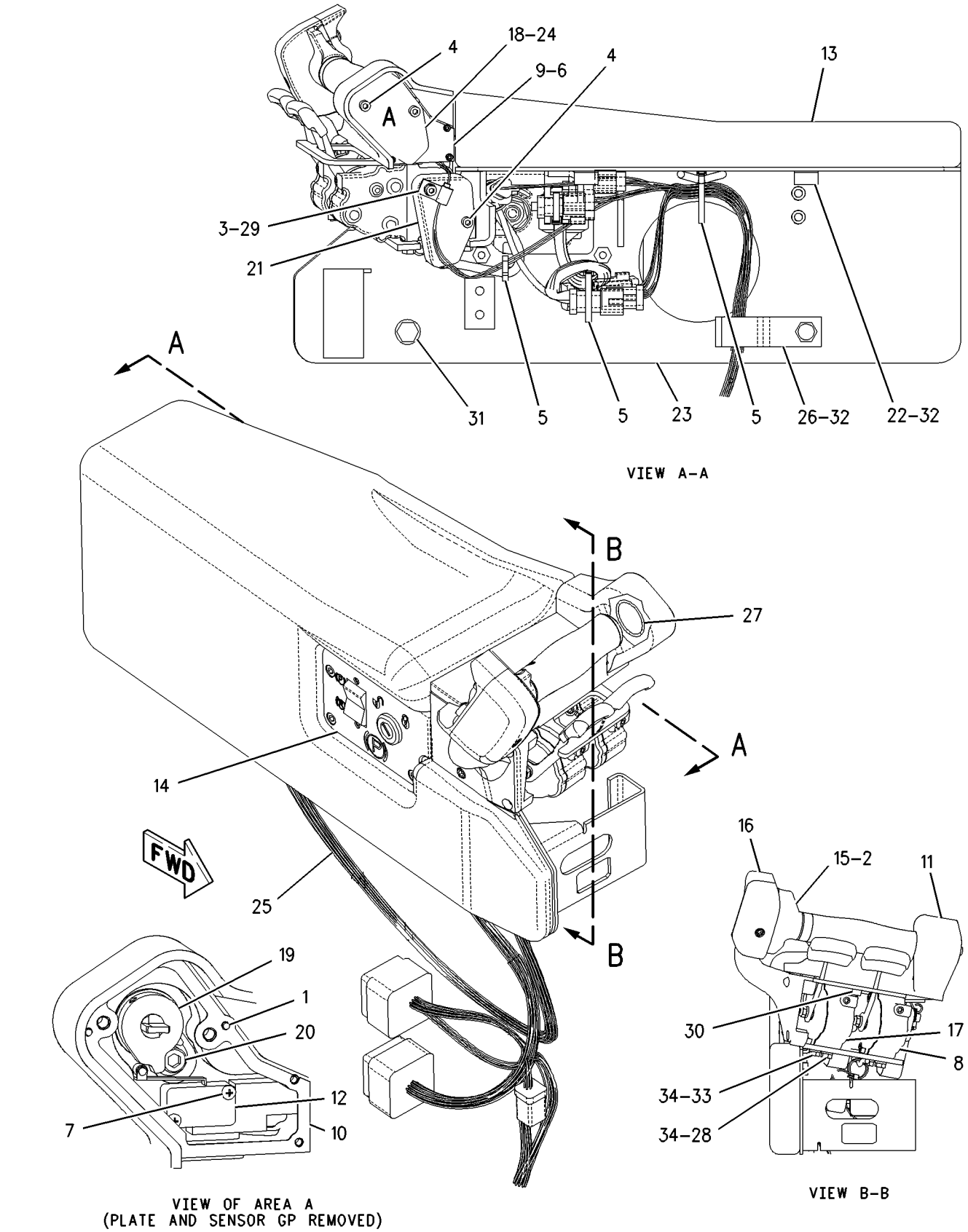

GRAPHIC #1 g00773790

206-6548 CONTROL GP-STEERING & TMSN

S/N: BLE1-UP; BMJ1-UP

PART OF 164-4206 CONTROL GP-STEERING & TMSN

SMCS-3033 **i01590416**

NOTE	REF NO	GRAPHIC REF	PART NUMBER	QTY	PART NAME 1 2 3 4 5 6 (PRODUCT LEVEL)	SEE PAGE
	1	1	**9X-6772**	4	STRAP-CABLE	
Y	2	1	*122-1511*	1	ADJUSTER GP-STEER & TMSN CONT	420
	3	1	**122-8026**	1	PLATE	
	4	1	**123-3283**	1	PLATE AS	
M		1	**6V-9632**	2	NUT-WELD (M6X1 THD)	
	5	1	**123-9176**	1	COVER	
	6	1	**136-4353**	1	FILM	
	7	1	**143-0013**	1	BELLOWS AS	
Y	8	1	*206-3721*	1	CONTROL GP-STEERING & TMSN	214
	9	1	**4P-7581**	3	CLIP	
M	10	1	**5C-9553**	2	BOLT (M6X1X16MM)	
	11	1	**5P-4116**	2	WASHER-HARD (8.8X20.5X2MM THK)	
M	12	1	**8T-4200**	9	BOLT (M8X1.25X16MM)	
	13	1	**8T-4224**	7	WASHER-HARD (8.8X16X2MM THK)	
M	14	1	**9X-2043**	5	SCREW-TRUSS HEAD (M6X1X14MM)	
	15	1	**9X-8256**	2	WASHER (6.6X12X2MM THK)	

M-METRIC PART
Y-SEPARATE ILLUSTRATION

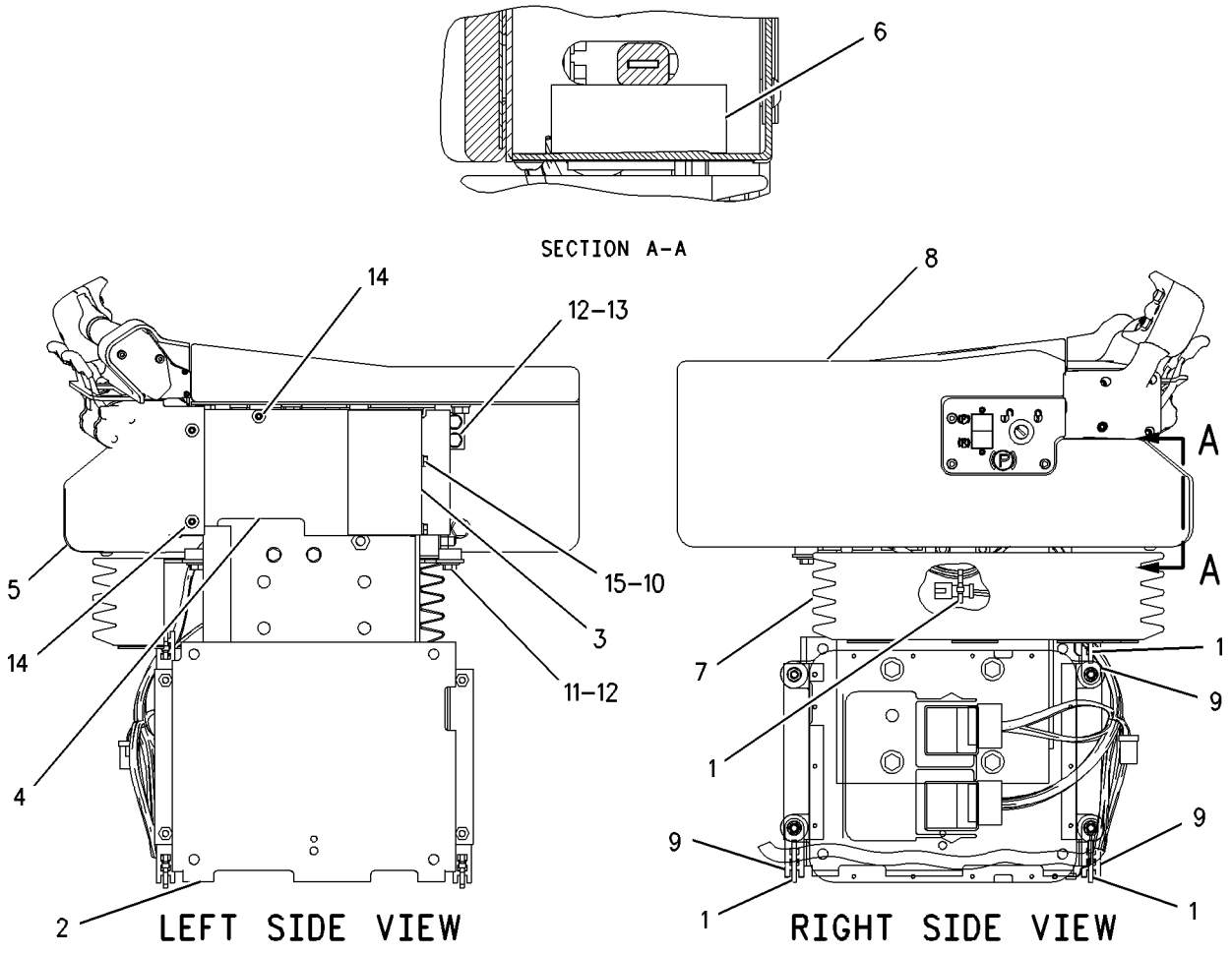

GRAPHIC #1 g00794751

MEMORANDA

163-5641 CONTROL GP-TRANSMISSION HYD

S/N: BSG1-UP; BSR1-UP

PART OF 166-3328, 166-6320 TRANSMISSION AR

SMCS-3073 **i01572130**

NOTE	REF NO	GRAPHIC REF	PART NUMBER	QTY	PART NAME 1 2 3 4 5 6 (PRODUCT LEVEL)	SEE PAGE
	1	1	**5K-5120**	2	STRIP	
	2	1	**104-6729**	1	RETAINER	
	3	1	**104-6730**	1	GASKET	
Y	4	1	**109-4365**	1	VALVE GP-RELIEF	288
	5	1	**110-2836**	2	SLEEVE	
	6	1	**124-5332**	1	ELBOW	
	7	1	**144-7871**	1	HARNESS AS	
Y	8	1	**160-8408**	5	VALVE GP-MODULATING	282
	9	1	**167-6834**	1	HARNESS AS	
	10	1	**031-0218**	2	BOLT-LOCKING	
	11	1	**0S-0509**	2	BOLT (3/8-16X0.75 IN)	
	12	1	**0S-1594**	2	BOLT (3/8-16X1 IN)	
	13	1	**0S-1619**	4	BOLT (3/8-16X3 IN)	
	14	1	**0T-0065**	3	BOLT (3/8-16X3.5 IN)	
	15	1	**1D-4540**	10	BOLT (5/16-18X2.75 IN)	
	16	1	**2H-3932**	2	SEAL-O-RING	
	17	1	**5M-2894**	9	WASHER-HARD (10.2X18.5X2.5MM THK)	
	18	1	**8M-4432**	4	SEAL-O-RING	
	19	1	**9M-1974**	10	WASHER-HARD (8.8X16X2MM THK)	

Y-SEPARATE ILLUSTRATION

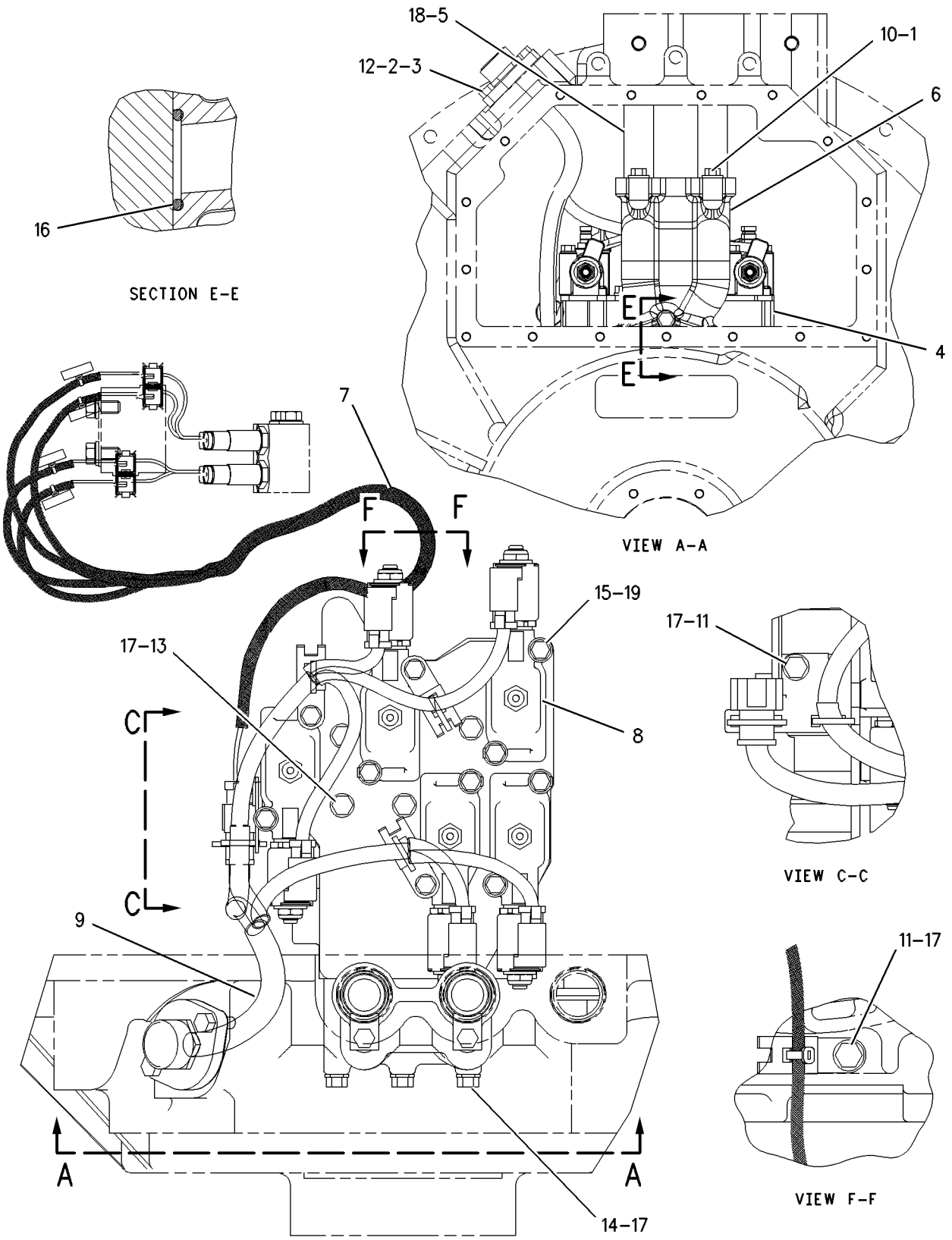

GRAPHIC #1 g00570512

157-0133 COOLER GP-TRANSMISSION OIL

S/N: 4ZF1-UP

PART OF 166-0273, 169-3791, 176-5509, 176-9269 ENGINE AR

ALSO AN ATTACHMENT

SMCS-1375 **i01644360**

NOTE	REF NO	GRAPHIC REF	PART NUMBER	QTY	PART NAME 1 2 3 4 5 6 (PRODUCT LEVEL)	SEE PAGE
	1	1	**2S-0795**	2	GASKET	
	2	1	**6F-7062**	1	WASHER (12.7X19.05X1.83MM THK)	
	3	1	**8M-9307**	1	PLUG-DRAIN	
	4	1	**8S-4304**	1	BONNET-TMSN OIL COOLER	
R	5	1	**127-5537**	1	CORE AS	
	6	1	**167-0160**	1	BRACKET	
	7	1	**180-3907**	1	SEAL-INTEGRAL	
	8	1	**180-8420**	1	BONNET	
	9	1	**0S-1595**	4	BOLT (1/2-13X1.25 IN)	
	10	1	**3J-1907**	1	SEAL-O-RING	
	11	1	**3K-0360**	1	SEAL-O-RING	
	12	1	**5P-8245**	4	WASHER-HARD (13.5X25.5X3MM THK)	
M	13	1	**6V-1819**	1	BOLT (M10X1.50X100MM)	
M	14	1	**6V-3668**	2	BOLT (M12X1.75X30MM)	
	15	1	**7M-8485**	1	SEAL-O-RING	
M	16	1	**8T-5030**	2	BOLT (M10X1.5X120MM)	
M	17	1	**8T-7950**	1	BOLT (M10X1.5X180MM)	
	18	1	**9S-4181**	1	PLUG	
	19	1	**9S-4185**	1	PLUG	
	20	1	**9S-4191**	1	PLUG	
	21	1	**9X-8873**	2	BOLT (1/2-13X2.25 IN)	
	22	1	**9X-8877**	6	BOLT (1/2-13X5.0IN)	
	23	1	**198-3462**	1	DIVERTER	
	24	1	**8T-6761**	1	PLUG-PIPE (1-11-1/2 NPTF THD)	

M-METRIC PART
R-REMFG PART MAY BE AVAILABLE

157-0133 **COOLER GP-TRANSMISSION OIL** ***(contd.)*** **i01644360**

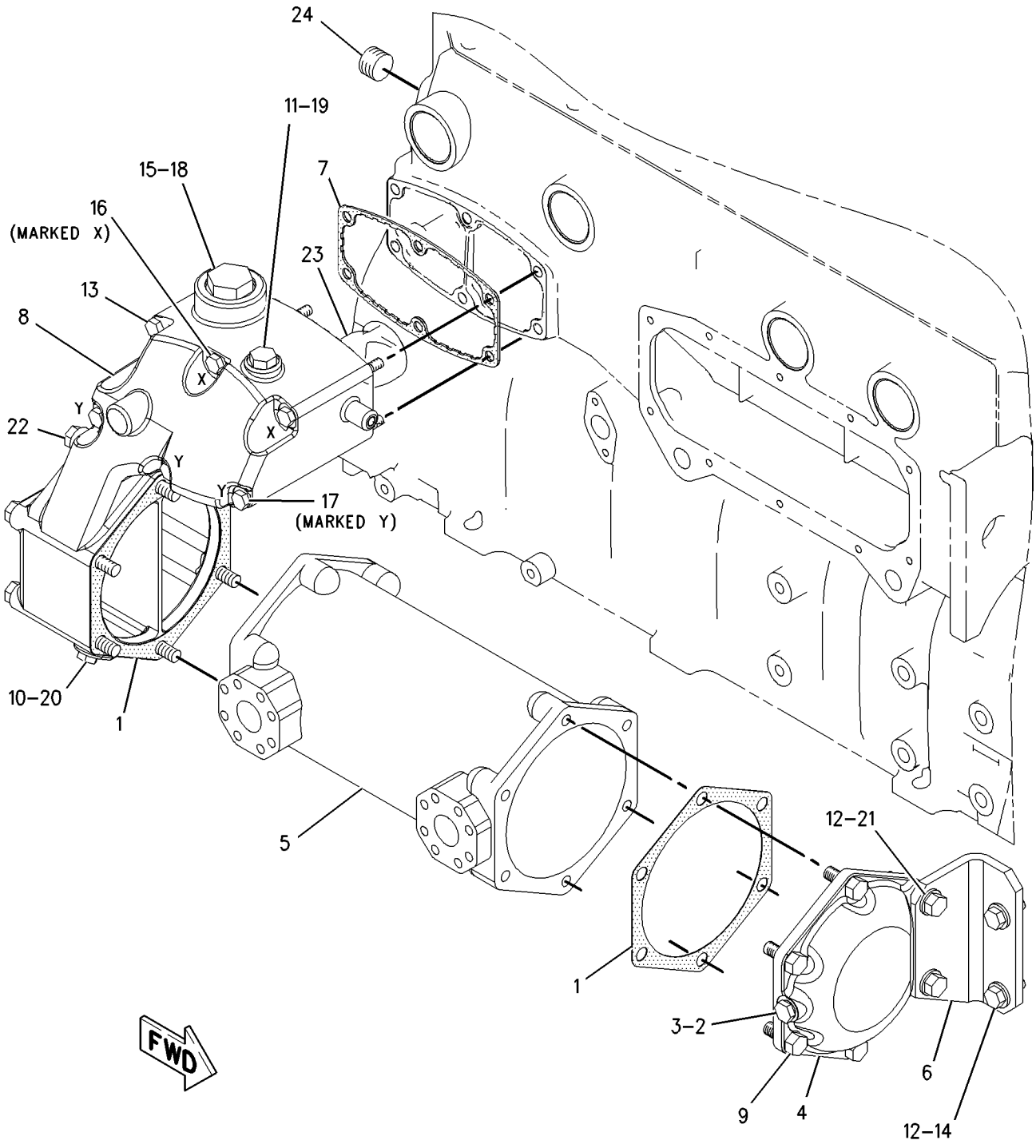

GRAPHIC #1 g00820151

198-1871 COUPLING & GUARD GP

S/N: BLE1-UP; BMJ1-UP

PART OF 164-4792, 164-4794 POWER TRAIN AR

SMCS-3279 **i01590460**

NOTE	REF NO	GRAPHIC REF	PART NUMBER	QTY	PART NAME 1 2 3 4 5 6 (PRODUCT LEVEL)	SEE PAGE
	1	1	**3E-4880**	2	COUPLING AS	
					(EACH INCLUDES)	
		1	**3E-4876**	3	BUSHING AS (THREADED)	
		1	**6Y-2130**	3	BUSHING AS (NON-THREADED)	
	2	1	**198-1883**	1	TUBE AS	
	3	1	**3W-8370**	1	GUARD AS	
		1	**1F-0750**	2	NUT-WELD (3/8-16 THD)	
	4	1	**174-5366**	1	GUARD AS	
		1	**1F-0750**	2	NUT-WELD (3/8-16 THD)	
		1	**7T-1099**	1	LINK	
	5	1	**172-5239**	1	BRACKET AS	
		1	**1F-0750**	4	NUT-WELD (3/8-16 THD)	
	6	1	**5S-7379**	8	BOLT (3/8-16X0.875 IN)	
	7	1	**5S-7383**	6	BOLT (3/8-16X1.75 IN)	
	8	1	**8T-2501**	6	BOLT (3/8-16X2 IN)	
	9	1	**8T-4896**	16	WASHER-HARD (10.2X18.5X2.5MM THK)	
	10	1	**5P-1075**	4	WASHER-HARD (10.2X22.5X3MM THK)	

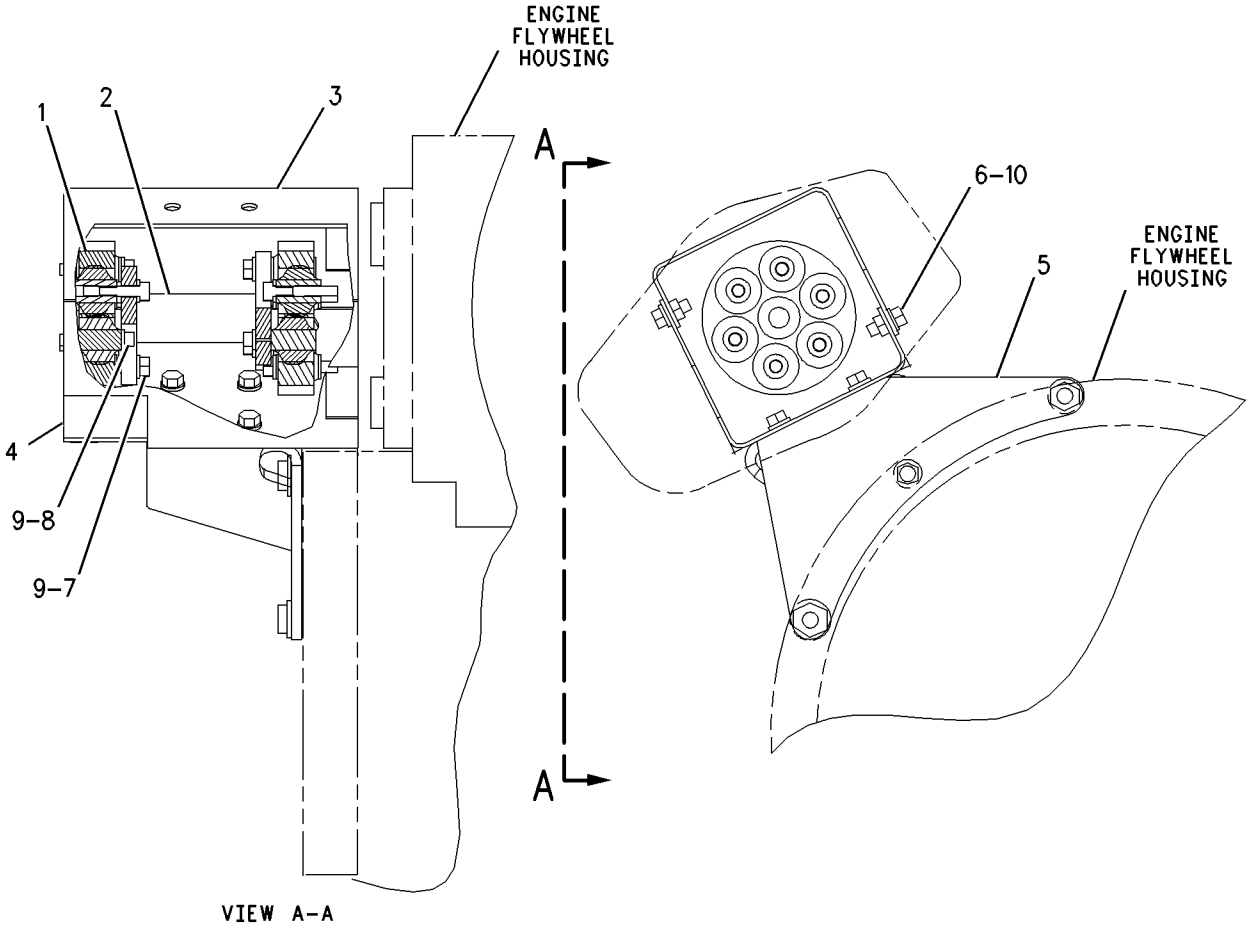

GRAPHIC #1 g00792450

106-4150 DRAIN GP-ECOLOGY

S/N: BLE1-UP; BMJ1-UP
PART OF 110-6287 DRAIN GP-ECOLOGY
AN ATTACHMENT

SMCS-3100 **i01048339**

NOTE	REF NO	GRAPHIC REF	PART NUMBER	QTY	PART NAME 1 2 3 4 5 6 (PRODUCT LEVEL)	SEE PAGE
	1	1	**4N-3808**	1	PIN-SPRING	
	2	1	**5P-9658**	1	SEAL-O-RING	
A	3	1	**2H-3931**	1	SEAL-O-RING (82.14MM ID)	

A-NOT PART OF THIS GROUP

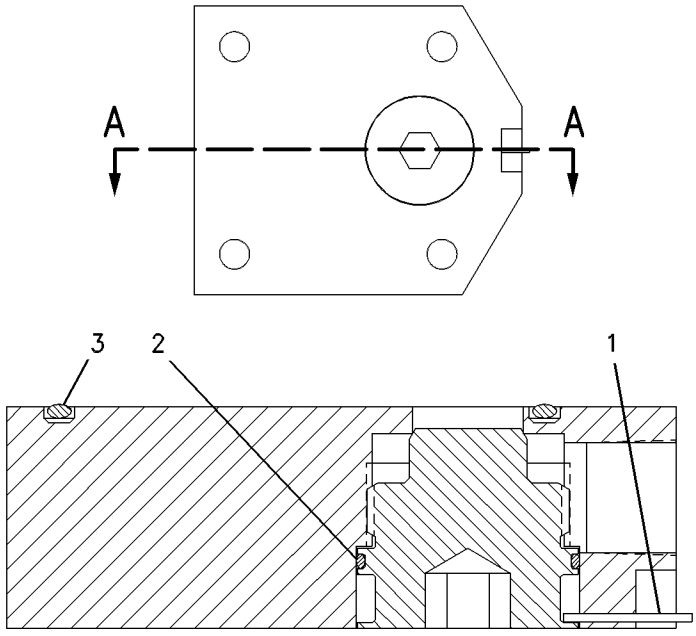

SECTION A-A

GRAPHIC #1 g00543496

110-6287 DRAIN GP-ECOLOGY

S/N: BLE1-UP; BMJ1-UP
AN ATTACHMENT

SMCS-3100 **i01632543**

NOTE	REF NO	GRAPHIC REF	PART NUMBER	QTY	PART NAME 1 2 3 4 5 6 (PRODUCT LEVEL)	SEE PAGE
Y	1	1	**106-4150**	1	DRAIN GP-ECOLOGY	223
	2	1	**2H-3931**	1	SEAL-O-RING	
	3	1	**8H-9818**	1	GASKET	
	4	1	**8T-2501**	4	BOLT (3/8-16X2 IN)	
	5	1	**2B-0858**	2	PLUG-PIPE (1/2-14 NPTF THD)	
	6	1	**8H-9819**	1	ADAPTER-PLUG	
	7	1	**4L-6454**	2	BOLT (3/8-16X1 IN)	
	8	1	**4B-7739**	1	PLUG-DRAIN (7/8-14 THD)	

Y-SEPARATE ILLUSTRATION

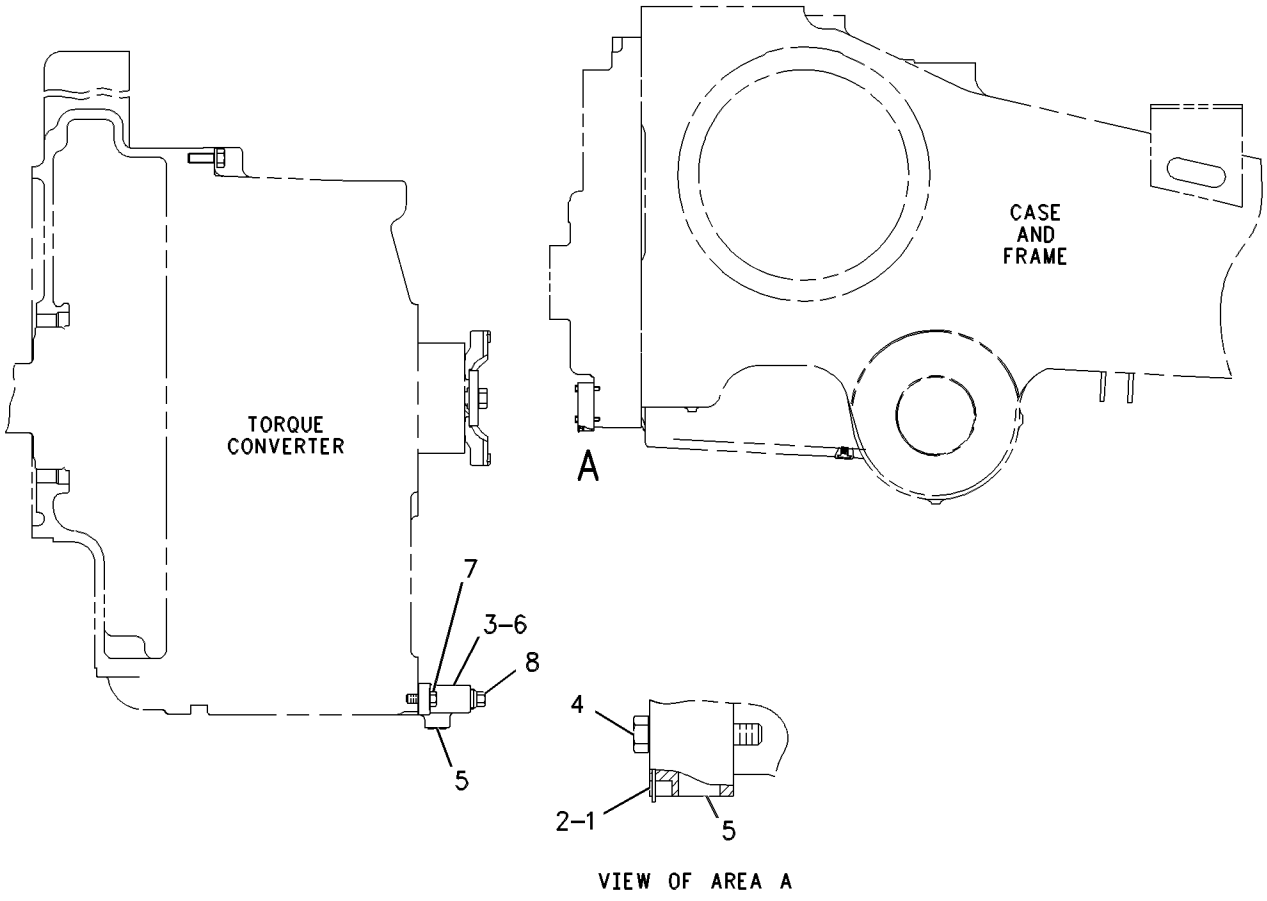

GRAPHIC #1 g00570596

POWER TRAIN

183-7114 FILTER GP-OIL

S/N: BLE1-UP; BMJ1-UP

PART OF 166-7067 LINES GP-POWER TRAIN OIL

SMCS-3004 **i01590450**

NOTE	REF NO	GRAPHIC REF	PART NUMBER	QTY	PART NAME 1 2 3 4 5 6 (PRODUCT LEVEL)	SEE PAGE
	1	1	**7B-3235**	5	BOLT (1/2-13X1.375 IN)	
	2	1	**2K-4472**	1	SEAL-O-RING	
	3	1	**9S-4191**	1	PLUG	
	4	1	**3J-1907**	1	SEAL-O-RING	
	5	1	**133-1276**	1	COVER AS	
		1	**133-8528**	1	STUD-TAPERLOCK	
	6	1	**9S-4182**	1	PLUG (7/16-20 THD)	
	7	1	**3J-7354**	1	SEAL-O-RING	
	8	1	**6D-9157**	1	SEAL-O-RING	
	9	1	**202-9706**	1	HOUSING AS-FILTER	
	10	1	**132-8876**	1	FILTER ELEMENT AS-OIL	
	11	1	**133-1299**	1	RETAINER	
	12	1	**4L-4986**	1	LOCKNUT	
	13	1	**9S-4183**	1	PLUG	
	14	1	**3D-2824**	2	SEAL-O-RING	
	15	1	**133-2199**	1	SPRING	
	16	1	**6T-9222**	1	SPOOL	
	17	1	**9S-8008**	1	PLUG	

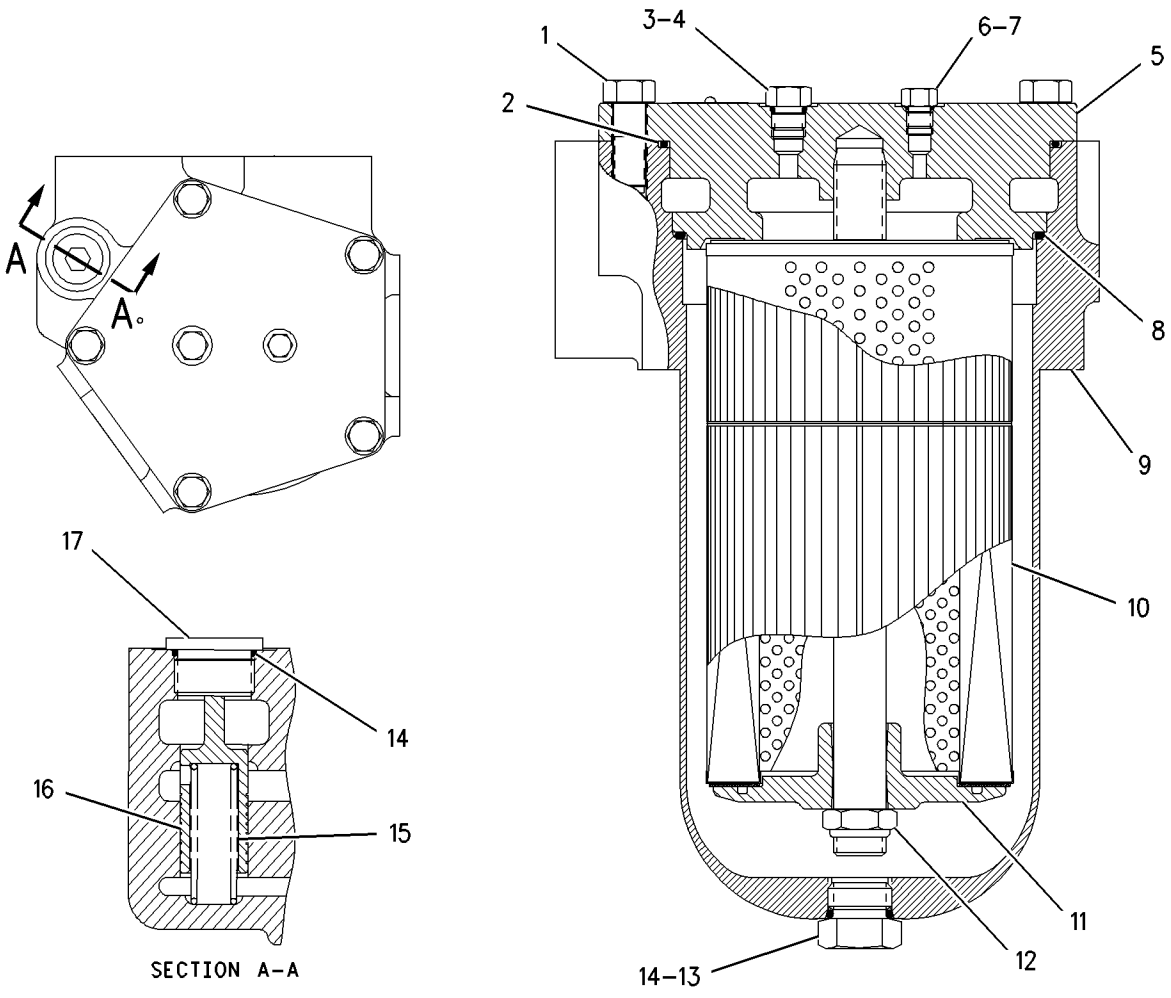

GRAPHIC #1 g00726851

POWER TRAIN

1Q-2275 FINAL DRIVE GP

S/N: BLE1-UP; BMJ1-UP
PART OF 216-3233 WASTE HANDLING AR
AN ATTACHMENT

SMCS-4050 **i01626343**

NOTE	REF NO	GRAPHIC REF	PART NUMBER	QTY	PART NAME 1 2 3 4 5 6 (PRODUCT LEVEL)	SEE PAGE
	1	1,2	**8C-6913**	26	WASHER-HARD (24X41.5X4MM THK)	
	2	1,2	**6V-0329**	1	CONE-BEARING	
	3	1,2	**6V-0330**	1	CUP-BEARING	
	4	1,2	**9G-9181**	1	RETAINER	
	5	1,2	**8G-8844**	1	LOCK RING	
	6	1,2	**9G-8639**	1	GEAR-RING (94 TEETH)	
	7	1,2	**8T-9399**	33	BOLT (3/4-10X2.25 IN)	
	8	1,2	**8T-4994**	33	WASHER-HARD (20X36.5X3.5MM THK)	
	9	1,2	**9G-8638**	3	GEAR-PLANET (40 TEETH)	
	10	1,2	**1B-3978**	6	CUP-BEARING	
	11	1,2	**1B-3980**	6	CONE-BEARING	
	12	1,2	**9G-9183**	3	SHAFT	
	13	1,2	**7X-0346**	3	BOLT (5/8-11X2 IN)	
	14	1,2	**8T-8919**	2	BOLT (1/2-13X1.75 IN)	
	15	1,2	**2P-3696**	3	RETAINER	
	16	1,2	**2B-0947**	10	BOLT (1/2-13X2.25 IN)	
	17	1,2	**4L-6454**	3	BOLT (3/8-16X1 IN)	
	18	1,2	**8T-4896**	3	WASHER-HARD (10.2X18.5X2.5MM THK)	
	19	1,2	**8G-8845**	1	COVER	
	20	1,2	**2R-0098**	1	SEAL-O-RING	
Y	21	1,2	*188-0908*	1	SEGMENT GP-SPROCKET	265
	22	1,2	**1P-9005**	1	SEAL-O-RING	
	23	1,2	**2S-4078**	1	SEAL-O-RING	
	24	1,2	**6V-0439**	1	PLUG-MAGNETIC	
	25	1,2	**9G-9175**	1	CARRIER	
	26	1,2	**9S-4185**	1	PLUG	
	27	1,2	**3K-0360**	1	SEAL-O-RING	
	28	1,2	**9H-3360**	1	SEAL-O-RING	
	29	1,2	**8E-2748**	1	HUB-REACTION	
	30	1,2	**112-3858**	1	SEAL-LIP TYPE	
	31	1,2	**6V-0327**	1	CUP-BEARING	
	32	1,2	**6V-0328**	1	CONE-BEARING	
	33	1,2	**8T-4223**	2	WASHER-HARD (13.5X25.5X3MM THK)	
	34	1,2	**7X-0385**	26	BOLT (7/8-9X3.25 IN)	
	35	1,2	**1Q-2266**	1	HUB AS	
	36	1,2	**6Y-5024**	1	GUARD	
	37	1,2	**6Y-0859**	1	SEAL GP-DUO-CONE	
	38	1,2	**1M-9011**	2	RING-SEALING	
	39	1,2	**1Q-2265**	1	SPINDLE AS	
	40	1,2	**1Q-2252**	1	GUARD-CONE SEAL	

Y-SEPARATE ILLUSTRATION

1Q-2275 FINAL DRIVE GP *(contd.)* **i01626343**

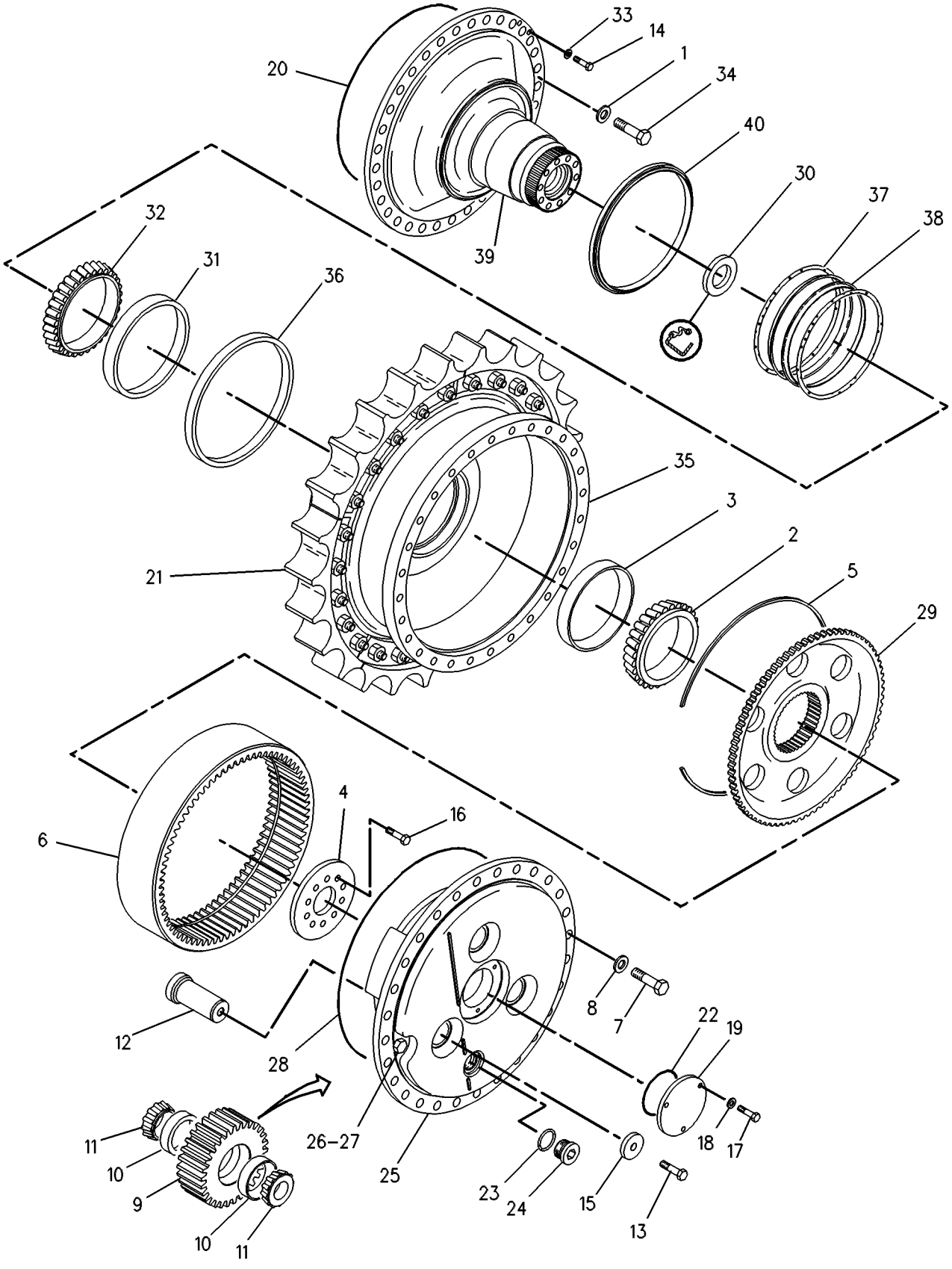

GRAPHIC #1 g00263762

1Q-2275 FINAL DRIVE GP *(contd.)* **i01626343**

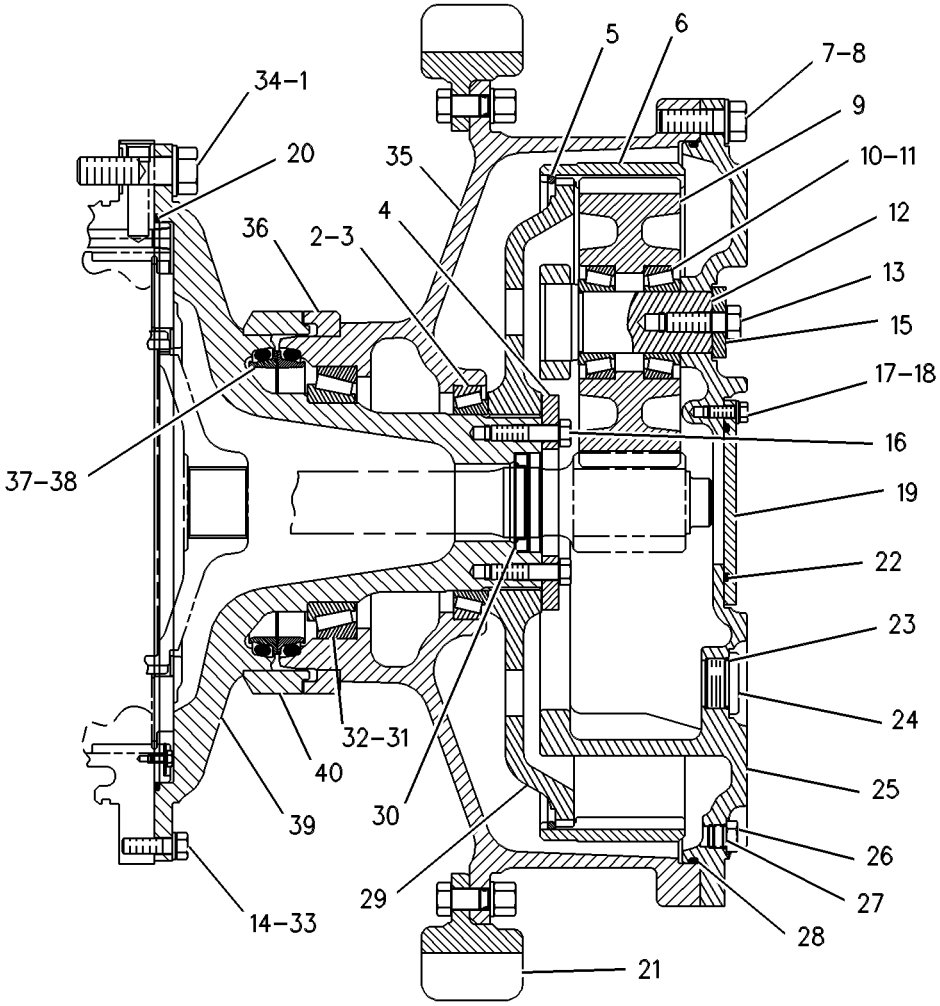

GRAPHIC #2 g00263763

MEMORANDA

POWER TRAIN

7G-5532 FINAL DRIVE GP

S/N: BLE1-UP; BMJ1-UP

PART OF 164-4792, 164-4794 POWER TRAIN AR

SMCS-4050 **i01662501**

NOTE	REF NO	GRAPHIC REF	PART NUMBER	QTY	PART NAME 1 2 3 4 5 6 (PRODUCT LEVEL)	SEE PAGE
	1	1	**9G-9180**	1	HUB-SPROCKET	
	2	1	**6V-0329**	1	CONE-BEARING	
	3	1	**6V-0330**	1	CUP-BEARING	
	4	1	**9G-9181**	1	RETAINER	
	5	1	**8G-8844**	1	LOCK RING	
	6	1	**9G-8639**	1	GEAR-RING (94 TEETH)	
	7	1	**8T-9399**	33	BOLT (3/4-10X2.25 IN)	
	8	1	**8T-4994**	33	WASHER-HARD (20X36.5X3.5MM THK)	
	9	1	**9G-8638**	3	GEAR-PLANET (40 TEETH)	
	10	1	**1B-3978**	6	CUP-BEARING	
	11	1	**1B-3980**	6	CONE-BEARING	
	12	1	**9G-9183**	3	SHAFT	
	13	1	**7X-0346**	3	BOLT (5/8-11X2 IN)	
R	14	1	**9G-9178**	1	SPINDLE	
	15	1	**2P-3696**	3	RETAINER	
	16	1	**2B-0947**	10	BOLT (1/2-13X2.25 IN)	
	17	1	**4L-6454**	3	BOLT (3/8-16X1 IN)	
	18	1	**8T-4896**	3	WASHER-HARD (10.2X18.5X2.5MM THK)	
	19	1	**8G-8845**	1	COVER	
	20	1	**6V-0328**	1	CONE-BEARING	
CY	21	1	*188-0908*	1	SEGMENT GP-SPROCKET	265
	22	1	**1P-9005**	1	SEAL-O-RING	
	23	1	**2S-4078**	1	SEAL-O-RING	
	24	1	**6V-0439**	1	PLUG-MAGNETIC	
	25	1	**9G-9175**	1	CARRIER	
	26	1	**9S-4185**	1	PLUG	
	27	1	**3K-0360**	1	SEAL-O-RING (16.36MM ID)	
	28	1	**9H-3360**	1	SEAL-O-RING	
	29	1	**106-8535**	1	HUB-REACTION	
	30	1	**112-3858**	1	SEAL-LIP TYPE	
	31	1	**6V-0327**	1	CUP-BEARING	
	32	1	**6Y-0859**	1	SEAL GP-DUO-CONE	
		1	**1M-9011**	2	RING-SEALING	
	33	1	**2R-0098**	1	SEAL-O-RING	
	34	1	**1D-4628**	26	BOLT (7/8-9X3.25 IN)	
		1	**8C-6913**	26	WASHER-HARD (24X41.5X4MM THK)	
	35	1	**8T-8919**	2	BOLT (1/2-13X1.75 IN)	
		1	**8T-4223**	2	WASHER-HARD (13.5X25.5X3MM THK)	

C-CHANGE FROM PREVIOUS TYPE
R-REMFG PART MAY BE AVAILABLE
Y-SEPARATE ILLUSTRATION

7G-5532 **FINAL DRIVE GP** ***(contd.)*** **i01662501**

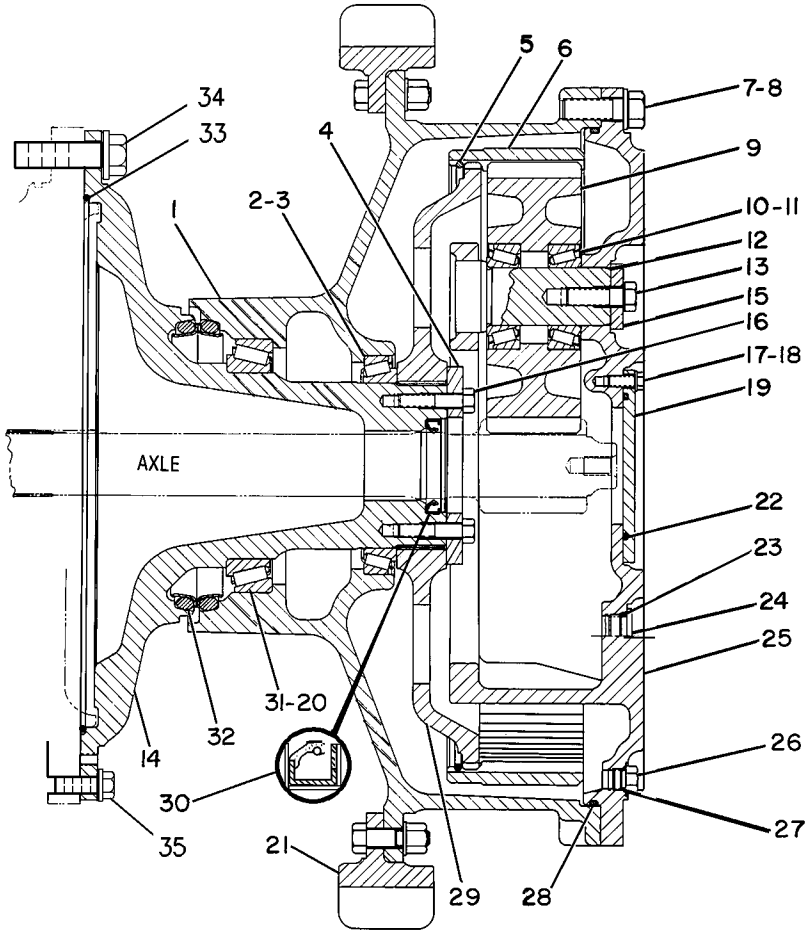

GRAPHIC #1 g00844873

POWER TRAIN

166-3488 GEAR GP-BEVEL & TRANSFER

S/N: BSG1-UP; BSR1-UP

PART OF 166-3328, 166-6320 TRANSMISSION AR

SMCS-3011 **i01590507**

NOTE	REF NO	GRAPHIC REF	PART NUMBER	QTY	PART NAME 1 2 3 4 5 6 (PRODUCT LEVEL)	SEE PAGE
	1	1	**190-2277**	1	CASE AS	
		1	**2D-6642**	1	BALL	
	2	1	**160-3586**	1	GEAR (58 TEETH)	
B	3	1	**9P-1922**	1	SHIM PACK (INCLUDES 14 SHIMS)	
	4	1	**9W-2992**	1	CAGE-BEARING	
	5	1	**3T-6742**	1	RETAINER	
	6	1	**0S-1569**	1	BOLT (5/8-11X4 IN)	
	7	2	**7D-1649**	2	WASHER-HARD (13.5X32X5MM THK)	
	8	2	**6T-3853**	2	SLEEVE	
	9	1	**7H-7628**	1	BEARING-RACE & ROLLER	
	10	1	**0S-1591**	4	BOLT (3/8-16X1.5 IN)	
	11	1	**5M-2894**	4	WASHER-HARD (10.2X18.5X2.5MM THK)	
	12	2	**1A-5822**	2	BOLT (1/2-13X2.75 IN)	
	13	1	**6I-8507**	1	PLATE-RETAINER	
	14	2	**6T-3852**	2	ROLLER	
	15	1	**6I-8511**	1	CAGE-BEARING	
B	16	1	**9P-1921**	1	SHIM PACK (INCLUDES 14 SHIMS)	
	17	1	**8C-3075**	1	SEAL-LIP	
	18	1	**160-3583**	1	GEAR-TRANSFER (35 TEETH)	
	19	1	**8D-1817**	2	CUP-BEARING	
	20	1	**8D-1819**	2	CONE-BEARING	
	21	1	**6S-2829**	2	CONE-BEARING	
	22	1	**6S-2828**	2	CUP-BEARING	
	23	1	**166-8883**	1	PINION-BEVEL (20 TEETH)	
	24	1,2	**7B-3235**	24	BOLT (1/2-13X1.375 IN)	
	25	1,2	**5P-8245**	24	WASHER-HARD (13.5X25.5X3MM THK)	
	26	1	**0L-1169**	12	BOLT (5/8-11X3.75 IN)	
	27	1,2	**5P-8247**	16	WASHER-HARD (17X32X3.5MM THK)	
	28	2	**7T-1475**	1	BRACKET-ROLLER	
	29	2	**9W-1570**	1	CAGE AS-BEARING	
		2	**4B-9880**	1	BALL	
		2	**9W-1569**	1	PLUG-ORIFICE	
	30	2	**9P-1478**	2	SHIM PACK (INCLUDES 14 SHIMS)	
	31	2	**7T-1474**	1	BRACKET-ROLLER	
	32	2	**6T-0364**	1	RING-RETAINING	
	33	2	**9W-8612**	1	SPACER-CONE	
	34	2	**1P-3934**	2	CUP-BEARING	
	35	2	**1P-3935**	2	CONE-BEARING	
	36	2	**7G-6224**	1	SHAFT-BEVEL GEAR	
	37	2	**0S-1897**	12	BOLT (3/4-16X2.25 IN)	
	38	2	**1S-1860**	12	NUT-TRACK (3/4-16 THD)	
	39	2	**166-8884**	1	GEAR-BEVEL (37 TEETH)	
	40	2	**9G-0832**	1	DOWEL	
	41	2	**7T-9946**	1	CAGE-BEARING	
	42	2	**6J-3473**	1	RING-SNAP	
	43	2	**5P-7592**	1	RACE-ROLLER BEARING	
	44	2	**4H-0019**	1	RACE & ROLLER AS	
	45	2	**9P-7072**	1	WASHER	
	46	2	**6V-2404**	1	LOCKWASHER-BEARING	
	47	2	**1L-6957**	1	LOCKNUT-BEARING	
	48	2	**1D-4601**	4	BOLT (5/8-11X8.5 IN)	

B-USE AS REQUIRED

166-3488 **GEAR GP-BEVEL & TRANSFER** *(contd.)* **i01590507**

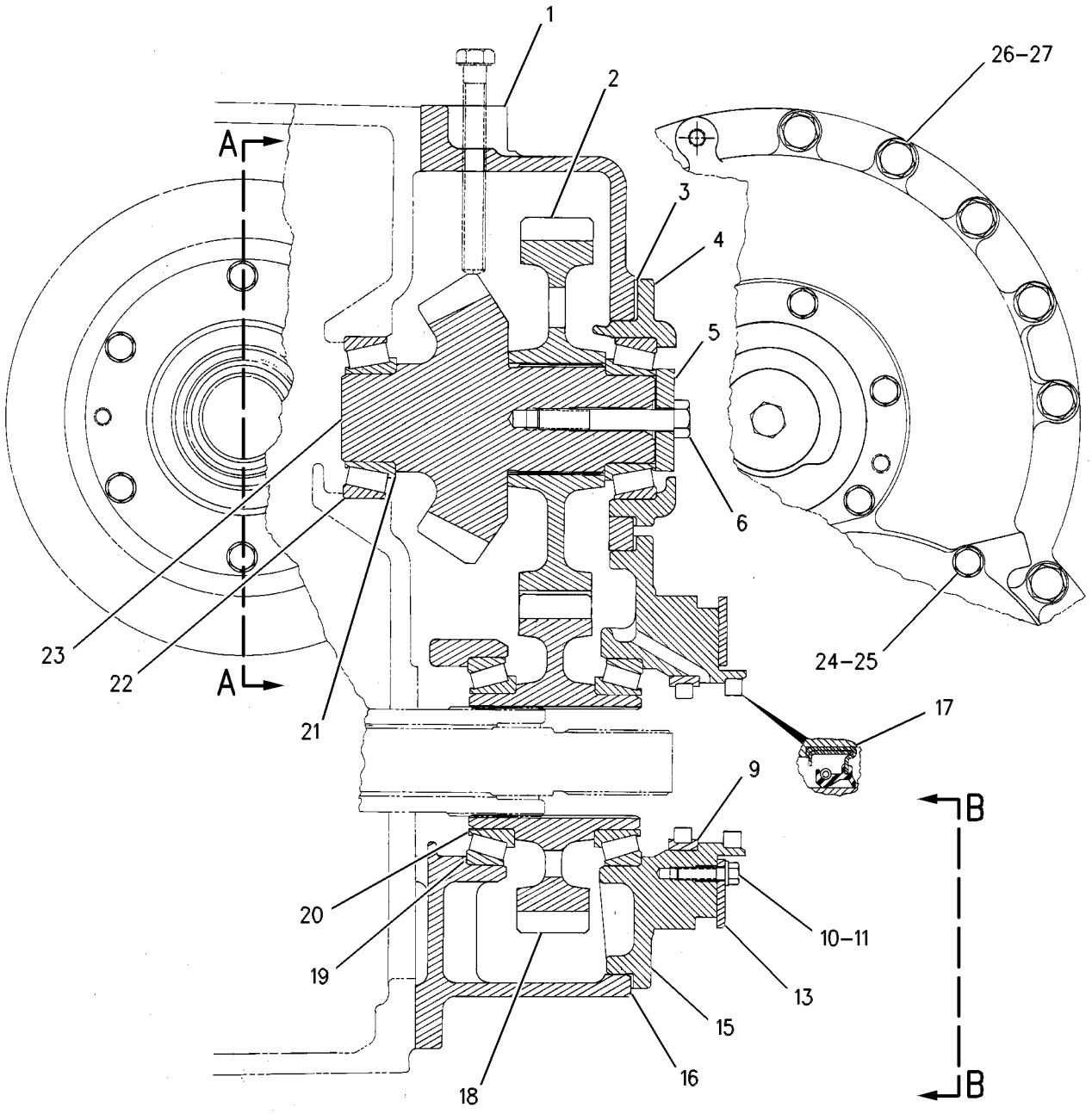

REFER TO ALL ILLUSTRATIONS OF
THIS GROUP FOR AUXILIARY VIEWS

GRAPHIC #1

g00573554

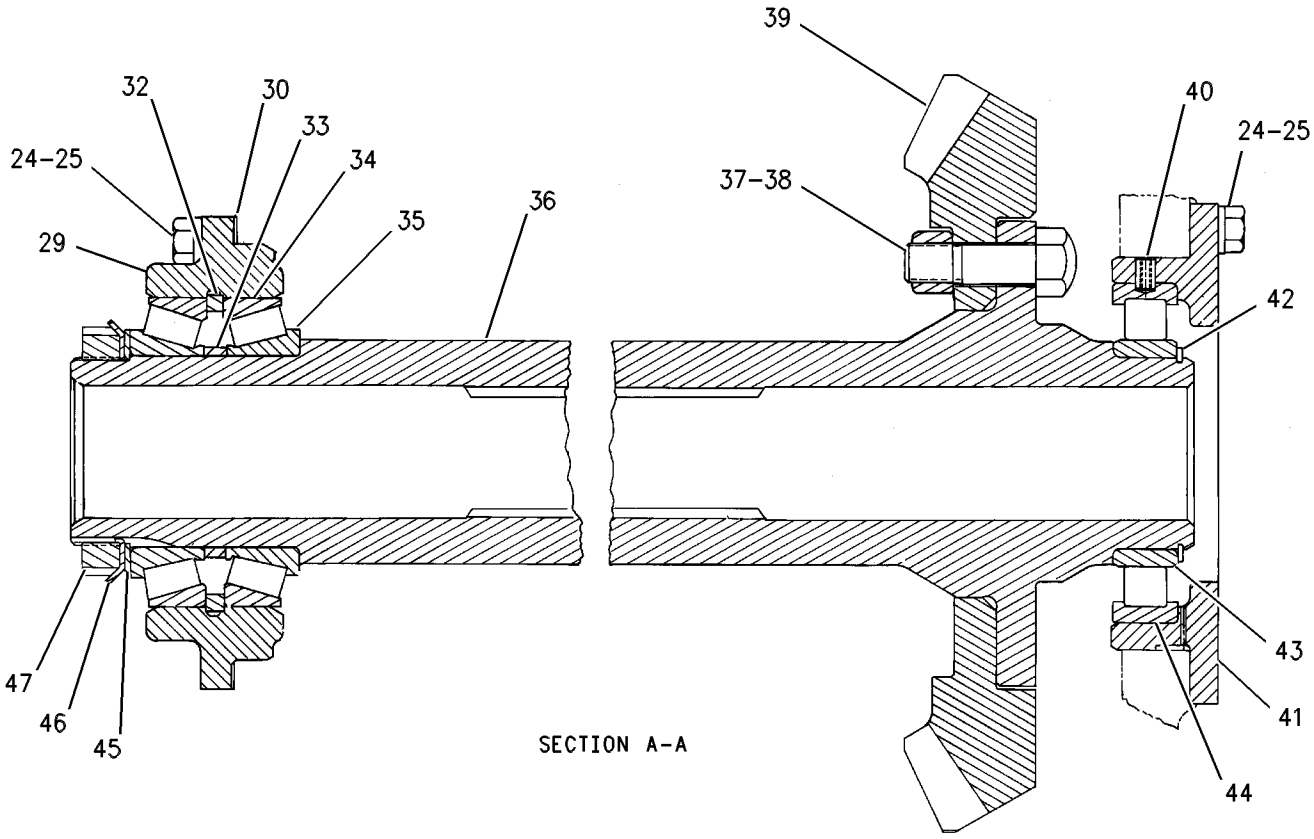

SECTION A-A

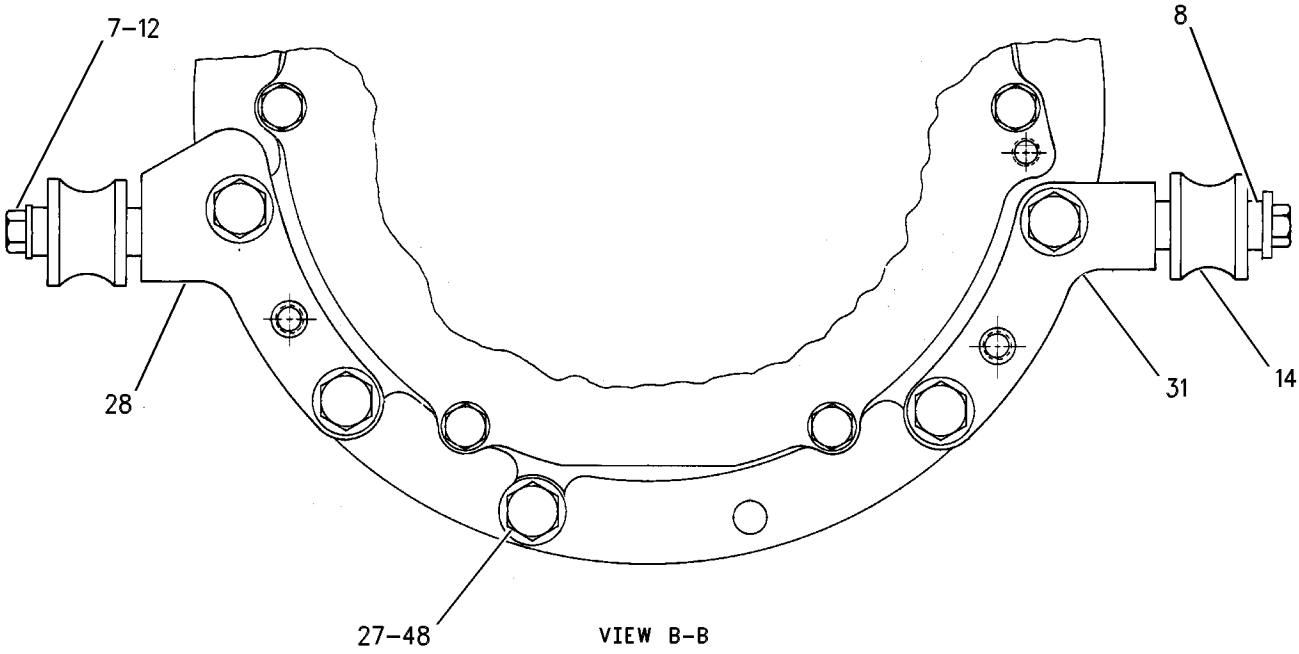

VIEW B-B

GRAPHIC #2 g00573556

3W-1356 GUARD GP-TRANSMISSION

S/N: 3SH1-UP
PART OF 9W-0804 RIPPER AR
AN ATTACHMENT

SMCS-7153 **i01668475**

NOTE	REF NO	GRAPHIC REF	PART NUMBER	QTY	PART NAME 1 2 3 4 5 6 (PRODUCT LEVEL)	SEE PAGE
	1	1	**3W-1357**	1	GUARD AS	
	2	1	**7X-0400**	4	BOLT (1-8X1.50IN)	
	3	1	**8T-5361**	4	WASHER-HARD (28X49X5MM THK)	

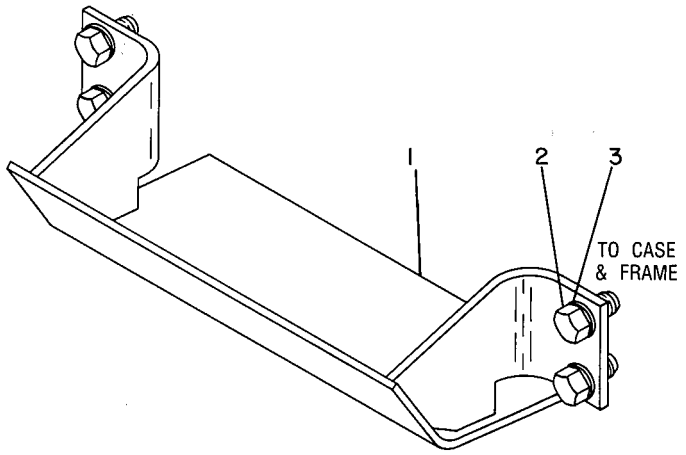

GRAPHIC #1 g00176636

166-7067 LINES GP-POWER TRAIN OIL

S/N: BLE1-UP; BMJ1-UP

PART OF 164-4792, 164-4794 POWER TRAIN AR

SMCS-3016 **i01590448**

NOTE	REF NO	GRAPHIC REF	PART NUMBER	QTY	PART NAME 1 2 3 4 5 6 (PRODUCT LEVEL)	SEE PAGE
	1	2	**2P-2717**	1	HASP-OIL FILLER	
Y	2	1	*3T-5298*	1	SCREEN GP-MAGNETIC	264
	3	1	**3T-5301**	1	TUBE	
	4	1	**3T-5302**	1	FLANGE	
	5	1	**3T-6471**	1	SCREEN AS	
		1	**3T-6469**	1	WASHER	
I	6	1	**3T-7310**	1	HOSE AS	
I	7	1	**3W-2470**	1	HOSE AS	
	8	2	**5D-1026**	2	CLAMP-HOSE	
	9	3	**5P-4247**	1	ELBOW-HOSE	
	10	3	**5P-8502**	2	PADLOCK GP	
					(EACH INCLUDES)	
A		3	**5P-8500**	1	KEY	
A		3	**8Y-6364**	1	SLEEVE	
	11	2	**5S-3632**	1	SLEEVE	
	12	2,3	**6V-0852**	3	CAP-DUST	
	13	1	**6V-1230**	1	ELBOW	
	14	1	**6V-5387**	1	PLATE-ORIFICE	
	15	1	**7V-8532**	1	SPACER	
	16	2	**8C-3447**	1	CAP-DUST	
	17	2	**8D-9558**	1	RIVET	
	18	1	**8E-8589**	1	CLAMP AS	
	19	1	**9M-0164**	2	CLAMP-HOSE	
Y	20	1	**9W-5596**	1	VALVE GP-RELIEF	286
	21	2	**101-3121**	1	SPACER (10.5X25X.25MM THK)	
Y	22	1	*108-4113*	1	PUMP GP-GEAR	261
I	23	1	**110-9709**	1	HOSE AS	
	24	2	**110-9734**	1	VALVE	
	25	1	**132-8876**	1	FILTER ELEMENT AS-OIL	
	26	2	**140-2863**	1	MANIFOLD	
	27	2	**140-2964**	1	RETAINER AS	
Y	28	1	**145-8310**	1	VALVE GP-PRIORITY	284
	29	2	*150-3026*	1	ELBOW AS	
		2	**3K-0360**	1	SEAL-O-RING	
		2	**6V-4292**	1	ELBOW-O-RING	
	30	3	*150-3065*	1	ADAPTER GP	
		3	**3J-1907**	1	SEAL-O-RING	
		3	**6V-0484**	1	ADAPTER-O-RING	
	31	3	**203-3347**	1	TUBE AS	
	32	3	**203-3348**	1	TUBE AS	
I	33	1	**174-6127**	1	HOSE AS	
	34	1	**174-6128**	1	TUBE AS	
I	35	2	**174-6129**	1	HOSE AS	
	36	2	**174-6131**	1	PLUNGER AS	
		2	**8Y-0790**	1	CLIP	
	37	1,2,3	**5S-7382**	12	BOLT (3/8-16X1.375 IN)	
	38	3	**206-0053**	1	TUBE AS	
	39	1	**175-2868**	1	TUBE AS	
I	40	1	**206-5937**	1	HOSE AS	
I	41	1	**206-5939**	1	HOSE AS	
Y	42	1	*183-7114*	1	FILTER GP-OIL (TRANSMISSION)	225
	43	2	**184-9807**	1	BRACKET	
	44	2	**185-6684**	1	BREATHER AS	
	45	2	**191-5517**	1	CAP AS	
	46	1	**206-5940**	1	BRACKET	
	47	1	*148-8306*	1	ADAPTER AS	

166-7067 LINES GP-POWER TRAIN OIL *(contd.)* i01590448

NOTE	REF NO	GRAPHIC REF	PART NUMBER	QTY	PART NAME 1 2 3 4 5 6 (PRODUCT LEVEL)	SEE PAGE
		1	**5P-5777**	1	ADAPTER-O-RING	
		1	**7M-8485**	1	SEAL-O-RING	
	48	1	*148-8336*	1	CONNECTOR GP	
		1	**3J-1907**	1	SEAL-O-RING	
		1	**6V-8397**	1	SEAL-O-RING	
		1	**6V-8636**	1	CONNECTOR	
	49	3	*148-8356*	1	ELBOW GP	
		3	**2S-4078**	1	SEAL-O-RING	
		3	**6V-8400**	1	SEAL-O-RING	
		3	**6V-9009**	1	ELBOW	
	50	1	*148-8374*	1	ELBOW GP	
		1	**3K-0360**	1	SEAL-O-RING	
		1	**6V-8397**	1	SEAL-O-RING	
		1	**6V-8723**	1	ELBOW	
	51	1	**1H-5728**	1	SEAL-O-RING	
	52	1,3	**1P-4577**	6	FLANGE-HALF	
	53	1,2	**1P-4578**	6	FLANGE-HALF	
	54	2	**2A-3211**	3	WASHER (5.5X12.3X.8MM THK)	
	55	2	**2K-4973**	2	LOCKNUT (3/8-16 THD)	
	56	1	**2K-8257**	1	SEAL-O-RING	
	57	2,3	**2S-4078**	2	SEAL-O-RING	
	58	2,3	**3J-1907**	3	SEAL-O-RING	
	59	1	**206-4874**	1	TUBE AS	
	60	2	**3J-7354**	1	SEAL-O-RING	
	61	1	**3K-0360**	1	SEAL-O-RING	
	62	1	**4L-6454**	3	BOLT (3/8-16X1 IN)	
	63	1	**4L-8149**	1	GASKET	
	64	2	**4L-9337**	2	BOLT (3/8-16X1.5 IN)	
	65	3	**4M-5281**	1	BOLT (1/4-20X.750 IN)	
	66	1	**4M-6425**	2	BOLT (5/16-18X1 IN)	
	67	2	**5K-9090**	1	SEAL-O-RING	
	68	1	**5M-3062**	2	BOLT (3/8-16X0.75 IN)	
	69	1,2,3	**5P-1075**	10	WASHER-HARD (10.2X22.5X3MM THK)	
	70	2	**5P-2228**	1	BOLT (1/2-13X1 IN)	
	71	2,3	**5P-7085**	3	SEAL-RECTANGULAR	
	72	1	**5P-7464**	1	CLIP (SLOT)	
	73	1	**5P-7465**	1	CLIP (TAB)	
M	74	3	**8T-4186**	1	BOLT (M10X1.5X40MM)	
	75	1	**6L-1649**	2	SEAL-O-RING	
	76	1	**6L-5359**	1	SEAL-O-RING	
	77	2,3	**6V-3965**	3	FITTING AS	
	78	1	**6V-5185**	1	CLIP (SLOT)	
	79	1	**6V-5186**	1	CLIP (TAB)	
	80	1,2	**6V-8801**	4	NUT (3/8-16 THD)	
	81	2	*155-2026*	1	UNION AS	
		2	**5K-9090**	2	SEAL-O-RING	
		2	**6V-8998**	1	UNION-FACE SEAL	
	82	2	**6V-9172**	1	NUT (1 7/16-12 THD)	
	83	2	**7G-3832**	1	GROMMET	
	84	2	**7G-3833**	1	CLIP (TAB)	
	85	2	**7G-3834**	1	CLIP (SLOT)	
	86	2	**7S-8920**	1	CLIP (SLOT)	
	87	2	**7S-8921**	1	CLIP (TAB)	
	88	3	**7X-0308**	4	BOLT (7/16-14X1.375 IN)	
	89	1	**7X-0313**	4	BOLT (7/16-14X2.75IN)	
	90	1	**1V-7753**	1	SPACER (.546X.841X1.75IN THK)	
	91	1	**7X-0772**	2	WASHER-HARD (10.2X25.5X2.5MM THK)	
	92	2	**8C-3101**	1	SEAL-O-RING	
	93	2	**8C-3446**	1	VALVE GP-FLUID SAMPLING	

166-7067 **LINES GP-POWER TRAIN OIL** ***(contd.)*** **i01590448**

NOTE	REF NO	GRAPHIC REF	PART NUMBER	QTY	PART NAME 1 2 3 4 5 6 (PRODUCT LEVEL)	SEE PAGE
	94	1	**8C-4436**	2	BOLT (1/2-13X1.375 IN)	
	95	2,3	**8C-6877**	12	BOLT (7/16-14X1.75 IN)	
	96	2	**8E-8593**	1	RING-CLAMP	
	97	1	**8M-4447**	1	SEAL-O-RING	
	98	1,2	**8M-4986**	12	SEAL-O-RING	
	99	1	**8M-4987**	4	SEAL-O-RING	
	100	1	**8M-5254**	4	SEAL-O-RING	
	101	1	**8M-8157**	1	SEAL-O-RING	
	102	2	**8M-8514**	2	SEAL-O-RING	
	103	2	**8S-0023**	1	CLIP (SLOT)	
	104	2	**8S-0024**	1	CLIP (TAB)	
	105	2	**9B-7237**	2	BOLT (3/8-16X1.25 IN)	
	106	3	**1P-7009**	1	CLIP	
	107	3	**8T-4205**	1	WASHER-HARD (7.2X14.5X2MM THK)	
	108	1,2	**8T-4223**	4	WASHER-HARD (13.5X25.5X3MM THK)	
	109	1	**8T-4224**	2	WASHER-HARD (8.8X16X2MM THK)	
	110	1,2,3	**8T-4896**	18	WASHER-HARD (10.2X18.5X2.5MM THK)	
	111	1,2,3	**8T-5360**	24	WASHER (12X22.5X2.5MM THK)	
	112	1	**8T-7008**	3	BOLT (3/8-16X3 IN)	
	113	2	**8T-8916**	4	BOLT (7/16-14X1.5 IN)	
	114	1	**8T-9389**	1	BOLT (1/2-13X2.75 IN)	
	115	2	**8T-9377**	1	BOLT (3/8-16X2.25 IN)	
	116	3	**9D-6196**	1	CLIP (SLOT)	
	117	3	**9D-6197**	1	CLIP (TAB)	
	118	3	**9V-5382**	1	GROMMET	
E	119	1	**5P-1424**		HOSE (43CM)	
E	120	1	**5P-1291**		HOSE (57CM)	

A-NOT PART OF THIS GROUP
E-ORDER BY THE CENTIMETER
I-SEE HOSE FABRICATION GUIDE
M-METRIC PART
Y-SEPARATE ILLUSTRATION

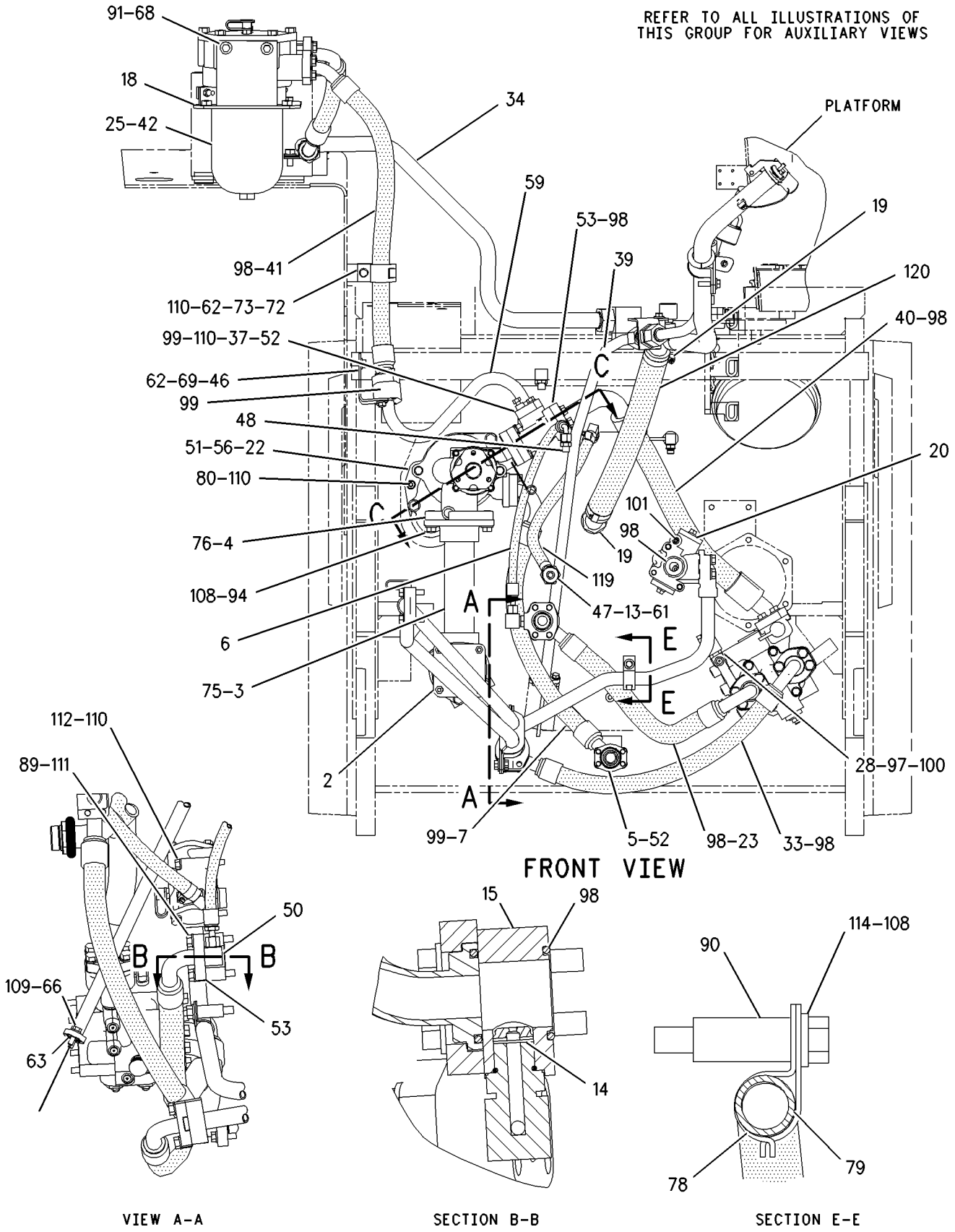

GRAPHIC #1 g00847503

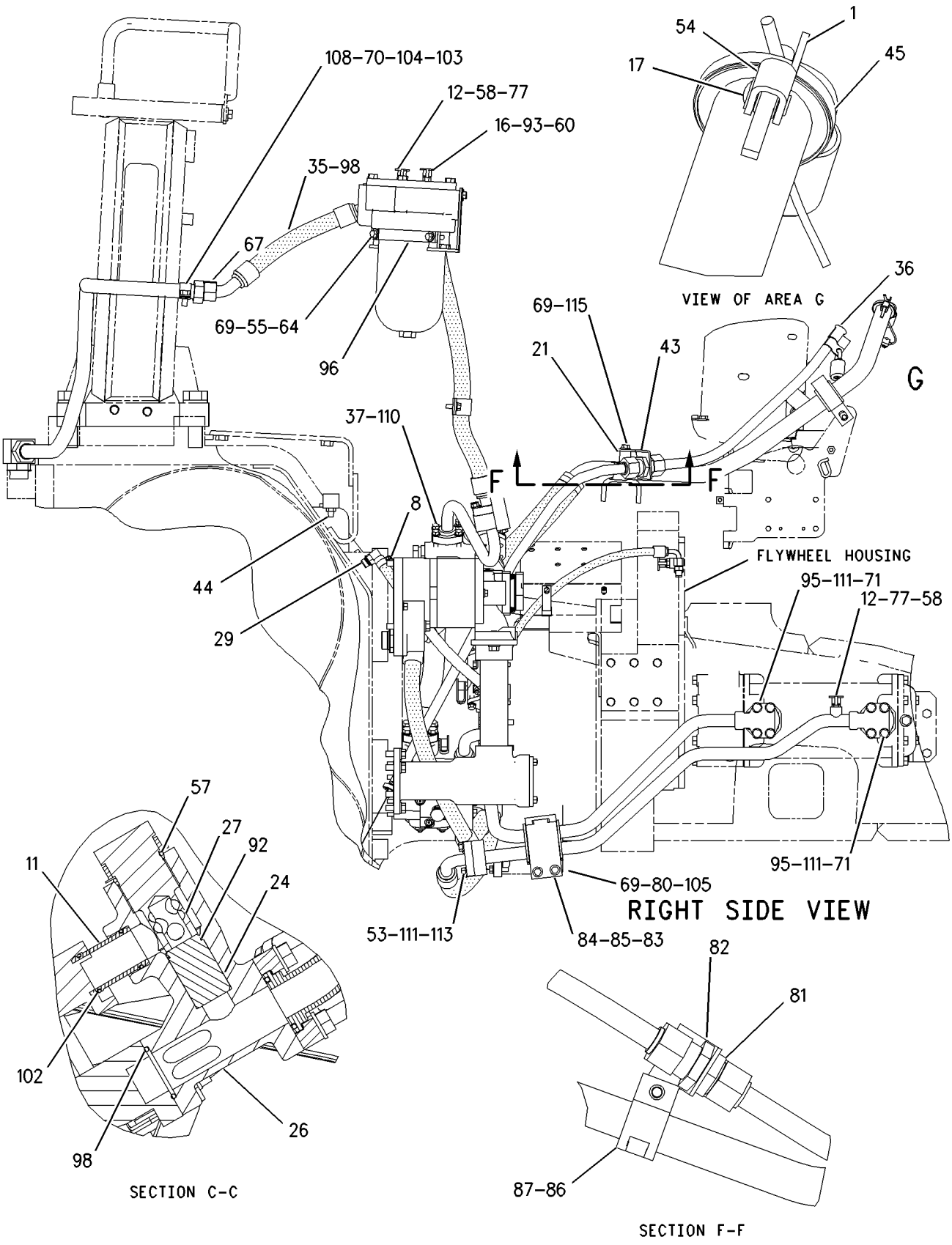

GRAPHIC #2

g00847504

REFER TO ALL ILLUSTRATIONS OF
THIS GROUP FOR AUXILIARY VIEWS

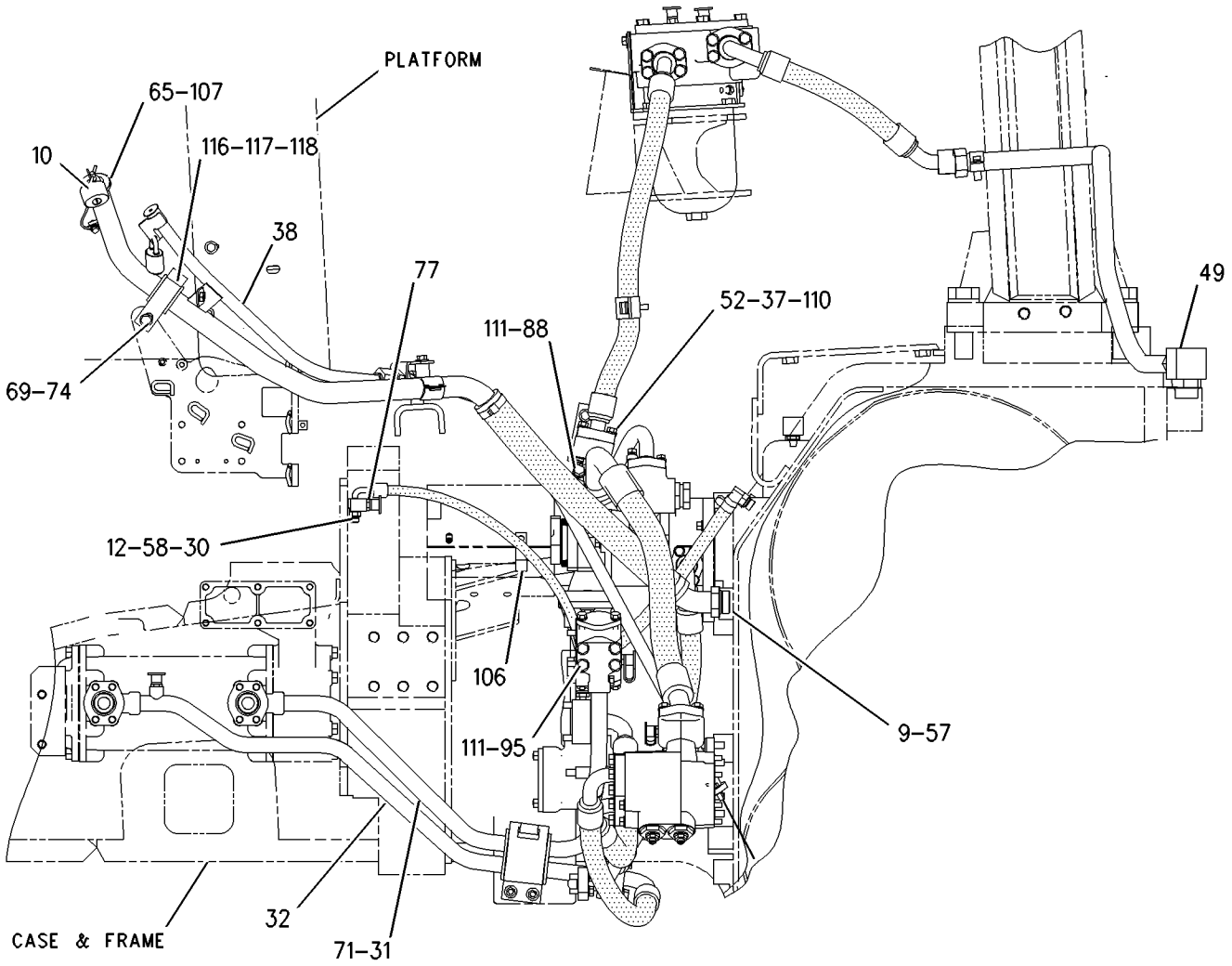

LEFT SIDE VIEW

GRAPHIC #3 g00847506

164-6093 MANIFOLD & VALVE GP

S/N: BLE1-UP; BMJ1-UP

PART OF 201-7272 VALVE GP-CONTROL

SMCS-4320 **i01496903**

NOTE	REF NO	GRAPHIC REF	PART NUMBER	QTY	PART NAME 1 2 3 4 5 6 (PRODUCT LEVEL)	SEE PAGE
	1	1	**137-8794**	2	SPOOL AS	
					(EACH INCLUDES)	
		1	**3D-7943**	1	RING-RETAINING	
		1	**5L-4758**	1	SEAL-O-RING	
		1	**137-8793**	1	SPRING	
	2	1	**111-3199**	1	MANIFOLD	
Y	3	1	**174-4909**	4	VALVE GP-SOLENOID	290
	4	1	**1P-1744**	2	DOWEL	

Y-SEPARATE ILLUSTRATION

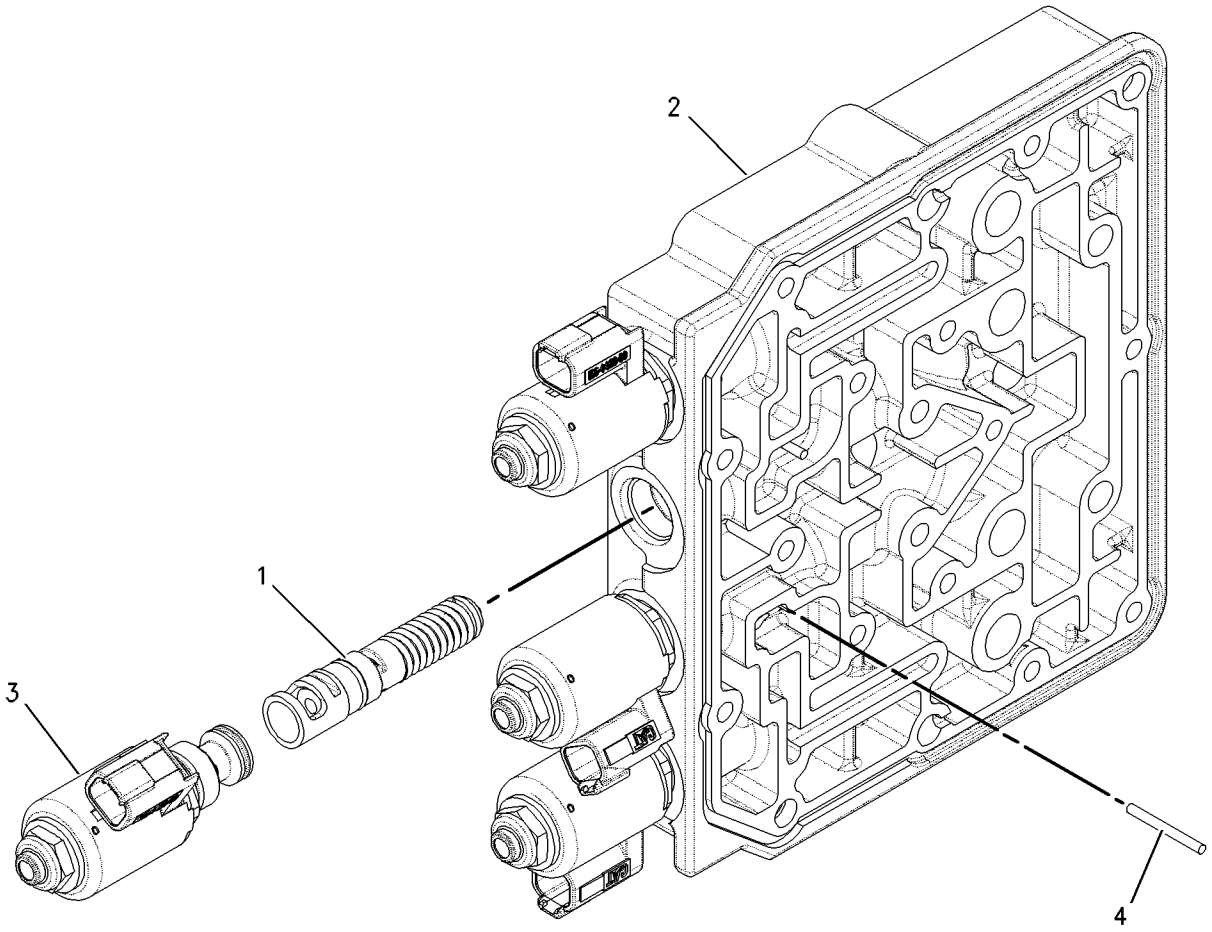

GRAPHIC #1 g00782989

175-4972 MANIFOLD & VALVE GP

S/N: BLE1-UP; BMJ1-UP

PART OF 201-7272 VALVE GP-CONTROL

SMCS-4320 **i01497202**

NOTE	REF NO	GRAPHIC REF	PART NUMBER	QTY	PART NAME 1 2 3 4 5 6 (PRODUCT LEVEL)	SEE PAGE
	1	1	**132-9455**	1	MANIFOLD	
Y	2	1	**172-2392**	2	VALVE GP-SOLENOID	289

Y-SEPARATE ILLUSTRATION

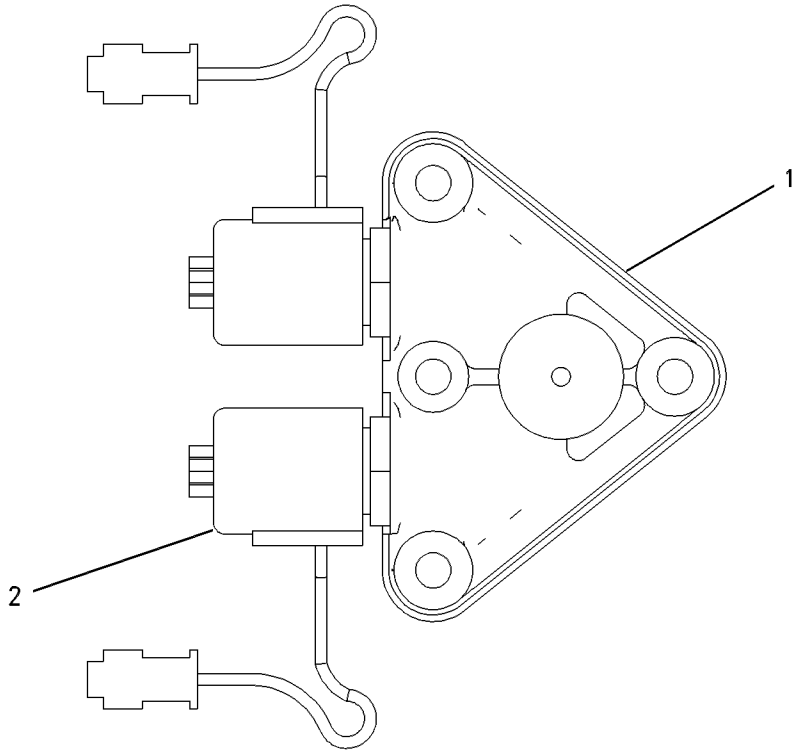

GRAPHIC #1 g00653425

8G-3087 MOUNTING GP-TRANSMISSION

S/N: BLE1-UP; BMJ1-UP
POWER SHIFT
PART OF 164-4792, 164-4794 POWER TRAIN AR

SMCS-3030 **i01572176**

NOTE	REF NO	GRAPHIC REF	PART NUMBER	QTY	PART NAME 1 2 3 4 5 6 (PRODUCT LEVEL)	SEE PAGE
	1	1	**8G-9880**	2	TUBE AS	
	2	1	**2K-4973**	4	LOCKNUT (3/8-16 THD)	
	3	1	**7X-0772**	8	WASHER-HARD (10.2X25.5X2.5MM THK)	
	4	1	**5S-7382**	4	BOLT (3/8-16X1.375 IN)	
	5	1	**8M-4390**	1	SEAL-O-RING	
	6	1	**9M-7002**	3	SEAL-O-RING	
	7	1	**2D-6506**	1	SEAL-O-RING	
	8	1	**1M-9011**	1	RING-SEALING	
	9	1	**8T-4223**	22	WASHER-HARD (13.5X25.5X3MM THK)	
	10	1	**7X-0332**	3	BOLT (1/2-13X4.5 IN)	
	11	1	**7X-0325**	19	BOLT (1/2-13X2.5 IN)	

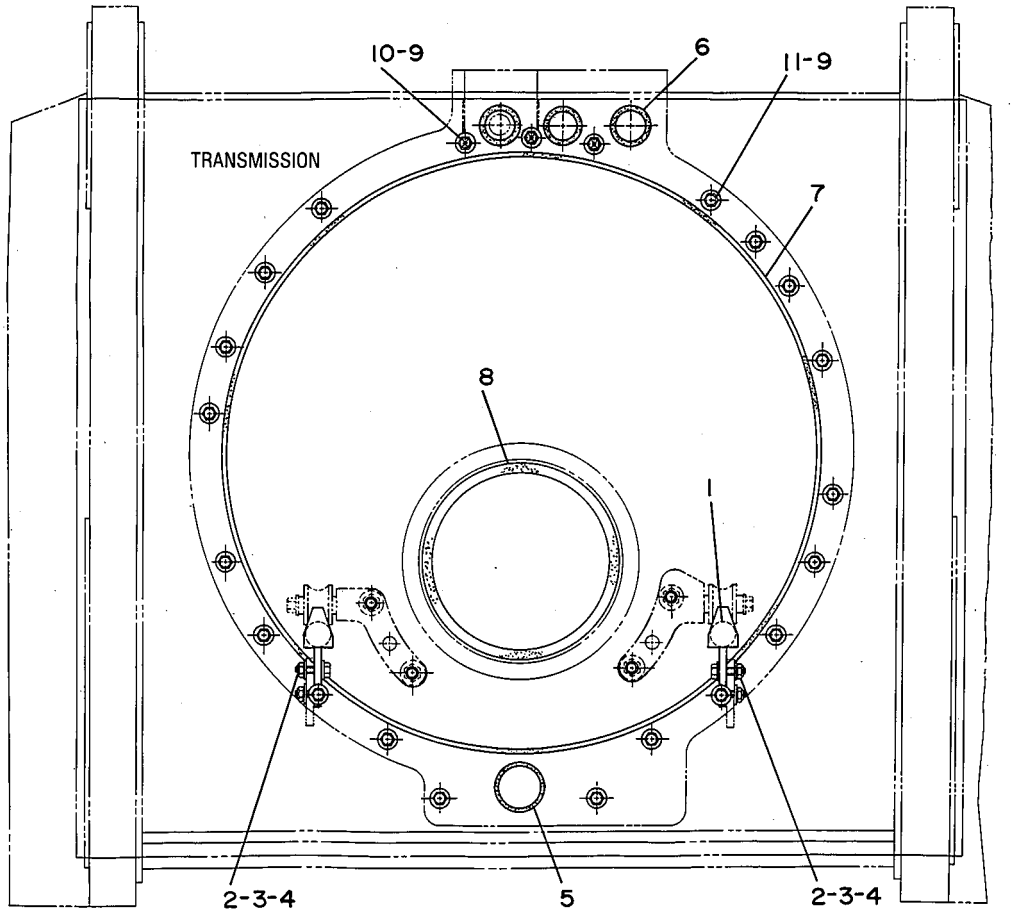

GRAPHIC #1 g00188865

MEMORANDA

158-8079 PEDAL GP-GOVERNOR & BRAKE

S/N: BLE1-UP; BMJ1-UP

PART OF 172-5262 CONTROL & MTG GP-PEDAL

SMCS-4122 **i01590456**

NOTE	REF NO	GRAPHIC REF	PART NUMBER	QTY	PART NAME 1 2 3 4 5 6 (PRODUCT LEVEL)	SEE PAGE
	1	1	**1B-8706**	1	KEY-WOODRUFF	
	2	1	**1B-8714**	1	KEY-WOODRUFF	
	3	1	**7P-4190**	4	BEARING-ROLLER	
	4	1	**9M-5731**	2	RIVET-POP	
M	5	1	**9X-6615**	4	BOLT (M5X.8X30MM)	
	6	1	**194-7034**	1	SPRING	
M	7	1	**105-3482**	6	BOLT-HEX SOCKET (M8X1.25X16MM)	
	8	1	**110-8379**	1	PEDAL	
	9	1	**111-3780**	1	SPRING	
	10	1	**111-3781**	2	BOLT-ANCHOR	
	11	1	**132-7077**	1	SWITCH AS-LIMIT	
		1	**6V-8376**	3	SCREW-MACHINE (8-32X0.25 IN)	
		1	**9B-7233**	3	LOCKWASHER	
	12	1	**145-3405**	2	SPACER	
Y	13	1	**147-1680**	1	SENSOR GP-POSITION	174
	14	1	**160-1431**	1	SHAFT	
	15	1	**160-1432**	1	SHAFT	
	16	1	**160-1433**	1	LEVER	
	17	1	**160-1434**	1	LEVER	
	18	1	**160-1435**	1	HOUSING	
Y	19	1	**160-2443**	1	SENSOR GP-POSITION	175
	20	1	**164-9541**	1	HARNESS AS	
	21	1	**165-6779**	1	GASKET	
	22	1	**165-9100**	1	LINK	
	23	1	**215-9801**	1	BRACKET AS	
	24	1	**165-9102**	1	PLATE	
	25	1	**165-9103**	1	SPRING	
	26	1	**165-9104**	1	SPACER	
	27	1	**184-8060**	1	PEDAL	
	28	1	**186-4998**	1	PAD AS-FOOT	
	29	1	**096-5962**	2	WASHER-HARD (3.4X7X0.8MM THK)	
M	30	1	**106-5472**	1	SETSCREW-HEX SOCKET (M5X0.8X20MM)	
	31	1	**111-9251**	4	WASHER-HARD (20X35X1.6MM THK)	
	32	1	**1B-2578**	1	NUT (3/8-16 THD)	
	33	1	**2J-6356**	4	RING-RETAINING	
	34	1	**4B-3609**	1	SETSCREW-SQUARE HEAD	
	35	1	**6V-0894**	2	SEAL-O-RING	
M	36	1	**6V-7357**	1	BOLT (M6X1.0X25MM)	
M	37	1	**6V-7744**	2	LOCKNUT (M10X1.5 THD)	
	38	1	**7X-7729**	2	WASHER (11X25X3MM THK)	
	39	1	**8F-7702**	2	SEAL-LIP	
	40	1	**8T-4121**	4	WASHER-HARD (11X21X2.5MM THK)	
M	41	1	**8T-4136**	2	BOLT (M10X1.5X25MM)	
M	42	1	**8T-4186**	2	BOLT (M10X1.5X40MM)	
M	43	1	**8T-4195**	2	BOLT (M10X1.5X30MM)	
	44	1	**8T-4205**	2	WASHER-HARD (7.2X14.5X2MM THK)	
M	45	1	**8T-4970**	2	BOLT (M6X1X14MM)	
	46	1	**9X-6281**	2	SCREW-MACHINE (4-40X1 IN)	
	47	1	**9X-8256**	2	WASHER (6.6X12X2MM THK)	
	48	1	**205-7331**	1	SPACER (20.32X28.016X.41MM THK)	

M-METRIC PART
Y-SEPARATE ILLUSTRATION

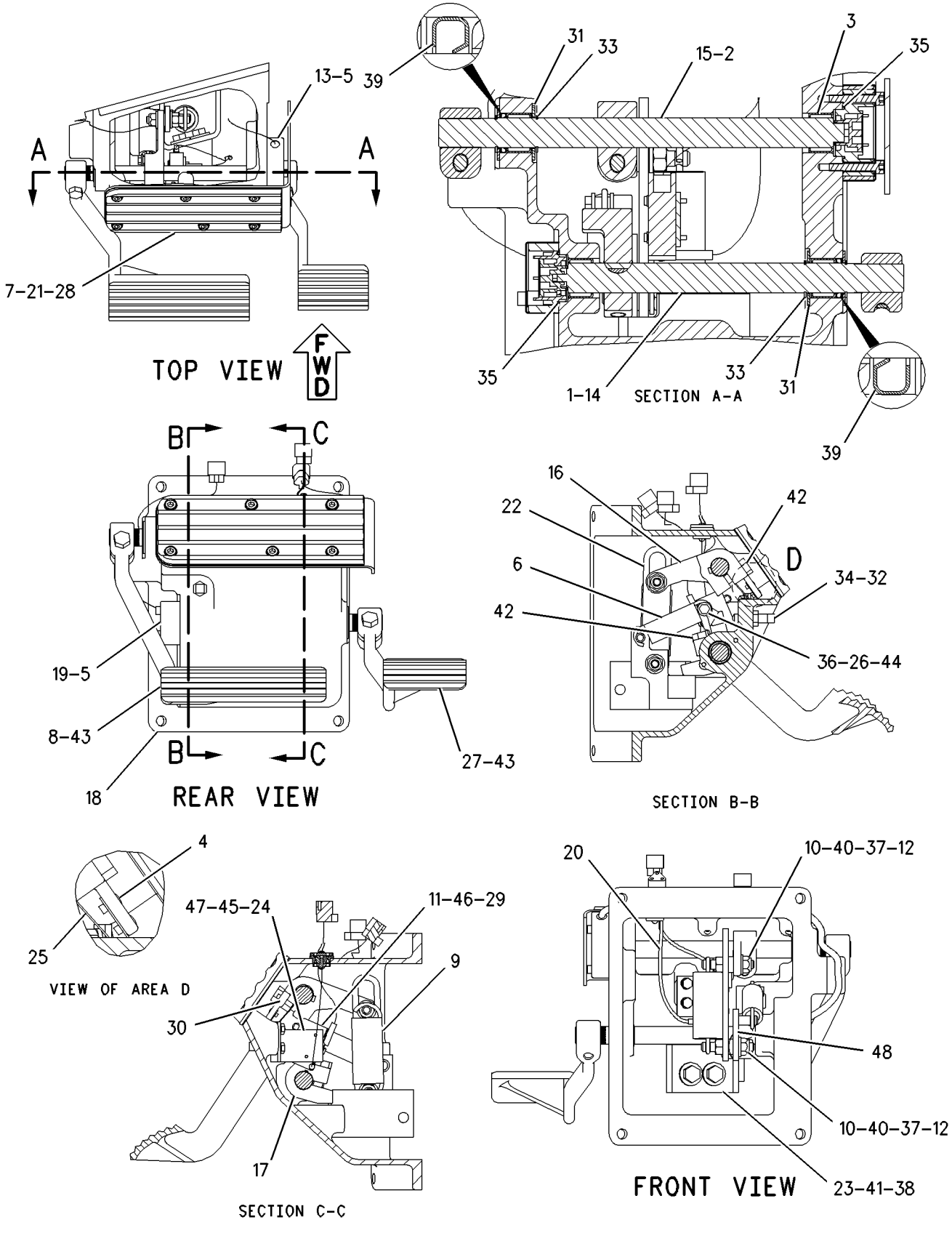

GRAPHIC #1 g00794478

POWER TRAIN

6I-8501 PLANETARY GP-TRANSMISSION

S/N: BSR1-UP

PART OF 166-3328 TRANSMISSION AR

SMCS-3155, 3160, 3169, 3170, 3187, 3189, 3190, 3304 **i01668477**

NOTE	REF NO	GRAPHIC REF	PART NUMBER	QTY	PART NAME 1 2 3 4 5 6 (PRODUCT LEVEL)	SEE PAGE
	1	1	**061-6711**	1	RING-RETAINING	
	2	1	**068-8093**	2	RING-RETAINING	
	3	1	**8H-5352**	2	BALL BEARING	
	4	1	**8M-5010**	2	SEAL-O-RING	
	5	1	**108-7754**	1	HOUSING AS	
	6	1	**3F-5022**	1	PLUG-CUP	
	7	1	**1A-5183**	2	BOLT (3/8-16X4.75 IN)	
	8	1	**9G-0281**	1	RING-SEAL	
	9	1	**8P-2022**	2	RING-SEAL	
	10	1	**9G-0280**	1	PISTON-CLUTCH	
	11	1	**3K-2511**	5	DOWEL-REACTION	
	12	1	**9P-7390**	8	DISC AS-FRICTION	
R	13	1	**8P-2051**	6	PLATE-CLUTCH	
	14	1	**6Y-1602**	1	COUPLING	
	15	1	**108-8853**	1	SHAFT AS	
	16	1	**3T-4968**	1	PLUG-ORIFICE	
	17	1	**8P-2053**	1	SEAL-RING	
	18	1	**6T-7882**	3	GEAR (25 TEETH)	
	19	1	**3T-4377**	2	SEAL-RING	
	20	1	**3S-2708**	3	PIN-SPRING	
	21	1	**9P-8623**	3	SHAFT-PLANETARY	
C	22	1	**131-4091**	1	SEAL-RING	
	23	1	**6Y-4819**	1	CARRIER-PLANETARY	
	24	1	**7T-3950**	1	GEAR (83 TEETH)	
	25	1	**030-8538**	1	BOLT (1/2-13X1.25 IN)	
	26	1	**5P-8245**	1	WASHER-HARD (13.5X25.5X3MM THK)	
	27	1	**9W-0645**	1	TUBE AS	
	28	1	**6Y-4831**	1	PLATE AS	
		1	**7M-5130**	1	PIN-SPRING	
	29	1	**5H-6202**	2	PIN	
	30	1	**7T-9272**	1	GEAR-SUN (34 TEETH)	
	31	1	**5M-3038**	1	SEAL-O-RING	
	32	1	**6V-0473**	1	RING-RETAINING	
	33	1	**7T-8816**	1	BALL BEARING	
	34	1	**8E-8304**	12	DISC-THRUST	
	35	1	**7G-2516**	6	GEAR-PLANETARY (24 TEETH)	
	36	1	**5M-6126**	6	BEARING	
	37	1	**8M-5266**	1	SEAL-O-RING	
	38	1	**112-5585**	3	SHAFT-PLANETARY	
C	39	1	**144-4284**	2	LOCK RING	
	40	1	**112-8041**	1	CARRIER-PLANETARY	
	41	1	**7G-6355**	1	GEAR-RING (90 TEETH)	
	42	1	**7H-7658**	10	SPRING	
	43	1	**9G-0285**	1	PISTON-CLUTCH	
	44	1	**9G-0286**	1	RING-SEAL	
	45	1	**9G-0284**	1	HOUSING-CLUTCH	
	46	1	**112-4511**	3	PIN-SPRING	
	47	1	**5D-2989**	3	BEARING	
	48	1	**8E-8305**	6	DISC-THRUST	
	49	2	**9P-8614**	1	GEAR-RING (90 TEETH)	
	50	2	**6Y-5911**	5	DISC-FRICTION	
	51	2	**6I-8500**	3	PLATE-CLUTCH	
	52	2	**4M-9592**	20	SPRING	
	53	2	**8P-9507**	1	PISTON-CLUTCH	
	54	2	**8P-2022**	2	RING-SEAL	
	55	2	**8P-2019**	2	RING-SEAL	

6I-8501 PLANETARY GP-TRANSMISSION *(contd.)* i01668477

NOTE	REF NO	GRAPHIC REF	PART NUMBER	QTY	PART NAME 1 2 3 4 5 6 (PRODUCT LEVEL)	SEE PAGE
	56	2	**9P-7757**	1	GEAR-SUN (42 TEETH)	
	57	2	**061-6711**	1	RING-RETAINING	
	58	2	**5P-5296**	2	RING-RETAINING	
	59	2	**9P-8626**	1	GEAR-SUN (42 TEETH)	
	60	2	**7T-8816**	2	BALL BEARING	
	61	2	**6V-0473**	2	RING-RETAINING	
	62	2	**3K-2511**	5	DOWEL-REACTION	
	63	2	**117-7826**	1	HOUSING AS-CLUTCH	
		2	**1A-2223**	4	DOWEL	
	64	2	**8P-1892**	1	PISTON-CLUTCH	
	65	2	**108-7743**	1	SHAFT AS-OUTPUT	
	66	2	**3T-8729**	1	BEARING-SLEEVE	
	67	2	**9G-6744**	1	BEARING-SLEEVE	
	68	2	**8E-8299**	6	DISC-THRUST	
	69	2	**8P-1916**	3	GEAR-PLANETARY (20 TEETH)	
	70	2	**5P-3930**	3	BEARING AS-ROLLER	
	71	2	**3S-2708**	3	PIN-SPRING	
	72	2	**9G-0289**	3	SHAFT-PLANETARY	
C	73	2	**144-4284**	1	LOCK RING	
	74	2	**7G-7218**	1	CARRIER-PLANETARY	
	75	2	**7T-9370**	1	GEAR-SUN (51 TEETH)	
	76	2	**9W-8270**	1	GEAR-RING (90 TEETH)	
	77	2	**9W-8269**	1	PLATE-REACTION	
	78	2	**9G-0290**	1	HUB-CLUTCH	
	79	2	**6Y-5912**	4	DISC-FRICTION	
	80	2	**8P-1964**	3	PLATE-CLUTCH	
	81	2	**6V-2478**	1	RING-RETAINING	
	82	2	**9G-8020**	1	PLATE-RETAINER	
	83	2	**7G-2343**	3	SPRING-DISC	
	84	2	**7G-7724**	1	PISTON-CLUTCH	
	85	2	**8P-2023**	1	RING-SEAL	
	86	2	**8D-9739**	1	SEAL-RING	
	87	2	**6I-8510**	1	HOUSING AS-CLUTCH	
	88	2	**6B-6863**	1	PIN-SPRING	
	89	2	**6P-7704**	1	CARRIER-RING	
	90	2	**5P-8194**	1	RING-RETAINING	
	91	2	**7G-2830**	2	RING-SEAL	
	92	2	**5M-3038**	1	SEAL-O-RING	
	93	2	**9M-4355**	10	DAMPER-BOLT	
C	94	3	**144-7878**	1	MANIFOLD	
	95	3	**5P-8245**	11	WASHER-HARD (13.5X25.5X3MM THK)	
	96	3	**1M-8657**	2	BOLT (1/2-13X15.69 IN)	
	97	3	**5P-5045**	1	BALL BEARING	
	98	3	**8M-5255**	1	SEAL-O-RING	
	99	3	**1L-7388**	1	RING-RETAINING	
	100	3	**4M-2442**	8	BOLT (1/2-13X12.32 IN)	
C	101	3	**5M-2894**	2	WASHER-HARD (10.2X18.5X2.5MM THK)	
	102	3	**0S-1619**	2	BOLT (3/8-16X3 IN)	
C	103	3	**0S-1620**	1	BOLT (1/2-13X0.75 IN)	
C	104	3	**152-1330**	1	BRACKET AS	
		3	**8M-8489**	2	DOWEL	
	105	3	**5P-5296**	1	RING-RETAINING	
C	106	3	**144-7881**	1	ROTOR	
	107	3	**5G-8836**	1	RING	
	108	3	**108-7749**	1	ROTOR	
	109	3	**5P-5297**	1	RING-RETAINING	
CY	110	3	**193-2550**	4	SENSOR GP-SPEED	180
C	115	3	**196-8884**	1	BRACKET AS	
	116	3	**8C-3334**	2	RIVET-TUBULAR	

NOTE	REF NO	GRAPHIC REF	PART NUMBER	QTY	PART NAME 1 2 3 4 5 6 (PRODUCT LEVEL)	SEE PAGE
	117	3	**124-9401**	4	CLIP (TAB)	

C-CHANGE FROM PREVIOUS TYPE
R-REMFG PART MAY BE AVAILABLE
Y-SEPARATE ILLUSTRATION

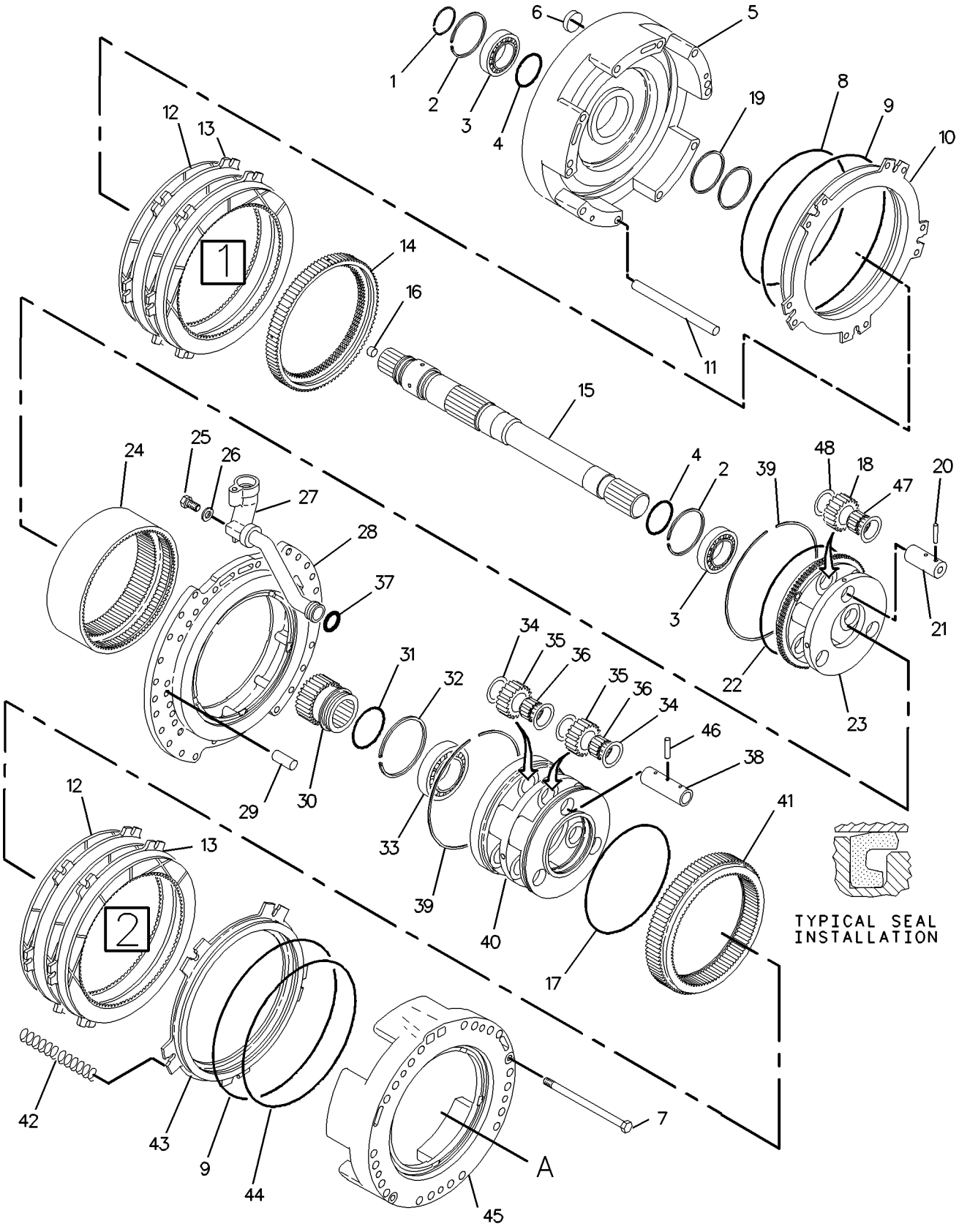

GRAPHIC #1 g00668674

SPEED SELECT	CLUTCH ENGAGE
1–FORWARD	2 & 5
2–FORWARD	2 & 4
3–FORWARD	2 & 3
NEUTRAL	3
1–REVERSE	1 & 5
2–REVERSE	1 & 4
3–REVERSE	1 & 3



TYPICAL SEAL INSTALLATION

GRAPHIC #2

g00473887

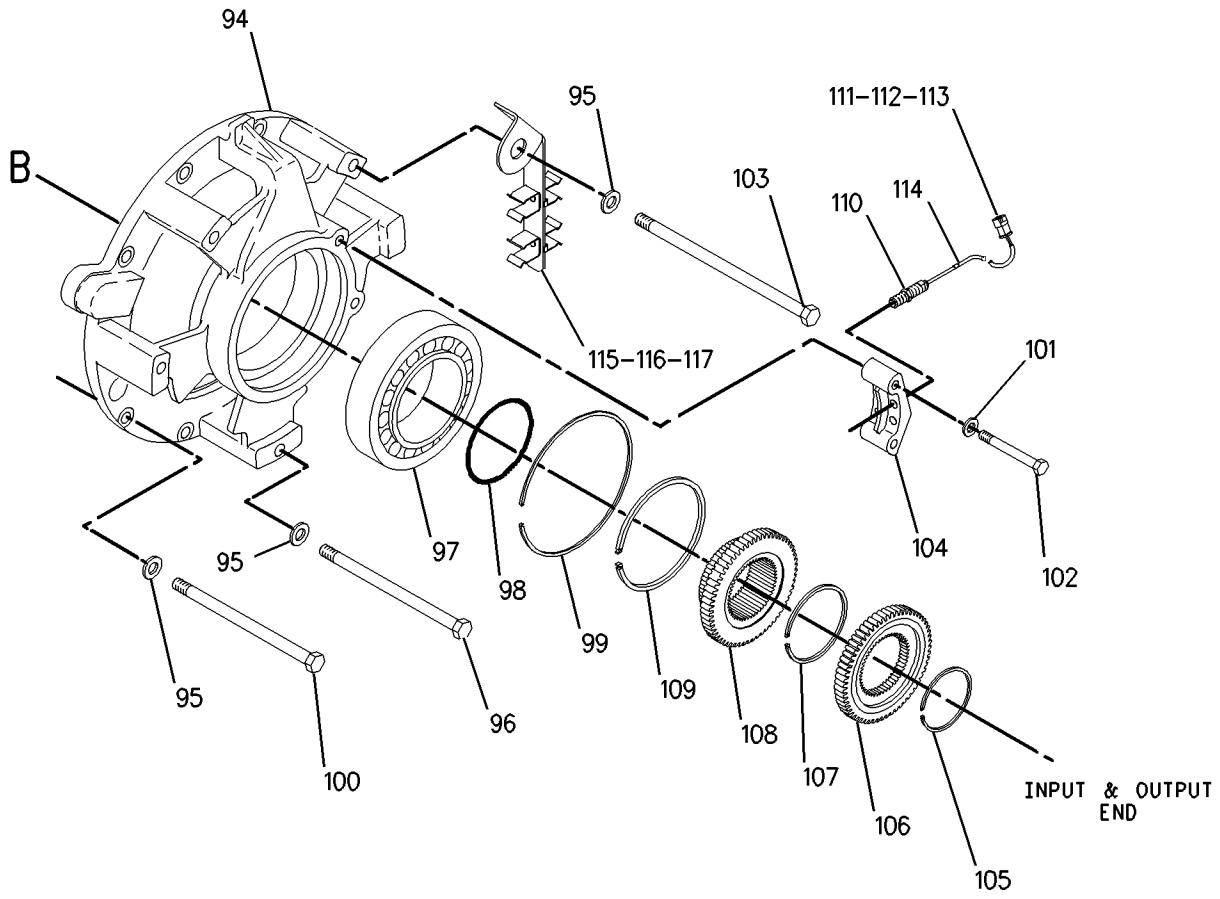

GRAPHIC #3 g00861906

POWER TRAIN

108-6984 PLANETARY GP-TRANSMISSION

S/N: BSG1-UP

PART OF 166-6320 TRANSMISSION AR

SMCS-3155, 3160, 3169, 3170, 3187, 3189, 3190, 3304 **i01590487**

NOTE	REF NO	GRAPHIC REF	PART NUMBER	QTY	PART NAME 1 2 3 4 5 6 (PRODUCT LEVEL)	SEE PAGE
	1	1	**061-6711**	1	RING-RETAINING	
	2	1	**068-8093**	2	RING-RETAINING	
	3	1	**8H-5352**	2	BALL BEARING	
	4	1	**8M-5010**	2	SEAL-O-RING	
	5	1	**108-7754**	1	HOUSING AS	
	6	1	**3F-5022**	1	PLUG-CUP	
	7	1	**1A-5183**	2	BOLT (3/8-16X4.75 IN)	
	8	1	**9G-0281**	1	RING-SEAL	
	9	1	**8P-2022**	2	RING-SEAL	
	10	1	**9G-0280**	1	PISTON-CLUTCH	
	11	1	**3K-2511**	5	DOWEL-REACTION	
	12	1	**9P-7390**	6	DISC AS-FRICTION	
R	13	1	**8P-2051**	4	PLATE-CLUTCH	
	14	1	**6Y-4843**	1	COUPLING	
	15	1	**108-8853**	1	SHAFT AS	
	16	1	**3T-4968**	1	PLUG-ORIFICE	
	17	1	**8P-2053**	1	SEAL-RING	
	18	1	**6I-8505**	3	GEAR-PLANET (25 TEETH)	
	19	1	**3T-4377**	2	SEAL-RING	
	20	1	**3S-2708**	3	PIN-SPRING	
	21	1	**6I-8506**	3	SHAFT-PLANETARY	
	22	1	**131-4091**	1	SEAL-RING	
	23	1	**6I-8504**	1	CARRIER-PLANETARY	
	24	1	**7T-3950**	1	GEAR (83 TEETH)	
	25	1	**030-8538**	1	BOLT (1/2-13X1.25 IN)	
	26	1	**5P-8245**	1	WASHER-HARD (13.5X25.5X3MM THK)	
	27	1	**9W-0645**	1	TUBE AS	
	28	1	**6Y-4845**	1	PLATE AS	
		1	**5H-6202**	2	PIN	
	29	1	**7M-5130**	1	PIN-SPRING	
	30	1	**7T-9272**	1	GEAR-SUN (34 TEETH)	
	31	1	**5M-3038**	1	SEAL-O-RING	
	32	1	**6V-0473**	1	RING-RETAINING	
	33	1	**7T-8816**	1	BALL BEARING	
	34	1	**8E-8304**	18	DISC-THRUST	
	35	1	**7G-2516**	6	GEAR-PLANETARY (24 TEETH)	
	36	1	**5M-6126**	9	BEARING	
	37	1	**8M-5266**	1	SEAL-O-RING	
	38	1	**112-5585**	3	SHAFT-PLANETARY	
	39	1	**144-4284**	2	LOCK RING	
	40	1	**112-8041**	1	CARRIER-PLANETARY	
	41	1	**9P-8521**	1	GEAR-RING (90 TEETH)	
	42	1	**7H-7658**	10	SPRING	
	43	1	**9G-0285**	1	PISTON-CLUTCH	
	44	1	**9G-0286**	1	RING-SEAL	
	45	1	**9G-0284**	1	HOUSING-CLUTCH	
	46	1	**112-4511**	3	PIN-SPRING	
	47	2	**9P-8614**	1	GEAR-RING (90 TEETH)	
	48	2	**6Y-5911**	5	DISC-FRICTION	
	49	2	**6I-8500**	3	PLATE-CLUTCH	
	50	2	**4M-9592**	20	SPRING	
	51	2	**8P-9507**	1	PISTON-CLUTCH	
	52	2	**8P-2022**	2	RING-SEAL	
	53	2	**8P-2019**	2	RING-SEAL	
	54	2	**9P-7757**	1	GEAR-SUN (42 TEETH)	
	55	2	**061-6711**	1	RING-RETAINING	

108-6984 PLANETARY GP-TRANSMISSION *(contd.)* i01590487

NOTE	REF NO	GRAPHIC REF	PART NUMBER	QTY	PART NAME 1 2 3 4 5 6 (PRODUCT LEVEL)	SEE PAGE
	56	2	**5P-5296**	2	RING-RETAINING	
	57	2	**9P-8626**	1	GEAR-SUN (42 TEETH)	
	58	2	**7T-8816**	2	BALL BEARING	
	59	2	**6V-0473**	2	RING-RETAINING	
	60	2	**3K-2511**	5	DOWEL-REACTION	
	61	2	**117-7826**	1	HOUSING AS-CLUTCH	
		2	**1A-2223**	4	DOWEL	
	62	2	**8P-1892**	1	PISTON-CLUTCH	
	63	2	**108-7743**	1	SHAFT AS-OUTPUT	
	64	2	**3T-8729**	1	BEARING-SLEEVE	
	65	2	**9G-6744**	1	BEARING-SLEEVE	
	66	2	**8E-8299**	6	DISC-THRUST	
	67	2	**8P-1916**	3	GEAR-PLANETARY (20 TEETH)	
	68	2	**5P-3930**	3	BEARING AS-ROLLER	
	69	2	**3S-2708**	3	PIN-SPRING	
	70	2	**9G-0289**	3	SHAFT-PLANETARY	
	71	2	**144-4284**	1	LOCK RING	
	72	2	**7G-7218**	1	CARRIER-PLANETARY	
	73	2	**7T-9370**	1	GEAR-SUN (51 TEETH)	
	74	2	**9W-8270**	1	GEAR-RING (90 TEETH)	
	75	2	**9U-9550**	1	PLATE-CLUTCH	
	76	2	**9G-0290**	1	HUB-CLUTCH	
	77	2	**6Y-5912**	3	DISC-FRICTION	
	78	2	**8P-1964**	2	PLATE-CLUTCH	
	79	2	**6V-2478**	1	RING-RETAINING	
	80	2	**9G-8020**	1	PLATE-RETAINER	
	81	2	**7G-2343**	3	SPRING-DISC	
	82	2	**7G-7724**	1	PISTON-CLUTCH	
	83	2	**8P-2023**	1	RING-SEAL	
	84	2	**8D-9739**	1	SEAL-RING	
	85	2	**6I-8510**	1	HOUSING AS-CLUTCH	
	86	2	**6B-6863**	1	PIN-SPRING	
	87	2	**6P-7704**	1	CARRIER-RING	
	88	2	**5P-8194**	1	RING-RETAINING	
	89	2	**7G-2830**	2	RING-SEAL	
	90	2	**5M-3038**	1	SEAL-O-RING	
C	91	2	**9M-4355**	10	DAMPER-BOLT	
	92	3	**144-7878**	1	MANIFOLD	
C	93	3	**5P-8245**	12	WASHER-HARD (13.5X25.5X3MM THK)	
	94	3	**1M-8657**	2	BOLT (1/2-13X15.69 IN)	
CY	95	3	**193-2550**	4	SENSOR GP-SPEED (MAGNETIC-HIGH OUTPUT)	180
C	96	3	**196-8884**	1	BRACKET AS	
	97	3	**124-9401**	4	CLIP (TAB)	
	98	3	**4M-2442**	8	BOLT (1/2-13X12.32 IN)	
	99	3	**5M-2894**	2	WASHER-HARD (10.2X18.5X2.5MM THK)	
	100	3	**0S-1619**	2	BOLT (3/8-16X3 IN)	
C	101	3	**0S-1620**	1	BOLT (1/2-13X0.75 IN)	
	102	3	**152-1330**	1	BRACKET AS	
		3	**8M-8489**	2	DOWEL	
	103	3	**5P-5296**	1	RING-RETAINING	
	104	3	**144-7881**	1	ROTOR	
	105	3	**5G-8836**	1	RING	
	106	3	**108-7749**	1	ROTOR	
	107	3	**5P-5297**	1	RING-RETAINING	
	108	3	**1L-7388**	1	RING-RETAINING	
	109	3	**8M-5255**	1	SEAL-O-RING	
	110	3	**5P-5045**	1	BALL BEARING	

C-CHANGE FROM PREVIOUS TYPE
R-REMFG PART MAY BE AVAILABLE
Y-SEPARATE ILLUSTRATION

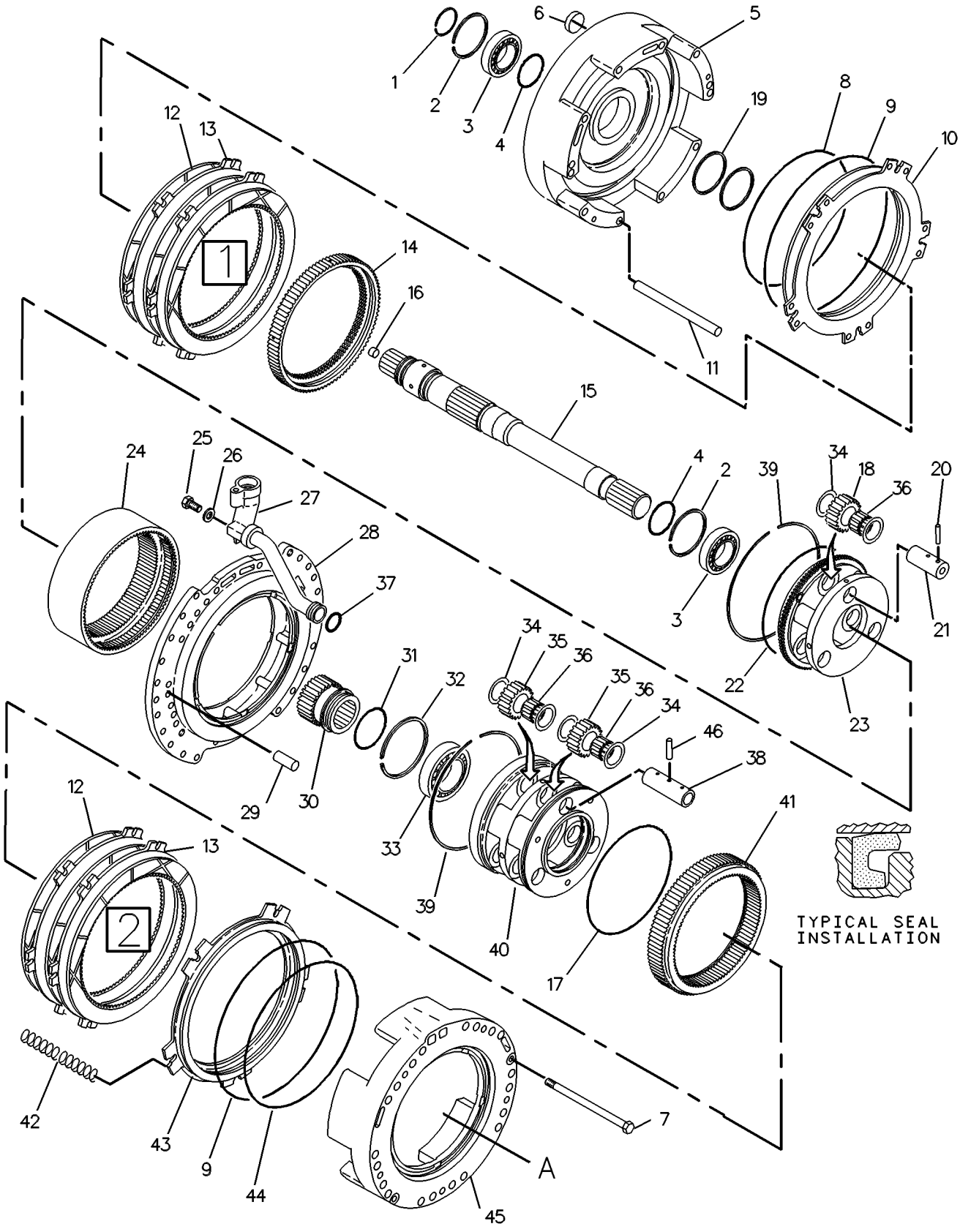

GRAPHIC #1 g00547303

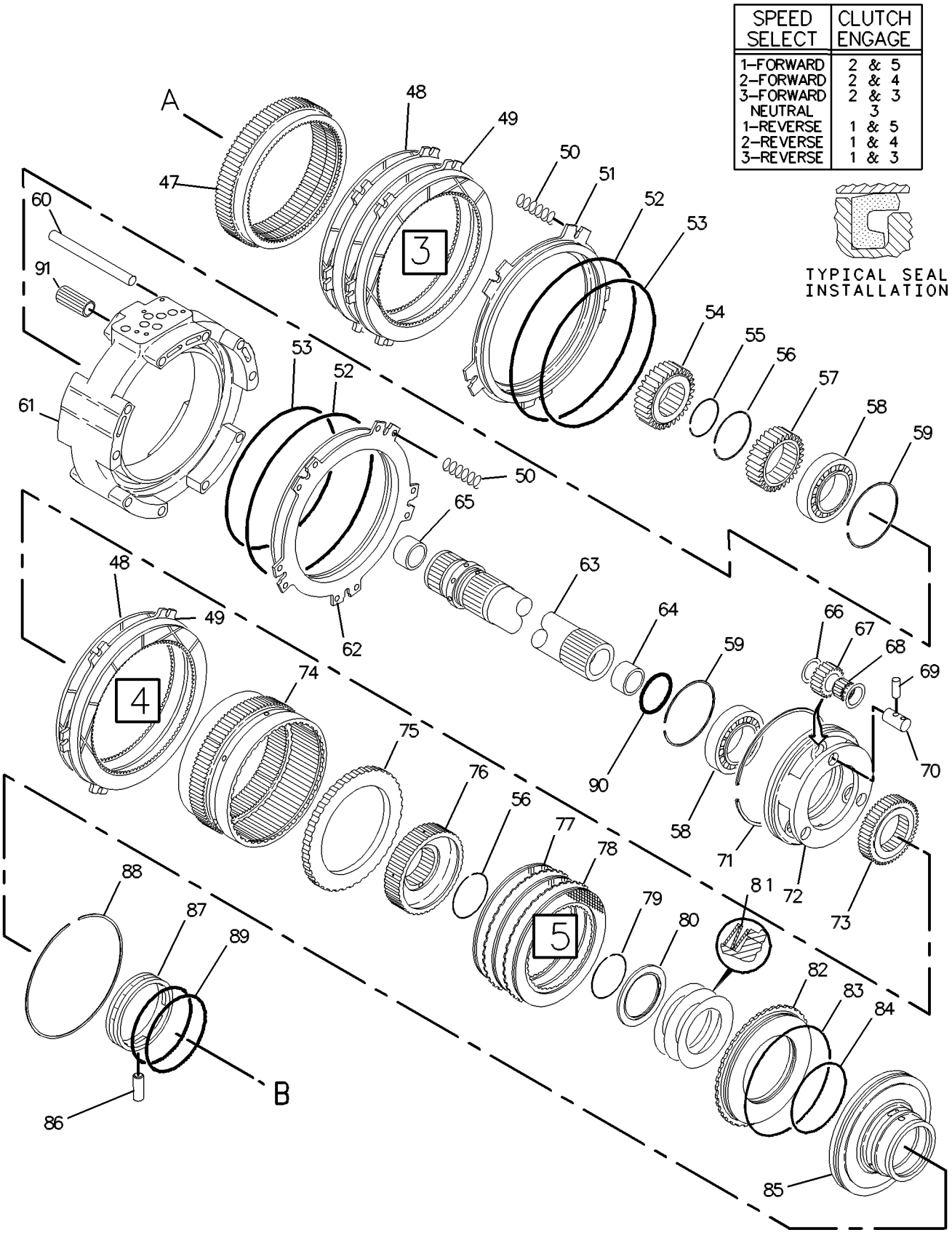

GRAPHIC #2

g00565363

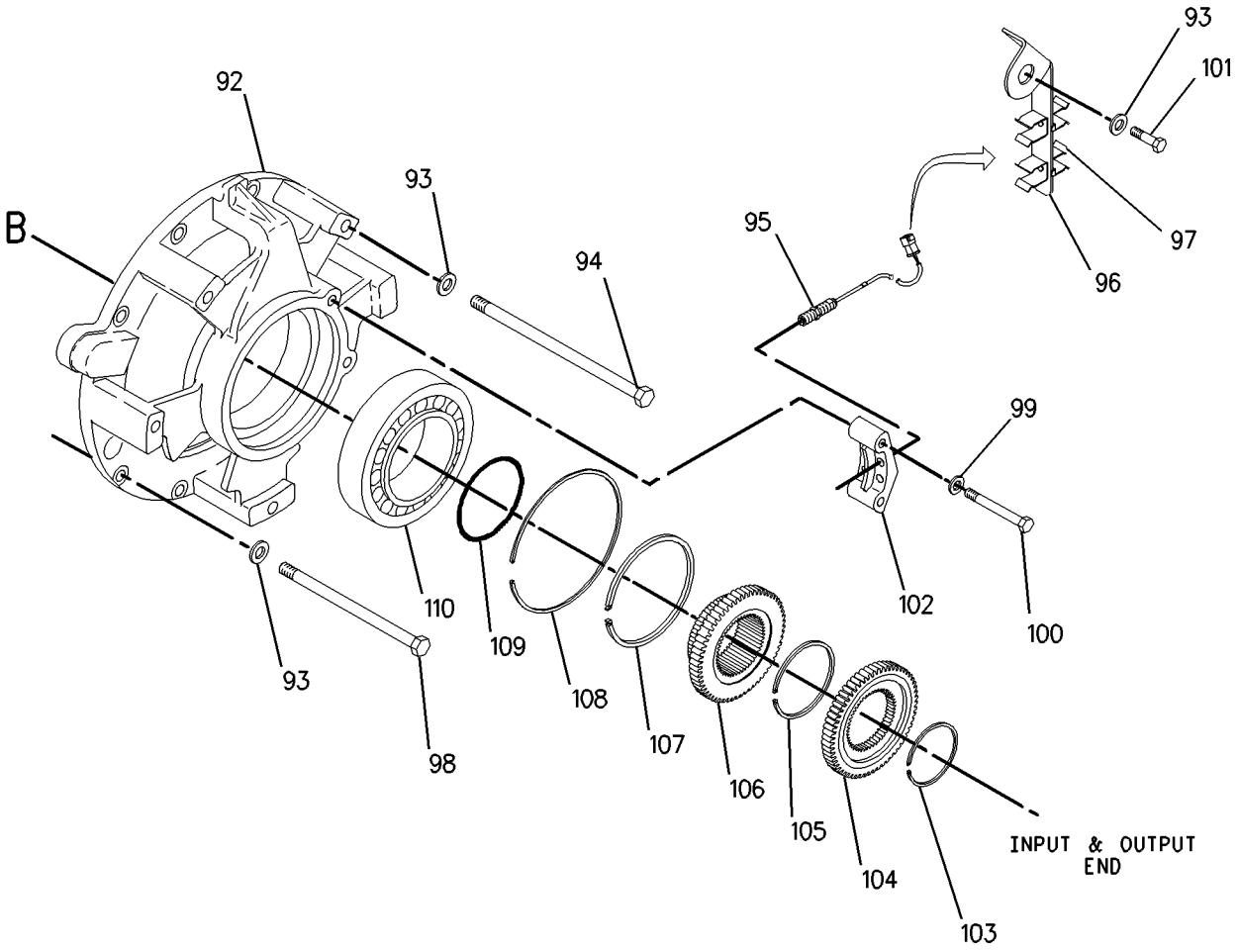

GRAPHIC #3 g00845033

POWER TRAIN

164-4792 POWER TRAIN AR

S/N: BLE1-UP

PART OF 211-4625 GENERAL AR

SMCS-3000 **i01590360**

NOTE	PART NUMBER	QTY	PART NAME 1 2 3 4 5 6 (PRODUCT LEVEL)	SEE PAGE
Y	*107-1023*	1	AXLE GP-POWER TRAIN	206
Y	**104-5372**	2	CLUTCH & BRAKE GP-STEERING	424
Y	*158-8077*	1	CONTROL & MTG GP-ELECTRONIC	146
Y	*172-5262*	1	CONTROL & MTG GP-PEDAL	211
Y	*164-4206*	1	CONTROL GP-STEERING & TMSN	212
Y	*198-1871*	1	COUPLING & GUARD GP	222
Y	*7G-5532*	2	FINAL DRIVE GP	230
Y	*166-7067*	1	LINES GP-POWER TRAIN OIL	236
Y	*8G-3087*	1	MOUNTING GP-TRANSMISSION	244
Y	**111-7003**	1	PLUG AS-WIRING	170
Y	*108-1696*	1	SHAFT GP-MAIN DRIVE	266
Y	*108-1430*	1	TORQUE CONVERTER GP	272
Y	**166-6320**	1	TRANSMISSION AR	276
Y	*164-4207*	1	VALVE & MTG GP-PILOT	278

Y-SEPARATE ILLUSTRATION

164-4794 POWER TRAIN AR

S/N: BMJ1-UP

PART OF 211-4627 GENERAL AR

SMCS-3000 **i01659395**

NOTE	PART NUMBER	QTY	PART NAME 1 2 3 4 5 6 (PRODUCT LEVEL)	SEE PAGE
Y	**107-1023**	1	AXLE GP-POWER TRAIN	206
Y	**104-5372**	2	CLUTCH & BRAKE GP-STEERING	424
Y	**158-8077**	1	CONTROL & MTG GP-ELECTRONIC	146
Y	**172-5262**	1	CONTROL & MTG GP-PEDAL	211
Y	**164-4206**	1	CONTROL GP-STEERING & TMSN	212
Y	**198-1871**	1	COUPLING & GUARD GP	222
Y	**7G-5532**	2	FINAL DRIVE GP	230
Y	**166-7067**	1	LINES GP-POWER TRAIN OIL	236
Y	**8G-3087**	1	MOUNTING GP-TRANSMISSION	244
Y	**111-7003**	1	PLUG AS-WIRING	170
Y	**108-1696**	1	SHAFT GP-MAIN DRIVE	266
Y	**108-1430**	1	TORQUE CONVERTER GP	272
Y	**166-3328**	1	TRANSMISSION AR	275
Y	**164-4207**	1	VALVE & MTG GP-PILOT	278

Y-SEPARATE ILLUSTRATION

108-4113 PUMP GP-GEAR

S/N: BLE1-UP; BMJ1-UP

PART OF 166-7067 LINES GP-POWER TRAIN OIL

SMCS-3115, 3153 **i01538778**

NOTE	REF NO	GRAPHIC REF	PART NUMBER	QTY	PART NAME 1 2 3 4 5 6 (PRODUCT LEVEL)	SEE PAGE
Y	1	1	**133-1403**	1	PUMP GP-GEAR (3 SECTION) (TMSN & CONV CHARGING & SCAV)	262
	2	1	**5P-8245**	2	WASHER-HARD (13.5X25.5X3MM THK)	
	3	1	**1D-4566**	2	BOLT (1/2-13X3.5 IN)	
	4	1	**2M-3974**	1	RING-RETAINING	
	5	1	**6H-3977**	1	SEAL-O-RING	
	6	1	**5P-9439**	1	BALL BEARING	
	7	1	**111-4919**	1	SEAL-LIP TYPE	
	8	1	**5H-4279**	1	PLUG-CUP	
	9	1	**140-8435**	1	FLANGE	
	10	1	**3T-5356**	1	CAGE-BEARING	
	11	1	**1P-4578**	2	FLANGE-HALF	
	12	1	**8T-5360**	4	WASHER (12X22.5X2.5MM THK)	
	13	1	**7X-0308**	4	BOLT (7/16-14X1.375 IN)	
	14	1	**1P-4577**	2	FLANGE-HALF	
	15	1	**5M-2894**	4	WASHER-HARD (10.2X18.5X2.5MM THK)	
	16	1	**3B-1915**	4	BOLT (3/8-16X1.37 IN)	
	17	1	**6L-4783**	4	BOLT-12 POINT HEAD (5/16-18X1.25 IN)	

Y-SEPARATE ILLUSTRATION

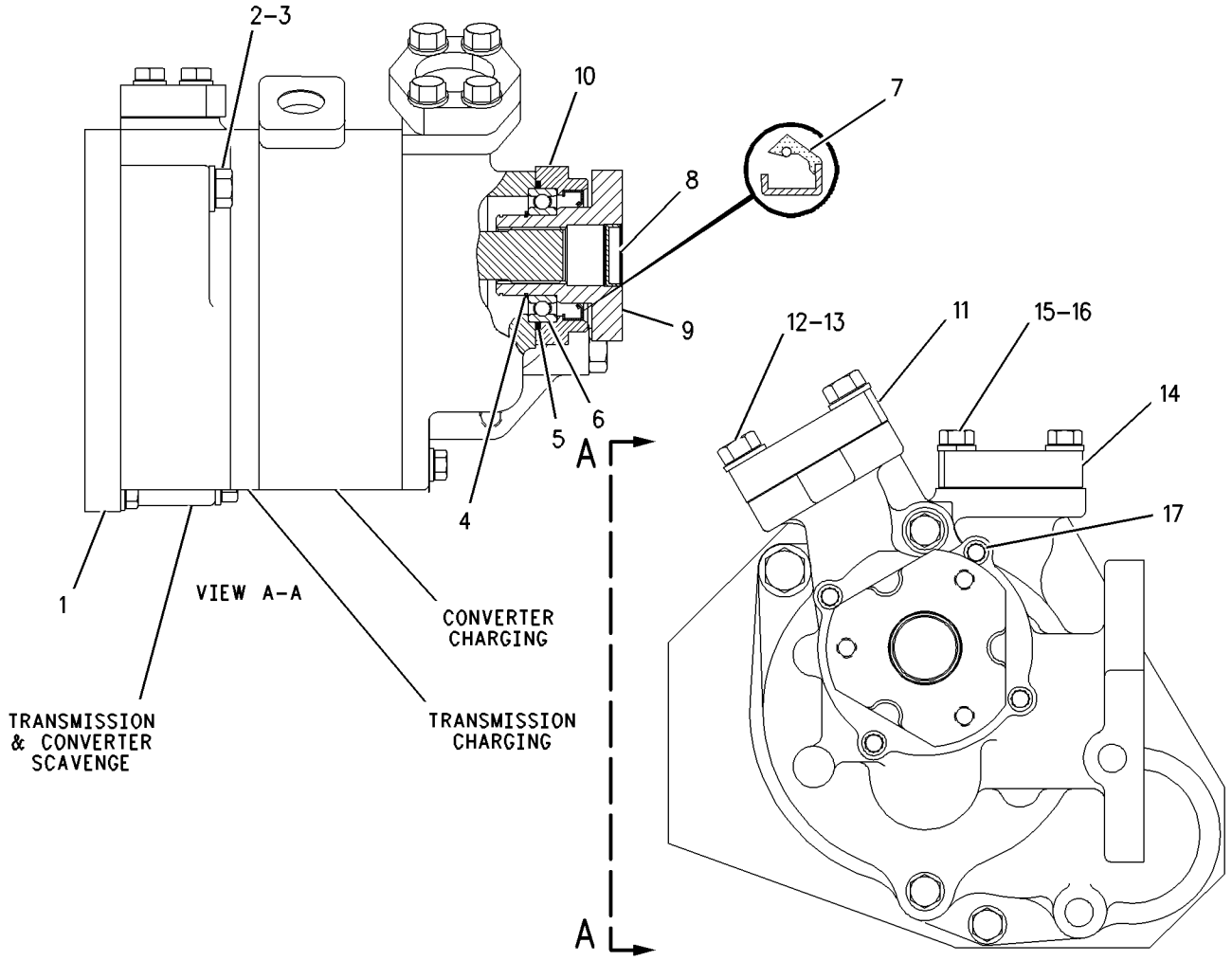

GRAPHIC #1 g00762866

133-1403 PUMP GP-GEAR

S/N: BLE1-UP; BMJ1-UP

PART OF 108-4113 PUMP GP-GEAR

SMCS-3115, 3153 **i01459371**

NOTE	REF NO	GRAPHIC REF	PART NUMBER	QTY	PART NAME 1 2 3 4 5 6 (PRODUCT LEVEL)	SEE PAGE
	1	1	**108-4107**	1	COVER-OIL PUMP	
	2	1	**2D-8009**	4	SEAL-O-RING	
	3	1	**108-4108**	1	BODY AS-OIL PUMP (TMSN & CONVERTER SCAVENGE)	
	3A	1	**131-0825**	2	BEARING-SLEEVE	
	4	1	**131-3278**	1	BODY AS-OIL PUMP (TRANSMISSION CHARGING)	
	4A	1	**5M-3605**	2	DOWEL	
	5	1	**133-1402**	1	BODY AS-OIL PUMP (CONVERTER CHARGING)	
	5A	1	**8M-8489**	2	DOWEL	
	5B	1	**1M-3909**	2	BEARING-SLEEVE	
	6	1	**132-7193**	1	COVER AS	
	6A	1	**1M-3909**	2	BEARING-SLEEVE	
	7	1	**5M-2894**	6	WASHER-HARD (10.2X18.5X2.5MM THK)	
	8	1	**6B-1557**	4	BOLT (3/8-16X7.5 IN)	
	9	1	**133-1401**	1	GEAR AS-OIL PUMP (12 TEETH)	
	10	1	**3T-1447**	2	GEAR-OIL PUMP (8 TEETH)	
	11	1	**2B-9373**	1	KEY-WOODRUFF	
	12	1	**3T-8757**	2	GEAR-OIL PUMP (12 TEETH)	
	13	1	**1B-8705**	1	KEY-WOODRUFF	
	14	1	**133-1400**	1	GEAR AS-OIL PUMP (12 TEETH)	
	15	1	**1H-5728**	1	SEAL-O-RING	
	16	1	**8F-6350**	2	BOLT (3/8-16X8 IN)	
	17	1	**5M-4987**	2	DOWEL	

133-1403 PUMP GP-GEAR *(contd.)* **i01459371**

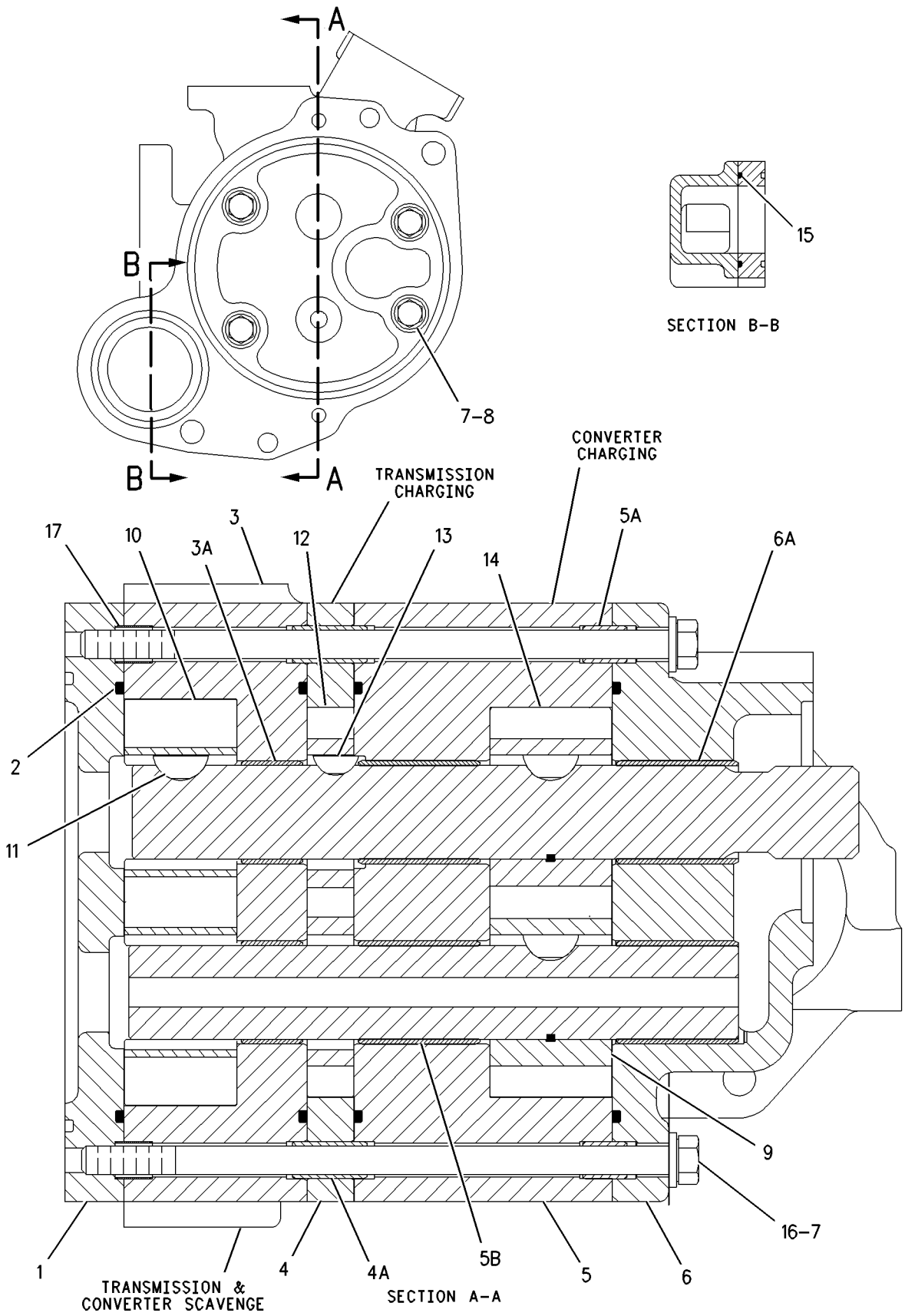

GRAPHIC #1 g00762673

3T-5298 SCREEN GP-MAGNETIC

S/N: BLE1-UP; BMJ1-UP

PART OF 166-7067 LINES GP-POWER TRAIN OIL

SMCS-3067, 3068 **i01668478**

NOTE	REF NO	GRAPHIC REF	PART NUMBER	QTY	PART NAME 1 2 3 4 5 6 (PRODUCT LEVEL)	SEE PAGE
	1	1	**8C-4436**	4	BOLT (1/2-13X1.375 IN)	
		1	**8T-4223**	4	WASHER-HARD (13.5X25.5X3MM THK)	
	2	1	**3T-5299**	1	HOUSING AS	
C		1	**2M-1538**	4	STUD-TAPERLOCK	
	3	1	**3S-3439**	1	COVER-TOP	
	4	1	**3S-3440**	1	WASHER-WAVE	
	5	1	**6V-8801**	4	NUT (3/8-16 THD)	
	6	1	**6V-5188**	1	SEAL-O-RING	
	7	1	**4S-8598**	1	SCREEN-SUCTION	
	8	1	**6L-5359**	1	SEAL-O-RING	
	9	1	**4S-8603**	1	TUBE AS (MAGNETIC SCREEN)	
	10	1	**8M-7160**	3	MAGNET	

C-CHANGE FROM PREVIOUS TYPE

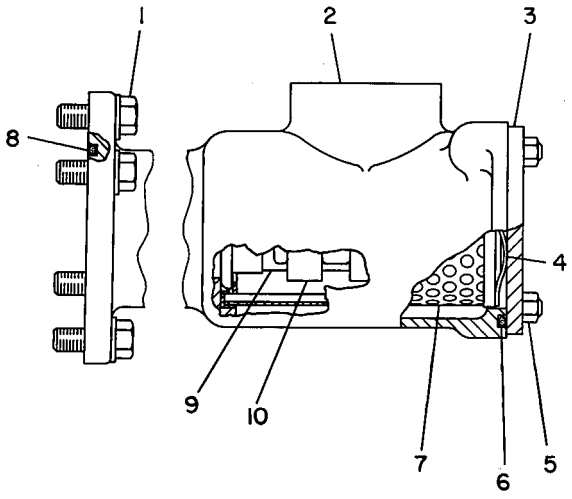

GRAPHIC #1 g00201103

188-0908 SEGMENT GP-SPROCKET

S/N: BLE1-UP; BMJ1-UP
PART OF 1Q-2275, 7G-5532 FINAL DRIVE GP
ALSO AN ATTACHMENT

SMCS-4155 **i01626359**

NOTE	REF NO	GRAPHIC REF	PART NUMBER	QTY	PART NAME 1 2 3 4 5 6 (PRODUCT LEVEL)	SEE PAGE
	1	1	**173-0946**	5	SEGMENT-SPROCKET	
	2	1	**6V-0937**	25	BOLT-SPROCKET	
	3	1	**2S-5658**	25	WASHER-HARD (17X29X3MM THK)	
	4	1	**7H-3607**	25	NUT	

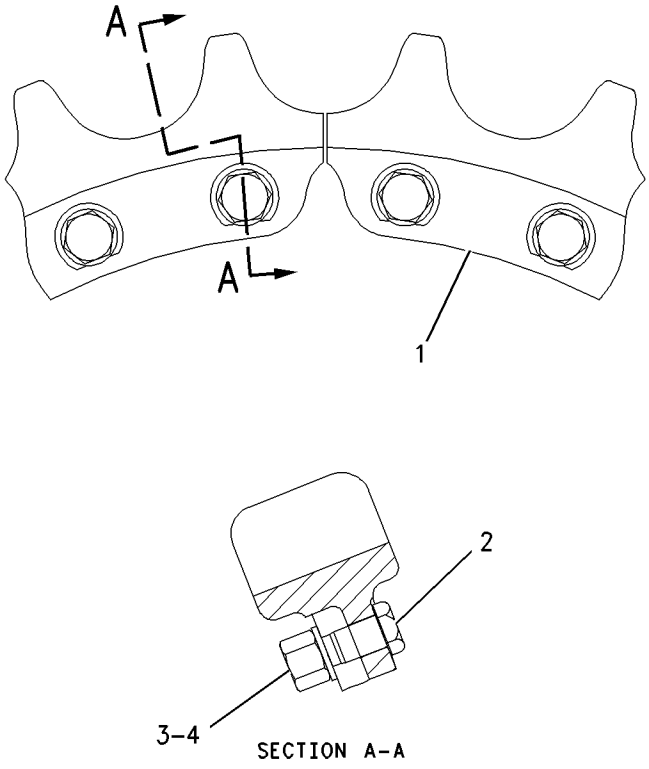

GRAPHIC #1 g00856173

108-1696 SHAFT GP-MAIN DRIVE

S/N: BLE1-UP; BMJ1-UP

PART OF 164-4792, 164-4794 POWER TRAIN AR

SMCS-3253 **i01668480**

NOTE	REF NO	GRAPHIC REF	PART NUMBER	QTY	PART NAME 1 2 3 4 5 6 (PRODUCT LEVEL)	SEE PAGE
Y	1	1	**108-2106**	1	UNIVERSAL JOINT GP	277
	2	1	**7X-7477**	8	BOLT (3/8 24 THD)	
	3	1	**7X-0608**	8	WASHER-HARD (10.2X16X2.0MM THK)	
	4	1	**3T-8305**	1	YOKE AS	
		1	**7D-1677**	1	RACE-BEARING INNER	
		1	**8H-2768**	1	PLUG-CUP	

Y-SEPARATE ILLUSTRATION

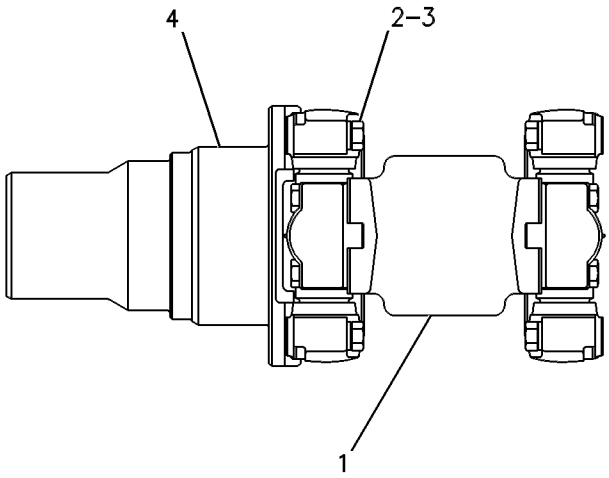

GRAPHIC #1 g00254101

MEMORANDA

1T-2055 TORQUE CONVERTER GP

S/N: 3XT1-UP

PART OF 108-1429 TORQUE CONVERTER GP

SMCS-3101, 3102, 3105, 3127, 3128, 3129, 3130, 3131, 3134, 3135, 3136

i01538962

NOTE	REF NO	GRAPHIC REF	PART NUMBER	QTY	PART NAME 1 2 3 4 5 6 (PRODUCT LEVEL)	SEE PAGE
	1	1	**1T-0437**	1	HOUSING	
	2	1	**1T-1994**	1	WHEEL-TURBINE	
	3	1	**1T-2051**	1	STATOR AS	
	4	1	**1T-0438**	1	RETAINER-BEARING	
	5	1	**1T-0446**	6	BOLT (3/8-16X.75 IN)	
	6	1	**1T-0421**	1	FLANGE AS-OUTPUT	
	7	1	**1T-0447**	1	CARRIER-RING	
	8	1	**1T-0097**	1	RING-METAL SEAL	
	9	1	**1T-0441**	1	BALL BEARING	
	10	1	**1T-0599**	1	SPACER	
	11	1	**3F-3727**	1	RING-SNAP	
	12	1	**1T-0414**	8	BOLT-12 POINT HEAD (5/16-18X1 IN)	
	13	1	**1T-2069**	1	CARRIER-BEARING	
	14	1	**1T-2077**	1	RETAINER-BEARING	
	15	1	**1A-2209**	8	BOLT (3/8-24X1.25 IN)	
	16	1	**1T-2048**	1	CARRIER AS-STATOR	
		1	**4S-8537**	1	DOWEL	
	17	1	**142-8540**	1	RING-SEAL	
	18	1	**179-9579**	1	BEARING	
	19	1	**1T-0051**	1	WHEEL-IMPELLER	
	20	1	**4B-3388**	36	BOLT (5/16-18X1.125 IN)	
	21	1	**1T-0738**	36	WASHER (8.4X19X1.83MM THK)	
	22	1	**4H-1440**	6	PIN-SPRING	
	23	1	**5B-0582**	1	DOWEL	

1T-2055 **TORQUE CONVERTER GP** ***(contd.)*** **i01538962**

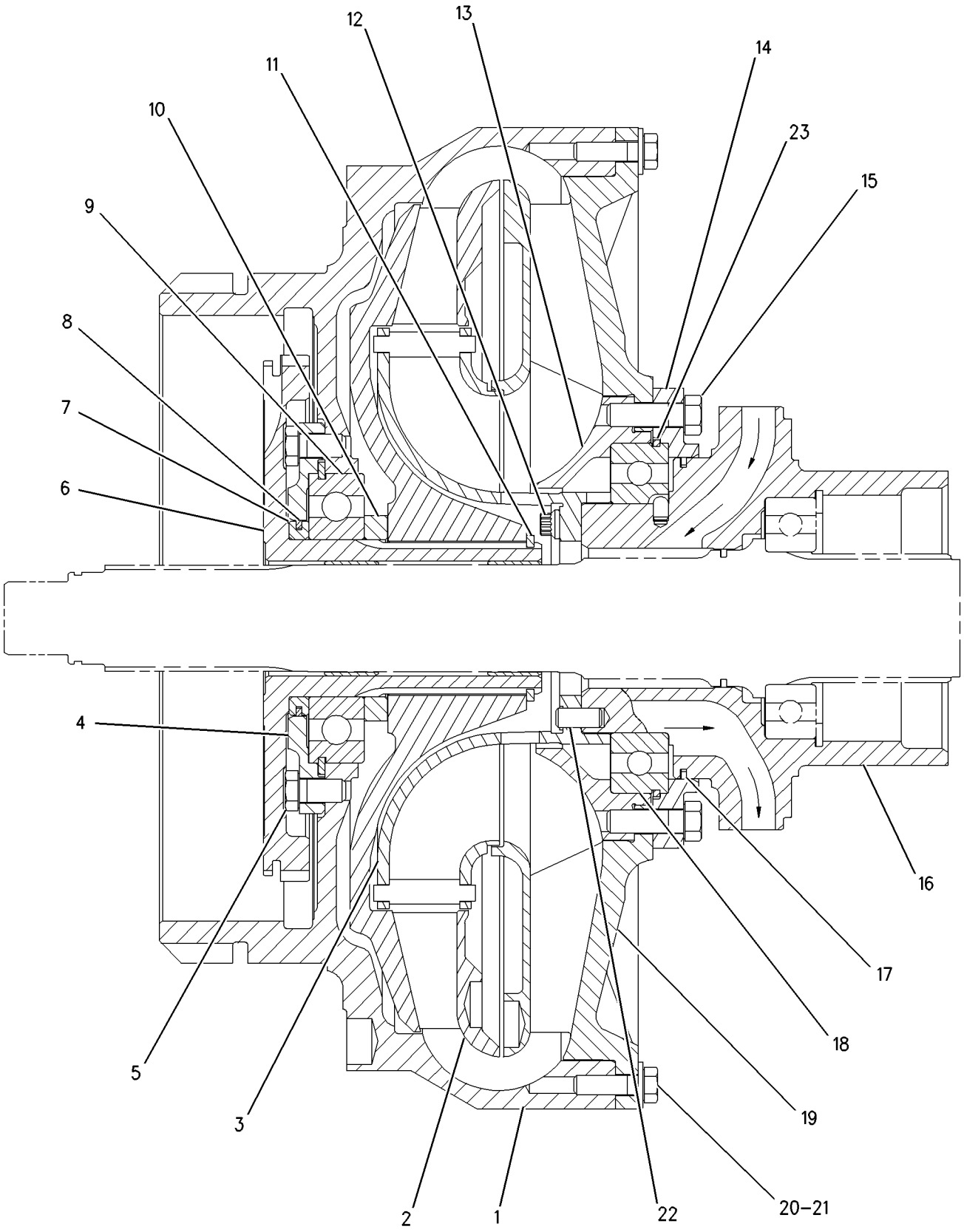

GRAPHIC #1 g00799295

108-1429 TORQUE CONVERTER GP

S/N: 3XT1-UP

PART OF 108-1430 TORQUE CONVERTER GP

SMCS-3101, 3102, 3105, 3127, 3128, 3129, 3130, 3131, 3134, 3135, 3136

i01504385

NOTE	REF NO	GRAPHIC REF	PART NUMBER	QTY	PART NAME 1 2 3 4 5 6 (PRODUCT LEVEL)	SEE PAGE
CY	1	1	*1T-2055*	1	TORQUE CONVERTER GP	268
	2	1	**8E-8300**	6	DISC-THRUST	
	3	1	**5P-3930**	3	BEARING AS-ROLLER	
	4	1	**3S-2708**	3	PIN-SPRING	
	5	1	**2K-5986**	2	PIN-SPRING	
	6	1	**9M-2008**	1	RING-METAL SEAL	
	7	1	**3T-4008**	3	GEAR-PLANETARY (23 TEETH)	
	8	1	**6K-3630**	1	RING	
	9	1	**5P-7679**	1	RACE-SPECIAL ROLLER BEARING	
	10	1	**3T-4013**	1	RETAINER-CARRIER	
	11	1	**6V-4583**	1	RING-RETAINING	
	12	1	**3T-4007**	1	CARRIER-PLANETARY	
	13	1	**3T-4011**	3	SHAFT AS-PLANETARY	
					(EACH INCLUDES)	
	14	1	**2A-3746**	1	PLUG-CUP	
	15	1	**5M-7878**	1	RING-SNAP	
	16	1	**5J-3964**	1	LOCK RING	
	17	1	**2D-5658**	1	BALL BEARING	
	18	1	**3T-4009**	1	GEAR-RING (82 TEETH)	
	19	1	**108-8377**	1	SHAFT AS	
	20	1	**5J-7386**	1	PLUG-ORIFICE (1/8-27 THD)	

C-CHANGE FROM PREVIOUS TYPE
Y-SEPARATE ILLUSTRATION

108-1429 **TORQUE CONVERTER GP** *(contd.)* **i01504385**

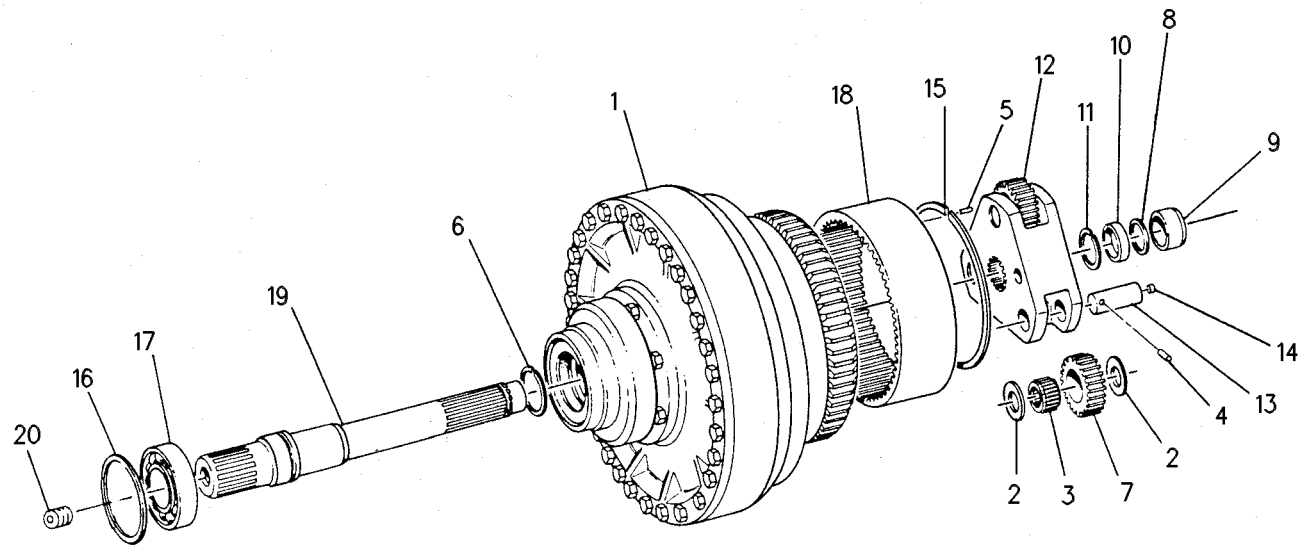

GRAPHIC #1 g00254082

POWER TRAIN

108-1430 TORQUE CONVERTER GP

S/N: BLE1-UP; BMJ1-UP

PART OF 164-4792, 164-4794 POWER TRAIN AR

SMCS-3101, 3102, 3105, 3127, 3128, 3129, 3130, 3131, 3134, 3135, 3136 **i01668483**

NOTE	REF NO	GRAPHIC REF	PART NUMBER	QTY	PART NAME 1 2 3 4 5 6 (PRODUCT LEVEL)	SEE PAGE
Y	1	1	**108-1429**	1	TORQUE CONVERTER GP	270
	2	1	**136-2216**	1	SEAL-LIP TYPE	
	3	1	**1T-1402**	1	RETAINER-SHAFT	
	4	1	**7X-3188**	1	BOLT (1/2-20X3.5 IN)	
	5	1	**8H-9818**	1	GASKET	
	6	1	**0S-1588**	8	BOLT (3/8-16X1.25 IN)	
	7	1	**5M-2894**	8	WASHER-HARD (10.2X18.5X2.5MM THK)	
	8	1	**6I-8487**	1	HOUSING AS-TORQUE CONVERTER	
		1	**4K-8603**	2	PLUG-CUP (25.73MM OD)	
	9	1	**8M-4433**	2	SEAL-O-RING	
	10	1	**8S-9008**	1	SLEEVE	
	11	1	**7G-5320**	1	ELBOW	
	12	1	**4L-6454**	2	BOLT (3/8-16X1 IN)	
	13	1	**8T-4896**	4	WASHER-HARD (10.2X18.5X2.5MM THK)	
	14	1	**1S-9799**	1	SEAL-O-RING (36.09MM ID)	
	15	1	**9P-3709**	1	GEAR-SUN (35 TEETH)	
	16	1	**9H-8712**	1	BEARING AS	
	17	1	**2D-1523**	1	RING-RETAINING	
	18	1	**9M-1976**	1	RING-RETAINING	
C	19	1	**8T-9382**	9	BOLT (7/16-14X1.25 IN)	
	20	1,2	**8T-5360**	12	WASHER (12X22.5X2.5MM THK)	
	21	1	**9H-0846**	1	SEAL-O-RING	
	22	1	**6F-4718**	1	SEAL-O-RING	
	23	1	**2S-2251**	1	SEAL-O-RING	
	24	1	**5S-7379**	2	BOLT (3/8-16X0.875 IN)	
	25	1	**110-0510**	1	COVER	
	26	1	**108-6954**	1	YOKE-UNIVERSAL JOINT	
C	27	2	**8T-8916**	3	BOLT (7/16-14X1.5 IN)	

C-CHANGE FROM PREVIOUS TYPE
Y-SEPARATE ILLUSTRATION

108-1430 **TORQUE CONVERTER GP** ***(contd.)*** **i01668483**

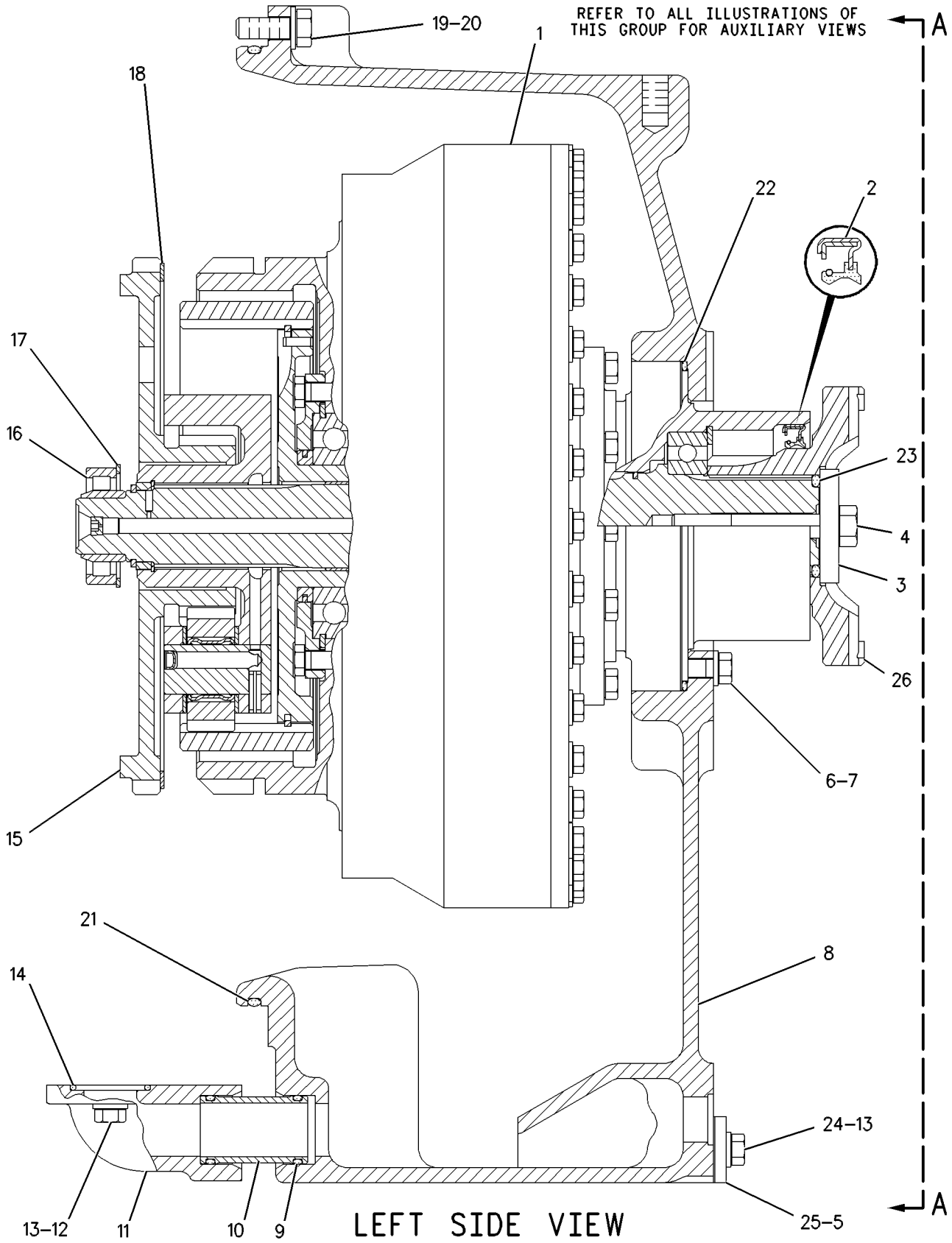

GRAPHIC #1 g00640720

108-1430 **TORQUE CONVERTER GP** ***(contd.)*** **i01668483**

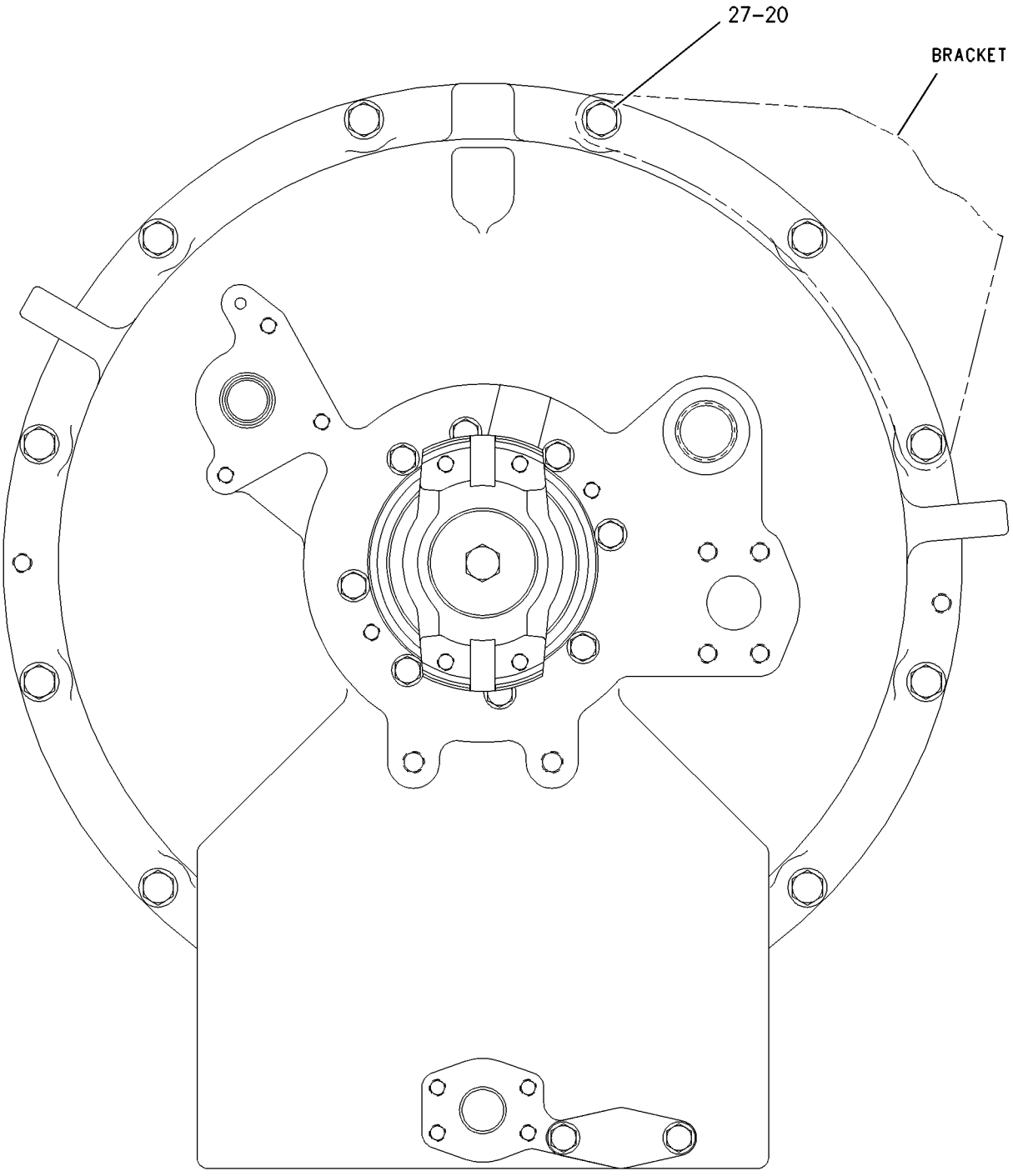

VIEW A-A

GRAPHIC #2 g00640262

166-3328 TRANSMISSION AR

S/N: BSR1-UP

PART OF 164-4794 POWER TRAIN AR

SMCS-3030, 3060, 3160 **i01601678**

NOTE	PART NUMBER	QTY	PART NAME 1 2 3 4 5 6 (PRODUCT LEVEL)	SEE PAGE
Y	*108-6983*	1	CASE & PARTS GP-PLANETARY	208
Y	*163-5641*	1	CONTROL GP-TRANSMISSION HYD	218
Y	*166-3488*	1	GEAR GP-BEVEL & TRANSFER	232
Y	*6I-8501*	1	PLANETARY GP-TRANSMISSION	248

Y-SEPARATE ILLUSTRATION

166-6320 TRANSMISSION AR

S/N: BSG1-UP

PART OF 164-4792 POWER TRAIN AR

SMCS-3030, 3060, 3160 **i01590464**

NOTE	PART NUMBER	QTY	PART NAME 1 2 3 4 5 6 (PRODUCT LEVEL)	SEE PAGE
Y	*108-6983*	1	CASE & PARTS GP-PLANETARY	208
Y	*163-5641*	1	CONTROL GP-TRANSMISSION HYD	218
Y	*166-3488*	1	GEAR GP-BEVEL & TRANSFER	232
Y	*108-6984*	1	PLANETARY GP-TRANSMISSION	254

Y-SEPARATE ILLUSTRATION

108-2106 UNIVERSAL JOINT GP

S/N: BLE1-UP; BMJ1-UP

PART OF 108-1696 SHAFT GP-MAIN DRIVE

SMCS-3251, 3253 **i01668486**

NOTE	REF NO	GRAPHIC REF	PART NUMBER	QTY	PART NAME 1 2 3 4 5 6 (PRODUCT LEVEL)	SEE PAGE
	1	1	**3V-2431**	8	WASHER (10.2X16.0X2.0MM THK)	
	2	1	**7G-9555**	2	SPIDER & BEARING AS	
	3	1	**0L-0478**	8	BOLT (3/8-24X1.75 IN)	

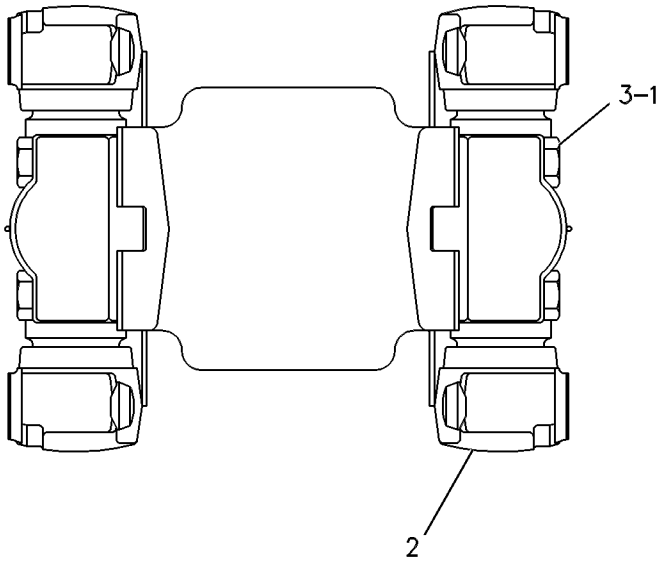

GRAPHIC #1 g00254100

164-4207 VALVE & MTG GP-PILOT

S/N: BLE1-UP; BMJ1-UP

PART OF 164-4792, 164-4794 POWER TRAIN AR

SMCS-5059 **i01668942**

NOTE	REF NO	GRAPHIC REF	PART NUMBER	QTY	PART NAME 1 2 3 4 5 6 (PRODUCT LEVEL)	SEE PAGE
	1	1	**3S-0004**	4	WASHER (0.406X0.728X0.09 IN THK)	
	2	1	**6V-0852**	4	CAP-DUST	
	3	1	**9S-1018**	8	WASHER (9.73X19.05X.84MM THK)	
	4	1	**114-3926**	1	PLATE	
Y	5	1	**201-7272**	1	VALVE GP-CONTROL	280
	6	1	**1A-5183**	4	BOLT (3/8-16X4.75 IN)	
	7	1	**2M-9780**	2	SEAL-O-RING	
	8	1	**3J-1907**	10	SEAL-O-RING	
	9	1	**5P-1404**	2	ADAPTER-O-RING (STRAIGHT THREAD)	
	10	1	**6V-0484**	4	ADAPTER-O-RING	
	11	1	**6V-3965**	4	FITTING AS	
	12	1	**7W-7381**	2	FITTING-OUTLET	
	13	1	**8M-4438**	4	SEAL-O-RING	
	14	1	**8M-5254**	6	SEAL-O-RING	

Y-SEPARATE ILLUSTRATION

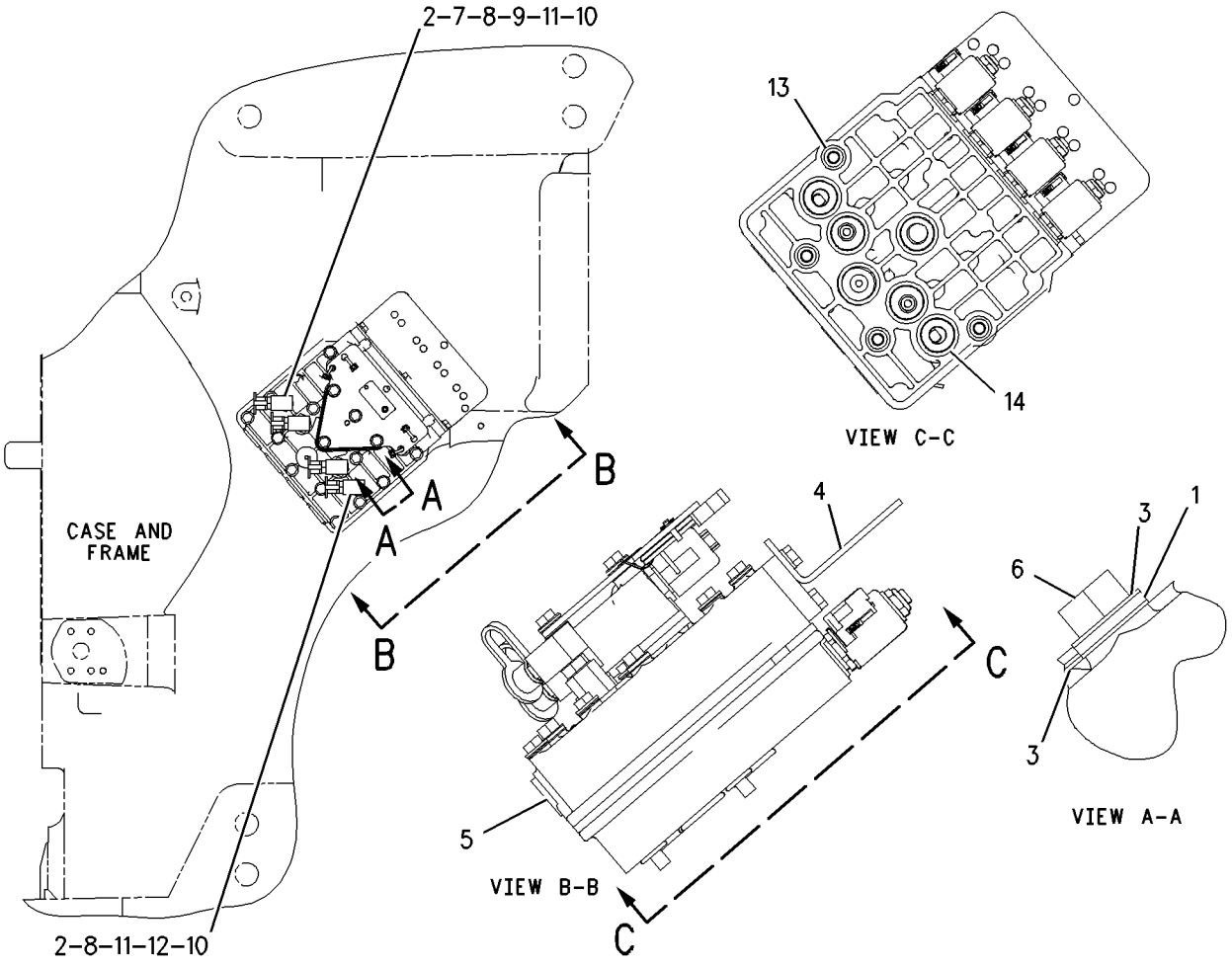

GRAPHIC #1 g00827214

MEMORANDA

201-7272 VALVE GP-CONTROL

S/N: BLE1-UP; BMJ1-UP

PART OF 164-4207 VALVE & MTG GP-PILOT

SMCS-3167 **i01632904**

NOTE	REF NO	GRAPHIC REF	PART NUMBER	QTY	PART NAME 1 2 3 4 5 6 (PRODUCT LEVEL)	SEE PAGE
	1	1	**9P-9150**	36	WASHER (8.25X18X.84MM THK)	
Y	2	1	**164-6093**	1	MANIFOLD & VALVE GP	242
	3	1	**176-0258**	2	PLUG	
	4	1	**108-4434**	1	PLATE-SEPARATOR	
	5	1	**132-9899**	1	PLATE	
	6	1	**132-9900**	1	PLATE	
Y	7	1	*175-4972*	1	MANIFOLD & VALVE GP	243
Y	8	1	*201-7270*	1	VALVE GP-TRANSMISSION CONTROL	292
	9	1	**1T-0738**	16	WASHER (8.4X19X1.83MM THK)	
	10	1	**3S-2093**	4	STRAP-CABLE	
	11	1	**185-3503**	2	SEAL-O-RING	
	12	1	**4J-7533**	4	SEAL-O-RING	
	13	1	**185-3502**	2	SEAL-O-RING	
	14	1	**176-0259**	2	PLUG	
M	15	1	**7X-2541**	3	BOLT (M8X1.25X140MM)	
M	16	1	**8T-3647**	11	BOLT (M8X1.25X80MM)	
M	17	1	**8T-4177**	2	BOLT (M8X1.25X90MM)	
	18	1	**9L-9068**	4	DOWEL	

M-METRIC PART
Y-SEPARATE ILLUSTRATION

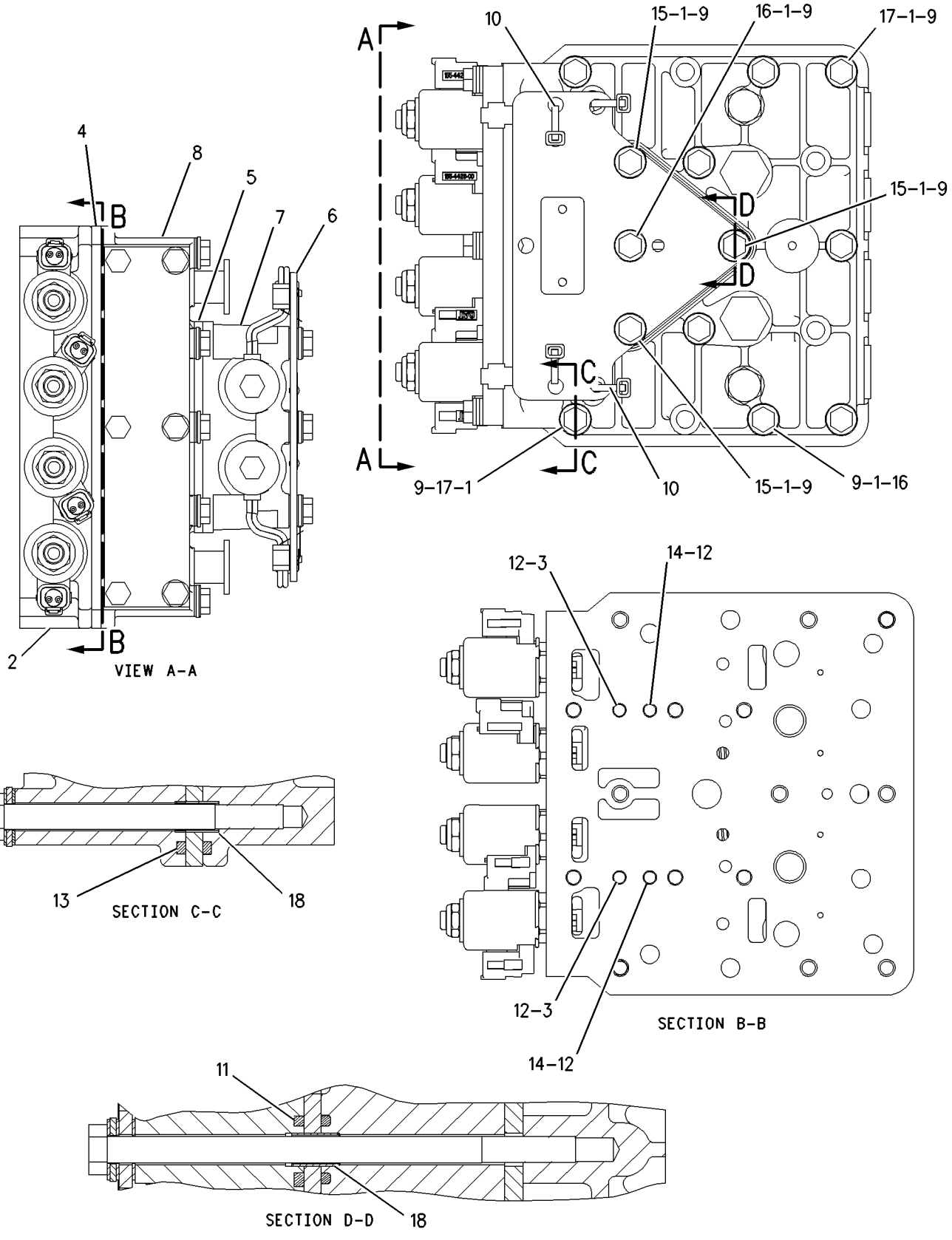

GRAPHIC #1 g00846982

160-8408 VALVE GP-MODULATING

S/N: BSG1-UP; BSR1-UP

PART OF 163-5641 CONTROL GP-TRANSMISSION HYD

SMCS-3139 **i01641979**

NOTE	REF NO	GRAPHIC REF	PART NUMBER	QTY	PART NAME 1 2 3 4 5 6 (PRODUCT LEVEL)	SEE PAGE
	1	1	**6V-3965**	1	FITTING AS	
	2	1	**145-1144**	1	COIL AS	
	3	1	**167-9524**	1	NUT-SELF LOCKING (1/2-28 THD)	
Z	4	1			VALVE AS	
	5	1	**164-2108**	1	WASHER (13.03X25.4X2.38MM THK)	
	6	1	**3J-1907**	1	SEAL-O-RING	

Z-NOT SERVICED SEPARATELY

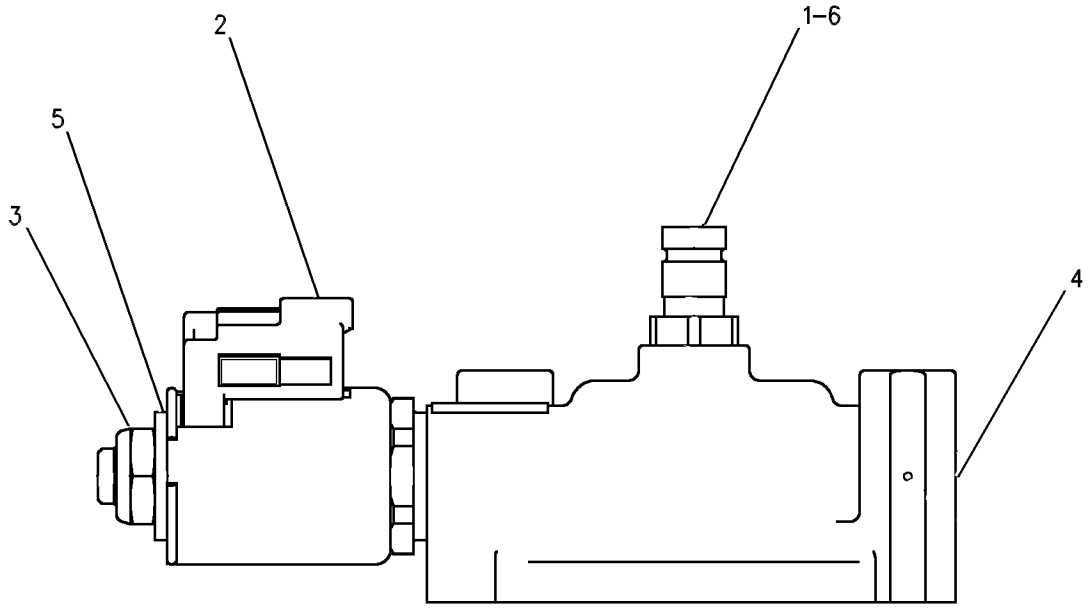

GRAPHIC #1 g00527971

MEMORANDA

145-8310 VALVE GP-PRIORITY

S/N: BLE1-UP; BMJ1-UP

PART OF 166-7067 LINES GP-POWER TRAIN OIL

SMCS-3180, 4320 **i01632920**

NOTE	REF NO	GRAPHIC REF	PART NUMBER	QTY	PART NAME 1 2 3 4 5 6 (PRODUCT LEVEL)	SEE PAGE
	1	1	**7J-0204**	5	SEAL-O-RING	
	2	1	**145-5375**	1	SPOOL AS	
		1	**5M-9548**	1	SPRING	
		1	**8J-6273**	1	RING-RETAINING	
		1	**8M-2537**	1	RETAINER	
		1	**108-8884**	1	SLEEVE	
	3	1	**129-5222**	1	SPRING	
	4	1	**129-5223**	1	SPRING	
	5	1	**108-6523**	2	ADJUSTER AS	
					(EACH INCLUDES)	
		1	**4K-2039**	1	SEAL-O-RING	
		1	**7M-8485**	1	SEAL-O-RING	
		1	**8T-4223**	1	WASHER-HARD (13.5X25.5X3MM THK)	
		1	**9U-8069**	1	PLUG	
M		1	**095-1207**	1	NUT (M12X1.75 THD)	
		1	**101-9754**	1	SCREW-ADJUSTMENT	
	6	1	**129-5476**	2	STOP	
Y	7	1	**198-4607**	1	VALVE GP-SOLENOID	291
	8	1	**9S-8010**	1	PLUG	
	9	1	**2S-4078**	1	SEAL-O-RING	
	10	1	**8P-0412**	1	SLUG	
	11	1	**4S-5983**	1	VALVE AS-RELIEF	
		1	**1L-3162**	1	RING-RETAINING	
		1	**4S-5982**	1	VALVE-RELIEF	
		1	**5M-9548**	1	SPRING	
		1	**5M-9554**	1	VALVE-CHECK	
		1	**8M-2537**	1	RETAINER	
	12	1	**8M-8627**	1	SPRING	
	13	1	**4M-5912**	1	SPRING	
	14	1	**6V-3965**	2	FITTING AS	
	15	1	**3J-1907**	2	SEAL-O-RING	
	16	1	**6V-0852**	2	CAP-DUST	
	17	1	**124-6657**	1	ORIFICE (WHITE)	
	18	1	**119-7833**	1	ORIFICE (PINK)	
	19	1	**124-6654**	1	ORIFICE (RED)	
	20	1	**3S-2173**	1	PLUG-CUP	
	21	1	**9S-8007**	5	PLUG (3/8-24 THD)	

M-METRIC PART
Y-SEPARATE ILLUSTRATION

145-8310 VALVE GP-PRIORITY *(contd.)* i01632920

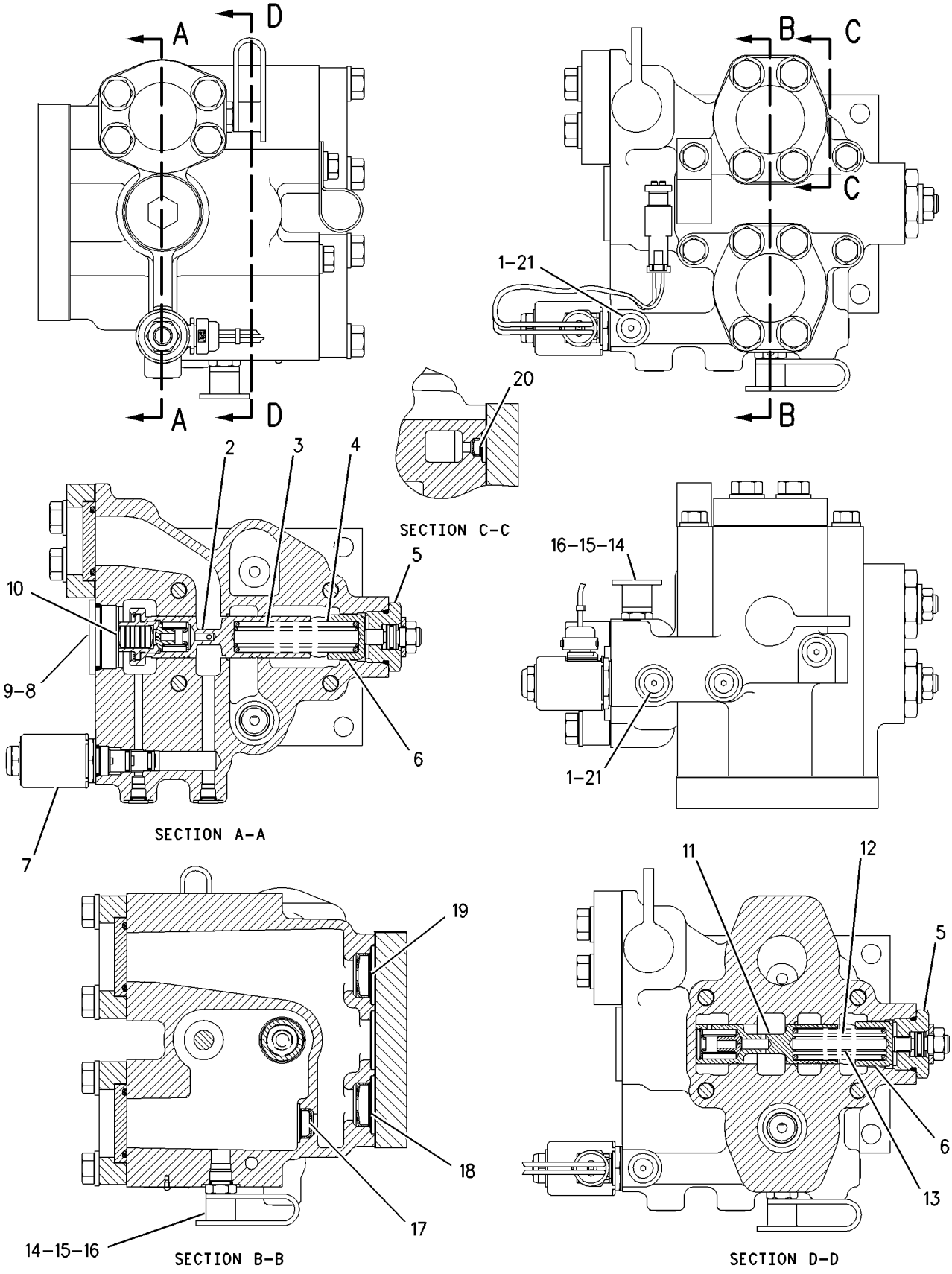

GRAPHIC #1 g00847267

9W-5596 VALVE GP-RELIEF

S/N: BLE1-UP; BMJ1-UP

PART OF 166-7067 LINES GP-POWER TRAIN OIL

SMCS-3133, 3182 **i01630435**

NOTE	REF NO	GRAPHIC REF	PART NUMBER	QTY	PART NAME 1 2 3 4 5 6 (PRODUCT LEVEL)	SEE PAGE
	1	1	**6V-0852**	1	CAP-DUST	
	2	1	**3T-6286**	1	HOUSING AS-RELIEF VALVE	
		1	**7M-1377**	1	STOP-VALVE	
	3	1	**4M-8239**	2	COVER	
	4	1	**7M-1296**	1	VALVE-RELIEF	
B	5	1	**5M-9623**	5	SHIM (0.9MM THK)	
	6	1	**0S-1594**	4	BOLT (3/8-16X1 IN)	
	7	1	**3B-4506**	4	LOCKWASHER	
	8	1	**7M-1297**	1	SPRING	
	9	1	**8M-4986**	3	SEAL-O-RING	
	10	1	**6V-3965**	1	FITTING AS	
	11	1	**7B-3028**	1	SCREW-DRIVE (NO 4X3/16 IN)	
	12	1	**3J-1907**	1	SEAL-O-RING	
	13	1	**9W-5594**	1	PLATE-IDENTIFICATION	
	14	1	**9W-5595**	1	SPRING	
	15	1	**3J-5554**	1	GASKET	
	16	1	**8J-4398**	1	COVER	
	17	1	**3L-0526**	2	BOLT (7/16-14X.875IN)	
	18	1	**6C-5341**	1	GASKET	
	19	1	**6C-5340**	1	COVER	
	20	1	**0T-0573**	3	BOLT (3/8-16X2.75 IN)	
	21	1	**9S-8752**	3	NUT-FULL (3/8-16 THD)	
	22	1	**6V-4365**	1	SEAL-O-RING	

B-USE AS REQUIRED

9W-5596 **VALVE GP-RELIEF** ***(contd.)*** **i01630435**

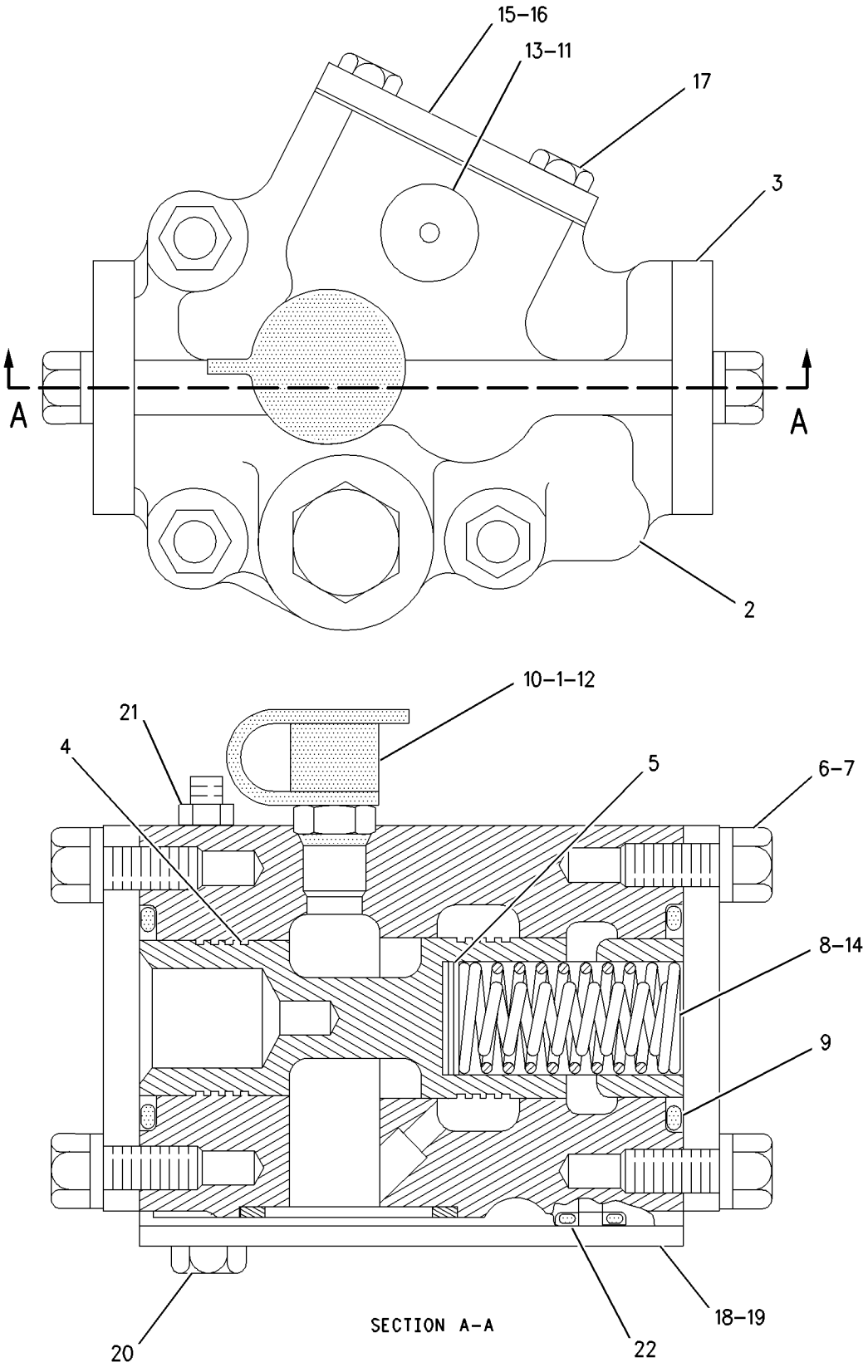

GRAPHIC #1 g00844984

109-4365 VALVE GP-RELIEF

S/N: BSG1-UP; BSR1-UP

PART OF 163-5641 CONTROL GP-TRANSMISSION HYD

SMCS-3133, 3182 **i01668492**

NOTE	REF NO	GRAPHIC REF	PART NUMBER	QTY	PART NAME 1 2 3 4 5 6 (PRODUCT LEVEL)	SEE PAGE
	1	1	**108-2096**	1	MANIFOLD	
	2	1	**106-9214**	1	PLATE	
	3	1	**2B-2695**	6	BOLT (5/16-18X0.875 IN)	
	4	1	**9M-1974**	7	WASHER-HARD (8.8X16X2MM THK)	
	5	1	**109-3968**	1	SPOOL AS-RELIEF	
	6	1	**106-9212**	1	SPRING	
	7	1	**109-3969**	1	STOP	
	8	1	**4M-5905**	1	SCREW-ADJUSTMENT (5/16-18X1 IN)	
	9	1	**5B-3180**	1	NUT (5/16-18 THD)	
	10	1	**6Y-4638**	1	PLUG-HEX SOCKET	
	11	1	**7M-8485**	1	SEAL-O-RING	
	12	1	**2M-7041**	1	SLUG	

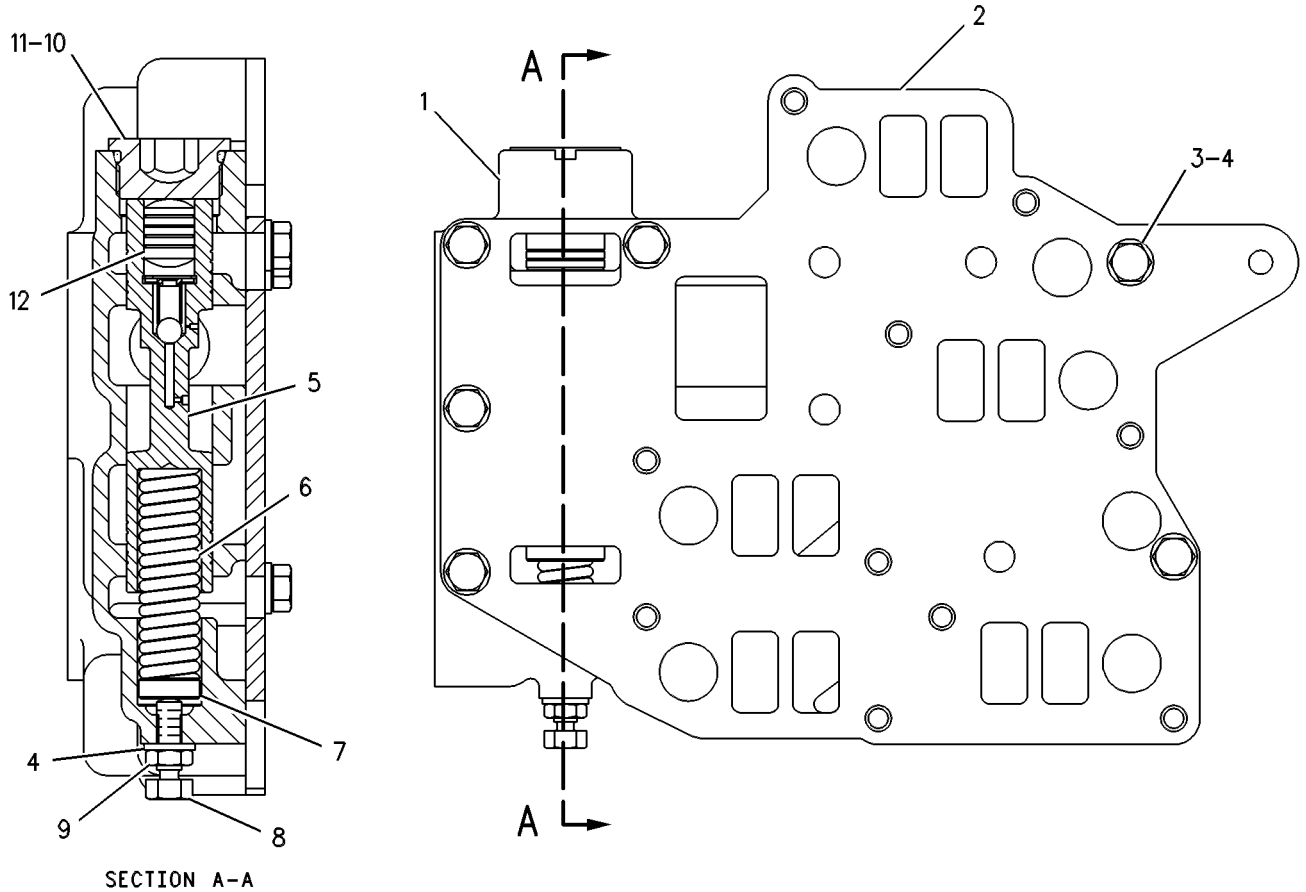

GRAPHIC #1 g00254128

172-2392 VALVE GP-SOLENOID

S/N: BLE1-UP; BMJ1-UP

PART OF 175-4972 MANIFOLD & VALVE GP

SMCS-4282, 5479 **i01497237**

NOTE	REF NO	GRAPHIC REF	PART NUMBER	QTY	PART NAME 1 2 3 4 5 6 (PRODUCT LEVEL)	SEE PAGE
	1	1	**156-5970**	1	NUT (1/2-20-2B THD)	
	2	1	**133-2249**	1	COIL AS	
		1	**1S-9593**	2	STRAP-CABLE	
		1	**8T-8729**	2	PIN-CONNECTOR	
		1	**8T-8737**	2	PLUG-SEAL	
		1	**102-8804**	1	KIT-RECEPTACLE (4 PIN)	
					(INCLUDES RECEPTACLE AS & WEDGE)	
	3	1	**172-2391**	1	SPOOL AS	
		1	**156-5970**	1	NUT (1/2-20-2B THD)	
					AVAILABLE REPAIR KIT(S):	
			189-1839	1	KIT-SEAL	
					(INCLUDES SEALS & RING-BACK UP)	

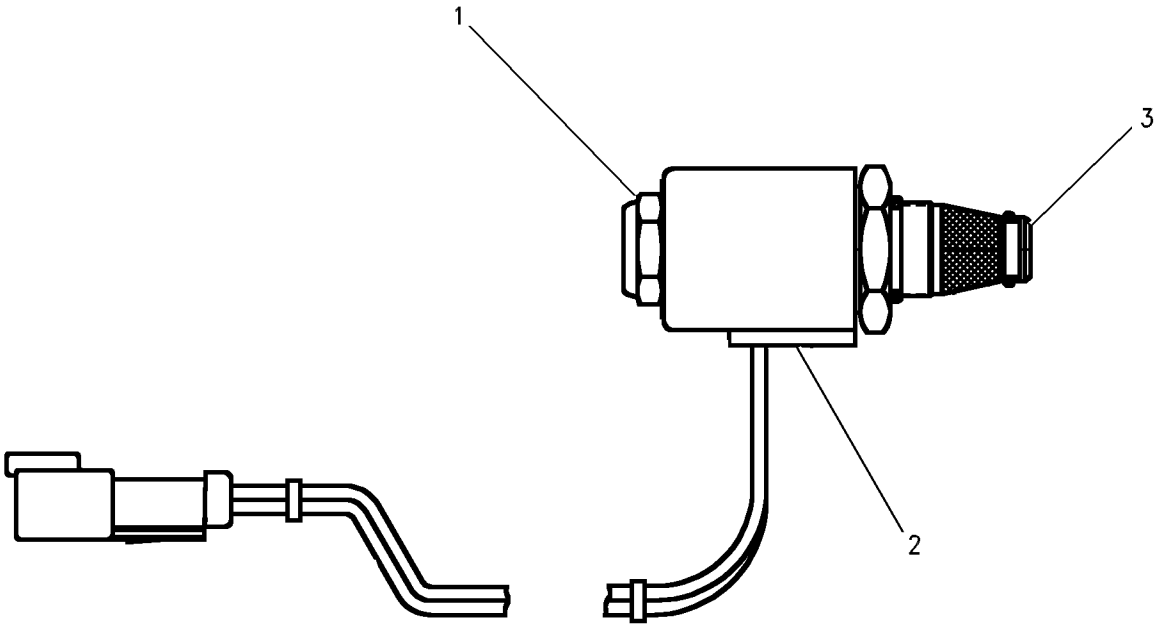

GRAPHIC #1 g00653409

174-4909 VALVE GP-SOLENOID

S/N: BLE1-UP; BMJ1-UP

PART OF 164-6093 MANIFOLD & VALVE GP

SMCS-4282, 5479 **i01496970**

NOTE	REF NO	GRAPHIC REF	PART NUMBER	QTY	PART NAME 1 2 3 4 5 6 (PRODUCT LEVEL)	SEE PAGE
	1	1	**145-1144**	1	COIL AS	
	2	1	**164-2108**	1	WASHER (13.03X25.4X2.38MM THK)	
	3	1	**167-9524**	1	NUT-SELF LOCKING (1/2-28 THD)	
	4	1	**8L-2746**	1	SEAL-O-RING	
	5	1	**6V-4589**	1	SEAL-O-RING	

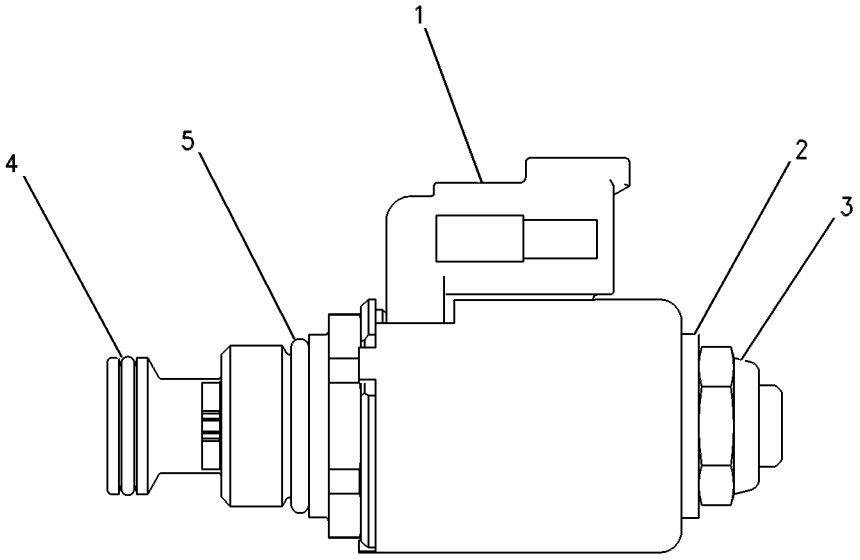

GRAPHIC #1 g00638363

198-4607 VALVE GP-SOLENOID

S/N: BLE1-UP; BMJ1-UP

PART OF 145-8310 VALVE GP-PRIORITY

SMCS-4282, 5479 **i01668499**

NOTE	REF NO	GRAPHIC REF	PART NUMBER	QTY	PART NAME 1 2 3 4 5 6 (PRODUCT LEVEL)	SEE PAGE
	1	1	**9X-7202**	1	WASHER (13.59X23.88X1.02MM THK)	
	2	1	**156-5970**	1	NUT (1/2-20-2B THD)	
	3	1	**176-6496**	1	COIL AS	
		1	**1S-9593**	2	STRAP-CABLE	
		1	**102-8802**	1	KIT-RECEPTACLE (2 PIN)	
					(INCLUDES RECEPTACLE AS & WEDGE)	
		1	**8T-8729**	2	PIN-CONNECTOR	
		1	**033-6032**	1	SEAL-O-RING	
	4	1	**198-4605**	1	SPOOL AS	
		1	**9X-7202**	1	WASHER (13.59X23.88X1.02MM THK)	
		1	**156-5970**	1	NUT (1/2-20-2B THD)	
					AVAILABLE REPAIR KIT(S):	
			7T-4515	1	KIT-SEAL	
					(INCLUDES 3 SEALS	

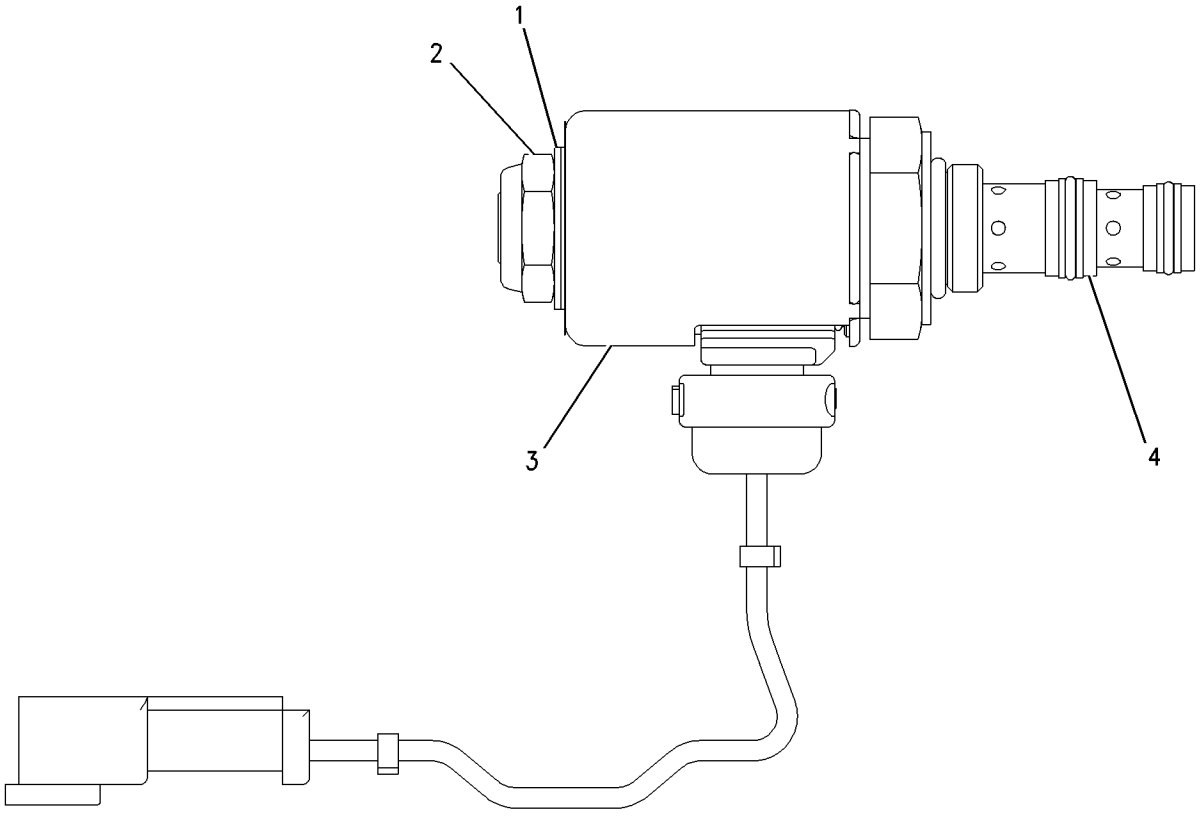

GRAPHIC #1 g00845356

201-7270 VALVE GP-TRANSMISSION CONTROL

S/N: BLE1-UP; BMJ1-UP

PART OF 201-7272 VALVE GP-CONTROL

SMCS-3073 **i01590447**

NOTE	REF NO	GRAPHIC REF	PART NUMBER	QTY	PART NAME 1 2 3 4 5 6 (PRODUCT LEVEL)	SEE PAGE
	1	1	**188-7067**	4	SPRING	
	2	1	**188-7068**	4	RETAINER	
	3	1	**188-7069**	4	PISTON-LOAD	
	4	1	**108-4430**	4	SPRING	
	5	1	**108-4433**	1	PLATE-END	
	6	1	**9S-8008**	4	PLUG	
	7	1	**133-3248**	2	VALVE-CHECK	
M	8	1	**8T-7547**	3	BOLT (M8X1.25X30MM)	
	9	1	**2M-9780**	2	SEAL-O-RING	
	10	1	**3D-2824**	4	SEAL-O-RING	
	11	1	**3J-1907**	2	SEAL-O-RING	
	12	1	**9S-4190**	2	PLUG	
	13	1	**6J-2419**	4	SEAL-O-RING	
	14	1	**3G-3250**	2	PLUG	
	15	1	**8T-4224**	3	WASHER-HARD (8.8X16X2MM THK)	
M	16	1	**7X-2537**	3	BOLT (M8X1.25X35MM)	

M-METRIC PART

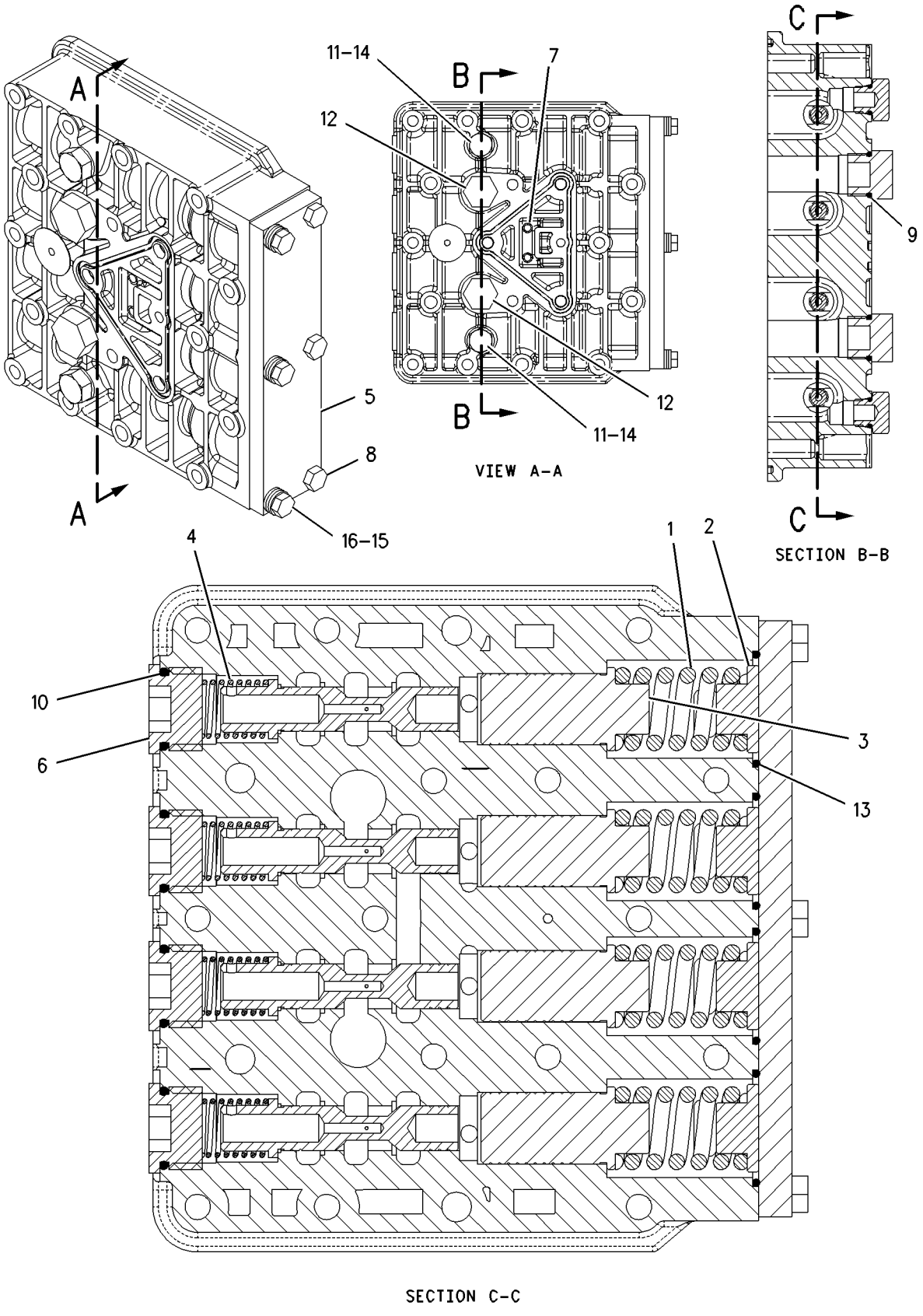

GRAPHIC #1 g00807926

FRAME AND BODY

169-0781 BATTERY BOX GP

S/N: BLE1-UP; BMJ1-UP

PART OF 164-4782, 164-4784 CHASSIS AR

SMCS-7257 **i01668502**

NOTE	REF NO	GRAPHIC REF	PART NUMBER	QTY	PART NAME 1 2 3 4 5 6 (PRODUCT LEVEL)	SEE PAGE
	1	1	**3B-4610**	1	PIN-COTTER	
	2	1	**5P-8502**	2	PADLOCK GP	
					(EACH INCLUDES)	
A		1	**5P-8500**	1	KEY	
A		1	**8Y-6364**	1	SLEEVE	
	3	1	**6D-1746**	1	BOLT (1/2-13X1.32 IN)	
	4	1	**7T-7523**	1	PLATE AS	
		1	**1F-0748**	1	NUT-WELD (1/2-13 THD)	
B	5	1	**8B-4624**	1	SHIM (.032MM THK)	
	6	1	**141-8984**	2	BRACKET AS	
					(EACH INCLUDES)	
		1	**1F-0748**	1	NUT-WELD (1/2-13 THD)	
	7	1	**153-7033**	1	DOOR AS	
Y	8	1	*197-5061*	1	BATTERY BOX GP	296
	9	1	**4L-6454**	8	BOLT (3/8-16X1 IN)	
	10	1	**5P-1075**	14	WASHER-HARD (10.2X22.5X3MM THK)	
	11	1	**5P-8167**	2	BOLT (3/8-16X0.625 IN)	
M	12	1	**8T-4191**	4	BOLT (M10X1.5X16MM)	
	13	1	**8T-4223**	3	WASHER-HARD (13.5X25.5X3MM THK)	
	14	1	**8T-9384**	2	BOLT (1/2-13X0.875 IN)	
	15	1	**3E-4044**	3	PLUG	

A-NOT PART OF THIS GROUP
B-USE AS REQUIRED
M-METRIC PART
Y-SEPARATE ILLUSTRATION

169-0781 **BATTERY BOX GP** ***(contd.)*** **i01668502**

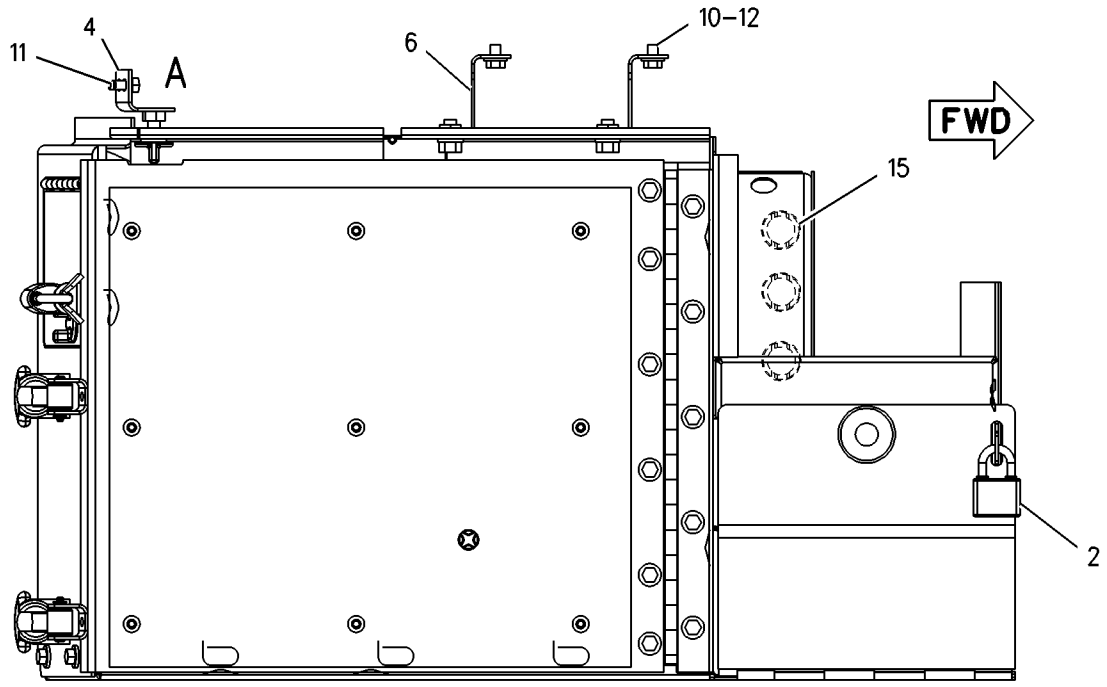

TOP VIEW

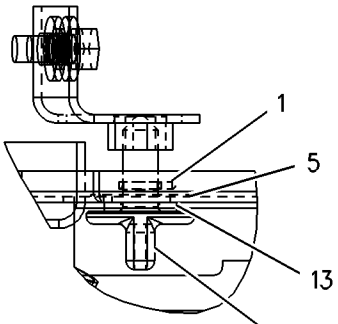

VIEW OF AREA A

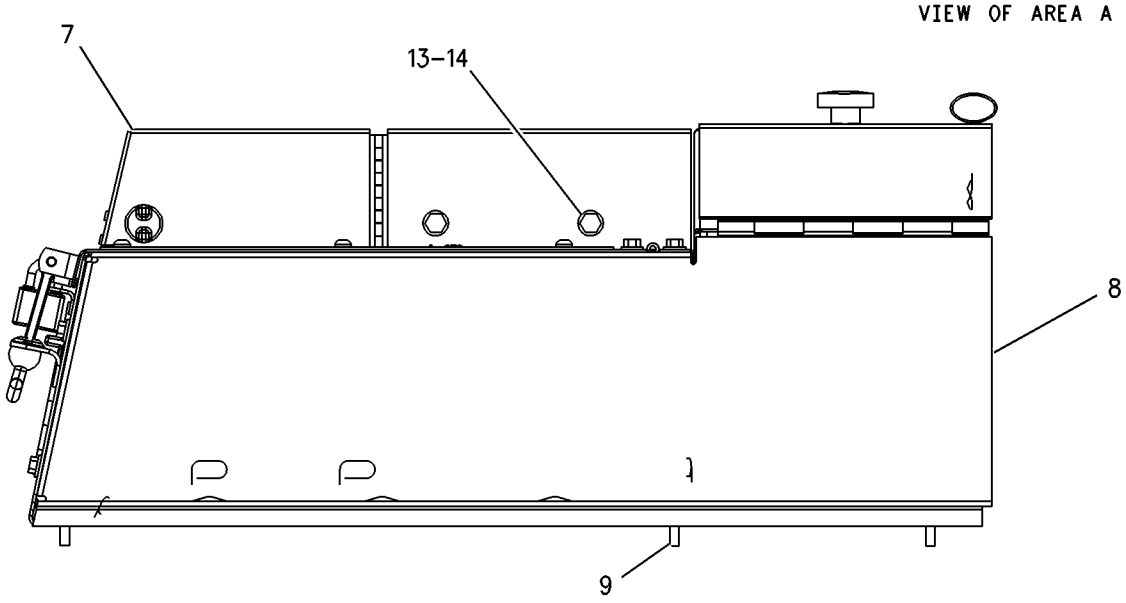

RIGHT SIDE VIEW

GRAPHIC #1 g00794259

197-5061 BATTERY BOX GP

S/N: BLE1-UP; BMJ1-UP

PART OF 169-0781 BATTERY BOX GP

SMCS-7257 **i01589754**

NOTE	REF NO	GRAPHIC REF	PART NUMBER	QTY	PART NAME 1 2 3 4 5 6 (PRODUCT LEVEL)	SEE PAGE
	1	1	**2M-5795**	2	PIN-CLEVIS	
	2	1	**3B-4610**	1	PIN-COTTER	
	3	1	**5V-1496**	2	RETAINER	
	4	1	**6D-1746**	1	BOLT (1/2-13X1.32 IN)	
	5	1	**6J-0488**	9	SCREW-BUTTON HEAD (3/8-16X0.875 IN)	
	6	1	**6V-9197**	2	LOCK PIN	
	7	1	**6Y-3973**	1	LINK	
	8	1	**6Y-3974**	1	PLATE	
B	9	1	**8B-4624**	1	SHIM (.032MM THK)	
	10	1	**8T-4222**	2	WASHER-PLATED (11X32X2.5MM THK)	
	11	1	**9M-3835**	2	LATCH-RUBBER	
	12	1	**9S-8230**	1	PLATE AS	
		1	**1F-0750**	1	NUT-WELD (3/8-16 THD)	
	13	1	**110-7665**	1	COVER AS	
		1	**1F-0750**	9	NUT-WELD (3/8-16 THD)	
		1	**9M-3838**	2	BRACKET	
	14	1	**110-7670**	1	PLATE	
	15	1	**118-8136**	1	HINGE AS	
		1	**1F-0750**	11	NUT-WELD (3/8-16 THD)	
	16	1	**5P-1075**	16	WASHER-HARD (10.2X22.5X3MM THK)	
	17	1	**5P-8167**	15	BOLT	
	18	1	**4H-1641**	1	PIN-SPRING	
	19	1	**8E-7561**	1	KNOB AS	
	20	1	**8E-1205**	1	KNOB	
	21	1	**8T-7566**	1	PIN-SPRING	
	22	1	**7S-2042**	1	STUD	
	23	1	**197-5060**	1	COVER AS	
	24	1	**1S-6385**	1	LUG	
	25	1	**6K-1049**	1	HINGE	
	26	1	**6Y-8735**	1	DOOR	
	27	1	**1F-0748**	1	NUT-WELD (1/2-13 THD)	
	28	1	**7T-1099**	2	LINK	
	29	1	**197-5062**	1	COVER AS	
	30	1	**1F-0750**	6	NUT-WELD (3/8-16 THD)	
	31	1	**7T-1099**	8	LINK	
	32	1	**9F-6445**	4	NUT-WELD (1/4-20 THD)	

B-USE AS REQUIRED

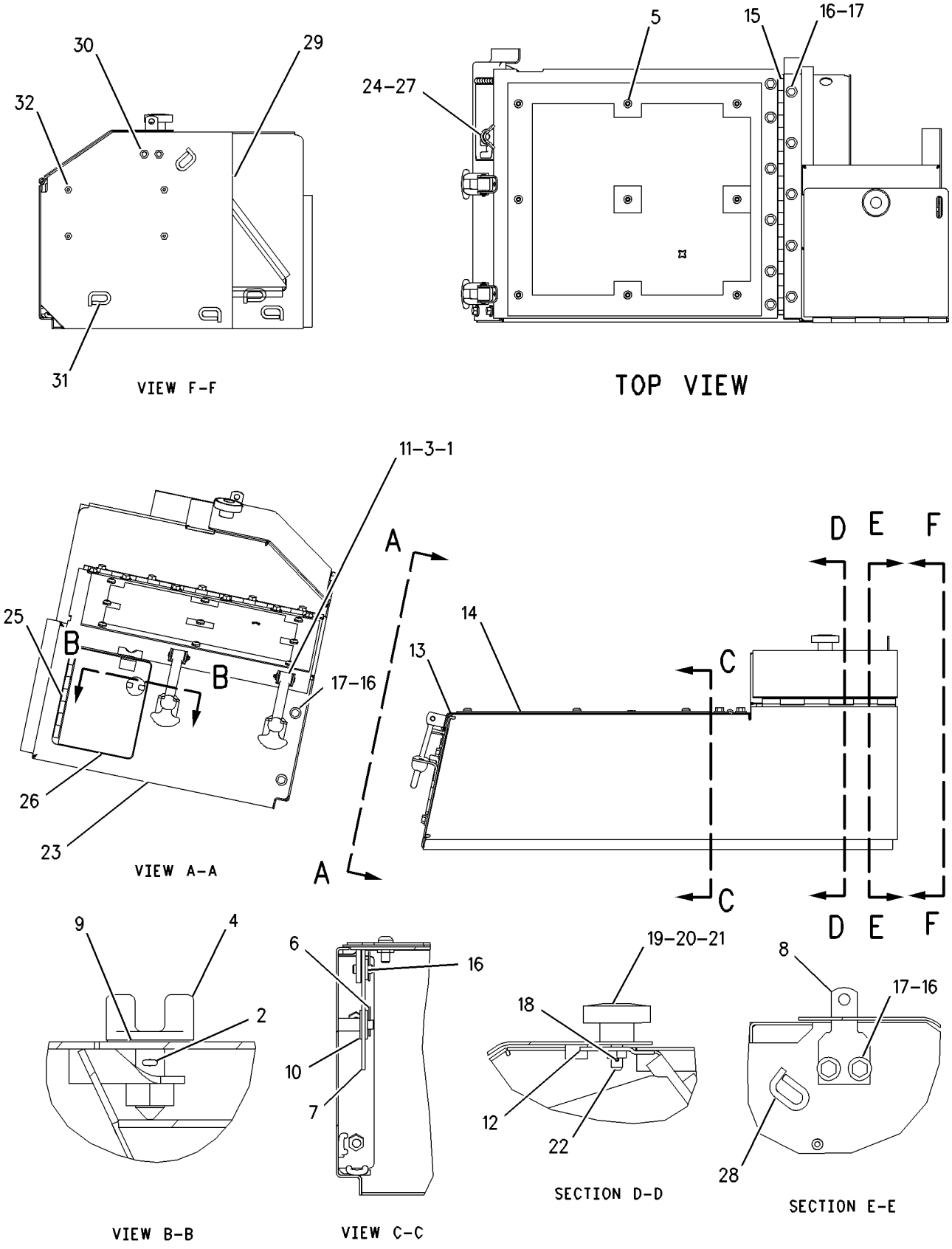

GRAPHIC #1

g00741755

FRAME AND BODY

168-6541 CASE & FRAME GP

S/N: BLE1-UP; BMJ1-UP

PART OF 164-4782, 164-4784 CHASSIS AR

SMCS-7051 **i01589703**

NOTE	REF NO	GRAPHIC REF	PART NUMBER	QTY	PART NAME 1 2 3 4 5 6 (PRODUCT LEVEL)	SEE PAGE
	1	1	**1J-8668**	2	STUD-TAPERLOCK	
	2	1	**3T-0996**	2	BEARING-SLEEVE	
	3	1	**3T-0997**	2	BEARING-SLEEVE	
	4	1	**6F-0711**	1	SEAL-O-RING	
	5	1	**106-8186**	1	VALVE-DRAIN	
	6	1	**106-8187**	1	PLUG	
	7	1	**168-6542**	1	CASE & FRAME AS	
	8	1	**3J-5169**	3	NUT (5/8-11 THD)	
	9	1	**4L-6454**	4	BOLT (3/8-16X1 IN)	
	10	1	**5K-0461**	1	CLIP	
	11	1	**5P-1075**	4	WASHER-HARD (10.2X22.5X3MM THK)	
	12	1	**5R-0939**	1	CLIP (TAB)	
	13	1	**5R-0940**	1	CLIP (SLOT)	
	14	1	**8G-4386**	14	SLEEVE	
	15	1	**8G-5247**	2	SLEEVE	
	16	1	**130-3374**	1	CLIP	

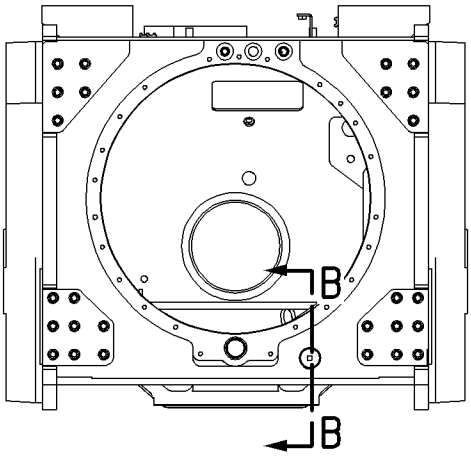

REAR VIEW

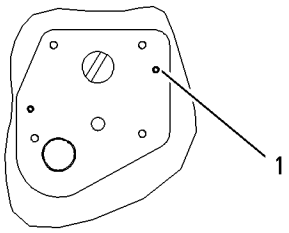

SECTION A-A

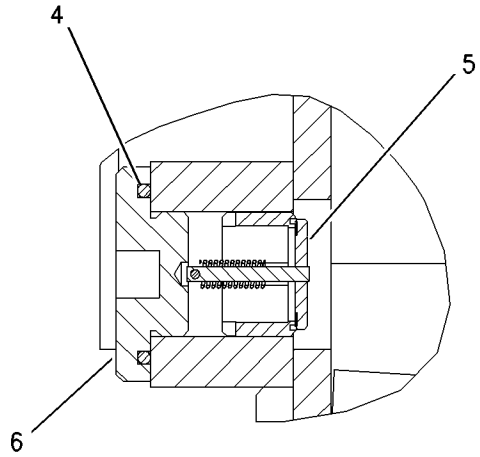

SECTION B-B

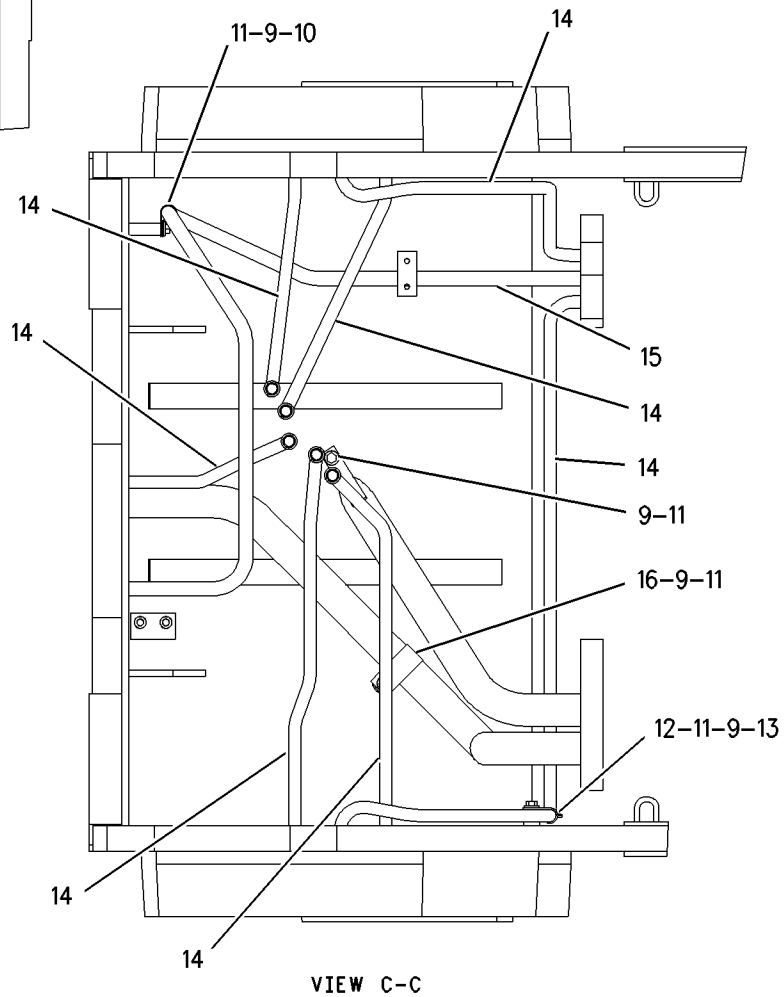

VIEW C-C

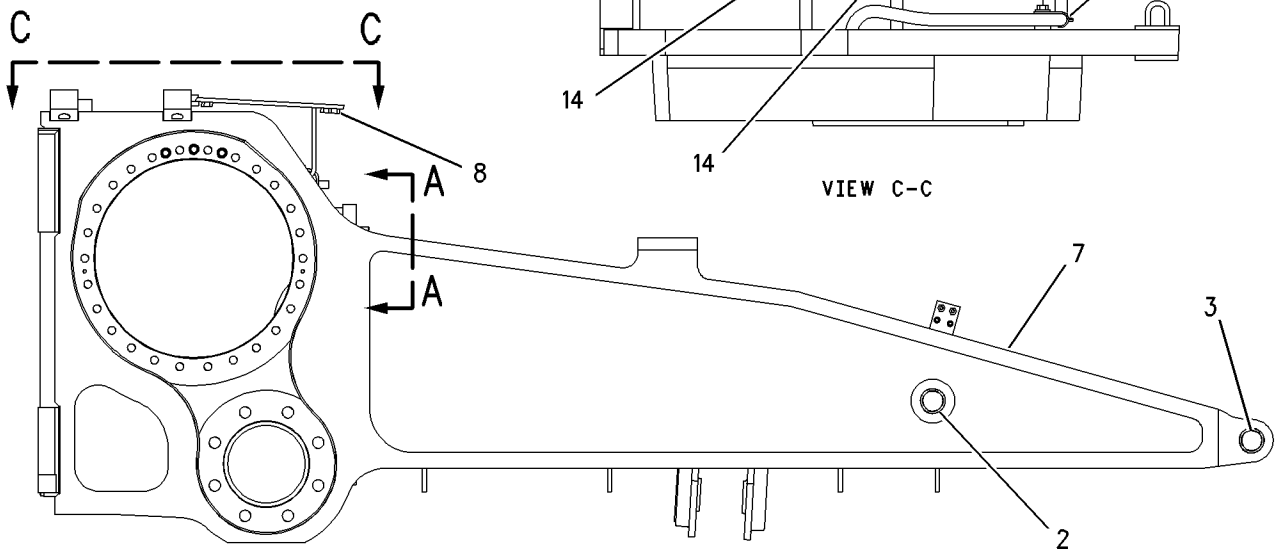

RIGHT SIDE VIEW

GRAPHIC #1 g00656000

FRAME AND BODY

216-7293 CASE & FRAME GP

S/N: BLE1-UP; BMJ1-UP
PART OF 216-3233 WASTE HANDLING AR
AN ATTACHMENT

SMCS-7051 **i01663457**

NOTE	REF NO	GRAPHIC REF	PART NUMBER	QTY	PART NAME 1 2 3 4 5 6 (PRODUCT LEVEL)	SEE PAGE
	1	1	**1J-8668**	2	STUD-TAPERLOCK	
	2	1	**3T-0996**	2	BEARING-SLEEVE	
	3	1	**3T-0997**	2	BEARING-SLEEVE	
	4	1	**6F-0711**	1	SEAL-O-RING	
	5	1	**106-8186**	1	VALVE-DRAIN	
	6	1	**106-8187**	1	PLUG	
	7	1	**168-6542**	1	CASE & FRAME AS	
	8	1	**3J-5169**	3	NUT (5/8-11 THD)	
	9	1	**4L-6454**	4	BOLT (3/8-16X1 IN)	
	10	1	**5K-0461**	1	CLIP	
	11	1	**5P-1075**	4	WASHER-HARD (10.2X22.5X3MM THK)	
	12	1	**5R-0939**	1	CLIP (TAB)	
	13	1	**5R-0940**	1	CLIP (SLOT)	
	14	1	**8G-4386**	14	SLEEVE	
	15	1	**8G-5247**	2	SLEEVE	
	16	1	**130-3374**	1	CLIP	
F		1	**7X-1456**	26	PLUG	

F-NOT SHOWN

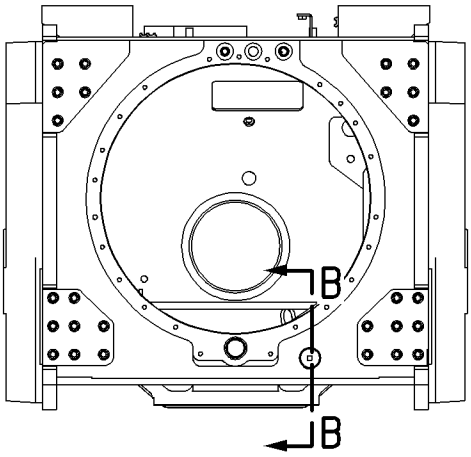

REAR VIEW

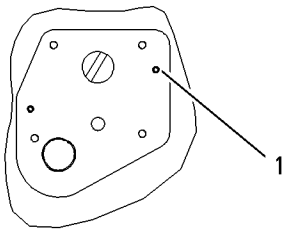

SECTION A-A

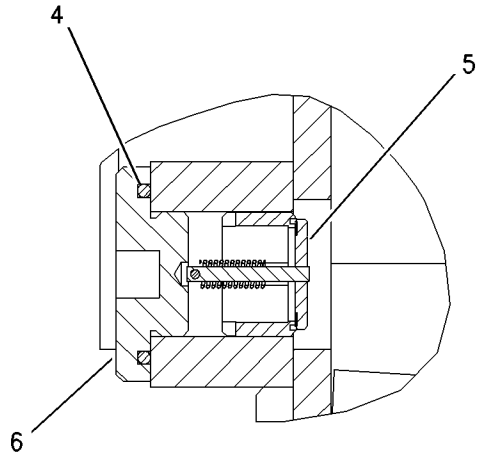

SECTION B-B

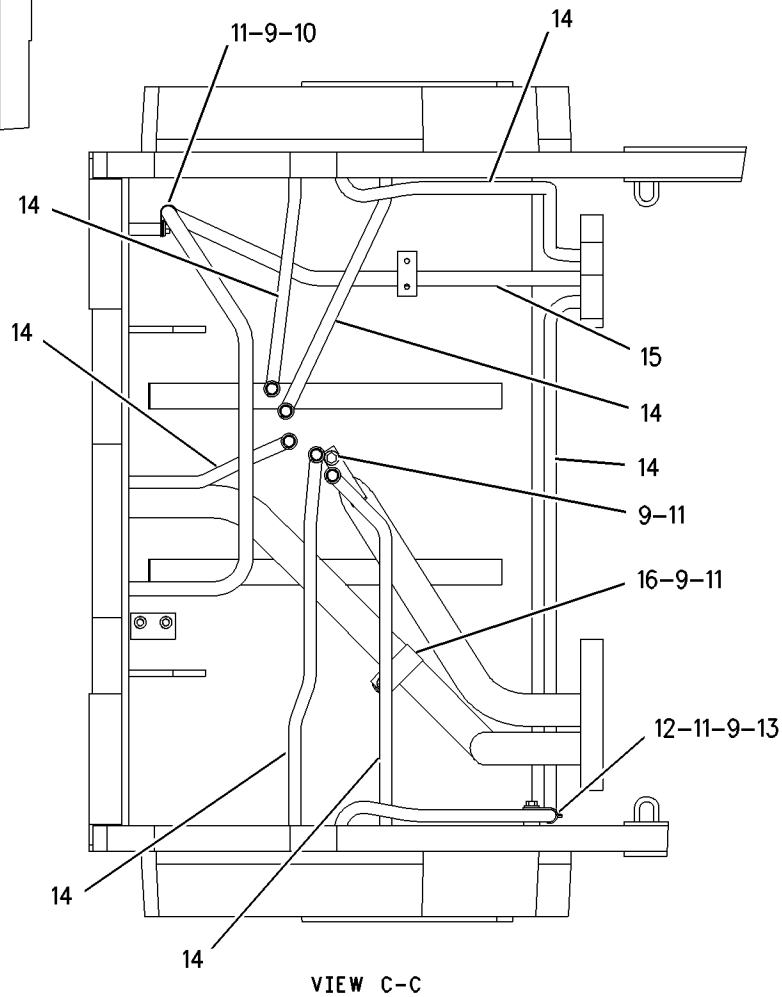

VIEW C-C

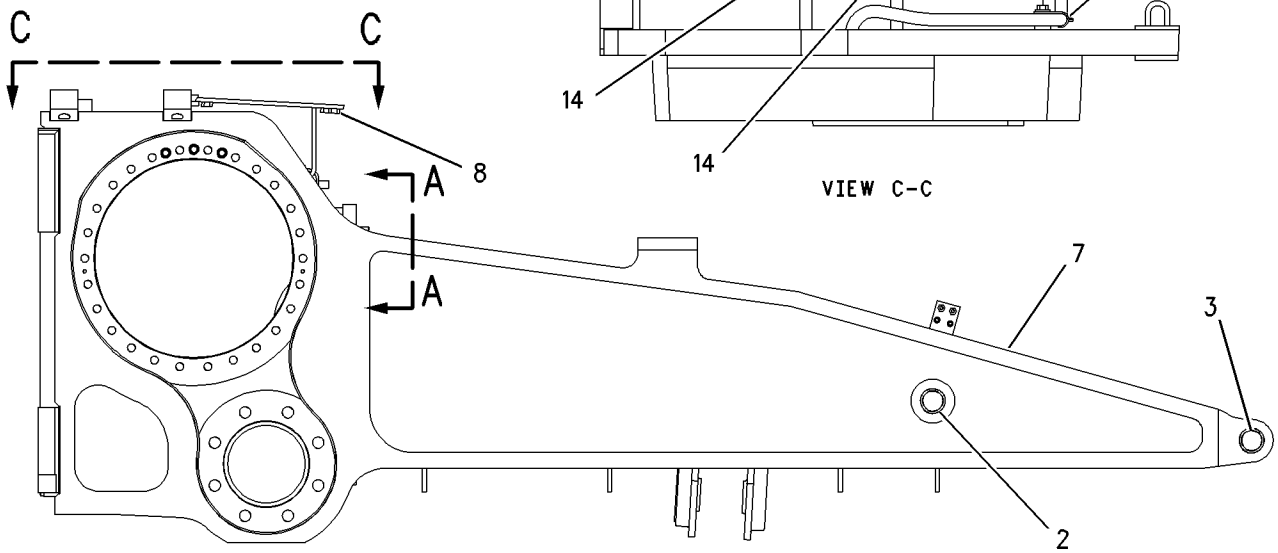

RIGHT SIDE VIEW

GRAPHIC #1 g00656000

FRAME AND BODY

164-4782 CHASSIS AR

S/N: BLE1-UP

PART OF 211-4625 GENERAL AR

SMCS-7000 **i01589607**

NOTE	PART NUMBER	QTY	PART NAME 1 2 3 4 5 6 (PRODUCT LEVEL)	SEE PAGE
Y	**166-7390**	1	BATTERY & WIRING GP	138
Y	**169-0781**	1	BATTERY BOX GP	294
Y	**168-6541**	1	CASE & FRAME GP	298
Y	**197-4158**	1	ENCLOSURE GP-FENDER	316
Y	**168-8597**	1	FENDER GP	318
Y	**190-5478**	1	GUARD GP-BOTTOM	328
Y	**169-3692**	1	GUARD GP-RADIATOR	336
Y	**169-0765**	1	HOOD & GUARD GP	344
Y	**170-6614**	1	INSTRUMENT GP	632
Y	**165-2555**	1	LINES GP-FUEL	114
Y	**168-9265**	1	MOUNTING GP-ROPS	657
Y	**164-9943**	1	PLATE & FILM GP	730
Y	**156-4755**	1	PLATFORM GP-CAB	666
Y	**184-6631**	1	PLUG AS-WIRING	171
Y	**183-9253**	1	ROPS GP	676
Y	**163-3283**	1	SEAT GP	682
Y	**170-4876**	1	TANK GP-FUEL	124
Y	**166-7391**	1	WIRING GP-PLATFORM	202

Y-SEPARATE ILLUSTRATION

FRAME AND BODY

164-4784 CHASSIS AR

S/N: BMJ1-UP

PART OF 211-4627 GENERAL AR

SMCS-7000 **i01592507**

NOTE	PART NUMBER	QTY	PART NAME 1 2 3 4 5 6 (PRODUCT LEVEL)	SEE PAGE
Y	*166-7390*	1	BATTERY & WIRING GP	138
Y	*169-0781*	1	BATTERY BOX GP	294
Y	*168-6541*	1	CASE & FRAME GP	298
Y	*197-4158*	1	ENCLOSURE GP-FENDER	316
Y	*168-8597*	1	FENDER GP	318
Y	*190-5478*	1	GUARD GP-BOTTOM	328
Y	*169-3692*	1	GUARD GP-RADIATOR	336
Y	*169-0765*	1	HOOD & GUARD GP	344
Y	*170-6614*	1	INSTRUMENT GP	632
Y	*165-2555*	1	LINES GP-FUEL	114
Y	*168-9265*	1	MOUNTING GP-ROPS	657
Y	*164-9945*	1	PLATE & FILM GP	732
Y	*156-4755*	1	PLATFORM GP-CAB	666
Y	**184-6631**	1	PLUG AS-WIRING	171
Y	*183-9253*	1	ROPS GP	676
Y	*163-3283*	1	SEAT GP	682
Y	*170-4876*	1	TANK GP-FUEL	124
Y	*166-7391*	1	WIRING GP-PLATFORM	202

Y-SEPARATE ILLUSTRATION

FRAME AND BODY

192-3016 COVER GP

S/N: BLE1-UP; BMJ1-UP

PART OF 156-4755 PLATFORM GP-CAB

SMCS-7251, 7300 **i01589640**

NOTE	REF NO	GRAPHIC REF	PART NUMBER	QTY	PART NAME 1 2 3 4 5 6 (PRODUCT LEVEL)	SEE PAGE
	1	1	**169-9639**	1	COVER AS	
	2	1	**192-3017**	2	ROLLER	
	3	1	**192-3018**	1	ROD	
	4	1	**193-7377**	2	PANEL	
	5	1	**5P-7177**	2	RETAINER	
BD	6	1	**6V-1359**		SEAL	
BD	7	1	**6V-2803**		SEAL	

B-USE AS REQUIRED
D-ORDER BY THE METER

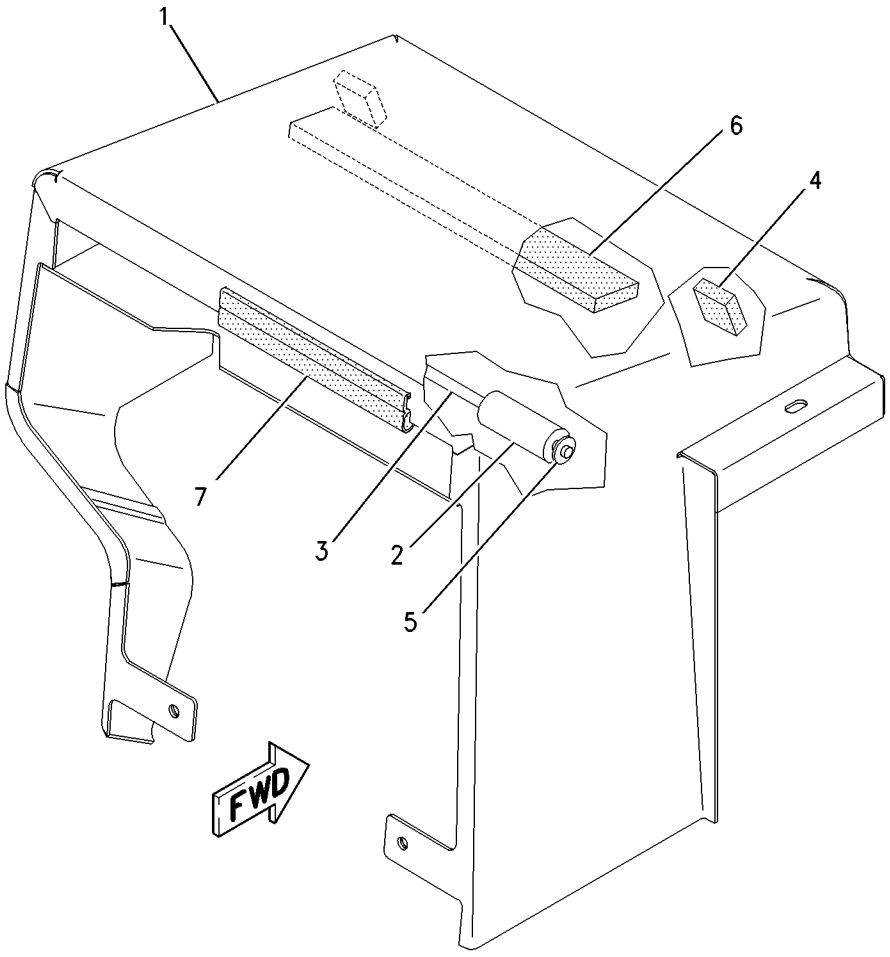

GRAPHIC #1 g00764398

FRAME AND BODY

3W-6866 DRAWBAR GP*I

S/N: BLE1-UP; BMJ1-UP

AN ATTACHMENT

SMCS-7105, 7119 **i01668504**

NOTE	REF NO	GRAPHIC REF	PART NUMBER	QTY	PART NAME 1 2 3 4 5 6 (PRODUCT LEVEL)	SEE PAGE
	1	1	**3W-6867**	1	DRAWBAR AS	
		1	**1P-1547**	1	PLATE-LOCK	
	2	1	**5D-3118**	10	STUD-TAPERLOCK	
	3	1	**8T-5361**	10	WASHER-HARD (28X49X5MM THK)	
	4	1	**6V-8190**	10	NUT (1-8 THD)	
	5	1	**7B-0863**	1	LATCH-PIN	
	6	1	**7X-3193**	1	BOLT (5/8-18X3.25IN)	
		1	**2K-4821**	1	LOCKNUT (5/8-18 THD)	
					-OR-	
		1	**7X-0347**	1	BOLT (5/8-11X2.25 IN)	
		1	**3K-2889**	1	LOCKNUT (5/8-11 THD)	
	7	1	**7F-9547**	1	PIN AS-DRAWBAR	
		1	**7F-9543**	1	COLLAR	

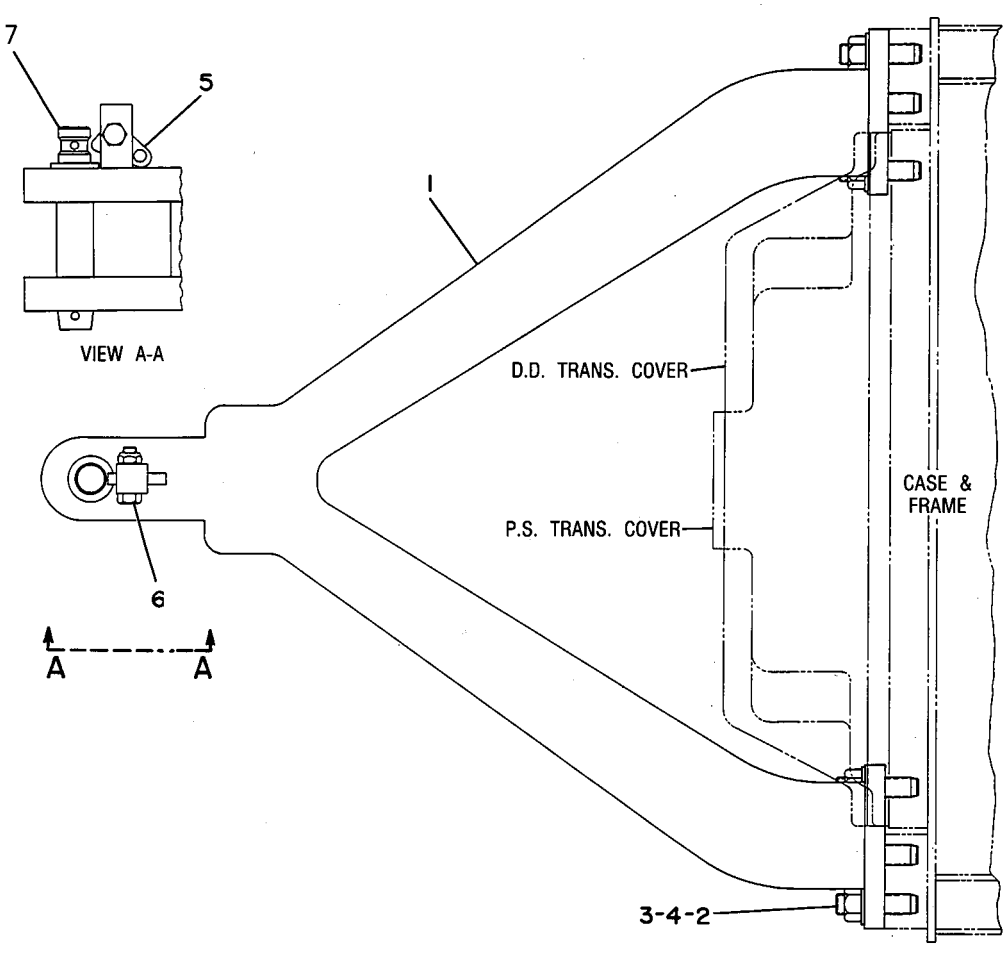

GRAPHIC #1 g00238444

7G-8975 DRAWBAR GP

S/N: BLE1-UP; BMJ1-UP

AN ATTACHMENT

SMCS-7105, 7119 **i01668507**

NOTE	REF NO	GRAPHIC REF	PART NUMBER	QTY	PART NAME 1 2 3 4 5 6 (PRODUCT LEVEL)	SEE PAGE
	1	1	**3W-2182**	1	DRAWBAR AS	
	2	1	**1P-1547**	1	PLATE-LOCK	
	3	1	**7B-0863**	1	LATCH-PIN	
	4	1	**7X-3193**	1	BOLT (5/8-18X3.25IN)	
		1	**2K-4821**	1	LOCKNUT (5/8-18 THD)	
					—OR—	
		1	**7X-0347**	1	BOLT (5/8-11X2.25 IN)	
		1	**3K-2889**	1	LOCKNUT (5/8-11 THD)	
	5	1	**7F-9547**	1	PIN AS-DRAWBAR	
	6	1	**7F-9543**	1	COLLAR	
	7	1	**5D-3118**	10	STUD-TAPERLOCK	
		1	**8T-5361**	10	WASHER-HARD (28X49X5MM THK)	
		1	**6V-8190**	10	NUT (1-8 THD)	

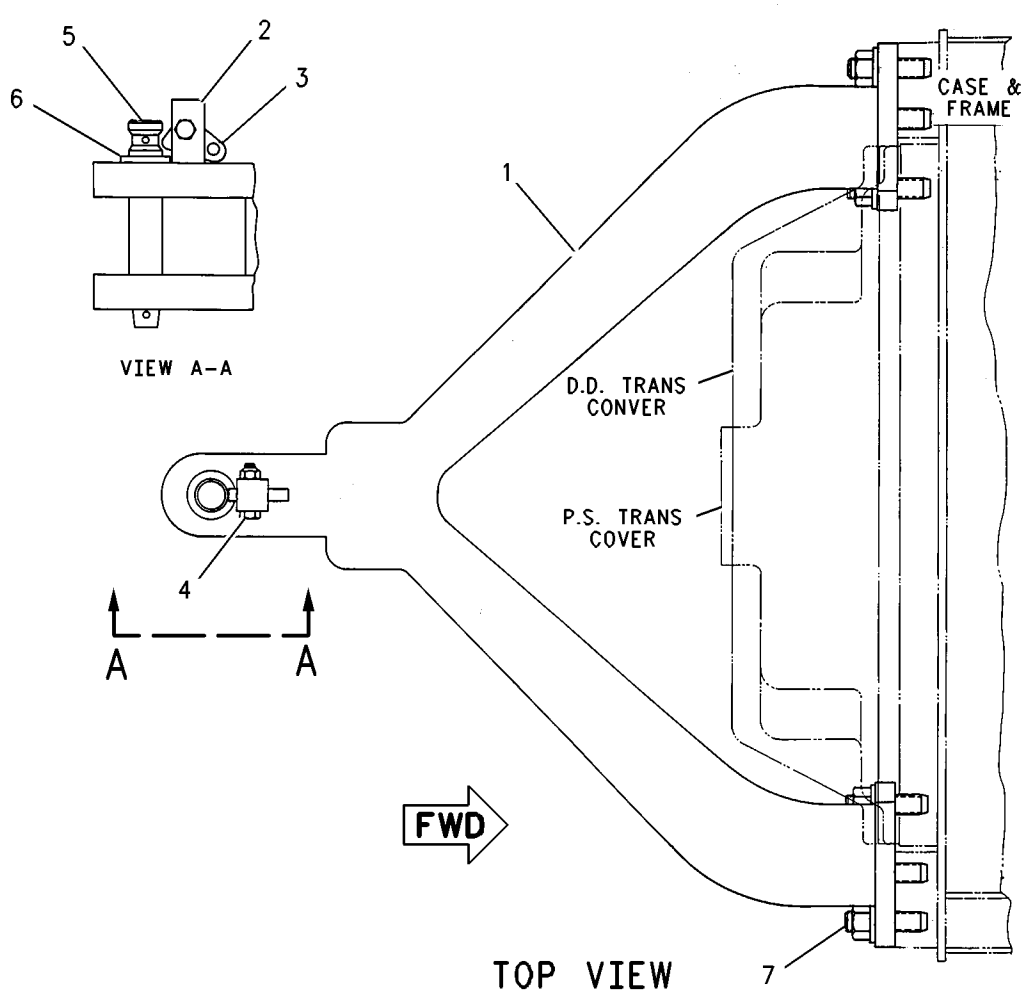

GRAPHIC #1 g00682759

MEMORANDA

FRAME AND BODY

169-0771 ENCLOSURE GP-ENGINE

S/N: BLE1-UP; BMJ1-UP
AN ATTACHMENT

SMCS-7263 **i01631651**

NOTE	REF NO	GRAPHIC REF	PART NUMBER	QTY	PART NAME 1 2 3 4 5 6 (PRODUCT LEVEL)	SEE PAGE
	1	1	**3B-4605**	2	PIN-COTTER	
	2	1	**3V-9399**	2	ROD AS	
					(EACH INCLUDES)	
		1	**4B-4278**	2	WASHER (10.2X20.5X1.6MM THK)	
	3	1	**4B-4278**	2	WASHER (10.2X20.5X1.6MM THK)	
	4	1	**5P-8502**	1	PADLOCK GP	
A		1	**8Y-6364**	1	SLEEVE	
A		1	**5P-8500**	1	KEY	
	5	1	**8T-9496**	4	LOCKNUT (9/16-18 THD)	
	6	1	**8Y-4000**	2	LATCH AS (T-BAR/COMPARTMENT)	
					(EACH INCLUDES)	
		1	**6H-3956**	1	PIN	
		1	**7X-0766**	1	SPRING-LATCH	
		1	**8Y-3966**	1	WASHER (14.7X35X1.57MM THK)	
		1	**8Y-3998**	1	HANDLE-LATCH	
		1	**8Y-3999**	1	BRACKET-MOUNTING	
		1	**8Y-8306**	1	SHAFT-LATCH	
	7	1	**170-7686**	1	SUPPORT AS	
M		1	**8T-3490**	6	NUT-WELD (M10X1.5 THD)	
	8	1	**170-7690**	1	SUPPORT AS	
M		1	**8T-3490**	7	NUT-WELD (M10X1.5 THD)	
	9	1	**170-7694**	4	HINGE	
	10	1	**170-7695**	1	BRACKET AS	
M		1	**8T-3490**	2	NUT-WELD (M10X1.5 THD)	
	11	1	**170-7701**	1	PLATE AS-RH	
M		1	**8T-3490**	2	NUT-WELD (M10X1.5 THD)	
		1	**9M-2307**	12	WASHER (.203X.75X.075 IN THK)	
		1	**9M-5732**	12	RIVET-POP	
	12	1	**170-7702**	1	PLATE AS-LH	
M		1	**8T-3490**	2	NUT-WELD (M10X1.5 THD)	
		1	**9M-2307**	12	WASHER (.203X.75X.075 IN THK)	
		1	**9M-5732**	12	RIVET-POP	
	13	1	**173-9310**	1	BRACKET AS	
M		1	**8T-3490**	2	NUT-WELD (M10X1.5 THD)	
	14	1	**193-7653**	1	HOOD AS	
M		1	**8T-3490**	16	NUT-WELD (M10X1.5 THD)	
M		1	**8T-5413**	2	STUD-WELD (M10X1.5X25MM OAL)	
		1	**9C-8895**	2	BOSS	
		1	**126-7975**	2	HANDHOLD	
	15	1	**197-0012**	2	DOOR AS	
					(EACH INCLUDES)	
		1	**8G-7723**	2	SPACER	
M		1	**8T-3490**	4	NUT-WELD (M10X1.5 THD)	
	16	1	**197-1334**	1	PLATE AS	
	17	1	**3W-9207**	2	GUIDE	
	18	1	**3W-9208**	2	PAWL	
	19	1	**4H-2558**	2	GROMMET	
	20	1	**4M-7470**	2	GROMMET	
M	21	1	**6V-7743**	3	LOCKNUT (M6X1 THD)	
M	22	1	**6V-7744**	4	LOCKNUT (M10X1.5 THD)	
	23	1	**7X-3392**	2	WASHER-HARD (13.5X22.5X3MM THK)	
M	24	1	**8C-8585**	12	BOLT-BUTTON HEAD (M10X1.5X20MM)	
	25	1	**8E-3070**	1	PLATE	
	26	1	**8E-4832**	2	STRIKER	
	27	1	**8T-2561**	4	WASHER-HARD (10.5X28.5X5MM THK)	
	28	1	**8T-4121**	41	WASHER-HARD (11X21X2.5MM THK)	

169-0771 **ENCLOSURE GP-ENGINE** *(contd.)* **i01631651**

NOTE	REF NO	GRAPHIC REF	PART NUMBER	QTY	PART NAME 1 2 3 4 5 6 (PRODUCT LEVEL)	SEE PAGE
M	29	1	**8T-4133**	4	NUT (M10X1.5 THD)	
M	30	1	**8T-4136**	4	BOLT (M10X1.5X25MM)	
M	31	1	**8T-4137**	37	BOLT (M10X1.5X20MM)	
M	32	1	**8T-4196**	4	BOLT (M10X1.5X35MM)	
	33	1	**8T-4205**	5	WASHER-HARD (7.2X14.5X2MM THK)	
	34	1	**8T-4896**	4	WASHER-HARD (10.2X18.5X2.5MM THK)	
M	35	1	**8T-4971**	2	BOLT (M6X1X30MM)	
	36	1	**9W-8940**	2	PLATE	
	37	1	**5P-7211**	10	SEAL	
	38	1	**5P-8309**	12	SEAL	

A-NOT PART OF THIS GROUP
M-METRIC PART

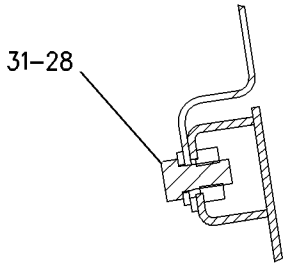

SECTION B-B

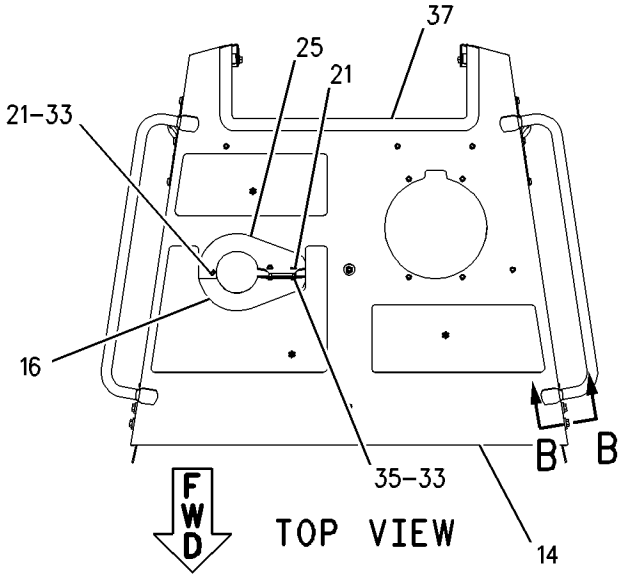

TOP VIEW

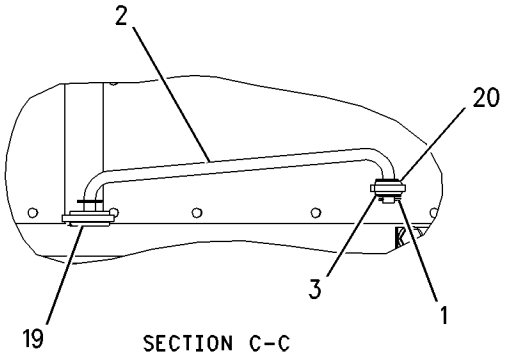

SECTION C-C

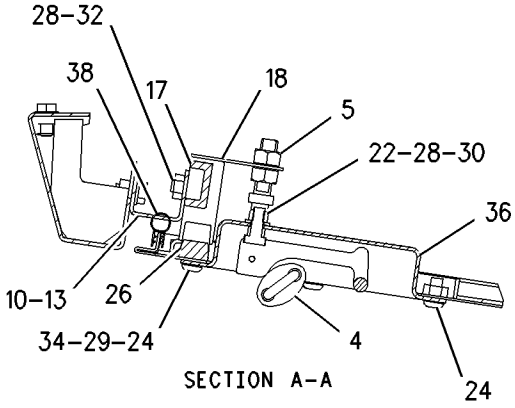

SECTION A-A

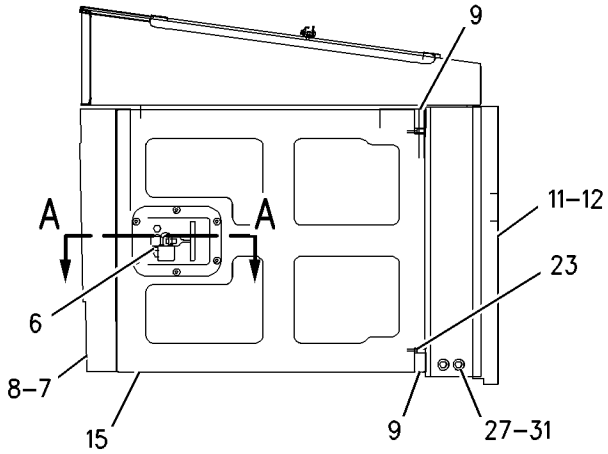

RIGHT SIDE VIEW

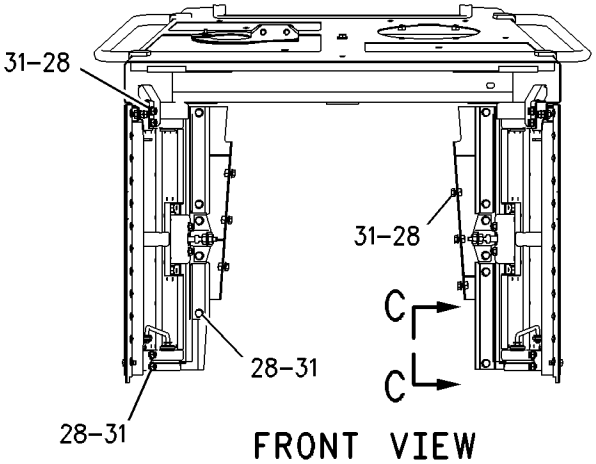

FRONT VIEW

GRAPHIC #1

g00846319

MEMORANDA

169-0772 ENCLOSURE GP-ENGINE

S/N: BLE1-UP; BMJ1-UP
SOUND SUPPRESSION
PART OF 164-4796, 164-4797 SUPPRESSION AR-SOUND
AN ATTACHMENT

SMCS-7263 **i01604168**

NOTE	REF NO	GRAPHIC REF	PART NUMBER	QTY	PART NAME 1 2 3 4 5 6 (PRODUCT LEVEL)	SEE PAGE
	1	1	**3B-4605**	2	PIN-COTTER	
	2	1	**3V-9399**	2	ROD AS	
					(EACH INCLUDES)	
		1	**4B-4278**	2	WASHER (10.2X20.5X1.6MM THK)	
	3	1	**4B-4278**	2	WASHER (10.2X20.5X1.6MM THK)	
	4	2	**5P-8502**	2	PADLOCK GP	
					(EACH INCLUDES)	
A		2	**8Y-6364**	1	SLEEVE	
A		2	**5P-8500**	1	KEY	
	5	1,2	**6P-2216**	62	CAP-PUSH ON	
	6	2	**8T-9496**	4	LOCKNUT (9/16-18 THD)	
	7	2	**8Y-4000**	2	LATCH AS (T-BAR/COMPARTMENT)	
					(EACH INCLUDES)	
		2	**6H-3956**	1	PIN	
		2	**7X-0766**	1	SPRING-LATCH	
		2	**8Y-3966**	1	WASHER (14.7X35X1.57MM THK)	
		2	**8Y-3998**	1	HANDLE-LATCH	
		2	**8Y-3999**	1	BRACKET-MOUNTING	
		2	**8Y-8306**	1	SHAFT-LATCH	
	8	1	**110-8209**	2	LINER	
	9	2	**127-8732**	40	PIN-WELD	
	10	2	**127-9365**	1	LINER-RH	
	11	2	**127-9366**	1	LINER-LH	
	12	2	**170-7684**	1	HOOD AS	
M		2	**8T-3490**	17	NUT-WELD (M10X1.5 THD)	
		2	**126-7975**	2	HANDHOLD	
	13	2	**170-7686**	1	SUPPORT AS (RH)	
M		2	**8T-3490**	6	NUT-WELD (M10X1.5 THD)	
	14	2	**170-7690**	1	SUPPORT AS (LH)	
M		2	**8T-3490**	7	NUT-WELD (M10X1.5 THD)	
	15	2	**170-7694**	4	HINGE	
	16	2	**170-7695**	1	BRACKET AS	
M		2	**8T-3490**	2	NUT-WELD (M10X1.5 THD)	
	17	2	**170-7701**	1	PLATE AS-RH	
M		2	**8T-3490**	2	NUT-WELD (M10X1.5 THD)	
		2	**9M-2307**	12	WASHER (.203X.75X.075 IN THK)	
		2	**9M-5732**	12	RIVET-POP	
	18	2	**170-7702**	1	PLATE AS-LH	
M		2	**8T-3490**	2	NUT-WELD (M10X1.5 THD)	
		2	**9M-2307**	12	WASHER (.203X.75X.075 IN THK)	
		2	**9M-5732**	12	RIVET-POP	
	19	2	**173-9310**	1	BRACKET AS	
M		2	**8T-3490**	2	NUT-WELD (M10X1.5 THD)	
	20	1	**174-4856**	1	LINER-RH	
	21	1	**174-4857**	1	LINER-LH	
	22	2	**174-4978**	1	LINER-RH	
	23	2	**174-4979**	1	LINER	
	24	2	**174-4980**	1	LINER	
	25	1	**214-7233**	1	LINER	
	26	1	**214-7234**	1	LINER	
	27	1	**214-7235**	1	LINER	
	28	2	**196-5600**	2	DOOR AS	
					(EACH INCLUDES)	
		2	**8G-7723**	2	SPACER	

169-0772 **ENCLOSURE GP-ENGINE** *(contd.)* **i01604168**

NOTE	REF NO	GRAPHIC REF	PART NUMBER	QTY	PART NAME 1 2 3 4 5 6 (PRODUCT LEVEL)	SEE PAGE
M		2	**8T-3490**	4	NUT-WELD (M10X1.5 THD)	
		2	**127-8732**	11	PIN-WELD	
	29	2	**3W-9207**	2	GUIDE	
	30	2	**3W-9208**	2	PAWL	
	31	1	**4H-2558**	2	GROMMET	
	32	1	**4M-7470**	2	GROMMET	
BE	33	2	**7X-7899**		SEAL	
M	34	2	**6V-7744**	4	LOCKNUT (M10X1.5 THD)	
	35	2	**7X-3392**	2	WASHER-HARD (13.5X22.5X3MM THK)	
M	36	2	**8C-8585**	12	BOLT-BUTTON HEAD (M10X1.5X20MM)	
	37	2	**8E-4832**	2	STRIKER	
	38	2	**8T-2561**	4	WASHER-HARD (10.5X28.5X5MM THK)	
	39	1,2	**8T-4121**	45	WASHER-HARD (11X21X2.5MM THK)	
M	40	2	**8T-4133**	4	NUT (M10X1.5 THD)	
M	41	2	**8T-4136**	4	BOLT (M10X1.5X25MM)	
M	42	1,2	**8T-4137**	37	BOLT (M10X1.5X20MM)	
BD	43	2	**5P-7211**		SEAL	
M	44	2	**8T-4196**	4	BOLT (M10X1.5X35MM)	
	45	2	**9W-8940**	2	PLATE	

A-NOT PART OF THIS GROUP
B-USE AS REQUIRED
D-ORDER BY THE METER
E-ORDER BY THE CENTIMETER
M-METRIC PART

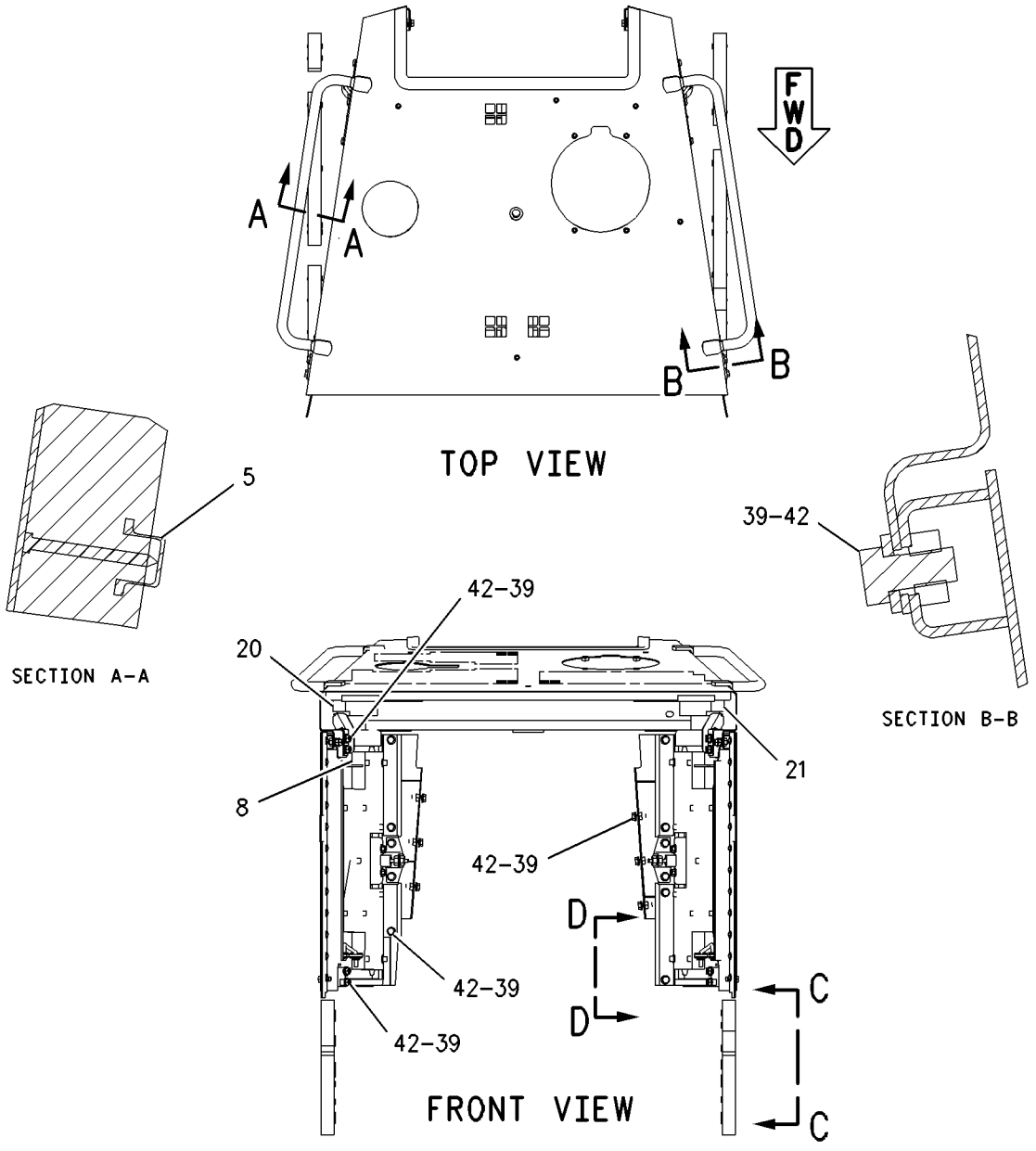

GRAPHIC #1 g00834391

169-0772 **ENCLOSURE GP-ENGINE** *(contd.)* **i01604168**

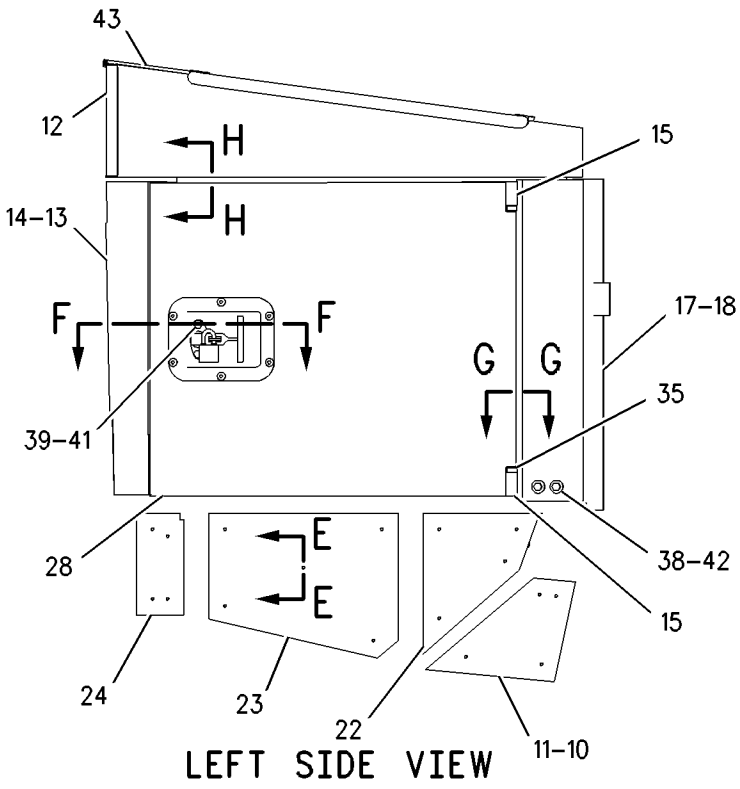

LEFT SIDE VIEW

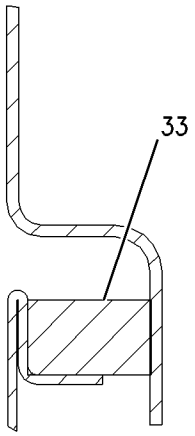

SECTION H-H

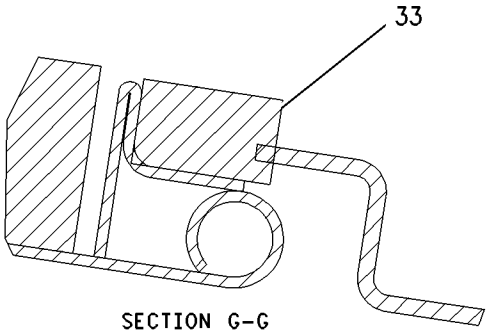

SECTION G-G

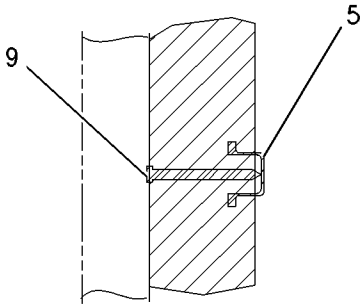

SECTION E-E

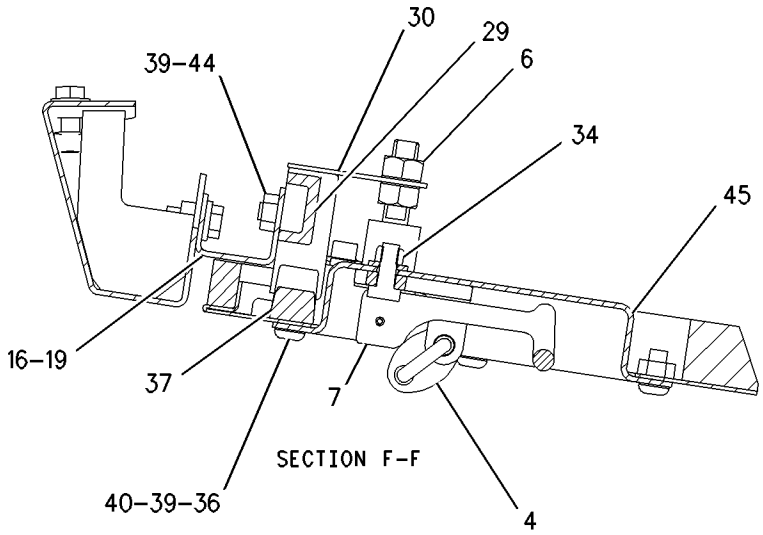

SECTION F-F

GRAPHIC #2

g00834402

197-4158 ENCLOSURE GP-FENDER

S/N: BLE1-UP; BMJ1-UP

PART OF 164-4782, 164-4784 CHASSIS AR

SMCS-7267 **i01668510**

NOTE	REF NO	GRAPHIC REF	PART NUMBER	QTY	PART NAME 1 2 3 4 5 6 (PRODUCT LEVEL)	SEE PAGE
	1	1	**2G-9524**	1	LATCH	
	2	1	**2N-3479**	4	SCREW (10-24X0.5 IN)	
	3	1	**3W-9481**	5	BOSS	
	4	1	**6D-9081**	3	RETAINER	
	5	1	**6V-9197**	2	LOCK PIN	
	6	1	**7T-8332**	3	MOUNTING	
	7	1	**9F-8125**	4	LOCKWASHER	
	8	1	**197-5477**	1	SUPPORT AS	
	9	1	**110-7673**	1	DOOR AS	
	10	1	**110-7678**	1	BRACKET AS	
	11	1	**110-7682**	1	SUPPORT AS	
	12	1	**197-4157**	1	LINK	
	13	1	**117-9727**	1	PLATE	
	14	1	**5P-1075**	11	WASHER-HARD (10.2X22.5X3MM THK)	
	15	1	**5P-1076**	5	WASHER-HARD (13.5X30X4MM THK)	
	16	1	**5P-4115**	2	WASHER-HARD (7.2X19X2MM THK)	
	17	1	**4L-6454**	2	BOLT (3/8-16X1 IN)	
	18	1	**5M-3062**	3	BOLT (3/8-16X0.75 IN)	
	19	1	**5P-2566**	5	BOLT (1/2-13X1.5 IN)	
	20	1	**5S-7379**	2	BOLT (3/8-16X0.875 IN)	
	21	1	**8T-4835**	3	BOLT (1/2-13X2 IN)	
	22	1	**9B-7237**	4	BOLT (3/8-16X1.25 IN)	

197-4158 **ENCLOSURE GP-FENDER** *(contd.)* **i01668510**

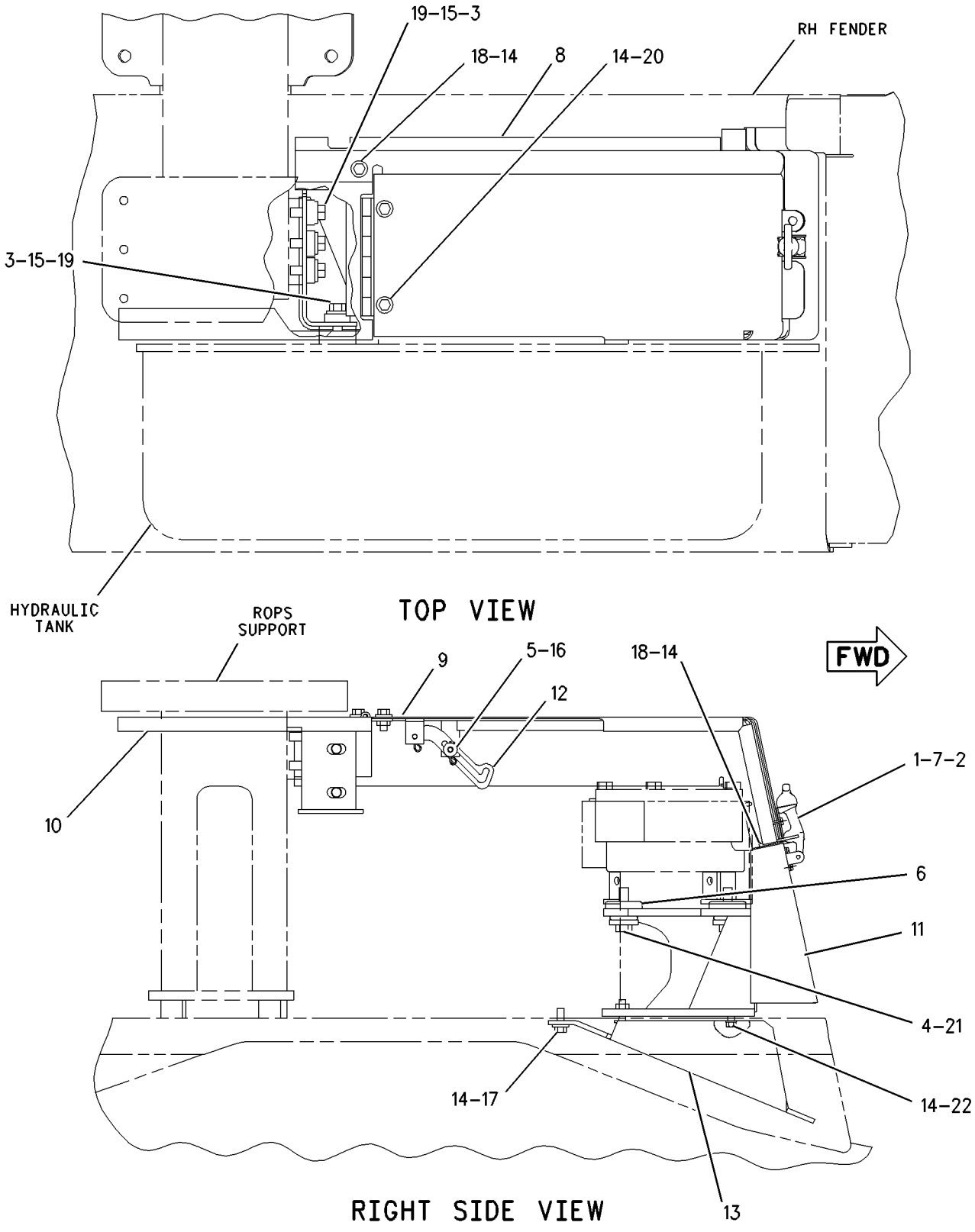

GRAPHIC #1 g00861909

168-8597 FENDER GP

S/N: BLE1-UP; BMJ1-UP

PART OF 164-4782, 164-4784 CHASSIS AR

SMCS-7252 **i01589711**

NOTE	REF NO	GRAPHIC REF	PART NUMBER	QTY	PART NAME 1 2 3 4 5 6 (PRODUCT LEVEL)	SEE PAGE
	1	1	**3W-3896**	2	HANDHOLD (GRAB)	
	2	1	**8Y-0373**	1	PLATE	
	3	1	**8Y-0374**	2	PLATE	
	4	1	**8Y-0375**	1	PLATE	
	5	1	**106-9361**	1	PLATE	
	6	1	**106-9378**	2	COVER	
	7	1	**168-8599**	1	SUPPORT AS	
	8	1	**173-0070**	1	FENDER AS-RH	
	9	1	**1F-0750**	18	NUT-WELD (3/8-16 THD)	
	10	1	**7T-1099**	1	LINK	
	11	1	**8T-5911**	5	NUT-WELD (1/2-13 THD)	
	12	1	**8T-5912**	4	NUT-WELD (3/8-16 THD)	
	13	1	**5P-2566**	24	BOLT (1/2-13X1.5 IN)	
	14	1	**5S-7379**	6	BOLT (3/8-16X0.875 IN)	
	15	1	**6J-0488**	22	SCREW-BUTTON HEAD (3/8-16X0.875 IN)	
	16	1	**7X-0515**	8	WASHER-HARD (17X35X5MM THK)	
	17	1	**7X-0582**	4	WASHER-HARD (20X44.5X6MM THK)	
	18	1	**7X-3391**	12	WASHER-HARD (13.5X32X6MM THK)	
	19	1	**8C-6857**	4	BOLT (3/4-10X2.75 IN)	
	20	1	**8T-4896**	4	WASHER-HARD (10.2X18.5X2.5MM THK)	
	21	1	**8T-9393**	8	BOLT (5/8-11X1.5 IN)	
	22	1	**173-0071**	1	FENDER AS-LH	
	23	1	**1F-0750**	16	NUT-WELD (3/8-16 THD)	
	24	1	**7T-1099**	1	LINK	
	25	1	**8T-5911**	5	NUT-WELD (1/2-13 THD)	
	26	1	**8T-5912**	11	NUT-WELD (3/8-16 THD)	
	27	1	**4L-6454**	4	BOLT (3/8-16X1 IN)	
	28	1	**5P-1075**	6	WASHER-HARD (10.2X22.5X3MM THK)	
	29	1	**5P-1076**	12	WASHER-HARD (13.5X30X4MM THK)	

168-8597 **FENDER GP** ***(contd.)*** **i01589711**

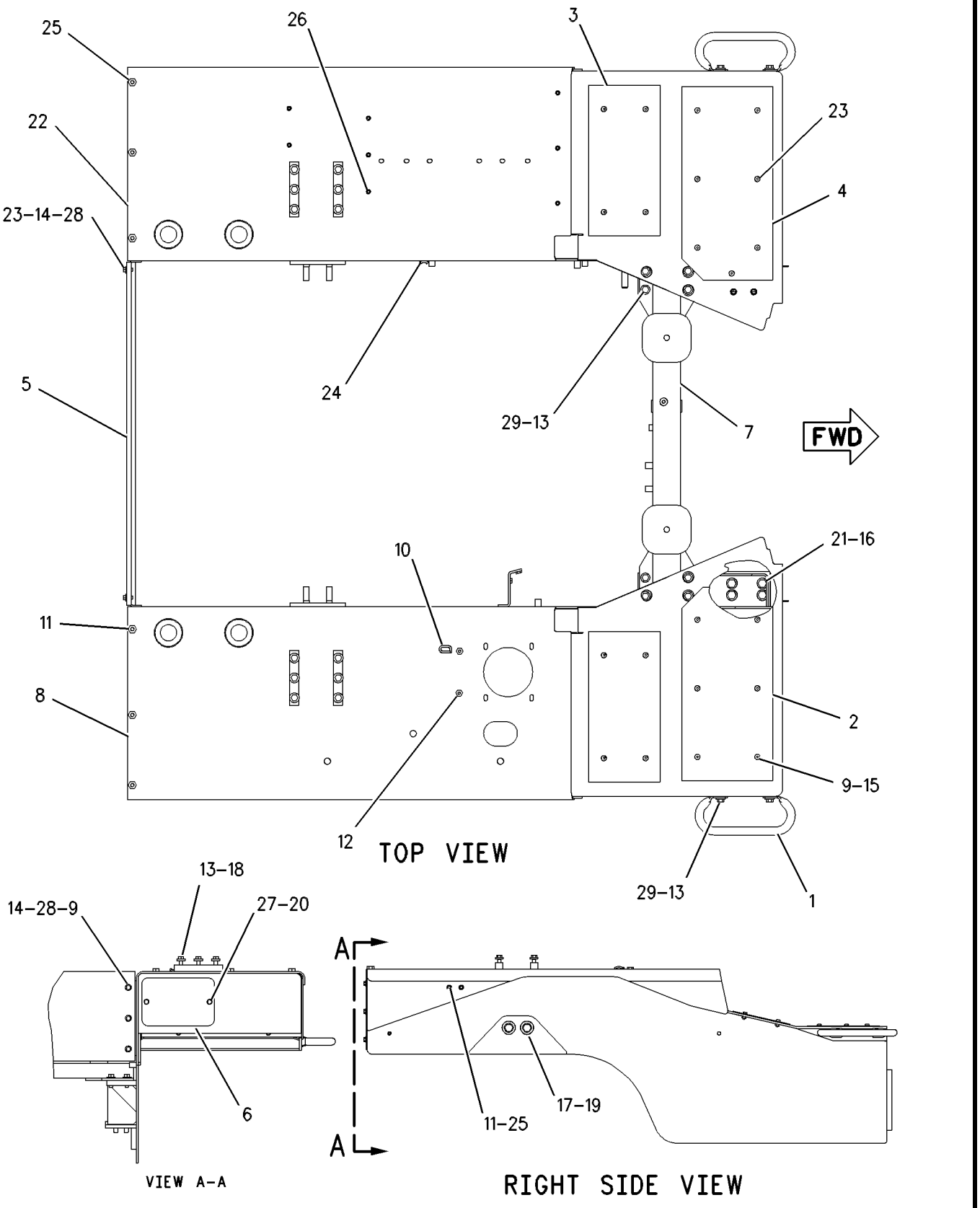

GRAPHIC #1 g00609394

173-1852 GRID GP-SAND BLAST ERODING

S/N: BLE1-UP; BMJ1-UP
AN ATTACHMENT

SMCS-7179 **i01592332**

NOTE	REF NO	GRAPHIC REF	PART NUMBER	QTY	PART NAME 1 2 3 4 5 6 (PRODUCT LEVEL)	SEE PAGE
	1	1	**180-6693**	4	BRACKET	
	2	1	**180-6692**	1	GRID AS	
	3	1	**180-6694**	1	BRACKET AS	
M		1	**8T-3490**	4	NUT-WELD (M10X1.5 THD)	
	4	1	**7X-7729**	14	WASHER (11X25X3MM THK)	
M	5	1	**8T-4133**	2	NUT (M10X1.5 THD)	
M	6	1	**8T-4136**	12	BOLT (M10X1.5X25MM)	

M-METRIC PART

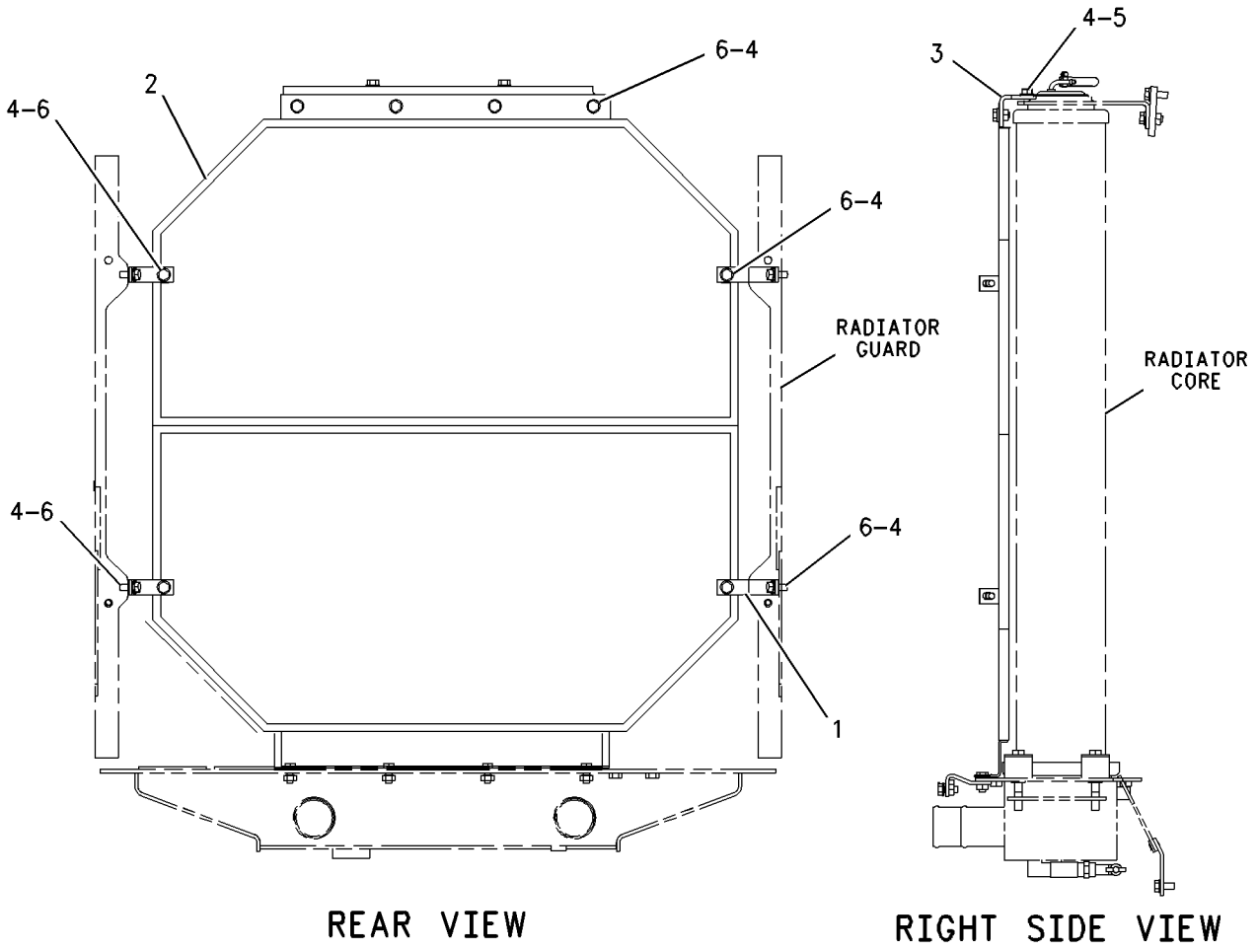

GRAPHIC #1 g00742847

FRAME AND BODY

172-0964 GRILL GP

S/N: BLE1-UP; BMJ1-UP
AN ATTACHMENT

SMCS-7170 **i01592317**

NOTE	REF NO	GRAPHIC REF	PART NUMBER	QTY	PART NAME 1 2 3 4 5 6 (PRODUCT LEVEL)	SEE PAGE
	1	1	**3W-1944**	1	GRILL AS	
	2	1	**172-0967**	1	GRILL AS	
	3	1	**5P-1076**	8	WASHER-HARD (13.5X30X4MM THK)	
M	4	1	**8T-4194**	4	BOLT (M12X1.75X50MM)	
M	5	1	**8T-6868**	4	BOLT (M12X1.75X80MM)	
	6	1	**3B-4615**	2	PIN-COTTER	
	7	1	**8M-3175**	2	WASHER-HARD (10.2X16X3MM THK)	
	8	1	**9W-2822**	1	ROD	

M-METRIC PART

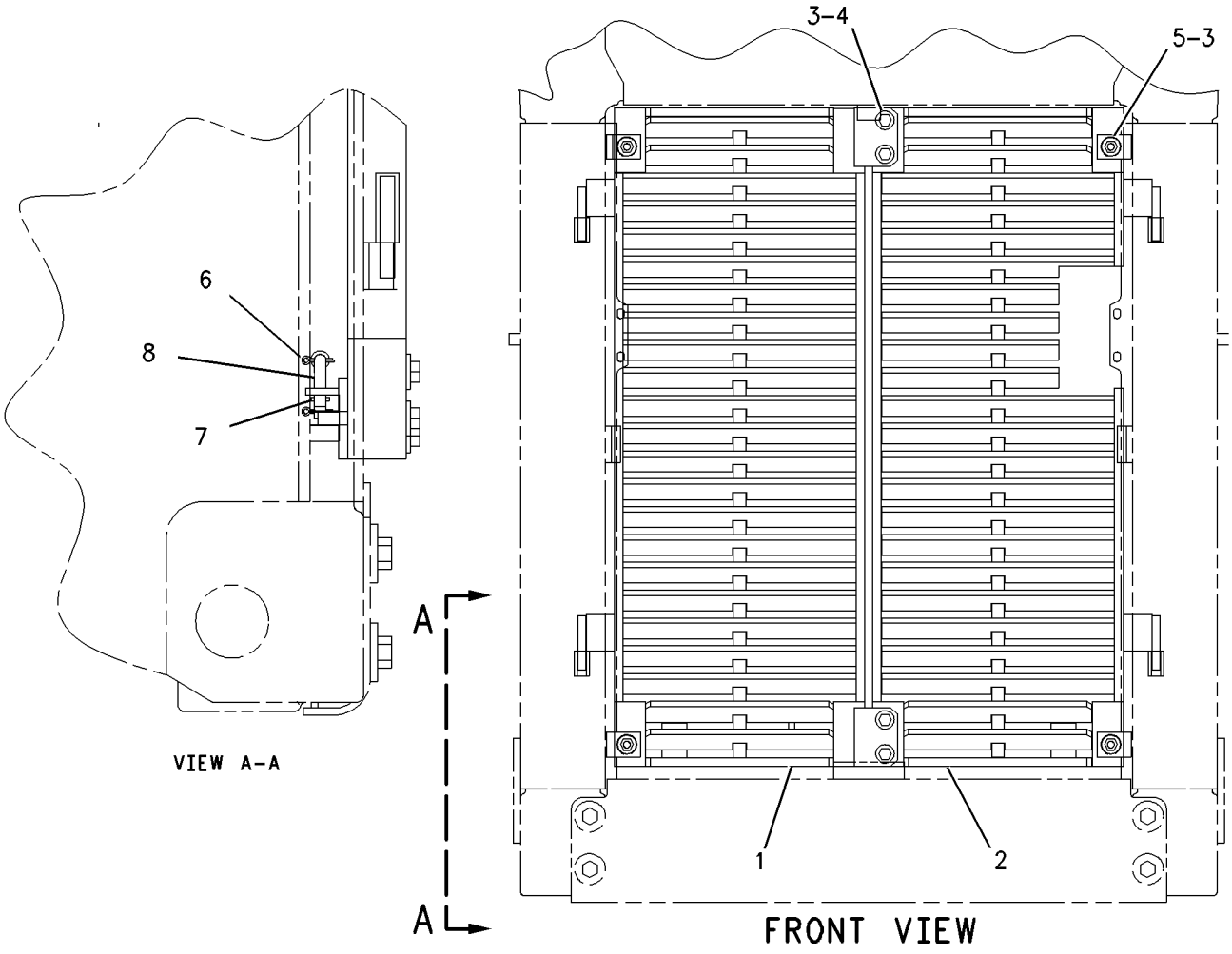

GRAPHIC #1 g00745442

217-0047 GRILL GP

S/N: BLE1-UP; BMJ1-UP
PART OF 216-7294 WASTE HANDLING GP
AN ATTACHMENT

SMCS-7170 **i01663098**

NOTE	PART NUMBER	QTY	PART NAME 1 2 3 4 5 6 (PRODUCT LEVEL)	SEE PAGE
Y	**205-8256**	1	SEAL GP-HOOD	348
	217-0046	1	MOUNTING GP-GRILL	
M	**5C-7261**	18	NUT (M8X1.25 THD)	
M	**8C-8778**	18	STUD-WELD (M8X1.25X25MM OAL)	
	8M-4069	18	WASHER (10.3X38.1X5MM THK)	

M-METRIC PART
Y-SEPARATE ILLUSTRATION

MEMORANDA

205-0576 GUARD AS-RADIATOR

S/N: BLE1-UP; BMJ1-UP
PART OF 216-7294 WASTE HANDLING GP
AN ATTACHMENT

SMCS-7155 **i01667930**

NOTE	REF NO	GRAPHIC REF	PART NUMBER	QTY	PART NAME 1 2 3 4 5 6 (PRODUCT LEVEL)	SEE PAGE
	1	1	**3G-6372**	2	BEARING-SLEEVE	
	2	1	**3T-4307**	2	BEARING-SLEEVE	
	3	1	**3T-4308**	4	BEARING-SLEEVE	
	4	1	**8E-9522**	2	BEARING-SLEEVE	
	5	1	**205-0571**	1	GUARD AS	
	5A	1	**3J-5169**	2	NUT (5/8-11 THD)	
	5B	1	**7T-1099**	3	LINK	
M	5C	1	**8T-3490**	13	NUT-WELD (M10X1.5 THD)	
	5D	1	**9B-2052**	1	HINGE	
	5E	1	**9C-8895**	2	BOSS	
	5F	1	**105-1398**	1	BAR AS	
	5G	1	**8E-0667**	1	DOOR	

M-METRIC PART

205-0576 **GUARD AS-RADIATOR** ***(contd.)*** **i01667930**

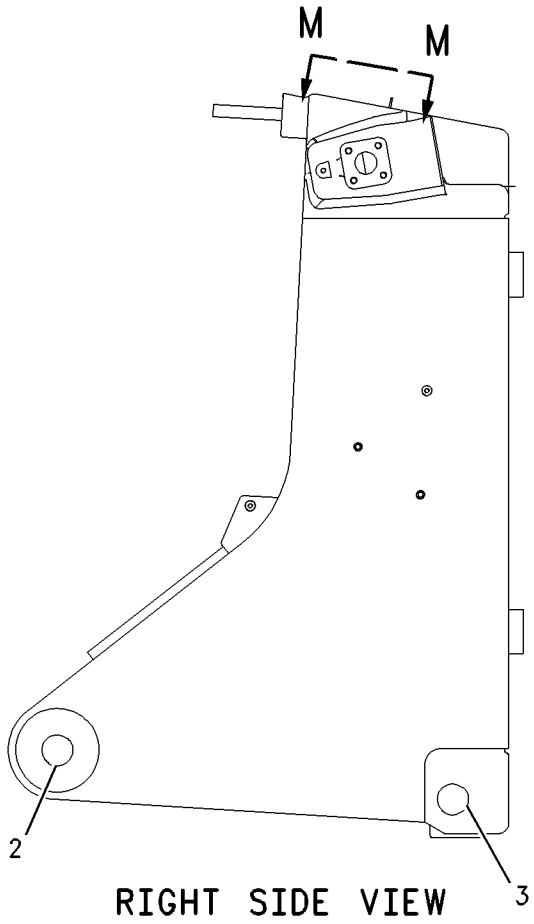

RIGHT SIDE VIEW

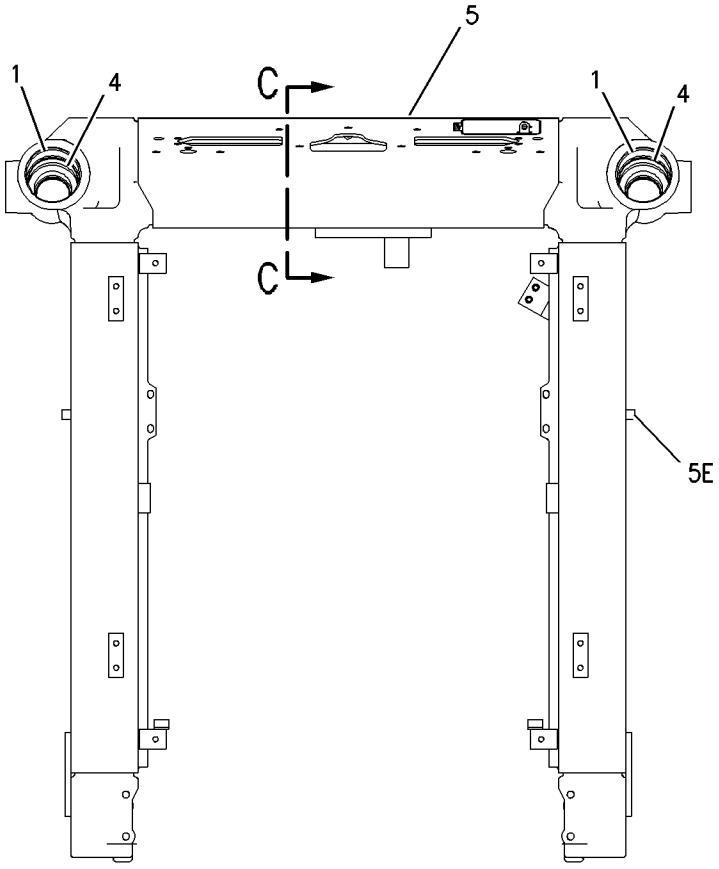

FRONT VIEW

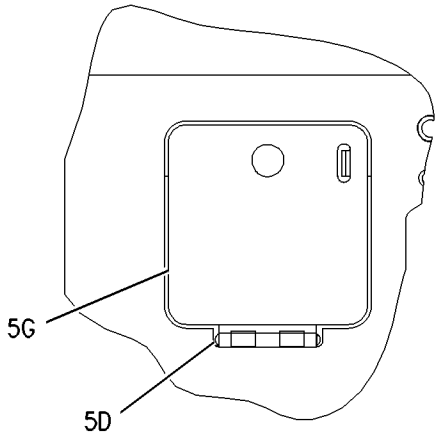

VIEW M-M

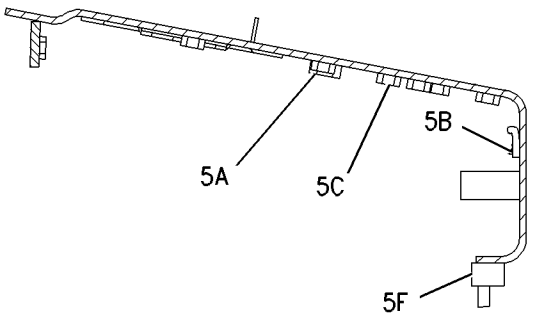

SECTION C-C

GRAPHIC #1 g00861862

205-0586 GUARD AS-RADIATOR

S/N: BLE1-UP; BMJ1-UP
PART OF 216-7294 WASTE HANDLING GP
AN ATTACHMENT

SMCS-7155 **i01667937**

NOTE	REF NO	GRAPHIC REF	PART NUMBER	QTY	PART NAME 1 2 3 4 5 6 (PRODUCT LEVEL)	SEE PAGE
	1	1	**1Q-1548**	1	GUARD AS	
		1	**1F-0750**	6	NUT-WELD (3/8-16 THD)	
	2	1	**1Q-2986**	2	HINGE AS	
	3	1	**1Q-2987**	2	HINGE AS	
	4	1	**8T-1578**	2	PAWL	
	5	1	**8T-9496**	4	LOCKNUT (9/16-18 THD)	
	6	1	**8Y-6400**	2	LATCH GP	
					(EACH INCLUDES)	
		1	**6H-3956**	1	PIN	
		1	**7X-0766**	1	SPRING-LATCH	
		1	**8Y-3966**	1	WASHER (14.7X35X1.57MM THK)	
		1	**8Y-3998**	1	HANDLE-LATCH	
		1	**8Y-5747**	1	BRACKET-MOUNTING	
		1	**8Y-8306**	1	SHAFT-LATCH	
	7	1	**9W-2822**	1	ROD	
	8	1	**105-1393**	1	GRILL AS-RH	
	9	1	**105-1394**	1	GRILL AS-LH	
	10	1	**105-1473**	2	PLATE AS	
	11	1	**2K-4973**	4	LOCKNUT (3/8-16 THD)	
	12	1	**3B-4615**	2	PIN-COTTER	
	13	1	**5P-1076**	8	WASHER-HARD (13.5X30X4MM THK)	
	14	1	**7X-0618**	2	WASHER-HARD (13.5X40X5MM THK)	
	15	1	**8C-4436**	8	BOLT (1/2-13X1.375 IN)	
	16	1	**8M-3175**	2	WASHER-HARD (10.2X16X3MM THK)	
	17	1	**8T-2502**	4	BOLT (3/8-16X1.125 IN)	
	18	1	**8T-4896**	4	WASHER-HARD (10.2X18.5X2.5MM THK)	
	19	1	**8T-9383**	2	BOLT (1/2-13X0.75 IN)	

205-0586 **GUARD AS-RADIATOR** ***(contd.)*** **i01667937**

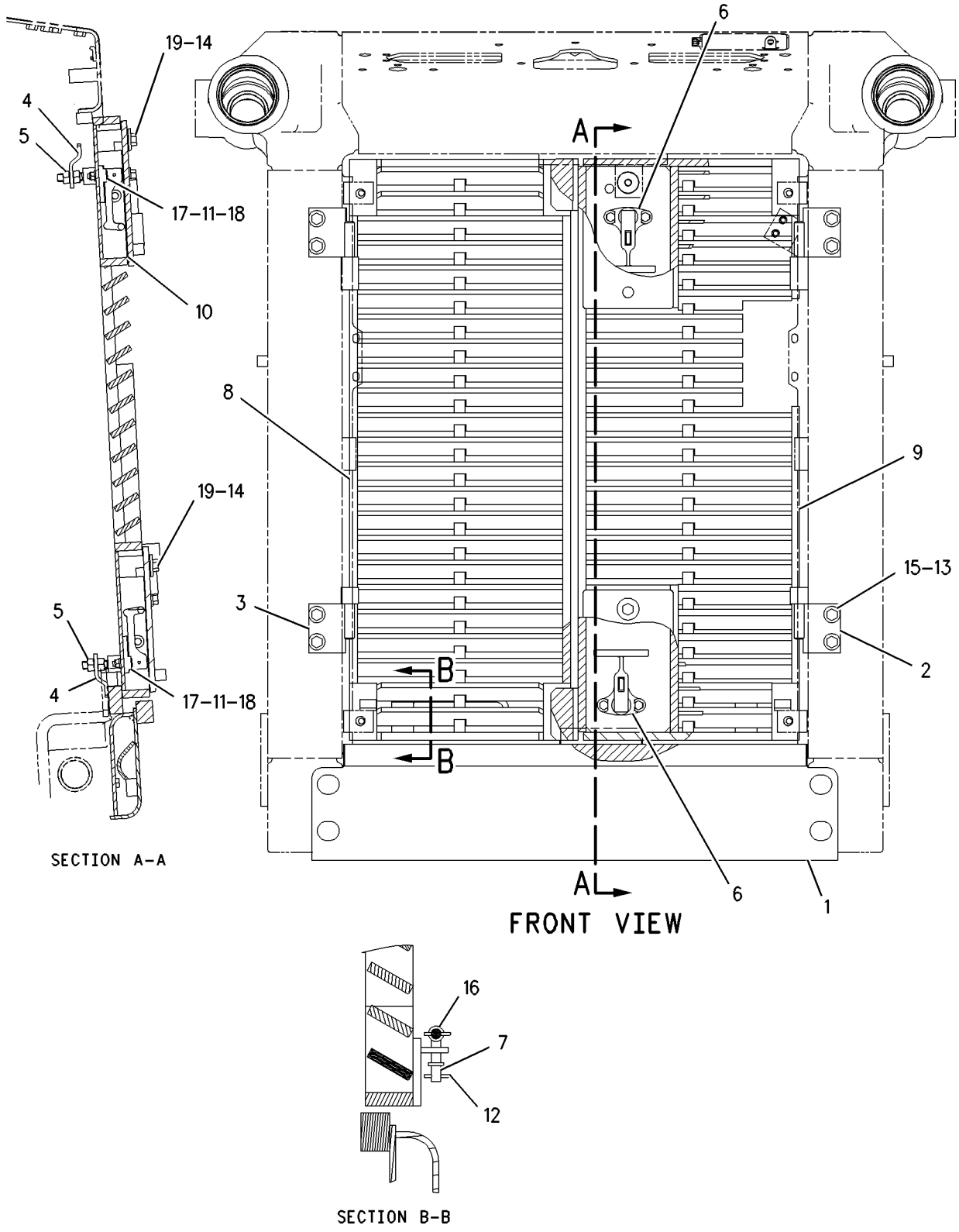

GRAPHIC #1 g00861628

FRAME AND BODY

190-5478 GUARD GP-BOTTOM

S/N: BLE1-UP; BMJ1-UP
PART OF 164-4782, 164-4784 CHASSIS AR

SMCS-7153 **i01590301**

NOTE	REF NO	GRAPHIC REF	PART NUMBER	QTY	PART NAME 1 2 3 4 5 6 (PRODUCT LEVEL)	SEE PAGE
	1	1	**3T-2747**	20	RETAINER	
	2	1	**206-3997**	1	COVER	
	3	1	**187-0931**	1	GUARD AS (RADIATOR BOTTOM)	
		1	**7B-9665**	1	PLUG	
	4	1	**205-5647**	1	GUARD AS-BOTTOM	
	5	1	**205-5643**	1	GUARD AS-BOTTOM	
	6	1	**3B-4629**	4	PIN-COTTER	
	7	1	**4J-2036**	4	PIN	
	8	1	**5S-7382**	1	BOLT (3/8-16X1.375 IN)	
	9	1	**6V-8182**	20	NUT (3/4-10 THD)	
	10	1	**7B-9665**	1	PLUG	
	11	1	**7X-0582**	20	WASHER-HARD (20X44.5X6MM THK)	
	12	1	**7X-0594**	8	WASHER-HARD (20X38X3MM THK)	
	13	1	**8T-4896**	1	WASHER-HARD (10.2X18.5X2.5MM THK)	
	14	1	**8T-8925**	20	BOLT (3/4-10X4.75 IN)	

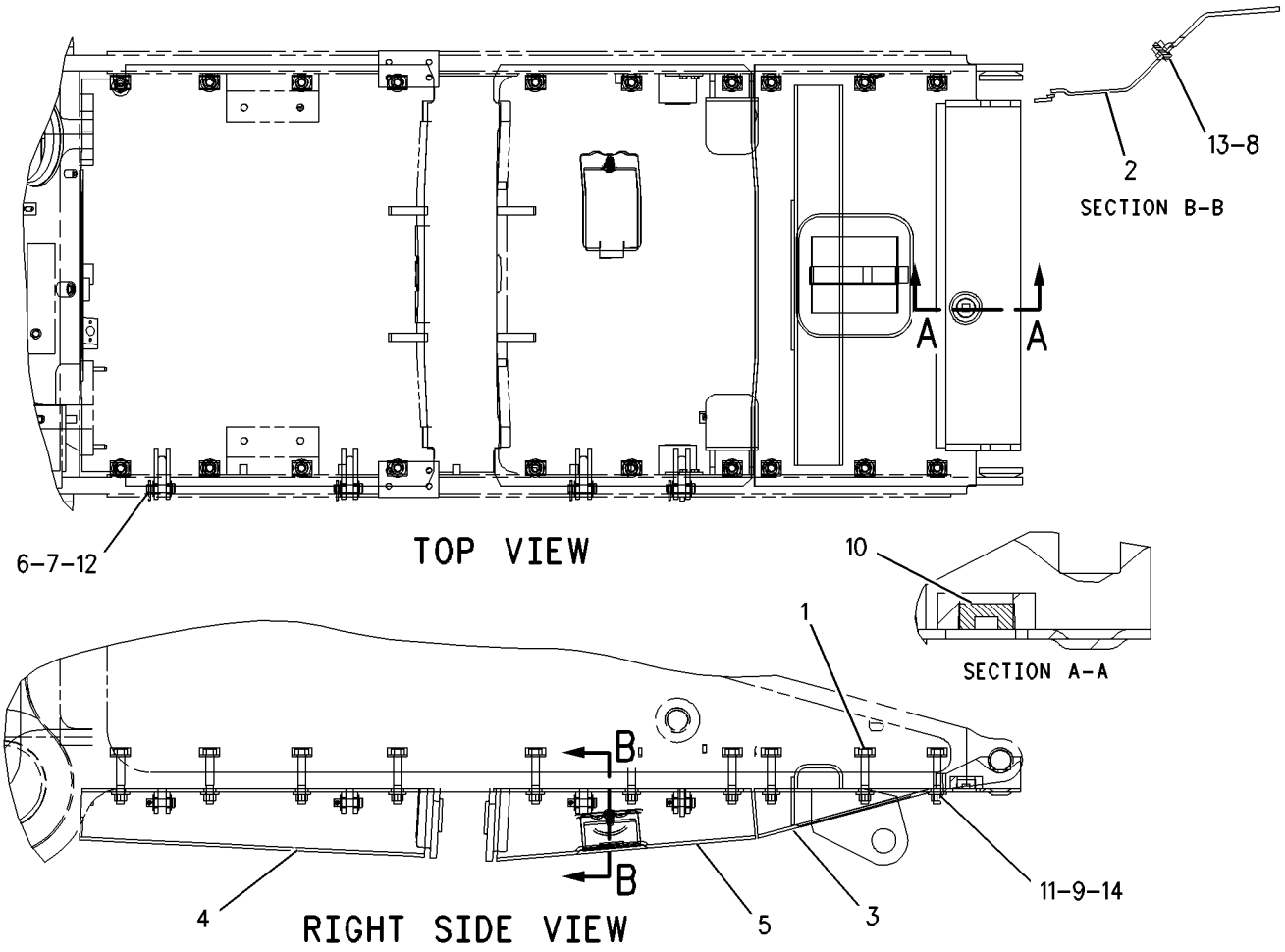

GRAPHIC #1 g00794244

FRAME AND BODY

190-5479 GUARD GP-BOTTOM

S/N: BLE1-UP; BMJ1-UP
AN ATTACHMENT

SMCS-7153 **i01592346**

NOTE	REF NO	GRAPHIC REF	PART NUMBER	QTY	PART NAME 1 2 3 4 5 6 (PRODUCT LEVEL)	SEE PAGE
	1	1	**3T-2747**	20	RETAINER	
	2	1	**3T-2748**	1	COVER	
	3	1	**187-0931**	1	GUARD AS (RADIATOR BOTTOM)	
		1	**7B-9665**	1	PLUG	
	4	1	**170-7185**	1	GUARD AS-BOTTOM	
	5	1	**170-7188**	1	GUARD AS-BOTTOM	
	6	1	**3B-4629**	4	PIN-COTTER	
	7	1	**4J-2036**	4	PIN	
	8	1	**5S-7382**	1	BOLT (3/8-16X1.375 IN)	
	9	1	**6V-8182**	20	NUT (3/4-10 THD)	
	10	1	**7B-9665**	1	PLUG	
	11	1	**7X-0582**	20	WASHER-HARD (20X44.5X6MM THK)	
	12	1	**7X-0594**	8	WASHER-HARD (20X38X3MM THK)	
	13	1	**8T-4896**	1	WASHER-HARD (10.2X18.5X2.5MM THK)	
	14	1	**8T-8925**	20	BOLT (3/4-10X4.75 IN)	

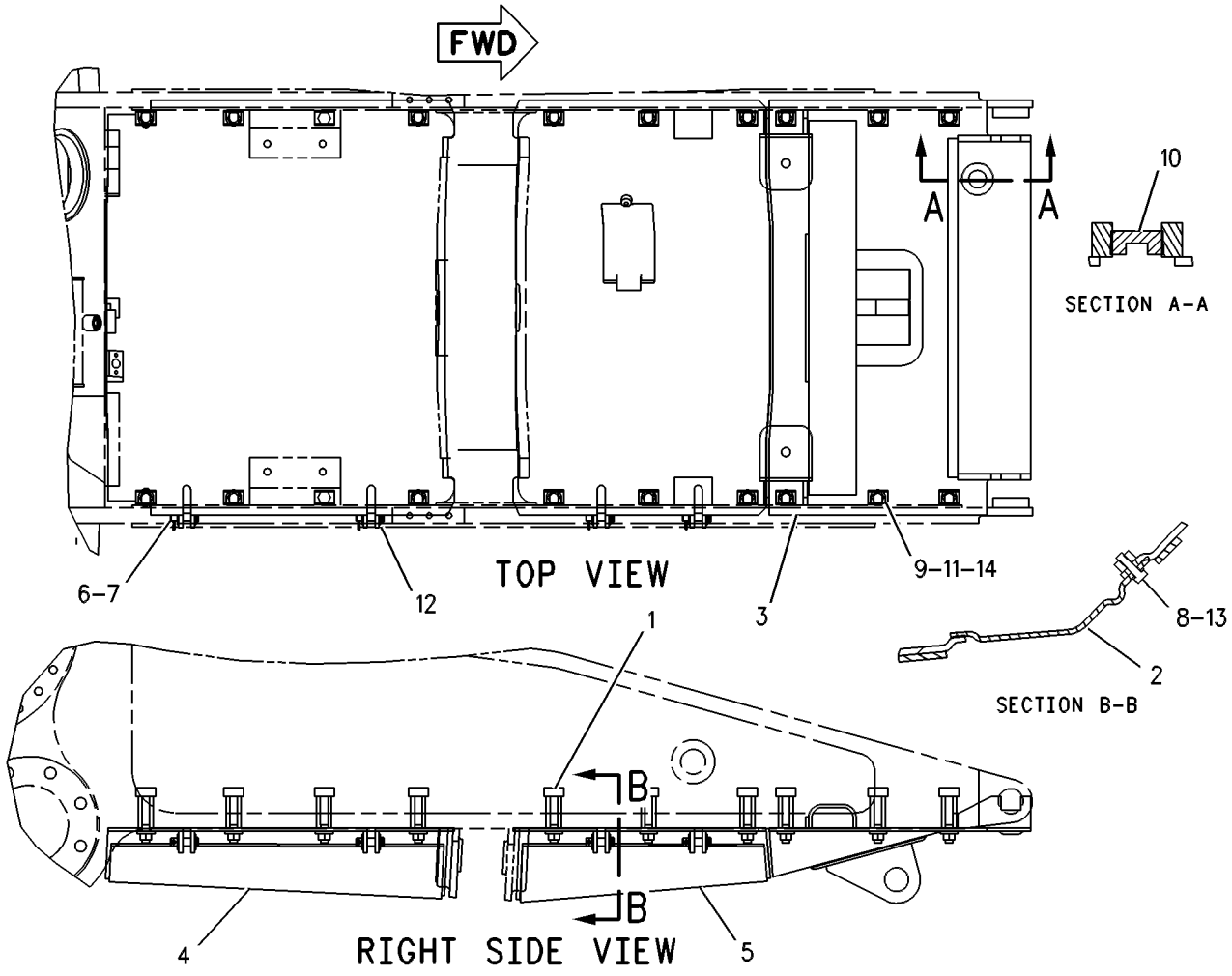

GRAPHIC #1 g00622791

FRAME AND BODY

190-5480 GUARD GP-BOTTOM

S/N: BLE1-UP; BMJ1-UP
AN ATTACHMENT

SMCS-7153 **i01662749**

NOTE	REF NO	GRAPHIC REF	PART NUMBER	QTY	PART NAME 1 2 3 4 5 6 (PRODUCT LEVEL)	SEE PAGE
	1	1	**3T-2747**	20	RETAINER	
	2	1	**209-2187**	1	COVER AS	
	3	1	**205-5660**	1	GUARD AS-BOTTOM	
	4	1	**205-5659**	1	GUARD AS-BOTTOM	
	5	1	**187-0931**	1	GUARD AS	
	6	1	**3B-4629**	4	PIN-COTTER	
	7	1	**4J-2036**	4	PIN	
	8	1	**5S-7382**	1	BOLT (3/8-16X1.375 IN)	
	9	1	**6V-8182**	20	NUT (3/4-10 THD)	
	10	1	**7B-9665**	1	PLUG	
	11	1	**7X-0582**	20	WASHER-HARD (20X44.5X6MM THK)	
	12	1	**7X-0594**	8	WASHER-HARD (20X38X3MM THK)	
	13	1	**8T-4896**	1	WASHER-HARD (10.2X18.5X2.5MM THK)	
	14	1	**8T-8925**	20	BOLT (3/4-10X4.75 IN)	

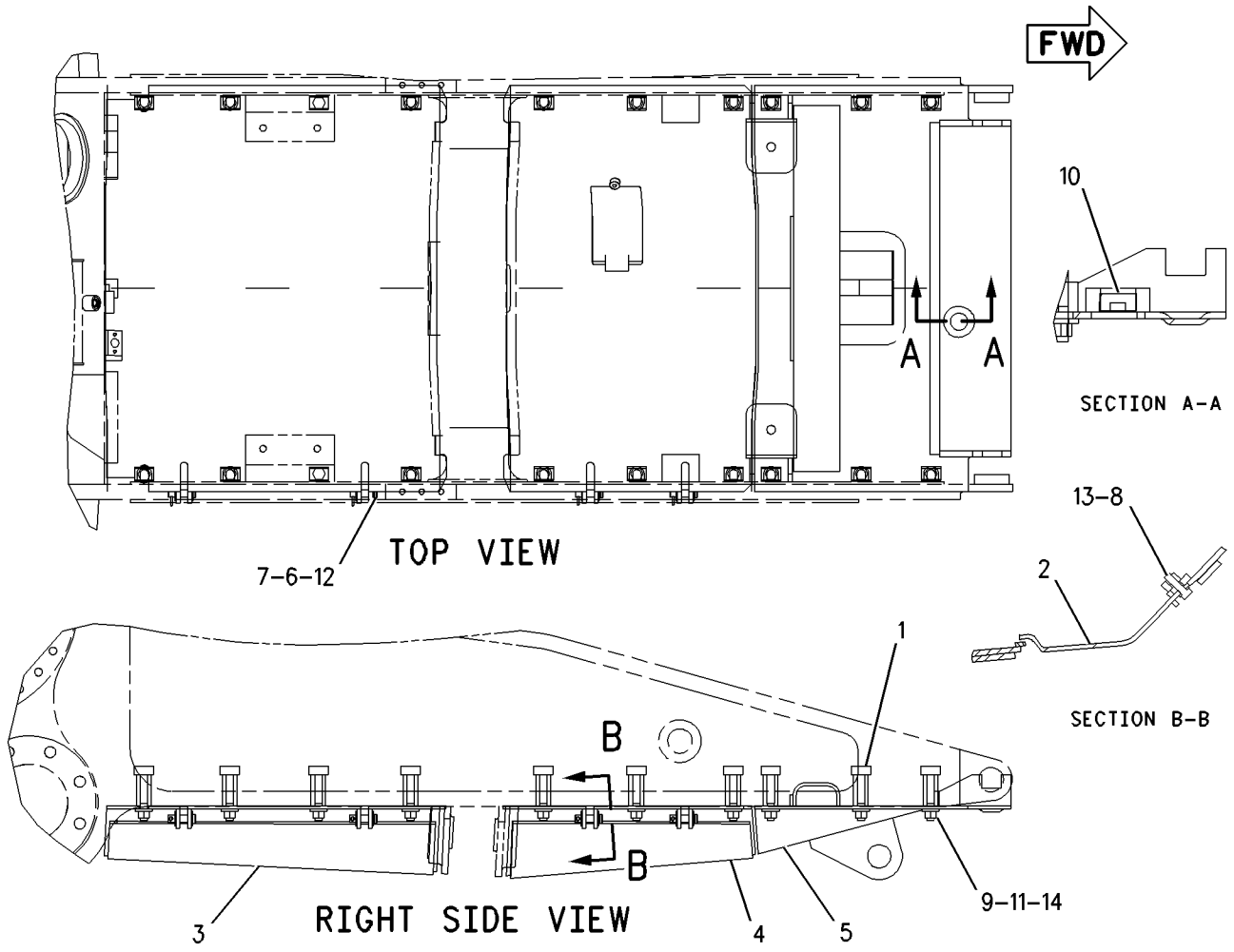

GRAPHIC #1 g00838570

MEMORANDA

190-5481 GUARD GP-BOTTOM

S/N: BLE1-UP; BMJ1-UP
SOUND SUPPRESSION
PART OF 164-4796, 164-4797 SUPPRESSION AR-SOUND
AN ATTACHMENT

SMCS-7153 **i01604176**

NOTE	REF NO	GRAPHIC REF	PART NUMBER	QTY	PART NAME 1 2 3 4 5 6 (PRODUCT LEVEL)	SEE PAGE
	1	1	**3T-2747**	20	RETAINER	
	2	1	**3T-2748**	1	COVER	
	3	1	**110-2873**	1	PLATE AS	
		1	**5P-8758**	2	SEAL	
		1	**6V-1359**	1	SEAL	
	4	1	**110-2876**	1	PLATE AS	
		1	**5P-8758**	2	SEAL	
		1	**6V-1359**	1	SEAL	
	5	1	**171-6339**	1	GUARD AS	
	6	1	**171-6344**	1	GUARD AS	
	7	1	**187-0930**	1	GUARD AS	
	8	1	**3B-4629**	4	PIN-COTTER	
	9	1	**4J-2036**	4	PIN	
	10	1	**5S-7382**	1	BOLT (3/8-16X1.375 IN)	
	11	1	**6V-8182**	20	NUT (3/4-10 THD)	
	12	1	**7B-9665**	1	PLUG	
	13	1	**7X-0515**	2	WASHER-HARD (17X35X5MM THK)	
	14	1	**7X-0582**	20	WASHER-HARD (20X44.5X6MM THK)	
	15	1	**7X-0594**	8	WASHER-HARD (20X38X3MM THK)	
	16	1	**8T-4896**	1	WASHER-HARD (10.2X18.5X2.5MM THK)	
M	17	1	**8T-7338**	4	BOLT (M16X2.0X45MM)	
	18	1	**8T-8925**	20	BOLT (3/4-10X4.75 IN)	
	19	1	**9X-8257**	4	WASHER (17.5X30X3.5MM THK)	
B	20	1	**5P-5934**		SEAL	
B	21	1	**5P-5641**		SEAL	
B	22	1	**5P-5671**		SEAL	
B	23	1	**5P-7514**		SEAL	

B-USE AS REQUIRED
M-METRIC PART

190-5481 **GUARD GP-BOTTOM** ***(contd.)*** **i01604176**

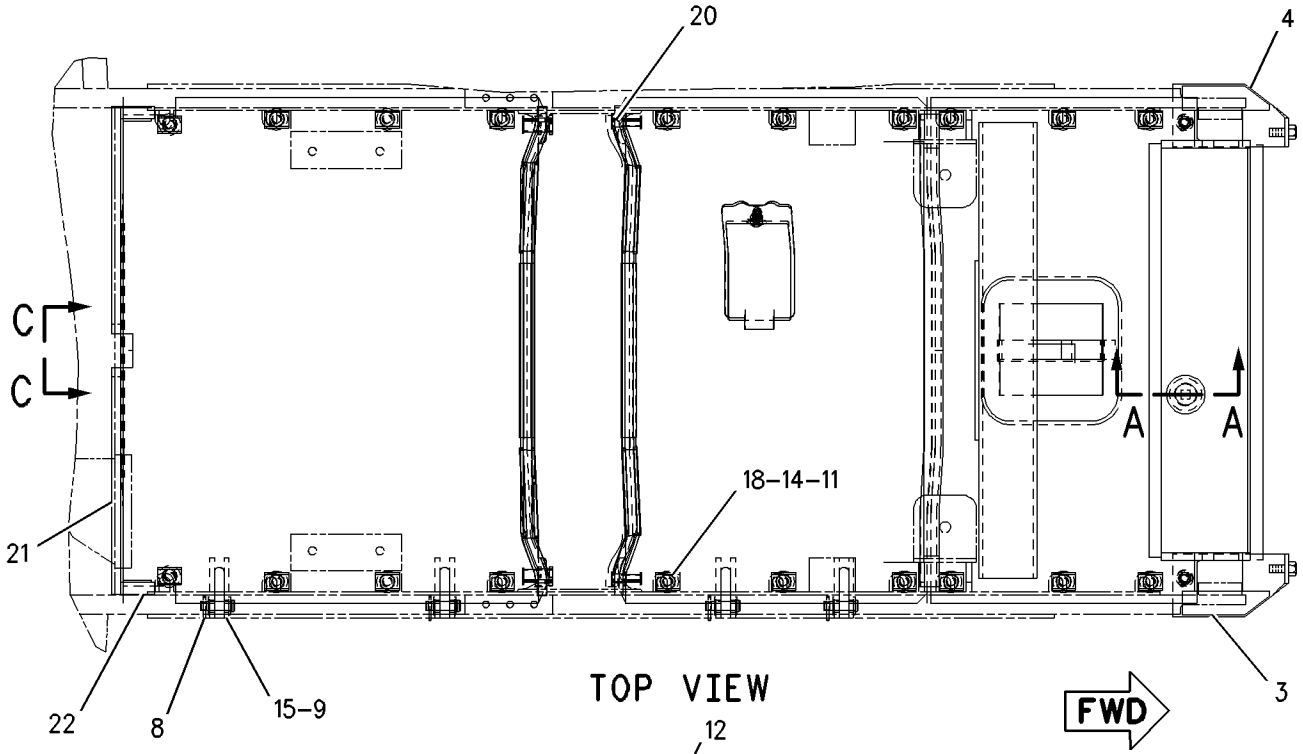

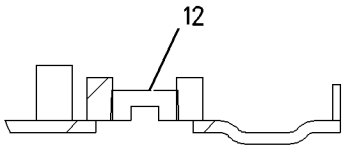

SECTION A-A

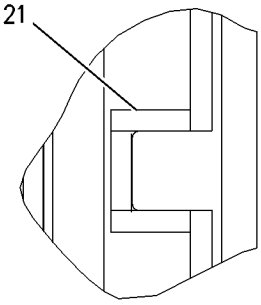

VIEW C-C

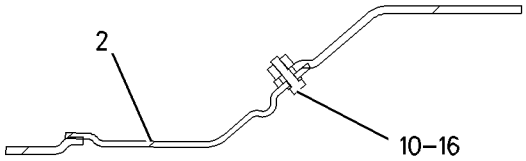

SECTION B-B

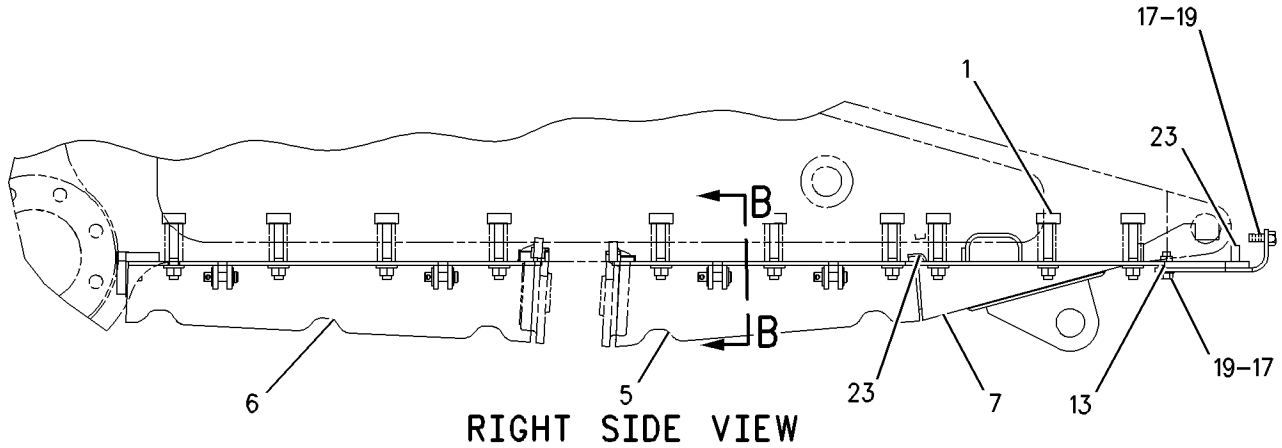

GRAPHIC #1 g00832120

110-8766 GUARD GP-FUEL TANK

S/N: BLE1-UP; BMJ1-UP
CANNOT BE USED WITH MACHINES EQUIPPED WITH RIPPER
AN ATTACHMENT

SMCS-1273 **i01582090**

NOTE	REF NO	GRAPHIC REF	PART NUMBER	QTY	PART NAME 1 2 3 4 5 6 (PRODUCT LEVEL)	SEE PAGE
	1	1	**8Y-8495**	4	SPACER	
	2	1	**111-3373**	1	GUARD AS	
	3	1	**112-5007**	1	GUARD AS	
	4	1	**206-0524**	2	BAR	
	5	1	**5P-1075**	4	WASHER-HARD (10.2X22.5X3MM THK)	
	6	1	**5P-2228**	4	BOLT (1/2-13X1 IN)	
	7	1	**5P-2566**	4	BOLT (1/2-13X1.5 IN)	
	8	1	**7X-0550**	14	WASHER-HARD (13.5X32X5MM THK)	
	9	1	**8T-2501**	6	BOLT (3/8-16X2 IN)	
	10	1	**8T-2502**	4	BOLT (3/8-16X1.125 IN)	
	11	1	**8T-4896**	6	WASHER-HARD (10.2X18.5X2.5MM THK)	
	12	1	**8T-8917**	6	BOLT (1/2-13X1.25 IN)	
	13	1	**130-0737**	1	FILM-STRIPE (LH SIDE)	
	14	1	**130-0738**	1	FILM-STRIPE (RH SIDE)	

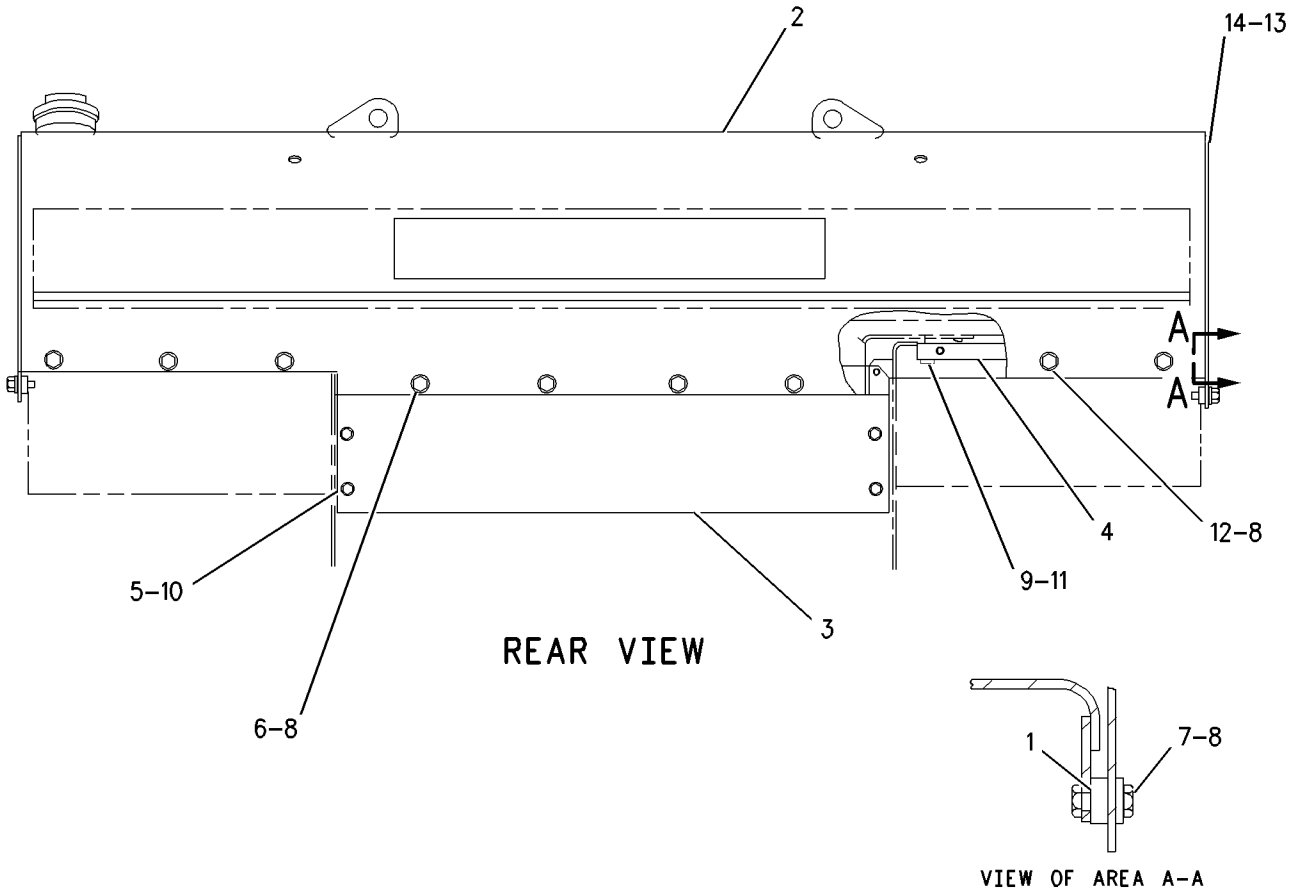

GRAPHIC #1 g00827540

FRAME AND BODY

110-8767 GUARD GP-FUEL TANK

S/N: BLE1-UP; BMJ1-UP
FOR USE WITH MACHINES EQUIPPED WITH RIPPER
AN ATTACHMENT

SMCS-1273 **i01582116**

NOTE	REF NO	GRAPHIC REF	PART NUMBER	QTY	PART NAME 1 2 3 4 5 6 (PRODUCT LEVEL)	SEE PAGE
	1	1	**8Y-8495**	4	SPACER	
	2	1	**111-3373**	1	GUARD AS	
	3	1	**112-5009**	1	GUARD AS	
	4	1	**206-0524**	2	BAR	
	5	1	**5P-1075**	4	WASHER-HARD (10.2X22.5X3MM THK)	
	6	1	**5P-2228**	4	BOLT (1/2-13X1 IN)	
	7	1	**5P-2566**	4	BOLT (1/2-13X1.5 IN)	
	8	1	**7X-0550**	14	WASHER-HARD (13.5X32X5MM THK)	
	9	1	**8T-2501**	6	BOLT (3/8-16X2 IN)	
	10	1	**8T-2502**	4	BOLT (3/8-16X1.125 IN)	
	11	1	**8T-4896**	6	WASHER-HARD (10.2X18.5X2.5MM THK)	
	12	1	**8T-8917**	6	BOLT (1/2-13X1.25 IN)	
	13	1	**130-0738**	1	FILM-STRIPE (RH)	
	14	1	**130-0737**	1	FILM-STRIPE (LH)	

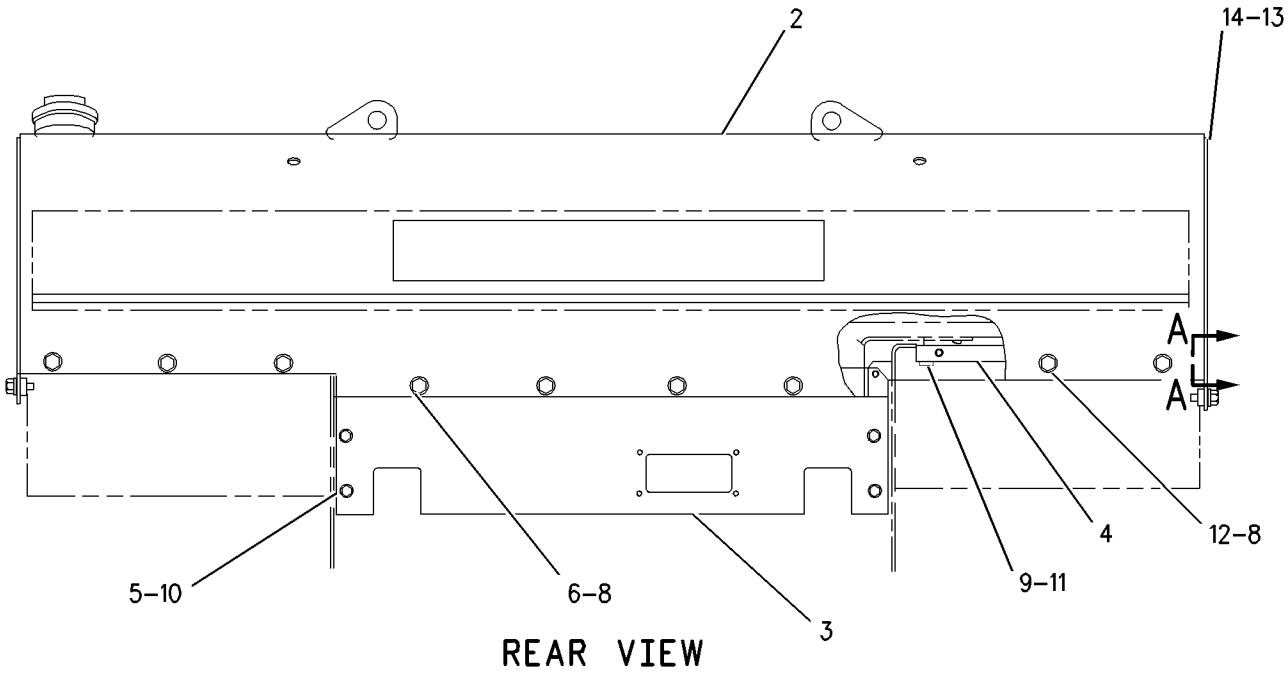

REAR VIEW

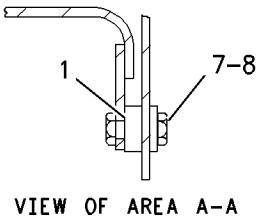

VIEW OF AREA A-A

GRAPHIC #1 g00827543

169-3692 GUARD GP-RADIATOR

S/N: BLE1-UP; BMJ1-UP

PART OF 164-4782, 164-4784 CHASSIS AR

SMCS-7155 **i01589792**

NOTE	REF NO	GRAPHIC REF	PART NUMBER	QTY	PART NAME 1 2 3 4 5 6 (PRODUCT LEVEL)	SEE PAGE
	1	1	**3W-3742**	2	PLUG	
	2	1	**3W-3896**	2	HANDHOLD (GRAB)	
	3	1	**5G-9973**	2	COVER	
	4	1	**5G-9974**	2	GASKET	
	5	1	**5P-8502**	1	PADLOCK GP	
A		1	**5P-8500**	1	KEY	
A		1	**8Y-6364**	1	SLEEVE	
	6	1	**9W-2822**	1	ROD	
	7	1	**109-4757**	1	GRILL AS	
	8	1	**193-2276**	1	GUARD AS	
M		1	**8T-3490**	4	NUT-WELD (M10X1.5 THD)	
	9	1	**155-8577**	2	COVER AS	
	10	1	**169-5875**	1	GUARD AS	
	11	1	**3G-6372**	2	BEARING-SLEEVE	
	12	1	**8E-9522**	2	BEARING-SLEEVE	
	13	1	**3T-4308**	4	BEARING-SLEEVE	
	14	1	**3T-4307**	2	BEARING-SLEEVE	
	15	1	**9B-2052**	1	HINGE	
	16	1	**3J-5169**	2	NUT (5/8-11 THD)	
M	17	1	**8T-3490**	13	NUT-WELD (M10X1.5 THD)	
M	18	1	**8T-4910**	4	BOLT (M12X1.75X60MM)	
M	19	1	**7X-2553**	4	BOLT (M16X2X40MM)	
M	20	1	**8T-4136**	4	BOLT (M10X1.5X25MM)	
	21	1	**8M-3175**	2	WASHER-HARD (10.2X16X3MM THK)	
	22	1	**8T-4122**	8	WASHER-HARD (17X32X3.5MM THK)	
M	23	1	**8T-4139**	4	BOLT (M12X1.75X30MM)	
M	24	1	**8T-4170**	4	BOLT (M20X2.5X150MM)	
	25	1	**170-8592**	4	PIN	
	26	1	**7X-0610**	4	WASHER-HARD (20X75X6MM THK)	
	27	1	**3B-4615**	2	PIN-COTTER	
	28	1	**3V-9244**	4	WASHER (16.5X50X5MM THK)	
	29	1	**5C-6565**	8	BOLT (1/2-13X1.125 IN)	
	30	1	**5M-6214**	2	PLUG-PIPE (1/2-27 THD)	
	31	1	**5P-1076**	16	WASHER-HARD (13.5X30X4MM THK)	
	32	1	**6V-5839**	4	WASHER (11X21X2.5MM THK)	

A-NOT PART OF THIS GROUP
M-METRIC PART

169-3692 **GUARD GP-RADIATOR** *(contd.)* **i01589792**

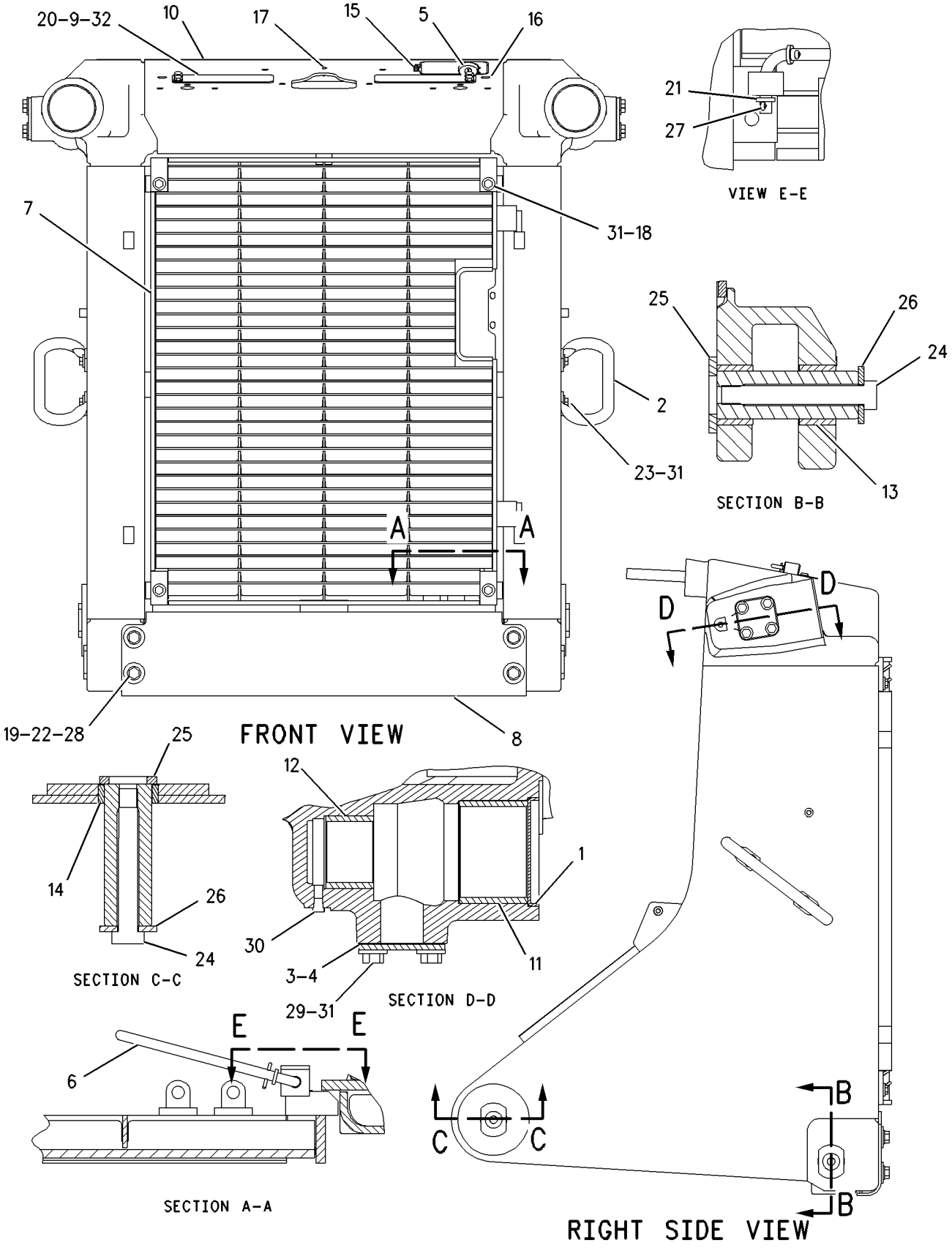

GRAPHIC #1 g00794267

210-2299 GUARD GP-REAR

S/N: BLE1-UP; BMJ1-UP
HEAVY DUTY
CANNOT BE USED WITH RIPPER
AN ATTACHMENT

SMCS-7187 **i01631838**

NOTE	REF NO	GRAPHIC REF	PART NUMBER	QTY	PART NAME 1 2 3 4 5 6 (PRODUCT LEVEL)	SEE PAGE
	1	1	**1K-8850**	1	SPRING	
	2	1	**2P-8514**	4	SPACER	
	3	1	**5G-7183**	1	GUARD AS	
		1	**4K-7627**	1	BAR	
		1	**4K-8501**	2	CLIP	
		1	**7G-4262**	1	HINGE	
	4	1	**030-8535**	4	BOLT-LOCKING (3/8-16X0.875 IN)	
	5	1	**5D-3118**	4	STUD-TAPERLOCK	
	6	1	**6V-8190**	4	NUT (1-8 THD)	
	7	1	**8T-5361**	4	WASHER-HARD (28X49X5MM THK)	

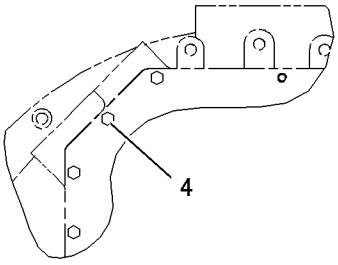

VIEW B-B

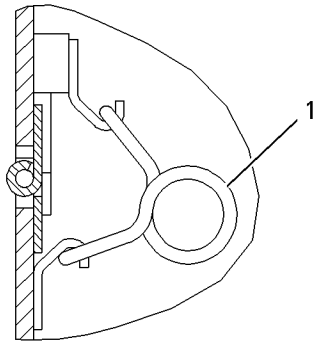

SECTION A-A

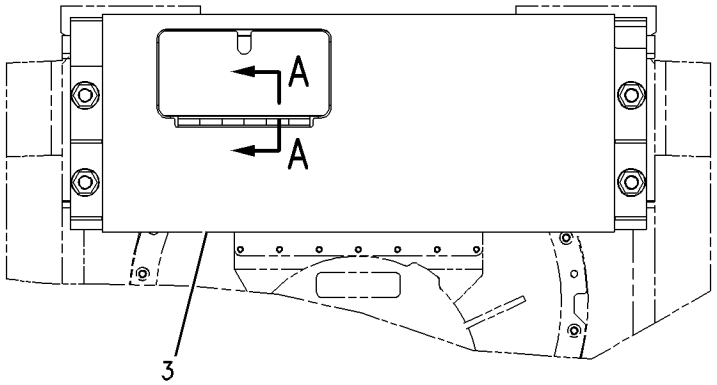

REAR VIEW

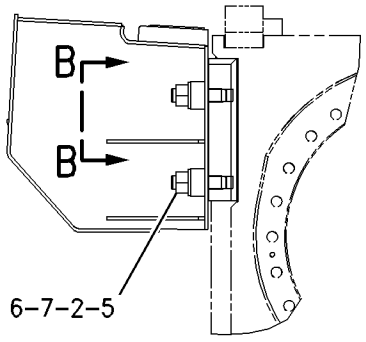

RIGHT SIDE VIEW

GRAPHIC #1 g00846759

108-0178 GUARD GP-TRACK GUIDE

S/N: BLE1-UP; BMJ1-UP
PART OF 139-8344 GRADER AR-FINE, 203-6440 GUIDING AR-UNDERCARRIAGE
FOR USE WITH HEAVY DUTY TRACK SYSTEM
AN ATTACHMENT

SMCS-4177 **i00577263**

NOTE	REF NO	GRAPHIC REF	PART NUMBER	QTY	PART NAME 1 2 3 4 5 6 (PRODUCT LEVEL)	SEE PAGE
	1	1	**9U-8468**	2	GUARD AS	
	2	1	**109-3446**	8	SPACER	
M	3	1	**8T-4141**	8	BOLT (M20X2.5X70MM)	

M-METRIC PART

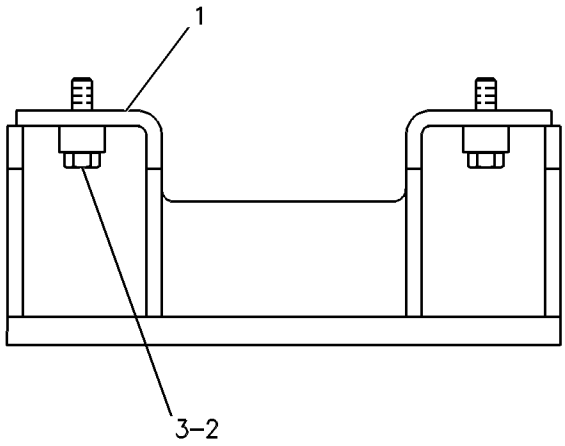

GRAPHIC #1 g00254157

164-0406 GUARD GP-TRACK GUIDE

S/N: BLE1-UP
PART OF 203-6415 GUIDING AR-UNDERCARRIAGE
AN ATTACHMENT

SMCS-4177 **i01605078**

NOTE	REF NO	GRAPHIC REF	PART NUMBER	QTY	PART NAME 1 2 3 4 5 6 (PRODUCT LEVEL)	SEE PAGE
	1	1	**134-5366**	4	TUBE	
	2	1	**134-5368**	4	ROD	
	3	1	**164-0403**	2	GUARD	
	4	1	**164-4611**	2	GUARD	
	5	1	**166-2287**	8	SPACER	
M	6	1	**7Y-5233**	8	LOCKNUT	
M	7	1	**8T-4141**	8	BOLT (M20X2.5X70MM)	
	8	1	**8T-4167**	8	WASHER-HARD (26X44X4MM THK)	

M-METRIC PART

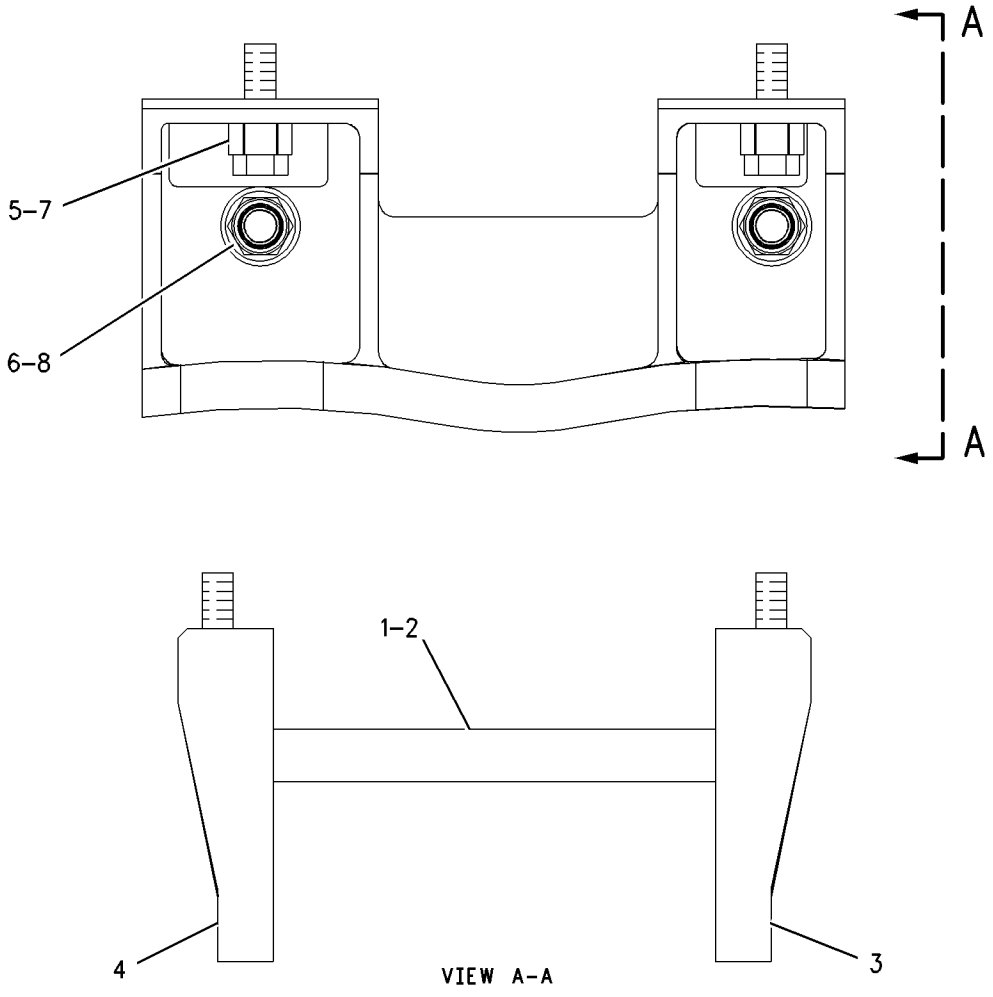

GRAPHIC #1 g00650656

109-3443 GUARD GP-TRACK ROLLER

S/N: BMJ1-UP
PART OF 203-6443 GUIDING AR-UNDERCARRIAGE
AN ATTACHMENT

SMCS-7152 **i01668513**

NOTE	REF NO	GRAPHIC REF	PART NUMBER	QTY	PART NAME 1 2 3 4 5 6 (PRODUCT LEVEL)	SEE PAGE
	1	1	**6I-9029**	4	GUARD AS	
	2	1	**7G-4355**	8	TUBE	
	3	1	**110-0771**	8	ROD	
	4	1	**9X-8257**	16	WASHER (17.5X30X3.5MM THK)	
M	5	1	**8T-4778**	16	LOCKNUT (M16X2 THD)	
	6	1	**109-3446**	24	SPACER	
M	7	1	**8T-4141**	24	BOLT (M20X2.5X70MM)	

QUANTITIES SHOWN ARE THOSE REQUIRED FOR BOTH LH AND RH SIDES
M-METRIC PART

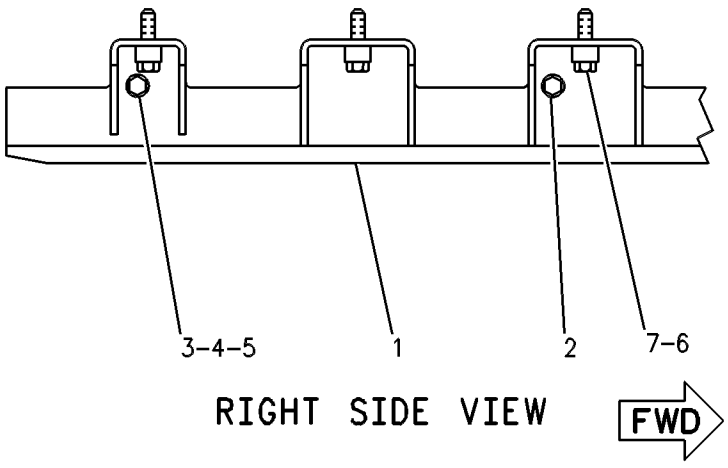

GRAPHIC #1 g00254164

109-3444 GUARD GP-TRACK ROLLER

S/N: BLE1-UP
AN ATTACHMENT

SMCS-7152 **i01669053**

NOTE	REF NO	GRAPHIC REF	PART NUMBER	QTY	PART NAME 1 2 3 4 5 6 (PRODUCT LEVEL)	SEE PAGE
	1	1	**6I-8139**	4	GUARD AS	
	2	1	**7G-4355**	6	TUBE	
	3	1	**110-0771**	6	ROD	
	4	1	**9X-8257**	12	WASHER (17.5X30X3.5MM THK)	
M	5	1	**8T-4778**	12	LOCKNUT (M16X2 THD)	
M	6	1	**8T-4141**	20	BOLT (M20X2.5X70MM)	
	7	1	**109-3446**	20	SPACER	
	8	1	**8E-9932**	4	PLATE	
M	9	1	**8T-4956**	4	BOLT (M12X1.75X35MM)	
	10	1	**8T-4223**	4	WASHER-HARD (13.5X25.5X3MM THK)	
M	11	1	**8T-4139**	4	BOLT (M12X1.75X30MM)	

QUANTITIES SHOWN ARE THOSE REQUIRED FOR BOTH LH AND RH SIDES
M-METRIC PART

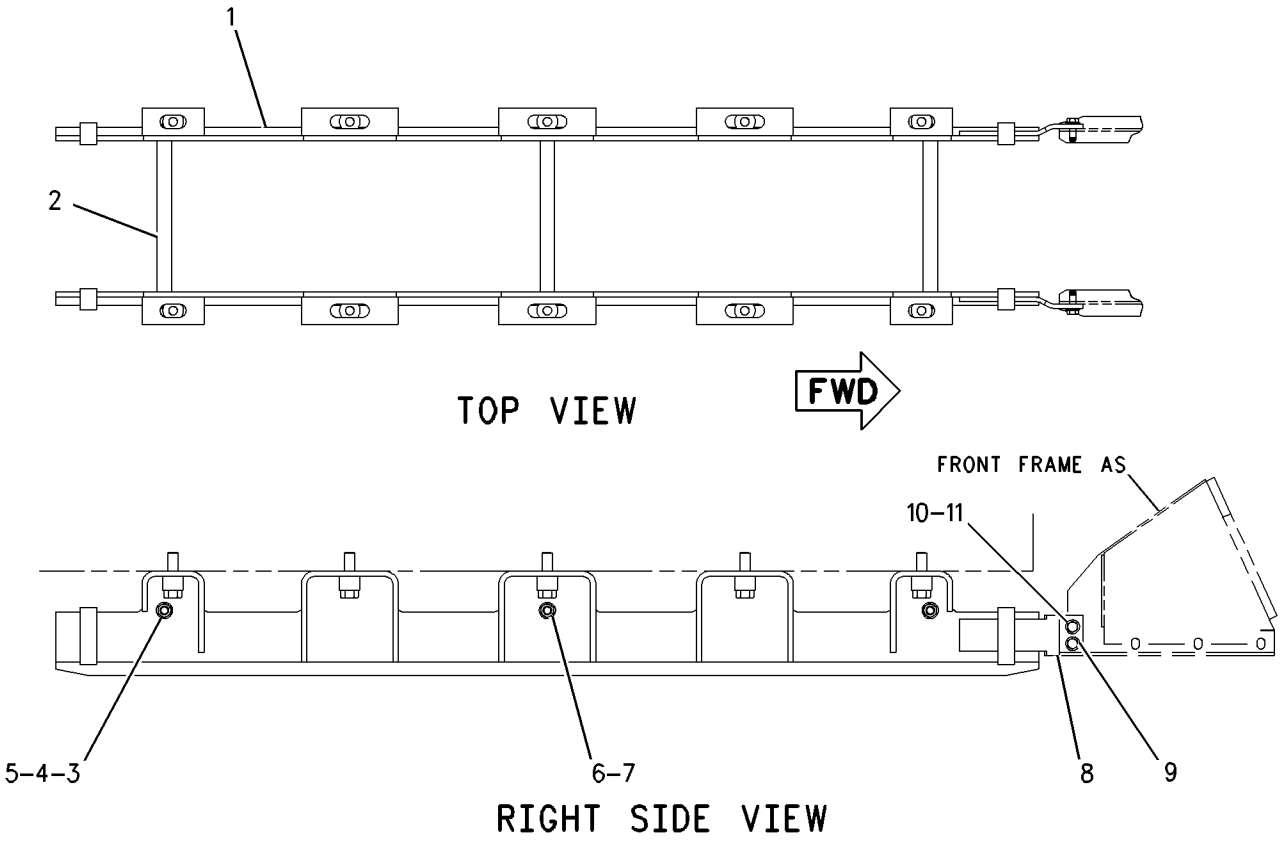

GRAPHIC #1 g00650775

134-5363 GUARD GP-TRACK ROLLER

S/N: BLE1-UP
PART OF 203-6442 GUIDING AR-UNDERCARRIAGE
AN ATTACHMENT

SMCS-7152 **i01662813**

NOTE	REF NO	GRAPHIC REF	PART NUMBER	QTY	PART NAME 1 2 3 4 5 6 (PRODUCT LEVEL)	SEE PAGE
	1	1	**8E-9932**	4	PLATE	
	2	1	**134-5364**	4	GUARD	
					(RIGHT REAR OUTER/RIGHT FRONT INNER/LEFT FRONT OUTER/LEFT REAR INNER)	
	3	1	**134-5365**	4	GUARD	
					(RIGHT REAR INNER/RIGHT FRONT OUTER/LEFT FRONT INNER/LEFT REAR OUTER)	
	4	1	**134-5366**	10	TUBE	
	5	1	**134-5368**	10	ROD	
	6	1	**166-2287**	20	SPACER	
M	7	1	**7Y-5233**	20	LOCKNUT	
M	8	1	**8T-4139**	4	BOLT (M12X1.75X30MM)	
M	9	1	**8T-4141**	20	BOLT (M20X2.5X70MM)	
	10	1	**8T-4167**	20	WASHER-HARD (26X44X4MM THK)	
	11	1	**8T-4223**	4	WASHER-HARD (13.5X25.5X3MM THK)	
M	12	1	**8T-4956**	4	BOLT (M12X1.75X35MM)	

QUANTITIES SHOWN ARE THOSE REQUIRED FOR BOTH LH AND RH SIDES
M-METRIC PART

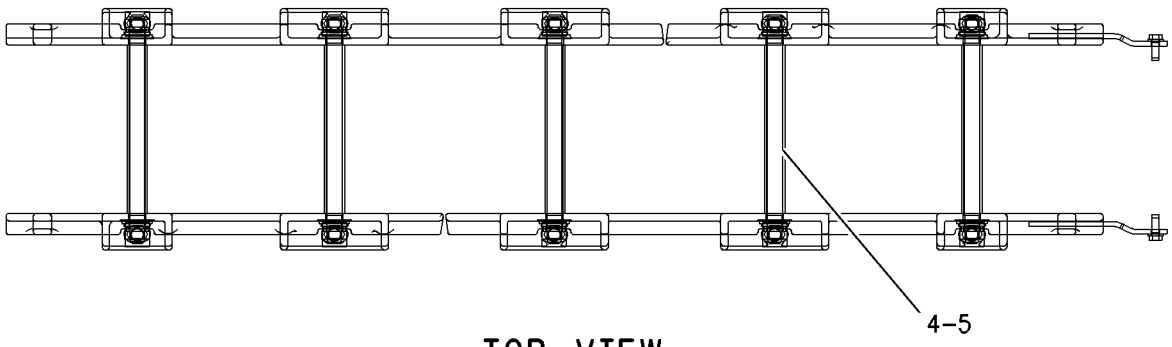

TOP VIEW

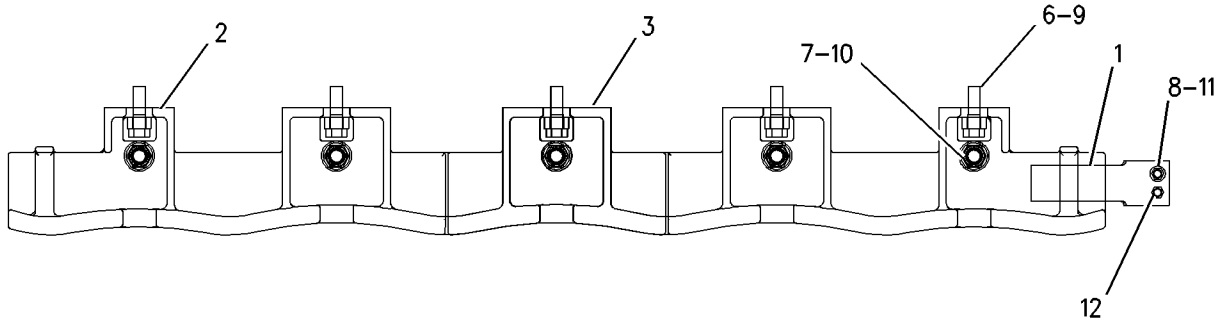

RIGHT SIDE VIEW

GRAPHIC #1 g00650784

169-0765 HOOD & GUARD GP

S/N: BLE1-UP; BMJ1-UP

PART OF 164-4782, 164-4784 CHASSIS AR

SMCS-7251 **i01589733**

NOTE	REF NO	GRAPHIC REF	PART NUMBER	QTY	PART NAME 1 2 3 4 5 6 (PRODUCT LEVEL)	SEE PAGE
	1	1	**6T-9927**	2	SLIDE	
	2	1	**9P-3066**	2	MOUNTING	
	3	1	**170-7598**	1	HOOD AS	
	3A	1	**126-7975**	2	HANDHOLD	
	4	1	**170-7602**	1	PLATE AS	
M		1	**8T-3490**	2	NUT-WELD (M10X1.5 THD)	
	5	1	**170-7604**	1	GUARD AS-RH	
M		1	**8T-3490**	5	NUT-WELD (M10X1.5 THD)	
		1	**195-6383**	2	SPACER	
	6	1	**170-7606**	1	GUARD AS-LH	
M		1	**8T-3490**	6	NUT-WELD (M10X1.5 THD)	
		1	**195-6383**	2	SPACER	
	7	1	**173-8952**	1	PLATE AS	
M		1	**8T-3490**	2	NUT-WELD (M10X1.5 THD)	
	8	1	**183-3222**	1	PLATE	
	9	1	**183-3223**	1	PLATE	
	10	1	**203-2481**	1	DOOR AS (RH)	
M		1	**8T-3490**	1	NUT-WELD (M10X1.5 THD)	
	11	1	**203-2480**	1	DOOR AS (LH)	
M		1	**8T-3490**	1	NUT-WELD (M10X1.5 THD)	
	12	1	**3W-3819**	2	PLATE	
	13	1	**7X-7729**	23	WASHER (11X25X3MM THK)	
	14	1	**6P-8269**	1	WASHER (20.5X88X6MM THK)	
M	15	1	**7X-2555**	1	BOLT (M16X2X80MM)	
M	16	1	**8C-8585**	4	BOLT-BUTTON HEAD (M10X1.5X20MM)	
	17	1	**8G-4014**	2	RETAINER	
	18	1	**8T-4122**	1	WASHER-HARD (17X32X3.5MM THK)	
M	19	1	**8T-4136**	24	BOLT (M10X1.5X25MM)	
	20	1	**9X-8266**	2	WASHER (10.2X56.5X6MM THK)	
BD	21	1	**5P-7211**		SEAL	
M	22	1	**8T-4137**	1	BOLT (M10X1.5X20MM)	

B-USE AS REQUIRED
D-ORDER BY THE METER
M-METRIC PART

169-0765 **HOOD & GUARD GP** *(contd.)* **i01589733**

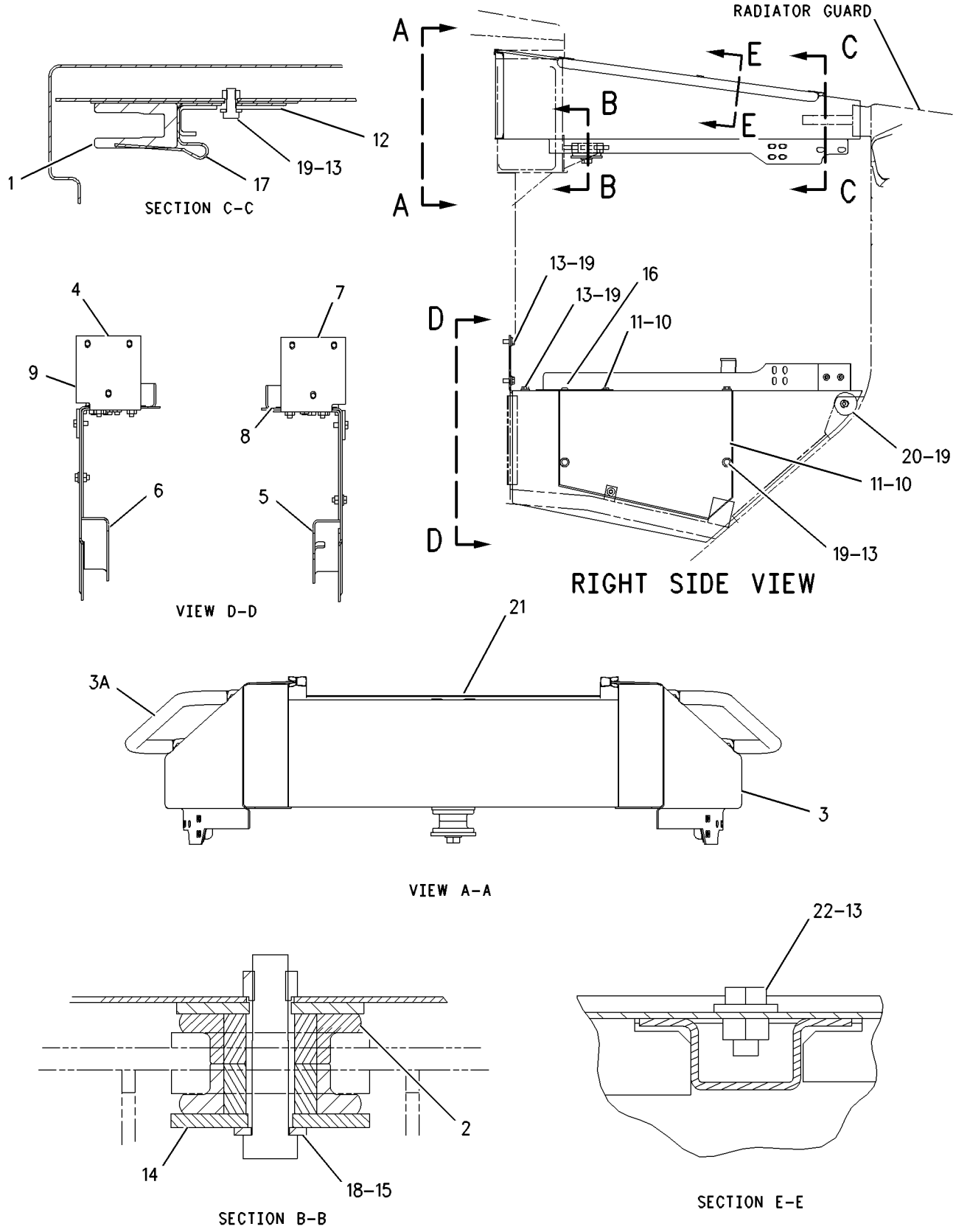

GRAPHIC #1 g00844862

8E-1685 HOOK GP-FRONT PULL

S/N: BLE1-UP; BMJ1-UP
PART OF 189-5846 HOOK GP-FRONT PULL
AN ATTACHMENT

SMCS-7103 **i00576145**

NOTE	REF NO	GRAPHIC REF	PART NUMBER	QTY	PART NAME 1 2 3 4 5 6 (PRODUCT LEVEL)	SEE PAGE
	1	1	**7S-6058**	1	HOOK-FRONT PULL	
	2	1	**7X-0368**	6	BOLT (3/4-10X3IN)	
	3	1	**6V-8182**	6	NUT (3/4-10 THD)	
	4	1	**8T-4994**	12	WASHER (5MM THK)	

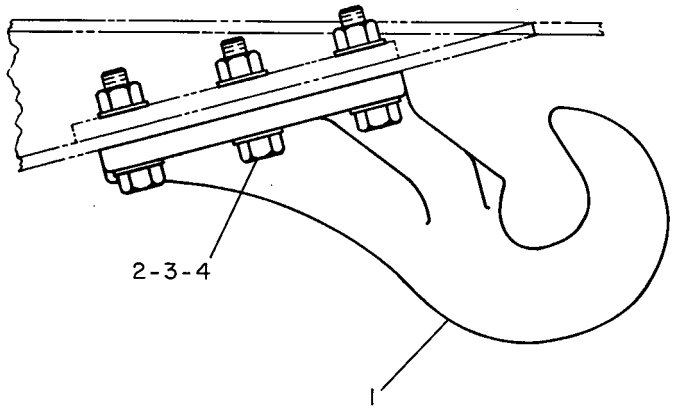

GRAPHIC #1 g00207876

189-5846 HOOK GP-FRONT PULL

S/N: BLE1-UP; BMJ1-UP
AN ATTACHMENT

SMCS-7103 **i01662728**

NOTE	PART NUMBER	QTY	PART NAME 1 2 3 4 5 6 (PRODUCT LEVEL)	SEE PAGE
Y	*8E-1685*	1	HOOK GP-FRONT PULL	346
	189-5722	1	GUARD AS	

Y-SEPARATE ILLUSTRATION

205-8256 SEAL GP-HOOD

S/N: BLE1-UP; BMJ1-UP
PART OF 217-0047 GRILL GP
AN ATTACHMENT

SMCS-7555 **i01663111**

NOTE	REF NO	GRAPHIC REF	PART NUMBER	QTY	PART NAME 1 2 3 4 5 6 (PRODUCT LEVEL)	SEE PAGE
D	1	1	**5P-7211**		SEAL	
E	2	1	**132-8502**		SEAL	
BE	3	1	**120-5281**		SEAL	

B-USE AS REQUIRED
D-ORDER BY THE METER
E-ORDER BY THE CENTIMETER

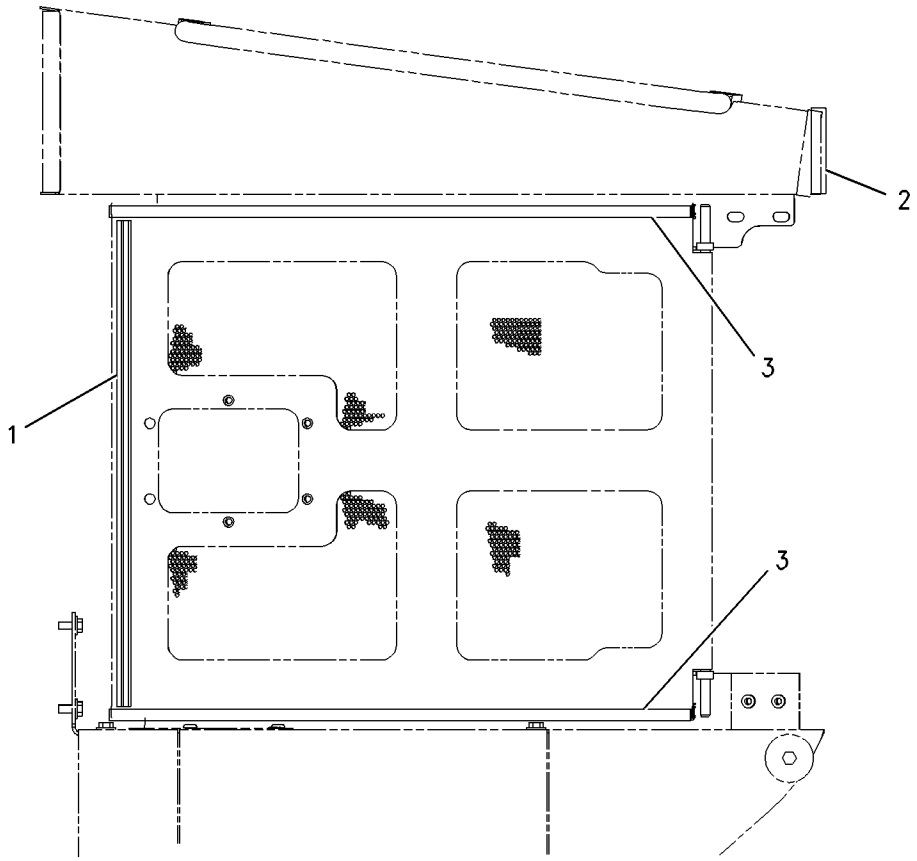

RIGHT SIDE VIEW

GRAPHIC #1 g00860581

MEMORANDA

FRAME AND BODY

180-8295 SWEEP GP

S/N: BLE1-UP; BMJ1-UP

AN ATTACHMENT

SMCS-7162 **i01631770**

NOTE	REF NO	GRAPHIC REF	PART NUMBER	QTY	PART NAME 1 2 3 4 5 6 (PRODUCT LEVEL)	SEE PAGE
	1	2	**1P-2772**	8	SPACER (26X31X19MM THK)	
	2	1	**5G-9958**	1	BRACKET AS	
	3	1	**5G-9961**	1	BRACKET AS	
	4	2	**6T-1698**	8	MOUNTING	
	5	1	**7X-0564**	4	WASHER-HARD (20X51X3MM THK)	
	6	1	**8E-6891**	2	BLOCK AS	
	7	2	**8E-9532**	2	SPACER	
	8	2	**8P-5244**	8	WASHER (33.3X69.8X6.35MM THK)	
	9	2	**150-1955**	8	PLATE	
	10	1	*180-8620*	1	SWEEP AS	
	10A	1	**1P-2772**	4	SPACER (26X31X19MM THK)	
		1	**3W-6528**	2	TUBE AS	
		1	**5G-9963**	2	PLATE AS	
	10B	1	**6K-3632**	2	LOCKNUT	
	10C	1	**8C-8844**	2	BOLT (1-8X5 IN)	
	10D	1	**8P-5244**	4	WASHER (33.3X69.8X6.35MM THK)	
	10E	1	**9S-5187**	6	MOUNTING	
	10F	1	**180-8293**	1	GUARD AS	
		1	**3W-5669**	1	TUBE	
		1	**7K-3673**	2	BOSS	
		1	**7T-1099**	2	LINK	
		1	**9S-5183**	2	BRACKET	
	10G	1	**180-8294**	1	GUARD AS	
		1	**7K-3673**	2	BOSS	
		1	**7T-1099**	8	LINK	
	11	1	**5P-1076**	12	WASHER-HARD (13.5X30X4MM THK)	
	12	2	**6K-3632**	4	LOCKNUT	
	13	1	**7X-0366**	4	BOLT (3/4-10X2 IN)	
	14	2	**7X-0582**	4	WASHER-HARD (20X44.5X6MM THK)	
	15	2	**8C-8842**	4	BOLT (3/4-10X4 IN)	
	16	2	**8C-8843**	4	BOLT (1-8X4.5 IN)	
	17	2	**8T-4122**	4	WASHER-HARD (17X32X3.5MM THK)	
	18	1	**8T-4835**	8	BOLT (1/2-13X2 IN)	
	19	2	**8T-9389**	8	BOLT (1/2-13X2.75 IN)	
	20	2	**8T-9393**	4	BOLT (5/8-11X1.5 IN)	

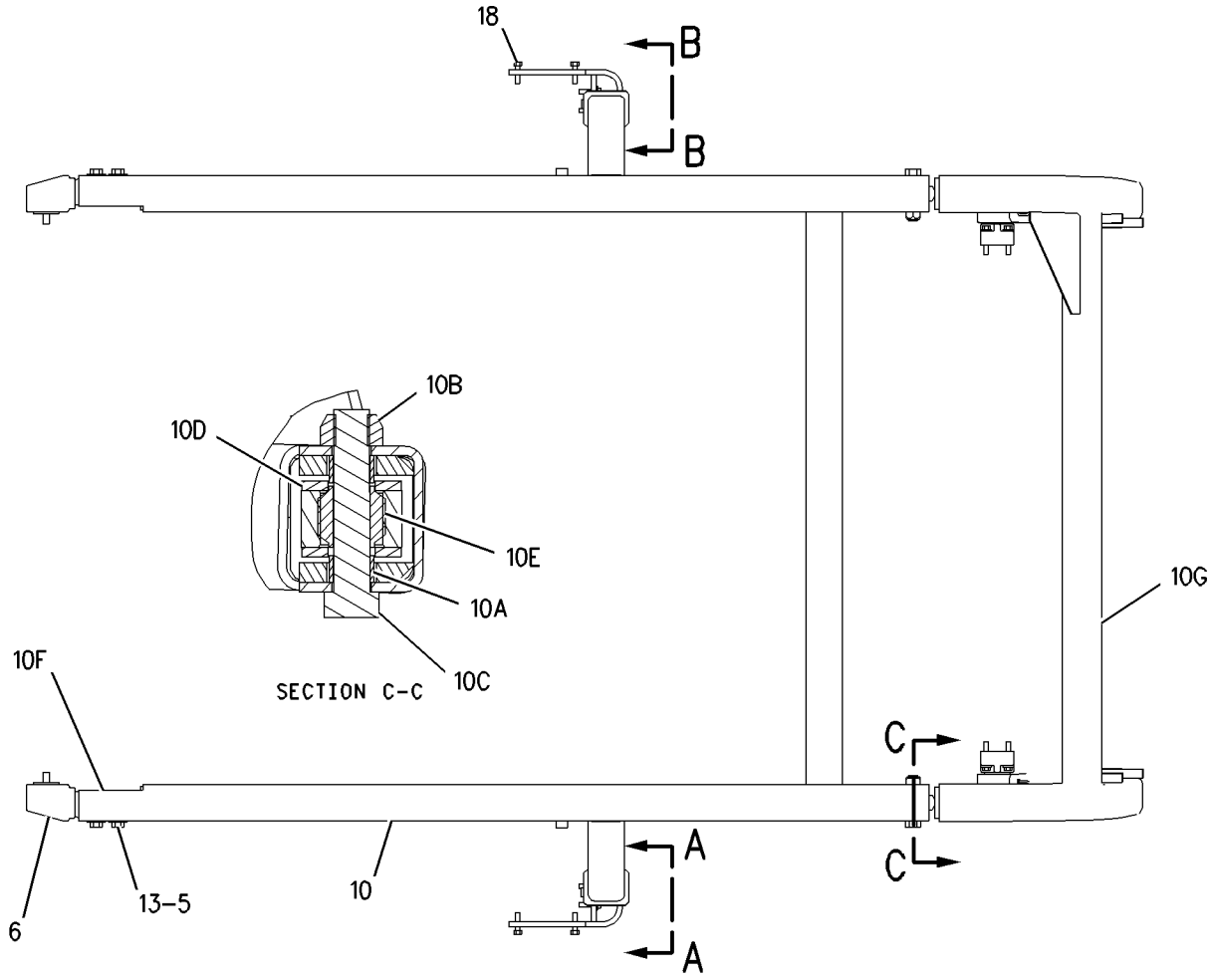

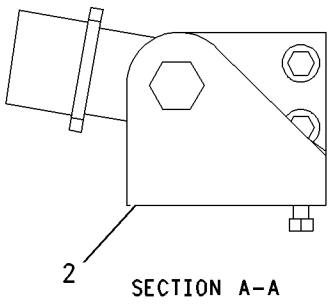

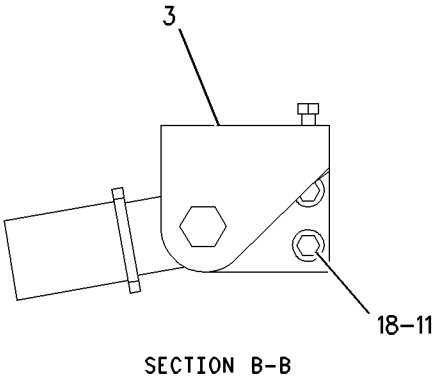

GRAPHIC #1 g00846459

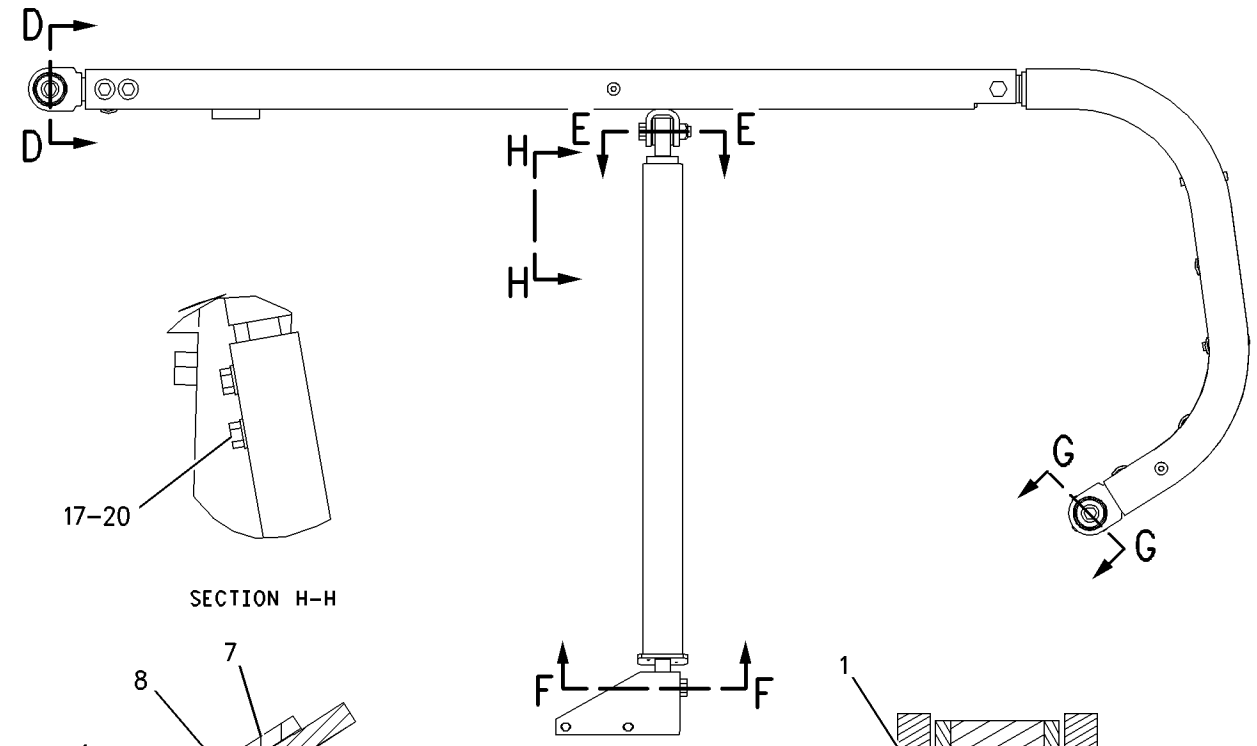

SECTION H-H

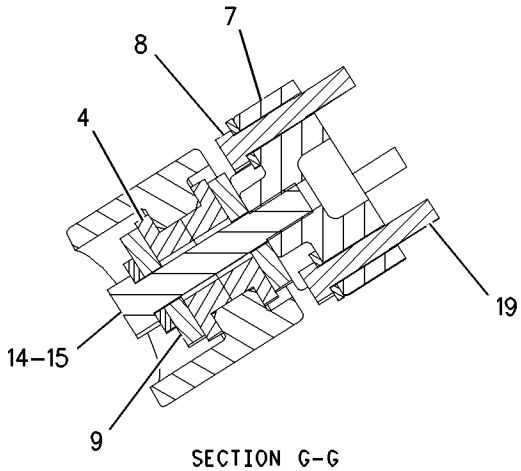

SECTION G-G

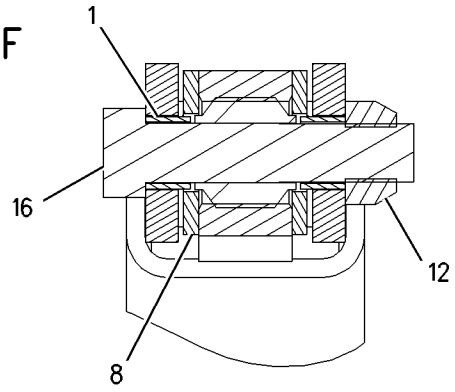

SECTION E-E

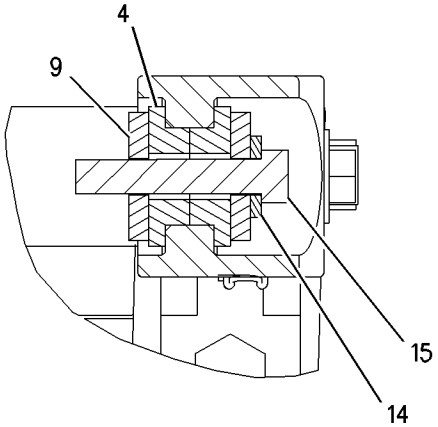

SECTION D-D

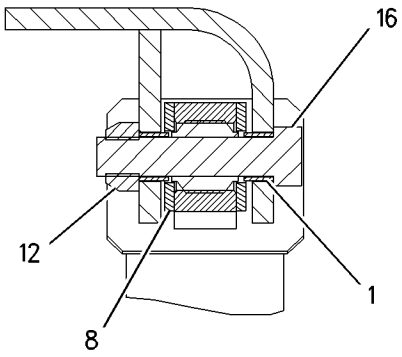

SECTION F-F

GRAPHIC #2

g00846460

108-1091 CAP GP-TRACK IDLER

S/N: BLE1-UP; BMJ1-UP

PART OF 194-5349, 194-5350 UNDERCARRIAGE AR

SMCS-4159 **i01590949**

NOTE	REF NO	GRAPHIC REF	PART NUMBER	QTY	PART NAME 1 2 3 4 5 6 (PRODUCT LEVEL)	SEE PAGE
	1	1	**165-6946**	1	BLOCK-TRACK IDLER	
	2	1	**152-3421**	1	CAP AS-TRACK IDLER	
	3	1	**1T-0068**	1	PIN-SPRING	
M	4	1	**6V-9167**	2	BOLT (M20X2.5X140MM)	
		1	**8T-3282**	2	WASHER-HARD (22X35X3.5MM THK)	

M-METRIC PART

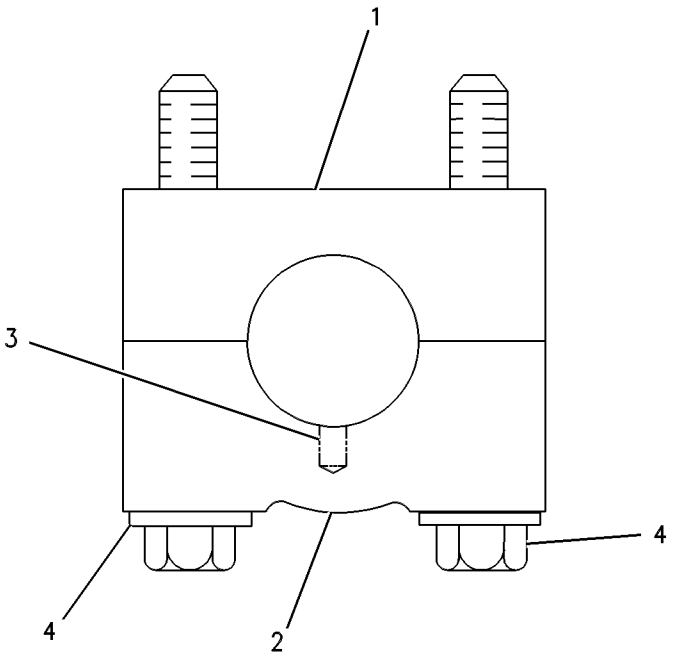

GRAPHIC #1 g00254089

UNDERCARRIAGE

186-2882 EQUALIZER BAR GP

S/N: BLE1-UP; BMJ1-UP

PART OF 194-5349, 194-5350 UNDERCARRIAGE AR

SMCS-7206, 7207, 7210 **i01590951**

NOTE	REF NO	GRAPHIC REF	PART NUMBER	QTY	PART NAME 1 2 3 4 5 6 (PRODUCT LEVEL)	SEE PAGE
	1	1	**3B-8485**	1	FITTING-GREASE (1/8-27 THD)(45 DEGREE)	
	2	1	**3B-8489**	2	FITTING-GREASE (1/8-27 THD)	
	3	1	**3W-5979**	1	BAR AS	
		1	**8G-8311**	2	BEARING-SLEEVE	
	4	1	**3W-9678**	1	SPACER (27.5X55X12MM THK)	
	5	1	**6Y-3896**	1	PIN AS	
	6	1	**7X-0466**	1	BOLT (1-14X2.25 IN)	
	7	1	**8G-4189**	2	BEARING-SELF ALIGNING	
	8	1	**8G-4190**	4	SEAL	
	9	1	**8G-8316**	2	SPACER (64.7X85X7MM THK)	
I	10	1	**5T-4374**	1	HOSE AS	
	11	1	**9U-8481**	2	PIN AS	
	12	1	**030-7946**	1	ELBOW	
	13	1	**124-0174**	1	CLIP	
	14	1	**1J-6472**	4	RING-RETAINING	
	15	1	**3J-7354**	1	SEAL-O-RING	
	16	1	**4L-6454**	1	BOLT (3/8-16X1 IN)	
	17	1	**7K-9205**	2	SEAL-LIP	
	18	1	**7V-3715**	1	WASHER (28X85X8MM THK)	
	19	1	**7X-0587**	2	WASHER-HARD (17X54X3MM THK)	
	20	1	**8L-6557**	1	CONNECTOR	
M	21	1	**8T-4190**	2	BOLT (M16X2X25MM)	
	22	1	**5P-1075**	1	WASHER-HARD (10.2X22.5X3MM THK)	

I-SEE HOSE FABRICATION GUIDE
M-METRIC PART

186-2882 **EQUALIZER BAR GP** ***(contd.)*** **i01590951**

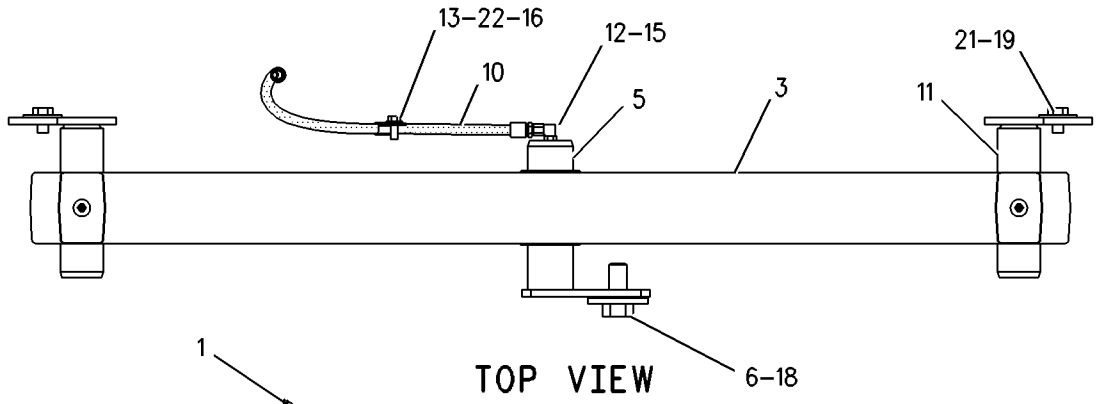

TOP VIEW

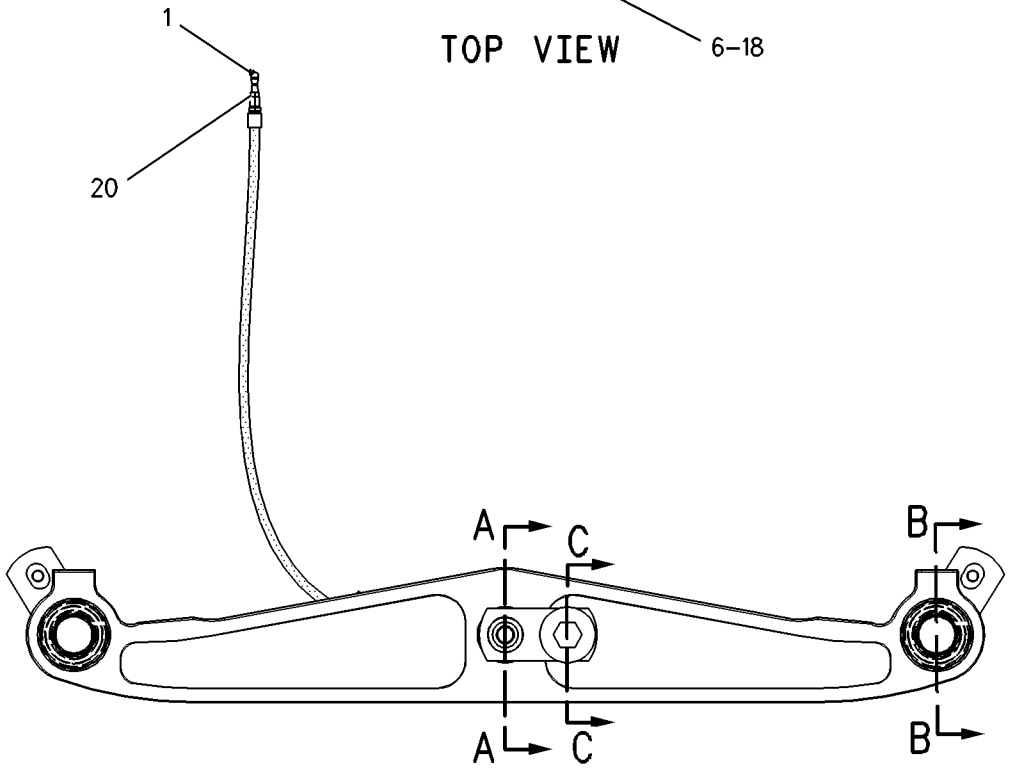

FRONT VIEW

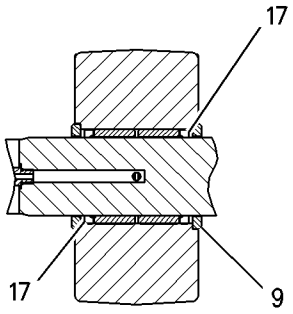

SECTION A-A

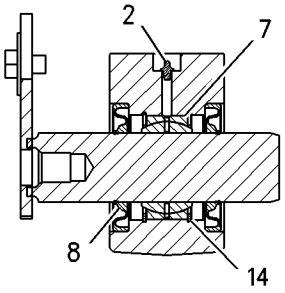

SECTION B-B

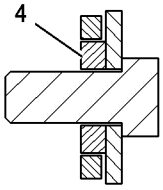

SECTION C-C

GRAPHIC #1 g00791129

UNDERCARRIAGE

191-4896 EQUALIZER BAR GP

S/N: BLE1-UP; BMJ1-UP
PART OF 200-6907 EQUALIZER BAR GP
AN ATTACHMENT

SMCS-7206, 7207, 7210 **i01602011**

NOTE	REF NO	GRAPHIC REF	PART NUMBER	QTY	PART NAME 1 2 3 4 5 6 (PRODUCT LEVEL)	SEE PAGE
	1	1	**3B-8485**	1	FITTING-GREASE (1/8-27 THD)(45 DEGREE)	
	2	1	**3B-8489**	2	FITTING-GREASE (1/8-27 THD)	
	3	1	**3W-9678**	1	SPACER (27.5X55X12MM THK)	
	4	1	**6Y-3896**	1	PIN AS	
	5	1	**7X-0466**	1	BOLT (1-14X2.25 IN)	
	6	1	**8G-4189**	2	BEARING-SELF ALIGNING	
	7	1	**8G-8316**	2	SPACER (64.7X85X7MM THK)	
I	8	1	**5T-4374**	1	HOSE AS	
	9	1	**9U-8481**	2	PIN AS	
	10	1	**133-5631**	2	PLUG	
	11	1	**139-0566**	4	SEAL AS	
					(EACH INCLUDES)	
		1	**139-0567**	1	RING-SEAL	
	12	1	**190-5452**	1	EQUALIZER BAR AS	
		1	**8G-8311**	2	BEARING-SLEEVE	
	13	1	**030-7946**	1	ELBOW	
	14	1	**124-0174**	1	CLIP	
	15	1	**1J-6472**	4	RING-RETAINING	
	16	1	**2F-5326**	8	SETSCREW (3/8-16X.37 IN)	
	17	1	**3J-7354**	1	SEAL-O-RING	
	18	1	**4L-6454**	1	BOLT (3/8-16X1 IN)	
	19	1	**5F-1678**	2	SEAL-O-RING	
	20	1	**7K-9205**	2	SEAL-LIP	
	21	1	**7V-3715**	1	WASHER (28X85X8MM THK)	
	22	1	**7X-0587**	2	WASHER-HARD (17X54X3MM THK)	
	23	1	**8L-6557**	1	CONNECTOR	
M	24	1	**8T-4190**	2	BOLT (M16X2X25MM)	
	25	1	**5P-1075**	1	WASHER-HARD (10.2X22.5X3MM THK)	

I-SEE HOSE FABRICATION GUIDE
M-METRIC PART

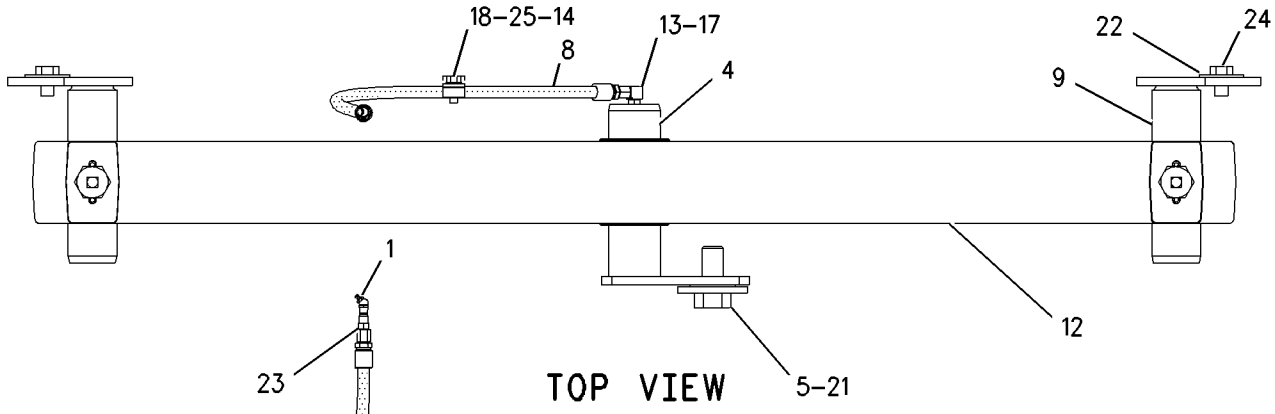

TOP VIEW

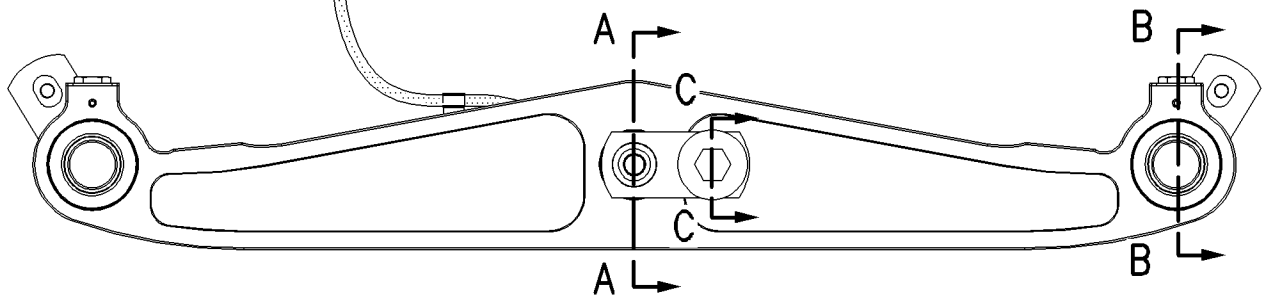

FRONT VIEW

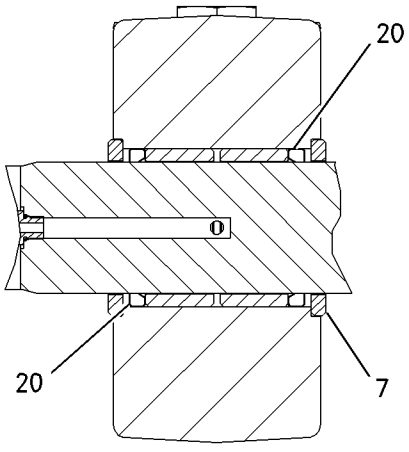

SECTION A–A

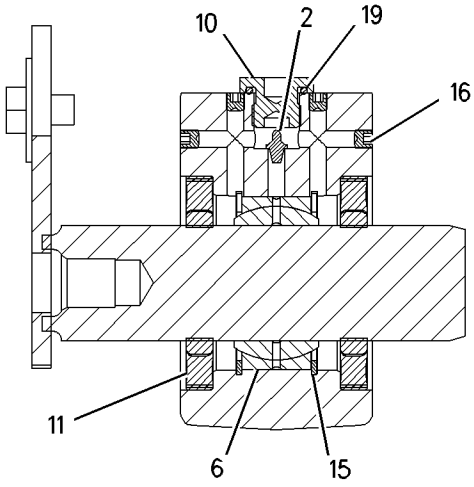

SECTION B–B

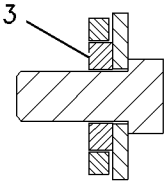

SECTION C–C

GRAPHIC #1

g00741784

UNDERCARRIAGE

200-6907 EQUALIZER BAR GP

S/N: BLE1-UP; BMJ1-UP
AN ATTACHMENT

SMCS-7206, 7207, 7210 **i01602004**

NOTE	PART NUMBER	QTY	PART NAME 1 2 3 4 5 6 (PRODUCT LEVEL)	SEE PAGE
Y	*191-4896*	1	EQUALIZER BAR GP	356

Y-SEPARATE ILLUSTRATION

MEMORANDA

UNDERCARRIAGE

5Q-7997 FRAME GP-TELESCOPING RECOIL

S/N: BLE1-UP
PART OF 5Q-7996 ROLLER AR
AN ATTACHMENT

SMCS-4151 **i01662564**

NOTE	REF NO	GRAPHIC REF	PART NUMBER	QTY	PART NAME 1 2 3 4 5 6 (PRODUCT LEVEL)	SEE PAGE
	1	1	**3T-2077**	1	BEARING	
	2	1	**3W-1852**	1	RING-RETAINING	
	3	1	**9X-4582**	1	SEAL AS	
		1	**8T-5071**	1	GUARD-SEAL	
M	4	1	**8T-4139**	16	BOLT (M12X1.75X30MM)	
	5	1	**8T-4223**	28	WASHER-HARD (13.5X25.5X3MM THK)	
M	6	1	**8T-4136**	4	BOLT (M10X1.5X25MM)	
	7	1	**108-0182**	1	FRAME AS (LH)	
	7A	1	**3T-1162**	1	BEARING-SLEEVE	
		1	**7T-5886**	2	DOWEL	
	7B	1	**163-2169**	1	GUARD AS	
	7C	1	**163-2170**	1	GUARD AS	
		1	**109-3949**	1	TUBE AS-ROLLER FRAME	
	8	1	**5Q-8207**	1	FRAME AS (RH)	
	8A	1	**163-2171**	1	GUARD AS	
	8B	1	**163-2172**	1	GUARD AS	
	8C	1	**7J-1333**	1	BEARING	
	8D	1	**7P-8370**	1	BEARING	
	8E	1	**7T-5886**	2	DOWEL	
	8F	1	**9U-8482**	2	BEARING-SLEEVE	
	9	1	**189-3032**	2	STRIP	
	10	1	**8E-1212**	1	COVER AS	
		1	**5P-9891**	1	PLATE-WARNING (HIGH PRESSURE CYLINDER)	
		1	**7B-3028**	4	SCREW-DRIVE (NO 4X3/16 IN)	
M	11	1	**8T-4184**	12	BOLT (M12X1.75X45MM)	
	12	1	**144-5574**	2	GUIDE AS	
					(EACH INCLUDES)	
		1	**8T-7532**	1	FILM-WARNING	
	13	1	**1B-5174**	2	PLUG-PIPE	
	14	1	**8T-4121**	4	WASHER-HARD (11X21X2.5MM THK)	
Y	15	1	*9U-8492*	1	TRACK ADJUSTER & RECOIL GP	402
	16	1	**5H-6734**	1	SEAL-O-RING	
	17	1	**160-4103**	2	STRIP	

M-METRIC PART
Y-SEPARATE ILLUSTRATION

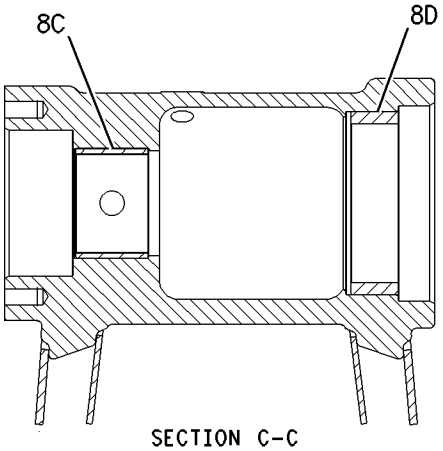

SECTION C-C

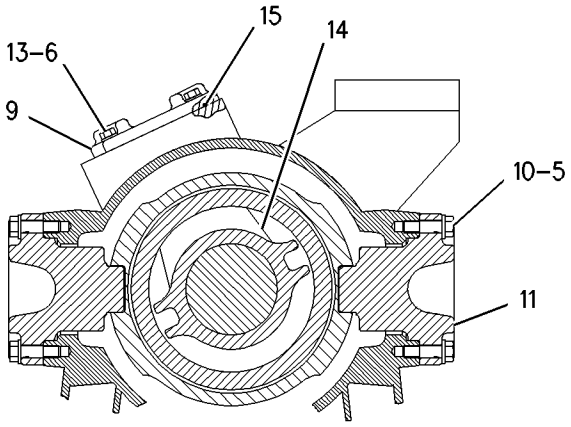

SECTION A-A

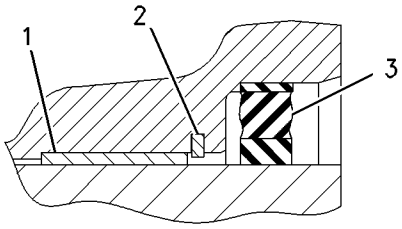

SECTION B-B

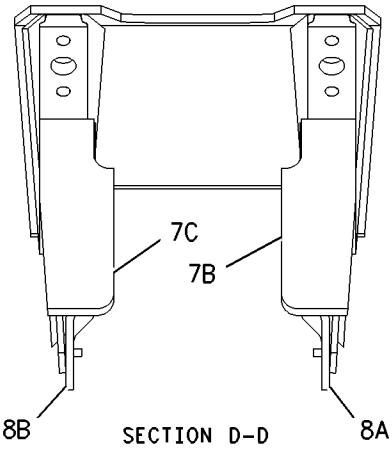

SECTION D-D

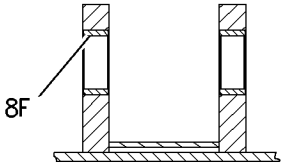

SECTION E-E

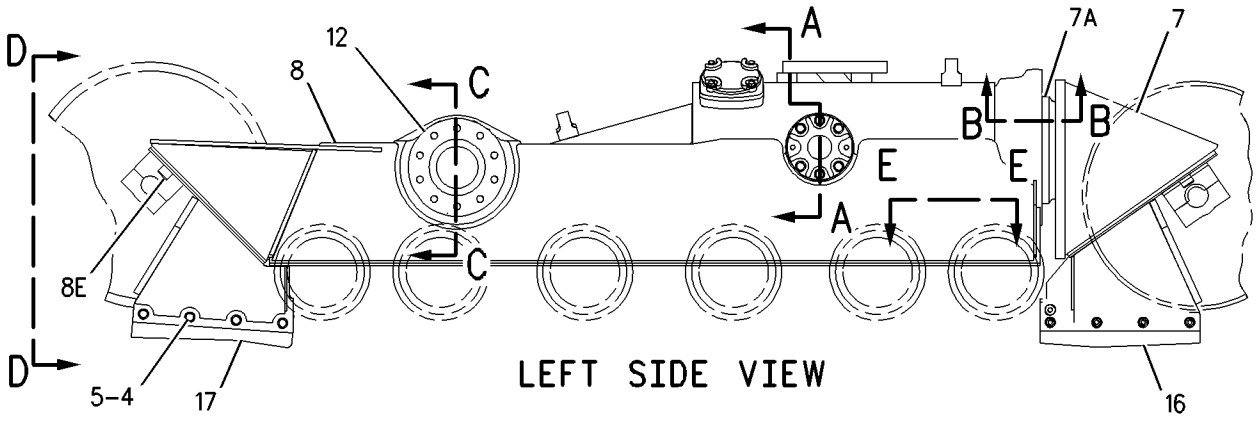

LEFT SIDE VIEW

GRAPHIC #1 g00859696

5Q-7998 FRAME GP-TELESCOPING RECOIL

S/N: BLE1-UP
LH
PART OF 5Q-7996 ROLLER AR
AN ATTACHMENT

SMCS-4151 **i01662575**

NOTE	REF NO	GRAPHIC REF	PART NUMBER	QTY	PART NAME 1 2 3 4 5 6 (PRODUCT LEVEL)	SEE PAGE
	1	1	**3T-2077**	1	BEARING	
	2	1	**3W-1852**	1	RING-RETAINING	
	3	1	**9X-4582**	1	SEAL AS	
M	4	1	**8T-4139**	16	BOLT (M12X1.75X30MM)	
	5	1	**8T-4223**	28	WASHER-HARD (13.5X25.5X3MM THK)	
M	6	1	**8T-4136**	4	BOLT (M10X1.5X25MM)	
	7	1	**108-0182**	1	FRAME AS (RH)	
		1	**4B-4158**	4	SCREW-DRIVE (3/16X0.25 IN)	
		1	**6V-2226**	1	PLATE-WARNING (RECOIL SPRING)	
	7A	1	**3T-1162**	1	BEARING-SLEEVE	
		1	**7T-5886**	2	DOWEL	
	7B	1	**163-2169**	1	GUARD AS	
	7C	1	**163-2170**	1	GUARD AS	
		1	**109-3949**	1	TUBE AS-ROLLER FRAME	
	8	1	**5Q-8209**	1	FRAME AS	
	8A	1	**163-2171**	1	GUARD AS	
	8B	1	**163-2172**	1	GUARD AS	
	8C	1	**7J-1333**	1	BEARING	
	8D	1	**7P-8370**	1	BEARING	
	8E	1	**7T-5886**	2	DOWEL	
	8F	1	**9U-8482**	2	BEARING-SLEEVE	
	9	1	**8E-1212**	1	COVER AS	
		1	**5P-9891**	1	PLATE-WARNING (HIGH PRESSURE CYLINDER)	
		1	**7B-3028**	4	SCREW-DRIVE (NO 4X3/16 IN)	
M	10	1	**8T-4184**	12	BOLT (M12X1.75X45MM)	
	11	1	**144-5574**	2	GUIDE AS	
		1	**8T-7532**	1	FILM-WARNING	
	12	1	**1B-5174**	2	PLUG-PIPE	
	13	1	**8T-4121**	4	WASHER-HARD (11X21X2.5MM THK)	
Y	14	1	*9U-8492*	1	TRACK ADJUSTER & RECOIL GP	402
	15	1	**5H-6734**	1	SEAL-O-RING	
	16	1	**160-4103**	2	STRIP	
	17	1	**189-3032**	2	STRIP	

M-METRIC PART
Y-SEPARATE ILLUSTRATION

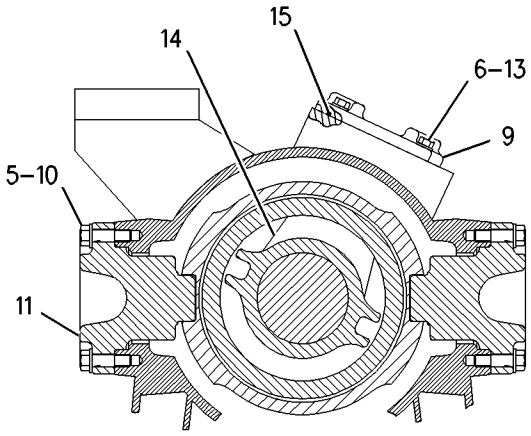

SECTION A-A

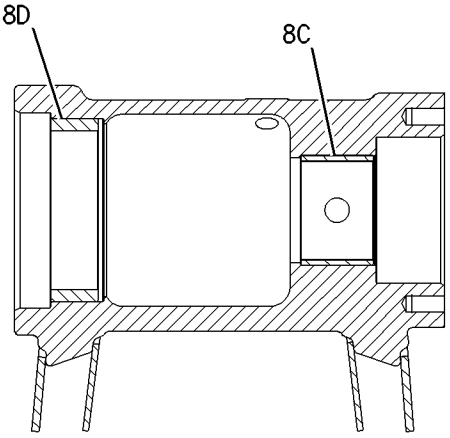

SECTION C-C

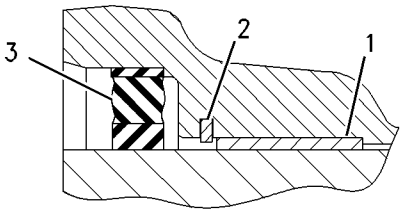

SECTION B-B

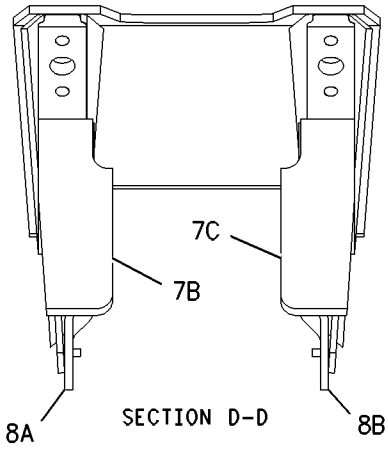

SECTION D-D

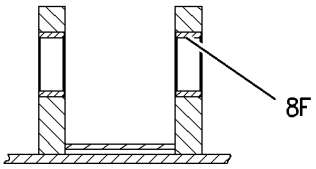

SECTION E-E

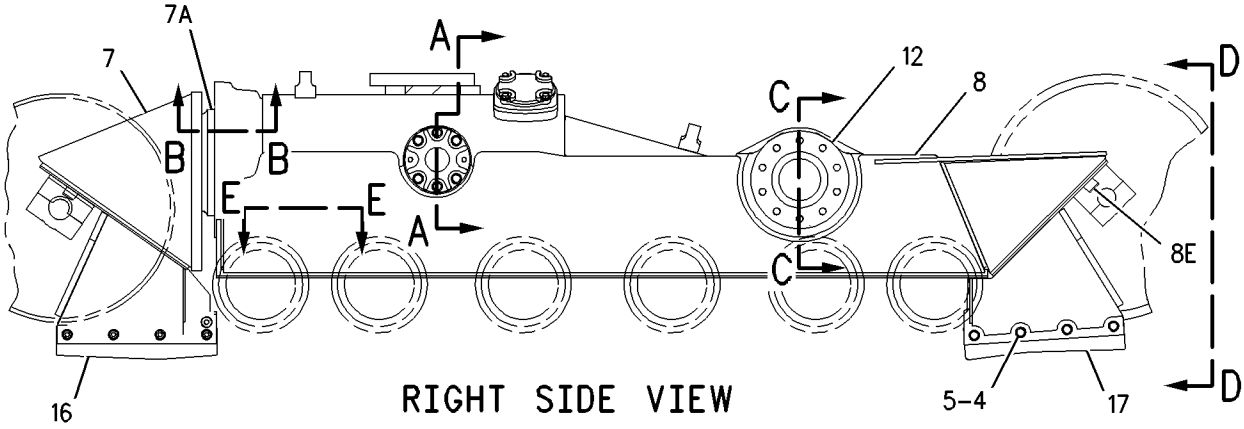

RIGHT SIDE VIEW

GRAPHIC #1 g00859679

108-0137 FRAME GP-TELESCOPING RECOIL–RH

S/N: BLE1-UP

PART OF 194-5349 UNDERCARRIAGE AR

SMCS-4151 **i01669111**

NOTE	REF NO	GRAPHIC REF	PART NUMBER	QTY	PART NAME 1 2 3 4 5 6 (PRODUCT LEVEL)	SEE PAGE
	1	1	**3T-2077**	1	BEARING	
	2	1	**3W-1852**	1	RING-RETAINING	
	3	1	**9X-4582**	1	SEAL AS	
	4	1	**8T-4223**	28	WASHER-HARD (13.5X25.5X3MM THK)	
M	5	1	**8T-4136**	4	BOLT (M10X1.5X25MM)	
		1	**8T-4121**	4	WASHER-HARD (11X21X2.5MM THK)	
	6	1	**5H-6734**	1	SEAL-O-RING	
	7	1	**8E-1212**	1	COVER AS	
		1	**5P-9891**	1	PLATE-WARNING (HIGH PRESSURE CYLINDER)	
		1	**7B-3028**	4	SCREW-DRIVE (NO 4X3/16 IN)	
M	8	1	**8T-4139**	16	BOLT (M12X1.75X30MM)	
	9	1	**144-5574**	2	GUIDE AS	
					(EACH INCLUDES)	
		1	**8T-7532**	1	FILM-WARNING	
Y	10	1	*9U-8492*	1	TRACK ADJUSTER & RECOIL GP	402
C	11	1	**160-4103**	2	STRIP	
	12	1	**1B-5174**	2	PLUG-PIPE	
	13	1	**108-0182**	1	FRAME AS	
		1	**109-3949**	1	TUBE AS-ROLLER FRAME	
		1	**6V-2226**	1	PLATE-WARNING (RECOIL SPRING)	
		1	**4B-4158**	4	SCREW-DRIVE (3/16X0.25 IN)	
	14	1	**3T-1162**	1	BEARING-SLEEVE	
	15	1	**7T-5886**	2	DOWEL	
C	16	1	**163-2169**	1	GUARD AS (INNER)	
C		1	**163-2170**	1	GUARD AS (OUTER)	
	17	1	**108-0139**	1	FRAME AS-RH	
		1	**9U-8482**	2	BEARING-SLEEVE	
	18	1	**7T-5886**	2	DOWEL	
	19	1	**7P-8370**	1	BEARING	
		1	**7J-1333**	1	BEARING	
C	20	1	**163-2171**	1	GUARD AS (INNER)	
C		1	**163-2172**	1	GUARD AS (OUTER)	
	21	1	**9G-1962**	2	HOOK	
M	22	1	**8T-4184**	12	BOLT (M12X1.75X45MM)	
C	23	1	**189-3032**	2	STRIP	
A	24	1	**8G-9530**	4	SHIM (8MM THK)	

A-NOT PART OF THIS GROUP
C-CHANGE FROM PREVIOUS TYPE
M-METRIC PART
Y-SEPARATE ILLUSTRATION

108-0137 **FRAME GP-TELESCOPING RECOIL** ***(contd.)*** **i01669111**

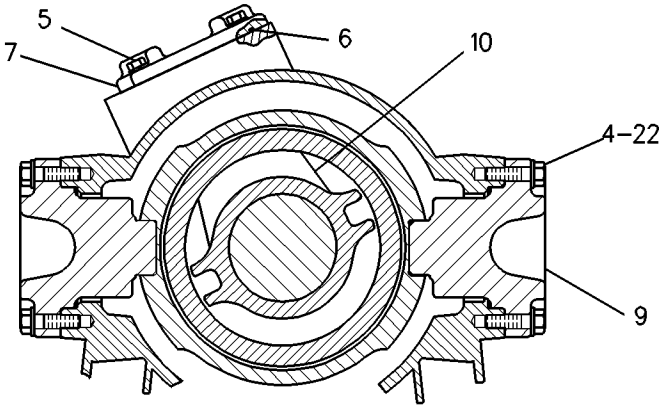

SECTION B-B

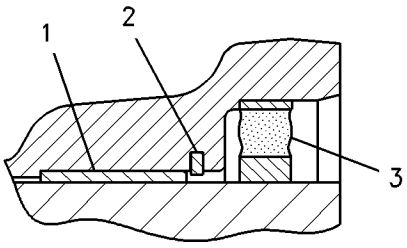

SECTION VIEW OF AREA A

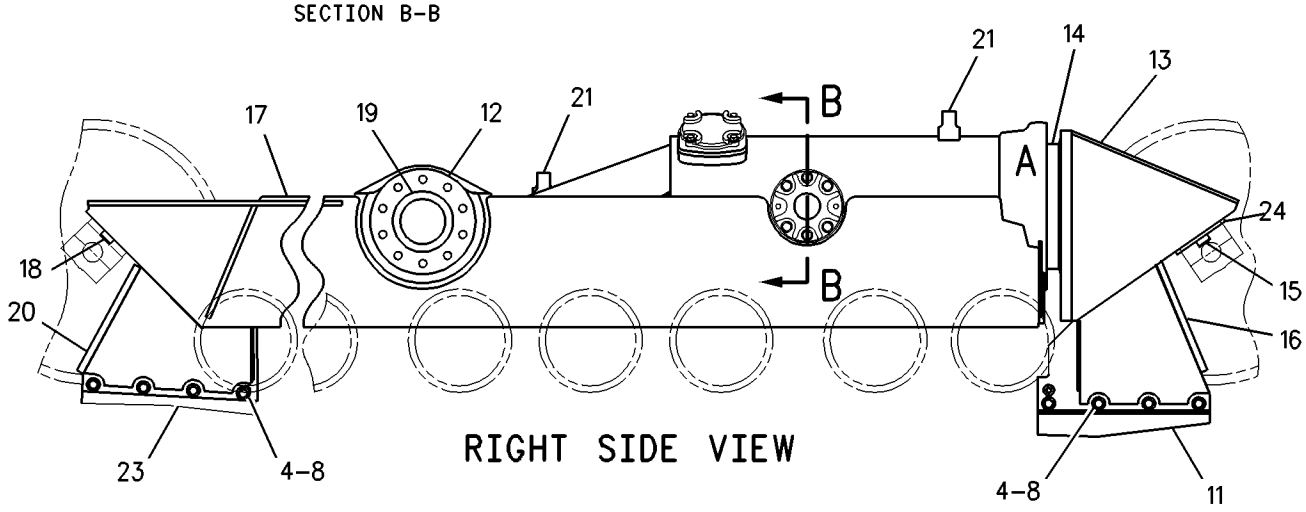

RIGHT SIDE VIEW

GRAPHIC #1 g00862337

UNDERCARRIAGE

108-0138 FRAME GP-TELESCOPING RECOIL—LH

S/N: BLE1-UP

PART OF 194-5349 UNDERCARRIAGE AR

SMCS-4151 **i01669122**

NOTE	REF NO	GRAPHIC REF	PART NUMBER	QTY	PART NAME 1 2 3 4 5 6 (PRODUCT LEVEL)	SEE PAGE
	1	1	**3T-2077**	1	BEARING	
	2	1	**3W-1852**	1	RING-RETAINING	
	3	1	**9X-4582**	1	SEAL AS	
	4	1	**8T-4223**	28	WASHER-HARD (13.5X25.5X3MM THK)	
M	5	1	**8T-4136**	4	BOLT (M10X1.5X25MM)	
		1	**8T-4121**	4	WASHER-HARD (11X21X2.5MM THK)	
	6	1	**1B-5174**	2	PLUG-PIPE	
	7	1	**8E-1212**	1	COVER AS	
		1	**5P-9891**	1	PLATE-WARNING (HIGH PRESSURE CYLINDER)	
		1	**7B-3028**	4	SCREW-DRIVE (NO 4X3/16 IN)	
M	8	1	**8T-4184**	12	BOLT (M12X1.75X45MM)	
	9	1	**144-5574**	2	GUIDE AS	
					(EACH INCLUDES)	
		1	**8T-7532**	1	FILM-WARNING	
Y	10	1	*9U-8492*	1	TRACK ADJUSTER & RECOIL GP	402
C	11	1	**160-4103**	2	STRIP	
M	12	1	**8T-4139**	16	BOLT (M12X1.75X30MM)	
	13	1	**5H-6734**	1	SEAL-O-RING	
	14	1	**108-0182**	1	FRAME AS	
		1	**6V-2226**	1	PLATE-WARNING (RECOIL SPRING)	
		1	**4B-4158**	4	SCREW-DRIVE (3/16X0.25 IN)	
	15	1	**3T-1162**	1	BEARING-SLEEVE	
	16	1	**7T-5886**	2	DOWEL	
C	17	1	**163-2169**	1	GUARD AS (INNER)	
C		1	**163-2170**	1	GUARD AS (OUTER)	
	18	1	**108-0142**	1	FRAME AS-LH	
		1	**9U-8482**	2	BEARING-SLEEVE	
	19	1	**7T-5886**	2	DOWEL	
	20	1	**7P-8370**	1	BEARING	
		1	**7J-1333**	1	BEARING	
C	21	1	**163-2171**	1	GUARD AS (INNER)	
C		1	**163-2172**	1	GUARD AS (OUTER)	
	22	1	**9G-1962**	2	HOOK	
C	23	1	**189-3032**	2	STRIP	
A	24	1	**8G-9530**	4	SHIM (8MM THK)	

A-NOT PART OF THIS GROUP
C-CHANGE FROM PREVIOUS TYPE
M-METRIC PART
Y-SEPARATE ILLUSTRATION

108-0138 **FRAME GP-TELESCOPING RECOIL** ***(contd.)*** **i01669122**

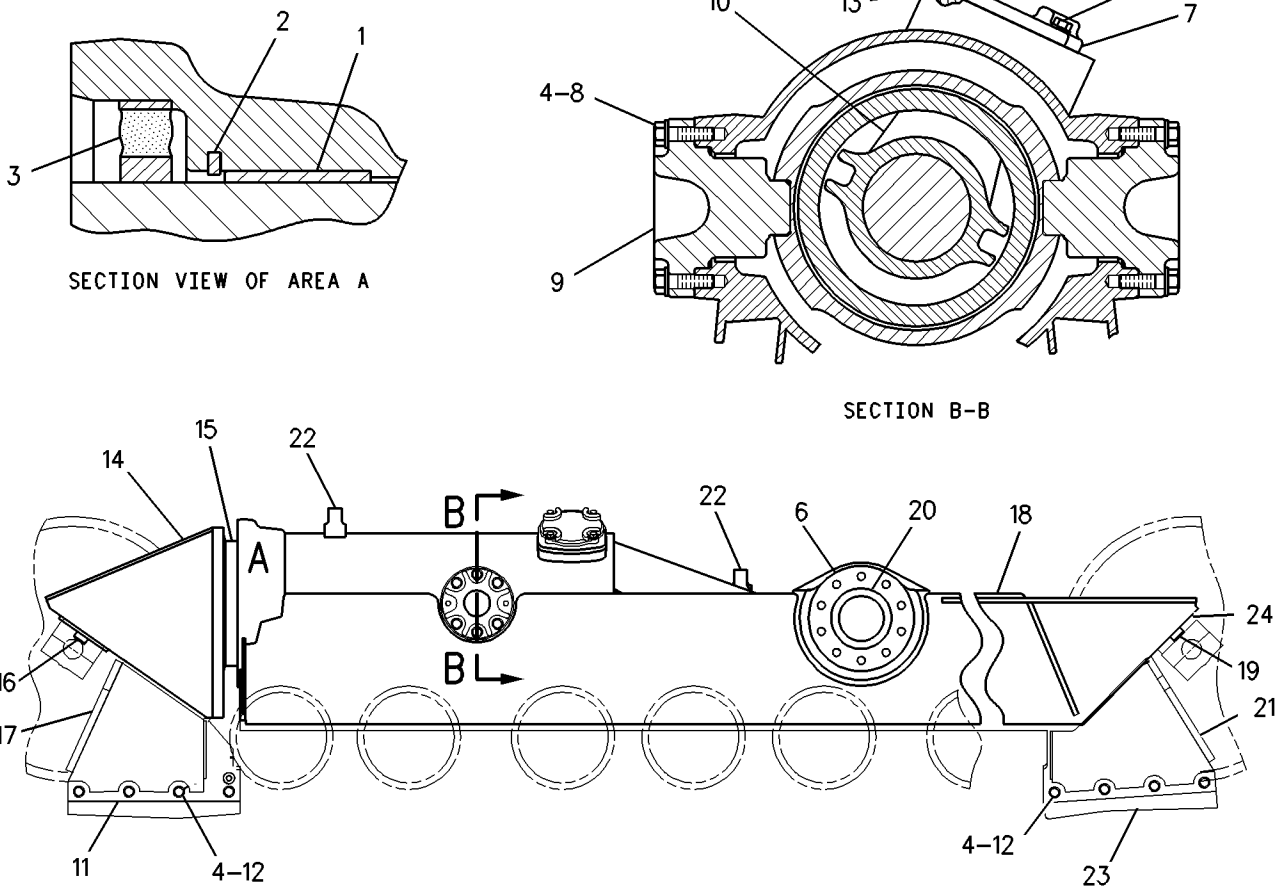

GRAPHIC #1 g00862345

UNDERCARRIAGE

108-0147 FRAME GP-TELESCOPING RECOIL—LH

S/N: BMJ1-UP

PART OF 194-5350 UNDERCARRIAGE AR

SMCS-4151 **i01360983**

NOTE	REF NO	GRAPHIC REF	PART NUMBER	QTY	PART NAME 1 2 3 4 5 6 (PRODUCT LEVEL)	SEE PAGE
	1	1	**3T-2077**	1	BEARING	
	2	1	**3W-1852**	1	RING-RETAINING	
	3	1	**9X-4582**	1	SEAL AS	
	4	1	**8T-4223**	26	WASHER-HARD (13.5X25.5X3MM THK)	
M	5	1	**8T-4136**	4	BOLT (M10X1.5X25MM)	
	6	1	**108-0156**	1	FRAME AS	
	7	1	**3T-1162**	1	BEARING-SLEEVE	
	8	1	**7T-5886**	2	DOWEL	
	9	1	**8E-1212**	1	COVER AS	
		1	**5P-9891**	1	PLATE-WARNING (HIGH PRESSURE CYLINDER)	
		1	**7B-3028**	4	SCREW-DRIVE (NO 4X3/16 IN)	
M	10	1	**8T-4184**	12	BOLT (M12X1.75X45MM)	
	11	1	**144-5574**	2	GUIDE AS	
					(EACH INCLUDES)	
		1	**8T-7532**	1	FILM-WARNING	
	12	1	**1B-5174**	2	PLUG-PIPE	
	13	1	**8T-4121**	4	WASHER-HARD (11X21X2.5MM THK)	
Y	14	1	*9U-8492*	1	TRACK ADJUSTER & RECOIL GP	402
	15	1	**5H-6734**	1	SEAL-O-RING (113.89MM ID)	
C	16	1	**160-4104**	2	STRIP	
C	17	1	**189-3032**	2	STRIP	
M	18	1	**8T-4139**	14	BOLT (M12X1.75X30MM)	
	19	1	**108-0149**	1	FRAME AS-RH	
	20	1	**7P-8370**	1	BEARING (190.7MM OD)	
	21	1	**7T-5886**	2	DOWEL	
	22	1	**7J-1333**	1	BEARING (137.04MM OD)	
C	23	1	**163-2171**	1	GUARD AS	
C	24	1	**163-2172**	1	GUARD AS	
C	25	1	**163-2177**	1	GUARD AS-RH	
C	26	1	**163-2178**	1	GUARD AS-LH	
	27	1	**9G-1962**	2	HOOK	
	28	1	**9U-8482**	2	BEARING-SLEEVE	
AB	29	1	**8G-9530**	4	SHIM (8MM THK)	

A-NOT PART OF THIS GROUP
B-USE AS REQUIRED
C-CHANGE FROM PREVIOUS TYPE
M-METRIC PART
Y-SEPARATE ILLUSTRATION

108-0147 **FRAME GP-TELESCOPING RECOIL** *(contd.)* **i01360983**

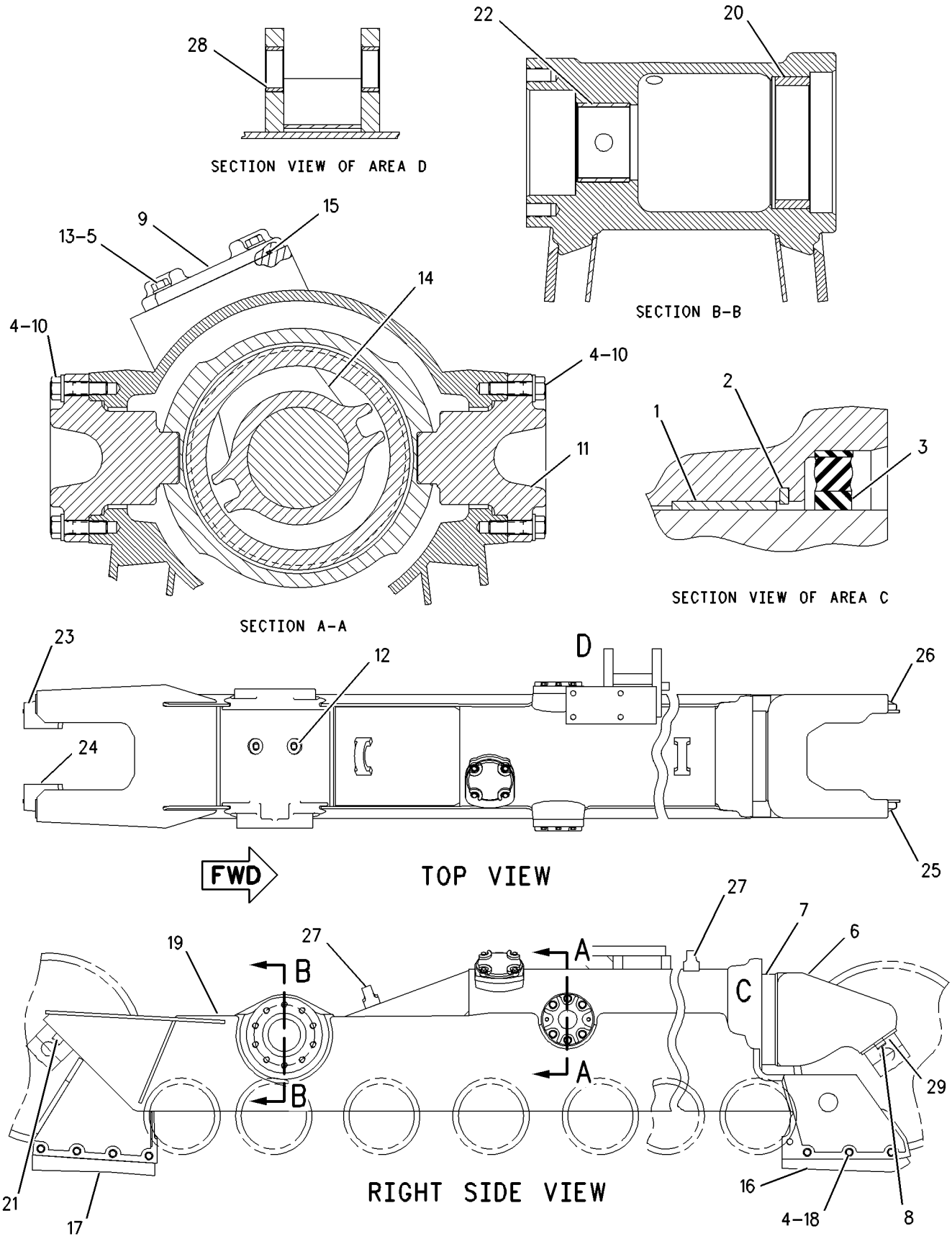

GRAPHIC #1

g00721795

UNDERCARRIAGE

108-0148 FRAME GP-TELESCOPING RECOIL–RH

S/N: BMJ1-UP

PART OF 194-5350 UNDERCARRIAGE AR

SMCS-4151 **i01360989**

NOTE	REF NO	GRAPHIC REF	PART NUMBER	QTY	PART NAME 1 2 3 4 5 6 (PRODUCT LEVEL)	SEE PAGE
	1	1	**3T-2077**	1	BEARING	
	2	1	**3W-1852**	1	RING-RETAINING	
	3	1	**9X-4582**	1	SEAL AS	
M	4	1	**8T-4139**	14	BOLT (M12X1.75X30MM)	
	5	1	**8T-4223**	26	WASHER-HARD (13.5X25.5X3MM THK)	
M	6	1	**8T-4136**	4	BOLT (M10X1.5X25MM)	
	7	1	**108-0156**	1	FRAME AS	
		1	**4B-4158**	4	SCREW-DRIVE (3/16 X 1/4 IN)	
		1	**6V-2226**	1	PLATE-WARNING (RECOIL SPRING)	
	8	1	**3T-1162**	1	BEARING-SLEEVE	
	9	1	**7T-5886**	2	DOWEL	
	10	1	**8E-1212**	1	COVER AS	
		1	**5P-9891**	1	PLATE-WARNING (HIGH PRESSURE CYLINDER)	
		1	**7B-3028**	4	SCREW-DRIVE (NO 4X3/16 IN)	
M	11	1	**8T-4184**	12	BOLT (M12X1.75X45MM)	
	12	1	**144-5574**	2	GUIDE AS	
					(EACH INCLUDES)	
		1	**8T-7532**	1	FILM-WARNING	
	13	1	**1B-5174**	2	PLUG-PIPE	
	14	1	**8T-4121**	4	WASHER-HARD (11X21X2.5MM THK)	
Y	15	1	*9U-8492*	1	TRACK ADJUSTER & RECOIL GP	402
	16	1	**5H-6734**	1	SEAL-O-RING (113.89MM ID)	
C	17	1	**160-4104**	2	STRIP	
C	18	1	**189-3032**	2	STRIP	
	19	1	**108-0152**	1	FRAME AS-LH	
	20	1	**7P-8370**	1	BEARING (190.7MM OD)	
	21	1	**7T-5886**	2	DOWEL	
	22	1	**7J-1333**	1	BEARING (137.04MM OD)	
C	23	1	**163-2171**	1	GUARD AS	
C	24	1	**163-2172**	1	GUARD AS	
C	25	1	**163-2178**	1	GUARD AS-LH	
C	26	1	**163-2177**	1	GUARD AS-RH	
	27	1	**9G-1962**	2	HOOK	
	28	1	**9U-8482**	2	BEARING-SLEEVE	
AB	29	1	**8G-9530**	4	SHIM (8MM THK)	

A-NOT PART OF THIS GROUP
B-USE AS REQUIRED
C-CHANGE FROM PREVIOUS TYPE
M-METRIC PART
Y-SEPARATE ILLUSTRATION

108-0148 **FRAME GP-TELESCOPING RECOIL** ***(contd.)*** **i01360989**

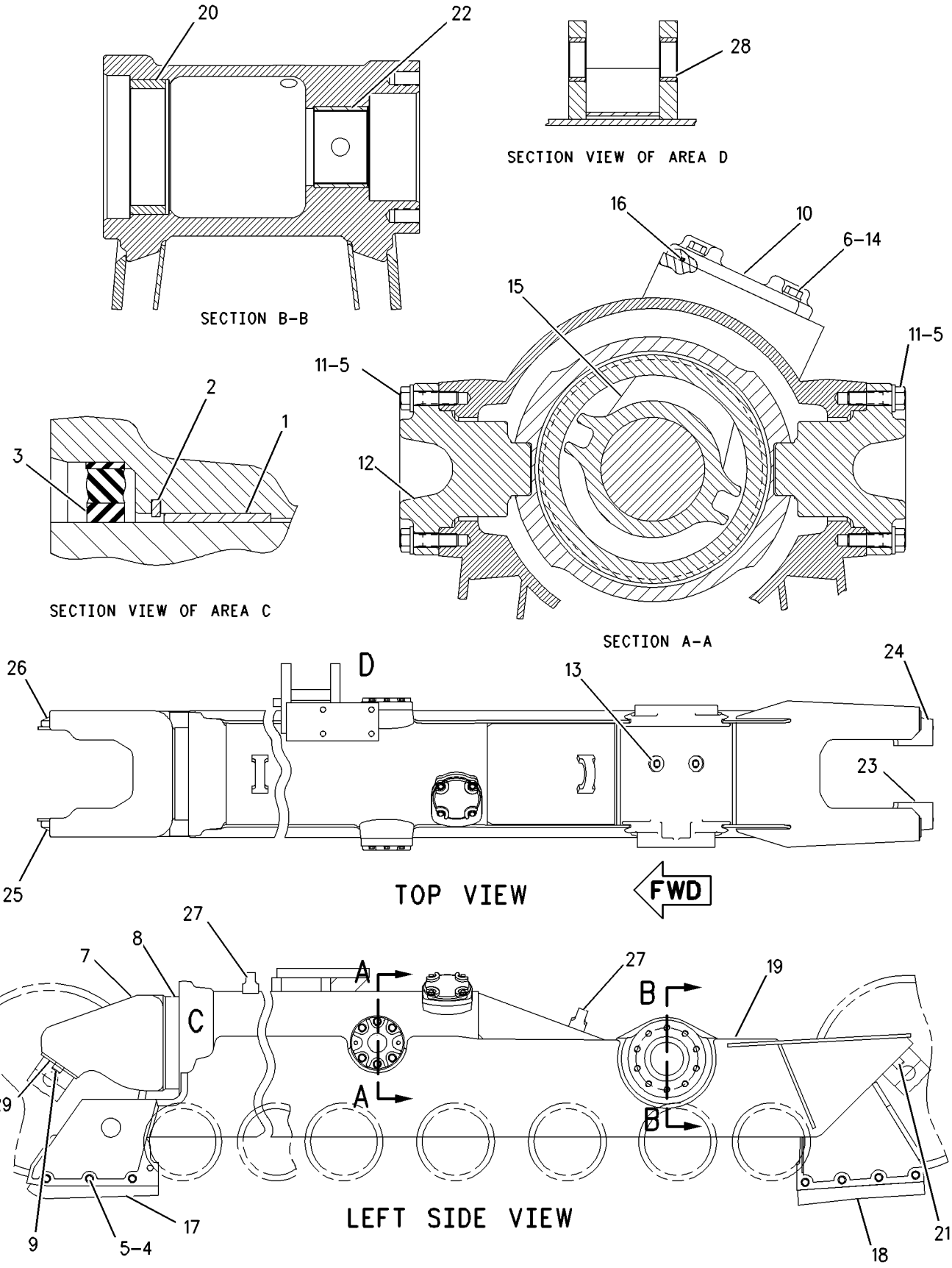

GRAPHIC #1

g00721770

UNDERCARRIAGE

108-0157 FRAME GP-TELESCOPING RECOIL—RH

S/N: BMJ1-UP
PART OF 139-8344 GRADER AR-FINE
AN ATTACHMENT

SMCS-4151 **i01572242**

NOTE	REF NO	GRAPHIC REF	PART NUMBER	QTY	PART NAME 1 2 3 4 5 6 (PRODUCT LEVEL)	SEE PAGE
	1	1	**3T-2077**	1	BEARING	
	2	1	**3W-1852**	1	RING-RETAINING	
	3	1	**9X-4582**	1	SEAL AS	
M	4	1	**8T-4139**	16	BOLT (M12X1.75X30MM)	
	5	1	**8T-4223**	28	WASHER-HARD (13.5X25.5X3MM THK)	
C	6	1	**160-4103**	2	STRIP	
	7	1	**108-0166**	1	FRAME AS	
		1	**6V-2226**	1	PLATE-WARNING (RECOIL SPRING)	
		1	**4B-4158**	4	SCREW-DRIVE (3/16X0.25 IN)	
	8	1	**3T-1162**	1	BEARING-SLEEVE	
	9	1	**7T-5886**	2	DOWEL	
C	10	1	**163-2175**	1	GUARD AS (OUTER)	
C	11	1	**163-2176**	1	GUARD AS (INNER)	
	12	1	**8E-1212**	1	COVER AS	
		1	**5P-9891**	1	PLATE-WARNING (HIGH PRESSURE CYLINDER)	
		1	**7B-3028**	4	SCREW-DRIVE (NO 4X3/16 IN)	
	13	1	**1B-5174**	2	PLUG-PIPE	
M	14	1	**8T-4136**	4	BOLT (M10X1.5X25MM)	
Y	15	1	*9U-8492*	1	TRACK ADJUSTER & RECOIL GP	402
	16	1	**5H-6734**	1	SEAL-O-RING	
	17	1	**8T-4121**	4	WASHER-HARD (11X21X2.5MM THK)	
	18	1	**108-0159**	1	FRAME AS-RH	
C	19	1	**163-2174**	1	GUARD AS (INNER)	
C	20	1	**163-2173**	1	GUARD AS (OUTER)	
	21	1	**9G-1962**	2	HOOK	
	22	1	**7P-8370**	1	BEARING (190.7MM OD)	
	23	1	**7J-1333**	1	BEARING (137.04MM OD)	
	24	1	**9U-8482**	2	BEARING-SLEEVE (73.07MM OD)	
	25	1	**7T-5886**	2	DOWEL	
	26	1	**144-5574**	2	GUIDE AS	
					(EACH INCLUDES)	
		1	**8T-7532**	1	FILM-WARNING (PARKING BRAKE CYLINDER)	
M	27	1	**8T-4184**	12	BOLT (M12X1.75X45MM)	
C	28	1	**189-3032**	2	STRIP	
AB	29	1	**8G-9530**	4	SHIM (8MM THK)	

A-NOT PART OF THIS GROUP
B-USE AS REQUIRED
C-CHANGE FROM PREVIOUS TYPE
M-METRIC PART
Y-SEPARATE ILLUSTRATION

108-0157 **FRAME GP-TELESCOPING RECOIL** ***(contd.)*** **i01572242**

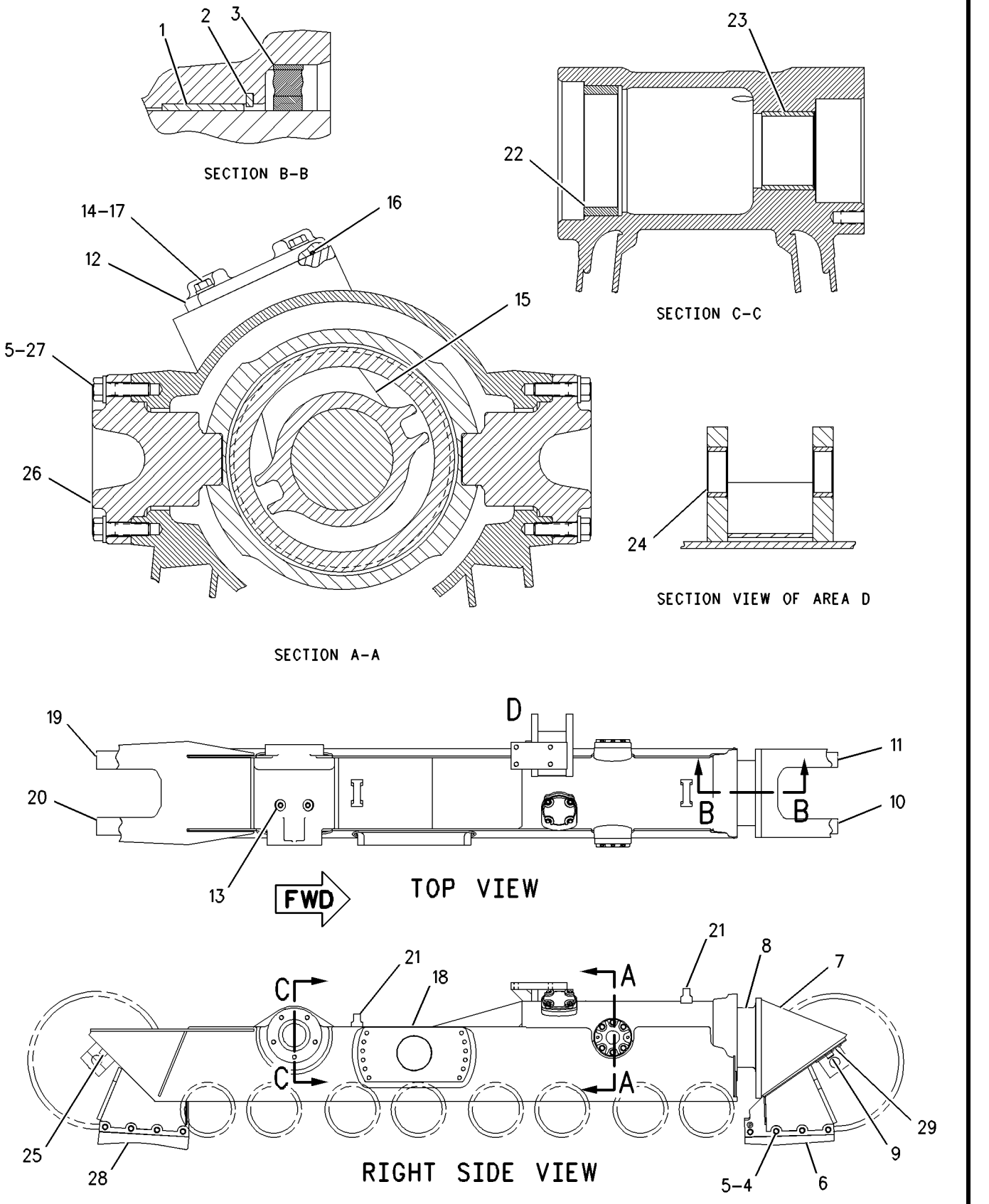

GRAPHIC #1 g00735809

UNDERCARRIAGE

108-0158 FRAME GP-TELESCOPING RECOIL—LH

S/N: BMJ1-UP
PART OF 139-8344 GRADER AR-FINE
AN ATTACHMENT

SMCS-4151 **i01572245**

NOTE	REF NO	GRAPHIC REF	PART NUMBER	QTY	PART NAME 1 2 3 4 5 6 (PRODUCT LEVEL)	SEE PAGE
	1	1	**3T-2077**	1	BEARING	
	2	1	**3W-1852**	1	RING-RETAINING	
	3	1	**9X-4582**	1	SEAL AS	
M	4	1	**8T-4139**	16	BOLT (M12X1.75X30MM)	
	5	1	**8T-4223**	28	WASHER-HARD (13.5X25.5X3MM THK)	
C	6	1	**160-4103**	2	STRIP	
	7	1	**108-0166**	1	FRAME AS	
		1	**6V-2226**	1	PLATE-WARNING (RECOIL SPRING)	
		1	**4B-4158**	4	SCREW-DRIVE (3/16X0.25 IN)	
	8	1	**3T-1162**	1	BEARING-SLEEVE	
	9	1	**7T-5886**	2	DOWEL	
C	10	1	**163-2175**	1	GUARD AS (INNER)	
C	11	1	**163-2176**	1	GUARD AS (OUTER)	
	12	1	**8E-1212**	1	COVER AS	
		1	**5P-9891**	1	PLATE-WARNING (HIGH PRESSURE CYLINDER)	
		1	**7B-3028**	4	SCREW-DRIVE (NO 4X3/16 IN)	
	13	1	**1B-5174**	2	PLUG-PIPE	
M	14	1	**8T-4136**	4	BOLT (M10X1.5X25MM)	
Y	15	1	*9U-8492*	1	TRACK ADJUSTER & RECOIL GP	402
	16	1	**5H-6734**	1	SEAL-O-RING	
	17	1	**8T-4121**	4	WASHER-HARD (11X21X2.5MM THK)	
	18	1	**108-0162**	1	FRAME AS-LH	
C	19	1	**163-2174**	1	GUARD AS (OUTER)	
C	20	1	**163-2173**	1	GUARD AS (INNER)	
	21	1	**9G-1962**	2	HOOK	
	22	1	**7P-8370**	1	BEARING	
	23	1	**7J-1333**	1	BEARING	
	24	1	**9U-8482**	2	BEARING-SLEEVE	
	25	1	**7T-5886**	2	DOWEL	
	26	1	**144-5574**	2	GUIDE AS	
					(EACH INCLUDES)	
		1	**8T-7532**	1	FILM-WARNING (PARKING BRAKE CYLINDER)	
M	27	1	**8T-4184**	12	BOLT (M12X1.75X45MM)	
	28	1	**189-3032**	2	STRIP	
AB	29	1	**8G-9530**	4	SHIM (8MM THK)	

A-NOT PART OF THIS GROUP
B-USE AS REQUIRED
C-CHANGE FROM PREVIOUS TYPE
M-METRIC PART
Y-SEPARATE ILLUSTRATION

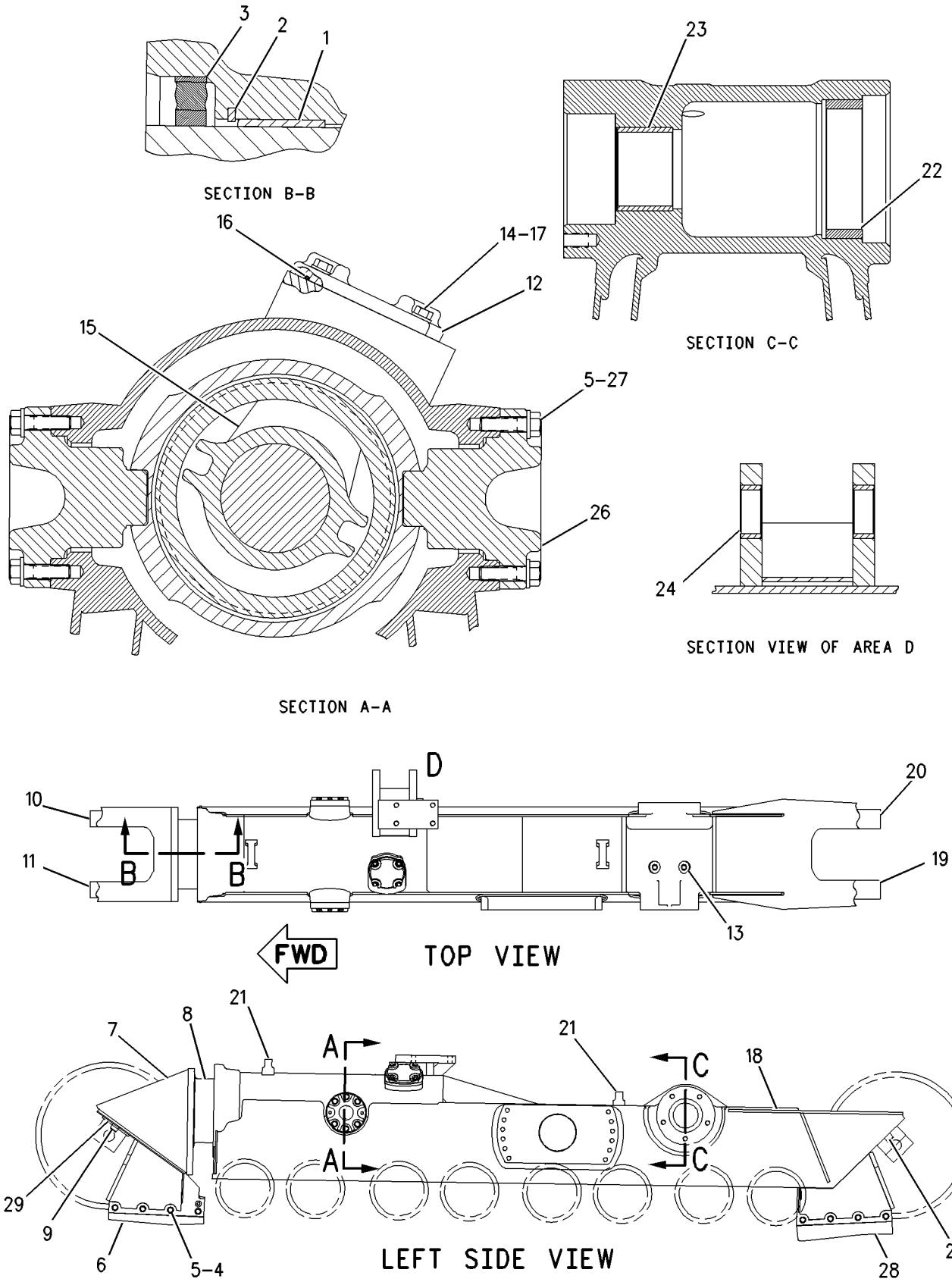

GRAPHIC #1

g00735802

UNDERCARRIAGE

203-6415 GUIDING AR-UNDERCARRIAGE

S/N: BLE1-UP
MODERATE SERVICE
AN ATTACHMENT

SMCS-4150 **i01662778**

NOTE	PART NUMBER	QTY	PART NAME 1 2 3 4 5 6 (PRODUCT LEVEL)	SEE PAGE
Y	*164-0406*	2	GUARD GP-TRACK GUIDE	340
Y	*125-4177*	1	ROLLER AR-TRACK	391

Y-SEPARATE ILLUSTRATION

UNDERCARRIAGE

203-6440 GUIDING AR-UNDERCARRIAGE

S/N: BMJ1-UP
AN ATTACHMENT

SMCS-4150 **i01632628**

NOTE	PART NUMBER	QTY	PART NAME 1 2 3 4 5 6 (PRODUCT LEVEL)	SEE PAGE
Y	*108-0178*	2	GUARD GP-TRACK GUIDE	339
Y	*125-5533*	1	ROLLER AR-TRACK	392

Y-SEPARATE ILLUSTRATION

UNDERCARRIAGE

203-6442 GUIDING AR-UNDERCARRIAGE

S/N: BLE1-UP
HEAVY DUTY
AN ATTACHMENT

SMCS-4150 **i01662790**

NOTE	PART NUMBER	QTY	PART NAME 1 2 3 4 5 6 (PRODUCT LEVEL)	SEE PAGE
Y	*134-5363*	1	GUARD GP-TRACK ROLLER	343
Y	*125-4177*	1	ROLLER AR-TRACK	391

Y-SEPARATE ILLUSTRATION

UNDERCARRIAGE

203-6443 GUIDING AR-UNDERCARRIAGE

S/N: BMJ1-UP
HEAVY DUTY
AN ATTACHMENT

SMCS-4150 **i01632638**

NOTE	PART NUMBER	QTY	PART NAME 1 2 3 4 5 6 (PRODUCT LEVEL)	SEE PAGE
Y	*109-3443*	1	GUARD GP-TRACK ROLLER	341
Y	*125-5533*	1	ROLLER AR-TRACK	392

Y-SEPARATE ILLUSTRATION

202-4296 IDLER GP-TRACK

S/N: BMJ1-UP
PART OF 139-8344 GRADER AR-FINE
AN ATTACHMENT

SMCS-4159 **i01605089**

NOTE	REF NO	GRAPHIC REF	PART NUMBER	QTY	PART NAME 1 2 3 4 5 6 (PRODUCT LEVEL)	SEE PAGE
	1	1	**2H-3928**	2	SEAL-O-RING	
	2	1	**7J-2036**	2	SEAL-O-RING	
	3	1	**6Y-0473**	1	PLUG-CLEAR	
		1	**9G-5664**	1	STOPPER-RUBBER	
	4	1	**106-7691**	2	WASHER-THRUST	
	5	1	**107-3945**	2	COLLAR-SEAL	
	6	1	**149-2494**	1	SHAFT-TRACK IDLER	
	7	1	**149-2495**	2	RETAINER	
	8	1	**162-7862**	2	SEAL GP-DUO-CONE	
					(EACH INCLUDES)	
		1	**162-2166**	2	RING-TORIC	
	9	1	**202-4295**	1	IDLER & BEARING AS	
		1	**9P-2245**	2	BEARING-SLEEVE	
	10	1	**1T-0765**	24	BOLT (3/8-16X1 IN)	
	11	1	**5M-2894**	24	WASHER-HARD (10.2X18.5X2.5MM THK)	

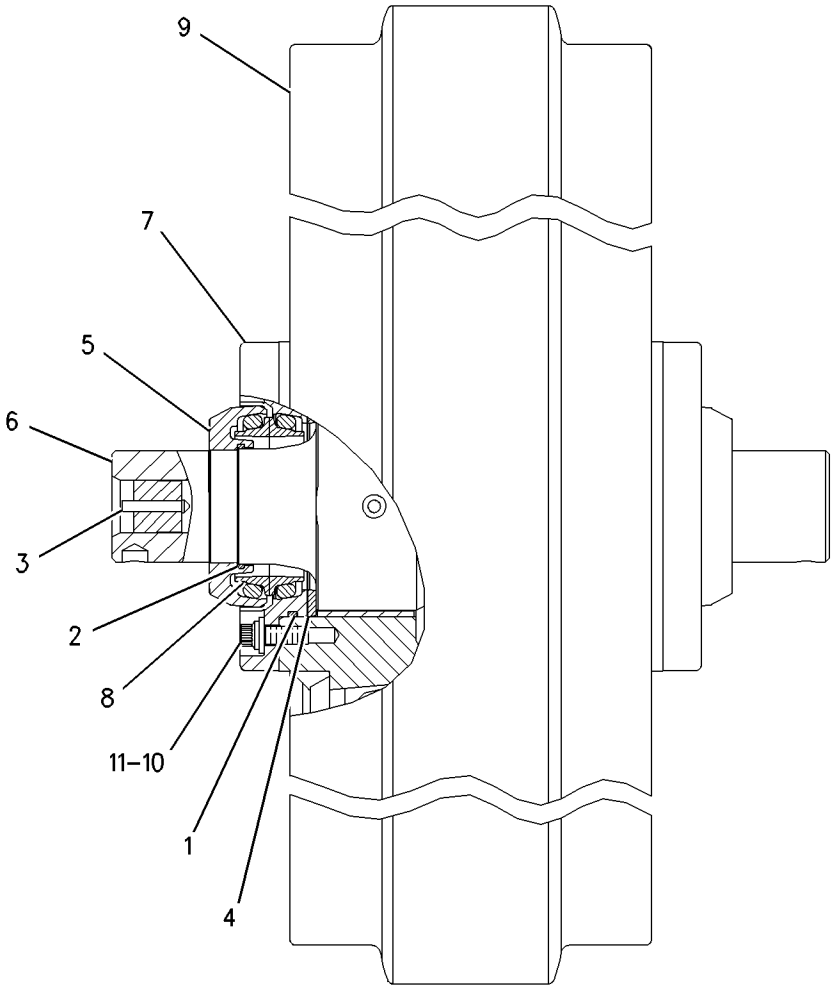

GRAPHIC #1 g00831601

UNDERCARRIAGE

202-4304 IDLER GP-TRACK

S/N: BLE1-UP; BMJ1-UP

PART OF 194-5349, 194-5350 UNDERCARRIAGE AR

SMCS-4159 **i01590986**

NOTE	REF NO	GRAPHIC REF	PART NUMBER	QTY	PART NAME 1 2 3 4 5 6 (PRODUCT LEVEL)	SEE PAGE
	1	1	**2H-3928**	2	SEAL-O-RING	
	2	1	**202-4303**	1	IDLER & BEARING AS	
		1	**9P-2245**	2	BEARING-SLEEVE	
	3	1	**7J-2036**	2	SEAL-O-RING	
	4	1	**6Y-0473**	1	PLUG-CLEAR	
		1	**9G-5664**	1	STOPPER-RUBBER	
	5	1	**106-7691**	2	WASHER-THRUST	
	6	1	**107-3945**	2	COLLAR-SEAL	
	7	1	**149-2494**	1	SHAFT-TRACK IDLER	
	8	1	**149-2495**	2	RETAINER	
	9	1	**162-7862**	2	SEAL GP-DUO-CONE	
					(EACH INCLUDES)	
		1	**162-2166**	2	RING-TORIC	
	10	1	**1T-0765**	24	BOLT (3/8-16X1 IN)	
	11	1	**5M-2894**	24	WASHER-HARD (10.2X18.5X2.5MM THK)	

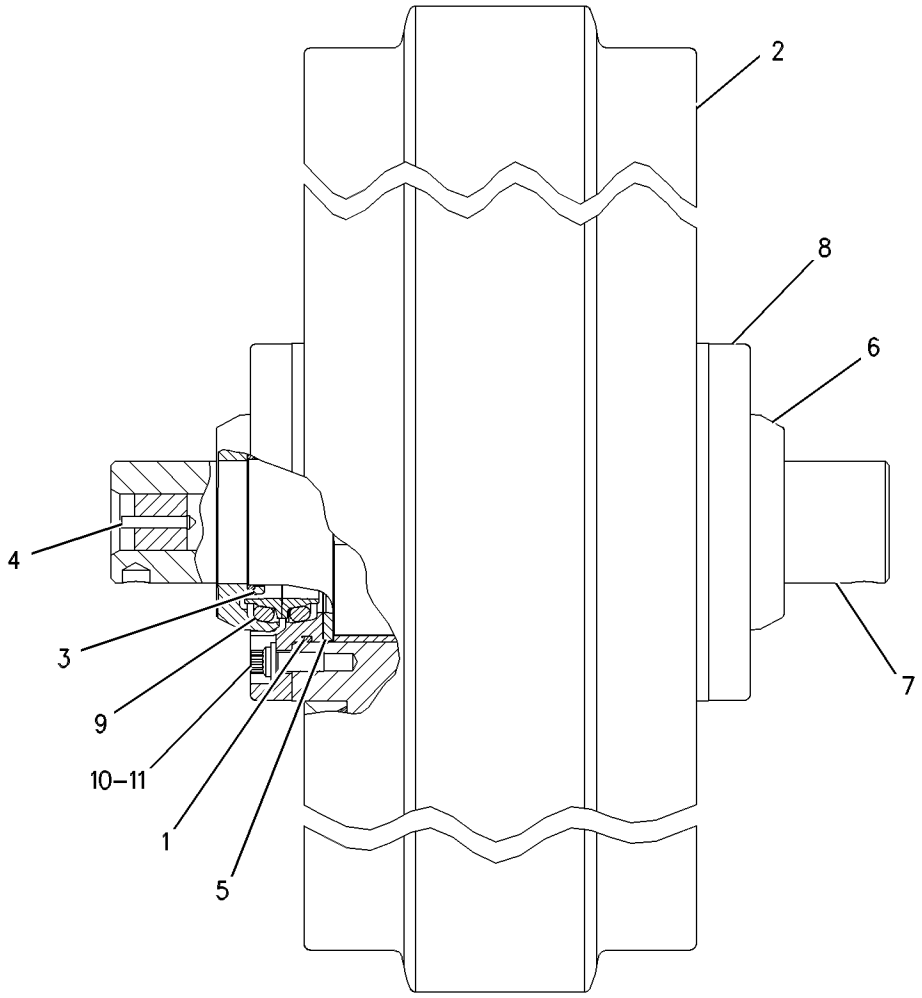

GRAPHIC #1 g00579901

6I-9668 LINK AS-TRACK

S/N: BLE1-UP
PART OF 6I-9641, 6I-9642, 6I-9643, 6I-9644 TRACK GP
ALSO AN ATTACHMENT

SMCS-4169, 4171 **i01338866**

NOTE	REF NO	GRAPHIC REF	PART NUMBER	QTY	PART NAME 1 2 3 4 5 6 (PRODUCT LEVEL)	SEE PAGE
	1	1	**8E-7406**	38	LINK-TRACK-LH	
	2	1	**8E-7405**	38	LINK-TRACK-RH	
	3	1	**8E-7410**	1	LINK-TRACK MASTER (LH)(BUSHING END)	
	4	1	**8E-7409**	1	LINK-TRACK MASTER (RH)(BUSHING END)	
	5	1	**8E-7407**	1	LINK-TRACK MASTER (RH)(PIN END)	
	6	1	**8E-7408**	1	LINK-TRACK MASTER (LH)(PIN END)	
	7	1	**152-8071**	78	RING-THRUST	
	8	1	**8E-9644**	78	SEAL AS	
	9	1	**8E-7222**	39	BUSHING-TRACK	
	10	1	**160-7820**	39	PIN-TRACK	
	11	1	**6Y-0473**	39	PLUG	
		1	**5G-2247**	39	STOPPER-RUBBER	

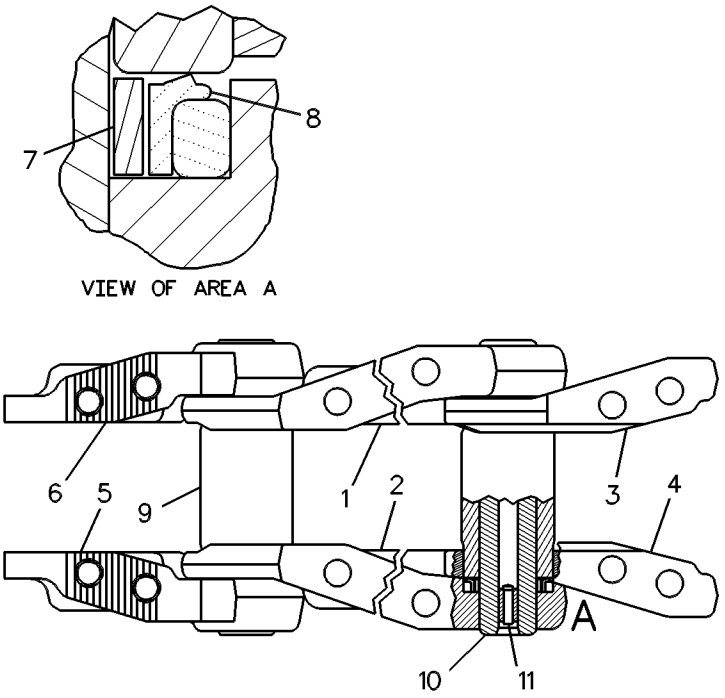

GRAPHIC #1 g00392897

6I-9671 LINK AS-TRACK

S/N: BMJ1-UP
SEALED & LUBRICATED-HEAVY DUTY
PART OF 6I-9653, 6I-9654, 6I-9655, 6I-9656 TRACK GP
ALSO AN ATTACHMENT

SMCS-4169, 4171 **i01539699**

NOTE	REF NO	GRAPHIC REF	PART NUMBER	QTY	PART NAME 1 2 3 4 5 6 (PRODUCT LEVEL)	SEE PAGE
	1	1	**6Y-0473**	41	PLUG-CLEAR	
	2	1	**5G-2247**	41	STOPPER-RUBBER	
	3	1	**8E-9644**	82	SEAL AS	
	4	1	**8E-7407**	1	LINK-MASTER-RH (PIN END)	
	5	1	**8E-7408**	1	LINK-MASTER-LH (PIN END)	
	6	1	**8E-7410**	1	LINK-MASTER-LH (BUSHING END)	
	7	1	**8E-7409**	1	LINK-MASTER-RH (BUSHING END)	
	8	1	**160-7820**	41	PIN-TRACK	
	9	1	**8E-7222**	41	BUSHING-TRACK	
	10	1	**8E-7406**	40	LINK-TRACK (LH)	
	11	1	**8E-7405**	40	LINK-TRACK (RH)	
	12	1	**152-8071**	82	RING-THRUST	

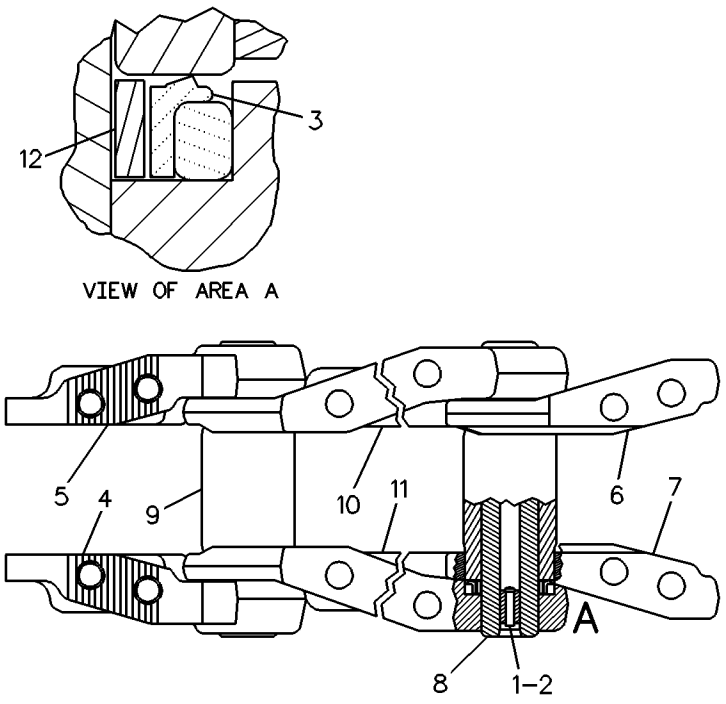

GRAPHIC #1 g00228875

8E-9037 LINK AS-TRACK

S/N: BMJ1-UP
PART OF 6I-9109 TRACK GP
AN ATTACHMENT

SMCS-4169, 4171 **i01632468**

NOTE	REF NO	GRAPHIC REF	PART NUMBER	QTY	PART NAME 1 2 3 4 5 6 (PRODUCT LEVEL)	SEE PAGE
	1	1	**8E-7410**	1	LINK-MASTER-LH (BUSHING END)	
	2	1	**8E-7222**	45	BUSHING-TRACK	
	3	1	**8E-7409**	1	LINK-MASTER-RH (BUSHING END)	
	4	1	**8E-7405**	44	LINK-TRACK (RH)	
	5	1	**160-7820**	45	PIN-TRACK	
	6	1	**8E-9644**	90	SEAL AS	
	7	1	**8E-7408**	1	LINK-MASTER-LH (PIN END)	
		1	**6Y-0473**	45	PLUG-CLEAR	
		1	**9G-1642**	45	STOPPER-RUBBER	
	9	1	**152-8071**	90	RING-THRUST	
	10	1	**8E-7407**	1	LINK-MASTER-RH (PIN END)	
	11	1	**8E-7406**	44	LINK-TRACK (LH)	

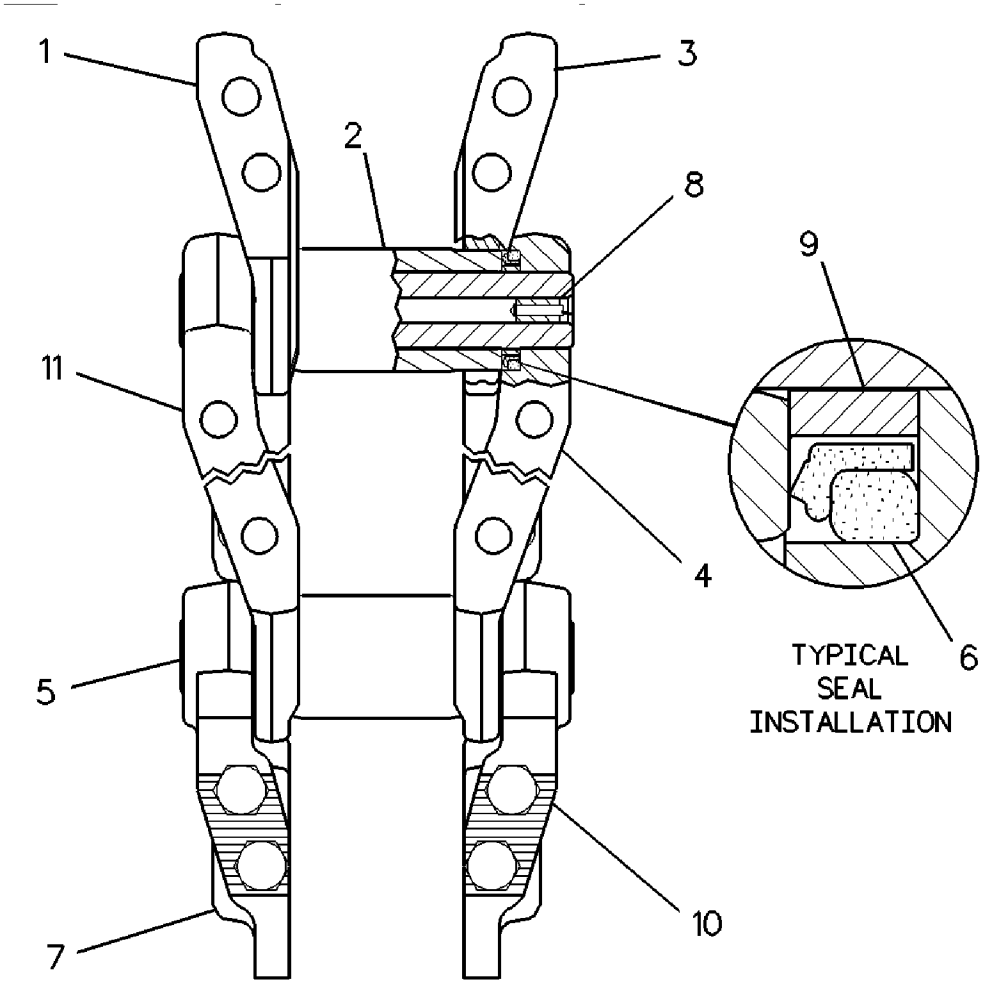

GRAPHIC #1 g00846880

152-8050 LINK AS-TRACK

S/N: BMJ1-UP
SEALED & LUBRICATED-ROTATING BUSHING TRACK
PART OF 6I-9657, 6I-9658 TRACK GP
AN ATTACHMENT

SMCS-4169, 4171 **i01669128**

NOTE	REF NO	GRAPHIC REF	PART NUMBER	QTY	PART NAME 1 2 3 4 5 6 (PRODUCT LEVEL)	SEE PAGE
	1	1	**165-1754**	40	JOINT AS-TRACK LINK (RH)	
					(EACH INCLUDES)	
		1	**195-6515**	1	LINK-TRACK (RH)	
	2	1	**165-1755**	40	JOINT AS-TRACK LINK (LH)	
					(EACH INCLUDES)	
		1	**195-6516**	1	LINK-TRACK (LH)	
	3	1	**165-1756**	1	JOINT AS-TRACK LINK (RH)(BUSHING END)	
		1	**8E-7409**	1	LINK-MASTER-RH (BUSHING END)	
	4	1	**165-1757**	1	JOINT AS-TRACK LINK (LH)(BUSHING END)	
		1	**8E-7410**	1	LINK-MASTER-LH (BUSHING END)	
	5	1	**6Y-0473**	41	PLUG-CLEAR	
C	6	1	**5G-2247**	41	STOPPER-RUBBER	
	7	1	**8E-7407**	1	LINK-MASTER-RH (PIN END)	
	8	1	**8E-7408**	1	LINK-MASTER-LH (PIN END)	
	9	1	**8E-9644**	164	SEAL AS	
	10	1	**152-8071**	164	RING-THRUST	
C	11	1	**160-7821**	41	PIN-TRACK	
	12	1	**165-1769**	41	BUSHING-TRACK	

C-CHANGE FROM PREVIOUS TYPE

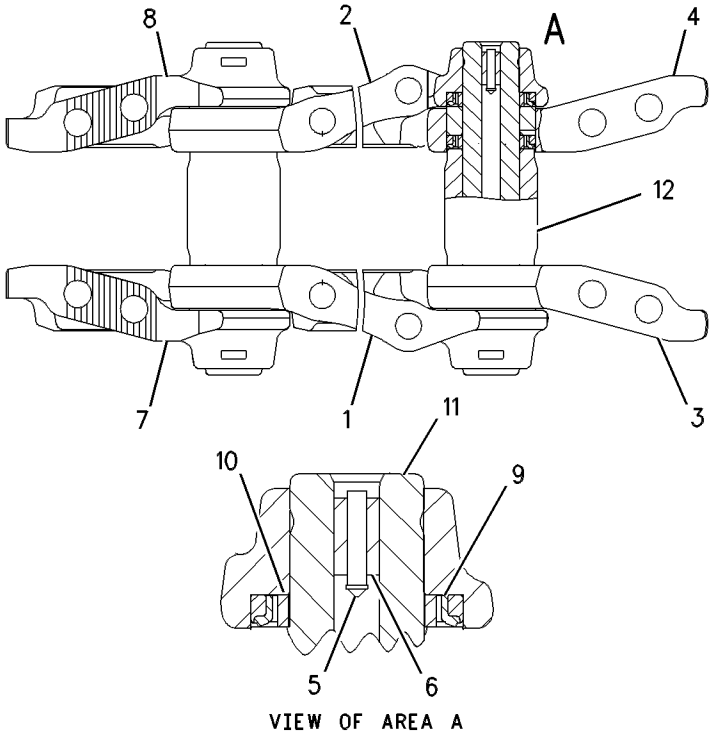

GRAPHIC #1 g00400819

152-8053 LINK AS-TRACK

S/N: BLE1-UP
SEALED AND LUBRICATED- ROTATING BUSHING TRACK
PART OF 6I-9645, 6I-9646 TRACK GP
AN ATTACHMENT

SMCS-4169, 4171 **i01669131**

NOTE	REF NO	GRAPHIC REF	PART NUMBER	QTY	PART NAME 1 2 3 4 5 6 (PRODUCT LEVEL)	SEE PAGE
	1	1	**165-1757**	1	JOINT AS-TRACK LINK (LH)(BUSHING END)	
		1	**8E-7410**	1	LINK-MASTER-LH (BUSHING END)	
	2	1	**165-1769**	39	BUSHING-TRACK	
	3	1	**165-1756**	1	JOINT AS-TRACK LINK (RH)(BUSHING END)	
		1	**8E-7409**	1	LINK-MASTER-RH (BUSHING END)	
	4	1	**165-1754**	38	JOINT AS-TRACK LINK (RH)	
					(EACH INCLUDES)	
		1	**8E-7405**	1	LINK-TRACK (RH)	
C	5	1	**160-7821**	39	PIN-TRACK	
	6	1	**8E-9644**	156	SEAL AS	
	7	1	**152-8071**	156	RING-THRUST	
	8	1	**8E-7407**	1	LINK-MASTER-RH (PIN END)	
	9	1	**165-1755**	38	JOINT AS-TRACK LINK (LH)	
					(EACH INCLUDES)	
		1	**8E-7406**	1	LINK-TRACK (LH)	
	10	1	**8E-7408**	1	LINK-MASTER-LH (PIN END)	
	11	1	**6Y-0473**	39	PLUG-CLEAR	
C		1	**5G-2247**	39	STOPPER-RUBBER	

C-CHANGE FROM PREVIOUS TYPE

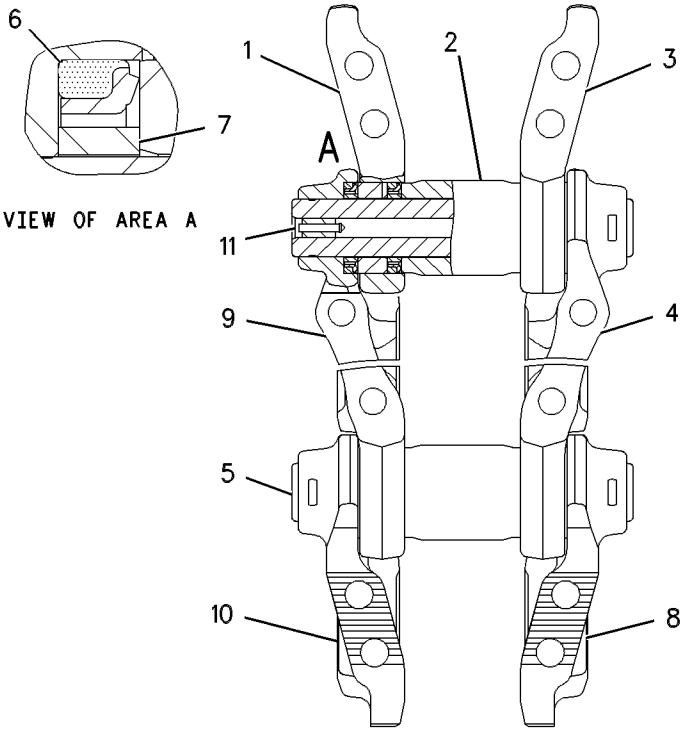

GRAPHIC #1 g00390629

108-0177 MOUNTING GP-CARRIER ROLLER

S/N: BLE1-UP
PART OF 5Q-7996 ROLLER AR
AN ATTACHMENT

SMCS-4154 **i00599755**

NOTE	REF NO	GRAPHIC REF	PART NUMBER	QTY	PART NAME 1 2 3 4 5 6 (PRODUCT LEVEL)	SEE PAGE
	1	1	**109-6938**	1	BRACKET	
M	2	1	**8T-4187**	2	BOLT (M20X2.5X80MM)	
	3	1	**8T-4123**	6	WASHER-PLATED (3.5MM THK)	
M	4	1	**7X-2563**	4	BOLT (M20X2.5X60MM)	

M-METRIC PART

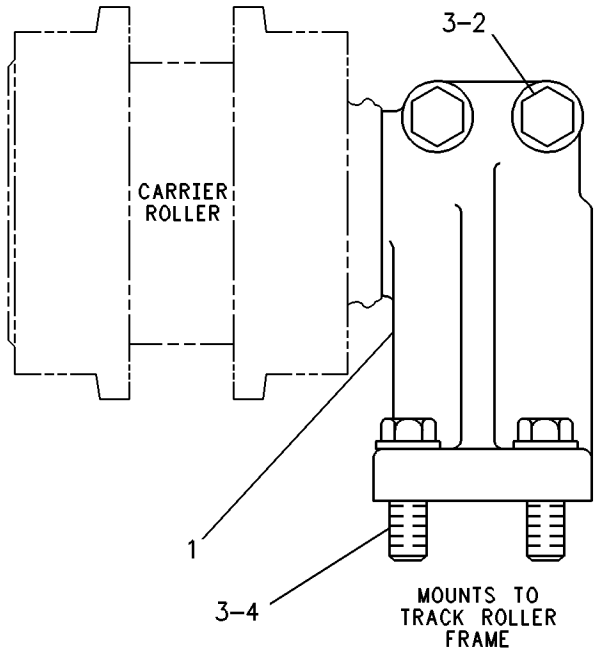

GRAPHIC #1 g00229134

169-4368 MOUNTING GP-CARRIER ROLLER

S/N: BMJ1-UP

PART OF 194-5350 UNDERCARRIAGE AR

SMCS-4154 **i01572256**

NOTE	REF NO	GRAPHIC REF	PART NUMBER	QTY	PART NAME 1 2 3 4 5 6 (PRODUCT LEVEL)	SEE PAGE
M	1	1	**7X-2575**	4	BOLT (M24X3X60MM)	
M	2	1	**8T-4187**	2	BOLT (M20X2.5X80MM)	
	3	1	**8T-4123**	2	WASHER-PLATED (22X35X3.5MM THK)	
	4	1	**171-0808**	1	BRACKET	
	5	1	**8T-4167**	4	WASHER-HARD (26X44X4MM THK)	

M-METRIC PART

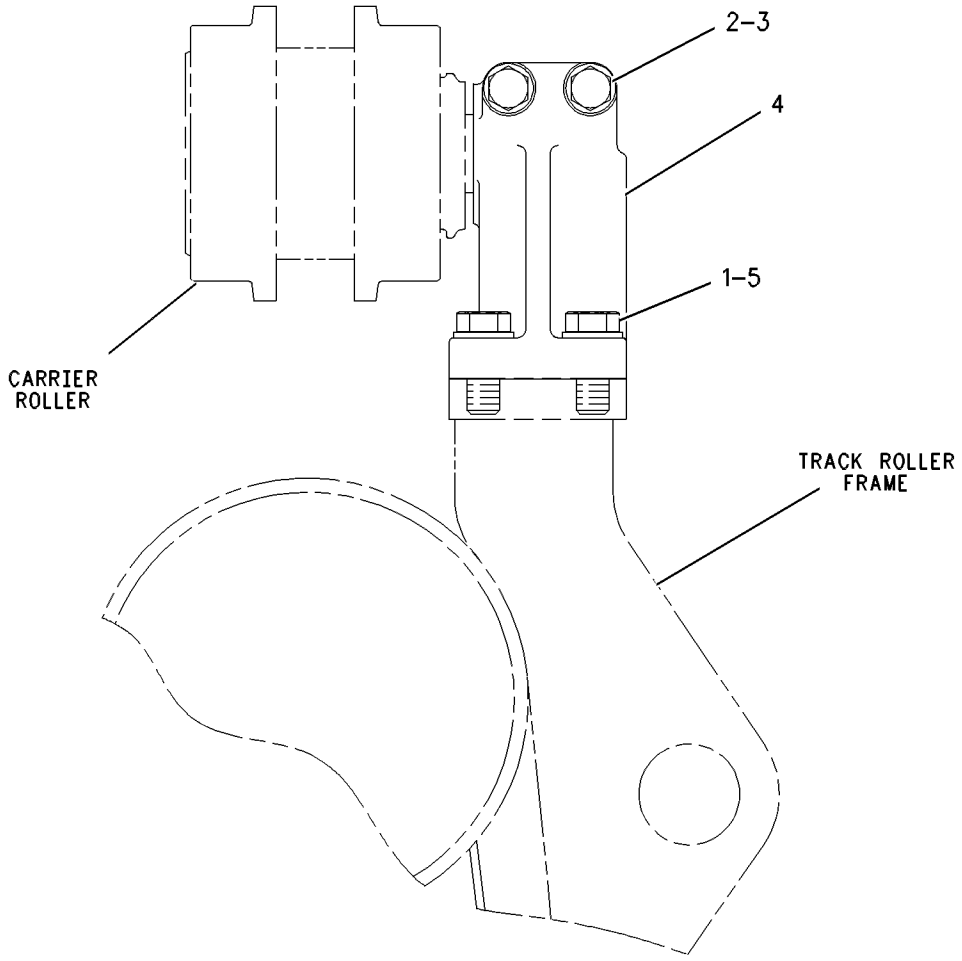

GRAPHIC #1 g00607917

108-0175 PIVOT BAR GP

S/N: BLE1-UP; BMJ1-UP

PART OF 194-5349, 194-5350 UNDERCARRIAGE AR

SMCS-4153 **i01669156**

NOTE	REF NO	GRAPHIC REF	PART NUMBER	QTY	PART NAME 1 2 3 4 5 6 (PRODUCT LEVEL)	SEE PAGE
	1	1	**7X-0427**	16	BOLT (1-1/4-7X3.50 IN)	
	2	1	**5G-9842**	2	SEAL	
	3	1	**108-0190**	2	SHAFT AS	
					(EACH INCLUDES)	
		1	**5G-9841**	1	RING	
	4	1	**5G-9843**	2	PLATE	
	5	1	**9M-3786**	2	SEAL-O-RING	
M	6	1	**8T-6430**	10	BOLT (M20X2.5X50MM)	
		1	**8T-4123**	10	WASHER-PLATED (22X35X3.5MM THK)	
M	7	1	**8T-0375**	12	BOLT (M16X2X45MM)	
	8	1	**5G-8993**	2	RETAINER	
	9	1	**3T-2051**	2	COVER	
	10	1	**8E-1900**	2	WASHER-THRUST (112X150X6.35MM THK)	

QUANTITIES SHOWN ARE THOSE REQUIRED FOR BOTH LH AND RH SIDES
M-METRIC PART

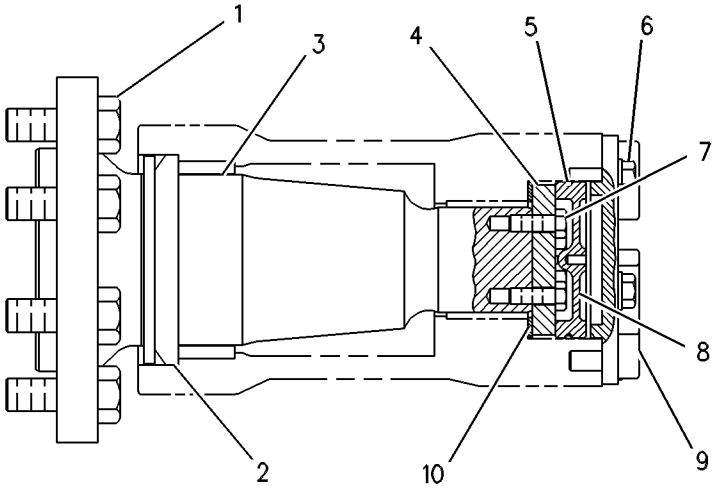

GRAPHIC #1 g00254102

UNDERCARRIAGE

5Q-7996 ROLLER AR

S/N: BLE1-UP

AN ATTACHMENT

SMCS-4180 **i01662555**

NOTE	PART NUMBER	QTY	PART NAME 1 2 3 4 5 6 (PRODUCT LEVEL)	SEE PAGE
Y	**5Q-7997**	1	FRAME GP-TELESCOPING RECOIL (RH)	360
Y	**5Q-7998**	1	FRAME GP-TELESCOPING RECOIL (LH)	362
Y	*108-0177*	2	MOUNTING GP-CARRIER ROLLER	387
Y	**6Y-1781**	2	ROLLER GP-TRACK CARRIER	394

Y-SEPARATE ILLUSTRATION

UNDERCARRIAGE

125-4177 ROLLER AR-TRACK

S/N: BLE1-UP
HIGH FLANGE
PART OF 203-6415, 203-6442 GUIDING AR-UNDERCARRIAGE
AN ATTACHMENT

SMCS-4180 **i00575037**

NOTE	PART NUMBER	QTY	PART NAME 1 2 3 4 5 6 (PRODUCT LEVEL)	SEE PAGE
Y	**120-5802**	8	ROLLER GP-TRACK-DOUBLE FLANGE	397

Y-SEPARATE ILLUSTRATION

125-5533 ROLLER AR-TRACK

S/N: BMJ1-UP
TRACK GUIDING-HIGH FLANGE
PART OF 203-6440, 203-6443 GUIDING AR-UNDERCARRIAGE
AN ATTACHMENT

SMCS-4180 **i00599867**

NOTE	PART NUMBER	QTY	PART NAME 1 2 3 4 5 6 (PRODUCT LEVEL)	SEE PAGE
Y	**120-5802**	10	ROLLER GP-TRACK-DOUBLE FLANGE	397

Y-SEPARATE ILLUSTRATION

MEMORANDA

UNDERCARRIAGE

6Y-1781 ROLLER GP-TRACK CARRIER

S/N: BLE1-UP; BMJ1-UP
PART OF 5Q-7996 ROLLER AR, 194-5350 UNDERCARRIAGE AR
ALSO AN ATTACHMENT

SMCS-4154 **i01572257**

NOTE	REF NO	GRAPHIC REF	PART NUMBER	QTY	PART NAME 1 2 3 4 5 6 (PRODUCT LEVEL)	SEE PAGE
	1	1	**7H-4574**	1	RING	
	2	1	**7H-4571**	1	COLLAR AS	
	3	1	**1M-4291**	2	DOWEL	
R	4	1	**9W-6647**	1	SEAL GP-DUO-CONE	
Z	5	1		2	SEAL-RING	
	6	1	**8H-2262**	2	RING-TORIC	
	7	1	**126-1347**	2	BEARING AS-SPECIAL	
					(EACH INCLUDES)	
	8	1	**9S-3582**	1	CONE-ROLLER BEARING	
	9	1	**9S-3581**	1	CUP-ROLLER BEARING	
	10	1	**9S-8320**	1	ROLLER AS	
	11	1	**2P-0347**	1	PLUG	
	12	1	**1S-8947**	1	SEAL-O-RING	
	13	1	**0S-1594**	3	BOLT (3/8-16X1 IN)	
	14	1	**8P-6188**	1	PLATE-RETAINER	
	15	1	**5M-2043**	1	COVER-ROLLER	
	16	1	**2H-6338**	1	SEAL-O-RING	
	17	1	**5K-9107**	2	BOLT-LOCKING (3/8-16X0.75 IN)	
	18	1	**6Y-2043**	1	SHAFT-CARRIER ROLLER	
	19	1	**1H-8720**	1	SEAL-O-RING	
	20	1	**5M-2894**	3	WASHER-HARD (10.2X18.5X2.5MM THK)	

R-REMFG PART MAY BE AVAILABLE
Z-NOT SERVICED SEPARATELY

6Y-1781 ROLLER GP-TRACK CARRIER *(contd.)* i01572257

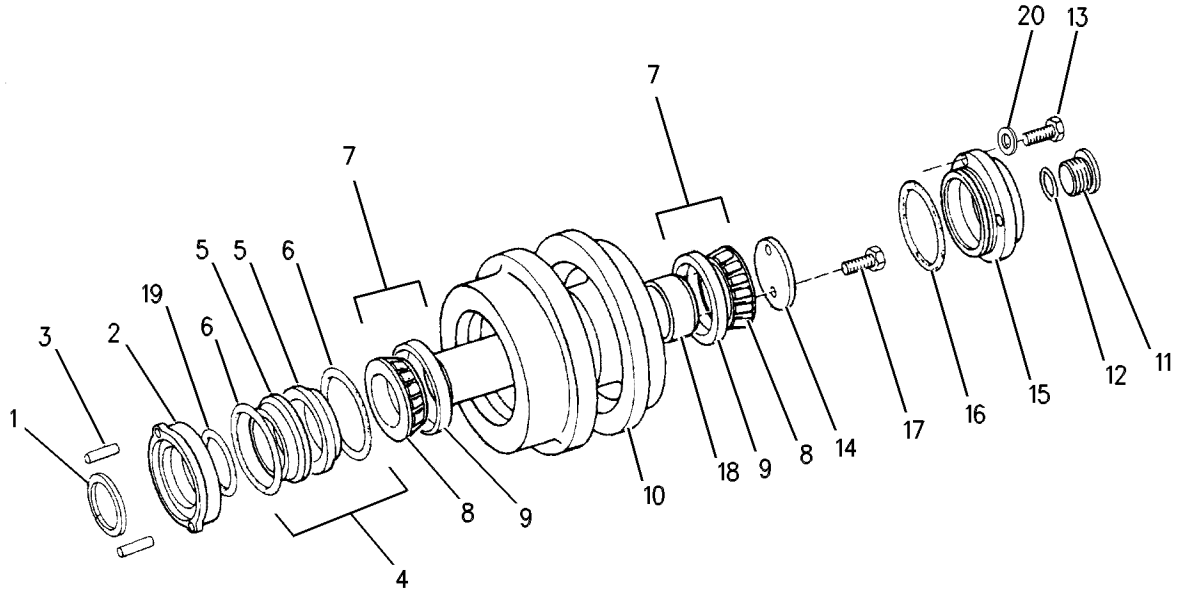

GRAPHIC #1 g00592961

120-5766 ROLLER GP-TRACK-DOUBLE FLANGE

S/N: BLE1-UP; BMJ1-UP
PART OF 125-4176 ROLLER GP-TRACK-DOUBLE FLANGE
FIELD REPLACEMENT FOR 125-4176—PAGE 398
ALSO AN ATTACHMENT

SMCS-4180 **i01572260**

NOTE	REF NO	GRAPHIC REF	PART NUMBER	QTY	PART NAME 1 2 3 4 5 6 (PRODUCT LEVEL)	SEE PAGE
	1	1	**5M-4443**	2	LOCK RING	
	2	1	**116-6702**	1	SHAFT-TRACK ROLLER	
	3	1	**120-5767**	1	RIM AS-DOUBLE FLANGE	
	4	1	**117-9748**	2	RING-RETAINING	
	5	1	**2H-3928**	2	SEAL-O-RING	
	6	1	**120-5785**	2	COLLAR-END	
	7	1	**116-6698**	2	BUSHING AS	
					(EACH INCLUDES)	
		1	**9B-2289**	2	PIN	
	8	1	**1M-8747**	2	SEAL GP-DUO-CONE	
					(EACH INCLUDES)	
		1	**8H-2262**	2	RING-TORIC	
	9	1	**5F-8000**	2	SEAL-O-RING	
	10	1	**6Y-0473**	1	PLUG-CLEAR	
	11	1	**7G-4332**	1	STOPPER	

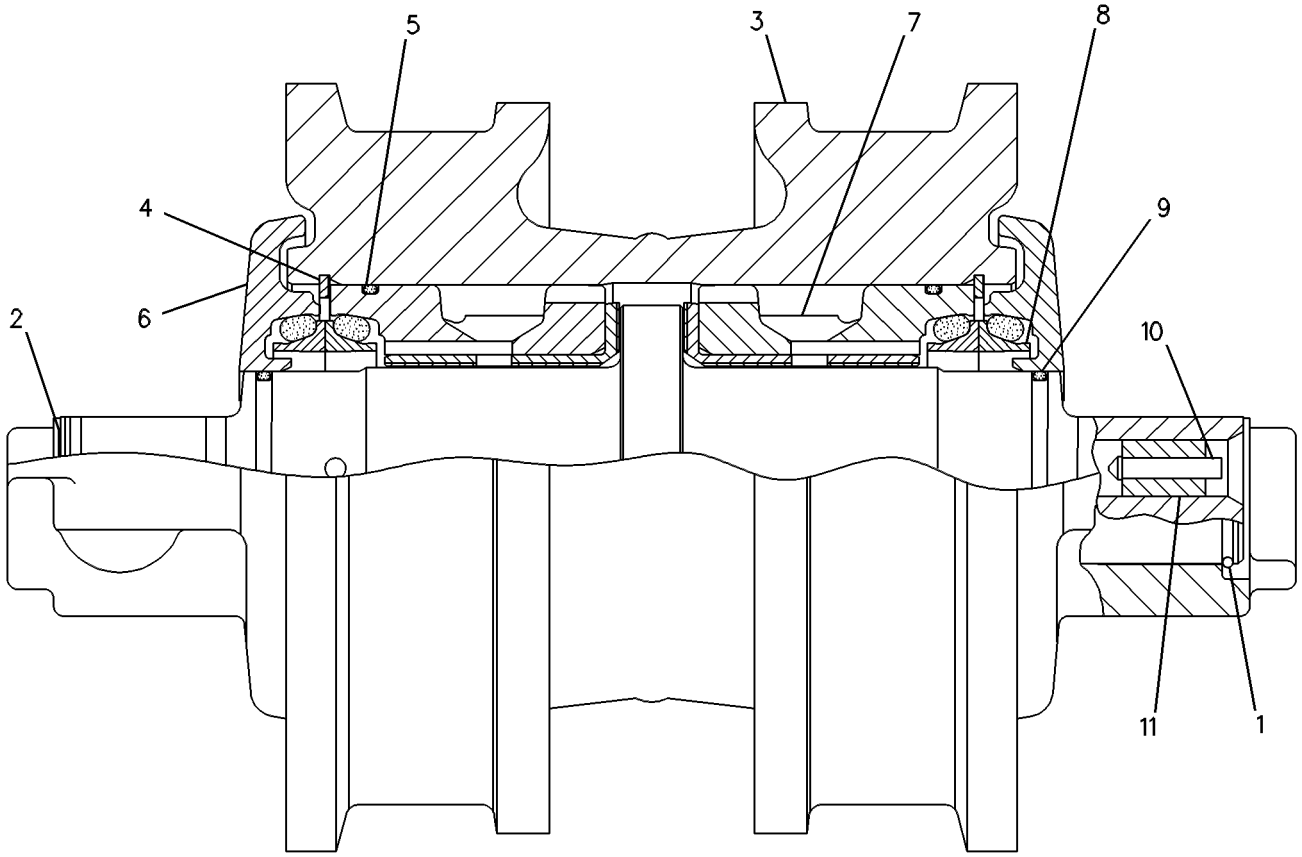

GRAPHIC #1 g00254290

UNDERCARRIAGE

120-5802 ROLLER GP-TRACK-DOUBLE FLANGE

S/N: BLE1-UP; BMJ1-UP
PART OF 125-4177, 125-5533 ROLLER AR-TRACK
AN ATTACHMENT

SMCS-4180 **i01668532**

NOTE	REF NO	GRAPHIC REF	PART NUMBER	QTY	PART NAME 1 2 3 4 5 6 (PRODUCT LEVEL)	SEE PAGE
	1	1	**5M-4443**	2	LOCK RING	
	2	1	**116-6702**	1	SHAFT-TRACK ROLLER	
		1	**8P-5197**	1	BEARING AS	
		1	**9B-2289**	2	PIN	
	3	1	**120-5804**	1	RIM AS-DOUBLE FLANGE	
	4	1	**117-9748**	2	RING-RETAINING	
	5	1	**2H-3928**	2	SEAL-O-RING	
	6	1	**120-5785**	2	COLLAR-END	
	7	1	**116-6698**	2	BUSHING AS	
R	8	1	**9W-6647**	2	SEAL GP-DUO-CONE	
	9	1	**5F-8000**	2	SEAL-O-RING	

R-REMFG PART MAY BE AVAILABLE

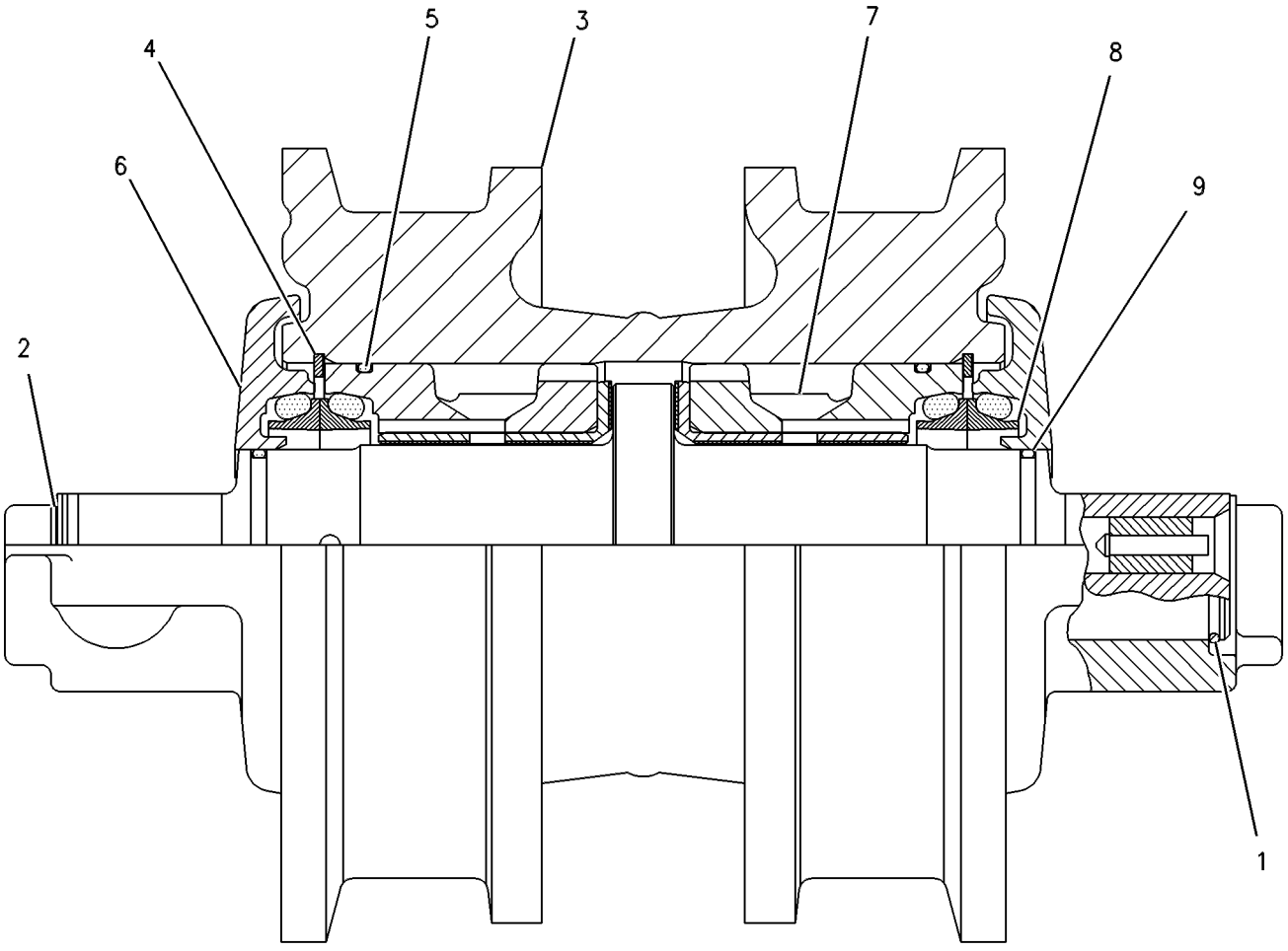

GRAPHIC #1 g00254207

125-4176 ROLLER GP-TRACK-DOUBLE FLANGE

S/N: BLE1-UP; BMJ1-UP
PART OF 139-8344 GRADER AR-FINE, 194-5349, 194-5350 UNDERCARRIAGE AR
FIELD REPLACEMENT ORDER 120-5766–PAGE 396
ALSO AN ATTACHMENT

SMCS-4180 **i01400091**

NOTE	PART NUMBER	QTY	PART NAME 1 2 3 4 5 6 (PRODUCT LEVEL)	SEE PAGE
Y	**120-5766**	1	ROLLER GP-TRACK-DOUBLE FLANGE	396
M	**6V-5845**	4	BOLT (M20X2.5X70MM)	
	8T-3282	4	WASHER-HARD (22X35X3.5MM THK)	

M-METRIC PART
Y-SEPARATE ILLUSTRATION

120-5746 ROLLER GP-TRACK-SINGLE FLANGE

S/N: BLE1-UP; BMJ1-UP

PART OF 125-4175 ROLLER GP-TRACK-SINGLE FLANGE

FIELD REPLACEMENT FOR 125-4175—PAGE 400

SMCS-4180 **i01572261**

NOTE	REF NO	GRAPHIC REF	PART NUMBER	QTY	PART NAME 1 2 3 4 5 6 (PRODUCT LEVEL)	SEE PAGE
	1	1	**5M-4443**	2	LOCK RING	
	2	1	**116-6702**	1	SHAFT-TRACK ROLLER	
	3	1	**120-5785**	2	COLLAR-END	
	4	1	**117-9748**	2	RING-RETAINING	
	5	1	**2H-3928**	2	SEAL-O-RING	
	6	1	**120-5753**	1	RIM AS-SINGLE FLANGE	
	7	1	**116-6698**	2	BUSHING AS	
					(EACH INCLUDES)	
		1	**9B-2289**	2	PIN	
	8	1	**1M-8747**	2	SEAL GP-DUO-CONE	
					(EACH INCLUDES)	
		1	**8H-2262**	2	RING-TORIC	
	9	1	**5F-8000**	2	SEAL-O-RING	
	10	1	**6Y-0473**	1	PLUG-CLEAR	
	11	1	**7G-4332**	1	STOPPER	

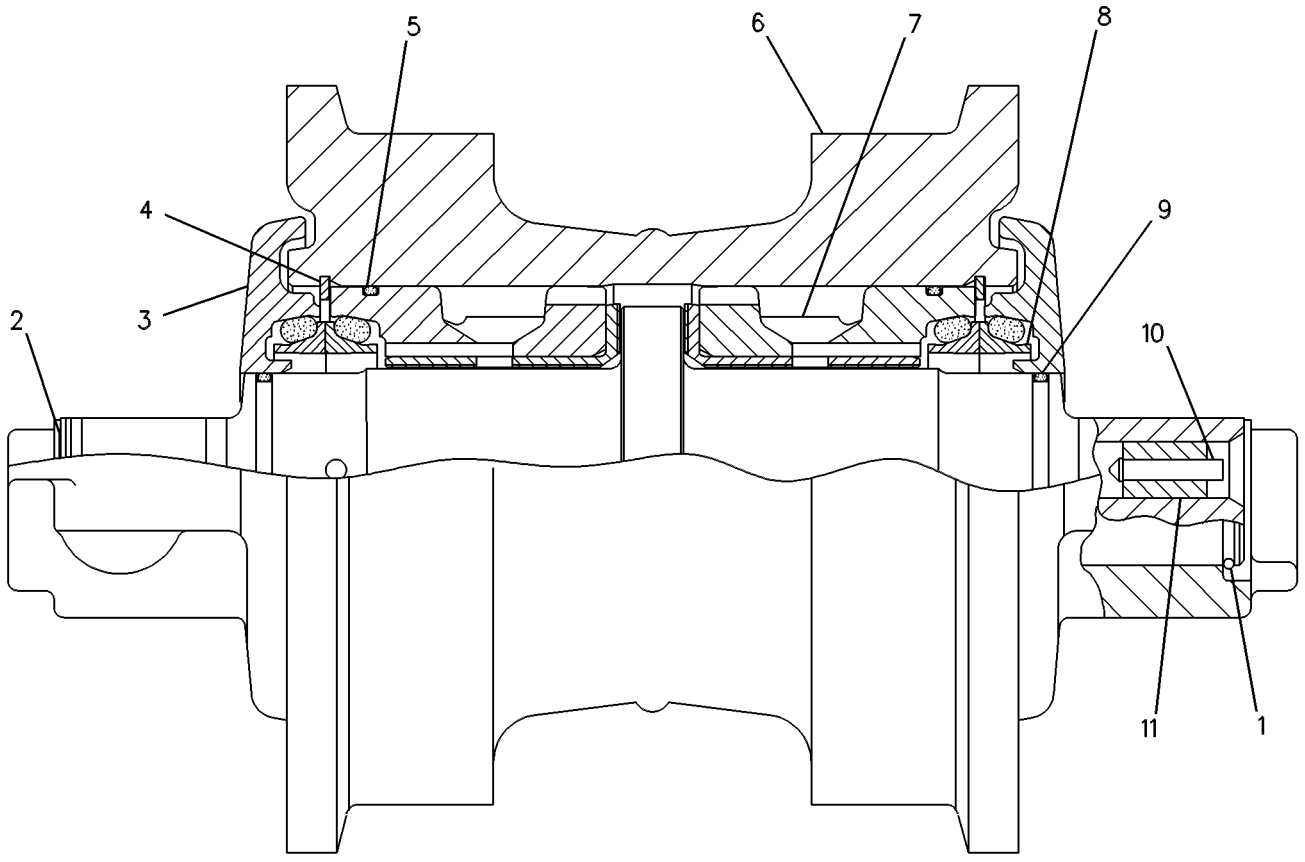

GRAPHIC #1 g00254275

125-4175 ROLLER GP-TRACK-SINGLE FLANGE

S/N: BLE1-UP; BMJ1-UP
PART OF 194-5349, 194-5350 UNDERCARRIAGE AR
FIELD REPLACEMENT ORDER 120-5746–PAGE 399

SMCS-4180 **i01400106**

NOTE	PART NUMBER	QTY	PART NAME 1 2 3 4 5 6 (PRODUCT LEVEL)	SEE PAGE
Y	**120-5746**	1	ROLLER GP-TRACK-SINGLE FLANGE	399
M	**6V-5845**	4	BOLT (M20X2.5X70MM)	
	8T-3282	4	WASHER-HARD (22X35X3.5MM THK)	

M-METRIC PART
Y-SEPARATE ILLUSTRATION

MEMORANDA

9U-8492 TRACK ADJUSTER & RECOIL GP

S/N: BLE1-UP; BMJ1-UP

PART OF 108-0137, 108-0138, 108-0147, 108-0148, 108-0157, 108-0158, 5Q-7997, 5Q-7998 FRAME GP-TELESCOPING RECOIL

ALSO AN ATTACHMENT

SMCS-4157, 4158 **i01604043**

NOTE	REF NO	GRAPHIC REF	PART NUMBER	QTY	PART NAME 1 2 3 4 5 6 (PRODUCT LEVEL)	SEE PAGE
	1	1	**3W-0640**	1	PISTON	
C	2	1	**108-0200**	1	CYLINDER	
	3	1	**9S-8010**	1	PLUG	
	4	1	**2S-4078**	1	SEAL-O-RING	
CM	5	1	**8T-4182**	2	BOLT (M10X1.5X45MM)	
C	6	1	**8T-4121**	2	WASHER-HARD (11X21X2.5MM THK)	
	7	1	**3W-2369**	1	PLATE AS	
	8	1	**3T-0598**	1	TUBE	
	9	1	**9U-8790**	1	PLATE AS	
	10	1	**9U-8491**	1	SPRING-RECOIL	
	11	1	**167-2323**	1	SEAL-U-CUP	
	12	1	**6Y-5799**	2	LOCK	
C	13	1	**190-8609**	1	VALVE-FILL	
	14	1	**2S-5926**	1	VALVE (RELIEF)	
CM	15	1	**7X-2553**	4	BOLT (M16X2X40MM)	
C		1	**9X-8257**	4	WASHER (17.5X30X3.5MM THK)	
	16	1	**2J-6274**	1	SEAL-O-RING	

C-CHANGE FROM PREVIOUS TYPE
M-METRIC PART

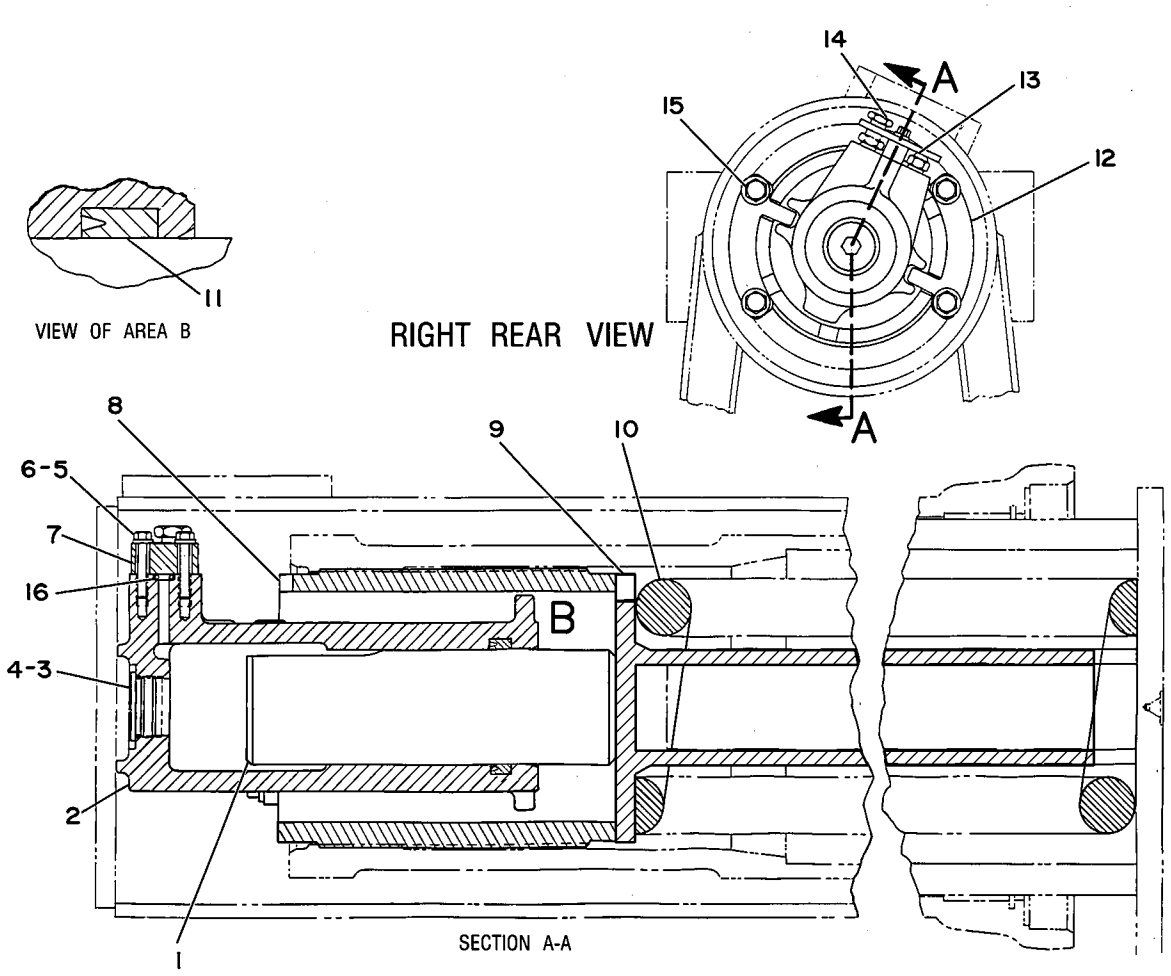

GRAPHIC #1 g00856254

UNDERCARRIAGE

6I-9109 TRACK GP–2 REQUIRED

S/N: BMJ1-UP

610MM (24 IN.) GROUSER SHOE. SEALED & LUBRICATED- MODERATE SERVICE-HEAVY DUTY

AN ATTACHMENT

SMCS-4170 **i01669342**

NOTE	PART NUMBER	QTY	PART NAME 1 2 3 4 5 6 (PRODUCT LEVEL)	SEE PAGE
Y	**8E-9037**	1	LINK AS-TRACK	384
	6V-1792	176	BOLT-TRACK (3/4-16X2.4 IN)	
	9S-1838	4	BOLT-TRACK (3/4-16X4.13 IN)	
	1S-1860	176	NUT-TRACK (3/4-16 THD)	
	6Y-6296	1	SHOE-MASTER TRACK	
	6Y-6287	44	SHOE-TRACK	

Y-SEPARATE ILLUSTRATION

6I-9641 TRACK GP–2 REQUIRED

S/N: BLE1-UP

560MM (22 IN.) GROUSER SHOE. SEALED & LUBRICATED- MODERATE SERVICE-HEAVY DUTY

PART OF 194-5349 UNDERCARRIAGE AR

SMCS-4170 **i01669346**

NOTE	PART NUMBER	QTY	PART NAME 1 2 3 4 5 6 (PRODUCT LEVEL)	SEE PAGE
Y	**6I-9668**	1	LINK AS-TRACK	382
	6V-1792	152	BOLT-TRACK (3/4-16X2.4 IN)	
	9S-1838	4	BOLT-TRACK (3/4-16X4.13 IN)	
	1S-1860	152	NUT-TRACK (3/4-16 THD)	
	6Y-6294	1	SHOE-MASTER TRACK	
	6Y-6286	38	SHOE-TRACK	

Y-SEPARATE ILLUSTRATION

UNDERCARRIAGE

6I-9642 TRACK GP–2 REQUIRED

S/N: BLE1-UP

610MM (24 IN) GROUSER SHOE. SEALED & LUBRICATED-MODERATE SERVICE-HEAVY DUTY

AN ATTACHMENT

SMCS-4170 **i01669349**

NOTE	PART NUMBER	QTY	PART NAME 1 2 3 4 5 6 (PRODUCT LEVEL)	SEE PAGE
Y	**6I-9668**	1	LINK AS-TRACK	382
	6V-1792	152	BOLT-TRACK (3/4-16X2.4 IN)	
	9S-1838	4	BOLT-TRACK (3/4-16X4.13 IN)	
	1S-1860	152	NUT-TRACK (3/4-16 THD)	
	6Y-6296	1	SHOE-MASTER TRACK	
	6Y-6287	38	SHOE-TRACK	

Y-SEPARATE ILLUSTRATION

6I-9643 TRACK GP–2 REQUIRED

S/N: BLE1-UP

510MM (20 IN.) GROUSER SHOE. SEALED & LUBRICATED-EXTREME SERVICE-HEAVY DUTY

AN ATTACHMENT

SMCS-4170 **i01669354**

NOTE	PART NUMBER	QTY	PART NAME 1 2 3 4 5 6 (PRODUCT LEVEL)	SEE PAGE
Y	**6I-9668**	1	LINK AS-TRACK	382
	6V-1792	152	BOLT-TRACK (3/4-16X2.4 IN)	
	9S-1838	4	BOLT-TRACK (3/4-16X4.13 IN)	
	1S-1860	152	NUT-TRACK (3/4-16 THD)	
	6Y-6394	1	SHOE-MASTER TRACK	
	6Y-6391	38	SHOE-TRACK	

Y-SEPARATE ILLUSTRATION

UNDERCARRIAGE

6I-9644 TRACK GP–2 REQUIRED

S/N: BLE1-UP

560MM (22 IN.) GROUSER SHOE. SEALED & LUBRICATED - EXTREME SERVICE

AN ATTACHMENT

SMCS-4170 **i01669356**

NOTE	PART NUMBER	QTY	PART NAME 1 2 3 4 5 6 (PRODUCT LEVEL)	SEE PAGE
Y	**6I-9668**	1	LINK AS-TRACK	382
	6V-1792	152	BOLT-TRACK (3/4-16X2.4 IN)	
	9S-1838	4	BOLT-TRACK (3/4-16X4.13 IN)	
	1S-1860	152	NUT-TRACK (3/4-16 THD)	
	6Y-6412	1	SHOE-MASTER TRACK	
	6Y-6389	38	SHOE-TRACK	

Y-SEPARATE ILLUSTRATION

UNDERCARRIAGE

6I-9645 TRACK GP–2 REQUIRED

S/N: BLE1-UP

560MM (22 IN) GROUSER SHOE. SEALED & LUBRICATED- MODERATE SERVICE

AN ATTACHMENT

SMCS-4170 **i01669367**

NOTE	PART NUMBER	QTY	PART NAME 1 2 3 4 5 6 (PRODUCT LEVEL)	SEE PAGE
Y	**152-8053**	1	LINK AS-TRACK	386
	6V-1792	152	BOLT-TRACK (3/4-16X2.4 IN)	
	9S-1838	4	BOLT-TRACK (3/4-16X4.13 IN)	
	1S-1860	152	NUT-TRACK (3/4-16 THD)	
	6Y-6286	38	SHOE-TRACK	
	6Y-6294	1	SHOE-MASTER TRACK	

Y-SEPARATE ILLUSTRATION

UNDERCARRIAGE

6I-9646 TRACK GP–2 REQUIRED

S/N: BLE1-UP
610MM (24 IN) GROUSER SHOE.
SEALED & LUBRICATED- MODERATE SERVICE-MAXIMUM LIFE TRACK
AN ATTACHMENT

SMCS-4170 **i01669371**

NOTE	PART NUMBER	QTY	PART NAME 1 2 3 4 5 6 (PRODUCT LEVEL)	SEE PAGE
Y	**152-8053**	1	LINK AS-TRACK	386
	6V-1792	152	BOLT-TRACK (3/4-16X2.4 IN)	
	9S-1838	4	BOLT-TRACK (3/4-16X4.13 IN)	
	1S-1860	152	NUT-TRACK (3/4-16 THD)	
	6Y-6296	1	SHOE-MASTER TRACK	
	6Y-6287	38	SHOE-TRACK	

Y-SEPARATE ILLUSTRATION

6I-9653 TRACK GP–2 REQUIRED

S/N: BMJ1-UP

560MM (22 IN.) GROUSER SHOE. SEALED & LUBRICATED- MODERATE SERVICE-HEAVY DUTY

PART OF 194-5350 UNDERCARRIAGE AR

SMCS-4170 **i01669383**

NOTE	PART NUMBER	QTY	PART NAME 1 2 3 4 5 6 (PRODUCT LEVEL)	SEE PAGE
Y	**6I-9671**	1	LINK AS-TRACK	383
	6V-1792	160	BOLT-TRACK (3/4-16X2.4 IN)	
	9S-1838	4	BOLT-TRACK (3/4-16X4.13 IN)	
	1S-1860	160	NUT-TRACK (3/4-16 THD)	
	6Y-6294	1	SHOE-MASTER TRACK	
	6Y-6286	40	SHOE-TRACK	

Y-SEPARATE ILLUSTRATION

UNDERCARRIAGE

6I-9654 TRACK GP–2 REQUIRED

S/N: BMJ1-UP

610MM (24 IN.) GROUSER SHOE. SEALED & LUBRICATED-MODERATE SERVICE-HEAVY DUTY

AN ATTACHMENT

SMCS-4170 **i01668536**

NOTE	PART NUMBER	QTY	PART NAME 1 2 3 4 5 6 (PRODUCT LEVEL)	SEE PAGE
Y	**6I-9671**	1	LINK AS-TRACK	383
	6V-1792	160	BOLT-TRACK (3/4-16X2.4 IN)	
	9S-1838	4	BOLT-TRACK (3/4-16X4.13 IN)	
	1S-1860	160	NUT-TRACK (3/4-16 THD)	
	6Y-6287	40	SHOE-TRACK	
	6Y-6296	1	SHOE-MASTER TRACK	

Y-SEPARATE ILLUSTRATION

6I-9655 TRACK GP–2 REQUIRED

S/N: BMJ1-UP

510MM (20 IN.) GROUSER SHOE. SEALED & LUBRICATED- EXTREME SERVICE-HEAVY DUTY AN ATTACHMENT

SMCS-4170 **i01669388**

NOTE	PART NUMBER	QTY	PART NAME 1 2 3 4 5 6 (PRODUCT LEVEL)	SEE PAGE
Y	**6I-9671**	1	LINK AS-TRACK	383
	6V-1792	160	BOLT-TRACK (3/4-16X2.4 IN)	
	9S-1838	4	BOLT-TRACK (3/4-16X4.13 IN)	
	1S-1860	160	NUT-TRACK (3/4-16 THD)	
	6Y-6391	40	SHOE-TRACK	
	6Y-6394	1	SHOE-MASTER TRACK	

Y-SEPARATE ILLUSTRATION

UNDERCARRIAGE

6I-9656 TRACK GP–2 REQUIRED

S/N: BMJ1-UP

560MM (22 IN.) GROUSER SHOE. SEALED & LUBRICATED- EXTREME SERVICE-HEAVY DUTY AN ATTACHMENT

SMCS-4170 **i01669395**

NOTE	PART NUMBER	QTY	PART NAME 1 2 3 4 5 6 (PRODUCT LEVEL)	SEE PAGE
Y	**6I-9671**	1	LINK AS-TRACK	383
	6V-1792	160	BOLT-TRACK (3/4-16X2.4 IN)	
	9S-1838	4	BOLT-TRACK (3/4-16X4.13 IN)	
	1S-1860	160	NUT-TRACK (3/4-16 THD)	
	6Y-6389	40	SHOE-TRACK	
	6Y-6412	1	SHOE-MASTER TRACK	

Y-SEPARATE ILLUSTRATION

6I-9657 TRACK GP–2 REQUIRED

S/N: BMJ1-UP
560MM (22 IN.) GROUSER SHOE.
SEALED & LUBRICATED-MODERATE SERVICE-ROTATING BUSHING TRACK
AN ATTACHMENT

SMCS-4170 **i01669406**

NOTE	PART NUMBER	QTY	PART NAME 1 2 3 4 5 6 (PRODUCT LEVEL)	SEE PAGE
Y	**152-8050**	1	LINK AS-TRACK	385
	6V-1792	160	BOLT-TRACK (3/4-16X2.4 IN)	
	9S-1838	4	BOLT-TRACK (3/4-16X4.13 IN)	
	1S-1860	160	NUT-TRACK (3/4-16 THD)	
	6Y-6286	40	SHOE-TRACK	
	6Y-6294	1	SHOE-MASTER TRACK	

Y-SEPARATE ILLUSTRATION

6I-9658 TRACK GP–2 REQUIRED

S/N: BMJ1-UP
610MM (24 IN.) GROUSER SHOE.
SEALED & LUBRICATED-MODERATE SERVICE-ROTATING BUSHING TRACK
AN ATTACHMENT

SMCS-4170 **i01669411**

NOTE	PART NUMBER	QTY	PART NAME 1 2 3 4 5 6 (PRODUCT LEVEL)	SEE PAGE
CY	**152-8050**	1	LINK AS-TRACK	385
	6V-1792	160	BOLT-TRACK (3/4-16X2.4 IN)	
	9S-1838	4	BOLT-TRACK (3/4-16X4.13 IN)	
	1S-1860	160	NUT-TRACK (3/4-16 THD)	
	6Y-6287	40	SHOE-TRACK	
	6Y-6296	1	SHOE-MASTER TRACK	

C-CHANGE FROM PREVIOUS TYPE
Y-SEPARATE ILLUSTRATION

UNDERCARRIAGE

194-5349 UNDERCARRIAGE AR

S/N: BLE1-UP

PART OF 211-4625 GENERAL AR

SMCS-4150 **i01590947**

NOTE	PART NUMBER	QTY	PART NAME 1 2 3 4 5 6 (PRODUCT LEVEL)	SEE PAGE
Y	*108-1091*	8	CAP GP-TRACK IDLER	353
Y	*186-2882*	1	EQUALIZER BAR GP	354
Y	*108-0137*	1	FRAME GP-TELESCOPING RECOIL (RH)	364
Y	*108-0138*	1	FRAME GP-TELESCOPING RECOIL (LH)	366
Y	**202-4304**	4	IDLER GP-TRACK	381
Y	*108-0175*	1	PIVOT BAR GP	389
Y	*125-4176*	4	ROLLER GP-TRACK-DOUBLE FLANGE	398
Y	*125-4175*	8	ROLLER GP-TRACK-SINGLE FLANGE	400
Y	**6I-9641**	2	TRACK GP	405

Y-SEPARATE ILLUSTRATION

UNDERCARRIAGE

194-5350 UNDERCARRIAGE AR

S/N: BMJ1-UP

PART OF 211-4627 GENERAL AR

SMCS-4150 **i01603848**

NOTE	PART NUMBER	QTY	PART NAME 1 2 3 4 5 6 (PRODUCT LEVEL)	SEE PAGE
Y	*108-1091*	8	CAP GP-TRACK IDLER	353
Y	*186-2882*	1	EQUALIZER BAR GP	354
Y	*108-0147*	1	FRAME GP-TELESCOPING RECOIL (RH)	368
Y	*108-0148*	1	FRAME GP-TELESCOPING RECOIL (LH)	370
Y	**202-4304**	4	IDLER GP-TRACK	381
Y	*169-4368*	2	MOUNTING GP-CARRIER ROLLER	388
Y	*108-0175*	1	PIVOT BAR GP	389
Y	**6Y-1781**	2	ROLLER GP-TRACK CARRIER	394
Y	*125-4176*	6	ROLLER GP-TRACK-DOUBLE FLANGE	398
Y	*125-4175*	8	ROLLER GP-TRACK-SINGLE FLANGE	400
Y	**6I-9653**	2	TRACK GP	411

Y-SEPARATE ILLUSTRATION

MEMORANDA

122-1511 ADJUSTER GP-STEER & TMSN CONT

S/N: BLE1-UP; BMJ1-UP

MANUAL

PART OF 206-6548 CONTROL GP-STEERING & TMSN

SMCS-4135 **i01642381**

NOTE	REF NO	GRAPHIC REF	PART NUMBER	QTY	PART NAME 1 2 3 4 5 6 (PRODUCT LEVEL)	SEE PAGE
	1	1	**130-7975**	2	SLEEVE-BRASS	
	2	2	**8F-7702**	2	SEAL-LIP	
	3	1	**8T-1172**	2	SEAL-LIP	
M	4	1	**8T-2658**	1	LOCKNUT (M3X0.5 THD)	
	5	1	**8T-5410**	2	SEAL-LIP	
M	6	1	**8T-9006**	1	BOLT-SOCKET HEAD (M3X.5X20MM)	
	7	1	**122-4268**	1	BRACKET AS	
M		1	**8T-3612**	1	NUT-WELD (M8X1.25 THD)	
	8	1	**122-4271**	1	KNOB	
	9	1	**122-6824**	1	PLATE	
	10	1	**122-6825**	1	SPACER	
	11	1	**122-6826**	1	PLATE AS	
M		1	**8T-3612**	2	NUT-WELD (M8X1.25 THD)	
M	12	1	**8T-3490**	1	NUT-WELD (M10X1.5 THD)	
M	13	1	**6V-9632**	2	NUT-WELD (M6X1 THD)	
	14	2	**130-9989**	2	SLEEVE	
	15	1	**130-9990**	1	SLEEVE	
	16	1	**132-3581**	1	BEARING AS	
	17	2	**133-7212**	1	PLATE	
	18	2	**133-7214**	1	SHAFT	
	19	1	**133-7230**	1	SHAFT	
	20	1	**133-7231**	1	PLATE	
	21	2	**136-2288**	1	BRACKET AS	
M		2	**5C-7261**	4	NUT (M8X1.25 THD)	
	22	1	**136-2290**	1	PLATE AS (5.0MM THK)	
M	23	1	**5C-7261**	1	NUT (M8X1.25 THD)	
	24	2	**5P-4116**	1	WASHER-HARD (8.8X20.5X2MM THK)	
M	25	2	**6V-2317**	1	BOLT (M8X1.25X30MM)	
	26	1	**7X-7729**	8	WASHER (11X25X3MM THK)	
	27	2	**8T-4121**	2	WASHER-HARD (11X21X2.5MM THK)	
M	28	1	**8T-4133**	4	NUT (M10X1.5 THD)	
M	29	1,2	**8T-4136**	6	BOLT (M10X1.5X25MM)	
M	30	1	**8T-4189**	1	BOLT (M8X1.25X20MM)	
M	31	2	**8T-4195**	2	BOLT (M10X1.5X30MM)	
	32	1	**8T-4224**	4	WASHER-HARD (8.8X16X2MM THK)	
M	33	1	**8T-4908**	2	BOLT (M8X1.25X25MM)	
	34	1,2	**8T-7934**	4	WASHER-HARD (11X21X5MM THK)	
	35	1	**124-0799**	1	SPRING	
	36	2	**130-1985**	1	SLEEVE	

M-METRIC PART

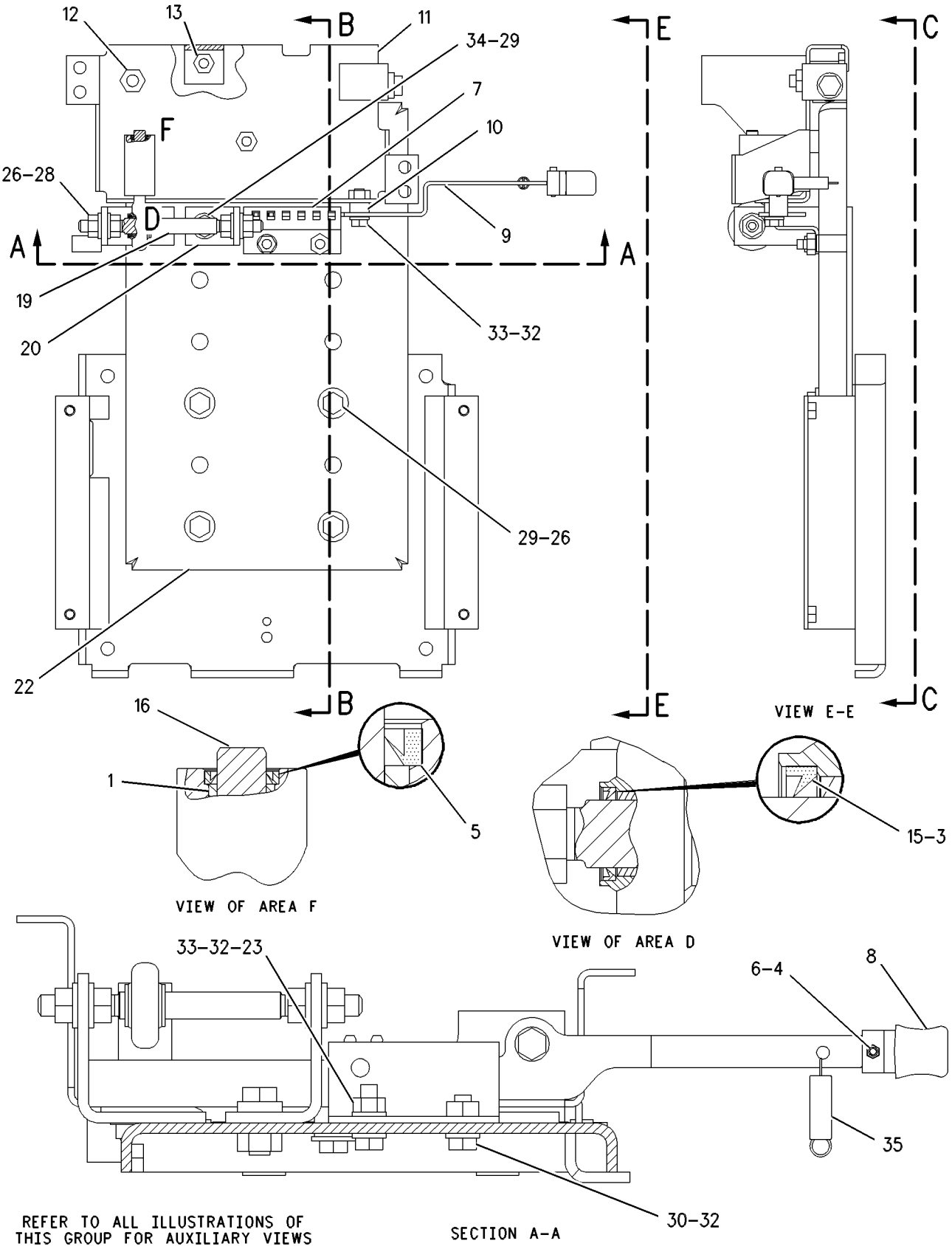

GRAPHIC #1 g00510208

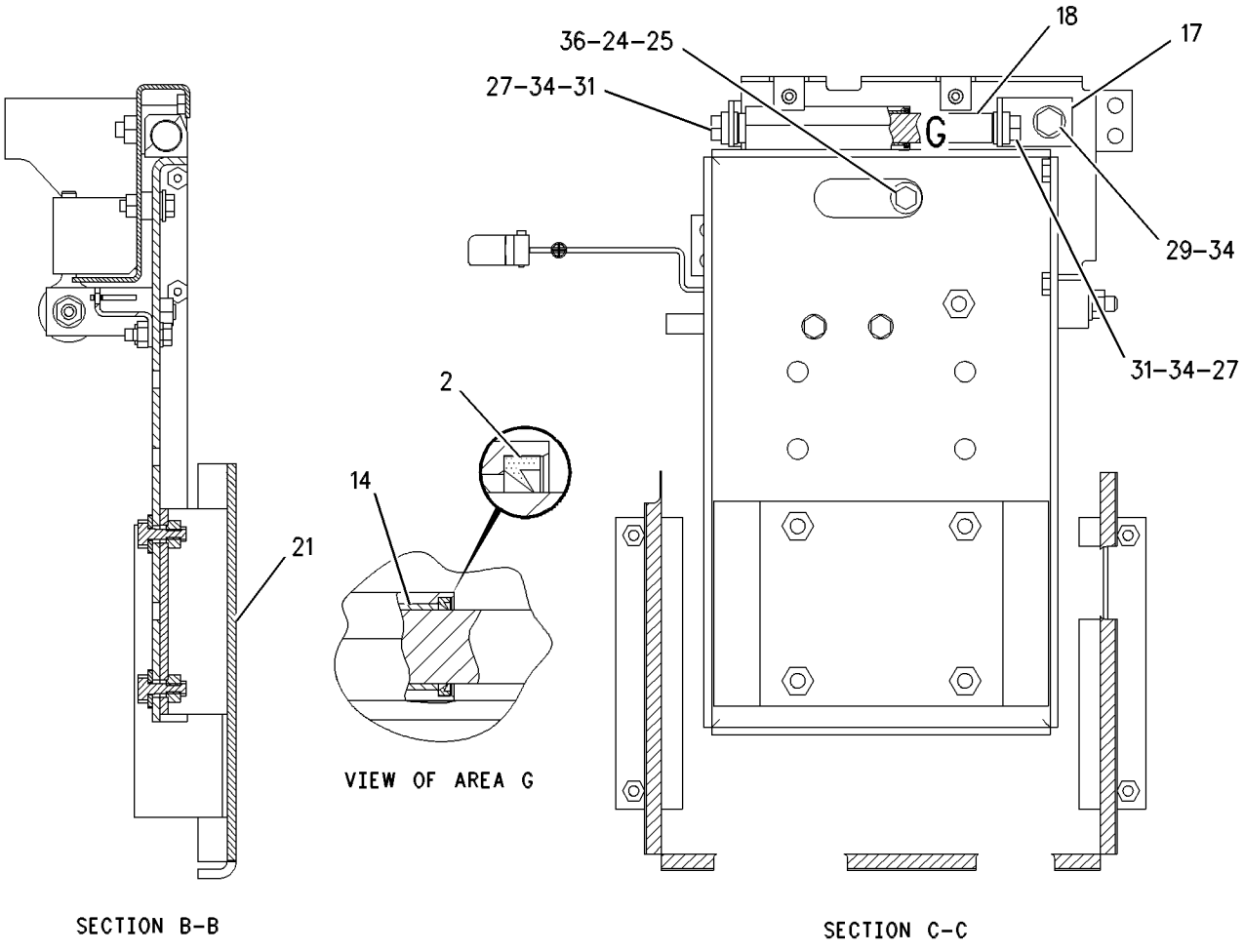

GRAPHIC #2 g00510209

MEMORANDA

STEERING AND BRAKING SYSTEM

104-5372 CLUTCH & BRAKE GP-STEERING

S/N: BLE1-UP; BMJ1-UP

PART OF 164-4792, 164-4794 POWER TRAIN AR

SMCS-4101, 4109 **i01669415**

NOTE	REF NO	GRAPHIC REF	PART NUMBER	QTY	PART NAME 1 2 3 4 5 6 (PRODUCT LEVEL)	SEE PAGE
	1	1,2	**104-5353**	1	HOUSING	
	2	1,2	**104-5354**	1	SPRING	
	3	1,2	**107-7304**	1	PISTON-BRAKE	
	4	1,2	**4S-8538**	1	BALL BEARING	
	5	1,2	**9S-8005**	3	PLUG	
	6	1,2	**3K-0360**	3	SEAL-O-RING (16.36MM ID)	
	7	1,2	**105-5062**	1	HUB AS	
		1,2	**4B-9784**	2	BALL	
	8	1,2	**1S-8868**	1	RING-RETAINING	
	9	1,2	**8G-2194**	3	RING-SEAL	
	10	1,2	**4M-5858**	1	BALL BEARING	
	11	1,2	**7G-9968**	1	RING-SEAL	
	12	1,2	**104-5363**	1	MANIFOLD-RETAINER	
	13	1,2	**3W-4404**	1	SEAL-RING	
	14	1,2	**8D-4771**	1	SEAL-O-RING	
	15	1,2	**8M-4438**	1	SEAL-O-RING	
	16	1,2	**6Y-5692**	6	PLATE-BRAKE	
	17	1,2	**101-5144**	5	DISC-FRICTION	
	18	1,2	**3W-2412**	1	PLATE	
	19	1,2	**6T-0837**	1	RING	
M	20	1,2	**8T-2223**	6	BOLT-SOCKET HEAD (M10X1.5X45MM)	
	21	1,2	**104-5358**	1	RING-SEAL	
	22	1,2	**104-5360**	1	PISTON-CLUTCH	
	23	1,2	**135-4721**	1	PLATE	
	24	1,2	**104-5362**	1	HUB-INPUT	
	25	1,2	**104-5361**	2	BEARING-SLEEVE	
	26	1,2	**101-5141**	6	DISC-FRICTION	
	27	1,2	**8G-4510**	7	PLATE-CLUTCH	
M	28	1,2	**8T-4195**	20	BOLT (M10X1.5X30MM)	
	29	1,2	**8T-4121**	20	WASHER-HARD (11X21X2.5MM THK)	
	30	1,2	**8M-4433**	3	SEAL-O-RING	
	31	1,2	**5S-7383**	2	BOLT (3/8-16X1.75 IN)	
	32	1,2	**8T-4896**	2	WASHER-HARD (10.2X18.5X2.5MM THK)	
	33	1,2	**8G-2192**	1	SEAL-RING	

M-METRIC PART

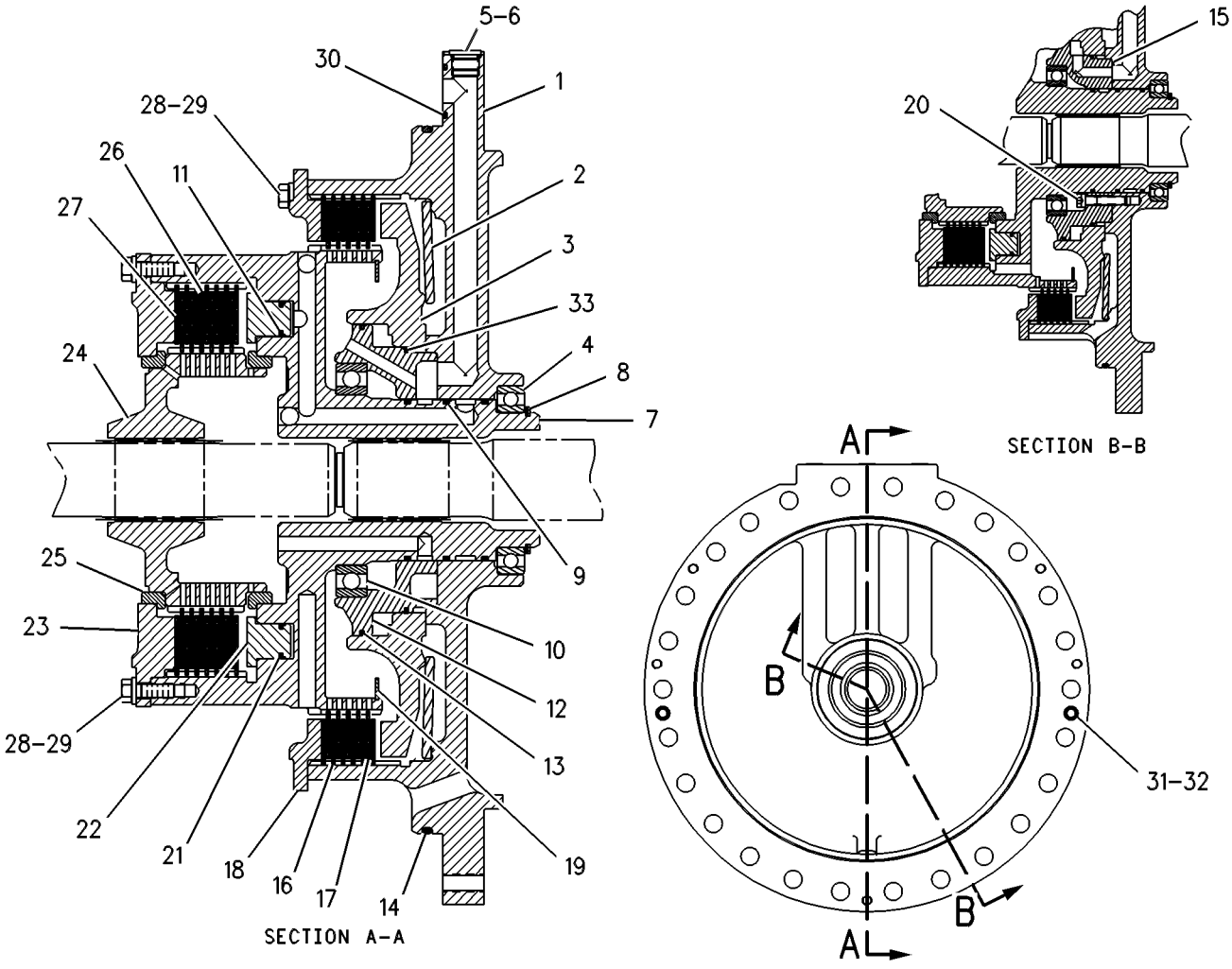

GRAPHIC #1

g00266183

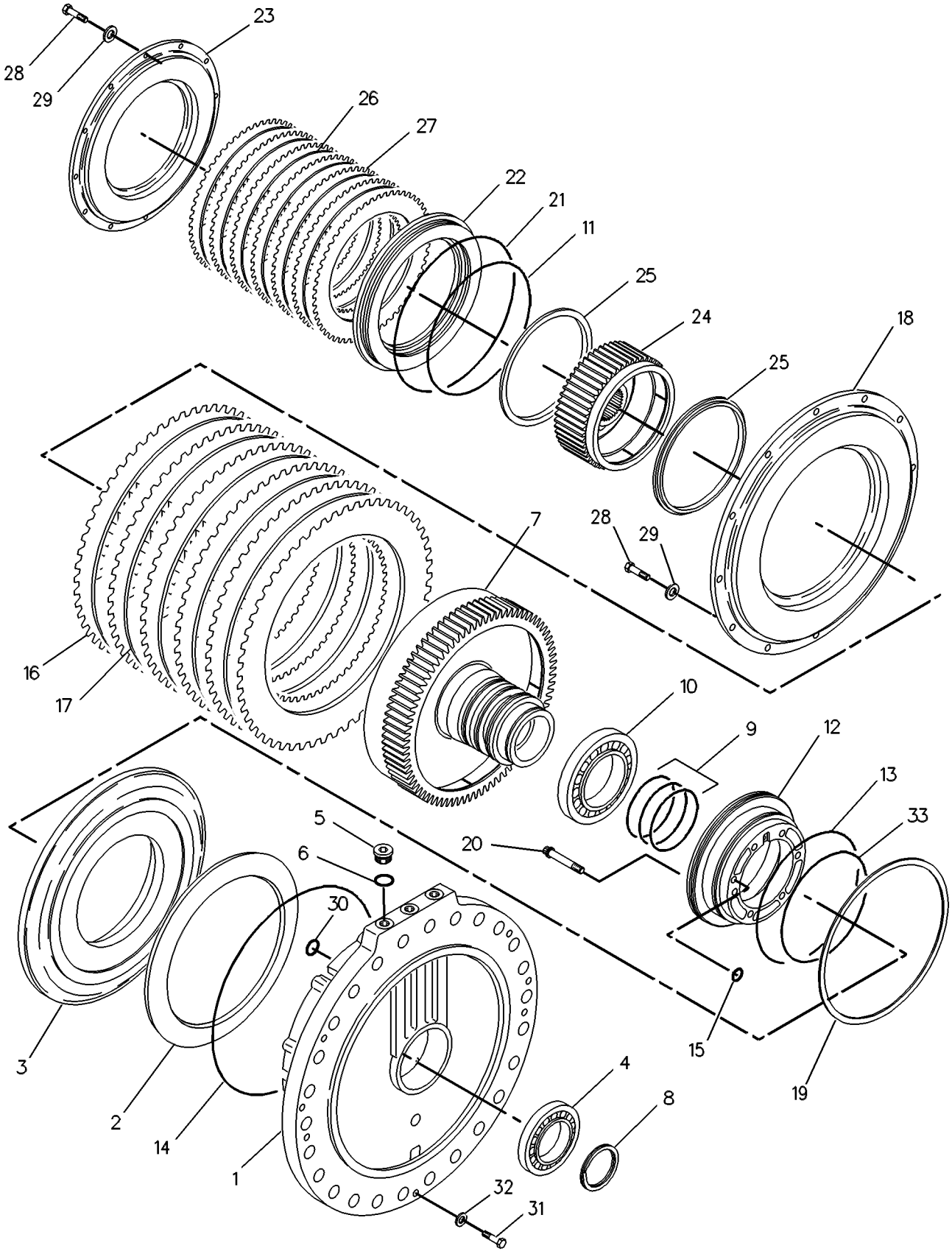

GRAPHIC #2 g00266208

STEERING AND BRAKING SYSTEM

123-6446 CONTROL GP-PARKING BRAKE

S/N: BLE1-UP; BMJ1-UP

PART OF 206-3721 CONTROL GP-STEERING & TMSN

SMCS-4269, 4284 **i01669416**

NOTE	REF NO	GRAPHIC REF	PART NUMBER	QTY	PART NAME 1 2 3 4 5 6 (PRODUCT LEVEL)	SEE PAGE
	1	1	**6V-8118**	2	SCREW-SOCKET HEAD (6/32X0.625 IN)	
M	2	1	**9X-2546**	3	BOLT (M6X1X20MM)	
	3	1	**9X-6772**	1	STRAP-CABLE	
	4	1	**137-4830**	1	SPRING	
J	5	1	**123-0912**	1	LOCK AS-CYLINDER	
		1	**7F-9223**	1	LOCKWASHER	
		1	**8T-5004**	1	SCREW-MACHINE (1/4-28X0.375 IN)	
	6	1	**214-9184**	1	HOUSING AS	
	6A	1	**214-9183**	1	FILM	
	7	1	**118-0639**	1	SWITCH AS-ROCKER (PARKING BRAKE)	
		1	**8T-8729**	12	PIN-CONNECTOR	
		1	**102-8801**	1	KIT-RECEPTACLE (12 PIN)	
					(INCLUDES RECEPTACLE AS & WEDGE)	
		1	**3E-5180**	1	WEDGE-RECEPTACLE LOCK	

J-REQUIRES 5P8500 KEY
M-METRIC PART

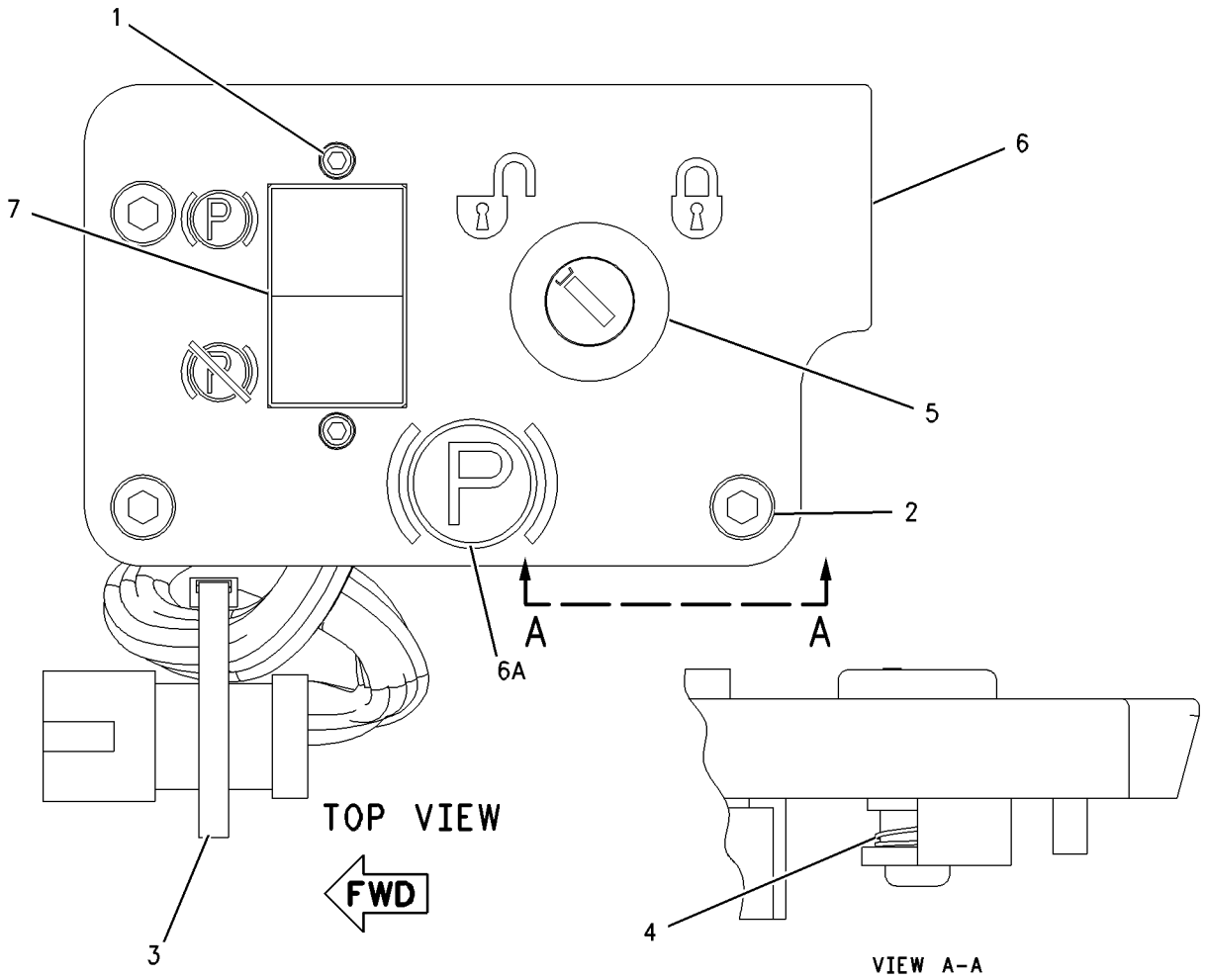

GRAPHIC #1 g00862385

127-2945 DETENT GP

S/N: BLE1-UP; BMJ1-UP

PART OF 206-3721 CONTROL GP-STEERING & TMSN

i00573019

NOTE	REF NO	GRAPHIC REF	PART NUMBER	QTY	PART NAME 1 2 3 4 5 6 (PRODUCT LEVEL)	SEE PAGE
Z	1	1		4	BALL	
Z	2	1		1	DOWEL	
Z	3	1		1	PIN-SPRING	
Z	4	1		4	SPRING	
Z	5	1		1	BEARING	
Z	6	1		1	SHAFT	
Z	7	1		1	DETENT	

Z-NOT SERVICED SEPARATELY

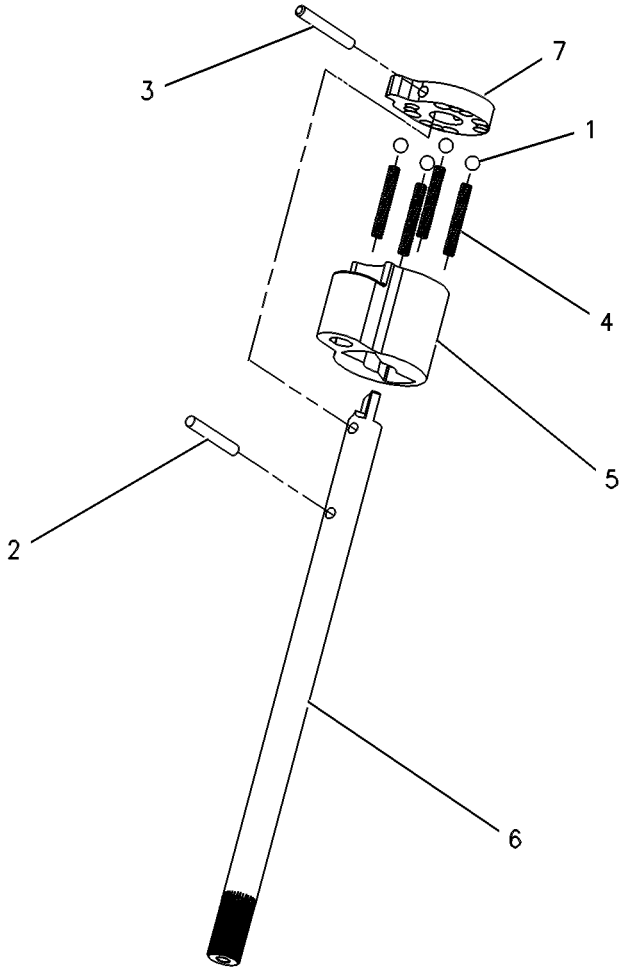

GRAPHIC #1

g00262217

MEMORANDA

122-7372 GEAR GP-STEERING

S/N: BLE1-UP; BMJ1-UP
PART OF 206-3721 CONTROL GP-STEERING & TMSN
FIELD REPLACEMENT FOR 125-9664—PAGE 432

SMCS-4301 **i01356743**

NOTE	REF NO	GRAPHIC REF	PART NUMBER	QTY	PART NAME 1 2 3 4 5 6 (PRODUCT LEVEL)	SEE PAGE
Z	1	1		1	PLUG-PIPE (1/16-27 NPTF THD)	
Z	2	1		2	SEAL-LIP	
M	3	1	**129-3178**	1	LOCKNUT (M6X1.0 THD)	
Z	4	1		1	SETSCREW-HEX SOCKET	
Z	5	1		3	BOLT-SOCKET HEAD	
Z	6	1		1	GEAR AS (40 TEETH)	
Z	7	1		1	GEAR AS (100 TEETH)	
Z	8	1		1	SLEEVE	
Z	9	1		1	SPRING-TORSION	
Z	10	1		1	SPRING-TORSION	
Z	11	1		1	PLATE	
Z	12	1		1	GASKET	
Z	13	1		1	HOUSING AS	
Z	14	1		1	COVER AS	
	15	1	**124-3702**	1	LEVER AS	
		1	**2K-8467**	1	PIN-SPRING (3.18MM DIA)	
M	16	1	**125-3298**	4	BOLT-SOCKET HEAD	
	17	1	**9X-8256**	1	WASHER (2MM THK)	

M-METRIC PART
Z-NOT SERVICED SEPARATELY

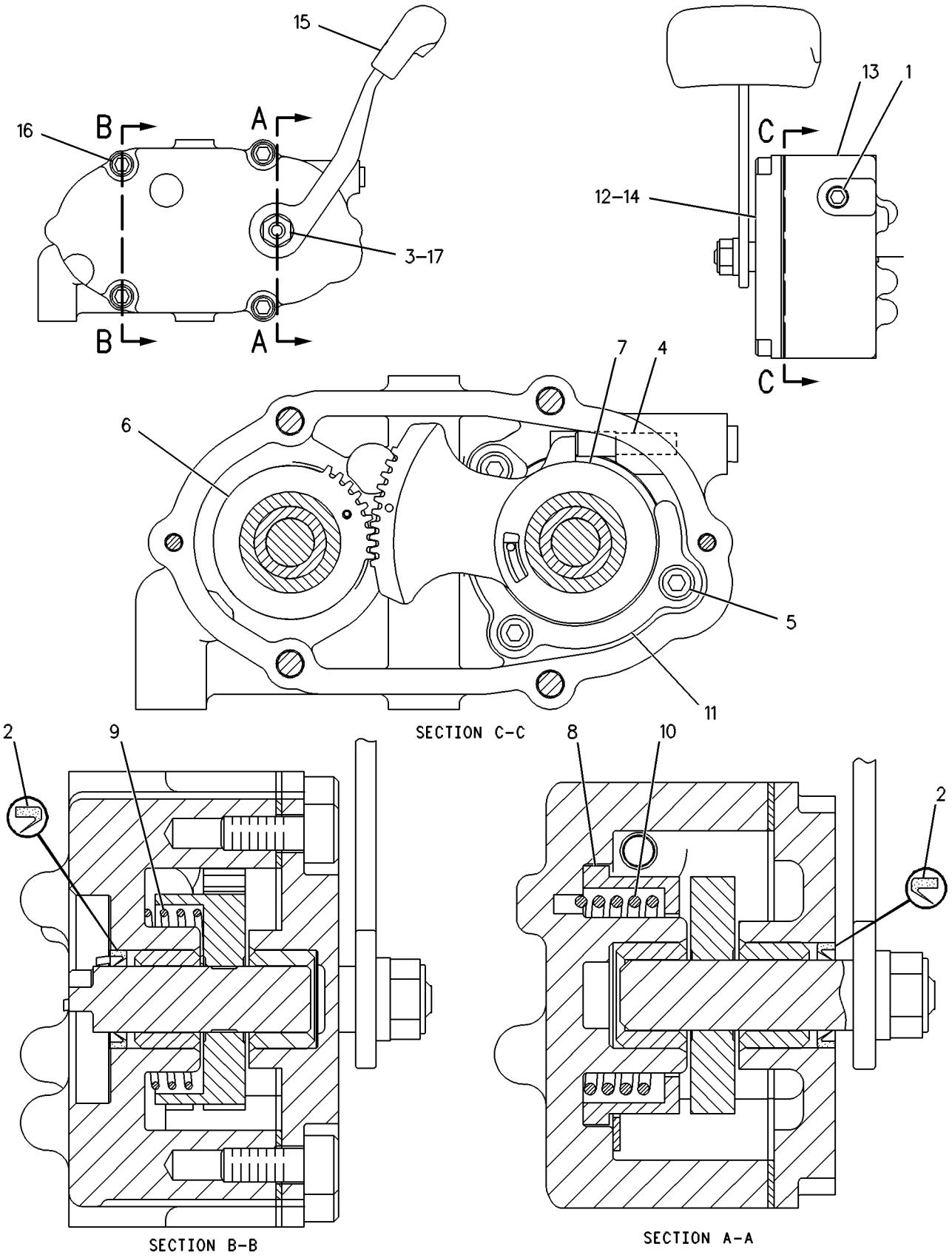

GRAPHIC #1

g00252547

125-9664 GEAR GP-STEERING

S/N: BLE1-UP; BMJ1-UP

PART OF 206-3721 CONTROL GP-STEERING & TMSN

FIELD REPLACEMENT ORDER 122-7372—PAGE 430, 4-125-3299 BOLT-SOCKET HEAD

SMCS-4301 **i00572993**

NOTE	REF NO	GRAPHIC REF	PART NUMBER	QTY	PART NAME 1 2 3 4 5 6 (PRODUCT LEVEL)	SEE PAGE
Z	1	1		1	PLUG-PIPE	
Z	2	1		2	SEAL-LIP	
M	3	1	**129-3178**	1	LOCKNUT (M6X1.0 THD)	
Z	4	1		1	SETSCREW-HEX	
Z	5	1		3	BOLT-SOCKET HEAD	
Z	6	1		1	GEAR AS (40 TEETH)	
Z	7	1		1	GEAR AS (100 TEETH)	
Z	8	1		1	SLEEVE	
Z	9	1		1	SPRING-TORSION	
Z	10	1		1	SPRING-TORSION	
Z	11	1		1	PLATE	
Z	12	1		1	GASKET	
Z	13	1		1	HOUSING AS	
Z	14	1		1	COVER AS	
	15	1	**124-3702**	1	LEVER AS	
		1	**2K-8467**	1	PIN-SPRING	
M	16	1	**125-3299**	4	BOLT-SOCKET HEAD	
	17	1	**9X-8256**	1	WASHER (2MM THK)	

M-METRIC PART
Z-NOT SERVICED SEPARATELY

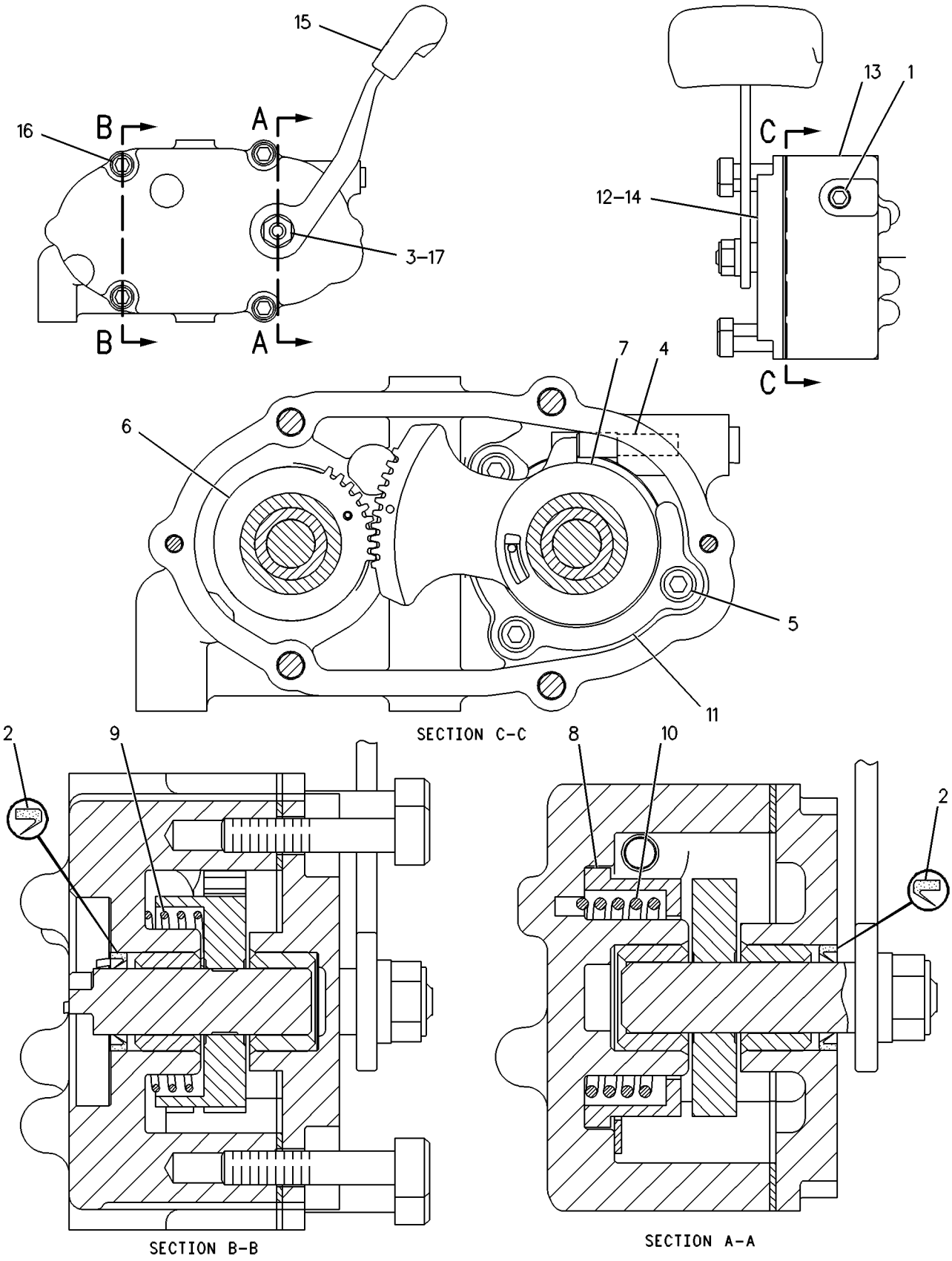

GRAPHIC #1 g00252542

125-0583 SUPPORT GP-CONTROL

S/N: BLE1-UP; BMJ1-UP

PART OF 206-3721 CONTROL GP-STEERING & TMSN

SMCS-4122 **i01642549**

NOTE	REF NO	GRAPHIC REF	PART NUMBER	QTY	PART NAME 1 2 3 4 5 6 (PRODUCT LEVEL)	SEE PAGE
M	1	1	**9X-8902**	1	BOLT-SOCKET HEAD (M3X0.5X8MM)	
	2	1	**5P-8907**	1	SEAL-O-RING	
	3	1	**125-0582**	1	COVER AS	
M	4	1	**125-3298**	1	BOLT-SOCKET HEAD	
	5	1	**125-8826**	1	COVER	
	6	1	**131-0447**	2	NUT	
	7	1	**132-7419**	1	SWITCH AS-PUSH BUTTON (DOWNSHIFT)	
		1	**144-0331**	1	CAP-PUSHBUTTON	
	8	1	**132-7450**	1	SWITCH AS-PUSH BUTTON (UPSHIFT)	
		1	**144-0331**	1	CAP-PUSHBUTTON	
	9	1	**151-9275**	1	KIT-RECEPTACLE (6 PIN)	
					(INCLUDES RECEPTACLE AS & WEDGE)	
	10	1	**8T-8729**	6	PIN-CONNECTOR	
	11	1	**3E-3383**	1	WEDGE-RECEPTACLE LOCK	
BD	12	1	**6V-2689**		TUBE-HEAT SHRINK (6.35MM ID)	

B-USE AS REQUIRED
D-ORDER BY THE METER
M-METRIC PART

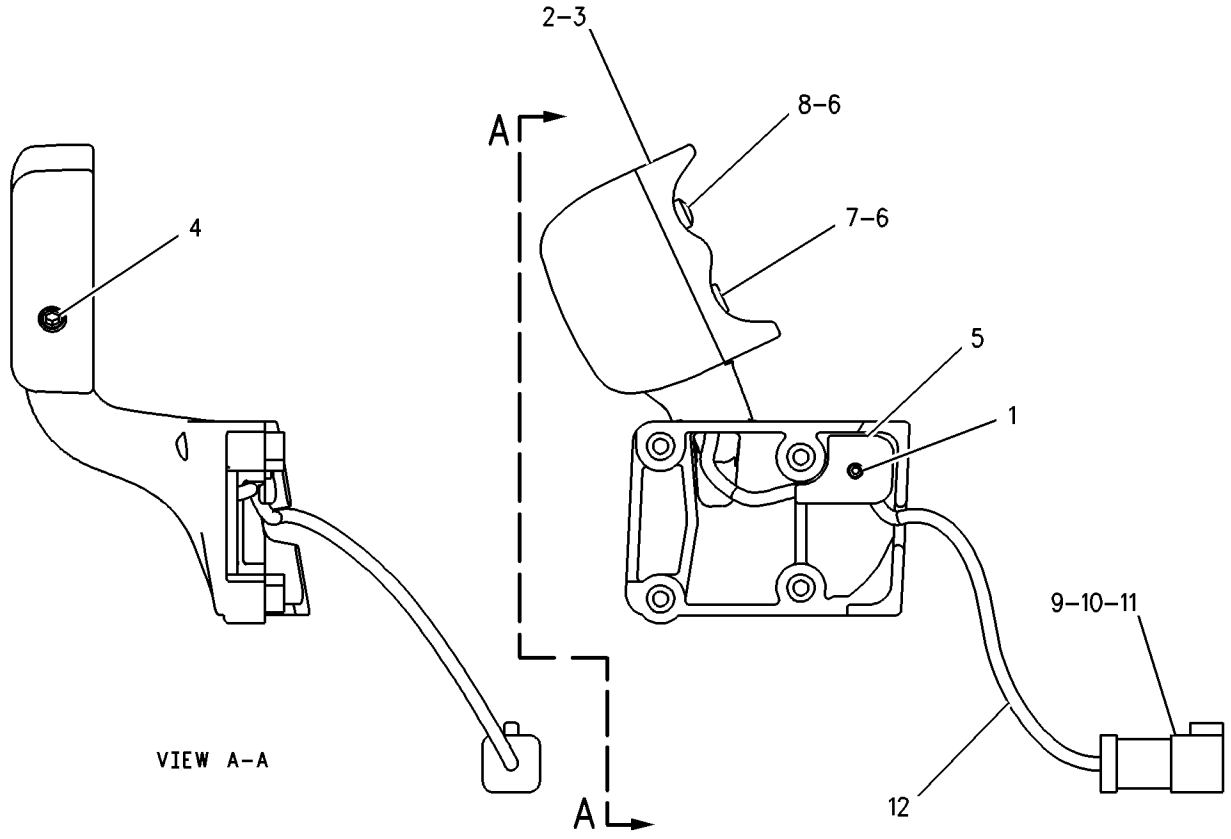

GRAPHIC #1 g00629711

171-4715 CONTROL AR-HYDRAULIC

S/N: BLE1-UP; BMJ1-UP
DOZER & RIPPER
AN ATTACHMENT

SMCS-5050 **i01592227**

NOTE	PART NUMBER	QTY	PART NAME 1 2 3 4 5 6 (PRODUCT LEVEL)	SEE PAGE
Y	*171-6133*	1	CONTROL AR-PILOT HYDRAULIC	437
Y	*171-6132*	1	LINES GP-RIPPER	482
	102-9478	1	FILM-INSTRUCTION (RIPPER)	
			INSTALL ON RAISED SURFACE TO THE RIGHT OF CONTROL HANDLE	

Y-SEPARATE ILLUSTRATION

168-7420 CONTROL AR-PILOT HYDRAULIC

S/N: BLE1-UP; BMJ1-UP
DOZER
PART OF 164-4807 HYDRAULIC AR

SMCS-5059, 5063 **i01590555**

NOTE	PART NUMBER	QTY	PART NAME 1 2 3 4 5 6 (PRODUCT LEVEL)	SEE PAGE
Y	**161-3615**	1	CONTROL GP-IMPLEMENT	616
Y	*173-7218*	1	LINES GP-PILOT	464
Y	*167-1170*	1	MOUNTING GP-CONTROL VALVE	495
Y	**162-8035**	1	VALVE GP-CONTROL	510
Y	**200-0189**	1	VALVE GP-PILOT	522

Y-SEPARATE ILLUSTRATION

HYDRAULIC SYSTEM

171-6133 CONTROL AR-PILOT HYDRAULIC

S/N: BLE1-UP; BMJ1-UP
PART OF 171-4715 CONTROL AR-HYDRAULIC
AN ATTACHMENT

SMCS-5059, 5063 **i01592253**

NOTE	PART NUMBER	QTY	PART NAME 1 2 3 4 5 6 (PRODUCT LEVEL)	SEE PAGE
Y	*161-3615*	1	CONTROL GP-IMPLEMENT	616
Y	*173-7219*	1	LINES GP-PILOT	470
Y	*167-1171*	1	MOUNTING GP-VALVE	497
Y	*162-8033*	1	VALVE GP-CONTROL	508
Y	*200-0189*	1	VALVE GP-PILOT	522
Y	*167-1177*	1	VALVE GP-PILOT (SINGLE LEVER)	520
	2A-1736	1	HANDLE	

Y-SEPARATE ILLUSTRATION

HYDRAULIC SYSTEM

126-8464 CYLINDER & LINES GP-LIFT—RH

S/N: BLE1-UP; BMJ1-UP; 3EP1-UP; 3FP1-UP; 3GP1-UP; 4AP1-UP; 4BP1-UP
PART OF 108-3978, 108-3982 BULLDOZER AR-ANGLING, 108-3974, 108-3976 BULLDOZER AR-SEMI-UNIVERSAL, 108-3970 BULLDOZER AR-STRAIGHT
AN ATTACHMENT

SMCS-5102 **i01539676**

NOTE	REF NO	GRAPHIC REF	PART NUMBER	QTY	PART NAME 1 2 3 4 5 6 (PRODUCT LEVEL)	SEE PAGE
	1	1	**8T-8987**	1	ELBOW-O-RING	
		1	**2S-4078**	1	SEAL-O-RING	
	2	1	**5S-7379**	4	BOLT (3/8-16X0.875 IN)	
	3	1	**8T-4896**	6	WASHER-HARD (10.2X18.5X2.5MM THK)	
	4	1	**1P-4577**	2	FLANGE-HALF	
	5	1	**5S-7382**	4	BOLT (3/8-16X1.375 IN)	
	6	1	**8T-2502**	1	BOLT (3/8-16X1.125 IN)	
	7	1	**6V-8801**	2	NUT (3/8-16 THD)	
	8	1	**9U-9122**	1	CLAMP (SLOT)	
	9	1	**9U-9121**	1	CLAMP (TAB)	
	10	1	**9X-8260**	1	CONNECTOR	
		1	**4K-1388**	1	SEAL-O-RING	
	11	1	**9U-9162**	1	TUBE AS	
		1	**6V-8400**	1	SEAL-O-RING	
I	12	1	**128-2570**	1	HOSE AS	
I	13	1	**128-2569**	1	HOSE AS	
	14	1	**8S-0023**	1	CLIP (SLOT)	
		1	**8S-0024**	1	CLIP (TAB)	
	15	1	**4J-0520**	3	SEAL-O-RING	
Y	16	1	**127-8931**	1	CYLINDER GP-LIFT	450
	17	1	**7S-8920**	1	CLIP (SLOT)	
		1	**7S-8921**	1	CLIP (TAB)	
	18	1	**5P-1075**	6	WASHER-HARD (10.2X22.5X3MM THK)	
	19	1	**5K-9090**	1	SEAL-O-RING	
	20	1	**129-3217**	1	GUARD AS	
	21	1	**4L-9337**	1	BOLT (3/8-16X1.5 IN)	

I-SEE HOSE FABRICATION GUIDE
Y-SEPARATE ILLUSTRATION

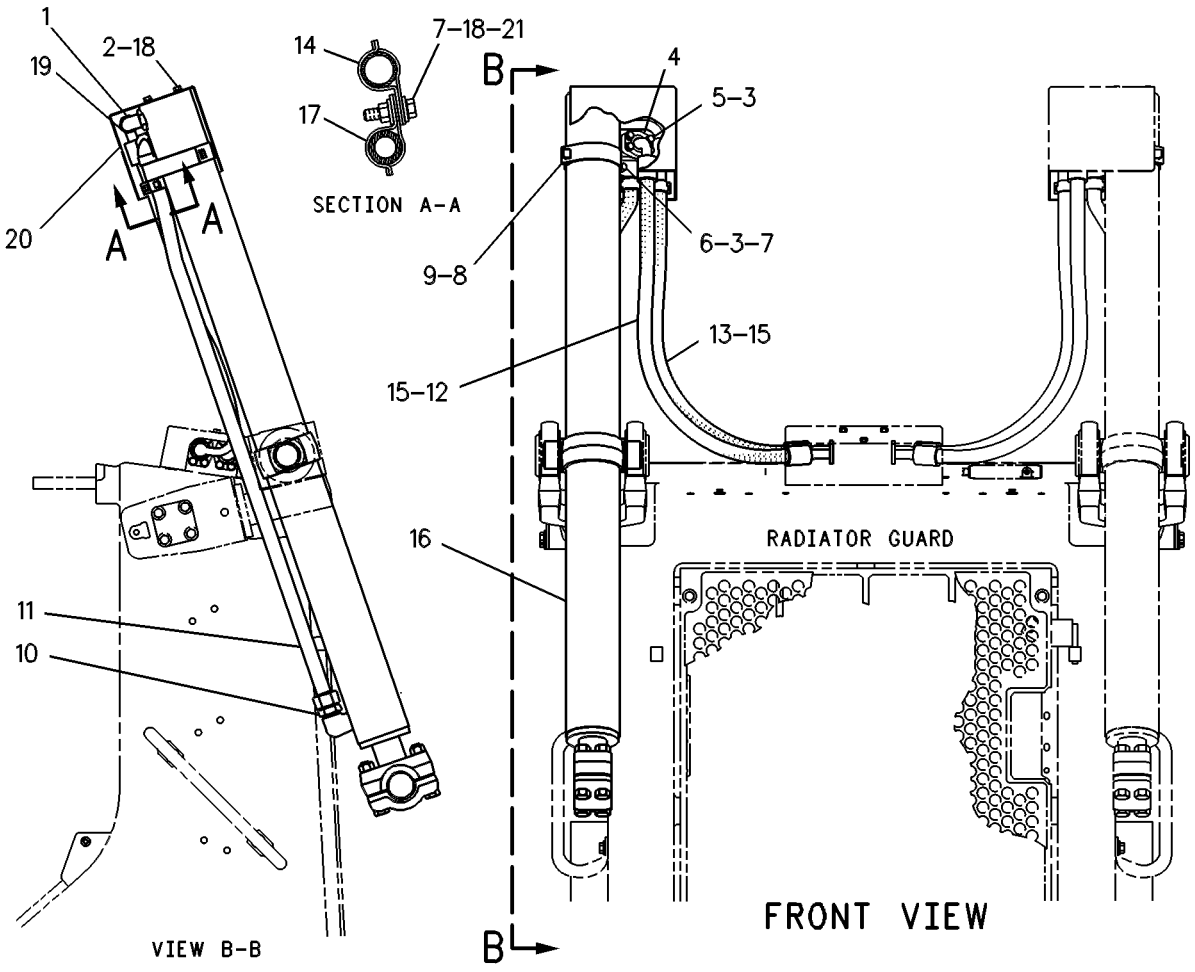

GRAPHIC #1

g00294039

HYDRAULIC SYSTEM

126-8465 CYLINDER & LINES GP-LIFT—LH

S/N: BLE1-UP; BMJ1-UP; 3EP1-UP; 3FP1-UP; 3GP1-UP; 4AP1-UP; 4BP1-UP
PART OF 108-3978, 108-3982 BULLDOZER AR-ANGLING, 108-3974, 108-3976 BULLDOZER AR-SEMI-UNIVERSAL, 108-3970 BULLDOZER AR-STRAIGHT
AN ATTACHMENT

SMCS-5102 **i01539675**

NOTE	REF NO	GRAPHIC REF	PART NUMBER	QTY	PART NAME 1 2 3 4 5 6 (PRODUCT LEVEL)	SEE PAGE
	1	1	**8T-8987**	1	ELBOW-O-RING	
	2	1	**5S-7379**	4	BOLT (3/8-16X0.875 IN)	
	3	1	**8T-4896**	6	WASHER-HARD (10.2X18.5X2.5MM THK)	
	4	1	**1P-4577**	2	FLANGE-HALF	
	5	1	**5S-7382**	4	BOLT (3/8-16X1.375 IN)	
	6	1	**8T-2502**	1	BOLT (3/8-16X1.125 IN)	
	7	1	**6V-8801**	2	NUT (3/8-16 THD)	
	8	1	**9U-9122**	1	CLAMP (SLOT)	
	9	1	**9U-9121**	1	CLAMP (TAB)	
	10	1	**9X-8260**	1	CONNECTOR	
I	11	1	**128-2571**	1	HOSE AS	
	12	1	**4J-0520**	3	SEAL-O-RING	
	13	1	**2S-4078**	1	SEAL-O-RING	
	14	1	**7S-8920**	1	CLIP (SLOT)	
	15	1	**4K-1388**	1	SEAL-O-RING	
	16	1	**5K-9090**	1	SEAL-O-RING	
	17	1	**7S-8921**	1	CLIP (TAB)	
	18	1	**8S-0023**	1	CLIP (SLOT)	
	19	1	**8S-0024**	1	CLIP (TAB)	
	20	1	**5P-1075**	6	WASHER-HARD (10.2X22.5X3MM THK)	
	21	1	**4L-9337**	1	BOLT (3/8-16X1.5 IN)	
	22	1	**6V-8400**	1	SEAL-O-RING	
Y	23	1	**127-8931**	1	CYLINDER GP-LIFT	450
	24	1	**9U-9161**	1	TUBE AS	
I	25	1	**128-2572**	1	HOSE AS	
	26	1	**129-3217**	1	GUARD AS	

I-SEE HOSE FABRICATION GUIDE
Y-SEPARATE ILLUSTRATION

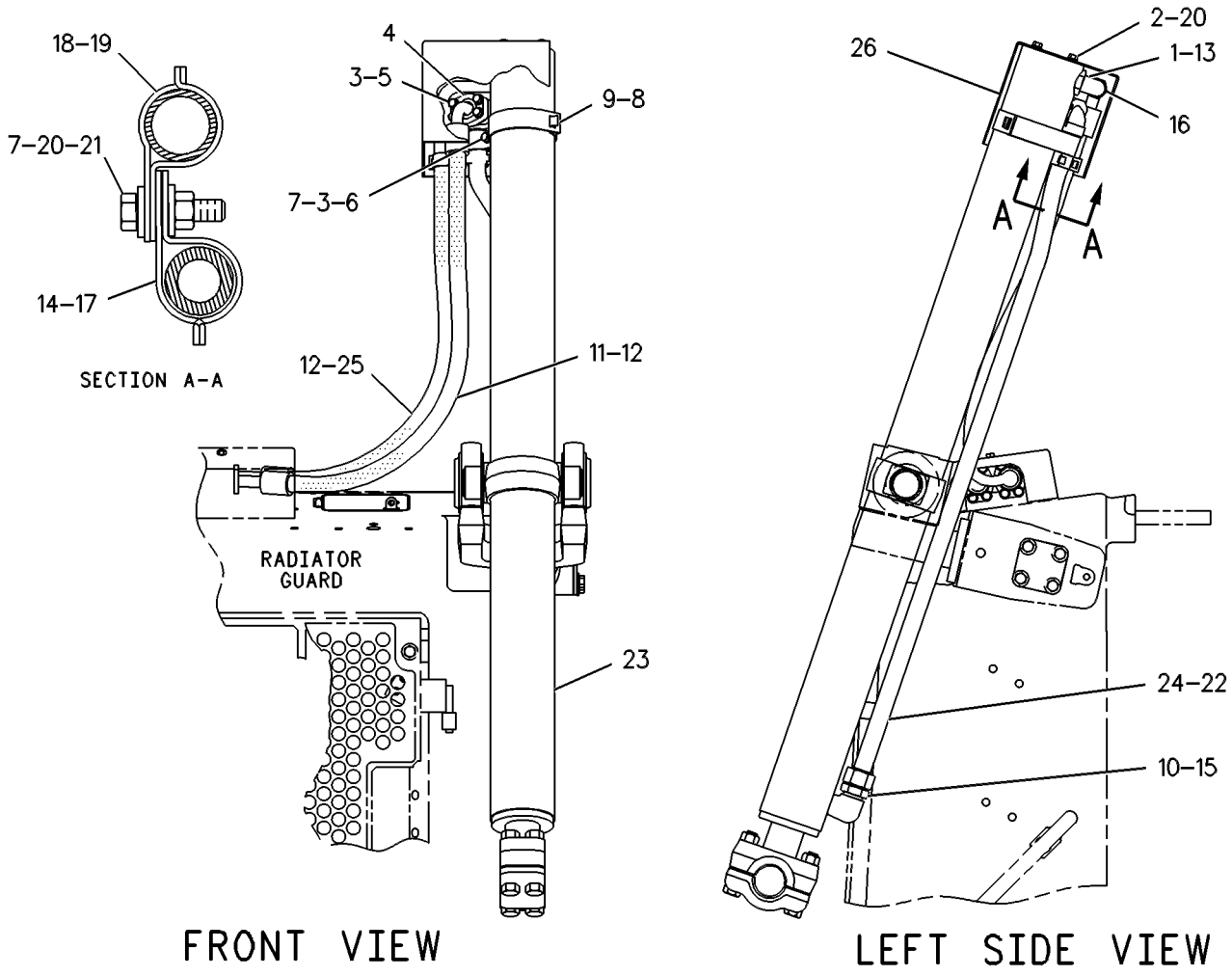

GRAPHIC #1

g00294040

HYDRAULIC SYSTEM

126-8466 CYLINDER & LINES GP-LIFT–RH

S/N: 3FP1-UP
PART OF 139-8346 BULLDOZER AR
AN ATTACHMENT

SMCS-5102 **i01539674**

NOTE	REF NO	GRAPHIC REF	PART NUMBER	QTY	PART NAME 1 2 3 4 5 6 (PRODUCT LEVEL)	SEE PAGE
	1	1	**8T-8987**	1	ELBOW-O-RING	
		1	**2S-4078**	1	SEAL-O-RING	
		1	**5K-9090**	1	SEAL-O-RING	
	2	1	**5S-7379**	4	BOLT (3/8-16X0.875 IN)	
	3	1	**8T-4896**	6	WASHER-HARD (10.2X18.5X2.5MM THK)	
	4	1	**1P-4577**	2	FLANGE-HALF	
	5	1	**5S-7382**	4	BOLT (3/8-16X1.375 IN)	
	6	1	**8T-2502**	1	BOLT (3/8-16X1.125 IN)	
	7	1	**6V-8801**	2	NUT (3/8-16 THD)	
	8	1	**9U-9121**	1	CLAMP (SLOT)	
	9	1	**9U-9122**	1	CLAMP (TAB)	
	10	1	**9X-8260**	1	CONNECTOR	
		1	**4K-1388**	1	SEAL-O-RING	
		1	**6V-8400**	1	SEAL-O-RING	
	11	1	**9U-9162**	1	TUBE AS	
Y	12	1	**129-4258**	1	CYLINDER GP-BULLDOZER LIFT	448
I	13	1	**128-2574**	1	HOSE AS	
I	14	1	**128-2573**	1	HOSE AS	
	15	1	**129-3217**	1	GUARD AS	
	16	1	**4J-0520**	3	SEAL-O-RING	
	17	1	**5P-1075**	6	WASHER-HARD (10.2X22.5X3MM THK)	
	18	1	**4L-9337**	1	BOLT (3/8-16X1.5 IN)	
	19	1	**8S-0024**	1	CLIP (TAB)	
	20	1	**8S-0023**	1	CLIP (SLOT)	
	21	1	**7S-8920**	1	CLIP (SLOT)	
	22	1	**7S-8921**	1	CLIP (TAB)	

I-SEE HOSE FABRICATION GUIDE
Y-SEPARATE ILLUSTRATION

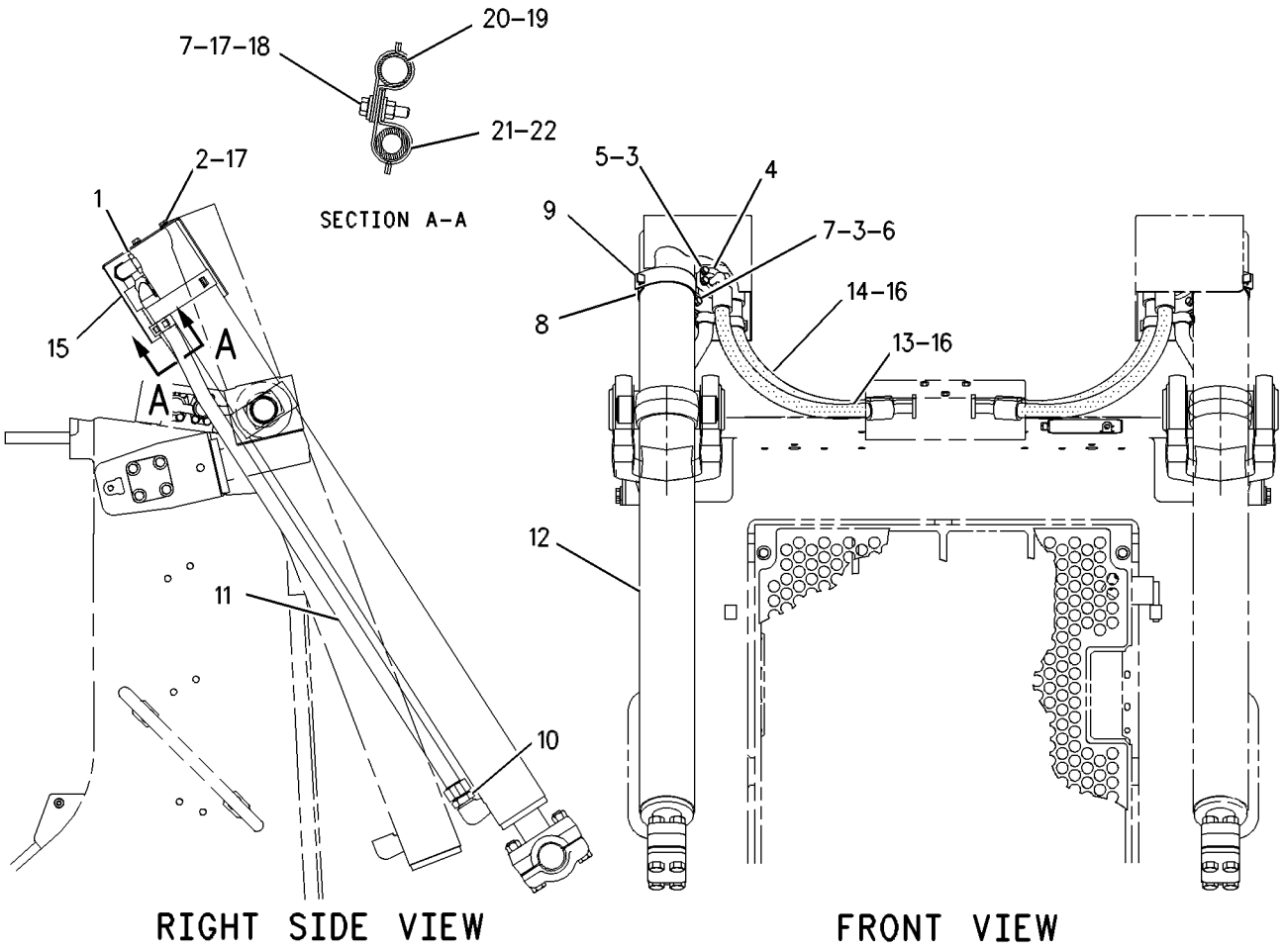

GRAPHIC #1

g00487663

HYDRAULIC SYSTEM

126-8467 CYLINDER & LINES GP-LIFT–LH

S/N: 3FP1-UP
PART OF 139-8346 BULLDOZER AR
AN ATTACHMENT

SMCS-5102 **i01539672**

NOTE	REF NO	GRAPHIC REF	PART NUMBER	QTY	PART NAME 1 2 3 4 5 6 (PRODUCT LEVEL)	SEE PAGE
	1	1	*148-8391*	1	ELBOW GP	
		1	**2S-4078**	1	SEAL-O-RING	
		1	**8T-8987**	1	ELBOW-O-RING	
		1	**5K-9090**	1	SEAL-O-RING	
	2	1	**5S-7379**	4	BOLT (3/8-16X0.875 IN)	
	3	1	**8T-4896**	6	WASHER-HARD (10.2X18.5X2.5MM THK)	
	4	1	**1P-4577**	2	FLANGE-HALF	
	5	1	**5S-7382**	4	BOLT (3/8-16X1.375 IN)	
	6	1	**8T-2502**	1	BOLT (3/8-16X1.125 IN)	
	7	1	**6V-8801**	2	NUT (3/8-16 THD)	
	8	1	**9U-9121**	1	CLAMP	
	9	1	**9U-9122**	1	CLAMP	
	10	1	*153-6251*	1	CONNECTOR AS	
		1	**9X-8260**	1	CONNECTOR	
		1	**4K-1388**	1	SEAL-O-RING	
		1	**6V-8400**	1	SEAL-O-RING	
Y	11	1	**129-4258**	1	CYLINDER GP-BULLDOZER LIFT	448
	12	1	**129-3217**	1	GUARD AS	
	13	1	**4J-0520**	3	SEAL-O-RING	
I	14	1	**128-2575**	1	HOSE AS	
I	15	1	**128-2576**	1	HOSE AS	
	16	1	**9U-9161**	1	TUBE AS	
	17	1	**5P-1075**	6	WASHER-HARD (10.2X22.5X3MM THK)	
	18	1	**7S-8920**	1	CLIP (SLOT)	
	19	1	**7S-8921**	1	CLIP (TAB)	
	20	1	**8S-0023**	1	CLIP (SLOT)	
	21	1	**8S-0024**	1	CLIP (TAB)	
	22	1	**4L-9337**	1	BOLT (3/8-16X1.5 IN)	
	23	1	**5K-9090**	1	SEAL-O-RING	

I-SEE HOSE FABRICATION GUIDE
Y-SEPARATE ILLUSTRATION

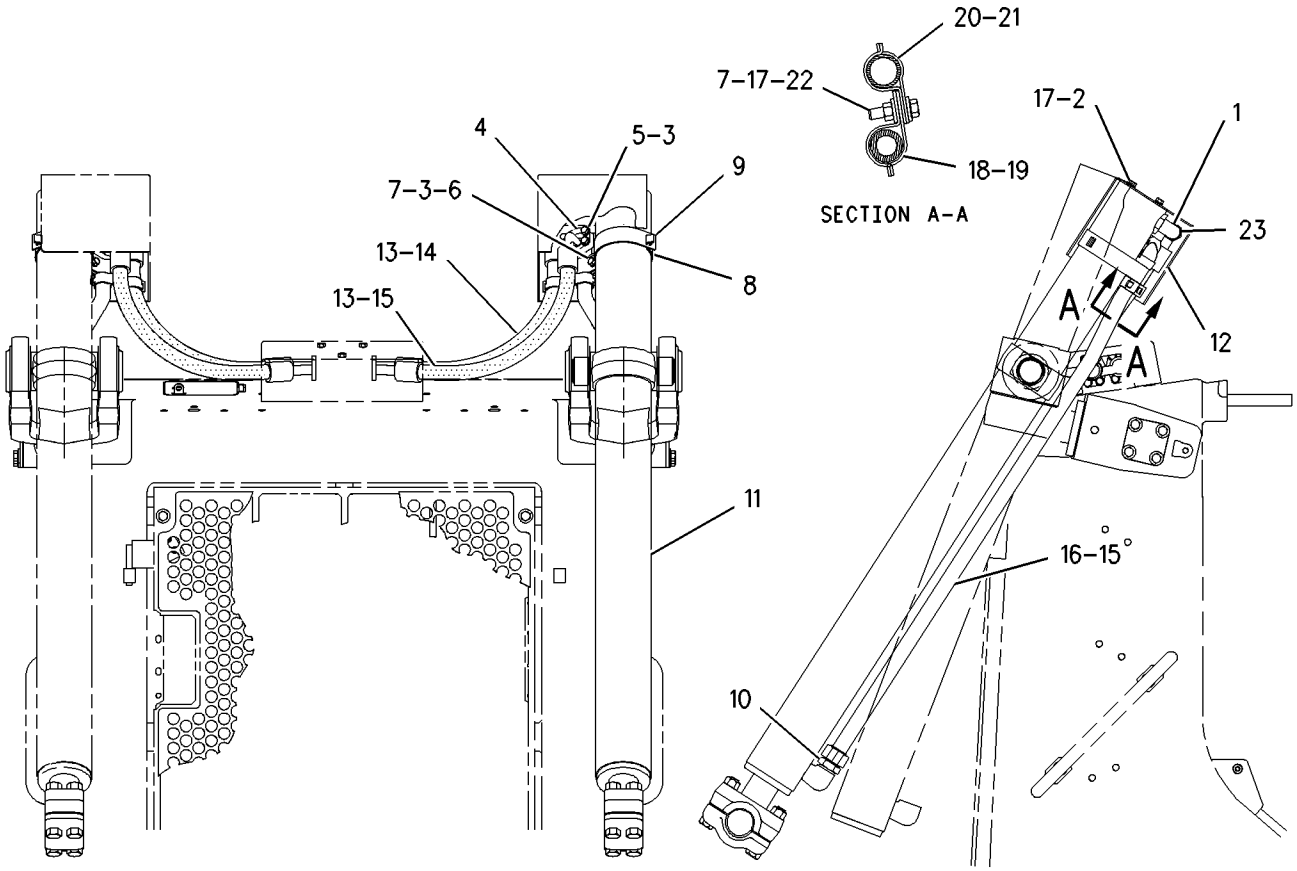

GRAPHIC #1

g00799657

HYDRAULIC SYSTEM

9W-9057 CYLINDER AR-TILT

S/N: BLE1-UP; BMJ1-UP
DUAL
AN ATTACHMENT

SMCS-5104 **i01572290**

NOTE	PART NUMBER	QTY	PART NAME 1 2 3 4 5 6 (PRODUCT LEVEL)	SEE PAGE
Y	**9T-6095**	2	CYLINDER GP-TILT	454
Y	*9W-9079*	1	LINES GP-TILT CYLINDER	490
	8C-8842	8	BOLT (3/4-10X4 IN)	

Y-SEPARATE ILLUSTRATION

MEMORANDA

129-4258 CYLINDER GP-BULLDOZER LIFT

S/N: 3FP1-UP
101.6MM (4 IN.) BORE X 1262MM (49.7 IN.) STROKE
PART OF 126-8466, 126-8467 CYLINDER & LINES GP-LIFT
AN ATTACHMENT

SMCS-5102 **i01572289**

NOTE	REF NO	GRAPHIC REF	PART NUMBER	QTY	PART NAME 1 2 3 4 5 6 (PRODUCT LEVEL)	SEE PAGE
R	1	1	**129-4302**	1	CYLINDER AS	
		1	**4J-6374**	2	BEARING-SLEEVE	
	2	1	**1F-6762**	1	BOLT (1 1/2-12X4.5IN)	
	3	1	**3G-8742**	1	WASHER	
	4	1	**1M-1571**	1	RING-WEAR	
	5	1	**9T-3885**	1	PISTON AS	
		1	**8C-9160**	1	SEAL AS	
	6	1	**172-9981**	1	HEAD	
	7	1	**2J-3506**	4	NUT-FULL (3/4-10 THD)	
R	8	1	**114-4304**	1	ROD AS	
B	9	1	**8E-9212**	16	SHIM (.8MM THK)	
	10	1	**4J-0121**	1	CAP-BEARING	
	11	1	**0S-1756**	4	BOLT (3/4-10X4.25 IN)	
	12	1	**2K-6830**	1	RING-BACKUP	
	13	1	**175-7900**	1	SEAL-O-RING	
	14	1	**8T-0785**	1	RING-WEAR	
	15	1	**167-2201**	1	SEAL AS-BUFFER	
	16	1	**167-2312**	1	SEAL-U-CUP	
	17	1	**167-2463**	1	SEAL-WIPER	

B-USE AS REQUIRED
R-REMFG PART MAY BE AVAILABLE

129-4258 CYLINDER GP-BULLDOZER LIFT *(contd.)* i01572289

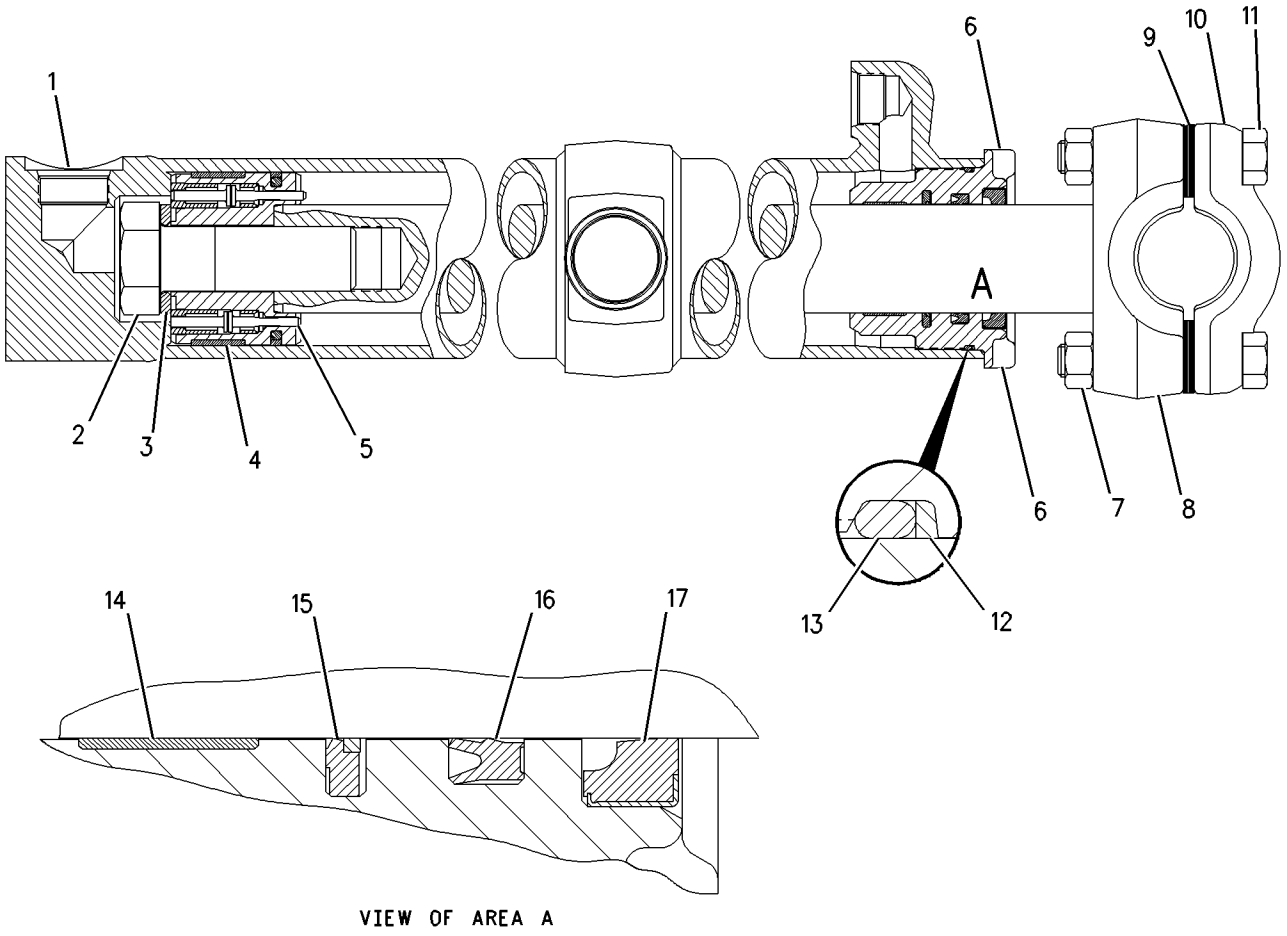

GRAPHIC #1 g00719868

HYDRAULIC SYSTEM

127-8931 CYLINDER GP-LIFT

S/N: BLE1-UP; BMJ1-UP; 3EP1-UP; 3FP1-UP; 3GP1-UP; 4AP1-UP; 4BP1-UP
101.6 MM (4 IN.) BORE X 1262 MM (49.7 IN.) STROKE
PART OF 126-8464, 126-8465 CYLINDER & LINES GP-LIFT
AN ATTACHMENT

SMCS-5102 **i01533982**

NOTE	REF NO	GRAPHIC REF	PART NUMBER	QTY	PART NAME 1 2 3 4 5 6 (PRODUCT LEVEL)	SEE PAGE
C	1	1	**172-9981**	1	HEAD	
	2	1	**1F-6762**	1	BOLT (1 1/2-12X4.5IN)	
	3	1	**3G-8742**	1	WASHER	
	4	1	**1M-1571**	1	RING-WEAR	
C	5	1	**167-2201**	1	SEAL AS-BUFFER	
	6	1	**9T-3885**	1	PISTON AS	
	7	1	**8C-9160**	1	SEAL AS	
	8	1	**175-7900**	1	SEAL-O-RING	
	9	1	**2K-6830**	1	RING-BACKUP	
R	10	1	**114-4304**	1	ROD AS	
B	11	1	**8E-9212**	16	SHIM (.8MM THK)	
	12	1	**4J-0121**	1	CAP-BEARING	
	13	1	**0S-1756**	4	BOLT (3/4-10X4.25 IN)	
	14	1	**2J-3506**	4	NUT-FULL (3/4-10 THD)	
	15	1	**8T-0785**	1	RING-WEAR	
C	16	1	**167-2463**	1	SEAL-WIPER	
	17	1	**167-2312**	1	SEAL-U-CUP	
R	18	1	**127-8932**	1	CYLINDER AS	
	19	1	**4J-6374**	2	BEARING-SLEEVE	

B-USE AS REQUIRED
C-CHANGE FROM PREVIOUS TYPE
R-REMFG PART MAY BE AVAILABLE

127-8931 CYLINDER GP-LIFT *(contd.)* i01533982

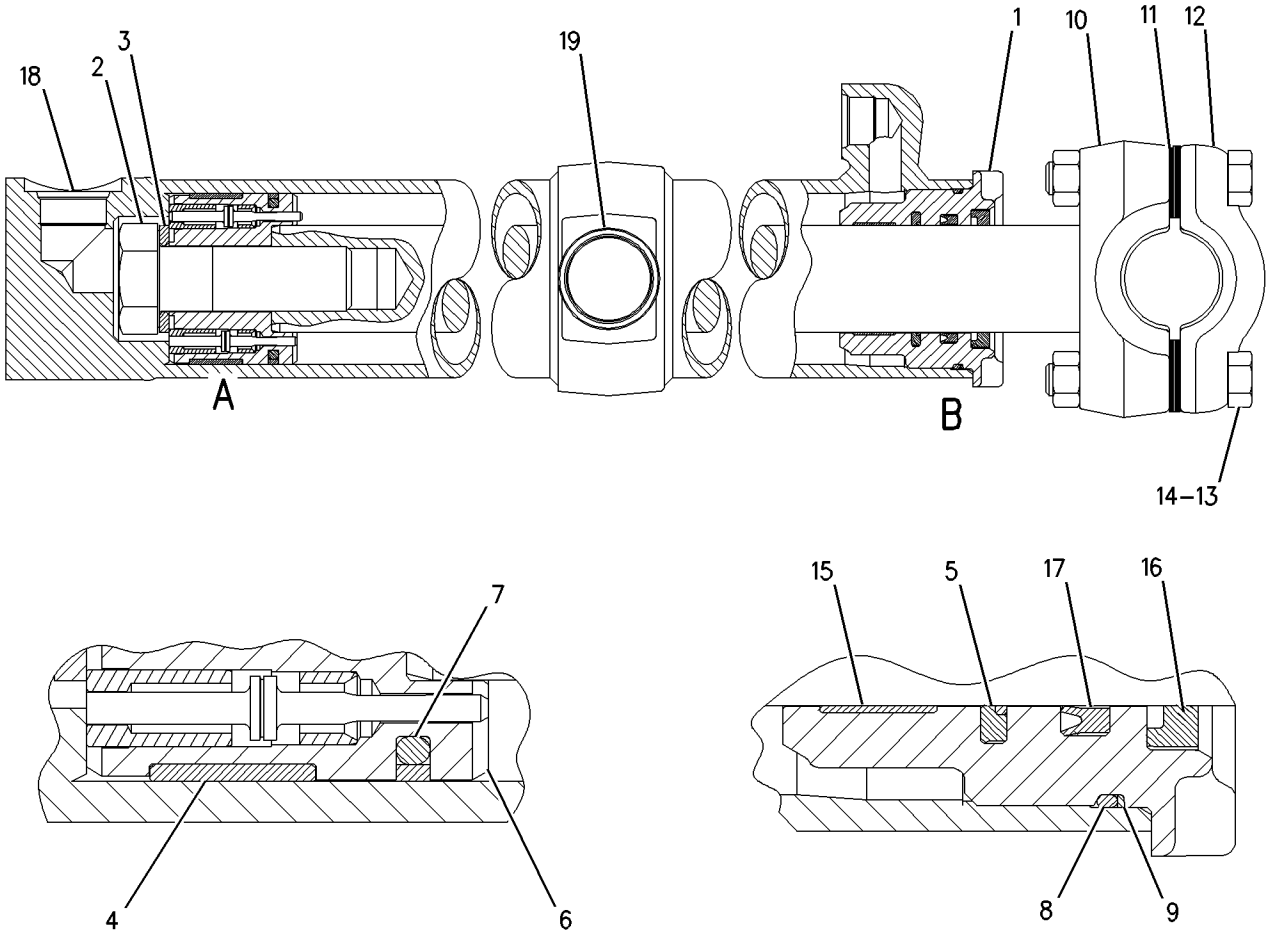

GRAPHIC #1 g00796638

HYDRAULIC SYSTEM

9T-2716 CYLINDER GP-RIPPER LIFT

S/N: 3SH1-UP
127MM (5 IN.) BORE X 362MM (14.25 IN.) STROKE
PART OF 9W-0804 RIPPER AR
AN ATTACHMENT

SMCS-5352 **i01668542**

NOTE	REF NO	GRAPHIC REF	PART NUMBER	QTY	PART NAME 1 2 3 4 5 6 (PRODUCT LEVEL)	SEE PAGE
	1	1	**3G-1753**	1	PISTON	
	2	1	**4J-3420**	1	RING-WEAR	
	3	1	**5J-5020**	1	SEAL AS	
R	4	1	**9T-2715**	1	CYLINDER AS	
	5	1	**4K-3128**	2	BEARING-SLEEVE	
C	6	1	**9T-6863**	1	HEAD	
C	7	1	**167-2201**	1	SEAL AS-BUFFER	
C	8	1	**167-2312**	1	SEAL-U-CUP	
C	9	1	**167-2463**	1	SEAL-WIPER	
	10	1	**9T-2714**	1	ROD AS	
	11	1	**2K-4507**	1	BEARING-SLEEVE	
	12	1	**1D-4628**	4	BOLT (7/8-9X3.25 IN)	
		1	**5P-8249**	4	WASHER-HARD (24X41.5X4MM THK)	
	13	1	**2K-4096**	1	RING	
	14	1	**5F-3144**	1	SEAL-O-RING	
	15	1	**3G-1757**	1	WASHER	
	16	1	**2J-0564**	1	LOCKNUT (2-12 THD)	
C	17	1	**8T-5668**	1	RING-WEAR	
	18	1	**1P-4576**	4	FLANGE-HALF	
	19	1	**4J-5267**	2	SEAL-O-RING	
	20	1	**5H-4018**	2	COVER	
	21	1	**9B-7237**	8	BOLT (3/8-16X1.25 IN)	
		1	**8T-4896**	8	WASHER-HARD (10.2X18.5X2.5MM THK)	

C-CHANGE FROM PREVIOUS TYPE
R-REMFG PART MAY BE AVAILABLE

9T-2716 CYLINDER GP-RIPPER LIFT *(contd.)* i01668542

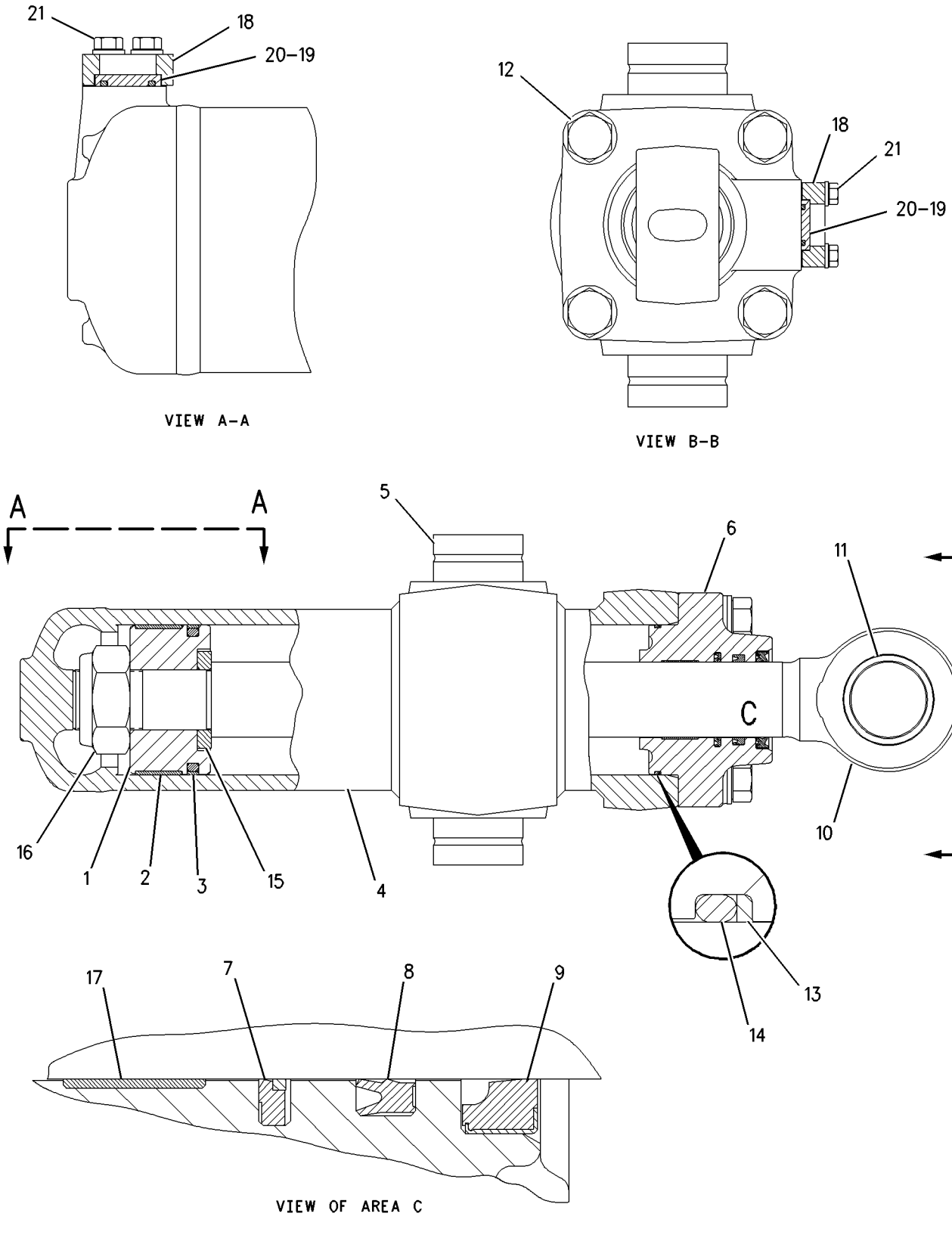

GRAPHIC #1 g00728785

9T-6095 CYLINDER GP-TILT

S/N: BLE1-UP; BMJ1-UP
152MM (6 IN.) BORE X 105MM (4 IN.) STROKE
PART OF 9W-9057 CYLINDER AR-TILT
AN ATTACHMENT

SMCS-5104 **i01668544**

NOTE	REF NO	GRAPHIC REF	PART NUMBER	QTY	PART NAME 1 2 3 4 5 6 (PRODUCT LEVEL)	SEE PAGE
R	1	1	**9T-6094**	1	CYLINDER AS	
	2	1	**2J-8489**	1	BEARING	
	3	1	**5J-5731**	1	LOCKNUT (1-3/4-12 THD)	
C	4	1	**132-1249**	2	WASHER (44X84X6.35MM THK)	
	5	1	**1J-0708**	1	RING-WEAR	
	6	1	**6E-1205**	1	HEAD	
	7	1	**2K-3258**	1	RING-BACKUP (RUBBER)	
	8	1	**5H-3252**	1	SEAL-O-RING	
R	9	1	**9T-6093**	1	ROD-PISTON	
	10	1	**1D-4627**	4	BOLT (7/8-9X3 IN)	
		1	**5P-8249**	4	WASHER-HARD (24X41.5X4MM THK)	
C	11	1	**118-1170**	1	PISTON AS	
	12	1	**1J-8569**	2	INSERT-PISTON	
	13	1	**167-2463**	1	SEAL-WIPER	
	14	1	**167-2312**	1	SEAL-U-CUP	
	15	1	**167-2201**	1	SEAL AS-BUFFER	
	16	1	**8T-5668**	1	RING-WEAR	
	17	1	**5J-4989**	1	SEAL AS	

C-CHANGE FROM PREVIOUS TYPE
R-REMFG PART MAY BE AVAILABLE

9T-6095 CYLINDER GP-TILT *(contd.)* i01668544

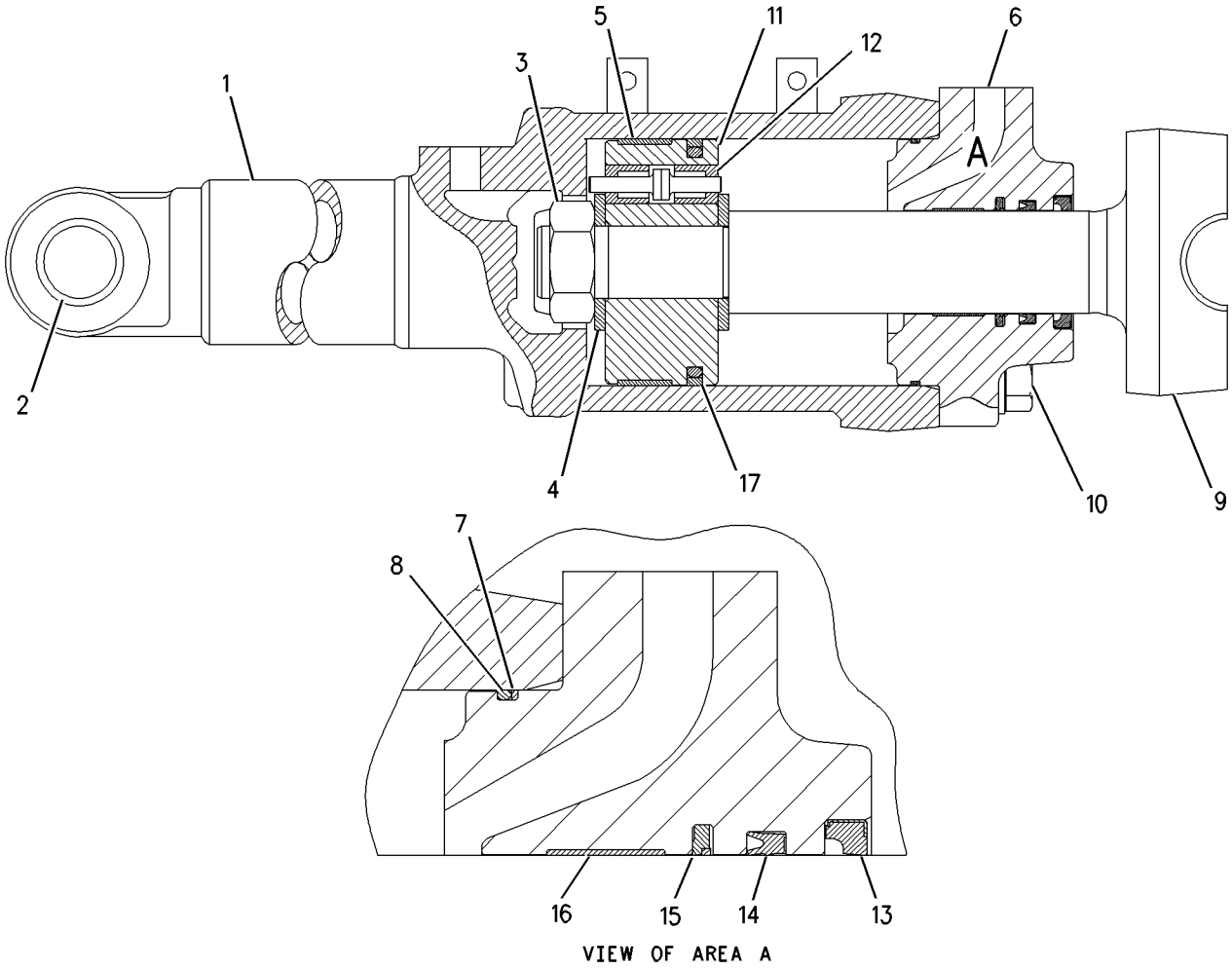

GRAPHIC #1 g00732746

HYDRAULIC SYSTEM

166-2582 CYLINDER GP-TILT

S/N: 3EP1-UP; 3FP1-UP; 4AP1-UP
165.1MM (6.5 IN) BORE X 127MM (5 IN) STROKE
PART OF 190-9771, 194-0937 PUSH ARM GP
AN ATTACHMENT

SMCS-5104 **i01643781**

NOTE	REF NO	GRAPHIC REF	PART NUMBER	QTY	PART NAME 1 2 3 4 5 6 (PRODUCT LEVEL)	SEE PAGE
R	1	1	**166-2583**	1	CYLINDER AS	
		1	**0T-0102**	2	BOLT (3/8-16X0.625 IN)	
		1	**2D-0092**	1	GASKET	
		1	**2K-1845**	1	COVER	
		1	**166-2584**	1	CAP AS	
		1	**2J-8489**	1	BEARING	
	2	1	**1J-2921**	1	BOLT	
	3	1	**3S-6162**	1	WASHER-HARD (40.5X67X6MM THK)	
	4	1	**3J-9703**	1	RING-WEAR	
	5	1	**5J-4991**	1	SEAL AS	
	6	1	**7J-8955**	1	RING-BACKUP (RUBBER)	
	7	1	**7J-8956**	1	SEAL-O-RING	
	8	1	**8T-8379**	1	SEAL-HEAD	
	9	1	**9T-0094**	1	RING-WEAR	
B	10	1	**8E-5703**	24	SHIM (0.8MM THK)	
	11	1	**8J-2880**	1	CAP-BEARING	
	12	1	**7X-0373**	4	BOLT (3/4-10X5.50 IN)	
	13	1	**6V-8182**	4	NUT (3/4-10 THD)	
	14	1	**1D-4709**	4	BOLT (1-8X3IN)	
	15	1	**5P-8250**	4	WASHER (28X49X5MM THK)	
	16	1	**6E-5527**	1	HEAD	
R	17	1	**1U-4069**	1	ROD AS	
B		1	**3J-6572**	14	SHIM (.5MM THK)	
	18	1	**4T-0259**	1	PISTON	
	19	1	**167-2469**	1	SEAL-WIPER	
	20	1	**167-2319**	1	SEAL-U-CUP	
	21	1	**167-2208**	1	SEAL AS-BUFFER	

B-USE AS REQUIRED
R-REMFG PART MAY BE AVAILABLE

166-2582 **CYLINDER GP-TILT** ***(contd.)*** **i01643781**

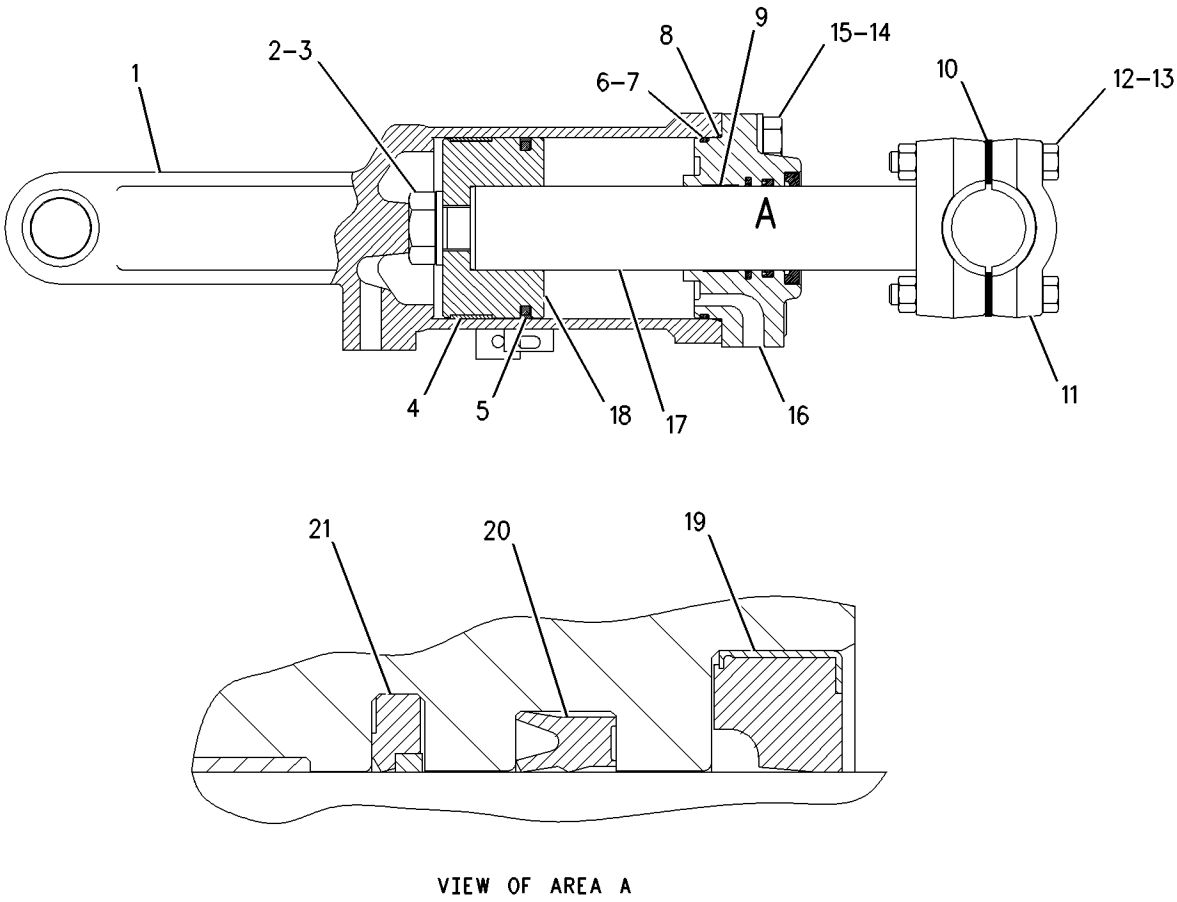

VIEW OF AREA A

GRAPHIC #1 g00852311

164-4807 HYDRAULIC AR

S/N: BLE1-UP; BMJ1-UP
LIFT/TILT, LOAD SENSING
PART OF 211-4625, 211-4627 GENERAL AR

SMCS-5051, 5056, 5057, 5073 **i01590515**

NOTE	PART NUMBER	QTY	PART NAME 1 2 3 4 5 6 (PRODUCT LEVEL)	SEE PAGE
Y	*168-7420*	1	CONTROL AR-PILOT HYDRAULIC	436
Y	*166-7282*	1	LINES GP-LIFT CYLINDER	460
Y	*166-7285*	1	LINES GP-PUMP	476
Y	*166-7283*	1	LINES GP-TILT CYLINDER	492
Y	*166-7288*	1	MOUNTING GP-VALVE	496
Y	**171-2092**	1	PUMP GP-PISTON	498
Y	*197-0959*	1	TANK & FILTER GP-HYDRAULIC	502
Y	**113-5429**	1	VALVE GP-QUICK-DROP	528
	5P-8502	1	PADLOCK GP	
A	**5P-8500**	1	KEY	
A	**8Y-6364**	1	SLEEVE	

A-NOT PART OF THIS GROUP
Y-SEPARATE ILLUSTRATION

MEMORANDA

HYDRAULIC SYSTEM

166-7282 LINES GP-LIFT CYLINDER

S/N: BLE1-UP; BMJ1-UP

PART OF 164-4807 HYDRAULIC AR

SMCS-5057, 5102 **i01668546**

NOTE	REF NO	GRAPHIC REF	PART NUMBER	QTY	PART NAME 1 2 3 4 5 6 (PRODUCT LEVEL)	SEE PAGE
	1	1,2	**7G-5984**	4	CLIP (TAB)	
	2	1,2	**7G-5985**	4	CLIP (SLOT)	
	3	1	**8E-8434**	1	GUARD	
I	4	1	**195-5918**	1	HOSE AS	
	5	2	**173-9432**	1	TUBE AS	
	6	2	**173-9433**	1	TUBE AS	
	7	1,2	**6V-8801**	4	NUT (3/8-16 THD)	
	8	2	**1P-3704**	2	SEAL-RECTANGULAR	
	9	1	**1P-4577**	4	FLANGE-HALF	
	10	1	**4J-0520**	4	SEAL-O-RING	
	11	1	**4L-9337**	3	BOLT (3/8-16X1.5 IN)	
	12	2	**5M-3062**	2	BOLT (3/8-16X0.75 IN)	
	13	1,2	**5P-1075**	8	WASHER-HARD (10.2X22.5X3MM THK)	
	14	2	**5P-8167**	3	BOLT (3/8-16X0.625 IN)	
	15	2	**9X-6458**	2	WASHER-HARD (10.2X22.5X3MM THK)	
	16	1	**5S-7382**	8	BOLT (3/8-16X1.375 IN)	
	17	1,2	**7G-5986**	4	GROMMET	
	18	2	**8S-0023**	2	CLIP (SLOT)	
	19	2	**8S-0024**	2	CLIP (TAB)	
	20	1,2	**8T-4896**	22	WASHER-HARD (10.2X18.5X2.5MM THK)	
	21	2	**8T-9377**	8	BOLT (3/8-16X2.25 IN)	
	22	1,2	**9B-7237**	4	BOLT (3/8-16X1.25 IN)	
I	23	1	**173-9430**	1	HOSE AS	
	24	1	**1J-8668**	2	STUD-TAPERLOCK	

I-SEE HOSE FABRICATION GUIDE

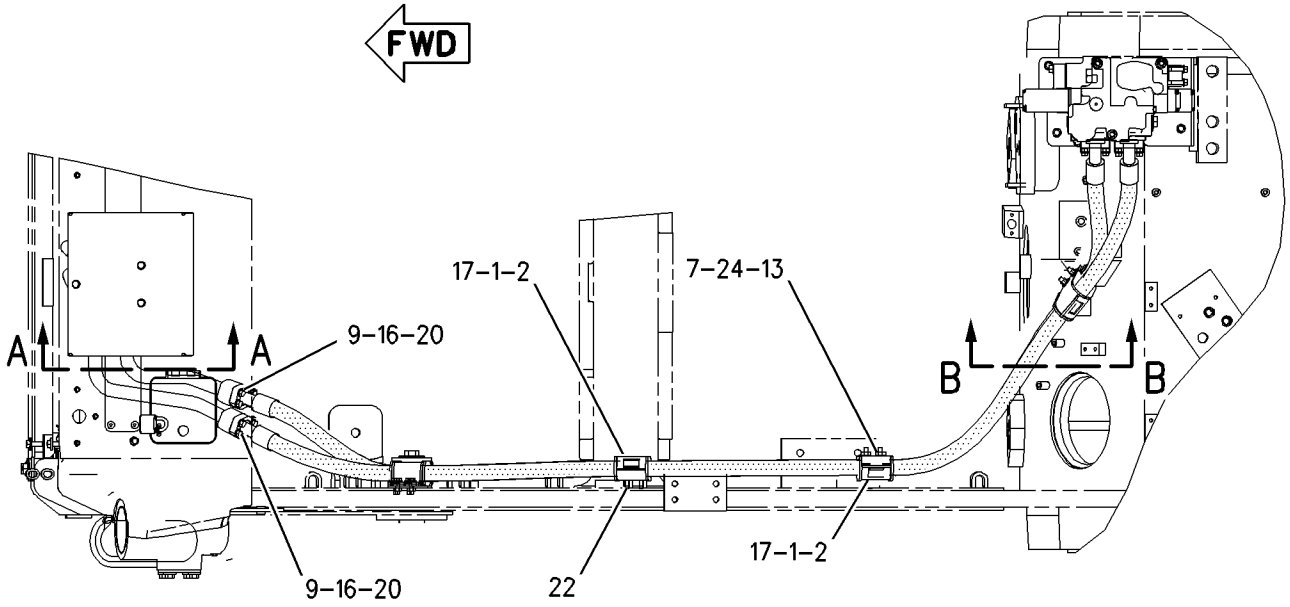

TOP VIEW

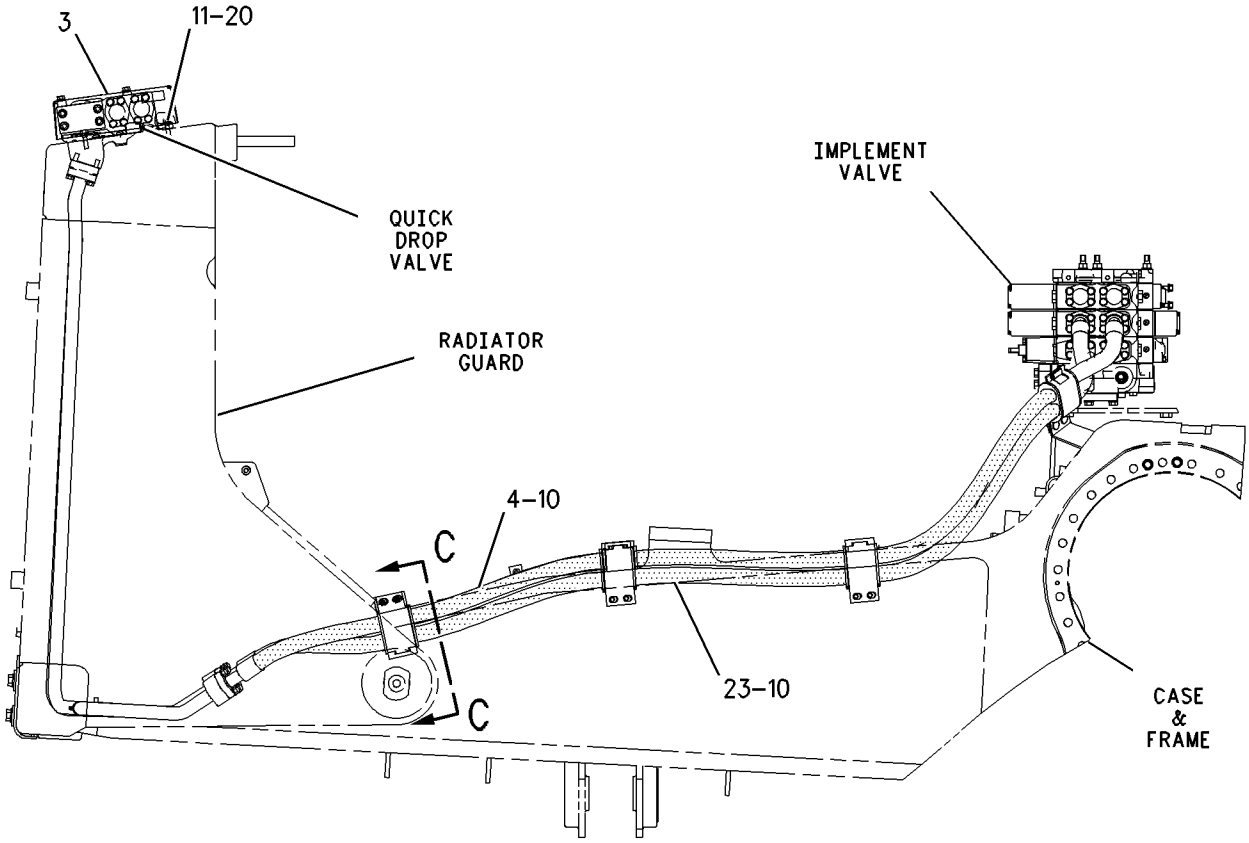

REFER TO ALL ILLUSTRATIONS OF THIS GROUP FOR AUXILIARY VIEWS

LEFT SIDE VIEW

GRAPHIC #1 g00845337

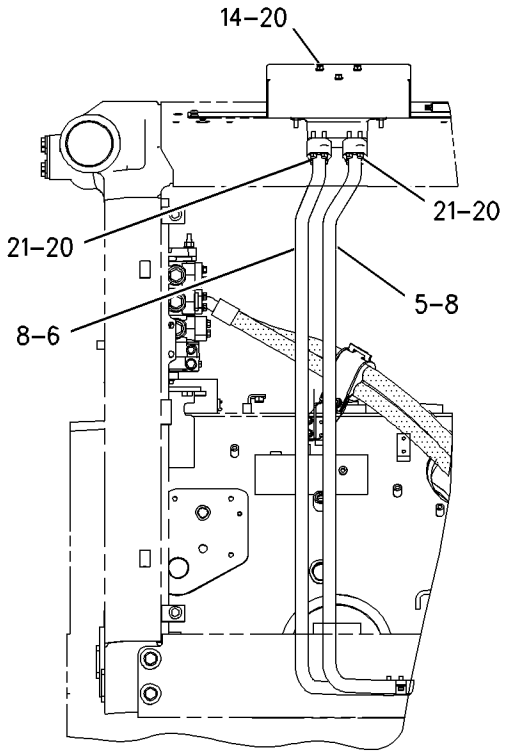

FRONT VIEW

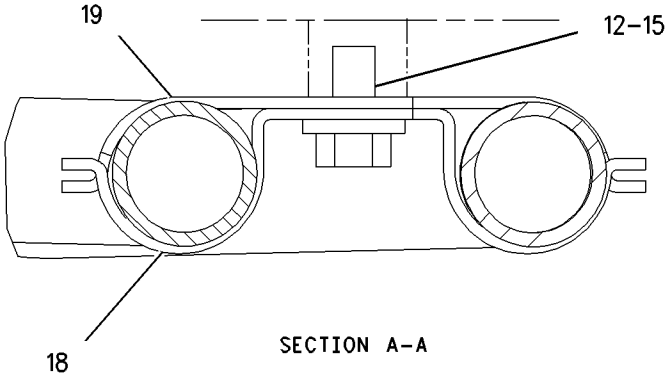

SECTION A-A

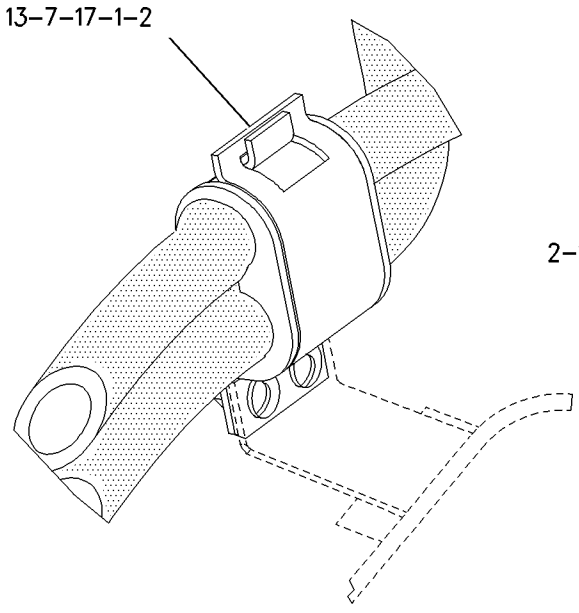

VIEW B-B

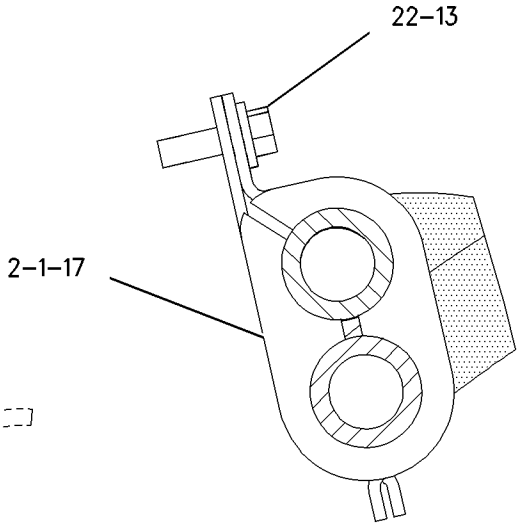

SECTION C-C

GRAPHIC #2

g00741156

MEMORANDA

HYDRAULIC SYSTEM

173-7218 LINES GP-PILOT

S/N: BLE1-UP; BMJ1-UP

PART OF 168-7420 CONTROL AR-PILOT HYDRAULIC

SMCS-5057 **i01590648**

NOTE	REF NO	GRAPHIC REF	PART NUMBER	QTY	PART NAME 1 2 3 4 5 6 (PRODUCT LEVEL)	SEE PAGE
	1	2	**8C-3451**	1	CAP-DUST	
	2	3	**6V-9829**	2	CAP AS	
	3	3	**7K-1181**	5	STRAP-CABLE	
	4	2	**8T-9358**	1	CONNECTOR	
M	5	3	**112-9319**	1	BOLT-HEX SOCKET (M5X0.8X80MM)	
	6	3	*150-5968*	1	TEE GP	
		3	**4J-5477**	2	SEAL-O-RING	
		3	**6V-9835**	1	TEE	
	7	3	**159-9202**	1	SEAL	
I	8	2	**160-4306**	1	HOSE AS	
	9	3	**160-4326**	1	KNOB AS	
Y	10	2	**162-0162**	1	VALVE GP-MANIFOLD & REDUCING	518
I	11	1	**166-7683**	1	HOSE AS	
I	12	1	**166-7684**	1	HOSE AS	
I	13	1	**166-7685**	1	HOSE AS	
I	14	1	**166-7686**	1	HOSE AS	
	15	2	**170-7568**	1	BRACKET AS	
		2	**9F-6445**	2	NUT-WELD (1/4-20 THD)	
	16	2	**200-0750**	1	ACCUMULATOR GP-PILOT OIL	
	17	3	**171-8787**	1	CAM	
I	18	1	**172-5399**	1	HOSE AS	
	19	2	*148-8305*	1	ADAPTER AS	
		2	**3J-1907**	1	SEAL-O-RING	
		2	**5P-9617**	1	ADAPTER	
	20	3	**189-0135**	1	SWITCH AS-LIMIT	
		3	**3E-3371**	1	WEDGE-RECEPTACLE LOCK (3 PIN)	
		3	**186-3735**	3	PIN-CONNECTOR	
		3	**102-8803**	1	KIT-RECEPTACLE (3 PIN)	
					(INCLUDES RECEPTACLE AS & WEDGE)	
	21	3	**191-3587**	1	SWITCH AS-LIMIT	
		3	**3E-3377**	1	WEDGE-RECEPTACLE LOCK	
		3	**186-3735**	3	PIN-CONNECTOR	
		3	**9G-3695**	3	PLUG (GROMMET SEALING)	
		3	**102-8804**	1	KIT-RECEPTACLE (4 PIN)	
					(INCLUDES RECEPTACLE AS & WEDGE)	
I	22	2	**191-5101**	1	HOSE AS	
	23	3	**194-7008**	1	VALVE GP-BALL	
	24	3	**195-3312**	1	HARNESS AS (LOCKOUT INDICATOR)	
	25	3	**196-1921**	1	PLATE	
I	26	2	**196-5602**	1	HOSE AS	
I	27	3	**196-5603**	1	HOSE AS	
I	28	3	**196-5604**	1	HOSE AS	
	29	2	**196-5605**	1	BRACKET AS	
		2	**8F-9836**	1	BOSS-THREADED (3/8-16X.75 IN)	
	30	3	**096-5962**	4	WASHER-HARD (3.4X7X0.8MM THK)	
	31	1	*148-8316*	1	CONNECTOR GP	
		1	**3J-7354**	1	SEAL-O-RING	
		1	**4J-5477**	1	SEAL-O-RING	
		1	**6V-8647**	1	CONNECTOR	
	32	2	*148-8318*	1	CONNECTOR GP	
		2	**3K-0360**	1	SEAL-O-RING	
		2	**6V-8397**	1	SEAL-O-RING	
		2	**6V-8634**	1	CONNECTOR	
	33	3	*148-8325*	2	CONNECTOR GP	
					(EACH INCLUDES)	
		3	**3J-1907**	1	SEAL-O-RING	

173-7218 **LINES GP-PILOT** ***(contd.)*** **i01590648**

NOTE	REF NO	GRAPHIC REF	PART NUMBER	QTY	PART NAME 1 2 3 4 5 6 (PRODUCT LEVEL)	SEE PAGE
		3	**4J-5477**	1	SEAL-O-RING	
		3	**6V-8641**	1	CONNECTOR	
	34	2	*148-8336*	1	CONNECTOR GP	
		2	**3J-1907**	1	SEAL-O-RING	
		2	**6V-8397**	1	SEAL-O-RING	
		2	**6V-8636**	1	CONNECTOR	
	35	3	*148-8326*	1	CONNECTOR GP	
		3	**3J-7354**	1	SEAL-O-RING	
		3	**6V-8397**	1	SEAL-O-RING	
		3	**6V-9872**	1	CONNECTOR	
	36	2,3	*148-8367*	3	ELBOW GP	
					(EACH INCLUDES)	
		2,3	**6V-8397**	1	SEAL-O-RING	
		2,3	**6V-9850**	1	ELBOW-SWIVEL	
	37	3	*148-8369*	2	ELBOW GP	
					(EACH INCLUDES)	
		3	**3J-7354**	1	SEAL-O-RING	
		3	**4J-5477**	1	SEAL-O-RING	
		3	**6V-8628**	1	ELBOW	
	38	2	*148-8374*	1	ELBOW GP	
		2	**3K-0360**	1	SEAL-O-RING	
		2	**6V-8397**	1	SEAL-O-RING	
		2	**6V-8723**	1	ELBOW	
	39	1,3	*148-8378*	6	ELBOW GP	
					(EACH INCLUDES)	
		1,3	**3J-1907**	1	SEAL-O-RING	
		1,3	**6V-8397**	1	SEAL-O-RING	
		1,3	**6V-8724**	1	ELBOW	
	40	2	*148-8428*	1	TEE GP	
		2	**3K-0360**	1	SEAL-O-RING	
		2	**6V-8398**	2	SEAL-O-RING	
		2	**6V-8782**	1	TEE-FACE SEAL	
	41	2	*148-8433*	1	TEE GP	
		2	**6V-8397**	2	SEAL-O-RING	
		2	**6V-9836**	1	TEE-SWIVEL	
	42	3	*148-8435*	1	TEE GP	
		3	**3J-1907**	1	SEAL-O-RING	
		3	**6V-8397**	2	SEAL-O-RING	
		3	**6V-8781**	1	TEE-FACE SEAL	
	43	3	*148-8439*	1	TEE GP	
		3	**3J-1907**	1	SEAL-O-RING	
		3	**6V-8397**	2	SEAL-O-RING	
		3	**6V-8774**	1	TEE	
	44	2	**1J-8668**	1	STUD-TAPERLOCK	
	45	2	**3J-7354**	1	SEAL-O-RING	
	46	2	**3D-2824**	1	SEAL-O-RING	
	47	2	**5M-3062**	1	BOLT (3/8-16X0.75 IN)	
	48	2	**5P-1075**	3	WASHER-HARD (10.2X22.5X3MM THK)	
	49	2	**6V-8397**	1	SEAL-O-RING	
	50	2	**6V-8801**	1	NUT (3/8-16 THD)	
	51	2	**6V-9168**	1	NUT (11/16-16 THD)	
M	52	3	**8T-0287**	4	BOLT (M5X0.8X10MM)	
	53	2	**8T-1893**	1	CLIP (SLOT)	
	54	2	**8T-1894**	1	CLIP (TAB)	
	55	2	**8T-2502**	2	BOLT (3/8-16X1.125 IN)	
	56	2	**8T-4205**	2	WASHER-HARD (7.2X14.5X2MM THK)	
	57	2	**8T-4896**	1	WASHER-HARD (10.2X18.5X2.5MM THK)	
	58	2	**8T-9368**	2	BOLT (1/4-20X2.25 IN)	
	59	3	**9X-6281**	4	SCREW-MACHINE (4-40X1 IN)	

173-7218 **LINES GP-PILOT** *(contd.)* **i01590648**

NOTE	REF NO	GRAPHIC REF	PART NUMBER	QTY	PART NAME 1 2 3 4 5 6 (PRODUCT LEVEL)	SEE PAGE
	60	2	**126-0814**	1	FITTING AS	
		2	**6V-0852**	1	CAP-DUST	
	61	2	*148-8434*	1	TEE AS-ORFS	
		2	**6V-8397**	2	SEAL-O-RING	
		2	**6V-9873**	1	CONNECTOR-SEAL	
	62	2	**8C-3446**	1	VALVE GP-FLUID SAMPLING	

I-SEE HOSE FABRICATION GUIDE
M-METRIC PART
Y-SEPARATE ILLUSTRATION

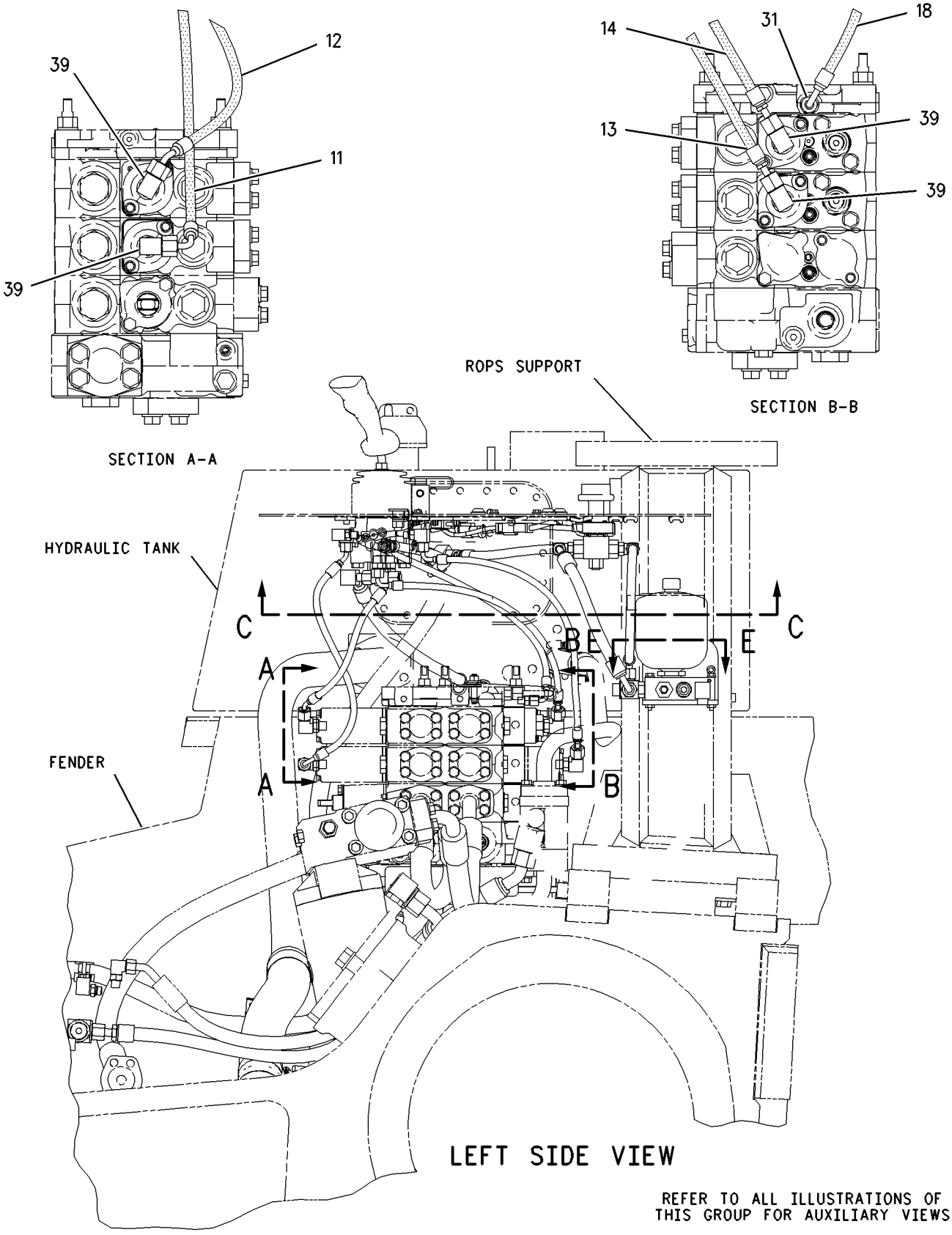

GRAPHIC #1

g00845973

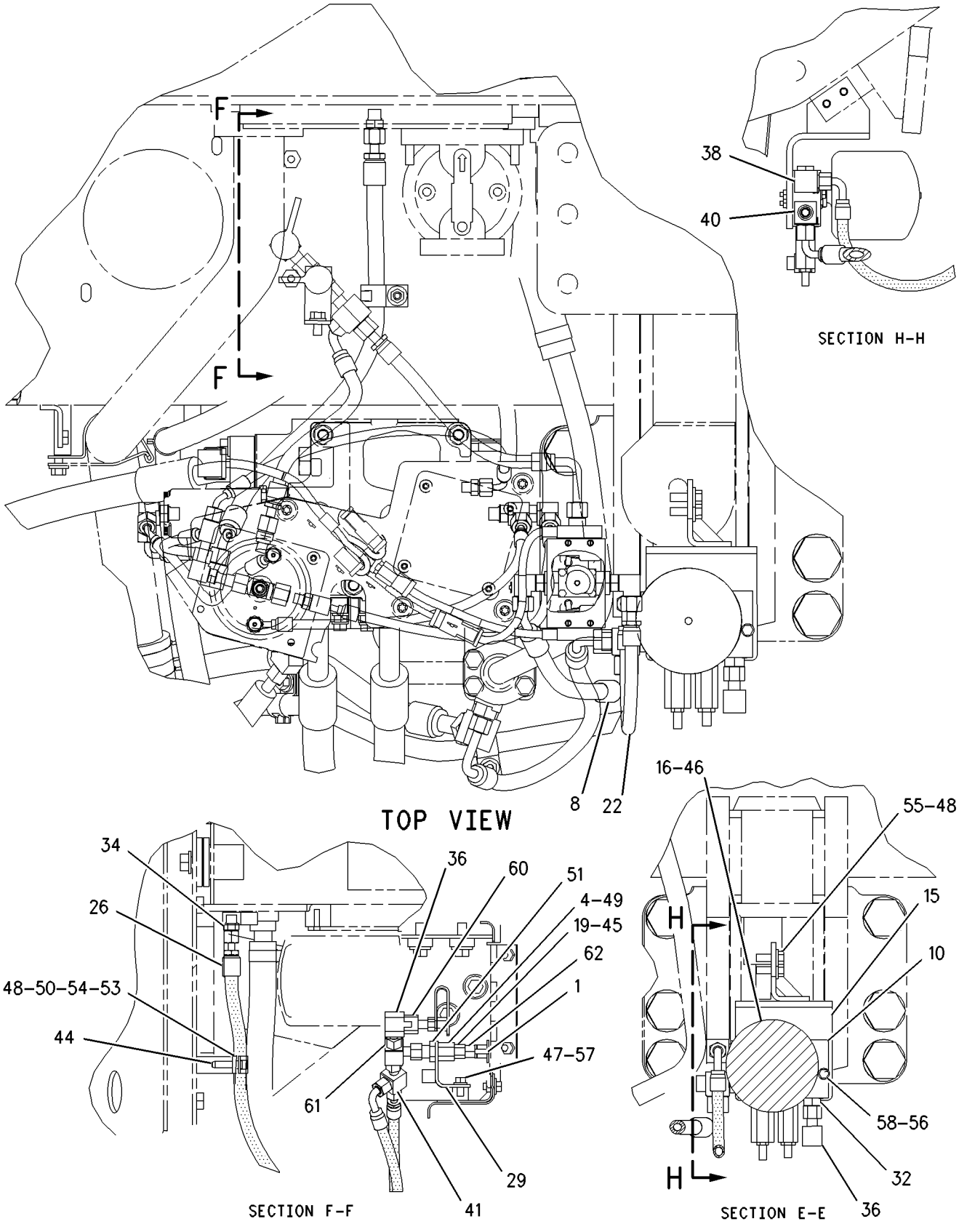

GRAPHIC #2

g00845982

173-7218 **LINES GP-PILOT** *(contd.)* **i01590648**

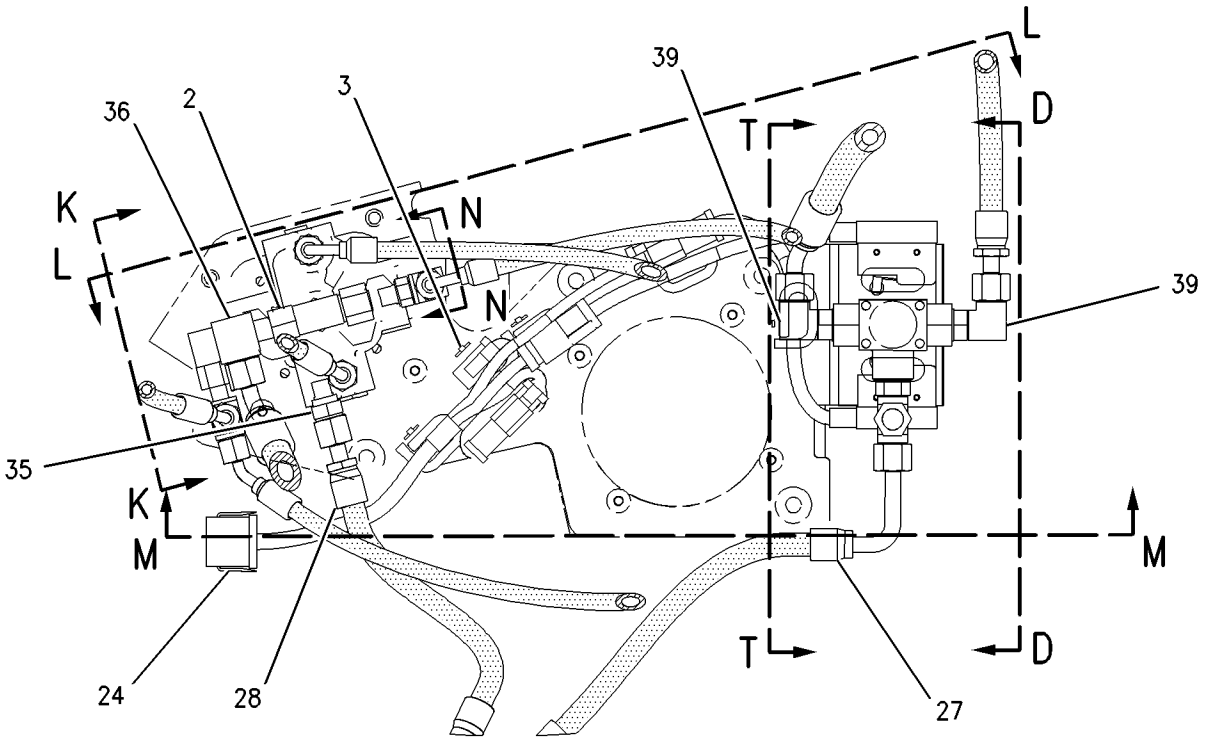

SECTION C-C

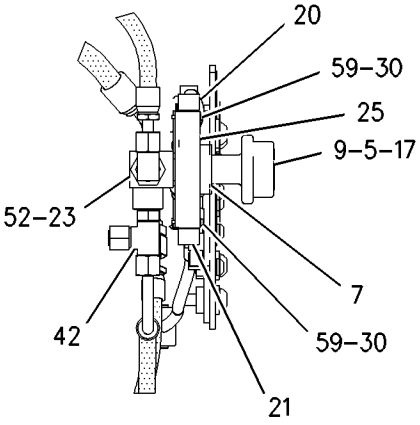

SECTION D-D

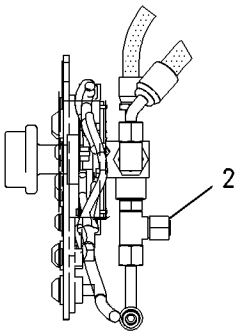

SECTION T-T

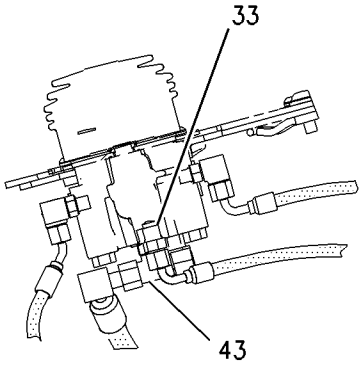

SECTION L-L

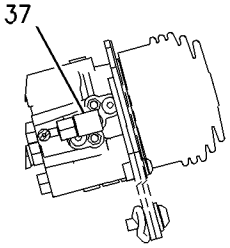

SECTION N-N

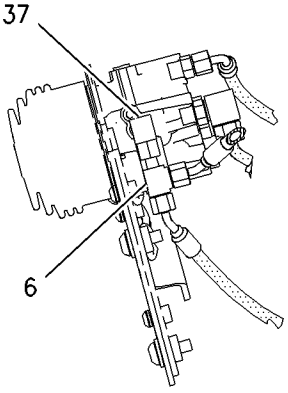

SECTION K-K

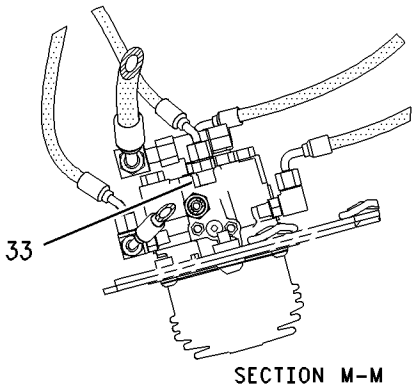

SECTION M-M

GRAPHIC #3

g00854242

HYDRAULIC SYSTEM

173-7219 LINES GP-PILOT

S/N: BLE1-UP; BMJ1-UP
DOZER & RIPPER
PART OF 171-6133 CONTROL AR-PILOT HYDRAULIC
AN ATTACHMENT

SMCS-5057 **i01592298**

NOTE	REF NO	GRAPHIC REF	PART NUMBER	QTY	PART NAME 1 2 3 4 5 6 (PRODUCT LEVEL)	SEE PAGE
	1	1	**8C-3451**	1	CAP-DUST	
	2	2	**7K-1181**	4	STRAP-CABLE	
	3	1	**8T-9358**	1	CONNECTOR	
M	4	2	**112-9319**	1	BOLT-HEX SOCKET (M5X0.8X80MM)	
	5	2	**159-9202**	1	SEAL	
I	6	1	**160-4306**	1	HOSE AS	
	7	2	**160-4326**	1	KNOB AS	
Y	8	1	**162-0162**	1	VALVE GP-MANIFOLD & REDUCING	518
	9	2	**163-3434**	1	TUBE AS	
	10	2	**163-3435**	1	TUBE AS	
I	11	1	**166-7683**	1	HOSE AS	
I	12	1	**166-7684**	1	HOSE AS	
I	13	1	**166-7685**	1	HOSE AS	
I	14	1	**166-7686**	1	HOSE AS	
I	15	1	**169-3313**	1	HOSE AS	
I	16	1	**169-3314**	1	HOSE AS	
	17	1	**170-7568**	1	BRACKET AS	
	18	1	**179-9387**	1	ACCUMULATOR AS	
	19	2	**171-8787**	1	CAM	
I	20	1	**172-5404**	1	HOSE AS	
	21	1	**126-0814**	1	FITTING AS	
	22	2	**189-0135**	1	SWITCH AS-LIMIT	
		2	**3E-3371**	1	WEDGE-RECEPTACLE LOCK (3 PIN)	
		2	**102-8803**	1	KIT-RECEPTACLE (3 PIN)	
					(INCLUDES RECEPTACLE AS & WEDGE)	
		2	**186-3735**	3	PIN-CONNECTOR	
	23	2	**191-3587**	1	SWITCH AS-LIMIT	
		2	**3E-3377**	1	WEDGE-RECEPTACLE LOCK	
		2	**9G-3695**	1	PLUG (GROMMET SEALING)	
		2	**102-8804**	1	KIT-RECEPTACLE (4 PIN)	
					(INCLUDES RECEPTACLE AS & WEDGE)	
		2	**186-3735**	3	PIN-CONNECTOR	
I	24	2	**191-5101**	1	HOSE AS	
	25	2	**194-7008**	1	VALVE GP-BALL	
	26	2	**195-3312**	1	HARNESS AS (LOCKOUT INDICATOR)	
	27	2	**196-1921**	1	PLATE	
I	28	1	**196-5602**	1	HOSE AS	
I	29	2	**196-5603**	1	HOSE AS	
I	30	2	**196-5604**	1	HOSE AS	
	31	1	**196-5605**	1	BRACKET AS	
		1	**8F-9836**	1	BOSS-THREADED (3/8-16X.75 IN)	
	32	2	**096-5962**	4	WASHER-HARD (3.4X7X0.8MM THK)	
	33	1	*148-8316*	1	CONNECTOR GP	
		1	**3J-7354**	1	SEAL-O-RING	
		1	**4J-5477**	1	SEAL-O-RING	
		1	**6V-8647**	1	CONNECTOR	
	34	1	*148-8318*	1	CONNECTOR GP	
		1	**3K-0360**	1	SEAL-O-RING	
		1	**6V-8397**	1	SEAL-O-RING	
		1	**6V-8634**	1	CONNECTOR	
	35	2	*148-8325*	3	CONNECTOR GP	
					(EACH INCLUDES)	
		2	**3J-1907**	1	SEAL-O-RING	
		2	**4J-5477**	1	SEAL-O-RING	

173-7219 **LINES GP-PILOT** ***(contd.)*** **i01592298**

NOTE	REF NO	GRAPHIC REF	PART NUMBER	QTY	PART NAME 1 2 3 4 5 6 (PRODUCT LEVEL)	SEE PAGE
		2	**6V-8641**	1	CONNECTOR	
	36	2	*148-8326*	1	CONNECTOR GP	
		2	**3J-7354**	1	SEAL-O-RING	
		2	**6V-8397**	1	SEAL-O-RING	
		2	**6V-9872**	1	CONNECTOR	
	37	1	*148-8336*	1	CONNECTOR GP	
		1	**3J-1907**	1	SEAL-O-RING	
		1	**6V-8397**	1	SEAL-O-RING	
		1	**6V-8636**	1	CONNECTOR	
	38	2	*148-8361*	1	ELBOW GP	
		2	**3J-7354**	1	SEAL-O-RING	
		2	**6V-8397**	1	SEAL-O-RING	
		2	**6V-9200**	1	ELBOW	
	39	1	*148-8374*	1	ELBOW GP	
		1	**3K-0360**	1	SEAL-O-RING	
		1	**6V-8397**	1	SEAL-O-RING	
		1	**6V-8723**	1	ELBOW	
	40	1,2	*148-8367*	3	ELBOW GP	
					(EACH INCLUDES)	
		1,2	**6V-8397**	1	SEAL-O-RING	
		1,2	**6V-9850**	1	ELBOW-SWIVEL	
	41	2	*148-8369*	3	ELBOW GP	
					(EACH INCLUDES)	
		2	**3J-7354**	1	SEAL-O-RING	
		2	**4J-5477**	1	SEAL-O-RING	
		2	**6V-8628**	1	ELBOW	
	42	1,2	*148-8378*	9	ELBOW GP	
					(EACH INCLUDES)	
		1,2	**3J-1907**	1	SEAL-O-RING	
		1,2	**6V-8397**	1	SEAL-O-RING	
		1,2	**6V-8724**	1	ELBOW	
	43	1	*148-8428*	1	TEE GP	
		1	**3K-0360**	1	SEAL-O-RING	
		1	**6V-8398**	2	SEAL-O-RING	
		1	**6V-8782**	1	TEE-FACE SEAL	
	44	1	*148-8433*	1	TEE GP	
		1	**6V-8397**	2	SEAL-O-RING	
		1	**6V-9836**	1	TEE-SWIVEL	
	45	2	*148-8435*	1	TEE GP	
		2	**3J-1907**	1	SEAL-O-RING	
		2	**6V-8397**	2	SEAL-O-RING	
		2	**6V-8781**	1	TEE-FACE SEAL	
	46	2	*148-8439*	1	TEE GP	
		2	**3J-1907**	1	SEAL-O-RING	
		1	**6V-8397**	2	SEAL-O-RING	
		2	**6V-8774**	1	TEE	
	47	2	*150-5968*	1	TEE GP	
		2	**4J-5477**	2	SEAL-O-RING	
		2	**6V-9835**	1	TEE	
	48	1	**1J-8668**	1	STUD-TAPERLOCK	
	49	1	**3J-7354**	1	SEAL-O-RING	
	50	1	**3D-2824**	1	SEAL-O-RING	
	51	1	**5M-3062**	1	BOLT (3/8-16X0.75 IN)	
	52	1	**5P-1075**	3	WASHER-HARD (10.2X22.5X3MM THK)	
	53	1	**6V-8397**	1	SEAL-O-RING	
	54	1	**6V-9168**	1	NUT (11/16-16 THD)	
	55	1	**6V-8801**	1	NUT (3/8-16 THD)	
M	56	2	**8T-0287**	4	BOLT (M5X0.8X10MM)	
	57	1	**8T-1893**	1	CLIP (SLOT)	

173-7219 **LINES GP-PILOT** ***(contd.)*** **i01592298**

NOTE	REF NO	GRAPHIC REF	PART NUMBER	QTY	PART NAME 1 2 3 4 5 6 (PRODUCT LEVEL)	SEE PAGE
	58	1	**8T-1894**	1	CLIP (TAB)	
	59	1	**8T-2502**	2	BOLT (3/8-16X1.125 IN)	
	60	1	**8T-4205**	2	WASHER-HARD (7.2X14.5X2MM THK)	
	61	1	**8T-4896**	1	WASHER-HARD (10.2X18.5X2.5MM THK)	
	62	1	**8T-9368**	2	BOLT (1/4-20X2.25 IN)	
	63	2	**9X-6281**	4	SCREW-MACHINE (4-40X1 IN)	
	64	1	*148-8434*	1	TEE AS-ORFS	
		1	**6V-8397**	2	SEAL-O-RING	
		1	**6V-9873**	1	CONNECTOR-SEAL	
	65	1	**8C-3446**	1	VALVE GP-FLUID SAMPLING	

I-SEE HOSE FABRICATION GUIDE
M-METRIC PART
Y-SEPARATE ILLUSTRATION

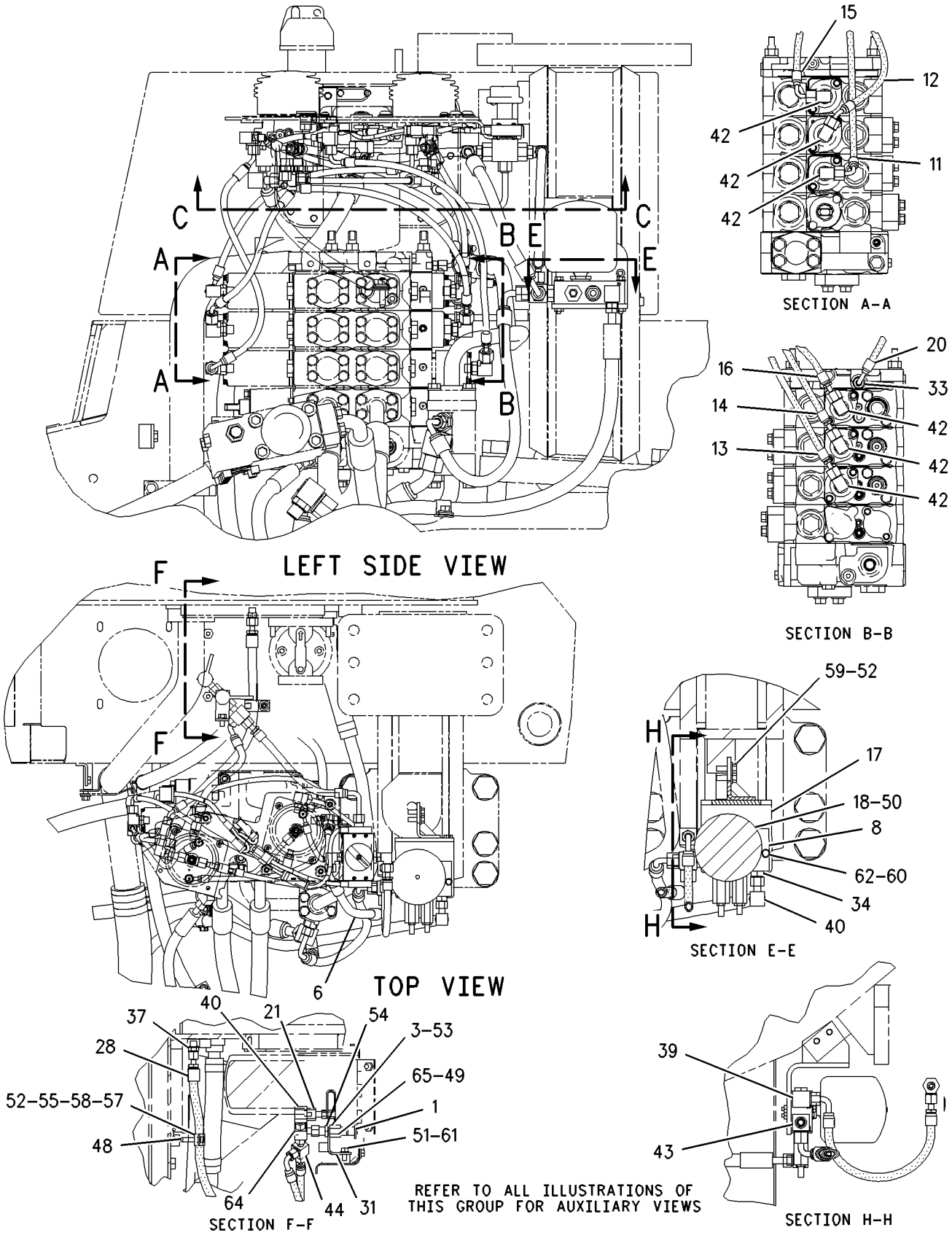

GRAPHIC #1 g00846471

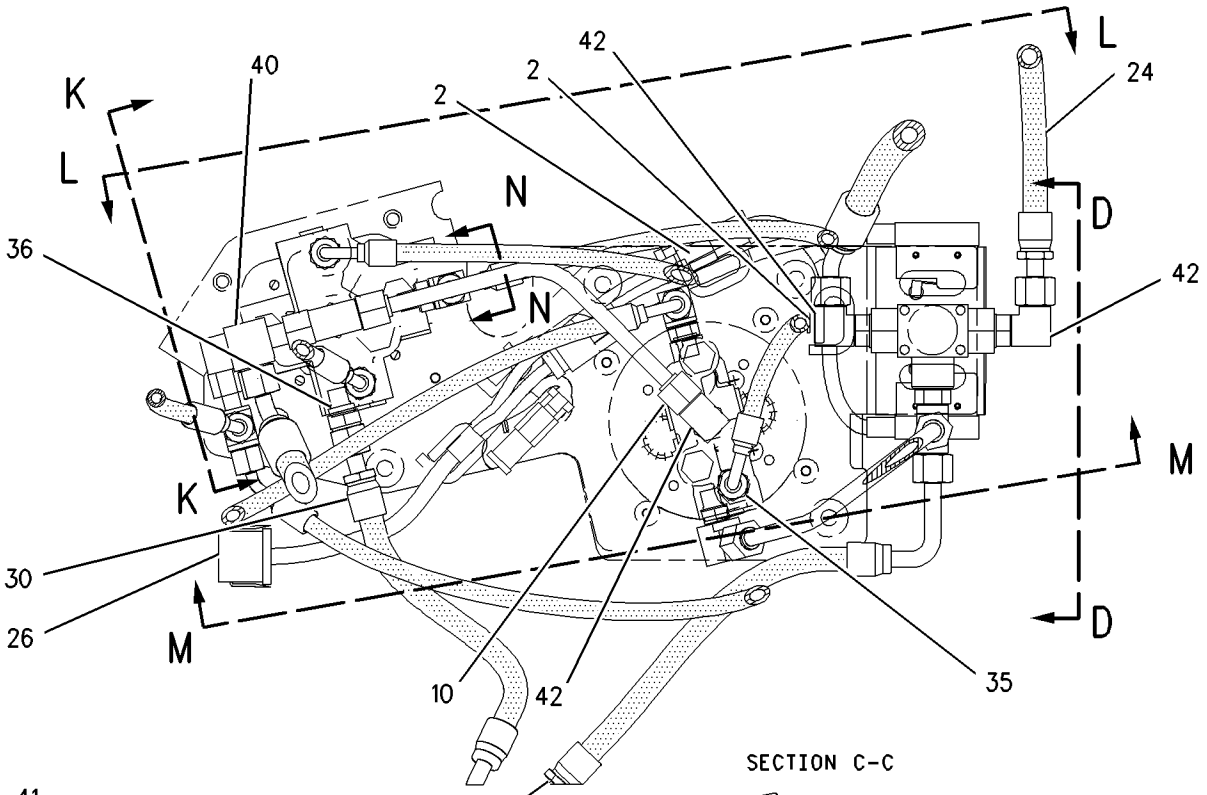

SECTION C-C

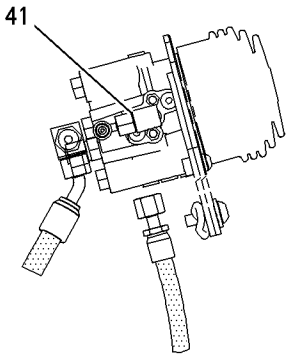

SECTION N-N

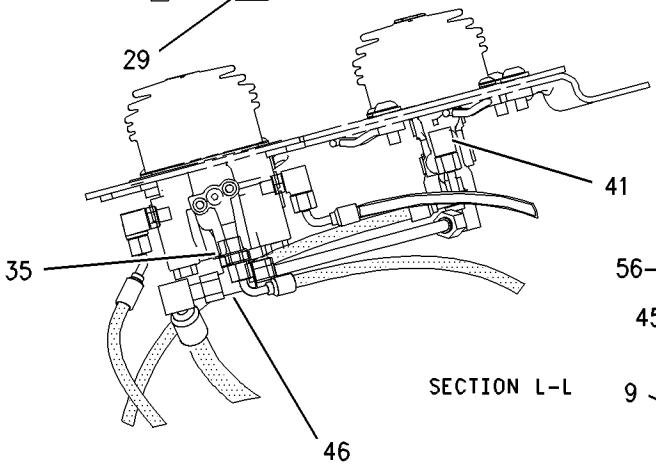

SECTION L-L

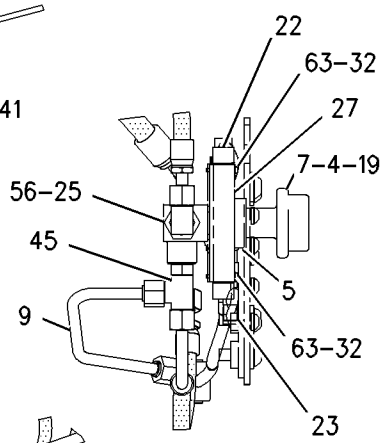

SECTION D-D

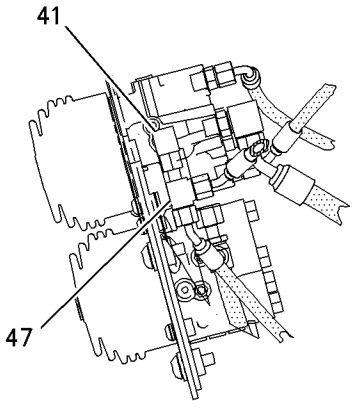

SECTION K-K

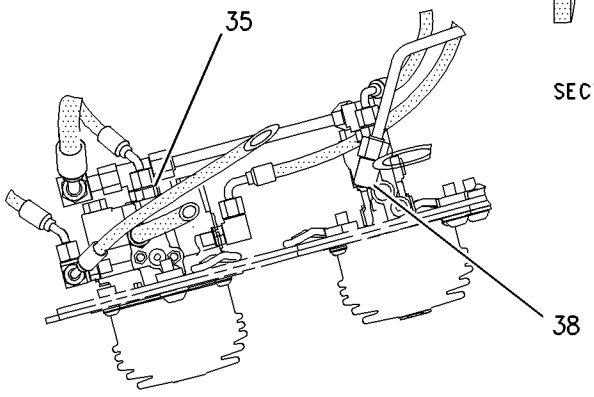

SECTION M-M

GRAPHIC #2 g00805820

MEMORANDA

HYDRAULIC SYSTEM

166-7285 LINES GP-PUMP

S/N: BLE1-UP; BMJ1-UP
PART OF 164-4807 HYDRAULIC AR

SMCS-5057 **i01590546**

NOTE	REF NO	GRAPHIC REF	PART NUMBER	QTY	PART NAME 1 2 3 4 5 6 (PRODUCT LEVEL)	SEE PAGE
	1	1	**3G-4783**	1	VALVE-BREAKER RELIEF	
	2	2	**5G-7191**	1	SPRING	
	3	2	**5P-2230**	2	CLAMP-HOSE	
	4	2	**5P-4868**	4	CLAMP (HOSE)	
	5	1	**6V-0852**	2	CAP-DUST	
	6	2	**8E-1408**	1	HOSE	
	7	2	**8J-9990**	1	PLUG-ORIFICE	
	8	2	**124-7000**	1	PLATE AS	
E	9	2	**5P-2094**		HOSE (25CM)	
	10	1	*148-8424*	1	TEE GP	
		1	**6V-8397**	1	SEAL-O-RING	
		1	**8T-8902**	1	TEE	
	11	2	**173-4602**	1	TUBE AS	
	12	1	**173-4603**	1	TUBE AS	
	13	2	**173-4604**	1	TUBE AS	
	14	2	**173-4605**	1	TUBE AS	
	15	2	**173-4606**	1	PLATE	
I	16	1	**174-3035**	1	HOSE AS	
I	17	1	**174-3037**	1	HOSE AS	
I	18	1	**175-3160**	1	HOSE AS	
I	19	1	**175-3161**	1	HOSE AS	
I	20	2	**175-3162**	1	HOSE AS	
	21	2	**175-3163**	1	TUBE AS	
	22	1	**175-3164**	1	SPACER	
	23	1	**175-3514**	1	SPACER	
	24	2	**187-4111**	1	BRACKET AS	
	25	1	*148-8319*	1	CONNECTOR GP	
		1	**2M-9780**	1	SEAL-O-RING	
		1	**6V-8397**	1	SEAL-O-RING	
		1	**6V-8715**	1	CONNECTOR	
	26	1	*148-8353*	2	ELBOW GP	
					(EACH INCLUDES)	
		1	**3J-1907**	1	SEAL-O-RING	
		1	**6V-8397**	1	SEAL-O-RING	
		1	**6V-9001**	1	ELBOW	
	27	1	*148-8360*	1	ELBOW GP	
		1	**6V-9182**	1	ELBOW	
		1	**6V-9746**	1	SEAL-O-RING	
		1	**7M-8485**	1	SEAL-O-RING	
	28	1	*148-8378*	1	ELBOW GP	
		1	**3J-1907**	1	SEAL-O-RING	
		1	**6V-8397**	1	SEAL-O-RING	
		1	**6V-8724**	1	ELBOW	
	29	1	*148-8388*	1	ELBOW GP	
		1	**2M-9780**	1	SEAL-O-RING	
		1	**6V-8629**	1	ELBOW	
		1	**6V-9746**	1	SEAL-O-RING	
	30	1	*148-8433*	1	TEE GP	
		1	**6V-8397**	2	SEAL-O-RING	
		1	**6V-9836**	1	TEE-SWIVEL	
	31	2	**1P-3703**	1	SEAL-RECTANGULAR	
	32	1	**1P-3705**	1	SEAL-RECTANGULAR	
	33	2	**1P-3709**	2	SEAL-RECTANGULAR	
	34	1	**1P-4577**	2	FLANGE-HALF	
	35	2	**1P-4578**	2	FLANGE-HALF	
	36	1	**1P-5764**	2	FLANGE-HALF	

166-7285 **LINES GP-PUMP** ***(contd.)*** **i01590546**

NOTE	REF NO	GRAPHIC REF	PART NUMBER	QTY	PART NAME 1 2 3 4 5 6 (PRODUCT LEVEL)	SEE PAGE
	37	1	**3D-2824**	1	SEAL-O-RING	
	38	1,2	**3J-1907**	2	SEAL-O-RING	
	39	2	**3J-7354**	1	SEAL-O-RING	
	40	1,2	**4J-0520**	3	SEAL-O-RING	
	41	1,2	**4J-0522**	2	SEAL-O-RING	
	42	2	**4L-6454**	7	BOLT (3/8-16X1 IN)	
	43	1	**4L-6459**	4	BOLT (3/8-16X2.5 IN)	
	44	2	**5M-3062**	2	BOLT (3/8-16X0.75 IN)	
	45	2	**5P-1075**	8	WASHER-HARD (10.2X22.5X3MM THK)	
	46	2	**5P-7468**	1	CLIP (SLOT)	
	47	2	**5P-7469**	1	CLIP (TAB)	
	48	2	**5P-8444**	1	GROMMET	
	49	2	**6V-0267**	1	CLIP (TAB)	
	50	2	**6V-0268**	1	CLIP (SLOT)	
	51	1	**6V-3965**	1	FITTING AS	
	52	2	**7X-0314**	4	BOLT (7/16-14X3 IN)	
	53	1	**7X-0346**	3	BOLT (5/8-11X2 IN)	
M	54	1	**8T-7338**	2	BOLT (M16X2.0X45MM)	
	55	2	**8T-1891**	3	CLIP (SLOT)	
	56	2	**8T-1892**	3	CLIP (TAB)	
	57	2	**8T-1895**	2	CLIP (SLOT)	
	58	2	**8T-1896**	2	CLIP (TAB)	
	59	2	**8T-2353**	1	ADAPTER-STRAIGHT THREAD	
	60	1	**8T-4122**	3	WASHER-HARD (17X32X3.5MM THK)	
	61	1	**8T-4223**	4	WASHER-HARD (13.5X25.5X3MM THK)	
	62	1	**8T-4835**	4	BOLT (1/2-13X2 IN)	
	63	1,2	**8T-4896**	6	WASHER-HARD (10.2X18.5X2.5MM THK)	
	64	1,2	**8T-5360**	6	WASHER (12X22.5X2.5MM THK)	
	65	1	**8T-9380**	2	BOLT (7/16-14X1 IN)	
	66	2	**9B-7237**	1	BOLT (3/8-16X1.25 IN)	
	67	1	**9X-8257**	2	WASHER (17.5X30X3.5MM THK)	
	68	2	*148-8407*	1	PLUG GP	
		2	**3J-1907**	1	SEAL-O-RING	
		2	**9S-4191**	1	PLUG	
	69	1	*155-3624*	1	PLUG GP	
		1	**3J-7354**	1	SEAL-O-RING	
		1	**9S-4182**	1	PLUG (7/16-20 THD)	
	70	1	**4S-5898**	1	SEAL-O-RING	
	71	1	**126-0814**	1	FITTING AS	

E-ORDER BY THE CENTIMETER
I-SEE HOSE FABRICATION GUIDE
M-METRIC PART

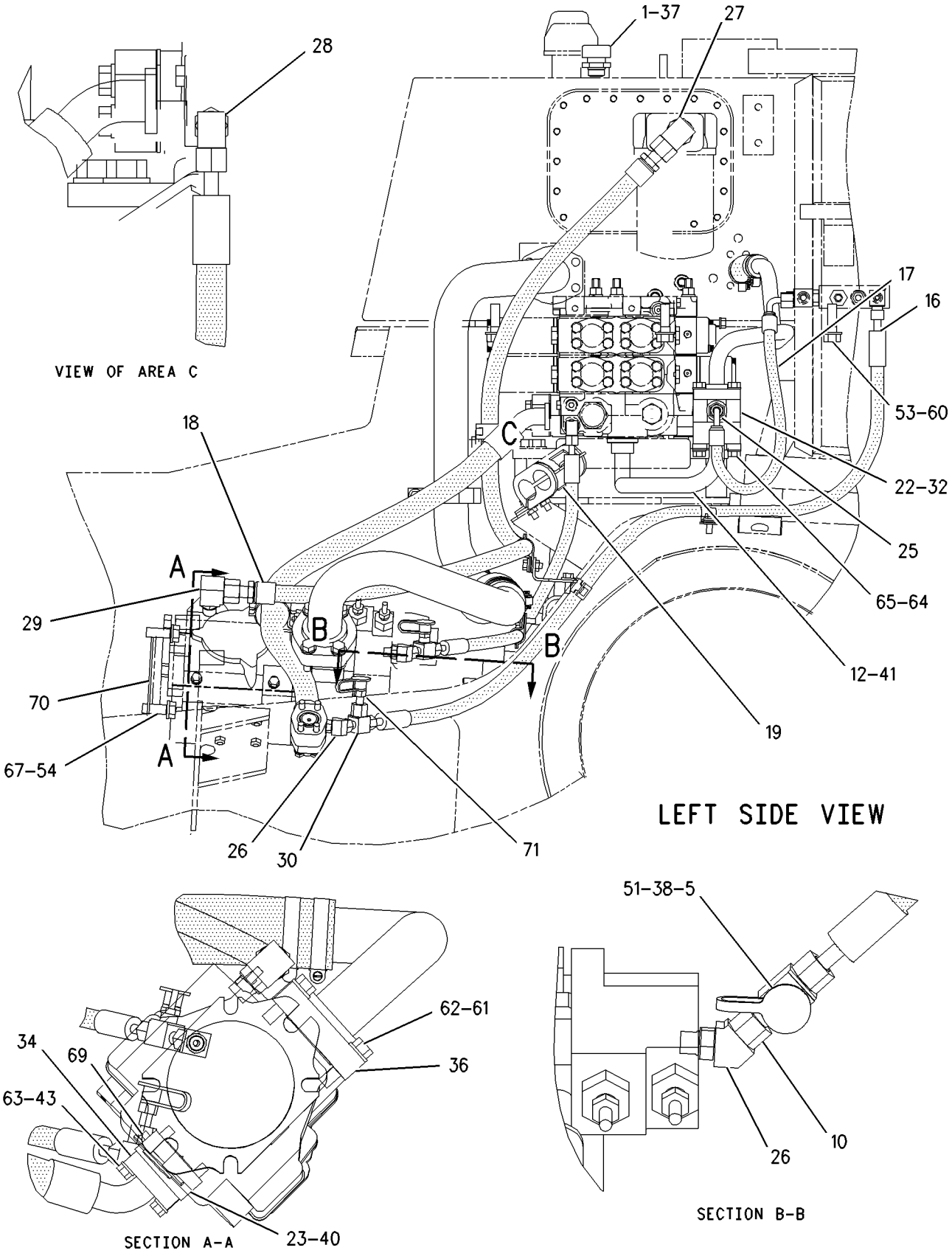

GRAPHIC #1

g00847808

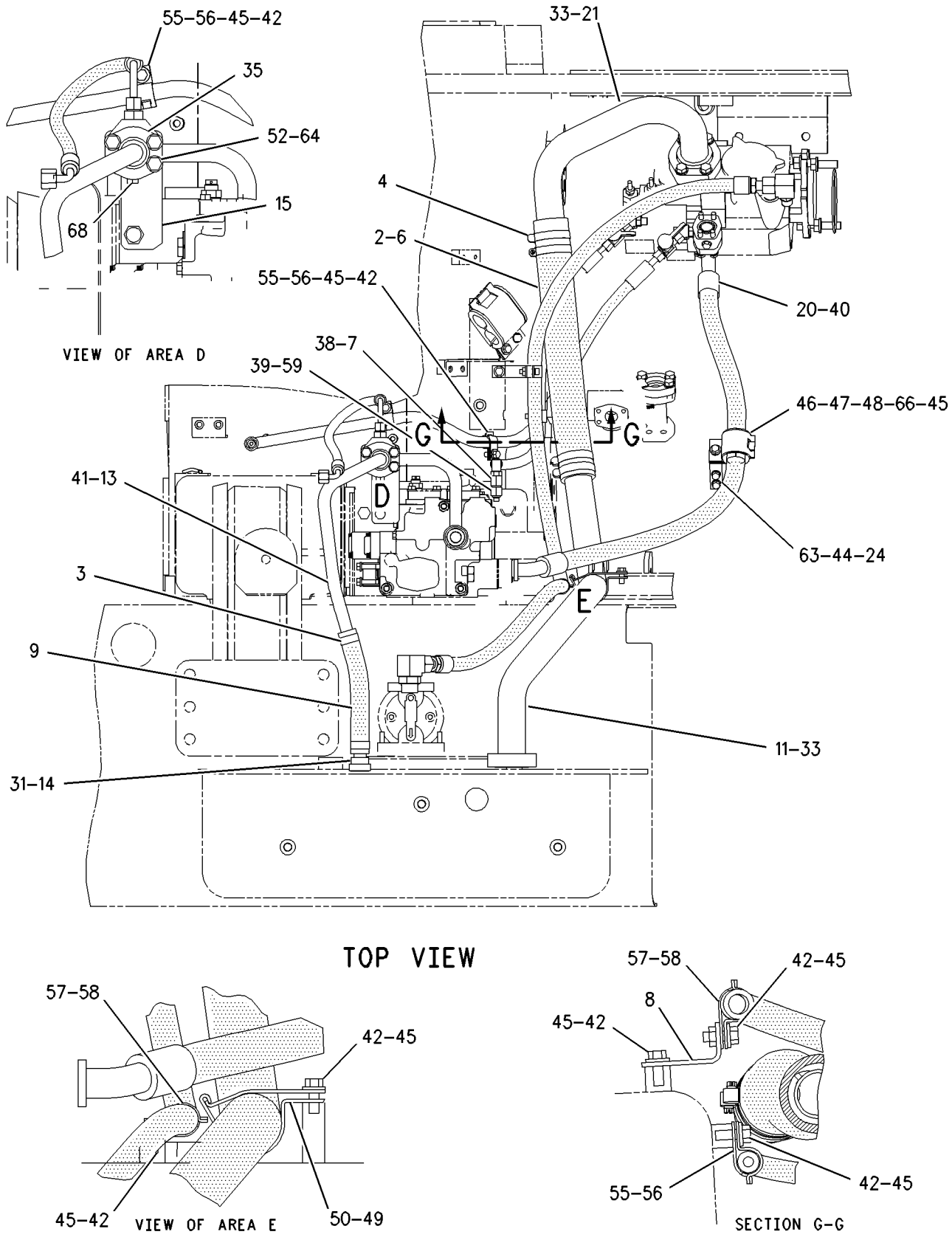

GRAPHIC #2 g00847809

HYDRAULIC SYSTEM

9W-1018 LINES GP-RIPPER

S/N: 3SH1-UP
PART OF 9W-0804 RIPPER AR
AN ATTACHMENT

SMCS-5057, 5352, 5356 **i01604068**

NOTE	REF NO	GRAPHIC REF	PART NUMBER	QTY	PART NAME 1 2 3 4 5 6 (PRODUCT LEVEL)	SEE PAGE
	1	1	**1K-5888**	1	SPACER (.42X.67X.63 IN THK)	
	2	1	**9M-2904**	8	CLAMP-HOSE	
	3	1	**112-4368**	2	SHIELD	
	4	1	**130-1977**	8	SHIELD	
	5	1	**130-9192**	8	GROMMET (46.50MM OD)	
I	6	1	**208-6726**	1	HOSE AS	
	7	1	**208-6727**	1	SHIELD	
I	8	1	**208-9699**	1	HOSE AS	
	9	1	**3G-8047**	1	GROMMET	
	10	1	**3G-8054**	1	CLIP (TAB)	
	11	1	**3G-8057**	1	CLIP (SLOT)	
	12	1	**4J-5267**	4	SEAL-O-RING	
	13	1	**4L-9337**	2	BOLT (3/8-16X1.5 IN)	
	14	1	**5P-1075**	4	WASHER-HARD (10.2X22.5X3MM THK)	
	15	1	**5P-7464**	1	CLIP (SLOT)	
	16	1	**5P-7465**	1	CLIP (TAB)	
	17	1	**6V-1249**	1	GROMMET	
	18	1	**6V-8801**	3	NUT (3/8-16 THD)	
	19	1	**8T-2501**	1	BOLT (3/8-16X2 IN)	
	20	1	**8T-4896**	2	WASHER-HARD (10.2X18.5X2.5MM THK)	

I-SEE HOSE FABRICATION GUIDE

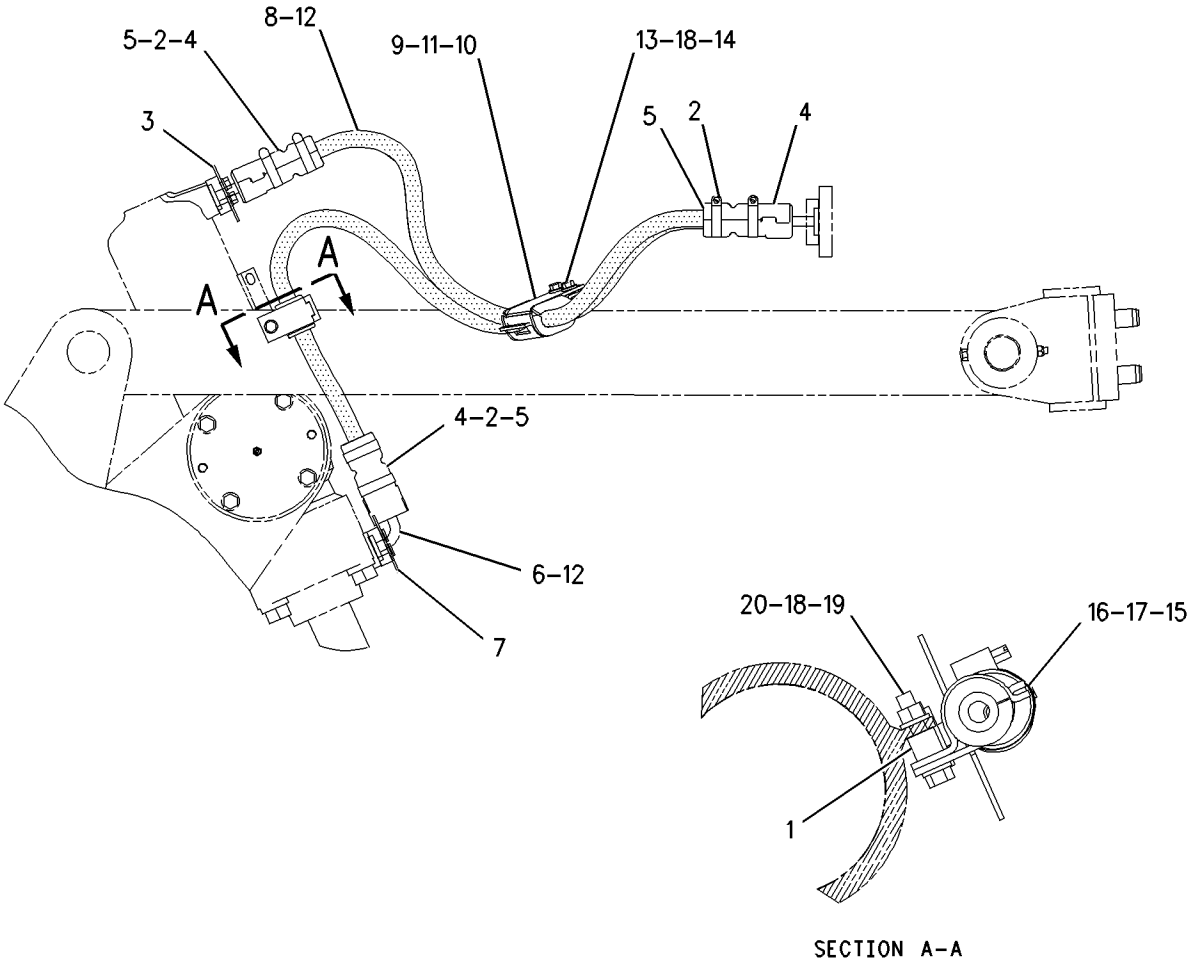

GRAPHIC #1 g00831650

HYDRAULIC SYSTEM

171-6132 LINES GP-RIPPER

S/N: BLE1-UP; BMJ1-UP
PART OF 171-4715 CONTROL AR-HYDRAULIC
AN ATTACHMENT

SMCS-5057, 5352, 5356 **i01592232**

NOTE	REF NO	GRAPHIC REF	PART NUMBER	QTY	PART NAME 1 2 3 4 5 6 (PRODUCT LEVEL)	SEE PAGE
	1	1	**3W-6658**	1	PLATE	
	2	1	**144-0346**	1	GUARD	
I	3	1	**172-6246**	1	HOSE AS	
I	4	1	**172-6247**	1	HOSE AS	
	5	1	**1P-4576**	8	FLANGE	
	6	1	**4J-0520**	2	SEAL-O-RING	
	7	1	**4J-5267**	2	SEAL-O-RING	
	8	1	**8T-2502**	4	BOLT (3/8-16X1.125 IN)	
	9	1	**5P-1075**	4	WASHER-HARD (10.2X22.5X3MM THK)	
	10	1	**5S-7382**	16	BOLT (3/8-16X1.375 IN)	
	11	1	**7G-3832**	1	GROMMET	
	12	1	**7G-3833**	1	CLIP (TAB)	
	13	1	**7G-3834**	1	CLIP (SLOT)	
	14	1	**8T-4223**	2	WASHER-HARD (13.5X25.5X3MM THK)	
	15	1	**8T-4896**	16	WASHER-HARD (10.2X18.5X2.5MM THK)	
	16	1	**5P-2566**	2	BOLT (1/2-13X1.5 IN)	

I-SEE HOSE FABRICATION GUIDE

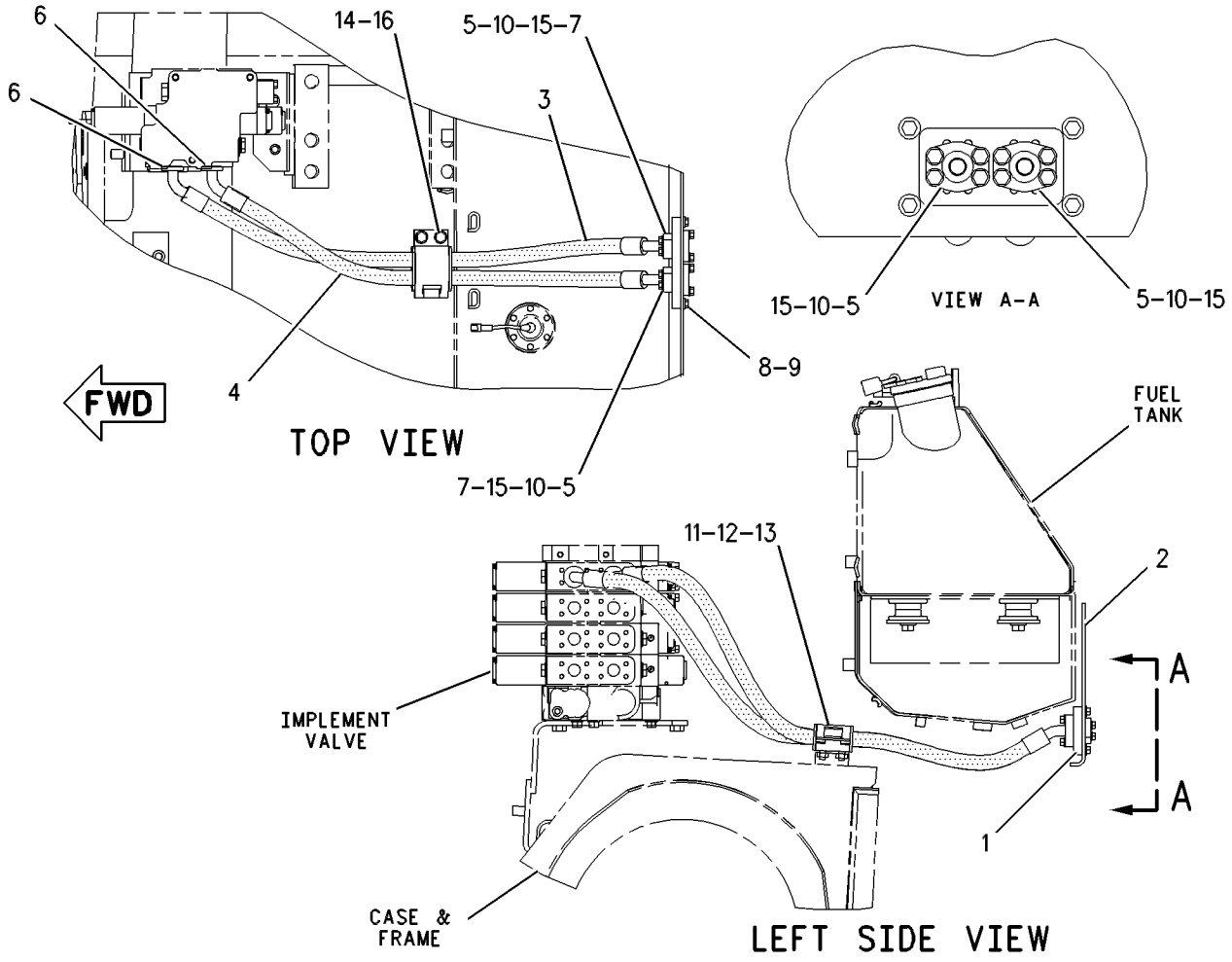

GRAPHIC #1 g00618023

MEMORANDA

HYDRAULIC SYSTEM

6Y-5705 LINES GP-TILT & TIP CYLINDER

S/N: 4AP1-UP

PART OF 108-3976, 108-3977 BULLDOZER AR-SEMI-UNIVERSAL

AN ATTACHMENT

SMCS-5057, 5104 **i01539667**

NOTE	REF NO	GRAPHIC REF	PART NUMBER	QTY	PART NAME 1 2 3 4 5 6 (PRODUCT LEVEL)	SEE PAGE
I	1	1	**6Y-5706**	1	HOSE AS	
I	2	1	**6Y-5707**	1	HOSE AS	
	3	1	**4J-5267**	4	SEAL-O-RING	
	4	1	**4T-1564**	1	GUARD	
		1	**3Y-5405**	2	RUBBER	
	5	1	**6V-8981**	2	ELBOW	
		1	**6V-8398**	4	SEAL-O-RING	
		1	**6V-9169**	2	NUT-BULKHEAD (13/16-16 THD)	
	6	1	**5P-2228**	3	BOLT (1/2-13X1 IN)	
	7	1	**8T-4223**	7	WASHER-HARD (13.5X25.5X3MM THK)	
	8	1	**8T-8917**	4	BOLT (1/2-13X1.25 IN)	
I	9	1	**7T-6934**	1	HOSE AS	
CI	10	1	**168-2599**	1	HOSE AS	
	11	1	**5S-7382**	8	BOLT (3/8-16X1.375 IN)	
		1	**8T-4896**	8	WASHER-HARD (10.2X18.5X2.5MM THK)	
	12	1	**1P-4576**	4	FLANGE	
	13	1	**4T-1563**	1	GUARD AS	

C-CHANGE FROM PREVIOUS TYPE
I-SEE HOSE FABRICATION GUIDE

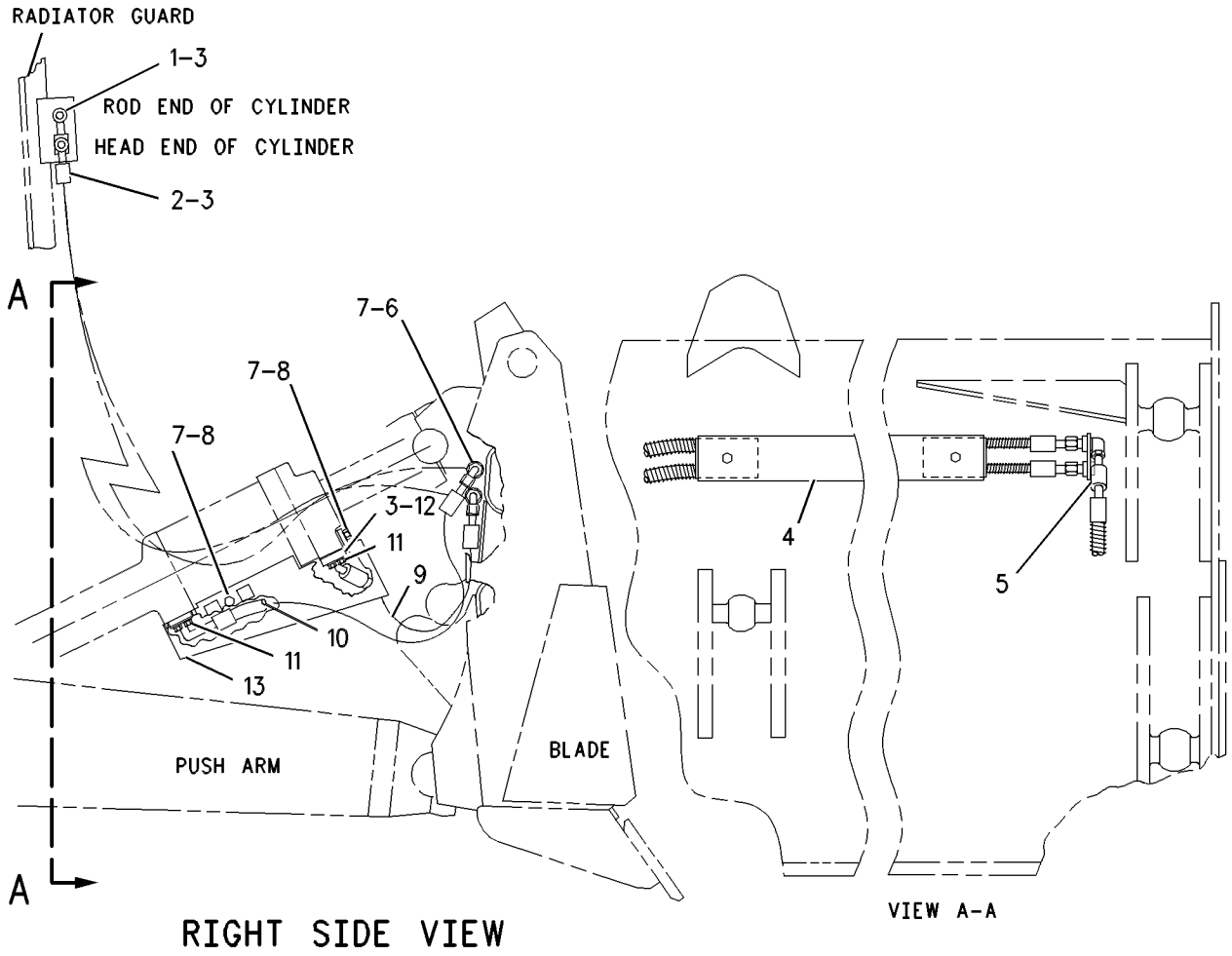

GRAPHIC #1 g00588174

HYDRAULIC SYSTEM

1U-2393 LINES GP-TILT CYLINDER

S/N: 3EP1-UP; 3FP1-UP
PART OF 108-3974, 108-3975 BULLDOZER AR-SEMI-UNIVERSAL, 108-3970, 108-3971 BULLDOZER AR-STRAIGHT
AN ATTACHMENT

SMCS-5057, 5104 **i01662680**

NOTE	REF NO	GRAPHIC REF	PART NUMBER	QTY	PART NAME 1 2 3 4 5 6 (PRODUCT LEVEL)	SEE PAGE
	1	1	**3Y-5405**	2	RUBBER	
	2	1	**145-5181**	4	SPACER (13.5X25X12MM THK)	
	3	1	**213-2282**	2	GUARD	
I	4	1	**168-2599**	1	HOSE AS	
	5	1	**1P-4576**	4	FLANGE	
	6	1	**4J-5267**	4	SEAL-O-RING	
	7	1	**4T-1563**	1	GUARD AS	
	8	1	**5P-2566**	4	BOLT (1/2-13X1.5 IN)	
	9	1	**5S-7382**	8	BOLT (3/8-16X1.375 IN)	
	10	1	**6V-8398**	4	SEAL-O-RING	
	11	1	**6V-8981**	2	ELBOW	
	12	1	**6V-9169**	2	NUT-BULKHEAD (13/16-16 THD)	
I	13	1	**6Y-3472**	1	HOSE AS	
I	14	1	**6Y-3474**	1	HOSE AS	
I	15	1	**7T-6934**	1	HOSE AS	
	16	1	**8T-4223**	4	WASHER-HARD (13.5X25.5X3MM THK)	
	17	1	**8T-4896**	8	WASHER-HARD (10.2X18.5X2.5MM THK)	
	18	1	**8T-8917**	4	BOLT (1/2-13X1.25 IN)	

I-SEE HOSE FABRICATION GUIDE

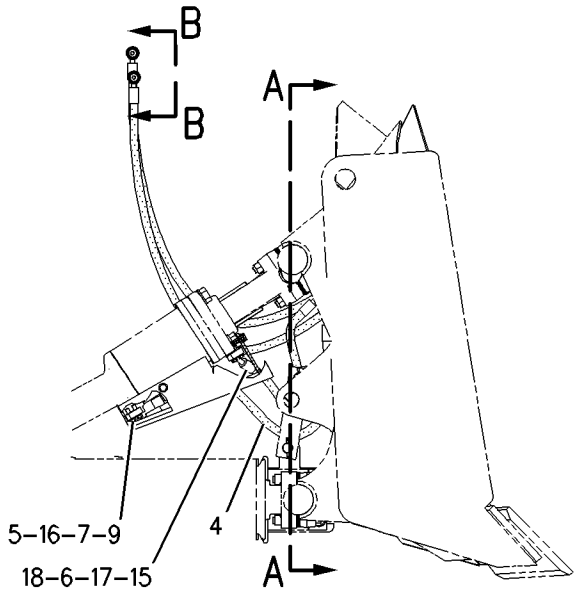

RIGHT SIDE VIEW

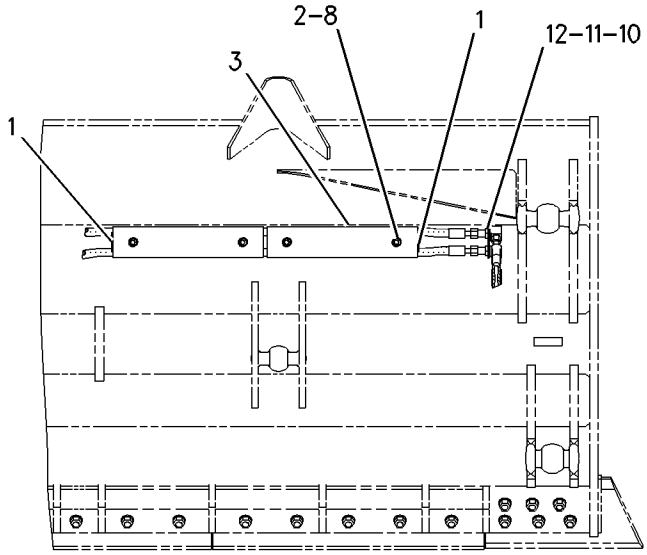

SECTION A-A

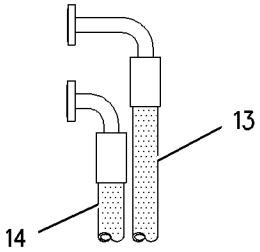

VIEW B-B

GRAPHIC #1

g00859272

HYDRAULIC SYSTEM

1U-2525 LINES GP-TILT CYLINDER

S/N: 3FP1-UP
PART OF 139-8346 BULLDOZER AR
AN ATTACHMENT

SMCS-5057, 5104 **i01572406**

NOTE	REF NO	GRAPHIC REF	PART NUMBER	QTY	PART NAME 1 2 3 4 5 6 (PRODUCT LEVEL)	SEE PAGE
I	1	1	**6Y-3475**	1	HOSE AS	
I	2	1	**6Y-3476**	1	HOSE AS	
	3	1	**4J-5267**	4	SEAL-O-RING	
	4	1	**4T-1564**	1	GUARD	
		1	**3Y-5405**	2	RUBBER	
	5	1	**6V-8981**	2	ELBOW	
		1	**6V-8398**	4	SEAL-O-RING	
		1	**6V-9169**	2	NUT-BULKHEAD (13/16-16 THD)	
	6	1	**5P-2228**	3	BOLT (1/2-13X1 IN)	
	7	1	**8T-4223**	7	WASHER-HARD (13.5X25.5X3MM THK)	
	8	1	**8T-8917**	4	BOLT (1/2-13X1.25 IN)	
I	9	1	**7T-6934**	1	HOSE AS	
CI	10	1	**168-2599**	1	HOSE AS	
	11	1	**5S-7382**	8	BOLT (3/8-16X1.375 IN)	
		1	**8T-4896**	8	WASHER-HARD (10.2X18.5X2.5MM THK)	
	12	1	**1P-4576**	4	FLANGE	
	13	1	**4T-1563**	1	GUARD AS	

C-CHANGE FROM PREVIOUS TYPE
I-SEE HOSE FABRICATION GUIDE

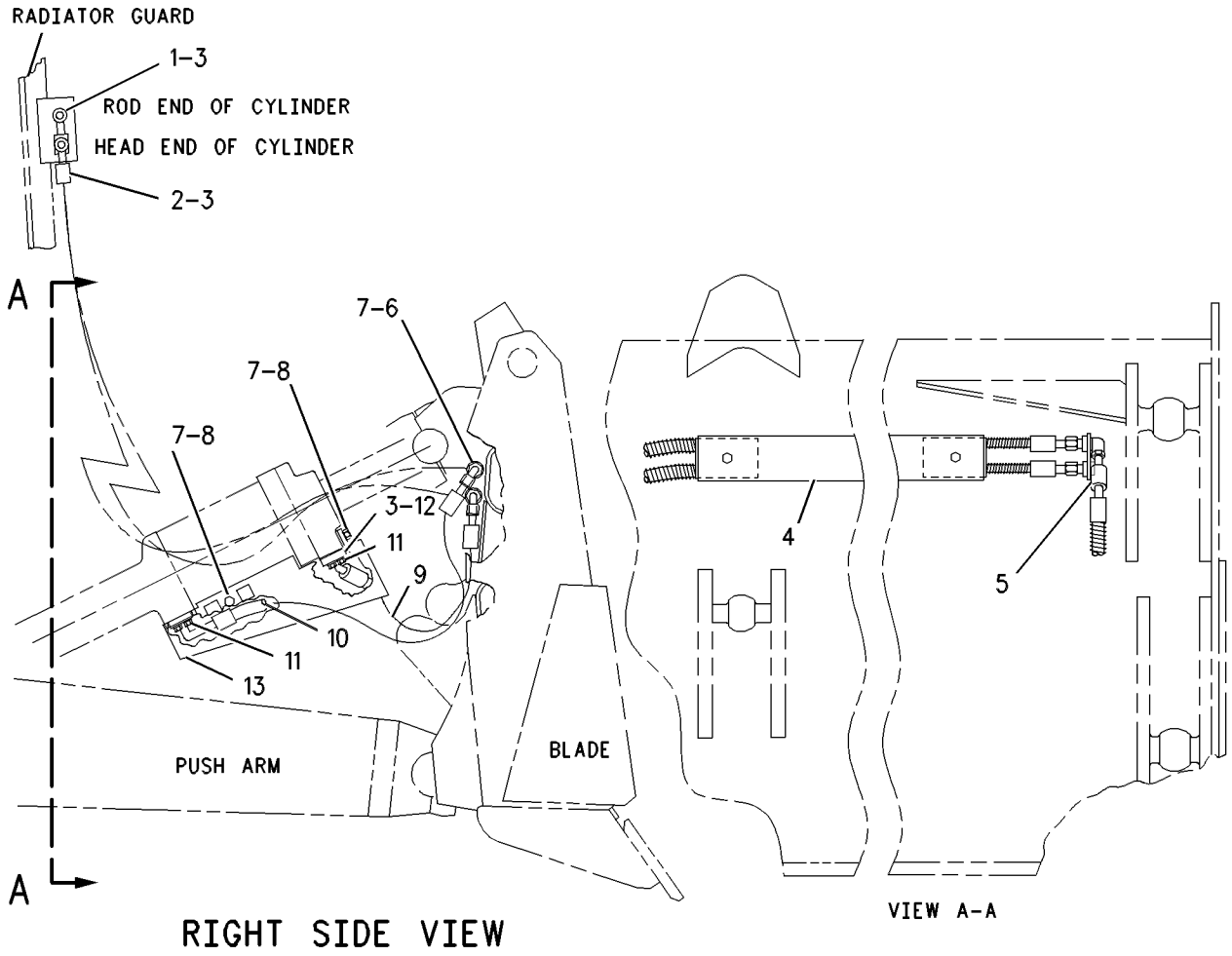

GRAPHIC #1 g00588174

HYDRAULIC SYSTEM

9W-9079 LINES GP-TILT CYLINDER

S/N: BLE1-UP; BMJ1-UP
PART OF 9W-9057 CYLINDER AR-TILT
AN ATTACHMENT

SMCS-5057, 5104 **i01572428**

NOTE	REF NO	GRAPHIC REF	PART NUMBER	QTY	PART NAME 1 2 3 4 5 6 (PRODUCT LEVEL)	SEE PAGE
	1	1	**6Y-0596**	1	GUARD AS-LH	
	2	1	**6Y-0597**	1	GUARD AS-RH	
C	3	1	**4L-6454**	2	BOLT (3/8-16X1 IN)	
	4	1	**3K-0360**	2	SEAL-O-RING	
C	5	1	**8T-4223**	16	WASHER-HARD (13.5X25.5X3MM THK)	
I	6	1	**9W-9083**	2	HOSE AS	
I	7	1	**9W-9082**	2	HOSE AS	
	8	1	**1P-4576**	20	FLANGE	
C	9	1	**9B-7237**	40	BOLT (3/8-16X1.25 IN)	
C	10	1	**8T-4896**	48	WASHER-HARD (10.2X18.5X2.5MM THK)	
	11	1	**6V-1249**	2	GROMMET	
CI	12	1	**6Y-3469**	1	HOSE AS	
CI	13	1	**6Y-3470**	1	HOSE AS	
C	14	1	**4J-5267**	12	SEAL-O-RING	
	15	1	**3G-8047**	1	GROMMET	
	16	1	**3G-8054**	1	CLIP (TAB)	
	17	1	**3G-8057**	1	CLIP (SLOT)	
	18	1	**6V-8625**	2	ELBOW	
	19	1	**2P-6588**	2	HEAD-ADAPTER	
	20	1	**6V-8398**	2	SEAL-O-RING	
	21	1	**5S-8766**	1	GUARD-LH	
	22	1	**5S-8709**	1	GUARD-CENTER	
	23	1	**5S-8765**	1	GUARD-RH	
	24	1	**5S-8718**	1	TUBE AS	
	25	1	**5S-8714**	2	TUBE AS	
	26	1	**5S-8712**	6	BLOCK	
C	27	1	**5S-7383**	6	BOLT (3/8-16X1.75 IN)	
C	28	1	**7X-0325**	6	BOLT (1/2-13X2.5 IN)	
C	29	1	**8T-8917**	10	BOLT (1/2-13X1.25 IN)	
	30	1	**6Y-0625**	1	BRACKET AS-LH	
	31	1	**6Y-0598**	1	BRACKET AS-RH	
	32	1	**5P-7464**	2	CLIP (SLOT)	
	33	1	**5P-7465**	2	CLIP (TAB)	

C-CHANGE FROM PREVIOUS TYPE
I-SEE HOSE FABRICATION GUIDE

9W-9079 **LINES GP-TILT CYLINDER** ***(contd.)*** **i01572428**

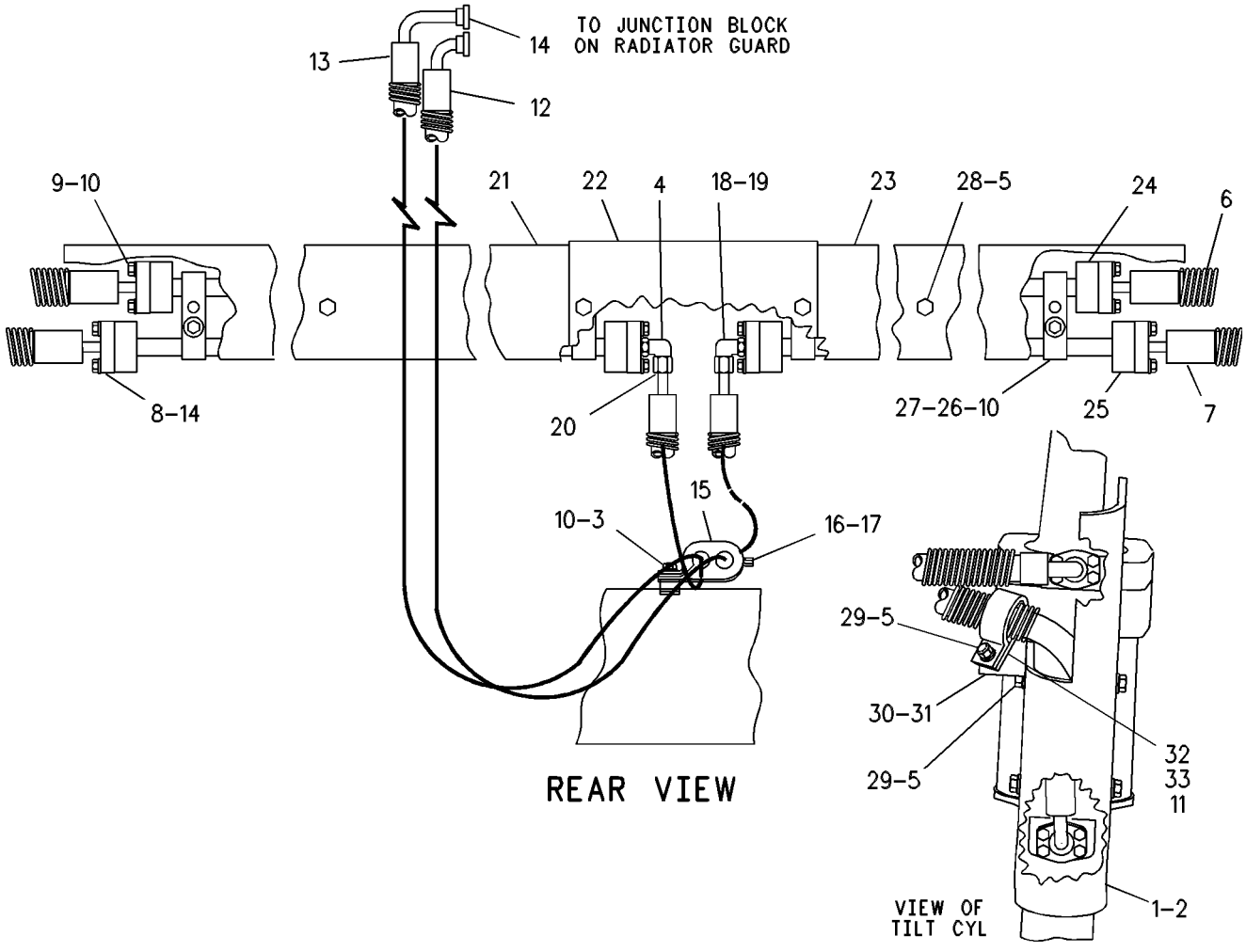

GRAPHIC #1

g00264397

HYDRAULIC SYSTEM

166-7283 LINES GP-TILT CYLINDER

S/N: BLE1-UP; BMJ1-UP

PART OF 164-4807 HYDRAULIC AR

SMCS-5057, 5104 **i01590535**

NOTE	REF NO	GRAPHIC REF	PART NUMBER	QTY	PART NAME 1 2 3 4 5 6 (PRODUCT LEVEL)	SEE PAGE
	1	1	**1K-5888**	2	SPACER (.42X.67X.63 IN THK)	
	2	1	**8E-8916**	1	MANIFOLD	
I	3	1	**194-7771**	2	HOSE AS	
I	4	1	**194-7772**	2	HOSE AS	
	5	1	**195-9319**	1	PLATE	
	6	1	**1P-4576**	8	FLANGE	
	7	1	**3G-8047**	4	GROMMET	
	8	1	**3G-8054**	4	CLIP (TAB)	
	9	1	**3G-8057**	4	CLIP (SLOT)	
	10	1	**3H-8683**	4	STRAP-CLAMP	
	11	1	**7S-6719**	2	STUD-TAPERLOCK	
	12	1	**4J-0520**	2	SEAL-O-RING	
	13	1	**4J-5267**	2	SEAL-O-RING	
	14	1	**9B-7237**	4	BOLT (3/8-16X1.25 IN)	
	15	1	**5M-3062**	2	BOLT (3/8-16X0.75 IN)	
	16	1	**5P-1075**	4	WASHER-HARD (10.2X22.5X3MM THK)	
	17	1	**5S-7382**	16	BOLT (3/8-16X1.375 IN)	
	18	1	**6V-8801**	6	NUT (3/8-16 THD)	
	19	1	**6V-8982**	2	ELBOW	
	20	1	**6V-9170**	2	NUT-BULKHEAD (1-14 THD)	
	21	1	**7J-9108**	4	SEAL-O-RING	
	22	1	**8T-2502**	2	BOLT (3/8-16X1.125 IN)	
	23	1	**8T-4896**	26	WASHER-HARD (10.2X18.5X2.5MM THK)	

I-SEE HOSE FABRICATION GUIDE

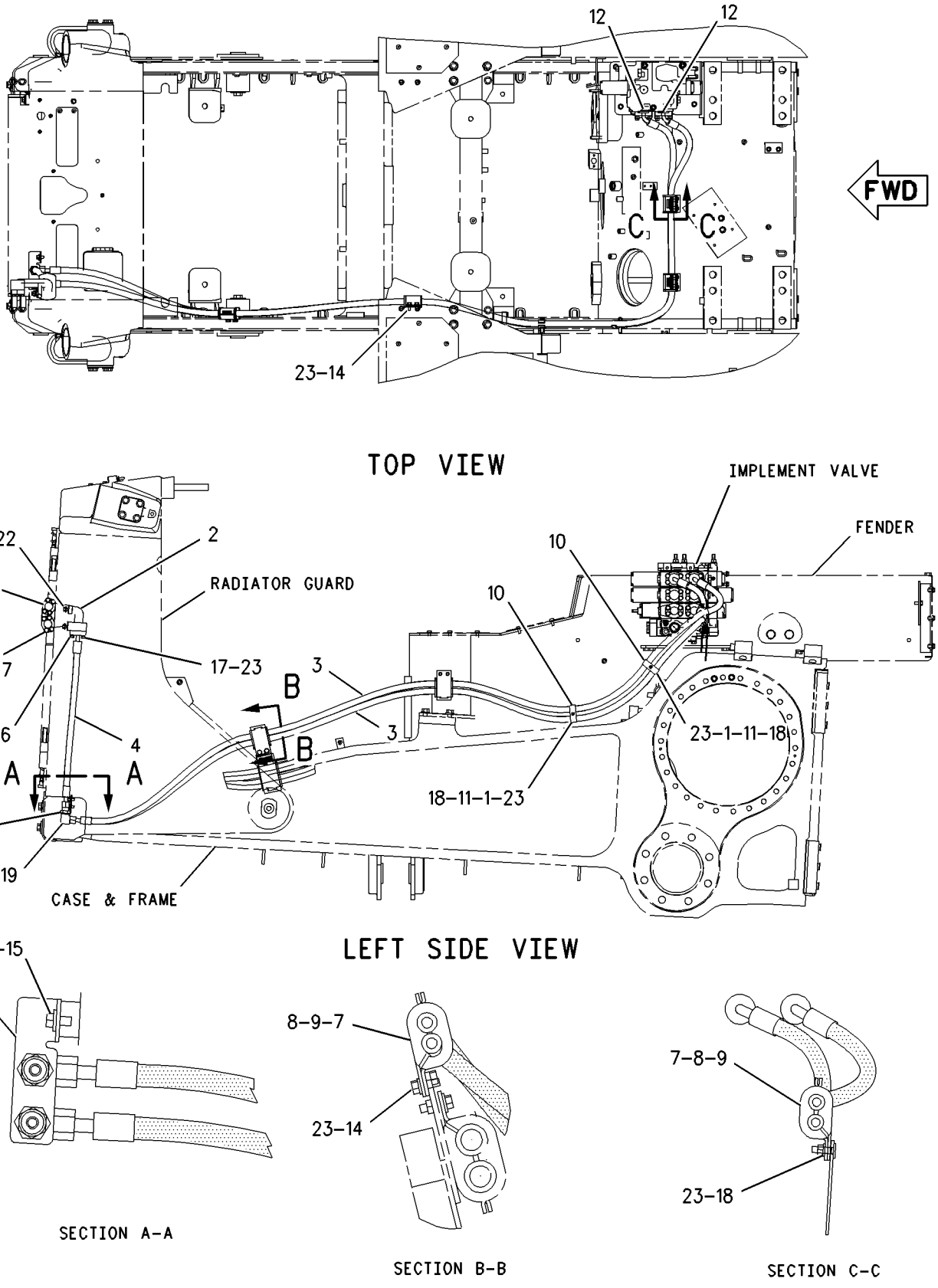

GRAPHIC #1 g00741184

HYDRAULIC SYSTEM

168-0241 MANIFOLD GP-INLET

S/N: BLE1-UP; BMJ1-UP
PART OF 162-8033, 162-8035 VALVE GP-CONTROL
ALSO AN ATTACHMENT

SMCS-5264 **i01590607**

NOTE	REF NO	GRAPHIC REF	PART NUMBER	QTY	PART NAME 1 2 3 4 5 6 (PRODUCT LEVEL)	SEE PAGE
	1	1	**8J-6815**	1	PLUG-ORIFICE	
Y	2	1	**104-7574**	1	VALVE GP-RELIEF	531
Y	3	1	**9T-8378**	1	VALVE GP-RELIEF	530
	4	1	**168-7513**	1	MANIFOLD (INLET)	
	5	1	**1P-4577**	2	FLANGE-HALF	
	6	1	**3J-1907**	2	SEAL-O-RING	
	7	1	**3J-7354**	2	SEAL-O-RING	
Y	8	1	**4T-5896**	1	VALVE GP-CHECK	506
	9	1	**5S-7382**	4	BOLT (3/8-16X1.375 IN)	
	10	1	**8T-4896**	4	WASHER-HARD (10.2X18.5X2.5MM THK)	
	11	1	**9S-4182**	2	PLUG (7/16-20 THD)	
	12	1	**9S-4191**	1	PLUG	
	13	1	**9S-8004**	1	PLUG	

Y-SEPARATE ILLUSTRATION

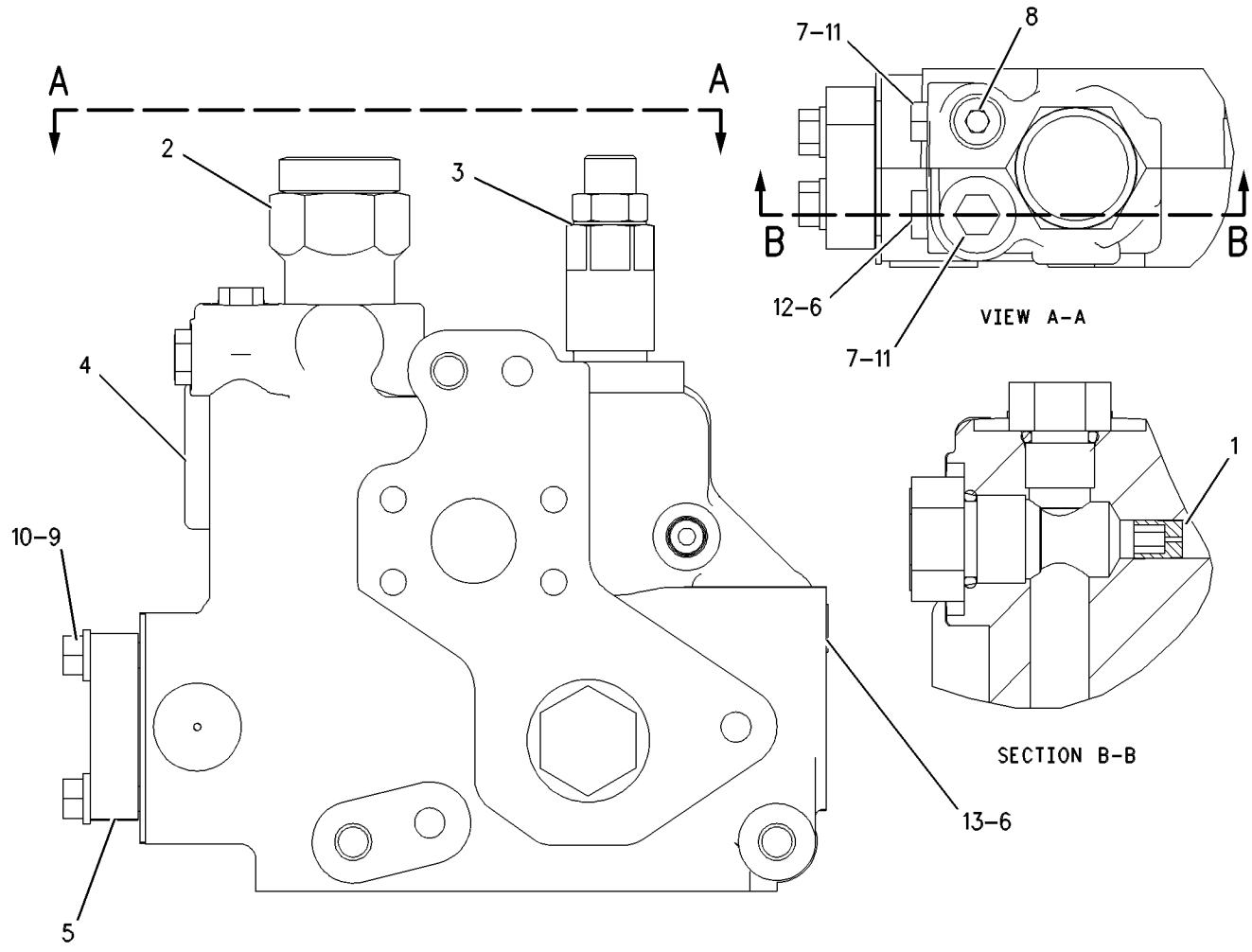

GRAPHIC #1 g00571940

HYDRAULIC SYSTEM

167-1170 MOUNTING GP-CONTROL VALVE

S/N: BLE1-UP; BMJ1-UP

PART OF 168-7420 CONTROL AR-PILOT HYDRAULIC

SMCS-5051 **i01590635**

NOTE	REF NO	GRAPHIC REF	PART NUMBER	QTY	PART NAME 1 2 3 4 5 6 (PRODUCT LEVEL)	SEE PAGE
M	1	1	**172-5291**	4	SCREW (M10X1.5X30MM)	
	2	1	**160-4702**	1	PLATE	
	3	1	**160-4703**	1	PLATE AS	
		1	**7T-1099**	4	LINK	
	4	1	**165-8433**	1	GASKET	
	5	1	**7X-7729**	4	WASHER (11X25X3MM THK)	
M	6	1	**111-4627**	6	SCREW-MACHINE (M6X1.0X30MM)	
	7	1	**8T-4205**	6	WASHER-HARD (7.2X14.5X2MM THK)	

M-METRIC PART

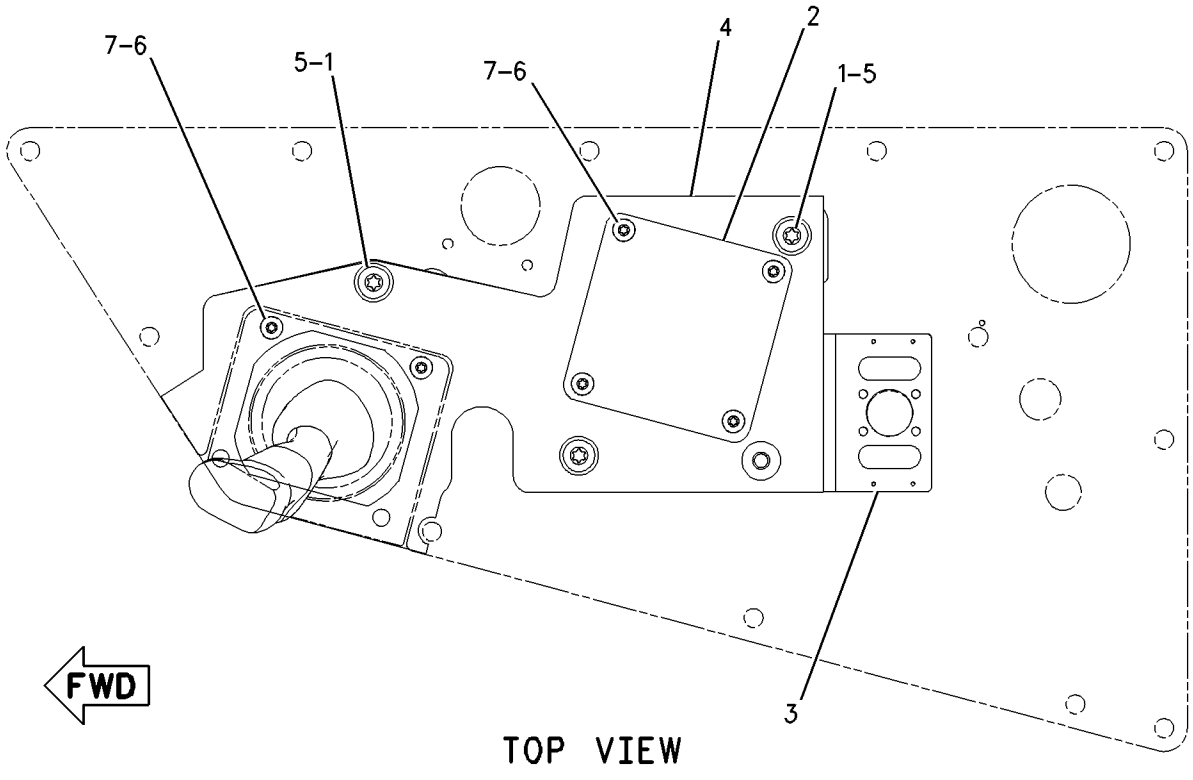

TOP VIEW

GRAPHIC #1 g00854054

166-7288 MOUNTING GP-VALVE

S/N: BLE1-UP; BMJ1-UP
PART OF 164-4807 HYDRAULIC AR

SMCS-5051 **i01590549**

NOTE	REF NO	GRAPHIC REF	PART NUMBER	QTY	PART NAME 1 2 3 4 5 6 (PRODUCT LEVEL)	SEE PAGE
	1	1	**172-5992**	1	PLATE AS	
	2	1	**5P-2424**	3	BOLT (1/2-13X2.25 IN)	
	3	1	**7X-0354**	3	BOLT (5/8-11X4.50IN)	
	4	1	**8T-4122**	4	WASHER-HARD (17X32X3.5MM THK)	
	5	1	**8T-4223**	3	WASHER-HARD (13.5X25.5X3MM THK)	
	6	1	**7X-0356**	1	BOLT (5/8-11X5 IN)	

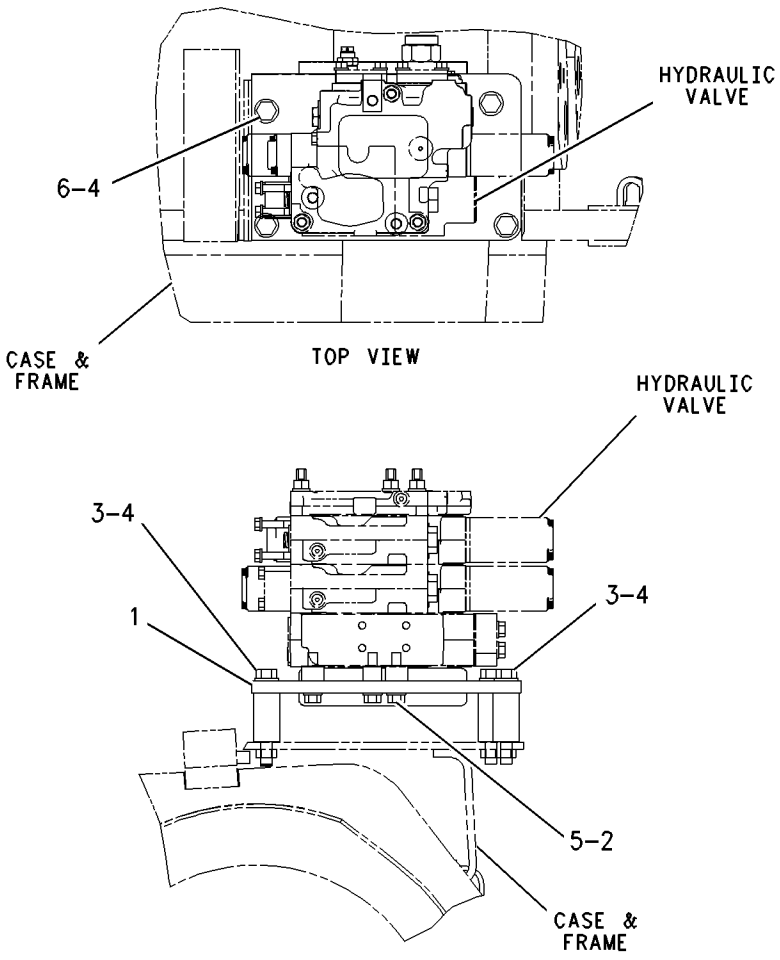

GRAPHIC #1 g00853879

167-1171 MOUNTING GP-VALVE

S/N: BLE1-UP; BMJ1-UP
PART OF 171-6133 CONTROL AR-PILOT HYDRAULIC
AN ATTACHMENT

SMCS-5051 **i01592287**

NOTE	REF NO	GRAPHIC REF	PART NUMBER	QTY	PART NAME 1 2 3 4 5 6 (PRODUCT LEVEL)	SEE PAGE
M	1	1	**172-5291**	4	SCREW (M10X1.5X30MM)	
	2	1	**8T-4205**	6	WASHER-HARD (7.2X14.5X2MM THK)	
	3	1	**160-4703**	1	PLATE AS	
	4	1	**165-8433**	1	GASKET	
	5	1	**7X-7729**	4	WASHER (11X25X3MM THK)	
M	6	1	**111-4627**	6	SCREW-MACHINE (M6X1.0X30MM)	

M-METRIC PART

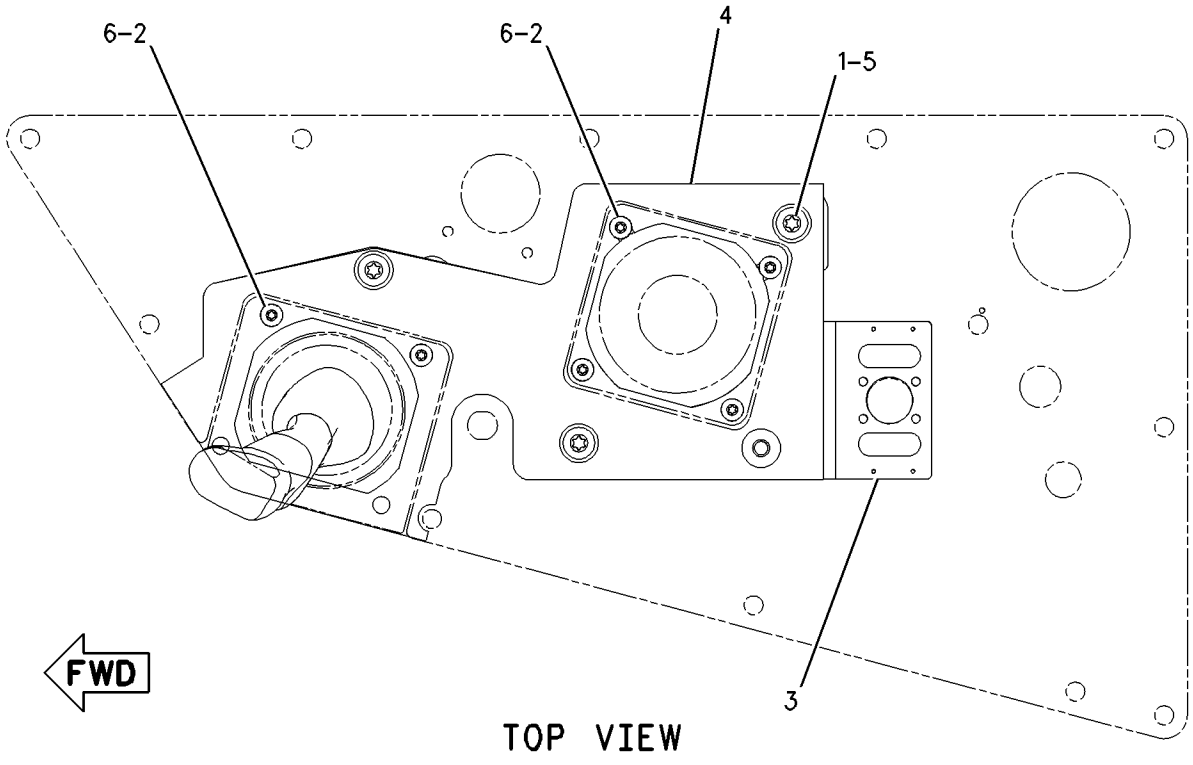

TOP VIEW

GRAPHIC #1 g00854052

HYDRAULIC SYSTEM

171-2092 PUMP GP-PISTON

S/N: BLE1-UP; BMJ1-UP
PART OF 164-4807 HYDRAULIC AR

SMCS-5070 **i01590928**

NOTE	REF NO	GRAPHIC REF	PART NUMBER	QTY	PART NAME 1 2 3 4 5 6 (PRODUCT LEVEL)	SEE PAGE
	1	1	**6E-4224**	1	PLUG-SWASHPLATE	
	2	1	**033-6036**	1	SEAL-O-RING	
	3	1	**100-3402**	1	BEARING-SWASH	
	4	1	**100-3405**	1	BEARING-SWASH	
M	5	1	**6V-8837**	3	BOLT (M6X1X16 MM)	
	6	1	**4F-4097**	1	SEAL-O-RING	
M	7	1	**3E-4302**	2	SCREW-FLAT HEAD (M4X0.7X10MM)	
	8	1	**100-3404**	1	COVER-TRUNNION	
	9	1	**9T-1636**	1	SEAT	
	10	1	**9T-1710**	1	POPPET	
	11	1	**9T-1699**	1	SPRING	
	12	1	**102-2081**	1	HEAD-PUMP	
B	13	1	**6E-1436**	1	KIT-SHAFT SHIM (17 SHIMS)	
	14	1	**6Y-4280**	1	CONE-BEARING	
	15	1	**7T-9755**	1	CUP-BEARING	
	16	1	**102-2083**	1	PLATE-VALVE	
	17	1	**3E-7417**	3	PLUG (M10X1 THD)	
	18	1	**8T-7876**	3	SEAL-O-RING	
	19	1	**7L-9061**	2	SEAL-O-RING	
	20	1	**100-3413**	1	GASKET	
Y	21	1	**102-2064**	1	ROTATING GP-PUMP	500
	22	1	**100-3409**	1	SPRING-BIAS	
	23	1	**100-3408**	1	KIT-BIAS PISTON	
					(INCLUDES SPRING, ROD, PISTON & SEAL)	
	24	1	**002-1212**	1	CUP-BEARING	
	25	1	**2F-8509**	1	CONE-BEARING	
	26	1	**117-1909**	1	SHAFT-PUMP	
	27	1	**102-2067**	1	HOUSING-PUMP	
	28	1	**006-8663**	1	RING	
	29	1	**8T-4750**	1	SEAL-LIP (RUBBER)	
Y	30	1	**169-3290**	1	SWASHPLATE GP	501
	31	1	**100-3415**	1	KIT-CONTROL PISTON	
					(INCLUDES ROD, PISTON & SEAL)	
	32	1	**9T-1652**	1	PIN	
M	33	1	**8T-0372**	1	BOLT (M12X1.75X90MM)	
M	34	1	**8T-7811**	1	BOLT-SOCKET HEAD (M12X1.75X50MM)	
M	35	1	**6V-8336**	1	BOLT (M12X1.75X70MM)	
M	36	1	**6V-8337**	4	BOLT-SOCKET HEAD (M8X1.25X35MM)	
Y	37	1	**102-2068**	1	VALVE GP-PRESS & FLOW CMPNSTR	526
	38	1	**9S-4190**	1	PLUG	
	39	1	**033-6027**	1	SEAL-O-RING	
	40	1	**095-0888**	2	PIN-SPRING	
	41	1	**8T-5039**	3	SEAL-O-RING	
M	42	1	**6V-7673**	3	BOLT (M12X1.75X50MM)	

B-USE AS REQUIRED
M-METRIC PART
Y-SEPARATE ILLUSTRATION

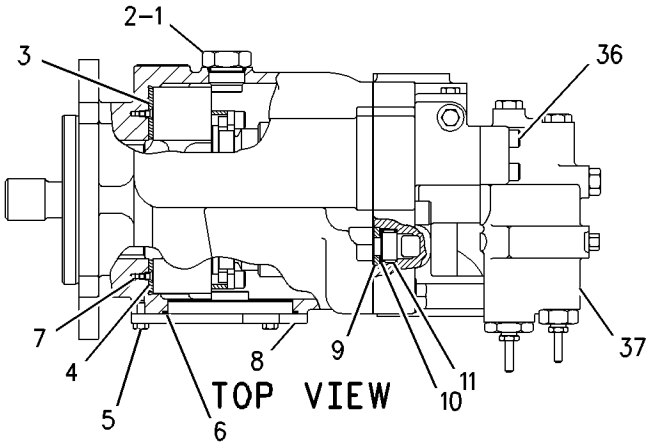

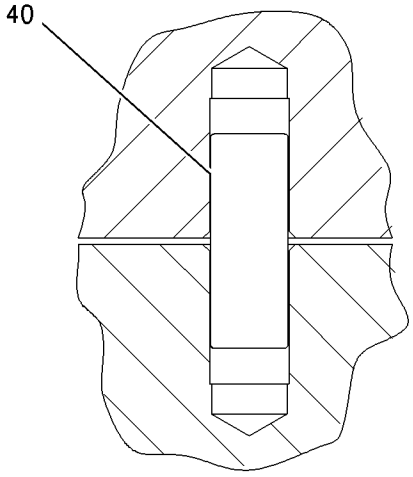

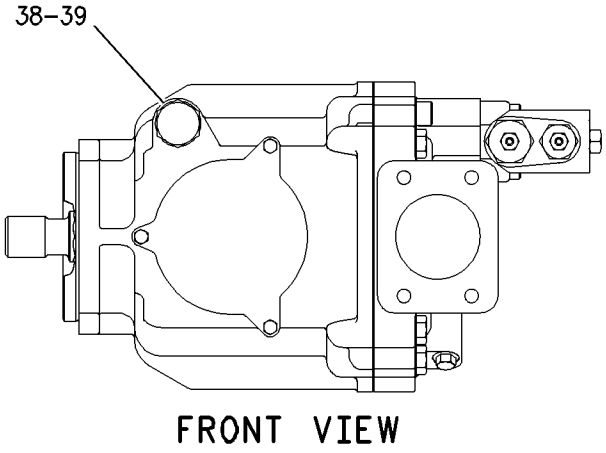

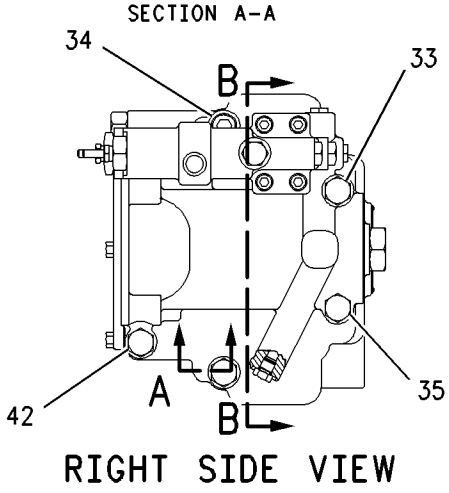

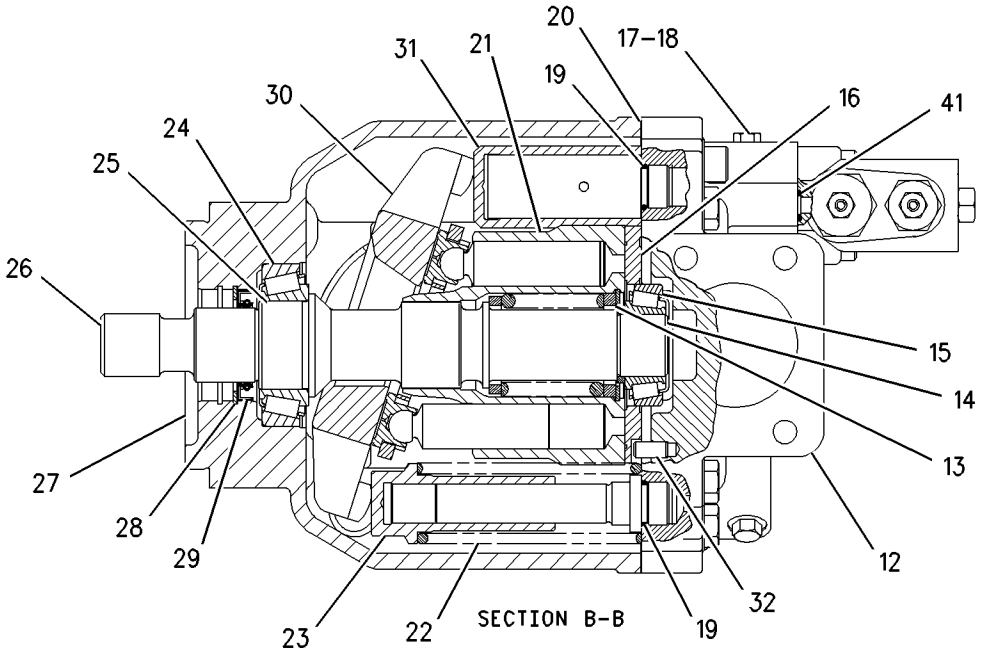

GRAPHIC #1 g00826663

HYDRAULIC SYSTEM

102-2064 ROTATING GP-PUMP

S/N: BLE1-UP; BMJ1-UP

PART OF 171-2092 PUMP GP-PISTON

SMCS-5070 **i00574547**

NOTE	REF NO	GRAPHIC REF	PART NUMBER	QTY	PART NAME 1 2 3 4 5 6 (PRODUCT LEVEL)	SEE PAGE
	1	1	**102-2061**	1	BARREL-CYLINDER	
	2	1	**3J-8500**	1	RING-RETAINING	
	3	1	**9T-7769**	1	GUIDE-OUTER	
M	4	1	**6V-5192**	4	BOLT-SOCKET HEAD (M8X1.25X30MM)	
	5	1	**100-3410**	2	PLATE	
	6	1	**100-3411**	2	PLATE-SPACER	
	7	1	**102-2062**	9	PISTON AS-PUMP	
	8	1	**102-2063**	1	PLATE-RETRACTION	
	9	1	**9T-7773**	1	GUIDE-INNER	
	10	1	**9T-7771**	1	SPRING	

M-METRIC PART

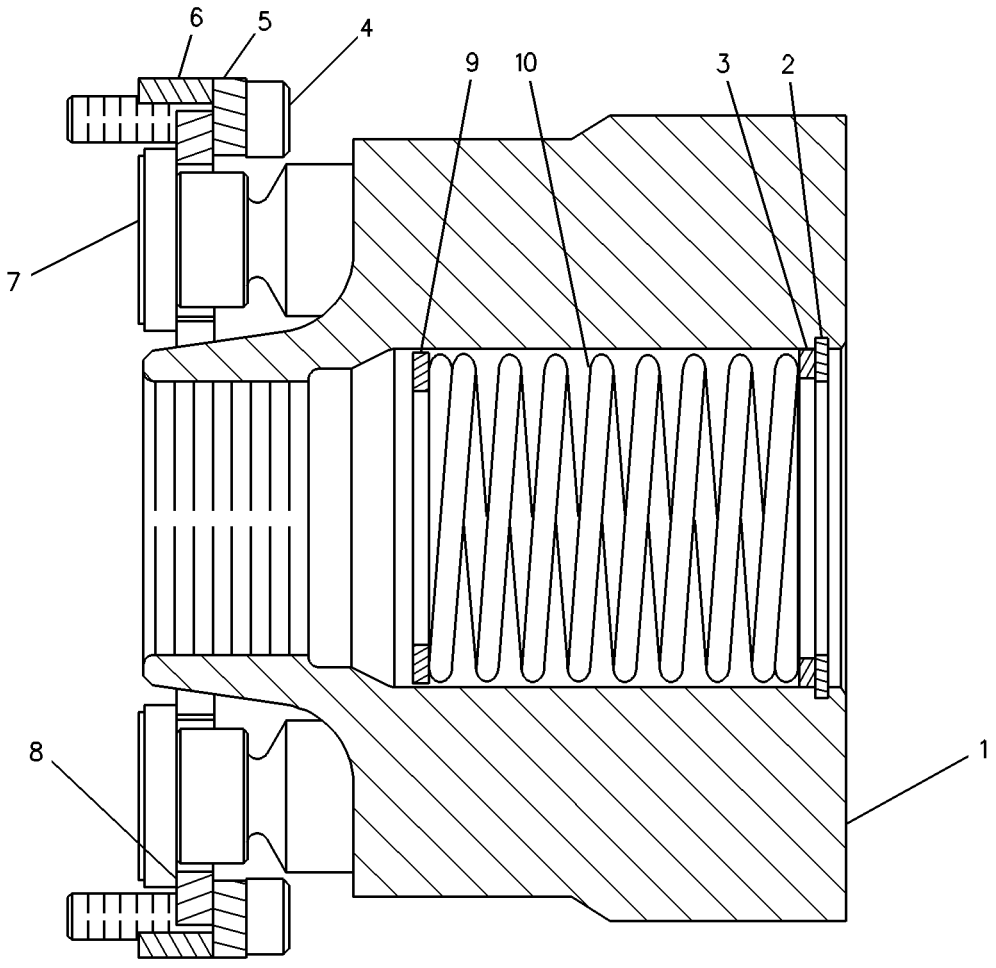

GRAPHIC #1 g00229086

169-3290 SWASHPLATE GP

S/N: BLE1-UP; BMJ1-UP

PART OF 171-2092 PUMP GP-PISTON

SMCS-5070 **i01590932**

NOTE	PART NUMBER	QTY	PART NAME 1 2 3 4 5 6 (PRODUCT LEVEL)	SEE PAGE
	1H-3937	2	PIN	
	167-1801	2	STOP-SWASHPLATE	

HYDRAULIC SYSTEM

197-0959 TANK & FILTER GP-HYDRAULIC

S/N: BLE1-UP; BMJ1-UP
PART OF 164-4807 HYDRAULIC AR

SMCS-5056, 5068 **i01590942**

NOTE	REF NO	GRAPHIC REF	PART NUMBER	QTY	PART NAME 1 2 3 4 5 6 (PRODUCT LEVEL)	SEE PAGE
	1	1	**5C-6565**	3	BOLT (1/2-13X1.125 IN)	
	2	1	**197-0964**	1	TANK AS-HYDRAULIC	
	3	1,2	**2K-4973**	10	LOCKNUT (3/8-16 THD)	
	4	1	**6E-6259**	1	GASKET	
	5	1	**6V-9633**	1	GASKET	
	6	1	**9T-3264**	1	COVER	
	7	1	**4T-0521**	1	BOLT	
	8	1	**1P-5760**	2	FLANGE-HALF	
	9	1	**8T-9377**	4	BOLT (3/8-16X2.25 IN)	
	10	2	**2D-4202**	1	PLATE	
	11	2	**7H-1447**	1	CAP-FILLER	
	12	2	**8T-2275**	1	BALL	
	13	2	**9H-6454**	1	GASKET	
	14	1	**8F-9206**	5	SEAL-O-RING	
	15	2	**8T-3298**	1	SEAL-RECTANGULAR	
	16	2	**5M-2057**	1	SEAL-O-RING	
	17	2	**8J-8782**	1	BODY-DRAIN VALVE	
	18	2	**8J-8783**	1	VALVE	
	19	2	**7B-3039**	1	SPRING	
	20	2	**1U-2827**	1	GUIDE-VALVE	
	21	2	**6H-9361**	1	RING-RETAINING	
	22	1	**5K-9107**	20	BOLT-LOCKING (3/8-16X0.75 IN)	
	23	2	**1R-0735**	1	FILTER ELEMENT AS-OIL (HYDRAULIC/REVERSE FLOW)	
					—OR—	
		2	**104-6931**	1	FILTER ELEMENT AS-OIL (REVERSE FLOW) (FIRE RESISTANT)	
					—OR—	
		2	**139-1537**	1	FILTER ELEMENT AS-OIL (HYDRAULIC) (HIGHER PERFORMANCE)	
	24	2	**8J-8322**	1	RING-RETAINING	
	25	2	**9J-2914**	1	SPACER	
	26	2	**8J-8468**	1	VALVE	
	27	2	**3G-3267**	1	SCREEN AS	
	28	2	**5P-3108**	3	SEAL-O-RING	
	29	2	**4J-0519**	1	SEAL-O-RING	
	30	2	**9T-3440**	1	BASE	
	31	2	**4K-0367**	1	NUT-FULL (5/8-11 THD)	
	32	2	**8J-8436**	1	TUBE AS	
	33	2	**8J-8443**	1	SPRING	
	34	1	**6E-2017**	1	SPACER	
	35	1	**4J-0524**	1	SEAL-O-RING	
	36	2	**5D-7927**	1	STRAINER AS	
	37	2	**9J-7031**	1	PLUG-DRAIN	
	38	1	**9T-8999**	1	FILTER GP-OIL	
	39	1	**4H-0408**	2	PLUG-PROTECTION (10MM)	
	40	2	**8C-3446**	1	VALVE GP-FLUID SAMPLING	
	41	2	**3J-7354**	1	SEAL-O-RING	
	42	2	**8C-3451**	1	CAP-DUST	
	43	2	**8V-7764**	1	ADAPTER-O-RING	
	44	2	**6K-6307**	1	SEAL-O-RING	
	45	1,2	**5M-2894**	10	WASHER-HARD (10.2X18.5X2.5MM THK)	
	46	1	**8T-4896**	4	WASHER-HARD (10.2X18.5X2.5MM THK)	
	47	1	**1P-5763**	2	FLANGE-HALF	
	48	1	**8T-4835**	4	BOLT (1/2-13X2 IN)	
	49	1	**8T-4223**	4	WASHER-HARD (13.5X25.5X3MM THK)	
	50	1	**201-5143**	1	COVER AS	

197-0959 TANK & FILTER GP-HYDRAULIC *(contd.)* i01590942

NOTE	REF NO	GRAPHIC REF	PART NUMBER	QTY	PART NAME 1 2 3 4 5 6 (PRODUCT LEVEL)	SEE PAGE
	51	2	**8J-6913**	1	RETAINER-SIGHT GLASS	
	52	2	**4J-8251**	1	GROMMET	
	53	2	**187-9194**	1	PLATE	
	54	2	**4J-8252**	1	GAUGE-SIGHT	
	55	2	**9M-7394**	1	LEVER	
	56	2	**1L-5072**	1	DOWEL	
	57	2	**5D-1911**	1	COVER-HYDRAULIC CAP	
	58	2	**2J-7761**	1	RING-RETAINING	

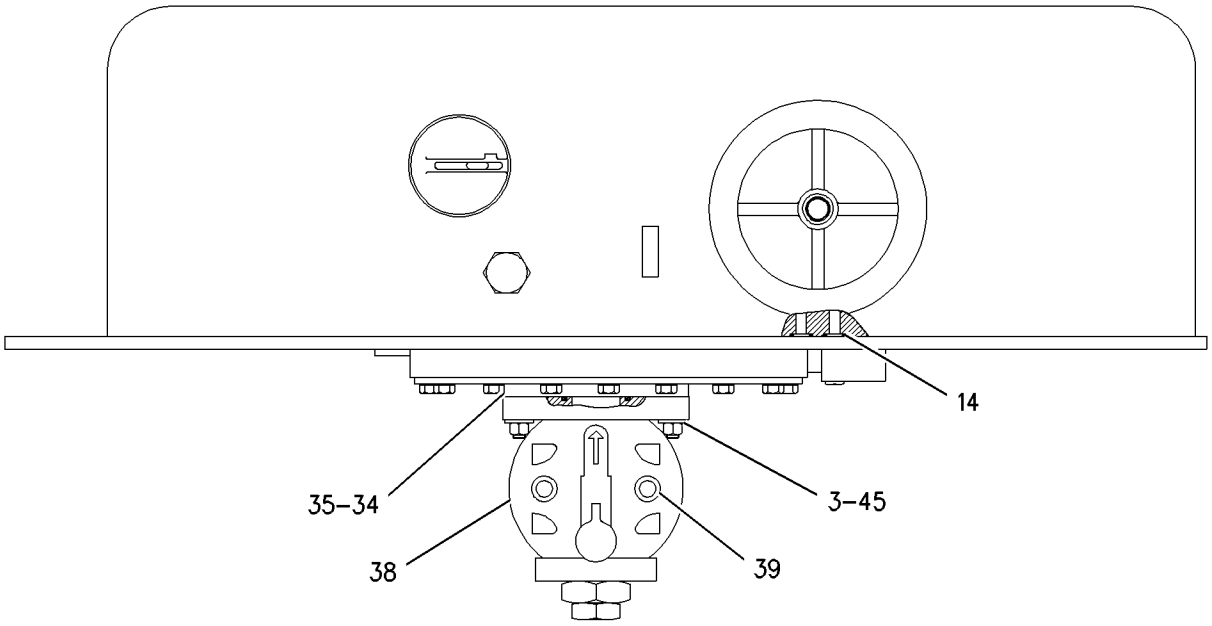

TOP VIEW

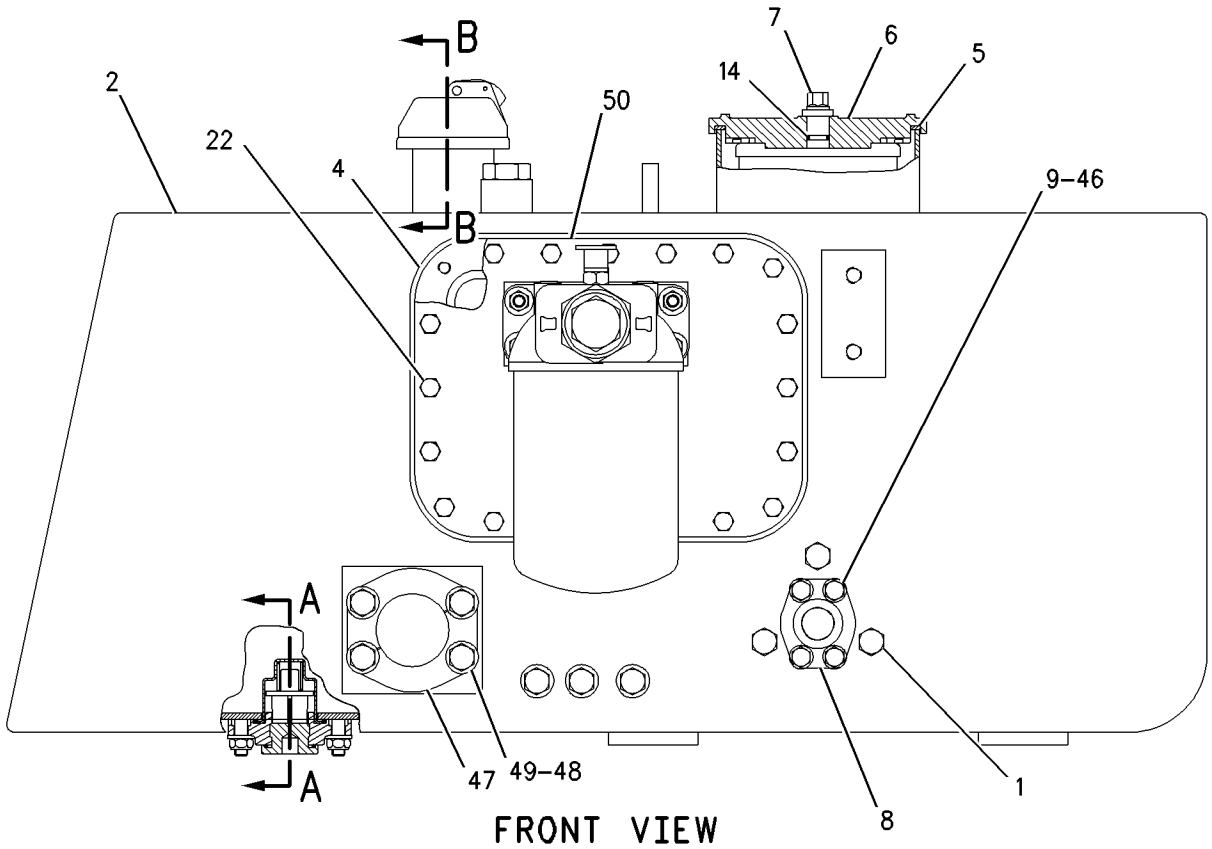

FRONT VIEW

GRAPHIC #1 g00791058

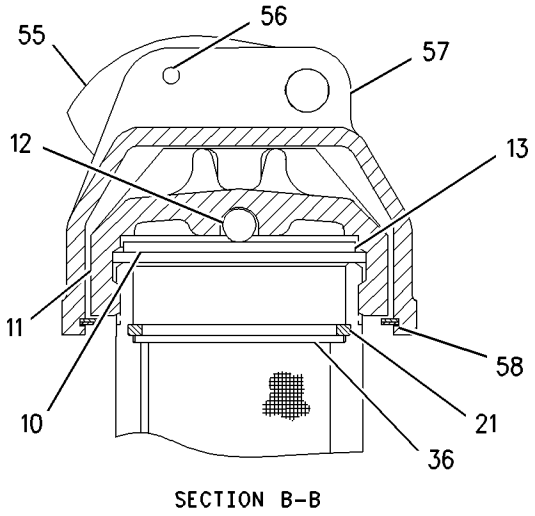

SECTION B-B

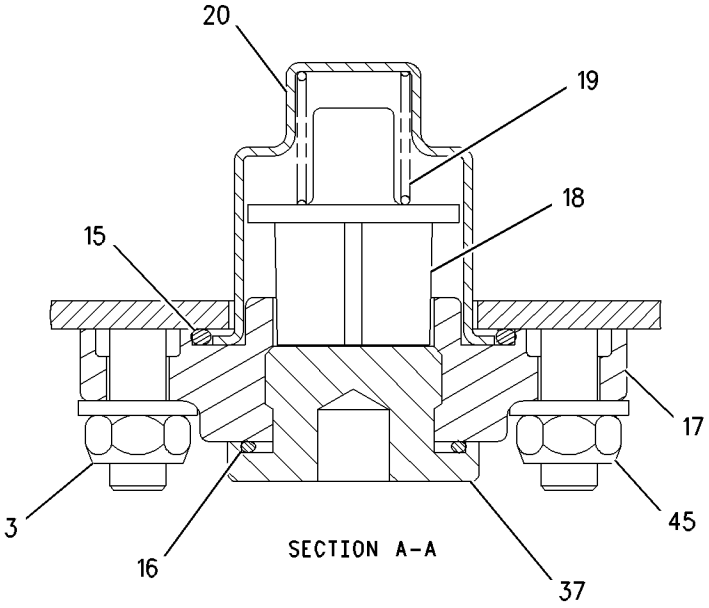

SECTION A-A

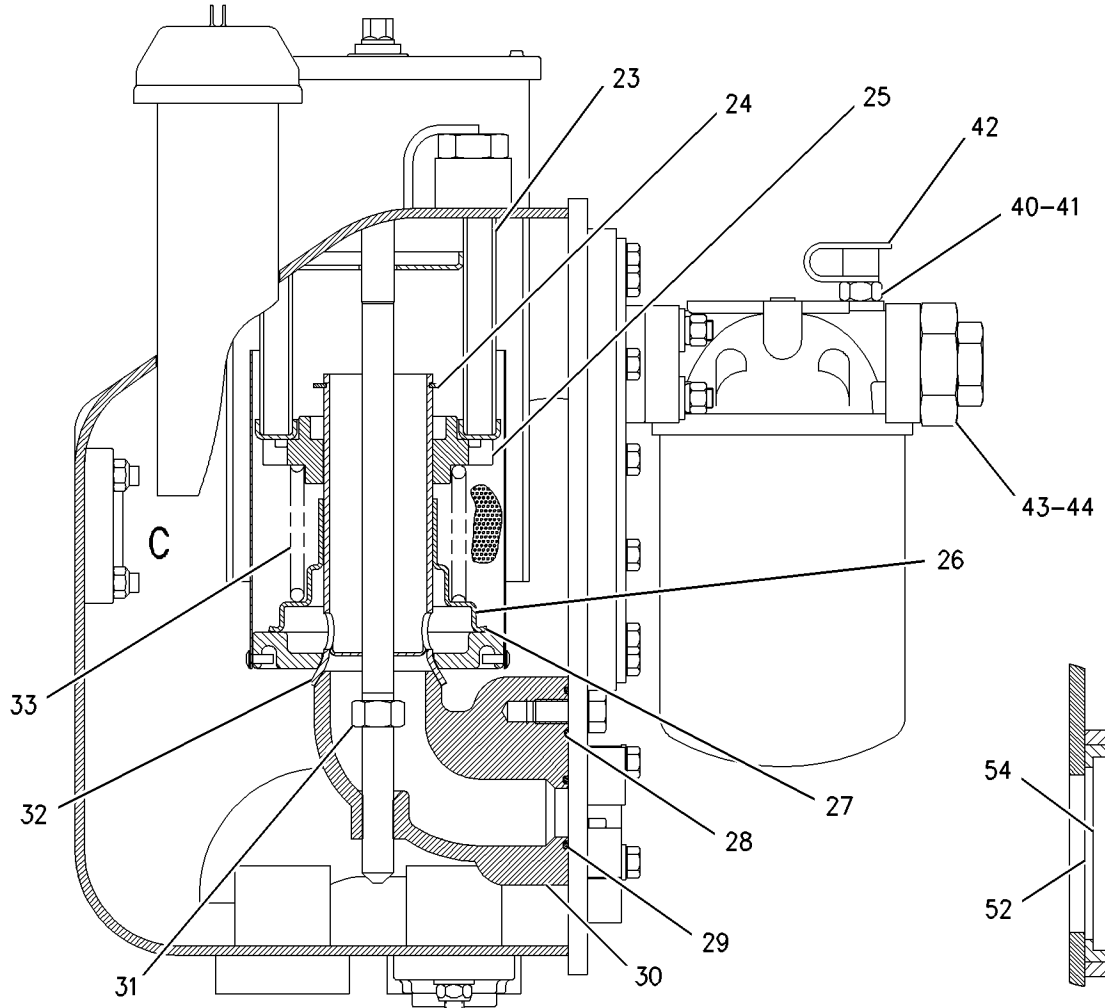

LEFT SIDE VIEW

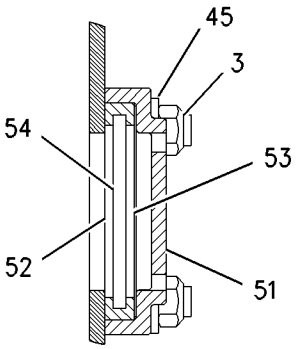

VIEW OF AREA C

GRAPHIC #2

g00791085

4T-5896 VALVE GP-CHECK

S/N: BLE1-UP; BMJ1-UP
PART OF 168-0241 MANIFOLD GP-INLET
ALSO AN ATTACHMENT

SMCS-5067 **i00563815**

NOTE	REF NO	GRAPHIC REF	PART NUMBER	QTY	PART NAME 1 2 3 4 5 6 (PRODUCT LEVEL)	SEE PAGE
	1	1	**5H-1472**	1	BALL	
	2	1	**9G-0278**	1	SPRING	
	3	1	**3J-1907**	1	SEAL-O-RING (11.89MM ID)	
	4	1	**4T-5071**	1	RING-BACKUP	
	5	1	**8C-3085**	1	SEAL-O-RING	
	6	1	**8L-6565**	1	PIN-SPRING	

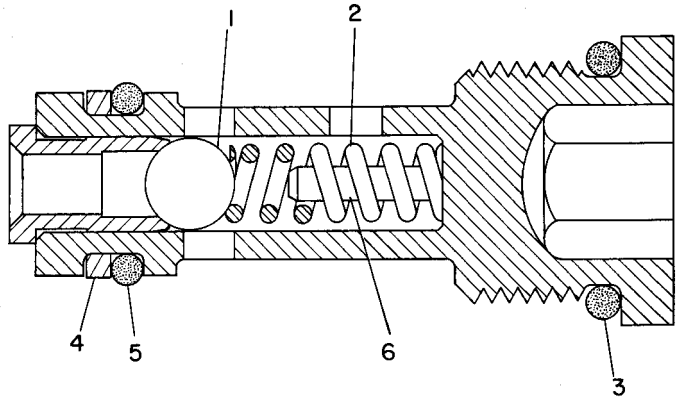

GRAPHIC #1 g00124639

MEMORANDA

HYDRAULIC SYSTEM

162-8033 VALVE GP-CONTROL

S/N: BLE1-UP; BMJ1-UP
PART OF 171-6133 CONTROL AR-PILOT HYDRAULIC
AN ATTACHMENT

SMCS-5051 **i01592263**

NOTE	REF NO	GRAPHIC REF	PART NUMBER	QTY	PART NAME 1 2 3 4 5 6 (PRODUCT LEVEL)	SEE PAGE
	1	1	**9S-8002**	2	PLUG	
Y	2	1	**162-8037**	1	VALVE GP-CONTROL (DOZER LIFT)	512
Y	3	1	**162-8038**	1	VALVE GP-CONTROL (DOZER TILT)	514
Y	4	1	**162-8039**	1	VALVE GP-CONTROL (RIPPER)	516
	5	1	**164-7677**	3	ROD	
Y	6	1	**168-0241**	1	MANIFOLD GP-INLET	494
	7	1	**169-9119**	1	COVER	
	8	1	**9S-4191**	1	PLUG	
	9	1	**1P-3702**	1	SEAL-RECTANGULAR	
	10	1	**1P-4577**	12	FLANGE-HALF	
	11	1	**1P-4578**	2	FLANGE-HALF	
	12	1	**3J-7354**	2	SEAL-O-RING	
	13	1	**4J-0522**	12	SEAL-O-RING	
	14	1	**4J-8997**	3	SEAL-O-RING	
	15	1	**5S-7382**	24	BOLT (3/8-16X1.375 IN)	
	16	1	**6V-5555**	12	SEAL-O-RING	
	17	1	**6V-8188**	3	NUT (1/2-13 THD)	
	18	1	**7X-3392**	3	WASHER-HARD (13.5X22.5X3MM THK)	
	19	1	**8T-4896**	24	WASHER-HARD (10.2X18.5X2.5MM THK)	
	20	1	**8T-5360**	4	WASHER (12X22.5X2.5MM THK)	
	21	1	**8T-8916**	4	BOLT (7/16-14X1.5 IN)	
	22	1	**3J-1907**	1	SEAL-O-RING	

Y-SEPARATE ILLUSTRATION

162-8033 VALVE GP-CONTROL *(contd.)*

i01592263

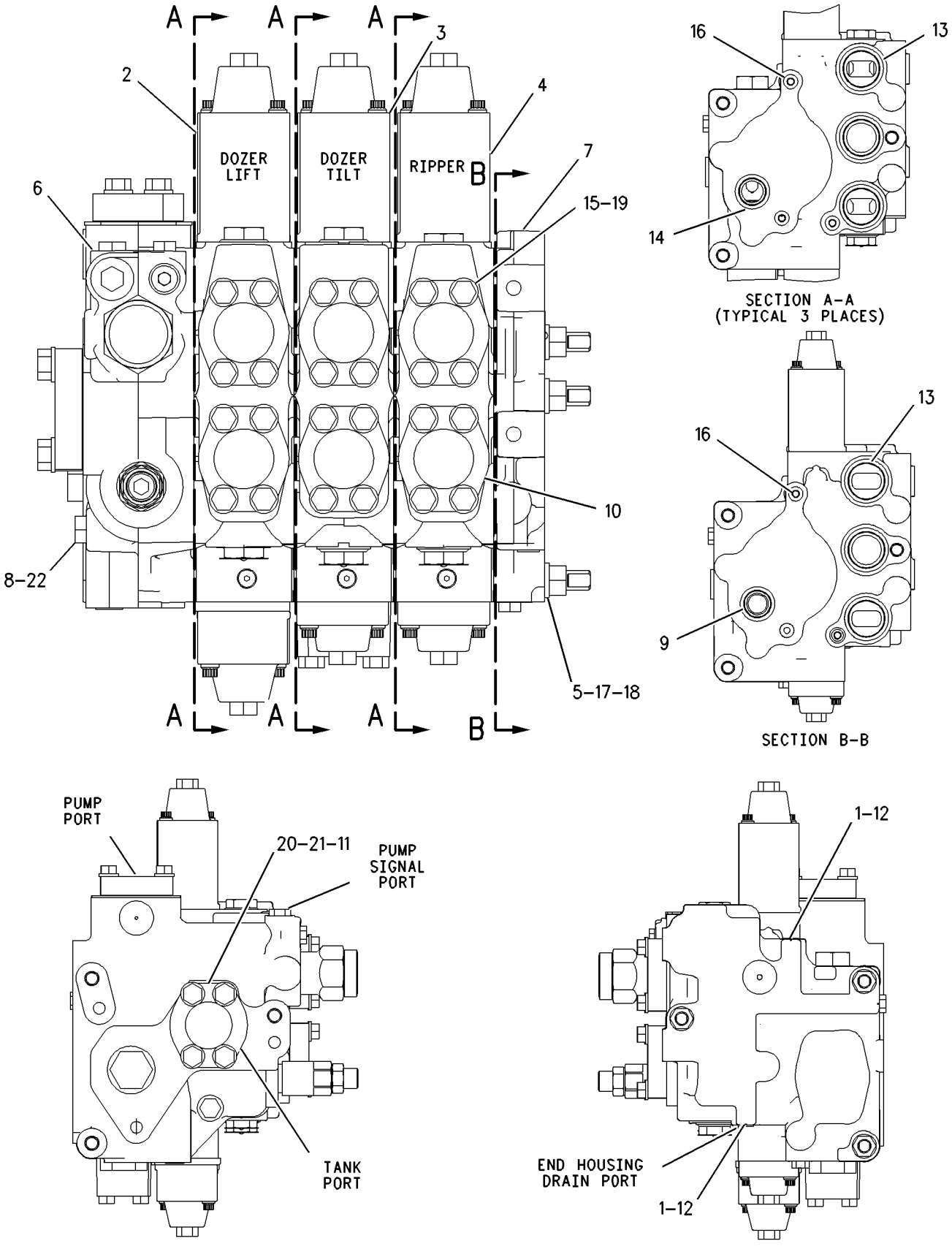

GRAPHIC #1

g00746762

HYDRAULIC SYSTEM

162-8035 VALVE GP-CONTROL

S/N: BLE1-UP; BMJ1-UP

PART OF 168-7420 CONTROL AR-PILOT HYDRAULIC

SMCS-5051 **i01590575**

NOTE	REF NO	GRAPHIC REF	PART NUMBER	QTY	PART NAME 1 2 3 4 5 6 (PRODUCT LEVEL)	SEE PAGE
	1	1	**9S-4191**	1	PLUG	
Y	2	1	**162-8037**	1	VALVE GP-CONTROL (LIFT)	512
Y	3	1	**162-8038**	1	VALVE GP-CONTROL (TILT)	514
	4	1	**164-7678**	3	ROD	
Y	5	1	**168-0241**	1	MANIFOLD GP-INLET	494
	6	1	**9S-8002**	2	PLUG	
	7	1	**169-9119**	1	COVER	
	8	1	**1P-3702**	1	SEAL-RECTANGULAR	
	9	1	**1P-4577**	8	FLANGE-HALF	
	10	1	**1P-4578**	2	FLANGE-HALF	
	11	1	**3J-7354**	2	SEAL-O-RING	
	12	1	**4J-0522**	9	SEAL-O-RING	
	13	1	**4J-8997**	2	SEAL-O-RING	
	14	1	**5S-7382**	16	BOLT (3/8-16X1.375 IN)	
	15	1	**6V-5555**	9	SEAL-O-RING	
	16	1	**6V-8188**	3	NUT (1/2-13 THD)	
	17	1	**7X-3392**	3	WASHER-HARD (13.5X22.5X3MM THK)	
	18	1	**8T-4896**	16	WASHER-HARD (10.2X18.5X2.5MM THK)	
	19	1	**8T-5360**	4	WASHER (12X22.5X2.5MM THK)	
	20	1	**8T-8916**	4	BOLT (7/16-14X1.5 IN)	
	21	1	**3J-1907**	1	SEAL-O-RING	

Y-SEPARATE ILLUSTRATION

162-8035 VALVE GP-CONTROL *(contd.)*

i01590575

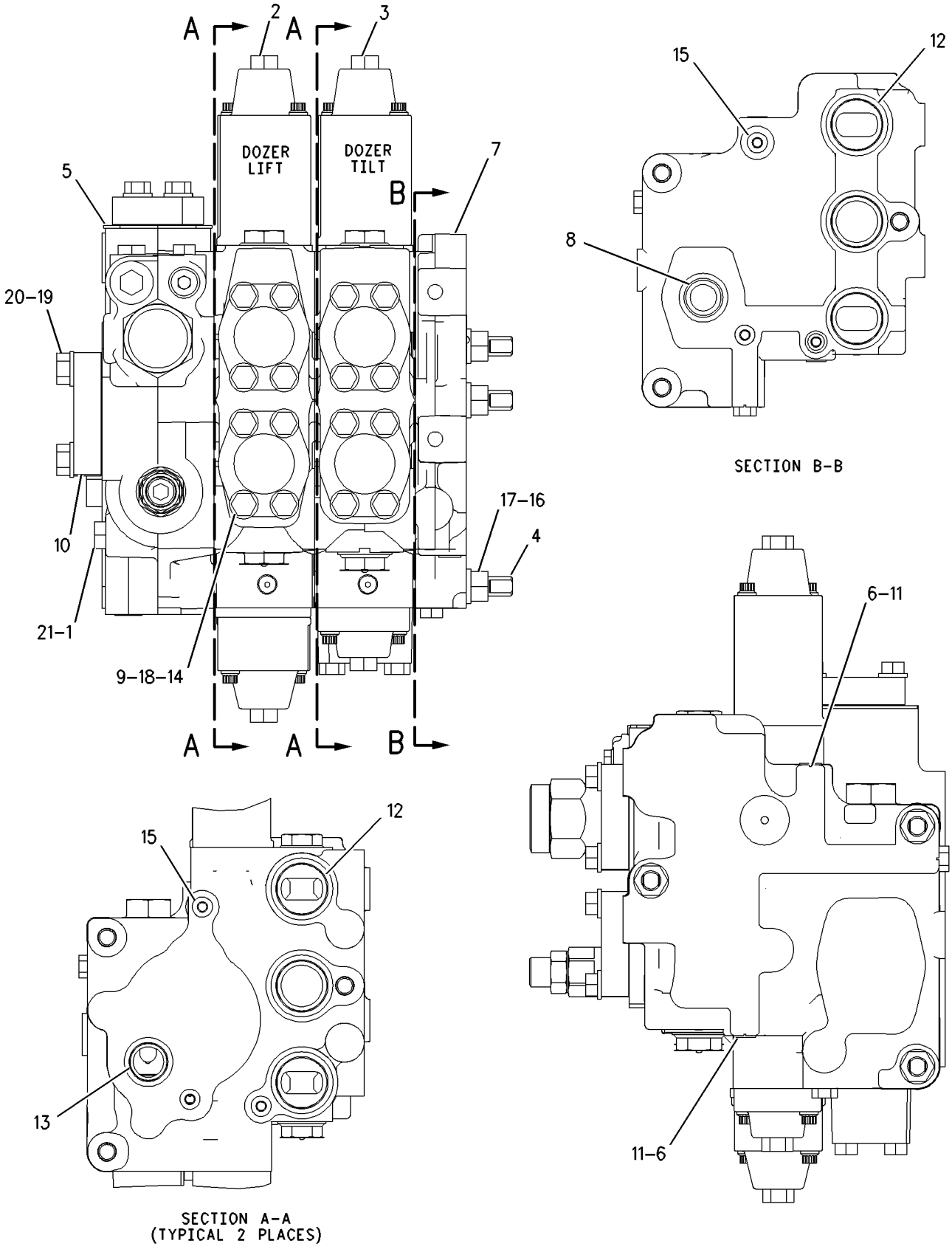

GRAPHIC #1

g00746898

HYDRAULIC SYSTEM

162-8037 VALVE GP-CONTROL

S/N: BLE1-UP; BMJ1-UP
PART OF 162-8033, 162-8035 VALVE GP-CONTROL
ALSO AN ATTACHMENT

SMCS-5051 **i01590592**

NOTE	REF NO	GRAPHIC REF	PART NUMBER	QTY	PART NAME 1 2 3 4 5 6 (PRODUCT LEVEL)	SEE PAGE
	1	1	**2S-2596**	2	SPRING	
	2	1	**3D-4603**	1	PLUG-PIPE	
	3	1	**4T-1108**	1	PLUG	
B	4	1	**4T-4628**	5	SHIM (0.50MM THK)	
	5	1	**173-0511**	1	HOUSING	
	6	1	**173-0515**	1	SPACER	
	7	1	**4T-5072**	1	RING-BACKUP	
	8	1	**9S-4181**	1	PLUG	
	9	1	**174-2043**	2	BOLT (5/16-18X4 IN)	
	10	1	**100-8012**	1	BODY	
	11	1	**153-7067**	1	RETAINER	
	12	1	**173-0512**	1	HOUSING	
	13	1	**153-7549**	1	RETAINER	
	14	1	**153-7550**	1	RETAINER	
	15	1	**153-7553**	1	SPRING	
	16	1	**161-2685**	1	SCREW	
	17	1	**5P-6446**	2	BOLT-12 POINT HEAD (5/16-18X2 IN)	
	18	1	**163-5671**	1	WASHER (17X39X2MM THK)	
	19	1	**164-0938**	1	SPRING	
Z	20	1		1	STEM-LIFT	
	21	1	**170-4001**	1	SPRING	
	22	1	**9S-8002**	1	PLUG	
	23	1	**100-8010**	2	VALVE	
	24	1	**100-8011**	1	PLUG	
B	25	1	**2J-2866**	3	SHIM (0.12MM THK)	
	26	1	**3J-7354**	1	SEAL-O-RING	
	27	1	**4J-5351**	1	SEAL-O-RING	
	28	1	**4K-1388**	2	SEAL-O-RING	
	29	1	**5K-0227**	2	SEAL-O-RING	
Y	30	1	**4T-1860**	1	VALVE GP-SHUTTLE	533
	31	1	**4T-5073**	2	RING-BACKUP	
	32	1	**5M-2057**	1	SEAL-O-RING	
	33	1	**7J-0204**	1	SEAL-O-RING	
	34	1	**7J-9933**	2	SEAL-O-RING	
	35	1	**7M-8485**	2	SEAL-O-RING	
	36	1	**4J-7533**	2	SEAL-O-RING	
	37	1	**9S-8001**	2	PLUG	
Z	38	1		1	BODY-VALVE	

B-USE AS REQUIRED
Y-SEPARATE ILLUSTRATION
Z-NOT SERVICED SEPARATELY

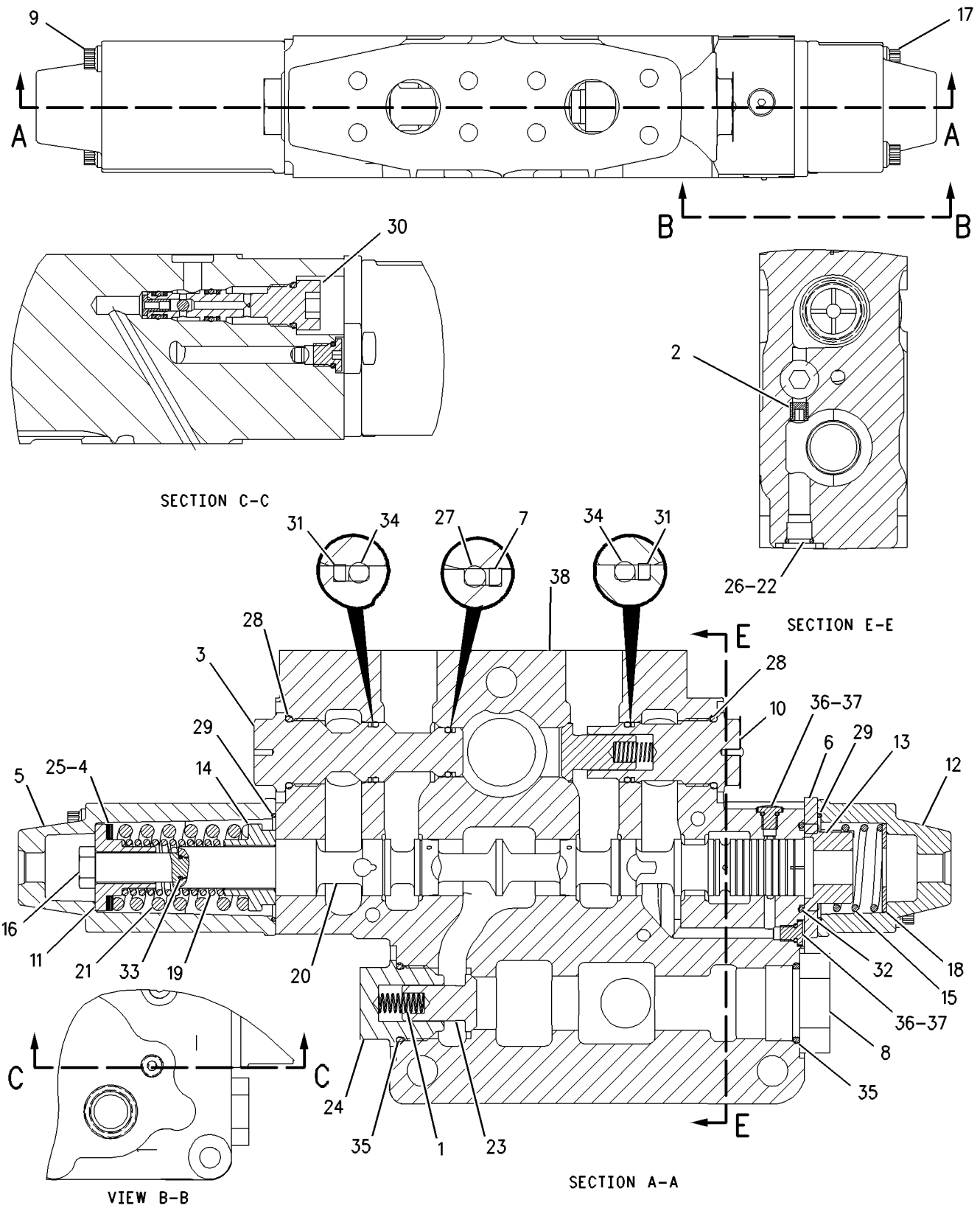

GRAPHIC #1 g00746950

HYDRAULIC SYSTEM

162-8038 VALVE GP-CONTROL

S/N: BLE1-UP; BMJ1-UP
PART OF 162-8033, 162-8035 VALVE GP-CONTROL
ALSO AN ATTACHMENT

SMCS-5051 **i01669429**

NOTE	REF NO	GRAPHIC REF	PART NUMBER	QTY	PART NAME 1 2 3 4 5 6 (PRODUCT LEVEL)	SEE PAGE
	1	1	**2S-2596**	1	SPRING	
	2	1	**4B-4278**	2	WASHER (10.2X20.5X1.6MM THK)	
	3	1	**4T-1108**	2	PLUG	
	4	1	**4T-1649**	1	HOUSING	
	5	1	**4T-1701**	1	SPRING	
	6	1	**4T-4511**	1	SLEEVE	
B	7	1	**4T-4628**	6	SHIM (0.50MM THK)	
	8	1	**4T-4631**	1	SPRING	
	9	1	**173-0511**	1	HOUSING	
	10	1	**8T-2501**	2	BOLT (3/8-16X2 IN)	
	11	1	**173-0514**	1	COVER	
	12	1	**4T-5072**	2	RING-BACKUP	
	13	1	**4T-5074**	1	RING-BACKUP	
	14	1	**9J-8126**	1	PLUG-ORIFICE	
	15	1	**9S-8001**	2	PLUG	
	16	1	**174-2043**	2	BOLT (5/16-18X4 IN)	
	17	1	**153-6976**	1	SPRING	
	18	1	**153-7067**	1	RETAINER	
	19	1	**153-7551**	1	RETAINER	
	20	1	**161-2684**	1	SCREW (3/8-24X2.87 IN)	
Z	21	1		1	STEM-TILT	
	22	1	**9S-8002**	1	PLUG	
	23	1	**100-8010**	1	VALVE	
	24	1	**100-8011**	1	PLUG	
B	25	1	**2J-2866**	2	SHIM (0.12MM THK)	
	26	1	**3J-7354**	1	SEAL-O-RING	
	27	1	**4J-5351**	2	SEAL-O-RING	
	28	1	**4J-7533**	2	SEAL-O-RING	
	29	1	**4K-1388**	2	SEAL-O-RING	
Z	30	1		1	VALVE	
Y	31	1	**4T-1860**	1	VALVE GP-SHUTTLE	533
	32	1	**4T-5073**	2	RING-BACKUP	
	33	1	**5M-2057**	2	SEAL-O-RING	
	34	1	**5K-0227**	2	SEAL-O-RING	
	35	1	**1T-0414**	2	BOLT-12 POINT HEAD (5/16-18X1 IN)	
	36	1	**6V-5556**	1	SEAL-O-RING	
	37	1	**7J-0204**	1	SEAL-O-RING	
	38	1	**7J-9933**	2	SEAL-O-RING	
	39	1	**7M-8485**	1	SEAL-O-RING	
Z	40	1			BODY-VALVE	

B-USE AS REQUIRED
Y-SEPARATE ILLUSTRATION
Z-NOT SERVICED SEPARATELY

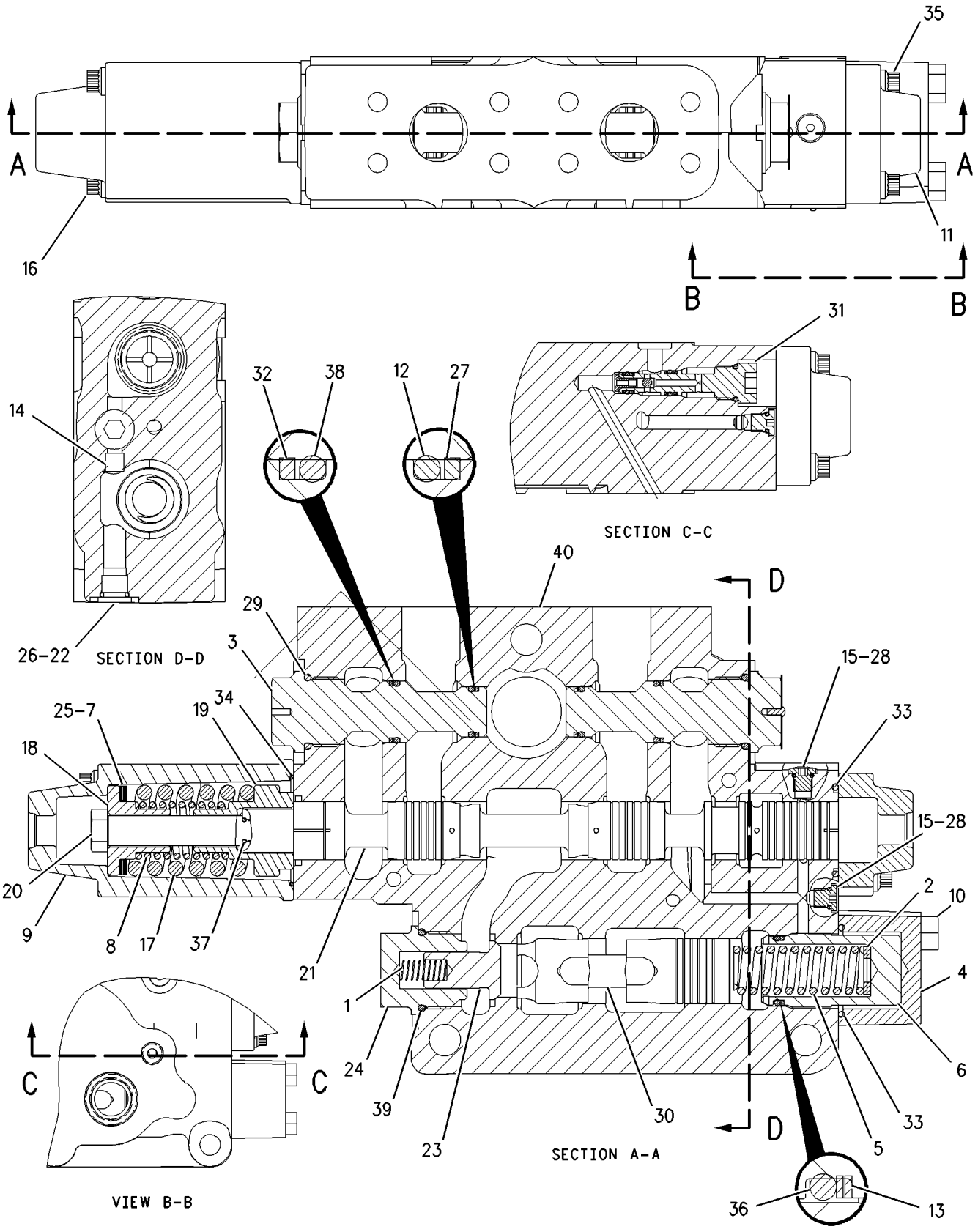

GRAPHIC #1 g00862548

HYDRAULIC SYSTEM

162-8039 VALVE GP-CONTROL

S/N: BLE1-UP; BMJ1-UP
PART OF 162-8033 VALVE GP-CONTROL
AN ATTACHMENT

SMCS-5051 **i01669446**

NOTE	REF NO	GRAPHIC REF	PART NUMBER	QTY	PART NAME 1 2 3 4 5 6 (PRODUCT LEVEL)	SEE PAGE
	1	1	**2S-2596**	2	SPRING	
	2	1	**3D-4603**	1	PLUG-PIPE	
	3	1	**4T-1108**	1	PLUG	
B	4	1	**4T-4628**	6	SHIM (0.50MM THK)	
	5	1	**4T-4631**	1	SPRING	
	6	1	**173-0511**	1	HOUSING	
	7	1	**4J-7533**	1	SEAL-O-RING	
	8	1	**173-0514**	1	COVER	
	9	1	**9S-4181**	1	PLUG	
	10	1	**174-2043**	2	BOLT (5/16-18X4 IN)	
	11	1	**100-8012**	1	BODY	
	12	1	**153-6976**	1	SPRING	
	13	1	**153-7067**	1	RETAINER	
	14	1	**153-7551**	1	RETAINER	
	15	1	**161-2684**	1	SCREW (3/8-24X2.87 IN)	
Z	16	1		1	STEM-RIPPER	
	17	1	**9S-8002**	1	PLUG	
	18	1	**100-8010**	2	VALVE	
	19	1	**100-8011**	1	PLUG	
B	20	1	**2J-2866**	2	SHIM (0.12MM THK)	
	21	1	**3J-7354**	1	SEAL-O-RING	
	22	1	**4J-5351**	1	SEAL-O-RING	
	23	1	**4K-1388**	2	SEAL-O-RING	
	24	1	**9S-8001**	1	PLUG	
Y	25	1	**4T-1860**	1	VALVE GP-SHUTTLE	533
	26	1	**4T-5072**	1	RING-BACKUP	
	27	1	**4T-5073**	2	RING-BACKUP	
	28	1	**5K-0227**	1	SEAL-O-RING	
	29	1	**1T-0414**	2	BOLT-12 POINT HEAD (5/16-18X1 IN)	
	30	1	**7J-0204**	1	SEAL-O-RING	
	31	1	**7J-9933**	2	SEAL-O-RING	
	32	1	**7M-8485**	2	SEAL-O-RING	
	33	1	**5M-2057**	1	SEAL-O-RING	
Z	34	1		1	BODY-VALVE	

B-USE AS REQUIRED
Y-SEPARATE ILLUSTRATION
Z-NOT SERVICED SEPARATELY

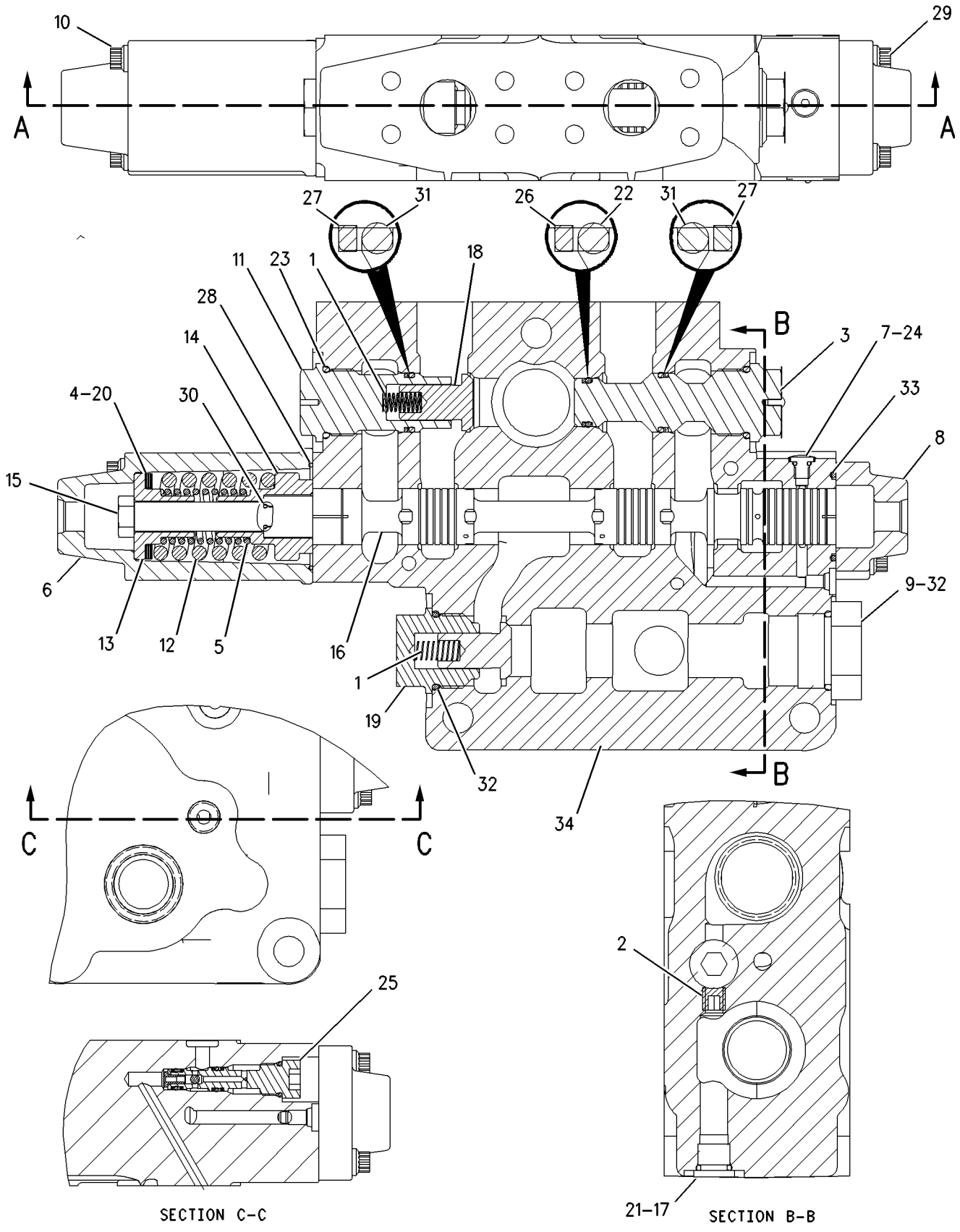

GRAPHIC #1 g00747032

162-0162 VALVE GP-MANIFOLD & REDUCING

S/N: BLE1-UP; BMJ1-UP
PART OF 173-7218, 173-7219 LINES GP-PILOT
ALSO AN ATTACHMENT

SMCS-3206 **i01590652**

NOTE	REF NO	GRAPHIC REF	PART NUMBER	QTY	PART NAME 1 2 3 4 5 6 (PRODUCT LEVEL)	SEE PAGE
	1	1	**158-9956**	1	VALVE-CHECK	
	2	1	**6E-5066**	1	SCREEN	
	3	1	**3K-0360**	1	SEAL-O-RING	
	4	1	**9S-8005**	1	PLUG	
Y	5	1	**170-3357**	1	VALVE GP-PRESSURE REDUCING	527
Y	6	1	**170-3360**	1	VALVE GP-RELIEF	532

Y-SEPARATE ILLUSTRATION

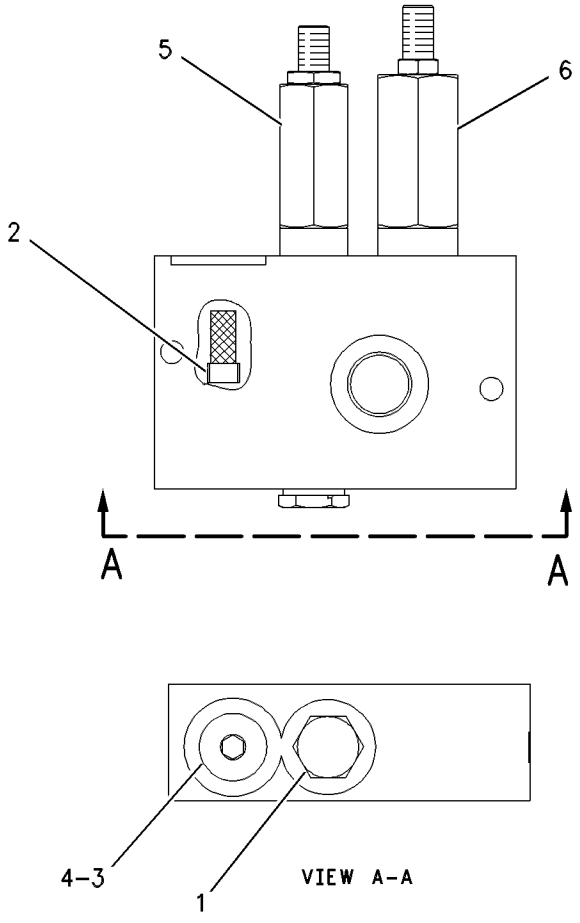

GRAPHIC #1 g00637822

MEMORANDA

HYDRAULIC SYSTEM

167-1177 VALVE GP-PILOT

S/N: BLE1-UP; BMJ1-UP
PART OF 171-6133 CONTROL AR-PILOT HYDRAULIC
AN ATTACHMENT

SMCS-5059 **i01592295**

NOTE	REF NO	GRAPHIC REF	PART NUMBER	QTY	PART NAME 1 2 3 4 5 6 (PRODUCT LEVEL)	SEE PAGE
	1	1	**9S-8004**	2	PLUG	
	2	1	**141-4852**	1	BOOT	
	3	1	**145-2334**	1	ADAPTER	
	4	1	**146-8477**	1	BRACKET	
	5	1	**146-8981**	1	PIN	
	6	1	**9S-8002**	6	PLUG	
Y	7	1	**194-5033**	1	VALVE GP-PILOT CARTRIDGE (RIPPER LOWER)	525
	8	1	**163-5512**	2	GROMMET	
	9	1	**190-6401**	1	PLATE	
M	10	1	**191-8920**	4	BOLT-SOCKET HEAD (M6X1X12MM)	
	11	1	**033-9139**	2	RING-RETAINING	
M	12	1	**105-3481**	1	BOLT-HEX SOCKET (M8X1.25X20MM)	
	13	1	**136-9297**	1	PLATE	
	14	1	**136-9298**	1	RETAINER	
	15	1	**149-5470**	1	PLATE	
	16	1	**3J-1907**	2	SEAL-O-RING	
	17	1	**3J-7354**	6	SEAL-O-RING	
	18	1	**7W-2632**	1	WASHER (8.5X16.8X1.6MM THK)	
	19	1	**8L-2786**	1	SEAL-O-RING	
	20	1	**201-9127**	1	LEVER AS	
	20A	1	**139-4189**	1	PLATE	
	20B	1	**199-6609**	1	SPACER	
	20C	1	**146-8479**	1	SWIVEL	
M	20D	1	**178-7877**	2	SETSCREW	
M	20E	1	**5C-2890**	2	NUT (M6X1 THD)	
Y	21	1	**194-5033**	1	VALVE GP-PILOT CARTRIDGE (RIPPER LIFT)	525
	22	1	**180-6152**	1	RETAINER	

M-METRIC PART
Y-SEPARATE ILLUSTRATION

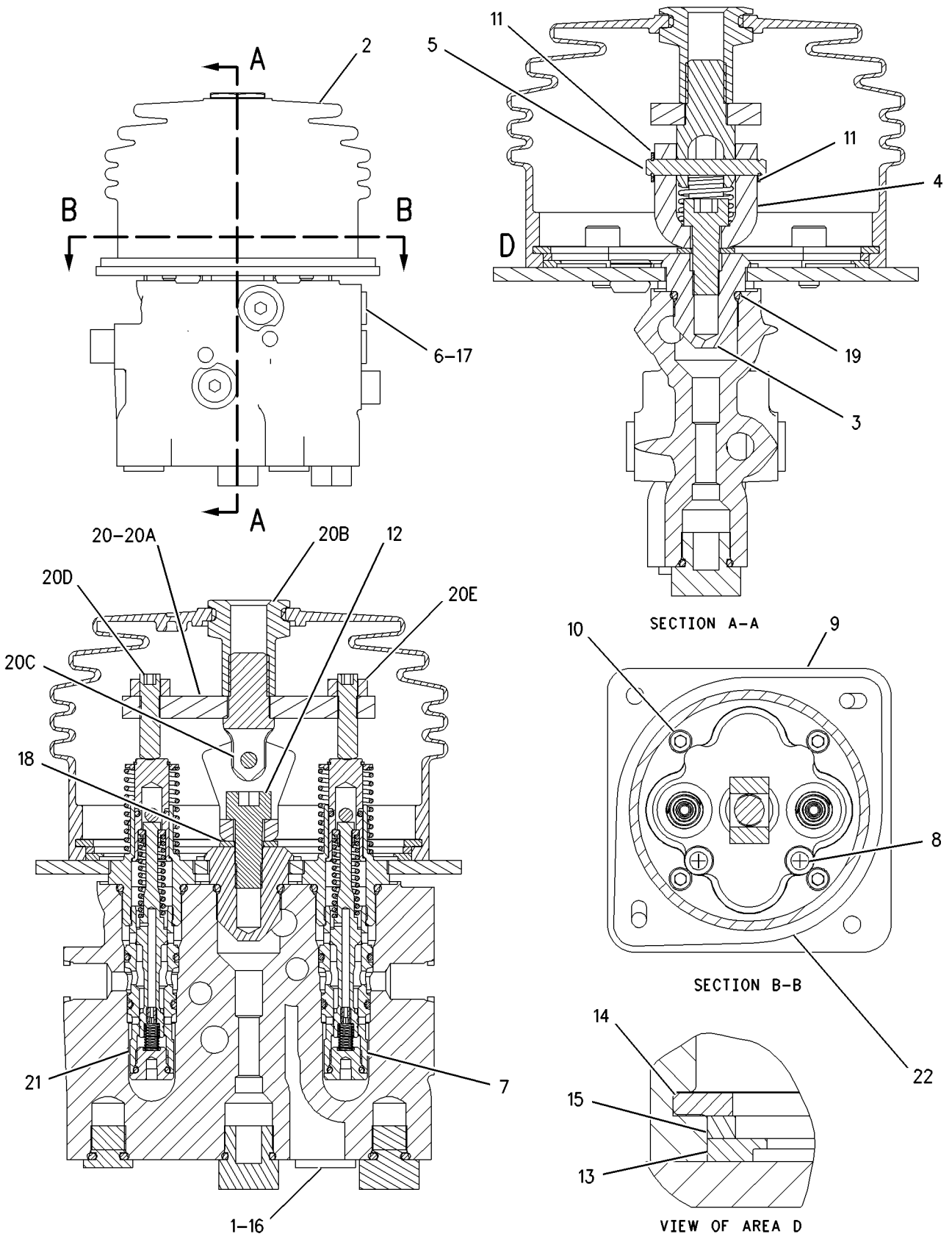

GRAPHIC #1

g00814499

HYDRAULIC SYSTEM

200-0189 VALVE GP-PILOT

S/N: BLE1-UP; BMJ1-UP
PART OF 168-7420, 171-6133 CONTROL AR-PILOT HYDRAULIC
ALSO AN ATTACHMENT

SMCS-5059 **i01668548**

NOTE	REF NO	GRAPHIC REF	PART NUMBER	QTY	PART NAME 1 2 3 4 5 6 (PRODUCT LEVEL)	SEE PAGE
Z	1	1		1	BODY	
	2	1	**141-4852**	1	BOOT	
	3	1	**145-2334**	1	ADAPTER	
	4	1	**163-5512**	2	GROMMET	
	5	1	**163-9308**	1	PLATE	
	6	1	**180-6152**	1	RETAINER	
Y	7	1	**194-5032**	1	VALVE GP-PILOT CARTRIDGE (DOZER RAISE)	524
Y	8	1	**194-5033**	1	VALVE GP-PILOT CARTRIDGE (DOZER TILT LEFT)	525
	9	1	**196-5515**	1	LEVER AS	
	9A	1	**146-6315**	3	PIN	
	9B	1	**199-7834**	1	DETENT AS	
		1	**199-7830**	1	DETENT	
		1	**8S-7499**	2	PIN-SPRING	
		1	**202-0599**	1	SPRING	
	9C	1	**146-6317**	1	WASHER (21.8X34X9MM THK)	
	9D	1	**159-3781**	1	SPRING	
M	9E	1	**5C-2890**	3	NUT (M6X1 THD)	
M	9F	1	**191-8920**	2	BOLT-SOCKET HEAD (M6X1X12MM)	
	10	1	**199-7833**	1	PLATE	
	11	1	**9S-8004**	3	PLUG	
	12	1	**200-5003**	8	SHIM (6.3X12X.025MM THK)	
	13	1	**136-9297**	1	PLATE	
	14	1	**136-9298**	1	RETAINER	
	15	1	**137-9755**	1	COIL AS	
BD		1	**6V-2689**		TUBE-HEAT SHRINK (6.35MM ID)	
		1	**8T-8729**	2	PIN-CONNECTOR	
	16	1	**149-5470**	1	PLATE	
M	17	1	**191-8921**	4	BOLT-SOCKET HEAD (M6X1X25MM)	
	18	1	**102-8802**	1	KIT-RECEPTACLE (2 PIN)	
					(INCLUDES RECEPTACLE AS & WEDGE)	
	19	1	**3E-3365**	1	WEDGE-RECEPTACLE LOCK (2 PIN)	
	20	1	**3J-1907**	3	SEAL-O-RING	
	21	1	**3J-7354**	5	SEAL-O-RING	
	22	1	**8L-2786**	1	SEAL-O-RING	
	23	1	**9S-8002**	5	PLUG	
Y	24	1	**194-5032**	1	VALVE GP-PILOT CARTRIDGE (DOZER LOWER)	524
Y	25	1	**194-5033**	1	VALVE GP-PILOT CARTRIDGE (DOZER TILT RIGHT)	525

B-USE AS REQUIRED
D-ORDER BY THE METER
M-METRIC PART
Y-SEPARATE ILLUSTRATION
Z-NOT SERVICED SEPARATELY

200-0189 VALVE GP-PILOT *(contd.)* **i01668548**

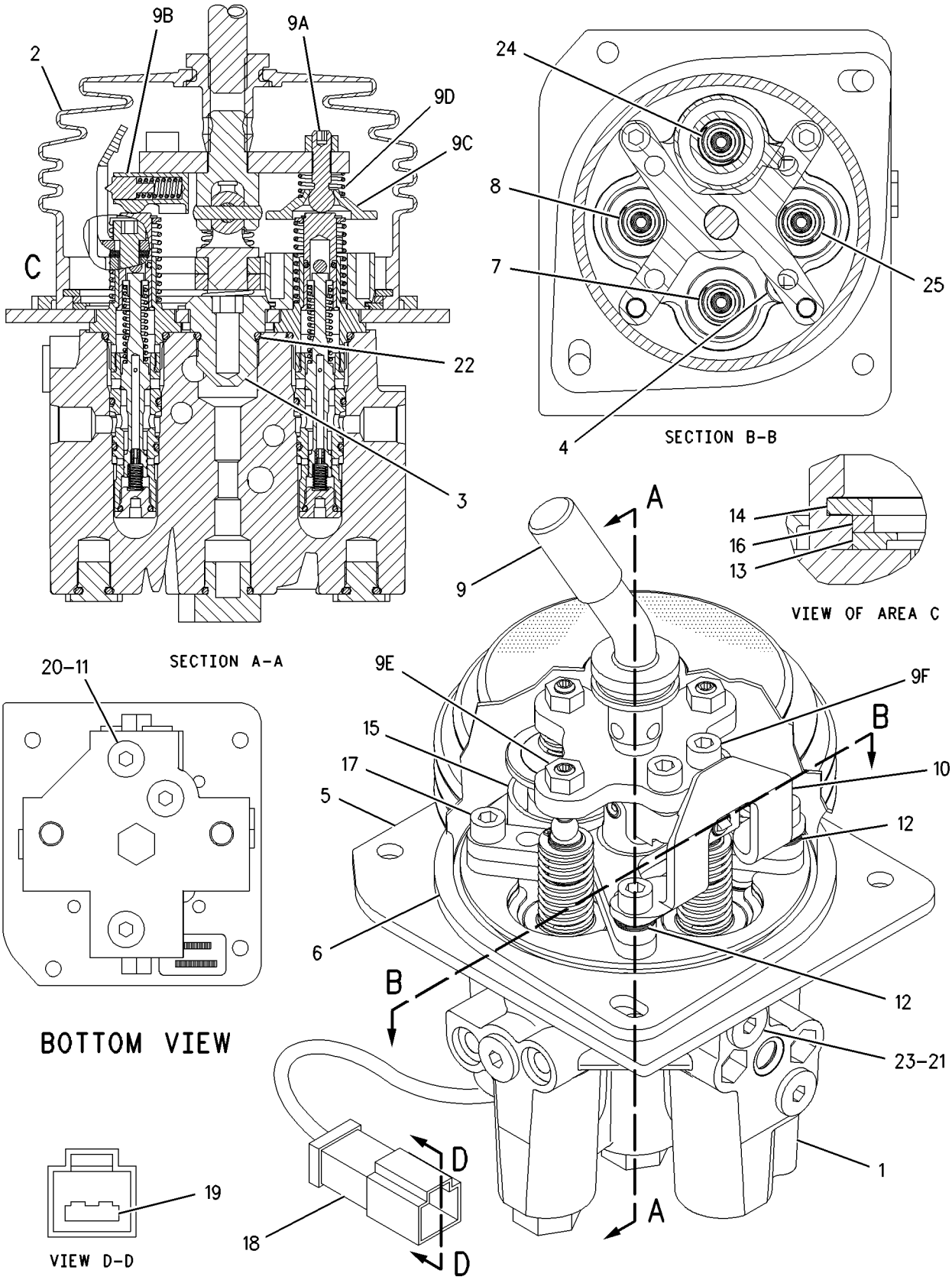

GRAPHIC #1 g00767886

HYDRAULIC SYSTEM

194-5032 VALVE GP-PILOT CARTRIDGE

S/N: BLE1-UP; BMJ1-UP
PART OF 200-0189 VALVE GP-PILOT
ALSO AN ATTACHMENT

SMCS-5059 **i01590710**

NOTE	REF NO	GRAPHIC REF	PART NUMBER	QTY	PART NAME 1 2 3 4 5 6 (PRODUCT LEVEL)	SEE PAGE
	1	1	**157-2153**	1	SPRING	
	2	1	**136-9304**	1	ADAPTER	
	3	1	**145-8707**	1	SPRING	
	4	1	**146-6316**	2	RETAINER	
	5	1	**146-6319**	1	RETAINER	
	6	1	**153-8925**	1	STOP	
	7	1	**116-4527**	1	ORIFICE	
	8	1	**146-6318**	1	PLUNGER	
	9	1	**191-3029**	1	SPOOL	
	10	1	**153-8926**	1	SPRING	
	11	1	**191-3028**	1	CAGE	
	12	1	**1M-6718**	1	BALL	
	13	1	**2H-3429**	1	RING-RETAINING	
	14	1	**3K-0360**	1	SEAL-O-RING	
	15	1	**4K-2039**	1	SEAL-O-RING	
	16	1	**6M-5062**	1	SEAL-O-RING	
	17	1	**7I-6601**	1	SEAL-O-RING	
	18	1	**7J-0204**	1	SEAL-O-RING	

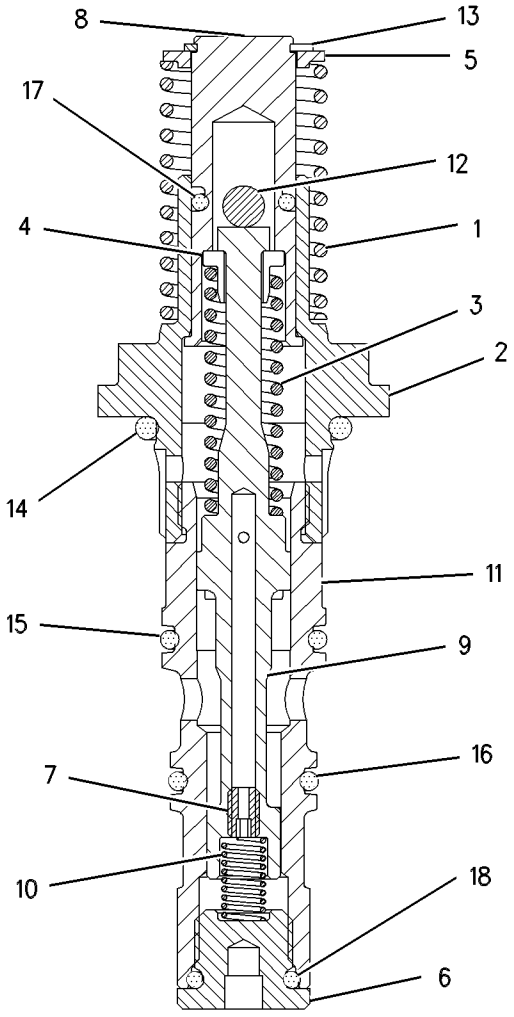

GRAPHIC #1 g00577903

HYDRAULIC SYSTEM

194-5033 VALVE GP-PILOT CARTRIDGE

S/N: BLE1-UP; BMJ1-UP
PART OF 167-1177, 200-0189 VALVE GP-PILOT
ALSO AN ATTACHMENT

SMCS-5059 **i01590713**

NOTE	REF NO	GRAPHIC REF	PART NUMBER	QTY	PART NAME 1 2 3 4 5 6 (PRODUCT LEVEL)	SEE PAGE
	1	1	**136-9304**	1	ADAPTER	
	2	1	**141-5151**	1	SPRING	
	3	1	**146-6316**	2	RETAINER	
	4	1	**146-6318**	1	PLUNGER	
	5	1	**146-6319**	1	RETAINER	
	6	1	**153-8925**	1	STOP	
	7	1	**153-8926**	1	SPRING	
	8	1	**157-2153**	1	SPRING	
	9	1	**191-3028**	1	CAGE	
	10	1	**191-3029**	1	SPOOL	
	11	1	**116-4527**	1	ORIFICE	
	12	1	**1M-6718**	1	BALL	
	13	1	**2H-3429**	1	RING-RETAINING	
	14	1	**3K-0360**	1	SEAL-O-RING	
	15	1	**4K-2039**	1	SEAL-O-RING	
	16	1	**6M-5062**	1	SEAL-O-RING	
	17	1	**7I-6601**	1	SEAL-O-RING	
	18	1	**7J-0204**	1	SEAL-O-RING	

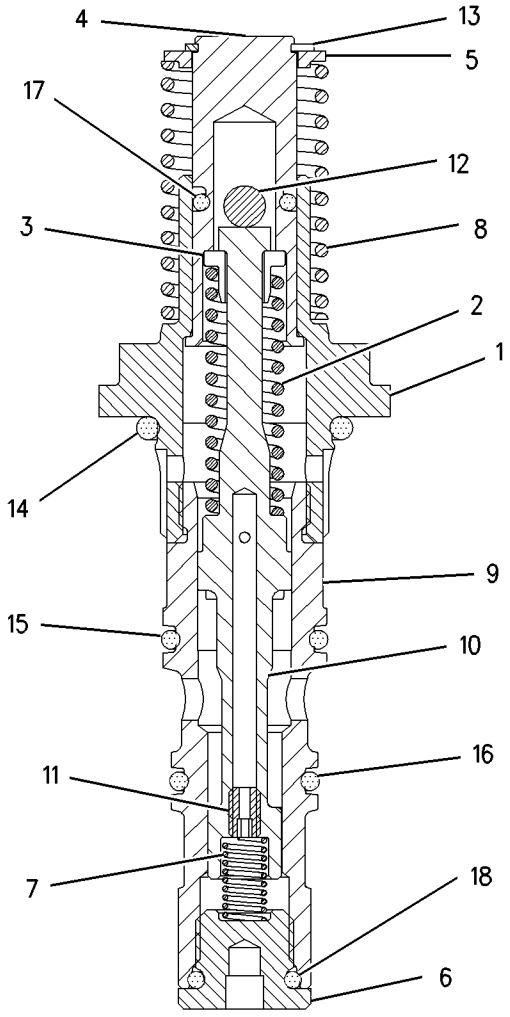

GRAPHIC #1 g00826503

HYDRAULIC SYSTEM

102-2068 VALVE GP-PRESS & FLOW CMPNSTR

S/N: BLE1-UP; BMJ1-UP

PART OF 171-2092 PUMP GP-PISTON

SMCS-5086 **i01669453**

NOTE	REF NO	GRAPHIC REF	PART NUMBER	QTY	PART NAME 1 2 3 4 5 6 (PRODUCT LEVEL)	SEE PAGE
	1	1	**6E-4246**	1	SPRING-MARGIN	
	2	1	**9S-4191**	1	PLUG	
	3	1	**3J-1907**	3	SEAL-O-RING	
	4	1	**6E-4241**	1	SPOOL-MARGIN	
	5	1	**9T-2186**	2	PLUG	
	6	1	**6E-4239**	1	SPOOL-CUTOFF	
	7	1	**6E-4230**	2	GUIDE-SPRING	
	8	1	**6E-4228**	1	SPRING	
	9	1	**6E-6140**	1	PLUG-COMPENSATOR	
		1	**033-6036**	1	SEAL-O-RING	
	10	1	**6E-4318**	1	PIN-SPRING STOP	
	11	1	**6E-6141**	2	LOCKNUT-SEALING	
M	12	1	**9X-8914**	2	SETSCREW-SOCKET	
	13	1	**6E-6142**	1	PLUG-MARGIN	
		1	**033-6027**	1	SEAL-O-RING	
	14	1	**6E-4242**	2	GUIDE-SPRING	
	15	1	**6E-4229**	1	BODY-COMPENSATOR	

M-METRIC PART

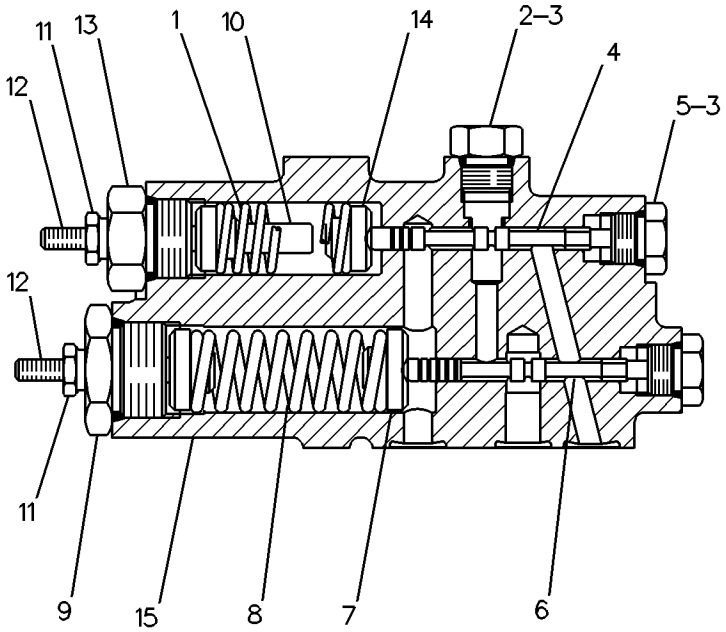

GRAPHIC #1 g00083258

170-3357 VALVE GP-PRESSURE REDUCING

S/N: BLE1-UP; BMJ1-UP
PART OF 162-0162 VALVE GP-MANIFOLD & REDUCING
ALSO AN ATTACHMENT

SMCS-5117 **i01590667**

NOTE	REF NO	GRAPHIC REF	PART NUMBER	QTY	PART NAME 1 2 3 4 5 6 (PRODUCT LEVEL)	SEE PAGE
	1	1	**3K-0360**	1	SEAL-O-RING	
	2	1	**161-6149**	1	SEAL-O-RING	
	3	1	**095-1750**	1	SEAL-O-RING	
	4	1	**161-6161**	2	RING-BACKUP	
	5	1	**187-0541**	2	RING-BACKUP	

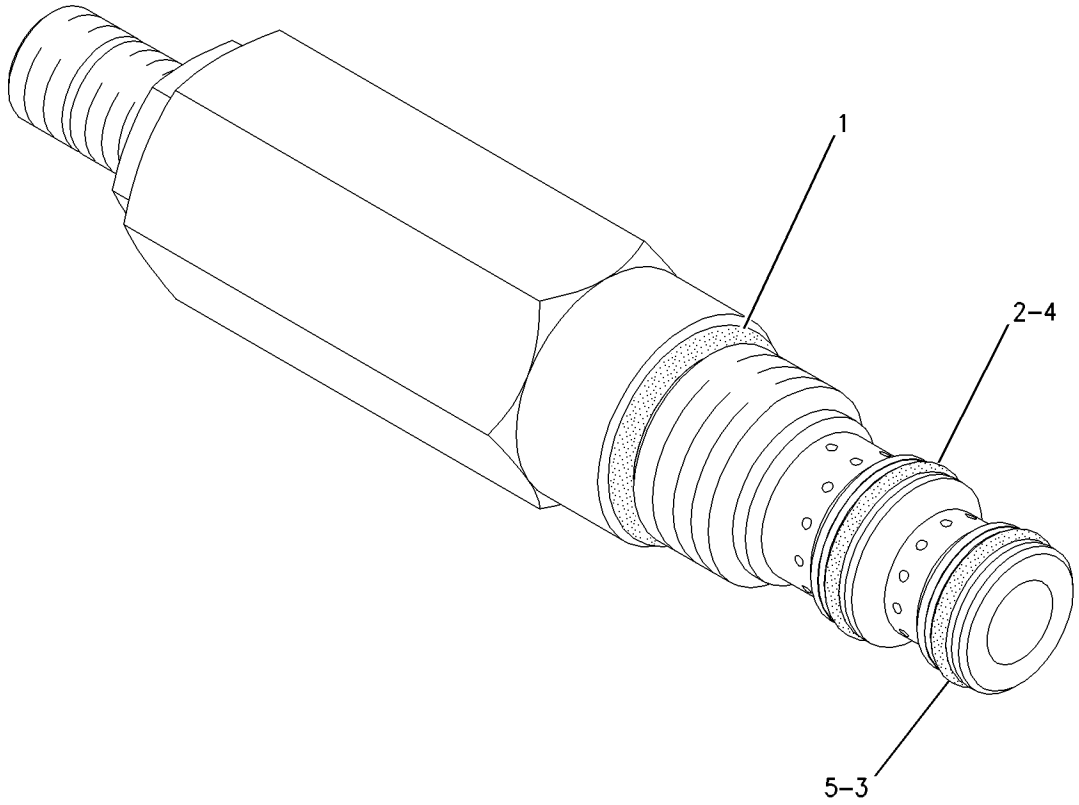

GRAPHIC #1 g00777733

113-5429 VALVE GP-QUICK-DROP

S/N: BLE1-UP; BMJ1-UP
PART OF 164-4807 HYDRAULIC AR

SMCS-5110 **i01572475**

NOTE	REF NO	GRAPHIC REF	PART NUMBER	QTY	PART NAME 1 2 3 4 5 6 (PRODUCT LEVEL)	SEE PAGE
	1	1	**1J-9671**	2	SEAL-O-RING	
	2	1	**1P-3706**	2	SEAL (54.5MM ID)	
	3	1	**1P-4577**	12	FLANGE-HALF	
	4	1	**2M-9780**	1	SEAL-O-RING	
	5	1	**3L-3813**	1	PIN	
	6	1	**113-5424**	1	VALVE GP	
B	7	1	**4M-6980**	4	SHIM (.25MM THK)	
B	8	1	**4T-4659**	4	SHIM (.80MM THK)	
	9	1	**5S-7382**	24	BOLT (3/8-16X1.375 IN)	
	10	1	**6E-4532**	1	COVER	
	11	1	**6E-4533**	1	COVER	
	12	1	**6E-4907**	1	STOP	
	13	1	**6K-8162**	1	RING-RETAINING	
	14	1	**7B-7525**	8	BOLT-SOCKET HEAD (7/16-14X1.25 IN)	
	15	1	**8T-4896**	24	WASHER-HARD (10.2X18.5X2.5MM THK)	
	16	1	**9S-8003**	2	PLUG-O-RING	
	17	1	**9S-8006**	1	PLUG	
	18	1	**9T-9836**	1	SLEEVE-ORIFICE	
B	19	1	**083-7784**	1	SHIM (2.0MM THK)	
	20	1	**100-6211**	1	PISTON	
	21	1	**108-1847**	1	SPRING	

B-USE AS REQUIRED

113-5429 VALVE GP-QUICK-DROP *(contd.)*

i01572475

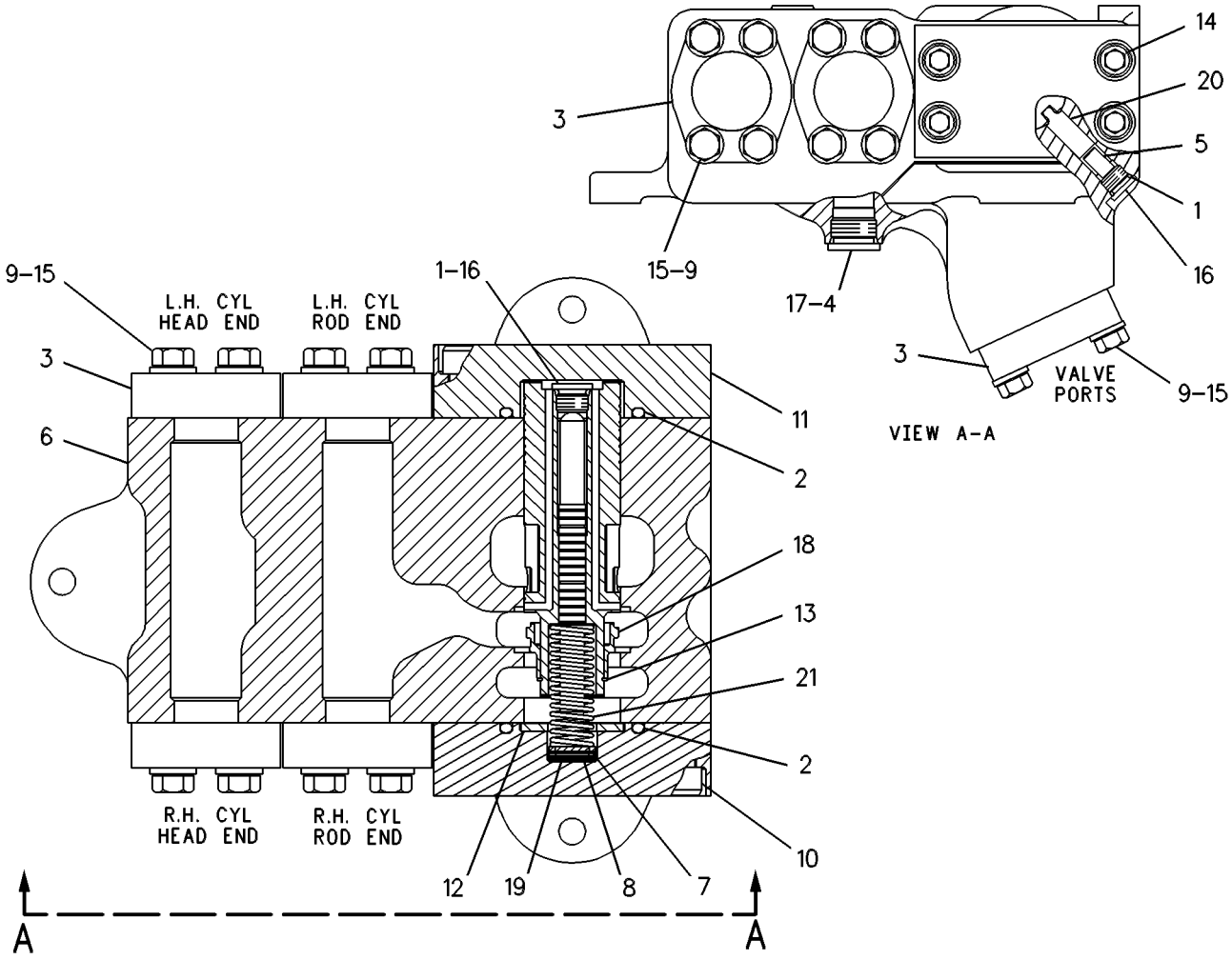

GRAPHIC #1

g00254129

HYDRAULIC SYSTEM

9T-8378 VALVE GP-RELIEF

S/N: BLE1-UP; BMJ1-UP
PART OF 168-0241 MANIFOLD GP-INLET
ALSO AN ATTACHMENT

SMCS-5069, 5117 **i01669462**

NOTE	REF NO	GRAPHIC REF	PART NUMBER	QTY	PART NAME 1 2 3 4 5 6 (PRODUCT LEVEL)	SEE PAGE
	1	1	**3K-0360**	2	SEAL-O-RING	
	2	1	**6E-1835**	1	RETAINER AS	
	3	1	**9X-6395**	1	NUT-ORFS (3/4-16 THD)	
	4	1	**6J-6439**	1	VALVE-POPPET	
	5	1	**4T-7571**	1	PLATE	
	6	1	**7J-9933**	1	SEAL-O-RING	
	7	1	**9M-1974**	1	WASHER-HARD (8.8X16X2MM THK)	
	8	1	**4T-2741**	1	SPRING	

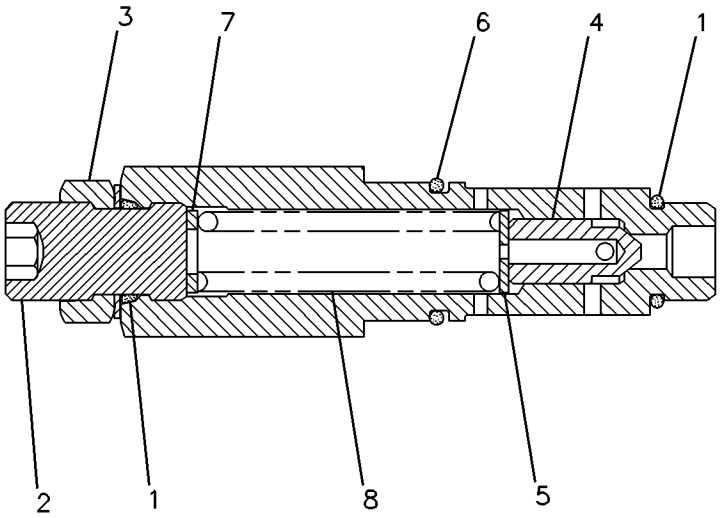

GRAPHIC #1 g00212557

HYDRAULIC SYSTEM

104-7574 VALVE GP-RELIEF

S/N: BLE1-UP; BMJ1-UP
PART OF 168-0241 MANIFOLD GP-INLET
ALSO AN ATTACHMENT

SMCS-5069, 5117 **i01590631**

NOTE	REF NO	GRAPHIC REF	PART NUMBER	QTY	PART NAME 1 2 3 4 5 6 (PRODUCT LEVEL)	SEE PAGE
	1	1	**106-3922**	1	PLUG	
	2	1	**7M-8485**	2	SEAL-O-RING	
	3	1	**4T-1009**	1	VALVE GP	
	4	1	**4T-5075**	1	RING-BACKUP	
	5	1	**6V-5393**	1	SEAL-O-RING	
	6	1	**4T-1011**	1	RING-SEAL	
	7	1	**5F-7054**	1	SEAL-O-RING	
	8	1	**4T-1005**	1	SPRING	
B	9	1	**5S-7001**	4	SPACER (7.54X14.15X.9MM THK)	

B-USE AS REQUIRED

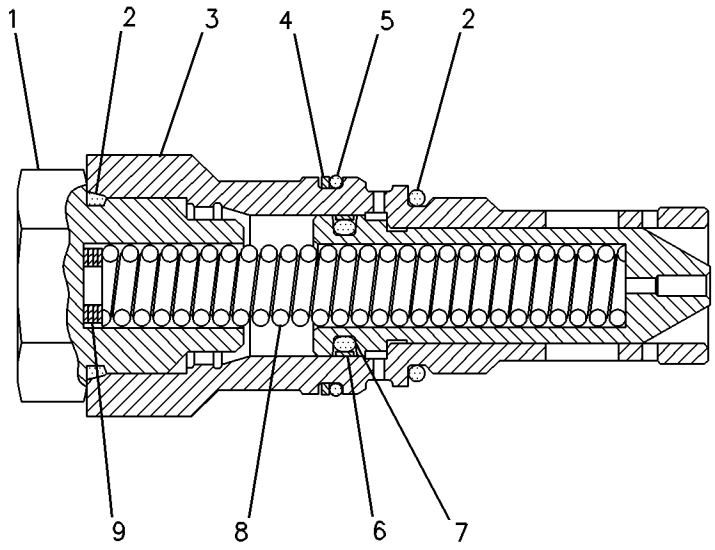

GRAPHIC #1 g00233165

170-3360 VALVE GP-RELIEF

S/N: BLE1-UP; BMJ1-UP
PART OF 162-0162 VALVE GP-MANIFOLD & REDUCING
ALSO AN ATTACHMENT

SMCS-5069, 5117 **i01590673**

NOTE	REF NO	GRAPHIC REF	PART NUMBER	QTY	PART NAME 1 2 3 4 5 6 (PRODUCT LEVEL)	SEE PAGE
J	1	1	**161-6149**	1	SEAL-O-RING	
J	2	1	**161-6161**	2	RING-BACKUP	
J	3	1	**2M-9780**	1	SEAL-O-RING	
					AVAILABLE REPAIR KIT(S):	
J			**133-5545**	1	KIT-SEAL	
J-PARTS MARKED J SERVICES KIT MARKED J						

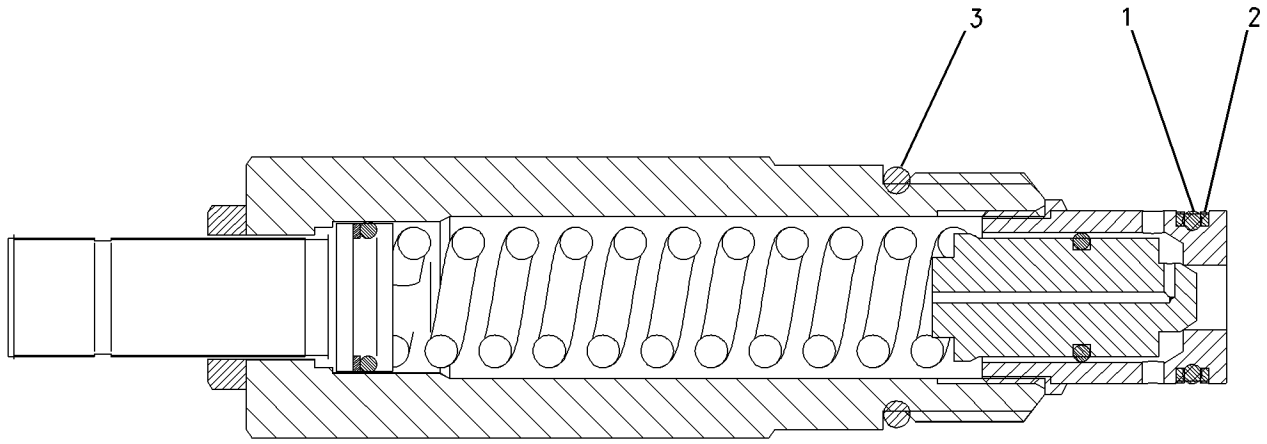

GRAPHIC #1 g00732207

4T-1860 VALVE GP-SHUTTLE

S/N: BLE1-UP; BMJ1-UP
PART OF 162-8037, 162-8038, 162-8039 VALVE GP-CONTROL
ALSO AN ATTACHMENT

SMCS-5079 **i01668552**

NOTE	REF NO	GRAPHIC REF	PART NUMBER	QTY	PART NAME 1 2 3 4 5 6 (PRODUCT LEVEL)	SEE PAGE
	1	1	**6V-5586**	1	SEAL-O-RING	
	2	1	**4T-5070**	2	RING-BACKUP	
	3	1	**4T-5071**	2	RING-BACKUP	
	4	1	**8C-3085**	1	SEAL-O-RING	
	5	1	**3J-1907**	1	SEAL-O-RING	
	6	1	**1M-6718**	1	BALL	

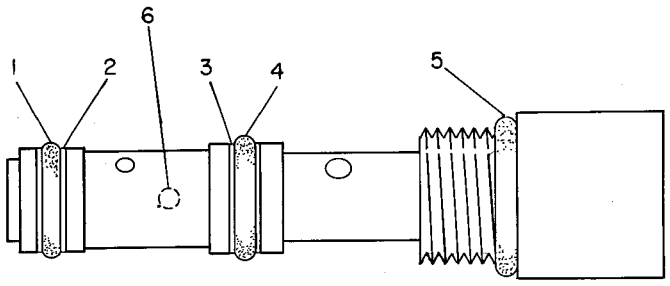

GRAPHIC #1 g00082112

IMPLEMENTS

4T-5348 BRACE GP-BULLDOZER

S/N: 3GP1-UP; 4BP1-UP

PART OF 108-3978, 108-3979, 108-3982, 108-3983 BULLDOZER AR-ANGLING AN ATTACHMENT

SMCS-6074 **i01669468**

NOTE	REF NO	GRAPHIC REF	PART NUMBER	QTY	PART NAME 1 2 3 4 5 6 (PRODUCT LEVEL)	SEE PAGE
	1	1	**4T-5495**	2	STUD-BALL	
	2	1	**3B-8489**	4	FITTING-GREASE (1/8-27 THD)	
	3	1	**1U-0928**	2	SCREW-ADJUSTMENT	
	4	1	**7X-0370**	16	BOLT (3/4-10X3.50 IN)	
	5	1	**3J-6559**	4	CAP-BEARING	
CB	6	1	**8E-9212**	104	SHIM (.8MM THK)	
	7	1	**3J-1770**	2	LOCK PIN	
	8	1	**4F-1252**	2	PIN	
	9	1	**160-6306**	2	CAP-BEARING	
	10	1	**7X-0368**	4	BOLT (3/4-10X3 IN)	
CB	11	1	**8E-5701**	52	SHIM (.8MM THK)	
	12	1	**1U-0929**	2	SCREW-ADJUSTMENT	
	13	1	**3J-6573**	2	SCREW-ADJUSTMENT	
	14	1	**1U-1176**	2	PIN	
	15	1	**4F-0255**	2	PIN	
	16	1	**3B-4627**	2	PIN-COTTER	
	17	1	**1U-1267**	2	BRACE AS	
					(EACH INCLUDES)	
	18	1	**8J-4866**	1	LUG	
	19	1	**6F-3908**	1	HANDLE	
	20	1	**3F-4854**	1	KNOB	
	21	1	**7T-4970**	1	ARM AS-RH	
	22	1	**7T-9146**	1	ARM AS-LH	
					(EACH ARM AS INCLUDES)	
		1	**4B-4098**	1	PLUG-CUP	
	23	1	**1U-1174**	1	BRACKET-LH	
		1	**1U-1173**	1	BRACKET-RH	
	24	1	**1U-1175**	2	PLATE	
	25	1	**3Y-3866**	1	NUT (FOR USE WITH 4 PLATE ARM AS)	
					—OR—	
		1	**9J-9147**	1	NUT (FOR USE WITH 2 CHANNEL ARM AS)	
	26	1	**9W-0588**	1	BEARING (FOR USE WITH 4 PLATE ARM AS)	
					—OR—	
		1	**1U-1263**	1	BEARING (FOR USE WITH 2 CHANNEL ARM AS)	

B-USE AS REQUIRED
C-CHANGE FROM PREVIOUS TYPE

4T-5348 **BRACE GP-BULLDOZER** *(contd.)* **i01669468**

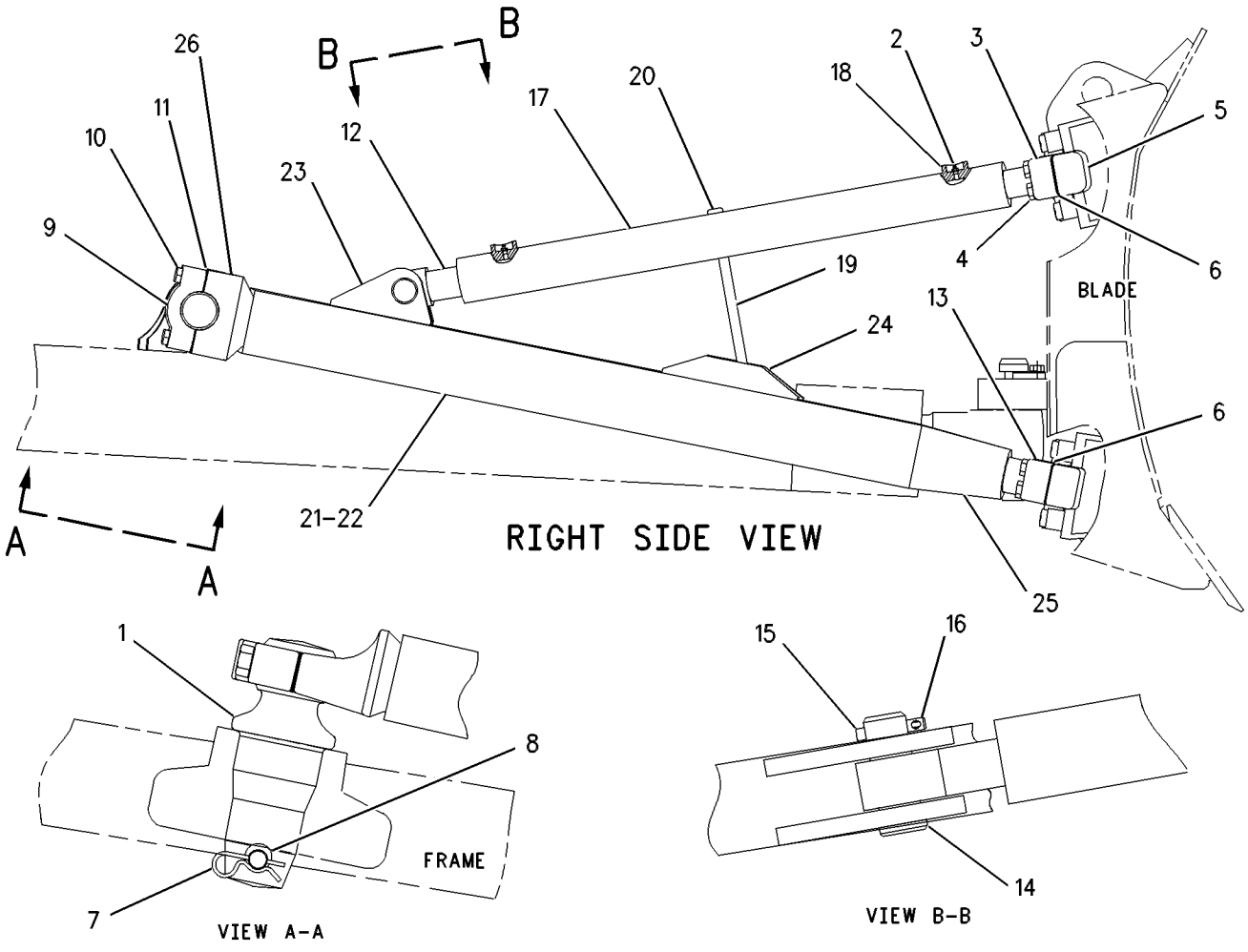

GRAPHIC #1 g00566637

139-8346 BULLDOZER AR

S/N: 3FP1-UP
FOR USE WITH 139-8344—PAGE 4
AN ATTACHMENT

SMCS-6050 **i01635737**

NOTE	PART NUMBER	QTY	PART NAME 1 2 3 4 5 6 (PRODUCT LEVEL)	SEE PAGE
Y	*8E-5203*	1	BLADE GP-SEMI-UNIVERSAL	587
Y	*126-8467*	1	CYLINDER & LINES GP-LIFT (LH)	444
Y	*126-8466*	1	CYLINDER & LINES GP-LIFT (RH)	442
Y	*1U-2525*	1	LINES GP-TILT CYLINDER	488
Y	*3G-9451*	1	MOUNTING GP-CYLINDER	558
Y	*190-9771*	1	PUSH ARM GP	562
Y	*139-9032*	1	TRUNNION GP-BULLDOZER	568
	8T-7371	1	PLATE-SERIAL NUMBER	
	4B-4158	2	SCREW-DRIVE (3/16X0.25 IN)	

Y-SEPARATE ILLUSTRATION

IMPLEMENTS

108-3978 BULLDOZER AR-ANGLING

S/N: 3GP1-UP
AN ATTACHMENT

SMCS-6050, 6052 **i01669611**

NOTE	PART NUMBER	QTY	PART NAME 1 2 3 4 5 6 (PRODUCT LEVEL)	SEE PAGE
Y	*6Y-1806*	1	BLADE GP-ANGLING	583
Y	*4T-5348*	1	BRACE GP-BULLDOZER	534
Y	*6Y-2073*	1	C-FRAME GP	554
Y	*126-8465*	1	CYLINDER & LINES GP-LIFT (LH)	440
Y	*126-8464*	1	CYLINDER & LINES GP-LIFT (RH)	438
Y	*3G-9451*	1	MOUNTING GP-CYLINDER	558
Y	*109-1352*	1	TRUNNION GP-BULLDOZER	567
	8T-7371	1	PLATE-SERIAL NUMBER	
	4B-4158	2	SCREW-DRIVE (3/16X0.25 IN)	

Y-SEPARATE ILLUSTRATION

IMPLEMENTS

108-3979 BULLDOZER AR-ANGLING

S/N: 3GP1-UP

AN ATTACHMENT

SMCS-6050, 6052 **i01127157**

NOTE	PART NUMBER	QTY	PART NAME 1 2 3 4 5 6 (PRODUCT LEVEL)	SEE PAGE
Y	*6Y-1806*	1	BLADE GP-ANGLING	583
Y	*4T-5348*	1	BRACE GP-BULLDOZER	534
Y	*6Y-2073*	1	C-FRAME GP	554
Y	*109-1352*	1	TRUNNION GP-BULLDOZER	567
	8T-7371	1	PLATE-SERIAL NUMBER	
	4B-4158	2	SCREW-DRIVE	

Y-SEPARATE ILLUSTRATION

108-3982 BULLDOZER AR-ANGLING

S/N: 4BP1-UP
AN ATTACHMENT

SMCS-6050, 6052 **i01539657**

NOTE	PART NUMBER	QTY	PART NAME 1 2 3 4 5 6 (PRODUCT LEVEL)	SEE PAGE
Y	*8E-1092*	1	BLADE GP-ANGLING	584
Y	*4T-5348*	1	BRACE GP-BULLDOZER	534
Y	*6I-8346*	1	C-FRAME GP	552
Y	*126-8464*	1	CYLINDER & LINES GP-LIFT (RH)	438
Y	*126-8465*	1	CYLINDER & LINES GP-LIFT (LH)	440
Y	*3G-9451*	1	MOUNTING GP-CYLINDER	558
Y	*109-1352*	1	TRUNNION GP-BULLDOZER	567
	8T-7371	1	PLATE-SERIAL NUMBER	
	4B-4158	2	SCREW-DRIVE (3/16X0.25 IN)	

Y-SEPARATE ILLUSTRATION

IMPLEMENTS

108-3983 BULLDOZER AR-ANGLING

S/N: 4BP1-UP

AN ATTACHMENT

SMCS-6050, 6052 **i01539656**

NOTE	PART NUMBER	QTY	PART NAME 1 2 3 4 5 6 (PRODUCT LEVEL)	SEE PAGE
Y	*8E-1092*	1	BLADE GP-ANGLING	584
Y	*4T-5348*	1	BRACE GP-BULLDOZER	534
Y	*6I-8346*	1	C-FRAME GP	552
Y	*109-1352*	1	TRUNNION GP-BULLDOZER	567
	8T-7371	1	PLATE-SERIAL NUMBER	
	4B-4158	2	SCREW-DRIVE (3/16X0.25 IN)	

Y-SEPARATE ILLUSTRATION

108-3974 BULLDOZER AR-SEMI-UNIVERSAL

S/N: 3FP1-UP
AN ATTACHMENT

SMCS-6050, 6078 **i01591095**

NOTE	PART NUMBER	QTY	PART NAME 1 2 3 4 5 6 (PRODUCT LEVEL)	SEE PAGE
Y	*8E-5203*	1	BLADE GP-SEMI-UNIVERSAL	587
Y	*126-8464*	1	CYLINDER & LINES GP-LIFT (RH)	438
Y	*126-8465*	1	CYLINDER & LINES GP-LIFT (LH)	440
Y	*1U-2393*	1	LINES GP-TILT CYLINDER	486
Y	*3G-9451*	1	MOUNTING GP-CYLINDER	558
Y	*190-9771*	1	PUSH ARM GP	562
Y	*109-1352*	1	TRUNNION GP-BULLDOZER	567
	8T-7371	1	PLATE-SERIAL NUMBER	
	4B-4158	2	SCREW-DRIVE (3/16X0.25 IN)	

Y-SEPARATE ILLUSTRATION

IMPLEMENTS

108-3975 BULLDOZER AR-SEMI-UNIVERSAL

S/N: 3FP1-UP

AN ATTACHMENT

SMCS-6050, 6078 **i01650483**

NOTE	PART NUMBER	QTY	PART NAME 1 2 3 4 5 6 (PRODUCT LEVEL)	SEE PAGE
Y	*8E-5203*	1	BLADE GP-SEMI-UNIVERSAL	587
Y	*1U-2393*	1	LINES GP-TILT CYLINDER	486
Y	*190-9771*	1	PUSH ARM GP	562
Y	*109-1352*	1	TRUNNION GP-BULLDOZER	567
	8T-7371	1	PLATE-SERIAL NUMBER	
			(ON UPPER RH CORNER ON REAR OF BLADE)	
	4B-4158	2	SCREW-DRIVE (3/16X0.25 IN)	

Y-SEPARATE ILLUSTRATION

108-3976 BULLDOZER AR-SEMI-UNIVERSAL

S/N: 4AP1-UP
AN ATTACHMENT

SMCS-6050, 6078 **i01604060**

NOTE	PART NUMBER	QTY	PART NAME 1 2 3 4 5 6 (PRODUCT LEVEL)	SEE PAGE
Y	*8E-9325*	1	BLADE GP-SEMI-UNIVERSAL	588
Y	*126-8464*	1	CYLINDER & LINES GP-LIFT (RH)	438
Y	*126-8465*	1	CYLINDER & LINES GP-LIFT (LH)	440
Y	*6Y-5705*	1	LINES GP-TILT & TIP CYLINDER	484
Y	*3G-9451*	1	MOUNTING GP-CYLINDER	558
Y	*194-0937*	1	PUSH ARM GP	564
Y	*109-1352*	1	TRUNNION GP-BULLDOZER	567
	8T-7371	1	PLATE-SERIAL NUMBER	
	4B-4158	2	SCREW-DRIVE (3/16X0.25 IN)	

Y-SEPARATE ILLUSTRATION

IMPLEMENTS

108-3977 BULLDOZER AR-SEMI-UNIVERSAL

S/N: 4AP1-UP

AN ATTACHMENT

SMCS-6050, 6078 **i01650499**

NOTE	PART NUMBER	QTY	PART NAME 1 2 3 4 5 6 (PRODUCT LEVEL)	SEE PAGE
Y	*8E-9325*	1	BLADE GP-SEMI-UNIVERSAL	588
Y	*6Y-5705*	1	LINES GP-TILT & TIP CYLINDER	484
Y	*194-0937*	1	PUSH ARM GP	564
Y	*109-1352*	1	TRUNNION GP-BULLDOZER	567
	8T-7371	1	PLATE-SERIAL NUMBER	
			(ON UPPER RH CORNER ON REAR OF BLADE)	
	4B-4158	2	SCREW-DRIVE (3/16X0.25 IN)	

Y-SEPARATE ILLUSTRATION

IMPLEMENTS

108-3970 BULLDOZER AR-STRAIGHT

S/N: 3EP1-UP
AN ATTACHMENT

SMCS-6050, 6051 **i01591024**

NOTE	PART NUMBER	QTY	PART NAME 1 2 3 4 5 6 (PRODUCT LEVEL)	SEE PAGE
Y	*8E-5186*	1	BLADE GP-STRAIGHT	591
Y	*126-8464*	1	CYLINDER & LINES GP-LIFT (RH)	438
Y	*126-8465*	1	CYLINDER & LINES GP-LIFT (LH)	440
Y	*1U-2393*	1	LINES GP-TILT CYLINDER	486
Y	*3G-9451*	1	MOUNTING GP-CYLINDER	558
Y	*190-9771*	1	PUSH ARM GP	562
Y	*109-1352*	1	TRUNNION GP-BULLDOZER	567
	8T-7371	1	PLATE-SERIAL NUMBER	
	4B-4158	2	SCREW-DRIVE (3/16X0.25 IN)	

Y-SEPARATE ILLUSTRATION

IMPLEMENTS

108-3971 BULLDOZER AR-STRAIGHT

S/N: 3EP1-UP

AN ATTACHMENT

SMCS-6050, 6051 **i01650449**

NOTE	PART NUMBER	QTY	PART NAME 1 2 3 4 5 6 (PRODUCT LEVEL)	SEE PAGE
Y	*8E-5186*	1	BLADE GP-STRAIGHT	591
Y	*1U-2393*	1	LINES GP-TILT CYLINDER	486
Y	*190-9771*	1	PUSH ARM GP	562
Y	*109-1352*	1	TRUNNION GP-BULLDOZER	567
	8T-7371	1	PLATE-SERIAL NUMBER	
			(ON UPPER RH CORNER ON REAR OF BLADE)	
	4B-4158	2	SCREW-DRIVE (3/16X0.25 IN)	

Y-SEPARATE ILLUSTRATION

IMPLEMENTS

7Z-9952 BULLDOZER AS

S/N: BLE1-UP
PART OF 7Z-9954 BULLDOZER GP
AN ATTACHMENT

SMCS-6050 **i01582085**

NOTE	REF NO	GRAPHIC REF	PART NUMBER	QTY	PART NAME 1 2 3 4 5 6 (PRODUCT LEVEL)	SEE PAGE
Y	1	1	**8E-5204**	1	BLADE GP-WASTE HANDLING	593
	2	1	**7Z-9953**	1	KIT-PLATE	
					(INCLUDES PLATE, GUSSETS, ANGLE AND BARS)	

Y-SEPARATE ILLUSTRATION

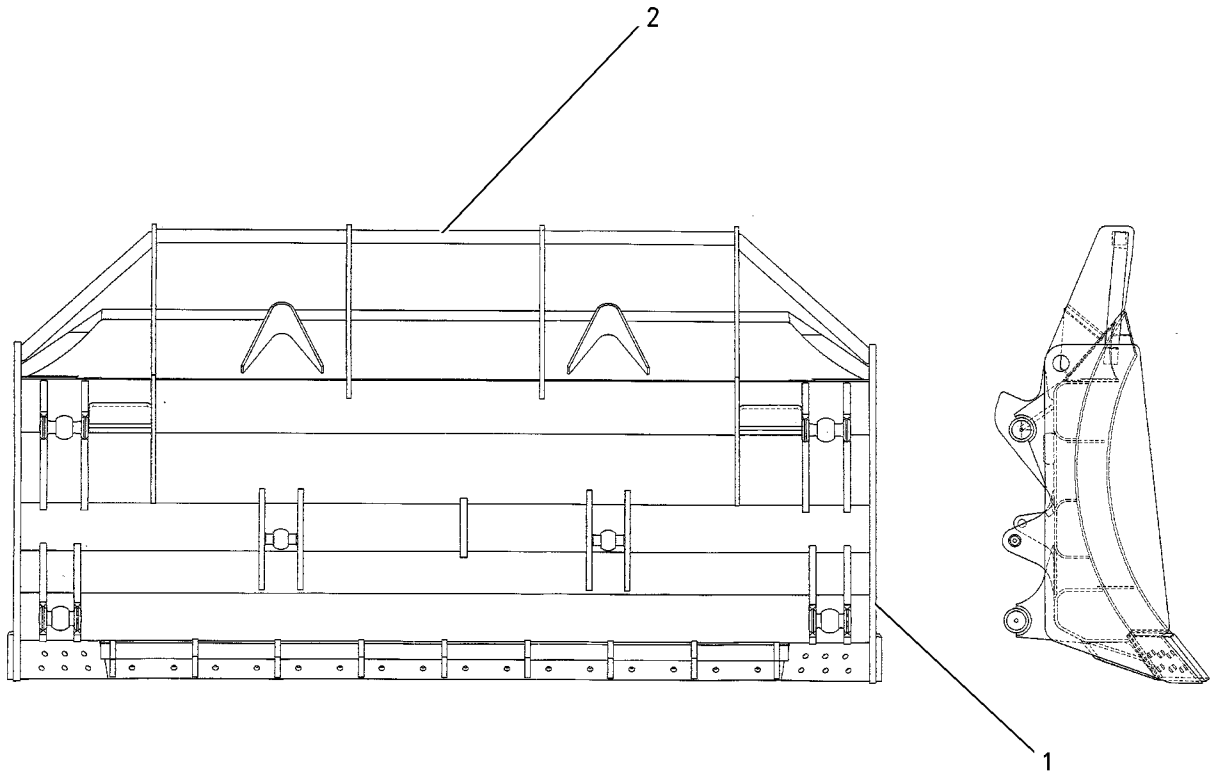

GRAPHIC #1 g00836295

IMPLEMENTS

7Z-9954 BULLDOZER GP

S/N: BLE1-UP
PART OF 7Z-9950 MODIFICATION AR-BULLDOZER
AN ATTACHMENT

SMCS-6060, 6082 **i01582083**

NOTE	REF NO	GRAPHIC REF	PART NUMBER	QTY	PART NAME 1 2 3 4 5 6 (PRODUCT LEVEL)	SEE PAGE
	1	1	**3B-4630**	2	PIN-COTTER	
	2	1	**4T-1481**	1	LINK AS	
	3	1	**8H-8898**	2	PIN	
Y	4	1	**9W-3762**	1	BIT & CUTTING EDGE GP	572
Y	5	1	**7Z-9952**	1	BULLDOZER AS (LOGGING)	547

Y-SEPARATE ILLUSTRATION

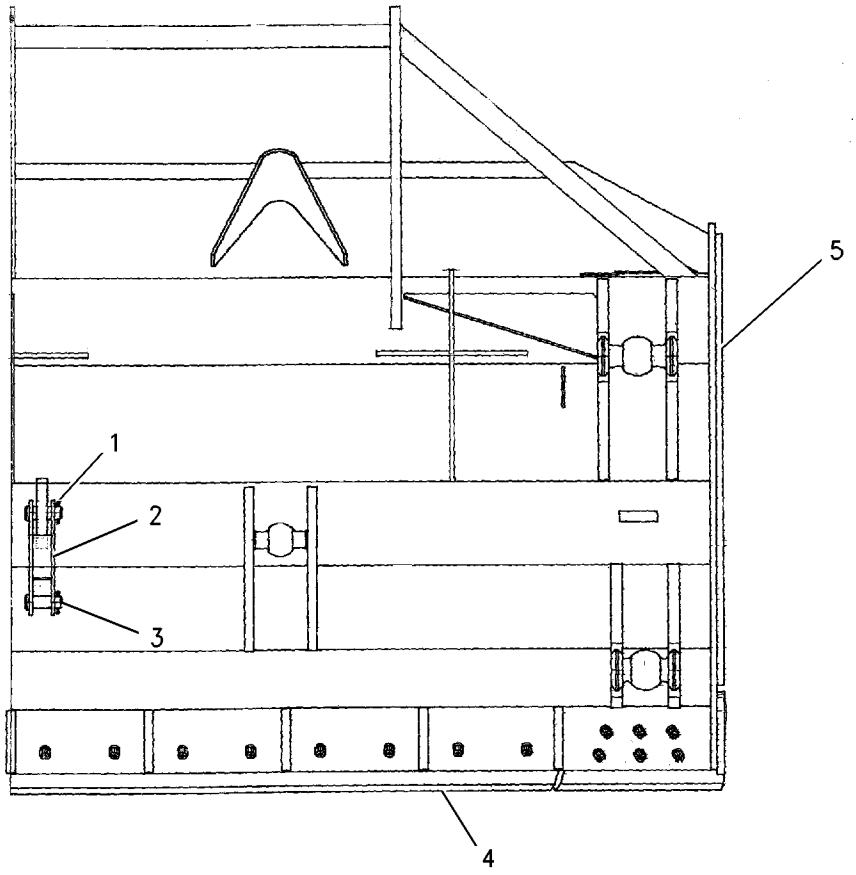

GRAPHIC #1 g00828191

6Y-2074 C-FRAME AS

S/N: 3GP1-UP
PART OF 6Y-3162 C-FRAME AS
AN ATTACHMENT

SMCS-6063 **i01669472**

NOTE	REF NO	GRAPHIC REF	PART NUMBER	QTY	PART NAME 1 2 3 4 5 6 (PRODUCT LEVEL)	SEE PAGE
	1	1	**9W-9000**	1	ADAPTER AS	
		1	**8E-5486**	2	BEARING-SLEEVE	
		1	**5M-6214**	1	PLUG-PIPE	
	2	1	**9V-0321**	1	BLOCK	
	3	1	**6J-9187**	1	BRACKET AS-RH	
		1	**6J-9188**	1	BRACKET AS-LH	
					(EACH BRACKET AS INCLUDES)	
	4	1	**4J-2414**	1	TRUNNION	
	5	1	**6Y-2076**	2	PLATE	
	6	1	**9W-4897**	6	BRACKET AS	
					(EACH BRACKET AS INCLUDES)	
		1	**8F-4387**	2	PLATE	
	7	1	**6Y-2075**	2	PLATE	
	8	1	**9W-5375**	2	BAR	
	9	1	**8P-9770**	1	PLATE	
	10	1	**6F-2904**	2	BEARING	
					(EACH BEARING INCLUDES)	
B		1	**4T-4866**	14	SHIM (0.8MM THK)	

B-USE AS REQUIRED

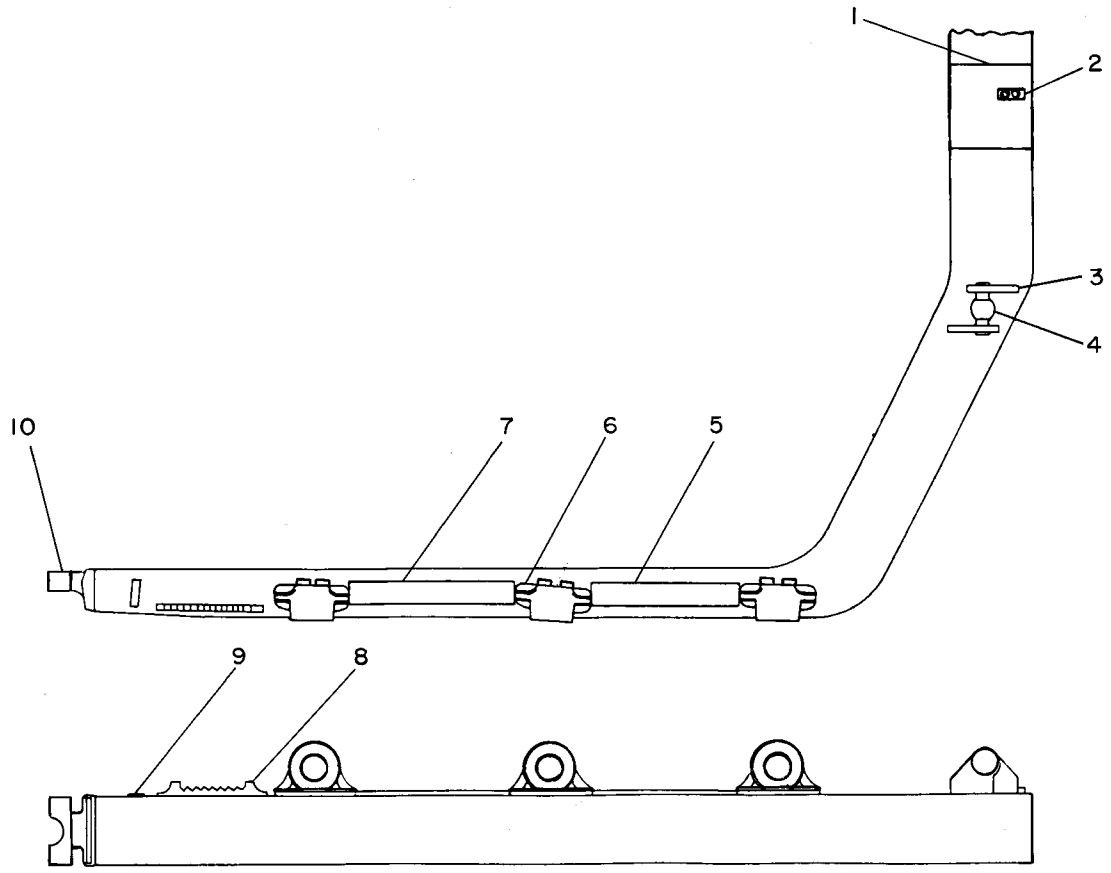

GRAPHIC #1 g00198468

6Y-3161 C-FRAME AS

S/N: 3GP1-UP
PART OF 6Y-3162 C-FRAME AS
AN ATTACHMENT

SMCS-6063 **i01288035**

NOTE	REF NO	GRAPHIC REF	PART NUMBER	QTY	PART NAME 1 2 3 4 5 6 (PRODUCT LEVEL)	SEE PAGE
	1	1	**9W-9000**	1	ADAPTER AS	
	2	1	**8E-5486**	2	BEARING-SLEEVE	
	3	1	**5M-6214**	1	PLUG-PIPE (1/8-27 THD)	
	4	1	**9V-0321**	1	BLOCK	
	5	1	**9W-5375**	2	BAR	
	6	1	**9W-4897**	6	BRACKET AS	
	7	1	**8P-9770**	1	PLATE	
	8	1	**6F-2904**	2	BEARING	
	9	1	**6J-9187**	1	BRACKET AS-RH	
		1	**6J-9188**	1	BRACKET AS-LH	
					(EACH BRACKET AS INCLUDES)	
	10	1	**4J-2414**	1	TRUNNION	

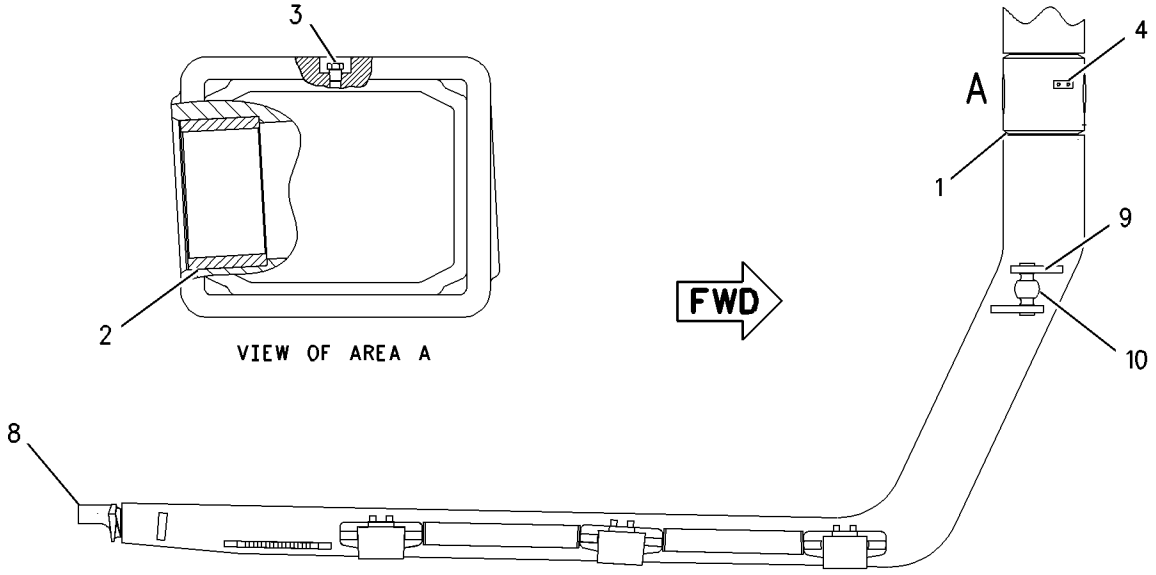

TOP VIEW

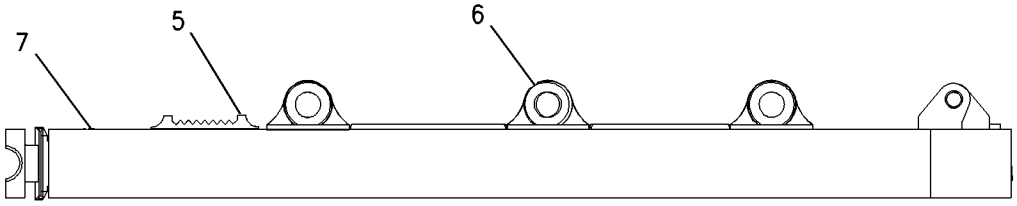

RIGHT SIDE VIEW

GRAPHIC #1 g00683707

IMPLEMENTS

6Y-3162 C-FRAME AS

S/N: 3GP1-UP
PART OF 6Y-2073 C-FRAME GP
AN ATTACHMENT

SMCS-6063 **i00837575**

NOTE	PART NUMBER	QTY	PART NAME 1 2 3 4 5 6 (PRODUCT LEVEL)	SEE PAGE
Y	*6Y-3161*	1	C-FRAME AS	550
			-OR-	
Y	*6Y-2074*	1	C-FRAME AS	549

Y-SEPARATE ILLUSTRATION

IMPLEMENTS

6I-8346 C-FRAME GP

S/N: 4BP1-UP

PART OF 108-3982, 108-3983 BULLDOZER AR-ANGLING

AN ATTACHMENT

SMCS-6063 **i01669482**

NOTE	REF NO	GRAPHIC REF	PART NUMBER	QTY	PART NAME 1 2 3 4 5 6 (PRODUCT LEVEL)	SEE PAGE
	1	1	**1U-0725**	1	RETAINER	
	2	1	**8T-9398**	2	BOLT (3/4-10X1.75 IN)	
	3	1	**160-6305**	2	CAP-BEARING	
B		1	**4T-4866**	52	SHIM (0.8MM THK)	
	4	1	**6Y-7471**	1	PIN-PIVOT	
	5	1	**7X-0444**	4	BOLT (1-8X6.5 IN)	
		1	**8T-5361**	4	WASHER-HARD (28X49X5MM THK)	
	6	1	**4F-1204**	4	NUT	
	7	1	**6I-8347**	1	C-FRAME AS	
		1	**6F-2904**	2	BEARING	
	8	1	**6I-8410**	1	BRACKET AS-RH	
		1	**6I-8411**	1	BRACKET AS-LH	
					(EACH BRACKET AS INCLUDES)	
	9	1	**4J-2414**	1	TRUNNION	
	10	1	**7T-9586**	6	BEARING	
	11	1	**8P-9770**	1	PLATE	
	12	1	**9W-4897**	6	BRACKET AS	
					(EACH BRACKET AS INCLUDES)	
		1	**8F-4387**	2	PLATE	
	13	1	**9W-5375**	2	BAR	
	14	1	**9W-9000**	1	ADAPTER AS	
		1	**5M-6214**	1	PLUG-PIPE	
		1	**8E-5486**	2	BEARING-SLEEVE	
	15	1	**9V-0321**	1	BLOCK	

B-USE AS REQUIRED

6I-8346 **C-FRAME GP** ***(contd.)*** **i01669482**

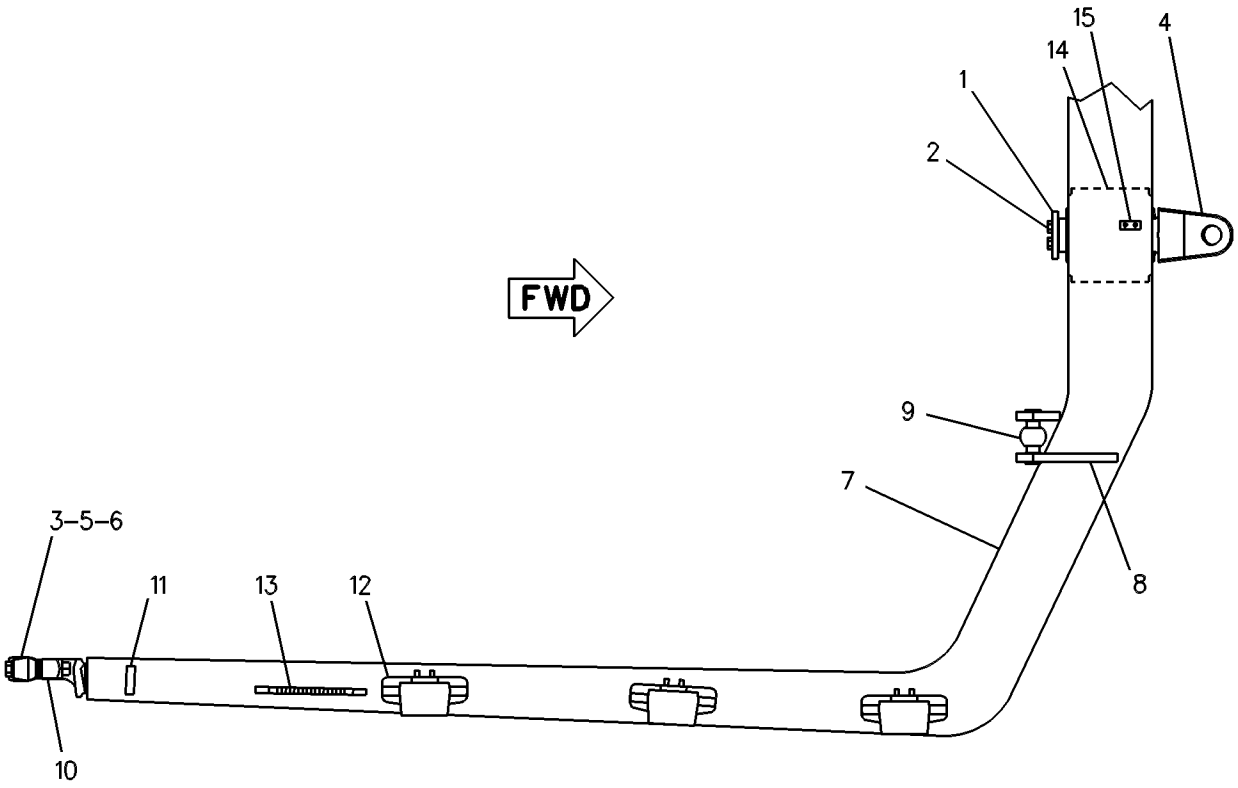

TOP VIEW

GRAPHIC #1 g00546338

6Y-2073 C-FRAME GP

S/N: 3GP1-UP
ONE PIECE
PART OF 108-3978, 108-3979 BULLDOZER AR-ANGLING
AN ATTACHMENT

SMCS-6063 **i01669486**

NOTE	REF NO	GRAPHIC REF	PART NUMBER	QTY	PART NAME 1 2 3 4 5 6 (PRODUCT LEVEL)	SEE PAGE
C	1	1	**1U-0725**	1	RETAINER	
C	2	1	**8T-9398**	2	BOLT (3/4-10X1.75 IN)	
	3	1	**160-6305**	2	CAP-BEARING	
C	4	1	**6Y-7471**	1	PIN-PIVOT	
	5	1	**7X-0444**	4	BOLT (1-8X6.5 IN)	
		1	**8T-5361**	4	WASHER-HARD (28X49X5MM THK)	
	6	1	**4F-1204**	4	NUT	
Y	7	1	**6Y-3162**	1	C-FRAME AS	551
B	8	1	**4T-4866**	52	SHIM (0.8MM THK)	

B-USE AS REQUIRED
C-CHANGE FROM PREVIOUS TYPE
Y-SEPARATE ILLUSTRATION

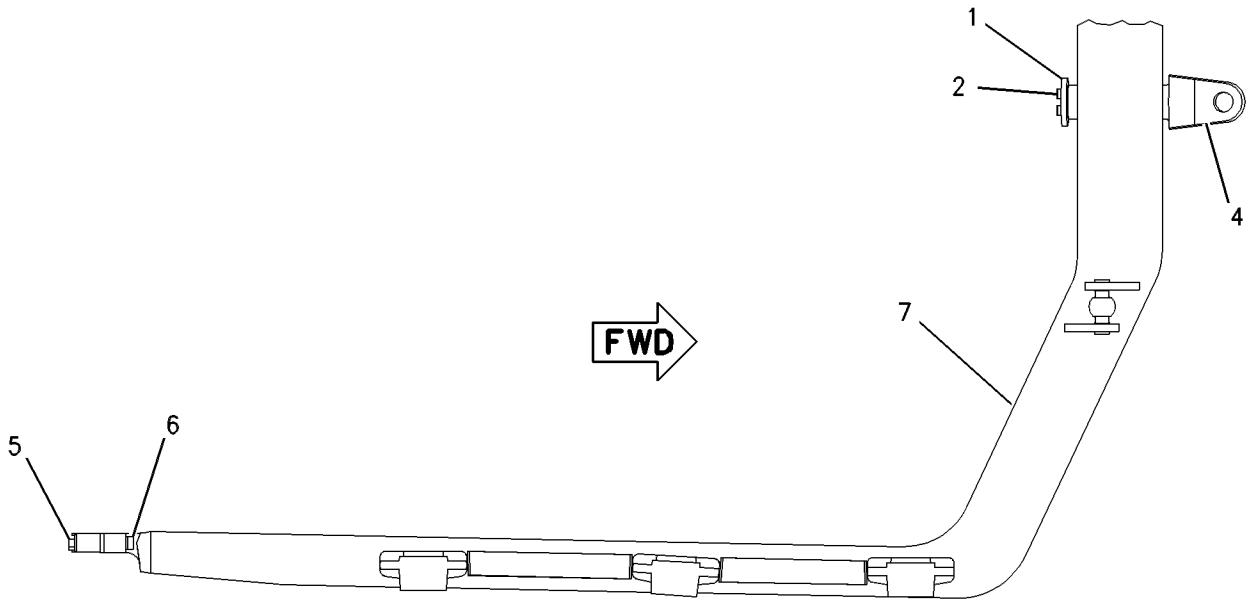

TOP VIEW

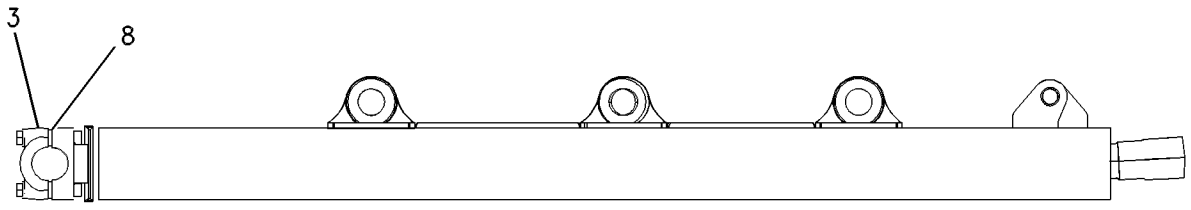

RIGHT SIDE VIEW

GRAPHIC #1 g00566713

7Z-9950 MODIFICATION AR-BULLDOZER

S/N: BLE1-UP
FOR USE WITH S BULLDOZERS
AN ATTACHMENT

SMCS-7000 **i01582077**

NOTE	PART NUMBER	QTY	PART NAME 1 2 3 4 5 6 (PRODUCT LEVEL)	SEE PAGE
Y	*7Z-9954*	1	BULLDOZER GP	548

Y-SEPARATE ILLUSTRATION

IMPLEMENTS

7Z-9951 MODIFICATION AR-BULLDOZER

S/N: BLE1-UP
FOR USE WITH LOGGING
AN ATTACHMENT

SMCS-7000 **i01662658**

NOTE	PART NUMBER	QTY	PART NAME 1 2 3 4 5 6 (PRODUCT LEVEL)	SEE PAGE
Y	*5Q-5779*	1	BLADE GP-LOGGING	585

Y-SEPARATE ILLUSTRATION

MEMORANDA

3G-9451 MOUNTING GP-CYLINDER

S/N: BLE1-UP; BMJ1-UP; 3EP1-UP; 3FP1-UP; 3GP1-UP; 4AP1-UP; 4BP1-UP
PART OF 139-8346 BULLDOZER AR, 108-3978, 108-3982 BULLDOZER AR-ANGLING, 108-3974, 108-3976 BULLDOZER AR-SEMI-UNIVERSAL, 108-3970 BULLDOZER AR-STRAIGHT AN ATTACHMENT

SMCS-6068 **i01643718**

NOTE	REF NO	GRAPHIC REF	PART NUMBER	QTY	PART NAME 1 2 3 4 5 6 (PRODUCT LEVEL)	SEE PAGE
	1	1	**4T-4875**	2	PIN	
	2	1	**3B-8489**	2	FITTING-GREASE (1/8-27 THD)	
C	3	1	**5M-3062**	2	BOLT (3/8-16X0.75 IN)	
		1	**8T-2561**	2	WASHER-HARD (10.5X28.5X5MM THK)	
	4	1	**7X-0358**	8	BOLT (5/8-11X5.50IN)	
	5	1	**6Y-2658**	2	YOKE	
	6	1	**5P-2671**	2	SEAL-LIP	
C	7	1	**6Y-9280**	2	CLAMP (TAB)	
C		1	**6Y-9281**	2	CLAMP (SLOT)	
C	8	1	**8T-4994**	2	WASHER-HARD (20X36.5X3.5MM THK)	
C	9	1	**8T-4835**	2	BOLT (1/2-13X2 IN)	
C	10	1	**8T-4223**	4	WASHER-HARD (13.5X25.5X3MM THK)	
C	11	1	**6V-8188**	2	NUT (1/2-13 THD)	
C	12	1	**9N-4233**	2	STRAP	
	13	1	**3G-9405**	4	CAP AS	
					(EACH INCLUDES)	
	14	1	**3G-9402**	1	BEARING-SLEEVE	

C-CHANGE FROM PREVIOUS TYPE

3G-9451 **MOUNTING GP-CYLINDER** *(contd.)* **i01643718**

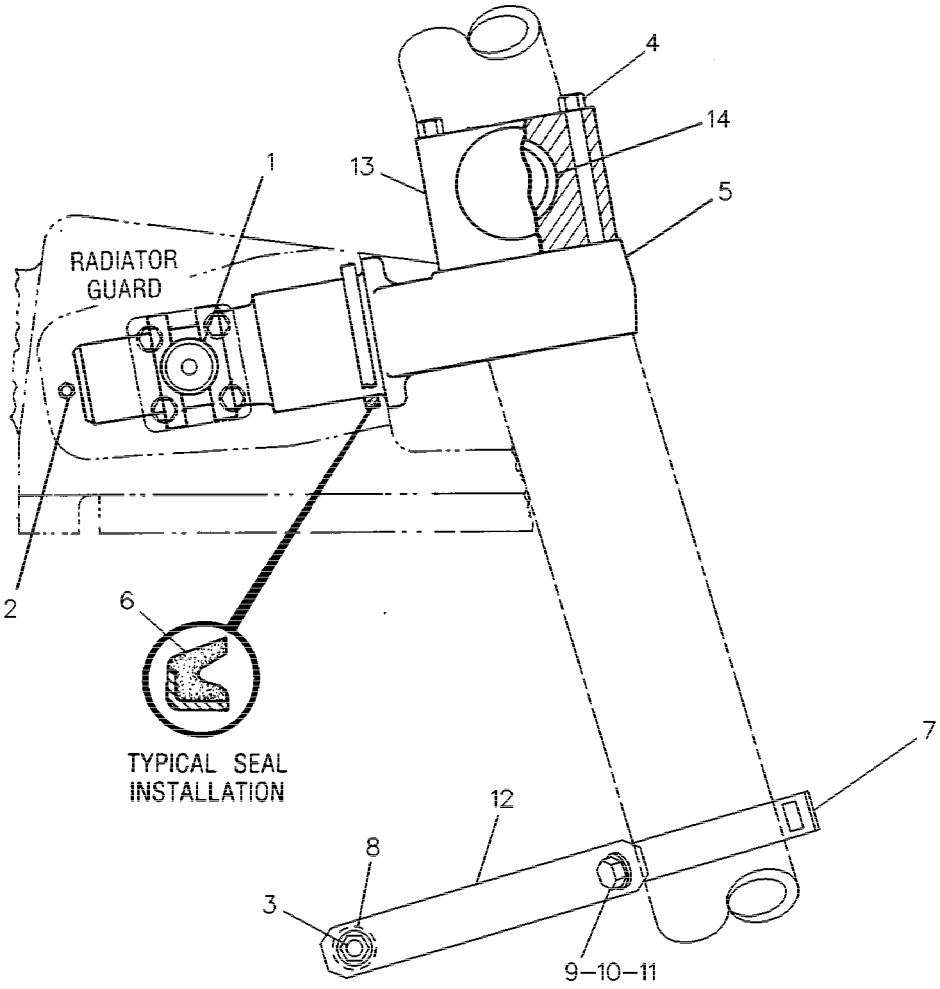

GRAPHIC #1 g00228573

9W-0610 MOUNTING GP-RIPPER

S/N: 3SH1-UP
PART OF 9W-0804 RIPPER AR
AN ATTACHMENT

SMCS-6165, 6324 **i00575996**

NOTE	REF NO	GRAPHIC REF	PART NUMBER	QTY	PART NAME 1 2 3 4 5 6 (PRODUCT LEVEL)	SEE PAGE
	1	1	**9W-0609**	4	SPACER	
	2	1	**1U-0301**	2	BRACKET AS	
	3	1	**1U-0612**	2	PIN	
	4	1	**7X-0292**	2	BOLT (3/8-16X4.50IN)	
		1	**2K-4973**	2	LOCKNUT (3/8-16 THD)	
	5	1	**1K-6872**	2	LOCKNUT (1/2-13 THD)	
	6	1	**5D-3118**	20	STUD-TAPERLOCK	
	7	1	**7X-0335**	2	BOLT (1/2-13X5.25IN)	
	8	1	**1U-0300**	1	BRACKET AS (RH)	
		1	**7T-1975**	1	BRACKET AS (LH)	
	9	1	**1U-0159**	2	PIN	
B	10	1	**9N-4449**	12	SPACER (1.5MM THK)	
	11	1	**6V-8190**	20	NUT (1-8 THD)	
B	12	1	**9N-4450**	4	SPACER (5MM THK)	

B-USE AS REQUIRED

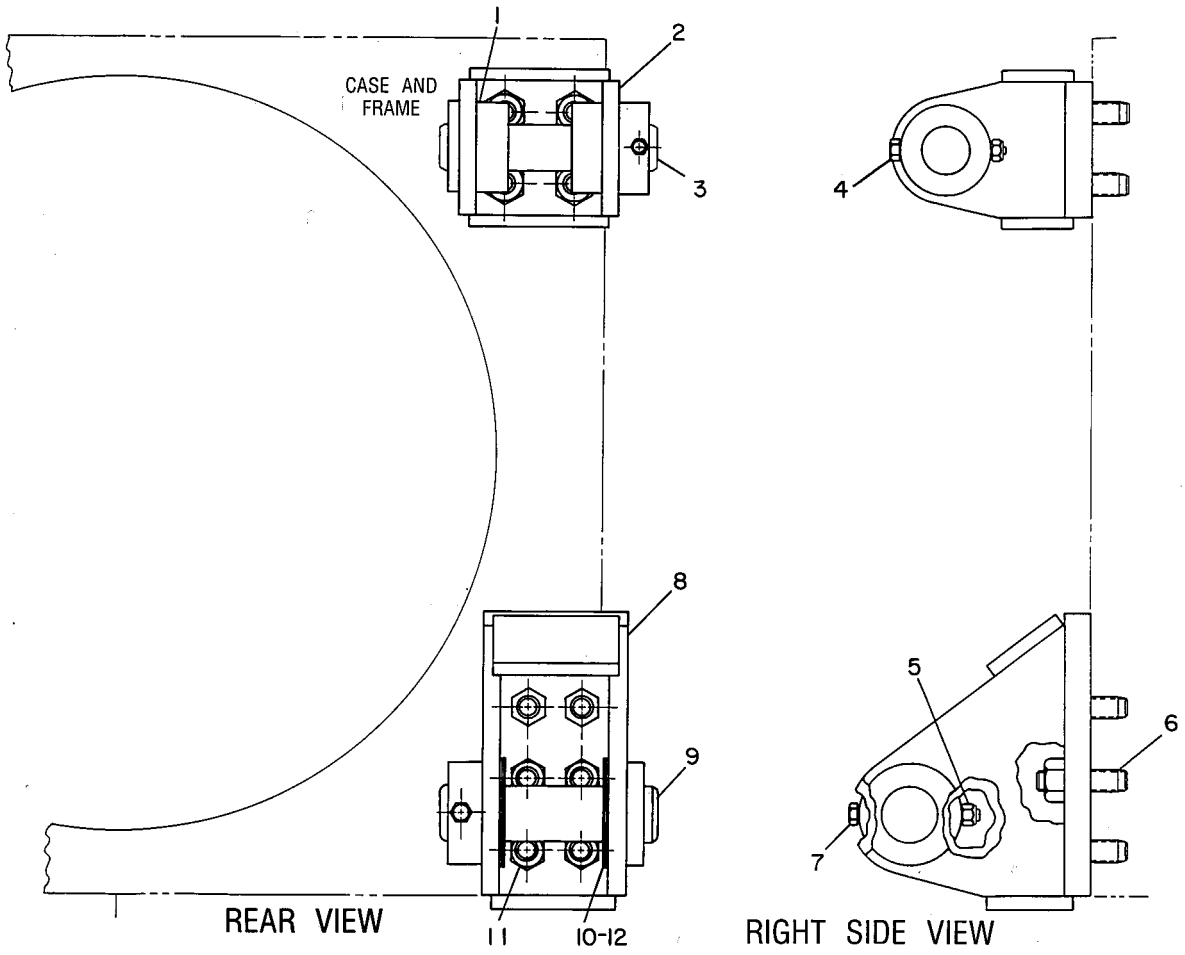

GRAPHIC #1 g00182031

MEMORANDA

190-9771 PUSH ARM GP

S/N: 3EP1-UP; 3FP1-UP

PART OF 139-8346 BULLDOZER AR, 108-3974, 108-3975 BULLDOZER AR-SEMI-UNIVERSAL, 108-3970, 108-3971 BULLDOZER AR-STRAIGHT

AN ATTACHMENT

SMCS-6061 **i01658618**

NOTE	REF NO	GRAPHIC REF	PART NUMBER	QTY	PART NAME 1 2 3 4 5 6 (PRODUCT LEVEL)	SEE PAGE
	1	1	**4F-0255**	2	PIN	
	2	1	**4F-1204**	4	NUT	
	3	1	**4F-2710**	8	NUT	
	4	1	**4T-1520**	1	CAGE AS	
		1	**6J-5383**	1	BEARING	
B	5	1	**4T-4866**	52	SHIM (0.8MM THK) (ONE HOLE)	
B	6	1	**8E-5703**	78	SHIM (0.8MM THK) (TWO HOLE)	
	7	1	**8J-2880**	3	CAP-BEARING	
	8	1	**124-9672**	1	BRACE AS-TILT	
	9	1	**160-6305**	2	CAP-BEARING	
Y	10	1	**166-2582**	1	CYLINDER GP-TILT	456
	11	1	**179-6151**	1	PUSH ARM AS-LH	
	11A	1	**209-2152**	1	BAR	
	11B	1	**4T-0780**	1	TRUNNION	
	11C	1	**8P-9770**	1	PLATE	
	11D	1	**124-9666**	1	BRACKET	
	11E	1	**179-6152**	1	BEARING	
	11F	1	**179-6153**	1	BEARING	
	12	1	**179-6162**	1	PUSH ARM AS-RH	
	12A	1	**209-2152**	1	BAR	
	12B	1	**4T-0732**	1	BRACKET	
	12C	1	**8P-9770**	1	PLATE	
	12D	1	**9W-2579**	2	PLATE	
	12E	1	**179-6152**	1	BEARING	
	12F	1	**179-6153**	1	BEARING	
	13	1	**3B-4627**	2	PIN-COTTER	
	14	1	**3F-6185**	2	PIN	
	15	1	**6V-8182**	10	NUT (3/4-10 THD)	
	16	1	**7X-0372**	6	BOLT (3/4X10X4.25 IN)	
	17	1	**7X-0373**	4	BOLT (3/4-10X5.50 IN)	
	18	1	**7X-0374**	8	BOLT (3/4-10X5.75IN)	
	19	1	**7X-0414**	4	BOLT (1-8X7.5 IN)	
	20	1	**7X-0582**	6	WASHER-HARD (20X44.5X6MM THK)	
	21	1	**8T-4994**	6	WASHER-HARD (20X36.5X3.5MM THK)	
	22	1	**8T-5361**	4	WASHER-HARD (28X49X5MM THK)	

B-USE AS REQUIRED
Y-SEPARATE ILLUSTRATION

190-9771 **PUSH ARM GP** ***(contd.)*** **i01658618**

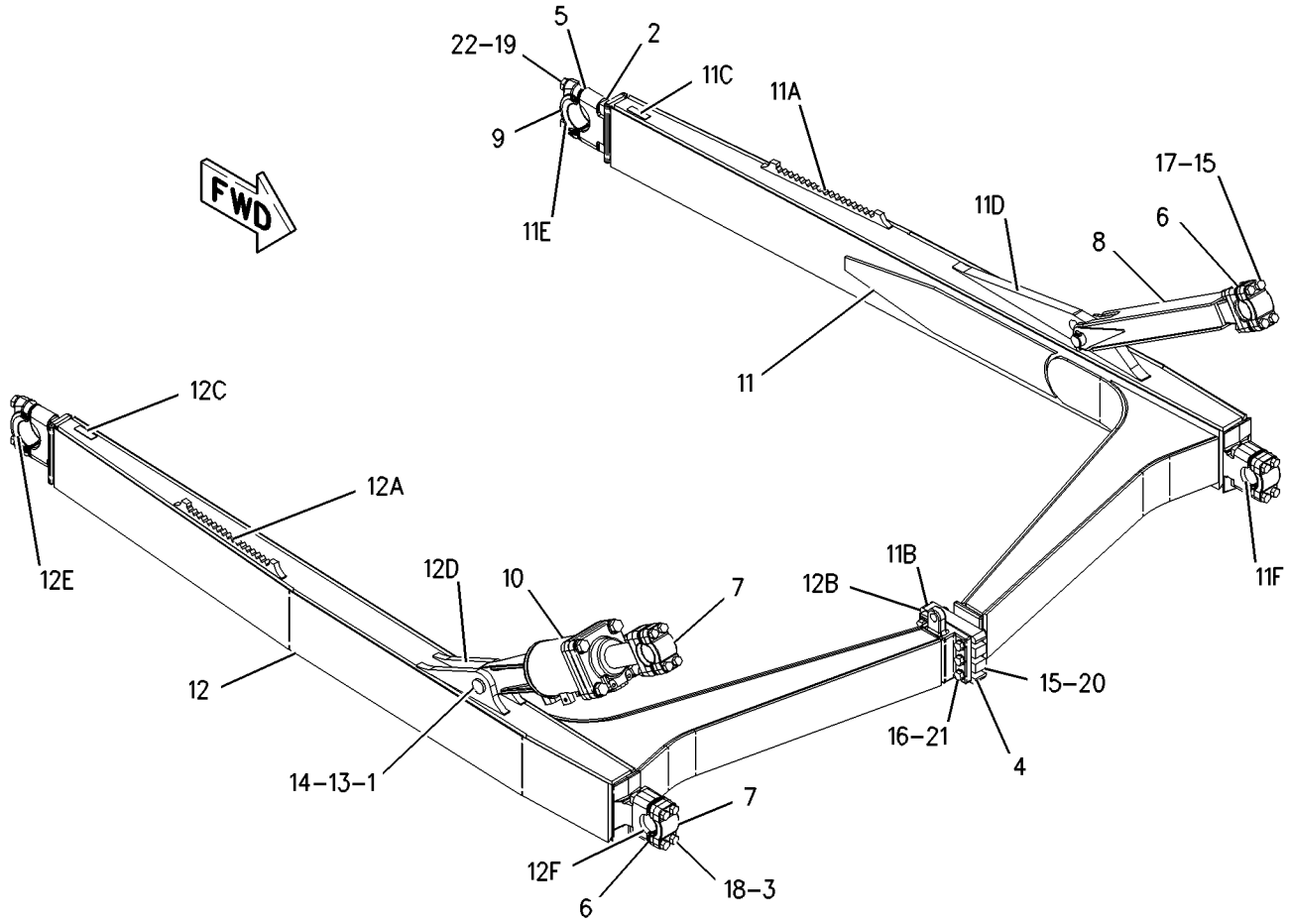

GRAPHIC #1 g00856532

IMPLEMENTS

194-0937 PUSH ARM GP

S/N: 4AP1-UP

PART OF 108-3976, 108-3977 BULLDOZER AR-SEMI-UNIVERSAL

AN ATTACHMENT

SMCS-6061 **i01604061**

NOTE	REF NO	GRAPHIC REF	PART NUMBER	QTY	PART NAME 1 2 3 4 5 6 (PRODUCT LEVEL)	SEE PAGE
	1	1	**4F-0255**	2	PIN	
	2	1	**4F-1204**	4	NUT	
	3	1	**4F-2710**	8	NUT	
	4	1	**4T-1520**	1	CAGE AS	
		1	**6J-5383**	1	BEARING	
	5	1	**4T-4866**	52	SHIM (0.8MM THK)	
	6	1	**8E-5703**	78	SHIM (0.8MM THK)	
	7	1	**8J-2880**	3	CAP-BEARING	
					(EACH INCLUDES)	
		1	**8E-5703**	14	SHIM (0.8MM THK)	
	8	1	**124-9672**	1	BRACE AS-TILT	
		1	**8E-2887**	1	YOKE	
		1	**8E-5703**	14	SHIM (0.8MM THK)	
	9	1	**160-6305**	2	CAP-BEARING	
					(EACH INCLUDES)	
		1	**4T-4866**	14	SHIM (0.8MM THK)	
Y	10	1	**166-2582**	1	CYLINDER GP-TILT	456
	11	1	**194-0935**	1	ARM AS	
		1	**1U-2533**	1	BAR	
		1	**4T-0780**	1	TRUNNION	
		1	**8P-9770**	1	PLATE	
		1	**124-9666**	1	BRACKET	
		1	**179-6152**	1	BEARING	
		1	**4T-4866**	14	SHIM (0.8MM THK)	
		1	**179-6153**	1	BEARING	
		1	**8E-5703**	14	SHIM (0.8MM THK)	
	12	1	**194-0936**	1	ARM AS	
		1	**1U-2533**	1	BAR	
		1	**4T-0732**	1	BRACKET	
		1	**8P-9770**	1	PLATE	
		1	**9W-2579**	2	PLATE	
		1	**179-6152**	1	BEARING	
		1	**4T-4866**	14	SHIM (0.8MM THK)	
		1	**179-6153**	1	BEARING	
		1	**8E-5703**	14	SHIM (0.8MM THK)	
	13	1	**3B-4627**	2	PIN-COTTER	
	14	1	**3F-6185**	2	PIN	
	15	1	**6V-8182**	10	NUT (3/4-10 THD)	
	16	1	**7X-0372**	6	BOLT (3/4X10X4.25 IN)	
	17	1	**7X-0373**	4	BOLT (3/4-10X5.50 IN)	
	18	1	**7X-0374**	8	BOLT (3/4-10X5.75IN)	
	19	1	**7X-0414**	4	BOLT (1-8X7.5 IN)	
	20	1	**7X-0582**	6	WASHER-HARD (20X44.5X6MM THK)	
	21	1	**8T-4994**	6	WASHER-HARD (20X36.5X3.5MM THK)	
	22	1	**8T-5361**	4	WASHER-HARD (28X49X5MM THK)	

Y-SEPARATE ILLUSTRATION

194-0937 **PUSH ARM GP** ***(contd.)*** **i01604061**

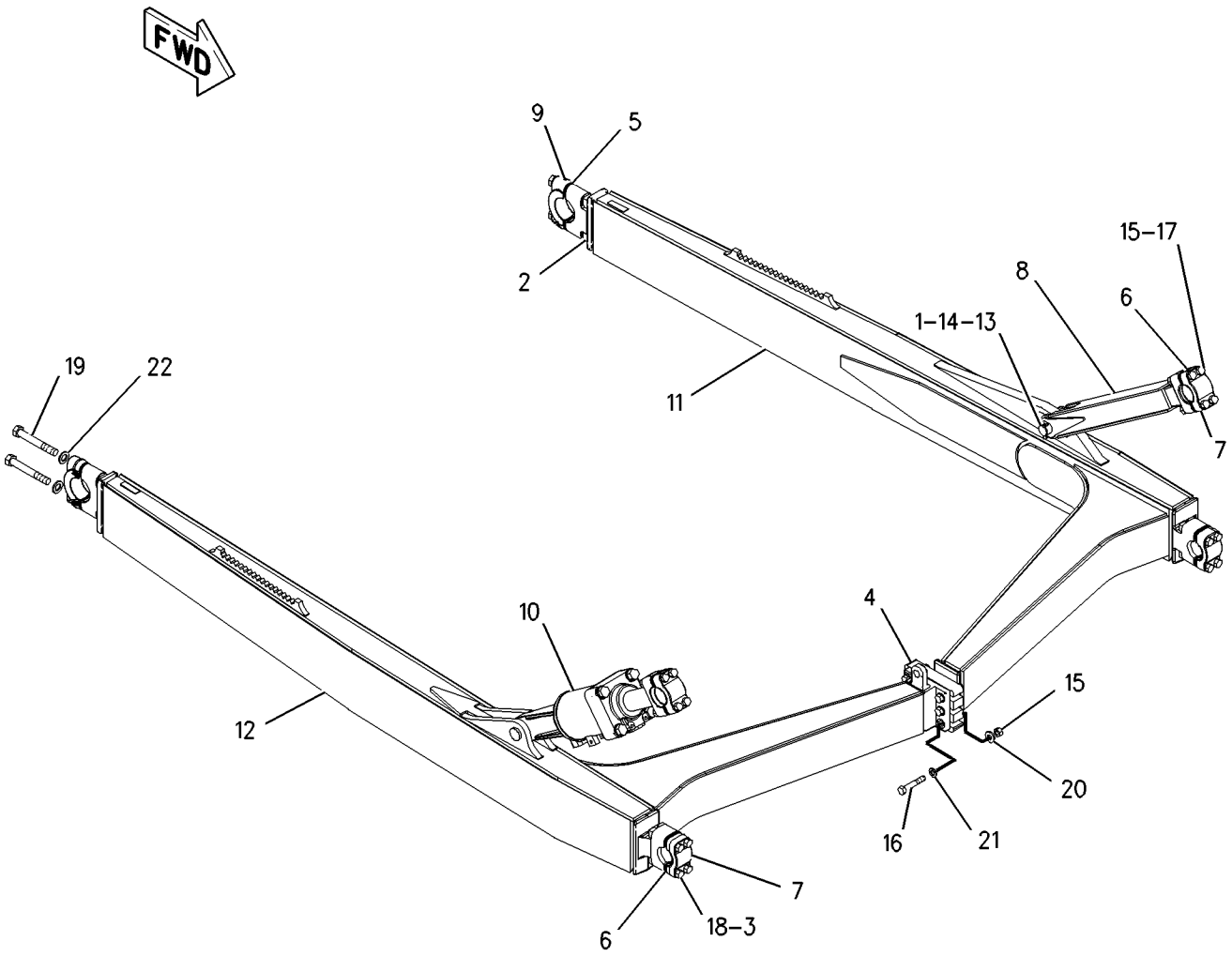

GRAPHIC #1 g00791032

IMPLEMENTS

9W-0804 RIPPER AR

S/N: 3SH1-UP

AN ATTACHMENT

SMCS-6312, 6316 **i01340718**

NOTE	PART NUMBER	QTY	PART NAME 1 2 3 4 5 6 (PRODUCT LEVEL)	SEE PAGE
Y	**9T-2716**	1	CYLINDER GP-RIPPER LIFT	452
Y	*3W-1356*	1	GUARD GP-TRANSMISSION	235
Y	*9W-1018*	1	LINES GP-RIPPER	480
Y	*9W-0610*	1	MOUNTING GP-RIPPER	560
Y	*9W-1017*	1	RIPPER GP	594
	8M-3494	1	PLATE-SERIAL NUMBER	
			ON CARRIAGE AS ON RH SIDE OF RH TOWER	
	4B-4158	2	SCREW-DRIVE (3/16 X 1/4 IN)	
	6V-2435	1	FILM-INSTRUCTION	
			ON RH FRONT DASH COMPARTMENT DOOR AS	

Y-SEPARATE ILLUSTRATION

109-1352 TRUNNION GP-BULLDOZER

S/N: 3EP1-UP; 3FP1-UP; 3GP1-UP; 4AP1-UP; 4BP1-UP
PART OF 108-3978, 108-3979, 108-3982, 108-3983 BULLDOZER AR-ANGLING, 108-3974, 108-3975, 108-3976, 108-3977 BULLDOZER AR-SEMI-UNIVERSAL, 108-3970, 108-3971 BULLDOZER AR-STRAIGHT
AN ATTACHMENT

SMCS-6069 **i00844125**

NOTE	REF NO	GRAPHIC REF	PART NUMBER	QTY	PART NAME 1 2 3 4 5 6 (PRODUCT LEVEL)	SEE PAGE
	1	1	**1U-4103**	2	TRUNNION	
M	2	1	**7X-2563**	20	BOLT (M20X2.5X60MM)	

M-METRIC PART

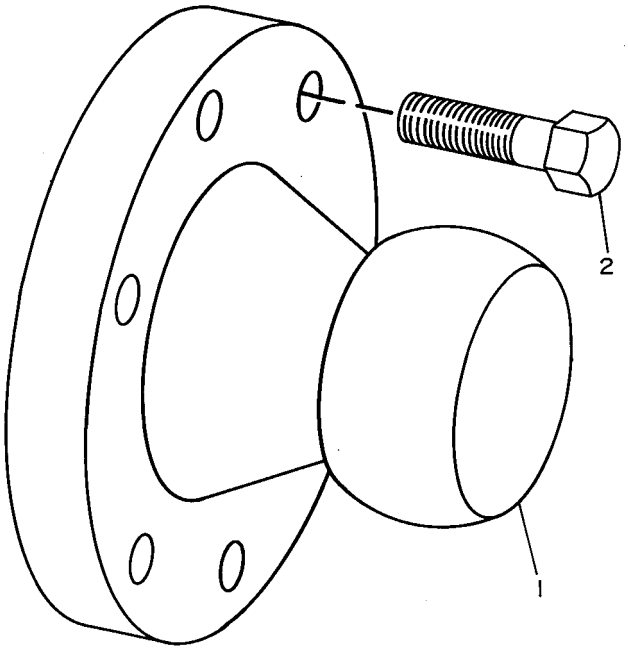

GRAPHIC #1 g00174192

139-9032 TRUNNION GP-BULLDOZER

S/N: 3FP1-UP
PART OF 139-8346 BULLDOZER AR
AN ATTACHMENT

SMCS-6069 **i01069808**

NOTE	PART NUMBER	QTY	PART NAME 1 2 3 4 5 6 (PRODUCT LEVEL)	SEE PAGE
M	**6V-3532**	24	BOLT (M20X2.5X60MM)	
	139-9053	2	TRUNNION AS	
	8T-4123	24	WASHER-PLATED (3.5MM THK)	

M-METRIC PART

5Q-5299 BIT & CUTTING EDGE GP

S/N: BLE1-UP; BMJ1-UP
PART OF 5Q-5298 BLADE GP-SEMI-UNIVERSAL
AN ATTACHMENT

SMCS-6801, 6804 **i01662628**

NOTE	REF NO	GRAPHIC REF	PART NUMBER	QTY	PART NAME 1 2 3 4 5 6 (PRODUCT LEVEL)	SEE PAGE
	1	1	**9W-8874**	1	BIT-END (RH)	
	2	1	**9W-8875**	1	BIT-END (LH)	
	3	1	**5Q-5405**	2	EDGE-CUTTING	
	4	1	**5J-4773**	28	BOLT-PLOW (3/4-10X2.5 IN)	
	5	1	**5P-8248**	28	WASHER-HARD (20X36.5X3.5MM THK)	
	6	1	**2J-3506**	28	NUT-FULL (3/4-10 THD)	

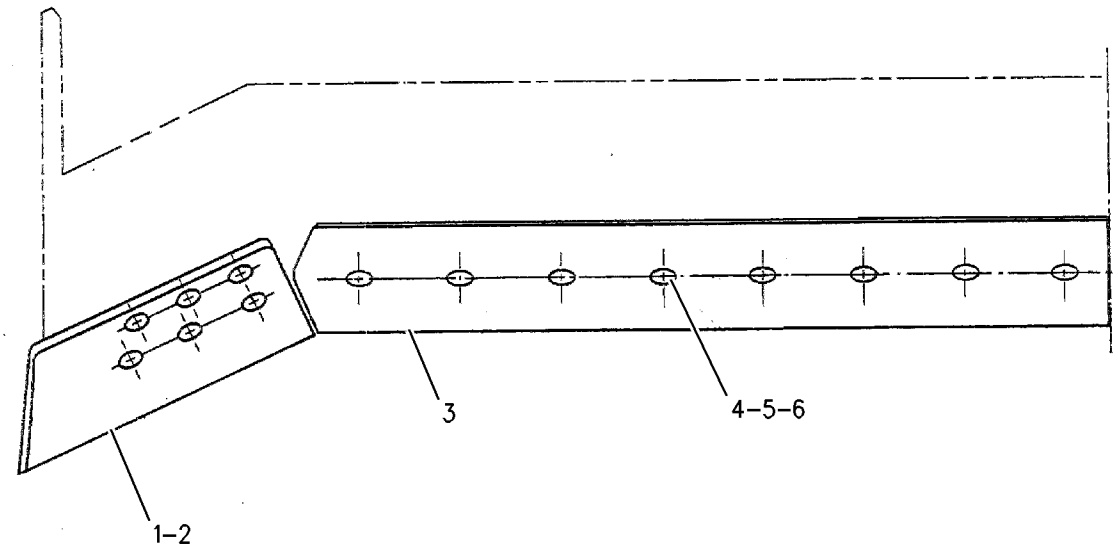

GRAPHIC #1 g00859456

6Y-1744 BIT & CUTTING EDGE GP

S/N: BLE1-UP; 3EP1-UP
PART OF 9U-8093 BLADE & EDGE GP, 5Q-5779 BLADE GP-LOGGING
AN ATTACHMENT

SMCS-6801, 6804 **i00575706**

NOTE	REF NO	GRAPHIC REF	PART NUMBER	QTY	PART NAME 1 2 3 4 5 6 (PRODUCT LEVEL)	SEE PAGE
	1	1	**9W-8874**	1	BIT-END-RH	
		1	**9W-8875**	1	BIT-END-LH	
	2	1	**5J-4773**	27	BOLT-PLOW (3/4-10X2.5IN)	
		1	**2J-3506**	27	NUT-FULL (3/4-10 THD)	
		1	**5P-8248**	27	WASHER-HARD (3.5MM THK)	
	3	1	**4T-2985**	3	EDGE-CUTTING	

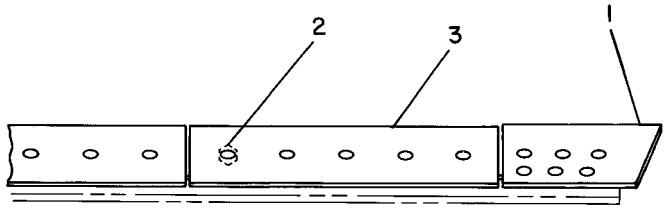

GRAPHIC #1 g00195337

WORK TOOLS

6Y-2039 BIT & CUTTING EDGE GP

S/N: 3GP1-UP; 4BP1-UP
PART OF 9U-8094, 9U-8202 BLADE & EDGE GP
AN ATTACHMENT

SMCS-6801, 6804 **i00575708**

NOTE	REF NO	GRAPHIC REF	PART NUMBER	QTY	PART NAME 1 2 3 4 5 6 (PRODUCT LEVEL)	SEE PAGE
	1	1	**9W-8874**	1	BIT-END-RH	
		1	**9W-8875**	1	BIT-END-LH	
	2	1	**5J-4773**	32	BOLT-PLOW (3/4-10X2.5IN)	
		1	**5P-8248**	32	WASHER-HARD (3.5MM THK)	
		1	**2J-3506**	32	NUT-FULL (3/4-10 THD)	
	3	1	**4T-2952**	4	EDGE-CUTTING	

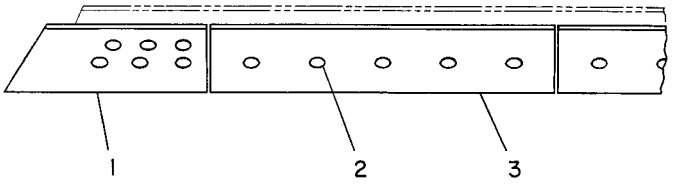

GRAPHIC #1 g00195495

9W-3762 BIT & CUTTING EDGE GP

S/N: BLE1-UP; BMJ1-UP; 3FP1-UP; 4AP1-UP
PART OF 9U-8095 BLADE & EDGE GP, 9U-8608 BLADE GP-SEMI-UNIVERSAL, 5Q-5499 BLADE GP-WASTE HANDLING, 7Z-9954 BULLDOZER GP
AN ATTACHMENT

SMCS-6801, 6804 **i00576041**

NOTE	REF NO	GRAPHIC REF	PART NUMBER	QTY	PART NAME 1 2 3 4 5 6 (PRODUCT LEVEL)	SEE PAGE
	1	1	**9W-1875**	1	BIT-END-RH	
		1	**9W-1876**	1	BIT-END-LH	
	2	1	**9W-1878**	2	EDGE-CUTTING	
	3	1	**5J-4773**	28	BOLT-PLOW (3/4-10X2.5IN)	
		1	**5P-8248**	28	WASHER-HARD (3.5MM THK)	
		1	**2J-3506**	28	NUT-FULL (3/4-10 THD)	

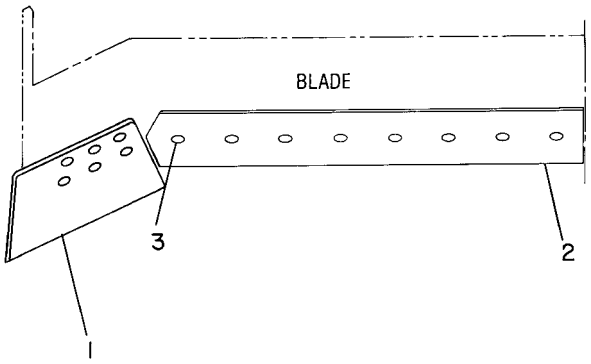

GRAPHIC #1 g00197117

WORK TOOLS

9U-8093 BLADE & EDGE GP

S/N: 3EP1-UP
PART OF 8E-5186 BLADE GP-STRAIGHT
AN ATTACHMENT

SMCS-6060 **i00677309**

NOTE	PART NUMBER	QTY	PART NAME 1 2 3 4 5 6 (PRODUCT LEVEL)	SEE PAGE
Y	*6Y-1744*	1	BIT & CUTTING EDGE GP	570
Y	**8E-5187**	1	BLADE AS-STRAIGHT	582

Y-SEPARATE ILLUSTRATION

WORK TOOLS

9U-8094 BLADE & EDGE GP

S/N: 4BP1-UP
PART OF 8E-1092 BLADE GP-ANGLING
AN ATTACHMENT

SMCS-6060 **i01065323**

NOTE	PART NUMBER	QTY	PART NAME 1 2 3 4 5 6 (PRODUCT LEVEL)	SEE PAGE
Y	*6Y-2039*	1	BIT & CUTTING EDGE GP	571
Y	**8E-1055**	1	BLADE AS	579

Y-SEPARATE ILLUSTRATION

WORK TOOLS

9U-8095 BLADE & EDGE GP

S/N: 3FP1-UP
PART OF 8E-5203 BLADE GP-SEMI-UNIVERSAL
AN ATTACHMENT

SMCS-6060 **i00575925**

NOTE	PART NUMBER	QTY	PART NAME 1 2 3 4 5 6 (PRODUCT LEVEL)	SEE PAGE
Y	*9W-3762*	1	BIT & CUTTING EDGE GP	572
Y	**8E-5204**	1	BLADE GP-WASTE HANDLING	593

Y-SEPARATE ILLUSTRATION

WORK TOOLS

9U-8202 BLADE & EDGE GP

S/N: 3GP1-UP
PART OF 6Y-1806 BLADE GP-ANGLING
AN ATTACHMENT

SMCS-6060 **i00575937**

NOTE	PART NUMBER	QTY	PART NAME 1 2 3 4 5 6 (PRODUCT LEVEL)	SEE PAGE
Y	*6Y-2039*	1	BIT & CUTTING EDGE GP	571
Y	**6Y-7469**	1	BLADE AS	578

Y-SEPARATE ILLUSTRATION

WORK TOOLS

7Z-9934 BLADE AR-SEMI-UNIVERSAL

S/N: BLE1-UP; BMJ1-UP
SEMI-UNIVERSAL, NARROW
AN ATTACHMENT

SMCS-6060, 6078 **i01662606**

NOTE	PART NUMBER	QTY	PART NAME 1 2 3 4 5 6 (PRODUCT LEVEL)	SEE PAGE
Y	*5Q-5298*	1	BLADE GP-SEMI-UNIVERSAL	586
Y-SEPARATE ILLUSTRATION				

WORK TOOLS

6Y-7469 BLADE AS

S/N: 3GP1-UP
PART OF 9U-8202 BLADE & EDGE GP
AN ATTACHMENT

SMCS-6060 **i01180728**

NOTE	REF NO	GRAPHIC REF	PART NUMBER	QTY	PART NAME 1 2 3 4 5 6 (PRODUCT LEVEL)	SEE PAGE
	1	1	**6Y-1824**	1	SHOE-RH	
		1	**6Y-1821**	1	SHOE-LH	
	2	1	**8P-9770**	1	PLATE	
	3	1	**6Y-7470**	1	BRACKET	
	4	1	**5S-8711**	6	BLOCK	

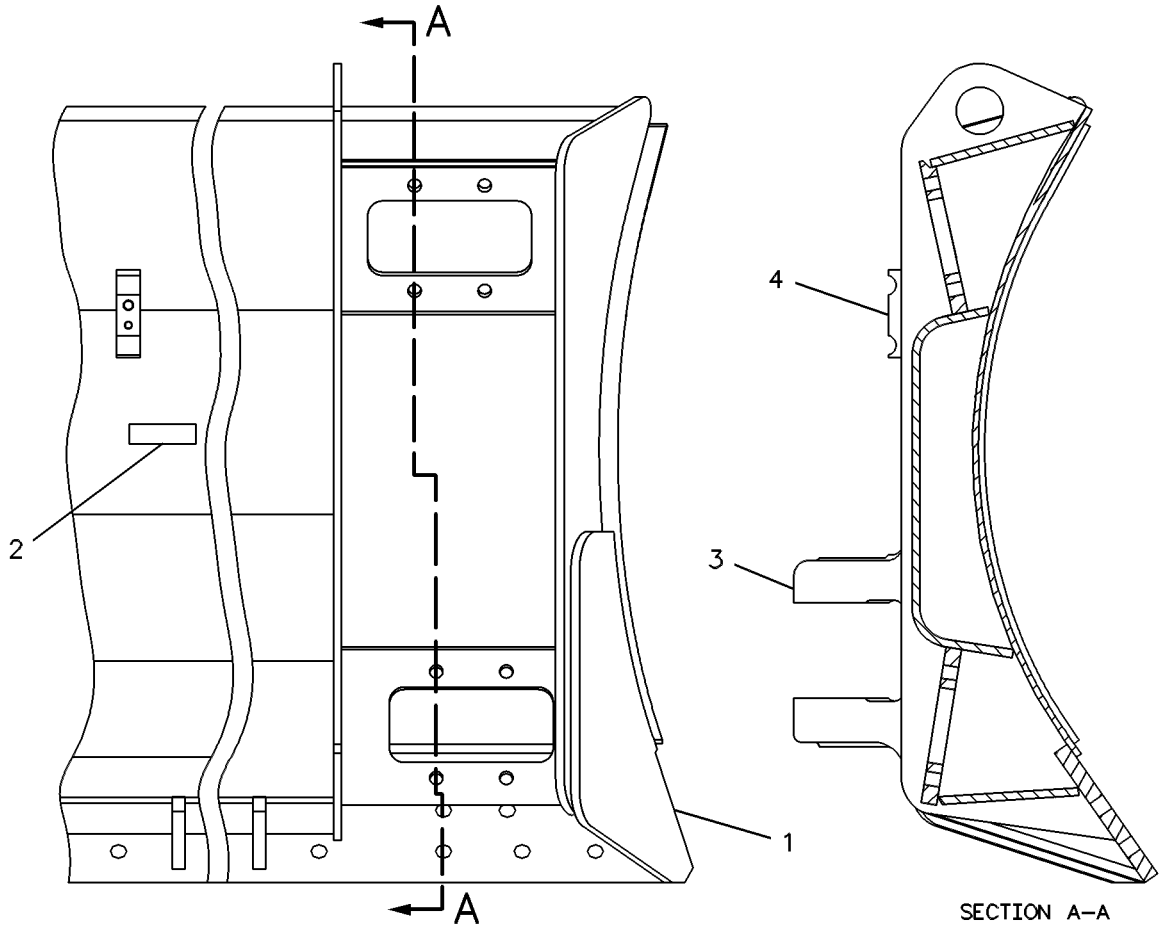

GRAPHIC #1 g00265433

WORK TOOLS

8E-1055 BLADE AS

S/N: 4BP1-UP
PART OF 9U-8094 BLADE & EDGE GP
AN ATTACHMENT

SMCS-6060 **i00598179**

NOTE	REF NO	GRAPHIC REF	PART NUMBER	QTY	PART NAME 1 2 3 4 5 6 (PRODUCT LEVEL)	SEE PAGE
	1	1	**6Y-7470**	1	BRACKET	
	2	1	**5S-8711**	6	BLOCK	
	3	1	**8P-9770**	1	PLATE (84MM X 25MM X 3MM)	

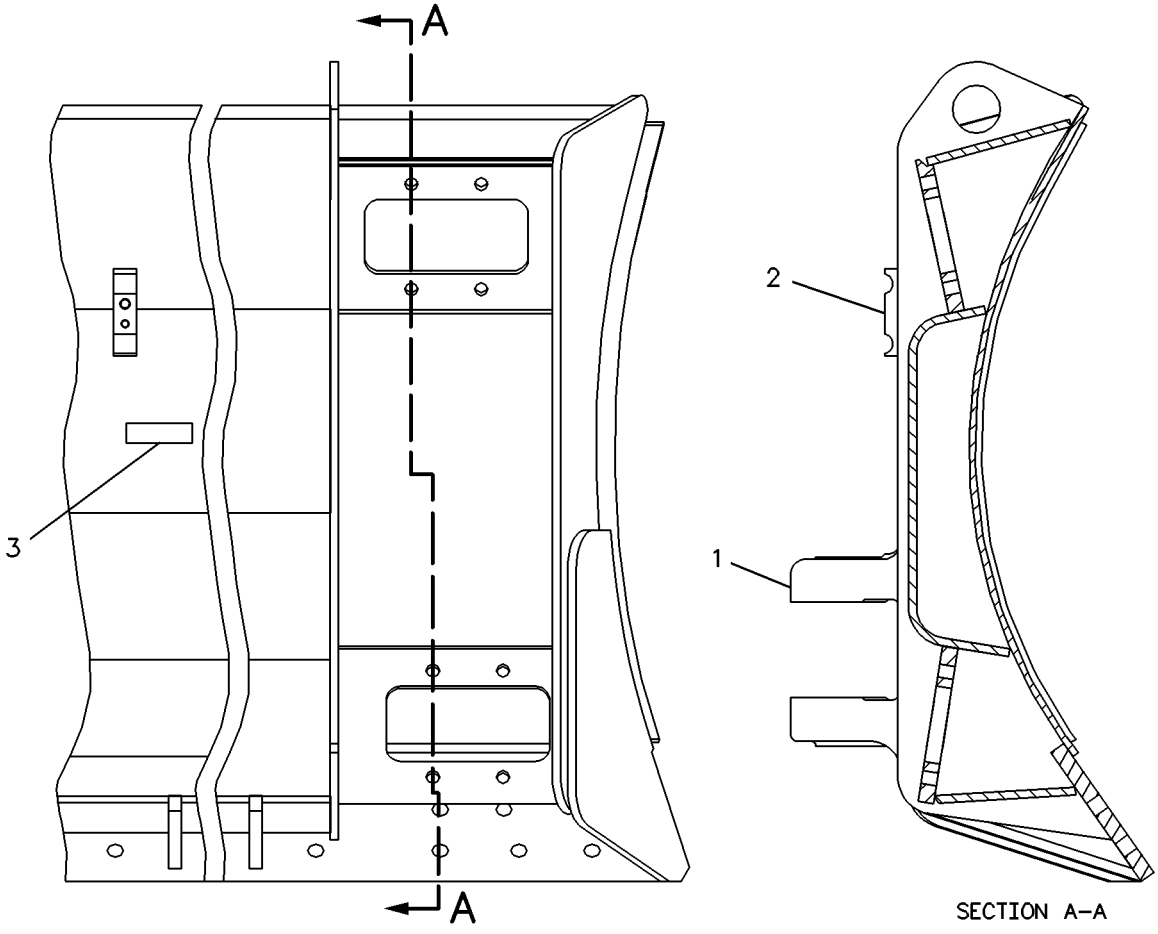

GRAPHIC #1 g00228687

5Q-5834 BLADE AS-SEMI-UNIVERSAL

S/N: BLE1-UP; BMJ1-UP
PART OF 5Q-5499 BLADE GP-WASTE HANDLING
AN ATTACHMENT

SMCS-6060 **i01665572**

NOTE	REF NO	GRAPHIC REF	PART NUMBER	QTY	PART NAME 1 2 3 4 5 6 (PRODUCT LEVEL)	SEE PAGE
Y	1	1	**8E-5204**	1	BLADE GP-WASTE HANDLING	593
	2	1	**5Q-5651**	4	TUBE	
M	3	1	**8T-5412**	4	BOLT (M12X1.75X140MM)	
	4	1	**7X-0618**	8	WASHER-HARD (13.5X40X5MM THK)	
M	5	1	**8T-4244**	4	NUT (M12X1.75 THD)	
	6	1	**5Q-5655**	1	SCREEN AS	

M-METRIC PART
Y-SEPARATE ILLUSTRATION

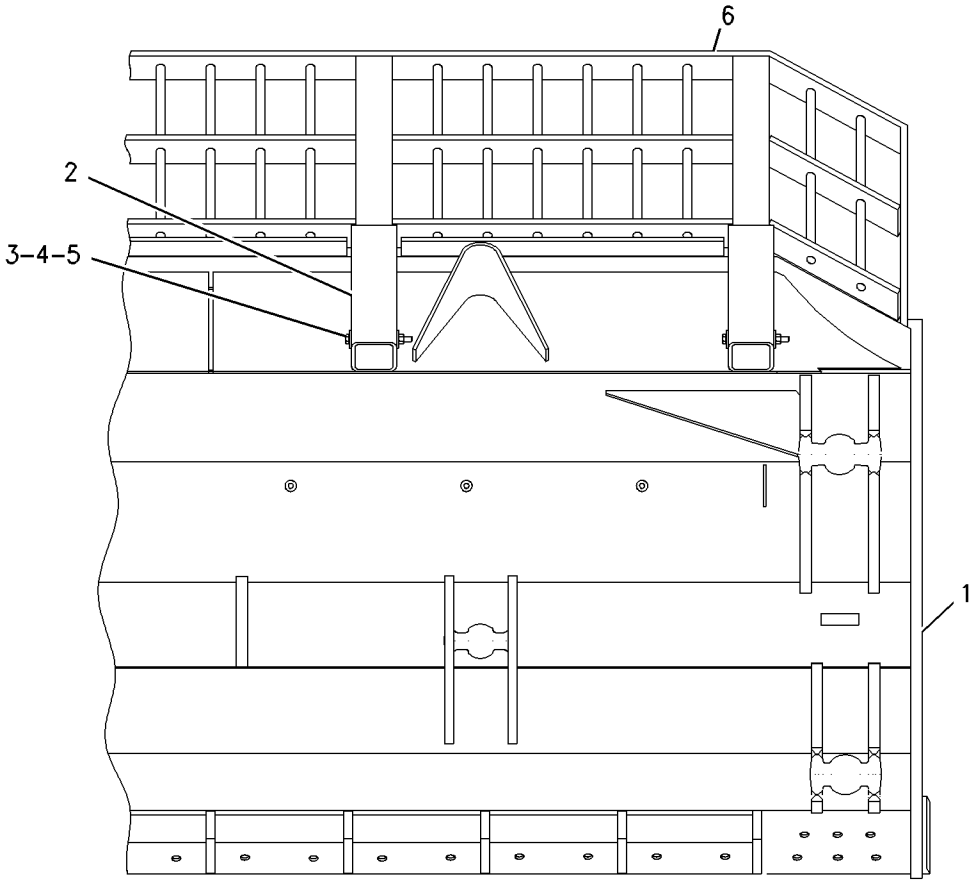

GRAPHIC #1 g00860260

WORK TOOLS

135-2965 BLADE AS-SEMI-UNIVERSAL

S/N: 4AP1-UP
PART OF 9U-8608 BLADE GP-SEMI-UNIVERSAL
AN ATTACHMENT

SMCS-6060 **i01509528**

NOTE	REF NO	GRAPHIC REF	PART NUMBER	QTY	PART NAME 1 2 3 4 5 6 (PRODUCT LEVEL)	SEE PAGE
	1	1	**142-9643**	2	BRACKET AS	
					(EACH INCLUDES)	
	2	1	**4T-1504**	1	TRUNNION	
	3	1	**135-2966**	1	BRACKET AS-RH	
	4	1	**7J-5131**	1	TRUNNION	
	5	1	**135-3084**	2	BRACKET AS	
					(EACH INCLUDES)	
	6	1	**4J-1641**	1	TRUNNION	
	7	1	**6Y-1390**	1	SUPPORT	
	8	1	**6H-3609**	3	BOSS (1/2-13 THD)	
	9	1	**1U-0183**	2	DEFLECTOR	
	10	1	**8P-9770**	1	PLATE	
	11	1	**9W-6381**	1	PLATE	
	12	1	**142-2328**	1	BRACKET	
	13	1	**135-2964**	1	BRACKET AS-LH	
	14	1	**7J-5131**	1	TRUNNION	
	15	1	**8E-5205**	2	SUPPORT	

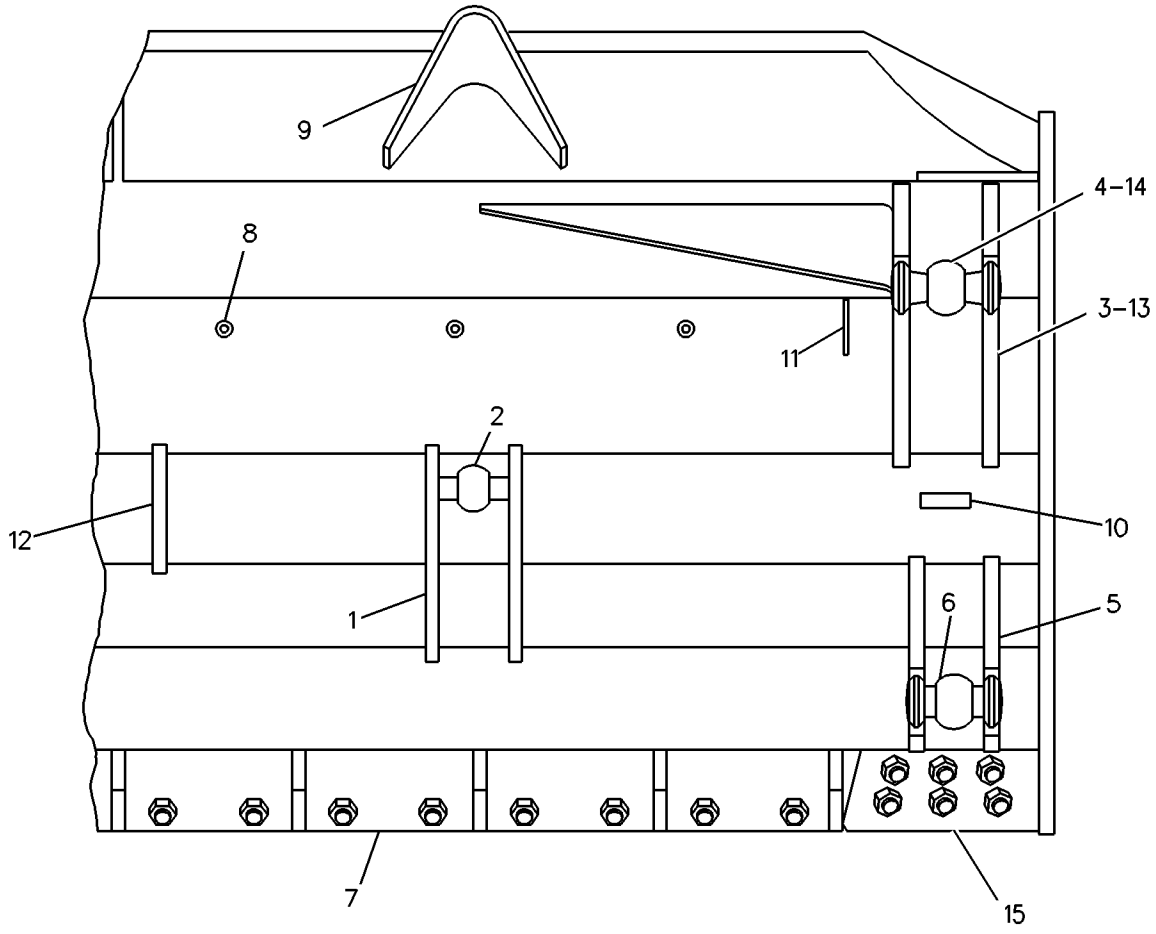

GRAPHIC #1 g00664955

WORK TOOLS

8E-5187 BLADE AS-STRAIGHT

S/N: BLE1-UP; 3EP1-UP
PART OF 9U-8093 BLADE & EDGE GP, 5Q-5780 BLADE GP-STRAIGHT
AN ATTACHMENT

SMCS-6051, 6060 **i01660724**

NOTE	REF NO	GRAPHIC REF	PART NUMBER	QTY	PART NAME 1 2 3 4 5 6 (PRODUCT LEVEL)	SEE PAGE
	1	1	**9W-6381**	1	PLATE	
	2	1	**8E-5188**	2	BRACKET AS	
					(EACH INCLUDES)	
		1	**7J-5131**	1	TRUNNION	
	3	1	**8P-9770**	1	PLATE	
	4	1	**8E-5192**	2	BRACKET AS	
					(EACH INCLUDES)	
		1	**4J-1641**	1	TRUNNION	
	5	1	**8E-5190**	2	BRACKET AS	
					(EACH INCLUDES)	
		1	**4T-1504**	1	TRUNNION	
	6	1	**8E-5194**	1	BRACKET	
	7	1	**6H-3609**	4	BOSS	
	8	1	**1U-0183**	2	DEFLECTOR	

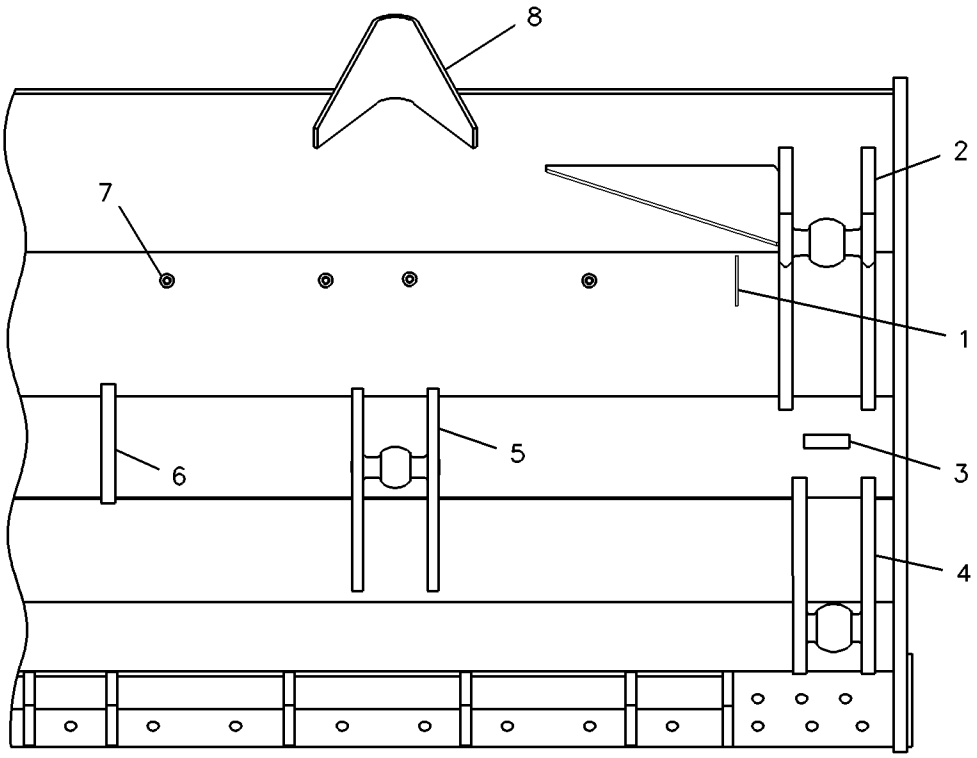

GRAPHIC #1 g00861449

WORK TOOLS

6Y-1806 BLADE GP-ANGLING

S/N: 3GP1-UP

PART OF 108-3978, 108-3979 BULLDOZER AR-ANGLING

AN ATTACHMENT

SMCS-6052, 6060 **i01180623**

NOTE	REF NO	GRAPHIC REF	PART NUMBER	QTY	PART NAME 1 2 3 4 5 6 (PRODUCT LEVEL)	SEE PAGE
YC	1	1	*9U-8202*	1	BLADE & EDGE GP	576
	2	1	**4T-6151**	4	TRUNNION	
	3	1	**8T-9399**	16	BOLT (3/4-10X2.25IN)	
	4	1	**6Y-6751**	1	PIN	
	5	1	**7X-0344**	1	BOLT (5/8-11X1.375IN)	
		1	**4J-9118**	1	RETAINER	

C-CHANGE FROM PREVIOUS TYPE
Y-SEPARATE ILLUSTRATION

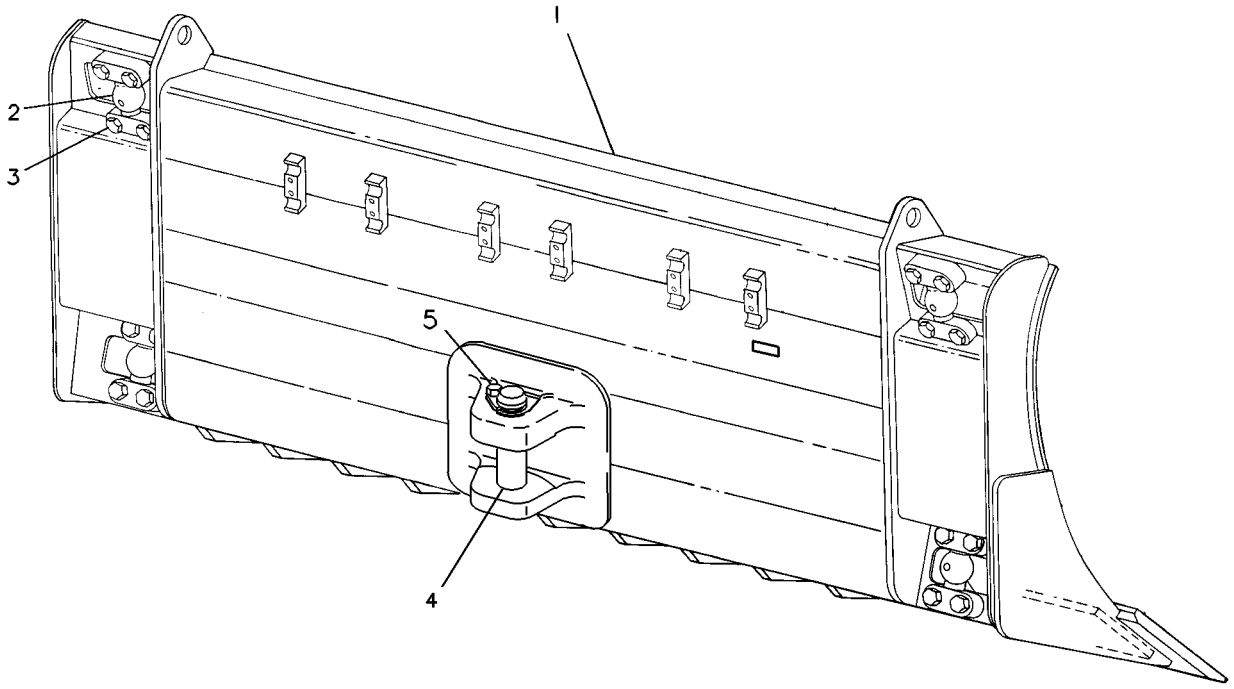

GRAPHIC #1 g00224106

WORK TOOLS

8E-1092 BLADE GP-ANGLING

S/N: 4BP1-UP
PART OF 108-3982, 108-3983 BULLDOZER AR-ANGLING
AN ATTACHMENT

SMCS-6052, 6060 **i00598185**

NOTE	REF NO	GRAPHIC REF	PART NUMBER	QTY	PART NAME 1 2 3 4 5 6 (PRODUCT LEVEL)	SEE PAGE
Y	1	1	*9U-8094*	1	BLADE & EDGE GP	574
	2	1	**8T-9399**	16	BOLT (3/4-10X2.25IN)	
	3	1	**4T-6151**	4	BEARING	
	4	1	**6Y-6751**	1	PIN	
	5	1	**7X-0344**	1	BOLT (5/8-11X1.375IN)	
		1	**4J-9118**	1	RETAINER	

Y-SEPARATE ILLUSTRATION

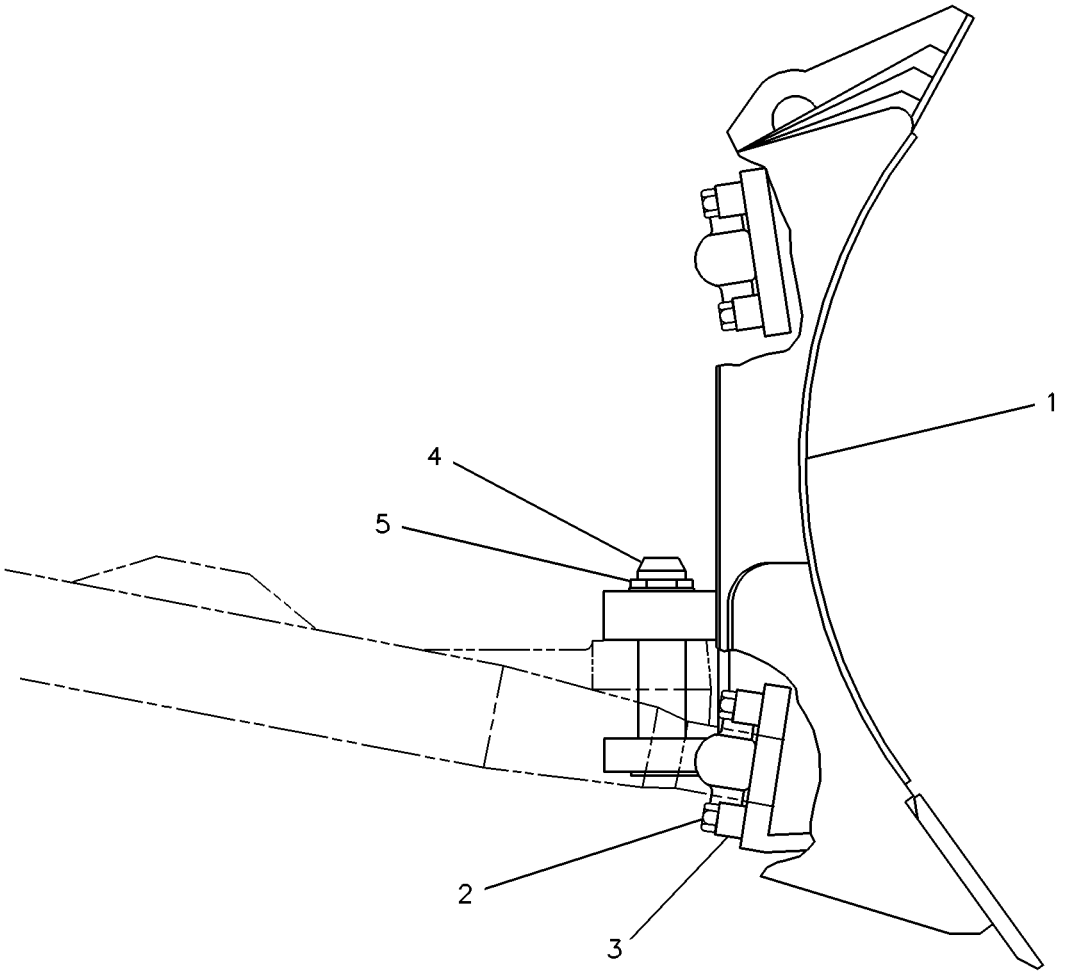

GRAPHIC #1 g00228682

WORK TOOLS

5Q-5779 BLADE GP-LOGGING

S/N: BLE1-UP
PART OF 7Z-9951 MODIFICATION AR-BULLDOZER
AN ATTACHMENT

SMCS-6060 **i01662665**

NOTE	REF NO	GRAPHIC REF	PART NUMBER	QTY	PART NAME 1 2 3 4 5 6 (PRODUCT LEVEL)	SEE PAGE
Y	1	1	*5Q-5780*	1	BLADE GP-STRAIGHT	590
Y	2	1	*6Y-1744*	1	BIT & CUTTING EDGE GP	570

Y-SEPARATE ILLUSTRATION

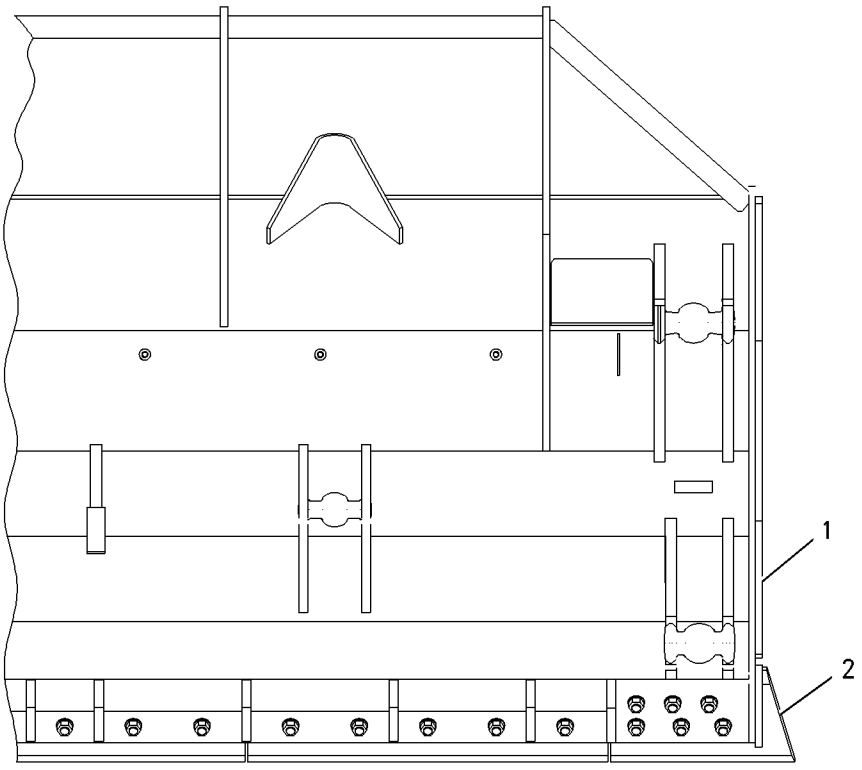

GRAPHIC #1 g00859374

WORK TOOLS

5Q-5298 BLADE GP-SEMI-UNIVERSAL

S/N: BLE1-UP; BMJ1-UP
PART OF 7Z-9934 BLADE AR-SEMI-UNIVERSAL
AN ATTACHMENT

SMCS-6060, 6078 **i01662618**

NOTE	REF NO	GRAPHIC REF	PART NUMBER	QTY	PART NAME 1 2 3 4 5 6 (PRODUCT LEVEL)	SEE PAGE
	1	1	**3B-4632**	2	PIN-COTTER	
	2	1	**4T-1481**	1	LINK AS	
	3	1	**8H-8898**	2	PIN	
Y	4	1	*5Q-5299*	1	BIT & CUTTING EDGE GP	569
	5	1	*5Q-5400*	1	BLADE AS	
	5A	1	**4J-1641**	2	TRUNNION	
		1	**6J-0499**	3	LUG (1/2-13 THD)	
		1	**6Y-1359**	1	BRACKET	
		1	**6Y-1387**	1	PLATE	
	5B	1	**1U-0183**	2	DEFLECTOR	
	5C	1	**7J-5131**	2	TRUNNION	
	5D	1	**6Y-1531**	2	BRACKET AS	
					(EACH INCLUDES)	
		1	**4T-1504**	1	TRUNNION	
	5E	1	**8P-9770**	1	PLATE	
	5F	1	**9W-6381**	1	PLATE	

Y-SEPARATE ILLUSTRATION

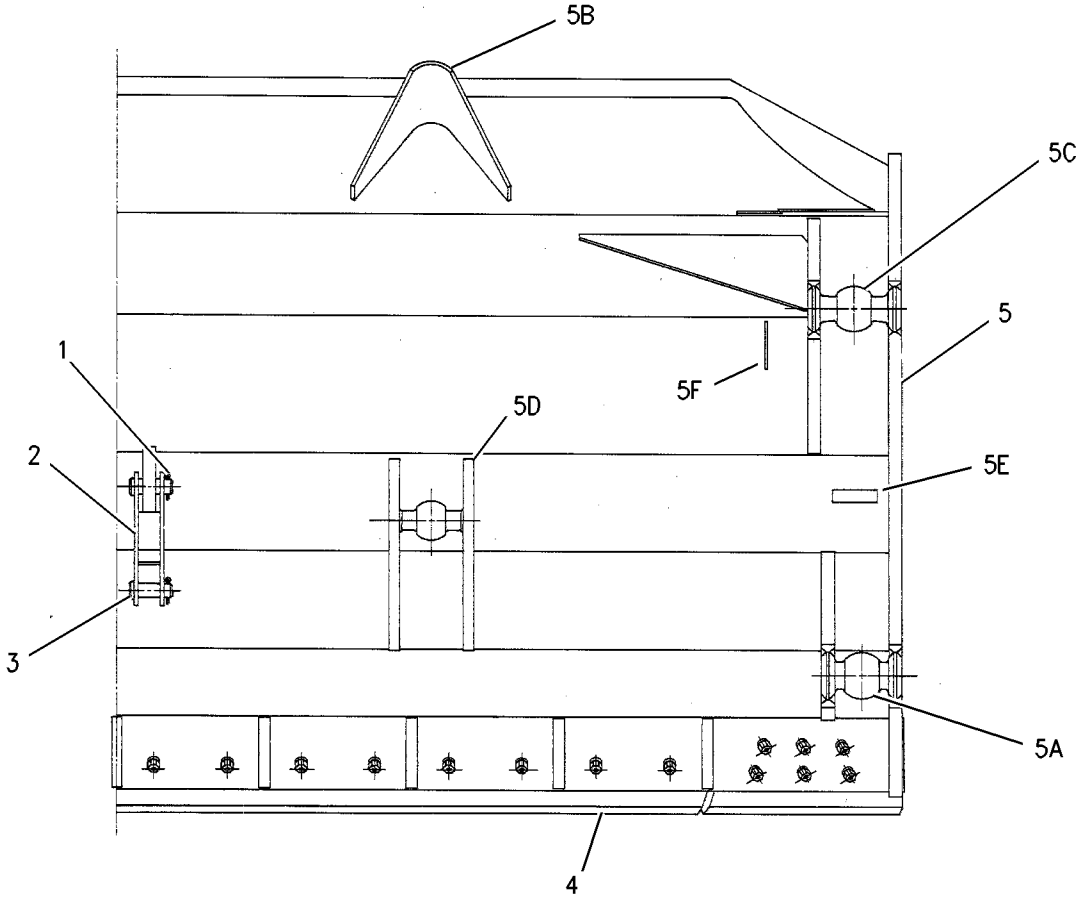

GRAPHIC #1 g00859399

WORK TOOLS

8E-5203 BLADE GP-SEMI-UNIVERSAL

S/N: 3FP1-UP

PART OF 139-8346 BULLDOZER AR, 108-3974, 108-3975 BULLDOZER AR-SEMI-UNIVERSAL AN ATTACHMENT

SMCS-6060, 6078 **i00576243**

NOTE	REF NO	GRAPHIC REF	PART NUMBER	QTY	PART NAME 1 2 3 4 5 6 (PRODUCT LEVEL)	SEE PAGE
	1	1	**3B-4632**	2	COTTER	
	2	1	**4T-1481**	1	LINK AS	
	3	1	**8H-8898**	2	PIN	
YC	4	1	*9U-8095*	1	BLADE & EDGE GP	575

C-CHANGE FROM PREVIOUS TYPE
Y-SEPARATE ILLUSTRATION

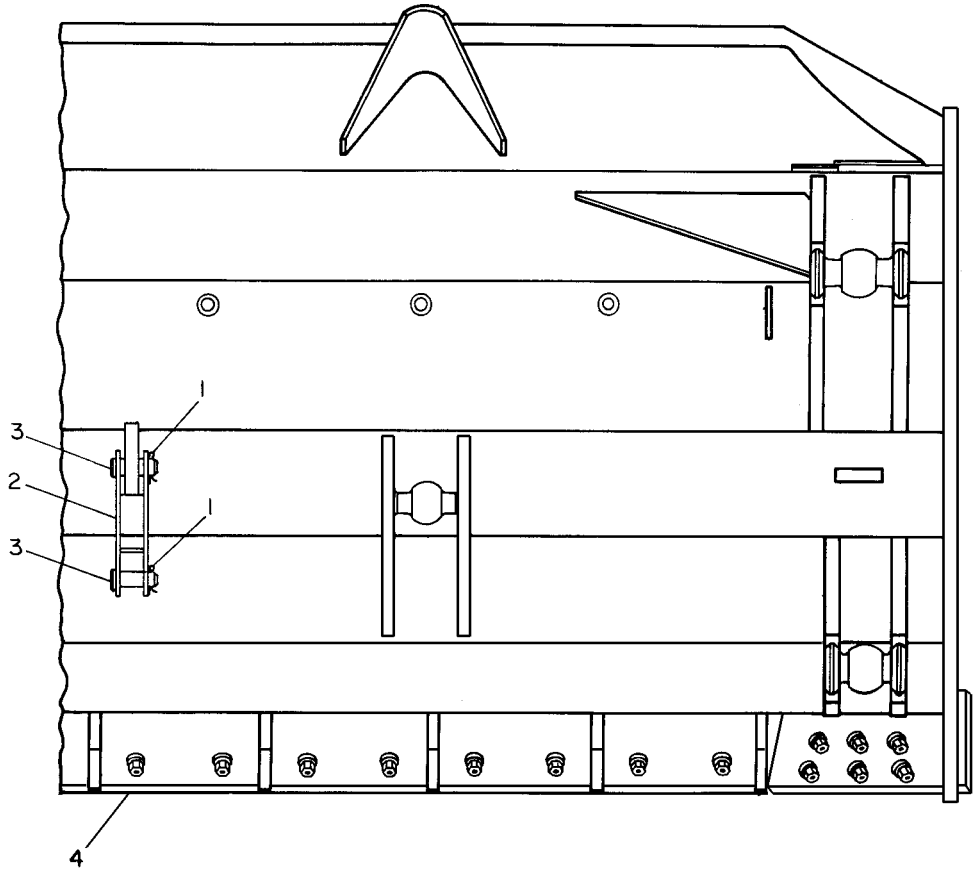

GRAPHIC #1 g00220846

WORK TOOLS

8E-9325 BLADE GP-SEMI-UNIVERSAL

S/N: 4AP1-UP

PART OF 108-3976, 108-3977 BULLDOZER AR-SEMI-UNIVERSAL

AN ATTACHMENT

SMCS-6060, 6078 **i00598204**

NOTE	REF NO	GRAPHIC REF	PART NUMBER	QTY	PART NAME 1 2 3 4 5 6 (PRODUCT LEVEL)	SEE PAGE
	1	1	**3B-4632**	1	COTTER	
	2	1	**4T-1481**	1	LINK AS	
	3	1	**8H-8898**	2	PIN	
Y	4	1	*9U-8608*	1	BLADE GP-SEMI-UNIVERSAL	589

Y-SEPARATE ILLUSTRATION

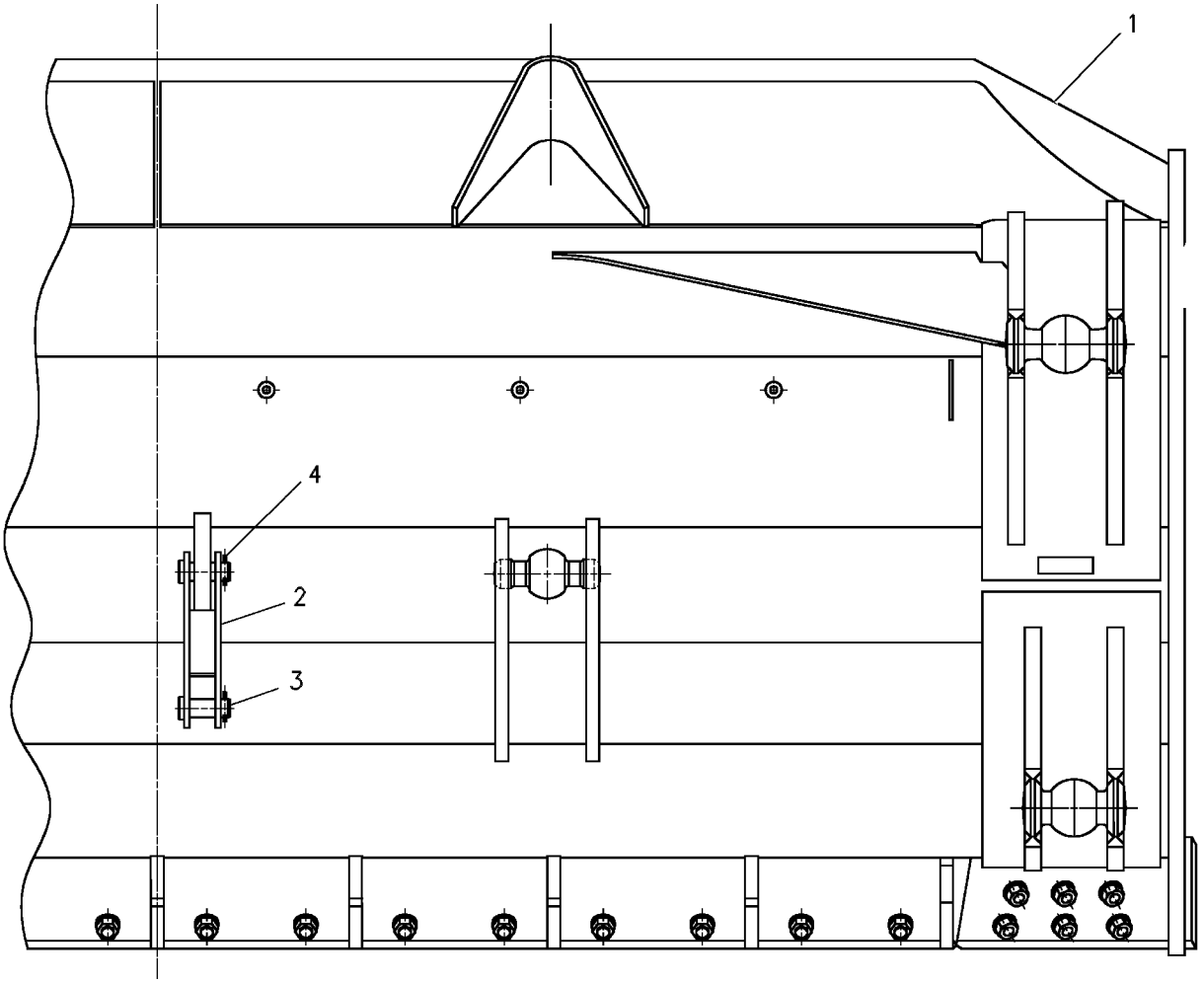

GRAPHIC #1 g00265382

WORK TOOLS

9U-8608 BLADE GP-SEMI-UNIVERSAL

S/N: 4AP1-UP

PART OF 8E-9325 BLADE GP-SEMI-UNIVERSAL

AN ATTACHMENT

SMCS-6060, 6078 **i01065326**

NOTE	PART NUMBER	QTY	PART NAME 1 2 3 4 5 6 (PRODUCT LEVEL)	SEE PAGE
Y	*9W-3762*	1	BIT & CUTTING EDGE GP	572
Y	**135-2965**	1	BLADE AS-SEMI-UNIVERSAL	581

Y-SEPARATE ILLUSTRATION

WORK TOOLS

5Q-5780 BLADE GP-STRAIGHT

S/N: BLE1-UP
PART OF 5Q-5779 BLADE GP-LOGGING
AN ATTACHMENT

SMCS-6051, 6060 **i01662970**

NOTE	REF NO	GRAPHIC REF	PART NUMBER	QTY	PART NAME 1 2 3 4 5 6 (PRODUCT LEVEL)	SEE PAGE
Y	1	1	**8E-5187**	1	BLADE AS-STRAIGHT	582
	2	1	**5Q-5781**	1	GUSSET GP-BLADE	

Y-SEPARATE ILLUSTRATION

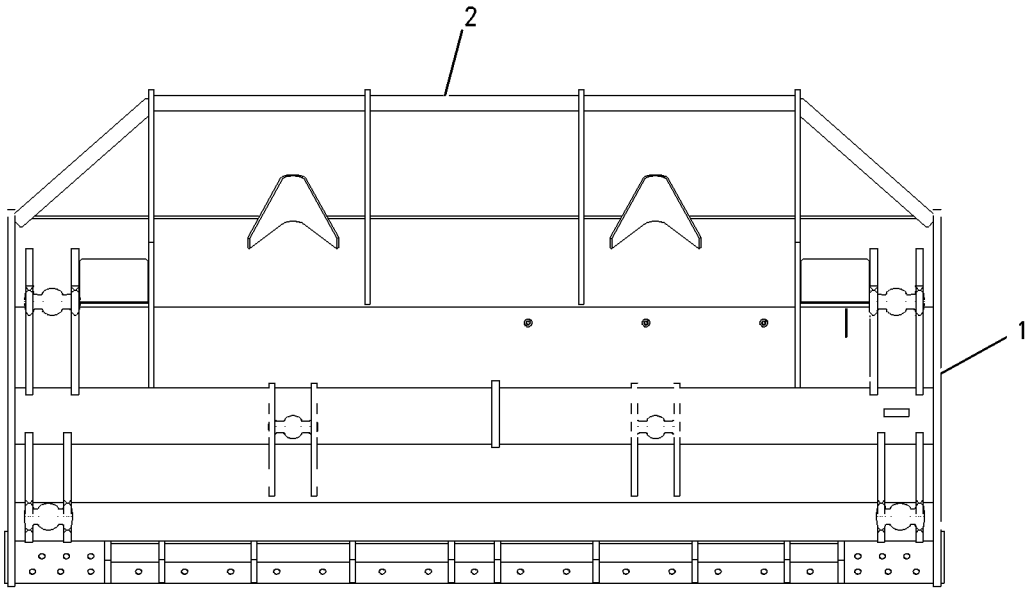

REAR VIEW

GRAPHIC #1 g00860865

WORK TOOLS

8E-5186 BLADE GP-STRAIGHT

S/N: 3EP1-UP
PART OF 108-3970, 108-3971 BULLDOZER AR-STRAIGHT
AN ATTACHMENT

SMCS-6051, 6060 **i00576226**

NOTE	REF NO	GRAPHIC REF	PART NUMBER	QTY	PART NAME 1 2 3 4 5 6 (PRODUCT LEVEL)	SEE PAGE
	1	1	**4T-1481**	1	LINK AS	
	2	1	**8H-8898**	2	PIN	
	3	1	**3B-4630**	2	COTTER	
Y	4	1	*9U-8093*	1	BLADE & EDGE GP	573

Y-SEPARATE ILLUSTRATION

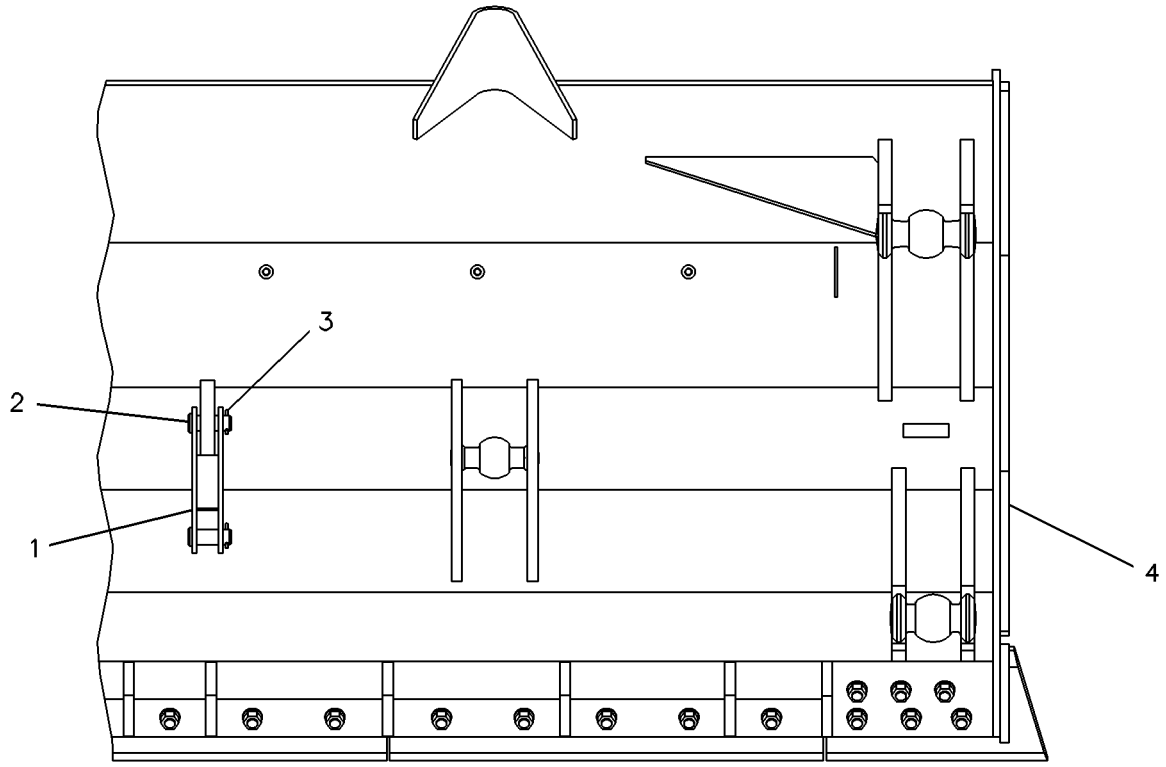

GRAPHIC #1 g00227249

WORK TOOLS

5Q-5499 BLADE GP-WASTE HANDLING

S/N: BLE1-UP; BMJ1-UP
TRASH RACK, SEMI-UNIVERSAL
AN ATTACHMENT

SMCS-6060, 6083 **i01662541**

NOTE	PART NUMBER	QTY	PART NAME 1 2 3 4 5 6 (PRODUCT LEVEL)	SEE PAGE
Y	*9W-3762*	1	BIT & CUTTING EDGE GP	572
Y	*5Q-5834*	1	BLADE AS-SEMI-UNIVERSAL	580
	4T-1481	1	LINK AS	
	8H-8898	2	PIN	
	3B-4632	2	PIN-COTTER	

Y-SEPARATE ILLUSTRATION

WORK TOOLS

8E-5204 BLADE GP-WASTE HANDLING

S/N: BLE1-UP; BMJ1-UP; 3FP1-UP
PART OF 9U-8095 BLADE & EDGE GP, 5Q-5834 BLADE AS-SEMI-UNIVERSAL, 7Z-9952 BULLDOZER AS
AN ATTACHMENT

SMCS-6060, 6083 **i01660737**

NOTE	REF NO	GRAPHIC REF	PART NUMBER	QTY	PART NAME 1 2 3 4 5 6 (PRODUCT LEVEL)	SEE PAGE
	1	1	**6H-3609**	4	BOSS	
	2	1	**1U-0183**	2	DEFLECTOR	
	3	1	**8P-9770**	1	PLATE	
	4	1	**9W-6381**	1	PLATE	
	5	1	**8E-5188**	2	BRACKET AS	
					(EACH INCLUDES)	
	6	1	**7J-5131**	1	TRUNNION	
	7	1	**6Y-1387**	1	PLATE	
	8	1	**8E-5190**	2	BRACKET AS	
					(EACH INCLUDES)	
	9	1	**4T-1504**	1	TRUNNION	
	10	1	**6Y-1390**	1	SUPPORT	
	11	1	**8E-5194**	1	BRACKET	
	12	1	**8E-5192**	2	BRACKET AS	
					(EACH INCLUDES)	
	13	1	**4J-1641**	1	TRUNNION	

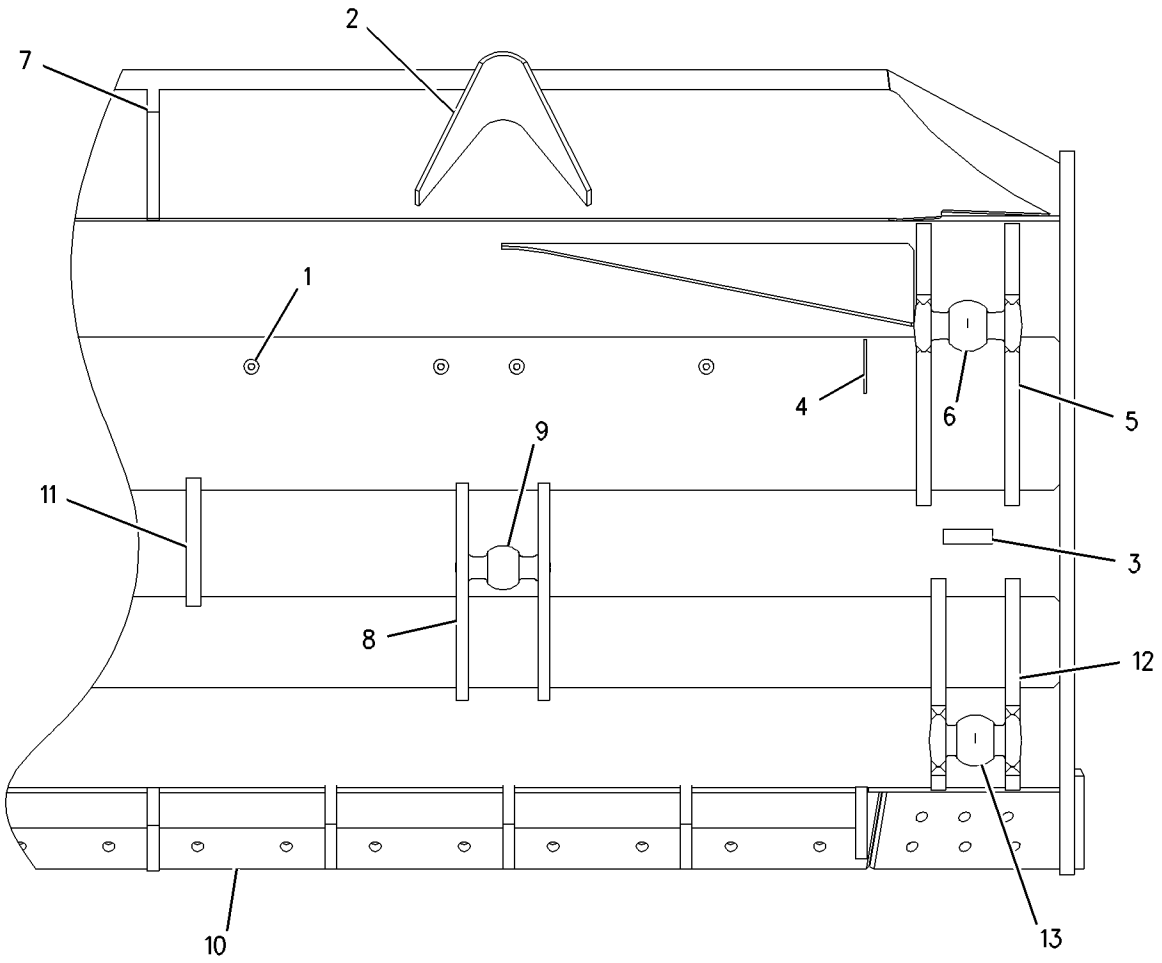

GRAPHIC #1 g00861453

WORK TOOLS

9W-1017 RIPPER GP

S/N: 3SH1-UP
PART OF 9W-0804 RIPPER AR
AN ATTACHMENT

SMCS-6311, 6312, 6315, 6316, 6325 **i01631492**

NOTE	REF NO	GRAPHIC REF	PART NUMBER	QTY	PART NAME 1 2 3 4 5 6 (PRODUCT LEVEL)	SEE PAGE
	1	1	**9W-0201**	1	CARRIAGE AS	
		1	**9W-0513**	2	PLATE AS	
	2	1	**2K-4309**	1	REINFORCEMENT-RH	
		1	**2K-4310**	1	REINFORCEMENT-LH	
	3	1	**9W-0553**	1	PLATE AS	
	4	1	**9J-9598**	2	PIN	
	5	1	**7X-0292**	2	BOLT (3/8-16X4.50 IN)	
		1	**2K-4973**	2	LOCKNUT (3/8-16 THD)	
	6	1	**8T-9389**	8	BOLT (1/2-13X2.75 IN)	
	7	1	**6V-8188**	8	NUT (1/2-13 THD)	
	8	1	**9W-0873**	2	LINK AS	
					(EACH INCLUDES)	
	9	1	**9W-0876**	2	BEARING-SLEEVE	
	10	1	**3B-8489**	3	FITTING-GREASE (1/8-27 THD)	
	11	1	**4K-3004**	2	BEARING-TRUNNION SUPPLEMENTARY	
	12	1	**3K-8510**	1	PIN	
	13	1	**5C-6565**	2	BOLT (1/2-13X1.125 IN)	
	14	1	**2K-0703**	1	BAR	
	15	1	**189-0985**	1	FRAME & BEARING AS	
		1	**3B-8489**	4	FITTING-GREASE (1/8-27 THD)	
	16	1	**9W-0099**	4	BEARING-SLEEVE	
	17	1	**1U-0159**	2	PIN	
	18	1	**7X-0340**	2	BOLT (1/2-13X6.5 IN)	
Y	19	1	*9J-8926*	1	TOOTH GP-RIPPER	597
	20	1	**8T-4223**	18	WASHER-HARD (13.5X25.5X3MM THK)	
	21	1	**1K-6872**	2	LOCKNUT (1/2-13 THD)	

Y-SEPARATE ILLUSTRATION

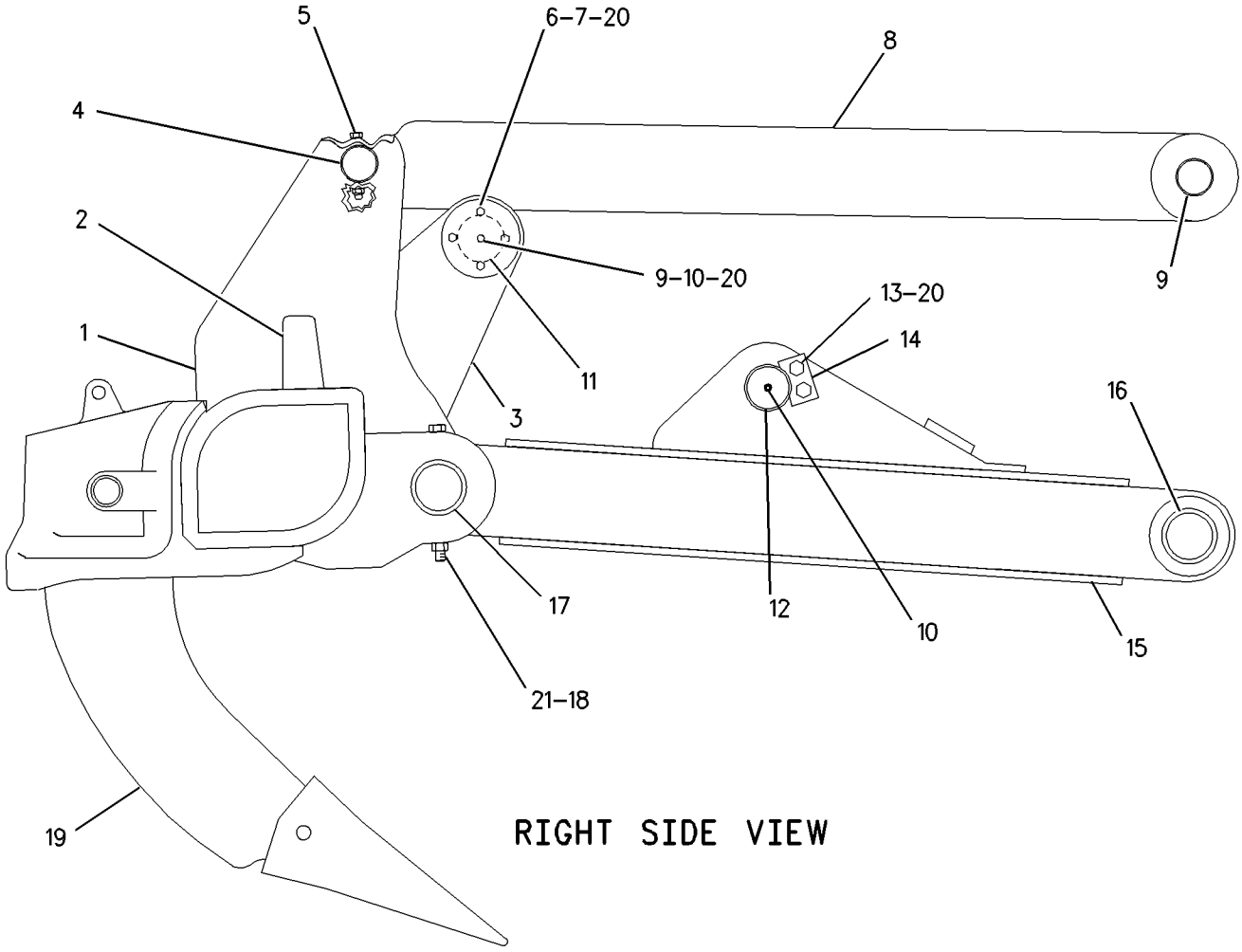

GRAPHIC #1 g00845716

WORK TOOLS

8J-2189 TOOTH GP-RIPPER

S/N: BLE1-UP

AN ATTACHMENT

SMCS-6808, 6810 **i01164429**

NOTE	REF NO	GRAPHIC REF	PART NUMBER	QTY	PART NAME 1 2 3 4 5 6 (PRODUCT LEVEL)	SEE PAGE
	1	1	**3B-5325**	2	COTTER	
	2	1	**8J-2190**	1	PIN	
	3	1	**9J-3139**	1	SHANK-RIPPER	
C	4	1	**114-0358**	1	PIN-G.E.T.	
C		1	**114-0359**	1	RETAINER AS-G.E.T.	
	5	1	**6Y-0359**	1	TIP-RIPPER	

C-CHANGE FROM PREVIOUS TYPE

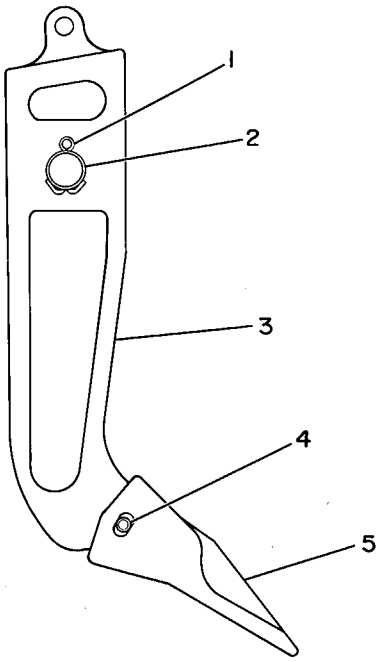

GRAPHIC #1 g00081660

WORK TOOLS

9J-8926 TOOTH GP-RIPPER

S/N: BLE1-UP; 3SH1-UP; BMJ1-UP
PART OF 9W-1017 RIPPER GP
AN ATTACHMENT

SMCS-6808, 6810 **i01101050**

NOTE	REF NO	GRAPHIC REF	PART NUMBER	QTY	PART NAME 1 2 3 4 5 6 (PRODUCT LEVEL)	SEE PAGE
	1	1	**3B-5325**	2	COTTER	
	2	1	**8J-2190**	1	PIN	
	3	1	**9J-8923**	1	SHANK-RIPPER	
	4	1	**114-0358**	1	PIN-G.E.T.	
	5	1	**6Y-0352**	1	TIP-RIPPER	
	6	1	**114-0359**	1	RETAINER AS-G.E.T.	

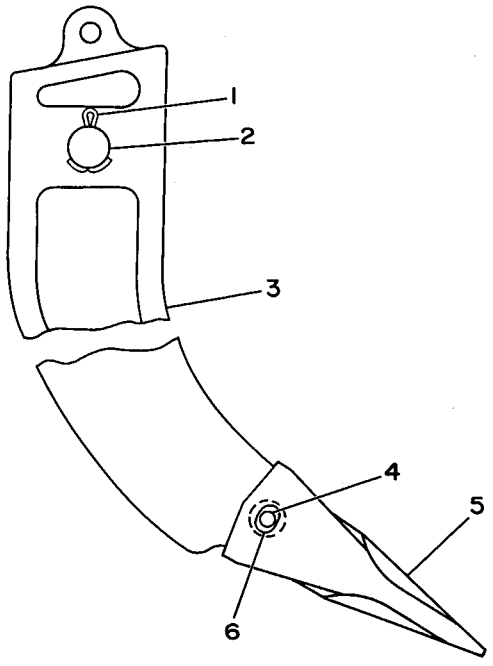

GRAPHIC #1 g00174183

OPERATOR STATION

173-1028 ADJUSTER GP-SEAT

S/N: BLE1-UP; BMJ1-UP
PART OF 178-0603, 180-7304 SEAT GP
ALSO AN ATTACHMENT

SMCS-7321 **i01589643**

NOTE	REF NO	GRAPHIC REF	PART NUMBER	QTY	PART NAME 1 2 3 4 5 6 (PRODUCT LEVEL)	SEE PAGE
	1	1	**4V-8256**	4	SPRING	
	2	1	**117-4492**	1	ROD	
	3	1	**136-1544**	1	LATCH AS-LH	
	4	1	**156-5545**	1	LATCH AS-RH	
	5	1	**164-4531**	1	ROD	
	6	1	**170-1112**	1	PLATE AS	
	7	1	**170-1114**	1	HANDLE (SLIDE ADJUSTMENT)	
	8	1	**170-1115**	1	HANDLE (TILT ADJUSTMENT)	
	9	1	**132-0338**	2	WASHER-PLASTIC (13X31.7X.8MM THK)	
	10	1	**2K-4973**	2	LOCKNUT (3/8-16 THD)	
	11	1	**7X-0608**	2	WASHER-HARD (10.2X16X2.0MM THK)	

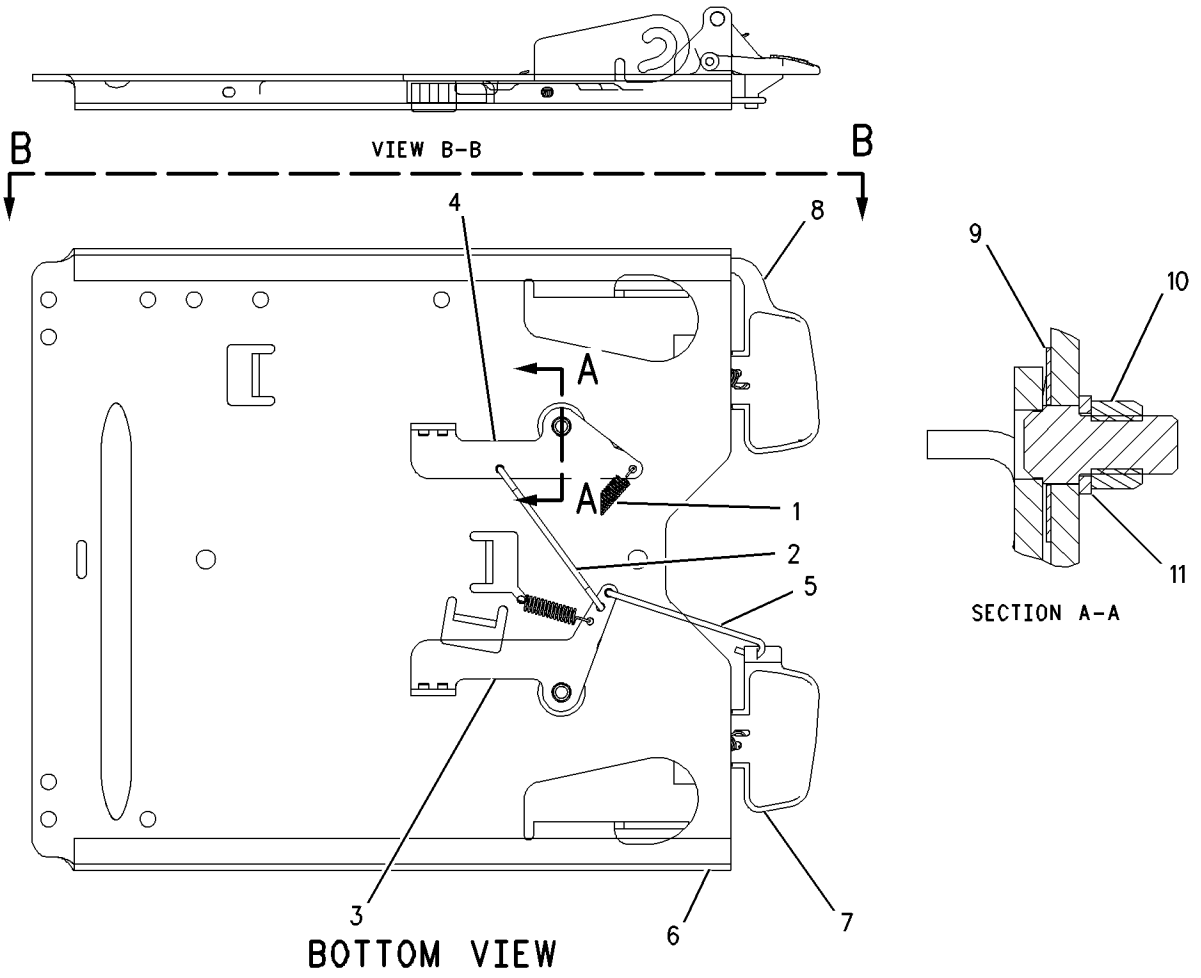

GRAPHIC #1 g00816460

OPERATOR STATION

164-3725 AIR CONDITIONER AR

S/N: BLE1-UP; BMJ1-UP
AN ATTACHMENT

SMCS-7320 **i01668563**

NOTE	PART NUMBER	QTY	PART NAME 1 2 3 4 5 6 (PRODUCT LEVEL)	SEE PAGE
Y	*108-0720*	1	AIR CONDITIONER GP	600
Y	*167-0029*	1	COMPRESSOR GP-REFRIGERANT	610
Y	*193-3134*	1	CONDENSER & MTG GP-REFRIGERANT	612
Y	*164-3727*	1	LINES GP-AIR CONDITIONER	640
	183-9257	1	ROLLOVER AS	
	110-6393	1	PLATE-INSTRUCTION (AIR CONDITIONER)	
			LOCATED ON LH SIDE OF DASH ABOVE AIR LOUVER SO IT CAN BE READ THROUGH CAB DOOR	
	125-9257	1	SWITCH AS-ROCKER	
	3E-8857	1	SWITCH AS	
	126-1699	1	ACTUATOR-ROCKER	
	3E-8825	2	LAMP (24 VOLT)	
	165-5674	1	LAMP-DIODE (LED)	

Y-SEPARATE ILLUSTRATION

OPERATOR STATION

108-0720 AIR CONDITIONER GP

S/N: BLE1-UP; BMJ1-UP
PART OF 164-3725 AIR CONDITIONER AR
AN ATTACHMENT

SMCS-7320 **i01572492**

NOTE	REF NO	GRAPHIC REF	PART NUMBER	QTY	PART NAME 1 2 3 4 5 6 (PRODUCT LEVEL)	SEE PAGE
	1	1	**6K-9555**	1	GROMMET (7.9MM OD)	
					—OR—	
		1	**2V-1937**	1	GROMMET (14.3MM OD)	
BD	2	1	**5P-5643**		SEAL	
	3	1	**109-6406**	1	COIL AS	
	4	1	**3E-5464**	1	SWITCH AS-THERMOSTAT	
	5	1	**6L-7159**	2	SCREW-MACHINE (8-32X.313 IN)	
M	6	1	**8T-4191**	2	BOLT (M10X1.5X16MM)	
	7	1	**2V-1937**	1	GROMMET	
	8	1	**5P-1075**	2	WASHER-HARD (10.2X22.5X3MM THK)	
	9	1	**1V-3113**	1	CLIP	
	10	1	**2A-3211**	1	WASHER (5.5X12.3X.8MM THK)	
	11	1	**7S-4346**	1	SCREW-MACHINE (10-32X0.5)	
D	12	1	**5P-5992**		HOSE (.1M)	
A	13	1	**110-6109**	1	KNOB-CONTROL	

A-NOT PART OF THIS GROUP
B-USE AS REQUIRED
D-ORDER BY THE METER
M-METRIC PART

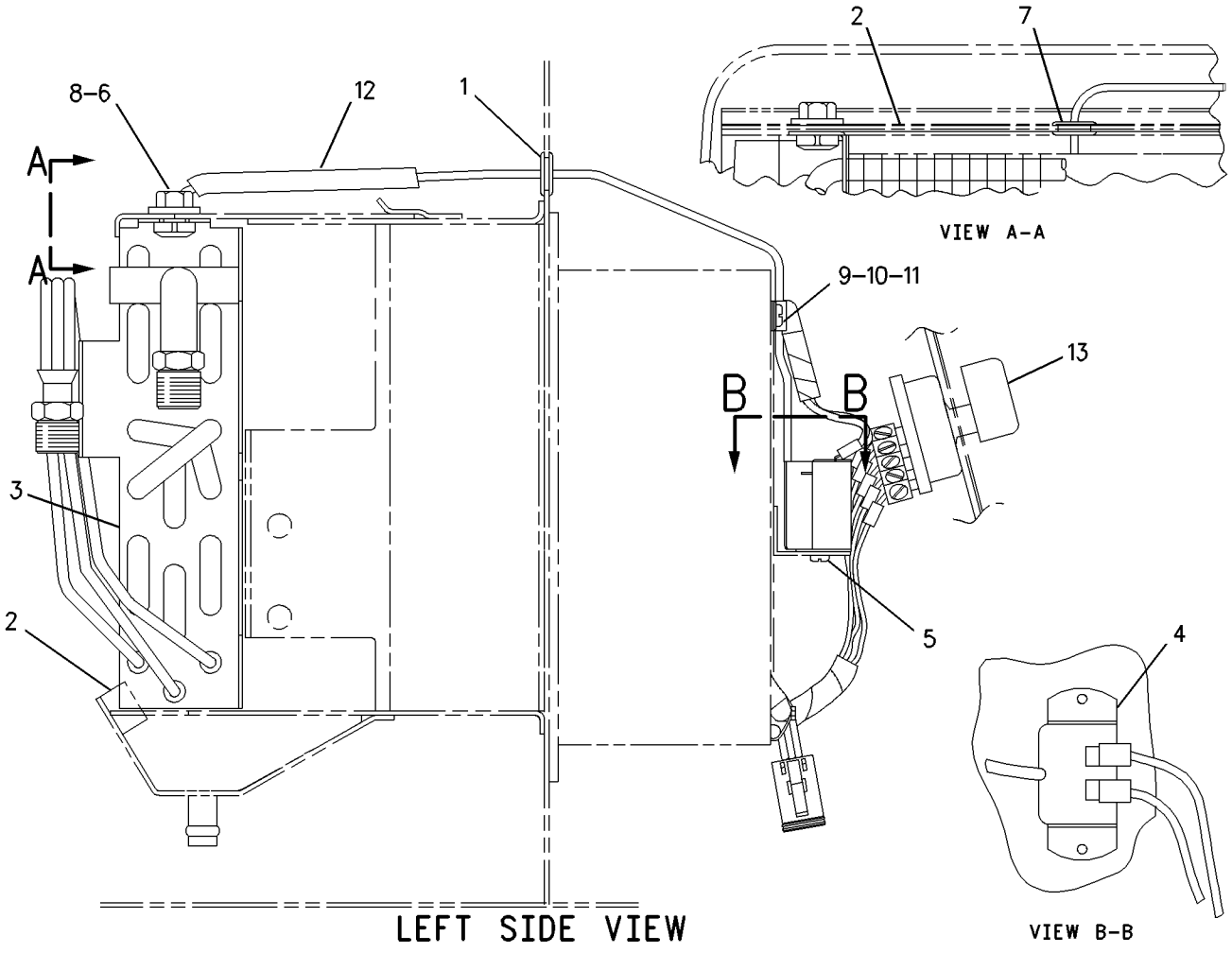

GRAPHIC #1

g00632509

OPERATOR STATION

159-0653 BLOWER GP-CAB

S/N: BLE1-UP; BMJ1-UP
PART OF 159-0725 PRESSURIZER GP-CAB
AN ATTACHMENT

SMCS-7316 **i01591583**

NOTE	REF NO	GRAPHIC REF	PART NUMBER	QTY	PART NAME 1 2 3 4 5 6 (PRODUCT LEVEL)	SEE PAGE
	1	1	**1M-1230**	4	NUT & LOCK AS	
	2	1	**3E-9865**	7	LOCKNUT (1/4-20 THD)	
	3	1	**3S-2093**	2	STRAP-CABLE	
	4	1	**6T-6708**	2	WASHER (7X28.6X4.1MM THK)	
	5	1	**8C-3756**	1	FILM-IDENTIFICATION (GROUP & SEQUENCE NO.)	
	6	1	**037-4838**	2	CLAMP	
	7	1	**118-5195**	2	WHEEL-BLOWER	
	8	1	**125-9740**	1	RESISTOR	
	9	1	**132-6534**	2	PLATE-ORIFICE	
	10	1	**172-9290**	1	HARNESS AS	
	11	1	**174-1504**	2	MOTOR AS	
					(EACH INCLUDES)	
		1	**3E-3365**	1	WEDGE-RECEPTACLE LOCK (2 PIN)	
		1	**9W-0852**	2	PIN-CONNECTOR	
		1	**102-8802**	1	KIT-RECEPTACLE (2 PIN)	
					(INCLUDES RECEPTACLE AS & WEDGE)	
	12	1	**175-0070**	4	BRACKET	
	13	1	**176-2504**	1	PLATE AS	
	14	1	**176-2505**	1	GASKET	
	15	1	**4B-4274**	4	WASHER (5.5X13X1.2MM THK)	
	16	1	**5P-4115**	6	WASHER-HARD (7.2X19X2MM THK)	
	17	1	**5P-8441**	1	GROMMET	
	18	1	**6D-4246**	2	CLIP	
	19	1	**6V-1668**	2	WASHER (6.5X29.1X3MM THK)	
	20	1	**6V-3320**	1	SCREW-MACHINE (1/4-20X7.50 IN)	

159-0653 BLOWER GP-CAB *(contd.)* **i01591583**

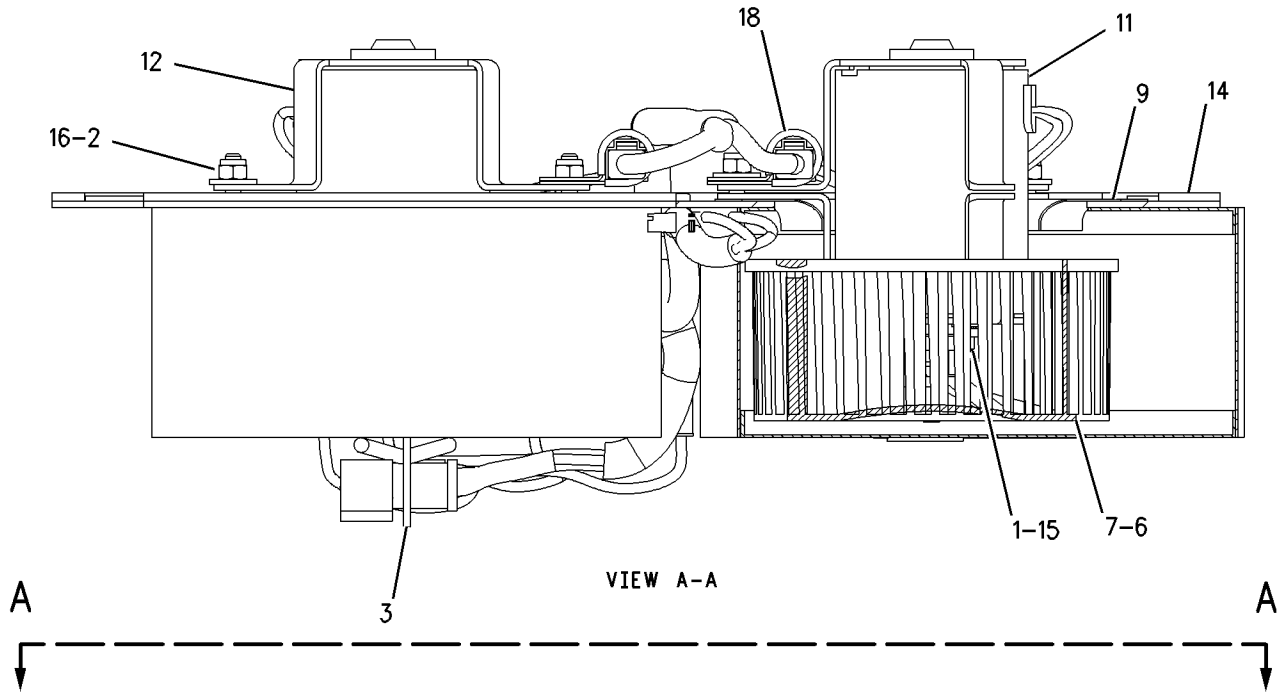

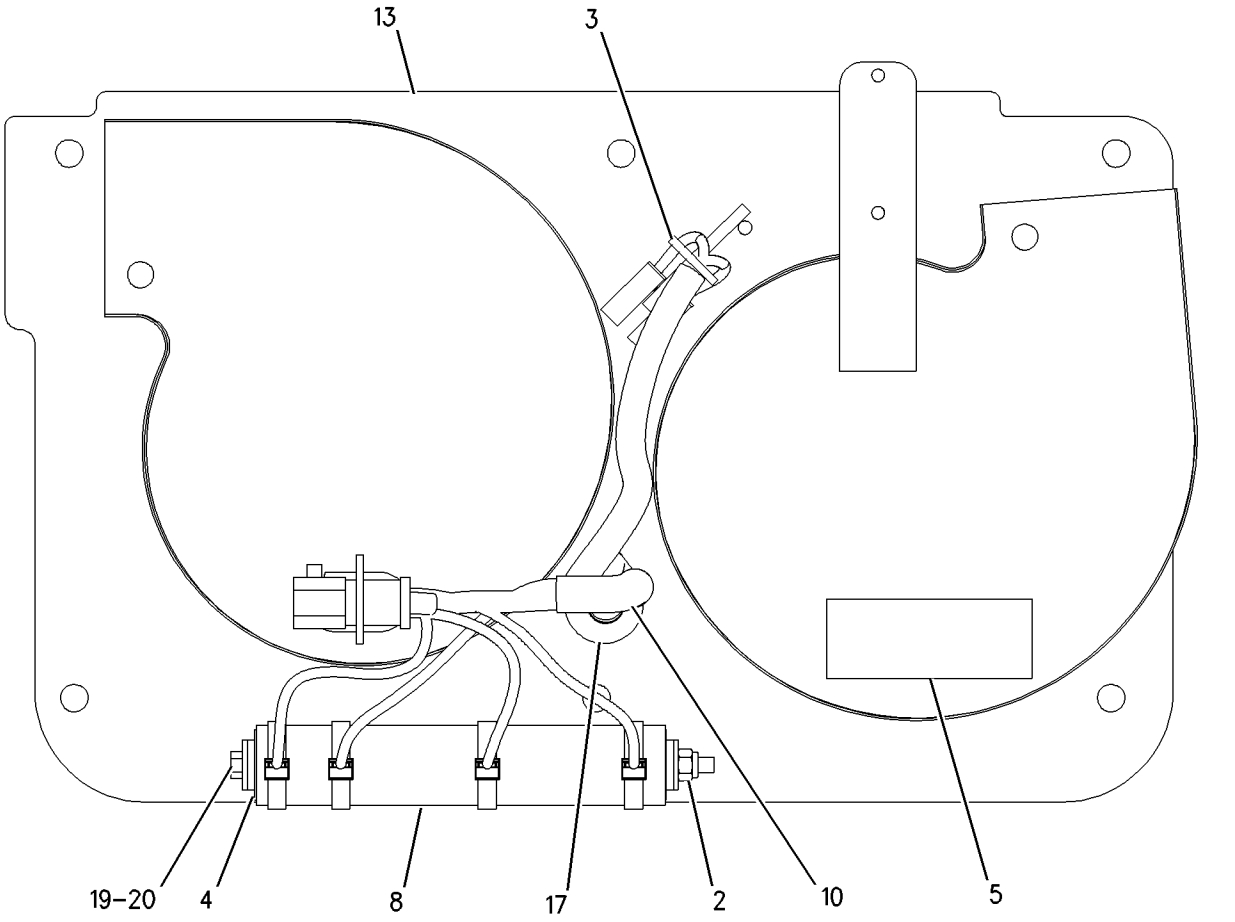

GRAPHIC #1

g00759306

OPERATOR STATION

158-7694 CAB AR

S/N: BLE1-UP; BMJ1-UP
PART OF 159-8371 CAB AR
AN ATTACHMENT

SMCS-7301, 7325, 7335 **i01591567**

NOTE	PART NUMBER	QTY	PART NAME 1 2 3 4 5 6 (PRODUCT LEVEL)	SEE PAGE
Y	*158-7696*	1	CAB GP	606
Y	*108-1335*	1	HANDHOLD GP	621
Y	*105-9657*	1	INSTALLATION GP-RADIO	627
Y	*158-7695*	1	LINER GP-CAB	636
Y	*105-9659*	1	MIRROR GP-REAR VIEW	650
Y	*158-7690*	1	WASHER GP-WINDOW	702
Y	*158-7691*	1	WIPER GP-WINDOW	724

Y-SEPARATE ILLUSTRATION

OPERATOR STATION

159-8371 CAB AR

S/N: BLE1-UP; BMJ1-UP
AN ATTACHMENT

SMCS-7301, 7325, 7335 **i01592138**

NOTE	PART NUMBER	QTY	PART NAME 1 2 3 4 5 6 (PRODUCT LEVEL)	SEE PAGE
Y	*158-7694*	1	CAB AR	604
Y	*156-7408*	1	COVER GP-CONSOLE	618
Y	*108-2675*	1	HEATER GP-CAB	622
Y	*170-6613*	1	INSTRUMENT GP	628
Y	*165-2556*	1	LINES GP-HEATER	646
Y	*169-9637*	1	MOUNTING GP-CAB	656
Y	*159-0725*	1	PRESSURIZER GP-CAB	672
Y	*183-9254*	1	ROPS GP	678
Y	**160-7186**	1	SEAT GP-SUSPENSION	692
Y	*169-9646*	1	TANK GP-WINDOW WASHER	698
Y	*194-4269*	1	WIRING GP-THROTTLE	205
	184-3287	1	FLOORPLATE AS	
	184-3290	1	FLOORPLATE AS	
	170-0258	1	PANEL	
			LOCATE PANEL ON OUTBOARD SIDE OF LH CONSOLE ASSEMBLY COVERING TWO HOLES WHICH POSITION ARMREST.	
	9N-1995	6	RIVET-POP	
	6J-0488	2	SCREW-BUTTON HEAD (3/8-16X0.875 IN)	
E	**3E-3892**		SEAL	
			LOCATE SEAL ACROSS BEND OF 157-1463 PLATE IN FRONT OF BOTTOM ON INSTRUMENT PANEL.	
	8T-9530	4	TACK-FASTENER	

E-ORDER BY THE CENTIMETER
Y-SEPARATE ILLUSTRATION

OPERATOR STATION

158-7696 CAB GP

S/N: BLE1-UP; BMJ1-UP
PART OF 158-7694 CAB AR
AN ATTACHMENT

SMCS-7301, 7325, 7335 **i01592146**

NOTE	REF NO	GRAPHIC REF	PART NUMBER	QTY	PART NAME 1 2 3 4 5 6 (PRODUCT LEVEL)	SEE PAGE
	1	2	**5G-8655**	2	LEVER	
	2	2	**6I-9386**	2	BRACKET AS	
					(EACH INCLUDES)	
		2	**7P-7610**	2	PLATE	
	3	2	**6V-2331**	2	HANDLE AS	
	4	2	**6V-2375**	2	HANDLE AS-INSIDE	
	5	2	**6V-3260**	8	BOLT-SOCKET HEAD (1/4-20X0.75 IN)	
	6	2	**6V-7190**	2	LEVER AS	
					(EACH INCLUDES)	
		2	**6V-8129**	2	SETSCREW-SOCKET	
	7	2	**6V-7636**	4	PIN AS-SPRING	
	8	2	**6V-8073**	2	LINK-CONNECTING	
	9	1	**7G-2454**	1	GLASS (TINTED)	
	10	2	**8C-3442**	2	SPRING-COIL	
Y	11	1	**8E-5112**	1	WINDOW AS-SLIDING (REAR)	704
Y	12	1	**8E-5113**	1	WINDOW AS-SLIDING (RH)	705
Y	13	1	**8E-5114**	1	WINDOW AS-SLIDING (LH)	706
B	14	2	**8T-0318**	8	SHIM (0.8MM THK)	
	15	2	**8T-1979**	1	LINKAGE AS	
		2	**8T-8914**	1	SEAL-LINKAGE	
	16	2	**8T-1980**	1	LINKAGE AS	
		2	**8T-8914**	1	SEAL-LINKAGE	
	17	2	**8T-3561**	1	PLATE-IDENTIFICATION	
	18	2	**8Y-8304**	2	STRIKER AS-LATCH	
					(EACH INCLUDES)	
		2	**8T-4158**	1	WASHER	
	19	1	**9G-1127**	2	GLASS	
	20	2	**109-9828**	1	LATCH AS-ROTARY	
	21	2	**109-9829**	1	LATCH AS-ROTARY	
	22	2	**118-0693**	2	ROD	
	23	1	**125-8254**	2	GLASS	
	24	1	**156-5086**	1	DOOR AS-LH	
	25	1	**156-5087**	1	DOOR AS-RH	
					(EACH DOOR AS INCLUDES)	
M		1	**6V-9632**	2	NUT-WELD (M6X1 THD)	
	26	1	**158-7697**	1	CAB AS	
M		1	**6V-9632**	13	NUT-WELD (M6X1 THD)	
		1	**1K-5888**	2	SPACER (.42X.67X.63 IN THK)	
		1	**8E-3276**	4	SPACER (7.5X15X5MM THK)	
		1	**5G-8871**	2	BOSS	
		1	**7T-1099**	14	LINK	
M		1	**9T-6001**	2	BOSS (M10X1.5X25MM)	
	27	2	**170-5854**	1	BRACKET-RH	
	28	2	**170-5855**	1	BRACKET-LH	
	29	2	**1B-8735**	2	KEY-WOODRUFF	
	30	2	**4K-3533**	2	WASHER (9.7X17.5X1.6MM THK)	
	31	2	**4M-6425**	2	BOLT (5/16-18X1 IN)	
	32	2	**5M-8500**	2	KNOB	
	33	1	**5P-1076**	1	WASHER-HARD (13.5X30X4MM THK)	
	34	2	**6V-8189**	2	NUT (5/16-18 THD)	
	35	2	**7X-0623**	12	WASHER (10.5X21X2MM THK)	
	36	2	**7X-7729**	12	WASHER (11X25X3MM THK)	
M	37	2	**8T-4136**	24	BOLT (M10X1.5X25MM)	
M	38	2	**8T-4181**	8	BOLT (M6X1X20MM)	
M	39	1	**8T-4192**	1	BOLT (M12X1.75X25MM)	

158-7696 **CAB GP** ***(contd.)*** **i01592146**

NOTE	REF NO	GRAPHIC REF	PART NUMBER	QTY	PART NAME 1 2 3 4 5 6 (PRODUCT LEVEL)	SEE PAGE
	40	2	**8T-9043**	2	BOLT (5/16-18X.875 IN)	
	41	2	**9D-9736**	2	BUMPER	
	42	2	**9N-1995**	2	RIVET-POP	
BD	43	1	**5P-6605**		SEAL	
BD	44	2	**5P-5930**		SEAL	
BE	45	2	**103-2543**		SEAL	
BD	46	2	**5P-5643**		SEAL	
BD	47	2	**5P-7483**		SEAL	
BD	48	2	**8T-6936**		SEAL	

B-USE AS REQUIRED
D-ORDER BY THE METER
E-ORDER BY THE CENTIMETER
M-METRIC PART
Y-SEPARATE ILLUSTRATION

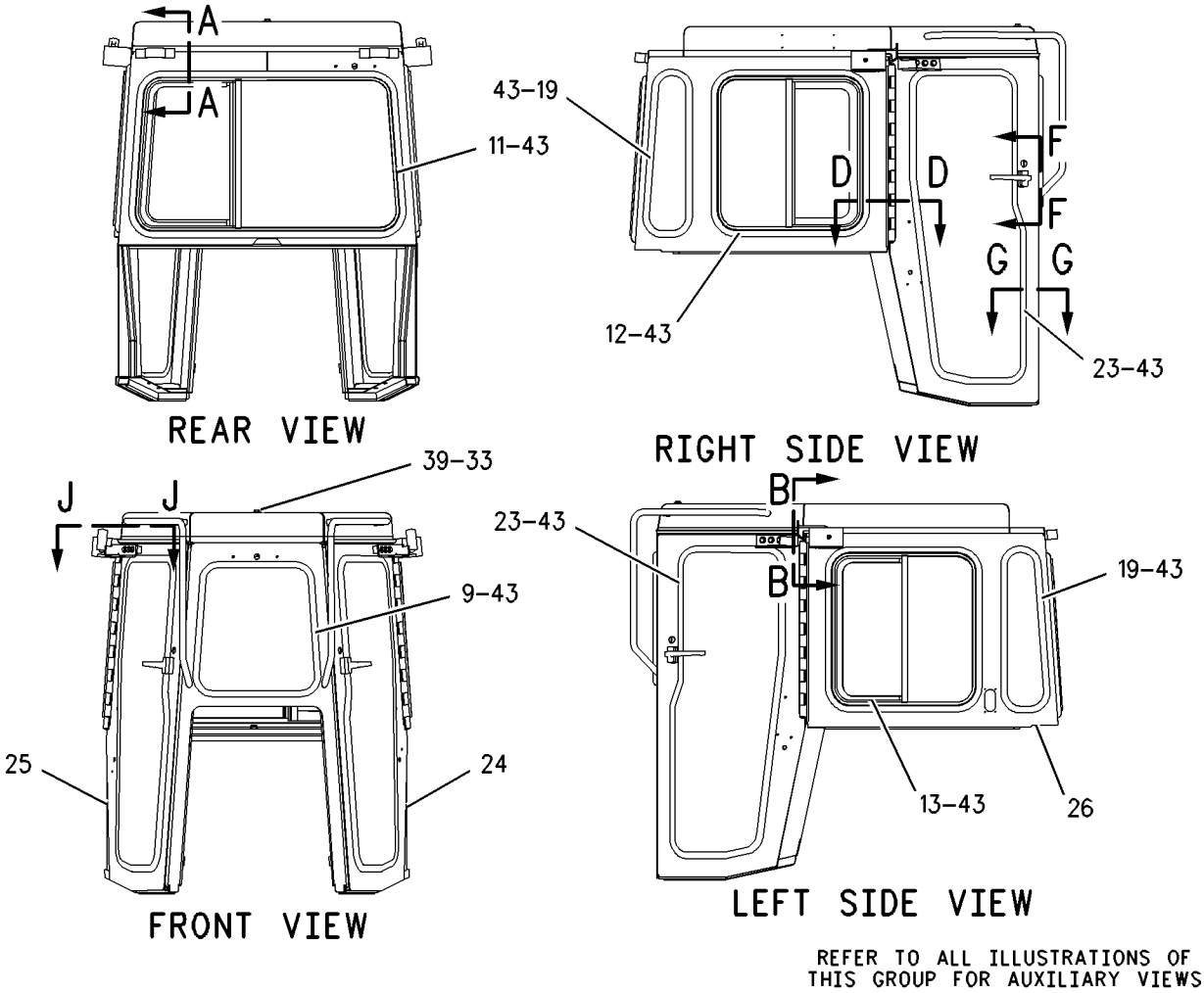

GRAPHIC #1 g00672173

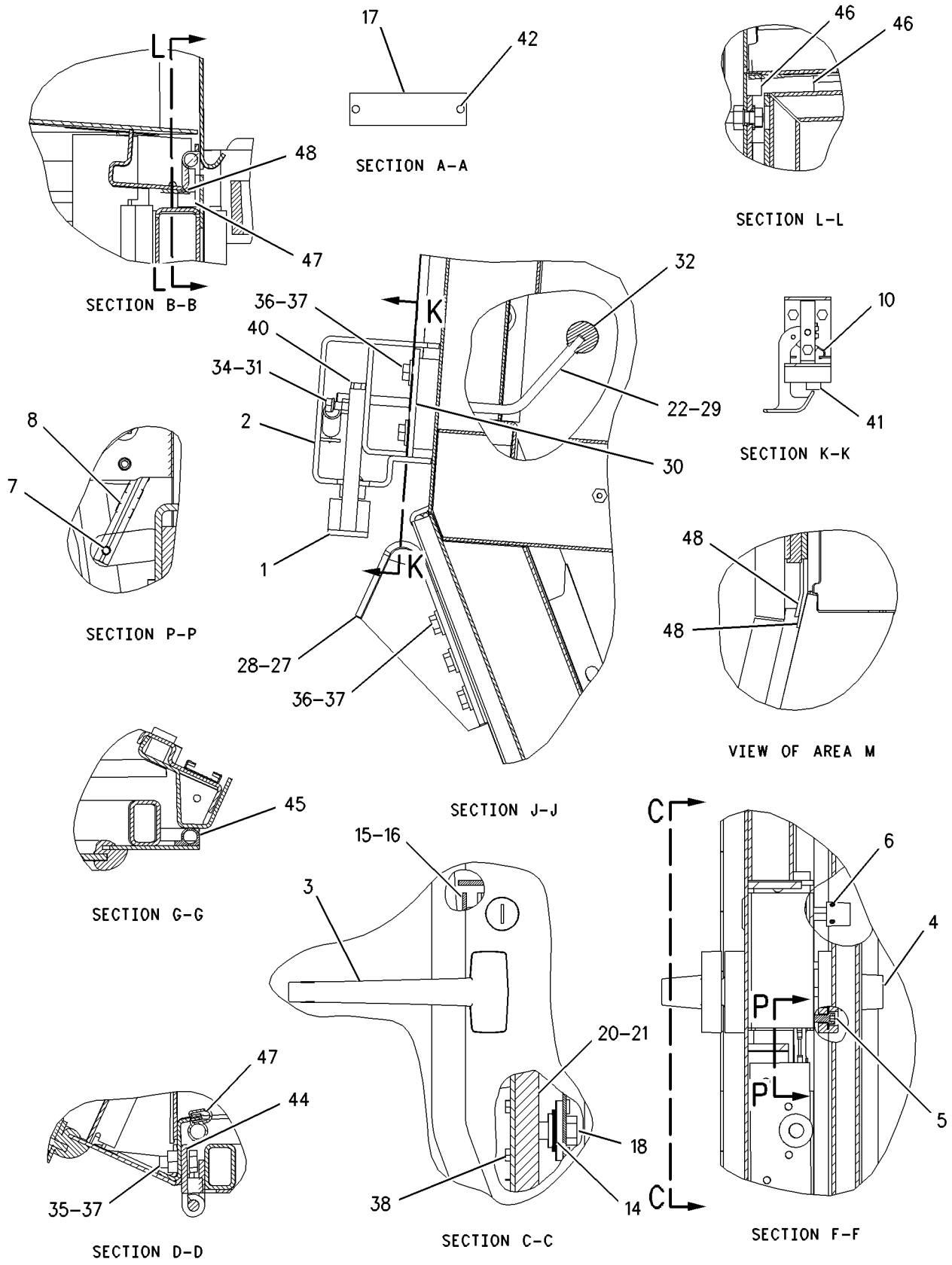

GRAPHIC #2 g00745481

OPERATOR STATION

106-5122 COMPRESSOR GP-REFRIGERANT

S/N: BLE1-UP; BMJ1-UP
PART OF 167-0029 COMPRESSOR GP-REFRIGERANT
AN ATTACHMENT

SMCS-1802 **i01643623**

NOTE	REF NO	GRAPHIC REF	PART NUMBER	QTY	PART NAME 1 2 3 4 5 6 (PRODUCT LEVEL)	SEE PAGE
	1	1	**7T-4532**	1	PLUG AS	
	2	1	**9X-7385**	2	SEAL-O-RING	

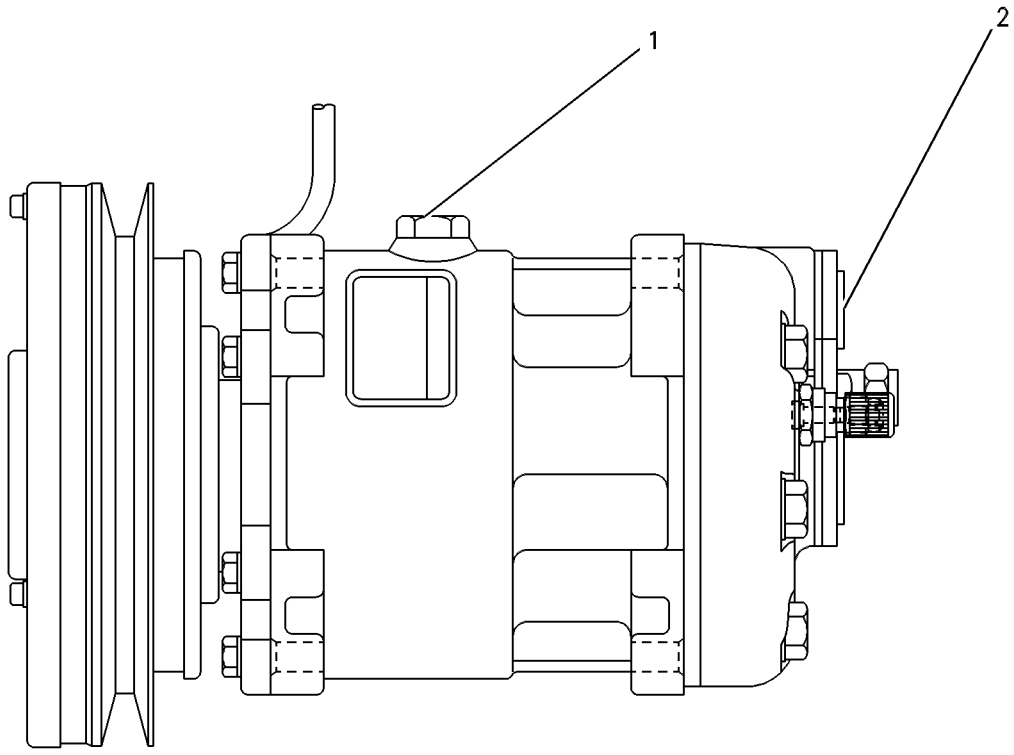

GRAPHIC #1 g00279110

OPERATOR STATION

167-0029 COMPRESSOR GP-REFRIGERANT

S/N: BLE1-UP; BMJ1-UP
PART OF 164-3725 AIR CONDITIONER AR
AN ATTACHMENT

SMCS-1802 **i01668565**

NOTE	REF NO	GRAPHIC REF	PART NUMBER	QTY	PART NAME 1 2 3 4 5 6 (PRODUCT LEVEL)	SEE PAGE
M	1	1	**4Y-6353**	1	BOLT-SPECIAL (M10X1.5X130MM)	
	2	1	**8S-5383**	1	BLOCK	
Y	3	1	**106-5122**	1	COMPRESSOR GP-REFRIGERANT	609
	4	1	**188-1012**	1	BRACKET	
	5	1	**188-1013**	1	PLATE	
	6	1	**214-9492**	1	ROD	
	7	1	**216-0349**	1	V-BELT	
M	8	1	**6V-3823**	1	BOLT (M12X1.75X60MM)	
	9	1	**8T-4121**	6	WASHER-HARD (11X21X2.5MM THK)	
M	10	1	**8T-4132**	2	NUT (M16X2 THD)	
M	11	1	**8T-4133**	3	NUT (M10X1.5 THD)	
M	12	1	**8T-4182**	1	BOLT (M10X1.5X45MM)	
M	13	1	**8T-4185**	3	BOLT (M10X1.5X50MM)	
M	14	1	**8T-4186**	2	BOLT (M10X1.5X40MM)	
M	15	1	**8T-4193**	1	BOLT (M16X2X50MM)	
	16	1	**8T-4223**	2	WASHER-HARD (13.5X25.5X3MM THK)	
M	17	1	**8T-4244**	1	NUT (M12X1.75 THD)	
	18	1	**9X-8257**	3	WASHER (17.5X30X3.5MM THK)	

M-METRIC PART
Y-SEPARATE ILLUSTRATION

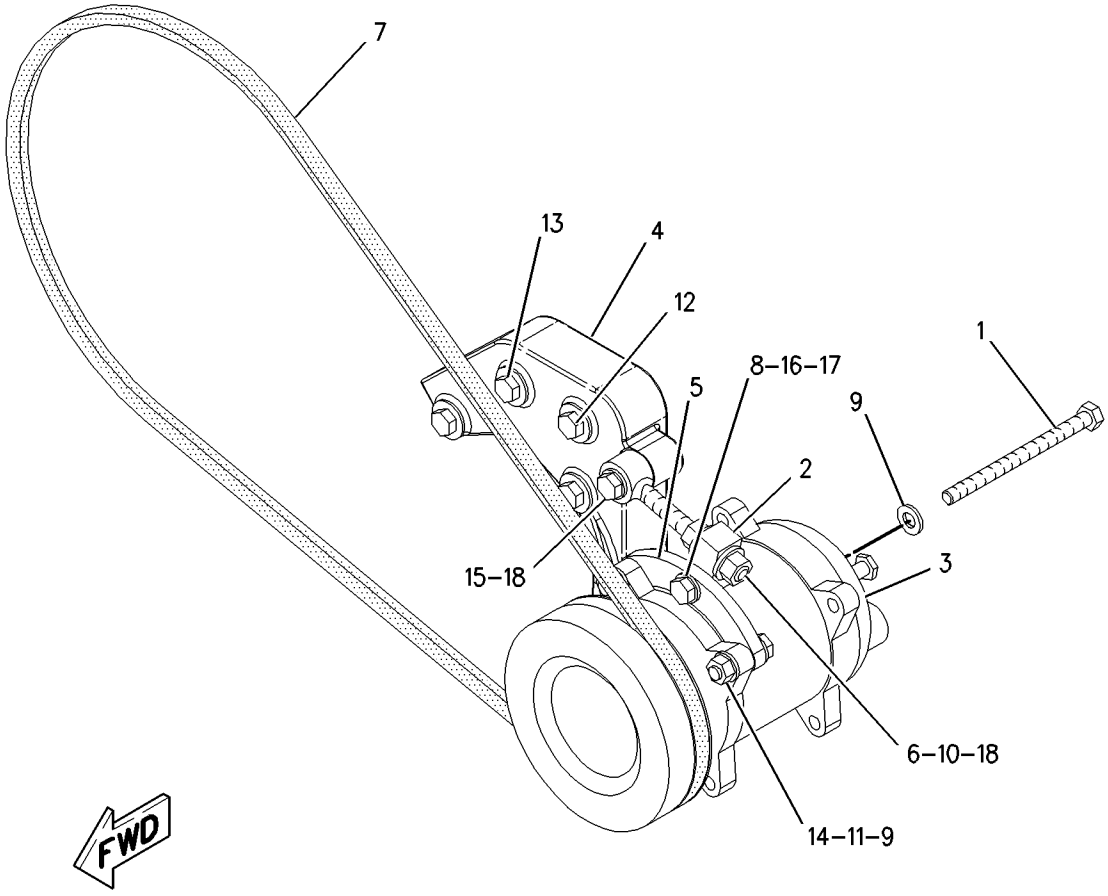

GRAPHIC #1 g00846867

OPERATOR STATION

193-3134 CONDENSER & MTG GP-REFRIGERANT

S/N: BLE1-UP; BMJ1-UP
PART OF 164-3725 AIR CONDITIONER AR
AN ATTACHMENT

SMCS-1805 **i01592184**

NOTE	REF NO	GRAPHIC REF	PART NUMBER	QTY	PART NAME 1 2 3 4 5 6 (PRODUCT LEVEL)	SEE PAGE
	1	1	**8D-0983**	6	MOUNTING	
	2	1	**8D-7185**	6	WASHER (11.9X38.1X3MM THK)	
Y	3	1	**103-9527**	1	CONDENSER GP-REFRIGERANT	614
	4	1	**109-5498**	1	SCREEN AS	
	5	1	**169-5459**	1	SUPPORT AS	
		1	**1F-0750**	2	NUT-WELD (3/8-16 THD)	
		1	**6J-1323**	2	LUG (1/2-13 THD)	
		1	**8J-7236**	2	NUT-WELD (3/4-10 THD)	
		1	**9F-6445**	6	NUT-WELD (1/4-20 THD)	
	6	1	**170-3399**	2	BRACKET	
	7	1	**172-5989**	2	BRACKET	
	8	1	**193-3307**	1	PLATE AS	
	9	1	**193-3308**	1	PLATE AS	
	10	1	**5M-3062**	2	BOLT (3/8-16X0.75 IN)	
	11	1	**5P-1075**	2	WASHER-HARD (10.2X22.5X3MM THK)	
	12	1	**7X-0311**	6	BOLT (7/16-14X2.25 IN)	
	13	1	**8T-9399**	2	BOLT (3/4-10X2.25 IN)	
	14	1	**7X-0447**	6	NUT (7/16-14 THD)	
	15	1	**7X-7742**	2	WASHER-PULLEY	
	16	1	**1M-4543**	2	GROMMET	
M	17	1	**8T-4139**	4	BOLT (M12X1.75X30MM)	
	18	1	**8T-4205**	6	WASHER-HARD (7.2X14.5X2MM THK)	
	19	1	**8T-4223**	3	WASHER-HARD (13.5X25.5X3MM THK)	
	20	1	**8T-4835**	3	BOLT (1/2-13X2 IN)	
	21	1	**8T-9364**	6	BOLT (1/4-20X0.625 IN)	
	22	1	**8T-5360**	12	WASHER (12X22.5X2.5MM THK)	

M-METRIC PART
Y-SEPARATE ILLUSTRATION

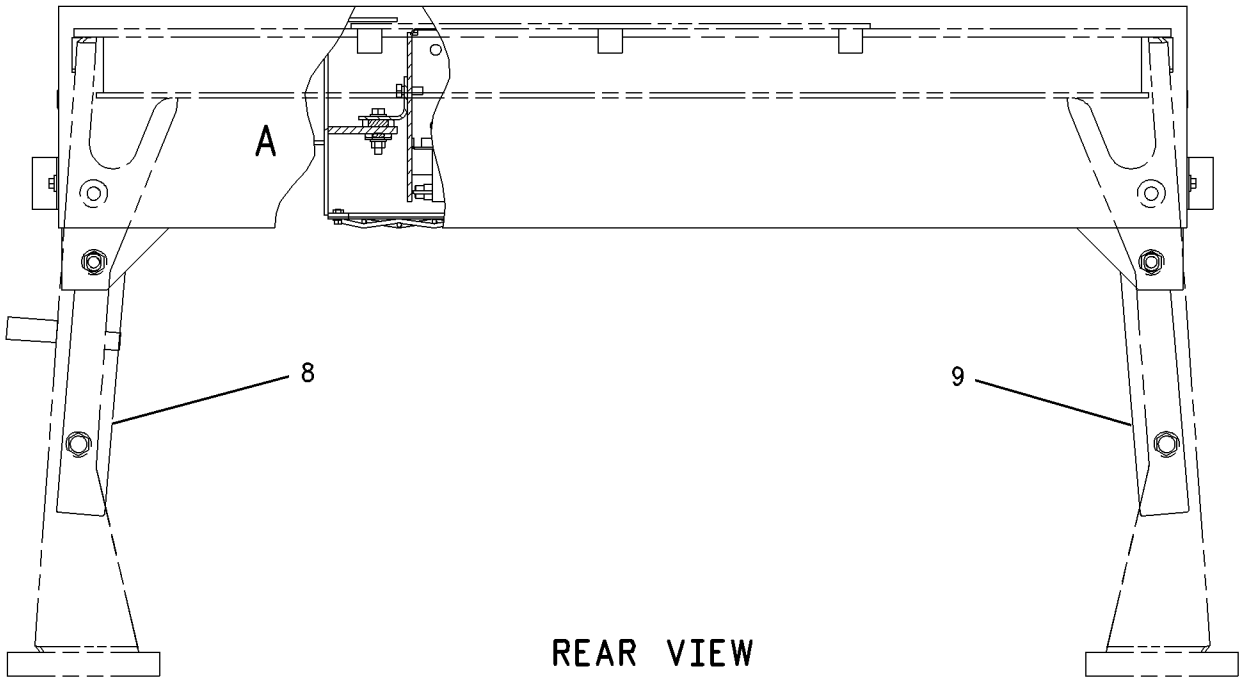

REAR VIEW

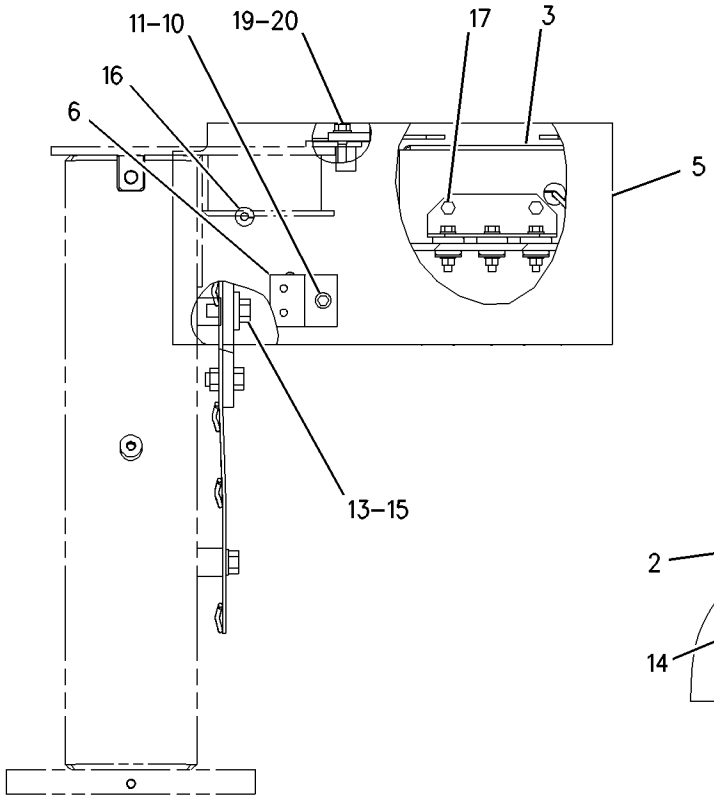

LEFT SIDE VIEW

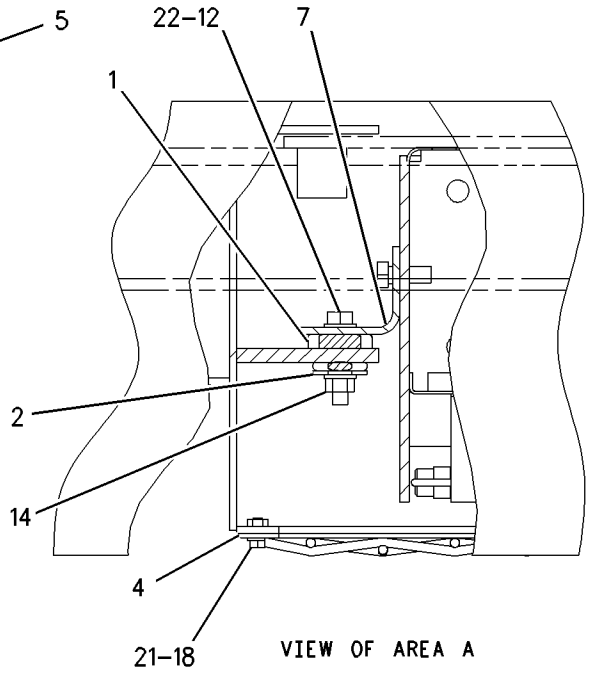

VIEW OF AREA A

GRAPHIC #1

g00791931

OPERATOR STATION

103-9527 CONDENSER GP-REFRIGERANT

S/N: BLE1-UP; BMJ1-UP
PART OF 193-3134 CONDENSER & MTG GP-REFRIGERANT
AN ATTACHMENT

SMCS-1805 **i01682468**

NOTE	REF NO	GRAPHIC REF	PART NUMBER	QTY	PART NAME 1 2 3 4 5 6 (PRODUCT LEVEL)	SEE PAGE
	1	1	**3E-5239**	1	RELAY AS (24 VOLT) (CONDENSER BLOWER MOTOR)	
	2	1	**3S-2093**	7	STRAP-CABLE	
C	3	1	**7T-5856**	4	CLAMP	
	4	1	**8C-3756**	1	FILM-IDENTIFICATION (GROUP & SEQUENCE NO.)	
C	5	1	**8P-6363**	1	PLUG	
	6	1	**9X-3452**	2	GUARD AS-FAN	
	7	1	**124-8490**	1	HARNESS AS	
	8	1	**142-8620**	2	FAN AS	
	9	1	**174-1495**	2	MOTOR GP-ELECTRIC	
					(EACH INCLUDES)	
		1	**3E-3365**	1	WEDGE-RECEPTACLE LOCK (2 PIN)	
		1	**9W-0852**	2	PIN-CONNECTOR	
		1	**102-8802**	1	KIT-RECEPTACLE (2 PIN)	
					(INCLUDES WEDGE & RECEPTACLE AS)	
	10	1	**203-2070**	8	MOUNT	
	11	1	**204-9530**	4	TUBE	
	12	1	**204-9531**	1	COIL-CONDENSER	
	13	1	**204-9532**	1	CASE AS	
M		1	**8T-3490**	12	NUT-WELD (M10X1.5 THD)	
		1	**9G-9151**	2	CLIP	
		1	**7T-1099**	4	LINK	
M		1	**8T-3597**	12	NUT-WELD (M12X1.75 THD)	
M	14	1	**5C-2890**	1	NUT (M6X1 THD)	
	15	1	**5P-1075**	8	WASHER-HARD (10.2X22.5X3MM THK)	
C	16	1	**5P-8441**	1	GROMMET	
	17	1	**6D-4246**	2	CLIP	
	18	1	**7X-0578**	4	WASHER-HARD (10.2X32X2.5MM THK)	
	19	1	**8T-4121**	4	WASHER-HARD (11X21X2.5MM THK)	
M	20	1	**8T-4133**	4	NUT (M10X1.5 THD)	
M	21	1	**8T-4137**	8	BOLT (M10X1.5X20MM)	
M	22	1	**8T-4192**	12	BOLT (M12X1.75X25MM)	
	23	1	**8T-4205**	1	WASHER-HARD (7.2X14.5X2MM THK)	
	24	1	**8T-4223**	12	WASHER-HARD (13.5X25.5X3MM THK)	
M	25	1	**8T-6685**	4	BOLT (M10X1.50X110MM)	
C	26	1	**9X-7373**	1	GROMMET	
BD	27	1	**5P-5924**		SEAL	
BD	28	1	**5P-5673**		SEAL	

B-USE AS REQUIRED
C-CHANGE FROM PREVIOUS TYPE
D-ORDER BY THE METER
M-METRIC PART

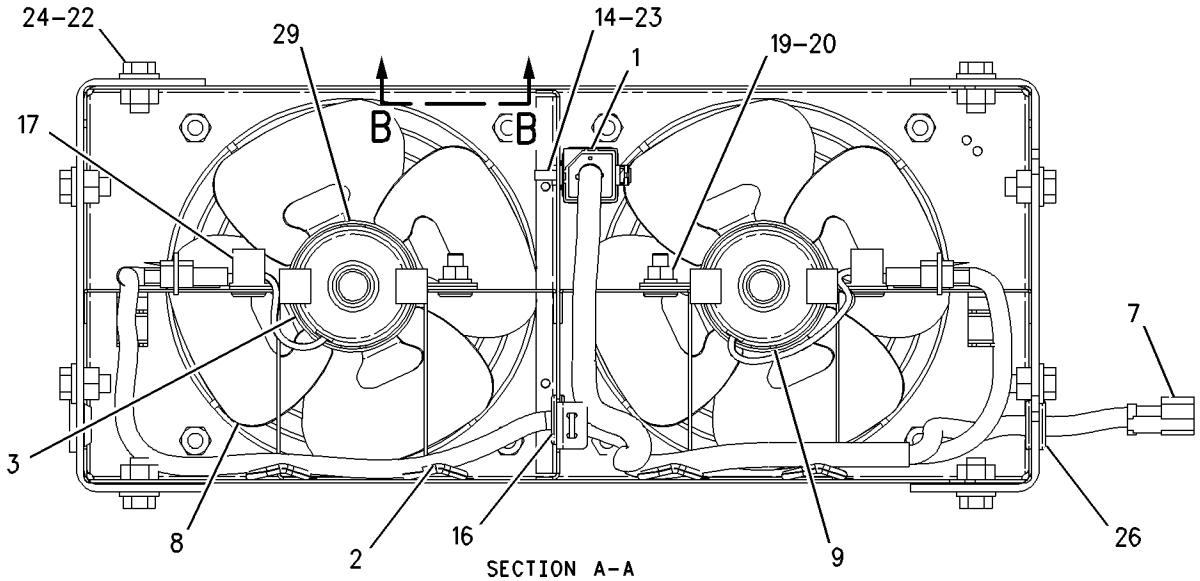

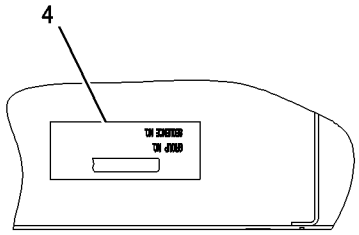

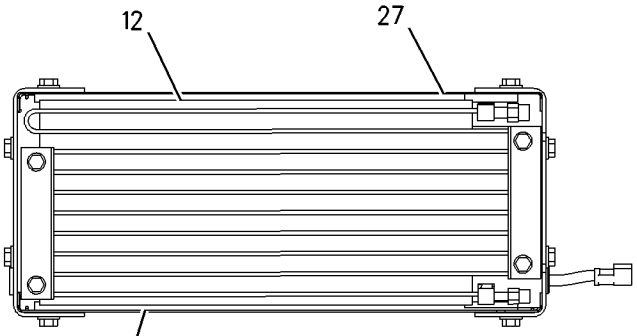

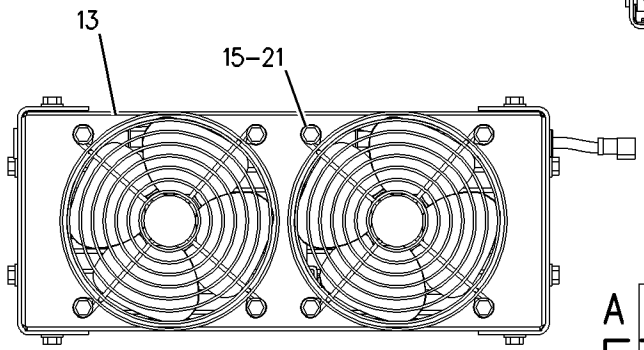

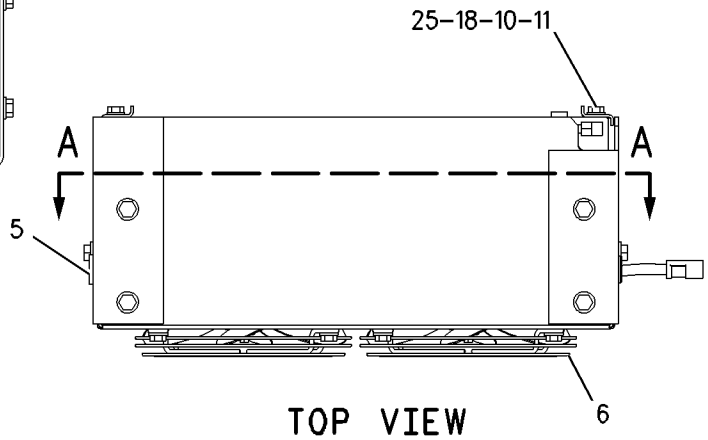

GRAPHIC #1 g00815036

OPERATOR STATION

161-3615 CONTROL GP-IMPLEMENT

S/N: BLE1-UP; BMJ1-UP
DOZER HANDLE
PART OF 168-7420, 171-6133 CONTROL AR-PILOT HYDRAULIC
ALSO AN ATTACHMENT

SMCS-5063 **i01590564**

NOTE	REF NO	GRAPHIC REF	PART NUMBER	QTY	PART NAME 1 2 3 4 5 6 (PRODUCT LEVEL)	SEE PAGE
	1	1	**188-1079**	1	CONTROL GP-HANDLE (DOZER)	
	2	1	**4B-9808**	2	SETSCREW (1/4-20X0.5 IN)	

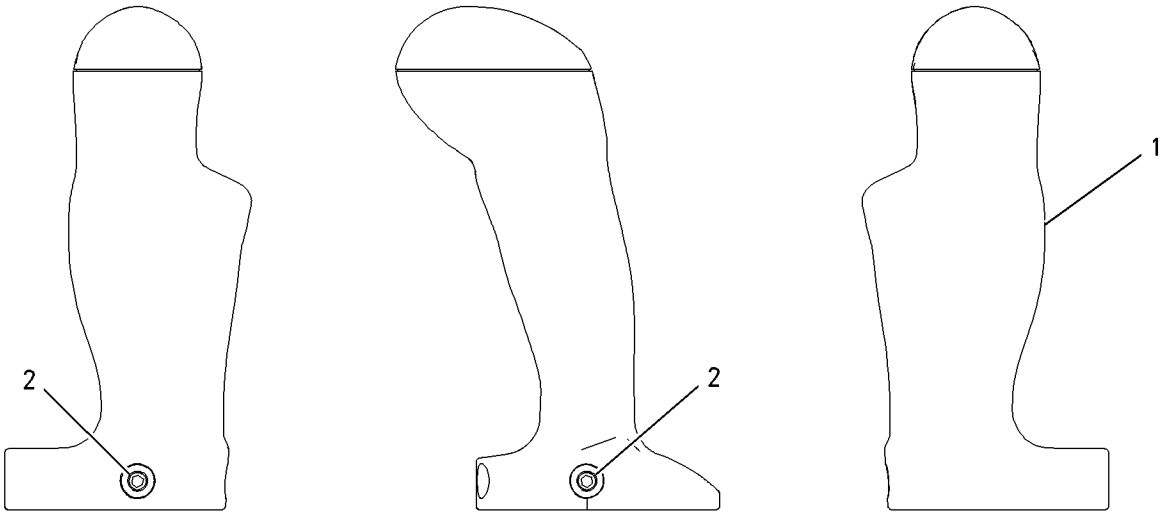

GRAPHIC #1 g00763645

OPERATOR STATION

194-3870 CONVERSION AR

S/N: BLE1-UP; BMJ1-UP
CANNOT BE USED WITH CAB
AN ATTACHMENT

SMCS-7300 **i01631784**

NOTE	PART NUMBER	QTY	PART NAME 1 2 3 4 5 6 (PRODUCT LEVEL)	SEE PAGE
	7X-0402	2	BOLT (1-8X2 IN)	
	185-0682	1	HANDHOLD AS	
	8T-5361	2	WASHER-HARD (28X49X5MM THK)	

OPERATOR STATION

156-7408 COVER GP-CONSOLE

S/N: BLE1-UP; BMJ1-UP
PART OF 159-8371 CAB AR
AN ATTACHMENT

SMCS-5258 **i01591562**

NOTE	REF NO	GRAPHIC REF	PART NUMBER	QTY	PART NAME 1 2 3 4 5 6 (PRODUCT LEVEL)	SEE PAGE
	1	1	**6Y-0206**	4	RETAINER	
	2	1	**7G-4824**	2	STRAP	
	3	1	**8E-7791**	2	STRAP	
	4	1	**8Y-5746**	1	ASHTRAY	
	5	1	**8Y-6388**	3	LOUVER AS	
	6	1	**159-3566**	1	COVER AS	
		1	**137-7502**	1	PANEL	
		1	**137-7503**	1	PANEL	
	7	1	**159-3568**	1	COVER AS	
		1	**156-7412**	1	PANEL	
	8	1	**114-9125**	1	HOLDER-CUP	
	9	1	**159-3961**	1	PANEL-ACOUSTICAL	
	10	1	**159-7945**	1	PANEL-ACOUSTICAL	
	11	1	**159-7948**	1	FLOOR MAT	
	12	1	**159-7949**	1	FLOOR MAT	
	13	1	**211-0220**	1	COVER AS	
	14	1	**159-9202**	1	SEAL	
	15	1	**161-3611**	1	PLATE	
	16	1	**161-4024**	2	BOOT	
	17	1	**170-5849**	1	SHROUD AS	
		1	**170-5851**	1	LINER-FOAM	
		1	**170-5852**	1	LINER-FOAM	
		1	**170-5853**	1	LINER-FOAM	
	18	1	**111-5147**	6	SCREW-MACHINE (6-32 X .625IN)	
	19	1	**159-3960**	1	PANEL-ACOUSTICAL	
BE	20	1	**124-3243**		SEAL	
	21	1	**7D-6922**	6	LOCKNUT (6-32 THD)	
	22	1	**198-9706**	2	SCREW-TRUSS HEAD	
M	23	1	**9X-2045**	5	SCREW-TRUSS HEAD (M6X1X20MM)	
	24	1	**9N-0869**	1	WASHER-HARD (8.8X25.5X2MM THK)	
	25	1	**9X-2038**	5	WASHER (7X19X2MM THK)	
M	26	1	**9X-2043**	9	SCREW-TRUSS HEAD (M6X1X14MM)	

B-USE AS REQUIRED
E-ORDER BY THE CENTIMETER
M-METRIC PART

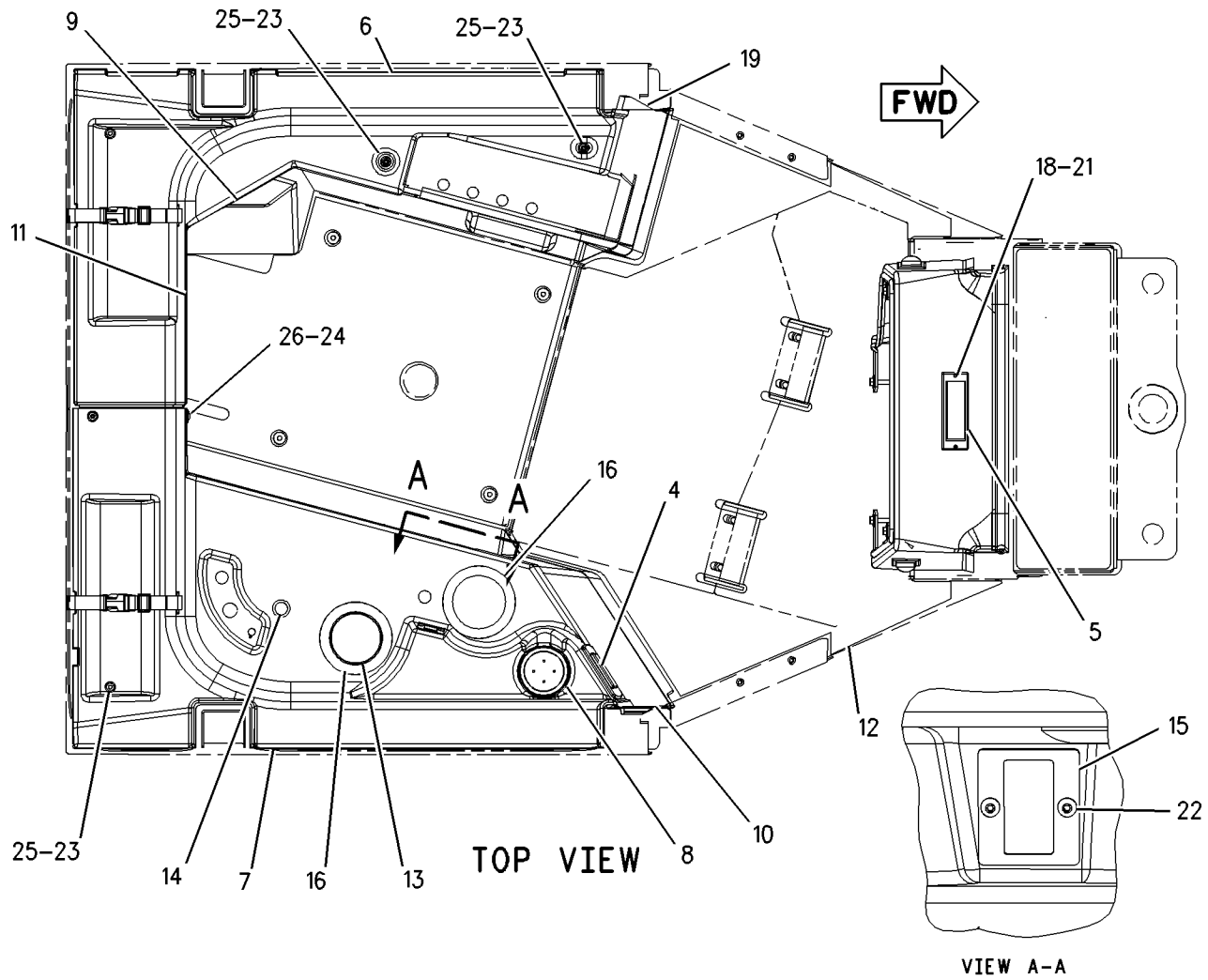

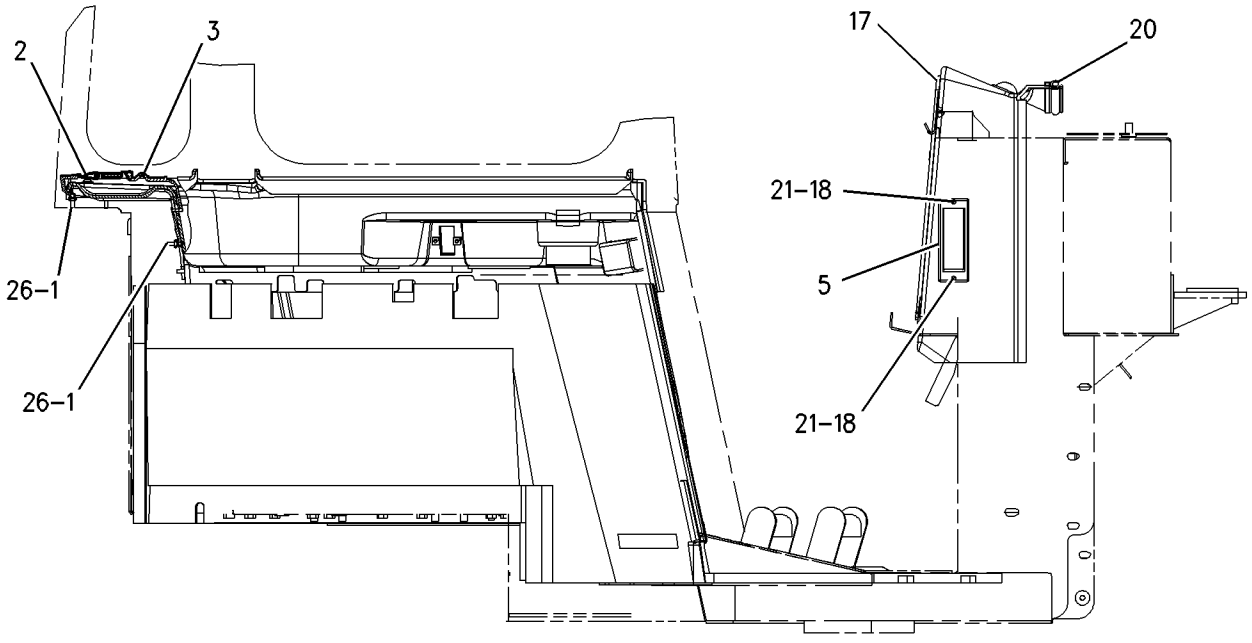

GRAPHIC #1 g00807592

OPERATOR STATION

1Z-0742 HANDHOLD GP

S/N: BLE1-UP; BMJ1-UP
HEAVY DUTY
PART OF 216-7294 WASTE HANDLING GP
AN ATTACHMENT

SMCS-7256 **i01626472**

NOTE	REF NO	GRAPHIC REF	PART NUMBER	QTY	PART NAME 1 2 3 4 5 6 (PRODUCT LEVEL)	SEE PAGE
	1	1	**104-5944**	2	HANDLE AS	
	2	1	**8T-8919**	4	BOLT (1/2-13X1.75 IN)	
	3	1	**1Q-2423**	2	HANDLE AS	
	4	1	**5P-2424**	4	BOLT (1/2-13X2.25 IN)	

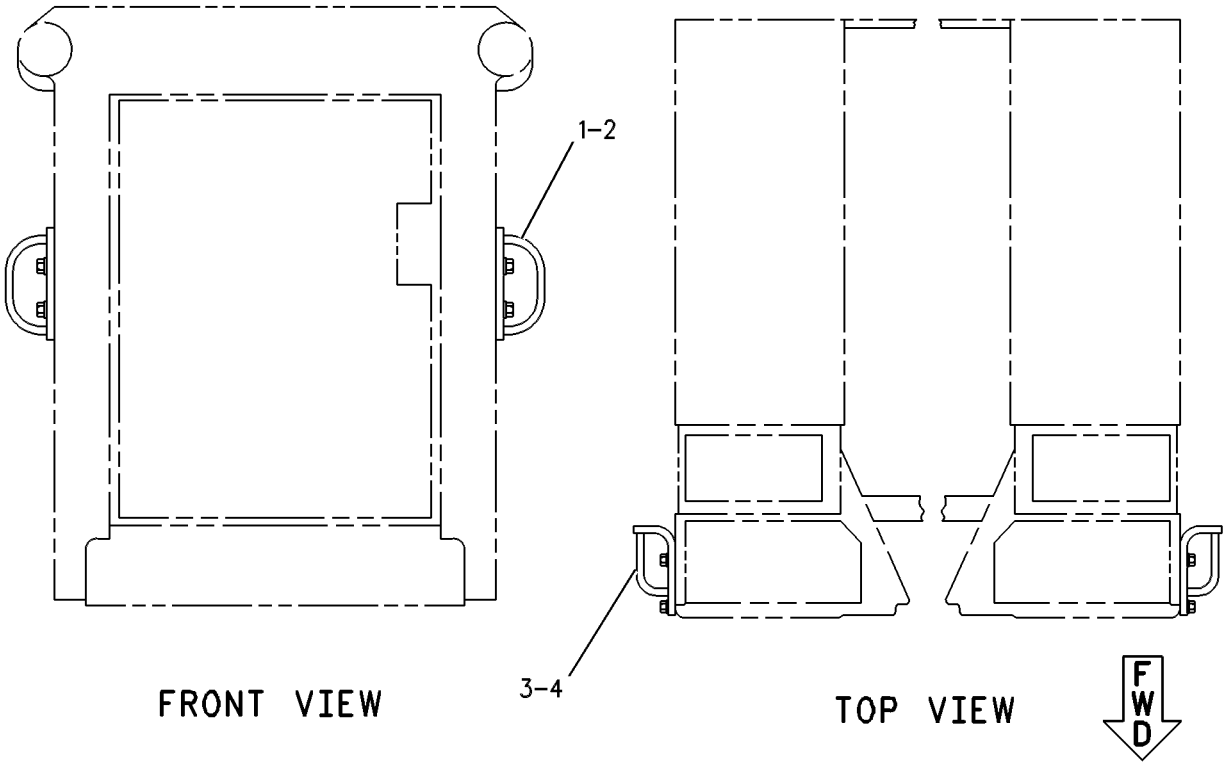

GRAPHIC #1 g00263699

OPERATOR STATION

108-1335 HANDHOLD GP

S/N: BLE1-UP; BMJ1-UP
PART OF 158-7694 CAB AR
AN ATTACHMENT

SMCS-7256 **i01668566**

NOTE	REF NO	GRAPHIC REF	PART NUMBER	QTY	PART NAME 1 2 3 4 5 6 (PRODUCT LEVEL)	SEE PAGE
	1	1	**9W-5343**	2	HANDHOLD	
	2	1	**5P-1076**	4	WASHER-HARD (13.5X30X4MM THK)	
M	3	1	**8T-4183**	4	BOLT (M12X1.75X40MM)	

M-METRIC PART

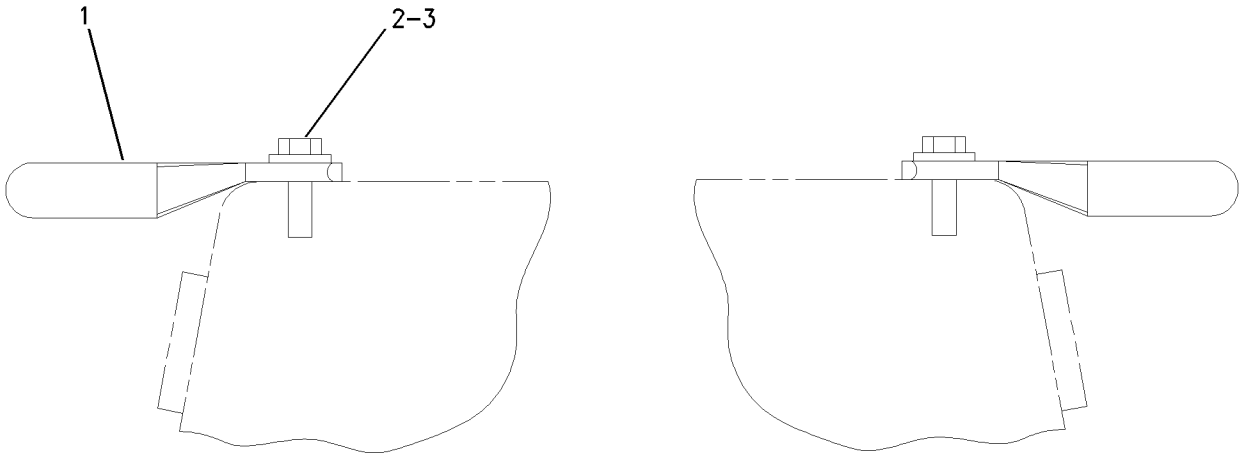

REAR VIEW

GRAPHIC #1 g00722600

OPERATOR STATION

108-2675 HEATER GP-CAB

S/N: BLE1-UP; BMJ1-UP
PART OF 159-8371 CAB AR
AN ATTACHMENT

SMCS-7304 **i01668568**

NOTE	REF NO	GRAPHIC REF	PART NUMBER	QTY	PART NAME 1 2 3 4 5 6 (PRODUCT LEVEL)	SEE PAGE
E	1	1	**5P-0767**		HOSE	
	2	1	**109-5761**	1	COIL AS-HEATER	
	3	1	**5D-1026**	2	CLAMP-HOSE	
	4	1	**8T-4121**	5	WASHER-HARD (11X21X2.5MM THK)	
M	5	1	**8T-4133**	1	NUT (M10X1.5 THD)	
M	6	1	**8T-4137**	4	BOLT (M10X1.5X20MM)	
	7	1	**6T-5617**	1	PLATE	
	8	1	**141-4123**	1	PLATE	
	9	1	**9X-2185**	4	SCREW (8-15X0.44 IN)	
BD	10	1	**5P-5643**		SEAL	
BD	11	1	**5P-5639**		SEAL	
	12	1	**7T-6299**	1	GROMMET	
	13	1	**134-9602**	1	VALVE AS-WATER	
	14	1	**2M-1444**	1	SCREW-TAPPING	
	15	1	**3E-1841**	1	LEVER	
	16	1	**8Y-5737**	1	CLIP	
	17	1	**037-4426**	1	RETAINER	
	18	1	**102-0341**	1	CLIP (TAB)	

B-USE AS REQUIRED
D-ORDER BY THE METER
E-ORDER BY THE CENTIMETER
M-METRIC PART

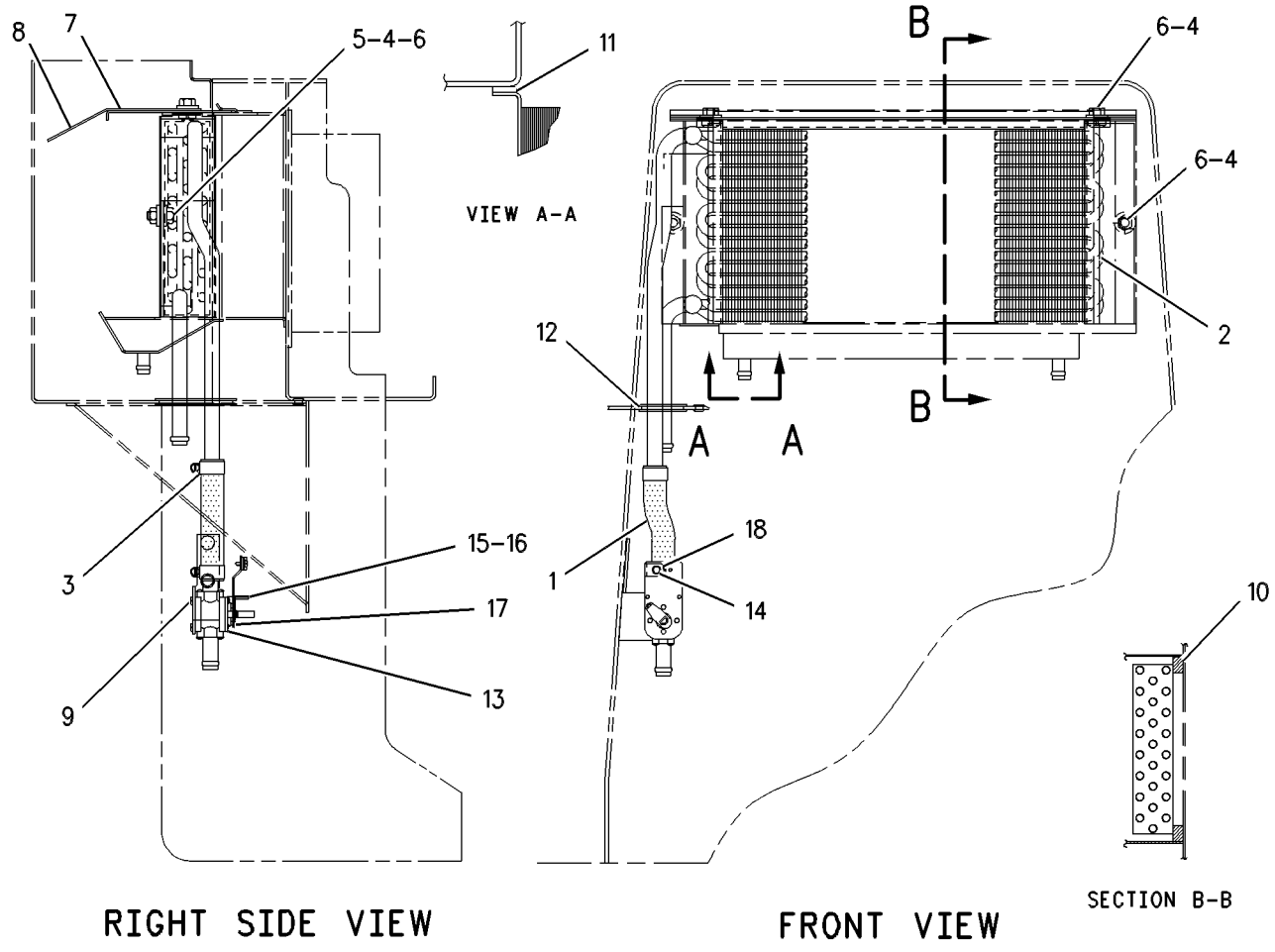

GRAPHIC #1 g00411640

OPERATOR STATION

174-2231 HOUSING GP-SEAT SUSPENSION

S/N: BLE1-UP; BMJ1-UP
PART OF 160-7165 SUSPENSION GP-SEAT
ALSO AN ATTACHMENT

SMCS-7321 **i01442226**

NOTE	REF NO	GRAPHIC REF	PART NUMBER	QTY	PART NAME 1 2 3 4 5 6 (PRODUCT LEVEL)	SEE PAGE
	1	1	**1Y-7927**	1	PIN	
	2	1	**2D-6235**	2	LOCKNUT	
	3	1	**2M-7819**	4	RING-RETAINING	
	4	1	**3D-2975**	2	RING-RETAINING	
	5	1	**4B-5059**	6	WASHER (29.5X15X2.5MM THK)	
	6	1	**4N-2927**	2	RACE-THRUST BEARING	
	7	1	**5D-4822**	2	RING-RETAINING	
	8	1	**5P-8445**	4	RING-RETAINING	
	9	1	**5V-0770**	2	BOLT-CARRIAGE	
	10	1	**7M-7219**	1	BEARING-THRUST	
	11	1	**7V-5191**	2	SPACER (28X10X7.1MM THK)	
	12	1	**8L-8413**	2	STRAP-CABLE	
	13	1	**8S-7803**	4	RING-RETAINING	
	14	1	**8Y-6041**	1	ARM AS	
	15	1	**8Y-6045**	1	CAM	
	16	1	**8Y-6046**	1	PIN	
	17	1	**8Y-6047**	2	PIN	
	18	1	**8Y-6060**	2	ROLLER	
	19	1	**8Y-6062**	1	LINK-ACTUATOR-RH	
	20	1	**8Y-6063**	1	LINK-ACTUATOR-LH	
	21	1	**8Y-6064**	2	ROLLER-SLIDER	
	22	1	**8Y-6066**	1	SPRING	
	23	1	**8Y-6067**	1	SPACER	
	24	1	**8Y-6068**	1	NUT (3/8 X 16 THD)	
	25	1	**8Y-6069**	1	ADJUSTER AS	
	26	1	**9X-8918**	3	SCREW-FLAT HEAD (8-32X0.50 IN)	
	27	1	**095-0878**	1	PIN-SPRING	
	28	1	**131-4242**	1	BOLT (3/8-16X5.18 IN)	
	29	1	**131-5167**	1	KNOB AS-WEIGHT	
	30	1	**161-5967**	1	SHAFT	
	31	1	**174-2237**	1	HOUSING AS-UPPER	
JZ	32	1		1	KNOB-HEIGHT	
JZ	33	1		1	KNOB-HEIGHT	
LZ	34	1		2	SPRING	
LZ	35	1		2	BUSHING	
VZ	36	1		2	SPRING	
VZ	37	1		2	SPACER	
VZ	38	1		2	BUSHING-GUIDE	
VZ	39	1		2	ROD	
PZ	40	1		1	TAPE-INDICATOR	
PZ	41	1		1	GUIDE	
SZ	42	1		1	PIN	
SZ	43	1		1	FOLLOWER-CAM	
TZ	44	1		1	PIN	
TZ	45	1		1	FOLLOWER-CAM	
UZ	46	1		2	ROLLER AS	
UZ	47	1		1	ROLLER AS	
QZ	48	1		3	BUMPER	
					AVAILABLE REPAIR KIT(S):	
J			**8Y-5945**	1	KIT-SUSPENSION KNOB	
L			**8Y-6859**	1	KIT-SPRING	
V			**8Y-6860**	1	KIT-SPRING	
P			**100-3224**	1	KIT-INDICATOR	
Q			**100-5179**	1	KIT-BUMPER	

174-2231 HOUSING GP-SEAT SUSPENSION *(contd.)* i01442226

NOTE	REF NO	GRAPHIC REF	PART NUMBER	QTY	PART NAME 1 2 3 4 5 6 (PRODUCT LEVEL)	SEE PAGE
S			**108-4086**	1	KIT-FOLLOWER	
T			**108-4087**	1	KIT-FOLLOWER	
U			**108-4103**	1	KIT-BEARING	

J-KIT MARKED J INCLUDES PARTS MARKED J
L-KIT MARKED L INCLUDES PARTS MARKED L AND RETAINING RING
P-KIT MARKED P INCLUDES PARTS MARKED P AND CABLE STRAP
Q-KIT MARKED Q INCLUDES PARTS MARKED Q
S-KIT MARKED S INCLUDES PARTS MARKED S
T-KIT MARKED T INCLUDES PARTS MARKED T
U-KIT MARKED U INCLUDES PARTS MARKED U
V-KIT MARKED V INCLUDES PARTS MARKED V
Z-NOT SERVICED SEPARATELY

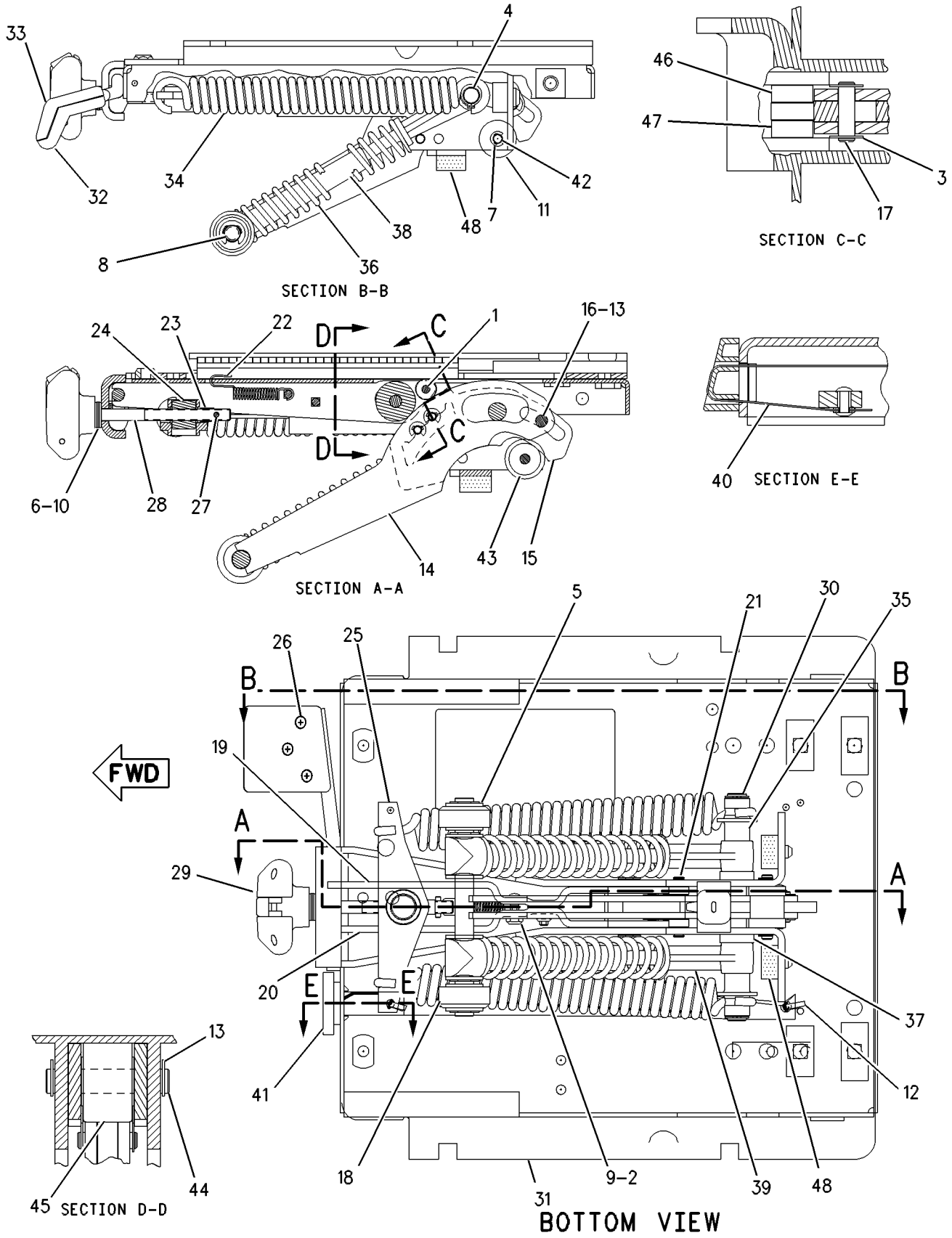

GRAPHIC #1 g00608620

OPERATOR STATION

105-9657 INSTALLATION GP-RADIO

S/N: BLE1-UP; BMJ1-UP
PART OF 158-7694 CAB AR
AN ATTACHMENT

SMCS-7338 **i01572694**

NOTE	REF NO	GRAPHIC REF	PART NUMBER	QTY	PART NAME 1 2 3 4 5 6 (PRODUCT LEVEL)	SEE PAGE
	1	1	**108-3138**	1	BRACKET AS	
	2	1	**6Y-7385**	1	BRACKET	
M	3	1	**8T-4171**	1	BOLT (M6X1X12MM)	
	4	1	**9X-8256**	1	WASHER (6.6X12X2MM THK)	
	5	1	**6C-3431**	1	AERIAL	
	6	1	**9U-8263**	1	COVER	
	7	1	**9U-8746**	1	CABLE AS-COAXIAL	
	8	1	**6V-7646**	4	WASHER-HARD (7.2X25X2MM THK)	
M	9	1	**5C-2890**	4	NUT (M6X1 THD)	
	10	1	**3E-6601**	2	FILM-NOTICE (RADIO)	
	11	1	**8K-1433**	1	GROMMET	
	12	1	**4N-9915**	4	GROMMET AS	
	13	1	**3E-4356**	4	WASHER-HARD (30X17.5X6MM THK)	

M-METRIC PART

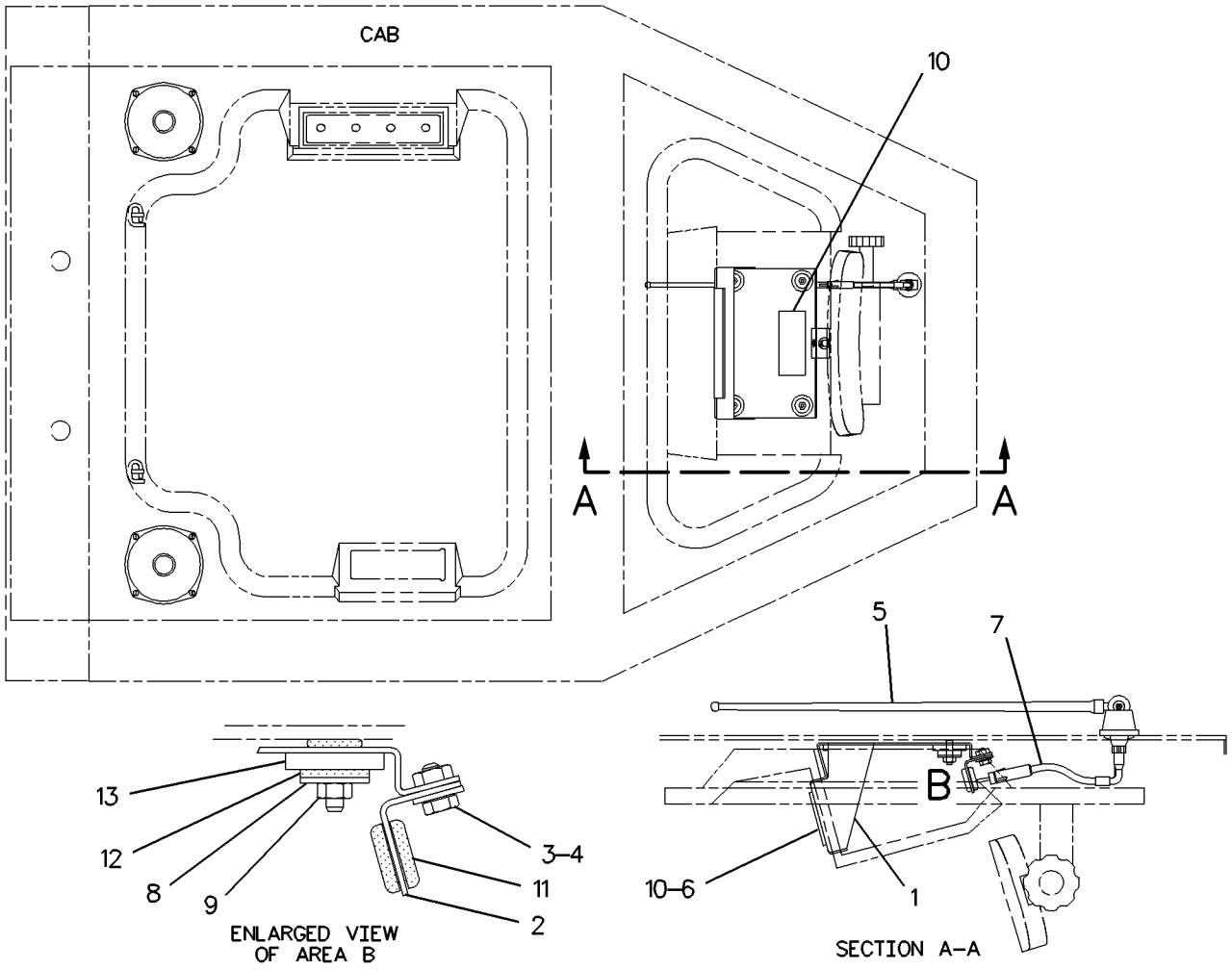

GRAPHIC #1 g00695903

OPERATOR STATION

170-6613 INSTRUMENT GP

S/N: BLE1-UP; BMJ1-UP
PART OF 159-8371 CAB AR
AN ATTACHMENT

SMCS-7450, 7451 **i01668570**

NOTE	REF NO	GRAPHIC REF	PART NUMBER	QTY	PART NAME 1 2 3 4 5 6 (PRODUCT LEVEL)	SEE PAGE
	1	1	**2P-4339**	1	NUT-JAM (7/16-20 THD)	
	2	1	**3E-0109**	2	PLUG-ROCKER SWITCH	
	3	1	**3S-2093**	18	STRAP-CABLE	
	4	1	**7F-6998**	1	LOCKWASHER	
	5	1	**8Y-6388**	5	LOUVER AS	
	6	1	**083-9527**	2	SPACER	
	7	1	**110-6109**	3	KNOB-CONTROL	
	8	1	**116-6203**	1	RESISTOR AS	
		1	**3E-3365**	1	WEDGE-RECEPTACLE LOCK (2 PIN)	
		1	**8T-8729**	2	PIN-CONNECTOR	
	9	1	**122-7127**	6	NUT	
	10	1	**123-0304**	1	INDICATOR AS	
		1	**115-1748**	1	LAMP (24 VOLT)	
		1	**123-0306**	1	SOCKET AS	
	11	1	**123-9294**	4	LAMP (24 VOLT)	
	12	1	**133-9405**	1	SWITCH AS-PUSH BUTTON (DISPLAY MODE)	
		1	**3E-3371**	1	WEDGE-RECEPTACLE LOCK (3 PIN)	
		1	**6F-0253**	1	LOCKWASHER	
		1	**8T-8729**	3	PIN-CONNECTOR	
		1	**102-8803**	1	KIT-RECEPTACLE (3 PIN)	
					(INCLUDES RECEPTACLE AS & WEDGE)	
		1	**141-9593**	1	NUT-SWITCH	
J	13	1	**142-8858**	1	SWITCH AS-KEY START (IGNITION)	
		1	**167-1530**	1	NUT	
Y	14	1	**154-7443**	1	CONTROL GP-MONITOR (CATERPILLAR MONITORING SYSTEM)	150
	15	1	**156-6287**	1	PANEL AS-INSTRUMENT	
		1	**7T-7388**	2	GUIDE	
	16	1	**157-1361**	1	SWITCH AS (BLOWER)	
		1	**3E-3383**	1	WEDGE-RECEPTACLE LOCK	
		1	**9W-0852**	6	PIN-CONNECTOR	
		1	**102-8805**	1	KIT-RECEPTACLE (6 PIN)	
					(INCLUDES RECEPTACLE AS & WEDGE)	
	17	1	**159-4712**	1	FILM-IDENTIFICATION	
	18	1	**159-9257**	1	LIGHT-DASH PANEL	
	19	1	**164-0847**	1	CABLE	
Y	20	1	**166-6928**	1	MODULE GP-QUAD GAUGE	651
Y	21	1	**168-0369**	1	MODULE GP-DISPLAY	166
	22	1	**169-2874**	1	FILM-IDENTIFICATION	
	23	1	**170-0260**	1	PLATE	
	24	1	**175-1349**	1	PLATE	
	25	1	**175-3950**	1	SWITCH AS (LIGHT)	
		1	**3E-3389**	1	WEDGE-RECEPTACLE LOCK	
		1	**9W-0852**	7	PIN-CONNECTOR	
		1	**102-8806**	1	KIT-RECEPTACLE (8 PIN)	
					(INCLUDES RECEPTACLE AS & WEDGE)	
	26	1	**175-4393**	1	SPACER (11.4X17.5X2MM THK)	
	27	1	**185-3533**	7	CLIP	
	28	1	**193-3356**	1	CABLE	
	29	1	**193-3359**	1	CONTROL AS (TEMPERATURE CONTROL)	
	30	1	**190-1029**	1	HARNESS AS (INSTRUMENT)	
	31	1	**130-5300**	3	CLIP	
	32	1	**132-5789**	1	CLIP	
	33	1	**213-7315**	6	SCREW-TRUSS HEAD	
	34	1	**198-9706**	12	SCREW-TRUSS HEAD	

170-6613 **INSTRUMENT GP** ***(contd.)*** **i01668570**

NOTE	REF NO	GRAPHIC REF	PART NUMBER	QTY	PART NAME 1 2 3 4 5 6 (PRODUCT LEVEL)	SEE PAGE
	35	1	**198-9707**	4	SCREW-TRUSS HEAD	
	36	1	**204-6101**	12	WASHER-HARD (5.3X10X1MM THK)	
	37	1	**204-6102**	6	WASHER-HARD (4.45X9.52X1MM THK)	
	38	1	**3E-6922**	10	SCREW-RECESS FLAT HEAD (NO. 6-19X12.7MM)	
	39	1	**4M-5281**	2	BOLT (1/4-20X.750 IN)	
	40	1	**4P-7581**	1	CLIP	
	41	1	**4P-8134**	1	CLIP	
	42	1	**5P-4115**	2	WASHER-HARD (7.2X19X2MM THK)	
	43	1	**6P-6591**	1	GROMMET	
BDM	44	1	**8T-4138**	3	BOLT (M6X1X20MM)	
M	45	1	**8T-4171**	10	BOLT (M6X1X12MM)	
	46	1	**8T-4205**	13	WASHER-HARD (7.2X14.5X2MM THK)	
	47	1	**9D-3769**	1	GROMMET	
E	48	1	**195-2194**		TUBING-BULK (60 CM)	
	49	1	**133-9405**	1	SWITCH AS-PUSH BUTTON (AUTO KICK DOWN)	
	50	1	**133-9405**	1	SWITCH AS-PUSH BUTTON (BY DIRECTIONAL MODE)	
					(EACH SWITCH AS INCLUDES)	
		1	**3E-3371**	1	WEDGE-RECEPTACLE LOCK (3 PIN)	
		1	**6F-0253**	1	LOCKWASHER	
		1	**8T-8729**	3	PIN-CONNECTOR	
		1	**102-8803**	1	KIT-RECEPTACLE (3 PIN)	
					INCLUDES RECEPTACLE AS & WEDGE)	
		1	**141-9593**	1	NUT-SWITCH	

B-USE AS REQUIRED
D-ORDER BY THE METER
E-ORDER BY THE CENTIMETER
J-REQUIRES 5P8500 KEY
M-METRIC PART
Y-SEPARATE ILLUSTRATION

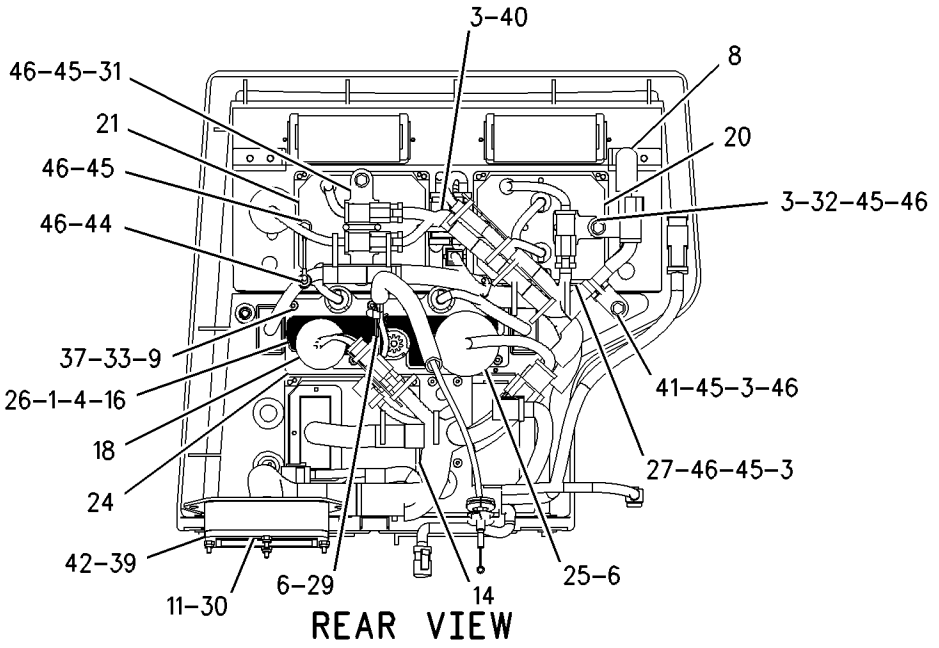

REAR VIEW

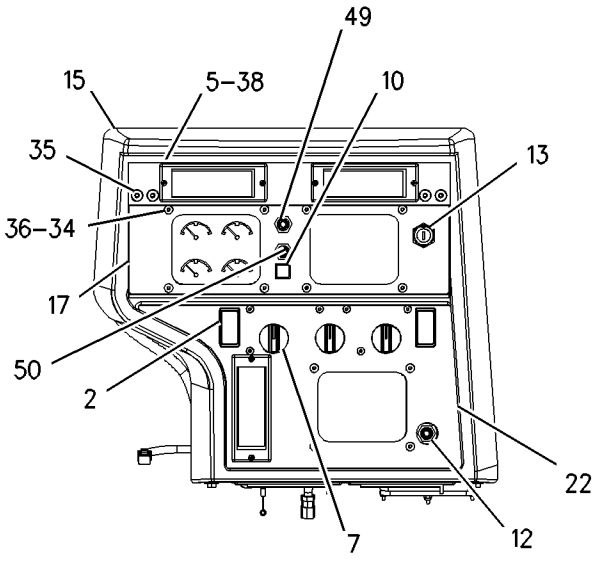

FRONT VIEW

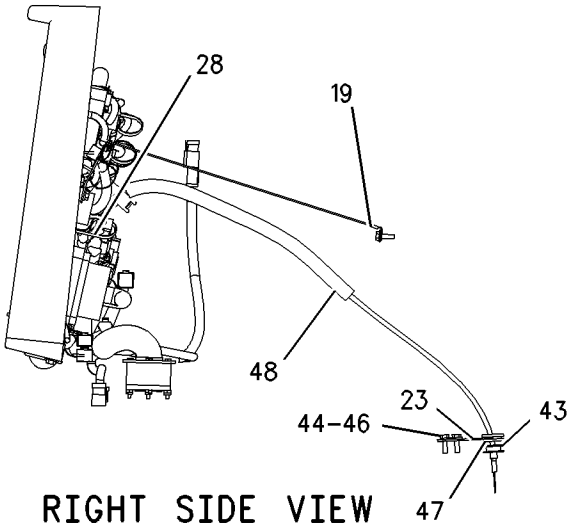

RIGHT SIDE VIEW

GRAPHIC #1 g00861980

MEMORANDA

OPERATOR STATION

170-6614 INSTRUMENT GP

S/N: BLE1-UP; BMJ1-UP

PART OF 164-4782, 164-4784 CHASSIS AR

SMCS-7450, 7451 **i01590060**

NOTE	REF NO	GRAPHIC REF	PART NUMBER	QTY	PART NAME 1 2 3 4 5 6 (PRODUCT LEVEL)	SEE PAGE
	1	1	**3E-0109**	1	PLUG-ROCKER SWITCH	
	2	1	**3S-2093**	17	STRAP-CABLE	
	3	1	**083-9527**	1	SPACER	
	4	1	**110-6109**	1	KNOB-CONTROL	
	5	1	**116-6203**	1	RESISTOR AS	
		1	**102-8802**	1	KIT-RECEPTACLE (2 PIN)	
					(INCLUDES RECEPTACLE AS & WEDGE)	
		1	**3E-3365**	1	WEDGE-RECEPTACLE LOCK (2 PIN)	
		1	**8T-8729**	2	PIN-CONNECTOR	
	6	1	**122-7127**	6	NUT	
	7	1	**123-0304**	1	INDICATOR AS	
		1	**115-1748**	1	LAMP (24 VOLT)	
		1	**123-0306**	1	SOCKET AS	
	8	1	**123-9294**	4	LAMP (24 VOLT)	
	9	1	**133-9405**	1	SWITCH AS-PUSH BUTTON (DEFAULT DISPLAY)	
		1	**3E-3371**	1	WEDGE-RECEPTACLE LOCK (3 PIN)	
		1	**3K-0835**	1	NUT (5/8-24 THD)	
		1	**6F-0253**	1	LOCKWASHER	
		1	**8T-8729**	3	PIN-CONNECTOR	
		1	**102-8803**	1	KIT-RECEPTACLE (3 PIN)	
					(INCLUDES RECEPTACLE AS & WEDGE)	
J	10	1	**142-8858**	1	SWITCH AS-KEY START	
		1	**167-1530**	1	NUT	
Y	11	1	**154-7443**	1	CONTROL GP-MONITOR (CATERPILLAR MONITORING SYSTEM)	150
	12	1	**156-6288**	1	PANEL AS-INSTRUCTION	
		1	**7T-7388**	2	GUIDE	
	13	1	**157-2741**	1	GUARD-VANDALISM	
	14	1	**159-4712**	1	FILM-IDENTIFICATION	
	15	1	**159-9257**	1	LIGHT-DASH PANEL	
	16	1	**164-0847**	1	CABLE	
	17	1	**164-9929**	1	FILM-IDENTIFICATION	
Y	18	1	**166-6928**	1	MODULE GP-QUAD GAUGE	651
Y	19	1	**168-0369**	1	MODULE GP-DISPLAY	166
	20	1	**169-2875**	1	FILM-IDENTIFICATION	
	21	1	**175-1349**	1	PLATE	
	22	1	**175-3950**	1	SWITCH AS (LIGHT SWITCH)	
		1	**3E-3389**	1	WEDGE-RECEPTACLE LOCK	
		1	**9W-0852**	7	PIN-CONNECTOR	
		1	**102-8806**	1	KIT-RECEPTACLE (8 PIN)	
					(INCLUDES RECEPTACLE AS & WEDGE)	
	23	1	**178-3003**	1	COVER	
	24	1	**185-3533**	7	CLIP	
	25	1	**186-5097**	1	ROD	
	26	1	**186-5099**	1	LOCK AS	
	27	1	**190-1029**	1	HARNESS AS (INSTRUMENT)	
	28	1	**194-1466**	1	CLIP	
	29	1	**130-5300**	3	CLIP	
	30	1	**132-5789**	1	CLIP	
	31	1	**213-7315**	6	SCREW-TRUSS HEAD	
	32	1	**198-9706**	12	SCREW-TRUSS HEAD	
	33	1	**198-9707**	4	SCREW-TRUSS HEAD	
	34	1	**204-6101**	12	WASHER-HARD (5.3X10X1MM THK)	
	35	1	**204-6102**	6	WASHER-HARD (4.45X9.52X1MM THK)	
	36	1	**4M-5281**	2	BOLT (1/4-20X.750 IN)	
	37	1	**4P-7581**	1	CLIP	

170-6614 **INSTRUMENT GP** ***(contd.)*** **i01590060**

NOTE	REF NO	GRAPHIC REF	PART NUMBER	QTY	PART NAME 1 2 3 4 5 6 (PRODUCT LEVEL)	SEE PAGE
	38	1	**4P-8134**	1	CLIP	
	39	1	**5P-4115**	2	WASHER-HARD (7.2X19X2MM THK)	
M	40	1	**8T-0337**	1	SCREW-MACHINE (M4X0.7X12MM)	
M	41	1	**8T-2659**	1	LOCKNUT (M4X0.7 THD)	
M	42	1	**8T-4138**	1	BOLT (M6X1X20MM)	
M	43	1	**8T-4171**	10	BOLT (M6X1X12MM)	
	44	1	**8T-4205**	11	WASHER-HARD (7.2X14.5X2MM THK)	
	45	1	**133-9405**	1	SWITCH AS-PUSH BUTTON (AUTO KICK DOWN)	
	46	1	**133-9405**	1	SWITCH AS-PUSH BUTTON (BY-DIRECTIONAL MODE)	
					(EACH SWITCH AS INCLUDES)	
		1	**3E-3371**	1	WEDGE-RECEPTACLE LOCK (3 PIN)	
		1	**3K-0835**	1	NUT (5/8-24 THD)	
		1	**6F-0253**	1	LOCKWASHER	
		1	**8T-8729**	3	PIN-CONNECTOR	
		1	**102-8803**	1	KIT-RECEPTACLE (3 PIN)	
					(INCLUDES RECEPTACLE AS & WEDGE)	

J-REQUIRES 5P8500 KEY
M-METRIC PART
Y-SEPARATE ILLUSTRATION

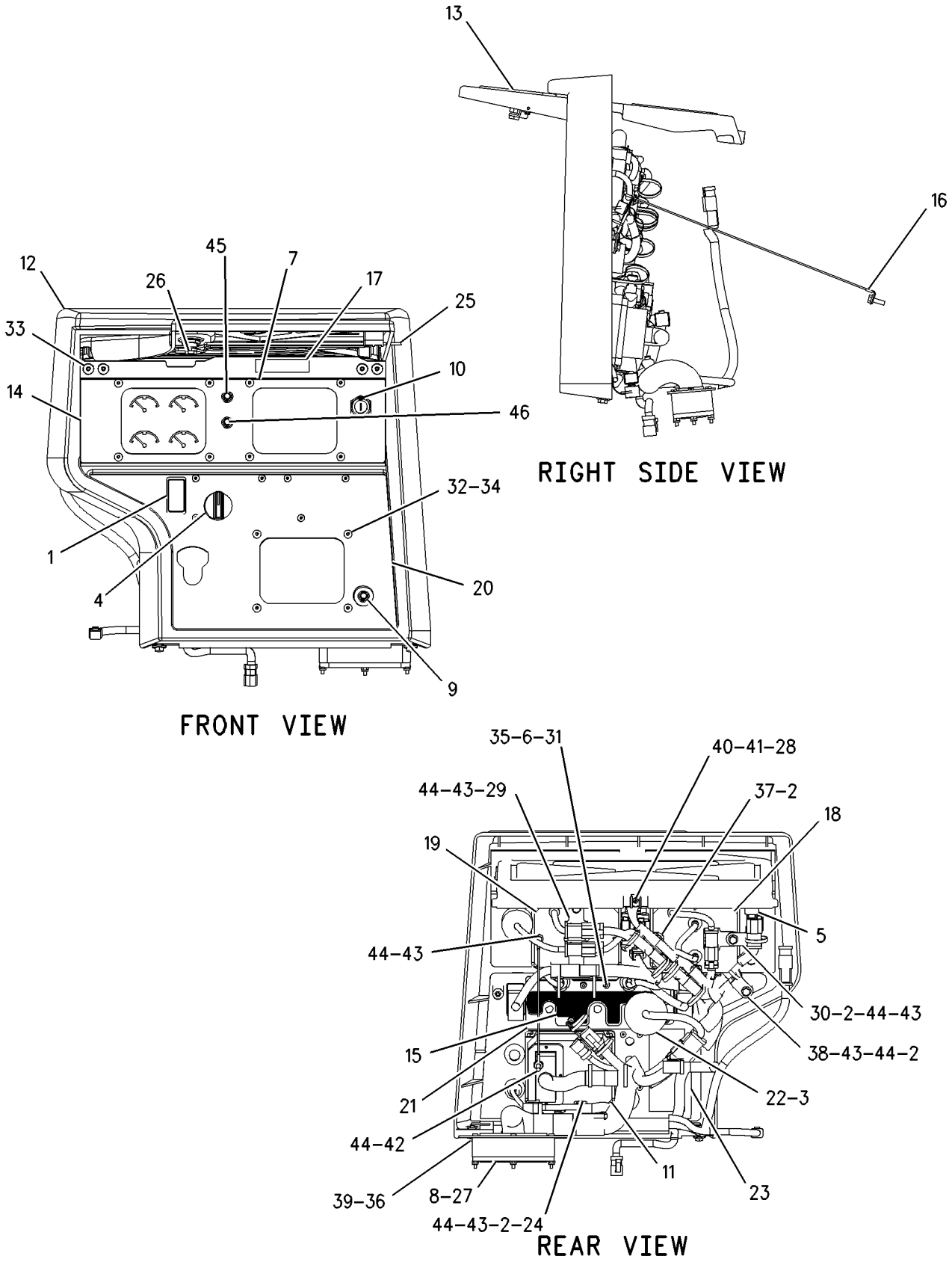

GRAPHIC #1

g00847875

MEMORANDA

OPERATOR STATION

158-7695 LINER GP-CAB

S/N: BLE1-UP; BMJ1-UP
PART OF 158-7694 CAB AR
AN ATTACHMENT

SMCS-7329 **i01592144**

NOTE	REF NO	GRAPHIC REF	PART NUMBER	QTY	PART NAME 1 2 3 4 5 6 (PRODUCT LEVEL)	SEE PAGE
	1	1	*6V-8928*	1	HOOK-COAT	
	2	1	**110-8152**	2	HANDLE AS-PULL	
M	3	1	**9X-2043**	14	SCREW-TRUSS HEAD (M6X1X14MM)	
	4	1	**126-3492**	1	HANDLE AS	
	5	1	**131-5176**	1	PLATE	
	6	1	**137-8708**	1	PLATE	
	7	1	**158-8906**	2	BLOCK-FOAM	
	8	1	**161-1083**	1	COVER-DOOR (RH)	
	9	1	**161-1084**	1	COVER-DOOR (LH)	
	10	1	**161-1085**	1	COVER-FRONT	
	11	1	**161-1086**	1	COVER AS	
	12	1	**161-1091**	1	COVER-POST (RH)	
	13	1	**161-1092**	1	COVER-POST (LH)	
	14	1	**161-1093**	2	TRIM-POST	
	15	1	**161-1094**	1	HEADLINER-FRONT	
Y	16	1	*161-1096*	1	LINER GP-CAB	638
	17	1	**161-1098**	1	RETAINER	
M	18	1	**3E-8020**	4	SCREW-TRUSS HEAD (M6X1X25MM)	
M	19	1	**6V-5683**	4	BOLT (M6X1X16MM)	
M	20	1	**6V-8225**	2	NUT (M6X1 THD)	
M	21	1	**8T-4181**	2	BOLT (M6X1X20MM)	
	22	1	**9X-8267**	2	WASHER (6.6X12X2MM THK)	
M	23	1	**9X-2045**	1	SCREW-TRUSS HEAD (M6X1X20MM)	

M-METRIC PART
Y-SEPARATE ILLUSTRATION

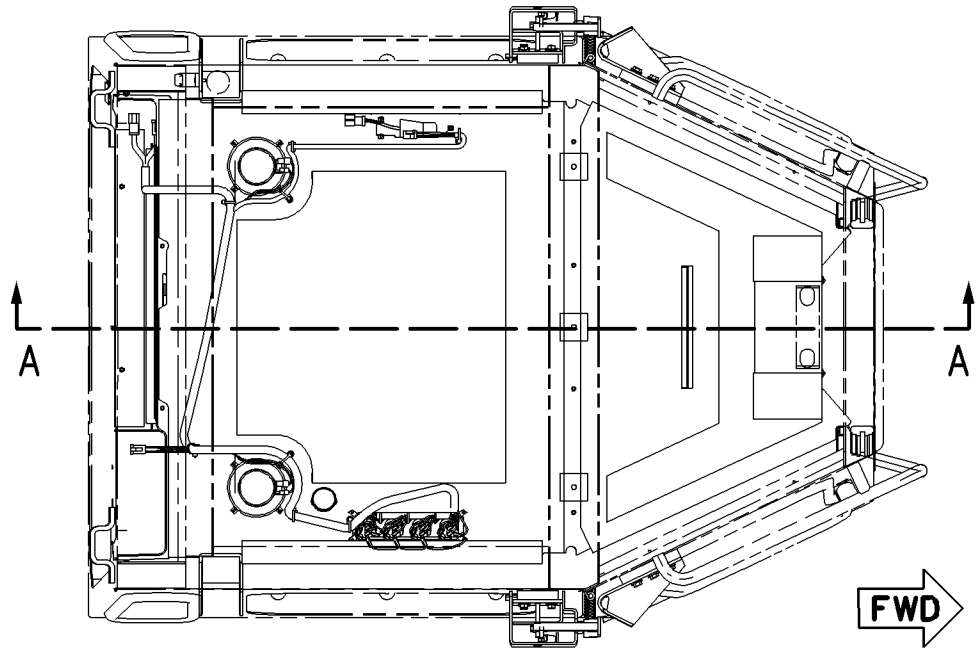

TOP VIEW

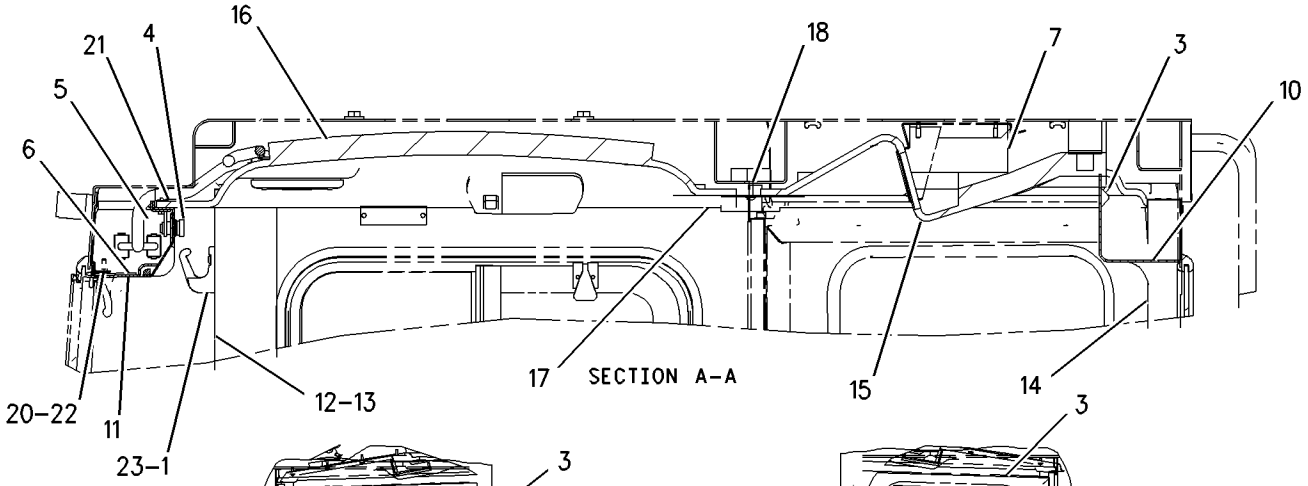

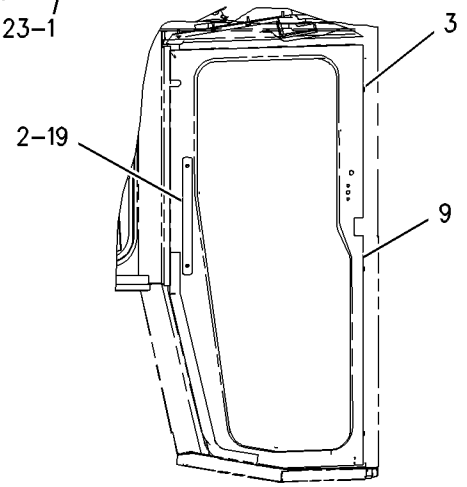

INSIDE VIEW LH DOOR

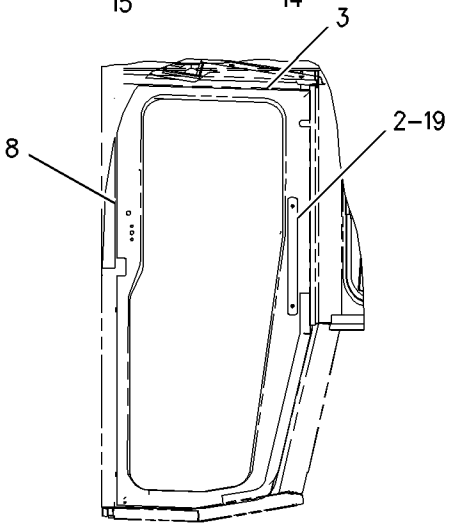

INSIDE VIEW RH DOOR

GRAPHIC #1 g00722401

OPERATOR STATION

161-1096 LINER GP-CAB

S/N: BLE1-UP; BMJ1-UP
PART OF 158-7695 LINER GP-CAB
AN ATTACHMENT

SMCS-7329 **i01592145**

NOTE	REF NO	GRAPHIC REF	PART NUMBER	QTY	PART NAME 1 2 3 4 5 6 (PRODUCT LEVEL)	SEE PAGE
Y	1	1	**3E-6389**	1	LAMP GP-DOME (24 VOLT, WITH SWITCH)	162
	2	1	**3S-2093**	11	STRAP-CABLE	
M	3	1	**7Y-7388**	4	SCREW-BUTTON HEAD (M5X0.8X12MM)	
	4	1	**6T-7695**	2	SPEAKER AS-RADIO	
	5	1	**8T-4752**	4	NUT (M5X0.8-6H THD)	
	6	1	**9U-9942**	1	FILM-IDENTIFICATION	
	7	1	**101-3055**	2	COVER-SPEAKER	
	8	1	**131-5137**	1	PLUG	
	9	1	**161-1097**	1	HEADLINER-REAR	
	10	1	**161-1099**	1	PLATE	
	11	1	**166-3733**	11	NUT-SPEED	
	12	1	**169-9636**	1	HARNESS AS	
	13	1	**103-9425**	11	SCREW-MACHINE (8-32X1 IN)	
	14	1	**3T-6655**	1	SWITCH AS-ROTARY (WIPER/WASHER) (RH DOOR)	
	15	1	**3T-6655**	1	SWITCH AS-ROTARY (WIPER/WASHER) (LH DOOR)	
	16	1	**3T-6655**	1	SWITCH AS-ROTARY (WIPER/WASHER) (FRONT)	
	17	1	**3T-6655**	1	SWITCH AS-ROTARY (WIPER/WASHER) (REAR)	
					(EACH SWITCH AS INCLUDES)	
		1	**7T-9302**	1	KNOB	
		1	**2H-3920**	1	LOCKWASHER	
		1	**6V-8369**	1	NUT (7/16-28 THD)	

M-METRIC PART
Y-SEPARATE ILLUSTRATION

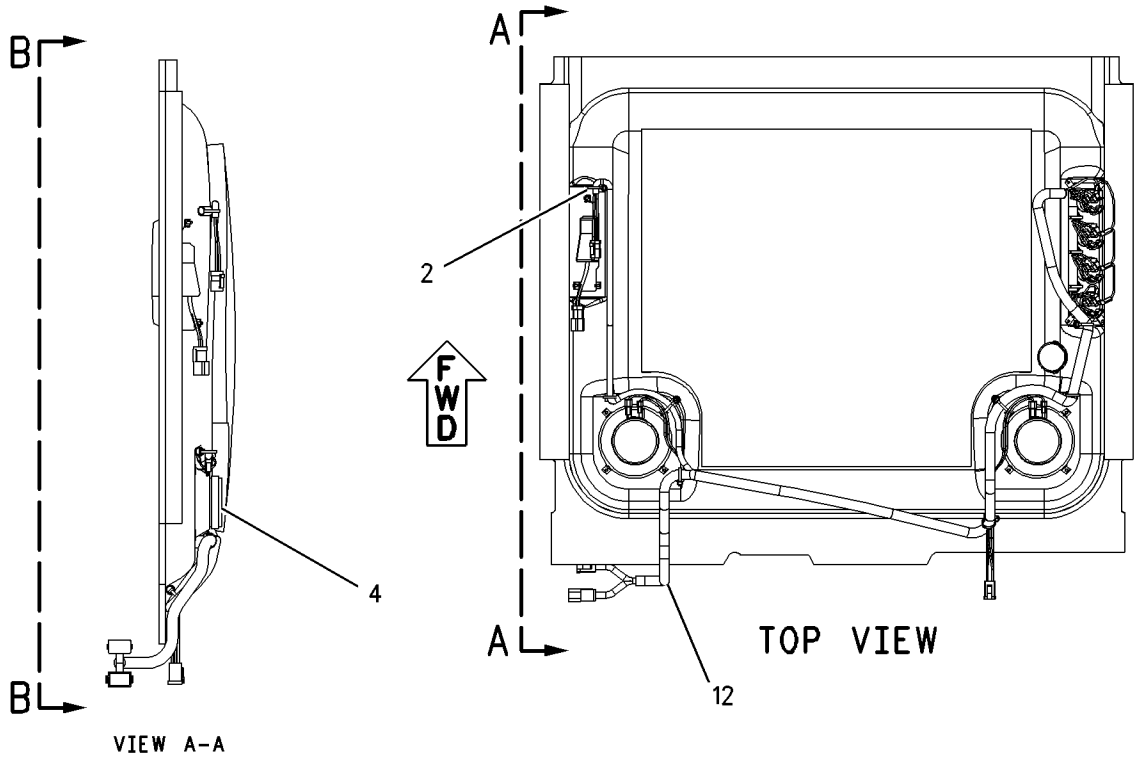

GRAPHIC #1 g00672355

OPERATOR STATION

164-3727 LINES GP-AIR CONDITIONER

S/N: BLE1-UP; BMJ1-UP
PART OF 164-3725 AIR CONDITIONER AR
AN ATTACHMENT

SMCS-1808 **i01668571**

NOTE	REF NO	GRAPHIC REF	PART NUMBER	QTY	PART NAME 1 2 3 4 5 6 (PRODUCT LEVEL)	SEE PAGE
BD	1	2	**6V-2495**		SEAL	
	2	3	**1P-6356**	1	PLATE	
	3	1	**3E-3535**	1	RECEIVER-DRYER GP (REFRIGERANT)	
	4	1	**5P-3948**	2	COUPLING AS-REFRIGERANT	
					(EACH INCLUDES)	
		1	**7F-8607**	1	SEAL-O-RING	
		1	**107-4399**	1	VALVE AS	
	5	2,3	**7K-1181**	4	STRAP-CABLE	
	6	1	**7K-3176**	2	COUPLING AS	
					(EACH INCLUDES)	
		1	**107-4393**	1	VALVE AS	
		1	**107-4394**	1	GASKET	
	7	3	**7T-9426**	1	GROMMET	
	8	3	**8C-5682**	1	TEE	
	9	2	**8R-3393**	1	STRAP	
M	10	2	**142-3953**	1	STUD	
	11	1	**103-6100**	2	COUPLER AS-QUICK	
					(EACH INCLUDES)	
		1	**9X-7382**	2	SEAL-O-RING	
	12	2	**109-4042**	1	HARNESS AS	
I	13	1	**109-4044**	1	HOSE AS	
I	14	2	**110-8834**	1	HOSE AS	
	15	3	**114-5333**	1	SWITCH AS-PRESSURE (A/C)	
		3	**102-8802**	1	KIT-RECEPTACLE (2 PIN)	
					(INCLUDES RECEPTACLE AS AND WEDGE)	
		3	**3E-3365**	1	WEDGE-RECEPTACLE LOCK (2 PIN)	
		3	**8T-8729**	2	PIN-CONNECTOR	
	16	1	**116-6202**	2	BOOT	
	17	2	**128-5924**	1	CLAMP	
I	18	2	**173-6924**	1	HOSE AS	
I	19	2	**173-6925**	1	HOSE AS	
I	20	2	**173-6926**	1	HOSE AS	
I	21	2	**173-6929**	1	HOSE AS	
I	22	2	**173-6930**	1	HOSE AS	
	23	3	**183-4273**	1	HARNESS AS (A/C COMPRESSOR)	
	24	1	**183-6316**	1	BRACKET AS	
	25	2	**186-6189**	1	ACCUMULATOR-REFRIGERANT	
	26	3	**203-2789**	1	BRACKET AS	
		3	**124-6998**	1	PLATE	
	27	1,3	**3S-2093**	5	STRAP-CABLE	
	28	3	**106-8704**	1	SUPPRESSOR AS-ARC	
		3	**102-8802**	1	KIT-RECEPTACLE (2 PIN)	
					(INCLUDES RECEPTACLE AS & WEDGE)	
		3	**3E-3365**	1	WEDGE-RECEPTACLE LOCK (2 PIN)	
		3	**8T-8729**	2	PIN-CONNECTOR	
	29	3	**109-1633**	1	CLIP (SLOT)	
	30	3	**109-1634**	1	CLIP (TAB)	
	31	3	**3E-4073**	1	FITTING AS-COMPRESSOR	
		3	**3E-4052**	1	CAP-SEAL (AIR CONDITIONER)(HIGH SIDE)	
		3	**3E-4058**	1	VALVE AS-AIR CONDITIONER (HIGH SIDE)	
	32	3	**3E-6812**	1	FITTING AS-AIR CONDITIONER	
		3	**3E-4051**	1	CAP-SEAL (AIR CONDITIONER)(LOW SIDE)	
		3	**3E-4057**	1	VALVE AS-AIR CONDITIONER (LOW SIDE)	
	33	2	**2D-2751**	1	GROMMET	
	34	1	**4D-7733**	6	CLIP	

164-3727 LINES GP-AIR CONDITIONER *(contd.)* i01668571

NOTE	REF NO	GRAPHIC REF	PART NUMBER	QTY	PART NAME 1 2 3 4 5 6 (PRODUCT LEVEL)	SEE PAGE
	35	2,3	**4K-8302**	2	CLIP	
	36	1,2	**4L-6454**	4	BOLT (3/8-16X1 IN)	
	37	3	**4P-7581**	1	CLIP	
	38	3	**4P-8134**	2	CLIP	
	39	2,3	**5C-6565**	3	BOLT (1/2-13X1.125 IN)	
	40	1	**5M-3062**	4	BOLT (3/8-16X0.75 IN)	
	41	1,3	**5P-1075**	2	WASHER-HARD (10.2X22.5X3MM THK)	
	42	2,3	**5P-4295**	2	CLIP	
	43	3	**5S-7382**	2	BOLT (3/8-16X1.375 IN)	
	44	1	**6D-1641**	1	CLIP (LOOP)	
	45	3	**6K-8178**	1	CLIP (LOOP)	
	46	3	**6V-1228**	1	CLIP	
	47	3	**6V-2372**	1	ELBOW-BARBED	
	48	3	**6V-8801**	2	NUT (3/8-16 THD)	
	49	1	**7T-8894**	1	GROMMET	
	50	1	**7T-8895**	1	GROMMET	
	51	3	**7T-9793**	1	VALVE (CHECK)	
	52	2	**8T-2561**	2	WASHER-HARD (10.5X28.5X5MM THK)	
	53	2,3	**8T-4121**	3	WASHER-HARD (11X21X2.5MM THK)	
M	54	2	**8T-4133**	1	NUT (M10X1.5 THD)	
M	55	3	**8T-4136**	1	BOLT (M10X1.5X25MM)	
	56	2,3	**8T-4223**	3	WASHER-HARD (13.5X25.5X3MM THK)	
	57	1,2,3	**8T-4896**	9	WASHER-HARD (10.2X18.5X2.5MM THK)	
M	58	3	**8T-6466**	1	BOLT (M10X1.50X60MM)	
M	59	3	**8T-4196**	1	BOLT (M10X1.5X35MM)	
	60	2	**9M-8406**	2	CLIP	
	61	3	**9X-7378**	1	SEAL-O-RING	
	62	2	**9X-7380**	3	SEAL-O-RING	
	63	1,2	**9X-7381**	3	SEAL-O-RING	
	64	1,2	**9X-7382**	2	SEAL-O-RING	
	65	1,2	**9X-7383**	6	SEAL-O-RING	
	66	3	**9X-7385**	2	SEAL-O-RING	
	67	1	**9X-8250**	1	CLIP	
BD	68	3	**5P-6129**		TUBE	
M	69	3	**8T-4195**	1	BOLT (M10X1.5X30MM)	
	70	2	**4P-7429**	2	CLIP (LADDER)	
	71	2	**4P-7428**	1	CLIP (LADDER)	
	72	3	**7X-7729**	1	WASHER (11X25X3MM THK)	

B-USE AS REQUIRED
D-ORDER BY THE METER
I-SEE HOSE FABRICATION GUIDE
M-METRIC PART

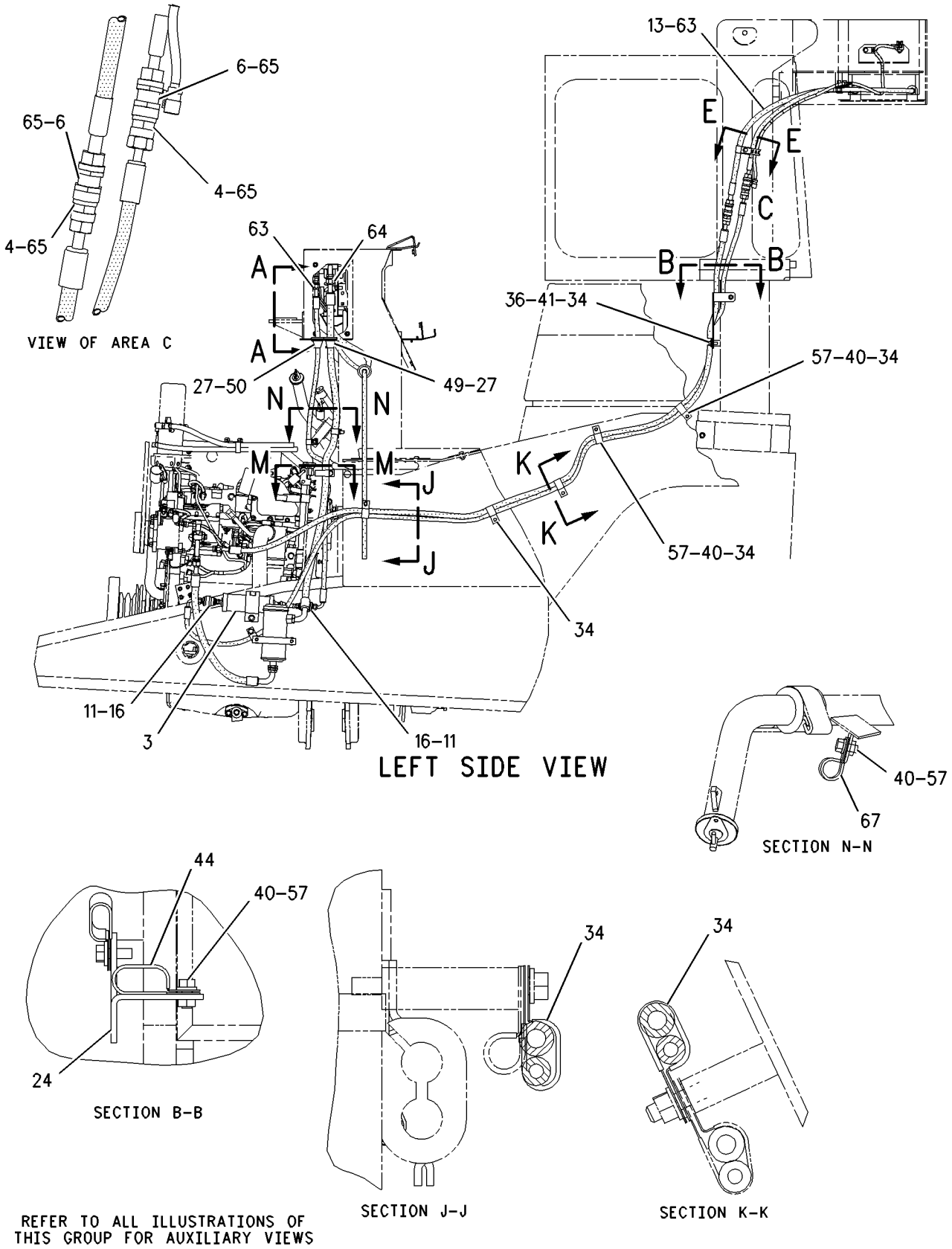

GRAPHIC #1 g00846272

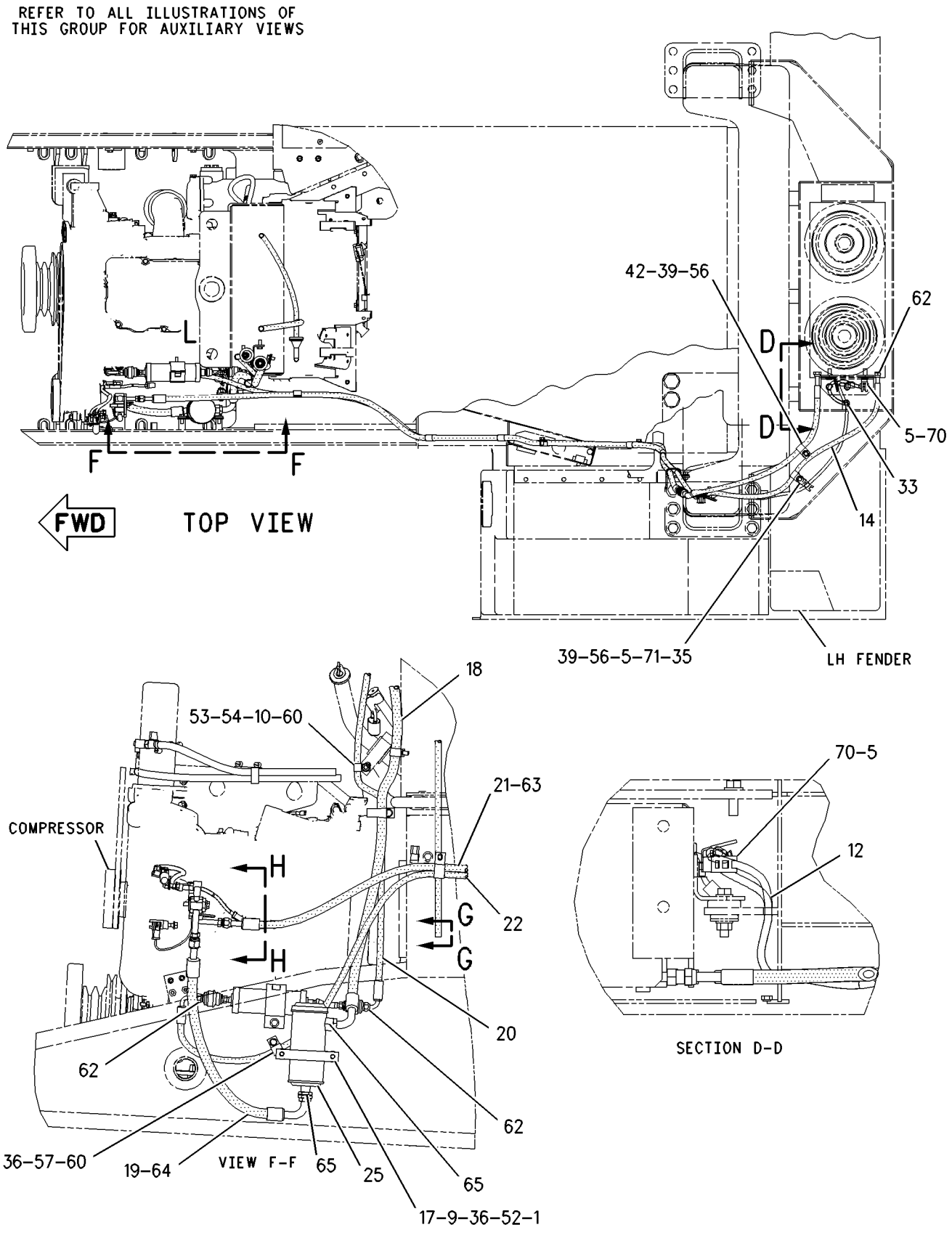

GRAPHIC #2

g00846273

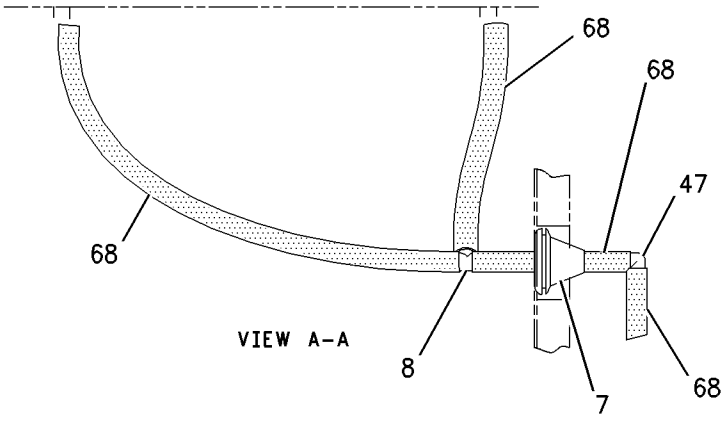

VIEW A-A

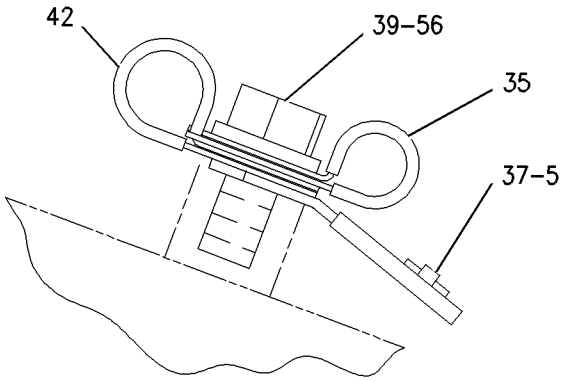

SECTION E-E

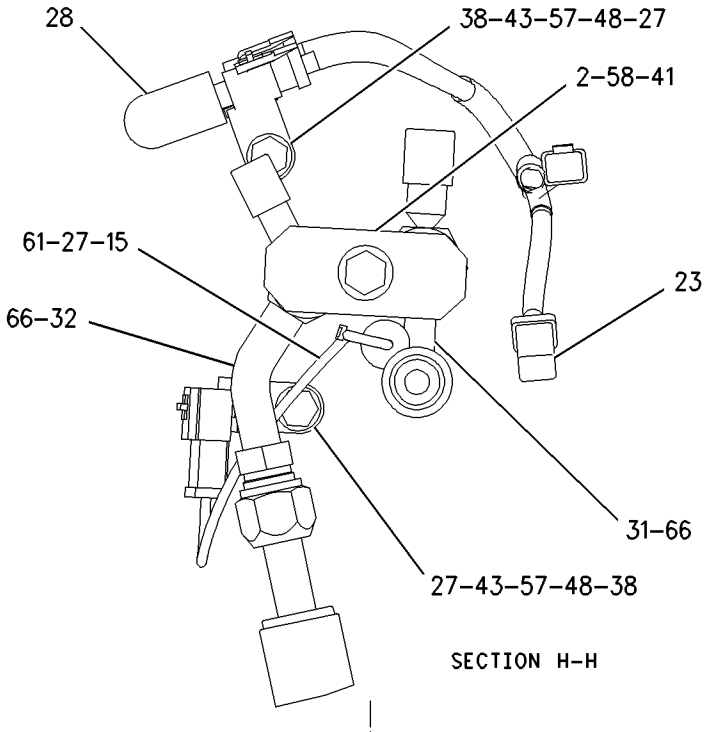

SECTION H-H

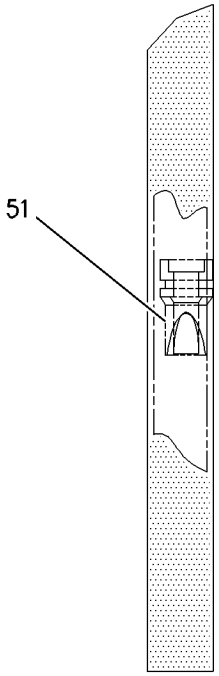

VIEW G-G

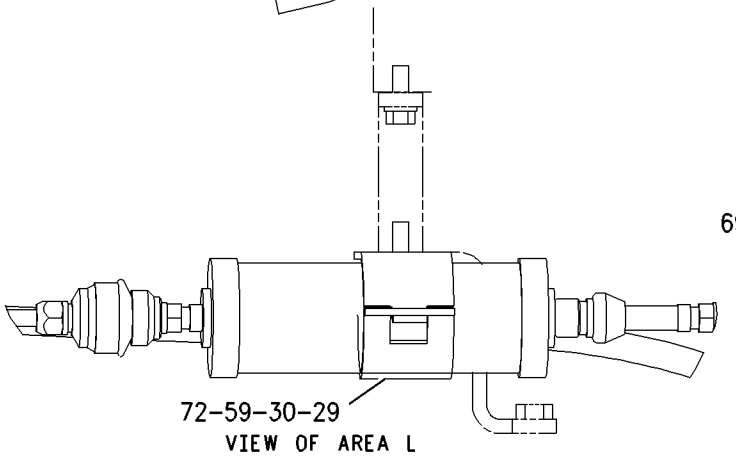

VIEW OF AREA L

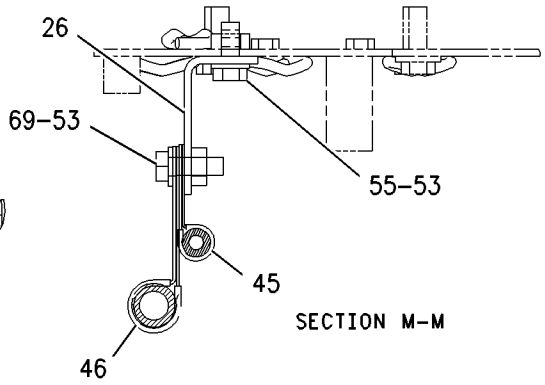

SECTION M-M

REFER TO ALL ILLUSTRATIONS OF THIS GROUP FOR AUXILIARY VIEWS

GRAPHIC #3

g00846274

MEMORANDA

OPERATOR STATION

165-2556 LINES GP-HEATER

S/N: BLE1-UP; BMJ1-UP
PART OF 159-8371 CAB AR
AN ATTACHMENT

SMCS-7304 **i01668574**

NOTE	REF NO	GRAPHIC REF	PART NUMBER	QTY	PART NAME 1 2 3 4 5 6 (PRODUCT LEVEL)	SEE PAGE
	1	1	**2B-0941**	1	SPACER (10.5X19X19MM THK)	
	2	2	**159-1503**	4	CLAMP-HOSE	
	3	2	**165-2273**	2	VALVE GP-SHUTOFF	
					(EACH INCLUDES)	
		2	**3K-0360**	2	SEAL-O-RING (16.36MM ID)	
	4	2	**9X-8257**	1	WASHER (17.5X30X3.5MM THK)	
	5	1	**203-2789**	1	BRACKET AS	
		1	**124-6998**	1	PLATE	
	6	2	**137-6722**	1	CLIP	
E	7	2	**5P-0767**		HOSE (312CM)	
M	8	1	**8T-4136**	1	BOLT (M10X1.5X25MM)	
	9	1,2	**8T-4896**	1	WASHER-HARD (10.2X18.5X2.5MM THK)	
	10	1	**5S-7383**	1	BOLT (3/8-16X1.75 IN)	
	11	1	**6D-4247**	4	CLIP (SLOT)	
	12	2	**6D-4636**	3	CLIP	
E	13	2	**5P-0767**		HOSE (256CM)	
	14	2	**7X-7729**	1	WASHER (11X25X3MM THK)	
M	15	2	**8T-0375**	1	BOLT (M16X2X45MM)	
	16	1,2	**8T-4121**	5	WASHER-HARD (11X21X2.5MM THK)	
M	17	2	**8T-4195**	1	BOLT (M10X1.5X30MM)	
M	18	1	**8T-4137**	4	BOLT (M10X1.5X20MM)	

E-ORDER BY THE CENTIMETER
M-METRIC PART

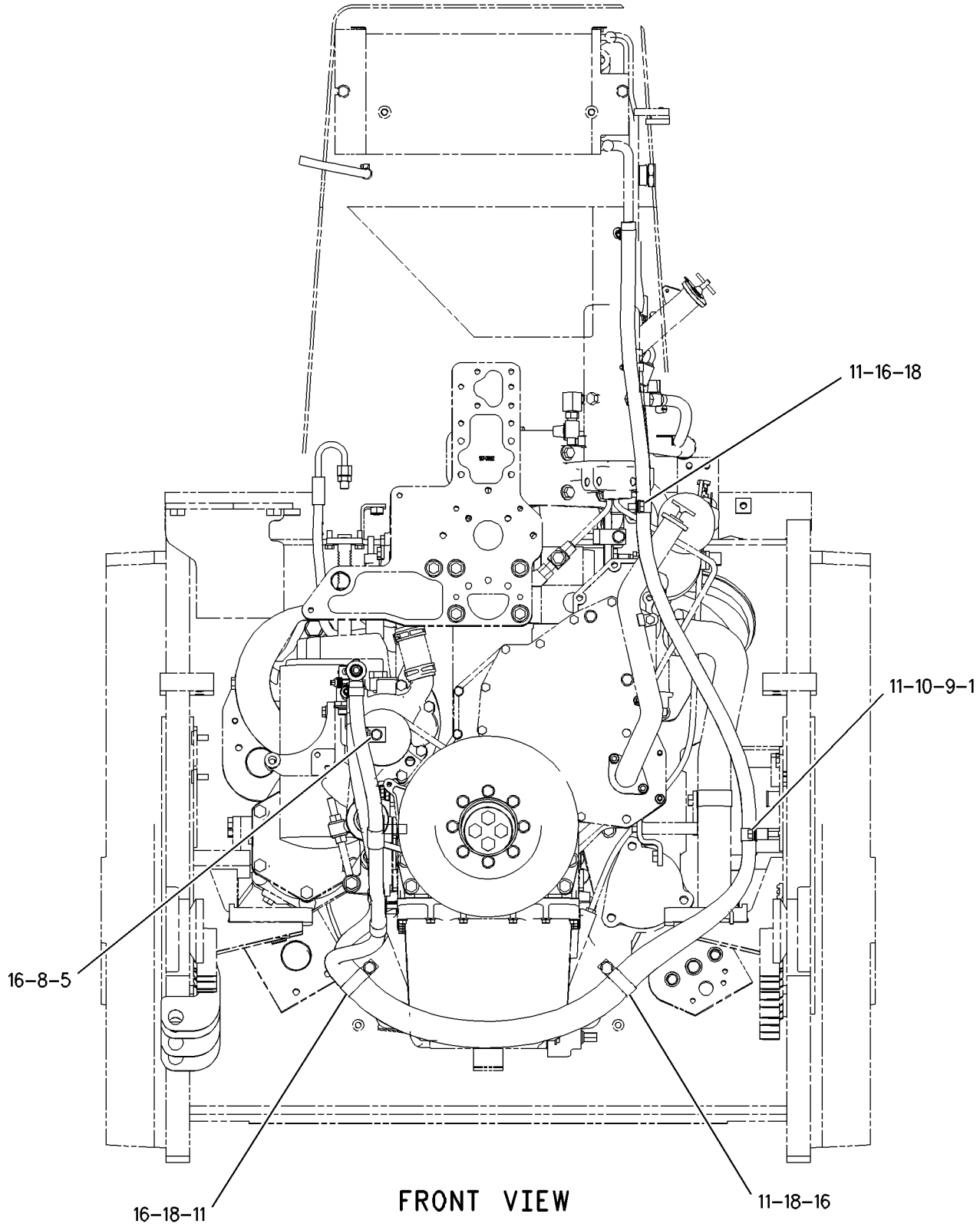

GRAPHIC #1 g00846039

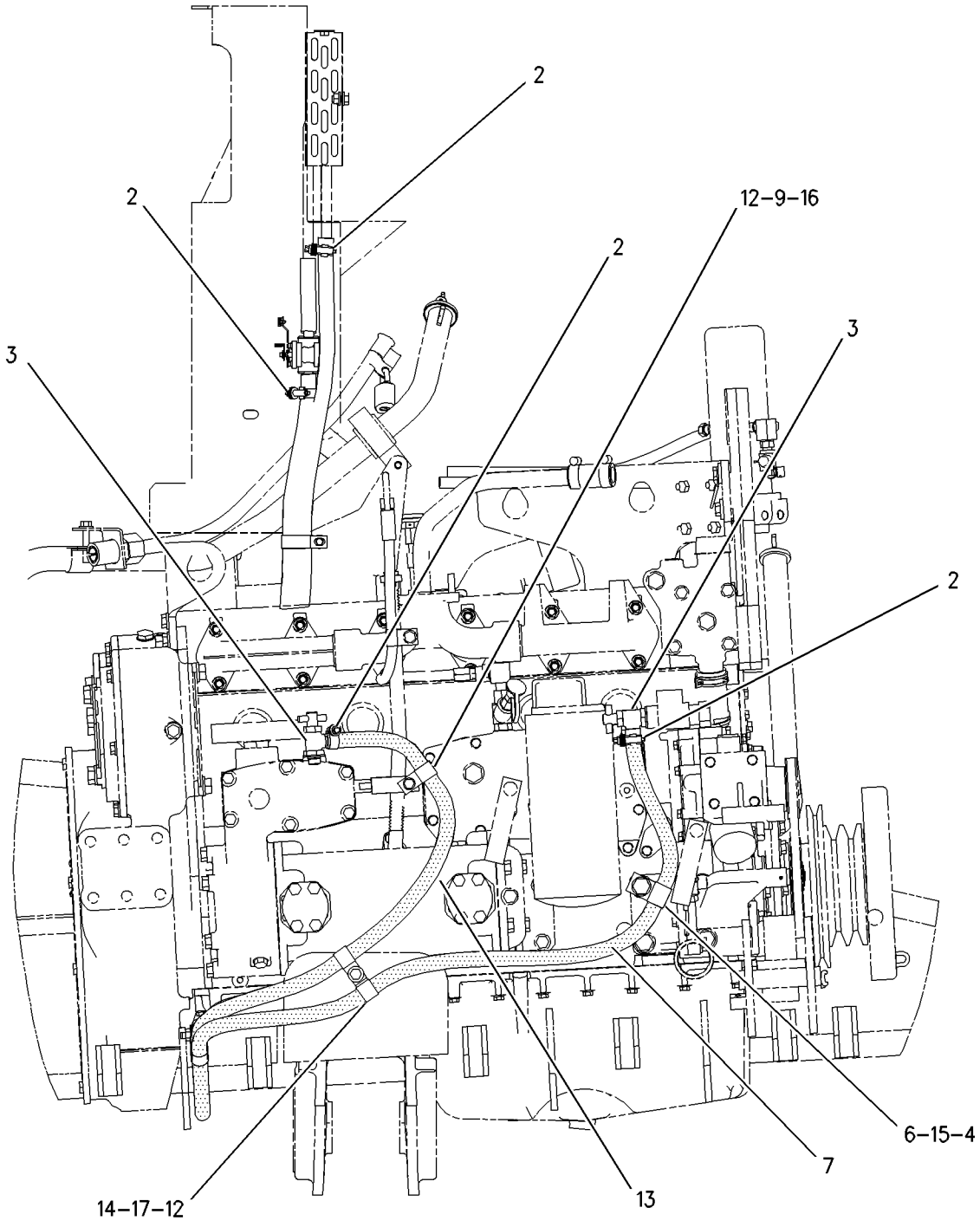

LEFT SIDE VIEW

GRAPHIC #2 g00846043

OPERATOR STATION

9P-9392 MIRROR GP-REAR VIEW

S/N: BLE1-UP; BMJ1-UP
PART OF 183-9253 ROPS GP

SMCS-7319 **i01668575**

NOTE	REF NO	GRAPHIC REF	PART NUMBER	QTY	PART NAME 1 2 3 4 5 6 (PRODUCT LEVEL)	SEE PAGE
	1	1	**5S-7379**	2	BOLT (3/8-16X0.875 IN)	
		1	**5P-1075**	2	WASHER-HARD (10.2X22.5X3MM THK)	
	2	1	**9P-9390**	1	BRACKET	
	3	1	**9P-9388**	1	KNOB (3/8-16IN)	
	4	1	**5P-6874**	1	MIRROR	
	5	1	**5K-9179**	1	BOLT-ROUND HEAD	

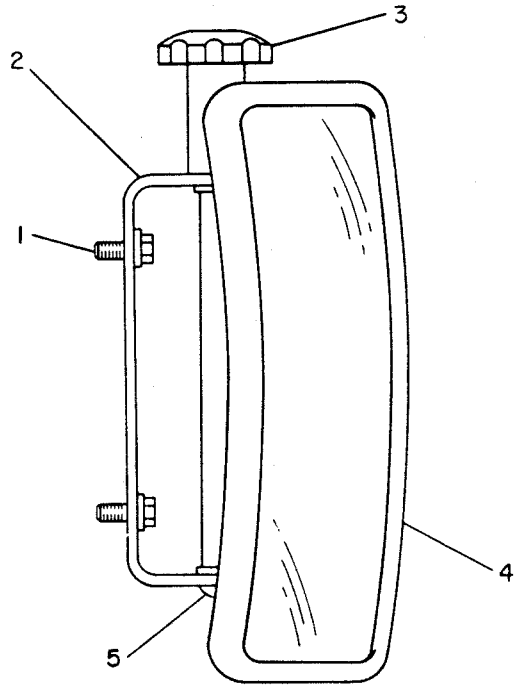

GRAPHIC #1 g00143265

OPERATOR STATION

105-9659 MIRROR GP-REAR VIEW

S/N: BLE1-UP; BMJ1-UP
PART OF 158-7694 CAB AR
AN ATTACHMENT

SMCS-7319 **i01668577**

NOTE	REF NO	GRAPHIC REF	PART NUMBER	QTY	PART NAME 1 2 3 4 5 6 (PRODUCT LEVEL)	SEE PAGE
	1	1	**9P-9388**	1	KNOB (3/8-16IN)	
	2	1	**5P-6874**	1	MIRROR	
	3	1	**5K-9179**	1	BOLT-ROUND HEAD	
	4	1	**6Y-5113**	1	BRACKET	
	5	1	**8T-4121**	2	WASHER-HARD (11X21X2.5MM THK)	
M	6	1	**8T-4195**	2	BOLT (M10X1.5X30MM)	

M-METRIC PART

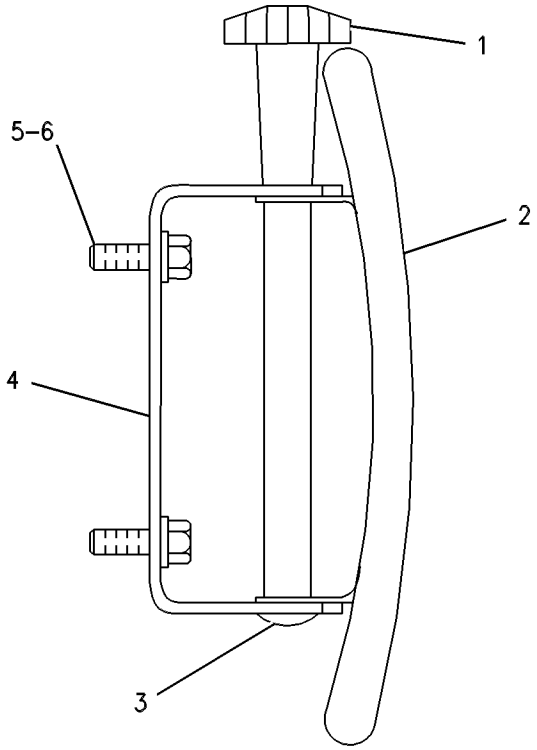

GRAPHIC #1 g00254288

OPERATOR STATION

166-6928 MODULE GP-QUAD GAUGE

S/N: BLE1-UP; BMJ1-UP
PART OF 170-6613, 170-6614 INSTRUMENT GP
ALSO AN ATTACHMENT

SMCS-7450, 7451 **i01301999**

NOTE	REF NO	GRAPHIC REF	PART NUMBER	QTY	PART NAME 1 2 3 4 5 6 (PRODUCT LEVEL)	SEE PAGE
	1	1	**102-8805**	1	KIT-RECEPTACLE (6 PIN)	
					(INCLUDES RECEPTACLE AS & WEDGE)	
	2	1	**8T-8729**	6	PIN-CONNECTOR	
	3	1	**3E-3383**	1	WEDGE-RECEPTACLE LOCK	

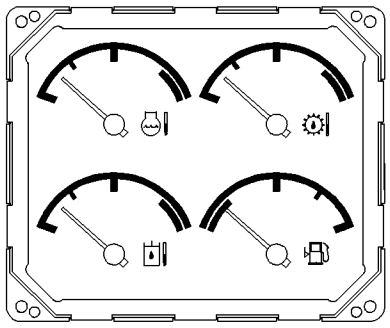

VIEW B-B

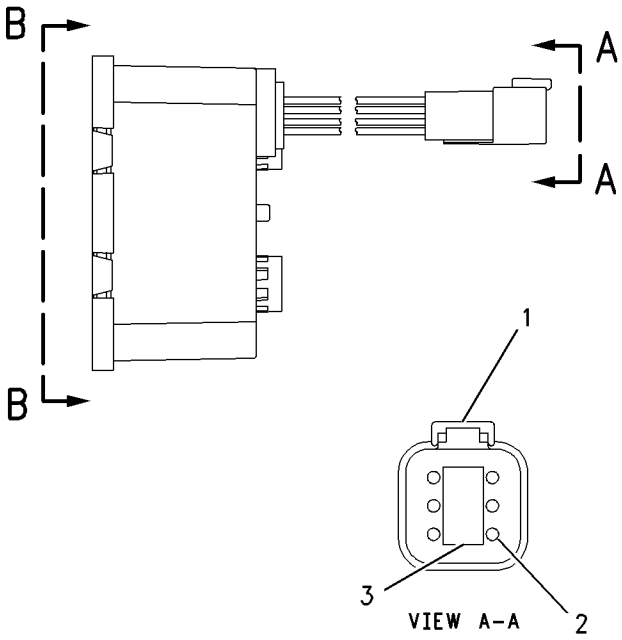

GRAPHIC #1 g00690309

117-1881 MOTOR AS-WINDOW WIPER

S/N: BLE1-UP; BMJ1-UP
24 VOLT
PART OF 158-7691 WIPER GP-WINDOW
AN ATTACHMENT

SMCS-7305 **i01668579**

NOTE	REF NO	GRAPHIC REF	PART NUMBER	QTY	PART NAME 1 2 3 4 5 6 (PRODUCT LEVEL)	SEE PAGE
	1	1	**7T-9096**	1	CAP	
	2	1	**5C-8814**	1	SEAL	
	3	1	**6A-9708**	1	NUT	
	4	1	**6A-9709**	1	WASHER (16.5X24X1MM THK)	
	5	1	**6A-9710**	1	WASHER (LEATHER)	
M	6	1	**6V-6889**	1	NUT (M8X1.25 THD)	
	7	1	**6A-9718**	1	WASHER (8.1X12.5X1MM THK)	
M	8	1	**5C-9553**	2	BOLT (M6X1X16MM)	
	9	1	**5P-0537**	2	WASHER-HARD (7.2X14.5X2MM THK)	
	10	1	**102-8805**	1	KIT-RECEPTACLE (6 PIN)	
					(INCLUDES RECEPTACLE AS & WEDGE)	
	11	1	**8T-8737**	1	PLUG-SEAL	
	12	1	**3E-3383**	1	WEDGE-RECEPTACLE LOCK	
	13	1	**8T-8729**	5	PIN-CONNECTOR	

M-METRIC PART

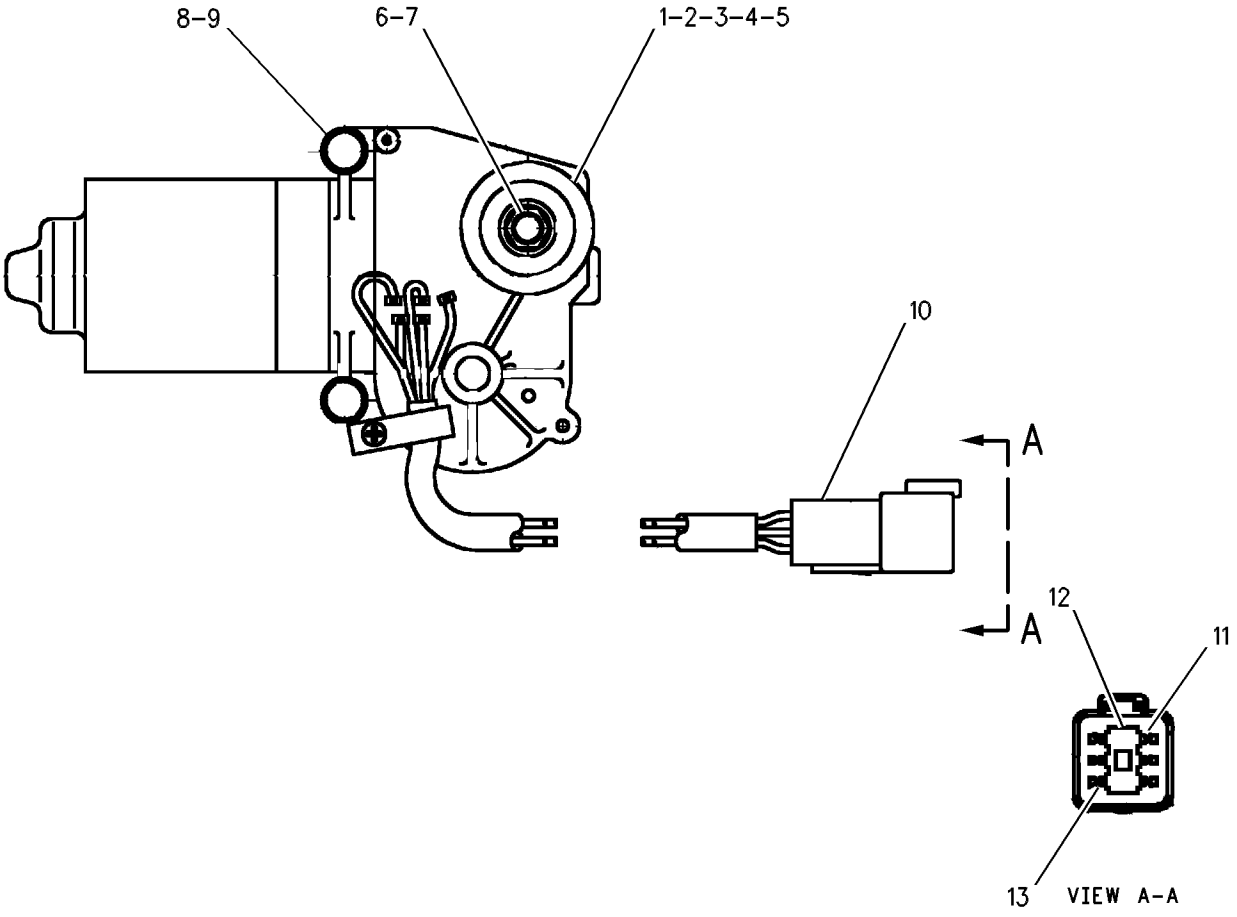

GRAPHIC #1 g00535256

OPERATOR STATION

117-1882 MOTOR AS-WINDOW WIPER

S/N: BLE1-UP; BMJ1-UP
24 VOLT
PART OF 158-7691 WIPER GP-WINDOW
AN ATTACHMENT

SMCS-7305 **i01668580**

NOTE	REF NO	GRAPHIC REF	PART NUMBER	QTY	PART NAME 1 2 3 4 5 6 (PRODUCT LEVEL)	SEE PAGE
	1	1	**7T-9096**	1	CAP	
	2	1	**5C-8814**	1	SEAL	
	3	1	**6A-9708**	1	NUT	
	4	1	**6A-9709**	1	WASHER (16.5X24X1MM THK)	
	5	1	**6A-9710**	1	WASHER (LEATHER)	
M	6	1	**6V-6889**	1	NUT (M8X1.25 THD)	
	7	1	**6A-9718**	1	WASHER (8.1X12.5X1MM THK)	
M	8	1	**5C-9553**	2	BOLT (M6X1X16MM)	
	9	1	**5P-0537**	2	WASHER-HARD (7.2X14.5X2MM THK)	
	10	1	**102-8805**	1	KIT-RECEPTACLE (6 PIN)	
					(INCLUDES RECEPTACLE AS & WEDGE)	
	11	1	**8T-8737**	1	PLUG-SEAL	
	12	1	**3E-3383**	1	WEDGE-RECEPTACLE LOCK	
	13	1	**8T-8729**	5	PIN-CONNECTOR	

M-METRIC PART

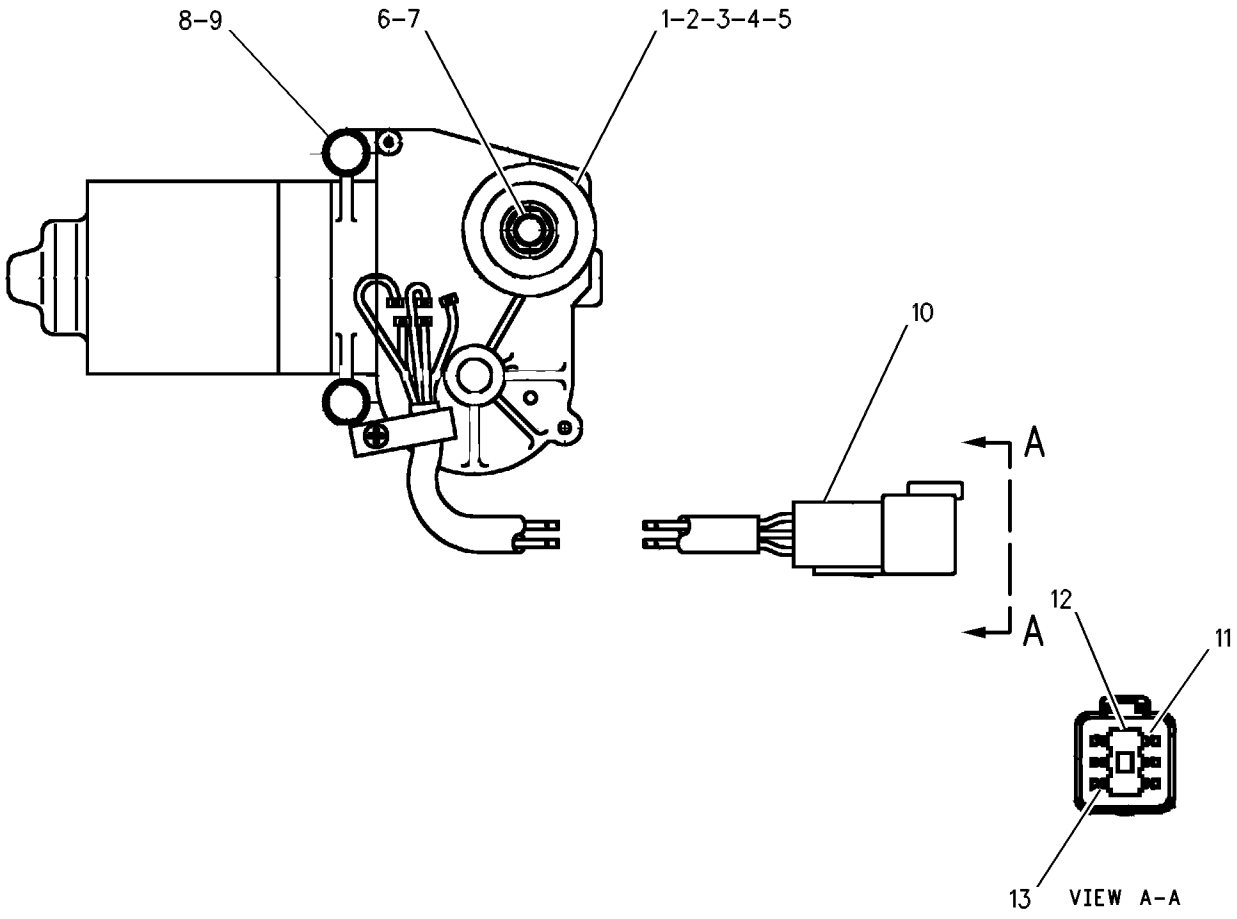

GRAPHIC #1 g00535298

OPERATOR STATION

147-7976 MOTOR GP-WINDOW WIPER

S/N: BLE1-UP; BMJ1-UP
24 VOLT
PART OF 158-7691 WIPER GP-WINDOW
AN ATTACHMENT

SMCS-7305 **i01044423**

NOTE	REF NO	GRAPHIC REF	PART NUMBER	QTY	PART NAME 1 2 3 4 5 6 (PRODUCT LEVEL)	SEE PAGE
M	1	1	**5C-7261**	1	NUT (M8X1.25 THD)	
	2	1	**3F-9556**	1	LOCKWASHER (8.4MM ID)	
	3	1	**102-8805**	1	KIT-RECEPTACLE (6 PIN)	
					(INCLUDES RECEPTACLE AND WEDGE)	
	4	1	**9G-3695**	1	PLUG-SEAL	
	5	1	**8T-8729**	5	PIN-CONNECTOR	

M-METRIC PART

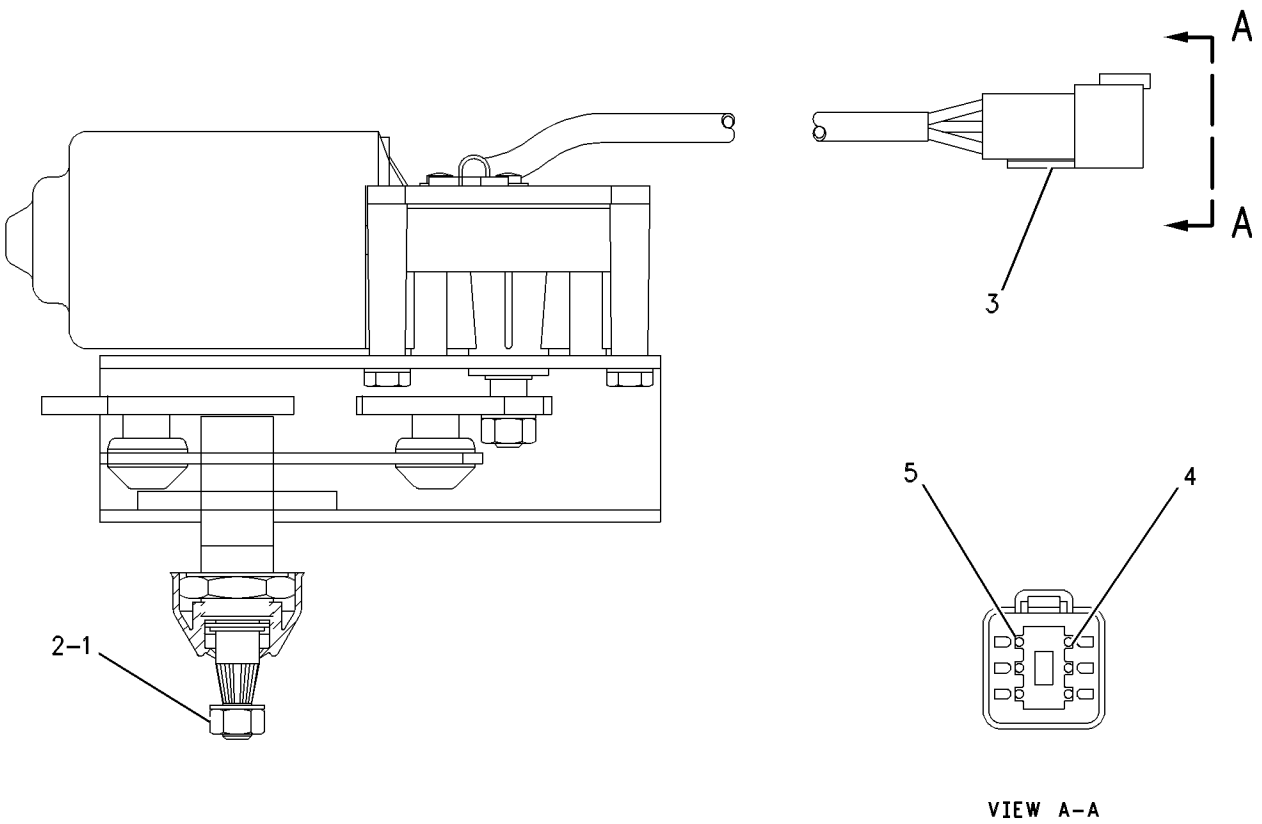

GRAPHIC #1 g00464037

147-7979 MOTOR GP-WINDOW WIPER

S/N: BLE1-UP; BMJ1-UP
24 VOLT
PART OF 158-7691 WIPER GP-WINDOW
AN ATTACHMENT

SMCS-7305 **i01127208**

NOTE	REF NO	GRAPHIC REF	PART NUMBER	QTY	PART NAME 1 2 3 4 5 6 (PRODUCT LEVEL)	SEE PAGE
M	1	1	**5C-7261**	1	NUT (M8X1.25 THD)	
	2	1	**3F-9556**	1	LOCKWASHER (8.4MM ID)	
	3	1	**102-8805**	1	KIT-RECEPTACLE (6 PIN)	
					(INCLUDES RECEPTACLE AS & WEDGE)	
	4	1	**9G-3695**	1	PLUG-SEAL	
	5	1	**8T-8729**	5	PIN-CONNECTOR	

M-METRIC PART

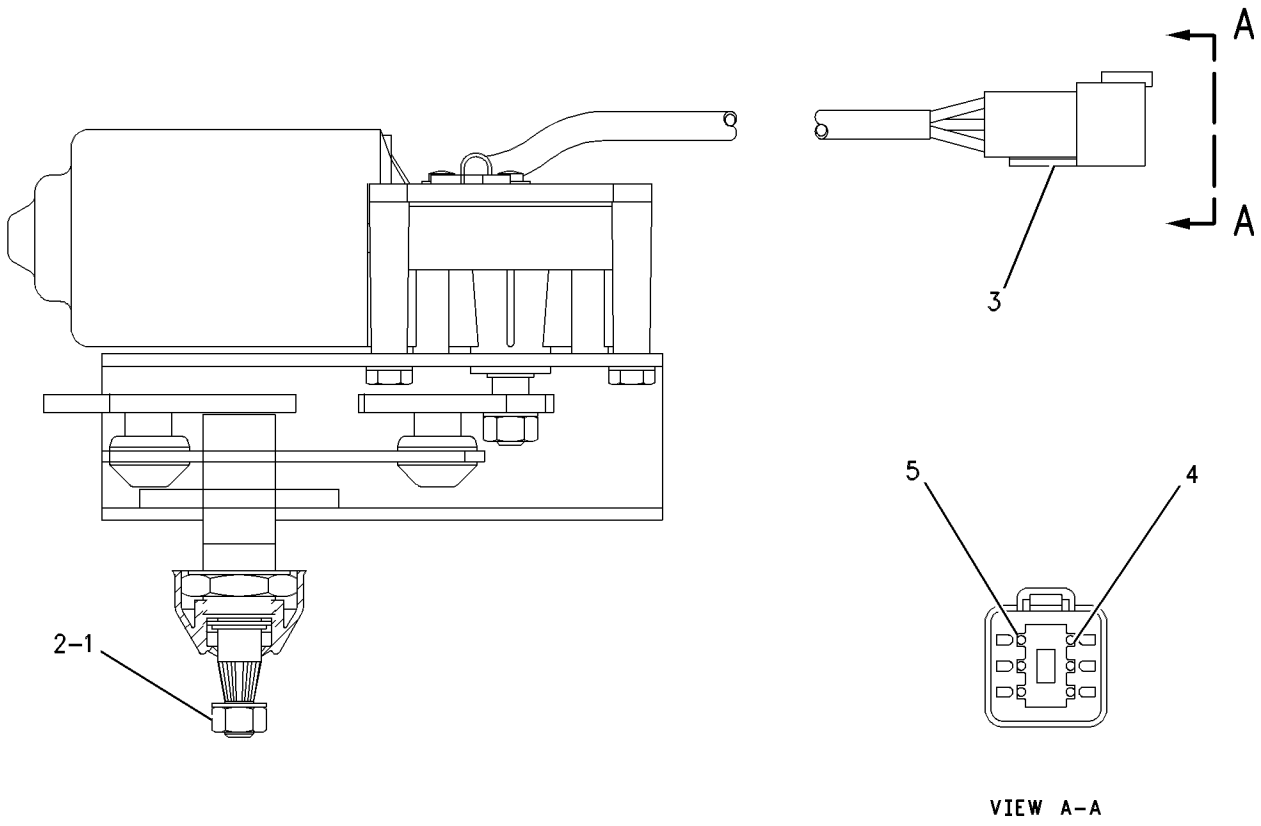

GRAPHIC #1 g00464037

OPERATOR STATION

169-9637 MOUNTING GP-CAB

S/N: BLE1-UP; BMJ1-UP
PART OF 159-8371 CAB AR
AN ATTACHMENT

SMCS-7266, 7301 **i01591677**

NOTE	REF NO	GRAPHIC REF	PART NUMBER	QTY	PART NAME 1 2 3 4 5 6 (PRODUCT LEVEL)	SEE PAGE
	1	1	**9G-0986**	1	SEAL	
	2	1	**9G-0983**	2	SEAL	
BD	3	1	**5P-7514**		SEAL	
	4	1	**9G-0990**	1	SEAL	
	5	1	**113-6033**	1	ANGLE	
	6	1	**7X-3392**	31	WASHER-HARD (13.5X22.5X3MM THK)	
	7	1	**171-2438**	7	BOLT-12 POINT HEAD (M12X1.75X30MM)	
M	8	1	**8T-4136**	8	BOLT (M10X1.5X25MM)	
	9	1	**7X-7729**	8	WASHER (11X25X3MM THK)	
BD	10	1	**5P-7513**		SEAL	
M	11	1	**9X-8272**	12	BOLT (M12X1.75X60MM)	
M	12	1	**189-5358**	2	BOLT-HEX HEAD (M10X1.5X60MM)	
	13	1	**189-5359**	2	WASHER-HARD (10.5X28.5X5MM THK)	

B-USE AS REQUIRED
D-ORDER BY THE METER
M-METRIC PART

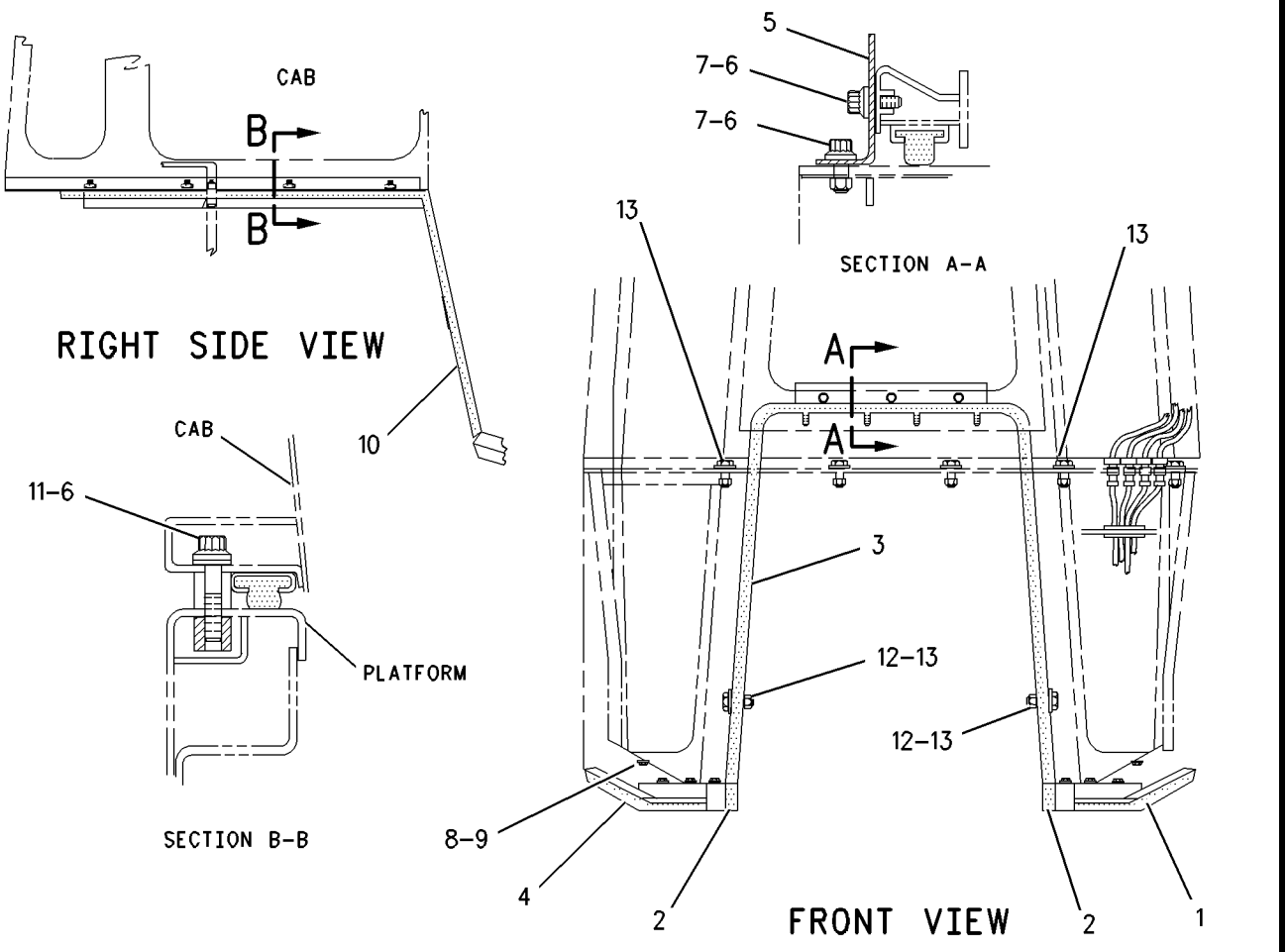

GRAPHIC #1 g00826797

OPERATOR STATION

168-9265 MOUNTING GP-ROPS

S/N: BLE1-UP; BMJ1-UP

PART OF 164-4782, 164-4784 CHASSIS AR

SMCS-7266 **i01589708**

NOTE	REF NO	GRAPHIC REF	PART NUMBER	QTY	PART NAME 1 2 3 4 5 6 (PRODUCT LEVEL)	SEE PAGE
	1	1	**168-9263**	1	SUPPORT AS-ROPS (LH)	
	2	1	**168-9264**	1	SUPPORT AS-ROPS (RH)	
	3	1	**7X-0428**	12	BOLT (1 1/4-7X4 IN)	
	4	1	**7X-0533**	12	WASHER-HARD (34X55X6MM THK)	

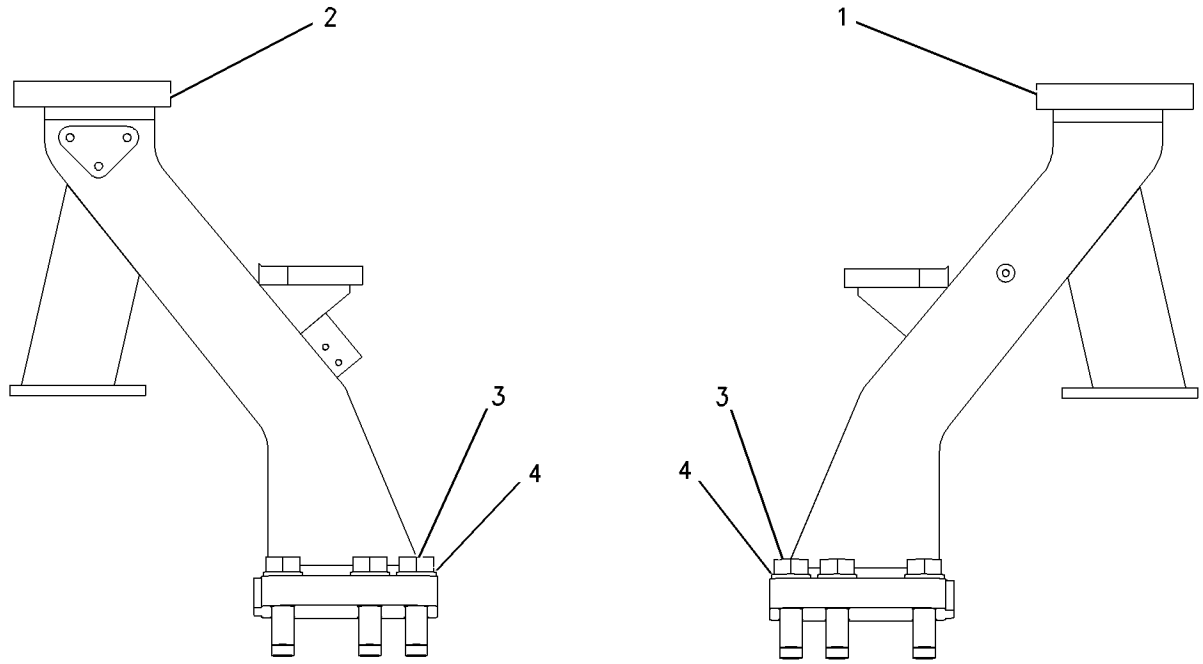

FRONT VIEW

GRAPHIC #1 g00742366

OPERATOR STATION

178-0604 PAN GP-BACKREST

S/N: BLE1-UP; BMJ1-UP
PART OF 178-0603 SEAT GP
AN ATTACHMENT

SMCS-7312 **i01442823**

NOTE	REF NO	GRAPHIC REF	PART NUMBER	QTY	PART NAME 1 2 3 4 5 6 (PRODUCT LEVEL)	SEE PAGE
	1	1	**164-4883**	1	KNOB-LUMBAR	
	2	1	**169-0651**	1	CUSHION AS	
Y	3	1	*178-0605*	1	PAN GP-BACKREST	659
	4	1	**8T-7566**	1	PIN-SPRING	

Y-SEPARATE ILLUSTRATION

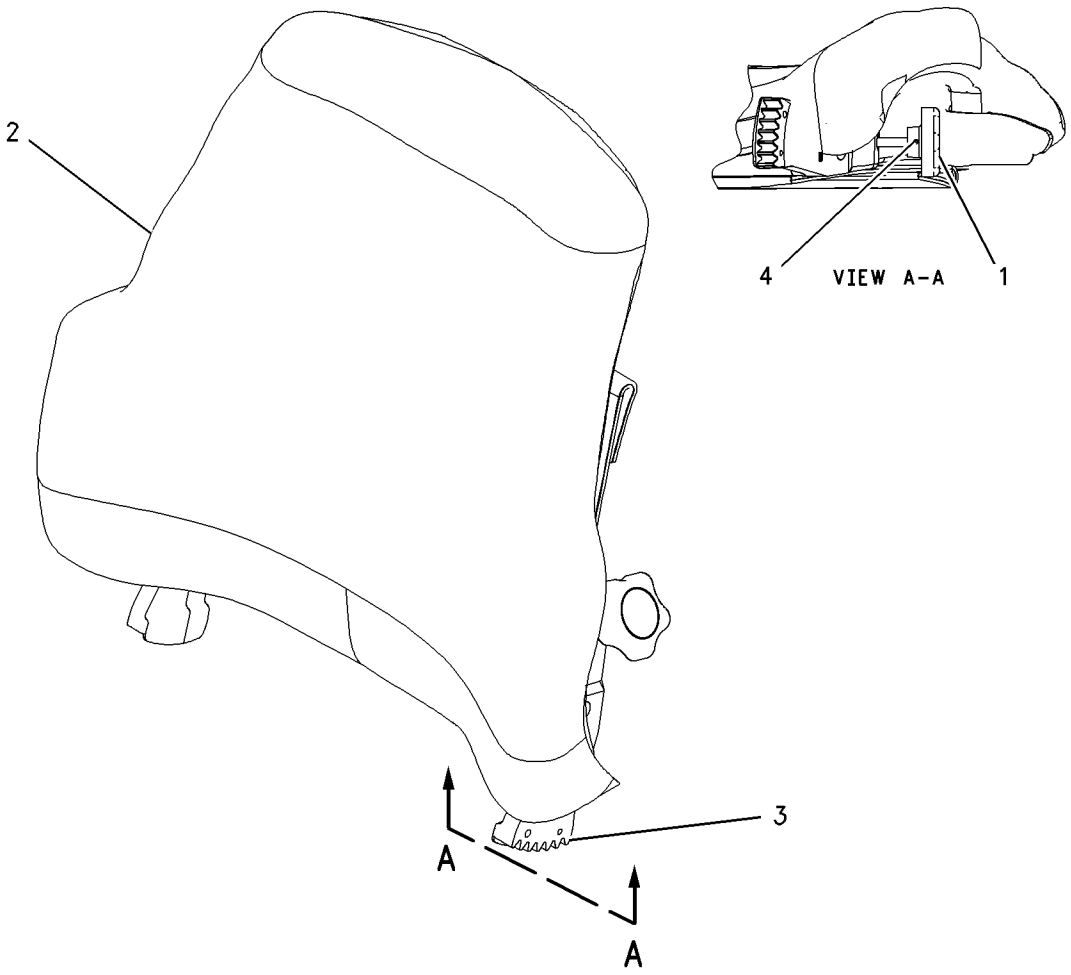

GRAPHIC #1 g00727710

OPERATOR STATION

178-0605 PAN GP-BACKREST

S/N: BLE1-UP; BMJ1-UP
PART OF 178-0604, 180-7305 PAN GP-BACKREST
ALSO AN ATTACHMENT

SMCS-7312 **i01442824**

NOTE	REF NO	GRAPHIC REF	PART NUMBER	QTY	PART NAME 1 2 3 4 5 6 (PRODUCT LEVEL)	SEE PAGE
	1	1	**4K-9429**	8	RIVET-POP	
	2	1	**5P-7957**	1	LANYARD	
	3	1	**136-1543**	1	PLATE AS-LUMBAR	
	4	1	**173-2052**	1	RETAINER	
	5	1	**178-7907**	1	HOLDER	
	6	1	**177-4930**	1	PAN AS-BACK	

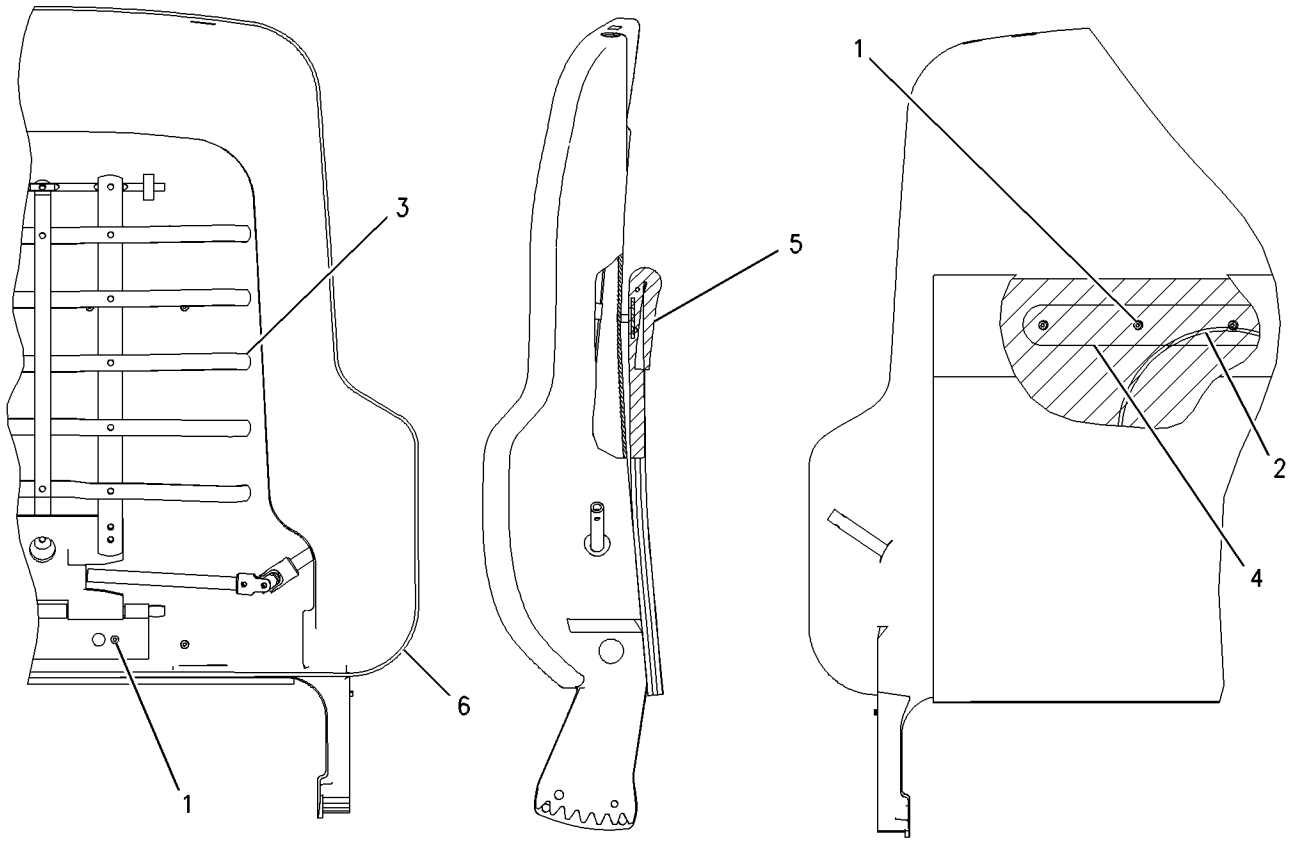

GRAPHIC #1 g00716497

OPERATOR STATION

180-7305 PAN GP-BACKREST

S/N: BLE1-UP; BMJ1-UP
PART OF 180-7304 SEAT GP

SMCS-7312 **i01444042**

NOTE	REF NO	GRAPHIC REF	PART NUMBER	QTY	PART NAME 1 2 3 4 5 6 (PRODUCT LEVEL)	SEE PAGE
	1	1	**164-4883**	1	KNOB-LUMBAR	
	2	1	**169-0697**	1	CUSHION AS	
		1	**184-2300**	1	FILM (SEAT CUSHION IDENTIFICATION)	
Y	3	1	*178-0605*	1	PAN GP-BACKREST	659
	4	1	**8T-7566**	1	PIN-SPRING	

Y-SEPARATE ILLUSTRATION

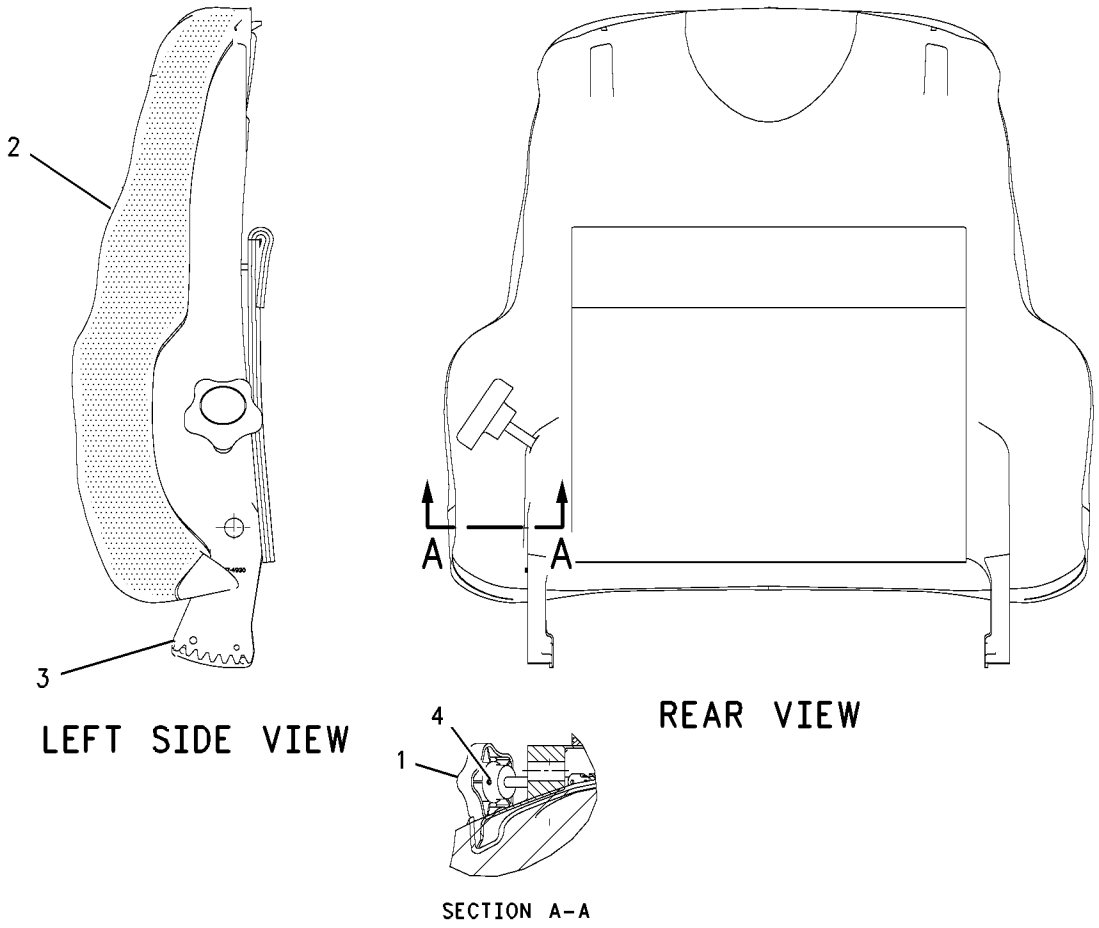

LEFT SIDE VIEW

REAR VIEW

SECTION A-A

GRAPHIC #1 g00678939

MEMORANDA

OPERATOR STATION

156-4756 PLATFORM GP

S/N: BLE1-UP; BMJ1-UP

PART OF 156-4755 PLATFORM GP-CAB

SMCS-7253, 7254 **i01589634**

NOTE	REF NO	GRAPHIC REF	PART NUMBER	QTY	PART NAME 1 2 3 4 5 6 (PRODUCT LEVEL)	SEE PAGE
	1	1	**156-4757**	1	PLATFORM AS	
	2	2	**4P-8134**	1	CLIP	
M	3	1,2	**6V-9632**	21	NUT-WELD (M6X1 THD)	
	4	2	**7T-1099**	38	LINK	
	5	2	**8F-9836**	4	BOSS-THREADED (3/8-16X.75 IN)	
M	6	2	**8T-3490**	90	NUT-WELD (M10X1.5 THD)	
	7	2	**169-6907**	6	SPACER	
	8	2	**172-4871**	1	CLAMP	
	9	2	**6C-6761**	1	PLATE	
M	10	2	**9T-6001**	2	BOSS (M10X1.5X25MM)	
M	11	2	**8T-3612**	2	NUT-WELD (M8X1.25 THD)	
M	12	2	**162-3934**	2	NUT-WELD (M6X1.6 THD)	
	13	2	**5D-9629**	2	ROD	
	14	2	**6P-2215**	7	PIN-WELD	
	15	1	**6V-6716**	2	RIVET-TRUSS HEAD	
	16	2	**9F-6445**	2	NUT-WELD (1/4-20 THD)	
	17	1	**109-1645**	1	CLIP	
	18	1	**169-6902**	1	BRACKET AS	
M		1	**8T-3490**	9	NUT-WELD (M10X1.5 THD)	
M	19	1	**124-8100**	2	SCREW-TRUSS HEAD (M10X1.5X20MM)	
	20	1	**7X-7729**	2	WASHER (11X25X3MM THK)	

M-METRIC PART

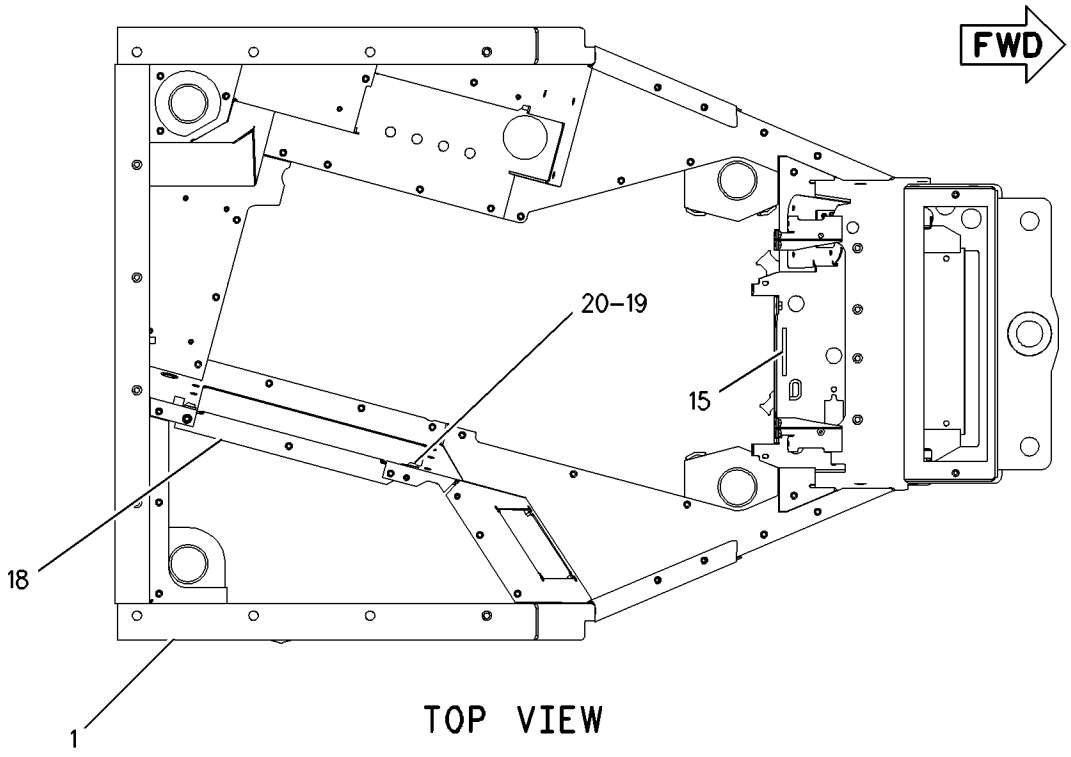

TOP VIEW

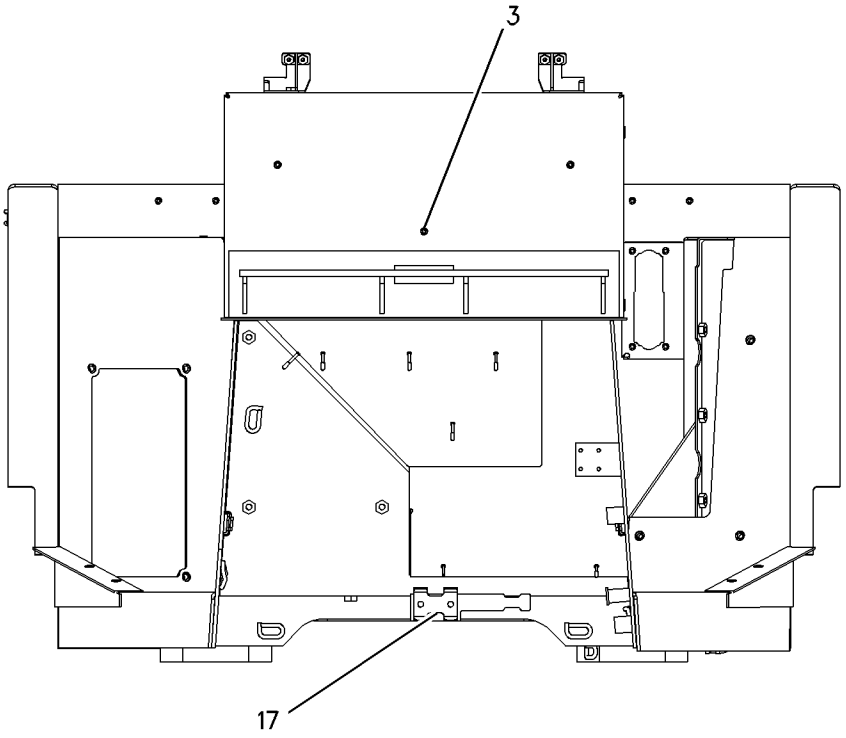

FRONT VIEW

GRAPHIC #1 g00793056

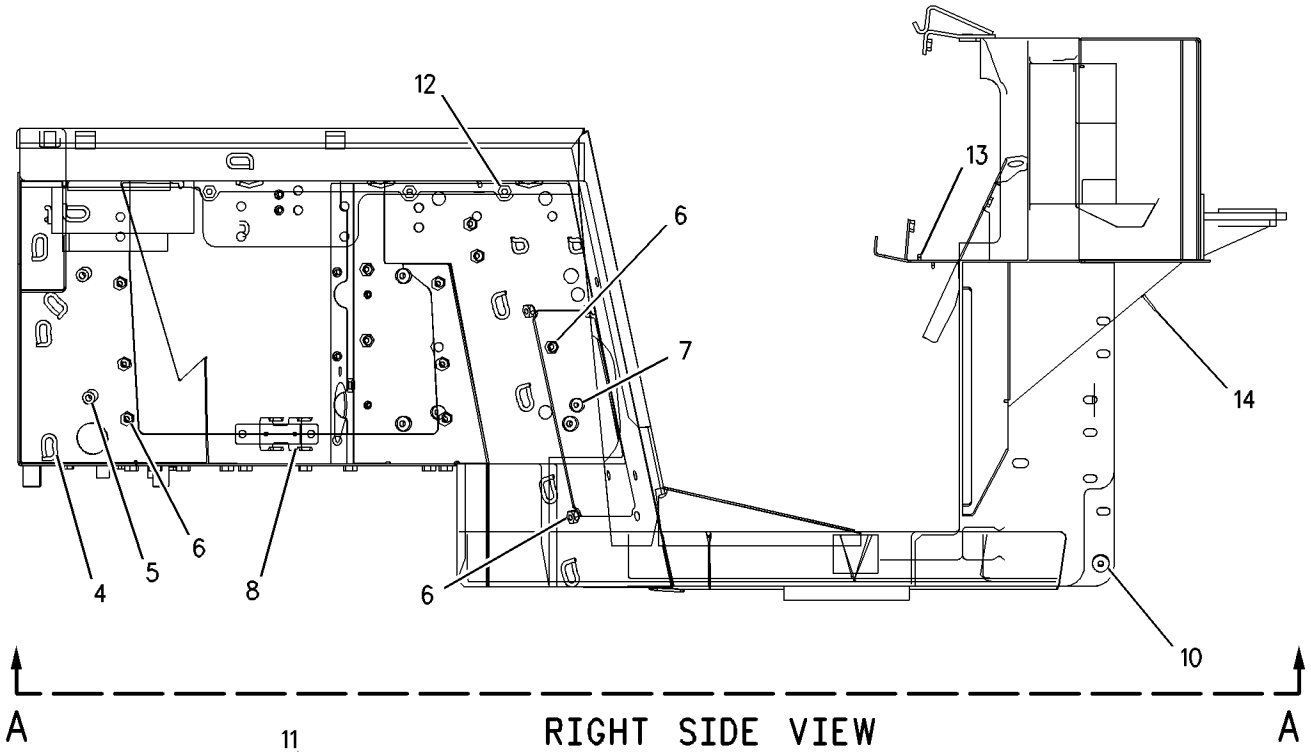

RIGHT SIDE VIEW

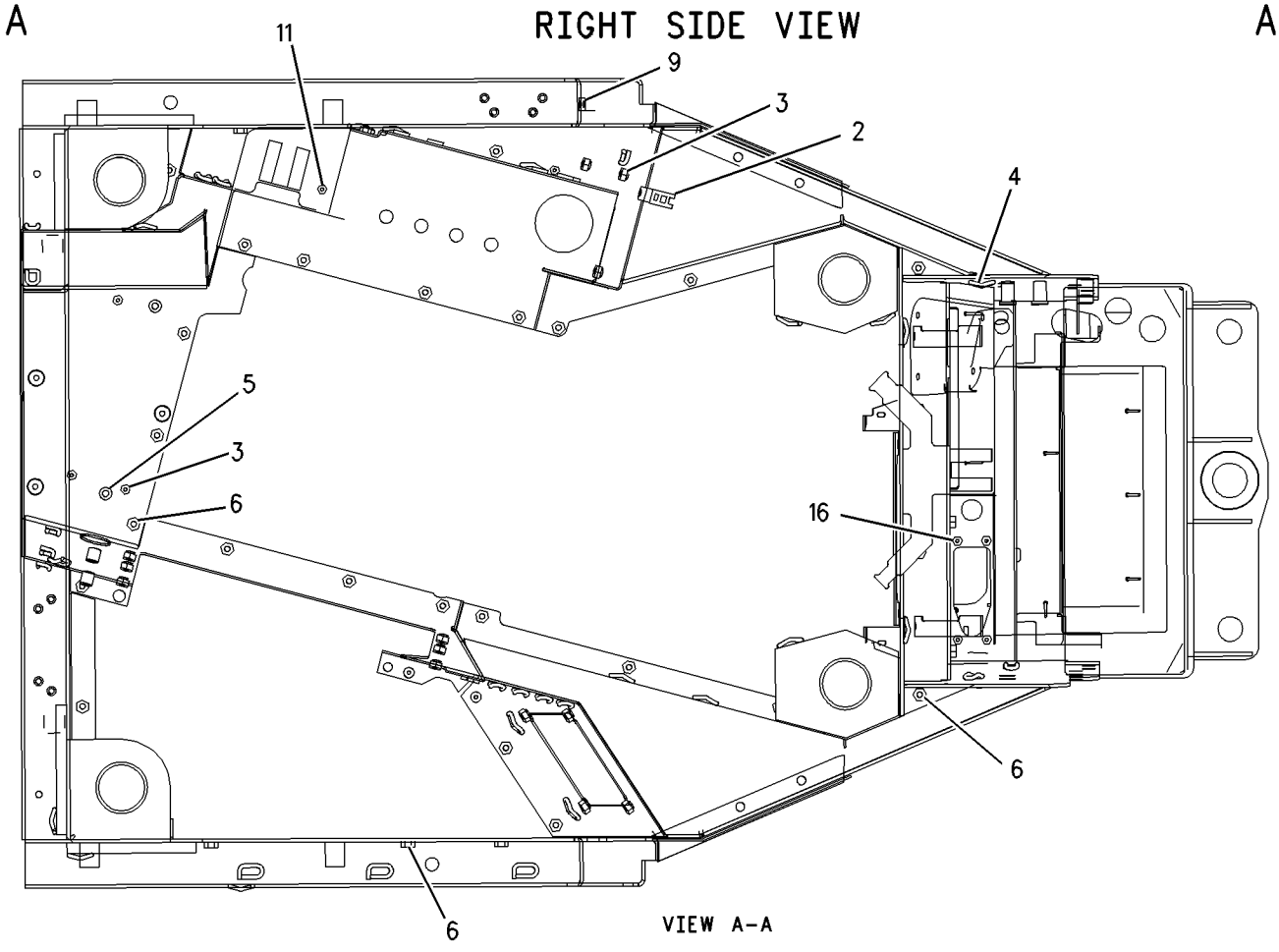

VIEW A-A

GRAPHIC #2

g00726285

MEMORANDA

OPERATOR STATION

156-4755 PLATFORM GP-CAB

S/N: BLE1-UP; BMJ1-UP

PART OF 164-4782, 164-4784 CHASSIS AR

SMCS-7253 **i01589611**

NOTE	REF NO	GRAPHIC REF	PART NUMBER	QTY	PART NAME 1 2 3 4 5 6 (PRODUCT LEVEL)	SEE PAGE
B	1	1	**1J-0245**	8	PLUG-PROTECTION	
	2	2	**3T-3634**	1	HANDHOLD	
B	3	1,2	**6H-3615**	12	PLUG-PROTECTION	
	4	2	**9X-8256**	4	WASHER (6.6X12X2MM THK)	
	5	2	**5P-7509**	1	PLUG-BUTTON	
	6	2	**6I-9706**	1	RETAINER AS	
M		2	**6V-9632**	4	NUT-WELD (M6X1 THD)	
	7	1	**6T-4556**	1	COVER	
	8	1	**6T-4557**	1	GASKET	
	9	2	**6V-8547**	1	PLUG-BUTTON	
	10	2	**6Y-0206**	4	RETAINER	
	11	2	**6Y-8114**	2	SPACER (13.8X23.75X12.7MM THK)	
	12	2	**7G-4824**	2	STRAP	
	13	2	**8C-5226**	1	PLUG-SEAL	
	14	2	**8E-7791**	2	STRAP	
	15	2	**8T-4943**	1	PLUG	
	16	1	**117-8131**	8	MOUNT	
	17	2	**117-9966**	1	PLUG	
M	18	2	**124-8100**	24	SCREW-TRUSS HEAD (M10X1.5X20MM)	
	19	2	**127-3018**	1	HANDHOLD	
	20	1	**141-2240**	1	PLATE	
Y	21	2	**156-4756**	1	PLATFORM GP	662
	22	2	**157-1457**	1	PLATE	
	23	2	**160-0082**	1	PLATE AS	
		2	**1F-0750**	1	NUT-WELD (3/8-16 THD)	
	24	2	**161-3610**	1	HOUSING	
	25	2	**161-3958**	1	GASKET	
	26	2	**161-3959**	1	PLATE AS	
	27	2	**161-3967**	1	PLATE AS	
		2	**7T-1099**	5	LINK	
	28	2	**163-3281**	1	BRACKET AS	
		2	**7G-4550**	1	GROMMET	
	29	1	**164-0758**	1	BOLT-HEX HEAD (9/16-18X2 IN)	
	30	2	**164-4365**	1	GASKET	
	31	2	**165-6857**	1	PAD AS-RUBBER	
	32	2	**170-0251**	2	STRIP	
	33	2	**170-0255**	1	COVER AS	
M	34	2	**172-5291**	4	SCREW (M10X1.5X30MM)	
	35	2	**184-3286**	1	FLOORPLATE AS	
M		2	**8T-3490**	2	NUT-WELD (M10X1.5 THD)	
	36	2	**184-3288**	1	FLOORPLATE AS	
M		2	**8T-3597**	4	NUT-WELD (M12X1.75 THD)	
	37	2	**184-3291**	1	FLOOR MAT	
	38	2	**185-2076**	2	SUPPORT AS	
	39	1	**185-3666**	4	SLEEVE	
Y	40	2	**192-3016**	1	COVER GP	304
	41	2	**205-2203**	1	PLATE	
	42	2	**5P-1075**	2	WASHER-HARD (10.2X22.5X3MM THK)	
	43	2	**5P-1076**	14	WASHER-HARD (13.5X30X4MM THK)	
	44	1	**5P-4115**	2	WASHER-HARD (7.2X19X2MM THK)	
	45	2	**5P-4116**	4	WASHER-HARD (8.8X20.5X2MM THK)	
	46	2	**6J-0488**	2	SCREW-BUTTON HEAD (3/8-16X0.875 IN)	
	47	1	**6T-8714**	4	WASHER-HARD (28X125X12MM THK)	
	48	1,2	**7X-7729**	66	WASHER (11X25X3MM THK)	
M	49	1	**8C-3290**	2	BOLT (M24X3X150MM)	
M	50	2	**8T-4136**	34	BOLT (M10X1.5X25MM)	

156-4755 **PLATFORM GP-CAB** ***(contd.)*** **i01589611**

NOTE	REF NO	GRAPHIC REF	PART NUMBER	QTY	PART NAME 1 2 3 4 5 6 (PRODUCT LEVEL)	SEE PAGE
	51	2	**208-0375**	2	SCREW-PAN HEAD	
M	52	2	**8T-4138**	2	BOLT (M6X1X20MM)	
M	53	2	**8T-4139**	14	BOLT (M12X1.75X30MM)	
	54	1	**8T-4167**	4	WASHER-HARD (26X44X4MM THK)	
M	55	2	**8T-4194**	2	BOLT (M12X1.75X50MM)	
M	56	1	**8T-4196**	4	BOLT (M10X1.5X35MM)	
	57	2	**8T-4223**	2	WASHER-HARD (13.5X25.5X3MM THK)	
M	58	1	**8T-4649**	2	BOLT (M24X3X140MM)	
M	59	2	**8T-4189**	4	BOLT (M8X1.25X20MM)	
	60	1	**8T-8908**	2	BOLT (1/4-20X1 IN)	
M	61	2	**184-0982**	16	SCREW-PAN HEAD	
	62	2	**9D-3769**	1	GROMMET	
	63	2	**7T-6299**	1	GROMMET	
	64	2	**6V-1790**	3	PLUG-BUTTON	
	65	2	**5P-0998**	3	PLUG-SEAL	

B-USE AS REQUIRED
M-METRIC PART
Y-SEPARATE ILLUSTRATION

REFER TO ALL ILLUSTRATIONS OF
THIS GROUP FOR AUXILIARY VIEWS

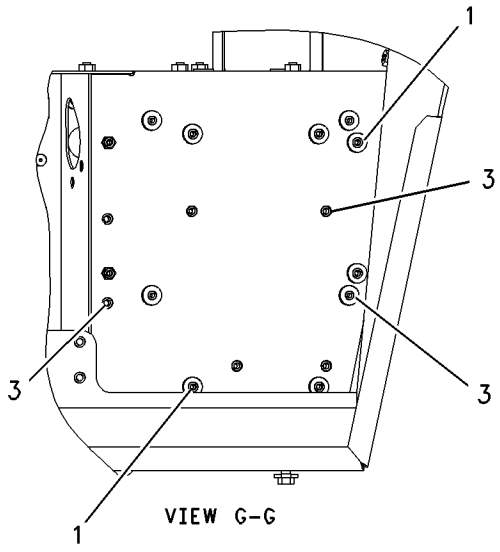

VIEW G-G

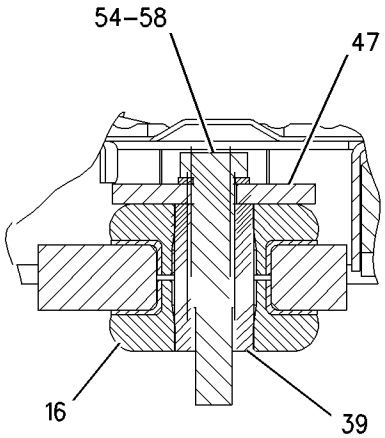

SECTION F-F
FRONT MOUNTS

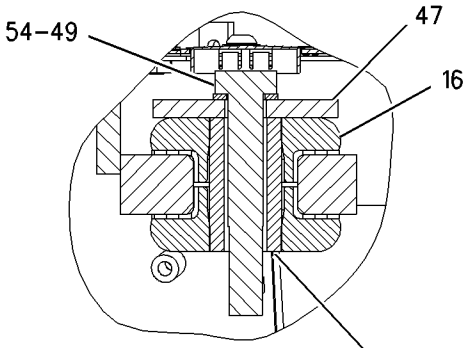

SECTION C-C
REAR MOUNTS

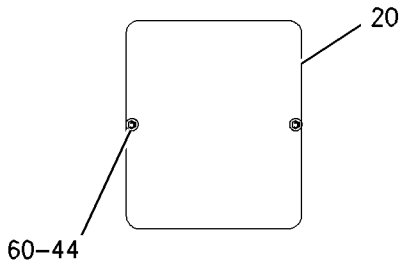

VIEW D-D

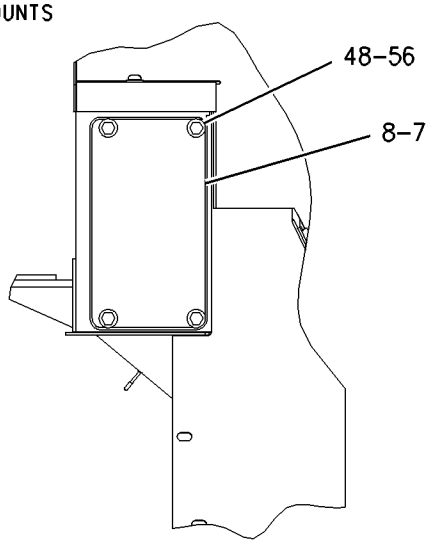

LEFT SIDE VIEW

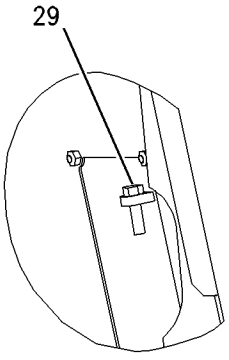

SECTION H-H

GRAPHIC #1 g00845685

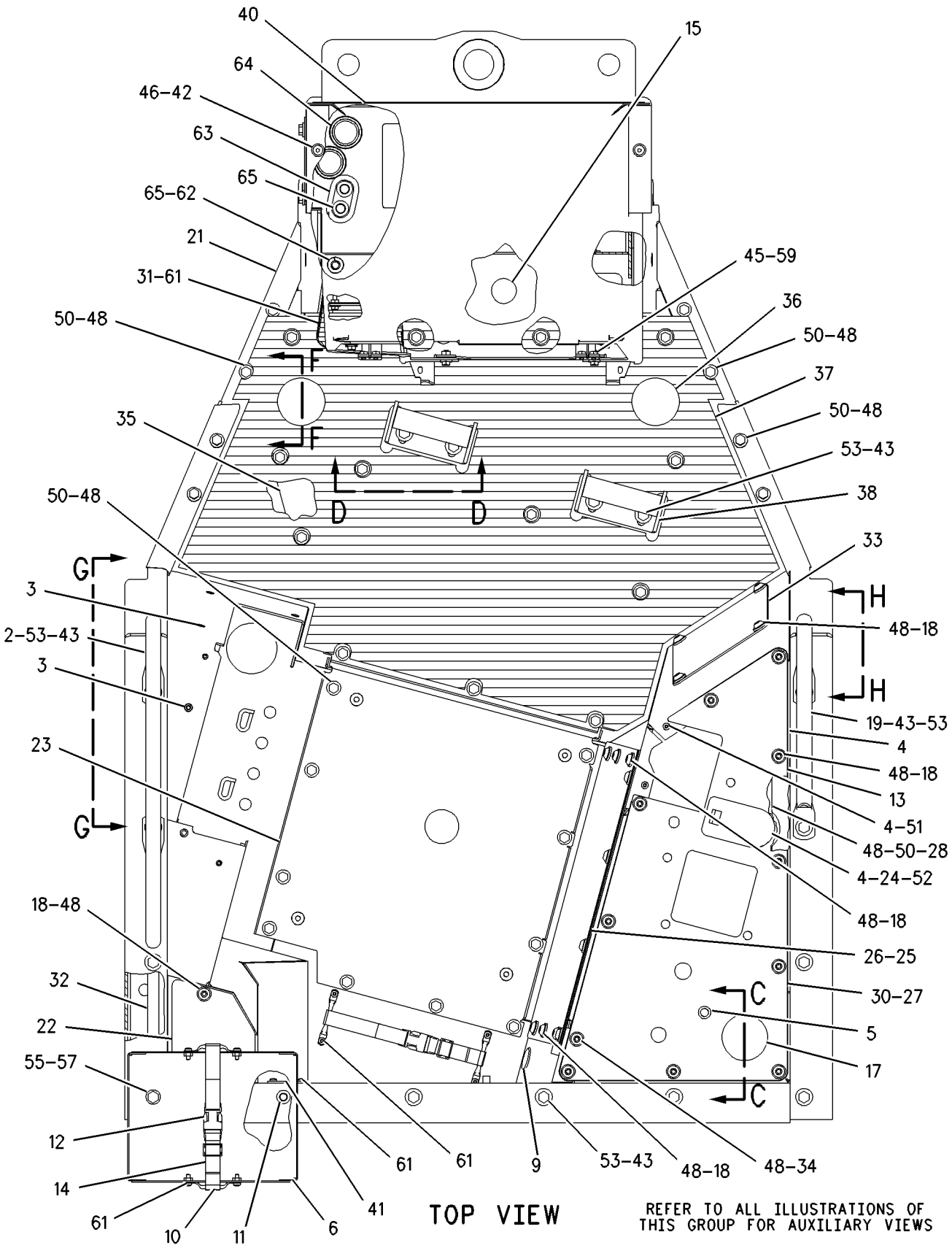

GRAPHIC #2

g00845686

OPERATOR STATION

195-8709 PLUG AS

S/N: BLE1-UP; BMJ1-UP
PART OF 164-4796, 164-4797 SUPPRESSION AR-SOUND
AN ATTACHMENT

SMCS-1408 **i01605228**

NOTE	REF NO	GRAPHIC REF	PART NUMBER	QTY	PART NAME 1 2 3 4 5 6 (PRODUCT LEVEL)	SEE PAGE
BD	1	1	**5P-5677**		WIRE-ELECTRICAL (18 GA)	
BE		1	**119-3662**		TUBE-HEAT SHRINK	
	2	1	**155-2265**	1	KIT-CONNECTING PLUG (8 PIN)	
					(INCLUDES PLUG AS, WEDGE)	
		1	**155-2259**	1	WEDGE-PLUG LOCK (8 PIN)	
		1	**8T-8737**	5	PLUG-SEAL	
		1	**9X-3402**	1	SOCKET-CONNECTOR	
					FOR 16-18 GA WIRE	
					—OR—	
		1	**126-1768**	1	SOCKET-CONNECTOR	
					FOR 14 GA WIRE	

B-USE AS REQUIRED
D-ORDER BY THE METER
E-ORDER BY THE CENTIMETER

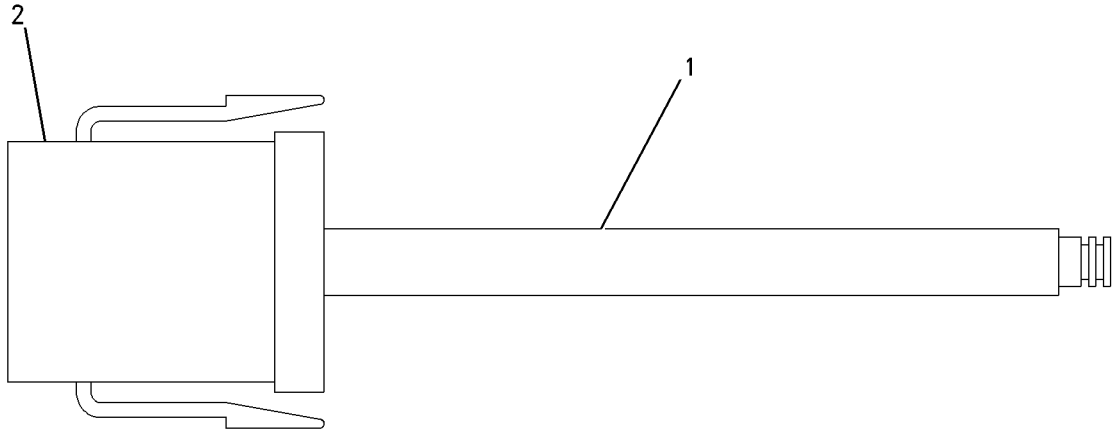

GRAPHIC #1 g00730235

MEMORANDA

OPERATOR STATION

159-0725 PRESSURIZER GP-CAB

S/N: BLE1-UP; BMJ1-UP
PART OF 159-8371 CAB AR
AN ATTACHMENT

SMCS-7311 **i01591577**

NOTE	REF NO	GRAPHIC REF	PART NUMBER	QTY	PART NAME 1 2 3 4 5 6 (PRODUCT LEVEL)	SEE PAGE
	1	1	**3H-6660**	2	PIN-SPRING	
	2	1	**3L-0594**	3	SPACER (8.7X15.9X15.9MM THK)	
	3	1	**3W-6756**	2	KNOB	
	4	1	**6P-2216**	7	CAP-PUSH ON	
	5	1	**6T-0988**	1	FILTER-AIR (CAB FRESH AIR)	
	6	1	**6T-5067**	1	LINER	
	7	1	**6T-5068**	1	FILTER AS (CAB REC AIR)	
BE	8	2	**7X-7877**		STRIP-EDGING	
	9	1	**9W-7033**	2	KNOB AS	
					(EACH INCLUDES)	
		1	**8T-7566**	1	PIN-SPRING	
	10	1	**111-4482**	1	COVER AS	
	11	1	**117-8863**	1	LINER	
	12	2	**127-1043**	1	LINER	
	13	2	**127-1044**	1	LINER	
	14	2	**127-1045**	1	LINER	
	15	1	**127-1046**	1	LINER	
	16	1	**127-1048**	1	LINER	
	17	1	**141-4044**	1	PANEL	
Y	18	1	**159-0653**	1	BLOWER GP-CAB	602
	19	1	**7X-0603**	3	WASHER-HARD (9.9X35X2.5MM THK)	
	20	1	**8T-4121**	6	WASHER-HARD (11X21X2.5MM THK)	
M	21	1	**8T-4195**	6	BOLT (M10X1.5X30MM)	
M	22	1	**8T-4971**	3	BOLT (M6X1X30MM)	
	23	1	**9X-8256**	3	WASHER (6.6X12X2MM THK)	

B-USE AS REQUIRED
E-ORDER BY THE CENTIMETER
M-METRIC PART
Y-SEPARATE ILLUSTRATION

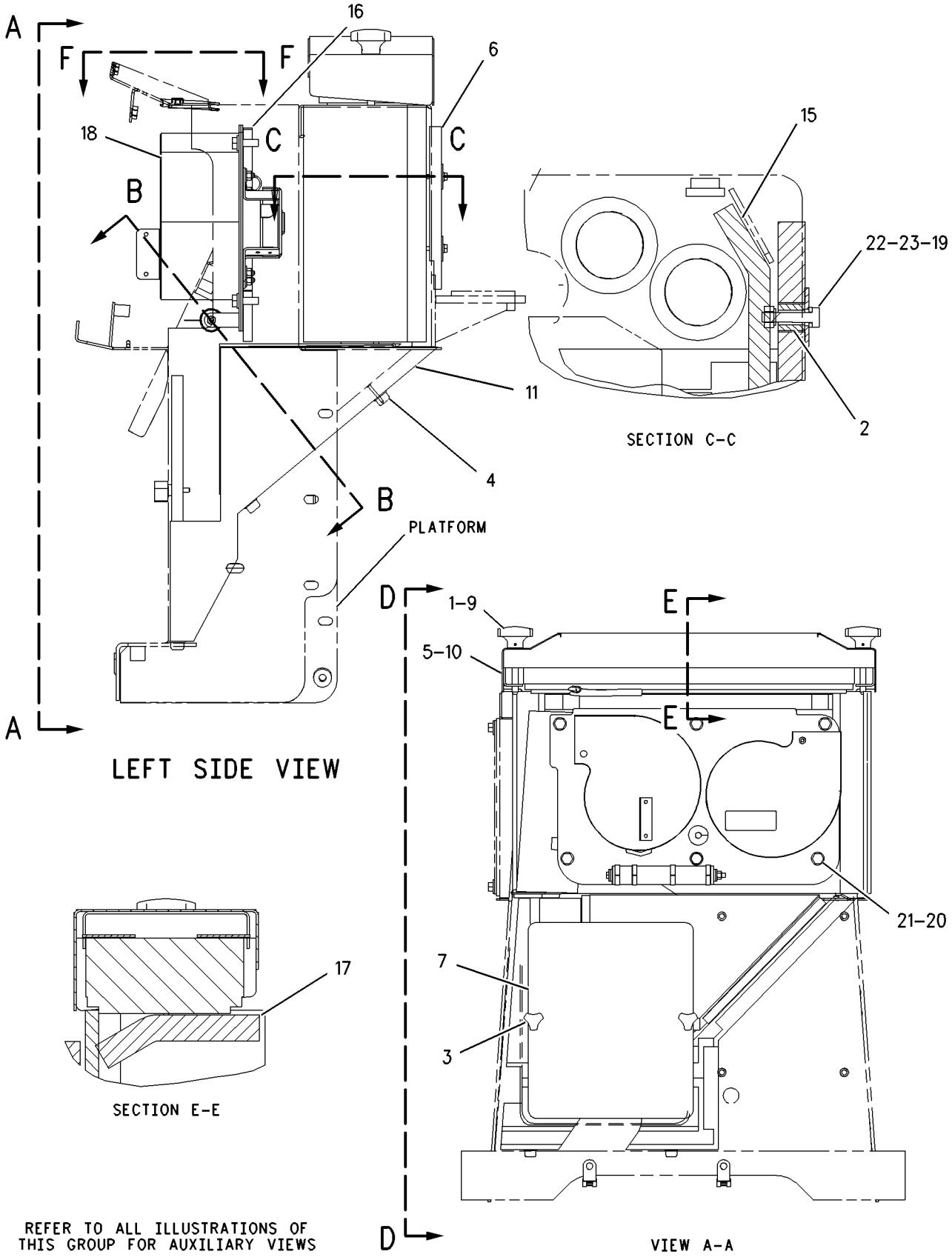

GRAPHIC #1 g00846015

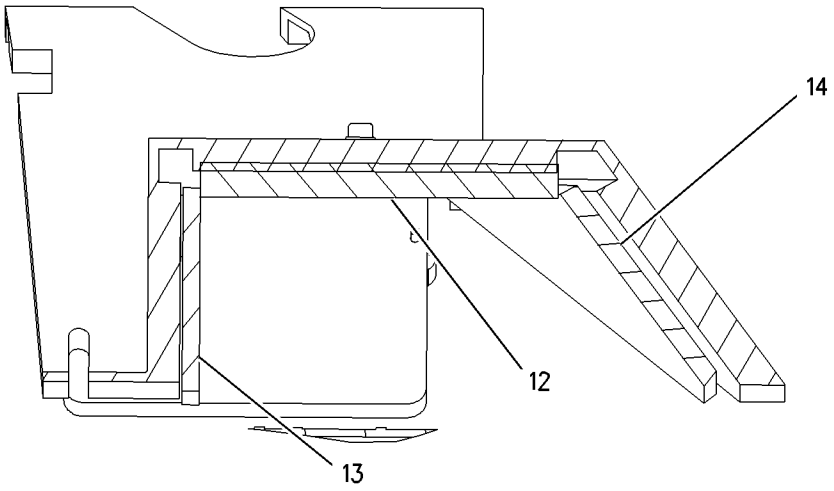

SECTION B-B

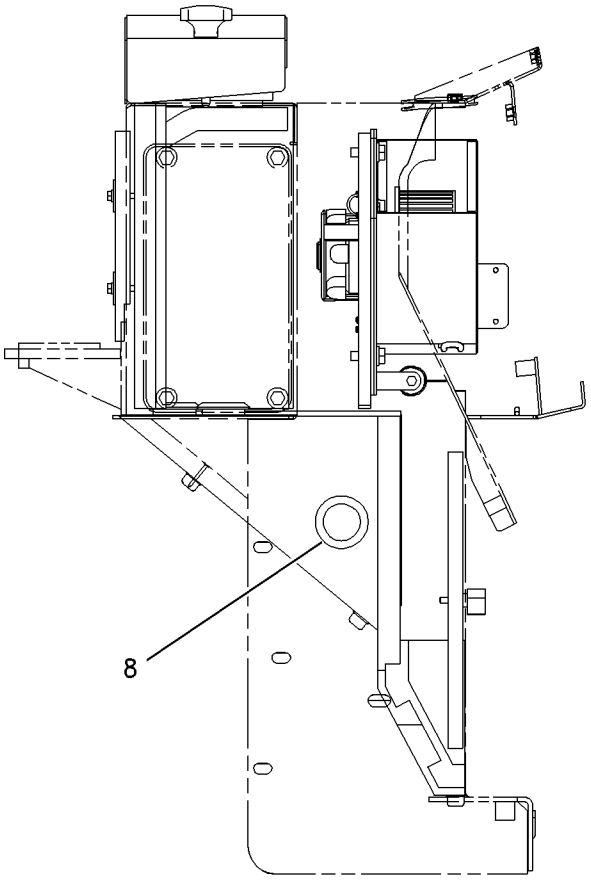

VIEW D-D

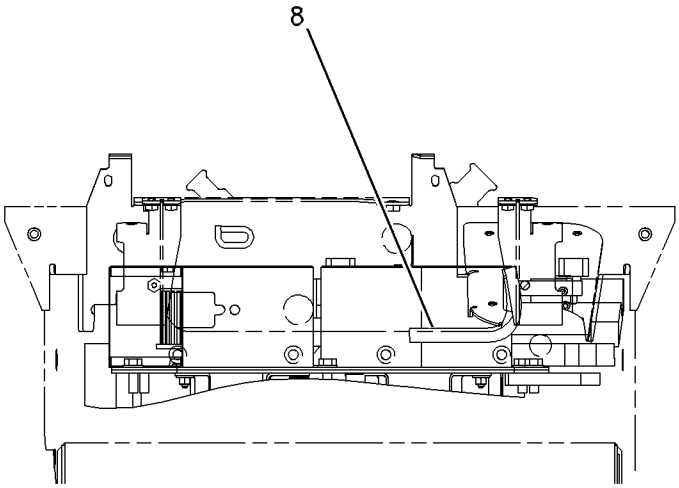

VIEW F-F

GRAPHIC #2

g00846016

OPERATOR STATION

177-4935 RECLINER GP-SEAT

S/N: BLE1-UP; BMJ1-UP
PART OF 178-0603, 180-7304 SEAT GP
ALSO AN ATTACHMENT

SMCS-7312 **i01442832**

NOTE	REF NO	GRAPHIC REF	PART NUMBER	QTY	PART NAME 1 2 3 4 5 6 (PRODUCT LEVEL)	SEE PAGE
	1	1	**188-2586**	1	LATCH	
	2	1	**164-4146**	1	SPRING	
	3	1	**177-1860**	1	GEAR	
	4	1	**177-1862**	1	BRACKET	
	5	1	**178-0607**	1	SHAFT AS	
	5A	1	**2K-9111**	2	PIN-SPRING	
	5B	1	**9M-6803**	2	DOWEL	
	5C	1	**170-8590**	1	SPRING	
	6	1	**178-0608**	1	BRACKET AS	
	7	1	**178-0609**	1	BRACKET AS	
	8	1	**0S-1614**	1	BOLT (1/4-20X0.5 IN)	
	9	1	**101-2867**	1	WASHER-HARD	
	10	1	**4M-6425**	1	BOLT (5/16-18X1 IN)	
	11	1	**5S-7383**	1	BOLT (3/8-16X1.75 IN)	
	12	1	**8T-4224**	1	WASHER-HARD (8.8X16X2MM THK)	

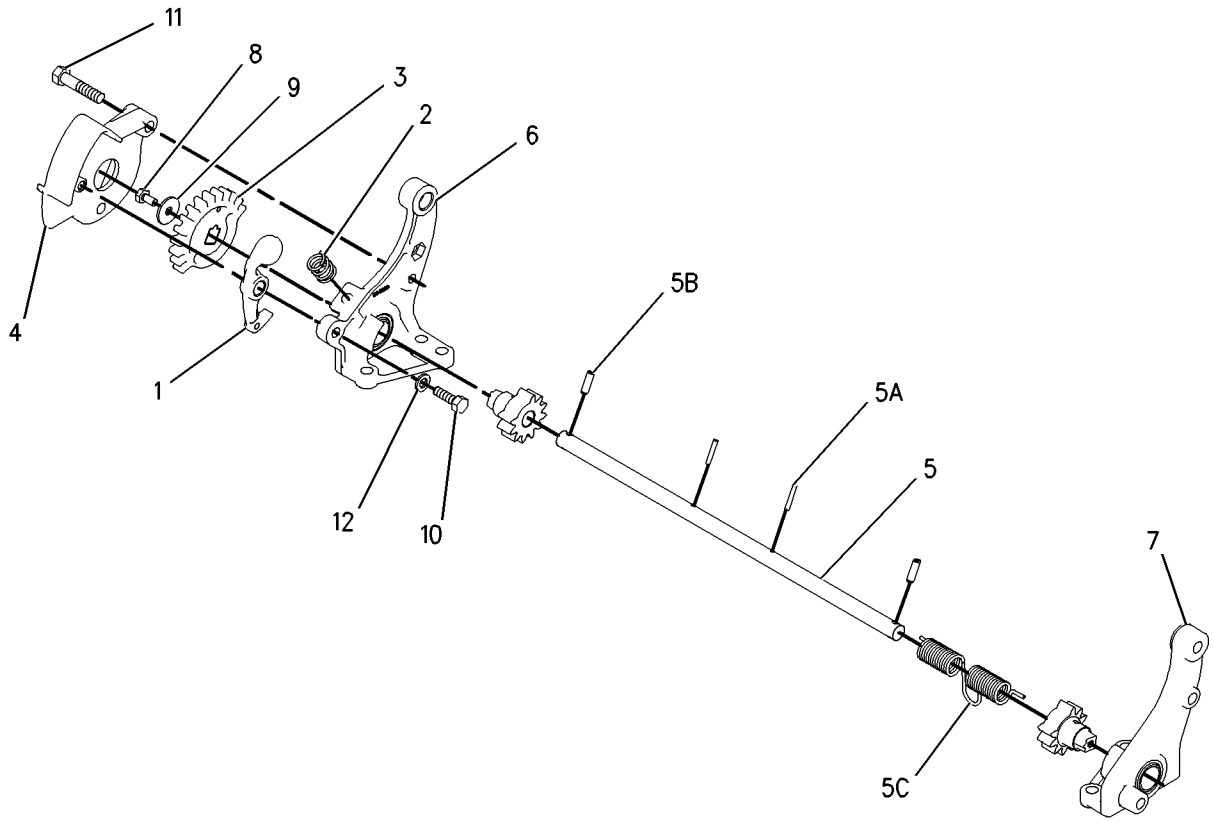

GRAPHIC #1 g00673022

OPERATOR STATION

183-9253 ROPS GP

S/N: BLE1-UP; BMJ1-UP

PART OF 164-4782, 164-4784 CHASSIS AR

SMCS-7323, 7325 **i01590288**

NOTE	REF NO	GRAPHIC REF	PART NUMBER	QTY	PART NAME 1 2 3 4 5 6 (PRODUCT LEVEL)	SEE PAGE
	1	1	**183-9256**	1	ROLLOVER AS	
	2	1	**8P-9747**	1	HANDHOLD	
	3	1	**5P-1076**	9	WASHER-HARD (13.5X30X4MM THK)	
	4	1	**5C-6565**	8	BOLT (1/2-13X1.125 IN)	
Y	5	1	*9P-9392*	1	MIRROR GP-REAR VIEW	649
	6	1	**170-7259**	1	TUBE AS	
	7	1	**170-7260**	1	TUBE AS	
	8	1	**8T-4994**	4	WASHER-HARD (20X36.5X3.5MM THK)	
	9	1	**8T-8924**	4	BOLT (3/4-10X2.50 IN)	
	10	1	**9G-0992**	2	HANDHOLD	
	11	1	**180-6600**	1	HANDHOLD	
	12	1	**8C-8843**	2	BOLT (1-8X4.5 IN)	
	13	1	**8P-5244**	4	WASHER (33.3X69.8X6.35MM THK)	
	14	1	**1P-2772**	4	SPACER (26X31X19MM THK)	
	15	1	**6K-3632**	2	LOCKNUT	
	16	1	**9S-5187**	2	MOUNTING	
	17	1	**189-5881**	1	HEADLINER	
	18	1	**198-6574**	14	WASHER (16X75X3.5MM THK)	
	19	1	**198-6575**	14	BUTTON	
	20	1	**8T-5361**	12	WASHER-HARD (28X49X5MM THK)	
	21	1	**7X-0405**	12	BOLT (1-8X2.75 IN)	

Y-SEPARATE ILLUSTRATION

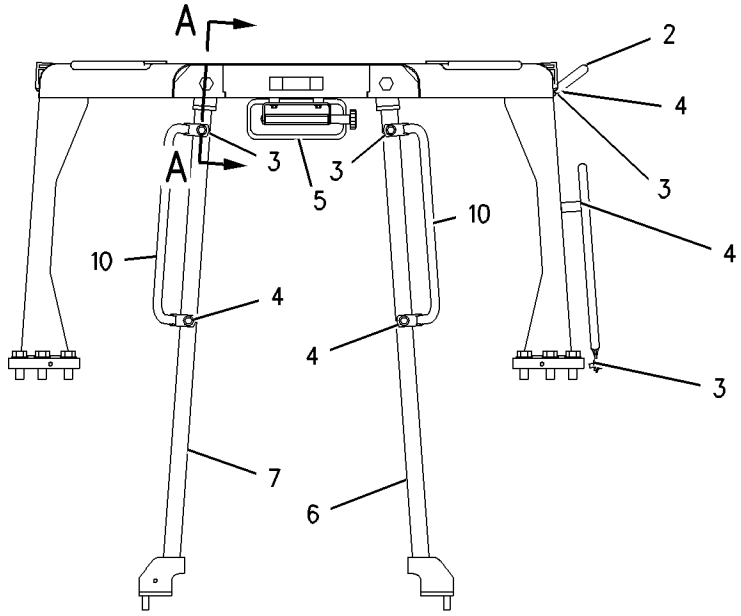

FRONT VIEW

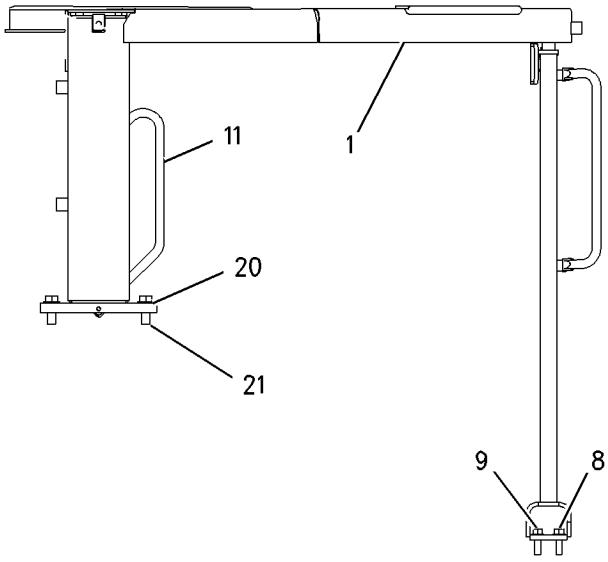

RIGHT SIDE VIEW

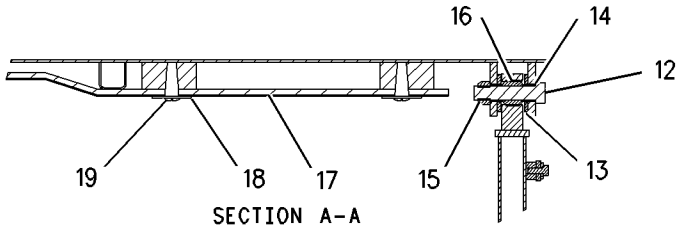

SECTION A-A

GRAPHIC #1 g00742207

OPERATOR STATION

183-9254 ROPS GP

S/N: BLE1-UP; BMJ1-UP
PART OF 159-8371 CAB AR
AN ATTACHMENT

SMCS-7323, 7325 **i01591811**

NOTE	REF NO	GRAPHIC REF	PART NUMBER	QTY	PART NAME 1 2 3 4 5 6 (PRODUCT LEVEL)	SEE PAGE
	1	1	**180-6600**	1	HANDHOLD	
	2	1	**190-4219**	1	ROPS AS	
	3	1	**5C-6565**	2	BOLT (1/2-13X1.25 IN)	
	4	1	**5P-1076**	3	WASHER-HARD (13.5X30X4MM THK)	
	5	1	**7X-0405**	12	BOLT (1-8X2.75 IN)	
	6	1	**8T-5361**	12	WASHER-HARD (28X49X5MM THK)	

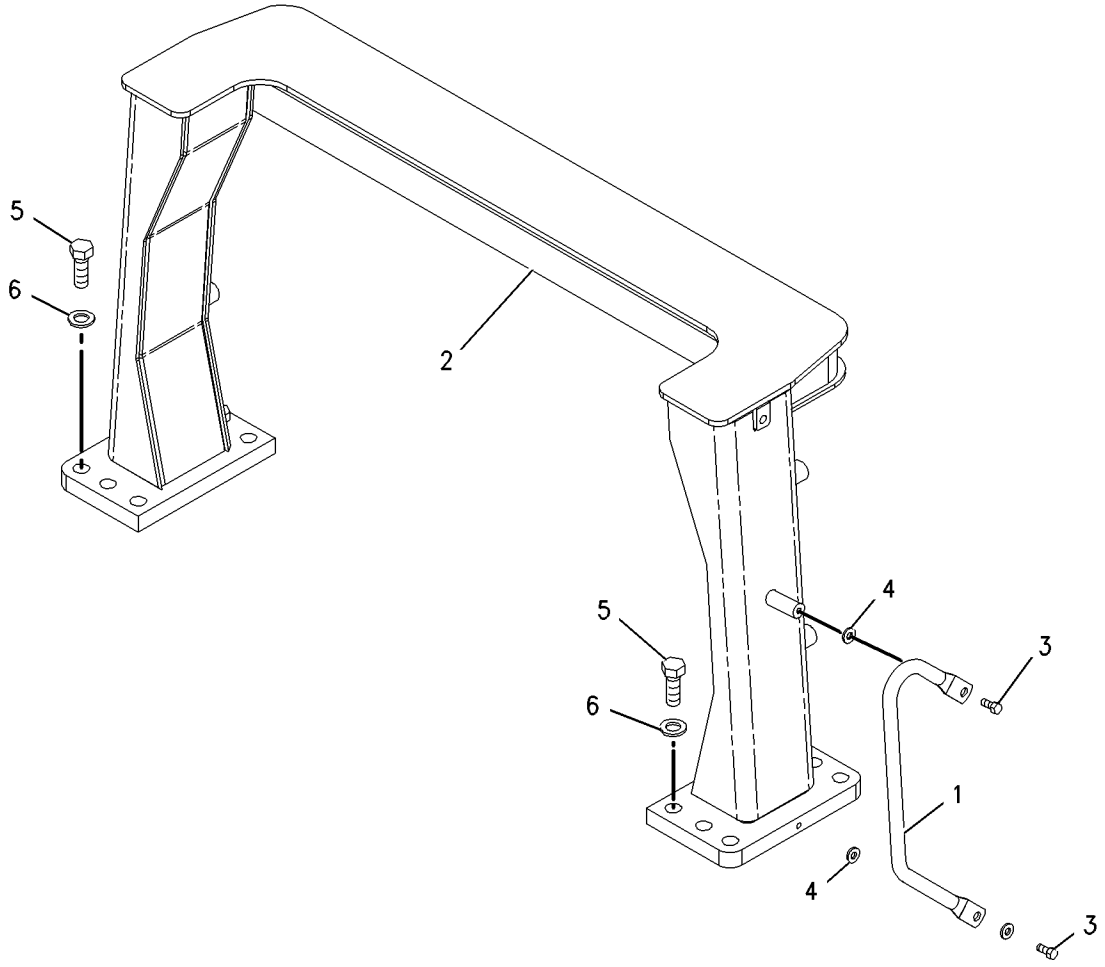

GRAPHIC #1 g00827217

OPERATOR STATION

194-3681 SCREEN GP-PROTECTION

S/N: BLE1-UP; BMJ1-UP
REAR
AN ATTACHMENT

SMCS-7165 **i01631780**

NOTE	REF NO	GRAPHIC REF	PART NUMBER	QTY	PART NAME 1 2 3 4 5 6 (PRODUCT LEVEL)	SEE PAGE
	1	1	**166-2153**	1	SCREEN AS	
		1	**7T-1099**	6	LINK	
	2	1	**194-3708**	2	BOSS	
	3	1	**6V-8182**	2	NUT (3/4-10 THD)	
	4	1	**7X-0366**	2	BOLT (3/4-10X2 IN)	
	5	1	**7X-0372**	2	BOLT (3/4X10X4.25 IN)	
	6	1	**7X-0582**	6	WASHER-HARD (20X44.5X6MM THK)	

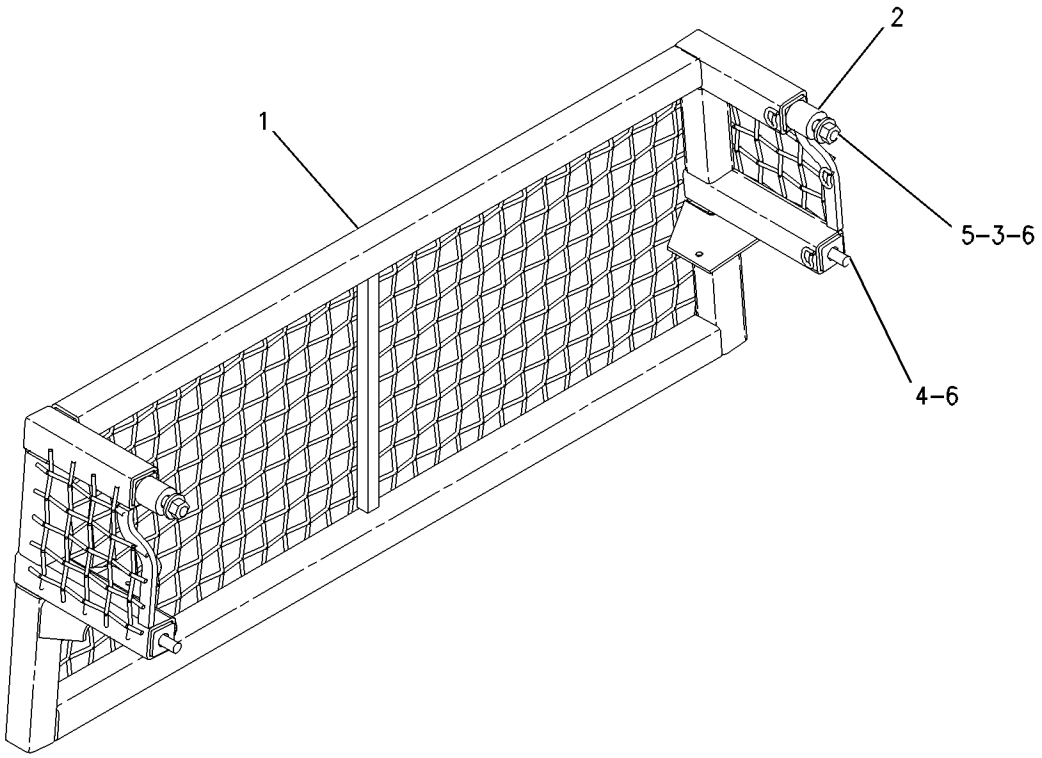

GRAPHIC #1 g00846718

OPERATOR STATION

194-3682 SCREEN GP-PROTECTION

S/N: BLE1-UP; BMJ1-UP
AN ATTACHMENT

SMCS-7165 **i01662754**

NOTE	REF NO	GRAPHIC REF	PART NUMBER	QTY	PART NAME 1 2 3 4 5 6 (PRODUCT LEVEL)	SEE PAGE
	1	1	**165-2577**	1	SCREEN AS	
		1	**1F-0750**	2	NUT-WELD (3/8-16 THD)	
		1	**7T-1099**	8	LINK	
	2	1	**7X-0366**	4	BOLT (3/4-10X2 IN)	
	3	1	**7X-0582**	4	WASHER-HARD (20X44.5X6MM THK)	

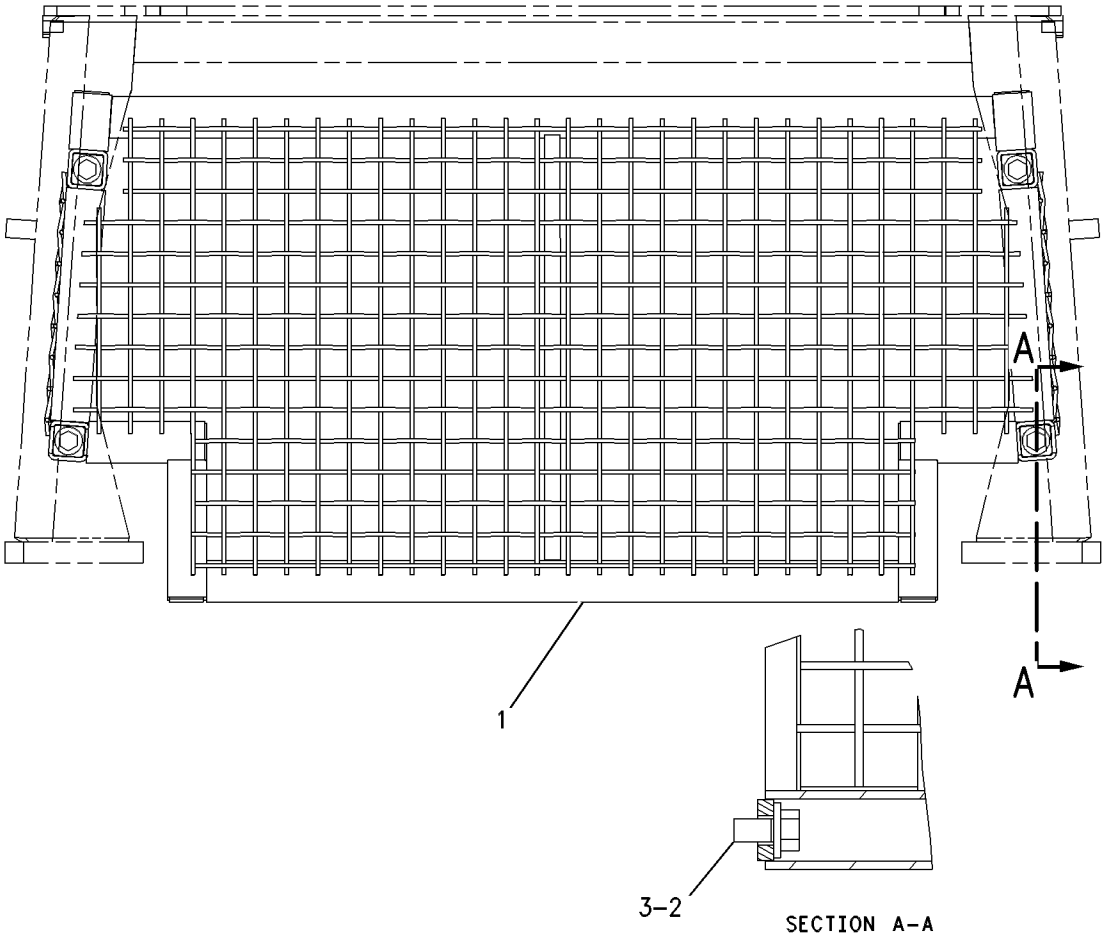

GRAPHIC #1 g00569648

OPERATOR STATION

160-7178 SEAT GP

S/N: BLE1-UP; BMJ1-UP
AN ATTACHMENT

SMCS-7312 **i01592147**

NOTE	REF NO	GRAPHIC REF	PART NUMBER	QTY	PART NAME 1 2 3 4 5 6 (PRODUCT LEVEL)	SEE PAGE
Y	1	1	**160-7188**	1	SEAT GP-SUSPENSION	693
	2	1	**9V-2818**	1	GROMMET	

Y-SEPARATE ILLUSTRATION

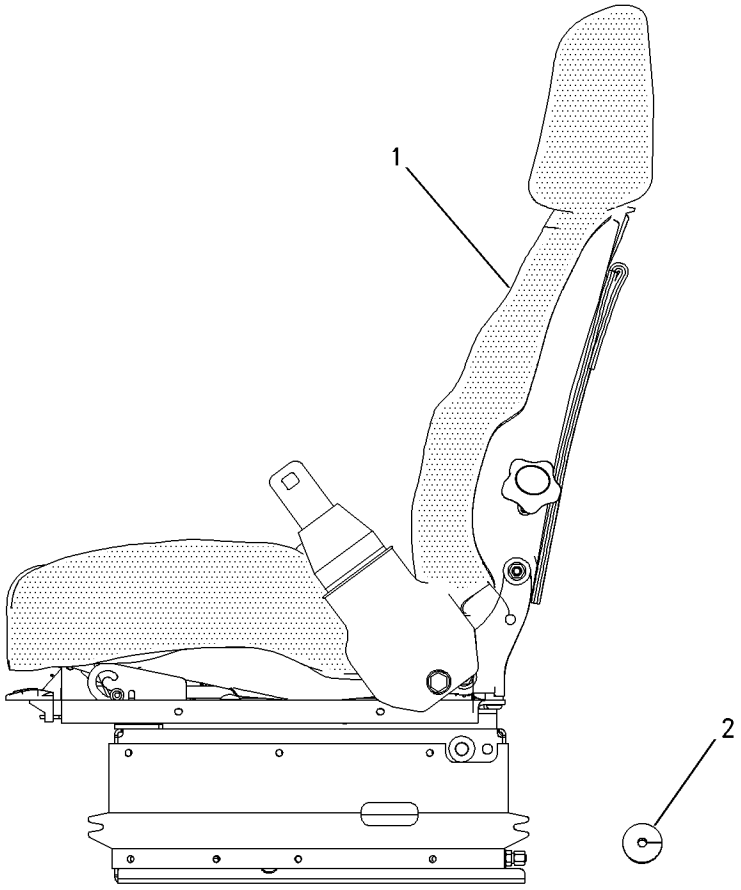

LEFT SIDE VIEW

GRAPHIC #1 g00722599

OPERATOR STATION

163-3283 SEAT GP

S/N: BLE1-UP; BMJ1-UP

PART OF 164-4782, 164-4784 CHASSIS AR

SMCS-7312 **i01589642**

NOTE	REF NO	GRAPHIC REF	PART NUMBER	QTY	PART NAME 1 2 3 4 5 6 (PRODUCT LEVEL)	SEE PAGE
	1	1	**126-3700**	1	ARMREST AS	
Y	2	1	**159-2950**	1	SEAT GP-SUSPENSION	691
	3	1	**184-1503**	2	KNOB	
	4	1	**184-3269**	1	PLATE AS	
	5	1	**184-3270**	1	PLATE AS	
	6	1	**5P-1075**	2	WASHER-HARD (10.2X22.5X3MM THK)	
	7	1	**7X-7729**	6	WASHER (11X25X3MM THK)	
	8	1	**8T-4121**	2	WASHER-HARD (11X21X2.5MM THK)	
M	9	1	**8T-4196**	2	BOLT (M10X1.5X35MM)	
M	10	1	**8T-4137**	2	BOLT (M10X1.5X20MM)	
M	11	1	**9X-2125**	4	BOLT-LOCKING (M10X1.5X25MM)	

M-METRIC PART
Y-SEPARATE ILLUSTRATION

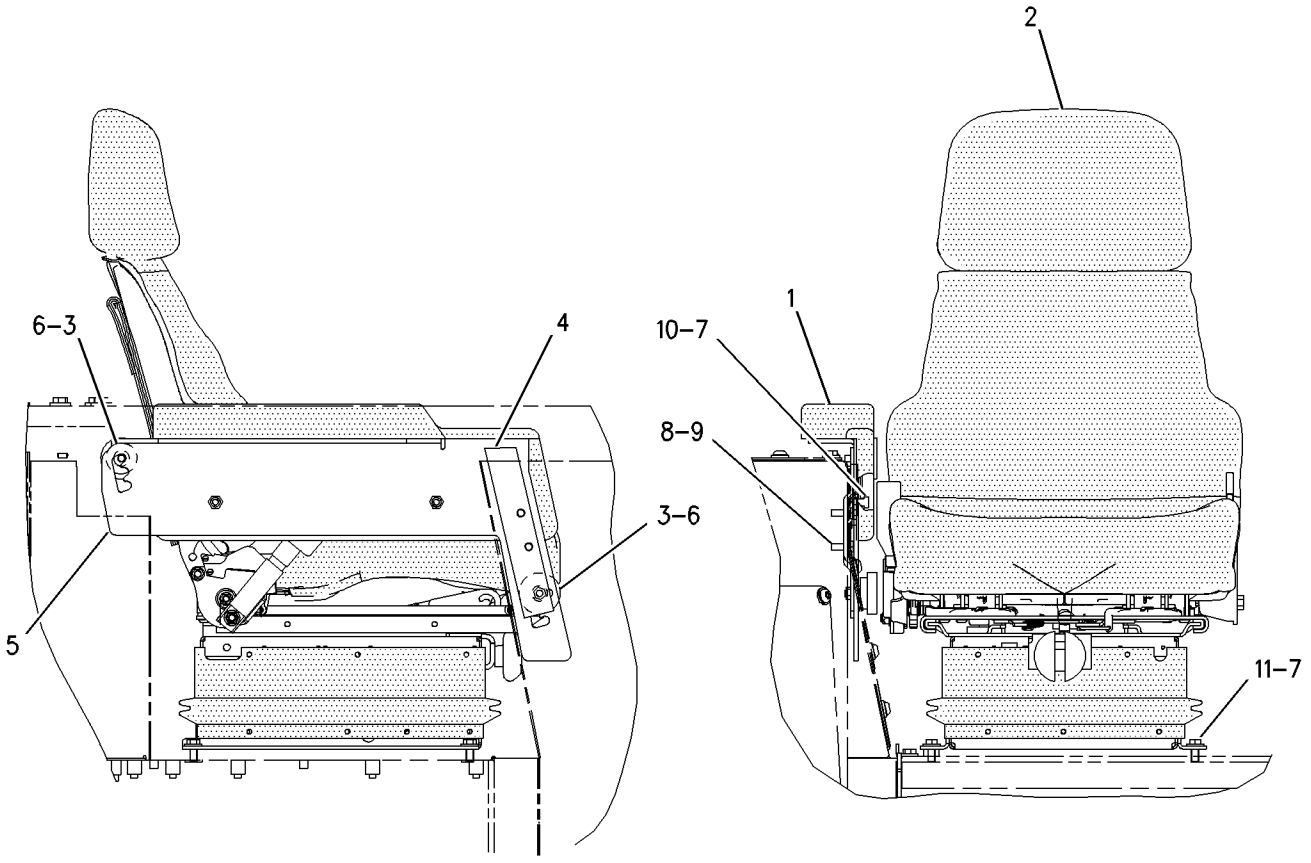

GRAPHIC #1 g00787491

MEMORANDA

OPERATOR STATION

178-0603 SEAT GP—FABRIC

S/N: BLE1-UP; BMJ1-UP
PART OF 178-0606 SEAT GP
AN ATTACHMENT

SMCS-7312 **i01442701**

NOTE	REF NO	GRAPHIC REF	PART NUMBER	QTY	PART NAME 1 2 3 4 5 6 (PRODUCT LEVEL)	SEE PAGE
	1	1	**135-5499**	1	PAN AS	
		1	**8T-9082**	5	RIVET-POP	
		1	**117-4506**	1	CUSHION AS	
	2	1	**143-1288**	8	LOCKNUT-FLANGE	
	3	1	**171-1230**	6	SCREW-BUTTON HEAD (3/8-16X1 IN)	
	4	1	**171-6682**	1	BAR-RECLINER	
	5	1	**172-2416**	2	PIN	
Y	6	1	*173-1028*	1	ADJUSTER GP-SEAT (SEAT)	598
	7	1	**177-1863**	2	BOLT-PIVOT (3/8-16X2.89 IN)	
Y	8	1	*177-4935*	1	RECLINER GP-SEAT	675
Y	9	1	*178-0604*	1	PAN GP-BACKREST (BACK)	658
	10	1	**184-2298**	1	ROD	
	11	1	**184-2299**	4	WASHER (7X25.4X2.54MM THK)	
	12	1	**095-0843**	2	COTTER	
	13	1	**5V-1496**	2	RETAINER	
	14	1	**6V-7646**	2	WASHER-HARD (7.2X25X2MM THK)	
	15	1	**8T-0328**	1	WASHER-HARD (5.5X10X1MM THK)	
	16	1	**8T-4205**	1	WASHER-HARD (7.2X14.5X2MM THK)	
	17	1	**8Y-6277**	2	SPACER (10.5X28.6X10MM THK)	

Y-SEPARATE ILLUSTRATION

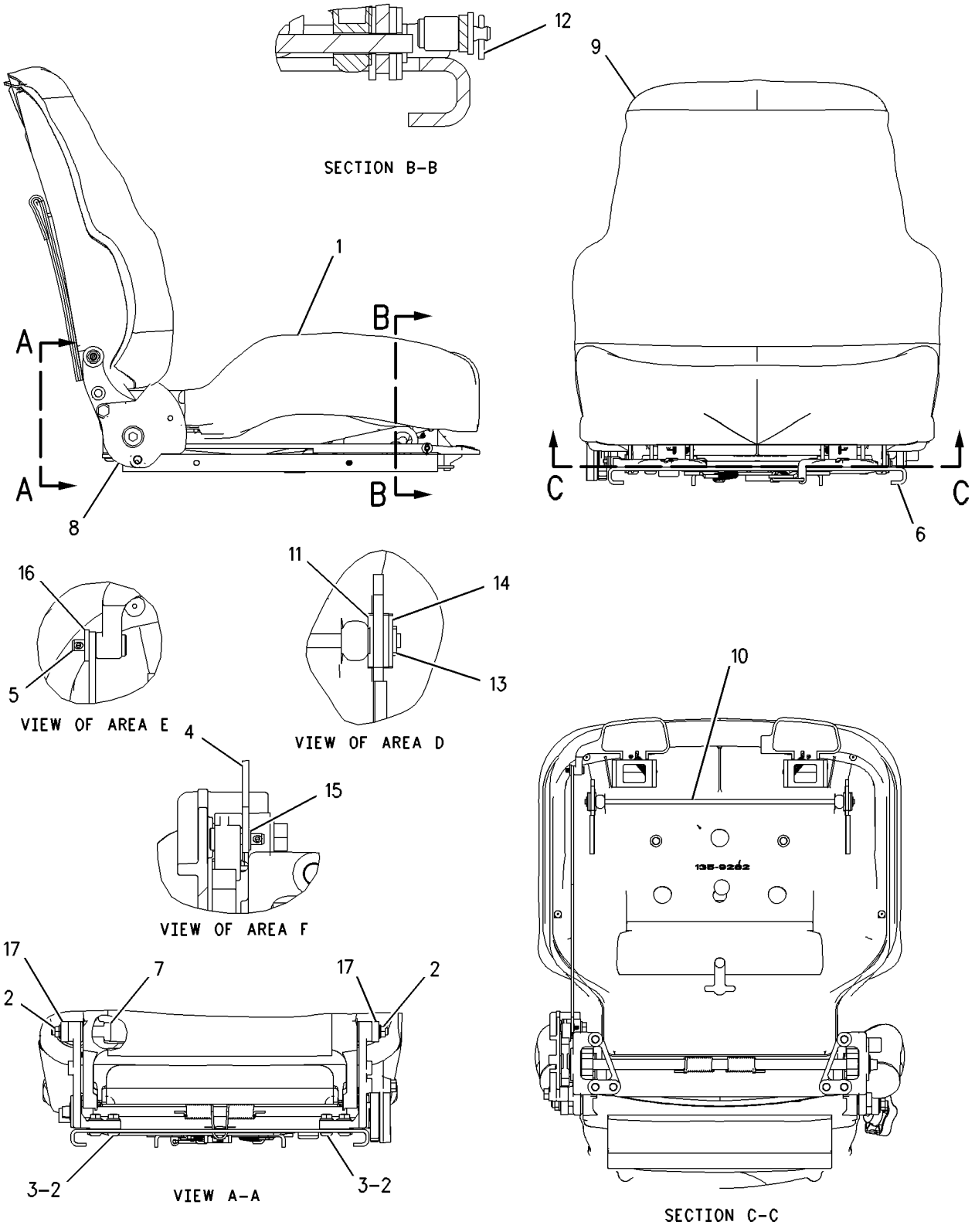

GRAPHIC #1 g00729407

OPERATOR STATION

178-0606 SEAT GP

S/N: BLE1-UP; BMJ1-UP
PART OF 160-7186, 160-7188 SEAT GP-SUSPENSION
AN ATTACHMENT

SMCS-7312 **i01434728**

NOTE	REF NO	GRAPHIC REF	PART NUMBER	QTY	PART NAME 1 2 3 4 5 6 (PRODUCT LEVEL)	SEE PAGE
	1	1	**173-3082**	1	EXTENSION GP-BACKREST (FABRIC)	
	2	1	**177-4937**	1	SPACER (11.7X19.8X20.3MM THK)	
Y	3	1	**178-0603**	1	SEAT GP (FABRIC)	684
	4	1	**180-5559**	1	SCREW-PAN HEAD (7/16-20X1.75 IN)	
	5	1	**180-5560**	1	SCREW-PAN HEAD (7/16-20X1.25 IN)	
	6	1	**183-3648**	1	SEAT BELT GP	

Y-SEPARATE ILLUSTRATION

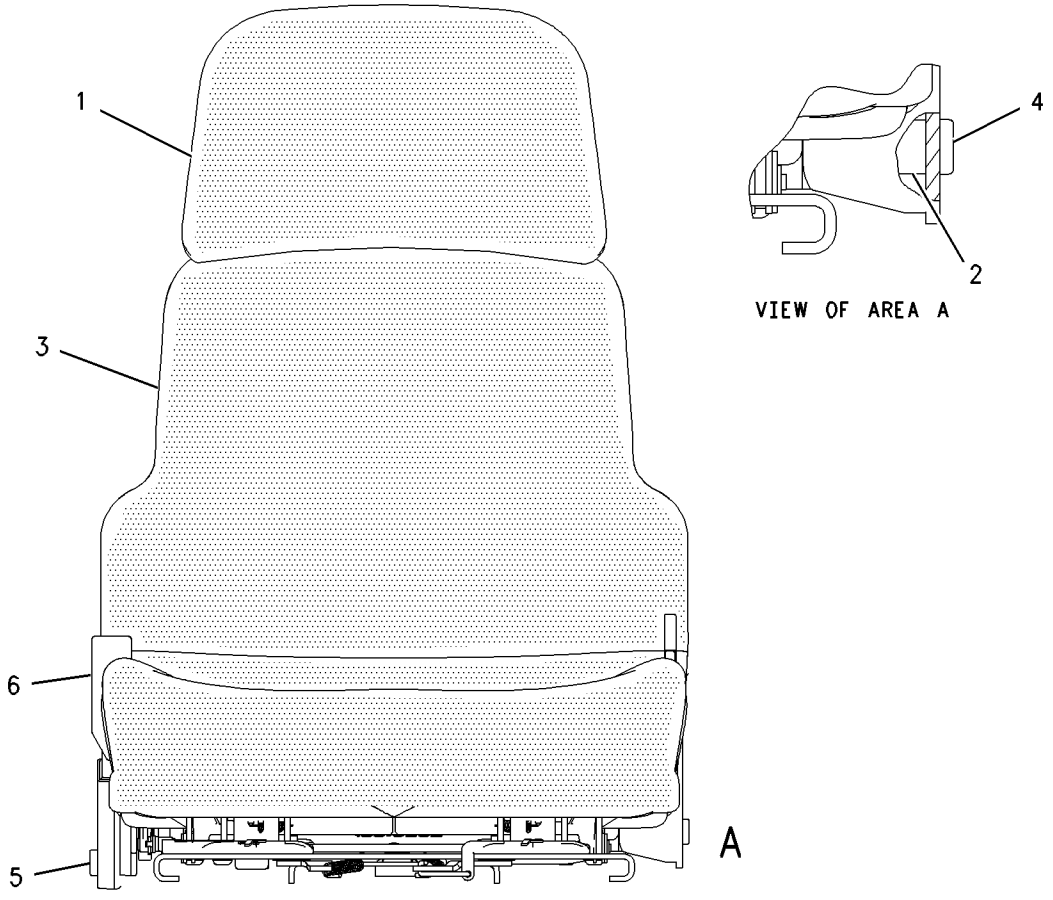

GRAPHIC #1 g00773865

MEMORANDA

OPERATOR STATION

180-7304 SEAT GP

S/N: BLE1-UP; BMJ1-UP

PART OF 184-6011 SEAT GP

SMCS-7312 **i01443994**

NOTE	REF NO	GRAPHIC REF	PART NUMBER	QTY	PART NAME 1 2 3 4 5 6 (PRODUCT LEVEL)	SEE PAGE
	1	1	**6K-3273**	5	RIVET-POP	
		1	**169-1026**	1	CUSHION AS	
	2	1	**143-1288**	8	LOCKNUT-FLANGE	
	3	1	**171-1230**	6	SCREW-BUTTON HEAD (3/8-16X1 IN)	
	4	1	**171-6682**	1	BAR-RECLINER	
	5	1	**172-2416**	2	PIN	
Y	6	1	*173-1028*	1	ADJUSTER GP-SEAT (SEAT)	598
	7	1	**177-1863**	2	BOLT-PIVOT (3/8-16X2.89 IN)	
Y	8	1	*177-4935*	1	RECLINER GP-SEAT	675
Y	9	1	*180-7305*	1	PAN GP-BACKREST (BACK)	660
	10	1	**184-2298**	1	ROD	
	11	1	**184-2299**	4	WASHER (7X25.4X2.54MM THK)	
	12	1	**095-0843**	2	COTTER	
	13	1	**8Y-6277**	2	SPACER (10.5X28.6X10MM THK)	
	14	1	**5V-1496**	2	RETAINER	
	15	1	**6V-7646**	2	WASHER-HARD (7.2X25X2MM THK)	
	16	1	**8T-0328**	1	WASHER-HARD (5.5X10X1MM THK)	
	17	1	**8T-4205**	1	WASHER-HARD (7.2X14.5X2MM THK)	

Y-SEPARATE ILLUSTRATION

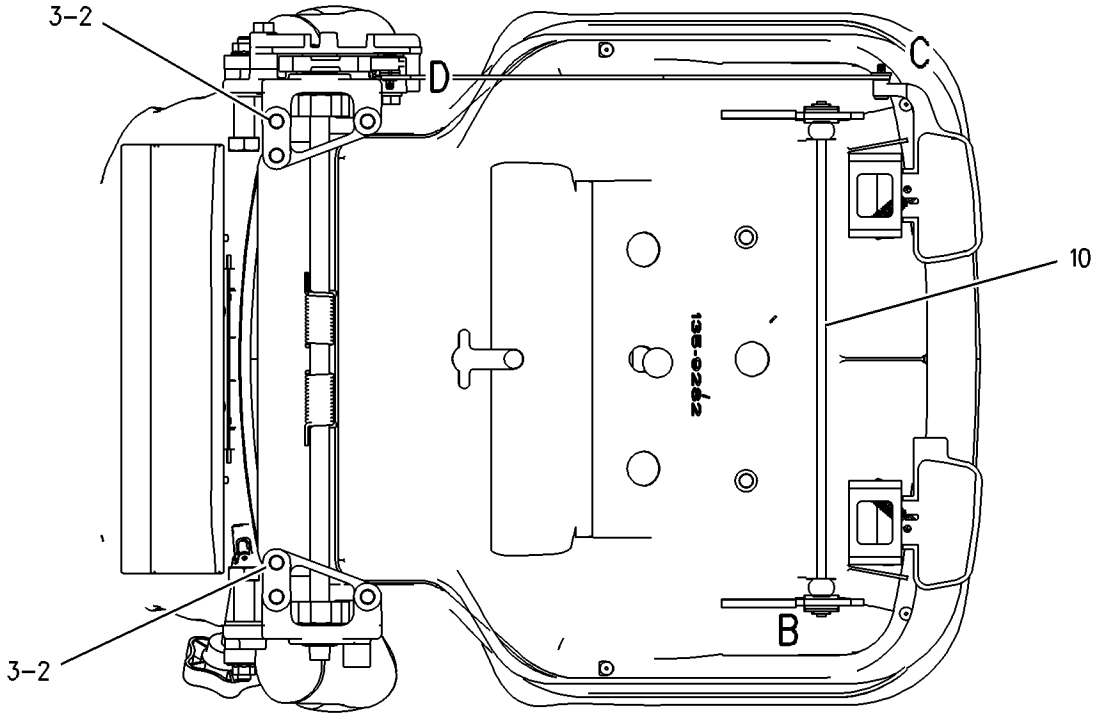

SECTION A-A

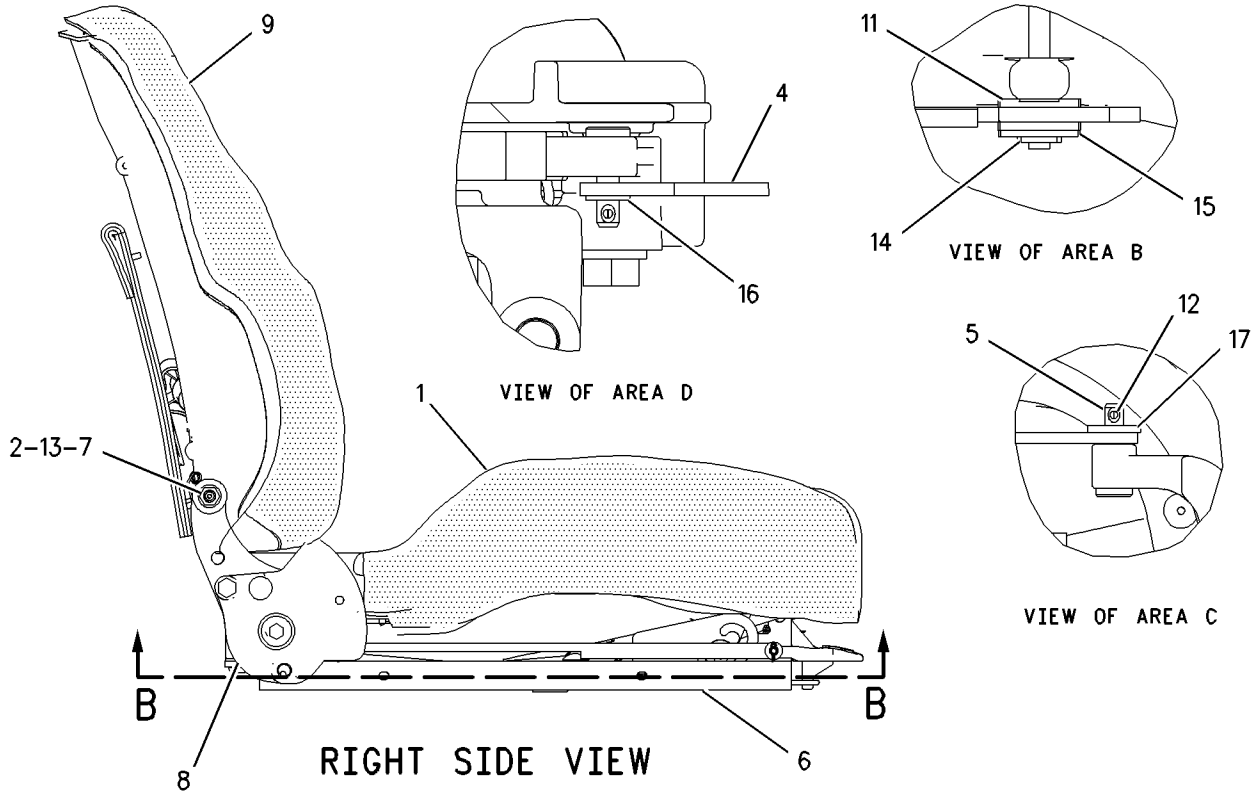

GRAPHIC #1 g00726860

OPERATOR STATION

184-6011 SEAT GP

S/N: BLE1-UP; BMJ1-UP

PART OF 159-2950 SEAT GP-SUSPENSION

SMCS-7312 **i01668581**

NOTE	REF NO	GRAPHIC REF	PART NUMBER	QTY	PART NAME 1 2 3 4 5 6 (PRODUCT LEVEL)	SEE PAGE
	1	1	**173-3083**	1	EXTENSION GP-BACKREST	
	2	1	**177-4937**	1	SPACER (11.7X19.8X20.3MM THK)	
	3	1	**180-5559**	1	SCREW-PAN HEAD (7/16-20X1.75 IN)	
	4	1	**180-5560**	1	SCREW-PAN HEAD (7/16-20X1.25 IN)	
Y	5	1	**180-7304**	1	SEAT GP (VINYL)	688
	6	1	**183-3648**	1	SEAT BELT GP	

Y-SEPARATE ILLUSTRATION

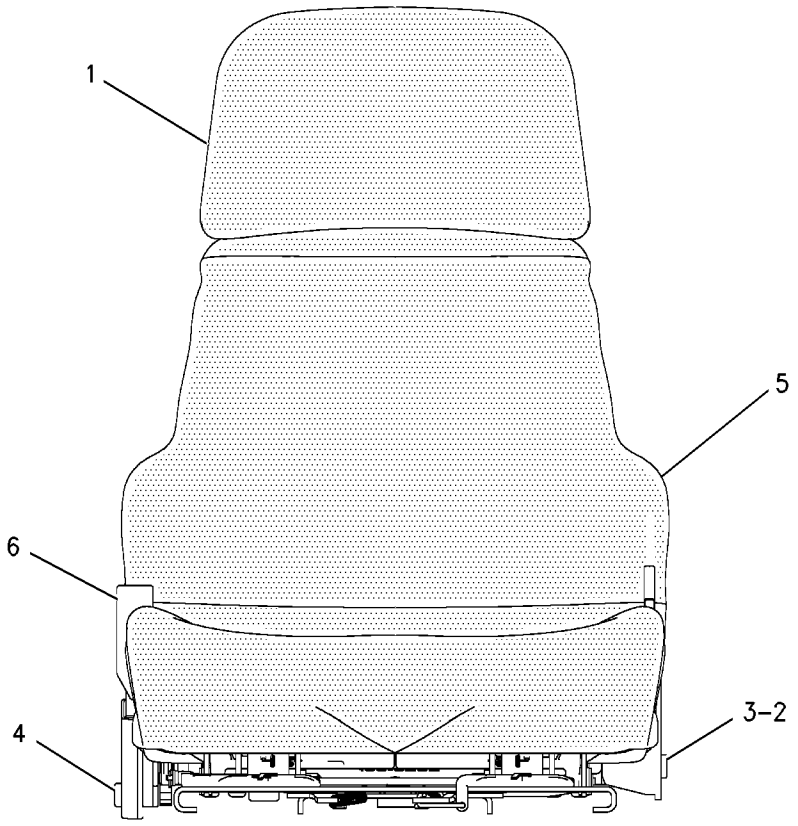

FRONT VIEW

GRAPHIC #1 g00683843

159-2950 SEAT GP-SUSPENSION

S/N: BLE1-UP; BMJ1-UP
PART OF 163-3283 SEAT GP

SMCS-7321, 7324, 7336 **i01600778**

NOTE	REF NO	GRAPHIC REF	PART NUMBER	QTY	PART NAME 1 2 3 4 5 6 (PRODUCT LEVEL)	SEE PAGE
Y	1	1	**160-7165**	1	SUSPENSION GP-SEAT	694
Y	2	1	*184-6011*	1	SEAT GP	690
JZ	3	1		4	BLOCK-SLIDER	
	4	1	**4F-4879**	1	BOLT (3/8-16X.5 IN)	
	5	1	**203-7703**	2	WASHER-HARD (10.2X22.22X2.38MM THK)	
J	6	1	**173-5787**	4	SETSCREW	
					AVAILABLE REPAIR KIT(S):	
J			**173-7035**	1	KIT-SLIDER BLOCK	

J-KIT MARKED J INCLUDES PART(S) MARKED J
Y-SEPARATE ILLUSTRATION
Z-NOT SERVICED SEPARATELY

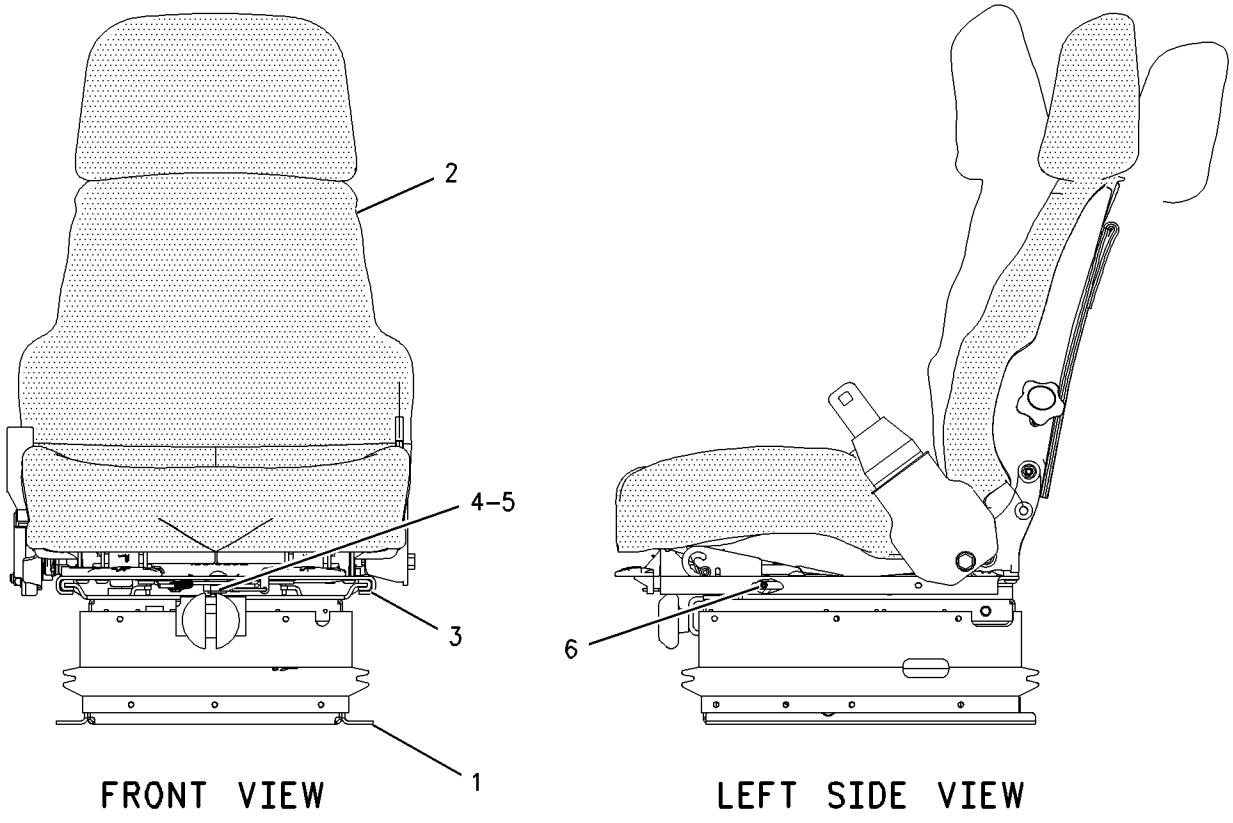

GRAPHIC #1 g00819547

OPERATOR STATION

160-7186 SEAT GP-SUSPENSION

S/N: BLE1-UP; BMJ1-UP
PART OF 159-8371 CAB AR
AN ATTACHMENT

SMCS-7321, 7324, 7336 **i01591669**

NOTE	REF NO	GRAPHIC REF	PART NUMBER	QTY	PART NAME 1 2 3 4 5 6 (PRODUCT LEVEL)	SEE PAGE
Y	1	1	**160-7165**	1	SUSPENSION GP-SEAT	694
Y	2	1	**178-0606**	1	SEAT GP	686
	3	1	**173-5787**	4	SETSCREW	
	4	1	**4F-4879**	1	BOLT (3/8-16X.5 IN)	
		1	**203-7703**	2	WASHER-HARD (10.2X22.22X2.38MM THK)	
					AVAILABLE REPAIR KIT(S):	
			173-7035	1	KIT-SLIDER BLOCK	

Y-SEPARATE ILLUSTRATION

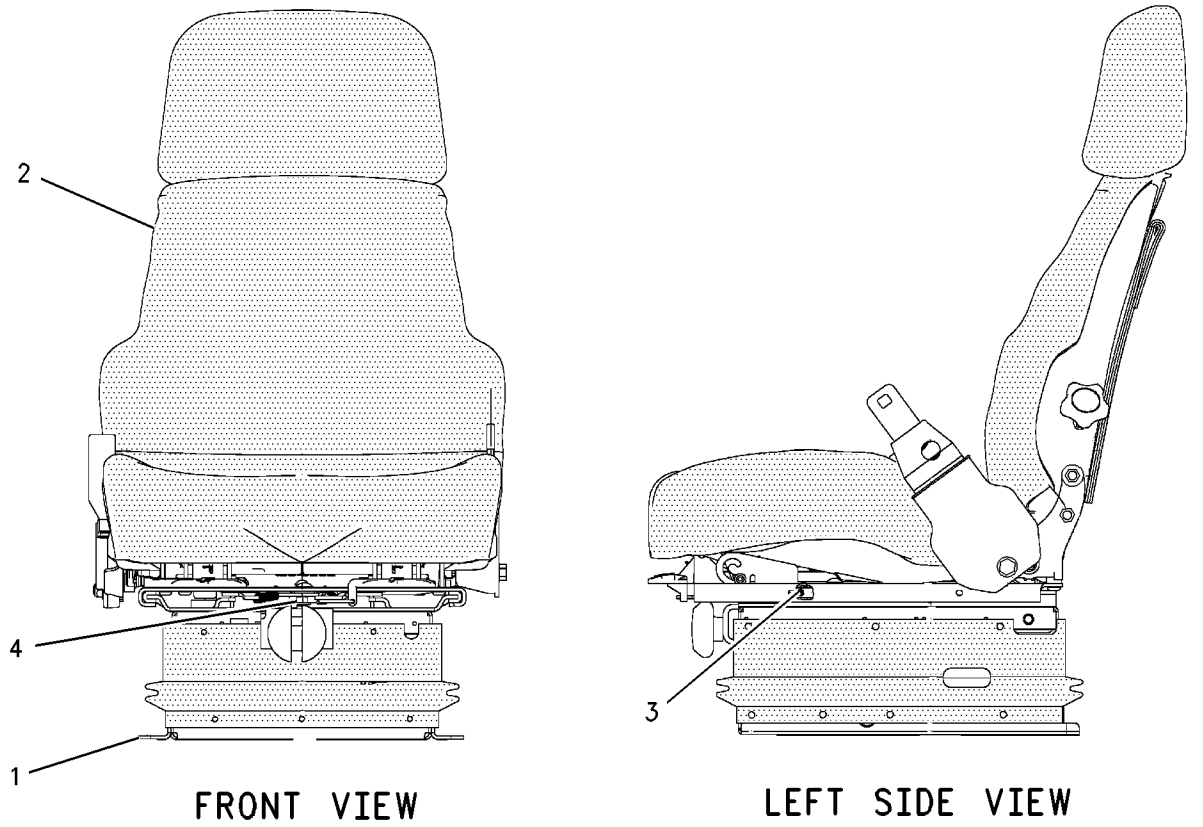

FRONT VIEW LEFT SIDE VIEW

GRAPHIC #1 g00825453

OPERATOR STATION

160-7188 SEAT GP-SUSPENSION

S/N: BLE1-UP; BMJ1-UP
PART OF 160-7178 SEAT GP
AN ATTACHMENT

SMCS-7321, 7324, 7336 **i01631549**

NOTE	REF NO	GRAPHIC REF	PART NUMBER	QTY	PART NAME 1 2 3 4 5 6 (PRODUCT LEVEL)	SEE PAGE
Y	1	1	**161-7539**	1	SUSPENSION GP-SEAT (AIR)	696
Y	2	1	*178-0606*	1	SEAT GP	686
J	3	1	**161-9289**	4	BLOCK-SLIDER	
	4	1	**4F-4879**	1	BOLT (3/8-16X.5 IN)	
		1	**203-7703**	2	WASHER-HARD (10.2X22.22X2.38MM THK)	
	5	1	**173-5787**	4	SETSCREW	
					AVAILABLE REPAIR KIT(S):	
J			**173-7035**	1	KIT-SLIDER BLOCK	

J-PART MARKED J SERVICED BY KIT MARKED J
Y-SEPARATE ILLUSTRATION

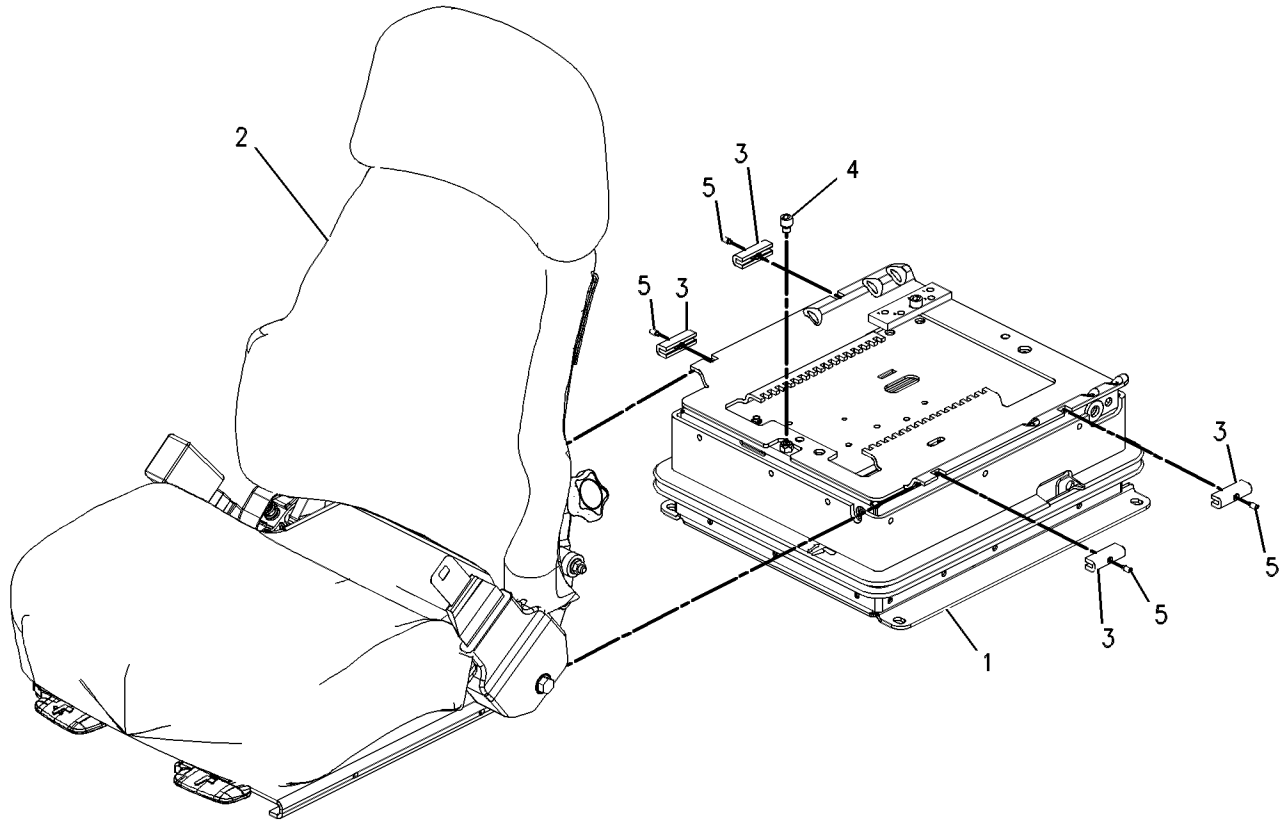

GRAPHIC #1 g00662344

OPERATOR STATION

160-7165 SUSPENSION GP-SEAT

S/N: BLE1-UP; BMJ1-UP
PART OF 159-2950, 160-7186 SEAT GP-SUSPENSION
ALSO AN ATTACHMENT

SMCS-7324 **i01508807**

NOTE	REF NO	GRAPHIC REF	PART NUMBER	QTY	PART NAME 1 2 3 4 5 6 (PRODUCT LEVEL)	SEE PAGE
	1	1	**2K-4973**	2	LOCKNUT (3/8-16 THD)	
	2	1	**4V-7884**	2	BEARING	
	3	1	**4V-8577**	4	BEARING	
	4	1	**5V-1497**	1	RETAINER	
	5	1	**8Y-5965**	1	ABSORBER-SHOCK	
	6	1	**8Y-6012**	1	ARM AS-SUSPENSION	
	7	1	**8Y-6014**	1	HOUSING AS-LOWER	
	8	1	**8Y-6024**	2	SHAFT AS	
J	9	1	**101-0003**	20	FASTENER	
J	10	1	**166-6781**	3	FASTENER	
J	11	1	**163-1146**	3	FASTENER	
	12	1	**145-0326**	1	FILM-INSTRUCTION (SEAT ADJUSTMENT)	
	13	1	**169-7380**	1	BOLT-SOCKET HEAD (3/8-16X0.375 IN)	
Y	14	1	**174-2231**	1	HOUSING GP-SEAT SUSPENSION	624
	15	1	**197-7689**	3	FASTENER	
					AVAILABLE REPAIR KIT(S):	
J			**8Y-5944**	1	KIT-SUSPENSION BOOT	
					(INCLUDES BOOT, RETAINER & PARTS MARKED J)	
			101-4194	1	KIT-BELT TETHER	
			101-4195	1	KIT-SUSPENSION ROLLER	

J-KIT MARKED J INCLUDES PART(S) MARKED J
Y-SEPARATE ILLUSTRATION

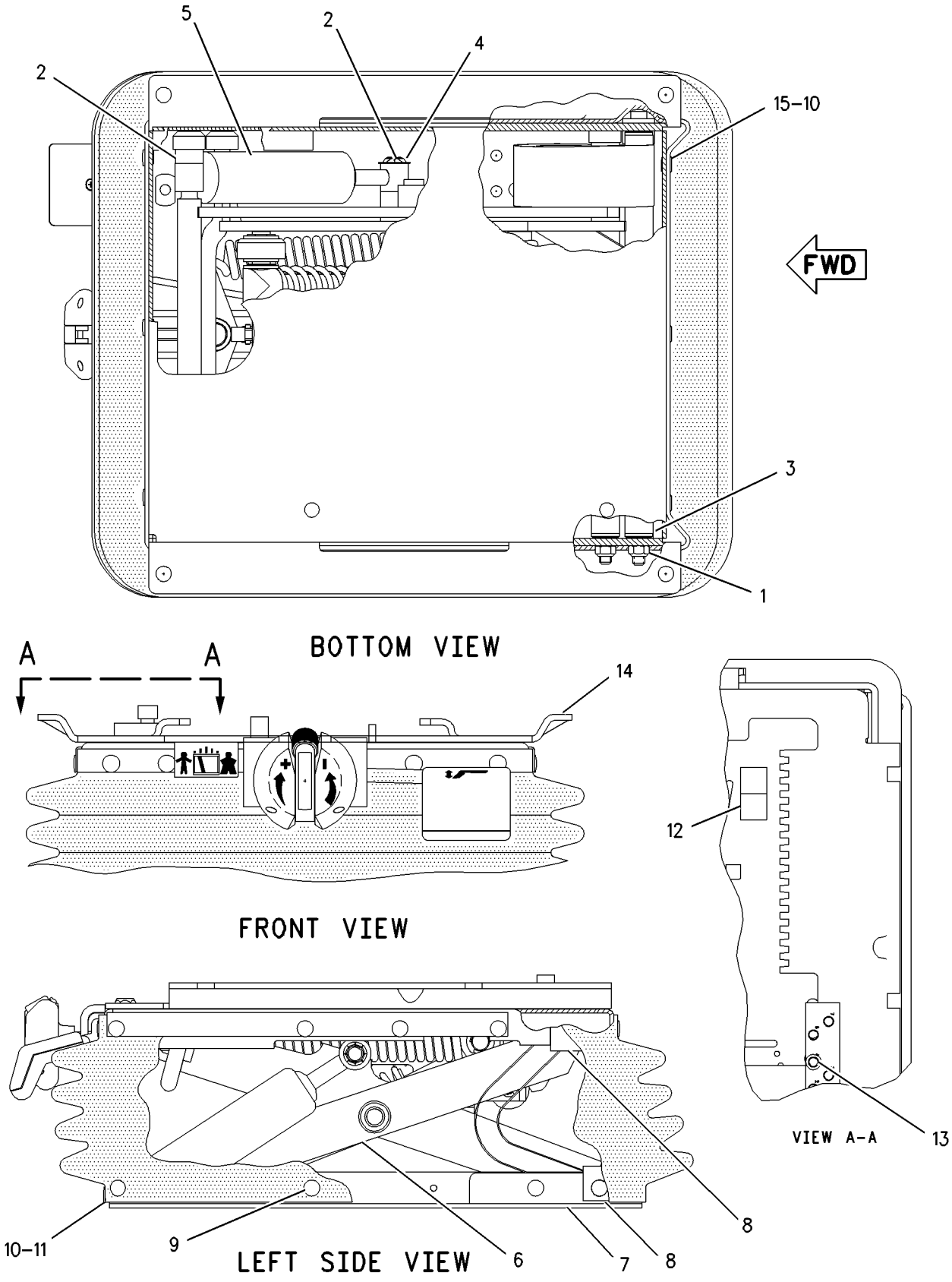

GRAPHIC #1 g00783260

OPERATOR STATION

161-7539 SUSPENSION GP-SEAT

S/N: BLE1-UP; BMJ1-UP
PART OF 160-7188 SEAT GP-SUSPENSION
AN ATTACHMENT

SMCS-7324 **i01442603**

NOTE	REF NO	GRAPHIC REF	PART NUMBER	QTY	PART NAME 1 2 3 4 5 6 (PRODUCT LEVEL)	SEE PAGE
	1	1	**1B-4430**	4	NUT-JAM (1/2-20 THD)	
	2	1	**3J-4818**	4	LOCKWASHER	
	3	1	**4V-7884**	2	BEARING	
	4	1	**4V-8556**	1	BOLT (3/8-16X2.34 IN)	
	5	1	**6K-0806**	1	STRAP-CABLE	
	6	1	**8L-8413**	5	STRAP-CABLE	
	7	1	**8Y-6917**	1	BOOT	
	8	1	**8Y-6922**	1	HOUSING AS	
	9	1	**9M-0164**	1	CLAMP-HOSE	
	10	1	**102-6317**	4	BUMPER	
	11	1	**123-8157**	2	SHAFT	
	12	1	**123-9131**	1	ABSORBER-SHOCK	
	13	1	**124-7128**	1	BUSHING-RELIEF	
	14	1	**128-0686**	2	SPACER (27.8MM THK)	
	15	1	**147-4549**	2	FITTING-ELBOW	
	16	1	**147-6522**	1	SPRING-AIR	
	17	1	**147-6523**	1	COMPRESSOR	
	18	1	**148-3749**	1	SCISSORS AS	
	19	1	**160-7765**	1	WASHER (16.26X22.23X1.97MM THK)	
B	20	1	**160-7766**	3	WASHER (16.26X22.23X0.51MM THK)	
B	21	1	**160-7767**	8	WASHER (3.68X12.57X0.51MM THK)	
	22	1	**164-5951**	1	HOUSING AS	
		1	**2K-4973**	1	LOCKNUT	
	23	1	**2K-4973**	3	LOCKNUT	
	24	1	**5P-8167**	1	BOLT (3/8-16X0.625 IN)	
	25	1	**8M-3267**	1	SCREW-HEX SOCKET (3/8-16X0.75 IN)	
	26	1	**8T-2501**	2	BOLT (3/8-16X2 IN)	
BE	27	1	**147-6541**		TUBE	
	28	1	**128-0613**	1	KIT-TETHER	
					(INCLUDES 2 TETHERS)	
JZ	29	1		27	CLIP	
LZ	30	1		4	ROLLER	
LZ	31	1		4	BEARING	
PZ	32	1		1	HARNESS	
PZ	33	1		1	NUT	
PZ		1		1	WASHER (0.38X0.88X0.02 IN THK)	
PZ		1		1	WASHER	
					AVAILABLE REPAIR KIT(S):	
			8Y-6928	1	KIT-FASTENER (SEAT SUSPENSION)	
					(INCLUDES PARTS MARKED J)	
			123-9128	1	KIT-ROLLER	
					(INCLUDES PARTS MARKED L & TIE WRAP)	
			123-8266	1	KIT-WIRING HARNESS	
					(INCLUDES PARTS MARKED P & TIE WRAPS)	

B-USE AS REQUIRED
E-ORDER BY THE CENTIMETER
J-INCLUDED IN 8Y6928 FASTENER KIT
L-INLCUDED IN 123-9128 ROLLER KIT
P-INLCUDED IN 123-8266 HARNESS KIT
Z-NOT SERVICED SEPARATELY

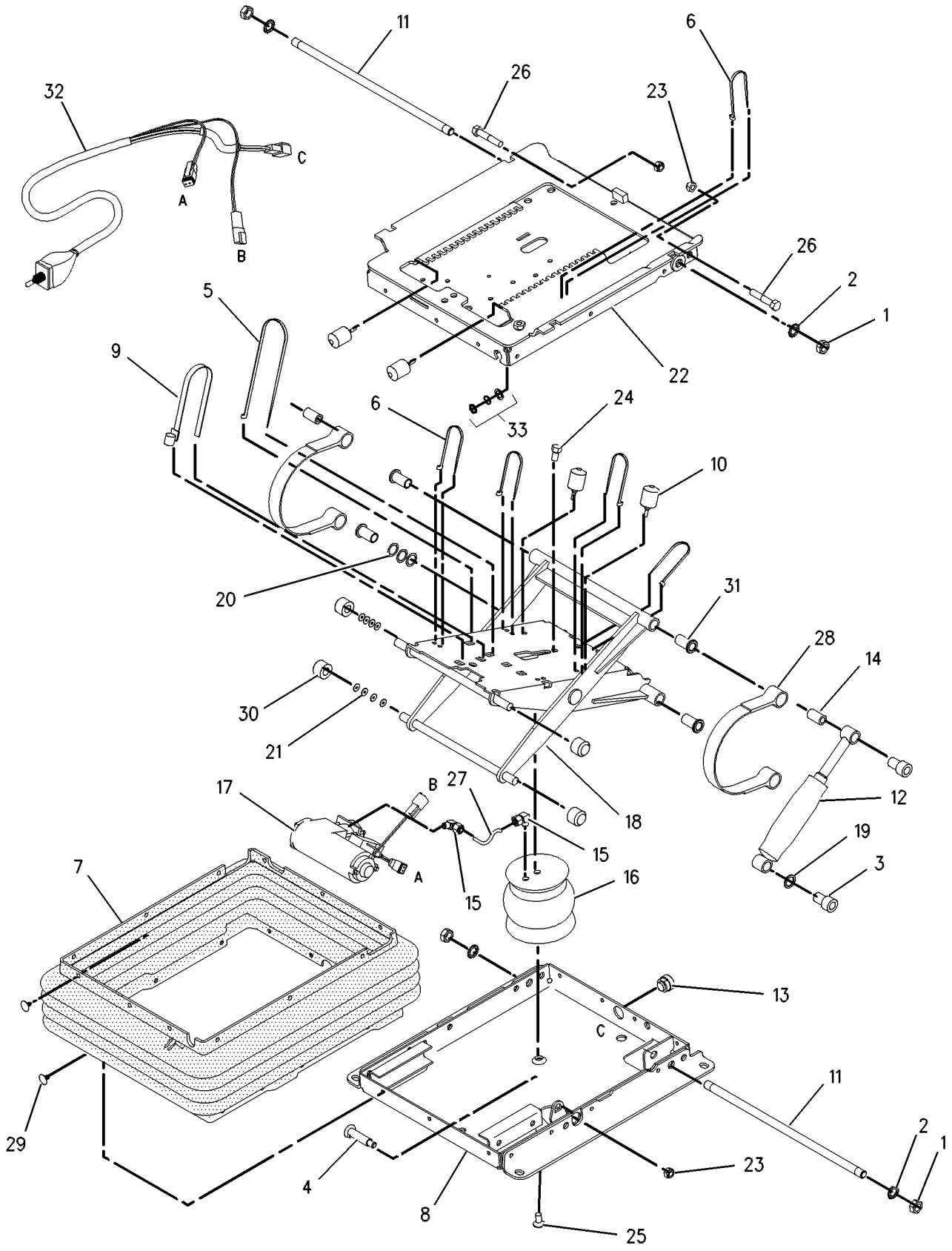

GRAPHIC #1 g00536599

OPERATOR STATION

169-9646 TANK GP-WINDOW WASHER

S/N: BLE1-UP; BMJ1-UP
PART OF 159-8371 CAB AR
AN ATTACHMENT

SMCS-7306 **i01513279**

NOTE	REF NO	GRAPHIC REF	PART NUMBER	QTY	PART NAME 1 2 3 4 5 6 (PRODUCT LEVEL)	SEE PAGE
	1	1	**8T-9364**	4	BOLT (1/4-20X0.625 IN)	
	2	1	**3S-2093**	1	STRAP-CABLE	
	3	1	**8T-5383**	4	VALVE AS-CHECK (WIPER/WASHER SYSTEM)	
Y	4	1	**169-9649**	1	TANK GP-WINDOW WASHER	700
	5	1	**8T-4205**	4	WASHER-HARD (7.2X14.5X2MM THK)	

Y-SEPARATE ILLUSTRATION

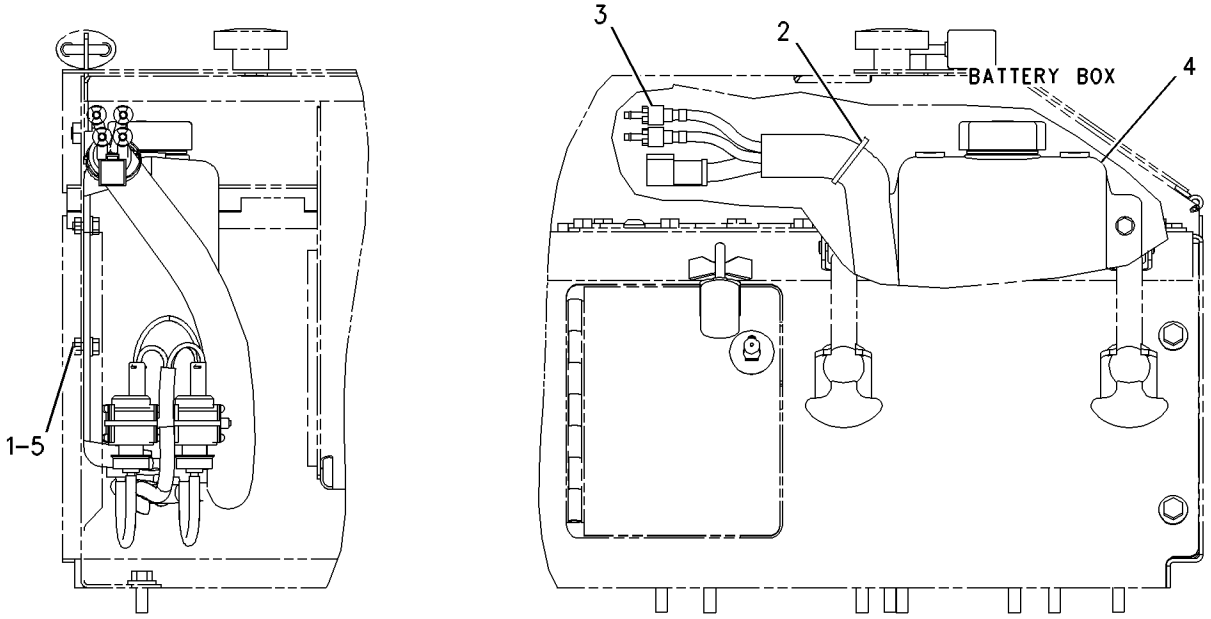

GRAPHIC #1 g00793153

MEMORANDA

OPERATOR STATION

169-9649 TANK GP-WINDOW WASHER

S/N: BLE1-UP; BMJ1-UP
PART OF 169-9646 TANK GP-WINDOW WASHER
AN ATTACHMENT

SMCS-7306 **i01591763**

NOTE	REF NO	GRAPHIC REF	PART NUMBER	QTY	PART NAME 1 2 3 4 5 6 (PRODUCT LEVEL)	SEE PAGE
	1	1	**169-9650**	1	TANK-WASHER	
	2	1	**8E-8292**	1	CAP-VENTED	
E	3	1	**144-0195**	2	HOSE (61CM EACH)	
	4	1	**186-4857**	1	HARNESS AS (WATER BOTTLE)	
BD	5	1	**6V-5817**		CONDUIT-FLEXIBLE	
	6	1	**7T-8891**	4	PUMP AS-WASHER	
B	7	1	**3S-2093**	6	STRAP-CABLE	
E	8	1	**144-0195**	4	HOSE (15CM EACH)	
E	9	1	**144-0195**	2	HOSE (57CM EACH)	

B-USE AS REQUIRED
D-ORDER BY THE METER
E-ORDER BY THE CENTIMETER

169-9649 TANK GP-WINDOW WASHER *(contd.)* i01591763

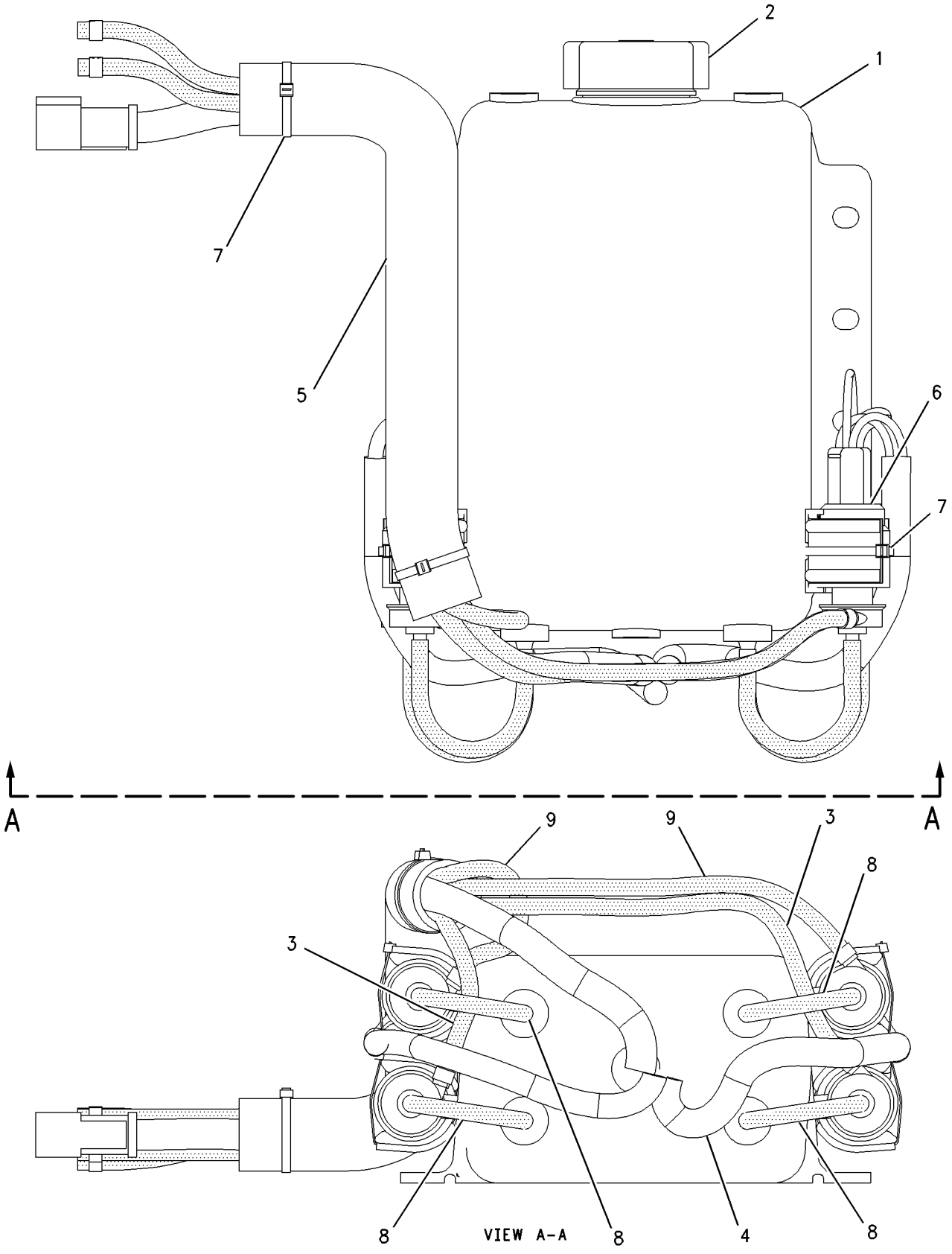

GRAPHIC #1 g00824992

OPERATOR STATION

158-7690 WASHER GP-WINDOW

S/N: BLE1-UP; BMJ1-UP
PART OF 158-7694 CAB AR
AN ATTACHMENT

SMCS-7306 **i01572842**

NOTE	REF NO	GRAPHIC REF	PART NUMBER	QTY	PART NAME 1 2 3 4 5 6 (PRODUCT LEVEL)	SEE PAGE
	1	1	**8T-5400**	4	CONNECTOR	
	2	1	**169-9635**	1	HARNESS AS	
	3	1	**9N-1995**	4	RIVET-POP	
	4	1	**3S-2093**	19	STRAP-CABLE	
M	5	1	**8T-4133**	1	NUT (M10X1.5 THD)	
E	6	1	**144-0195**	2	HOSE (350CM EACH)	
	7	1	**144-0195**	2	HOSE (2CM EACH)	
	8	1	**144-0195**		HOSE (450CM)	
	9	1	**144-0195**		HOSE (250CM)	
	10	1	**8T-4896**	1	WASHER-HARD (10.2X18.5X2.5MM THK)	
D	11	1	**6V-5818**	2	CONDUIT-FLEXIBLE (.375M EACH)	
	12	1	**102-8810**	1	KIT-CONNECTING PLUG (6 PINS)	
					(INCLUDES PLUG AS & WEDGE)	
	13	1	**3E-3380**	1	WEDGE-PLUG LOCK	
	14	1	**8T-8737**	1	PLUG-SEAL	
E	15	1	**7X-7927**		TAPE (6CM)	
E	16	1	**7X-7928**		TAPE (6CM)	
E	17	1	**7X-7929**		TAPE (6CM)	
E	18	1	**7X-7930**		TAPE (6CM)	
	19	1	**7Y-3281**	3	GROMMET	
	20	1	**145-7328**	2	ELBOW-HOSE	
	21	1	**8E-6856**	1	COVER	
E	22	1	**7X-7702**		CONDUIT-FLEXIBLE (83CM)	
	23	1	**2G-8097**	1	MOUNTING	

D-ORDER BY THE METER
E-ORDER BY THE CENTIMETER
M-METRIC PART

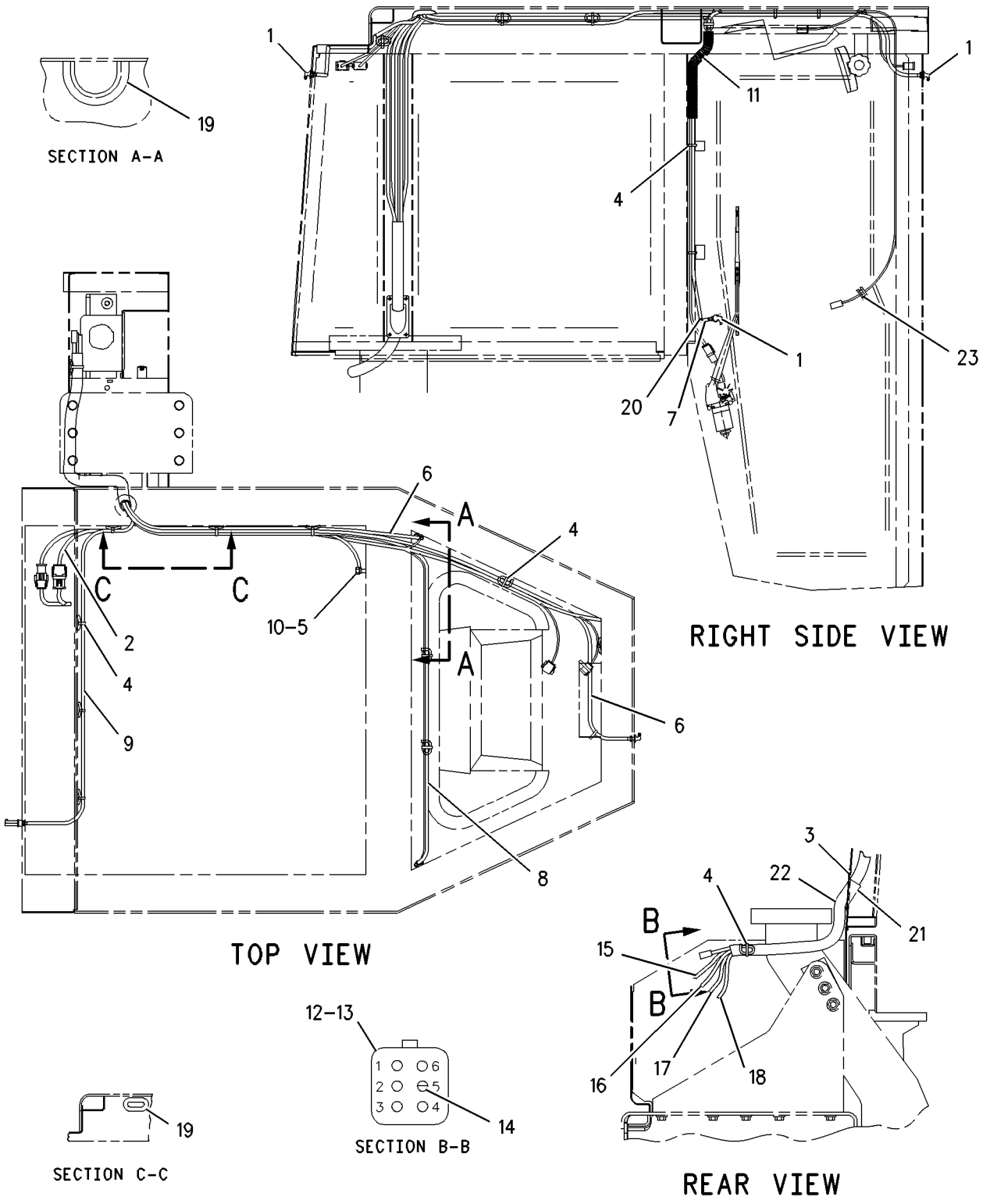

GRAPHIC #1 g00793091

OPERATOR STATION

8E-5112 WINDOW AS-SLIDING—REAR

S/N: BLE1-UP; BMJ1-UP
PART OF 158-7696 CAB GP
AN ATTACHMENT

SMCS-7310 **i01341021**

NOTE	PART NUMBER	QTY	PART NAME 1 2 3 4 5 6 (PRODUCT LEVEL)	SEE PAGE
Y	**6T-5008**	1	WINDOW GP-CAB (REAR)(SLIDING)	708
			—OR—	
Y	**9N-4369**	1	WINDOW GP-CAB (REAR)(SLIDING)	722

Y-SEPARATE ILLUSTRATION

8E-5113 WINDOW AS-SLIDING—RH

S/N: BLE1-UP; BMJ1-UP
PART OF 158-7696 CAB GP
AN ATTACHMENT

SMCS-7310 **i01341023**

NOTE	PART NUMBER	QTY	PART NAME 1 2 3 4 5 6 (PRODUCT LEVEL)	SEE PAGE
Y	*6T-8402*	1	WINDOW GP-CAB (RH) (SLIDING)	709
			—OR—	
Y	*8E-3446*	1	WINDOW GP-CAB (RH) (SLIDING)	713

Y-SEPARATE ILLUSTRATION

OPERATOR STATION

8E-5114 WINDOW AS-SLIDING—LH

S/N: BLE1-UP; BMJ1-UP
PART OF 158-7696 CAB GP
AN ATTACHMENT

SMCS-7310 **i01341025**

NOTE	PART NUMBER	QTY	PART NAME 1 2 3 4 5 6 (PRODUCT LEVEL)	SEE PAGE
Y	*6T-8403*	1	WINDOW GP-CAB (LH) (SLIDING)	710
			—OR—	
Y	*8E-3447*	1	WINDOW GP-CAB (LH) (SLIDING)	714

Y-SEPARATE ILLUSTRATION

6T-5005 WINDOW GP-CAB—REAR

S/N: BLE1-UP; BMJ1-UP
PART OF 6T-5008 WINDOW GP-CAB
AN ATTACHMENT

SMCS-7310 **i01102651**

NOTE	REF NO	GRAPHIC REF	PART NUMBER	QTY	PART NAME 1 2 3 4 5 6 (PRODUCT LEVEL)	SEE PAGE
	1	1	**3T-1121**	1	LOCK AS	
	2	1	**2H-6622**	2	SCREW-MACHINE	
	3	1	**9P-7860**	1	LOCK AS	
	4	1	**9P-7859**	2	SCREW	
BD	5	1	**5P-5680**		SEAL (.61M)	
EB	6	1	**9X-6268**		TAPE	
BD	7	1	**6V-5833**		SEAL (.64M)	
BD	8	1	**5P-8918**		SEAL (1.4M)	
BD	9	1	**8Y-6447**	1	GLASS (TINTED)	
BE	10	1	**8Y-6839**		SEAL (63.5CM)	
BD	11	1	**5P-5680**		SEAL (1.3 M)	
	12	1	**117-5676**	1	SLIDE	
	13	1	**124-9775**	1	SLIDE	

B-USE AS REQUIRED
D-ORDER BY THE METER
E-ORDER BY THE CENTIMETER

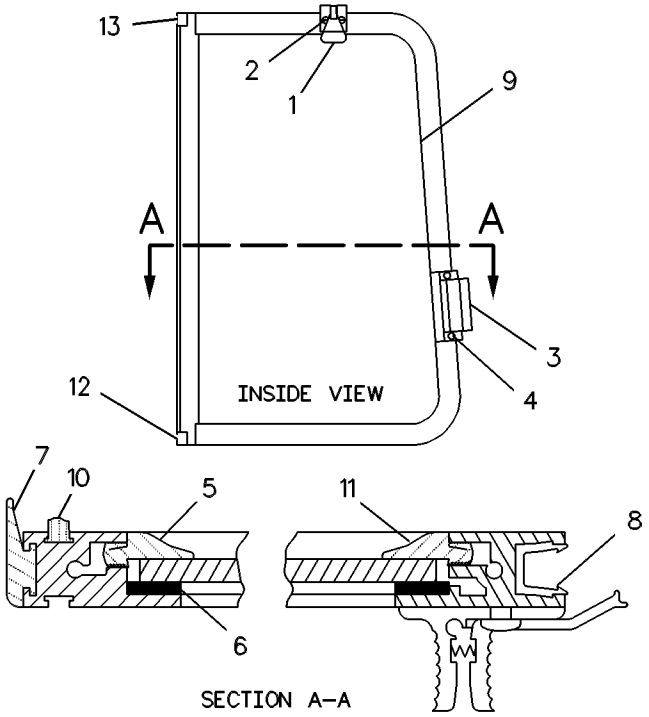

GRAPHIC #1 g00257563

6T-5008 WINDOW GP-CAB–REAR

S/N: BLE1-UP; BMJ1-UP
SLIDING
PART OF 8E-5112 WINDOW AS-SLIDING
AN ATTACHMENT

SMCS-7310 **i01625869**

NOTE	REF NO	GRAPHIC REF	PART NUMBER	QTY	PART NAME 1 2 3 4 5 6 (PRODUCT LEVEL)	SEE PAGE
Y	1	1	**6T-5005**	1	WINDOW GP-CAB (REAR)	707
	2	1	**9P-7855**	1	GLASS (TINTED)	
BD	3	1	**5P-5680**		SEAL	
BE	4	1	**8Y-6839**		SEAL	
BD	5	1	**6V-5833**		SEAL	
DB	6	1	**8T-0687**		FILLER	

B-USE AS REQUIRED
D-ORDER BY THE METER
E-ORDER BY THE CENTIMETER
Y-SEPARATE ILLUSTRATION

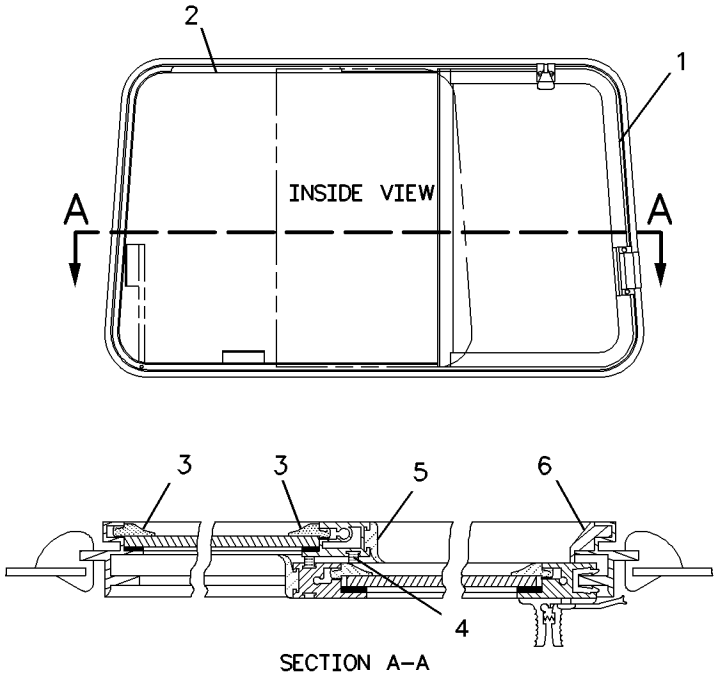

GRAPHIC #1 g00853624

6T-8402 WINDOW GP-CAB–RH

S/N: BLE1-UP; BMJ1-UP
SLIDING
PART OF 8E-5113 WINDOW AS-SLIDING
AN ATTACHMENT

SMCS-7310 **i01625882**

NOTE	REF NO	GRAPHIC REF	PART NUMBER	QTY	PART NAME 1 2 3 4 5 6 (PRODUCT LEVEL)	SEE PAGE
Y	1	1	**7T-1068**	1	WINDOW GP-CAB (RH)	711
	2	1	**7T-1330**	1	GLASS (TINTED)	
D	3	1	**5P-5680**		SEAL (1.14M)	
DB	4	1	**8T-0687**		FILLER	
D	5	1	**5P-5680**		SEAL (.66M)	
D	6	1	**6V-5833**		SEAL (.64M)	
E	7	1	**8Y-6839**		SEAL (64 CM)	

B-USE AS REQUIRED
D-ORDER BY THE METER
E-ORDER BY THE CENTIMETER
Y-SEPARATE ILLUSTRATION

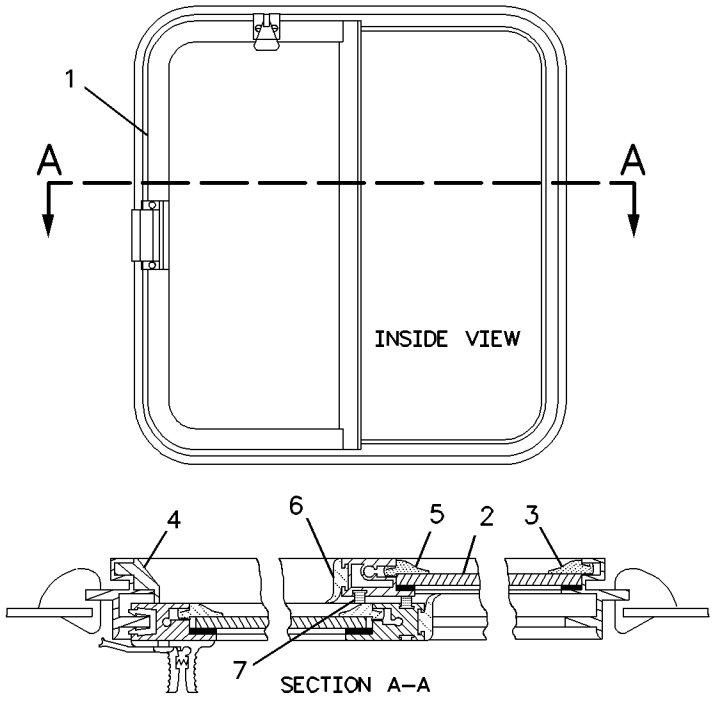

GRAPHIC #1 g00844619

6T-8403 WINDOW GP-CAB—LH

S/N: BLE1-UP; BMJ1-UP
SLIDING
PART OF 8E-5114 WINDOW AS-SLIDING
AN ATTACHMENT

SMCS-7310 **i01625895**

NOTE	REF NO	GRAPHIC REF	PART NUMBER	QTY	PART NAME 1 2 3 4 5 6 (PRODUCT LEVEL)	SEE PAGE
BD	1	1	**5P-5680**		SEAL	
BD	2	1	**8T-0687**		FILLER	
BD	3	1	**6V-5833**		SEAL	
Y	4	1	**7T-1069**	1	WINDOW GP-CAB (LH)	712
BE	5	1	**8Y-6839**		SEAL	
	6	1	**7T-1330**	1	GLASS (TINTED)	

B-USE AS REQUIRED
D-ORDER BY THE METER
E-ORDER BY THE CENTIMETER
Y-SEPARATE ILLUSTRATION

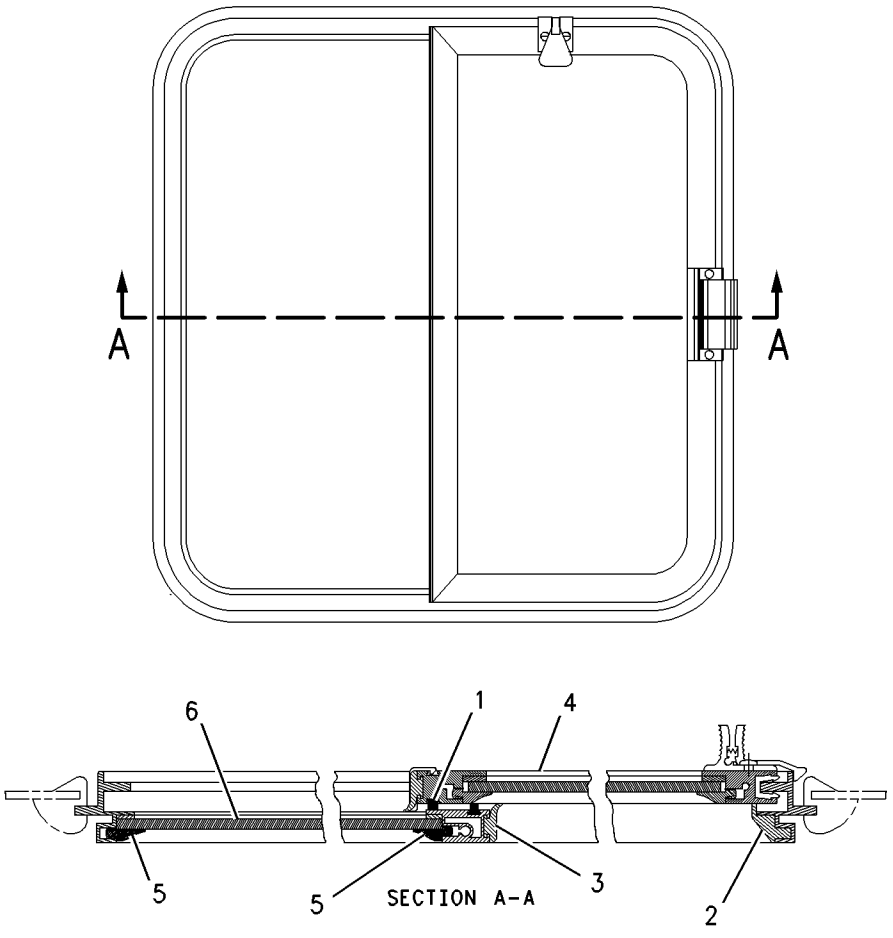

GRAPHIC #1 g00842070

OPERATOR STATION

7T-1068 WINDOW GP-CAB–RH

S/N: BLE1-UP; BMJ1-UP
PART OF 6T-8402 WINDOW GP-CAB
AN ATTACHMENT

SMCS-7310 **i01102654**

NOTE	REF NO	GRAPHIC REF	PART NUMBER	QTY	PART NAME 1 2 3 4 5 6 (PRODUCT LEVEL)	SEE PAGE
	1	1	**3T-1121**	1	LOCK AS	
	2	1	**2H-6622**	2	SCREW-MACHINE	
	3	1	**9P-7860**	1	LOCK AS	
	4	1	**9P-7859**	2	SCREW	
BD	5	1	**5P-5680**		SEAL (.61M)	
EB	6	1	**9X-6268**		TAPE	
BD	7	1	**6V-5833**		SEAL (.64M)	
BD	8	1	**5P-8918**		SEAL (1.2M)	
	9	1	**8Y-6448**	1	GLASS	
BE	10	1	**8Y-6839**		SEAL (64CM)	
BD	11	1	**5P-5680**		SEAL (1.1M)	
	12	1	**124-9774**	1	SLIDE	
	13	1	**117-5677**	1	SLIDE	

B-USE AS REQUIRED
D-ORDER BY THE METER
E-ORDER BY THE CENTIMETER

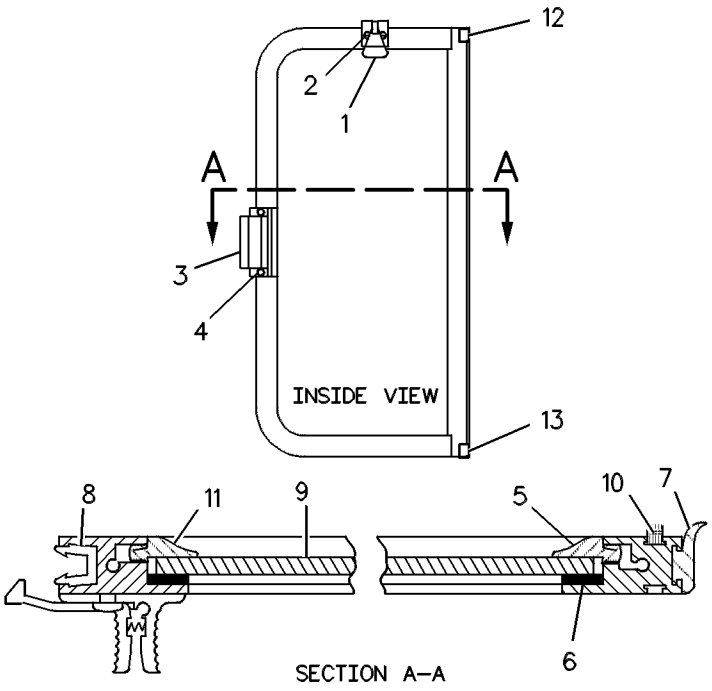

GRAPHIC #1 g00257169

OPERATOR STATION

7T-1069 WINDOW GP-CAB—LH

S/N: BLE1-UP; BMJ1-UP
PART OF 6T-8403 WINDOW GP-CAB
AN ATTACHMENT

SMCS-7310 **i00731601**

NOTE	REF NO	GRAPHIC REF	PART NUMBER	QTY	PART NAME 1 2 3 4 5 6 (PRODUCT LEVEL)	SEE PAGE
	1	1	**3T-1121**	1	LOCK AS	
	2	1	**2H-6622**	2	SCREW-MACHINE	
	3	1	**9P-7860**	1	LOCK AS	
	4	1	**9P-7859**	2	SCREW	
D	5	1	**5P-5680**		SEAL (.61M)	
EB	6	1	**9X-6268**		TAPE	
D	7	1	**6V-5833**		SEAL (.64M)	
D	8	1	**5P-8918**		SEAL (1.2M)	
	9	1	**8Y-6448**	1	GLASS	
E	10	1	**8Y-6839**		SEAL (64CM)	
D	11	1	**5P-5680**		SEAL (1.1M)	
	12	1	**124-9774**	1	SLIDE	
	13	1	**117-5677**	1	SLIDE	

B-USE AS REQUIRED
D-ORDER BY THE METER
E-ORDER BY THE CENTIMETER

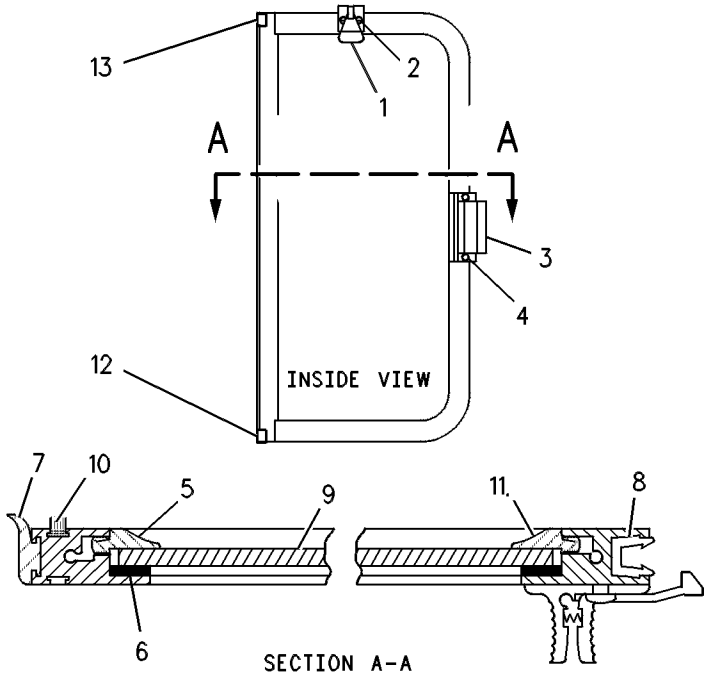

GRAPHIC #1 g00326280

8E-3446 WINDOW GP-CAB–RH

S/N: BLE1-UP; BMJ1-UP
SLIDING
PART OF 8E-5113 WINDOW AS-SLIDING
AN ATTACHMENT

SMCS-7310 **i01572892**

NOTE	REF NO	GRAPHIC REF	PART NUMBER	QTY	PART NAME 1 2 3 4 5 6 (PRODUCT LEVEL)	SEE PAGE
BE	1	1	**8Y-6423**		SEAL	
BE	2	1	**8Y-6459**		TAPE-BUTYL	
	3	1	**8Y-6430**	1	SEAL-WINDOW	
Y	4	1	**8Y-6433**	1	WINDOW GP-CAB	718
	5	1	**8Y-6462**	1	KIT-LEAF SPRING	
					(INCLUDES SPRING AS & RIVET)	
	6	1	**8Y-6432**	1	GLASS-FIXED-RH (TINTED)	
BE	7	1	**8Y-6424**		SEAL	
BE	8	1	**8Y-6910**		WEATHERSTRIP	

B-USE AS REQUIRED
E-ORDER BY THE CENTIMETER
Y-SEPARATE ILLUSTRATION

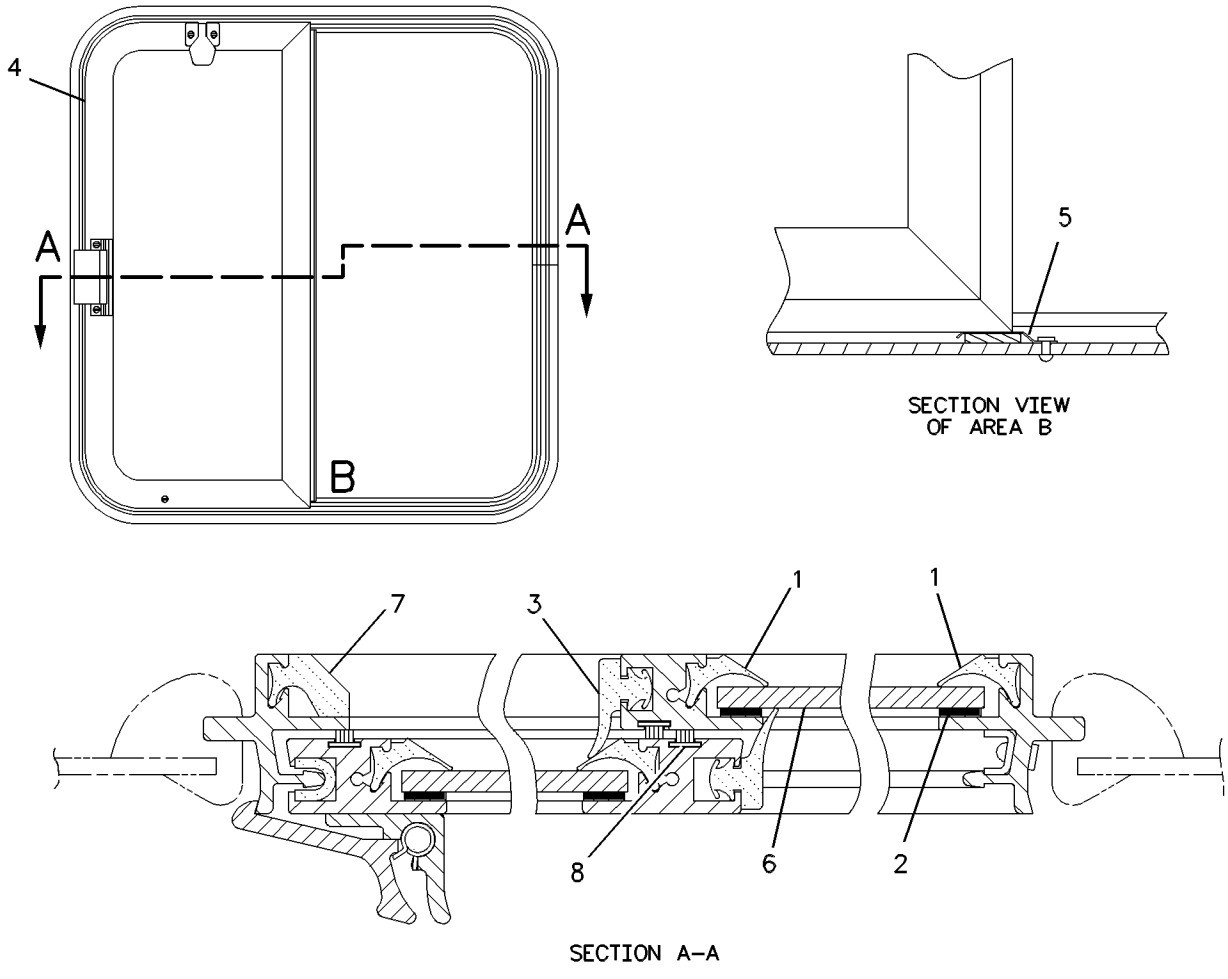

GRAPHIC #1 g00544799

8E-3447 WINDOW GP-CAB—LH

S/N: BLE1-UP; BMJ1-UP
SLIDING
PART OF 8E-5114 WINDOW AS-SLIDING
AN ATTACHMENT

SMCS-7310 **i01572894**

NOTE	REF NO	GRAPHIC REF	PART NUMBER	QTY	PART NAME 1 2 3 4 5 6 (PRODUCT LEVEL)	SEE PAGE
BE	1	1	**8Y-6423**		SEAL	
BE	2	1	**8Y-6459**		TAPE-BUTYL	
	3	1	**8Y-6430**	1	SEAL-WINDOW	
Y	4	1	**8Y-6420**	1	WINDOW GP-CAB	716
	5	1	**8Y-6462**	1	KIT-LEAF SPRING	
					(INCLUDES SPRING AS & RIVET)	
	6	1	**8Y-6419**	1	GLASS-FIXED-LH (TINTED)	
BE	7	1	**8Y-6424**		SEAL	
BE	8	1	**8Y-6910**		WEATHERSTRIP	

B-USE AS REQUIRED
E-ORDER BY THE CENTIMETER
Y-SEPARATE ILLUSTRATION

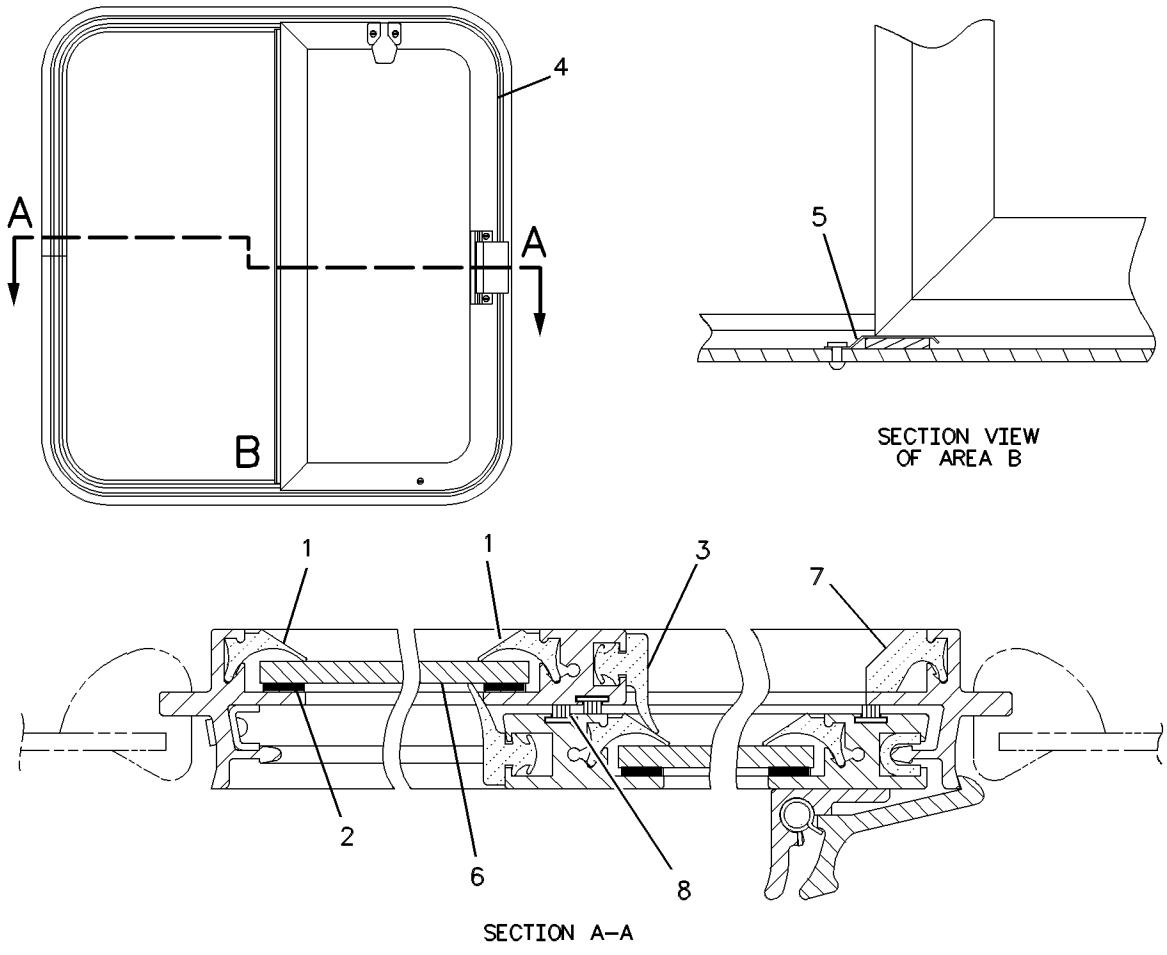

GRAPHIC #1 g00544804

MEMORANDA

OPERATOR STATION

8Y-6420 WINDOW GP-CAB—LH

S/N: BLE1-UP; BMJ1-UP
PART OF 8E-3447 WINDOW GP-CAB
AN ATTACHMENT

SMCS-7310 **i01539332**

NOTE	REF NO	GRAPHIC REF	PART NUMBER	QTY	PART NAME 1 2 3 4 5 6 (PRODUCT LEVEL)	SEE PAGE
	1	1	**8Y-6454**	1	KIT-CATCH	
					(INCLUDES CATCH AS & PARTS MARKED J)	
JM	2	1	**084-4111**	2	SCREW-PAN HEAD	
	3	1	**8Y-6455**	1	KIT-CATCH	
					(INCLUDES CATCH AS & 2 SCREWS)	
M	4	1	**8T-4777**	2	SCREW-MACHINE (M5X0.8X12MM)	
	5	1	**8Y-6460**	1	KIT-RUNNER GUIDE	
					(INCLUDES GUIDE & SCREW)	
	6	1	**3S-9557**	2	SCREW-PAN HEAD (4-40X0.5 IN)	
	7	1	**8Y-6461**	1	KIT-RUNNER GUIDE	
					(INCLUDES A GUIDE & PARTS MARKED L)	
LM	8	1	**6V-2312**	2	SCREW-MACHINE (M6X1X25MM)	
BE	9	1	**8Y-6423**		SEAL	
	10	1	**8Y-6430**	1	SEAL-WINDOW	
BE	11	1	**8Y-6459**		TAPE-BUTYL	
	12	1	**8Y-6422**	1	GLASS-SLIDER (LH) (TINTED)	
BE	13	1	**8Y-6910**		WEATHERSTRIP	

B-USE AS REQUIRED
E-ORDER BY THE CENTIMETER
J-INCLUDED IN 8Y6454 CATCH KIT
L-INCLUDED IN 8Y6461 GUIDE RUNNER KIT
M-METRIC PART

8Y-6420 WINDOW GP-CAB *(contd.)* **i01539332**

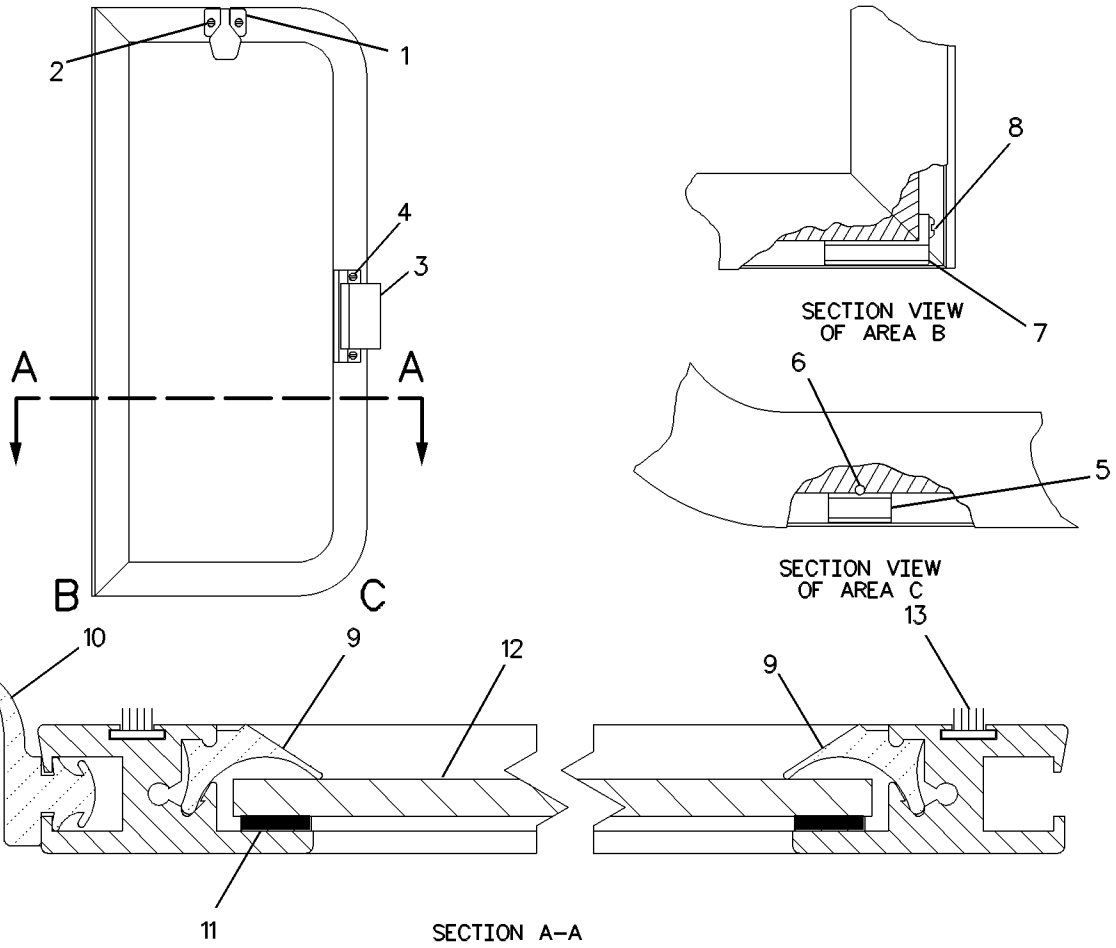

GRAPHIC #1 g00544827

OPERATOR STATION

8Y-6433 WINDOW GP-CAB—RH

S/N: BLE1-UP; BMJ1-UP
PART OF 8E-3446 WINDOW GP-CAB
AN ATTACHMENT

SMCS-7310 **i01539331**

NOTE	REF NO	GRAPHIC REF	PART NUMBER	QTY	PART NAME 1 2 3 4 5 6 (PRODUCT LEVEL)	SEE PAGE
	1	1	**8Y-6454**	1	KIT-CATCH	
					(INCLUDES CATCH AS & 2 SCREWS)	
M	2	1	**084-4111**	2	SCREW-PAN HEAD	
	3	1	**8Y-6455**	1	KIT-CATCH	
					(INCLUDES CATCH AS & 2 SCREWS)	
M	4	1	**8T-4777**	2	SCREW-MACHINE (M5X0.8X12MM)	
	5	1	**8Y-6460**	1	KIT-RUNNER GUIDE	
					(INCLUDES GUIDE & SCREW)	
M	6	1	**6V-2312**	2	SCREW-MACHINE (M6X1X25MM)	
	7	1	**8Y-6461**	1	KIT-RUNNER GUIDE	
					(INCLUDES GUIDE & SCREW)	
M		1	**6V-2312**	1	SCREW-MACHINE (M6X1X25MM)	
E	8	1	**8Y-6423**		SEAL (125CM)	
	9	1	**8Y-6430**	1	SEAL-WINDOW	
BE	10	1	**8Y-6459**		TAPE-BUTYL	
E	11	1	**8Y-6423**		SEAL (59CM)	
	12	1	**8Y-6431**	1	GLASS-SLIDER-RH (TINTED)	
BE	13	1	**8Y-6910**		WEATHERSTRIP	

B-USE AS REQUIRED
E-ORDER BY THE CENTIMETER
M-METRIC PART

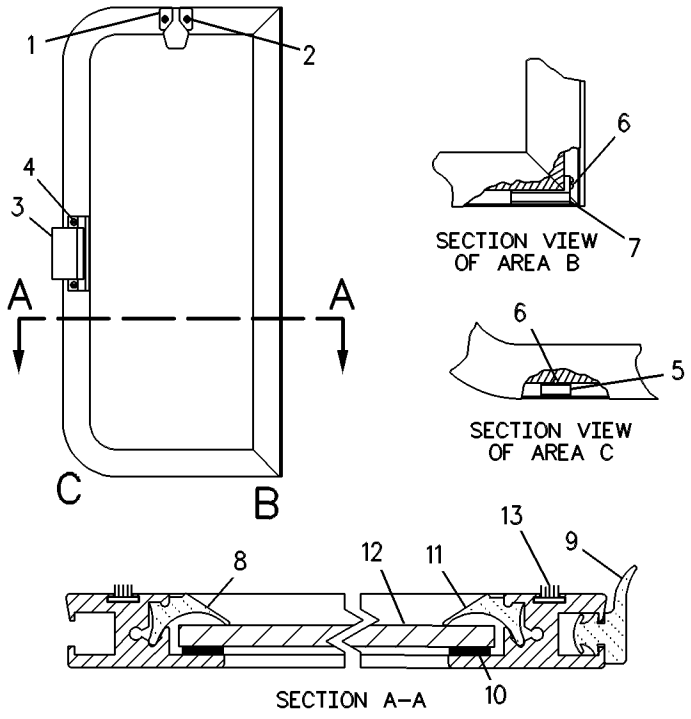

GRAPHIC #1 g00326281

MEMORANDA

OPERATOR STATION

8Y-6446 WINDOW GP-CAB—REAR

S/N: BLE1-UP; BMJ1-UP
PART OF 9N-4369 WINDOW GP-CAB
AN ATTACHMENT

SMCS-7310 **i01539329**

NOTE	REF NO	GRAPHIC REF	PART NUMBER	QTY	PART NAME 1 2 3 4 5 6 (PRODUCT LEVEL)	SEE PAGE
	1	1	**8Y-6454**	1	KIT-CATCH	
					(INCLUDES CATCH AS & PARTS MARKED J)	
JM	2	1	**084-4111**	2	SCREW-PAN HEAD	
	3	1	**8Y-6455**	1	KIT-CATCH	
					(INCLUDES 2 SCREWS)	
M	4	1	**8T-4777**	2	SCREW-MACHINE (M5X0.8X12MM)	
	5	1	**8Y-6460**	1	KIT-RUNNER GUIDE	
					(INCLUDES SCREW)	
		1	**3S-9557**	1	SCREW-PAN HEAD (4-40X0.5 IN)	
M	6	1	**6V-2312**	1	SCREW-MACHINE (M6X1X25MM)	
	7	1	**8Y-6461**	1	KIT-RUNNER GUIDE	
					(INCLUDES A GUIDE & PART MARKED L)	
LM	8	1	**6V-2312**	1	SCREW-MACHINE (M6X1X25MM)	
	9	1	**8Y-6430**	1	SEAL-WINDOW	
EB	10	1	**8Y-6459**		TAPE-BUTYL	
BE	11	1	**8Y-6423**		SEAL	
	12	1	**8Y-6443**	1	GLASS-REAR SLIDER (TINTED)	
	13	1	**8Y-6910**		WEATHERSTRIP	

B-USE AS REQUIRED
E-ORDER BY THE CENTIMETER
J-INCLUDED IN 8Y6454 CATCH KIT
L-INCLUDED IN 8Y6461 RUNNER GUIDE KIT
M-METRIC PART

8Y-6446 WINDOW GP-CAB ***(contd.)*** **i01539329**

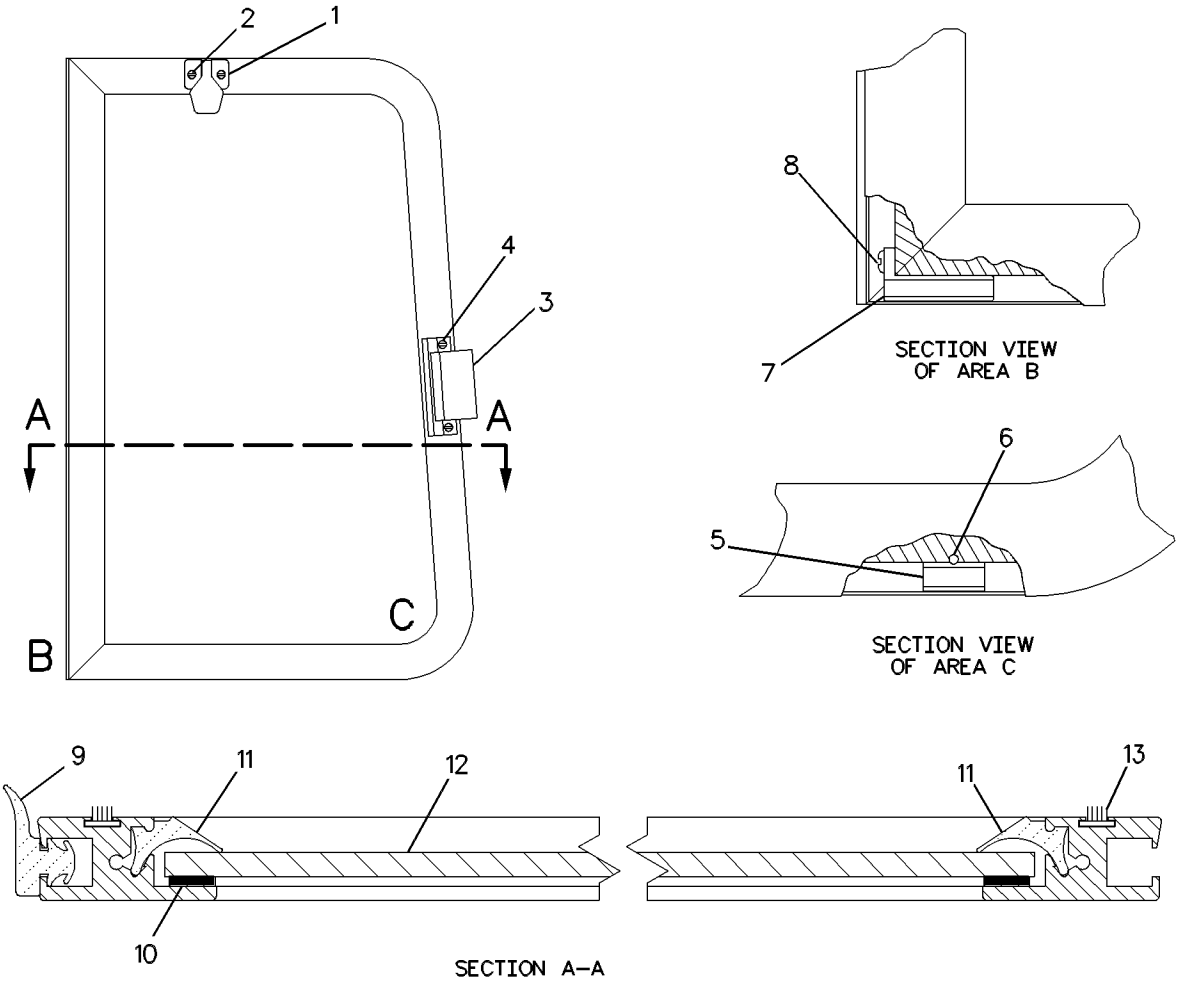

GRAPHIC #1 g00544049

OPERATOR STATION

9N-4369 WINDOW GP-CAB–REAR

S/N: BLE1-UP; BMJ1-UP
SLIDING
PART OF 8E-5112 WINDOW AS-SLIDING
AN ATTACHMENT

SMCS-7310 **i01121592**

NOTE	REF NO	GRAPHIC REF	PART NUMBER	QTY	PART NAME 1 2 3 4 5 6 (PRODUCT LEVEL)	SEE PAGE
BE	1	1	**8Y-6423**		SEAL	
BE	2	1	**8Y-6459**		TAPE-BUTYL	
	3	1	**8Y-6430**	1	SEAL-WINDOW	
Y	4	1	**8Y-6446**	1	WINDOW GP-CAB	720
	5	1	**8Y-6463**	1	KIT-STOP RAIL	
					(INCLUDES SOCKET HEAD BOLT, RUBBER STOP & CLIP)	
JM	6	1	**8C-4982**	1	BOLT-SOCKET HEAD (M4X0.7X20MM)	
J	7	1	**8Y-6428**	1	STOP-RUBBER	
J	8	1	**8Y-6429**	1	CLIP	
	9	1	**8Y-6462**	1	KIT-LEAF SPRING	
					(INCLUDES SPRING AS & RIVET)	
	10	1	**8Y-6445**	1	GLASS-FIXED REAR (TINTED)	
BE	11	1	**8Y-6424**		SEAL	
BE	12	1	**8Y-6910**		WEATHERSTRIP	

B-USE AS REQUIRED
E-ORDER BY THE CENTIMETER
J-INCLUDED IN 8Y6463 STOP RAIL KIT
M-METRIC PART
Y-SEPARATE ILLUSTRATION

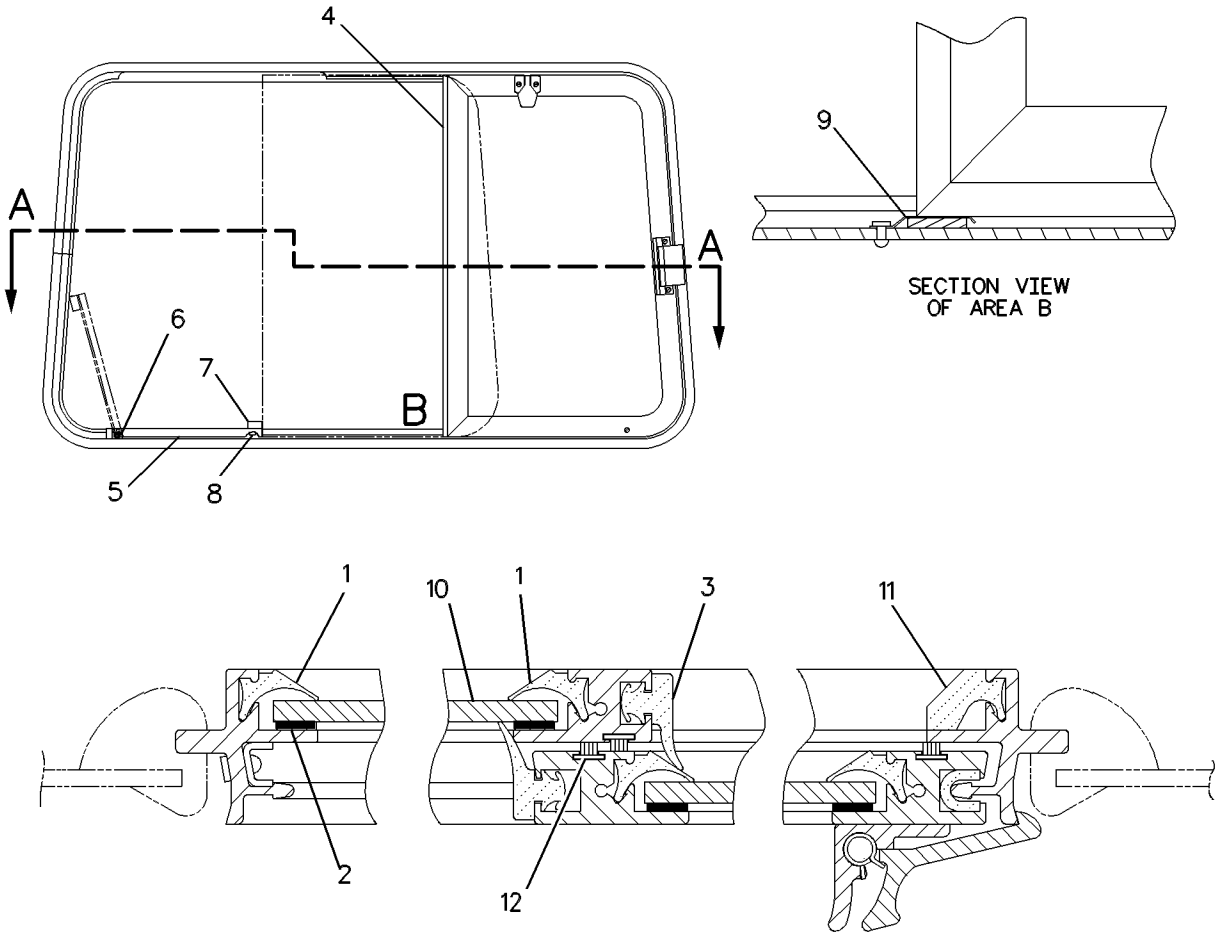

GRAPHIC #1 g00544830

OPERATOR STATION

158-7691 WIPER GP-WINDOW

S/N: BLE1-UP; BMJ1-UP
PART OF 158-7694 CAB AR
AN ATTACHMENT

SMCS-7305 **i01572928**

NOTE	REF NO	GRAPHIC REF	PART NUMBER	QTY	PART NAME 1 2 3 4 5 6 (PRODUCT LEVEL)	SEE PAGE
Y	1	1	**147-7976**	1	MOTOR GP-WINDOW WIPER	654
	2	1	**145-8741**	1	ARM AS-WIPER (FRONT)	
	3	1	**6V-5851**	2	BLADE AS-WIPER (FRONT & REAR)	
	4	1	**6V-5849**	2	BLADE AS-WIPER (RH & LH DOORS)	
		1	**8C-5060**	1	KIT-WIPER BLADE	
	5	1	**151-0254**	1	ARM AS-WIPER (RH DOOR)	
Y	6	1	**117-1882**	1	MOTOR AS-WINDOW WIPER	653
Y	7	1	**117-1881**	1	MOTOR AS-WINDOW WIPER	652
	8	1	**151-0255**	1	ARM AS-WIPER (LH DOOR)	
	9	1	**7T-8361**	2	SPACER	
	10	1	**8V-5455**	1	BOSS	
	11	1	**6N-7523**	2	WASHER (6.48X11.9X1.57MM THK)	
Y	12	1	*6V-6561*	1	WIPER PIVOT GP	726
	13	1	**151-0256**	1	ARM AS (REAR)	
M	14	1	**6V-7357**	2	BOLT (M6X1.0X25MM)	
Y	15	1	**147-7979**	1	MOTOR GP-WINDOW WIPER	655
	16	1	**9N-2061**	2	CLIP	

M-METRIC PART
Y-SEPARATE ILLUSTRATION

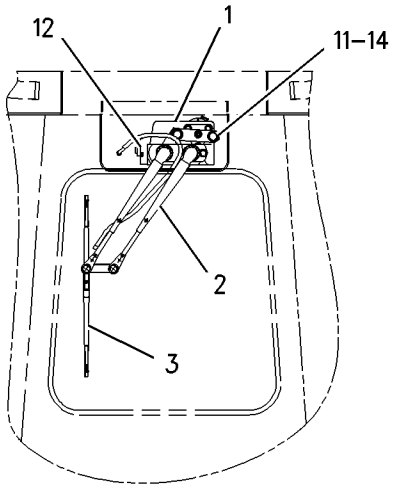

FRONT VIEW

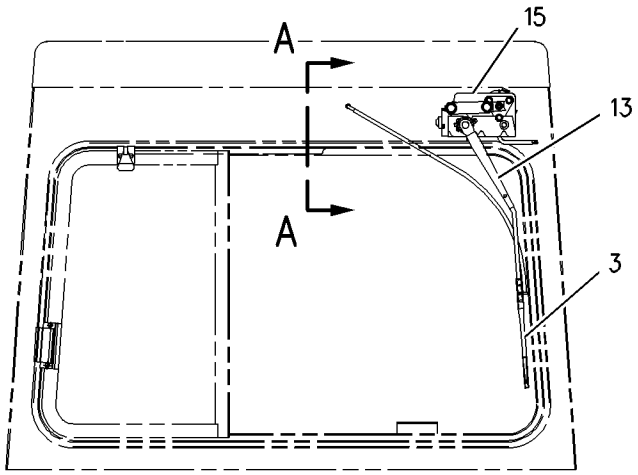

REAR VIEW

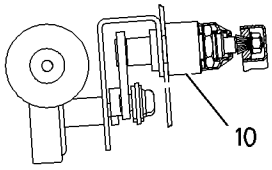

SECTION A-A

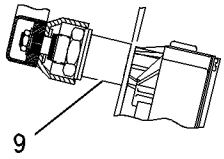

SECTION B-B

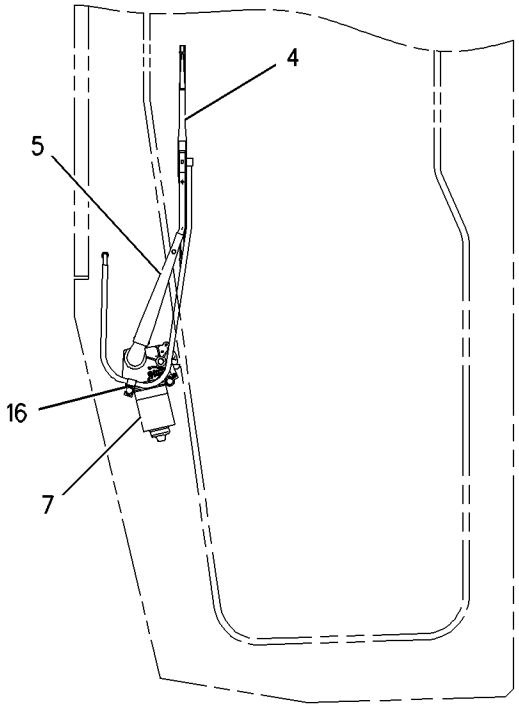

RIGHT SIDE VIEW

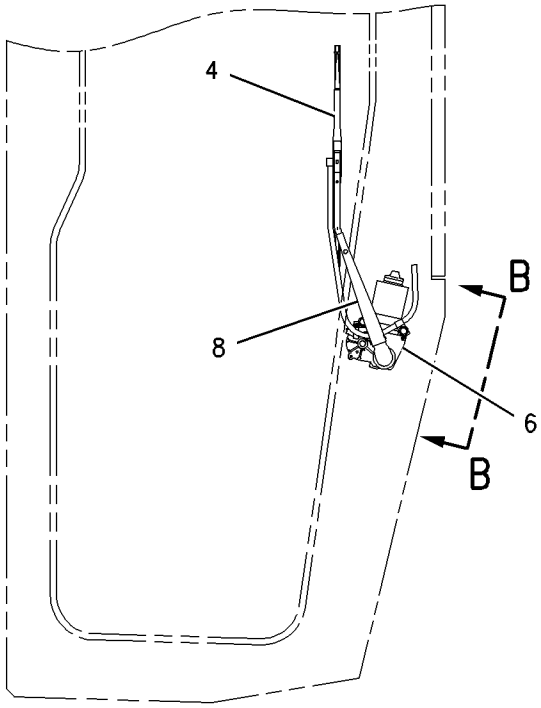

LEFT SIDE VIEW

GRAPHIC #1 g00793502

OPERATOR STATION

6V-6561 WIPER PIVOT GP

S/N: BLE1-UP; BMJ1-UP
PART OF 158-7691 WIPER GP-WINDOW
AN ATTACHMENT

SMCS-7305 **i00718327**

NOTE	REF NO	GRAPHIC REF	PART NUMBER	QTY	PART NAME 1 2 3 4 5 6 (PRODUCT LEVEL)	SEE PAGE
	1	1	**6V-6207**	1	SHAFT AS-PIVOT	
	2	1	**6V-6209**	1	CAP	
M	3	1	**5C-7267**	1	NUT (M6X1 THD)	
					—OR—	
M		1	**6V-6889**	1	NUT (M8X1.25 THD)	
	4	1	**6A-9718**	1	WASHER	
	5	1	**6V-6210**	1	GASKET-SHAFT	

M-METRIC PART

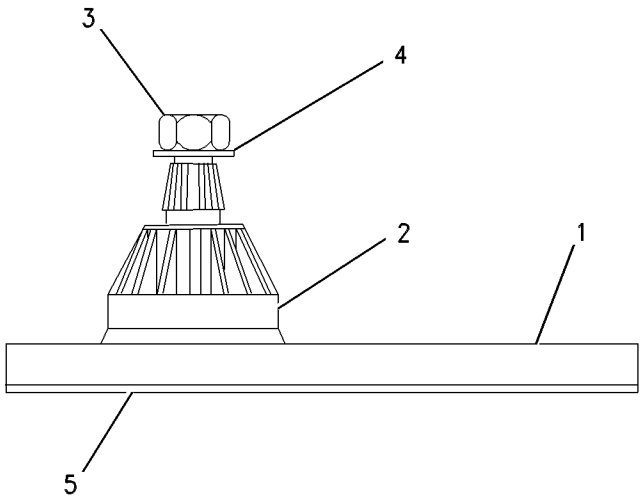

GRAPHIC #1 g00316575

SERVICE EQUIPMENT AND SUPPLIES

178-3932 FILM GP

S/N: BMJ1-UP

PART OF 164-9945 PLATE & FILM GP

SMCS-7000 **i01600769**

NOTE	REF NO	GRAPHIC REF	PART NUMBER	QTY	PART NAME 1 2 3 4 5 6 (PRODUCT LEVEL)	SEE PAGE
	1	1	**177-0982**	1	FILM-STRIPE (RH)(FRONT)	
	2	1	**177-0983**	1	FILM-STRIPE (LH)(FRONT)	
	3	1	**126-2281**	1	FILM-STRIPE (CATERPILLAR)(FRONT)	
	4	1	**200-5136**	1	FILM-STRIPE	
	5	1	**126-2282**	1	FILM-STRIPE (RH)	
	6	1	**200-5137**	1	FILM-STRIPE	
	7	1	**126-2280**	1	FILM-STRIPE (CATERPILLAR)(REAR)	
	8	1	**137-3924**	1	FILM-STRIPE (LH)	

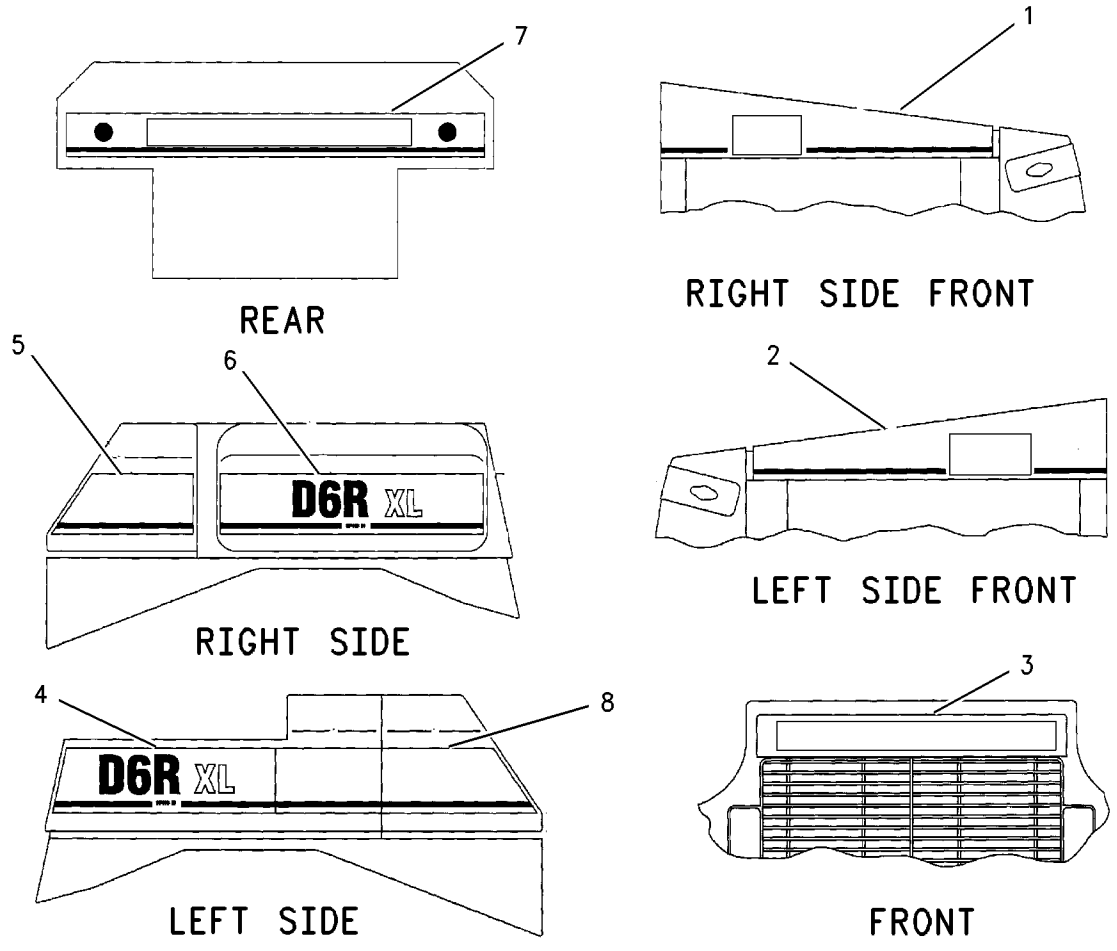

GRAPHIC #1 g00846751

SERVICE EQUIPMENT AND SUPPLIES

178-3933 FILM GP

S/N: BLE1-UP

PART OF 164-9943 PLATE & FILM GP

SMCS-7000 **i01629993**

NOTE	REF NO	GRAPHIC REF	PART NUMBER	QTY	PART NAME 1 2 3 4 5 6 (PRODUCT LEVEL)	SEE PAGE
	1	1	**177-0982**	1	FILM-STRIPE (RH)(FRONT)	
	2	1	**177-0983**	1	FILM-STRIPE (LH)(FRONT)	
	3	1	**126-2281**	1	FILM-STRIPE (CATERPILLAR)(FRONT)	
	4	1	**200-5134**	1	FILM-STRIPE (D6R)(LH)	
	5	1	**126-2282**	1	FILM-STRIPE (RH)	
	6	1	**200-5133**	1	FILM-STRIPE (D6R)(RH)	
	7	1	**126-2280**	1	FILM-STRIPE (CATERPILLAR)(REAR)	
	8	1	**137-3924**	1	FILM-STRIPE (LH)	

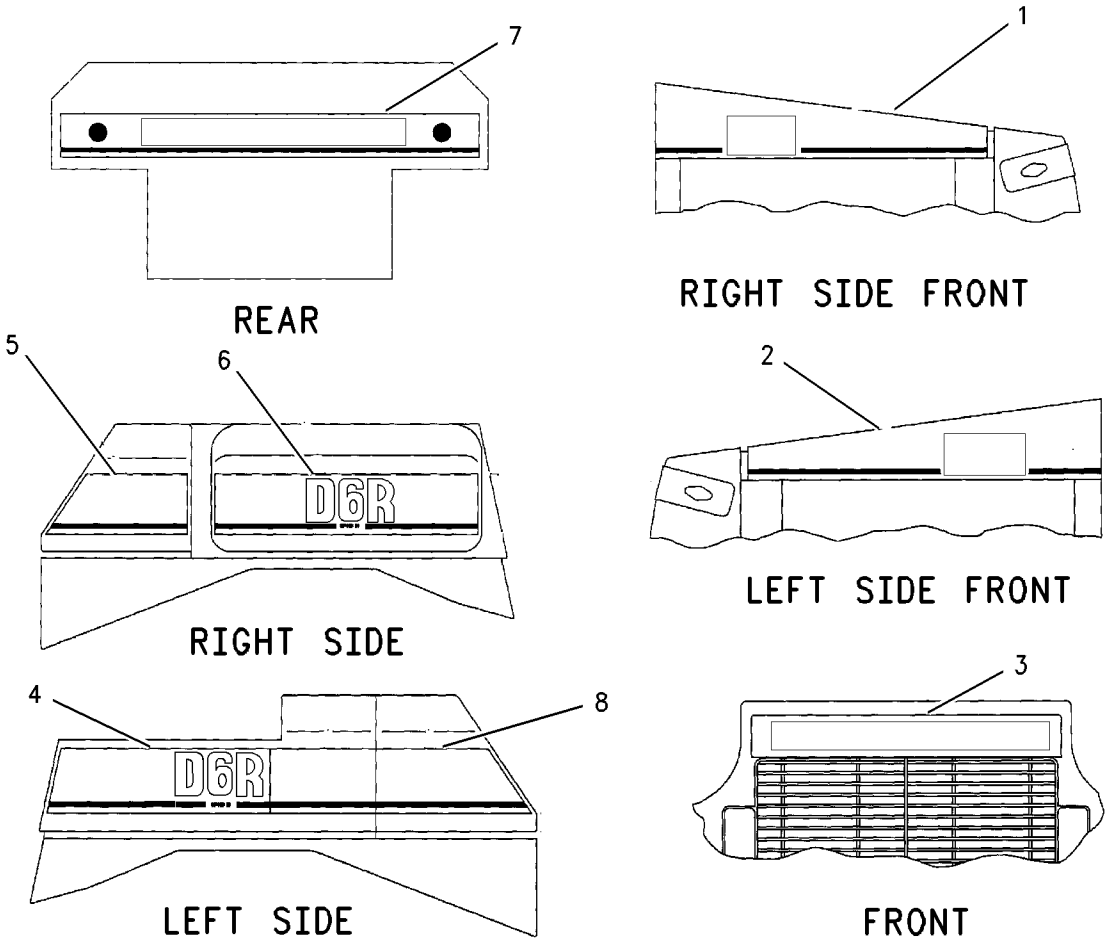

GRAPHIC #1 g00845666

SERVICE EQUIPMENT AND SUPPLIES

205-7590 FILM GP

S/N: BLE1-UP; BMJ1-UP
PART OF 216-7294 WASTE HANDLING GP
AN ATTACHMENT

SMCS-7000 **i01663067**

NOTE	REF NO	GRAPHIC REF	PART NUMBER	QTY	PART NAME 1 2 3 4 5 6 (PRODUCT LEVEL)	SEE PAGE
	1	1	**202-1364**	2	FILM	

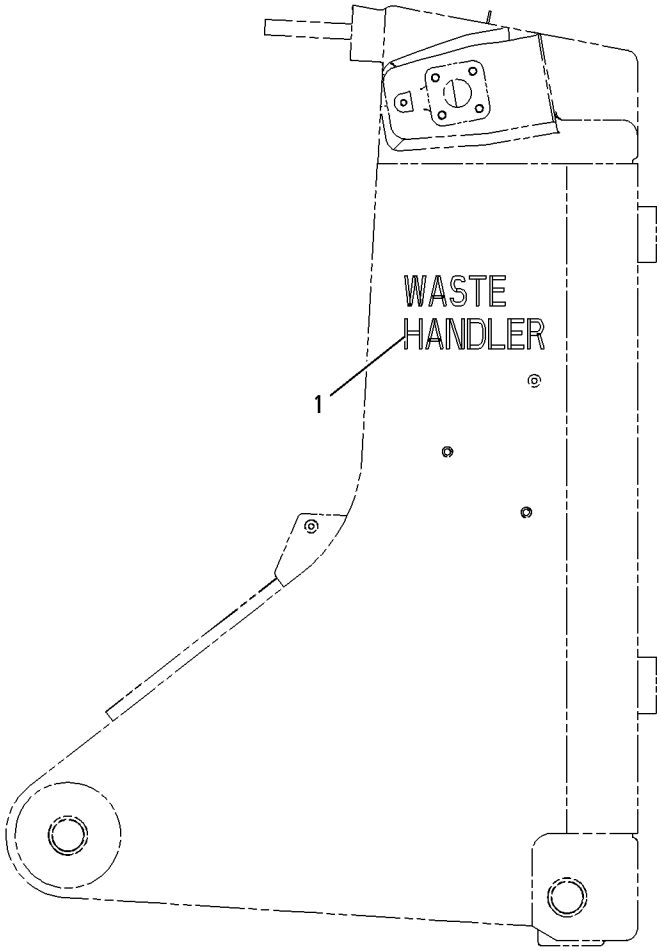

RIGHT SIDE VIEW

GRAPHIC #1 g00860591

SERVICE EQUIPMENT AND SUPPLIES

164-9943 PLATE & FILM GP

S/N: BLE1-UP

PART OF 164-4782 CHASSIS AR

SMCS-7557, 7563 **i01669490**

NOTE	PART NUMBER	QTY	PART NAME 1 2 3 4 5 6 (PRODUCT LEVEL)	SEE PAGE
Y	*178-3933*	1	FILM GP	728
A	**4W-1413**	1	PLATE-SERIAL NUMBER (ENGINE)	
			LH SIDE OF CYLINDER BLOCK TOWARD THE TOP OF REAR.	
	8T-9905	1	PLATE-IDENTIFICATION (TRANSMISSION OIL FILL TUBE)	
			ON CAP (VERT. SHAFT, ON "T" HANDLE).	
	9X-1878	1	PLATE (PRODUCT IDENTIFICATION)	
			USE FASTENER WHEN MOUNTING PLATE. ATTACH PLATE TO ROPS MOUNTING PAD. FOR CONCEALED PIN LOCATION, SEE CHART.	
	174-4590	1	PLATE-INFORMATION	
			SECURE PLATE TO THE STEEL AREA OF LH DASH UPRIGHT WIH TACK FASTENERS.	
	189-0488	1	PLATE-WARNING	
			ON UPPER LEDGE OF LH CONSOLE OF OPERATORS STATION - READABLE FROM RH SIDE OF TRACTOR.	
	214-8976	1	PLATE (FUEL DRAIN VALVE)	
			INSTALL PLATE ON FUEL TANK DRAIN VALVE.	
	8T-9530	16	TACK-FASTENER	
			USE FASTENERS WHEN MOUNTING PLATES.	
	9F-6656	1	RING-RETAINING	
			ON CAP (VERT. SHAFT, ON "T" HANDLE).	
	9F-6656	1	RING-RETAINING	
			INSTALL PLATE ON FUEL TANK DRAIN VALVE.	
	4P-6464	1	FILM-AIR CLEANER (RADIAL SEAL)	
			CENTER ON EXTERIOR OF AIR CLEANER COVER.	
	6V-4611	1	FILM-WARNING (JUMPER CABLE)	
			ON BOTTOM OF BATTERY BOX COVER.	
	7X-3229	4	FILM-LIFT & TIE DOWN	
			WITHOUT RIPPER-ON SIDE OF TRACK ROLLER FRAME BETWEEN FRONT ROLLER & IDLER & BETWEEN REAR ROLLER & IDLER (2 EACH SIDE)	
			WITH RIPPER-ON SIDE OF TRACK ROLLER FRAME BETWEEN FRONT ROLLER & IDLER AND ON SIDE OF LOWER RIPPER FRAME BY REAR PIN	
			2 EACH SIDE)	
	7X-7644	4	FILM-TIE DOWN	
			ON FRONT TOWING EYE.	
			W/O RIPPER - ON SIDE OF TRACK ROLLER FRAME CENTERED BETWEEN FRONT & REAR IDLERS. (1 EA SIDE)	
			ON REAR DRAWBAR CLEVIS. (NOT REQUIRED ON MACHINES W/O DAWBAR)	
			W/ RIPPER - ON SIDE OF TRACK ROLLER FRAME CENTERED BETWEEN FRONT & REAR IDLERS & BETWEEN REAR ROLLER & IDLER.	
			(2 EA SIDE)	
	8C-3221	1	FILM-OIL LEVEL (TRANSMISSION)	
			ON FILL TUBE, NEAR TOP.	
	8T-4999	1	FILM-INSTRUCTION (BATTERY DISCONNECT)	
			ON FACE OF DISCONNECT SWITCH.	
	9X-6340	1	FILM-INSTRUCTION (ENGINE OIL)	
			ON ENGINE OIL FILL TUBE.	
	102-2913	1	FILM-INSTRUCTION (DOZER CONTROL)	
			ON RAISED SURFACE TO RIGHT OF CONTROL	

164-9943 **PLATE & FILM GP** ***(contd.)*** **i01669490**

NOTE	PART NUMBER	QTY	PART NAME 1 2 3 4 5 6 (PRODUCT LEVEL)	SEE PAGE
	105-3330	2	FILM-WARNING (ACCUMULATOR PRESSURE)	
			LOCATE ON PLATFORM	
	127-8819	1	FILM-NOTICE	
			ON RH SIDE OF ENGINE SIDE GUARD - CENTERED ON ACCESS COVER.	
	137-3937	1	FILM-IDENTIFICATION (EXCLAMATION SYMBOL)	
			REAR RH CONSOLE CORNER BY ACTION LIGHT.	
	152-1482	1	FILM-IDENTIFICATION	
			HYD CONTROL LOCK - INSTALL NEXT TO KNOB.	
	164-9999	1	FILM-INSTRUCTION	
			LOCATE VERTICALLY ON REAR OF BATTERY BOX PANEL.	
	169-2876	2	FILM-IDENTIFICATION (12 VOLT)	
			2 - REAR CONSOLE BEHIND OPERATOR'S SEAT	
	173-1602	1	FILM-MONITOR	
			ON EMS MODULE INSTRUMENT PANEL.	
	190-2938	1	FILM-WARNING (PRESSURIZED COOLANT)	
			UNDERNEATH THE DOOR TO THE RADIATOR FILL.	
	190-5386	2	FILM-REFLECTOR (RED)	
			APPLY TO THE REAR LH & RH SIDE OF MACHINE ON FILM STRIPE.	

A-NOT PART OF THIS GROUP
Y-SEPARATE ILLUSTRATION

SERVICE EQUIPMENT AND SUPPLIES

164-9945 PLATE & FILM GP

S/N: BMJ1-UP

PART OF 164-4784 CHASSIS AR

SMCS-7557, 7563 **i01669544**

NOTE	PART NUMBER	QTY	PART NAME 1 2 3 4 5 6 (PRODUCT LEVEL)	SEE PAGE
Y	*178-3932*	1	FILM GP	727
A	**4W-1413**	1	PLATE-SERIAL NUMBER (ENGINE)	
			LH SIDE OF CYLINDER BLOCK TOWARD THE TOP OF REAR	
	8T-9905	1	PLATE-IDENTIFICATION (TRANSMISSION OIL FILL TUBE)	
			ON CAP (VENT. SHAFT, ON "T" HANDLE).	
	9X-1878	1	PLATE (PRODUCT IDENTIFICATION)	
			USE FASTENER WHEN MOUNTING PLATE. ATTACH PLATE TO ROPS MOUNTING PAD. FOR CONCEALED PIN LOCATION, SEE CHART.	
	174-4590	1	PLATE-INFORMATION	
			SECURE PLATE TO THE STEEL AREA OF LH DASH UPRIGHT WITH TRACK FASTENERS.	
	189-0488	1	PLATE-WARNING	
			ON UPPER LEDGE OF LH CONSOLE OF OPERATORS STATION - READABLE FROM RH SIDE OF TRACTOR.	
	214-8976	1	PLATE (FUEL DRAIN VALVE)	
			INSTALL PLATE ON FUEL TANK DRAIN VALVE.	
	9F-6656	1	RING-RETAINING	
			ON CAP (VENT. SHAFT, ON "T" HANDLE).	
	9F-6656	1	RING-RETAINING	
			INSTALL PLATE ON FUEL TANK DRAIN VALVE.	
	8T-9530	16	TACK-FASTENER	
			USE FASTENER WHEN MOUNTING PLATES.	
	4P-6464	1	FILM-AIR CLEANER (RADIAL SEAL)	
			CENTER ON EXTERIOR OF AIR CLEANER COVER.	
	5P-9884	1	FILM (HYDRAULIC OIL)	
			TANK LIFT HOOK (REAR) - ADJACENT TO HYDRAULIC TANK FILLER SPOUT.	
	6V-4611	1	FILM-WARNING (JUMPER CABLE)	
			ON BOTTOM OF BATTERY BOX COVER.	
	7X-3229	4	FILM-LIFT & TIE DOWN	
			W/O RIPPER - ON SIDE OF TRACK ROLLER FRAME BETWEEN FRONT ROLLER & IDLER & BETWEEN REAR ROLLER & IDLER. (2 EA SIDE)	
			W/ RIPER - ON SIDE OF TRACK ROLLER FRAME BETWEEN FRONT ROLLER & IDLER & ON SIDE OF LOWER RIPPER FRAME BY REAR PIN.	
			(2 EA SIDE)	
	7X-7644	4	FILM-TIE DOWN	
			ON FRONT TOWING EYE.	
			W/O RIPPER - ON SIDE OF TRACK ROLLER FRAME CENTERED BETWEEN FRONT & REAR IDLERS. (1 EA SIDE)	
			ON REAR DRAWBAR CLEVIS. (NOT REQUIRED ON MACHINES W/O DRAWBAR)	
			W/ RIPPER - ON SIDE OF TRACK ROLLER FRAME CENTERED BETWEEN FRONT & REAR IDLERS - & BETWEEN REAR ROLLER & IDLER.	
			(2 EA SIDE)	
	8C-3221	1	FILM-OIL LEVEL (TRANSMISSION)	
			ON FILL TUBE, NEAR TOP.	
	8T-4999	1	FILM-INSTRUCTION (BATTERY DISCONNECT)	
			ON FACE OF DISCONNECT SWITCH.	
	9X-6340	1	FILM-INSTRUCTION (ENGINE OIL)	
			ON ENGINE OIL FILL TUBE.	

164-9945 **PLATE & FILM GP** ***(contd.)*** **i01669544**

NOTE	PART NUMBER	QTY	PART NAME 1 2 3 4 5 6 (PRODUCT LEVEL)	SEE PAGE
	102-2913	1	FILM-INSTRUCTION (DOZER CONTROL)	
			ON RAISED SURFACE TO RIGHT OF CONTROL.	
	105-3330	2	FILM-WARNING (ACCUMULATOR PRESSURE)	
			LOCATED ON PLATFORM	
	127-8819	1	FILM-NOTICE	
			ON RH SIDE OF ENGINE SIDE GUARD - CENTERED ON ACCESS COVER.	
	137-3937	1	FILM-IDENTIFICATION (EXCLAMATION SYMBOL)	
			REAR RH CONSOLE CORNER BY ACTION LIGHT.	
	152-1482	1	FILM-IDENTIFICATION	
			HYDRAULIC CONTROL LOCK - INSTALL NEXT TO KNOB.	
	164-9999	1	FILM-INSTRUCTION (FUSE)	
			LOCATE VERTICALLY ON REAR OF BATTERY BOX PANEL.	
	169-2876	2	FILM-IDENTIFICATION (12 VOLT)	
			2 - REAR CONSOLE BEHIND OPERATOR'S SEAT.	
	173-1602	1	FILM-MONITOR	
			ON EMS MODULE INSTRUMENT PANEL.	
	190-2938	1	FILM-WARNING (PRESSURIZED COOLANT)	
			TO THE RIGHT OF RADIATOR FILL COVER.	
	190-5386	2	FILM-REFLECTOR (RED)	
			APPLY TO THE REAR LH & RH SIDE OF MACHINE ON FILM STRIPE.	

A-NOT PART OF THIS GROUP
Y-SEPARATE ILLUSTRATION

MEMORANDA

PART NUMBER INDEX

Part	Page
0	
0L-0478	277
0L-1026	26
0L-1169	232
0S-0509	218
0S-0519	28
0S-1569	232
0S-1585	208
0S-1588	272
0S-1591	100
	232
0S-1594	208
	218
	286
	394
0S-1595	220
0S-1614	675
0S-1619	218
	249
	255
0S-1620	249
	255
0S-1756	448
	450
0S-1897	232
0T-0065	218
0T-0102	208
	456
0T-0573	286
1	
1A-2209	268
1A-2223	249
	255
1A-2610	208
1A-5183	248
	254
	278
1A-5822	232
1B-2578	246
1B-3978	226
	230
1B-3980	226
	230
1B-4430	696
1B-5174	360
	362
	364
	366
	368
	370
	372
	374
1B-8705	16
	25
	262
1B-8706	246
1B-8714	246
1B-8735	606
1D-4540	218
1D-4566	261
1D-4601	232
1D-4627	454
1D-4628	230
	452
1D-4709	456
1F-0748	294
	296
1F-0750	132
	134
	164
	222
	296
	318
	326
	612
	666
	680
1F-6762	448
	450
1H-1023	184
1H-2629	184
1H-3244	128
	136
	168
1H-3937	501
1H-5728	237
	262
1H-8720	394
1J-0245	666
1J-0708	454
1J-2921	456
1J-6472	354
	356
1J-8569	454
1J-8668	114
	140
	298
	300
	460
	465
	471
1J-9671	49
	528
1K-5888	480
	492
	606
1K-6872	560
	594
1K-8850	338
1L-3162	284
1L-4775	70
1L-5072	503
1L-6957	232
1L-7388	249
	255
1L-8545	60
1M-1230	602
1M-1571	448
	450
1M-3909	262
1M-4291	394
1M-4543	612
1M-6119	138
	139
	145
1M-6120	138
	139
	145
1M-6718	524
	525
	533
1M-8657	249
	255
1M-8747	396
	399
1M-9011	226
	230
	244
1M-9968	185
1M-9971	184
1N-4403	99
1P-1547	305
	306
1P-1744	242
1P-2772	350
	676
1P-3702	508
	510
1P-3703	476
1P-3704	460
1P-3705	476
1P-3706	528
1P-3709	476
1P-3934	232
1P-3935	232
1P-4278	90
	96
	118
1P-4576	452
	482
	484
	486
	488
	490
	492
1P-4577	237
	261
	438
	440
	442
	444
	460
	476
	494
	508
	510
	528
1P-4578	237
	261
	476
	508
	510
1P-5760	502
1P-5763	502
1P-5764	476
1P-6356	640
1P-7009	238
1P-9005	226
	230
1P-9328	96
1Q-1548	326
1Q-2252	226
1Q-2265	226
1Q-2266	226
1Q-2275	7
	►226
1Q-2423	620
1Q-2986	326
1Q-2987	326
1R-0716	72
1R-0735	502
1R-0762	118
1R-0770	113
1S-0994	117
1S-0996	114
1S-1860	232
	404
	405
	406
	407
	408
	409
	410
	411
	412
	413
	414
	415
	416
1S-4915	139
1S-6385	296
1S-7251	138
	139
	191
1S-7252	139
	191
1S-7446	184
1S-8868	424
1S-8947	394
1S-9593	158
	160
	289
	291
1S-9799	272
1T-0051	268
1T-0068	353
1T-0097	268
1T-0414	268
	514
	516
1T-0421	268
1T-0437	268
1T-0438	268
1T-0441	268
1T-0446	268
1T-0447	268
1T-0599	268
1T-0738	268
	280
1T-0765	380
	381
1T-1402	272
1T-1994	268
1T-2048	268
1T-2051	268
1T-2055	►268

► **PRIMARY REFERENCE**

PART NUMBER INDEX

Part	Page
	270
1T-2069	268
1T-2077	268
1U-0159	560
	594
1U-0183	581
	582
	586
	593
1U-0300	560
1U-0301	560
1U-0612	560
1U-0725	552
	554
1U-0928	534
1U-0929	534
1U-1173	534
1U-1174	534
1U-1175	534
1U-1176	534
1U-1263	534
1U-1267	534
1U-2393	▶486
	541
	542
	545
	546
1U-2525	▶488
	536
1U-2533	564
1U-2827	502
1U-4069	456
1U-4103	567
1U-8846	48
	50
	55
	103
	155
1V-3113	600
1V-7753	237
1W-2431	105
1W-3011	114
1W-4738	47
1W-4741	47
1W-4746	47
1W-6448	214
1W-8407	28
1Y-7452	90
1Y-7927	624
1Z-0742	8
	▶620

2

Part	Page
2A-1162	49
2A-1736	437
2A-3211	237
	600
2A-3746	270
2A-4429	32
2B-0858	224
2B-0941	646
2B-0947	226
	230
2B-2695	288
2B-9373	262
2D-0092	456
2D-1523	272
2D-2751	640
2D-4202	502
2D-5658	270
2D-6235	624
2D-6392	184
2D-6506	244
2D-6642	232
2D-8009	262
2F-5326	356
2F-6678	185
2F-8509	498
2G-1133	202
2G-8097	702
2G-9524	316
2H-3429	184
	524
	525
2H-3920	638
2H-3922	138
	197
	202
2H-3928	380
	381
	396
	397
	399
2H-3931	223
	224
2H-3932	218
2H-6338	394
2H-6622	707
	711
	712
2J-0564	452
2J-2866	512
	514
	516
2J-3506	448
	450
	569
	570
	571
	572
2J-6274	402
2J-6356	246
2J-7761	503
2J-8163	184
2J-8489	454
	456
2K-0703	594
2K-1845	456
2K-3258	454
2K-4096	452
2K-4309	594
2K-4310	594
2K-4472	225
2K-4507	452
2K-4821	128
	136
	305
	306
2K-4973	237
	244
	326
	502
	560
	594
	598
	694
	696
2K-5986	270
2K-6830	448
	450
2K-8257	237
2K-8467	430
	432
2K-9111	675
2L-8050	139
2L-8054	139
2L-8058	139
2L-8061	139
2L-8075	128
2M-0913	138
2M-1444	622
2M-1538	264
2M-3974	261
2M-4453	88
2M-5795	296
2M-7041	288
2M-7819	624
2M-9780	114
	118
	208
	278
	292
	476
	528
	532
2N-3476	202
2N-3479	316
2P-0347	394
2P-2717	236
2P-3696	226
	230
2P-4304	72
2P-4339	628
2P-5616	128
2P-6588	490
2P-8514	338
2R-0098	226
	230
2S-0795	220
2S-2251	272
2S-2596	512
	514
	516
2S-3029	70
2S-3440	74
2S-4078	208
	226
	230
	237
	284
	402
	438
	440
	442
	444
2S-5658	265
2S-5926	402
2V-1937	600
2V-4868	96
2W-5825	80
2W-7211	26
2W-7381	59
2W-7566	46
2W-8147	25
2W-8476	46
2Y-5829	77

3

Part	Page
3B-0623	26
	30
3B-1915	261
3B-4501	138
	202
3B-4506	286
3B-4605	308
	312
3B-4610	294
	296
3B-4615	321
	326
	336
3B-4627	534
	562
	564
3B-4629	328
	329
	330
	332
3B-4630	548
	591
3B-4632	586
	587
	588
	592
3B-5325	596
	597
3B-7721	96
3B-8485	354
	356
3B-8489	354
	356
	534
	558
	594
3D-2824	58
	86
	96
	196
	225
	292
	465
	471
	477
3D-2975	624
3D-4603	512
	516

▶ **PRIMARY REFERENCE**

PART NUMBER INDEX

Part	Page	Part	Page	Part	Page	Part	Page
3D-7943	242	3E-4044	294	3G-6372	324		114
3E-0109	628	3E-4048	212		336		140
	632	3E-4051	640	3G-8047	480		225
3E-0125	188	3E-4052	640		490		237
3E-0127	188	3E-4057	640		492		354
3E-0128	188	3E-4058	640	3G-8054	480		356
3E-0129	188	3E-4073	640		490		464
3E-0130	188	3E-4302	498		492		465
3E-0131	188	3E-4352	103	3G-8057	480		470
3E-0132	188		172		490		471
3E-0133	188	3E-4353	51		492		477
3E-0134	188		54	3G-8742	448		494
3E-0135	188		109		450		502
3E-0136	188		110	3G-9402	558		508
3E-0137	188	3E-4356	627	3G-9405	558		510
3E-0138	188	3E-4876	222	3G-9451	536		512
3E-0139	188	3E-4880	222		537		514
3E-0140	188	3E-4999	60		539		516
3E-0141	188	3E-5180	427		541		520
3E-0142	188	3E-5239	614		543		522
3E-0144	188	3E-5464	600		545	3J-8500	500
3E-0145	188	3E-6328	▶126		▶558	3J-9703	456
3E-0146	188		202	3H-6660	672	3K-0360	32
3E-1841	622	3E-6389	▶162	3H-8683	492		49
3E-2954	212		638	3J-1770	534		74
3E-3365	126	3E-6601	627	3J-1907	49		82
	138	3E-6812	640		84		86
	139	3E-6922	629		118		96
	180	3E-7417	498		140		114
	196	3E-7577	▶128		208		140
	202		134		220		220
	522	3E-7771	185		225		226
	602	3E-7775	194		236		230
	614	3E-8005	18		237		236
	628	3E-8017	108		278		237
	632		111		282		424
	640	3E-8020	636		284		464
3E-3368	177	3E-8782	164		286		465
	178	3E-8825	164		292		470
3E-3371	162		202		464		471
	174		599		465		490
	175	3E-8857	599		470		518
	176	3E-9044	202		471		524
	181	3E-9314	164		476		525
	200	3E-9328	164		477		527
	464	3E-9865	602		494		530
	470	3E-9867	84		506		646
	628	3E-9868	84		508	3K-0835	632
	629	3F-0379	184		510		633
	632		194		520	3K-2511	248
	633	3F-3442	208		522		249
3E-3377	464	3F-3727	268		526		254
	470	3F-4854	534		533		255
3E-3380	702	3F-5022	248	3J-4818	696	3K-2889	305
3E-3383	166		254	3J-5169	298		306
	170	3F-6185	562		300	3K-6060	140
	434		564		324	3K-7942	214
	628	3F-9556	136		336	3K-8460	49
	651		654	3J-5554	286	3K-8510	594
	652		655	3J-6559	534	3L-0526	286
	653	3G-1753	452	3J-6572	456	3L-0594	672
3E-3389	628	3G-1757	452	3J-6573	534	3L-3380	184
	632	3G-3250	292	3J-7354	49	3L-3813	528
3E-3535	640	3G-3267	502		84	3L-5893	94
3E-3892	605	3G-4783	476		96	3N-3763	185

▶ **PRIMARY REFERENCE**

PART NUMBER INDEX

Part	Page
3P-1156	77
3R-8801	185
3S-0004	278
3S-2093	200
	280
	602
	614
	628
	632
	638
	640
	698
	700
	702
3S-2173	284
3S-2708	248
	249
	254
	255
	270
3S-3439	264
3S-3440	264
3S-6162	456
3S-7781	208
3S-8665	77
3S-9557	716
	720
3S-9643	82
3T-0598	402
3T-0996	298
	300
3T-0997	298
	300
3T-1121	707
	711
	712
3T-1162	360
	362
	364
	366
	368
	370
	372
	374
3T-1447	262
3T-2051	389
3T-2077	360
	362
	364
	366
	368
	370
	372
	374
3T-2662	152
3T-2747	328
	329
	330
	332
3T-2748	329
	332
3T-3418	184
3T-3422	184
	194
3T-3423	184
	185
3T-3424	184
	185
3T-3434	184
	194
3T-3634	666
3T-4007	270
3T-4008	270
3T-4009	270
3T-4011	270
3T-4013	270
3T-4307	324
	336
3T-4308	324
	336
3T-4377	248
	254
3T-4968	248
	254
3T-5298	236
	▶264
3T-5299	264
3T-5301	236
3T-5302	236
3T-5356	261
3T-6286	286
3T-6354	128
3T-6469	236
3T-6471	236
3T-6655	638
3T-6742	232
3T-7310	236
3T-8305	266
3T-8729	249
	255
3T-8757	262
3T-9494	184
	185
3T-9524	184
3T-9525	184
3T-9922	208
3V-2431	277
3V-9244	336
3V-9399	308
	312
3W-0640	402
3W-1356	▶235
	566
3W-1357	235
3W-1654	▶104
3W-1655	104
3W-1852	360
	362
	364
	366
	368
	370
	372
	374
3W-1944	321
3W-2182	306
3W-2369	402
3W-2412	424
3W-2470	236
3W-3742	336
3W-3819	344
3W-3896	318
	336
3W-4404	424
3W-5669	350
3W-5979	354
3W-6528	350
3W-6658	482
3W-6756	672
3W-6866	▶305
3W-6867	305
3W-8370	222
3W-9207	308
	313
3W-9208	308
	313
3W-9481	316
3W-9678	354
	356
3Y-3866	534
3Y-5405	484
	486
	488

4

Part	Page
4B-1270	214
4B-2043	128
4B-2049	138
	185
	188
4B-3388	268
4B-3609	246
4B-4098	38
	534
4B-4158	362
	364
	366
	370
	372
	374
	536
	537
	538
	539
	540
	541
	542
	543
	544
	545
	546
	566
4B-4274	602
4B-4278	308
	312
	514
4B-4863	168
	202
	205
4B-5059	624
4B-7739	224
4B-9782	208
4B-9784	424
4B-9785	208
4B-9808	616
4B-9880	232
4D-6716	90
4D-7733	640
4D-7735	114
4F-0255	534
	562
	564
4F-1204	552
	554
	562
	564
4F-1252	534
4F-2294	198
4F-2710	562
	564
4F-4097	498
4F-4879	691
	692
	693
4F-5695	26
4F-6024	47
4G-4972	28
4H-0019	232
4H-0408	502
4H-1440	268
4H-1641	296
4H-2558	308
	313
4H-5440	208
4H-7869	191
4J-0121	448
	450
4J-0519	502
4J-0520	438
	440
	442
	444
	460
	477
	482
	492
4J-0522	477
	508
	510
4J-0524	502
4J-1641	581
	582
	586
	593
4J-2036	328
	329
	330
	332
4J-2414	549
	550
	552
4J-3420	452
4J-5267	452
	480
	482
	484
	486
	488

▶ **PRIMARY REFERENCE**

PART NUMBER INDEX

Part	Page	Part	Page	Part	Page	Part	Page
	490		641		632	4T-4631	514
	492	4L-6459	477		641		516
4J-5351	512	4L-8149	237	4P-7582	140	4T-4659	528
	514	4L-9337	237	4P-8134	140	4T-4866	549
	516		438		200		552
4J-5477	464		440		202		554
	465		442		214		562
	470		444		629		564
	471		460		633	4T-4875	558
4J-6374	448		480		641	4T-5070	533
	450	4M-0189	48		662	4T-5071	506
4J-7533	280	4M-1815	185	4R-9999	64		533
	512	4M-1827	184	4S-1962	132	4T-5072	512
	514	4M-1828	184		134		514
	516	4M-1829	184	4S-5898	477		516
4J-8251	503	4M-1831	184	4S-5982	284	4T-5073	512
4J-8252	503		194	4S-5983	284		514
4J-8997	508	4M-1853	184	4S-6668	114		516
	510	4M-1854	184	4S-8537	268	4T-5074	514
4J-9118	583	4M-1896	185	4S-8538	424	4T-5075	531
	584	4M-2442	249	4S-8598	264	4T-5348	▶534
4K-0367	502		255	4S-8603	264		537
4K-1388	438	4M-5281	237	4S-9191	82		538
	440		629	4T-0259	456		539
	442		632	4T-0521	502		540
	444	4M-5858	424	4T-0732	562	4T-5495	534
	512	4M-5905	288		564	4T-5896	494
	514	4M-5912	284	4T-0780	562		▶506
	516	4M-6425	237		564	4T-6151	583
4K-2039	284		606	4T-1005	531		584
	524		675	4T-1009	531	4T-7571	530
	525	4M-6980	528	4T-1011	531	4V-7884	694
4K-3004	594	4M-7470	308	4T-1108	512		696
4K-3094	138		313		514	4V-8256	598
4K-3128	452	4M-8239	286		516	4V-8556	696
4K-3533	606	4M-9592	248	4T-1481	548	4V-8577	694
4K-7627	338		254		586	4W-1203	38
4K-8302	641	4N-1059	190		587	4W-1204	38
4K-8501	338	4N-1230	47		588	4W-1413	730
4K-8603	272	4N-2514	45		591		732
4K-9429	659	4N-2927	624		592	4W-2026	20
4L-2729	185	4N-3808	223	4T-1504	581	4W-4794	82
4L-4986	225	4N-7521	188		582	4W-9972	138
4L-6454	104	4N-9915	627		586	4Y-6353	610
	106	4P-2102	9		593	4Z-8917	8
	114		10	4T-1520	562	4Z-8918	8
	132		11		564		
	134		12	4T-1563	484		
	140		▶36		486	**5**	
	158	4P-4369	108		488		
	164	4P-5524	99	4T-1564	484	5A-3604	76
	224	4P-5866	112		488	5B-0582	268
	226	4P-6464	730	4T-1649	514	5B-3180	288
	230		732	4T-1701	514	5C-2890	118
	237	4P-7428	51	4T-1860	512		155
	272		140		514		520
	294		641		516		522
	298	4P-7429	96		▶533		614
	300		641	4T-2741	530		627
	316	4P-7581	132	4T-2952	571	5C-6565	336
	318		140	4T-2985	570		502
	354		200	4T-4511	514		594
	356		202	4T-4628	512		641
	477		216		514		676
	490		629		516		678

▶ **PRIMARY REFERENCE**

PART NUMBER INDEX

Part	Page
5C-7261	22
	140
	322
	420
	654
	655
5C-7267	726
5C-8814	652
	653
5C-9553	140
	205
	216
	652
	653
5D-0353	208
5D-1026	236
	622
5D-1911	503
5D-2989	248
5D-3118	305
	306
	338
	560
5D-4822	624
5D-7927	502
5D-9629	214
	662
5F-0304	49
5F-1678	356
5F-3106	48
5F-3144	452
5F-7054	531
5F-8000	88
	396
	397
	399
5F-9144	113
5F-9757	202
5G-2247	382
	383
	385
	386
5G-4109	114
5G-7183	338
5G-7191	476
5G-8655	606
5G-8836	249
	255
5G-8871	606
5G-8993	389
5G-9841	389
5G-9842	389
5G-9843	389
5G-9958	350
5G-9961	350
5G-9963	350
5G-9973	336
5G-9974	336
5H-1472	506
5H-3252	454
5H-4018	452
5H-4279	261
5H-6202	248
	254
5H-6734	360
	362
	364
	366
	368
	370
	372
	374
5J-3964	270
5J-4773	569
	570
	571
	572
5J-4989	454
5J-4991	456
5J-5020	452
5J-5314	184
5J-5731	454
5J-7386	270
5K-0227	512
	514
	516
5K-0461	298
	300
5K-5120	208
	218
5K-9090	237
	438
	440
	442
	444
5K-9107	394
	502
5K-9179	649
	650
5K-9246	208
5K-9988	208
5L-4758	242
5L-7200	138
	202
5L-8957	114
5M-2043	394
5M-2057	502
	512
	514
	516
5M-2894	208
	218
	232
	249
	255
	261
	262
	272
	380
	381
	394
	502
5M-3034	184
5M-3038	248
	249
	254
	255
5M-3062	114
	140
	164
	237
	316
	460
	465
	471
	477
	492
	558
	612
	641
5M-3605	262
5M-4443	396
	397
	399
5M-4987	262
5M-6126	248
	254
5M-6214	336
	549
	550
	552
5M-7878	270
5M-8500	606
5M-9548	284
5M-9554	284
5M-9623	286
5M-9735	60
5P-0492	156
5P-0537	652
	653
5P-0597	102
5P-0695	139
5P-0747	138
	139
	191
5P-0760	139
5P-0761	138
	139
	145
5P-0764	106
5P-0767	622
	646
5P-0998	667
5P-1075	104
	114
	132
	134
	140
	158
	160
	164
	202
	222
	237
	294
	296
	298
	300
	316
	318
	334
	335
	336
	354
	356
	438
5P-1076	60
	316
	318
	321
	326
	336
	350
	606
	621
	666
	676
	678
5P-1251	96
5P-1291	238
5P-1404	278
5P-1424	238
5P-1465	96
5P-1505	114
5P-1838	96
5P-2094	74
	476
5P-2228	237
	334
	335
	484
	488
5P-2230	476
5P-2424	496
	620
5P-2566	316
	318
	334
	335
	482
	486
5P-2671	558
5P-2817	102
5P-2937	96
5P-2955	164
5P-3108	502
5P-3264	122
5P-3418	128
5P-3419	128
5P-3422	96
5P-3930	249
	255
	270
5P-3948	640

► **PRIMARY REFERENCE**

PART NUMBER INDEX

Part	Page
5P-4057	208
5P-4115	316
	602
	629
	633
	666
5P-4116	36
	216
	420
	666
5P-4247	236
5P-4295	140
	641
5P-4536	112
5P-4868	476
5P-5045	249
	255
5P-5296	249
	255
5P-5297	249
	255
5P-5639	622
5P-5641	332
5P-5643	600
	607
	622
5P-5671	332
5P-5673	614
5P-5677	138
	170
	171
	670
5P-5680	707
	708
	709
	710
	711
	712
5P-5777	237
5P-5924	614
5P-5930	607
5P-5934	332
5P-5991	118
5P-5992	600
5P-6129	641
5P-6298	184
5P-6436	76
5P-6446	512
5P-6605	607
5P-6874	649
	650
5P-6944	140
5P-7085	237
5P-7177	304
5P-7211	309
	313
	344
	348
5P-7464	237
	480
	490
5P-7465	237
	480
	490
5P-7468	477
5P-7469	477
5P-7483	607
5P-7509	666
5P-7513	656
5P-7514	332
	656
5P-7592	232
5P-7679	270
5P-7807	128
5P-7957	659
5P-7970	74
5P-8167	140
	294
	296
	460
	696
5P-8194	249
	255
5P-8196	72
5P-8245	20
	48
	51
	66
	67
	69
	208
	220
	232
	248
	249
	254
	255
	261
5P-8247	136
	232
5P-8248	569
	570
	571
	572
5P-8249	452
	454
5P-8250	456
5P-8309	309
5P-8347	147
5P-8441	602
	614
5P-8444	477
5P-8445	624
5P-8500	15
	124
	236
	294
	308
	312
	336
	458
5P-8502	15
	124
	236
	294
	308
	312
	336
	458
5P-8758	332
5P-8907	434
5P-8918	707
	711
	712
5P-8998	208
5P-9439	261
5P-9617	72
	84
	464
5P-9658	223
5P-9884	732
5P-9891	360
	362
	364
	366
	368
	370
	372
	374
5Q-5298	577
	▶586
5Q-5299	▶569
	586
5Q-5400	586
5Q-5405	569
5Q-5499	▶592
5Q-5651	580
5Q-5655	580
5Q-5779	556
	▶585
5Q-5780	585
	▶590
5Q-5781	590
5Q-5834	▶580
	592
5Q-7996	▶390
5Q-7997	▶360
	390
5Q-7998	▶362
	390
5Q-8207	360
5Q-8209	362
5R-0939	298
	300
5R-0940	298
	300
5R-4787	92
5S-3632	236
5S-7001	531
5S-7349	136
	194
5S-7379	222
	272
	316
	318
	438
	440
	442
5S-7382	236
	244
	328
	329
	330
5S-7383	222
	424
	490
	646
	675
5S-8709	490
5S-8711	578
	579
5S-8712	490
5S-8714	490
5S-8718	490
5S-8765	490
5S-8766	490
5S-9062	38
5T-4374	354
	356
5V-0770	624
5V-1496	296
	684
	688
5V-1497	694
	6
6A-5591	48
6A-9708	652
	653
6A-9709	652
	653
6A-9710	652
	653
6A-9718	652
	653
	726
6B-1124	60
6B-1557	262
6B-4594	90
6B-6863	249
	255
6B-7246	92
6C-3060	124
6C-3431	627
6C-5340	286
6C-5341	286
6C-6761	662
6D-1641	641
6D-1746	294
	296

▶ **PRIMARY REFERENCE**

PART NUMBER INDEX

Part	Page	Part	Page	Part	Page	Part	Page
6D-3273	145		540	6K-3630	270	6V-0267	477
6D-4246	602		▶552	6K-3632	350	6V-0268	477
	614	6I-8347	552		676	6V-0327	226
6D-4247	140	6I-8410	552	6K-6307	502		230
	646	6I-8411	552	6K-6967	96	6V-0328	226
6D-4636	646	6I-8487	272	6K-8162	528		230
6D-5801	168	6I-8500	248	6K-8178	641	6V-0329	226
	202		254	6K-8498	208		230
	205	6I-8501	▶248	6K-9555	600	6V-0330	226
6D-9081	316		275	6L-1649	237		230
6D-9157	225	6I-8504	254	6L-4783	261	6V-0439	226
6E-1205	454	6I-8505	254	6L-5359	237		230
6E-1436	498	6I-8506	254		264	6V-0473	248
6E-1835	530	6I-8507	232	6L-7159	600		249
6E-2017	502	6I-8510	249	6M-5062	524		254
6E-4224	498		255		525		255
6E-4228	526	6I-8511	232	6N-1558	105	6V-0484	208
6E-4229	526	6I-9029	341	6N-1872	128		236
6E-4230	526	6I-9109	4	6N-3279	184		278
6E-4239	526		▶404	6N-3826	184	6V-0852	44
6E-4241	526	6I-9386	606		194		208
6E-4242	526	6I-9641	▶405	6N-7523	124		236
6E-4246	526		417		724		278
6E-4318	526	6I-9642	▶406	6P-2215	662		284
6E-4532	528	6I-9643	▶407	6P-2216	312		286
6E-4533	528	6I-9644	▶408		672		466
6E-4907	528	6I-9645	▶409	6P-6591	629		476
6E-5066	518	6I-9646	▶410	6P-7704	249	6V-0890	▶184
6E-5527	456	6I-9653	▶411		255		190
6E-6140	526		418	6P-8269	124	6V-0894	214
6E-6141	526	6I-9654	▶412		344		246
6E-6142	526	6I-9655	▶413	6S-1066	158	6V-0937	265
6E-6259	502	6I-9656	▶414		160	6V-1228	641
6F-0253	628	6I-9657	▶415	6S-2828	232	6V-1230	236
	629	6I-9658	▶416	6S-2829	232	6V-1249	480
	632	6I-9668	▶382	6T-0363	184		490
	633		405	6T-0364	232	6V-1322	184
6F-0711	298		406	6T-0371	184	6V-1355	96
	300		407	6T-0837	424	6V-1359	304
6F-2904	549		408	6T-0988	672		332
	550	6I-9671	▶383	6T-1120	185	6V-1668	602
	552		411	6T-1698	350	6V-1748	202
6F-3908	534		412	6T-3643	168	6V-1790	667
6F-4718	272		413	6T-3852	232	6V-1792	404
6F-7045	197		414	6T-3853	232		405
6F-7062	220	6I-9706	666	6T-4556	666		406
6H-3609	581	6J-0488	296	6T-4557	666		407
	582		318	6T-5005	▶707		408
	593		605		708		409
6H-3615	666		666	6T-5008	704		410
6H-3956	308	6J-0499	586		▶708		411
	312	6J-1323	612	6T-5067	672		412
	326	6J-2419	292	6T-5068	672		413
6H-3977	261	6J-3473	232	6T-5617	622		414
6H-4005	164	6J-5383	562	6T-6708	602		415
6H-9361	502		564	6T-7058	202		416
6I-1418	146	6J-6439	530	6T-7695	638	6V-1819	78
6I-2353	112	6J-9187	549	6T-7882	248		220
6I-2431	92		550	6T-8402	705	6V-1820	47
6I-2435	92	6J-9188	549		▶709		51
6I-2501	99		550	6T-8403	706		74
6I-2502	99	6K-0806	96		▶710		109
6I-4464	99		696	6T-8714	666	6V-2226	362
6I-8139	342	6K-1049	296	6T-9222	225		364
6I-8346	539	6K-3273	688	6T-9927	344		366

▶ **PRIMARY REFERENCE**

PART NUMBER INDEX

Part	Page	Part	Page	Part	Page	Part	Page
	370	6V-5049	44	6V-6561	724		202
	372		58		▶726	6V-8373	185
	374		72	6V-6703	151	6V-8376	152
6V-2312	716		77	6V-6716	662		168
	718		113	6V-6889	652		246
	720		117		653	6V-8378	194
6V-2317	22		118		726	6V-8397	114
	41	6V-5050	122	6V-7190	606		118
	43	6V-5185	237	6V-7357	118		237
	52	6V-5186	237		246		464
	420	6V-5188	264		724		465
6V-2331	606	6V-5192	500	6V-7636	606		466
6V-2372	641	6V-5217	50	6V-7646	627		470
6V-2375	606		76		684		471
6V-2404	232		200		688		472
6V-2435	566	6V-5218	72	6V-7673	47		476
6V-2478	249	6V-5219	24		498	6V-8398	114
	255		72	6V-7728	158		465
6V-2495	640	6V-5220	72		160		471
6V-2689	434	6V-5223	147	6V-7743	308		484
	522	6V-5387	236	6V-7744	246		486
6V-2803	304	6V-5393	531		308		488
6V-3260	606	6V-5555	508		313		490
6V-3320	602		510	6V-7981	122	6V-8400	237
6V-3532	568	6V-5556	514	6V-8073	606		438
6V-3538	28	6V-5582	▶188	6V-8077	72		440
6V-3668	38		192	6V-8118	427		442
	220	6V-5586	533	6V-8129	606		444
6V-3822	46	6V-5645	168	6V-8149	20	6V-8547	666
	118	6V-5683	168	6V-8182	328	6V-8625	114
6V-3823	610		636		329		490
6V-3918	18	6V-5696	20		330	6V-8628	465
	50		67		332		471
	55	6V-5817	700		346	6V-8629	476
	86	6V-5818	702		456	6V-8634	464
6V-3940	16	6V-5833	707		562		470
	18		708		564	6V-8636	117
	56		709		679		118
	77		710	6V-8185	168		122
	172		711	6V-8186	198		237
6V-3965	44		712	6V-8187	168		465
	208	6V-5839	35	6V-8188	185		471
	237		47		188	6V-8641	465
	278		74		194		471
	282		77		508	6V-8647	464
	284		78		510		470
	286		105		558	6V-8675	51
	477		108		594		66
6V-4248	110		117	6V-8189	136	6V-8715	118
	117		118		164		476
6V-4249	77		122		606	6V-8721	114
	105		191	6V-8190	305	6V-8723	237
6V-4292	114		200		306		465
	236		336		338		471
6V-4365	286	6V-5843	46		560	6V-8724	117
6V-4369	200		54	6V-8197	48		465
6V-4583	270	6V-5844	48		51		471
6V-4589	72	6V-5845	398	6V-8212	191		476
	118		400	6V-8225	636	6V-8730	114
	122	6V-5849	724	6V-8260	70	6V-8774	465
	290	6V-5851	724	6V-8336	48		471
6V-4611	730	6V-6207	726		498	6V-8781	465
	732	6V-6209	726	6V-8337	498		471
6V-5048	72	6V-6210	726	6V-8369	638	6V-8782	465
	172	6V-6317	200	6V-8370	138		471

▶ **PRIMARY REFERENCE**

PART NUMBER INDEX

Part	Page	Part	Page	Part	Page	Part	Page
6V-8801	104		471	6Y-3973	296		306
	114	6V-9873	466	6Y-3974	296	7B-3028	286
	158		472	6Y-4280	498		360
	160	6Y-0206	618	6Y-4638	288		362
	237		666	6Y-4819	248		364
	264	6Y-0352	597	6Y-4831	248		366
	438	6Y-0359	596	6Y-4843	254		368
	440	6Y-0473	380	6Y-4845	254		370
	442		381	6Y-5024	226		372
	444		382	6Y-5113	650		374
	460		383	6Y-5692	424	7B-3039	502
	465		384	6Y-5705	▶484	7B-3235	225
	471		385		543		232
	480		386		544	7B-7525	528
	492		396	6Y-5706	484	7B-9665	328
	641		399	6Y-5707	484		329
6V-8837	498	6Y-0596	490	6Y-5799	402		330
6V-8928	636	6Y-0597	490	6Y-5911	248		332
6V-8936	72	6Y-0598	490		254	7C-1493	72
6V-8981	484	6Y-0625	490	6Y-5912	249	7C-2164	60
	486	6Y-0859	226		255	7C-3567	53
	488		230	6Y-6286	405	7C-6670	112
6V-8982	492	6Y-1359	586		409	7C-6672	112
6V-8994	118	6Y-1387	586		411	7C-7431	111
6V-8998	237		593		415	7C-8370	60
6V-9001	117	6Y-1390	581	6Y-6287	404	7C-8634	38
	476		593		406	7D-1649	51
6V-9009	237	6Y-1531	586		410		232
6V-9167	353	6Y-1602	248		412	7D-1677	266
6V-9168	118	6Y-1744	▶570		416	7D-6922	618
	465		573	6Y-6294	405	7D-7233	96
	471		585		409	7E-2707	118
6V-9169	484	6Y-1781	390		411	7E-3870	5
	486		▶394		415		6
	488		418	6Y-6296	404		102
6V-9170	492	6Y-1806	537		406		109
6V-9172	237		538		410	7F-3488	184
6V-9182	476		▶583		412	7F-3491	184
6V-9197	296	6Y-1821	578		416	7F-3525	184
	316	6Y-1824	578	6Y-6389	408	7F-6998	628
6V-9200	114	6Y-2039	▶571		414	7F-7621	128
	471		574	6Y-6391	407	7F-8607	640
6V-9632	74		576		413	7F-9223	427
	200	6Y-2043	394	6Y-6394	407	7F-9543	305
	205	6Y-2073	537		413		306
	214		538	6Y-6412	408	7F-9547	305
	216		▶554		414		306
	420	6Y-2074	▶549	6Y-6751	583	7G-2343	249
	606		551		584		255
	662	6Y-2075	549	6Y-7385	627	7G-2454	606
	666	6Y-2076	549	6Y-7469	576	7G-2516	248
6V-9633	502	6Y-2130	222		▶578		254
6V-9746	96	6Y-2658	558	6Y-7470	578	7G-2830	249
	476	6Y-3161	▶550		579		255
6V-9748	38		551	6Y-7471	552	7G-3832	237
6V-9829	464	6Y-3162	▶551		554		482
6V-9835	464		554	6Y-8114	666	7G-3833	237
	471	6Y-3469	490	6Y-8735	296		482
6V-9836	465	6Y-3470	490	6Y-9280	558	7G-3834	237
	471	6Y-3472	486	6Y-9281	558		482
	476	6Y-3474	486			7G-4262	338
6V-9850	465	6Y-3475	488			7G-4332	396
	471	6Y-3476	488				399
6V-9851	72	6Y-3896	354			7G-4355	341
6V-9872	465		356	7B-0863	305		342

7

▶ PRIMARY REFERENCE

PART NUMBER INDEX

Part	Page
7G-4550	666
7G-4824	618
	666
7G-5186	90
7G-5320	272
7G-5532	▶230
	259
	260
7G-5984	460
7G-5985	460
7G-5986	460
7G-6224	232
7G-6355	248
7G-7218	249
	255
7G-7724	249
	255
7G-8975	▶306
7G-9555	277
7G-9968	424
7H-1447	502
7H-3607	265
7H-4571	394
7H-4574	394
7H-7628	232
7H-7658	248
	254
7I-2272	200
7I-6601	524
	525
7J-0204	284
	512
	514
	516
	524
	525
7J-1333	360
	362
	364
	366
	368
	370
	372
	374
7J-2036	380
	381
7J-5131	581
	582
	586
	593
7J-8611	208
7J-8955	456
7J-8956	456
7J-9108	492
7J-9933	512
	514
	516
	530
7K-1181	132
	134
	138
	152
	156
	158
	160
	164
	168
	202
	464
	470
	640
7K-3176	640
7K-3673	350
7K-9205	354
	356
7L-2894	184
	194
7L-9061	498
7M-0185	60
7M-0324	184
7M-0325	184
7M-0326	184
7M-0327	184
7M-1201	208
7M-1296	286
7M-1297	286
7M-1377	286
7M-5130	248
	254
7M-7219	624
7M-8485	96
	156
	220
	237
	284
	288
	476
	512
	514
	516
	531
7M-8651	184
7M-9918	112
7N-0718	138
	▶197
7N-1996	202
7N-5683	28
7N-9023	128
7N-9943	162
7P-4190	246
7P-6682	138
7P-7610	606
7P-8370	360
	362
	364
	366
	368
	370
	372
	374
7S-2042	296
7S-4244	118
7S-4346	600
7S-6058	346
7S-6719	492
7S-8920	237
	438
	440
	442
	444
7S-8921	237
	438
	440
	442
	444
7T-0020	162
7T-1068	709
	▶711
7T-1069	710
	▶712
7T-1099	109
	160
	164
	168
	200
	214
	222
	296
	318
	324
	350
	495
	606
	614
	662
	666
	679
	680
7T-1330	709
	710
7T-1474	232
7T-1475	232
7T-1975	560
7T-3267	194
7T-3268	194
7T-3271	194
7T-3276	194
7T-3277	194
7T-3278	194
7T-3279	194
7T-3451	194
7T-3454	194
7T-3950	248
	254
7T-3974	184
	194
7T-4515	291
7T-4532	609
7T-4970	534
7T-5856	614
7T-5886	360
	362
	364
	366
	368
	370
	372
	374
7T-6299	622
	667
7T-6934	484
	486
	488
7T-7388	628
	632
7T-7523	294
7T-8332	316
7T-8361	724
7T-8816	248
	249
	254
	255
7T-8875	208
7T-8876	208
7T-8891	700
7T-8894	641
7T-8895	641
7T-9096	652
	653
7T-9123	185
7T-9146	534
7T-9272	248
	254
7T-9302	638
7T-9370	249
	255
7T-9426	640
7T-9515	138
	202
7T-9517	138
7T-9586	552
7T-9755	498
7T-9793	641
7T-9946	232
7V-3715	354
	356
7V-5191	624
7V-8532	236
7W-2632	520
7W-3872	52
7W-5838	102
7W-7381	278
7X-0291	114
	140
7X-0292	560
	594
7X-0308	237
	261
7X-0311	612
7X-0313	237
7X-0314	477
7X-0325	244
	490
7X-0332	244
7X-0335	560
7X-0339	132
	134
7X-0340	594
7X-0342	140
7X-0344	583
	584
7X-0346	226
	230
	477
7X-0347	305
	306
7X-0354	496
7X-0356	496
7X-0358	558
7X-0365	160

▶ **PRIMARY REFERENCE**

PART NUMBER INDEX

Part	Page
7X-0366	53
	350
	679
	680
7X-0368	346
	534
7X-0370	534
7X-0372	562
	564
	679
7X-0373	456
	562
	564
7X-0374	562
	564
7X-0385	226
7X-0400	235
7X-0402	617
7X-0405	676
	678
7X-0414	562
	564
7X-0427	389
7X-0428	657
7X-0444	552
	554
7X-0447	612
7X-0466	354
	356
7X-0515	53
	140
	318
	332
7X-0533	657
7X-0550	334
	335
7X-0562	185
	188
	194
7X-0564	350
7X-0578	81
	614
7X-0579	118
7X-0582	160
	318
	328
	329
	330
	332
	350
	562
	564
	679
	680
7X-0587	354
	356
7X-0594	328
	329
	330
	332
7X-0603	672
7X-0608	266
	598
7X-0610	336
7X-0618	326
	580
7X-0623	606
7X-0766	308
	312
	326
7X-0772	237
	244
7X-0818	146
7X-1456	300
7X-2488	53
7X-2537	36
	60
	292
7X-2539	118
7X-2541	280
7X-2548	168
7X-2553	336
	402
7X-2555	344
7X-2563	387
	567
7X-2575	388
7X-2908	56
7X-3188	272
7X-3193	305
	306
7X-3229	730
	732
7X-3373	184
	194
7X-3391	318
7X-3392	308
	313
	508
	510
	656
7X-6315	149
	151
7X-7477	266
7X-7644	730
	732
7X-7702	702
7X-7729	80
	81
	84
	90
	98
	100
	106
	118
	212
	246
	320
	344
	420
	495
	497
	606
	641
	646
	656
	662
	666
	682
7X-7742	612
7X-7877	672
7X-7888	214
7X-7899	313
7X-7927	702
7X-7928	702
7X-7929	702
7X-7930	702
7Y-3281	702
7Y-5233	340
	343
7Y-7388	638
7Z-9934	▶577
7Z-9950	▶555
7Z-9951	▶556
7Z-9952	▶547
	548
7Z-9953	547
7Z-9954	▶548
	555
8B-4624	294
	296
8C-3075	232
8C-3085	506
	533
8C-3089	184
8C-3101	237
8C-3221	730
	732
8C-3290	666
8C-3334	249
8C-3442	606
8C-3445	72
8C-3446	72
	84
	237
	466
	472
	502
8C-3447	236
8C-3451	464
	470
	502
8C-3655	194
8C-3681	96
8C-3756	602
	614
8C-4436	238
	264
	326
8C-4982	722
8C-4984	34
8C-5060	724
8C-5226	666
8C-5607	158
	160
8C-5608	158
	160
8C-5682	640
8C-5917	145
8C-5918	138
8C-6857	318
8C-6877	238
8C-6913	226
	230
8C-8585	308
	313
	344
8C-8778	322
8C-8842	350
	446
8C-8843	350
	676
8C-8844	350
8C-9160	448
	450
8C-9660	128
	184
8D-0983	612
8D-1817	232
8D-1819	232
8D-4771	424
8D-7185	612
8D-8879	138
	145
8D-9558	236
8D-9739	249
	255
8E-0667	324
8E-1055	574
	▶579
8E-1092	539
	540
	▶584
8E-1205	296
8E-1212	360
	362
	364
	366
	368
	370
	372
	374
8E-1408	476
8E-1685	▶346
	347
8E-1900	389
8E-2748	226
8E-2887	564
8E-3070	308
8E-3276	606
8E-3446	705
	▶713
8E-3447	706
	▶714
8E-4832	308
	313
8E-5112	606
	▶704
8E-5113	606
	▶705
8E-5114	606
	▶706
8E-5186	545
	546
	▶591
8E-5187	573

8

▶ **PRIMARY REFERENCE**

PART NUMBER INDEX

Part	Page
	▶582
	590
8E-5188	582
	593
8E-5190	582
	593
8E-5192	582
	593
8E-5194	582
	593
8E-5203	536
	541
	542
	▶587
8E-5204	547
	575
	580
	▶593
8E-5205	581
8E-5486	549
	550
	552
8E-5701	534
8E-5703	456
	562
	564
8E-6856	702
8E-6891	350
8E-7222	382
	383
	384
8E-7405	382
	383
	384
	386
8E-7406	382
	383
	384
	386
8E-7407	382
	383
	384
	385
	386
8E-7408	382
	383
	384
	385
	386
8E-7409	382
	383
	384
	385
	386
8E-7410	382
	383
	384
	385
	386
8E-7561	296
8E-7791	618
	666
8E-8292	700
8E-8299	249
	255
8E-8300	270
8E-8304	248
	254
8E-8305	248
8E-8434	460
8E-8589	236
8E-8593	238
8E-8916	492
8E-9037	▶384
	404
8E-9212	448
	450
	534
8E-9325	543
	544
	▶588
8E-9522	324
	336
8E-9532	350
8E-9644	382
	383
	384
	385
	386
8E-9932	342
	343
8F-1434	128
	138
	185
	188
	194
8F-4387	549
	552
8F-6350	262
8F-6575	69
8F-7702	246
	420
8F-8151	90
8F-9206	502
8F-9836	464
	470
	662
8G-2192	424
8G-2194	424
8G-3087	▶244
	259
	260
8G-4014	344
8G-4189	354
	356
8G-4190	354
8G-4386	298
	300
8G-4510	424
8G-5247	298
	300
8G-7723	308
	312
8G-8311	354
	356
8G-8316	354
	356
8G-8844	226
	230
8G-8845	226
8G-9530	364
	366
	368
	370
	372
	374
8G-9880	244
8H-1141	194
8H-1603	208
8H-2262	394
	396
	399
8H-2768	266
8H-5303	197
8H-5306	197
8H-5352	248
	254
8H-8898	548
	586
	587
	588
	591
	592
8H-9818	224
	272
8H-9819	224
8J-2189	▶596
8J-2190	596
	597
8J-2880	456
	562
	564
8J-4398	286
8J-4866	534
8J-6273	284
8J-6815	494
8J-6913	503
8J-7236	612
8J-8322	502
8J-8436	502
8J-8443	502
8J-8468	502
8J-8782	502
8J-8783	502
8J-9990	476
8K-1433	627
8L-2746	290
8L-2779	72
	77
	117
8L-2786	58
	72
	172
	520
	522
8L-6557	354
	356
8L-6565	506
8L-8413	624
	696
8M-1871	114
8M-2530	208
8M-2537	284
8M-2771	214
8M-3175	321
	326
	336
8M-3267	696
8M-3494	566
8M-4069	322
8M-4390	244
8M-4432	208
	218
8M-4433	272
	424
8M-4438	278
	424
8M-4447	238
8M-4986	238
	286
8M-4987	238
8M-5010	248
	254
8M-5254	238
	278
8M-5255	249
	255
8M-5266	248
	254
8M-5661	208
8M-5860	30
8M-7160	264
8M-8157	238
8M-8489	249
	255
	262
8M-8514	238
8M-8627	284
8M-9307	220
8M-9315	49
8N-0869	139
8N-1725	138
8N-1978	8
8N-4617	99
8N-6849	36
8N-6854	36
8N-8846	94
8P-0058	208
8P-0412	284
8P-1892	249
	255
8P-1916	249
	255
8P-1964	249
	255
8P-2019	248
	254
8P-2022	248
	254
8P-2023	249
	255
8P-2051	248
	254
8P-2053	248
	254
8P-5197	397
8P-5244	350
	676
8P-6188	394

▶ **PRIMARY REFERENCE**

PART NUMBER INDEX

Part	Page
8P-6363	614
8P-9507	248
	254
8P-9747	676
8P-9770	549
	550
	552
	562
	564
	578
	579
	581
	582
	586
	593
8R-3393	640
8S-0023	238
	438
	440
	442
	444
	460
8S-0024	238
	438
	440
	442
	444
	460
8S-2332	190
	191
8S-2384	8
8S-4304	220
8S-5383	610
8S-7499	522
8S-7803	624
8S-9008	272
8S-9130	208
8T-0100	22
	43
8T-0119	114
8T-0193	105
8T-0267	214
8T-0287	465
	471
8T-0292	76
8T-0318	606
8T-0328	138
	152
	185
	188
	194
	200
	202
	214
	684
	688
8T-0337	633
8T-0372	498
8T-0375	389
	646
8T-0639	158
	160
8T-0644	82
	88
8T-0646	69
8T-0687	708
	709
	710
8T-0785	448
	450
8T-1158	76
8T-1172	420
8T-1578	326
8T-1715	74
8T-1887	114
8T-1888	114
8T-1891	477
8T-1892	477
8T-1893	114
	465
	471
8T-1894	114
	465
	472
8T-1895	477
8T-1896	477
8T-1979	606
8T-1980	606
8T-2223	424
8T-2225	139
8T-2275	502
8T-2353	477
8T-2501	104
	222
	224
	334
	335
	480
	514
	696
8T-2502	326
	334
	335
	438
	440
	442
	444
	465
	472
	482
	492
8T-2561	308
	313
	558
	641
8T-2658	420
8T-2659	633
8T-3282	353
	398
	400
8T-3298	502
8T-3490	5
	66
	80
	84
	90
	92
	96
	109
	200
	214
	308
	312
	313
	320
	324
	336
	344
	420
	614
	662
	666
8T-3561	606
8T-3597	92
	614
	666
8T-3612	214
	420
	662
8T-3647	280
8T-3666	59
8T-4121	60
	84
	90
	92
	96
	98
	100
	109
	114
	118
	132
	134
	140
	168
	188
	202
	211
	212
	214
	246
	308
	313
	360
	362
	364
	366
	368
	370
	372
	374
	420
	606
	641
	646
	656
	666
8T-4122	124
	336
	344
	350
	477
	496
8T-4123	53
	387
	388
	389
	568
8T-4132	132
	134
	610
8T-4133	100
	188
	211
	212
	309
	313
	320
	420
	610
	614
	622
	641
	702
8T-4136	60
	84
	90
	96
	100
	118
	212
	246
	309
	313
	320
	336
	344
	360
	362
	364
	366
	368
	370
	372
	374
	420
	606
	641
	646
	656
	666
8T-4137	80
	81
	84
	100
	114
	118
	132
	134
	140
	202
	214
	309
	313
	344

► **PRIMARY REFERENCE**

PART NUMBER INDEX

Part	Page
	614
	622
	646
	682
8T-4138	214
	629
	633
	667
8T-4139	336
	342
	343
	360
	362
	364
	366
	368
	370
	372
	374
	612
	667
8T-4141	339
	340
	341
	342
	343
8T-4158	606
8T-4167	340
	343
	388
	667
8T-4170	336
8T-4171	627
	629
	633
8T-4176	92
8T-4177	280
8T-4178	60
8T-4181	606
	636
8T-4182	40
	81
	402
	610
8T-4183	621
8T-4184	360
	362
	364
	366
	368
	370
	372
	374
8T-4185	90
	610
8T-4186	60
	81
	237
	246
	610
8T-4187	387
	388
8T-4189	202
	420
	667
8T-4190	354
	356
8T-4191	140
	168
	294
	600
8T-4192	606
	614
8T-4193	53
	132
	134
	610
8T-4194	321
	667
8T-4195	84
	90
	92
	98
	100
	106
	109
	118
	211
	246
	420
	424
	641
	646
	650
	672
8T-4196	60
	81
	84
	90
	309
	313
	641
	667
	682
8T-4200	216
8T-4205	136
	168
	184
	194
	200
	238
	246
	309
	465
	472
	495
	497
	612
	614
	629
	633
	684
	688
	698
8T-4222	106
	296
8T-4223	60
	114
	132
	134
	140
	168
	226
	230
	238
	244
	264
	284
	294
	342
	343
	360
	362
	364
	366
	368
	370
	372
	374
	477
	482
	484
	486
	488
	490
	496
	502
	558
	594
	610
	612
	614
	641
	667
8T-4224	22
	136
	140
	146
	164
	202
	216
	238
	292
	420
	675
8T-4244	60
	580
	610
8T-4649	667
8T-4750	498
8T-4752	638
8T-4777	716
	718
	720
8T-4778	341
	342
8T-4779	70
8T-4835	316
	350
	477
	502
	558
	612
8T-4896	80
	114
	140
	164
	222
	226
	230
	238
	244
	272
	309
	318
	326
	328
	329
	330
	332
	334
	335
	424
	438
	440
	442
	444
	452
	460
	465
	472
	477
	480
	482
	484
	486
	488
	490
	492
	494
	502
	508
	510
	528
	641
	646
	702
8T-4908	420
8T-4910	60
	336
8T-4943	666
8T-4956	342
	343
8T-4970	246
8T-4971	309
	672
8T-4983	82
8T-4984	84
8T-4985	106
8T-4986	105
8T-4994	158
	160
	226
	230
	346
	558
	562
	564
	676
8T-4999	730
	732

► **PRIMARY REFERENCE**

PART NUMBER INDEX

Part	Page
8T-5004	427
8T-5030	220
8T-5039	498
8T-5071	360
8T-5360	238
	261
	272
	477
	508
	510
	612
8T-5361	235
	305
	306
	338
	552
	554
	562
	564
	617
	676
	678
8T-5383	698
8T-5400	702
8T-5410	420
8T-5412	580
8T-5413	308
8T-5451	200
8T-5668	452
	454
8T-5911	318
8T-5912	318
8T-6338	72
8T-6430	389
8T-6466	80
	98
	641
8T-6685	202
	614
8T-6723	114
8T-6724	114
8T-6761	220
8T-6762	82
8T-6764	32
8T-6868	60
	321
8T-6869	118
8T-6936	607
8T-7008	238
8T-7044	108
8T-7338	332
	477
8T-7371	536
	537
	538
	539
	540
	541
	542
	543
	544
	545
	546
8T-7532	360
	362
	364
	366
	368
	370
	372
	374
8T-7547	292
8T-7566	296
	658
	660
	672
8T-7811	498
8T-7876	498
8T-7934	420
8T-7950	220
8T-8379	456
8T-8566	194
8T-8569	194
8T-8729	138
	139
	162
	166
	170
	174
	175
	176
	180
	181
	289
	291
	427
	434
	522
	628
	629
	632
	633
	640
	651
	652
	653
	654
	655
8T-8737	170
	172
	200
	289
	652
	653
	670
	702
8T-8902	476
8T-8908	667
8T-8914	606
8T-8916	238
	272
	508
	510
8T-8917	334
	335
	484
	486
	488
	490
8T-8919	132
8T-8924	676
8T-8925	328
	329
	330
	332
8T-8987	438
	440
	442
	444
8T-9006	420
8T-9043	607
8T-9056	140
8T-9082	684
8T-9358	464
	470
8T-9364	124
	612
	698
8T-9368	465
	472
8T-9377	238
	460
	502
8T-9380	477
8T-9382	272
8T-9383	326
8T-9384	114
	140
	294
8T-9389	238
	350
	594
8T-9393	318
	350
8T-9396	124
8T-9397	158
	160
8T-9398	552
	554
8T-9399	226
	230
	583
	584
	612
8T-9496	308
	312
	326
8T-9530	605
	730
	732
8T-9655	118
	146
	147
8T-9756	138
8T-9757	139
	145
8T-9884	194
8T-9905	730
	732
8V-0622	145
8V-5455	724
8V-7764	502
8Y-0373	318
8Y-0374	318
8Y-0375	318
8Y-0790	236
8Y-3966	308
	312
	326
8Y-3998	308
	312
	326
8Y-3999	308
	312
8Y-4000	308
	312
8Y-5737	622
8Y-5746	618
8Y-5747	326
8Y-5944	694
8Y-5945	624
8Y-5965	694
8Y-6012	694
8Y-6014	694
8Y-6024	694
8Y-6041	624
8Y-6045	624
8Y-6046	624
8Y-6047	624
8Y-6060	624
8Y-6062	624
8Y-6063	624
8Y-6064	624
8Y-6066	624
8Y-6067	624
8Y-6068	624
8Y-6069	624
8Y-6277	684
	688
8Y-6364	15
	124
	236
	294
	308
	312
	336
	458
8Y-6388	618
	628
8Y-6400	326
8Y-6419	714
8Y-6420	714
	▶716
8Y-6422	716
8Y-6423	713
	714
	716
	718
	720
	722
8Y-6424	713
	714
	722
8Y-6428	722
8Y-6429	722
8Y-6430	713

▶ **PRIMARY REFERENCE**

PART NUMBER INDEX

Part	Page
	714
	716
	718
	720
	722
8Y-6431	718
8Y-6432	713
8Y-6433	713
	▶718
8Y-6443	720
8Y-6445	722
8Y-6446	▶720
	722
8Y-6447	707
8Y-6448	711
	712
8Y-6454	716
	718
	720
8Y-6455	716
	718
	720
8Y-6459	713
	714
	716
	718
	720
	722
8Y-6460	716
	718
	720
8Y-6461	716
	718
	720
8Y-6462	713
	714
	722
8Y-6463	722
8Y-6839	707
	708
	709
	710
	711
	712
8Y-6859	624
8Y-6860	624
8Y-6910	713
	714
	716
	718
	720
	722
8Y-6917	696
8Y-6922	696
8Y-6928	696
8Y-8304	606
8Y-8306	308
	312
	326
8Y-8495	334
	335
8Y-9603	191

9

Part	Page
9B-2052	324
	336
9B-2289	396
	397
	399
9B-2596	99
9B-7233	128
	152
	168
	246
9B-7237	114
	160
	238
	316
	452
	460
	477
	490
	492
9C-8895	308
	324
9D-3437	138
9D-3769	629
	667
9D-6196	238
9D-6197	238
9D-9736	607
9F-2247	128
9F-4446	18
9F-5599	184
9F-5644	197
9F-6445	296
	464
	612
	662
9F-6656	730
	732
9F-8125	316
9G-0002	138
9G-0003	139
	145
9G-0004	145
9G-0005	138
9G-0278	506
9G-0280	248
	254
9G-0281	248
	254
9G-0284	248
	254
9G-0285	248
	254
9G-0286	248
	254
9G-0289	249
	255
9G-0290	249
	255
9G-0832	232
9G-0983	656
9G-0986	656
9G-0990	656
9G-0992	676

Part	Page
9G-1127	606
9G-1642	384
9G-1962	364
	366
	368
	370
	372
	374
9G-2673	202
9G-3695	171
	464
	470
	654
	655
9G-4101	184
	185
9G-5664	380
	381
9G-6655	156
9G-6744	249
	255
9G-6770	185
9G-8020	249
	255
9G-8615	208
9G-8637	206
9G-8638	226
	230
9G-8639	226
	230
9G-9151	614
9G-9175	226
	230
9G-9178	230
9G-9180	230
9G-9181	226
	230
9G-9183	226
	230
9H-0846	272
9H-3360	226
	230
9H-3757	184
9H-6454	502
9H-8712	272
9J-2914	502
9J-3139	596
9J-7031	502
9J-8126	514
9J-8923	597
9J-8926	594
	▶597
9J-9147	534
9J-9598	594
9L-6770	128
	136
9L-9068	280
9L-9188	72
9M-0164	236
	696
9M-1974	18
	24
	34
	41
	50

Part	Page
	52
	55
	72
	74
	76
	77
	86
	103
	147
	200
	218
	288
	530
9M-1976	272
9M-2008	270
9M-2307	308
	312
9M-2904	480
9M-3786	389
9M-3835	296
9M-3838	296
9M-4355	249
	255
9M-5731	246
9M-5732	308
	312
9M-6803	675
9M-7002	244
9M-7394	503
9M-7606	184
9M-7609	184
9M-8406	641
9M-9647	208
9N-0869	146
	147
	618
9N-0943	128
9N-1995	605
	607
	702
9N-2061	724
9N-3388	128
9N-4233	558
9N-4369	704
	▶722
9N-4449	560
9N-4450	560
9N-4685	77
9P-1475	208
9P-1478	232
9P-1921	232
9P-1922	232
9P-2245	380
	381
9P-2553	5
9P-3066	124
	344
9P-3709	272
9P-7072	232
9P-7121	124
9P-7390	248
	254
9P-7757	249
	254
9P-7855	708

▶ **PRIMARY REFERENCE**

PART NUMBER INDEX

Part	Page	Part	Page	Part	Page	Part	Page
9P-7859	707	9S-4182	49	9S-8230	296		▶589
	711		225	9S-8320	394	9U-8746	627
	712		477	9S-8752	100	9U-8790	402
9P-7860	707		494		286	9U-9121	438
	711	9S-4183	58	9S-9830	128		440
	712		225	9T-0094	456		442
9P-8521	254	9S-4185	72	9T-1636	498		444
9P-8614	248		82	9T-1652	498	9U-9122	438
	254		96	9T-1699	498		440
9P-8623	248		220	9T-1710	498		442
9P-8626	249		226	9T-2186	526		444
	255		230	9T-2714	452	9U-9161	440
9P-9150	280	9S-4190	72	9T-2715	452		444
9P-9388	649		118	9T-2716	▶452	9U-9162	438
	650		208		566		442
9P-9390	649		292	9T-3264	502	9U-9550	255
9P-9392	▶649		498	9T-3440	502	9U-9942	638
	676	9S-4191	49	9T-3885	448	9V-0321	92
9S-1018	278		58		450		549
9S-1240	132		118	9T-6001	606		550
	134		220		662		552
9S-1838	404		225	9T-6093	454	9V-2818	681
	405		477	9T-6094	454	9V-5382	238
	406		494	9T-6095	446	9W-0099	594
	407		508		▶454	9W-0201	594
	408		510	9T-6863	452	9W-0513	594
	409		526	9T-7769	500	9W-0553	594
	410	9S-4497	92	9T-7771	500	9W-0588	534
	411	9S-5183	350	9T-7773	500	9W-0609	560
	412	9S-5187	350	9T-8378	494	9W-0610	▶560
	413		676		▶530		566
	414	9S-6130	208	9T-8999	502	9W-0645	248
	415	9S-6758	100	9T-9836	528		254
	416	9S-7710	208	9U-8069	284	9W-0804	▶566
9S-2005	128	9S-8001	512	9U-8093	▶573	9W-0852	602
9S-2006	128		514		591		614
9S-2009	128		516	9U-8094	▶574		628
9S-2011	128	9S-8002	29		584		632
9S-2012	128		508	9U-8095	▶575	9W-0873	594
9S-2013	128		510		587	9W-0876	594
9S-2014	128		512	9U-8202	▶576	9W-1017	566
9S-2248	128		514		583		▶594
9S-2255	128		516	9U-8263	627	9W-1018	▶480
9S-2260	128		520	9U-8468	339		566
9S-2262	128		522	9U-8481	354	9W-1441	168
9S-2290	129	9S-8003	528		356	9W-1442	168
9S-2291	129	9S-8004	32	9U-8482	360	9W-1446	168
9S-2292	128		122		362	9W-1569	232
9S-2300	128		494		364	9W-1570	232
9S-2301	128		520		366	9W-1875	572
9S-2302	128		522		368	9W-1876	572
9S-2389	128	9S-8005	32		370	9W-1878	572
9S-2390	128		49		372	9W-2579	562
9S-2393	128		58		374		564
9S-2396	128		86	9U-8491	402	9W-2822	321
9S-2437	128		424	9U-8492	360		326
9S-2544	128		518		362		336
	184	9S-8006	528		364	9W-2992	232
9S-3451	128	9S-8007	284		366	9W-3762	548
9S-3581	394	9S-8008	86		368		▶572
9S-3582	394		225		370		575
9S-4167	118		292		372		589
9S-4181	220	9S-8010	32		374		592
	512		284		▶402	9W-4159	208
	516		402	9U-8608	588	9W-4897	549

▶ **PRIMARY REFERENCE**

PART NUMBER INDEX

Part	Page
	550
	552
9W-5334	208
9W-5343	621
9W-5375	549
	550
	552
9W-5594	286
9W-5595	286
9W-5596	236
	▶286
9W-6381	581
	582
	586
	593
9W-6647	394
	397
9W-7033	672
9W-8269	249
9W-8270	249
	255
9W-8612	232
9W-8874	569
	570
	571
9W-8875	569
	570
	571
9W-8940	309
	313
9W-9000	549
	550
	552
9W-9057	▶446
9W-9079	446
	▶490
9W-9082	490
9W-9083	490
9X-0199	138
	202
9X-0262	172
9X-1386	139
9X-1813	177
	178
	180
	181
	196
9X-1878	730
	732
9X-2038	618
9X-2043	216
	618
	636
9X-2045	618
	636
9X-2053	45
9X-2099	43
9X-2125	682
9X-2185	622
9X-2500	128
9X-2546	427
9X-3401	138
	202
9X-3402	171
	670
9X-3452	614
9X-3463	163
9X-3966	74
9X-4582	360
	362
	364
	366
	368
	370
	372
	374
9X-4824	194
9X-6165	158
	160
9X-6268	707
	711
	712
9X-6281	246
	465
	472
9X-6340	730
	732
9X-6395	530
9X-6458	208
	460
9X-6615	214
	246
9X-6772	214
	216
	427
9X-7202	291
9X-7373	614
9X-7378	641
9X-7380	641
9X-7381	641
9X-7382	640
	641
9X-7383	641
9X-7385	609
	641
9X-8250	641
9X-8256	118
	140
	205
	214
	216
	246
	430
	432
	627
	666
	672
9X-8257	70
	132
	134
	332
	341
	342
	402
	477
	610
	646
9X-8260	438
	440
	442
	444
9X-8266	344
9X-8267	636
9X-8268	26
	42
	45
	48
9X-8272	656
9X-8600	125
9X-8873	220
9X-8877	220
9X-8902	214
	434
9X-8914	526
9X-8918	624
9Y-9236	96
9Y-9619	53
9Z-8212	8
9Z-8213	8
0	
002-1212	498
003-2143	90
003-9514	90
003-9835	139
005-8593	88
006-8663	498
030-1707	138
030-7946	354
	356
030-7950	122
030-8535	208
	338
030-8538	248
	254
031-0218	208
	218
031-1119	94
033-5853	29
033-6027	498
	526
033-6032	76
	291
033-6033	72
033-6036	498
	526
033-9139	520
036-9821	184
036-9823	184
	194
037-4426	622
037-4838	602
037-5197	139
045-4065	185
061-6711	248
	249
	254
061-9455	22
067-2551	114
068-4209	152
	168
	202
	205
068-8093	248
	254
069-4269	96
083-7784	528
083-9527	628
	632
084-4111	716
	718
	720
095-0843	684
	688
095-0878	624
095-0888	498
095-1207	284
095-1750	527
096-5962	246
	464
	470
1	
100-3224	624
100-3320	200
100-3402	498
100-3404	498
100-3405	498
100-3408	498
100-3409	498
100-3410	500
100-3411	500
100-3413	498
100-3415	498
100-4336	114
	118
100-5179	624
100-6211	528
100-6531	128
100-6532	128
100-6656	128
100-6657	128
100-6658	128
100-8010	512
	514
	516
100-8011	512
	514
	516
100-8012	512
	516
101-0003	694
101-0852	151
101-2850	99
101-2867	675
101-3055	638
101-3121	236
101-3128	147
101-3207	46
101-3208	46
101-4194	694
101-4195	694
101-5141	424
101-5144	424
101-9754	284
102-0341	622

▶ **PRIMARY REFERENCE**

PART NUMBER INDEX

Part	Page
102-2061	500
102-2062	500
102-2063	500
102-2064	498
	▶500
102-2067	498
102-2068	498
	▶526
102-2081	498
102-2083	498
102-2913	730
	733
102-6317	696
102-8801	427
102-8802	124
	126
	138
	139
	172
	180
	196
	202
	291
	522
	602
	614
	632
	640
102-8803	162
	174
	175
	176
	181
	200
	464
	470
	628
	629
	632
	633
102-8804	289
	464
	470
102-8805	166
	170
	628
	651
	652
	653
	654
	655
102-8806	628
	632
102-8810	702
102-9478	435
103-2543	607
103-6100	640
103-6262	214
103-9425	638
103-9527	612
	▶614
104-5353	424
104-5354	424
104-5358	424
104-5360	424
104-5361	424
104-5362	424
104-5363	424
104-5372	259
	260
	▶424
104-5944	620
104-6202	139
104-6729	218
104-6730	218
104-6931	502
104-7574	494
	▶531
105-1393	326
105-1394	326
105-1398	324
105-1473	326
105-3330	731
	733
105-3481	520
105-3482	246
105-5062	424
105-9149	202
105-9657	604
	▶627
105-9659	604
	▶650
106-3922	531
106-4150	▶223
	224
106-4572	90
106-5122	▶609
	610
106-5472	246
106-7691	380
	381
106-8186	298
	300
106-8187	298
	300
106-8535	230
106-8536	206
106-8704	640
106-9212	288
106-9214	288
106-9361	318
106-9378	318
107-1023	▶206
	259
	260
107-3786	152
	202
107-3945	380
	381
107-4393	640
107-4394	640
107-4399	640
107-7304	424
107-7694	16
107-7809	16
108-0137	▶364
	417
108-0138	▶366
	417
108-0139	364
108-0142	366
108-0147	▶368
	418
108-0148	▶370
	418
108-0149	368
108-0152	370
108-0156	368
	370
108-0157	4
	▶372
108-0158	4
	▶374
108-0159	372
108-0162	374
108-0166	372
	374
108-0175	▶389
	417
	418
108-0177	▶387
	390
108-0178	4
	▶339
	377
108-0182	360
	362
	364
	366
108-0190	389
108-0200	402
108-0720	599
	▶600
108-1091	▶353
	417
	418
108-1335	604
	▶621
108-1429	▶270
	272
108-1430	259
	260
	▶272
108-1696	259
	260
	▶266
108-1847	528
108-2096	288
108-2106	266
	▶277
108-2675	605
	▶622
108-3138	627
108-3970	▶545
108-3971	▶546
108-3974	▶541
108-3975	▶542
108-3976	▶543
108-3977	▶544
108-3978	▶537
108-3979	▶538
108-3982	▶539
108-3983	▶540
108-4086	625
108-4087	625
108-4103	625
108-4107	262
108-4108	262
108-4113	236
	▶261
108-4430	292
108-4433	292
108-4434	280
108-6523	284
108-6954	272
108-6983	▶208
	275
	276
108-6984	▶254
	276
108-7743	249
	255
108-7747	208
108-7748	208
108-7749	249
	255
108-7754	248
	254
108-8377	270
108-8853	248
	254
108-8884	284
109-1352	537
	538
	539
	540
	541
	542
	543
	544
	545
	546
	▶567
109-1633	640
109-1634	640
109-1645	662
109-3207	65
109-3443	▶341
	379
109-3444	▶342
109-3446	339
	341
	342
109-3622	92
109-3949	360
	362
	364
109-3968	288
109-3969	288
109-4042	640
109-4044	640
109-4365	218
	▶288
109-4757	336
109-5498	612
109-5761	622
109-6406	600
109-6938	387
109-9828	606
109-9829	606

▶ **PRIMARY REFERENCE**

PART NUMBER INDEX

Part	Page
110-0510	272
110-0771	341
	342
110-2445	96
110-2836	218
110-2873	332
110-2876	332
110-6109	600
	628
	632
110-6287	▶224
110-6393	599
110-7665	296
110-7670	296
110-7673	316
110-7678	316
110-7682	316
110-8152	636
110-8209	312
110-8379	246
110-8766	▶334
110-8767	▶335
110-8834	640
110-9709	236
110-9734	236
111-2416	200
111-3199	242
111-3373	334
	335
111-3780	246
111-3781	246
111-4482	672
111-4627	495
	497
111-4919	261
111-5147	618
111-7003	▶170
	259
	260
111-7276	145
111-7277	138
111-7978	138
111-8314	164
111-9251	246
112-3858	226
	230
112-4368	480
112-4511	248
	254
112-5007	334
112-5009	335
112-5585	248
	254
112-7673	5
	6
112-8041	248
	254
112-9319	464
	470
113-5336	36
113-5424	528
113-5429	458
	▶528
113-6033	656
114-0358	596
114-0359	596
	597
114-3926	278
114-4304	448
	450
114-5333	640
114-9125	618
115-1748	628
	632
115-2422	140
116-3715	108
116-4527	524
	525
116-6202	640
116-6203	628
	632
116-6698	396
	397
	399
116-6702	396
	397
	399
117-1385	88
	172
	179
117-1881	▶652
	724
117-1882	▶653
	724
117-1909	498
117-2311	202
117-4492	598
117-4506	684
117-5676	707
117-5677	711
	712
117-7826	249
	255
117-8131	666
117-8863	672
117-9727	316
117-9748	396
	397
	399
117-9966	666
118-0639	427
118-0693	606
118-1170	454
118-1727	9
	10
	11
	12
	▶20
118-5195	602
118-6299	164
118-7226	138
	▶181
118-7284	9
	10
	11
	12
	▶155
118-8136	296
119-2921	64
119-3662	139
	171
	670
119-4142	172
	▶179
119-7833	284
120-5281	348
120-5746	▶399
	400
120-5753	399
120-5766	▶396
	398
120-5767	396
120-5785	396
	397
	399
120-5802	391
	392
	▶397
120-5804	397
122-1511	216
	▶420
122-4268	420
122-4271	420
122-6824	420
122-6825	420
122-6826	420
122-7127	628
	632
122-7372	214
	▶430
122-8026	216
123-0304	628
	632
123-0306	628
	632
123-0912	427
123-3283	216
123-3295	214
123-3296	214
123-3826	214
123-6377	214
123-6392	214
123-6446	214
	▶427
123-6449	138
123-8157	696
123-8266	696
123-9128	696
123-9131	696
123-9176	216
123-9294	628
	632
123-9812	214
124-0174	77
	354
	356
124-0506	24
124-0799	420
124-3243	618
124-3702	430
	432
124-5332	218
124-6654	284
124-6657	284
124-6998	640
	646
124-7000	476
124-7128	696
124-8100	212
	662
	666
124-8490	614
124-9401	250
	255
124-9666	562
	564
124-9672	562
	564
124-9774	711
	712
124-9775	707
125-0582	434
125-0583	214
	▶434
125-1302	168
125-1362	80
125-3298	430
	434
125-3299	432
125-4175	▶400
	417
	418
125-4176	4
	▶398
	417
	418
125-4177	376
	378
	▶391
125-5533	377
	379
	▶392
125-6533	185
125-6535	185
125-6536	185
125-6537	184
125-7484	98
125-8254	606
125-8826	434
125-9257	599
125-9664	214
	▶432
125-9740	602
126-0814	466
	470
	477
126-1347	394
126-1683	36
126-1699	599
126-1757	22
126-1768	171
	670
126-2280	727
	728
126-2281	727
	728
126-2282	727
	728
126-2487	214

▶ **PRIMARY REFERENCE**

PART NUMBER INDEX

Part	Page
126-3492	636
126-3700	682
126-5011	200
126-7975	308
	312
	344
126-8464	▶438
	537
	539
	541
	543
	545
126-8465	▶440
	537
	539
	541
	543
	545
126-8466	▶442
	536
126-8467	▶444
	536
127-1043	672
127-1044	672
127-1045	672
127-1046	672
127-1048	672
127-2945	214
	▶428
127-3018	666
127-5537	220
127-8732	312
	313
127-8819	731
	733
127-8931	438
	440
	▶450
127-8932	450
127-9365	312
127-9366	312
128-0314	138
128-0613	696
128-0686	696
128-2569	438
128-2570	438
128-2571	440
128-2572	440
128-2573	442
128-2574	442
128-2575	444
128-2576	444
128-3340	70
128-3341	70
128-3813	70
128-5924	640
129-3178	430
	432
129-3217	438
	440
	442
	444
129-4258	442
	444
	▶448
129-4302	448
129-5222	284
129-5223	284
129-5476	284
129-8331	160
130-0737	334
	335
130-0738	334
	335
130-1977	480
130-1985	420
130-3216	60
130-3374	298
	300
130-5097	6
130-5300	202
	628
	632
130-7975	420
130-9192	480
130-9811	172
130-9989	420
130-9990	420
131-0353	103
131-0447	434
131-0825	262
131-3278	262
131-4091	248
	254
131-4242	624
131-5137	638
131-5167	624
131-5176	636
132-0338	598
132-1249	454
132-3581	420
132-5789	139
	158
	160
	628
	632
132-6534	602
132-7077	246
132-7193	262
132-7419	434
132-7450	434
132-8502	348
132-8876	225
	236
132-9455	243
132-9899	280
132-9900	280
133-1276	225
133-1299	225
133-1400	262
133-1401	262
133-1402	262
133-1403	261
	▶262
133-2199	225
133-2249	289
133-3248	292
133-5545	532
133-5631	356
133-6379	68
133-7212	420
133-7214	420
133-7230	420
133-7231	420
133-8528	225
133-9405	628
	629
	632
	633
134-4126	149
134-5363	▶343
	378
134-5364	343
134-5365	343
134-5366	340
	343
134-5368	340
	343
134-9602	622
135-2964	581
135-2965	▶581
	589
135-2966	581
135-3084	581
135-4721	424
135-5499	684
135-8581	214
135-9819	20
136-0822	22
136-1543	659
136-1544	598
136-2216	272
136-2288	420
136-2290	420
136-4353	216
136-9297	520
	522
136-9298	520
	522
136-9304	524
	525
137-3924	727
	728
137-3937	731
	733
137-4830	427
137-6667	172
137-6722	646
137-7502	618
137-7503	618
137-8708	636
137-8793	242
137-8794	242
137-9755	522
138-0444	124
139-0566	356
139-0567	356
139-1537	502
139-4189	520
139-5345	168
139-8344	▶4
139-8346	▶536
139-9032	536
	▶568
139-9053	568
140-2863	236
140-2964	236
140-8435	261
141-2240	666
141-4044	672
141-4123	622
141-4852	520
	522
141-4976	202
141-5151	525
141-8984	294
141-9593	628
	629
142-2328	581
142-3953	640
142-8540	268
142-8620	614
142-8858	628
	632
142-9643	581
143-0013	216
143-1288	684
	688
144-0195	700
	702
144-0331	434
144-0346	482
144-4284	248
	249
	254
	255
144-5574	360
	362
	364
	366
	368
	370
	372
	374
144-7871	218
144-7878	249
	255
144-7881	249
	255
145-0326	694
145-1144	282
	290
145-2334	520
	522
145-3405	246
145-5181	486
145-5375	284
145-7328	702
145-8310	236
	▶284
145-8707	524
145-8741	724
146-6315	522
146-6316	524
	525
146-6317	522
146-6318	524
	525
146-6319	524
	525

▶ **PRIMARY REFERENCE**

PART NUMBER INDEX

Part	Page
146-6669	208
146-6670	208
146-8477	520
146-8479	520
146-8981	520
147-0319	▶163
	164
147-1680	▶174
	214
	246
147-4549	696
147-5088	87
147-6522	696
147-6523	696
147-6541	696
147-7976	▶654
	724
147-7979	▶655
	724
148-0757	138
148-2903	65
148-3749	696
148-8305	464
148-8306	236
148-8316	464
	470
148-8318	464
	470
148-8319	476
148-8325	464
	470
148-8326	465
	471
148-8336	237
	465
	471
148-8347	96
148-8353	476
148-8356	237
148-8360	476
148-8361	114
	471
148-8364	114
148-8367	465
	471
148-8369	465
	471
148-8372	114
148-8374	237
	465
	471
148-8378	465
	471
	476
148-8388	476
148-8391	444
148-8407	477
148-8411	96
148-8424	476
148-8428	465
	471
148-8433	465
	471
	476
148-8434	466
148-8435	465
	471
148-8439	465
	471
148-8510	60
149-2494	380
	381
149-2495	380
	381
149-5240	65
149-5470	520
	522
149-9818	202
150-1955	350
150-3026	114
	236
150-3065	236
150-5968	464
	471
151-0254	724
151-0255	724
151-0256	724
151-2939	25
151-9275	434
152-1330	249
	255
152-1482	731
	733
152-3421	353
152-8050	▶385
	415
	416
152-8053	▶386
	409
	410
152-8071	382
	383
	384
	385
	386
153-4906	32
	122
	172
153-4907	122
153-5043	182
153-5710	145
153-6251	444
153-6281	145
153-6976	514
	516
153-7033	294
153-7067	512
	514
	516
153-7549	512
153-7550	512
153-7551	514
	516
153-7553	512
153-8925	524
	525
153-8926	524
	525
154-3358	47
154-7443	148
	▶150
	628
	632
155-2026	237
155-2259	171
	670
155-2260	177
	178
	200
155-2261	182
	198
155-2265	171
	670
155-2270	182
	198
	200
155-2276	200
155-3624	477
155-7918	13
	14
	▶46
155-7927	13
	14
	▶68
155-8577	336
156-4755	302
	303
	▶666
156-4756	▶662
	666
156-4757	662
156-5086	606
156-5087	606
156-5545	598
156-5970	289
	291
156-6287	628
156-6288	632
156-7408	605
	▶618
156-7412	618
157-0133	9
	10
	11
	12
	▶220
157-0670	84
157-1361	628
157-1457	666
157-1740	▶1
	2
	3
157-2153	524
	525
157-2741	632
158-0248	163
158-0250	163
158-0252	163
158-0451	56
158-6072	112
158-6632	138
	202
158-7690	604
	▶702
158-7691	604
	▶724
158-7694	▶604
	605
158-7695	604
	▶636
158-7696	604
	▶606
158-7697	606
158-8077	▶146
	259
	260
158-8079	211
	▶246
158-8906	636
158-9956	518
159-0653	▶602
	672
159-0725	605
	▶672
159-1097	172
159-1503	646
159-1549	202
159-2950	682
	▶691
159-3537	155
159-3566	618
159-3568	618
159-3781	522
159-3960	618
159-3961	618
159-4712	628
	632
159-7351	214
159-7352	214
159-7945	618
159-7948	618
159-7949	618
159-8371	▶605
159-9035	1
	▶153
159-9202	464
	470
	618
159-9257	628
	632
159-9322	200
160-0082	666
160-0526	24
160-1431	246
160-1432	246
160-1433	246
160-1434	246
160-1435	246
160-2443	▶175
	246
160-2444	175
160-3583	232
160-3586	232
160-4103	360
	362
	364
	366
	372
	374

▶ **PRIMARY REFERENCE**

PART NUMBER INDEX

Part	Page
160-4104	368
	370
160-4306	464
	470
160-4326	464
	470
160-4702	495
160-4703	495
	497
160-5574	202
160-6305	552
	554
	562
	564
160-6306	534
160-7165	691
	692
	▶694
160-7178	▶681
160-7186	605
	▶692
160-7188	681
	▶693
160-7690	200
160-7765	696
160-7766	696
160-7767	696
160-7820	382
	383
	384
160-7821	385
	386
160-8124	172
	200
160-8147	25
160-8166	25
160-8172	56
160-8184	47
160-8197	56
160-8199	56
160-8408	218
	▶282
161-1083	636
161-1084	636
161-1085	636
161-1086	636
161-1091	636
161-1092	636
161-1093	636
161-1094	636
161-1096	636
	▶638
161-1097	638
161-1098	636
161-1099	638
161-1703	172
161-1704	172
161-1705	172
161-2684	514
	516
161-2685	512
161-3398	108
161-3406	13
	14
	▶28
161-3411	108
161-3425	56
161-3610	666
161-3611	618
161-3615	436
	437
	▶616
161-3958	666
161-3959	666
161-3967	666
161-4024	618
161-5967	624
161-6149	527
	532
161-6161	527
	532
161-7539	693
	▶696
161-8979	▶176
	214
161-9289	693
161-9926	138
	▶177
162-0162	464
	470
	▶518
162-2166	380
	381
162-3934	662
162-7862	380
	381
162-8033	437
	▶508
162-8035	436
	▶510
162-8037	508
	510
	▶512
162-8038	508
	510
	▶514
162-8039	508
	▶516
163-1146	694
163-2169	360
	362
	364
	366
163-2170	360
	362
	364
	366
163-2171	360
	362
	364
	366
163-2172	360
	362
	364
	366
	368
	370
163-2173	372
	374
163-2174	372
	374
163-2175	372
	374
163-2176	372
	374
163-2177	368
	370
163-2178	368
	370
163-2437	68
163-2442	32
163-2444	32
163-2445	69
163-2447	62
163-2449	63
163-2459	69
163-2478	32
163-3281	666
163-3283	302
	303
	▶682
163-3434	470
163-3435	470
163-5512	520
	522
163-5641	▶218
	275
	276
163-5671	512
163-9308	522
164-0403	340
164-0406	▶340
	376
164-0758	666
164-0847	628
	632
164-0938	512
164-2108	282
	290
164-3725	▶599
164-3727	599
	▶640
164-3739	168
164-3740	▶168
	202
164-3744	138
164-4146	675
164-4206	▶212
	259
	260
164-4207	259
	260
	▶278
164-4365	666
164-4375	212
164-4531	598
164-4611	340
164-4782	2
	▶302
164-4784	3
	▶303
164-4792	2
	▶259
164-4794	3
	▶260
164-4796	▶5
164-4797	▶6
164-4807	2
	3
	▶458
164-4858	125
164-4883	658
	660
164-5570	114
164-5669	69
164-5951	696
164-6093	▶242
	280
164-6100	13
	14
	▶16
164-6148	13
	14
	▶25
164-7577	138
	▶196
164-7677	508
164-7678	510
164-9541	246
164-9929	632
164-9943	302
	▶730
164-9945	303
	▶732
164-9997	168
164-9999	731
	733
165-1754	385
	386
165-1755	385
	386
165-1756	385
	386
165-1757	385
	386
165-1769	385
	386
165-2273	646
165-2555	▶114
	302
	303
165-2556	605
	▶646
165-2577	680
165-4445	9
	10
	11
	12
	▶108
165-4446	13
	14
	▶50
165-4450	13
	14
	▶122
165-4455	9
	10
	11

▶ **PRIMARY REFERENCE**

PART NUMBER INDEX

Part	Page
	12
	▶48
165-4459	9
	10
	11
	12
	▶55
165-4461	9
	10
	11
	12
	▶82
165-4466	9
	10
	11
	12
	▶117
165-4468	9
	10
	11
	12
	▶147
165-5674	599
165-6779	246
165-6857	666
165-6946	353
165-8433	495
	497
165-9100	246
165-9102	246
165-9103	246
165-9104	246
166-0270	9
	12
	▶13
166-0273	2
	▶9
166-1759	13
	14
	▶120
166-1776	22
166-1781	22
166-1784	9
	10
	11
	12
	▶51
166-1790	9
	10
	11
	12
	▶66
166-1792	9
	10
	11
	12
	▶67
166-1795	48
	▶49
166-1796	49
166-2153	679
166-2287	340
	343
166-2582	▶456
	562
166-2583	456
166-2584	456
166-3328	260
	▶275
166-3488	▶232
	275
	276
166-3648	56
166-3657	56
166-3733	638
166-6320	259
	▶276
166-6781	694
166-6928	628
	632
	▶651
166-7067	▶236
	259
	260
166-7282	458
	▶460
166-7283	458
	▶492
166-7285	458
	▶476
166-7288	458
	▶496
166-7390	▶138
	302
	303
166-7391	▶202
	302
	303
166-7417	168
166-7418	168
166-7419	168
166-7683	464
	470
166-7684	464
	470
166-7685	464
	470
166-7686	464
	470
166-8883	232
166-8884	232
167-0024	29
167-0029	599
	▶610
167-0138	168
	▶198
167-0160	220
167-0167	77
167-0168	77
167-0169	9
	10
	11
	12
	▶77
167-0171	34
	▶42
167-0172	108
167-0174	▶65
	121
167-1170	436
	▶495
167-1171	437
	▶497
167-1177	437
	▶520
167-1530	628
	632
167-1801	501
167-1884	164
167-2201	448
	450
	452
	454
167-2208	456
167-2312	448
	450
	452
	454
167-2319	456
167-2323	402
167-2463	448
	450
	452
	454
167-2469	456
167-6834	218
167-7630	▶152
167-8121	35
167-9524	282
	290
168-0241	▶494
	508
	510
168-0369	▶166
	628
	632
168-2599	484
	486
	488
168-6541	▶298
	302
	303
168-6542	298
	300
168-7209	56
168-7420	▶436
	458
168-7513	494
168-8371	2
	3
	▶15
168-8373	15
	▶132
168-8376	15
	▶81
168-8377	15
	▶105
168-8378	15
	▶84
168-8382	15
	▶109
168-8383	15
	▶60
168-8384	15
	▶90
168-8385	90
	▶92
168-8387	15
	▶110
168-8597	302
	303
	▶318
168-8599	318
168-8807	92
168-9263	657
168-9264	657
168-9265	302
	303
	▶657
169-0651	658
169-0697	660
169-0765	302
	303
	▶344
169-0771	▶308
169-0772	5
	6
	▶312
169-0781	▶294
	302
	303
169-1026	688
169-1838	94
169-1840	▶94
	96
169-2874	628
169-2875	632
169-2876	731
	733
169-3104	65
169-3109	9
	10
	11
	12
	▶75
169-3111	147
169-3122	13
	14
	▶111
169-3124	82
169-3290	498
	▶501
169-3313	470
169-3314	470
169-3692	302
	303
	▶336
169-3788	10
	11
	▶14
169-3791	3
	▶10
169-3796	92
169-3797	90
169-3798	90
169-3799	90
169-3800	90
169-3801	90
169-3803	15

▶ **PRIMARY REFERENCE**

PART NUMBER INDEX

Part	Page	Part	Page	Part	Page	Part	Page
	▶98		303	172-4857	138		10
169-3804	15		▶632	172-4860	202		11
	▶106	170-7185	329	172-4861	138		12
169-3807	98	170-7188	329		145		▶103
169-3812	90	170-7259	676	172-4862	138	173-6924	640
169-3813	90	170-7260	676	172-4863	168	173-6925	640
169-3814	90	170-7568	464	172-4864	139	173-6926	640
169-3815	90		470	172-4865	139	173-6929	640
169-3826	96	170-7598	344	172-4866	139	173-6930	640
169-3883	105	170-7602	344	172-4869	160	173-7035	691
169-3895	67	170-7604	344	172-4871	139		692
169-3899	66	170-7606	344		202		693
169-4368	▶388	170-7684	312		662	173-7126	113
	418	170-7686	308	172-5239	222	173-7218	436
169-5459	612		312	172-5262	▶211		▶464
169-5875	336	170-7690	308		259	173-7219	437
169-6902	662		312		260		▶470
169-6907	662	170-7694	308	172-5291	495	173-7774	▶134
169-7380	694		312		497	173-8952	344
169-8586	65	170-7695	308		666	173-9310	308
169-8598	65		312	172-5399	464		312
169-8680	168	170-7701	308	172-5404	470	173-9430	460
169-8681	168		312	172-5780	120	173-9432	460
169-9119	508	170-7702	308		▶121	173-9433	460
	510		312	172-5989	612	174-1495	614
169-9635	702	170-8590	675	172-5992	496	174-1504	602
169-9636	638	170-8592	336	172-6246	482	174-2043	512
169-9637	605	170-9198	158	172-6247	482		514
	▶656		160	172-9290	602		516
169-9639	304	170-9215	124	172-9389	146	174-2231	▶624
169-9646	605	171-0808	388		▶151		694
	▶698	171-1230	684		183	174-2237	624
169-9649	698		688	172-9981	448	174-3035	476
	▶700	171-2092	458		450	174-3037	476
169-9650	700		▶498	173-0070	318	174-3847	55
170-0251	666	171-2213	168	173-0071	318	174-4590	730
170-0255	666	171-2438	656	173-0511	512		732
170-0258	605	171-2990	109		514	174-4856	312
170-0260	628	171-4715	▶435		516	174-4857	312
170-1100	15	171-5349	139	173-0512	512	174-4909	242
	▶96		180	173-0514	514		▶290
170-1112	598	171-6132	435		516	174-4978	312
170-1114	598		▶482	173-0515	512	174-4979	312
170-1115	598	171-6133	435	173-0946	265	174-4980	312
170-3357	518		▶437	173-1028	▶598	174-5366	222
	▶527	171-6339	332		684	174-6052	139
170-3360	518	171-6344	332		688	174-6127	236
	▶532	171-6682	684	173-1566	202	174-6128	236
170-3399	612		688	173-1602	731	174-6129	236
170-3461	202	171-7077	211		733	174-6131	236
170-3794	139		212	173-1852	▶320	174-7412	80
170-4001	512	171-7215	138	173-2052	659	174-7414	▶80
170-4876	▶124	171-8787	464	173-3082	686	174-7592	114
	302		470	173-3083	690	174-7593	114
	303	172-0964	▶321	173-4602	476	174-7599	118
170-4877	125	172-0967	321	173-4603	476	174-7875	139
170-5849	618	172-2391	289	173-4604	476	174-7876	139
170-5851	618	172-2392	243	173-4605	476	174-9570	▶113
170-5852	618		▶289	173-4606	476		118
170-5853	618	172-2416	684	173-5623	15	175-0070	602
170-5854	606		688		▶53	175-0454	26
170-5855	606	172-3353	147	173-5787	691	175-1349	628
170-6613	605		▶149		692		632
	▶628	172-4854	138		693	175-2868	236
170-6614	302	172-4856	138	173-6107	9	175-3160	476

▶ **PRIMARY REFERENCE**

PART NUMBER INDEX

Part	Page	Part	Page	Part	Page	Part	Page
175-3161	476	178-0607	675	183-4273	640	185-3159	24
175-3162	476	178-0608	675	183-4274	139	185-3241	122
175-3163	476	178-0609	675	183-4365	62	185-3502	280
175-3164	476	178-3003	632		63	185-3503	280
175-3514	476	178-3842	106	183-5163	42	185-3533	628
175-3721	48	178-3844	106	183-6316	640		632
175-3950	628	178-3932	▶727	183-7114	▶225	185-3666	666
	632		732		236	185-5294	132
175-4178	68	178-3933	▶728	183-7889	32		▶136
175-4393	628		730	183-9253	302	185-5628	152
175-4972	▶243	178-5037	30		303	185-5897	134
	280	178-7877	520		▶676	185-6393	190
175-5123	114	178-7907	659	183-9254	605	185-6684	236
175-6260	9	179-6151	562		▶678	185-7141	158
	10	179-6152	562	183-9256	676		160
	11		564	183-9257	599	186-0067	145
	12	179-6153	562	183-9374	53		▶190
	▶47		564	183-9575	53	186-0928	148
175-7900	448	179-6162	562	184-0982	667		154
	450	179-6874	166	184-1503	682	186-0929	▶148
176-0258	280	179-9387	470	184-2298	684		154
176-0259	280	179-9579	268		688	186-2882	▶354
176-1252	117	179-9848	149	184-2299	684		417
176-2504	602	180-1484	202		688		418
176-2505	602	180-3907	220	184-2300	660	186-3394	106
176-5509	6	180-5559	686	184-2472	149	186-3735	126
	▶11		690	184-2515	62		196
176-5913	69	180-5560	686		63		464
176-5914	69		690	184-3269	682		470
176-6496	291	180-6152	520	184-3270	682	186-3736	198
176-7688	30		522	184-3286	666	186-4857	700
176-7690	30	180-6600	676	184-3287	605	186-4998	246
176-9269	5		678	184-3288	666	186-5097	632
	▶12	180-6692	320	184-3290	605	186-5099	632
177-0982	727	180-6693	320	184-3291	666	186-5120	109
	728	180-6694	320	184-3579	152	186-5123	84
177-0983	727	180-6695	90	184-5498	132	186-6189	640
	728	180-6696	90	184-6011	▶690	187-0541	527
177-1043	86	180-6699	90		691	187-0930	332
177-1044	86	180-7304	▶688	184-6631	▶171	187-0931	328
177-1050	87		690		302		329
177-1056	87	180-7305	▶660		303		330
177-1860	675		688	184-8060	246	187-1315	34
177-1862	675	180-8293	350	184-9807	236	187-3961	84
177-1863	684	180-8294	350	185-0682	617	187-3962	54
	688	180-8295	▶350	185-0837	60	187-3966	9
177-4930	659	180-8420	220	185-0838	60		10
177-4935	▶675	180-8620	350	185-0844	84		11
	684	180-9340	178	185-0845	84		12
	688	183-1350	81	185-2076	666		▶54
177-4937	686	183-2097	9	185-2638	136	187-3971	103
	690		10	185-2639	136	187-4111	476
177-7878	13		11	185-2642	136	187-8194	47
	14		12	185-2644	136	187-8195	47
	▶57		▶72	185-2645	136	187-8222	47
178-0603	▶684	183-2100	110	185-2647	136	187-8949	45
	686	183-2317	32	185-2648	136	187-8971	64
178-0604	▶658	183-3222	344	185-2650	136	187-8984	87
	684	183-3223	344	185-2651	136	187-9194	503
178-0605	658	183-3398	77	185-2653	136	188-0908	226
	▶659	183-3401	117	185-2654	136		230
	660	183-3406	118	185-2655	136		▶265
178-0606	▶686	183-3648	686	185-2656	136	188-1010	5
	692		690	185-2657	136		6
	693	183-4224	6	185-2658	136	188-1011	106

▶ **PRIMARY REFERENCE**

PART NUMBER INDEX

Part	Page
188-1012	610
188-1013	610
188-1017	51
188-1018	15
	▶102
188-1019	106
188-1079	616
188-2586	675
188-3034	96
188-3122	32
188-3826	13
	14
	▶79
188-5156	111
	▶112
188-7067	292
188-7068	292
188-7069	292
188-8739	121
188-8849	163
188-9141	▶56
	57
188-9865	200
189-0135	464
	470
189-0488	730
	732
189-0985	594
189-1839	289
189-3032	360
	362
	364
	366
	368
	370
	372
	374
189-3158	168
189-5358	656
189-5359	656
189-5586	92
189-5587	92
189-5588	92
189-5722	347
189-5746	139
189-5846	▶347
189-5881	676
189-8640	▶164
189-9306	9
	10
	11
	12
	▶64
190-1029	628
	632
190-2277	232
190-2278	208
190-2938	731
	733
190-3562	29
190-3586	139
190-4219	678
190-5166	50
190-5386	731
	733
190-5452	356
190-5478	302
	303
	▶328
190-5479	▶329
190-5480	▶330
190-5481	5
	6
	▶332
190-6114	55
190-6115	32
190-6117	32
190-6401	520
190-7515	84
190-8609	402
190-8970	118
190-9771	536
	541
	542
	545
	546
	▶562
190-9775	125
191-0920	121
191-1782	118
191-1783	118
191-3028	524
	525
191-3029	524
	525
191-3587	464
	470
191-4457	82
191-4531	24
191-4896	▶356
	358
191-5101	464
	470
191-5517	236
191-6587	172
	▶182
191-8920	520
	522
191-8921	522
192-3016	▶304
	666
192-3017	304
192-3018	304
192-4209	152
193-2162	122
193-2276	336
193-2550	139
	▶180
	249
	255
193-3134	599
	▶612
193-3307	612
193-3308	612
193-3356	628
193-3359	628
193-3973	139
193-7377	304
193-7653	308
193-8570	194
194-0935	564
194-0936	564
194-0937	543
	544
	▶564
194-1094	205
194-1466	632
194-3482	134
194-3681	▶679
194-3682	▶680
194-3708	679
194-3870	▶617
194-4268	205
194-4269	▶205
	605
194-4735	76
194-5032	522
	▶524
194-5033	520
	522
	▶525
194-5052	9
	10
	11
	12
	▶43
194-5226	177
	182
	200
194-5227	177
	182
194-5349	2
	▶417
194-5350	3
	▶418
194-6726	172
	▶178
194-7008	464
	470
194-7034	246
194-7664	139
194-7771	492
194-7772	492
194-9380	202
195-0452	76
195-2194	629
195-3312	464
	470
195-4590	9
	10
	11
	12
	▶45
195-4989	164
195-5200	1
	▶154
195-5837	48
195-5918	460
195-6383	344
195-6515	385
195-6516	385
195-7882	81
195-8098	13
	14
	▶78
195-8709	5
	6
	▶670
195-9319	492
196-1921	464
	470
196-5463	112
196-5478	112
196-5515	522
196-5600	312
196-5602	464
	470
196-5603	464
	470
196-5604	464
	470
196-5605	464
	470
196-5962	112
196-7771	114
196-8884	249
	255
196-9654	200
196-9852	202
196-9858	96
196-9997	15
	▶70
197-0012	308
197-0668	139
197-0754	139
197-0755	139
197-0959	458
	▶502
197-0964	502
197-1334	308
197-3271	75
197-3272	75
197-4157	316
197-4158	302
	303
	▶316
197-5060	296
197-5061	294
	▶296
197-5062	296
197-5477	316
197-6280	▶156
197-6281	156
197-6648	9
	10
	11
	12
	▶74
197-7447	158
197-7689	694
197-8602	9
	10
	11
	12
	▶18
197-9297	56
197-9299	56
198-0921	9
	10
	11

▶ **PRIMARY REFERENCE**

PART NUMBER INDEX

Part	Page
	12
	▶44
198-0922	9
	10
	11
	12
	▶58
198-1319	9
	10
	11
	12
	▶76
198-1320	9
	10
	11
	12
	▶200
198-1871	▶222
	259
	260
198-1883	222
198-3462	220
198-4605	291
198-4607	284
	▶291
198-6574	676
198-6575	676
198-7390	200
198-9706	618
	628
	632
198-9707	629
	632
199-4010	202
199-6163	64
199-6609	520
199-7830	522
199-7833	522
199-7834	522
199-7837	15
	▶191
2	
200-0189	436
	437
	▶522
200-0750	464
200-5003	522
200-5133	728
200-5134	728
200-5136	727
200-5137	727
200-6907	▶358
201-1283	200
201-1571	24
201-5143	502
201-5469	122
201-7270	280
	▶292
201-7272	278
	▶280
201-9127	520
202-0599	522
202-0985	158
	160
202-1364	729
202-4295	380
202-4296	4
	▶380
202-4303	381
202-4304	▶381
	417
	418
202-9706	225
203-2070	614
203-2480	344
203-2481	344
203-2789	640
	646
203-3347	236
203-3348	236
203-5805	26
203-6090	26
203-6415	▶376
203-6440	▶377
203-6442	▶378
203-6443	▶379
203-7703	691
	692
	693
203-7775	108
203-9479	79
204-1533	74
204-1534	74
204-2281	202
204-4444	24
204-4944	122
	▶123
204-5208	9
	10
	11
	12
	▶24
204-6101	629
	632
204-6102	629
	632
204-8673	14
204-9530	614
204-9531	614
204-9532	614
204-9538	▶26
	29
204-9539	28
	▶29
204-9661	79
204-9662	72
205-0571	324
205-0576	8
	▶324
205-0586	8
	▶326
205-1201	16
205-1244	9
	10
	11
	12
	▶172
205-1481	8
205-1482	8
205-1674	8
205-2203	666
205-3078	51
205-3239	6
205-3762	202
205-4271	124
	▶125
205-5164	24
205-5285	18
205-5307	100
205-5308	100
205-5643	328
205-5647	328
205-5659	330
205-5660	330
205-7331	246
205-7590	8
	▶729
205-8256	322
	▶348
205-8674	▶99
	100
205-8681	100
206-0053	236
206-0524	334
	335
206-3719	64
206-3720	214
206-3721	▶214
	216
206-3997	328
206-4874	237
206-5887	22
206-5937	236
206-5939	236
206-5940	236
206-5990	13
206-6548	212
	▶216
206-6923	9
	10
	11
	12
	▶22
206-9000	15
	▶100
206-9001	15
	▶118
207-1556	191
	▶192
207-1557	192
	▶194
207-6797	158
	160
207-9808	153
	183
207-9809	153
	▶183
208-0039	24
208-0375	667
208-4622	132
	134
208-4701	158
	160
208-4705	160
208-6726	480
208-6727	480
208-8368	5
	6
208-9699	480
209-2152	562
209-2187	330
209-2375	52
209-3672	60
209-3673	41
209-3777	18
209-5074	72
209-6417	158
	160
209-6692	87
209-9167	88
210-2299	▶338
210-5984	▶32
	34
210-5985	▶30
	32
210-5987	13
	14
	▶34
210-6786	▶160
210-8550	9
	10
	11
	12
	▶41
210-9096	▶86
	88
210-9097	86
	▶87
211-0220	618
211-0274	▶158
211-0546	78
211-0910	80
211-0911	80
211-1044	132
	134
211-1812	9
	10
	11
	▶88
211-2029	9
	10
	11
	12
	▶52
211-2134	32
211-2179	9
	10
	11
	12
	▶35
211-4625	▶2
211-4627	▶3
212-5839	38
212-5844	38
212-7002	26
212-9354	118

▶ **PRIMARY REFERENCE**

PART NUMBER INDEX

Part	Page	Part	Page	Part	Page	Part	Page
212-9355	118						
212-9356	118						
212-9433	118						
213-1723	84						
213-1724	84						
213-2282	486						
213-7315	628						
	632						
213-7511	►145						
213-8516	76						
213-9320	►62						
	69						
213-9321	►63						
	69						
214-1645	105						
214-5705	60						
214-7170	200						
214-7233	312						
214-7234	312						
214-7235	312						
214-8976	730						
	732						
214-9183	427						
214-9184	427						
214-9389	156						
214-9492	132						
	134						
	610						
215-1362	168						
215-3220	38						
215-3222	38						
215-3250	►38						
	40						
215-3251	15						
	►40						
215-3291	60						
215-3292	60						
215-3296	60						
215-3363	59						
215-3629	60						
215-3673	9						
	10						
	11						
	12						
	►59						
215-6298	105						
215-9541	82						
215-9571	68						
	►69						
215-9801	246						
216-0349	610						
216-1598	68						
216-3233	►7						
216-7293	7						
	►300						
216-7294	7						
	►8						
217-0046	322						
217-0047	8						
	►322						

► **PRIMARY REFERENCE**



© 2002 Caterpillar
All Rights Reserved

Printed in U.S.A.