CATERPILLAR®

SEBP4446
December 2005

RUTHZIL TRATOR COMERCIAL DE PEÇAS LTDA 11 97083-6812 ROLANDO

Parts Manual

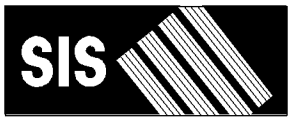

See "General Information" for New Parts Manual Features.

D6R Series III TRACK-TYPE TRACT0R
STD,XL, Differential Steering

GMT1-Up (Machine)
JDL1-Up (Machine)
THX1-Up (Engine)
KKA1-Up (Transmission)
C4C1-Up (Bulldozer)
C4K1-Up (Bulldozer)
C4L1-Up (Bulldozer)
C4N1-Up (Bulldozer)
C4R1-Up (Bulldozer)
C4T1-Up (Bulldozer)
C4W1-Up (Bulldozer)
D6C1-Up (Bulldozer)
D6D1-Up (Ripper)
T6K1-Up (Torque Converter)

Powered By C9 Engine
This Parts Manual is also available in .PDF format on Compact Disc (CD-ROM)-Caterpillar Form No. SERP4446

Product and Dealer Information

Note: For product identification plate locations, see the section “Product Identification Information” in the Operation and Maintenance Manual.

Delivery Date: _____

Product Information

Model: _____

Product Identification Number: _____

Engine Serial Number: _____

Transmission Serial Number: _____

Generator Serial Number: _____

Attachment Serial Numbers: _____

Attachment Information: _____

Customer Equipment Number: _____

Dealer Equipment Number: _____

Dealer Information

Name: _____ Branch: _____

Address: _____

_____

_____

	Dealer Contact	Phone Number	Hours
Sales:	_____	_____	_____
Parts:	_____	_____	_____
Service:	_____	_____	_____

Informations produit et concessionnaire

Nota: Voir l'emplacement de la plaque signalétique du produit au chapitre "Informations produit" du guide d'utilisation et d'entretien.

Date de livraison: _____

Informations produit

Modèle: _____

Numéro d'identification produit: _____

Numéro de série du moteur: _____

Numéro de série de la boîte de vitesses: _____

Numéro de série de l'alternateur: _____

Numéros de série d'équipement: _____

Informations sur l'équipement: _____

Numéro matériel client: _____

Numéro matériel concessionnaire: _____

Informations concessionnaire

Nom: _____ Agence: _____

Adresse: _____

_____

_____

	Contact concessionnaire	Numéro de téléphone	Heures
Ventes:			
Pièces:			
Service:			

Información del Producto/Distribuidor

Nota: Para saber la ubicación de las placas de identificación del producto, ver la sección “Información sobre identificación del producto” en el Manual de Operación y Mantenimiento.

Fecha de entrega: _____

Información del producto

Modelo: _____

Número de identificación del producto: _____

Número de serie del motor: _____

Número de serie de la transmisión: _____

Número de serie del generador: _____

Números de serie de los accesorios: _____

Información sobre los accesorios: _____

Número del equipo del cliente: _____

Número del equipo del distribuidor: _____

Información del distribuidor

Nombre: _____ Sucursal: _____

Dirección: _____

_____

_____

Comunicación con el distribuidor	Número de teléfono	Horas
Ventas: _____	_____	_____
Piezas: _____	_____	_____
Servicio: _____	_____	_____

Informações Sobre Produto e Revendedor

Nota: Para localizações da placa de identificação do produto, consulte a seção, “Informações Sobre Identificação do Produto” no Manual de Operação e Manutenção.

Data de Entrega: _____

Informações Sobre o Produto

Modelo: _____

Número de Identificação do Produto: _____

Número de Série do Motor: _____

Número de Série da Transmissão: _____

Número de Série do Gerador: _____

Números de Série de Acessórios: _____

Informações Sobre Acessórios: _____

Número do Equipamento do Cliente: _____

Número do Equipamento do Revendedor: _____

Informações Sobre o Revendedor

Nome: _____ Filial: _____

Endereço: _____

_____

_____

	Contato do Revendedor	Telefone	Horas
Vendas:	_____	_____	_____
Peças:	_____	_____	_____
Serviço:	_____	_____	_____

Produkt- und Händlerinformation

Anmerkung: Für die Lage der Produkt-Identnummer und Seriennummern siehe Abschnitt “Produkt-Identinformation” im Betriebs- und Wartungshandbuch.

Lieferdatum: _____

Produkt-Identinformation

Modell: _____

Produkt-Identnummer: _____

Seriennummer des Motors: _____

Seriennummer des Getriebes: _____

Seriennummer des Generators: _____

Seriennummern der Arbeitsgeräte: _____

Arbeitsgeräteinformation: _____

Kundennummer: _____

Händlernummer: _____

Händlerinformation

Name: _____ Niederlassung: _____

Adresse: _____

_____

_____

	Kontaktperson beim Händler	Telefon	Dienststunden
Verkauf:	_____	_____	_____
Ersatzteile:	_____	_____	_____
Service:	_____	_____	_____

MEMORANDA

TABLE OF CONTENTS

Name	Page
GENERAL INFORMATION	A23
REPAIR ALTERNATIVES	A42
SUPPLEMENTAL COOLANT ADDITIVES	A47
ENGLISH-PORTUGUESE PARTS NOMENCLATURE	A52
MAINTENANCE PARTS	A60
INDEX	A83
MACHINE ARRANGEMENT	1
CHASSIS AR	1
GENERAL AR	2
ENGINE ARRANGEMENT	4
ENGINE AR	4
ENGINE AR-CORE	10
INSTALLATION AR-ENGINE	16
BASIC ENGINE	17
CAMSHAFT GP	17
COVER GP-CYLINDER BLOCK	18
COVER GP-FRONT HOUSING	20
COVER GP-VALVE MECHANISM	22
CRANKSHAFT GP	23
CYLINDER BLOCK AS	24
CYLINDER BLOCK GP	26
CYLINDER HEAD AS	28
CYLINDER HEAD GP	30
DAMPER GP	33
DRAIN GP-ENGINE OIL	34
DRIVE AR-FAN	35
DRIVE GP-FAN	36
DRIVE GP-PUMP	41
FASTENER GP-CYLINDER HEAD	42
FASTENER GP-DAMPER & PULLEY	44
FASTENER GP-FRONT HOUSING	45
FASTENER GP-VALVE COVER	46
FLYWHEEL GP	48
GEAR GP-FRONT	49
GEAR GP-REAR	50
HOUSING AS-FLYWHEEL	51
HOUSING GP-FLYWHEEL	52
HOUSING GP-FRONT	54
LIFTING GP-ENGINE	55
MOUNTING GP-ALTERNATOR	56
MOUNTING GP-ENGINE	57
MOUNTING GP-FAN DRIVE	58
PAN GP-OIL	59
PISTON & ROD GP	60
PLUG GP-ENGINE	61
PULLEY GP-CRANKSHAFT	62
PULLEY GP-FAN & ALT DRIVE	63
ROCKER ARM GP	67
SEAL GP-CRANKSHAFT	69
SUPPORT GP-ENGINE	71
TRUNNION GP-ENGINE	72
VALVE MECHANISM GP	73
YOKE GP	75
LUBRICATION SYSTEM	76
FILLER GP-ENGINE OIL	76
FILTER GP-ENGINE OIL	77
FUMES DISPOSAL GP	80
GAUGE GP-OIL LEVEL (DIPSTICK)	82
LINES GP-ENGINE OIL	83
LINES GP-OIL SUPPLY	84
LINES GP-TURBOCHARGER OIL	87
OIL CHANGE GP-HIGH SPEED	91
PUMP GP-ENGINE OIL	93
VALVE GP-FLUID SAMPLING	94
VALVE GP-MODULATING	95
COOLING SYSTEM	96
COOLER GP-ENGINE OIL	96
COOLING AR-HIGH AMBIENT TEMP	97
FAN AR-EJECTOR	97
FAN GP-BLOWER	98
FAN GP-REVERSIBLE	99
LINES GP-WATER	100
PUMP GP-WATER	105
RADIATOR AR	108
RADIATOR GP	109
TANK GP-COOLANT	112
AIR INLET AND EXHAUST SYSTEM	116
AFTERCOOLER GP-AIR	116
AIR CLEANER GP	117
DUST EJECTOR GP	119
ELBOW GP-AIR INLET	120
GUARD GP-PRECLEANER	121
LINES GP-AIR	122
MANIFOLD GP-EXHAUST	126
MUFFLER GP	127
PRECLEANER AR	128
PRECLEANER GP	130
PRESCREENER AS	133
SHIELD GP-EXHAUST	134
TURBOCHARGER GP	135
FUEL SYSTEM	139
FILTER & LINES GP-FUEL	139
FILTER GP-WATER SEP & FUEL	141
INJECTOR GP-FUEL	142
LINES GP-FUEL	143
PUMP & MTG GP-UNIT INJ HYD	147

TABLE OF CONTENTS

Name	Page
PUMP GP-FUEL INJECTION	149
SHIELD AR-THERMO	151
SHIELD GP-HEAT	153
TANK GP-FUEL	154
ELECTRICAL AND STARTING SYSTEM	156
ALARM GP	156
ALTERNATOR GP-CHARGING	157
BATTERY & WIRING GP	166
BATTERY GP	170
CONTROL GP-ENGINE ELECTRONIC	171
CONTROL GP-UNPROGRAMMED	173
CONVERTER GP-ELECTRICAL	174
ELECTRONICS AR-MACHINE	175
ELECTRONICS GP-MONITOR	175
ELECTRONICS GP-POWER TRAIN	175
HEATER GP-JACKET WATER	176
INSTALLATION AR-GRADE CONTROL	177
INSTALLATION GP-COMMUNICATION	178
INSTALLATION GP-GRADE CONTROL	182
INSTALLATION GP-SECURITY	183
LAMP GP-DOME	185
LAMP GP-FLOOD	186
LIGHTING GP-FLOOD	189
MODULE & MTG GP-GRADE CONTROL	200
MOUNTING GP-CONNECTOR	201
PANEL GP-FUSE	202
SENSOR GP-ENGINE	204
SENSOR GP-POSITION	205
SENSOR GP-PRESSURE	207
SENSOR GP-SPEED	215
SENSOR GP-TEMPERATURE	218
STARTING AID GP-ETHER	221
STARTING MOTOR GP-ELECTRIC	223
SWITCH GP-BYPASS	232
SWITCH GP-DISCONNECT	233
SWITCH GP-MAGNETIC	234
SWITCH GP-PUSH BUTTON	236
VALVE GP-ETHER STARTING	237
WIRING GP-ELECTRONIC CONTROL	238
WIRING GP-ENGINE	240
WIRING GP-GRADE CONTROL	243
WIRING GP-PLATFORM	248
POWER TRAIN	252
ACCUMULATOR GP	252
AXLE GP-POWER TRAIN	254
BASE GP-OIL FILTER	255
BRAKE & DIFFERENTIAL DRIVE GP	256
BRAKE & PLANETARY GP	261
CASE & PARTS GP-PLANETARY	263
CONTROL GP-TRANSMISSION HYD	266
COOLER GP-TRANSMISSION OIL	268
COUPLING & GUARD GP	270
COUPLING GP-PUMP	271
DRAIN GP-ECOLOGY	272
FILTER GP-OIL	275
FINAL DRIVE GP	276
GEAR GP-BEVEL & TRANSFER	280
LINES GP-POWER TRAIN OIL	283
MANIFOLD GP-TRANSMISSION	289
MOUNTING GP-FINAL DRIVE	290
MOUNTING GP-TRANSMISSION	291
PLANETARY GP-TRANSMISSION	292
POWER TRAIN AR	298
PUMP GP-GEAR	299
SCREEN GP-MAGNETIC	303
SEGMENT GP-SPROCKET	304
SHAFT GP-DRIVE	305
TORQUE CONVERTER GP	306
TRANSMISSION AR	313
UNIVERSAL JOINT GP	314
VALVE & MTG GP-CONTROL	315
VALVE GP-MODULATING	316
VALVE GP-RELIEF	319
VALVE GP-TRANSMISSION CONTROL	322
FRAME AND BODY	326
BAR GP-STRIKER	326
BOX GP-BATTERY	328
CASE & FRAME GP	331
DRAWBAR GP	332
ENCLOSURE GP-ENGINE	334
ENCLOSURE GP-HYDRAULIC TANK	341
FENDER GP	343
GRID GP-SAND BLAST ERODING	346
GRILL GP-RADIATOR	347
GUARD AR-FINAL DRIVE	349
GUARD AR-IDLER	349
GUARD GP-BOTTOM	350
GUARD GP-FUEL TANK	356
GUARD GP-RADIATOR	359
GUARD GP-REAR	362
GUARD GP-TRANSMISSION	363
LATCH GP	364
SWEEP GP	365
UNDERCARRIAGE	367
BAR AR-STRIKER	367
BAR GP-EQUALIZER	368
BAR GP-STRIKER	371
CAP GP-TRACK IDLER	372
CAP GP-TRACK ROLLER	374
FRAME GP-TELESCOPING RECOIL	375
GUARD GP-TRACK GUIDE	383

TABLE OF CONTENTS

Name	Page
GUARD GP-TRACK ROLLER	385
GUIDING AR-UNDERCARRIAGE	387
IDLER GP-FRONT	388
IDLER GP-TRACK	391
LINK AS-TRACK	392
LINK AS-TRACK BOX	394
LINK GP-TRACK	398
MOUNTING GP-CARRIER ROLLER	400
PIVOT BAR GP	401
ROLLER AR-TRACK	402
ROLLER GP-TRACK CARRIER	403
ROLLER GP-TRACK-DOUBLE FLANGE	404
ROLLER GP-TRACK-SINGLE FLANGE	408
SCRAPER GP-IDLER	411
STRIKER GP-REAR	412
TRACK ADJUSTER & RECOIL GP	414
TRACK GP	416
UNDERCARRIAGE AR	422
STEERING AND BRAKING SYSTEM	425
CONTROL GP-HANDLE	425
CONTROL GP-PARKING BRAKE	427
CONTROL GP-STEERING & TMSN	429
MANIFOLD & VALVE GP	433
VALVE GP-SOLENOID	436
HYDRAULIC SYSTEM	438
ACCUMULATOR GP-PILOT OIL	438
ADAPTER GP-MOTOR	440
CONTROL & MTG GP-JOYSTICK	441
CONTROL AR-HYDRAULIC IMPLEMENT	442
CONTROL GP-HANDLE	444
CONTROL GP-JOYSTICK	445
CONTROL GP-PILOT OPERATED HYD	446
COOLER GP-HYDRAULIC OIL	447
CYLINDER & LINES GP-LIFT	448
CYLINDER GP-LIFT	452
CYLINDER GP-RIPPER	454
CYLINDER GP-TILT	456
HANDLE GP-CONTROL	462
HYDRAULIC AR-2 VALVE	464
LINES GP-LIFT CYLINDER	465
LINES GP-PILOT	467
LINES GP-PUMP	478
LINES GP-RIPPER	481
LINES GP-TILT CYLINDER	483
MANIFOLD GP-CONTROL	491
MANIFOLD GP-VALVE	492
MOTOR GP-PISTON	493
MOUNTING GP-CYLINDER	494
MOUNTING GP-VALVE	496
PUMP & MOUNTING GP	497
PUMP GP-PISTON	498
ROTATING GP-MOTOR	501
TANK & MTG GP-HYDRAULIC	503
TANK GP-HYDRAULIC	504
VALVE & MTG GP-BULLDOZER	507
VALVE & MTG GP-COUNTERBALANCE	508
VALVE GP-BANK 3	509
VALVE GP-BANK 4	511
VALVE GP-CHECK	515
VALVE GP-CONTROL	516
VALVE GP-COUNTERBALANCE	528
VALVE GP-PILOT	529
VALVE GP-PILOT CARTRIDGE	535
VALVE GP-PRESSURE REDUCING	537
VALVE GP-PUMP CONTROL	538
VALVE GP-QUICK-DROP	540
VALVE GP-RELIEF	543
VALVE GP-SHUTTLE	547
VALVE GP-SOLENOID	549
IMPLEMENTS	551
BRACE GP-BULLDOZER	551
BULLDOZER AR-ANGLING	553
BULLDOZER AR-SEMI-UNIVERSAL	557
C-FRAME AS	561
C-FRAME GP	562
PUSH ARM GP	564
TRUNNION GP-BULLDOZER	568
WORK TOOLS	569
BLADE & EDGE GP-ANGLING	569
BLADE & EDGE GP-SEMI-UNIVERSAL	570
BLADE AS-SEMI-UNIVERSAL	572
BLADE GP-ANGLING	575
BLADE GP-SEMI-UNIVERSAL	576
CONTROL GP-WINCH	578
EDGE GP-BIT & CUTTING	579
INSTALLATION AR-WINCH	581
LINES GP-WINCH	582
MOUNTING GP-MAST	585
MOUNTING GP-RIPPER	588
RIPPER AR	590
RIPPER GP	591
TOOTH GP-RIPPER	593
OPERATOR STATION	597
ADJUSTER GP-SEAT	597
AIR CONDITIONER AR	598
AIR CONDITIONER GP	599
BLOWER GP-CAB	600
CAB AR	602
CAB GP	604

TABLE OF CONTENTS

Name	Page
CANOPY AR-OPEN ROPS	607
COMPRESSOR GP-REFRIGERANT	608
CONDENSER & MTG GP-REFRIGERANT	611
CONDENSER GP-REFRIGERANT	614
CONTROL & MTG GP-PEDAL	616
CONTROL GP-UNPRGMED MONITOR	617
COVER GP-CONSOLE	618
HANDHOLD GP	621
HEATER GP-CAB	623
HOUSING GP-SEAT SUSPENSION	624
INSTALLATION GP-RADIO	627
INSTRUMENT GP-CAB	628
KNOB GP	635
LINER GP-CAB	636
LINES GP-AIR CONDITIONER	640
LINES GP-HEATER	647
MIRROR GP-REAR VIEW	649
MODULE GP-DISPLAY	651
MODULE GP-QUAD GAUGE	652
MOTOR GP-WINDOW WIPER	653
MOUNTING GP-ANTENNA	655
MOUNTING GP-CAB	656
MOUNTING GP-MONITOR	657
MOUNTING GP-PLATFORM	659
MOUNTING GP-ROPS	661
PAN GP-BACKREST	662
PEDAL GP-GOVERNOR & BRAKE	665
PLATFORM GP	667
PLATFORM GP-OPERATOR	668
PRESSURIZER GP-CAB	671
RECLINER GP-SEAT	673
ROPS GP	674
ROPS GP-OPEN	675
SCREEN GP-PROTECTION	677
SEAT GP	679
SEAT GP-SUSPENSION	688
SUSPENSION GP-SEAT	691
TANK GP-WINDOW WASHER	695
WASHER GP-WINDOW	698
WINDOW GP-CAB	700
WINDOW GP-SLIDING	715
WIPER GP-WINDOW	716
WIPER PIVOT GP	718
SERVICE EQUIPMENT AND SUPPLIES	719
FILM GP	719
PLATE & FILM GP	723
PART NUMBER INDEX	B1

TABLE DES MATIÈRES

Désignation	Page
GÉNÉRALITÉS	A26
OPTIONS DE RÉPARATION	A43
ADDITIFS POUR LIQUIDE DE REFROIDISSEMENT	A48
PIÈCES DE RECHANGE	A64
INDEX	A94
VERSION DE MACHINE	1
VERSION DE CHASSIS	1
VUE DU MODÈLE	2
VERSION DE MOTEUR	4
MOTEUR (VERSION)	4
MOTEUR - PARTIE CENTRALE (VERSION)	10
MONTAGE DE MOTEUR (VERSION)	16
MOTEUR STANDARD	17
ARBRE A CAMES (ASS)	17
BLOC-CYLINDRES - COUVERCLE (ASS)	18
COUVERCLE DE CARTER AV (ASS)	20
CACHE-SOUPAPES (ASS)	22
VILEBREQUIN (ASS)	23
BLOC-CYLINDRES (ENS)	24
BLOC-CYLINDRES (ASS)	26
CULASSE (ENS)	28
CULASSE (ASS)	30
AMORTISSEUR DE VIBRATIONS (ASS)	33
VIDANGE-HUILE DE MOTEUR (ASS)	34
ENTRAINEMENT DE VENTILATEUR (VERSION)	35
ENTRAÎNEMENT DE VENTILATEUR (ASS)	36
ENTRAÎNEMENT DE POMPE (ASS)	41
BOULONNERIE DE LA CULASSE (ASS)	42
BOULONNERIE D'AMORTISSEUR ET DE POULIE	44
BOULONNERIE DE CARTER AV (ASS)	45
CACHE-SOUPAPE - BOULONNERIE (ASS)	46
VOLANT MOTEUR (ASS)	48
PIGNONNERIE AV (ASS)	49
PIGNON AR (ASS)	50
CARTER DE VOLANT (ENS)	51
CARTER DE VOLANT (ASS)	52
CARTER AV (ASS)	54
OEILLETONS DE LEVAGE MOTEUR (ASS)	55
MONTAGE D'ALTERNATEUR (ASS)	56
MONTAGE DE MOTEUR (ASS)	57
MONTAGE D'ENTRAÎNEMENT DE VENTILATEUR (ASS)	58
HUILE MOTEUR - CARTER (ASS)	59
PISTON ET BIELLE (ASS)	60
BOUCHON DE MOTEUR (ASS)	61
VILEBREQUIN - POULIE (ASS)	62
POULIE - ENTRAÎNEMENT D'ALTERNA. ET DE VENTI.	63
AXE DE CULBUTEUR (ASS)	67
JOINT DE VILEBREQUIN (ASS)	69
SUPPORT DE MOTEUR (ASS)	71
TOURILLON DE MOTEUR (ASS)	72
CULBUTERIE (ASS)	73
ETRIER (ASS)	75
CIRCUIT DE GRAISSAGE	76
BOUCHON DE REMPLISSAGE D'HUILE MOTEUR (ASS)	76
FILTRE À HUILE MOTEUR (ASS)	77
DISPOSITIF D'EVACUATION DES VAPEURS DE CARTER	80
JAUGE D'HUILE MOTEUR (BAIONNETTE) (ASS)	82
CANALISATIONS D'HUILE MOTEUR (ASS)	83
CANALISATIONS D'ALIMENTATION D'HUILE (ASS)	84
CANALISATIONS D'HUILE DE TURBOCOMPRESSEUR (ASS)	87
DISPOSITIF DE VIDANGE RAPIDE D'HUILE (ASS)	91
POMPE A HUILE MOTEUR (ASS)	93
ROBINET-PRÉLÈVEMENT D'ÉCHANTILLON DE LIQUIDE (ASS)	94
SOUPAPE DE MODULATION (ASS)	95
CIRCUIT DE REFROIDISSEMENT	96
REFROIDISSEUR D'HUILE MOTEUR (ASS)	96
REFROIDISSEMENT AUX TEMPÉRATURES ÉLEVÉES (VERSION)	97
VENTILATEUR - ÉJECTEUR (VERSION)	97
VENTILATEUR SOUFFLANT (ASS)	98
VENTILATEUR A PALES RÉVERSIBLES (ASS)	99
CANALISATIONS D'EAU (ASS)	100
POMPE A EAU (ASS)	105

* TRADUCTION NON DISPONIBLE AU MOMENT DE LA PUBLICATION

TABLE DES MATIÈRES

Désignation	Page
RADIATEUR (VERSION)	108
RADIATEUR (ASS)	109
RÉSERVOIR DU LIQUIDE DE REFROIDISSEMENT (ASS)	112
CIRCUIT D'ADMISSION D'AIR ET D'ECHAPPEMENT	116
REFROIDISSEUR D'ADMISSION D'AIR (ASS)	116
FILTRE A AIR (ASS)	117
ÉJECTEUR AUTOMATIQUE DE POUSSIÈRE (ASS)	119
COUDE D'ADMISSION D'AIR (ASS)	120
PROTECTION DE PRÉFILTRE (ASS)	121
CANALISATIONS D'AIR (ASS)	122
COLLECTEUR D'ÉCHAPPEMENT (ASS)	126
SILENCIEUX (ASS)	127
PREFILTRE (VERSION)	128
PREFILTRE (ASS)	130
ÉPURATEUR (ENS)	133
DEFLECTEUR D'ECHAPPEMENT (ASS)	134
TURBOCOMPRESSEUR (ASS)	135
CIRCUIT DE CARBURANT	139
FILTRE ET CANALISATIONS DE CARBURANT (ASS)	139
FILTRE DE SÉPARATEUR D'EAU ET DE CARBURANT (ASS)	141
INJECTEUR DE CARBURANT (ASS)	142
CANALISATIONS DE CARBURANT (ASS)	143
POMPE D'INJECTEURS-POMPES HYDRAU. ET MONTAGE	147
POMPE D'INJECTION DE CARBURANT (ASS)	149
ÉCRAN THERMIQUE (VERSION)	151
ÉCRAN THERMIQUE (ASS)	153
RÉSERVOIR DE CARBURANT (ASS)	154
CIRCUIT DE DÉMARRAGE ET ÉLECTRIQUE	156
AVERTISSEUR (ASS)	156
ALTERNATEUR DE CHARGE (ASS)	157
BATTERIE ET CÂBLAGE	166
BATTERIE (ASS)	170
COMMANDE ELECTRONIQUE DE MOTEUR (ASS)	171
COMMANDE NON PROGRAMMEE (ASS)	173
TRANSFORMATION ELECTRIQUE (ASS)	174
COMPOSANTS ÉLECTRONIQUES DE LA MACHINE (VERSION)	175
ÉLECTRONIQUE-MONITEUR (ASS)	175
ÉLECTRONIQUE DE TRANSMISSION (ASS)	175
EAU DES CHEMISES - RECHAUFFEUR (ASS)	176
VERSION DE MONTAGE DE COMMANDE DE PROFIL LONGITUDINAL	177
MONTAGE-COMMUNICATION (ASS)	178
MONTAGE DE COMMANDE DE PROFIL LONGITUDINAL (ASS)	182
MONTAGE-SÉCURITÉ (ASS)	183
PLAFONNIER (ASS)	185
LAMPE - PHARE (ASS)	186
ÉCLAIRAGE - PROJECTEURS (ASS)	189
MODULE DE PROFIL LONGITUDINAL ET MONTAGE (ASS)	200
MONTAGE DE CONNECTEUR (ASS)	201
PANNEAU - FUSIBLES (ASS)	202
CAPTEUR - MOTEUR (ASS)	204
SONDE - CIRCUIT DE CARBURANT	205
CAPTEUR DE PRESSION (ASS)	207
CAPTEUR DE VITESSE (ASS)	215
CAPTEUR DE TEMPERATURE (ASS)	218
AUXILIAIRE DE DÉMARRAGE À L'ÉTHER	221
DÉMARREUR ÉLECTRIQUE (ASS)	223
INTERRUPTEUR - DÉRIVATION (ASS)	232
ROBINET DE BATTERIE (ASS)	233
CONTACTEUR MAGNETIQUE (ASS)	234
CONTACTEUR DE BOUTON-POUSSOIR (ASS)	236
SOUPAPE DE DÉMARRAGE À L'ÉTHER (ASS)	237
COMMANDE ÉLECTRONIQUE - CABLAGE	238
CABLAGE DE MOTEUR (ASS)	240
AVERTISSEMENT DE PROFIL LONGITUDINAL (ASS)	243
CABLAGE - PLATE-FORME (ASS)	248
TRANSMISSION	252
ACCUMULATEUR (ASS)	252
ARBRE DE TRANSMISSION (ASS)	254
SUPPORT DE FILTRE À HUILE (ASS)	255
FREIN ET ENTRAÎNEMENT DE DIFFÉRENTIEL (ASS)	256
FREIN ET TRAINS PLANÉTAIRES (ASS)	261
TRAINS PLANÉTAIRES - CARTER ET PIÈCES	263

* TRADUCTION NON DISPONIBLE AU MOMENT DE LA PUBLICATION

TABLE DES MATIÈRES

Désignation	Page
COMMANDE HYDRAULIQUE DE BOÎTE (ASS)	266
REFROIDISSEUR D'HUILE DE BOÎTE (ASS)	268
RACCORD ET PROTECTION (ASS)	270
ACCOUPLEMENT DE POMPE (ASS)	271
VIDANGE-ÉCOLOGIE (ASS)	272
FILTRE A HUILE (ASS)	275
RÉDUCTEURS (ASS)	276
COURONNE ET ENGRENAGES DE TRANSFERT (ASS)	280
CANALISATIONS D'HUILE DE TRANSMISSION (ASS)	283
*MANIFOLD GP-TRANSMISSION	289
MONTAGE DE RÉDUCTEURS (ASS)	290
REDUCTEUR MARIN - MONTAGE (ASS)	291
BOÎTE PLANÉTAIRE (ASS)	292
TRANSMISSION (VERSION)	298
POMPE A ENGRENAGES (ASS)	299
ÉCRAN MAGNÉTIQUE (ASS)	303
SEGMENT DE BARBOTIN (ASS)	304
ARBRE D'ENTRAÎNEMENT (ASS)	305
CONVERTISSEUR DE COUPLE (ASS)	306
BOÎTE DE VITESSES (VERSION)	313
JOINT UNIVERSEL (ASS)	314
DISTRIBUTEUR ET MONTAGE (ASS)	315
SOUPAPE DE MODULATION (ASS)	316
CLAPET DE DECHARGE (ASS)	319
DISTRIBUTEUR DE BOITE (ASS)	322
CHÂSSIS ET BENNE	326
BARRE DÉFLECTRICE (ASS)	326
COMPARTIMENT DE BATTERIE (ASS)	328
CHÂSSIS ET CARTER (ASS)	331
BARRE D'ATTELAGE (ASS)	332
CARENAGE DE MOTEUR (ASS)	334
CARENAGE - RESERVOIR HYDRAULIQUE (ASS)	341
GARDE-BOUE (ASS)	343
DEFLECTEUR PARE-SABLE (ASS)	346
GRILLE DE RADIATEUR (ASS)	347
PROTECTEUR DE RÉDUCTEURS (VERSION)	349
PROTECTION DE ROUE LIBRE (VERSION)	349
BLINDAGE INFÉRIEUR (ASS)	350
PROTECTION DU RÉSERVOIR DE CARBURANT (ASS)	356
PROTÈGE-RADIATEUR (ASS)	359
BLINDAGE AR	362
BLINDAGE DE TRANSMISSION	363
VERROU (ASS)	364
ARCEAUX DE DÉBARDAGE (ASS)	365
TRAIN DE ROULEMENT	367
BARRE DÉFLECTRICE (VERSION)	367
BALANCIER DE SUSPENSION (ASS)	368
BARRE DÉFLECTRICE (ASS)	371
CHAPEAU DE ROUE AV (CHAINE) (ASS)	372
CHAPEAU DE GALET INFERIEUR (ASS)	374
CARTER TELESCOPIQUE DE MECANISME AMORTISSEUR	375
GUIDE PROTECTEUR DE CHAÎNE (ASS)	383
PROTEGE-GALETS (ASS)	385
VERSION DE GUIDAGE DE TRAIN DE ROULEMENT	387
ROUE AV (ASS)	388
ROUE AV - CHAINES (ASS)	391
MAILLON DE CHAINE (ENS)	392
BIELLE DE CARTER DE CHAÎNE (ENS)	394
BIELLETTE - CHAÎNE (ASS)	398
MONTAGE DE GALET SUPÉRIEUR	400
TRAVERSE PIVOT (ASS)	401
GALET INFÉRIEUR (VERSION)	402
GALET SUPERIEUR (ASS)	403
GALET A BOUDIN DOUBLE (ASS)	404
GALET A BOUDIN SIMPLE (ASS)	408
ROUE AV DE SCRAPER (ASS)	411
LOQUET TOURNANT ARRIÈRE (ASS)	412
MECANISME AMORTISSEUR ET REGLAGE DE CHAINES (ASS)	414
CHAINES (ASS)	416
TRAIN DE ROULEMENT	422
CIRCUIT DE DIRECTION ET DE FREIN	425
COMMANDE DE POIGNÉE (ASS)	425
COMMANDE DE FREIN DE STATIONNEMENT (ASS)	427
COMMANDE DE DIRECTION ET BOITE DE VITESSES	429
COLLECTEUR ET SOUPAPE (ASS)	433
SOUPAPE - SOLÉNOÏDE (ASS)	436
CIRCUIT HYDRAULIQUE	438
ACCUMULATEUR - HUILE PILOTE (ASS)	438
ADAPTATEUR DE MOTEUR (ASS)	440
COMMANDE ET MONTAGE - LEVIER (ASS)	441

* TRADUCTION NON DISPONIBLE AU MOMENT DE LA PUBLICATION

TABLE DES MATIÈRES

Désignation	Page
VERSION DE COMMANDE D'ÉQUIPEMENT HYDRAULIQUE	442
COMMANDE DE POIGNÉE (ASS)	444
PALONNIER - GROUPE DE COMMANDE (ASS)	445
COMMANDE HYDRAULIQUE PILOTE (ASS)	446
REFROIDISSEUR D'HUILE HYDRAULIQUE (ASS)	447
VÉRIN DE LEVAGE ET CANALISATIONS (ASS)	448
VÉRIN DE LEVAGE (ASS)	452
VERIN DE RIPPER (ASS)	454
VÉRIN D'INCLINAISON (ASS)	456
POIGNÉE DE COMMANDE (ASS)	462
DISTRIBUTEUR - 2 VOIES (VERSION)	464
CANALISATIONS DE VÉRIN DE LEVAGE (ASS)	465
CANALISATIONS A COMMANDE PILOTE (ASS)	467
CANALISATIONS DE POMPE (ASS)	478
CANALISATIONS DU RIPPER (ASS)	481
CANALISATIONS DU VÉRIN D'INCLINAISON (ASS)	483
COLLECTEUR - COMMANDE (ASS)	491
COLLECTEUR - SOUPAPE (ASS)	492
GROUPE DE MOTEUR A PISTONS	493
MONTAGE DE VÉRIN (ASS)	494
MONTAGE DE SOUPAPE (ASS)	496
POMPE ET MONTAGE (ASS)	497
POMPE A PISTONS (ASS)	498
GROUPE DE ROTATION DE MOTEUR	501
RÉSERVOIR HYDRAULIQUE ET MONTAGE (ASS)	503
RÉSERVOIR HYDRAULIQUE (ASS)	504
SOUPAPE DE BULLDOZER ET MONTAGE (ASS)	507
SOUPAPE ET MONTAGE - CONTREPOIDS (ASS)	508
DISTRIBUTEUR TRIPLE ÉLÉMENT (ASS)	509
DISTRIBUTEUR 4 ÉLÉMENTS (ASS)	511
CLAPET DE RETENUE (ENS)	515
DISTRIBUTEUR (ASS)	516
SOUPAPE D'ÉQUILIBRE (ASS)	528
SOUPAPE PILOTE (ASS)	529
SOUPAPE - CARTOUCHE PILOTE (ASS)	535
SOUPAPE RÉDUCTRICE DE PRESSION (ASS)	537
DISTRIBUTEUR DE POMPE (ASS)	538
SOUPAPE D'ABAISSEMENT RAPIDE (ASS)	540
CLAPET DE DECHARGE (ASS)	543
VANNE PILOTE (ASS)	547
SOUPAPE - SOLÉNOÏDE (ASS)	549
ÉQUIPEMENTS	551
TIRANT DE BULLDOZER (ASS)	551
BULLDOZER À ORIENTATION (VERSION)	553
LAME DE BULLDOZER SEMI-UNIVERSELLE (VERSION)	557
BATI EN C (ENS)	561
BATI EN C (ASS)	562
BRAS DE POUSSÉE (ASS)	564
TOURILLON DE BULLDOZER (ASS)	568
OUTILS DE TRAVAIL	569
LAME ORIENTABLE (ASS)	569
LAME DE COUPE SEMI-UNIVERSELLE (ASS)	570
LAME SEMI-UNIVERSELLE (ENS)	572
LAME À ORIENTATION (ASS)	575
LAME SEMI-UNIVERSELLE (ASS)	576
COMMANDE DE TREUIL (ASS)	578
EMBOUT ET LAME DE COUPE (ASS)	579
MONTAGE DE TREUIL (VERSION)	581
CANALISATIONS DE TREUIL (ASS)	582
MONTAGE DU MAT (ASS)	585
MONTAGE DE RIPPER (ASS)	588
RIPPER (VERSION)	590
RIPPER (ASS)	591
DENT DE RIPPER (ASS)	593
POSTE DE CONDUITE	597
REGLAGE DE SIEGE (ASS)	597
CLIMATISEUR (VERSION)	598
CLIMATISEUR (ASS)	599
VENTILATEUR SOUFFLANT DE CABINE (ASS)	600
CABINE (VERSION)	602
CABINE (ASS)	604
VERSION DE TOIT - ROPS OUVERT	607
COMPRESSEUR DE REFRIGERANT (ASS)	608
CONDENSATEUR ET MONTAGE (RÉFRIGÉRANT)	611
CONDENSEUR DE RÉFRIGÉRANT	614
COMMANDE ET MONTAGE DE PÉDALE (ASS)	616
COMMANDE DE MONITEUR NON PROGRAMMÉE (ASS)	617
COUVERCLE DE LA CONSOLE (ASS)	618
POIGNÉE	621
CHAUFFAGE DE CABINE (ASS)	623

* TRADUCTION NON DISPONIBLE AU MOMENT DE LA PUBLICATION

TABLE DES MATIÈRES

Désignation	Page	Désignation	Page
SUSPENSION DE SIEGE - CARTER (ASS)	624		
MONTAGE DE RADIO (ASS)	627		
INSTRUMENTS DE LA CABINE (ASS)	628		
BOUTON (ASS)	635		
CABINE - REVÊTEMENT (ASS)	636		
CANALISATIONS DE CLIMATISEUR (ASS)	640		
CANALISATIONS DE CHAUFFAGE (ASS)	647		
RÉTROVISEUR (ASS)	649		
MODULE D'AFFICHAGE (ASS)	651		
MODULE - QUATRE INSTRUMENTS (ASS)	652		
MOTEUR D'ESSUIE-GLACE (ASS)	653		
MONTAGE-ANTENNE (ASS)	655		
MONTAGE DE CABINE (ASS)	656		
MONTAGE DE MONITEUR (ASS)	657		
MONTAGE DE PLATE-FORME (ASS)	659		
MONTAGE DU TOIT ROPS (ASS)	661		
COUVERCLE INFÉRIEUR-DOSSIER (ASS)	662		
PÉDALE DE RÉGULATEUR ET DE FREIN (ASS)	665		
PLATE-FORME (ASS)	667		
PLATE-FORME DE CABINE	668		
SURPRESSEUR (ASS)	671		
SIÈGE INCLINABLE (ASS)	673		
TOIT ROPS (ASS)	674		
TOIT ROPS - OUVERT (ASS)	675		
GRILLE DE PROTECTION (ASS)	677		
SIÈGE (ASS)	679		
SIÈGE AVEC SUSPENSION (ASS)	688		
RÉSERVOIR - LAVE-GLACE (ASS)	695		
LAVE-GLACE - VITRE (ASS)	698		
VITRE DE CABINE (ASS)	700		
FENETRE COULISSANTE (ASS)	715		
ESSUIE-GLACE (ASS)	716		
PIVOT D'ESSUIE-GLACE (ASS)	718		
MATÉRIEL ET FOURNITURES D'ENTRETIEN	719		
PLAQUE SIGNALÉTIQUE (ASS)	719		
PLAQUES SIGNALETIQUES ET AUTOCOLLANTS (ASS)	723		
INDEX DE NUMÉROS DE PIÈCES	B1		

* TRADUCTION NON DISPONIBLE AU MOMENT DE LA PUBLICATION

CONTENIDO

Nombre	Página
INFORMACIÓN GENERAL	A30
ALTERNATIVAS DE REPARACIÓN	A44
ADITIVOS DE REFRIGERANTE SUPLEMENTARIOS	A49
PIEZAS DE MANTENIMIENTO	A69
INDICE	A106
CONFIGURACIÓN DE MÁQUINA	1
CHASIS (CONFIG)	1
CONFIGURACIÓN GENERAL	2
CONFIGURACIÓN DE MOTOR	4
CONFIGURACIÓN DE MOTORES	4
MOTOR - NÚCLEO (CONFIG)	10
CONFIGURACIÓN DE INSTALACIÓN DEL MOTOR	16
MOTOR BÁSICO	17
ÁRBOL DE LEVAS (GR)	17
TAPA DEL BLOQUE MOTOR (GR)	18
TAPA DE LA CAJA DELANTERA (GR)	20
TAPA DEL MECANISMO DE VÁLVULAS (GR)	22
CIGÜEÑAL (GR)	23
BLOQUE MOTOR (CONJ)	24
BLOQUE MOTOR (GR)	26
CULATA DE CILINDROS (CONJ)	28
CULATA DE CILINDROS (GR)	30
AMORTIGUADOR DE VIBRACIONES (GR)	33
DRENAJE DEL ACEITE DE MOTOR	34
MANDO DE VENTILADOR (CONFIG)	35
IMPULSOR DE VENTILADOR (GR)	36
MANDO DE BOMBA (GR)	41
CULATA DE CILINDROS - TORNILLERÍA DE LA (GR)	42
GRUPO DE TORNILLERIA-AMORTIGUADOR Y POLEA	44
CAJA DELANTERA - TORNILLERÍA DE LA (GR)	45
TORNILLERÍA DE LA TAPA DE VÁLVULAS (GR)	46
VOLANTE (GR)	48
ENGRANAJE DELANTERO (GR)	49
ENGRANAJE TRASERO (GR)	50
CAJA DE VOLANTE (CONJ)	51
VOLANTE - CAJA DE (GR)	52
CAJA DELANTERA (GR)	54
CÁNCAMOS DE LEVANTAMIENTO DEL MOTOR (GR)	55
MONTAJE DEL ALTERNADOR (GR)	56
MONTAJE DEL MOTOR (GR)	57
MONTAJE DEL MANDO DE VENTILADOR (GR)	58
CÁRTER - COLECTOR DEL (GR)	59
PISTÓN Y BIELA (GR)	60
TAPÓN DEL MOTOR (GR)	61
CIGÜEÑAL - POLEA DE (GR)	62
POLEA DE MANDO DEL ALTERNADOR Y VENTILADOR (GR)	63
BALANCÍN (GR)	67
SELLO DE CIGÜEÑAL (GR)	69
MOTOR - SOPORTE DEL (GR)	71
MUÑÓN DEL MOTOR (GR)	72
MECANISMO DE VÁLVULAS (GR)	73
YUGO (GR)	75
SISTEMA DE LUBRICACIÓN	76
TUBO DE LLENADO DE ACEITE (GR)	76
FILTRO DE ACEITE DEL MOTOR (GR)	77
ESCAPE DE GASES (GR)	80
INDICADOR DEL NIVEL DE ACEITE (VARILLA) (GR)	82
TUBERÍAS DE ACEITE DEL MOTOR (GR)	83
TUBERIAS DE ACEITE (GR)	84
TURBOCOMPRESOR - TUBERÍAS DE ACEITE DEL (GR)	87
CAMBIO RÁPIDO DE ACEITE (GR)	91
BOMBA DE ACEITE DEL MOTOR (GR)	93
VÁLVULA DE MUESTREO (GR)	94
VÁLVULA DE MODULACIÓN (GR)	95
SISTEMA DE ENFRIAMIENTO	96
ENFRIADOR DE ACEITE DEL MOTOR (GR)	96
ENFRIADOR PARA ALTA TEMPERATURA DE AMBIENTE (CONFIG)	97
VENTILADOR EXPULSOR (CONFIG)	97
SOPLADOR - VENTILADOR (GR)	98
VENTILADOR REVERSIBLE (GR)	99
TUBERÍAS DEL AGUA (GR)	100
BOMBA DE AGUA (GR)	105
RADIADOR (CONFIG)	108
RADIADOR (GR)	109
TANQUE DE REFRIGERANTE (GR)	112
SISTEMA DE ADMISIÓN Y ESCAPE DE AIRE	116
POSENFRIADOR DE AIRE (GR)	116

* NO HAY TRADUCCION DISPONIBLE EN EL MOMENTO DE LA IMPRESION

CONTENIDO

Nombre	Página
FILTRO DE AIRE (GR)	117
EXPULSOR DE POLVO (GR)	119
CODO DE ADMISIÓN DE AIRE (GR)	120
PROTECTOR DEL ANTEFILTRO (GR)	121
AIRE - TUBERÍAS DE (GR)	122
MÚLTIPLE DE ESCAPE (GR)	126
SILENCIADOR (GR)	127
ANTEFILTRO (CONFIG)	128
ANTEFILTRO (GR)	130
ANTEFILTRO (CONJ)	133
PROTECTOR DEL ESCAPE (GR)	134
TURBOCOMPRESOR (GR)	135
SISTEMA DE COMBUSTIBLE	139
FILTRO Y TUBERÍAS DE COMBUSTIBLE (GR)	139
FILTRO DE COMBUSTIBLE Y SEPARADOR DE AGUA (GR)	141
INYECTOR DE COMBUSTIBLE (GR)	142
TUBERÍAS DE COMBUSTIBLE (GR)	143
BOMBA HIDRÁULICA DEL INYECTOR UNITARIO Y MONTAJE	147
BOMBA DE INYECCIÓN DE COMBUSTIBLE (GR)	149
PROTECTOR TÉRMICO (CONFIG)	151
PROTECTOR TÉRMICO (GR)	153
COMBUSTIBLE - TANQUE DE (GR)	154
SISTEMA ELÉCTRICO Y DE ARRANQUE	156
ALARMA (GR)	156
CARGA - ALTERNADOR DE (GR)	157
BATERÍA Y CABLES (GR)	166
BATERÍA (GR)	170
CONTROL ELECTRÓNICO DEL MOTOR (GR)	171
CONTROL NO PROGRAMADO (GR)	173
CONVERTIDOR ELÉCTRICO (GR)	174
CONFIGURACIÓN ELECTRÓNICA DE LA MÁQUINA	175
ELECTRONICA DE MONITOR (GR)	175
TREN DE FUERZA-GRUPO ELECTRÓNICO	175
AGUA DE LAS CAMISAS - CALENTADOR DEL (GR)	176
INSTALALCIÓN (CONFIG) -CONTROL DE GRADO	177
INSTALACION DE COMUNICACION (GR)	178
GRUPO DE INSTALACION, CONTROL DE GRADO	182
INSTALACION DE SEGURIDAD (GR)	183
LÁMPARA DEL TECHO (GR)	185
REFLECTOR (GR)	186
LUCES DE REFLECTOR (GR)	189
GR DE MONTAJE Y MODULO-CONTROL DE GRADO	200
GRUPO DE MONTAJE-CONECTOR	201
PANEL DE FUSIBLES (GR)	202
SENSOR DEL MOTOR (GR)	204
DETECTOR DE POSICIÓN (SISTEMA DE COMBUST.) (GR)	205
SENSOR DE PRESIÓN (GR)	207
SENSOR DE VELOCIDAD (GR)	215
SENSOR DE TEMPERATURA (GR)	218
AUXILIAR DE ARRANQUE CON ÉTER (GR)	221
MOTOR DE ARRANQUE ELÉCTRICO (GR)	223
INTERRUPTOR DE DERIVACIÓN	232
DISYUNTOR (GR)	233
INTERRUPTOR MAGNÉTICO (GR)	234
GRUPO DE INTERRUPTOR-BOTON PULSADOR	236
GRUPO DE VÁLVULA-ARRANQUE CON ÉTER	237
CABLES DEL CONTROL ELECTRÓNICO (GR)	238
CABLES DEL MOTOR (GR)	240
CABLE GR-GRADO DE CONTROL	243
CABLES DE LA PLATAFORMA (GR)	248
TREN DE FUERZA	252
ACUMULADOR (GR)	252
EJE DEL TREN DE FUERZA (GR)	254
FILTRO DE ACEITE - BASE DEL (GR)	255
FRENO Y MANDO DE DIFERENCIAL (GR)	256
FRENO Y PLANETARIOS (GR)	261
CAJA Y PIEZAS DE LOS PLANETARIOS	263
CONTROL HIDRÁULICO DE LA TRANSMISIÓN (GR)	266
ENFRIADOR DE ACEITE DE LA TRANSMISIÓN (GR)	268
ACOPLAMIENTO Y PROTECCION (GR)	270
ACOPLAMIENTO DE BOMBA (GR)	271
DRENAJE DE SEGURIDAD ECOLÓGICA (GR)	272
FILTRO DE ACEITE (GR)	275
MANDO FINAL (GR)	276
ENGRANAJE DE TRANSFERENCIA Y CORONA (GR)	280
TUBERÍAS DE ACEITE DEL TREN DE FUERZA (GR)	283

* NO HAY TRADUCCION DISPONIBLE EN EL MOMENTO DE LA IMPRESION

CONTENIDO

Nombre	Página
*MANIFOLD GP-TRANSMISSION	289
MONTAJE DE MANDO FINAL (GR)	290
MONTAJE DE LA TRANSMISIÓN (GR)	291
TRANSMISIÓN PLANETARIA (GR)	292
TREN DE FUERZA (CONFIG)	298
BOMBA DE ENGRANAJES (GR)	299
REJILLA MAGNÉTICA (GR)	303
SEGMENTO DE RUEDA MOTRIZ (GR)	304
EJE DE MANDO (GR)	305
CONVERTIDOR DE PAR (GR)	306
TRANSMISION (CONFIG)	313
JUNTA UNIVERSAL (GR)	314
VÁLVULA DE CONTROL Y MONTAJE (GR)	315
VÁLVULA DE MODULACIÓN (GR)	316
VÁLVULA DE ALIVIO (GR)	319
VÁLVULA DE CONTROL DE LA TRANSMISIÓN (GR)	322
BASTIDOR Y CAJA	326
BARRA LIMPIADORA (GR)	326
CAJA DE BATERÍA	328
CAJA Y BASTIDOR (GR)	331
BARRA DE TIRO (GR)	332
COMPARTIMIENTO DEL MOTOR (GR)	334
COMPARTIMIENTO DEL TANQUE HIDRÁULICO (GR)	341
GUARDABARROS (GR)	343
PROTECTOR CONTRA ARENA (GR)	346
REJILLA DEL RADIADOR (GR)	347
PROTECTOR DE MANDO FINAL (GR)	349
PROTECTOR DE LA RUEDA GUÍA (CONFIG)	349
PROTECTOR INFERIOR (GR)	350
PROTECTOR DEL TANQUE DE COMBUSTIBLE (GR)	356
PROTECTOR DEL RADIADOR (GR)	359
PROTECTOR POSTERIOR (GR)	362
PROTECTOR DE LA TRANSMISIÓN (GR)	363
RETÉN (GR)	364
PROTECTORES DE RAMAS (GR)	365
TREN DE RODAJE	367
BARRA LIMPIADORA(CONFIG)	367
BARRA COMPENSADORA (GR)	368
BARRA LIMPIADORA (GR)	371
TAPA DE RUEDA GUÍA (GR)	372
TAPA DE RODILLO INFERIOR	374
BASTIDOR TELESCÓPICO DEL RESORTE TENSOR (GR)	375
PROTECTOR GUÍA DE CADENA (GR)	383
PROTECTOR DE RODILLOS INFERIORES (GR)	385
GUIAJE DE TREN DE RODAJE (CONFIG)	387
RUEDA GUÍA DELANTERA (GR)	388
RUEDA GUÍA DE CADENA (GR)	391
ESLABÓN DE CADENA (CONJ)	392
*LINK AS-TRACK BOX	394
ESLABON DE CADENA (GR)	398
MONTAJE DE RODILLOS SUPERIORES (GR)	400
BARRA PIVOTE (GR)	401
RODILLO DE CADENA (CONFIG)	402
RODILLO SUPERIOR DE CADENAS (GR)	403
RODILLOS DE PESTAÑA DOBLE (GR)	404
RODILLOS DE PESTAÑA SIMPLE (GR)	408
RUEDA GUÍA DE LA TRAÍLLA (GR)	411
GRUPO DEFLECTOR, TRASERO	412
RESORTE TENSOR Y AJUSTADOR DE LA CADENA (GR)	414
CADENAS (GR)	416
TREN DE RODAJE (CONFIG)	422
SISTEMA DE FRENOS Y DIRECCIÓN	425
CONTROL DE MANIJA (GR)	425
CONTROL DEL FRENO DE ESTACIONAMIENTO	427
CONTROL DE DIRECCIÓN Y TRANSMISIÓN (GR)	429
MÚLTIPLE Y VÁLVULA (GR)	433
VÁLVULA DE SOLENOIDE (GR)	436
SISTEMA HIDRÁULICO	438
ACUMULADOR DE ACEITE PILOTO (GR)	438
ADAPTADOR DE MOTOR (GR)	440
PALANCA UNIVERSAL-CONTROL Y MONTAJE (GR)	441
CONTROL HIDRAULICO DE IMPLEMENTO (CONFIG)	442
CONTROL DE MANIJA (GR)	444
PALANCA UNIVERSAL DE CONTROL (GR)	445
CONTROL HIDRÁULICO DE OPERACIÓN PILOTO (GR)	446
ENFRIADOR DEL ACEITE HIDRAULICO (GR)	447
CILINDRO DE LEVANTAMIENTO Y TUBERÍAS (GR)	448
CILINDRO DE LEVANTAMIENTO (GR)	452
CILINDRO DE DESGARRADOR (GR)	454

* NO HAY TRADUCCION DISPONIBLE EN EL MOMENTO DE LA IMPRESION

CONTENIDO

Nombre	Página
INCLINACIÓN HORIZONTAL - CILINDRO DE (GR)	456
PERILLA DE CONTROL (GR)	462
CONFIGURACIÓN HIDRÁULICA DE 2 VÁLVULAS	464
CILINDRO DE LEVANTAMIENTO - TUBERÍAS DEL (GR)	465
TUBERÍAS CON SERVOMANDO (GR)	467
BOMBA - TUBERÍAS DE (GR)	478
TUBERÍAS DEL DESGARRADOR (GR)	481
TUBERÍAS DEL CILINDRO DE INCLINACIÓN (GR)	483
CONTROL DEL MULTIPLE (GR)	491
MULTIPLE DE VALVULA (GR)	492
PISTONES DEL MOTOR (GR)	493
MONTAJE DE CILINDRO (GR)	494
VÁLVULA - MONTAJE DE LA (GR)	496
BOMBA Y MONTAJE (GR)	497
BOMBA DE PISTONES (GR)	498
GRUPO DE ROTACIÓN DEL MOTOR (GR)	501
TANQUE HIDRÁULICO Y MONTAJE (GR)	503
TANQUE HIDRÁULICO (GR)	504
GRUPO DE MONTAJE Y VÁLVULA, HOJA TOPADORA	507
VALVULA DE COMPENSACION Y MONTAJE (GR)	508
GRUPO DE 3 VÁLVULAS HIDRÁULICAS	509
GRUPO DE 4 VÁLVULAS HIDRÁULICAS	511
VÁLVULA DE RETENCIÓN (GR)	515
VÁLVULA DE CONTROL (GR)	516
VÁLVULA DE COMPENSACIÓN (GR)	528
VÁLVULA PILOTO (GR)	529
VALVULA PILOTO DE CARTUCHO (GR)	535
VÁLVULA REDUCTORA DE PRESIÓN (GR)	537
VALVULA DE CONTROL DE LA BOMBA (GR)	538
VÁLVULA DE CAÍDA RÁPIDA (GR)	540
VÁLVULA DE ALIVIO (GR)	543
VÁLVULA DE LANZADERA (GR)	547
VÁLVULA DE SOLENOIDE (GR)	549
IMPLEMENTOS	551
SOPORTE DE LA HOJA TOPADORA	551
HOJA TOPADORA ORIENTABLE (CONFIG)	553
HOJA TOPADORA SEMIUNIVERSAL	557
BASTIDOR EN C (CONJ)	561
BASTIDOR EN C (GR)	562
BRAZO DE EMPUJE (GR)	564
MUÑÓN DE LA HOJA TOPADORA (GR)	568
HERRAMIENTAS	569
HOJA ORIENTABLE (GR)	569
HOJA Y CUCHILLA SEMIUNIVERSAL (GR)	570
HOJA SEMIUNIVERSAL (CONJ)	572
HOJA ORIENTABLE (GR)	575
HOJA SEMIUNIVERSAL (GR)	576
CONTROL DEL MALACATE (GR)	578
GRUPO DE CANTONERA Y CUCHILLA	579
INSTALACIÓN DEL MALACATE (CONFIG)	581
TUBERÍAS DEL MALACATE (GR)	582
MASTIL - MONTAJE DEL (GR)	585
MONTAJE DEL DESGARRADOR (GR)	588
DESGARRADOR (CONFIG)	590
DESGARRADOR (GR)	591
DIENTE DE DESGARRADOR (GR)	593
CABINA DEL OPERADOR	597
AJUSTADOR DEL ASIENTO (GR)	597
ACONDICIONADOR DE AIRE (CONFIG)	598
ACONDICIONADOR DE AIRE (GR)	599
VENTILADOR SOPLADOR DE LA CABINA (GR)	600
CABINA (CONFIG)	602
CABINA (GR)	604
TECHO ROPS ABIERTO (CONFIG)	607
COMPRESOR DE REFRIGERANTE (GR)	608
CONDENSADOR DEL REFRIGERANTE Y MONTAJE (GR)	611
CONDENSADOR DE REFRIGERANTE (GR)	614
PEDAL-GRUPO DE CONTROL Y MONTAJE	616
GRUPO DE CONTROL-MONITOR NO PROGRAMADO	617
TAPA DE LA CONSOLA (GR)	618
PASAMANOS (GR)	621
CALEFACCIÓN DE LA CABINA (GR)	623
CAJA DE LA SUSPENSIÓN DEL ASIENTO (GR)	624
INSTALACIÓN DE RADIO (GR)	627
INSTRUMENTOS DE CABINA (GR)	628
GRUPO DE PARILLA	635

* NO HAY TRADUCCION DISPONIBLE EN EL MOMENTO DE LA IMPRESION

CONTENIDO

Nombre	Página
REVESTIMIENTO DE LA CABINA (GR)	636
TUBERÍAS DE ACONDICIONADOR DE AIRE (GR)	640
TUBERÍAS DE LA CALEFACCIÓN (GR)	647
RETROVISOR (GR)	649
MODULO DE LA PANTALLA (GR)	651
MODULO ELECTRÓNICO DE CUATRO INDICADORES (GR)	652
MOTOR-LIMPIAPARABRISAS (GR)	653
MONTAJE DE ANTENA (GR)	655
GRUPO DE MONTAJE DE LA CABINA	656
MONTAJE GR-MONITOR	657
MONTAJE DE LA PLATAFORMA (GR)	659
MONTAJE DE LA ESTRUCTURA ROPS (GR)	661
SOPORTE DEL RESPALDO (GR)	662
REGULADOR Y PEDAL DEL FRENO (GR)	665
PLATAFORMA (GR)	667
PLATAFORMA DE LA CABINA	668
PRESURIZADOR (GR)	671
RECLINACION DE ASIENTO (GR)	673
ESTRUCTURA ROPS (GR)	674
ESTRUCTURA ROPS ABIERTA (GR)	675
REJILLA PROTECTORA (GR)	677
ASIENTO (GR)	679
SUSPENSIÓN - ASIENTO CON (GR)	688
ASIENTO CON SUSPENSIÓN (GR)	691
TANQUE DEL LAVAPARABRISAS (GR)	695
LAVAPARABRISAS DE LA VENTANA (GR)	698
VENTANA DE LA CABINA (GR)	700
VENTANA DESLIZANTE (GR)	715
LIMPIAPARABRISAS DE LA VENTANA (GR)	716
PIVOTE DEL LIMPIADOR (GR)	718
EQUIPOS Y SUMINISTRO DE SERVICIOS	719
ETIQUETA DE ADVERTENCIA (GR)	719
CALCOMANÍAS Y PLACAS DE IDENTIFICACIÓN (GR)	723
INDICE DE NUMEROS DE PIEZA	B1

* NO HAY TRADUCCION DISPONIBLE EN EL MOMENTO DE LA IMPRESION

ÍNDICE

Designação	Página
INFORMAÇÃO GERAL	A34
ALTERNATIVAS DE REPARO	A45
ADITIVOS SUPLEMENTARES DO LÍQUIDO ARREFECEDOR	A50
NOMENCLATURA DE PEÇAS INGLÊS-PORTUGUÊS	A52
PEÇAS DE MANUTENÇÃO	A74
ÍNDICE	A118
MÁQUINA - ARRANJO	1
CHASSI	1
ARRANJO GERAL	2
MOTOR - ARRANJO	4
MOTOR	4
MOTOR - NÚCLEO	10
GRUPO DE INSTALAÇÃO - MOTOR	16
MOTOR BÁSICO	17
EIXO-COMANDO DE VÁLVULA	17
TAMPA - BLOCO DO MOTOR	18
TAMPA - CAIXA DIANTEIRA	20
TAMPA - MECANISMO DAS VÁLVULAS	22
VIRABREQUIM	23
BLOCO DO MOTOR	24
CABEÇOTE DO MOTOR	28
AMORTECEDOR	33
DRENO - ÓLEO DO MOTOR	34
COMANDO DO VENTILADOR	35
COMANDO DA BOMBA	41
FIXADORES - CABEÇOTE DO MOTOR	42
FIXADOR - AMORTECEDOR E POLIA	44
FIXADORES - CAIXA DIANTEIRA	45
FIXADORES - TAMPA DA VÁLVULA	46
VOLANTE DO MOTOR	48
ENGRENAGENS DE DISTRIBUIÇÃO	49
ENGRENAGENS DE COMANDO TRASEIRO	50
CAIXA DO VOLANTE DO MOTOR	51
CAIXA DIANTEIRA	54
LEVANTAMENTO DO MOTOR	55
MONTAGEM - ALTERNADOR	56
MONTAGEM - MOTOR	57
MONTAGEM - COMANDO DO VENTILADOR	58
CÁRTER DO ÓLEO DO MOTOR	59
PISTÃO E BIELA	60
BUJÃO DO MOTOR	61
POLIA DO VIRABREQUIM	62
POLIA - VENTILADOR E COMANDO DO ALTERNADOR	63
BALANCIM	67
RETENTOR DO VIRABREQUIM	69
SUPORTE DO MOTOR	71
MUNHÃO DO MOTOR	72
MECANISMO DAS VÁLVULAS	73
GARFO	75
SISTEMA DE LUBRIFICAÇÃO	76
BOCAL DE ENCHIMENTO DE ÓLEO DO MOTOR	76
FILTRO - ÓLEO DO MOTOR	77
ELIMINAÇÃO DE VAPORES DO CÁRTER	80
INDICADOR - NÍVEL DO ÓLEO (VARETA)	82
TUBOS - ÓLEO DO MOTOR	83
TUBOS - SUPRIMENTO DE ÓLEO	84
TUBOS - ÓLEO DO TURBOALIMENTADOR	87
ÓLEO - ARRANJO PARA TROCA RÁPIDA	91
BOMBA DE ÓLEO - MOTOR	93
VÁLVULA PARA TIRAR AMOSTRAS DE FLUIDOS	94
VÁLVULA DE MODULAÇÃO	95
SISTEMA DE ARREFECIMENTO	96
ARREFECEDOR - ÓLEO DO MOTOR	96
ARREFECIMENTO - TEMP. AMBIENTE ALTA	97
VENTILADOR - EJETOR	97
VENTILADOR DE SOPRO	98
VENTILADOR REVERSÍVEL	99
TUBOS - ÁGUA	100
BOMBA DE ÁGUA	105
RADIADOR	108
TANQUE - LÍQUIDO ARREFECEDOR	112
SISTEMA DA ADMISSÃO DE AR E DE ESCAPE	116
PÓS-ARREFECEDOR DA ADMISSÃO DE AR	116
PURIFICADOR DE AR	117
EJETOR DE POEIRA	119
COTOVELO DE ADMISSÃO DE AR	120
PROTETOR - PRÉ-PURIFICADOR	121
TUBOS - AR	122
COLETOR DE ESCAPE	126
SILENCIADOR	127
PRÉ-PURIFICADOR	128
PRÉ-PURIFICADOR COM TELA	133

ÍNDICE

Designação	Página
BLINDAGEM DO COLETOR DE ESCAPE	134
TURBOALIMENTADOR	135
SISTEMA DE COMBUSTÍVEL	139
FILTRO E TUBOS - COMBUSTÍVEL	139
FILTRO DE COMBUSTÍVEL E SEPARADOR DE ÁGUA	141
INJETOR DE COMBUSTÍVEL	142
TUBOS - COMBUSTÍVEL	143
BOMBA HIDRÁULICA E MONTAGEM - UNIDADE INJETORA	147
BOMBA DE INJEÇÃO DO COMBUSTÍVEL	149
PROTETOR - TÉRMICO	151
DEFLETOR TÉRMICO DE CALOR	153
TANQUE DE COMBUSTÍVEL	154
SISTEMA ELÉTRICO E DE PARTIDA	156
ALARME	156
ALTERNADOR DE CORRENTE	157
BATERIA E CABOS / FIOS ELÉTRICOS	166
BATERIA	170
CONTROLE ELETRÔNICO - MOTOR	171
CONTROLE - NÃO PROGRAMADO	173
CONVERSOR ELÉTRICO	174
SISTEMA ELETRÔNICO - MÁQUINA	175
SISTEMA ELETRÔNICO - MONITOR	175
SISTEMA ELETRÔNICO - TREM DE FORÇA	175
AQUECEDOR DA ÁGUA DO MOTOR	176
INSTALACAO - CONTROLE DA GRELHA	177
INSTALAÇÃO-COMUNICAÇÃO	178
INSTALAÇÃO-CONTROLE DA INCLINAÇÃO	182
INSTALAÇÃO-SEGURANÇA	183
LÂMPADA - TETO	185
LÂMPADA - FAROL	186
SISTEMA DE ILUMINAÇÃO - FARÓIS	189
MODULO E MONTAGEM - CONTROLE DA GRELHA	200
MONTAGEM-CONECTOR	201
PAINEL DE FUSÍVEIS	202
SENSOR DO MOTOR	204
EMISSOR - POSIÇÃO	205
SENSOR - PRESSÃO	207
SENSOR DE VELOCIDADE	215
SENSOR - TEMPERATURA	218
AUXILIAR DE PARTIDA A ÉTER	221
MOTOR ELÉTRICO DE PARTIDA	223
INTERRUPTOR DE DERIVAÇÃO	232
CHAVE GERAL	233
INTERRUPTOR - MAGNÉTICO	234
INTERRUPTOR-BOTÃO	236
VALVULA - PARTIDA A ETER	237
CABOS/FIOS ELÉTRICOS - CONTROLE ELETRÔNICO	238
CABOS/FIOS ELÉTRICOS - MOTOR	240
FIACAO - CONTROLE DO NIVEL	243
CABOS/FIOS ELÉTRICOS - PLATAFORMA	248
TREM DE FORÇA	252
ACUMULADOR	252
SEMI-EIXO - TREM DE FORÇA	254
BASE DO FILTRO DE ÓLEO	255
FREIO E COMANDO DO DIFERENCIAL	256
FREIOS E ENGRENAGENS PLANETARIAS	261
CARCAÇA DAS ENGRENAGENS PLANETÁRIAS E COMPONENTES	263
CONTROLE HIDRÁULICO DA TRANSMISSÃO	266
ARREFECEDOR DE ÓLEO DA TRANSMISSÃO	268
ACOPLAMENTO E PROTETOR	270
ACOPLAMENTO DA BOMBA	271
DRENO - ECOLOGIA	272
FILTRO - ÓLEO	275
COMANDO FINAL	276
COROA E ENGRENAGEM DE TRANFERÊNCIA	280
TUBOS - ÓLEO DA TRANSMISSÃO	283
COLETOR-TRANSMISSÃO	289
MONTAGEM - COMANDO FINAL	290
MONTAGEM - TRANSMISSÃO	291
ENGRENAGENS PLANETÁRIAS - TRANSMISSÃO	292
TREM DE FORÇA	298
BOMBA DE ENGRENAGENS	299
FILTRO - MAGNÉTICO	303
SEGMENTO DA RODA MOTRIZ	304
EIXO DE TRANSMISSÃO	305
CONVERSOR DE TORQUE	306
TRANSMISSÃO	313
JUNTA UNIVERSAL	314
VÁLVULA DE CONTROLE E MONTAGEM	315
VÁLVULA DE MODULAÇÃO	316
VÁLVULA DE ALÍVIO	319
VÁLVULA DE CONTROLE - TRANSMISSÃO	322
CHASSI E CARROCERIA	326
BARRA LIMPADORA DOS ROLOS	326
CAIXA - BATERIA	328
CAIXA E CHASSI	331

ÍNDICE

Designação	Página
BARRA DE TRAÇÃO	332
COBERTURA DO MOTOR	334
COBERTURA - TANQUE HIDRÁULICO	341
PÁRA-LAMA	343
GRADE DO RADIADOR CONTRA EROSÃO	346
GRADE DO RADIADOR	347
PROTETOR - COMANDO FINAL	349
PROTETOR - RODA-GUIA	349
PROTETOR INFERIOR	350
PROTETOR - TANQUE DE COMBUSTÍVEL	356
PROTETOR - RADIADOR	359
PROTETOR - TRASEIRO	362
PROTETOR - TRANSMISSÃO	363
TRINCO	364
BARRAS DE PROTEÇÃO DO CAPÔ	365
MATERIAL RODANTE	367
BARRA LIMPADORA DOS ROLOS	367
BARRA DE SUSPENSÃO	368
BARRA LIMPADORA DOS ROLOS	371
TAMPA DA RODA-GUIA	372
TAMPA - ROLETE DAS ESTEIRAS	374
ARMAÇÃO TELESCÓPICA DA MOLA TENSORA	375
PROTETOR - GUIA DOS ROLETES DAS ESTEIRAS	383
PROTETOR - ROLETES DAS ESTEIRAS	385
GUIA-MATERIAL RODANTE	387
RODA-GUIA DIANTEIRA	388
RODA-GUIA DAS ESTEIRAS	391
ELO DA ESTEIRA	392
ELO-CAIXA DA ESTEIRA	394
ELO DA ESTEIRA	398
MONTAGEM - ROLETE SUPERIOR	400
BARRA DE ARTICULAÇÃO	401
ROLETE DAS ESTEIRAS	402
ROLETE SUPERIOR DA ESTEIRA	403
ROLETE DE ESTEIRA DE FLANGE DUPLO	404
ROLETE DE ESTEIRA DE FLANGE SIMPLES	408
RASPADOR - RODA-GUIA	411
BATENTE - TRASEIRO	412
AJUSTADOR DE ESTEIRAS E MOLA TENSORA	414
ESTEIRA	416
MATERIAL RODANTE	422
SISTEMA DE DIREÇÃO E DE FREIO	425
CONTROLE-CABO	425
CONTROLE DO FREIO DE ESTACIONAMENTO	427
CONTROLE DE DIREÇÃO E TRANSMISSÃO	429
COLETOR E VÁLVULA	433
VÁLVULA SOLENÓIDE	436
SISTEMA HIDRÁULICO	438
ACUMULADOR D ÓLEO - PILOTO	438
ADAPTADOR DO MOTOR	440
ALAVANCA DE CONTROLE E MONTAGEM	441
CONTROLE HIDRÁULICO DO ACESSÓRIO	442
CONTROLE-CABO	444
CONTROLE - ALAVANCA	445
CONTROLE HIDRÁULICO DE OPERAÇÃO PILOTO	446
ARREFECEDOR DO ÓLEO HIDRÁULICO	447
CILINDRO DE LEVANTAMENTO E TUBOS	448
CILINDRO DE LEVANTAMENTO	452
CILINDRO DO RÍPER	454
CILINDRO DE INCLINAÇÃO	456
ALAVANCA DE CONTROLE	462
ARRANJO HIDRÁULICO - 2 VÁLVULAS	464
TUBOS - CILINDRO DE LEVANTAMENTO	465
TUBOS - CIRCUITO PILOTO	467
TUBOS - BOMBA	478
TUBOS - RIPER	481
TUBOS - CILINDRO DE INCLINAÇÃO	483
COLETOR - CONTROLE	491
COLETOR - VÁLVULA	492
MOTOR - PISTÃO	493
MONTAGEM - CILINDRO	494
MONTAGEM - VÁLVULA	496
BOMBA E MONTAGEM	497
BOMBA DE PISTÃO	498
MOTOR DO GRUPO ROTATIVO	501
TANQUE DE ÓLEO HIDRÁULICO E MONTAGEM	503
TANQUE HIDRÁULICO	504
VÁLVULA E MONTAGEM - LÂMINA	507
VÁLVULA DE CONTRAPESO E MONTAGEM	508
GRUPO DE VÁLVULAS DE CONTROLE - TRIPLO	509
GRUPO DE VÁLVULAS DE CONTROLE - QUÁDRUPLO	511
VÁLVULA DE RETENÇÃO	515
VÁLVULA DE CONTROLE	516
VÁLVULA DE CONTRABALANÇO	528
VÁLVULA DE CONTROLE PILOTO	529
VÁLVULA DO CARTUCHO PILOTO	535

ÍNDICE

Designação	Página
VÁLVULA DE REDUÇÃO DE PRESSÃO	537
VÁLVULA DE CONTROLE DA BOMBA	538
VÁLVULA DE QUEDA RÁPIDA	540
VÁLVULA DE ALÍVIO	543
VÁLVULA DE SEPARAÇÃO	547
VÁLVULA SOLENÓIDE	549
ACESSÓRIOS	551
TIRANTE DA LÂMINA	551
LÂMINA ANGULÁVEL	553
LÂMINA SEMI-UNIVERSAL	557
ARMAÇÃO C	561
BRAÇO DE EMPUXO	564
MUNHÃO DA LÂMINA	568
FERRAMENTAS DE TRABALHO	569
LÂMINA ANGULÁVEL E BORDA CORTANTE	569
LÂMINA E BORDA CORTANTE SEMI-UNIVERSAL	570
LÂMINA SEMI-UNIVERSAL	572
LÂMINA ANGULÁVEL	575
LÂMINA SEMI-UNIVERSAL	576
CONTROLE DO GUINCHO	578
BEIRA - PONTA CORTANTE	579
INSTALACÃO DO GUINCHO	581
TUBOS - GUINCHO	582
MONTAGEM - MASTRO	585
MONTAGEM - RIPER	588
RIPER	590
DENTE DO RÍPER	593
POSTO DO OPERADOR	597
AJUSTADOR DO ASSENTO	597
CONDICIONADOR DE AR	598
VENTILADOR DA CABINE	600
CABINE	602
TOLDO - ROPS ABERTA	607
COMPRESSOR DE REFRIGERANTE	608
CONDENSADOR DO REFRIGERANTE E MONTAGEM	611
CONDENSADOR DE REFRIGERANTE	614
CONTROLE DO PEDAL E MONTAGEM	616
CONTROLE-MONITOR NÃO PROGRAMADO	617
TAMPA - CONSOLO	618
PEGA-MÃO	621
AQUECEDOR DA CABINE	623
CAIXA - SUSPENSÃO DO ASSENTO	624
INSTALAÇÃO DO RÁDIO	627
INSTRUMENTOS-CABINE	628
BOTÃO	635
REVESTIMENTO DA CABINE	636
TUBOS - AR CONDICIONADO	640
TUBOS - AQUECEDOR	647
ESPELHO RETROVISOR	649
MÓDULO DO VISOR	651
MÓDULO ELETRÔNICO DE QUATRO INDICADORES	652
MOTOR - LIMPADOR DO VIDRO	653
MONTAGEM-ANTENA	655
MONTAGEM - CABINE	656
MONTAGEM - MONITOR	657
MONTAGEM - PLATAFORMA	659
MONTAGEM - ESTRUTURA ROPS	661
FUNDO - ENCOSTO	662
PEDAL - GOVERNADOR E FREIO	665
PLATAFORMA	667
PLATAFORMA DO OPERADOR	668
PRESSURIZADOR	671
RECLINAÇÃO - ASSENTO	673
ESTRUTURA ROPS	674
ROPS ABERTA	675
TELA DE PROTEÇÃO	677
ASSENTO	679
ASSENTO COM SUSPENSÃO	688
SUSPENSÃO - ASSENTO	691
TANQUE - LAVADOR DE JANELA	695
LAVADOR DO VIDRO	698
JANELA DA CABINE	700
VIDRO - DESLIZANTE	715
LIMPADOR DO VIDRO	716
PIVÔ DO LIMPADOR	718
EQUIPAMENTO DE SERVIÇO E SUPRIMENTOS	719
DECALQUE	719
PLACA E DECALQUE	723
ÍNDICE DE NÚMERO DE PEÇA	B1

INHALTSVERZEICHNIS

Bezeichnung	Seite
ALLGEMEINE HINWEISE	A38
REPARATURALTERNATIVEN	A46
KÜHLMITTELZUSATZ	A51
WARTUNGSTEILE	A79
STICHWORTVERZEICHNIS	A130
MASCHINE	1
FAHRWERK	1
GRUNDAUSFÜHRUNG	2
MOTORAUSFÜHRUNG	4
MOTORAUSFÜHRUNG	4
MOTORKÜHLERBLOCK	10
MOTOR-EINBAUSATZ	16
MOTOR (GRUNDAUSFÜHRUNG)	17
NOCKENWELLE	17
MOTORBLOCKDECKEL	18
STIRNRADGEHÄUSEDECKEL	20
VENTILDECKEL	22
KURBELWELLE	23
MOTORBLOCK	24
ZYLINDERKOPF	28
DÄMPFER	33
MOTORÖLABLASS	34
LÜFTERANTRIEB	35
PUMPENANTRIEB	41
ZYLINDERKOPF-HALTETEILE	42
BEFESTIGUNG - DÄMPFER U. RIEMENSCHEIBE	44
STIRNRADGEHÄUSE-HALTETEILE	45
VENTILDECKELBEFESTIGUNG	46
SCHWUNGRAD	48
STIRNRAD	49
ZAHNRADVORGELEGE	50
SCHWUNGRADGEHÄUSE	51
STIRNRADGEHÄUSE	54
MOTORHUBÖSE	55
DREHSTROMGENERATOR - BEFESTIGUNG	56
MOTORAUFLAGER	57
LÜFTERANTRIEBSAUFHÄNGUNG	58
ÖLWANNE	59
PLEUELSTANGE UND KOLBEN	60
MOTORSTOPFEN	61
KURBELWELLEN-RIEMENSCHEIBE	62
RIEMENSCHEIBE - LÜFTER- U. DREHSTROMGENERATOR	63
VENTILKIPPHEBEL	67
KURBELWELLENDICHTUNG	69
MOTORAUFHÄNGUNG	71
MONTAGEZAPFEN	72
VENTILSTEUERUNG	73
JOCHSATZ	75
SCHMIERSYSTEM	76
MOTORÖLEINFÜLLSTUTZEN	76
ÖLFILTER	77
ENTDUNSTER	80
ÖLMESSSTAB	82
MOTORÖLLEITUNGEN	83
ÖLZUFUHRLEITUNGEN	84
TURBOLADERÖLLEITUNGEN	87
ÖLSCHNELLWECHSELANSCHLUSS	91
SCHMIERPUMPE	93
PROBEENTNAHMEVENTIL	94
MODULATORVENTIL	95
KÜHLSYSTEM	96
MOTORÖLKÜHLER	96
KÜHLSYSTEM - HOHE UMGEBUNGSTEMPERATUREN	97
AUSWERFERLÜFTER	97
DRUCKLÜFTER	98
UMKEHRLÜFTER	99
KÜHLWASSERLEITUNGEN	100
KÜHLWASSERPUMPE	105
KÜHLER	108
KÜHLMITTELBEHÄLTER	112
LUFTEINLASS- UND ABGASSYSTEM	116
LADELUFTKÜHLER	116
LUFTREINIGER	117
STAUBAUSWERFER	119
LUFTEINLASSBOGEN	120
VORREINIGERSCHUTZ	121
DRUCKLUFTLEITUNGEN	122
AUSPUFFKRÜMMER	126
SCHALLDÄMPFER	127
VORREINIGER	128
VORABSCHEIDER	133
AUSPUFFABSCHIRMUNG	134
TURBOLADER	135
KRAFTSTOFFSYSTEM	139
KRAFTSTOFFILTER UND LEITUNGEN	139
WASSERABSCHEIDER- U. KRAFTSTOFFILTER	141
KRAFTSTOFFEINSPRITZDÜSE	142
KRAFTSTOFFLEITUNGEN	143
PUMPE UND BEFESTIGUNGSTEILE	147

* ÜBERSETZUNG ZUM ZEITPUNKT DER DRUCKLEGUNG NICHT VORHANDEN

INHALTSVERZEICHNIS

Bezeichnung	Seite
KRAFTSTOFFEINSPRITZPUMPE	149
HITZESCHILD	151
WÄRMESCHIRM	153
KRAFTSTOFFTANK	154
ELEKTRISCHE ANLAGE UND STARTSYSTEM	156
WARNVORRICHTUNG	156
DREHSTROMGENERATOR	157
BATTERIE UND VERDRAHTUNG	166
BATTERIE	170
MOTORSTEUERUNG, ELEKTRON.	171
STEUERUNG - NICHT PROGRAMMIERT	173
ELEKTR. UMFORMER	174
ELEKTRONIK - MASCHINE	175
ELEKTRONIK - MONITOR	175
KRAFTÜBERTRAGUNGSELEKTRONIK	175
UMLAUFKÜHLWASSERHEIZUNG	176
NEIGUNGSSTEUREINBAUSATZ	177
KOMMUNIKATIONSEINBAUSATZ	178
EINBAUSATZ - PLANIERSTEUERUNG	182
SICHERHEITSEINBAUSATZ	183
FAHRERHAUSBELEUCHTUNG	185
ARBEITSLEUCHTEN	186
PLANIERSTEUERUNGSMODUL	200
BEFESTIGUNG - VERBINDER	201
INSTRUMENTENTAFEL-SICHERUNG	202
MOTORSENSOR	204
STELLUNGSSENSOR	205
DRUCKSENSOR	207
DREHZAHLSENSOR	215
TEMPERATURSENSOR	218
ÄTHERSTARTHILFE	221
STARTERMOTOR	223
UMGEHUNGSSCHALTER	232
TRENNSCHALTER	233
MAGNETSCHALTER	234
DRUCKKOPFSCHALTER	236
ÄTHERSTARTVENTIL	237
VERDRAHTUNG (ELEKTRON. STEUERUNG)	238
MOTORVERDRAHTUNG	240
NIEGUNGSSTEUER VERDRAHTUNG	243
FAHRERPLATTFORMVERDRAHTUNG	248
KRAFTÜBERTRAGUNG	252
DRUCKSPEICHER	252
KRAFTÜBERTRAGUNGSACHSE	254
ÖLFILTERSOCKEL	255
BREMSE UND DIFFERENTIALANTRIEB	256
BREMSE UND PLANETENGETRIEBE	261
PLANETENANTRIEBSGEHÄUSE U. TEILE	263
GETRIEBEHYDRAULIK	266
GETRIEBEÖLKÜHLER	268
KUPPLUNG UND VERKLEIDUNG	270
PUMPENANSCHLUSS	271
ABLASS (UMWELTFREUNDLICH)	272
ÖLFILTER	275
SEITENANTRIEB	276
TELLERRAD- UND VORGELEGERADSATZ	280
ÖLLEITUNGEN - KRAFTÜBERTRAGUNG	283
*MANIFOLD GP-TRANSMISSION	289
SEITENANTRIEBSBEFESTIGUNG	290
GETRIEBEAUFLAGER	291
PLANETENGETRIEBE	292
KRAFTÜBERTRAGUNG	298
ZAHNRADPUMPE	299
MAGNETSIEB	303
KETTENRADSEGMENT	304
ANTRIEBSWELLE	305
DREHMOMENTWANDLER	306
GETRIEBE	313
KREUZGELENK	314
STEUERVENTIL UND BEFESTIGUNGSTEILE	315
MODULATORVENTIL	316
ÜBERDRUCKVENTIL	319
GETRIEBESTEUERVENTIL	322
RAHMEN UND AUFBAU	326
ABSTREIFBALKEN	326
BATTERIEKASTEN	328
RAHMEN UND GEHÄUSE	331
ZUGHAKEN	332
MOTORVERKLEIDUNG	334
HYDRAULIKTANKVERKLEIDUNG	341
SCHUTZBLECHE	343
SANDSTRAHLSCHUTZGITTER	346
KÜHLERGRILL	347
SEITENANTRIEBSVERKLEIDUNG	349
LEITRADSCHUTZ	349
PANZERWANNE	350
KRAFTSTOFFTANKVERKLEIDUNG	356
KÜHLERSCHUTZ	359
HECKVERKLEIDUNG	362
GETRIEBESCHUTZ	363
VERRIEGELUNG	364
SCHUTZBÜGEL	365

* ÜBERSETZUNG ZUM ZEITPUNKT DER DRUCKLEGUNG NICHT VORHANDEN

INHALTSVERZEICHNIS

Bezeichnung	Seite
LAUFWERK	367
ABSTREIFBALKEN	367
QUERTRAVERSE	368
ABSTREIFBALKEN	371
LEITRADAUFSATZ	372
LAUFROLLENAUFSATZ	374
LAUFROLLENRAHMEN (TELESKOPRÜCKLAUF)	375
KETTENFÜHRUNGSSCHUTZ	383
LAUFROLLENSCHUTZ	385
LAUFWERKFÜHRUNG	387
LEITRAD, VORN	388
LEITRAD	391
KETTENGLIEDER	392
KETTENKASTEN - GLIEDERKETTE	394
KETTENGLIED	398
TRAGROLLENAUFHÄNGUNG	400
ACHSWELLE	401
LAUFROLLE	402
TRAGROLLE	403
DOPPELFLANSCHROLLEN	404
EINZELFLANSCHROLLEN	408
LEITRADABSTREIFER	411
ABSTREIFER, HINTEN	412
KETTENSPANNER UND -FEDERRÜCKLAUF	414
LAUFWERKSKETTE	416
LAUFWERKSRAHMEN	422
LENK- UND BREMSSYSTEM	425
STEUERHEBEL	425
FESTSTELLBREMSGESTÄNGE	427
LENK- UND GETRIEBESTEUERUNG	429
KRÜMMER UND VENTIL	433
MAGNETVENTIL	436
HYDRAULIKSYSTEM	438
VORSTEUERÖLDRUCKSAMMLER	438
MOTORANSCHLUSS	440
JOYSTICKSTEUERUNG U. BEFESTIGUNG	441
ARBEITSGERÄT - HYDRAULIKSTEUERUNG	442
STEUERHEBEL	444
JOYSTICK -STEUERUNG	445
HYDRAULIKBEDIENUNG (MIT VORSTEUERUNG)	446
HYDRAULIKÖLKÜHLER	447
HUBZYLINDER U. LEITUNGEN	448
HUBZYLINDER	452
AUFREISSERZYLINDER	454
KIPPZYLINDER	456
STEUERHEBEL	462
HYDRAULIKANORDNUNG (2-VENTIL-HYDRAULIK)	464
HUBZYLINDERLEITUNGEN	465
VORSTEUERLEITUNGEN	467
HYDRAULIKPUMPE UND LEITUNGEN	478
AUFREISSERLEITUNGEN	481
NEIGEZYLINDERLEITUNGEN	483
STEUERKRÜMMER	491
KRÜMMERVENTIL	492
KOLBENMOTOR	493
ZYLINDERAUFHÄNGUNG	494
VENTILAUFHÄNGUNG	496
PUMPE UND BEFESTIGUNGSTEILE	497
KOLBENPUMPE	498
MOTORDREHVORRICHTUNG	501
HYDRAULIKTANK UND BEFESTIGUNGSTEILE	503
HYDRAULIKTANK	504
VENTIL U. BEFESTIGUNG - DOZER	507
AUSGLEICHSVENTIL U. BEFESTIGUNG	508
VENTILSATZ (3-VENTIL)	509
VENTILSATZ (4-VENTIL)	511
SPERRVENTIL	515
STEUERVENTIL	516
AUSGLEICHSVENTIL	528
VORSTEUERVENTIL	529
EINBAUVORSTEUERVENTIL	535
DRUCKREDUZIERVENTIL	537
PUMPENSTEUERVENTIL	538
SCHNELLSENKVENTIL	540
ÜBERDRUCKVENTIL	543
PENDELVENTIL	547
MAGNETVENTIL	549
ARBEITSGERÄTE	551
SCHILDSTREBE	551
SCHWENKPLANIERSCHILD	553
SU-SCHILD	557
C-RAHMEN	561
SCHUBARM	564
MONTAGEZAPFEN (PLANIERSCHILDEINRICHTUNG)	568
ARBEITSGERÄTE	569
SCHWENKSCHILD U. SCHNEIDMESSER	569
SU-PLANIERSCHILD U. ECKMESSER	570
SU-SCHILD	572
SCHWENKSCHILD	575
SU-SCHILD	576
WINDENSTEUERUNG	578

* ÜBERSETZUNG ZUM ZEITPUNKT DER DRUCKLEGUNG NICHT VORHANDEN

INHALTSVERZEICHNIS

Bezeichnung	Seite
SCHNEIDMESSER UND EINSATZSTÜCK	579
WINDENEINBAUSATZ	581
WINDEN-ÖLLEITUNGEN	582
HUBMASTBEFESTIGUNG	585
AUFREISSERBEFESTIGUNG	588
AUFREISSER	590
AUFREISSERZAHN	593
FAHRERHAUS	597
FAHRERSITZVERSTELLER	597
KLIMAANLAGE	598
FAHRERHAUS-DRUCKLÜFTER	600
FAHRERHAUS	602
OFFENES FAHRERHAUS MIT ÜBERROLLSCHUTZ	607
KÄLTEMITTELKOMPRESSOR	608
KÄLTEMITTELKONDENSATOR U. BEFESTIGUNGSTEILE	611
KÄLTEMITTELKONDENSATOR	614
STEUERPEDAL U. BEFESTIGUNG	616
STEUERUNG, NICHT PROGRAMMIERTER MONITOR	617
STEUERKONSOLENABDECKUNG	618
HALTEGRIFF	621
FAHRERHAUSHEIZUNG	623
FAHRERSITZFEDERUNGSGEHÄUSE	624
RADIOEINBAUSATZ	627
FAHRERHAUS-INSTRUMENTENTAFEL	628
KNOPF	635
FAHRERHAUSAUSKLEIDUNG	636
KLIMAANLAGENLEITUNGEN	640
HEIZUNGSLEITUNGEN	647
RÜCKSPIEGEL	649
ANZEIGEMODUL	651
MODUL - VIER ELEKTRON. ANZEIGEN	652
SCHEIBENWISCHERMOTOR	653
ANTENNENBEFESTIGUNG	655
FAHRERHAUSANBAUSATZ	656
MONITORBEFESTIGUNG	657
PLATTFORM-ANBAUSATZ	659
ÜBERROLLSCHUTZAUFLAGER	661
SCHALE - RÜCKENLEHNE	662
GAS- U. BREMSPEDAL	665
PLATTFORM	667
FAHRERPLATTFORM	668
FAHRERHAUSBELÜFTUNG	671
VERSTELLBARER SITZ	673
ÜBERROLLSCHUTZ	674
ÜBERROLL-SCHUTZDACH	675
SCHUTZGITTER	677
FAHRERSITZ	679
SCHWINGSITZ	688
FAHRERSITZFEDERUNG	691
SCHEIBENWASCHMITTELBEHÄLTER	695
SCHEIBENWASCHANLAGE	698
FAHRERHAUSFENSTER	700
SCHIEBEFENSTER	715
SCHEIBENWISCHER	716
WISCHERARM	718
WARTUNGSAUSRÜSTUNG UND -ZUBEHÖR	719
AUFKLEBER	719
SCHILD UND AUFKLEBER	723
ERSATZTEILNUMMERNINDEX	B1

* ÜBERSETZUNG ZUM ZEITPUNKT DER DRUCKLEGUNG NICHT VORHANDEN

GENERAL INFORMATION

1. MACHINE IDENTIFICATION

Caterpillar machines are identified by Product Identification Numbers (PIN). Some components included in a machine may be identified by Serial Numbers (S/N). Typical components that will be serialized include engines, transmissions, bulldozers, and rippers. The machine and engine are further identified by arrangement numbers and in some cases modification numbers. These numbers are shown on the product identification plate(s) and on the master plate in the operator's compartment.

Caterpillar dealers need all of these numbers to determine accurate parts identification.

SIS *New Feature*

Effective First Quarter 2001 the Caterpillar Product Identification Number (PIN) changed from 8 to 17 characters. In an effort to provide uniform equipment identification, Caterpillar and other construction equipment manufacturers are moving to comply with the latest version of the product identification numbering standard. Non-road machine PINs are defined by ISO 10261. The new PIN format will apply to all Caterpillar machines and generator sets. The PIN plates and frame marking will display the 17 character PIN. The new format will look like the following:

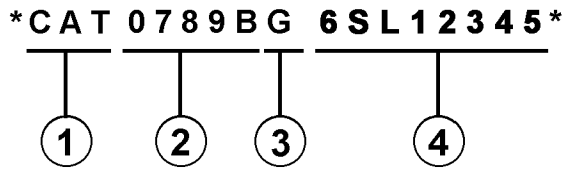

Where:

1. Caterpillar's World Manufacturing Code (characters 1-3)

2. Machine Descriptor (characters 4-8)

3. Check Character (character 9)

4. Machine Indicator Section (MIS) or Product Sequence Number (characters 10-17). These were previously referred to as the Serial Number.

Machines and generator sets produced before First Quarter 2001 will maintain their 8 character PIN format.

Components such as engines, transmissions, axles, etc. and work tools will continue to use an 8 character Serial Number (S/N).

2. ORDERING PARTS

WARNING

When replacement parts are required for this product Caterpillar recommends using Caterpillar replacement parts or parts with equivalent specifications including, but not limited to, physical dimensions, type, strength and material.

Failure to heed this warning can lead to premature failures, product damage, personal injury or death.

Quality Caterpillar replacement parts are available from Caterpillar dealers throughout the world. Their parts inventories are up to date and include all parts normally required to protect your investment in Caterpillar machines. Dealers may offer repair kits or remanufactured parts to allow selection of the most effective repair alternative for a particular situation. When ordering parts, your order should specify the quantity, part number, part name, and the serial number/product identification number of the machine for which the parts are needed.

3. PARTS MANUAL ORGANIZATION

Product information in this manual is presented as "information elements" that represent all of the components for the specific model. Engine Arrangement and Seat Group are examples of information elements. The information elements are organized alphabetically by part name and secondarily by part number within each major section of the manual.

4. TABLE OF CONTENTS

A table of contents (TOC) is found at the beginning of the manual. The TOC lists each section of the manual with a complete list of all information elements organized as they appear in the manual. Page numbers are provided for quick reference to detailed parts identification illustrations and serviceable consist lists.

5. MAINTENANCE PARTS INDEX

The Maintenance Parts Index, located near the beginning of the manual, references most frequently used maintenance part numbers, providing description, quantity, usage and page number. This information is organized alphabetically by part description.

6. INDEX

The index located near the front of the manual is an alphabetical listing of all information elements included in the manual. Page numbers are provided for quick reference to detailed parts identification illustrations and serviceable consist lists.

7. PART NUMBER INDEX

A numerical index listing all part numbers and the corresponding page number(s) appears at the back of the manual.

8. CAPTIONS

Captions located at the beginning of each information element identify the part number and part name along with additional descriptive information. PIN and S/N information found in each caption should be used to select correct information for a specific machine. Field replacement options, identification of optional attachment components, and where used ("part of") information is also provided.

The first line of a caption is shown in larger type font to indicate the beginning of an information element. Captions for additional pages that may be required to illustrate an information element will be shown in standard type font and will include the term *(contd.)* .

9. NON-SERVICED PARTS

In some instances it is necessary to display non-serviced parts that are a link to a lower level serviceable consist lists. These non-serviced part numbers are shown in *italic* type indicating that they are not available.

10. PARTS LIST REFERENCE NUMBERS

Numbers shown in the Ref No column correspond to numbers used in the associated graphic(s). An alphabetic suffix may be added to a reference number to identify lower level consist items. Numbers shown in the Graphic Ref column refer to the graphic number identifier displayed in the lower left corner of each illustration. The Graphic Ref number may be used in combination with the item Ref No to determine the correct part number. There may be intentional omission of a Ref No in a consist list as information is updated to reflect the latest serviceable part numbers.

11. INDENTED PART NAMES

When a part name is indented in a parts list, it is part of (included in) the group or assembly under which it is indented.

12. ILLUSTRATION REFERENCE LETTERS

When necessary, illustrations contain reference letters (A, B, C etc.) that are intended to track lines and harnesses from one point to another. They are also used to show where to reconnect illustrations that have been separated.

13. ABBREVIATIONS AND SYMBOLS

O.D. – Outside Diameter
I.D. – Inside Diameter
A – Not Part Of This Group
B – Use As Required
C – Change From Previous Type
D – Order By The Meter
E – Order By The Centimeter
F – Not Shown
G – Order By The Inch
I – Refer To Hydraulic Information System
M – Metric Part
R – Remfg Part May Be Available
Y – Separate Illustration
Z – Not Serviced Separately

SIS *New Feature*

14.<END>

This symbol indicates the end of an information element.

NOTE:

Continuing improvement and advancement of product design may cause changes to your machine which may not be included in this publication. Whenever a question arises regarding your caterpillar product or this publication, please consult your caterpillar dealer for the latest available information.

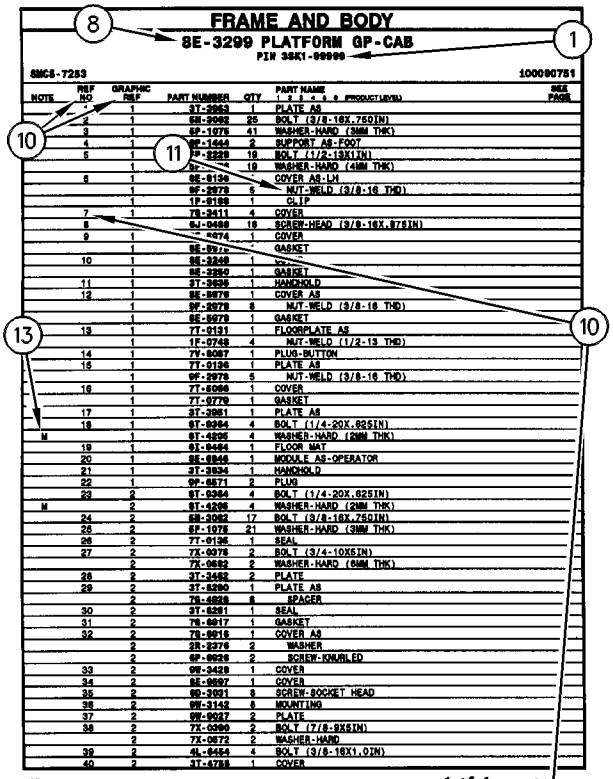
FRAME AND BODY
8E-3299 PLATFORM GP-CAB
PIN 35K1-99999
SMCS-7253
100090751
NOTE | REF NO | GRAPHIC REF | PART NUMBER | QTY | PART NAME | SEE PAGE
1 | 1 | 3T-2953 | PLATE AS
2 | 1 | 5E-2062 | 25 | BOLT (3/8-16X.750IN)
3 | 1 | 9F-1075 | 41 | WASHER-HARD (38MM THK)
4 | 1 | 9F-1444 | 2 | SUPPORT AS-FOOT
5 | 1 | 7P-2229 | 19 | BOLT (1/2-13X1IN)
1 | 19 | WASHER-HARD (41MM THK)
6 | 1 | 8E-6136 | COVER AS-LH
1 | 9F-2978 | 5 | NUT-WELD (3/8-16 THD)
1 | 1P-0189 | 1 | CLIP
7 | 1 | 7S-2411 | 4 | COVER
8 | 9J-0498 | 18 | SCREW-HEAD (3/8-16X.875IN)
9 | 1 | 4474 | 1 | COVER
1 | 8E-8976 | GASKET
10 | 1 | 8E-3248 | 1
1 | 8E-3250 | 1 | GASKET
11 | 1 | 3T-2636 | 1 | HANDHOLD
12 | 1 | 8E-8978 | 1 | COVER AS
1 | 9F-2978 | 8 | NUT-WELD (3/8-16 THD)
1 | 8E-8979 | 1 | GASKET
13 | 1 | 7T-0131 | 1 | FLOORPLATE AS
1 | 1F-0748 | 4 | NUT-WELD (1/2-13 THD)
14 | 1 | 7V-8087 | 1 | PLUG-BUTTON
15 | 1 | 7T-0136 | 1 | PLATE AS
1 | 9F-2978 | 5 | NUT-WELD (3/8-16 THD)
16 | 1 | 7T-8066 | 1 | COVER
1 | 7T-8779 | 1 | GASKET
17 | 1 | 3T-3951 | 1 | PLATE AS
18 | 1 | 6T-8364 | 4 | BOLT (1/4-20X.625IN)
M | 1 | 9T-4205 | 4 | WASHER-HARD (20MM THK)
19 | 1 | 6L-8494 | 1 | FLOOR MAT
20 | 1 | 8E-8846 | 1 | MODULE AS-OPERATOR
21 | 1 | 3T-3834 | 1 | HANDHOLD
22 | 1 | 9P-8571 | 2 | PLUG
23 | 2 | 6T-8364 | 4 | BOLT (1/4-20X.625IN)
M | 2 | 9T-4205 | 4 | WASHER-HARD (20MM THK)
24 | 2 | 5E-2062 | 17 | BOLT (3/8-16X.750IN)
25 | 2 | 9F-1075 | 21 | WASHER-HARD (38MM THK)
26 | 2 | 7T-0135 | 1 | SEAL
27 | 2 | 7X-0075 | 2 | BOLT (3/4-10X5IN)
2 | 7X-0652 | 2 | WASHER-HARD (64MM THK)
28 | 2 | 3T-3452 | 2 | PLATE
29 | 2 | 3T-8290 | 1 | PLATE AS
2 | 7S-4828 | 8 | SPACER
30 | 2 | 3T-8281 | 1 | SEAL
31 | 2 | 7S-8817 | 1 | GASKET
32 | 2 | 7S-8815 | 1 | COVER AS
2 | 2R-2276 | 2 | WASHER
2 | 9F-8926 | 2 | SCREW-KNURLED
33 | 2 | 9W-3429 | 1 | COVER
34 | 2 | 8E-8897 | 1 | COVER
35 | 2 | 9D-3931 | 8 | SCREW-SOCKET HEAD
36 | 2 | 9W-3142 | 8 | MOUNTING
37 | 2 | 9W-8927 | 2 | PLATE
38 | 2 | 7X-0990 | 2 | BOLT (7/8-9X8IN)
2 | 7X-0672 | 2 | WASHER-HARD
39 | 2 | 4L-8454 | 4 | BOLT (3/8-16X1.0IN)
40 | 2 | 3T-4788 | 1 | COVER
12 FRAME AND BODY
1 of 4
SELP4570-01

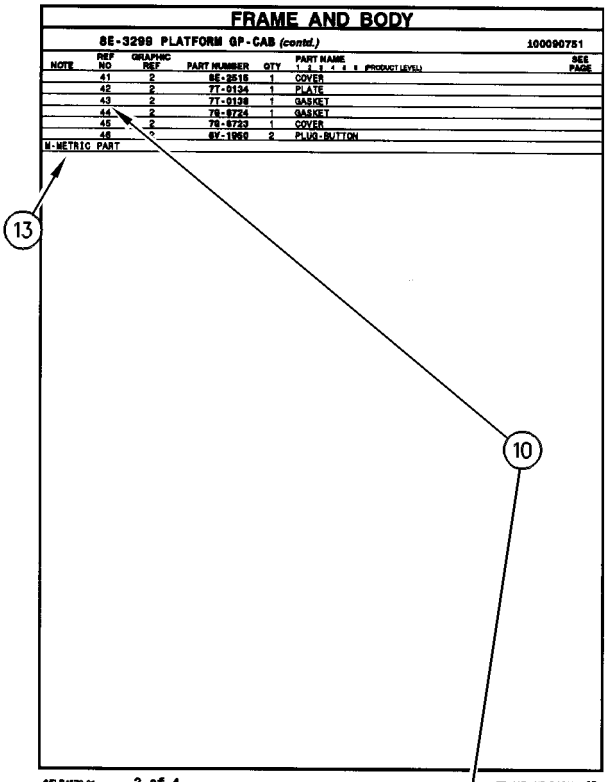
FRAME AND BODY
8E-3299 PLATFORM GP-CAB (contd.)
100090751
NOTE | REF NO | GRAPHIC REF | PART NUMBER | QTY | PART NAME | SEE PAGE
41 | 2 | 8E-2516 | 1 | COVER
42 | 2 | 7T-0134 | 1 | PLATE
43 | 2 | 7T-0138 | 1 | GASKET
44 | 2 | 7S-8724 | 1 | GASKET
45 | 2 | 7S-8723 | 1 | COVER
46 | 2 | 6V-1950 | 2 | PLUG-BUTTON
M-METRIC PART
SELP4570-01
2 of 4
FRAME AND BODY 13

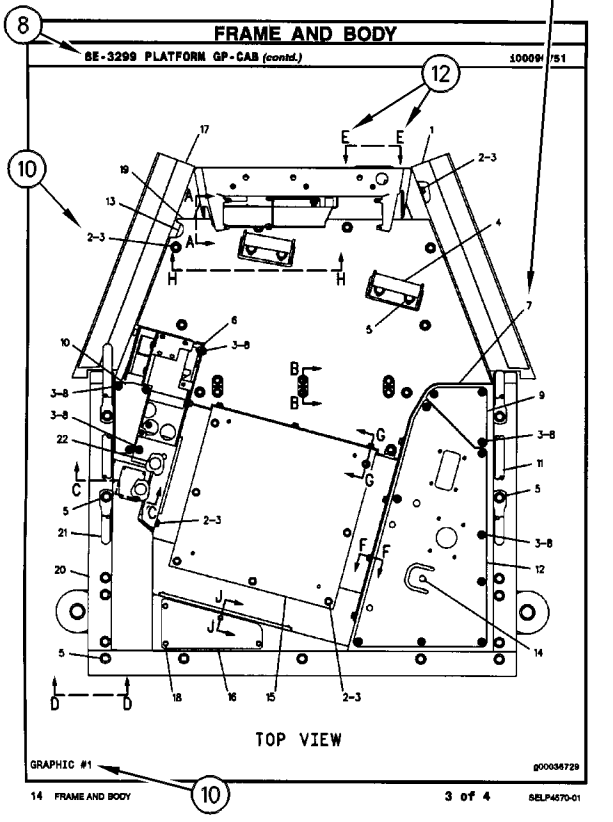
FRAME AND BODY
8E-3299 PLATFORM GP-CAB (contd.)
100090751
TOP VIEW
GRAPHIC #1
g00036729
14 FRAME AND BODY
3 of 4
SELP4570-01

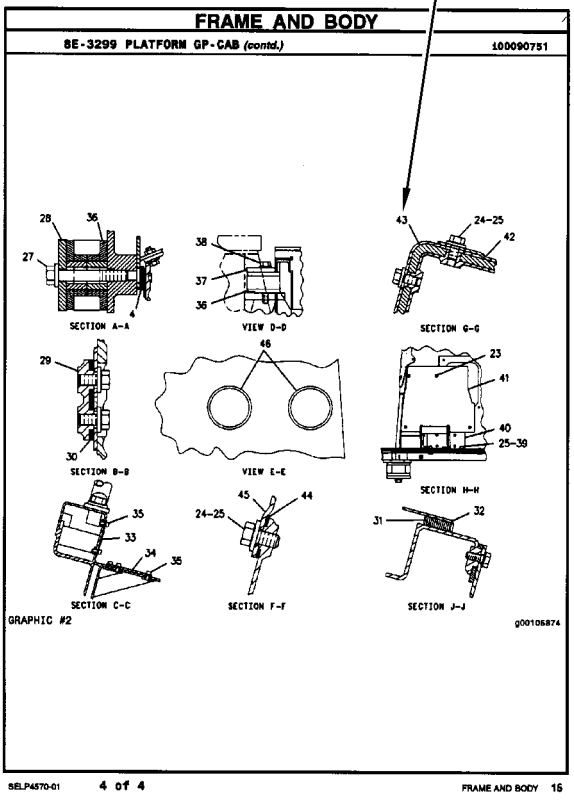
FRAME AND BODY
8E-3299 PLATFORM GP-CAB (contd.)
100090751
SECTION A-A
VIEW D-D
SECTION G-G
SECTION B-B
VIEW E-E
SECTION H-H
SECTION C-C
SECTION F-F
SECTION J-J
GRAPHIC #2
g00105874
SELP4570-01
4 of 4
FRAME AND BODY 15

GÉNÉRALITÉS

1. IDENTIFICATION DE LA MACHINE

Toutes les machines Caterpillar portent un numéro d'identification (PIN). Certains composants des machines peuvent porter des numéros de série (S/N). En général, parmi les composants qui portent des numéros de série il y a les moteurs, les transmissions, les bulldozers et les rippers. En plus, la machine et le moteur peuvent recevoir des numéros de version, et dans certains cas, de modification. Ces numéros figurent sur les plaques de numéro de série et sur la plaque signalétique principale qui se trouve dans le poste de conduite.

Les concessionnaires Caterpillar doivent connaître tous ces numéros pour identifier correctement les pièces.

SIS *Nouvelle Caractéristique*

À partir du premier trimestre 2001, le numéro d'identification produit (PIN) Caterpillar passe de 8 à 17 caractères. Afin de permettre une identification uniforme des matériels, Caterpillar et d'autres constructeurs de machines de travaux publics s'efforcent de se conformer à la norme la plus récente portant sur les numéros d'identification des produits. Les numéros d'identification (PIN) de machines de chantier sont définis par la norme ISO 10261. Le nouveau format du numéro d'identification est valable pour toutes les machines et tous les groupes électrogènes Caterpillar. Le numéro d'identification produit (PIN) figurant sur la plaque et sur le châssis se composera de 17 caractères. Le nouveau format ressemblera à ceci:

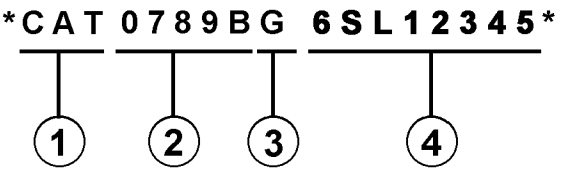

Il se décomposera de la façon suivante:

1. Code international de fabrication de Caterpillar (caractères 1 à 3)

2. Descriptif de la machine (caractères 4 à 8)

3. Contrôle (caractère 9)

4. Indicateur machine (MIS) ou numéro de séquence produit (caractères 10 à 17). Ceux-ci étaient auparavant désignés sous le terme de numéro de série.

Les machines et les groupes électrogènes construits avant le premier trimestre 2001 garderont le format à 8 caractères du numéro d'identification produit (PIN).

Les organes tels que les moteurs, les boîtes de vitesses, les essieux, etc., continueront d'être désignés par un numéro de série (S/N) à 8 caractères.

2. COMMANDE DE PIÈCES

⚠ DANGER

Lorsqu'il faut remplacer des pièces de rechange pour ce produit Caterpillar recommande d'utiliser les pièces de rechange Caterpillar ou les pièces qui ont des spécifications équivalentes dont les dimensions physiques, le type, la force et le matériau. Ces équivalences ne se limitent pas à l'énoncé précédent.

L'inobservation de cette mise en garde peut entraîner des défaillances prématurées, des dommages au produit, des blessures ou même la mort.

Les concessionnaires Caterpillar fournissent dans le monde entier des pièces de rechange de qualité Caterpillar. Leurs stocks de pièces sont constamment réapprovisionnés et comptent toutes les pièces nécessaires pour assurer la bonne marche de vos machines Caterpillar. Certains concessionnaires proposent également des kits de réparation ou des pièces rénovées, ce qui permet de choisir la solution la plus économique dans une situation donnée. Lors des commandes de pièces, mentionner la quantité, le numéro et la désignation des pièces ainsi que le numéro de série ou le numéro d'identification (PIN) de la machine pour laquelle ces pièces sont requises.

3. ORGANISATION DU CATALOGUE DE PIÈCES

Les renseignements sur les produits sont présentés sous forme de "Information element" (élément d'information) représentant tous les composants d'un modèle donné. "Engine Arrangement" (version de moteur) et "Seat Group" (assemblage de siège)" sont des exemples d'éléments d'information. Les éléments d'information sont classés par ordre alphabétique par la désignation standard des pièces et par numéros de pièces dans chaque partie importante du manuel.

4. TABLE DES MATIÈRES

SIS *Nouvelle Caractéristique*

La table des matières se trouve au début du manuel. La table des matières fournit la liste de tous les chapitres du manuel avec une liste complète de tous les éléments d'information classés par ordre d'apparition dans le manuel. Les numéros de page sont fournis afin que l'utilisateur puisse trouver rapidement les illustrations détaillées concernant l'identification des pièces et les listes des pièces d'entretien.

5. INDEX DES PIÈCES D'ENTRETIEN

La rubrique "Index des pièces d'entretien" qui se trouve au début du manuel renvoie aux pièces d'entretien les plus fréquemment utilisées en précisant la désignation, la quantité, là où la pièce est utilisée et le numéro de page. Ces pièces sont classés par ordre alphabétique.

6. INDEX

L'index qui se trouve vers le début du manuel est une liste alphabétique de tous les éléments d'information du manuel. Les numéros de page sont fournis afin que l'utilisateur puisse trouver rapidement les illustrations détaillées concernant l'identification des pièces et les listes des pièces d'entretien.

7. INDEX DES NUMÉROS DE PIÈCES

Une liste numérique de tous les numéros de pièces et des pages correspondantes se trouve à la fin du manuel.

8. LÉGENDES

Les légendes qui se trouvent en haut de chaque page de chaque élément d'information fournissent le numéro de pièce, la désignation ainsi que des renseignements supplémentaires sur les pièces. Les renseignements concernant les numéros de série (S/N) qui se trouvent dans chaque légende doivent être utilisés pour sélectionner les informations correctes pour un moteur donné. Les informations concernant les options de remplacement sur le chantier, l'identification des composants des équipements offerts en option et les lieux d'application sont aussi fournies.

SIS *Nouvelle Caractéristique*

Les lettres de la première ligne d'une légende sont présentées en police plus grande afin d'indiquer le début d'une unité d'information. Les légendes qui pourraient être requises pour des pages supplémentaires afin d'illustrer une unité d'information seront présentées en police standard et comprendront le terme (à suivre).

9. PIÈCES NON FOURNIES

SIS *Nouvelle Caractéristique*

Dans certains cas, il est nécessaire d'indiquer les pièces non fournies qui sont en aval de la liste des pièces d'entretien. Les numéros des pièces non fournies dans la liste des pièces et les légendes seront en italique pour signaler qu'ils ne sont pas disponibles.

10. NUMÉROS DE RÉFÉRENCE DE LA LISTE DES PIÈCES

SIS *Nouvelle Caractéristique*

Les numéros indiqués dans la colonne des numéros de références correspondent aux numéros utilisés dans les illustrations auxquelles ils sont associés. Un suffixe alphabétique peut être ajouté à un numéro de référence pour identifier la liste des articles en aval. Les numéros indiqués dans la colonne de référence de l'illustration renvoient à l'identification du numéro affiché dans le coin inférieur gauche de chaque illustration. Le numéro de référence de l'illustration pourrait être utilisé avec le numéro de référence de l'article pour déterminer le numéro de pièce correct. Il peut y avoir une omission intentionnelle d'un numéro de référence dans une liste de pièces suite à la mise à jour des informations en vue de refléter les numéros de pièces les plus récentes.

11. DÉSIGNATIONS DE PIÈCES EN RETRAIT

Lorsqu'une désignation de pièce est en retrait, cela veut dire que l'article en regard fait partie de l'ensemble sous lequel il figure.

12. LETTRES DE RÉFÉRENCE DES ILLUSTRATIONS

Quand cela est nécessaire, les illustrations comportent des lettres de référence (A, B, C, etc.) pour montrer le trajet des canalisations et faisceaux de câbles d'un point à l'autre. Elles sont utilisées également pour indiquer où relier les illustrations séparées auparavant.

13. ABRÉVIATIONS ET SYMBOLES

O.D. – Diamètre extérieur
I.D. – Diamètre intérieur
A – Ne fait pas partie de ce groupe
B – Utiliser selon besoin
C – Modification
D – Commander par mètre
E – Commander par centimètre
F – Non représenté
G – Commander par pouce
I – Voir "Hydraulic Information System"
M – Pièce métrique
R – Pièce rénovée éventuellement disponible
Y – Illustration séparée
Z – Non fourni séparément

NOTA:

En raison du progrès technique et des améliorations continuelles apportées au matériel, votre machine comporte peut-être des modifications qui n'apparaissent pas dans la présente publication. En cas de doute sur un détail de votre machine Caterpillar ou sur le texte de la présente publication, adressez-vous à votre concessionnaire Caterpillar.

FRAME AND BODY

8E-3299 PLATFORM GP-CAB

PIN 3SK1-99999

8MC5-7253 100090751

NOTE	REF NO	GRAPHIC REF	PART NUMBER	QTY	PART NAME (1 2 3 4 5 6 PRODUCT LEVEL)	SEE PAGE
	*	1	3T-2953	1	PLATE AS	
	2	1	5S-2062	25	BOLT (3/8-16X.750IN)	
	3	1	9F-1076	41	WASHER-HARD (38MM THK)	
	4	1	9W-1444	2	SUPPORT AS-FOOT	
	5	1	7P-2229	18	BOLT (1/2-13X1IN)	
		1	9F-	18	WASHER-HARD (41MM THK)	
	6	1	8E-6136	*	COVER AS-LH	
		1	9F-2978	6	NUT-WELD (3/8-16 THD)	
		1	1P-0188	1	CLIP	
	7	1	7S-2411	4	COVER	
	8	1	9J-0498	18	SCREW-HEAD (3/8-16X.875IN)	
	9	1	-4474	1	COVER	
		1	8E-897	*	GASKET	
	10	1	8E-3249	1		
		1	8E-3250	1	GASKET	
	11	1	3T-2636	1	HANDHOLD	
	12	1	8E-8678	1	COVER AS	
		1	9F-2978	6	NUT-WELD (3/8-16 THD)	
		1	8E-8678	1	GASKET	
	13	1	7T-0131	1	FLOORPLATE AS	
		1	1F-0748	4	NUT-WELD (1/2-13 THD)	
	14	1	7V-8087	1	PLUG-BUTTON	
	15	1	7T-0136	1	PLATE AS	
		1	9F-2978	5	NUT-WELD (3/8-16 THD)	
	16	1	7T-8066	1	COVER	
		1	7T-8779	1	GASKET	
	17	1	3T-3951	1	PLATE AS	
	18	1	6T-8364	4	BOLT (1/4-20X.625IN)	
M		1	9T-4205	4	WASHER-HARD (20MM THK)	
	19	1	6L-8494	1	FLOOR MAT	
	20	1	8E-8846	1	MODULE AS-OPERATOR	
	21	1	3T-3834	1	HANDHOLD	
	22	1	9P-8671	2	PLUG	
	23	2	6T-8364	4	BOLT (1/4-20X.625IN)	
M		2	9T-4205	4	WASHER-HARD (20MM THK)	
	24	2	5S-2062	17	BOLT (3/8-16X.750IN)	
	25	2	9F-1076	21	WASHER-HARD (38MM THK)	
	26	2	7T-0135	1	SEAL	
	27	2	7X-0078	2	BOLT (3/4-10X5IN)	
		2	7X-0662	2	WASHER-HARD (64MM THK)	
	28	2	3T-3452	2	PLATE	
	29	2	3T-8290	1	PLATE AS	
		2	7S-4828	8	SPACER	
	30	2	3T-8281	1	SEAL	
	31	2	7S-8817	1	GASKET	
	32	2	7S-8815	1	COVER AS	
		2	2S-2276	2	WASHER	
		2	9F-8926	2	SCREW-KNURLED	
	33	2	9W-3429	1	COVER	
	34	2	8E-8697	1	COVER	
	35	2	9D-3931	8	SCREW-SOCKET HEAD	
	36	2	9W-3142	8	MOUNTING	
	37	2	9W-8027	2	PLATE	
	38	2	7X-0090	2	BOLT (7/8-9X8IN)	
		2	7X-0672	2	WASHER-HARD	
	39	2	4L-8454	4	BOLT (3/8-16X1.0IN)	
	40	2	3T-4788	1	COVER	

12 FRAME AND BODY 1 of 4 SELP4570-01

FRAME AND BODY

8E-3299 PLATFORM GP-CAB (contd.)

100090751

NOTE	REF NO	GRAPHIC REF	PART NUMBER	QTY	PART NAME (1 2 3 4 5 6 PRODUCT LEVEL)	SEE PAGE
	41	2	8E-2516	1	COVER	
	42	2	7T-0134	1	PLATE	
	43	2	7T-0138	1	GASKET	
	44	2	7S-8724	1	GASKET	
	45	2	7S-8723	1	COVER	
	46	2	6V-1950	2	PLUG-BUTTON	

M-METRIC PART

SELP4570-01 2 of 4 FRAME AND BODY 13

FRAME AND BODY

8E-3299 PLATFORM GP-CAB (contd.)

100090751

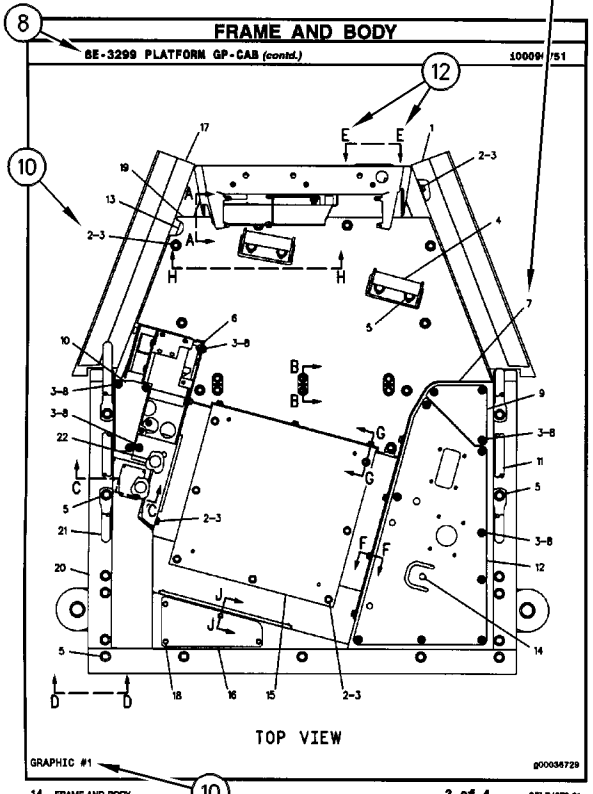

14 FRAME AND BODY 3 of 4 SELP4570-01

FRAME AND BODY

8E-3299 PLATFORM GP-CAB (contd.)

100090751

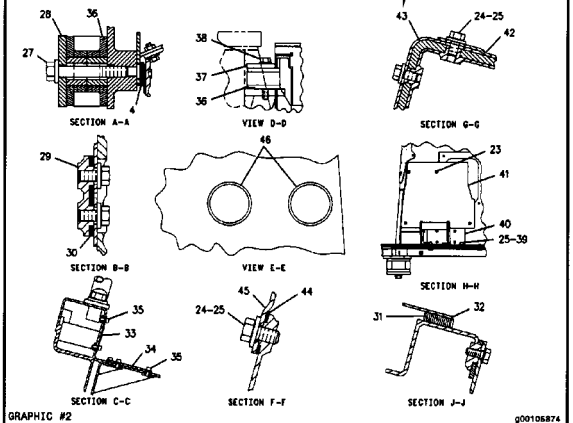

SELP4570-01 4 of 4 FRAME AND BODY 15

INFORMACIÓN GENERAL

1. MÁQUINAS

Las máquinas Caterpillar se identifican con Números de Identificación del Producto (PIN). Algunos componentes incluídos en la máquina pueden estar identificados con Números de Serie (N/S). Los componentes que tienen típicamente esta identificación incluyen motores, transmisiones, hojas topadoras y desgarradores. La máquina y el motor se identifican además con Números de Configuración y en algunos casos, Números de Modificación. Estos números están en las placas de identificación del producto o en la placa principal en la cabina del operador.

Los distribuidores Caterpillar necesitan estos números para identificar con exactitud los números de piezas de repuesto.

SIS *Nueva Característica*

A partir del primer trimestre del 2001, el Número de Identificación de Producto (PIN) de Caterpillar cambió de 8 a 17 caracteres. Para hacer más uniforme el método de identificación de equipos, Caterpillar y otros fabricantes de equipo de construcción han tomado medidas para cumplir con la versión más reciente de la norma de numeración de identificación de productos. Los Números de Identificación de Producto para máquinas que no se operan en carreteras son definidos por la norma ISO 10261. El nuevo formato PIN corresponderá a todas las máquinas y grupos electrógenos Caterpillar. Las placas y los caracteres PIN estampados en el bastidor mostrarán el PIN de 17 caracteres. El nuevo formato tendrá la apariencia siguiente:

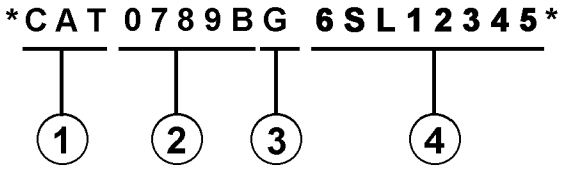

Significado de los caracteres:

1. Código de Fabricación Mundial de Caterpillar (caracteres 1-3)

2. Sección Descriptor de la Máquina (caracteres 4-8)

3. Carácter de Verificación (carácter 9)

4. Sección Indicador de la Máquina (MIS) o Número de Secuencia de Producto (caracteres 10-17). Anteriormente, estos caracteres constituían el Número de Serie.

Las máquinas y grupos electrógenos producidos antes del primer semestre del 2001 mantendrán su formato PIN de 8 caracteres.

Los componentes como motores, transmisiones, ejes, herramientas de trabajo, etc., continuarán usando un Número de Serie (S/N) de 8 caracteres.

2. COMO PEDIR REPUESTOS

⚠ ADVERTENCIA

Cuando se necesiten piezas de repuesto para este producto, Caterpillar recomienda usar piezas de repuesto Caterpillar o piezas que tengan especificaciones equivalentes incluyendo, pero sin estar limitadas a, dimensiones físicas, tipo, fortaleza y material.

El no hacer caso de esta advertencia puede llevar a fallas prematuras, daños al producto y lesiones graves o mortales.

Las piezas de repuesto Caterpillar de calidad están a la disposición de los distribuidores Caterpillar en todo el mundo. Sus existencias actualizadas incluyen todas las piezas normalmente requeridas para proteger su inversión en máquinas Caterpillar. Los distribuidores pueden tener juegos de reparación o piezas remanufacturadas para permitir la selección de la mejor alternativa de reparación en un caso en particular. Al pedir piezas de repuesto, especifique en su pedido la cantidad, el número de pieza, el nombre de la pieza y el número de serie/número de identificación del producto, de la máquina para la cual se necesitan estas piezas.

3. ORGANIZACION DEL MANUAL DE PIEZAS

La información sobre el producto, se presenta en este manual, como "elementos de información" que representan todos los componentes de un modelo específico. Las configuraciones de motores y los grupos de asientos son ejemplos de elementos de información. Los elementos de información están organizados primeramente por nombres de piezas en orden alfabético y en segundo lugar, por el número de pieza dentro de cada sección principal del manual.

4. CONTENIDO

La página de Contenido se encuentra al principio del manual. El Contenido indica cada sección del manual con una lista completa de todos los elementos de información organizados en el orden que aparecen en el manual. Los números de página proporcionan una referencia rápida a las ilustraciones detalladas de identificación de piezas y a las listas de componentes de repuesto de dichas piezas.

5. ÍNDICE DE PIEZAS DE MANTENIMIENTO

Al principio de este catálogo se encuentra un índice de los números de piezas utilizadas más frecuentemente para el mantenimiento, que incluye descripción, cantidad necesaria, lugar de utilización y número de página. Esta información está organizada alfabéticamente, por descripción de la pieza.

6. ÍNDICE

El Índice, ubicado cerca del principio del manual, es una lista en orden alfabético de todos los elementos de información incluídos en el manual. Los números de página proporcionan una referencia rápida a las ilustraciones detalladas de identificación de piezas y a las listas de componentes de repuesto de dichas piezas.

7. INDICE NUMÉRICO DE PIEZAS

Un índice numérico de piezas con el correspondiente número de página aparece al final de este catálogo.

8. TÍTULOS

Los títulos ubicados al principio de cada elemento de información identifican el número y el nombre de la pieza junto con información descriptiva. Se debe usar información sobre los Números de Identificación de Pieza (PIN) y los números de serie (S/N) para seleccionar la información que corresponda a una máquina en particular. También se suministra información sobre las opciones de reparación en el campo, la identificación de componentes de accesorios optativos y el lugar de ubicación de la pieza ("es parte de").

La primera línea del título se muestra con un tipo de letra más grande para indicar el comienzo de un elemento de información. Si se requieren páginas adicionales para ilustrar un elemento de información, los títulos se muestran con un tipo de letra normal y la continuación se indica entre paréntesis.

9. PIEZAS QUE NO SE SUMINISTRAN COMO REPUESTO

En algunos casos es necesario indicar piezas que no se suministran como repuesto pero que pueden estar conectadas a listas de componentes de otras piezas de repuesto. En tal caso, dichas piezas se muestran en cursiva para indicar que no son piezas disponibles.

10. NÚMEROS DE REFERENCIA

Los números en la columna de No. de Referencia corresponden a los números indicados en la ilustración que pertenece a ese número de pieza. Los números que tienen un sufijo alfabético identifican artículos de las listas de componentes de piezas. Los números en la columna de Referencia de la ilustración se identifican en la esquina inferior izquierda de cada ilustración. Para determinar el número de pieza correcto se puede utilizar tanto el No. de Referencia de la ilustración como el No. de Referencia del artículo. A medida que se actualiza la información para indicar los más recientes números de piezas de repuesto, puede omitirse intencionalmente un No. de Referencia en una lista de componentes de piezas.

11. NOMBRES DE PIEZA SANGRADOS

Cuando el nombre de una pieza está sangrado en una lista, significa que esta pieza forma parte del grupo o conjunto del renglón inmediatamente superior.

12. LETRAS DE REFERENCIA DE ILUSTRACIONES

Las ilustraciones contienen algunas veces letras de referencia (A, B, C etc.) cuyo propósito es seguir el trayecto de líneas y mazos de cables de un punto a otro. También se utilizan para mostrar dónde volver a unir ilustraciones que se habían separado.

13. ABREVIATURAS Y SIMBOLOS

O.D. – Diámetro exterior
I.D. – Diámetro interior
A – No es pieza de este grupo
B – Utilizado según la demanda
C – Indica cambio
D – Se pide por metro
E – Se pide por centímetro
F – No se muestra
G – Se pide por pulgada
I – Consulte el sistema de información hidráulica
M – Pieza métrica
R – Puede estar disponible como pieza remanufacturada
Y – Ilustración separada
Z – No se suministra por separado

SIS *Nueva Característica*

14.<END>

Este símbolo indica el final de un elemento de información.

NOTA:

Las contínuas mejoras y adelantos en diseño podrían originar cambios a su máquina que no se incluyen en esta publicación. Cuando tenga alguna pregunta acerca de su producto Caterpillar o de esta publicación, consulte al distribuidor Caterpillar para obtener la información más reciente.

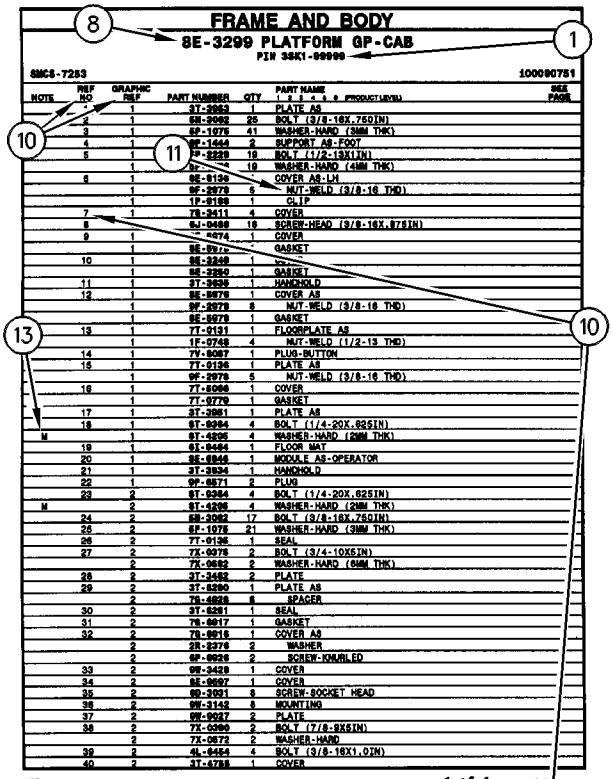

FRAME AND BODY

8E-3299 PLATFORM GP-CAB

PIN 35K1-99999

SMCS-7253 100090751

NOTE	REF NO	GRAPHIC REF	PART NUMBER	QTY	PART NAME (1 2 3 4 5 6 PRODUCT LEVEL)	SEE PAGE
	*	1	3T-2953	1	PLATE AS	
	2	1	5E-2062	25	BOLT (3/8-16X.750IN)	
	3	1	6P-1076	41	WASHER-HARD (38MM THK)	
	4	1	9F-1444	2	SUPPORT AS-FOOT	
	5	1	7P-2229	18	BOLT (1/2-13X1IN)	
		1	6P-	18	WASHER-HARD (41MM THK)	
	6	1	8E-6136	1	COVER AS-LH	
		1	9F-2978	6	NUT-WELD (3/8-16 THD)	
		1	1P-0169	1	CLIP	
	7	1	7S-2411	4	COVER	
	8	1	9J-0498	18	SCREW-HEAD (3/8-16X.875IN)	
	9	1	4474	1	COVER	
		1	8E-897		GASKET	
	10	1	8E-3248	1		
		1	8E-3250	1	GASKET	
	11	1	3T-2636	1	HANDHOLD	
	12	1	8E-8678	1	COVER AS	
		1	9F-2978	6	NUT-WELD (3/8-16 THD)	
		1	8E-8678	1	GASKET	
	13	1	7T-0131	1	FLOORPLATE AS	
		1	1F-0748	4	NUT-WELD (1/2-13 THD)	
	14	1	7V-8087	1	PLUG-BUTTON	
	15	1	7T-0136	1	PLATE AS	
		1	9F-2978	5	NUT-WELD (3/8-16 THD)	
	16	1	7T-8066	1	COVER	
		1	7T-8779	1	GASKET	
	17	1	3T-3951	1	PLATE AS	
	18	1	6T-8364	4	BOLT (1/4-20X.625IN)	
M		1	9T-4205	4	WASHER-HARD (20MM THK)	
	19	1	6L-8494	1	FLOOR MAT	
	20	1	8E-8846	1	MODULE AS-OPERATOR	
	21	1	3T-3834	1	HANDHOLD	
	22	1	9P-8671	2	PLUG	
	23	2	6T-8364	4	BOLT (1/4-20X.625IN)	
M		2	9T-4205	4	WASHER-HARD (20MM THK)	
	24	2	5E-2062	17	BOLT (3/8-16X.750IN)	
	25	2	6P-1076	21	WASHER-HARD (38MM THK)	
	26	2	7T-0135	1	SEAL	
	27	2	7X-0078	2	BOLT (3/4-10X5IN)	
		2	7X-0662	2	WASHER-HARD (64MM THK)	
	28	2	3T-3452	2	PLATE	
	29	2	3T-8290	1	PLATE AS	
		2	7S-4828	8	SPACER	
	30	2	3T-8281	1	SEAL	
	31	2	7S-8817	1	GASKET	
	32	2	7S-8815	1	COVER AS	
		2	2R-2276	2	WASHER	
		2	6P-8926	2	SCREW-KNURLED	
	33	2	9W-3429	1	COVER	
	34	2	8E-8697	1	COVER	
	35	2	6D-3031	8	SCREW-SOCKET HEAD	
	36	2	9W-3142	8	MOUNTING	
	37	2	9W-8027	2	PLATE	
	38	2	7X-0090	2	BOLT (7/8-9X8IN)	
		2	7X-0672	2	WASHER-HARD	
	39	2	4L-8454	4	BOLT (3/8-16X1.0IN)	
	40	2	3T-4788	1	COVER	

12 FRAME AND BODY 1 of 4 SELP4570-01

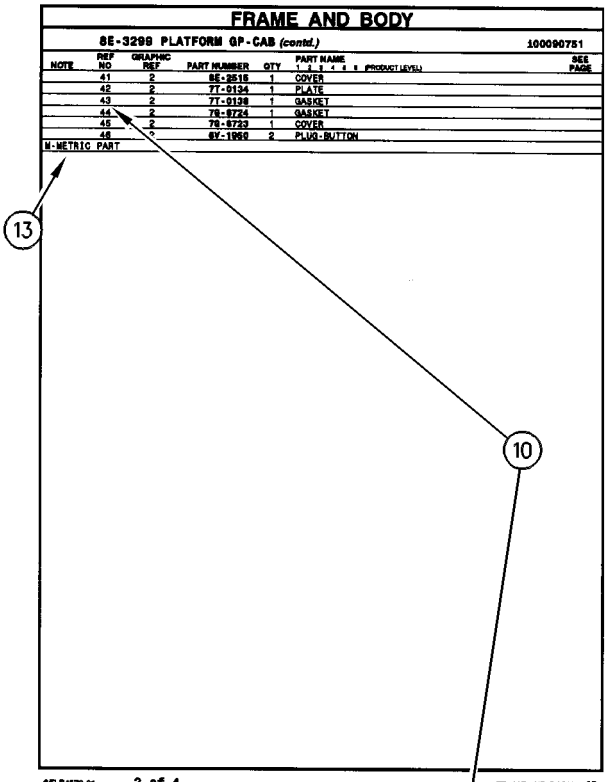

FRAME AND BODY

8E-3299 PLATFORM GP-CAB (contd.) 100090751

NOTE	REF NO	GRAPHIC REF	PART NUMBER	QTY	PART NAME (1 2 3 4 5 6 PRODUCT LEVEL)	SEE PAGE
	41	2	8E-2516	1	COVER	
	42	2	7T-0134	1	PLATE	
	43	2	7T-0138	1	GASKET	
	44	2	7S-8724	1	GASKET	
	45	2	7S-8723	1	COVER	
	46	2	6V-1950	2	PLUG-BUTTON	

M-METRIC PART

SELP4570-01 2 of 4 FRAME AND BODY 13

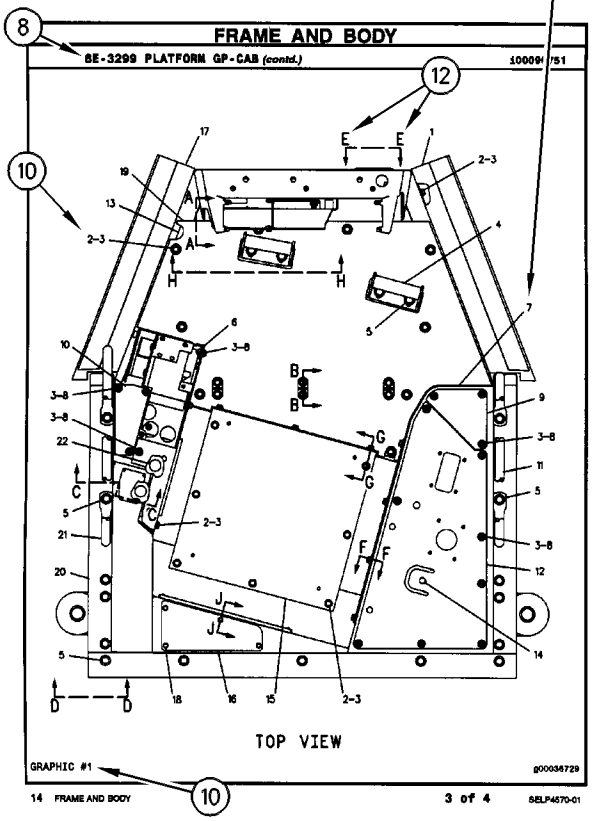

FRAME AND BODY

8E-3299 PLATFORM GP-CAB (contd.) 100090751

TOP VIEW

GRAPHIC #1 g00036729

14 FRAME AND BODY 3 of 4 SELP4570-01

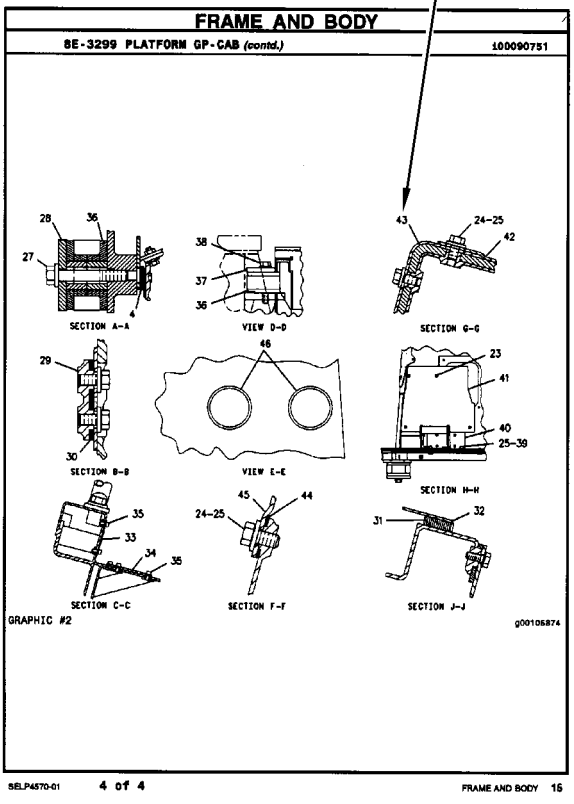

FRAME AND BODY

8E-3299 PLATFORM GP-CAB (contd.) 100090751

SECTION A-A

VIEW D-D

SECTION G-G

SECTION B-B

VIEW E-E

SECTION H-H

SECTION C-C

SECTION F-F

SECTION J-J

GRAPHIC #2 g00105874

SELP4570-01 4 of 4 FRAME AND BODY 16

INFORMAÇÃO GERAL

1. IDENTIFICAÇÃO DA MÁQUINA

As máquinas Caterpillar são identificadas pelos Números de Informação do Produto (PIN). Alguns componentes incluídos numa máquina podem ser identificados por Números de Série (S/N). Componentes típicos que serão enumerados com números de série incluem motores, transmissões, lâminas e ríperes. Além do número de série, a máquina e o motor são ainda identificados por números de arranjo e, em alguns casos, números de modificações. Tais números encontram-se na(s) placa(s) de identificação do produto e na placa mestre no compartimento do operador.

SIS *Novidades*

A partir do primeiro trimestre de 2001 o Número de Identificação de Produto da Caterpillar (PIN) precisa ser mudado de 8 para 17 caracteres. Esforçando-se para fornecer uma identificação uniforme de equipamentos, a Caterpillar e outros fabricantes de equipamento de construção estão mudando para atender a versão mais atualizada do padrão de identificação de produtos. Os números de PIN para produtos de aplicações não rodoviárias são definidos pela ISO 10261. O novo formato de número PIN será adotado em todas as máquinas e grupos geradores Caterpillar. As placas e as marcações do chassi mostrarão os 17 dígitos de PIN. O novo formato terá a seguinte disposição:

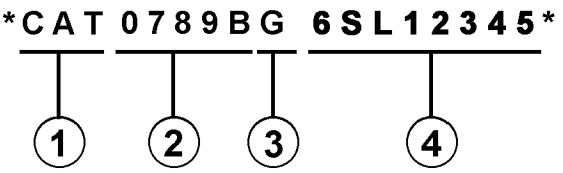

Onde:

1. Código de Fabricação Mundial da Caterpillar (dígitos 1-3)

2. Descrição da Máquina (dígitos 4-8)

3. Dígito de Verificação (dígito 9)

4. Seção de Indicador da Máquina (MIS) ou Número de Seqüência de Produto (dígitos 10-17). Estes eram anteriormente chamados de Número de Série.

Máquinas e grupos geradores produzidos antes do primeiro trimestre de 2001 manterão o formato de 8 caracteres de PIN.

Componentes como motores, transmissões, eixos, ferramentas de trabalho, etc. continuarão a usar Número de Série (S/N) com oito caracteres.

2. COMO OBTER PEÇAS

⚠ CUIDADO

Quando peças de substituição são exigidas para este produto, a Caterpillar recomenda a utilização de peças de substituição Caterpillar ou peças com as especificações equivalentes incluindo, mas não limitadas, à dimensões físicas, tipos, resistência e materiais.

A inobservância desta advertência poderá resultar em falhas prematuras, danos ao produto, ferimentos ou morte.

As Peças de Reposição de Qualidade Caterpillar encontram-se disponíveis nos revendedores Caterpillar no mundo inteiro. Seus estoques de peças são atualizados e incluem todas as peças normalmente necessárias para proteger seu investimento em máquinas Caterpillar. Alguns revendedores podem oferecer jogos de reparo ou peças de troca/remanufaturadas disponíveis como uma opção da alternativa de reparo mais eficaz para uma situação específica. Ao encomendar peças, seu pedido deve especificar a quantidade, o número e o nome da peça e o número de série/número de identificação do produto referentes à máquina para a qual as peças se destinam.

3. ORGANIZAÇÃO DO MANUAL DE PEÇAS

A informação do produto neste manual é apresentada em forma de "elementos de informação" que representam todos os componentes para o modelo específico. Arranjo de Motor e Grupo de Assento são exemplos de elementos de informação. Os elementos de informação são organizados em ordem alfabética por nome de peça ou secundariamente, por número de peça incluído em cada seção principal do manual.

4. LISTA DE CONTEÚDOS

A Lista de Conteúdos (TOC) se encontra no princípio do manual. A Lista de Conteúdos (TOC) relaciona em cada seção do manual uma lista completa com todos os elementos de informação organizados conforme aparecem no manual. Números de página são fornecidos para que se tenha referência rápida de ilustrações de peças detalhadas e listas de conteúdos que podem receber serviço de manutenção.

5. ÍNDICE DE PEÇAS DE MANUTENÇÃO

O Índice de Peças de Manutenção, localizado perto do princípio do manual, faz referência aos números de peça de manutenção usados com maior frequência, fornecendo uma descrição, a quantidade, o uso e o número de página. Esta informação é organizada com a descrição da peça em ordem alfabética.

6. ÍNDICE

O Índice localizado perto do princípio do manual, consiste de uma lista em ordem alfabética de todos os elementos de informação incluídos no manual. Números de página são fornecidos para que se tenha referência rápida de ilustrações de peças detalhadas e listas de conteúdos que podem receber serviço de manutenção.

7. ÍNDICE DE NÚMERO DE PEÇA

Um índice numérico relacionando todos os números de peça e a(s) página(s) correspondentes, aparece no final do manual.

8. LEGENDAS

As legendas localizadas no início de cada elemento de informação identificam o número e o nome de peça, juntamente com informação descritiva adicional. Informações sobre o Número de Informação do Produto (PIN) e o Número de Série (S/N) encontradas em cada legenda devem ser usadas para selecionar a informação correta sobre uma máquina específica. Opções de substituição no campo, identificação de componentes de acessórios opcionais e informações sobre onde são utilizados ("parte de") são também fornecidas.

A primeira linha de uma legenda é indicada em tipo maior para indicar o princípio de um elemento de informação. Legendas para páginas adicionais que podem ser necessárias para ilustrar um elemento de informação serão apresentadas em tipo padrão e incluirão o termo *(continua)* .

9. NÃO DISPONÍVEL SEPARADAMENTE

Em alguns casos, é necessário mostrar peças não disponíveis separadamente que têm uma ligação com listas de conteúdos de nível inferior que podem receber serviço de manutenção. Os números de peça destes componentes não disponíveis aparecerão em *itálico* , a fim de indicar que não estão disponíveis.

10. NÙMEROS DE REFERÊNCIA À LISTA DE PEÇAS

Os números indicados na coluna Ref No (No. de Referência) correspondem-se aos números usados no(s) gráfico(s) correspondente(s). Um sufixo com letras pode ser acrescentado a um número de referência para identificar itens de conteúdo de nível inferior. Os números indicados na coluna Graphic Ref (Referência de Gráfico) referem-se ao identificador de número de gráfico presente no canto esquerdo inferior de cada ilustração. O número de Referência de Gráfico pode ser usado em combinação com o item Ref No para determinar-se o número de peça correto. Poderá haver omissão intencional de um número de referência (Ref No) de uma lista de conteúdos uma vez que as informações são atualizadas para refletir os números de peça mais recentes que podem receber serviço de manutenção.

11. NOMES DE PEÇAS DESALINHADOS

Quando um nome de peça encontra-se desalinhado numa lista de peças, significa que tal item faz parte do (está incluído no) grupo ou conjunto sob o qual está relacionado.

12. LETRAS DE REFERÊNCIA NAS ILUSTRAÇÕES

Quando necessário, as ilustrações contêm letras de referência (A, B, C, etc.) que são utilizadas para seguir tubulações e cabos elétricos de um ponto a outro. Também foram utilizadas para indicar onde se pode reconectar as ilustrações que foram separadas.

13. ABREVIAÇÕES E SÍMBOLOS

O.D. – "Outside Diameter" (Diâmetro Externo)
I.D. – "Inside Diameter" (Diâmetro Interno)
A – Não faz parte deste grupo
B – Use conforme necessário
C – Indica modificação
D – Vendido por metro
E – Vendido por centímetro
F – Não ilustrado
G – Vendido por polegada
I – Consultar o Sistema de Informações Hidráulicas
M – Peça métrica
R – Peça remanufaturada pode estar disponível; consulte o seu revendedor Cat
Y – Ilustração separada
Z – Não disponível separadamente

SIS *Novidades*

14. <END>

Este símbolo indica o final de um elemento de informação.

INFORMAÇÃO GERAL

NOTA:

Os contínuos aperfeiçoamentos e avanços no projeto do produto podem ocasionar modificações em sua máquina que talvez ainda não estejam incluídas nesta publicação. Sempre que surgirem dúvidas quanto a um produto Caterpillar ou quanto à presente publicação, consulte o seu revendedor Caterpillar para obter as informações mais recentes disponíveis.

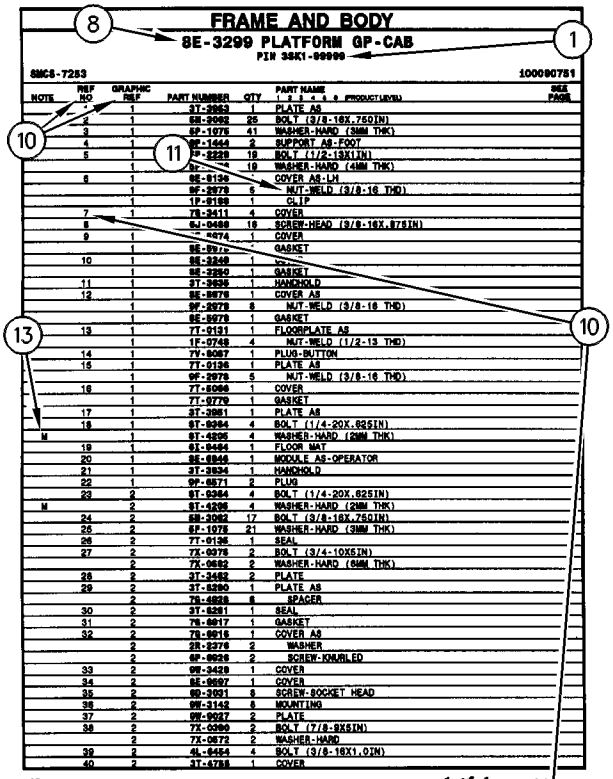

FRAME AND BODY

8E-3299 PLATFORM GP-CAB

PIN 35K1-99999

SMCS-7253 100090751

NOTE	REF NO	GRAPHIC REF	PART NUMBER	QTY	PART NAME 1 2 3 4 5 6 (PRODUCT LEVEL)	SEE PAGE
		1	3T-2953	1	PLATE AS	
	2	1	6B-2062	25	BOLT (3/8-16X.750IN)	
	3	1	6P-1076	41	WASHER-HARD (38MM THK)	
	4	1	9W-1444	2	SUPPORT AS-FOOT	
	5	1	7P-2229	18	BOLT (1/2-13X1IN)	
		1	9P-[illegible]	18	WASHER-HARD (41MM THK)	
	6	1	8E-6136	1	COVER AS-LH	
		1	9F-2978	6	NUT-WELD (3/8-16 THD)	
		1	1P-0169	1	CLIP	
	7	1	7B-2411	4	COVER	
	8	1	9J-0498	18	SCREW-HEAD (3/8-16X.875IN)	
	9	1	[illegible]-4474	1	COVER	
		1	8E-[illegible]		GASKET	
	10	1	8E-3249	1	[illegible]	
		1	8E-3250	1	GASKET	
	11	1	3T-2636	1	HANDHOLD	
	12	1	8E-6076	1	COVER AS	
		1	9F-2978	8	NUT-WELD (3/8-16 THD)	
		1	8E-6078	1	GASKET	
	13	1	7T-0131	1	FLOORPLATE AS	
		1	1F-0748	4	NUT-WELD (1/2-13 THD)	
	14	1	7V-6067	1	PLUG-BUTTON	
	15	1	7T-0136	1	PLATE AS	
		1	9F-2978	5	NUT-WELD (3/8-16 THD)	
	16	1	7T-6066	1	COVER	
		1	7T-0779	1	GASKET	
	17	1	3T-3951	1	PLATE AS	
	18	1	6T-0364	4	BOLT (1/4-20X.625IN)	
M		1	9T-4205	4	WASHER-HARD (28MM THK)	
	19	1	6L-6494	1	FLOOR MAT	
	20	1	8E-6846	1	MODULE AS-OPERATOR	
	21	1	3T-3834	1	HANDHOLD	
	22	1	9P-6671	2	PLUG	
	23	2	6T-0364	4	BOLT (1/4-20X.625IN)	
M		2	9T-4205	4	WASHER-HARD (28MM THK)	
	24	2	6B-2062	17	BOLT (3/8-16X.750IN)	
	25	2	6P-1076	21	WASHER-HARD (38MM THK)	
	26	2	7T-0135	1	SEAL	
	27	2	7X-0078	2	BOLT (3/4-10X5IN)	
		2	7X-0662	2	WASHER-HARD (64MM THK)	
	28	2	3T-3452	2	PLATE	
	29	2	3T-6290	1	PLATE AS	
		2	7B-4828	8	SPACER	
	30	2	3T-6281	1	SEAL	
	31	2	7B-6817	1	GASKET	
	32	2	7B-6815	1	COVER AS	
		2	2R-2276	2	WASHER	
		2	9P-6626	2	SCREW-KNURLED	
	33	2	9W-3429	1	COVER	
	34	2	8E-6697	1	COVER	
	35	2	6D-3031	8	SCREW-SOCKET HEAD	
	36	2	9W-3142	8	MOUNTING	
	37	2	9W-6027	2	PLATE	
	38	2	7X-0090	2	BOLT (7/8-9X8IN)	
		2	7X-0672	2	WASHER-HARD	
	39	2	4L-6454	4	BOLT (3/8-16X1.0IN)	
	40	2	3T-4788	1	COVER	

12 FRAME AND BODY 1 of 4 SELP4570-01

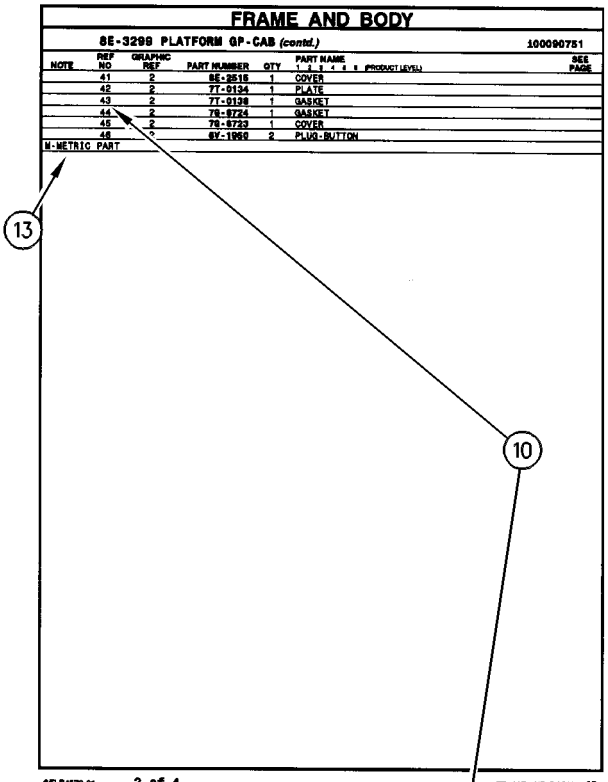

FRAME AND BODY

8E-3299 PLATFORM GP-CAB (contd.) 100090751

NOTE	REF NO	GRAPHIC REF	PART NUMBER	QTY	PART NAME 1 2 3 4 5 6 (PRODUCT LEVEL)	SEE PAGE
	41	2	8E-2516	1	COVER	
	42	2	7T-0134	1	PLATE	
	43	2	7T-0138	1	GASKET	
	44	2	7B-8724	1	GASKET	
	45	2	7B-8723	1	COVER	
	46	2	6V-1950	2	PLUG-BUTTON	

M-METRIC PART

SELP4570-01 2 of 4 FRAME AND BODY 13

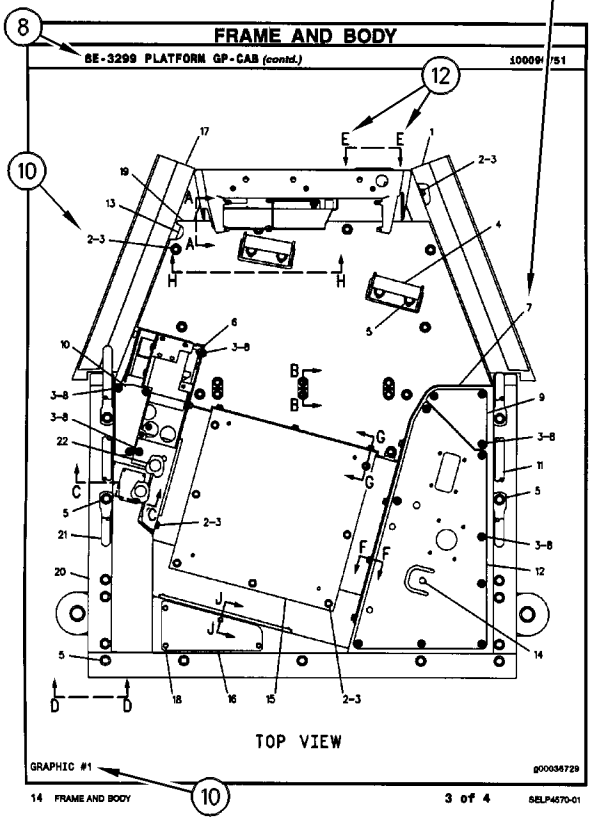

FRAME AND BODY

8E-3299 PLATFORM GP-CAB (contd.) 100090751

TOP VIEW

GRAPHIC #1 g00036729

14 FRAME AND BODY 3 of 4 SELP4570-01

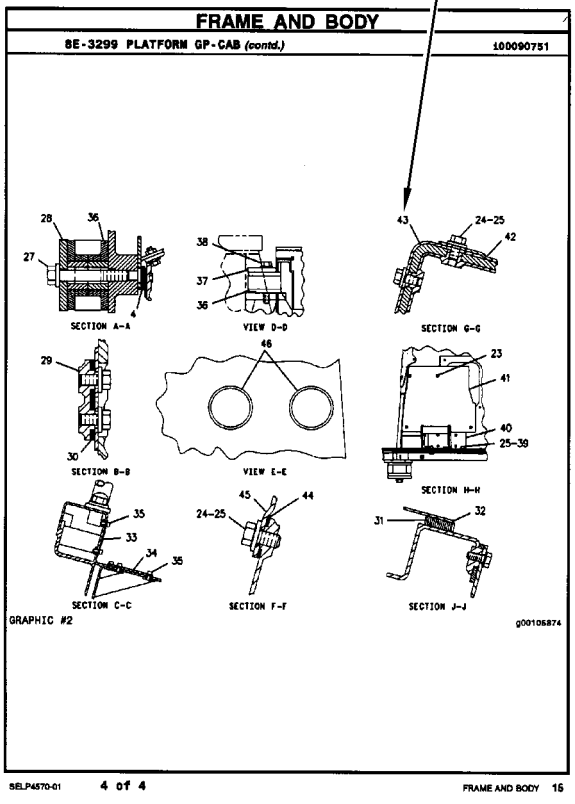

FRAME AND BODY

8E-3299 PLATFORM GP-CAB (contd.) 100090751

SECTION A-A

VIEW D-D

SECTION G-G

SECTION B-B

VIEW E-E

SECTION H-H

SECTION C-C

SECTION F-F

SECTION J-J

GRAPHIC #2 g00105874

SELP4570-01 4 of 4 FRAME AND BODY 16

ALLGEMEINE HINWEISE

1. MASCHINENKENNZEICHNUNG

Caterpillar-Maschinen sind mit PRODUCT IDENTIFICATION NUMBERS (PIN) (Produkt-Identnummern) gekennzeichnet. Einige Baugruppen, z.B. Motoren, Getriebe, Planierschilde und Aufreißer, sind mit SERIAL NUMBERS (S/N) (Seriennummern) gekennzeichnet. An der Maschine und am Motor befinden sich außerdem ARRANGEMENT NUMBERS (Ausrüstungsnummern) sowie in einigen Fällen MODIFICATION NUMBERS (Änderungsnummern). Sie befinden sich auf den PIN-Schildern und auf dem Typenschild im Fahrerhaus.

Bei Ersatzteilbestellungen müssen dem Händler alle diese Nummern zur Verfügung gestellt werden.

SIS *Neu im Parts Manual*

Vom ersten Quartal 2001 ab wurde die Caterpillar Produkt-Identnummer (PIN) von 8 auf 17 Zeichen geändert. Um zur Standardisierung der Produkt-Identnummer beizutragen, sind Caterpillar und andere Baumaschinenhersteller bestrebt, die aktuellste Norm zur Produkt-Identnummerierung einzuführen. Produkt-Identnummern für Baumaschinen sind durch ISO 10261 definiert. Das neue Format der Produkt-Identnummern gilt für alle Caterpillar-Maschinen und -Stromaggregate. Die Produkt-Identschilder und -Identrahmenmarkierung enthalten die aus 17 Zeichen bestehende Identnummer. Das neue Format hat folgende Abschnitte:

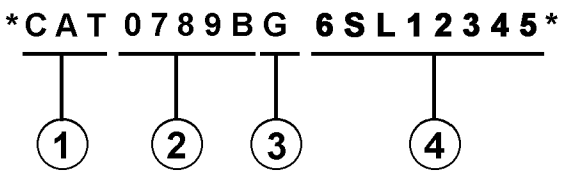

Abschnitte:

1. Caterpillars weltweiter Herstellungscode (Zeichen 1-3)

2. Modell (Zeichen 4-8)

3. Kontrollzeichen (Zeichen 9)

4. Maschinenspezifische Kennung (MIS) oder Produktsequenznummer (Zeichen 10-17). Diese wurde früher als Seriennummer bezeichnet.

Für vor dem ersten Quartal 2001 hergestellte Maschinen und Stromaggregate wird das aus 8 Zeichen bestehende PIN-Format beibehalten.

Bauteile wie z.B. Motoren, Getriebe, Achsen sowie Arbeitsgeräte werden weiterhin eine aus 8 Zeichen bestehende Seriennummer (S/N) aufweisen.

2. BESTELLEN VON ERSATZTEILEN

⚠ WARNUNG

Wenn für diese Maschine Ersatzteile benötigt werden, empfiehlt Caterpillar, ausschließlich Caterpillar-Ersatzteile oder solche zu verwenden, die die gleichen technischen Merkmale hinsichtlich Typ, Festigkeit, Werkzeugeigenschaften und die gleichen Maße aufweisen.

Bei Nichtbeachtung dieser Warnung besteht Verletzungs- oder sogar Lebensgefahr! Ferner kann Nichtbeachtung vorzeitige Ausfälle der Teile und Beschädigung der Maschine zur Folge haben.

Original Caterpillar-Ersatzteile können weltweit bei jedem Caterpillar-Händlern bestellt werden. Die umfangreichen Händlerlager enthalten normalerweise alle Teile, die Sie für Ihre Caterpillar-Maschine benötigen. Einige Händler bieten Reparatursätze, Austausch- oder werküberholte Teile an, so daß Sie eine Auswahl unter verschiedenen Reparaturmöglichkeiten treffen können. Ihre Bestellung muß folgende Angaben enthalten: Anzahl der benötigten Teile, Bestellnummer, Bezeichnung des Teils, Serien-Nr./Produkt-Ident-Nr., Ausrüstungs-Nr. und Änderungs-Nr. der Maschine, für die diese Teile benötigt werden.

3. AUFBAU DES PARTS MANUAL

Die Produktinformationen für alle Komponenten eines bestimmten Modells sind in INFORMATION ELEMENTS (Informationseinheiten) gegliedert. ENGINE ARRANGEMENT (Motorausführung) und SEAT GROUP (Fahrersitz) sind Beispiele für solche Informationseinheiten. Sie sind innerhalb jeder Gruppe alphabetisch, entsprechend der Ersatzteilbezeichnung, und zusätzlich numerisch, entsprechend der Ersatzteilnummer, geordnet.

4. INHALTSVERZEICHNIS

Das Inhaltsverzeichnis befindet sich am Anfang des Buches. Im Inhaltsverzeichnis werden die einzelnen Abschnitte des Buches aufgeführt. Die Abschnitte enthalten eine vollständige Aufstellung aller Informationseinheiten. Diese sind entsprechend ihrem Erscheinen im Buch geordnet. Das Inhaltsverzeichnis enthält Seitenangaben für Schnellverweise auf detaillierte Abbildungen und Teillisten.

ALLGEMEINE HINWEISE

5. INDEX FÜR WARTUNGSTEILE

Der Index für Wartungsteile vorn im Buch enthält die Bestellnummern, Seitenangaben, Mengenangaben und Informationen über den Einsatzbereich für die am häufigsten benötigten Ersatzteile. Die Angaben sind alphabetisch entsprechend der Teilebezeichnung geordnet.

6. INDEX

Der Index vorn im Buch enthält eine alphabetische Liste aller Informationseinheiten. Er enthält Seitenangaben für Schnellverweise auf detaillierte Abbildungen und Teillisten.

7. INDEX FÜR BESTELLNUMMERN

Hinten im Buch befindet sich ein numerischer Index, mit allen Bestellnummern und dem Hinweis auf die Seite, auf der sich die betreffende Abbildung befindet.

8. ÜBERSCHRIFTEN

Die Überschriften, die sich am Anfang jeder der Informationseinheiten befinden, enthalten Bestellnummern, Ersatzteilbezeichnungen und zusätzliche beschreibende Informationen. Produkt-Ident- und Seriennummern in den Überschriften sollten zur Auswahl der richtigen Informationen für die betreffende Maschine verwendet werden. Die Überschriften enthalten außerdem Informationen über möglichen Außendienstersatz, mögliche Baugerätekomponenten und die Baugruppe, zu der das Teil gehört.

Die erste Zeile einer Überschrift erscheint in einer größeren Schriftart, um den Anfang einer Informationseinheit zu kennzeichnen. Überschriften für zusätzliche Seiten, die zur Erläuterung einer Informationseinheit notwendig sind, erscheinen in normaler Schriftart und enthalten den Begriff "(contd.)".

9. NICHT EINZELN LIEFERBARE TEILE

In einigen Fällen ist es notwendig nicht lieferbare Teile, die selbst mit einer eigenen Teilliste im Buch vertreten sind, aufzuführen. Die Bestellnummern dieser nicht einzeln lieferbaren Teile erscheinen kursiv, wodurch angezeigt wird, daß sie nur in Verbindung mit anderen Teilen lieferbar sind.

10. REFERENZNUMMER FÜR ERSATZTEILE

Die Zahlen, die in der Spalte "Ref No" aufgeführt sind, stimmen mit den Zahlen in den beigefügten Abbildungen überein. Ein Buchstaben-Suffix kann zu einer Referenznummer hinzugefügt werden, um zu kennzeichnen, daß das Teil mit einer eigenen Teilliste im Buch aufgeführt ist. Die in der Spalte "Graphic Ref" angeführten Zahlen verweisen auf die Identifikationsnummer der Abbildung, die sich in der linken unteren Ecke der Abbildung befindet. Diese Nummer kann zusammen mit der Referenznummer des Teils angegeben werden, um die richtige Ersatzteilnummer zu ermitteln. Referenznummern können absichtlich weggelassen werden, da die Nummern der lieferbaren Ersatzteile ständig aktualisiert werden.

11. EINGERÜCKTE BEZEICHNUNGEN

Wenn eine Bezeichnung eingerückt ist, wird dadurch angezeigt, daß das Teil zu einer Baugruppe gehört, unter deren Bezeichnung es eingerückt ist.

12. REFERENZBUCHSTABEN

Falls erforderlich sind in den Abbildungen Referenzbuchstaben enthalten (z.B. A, B, C, usw.), die Leitungen und Kabelbäume von einem Punkt zum anderen verfolgen. Außerdem geben sie die Stelle an, an der getrennte Abbildungen fortgesetzt werden.

13. ABKÜRZUNGEN UND SYMBOLE

O.D. – Außendurchmesser
I.D. – Innendurchmesser
A – kein Teil dieser Gruppe
B – nach Bedarf verwenden
C – Hinweis auf eine Änderung
D – in Meter-Länge bestellen
E – in Zentimeter-Länge bestellen
F – nicht gezeigt
G – in Zoll-Länge bestellen
I – siehe Hydraulikinformationssystem
M – metrisches Teil
R – werküberholtes Teil unter Umständen lieferbar
Y – separate Abbildung
Z – nicht einzeln lieferbar

SIS *Neu im Parts Manual*

14. <END>

Dieses Symbol zeigt das Ende eines Informationselements an.

ALLGEMEINE HINWEISE

ANMERKUNG:

Ständig vorgenommene Verbesserungen und Weiterentwicklungen an Ihrer Maschine können Änderungen verursachen, die in der vorliegenden Ausgabe noch nicht berücksichtigt sind. Fragen zu Ihrer Caterpillar-Maschine oder diesem Ersatzteilbuch beantwortet Ihr Caterpillar-Händler.

ALLGEMEINE HINWEISE

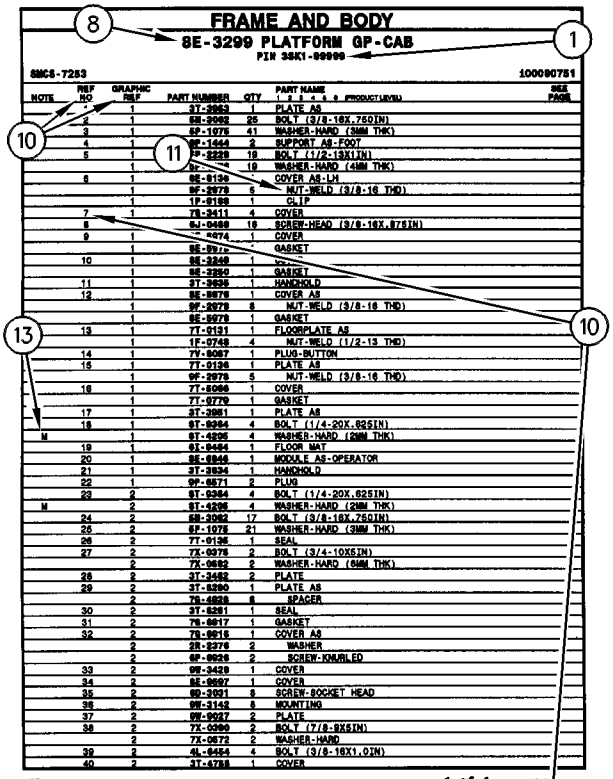

FRAME AND BODY

8E-3299 PLATFORM GP-CAB

PIN 35K1-99999

SMCS-7253 100090751

NOTE	REF NO	GRAPHIC REF	PART NUMBER	QTY	PART NAME 1 2 3 4 5 6 (PRODUCT LEVEL)	SEE PAGE
	*	1	3T-2953	1	PLATE AS	
	2	1	6B-2062	25	BOLT (3/8-16X.750IN)	
	3	1	6P-1076	41	WASHER-HARD (3MM THK)	
	4	1	9F-1444	2	SUPPORT AS-FOOT	
	5	1	7P-2229	19	BOLT (1/2-13X1IN)	
		1	9F-	19	WASHER-HARD (4MM THK)	
	6	1	8E-6136	1	COVER AS-LH	
		1	9F-2978	5	NUT-WELD (3/8-16 THD)	
		1	1P-0169	1	CLIP	
	7	1	7S-2411	4	COVER	
	8	1	9J-0498	18	SCREW-HEAD (3/8-16X.875IN)	
	9	1	-4474	1	COVER	
		1	8E-897		GASKET	
	10	1	8E-3249	1		
		1	8E-3250	1	GASKET	
	11	1	3T-2636	1	HANDHOLD	
	12	1	8E-8678	1	COVER AS	
		1	9F-2978	8	NUT-WELD (3/8-16 THD)	
		1	8E-8678	1	GASKET	
	13	1	7T-0131	1	FLOORPLATE AS	
		1	1F-0748	4	NUT-WELD (1/2-13 THD)	
	14	1	7V-8087	1	PLUG-BUTTON	
	15	1	7T-0136	1	PLATE AS	
		1	9F-2978	5	NUT-WELD (3/8-16 THD)	
	16	1	7T-8066	1	COVER	
		1	7T-8779	1	GASKET	
	17	1	3T-3951	1	PLATE AS	
	18	1	6T-8364	4	BOLT (1/4-20X.625IN)	
M		1	9T-4205	4	WASHER-HARD (2MM THK)	
	19	1	6L-8494	1	FLOOR MAT	
	20	1	8E-8846	1	MODULE AS-OPERATOR	
	21	1	3T-3834	1	HANDHOLD	
	22	1	9P-8671	2	PLUG	
	23	2	6T-8364	4	BOLT (1/4-20X.625IN)	
M		2	9T-4205	4	WASHER-HARD (2MM THK)	
	24	2	6B-2062	17	BOLT (3/8-16X.750IN)	
	25	2	6P-1076	21	WASHER-HARD (3MM THK)	
	26	2	7T-0135	1	SEAL	
	27	2	7X-0078	2	BOLT (3/4-10X5IN)	
		2	7X-0662	2	WASHER-HARD (6MM THK)	
	28	2	3T-3452	2	PLATE	
	29	2	3T-8290	1	PLATE AS	
		2	7S-4828	8	SPACER	
	30	2	3T-8281	1	SEAL	
	31	2	7S-8817	1	GASKET	
	32	2	7S-8815	1	COVER AS	
		2	2R-2276	2	WASHER	
		2	6P-8926	2	SCREW-KNURLED	
	33	2	9W-3429	1	COVER	
	34	2	8E-8697	1	COVER	
	35	2	6D-3031	8	SCREW-SOCKET HEAD	
	36	2	9W-3142	8	MOUNTING	
	37	2	9W-8027	2	PLATE	
	38	2	7X-0090	2	BOLT (7/8-9X8IN)	
		2	7X-0672	2	WASHER-HARD	
	39	2	4L-8454	4	BOLT (3/8-16X1.0IN)	
	40	2	3T-4788	1	COVER	

12 FRAME AND BODY 1 of 4 SELP4570-01

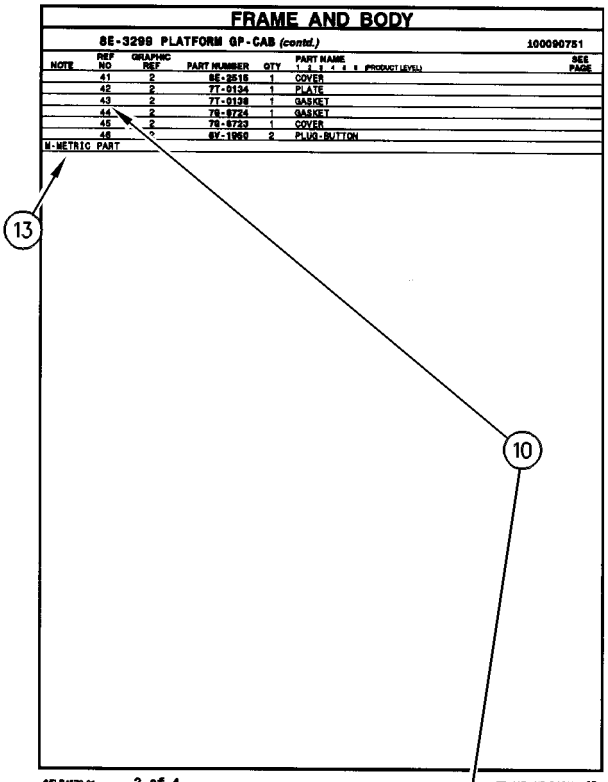

FRAME AND BODY

8E-3299 PLATFORM GP-CAB (contd.) 100090751

NOTE	REF NO	GRAPHIC REF	PART NUMBER	QTY	PART NAME 1 2 3 4 5 6 (PRODUCT LEVEL)	SEE PAGE
	41	2	8E-2516	1	COVER	
	42	2	7T-0134	1	PLATE	
	43	2	7T-0138	1	GASKET	
	44	2	7S-8724	1	GASKET	
	45	2	7S-8723	1	COVER	
	46	2	6V-1950	2	PLUG-BUTTON	

M-METRIC PART

SELP4570-01 2 of 4 FRAME AND BODY 13

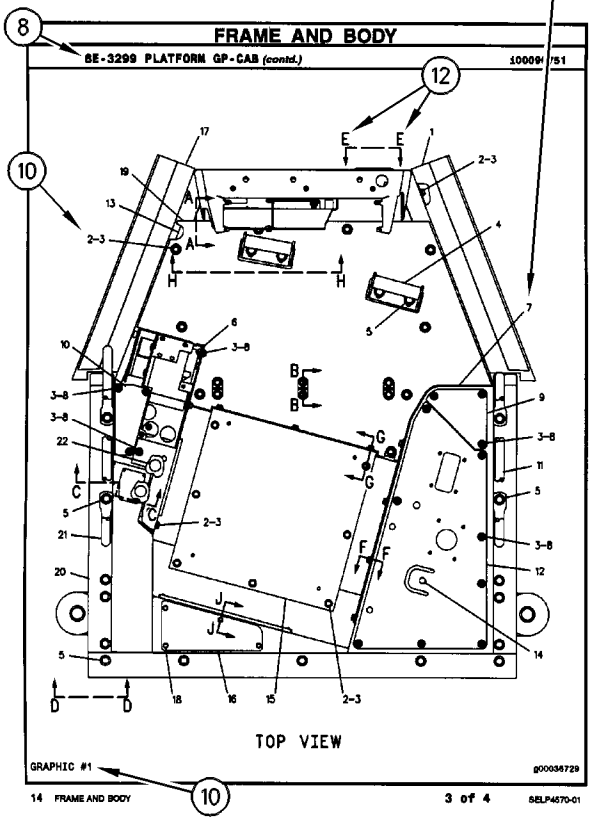

FRAME AND BODY

8E-3299 PLATFORM GP-CAB (contd.) 100090751

TOP VIEW

GRAPHIC #1 g00036729

14 FRAME AND BODY 3 of 4 SELP4570-01

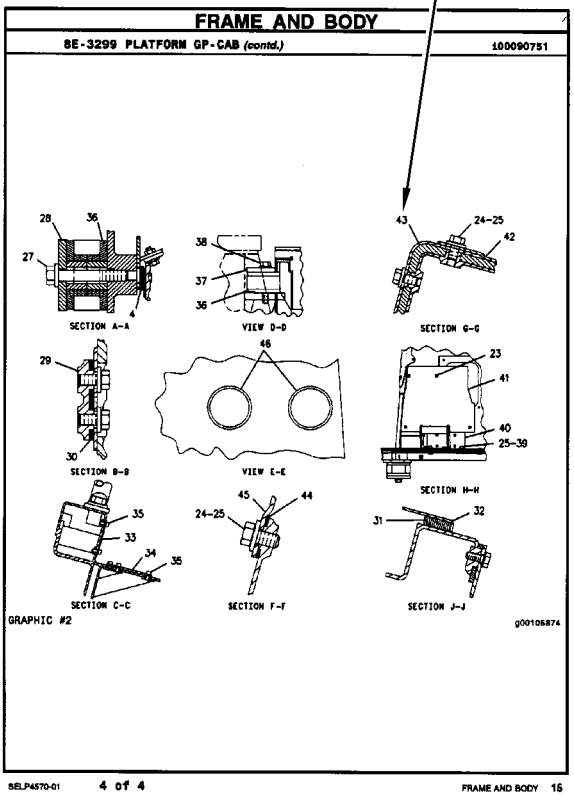

FRAME AND BODY

8E-3299 PLATFORM GP-CAB (contd.) 100090751

SECTION A-A

VIEW D-D

SECTION G-G

SECTION B-B

VIEW E-E

SECTION H-H

SECTION C-C

SECTION F-F

SECTION J-J

GRAPHIC #2 g00105874

SELP4570-01 4 of 4 FRAME AND BODY 16

REPAIR ALTERNATIVES

REMANUFACTURED COMPONENTS

As an option when making repairs consider Caterpillar Remanufactured Components. Components that are available through the Caterpillar Remanufactured Program are identified three ways in the parts book:

- with the letter R in the note field of the parts list
- with an R* at the beginning of the first line of the caption
- with an *R at the end of the first line of the caption

Typical components included in the Remanufacturing Program include:

ALTERNATORS
CONNECTING RODS
CRANKSHAFTS - UNDERSIZE
CRANKSHAFTS - UPGRADE TO NEW
CYLINDER HEADS
ELECTRONIC CONTROL MODULES (ECM)
ELECTRONIC SENSORS
FUEL INJECTORS
FUEL NOZZLES
FUEL PUMPS
GOVERNORS
OIL PUMPS
PISTONS
SHORT BLOCKS
STARTERS
TURBOCHARGERS - COMPLETE
TURBOCHARGER CARTRIDGES
WATER PUMPS

Caterpillar Remanufactured engines for many engine arrangements are also available.

COMPOSANTS RÉNOVÉS

Comme option de réparation, considérer les composants rénovés Caterpillar. Les composants disponibles dans le cadre du programme Caterpillar de composants rénovés sont identifiés de trois façons dans le catalogue de pièces:

- avec la lettre "R" dans l'espace note de la liste des pièces
- avec R* au début de la première ligne des légendes
- avec *R à la fin de la première ligne des légendes

Les composants suivants figurent parmi les composants typiques du programme de rénovation:

ALTERNATEURS
BIELLES
VILEBREQUINS - SOUS-DIMENSIONNÉS
VILEBREQUINS - REMIS À NEUF
CULASSES
MODULES DE COMMANDE ÉLECTRONIQUE (ECM)
CAPTEURS ÉLECTRONIQUES
INJECTEURS
TÊTES D'INJECTEURS
POMPES À CARBURANT
RÉGULATEURS
POMPES À HUILE
PISTONS
BLOCS EMBIELLÉS
DÉMARREURS
TURBOCOMPRESSEURS - COMPLETS
CARTOUCHES DE TURBOCOMPRESSEUR
POMPES À EAU

Des moteurs rénovés sont aussi disponibles pour plusieurs versions de moteur.

ALTERNATIVAS DE REPARACIÓN

COMPONENTES REMANUFACTURADOS

Al hacer reparaciones, tenga en cuenta la opción de Componentes Remanufacturados Caterpillar. Los componentes que están disponibles por medio del programa de Productos Remanufacturados Caterpillar se identifican de tres maneras en el manual de piezas:

- con la letra R en el espacio de Nota de la lista de piezas
- con una R* al comienzo de la primera línea de la leyenda
- con una *R al final de la primera línea de la leyenda

Los componentes que se incluyen típicamente en el Programa de Productos Remanufacturados son:

ALTERNADORES
BIELAS
CIGÜEÑALES - BAJOMEDIDA
CIGÜEÑALES - REMANUFACTURADOS A NUEVO
CULATAS
MÓDULOS DE CONTROL ELECTRÓNICO (ECM)
SENSORES ELECTRONICOS
INYECTORES
BOQUILLAS
BOMBAS DE COMBUSTIBLE
REGULADORES
BOMBAS DE ACEITE
PISTONES
MONOBLOQUES
MOTORES DE ARRANQUE
TURBOCOMPRESORES - COMPLETOS
NÚCLEOS DE TURBOCOMPRESOR
BOMBAS DE AGUA

También hay disponibles motores Remanufacturados Caterpillar para muchas de las configuraciones de motores.

ALTERNATIVAS DE REPARO

COMPONENTES REMANUFATURADOS

Considere o uso de Componentes Remanufaturados Caterpillar ao efetuar reparos. Os componentes disponíveis através do Programa de Remanufatura Caterpillar são identificados de três formas no manual de peças:

- com um R na área da nota da lista de peças
- com um R* no princípio da primeira linha da legenda
- com um *R no final da primeira linha da legenda

Os componentes típicos que constam no Programa de Remanufatura incluem:

ALTERNADORES
BIELAS
VIRABREQUINS - SUBMEDIDAS
VIRABREQUINS - ATUALIZAÇÃO
CABEÇOTES
MÓDULOS DE CONTROLE ELETRÔNICO (ECM)
SENSORES ELETRÔNICOS
INJETORES DE COMBUSTÍVEL
BICOS DE ABASTECIMENTO DE COMBUSTÍVEL
BOMBAS DE COMBUSTÍVEL
GOVERNADORES
BOMBAS DE ÓLEO
PISTÕES
BLOCOS BÁSICOS DO MOTOR
MOTORES DE PARTIDA
TURBOALIMENTADORES - COMPLETOS
CARTUCHOS DE TURBOALIMENTADORES
BOMBAS D'ÁGUA

Motores Remanufaturados Caterpillar também encontram-se disponíveis para diversos arranjos de motor.

REPARATURALTERNATIVEN

WERKÜBERHOLTE AT-PRODUKTE

Bei Reparaturen sollten werküberholte AT-Produkte von Caterpillar in Betracht gezogen werden. Die durch das AT-Programm von Caterpillar erhältlichen Teile sind im Parts Book auf drei verschiedene Arten gekennzeichnet:

- mit dem Buchstaben R in der Spalte NOTE der Ersatzteilliste
- mit einem R* am Anfang der ersten Zeile der Überschrift
- mit einem *R am Ende der ersten Zeile der Überschrift

Das AT-Programm umfaßt u.a. folgende Produkte:

DREHSTROMGENERATOREN
PLEUELSTANGEN
KURBELWELLEN - MIT UNTERMASS
KURBELWELLEN - MIT ORIGINALMASS
ZYLINDERKÖPFE
ELEKTRONISCHE STEUEREINHEITEN (EMC)
ELEKTRONISCHE SENSOREN
PUMPENDÜSEN
EINSPRITZDÜSEN
KRAFTSTOFFPUMPEN
DREHZAHLREGLER
ÖLPUMPEN
KOLBEN
TEILMOTOREN
ANLASSER
TURBOLADER - KOMPLETT
TURBOLADERLAUFZEUGE
KÜHLWASSERPUMPEN

Viele Motoren können durch werküberholte AT-Motoren von Caterpillar ersetzt werden.

SUPPLEMENTAL COOLANT ADDITIVES

CUSTOMER BENEFITS:

Protects against cavitation, foam, erosion, corrosion, and scale buildup in cooling systems.

- Provides measured coolant conditioner.

DESCRIPTION:

Additives deplete from the coolant with normal operation. For this reason, Supplemental Coolant Additives (SCA) must be added to all heavy duty coolants at regular intervals. In addition, when not using a fully formulated, pre-charged antifreeze, like Caterpillar's DEAC, an initial charge of SCA must be added to the cooling system. The amount of SCA added to the system is dependent on the capacity of the system.

The SCA for initial fill is provided as a liquid. SCA's for maintenance intervals are available in liquid form and as a spin-on element. (No Spin-on available for 3600 Family of Engines)

NOTE:

The amount of SCA added at initial fill is not the same as the amount added at maintenance intervals.

The coolant additive elements can be used with any ethylene or propylene glycol type antifreeze which meets ASTM D4985 or ASTM D5345 Specifications.

NOTE:

For use with standard heavy duty coolant only, not for use with Extended Life Coolant.

PARTS NEEDED:

Cooling System Capacity		Liquid SCA at Initial Fill	Liquid SCA at Maintenance*	Spin-on SCA Maintenance Element*
Liters	Gallons			
22-30	(6-8)	3P-2044 (1)	6V-3542 (1)	111-2370 (1)
30-38	(8-10)	3P-2044 (1) 6V-3542 (1)	111-2372 (1)	111-2369 (1)
38-49	(10-13)	3P-2044 (1) 8T-1589 (1)	111-2372 (1)	111-2369 (1)
49-64	(13-17)	3P-2044 (2)	8T-1589 (1)	9N-3368 (1)
64-83	(17-22)	3P-2044 (2) 8T-1589 (1)	111-2372 (1) 6V-3542 (1)	111-2371 (1)
83-114	(22-30)	3P-2044 (3) 8T-1589 (1)	3P-2044 (1)	9N-3718 (1)
114-163	(30-43)	3P-2044 (5)	3P-2044 (1) 6V-3542 (1)	111-2371 (2)
163-242	(43-64)	3P-2044 (8)	3P-2044 (2)	9N-3718 (2)

** Normal maintenance period is 250 hrs. See your Operation and Maintenance Manual for complete coolant maintenance instructions.*

( ) Indicates quantity required.

ADDITIFS POUR LIQUIDE DE REFROIDISSEMENT

AVANTAGES POUR LE CLIENT

L'additif protège contre la cavitation, la mousse, l'érosion, la corrosion et l'accumulation de dépôts dans le circuit de refroidissement.

- L'additif complémentaire fournit une quantité mesurée d'additif.

DESCRIPTION:

Les additifs s'épuisent pendant l'utilisation du moteur. C'est pourquoi l'on doit ajouter de l'additif au liquide de refroidissement/antigel pour moteurs diesel à intervalles réguliers. En plus, si l'on n'utilise pas de l'antigel entièrement formulé et pré-chargé comme le liquide de refroidissement/antigel Caterpillar pour moteurs diesel, une quantité initiale d'additif doit être ajoutée au circuit de refroidissement. La quantité d'additif à ajouter au circuit dépend de la contenance du circuit.

L'additif pour le remplissage initial est fourni sous forme liquide. L'additif pour l'entretien ultérieur est disponible sous forme liquide et sous forme d'élément à visser. (Il n'y a pas d'élément à visser pour les moteurs de la famille 3600).

NOTA:

La quantité d'additif à ajouter au remplissage initial diffère de la quantité à ajouter aux intervalles d'entretien.

Les éléments d'additif peuvent être utilisés avec tout antigel de type éthylène ou propylène-glycol conforme à la norme ASTM D4985 ou ASTM D5345.

NOTA:

A utiliser uniquement avec du liquide de refroidissement pour moteurs diesel et non avec le liquide de refroidissement longue durée.

PIÈCES NÉCESSAIRES:

Contenance du circuit de refroidissement		Additif liquide au remplissage initial	Additif liquide aux intervalles d'entretien*	Elément d'additif à visser aux intervalles d'entretien*
Litres	Gallons U.S.			
22-30	(6-8)	3P-2044 (1)	6V-3542 (1)	111-2370 (1)
30-38	(8-10)	3P-2044 (1) 6V-3542 (1)	111-2372 (1)	111-2369 (1)
38-49	(10-13)	3P-2044 (1) 8T-1589 (1)	111-2372 (1)	111-2369 (1)
49-64	(13-17)	3P-2044 (2)	8T-1589 (1)	9N-3368 (1)
64-83	(17-22)	3P-2044 (2) 8T-1589 (1)	111-2372 (1) 6V-3542 (1)	111-2371 (1)
83-114	(22-30)	3P-2044 (3) 8T-1589 (1)	3P-2044 (1)	9N-3718 (1)
114-163	(30-43)	3P-2044 (5)	3P-2044 (1) 6V-3542 (1)	111-2371 (2)
163-242	(43-64)	3P-2044 (8)	3P-2044 (2)	9N-3718 (2)

** L'intervalle d'entretien normal est de 250 heures-service. Voir le Guide d'utilisation et d'entretien pour de plus amples renseignements concernant l'entretien du circuit de refroidissement.*

( ) Indique la quantité exigée.

ADITIVOS DE REFRIGERANTE SUPLEMENTARIOS

VENTAJAS PARA EL USUARIO:

Protegen contra la cavitación, la formación de espuma, la corrosión y la acumulación de escamas en los sistemas de enfriamiento.

- Suministra un acondicionador dosificado de refrigerante.

DESCRIPCIÓN:

Los aditivos en el refrigerante se agotan con la operación normal. Por esta razón, se debe agregar Aditivo de refrigerante suplementario (SCA) a todos los refrigerantes para servicio pesado, a intervalos regulares. Además, cuando no se usa un anticongelante de precarga completo, tal como el DEAC de Caterpillar, es necesario agregar una cantidad de aditivo de refrigerante suplementario inicial al sistema de enfriamiento. La cantidad de aditivo que se debe agregar depende de la capacidad del sistema.

El SCA de llenado inicial es líquido. El que se usa para el mantenimiento está disponible tanto en líquido como en un elemento enroscable. (No hay elemento enroscable disponible para la Familia de Motores 3600).

NOTA:

La cantidad de aditivo de llenado inicial no es la misma que se agrega en los intervalos de mantenimiento.

Los elementos de aditivo de refrigerante se pueden usar con cualquier anticongelante de tipo glicol etilénico o propílico que esté de acuerdo con las especificaciones de las normas ASTM D4985 o ASTM D5345.

NOTA:

Se debe utilizar únicamente con refrigerante estándar para servicio pesado; no se debe usar con Refrigerante de Larga Duración.

PIEZAS NECESARIAS:

Capacidad del Sistema de Enfriamiento		SCA líquido de llenado inicial	SCA líquido de mantenimiento*	Elemento de mantenimiento enroscable*
litros	gal EE.UU.			
22-30	6-8	3P-2044 (1)	6V-3542 (1)	111-2370 (1)
30-38	8-10	3P-2044 (1) 6V-3542 (1)	111-2372 (1)	111-2369 (1)
38-49	10-13	3P-2044 (1) 8T-1589 (1)	111-2372 (1)	111-2369 (1)
49-64	13-17	3P-2044 (2)	8T-1589 (1)	9N-3368 (1)
64-83	17-22	3P-2044 (2) 8T-1589 (1)	111-2372 (1) 6V-3542 (1)	111-2371 (1)
83-114	22-30	3P-2044 (3) 8T-1589 (1)	3P-2044 (1)	9N-3718 (1)
114-163	30-43	3P-2044 (5)	3P-2044 (1) 6V-3542 (1)	111-2371 (2)
163-242	43-64	3P-2044 (8)	3P-2044 (2)	9N-3718 (2)

** El período normal de mantenimiento es de 250 horas. Para ver las instrucciones completas sobre el mantenimiento del refrigerante, consulte el Manual de Operación y Mantenimiento.*

( ) Indica la cantidad necesaria.

ADITIVOS SUPLEMENTARES DO LÍQUIDO ARREFECEDOR

BENEFÍCIOS PARA O CLIENTE:

Protege contra cavitação, espuma, erosão, corrosão e acúmulo de crostas nos sistemas de arrefecimento.

- Fornece uma quantidade pré-determinada de condicionador de arrefecimento.

DESCRIÇÃO:

Com a operação normal, os aditivos se esgotam do líquido arrefecedor. Por isso, Aditivos Suplementares do Líquido Arrefecedor (SCA) devem ser acrescentados a todos os líquidos arrefecedores para serviço pesado em intervalos regulares. Além disso, quando um anticongelante pré-carregado, totalmente formulado não for usado, como o DEAC Caterpillar, uma carga inicial de SCA deve ser acrescentada ao sistema de arrefecimento. A quantidade de SCA acrescentada ao sistema depende da capacidade do sistema.

O SCA para abastecimento inicial é fornecido em forma de líquido. Os aditivos suplementares (SCA) para intervalos de manutenção estão à disposição em forma líquida e como um elemento com roscas. (Exceto os Motores da Família 3600)

NOTA:

A quantidade de SCA adicionada no abastecimento inicial não é a mesma que a acrescentada nos intervalos de manutenção.

Os elementos do aditivo do líquido arrefecedor podem ser usados com qualquer tipo de anticongelante etileno ou propileno que satisfaz as Especificações ASTM D4985 ou ASTM D5345.

NOTA:

Para uso apenas com líquido arrefecedor para serviço pesado padrão, não deve ser usado com Líquido Arrefecedor de Vida Longa.

PEÇAS NECESSÁRIAS:

Capacidade do Sistema de Arrefecimento		Líquido SCA Durante Abastecimento Inicial	Líquido SCA Durante Manutenção*	Elemento de Manutenção de SCA com Roscas*
Litros	Galões			
22-30	6-8	3P-2044 (1)	6V-3542 (1)	111-2370 (1)
30-38	8-10	3P-2044 (1) 6V-3542 (1)	111-2372 (1)	111-2369 (1)
38-49	10-13	3P-2044 (1) 8T-1589 (1)	111-2372 (1)	111-2369 (1)
49-64	13-17	3P-2044 (2)	8T-1589 (1)	9N-3368 (1)
64-83	17-22	3P-2044 (2) 8T-1589 (1)	111-2372 (1) 6V-3542 (1)	111-2371 (1)
83-114	22-30	3P-2044 (3) 8T-1589 (1)	3P-2044 (1)	9N-3718 (1)
114-163	30-43	3P-2044 (5)	3P-2044 (1) 6V-3542 (1)	111-2371 (2)
163-242	43-64	3P-2044 (8)	3P-2044 (2)	9N-3718 (2)

** O período normal de manutenção é de 250 horas. Consulte o Manual de Operação e Manutenção para obter instruções completas quanto à manutenção do líquido arrefecedor.*

( ) Indica a quantidade exigida.

KÜHLMITTELZUSATZ

VORTEILE FÜR DEN KUNDEN:

Schutz gegen Kavitation, Schaumbildung, Erosion, Korrosion und Kesselsteinbildung in Kühlsystemen.

- Richtig dosierter Kühlmittelzusatz

BESCHREIBUNG:

Additive erschöpfen sich während des Motorbetriebs. Deshalb muß allen HD-Kühlmitteln regelmäßig Kühlmittelzusatz beigefügt werden. Wenn bei Erstfüllung kein vollwertiges Fertigkühlmittel, wie das Frostschutz- und Kühlmittel für Dieselmotoren von Caterpiller (DEAC), verwendet wird, muß bei Erstfüllung Kühlmittelzusatz beigefügt werden. Wieviel Kühlmittelzusatz beigefügt werden muß, hängt vom Inhalt des Kühlsystems ab.

Für Erstfüllung ist Kühlmittelzusatz nur in flüssiger Form erhältlich. Für Wartungsintervalle ist Kühlmittelzusatz in flüssiger Form und als Zusatzelement erhältlich. (Für die Motorbaureihe 3600 sind keine Zusatzelemente erhältlich.)

ANMERKUNG:

Die Kühlmittelmenge bei Erstfüllung ist nicht die gleiche Menge, die bei Wartungsintervallen beigefügt werden muß.

Die Kühlmittelzusatzelemente können mit allen Frostschutzmitteln auf Ethylen- oder Propylenglykolbasis verwendet werden, die den Standards nach ASTM D4985 oder ASTM D5345 entsprechen.

ANMERKUNG:

Den Kühlmittelzusatz nicht mit Langzeitkühlmittel (ELC) von Caterpillar verwenden. Der Kühlmittelzusatz ist nur für HD-Kühlmittel bestimmt.

TEILEBEZEICHNUNG:

Kühlsysteminhalt		Kühlmittelzusatz bei Erstfüllung	Flüssiger Kühlmittelzusatz bei Wartung*	Kühlmittelzusatzelement bei Wartung*
Liter	US-Gall.			
22-30	(6-8)	3P-2044 (1)	6V-3542 (1)	111-2370 (1)
30-38	(8-10)	3P-2044 (1) 6V-3542 (1)	111-2372 (1)	111-2369 (1)
38-49	(10-13)	3P-2044 (1) 8T-1589 (1)	111-2372 (1)	111-2369 (1)
49-64	(13-17)	3P-2044 (2)	8T-1589 (1)	9N-3368 (1)
64-83	(17-22)	3P-2044 (2) 8T-1589 (1)	111-2372 (1) 6V-3542 (1)	111-2371 (1)
83-114	(22-30)	3P-2044 (3) 8T-1589 (1)	3P-2044 (1)	9N-3718 (1)
114-163	(30-43)	3P-2044 (5)	3P-2044 (1) 6V-3542 (1)	111-2371 (2)
163-242	(43-64)	3P-2044 (8)	3P-2044 (2)	9N-3718 (2)

** Der normale Wartungsintervall beträgt 250 Betriebsstunden. Für vollständige Anweisungen zur Wartung des Kühlsystems, siehe Betriebs- und Wartungshandbuch.*

( ) Erforderliche Anzahl

NOMENCLATURA DE PEÇAS INGLÊS-PORTUGUÊS

INGLÊS	PORTUGUÊS
ABOVE	Acima
ABSORBER	Amortecedor
ACCESSORY	Acessório
ACTUATOR	Acionador
ADAPTER	Adaptador
ADHESIVE	Adesivo
ADJUSTER	Adjustador
AFTERCOOLER	Pós-resfriador
AIR	Ar
AIR CLEANER	Purificador de ar
AIR SYSTEM	Sistema de ar
ALARM	Alarme
ALTERNATOR	Alternador
AMMETER	Amperímetro
ANCHOR	Âncora, fixador
ANGLE	Ângulo, canto
ANVIL A.	Bigorna conj.
ARBOR	Mandril, eixo
ARM	Braço
ARMATURE	Armadura, Induzida
ARM REST	Apoio para braço
ARRESTER	Detentor
ASSEM. = ASSEMBLY	Conjunto
ATTACHMENT	Acessório
AVAILABLE	Disponível
AXLE	Eixo
AXLE SHAFT	Semi-eixo, ponta
BACK-UP ALARM	Alarme de marcha à ré
BACK-UP LIGHT	Luz da marcha à ré
BACK-UP SWITCH	Interruptor de marcha à ré
BACKBOARD	Prancha traseira
BACK CUSHION	Encosto
BACKHOE	Retroescavadeira
BAFFLE	Defletor
BAG	Saco, sacola
BAIL	Alça
BALANCER	Balanceador
BALL	Esfera
BALLCHECK ASSEMBLY	Conjunto de (válvula) de esfera de retenção
BALL JOINT	Junta esférica
BALLSTUD	Munhão esférica
BAND	Banda, cinta, tira
BAND & LINING	Banda e revestimento
BAR	Barra
BARREL	Cilindro
BARRIER	Barreira
BASE	Base
BASIN	Bacia, coletor
BATTERY	Bateria
BEAM	Barra, viga, trave
BEARING	Mancal, rolamento
BEARING BALL	Rolamento de esferas
BEARING-SLEEVE	Mancal tipo luva
BEARING-NEEDLE	Rolamento de agulha
BEARING-ROLLER	Rolamento tipo roletes
BELL	Campânula
BELLCRANK	Alavanca angular
BELLOWS	Fole
BELOW	Abaixo
BELT	Correia, cinto
BELT TIGHTENER	Ajustador de correia
BEVEL GEAR	Coroa
BIT-CUTTER	Broca, fresa
BLACK	Preto
BLADE	Lâmina
BLEEDER	Sangrador
BLOCK	Bloco, calço
BLOWER	Ventilador
BLUE	Azul
BOARD	Prancha, tábua
BODY	Corpo
BOLT	Parafuso
BONNET	Tampa
BOOM	Lança
BOOSTER	Reforçador
BOOT	Protetor contra poeira
BORE	Furo
BOSS	Ressalto
BOTH	Ambos (as)
BOTTOM	Fundo
BOWL	Caçamba
BOX	Caixa
BRACE	Tirante
BRACKET	Suporte
BRAKE	Freio
BREAKER	Interruptor
BREATHER	Respiro
BRIDGE	Braço
BROWN	Marrom
BRUSH	Escova
BUCKET	Caçamba
BULB	Bulbo
BULLDOZER	Bulldozer
BUMPER	Pára-choque
BUSHING	Bucha
BUTTON	Botão
BUZZER WARNING	Alarme sonoro
C = CHANGE	Alteração
CAB	Cabina
CABINET	Gabinete
CABLE	Cabo
CAGE	Alojamento
CALIPER	Calibrador
CAM	Excêntrico, ressalto
CAMSHAFT	Eixo-comando-de-válvulas
CANOPY	Coberta, toldo

NOMENCLATURA DE PEÇAS INGLÊS-PORTUGUÊS

INGLÊS	PORTUGUÊS
CAP	Tampa
CAPACITOR	Capacitor, condensador
CARBURETOR	Caburador
CARCASS	Carcaça
CARRIER	Suporte
CARTON	Caixa de papelão
CARTRIDGE	Cartucho
CASE	Caixa, alojamento
CASING	Invólucro, revestimento
CASTER	Rolete, roldana
CAST IRON	Ferro fundido
CATWALK	Passadiço
CENTER	Centro
CHAIN	Corrente
CHAMBER	Câmara
CHANGEOVER	Modificação
CHANNEL	Canal
CHASSIS	Chassi, armação
CHECK-VALVE	Válvula de retenção
CIRCUIT	Circuito
CIRCUIT BREAKER	Interruptor de circuito
CLAMP	Braçadeira
CLASP	Fecho, grampo
CLEANER	Purificador
CLEVIS	Forquilha, garfo
CLIP	Clipe, presilha, grampo
CLOSURE	Fecho
CLUTCH	Embreagem
COARSE	Grosso, áspero
COATING	Capa, revestimento
COCK	Torneira
COIL	Bobina, serpentina
COLLAR	Colar
COLLECTOR	Coletor
COLLET	Mandril
COLUMN	Coluna
COMPACTOR	Compactador
COMPARTMENT	Compartimento
COMPLETE	Completo
COMPOUND	Composto
COMPRESSOR	Compressor
CONCAVE	Côncavo
CONDITIONER	Condicionador
CONDUIT	Conduite, eletroduto
CONE	Cone
CONNECTING	Ligação
CONNECTED ROD	Biela
CONNECTION	Conexão
CONNECTOR	Conetor
CONSISTS OF	Consiste de
CONSOLE	Consolo
CONTACT	Contato, platinado
CONTACTOR	Contactador
CONTINUED FROM	Continuação de
CONTROL	Controle
CONVERSION	Conversão
CONVERTER	Conversor
COOLER	Arrefecedor
COOLING	Arrefecimento
CORK	Cortiça
CORE	Núcleo
CORNER	Canto
COTTER PIN	Contrapino
COUNTER	Contador, tacômetro
COUNTERWEIGHT	Contrapeso
COUPLER	Acoplador, engate
COUPLING	Acoplamento, conexão
COVER	Tampa
COWL	Capota
COWLING	Capota
CRADLE	Armação, suporte
CRANK	Manivela
CRANKCASE	Cárter
CRANKSHAFT	Virabrequim
CROSS UNION	Junta transversal
CROSSBAR	Barra transversal
CUP	Capa, anel externa
CURTAIN	Cortina
CUSHION	Almofada, amortecedor
CUTTER	Fresa, cortador
CUTTING EDGE	Borda cortante
CYLINDER	Cilindro
CYLINDER BLOCK	Bloco do motor
CYLINDER HEAD	Cabeçote
DAMPER	Amortecedor
DARK GREEN	Verde escuro
DASH	Painel
DASH PANEL	Painel de Instrumento
DECELERATOR	Desacelerador
DEFLECTOR	Defletor
DETENT	Retém, pino de trava
DIAGRAM-WIRING	Diagrama dos circuitos elétricos
DIAL	Medidor de dial
DIAPHRAGM	Diafragma
DIESEL ENGINE COMPLETE	Motor diesel completo
DIFFERENTIAL	Diferencial
DIFFUSER	Difusor
DIMMER	Redutor de luminosidade
DIODE	Diodo
DIRECTOR	Diretor
DISC	Disco
DISCONNECT	Desligar
DISPOSABLE	Disponível, substituível
DISSIPATOR	Dissipador de calor
DISTRIBUTOR	Distribuidor
DM = DECIMETER	dm = decímetro

NOMENCLATURA DE PEÇAS INGLÊS-PORTUGUÊS

INGLÊS	PORTUGUÊS
DOME LIGHT	Lâmpada do teto
DOOR	Porta
DOWEL	Pino-guia, cavilha
DOWNSHIFT	Mudança para marcha mais baixa
DOZER	Bulldozer (lâmina)
DRAIN	Dreno
DRAWBAR	Barra de tração
DRILL	Broca
DRILLED	Broqueado, perturado
DRIVE	Comando, acionamento, propulsão
DRIVER	Acionador, mecanismo propulsor
DRIVESHAFT	Eixo acionador, eixo de transmissão
DRUM	Tambor
DUCT	Conduto, canal
EACH	Cada
EDGE	Borda, canto
EFFECTIVE WITH	Efetivo a partir de
EJECTOR	Ejetor
ELBOW	Cotovelo
ELEMENT	Elemento
ENCLOSURE	Cobertura
END	Extremidade
END BIT	Canto de lâmina
END VIEW	Vista traseira
ENGINE	Motor
ENGINE ARRANGEMENT	Arranjo do motor
EXCEPT	Exceto
EXHAUST	Escape
EXHAUST PIPE	Cano de escape
EXPANDER	Expansor
EXPANSION PLUG	Bujão de expansão
EXTENSION	Extensão
EXTINGUISHER	Extintor
EXTRACTOR	Extrator
EYE	Olhal
EYEBOLT	Parafuso de olhal
FABRIC	Tecido, tela textura
FACING	Revestimento, forro
FAN	Ventilador
FASTENED	Fixo, preso
FASTENER	Fixador, prendedor
FENDER	Pára-lamas
FERRULE	Virola
FIELD COIL	Bobina indutora, ou de campo
FIELD REPLACEMENT	Reposicão ou substituicão no campo
FILLER	Bocal de enchimento
FILM	Película
FILTER	Filtro
FINAL DRIVE	Comando final
FINGER	Dedo
FIREWALL	Parede contra fogo
FITTING	Graxeira, conexão
FIXTURE	Dispositivo, Aparelho
FLANGE	Flange
FLASHER	Luz intermitente
FLOAT	Flutuar, livre
FLOOD-LAMP	Farol
FLOOR	Piso
FLOORMAT	Tapete
FLOORPLATE	Chapa do piso
FLYWEIGHT	Peso volante
FLYWHEEL	Volante
FOLLOWER	Seguidor
FOOT	Pé
FORK	Garfo
FOR USE WITH	Para usar com
FOUNDATION	Assentamento, alicerce
FRAME	Armacão, chassi
FRONT	Frente, dianteiro
FT = FOOT	Pé
FUEL INJECTION	Injecão de combustível
FUEL PUMP	Bomba de combustível
FUEL RATIO	Limitador de combustível
FUEL SYSTEM	Sistema do combustível
FUEL TANK	Tanque do combustível
FUMES DISPOSAL	Eliminação de vapores do cárter
FUSE	Fusível
G = GROUP	Grupo
GAGE	Indicador, manômetro
GAP	Folga, lacuna, intervalo
GASKET	Junta
GASKET KIT	Jogo de junta
GATE	Entrada, trava
GAUGE	Indicador, manômetro
GEAR	Engrenagem, marcha
GEAR BOX	Caixa de engrenagem
GEAR PUMP	Bomba de engrenagem
GENERATOR	Gerador
GLAND	Junta, gaxeta, vedacão sobreposta
GLASS	Vidro
GLOW PLUG	Vela incandescente
GOVERNOR	Governador
GRAB IRON	Balaústre corrimão
GRATE	Grade, grelha
GRAY	Cinza
GRID	Grade, grelha
GRILL	Grade, grelha
GRIP	Pega, garra, cabo

NOMENCLATURA DE PEÇAS INGLÊS-PORTUGUÊS

INGLÊS	PORTUGUÊS
GROMMET	Ilhós
GROUND BRUSH	Escova-terra
GROUND (ELECTRIC)	Terra (eletricidade)
GROUSER	Garra (de sapata)
GUARD	Protetor
GUIDE	Guia
GUSSET	Cantoneira
HACKSAW	Serra para metais
HALF	Metade, meio (a)
HALF LINK	Semi-elo
HAMMER	Martelo
HAND CONTROL	Controle manual
HANDLE	Cabo, alça
HANDRAIL	Corrimão, balaústre
HANGER	Suporte, dispositivo de suspensão
HARDWARE	Ferragem
HARDWARE KIT	Jogo de ferragem
HARNESS	Chicote
HEAD = HD	Cabeça
HEADER	Coletor
HEADLAMP	Farol dianteiro
HEADLIGHT	Farol dianteiro
HEAT SINK	Difusor de calor
HEATER	Aquecedor
HIGH-IDLE	Marcha acelerada em vazio
HINGE	Dobradiça, articulacão
HITCH	Engate
HOIST	Guincho, talha
HOLD	Suporte, fixador
HOLD DOWN	Fixar, reter, manter abaixado
HOLDER	Fixador, suporte
HOLE	Furo, buraco
HOOD	Capô
HOOD & DASH	Capô e painel
HOOK	Gancho
HORN	Buzina
HOSE	Mangueira
HOUSING	Alojamento
HUB	Cubo
HYDRAULIC	Hidráulico
ID = INSIDE DIAMETER	Diâmetro interno
IDLER	Roda-guia
IDLER & SHAFT	Roda-guia e eixo
IDLER GEAR	Engrenagem intermediária
IDLER PULLEY	Polia intermediária
IMPELLER	Impulsor, rotor
IN = INCH	Polegada
INCLUDES	Inclui
INDICATE	Indicam
INDICATOR	Indicador
INLAY	Incrustação
INLET	Admissão, entrada
INPUT	Entrada
INSERT	Inserção
INSTALLATION	Instalação
INSTALLED ON MODEL	Instalação no modelo
INSTRUCTION	Instrução
INSTRUMENT	Instrumento
INSULATED BRUSH	Escova isolada
INSULATION	Isolação, isolamento
INSULATOR	Isolante, isolador
INTAKE	Admissão
INTERLOCK	Trava interna
INTERMEDIATE	Intermediário
INTERNAL	Interno
INVERTER	Inversor
IRON	Ferro
JACK	Macaco
JAW	Mandíbula, garra
JET	Jato, vaporizador
JOINT	Junta, articulação
JUNCTION	Junção
KEY	Chaveta
KINGBOLT	Pino de engate
KNIFE	Faca, lâmina
KNOB	Maçaneta, botão
LADDER	Escada
LAMP	Lâmpada
LARGE	Grande
LATCH	Trinco, lingüeta
LEAD	Condutor, cabo
LEG	Perna
LENS	Lente
LEVEL	Nível
LEVER	Alavanca
L.H. = LEFT HAND	Lado esquerdo
LID	Placa, tampa
LIFT	Levantar
LIFT CYLINDER	Cilindro de levantamento
LIFTER	Tucho
LIFTING EYE	Olhal de levantamento
LIGHT GREEN	Verde claro
LIGHTING	Sistema de iluminação
LINE	Tubulação
LINER	Camisa
LINES & PUMP	Tubulação e bomba
LINES & VALVE	Tubulação e válvula
LINING	Revestimento, lona
LINK	Elo
LINKAGE	Articulação
LIP	Lábio, borda
LISTED	Relacionamento
LITERATURE	Literatura
LOCATED	Localizado

NOMENCLATURA DE PEÇAS INGLÊS-PORTUGUÊS

INGLÊS	PORTUGUÊS
LOCATOR	Localizador
LOCK	Trava
LOCKNUT	Contraporca
LOCKWASHER	Arruela de pressão
LOCKWIRE	Arame de trava
LONG	Longo
LOOM	Tubo isolador
LOW IDLE	Marcha lenta
LOUVER	Persiana
LOWER	Abaixar, inferior
LUBRICANT	Lubrificante
LUG	Ressalto, orelha
MACHINE SCREW	Parafuso de fenda
MAGNET	Imã magneto
MAIN	Principal
MAINTENANCE	Manutenção
MANIFOLD	Coletor
MARKED	Marcado (a)
MARKER	Marcador
MASTER PIN	Pino mestre
MAT	Capacho, esteira
METER	Medidor, contador
MINOR	Menor
MIRROR	Espelho
MISCELLANEOUS	Miscelânea
MODIFICATION	Modificação
MOLDBOARD	Armação da lâmina
MOTOR	Motor
MOULDING	Moldura
MOUNT	Montar
MOUNTED	Montado (a)
MOUNTING	Montagem
MUFFLER	Silenciador
NAMEPLATE	Plaqueta de identificação
N.C. (THREAD)	Rosca grossa
NEEDLE	Agulha
N.F. (THREAD)	Rosca fina
NIB	Ponta, bico
NIPPLE	Conexão
NONE	Nenhum (a)
NORMALIZING	Normalização
NOT PART OF	Não faz parte de
NOZZLE	Bocal, bico injetor
N/S = NOT SERVICED	Não vendável
NUMBER (No)	Número (No)
NUT	Porca
NUT-WING	Porca borboleta
NUT-CASTLE	Porca acastelada
NUT-WELD	Porca-soldada
NUT-CAP	Porca cega
NUT-HEX	Porca sextavada
NUT-LOCK	Contraporca
NUT-IMPERIAL	Porca imperial
NUT-JAM	Porca de trava, contraporca
NUT-LOW CROWN	Porca de meia coroa
NUT-RETAINING	Porca de retenção
NUT-SELF LOCK	Porca de autotravamento
NUT-SLOTTED	Porca fendada
NUT-SPANNER	Porca para chaves
O.D. = OUTSIDE DIAMETER	Diâmetro externo
O-RING	Anel "O"
OIL	Óleo
OILPAN	Cárter
OIL PUMP	Bomba de óleo
OIL SYSTEM	Sistema de lubrificação
OILER	Almotolia, lubrificador
ORANGE	Laranja
TO ORDER	Para pedir
ORIFICE	Orifício
OUTER	Externo
OUTER RACE	Anel externo
OUTPUT	Saída
OVERALL	Geral, total
OVERHAUL	Revisão
OVER SIZE	Sobremedida
PACKING	Embalagem, gaxeta
PAD	Coxim, calço
PADLOCK	Cadeado
PAINT	Pintura
PAN	Cárter
PANEL	Painel
PARKING BRAKE	Freio de estacionamento
PARTITION	Separacão
PARTS G	Grupo de peças
PARTS OF	Peça de
PARTS OF ALL ENGINE ARRANGEMENTS	Peças de todos os arranjos do motor exceto
PAWL	Garra
PEDAL	Pedal
PEDESTAL	Pedestal
PERFORMANCE	Desempenho
PILOT	Piloto
PIN	Pino
PIN & BUSHING	Pino e bucha
PIN-COTTER	Contrapino
PINCH BAR	Pé de cabra
PINION	Pinhão
PIPE	Tubo
PISTON	Pistão
PIVOT	Articulação, pivô
PLANETARY	Planetário
PLATE	Placa
PLATFORM	Plataforma
PLUG	Bujão
PLUNGER	Pistão, êmbolo

NOMENCLATURA DE PEÇAS INGLÊS-PORTUGUÊS

INGLÊS	PORTUGUÊS
POINT	Ponta, ponto
POINTER	Ponteiro
POLE & COIL	Polo e bobina
POLE	Polo, lança, vara
POPPET	Gatilho
POST	Poste, coluna
POTENTIOMETER	Potenciômetro
POWER TAKE OFF	Tomada de força
POWER TRAIN	Trem de força
PRE-SCREENER	Tela protetora
PRECHAMBER	Câmara de pré-combustão
PRECLEANER	Pré-purificador
PRECOMBUSTION	Pré-combustão
PRESS	Prensa
PRESS = PRESSURE	Pressão
PREVIOUS	Prévio, anterior
PRIMARY	Primário, principal
PROBE	Prova
PROJECTOR	Projeter
PROTECTION	Proteção
PROTECTOR	Proteter
PULLER	Extrator, sacador
PULLEY	Polia
PUMP	Bomba
PURPLE	Roxo
PUSHROD	Haste de empuxo
QTY = QUANTITY	Quantidade
RACE	Pista
RACE & ROLLER	Pista e rolete
RACK	Cremalheira
RADIATOR	Radiador
RAIL	Trilho, guia
RANGE TRANSM	Transmissão manual
RATCHET	Catraca
REAR	Traseiro (a)
REBORED	Escareado, alargado
REBUILD KIT	Jogo de recondicionamento
RECEPTACLE	Recipiente
RECTIFIER	Retificador
RED	Vermelho
REDUCER	Redutor
REFER	Referir
REGULATOR	Regulador
RELATED REPAIR ITEMS	Itens de reparos relacionados
RELAY	Relé
RELIEF VALVE	Válvula de alívio
REPAIR G	Grupo de reparo
REPAIR KIT	Jogo de reparo
REPAIR ITEMS	Itens de reparo
REPLACEMENT	Reposição, substituição
REQUIRED	Necessário
RESERVOIR A	Reservatôrio
RESIN	Resina
RESISTOR	Resistência
RETAINER	Fixador
RETARDER	Retardador
REVERSIBLE	Reversível
R.H. = RIGHT HAND	Lado direito
RIM	Aro
RIM & TIRE	Aro e pneu
RING	Anel
RIVET	Rebite
ROCKET	Balancim
ROD	Haste
ROD END	Extremidade da haste
ROLLER	Rolete
ROPE-STARTING	Partida à corda
ROTATOR	Girador
ROTOCHAMBER	Càmara pneumática
ROTOCOIL	Girador de válvula
ROTOR	Rotor
RUST INHIBITOR	Antioxidante
SADDLE	Sela, assento
SAFETY	Segurança
SAFETY TREAD	Tiras antiderrapante
SCRAPER	Tampa
SCREEN	Tela
SCREW	Parafuso
SCREW-HEX HD	Parafuso de cabeça hexagonal
SCREW-KIT	Jogos de parafuso
SCREW-MACHINE	Parafuso de fenda
SCREW-ROUND HD	Parafuso de cabeça redonda
SCREW-FLANGED	Parafuso com flange
SCREW-LOCKING	Parafuso de trava
SCREW-THUMB	Parafuso de orelhas
SCREWDRIVER	Chave de fenda
SEAL	Retentor
SEALED UNIT	Unidade vedada
SEALER	Vedador isolante
SEAT	Assento
SECONDARY	Secundário
SECTION	Seção
SEGMENT	Segmento
SENDER	Emissor
SENSOR	Sensor
SEPARATE	Separar, separado
SEPARATOR	Separador
SERIAL NUMBER PLATE	Placa de número de série
SERVICE	Serviço, manutenção
SERVICE KIT	Jogo de manutenção
SERVICE METER	Horômetro
SETSCREW	Parafuso de fixação
SHACKLE	Grilheto, anel, manilha
SHAFT	Eixo

NOMENCLATURA DE PEÇAS INGLÊS-PORTUGUÊS

INGLÊS	PORTUGUÊS
SHANK	Porta-ponta do escarificador
SHEAVE	Polia, roldana
SHEET	Folha, lâmina
SHELL	Invólucro, cápsula, casquilho
SHIELD	Blindagem, protetor
SHIFT	Mudança
SHIM	Calço
SHIPPING	Embarque
SHOCK ABSORBER	Amortecedor de choques
SHOCKMOUNT	Montagem a prova de choques
SHOE	Sapata
SHORT	Curto
SHOWN	Ilustrado, mostrado
SHROUD	Tampa de proteção
SHUNT	Derivação
SHUT OFF	Desligar, parada
SHUTTLE	Pistão de vaivém
SIDE	Lateral
SIDE VIEW	Vista lateral
SILICONE	Silicone
SINK	Absorvente de calor
SKIVING	Desbaste
SLACK ADJUSTER	Adjustador de folga
SLEEVE	Luva, manga, camisa
SLIDER	Cursor, deslizador
SLIDE RAIL	Trilho deslizante
SLING	Cabos, amarras, linga
SLINGER	Defletor
SLUG	Pistão de reação, pistãozinho
SMALL	Pequeno
SNAP RING	Anel de retenção, anel de pressão
SNUBBER	Amortecedor
SOCKET	Soquete, tomada
SOLENOID	Solenóide
SPACER	Espaçador
SPARE	Sobressalente
SPARK PLUG	Vela de ignição
SPECIAL	Especial
SPEEDOMETER	Velocimetro
SPIDER	Cruzeta
SPINDLE	Ponta de eixo
SPLINE	Estria
SPOOL	Carretel
SPOUT	Calha, tubo
SPRING	Mola
SPROCKET	Roda motriz, roda dentada
STABILIZER	Estabilizador
STACK	Chaminé, cano de escapamento
STAND	Suporte, cavalete
STANDPIPE	Suporte vertical de sucção
STAPLE	Grampo
STARTER	Arranque motor de partida
STATOR	Estator
STEERING	Direção
STEM	Haste
STEP	Degrau
STICK	Vareta
STOP	Parar
STORAGE	Armazenagem
STRAINER	Tela filtrante
STRAP	Tira, cinta, suporte de fixação
STREET ELL	Conexão cotovelo
STRIP	Tira, fita, listra
STROKE	Curso do pistão
STUD	Prisioneiro
SUMP	Tanque, reservatório
SUPPLY VALVE	Válvula de suprimento
SUPPORT	Suporte
SUSPENSION	Suspensão
SWITCH	Interruptor
SWIVEL	Articulação giratória
TAB	Tira, aba, lingüeta
TABLE	Mesa
TACHOGRAPH	Tacógrafo
TACHOMETER	Tacômetro
TAG	Etiqueta
TAIL LAMP	Farol traseiro
TAN	Castanho
TANG	Lingüeta
TANK	Tanque
TAP	Macho
TAPE	Fita
TAPPET	Tucho
TEE	Conexão em "T"
TEMP. = TEMPERATURE	Temperatura
TERMINAL	Terminal
TEST UNIT	Unidade de teste
TESTER	Aparelho de teste
THERMISTOR	Termistor
THERMOCOUPLE	Termopar
THERMOMETER	Termômetro
THERMOSTAT	Termostato
THERMOSWITCH	Interruptor térmico
THICK	Grosso (a) espesso (a)
TIE	Ligação, tirante
THREAD (OF NUT)	Rosca (de porca)
THROTTLE	Acelerador de
THROWER	Defletor
THRU = THROUGH	Através de
TIGHTENER	Tensor
TILT CYLINDER	Cilindro de inclinação
TIMING	Sincronização, Distribuição

NOMENCLATURA DE PEÇAS INGLÊS-PORTUGUÊS

INGLÊS	PORTUGUÊS
TIP	Ponta
TIRE	Pneu
TIRE & RIM	Pneu e aro
TONGUE	Língua, lingueta
TOOL	Ferramenta
TOOLCABINET	Armário para ferramenta
TOOTH/TEETH	Dente/dentes
TOP	Topo, parte superior
TORQUE	Torque
TORQ. CONV.	Conversor de torque
TORQ. DIVIDER	Divisor de torque
TOWER	Torre
TRACK	Esteira
TRACK PIN	Pino de esteira
TRACTOR	Trator
TRAILING UNIT	Unidade rebocada
TRANSFER	Decalcomania
TRANSFORMER	Transformador
TRANSISTOR	Transistor
TRANSMISSION	Transmissão
TRANSMISSION OVERHAUL	Revisão da transmissão
TREAD	Piso, banda de rodagem
TREADLE	Pedal
TROLLY	Carrinho
TRUCK	Caminhão
TRUNNION	Munhão
TUBE	Tubo, cano
TUBING	Tubulagem canalização
TURBINE	Turbina
TURBOCHARGER	Turboalimentador
U-BOLT	Parafuso em "U"
U-JOINT	Junta universal
UNDERSIZE	Submedida
UNION	União
UPPER	Superior
USE AS REQUIRED	Usar conforme necessitar
VALUE	Valor
VALVE	Válvula
VALVE GRINDING	Retificação das válvulas
VEE BELT	Correia "V"
VEE BELT SET	Jogo de correia em "V"
VENT	Respiro
VIEW	Vista
VISE	Morsa, torno
VISOR	Pára-sol
WALKWAY	Passadiço, corredor
WARNING G.	Grupo de alarma
WASHER	Arruela
WATER PUMP	Bomba d'água
WEARPLATE	Placa de desgaste
WEDGE	Cunha
WEIGHT	Peso
WELD	Solda
WELDNUT	Porca soldada
WHEEL	Roda
WHITE	Branco
WICK	Mecha, pavio
WINCH	Guincho
WINDOW	Janela
WINDSHIELD	Pára-brisa
WIPER	Limpador
WIRE	Fio
WIRING	Sistema elétrico
WIRING DIAGRAM	Diagrama do sistema elétrico
WITH	Com
WRAPPER	Invólucro, envoltório
WRENCH	Chave
YELLOW	Amarelo
YOKE	Garfo

MAINTENANCE PARTS

DESCRIPTION	PART NUMBER	QTY	WHERE USED	PAGE
AIR INLET AND EXHAUST SYSTEM				
FILTER ELEMENT AS-AIR (PRIMARY)	6I-2501	1	AIR CLEANER GP	117
FILTER ELEMENT AS-AIR (SECONDARY)	6I-2502	1	AIR CLEANER GP	117
BASIC ENGINE				
BELT (ALTERNATOR)	241-4981	1	PULLEY GP-FAN & ALT DRIVE	65
BREATHER AS (CRANKCASE)	204-4444	1	COVER GP-VALVE MECHANISM	22
	240-0041	1	COVER GP-CYLINDER BLOCK	18
ELEMENT (BREATHER) (CRANKCASE)	185-3159	1	COVER GP-VALVE MECHANISM	22
V-BELT (COMPRESSOR)	1N-4556	1	DRIVE GP-FAN	40
V-BELT (ENGINE)	206-7870	1	PULLEY GP-FAN & ALT DRIVE	63
V-BELT SET (INCLUDES 2-BELTS) (ENGINE)	130-3216	1	PULLEY GP-FAN & ALT DRIVE	63
V-BELT SET (INCLUDES 2-BELTS) (FAN DRIVE)	6L-1987	1	DRIVE GP-FAN	40
V-BELT SET (INCLUDES 3-BELTS) (FAN)	4P-8087	1	PULLEY GP-FAN & ALT DRIVE	65
COOLING SYSTEM				
CAP AS-RADIATOR	031-1119	1	TANK GP-COOLANT	112
		1	TANK GP-COOLANT	113
GASKET (WATER REGULATOR HOUSING)	191-4457	1	LINES GP-WATER	100
HOSE-RADIATOR	187-3961	1	LINES GP-WATER	101
REGULATOR-WATER TEMPERATURE (92-DEG C) (COOLANT)	248-5513	1	LINES GP-WATER	100
SEAL-LIP TYPE (WATER TEMPERATURE REGULATOR)	3S-9643	1	LINES GP-WATER	100

MAINTENANCE PARTS

DESCRIPTION	PART NUMBER	QTY	WHERE USED	PAGE
ELECTRICAL AND STARTING SYSTEM				
BATTERY (12-VOLT, MAINTENANCE FREE)	153-5710	2	BATTERY GP	170
BATTERY (12-VOLT, WET)	115-2422	2	BATTERY & WIRING GP	167
BELT (ALTERNATOR, WATER PUMP)	241-4982	1	ALTERNATOR GP-CHARGING	160
CAP-RAIN	164-5798	1	ALTERNATOR GP-CHARGING	162
CIRCUIT BREAKER AS (15-AMPERE) (FAN BLOWER MOTOR)	6T-3643	1	PANEL GP-FUSE	202
ELEMENT AS-JACKET WATER HEATER (120-VOLT, 1500-WATT)	9G-6655	1	HEATER GP-JACKET WATER	176
FUSE (10-AMPERE)	9W-1442	2	PANEL GP-FUSE	202
FUSE (15-AMPERE)	9W-1441	20	PANEL GP-FUSE	202
FUSE (175-AMPERE)	239-8107	1	PANEL GP-FUSE	202
		1	WIRING GP-PLATFORM	249
FUSE (20-AMPERE)	9W-1446	2	PANEL GP-FUSE	202
KEY AS-ELECTRONIC (SECURITY) (GRAY)	206-5165	2	INSTALLATION GP-SECURITY	183
KEY AS-ELECTRONIC (SECURITY) (YELLOW)	206-5162	2	INSTALLATION GP-SECURITY	183
LAMP AS-INDICATOR (ACTION LIGHT)	170-3461	1	WIRING GP-PLATFORM	248
LAMP-HALOGEN (24-VOLT, 65-WATT)	9X-3463	1	LAMP GP-FLOOD	187
LAMP-HALOGEN (24-VOLT, 65-WATT) (FLOOD)	9X-3463	1	LAMP GP-FLOOD	186
LAMP-HALOGEN (24-VOLT, 65-WATT) (FLOODLIGHT)	9X-3463	1	LAMP GP-FLOOD	188
LAMP-LED (24-VOLT, RED) (MACHINE SECURITY SYSTEM)	242-3282	1	INSTALLATION GP-SECURITY	183
LAMP (24-VOLT)	7N-1996	1	WIRING GP-PLATFORM	248
	7N-9943	1	LAMP GP-DOME	185
LAMP (24-VOLT, 3-WATT)	115-1748	1	WIRING GP-GRADE CONTROL	243
LENS AS	158-0248	1	LAMP GP-FLOOD	187
LENS AS (FLOOD)	158-0248	1	LAMP GP-FLOOD	186
FRAME AND BODY				
PADLOCK GP (BATTERY BOX)	246-2641	2	BOX GP-BATTERY	328
PADLOCK GP (ENGINE ENCLOSURE)	246-2641	2	ENCLOSURE GP-ENGINE	334
PADLOCK GP (HYDRAULIC TANK ENCLOSURE)	246-2641	2	ENCLOSURE GP-HYDRAULIC TANK	341
PADLOCK GP (RADIATOR GUARD)	246-2641	1	GUARD GP-RADIATOR	359
PLUG (DRAIN) (TRANSMISSION CASE)	106-8187	1	CASE & FRAME GP	331
FUEL SYSTEM				
CAP AS-FILLER (FUEL TANK)	7X-7700	1	TANK GP-FUEL	154
FILTER AS-FUEL (HIGH EFFICIENCY)	1R-0762	1	FILTER & LINES GP-FUEL	139
FILTER AS-WATER SEP & FUEL (PRIMARY)	1R-0770	1	FILTER GP-WATER SEP & FUEL	141
PADLOCK GP (FUEL CAP)	246-2641	1	TANK GP-FUEL	154
SEAL	220-8678	1	FILTER GP-WATER SEP & FUEL	141
STRAINER-FUEL	9P-7121	1	TANK GP-FUEL	154

MAINTENANCE PARTS

DESCRIPTION	PART NUMBER	QTY	WHERE USED	PAGE
HYDRAULIC SYSTEM				
CAP-FILLER (HYDRAULIC TANK)	7H-1447	1	TANK GP-HYDRAULIC	504
FILTER ELEMENT AS-OIL (ADVANCED EFFICIENCY)	1R-0777	2	TANK GP-HYDRAULIC	504
FILTER ELEMENT AS-OIL (FIRE RESISTANT FLUID)	104-6931	2	TANK GP-HYDRAULIC	504
FILTER ELEMENT AS-OIL (STANDARD EFFICIENCY) (STANDARD)	1R-0735	2	TANK GP-HYDRAULIC	504
FILTER ELEMENT AS-OIL (ULTRA HIGH EFFICIENCY)	139-1537	2	TANK GP-HYDRAULIC	504
LAMP-LED (24-VOLT, GREEN)	126-0810	1	LINES GP-PILOT	473
PADLOCK GP (HYDRAULIC TANK FILL)	246-2641	1	TANK & MTG GP-HYDRAULIC	503
PLUG-DRAIN (HYDRAULIC TANK)	9J-7031	1	TANK GP-HYDRAULIC	504
SCREEN AS (HYDRAULIC TANK)	3G-3267	2	TANK GP-HYDRAULIC	504
SEAL-O-RING	6V-5324	1	VALVE GP-SHUTTLE	547
STRAINER AS (HYDRAULIC TANK FILL)	5D-7927	1	TANK GP-HYDRAULIC	504
LUBRICATION SYSTEM				
CAP AS-FILLER (ENGINE)	6N-2985	1	FILLER GP-ENGINE OIL	76
FILTER AS-ENGINE OIL (ADVANCED EFFICIENCY)	1R-1808	1	FILTER GP-ENGINE OIL	77
HOSE-FUMES DISP (CRANKCASE)	246-0604	1	FUMES DISPOSAL GP	81
OPERATOR STATION				
ACCUMULATOR GP-REFRIGERANT	186-6189	1	LINES GP-AIR CONDITIONER	640
		1	LINES GP-AIR CONDITIONER	643
BLADE AS-WIPER (DOOR, RH, LH)	6V-5849	2	WIPER GP-WINDOW	716
BLADE AS-WIPER (FRONT, REAR)	6V-5851	2	WIPER GP-WINDOW	716
CAP-VENTED (WINDOW WASHER TANK)	8E-8292	1	TANK GP-WINDOW WASHER	695
FILTER-AIR (FRESH AIR)	6T-0988	1	PRESSURIZER GP-CAB	671
FILTER AS (AIR RECIRCULATION)	6T-5068	1	PRESSURIZER GP-CAB	671
LAMP (24-VOLT)	123-9294	4	INSTRUMENT GP-CAB	628
		4	INSTRUMENT GP-CAB	631
LAMP (24-VOLT, 3-WATT)	115-1748	1	INSTRUMENT GP-CAB	628
		1	INSTRUMENT GP-CAB	631
PADLOCK GP (LITERATURE COMPARTMENT)	246-2641	1	CANOPY AR-OPEN ROPS	607
RECEIVER-DRYER GP (AIR CONDITIONER)	175-7162	1	LINES GP-AIR CONDITIONER	640
		1	LINES GP-AIR CONDITIONER	643
SEAT BELT GP	222-0345	1	SEAT GP	681
V-BELT (REFRIGERANT COMPRESSOR)	216-0349	1	COMPRESSOR GP-REFRIGERANT	609

MAINTENANCE PARTS

DESCRIPTION	PART NUMBER	QTY	WHERE USED	PAGE
POWER TRAIN				
BREATHER AS (TRANSMISSION)	9G-5127	1	LINES GP-POWER TRAIN OIL	283
FILTER ELEMENT AS-OIL (ULTRA HIGH EFFICIENCY)	1R-1809	1	FILTER GP-OIL	275
FILTER GP-OIL (POWER TRAIN)	235-5812	1	LINES GP-POWER TRAIN OIL	283
PLUG-DRAIN (POWER TRAIN)	4B-7739	1	DRAIN GP-ECOLOGY	273
PLUG-DRAIN (TRANSMISSION OIL COOLER)	8M-9307	1	COOLER GP-TRANSMISSION OIL	268
PLUG-MAGNETIC (FINAL DRIVE, OIL FILL)	6V-0439	1	FINAL DRIVE GP	276
		1	FINAL DRIVE GP	278
SCREEN AS (TORQUE CONVERTER SCAVENGE)	3T-6471	1	LINES GP-POWER TRAIN OIL	283
SCREEN GP-MAGNETIC (TRANSMISSION)	4S-8603	1	SCREEN GP-MAGNETIC	303
	231-4166	1	LINES GP-POWER TRAIN OIL	283
SCREEN-SUCTION (TORQUE CONVERTER SCAVENGE)	8S-9130	1	CASE & PARTS GP-PLANETARY	263
SCREEN-SUCTION (TRANSMISSION)	4S-8598	1	SCREEN GP-MAGNETIC	303
WORK TOOLS				
LAMP (24-VOLT)	138-2434	1	CONTROL GP-WINCH	578

PIÈCES DE RECHANGE

DESCRIPTION	NUMÉRO DE PIECÈS	QTÉ	DOMAINE D'APPLICATION	PAGE
CHÂSSIS ET BENNE				
BOUCHON FILETÉ (VIDANGE) (CARTER DE BOITE DE VITESSES)	106-8187	1	CHÂSSIS ET CARTER (ASS)	331
CADENAS (ASS) (CARENAGE DE MOTEUR)	246-2641	2	CARENAGE DE MOTEUR (ASS)	334
CADENAS (ASS) (CARÉNAGE DE RÉSERVOIR HYDRAULIQUE)	246-2641	2	CARENAGE - RESERVOIR HYDRAULIQUE (ASS)	341
CADENAS (ASS) (COMPARTIMENT DE BATTERIE)	246-2641	2	COMPARTIMENT DE BATTERIE (ASS)	328
CADENAS (ASS) (PROTÈGE-RADIATEUR)	246-2641	1	PROTÈGE-RADIATEUR (ASS)	359
CIRCUIT D'ADMISSION D'AIR ET D'ECHAPPEMENT				
ÉLÉMENT DE FILTRE À AIR (ENS) (PRINCIPAL)	6I-2501	1	FILTRE A AIR (ASS)	117
ÉLÉMENT DE FILTRE À AIR (ENS) (SECONDAIRE)	6I-2502	1	FILTRE A AIR (ASS)	117
CIRCUIT DE CARBURANT				
BOUCHON DE GOULOTTE DE REMPLISSAGE (ENS) (RÉSERVOIR DE CARBURANT)	7X-7700	1	RÉSERVOIR DE CARBURANT (ASS)	154
BOURRELET D'ÉTANCHÉITÉ	220-8678	1	FILTRE DE SÉPARATEUR D'EAU ET DE CARBURANT (ASS)	141
CADENAS (ASS) (BOUCHON DE CARBURANT)	246-2641	1	RÉSERVOIR DE CARBURANT (ASS)	154
FILTRE - SÉPARATEUR D'EAU ET DE CARBURANT (ENS) (PRINCIPAL)	1R-0770	1	FILTRE DE SÉPARATEUR D'EAU ET DE CARBURANT (ASS)	141
FILTRE À CARBURANT	9P-7121	1	RÉSERVOIR DE CARBURANT (ASS)	154
FILTRE A CARBURANT (ENS) (GRANDE EFFICACITÉ)	1R-0762	1	FILTRE ET CANALISATIONS DE CARBURANT (ASS)	139

* TRADUCTION NON DISPONIBLE AU MOMENT DE LA PUBLICATION

PIÈCES DE RECHANGE

DESCRIPTION	NUMÉRO DE PIECÈS	QTÉ	DOMAINE D'APPLICATION	PAGE
CIRCUIT DE DÉMARRAGE ET ÉLECTRIQUE				
AMPOULE (24 VOLTS)	7N-1996	1	CABLAGE - PLATE-FORME (ASS)	248
	7N-9943	1	PLAFONNIER (ASS)	185
AMPOULE (24V, 3W)	115-1748	1	AVERTISSEMENT DE PROFIL LONGITUDINAL (ASS)	243
BATTERIE (12V, HUMIDE)	115-2422	2	BATTERIE ET CÂBLAGE	167
BATTERIE (12V, SANS ENTRETIEN)	153-5710	2	BATTERIE (ASS)	170
BOUCHON CONTRE LA PLUIE	164-5798	1	ALTERNATEUR DE CHARGE (ASS)	162
CLÉ ÉLECTRONIQUE (ENS) (SÉCURITÉ) (GRIS)	206-5165	2	MONTAGE-SÉCURITÉ (ASS)	183
CLÉ ÉLECTRONIQUE (ENS) (SÉCURITÉ) (JAUNE)	206-5162	2	MONTAGE-SÉCURITÉ (ASS)	183
COURROIE (ALTERNATEUR, POMPE À EAU)	241-4982	1	ALTERNATEUR DE CHARGE (ASS)	160
DIODE (24-VOLTS, ROUGE) (SYSTÈME DE SÉCURITÉ DE LA MACHINE)	242-3282	1	MONTAGE-SÉCURITÉ (ASS)	183
DISJONCTEUR (ENS) (15A) (MOTEUR DE SOUFFLANTE DE VENTILATEUR)	6T-3643	1	PANNEAU - FUSIBLES (ASS)	202
ÉLÉMENT DU RÉCHAUFFEUR D'EAU DES CHEMISES (ENS) (120V, 1500W)	9G-6655	1	EAU DES CHEMISES - RECHAUFFEUR (ASS)	176
FUSIBLE (10A)	9W-1442	2	PANNEAU - FUSIBLES (ASS)	202
FUSIBLE (15A)	9W-1441	20	PANNEAU - FUSIBLES (ASS)	202
FUSIBLE (175A)	239-8107	1	CABLAGE - PLATE-FORME (ASS)	249
		1	PANNEAU - FUSIBLES (ASS)	202
FUSIBLE (20A)	9W-1446	2	PANNEAU - FUSIBLES (ASS)	202
LAMPE DE TÉMOIN (ENS) (TÉMOIN D'ACTIONNEMENT)	170-3461	1	CABLAGE - PLATE-FORME (ASS)	248
LAMPE HALOGÈNE (*24-VOLT, 65-WATT) (PROJECTEUR)	9X-3463	1	LAMPE - PHARE (ASS)	186
LAMPE HALOGÈNE (24V, 65W)	9X-3463	1	LAMPE - PHARE (ASS)	187
LAMPE HALOGÈNE (24V, 65W) (PROJECTEUR)	9X-3463	1	LAMPE - PHARE (ASS)	188
LENTILLE (ENS)	158-0248	1	LAMPE - PHARE (ASS)	187
LENTILLE (ENS) (PROJECTEUR)	158-0248	1	LAMPE - PHARE (ASS)	186
CIRCUIT DE GRAISSAGE				
BOUCHON DE GOULOTTE DE REMPLISSAGE (ENS) (MOTEUR)	6N-2985	1	BOUCHON DE REMPLISSAGE D'HUILE MOTEUR (ASS)	76
FILTRE A HUILE MOTEUR (ENS) (*ADVANCED EFFICIENCY)	1R-1808	1	FILTRE À HUILE MOTEUR (ASS)	77
FLEXIBLE D'ÉVACUATION DES VAPEURS (CARTER)	246-0604	1	DISPOSITIF D'EVACUATION DES VAPEURS DE CARTER	81

* TRADUCTION NON DISPONIBLE AU MOMENT DE LA PUBLICATION

PIÈCES DE RECHANGE

DESCRIPTION	NUMÉRO DE PIECÈS	QTÉ	DOMAINE D'APPLICATION	PAGE
CIRCUIT DE REFROIDISSEMENT				
BOUCHON DE RADIATEUR (ENS)	031-1119	1	RÉSERVOIR DU LIQUIDE DE REFROIDISSEMENT (ASS)	112
		1	RÉSERVOIR DU LIQUIDE DE REFROIDISSEMENT (ASS)	113
FLEXIBLE DE RADIATEUR	187-3961	1	CANALISATIONS D'EAU (ASS)	101
JOINT PLAT (BOÎTIER DE RÉGULATEUR D'EAU)	191-4457	1	CANALISATIONS D'EAU (ASS)	100
THERMOSTAT-TEMPÉRATURE D'EAU (92-DEG C) (LIQUIDE DE REFROIDISSEMENT)	248-5513	1	CANALISATIONS D'EAU (ASS)	100
TYPE LÈVRE À JOINT (RÉGULATEUR DE TEMPÉRATURE D'EAU)	3S-9643	1	CANALISATIONS D'EAU (ASS)	100
CIRCUIT HYDRAULIQUE				
BOUCHON DE GOULOTTE DE REMPLISSAGE (RÉSERVOIR HYDRAULIQUE)	7H-1447	1	RÉSERVOIR HYDRAULIQUE (ASS)	504
BOUCHON DE VIDANGE (RÉSERVOIR HYDRAULIQUE)	9J-7031	1	RÉSERVOIR HYDRAULIQUE (ASS)	504
CADENAS (ASS) (REMPLISSAGE DE RÉSERVOIR HYDRAULIQUE)	246-2641	1	RÉSERVOIR HYDRAULIQUE ET MONTAGE (ASS)	503
CREPINE (ENS) (REMPLISSAGE DE RÉSERVOIR HYDRAULIQUE)	5D-7927	1	RÉSERVOIR HYDRAULIQUE (ASS)	504
DIODE (24-VOLTS, VERT)	126-0810	1	CANALISATIONS A COMMANDE PILOTE (ASS)	473
ÉCRAN (ENS) (RÉSERVOIR HYDRAULIQUE)	3G-3267	2	RÉSERVOIR HYDRAULIQUE (ASS)	504
ÉLÉMENT DE FILTRE À HUILE (ENS) (EFFICACITÉ AMÉLIORÉE)	1R-0777	2	RÉSERVOIR HYDRAULIQUE (ASS)	504
ÉLÉMENT DE FILTRE À HUILE (ENS) (EFFICACITÉ STANDARD) (STANDARD)	1R-0735	2	RÉSERVOIR HYDRAULIQUE (ASS)	504
ÉLÉMENT DE FILTRE À HUILE (ENS) (LIQUIDE RÉSISTANT AU FEU)	104-6931	2	RÉSERVOIR HYDRAULIQUE (ASS)	504
ÉLÉMENT DE FILTRE À HUILE (ENS) (TRÈS GRANDE EFFICACITÉ)	139-1537	2	RÉSERVOIR HYDRAULIQUE (ASS)	504
JOINT TORIQUE	6V-5324	1	VANNE PILOTE (ASS)	547

* TRADUCTION NON DISPONIBLE AU MOMENT DE LA PUBLICATION

PIÈCES DE RECHANGE

DESCRIPTION	NUMÉRO DE PIECÈS	QTÉ	DOMAINE D'APPLICATION	PAGE
MOTEUR STANDARD				
COURROIE (ALTERNATEUR)	241-4981	1	POULIE - ENTRAÎNEMENT D'ALTERNA. ET DE VENTI.	65
COURROIE TRAPEZOIDALE (COMPRESSEUR)	1N-4556	1	ENTRAÎNEMENT DE VENTILATEUR (ASS)	40
COURROIE TRAPEZOIDALE (MOTEUR)	206-7870	1	POULIE - ENTRAÎNEMENT D'ALTERNA. ET DE VENTI.	63
ÉLÉMENT (RENIFLARD) (CARTER)	185-3159	1	CACHE-SOUPAPES (ASS)	22
JEU DE COURROIES TRAPEZOIDALES (COMPREND 2 COURROIES) (ENTRAÎNEMENT DE VENTILATEUR)	6L-1987	1	ENTRAÎNEMENT DE VENTILATEUR (ASS)	40
JEU DE COURROIES TRAPEZOIDALES (COMPREND 2 COURROIES) (MOTEUR)	130-3216	1	POULIE - ENTRAÎNEMENT D'ALTERNA. ET DE VENTI.	63
JEU DE COURROIES TRAPEZOIDALES (COMPREND 3 COURROIES) (VENTILATEUR)	4P-8087	1	POULIE - ENTRAÎNEMENT D'ALTERNA. ET DE VENTI.	65
RENIFLARD (ENS) (VILEBREQUIN)	204-4444	1	CACHE-SOUPAPES (ASS)	22
	240-0041	1	BLOC-CYLINDRES - COUVERCLE (ASS)	18
OUTILS DE TRAVAIL				
AMPOULE (24 VOLTS)	138-2434	1	COMMANDE DE TREUIL (ASS)	578
POSTE DE CONDUITE				
ACCUMULATEUR - CLIMATISEUR (ASS)	186-6189	1	CANALISATIONS DE CLIMATISEUR (ASS)	640
		1	CANALISATIONS DE CLIMATISEUR (ASS)	643
AMPOULE (24 VOLTS)	123-9294	4	INSTRUMENTS DE LA CABINE (ASS)	628
		4	INSTRUMENTS DE LA CABINE (ASS)	631
AMPOULE (24V, 3W)	115-1748	1	INSTRUMENTS DE LA CABINE (ASS)	628
		1	INSTRUMENTS DE LA CABINE (ASS)	631
BALAI D'ESSUIE-GLACE (ENS) (AVANT, ARRIÈRE)	6V-5851	2	ESSUIE-GLACE (ASS)	716
BALAI D'ESSUIE-GLACE (ENS) (PORTE, DROITE, GAUCHE)	6V-5849	2	ESSUIE-GLACE (ASS)	716
BOUCHON À ÉVENT (RÉSERVOIR DE LAVE-GLACE DE VITRE)	8E-8292	1	RÉSERVOIR - LAVE-GLACE (ASS)	695
CADENAS (ASS) (COMPARTIMENT POUR LA DOCUMENTATION)	246-2641	1	VERSION DE TOIT - ROPS OUVERT	607
CEINTURE DE SECURITE (ASS)	222-0345	1	SIÈGE (ASS)	681
COURROIE TRAPEZOIDALE (COMPRESSEUR DE RÉFRIGÉRANT)	216-0349	1	COMPRESSEUR DE REFRIGERANT (ASS)	609
FILTRE À AIR (AIR FRAIS)	6T-0988	1	SURPRESSEUR (ASS)	671
FILTRE (ENS) (RECIRCULATION D'AIR)	6T-5068	1	SURPRESSEUR (ASS)	671
RÉCEPTEUR-DÉSHYDRATEUR (ASS) (CLIMATISEUR)	175-7162	1	CANALISATIONS DE CLIMATISEUR (ASS)	640
		1	CANALISATIONS DE CLIMATISEUR (ASS)	643

* TRADUCTION NON DISPONIBLE AU MOMENT DE LA PUBLICATION

PIÈCES DE RECHANGE

DESCRIPTION	NUMÉRO DE PIECÈS	QTÉ	DOMAINE D'APPLICATION	PAGE
TRANSMISSION				
BOUCHON AIMANTÉ (RÉDUCTEUR, REMPLISSAGE D'HUILE)	6V-0439	1	RÉDUCTEURS (ASS)	276
		1	RÉDUCTEURS (ASS)	278
BOUCHON DE VIDANGE (REFROIDISSEUR D'HUILE DE BOÎTE)	8M-9307	1	REFROIDISSEUR D'HUILE DE BOÎTE (ASS)	268
BOUCHON DE VIDANGE (TRANSMISSION)	4B-7739	1	VIDANGE-ÉCOLOGIE (ASS)	273
ÉCRAN (ENS) (GAVAGE DU CONVERTISSEUR DE COUPLE)	3T-6471	1	CANALISATIONS D'HUILE DE TRANSMISSION (ASS)	283
ÉCRAN MAGNÉTIQUE (ASS) (BOîTE DE VITESSES)	4S-8603	1	ÉCRAN MAGNÉTIQUE (ASS)	303
	231-4166	1	CANALISATIONS D'HUILE DE TRANSMISSION (ASS)	283
ÉLÉMENT DE FILTRE À HUILE (ENS) (TRÈS GRANDE EFFICACITÉ)	1R-1809	1	FILTRE A HUILE (ASS)	275
FILTRE A HUILE (ASS) (TRANSMISSION)	235-5812	1	CANALISATIONS D'HUILE DE TRANSMISSION (ASS)	283
RENIFLARD (ENS) (BOîTE DE VITESSES)	9G-5127	1	CANALISATIONS D'HUILE DE TRANSMISSION (ASS)	283
TAMIS D'ASPIRATION (BOîTE DE VITESSES)	4S-8598	1	ÉCRAN MAGNÉTIQUE (ASS)	303
TAMIS D'ASPIRATION (GAVAGE DU CONVERTISSEUR DE COUPLE)	8S-9130	1	TRAINS PLANÉTAIRES - CARTER ET PIÈCES	263

* TRADUCTION NON DISPONIBLE AU MOMENT DE LA PUBLICATION

PIEZAS DE MANTENIMIENTO

DESCRIPCION	NUMERO DE PIEZA	CANT	SE UTILIZA EN	PAGINA
BASTIDOR Y CAJA				
CANDADO (GR) (COMPARTIMENTO DE BATERIA)	246-2641	2	CAJA DE BATERÍA	328
CANDADO (GR) (*HYDRAULIC TANK ENCLOSURE)	246-2641	2	COMPARTIMIENTO DEL TANQUE HIDRÁULICO (GR)	341
CANDADO (GR) (PROTECTOR DE RADIADOR)	246-2641	1	PROTECTOR DEL RADIADOR (GR)	359
CANDADO (GR) (RECINTO DE MOTOR)	246-2641	2	COMPARTIMIENTO DEL MOTOR (GR)	334
TAPÓN (DRENAJE) (CAJA DE TRANSMISION)	106-8187	1	CAJA Y BASTIDOR (GR)	331
CABINA DEL OPERADOR				
ACUMULADOR DEL ACONDICIONADOR DE AIRE (GR)	186-6189	1	TUBERÍAS DE ACONDICIONADOR DE AIRE (GR)	640
		1	TUBERÍAS DE ACONDICIONADOR DE AIRE (GR)	643
CANDADO (GR) (COMPARTIMENTO PARA LA LITERATURA)	246-2641	1	TECHO ROPS ABIERTO (CONFIG)	607
CINTURÓN DE SEGURIDAD (GR)	222-0345	1	ASIENTO (GR)	681
CORREA TRAPEZOIDAL (COMPRESOR DEL REFRIGERANTE)	216-0349	1	COMPRESOR DE REFRIGERANTE (GR)	609
FILTRO (CONJ) (*AIR RECIRCULATION)	6T-5068	1	PRESURIZADOR (GR)	671
FILTRO DE AIRE (AIRE FRESCO)	6T-0988	1	PRESURIZADOR (GR)	671
HOJA DE LIMPIAPARABRISAS (CONJ) (DELANTERO, TRASERO)	6V-5851	2	LIMPIAPARABRISAS DE LA VENTANA (GR)	716
HOJA DE LIMPIAPARABRISAS (CONJ) (PUERTA, MANO DERECHA , MANO IZQUIERDA)	6V-5849	2	LIMPIAPARABRISAS DE LA VENTANA (GR)	716
LÁMPARA (24 VOLTIOS)	123-9294	4	INSTRUMENTOS DE CABINA (GR)	628
		4	INSTRUMENTOS DE CABINA (GR)	631
LÁMPARA (24-VOLTIOS, 3-VATIOS)	115-1748	1	INSTRUMENTOS DE CABINA (GR)	628
		1	INSTRUMENTOS DE CABINA (GR)	631
RECEPTOR-SECADOR (GR) (ACONDICIONADOR DE AIRE)	175-7162	1	TUBERÍAS DE ACONDICIONADOR DE AIRE (GR)	640
		1	TUBERÍAS DE ACONDICIONADOR DE AIRE (GR)	643
TAPA CON RESPIRADERO (TANQUE DE LIMPIPARABRISA)	8E-8292	1	TANQUE DEL LAVAPARABRISAS (GR)	695
HERRAMIENTAS				
LÁMPARA (24 VOLTIOS)	138-2434	1	CONTROL DEL MALACATE (GR)	578

* NO HAY TRADUCCION DISPONIBLE EN EL MOMENTO DE LA IMPRESION

PIEZAS DE MANTENIMIENTO

DESCRIPCION	NUMERO DE PIEZA	CANT	SE UTILIZA EN	PAGINA
MOTOR BÁSICO				
CORREA (ALTERNADOR)	241-4981	1	POLEA DE MANDO DEL ALTERNADOR Y VENTILADOR (GR)	65
CORREA TRAPEZOIDAL (COMPRESOR)	1N-4556	1	IMPULSOR DE VENTILADOR (GR)	40
CORREA TRAPEZOIDAL (MOTOR)	206-7870	1	POLEA DE MANDO DEL ALTERNADOR Y VENTILADOR (GR)	63
ELEMENTO (RESPIRADERO) (CÁRTER DEL MOTOR)	185-3159	1	TAPA DEL MECANISMO DE VÁLVULAS (GR)	22
JUEGO DE CORREAS TRAPEZOIDALES (INCLUYE 2-CORREAS) (MANDO DE VENTILADOR)	6L-1987	1	IMPULSOR DE VENTILADOR (GR)	40
JUEGO DE CORREAS TRAPEZOIDALES (INCLUYE 2-CORREAS) (MOTOR)	130-3216	1	POLEA DE MANDO DEL ALTERNADOR Y VENTILADOR (GR)	63
JUEGO DE CORREAS TRAPEZOIDALES (INCLUYE 3 CORREAS) (VENTILADOR)	4P-8087	1	POLEA DE MANDO DEL ALTERNADOR Y VENTILADOR (GR)	65
RESPIRADERO (CONJ) (CÁRTER DEL MOTOR)	204-4444	1	TAPA DEL MECANISMO DE VÁLVULAS (GR)	22
	240-0041	1	TAPA DEL BLOQUE MOTOR (GR)	18
SISTEMA DE ADMISIÓN Y ESCAPE DE AIRE				
ELEMENTO DEL FILTRO DE AIRE (CONJ) (PRIMARIO)	6I-2501	1	FILTRO DE AIRE (GR)	117
ELEMENTO DEL FILTRO DE AIRE (CONJ) (SECUNDARIO)	6I-2502	1	FILTRO DE AIRE (GR)	117
SISTEMA DE COMBUSTIBLE				
CANDADO (GR) (TAPA DE TANQUE DE COMB.)	246-2641	1	COMBUSTIBLE - TANQUE DE (GR)	154
COLADOR DE COMBUSTIBLE	9P-7121	1	COMBUSTIBLE - TANQUE DE (GR)	154
FILTRO DE COMBUSTIBLE (CONJ) (ALTA EFICIENCIA)	1R-0762	1	FILTRO Y TUBERÍAS DE COMBUSTIBLE (GR)	139
FILTRO DE COMBUSTIBLE Y SEPARADOR DE AGUA (CONJ) (PRIMARIO)	1R-0770	1	FILTRO DE COMBUSTIBLE Y SEPARADOR DE AGUA (GR)	141
SELLO	220-8678	1	FILTRO DE COMBUSTIBLE Y SEPARADOR DE AGUA (GR)	141
TAPA DE LLENADO (CONJ) (TANQUE DE COMBUSTIBLE)	7X-7700	1	COMBUSTIBLE - TANQUE DE (GR)	154

* NO HAY TRADUCCION DISPONIBLE EN EL MOMENTO DE LA IMPRESION

PIEZAS DE MANTENIMIENTO

DESCRIPCION	NUMERO DE PIEZA	CANT	SE UTILIZA EN	PAGINA
SISTEMA DE ENFRIAMIENTO				
EMPAQUETADURA (*WATER REGULATOR HOUSING)	191-4457	1	TUBERÍAS DEL AGUA (GR)	100
MANGUERA DE RADIADOR	187-3961	1	TUBERÍAS DEL AGUA (GR)	101
REGULADOR DE TEMPERATURA DEL AGUA (92 GRADOS CENTÍGRADOS) (REFRIGERANTE)	248-5513	1	TUBERÍAS DEL AGUA (GR)	100
SELLO DE LABIO (REGULADOR DE TEMPERATURA DEL AGUA)	3S-9643	1	TUBERÍAS DEL AGUA (GR)	100
TAPA DE RADIADOR (CONJ)	031-1119	1	TANQUE DE REFRIGERANTE (GR)	112
		1	TANQUE DE REFRIGERANTE (GR)	113
SISTEMA DE LUBRICACIÓN				
FILTRO DE ACEITE DEL MOTOR (CONJ) (*ADVANCED EFFICIENCY)	1R-1808	1	FILTRO DE ACEITE DEL MOTOR (GR)	77
*HOSE-FUMES DISP (CÁRTER DEL MOTOR)	246-0604	1	ESCAPE DE GASES (GR)	81
TAPA DE LLENADO (CONJ) (MOTOR)	6N-2985	1	TUBO DE LLENADO DE ACEITE (GR)	76

* NO HAY TRADUCCION DISPONIBLE EN EL MOMENTO DE LA IMPRESION

PIEZAS DE MANTENIMIENTO

DESCRIPCION	NUMERO DE PIEZA	CANT	SE UTILIZA EN	PAGINA
SISTEMA ELÉCTRICO Y DE ARRANQUE				
BATERÍA (*12-VOLT, WET)	115-2422	2	BATERÍA Y CABLES (GR)	167
BATERÍA (12-VOLTIOS, LIBRE DE MANTENIMIENTO)	153-5710	2	BATERÍA (GR)	170
CONJUNTO DE LLAVE, ELECTRONICA (SEGURIDAD) (AMARILLO)	206-5162	2	INSTALACION DE SEGURIDAD (GR)	183
CONJUNTO DE LLAVE, ELECTRONICA (SEGURIDAD) (GRIS)	206-5165	2	INSTALACION DE SEGURIDAD (GR)	183
CORREA (*ALTERNATOR, WATER PUMP)	241-4982	1	CARGA - ALTERNADOR DE (GR)	160
DISYUNTOR (CONJ) (15 AMPERIOS) (MOTOR DE SOPLADOR DE VENTILADOR)	6T-3643	1	PANEL DE FUSIBLES (GR)	202
ELEMENTO DEL CALENTADOR DEL AGUA DE LAS CAMISAS (120 VOLTIOS, 1500 VATIOS)	9G-6655	1	AGUA DE LAS CAMISAS - CALENTADOR DEL (GR)	176
FUSIBLE (10-AMPERIOS)	9W-1442	2	PANEL DE FUSIBLES (GR)	202
FUSIBLE (15 AMPERIOS)	9W-1441	20	PANEL DE FUSIBLES (GR)	202
FUSIBLE (175-AMPERIOS)	239-8107	1	CABLES DE LA PLATAFORMA (GR)	249
		1	PANEL DE FUSIBLES (GR)	202
FUSIBLE (20-AMPERIOS)	9W-1446	2	PANEL DE FUSIBLES (GR)	202
LAMPARA INDICADORA (CONJ) (LUZ DE ACCIÓN)	170-3461	1	CABLES DE LA PLATAFORMA (GR)	248
LAMPARA-LED (24-VOLTIOS, ROJO) (SISTEMA DE SEGURIDAD DE LA MÁQUINA)	242-3282	1	INSTALACION DE SEGURIDAD (GR)	183
LÁMPARA (24 VOLTIOS)	7N-1996	1	CABLES DE LA PLATAFORMA (GR)	248
	7N-9943	1	LÁMPARA DEL TECHO (GR)	185
LÁMPARA (24-VOLTIOS, 3-VATIOS)	115-1748	1	CABLE GR-GRADO DE CONTROL	243
LUCES DE ALÓGENO (*24-VOLT, 65-WATT) (REFLECTOR)	9X-3463	1	REFLECTOR (GR)	186
LUCES DE ALÓGENO (24 VOLTIOS, 65 VATIOS)	9X-3463	1	REFLECTOR (GR)	187
LUCES DE ALÓGENO (24 VOLTIOS, 65 VATIOS) (REFLECTOR)	9X-3463	1	REFLECTOR (GR)	188
TAPA PARA LLUVIA	164-5798	1	CARGA - ALTERNADOR DE (GR)	162
VIDRIO (CONJ)	158-0248	1	REFLECTOR (GR)	187
VIDRIO (CONJ) (REFLECTOR)	158-0248	1	REFLECTOR (GR)	186

* NO HAY TRADUCCION DISPONIBLE EN EL MOMENTO DE LA IMPRESION

PIEZAS DE MANTENIMIENTO

DESCRIPCION	NUMERO DE PIEZA	CANT	SE UTILIZA EN	PAGINA
SISTEMA HIDRÁULICO				
CANDADO (GR) (LLENADO DEL TANQUE HIDRÁULICO)	246-2641	1	TANQUE HIDRÁULICO Y MONTAJE (GR)	503
COLADOR (CONJ) (LLENADO DEL TANQUE HIDRÁULICO)	5D-7927	1	TANQUE HIDRÁULICO (GR)	504
ELEMENTO DE FILTRO DE ACEITE (CONJ) (*ADVANCED EFFICIENCY)	1R-0777	2	TANQUE HIDRÁULICO (GR)	504
ELEMENTO DE FILTRO DE ACEITE (CONJ) (EFICIENCIA ULTRA ALTA)	139-1537	2	TANQUE HIDRÁULICO (GR)	504
ELEMENTO DE FILTRO DE ACEITE (CONJ) (FLUÍDO RESISTENTE AL FUEGO)	104-6931	2	TANQUE HIDRÁULICO (GR)	504
ELEMENTO DE FILTRO DE ACEITE (CONJ) (GRUPO DE LAMPARA-TABLERO) (ESTANDAR)	1R-0735	2	TANQUE HIDRÁULICO (GR)	504
LAMPARA-LED (24 VOLTIOS, VERDE)	126-0810	1	TUBERÍAS CON SERVOMANDO (GR)	473
PANTALLA (CONJ) (TANQUE HIDRÁULICO)	3G-3267	2	TANQUE HIDRÁULICO (GR)	504
SELLO ANULAR	6V-5324	1	VÁLVULA DE LANZADERA (GR)	547
TAPA DEL TUBO DE LLENADO (TANQUE HIDRÁULICO)	7H-1447	1	TANQUE HIDRÁULICO (GR)	504
TAPÓN DE DRENAJE (TANQUE HIDRÁULICO)	9J-7031	1	TANQUE HIDRÁULICO (GR)	504
TREN DE FUERZA				
ELEMENTO DE FILTRO DE ACEITE (CONJ) (EFICIENCIA ULTRA ALTA)	1R-1809	1	FILTRO DE ACEITE (GR)	275
FILTRO DE ACEITE (GR) (TREN DE FUERZA)	235-5812	1	TUBERÍAS DE ACEITE DEL TREN DE FUERZA (GR)	283
PANTALLA (CONJ) (BARRIDO DE CONVERTIDOR DE PAR)	3T-6471	1	TUBERÍAS DE ACEITE DEL TREN DE FUERZA (GR)	283
REJILLA DE SUCCIÓN (BARRIDO DE CONVERTIDOR DE PAR)	8S-9130	1	CAJA Y PIEZAS DE LOS PLANETARIOS	263
REJILLA DE SUCCIÓN (TRANSMISION)	4S-8598	1	REJILLA MAGNÉTICA (GR)	303
REJILLA MAGNÉTICA (GR) (TRANSMISION)	231-4166	1	TUBERÍAS DE ACEITE DEL TREN DE FUERZA (GR)	283
	4S-8603	1	REJILLA MAGNÉTICA (GR)	303
RESPIRADERO (CONJ) (TRANSMISION)	9G-5127	1	TUBERÍAS DE ACEITE DEL TREN DE FUERZA (GR)	283
TAPÓN DE DRENAJE (REFRIGERANTE DE ACEITE DE TRANSMISIÓN)	8M-9307	1	ENFRIADOR DE ACEITE DE LA TRANSMISIÓN (GR)	268
TAPÓN DE DRENAJE (TREN DE FUERZA)	4B-7739	1	DRENAJE DE SEGURIDAD ECOLÓGICA (GR)	273
TAPÓN MAGNÉTICO (MANDO FINAL, LLENADO DE ACEITE)	6V-0439	1	MANDO FINAL (GR)	276
		1	MANDO FINAL (GR)	278

* NO HAY TRADUCCION DISPONIBLE EN EL MOMENTO DE LA IMPRESION

PEÇAS DE MANUTENÇÃO

DESCRIÇÃO	NÚMERO DE PEÇA	QUANT	UTILIZADA EM	PÁGINA
CHASSI E CARROCERIA				
CADEADO (CAIXA DA BATERIA)	246-2641	2	CAIXA - BATERIA	328
CADEADO (COBERTURA DO MOTOR)	246-2641	2	COBERTURA DO MOTOR	334
CADEADO (COBERTURA DO TANQUE HIDRÁULICO)	246-2641	2	COBERTURA - TANQUE HIDRÁULICO	341
CADEADO (PROTETOR DO RADIADOR)	246-2641	1	PROTETOR - RADIADOR	359
TAMPÃO (DRENAGEM) (CAIXA DE TRANSMISSÃO)	106-8187	1	CAIXA E CHASSI	331
FERRAMENTAS DE TRABALHO				
LÂMPADA (24 VOLTS)	138-2434	1	CONTROLE DO GUINCHO	578
MOTOR BÁSICO				
CORREIA (ALTERNADOR)	241-4981	1	POLIA - VENTILADOR E COMANDO DO ALTERNADOR	65
CORREIA EM V (COMPRESSOR)	1N-4556	1	COMANDO DO VENTILADOR	40
CORREIA EM V (MOTOR)	206-7870	1	POLIA - VENTILADOR E COMANDO DO ALTERNADOR	63
ELEMENTO (RESPIRO) (CÁRTER DO MOTOR)	185-3159	1	TAMPA - MECANISMO DAS VÁLVULAS	22
JOGO DE CORREIAS EM V (INCLUI 2 CORREIAS) (COMANDO DO VENTILADOR)	6L-1987	1	COMANDO DO VENTILADOR	40
JOGO DE CORREIAS EM V (INCLUI 2 CORREIAS) (MOTOR)	130-3216	1	POLIA - VENTILADOR E COMANDO DO ALTERNADOR	63
JOGO DE CORREIAS EM V (INCLUI 3 CORREIAS) (VENTILADOR)	4P-8087	1	POLIA - VENTILADOR E COMANDO DO ALTERNADOR	65
RESPIRO (CÁRTER)	204-4444	1	TAMPA - MECANISMO DAS VÁLVULAS	22
	240-0041	1	TAMPA - BLOCO DO MOTOR	18

* TRADUÇÃO NÃO DISPONÍVEL NO MOMENTO DA IMPRESSÃO

PEÇAS DE MANUTENÇÃO

DESCRIÇÃO	NÚMERO DE PEÇA	QUANT	UTILIZADA EM	PÁGINA
POSTO DO OPERADOR				
ACUMULADOR - AR CONDICIONADO	186-6189	1	TUBOS - AR CONDICIONADO	640
		1	TUBOS - AR CONDICIONADO	643
CADEADO (COMPARTIMENTO PARA PUBLICAÇÕES)	246-2641	1	TOLDO - ROPS ABERTA	607
CINTO DE SEGURANÇA	222-0345	1	ASSENTO	681
CORREIA EM V (COMPRESSOR DO REFRIGERANTE)	216-0349	1	COMPRESSOR DE REFRIGERANTE	609
FILTRO - AR (AR FRESCO)	6T-0988	1	PRESSURIZADOR	671
FILTRO (RECIRCULAÇÃO DO AR)	6T-5068	1	PRESSURIZADOR	671
LÂMINA DO LIMPADOR DE PÁRA-BRISA (DIANTEIRO, TRASEIRO)	6V-5851	2	LIMPADOR DO VIDRO	716
LÂMINA DO LIMPADOR DE PÁRA-BRISA (PORTA, LD, LE)	6V-5849	2	LIMPADOR DO VIDRO	716
LÂMPADA (24 VOLTS)	123-9294	4	INSTRUMENTOS-CABINE	628
		4	INSTRUMENTOS-CABINE	631
LÂMPADA (24 VOLTS, 3 WATTS)	115-1748	1	INSTRUMENTOS-CABINE	628
		1	INSTRUMENTOS-CABINE	631
RECEPTOR - SECADOR (CONDICIONADOR DE AR)	175-7162	1	TUBOS - AR CONDICIONADO	640
		1	TUBOS - AR CONDICIONADO	643
TAMPA COM RESPIRO (TANQUE DO LAVADOR DE VIDROS)	8E-8292	1	TANQUE - LAVADOR DE JANELA	695
SISTEMA DA ADMISSÃO DE AR E DE ESCAPE				
ELEMENTO DO FILTRO DE AR (PRIMÁRIO)	6I-2501	1	PURIFICADOR DE AR	117
ELEMENTO DO FILTRO DE AR (SECUNDÁRIO)	6I-2502	1	PURIFICADOR DE AR	117
SISTEMA DE ARREFECIMENTO				
JUNTA (ALOJAMENTO DO REGULADOR DA ÁGUA)	191-4457	1	TUBOS - ÁGUA	100
MANGUEIRA - RADIADOR	187-3961	1	TUBOS - ÁGUA	101
REGULADOR DE TEMPERATURA DA ÁGUA (92 GRAUS C) (LÍQUIDO ARREFECEDOR)	248-5513	1	TUBOS - ÁGUA	100
TAMPA - RADIADOR	031-1119	1	TANQUE - LÍQUIDO ARREFECEDOR	112
		1	TANQUE - LÍQUIDO ARREFECEDOR	113
VEDADOR TIPO LABIO (REGULADOR DA TEMPERATURA DA ÁGUA)	3S-9643	1	TUBOS - ÁGUA	100

* TRADUÇÃO NÃO DISPONÍVEL NO MOMENTO DA IMPRESSÃO

PEÇAS DE MANUTENÇÃO

DESCRIÇÃO	NÚMERO DE PEÇA	QUANT	UTILIZADA EM	PÁGINA
SISTEMA DE COMBUSTÍVEL				
CADEADO (TAMPA DO TANQUE DE COMBUSTÍVEL)	246-2641	1	TANQUE DE COMBUSTÍVEL	154
FILTRO - COMBUSTÍVEL	9P-7121	1	TANQUE DE COMBUSTÍVEL	154
FILTRO - COMBUSTÍVEL (ALTA EFICIÊNCIA)	1R-0762	1	FILTRO E TUBOS - COMBUSTÍVEL	139
FILTRO - SEPARADOR DE ÁGUA E COMBUSTÍVEL (PRIMÁRIO)	1R-0770	1	FILTRO DE COMBUSTÍVEL E SEPARADOR DE ÁGUA	141
RETENTOR	220-8678	1	FILTRO DE COMBUSTÍVEL E SEPARADOR DE ÁGUA	141
TAMPA - BOCAL DE ENCHIMENTO (TANQUE DE COMBUSTÍVEL)	7X-7700	1	TANQUE DE COMBUSTÍVEL	154
SISTEMA DE LUBRIFICAÇÃO				
FILTRO - ÓLEO DO MOTOR (EFICIÊNCIA AVANÇADA)	1R-1808	1	FILTRO - ÓLEO DO MOTOR	77
MANGUEIRA-ELIMINAÇÃO DE VAPORES DO CÁRTER (CÁRTER DO MOTOR)	246-0604	1	ELIMINAÇÃO DE VAPORES DO CÁRTER	81
TAMPA - BOCAL DE ENCHIMENTO (MOTOR)	6N-2985	1	BOCAL DE ENCHIMENTO DE ÓLEO DO MOTOR	76

* TRADUÇÃO NÃO DISPONÍVEL NO MOMENTO DA IMPRESSÃO

PEÇAS DE MANUTENÇÃO

DESCRIÇÃO	NÚMERO DE PEÇA	QUANT	UTILIZADA EM	PÁGINA
SISTEMA ELÉTRICO E DE PARTIDA				
BATERIA (12 VOLTS, ISENTO DE MANUTENÇÃO)	153-5710	2	BATERIA	170
BATERIA (12 VOLTS, ÚMIDO)	115-2422	2	BATERIA E CABOS / FIOS ELÉTRICOS	167
CHAVE - ELETRÔNICO (SEGURANÇA) (AMARELO)	206-5162	2	INSTALAÇÃO-SEGURANÇA	183
CHAVE - ELETRÔNICO (SEGURANÇA) (CINZA)	206-5165	2	INSTALAÇÃO-SEGURANÇA	183
CORREIA (ALTERNADOR, BOMBA DE ÁGUA)	241-4982	1	ALTERNADOR DE CORRENTE	160
DISJUNTOR AUTOMÁTICO DE CIRCUITO (15 AMPERES) (MOTOR DO VENTILADOR)	6T-3643	1	PAINEL DE FUSÍVEIS	202
ELEMENTO - AQUECEDOR DE ÁGUA DA CAMISA (120 VOLTS, 1500 WATTS)	9G-6655	1	AQUECEDOR DA ÁGUA DO MOTOR	176
FUSÍVEL (10 AMPERES)	9W-1442	2	PAINEL DE FUSÍVEIS	202
FUSÍVEL (15 AMPERES)	9W-1441	20	PAINEL DE FUSÍVEIS	202
FUSÍVEL (175 AMPÈRES)	239-8107	1	CABOS/FIOS ELÉTRICOS - PLATAFORMA	249
		1	PAINEL DE FUSÍVEIS	202
FUSÍVEL (20-AMPERES)	9W-1446	2	PAINEL DE FUSÍVEIS	202
LÂMPADA - HALOGÊNEO (*24-VOLT, 65-WATT) (FAROL)	9X-3463	1	LÂMPADA - FAROL	186
LÂMPADA - HALOGÊNEO (24 VOLTS, 65 WATTS)	9X-3463	1	LÂMPADA - FAROL	187
LÂMPADA - HALOGÊNEO (24 VOLTS, 65 WATTS) (FAROL)	9X-3463	1	LÂMPADA - FAROL	188
LÂMPADA - LED (24-VOLTS, VERMELHO) (SISTEMA DE SEGURANÇA DA MÁQUINA)	242-3282	1	INSTALAÇÃO-SEGURANÇA	183
LÂMPADA INDICADORA (LUZ DE AÇÃO)	170-3461	1	CABOS/FIOS ELÉTRICOS - PLATAFORMA	248
LÂMPADA (24 VOLTS)	7N-1996	1	CABOS/FIOS ELÉTRICOS - PLATAFORMA	248
	7N-9943	1	LÂMPADA - TETO	185
LÂMPADA (24 VOLTS, 3 WATTS)	115-1748	1	FIACAO - CONTROLE DO NIVEL	243
LENTE	158-0248	1	LÂMPADA - FAROL	187
LENTE (FAROL)	158-0248	1	LÂMPADA - FAROL	186
TAMPA - CHUVA	164-5798	1	ALTERNADOR DE CORRENTE	162

* TRADUÇÃO NÃO DISPONÍVEL NO MOMENTO DA IMPRESSÃO

PEÇAS DE MANUTENÇÃO

DESCRIÇÃO	NÚMERO DE PEÇA	QUANT	UTILIZADA EM	PÁGINA
SISTEMA HIDRÁULICO				
BUJÃO DO DRENO (TANQUE HIDRÁULICO)	9J-7031	1	TANQUE HIDRÁULICO	504
CADEADO (ENCHIMENTO DO TANUQE HIDRÁULICO)	246-2641	1	TANQUE DE ÓLEO HIDRÁULICO E MONTAGEM	503
ELEMENTO FILTRANTE - ÓLEO (EFICIÊNCIA AVANÇADA)	1R-0777	2	TANQUE HIDRÁULICO	504
ELEMENTO FILTRANTE - ÓLEO (EFICIÊNCIA PADRÃO) (PADRÃO)	1R-0735	2	TANQUE HIDRÁULICO	504
ELEMENTO FILTRANTE - ÓLEO (EFICIÊNCIA ULTRA ALTA)	139-1537	2	TANQUE HIDRÁULICO	504
ELEMENTO FILTRANTE - ÓLEO (FLUIDO RESISTENTE A FOGO)	104-6931	2	TANQUE HIDRÁULICO	504
LÂMPADA - LED (24-VOLTS, VERDE)	126-0810	1	TUBOS - CIRCUITO PILOTO	473
RETENTOR DE ANEL-O	6V-5324	1	VÁLVULA DE SEPARAÇÃO	547
TAMPA - BOCAL DE ENCHIMENTO (TANQUE HIDRÁULICO)	7H-1447	1	TANQUE HIDRÁULICO	504
TELA FILTRANTE (ENCHIMENTO DO TANUQE HIDRÁULICO)	5D-7927	1	TANQUE HIDRÁULICO	504
TELA FILTRANTE (TANQUE HIDRÁULICO)	3G-3267	2	TANQUE HIDRÁULICO	504
TREM DE FORÇA				
BUJÃO DO DRENO (ARREFECEDOR DO ÓLEO DA TRANSMISSÃO)	8M-9307	1	ARREFECEDOR DE ÓLEO DA TRANSMISSÃO	268
BUJÃO DO DRENO (TREM DE FORÇA)	4B-7739	1	DRENO - ECOLOGIA	273
BUJÃO MAGNÉTICO (COMANDO FINAL, ENCHIMENTO DE ÓLEO)	6V-0439	1	COMANDO FINAL	276
		1	COMANDO FINAL	278
ELEMENTO FILTRANTE - ÓLEO (EFICIÊNCIA ULTRA ALTA)	1R-1809	1	FILTRO - ÓLEO	275
FILTRO - MAGNÉTICO (TRANSMISSÃO)	4S-8603	1	FILTRO - MAGNÉTICO	303
	231-4166	1	TUBOS - ÓLEO DA TRANSMISSÃO	283
FILTRO - ÓLEO (TREM DE FORÇA)	235-5812	1	TUBOS - ÓLEO DA TRANSMISSÃO	283
RESPIRO (TRANSMISSÃO)	9G-5127	1	TUBOS - ÓLEO DA TRANSMISSÃO	283
TELA DE SUCÇÃO (RETORNO DO CONVERSOR DE TORQUE)	8S-9130	1	CARCAÇA DAS ENGRENAGENS PLANETÁRIAS E COMPONENTES	263
TELA DE SUCÇÃO (TRANSMISSÃO)	4S-8598	1	FILTRO - MAGNÉTICO	303
TELA FILTRANTE (RETORNO DO CONVERSOR DE TORQUE)	3T-6471	1	TUBOS - ÓLEO DA TRANSMISSÃO	283

* TRADUÇÃO NÃO DISPONÍVEL NO MOMENTO DA IMPRESSÃO

WARTUNGSTEILE

BESCHREIBUNG	ERSATZTEIL-NUMMER	MENGE	VERWENDET IN	SEITE
ARBEITSGERÄTE				
LEUCHTE (24 V)	138-2434	1	WINDENSTEUERUNG	578
ELEKTRISCHE ANLAGE UND STARTSYSTEM				
ABDECKGLAS	158-0248	1	ARBEITSLEUCHTEN	187
ABDECKGLAS (ARBEITSSCHEIN-WERFER)	158-0248	1	ARBEITSLEUCHTEN	186
BATTERIE (12 V, WARTUNGSFREI)	153-5710	2	BATTERIE	170
BATTERIE (12 VOLT, NASS)	115-2422	2	BATTERIE UND VERDRAHTUNG	167
ELEKTRONISCHER SCHLÜSSEL (SICHERHEIT) (GELB)	206-5162	2	SICHERHEITSEINBAUSATZ	183
ELEKTRONISCHER SCHLÜSSEL (SICHERHEIT) (GRAU)	206-5165	2	SICHERHEITSEINBAUSATZ	183
HALOGENSCHINWERFER (*24-VOLT, 65-WATT) (ARBEITSSCHEINWERFER)	9X-3463	1	ARBEITSLEUCHTEN	186
HALOGENSCHINWERFER (24V)(65W)	9X-3463	1	ARBEITSLEUCHTEN	187
HALOGENSCHINWERFER (24V)(65W) (ARBEITSSCHEINWERFER)	9X-3463	1	ARBEITSLEUCHTEN	188
KEILRIEMEN (DREHSTROMGENERA-TOR, WASSERPUMPE)	241-4982	1	DREHSTROMGENERATOR	160
KONTROLLEUCHTE (WARNLEUCHTE)	170-3461	1	FAHRERPLATTFORMVERDRAHTUNG	248
LEUCHTE, ROT (24 V, ROT) (MASCHINENSICHERHEITSSYSTEM)	242-3282	1	SICHERHEITSEINBAUSATZ	183
LEUCHTE (24 V)	7N-1996	1	FAHRERPLATTFORMVERDRAHTUNG	248
	7N-9943	1	FAHRERHAUSBELEUCHTUNG	185
LEUCHTE (24 V, 3 W)	115-1748	1	NIEGUNGSSTEUER VERDRAHTUNG	243
REGENSCHUTZKAPPE	164-5798	1	DREHSTROMGENERATOR	162
SICHERUNG (10 A)	9W-1442	2	INSTRUMENTENTAFEL-SICHERUNG	202
SICHERUNG (15 A)	9W-1441	20	INSTRUMENTENTAFEL-SICHERUNG	202
SICHERUNG (175 A)	239-8107	1	FAHRERPLATTFORMVERDRAHTUNG	249
		1	INSTRUMENTENTAFEL-SICHERUNG	202
SICHERUNG (20 A)	9W-1446	2	INSTRUMENTENTAFEL-SICHERUNG	202
UMLAUFKÜHLWASSERHEIZUNGS-ELEMENT (120 V, 1500 W)	9G-6655	1	UMLAUFKÜHLWASSERHEIZUNG	176
UNTERBRECHER (15 A) (LÜFTERMOTOR)	6T-3643	1	INSTRUMENTENTAFEL-SICHERUNG	202

* ÜBERSETZUNG ZUM ZEITPUNKT DER DRUCKLEGUNG NICHT VORHANDEN

WARTUNGSTEILE

BESCHREIBUNG	ERSATZTEIL-NUMMER	MENGE	VERWENDET IN	SEITE
FAHRERHAUS				
FILTERSATZ (UMLAUFLUFT)	6T-5068	1	FAHRERHAUSBELÜFTUNG	671
KÄLTEMITTELTROCKNER (KLIMAANLAGE)	175-7162	1	KLIMAANLAGENLEITUNGEN	640
		1	KLIMAANLAGENLEITUNGEN	643
KAPPE MIT ENTLÜFTER (SCHEIBEN-WASCHMITTELBEHÄLTER)	8E-8292	1	SCHEIBENWASCHMITTELBEHÄLTER	695
KEILRIEMEN (KÄLTEMITTELKOM-PRESSOR)	216-0349	1	KÄLTEMITTELKOMPRESSOR	609
KLIMAANLAGENDRUCKSPEICHER	186-6189	1	KLIMAANLAGENLEITUNGEN	640
		1	KLIMAANLAGENLEITUNGEN	643
LEUCHTE (24 V)	123-9294	4	FAHRERHAUS-INSTRUMENTENTAFEL	628
		4	FAHRERHAUS-INSTRUMENTENTAFEL	631
LEUCHTE (24 V, 3 W)	115-1748	1	FAHRERHAUS-INSTRUMENTENTAFEL	628
		1	FAHRERHAUS-INSTRUMENTENTAFEL	631
LUFTFILTER (FRISCHLUFT)	6T-0988	1	FAHRERHAUSBELÜFTUNG	671
SCHEIBENWISCHERBLATT (TÜR, RECHTS, LINKS)	6V-5849	2	SCHEIBENWISCHER	716
SCHEIBENWISCHERBLATT (VORN, HINTEN)	6V-5851	2	SCHEIBENWISCHER	716
SICHERHEITSGURT	222-0345	1	FAHRERSITZ	681
VORHÄNGESCHLOSS (LTERATURFACH)	246-2641	1	OFFENES FAHRERHAUS MIT ÜBERROLLSCHUTZ	607
HYDRAULIKSYSTEM				
ABLASSSTOPFEN (HYDRAULIKTANK)	9J-7031	1	HYDRAULIKTANK	504
EINFÜLLSTUTZENKAPPE (HYDRAULIKTANK)	7H-1447	1	HYDRAULIKTANK	504
FILTERSIEB (HYDRAULIKTANKEIN-FÜLLSIEB)	5D-7927	1	HYDRAULIKTANK	504
LEUCHTE, ROT (24 V, GRÜN)	126-0810	1	VORSTEUERLEITUNGEN	473
O-RING-DICHTUNG	6V-5324	1	PENDELVENTIL	547
ÖLFILTERELEMENT (ADVANCED EFFICIENCY)	1R-0777	2	HYDRAULIKTANK	504
ÖLFILTERELEMENT (SCHWER ENTFLAMMBARE FLÜSSIGKEIT)	104-6931	2	HYDRAULIKTANK	504
ÖLFILTERELEMENT (STANDRAD EFFIZIENZ) (STANDARD)	1R-0735	2	HYDRAULIKTANK	504
ÖLFILTERELEMENT (ULTRA HOCHLEISTUNG)	139-1537	2	HYDRAULIKTANK	504
SIEB (HYDRAULIKTANK)	3G-3267	2	HYDRAULIKTANK	504
VORHÄNGESCHLOSS (HYDRAULIKTANKEINFÜLLSIEB)	246-2641	1	HYDRAULIKTANK UND BEFESTIGUNGSTEILE	503

* ÜBERSETZUNG ZUM ZEITPUNKT DER DRUCKLEGUNG NICHT VORHANDEN

WARTUNGSTEILE

BESCHREIBUNG	ERSATZTEIL-NUMMER	MENGE	VERWENDET IN	SEITE
KRAFTSTOFFSYSTEM				
DICHTUNG	220-8678	1	WASSERABSCHEIDER- U. KRAFTSTOFFILTER	141
EINFÜLLKAPPE (KRAFTSTOFFTANK)	7X-7700	1	KRAFTSTOFFTANK	154
KRAFTSTOFFILTER (HOCHLEISTUNG)	1R-0762	1	KRAFTSTOFFILTER UND LEITUNGEN	139
KRAFTSTOFFSIEB	9P-7121	1	KRAFTSTOFFTANK	154
VORHÄNGESCHLOSS (KRAFTSTOFFKAPPE)	246-2641	1	KRAFTSTOFFTANK	154
WASSERABSCHEIDER UND KRAFTSTOFFILTER (HAUPTELEMENT)	1R-0770	1	WASSERABSCHEIDER- U. KRAFTSTOFFILTER	141
KRAFTÜBERTRAGUNG				
ABLASSSTOPFEN (GETRIEBESÖLKÜHLER)	8M-9307	1	GETRIEBEÖLKÜHLER	268
ABLASSSTOPFEN (KRAFTÜBERTRAGUNG)	4B-7739	1	ABLASS (UMWELTFREUNDLICH)	273
ANSAUGSIEB (GETRIEBE)	4S-8598	1	MAGNETSIEB	303
ANSAUGSIEB (WANDLERRÜCKLAUF-SIEB)	8S-9130	1	PLANETENANTRIEBSGEHÄUSE U. TEILE	263
ENTLÜFTER (GETRIEBE)	9G-5127	1	ÖLLEITUNGEN - KRAFTÜBERTRAGUNG	283
MAGNETSIEB (GETRIEBE)	4S-8603	1	MAGNETSIEB	303
	231-4166	1	ÖLLEITUNGEN - KRAFTÜBERTRAGUNG	283
MAGNETSTOPFEN (SEITENANTRIEB, ÖLEINFÜLLUNG)	6V-0439	1	SEITENANTRIEB	276
		1	SEITENANTRIEB	278
ÖLFILTER (KRAFTÜBERTRAGUNG)	235-5812	1	ÖLLEITUNGEN - KRAFTÜBERTRAGUNG	283
ÖLFILTERELEMENT (ULTRA HOCHLEISTUNG)	1R-1809	1	ÖLFILTER	275
SIEB (WANDLERRÜCKLAUFSIEB)	3T-6471	1	ÖLLEITUNGEN - KRAFTÜBERTRAGUNG	283
KÜHLSYSTEM				
DICHTUNG (THERMOSTATGEHÄUSE)	191-4457	1	KÜHLWASSERLEITUNGEN	100
KÜHLERKAPPE	031-1119	1	KÜHLMITTELBEHÄLTER	112
		1	KÜHLMITTELBEHÄLTER	113
KÜHLERSCHLAUCH	187-3961	1	KÜHLWASSERLEITUNGEN	101
LIPPENDICHTUNG (KÜHLWASSERTHERMOSTAT)	3S-9643	1	KÜHLWASSERLEITUNGEN	100
WASSERTEMPERATURREGLER (92 GRAD) (KÜHLMITTEL)	248-5513	1	KÜHLWASSERLEITUNGEN	100
LUFTEINLASS- UND ABGASSYSTEM				
LUFTFILTER (HAUPTELEMENT)	6I-2501	1	LUFTREINIGER	117
LUFTFILTER (HILFSELEMENT)	6I-2502	1	LUFTREINIGER	117

* ÜBERSETZUNG ZUM ZEITPUNKT DER DRUCKLEGUNG NICHT VORHANDEN

WARTUNGSTEILE

BESCHREIBUNG	ERSATZTEIL-NUMMER	MENGE	VERWENDET IN	SEITE
MOTOR (GRUNDAUSFÜHRUNG)				
ELEMENT (ENTLÜFTER) (KURBELGEHÄUSE)	185-3159	1	VENTILDECKEL	22
ENTLÜFTER (KURBELGEHÄUSE)	204-4444	1	VENTILDECKEL	22
	240-0041	1	MOTORBLOCKDECKEL	18
KEILRIEMEN (DREHSTROMGENERATOR)	241-4981	1	RIEMENSCHEIBE - LÜFTER- U. DREHSTROMGENERATOR	65
KEILRIEMEN (KOMPRESSOR)	1N-4556	1	LÜFTERANTRIEB	40
KEILRIEMEN (MOTOR)	206-7870	1	RIEMENSCHEIBE - LÜFTER- U. DREHSTROMGENERATOR	63
KEILRIEMENSATZ (EINSCHL. 2 RIEMEN) (LÜFTERANTRIEB)	6L-1987	1	LÜFTERANTRIEB	40
KEILRIEMENSATZ (EINSCHL. 2 RIEMEN) (MOTOR)	130-3216	1	RIEMENSCHEIBE - LÜFTER- U. DREHSTROMGENERATOR	63
KEILRIEMENSATZ (EINSCHL. 3 RIEMEN) (LÜFTER)	4P-8087	1	RIEMENSCHEIBE - LÜFTER- U. DREHSTROMGENERATOR	65
RAHMEN UND AUFBAU				
SCHRAUBE (ABLASS) (GETRIEBEGEHÄUSE)	106-8187	1	RAHMEN UND GEHÄUSE	331
VORHÄNGESCHLOSS (BATTERIEKASTEN)	246-2641	2	BATTERIEKASTEN	328
VORHÄNGESCHLOSS (HYDRAULIKTANKVERKLEIDUNG)	246-2641	2	HYDRAULIKTANKVERKLEIDUNG	341
VORHÄNGESCHLOSS (KÜHLERSCHUTZ)	246-2641	1	KÜHLERSCHUTZ	359
VORHÄNGESCHLOSS (MOTORVERKLEIDUNG)	246-2641	2	MOTORVERKLEIDUNG	334
SCHMIERSYSTEM				
EINFÜLLKAPPE (MOTOR)	6N-2985	1	MOTORÖLEINFÜLLSTUTZEN	76
ENTDUNSTERSCHLAUCH (KURBELGEHÄUSE)	246-0604	1	ENTDUNSTER	81
ÖLFILTER (*ADVANCED EFFICIENCY)	1R-1808	1	ÖLFILTER	77

* ÜBERSETZUNG ZUM ZEITPUNKT DER DRUCKLEGUNG NICHT VORHANDEN

INDEX

Name	Page
A	
ACCUMULATOR GP–CHARGED	252
ACCUMULATOR GP–UNCHARGED	253
ACCUMULATOR GP-PILOT OIL–CHARGED	439
ACCUMULATOR GP-PILOT OIL–UNCHARGED	438
ACCUMULATOR GP-PILOT OIL (CHARGED)	467
ACCUMULATOR GP-REFRIGERANT	640
	643
ADAPTER GP-MOTOR	440
ADJUSTER GP-SEAT	597
AFTERCOOLER GP-AIR	116
AIR CLEANER GP	117
	118
AIR COMPRESSOR GP-SEAT	693
AIR CONDITIONER AR	598
AIR CONDITIONER GP	599
ALARM AS	167
ALARM GP	156
ALTERNATOR GP-CHARGING	157
	159
	160
	162
	164
AXLE GP-POWER TRAIN	254
B	
BAR AR-STRIKER–FRONT	367
BAR GP-EQUALIZER	368
	370
BAR GP-STRIKER–REAR	326
	371
BASE GP-OIL FILTER–POWER TRAIN	255
BATTERY & WIRING GP	166
BATTERY GP–HEAVY-DUTY	170
BATTERY (12-VOLT, MAINTENANCE FREE)	170
BATTERY (12-VOLT, WET)	167
BELT (ALTERNATOR)	65
BELT (ALTERNATOR, WATER PUMP)	160
BLADE & EDGE GP-ANGLING	569
BLADE & EDGE GP-SEMI-UNIVERSAL	570
	571
BLADE AS-SEMI-UNIVERSAL	572
	574
BLADE AS-WIPER (DOOR, RH, LH)	716
BLADE AS-WIPER (FRONT, REAR)	716
BLADE GP-ANGLING	575
BLADE GP-SEMI-UNIVERSAL	576
	577
BLOWER GP-CAB	600
BOX GP-BATTERY	328
	329
BRACE GP-BULLDOZER	551
BRAKE & DIFFERENTIAL DRIVE GP	256
BRAKE & PLANETARY GP	261
BREATHER AS (CRANKCASE)	18
	22
BREATHER AS (TRANSMISSION)	283
BULLDOZER AR-ANGLING	553
	554
	555
	556
BULLDOZER AR-SEMI-UNIVERSAL	557
	558
	559
	560
C	
C-FRAME AS–ANGLING BULLDOZER	561
C-FRAME GP–ANGLING BULLDOZER	562
	563
CAB AR	602
	603
CAB GP	604
CAMSHAFT GP	17
CANOPY AR-OPEN ROPS	607
CAP AS-FILLER (ENGINE)	76
CAP AS-FILLER (FUEL TANK)	154
CAP AS-RADIATOR	112
	113
CAP-FILLER (HYDRAULIC TANK)	504
CAP GP-TRACK IDLER	373
CAP GP-TRACK IDLER–HEAVY-DUTY	372
CAP GP-TRACK ROLLER–SYSTEMONE	374
CAP-RAIN	162
CAP-VENTED (WINDOW WASHER TANK)	695
CARTRIDGE GP-TURBOCHARGER	135
	137
CASE & FRAME GP	331
CASE & PARTS GP-PLANETARY	263
CHASSIS AR	1
	2
CIRCUIT BREAKER AS (15-AMPERE) (FAN BLOWER MOTOR)	202
COMPRESSOR GP-REFRIGERANT	608
	609
CONDENSER & MTG GP-REFRIGERANT	611
CONDENSER & MTG GP-REFRIGERANT–ROPS MOUNTED	612
CONDENSER GP-REFRIGERANT	614
CONTROL & MTG GP-JOYSTICK–GRADE CONTROL	441
CONTROL & MTG GP-PEDAL	616
CONTROL AR-HYDRAULIC IMPLEMENT–ACCUGRADE	443
CONTROL AR-HYDRAULIC IMPLEMENT–BULLDOZER, RIPPER	442

INDEX

Name	Page
CONTROL AR-HYDRAULIC IMPLEMENT–BULLDOZER, WINCH	442
CONTROL AS (TEMPERATURE)	628
CONTROL GP-ENGINE ELECTRONIC	171, 172
CONTROL GP-HANDLE–BULLDOZER	444
CONTROL GP-HANDLE–STEERING, TRANSMISSION	425
CONTROL GP-HANDLE (WINCH)	529
CONTROL GP-HANDLE (WINCH CONTROL)	578
CONTROL GP-JOYSTICK–BULLDOZER	445
CONTROL GP-MACHINE	171
CONTROL GP-PARKING BRAKE	427
CONTROL GP-PILOT OPERATED HYD–BULLDOZER	446
CONTROL GP-STEERING & TMSN	429, 431
CONTROL GP-TRANSMISSION HYD	266
CONTROL GP-UNPRGMED MONITOR–CATERPILLAR MONITORING SYSTEM	617
CONTROL GP-UNPRGMED MONITOR (CATERPILLAR MONITORING SYSTEM)	628, 631
CONTROL GP-UNPROGRAMMED	249
CONTROL GP-UNPROGRAMMED–PRODUCT LINK 300	173
CONTROL GP-WINCH	578
CONVERTER GP-ELECTRICAL	174
COOLANT HEATER LINES	647
COOLER GP-ENGINE OIL	96
COOLER GP-HYDRAULIC OIL	447
COOLER GP-TRANSMISSION OIL	268
COOLING AR-HIGH AMBIENT TEMP	97
CORE AS-AFTERCOOLER	151, 152
CORE AS-OIL COOLER (ENGINE)	96
CORE AS-OIL COOLER (TRANSMISSION)	268
CORE AS-RADIATOR	108
COUPLING & GUARD GP	270
COUPLING GP-PUMP	271
COVER GP-CONSOLE–CAB	619
COVER GP-CONSOLE–OPEN ROPS	618
COVER GP-CYLINDER BLOCK	18
COVER GP-FRONT HOUSING	20, 21
COVER GP-VALVE MECHANISM	22
CRANKSHAFT GP	23
CYLINDER & LINES GP-LIFT–LH	450
CYLINDER & LINES GP-LIFT–RH	448
CYLINDER AS-ETHER	221
CYLINDER BLOCK AS	24
CYLINDER BLOCK GP	26, 27
CYLINDER GP-LIFT–BULLDOZER	452
CYLINDER GP-RIPPER–LIFT	454
CYLINDER GP-TILT–ANGLING BULLDOZER	458
CYLINDER GP-TILT–SEMI-UNIVERSAL BULLDOZER	456, 460
CYLINDER HEAD AS	28
CYLINDER HEAD GP	30, 31

D

DAMPER GP	33
DRAIN GP-ECOLOGY–POWER TRAIN	272, 273
DRAIN GP-ENGINE OIL	34
DRAWBAR GP	333
DRAWBAR GP–LONG	332
DRIVE AR-FAN–MODULATING	35
DRIVE GP-FAN	36, 38, 40
DRIVE GP-FAN–MODULATING	39
DRIVE GP-PUMP–WATER	41
DUST EJECTOR GP	119

E

EDGE GP-BIT & CUTTING–ANGLING	579
EDGE GP-BIT & CUTTING–SEMI-UNIVERSAL	580
ELBOW	77
ELBOW GP-AIR INLET	120
ELECTRONICS AR-MACHINE	175
ELECTRONICS GP-MONITOR–CATERPILLAR MONITORING SYSTEM	175
ELECTRONICS GP-POWER TRAIN	175
ELEMENT AS-JACKET WATER HEATER (120-VOLT, 1500-WATT)	176
ELEMENT (BREATHER) (CRANKCASE)	22
ENCLOSURE GP-ENGINE	334
ENCLOSURE GP-ENGINE–LH	339
ENCLOSURE GP-ENGINE–RH	337
ENCLOSURE GP-HYDRAULIC TANK	341
ENGINE AR	4, 5, 6, 7, 8, 9
ENGINE AR-CORE	10, 11, 12, 13, 14, 15
EXTENSION GP-BACKREST (CLOTH)	681

INDEX

Name	Page
EXTENSION GP-BACKREST (VINYL) (SEAT)	684

F

Name	Page
FAN AR-EJECTOR	97
FAN GP-BLOWER	98
FAN GP-REVERSIBLE	99
FASTENER GP-CYLINDER HEAD	42, 43
FASTENER GP-DAMPER & PULLEY	44
FASTENER GP-FRONT HOUSING	45
FASTENER GP-VALVE COVER	46, 47
FENDER GP	343
FENDER GP–LH	345
FENDER GP–RH	344
FILLER GP-ENGINE OIL	76
FILM-CIRCUIT BREAKER	202
FILM GP	719, 721
FILM-IDENTIFICATION (ACTION LIGHT)	631
FILM-IDENTIFICATION (FILTER)	578
FILM-IDENTIFICATION (GROUP NUMBER) (REFRIGERANT CONDENSER)	614
FILM-IDENTIFICATION (IGNITION SWITCH)	183
FILM-IDENTIFICATION (INSTRUMENT PANEL)	628, 631, 632
FILM-IDENTIFICATION (JOYSTICK) (GRADE CONTROL)	177
FILM-IDENTIFICATION (LIGHTS)	629
FILM-IDENTIFICATION (LOW SPEED, WINCH LIGHT)	442
FILM-IDENTIFICATION (SECURITY SYSTEM)	183
FILM-IDENTIFICATION (WATER HEATER)	176
FILM-IDENTIFICATION (WINCH CONTROL)	442
FILM-IDENTIFICATION (WINCH FREESPOOL)	578
FILM-IDENTIFICATION (WINDOW WIPER CONTROLS)	638
FILM-INFORMATION (AIR CLEANER)	117
FILM-INFORMATION (TIE-DOWN)	332, 333, 581
FILM-INFORMATION (TIE-DOWN)	590
FILM-INSTRUCTION (RIPPER CONTROL)	442
FILM-INSTRUCTION (SEAT ADJUSTMENT)	691, 693
FILM-NOTICE (RADIO)	627
FILM-WARNING (ACCUMULATOR)	438, 439
FILM-WARNING (ELECTRICAL SHOCK)	202
FILM-WARNING (HIGH PRESSURE, READ OMM)	252, 253
FILM-WARNING (HIGH PRESSURE, READ OMM, ISO)	726
FILM-WARNING (JUMP START, READ OMM)	726
FILM-WARNING (JUMP START, READ OMM)	724
FILM-WARNING (NO WELD, NO DRILL, READ OMM)	607, 724, 726
FILM-WARNING (PRODUCT LINK RADIO, NACD)	178
FILM-WARNING (PRODUCT LINK RADIO, NACD)	180
FILM-WARNING (PRODUCT LINK RADIO, NON NACD)	726
FILM-WARNING (RECOIL SPRING)	381
FILM-WARNING (RECOIL SPRING)	379
FILM-WARNING (RECOIL SPRING)	375, 377, 423, 424
FILM-WARNING (ROPS)	724, 726
FILM-WARNING (ROPS/FOPS)	607
FILTER & LINES GP-FUEL	139
FILTER-AIR (FRESH AIR)	671
FILTER AS (AIR RECIRCULATION)	671
FILTER AS-ENGINE OIL (ADVANCED EFFICIENCY)	77
FILTER AS-FUEL (HIGH EFFICIENCY)	139
FILTER AS-WATER SEP & FUEL (PRIMARY)	141
FILTER ELEMENT AS-AIR (PRIMARY)	117
FILTER ELEMENT AS-AIR (SECONDARY)	117
FILTER ELEMENT AS-OIL (ADVANCED EFFICIENCY)	504
FILTER ELEMENT AS-OIL (FIRE RESISTANT FLUID)	504
FILTER ELEMENT AS-OIL (STANDARD EFFICIENCY) (STANDARD)	504
FILTER ELEMENT AS-OIL (ULTRA HIGH EFFICIENCY)	275
FILTER ELEMENT AS-OIL (ULTRA HIGH EFFICIENCY)	504
FILTER GP-ENGINE OIL	77
FILTER GP-OIL–POWER TRAIN	275
FILTER GP-OIL (POWER TRAIN)	283
FILTER GP-WATER SEP & FUEL	141
FINAL DRIVE GP	276
FINAL DRIVE GP–WASTE HANDLING	278
FLOOR MAT	619, 659
FLYWHEEL GP	48
FRAME GP-TELESCOPING RECOIL–LH	381

INDEX

Name	Page
FRAME GP-TELESCOPING RECOIL–LH, XL/XW	377
FRAME GP-TELESCOPING RECOIL–RH	379
FRAME GP-TELESCOPING RECOIL–RH, XL/XW	375
FUMES DISPOSAL GP	81
FUMES DISPOSAL GP–CRANKCASE	80
FUSE (10-AMPERE)	202
FUSE (15-AMPERE)	202
FUSE (175-AMPERE)	202
FUSE (175-AMPERE)	249
FUSE (20-AMPERE)	202

G

GASKET (WATER REGULATOR HOUSING)	100
GAUGE AS-OIL LEVEL (TRANSMISSION CASE)	283
GAUGE GP-OIL LEVEL (DIPSTICK)–ENGINE	82
GAUGE-SIGHT (HYDRAULIC TANK)	504
GAUGE-SIGHT (WATER TANK)	114
GEAR GP-BEVEL & TRANSFER	280
GEAR GP-FRONT	49
GEAR GP-REAR	50
GENERAL AR	2
	3
GLASS-FIXED REAR (TINTED)	713
GLASS-REAR SLIDER (TINTED)	711
GLASS-SLIDER-RH (TINTED) (TINTED)	710
GLASS (TINTED)	700
	701
	702
	703
GRID GP-SAND BLAST ERODING	346
GRILL GP-RADIATOR–HEAVY DUTY	347
	348
GUARD AR-FINAL DRIVE	349
GUARD AR-IDLER	349
GUARD GP-BOTTOM	350
	351
	354
GUARD GP-BOTTOM–HOOK	353
GUARD GP-FUEL TANK	356
	357
	358
GUARD GP-PRECLEANER	121
GUARD GP-RADIATOR	359
GUARD GP-RADIATOR–BOTTOM	361
GUARD GP-REAR	362
GUARD GP-TRACK GUIDE	383
GUARD GP-TRACK GUIDE–SYSTEMONE	384
GUARD GP-TRACK ROLLER	385
	386
GUARD GP-TRANSMISSION	363
GUIDING AR-UNDERCARRIAGE	387
GUIDING AR-UNDERCARRIAGE–SYSTEMONE	387

H

HANDHOLD GP–CAB ASSIST	621
HANDHOLD GP–WASTE HANDLING	622
HANDLE GP-CONTROL–BULLDOZER	462
	463
HANDLE GP-CONTROL (DOZER)	462
HARNESS AS-CAB (WIPER, SPEAKER)	638
HARNESS AS-CHASSIS	166
	167
	243
	248
HARNESS AS-CONSOLE	249
HARNESS AS-CONSOLE (WINCH)	473
HARNESS AS-CONTROL	244
HARNESS AS-CONTROL (PRODUCT LINK)	180
HARNESS AS-CONTROL (PRODUCT LINK) (COMMUNICATIONS)	178
HARNESS AS-ENGINE (ELECTRONIC CONTROL MODULE)	238
HARNESS AS-ENGINE (UNIT INJECTOR)	238
HARNESS AS-FRONT LIGHTING (CYLINDER)	192
HARNESS AS-HEATER & AIR COND (CONDENSER BLOWER MOTORS) (A/C)	614
HARNESS AS-LIGHTING (FLOODLIGHT) (REAR)	190
HARNESS AS-LIGHTING (FRONT) (CYLINDER)	195
HARNESS AS-LIGHTING (FRONT FLOODLIGHTS)	198
HARNESS AS-LIGHTING (REAR) (ROPS)	195
HARNESS AS-LIGHTING (REAR) (SIDE FLOODLIGHTS)	198
HARNESS AS-LIGHTING (ROPS)	192
HARNESS AS-MONITOR	244
HARNESS AS-MOTOR	600
HARNESS AS-PANEL	202
HARNESS AS-PANEL (INSTRUMENT)	628
HARNESS AS-PANEL (INSTRUMENT)	631
HARNESS AS-PLATFORM	243
HARNESS AS-POWER (ELECTRICAL CONVERTER)	174
HARNESS AS-RADIO	244
HARNESS AS-RADIO (PRODUCT LINK)	180
HARNESS AS-RADIO (PRODUCT LINK) (COMMUNICATIONS)	178
HARNESS AS-SENSOR	266
	467
HARNESS AS-SOLENOID (WINCH, REAR)	582
HARNESS AS-SWITCH (SERVICE BRAKE)	665
HARNESS AS-TRANSMISSION	167

INDEX

Name	Page
	240
HARNESS AS-VALVE (SEAT AIR COMPRESSOR)	693
HARNESS AS-WIRING	244 429 578
HARNESS AS-WIRING (AIR CONDITIONER COMPRESSOR)	640 643
HARNESS AS-WIRING (CRANK WITHOUT INJECT)	240
HARNESS AS-WIRING (FUEL PRESSURE)	145
HARNESS AS-WIRING (LH)	244
HARNESS AS-WIRING (MACHINE SECURITY SYSTEM)	183
HARNESS AS-WIRING (RH)	244
HARNESS AS-WIRING (ROPS)	643
HARNESS AS-WIRING (WINDOW WASHER)	695
HARNESS AS-WIRING (WIPER, WASHER, RADIO)	698
HEATER GP-CAB	623
HEATER GP-JACKET WATER	176
HOSE-FUMES DISP (CRANKCASE)	81
HOSE-RADIATOR	101
HOUSING AS-FLYWHEEL	51
HOUSING GP-FLYWHEEL	52
HOUSING GP-FRONT	54
HOUSING GP-SEAT SUSPENSION	624
HYDRAULIC AR-2 VALVE	464

I

IDLER GP-FRONT–SYSTEMONE	388
IDLER GP-FRONT–WASTE HANDLING	389
IDLER GP-TRACK	391
INDICATOR AS (ACTION LIGHT)	243 628 631
INJECTOR GP-FUEL	142
INSTALLATION AR-ENGINE	16
INSTALLATION AR-GRADE CONTROL–ACCUGRADE	177
INSTALLATION AR-WINCH	581
INSTALLATION GP-COMMUNICATION	178 180
INSTALLATION GP-GRADE CONTROL	182
INSTALLATION GP-RADIO	627
INSTALLATION GP-SECURITY	183
INSTRUMENT GP-CAB	628
INSTRUMENT GP-CAB–OPEN ROPS	631

K

KEY AS-ELECTRONIC (SECURITY) (GRAY)	183
KEY AS-ELECTRONIC (SECURITY) (YELLOW)	183
KIT-AIR CLEANER CLAMP	117
KIT-AIR VALVE (SUSPENSION SEAT)	693
KIT-BEARING (ALTERNATOR)	157
KIT-BEARING (MOTOR ROTATING GROUP) (ROTATING PISTON MOTOR)	501
KIT-BEARING (STARTING MOTOR)	223
KIT-BEARING (SUSPENSION SEAT)	625
KIT-BRUSH (STARTING MOTOR)	223 226
KIT-BUMPER (WEIGHT ADJUSTMENT) (SUSPENSION SEAT)	625
KIT-BUSHING (STARTING MOTOR)	226
KIT-CAP FILTER (FUEL TANK, VENTED)	154
KIT-CATCH (CAB WINDOW)	708 710 711
KIT-FOLLOWER (SUSPENSION SEAT)	625
KIT-HARDWARE (ALTERNATOR)	157
KIT-HARDWARE (STARTING MOTOR)	223
KIT-HYDRAULIC CYLINDER SEAL	456
KIT-INDICATOR (WEIGHT ADJUSTMENT) (SUSPENSION SEAT)	625
KIT-INSULATOR (STARTING MOTOR)	226
KIT-LEAF SPRING (CAB WINDOW)	706 707
KIT-LEAF SPRING (CAB WINDOW)	713
KIT-LEVER (STARTING MOTOR)	226
KIT-PRECLEANER (TURBINE)	130 131
KIT-REPAIR (FUEL LEVEL GAUGE)	154
KIT-RUNNER GUIDE (CAB WINDOW)	708 711
KIT-RUNNER GUIDE (INCL GUIDE & SCREW)	710
KIT-SCREEN (PRECLEANER)	131
KIT-SEAL (ACCUMULATOR)	252 253
KIT-SEAL (DEMAND FAN VALVE)	316
KIT-SEAL (FAN CLUTCH)	39
KIT-SEAL (RELIEF VALVE)	546
KIT-SEAL (SOLENOID VALVE)	436 549
KIT-SHIM (21-SHIMS) (PISTON PUMP)	499
KIT-SHOCK ABSORBER (SUSPENSION SEAT)	693
KIT-SLIDER BLOCK (SUSPENSION SEAT)	688 689 690
KIT-SPRING (HEIGHT ADJUSTMENT) (SUSPENSION SEAT)	624
KIT-SPRING (SUSPENSION SEAT)	624
KIT-STARTING MOTOR PIN	223
KIT-STARTING MOTOR SEAL	223

INDEX

Name	Page
KIT-STOP RAIL (CAB WINDOW)	713
KIT-SUSPENSION KNOB (HEIGHT ADJUSTMENT) (SUSPENSION SEAT)	624
KIT-TERMINAL (ALTERNATOR)	157
KIT-TERMINAL (LOCK)	202
KIT-TETHER (SUSPENSION SEAT)	693
KIT-WASHER (STARTING MOTOR)	223
KIT-WIPER BLADE (WINDOW)	716
KNOB GP	635

L

Name	Page
LAMP AS-INDICATOR (ACTION LIGHT)	248
LAMP GP-DOME	185
LAMP GP-FLOOD–SUSPENDED MOUNT	186 188
LAMP GP-FLOOD–VERTICAL MOUNT	187
LAMP-HALOGEN (24-VOLT, 65-WATT)	187
LAMP-HALOGEN (24-VOLT, 65-WATT) (FLOOD)	186
LAMP-HALOGEN (24-VOLT, 65-WATT) (FLOODLIGHT)	188
LAMP-LED (24-VOLT, GREEN)	473
LAMP-LED (24-VOLT, RED) (MACHINE SECURITY SYSTEM)	183
LAMP (24-VOLT)	185 248 578 628 631
LAMP (24-VOLT, 3-WATT)	243 628 631
LATCH GP	364
LENS AS	187
LENS AS (FLOOD)	186
LIFTING GP-ENGINE	55
LIGHTING GP-FLOOD–11-LAMP	195
LIGHTING GP-FLOOD–2-LAMP–ROPS MOUNTED	189
LIGHTING GP-FLOOD–5-LAMP, ENG COMPT, FRONT, REAR	190
LIGHTING GP-FLOOD–7-LAMP	192
LIGHTING GP-FLOOD–9-LAMP	198
LINER GP-CAB	636 638
LINES GP-AIR	122
LINES GP-AIR–ATAAC	123
LINES GP-AIR CONDITIONER	640
LINES GP-AIR CONDITIONER–ROPS MOUNTED	643
LINES GP-ENGINE OIL	83
LINES GP-FUEL	143 145
LINES GP-HEATER	647
LINES GP-LIFT CYLINDER	465
LINES GP-OIL SUPPLY–HYDRAULIC FAN OIL	84
LINES GP-PILOT	467
LINES GP-PILOT–GRADE CONTROL	475
LINES GP-PILOT–RIPPER	471
LINES GP-PILOT–WINCH	473
LINES GP-POWER TRAIN OIL	283
LINES GP-PUMP	478
LINES GP-RIPPER	481 482
LINES GP-TILT CYLINDER	483
LINES GP-TILT CYLINDER–ANGLING BULLDOZER	489
LINES GP-TILT CYLINDER–SEMI-UNIVERSAL BULLDOZER	485 487
LINES GP-TURBOCHARGER OIL	87 89
LINES GP-WATER	101
LINES GP-WATER–REGULATOR	100
LINES GP-WATER–TURBOCHARGER	103
LINES GP-WINCH	582
LINK AS-TRACK	392 393
LINK AS-TRACK BOX–LINK BOX	394 396
LINK AS-TRACK BOX–LINK BOX, OFFSET	395 397
LINK GP-TRACK–SYSTEMONE	398 399
LITERATURE GP	2

M

Name	Page
MANIFOLD & VALVE GP–PARKING, SECONDARY BRAKE	435
MANIFOLD & VALVE GP–SECONDARY BRAKE	433
MANIFOLD GP-CONTROL–IMPLEMENT PILOT PRESSURE	491
MANIFOLD GP-EXHAUST	126
MANIFOLD GP-TRANSMISSION	289
MANIFOLD GP-VALVE	492
MIRROR GP-REAR VIEW–CAB	650
MIRROR GP-REAR VIEW–OPEN ROPS	649
MODULE & MTG GP-GRADE CONTROL	200
MODULE GP-DISPLAY	651
MODULE GP-INTERFACE (KEY)	183
MODULE GP-POWER SUPPLY	200
MODULE GP-QUAD GAUGE	652
MOTOR GP-ELECTRIC	614
MOTOR GP-PISTON	493
MOTOR GP-WINDOW WIPER–FRONT	653

INDEX

Name	Page
MOTOR GP-WINDOW WIPER–REAR	654
MOUNTING GP-ALTERNATOR	56
MOUNTING GP-ANTENNA–ACCUGRADE	655
MOUNTING GP-CAB	656
MOUNTING GP-CARRIER ROLLER	400
MOUNTING GP-CONNECTOR	201
MOUNTING GP-CYLINDER	494
MOUNTING GP-ENGINE	57
MOUNTING GP-FAN DRIVE	58
MOUNTING GP-FINAL DRIVE	290
MOUNTING GP-MAST–GRADE CONTROL	585
	586
	587
MOUNTING GP-MONITOR–GRADE CONTROL–CAB	657
MOUNTING GP-MONITOR–GRADE CONTROL–CHASSIS	658
MOUNTING GP-PLATFORM	659
MOUNTING GP-RIPPER	588
MOUNTING GP-ROPS	661
MOUNTING GP-TRANSMISSION	291
MOUNTING GP-VALVE–IMPLEMENT	496
MUFFLER GP	127

O

OIL CHANGE GP-HIGH SPEED	91

P

PADLOCK GP (BATTERY BOX)	328
PADLOCK GP (ENGINE ENCLOSURE)	334
PADLOCK GP (FUEL CAP)	154
PADLOCK GP (HYDRAULIC TANK ENCLOSURE)	341
PADLOCK GP (HYDRAULIC TANK FILL)	503
PADLOCK GP (LITERATURE COMPARTMENT)	607
PADLOCK GP (RADIATOR GUARD)	359
PAN GP-BACKREST	663
PAN GP-BACKREST–CLOTH	662
PAN GP-BACKREST–VINYL SEAT	664
PAN GP-OIL	59
PANEL GP-FUSE	202
PEDAL GP-GOVERNOR & BRAKE	665
PISTON & ROD GP	60
PIVOT BAR GP	401
PLANETARY GP-TRANSMISSION	292
PLATE & FILM GP	723
	724
	726
PLATE-IDENTIFICATION (SEQUENCE)	604
PLATE-INSTRUCTION (AIR CONDITIONER)	598
	723
	725
PLATE-SERIAL NUMBER	560
PLATE-SERIAL NUMBER (BULLDOZER)	553
	554
	555
	556
	557
	558
	559
PLATE-SERIAL NUMBER (RIPPER)	590
PLATE-SERIAL NUMBER (TRANSMISSION)	263
PLATE-WARNING (HIGH PRESSURE CYLINDER)	375
	377
	379
	423
	424
PLATE-WARNING (RECOIL SPRING)	375
	377
	379
	381
	423
	424
PLATFORM GP	667
PLATFORM GP-OPERATOR	668
PLUG AS-CODE (GRADE CONTROL)	177
PLUG AS-CODE (MONITOR)	629
	632
PLUG AS-CODE (POWER TRAIN)	431
PLUG-DRAIN (HYDRAULIC TANK)	504
PLUG-DRAIN (POWER TRAIN)	273
PLUG (DRAIN) (TRANSMISSION CASE)	331
PLUG-DRAIN (TRANSMISSION OIL COOLER)	268
PLUG GP-ENGINE	61
PLUG-MAGNETIC (FINAL DRIVE, OIL FILL)	276
	278
POWER TRAIN AR	298
PRECLEANER AR–WITH PRESCREEN	128
PRECLEANER AR–WITHOUT PRESCREEN	129
PRECLEANER GP–WITH SCREEN	131
PRECLEANER GP–WITHOUT SCREEN	130
PRESCREENER AS	133
PRESSURIZER GP-CAB	671
PULLEY GP-CRANKSHAFT	62
PULLEY GP-FAN & ALT DRIVE	63
	65
PUMP & MOUNTING GP	497
PUMP & MTG GP-UNIT INJ HYD	147
PUMP GP-ENGINE OIL	93
PUMP GP-FUEL INJECTION	149
	150
	151
PUMP GP-FUEL TRANSFER	149
PUMP GP-GEAR–TRANSMISSION, TORQUE CONVERTER	299

INDEX

Name	Page
	301
PUMP GP-PISTON–IMPLEMENT	498
PUMP GP-WATER	105
	106
	107
PUSH ARM GP–SEMI-UNIVERSAL BULLDOZER	564
	566

R

RADIATOR AR–TRASH RESISTANT	108
RADIATOR GP	109
	111
RADIO GP-COMMUNICATION (PRODUCT LINK 121SR)	178
	180
RECEIVER-DRYER GP (AIR CONDITIONER)	640
	643
RECLINER GP-SEAT	673
REGULATOR AS (FUEL PRESSURE)	145
REGULATOR AS-VOLTAGE (24-VOLT)	157
REGULATOR-WATER TEMPERATURE (92-DEG C) (COOLANT)	100
RELAY AS (24-VOLT) (CONDENSER BLOWER MOTOR)	614
RIM AS-DOUBLE FLANGE	405
RIPPER AR	590
RIPPER GP	591
ROCKER ARM GP–EXHAUST	67
ROCKER ARM GP–INLET	68
ROLLER AR-TRACK	402
ROLLER GP-TRACK CARRIER–SYSTEMONE	403
ROLLER GP-TRACK-DOUBLE FLANGE	407
ROLLER GP-TRACK-DOUBLE FLANGE–HEAVY-DUTY	404
	405
ROLLER GP-TRACK-SINGLE FLANGE	410
ROLLER GP-TRACK-SINGLE FLANGE–HEAVY-DUTY	408
	409
ROPS GP	674
ROPS GP-OPEN	675
ROTATING GP-MOTOR	501

S

SCRAPER GP-IDLER	411
SCREEN AS (HYDRAULIC TANK)	504
SCREEN AS (TORQUE CONVERTER SCAVENGE)	283
SCREEN GP-MAGNETIC–TRANSMISSION	303
SCREEN GP-MAGNETIC (TRANSMISSION)	283
	303
SCREEN GP-PROTECTION–REAR	677
	678
SCREEN-SUCTION (TORQUE CONVERTER SCAVENGE)	263
SCREEN-SUCTION (TRANSMISSION)	303
SEAL	141
SEAL GP-CRANKSHAFT	69
	70
SEAL-LIP TYPE (WATER TEMPERATURE REGULATOR)	100
SEAL-O-RING	547
SEAT BELT GP	681
SEAT GP–AIR SUSPENSION, CLOTH	685
SEAT GP–AIR SUSPENSION, VINYL	686
SEAT GP–CLOTH	679
	681
	687
SEAT GP–VINYL	682
	684
SEAT GP-SUSPENSION–CLOTH	689
SEAT GP-SUSPENSION–CLOTH, AIR	690
SEAT GP-SUSPENSION–VINYL, AIR	688
SEGMENT GP-SPROCKET	304
SENDER AS-FUEL LEVEL	154
SENSOR AS-POSITION (JOYSTICK) (BULLDOZER CONTROL HANDLE)	445
SENSOR GP-ENGINE	204
SENSOR GP-POSITION–DECELERATOR PEDAL	206
SENSOR GP-POSITION–SERVICE BRAKE PEDAL	205
SENSOR GP-POSITION (DECELERATOR PEDAL)	665
SENSOR GP-POSITION (DIRECTION CONTROL)	425
SENSOR GP-PRESSURE	209
	210
	211
SENSOR GP-PRESSURE–ATMOSPHERIC AIR	209
SENSOR GP-PRESSURE–BULLDOZER PILOT OIL	214
SENSOR GP-PRESSURE–ENGINE OIL	210
SENSOR GP-PRESSURE–FUEL	208
SENSOR GP-PRESSURE–INJECTION ACTUATION	212
	213
SENSOR GP-PRESSURE–TURBOCHARGER INLET	207
SENSOR GP-PRESSURE (FUEL)	145
SENSOR GP-PRESSURE (INJECTION ACTUATION)	213
SENSOR GP-PRESSURE (TURBOCHARGER INLET)	166
SENSOR GP-SPEED–ENGINE TIMING	217

INDEX

Name	Page
SENSOR GP-SPEED–FAN DRIVE	215
SENSOR GP-SPEED–TORQUE CONVERTER	216
SENSOR GP-SPEED (FAN DRIVE)	39
SENSOR GP-SPEED (TORQUE CONVERTER)	240
SENSOR GP-SPEED (TRANSMISSION OUTPUT 1)	293
SENSOR GP-SPEED (TRANSMISSION OUTPUT 2)	293
SENSOR GP-TEMPERATURE–AIR INLET MANIFOLD	219
SENSOR GP-TEMPERATURE–TMSN, TORQUE CONVERTER OIL	218
SENSOR GP-TEMPERATURE–WATER, COOLANT	220
SENSOR GP-TEMPERATURE (2-PIN)	219, 220
SERVICE GP-MONITOR	175
SERVICE GP-POWER TRAIN	175
SHAFT GP-DRIVE	305
SHIELD AR-THERMO	151, 152
SHIELD GP-EXHAUST	134
SHIELD GP-HEAT	153
SOFTWARE GP-COMMUNICATION (GRADE CONTROL)	177
SOFTWARE GP-COMMUNICATION (PRODUCT LINK 121SR)	178
SOFTWARE GP-COMMUNICATION (PRODUCT LINK 121SR) (PRODUCT LINK 121SR)	180
SOFTWARE GP-MACHINE (SECURITY)	183
SOFTWARE GP-MONITOR	175
SOFTWARE GP-POWER TRAIN	175
SOLENOID AS (24-VOLT) (STARTING MOTOR)	223, 226
STARTING AID GP-ETHER	221
STARTING MOTOR GP-ELECTRIC	223, 225, 226, 229, 230
STARTING MOTOR GP-ELECTRIC–HEAVY-DUTY	228
STRAINER AS (HYDRAULIC TANK FILL)	504
STRAINER-FUEL	154
STRIKER GP-REAR	412
SUPPORT GP-ENGINE	71
SUSPENSION GP-SEAT	691
SUSPENSION GP-SEAT–AIR	693
SWEEP GP	365
SWITCH AS-KEY START (IGNITION)	628, 631
SWITCH AS (LIGHTS)	628, 631
SWITCH AS-LIMIT (PARKING BRAKE)	425
SWITCH AS-LIMIT (SERVICE BRAKE PEDAL)	665
SWITCH AS-PRESSURE (REFRIGERANT)	640, 643
SWITCH AS-PUSH BUTTON (AUTO KICK-DOWN)	631
SWITCH AS-PUSH BUTTON (AUTOMATIC KICKDOWN)	628
SWITCH AS-PUSH BUTTON (BIDIRECTIONAL MODE)	628, 631
SWITCH AS-PUSH BUTTON (DISPLAY MODES)	628, 631
SWITCH AS-PUSH BUTTON (DOWNSHIFT)	425
SWITCH AS-PUSH BUTTON (UPSHIFT)	425
SWITCH AS-ROCKER (AIR CONDITIONER CONTROL)	629
SWITCH AS-ROCKER (HYDRAULIC LOCKOUT)	248
SWITCH AS-ROCKER (PARKING BRAKE)	427
SWITCH AS-ROCKER (REAR FLOODLIGHTS)	190, 195, 198
SWITCH AS-ROCKER (REAR FLOODLIGHTS)	192
SWITCH AS-ROCKER (THROTTLE)	248
SWITCH AS-ROTARY (BLOWER)	628
SWITCH AS-ROTARY (FRONT)	638
SWITCH AS-ROTARY (LH DOOR)	638
SWITCH AS-ROTARY (REAR)	638
SWITCH AS-ROTARY (RH DOOR)	638
SWITCH AS-TEMPERATURE (REFRIGERANT)	599
SWITCH AS-TOGGLE (UNDERHOOD SERVICE LIGHT)	190, 192, 195, 198
SWITCH GP-BYPASS–POWER TRAIN OIL FILTER	232
SWITCH GP-DISCONNECT–BATTERY	233
SWITCH GP-MAGNETIC–MAIN RELAY	235
SWITCH GP-MAGNETIC–START RELAY	234
SWITCH GP-MAGNETIC (24-VOLT) (MAIN RELAY)	202
SWITCH GP-PUSH BUTTON–HORN–PRIMING PUMP	236

INDEX

Name	Page
T	
TANK & MTG GP-HYDRAULIC	503
TANK GP-COOLANT	112
	113
	114
TANK GP-FUEL	154
TANK GP-HYDRAULIC	504
TANK GP-WINDOW WASHER	695
	697
TOOTH GP-RIPPER–CURVED SHANK	595
TOOTH GP-RIPPER–STRAIGHT SHANK	594
TOOTH GP-RIPPER–STRAIGHT SHANK-1 TOOTH	596
TOOTH GP-RIPPER–STRAIGHT SHANK-2 TEETH	596
TOOTH GP-RIPPER–STRAIGHT SHANK-3 TEETH	593
TORQUE CONVERTER GP	306
	308
	311
TRACK ADJUSTER & RECOIL GP	414
TRACK GP–2 REQUIRED	416
TRACK GP–2-REQUIRED	416
	417
TRACK GP–2-REQUIRED, SYSTEMONE	418
	419
	420
	421
TRANSMISSION AR	313
TRUNNION GP-BULLDOZER	568
TRUNNION GP-ENGINE	72
TURBOCHARGER GP	135
	136
	137
	138
U	
UNDERCARRIAGE AR	422
UNDERCARRIAGE AR–HEAVY-DUTY	423
	424
UNIVERSAL JOINT GP	314
V	
V-BELT (COMPRESSOR)	40
V-BELT (ENGINE)	63
V-BELT (REFRIGERANT COMPRESSOR)	609
V-BELT SET (INCLUDES 2-BELTS) (ENGINE)	63
V-BELT SET (INCLUDES 2-BELTS) (FAN DRIVE)	40
V-BELT SET (INCLUDES 3-BELTS) (FAN)	65
VALVE & MTG GP-BULLDOZER–GRADE CONTROL	507
VALVE & MTG GP-CONTROL–TRANSMISSION	315
VALVE & MTG GP-COUNTERBALANCE	508
VALVE AS-WATER	623
VALVE-BREAKER RELIEF	503
VALVE GP-BANK 3–BULLDOZER LIFT, TILT, STEERING	509
VALVE GP-BANK 4–BULLDOZER, STEERING, WINCH	513
VALVE GP-BANK 4–STEERING, BULLDOZER, RIPPER	511
VALVE GP-CHECK–PILOT PRESSURE SUPPLY	515
VALVE GP-CONTROL–BULLDOZER LIFT	518
VALVE GP-CONTROL–BULLDOZER TILT	521
VALVE GP-CONTROL–RIPPER LIFT	523
VALVE GP-CONTROL–STEERING	516
VALVE GP-CONTROL–WINCH	526
VALVE GP-COUNTERBALANCE	528
VALVE GP-ETHER STARTING	237
VALVE GP-FLOW CONTROL	516
VALVE GP-FLUID SAMPLING	94
VALVE GP-MODULATING	316
	318
VALVE GP-MODULATING–PILOT OIL	95
VALVE GP-MODULATING–TRANSMISSION CLUTCH	317
VALVE GP-PILOT–BULLDOZER CONTROL	533
VALVE GP-PILOT–RIPPER	531
VALVE GP-PILOT–WINCH	529
VALVE GP-PILOT CARTRIDGE–BULLDOZER LIFT, LOWER	535
VALVE GP-PILOT CARTRIDGE–IMPLEMENT	536
VALVE GP-PRESSURE REDUCING–IMPLEMENT PILOT OIL	537
VALVE GP-PUMP CONTROL–PRESSURE, FLOW COMPENSATOR	538
VALVE GP-QUICK-DROP	540
	541
VALVE GP-RELIEF–CROSSOVER	544
VALVE GP-RELIEF–IMPLEMENT PILOT OIL	546
VALVE GP-RELIEF–MAIN	543
VALVE GP-RELIEF–PILOT OIL PRESSURE	545
VALVE GP-RELIEF–TORQUE CONVERTER OUTLET	321
VALVE GP-RELIEF–TRANSMISSION OIL PRESSURE	319
VALVE GP-RELIEF (REFRIGERANT COMPRESSOR)	608
VALVE GP-SHUTOFF	647
VALVE GP-SHUTTLE	547
	548
VALVE GP-SOLENOID–BLADE CONTROL	550
VALVE GP-SOLENOID–HYDRAULIC LOCKOUT	549

INDEX

Name	Page
VALVE GP-SOLENOID–PARKING, SECONDARY BRAKE	436
VALVE GP-SOLENOID–SECONDARY BRAKE	437
VALVE GP-TRANSMISSION CONTROL	322
	324
VALVE MECHANISM GP	73
	74

W

WASHER GP-WINDOW	698
WINDOW GP-CAB	715
WINDOW GP-CAB–LH	703
	705
	707
	708
WINDOW GP-CAB–REAR	700
	701
	711
	713
WINDOW GP-CAB–RH	702
	704
	706
	710
WINDOW GP-CAB (LH)	703
WINDOW GP-CAB (REAR)	701
WINDOW GP-CAB (RH)	702
WINDOW GP-SLIDING–LH	715
WINDOW GP-SLIDING–REAR	715
WINDOW GP-SLIDING–RH	715
WIPER GP-WINDOW	716
WIPER PIVOT GP	718
WIRING GP-ELECTRONIC CONTROL	238
WIRING GP-ENGINE	240
WIRING GP-GRADE CONTROL	243
WIRING GP-PLATFORM	248

Y

YOKE GP	75

INDEX

Désignation	Page
A	
ACCOUPLEMENT DE POMPE (ASS)	271
ACCUMULATEUR - CLIMATISEUR (ASS)	640 643
ACCUMULATEUR - HUILE PILOTE (ASS)	438
ACCUMULATEUR - HUILE PILOTE (ASS)	439
ACCUMULATEUR - HUILE PILOTE (ASS) (CHARGÉ)	467
ACCUMULATEUR (ASS)	252
ACCUMULATEUR (ASS)	253
ADAPTATEUR DE MOTEUR (ASS)	440
ALARME (ENS)	167
ALTERNATEUR DE CHARGE (ASS)	157 159 160 162 164
AMORTISSEUR DE VIBRATIONS (ASS)	33
AMPOULE (24 VOLTS)	248
AMPOULE (24 VOLTS)	185 578 628 631
AMPOULE (24V, 3W)	243 628 631
ARBRE A CAMES (ASS)	17
ARBRE DE TRANSMISSION (ASS)	254
ARBRE D'ENTRAÎNEMENT (ASS)	305
ARCEAUX DE DÉBARDAGE (ASS)	365
AUTOCOLLANT DE DISJONCTEUR	202
AUTOCOLLANT DE MISE EN GARDE (ACCUMULATEUR)	438 439
AUTOCOLLANT DE MISE EN GARDE (DÉMARRAGE AVEC CÂBLES VOLANTS, LIRE LE GUIDE)	724 726
AUTOCOLLANT DE MISE EN GARDE (ÉLECTROCUTION)	202
AUTOCOLLANT DE MISE EN GARDE (HAUTE PRESSION, LIRE LE GUIDE D'UTILISATION ET D'ENTRETIEN)	252 253
AUTOCOLLANT DE MISE EN GARDE (HAUTE PRESSION, LIRE LE GUIDE D'UTILISATION ET D'ENTRETIEN, ISO)	726
AUTOCOLLANT DE MISE EN GARDE (PAS DE SOUDAGE, PAS DE PERÇAGE, LIRE LE GUIDE D'UTILISATION ET D'ENTRETIEN)	724 726
AUTOCOLLANT DE MISE EN GARDE (PAS DE SOUDAGE, PAS DE PERÇAGE, LIRE LE GUIDE D'UTILISATION ET D'ENTRETIEN)	607
AUTOCOLLANT DE MISE EN GARDE (RADIO PRODUCT LINK, AUTRE QUE NACD)	726
AUTOCOLLANT DE MISE EN GARDE (RADIO PRODUCT LINK, NACD)	178 180
AUTOCOLLANT DE MISE EN GARDE (RESSORT AMORTISSEUR)	375 377 379 381 423 424
AUTOCOLLANT DE MISE EN GARDE (ROPS)	724
AUTOCOLLANT DE MISE EN GARDE (ROPS)	726
AUTOCOLLANT DE MISE EN GARDE (ROPS/FOPS)	607
AUTOCOLLANT D'IDENTIFICATION (COMMANDE DE TREUIL)	442
AUTOCOLLANT D'IDENTIFICATION (COMMANDES D'ESSUIE-GLACE)	638
AUTOCOLLANT D'IDENTIFICATION (CONTACTEUR D'ALLUMAGE)	183
AUTOCOLLANT D'IDENTIFICATION (ÉCLAIRAGE)	629
AUTOCOLLANT D'IDENTIFICATION (FILTRE)	578
AUTOCOLLANT D'IDENTIFICATION (LEVIER) (COMMANDE DE PROFIL LONGITUDINAL)	177
AUTOCOLLANT D'IDENTIFICATION (NUMÉRO D'ASSEMBLAGE) (CONDENSEUR DE RÉFRIGÉRANT)	614
AUTOCOLLANT D'IDENTIFICATION (RÉCHAUFFEUR D'EAU)	176
AUTOCOLLANT D'IDENTIFICATION (SYSTÈME DE SÉCURITÉ)	183
AUTOCOLLANT D'IDENTIFICATION (TABLEAU DE BORD)	628 631 632
AUTOCOLLANT D'IDENTIFICATION (TAMBOUR LIBRE DU TREUIL)	578
AUTOCOLLANT D'IDENTIFICATION (TÉMOIN D'ACTIONNEMENT)	631
AUTOCOLLANT D'IDENTIFICATION (VITESSE LENTE, ÉCLAIRAGE DE TREUIL)	442
AUTOCOLLANT-INFORMATION (FILTRE À AIR)	117

* TRADUCTION NON DISPONIBLE AU MOMENT DE LA PUBLICATION

INDEX

Désignation	Page
AUTOCOLLANT-INFORMATION (TIRANT)	581, 590
AUTOCOLLANT-INFORMATION (TIRANT)	332, 333
AUXILIAIRE DE DÉMARRAGE À L'ÉTHER	221
AVERTISSEMENT DE PROFIL LONGITUDINAL (ASS)	243
AVERTISSEUR (ASS)	156
AXE DE CULBUTEUR (ASS)	67, 68
B	
BALAI D'ESSUIE-GLACE (ENS) (AVANT, ARRIÈRE)	716
BALAI D'ESSUIE-GLACE (ENS) (PORTE, DROITE, GAUCHE)	716
BALANCIER DE SUSPENSION (ASS)	368, 370
BARRE D'ATTELAGE (ASS)	333
BARRE D'ATTELAGE (ASS)	332
BARRE DÉFLECTRICE (ASS)	326
BARRE DÉFLECTRICE (ASS)	371
BARRE DÉFLECTRICE (VERSION)	367
BATI EN C (ASS)	562, 563
BATI EN C (ENS)	561
BATTERIE (ASS)	170
BATTERIE ET CÂBLAGE	166
BATTERIE (12V, HUMIDE)	167
BATTERIE (12V, SANS ENTRETIEN)	170
BIELLE DE CARTER DE CHAÎNE (ENS)	394, 395, 396, 397
BIELLETTE - CHAÎNE (ASS)	398, 399
BLINDAGE AR	362
BLINDAGE DE TRANSMISSION	363
BLINDAGE INFÉRIEUR (ASS)	350, 351, 353, 354
BLOC-CYLINDRES - COUVERCLE (ASS)	18
BLOC-CYLINDRES (ASS)	26, 27
BLOC-CYLINDRES (ENS)	24
BOÎTE DE VITESSES (VERSION)	313
BOÎTE PLANÉTAIRE (ASS)	292
BOUCHON À ÉVENT (RÉSERVOIR DE LAVE-GLACE DE VITRE)	695
BOUCHON AIMANTÉ (RÉDUCTEUR, REMPLISSAGE D'HUILE)	276
	278
BOUCHON CONTRE LA PLUIE	162
BOUCHON DE GOULOTTE DE REMPLISSAGE (ENS) (MOTEUR)	76
BOUCHON DE GOULOTTE DE REMPLISSAGE (ENS) (RÉSERVOIR DE CARBURANT)	154
BOUCHON DE GOULOTTE DE REMPLISSAGE (RÉSERVOIR HYDRAULIQUE)	504
BOUCHON DE MOTEUR (ASS)	61
BOUCHON DE RADIATEUR (ENS)	112, 113
BOUCHON DE REMPLISSAGE D'HUILE MOTEUR (ASS)	76
BOUCHON DE VIDANGE (REFROIDISSEUR D'HUILE DE BOÎTE)	268
BOUCHON DE VIDANGE (RÉSERVOIR HYDRAULIQUE)	504
BOUCHON DE VIDANGE (TRANSMISSION)	273
BOUCHON FILETÉ (VIDANGE) (CARTER DE BOITE DE VITESSES)	331
BOULONNERIE D'AMORTISSEUR ET DE POULIE	44
BOULONNERIE DE CARTER AV (ASS)	45
BOULONNERIE DE LA CULASSE (ASS)	42, 43
BOURRELET D'ÉTANCHÉITÉ	141
BOUTON (ASS)	635
BRAS DE POUSSÉE (ASS)	564, 566
BULLDOZER À ORIENTATION (VERSION)	554, 555, 556
BULLDOZER À ORIENTATION (VERSION)	553
C	
CABINE - REVÊTEMENT (ASS)	636, 638
CABINE (ASS)	604
CABINE-FAISCEAU DE CÂBLES (ENS) (ESSUIE-GLACE, HAUT-PARLEUR)	638
CABINE (VERSION)	602, 603
CABLAGE - PLATE-FORME (ASS)	248
CABLAGE DE MOTEUR (ASS)	240
CÂBLAGE-MONITEUR	244
CABLAGE MOTEUR (ENS) (INJECTEUR D'UNITÉ)	238
CABLAGE MOTEUR (ENS) (MODULE DE COMMANDE ÉLECTRONIQUE)	238
CACHE-SOUPAPE - BOULONNERIE (ASS)	46, 47
CACHE-SOUPAPES (ASS)	22

* TRADUCTION NON DISPONIBLE AU MOMENT DE LA PUBLICATION

INDEX

Désignation	Page
CADENAS (ASS) (BOUCHON DE CARBURANT)	154
CADENAS (ASS) (CARENAGE DE MOTEUR)	334
CADENAS (ASS) (CARÉNAGE DE RÉSERVOIR HYDRAULIQUE)	341
CADENAS (ASS) (COMPARTIMENT DE BATTERIE)	328
CADENAS (ASS) (COMPARTIMENT POUR LA DOCUMENTATION)	607
CADENAS (ASS) (PROTÈGE-RADIATEUR)	359
CADENAS (ASS) (REMPLISSAGE DE RÉSERVOIR HYDRAULIQUE)	503
CANALISATIONS A COMMANDE PILOTE (ASS)	471
	473
	475
CANALISATIONS A COMMANDE PILOTE (ASS)	467
CANALISATIONS D'AIR (ASS)	122
	123
CANALISATIONS D'ALIMENTATION D'HUILE (ASS)	84
CANALISATIONS DE CARBURANT (ASS)	143
	145
CANALISATIONS DE CHAUFFAGE (ASS)	647
CANALISATIONS DE CLIMATISEUR (ASS)	640
	643
CANALISATIONS DE POMPE (ASS)	478
CANALISATIONS DE RÉCHAUFFEUR DE LIQUIDE DE REFROIDISSEMENT	647
CANALISATIONS DE TREUIL (ASS)	582
CANALISATIONS DE VÉRIN DE LEVAGE (ASS)	465
CANALISATIONS D'EAU (ASS)	100
	101
	103
CANALISATIONS D'HUILE DE TRANSMISSION (ASS)	283
CANALISATIONS D'HUILE DE TURBOCOMPRESSEUR (ASS)	87
	89
CANALISATIONS D'HUILE MOTEUR (ASS)	83
CANALISATIONS DU RIPPER (ASS)	481
	482
CANALISATIONS DU VÉRIN D'INCLINAISON (ASS)	483
	485
	487
	489
CAPTEUR - MOTEUR (ASS)	204
CAPTEUR DE POSITION (ENS) (LEVIER) (POIGNÉE DE COMMANDE DE LAME)	445
CAPTEUR DE PRESSION (ASS)	207
	208
	209
	210
	211
	212
	213
	214
CAPTEUR DE PRESSION (ASS) (ADMISSION DE TURBOCOMPRESSEUR)	166
CAPTEUR DE PRESSION (ASS) (CARBURANT)	145
CAPTEUR DE PRESSION (ASS) (COMMANDE D'INJECTION)	213
CAPTEUR DE TEMPERATURE (ASS)	218
	219
	220
CAPTEUR DE TEMPERATURE (ASS) (2 BROCHES)	219
	220
CAPTEUR DE VITESSE (ASS)	215
	216
	217
CAPTEUR DE VITESSE (ASS) (CONVERTISSEUR DE COUPLE)	240
CAPTEUR DE VITESSE (ASS) (ENTRAÎNEMENT DE VENTILATEUR)	39
CAPTEUR DE VITESSE (ASS) (SORTIE 1 DE BOÎTE)	293
CAPTEUR DE VITESSE (ASS) (SORTIE 2 DE BOÎTE)	293
CARENAGE - RESERVOIR HYDRAULIQUE (ASS)	341
CARENAGE DE MOTEUR (ASS)	337
	339
CARENAGE DE MOTEUR (ASS)	334
CARTER AV (ASS)	54
CARTER DE VOLANT (ASS)	52
CARTER DE VOLANT (ENS)	51
CARTER TELESCOPIQUE DE MECANISME AMORTISSEUR	375
	377
	379
	381
CEINTURE DE SECURITE (ASS)	681
CHAINES (ASS)	416
	417
	418
	419
	420
	421
CHAPEAU DE GALET INFERIEUR (ASS)	374
CHAPEAU DE ROUE AV (CHAINE) (ASS)	372
	373

* TRADUCTION NON DISPONIBLE AU MOMENT DE LA PUBLICATION

INDEX

Désignation	Page
CHÂSSIS ET CARTER (ASS)	331
CHAUFFAGE DE CABINE (ASS)	623
CLAPET DE DECHARGE (ASS)	319
	321
	543
	544
	545
	546
CLAPET DE DECHARGE (ASS) (COMPRESSEUR DE RÉFRIGÉRANT)	608
CLAPET DE DÉCHARGE HYDRAULIQUE	503
CLAPET DE RETENUE (ENS)	515
CLÉ ÉLECTRONIQUE (ENS) (SÉCURITÉ) (GRIS)	183
CLÉ ÉLECTRONIQUE (ENS) (SÉCURITÉ) (JAUNE)	183
CLIMATISEUR (ASS)	599
CLIMATISEUR (VERSION)	598
COLLECTEUR - COMMANDE (ASS)	491
COLLECTEUR - SOUPAPE (ASS)	492
COLLECTEUR D'ÉCHAPPEMENT (ASS)	126
COLLECTEUR ET SOUPAPE (ASS)	433
	435
COMMANDE DE DIRECTION ET BOITE DE VITESSES	429
	431
COMMANDE DE FAISCEAU (ENS)	244
COMMANDE DE FAISCEAU (ENS) (LIAISON DE PRODUIT)	180
COMMANDE DE FAISCEAU (ENS) (LIAISON DE PRODUIT) (*COMMUNICATIONS)	178
COMMANDE DE FREIN DE STATIONNEMENT (ASS)	427
COMMANDE DE MACHINE (ASS)	171
COMMANDE DE MONITEUR NON PROGRAMMÉE (ASS)	617
COMMANDE DE MONITEUR NON PROGRAMMÉE (ASS) (SYSTÈME DE SURVEILLANCE CATERPILLAR)	628
	631
COMMANDE DE POIGNÉE (ASS)	425
COMMANDE DE POIGNÉE (ASS)	444
COMMANDE DE POIGNÉE (ASS) (COMMANDE DE TREUIL)	578
COMMANDE DE POIGNÉE (ASS) (TREUIL)	529
COMMANDE DE TREUIL (ASS)	578
COMMANDE ÉLECTRONIQUE - CABLAGE	238
COMMANDE ELECTRONIQUE DE MOTEUR (ASS)	171
	172
COMMANDE (ENS) (TEMPÉRATURE)	628
COMMANDE ET MONTAGE - LEVIER (ASS)	441
COMMANDE ET MONTAGE DE PÉDALE (ASS)	616
COMMANDE HYDRAULIQUE DE BOÎTE (ASS)	266
COMMANDE HYDRAULIQUE PILOTE (ASS)	446
COMMANDE NON PROGRAMMEE (ASS)	173
COMMANDE NON PROGRAMMEE (ASS)	249
COMPARTIMENT DE BATTERIE (ASS)	328
	329
COMPOSANTS ÉLECTRONIQUES DE LA MACHINE (VERSION)	175
COMPRESSEUR DE REFRIGERANT (ASS)	608
	609
CONDENSATEUR ET MONTAGE (RÉFRIGÉRANT)	611
	612
CONDENSEUR DE RÉFRIGÉRANT	614
CONSOLE DE FAISCEAU (ENS)	249
CONSOLE DE FAISCEAU (ENS) (TREUIL)	473
CONTACTEUR DE BOUTON-POUSSOIR (ASS)	236
CONTACTEUR DE DÉMARRAGE À CLÉ (ENS) (ALLUMAGE)	628
	631
CONTACTEUR (ENS) (ÉCLAIRAGE)	628
	631
CONTACTEUR MAGNETIQUE (ASS)	234
	235
CONTACTEUR MAGNETIQUE (ASS) (24 VOLTS) (RELAIS PRINCIPAL)	202
CONVERTISSEUR DE COUPLE (ASS)	306
	308
	311
COUDE	77
COUDE D'ADMISSION D'AIR (ASS)	120
COURONNE ET ENGRENAGES DE TRANSFERT (ASS)	280
COURROIE (ALTERNATEUR)	65
COURROIE (ALTERNATEUR, POMPE À EAU)	160
COURROIE TRAPEZOIDALE (COMPRESSEUR)	40
COURROIE TRAPEZOIDALE (COMPRESSEUR DE RÉFRIGÉRANT)	609
COURROIE TRAPEZOIDALE (MOTEUR)	63
COUVERCLE DE CARTER AV (ASS)	20
	21
COUVERCLE DE LA CONSOLE (ASS)	618
	619
COUVERCLE INFÉRIEUR-DOSSIER (ASS)	662
	663
	664

* TRADUCTION NON DISPONIBLE AU MOMENT DE LA PUBLICATION

INDEX

Désignation	Page
CREPINE (ENS) (REMPLISSAGE DE RÉSERVOIR HYDRAULIQUE)	504
CULASSE (ASS)	30
	31
CULASSE (ENS)	28
CULBUTERIE (ASS)	73
	74
CYLINDRE D'ETHER (ENS)	221

D

DEFLECTEUR D'ECHAPPEMENT (ASS)	134
DEFLECTEUR PARE-SABLE (ASS)	346
DÉMARREUR ÉLECTRIQUE (ASS)	228
	229
	230
DÉMARREUR ÉLECTRIQUE (ASS)	223
DÉMARREUR ÉLECTRIQUE (ASS)	225
	226
DENT DE RIPPER (ASS)	593
	594
	595
	596
DIODE (24-VOLTS, ROUGE) (SYSTÈME DE SÉCURITÉ DE LA MACHINE)	183
DIODE (24-VOLTS, VERT)	473
DISJONCTEUR DE SECURITE (ENS) (FREIN DE STATIONNEMENT)	425
DISJONCTEUR DE SECURITE (ENS) (PÉDALE DE FREIN DE MANOEUVRE)	665
DISJONCTEUR (ENS) (15A) (MOTEUR DE SOUFFLANTE DE VENTILATEUR)	202
DISPOSITIF DE VIDANGE RAPIDE D'HUILE (ASS)	91
DISPOSITIF D'EVACUATION DES VAPEURS DE CARTER	80
	81
DISTRIBUTEUR - 2 VOIES (VERSION)	464
DISTRIBUTEUR (ASS)	516
	518
	521
	523
	526
DISTRIBUTEUR DE BOITE (ASS)	322
	324
DISTRIBUTEUR DE DÉBIT (ASS)	516
DISTRIBUTEUR DE POMPE (ASS)	538
DISTRIBUTEUR ET MONTAGE (ASS)	315
DISTRIBUTEUR TRIPLE ÉLÉMENT (ASS)	509
DISTRIBUTEUR 4 ÉLÉMENTS (ASS)	511
	513

E

EAU DES CHEMISES - RECHAUFFEUR (ASS)	176
ÉCLAIRAGE - PROJECTEURS (ASS)	189
	190
	192
	195
	198
ÉCRAN (ENS) (GAVAGE DU CONVERTISSEUR DE COUPLE)	283
ÉCRAN (ENS) (RÉSERVOIR HYDRAULIQUE)	504
ÉCRAN MAGNÉTIQUE (ASS)	303
ÉCRAN MAGNÉTIQUE (ASS) (BOÎTE DE VITESSES)	303
ÉCRAN MAGNÉTIQUE (ASS) (BOÎTE DE VITESSES)	283
ÉCRAN THERMIQUE (ASS)	153
ÉCRAN THERMIQUE (VERSION)	151
	152
ÉJECTEUR AUTOMATIQUE DE POUSSIÈRE (ASS)	119
ÉLECTRONIQUE DE TRANSMISSION (ASS)	175
ÉLECTRONIQUE-MONITEUR (ASS)	175
ÉLÉMENT DE FILTRE À AIR (ENS) (PRINCIPAL)	117
ÉLÉMENT DE FILTRE À AIR (ENS) (SECONDAIRE)	117
ÉLÉMENT DE FILTRE À HUILE (ENS) (EFFICACITÉ AMÉLIORÉE)	504
ÉLÉMENT DE FILTRE À HUILE (ENS) (EFFICACITÉ STANDARD) (STANDARD)	504
ÉLÉMENT DE FILTRE À HUILE (ENS) (LIQUIDE RÉSISTANT AU FEU)	504
ÉLÉMENT DE FILTRE À HUILE (ENS) (TRÈS GRANDE EFFICACITÉ)	504
ÉLÉMENT DE FILTRE À HUILE (ENS) (TRÈS GRANDE EFFICACITÉ)	275
ÉLÉMENT DU RÉCHAUFFEUR D'EAU DES CHEMISES (ENS) (120V, 1500W)	176
ÉLÉMENT (RENIFLARD) (CARTER)	22
EMBOUT ET LAME DE COUPE (ASS)	579
	580
ENTRAÎNEMENT DE POMPE (ASS)	41
ENTRAÎNEMENT DE VENTILATEUR (ASS)	40
ENTRAÎNEMENT DE VENTILATEUR (ASS)	36
	38
	39
ENTRAINEMENT DE VENTILATEUR (VERSION)	35
ENTRETIEN DE LA TRANSMISSION (ASS)	175
ENTRETIEN DU MONITEUR (ASS)	175
ÉPURATEUR (ENS)	133
ESSUIE-GLACE (ASS)	716

* TRADUCTION NON DISPONIBLE AU MOMENT DE LA PUBLICATION

INDEX

Désignation	Page
ETRIER (ASS)	75

F

Désignation	Page
FAISCEAU-BOÎTE DE TRANSMISSION	167 240
FAISCEAU DE CABLES - CAPTEUR (ENS)	467
FAISCEAU DE CABLES - CAPTEUR (ENS)	266
FAISCEAU DE CABLES DE LA PLATE-FORME	243
FAISCEAU DE CABLES (ENS)	244 429 578
FAISCEAU DE CABLES (ENS) (COMPRESSEUR DE CLIMATISEUR)	640 643
FAISCEAU DE CABLES (ENS) (DROITE)	244
FAISCEAU DE CABLES (ENS) (GAUCHE)	244
FAISCEAU DE CABLES (ENS) (LANCEMENT DU MOTEUR SANS INJECTION)	240
FAISCEAU DE CABLES (ENS) (LAVE-VITRE)	695
FAISCEAU DE CABLES (ENS) (PRESSION DU CARBURANT)	145
FAISCEAU DE CABLES (ENS) (ROPS)	643
FAISCEAU DE CABLES (ENS) (SYSTÈME DE SÉCURITÉ DE LA MACHINE)	183
FAISCEAU DE CABLES (ENS) (*WIPER, WASHER, RADIO)	698
FAISCEAU DE CHÂSSIS (ENS)	166 167 243 248
FAISCEAU DE CHAUFFAGE ET CLIMATISATION (MOTEURS DE VENTILATEUR DE CONDENSEUR) (CLIMATISEUR)	614
FAISCEAU DE CONTACTEUR (ENS) (FREIN DE MANOEUVRE)	665
FAISCEAU DE MOTEUR (ENS)	600
FAISCEAU DE RADIO (ENS)	244
FAISCEAU DE RADIO (ENS) (LIAISON DE PRODUIT)	180
FAISCEAU DE RADIO (ENS) (LIAISON DE PRODUIT) (*COMMUNICATIONS)	178
FAISCEAU DE REFROIDISSEUR D'ADMISSION (ENS)	151 152
FAISCEAU DE SOLÉNOÏDE (ENS) (TREUIL ARRIÈRE)	582
FAISCEAU DE SOUPAPE (ENS) (COMPRESSEUR PNEUMATIQUE DE SIÈGE)	693
FAISCEAU D'ÉCLAIRAGE AVANT (ENS) (VÉRIN)	192
FAISCEAU D'ÉCLAIRAGE (ENS) (ARRIÈRE) (ROPS)	195
FAISCEAU D'ÉCLAIRAGE (ENS) (ARRIÈRE) (*SIDE FLOODLIGHTS)	198
FAISCEAU D'ÉCLAIRAGE (ENS) (AVANT) (VÉRIN)	195
FAISCEAU D'ÉCLAIRAGE (ENS) (PLAFONNIER) (ARRIÈRE)	190
FAISCEAU D'ÉCLAIRAGE (ENS) (PROJECTEURS AVANT)	198
FAISCEAU D'ÉCLAIRAGE (ENS) (ROPS)	192
FAISCEAU DU REFROIDISSEUR D'HUILE (ENS) (BOÎTE DE VITESSES)	268
FAISCEAU DU REFROIDISSEUR D'HUILE (ENS) (MOTEUR)	96
FENETRE COULISSANTE (ASS)	715
FENETRE COULISSANTE (ASS)	715
FILTRE - SÉPARATEUR D'EAU ET DE CARBURANT (ENS) (PRINCIPAL)	141
FILTRE À AIR (AIR FRAIS)	671
FILTRE A AIR (ASS)	117 118
FILTRE À CARBURANT	154
FILTRE A CARBURANT (ENS) (GRANDE EFFICACITÉ)	139
FILTRE A HUILE (ASS)	275
FILTRE A HUILE (ASS) (TRANSMISSION)	283
FILTRE À HUILE MOTEUR (ASS)	77
FILTRE A HUILE MOTEUR (ENS) (*ADVANCED EFFICIENCY)	77
FILTRE DE SÉPARATEUR D'EAU ET DE CARBURANT (ASS)	141
FILTRE (ENS) (RECIRCULATION D'AIR)	671
FILTRE ET CANALISATIONS DE CARBURANT (ASS)	139
FLEXIBLE DE RADIATEUR	101
FLEXIBLE D'ÉVACUATION DES VAPEURS (CARTER)	81
FREIN ET ENTRAÎNEMENT DE DIFFÉRENTIEL (ASS)	256
FREIN ET TRAINS PLANÉTAIRES (ASS)	261
FUSIBLE (10A)	202
FUSIBLE (15A)	202
FUSIBLE (175A)	202 249
FUSIBLE (20A)	202

G

Désignation	Page
GALET A BOUDIN DOUBLE (ASS)	404 405

* TRADUCTION NON DISPONIBLE AU MOMENT DE LA PUBLICATION

INDEX

Désignation	Page
	407
GALET A BOUDIN SIMPLE (ASS)	408
	409
	410
GALET INFÉRIEUR (VERSION)	402
GALET SUPERIEUR (ASS)	403
GARDE-BOUE (ASS)	343
	344
	345
GRILLE DE PROTECTION (ASS)	677
	678
GRILLE DE RADIATEUR (ASS)	347
	348
GROUPE DE MOTEUR A PISTONS	493
GROUPE DE ROTATION DE MOTEUR	501
GUIDE PROTECTEUR DE CHAÎNE (ASS)	383
	384

H

HUILE MOTEUR - CARTER (ASS)	59

I

INDICATEUR (ENS) (TÉMOIN D'ACTIONNEMENT)	243
INDICATEUR (ENS) (TÉMOIN D'ACTIONNEMENT)	628
	631
INJECTEUR DE CARBURANT (ASS)	142
INSTRUMENTS DE LA CABINE (ASS)	628
INSTRUMENTS DE LA CABINE (ASS)	631
INTERRUPTEUR - BOUTON-POUSSOIR (ENS) (CHANG. DE VITESSE)	425
INTERRUPTEUR - BOUTON-POUSSOIR (ENS) (MODE BIDIRECTIONNEL)	628
	631
INTERRUPTEUR - BOUTON-POUSSOIR (ENS) (MODES D'AFFICHAGE)	628
	631
INTERRUPTEUR - BOUTON-POUSSOIR (ENS) (PASSAGE DE VITESSE)	425
INTERRUPTEUR - BOUTON-POUSSOIR (ENS) (RÉTROGRADAGE AUTOMATIQUE)	628
	631
INTERRUPTEUR - DÉRIVATION (ASS)	232
INTERRUPTEUR À BASCULE (ENS) (TÉMOIN D'ENTRETIEN SOUS LE CAPOT)	190
	192
	195
	198
INTERRUPTEUR BALANCIER (ENS) (ACCÉLÉRATEUR)	248
INTERRUPTEUR BALANCIER (ENS) (BLOCAGE HYDRAULIQUE)	248
INTERRUPTEUR BALANCIER (ENS) (COMMANDE DE CLIMATISEUR)	629
INTERRUPTEUR BALANCIER (ENS) (FREIN DE STATIONNEMENT)	427
INTERRUPTEUR BALANCIER (ENS) (PROJECTEURS ARRIÈRE)	190
	192
	195
	198
INTERRUPTEUR ROTATIF (ENS) (ARRIÈRE)	638
INTERRUPTEUR ROTATIF (ENS) (AVANT)	638
INTERRUPTEUR ROTATIF (ENS) (PORTE GAUCHE)	638
INTERRUPTEUR ROTATIF (ENS) (PORTIERE DROITE)	638
INTERRUPTEUR ROTATIF (ENS) (SOUFFLANT)	628

J

JANTE À DOUBLE BRIDE (ENS)	405
JAUGE DE NIVEAU D'HUILE (ENS) (CARTER DE BOITE DE VITESSES)	283
JAUGE D'HUILE MOTEUR (BAIONNETTE) (ASS)	82
JEU DE COURROIES TRAPEZOIDALES (COMPREND 2 COURROIES) (ENTRAÎNEMENT DE VENTILATEUR)	40
JEU DE COURROIES TRAPEZOIDALES (COMPREND 2 COURROIES) (MOTEUR)	63
JEU DE COURROIES TRAPEZOIDALES (COMPREND 3 COURROIES) (VENTILATEUR)	65
JOINT DE VILEBREQUIN (ASS)	69
	70
JOINT PLAT (BOÎTIER DE RÉGULATEUR D'EAU)	100
JOINT TORIQUE	547
JOINT UNIVERSEL (ASS)	314

K

KIT D'AMORTISSEUR (SIEGE A SUSPENSION)	693
KIT D'ATTACHE (SIEGE A SUSPENSION)	693
KIT DE BAGUE (DÉMARREUR)	226
KIT DE BALAI D'ESSUIE-GLACE (GLACE)	716
KIT DE BALAIS (DÉMARREUR)	223
KIT DE BALAIS (DÉMARREUR)	226
KIT DE BEC (VITRE DE CABINE)	708
	710

* TRADUCTION NON DISPONIBLE AU MOMENT DE LA PUBLICATION

INDEX

Désignation	Page
KIT DE BEC (VITRE DE CABINE)	711
KIT DE BLOC COULISSANT (SIEGE A SUSPENSION)	688, 689, 690
KIT DE BORNE (ALTERNATEUR)	157
KIT DE BORNE (VERROUILLAGE)	202
KIT DE BOULONNERIE (ALTERNATEUR)	157
KIT DE BOULONNERIE (DÉMARREUR)	223
KIT DE BOUTON (REGLAGE DE HAUTEUR) (SIEGE A SUSPENSION)	624
KIT DE BRIDE DE FIXATION DE FILTRE A AIR	117
KIT DE BROCHE DE DÉMARREUR	223
KIT DE BUTÉE (VITRE DE CABINE)	713
KIT DE CALES (21 CALES) (POMPE À PISTONS)	499
KIT DE CHAPEAU DE FILTRE (RÉSERVOIR DE CARBURANT, AÉRÉ)	154
KIT DE COUSSINET (ALTERNATEUR)	157
KIT DE COUSSINET (ASSEMBLAGE DE ROTATION DE MOTEUR) (MOTEUR À PISTONS ROTATIF)	501
KIT DE COUSSINET (DÉMARREUR)	223
KIT DE COUSSINET (SIEGE A SUSPENSION)	625
KIT DE GUIDE (COMPREND GUIDE ET ÉCROU)	710
KIT DE GUIDE (VITRE DE CABINE)	708, 711
KIT DE JOINT DE DÉMARREUR	223
KIT DE JOINT DE VERIN HYDRAULIQUE	456
KIT DE JOINTS (ACCUMULATEUR)	252, 253
KIT DE JOINTS (CLAPET DE DÉCHARGE)	546
KIT DE JOINTS (ÉLECTROVANNE)	436, 549
KIT DE JOINTS (SOUPAPE DE VENTILATEUR À VITESSE VARIABLE)	316
KIT DE JOINTS (VENTILATEUR - EMBRAYAGE)	39
KIT DE LEVIER (DÉMARREUR)	226
KIT DE PARE-CHOCS (RÉGLAGE DU POIDS) (SIEGE A SUSPENSION)	625
KIT DE POUSSOIR (SIEGE A SUSPENSION)	625
KIT DE PRÉFILTRE (TURBINE)	130, 131
KIT DE RÉPARATION (JAUGE DE NIVEAU DE CARBURANT)	154
KIT DE RESSORT (VITRE DE CABINE)	713
KIT DE RESSORT (VITRE DE CABINE)	706, 707
KIT DE RESSORTS (REGLAGE DE HAUTEUR) (SIEGE A SUSPENSION)	624
KIT DE RESSORTS (SIEGE A SUSPENSION)	624
KIT DE RONDELLE (DÉMARREUR)	223
KIT DE SOUPAPE PNEUMATIQUE (SIEGE A SUSPENSION)	693
KIT DE TAMIS (PRÉFILTRE)	131
KIT D'INDICATEUR (RÉGLAGE DU POIDS) (SIEGE A SUSPENSION)	625
KIT D'ISOLANT (DÉMARREUR)	226

L

Désignation	Page
LAME À ORIENTATION (ASS)	575
LAME DE BULLDOZER SEMI-UNIVERSELLE (VERSION)	557, 558, 559, 560
LAME DE COUPE SEMI-UNIVERSELLE (ASS)	570, 571
LAME ORIENTABLE (ASS)	569
LAME SEMI-UNIVERSELLE (ASS)	576, 577
LAME SEMI-UNIVERSELLE (ENS)	572, 574
LAMPE - PHARE (ASS)	186
LAMPE - PHARE (ASS)	187
LAMPE - PHARE (ASS)	188
LAMPE DE TÉMOIN (ENS) (TÉMOIN D'ACTIONNEMENT)	248
LAMPE HALOGÈNE (*24-VOLT, 65-WATT) (PROJECTEUR)	186
LAMPE HALOGÈNE (24V, 65W)	187
LAMPE HALOGÈNE (24V, 65W) (PROJECTEUR)	188
LAVE-GLACE - VITRE (ASS)	698
LENTILLE (ENS)	187
LENTILLE (ENS) (PROJECTEUR)	186
LITTÉRATURE (ASS)	2
LOGICIEL - ÉLECTROMODULE (ASS)	175
LOGICIEL - MACHINE (ENS) (SÉCURITÉ)	183
LOGICIEL - TRANSMISSION (ENS)	175
LOGICIEL DE COMMUNICATION (ASS) (COMMANDE DE PENTE)	177
LOGICIEL DE COMMUNICATION (ASS) (PRODUCT LINK 121SR)	178
LOGICIEL DE COMMUNICATION (ASS) (PRODUCT LINK 121SR) (PRODUCT LINK 121SR)	180
LOQUET TOURNANT ARRIÈRE (ASS)	412

* TRADUCTION NON DISPONIBLE AU MOMENT DE LA PUBLICATION

INDEX

Désignation	Page

M

MAILLON DE CHAINE (ENS)	392
	393
*MANIFOLD GP-TRANSMISSION	289
MANOCONTACT (ENS) (RÉFRIGÉRANT)	640
	643
MECANISME AMORTISSEUR ET REGLAGE DE CHAINES (ASS)	414
MODULE - QUATRE INSTRUMENTS (ASS)	652
MODULE D'AFFICHAGE (ASS)	651
MODULE D'ALIMENTATION (ASS)	200
MODULE DE PROFIL LONGITUDINAL ET MONTAGE (ASS)	200
MODULE-INTERFACE (ASS) (CLAVETTE)	183
MONTAGE-ANTENNE (ASS)	655
MONTAGE-COMMUNICATION (ASS)	178
MONTAGE-COMMUNICATION (ASS)	180
MONTAGE D'ALTERNATEUR (ASS)	56
MONTAGE DE CABINE (ASS)	656
MONTAGE DE COMMANDE DE PROFIL LONGITUDINAL (ASS)	182
MONTAGE DE CONNECTEUR (ASS)	201
MONTAGE DE GALET SUPÉRIEUR	400
MONTAGE DE MONITEUR (ASS)	657
	658
MONTAGE DE MOTEUR (ASS)	57
MONTAGE DE MOTEUR (VERSION)	16
MONTAGE DE PLATE-FORME (ASS)	659
MONTAGE DE RADIO (ASS)	627
MONTAGE DE RÉDUCTEURS (ASS)	290
MONTAGE DE RIPPER (ASS)	588
MONTAGE DE SOUPAPE (ASS)	496
MONTAGE DE TREUIL (VERSION)	581
MONTAGE DE VÉRIN (ASS)	494
MONTAGE D'ENTRAÎNEMENT DE VENTILATEUR (ASS)	58
MONTAGE DU MAT (ASS)	585
	586
	587
MONTAGE DU TOIT ROPS (ASS)	661
MONTAGE-SÉCURITÉ (ASS)	183
MOTEUR - PARTIE CENTRALE (VERSION)	10
	11
	12
	13
	14
	15
MOTEUR D'ESSUIE-GLACE (ASS)	653
	654
MOTEUR ELECTRIQUE (ASS)	614
MOTEUR (VERSION)	4
	5
	6
	7
	8
	9

O

OEILLETONS DE LEVAGE MOTEUR (ASS)	55

P

PALONNIER - GROUPE DE COMMANDE (ASS)	445
PANNEAU - FUSIBLES (ASS)	202
PANNEAU DE FAISCEAU (ENS)	202
PANNEAU DE FAISCEAU (ENS) (INSTRUMENT)	628
	631
PÉDALE DE RÉGULATEUR ET DE FREIN (ASS)	665
PIGNON AR (ASS)	50
PIGNONNERIE AV (ASS)	49
PISTON ET BIELLE (ASS)	60
PIVOT D'ESSUIE-GLACE (ASS)	718
PLAFONNIER (ASS)	185
PLAQUE - AVERTISSEMENT (RESSORT AMORTISSEUR)	375
	379
	381
PLAQUE - AVERTISSEMENT (RESSORT AMORTISSEUR)	377
	423
	424
PLAQUE - AVERTISSEMENT (VÉRIN HAUTE PRESSION)	375
	377
	379
	423
	424
PLAQUE DE NUMÉRO DE SÉRIE	560
PLAQUE DE NUMÉRO DE SÉRIE (BOITE DE VITESSE)	263
PLAQUE DE NUMÉRO DE SÉRIE (BULLDOZER)	557
	558
	559
PLAQUE DE NUMÉRO DE SÉRIE (BULLDOZER)	553
	554
	555
	556
PLAQUE DE NUMÉRO DE SÉRIE (RIPPER)	590
PLAQUE D'INSTRUCTIONS (CLIMATISEUR)	723
	725

* TRADUCTION NON DISPONIBLE AU MOMENT DE LA PUBLICATION

INDEX

Désignation	Page
PLAQUE D'INSTRUCTIONS (CLIMATISEUR)	598
PLAQUE (IDENTIFICATION) (ORDRE)	604
PLAQUE SIGNALÉTIQUE (ASS)	719
	721
PLAQUE SIGNALÉTIQUE (REMARQUE) (RADIO)	627
PLAQUES SIGNALETIQUES ET AUTOCOLLANTS (ASS)	723
	724
	726
PLATE-FORME (ASS)	667
PLATE-FORME DE CABINE	668
POIGNÉE	621
	622
POIGNÉE DE COMMANDE (ASS)	462
	463
POIGNÉE DE COMMANDE (ASS) (BULLDOZER)	462
POMPE A EAU (ASS)	105
	106
	107
POMPE A ENGRENAGES (ASS)	299
	301
POMPE A HUILE MOTEUR (ASS)	93
POMPE A PISTONS (ASS)	498
POMPE D'ALIMENTATION EN CARBURANT (ASS)	149
POMPE D'INJECTEURS-POMPES HYDRAU. ET MONTAGE	147
POMPE D'INJECTION DE CARBURANT (ASS)	150
	151
POMPE D'INJECTION DE CARBURANT (ASS)	149
POMPE ET MONTAGE (ASS)	497
POULIE - ENTRAÎNEMENT D'ALTERNA. ET DE VENTI.	63
	65
PREFILTRE (ASS)	131
PREFILTRE (ASS)	130
PREFILTRE (VERSION)	128
	129
PRISE CODE (ENS) (COMMANDE DE PENTE)	177
PRISE CODE (ENS) (MONITEUR)	629
	632
PRISE CODE (ENS) (TRANSMISSION)	431
PROTECTEUR DE RÉDUCTEURS (VERSION)	349
PROTECTION DE PRÉFILTRE (ASS)	121
PROTECTION DE ROUE LIBRE (VERSION)	349
PROTECTION DU RÉSERVOIR DE CARBURANT (ASS)	356
	357
	358
PROTEGE-GALETS (ASS)	385
	386
PROTÈGE-RADIATEUR (ASS)	359
	361
PUISSANCE DE FAISCEAU (ENS) (CONVERTISSEUR ÉLECTRIQUE)	174

R

RACCORD ET PROTECTION (ASS)	270
RADIATEUR (ASS)	109
	111
RADIATEUR-CORPS (ENS)	108
RADIATEUR (VERSION)	108
RADIO -COMMUNICATION (ASS) (PRODUCT LINK 121SR)	178
	180
RALLONGE DU DOSSIER DE SIEGE (TOILE)	681
RALLONGE DU DOSSIER DE SIEGE (VINYLE) (SIÈGE)	684
RÉCEPTEUR-DÉSHYDRATEUR (ASS) (CLIMATISEUR)	640
	643
REDUCTEUR MARIN - MONTAGE (ASS)	291
RÉDUCTEURS (ASS)	276
	278
REFROIDISSEMENT AUX TEMPÉRATURES ÉLEVÉES (VERSION)	97
REFROIDISSEUR D'ADMISSION D'AIR (ASS)	116
REFROIDISSEUR D'HUILE DE BOÎTE (ASS)	268
REFROIDISSEUR D'HUILE HYDRAULIQUE (ASS)	447
REFROIDISSEUR D'HUILE MOTEUR (ASS)	96
REGARD DE NIVEAU (RÉSERVOIR D'EAU)	114
REGARD DE NIVEAU (RÉSERVOIR HYDRAULIQUE)	504
REGLAGE DE SIEGE (ASS)	597
REGULATEUR DE LA TENSION (ENS) (24 VOLTS)	157
RÉGULATEUR (ENS) (PRESSION DU CARBURANT)	145
RELAIS (ENS) (24 VOLTS) (MOTEUR SOUFFLANT DE CONDENSATEUR)	614
RENIFLARD (ENS) (BOÎTE DE VITESSES)	283
RENIFLARD (ENS) (VILEBREQUIN)	18
	22
RÉSERVOIR - LAVE-GLACE (ASS)	695
RÉSERVOIR - LAVE-GLACE (ASS)	697
RÉSERVOIR DE CARBURANT (ASS)	154

* TRADUCTION NON DISPONIBLE AU MOMENT DE LA PUBLICATION

INDEX

Désignation	Page
RÉSERVOIR DU LIQUIDE DE REFROIDISSEMENT (ASS)	112
	113
	114
RÉSERVOIR HYDRAULIQUE (ASS)	504
RÉSERVOIR HYDRAULIQUE ET MONTAGE (ASS)	503
RÉTROVISEUR (ASS)	649
	650
RIPPER (ASS)	591
RIPPER (VERSION)	590
ROBINET DE BATTERIE (ASS)	233
ROBINET-PRÉLÈVEMENT D'ÉCHANTILLON DE LIQUIDE (ASS)	94
ROTATION DE LA ROUE DU VENTILATEUR SOUFFLANT (COMMANDE DE RIPPER)	442
ROTATION DE LA ROUE DU VENTILATEUR SOUFFLANT (RÉGLAGE DU SIÈGE)	691
	693
ROUE AV - CHAINES (ASS)	391
ROUE AV (ASS)	388
	389
ROUE AV DE SCRAPER (ASS)	411

S

SEGMENT DE BARBOTIN (ASS)	304
SIÈGE - COMPRESSEUR D'AIR (ASS)	693
SIÈGE (ASS)	679
	681
	682
	684
	685
	686
	687
SIÈGE AVEC SUSPENSION (ASS)	688
	693
SIÈGE AVEC SUSPENSION (ASS)	689
	690
	691
SIÈGE INCLINABLE (ASS)	673
SILENCIEUX (ASS)	127
SOLÉNOÏDE (ENS) (24 VOLTS) (DÉMARREUR)	223
	226
SONDE - CIRCUIT DE CARBURANT	205
	206
SONDE - CIRCUIT DE CARBURANT (COMMANDE DE DIRECTION)	425
SONDE - CIRCUIT DE CARBURANT (PÉDALE DE DÉCÉLÉRATEUR)	665
SONDE - NIVEAU DE CARBURANT (ENS)	154
SOUPAPE - CARTOUCHE PILOTE (ASS)	535
	536
SOUPAPE - EAU	623
SOUPAPE - SOLÉNOÏDE (ASS)	436
	437
	549
	550
SOUPAPE D'ABAISSEMENT RAPIDE (ASS)	540
	541
SOUPAPE D'ARRÊT (ASS)	647
SOUPAPE DE BULLDOZER ET MONTAGE (ASS)	507
SOUPAPE DE DÉMARRAGE À L'ÉTHER (ASS)	237
SOUPAPE DE MODULATION (ASS)	95
	316
	317
	318
SOUPAPE D'ÉQUILIBRE (ASS)	528
SOUPAPE ET MONTAGE - CONTREPOIDS (ASS)	508
SOUPAPE PILOTE (ASS)	529
	531
	533
SOUPAPE RÉDUCTRICE DE PRESSION (ASS)	537
SUPPORT DE FILTRE À HUILE (ASS)	255
SUPPORT DE MOTEUR (ASS)	71
SURPRESSEUR (ASS)	671
SUSPENSION DE SIEGE - CARTER (ASS)	624

T

TAMIS D'ASPIRATION (BOÎTE DE VITESSES)	303
TAMIS D'ASPIRATION (GAVAGE DU CONVERTISSEUR DE COUPLE)	263
TAPIS DE PLANCHER	619
	659
THERMOCONTACT (ENS) (RÉFRIGÉRANT)	599
THERMOSTAT-TEMPÉRATURE D'EAU (92-DEG C) (LIQUIDE DE REFROIDISSEMENT)	100
TIRANT DE BULLDOZER (ASS)	551
TOIT ROPS - OUVERT (ASS)	675
TOIT ROPS (ASS)	674
TOURILLON DE BULLDOZER (ASS)	568
TOURILLON DE MOTEUR (ASS)	72
TRAIN DE ROULEMENT	422
	423
	424
TRAINS PLANÉTAIRES - CARTER ET PIÈCES	263
TRANSFORMATION ELECTRIQUE (ASS)	174

* TRADUCTION NON DISPONIBLE AU MOMENT DE LA PUBLICATION

INDEX

Désignation	Page
TRANSMISSION (VERSION)	298
TRAVERSE PIVOT (ASS)	401
TURBOCOMPRESSEUR - CARTOUCHE (ASS)	135
	137
TURBOCOMPRESSEUR (ASS)	135
	136
	137
	138
TYPE LÈVRE À JOINT (RÉGULATEUR DE TEMPÉRATURE D'EAU)	100

V

VANNE PILOTE (ASS)	547
	548
VENTILATEUR - ÉJECTEUR (VERSION)	97
VENTILATEUR A PALES RÉVERSIBLES (ASS)	99
VENTILATEUR SOUFFLANT (ASS)	98
VENTILATEUR SOUFFLANT DE CABINE (ASS)	600
VÉRIN DE LEVAGE (ASS)	452
VÉRIN DE LEVAGE ET CANALISATIONS (ASS)	448
	450
VERIN DE RIPPER (ASS)	454
VÉRIN D'INCLINAISON (ASS)	456
	458
	460
VERROU (ASS)	364
VERSION DE CHASSIS	1
	2
VERSION DE COMMANDE D'ÉQUIPEMENT HYDRAULIQUE	442
	443
VERSION DE GUIDAGE DE TRAIN DE ROULEMENT	387
VERSION DE MONTAGE DE COMMANDE DE PROFIL LONGITUDINAL	177
VERSION DE TOIT - ROPS OUVERT	607
VIDANGE-ÉCOLOGIE (ASS)	272
	273
VIDANGE-HUILE DE MOTEUR (ASS)	34
VILEBREQUIN - POULIE (ASS)	62
VILEBREQUIN (ASS)	23
VITRE ARRIÈRE FIXE (TEINTÉ)	713
VITRE DE CABINE (ASS)	700
	701
	702
	703
	704
	705
	706
	707
	708
	710
	711
	713
	715
VITRE DE CABINE (ASS) (ARRIÈRE)	701
VITRE DE CABINE (ASS) (DROITE)	702
VITRE DE CABINE (ASS) (GAUCHE)	703
VITRE-PATIN ARRIÈRE (TEINTÉ)	711
VITRE-PATIN-DROIT (TEINTÉ) (TEINTÉ)	710
VITRE (TEINTÉ)	700
	701
	702
	703
VOLANT MOTEUR (ASS)	48
VUE DU MODÈLE	2
	3

* TRADUCTION NON DISPONIBLE AU MOMENT DE LA PUBLICATION

INDICE

Nombre	Página

A

ACONDICIONADOR DE AIRE (CONFIG)	598
ACONDICIONADOR DE AIRE (GR)	599
ACOPLAMIENTO DE BOMBA (GR)	271
ACOPLAMIENTO Y PROTECCION (GR)	270
ACUMULADOR DE ACEITE PILOTO (GR)	438
	439
ACUMULADOR DE ACEITE PILOTO (GR) (CARGADO)	467
ACUMULADOR DEL ACONDICIONADOR DE AIRE (GR)	640
	643
ACUMULADOR (GR)	252
ACUMULADOR (GR)	253
ADAPTADOR DE MOTOR (GR)	440
AGUA DE LAS CAMISAS - CALENTADOR DEL (GR)	176
AIRE - TUBERÍAS DE (GR)	122
	123
AJUSTADOR DEL ASIENTO (GR)	597
ALARMA (CONJ)	167
ALARMA (GR)	156
ALFOMBRILLA DEL PISO	619
	659
AMORTIGUADOR DE VIBRACIONES (GR)	33
ANTEFILTRO (CONFIG)	128
	129
ANTEFILTRO (CONJ)	133
ANTEFILTRO (GR)	131
ANTEFILTRO (GR)	130
ÁRBOL DE LEVAS (GR)	17
ARO DE PESTAÑA DOBLE (CONJ)	405
ASIENTO CON SUSPENSIÓN (GR)	693
ASIENTO CON SUSPENSIÓN (GR)	691
ASIENTO (GR)	679
	681
	682
	684
	685
	686
	687
AUXILIAR DE ARRANQUE CON ÉTER (GR)	221

B

BALANCÍN (GR)	67
	68
BARRA COMPENSADORA (GR)	368
	370
BARRA DE TIRO (GR)	333
BARRA DE TIRO (GR)	332
BARRA LIMPIADORA (GR)	326
	371
BARRA LIMPIADORA(CONFIG)	367
BARRA PIVOTE (GR)	401
BASTIDOR EN C (CONJ)	561
BASTIDOR EN C (GR)	562
	563
BASTIDOR TELESCÓPICO DEL RESORTE TENSOR (GR)	377
	379
	381
BASTIDOR TELESCÓPICO DEL RESORTE TENSOR (GR)	375
BATERÍA (GR)	170
BATERÍA Y CABLES (GR)	166
BATERÍA (*12-VOLT, WET)	167
BATERÍA (12-VOLTIOS, LIBRE DE MANTENIMIENTO)	170
BLOQUE DESLIZANTE-JUEGO (ASIENTO DE SUSPENSION)	688
	689
	690
BLOQUE MOTOR (CONJ)	24
BLOQUE MOTOR (GR)	26
	27
BOMBA - TUBERÍAS DE (GR)	478
BOMBA DE ACEITE DEL MOTOR (GR)	93
BOMBA DE AGUA (GR)	105
	106
	107
BOMBA DE ENGRANAJES (GR)	299
	301
BOMBA DE INYECCIÓN DE COMBUSTIBLE (GR)	149
	150
	151
BOMBA DE PISTONES (GR)	498
BOMBA DE TRANSFERENCIA DE COMBUSTIBLE (GR)	149
BOMBA HIDRÁULICA DEL INYECTOR UNITARIO Y MONTAJE	147
BOMBA Y MONTAJE (GR)	497
BRAZO DE EMPUJE (GR)	564
	566

C

CABINA - MAZO DE CABLES DE LA (*WIPER, SPEAKER)	638
CABINA (CONFIG)	602
	603
CABINA (GR)	604
CABLE GR-GRADO DE CONTROL	243
CABLES DE LA PLATAFORMA (GR)	248

* NO HAY TRADUCCION DISPONIBLE EN EL MOMENTO DE LA IMPRESION

INDICE

Nombre	Página
CABLES DEL CONTROL ELECTRÓNICO (GR)	238
CABLES DEL MOTOR (GR)	240
CADENAS (GR)	416
	417
	418
	419
	420
	421
CAJA DE BATERÍA	328
	329
CAJA DE LA SUSPENSIÓN DEL ASIENTO (GR)	624
CAJA DE VOLANTE (CONJ)	51
CAJA DELANTERA - TORNILLERÍA DE LA (GR)	45
CAJA DELANTERA (GR)	54
CAJA Y BASTIDOR (GR)	331
CAJA Y PIEZAS DE LOS PLANETARIOS	263
CALCOMANÍA DE ADVERTENCIA (ACUMULADOR)	438
	439
CALCOMANÍA DE ADVERTENCIA (ASIENTO AJUSTABLE)	691
	693
CALCOMANÍA DE ADVERTENCIA (CONTROL DE DESGARRADOR)	442
CALCOMANÍA DE ADVERTENCIA (DESCARGA ELECTRICA)	202
CALCOMANÍA DE ADVERTENCIA (*HIGH PRESSURE, READ OMM)	252
	253
CALCOMANÍA DE ADVERTENCIA (*HIGH PRESSURE, READ OMM, ISO)	726
CALCOMANÍA DE ADVERTENCIA (*JUMP START, READ OMM)	724
CALCOMANÍA DE ADVERTENCIA (*JUMP START, READ OMM)	726
CALCOMANÍA DE ADVERTENCIA (NO SUELDE, NO TALADRE, LEA EL OMM)	724
	726
CALCOMANÍA DE ADVERTENCIA (NO SUELDE, NO TALADRE, LEA EL OMM)	607
CALCOMANÍA DE ADVERTENCIA (PRODUCTO DE ENLACE DE RADIO, NO NACD)	726
CALCOMANÍA DE ADVERTENCIA (RADIO)	627
CALCOMANÍA DE ADVERTENCIA (RADIO DE PRODUCTO DE ENLACE, NACD)	178
	180
CALCOMANÍA DE ADVERTENCIA (RESORTE DE AMORTIGUACION)	375
	377
	379
	381
	423
	424
CALCOMANÍA DE ADVERTENCIA (ROPS)	724
	726
CALCOMANÍA DE ADVERTENCIA (*ROPS/FOPS)	607
CALCOMANÍA DE IDENTIFICACIÓN (CALENTADOR DE AGUA)	176
CALCOMANÍA DE IDENTIFICACIÓN (FILTRO)	578
CALCOMANÍA DE IDENTIFICACIÓN (INTERRUPTOR DE ENCENDIDO)	183
CALCOMANÍA DE IDENTIFICACIÓN (*LOW SPEED, WINCH LIGHT)	442
CALCOMANÍA DE IDENTIFICACIÓN (LUCES)	629
CALCOMANÍA DE IDENTIFICACIÓN (LUZ DE ACCION)	631
CALCOMANÍA DE IDENTIFICACIÓN (NOMBRE DE GRUPO) (CONDENSADOR DE REFRIGERANTE)	614
CALCOMANÍA DE IDENTIFICACIÓN (PALANCA UNIVERSAL) (GRADO CONTROL)	177
CALCOMANÍA DE IDENTIFICACIÓN (SISTEMA DE SEGURIDAD)	183
CALCOMANÍA DE IDENTIFICACIÓN (TABLERO DE INSTRUMENTOS)	631
CALCOMANÍA DE IDENTIFICACIÓN (TABLERO DE INSTRUMENTOS)	628
	632
CALCOMANÍA DE IDENTIFICACIÓN (*WINCH CONTROL)	442
CALCOMANÍA DE IDENTIFICACIÓN (*WINCH FREESPOOL)	578
CALCOMANÍA DE IDENTIFICACIÓN (*WINDOW WIPER CONTROLS)	638
CALCOMANIA, DISYUNTOR	202
CALCOMANÍAS Y PLACAS DE IDENTIFICACIÓN (GR)	723
	724
	726
CALEFACCIÓN DE LA CABINA (GR)	623
CAMBIO RÁPIDO DE ACEITE (GR)	91
CÁNCAMOS DE LEVANTAMIENTO DEL MOTOR (GR)	55
CANDADO (GR) (COMPARTIMENTO DE BATERIA)	328
CANDADO (GR) (COMPARTIMENTO PARA LA LITERATURA)	607
CANDADO (GR) (*HYDRAULIC TANK ENCLOSURE)	341

* NO HAY TRADUCCION DISPONIBLE EN EL MOMENTO DE LA IMPRESION

INDICE

Nombre	Página
CANDADO (GR) (LLENADO DEL TANQUE HIDRÁULICO)	503
CANDADO (GR) (PROTECTOR DE RADIADOR)	359
CANDADO (GR) (RECINTO DE MOTOR)	334
CANDADO (GR) (TAPA DE TANQUE DE COMB.)	154
CARGA - ALTERNADOR DE (GR)	157
	159
	160
	162
	164
CÁRTER - COLECTOR DEL (GR)	59
CHASIS (CONFIG)	1
	2
CIGÜEÑAL - POLEA DE (GR)	62
CIGÜEÑAL (GR)	23
CILINDRO DE DESGARRADOR (GR)	454
CILINDRO DE ÉTER (CONJ)	221
CILINDRO DE LEVANTAMIENTO - TUBERÍAS DEL (GR)	465
CILINDRO DE LEVANTAMIENTO (GR)	452
CILINDRO DE LEVANTAMIENTO Y TUBERÍAS (GR)	448
	450
CINTURÓN DE SEGURIDAD (GR)	681
CODO DE ADMISIÓN DE AIRE (GR)	120
COLADOR (CONJ) (LLENADO DEL TANQUE HIDRÁULICO)	504
COLADOR DE COMBUSTIBLE	154
COMBUSTIBLE - TANQUE DE (GR)	154
COMPARTIMIENTO DEL MOTOR (GR)	334
	337
	339
COMPARTIMIENTO DEL TANQUE HIDRÁULICO (GR)	341
COMPRESOR DE AIRE DEL ASIENTO (GR)	693
COMPRESOR DE REFRIGERANTE (GR)	608
	609
CONDENSADOR DE REFRIGERANTE (GR)	614
CONDENSADOR DEL REFRIGERANTE Y MONTAJE (GR)	611
	612
CONFIGURACIÓN DE CABLERIA, CALENTADOR Y ACONDICIONADOR DE AIRE (*CONDENSER BLOWER MOTORS) (A/A)	614
CONFIGURACIÓN DE INSTALACIÓN DEL MOTOR	16
CONFIGURACIÓN DE MOTORES	4
	5
	6
	7
	8
	9
CONFIGURACIÓN ELECTRÓNICA DE LA MÁQUINA	175
CONFIGURACIÓN GENERAL	2
	3
CONFIGURACIÓN HIDRÁULICA DE 2 VÁLVULAS	464
CONJUNTO DE CABLERIA, RADIO	244
CONJUNTO DE CABLERIA, RADIO (ESLABON DE PRODUCTO)	180
CONJUNTO DE CABLERIA, RADIO (ESLABON DE PRODUCTO) (*COMMUNICATIONS)	178
CONJUNTO DE CABLES, VÁLVULA (COMPRESOR DE AIRE DEL ASIENTO)	693
CONJUNTO DE CONTROL (TEMPERATURA)	628
CONJUNTO DE ENCHUFE DE CODIGO (*GRADE CONTROL)	177
CONJUNTO DE ENCHUFE DE CODIGO (MONITOR)	629
	632
CONJUNTO DE ENCHUFE DE CODIGO (TREN DE FUERZA)	431
CONJUNTO DE LLAVE, ELECTRONICA (SEGURIDAD) (AMARILLO)	183
CONJUNTO DE LLAVE, ELECTRONICA (SEGURIDAD) (GRIS)	183
CONJUNTO DE MAZO DE CABLES DE LA CONSOLA	249
CONJUNTO DE MAZO DE CABLES DE LA CONSOLA (CABRESTANTE)	473
CONJUNTO DE MAZO DE CABLES DE SOLENOIDE (CABRESTANTE, TRASERO)	582
CONJUNTO, MAZO DE CABLES, LUCES DELANTERAS (CILINDRO)	192
CONTROL DE DIRECCIÓN Y TRANSMISIÓN (GR)	429
	431
CONTROL DE MANIJA (GR)	425
	444
CONTROL DE MANIJA (GR) (MALACATE)	529
CONTROL DE MANIJA (GR) (*WINCH CONTROL)	578
CONTROL DE MAQUINA (GR)	171
CONTROL DEL FRENO DE ESTACIONAMIENTO	427
CONTROL DEL MALACATE (GR)	578
CONTROL DEL MULTIPLE (GR)	491
CONTROL ELECTRÓNICO DEL MOTOR (GR)	171
	172

* NO HAY TRADUCCION DISPONIBLE EN EL MOMENTO DE LA IMPRESION

INDICE

Nombre	Página
CONTROL HIDRAULICO DE IMPLEMENTO (CONFIG)	442, 443
CONTROL HIDRÁULICO DE LA TRANSMISIÓN (GR)	266
CONTROL HIDRÁULICO DE OPERACIÓN PILOTO (GR)	446
CONTROL NO PROGRAMADO (GR)	173, 249
CONVERTIDOR DE PAR (GR)	306, 308, 311
CONVERTIDOR ELÉCTRICO (GR)	174
CORREA (ALTERNADOR)	65
CORREA (*ALTERNATOR, WATER PUMP)	160
CORREA TRAPEZOIDAL (COMPRESOR)	40
CORREA TRAPEZOIDAL (COMPRESOR DEL REFRIGERANTE)	609
CORREA TRAPEZOIDAL (MOTOR)	63
CULATA DE CILINDROS - TORNILLERÍA DE LA (GR)	42, 43
CULATA DE CILINDROS (CONJ)	28
CULATA DE CILINDROS (GR)	30, 31

D

Nombre	Página
DESGARRADOR (CONFIG)	590
DESGARRADOR (GR)	591
DETECTOR DE NIVEL DEL COMBUSTIBLE	154
DETECTOR DE POSICIÓN (SISTEMA DE COMBUST.) (GR)	205, 206
DETECTOR DE POSICIÓN (SISTEMA DE COMBUST.) (GR) (*DIRECTION CONTROL)	425
DETECTOR DE POSICIÓN (SISTEMA DE COMBUST.) (GR) (PEDAL DECELERADOR)	665
DIENTE DE DESGARRADOR (GR)	593, 594, 595, 596
DISYUNTOR (CONJ) (15 AMPERIOS) (MOTOR DE SOPLADOR DE VENTILADOR)	202
DISYUNTOR (GR)	233
DRENAJE DE SEGURIDAD ECOLÓGICA (GR)	272, 273
DRENAJE DEL ACEITE DE MOTOR	34

E

Nombre	Página
EJE DE MANDO (GR)	305
EJE DEL TREN DE FUERZA (GR)	254
*ELBOW	77
ELECTRONICA DE MONITOR (GR)	175
ELEMENTO DE FILTRO DE ACEITE (CONJ) (*ADVANCED EFFICIENCY)	504
ELEMENTO DE FILTRO DE ACEITE (CONJ) (EFICIENCIA ULTRA ALTA)	275
ELEMENTO DE FILTRO DE ACEITE (CONJ) (EFICIENCIA ULTRA ALTA)	504
ELEMENTO DE FILTRO DE ACEITE (CONJ) (FLUÍDO RESISTENTE AL FUEGO)	504
ELEMENTO DE FILTRO DE ACEITE (CONJ) (GRUPO DE LAMPARA-TABLERO) (ESTANDAR)	504
ELEMENTO DEL CALENTADOR DEL AGUA DE LAS CAMISAS (120 VOLTIOS, 1500 VATIOS)	176
ELEMENTO DEL FILTRO DE AIRE (CONJ) (PRIMARIO)	117
ELEMENTO DEL FILTRO DE AIRE (CONJ) (SECUNDARIO)	117
ELEMENTO (RESPIRADERO) (CÁRTER DEL MOTOR)	22
EMPAQUETADURA (*WATER REGULATOR HOUSING)	100
ENFRIADOR DE ACEITE DE LA TRANSMISIÓN (GR)	268
ENFRIADOR DE ACEITE DEL MOTOR (GR)	96
ENFRIADOR DEL ACEITE HIDRAULICO (GR)	447
ENFRIADOR PARA ALTA TEMPERATURA DE AMBIENTE (CONFIG)	97
ENGRANAJE DE TRANSFERENCIA Y CORONA (GR)	280
ENGRANAJE DELANTERO (GR)	49
ENGRANAJE TRASERO (GR)	50
ESCAPE DE GASES (GR)	80, 81
ESLABÓN DE CADENA (CONJ)	392, 393
ESLABON DE CADENA (GR)	398, 399
ESTRUCTURA ROPS ABIERTA (GR)	675
ESTRUCTURA ROPS (GR)	674
ETIQUETA DE ADVERTENCIA (GR)	719, 721
EXPULSOR DE POLVO (GR)	119
EXTENSIÓN DEL RESPALDO (GR) (DE TELA)	681
EXTENSIÓN DEL RESPALDO (GR) (VINILO) (ASIENTO)	684

* NO HAY TRADUCCION DISPONIBLE EN EL MOMENTO DE LA IMPRESION

INDICE

Nombre — Página

F

FILTRO (CONJ) (*AIR RECIRCULATION) 671
FILTRO DE ACEITE - BASE DEL (GR) 255
FILTRO DE ACEITE DEL MOTOR (CONJ) (*ADVANCED EFFICIENCY) 77
FILTRO DE ACEITE DEL MOTOR (GR) 77
FILTRO DE ACEITE (GR) 275
FILTRO DE ACEITE (GR) (TREN DE FUERZA) . . . 283
FILTRO DE AIRE (AIRE FRESCO) 671
FILTRO DE AIRE (GR) 117
118
FILTRO DE COMBUSTIBLE (CONJ) (ALTA EFICIENCIA) 139
FILTRO DE COMBUSTIBLE Y SEPARADOR DE AGUA (CONJ) (PRIMARIO) 141
FILTRO DE COMBUSTIBLE Y SEPARADOR DE AGUA (GR) 141
FILTRO Y TUBERÍAS DE COMBUSTIBLE (GR) 139
FRENO Y MANDO DE DIFERENCIAL (GR) 256
FRENO Y PLANETARIOS (GR) 261
FUSIBLE (10-AMPERIOS) 202
FUSIBLE (15 AMPERIOS) 202
FUSIBLE (175-AMPERIOS) 202
249
FUSIBLE (20-AMPERIOS) 202

G

GR DE MONTAJE Y MODULO-CONTROL DE GRADO 200
GRUPO DE CANTONERA Y CUCHILLA 579
580
GRUPO DE CONTROL-MONITOR NO PROGRAMADO 617
GRUPO DE CONTROL-MONITOR NO PROGRAMADO (SISTEMA MONITOR CATERPILLAR) 628
GRUPO DE CONTROL-MONITOR NO PROGRAMADO (SISTEMA MONITOR CATERPILLAR) 631
GRUPO DE INSTALACION, CONTROL DE GRADO 182
GRUPO DE INTERRUPTOR-BOTON PULSADOR 236
GRUPO DE MONTAJE-CONECTOR 201
GRUPO DE MONTAJE DE LA CABINA 656
GRUPO DE MONTAJE Y VÁLVULA, HOJA TOPADORA 507
GRUPO DE PARILLA 635
GRUPO DE ROTACIÓN DEL MOTOR (GR) 501
GRUPO DE SOFTWARE, COMUNICACIÓN (*GRADE CONTROL) 177
GRUPO DE SOFTWARE, COMUNICACIÓN (*PRODUCT LINK 121SR) 178
GRUPO DE SOFTWARE, COMUNICACIÓN (*PRODUCT LINK 121SR) (*PRODUCT LINK 121SR) 180
GRUPO DE TORNILLERIA-AMORTIGUADOR Y POLEA 44
GRUPO DE VÁLVULA-ARRANQUE CON ÉTER 237
GRUPO DE 3 VÁLVULAS HIDRÁULICAS 509
GRUPO DE 4 VÁLVULAS HIDRÁULICAS 511
513
GRUPO DEFLECTOR, TRASERO 412
GUARDABARROS (GR) 343
344
345
GUIAJE DE TREN DE RODAJE (CONFIG) 387

H

HOJA DE LIMPIAPARABRISAS (CONJ) (DELANTERO, TRASERO) 716
HOJA DE LIMPIAPARABRISAS (CONJ) (PUERTA, MANO DERECHA , MANO IZQUIERDA) 716
HOJA ORIENTABLE (GR) 569
575
HOJA SEMIUNIVERSAL (CONJ) 572
574
HOJA SEMIUNIVERSAL (GR) 576
577
HOJA TOPADORA ORIENTABLE (CONFIG) 553
HOJA TOPADORA ORIENTABLE (CONFIG) 554
555
556
HOJA TOPADORA SEMIUNIVERSAL 557
558
559
560
HOJA Y CUCHILLA SEMIUNIVERSAL (GR) 570
571
*HOSE-FUMES DISP (CÁRTER DEL MOTOR) . . . 81

I

IMPULSOR DE VENTILADOR (GR) 40
IMPULSOR DE VENTILADOR (GR) 36
38
39
INCLINACIÓN HORIZONTAL - CILINDRO DE (GR) 456
458
460

* NO HAY TRADUCCION DISPONIBLE EN EL MOMENTO DE LA IMPRESION

INDICE

Nombre	Página
INDICADOR (CONJ) (LUZ DE ACCION)	243, 628, 631
INDICADOR DEL NIVEL DE ACEITE (VARILLA) (GR)	82
INSTALACION DE COMUNICACION (GR)	178
INSTALACION DE COMUNICACION (GR)	180
INSTALACIÓN DE RADIO (GR)	627
INSTALACION DE SEGURIDAD (GR)	183
INSTALACIÓN DEL MALACATE (CONFIG)	581
INSTALALCIÓN (CONFIG) -CONTROL DE GRADO	177
INSTRUMENTOS DE CABINA (GR)	628, 631
INTERRUPTOR (CONJ) (LUCES)	628, 631
INTERRUPTOR DE ARRANQUE CON LLAVE (CONJ) (ENCENDIDO)	628, 631
INTERRUPTOR DE DERIVACIÓN	232
INTERRUPTOR DE LÍMITE (CONJ) (FRENO DE ESTACIONAMIENTO)	425
INTERRUPTOR DE LÍMITE (CONJ) (PEDAL DE FRENO DE SEVICIO)	665
INTERRUPTOR DE PRESIÓN (CONJ) (REFRIGERANTE)	640, 643
INTERRUPTOR DE TEMPERATURA (CONJ) (REFRIGERANTE)	599
INTERRUPTOR DE VOLQUETE (CONJ) (ACELERACIÓN)	248
INTERRUPTOR DE VOLQUETE (CONJ) (CONTROL DEL ACONDICIONADOR DE AIRE)	629
INTERRUPTOR DE VOLQUETE (CONJ) (DESCONEXIÓN HIDRÁULICA)	248
INTERRUPTOR DE VOLQUETE (CONJ) (FRENO DE ESTACIONAMIENTO)	427
INTERRUPTOR DE VOLQUETE (CONJ) (REFLECTORES TRASEROS)	192, 198
INTERRUPTOR DE VOLQUETE (CONJ) (REFLECTORES TRASEROS)	190
INTERRUPTOR DE VOLQUETE (CONJ) (REFLECTORES TRASEROS)	195
INTERRUPTOR DE VOLQUETE (CONJ) (*UNDERHOOD SERVICE LIGHT)	190, 195
INTERRUPTOR DE VOLQUETE (CONJ) (*UNDERHOOD SERVICE LIGHT)	192
INTERRUPTOR DE VOLQUETE (CONJ) (*UNDERHOOD SERVICE LIGHT)	198
INTERRUPTOR MAGNÉTICO (GR)	234
	235
INTERRUPTOR MAGNÉTICO (GR) (24 VOLTIOS) (RELE PRINCIPAL)	202
INTERRUPTOR PULSADOR (CONJ) (*AUTOMATIC KICKDOWN)	628
INTERRUPTOR PULSADOR (CONJ) (CAMBIAR A UNA MARCHA SUPERIOR)	425
INTERRUPTOR PULSADOR (CONJ) (CAMBIO DESCENDENTE)	425
INTERRUPTOR PULSADOR (CONJ) (DESCONECTOR AUTOMATICO)	631
INTERRUPTOR PULSADOR (CONJ) (MODALIDADES DE VISUALIZACION)	628, 631
INTERRUPTOR PULSADOR (CONJ) (MODO BIDIRECCIONAL)	628, 631
INTERRUPTOR ROTATIVO (CONJ) (DELANTERO)	638
INTERRUPTOR ROTATIVO (CONJ) (PARTE TRASERA)	638
INTERRUPTOR ROTATIVO (CONJ) (PUERTA DE LADO DERECHO)	638
INTERRUPTOR ROTATIVO (CONJ) (PUERTA IZQUIERDA)	638
INTERRUPTOR ROTATIVO (CONJ) (VENTILADOR SOPLADOR)	628
INYECTOR DE COMBUSTIBLE (GR)	142

J

JUEGO (AISLADOR) (MOTOR DE ARRANQUE)	226
JUEGO-ANTEFILTRO (TURBINA)	130
JUEGO-ANTEFILTRO (TURBINA)	131
JUEGO DE ABRAZADERA DEL FILTRO DE AIRE	117
JUEGO DE ALDABA (VENTANA DE CABINA)	708, 710, 711
JUEGO DE AMORTIGUADOR (ASIENTO DE SUSPENSION)	693
JUEGO DE ARANDELA (MOTOR DE ARRANQUE)	223
JUEGO DE ATADURA (ASIENTO DE SUSPENSION)	693
JUEGO DE BOTÓN (AJUSTE DE ALTURA) (ASIENTO DE SUSPENSION)	624
JUEGO DE BUJES (MOTOR DE ARRANQUE)	226
JUEGO DE CALCES (*21-SHIMS) (BOMBA DE PISTON)	499
JUEGO DE COJINETES (ALTERNADOR)	157

* NO HAY TRADUCCION DISPONIBLE EN EL MOMENTO DE LA IMPRESION

INDICE

Nombre	Página
JUEGO DE COJINETES (ASIENTO DE SUSPENSION)	625
JUEGO DE COJINETES (GRUPO GIRATORIO DEL MOTOR) (MOTOR DE PISTÓN ROTATORIO)	501
JUEGO DE COJINETES (MOTOR DE ARRANQUE)	223
JUEGO DE CORREAS TRAPEZOIDALES (INCLUYE 2-CORREAS) (MANDO DE VENTILADOR)	40
JUEGO DE CORREAS TRAPEZOIDALES (INCLUYE 2-CORREAS) (MOTOR)	63
JUEGO DE CORREAS TRAPEZOIDALES (INCLUYE 3 CORREAS) (VENTILADOR)	65
JUEGO DE ESCOBILLAS (MOTOR DE ARRANQUE)	223 226
JUEGO DE FILTRO DE TAPA (*FUEL TANK, VENTED)	154
JUEGO DE GUÍA (INCLUYE GUÍA Y TORNILLO)	710
JUEGO DE GUÍA (VENTANA DE CABINA)	708 711
JUEGO DE HOJA DE LIMPIAPARABRISAS (VENTANA)	716
JUEGO DE INDICADOR (AJUSTE DE PESO) (ASIENTO DE SUSPENSION)	625
JUEGO DE PALANCA (MOTOR DE ARRANQUE)	226
JUEGO DE PANTALLA (ANTEFILTRO)	131
JUEGO DE PARAGOLPES (AJUSTE DE PESO) (ASIENTO DE SUSPENSION)	625
JUEGO DE PASADOR DEL MOTOR DE ARRANQUE	223
JUEGO DE REPARACIÓN (TUBERÍAS DEL FRENO) (*FUEL LEVEL GAUGE)	154
JUEGO DE RESORTE DE HOJA DE BALLESTA (VENTANA DE CABINA)	706 707 713
JUEGO DE RESORTES (AJUSTE DE ALTURA) (ASIENTO DE SUSPENSION)	624
JUEGO DE RESORTES (ASIENTO DE SUSPENSION)	624
JUEGO DE RIEL DE TOPE (VENTANA DE CABINA)	713
JUEGO DE SEGUIDOR (ASIENTO DE SUSPENSION)	625
JUEGO DE SELLO DE CILINDRO HIDRAULICO	456
JUEGO DE SELLO DEL MOTOR DE ARRANQUE	223
JUEGO DE SELLOS (ACUMULADOR)	252 253
JUEGO DE SELLOS (VALVULA DE ALIVIO)	546
JUEGO DE SELLOS (VÁLVULA DE DEMANDA DEL VENTILADOR)	316
JUEGO DE SELLOS (VALVULA DE SOLENOIDE)	436 549
JUEGO DE SELLOS (VENTILADOR DEL EMBRAGUE)	39
JUEGO DE TERMINAL (ALTERNADOR)	157
JUEGO DE TERMINAL (TRABA)	202
JUEGO DE TORNILLERÍA (ALTERNADOR)	157
JUEGO DE TORNILLERÍA (MOTOR DE ARRANQUE)	223
JUEGO DE VALVULA DE AIRE (ASIENTO DE SUSPENSION)	693
JUNTA UNIVERSAL (GR)	314

L

LÁMPARA DEL TECHO (GR)	185
LAMPARA INDICADORA (CONJ) (LUZ DE ACCIÓN)	248
LAMPARA-LED (24-VOLTIOS, ROJO) (SISTEMA DE SEGURIDAD DE LA MÁQUINA)	183
LAMPARA-LED (24 VOLTIOS, VERDE)	473
LÁMPARA (24 VOLTIOS)	185 248 628 631
LÁMPARA (24 VOLTIOS)	578
LÁMPARA (24-VOLTIOS, 3-VATIOS)	243 628 631
LAVAPARABRISAS DE LA VENTANA (GR)	698
LIMPIAPARABRISAS DE LA VENTANA (GR)	716
*LINK AS-TRACK BOX	394 395 396 397
LUCES DE ALÓGENO (*24-VOLT, 65-WATT) (REFLECTOR)	186
LUCES DE ALÓGENO (24 VOLTIOS, 65 VATIOS)	187
LUCES DE ALÓGENO (24 VOLTIOS, 65 VATIOS) (REFLECTOR)	188
LUCES DE REFLECTOR (GR)	189 190
LUCES DE REFLECTOR (GR)	192 195 198

* NO HAY TRADUCCION DISPONIBLE EN EL MOMENTO DE LA IMPRESION

INDICE

Nombre	Página
M	
MANDO DE BOMBA (GR)	41
MANDO DE VENTILADOR (CONFIG)	35
MANDO FINAL (GR)	276, 278
MANGUERA DE RADIADOR	101
*MANIFOLD GP-TRANSMISSION	289
MASTIL - MONTAJE DEL (GR)	585, 586, 587
MAZO DE CABLES (CONJ)	244, 429, 578
MAZO DE CABLES (CONJ) (CARTER SIN INYECCIÓN)	240
MAZO DE CABLES (CONJ) (COMPRESOR DE AIRE ACONDICIONADO)	640, 643
MAZO DE CABLES (CONJ) (IZQUIERDO)	244
MAZO DE CABLES (CONJ) (LADO DERECHO)	244
MAZO DE CABLES (CONJ) (LAVAPARABRISAS)	695
MAZO DE CABLES (CONJ) (PRESION DE COMBUSTIBLE)	145
MAZO DE CABLES (CONJ) (ROPS)	643
MAZO DE CABLES (CONJ) (SISTEMA DE SEGURIDAD DE LA MÁQUINA)	183
MAZO DE CABLES (CONJ) (*WIPER, WASHER, RADIO)	698
MAZO DE CABLES DE CONTROL (CONJ)	244
MAZO DE CABLES DE CONTROL (CONJ) (ESLABON DE PRODUCTO)	180
MAZO DE CABLES DE CONTROL (CONJ) (ESLABON DE PRODUCTO) (*COMMUNICATIONS)	178
MAZO DE CABLES DE LA PLATAFORMA (CONJ)	243
MAZO DE CABLES DE LA TRANSMISION	167, 240
MAZO DE CABLES DE POTENCIA (CONJ) (CONVERTIDOR ELECTRICO)	174
MAZO DE CABLES DE SENSOR (CONJ)	266, 467
MAZO DE CABLES DEL CHASIS (CONJ)	166, 167, 243
MAZO DE CABLES DEL CHASIS (CONJ)	248
MAZO DE CABLES DEL INTERRUPTOR (CONFIG) (FRENO DE SERVICIO)	665
MAZO DE CABLES DEL MONITOR (CONJ)	244
MAZO DE CABLES DEL MOTOR (CONJ) (BOMBA INYECTORA INDIVIDUAL)	238
MAZO DE CABLES DEL MOTOR (CONJ) (MODULO DE CONTROL ELECTRONICO)	238
MAZO DE CABLES DEL TABLERO (CONJ)	202
MAZO DE CABLES DEL TABLERO (CONJ) (INSTRUMENTO)	628
MAZO DE CABLES DEL TABLERO (CONJ) (INSTRUMENTO)	631
MAZO DE CABLES, LUCES (FRENTE) (CILINDRO)	195
MAZO DE CABLES, LUCES (REFLECTOR) (PARTE TRASERA)	190
MAZO DE CABLES, LUCES (REFLECTORES DELANTEROS)	198
MAZO DE CABLES, LUCES (ROPS)	192
MAZO DE CABLES, LUCES (SELECTOR DE MARCHAS AUTOMÁTICO/MANUAL) (ROPS)	195
MAZO DE CABLES, LUCES (SELECTOR DE MARCHAS AUTOMÁTICO/MANUAL) (*SIDE FLOODLIGHTS)	198
MAZO DE CABLES-MOTOR	600
MECANISMO DE VÁLVULAS (GR)	73, 74
MIRILLA (TANQUE DE AGUA)	114
MIRILLA (TANQUE HIDRÁULICO)	504
MODULO DE INTERFAZ (GR) (LLAVE)	183
MODULO DE LA PANTALLA (GR)	651
MODULO ELECTRÓNICO DE CUATRO INDICADORES (GR)	652
MÓDULO GR-SUMINISTRO DE POTENCIA	200
MONTAJE DE ANTENA (GR)	655
MONTAJE DE CILINDRO (GR)	494
MONTAJE DE LA ESTRUCTURA ROPS (GR)	661
MONTAJE DE LA PLATAFORMA (GR)	659
MONTAJE DE LA TRANSMISIÓN (GR)	291
MONTAJE DE MANDO FINAL (GR)	290
MONTAJE DE RODILLOS SUPERIORES (GR)	400
MONTAJE DEL ALTERNADOR (GR)	56
MONTAJE DEL DESGARRADOR (GR)	588
MONTAJE DEL MANDO DE VENTILADOR (GR)	58
MONTAJE DEL MOTOR (GR)	57
MONTAJE GR-MONITOR	657, 658
MOTOR - NÚCLEO (CONFIG)	10, 11, 12, 13, 14, 15
MOTOR - SOPORTE DEL (GR)	71
MOTOR DE ARRANQUE ELÉCTRICO (GR)	223

* NO HAY TRADUCCION DISPONIBLE EN EL MOMENTO DE LA IMPRESION

INDICE

Nombre	Página
	225
	226
	228
	229
	230
MOTOR ELÉCTRICO (GR)	614
MOTOR-LIMPIAPARABRISAS (GR)	653
	654
MÚLTIPLE DE ESCAPE (GR)	126
MULTIPLE DE VALVULA (GR)	492
MÚLTIPLE Y VÁLVULA (GR)	433
	435
MUÑÓN DE LA HOJA TOPADORA (GR)	568
MUÑÓN DEL MOTOR (GR)	72

N

NUCLEO DE RADIADOR (CONJ)	108
NÚCLEO DE TURBOCOMPRESOR (GR)	135
	137
NÚCLEO DEL ENFRIADOR DE ACEITE (CONJ) (MOTOR)	96
NÚCLEO DEL ENFRIADOR DE ACEITE (CONJ) (TRANSMISION)	268
NÚCLEO DEL POSENFRIADOR (CONJ)	151
	152

P

PALANCA UNIVERSAL-CONTROL Y MONTAJE (GR)	441
PALANCA UNIVERSAL DE CONTROL (GR)	445
PANEL DE FUSIBLES (GR)	202
PANTALLA (CONJ) (BARRIDO DE CONVERTIDOR DE PAR)	283
PANTALLA (CONJ) (TANQUE HIDRÁULICO)	504
PASAMANOS (GR)	621
	622
PEDAL-GRUPO DE CONTROL Y MONTAJE	616
PERILLA DE CONTROL (GR)	462
	463
PERILLA DE CONTROL (GR) (HOJA TOPADORA)	462
PISTÓN Y BIELA (GR)	60
PISTONES DEL MOTOR (GR)	493
PIVOTE DEL LIMPIADOR (GR)	718
PLACA DE ADVERTENCIA (CILINDRO PARA ALTA PRESION)	375
	377
	379
	423
	424
PLACA DE ADVERTENCIA (RESORTE DE AMORTIGUACION)	375
	377
	379
	381
	423
	424
PLACA DE IDENTIFICACION (SECUENCIAS)	604
PLACA DE INFORMACION (AMARRE)	332
	333
	581
	590
PLACA DE INFORMACION (FILTRO DE AIRE)	117
PLACA DE INSTRUCCIONES (ACONDICIONADOR DE AIRE)	598
	723
	725
PLACA DEL NÚMERO DE SERIE	560
PLACA DEL NÚMERO DE SERIE (DESGARRADOR)	590
PLACA DEL NÚMERO DE SERIE (HOJA TOPADORA)	553
	554
	555
	556
	557
	558
	559
PLACA DEL NÚMERO DE SERIE (TRANSMISION)	263
PLATAFORMA DE LA CABINA	668
PLATAFORMA (GR)	667
POLEA DE MANDO DEL ALTERNADOR Y VENTILADOR (GR)	65
POLEA DE MANDO DEL ALTERNADOR Y VENTILADOR (GR)	63
POSENFRIADOR DE AIRE (GR)	116
POSICIÓN DEL SENSOR (CONJ) (PALANCA UNIVERSAL) (*BULLDOZER CONTROL HANDLE)	445
PRESURIZADOR (GR)	671
PROTECTOR CONTRA ARENA (GR)	346
PROTECTOR DE LA RUEDA GUÍA (CONFIG)	349
PROTECTOR DE LA TRANSMISIÓN (GR)	363
PROTECTOR DE MANDO FINAL (GR)	349
PROTECTOR DE RODILLOS INFERIORES (GR)	385
	386
PROTECTOR DEL ANTEFILTRO (GR)	121
PROTECTOR DEL ESCAPE (GR)	134
PROTECTOR DEL RADIADOR (GR)	359
	361

* NO HAY TRADUCCION DISPONIBLE EN EL MOMENTO DE LA IMPRESION

INDICE

Nombre	Página
PROTECTOR DEL TANQUE DE COMBUSTIBLE (GR)	356, 357, 358
PROTECTOR GUÍA DE CADENA (GR)	383, 384
PROTECTOR INFERIOR (GR)	350, 351, 353, 354
PROTECTOR POSTERIOR (GR)	362
PROTECTOR TÉRMICO (CONFIG)	151, 152
PROTECTOR TÉRMICO (GR)	153
PROTECTORES DE RAMAS (GR)	365
PUBLICACIONES (GR)	2
RADIADOR (CONFIG)	108
RADIADOR (GR)	109, 111
RADIO (GR)-COMUNICACION (*PRODUCT LINK 121SR)	178, 180
RECEPTOR-SECADOR (GR) (ACONDICIONADOR DE AIRE)	640, 643
RECLINACION DE ASIENTO (GR)	673
REFLECTOR (GR)	186, 187, 188
REGULADOR (CONJ) (PRESION DE COMBUSTIBLE)	145
REGULADOR DE TEMPERATURA DEL AGUA (92 GRADOS CENTÍGRADOS) (REFRIGERANTE)	100
REGULADOR DE VOLTAJE (24 VOLTIOS)	157
REGULADOR Y PEDAL DEL FRENO (GR)	665
REJILLA DE SUCCIÓN (BARRIDO DE CONVERTIDOR DE PAR)	263
REJILLA DE SUCCIÓN (TRANSMISION)	303
REJILLA DEL RADIADOR (GR)	347, 348
REJILLA MAGNÉTICA (GR)	303
REJILLA MAGNÉTICA (GR) (TRANSMISION)	283
REJILLA MAGNÉTICA (GR) (TRANSMISION)	303
REJILLA PROTECTORA (GR)	677, 678
RELÉ (CONJ) (24 VOLTIOS) (MOTOR DE SOPLADOR DE CONDENSADOR)	614
RESORTE TENSOR Y AJUSTADOR DE LA CADENA (GR)	414
RESPIRADERO (CONJ) (CÁRTER DEL MOTOR)	22
RESPIRADERO (CONJ) (CÁRTER DEL MOTOR)	18
RESPIRADERO (CONJ) (TRANSMISION)	283
RETÉN (GR)	364
RETROVISOR (GR)	649, 650
REVESTIMIENTO DE LA CABINA (GR)	636, 638
RODILLO DE CADENA (CONFIG)	402
RODILLO SUPERIOR DE CADENAS (GR)	403
RODILLOS DE PESTAÑA DOBLE (GR)	404, 405
RODILLOS DE PESTAÑA DOBLE (GR)	407
RODILLOS DE PESTAÑA SIMPLE (GR)	408, 409, 410
RUEDA GUÍA DE CADENA (GR)	391
RUEDA GUÍA DE LA TRAÍLLA (GR)	411
RUEDA GUÍA DELANTERA (GR)	388, 389
SEGMENTO DE RUEDA MOTRIZ (GR)	304
SELLO	141
SELLO ANULAR	547
SELLO DE CIGÜEÑAL (GR)	69, 70
SELLO DE LABIO (REGULADOR DE TEMPERATURA DEL AGUA)	100
SENSOR DE PRESIÓN (GR)	207, 208, 209, 210, 211, 212, 213, 214
SENSOR DE PRESIÓN (GR) (ACCIONAMIENTO DE INYECCION)	213
SENSOR DE PRESIÓN (GR) (COMBUSTIBLE)	145
SENSOR DE PRESIÓN (GR) (ENTRADA DE TURBOALIMENTADOR)	166
SENSOR DE TEMPERATURA (GR)	218, 219, 220
SENSOR DE TEMPERATURA (GR) (2 CLAVIJAS)	219, 220
SENSOR DE VELOCIDAD (GR)	215

R

S

* NO HAY TRADUCCION DISPONIBLE EN EL MOMENTO DE LA IMPRESION

INDICE

Nombre	Página
	216
	217
SENSOR DE VELOCIDAD (GR) (CONVERTIDOR DE PAR)	240
SENSOR DE VELOCIDAD (GR) (MANDO DE VENTILADOR)	39
SENSOR DE VELOCIDAD (GR) (SALIDA DE TRANSMISIÓN 1)	293
SENSOR DE VELOCIDAD (GR) (SALIDA DE TRANSMISIÓN 2)	293
SENSOR DEL MOTOR (GR)	204
SERVICIO DE MONITOR (GR)	175
SERVICIO DE TREN DE FUERZA (GR)	175
SILENCIADOR (GR)	127
SOFTWARE DEL MONITOR (GR)	175
SOFTWARE DEL TREN DE FUERZA (GR)	175
SOFTWARE PARA LA MAQUINA (GR) (SEGURIDAD)	183
SOLENOIDE (CONJ) (24 VOLTIOS) (MOTOR DE ARRANQUE)	223
	226
SOPLADOR - VENTILADOR (GR)	98
SOPORTE DE LA HOJA TOPADORA	551
SOPORTE DEL RESPALDO (GR)	662
	663
	664
SUSPENSIÓN - ASIENTO CON (GR)	689
	690
SUSPENSIÓN - ASIENTO CON (GR)	688

T

TANQUE DE REFRIGERANTE (GR)	112
	113
	114
TANQUE DEL LAVAPARABRISAS (GR)	695
	697
TANQUE HIDRÁULICO (GR)	504
TANQUE HIDRÁULICO Y MONTAJE (GR)	503
TAPA CON RESPIRADERO (TANQUE DE LIMPIPARABRISA)	695
TAPA DE LA CAJA DELANTERA (GR)	20
	21
TAPA DE LA CONSOLA (GR)	618
	619
TAPA DE LLENADO (CONJ) (MOTOR)	76
TAPA DE LLENADO (CONJ) (TANQUE DE COMBUSTIBLE)	154
TAPA DE RADIADOR (CONJ)	112
	113
TAPA DE RODILLO INFERIOR	374
TAPA DE RUEDA GUÍA (GR)	372
	373
TAPA DEL BLOQUE MOTOR (GR)	18
TAPA DEL MECANISMO DE VÁLVULAS (GR)	22
TAPA DEL TUBO DE LLENADO (TANQUE HIDRÁULICO)	504
TAPA PARA LLUVIA	162
TAPÓN DE DRENAJE (REFRIGERANTE DE ACEITE DE TRANSMISIÓN)	268
TAPÓN DE DRENAJE (TANQUE HIDRÁULICO)	504
TAPÓN DE DRENAJE (TREN DE FUERZA)	273
TAPÓN DEL MOTOR (GR)	61
TAPÓN (DRENAJE) (CAJA DE TRANSMISION)	331
TAPÓN MAGNÉTICO (MANDO FINAL, LLENADO DE ACEITE)	276
	278
TECHO ROPS ABIERTO (CONFIG)	607
TORNILLERÍA DE LA TAPA DE VÁLVULAS (GR)	46
	47
TRANSMISION (CONFIG)	313
TRANSMISIÓN PLANETARIA (GR)	292
TREN DE FUERZA (CONFIG)	298
TREN DE FUERZA-GRUPO ELECTRÓNICO	175
TREN DE RODAJE (CONFIG)	422
	423
	424
TUBERÍAS CON SERVOMANDO (GR)	467
	475
TUBERÍAS CON SERVOMANDO (GR)	471
	473
TUBERÍAS DE ACEITE DEL MOTOR (GR)	83
TUBERÍAS DE ACEITE DEL TREN DE FUERZA (GR)	283
TUBERIAS DE ACEITE (GR)	84
TUBERÍAS DE ACONDICIONADOR DE AIRE (GR)	640
	643
TUBERIAS DE CALEFACCION	647
TUBERÍAS DE COMBUSTIBLE (GR)	143
	145
TUBERÍAS DE LA CALEFACCIÓN (GR)	647
TUBERÍAS DEL AGUA (GR)	100
	101
	103
TUBERÍAS DEL CILINDRO DE INCLINACIÓN (GR)	483
	485
	487
	489
TUBERÍAS DEL DESGARRADOR (GR)	481
	482
TUBERÍAS DEL MALACATE (GR)	582

* NO HAY TRADUCCION DISPONIBLE EN EL MOMENTO DE LA IMPRESION

INDICE

Nombre	Página
TUBO DE LLENADO DE ACEITE (GR)	76
TURBOCOMPRESOR - TUBERÍAS DE ACEITE DEL (GR)	87
	89
TURBOCOMPRESOR (GR)	135
	136
	137
	138
V	
VÁLVULA - MONTAJE DE LA (GR)	496
VÁLVULA DE AGUA (CONJ)	623
VÁLVULA DE ALIVIO DEL FRENO	503
VÁLVULA DE ALIVIO (GR)	319
	321
	543
	544
	545
	546
VÁLVULA DE ALIVIO (GR) (COMPRESOR DEL REFRIGERANTE)	608
VÁLVULA DE CAÍDA RÁPIDA (GR)	540
	541
VÁLVULA DE COMPENSACIÓN (GR)	528
VALVULA DE COMPENSACION Y MONTAJE (GR)	508
VÁLVULA DE CONTROL DE FLUJO (GR)	516
VALVULA DE CONTROL DE LA BOMBA (GR)	538
VÁLVULA DE CONTROL DE LA TRANSMISIÓN (GR)	322
	324
VÁLVULA DE CONTROL (GR)	516
	518
	521
	523
	526
VÁLVULA DE CONTROL Y MONTAJE (GR)	315
VÁLVULA DE CORTE (GR)	647
VÁLVULA DE LANZADERA (GR)	547
	548
VÁLVULA DE MODULACIÓN (GR)	95
	316
	317
	318
VÁLVULA DE MUESTREO (GR)	94
VÁLVULA DE RETENCIÓN (GR)	515
VÁLVULA DE SOLENOIDE (GR)	436
	437
	549
	550
VALVULA PILOTO DE CARTUCHO (GR)	535
	536
VÁLVULA PILOTO (GR)	529
	531
	533
VÁLVULA REDUCTORA DE PRESIÓN (GR)	537
VARILLA DE NIVEL DE ACEITE (CONJ) (CAJA DE TRANSMISION)	283
VENTANA DE LA CABINA (GR)	700
	701
	702
	703
	704
	705
	706
	707
	708
	710
	715
VENTANA DE LA CABINA (GR)	711
	713
VENTANA DE LA CABINA (GR) (LADO DERECHO)	702
VENTANA DE LA CABINA (GR) (LADO IZQUIERDO)	703
VENTANA DE LA CABINA (GR) (PARTE TRASERA)	701
VENTANA DESLIZANTE (GR)	715
VENTANA DESLIZANTE (GR)	715
VENTILADOR EXPULSOR (CONFIG)	97
VENTILADOR REVERSIBLE (GR)	99
VENTILADOR SOPLADOR DE LA CABINA (GR)	600
VIDRIO (AHUMADO)	700
	701
	702
	703
VIDRIO (CONJ)	187
VIDRIO (CONJ) (REFLECTOR)	186
VIDRIO-DESLIZANTE-DERECHO (AHUMADO) (AHUMADO)	710
VIDRIO-DESLIZANTE TRASERO (AHUMADO)	711
VIDRIO-FIJO TRASERO (AHUMADO)	713
VOLANTE - CAJA DE (GR)	52
VOLANTE (GR)	48
Y	
YUGO (GR)	75

* NO HAY TRADUCCION DISPONIBLE EN EL MOMENTO DE LA IMPRESION

ÍNDICE

Designação	Página
A	
ACOPLAMENTO DA BOMBA	271
ACOPLAMENTO E PROTETOR	270
ACUMULADOR	252, 253
ACUMULADOR - AR CONDICIONADO	640, 643
ACUMULADOR D ÓLEO - PILOTO	438, 439
ACUMULADOR D ÓLEO - PILOTO (CARREGADO)	467
ADAPTADOR DO MOTOR	440
AJUSTADOR DE ESTEIRAS E MOLA TENSORA	414
AJUSTADOR DO ASSENTO	597
ALARME	156, 167
ALAVANCA DE CONTROLE	462, 463
ALAVANCA DE CONTROLE E MONTAGEM	441
ALAVANCA DE CONTROLE (LÂMINA)	462
ALTERNADOR DE CORRENTE	157, 159, 160, 162, 164
AMORTECEDOR	33
AQUECEDOR DA ÁGUA DO MOTOR	176
AQUECEDOR DA CABINE	623
ARMAÇÃO C	561, 562, 563
ARMAÇÃO TELESCÓPICA DA MOLA TENSORA	375, 377, 379, 381
ARO DE FLANGE DUPLA	405
ARRANJO GERAL	2, 3
ARRANJO HIDRÁULICO - 2 VÁLVULAS	464
ARREFECEDOR - ÓLEO DO MOTOR	96
ARREFECEDOR DE ÓLEO DA TRANSMISSÃO	268
ARREFECEDOR DO ÓLEO HIDRÁULICO	447
ARREFECIMENTO - TEMP. AMBIENTE ALTA	97
ASSENTO	679, 681, 682, 684, 685, 686, 687
ASSENTO COM SUSPENSÃO	688, 689, 690
AUXILIAR DE PARTIDA A ÉTER	221
B	
BALANCIM	67, 68
BARRA DE ARTICULAÇÃO	401
BARRA DE SUSPENSÃO	368, 370
BARRA DE TRAÇÃO	332, 333
BARRA LIMPADORA DOS ROLOS	326, 367, 371
BARRAS DE PROTEÇÃO DO CAPÔ	365
BASE DO FILTRO DE ÓLEO	255
BATENTE - TRASEIRO	412
BATERIA	170
BATERIA E CABOS / FIOS ELÉTRICOS	166
BATERIA (12 VOLTS, ISENTO DE MANUTENÇÃO)	170
BATERIA (12 VOLTS, ÚMIDO)	167
BEIRA - PONTA CORTANTE	579, 580
BLINDAGEM DO COLETOR DE ESCAPE	134
BLOCO DO MOTOR	24, 26, 27
BOCAL DE ENCHIMENTO DE ÓLEO DO MOTOR	76
BOMBA DE ÁGUA	105, 106, 107
BOMBA DE ENGRENAGENS	299, 301
BOMBA DE INJEÇÃO DO COMBUSTÍVEL	149, 150, 151
BOMBA DE ÓLEO - MOTOR	93
BOMBA DE PISTÃO	498
BOMBA DE TRANSFERÊNCIA DO COMBUSTÍVEL	149
BOMBA E MONTAGEM	497
BOMBA HIDRÁULICA E MONTAGEM - UNIDADE INJETORA	147
BOTÃO	635
BRAÇO DE EMPUXO	564, 566
BUJÃO - CÓDIGO (CONTROLE DO GRAU)	177
BUJÃO - CÓDIGO (MONITOR)	629

* TRADUÇÃO NÃO DISPONÍVEL NO MOMENTO DA IMPRESSÃO

ÍNDICE

Designação	Página
	632
BUJÃO - CÓDIGO (TREM DE FORÇA)	431
BUJÃO DO DRENO (ARREFECEDOR DO ÓLEO DA TRANSMISSÃO)	268
BUJÃO DO DRENO (TANQUE HIDRÁULICO)	504
BUJÃO DO DRENO (TREM DE FORÇA)	273
BUJÃO DO MOTOR	61
BUJÃO MAGNÉTICO (COMANDO FINAL, ENCHIMENTO DE ÓLEO)	276
	278

C

CABEÇOTE DO MOTOR	28
	30
	31
CABINE	602
	603
	604
CABOS/FIOS ELÉTRICOS - CONTROLE ELETRÔNICO	238
CABOS/FIOS ELÉTRICOS - MOTOR	240
CABOS/FIOS ELÉTRICOS - PLATAFORMA	248
CADEADO (CAIXA DA BATERIA)	328
CADEADO (COBERTURA DO MOTOR)	334
CADEADO (COBERTURA DO TANQUE HIDRÁULICO)	341
CADEADO (COMPARTIMENTO PARA PUBLICAÇÕES)	607
CADEADO (ENCHIMENTO DO TANUQE HIDRÁULICO)	503
CADEADO (PROTETOR DO RADIADOR)	359
CADEADO (TAMPA DO TANQUE DE COMBUSTÍVEL)	154
CAIXA - BATERIA	328
	329
CAIXA - SUSPENSÃO DO ASSENTO	624
CAIXA DIANTEIRA	54
CAIXA DO VOLANTE DO MOTOR	51
	52
CAIXA E CHASSI	331
CARCAÇA DAS ENGRENAGENS PLANETÁRIAS E COMPONENTES	263
CÁRTER DO ÓLEO DO MOTOR	59
CARTUCHO DO TURBOALIMENTADOR	135
	137
CHASSI	1
	2
CHAVE - ELETRÔNICO (SEGURANÇA) (AMARELO)	183
CHAVE - ELETRÔNICO (SEGURANÇA) (CINZA)	183
CHAVE GERAL	233
CHAVE INTERRUPTORA DE PARTIDA (IGNIÇÃO)	628
	631
CHICOTE - CABINE (LIMPADOR, ALTO-FALANTE)	638
CHICOTE - CABOS ELÉTRICOS	244
	429
	578
CHICOTE - CABOS ELÉTRICOS (COMPRESSOR DO CONDICIONADOR DE AR)	640
	643
CHICOTE - CABOS ELÉTRICOS (LADO DIREITO)	244
CHICOTE - CABOS ELÉTRICOS (LADO ESQUERDO)	244
CHICOTE - CABOS ELÉTRICOS (LAVADOR DE VIDROS)	695
CHICOTE - CABOS ELÉTRICOS (PARTIDA SEM INJEÇÃO)	240
CHICOTE - CABOS ELÉTRICOS (PRESSÃO DO COMBUSTÍVEL)	145
CHICOTE - CABOS ELÉTRICOS (ROPS)	643
CHICOTE - CABOS ELÉTRICOS (SISTEMA DE SEGURANÇA DA MÁQUINA)	183
CHICOTE - CABOS ELÉTRICOS (*WIPER, WASHER, RADIO)	698
CHICOTE - CHASSI	166
	167
	243
	248
CHICOTE - CONSOLO	249
CHICOTE - CONSOLO (GUINCHO)	473
CHICOTE - ILUMINAÇÃO (DIANTEIRO) (CILINDRO)	195
CHICOTE - ILUMINAÇÃO (FARÓIS DIANTEIROS)	198
CHICOTE - ILUMINAÇÃO (HOLOFOTE) (TRASEIRO)	190
CHICOTE - ILUMINAÇÃO (PARTE TRASEIRA) (ROPS)	195
CHICOTE - ILUMINAÇÃO (PARTE TRASEIRA) (*SIDE FLOODLIGHTS)	198
CHICOTE - ILUMINAÇÃO (ROPS)	192
CHICOTE - MONITOR	244
CHICOTE - MOTOR (MÓDULO DE CONTROLE ELETRÔNICO)	238
CHICOTE - MOTOR (UNIDADE INJETORA)	238
CHICOTE - PLATAFORMA	243
CHICOTE - SENSOR	266
	467
CHICOTE - SOLENÓIDE (GUINCHO, TRASEIRO)	582

* TRADUÇÃO NÃO DISPONÍVEL NO MOMENTO DA IMPRESSÃO

ÍNDICE

Designação	Página
CHICOTE - TRANSMISSÃO	167, 240
CHICOTE - VÁLVULA (COMPRESSOR DE AR DO ASSENTO)	693
CILINDRO DE ÉTER	221
CILINDRO DE INCLINAÇÃO	456, 458, 460
CILINDRO DE LEVANTAMENTO	452
CILINDRO DE LEVANTAMENTO E TUBOS	448, 450
CILINDRO DO RÍPER	454
CINTO DE SEGURANÇA	681
COBERTURA - TANQUE HIDRÁULICO	341
COBERTURA DO MOTOR	334, 337, 339
COLETOR - CONTROLE	491
COLETOR - VÁLVULA	492
COLETOR DE ESCAPE	126
COLETOR E VÁLVULA	433, 435
COLETOR-TRANSMISSÃO	289
COLMÉIA - ARREFECEDOR DE ÓLEO (MOTOR)	96
COLMÉIA - ARREFECEDOR DE ÓLEO (TRANSMISSÃO)	268
COLMEIA DO RADIADOR	108
COMANDO DA BOMBA	41
COMANDO DO VENTILADOR	35, 36, 38, 39, 40
COMANDO FINAL	276, 278
COMÉIA-PÓS-ARREFECEDOR	151, 152
COMPRESSOR DE AR - ASSENTO	693
COMPRESSOR DE REFRIGERANTE	608, 609
CONDENSADOR DE REFRIGERANTE	614
CONDENSADOR DO REFRIGERANTE E MONTAGEM	611, 612
CONDICIONADOR DE AR	598, 599
CONTROLE - ALAVANCA	445
CONTROLE - NÃO PROGRAMADO	173, 249
CONTROLE-CABO	425, 444
CONTROLE-CABO (CONTROLE DO GUINCHO)	578
CONTROLE-CABO (GUINCHO)	529
CONTROLE DA MÁQUINA	171
CONTROLE DE DIREÇÃO E TRANSMISSÃO	429, 431
CONTROLE DO FREIO DE ESTACIONAMENTO	427
CONTROLE DO GUINCHO	578
CONTROLE DO PEDAL E MONTAGEM	616
CONTROLE ELETRÔNICO - MOTOR	171, 172
CONTROLE HIDRÁULICO DA TRANSMISSÃO	266
CONTROLE HIDRÁULICO DE OPERAÇÃO PILOTO	446
CONTROLE HIDRÁULICO DO ACESSÓRIO	442, 443
CONTROLE-MONITOR NÃO PROGRAMADO	617
CONTROLE-MONITOR NÃO PROGRAMADO (SISTEMA DE MONITORIZAÇÃO CATERPILLAR)	628, 631
CONTROLE (TEMPERATURA)	628
CONVERSOR DE TORQUE	306, 308, 311
CONVERSOR ELÉTRICO	174
COROA E ENGRENAGEM DE TRANFERÊNCIA	280
CORREIA (ALTERNADOR)	65
CORREIA (ALTERNADOR, BOMBA DE ÁGUA)	160
CORREIA EM V (COMPRESSOR)	40
CORREIA EM V (COMPRESSOR DO REFRIGERANTE)	609
CORREIA EM V (MOTOR)	63
COTOVELO	77
COTOVELO DE ADMISSÃO DE AR	120

D

Designação	Página
DECALQUE	719, 721
DECALQUE - ADVERTÊNCIA (ACUMULADOR)	438, 439
DECALQUE - ADVERTÊNCIA (ALTA PRESSÃO, CONSULTAR OMM)	252, 253
DECALQUE - ADVERTÊNCIA (ALTA PRESSÃO, LER OMM, ISO)	726

* TRADUÇÃO NÃO DISPONÍVEL NO MOMENTO DA IMPRESSÃO

ÍNDICE

Designação	Página
DECALQUE - ADVERTÊNCIA (CHOQUE ELÉTRICO)	202
DECALQUE - ADVERTÊNCIA (MOLA TENSORA)	375
	377
	379
	381
	423
	424
DECALQUE - ADVERTÊNCIA (NÃO SOLDAR, NÃO PERFURAR, CONSULTAR OMM)	607
	724
	726
DECALQUE - ADVERTÊNCIA (PARTIDA COM CABO AUXILIAR, CONSULTAR OMM)	724
	726
DECALQUE - ADVERTÊNCIA (RÁDIO DO PRODUCT LINK, NACD)	180
DECALQUE - ADVERTÊNCIA (RÁDIO DO PRODUCT LINK, NACD)	178
DECALQUE - ADVERTÊNCIA (RÁDIO DO PRODUCT LINK, NÃO NACD)	726
DECALQUE - ADVERTÊNCIA (ROPS)	724
	726
DECALQUE - ADVERTÊNCIA (ROPS/FOPS)	607
DECALQUE - AVISO (RÁDIO)	627
DECALQUE - IDENTIFICAÇÃO (ALAVANCA DE CONTROLE) (CONTROLE DE RAMPA)	177
DECALQUE - IDENTIFICAÇÃO (AQUECEDOR DE ÁGUA)	176
DECALQUE - IDENTIFICAÇÃO (BAIXA VELOCIDADE, LUZ DO GUINCHO)	442
DECALQUE - IDENTIFICAÇÃO (CARRETEL LIVRE DO GUINCHO)	578
DECALQUE - IDENTIFICAÇÃO (CONTROLE DO GUINCHO)	442
DECALQUE - IDENTIFICAÇÃO (CONTROLES DO LIMPADOR DE PÁRA-BRISA)	638
DECALQUE - IDENTIFICAÇÃO (FILTRO)	578
DECALQUE - IDENTIFICAÇÃO (IGNIÇÃO)	183
DECALQUE - IDENTIFICAÇÃO (LUZ DE AÇÃO)	631
DECALQUE - IDENTIFICAÇÃO (LUZES)	629
DECALQUE - IDENTIFICAÇÃO (NÚMERO DE GRUPO) (CONDENSADOR DO REFRIGERANTE)	614
DECALQUE - IDENTIFICAÇÃO (PAINEL DE INSTRUMENTOS)	628
	631
	632
DECALQUE - IDENTIFICAÇÃO (SISTEMA DE SEGURANÇA)	183
DECALQUE - INFORMAÇÕES (AMARRAÇÃO)	332
	333
DECALQUE - INFORMAÇÕES (AMARRAÇÃO)	581
DECALQUE - INFORMAÇÕES (AMARRAÇÃO)	590
DECALQUE - INFORMAÇÕES (PURIFICADOR DE AR)	117
DECALQUE - INSTRUÇÃO (AJUSTE DO ASSENTO)	691
	693
DECALQUE - INSTRUÇÃO (CONTROLE DE RÍPER)	442
DEFLETOR TÉRMICO DE CALOR	153
DENTE DO RÍPER	593
	594
	595
	596
DESLIZADOR DO VIDRO - LADO DIREITO (MATIZADO) (MATIZADO)	710
DISJUNTOR AUTOMÁTICO DE CIRCUITO (15 AMPERES) (MOTOR DO VENTILADOR)	202
DRENO - ECOLOGIA	272
	273
DRENO - ÓLEO DO MOTOR	34

E

EIXO-COMANDO DE VÁLVULA	17
EIXO DE TRANSMISSÃO	305
EJETOR DE POEIRA	119
ELEMENTO - AQUECEDOR DE ÁGUA DA CAMISA (120 VOLTS, 1500 WATTS)	176
ELEMENTO DO FILTRO DE AR (PRIMÁRIO)	117
ELEMENTO DO FILTRO DE AR (SECUNDÁRIO)	117
ELEMENTO FILTRANTE - ÓLEO (EFICIÊNCIA AVANÇADA)	504
ELEMENTO FILTRANTE - ÓLEO (EFICIÊNCIA PADRÃO) (PADRÃO)	504
ELEMENTO FILTRANTE - ÓLEO (EFICIÊNCIA ULTRA ALTA)	275
	504
ELEMENTO FILTRANTE - ÓLEO (FLUIDO RESISTENTE A FOGO)	504
ELEMENTO (RESPIRO) (CÁRTER DO MOTOR)	22
ELIMINAÇÃO DE VAPORES DO CÁRTER	80
	81
ELO-CAIXA DA ESTEIRA	394
	395

* TRADUÇÃO NÃO DISPONÍVEL NO MOMENTO DA IMPRESSÃO

ÍNDICE

Designação	Página
	396
	397
ELO DA ESTEIRA	392
	393
	398
	399
EMISSOR - NÍVEL DO COMBUSTÍVEL	154
EMISSOR - POSIÇÃO	205
	206
EMISSOR - POSIÇÃO (CONTROLE DE DIREÇÃO)	425
EMISSOR - POSIÇÃO (PEDAL DESACELERADOR)	665
ENGRENAGENS DE COMANDO TRASEIRO	50
ENGRENAGENS DE DISTRIBUIÇÃO	49
ENGRENAGENS PLANETÁRIAS - TRANSMISSÃO	292
ESPELHO RETROVISOR	649
	650
ESTEIRA	416
	417
	418
	419
	420
	421
ESTRUTURA ROPS	674
EXTENSÃO - ENCOSTO (TECIDO)	681
EXTENSÃO - ENCOSTO (VINIL) (ASSENTO)	684

F

Designação	Página
FIAÇÃO - AQUECEDOR E AR CONDICIONADO (MOTORES DO SOPRADOR DO CONDENSADOR) (AR CONDICIONADO)	614
FIAÇÃO - CONTROLE	244
FIACAO - CONTROLE DO NIVEL	243
FIAÇÃO - CONTROLE (PRODUCT LINK)	180
FIAÇÃO - CONTROLE (PRODUCT LINK) (COMUNICAÇÕES)	178
FIAÇÃO - INTERRUPTOR (FREIO DE SERVIÇO)	665
FIAÇÃO - PAINEL	202
FIAÇÃO - PAINEL (INSTRUMENTO)	628
	631
FIAÇÃO -LUZES DIANTEIRAS (CILINDRO)	192
FIAÇÃO ELÉTRICA (CONVERSOR ELÉTRICO)	174
FIAÇÃO-MOTOR	600
FIAÇÃO-RÁDIO	244
FIAÇÃO-RÁDIO (PRODUCT LINK)	180
FIAÇÃO-RÁDIO (PRODUCT LINK) (COMUNICAÇÕES)	178
FILTRO - AR (AR FRESCO)	671
FILTRO - COMBUSTÍVEL	154
FILTRO - COMBUSTÍVEL (ALTA EFICIÊNCIA)	139
FILTRO - MAGNÉTICO	303
FILTRO - MAGNÉTICO (TRANSMISSÃO)	283
	303
FILTRO - ÓLEO	275
FILTRO - ÓLEO DO MOTOR	77
FILTRO - ÓLEO DO MOTOR (EFICIÊNCIA AVANÇADA)	77
FILTRO - ÓLEO (TREM DE FORÇA)	283
FILTRO - SEPARADOR DE ÁGUA E COMBUSTÍVEL (PRIMÁRIO)	141
FILTRO DE COMBUSTÍVEL E SEPARADOR DE ÁGUA	141
FILTRO E TUBOS - COMBUSTÍVEL	139
FILTRO (RECIRCULAÇÃO DO AR)	671
FIXADOR - AMORTECEDOR E POLIA	44
FIXADORES - CABEÇOTE DO MOTOR	42
	43
FIXADORES - CAIXA DIANTEIRA	45
FIXADORES - TAMPA DA VÁLVULA	46
	47
FREIO E COMANDO DO DIFERENCIAL	256
FREIOS E ENGRENAGENS PLANETARIAS	261
FUNDO - ENCOSTO	662
	663
	664
FUSÍVEL (10 AMPERES)	202
FUSÍVEL (15 AMPERES)	202
FUSÍVEL (175 AMPÈRES)	202
	249
FUSÍVEL (20-AMPERES)	202

G

Designação	Página
GARFO	75
GR. DE SERVICO - TREM DE FORÇA	175
GRADE DO RADIADOR	347
	348
GRADE DO RADIADOR CONTRA EROSÃO	346
GRUPO DE INSTALAÇÃO - MOTOR	16
GRUPO DE VÁLVULAS DE CONTROLE - QUÁDRUPLO	511
	513
GRUPO DE VÁLVULAS DE CONTROLE - TRIPLO	509
GUIA-MATERIAL RODANTE	387

I

Designação	Página
INDICADOR - NÍVEL DE ÓLEO (CAIXA DE TRANSMISSÃO)	283
INDICADOR - NÍVEL DO ÓLEO (VARETA)	82

* TRADUÇÃO NÃO DISPONÍVEL NO MOMENTO DA IMPRESSÃO

ÍNDICE

Designação	Página
INDICADOR (LUZ DE AÇÃO)	243, 631
INDICADOR (LUZ DE AÇÃO)	628
INJETOR DE COMBUSTÍVEL	142
INSTALACAO - CONTROLE DA GRELHA	177
INSTALAÇÃO-COMUNICAÇÃO	178, 180
INSTALAÇÃO-CONTROLE DA INCLINAÇÃO	182
INSTALACÃO DO GUINCHO	581
INSTALAÇÃO DO RÁDIO	627
INSTALAÇÃO-SEGURANÇA	183
INSTRUMENTOS-CABINE	628, 631
INTERRUPTOR - BALANCIM (ACELERADOR)	248
INTERRUPTOR - BALANCIM (CONTROLE DO CONDICIONADOR DE AR)	629
INTERRUPTOR - BALANCIM (FARÓIS TRASEIROS)	190, 192, 195, 198
INTERRUPTOR - BALANCIM (FREIO DE ESTACIONAMENTO)	427
INTERRUPTOR - BALANCIM (LUZ DE SERVIÇO SOB O CAPÔ)	190, 192, 195, 198
INTERRUPTOR - BALANCIM (TRAVA HIDRÁULICA)	248
INTERRUPTOR - BOTÃO (AUTOMÁTICA - REDUÇÃO)	631
INTERRUPTOR - BOTÃO (DESENGATE AUTOMÁTICO)	628
INTERRUPTOR - BOTÃO (MODALIDADES DE VISUALIZAÇÃO)	628, 631
INTERRUPTOR - BOTÃO (MODO BIDIRECIONAL)	628, 631
INTERRUPTOR - BOTÃO (MUDANÇA MARCHAS ACIMA)	425
INTERRUPTOR - BOTÃO (REDUÇÃO DE MARCHA)	425
INTERRUPTOR - LIMITADOR (FREIO DE ESTACIONAMENTO)	425
INTERRUPTOR - LIMITADOR (PEDALDO FREIO DE SERVIÇO)	665
INTERRUPTOR - MAGNÉTICO	234, 235
INTERRUPTOR - MAGNÉTICO (24 VOLTS) (RELÉ PRINCIPAL)	202
INTERRUPTOR - PRESSÃO (REFRIGERANTE)	640, 643
INTERRUPTOR - ROTATIVO (DIANTEIRO)	638
INTERRUPTOR - ROTATIVO (PORTA - LADO ESQUERDO)	638
INTERRUPTOR - ROTATIVO (PORTA-LADO DIREITO)	638
INTERRUPTOR - ROTATIVO (TRASEIRO)	638
INTERRUPTOR - ROTATIVO (VENTILADOR)	628
INTERRUPTOR - TEMPERATURA (REFRIGERANTE)	599
INTERRUPTOR-BOTÃO	236
INTERRUPTOR DE DERIVAÇÃO	232
INTERRUPTOR (LUZES)	628, 631

J

Designação	Página
JANELA DA CABINE	700, 701, 702, 703, 704, 705, 706, 707, 708, 710, 711, 713, 715
JANELA DA CABINE (DIREITO)	702
JANELA DA CABINE (ESQUERDO)	703
JANELA DA CABINE (TRASEIRO)	701
JOGO - PRÉ-PURIFICADOR (TURBINA)	130, 131
JOGO DE ABRAÇADEIRA DO PURIFICADOR DE AR	117
JOGO DE ALAVANCA (MOTOR DE PARTIDA)	226
JOGO DE AMORTECEDOR DE CHOQUES (ASSENTO DA SUSPENSÃO)	693
JOGO DE ARRUELA (MOTOR DE PARTIDA)	223
JOGO DE BLOCO DESLIZADOR (ASSENTO DA SUSPENSÃO)	688, 689, 690
JOGO DE BOTÃO DE SUSPENSÃO (AJUSTE DE ALTURA) (ASSENTO DA SUSPENSÃO)	624
JOGO DE BUCHA (MOTOR DE PARTIDA)	226
JOGO DE CALÇOS (21 CALÇOS) (BOMBA DO PISTÃO)	499

* TRADUÇÃO NÃO DISPONÍVEL NO MOMENTO DA IMPRESSÃO

ÍNDICE

Designação	Página
JOGO DE CORDÃO (ASSENTO DA SUSPENSÃO)	693
JOGO DE CORREIAS EM V (INCLUI 2 CORREIAS) (COMANDO DO VENTILADOR)	40
JOGO DE CORREIAS EM V (INCLUI 2 CORREIAS) (MOTOR)	63
JOGO DE CORREIAS EM V (INCLUI 3 CORREIAS) (VENTILADOR)	65
JOGO DE ESCOVA (MOTOR DE PARTIDA)	223 226
JOGO DE FILTRO DA TAMPA (TANQUE DE COMBUSTÍVEL, COM RESPIRO)	154
JOGO DE FIXADORES (ALTERNADOR)	157
JOGO DE FIXADORES (MOTOR DE PARTIDA)	223
JOGO DE GUIA DE TRILHO (INCLUI GUIA E PARAFUSO)	710
JOGO DE GUIA DE TRILHO (VIDRO DA CABINE)	708 711
JOGO DE INDICADOR (AJUSTAGEM DO PESO) (ASSENTO DA SUSPENSÃO)	625
JOGO DE ISOLADOR (MOTOR DE PARTIDA)	226
JOGO DE LÂMINA DO LIMPADOR DE PÁRA-BRISA (JANELA)	716
JOGO DE MANCAL (ALTERNADOR)	157
JOGO DE MANCAL (ASSENTO DA SUSPENSÃO)	625
JOGO DE MANCAL (GRUPO ROTAÇÃO MOTOR) (MOTOR DO PISTÃO GIRATÓRIO)	501
JOGO DE MANCAL (MOTOR DE PARTIDA)	223
JOGO DE MOLA (AJUSTE DE ALTURA) (ASSENTO DA SUSPENSÃO)	624
JOGO DE MOLA (ASSENTO DA SUSPENSÃO)	624
JOGO DE MOLA DE FOLHA (VIDRO DA CABINE)	706 707 713
JOGO DE PÁRA-CHOQUE (AJUSTAGEM DO PESO) (ASSENTO DA SUSPENSÃO)	625
JOGO DE PINO DO MOTOR DE PARTIDA	223
JOGO DE REPARO (INDICADOR DO NÍVEL DE COMBUSTÍVEL)	154
JOGO DE RETENTOR (ACUMULADOR)	252 253
JOGO DE RETENTOR DO CILINDRO HIDRÁULICO	456
JOGO DE RETENTOR DO MOTOR DE PARTIDA	223
JOGO DE RETENTOR (EMBREAGEM - VENTILADOR)	39
JOGO DE RETENTOR (VALVULA DE ALIVIO)	546
JOGO DE RETENTOR (VÁLVULA DE DEMANDA DO VENTILADOR)	316
JOGO DE RETENTOR (VÁLVULA SOLENÓIDE)	436 549
JOGO DE SEGUIDOR (ASSENTO DA SUSPENSÃO)	625
JOGO DE TELA (PRÉ-PURIFICADOR)	131
JOGO DE TERMINAL (ALTERNADOR)	157
JOGO DE TERMINAL (TRAVA)	202
JOGO DE TRILHO DE PARADA (VIDRO DA CABINE)	713
JOGO DE TRINCO (VIDRO DA CABINE)	708 710 711
JOGO DE VÁLVULA DE AR (ASSENTO DA SUSPENSÃO)	693
JUNTA (ALOJAMENTO DO REGULADOR DA ÁGUA)	100
JUNTA UNIVERSAL	314

L

LÂMINA ANGULÁVEL	553 554 555 556 575
LÂMINA ANGULÁVEL E BORDA CORTANTE	569
LÂMINA DO LIMPADOR DE PÁRA-BRISA (DIANTEIRO, TRASEIRO)	716
LÂMINA DO LIMPADOR DE PÁRA-BRISA (PORTA, LD, LE)	716
LÂMINA E BORDA CORTANTE SEMI-UNIVERSAL	570 571
LÂMINA SEMI-UNIVERSAL	557 558 559 560 572 574 576 577
LÂMPADA - FAROL	186 187 188
LÂMPADA - HALOGÊNEO (*24-VOLT, 65-WATT) (FAROL)	186

* TRADUÇÃO NÃO DISPONÍVEL NO MOMENTO DA IMPRESSÃO

ÍNDICE

Designação	Página
LÂMPADA - HALOGÊNEO (24 VOLTS, 65 WATTS)	187
LÂMPADA - HALOGÊNEO (24 VOLTS, 65 WATTS) (FAROL)	188
LÂMPADA - LED (24-VOLTS, VERDE)	473
LÂMPADA - LED (24-VOLTS, VERMELHO) (SISTEMA DE SEGURANÇA DA MÁQUINA)	183
LÂMPADA - TETO	185
LÂMPADA INDICADORA (LUZ DE AÇÃO)	248
LÂMPADA (24 VOLTS)	248
	578
	628
	631
LÂMPADA (24 VOLTS)	185
LÂMPADA (24 VOLTS, 3 WATTS)	243
	628
	631
LAVADOR DO VIDRO	698
LENTE	187
LENTE (FAROL)	186
LEVANTAMENTO DO MOTOR	55
LIMPADOR DO VIDRO	716

M

MANGUEIRA - RADIADOR	101
MANGUEIRA-ELIMINAÇÃO DE VAPORES DO CÁRTER (CÁRTER DO MOTOR)	81
MATERIAL RODANTE	422
	423
	424
MECANISMO DAS VÁLVULAS	73
	74
MÓDULO - INTERFACE (CHAVE)	183
MÓDULO DO VISOR	651
MODULO E MONTAGEM - CONTROLE DA GRELHA	200
MÓDULO ELETRÔNICO DE QUATRO INDICADORES	652
MÓDULO-SUPRIMENTO DE ENERGIA	200
MONITOR DE SERVIÇO	175
MONTAGEM - ALTERNADOR	56
MONTAGEM - CABINE	656
MONTAGEM - CILINDRO	494
MONTAGEM - COMANDO DO VENTILADOR	58
MONTAGEM - COMANDO FINAL	290
MONTAGEM - ESTRUTURA ROPS	661
MONTAGEM - MASTRO	585
	586
	587
MONTAGEM - MONITOR	657
	658
MONTAGEM - MOTOR	57
MONTAGEM - PLATAFORMA	659
MONTAGEM - RIPER	588
MONTAGEM - ROLETE SUPERIOR	400
MONTAGEM - TRANSMISSÃO	291
MONTAGEM - VÁLVULA	496
MONTAGEM-ANTENA	655
MONTAGEM-CONECTOR	201
MOTOR	4
	5
	6
	7
	8
	9
MOTOR - LIMPADOR DO VIDRO	653
	654
MOTOR - NÚCLEO	10
	11
	12
	13
	14
	15
MOTOR - PISTÃO	493
MOTOR DO GRUPO ROTATIVO	501
MOTOR ELÉTRICO	614
MOTOR ELÉTRICO DE PARTIDA	223
	225
	226
	228
	229
	230
MUNHÃO DA LÂMINA	568
MUNHÃO DO MOTOR	72

O

ÓLEO - ARRANJO PARA TROCA RÁPIDA	91

P

PAINEL DE FUSÍVEIS	202
PÁRA-LAMA	343
	344
	345
PEDAL - GOVERNADOR E FREIO	665
PEGA-MÃO	621
	622
PELÍCULA - DISJUNTOR	202
PISTÃO E BIELA	60
PIVÔ DO LIMPADOR	718
PLACA - NÚMERO DE SÉRIE	560
PLACA - NÚMERO DE SÉRIE (LÂMINA)	553
	554

* TRADUÇÃO NÃO DISPONÍVEL NO MOMENTO DA IMPRESSÃO

ÍNDICE

Designação	Página
	555
	556
	557
	558
	559
PLACA - NÚMERO DE SÉRIE (RÍPER)	590
PLACA - NÚMERO DE SÉRIE (TRANSMISSÃO)	263
PLACA DE ADVERTÊNCIA (CILINDRO DE ALTA PRESSÃO)	375
	377
	379
	423
	424
PLACA DE ADVERTÊNCIA (MOLA TENSORA)	375
	377
	379
	381
	423
	424
PLACA DE IDENTIFICAÇÃO (SEQÜÊNCIA)	604
PLACA DE INSTRUÇÃO (CONDICIONADOR DE AR)	598
	725
PLACA DE INSTRUÇÃO (CONDICIONADOR DE AR)	723
PLACA E DECALQUE	723
	724
	726
PLATAFORMA	667
PLATAFORMA DO OPERADOR	668
POLIA - VENTILADOR E COMANDO DO ALTERNADOR	63
	65
POLIA DO VIRABREQUIM	62
PÓS-ARREFECEDOR DA ADMISSÃO DE AR	116
POSIÇÃO DO SENSOR (ALAVANCA DE CONTROLE) (ALAVANCA DE CONTROLE DA LÂMINA)	445
PRÉ-PURIFICADOR	128
	129
	130
	131
PRÉ-PURIFICADOR COM TELA	133
PRESSURIZADOR	671
PROTETOR - COMANDO FINAL	349
PROTETOR - GUIA DOS ROLETES DAS ESTEIRAS	383
	384
PROTETOR - PRÉ-PURIFICADOR	121
PROTETOR - RADIADOR	359
	361
PROTETOR - RODA-GUIA	349
PROTETOR - ROLETES DAS ESTEIRAS	385
	386
PROTETOR - TANQUE DE COMBUSTÍVEL	356
	357
	358
PROTETOR - TÉRMICO	151
	152
PROTETOR - TRANSMISSÃO	363
PROTETOR - TRASEIRO	362
PROTETOR INFERIOR	350
	351
	353
	354
PUBLICAÇÃO	2
PURIFICADOR DE AR	117
	118

R

RADIADOR	108
	109
	111
RÁDIO - COMUNICAÇÃO (PRODUCT LINK 121SR)	178
	180
RASPADOR - RODA-GUIA	411
RECEPTOR - SECADOR (CONDICIONADOR DE AR)	640
	643
RECLINAÇÃO - ASSENTO	673
REGULADOR DE TEMPERATURA DA ÁGUA (92 GRAUS C) (LÍQUIDO ARREFECEDOR)	100
REGULADOR DE VOLTAGEM (24 VOLTS)	157
REGULADOR (PRESSÃO DO COMBUSTÍVEL)	145
RELÉ (CONJ) (24 VOLTS) (MOTOR DO VENTILADOR DO CONDENSADOR)	614
RESPIRO (CÁRTER)	18
	22
RESPIRO (TRANSMISSÃO)	283
RETENTOR	141
RETENTOR DE ANEL-O	547
RETENTOR DO VIRABREQUIM	69
	70
REVESTIMENTO DA CABINE	636
	638
RIPER	590
	591
RODA-GUIA DAS ESTEIRAS	391
RODA-GUIA DIANTEIRA	388
	389
ROLETE DAS ESTEIRAS	402

* TRADUÇÃO NÃO DISPONÍVEL NO MOMENTO DA IMPRESSÃO

ÍNDICE

Designação	Página
ROLETE DE ESTEIRA DE FLANGE DUPLO	404, 405, 407
ROLETE DE ESTEIRA DE FLANGE SIMPLES	408, 409, 410
ROLETE SUPERIOR DA ESTEIRA	403
ROPS ABERTA	675
S	
SEGMENTO DA RODA MOTRIZ	304
SEMI-EIXO - TREM DE FORÇA	254
SENSOR - PRESSÃO	207, 208, 209, 210, 211, 212, 213, 214
SENSOR - PRESSÃO (ACIONAMENTO DA INJEÇÃO)	213
SENSOR - PRESSÃO (ADMISSÃO DO TURBOALIMENTADOR)	166
SENSOR - PRESSÃO (COMBUSTÍVEL)	145
SENSOR - TEMPERATURA	218, 219, 220
SENSOR - TEMPERATURA (2 PINOS)	219, 220
SENSOR DE VELOCIDADE	215, 216, 217
SENSOR DE VELOCIDADE (COMANDO DO VENTILADOR)	39
SENSOR DE VELOCIDADE (CONVERSOR DE TORQUE)	240
SENSOR DE VELOCIDADE (SAÍDA DA TRANSMISSÃO 1)	293
SENSOR DE VELOCIDADE (SAÍDA DA TRANSMISSÃO 2)	293
SENSOR DO MOTOR	204
SILENCIADOR	127
SISTEMA DE ILUMINAÇÃO - FARÓIS	189, 190, 192, 195, 198
SISTEMA ELETRÔNICO - MÁQUINA	175
SISTEMA ELETRÔNICO - MONITOR	175
SISTEMA ELETRÔNICO - TREM DE FORÇA	175
SOFTWARE - COMUNICAÇÃO (CONTROLE DO GRAU)	177
SOFTWARE - COMUNICAÇÃO (PRODUCT LINK 121SR)	178
SOFTWARE - COMUNICAÇÃO (PRODUCT LINK 121SR) (PRODUCT LINK 121SR)	180
SOFTWARE - MÁQUINA (SEGURANÇA)	183
SOFTWARE - MONITOR	175
SOFTWARE - TREM DE FORÇA	175
SOLENÓIDE (24 VOLTS) (MOTOR DE PARTIDA)	223, 226
SUPORTE DO MOTOR	71
SUSPENSÃO - ASSENTO	691, 693
T	
TAMPA - BLOCO DO MOTOR	18
TAMPA - BOCAL DE ENCHIMENTO (MOTOR)	76
TAMPA - BOCAL DE ENCHIMENTO (TANQUE DE COMBUSTÍVEL)	154
TAMPA - BOCAL DE ENCHIMENTO (TANQUE HIDRÁULICO)	504
TAMPA - CAIXA DIANTEIRA	20, 21
TAMPA - CHUVA	162
TAMPA - CONSOLO	618, 619
TAMPA - MECANISMO DAS VÁLVULAS	22
TAMPA - RADIADOR	112, 113
TAMPA - ROLETE DAS ESTEIRAS	374
TAMPA COM RESPIRO (TANQUE DO LAVADOR DE VIDROS)	695
TAMPA DA RODA-GUIA	372, 373
TAMPÃO (DRENAGEM) (CAIXA DE TRANSMISSÃO)	331
TANQUE - LAVADOR DE JANELA	695, 697
TANQUE - LÍQUIDO ARREFECEDOR	112, 113, 114
TANQUE DE COMBUSTÍVEL	154
TANQUE DE ÓLEO HIDRÁULICO E MONTAGEM	503
TANQUE HIDRÁULICO	504
TAPETE	619, 659
TELA DE PROTEÇÃO	677, 678

* TRADUÇÃO NÃO DISPONÍVEL NO MOMENTO DA IMPRESSÃO

ÍNDICE

Designação	Página
TELA DE SUCÇÃO (RETORNO DO CONVERSOR DE TORQUE)	263
TELA DE SUCÇÃO (TRANSMISSÃO)	303
TELA FILTRANTE (ENCHIMENTO DO TANUQE HIDRÁULICO)	504
TELA FILTRANTE (RETORNO DO CONVERSOR DE TORQUE)	283
TELA FILTRANTE (TANQUE HIDRÁULICO)	504
TIRANTE DA LÂMINA	551
TOLDO - ROPS ABERTA	607
TRANSMISSÃO	313
TREM DE FORÇA	298
TRINCO	364
TUBOS - ÁGUA	100
	101
	103
TUBOS - AQUECEDOR	647
TUBOS - AR	122
	123
TUBOS - AR CONDICIONADO	640
	643
TUBOS - BOMBA	478
TUBOS - CILINDRO DE INCLINAÇÃO	483
	485
	487
	489
TUBOS - CILINDRO DE LEVANTAMENTO	465
TUBOS - CIRCUITO PILOTO	467
	471
	473
	475
TUBOS - COMBUSTÍVEL	143
	145
TUBOS - GUINCHO	582
TUBOS - ÓLEO DA TRANSMISSÃO	283
TUBOS - ÓLEO DO MOTOR	83
TUBOS - ÓLEO DO TURBOALIMENTADOR	87
	89
TUBOS - RIPER	481
	482
TUBOS - SUPRIMENTO DE ÓLEO	84
TUBOS DO AQUECEDOR	647
TURBOALIMENTADOR	135
	136
	137
	138

V

VALVULA - PARTIDA A ETER	237
VÁLVULA DE ÁGUA	623
VÁLVULA DE ALÍVIO	319
	321
	543
	544
	545
	546
VÁLVULA DE ALÍVIO (COMPRESSOR DO REFRIGERANTE)	608
VÁLVULA DE CONTRABALANÇO	528
VÁLVULA DE CONTRAPESO E MONTAGEM	508
VÁLVULA DE CONTROLE	516
	518
	521
	523
	526
VÁLVULA DE CONTROLE - FLUXO	516
VÁLVULA DE CONTROLE - TRANSMISSÃO	322
	324
VÁLVULA DE CONTROLE DA BOMBA	538
VÁLVULA DE CONTROLE E MONTAGEM	315
VÁLVULA DE CONTROLE PILOTO	529
	531
	533
VÁLVULA DE MODULAÇÃO	95
	316
	317
	318
VÁLVULA DE PARADA	647
VÁLVULA DE QUEDA RÁPIDA	540
	541
VÁLVULA DE REDUÇÃO DE PRESSÃO	537
VÁLVULA DE RETENÇÃO	515
VÁLVULA DE SEPARAÇÃO	547
	548
VÁLVULA DISJUNTORA	503
VÁLVULA DO CARTUCHO PILOTO	535
	536
VÁLVULA E MONTAGEM - LÂMINA	507
VÁLVULA PARA TIRAR AMOSTRAS DE FLUIDOS	94
VÁLVULA SOLENÓIDE	436
	437
	549
	550
VEDADOR TIPO LABIO (REGULADOR DA TEMPERATURA DA ÁGUA)	100
VENTILADOR - EJETOR	97
VENTILADOR DA CABINE	600
VENTILADOR DE SOPRO	98
VENTILADOR REVERSÍVEL	99
VIDRO - DESLIZADOR TRASEIRO (MATIZADO)	711
VIDRO - DESLIZANTE	715
VIDRO - FIXADO NA PARTE TRASEIRA (MATIZADO)	713

* TRADUÇÃO NÃO DISPONÍVEL NO MOMENTO DA IMPRESSÃO

ÍNDICE

Designação	Página	Designação	Página
VIDRO (MATIZADO)	700		
VIDRO (MATIZADO)	701		
	702		
	703		
VIGIA (TANQUE DE ÁGUA)	114		
VIGIA (TANQUE HIDRÁULICO)	504		
VIRABREQUIM	23		
VOLANTE DO MOTOR	48		

* TRADUÇÃO NÃO DISPONÍVEL NO MOMENTO DA IMPRESSÃO

STICHWORTVERZEICHNIS

Bezeichnung	Seite

A

ABDECKGLAS	187
ABDECKGLAS (ARBEITSSCHEINWERFER)	186
ABLASS (UMWELTFREUNDLICH)	272, 273
ABLASSSTOPFEN (GETRIEBESÖLKÜHLER)	268
ABLASSSTOPFEN (HYDRAULIKTANK)	504
ABLASSSTOPFEN (KRAFTÜBERTRAGUNG)	273
ABSPERRVENTIL	647
ABSTREIFBALKEN	326, 367, 371
ABSTREIFER, HINTEN	412
ACHSWELLE	401
ALARM	167
ANSAUGSIEB (GETRIEBE)	303
ANSAUGSIEB (WANDLERRÜCKLAUFSIEB)	263
ANSCHLUSSKLEMMENSATZ (DREHSTROM-GENERATOR)	157
ANSCHLUSSKLEMMENSATZ (SPERRE)	202
ANTENNENBEFESTIGUNG	655
ANTRIEBSSTRANG-WARTUNGSSATZ	175
ANTRIEBSWELLE	305
ANZEIGE (WARNLEUCHTE)	243, 628, 631
ANZEIGEMODUL	651
ANZEIGEN-EINBAUSATZ (GEWICHTSEINSTELLUNG) (SCHWINGSITZ)	625
ANZUGSLEINE (SCHWINGSITZ)	693
ARBEITSGERÄT - HYDRAULIKSTEUERUNG	442, 443
ARBEITSLEUCHTEN	186, 187, 188, 189, 190, 192, 195, 198
ARRETIERUNGSEINBAUSATZ (FAHRERHAUSFENSTER)	708, 710, 711
ÄTHERSTARTHILFE	221
ÄTHERSTARTHILFEZYLINDER	221
ÄTHERSTARTVENTIL	237
AUFKLEBER	719, 721
AUFKLEBER - INFORMATION (FESTZURREN)	581, 590
AUFKLEBER - INFORMATION (FESTZURREN)	332, 333
AUFKLEBER - INFORMATION (LUFTREINIGER)	117
AUFKLEBER (RADIO)	627
AUFREISSER	590, 591
AUFREISSERBEFESTIGUNG	588
AUFREISSERLEITUNGEN	481, 482
AUFREISSERZAHN	593, 594, 595, 596
AUFREISSERZYLINDER	454
AUSGLEICHSVENTIL	528
AUSGLEICHSVENTIL U. BEFESTIGUNG	508
AUSPUFFABSCHIRMUNG	134
AUSPUFFKRÜMMER	126
AUSWERFERLÜFTER	97

B

BATTERIE	170
BATTERIE UND VERDRAHTUNG	166
BATTERIE (12 V, WARTUNGSFREI)	170
BATTERIE (12 VOLT, NASS)	167
BATTERIEKASTEN	328, 329
BEFESTIGUNG - DÄMPFER U. RIEMENSCHEIBE	44
BEFESTIGUNG - VERBINDER	201
BEFESTIGUNGSTEILE (DREHSTROMGENERATOR)	157
BEFESTIGUNGSTEILE (STARTERMOTOR)	223
BEILAGSCHEIBEN-SATZ (STARTERMOTOR)	223
BELEUCHTUNGSKABELSTRANG (ARBEITSSCHEINWERFER) (HINTEN)	190
BELEUCHTUNGSKABELSTRANG (HINTEN) (*SIDE FLOODLIGHTS)	198
BELEUCHTUNGSKABELSTRANG (HINTEN) (ÜBERROLLSCHUTZ)	195
BELEUCHTUNGSKABELSTRANG (ÜBERROLLSCHUTZ)	192
BELEUCHTUNGSKABELSTRANG (VORDERE ARBEITSLEUCHTEN)	198
BELEUCHTUNGSKABELSTRANG (VORN) (ZYLINDER)	195
BLATTFEDERSATZ (FAHRERHAUSFENSTER)	706, 707

* ÜBERSETZUNG ZUM ZEITPUNKT DER DRUCKLEGUNG NICHT VORHANDEN

STICHWORTVERZEICHNIS

Bezeichnung	Seite
	713
BREMSE UND DIFFERENTIALANTRIEB	256
BREMSE UND PLANETENGETRIEBE	261
BUCHSEN-EINBAUSATZ (STARTERMOTOR)	226
BÜRSTEN-EINBAUSATZ (STARTERMOTOR)	223
BÜRSTEN-EINBAUSATZ (STARTERMOTOR)	226

C

C-RAHMEN	561
	562
	563
CODESTECKER (KRAFTÜBERTRAGUNG)	431
CODESTECKER (NEIGUNGSSTEUERUNG)	177
CODESTECKER (ÜBERWACHUNGSTAFEL)	629
	632

D

DÄMPFER	33
DICHTUNG	141
DICHTUNG (THERMOSTATGEHÄUSE)	100
DICHTUNGSSATZ (AUSGELEICHSVENTIL)	546
DICHTUNGSSATZ (DRUCKSPEICHER)	252
	253
DICHTUNGSSATZ (LÜFTERKUPPLUNG)	39
DICHTUNGSSATZ (LÜFTERVENTIL)	316
DICHTUNGSSATZ (SOLENOIDVENTIL)	436
	549
DOKUMENTATION	2
DOPPELFLANSCHFELGE	405
DOPPELFLANSCHROLLEN	404
	405
	407
DREHKNOPFSCHALTER (HINTEN)	638
DREHKNOPFSCHALTER (LINKE TÜR)	638
DREHKNOPFSCHALTER (LÜFTER)	628
DREHKNOPFSCHALTER (RECHTE TÜRY)	638
DREHKNOPFSCHALTER (VORNE)	638
DREHMOMENTWANDLER	306
	308
	311
DREHSTROMGENERATOR	157
	159
	160
	162
	164
DREHSTROMGENERATOR - BEFESTIGUNG	56
DREHZAHLSENSOR	215
	216
	217
DREHZAHLSENSOR (DREHMOMENTWANDLER)	240
DREHZAHLSENSOR (GETRIEBEAUSGANG 1)	293
DREHZAHLSENSOR (GETRIEBEAUSGANG 2)	293
DREHZAHLSENSOR (LÜFTERANTRIEB)	39
DRUCKKNOPFSCHALTER (ANZEIGEMODI)	628
	631
DRUCKKNOPFSCHALTER (AUTOM. KICKDOWN)	628
DRUCKKNOPFSCHALTER (BIDIREKTIONAL)	628
	631
DRUCKKNOPFSCHALTER (HERUNTERSCHALTEN)	425
DRUCKKNOPFSCHALTER (HOCHSCHALTEN)	425
DRUCKKNOPFSCHALTER (KICKDOWN-AUTOMATIK)	631
DRUCKKOPFSCHALTER	236
DRUCKLÜFTER	98
DRUCKLUFTLEITUNGEN	122
	123
DRUCKLUFTVENTILSATZ (SCHWINGSITZ)	693
DRUCKREDUZIERVENTIL	537
DRUCKSCHALTER (KÜHLMITTEL)	640
	643
DRUCKSENSOR	207
	208
	209
	210
	211
	212
	213
	214
DRUCKSENSOR (EINSPRITZBETÄTIGUNG)	213
DRUCKSENSOR (KRAFTSTOFF)	145
DRUCKSENSOR (TURBILADEREINLASS)	166
DRUCKSPEICHER	252
	253

E

EINBAUSATZ - PLANIERSTEUERUNG	182
EINBAUVORSTEUERVENTIL	535
	536
EINFÜLLKAPPE (KRAFTSTOFFTANK)	154
EINFÜLLKAPPE (MOTOR)	76
EINFÜLLSTUTZENKAPPE (HYDRAULIKTANK)	504
EINZELFLANSCHROLLEN	408
	409
	410
ELEKTR. UMFORMER	174

* ÜBERSETZUNG ZUM ZEITPUNKT DER DRUCKLEGUNG NICHT VORHANDEN

STICHWORTVERZEICHNIS

Bezeichnung	Seite
ELEKTRONIK - MASCHINE	175
ELEKTRONIK - MONITOR	175
ELEKTRONISCHER SCHLÜSSEL (SICHERHEIT) (GELB)	183
ELEKTRONISCHER SCHLÜSSEL (SICHERHEIT) (GRAU)	183
ELEMENT (ENTLÜFTER) (KURBELGEHÄUSE)	22
ENDSCHALTER (BETRIEBSBREMSPEDAL)	665
ENDSCHALTER (FESTSTELLBREMSE)	425
ENTDUNSTER	80
	81
ENTDUNSTERSCHLAUCH (KURBELGEHÄUSE)	81
ENTLÜFTER (GETRIEBE)	283
ENTLÜFTER (KURBELGEHÄUSE)	18
	22

F

FAHRERHAUS	602
	603
	604
FAHRERHAUS-DRUCKLÜFTER	600
FAHRERHAUS-INSTRUMENTENTAFEL	628
	631
FAHRERHAUS-KABELBAUM (SCHEIBENWISCHER, LAUTSPRECHER)	638
FAHRERHAUSANBAUSATZ	656
FAHRERHAUSAUSKLEIDUNG	636
	638
FAHRERHAUSBELEUCHTUNG	185
FAHRERHAUSBELÜFTUNG	671
FAHRERHAUSFENSTER	700
	701
	702
	703
	704
	705
	706
	707
	708
	710
	711
	713
	715
FAHRERHAUSFENSTER (HINTEN)	701
FAHRERHAUSFENSTER (LINKS)	703
FAHRERHAUSFENSTER (RECHTS)	702
FAHRERHAUSHEIZUNG	623
FAHRERPLATTFORM	668
FAHRERPLATTFORM-KABELSTRANG	243
FAHRERPLATTFORMVERDRAHTUNG	248
FAHRERSITZ	679
	681
	682
	684
	685
	686
	687
FAHRERSITZFEDERUNG	691
	693
FAHRERSITZFEDERUNGSGEHÄUSE	624
FAHRERSITZVERSTELLER	597
FAHRWERK	1
	2
FAHRWERK-KABELBAUM	166
	167
	243
	248
FEDER-EINBAUSATZ (HÖHENEINSTELLUNG) (SCHWINGSITZ)	624
FEDER-EINBAUSATZ (SCHWINGSITZ)	624
FEDERUNGS-EINBAUSATZ (EINSTELLKNOPF) (HÖHENEINSTELLUNG) (SCHWINGSITZ)	624
FESTE VERGLASUNG, HINTEN (GETÖNT)	713
FESTSTELLBREMSGESTÄNGE	427
FILTERSATZ (UMLAUFLUFT)	671
FILTERSIEB (HYDRAULIKTANKEINFÜLLSIEB)	504
FUSSMATTE	619
	659

G

GAS- U. BREMSPEDAL	665
GETRIEBE	313
GETRIEBE-KABELBAUM	167
	240
GETRIEBEAUFLAGER	291
GETRIEBEHYDRAULIK	266
GETRIEBEÖLKÜHLER	268
GETRIEBESCHUTZ	363
GETRIEBESTEUERVENTIL	322
	324
GLAS (GETÖNT)	700
	701
	702
	703
GLEITSCHIENENBLOCK-EINBAUSATZ (SCHWINGSITZ)	688
	689
	690
GRUNDAUSFÜHRUNG	2
	3

* ÜBERSETZUNG ZUM ZEITPUNKT DER DRUCKLEGUNG NICHT VORHANDEN

STICHWORTVERZEICHNIS

Bezeichnung	Seite

H

HALOGENSCHINWERFER (*24-VOLT, 65-WATT) (ARBEITSSCHEINWERFER) 186
HALOGENSCHINWERFER (24V)(65W) 187
HALOGENSCHINWERFER (24V)(65W) (ARBEITSSCHEINWERFER) 188
HALTEGRIFF 621
622
HEBEL-EINBAUSATZ (STARTERMOTOR) 226
HECKVERKLEIDUNG 362
HEIZUNGSLEITUNGEN 647
HINTERES GLASSCHIEBEFENSTER (GETÖNT) 711
HITZESCHILD 151
152
HUBMASTBEFESTIGUNG 585
586
587
HUBZYLINDER 452
HUBZYLINDER U. LEITUNGEN 448
450
HUBZYLINDERLEITUNGEN 465
HYDRAULIKANORDNUNG (2-VENTIL-HYDRAULIK) 464
HYDRAULIKBEDIENUNG (MIT VORSTEUERUNG) 446
HYDRAULIKÖLKÜHLER 447
HYDRAULIKPUMPE UND LEITUNGEN 478
HYDRAULIKTANK 504
HYDRAULIKTANK UND BEFESTIGUNGSTEILE 503
HYDRAULIKTANKVERKLEIDUNG 341
HYDRAULIKZYLINDER-DICHTUNGSSATZ 456

I

IDENTIFIKATIONSSCHILD (SEQUENZ) 604
IDENTIFIZIERUNGS-AUFKLEBER (FILTER) 578
IDENTIFIZIERUNGS-AUFKLEBER (GRUPPENNUMMER) (KÄLTEMITTELKONDENSATOR) 614
IDENTIFIZIERUNGS-AUFKLEBER (INSTRUMENTENTAFEL) 628
631
632
IDENTIFIZIERUNGS-AUFKLEBER (JOYSTICK) (NEIGUNGSSTEUERUNG) 177
IDENTIFIZIERUNGS-AUFKLEBER (LEUCHTEN) 629
IDENTIFIZIERUNGS-AUFKLEBER (SCHEIBENWISCHERSTEUERUNG) 638
IDENTIFIZIERUNGS-AUFKLEBER (SICHERHEITSSYSTEM) 183
IDENTIFIZIERUNGS-AUFKLEBER (STARTSCHLÜSSELSCHALTER) 183
IDENTIFIZIERUNGS-AUFKLEBER (UNTERE DREHZAHL, WINDENLEUCHTE) 442
IDENTIFIZIERUNGS-AUFKLEBER (WARNLEUCHTE) 631
IDENTIFIZIERUNGS-AUFKLEBER (WASSERHEIZUNG) 176
IDENTIFIZIERUNGS-AUFKLEBER (WINDENFREILAUF) 578
IDENTIFIZIERUNGS-AUFKLEBER (WINDENSTEUERUNG) 442
INSTRUKTIONS-AUFKLEBER (AUFREISSER-STEUERUNG) 442
INSTRUKTIONS-AUFKLEBER (FÜR SITZVERSTELLUNG) 691
693
INSTRUKTONSSCHILD (KLIMAANLAGE) 598
723
INSTRUKTONSSCHILD (KLIMAANLAGE) 725
INSTRUMENTENTAFEL-KABELSTRANG 202
INSTRUMENTENTAFEL-KABELSTRANG (ANZEIGE) 628
INSTRUMENTENTAFEL-KABELSTRANG (ANZEIGE) 631
INSTRUMENTENTAFEL-SICHERUNG 202
ISOLATOR-EINBAUSATZ (STARTERMOTOR) 226

J

JOCHSATZ 75
JOYSTICK -STEUERUNG 445
JOYSTICKSTEUERUNG U. BEFESTIGUNG 441

K

KABELSTRANG - HEIZUNG U. KLIMAANLAGE (KONDENSATORGEBLÄSEMOTOREN) (A/C) 614
KABELSTRANG - MOTOR 600
KABELSTRANG - VORDERE BELEUCHTUNG (ZYLINDER) 192
KABELSTRANG (UMFORMER) 174
KÄLTEMITTELKOMPRESSOR 608
609
KÄLTEMITTELKONDENSATOR 614
KÄLTEMITTELKONDENSATOR U. BEFESTIGUNGSTEILE 611
612
KÄLTEMITTELTROCKNER (KLIMAANLAGE) . . . 640
643

* ÜBERSETZUNG ZUM ZEITPUNKT DER DRUCKLEGUNG NICHT VORHANDEN

STICHWORTVERZEICHNIS

Bezeichnung	Seite
KAPPE MIT ENTLÜFTER (SCHEIBENWASCH-MITTELBEHÄLTER)	695
KAPPENFILTERSATZ (KRAFTSTOFFTANK, ENTLÜFTET)	154
KEILRIEMEN (DREHSTROMGENERATOR)	65
KEILRIEMEN (DREHSTROMGENERATOR, WASSERPUMPE)	160
KEILRIEMEN (KÄLTEMITTELKOMPRESSOR)	609
KEILRIEMEN (KOMPRESSOR)	40
KEILRIEMEN (MOTOR)	63
KEILRIEMENSATZ (EINSCHL. 2 RIEMEN) (LÜFTERANTRIEB)	40
KEILRIEMENSATZ (EINSCHL. 2 RIEMEN) (MOTOR)	63
KEILRIEMENSATZ (EINSCHL. 3 RIEMEN) (LÜFTER)	65
KETTENFÜHRUNGSSCHUTZ	383 384
KETTENGLIED	398 399
KETTENGLIEDER	392 393
KETTENKASTEN - GLIEDERKETTE	394 395 396 397
KETTENRADSEGMENT	304
KETTENSPANNER UND -FEDERRÜCKLAUF	414
KIPPSCHALTER (FESTSTELLBREMSE)	427
KIPPSCHALTER (GASSTEUERUNG)	248
KIPPSCHALTER (HINTERE ARBEITSLEUCHTEN)	190 192 195 198
KIPPSCHALTER (HYDRAULIKSPERRE)	248
KIPPSCHALTER (KLIMAANLAGENSTEUERUNG)	629
KIPPSCHALTER (WARTUNGSLEUCHTE UNTER DER HAUBE)	190 192 195 198
KIPPZYLINDER	456 458 460
KLIMAANLAGE	598 599
KLIMAANLAGENDRUCKSPEICHER	640 643
KLIMAANLAGENLEITUNGEN	640 643
KNIESTÜCK	77
KNOPF	635
KOLBENMOTOR	493
KOLBENPUMPE	498
KOMMUNIKATIONSEINBAUSATZ	178 180
KONSOLEN-VERDRAHTUNG	249
KONSOLEN-VERDRAHTUNG (WINDE)	473
KONTROLLEUCHTE (WARNLEUCHTE)	248
KRAFTSTOFFEINSPRITZDÜSE	142
KRAFTSTOFFEINSPRITZPUMPE	149 150 151
KRAFTSTOFFILTER (HOCHLEISTUNG)	139
KRAFTSTOFFILTER UND LEITUNGEN	139
KRAFTSTOFFLEITUNGEN	143 145
KRAFTSTOFFÖRDERPUMPE	149
KRAFTSTOFFSIEB	154
KRAFTSTOFFSTANDGEBER	154
KRAFTSTOFFTANK	154
KRAFTSTOFFTANKVERKLEIDUNG	356 357 358
KRAFTÜBERTRAGUNG	298
KRAFTÜBERTRAGUNGSACHSE	254
KRAFTÜBERTRAGUNGSELEKTRONIK	175
KREUZGELENK	314
KRÜMMER UND VENTIL	433 435
KRÜMMERVENTIL	492
KÜHLER	108 109 111
KÜHLERBLOCK	108
KÜHLERGRILL	347 348
KÜHLERKAPPE	112 113
KÜHLERSCHLAUCH	101
KÜHLERSCHUTZ	359 361
KÜHLMITTELBEHÄLTER	112 113 114
KÜHLSYSTEM - HOHE UMGEBUNGSTEMPERATUREN	97
KÜHLWASSERLEITUNGEN	100 101 103
KÜHLWASSERPUMPE	105 106 107

* ÜBERSETZUNG ZUM ZEITPUNKT DER DRUCKLEGUNG NICHT VORHANDEN

STICHWORTVERZEICHNIS

Bezeichnung	Seite
KUPPLUNG UND VERKLEIDUNG	270
KURBELWELLE	23
KURBELWELLEN-RIEMENSCHEIBE	62
KURBELWELLENDICHTUNG	69
	70

L

LADELUFTKÜHLER	116
LADELUFTKÜHLERBLOCK	151
	152
LAGERSATZ (DREHSTROMGENERATOR)	157
LAGERSATZ (MOTORROTATIONSGRUPPE) (ROTIERENDER KOLBENMOTOR)	501
LAGERSATZ (SCHWINGSITZ)	625
LAGERSATZ (STARTERMOTOR)	223
LAUFFÜHRUNGSSATZ (EINSCHL. FÜHRUNG UND SCHRAUBE)	710
LAUFFÜHRUNGSSATZ (FAHRERHAUSFENSTER)	708
	711
LAUFROLLE	402
LAUFROLLENAUFSATZ	374
LAUFROLLENRAHMEN (TELESKOPRÜCKLAUF)	375
	377
	379
	381
LAUFROLLENSCHUTZ	385
	386
LAUFWERKFÜHRUNG	387
LAUFWERKSKETTE	416
	417
	418
	419
	420
	421
LAUFWERKSRAHMEN	422
	423
	424
LEITRAD	391
LEITRAD, VORN	388
	389
LEITRADABSTREIFER	411
LEITRADAUFSATZ	372
	373
LEITRADSCHUTZ	349
LENK- UND GETRIEBESTEUERUNG	429
	431
LEUCHTE, ROT (24 V, GRÜN)	473
LEUCHTE, ROT (24 V, ROT) (MASCHINENSICHERHEITSSYSTEM)	183
LEUCHTE (24 V)	185
	248
	578
	628
	631
LEUCHTE (24 V, 3 W)	243
	628
	631
LIPPENDICHTUNG (KÜHLWASSERTHERMOSTAT)	100
LUFTEINLASSBOGEN	120
LÜFTERANTRIEB	35
	36
	38
	39
	40
LÜFTERANTRIEBSAUFHÄNGUNG	58
LUFTFILTER (FRISCHLUFT)	671
LUFTFILTER (HAUPTELEMENT)	117
LUFTFILTER (HILFSELEMENT)	117
LUFTKOMPRESSORSITZ	693
LUFTREINIGER	117
	118
LUFTREINIGERKLEMMEN-EINBAUSATZ	117

M

MAGNETSCHALTER	234
	235
MAGNETSCHALTER (24 V) (HAUPTRELAIS)	202
MAGNETSIEB	303
MAGNETSIEB (GETRIEBE)	283
	303
MAGNETSPULE (24 V) (STARTERMOTOR)	223
	226
MAGNETSTOPFEN (SEITENANTRIEB, ÖLEINFÜLLUNG)	276
	278
MAGNETVENTIL	436
	437
	549
	550
*MANIFOLD GP-TRANSMISSION	289
MASCHINENSTEUERUNG	171
MODUL - VIER ELEKTRON. ANZEIGEN	652
MODULATORVENTIL	95
	316
	317
	318
MONITOR - KABELBAUM	244
MONITOR - SERVICE	175
MONITOR - SOFTWARE	175
MONITORBEFESTIGUNG	657
	658

* ÜBERSETZUNG ZUM ZEITPUNKT DER DRUCKLEGUNG NICHT VORHANDEN

STICHWORTVERZEICHNIS

Bezeichnung	Seite
MONTAGEZAPFEN	72
MONTAGEZAPFEN (PLANIERSCHILDEINRICHTUNG)	568
MOTOR-EINBAUSATZ	16
MOTOR, ELEKTR.	614
MOTORANSCHLUSS	440
MOTORAUFHÄNGUNG	71
MOTORAUFLAGER	57
MOTORAUSFÜHRUNG	4
	5
	6
	7
	8
	9
MOTORBLOCK	24
	26
	27
MOTORBLOCKDECKEL	18
MOTORDREHVORRICHTUNG	501
MOTORHUBÖSE	55
MOTORKABELSTRANG (ELEKTRON. STEUERMODUL)	238
MOTORKABELSTRANG (PUMPENDÜSE)	238
MOTORKÜHLERBLOCK	10
	11
	12
	13
	14
	15
MOTORÖLABLASS	34
MOTORÖLEINFÜLLSTUTZEN	76
MOTORÖLKÜHLER	96
MOTORÖLLEITUNGEN	83
MOTORSENSOR	204
MOTORSTEUERUNG, ELEKTRON.	172
MOTORSTEUERUNG, ELEKTRON.	171
MOTORSTOPFEN	61
MOTORVERDRAHTUNG	240
MOTORVERKLEIDUNG	334
	337
	339

N

NEIGEZYLINDERLEITUNGEN	483
	485
	487
	489
NEIGUNGSSTEUREINBAUSATZ	177
NIEGUNGSSTEUER VERDRAHTUNG	243
NOCKENWELLE	17

O

O-RING-DICHTUNG	547
OFFENES FAHRERHAUS MIT ÜBERROLLSCHUTZ	607
ÖLFILTER	77
	275
ÖLFILTER (*ADVANCED EFFICIENCY)	77
ÖLFILTER (KRAFTÜBERTRAGUNG)	283
ÖLFILTERELEMENT (ADVANCED EFFICIENCY)	504
ÖLFILTERELEMENT (SCHWER ENTFLAMMBARE FLÜSSIGKEIT)	504
ÖLFILTERELEMENT (STANDRAD EFFIZIENZ) (STANDARD)	504
ÖLFILTERELEMENT (ULTRA HOCHLEISTUNG)	275
ÖLFILTERELEMENT (ULTRA HOCHLEISTUNG)	504
ÖLFILTERSOCKEL	255
ÖLKÜHLERBLOCK (GETRIEBE)	268
ÖLKÜHLERBLOCK (MOTOR)	96
ÖLLEITUNGEN - KRAFTÜBERTRAGUNG	283
ÖLMESSSTAB	82
ÖLMESSSTAB (GETRIEBEGEHÄUSE)	283
ÖLSCHNELLWECHSELANSCHLUSS	91
ÖLWANNE	59
ÖLZUFUHRLEITUNGEN	84

P

PANZERWANNE	350
	351
	353
	354
PENDELVENTIL	547
	548
PLANETENANTRIEBSGEHÄUSE U. TEILE	263
PLANETENGETRIEBE	292
PLANIERSTEUERUNGSMODUL	200
PLATTFORM	667
PLATTFORM-ANBAUSATZ	659
PLEUELSTANGE UND KOLBEN	60
PROBEENTNAHMEVENTIL	94
PUMPE UND BEFESTIGUNGSTEILE	147
	497
PUMPENANSCHLUSS	271
PUMPENANTRIEB	41
PUMPENSTEUERVENTIL	538

Q

QUERTRAVERSE	368
	370

* ÜBERSETZUNG ZUM ZEITPUNKT DER DRUCKLEGUNG NICHT VORHANDEN

STICHWORTVERZEICHNIS

Bezeichnung	Seite
R	
RADIO - KABELSTRANG	244
RADIO - KABELSTRANG (PRODUCT LINK RADIO)	180
RADIO - KABELSTRANG (PRODUCT LINK RADIO) (*COMMUNICATIONS)	178
RADIO - KOMMUNIKATION (PRODUCT LINK 212SR)	178
RADIO - KOMMUNIKATION (PRODUCT LINK 212SR)	180
RADIOEINBAUSATZ	627
RAHMEN UND GEHÄUSE	331
RECHTES SCHIEBEGLASFENSTER (GETÖNT) (GETÖNT)	710
REGENSCHUTZKAPPE	162
REGLER (KRAFTSTOFFDRUCK)	145
RELAIS (24 V) (KONDENSATORGEBLÄSEMOTOR)	614
REPARATURSATZ (KRAFTSTOFFANZEIGE)	154
RIEMENSCHEIBE - LÜFTER- U. DREHSTROMGENERATOR	63 65
RÜCKLEHNENVERLÄNGERUNG (PVC) (SITZ)	684
RÜCKLEHNENVERLÄNGERUNG (STOFF)	681
RÜCKSCHLAGVENTIL (GEGEN VAKUUM)	503
RÜCKSPIEGEL	649 650
S	
SANDSTRAHLSCHUTZGITTER	346
SCHALE - RÜCKENLEHNE	662 663 664
SCHALLDÄMPFER	127
SCHALTER (LEUCHTEN)	628 631
SCHALTERKABELSTRANG (BETRIEBSBREMSE)	665
SCHAUGLAS (HYDRAULIKTANK)	504
SCHAUGLAS (WASSERTANK)	114
SCHEIBENWASCHANLAGE	698
SCHEIBENWASCHMITTELBEHÄLTER	695 697
SCHEIBENWISCHER	716
SCHEIBENWISCHERBLATT (TÜR, RECHTS, LINKS)	716
SCHEIBENWISCHERBLATT (VORN, HINTEN)	716
SCHEIBENWISCHERBLATTSATZ (FENSTER)	716
SCHEIBENWISCHERMOTOR	653 654
SCHIEBEFENSTER	715
SCHILD UND AUFKLEBER	723 724 726
SCHILDSTREBE	551
SCHMIERPUMPE	93
SCHNEIDMESSER UND EINSATZSTÜCK	579 580
SCHNELLSENKVENTIL	540 541
SCHNITTSTELLENMODUL (TASTE)	183
SCHRAUBE (ABLASS) (GETRIEBEGEHÄUSE)	331
SCHUBARM	564 566
SCHUTZBLECHE	343 344 345
SCHUTZBÜGEL	365
SCHUTZGITTER	677 678
SCHUTZSCHLATERAUFKLEBER	202
SCHWENKPLANIERSCHILD	553 554 555 556
SCHWENKSCHILD	575
SCHWENKSCHILD U. SCHNEIDMESSER	569
SCHWINGSITZ	688 689 690
SCHWUNGRAD	48
SCHWUNGRADGEHÄUSE	51 52
SEITENANTRIEB	276 278
SEITENANTRIEBSBEFESTIGUNG	290
SEITENANTRIEBSVERKLEIDUNG	349
SENSOR, KABELSTRANG	266 467
SERIENNUMMERNSCHILD	560
SERIENNUMMERNSCHILD (AUFREISSER)	590
SERIENNUMMERNSCHILD (GETRIEBE)	263
SERIENNUMMERNSCHILD (PLANIERSCHILD)	553 554 555 556 557 558 559
SICHERHEITSEINBAUSATZ	183

* ÜBERSETZUNG ZUM ZEITPUNKT DER DRUCKLEGUNG NICHT VORHANDEN

STICHWORTVERZEICHNIS

Bezeichnung	Seite
SICHERHEITSGURT	681
SICHERUNG (10 A)	202
SICHERUNG (15 A)	202
SICHERUNG (175 A)	202, 249
SICHERUNG (20 A)	202
SIEB-EINBAUSATZ (VORREINIGER)	131
SIEB (HYDRAULIKTANK)	504
SIEB (WANDLERRÜCKLAUFSIEB)	283
SOFTWARE - KOMMUNIKATION (NEIGUNGSSTEUERUNG)	177
SOFTWARE - KOMMUNIKATION (PRODUCT LINK 212SR)	178
SOFTWARE - KOMMUNIKATION (PRODUCT LINK 212SR) (PRODUCT LINK 121SR)	180
SOFTWARE - KRAFTÜBERTRAGUNG	175
SOFTWARE - MASCHINE (SICHERHEIT)	183
SPANNUNGSREGLER (24 V)	157
SPERRSCHIENENSATZ (FAHRERHAUSFENSTER)	713
SPERRVENTIL	515
STARTERMOTOR	223, 225, 226, 228, 229, 230
STARTERMOTOR-DICHTUNGSSATZ	223
STARTERMOTOR-STIFTEINBAUSATZ	223
STARTSCHLÜSSELSCHALTER (ZÜNDUNG)	628, 631
STAUBAUSWERFER	119
STELLUNGSSENSOR	205, 206
STELLUNGSSENSOR (GASREDUZIERPEDAL)	665
STELLUNGSSENSOR (JOYSTICK) (PLANIERSCHILDSTEUERUNG, HANDGRIFF)	445
STELLUNGSSENSOR (RICHUTNGSSTEUERUNG)	425
STEUERHEBEL	425, 444, 462, 463
STEUERHEBEL (PLANIERSCHILD)	462
STEUERHEBEL (SEILWINDE)	529
STEUERHEBEL (WINDENSTEUERUNG)	578
STEUERKONSOLENABDECKUNG	618, 619
STEUERKRÜMMER	491
STEUERPEDAL U. BEFESTIGUNG	616
STEUERUNG - NICHT PROGRAMMIERT	173, 249
STEUERUNG, NICHT PROGRAMMIERTER MONITOR	617
STEUERUNG, NICHT PROGRAMMIERTER MONITOR (CATERPILLAR ÜBERWACHUNGSSYSTEM)	628, 631
STEUERUNG (TEMPERATUR)	628
STEUERUNGS-KABELSTRANG	244
STEUERUNGS-KABELSTRANG (PRODUCT LINK RADIO)	180
STEUERUNGS-KABELSTRANG (PRODUCT LINK RADIO) (*COMMUNICATIONS)	178
STEUERVENTIL	516, 518, 521, 523, 526
STEUERVENTIL UND BEFESTIGUNGSTEILE	315
STIRNRAD	49
STIRNRADGEHÄUSE	54
STIRNRADGEHÄUSE-HALTETEILE	45
STIRNRADGEHÄUSEDECKEL	20, 21
STOSSDÄMPFER-REPARATURSATZ (SCHWINGSITZ)	693
STOSSSTANGEN-EINBAUSATZ (GEWICHTSEINSTELLUNG) (SCHWINGSITZ)	625
STROMVERSORGUNGSMODUL	200
SU-PLANIERSCHILD U. ECKMESSER	570, 571
SU-SCHILD	557, 558, 559, 560, 572, 574, 576, 577

T

Bezeichnung	Seite
TELLERRAD- UND VORGELEGERADSATZ	280
TEMPERATURSCHALTER (KÜHLMITTEL)	599
TEMPERATURSENSOR	218, 219, 220
TEMPERATURSENSOR (2POLIG)	219, 220
TRAGROLLE	403
TRAGROLLENAUFHÄNGUNG	400
TRENNSCHALTER	233

* ÜBERSETZUNG ZUM ZEITPUNKT DER DRUCKLEGUNG NICHT VORHANDEN

STICHWORTVERZEICHNIS

Bezeichnung	Seite
TURBOLADER	135, 136, 137, 138
TURBOLADEREINSATZ	135, 137
TURBOLADERÖLLEITUNGEN	87, 89

U

Bezeichnung	Seite
ÜBERDRUCKVENTIL	319, 321, 543, 544, 545, 546
ÜBERDRUCKVENTIL (KÄLTEMITTELKOMPRESSOR)	608
ÜBERROLL-SCHUTZDACH	675
ÜBERROLLSCHUTZ	674
ÜBERROLLSCHUTZAUFLAGER	661
UMGEHUNGSSCHALTER	232
UMKEHRLÜFTER	99
UMLAUFKÜHLWASSERHEIZUNG	176
UMLAUFKÜHLWASSERHEIZUNGS-ELEMENT (120 V, 1500 W)	176
UNTERBRECHER (15 A) (LÜFTERMOTOR)	202
UNTERLEGSCHEIBE (21 BEILAGSCHEIBEN) (KOLBENPUMPE)	499

V

Bezeichnung	Seite
VEDRAHTUNG - SOLENOID (WINDE, HINTEN)	582
VENTIL U. BEFESTIGUNG - DOZER	507
VENTILAUFHÄNGUNG	496
VENTILDECKEL	22
VENTILDECKELBEFESTIGUNG	46, 47
VENTILKABELSTRANG (SITZ LUFTKOMPRESSOR)	693
VENTILKIPPHEBEL	67, 68
VENTILSATZ (3-VENTIL)	509
VENTILSATZ (4-VENTIL)	511, 513
VENTILSTEUERUNG	73, 74
VENTILSTÖSSELSATZ (SCHWINGSITZ)	625
VERDRAHTUNG (ELEKTRON. STEUERUNG)	238
VERDRAHTUNGSKABELBAUM	244, 429, 578
VERDRAHTUNGSKABELBAUM (DURCHDREHEN OHNE EINSPRITZUNG)	240
VERDRAHTUNGSKABELBAUM (KLIMAANLAGE - KOMPRESSOR)	640, 643
VERDRAHTUNGSKABELBAUM (KRAFTSTOFFDRUCK)	145
VERDRAHTUNGSKABELBAUM (LINKS)	244
VERDRAHTUNGSKABELBAUM (MASCHINENSICHERHEITSSYSTEM)	183
VERDRAHTUNGSKABELBAUM (RECHTS)	244
VERDRAHTUNGSKABELBAUM (SCHEIBENWASCHER)	695
VERDRAHTUNGSKABELBAUM (ÜBERROLLSCHUTZ)	643
VERDRAHTUNGSKABELBAUM (*WIPER, WASHER, RADIO)	698
VERRIEGELUNG	364
VERSTELLBARER SITZ	673
VORABSCHEIDER	133
VORHÄNGESCHLOSS (BATTERIEKASTEN)	328
VORHÄNGESCHLOSS (HYDRAULIKTANKEINFÜLLSIEB)	503
VORHÄNGESCHLOSS (HYDRAULIKTANKVERKLEIDUNG)	341
VORHÄNGESCHLOSS (KRAFTSTOFFKAPPE)	154
VORHÄNGESCHLOSS (KÜHLERSCHUTZ)	359
VORHÄNGESCHLOSS (LTERATURFACH)	607
VORHÄNGESCHLOSS (MOTORVERKLEIDUNG)	334
VORREINIGER	128, 129, 130, 131
VORREINIGERSATZ (TURBINE)	130, 131
VORREINIGERSCHUTZ	121
VORSTEUERLEITUNGEN	467, 471, 473, 475
VORSTEUERÖLDRUCKSAMMLER	438, 439
VORSTEUERÖLDRUCKSAMMLER (GELADEN)	467
VORSTEUERVENTIL	529, 531, 533

* ÜBERSETZUNG ZUM ZEITPUNKT DER DRUCKLEGUNG NICHT VORHANDEN

STICHWORTVERZEICHNIS

Bezeichnung	Seite
W	
WÄRMESCHIRM	153
WARNAUFKLEBER (DRUCKSPEICHER)	438 439
WARNAUFKLEBER (HOCHDRUCK, HANDBUCH LESEN)	252 253
WARNAUFKLEBER (HOCHDRUCK, HANDBUCH LESEN, ISO)	726
WARNAUFKLEBER (KETTENSPANNFEDER)	375 377 379 381 423 424
WARNAUFKLEBER (NICHT SCHWEISSEN, NICHT BOHREN, HANDBUCH LESEN)	607
WARNAUFKLEBER (NICHT SCHWEISSEN, NICHT BOHREN, HANDBUCH LESEN)	724 726
WARNAUFKLEBER (PRODUCT LINK RADIO, NACD)	178 180
WARNAUFKLEBER (PRODUCT LINK RADIO, NICHT NACD)	726
WARNAUFKLEBER (STARTHILFEKABEL, HANDBUCH LESEN)	724
WARNAUFKLEBER (STARTHILFEKABEL, HANDBUCH LESEN)	726
WARNAUFKLEBER (STROMSCHLAGGE-FAHR)	202
WARNAUFKLEBER (ÜBERROLLSCHUTZ)	726
WARNAUFKLEBER (ÜBERROLLSCHUTZ)	724
WARNAUFKLEBER (ÜBERROLLSCHUTZ/ STEINSCHLAGSCHUTZ)	607
WARNSCHILD (HOCHDRUCKZYLINDER)	375 377 379 423 424
WARNSCHILD (KETTENSPANNFEDER)	375 377 379 381
WARNSCHILD (KETTENSPANNFEDER)	423 424
WARNVORRICHTUNG	156
WASSERABSCHEIDER- U. KRAFTSTOFFIL-TER	141
WASSERABSCHEIDER UND KRAFTSTOFFIL-TER (HAUPTELEMENT)	141
WASSERTEMPERATURREGLER (92 GRAD) (KÜHLMITTEL)	100
WASSERVENTIL	623
WINDEN-ÖLLEITUNGEN	582
WINDENEINBAUSATZ	581
WINDENSTEUERUNG	578
WISCHERARM	718
Z	
ZAHNRADPUMPE	299 301
ZAHNRADVORGELEGE	50
ZUFLUSSREGULIERVENTIL	516
ZUGHAKEN	332 333
ZYLINDERAUFHÄNGUNG	494
ZYLINDERKOPF	28 30 31
ZYLINDERKOPF-HALTETEILE	42 43

* ÜBERSETZUNG ZUM ZEITPUNKT DER DRUCKLEGUNG NICHT VORHANDEN

MACHINE ARRANGEMENT

218-4978 CHASSIS AR

S/N: JDL1-UP

PART OF 218-4976 GENERAL AR

SMCS-7000 **i02429894**

NOTE	PART NUMBER	QTY	PART NAME 1 2 3 4 5 6 (PRODUCT LEVEL)	SEE PAGE
Y	*222-1141*	1	BATTERY & WIRING GP	166
Y	*218-1838*	1	BOX GP-BATTERY	328
Y	*223-0535*	1	CAB AR	602
Y	*223-0666*	1	CASE & FRAME GP	331
Y	*218-1835*	1	ENCLOSURE GP-ENGINE	334
Y	*218-1839*	1	ENCLOSURE GP-HYDRAULIC TANK	341
Y	*218-1841*	1	FENDER GP	343
Y	*218-1836*	1	GUARD GP-BOTTOM	350
Y	*223-1540*	1	GUARD GP-RADIATOR	359
Y	*238-7605*	1	INSTRUMENT GP-CAB	628
Y	*223-1679*	1	LINES GP-FUEL	143
Y	*208-8699*	1	MOUNTING GP-ROPS	661
Y	*228-0542*	1	PLATE & FILM GP	724
Y	*220-2800*	1	PLATFORM GP-OPERATOR	668
Y	*208-8705*	1	ROPS GP	674
Y	*223-2205*	1	SEAT GP	687
Y	*218-1843*	1	TANK GP-FUEL	154
Y	*222-1142*	1	WIRING GP-PLATFORM	248
	6V-1970	1	LITERATURE GP	
	5P-7958	1	SLEEVE-CABLE SPLICE	
	5P-8500	2	KEY	

Y-SEPARATE ILLUSTRATION

<END>

MACHINE ARRANGEMENT

222-1592 CHASSIS AR

S/N: GMT1-UP

PART OF 222-1591 GENERAL AR

SMCS-7000 **i02429804**

NOTE	PART NUMBER	QTY	PART NAME 1 2 3 4 5 6 (PRODUCT LEVEL)	SEE PAGE
Y	*222-1141*	1	BATTERY & WIRING GP	166
Y	*218-1838*	1	BOX GP-BATTERY	328
Y	*223-0535*	1	CAB AR	602
Y	*223-0666*	1	CASE & FRAME GP	331
Y	*218-1835*	1	ENCLOSURE GP-ENGINE	334
Y	*218-1839*	1	ENCLOSURE GP-HYDRAULIC TANK	341
Y	*218-1841*	1	FENDER GP	343
Y	*218-1836*	1	GUARD GP-BOTTOM	350
Y	*223-1540*	1	GUARD GP-RADIATOR	359
Y	*238-7605*	1	INSTRUMENT GP-CAB	628
Y	*223-1679*	1	LINES GP-FUEL	143
Y	*208-8699*	1	MOUNTING GP-ROPS	661
Y	*228-0541*	1	PLATE & FILM GP	723
Y	*220-2800*	1	PLATFORM GP-OPERATOR	668
Y	*208-8705*	1	ROPS GP	674
Y	*223-2205*	1	SEAT GP	687
Y	*218-1843*	1	TANK GP-FUEL	154
Y	*222-1142*	1	WIRING GP-PLATFORM	248
	6V-1970	1	LITERATURE GP	
	5P-8500	2	KEY	
	5P-7958	1	SLEEVE-CABLE SPLICE	

Y-SEPARATE ILLUSTRATION

<END>

218-4976 GENERAL AR

S/N: JDL1-UP

SMCS-7000 **i02429798**

NOTE	PART NUMBER	QTY	PART NAME 1 2 3 4 5 6 (PRODUCT LEVEL)	SEE PAGE
Y	*218-4978*	1	CHASSIS AR	1
Y	*270-7621*	1	ELECTRONICS AR-MACHINE	175
Y	**261-4290**	1	ENGINE AR	4
Y	*218-4981*	1	HYDRAULIC AR-2 VALVE	464
Y	*223-0551*	1	INSTALLATION AR-ENGINE	16
Y	*218-4979*	1	POWER TRAIN AR	298
Y	*218-4982*	1	UNDERCARRIAGE AR	422

Y-SEPARATE ILLUSTRATION

<END>

MACHINE ARRANGEMENT

222-1591 GENERAL AR

S/N: GMT1-UP

SMCS-7000 **i02429801**

NOTE	PART NUMBER	QTY	PART NAME 1 2 3 4 5 6 (PRODUCT LEVEL)	SEE PAGE
Y	*222-1592*	1	CHASSIS AR	2
Y	*270-7621*	1	ELECTRONICS AR-MACHINE	175
Y	**261-4294**	1	ENGINE AR	7
Y	*218-4981*	1	HYDRAULIC AR-2 VALVE	464
Y	*223-0551*	1	INSTALLATION AR-ENGINE	16
Y	*218-4979*	1	POWER TRAIN AR	298
Y	*222-8667*	1	UNDERCARRIAGE AR	422

Y-SEPARATE ILLUSTRATION

<END>

ENGINE ARRANGEMENT

261-4290 ENGINE AR

S/N: THX1-UP
149 BRAKE KW (200 BHP) AT 1850 RPM
PART OF 218-4976 GENERAL AR

SMCS-1000 **i02431371**

NOTE	PART NUMBER	QTY	PART NAME 1 2 3 4 5 6 (PRODUCT LEVEL)	SEE PAGE
Y	*238-1116*	1	COOLER GP-TRANSMISSION OIL	268
Y	*246-0605*	1	COVER GP-CYLINDER BLOCK	18
Y	*118-1727*	1	COVER GP-FRONT HOUSING	20
Y	*222-1783*	1	COVER GP-VALVE MECHANISM	22
Y	*211-8041*	1	DAMPER GP	33
Y	*4P-2102*	1	DRAIN GP-ENGINE OIL	34
Y	*246-0599*	1	DRIVE GP-PUMP	41
Y	*246-0596*	1	ELBOW GP-AIR INLET	120
Y	*261-4530*	1	ENGINE AR-CORE	10
Y	*222-2409*	1	FASTENER GP-DAMPER & PULLEY	44
Y	*219-8681*	1	FASTENER GP-FRONT HOUSING	45
Y	*258-8728*	1	FASTENER GP-VALVE COVER	47
Y	*236-7315*	1	FASTENER GP-VALVE COVER	46
Y	*230-4118*	1	FILLER GP-ENGINE OIL	76
Y	*183-2097*	1	FILTER GP-ENGINE OIL	77
Y	*241-3718*	1	FLYWHEEL GP	48
Y	*241-3719*	1	FUMES DISPOSAL GP	81
Y	*246-0601*	1	GAUGE GP-OIL LEVEL (DIPSTICK)	82
Y	*175-6260*	1	GEAR GP-REAR	50
Y	*219-8666*	1	HOUSING GP-FLYWHEEL	52
Y	*166-1784*	1	LIFTING GP-ENGINE	55
Y	*198-1319*	1	LINES GP-ENGINE OIL	83
Y	*264-2014*	1	LINES GP-FUEL	145
Y	*266-9810*	1	LINES GP-TURBOCHARGER OIL	87
Y	*165-4461*	1	LINES GP-WATER	100
Y	*165-4445*	1	MANIFOLD GP-EXHAUST	126
Y	*246-0600*	1	MOUNTING GP-ALTERNATOR	56
Y	*246-0598*	1	MOUNTING GP-FAN DRIVE	58
Y	*165-4459*	1	PAN GP-OIL	59
Y	*252-1567*	1	PLUG GP-ENGINE	61
Y	*246-0602*	1	PULLEY GP-CRANKSHAFT	62
Y	*211-1812*	1	PUMP GP-WATER	107
Y	*189-9306*	1	SEAL GP-CRANKSHAFT	70
Y	*231-1978*	1	SENSOR GP-ENGINE	204
Y	*166-1790*	1	SUPPORT GP-ENGINE	71
Y	*166-1792*	1	TRUNNION GP-ENGINE	72
Y	*198-0921*	1	VALVE GP-FLUID SAMPLING	94
Y	*235-8203*	1	WIRING GP-ELECTRONIC CONTROL	238
			PLEASE USE THE GASKET KIT LINK IN SIS OR CONTACT YOUR LOCAL DEALER FOR THE LATEST GASKET KIT INFORMATION	

Y-SEPARATE ILLUSTRATION

ENGINE ARRANGEMENT

261-4291 ENGINE AR

S/N: THX1-UP
149 BRAKE KW (200 BHP) AT 1850 RPM
PART OF 263-5029 DRIVE AR-FAN
AN ATTACHMENT

SMCS-1000 **i02456681**

NOTE	PART NUMBER	QTY	PART NAME 1 2 3 4 5 6 (PRODUCT LEVEL)	SEE PAGE
Y	*238-1116*	1	COOLER GP-TRANSMISSION OIL	268
Y	*246-0605*	1	COVER GP-CYLINDER BLOCK	18
Y	*118-1727*	1	COVER GP-FRONT HOUSING	20
Y	*222-1783*	1	COVER GP-VALVE MECHANISM	22
Y	*211-8041*	1	DAMPER GP	33
Y	*4P-2102*	1	DRAIN GP-ENGINE OIL	34
Y	*246-0599*	1	DRIVE GP-PUMP	41
Y	*246-0596*	1	ELBOW GP-AIR INLET	120
Y	*261-4531*	1	ENGINE AR-CORE	11
Y	*222-2409*	1	FASTENER GP-DAMPER & PULLEY	44
Y	*219-8681*	1	FASTENER GP-FRONT HOUSING	45
Y	*258-8728*	1	FASTENER GP-VALVE COVER	47
Y	*236-7315*	1	FASTENER GP-VALVE COVER	46
Y	*230-4118*	1	FILLER GP-ENGINE OIL	76
Y	*183-2097*	1	FILTER GP-ENGINE OIL	77
Y	*241-3718*	1	FLYWHEEL GP	48
Y	*241-3719*	1	FUMES DISPOSAL GP	81
Y	*246-0601*	1	GAUGE GP-OIL LEVEL (DIPSTICK) (ENGINE)	82
Y	*175-6260*	1	GEAR GP-REAR	50
Y	*219-8666*	1	HOUSING GP-FLYWHEEL	52
Y	*166-1784*	1	LIFTING GP-ENGINE	55
Y	*198-1319*	1	LINES GP-ENGINE OIL	83
Y	*264-2014*	1	LINES GP-FUEL	145
Y	*266-9810*	1	LINES GP-TURBOCHARGER OIL	87
Y	*165-4461*	1	LINES GP-WATER	100
Y	*165-4445*	1	MANIFOLD GP-EXHAUST	126
Y	*246-0600*	1	MOUNTING GP-ALTERNATOR	56
Y	*246-0598*	1	MOUNTING GP-FAN DRIVE	58
Y	*165-4459*	1	PAN GP-OIL	59
Y	*252-1567*	1	PLUG GP-ENGINE	61
Y	*246-0602*	1	PULLEY GP-CRANKSHAFT	62
Y	*211-1812*	1	PUMP GP-WATER	107
Y	*189-9306*	1	SEAL GP-CRANKSHAFT	70
Y	*231-1978*	1	SENSOR GP-ENGINE	204
Y	*166-1790*	1	SUPPORT GP-ENGINE	71
Y	*166-1792*	1	TRUNNION GP-ENGINE	72
Y	*198-0921*	1	VALVE GP-FLUID SAMPLING	94
Y	*235-8203*	1	WIRING GP-ELECTRONIC CONTROL	238
			PLEASE USE THE GASKET KIT LINK IN SIS OR CONTACT YOUR LOCAL DEALER FOR THE LATEST GASKET KIT INFORMATION	

Y-SEPARATE ILLUSTRATION

ENGINE ARRANGEMENT

261-4293 ENGINE AR

S/N: THX1-UP
138 BRAKE KW (185 BHP) AT 1850 RPM
PART OF 263-1982 SHIELD AR-THERMO
AN ATTACHMENT

SMCS-1000 **i02431081**

NOTE	PART NUMBER	QTY	PART NAME 1 2 3 4 5 6 (PRODUCT LEVEL)	SEE PAGE
Y	*238-1116*	1	COOLER GP-TRANSMISSION OIL	268
Y	*246-0605*	1	COVER GP-CYLINDER BLOCK	18
Y	*118-1727*	1	COVER GP-FRONT HOUSING	20
Y	*222-1783*	1	COVER GP-VALVE MECHANISM	22
Y	*211-8041*	1	DAMPER GP	33
Y	*4P-2102*	1	DRAIN GP-ENGINE OIL	34
Y	*246-0599*	1	DRIVE GP-PUMP	41
Y	*246-0596*	1	ELBOW GP-AIR INLET	120
Y	*261-4533*	1	ENGINE AR-CORE	12
Y	*222-2409*	1	FASTENER GP-DAMPER & PULLEY	44
Y	*219-8681*	1	FASTENER GP-FRONT HOUSING	45
Y	*258-8728*	1	FASTENER GP-VALVE COVER	47
Y	*236-7315*	1	FASTENER GP-VALVE COVER	46
Y	*230-4118*	1	FILLER GP-ENGINE OIL	76
Y	*183-2097*	1	FILTER GP-ENGINE OIL	77
Y	*241-3718*	1	FLYWHEEL GP	48
Y	*241-3719*	1	FUMES DISPOSAL GP	81
Y	*246-0601*	1	GAUGE GP-OIL LEVEL (DIPSTICK) (ENGINE)	82
Y	*175-6260*	1	GEAR GP-REAR	50
Y	*219-8666*	1	HOUSING GP-FLYWHEEL	52
Y	*166-1784*	1	LIFTING GP-ENGINE	55
Y	*198-1319*	1	LINES GP-ENGINE OIL	83
Y	*264-2014*	1	LINES GP-FUEL	145
Y	*266-9811*	1	LINES GP-TURBOCHARGER OIL	89
Y	*165-4461*	1	LINES GP-WATER	100
Y	*165-4445*	1	MANIFOLD GP-EXHAUST	126
Y	*246-0600*	1	MOUNTING GP-ALTERNATOR	56
Y	*246-0598*	1	MOUNTING GP-FAN DRIVE	58
Y	*165-4459*	1	PAN GP-OIL	59
Y	*252-1567*	1	PLUG GP-ENGINE	61
Y	*246-0602*	1	PULLEY GP-CRANKSHAFT	62
Y	*211-1812*	1	PUMP GP-WATER	107
Y	*189-9306*	1	SEAL GP-CRANKSHAFT	70
Y	*231-1978*	1	SENSOR GP-ENGINE	204
Y	*166-1790*	1	SUPPORT GP-ENGINE	71
Y	*166-1792*	1	TRUNNION GP-ENGINE	72
Y	*198-0921*	1	VALVE GP-FLUID SAMPLING	94
Y	*235-8203*	1	WIRING GP-ELECTRONIC CONTROL	238
			PLEASE USE THE GASKET KIT LINK IN SIS OR CONTACT YOUR LOCAL DEALER FOR THE LATEST GASKET KIT INFORMATION	

Y-SEPARATE ILLUSTRATION

ENGINE ARRANGEMENT

261-4294 ENGINE AR

S/N: THX1-UP
138 BRAKE KW (185 BHP) AT 1850 RPM
PART OF 222-1591 GENERAL AR

SMCS-1000 **i02434238**

NOTE	PART NUMBER	QTY	PART NAME 1 2 3 4 5 6 (PRODUCT LEVEL)	SEE PAGE
Y	*238-1116*	1	COOLER GP-TRANSMISSION OIL	268
Y	*246-0605*	1	COVER GP-CYLINDER BLOCK	18
Y	*118-1727*	1	COVER GP-FRONT HOUSING	20
Y	*222-1783*	1	COVER GP-VALVE MECHANISM	22
Y	*211-8041*	1	DAMPER GP	33
Y	*4P-2102*	1	DRAIN GP-ENGINE OIL	34
Y	*246-0599*	1	DRIVE GP-PUMP	41
Y	*246-0596*	1	ELBOW GP-AIR INLET	120
Y	*261-4534*	1	ENGINE AR-CORE	13
Y	*222-2409*	1	FASTENER GP-DAMPER & PULLEY	44
Y	*219-8681*	1	FASTENER GP-FRONT HOUSING	45
Y	*258-8728*	1	FASTENER GP-VALVE COVER	47
Y	*236-7315*	1	FASTENER GP-VALVE COVER	46
Y	*230-4118*	1	FILLER GP-ENGINE OIL	76
Y	*183-2097*	1	FILTER GP-ENGINE OIL	77
Y	*241-3718*	1	FLYWHEEL GP	48
Y	*241-3719*	1	FUMES DISPOSAL GP	81
Y	*246-0601*	1	GAUGE GP-OIL LEVEL (DIPSTICK) (ENGINE)	82
Y	*175-6260*	1	GEAR GP-REAR	50
Y	*219-8666*	1	HOUSING GP-FLYWHEEL	52
Y	*166-1784*	1	LIFTING GP-ENGINE	55
Y	*198-1319*	1	LINES GP-ENGINE OIL	83
Y	*264-2014*	1	LINES GP-FUEL	145
Y	*266-9810*	1	LINES GP-TURBOCHARGER OIL	87
Y	*165-4461*	1	LINES GP-WATER	100
Y	*165-4445*	1	MANIFOLD GP-EXHAUST	126
Y	*246-0600*	1	MOUNTING GP-ALTERNATOR	56
Y	*246-0598*	1	MOUNTING GP-FAN DRIVE	58
Y	*165-4459*	1	PAN GP-OIL	59
Y	*252-1567*	1	PLUG GP-ENGINE	61
Y	*246-0602*	1	PULLEY GP-CRANKSHAFT	62
Y	*211-1812*	1	PUMP GP-WATER	107
Y	*189-9306*	1	SEAL GP-CRANKSHAFT	70
Y	*231-1978*	1	SENSOR GP-ENGINE	204
Y	*166-1790*	1	SUPPORT GP-ENGINE	71
Y	*166-1792*	1	TRUNNION GP-ENGINE	72
Y	*198-0921*	1	VALVE GP-FLUID SAMPLING	94
Y	*235-8203*	1	WIRING GP-ELECTRONIC CONTROL	238
			PLEASE USE THE GASKET KIT LINK IN SIS OR CONTACT YOUR LOCAL DEALER FOR THE LATEST GASKET KIT INFORMATION	

Y-SEPARATE ILLUSTRATION

ENGINE ARRANGEMENT

261-4295 ENGINE AR

S/N: THX1-UP
138 BRAKE KW (185 BHP) AT 1850 RPM
AN ATTACHMENT

SMCS-1000 **i02431086**

NOTE	PART NUMBER	QTY	PART NAME 1 2 3 4 5 6 (PRODUCT LEVEL)	SEE PAGE
Y	*238-1116*	1	COOLER GP-TRANSMISSION OIL	268
Y	*246-0605*	1	COVER GP-CYLINDER BLOCK	18
Y	*118-1727*	1	COVER GP-FRONT HOUSING	20
Y	*222-1783*	1	COVER GP-VALVE MECHANISM	22
Y	*211-8041*	1	DAMPER GP	33
Y	*4P-2102*	1	DRAIN GP-ENGINE OIL	34
Y	*246-0599*	1	DRIVE GP-PUMP	41
Y	*246-0596*	1	ELBOW GP-AIR INLET	120
Y	*261-4535*	1	ENGINE AR-CORE	14
Y	*222-2409*	1	FASTENER GP-DAMPER & PULLEY	44
Y	*219-8681*	1	FASTENER GP-FRONT HOUSING	45
Y	*258-8728*	1	FASTENER GP-VALVE COVER	47
Y	*236-7315*	1	FASTENER GP-VALVE COVER	46
Y	*230-4118*	1	FILLER GP-ENGINE OIL	76
Y	*183-2097*	1	FILTER GP-ENGINE OIL	77
Y	*241-3718*	1	FLYWHEEL GP	48
Y	*241-3719*	1	FUMES DISPOSAL GP	81
Y	*246-0601*	1	GAUGE GP-OIL LEVEL (DIPSTICK) (ENGINE)	82
Y	*175-6260*	1	GEAR GP-REAR	50
Y	*219-8666*	1	HOUSING GP-FLYWHEEL	52
Y	*166-1784*	1	LIFTING GP-ENGINE	55
Y	*198-1319*	1	LINES GP-ENGINE OIL	83
Y	*264-2014*	1	LINES GP-FUEL	145
Y	*266-9811*	1	LINES GP-TURBOCHARGER OIL	89
Y	*165-4461*	1	LINES GP-WATER	100
Y	*165-4445*	1	MANIFOLD GP-EXHAUST	126
Y	*246-0600*	1	MOUNTING GP-ALTERNATOR	56
Y	*246-0598*	1	MOUNTING GP-FAN DRIVE	58
Y	*165-4459*	1	PAN GP-OIL	59
Y	*252-1567*	1	PLUG GP-ENGINE	61
Y	*246-0602*	1	PULLEY GP-CRANKSHAFT	62
Y	*211-1812*	1	PUMP GP-WATER	107
Y	*189-9306*	1	SEAL GP-CRANKSHAFT	70
Y	*231-1978*	1	SENSOR GP-ENGINE	204
Y	*166-1790*	1	SUPPORT GP-ENGINE	71
Y	*166-1792*	1	TRUNNION GP-ENGINE	72
Y	*198-0921*	1	VALVE GP-FLUID SAMPLING	94
Y	*235-8203*	1	WIRING GP-ELECTRONIC CONTROL	238
			PLEASE USE THE GASKET KIT LINK IN SIS OR CONTACT YOUR LOCAL DEALER FOR THE LATEST GASKET KIT INFORMATION	

Y-SEPARATE ILLUSTRATION

ENGINE ARRANGEMENT

261-4297 ENGINE AR

S/N: THX1-UP
149 BRAKE KW (200 BHP) AT 1850 RPM
PART OF 237-2569, 237-2707 SHIELD AR-THERMO
AN ATTACHMENT

SMCS-1000 **i02431088**

NOTE	PART NUMBER	QTY	PART NAME 1 2 3 4 5 6 (PRODUCT LEVEL)	SEE PAGE
Y	*238-1116*	1	COOLER GP-TRANSMISSION OIL	268
Y	*246-0605*	1	COVER GP-CYLINDER BLOCK	18
Y	*118-1727*	1	COVER GP-FRONT HOUSING	20
Y	*222-1783*	1	COVER GP-VALVE MECHANISM	22
Y	*211-8041*	1	DAMPER GP	33
Y	*4P-2102*	1	DRAIN GP-ENGINE OIL	34
Y	*246-0599*	1	DRIVE GP-PUMP	41
Y	*246-0596*	1	ELBOW GP-AIR INLET	120
Y	*261-4537*	1	ENGINE AR-CORE	15
Y	*222-2409*	1	FASTENER GP-DAMPER & PULLEY	44
Y	*219-8681*	1	FASTENER GP-FRONT HOUSING	45
Y	*258-8728*	1	FASTENER GP-VALVE COVER	47
Y	*236-7315*	1	FASTENER GP-VALVE COVER	46
Y	*230-4118*	1	FILLER GP-ENGINE OIL	76
Y	*183-2097*	1	FILTER GP-ENGINE OIL	77
Y	*241-3718*	1	FLYWHEEL GP	48
Y	*241-3719*	1	FUMES DISPOSAL GP	81
Y	*246-0601*	1	GAUGE GP-OIL LEVEL (DIPSTICK) (ENGINE)	82
Y	*175-6260*	1	GEAR GP-REAR	50
Y	*219-8666*	1	HOUSING GP-FLYWHEEL	52
Y	*166-1784*	1	LIFTING GP-ENGINE	55
Y	*198-1319*	1	LINES GP-ENGINE OIL	83
Y	*264-2014*	1	LINES GP-FUEL	145
Y	*266-9811*	1	LINES GP-TURBOCHARGER OIL	89
Y	*165-4461*	1	LINES GP-WATER	100
Y	*165-4445*	1	MANIFOLD GP-EXHAUST	126
Y	*246-0600*	1	MOUNTING GP-ALTERNATOR	56
Y	*246-0598*	1	MOUNTING GP-FAN DRIVE	58
Y	*165-4459*	1	PAN GP-OIL	59
Y	*252-1567*	1	PLUG GP-ENGINE	61
Y	*246-0602*	1	PULLEY GP-CRANKSHAFT	62
Y	*211-1812*	1	PUMP GP-WATER	107
Y	*189-9306*	1	SEAL GP-CRANKSHAFT	70
Y	*231-1978*	1	SENSOR GP-ENGINE	204
Y	*166-1790*	1	SUPPORT GP-ENGINE	71
Y	*166-1792*	1	TRUNNION GP-ENGINE	72
Y	*198-0921*	1	VALVE GP-FLUID SAMPLING	94
Y	*235-8203*	1	WIRING GP-ELECTRONIC CONTROL	238
			PLEASE USE THE GASKET KIT LINK IN SIS OR CONTACT YOUR LOCAL DEALER FOR THE LATEST GASKET KIT INFORMATION	

Y-SEPARATE ILLUSTRATION

ENGINE ARRANGEMENT

261-4530 ENGINE AR-CORE

S/N: THX1-UP

PART OF 261-4290 ENGINE AR

SMCS-1000 **i02431516**

NOTE	PART NUMBER	QTY	PART NAME 1 2 3 4 5 6 (PRODUCT LEVEL)	SEE PAGE
Y	*242-0674*	1	CAMSHAFT GP	17
Y	*231-1972*	1	CONTROL GP-ENGINE ELECTRONIC	172
Y	*188-3826*	1	COOLER GP-ENGINE OIL	96
Y	*217-8669*	1	COVER GP-FRONT HOUSING	21
Y	*164-6148*	1	CRANKSHAFT GP	23
Y	*161-3406*	1	CYLINDER BLOCK GP	26
Y	*242-0672*	1	CYLINDER HEAD GP	30
Y	*213-4363*	1	FASTENER GP-CYLINDER HEAD	43
Y	*205-1321*	1	GEAR GP-FRONT	49
Y	*245-3262*	1	HOUSING GP-FRONT	54
Y	*265-1400*	6	PISTON & ROD GP	60
Y	*220-8233*	1	PUMP & MTG GP-UNIT INJ HYD	147
Y	*195-8098*	1	PUMP GP-ENGINE OIL	93
Y	*267-9720*	1	PUMP GP-FUEL INJECTION	151
Y	*262-5901*	1	TURBOCHARGER GP	138
Y	*242-0447*	1	VALVE MECHANISM GP	74
	261-7971	1	ELECTRONICS GP-ENGINE RATINGS	

Y-SEPARATE ILLUSTRATION

ENGINE ARRANGEMENT

261-4531 ENGINE AR-CORE

S/N: THX1-UP
PART OF 261-4291 ENGINE AR
AN ATTACHMENT

SMCS-1000 **i02456840**

NOTE	PART NUMBER	QTY	PART NAME 1 2 3 4 5 6 (PRODUCT LEVEL)	SEE PAGE
Y	*242-0674*	1	CAMSHAFT GP	17
Y	*231-1972*	1	CONTROL GP-ENGINE ELECTRONIC	172
Y	*188-3826*	1	COOLER GP-ENGINE OIL	96
Y	*217-8669*	1	COVER GP-FRONT HOUSING	21
Y	*164-6148*	1	CRANKSHAFT GP	23
Y	*161-3406*	1	CYLINDER BLOCK GP	26
Y	*242-0672*	1	CYLINDER HEAD GP	30
Y	*213-4363*	1	FASTENER GP-CYLINDER HEAD	43
Y	*205-1321*	1	GEAR GP-FRONT	49
Y	*245-3262*	1	HOUSING GP-FRONT	54
Y	*265-1400*	6	PISTON & ROD GP	60
Y	*220-8233*	1	PUMP & MTG GP-UNIT INJ HYD	147
Y	*195-8098*	1	PUMP GP-ENGINE OIL	93
Y	*267-9720*	1	PUMP GP-FUEL INJECTION	151
Y	*262-5901*	1	TURBOCHARGER GP	138
Y	*242-0447*	1	VALVE MECHANISM GP	74
	261-7972	1	ELECTRONICS GP-ENGINE RATINGS	

Y-SEPARATE ILLUSTRATION

ENGINE ARRANGEMENT

261-4533 ENGINE AR-CORE

S/N: THX1-UP
PART OF 261-4293 ENGINE AR
AN ATTACHMENT

SMCS-1000 **i02436478**

NOTE	PART NUMBER	QTY	PART NAME 1 2 3 4 5 6 (PRODUCT LEVEL)	SEE PAGE
Y	*242-0674*	1	CAMSHAFT GP	17
Y	*231-1972*	1	CONTROL GP-ENGINE ELECTRONIC	172
Y	*188-3826*	1	COOLER GP-ENGINE OIL	96
Y	*217-8669*	1	COVER GP-FRONT HOUSING	21
Y	*164-6148*	1	CRANKSHAFT GP	23
Y	*161-3406*	1	CYLINDER BLOCK GP	26
Y	*242-0672*	1	CYLINDER HEAD GP	30
Y	*213-4363*	1	FASTENER GP-CYLINDER HEAD	43
Y	*205-1321*	1	GEAR GP-FRONT	49
Y	*245-3262*	1	HOUSING GP-FRONT	54
Y	*265-1400*	6	PISTON & ROD GP	60
Y	*220-8233*	1	PUMP & MTG GP-UNIT INJ HYD	147
Y	*195-8098*	1	PUMP GP-ENGINE OIL	93
Y	*267-9720*	1	PUMP GP-FUEL INJECTION	151
Y	*237-2041*	1	TURBOCHARGER GP	136
Y	*242-0447*	1	VALVE MECHANISM GP	74
	261-7973	1	ELECTRONICS GP-ENGINE RATINGS	

Y-SEPARATE ILLUSTRATION

ENGINE ARRANGEMENT

261-4534 ENGINE AR-CORE

S/N: THX1-UP

PART OF 261-4294 ENGINE AR

SMCS-1000 **i02434266**

NOTE	PART NUMBER	QTY	PART NAME 1 2 3 4 5 6 (PRODUCT LEVEL)	SEE PAGE
Y	*242-0674*	1	CAMSHAFT GP	17
Y	*231-1972*	1	CONTROL GP-ENGINE ELECTRONIC	172
Y	*188-3826*	1	COOLER GP-ENGINE OIL	96
Y	*217-8669*	1	COVER GP-FRONT HOUSING	21
Y	*164-6148*	1	CRANKSHAFT GP	23
Y	*161-3406*	1	CYLINDER BLOCK GP	26
Y	*242-0672*	1	CYLINDER HEAD GP	30
Y	*213-4363*	1	FASTENER GP-CYLINDER HEAD	43
Y	*205-1321*	1	GEAR GP-FRONT	49
Y	*245-3262*	1	HOUSING GP-FRONT	54
Y	*265-1400*	6	PISTON & ROD GP	60
Y	*220-8233*	1	PUMP & MTG GP-UNIT INJ HYD	147
Y	*195-8098*	1	PUMP GP-ENGINE OIL	93
Y	*267-9720*	1	PUMP GP-FUEL INJECTION	151
Y	*262-5901*	1	TURBOCHARGER GP	138
Y	*242-0447*	1	VALVE MECHANISM GP	74
	261-7973	1	ELECTRONICS GP-ENGINE RATINGS	

Y-SEPARATE ILLUSTRATION

ENGINE ARRANGEMENT

261-4535 ENGINE AR-CORE

S/N: THX1-UP
PART OF 261-4295 ENGINE AR
AN ATTACHMENT

SMCS-1000 **i02436566**

NOTE	PART NUMBER	QTY	PART NAME 1 2 3 4 5 6 (PRODUCT LEVEL)	SEE PAGE
Y	*242-0674*	1	CAMSHAFT GP	17
Y	*231-1972*	1	CONTROL GP-ENGINE ELECTRONIC	172
Y	*188-3826*	1	COOLER GP-ENGINE OIL	96
Y	*217-8669*	1	COVER GP-FRONT HOUSING	21
Y	*164-6148*	1	CRANKSHAFT GP	23
Y	*161-3406*	1	CYLINDER BLOCK GP	26
Y	*242-0672*	1	CYLINDER HEAD GP	30
Y	*213-4363*	1	FASTENER GP-CYLINDER HEAD	43
Y	*205-1321*	1	GEAR GP-FRONT	49
Y	*245-3262*	1	HOUSING GP-FRONT	54
Y	*265-1400*	6	PISTON & ROD GP	60
Y	*220-8233*	1	PUMP & MTG GP-UNIT INJ HYD	147
Y	*195-8098*	1	PUMP GP-ENGINE OIL	93
Y	*267-9720*	1	PUMP GP-FUEL INJECTION	151
Y	*237-2041*	1	TURBOCHARGER GP	136
Y	*242-0447*	1	VALVE MECHANISM GP	74
	261-7974	1	ELECTRONICS GP-ENGINE RATINGS	

Y-SEPARATE ILLUSTRATION

ENGINE ARRANGEMENT

261-4537 ENGINE AR-CORE

S/N: THX1-UP
PART OF 261-4297 ENGINE AR
AN ATTACHMENT

SMCS-1000 **i02436484**

NOTE	PART NUMBER	QTY	PART NAME 1 2 3 4 5 6 (PRODUCT LEVEL)	SEE PAGE
Y	*242-0674*	1	CAMSHAFT GP	17
Y	*231-1972*	1	CONTROL GP-ENGINE ELECTRONIC	172
Y	*188-3826*	1	COOLER GP-ENGINE OIL	96
Y	*217-8669*	1	COVER GP-FRONT HOUSING	21
Y	*164-6148*	1	CRANKSHAFT GP	23
Y	*161-3406*	1	CYLINDER BLOCK GP	26
Y	*242-0672*	1	CYLINDER HEAD GP	30
Y	*213-4363*	1	FASTENER GP-CYLINDER HEAD	43
Y	*205-1321*	1	GEAR GP-FRONT	49
Y	*245-3262*	1	HOUSING GP-FRONT	54
Y	*265-1400*	6	PISTON & ROD GP	60
Y	*220-8233*	1	PUMP & MTG GP-UNIT INJ HYD	147
Y	*195-8098*	1	PUMP GP-ENGINE OIL	93
Y	*267-9720*	1	PUMP GP-FUEL INJECTION	151
Y	*237-2041*	1	TURBOCHARGER GP	136
Y	*242-0447*	1	VALVE MECHANISM GP	74
	261-7975	1	ELECTRONICS GP-ENGINE RATINGS	

Y-SEPARATE ILLUSTRATION

ENGINE ARRANGEMENT

223-0551 INSTALLATION AR-ENGINE

S/N: JDL1-UP; GMT1-UP

PART OF 218-4976, 222-1591 GENERAL AR

SMCS-1000 **i02429835**

NOTE	PART NUMBER	QTY	PART NAME 1 2 3 4 5 6 (PRODUCT LEVEL)	SEE PAGE
Y	*250-6056*	1	AFTERCOOLER GP-AIR	116
Y	*206-9000*	1	AIR CLEANER GP	118
Y	*280-2703*	1	ALTERNATOR GP-CHARGING	164
Y	*241-8240*	1	COMPRESSOR GP-REFRIGERANT	609
Y	*168-8783*	1	CONDENSER & MTG GP-REFRIGERANT	611
Y	*169-3806*	1	COOLER GP-HYDRAULIC OIL	447
Y	*215-3251*	1	DRIVE GP-FAN	38
Y	*241-4353*	1	DUST EJECTOR GP	119
Y	*168-8376*	1	FAN GP-BLOWER	98
Y	*223-0560*	1	FILTER & LINES GP-FUEL	139
Y	*230-5585*	1	FUMES DISPOSAL GP	80
Y	*168-8377*	1	LINES GP-AIR	122
Y	*251-4553*	1	LINES GP-AIR (ATAAC)	123
Y	*168-8378*	1	LINES GP-WATER	101
Y	*223-0556*	1	MOUNTING GP-ENGINE	57
Y	*239-3686*	1	MUFFLER GP	127
Y	*262-2027*	1	PULLEY GP-FAN & ALT DRIVE	65
Y	*227-0833*	1	RADIATOR GP	109
Y	*237-2737*	1	SHIELD GP-EXHAUST	134
Y	*263-9012*	1	STARTING AID GP-ETHER	221
Y	*223-0558*	1	STARTING MOTOR GP-ELECTRIC	229
Y	*255-5232*	1	TANK GP-COOLANT	114
Y	*222-1143*	1	WIRING GP-ENGINE	240
Y	*224-2693*	1	YOKE GP	75

Y-SEPARATE ILLUSTRATION

242-0674 CAMSHAFT GP

S/N: THX1-UP

PART OF 261-4530, 261-4531, 261-4533, 261-4534, 261-4535, 261-4537 ENGINE

AR-CORE

ALSO AN ATTACHMENT

SMCS-1210 **i02433943**

NOTE	REF NO	GRAPHIC REF	PART NUMBER	QTY	PART NAME 1 2 3 4 5 6 (PRODUCT LEVEL)	SEE PAGE
	1	1	**107-7694**	1	PLATE-THRUST	
	2	1	**242-0673**	1	CAMSHAFT AS	
	2A	1	**1B-8705**	1	KEY-WOODRUFF	
	2B	1	**224-3247**	1	GEAR (100-TEETH)	
M	3		**6V-3940**	2	BOLT (M8X1.25X25-MM)	

M-METRIC PART

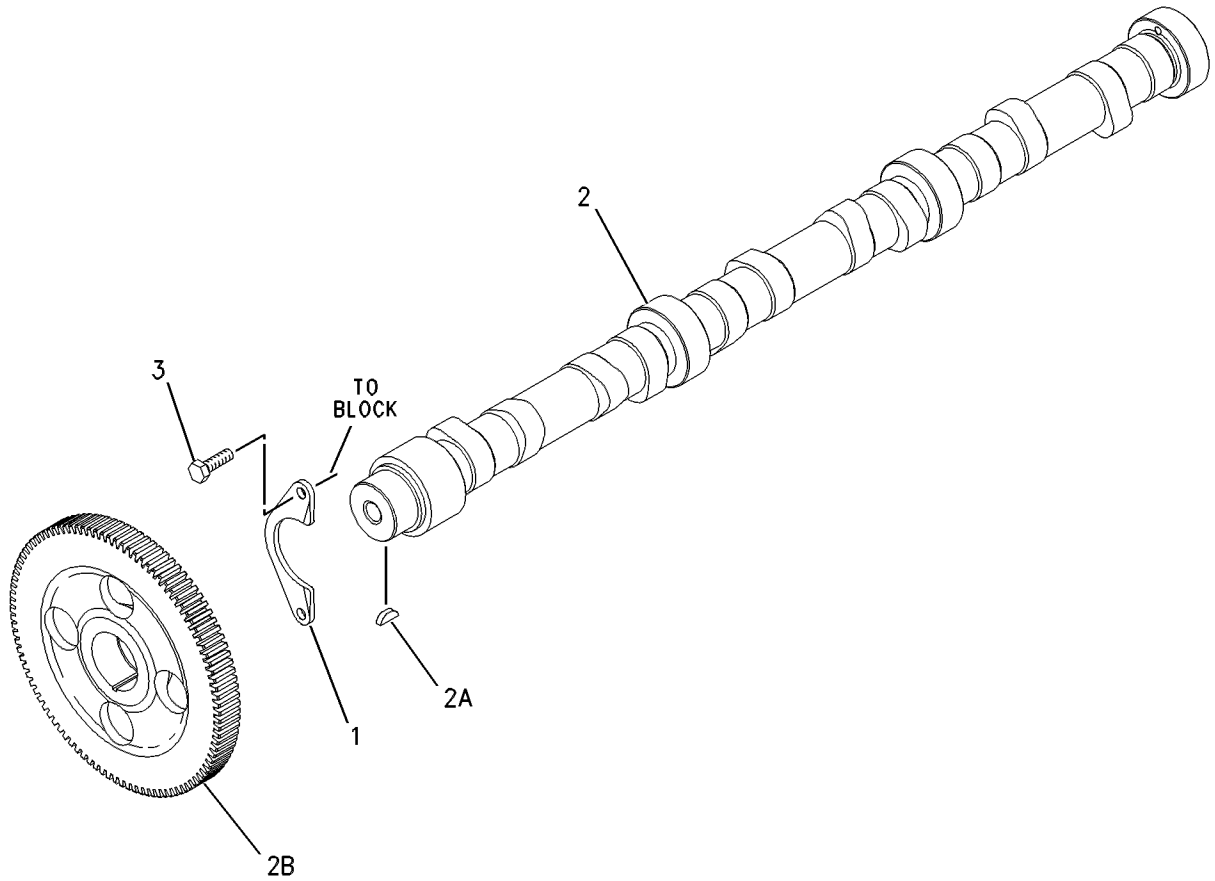

GRAPHIC #1 **<END>** g00626400

BASIC ENGINE

246-0605 COVER GP-CYLINDER BLOCK

S/N: THX1-UP

PART OF 261-4290, 261-4291, 261-4293, 261-4294, 261-4295, 261-4297 ENGINE AR

ALSO AN ATTACHMENT

SMCS-1201 **i02468736**

NOTE	REF NO	GRAPHIC REF	PART NUMBER	QTY	PART NAME 1 2 3 4 5 6 (PRODUCT LEVEL)	SEE PAGE
	1	1	**205-5285**	1	GASKET	
	2	1	**215-4441**	1	COVER	
	3	1	**240-0041**	1	BREATHER AS (CRANKCASE)	
M	4	1	**3E-8005**	1	BOLT (M8X1.25X160-MM)	
M	5	1	**6V-3918**	2	BOLT (M8X1.25X50-MM)	
M	6	1	**6V-3940**	9	BOLT (M8X1.25X25-MM)	
	7	1	**9F-4446**	1	SEAL-O-RING	
	8	1	**9M-1974**	12	WASHER-HARD (8.8X16X2-MM THK)	

M-METRIC PART

246-0605 **COVER GP-CYLINDER BLOCK** *(contd.)* **i02468736**

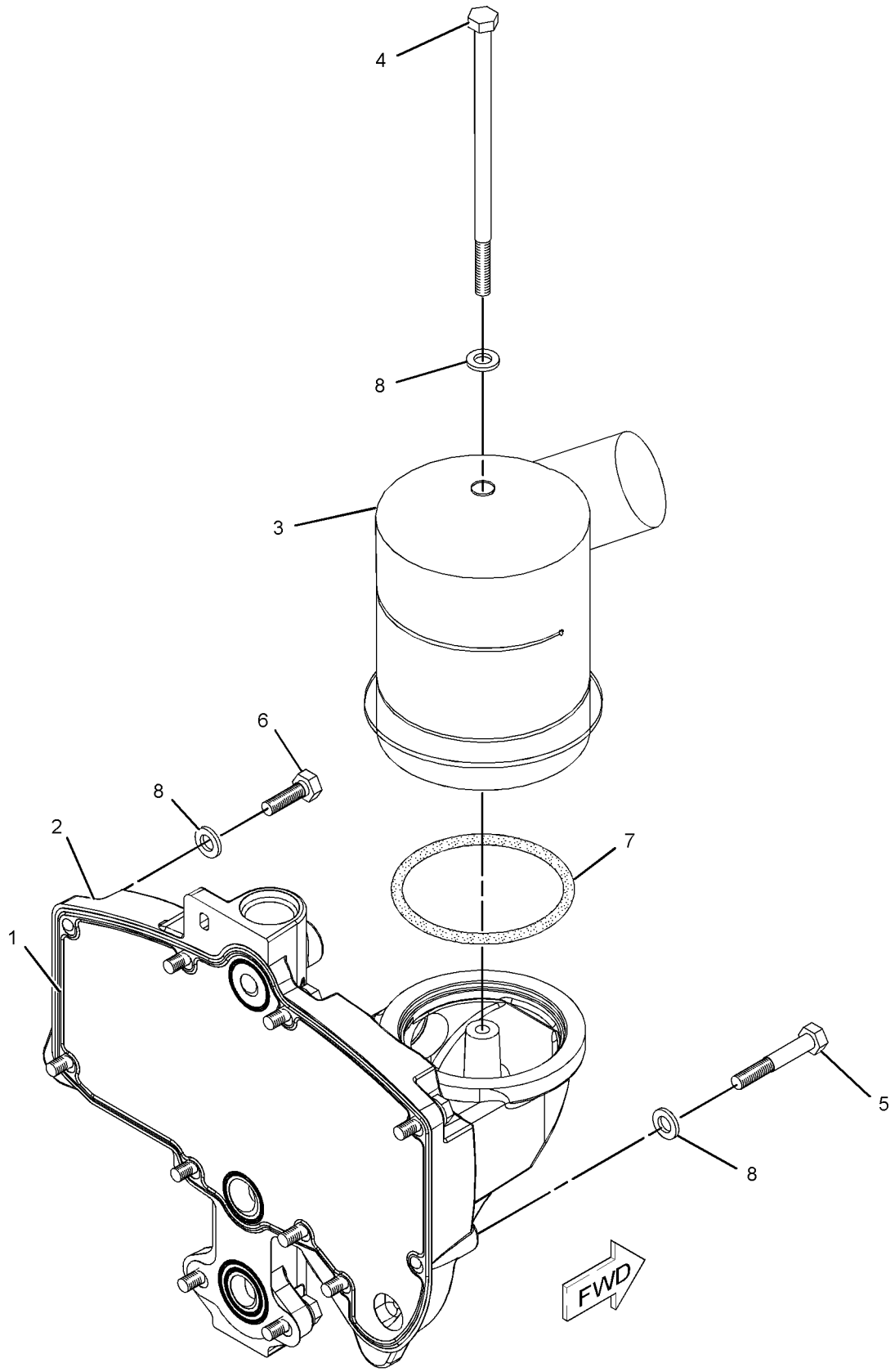

GRAPHIC #1 **<END>** g01100912

118-1727 COVER GP-FRONT HOUSING

S/N: THX1-UP

PART OF 261-4290, 261-4291, 261-4293, 261-4294, 261-4295, 261-4297 ENGINE AR

ALSO AN ATTACHMENT

SMCS-1151, 1166 **i01671188**

NOTE	REF NO	GRAPHIC REF	PART NUMBER	QTY	PART NAME 1 2 3 4 5 6 (PRODUCT LEVEL)	SEE PAGE
	1	1	**5P-8245**	4	WASHER-HARD (13.5X25.5X3-MM THK)	
M	2	1	**6V-5696**	2	BOLT (M12X1.75X80-MM)	
	3	1	**4W-2026**	1	COVER	
	4	1	**135-9819**	1	SEAL	
M	5	1	**6V-8149**	2	NUT (M12X1.75-THD)	

M-METRIC PART

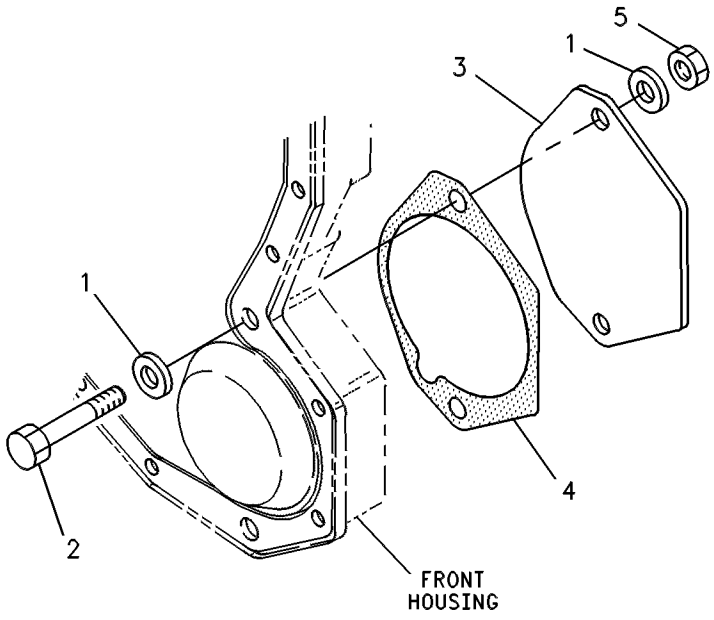

GRAPHIC #1 **<END>** g00245495

217-8669 COVER GP-FRONT HOUSING

S/N: THX1-UP
PART OF 261-4530, 261-4531, 261-4533, 261-4534, 261-4535, 261-4537 ENGINE
AR-CORE
ALSO AN ATTACHMENT

SMCS-1151, 1166 **i02433730**

NOTE	REF NO	GRAPHIC REF	PART NUMBER	QTY	PART NAME 1 2 3 4 5 6 (PRODUCT LEVEL)	SEE PAGE
	1	1	**209-0760**	1	COVER AS-FRONT	
	1A	1	**126-1757**	2	WASHER (10.85X19.3X1.27-MM THK)	
	1B	1	**136-0822**	2	STUD	
	2	1	**209-0762**	1	GASKET AS	

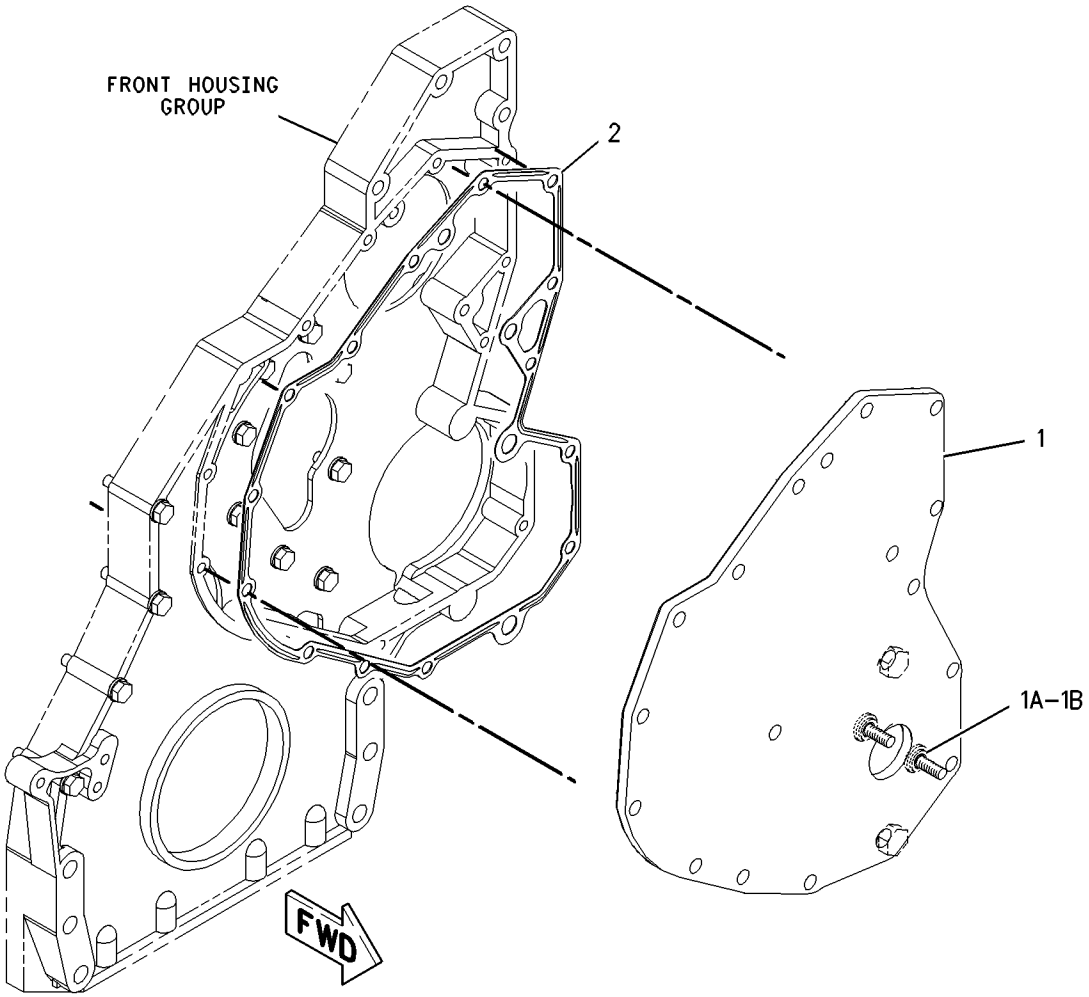

GRAPHIC #1 **<END>** g00849279

BASIC ENGINE

222-1783 COVER GP-VALVE MECHANISM

S/N: THX1-UP

PART OF 261-4290, 261-4291, 261-4293, 261-4294, 261-4295, 261-4297 ENGINE AR

ALSO AN ATTACHMENT

SMCS-1107 **i02431505**

NOTE	REF NO	GRAPHIC REF	PART NUMBER	QTY	PART NAME 1 2 3 4 5 6 (PRODUCT LEVEL)	SEE PAGE
	1	1	**204-4444**	1	BREATHER AS (CRANKCASE)	
		1	**124-0506**	1	SEAL	
		1	**160-0526**	1	SEAL-O-RING	
		1	**185-3159**	1	ELEMENT (BREATHER) (CRANKCASE)	
	2	1	**213-5206**	1	COVER GP-VALVE MECHANISM	
J		1	**217-5701**		SEAL (23-DM VALVE MECHANISM COVER)	
	3	1	**246-5083**	11	SLEEVE-SPACER	
	4	1	**259-2358**	1	COVER-BASE (VALVE MECHANISM)	
	5	1	**259-2364**	1	SEAL AS	

J-SOLD BY THE DECIMETER

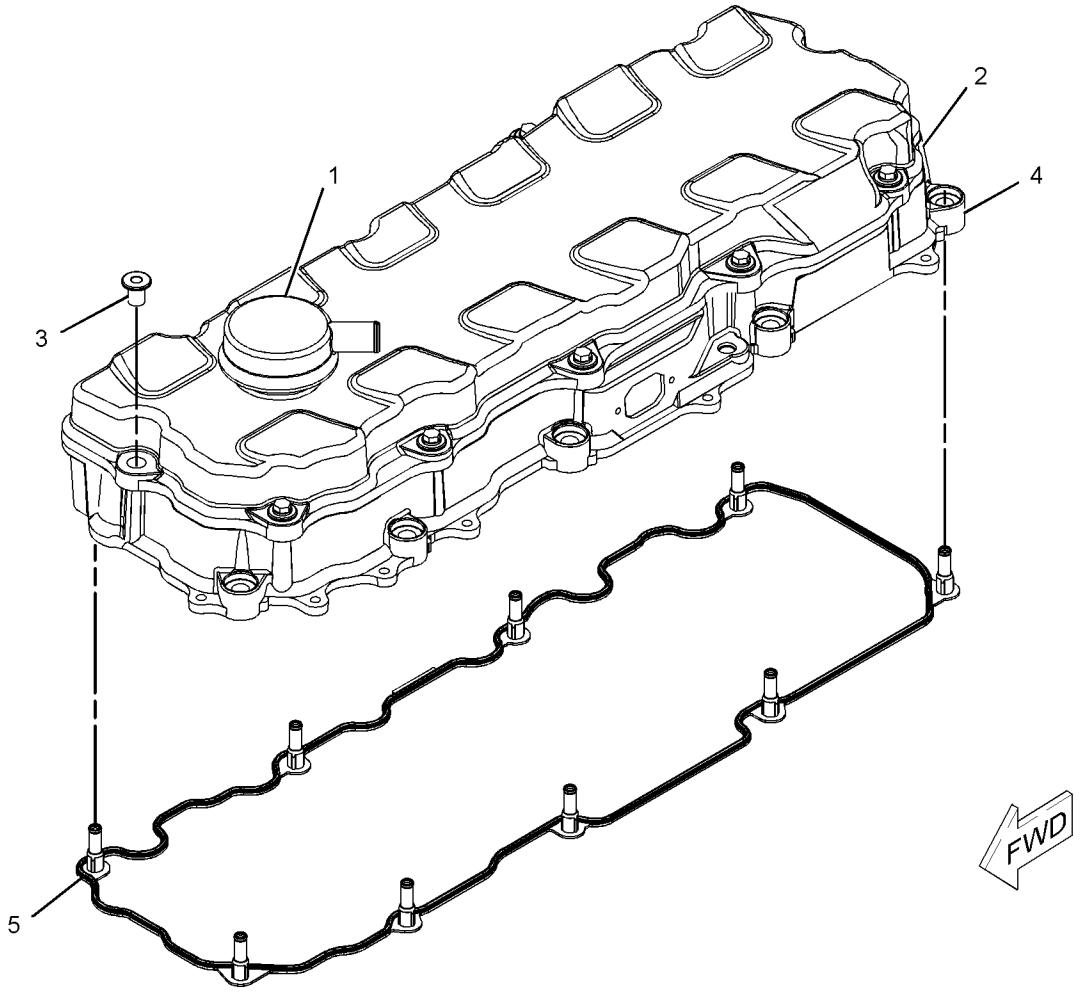

GRAPHIC #1 **<END>** g01205321

164-6148 CRANKSHAFT GP

S/N: THX1-UP

PART OF 261-4530, 261-4531, 261-4533, 261-4534, 261-4535, 261-4537 ENGINE

AR-CORE

ALSO AN ATTACHMENT

SMCS-1202 **i02209490**

NOTE	REF NO	GRAPHIC REF	PART NUMBER	QTY	PART NAME 1 2 3 4 5 6 (PRODUCT LEVEL)	SEE PAGE
	1	1	**151-2939**	7	BEARING-MAIN	
R	2	1	**160-8147**	1	CRANKSHAFT AS	
	2A	1	**1B-8705**	1	KEY-WOODRUFF	
	2B	1	**2W-8147**	1	GEAR (50-TEETH)	
	2C	1	**9Y-0810**	1	SLEEVE-WEAR	
	3	1	**246-3150**	2	PLATE-THRUST	

R-REMFG PART MAY BE AVAILABLE

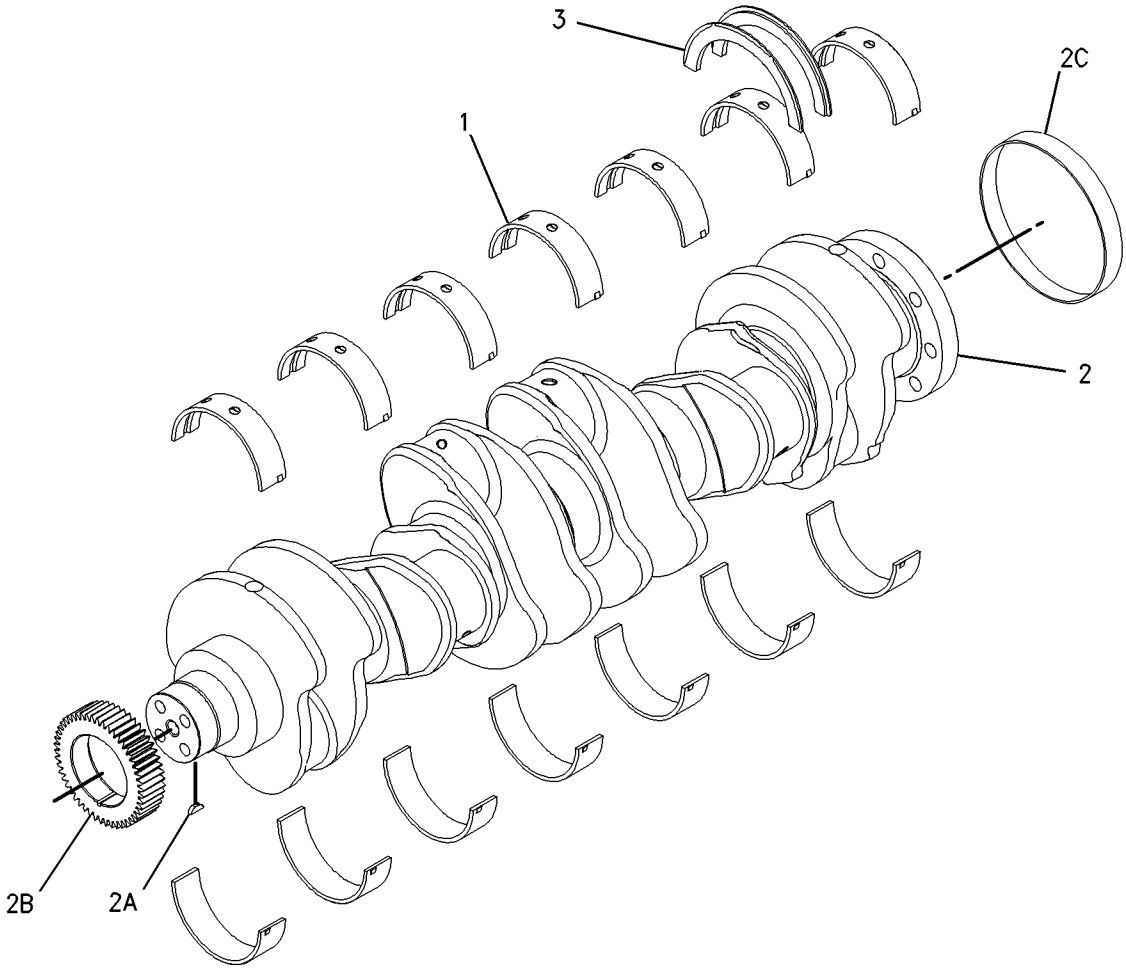

GRAPHIC #1 **<END>** g00789955

BASIC ENGINE

221-3248 CYLINDER BLOCK AS

S/N: THX1-UP

PART OF 220-1952 CYLINDER BLOCK GP

ALSO AN ATTACHMENT

SMCS-1201 **i02293480**

NOTE	REF NO	GRAPHIC REF	PART NUMBER	QTY	PART NAME 1 2 3 4 5 6 (PRODUCT LEVEL)	SEE PAGE
	1	1	**0L-1026**	2	PLUG-CUP	
	2	1	**3B-0623**	2	PLUG-CUP	
	3	1	**4F-5695**	4	PLUG-CUP	
M	4	1	**175-0454**	14	BOLT (M16X2X160-MM)	
	5	1	**203-5805**	2	BEARING-SLEEVE	
	6	1	**203-6090**	1	BEARING-SLEEVE	
	7	1	**212-7002**	7	CAP-BEARING	
	8	1	**216-5586**	1	BEARING-SLEEVE (CAMSHAFT)	
	10	1	**9X-8268**	14	WASHER (17.5X30X3.5-MM THK)	

M-METRIC PART

221-3248 **CYLINDER BLOCK AS** *(contd.)* **i02293480**

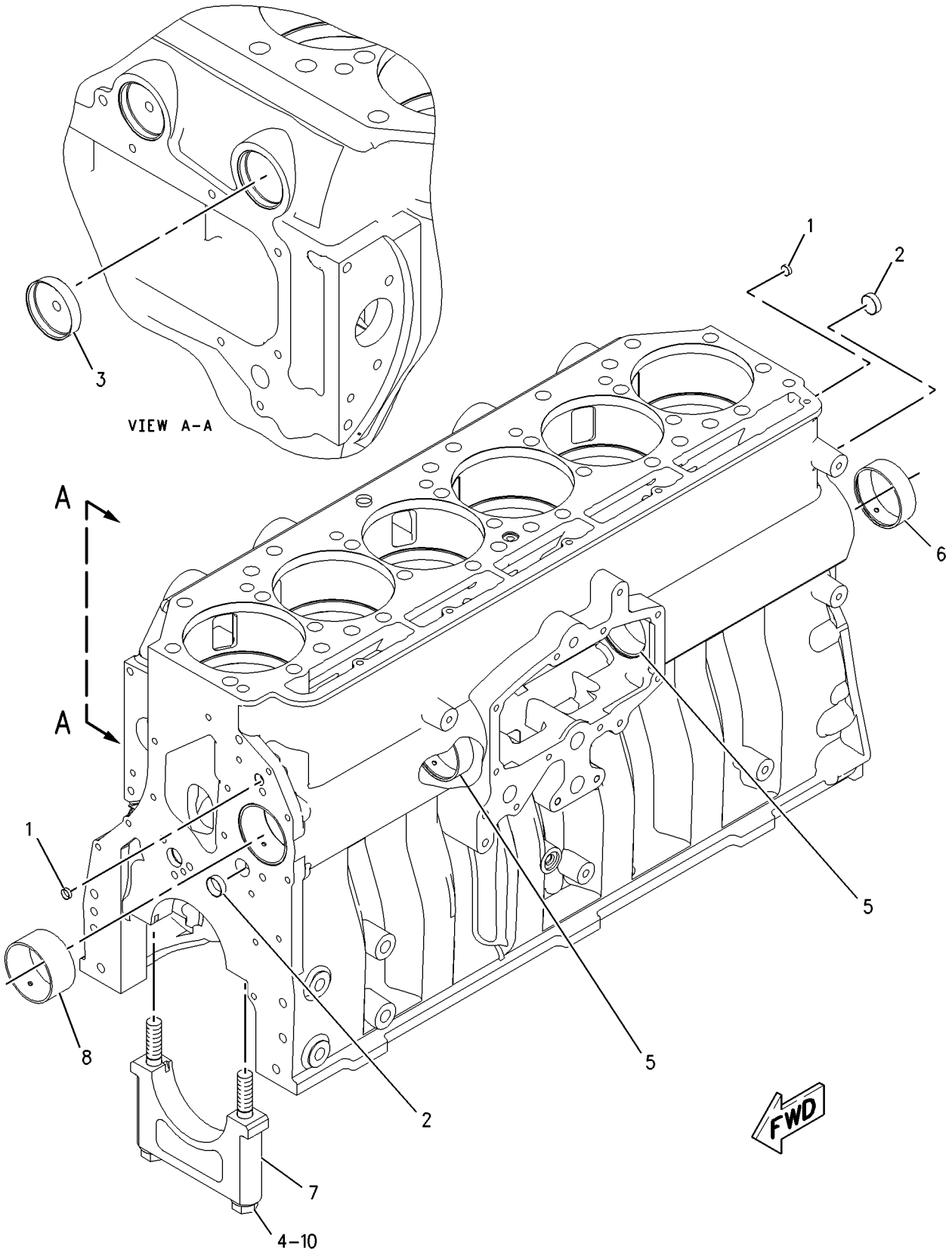

GRAPHIC #1 **<END>** g00920253

161-3406 CYLINDER BLOCK GP

S/N: THX1-UP
PART OF 261-4530, 261-4531, 261-4533, 261-4534, 261-4535, 261-4537 ENGINE
AR-CORE
ALSO AN ATTACHMENT

SMCS-1201 **i01833065**

NOTE	REF NO	GRAPHIC REF	PART NUMBER	QTY	PART NAME 1 2 3 4 5 6 (PRODUCT LEVEL)	SEE PAGE
	1	1	**0S-0519**	1	PLUG-CUP	
	2	1	**1W-8407**	2	SLEEVE	
	3	1	**4G-4972**	1	SEAL-O-RING	
CY	4	1	*220-1952*	1	CYLINDER BLOCK GP	27
	5	1	**6V-3538**	2	DOWEL	
	6	1	**7N-5683**	2	DOWEL	

C-CHANGE FROM PREVIOUS TYPE
Y-SEPARATE ILLUSTRATION

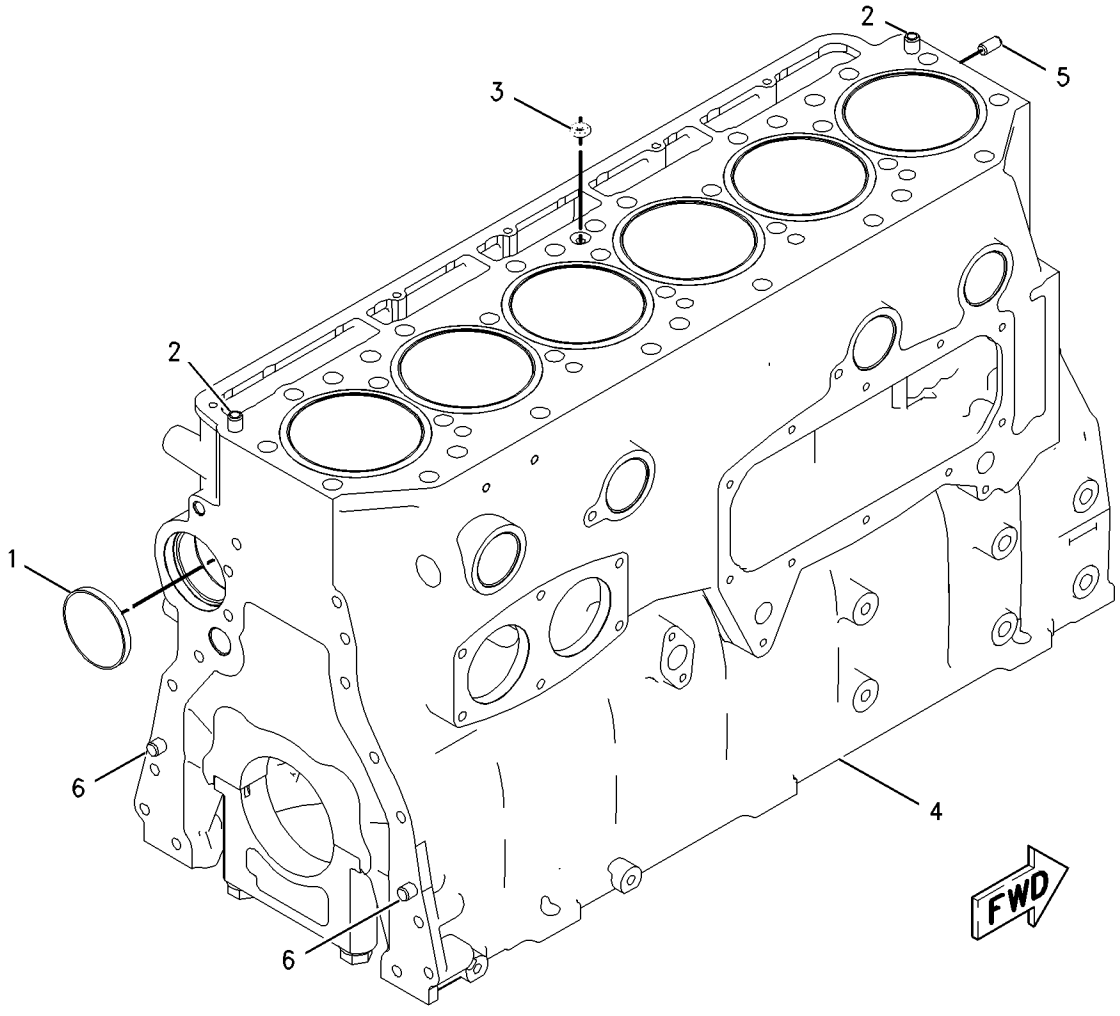

GRAPHIC #1 **<END>** g00838255

220-1952 CYLINDER BLOCK GP

S/N: THX1-UP
PART OF 161-3406 CYLINDER BLOCK GP
ALSO AN ATTACHMENT

SMCS-1201 **i02293446**

NOTE	REF NO	GRAPHIC REF	PART NUMBER	QTY	PART NAME 1 2 3 4 5 6 (PRODUCT LEVEL)	SEE PAGE
	1	1	**167-0024**	6	SEAL-LINER	
	2	1	**190-3562**	6	LINER-CYLINDER	
Y	3	1	**221-3248**	1	CYLINDER BLOCK AS	24

Y-SEPARATE ILLUSTRATION

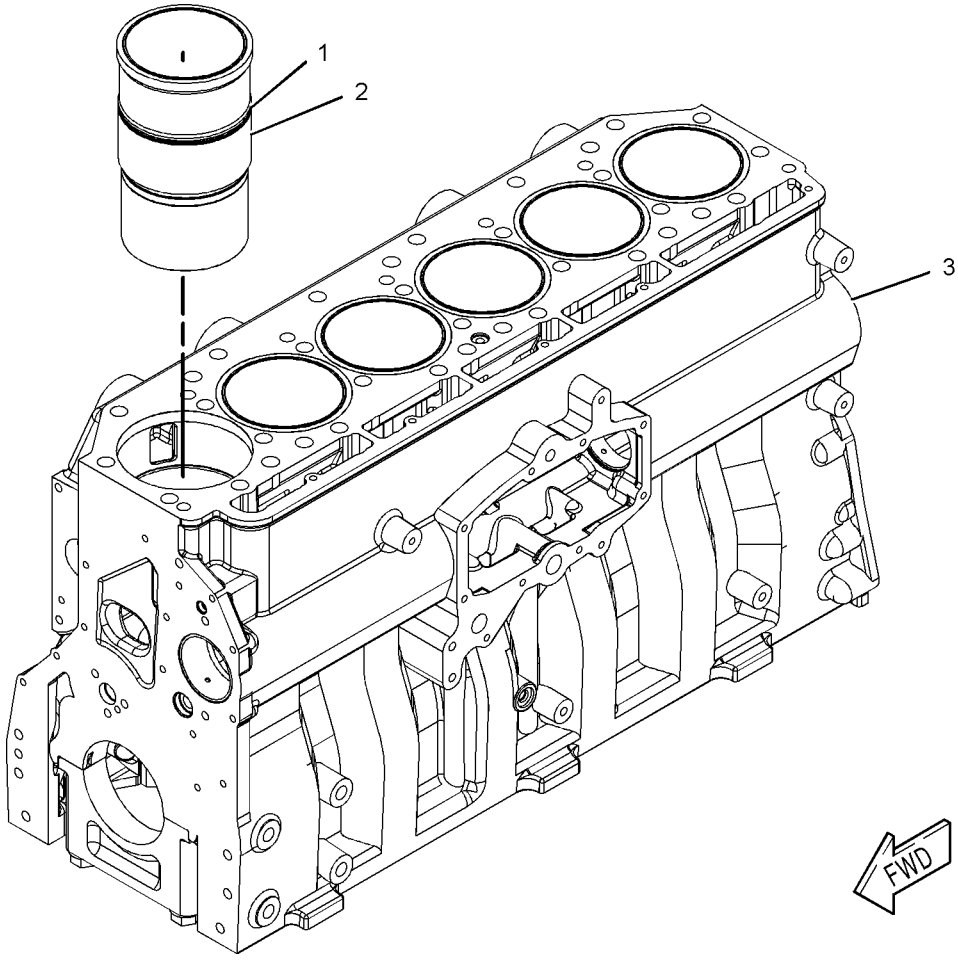

GRAPHIC #1 **<END>** g01032547

BASIC ENGINE

252-8438 CYLINDER HEAD AS

S/N: THX1-UP

PART OF 252-8439 CYLINDER HEAD GP

ALSO AN ATTACHMENT

SMCS-1100, 1101 **i02433926**

NOTE	REF NO	GRAPHIC REF	PART NUMBER	QTY	PART NAME 1 2 3 4 5 6 (PRODUCT LEVEL)	SEE PAGE
	1	1	**6V-7604**	6	PLUG-CUP	
	2	1	**8M-5860**	18	PLUG-CUP	
	3	1	**212-8917**	12	INSERT-VALVE SEAT (EXHAUST)	
	4	1	**227-1200**	6	SLEEVE-INJECTOR	
	5	1	**241-8388**	12	INSERT-VALVE SEAT (INLET)	
	7	1	**8C-0563**	12	SEAL-O-RING	

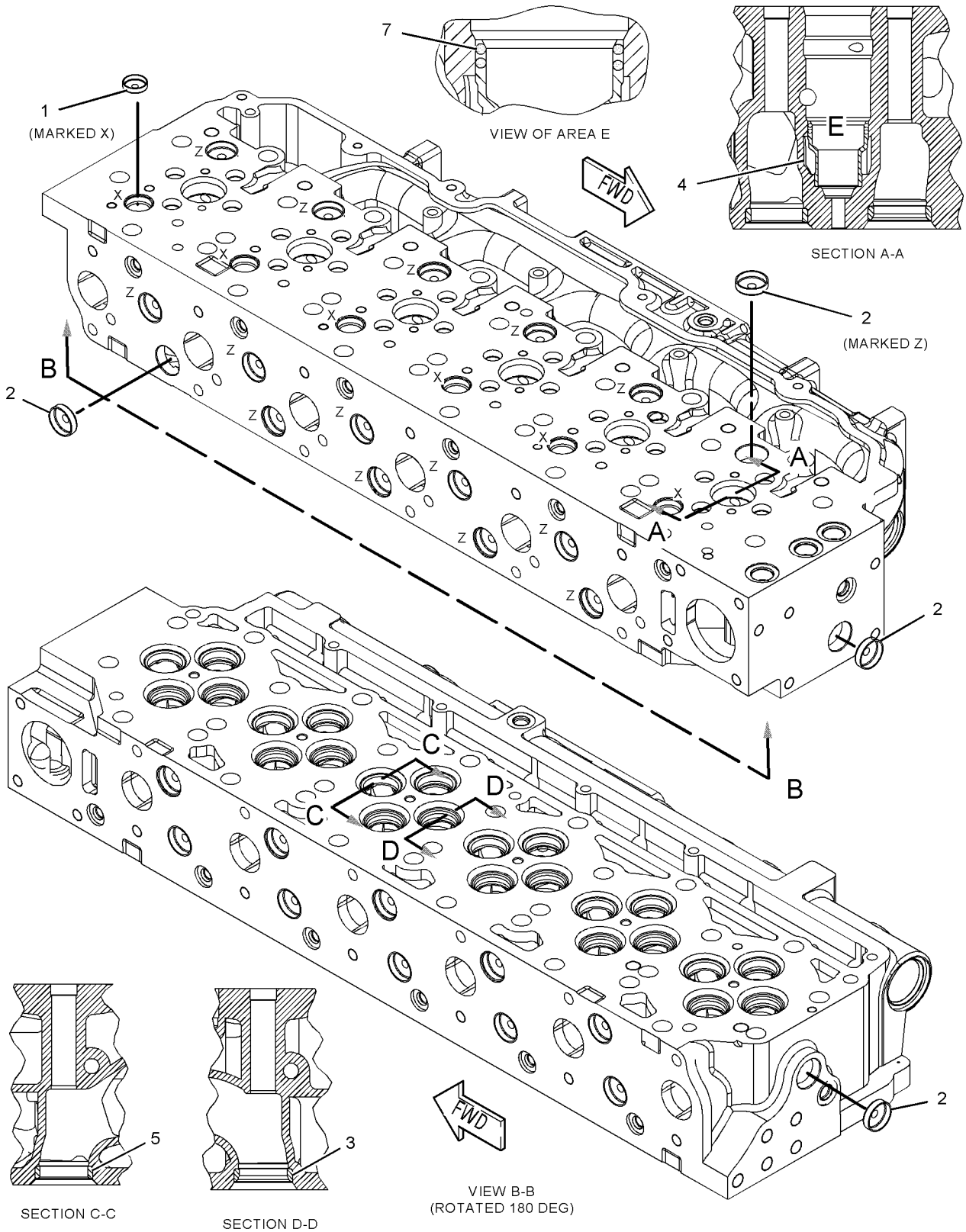

GRAPHIC #1

<END>

g01089169

BASIC ENGINE

242-0672 CYLINDER HEAD GP

S/N: THX1-UP
PART OF 261-4530, 261-4531, 261-4533, 261-4534, 261-4535, 261-4537 ENGINE
AR-CORE
ALSO AN ATTACHMENT

SMCS-1100 **i02433918**

NOTE	REF NO	GRAPHIC REF	PART NUMBER	QTY	PART NAME 1 2 3 4 5 6 (PRODUCT LEVEL)	SEE PAGE
	1	1	**2A-3746**	1	PLUG-CUP	
	2	1	**187-1315**	1	GASKET AS	
Y	3	1	**252-8439**	1	CYLINDER HEAD GP	31

Y-SEPARATE ILLUSTRATION

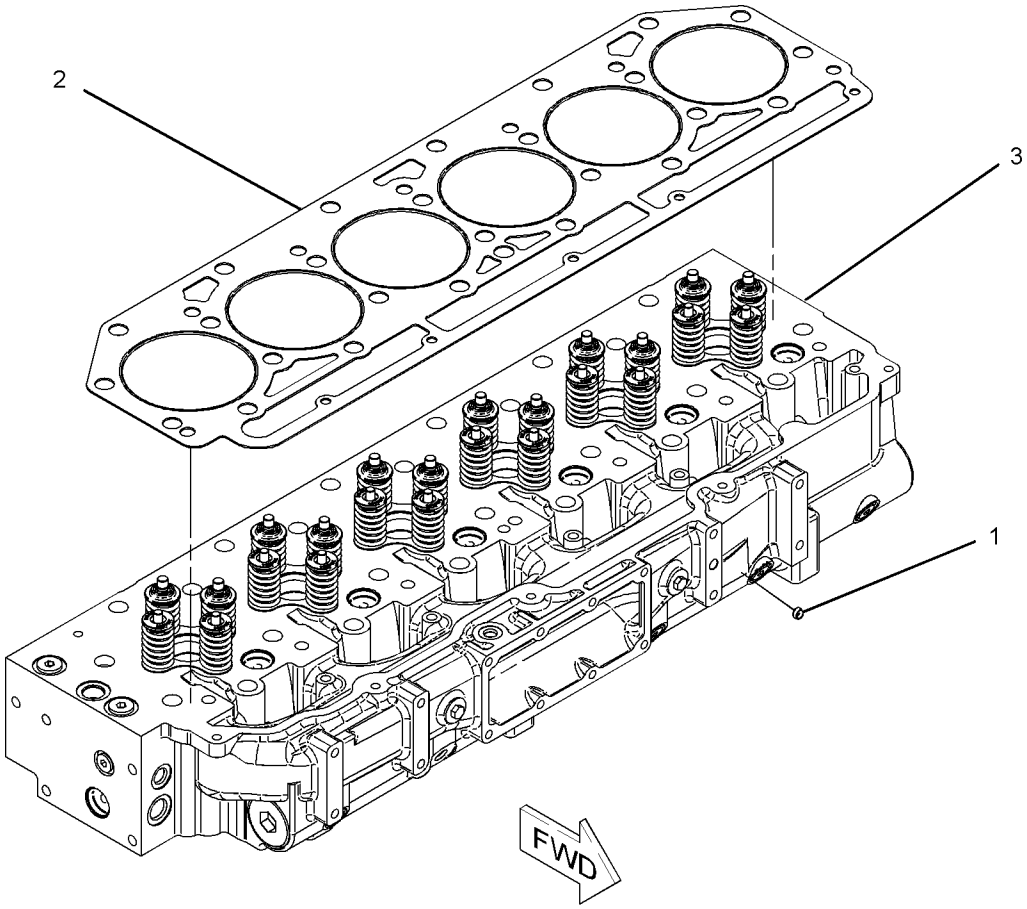

GRAPHIC #1 **<END>** g01065328

252-8439 CYLINDER HEAD GP

S/N: THX1-UP

PART OF 242-0672 CYLINDER HEAD GP

ALSO AN ATTACHMENT

SMCS-1100 **i02433924**

NOTE	REF NO	GRAPHIC REF	PART NUMBER	QTY	PART NAME 1 2 3 4 5 6 (PRODUCT LEVEL)	SEE PAGE
	1	1	**1W-2715**	24	LOCK-RETAINER	
	2	1	**2A-4429**	24	LOCK-RETAINER	
	3	1	**260-4856**	12	GUIDE-VALVE	
	4	1	**163-2478**	12	SEAL-VALVE STEM	
	5	1	*183-3407*	6	PLUG AS	
					(EACH INCLUDES)	
		1	**9S-8004**	1	PLUG	
		1	**153-4906**	1	SEAL-O-RING	
	6	1	**271-7442**	2	PLUG (HEX HEAD)	
	7	1	**183-2317**	2	SEAL-O-RING	
	8	1	**190-6115**	12	SPRING-VALVE (INNER)	
	9	1	**190-6117**	12	SPRING-VALVE (OUTER)	
	10	1	**211-2134**	12	RETAINER (VALVE SPRING)	
	11	1	**217-0609**	6	SEAT-VALVE SPRING	
	12	1	**241-8382**	12	VALVE-INLET	
	13	1	**241-8383**	12	VALVE-EXHAUST	
	14	1	**241-8384**	12	RETAINER (VALVE SPRING)	
	15	1	**241-8385**	12	SPRING-VALVE (OUTER)	
	16	1	**241-8386**	12	SPRING-VALVE (INNER)	
	17	1	**241-8387**	6	SEAT	
	18	1	**241-8389**	12	GUIDE-VALVE	
	19	1	**241-8390**	12	SEAL-VALVE STEM	
Y	20	1	*252-8438*	1	CYLINDER HEAD AS	28
	21	1	*148-8395*	2	PLUG AS	
					(EACH INCLUDES)	
		1	**3K-0360**	1	SEAL-O-RING	
		1	**9S-8005**	1	PLUG-O RING (HEX HEAD)	
	22	1	**8T-6764**	2	PLUG-PIPE	

Y-SEPARATE ILLUSTRATION

252-8439 **CYLINDER HEAD GP** *(contd.)* **i02433924**

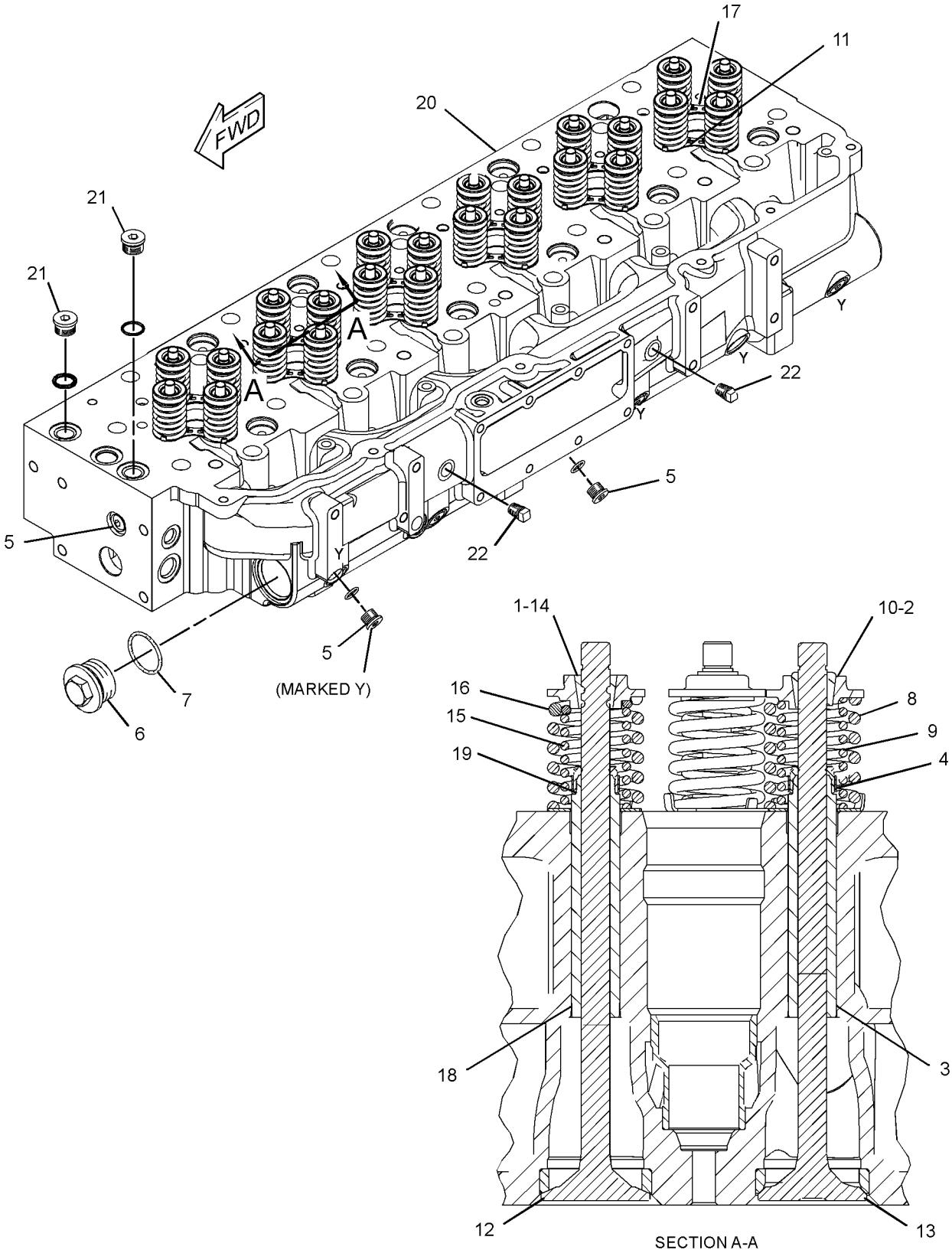

GRAPHIC #1 **<END>** g01191136

211-8041 DAMPER GP

S/N: THX1-UP
13 INCH
PART OF 261-4290, 261-4291, 261-4293, 261-4294, 261-4295, 261-4297 ENGINE AR
FOR USE WITH CRANK PULLEY GP
ALSO AN ATTACHMENT

SMCS-1205 **i01830638**

NOTE	REF NO	GRAPHIC REF	PART NUMBER	QTY	PART NAME 1 2 3 4 5 6 (PRODUCT LEVEL)	SEE PAGE
	1	1	**208-9619**	1	DAMPER AS	

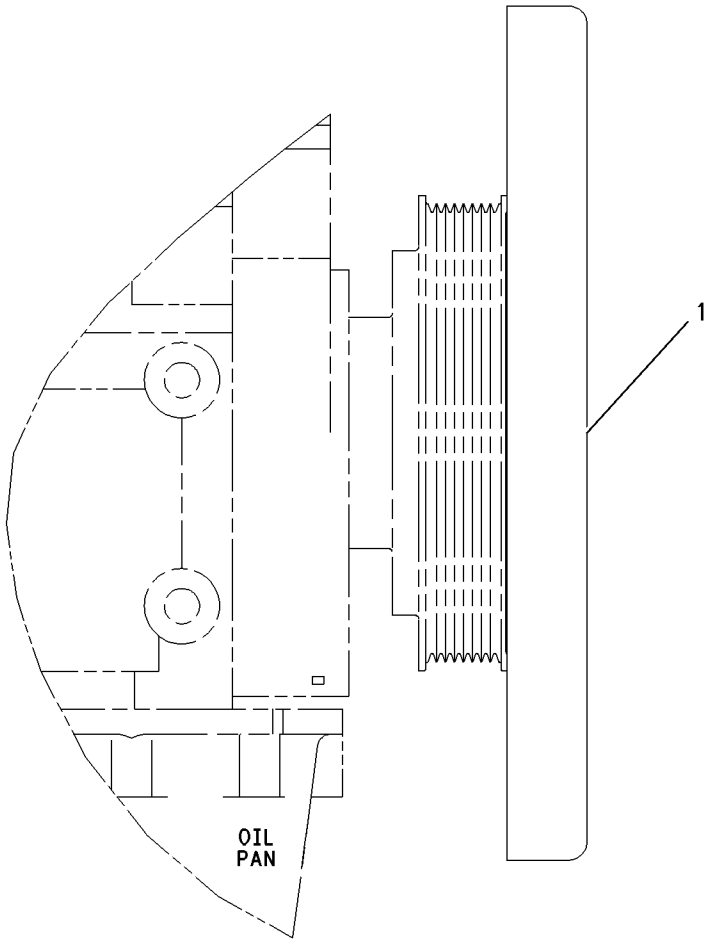

RIGHT SIDE VIEW

GRAPHIC #1 **<END>** g00919128

4P-2102 DRAIN GP-ENGINE OIL

S/N: THX1-UP

PART OF 261-4290, 261-4291, 261-4293, 261-4294, 261-4295, 261-4297 ENGINE AR

ALSO AN ATTACHMENT

SMCS-1302 **i01232254**

NOTE	REF NO	GRAPHIC REF	PART NUMBER	QTY	PART NAME 1 2 3 4 5 6 (PRODUCT LEVEL)	SEE PAGE
	1	1	**8N-6854**	1	GASKET-ADAPTER	
	2	1	**113-5336**	1	ADAPTER AS-DRAIN	
	2A	1	**5N-8780**	1	PLUG-DRAIN	
		1	**8N-6849**	1	ADAPTER-PLUG	
	3	1	**5P-4116**	2	WASHER (2MM THK)	
M	4	1	**7X-2537**	2	BOLT (M8X1.25X35MM)	

M-METRIC PART

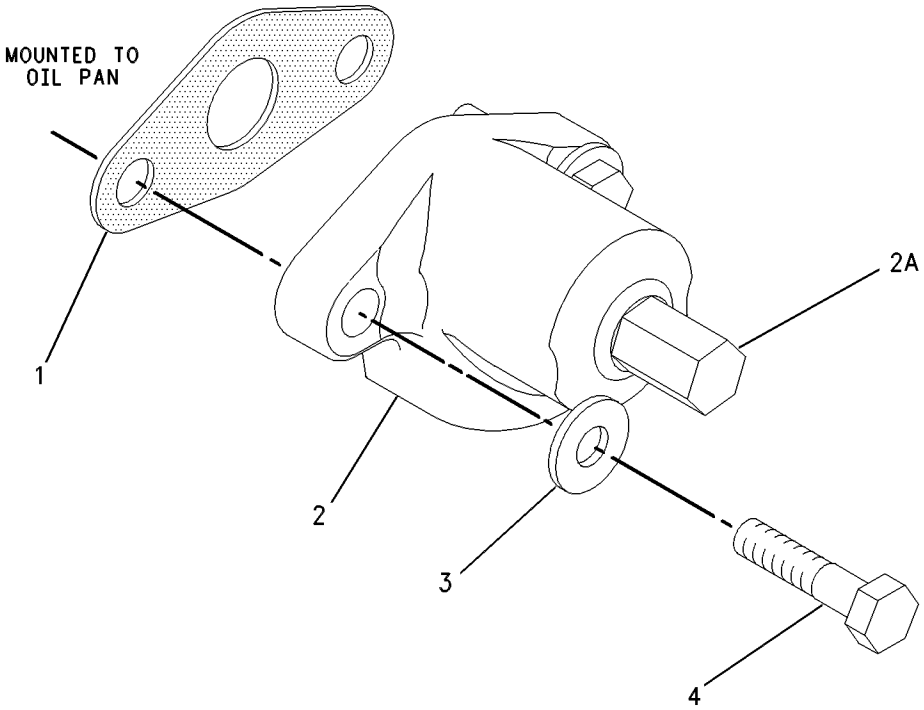

GRAPHIC #1 **<END>** g00659483

263-5028 DRIVE AR-FAN—MODULATING

S/N: GMT1-UP
AN ATTACHMENT

SMCS-1359 **i02454318**

NOTE	PART NUMBER	QTY	PART NAME 1 2 3 4 5 6 (PRODUCT LEVEL)	SEE PAGE
Y	*282-2594*	1	DRIVE GP-FAN	40
Y	*224-0821*	1	LINES GP-OIL SUPPLY (DEMAND FAN)	84

Y-SEPARATE ILLUSTRATION

<END>

263-5029 DRIVE AR-FAN—MODULATING

S/N: JDL1-UP
AN ATTACHMENT

SMCS-1359 **i02456438**

NOTE	PART NUMBER	QTY	PART NAME 1 2 3 4 5 6 (PRODUCT LEVEL)	SEE PAGE
Y	*282-2594*	1	DRIVE GP-FAN	40
Y	**261-4291**	1	ENGINE AR	5
Y	*224-0821*	1	LINES GP-OIL SUPPLY	84

Y-SEPARATE ILLUSTRATION

<END>

BASIC ENGINE

215-3250 DRIVE GP-FAN

S/N: JDL1-UP; GMT1-UP

PART OF 215-3251 DRIVE GP-FAN

SMCS-1359 **i01830300**

NOTE	REF NO	GRAPHIC REF	PART NUMBER	QTY	PART NAME 1 2 3 4 5 6 (PRODUCT LEVEL)	SEE PAGE
	1	1	**4B-4098**	1	PLUG-CUP	
	2	1	**4W-1203**	2	CUP-BEARING	
	3	1	**4W-1204**	2	CONE-BEARING	
	4	1	**7C-8634**	1	PLATE	
	5	1	**212-5839**	1	HUB	
	6	1	**212-5844**	1	SPACER (35.3X45.5X93-MM THK)	
	7	1	**215-3222**	1	BRACKET AS	
	8	1	**5S-9062**	1	SPACER (35.032X50.8X15.88-MM THK)	
M	9	1	**6V-3668**	1	BOLT (M12X1.75X30-MM)	
	10	1	**6V-9748**	1	SEAL-LIP TYPE	

M-METRIC PART

215-3250 DRIVE GP-FAN *(contd.)* **i01830300**

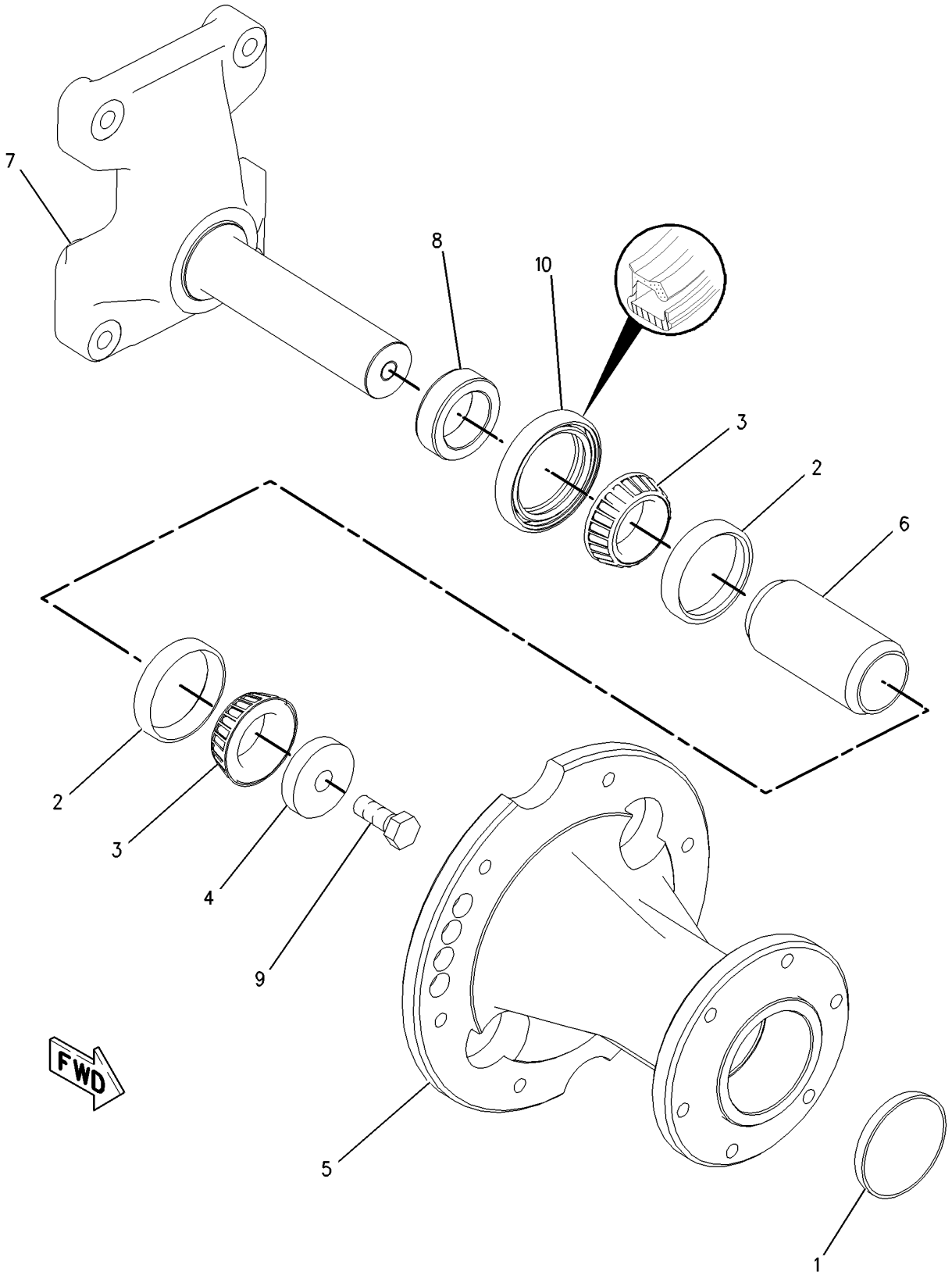

GRAPHIC #1 **<END>** g00934720

BASIC ENGINE

215-3251 DRIVE GP-FAN

S/N: JDL1-UP; GMT1-UP

PART OF 223-0551 INSTALLATION AR-ENGINE

SMCS-1359 **i01822411**

NOTE	REF NO	GRAPHIC REF	PART NUMBER	QTY	PART NAME 1 2 3 4 5 6 (PRODUCT LEVEL)	SEE PAGE
Y	1	1	**215-3250**	1	DRIVE GP-FAN	36
M	2	1	**8T-4182**	4	BOLT (M10X1.5X45MM)	

M-METRIC PART
Y-SEPARATE ILLUSTRATION

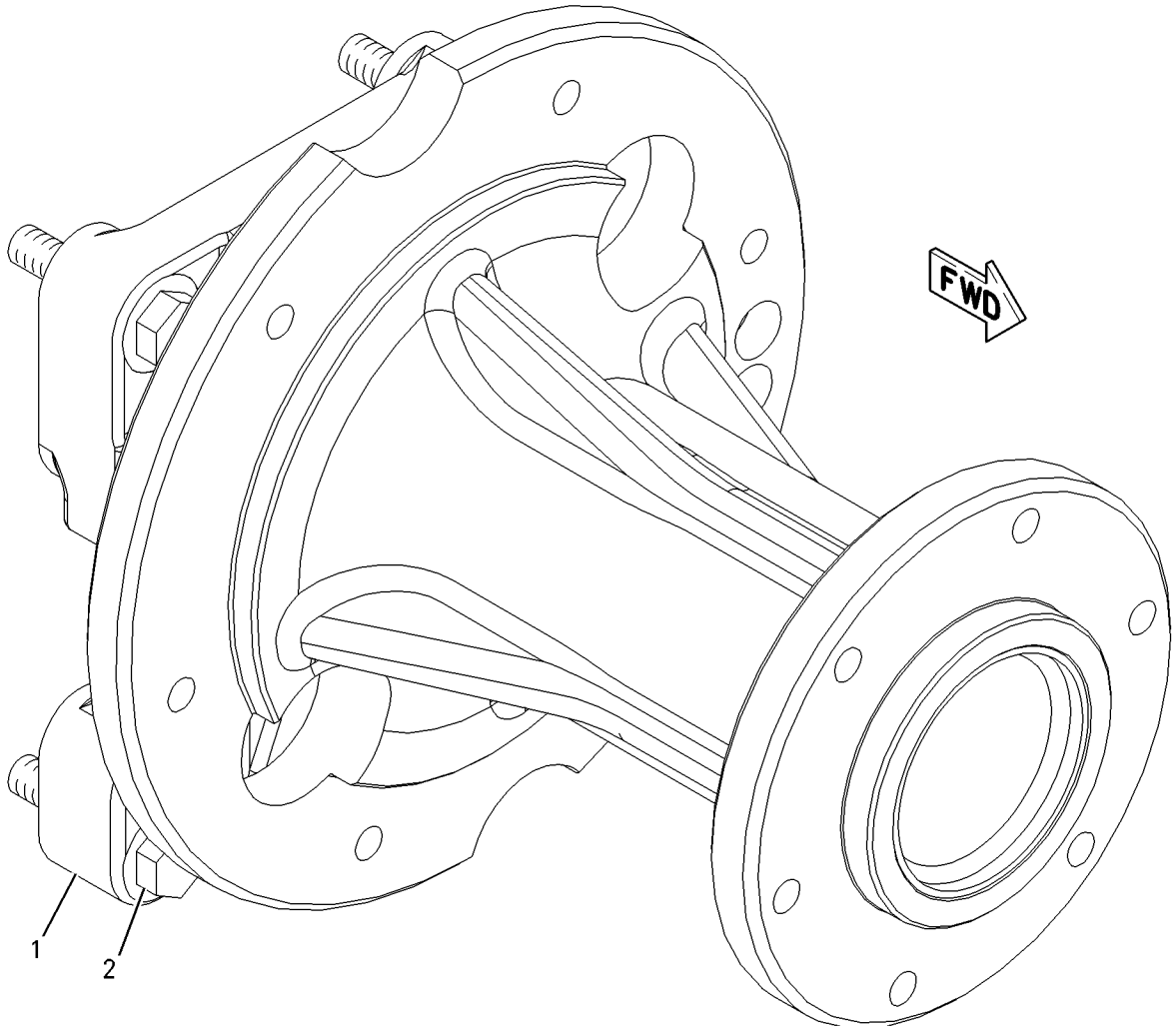

GRAPHIC #1 **<END>** g00851243

243-1872 DRIVE GP-FAN–MODULATING

S/N: JDL1-UP; GMT1-UP
PART OF 282-2594 DRIVE GP-FAN
AN ATTACHMENT

SMCS-1359 **i02454511**

NOTE	REF NO	GRAPHIC REF	PART NUMBER	QTY	PART NAME 1 2 3 4 5 6 (PRODUCT LEVEL)	SEE PAGE
Y	1	1	**119-4166**	1	SENSOR GP-SPEED (FAN DRIVE)	215
	2	1	**188-3548**	1	KIT-SEAL (FAN CLUTCH)	
					(INCLUDES WEAR SLEEVES, OIL SEALS, O-RINGS, SEAL RINGS, NAMEPLATE KIT, RETAINER, & BALANCE PLATE)	

Y-SEPARATE ILLUSTRATION

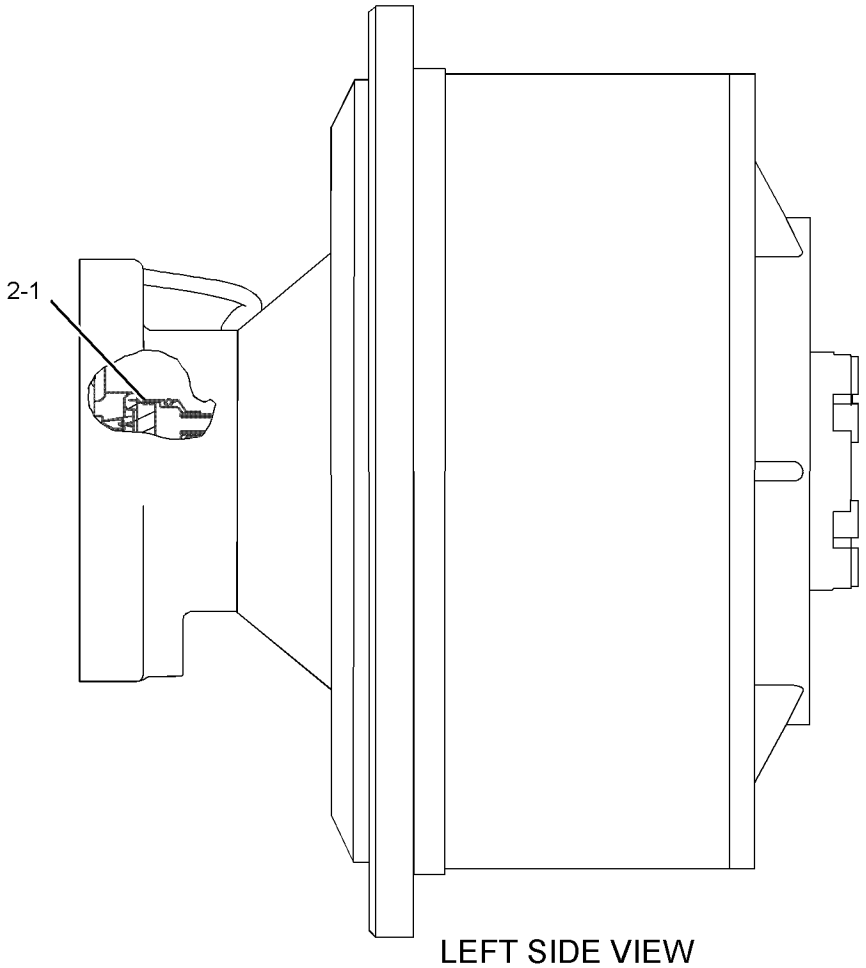

LEFT SIDE VIEW

GRAPHIC #1 **<END>** g01209552

BASIC ENGINE

282-2594 DRIVE GP-FAN

S/N: JDL1-UP; GMT1-UP
PART OF 263-5028, 263-5029 DRIVE AR-FAN
AN ATTACHMENT

SMCS-1359 **i02454484**

NOTE	REF NO	GRAPHIC REF	PART NUMBER	QTY	PART NAME 1 2 3 4 5 6 (PRODUCT LEVEL)	SEE PAGE
	1	1	**1N-4556**	1	V-BELT (COMPRESSOR)	
	2	1	**6L-1987**	1	V-BELT SET (INCLUDES 2-BELTS) (FAN DRIVE)	
	3	1	**185-0843**	1	ADAPTER	
	4	1	**215-3291**	1	PULLEY	
Y	5	1	**243-1872**	1	DRIVE GP-FAN	39
	6	1	**243-5007**	1	PULLEY-FAN	
	7	1	**243-5008**	1	PULLEY	
	8	1	**0S-1588**	6	BOLT (3/8-16X1.25-IN)	
	9	1	**0S-1595**	6	BOLT (1/2-13X1.25-IN)	
	10	1	**4P-7581**	1	CLIP (LADDER)	
	11	1	**5P-8245**	4	WASHER-HARD (13.5X25.5X3-MM THK)	
M	12	1	**6V-7673**	4	BOLT (M12X1.75X50-MM)	
	13	1	**7K-1181**	1	STRAP-CABLE	

M-METRIC PART
Y-SEPARATE ILLUSTRATION

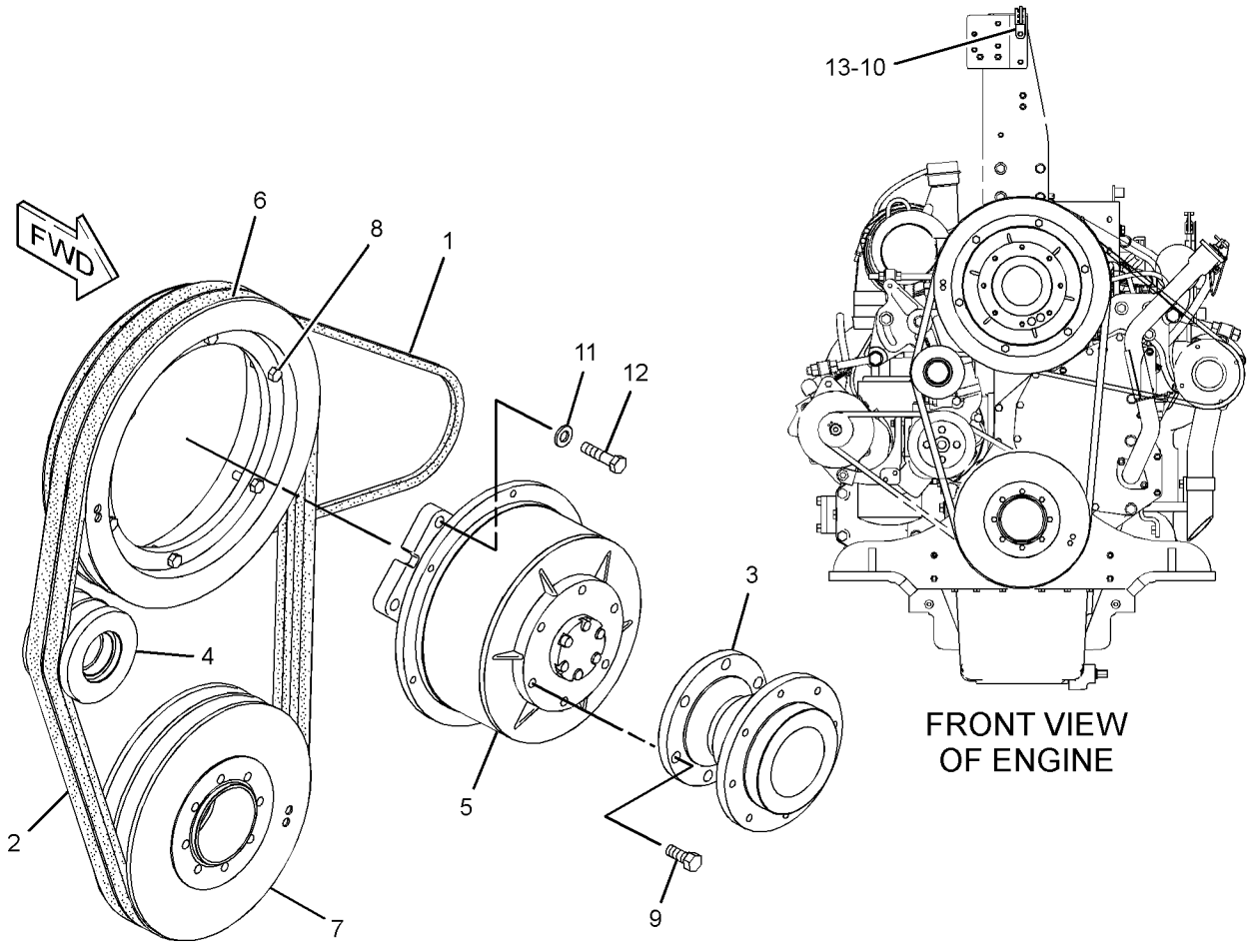

GRAPHIC #1 **<END>** g01227475

246-0599 DRIVE GP-PUMP—WATER

S/N: THX1-UP

PART OF 261-4290, 261-4291, 261-4293, 261-4294, 261-4295, 261-4297 ENGINE AR

ALSO AN ATTACHMENT

SMCS-1207, 3108 **i02431510**

NOTE	REF NO	GRAPHIC REF	PART NUMBER	QTY	PART NAME 1 2 3 4 5 6 (PRODUCT LEVEL)	SEE PAGE
	1	1	**236-8240**	1	PULLEY	
M	2	1	**6V-2317**	4	BOLT (M8X1.25X30-MM)	
	3	1	**9M-1974**	4	WASHER-HARD (8.8X16X2-MM THK)	

M-METRIC PART

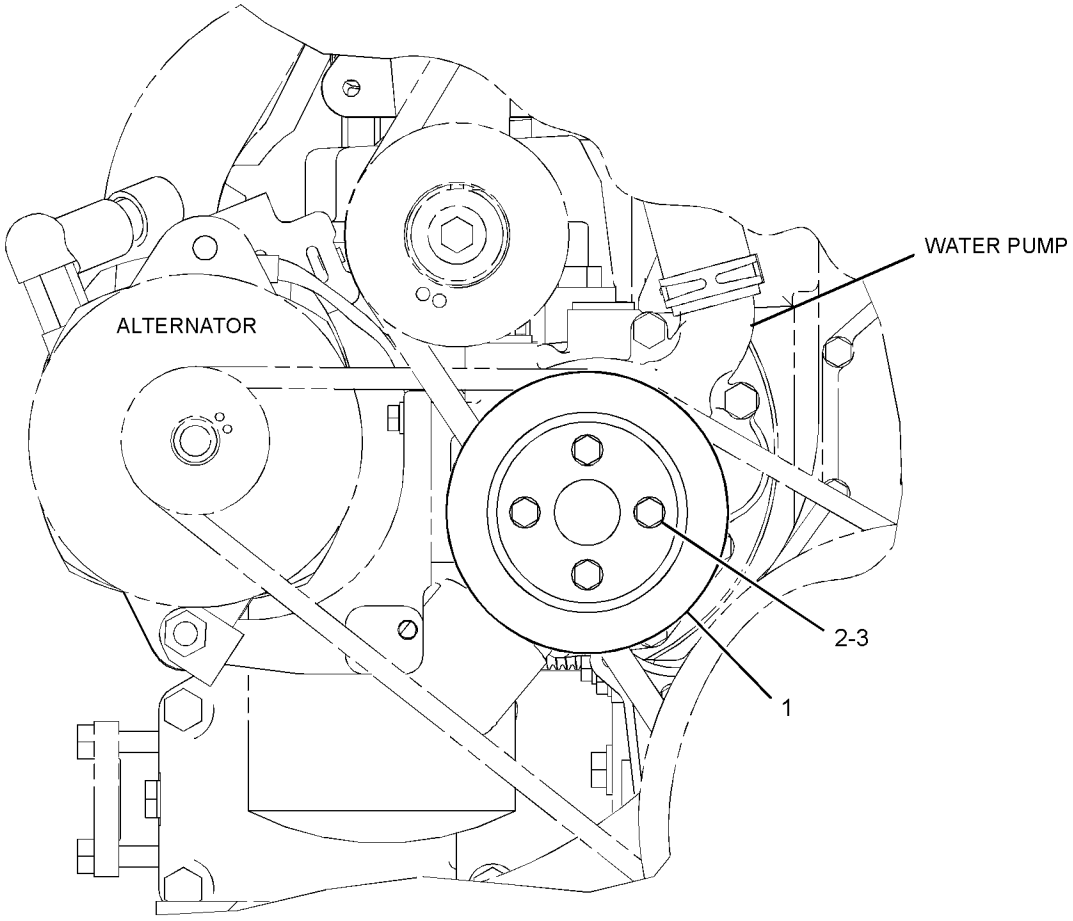

FRONT VIEW

GRAPHIC #1 **<END>** g01205602

167-0171 FASTENER GP-CYLINDER HEAD

S/N: THX1-UP
PART OF 213-4363 FASTENER GP-CYLINDER HEAD
ALSO AN ATTACHMENT

SMCS-1100 **i01682539**

NOTE	REF NO	GRAPHIC REF	PART NUMBER	QTY	PART NAME 1 2 3 4 5 6 (PRODUCT LEVEL)	SEE PAGE
M	1	1	**183-5163**	1	BOLT	
	2	1	**9X-8268**	1	WASHER (17.5X30X3.5MM THK)	

M-METRIC PART

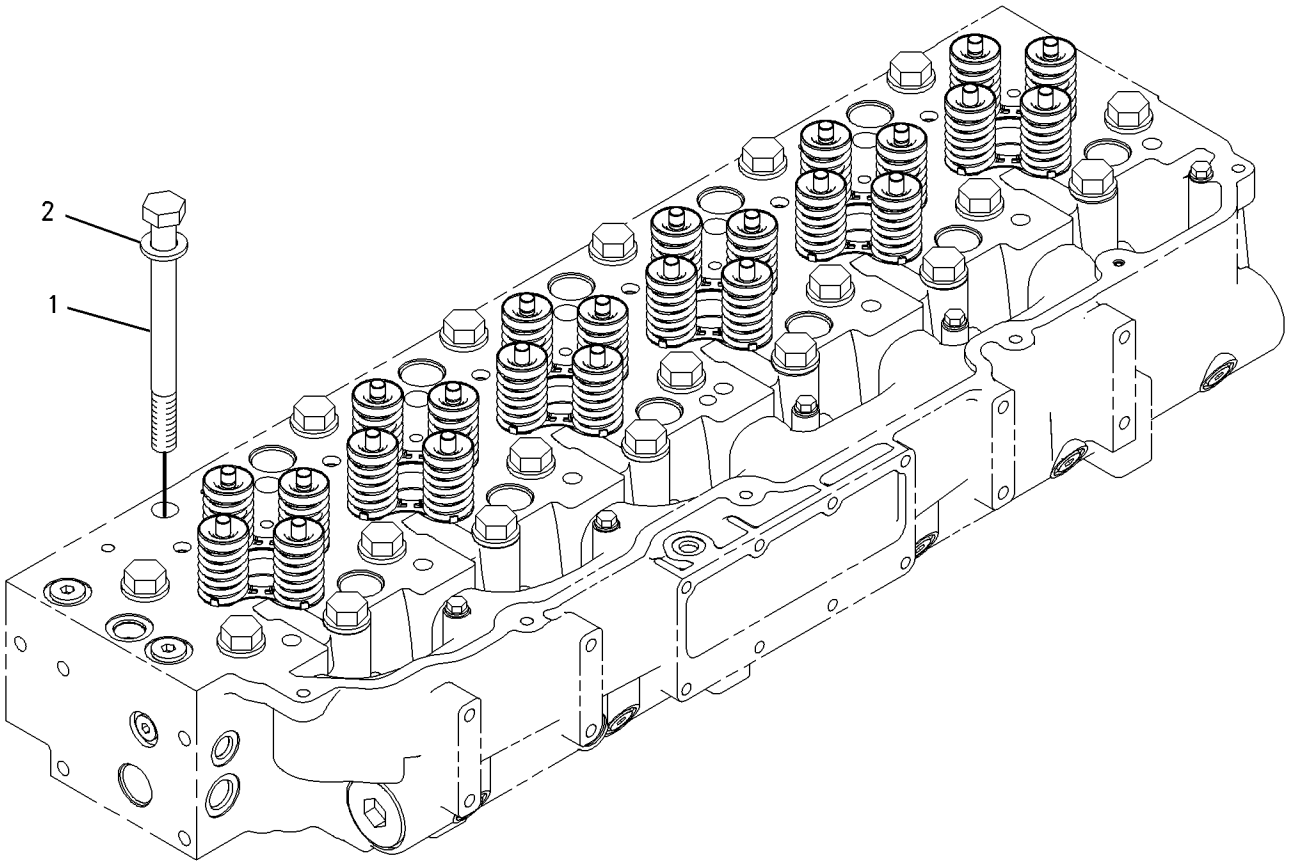

GRAPHIC #1 **<END>** g00792849

213-4363 FASTENER GP-CYLINDER HEAD

S/N: THX1-UP
PART OF 261-4530, 261-4531, 261-4533, 261-4534, 261-4535, 261-4537 ENGINE
AR-CORE
ALSO AN ATTACHMENT

SMCS-1100 **i02433678**

NOTE	REF NO	GRAPHIC REF	PART NUMBER	QTY	PART NAME 1 2 3 4 5 6 (PRODUCT LEVEL)	SEE PAGE
Y	1	1	*167-0171*	26	FASTENER GP-CYLINDER HEAD	42
M	2	1	**8C-4984**	5	BOLT (M8X1.25X150-MM)	
	3	1	**9M-1974**	5	WASHER-HARD (8.8X16X2-MM THK)	

M-METRIC PART
Y-SEPARATE ILLUSTRATION

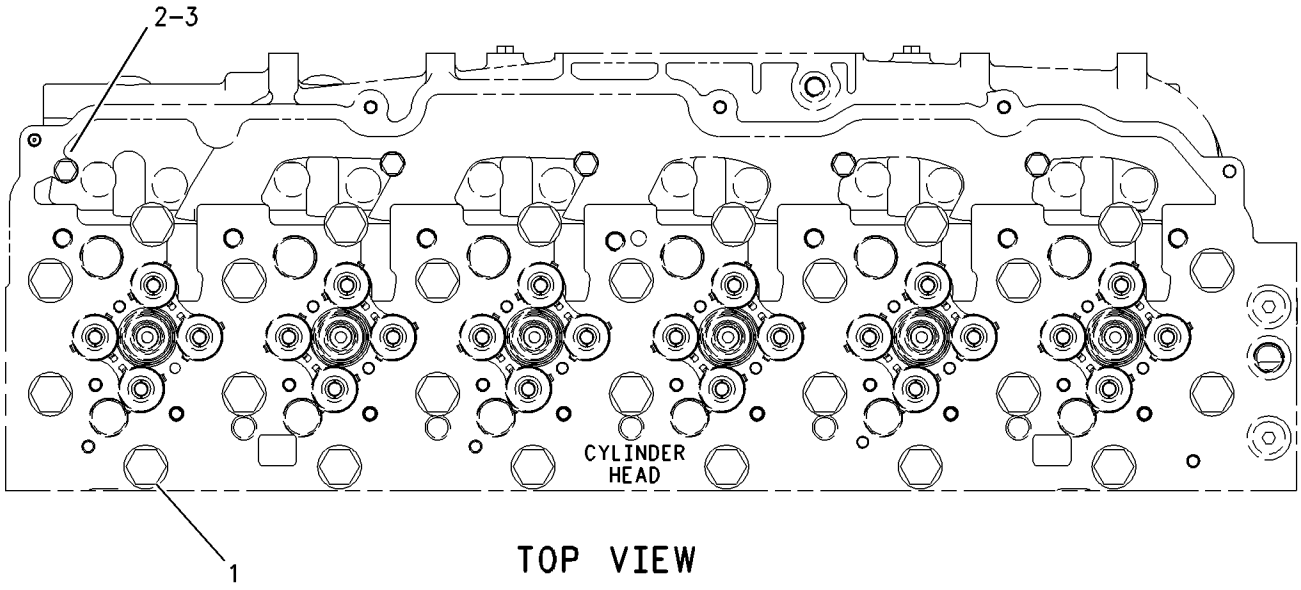

TOP VIEW

GRAPHIC #1 **<END>** g00919169

222-2409 FASTENER GP-DAMPER & PULLEY

S/N: THX1-UP

PART OF 261-4290, 261-4291, 261-4293, 261-4294, 261-4295, 261-4297 ENGINE AR

ALSO AN ATTACHMENT

SMCS-1205, 7553 **i02159846**

NOTE	REF NO	GRAPHIC REF	PART NUMBER	QTY	PART NAME 1 2 3 4 5 6 (PRODUCT LEVEL)	SEE PAGE
C	1	1	**228-3621**	1	SPACER	

C-CHANGE FROM PREVIOUS TYPE

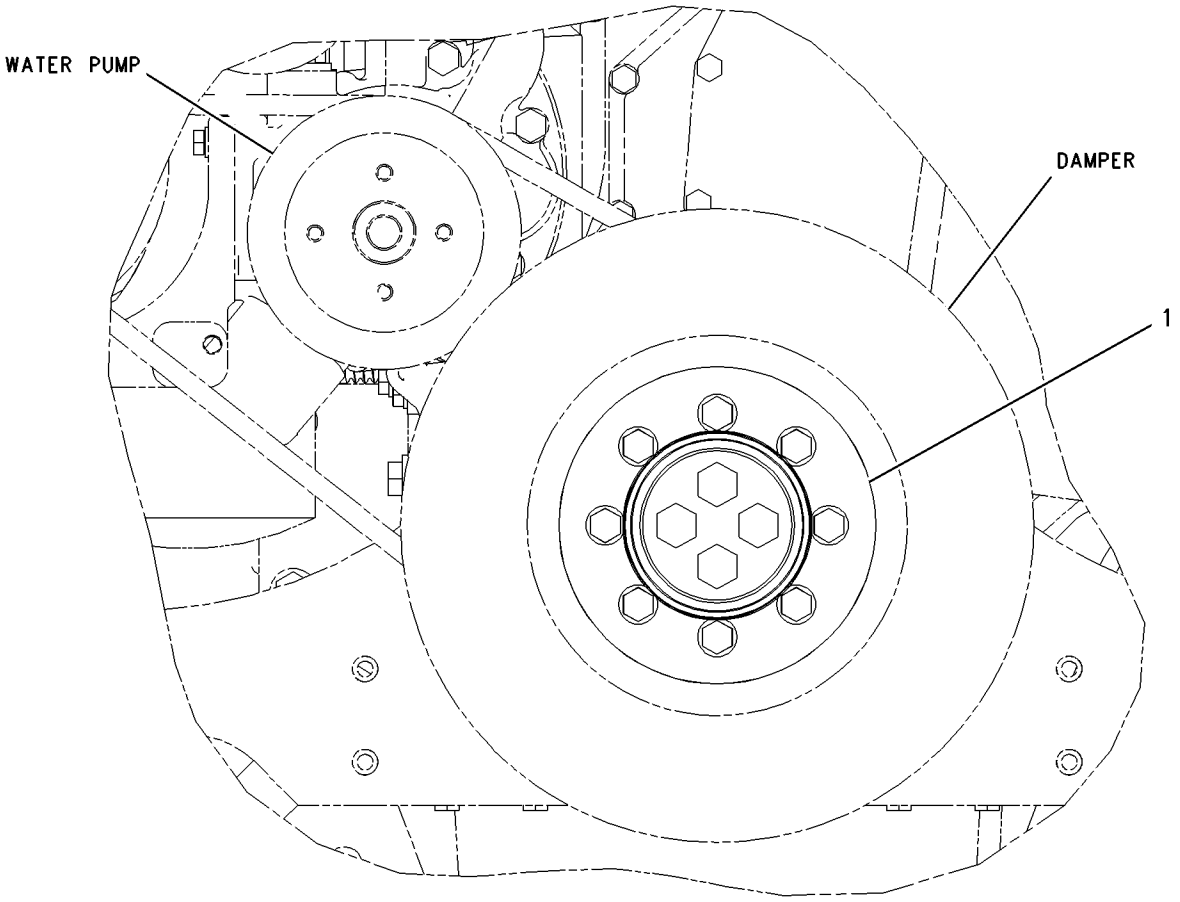

FRONT VIEW

GRAPHIC #1 **<END>** g00923791

219-8681 FASTENER GP-FRONT HOUSING

S/N: THX1-UP

PART OF 261-4290, 261-4291, 261-4293, 261-4294, 261-4295, 261-4297 ENGINE AR

ALSO AN ATTACHMENT

SMCS-1151, 1162 **i02431537**

NOTE	REF NO	GRAPHIC REF	PART NUMBER	QTY	PART NAME 1 2 3 4 5 6 (PRODUCT LEVEL)	SEE PAGE
M	1	1	**9X-2099**	6	STUD (M8X1.25-THD)	
M	2	1	**6V-2317**	6	BOLT (M8X1.25X30-MM)	
M	3	1	**8T-0100**	2	BOLT (M8X1.25X60-MM)	

M-METRIC PART

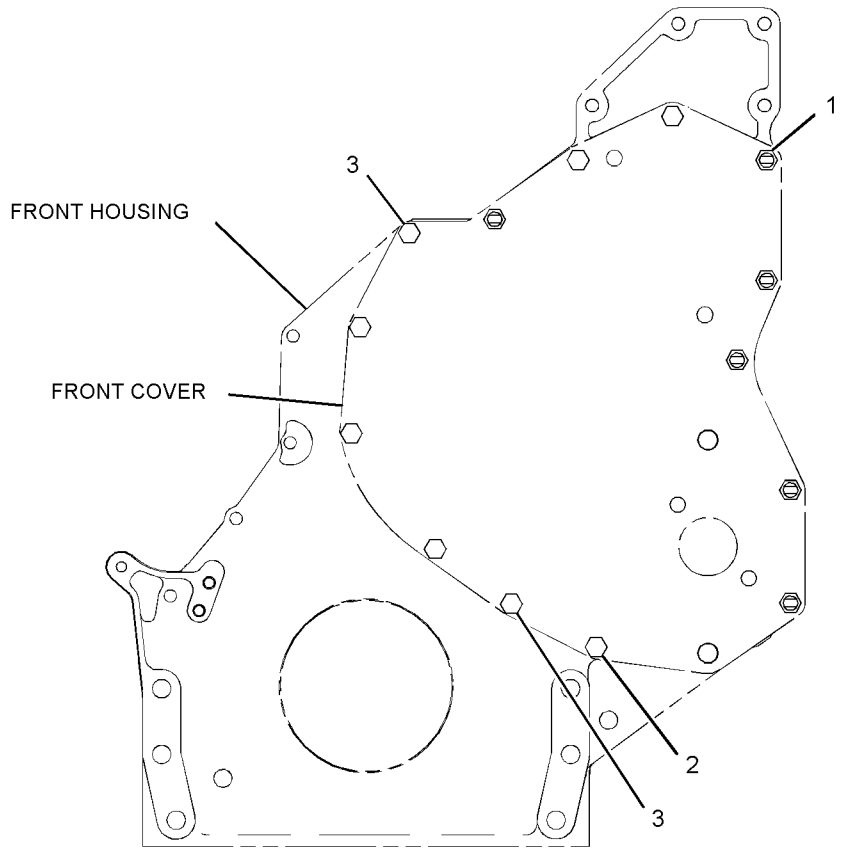

FRONT VIEW

GRAPHIC #1 **<END>** g01146786

236-7315 FASTENER GP-VALVE COVER

S/N: THX1-UP

PART OF 261-4290, 261-4291, 261-4293, 261-4294, 261-4295, 261-4297 ENGINE AR

ALSO AN ATTACHMENT

SMCS-1107 **i02431566**

NOTE	REF NO	GRAPHIC REF	PART NUMBER	QTY	PART NAME 1 2 3 4 5 6 (PRODUCT LEVEL)	SEE PAGE
M	1	1	**099-3649**	11	BOLT (M8X1.25X40-MM)	
	2	1	**8T-4224**	11	WASHER-HARD (8.8X16X2-MM THK)	

M-METRIC PART

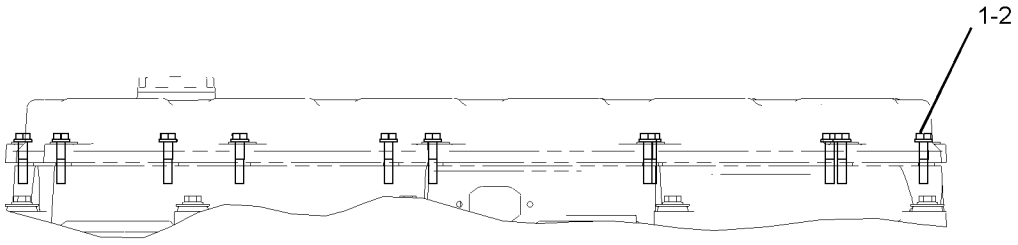

GRAPHIC #1 **<END>** g01013698

258-8728 FASTENER GP-VALVE COVER

S/N: THX1-UP

PART OF 261-4290, 261-4291, 261-4293, 261-4294, 261-4295, 261-4297 ENGINE AR

ALSO AN ATTACHMENT

SMCS-1107 **i02431531**

NOTE	REF NO	GRAPHIC REF	PART NUMBER	QTY	PART NAME 1 2 3 4 5 6 (PRODUCT LEVEL)	SEE PAGE
	1	1	**244-4500**	9	SPRING	
M	2	1	**8T-0100**	9	BOLT (M8X1.25X60-MM)	
	3	1	**9N-0869**	9	WASHER-HARD (8.8X25.5X2-MM THK)	

M-METRIC PART

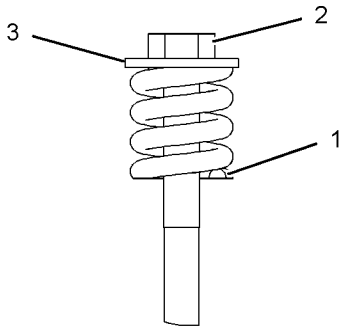

VIEW OF AREA A

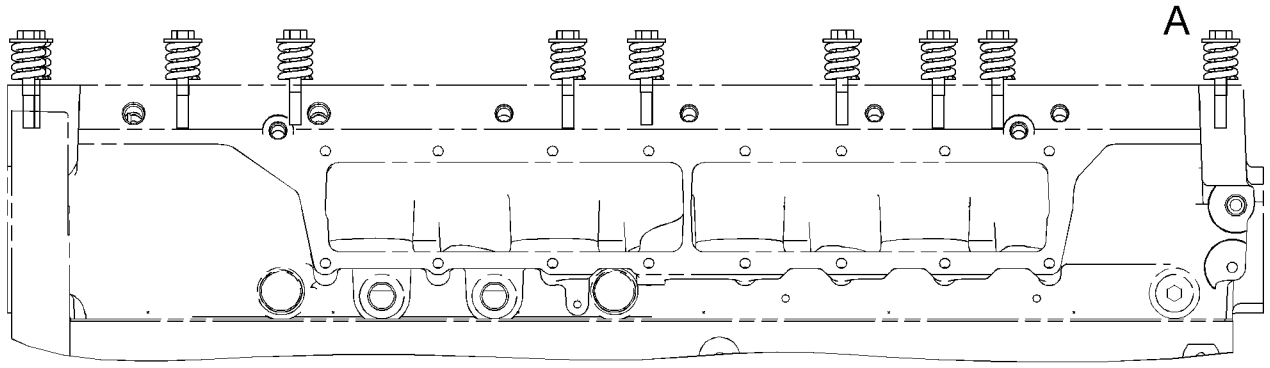

RIGHT SIDE VIEW

GRAPHIC #1 **<END>** g01146125

241-3718 FLYWHEEL GP

S/N: THX1-UP

PART OF 261-4290, 261-4291, 261-4293, 261-4294, 261-4295, 261-4297 ENGINE AR

ALSO AN ATTACHMENT

SMCS-1156 **i02431564**

NOTE	REF NO	GRAPHIC REF	PART NUMBER	QTY	PART NAME 1 2 3 4 5 6 (PRODUCT LEVEL)	SEE PAGE
M	1	1	**9X-2053**	8	BOLT	
	2	1	**237-0229**	1	FLYWHEEL AS	
		1	**4N-2514**	1	GEAR (113-TEETH)	
	3	1	**9X-8268**	8	WASHER (17.5X30X3.5-MM THK)	

M-METRIC PART

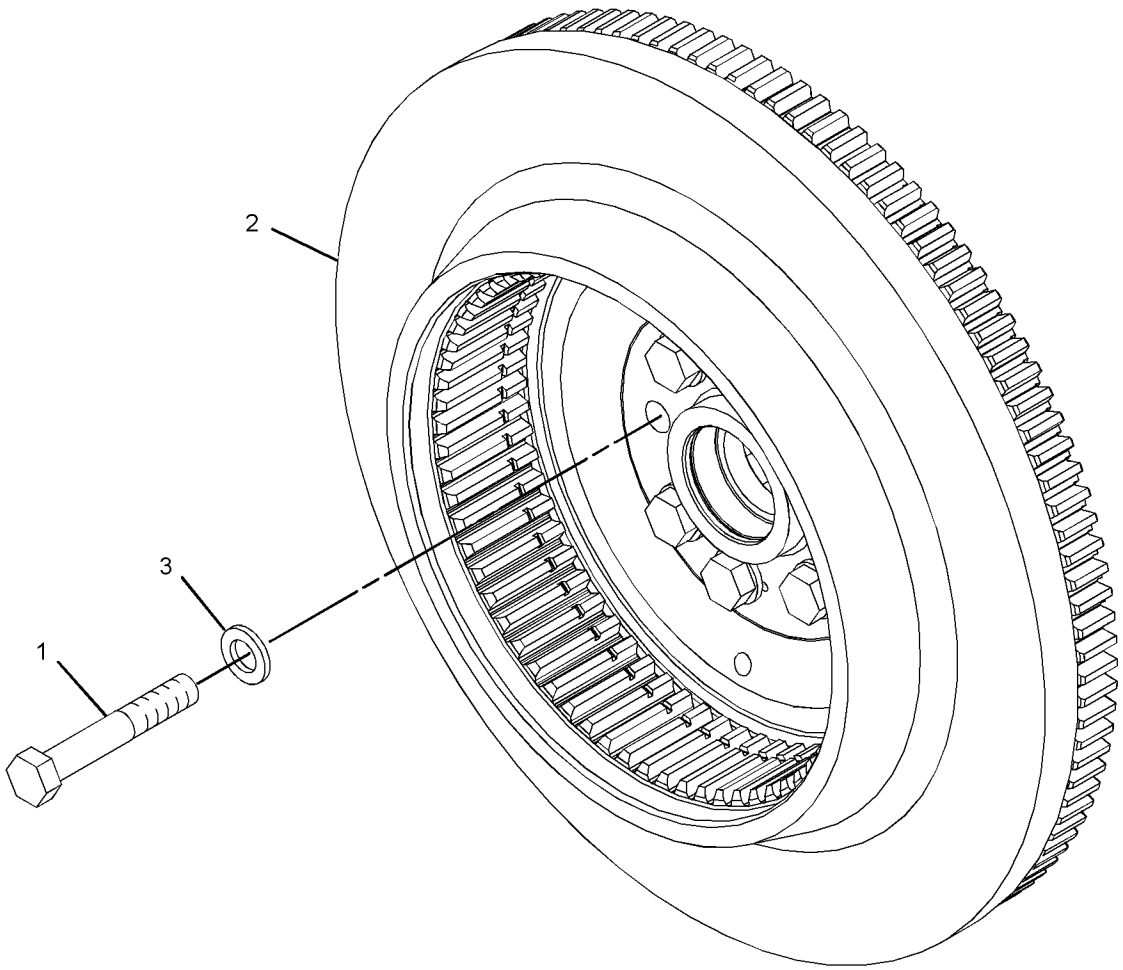

GRAPHIC #1 **<END>** g01205624

205-1321 GEAR GP-FRONT

S/N: THX1-UP
PART OF 261-4530, 261-4531, 261-4533, 261-4534, 261-4535, 261-4537 ENGINE
AR-CORE
ALSO AN ATTACHMENT

SMCS-1206 **i01696307**

NOTE	REF NO	GRAPHIC REF	PART NUMBER	QTY	PART NAME 1 2 3 4 5 6 (PRODUCT LEVEL)	SEE PAGE
	1	1	**113-6069**	1	PLATE-THRUST	
	2	1	**115-4219**	1	PLATE-RETAINING	
	3	1	**200-4495**	1	SHAFT-IDLER	
	4	1	**205-1320**	1	GEAR AS-IDLER (50 TEETH)	
	4A	1	**115-4072**	1	BEARING	
M	5	1	**136-4183**	1	BOLT-12 POINT HEAD (M10X1.5X30MM)	
M	6	1	**6V-5843**	2	BOLT (M10X1.50X45MM)	

M-METRIC PART

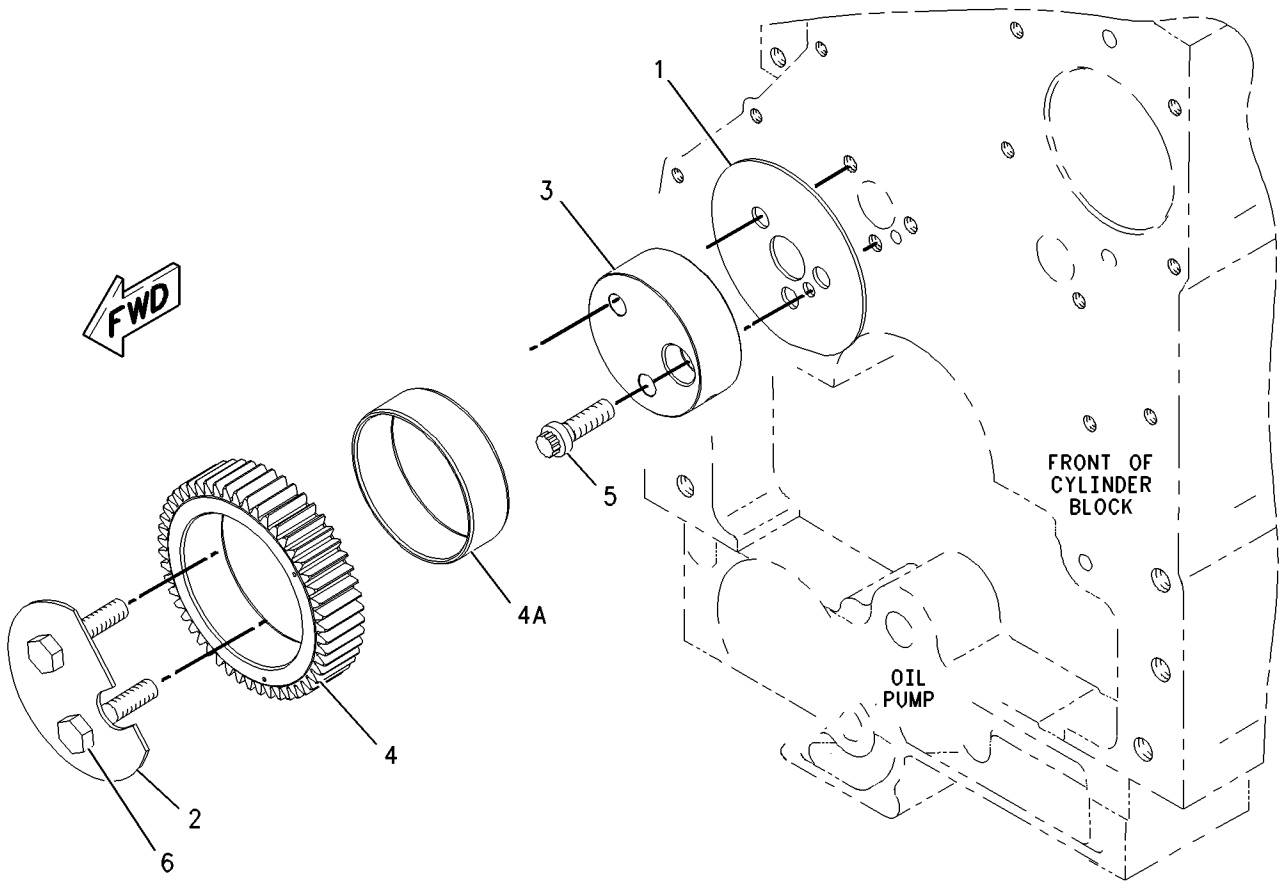

GRAPHIC #1 **<END>** g00873940

BASIC ENGINE

175-6260 GEAR GP-REAR

S/N: THX1-UP

PART OF 261-4290, 261-4291, 261-4293, 261-4294, 261-4295, 261-4297 ENGINE AR

ALSO AN ATTACHMENT

SMCS-1204 **i01830860**

NOTE	REF NO	GRAPHIC REF	PART NUMBER	QTY	PART NAME 1 2 3 4 5 6 (PRODUCT LEVEL)	SEE PAGE
	1	1	**187-8194**	1	GEAR AS-DRIVE (64 TEETH)	
		1	**4F-6024**	1	PIN	
	2	1	**1W-4741**	2	GEAR AS-IDLER (70 TEETH)	
					(EACH INCLUDES)	
		1	**1W-4738**	1	BEARING-SLEEVE	
	3	1	**1W-4746**	2	RETAINER-GEAR	
	4	1	**187-8195**	1	GEAR AS-DRIVE (64 TEETH)	
	4A	1	**4F-6024**	1	PIN	
	5	1	**154-3358**	1	GEAR-ADAPTER (68 TEETH)	
	6	1	**187-8222**	2	ADAPTER AS-PUMP	
					(EACH INCLUDES)	
		1	**160-8184**	1	BEARING-SLEEVE	
	7	1	**4N-1230**	2	SEAL-O-RING	
M	8	1	**6V-1820**	12	BOLT (M10X1.50X30MM)	
	9	1	**6V-5839**	12	WASHER (11X21X2.5MM THK)	
M	10	1	**6V-7673**	6	BOLT (M12X1.75X50MM)	

M-METRIC PART

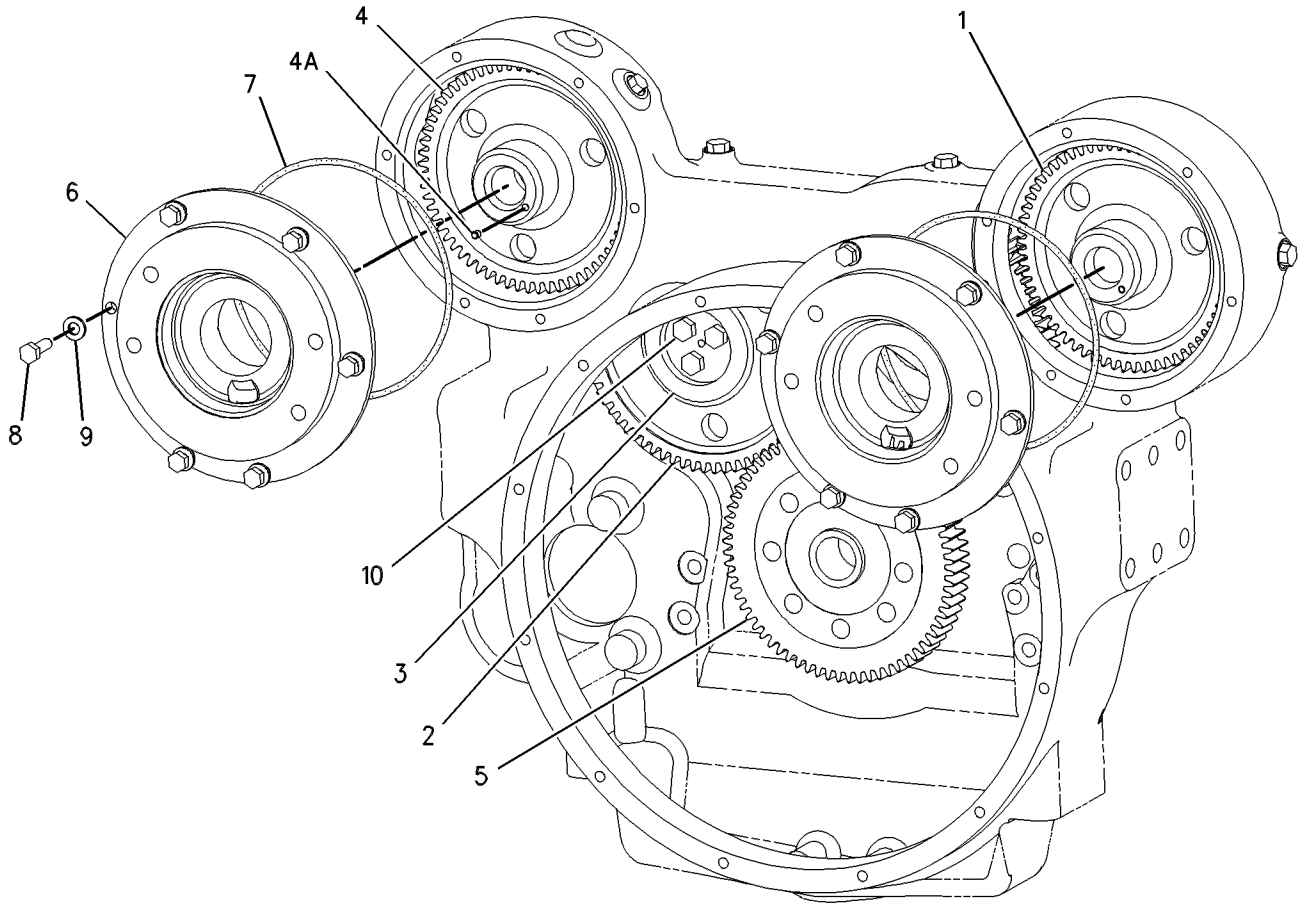

GRAPHIC #1 **<END>** g00639229

221-5461 HOUSING AS-FLYWHEEL

S/N: THX1-UP
PART OF 219-8666 HOUSING GP-FLYWHEEL
ALSO AN ATTACHMENT

SMCS-1157 **i02431610**

NOTE	REF NO	GRAPHIC REF	PART NUMBER	QTY	PART NAME 1 2 3 4 5 6 (PRODUCT LEVEL)	SEE PAGE
	1	1	**2A-1162**	1	GASKET	
	2	1	**5F-0304**	1	PLUG	
	3	1	**229-9281**	1	HOUSING-FLYWHEEL	
	4	1	*148-8395*	2	PLUG AS	
					(EACH INCLUDES)	
	4A	1	**3K-0360**	1	SEAL-O-RING	
		1	**9S-8005**	1	PLUG-O RING	
	5	1	*148-8405*	1	PLUG AS	
	5A	1	**1J-9671**	1	SEAL-O-RING	
		1	**3K-8460**	1	PLUG	
	6	1	*148-8407*	4	PLUG AS	
					(EACH INCLUDES)	
	6A	1	**3J-1907**	1	SEAL-O-RING	
		1	**9S-4191**	1	PLUG-O RING	
	7	1	*155-3624*	1	PLUG AS	
	7A	1	**3J-7354**	1	SEAL-O-RING	
		1	**9S-4182**	1	PLUG	
	8	1	**8M-9315**	2	BEARING-SLEEVE	

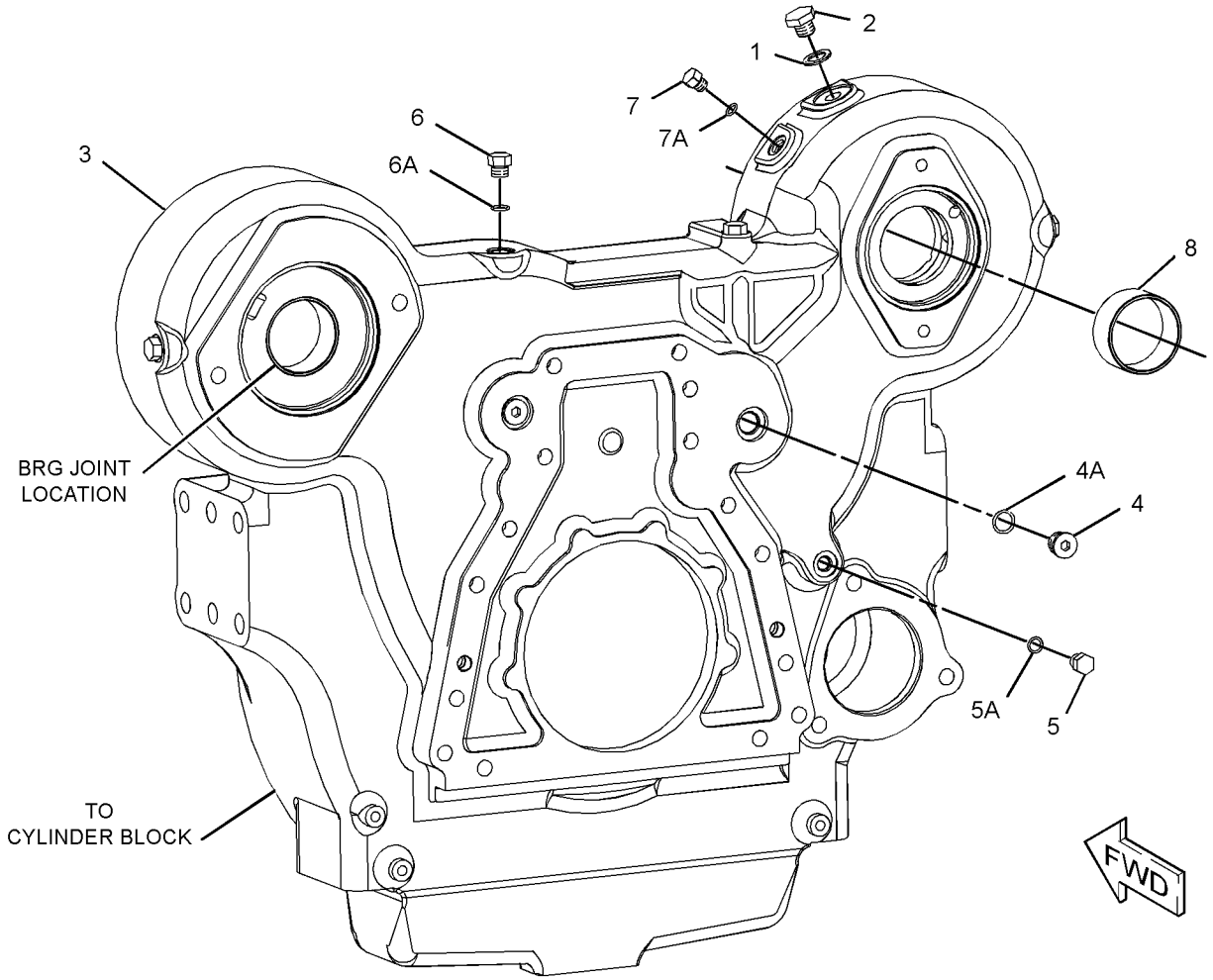

GRAPHIC #1 **<END>** g01210643

BASIC ENGINE

219-8666 HOUSING GP-FLYWHEEL

S/N: THX1-UP

PART OF 261-4290, 261-4291, 261-4293, 261-4294, 261-4295, 261-4297 ENGINE AR

ALSO AN ATTACHMENT

SMCS-1157 **i02431592**

NOTE	REF NO	GRAPHIC REF	PART NUMBER	QTY	PART NAME 1 2 3 4 5 6 (PRODUCT LEVEL)	SEE PAGE
	1	1	**9X-8268**	2	WASHER (17.5X30X3.5-MM THK)	
	2	1	**175-3721**	1	COVER	
Y	3	1	**221-5461**	1	HOUSING AS-FLYWHEEL	51
	4	1	**101-3934**	1	COVER	
	5	1	**3F-5792**	1	SEAL-O-RING	
	6	1	**4M-0189**	1	SEAL-O-RING	
	7	1	**5P-8245**	17	WASHER-HARD (13.5X25.5X3-MM THK)	
M	8	1	**6A-5591**	2	BOLT (M12X1.75X25-MM)	
M	9	1	**6V-5844**	2	BOLT (M16X2X35-MM)	
M	10	1	**6V-8197**	9	BOLT (M12X1.75X40-MM)	
M	11	1	**6V-8336**	6	BOLT (M12X1.75X70-MM)	
BF			**1U-8846**		SEALANT-GASKET (10-ML)	

B-USE AS REQUIRED
F-NOT SHOWN
M-METRIC PART
Y-SEPARATE ILLUSTRATION

219-8666 **HOUSING GP-FLYWHEEL** *(contd.)* **i02431592**

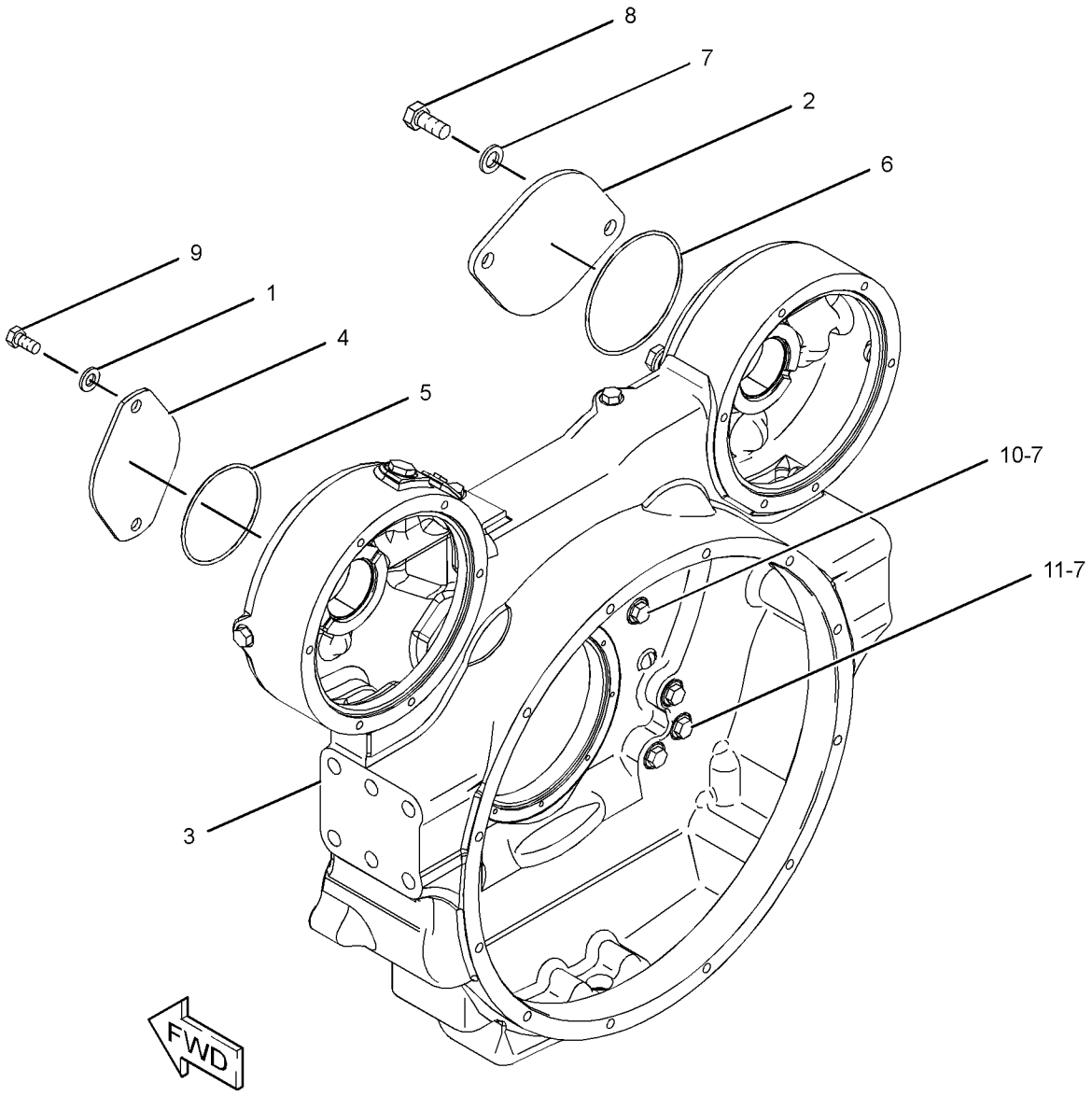

GRAPHIC #1 **<END>** g01208984

BASIC ENGINE

245-3262 HOUSING GP-FRONT

S/N: THX1-UP
PART OF 261-4530, 261-4531, 261-4533, 261-4534, 261-4535, 261-4537 ENGINE
AR-CORE
ALSO AN ATTACHMENT

SMCS-1151, 1162 **i02433945**

NOTE	REF NO	GRAPHIC REF	PART NUMBER	QTY	PART NAME 1 2 3 4 5 6 (PRODUCT LEVEL)	SEE PAGE
	1	1	**245-3261**	1	HOUSING-FRONT	
M	2	1	**6V-3918**	4	BOLT (M8X1.25X50-MM)	
M	3	1	**6V-5217**	8	BOLT (M8X1.25X20-MM)	
	4	1	**9M-1974**	12	WASHER-HARD (8.8X16X2-MM THK)	
BF			**1U-8846**		SEALANT-GASKET	

B-USE AS REQUIRED
F-NOT SHOWN
M-METRIC PART

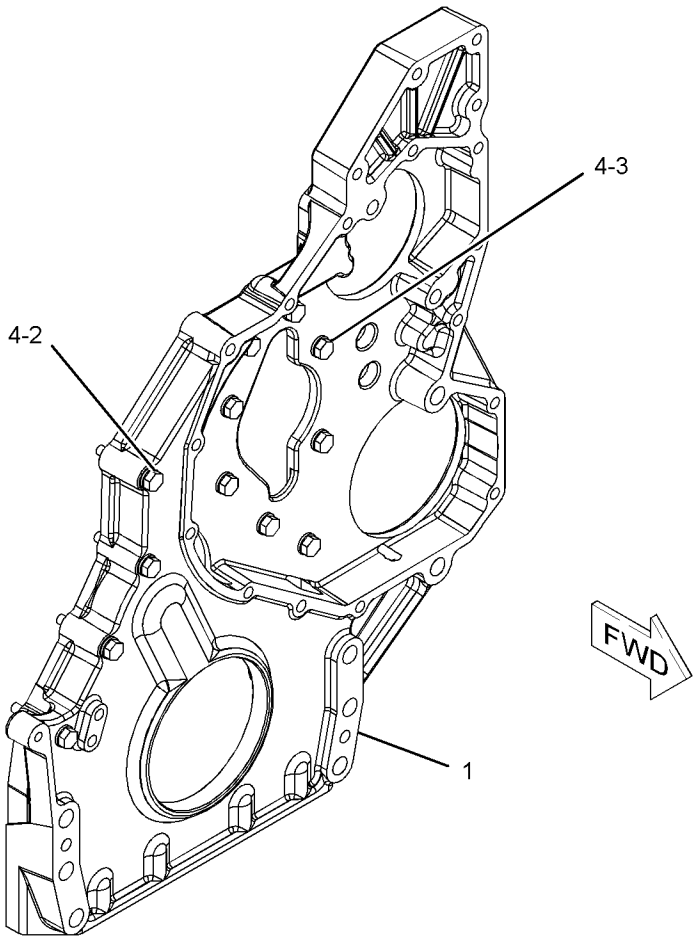

GRAPHIC #1 **<END>** g01216556

166-1784 LIFTING GP-ENGINE

S/N: THX1-UP

PART OF 261-4290, 261-4291, 261-4293, 261-4294, 261-4295, 261-4297 ENGINE AR ALSO AN ATTACHMENT

SMCS-1122 **i02126663**

NOTE	REF NO	GRAPHIC REF	PART NUMBER	QTY	PART NAME 1 2 3 4 5 6 (PRODUCT LEVEL)	SEE PAGE
C	1	1	**188-1017**	1	PLATE-LIFTING	
	2	1	**219-8675**	1	BRACKET AS	
	3	1	**3E-4353**	2	WASHER-HARD (11X25X3-MM THK)	
C	4	1	**4P-7428**	2	CLIP	
C	5	1	**5P-8245**	4	WASHER-HARD (13.5X25.5X3-MM THK)	
M	6	1	**6V-1820**	2	BOLT (M10X1.5X30-MM)	
CM	7	1	**6V-8197**	4	BOLT (M12X1.75X40-MM)	
CM	8	1	**6V-8675**	4	BOLT (M12X1.75X35-MM)	
C	9	1	**7D-1649**	4	WASHER-HARD (13.5X32X5-MM THK)	

C-CHANGE FROM PREVIOUS TYPE
M-METRIC PART

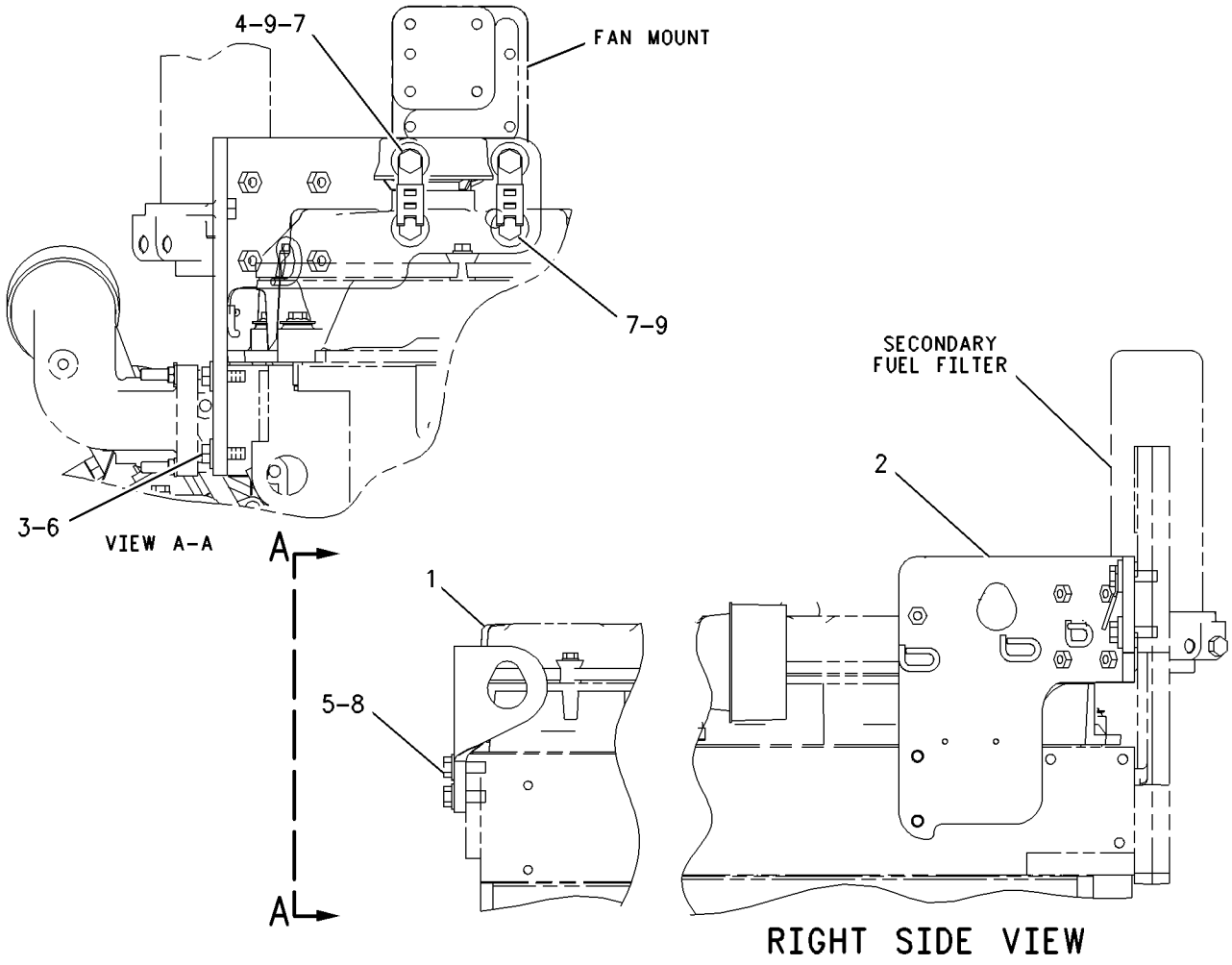

GRAPHIC #1 **<END>** g00998617

246-0600 MOUNTING GP-ALTERNATOR

S/N: THX1-UP

PART OF 261-4290, 261-4291, 261-4293, 261-4294, 261-4295, 261-4297 ENGINE AR

ALSO AN ATTACHMENT

SMCS-1405 **i02431616**

NOTE	REF NO	GRAPHIC REF	PART NUMBER	QTY	PART NAME 1 2 3 4 5 6 (PRODUCT LEVEL)	SEE PAGE
	1	1	**7W-3872**	2	SLEEVE	
	2	1	**241-8475**	1	BRACKET	
M	3	1	**6V-2317**	4	BOLT (M8X1.25X30-MM)	
	4	1	**9M-1974**	4	WASHER-HARD (8.8X16X2-MM THK)	

M-METRIC PART

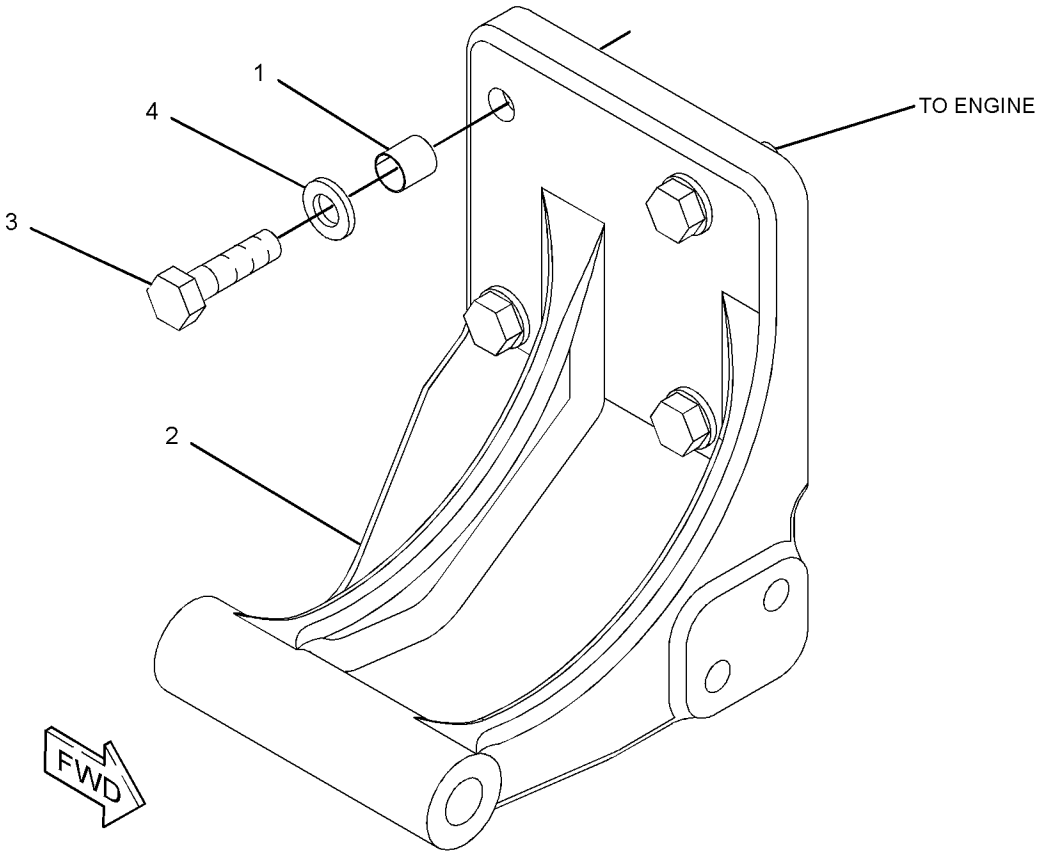

GRAPHIC #1 **<END>** g01206788

223-0556 MOUNTING GP-ENGINE

S/N: JDL1-UP; GMT1-UP

PART OF 223-0551 INSTALLATION AR-ENGINE

SMCS-1152 **i02432536**

NOTE	REF NO	GRAPHIC REF	PART NUMBER	QTY	PART NAME 1 2 3 4 5 6 (PRODUCT LEVEL)	SEE PAGE
	1	1	**7C-3567**	2	MOUNT AS	
	2	1	**183-9374**	2	BLOCK	
	3	1	**224-2695**	2	SUPPORT-ENGINE	
	4	1	**236-8191**	2	CAP-MOUNT	
	5	1	**7X-0515**	4	WASHER-HARD (17X35X5-MM THK)	
	6	1	**8T-4123**	16	WASHER-PLATED (22X35X3.5-MM THK)	
M	7	1	**8T-4170**	4	BOLT (M20X2.5X150-MM)	
M	8	1	**8T-4193**	4	BOLT (M16X2X50-MM)	
M	9	1	**8T-6430**	12	BOLT (M20X2.5X50-MM)	

M-METRIC PART

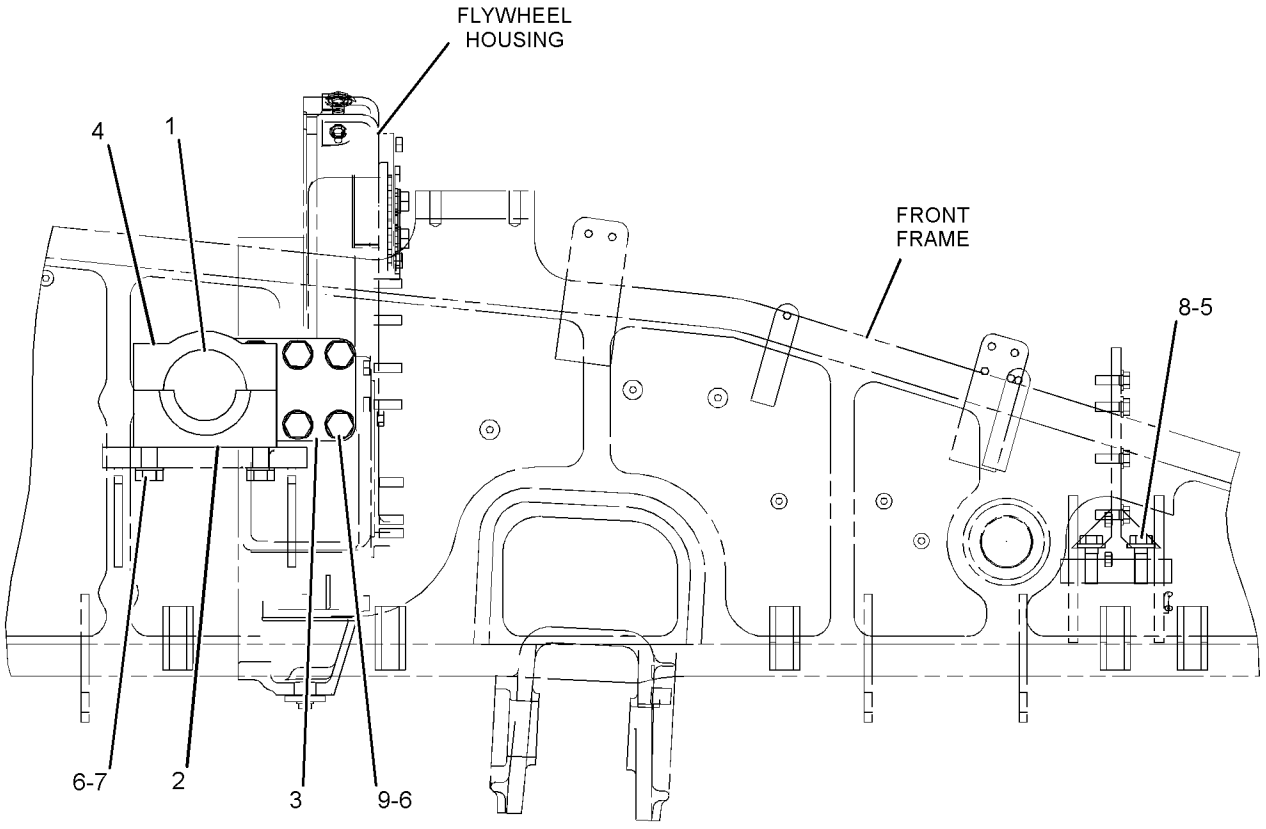

RIGHT SIDE VIEW

GRAPHIC #1 **<END>** g01209988

246-0598 MOUNTING GP-FAN DRIVE

S/N: THX1-UP

PART OF 261-4290, 261-4291, 261-4293, 261-4294, 261-4295, 261-4297 ENGINE AR

ALSO AN ATTACHMENT

SMCS-1359 **i02431621**

NOTE	REF NO	GRAPHIC REF	PART NUMBER	QTY	PART NAME 1 2 3 4 5 6 (PRODUCT LEVEL)	SEE PAGE
	1	1	**241-8474**	1	SUPPORT	
	2	1	**3E-4353**	5	WASHER-HARD (11X25X3-MM THK)	
M	3	1	**6V-5843**	5	BOLT (M10X1.5X45-MM)	

M-METRIC PART

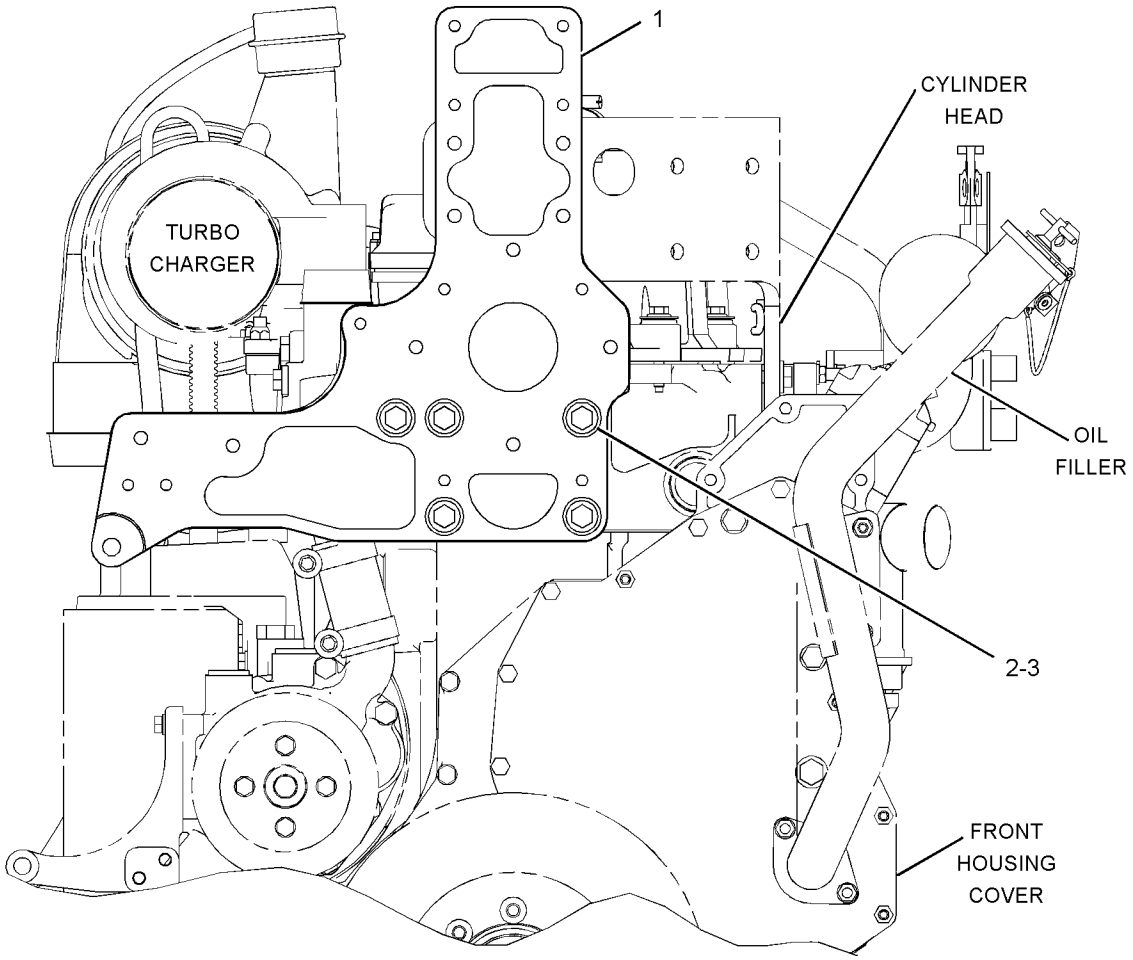

FRONT VIEW

GRAPHIC #1 **<END>** g01206764

165-4459 PAN GP-OIL

S/N: THX1-UP

PART OF 261-4290, 261-4291, 261-4293, 261-4294, 261-4295, 261-4297 ENGINE AR

ALSO AN ATTACHMENT

SMCS-1302 **i01830123**

NOTE	REF NO	GRAPHIC REF	PART NUMBER	QTY	PART NAME 1 2 3 4 5 6 (PRODUCT LEVEL)	SEE PAGE
	1	1	**1U-8846**		SEALANT-GASKET	
	2	1	**190-6114**	1	GASKET-OIL PAN	
	3	1	**174-3847**	1	PAN-OIL	
M	4	1	**6V-3918**	32	BOLT (M8X1.25X50-MM)	
	5	1	**9M-1974**	32	WASHER-HARD (8.8X16X2-MM THK)	

M-METRIC PART

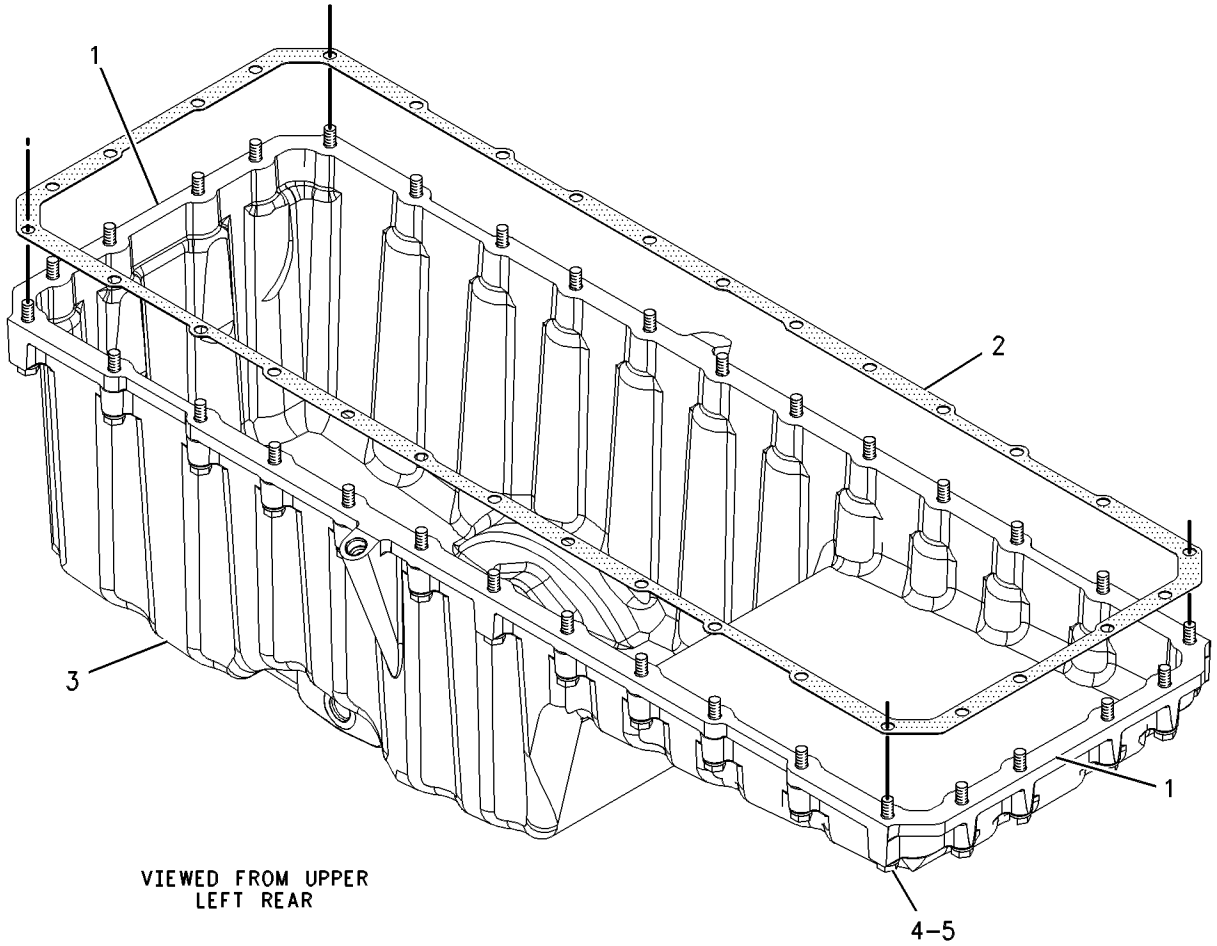

GRAPHIC #1 **<END>** g00637845

BASIC ENGINE

265-1400 PISTON & ROD GP

S/N: THX1-UP
16.1:1 COMPRESSION RATIO
PART OF 261-4530, 261-4531, 261-4533, 261-4534, 261-4535, 261-4537 ENGINE
AR-CORE
ALSO AN ATTACHMENT

SMCS-1225 **i02434196**

NOTE	REF NO	GRAPHIC REF	PART NUMBER	QTY	PART NAME 1 2 3 4 5 6 (PRODUCT LEVEL)	SEE PAGE
	1	1	**213-3190**	1	BEARING (CONNECTING ROD)	
R	2	1	**160-8199**	1	ROD AS	
	2A	1	**160-8194**	1	BEARING (CONNECTING ROD)	
M	2B	1	**160-8197**	2	BOLT	
	3	1	**166-3648**	1	PIN-PISTON	
	4	1	**168-7211**	1	RING-PISTON (OIL CONTROL)	
	5	1	**265-1401**	1	CROWN AS-PISTON	
	6	1	**161-3424**	1	RING-PISTON (INTERMEDIATE)	
	7	1	**197-9367**	1	TUBE AS (PISTON COOLING JET)	
	8	1	**197-9392**	1	RING-PISTON (TOP)	
	9	1	**238-2709**	1	SKIRT-PISTON	
M	10	1	**6V-3940**	1	BOLT (M8X1.25X25-MM)	
	11	1	**7X-2908**	2	RING-RETAINING	

M-METRIC PART
R-REMFG PART MAY BE AVAILABLE

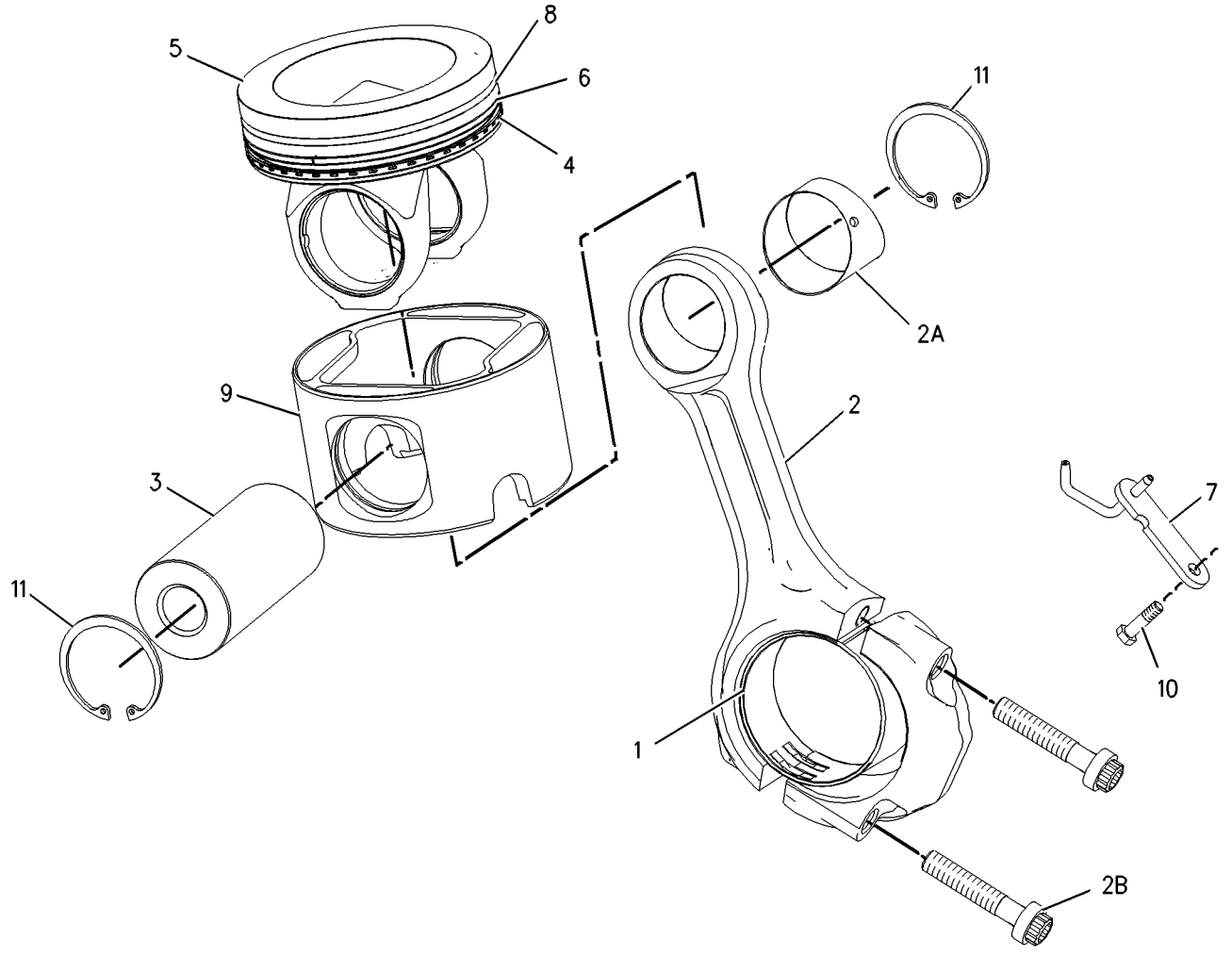

GRAPHIC #1 **<END>** g00922644

252-1567 PLUG GP-ENGINE

S/N: THX1-UP

PART OF 261-4290, 261-4291, 261-4293, 261-4294, 261-4295, 261-4297 ENGINE AR

ALSO AN ATTACHMENT

SMCS-1000 **i02163217**

NOTE	REF NO	GRAPHIC REF	PART NUMBER	QTY	PART NAME 1 2 3 4 5 6 (PRODUCT LEVEL)	SEE PAGE
	1	1	*148-8408*	1	PLUG AS	
		1	**3D-2824**	1	SEAL-O-RING	
		1	**9S-4183**	1	PLUG	
	2	1	*183-3406*	1	PLUG AS	
		1	**6V-5049**	1	SEAL-O-RING	
		1	**9S-4191**	1	PLUG-O RING	
	3	1	*183-3408*	1	PLUG AS	
		1	**6V-5049**	1	SEAL-O-RING	
		1	**9S-8004**	1	PLUG	
	4	1	**8L-2786**	1	SEAL-O-RING	
	5	1	**9S-8005**	1	PLUG-O RING	

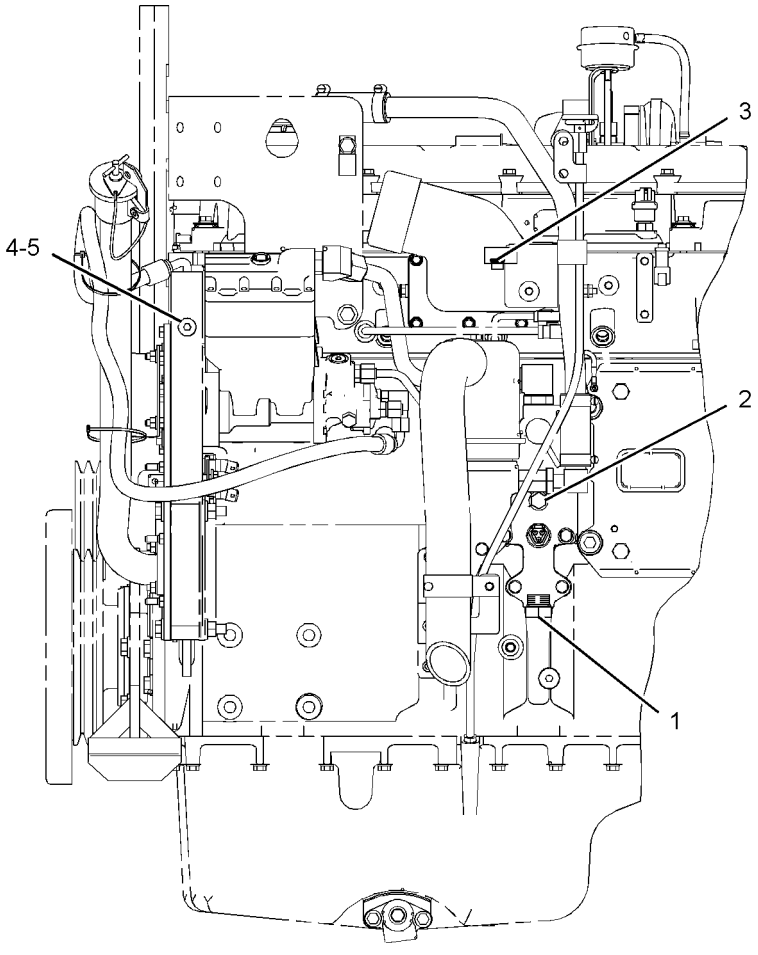

LEFT SIDE VIEW

GRAPHIC #1

<END>

g01101305

246-0602 PULLEY GP-CRANKSHAFT

S/N: THX1-UP

PART OF 261-4290, 261-4291, 261-4293, 261-4294, 261-4295, 261-4297 ENGINE AR

ALSO AN ATTACHMENT

SMCS-1205 **i02431623**

NOTE	REF NO	GRAPHIC REF	PART NUMBER	QTY	PART NAME 1 2 3 4 5 6 (PRODUCT LEVEL)	SEE PAGE
	1	1	**2W-7381**	1	WASHER	
	2	1	**236-8239**	1	PULLEY-CRANKSHAFT	
M	3	1	**8T-3666**	4	BOLT (M14X60-MM)	

M-METRIC PART

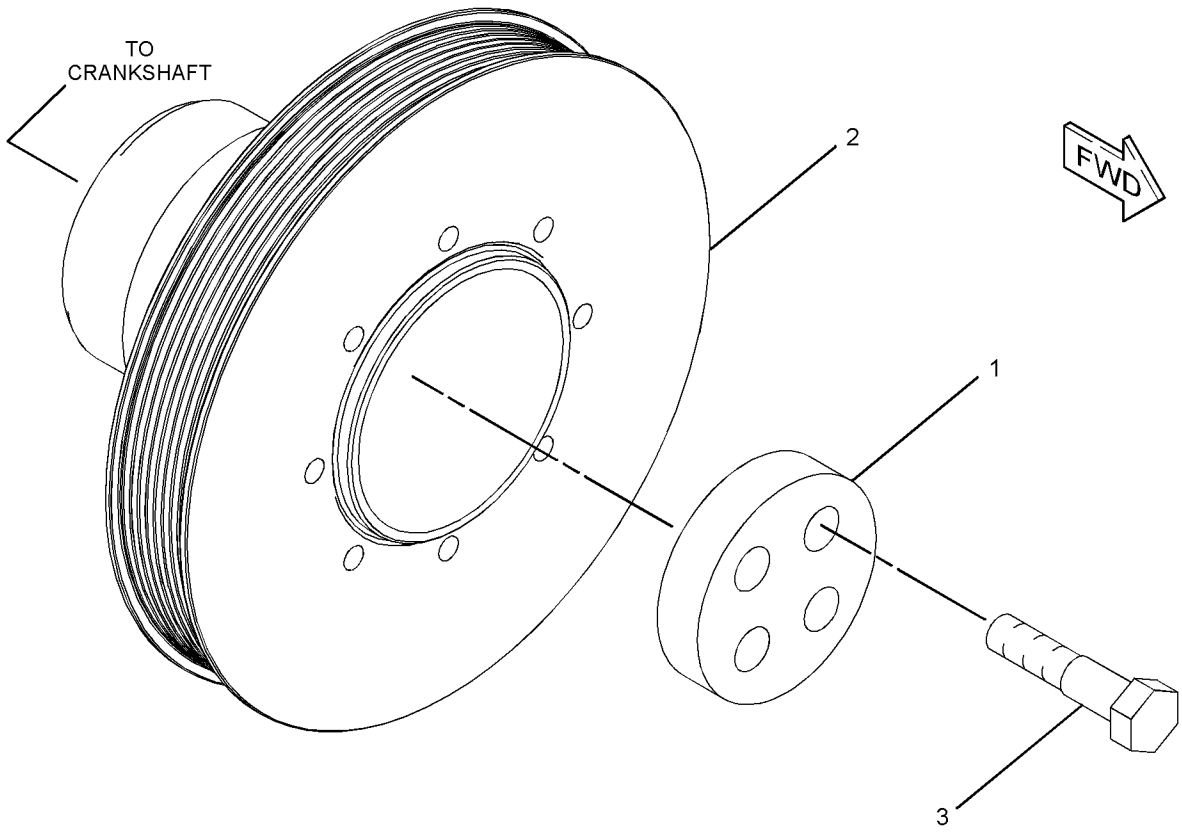

GRAPHIC #1 **<END>** g01206786

206-3673 PULLEY GP-FAN & ALT DRIVE

S/N: JDL1-UP; GMT1-UP
PART OF 222-3892 COOLING AR-HIGH AMBIENT TEMP
AN ATTACHMENT

SMCS-1359, 1425 **i02453902**

NOTE	REF NO	GRAPHIC REF	PART NUMBER	QTY	PART NAME 1 2 3 4 5 6 (PRODUCT LEVEL)	SEE PAGE
	1	1	**1L-8545**	1	SPACER (1X1.25X0.99-IN THK)	
	2	1	**5M-9735**	1	SEAL-LIP TYPE	
	3	1	**6B-1124**	2	BALL BEARING	
	4	1	**7C-8370**	1	CAP-DUST (BELT TIGHTNER PULLEY BOLT)	
	5	1	**130-3216**	1	V-BELT SET (INCLUDES 2-BELTS) (ENGINE)	
	6	1	**185-0838**	1	ROD-ADJUSTING	
	7	1	**243-6492**	1	PULLEY-FAN	
	8	1	**206-7870**	1	V-BELT (ENGINE)	
	9	1	**209-3672**	1	PULLEY	
	10	1	**214-5705**	1	ADAPTER	
	11	1	**215-3291**	1	PULLEY	
	12	1	**215-3296**	1	ARM AS	
		1	**3E-4999**	1	PIN-SPRING	
	13	1	**215-3742**	1	PULLEY	
	14	1	**222-9151**	1	WASHER-HARD (11X32X5-MM THK)	
	15	1	**5P-1076**	1	WASHER-HARD (13.5X30X4-MM THK)	
M	16	1	**6V-4248**	1	BOLT (M10X1.5X25-MM)	
	17	1	**7C-2164**	1	BLOCK	
	18	1	**8T-4121**	14	WASHER-HARD (11X21X2.5-MM THK)	
M	19	1	**8T-4198**	8	BOLT (M10X1.5X100-MM)	
M	20	1	**8T-4186**	1	BOLT (M10X1.5X40-MM)	
M	21	1	**8T-4196**	13	BOLT (M10X1.5X35-MM)	
	22	1	**8T-4223**	3	WASHER-HARD (13.5X25.5X3-MM THK)	
M	23	1	**8T-4244**	2	NUT (M12X1.75-THD)	
M	24	1	**8T-4910**	1	BOLT (M12X1.75X60-MM)	
M	25	1	**8T-6868**	1	BOLT (M12X1.75X80-MM)	

M-METRIC PART

206-3673 **PULLEY GP-FAN & ALT DRIVE** *(contd.)* **i02453902**

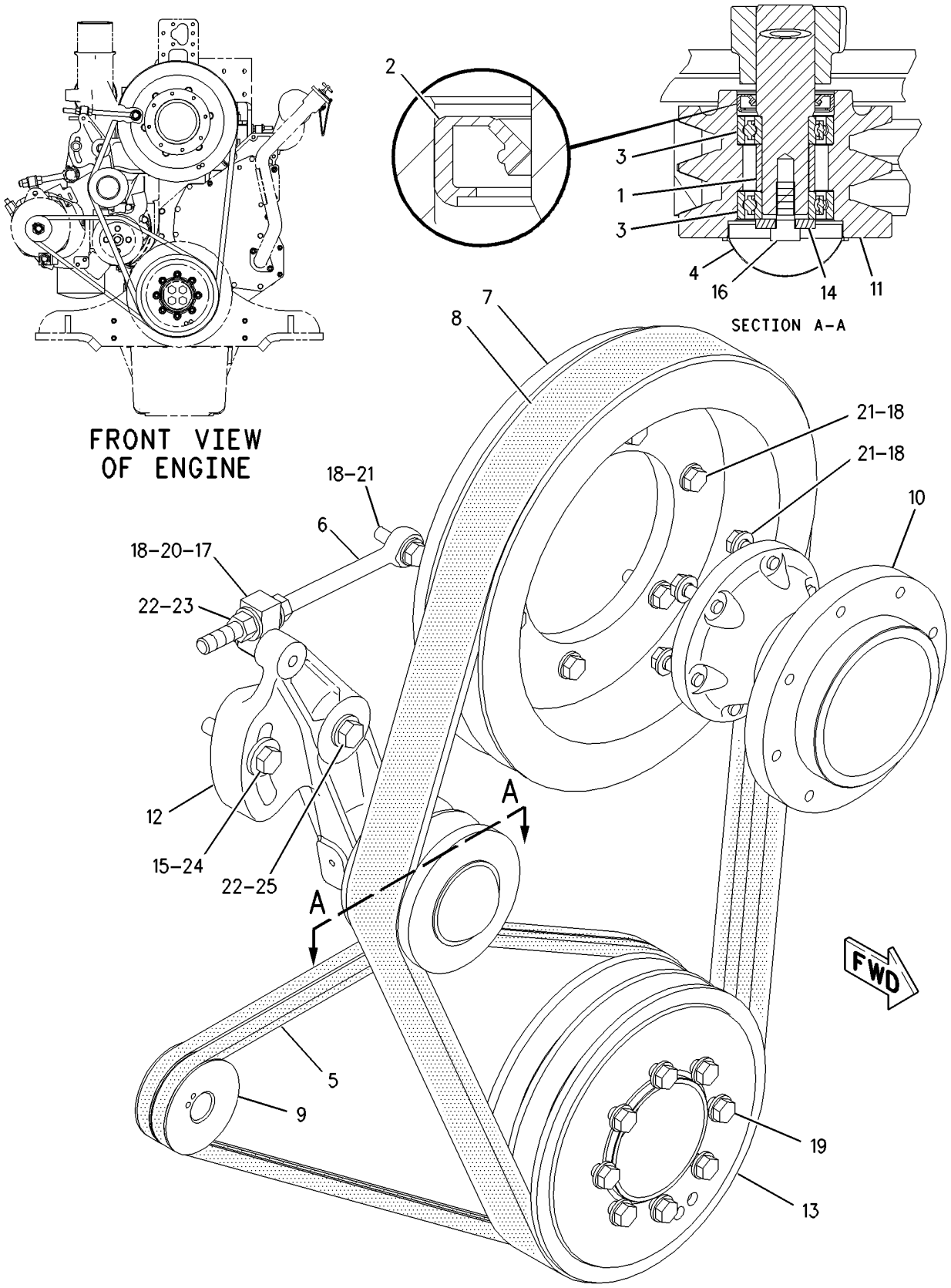

GRAPHIC #1 **<END>** g00991611

BASIC ENGINE

262-2027 PULLEY GP-FAN & ALT DRIVE

S/N: JDL1-UP; GMT1-UP

PART OF 223-0551 INSTALLATION AR-ENGINE

SMCS-1359, 1425 **i02441383**

NOTE	REF NO	GRAPHIC REF	PART NUMBER	QTY	PART NAME 1 2 3 4 5 6 (PRODUCT LEVEL)	SEE PAGE
	1	1	**1L-8545**	1	SPACER (1X1.25X0.99-IN THK)	
	2	1	**4P-8087**	1	V-BELT SET (INCLUDES 3-BELTS) (FAN)	
	3	1	**5M-9735**	1	SEAL-LIP TYPE	
	4	1	**6B-1124**	2	BALL BEARING	
	5	1	**7C-8370**	1	CAP-DUST	
	6	1	**123-0790**	1	PULLEY (8-GROOVE)	
	7	1	**185-0838**	1	ROD-ADJUSTING	
	8	1	**214-5705**	1	ADAPTER	
	9	1	**215-3296**	1	ARM AS	
		1	**3E-4999**	1	PIN-SPRING	
	10	1	**222-9151**	1	WASHER-HARD (11X32X5-MM THK)	
	11	1	**241-4981**	1	BELT (ALTERNATOR)	
	12	1	**267-7507**	1	PULLEY-FAN	
	13	1	**267-7508**	1	PULLEY	
	14	1	**267-7509**	1	PULLEY	
	15	1	**5P-1076**	1	WASHER-HARD (13.5X30X4-MM THK)	
M	16	1	**6V-4248**	1	BOLT (M10X1.5X25-MM)	
	17	1	**7C-2164**	1	BLOCK	
	18	1	**8T-4121**	14	WASHER-HARD (11X21X2.5-MM THK)	
M	19	1	**8T-4186**	7	BOLT (M10X1.5X40-MM)	
M	20	1	**8T-4196**	7	BOLT (M10X1.5X35-MM)	
M	21	1	**8T-4198**	8	BOLT (M10X1.5X100-MM)	
	22	1	**8T-4223**	3	WASHER-HARD (13.5X25.5X3-MM THK)	
M	23	1	**8T-4244**	2	NUT (M12X1.75-THD)	
M	24	1	**8T-4910**	1	BOLT (M12X1.75X60-MM)	
M	25	1	**8T-6868**	1	BOLT (M12X1.75X80-MM)	

M-METRIC PART

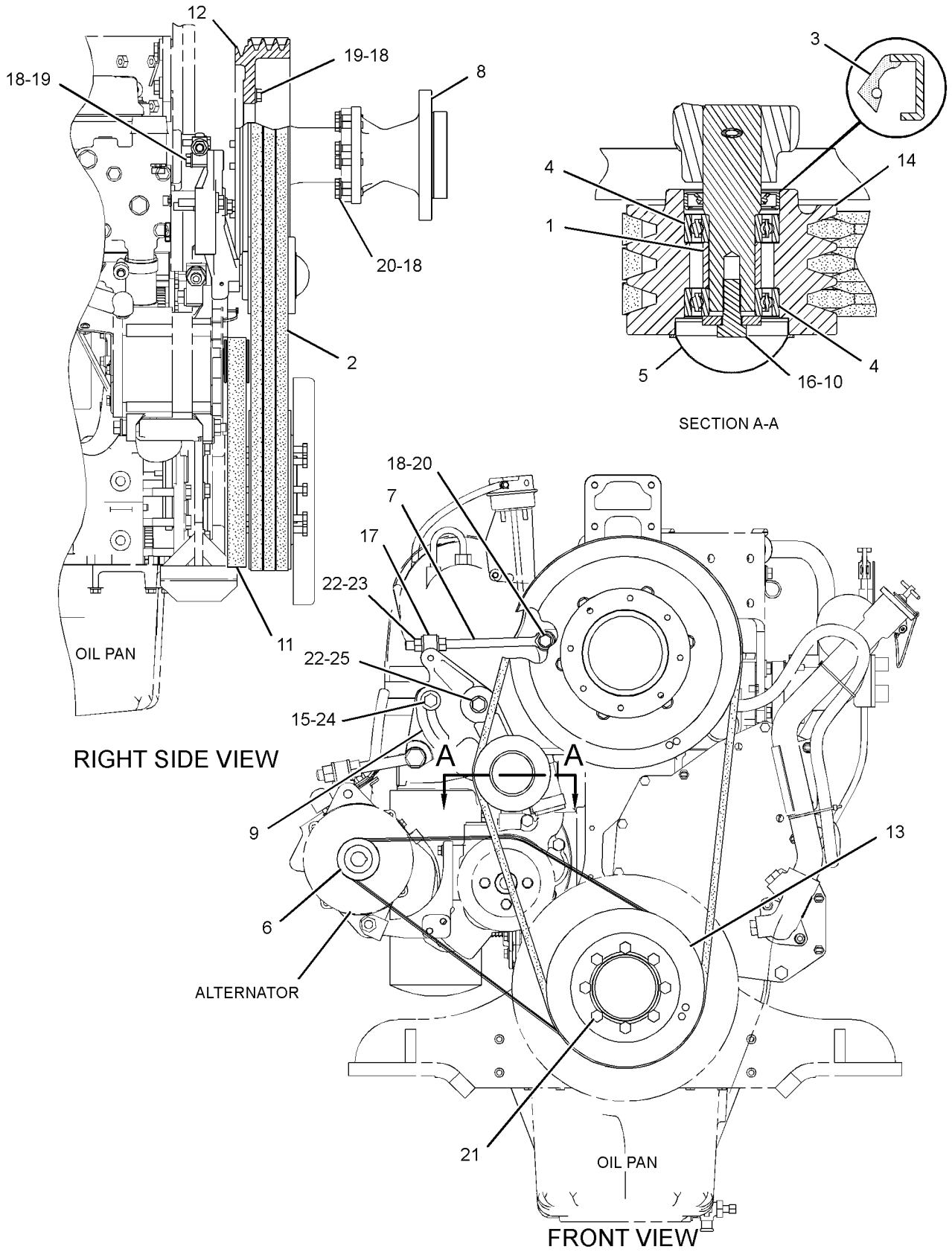

GRAPHIC #1 **<END>** g01209602

213-9320 ROCKER ARM GP–EXHAUST

S/N: THX1-UP

PART OF 212-8926 VALVE MECHANISM GP

ALSO AN ATTACHMENT

SMCS-1123 **i01881412**

NOTE	REF NO	GRAPHIC REF	PART NUMBER	QTY	PART NAME 1 2 3 4 5 6 (PRODUCT LEVEL)	SEE PAGE
	1	1	**163-2447**	1	ARM AS-ROCKER	
M	2	1	**183-4365**	1	SCREW-ADJUSTING (M10X1.5 THD)	
M	3	1	**2Y-5829**	1	NUT (M10X1.5 THD)	

M-METRIC PART

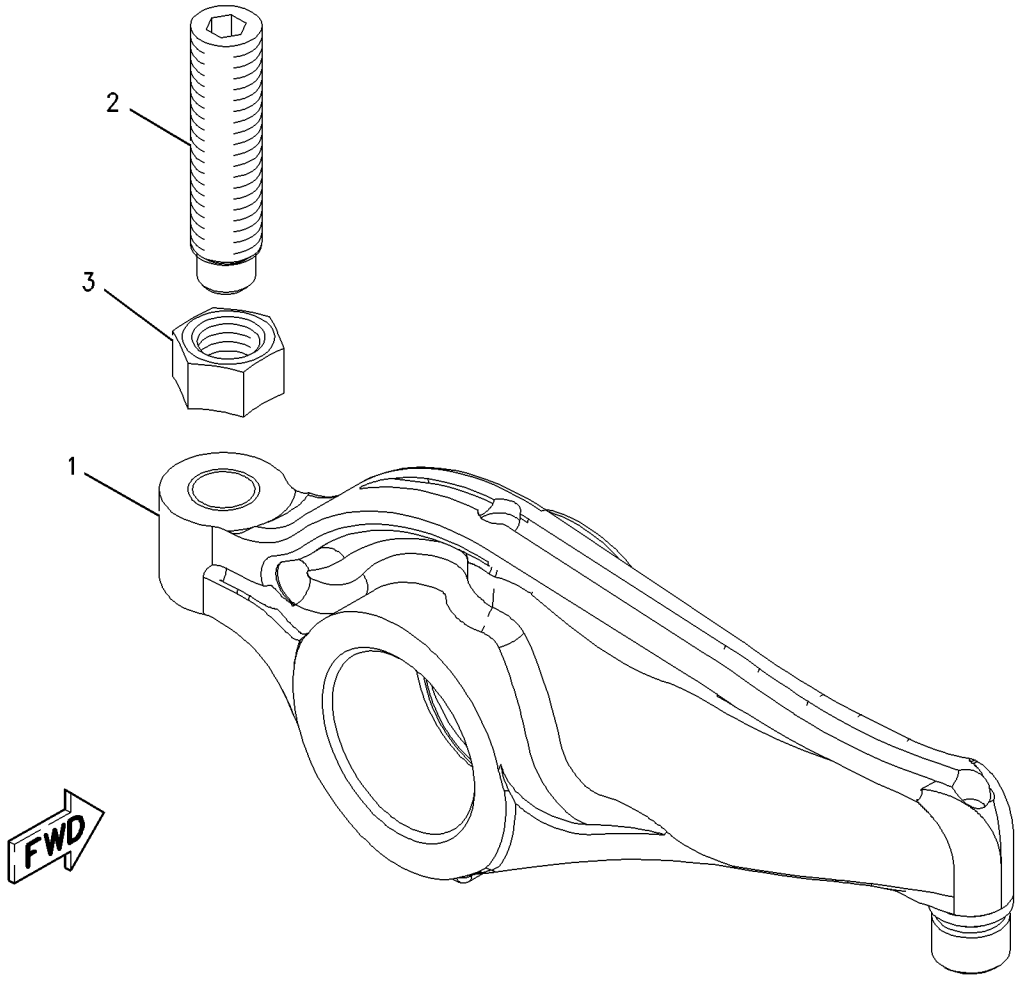

GRAPHIC #1 **<END>** g00979393

242-0329 ROCKER ARM GP–INLET

S/N: THX1-UP
PART OF 212-8926 VALVE MECHANISM GP
ALSO AN ATTACHMENT

SMCS-1123 **i02433900**

NOTE	REF NO	GRAPHIC REF	PART NUMBER	QTY	PART NAME 1 2 3 4 5 6 (PRODUCT LEVEL)	SEE PAGE
M	1	1	**183-4365**	1	SCREW-ADJUSTMENT (M10X1.15-THD)	
	2	1	**242-0328**	1	ROCKER ARM AS	
M	3	1	**2Y-5829**	1	NUT (M10X1.15-THD)	

M-METRIC PART

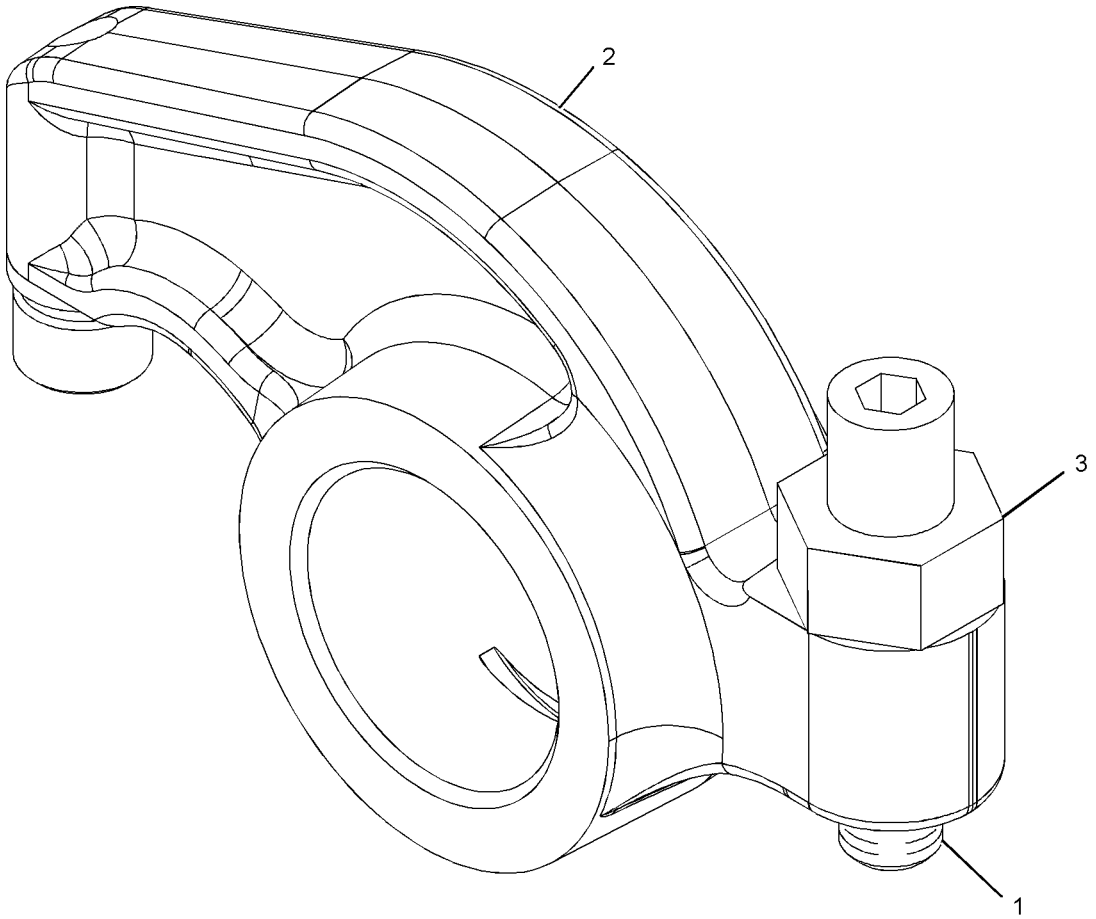

GRAPHIC #1 **<END>** g01056688

BASIC ENGINE

119-2921 SEAL GP-CRANKSHAFT

S/N: THX1-UP

PART OF 189-9306 SEAL GP-CRANKSHAFT

ALSO AN ATTACHMENT

SMCS-1160, 1161 **i01114134**

NOTE	PART NUMBER	QTY	PART NAME 1 2 3 4 5 6 (PRODUCT LEVEL)	SEE PAGE
			(NO SERVICED PARTS)	

<END>

189-9306 SEAL GP-CRANKSHAFT

S/N: THX1-UP
FRONT AND REAR
PART OF 261-4290, 261-4291, 261-4293, 261-4294, 261-4295, 261-4297 ENGINE AR
FOR USE WITH WET FLYWHEEL HSG AND FRONT DUST EXCLUDER
ALSO AN ATTACHMENT

SMCS-1160, 1161 **i01830492**

NOTE	REF NO	GRAPHIC REF	PART NUMBER	QTY	PART NAME 1 2 3 4 5 6 (PRODUCT LEVEL)	SEE PAGE
	1	1	**4R-9999**	1	EXCLUDER-CRANKSHAFT SEAL	
	2	1	**199-6163**	1	SEAL-O-RING	
Y	3	1	**119-2921**	1	SEAL GP-CRANKSHAFT (FRONT)	69
	4	1	**187-8971**	1	SEAL GP-CRANKSHAFT (REAR)	
	5	1	**206-3719**	9	BOLT AS	

Y-SEPARATE ILLUSTRATION

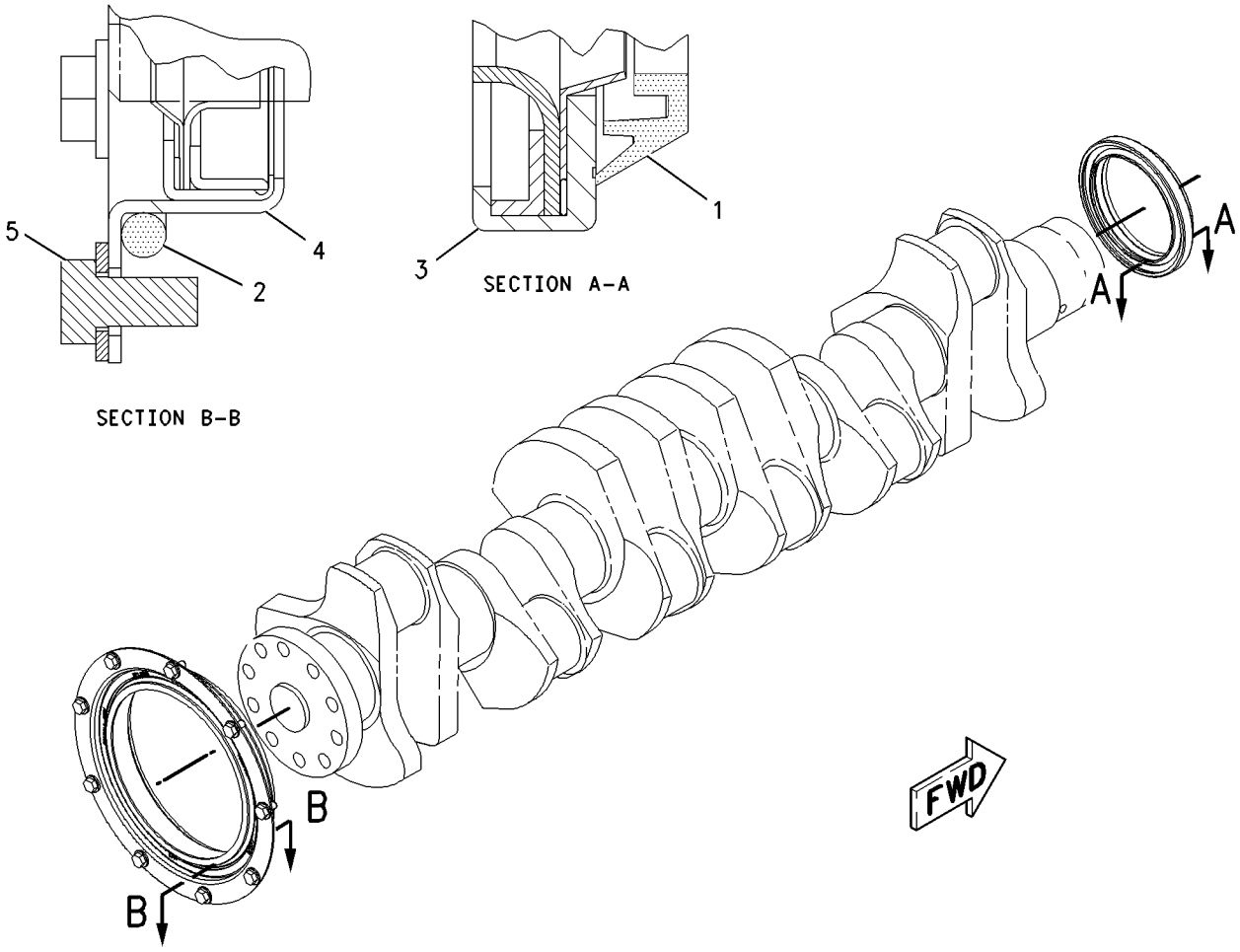

GRAPHIC #1 **<END>** g00850653

166-1790 SUPPORT GP-ENGINE

S/N: THX1-UP

PART OF 261-4290, 261-4291, 261-4293, 261-4294, 261-4295, 261-4297 ENGINE AR

FOR USE WITH FRONT TRUNNION ENGINE SUPPORT

ALSO AN ATTACHMENT

SMCS-1154 **i01827674**

NOTE	REF NO	GRAPHIC REF	PART NUMBER	QTY	PART NAME 1 2 3 4 5 6 (PRODUCT LEVEL)	SEE PAGE
	1	1	**169-3899**	1	SUPPORT AS-ENGINE	
M	1A	1	**8T-3490**	4	NUT-WELD (M10X1.5 THD)	
	2	1	**5P-8245**	6	WASHER-HARD (13.5X25.5X3-MM THK)	
M	3	1	**6V-8675**	6	BOLT (M12X1.75X35-MM)	

M-METRIC PART

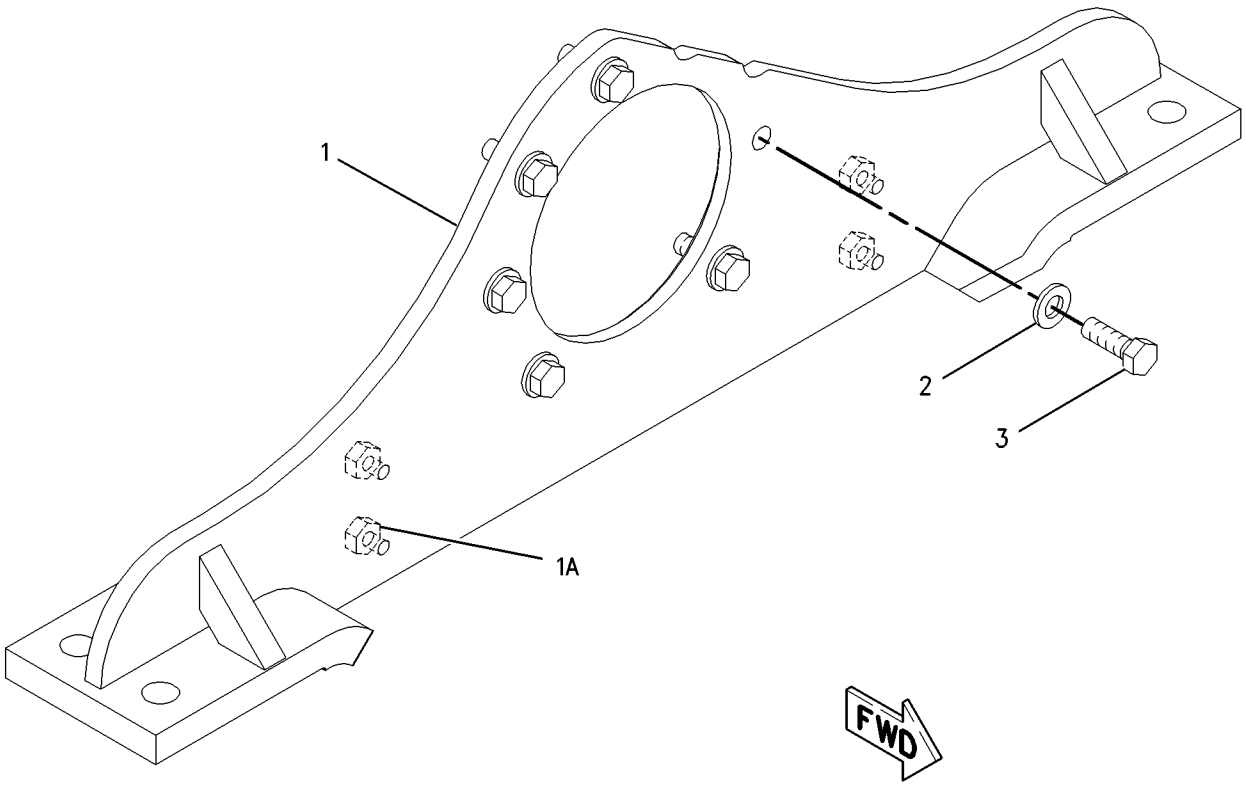

GRAPHIC #1 **<END>** g00852403

166-1792 TRUNNION GP-ENGINE

S/N: THX1-UP

PART OF 261-4290, 261-4291, 261-4293, 261-4294, 261-4295, 261-4297 ENGINE AR

ALSO AN ATTACHMENT

SMCS-1153 **i01827686**

NOTE	REF NO	GRAPHIC REF	PART NUMBER	QTY	PART NAME 1 2 3 4 5 6 (PRODUCT LEVEL)	SEE PAGE
	1	1	**169-3895**	1	TRUNNION AS	
	2	1	**5P-8245**	6	WASHER-HARD (13.5X25.5X3-MM THK)	
M	3	1	**6V-5696**	6	BOLT (M12X1.75X80-MM)	

M-METRIC PART

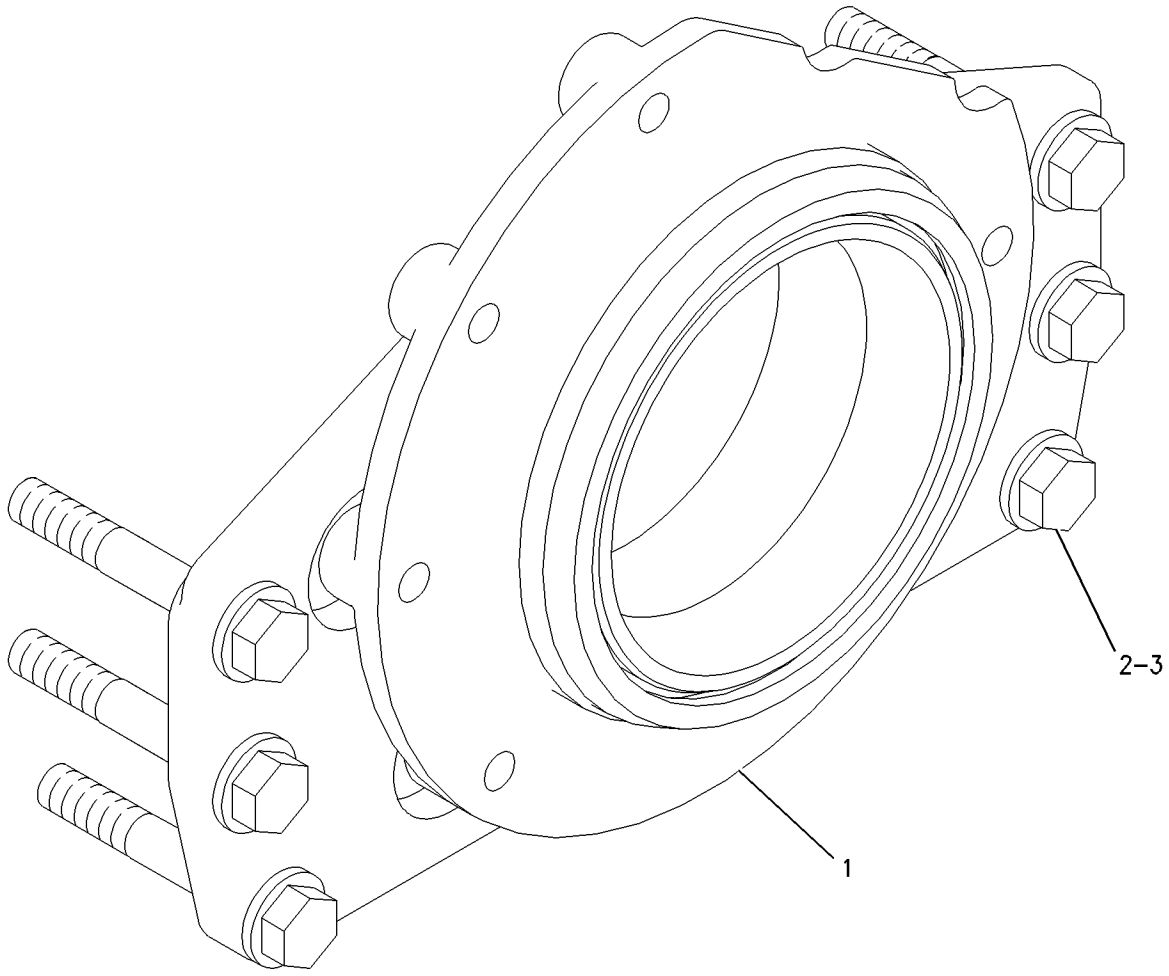

GRAPHIC #1 **<END>** g00935295

212-8926 VALVE MECHANISM GP

S/N: THX1-UP

PART OF 242-0447 VALVE MECHANISM GP

ALSO AN ATTACHMENT

SMCS-1102 **i02433895**

NOTE	REF NO	GRAPHIC REF	PART NUMBER	QTY	PART NAME 1 2 3 4 5 6 (PRODUCT LEVEL)	SEE PAGE
	1	1	**163-2445**	1	SHAFT AS-ROCKER ARM	
		1	**8F-6575**	2	PLUG-CUP	
	2	1	**163-2459**	6	SPRING	
	3	1	**164-5669**	2	STAND (END)	
	4	1	**176-5913**	4	STAND (MIDDLE)	
	5	1	**176-5914**	1	STAND (OIL)	
Y	6	1	*213-9320*	6	ROCKER ARM GP (EXHAUST)	67
Y	7	1	*242-0329*	6	ROCKER ARM GP (INLET)	68
	8	1	**5P-8245**	7	WASHER-HARD (13.5X25.5X3-MM THK)	
M	9	1	**8T-0646**	7	BOLT (M12X1.75X110-MM)	

M-METRIC PART
Y-SEPARATE ILLUSTRATION

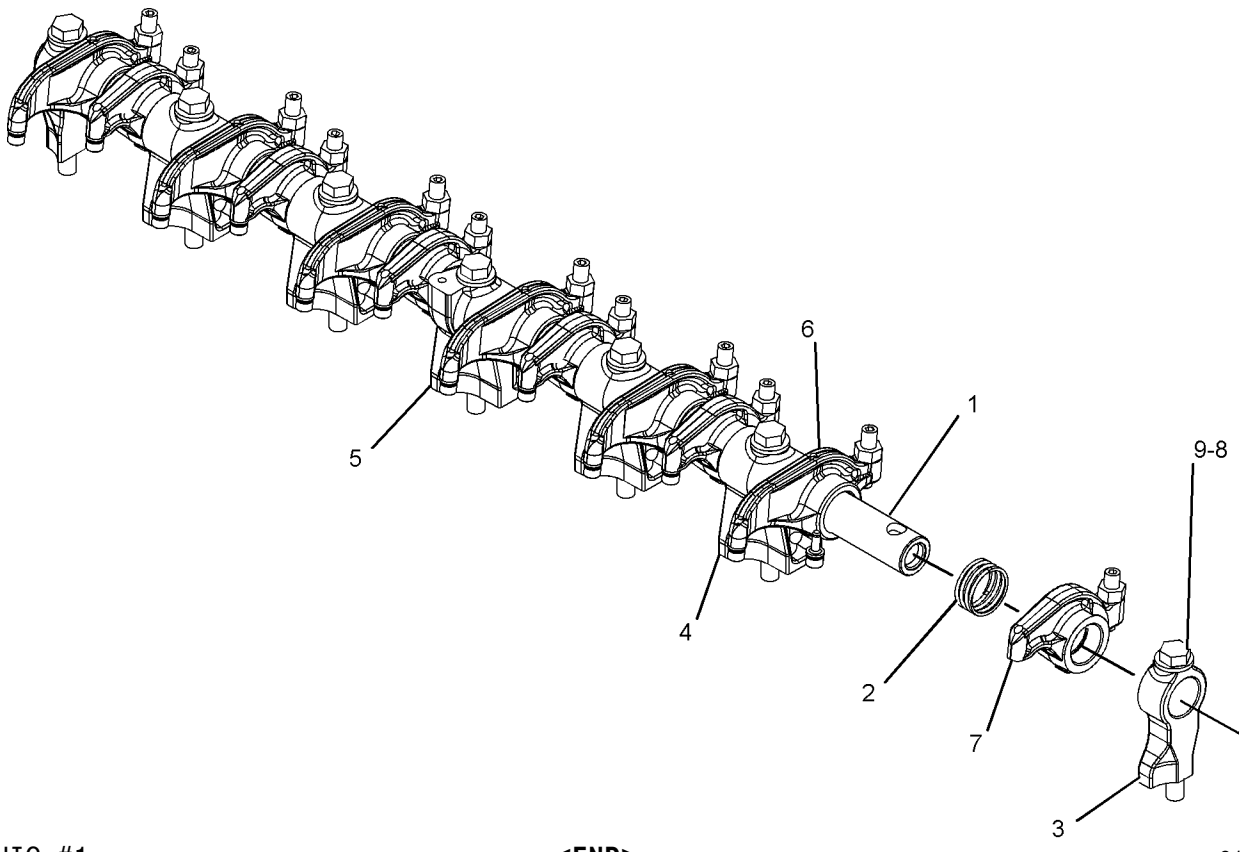

GRAPHIC #1 **<END>** g01069313

242-0447 VALVE MECHANISM GP

S/N: THX1-UP
PART OF 261-4530, 261-4531, 261-4533, 261-4534, 261-4535, 261-4537 ENGINE
AR-CORE
ALSO AN ATTACHMENT

SMCS-1102 **i02433898**

NOTE	REF NO	GRAPHIC REF	PART NUMBER	QTY	PART NAME 1 2 3 4 5 6 (PRODUCT LEVEL)	SEE PAGE
	1	1	**216-1598**	12	GUIDE	
	2	1	**133-6379**	12	ROD (VALVE)	
	3	1	**163-2437**	12	LIFTER AS-VALVE	
Y	4	1	**212-8926**	1	VALVE MECHANISM GP	73
	5	1	**244-5891**	6	BRIDGE-VALVE	
	6	1	**241-4815**	6	BRIDGE-VALVE	

Y-SEPARATE ILLUSTRATION

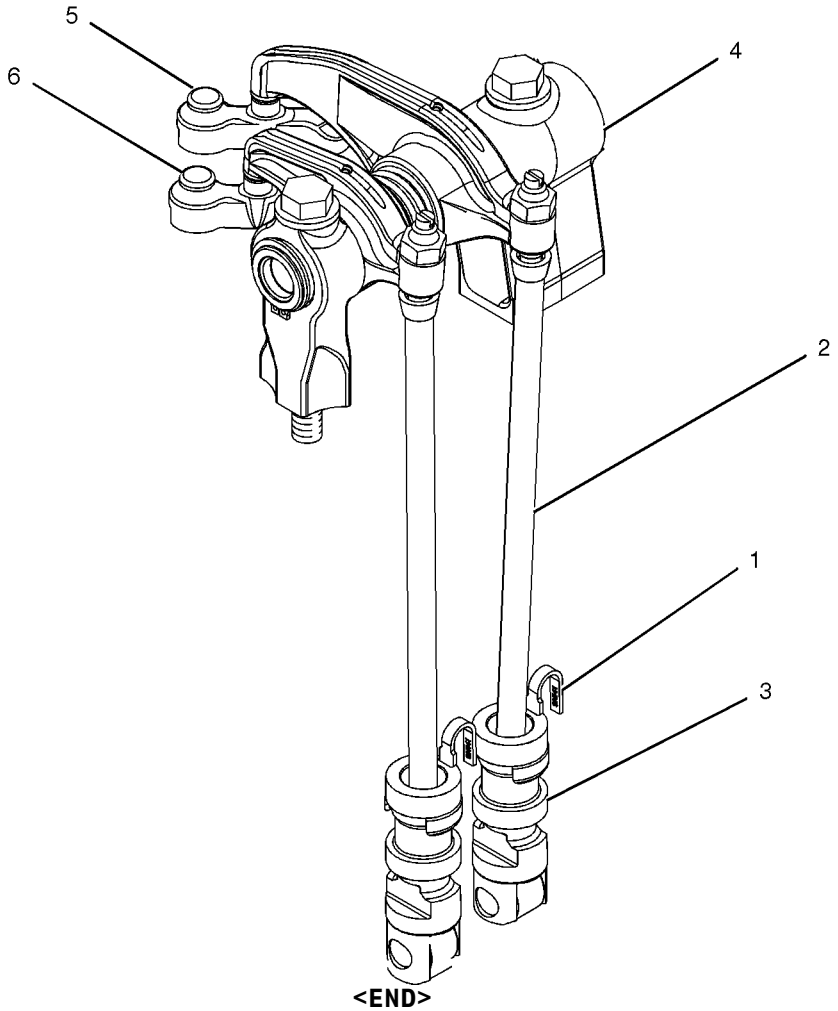

GRAPHIC #1 **<END>** g01043825

BASIC ENGINE

224-2693 YOKE GP

S/N: JDL1-UP; GMT1-UP

PART OF 223-0551 INSTALLATION AR-ENGINE

SMCS-3108 **i02432576**

NOTE	REF NO	GRAPHIC REF	PART NUMBER	QTY	PART NAME 1 2 3 4 5 6 (PRODUCT LEVEL)	SEE PAGE
	1	1	**128-3341**	1	COVER	
	2	1	**224-2694**	1	FLANGE	
	3	1	**128-3813**	1	SEAL-LIP TYPE	
	4	1	**1L-4775**	1	RING-RETAINING	
	5	1	**2S-3029**	1	BALL BEARING	
M	6	1	**6V-5844**	2	BOLT (M16X2X35-MM)	
	7	1	**6V-8260**	1	SEAL-O-RING	
	8	1	**9X-8268**	2	WASHER (17.5X30X3.5-MM THK)	

M-METRIC PART

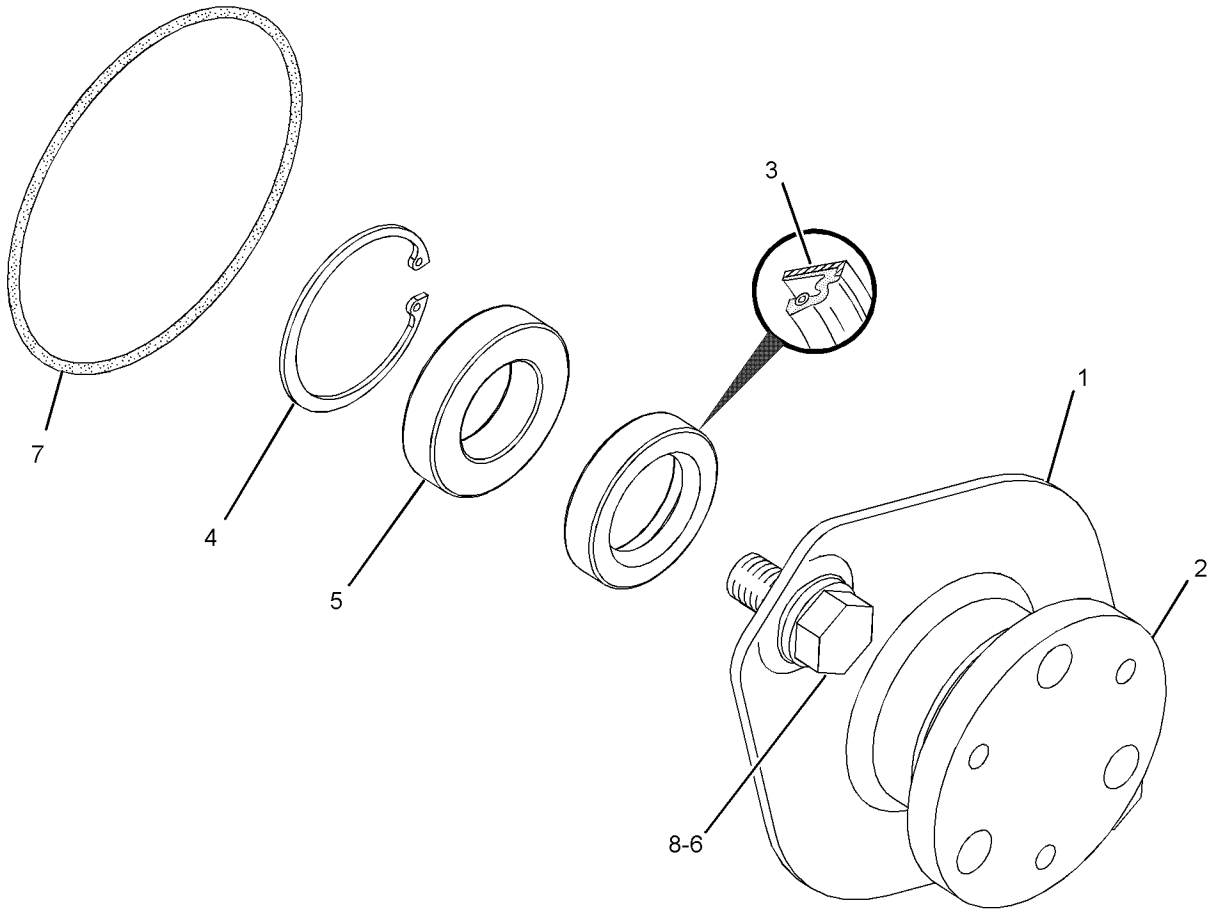

GRAPHIC #1 **<END>** g01210810

LUBRICATION SYSTEM

230-4118 FILLER GP-ENGINE OIL

S/N: THX1-UP

PART OF 261-4290, 261-4291, 261-4293, 261-4294, 261-4295, 261-4297 ENGINE AR

ALSO AN ATTACHMENT

SMCS-1316 **i02090568**

NOTE	REF NO	GRAPHIC REF	PART NUMBER	QTY	PART NAME 1 2 3 4 5 6 (PRODUCT LEVEL)	SEE PAGE
	1	1	**230-4119**	1	TUBE AS	
		1	**6N-2985**	1	CAP AS-FILLER (ENGINE)	
	2	1	**061-9455**	1	SEAL-O-RING	
M	3	1	**5P-7970**	4	NUT (M8X1.25-THD)	
	4	1	**9M-1974**	4	WASHER-HARD (8.8X16X2-MM THK)	

M-METRIC PART

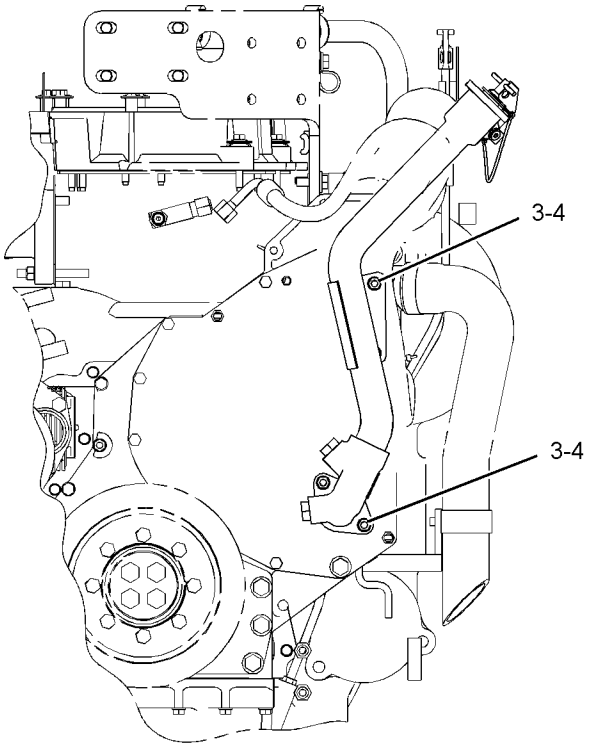

FRONT VIEW

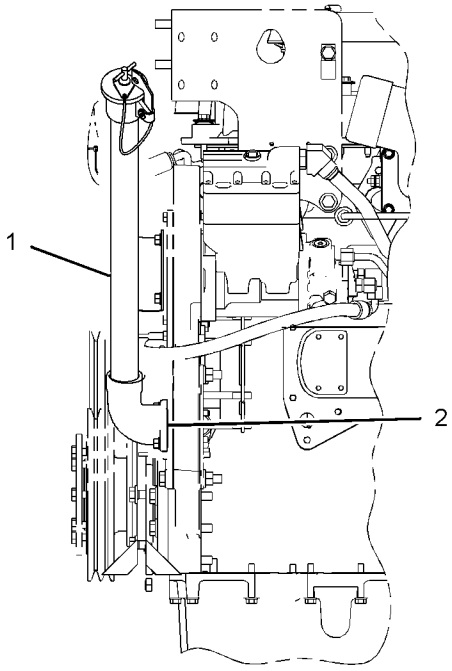

LEFT SIDE VIEW

GRAPHIC #1 **<END>** g01072234

183-2097 FILTER GP-ENGINE OIL

S/N: THX1-UP

PART OF 261-4290, 261-4291, 261-4293, 261-4294, 261-4295, 261-4297 ENGINE AR

ALSO AN ATTACHMENT

SMCS-1306, 1308 **i02201158**

NOTE	REF NO	GRAPHIC REF	PART NUMBER	QTY	PART NAME 1 2 3 4 5 6 (PRODUCT LEVEL)	SEE PAGE
C	1	2	**1R-1808**	1	FILTER AS-ENGINE OIL (ADVANCED EFFICIENCY)	
	2	2	**7C-1493**	2	VALVE AS-BYPASS (ENGINE OIL FILTER)	
	3	2	**8C-3445**	1	CAP-DUST	
	4	2	**8T-8902**	1	TEE	
C	5	2	**209-7290**	1	GASKET	
C	6	2	**249-0159**	1	BASE AS-OIL FILTER	
C	6A	1	**2P-4304**	1	STUD-HOLLOW (1.5-16X1.339-IN)	
	7	2	**242-3864**	2	SPRING	
M	8	2	**5P-8196**	3	PLUG	
	9	2	**5P-9617**	1	ADAPTER	
	10	2	**6V-4589**	3	SEAL-O-RING	
	11	2	**6V-5048**	1	SEAL-O-RING	
	12	2	**6V-5049**	2	SEAL-O-RING	
M	13	1	**6V-5218**	2	BOLT (M8X1.25X35-MM)	
M	14	1	**6V-5219**	8	BOLT (M8X1.25X40-MM)	
M	15	1	**6V-5220**	2	BOLT (M8X1.25X65-MM)	
	16	2	**6V-8077**	1	ELBOW	
	17	2	**6V-8723**	1	ELBOW	
	18	2	**8C-3446**	1	VALVE-FLUID SAMPLING (ENGINE OIL)	
	19	2	**8L-2779**	2	SEAL-O-RING	
	20	2	**8L-2786**	2	SEAL-O-RING	
	21	1	**9M-1974**	12	WASHER-HARD (8.8X16X2-MM THK)	
	22	2	**9S-4185**	1	PLUG	

C-CHANGE FROM PREVIOUS TYPE
M-METRIC PART

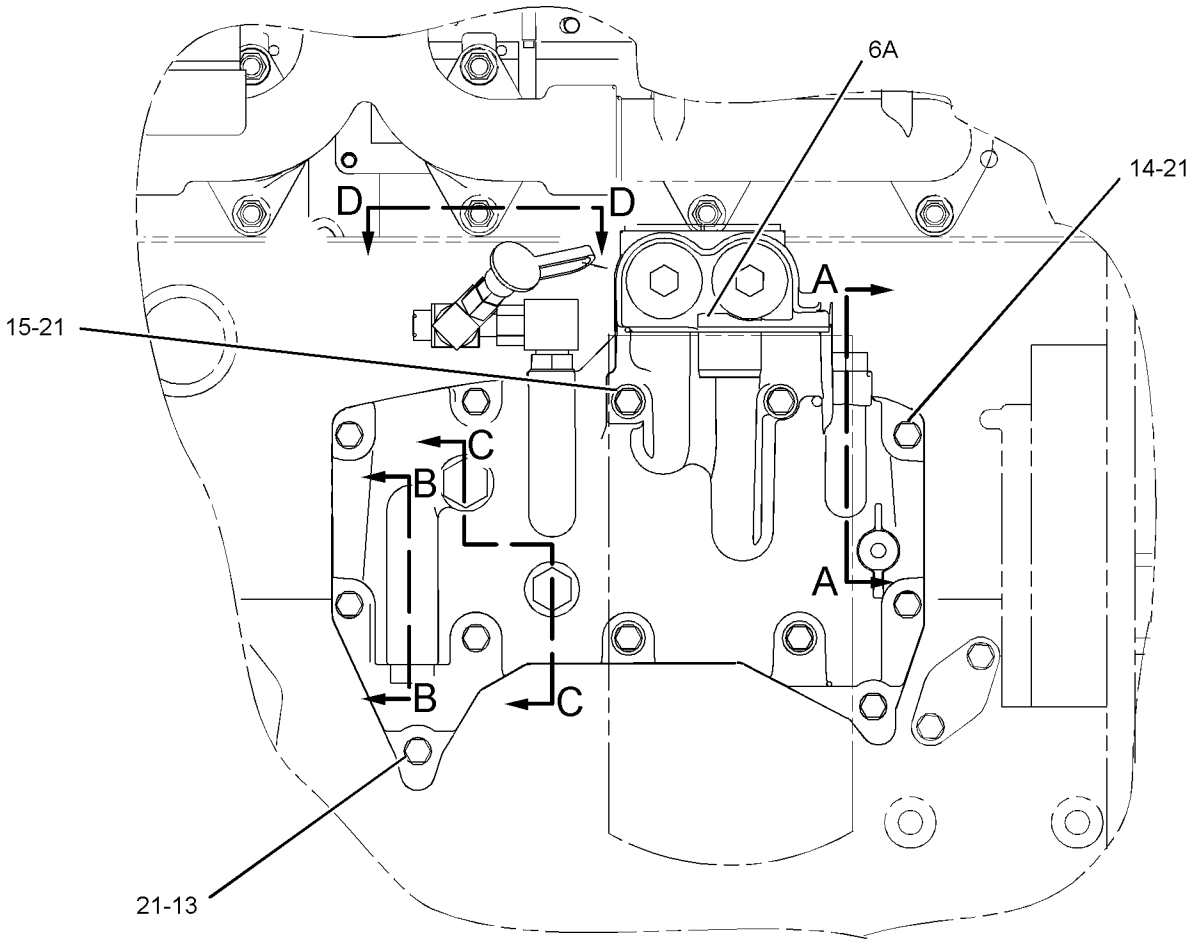

RIGHT SIDE VIEW

GRAPHIC #1 g01062689

183-2097 **FILTER GP-ENGINE OIL** *(contd.)* **i02201158**

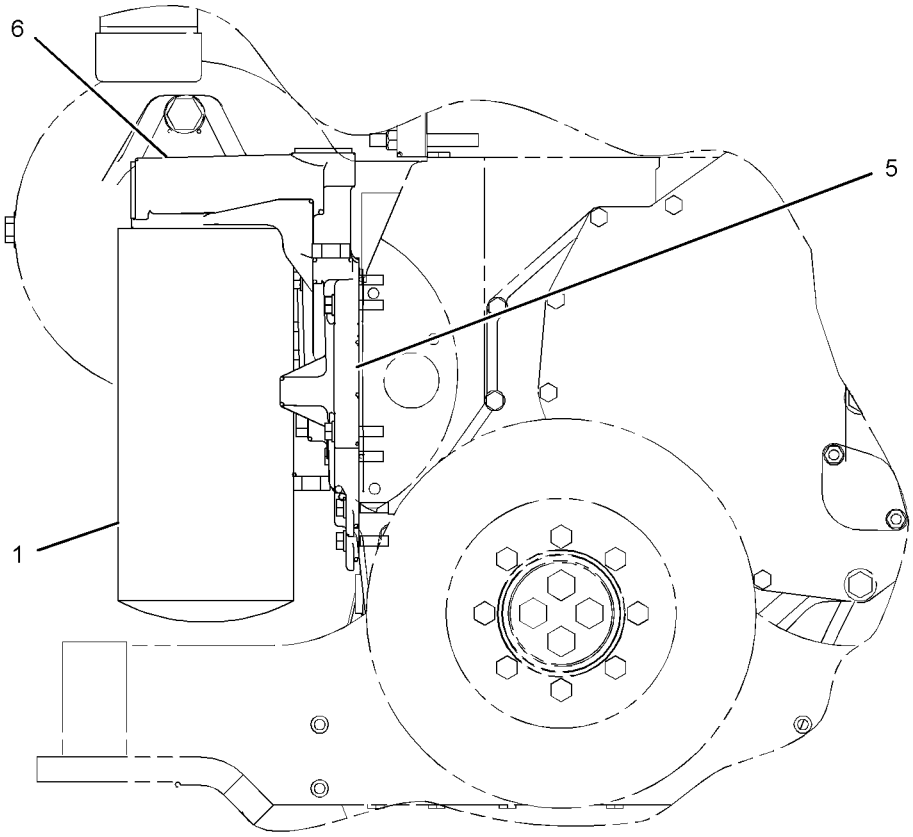

FRONT VIEW

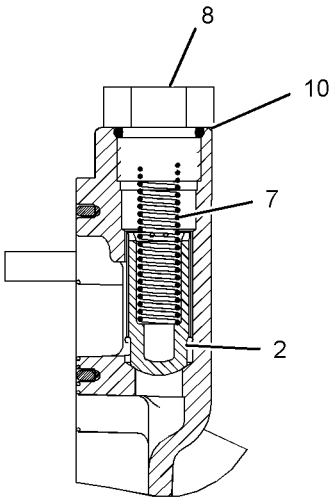

SECTION A-A

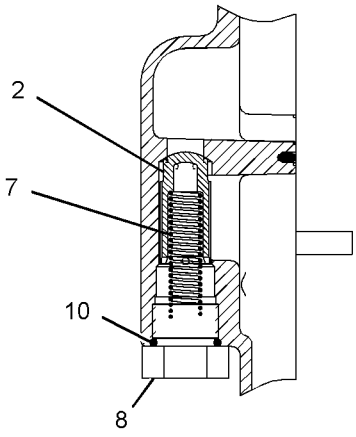

SECTION B-B

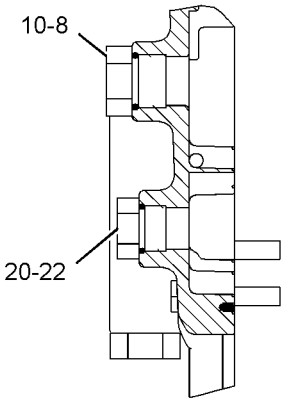

SECTION C-C

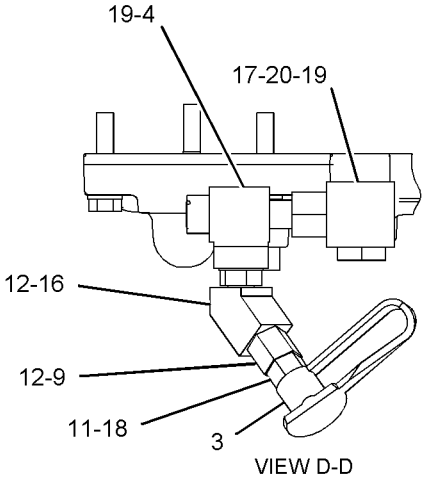

VIEW D-D

GRAPHIC #2 **<END>** g01062704

230-5585 FUMES DISPOSAL GP–CRANKCASE

S/N: JDL1-UP; GMT1-UP

PART OF 223-0551 INSTALLATION AR-ENGINE

SMCS-1317 **i02441285**

NOTE	REF NO	GRAPHIC REF	PART NUMBER	QTY	PART NAME 1 2 3 4 5 6 (PRODUCT LEVEL)	SEE PAGE
	1	1	**2S-3440**	1	CLAMP-HOSE	
	2	1	**9M-0164**	1	CLAMP-HOSE	
	3	1	**114-9223**	1	SPACER (11.13X19.05X19-MM THK)	
	4	1	**184-7211**	2	CLIP	
	5	1	**230-9796**	1	DUCT AS	
	6	1	**6V-1889**	3	CLIP	
	7	1	**8T-4121**	4	WASHER-HARD (11X21X2.5-MM THK)	
M	8	1	**8T-4133**	2	NUT (M10X1.5 THD)	
M	9	1	**8T-4136**	1	BOLT (M10X1.5X25-MM)	
M	10	1	**8T-4182**	1	BOLT (M10X1.5X45-MM)	

M-METRIC PART

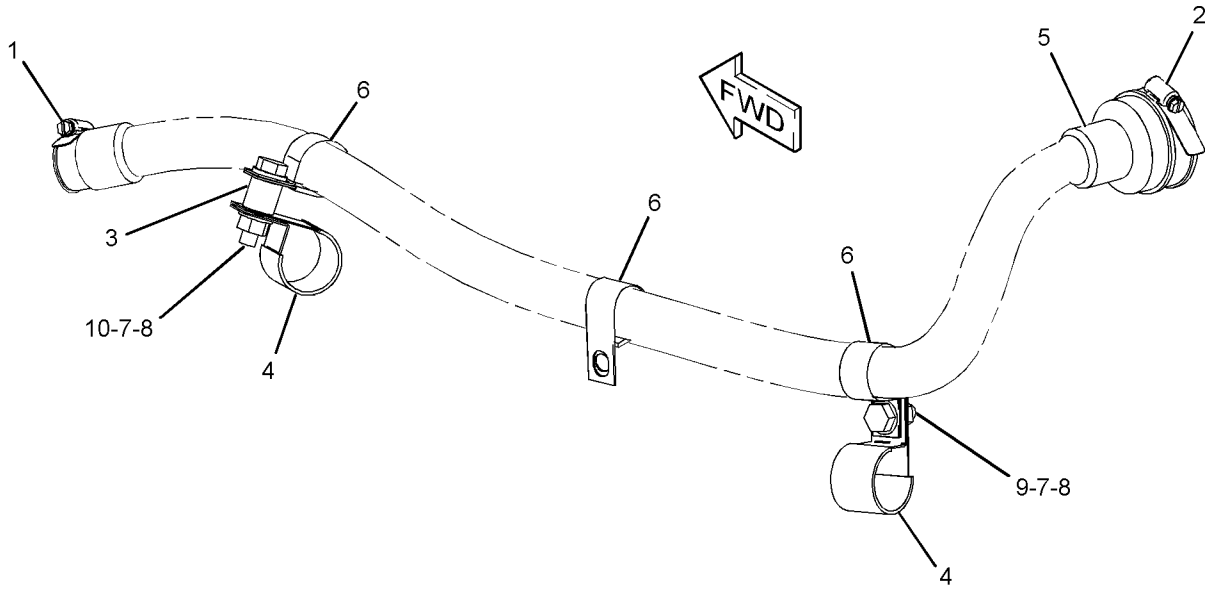

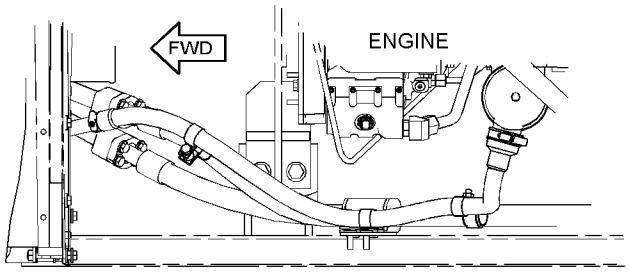

TOP VIEW

GRAPHIC #1 **<END>** g01208126

241-3719 FUMES DISPOSAL GP

S/N: THX1-UP

PART OF 261-4290, 261-4291, 261-4293, 261-4294, 261-4295, 261-4297 ENGINE AR

ALSO AN ATTACHMENT

SMCS-1317 **i02431569**

NOTE	REF NO	GRAPHIC REF	PART NUMBER	QTY	PART NAME 1 2 3 4 5 6 (PRODUCT LEVEL)	SEE PAGE
	1	1	**9M-7958**	2	CLAMP-HOSE	
	2	1	**9U-6993**	1	ADAPTER AS	
		1	**3D-2824**	1	SEAL-O-RING	
	3	1	**246-0604**	1	HOSE-FUMES DISP (CRANKCASE)	
	4	1	**4D-7388**	1	CLIP	
M	5	1	**6V-4248**	1	BOLT (M10X1.5X25-MM)	
	6	1	**6V-5839**	1	WASHER (11X21X2.5-MM THK)	

M-METRIC PART

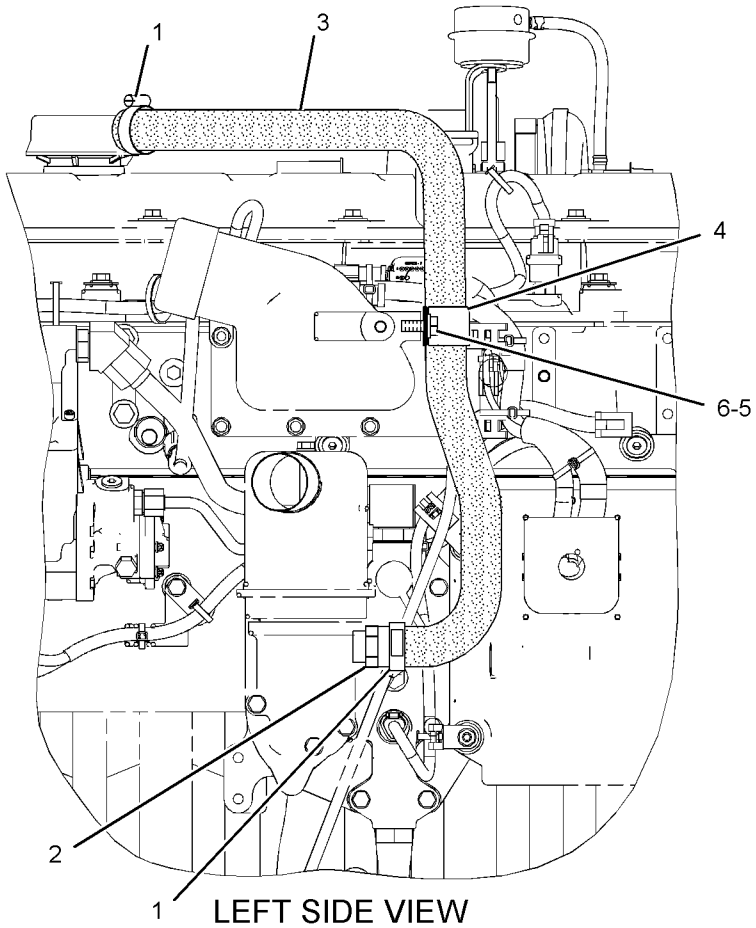

LEFT SIDE VIEW

GRAPHIC #1 **<END>** g01146828

246-0601 GAUGE GP-OIL LEVEL (DIPSTICK)—ENGINE

S/N: THX1-UP

PART OF 261-4290, 261-4291, 261-4293, 261-4294, 261-4295, 261-4297 ENGINE AR

ALSO AN ATTACHMENT

SMCS-1326 **i02241489**

NOTE	REF NO	GRAPHIC REF	PART NUMBER	QTY	PART NAME 1 2 3 4 5 6 (PRODUCT LEVEL)	SEE PAGE
	1	1	**261-3162**	1	GAUGE-OIL LEVEL (DIPSTICK) (ENGINE)	
	2	1	**246-7899**	1	TUBE AS	

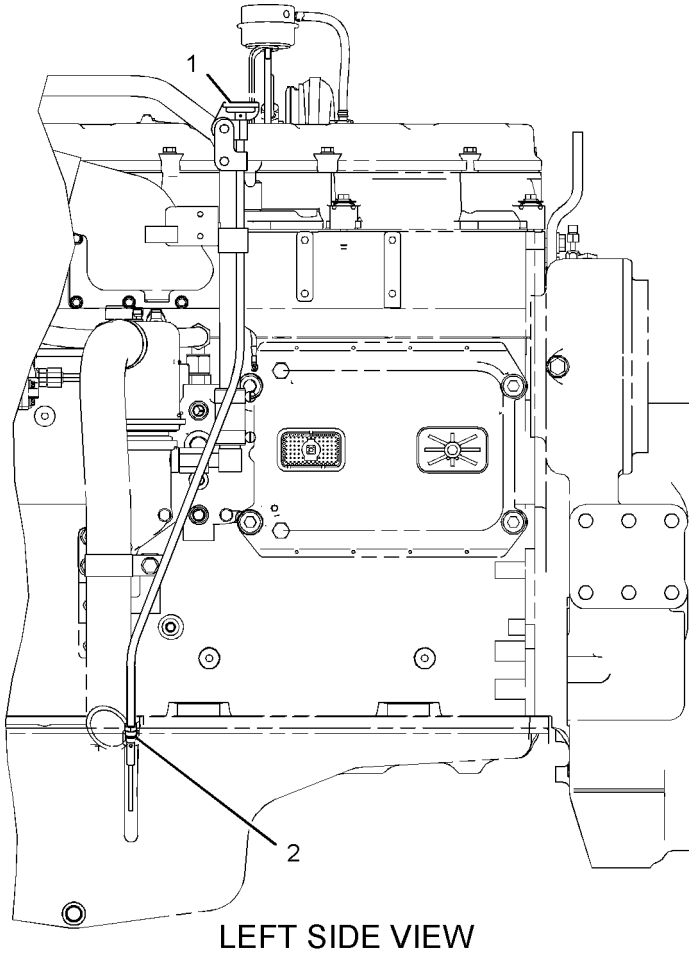

LEFT SIDE VIEW

GRAPHIC #1 **<END>** g01101373

198-1319 LINES GP-ENGINE OIL

S/N: THX1-UP
FRONT SUMP
PART OF 261-4290, 261-4291, 261-4293, 261-4294, 261-4295, 261-4297 ENGINE AR
ALSO AN ATTACHMENT

SMCS-1307 **i02094237**

NOTE	REF NO	GRAPHIC REF	PART NUMBER	QTY	PART NAME 1 2 3 4 5 6 (PRODUCT LEVEL)	SEE PAGE
	2	1	**234-0203**	1	ELBOW-OUTLET	
	3	1	**195-0452**	1	GASKET	
	4	1	**213-8516**	1	TUBE AS	
	5	1	**033-6034**	1	SEAL-O-RING	
	7	1	**208-9282**	1	BOLT (M8X1.25X25-MM)	
	8	1	**5P-7530**	1	SEAL-O-RING	
M	9	1	**6V-5217**	2	BOLT (M8X1.25X20-MM)	
M	11	1	**8T-0292**	1	BOLT (M8X1.25X90-MM)	
M	12	1	**6V-3940**	2	BOLT (M8X1.25X25-MM)	
	13	1	**9M-1974**	5	WASHER-HARD (8.8X16X2-MM THK)	

M-METRIC PART

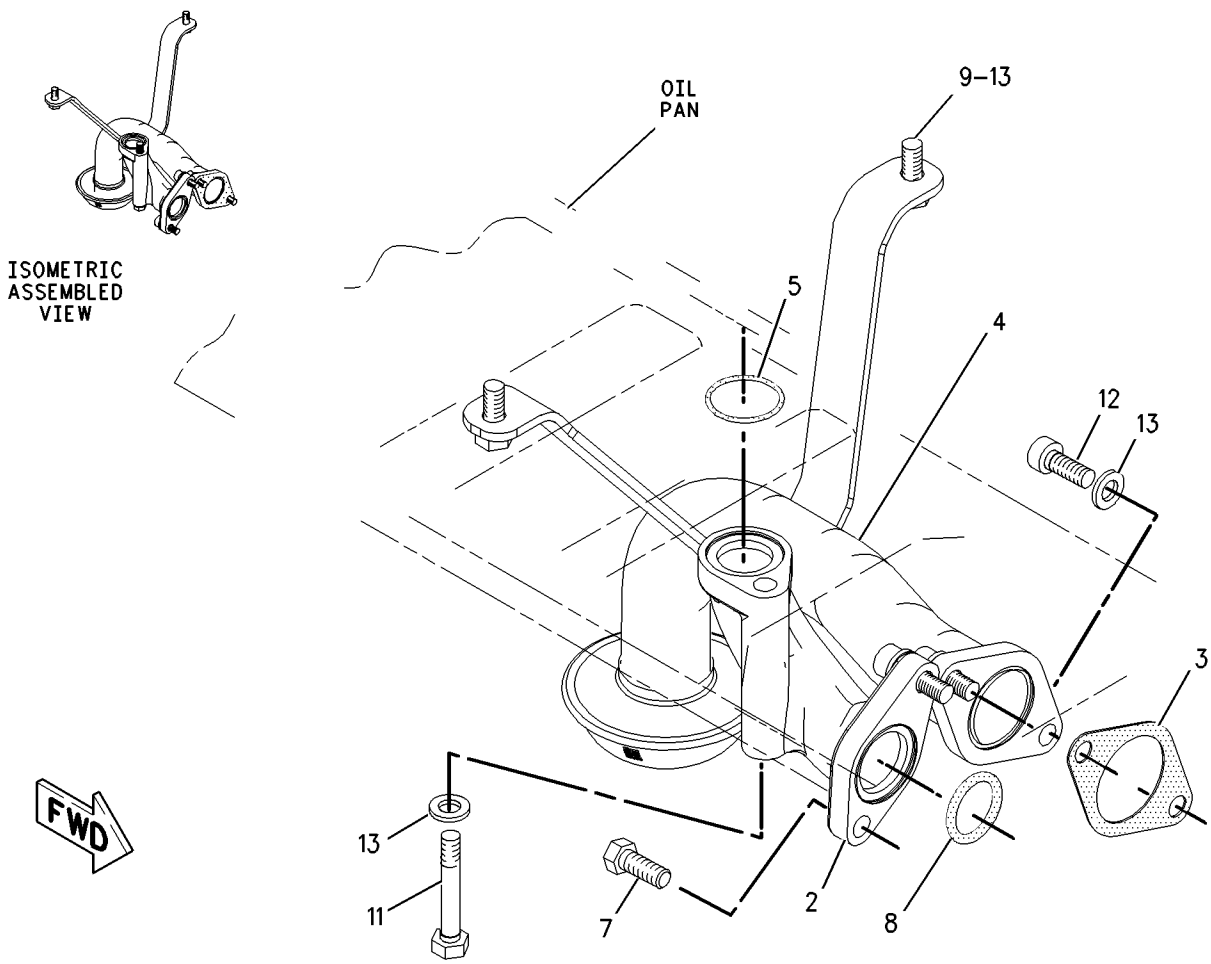

GRAPHIC #1 **<END>** g00934978

LUBRICATION SYSTEM

224-0821 LINES GP-OIL SUPPLY—HYDRAULIC FAN OIL

S/N: JDL1-UP; GMT1-UP
PART OF 263-5028, 263-5029 DRIVE AR-FAN
AN ATTACHMENT

SMCS-1307 **i02469277**

NOTE	REF NO	GRAPHIC REF	PART NUMBER	QTY	PART NAME 1 2 3 4 5 6 (PRODUCT LEVEL)	SEE PAGE
C	1	1	**7P-9231**	2	BRACKET	
	2	1	**124-7000**	1	PLATE AS	
	3	1	*148-8369*	1	ELBOW AS	
		1	**6V-8628**	1	ELBOW	
		1	**3J-7354**	1	SEAL-O-RING	
		1	**4J-5477**	1	SEAL-O-RING	
C	4	1	*148-8378*	2	ELBOW AS	
					(EACH INCLUDES)	
		1	**6V-8724**	1	ELBOW	
		1	**3J-1907**	1	SEAL-O-RING	
		1	**6V-8397**	1	SEAL-O-RING	
	5	1	*148-8435*	1	TEE AS	
		1	**6V-8781**	1	TEE-FACE SEAL	
		1	**3J-1907**	1	SEAL-O-RING	
		1	**6V-8397**	2	SEAL-O-RING	
C	6	1	**154-2302**	1	SPACER (11X20X15-MM THK)	
	7	1	**187-3974**	1	TUBE AS	
	8	1	**189-5576**	1	TUBE AS	
	9	1	**189-5577**	1	TUBE AS	
Y	10	1	**192-0729**	1	VALVE GP-MODULATING (HYDRAULIC FAN OIL)	95
	11	1	**235-6529**	1	BRACKET AS	
I	12	1	**236-6742**	1	HOSE AS	
I	13	1	**236-6743**	1	HOSE AS	
C	14	1	*148-8318*	1	CONNECTOR AS	
		1	**6V-8634**	1	CONNECTOR	
		1	**3K-0360**	1	SEAL-O-RING	
		1	**6V-8397**	1	SEAL-O-RING	
	15	1	*148-8325*	1	CONNECTOR AS	
		1	**6V-8641**	1	CONNECTOR	
		1	**3J-1907**	1	SEAL-O-RING	
		1	**4J-5477**	1	SEAL-O-RING	
	16	1	*148-8336*	1	CONNECTOR AS	
		1	**6V-8636**	1	CONNECTOR	
		1	**3J-1907**	1	SEAL-O-RING	
		1	**6V-8397**	1	SEAL-O-RING	
	17	1	*148-8340*	1	CONNECTOR AS	
		1	**6V-8639**	1	CONNECTOR	
		1	**3K-0360**	1	SEAL-O-RING	
		1	**6V-8398**	1	SEAL-O-RING	
	18	1	*148-8354*	1	ELBOW AS	
		1	**6V-9002**	1	ELBOW	
		1	**6V-8398**	1	SEAL-O-RING	
		1	**3K-0360**	1	SEAL-O-RING	
C	20	1	**4L-6454**	1	BOLT (3/8-16X1-IN)	
M	21	1	**5C-7261**	1	NUT (M8X1.25-THD)	
	22	1	**5P-4295**	1	CLIP	
	23	1	**6V-5049**	1	SEAL-O-RING	
	24	1	**7W-7381**	1	FITTING-OUTLET	
	25	1	**8M-2773**	4	CLIP	
C	26	1	**8T-4121**	9	WASHER-HARD (11X21X2.5-MM THK)	
CM	27	1	**8T-4133**	2	NUT (M10X1.5 THD)	
CM	28	1	**8T-4136**	2	BOLT (M10X1.5X25-MM)	
CM	29	1	**8T-4185**	1	BOLT (M10X1.5X50-MM)	
M	30	1	**8T-4195**	2	BOLT (M10X1.5X30-MM)	
	31	1	**8T-4224**	2	WASHER-HARD (8.8X16X2-MM THK)	

224-0821 **LINES GP-OIL SUPPLY** *(contd.)* **i02469277**

NOTE	REF NO	GRAPHIC REF	PART NUMBER	QTY	PART NAME 1 2 3 4 5 6 (PRODUCT LEVEL)	SEE PAGE
C	32	1	**8T-4896**	1	WASHER-HARD (10.2X18.5X2.5-MM THK)	
M	33	1	**8T-6466**	2	BOLT (M10X1.5X60-MM)	

C-CHANGE FROM PREVIOUS TYPE
I-REFER TO HYDRAULIC INFORMATION SYSTEM
M-METRIC PART
Y-SEPARATE ILLUSTRATION

224-0821 **LINES GP-OIL SUPPLY** *(contd.)* **i02469277**

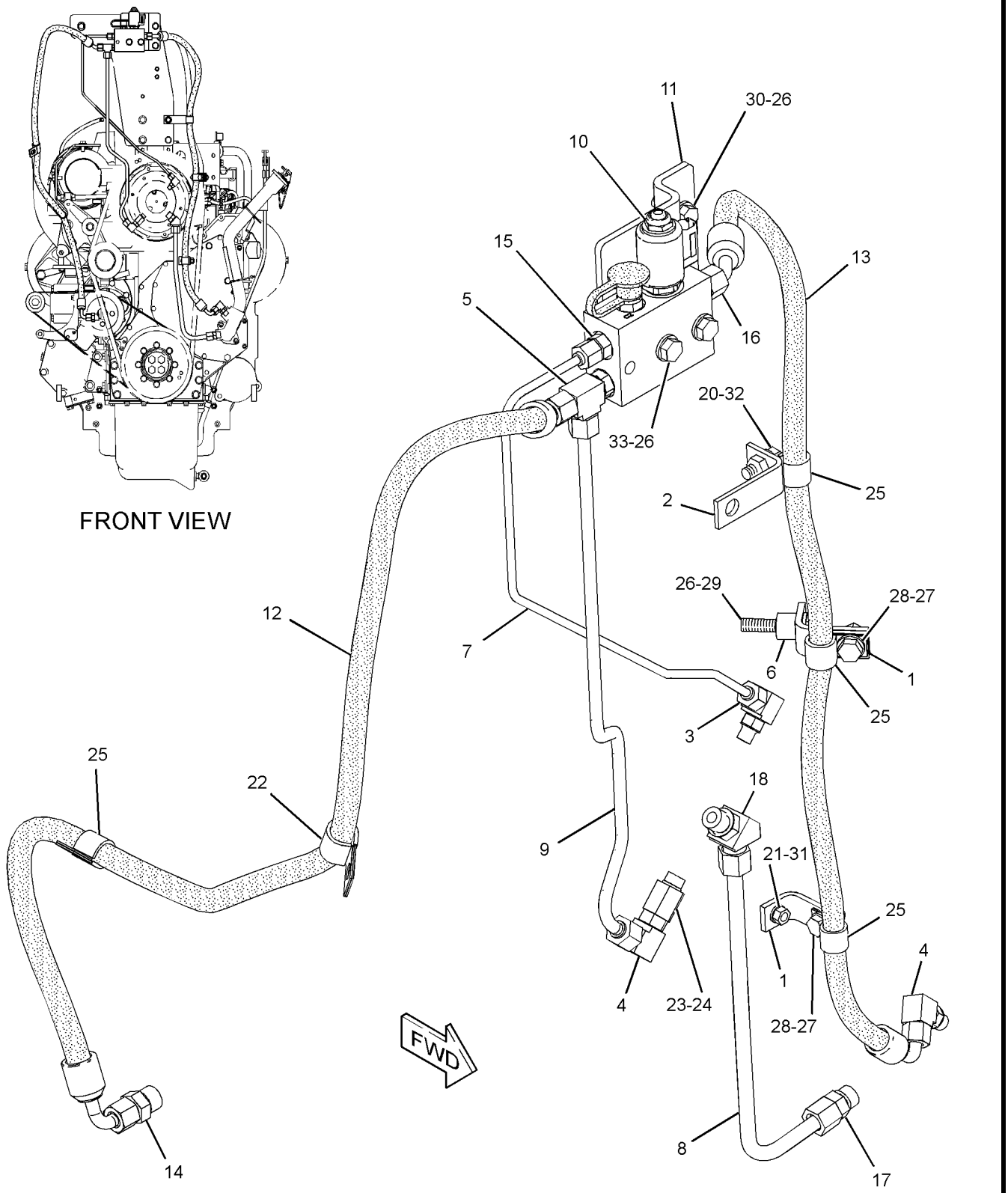

GRAPHIC #1 **<END>** g01217947

LUBRICATION SYSTEM

266-9810 LINES GP-TURBOCHARGER OIL

S/N: THX1-UP

PART OF 261-4290, 261-4291, 261-4294 ENGINE AR

ALSO AN ATTACHMENT

SMCS-1052, 1307 **i02375415**

NOTE	REF NO	GRAPHIC REF	PART NUMBER	QTY	PART NAME 1 2 3 4 5 6 (PRODUCT LEVEL)	SEE PAGE
	1	1	**9N-4685**	1	BLOCK	
	2	1	**167-0168**	1	HOSE AS-OIL SUPPLY	
	3	1	*183-3399*	1	CONNECTOR AS	
		1	**214-7568**	1	SEAL-O-RING	
		1	**6V-8636**	1	CONNECTOR	
		1	**221-3494**	1	SEAL-O-RING	
	4	1	**197-8419**	1	GASKET (TURBOCHARGER OIL)	
	5	1	**246-6036**	1	HOSE	
	6	1	**257-5858**	1	TUBE AS	
	7	1	**263-3464**	1	TUBE AS	
	8	1	**269-8788**	2	CLAMP-BAND	
	9	1	**124-0174**	1	CLIP	
M	10	1	**2Y-5829**	1	NUT (M10X1.15-THD)	
	11	1	**5P-7530**	1	SEAL-O-RING	
M	12	1	**6V-3940**	2	BOLT (M8X1.25X25-MM)	
M	13	1	**6V-4249**	1	BOLT (M10X1.5X50-MM)	
M	14	1	**6V-5218**	2	BOLT (M8X1.25X35-MM)	
	15	1	**6V-5839**	2	WASHER (11X21X2.5-MM THK)	
	16	1	**7C-4354**	1	CLIP	
	17	1	**9M-1974**	4	WASHER-HARD (8.8X16X2-MM THK)	

M-METRIC PART

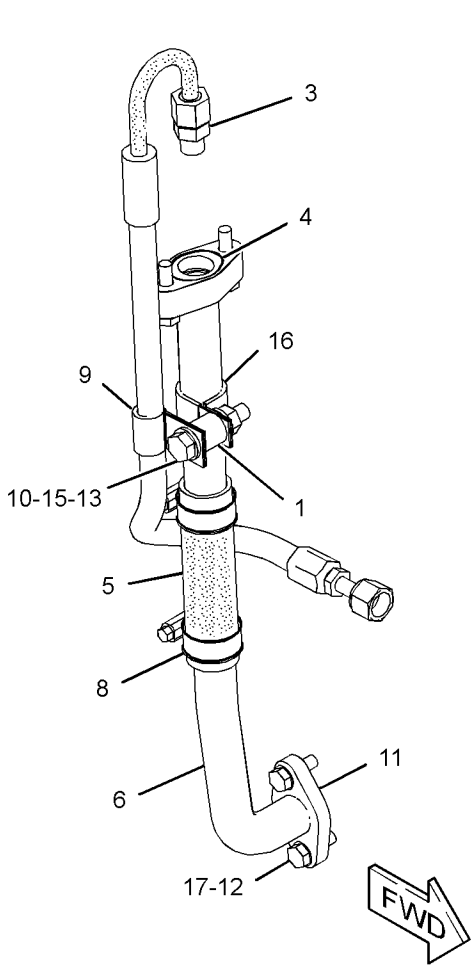

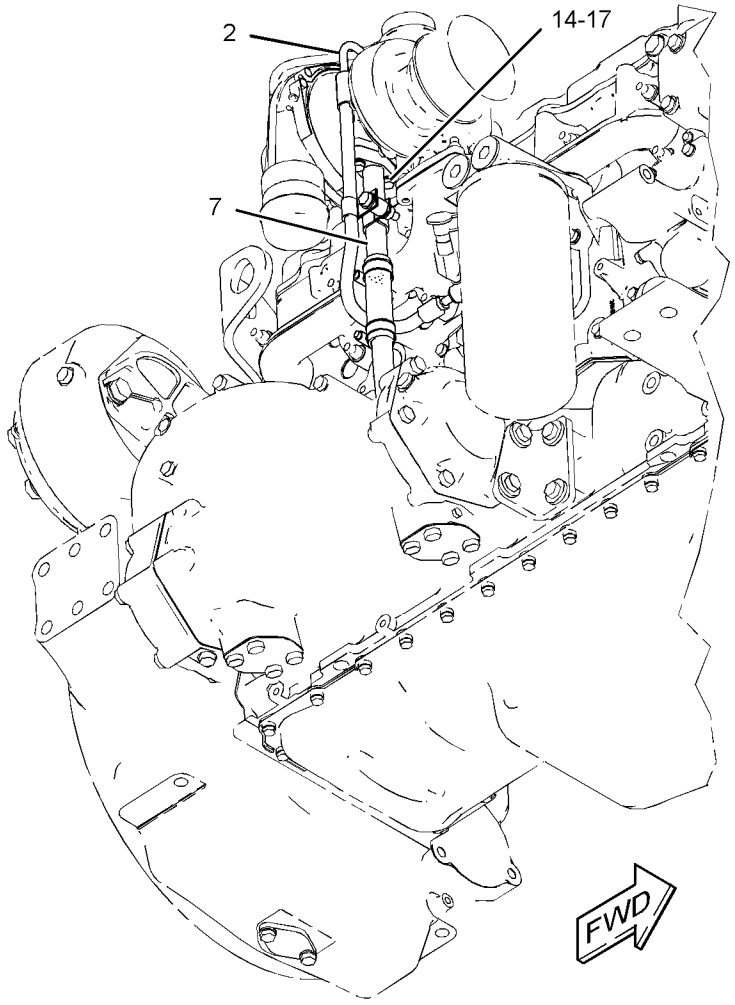

GRAPHIC #1 **<END>** g01214244

266-9811 LINES GP-TURBOCHARGER OIL

S/N: THX1-UP

PART OF 261-4293, 261-4295, 261-4297 ENGINE AR

AN ATTACHMENT

SMCS-1052, 1307 **i02434349**

NOTE	REF NO	GRAPHIC REF	PART NUMBER	QTY	PART NAME 1 2 3 4 5 6 (PRODUCT LEVEL)	SEE PAGE
	1	1	*183-3399*	1	CONNECTOR AS	
		1	**6V-8636**	1	CONNECTOR	
		1	**214-7568**	1	SEAL-O-RING	
		1	**221-3494**	1	SEAL-O-RING	
	2	1	**197-8419**	1	GASKET (TURBOCHARGER OIL)	
	3	1	**234-7526**	1	TUBE AS	
	4	1	**246-6036**	1	HOSE	
	5	1	**257-5858**	1	TUBE AS	
	6	1	**263-3464**	1	TUBE AS	
	7	1	**269-8788**	2	CLAMP-BAND	
M	8	1	**2Y-5829**	1	NUT (M10X1.15-THD)	
	9	1	**5P-7530**	1	SEAL-O-RING	
	10	1	**5P-9297**	1	CLIP	
M	11	1	**6V-3940**	2	BOLT (M8X1.25X25-MM)	
M	12	1	**6V-4248**	1	BOLT (M10X1.5X25-MM)	
M	13	1	**6V-5218**	2	BOLT (M8X1.25X35-MM)	
	14	1	**6V-5839**	2	WASHER (11X21X2.5-MM THK)	
	15	1	**7C-4354**	1	CLIP	
	16	1	**9M-1974**	4	WASHER-HARD (8.8X16X2-MM THK)	

M-METRIC PART

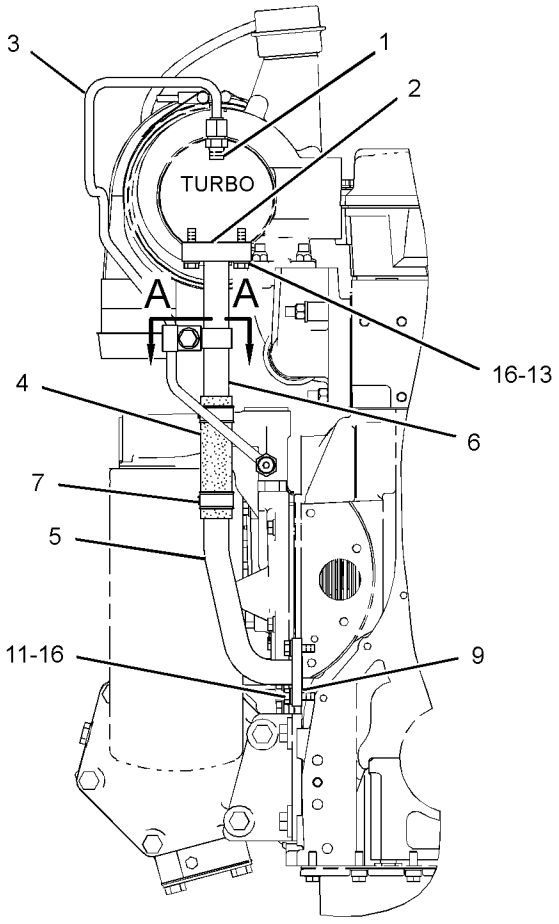

REAR VIEW

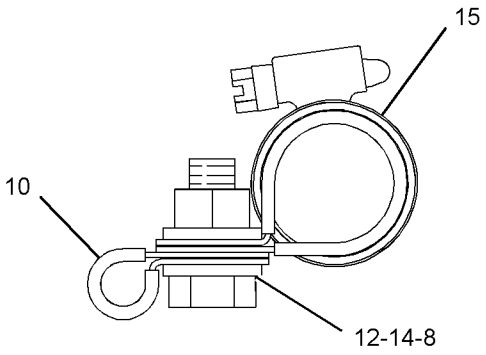

SECTION A-A

GRAPHIC #1 **<END>** g01207395

LUBRICATION SYSTEM

263-0853 OIL CHANGE GP-HIGH SPEED

S/N: JDL1-UP; GMT1-UP

AN ATTACHMENT

SMCS-1325 **i02455762**

NOTE	REF NO	GRAPHIC REF	PART NUMBER	QTY	PART NAME 1 2 3 4 5 6 (PRODUCT LEVEL)	SEE PAGE
	1	1	**1V-3713**	1	ANGLE	
	2	1	**2P-1286**	1	LOCKNUT-BULKHEAD (1-5/16-12-THD)	
	3	1	**2V-2043**	1	LOCKNUT-FLARED (1-5/8-12-THD)	
	4	1	**3W-2647**	1	SPACER (13.5X30X10-MM THK)	
	5	1	**8N-6854**	1	GASKET	
	6	1	**8W-0327**	1	ADAPTER	
	7	1	**9Y-7595**	1	SPACER (13X30X14-MM THK)	
	8	1	**110-8319**	1	FITTING AS (QUICK DISCONNECT)	
		1	**110-8318**	1	CAP-DUST	
	9	1	**110-8827**	1	FITTING AS (QUICK DISCONNECT)	
		1	**110-8826**	1	CAP-DUST	
	11	1	**225-2412**	1	BRACKET	
I	12	1	**254-8108**	1	HOSE AS	
	13	1	**264-5336**	1	PLATE AS	
I	14	1	**264-5352**	1	HOSE AS	
	15	1	**108-8089**	1	COVER-TOP	
	16	1	**118-6878**	1	BRACKET AS	
	17	1	*148-8327*	2	CONNECTOR AS	
					(EACH INCLUDES)	
		1	**6V-8637**	1	CONNECTOR	
		1	**3D-2824**	1	SEAL-O-RING	
		1	**6V-9746**	1	SEAL-O-RING	
	18	1	*148-8339*	1	CONNECTOR AS	
		1	**6V-8716**	1	CONNECTOR	
		1	**6V-9746**	1	SEAL-O-RING	
		1	**7M-8485**	1	SEAL-O-RING	
	19	1	*148-8382*	1	ELBOW AS	
		1	**8T-0404**	1	ELBOW	
		1	**3D-2824**	1	SEAL-O-RING	
		1	**7J-9108**	1	SEAL-O-RING	
	20	1	**1V-9365**	1	SPACER (0.493X0.675X1.19-IN THK)	
	21	1	**3M-7045**	1	PLUG	
	22	1	**5P-7854**	7	CLIP	
	23	1	**7C-4355**	2	CLIP	
M	24	1	**7X-2552**	1	BOLT (M16X2X30-MM)	
	25	1	**8M-2773**	1	CLIP	
	26	1	**8T-4121**	11	WASHER-HARD (11X21X2.5-MM THK)	
M	27	1	**8T-4122**	1	WASHER-HARD (17X32X3.5-MM THK)	
M	28	1	**8T-4133**	4	NUT (M10X1.5 THD)	
M	29	1	**8T-4136**	3	BOLT (M10X1.5X25-MM)	
M	30	1	**8T-4137**	2	BOLT (M10X1.5X20-MM)	
M	31	1	**8T-4185**	1	BOLT (M10X1.5X50-MM)	
M	32	1	**8T-4186**	3	BOLT (M10X1.5X40-MM)	
M	33	1	**8T-4195**	2	BOLT (M10X1.5X30-MM)	
M	34	1	**8T-4196**	2	BOLT (M10X1.5X35-MM)	
M	35	1	**8T-6466**	1	BOLT (M10X1.5X60-MM)	

I-REFER TO HYDRAULIC INFORMATION SYSTEM
M-METRIC PART

263-0853 **OIL CHANGE GP-HIGH SPEED** *(contd.)* **i02455762**

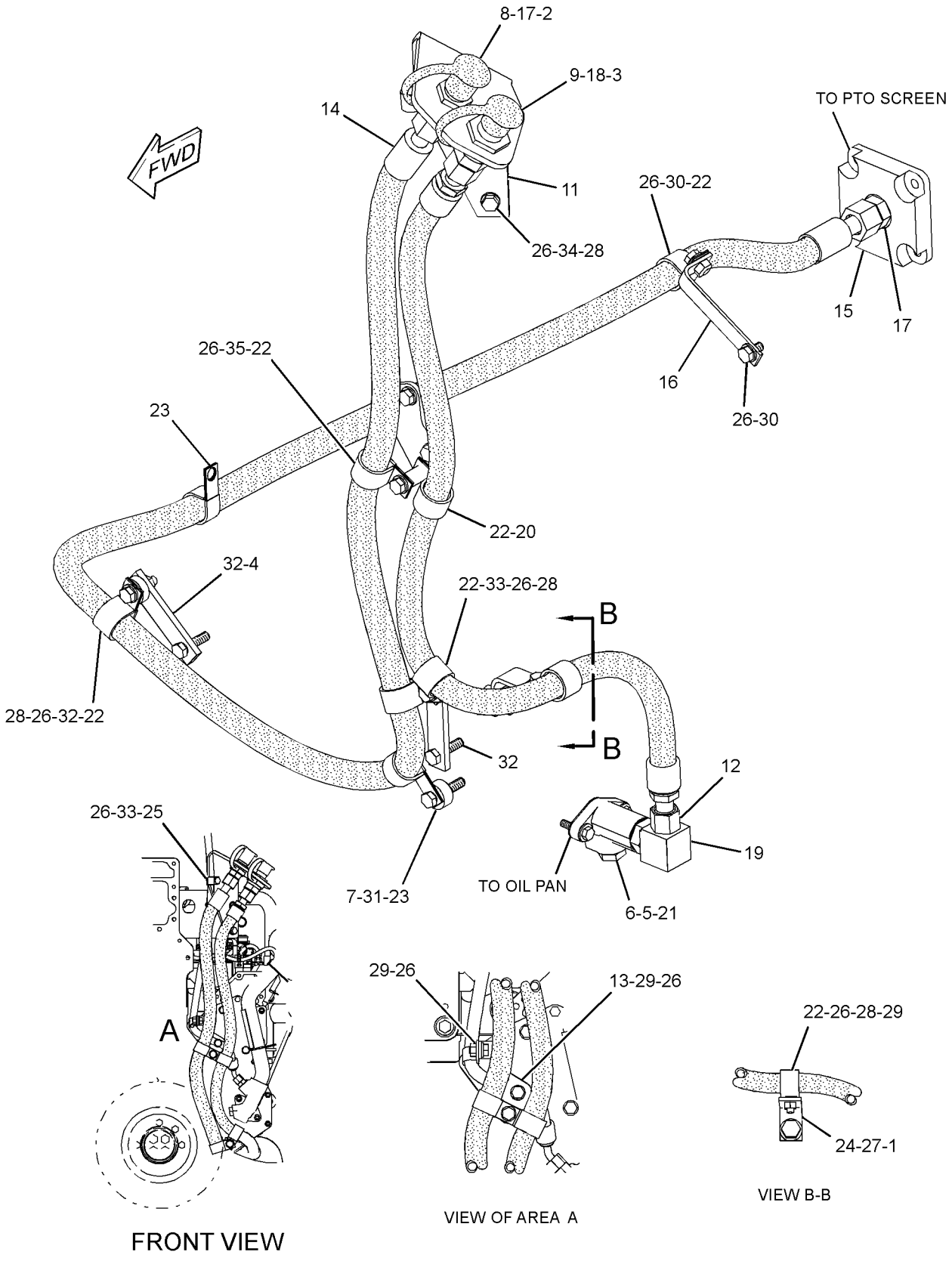

GRAPHIC #1 **<END>** g01209704

195-8098 PUMP GP-ENGINE OIL

S/N: THX1-UP
PART OF 261-4530, 261-4531, 261-4533, 261-4534, 261-4535, 261-4537 ENGINE AR-CORE
ALSO AN ATTACHMENT

SMCS-1304, 1315 **i01836187**

NOTE	REF NO	GRAPHIC REF	PART NUMBER	QTY	PART NAME 1 2 3 4 5 6 (PRODUCT LEVEL)	SEE PAGE
	1	1	**211-0546**	1	PUMP GP-ENGINE OIL	
		1	**210-5522**	1	PUMP AS-ENGINE OIL	
	1A	1	**221-0144**	1	GEAR AS (60 TEETH)	
M	2	1	**6V-1819**	2	BOLT (M10X1.50X100MM)	
	3	1	**6V-5839**	2	WASHER (11X21X2.5MM THK)	

M-METRIC PART

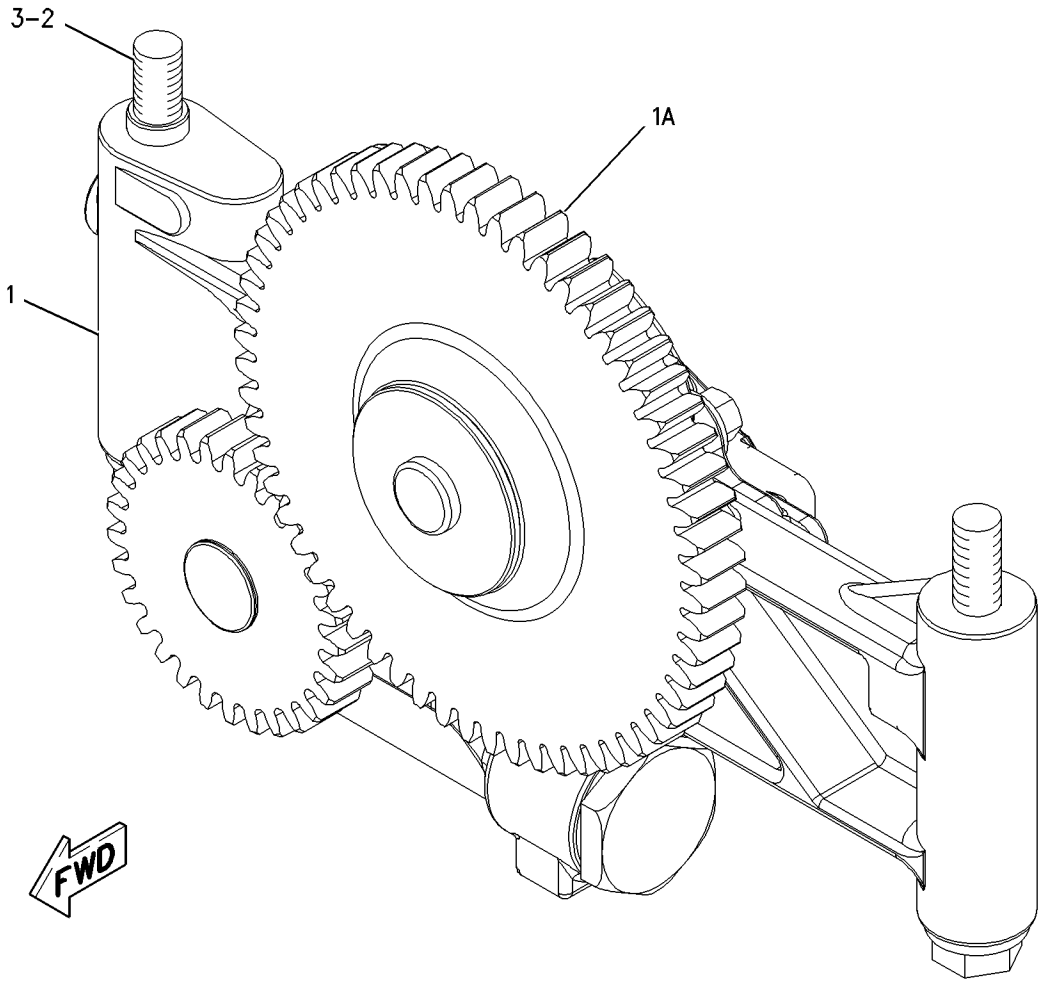

GRAPHIC #1 **<END>** g00909910

LUBRICATION SYSTEM

198-0921 VALVE GP-FLUID SAMPLING

S/N: THX1-UP

PART OF 261-4290, 261-4291, 261-4293, 261-4294, 261-4295, 261-4297 ENGINE AR

ALSO AN ATTACHMENT

SMCS-7542 **i01830867**

NOTE	REF NO	GRAPHIC REF	PART NUMBER	QTY	PART NAME 1 2 3 4 5 6 (PRODUCT LEVEL)	SEE PAGE
	2	1	**6V-0852**	1	CAP-DUST	
	3	1	**6V-3965**	1	FITTING AS (QUICK DISCONNECT)	
	4	1	**6V-5049**	1	SEAL-O-RING	

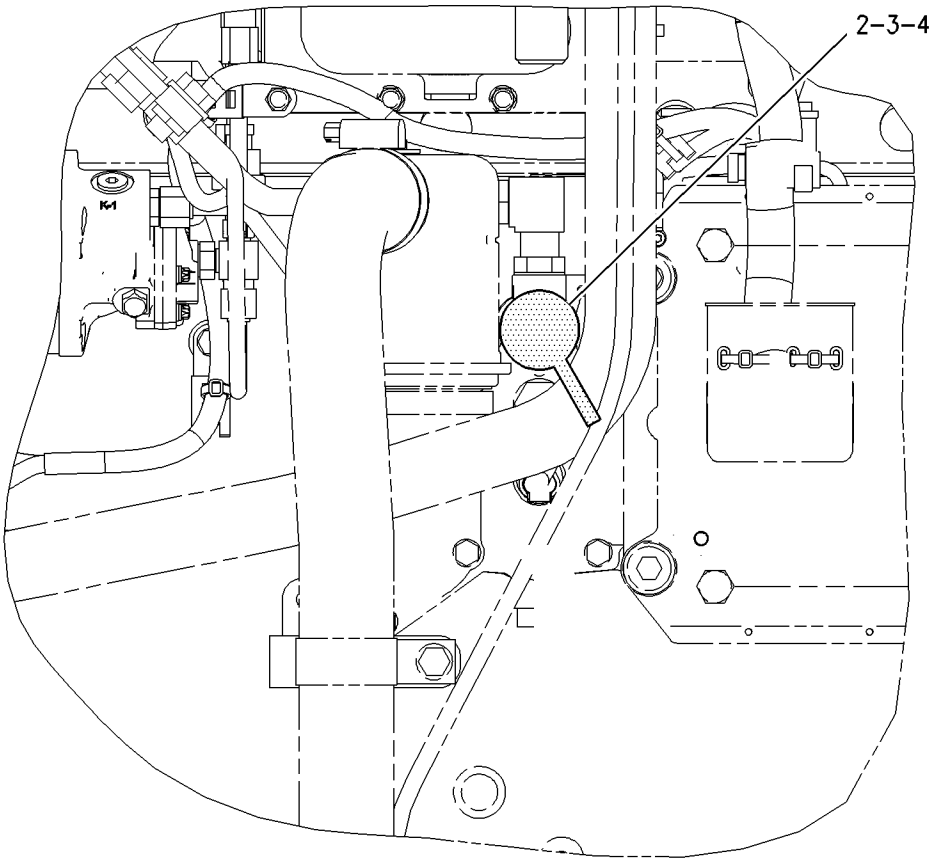

LEFT SIDE VIEW

GRAPHIC #1 **<END>** g00935554

192-0729 VALVE GP-MODULATING–PILOT OIL

S/N: JDL1-UP; GMT1-UP
PART OF 224-0821 LINES GP-OIL SUPPLY
AN ATTACHMENT

SMCS-1359, 5479 **i02157382**

NOTE	REF NO	GRAPHIC REF	PART NUMBER	QTY	PART NAME 1 2 3 4 5 6 (PRODUCT LEVEL)	SEE PAGE
	1	1	**175-3616**	1	MANIFOLD AS	
	1A	1	**6V-0852**	1	CAP-DUST	
	1B	1	**6V-3965**	1	FITTING AS (QUICK DISCONNECT)	
Y	2	1	**176-5321**	1	VALVE GP-MODULATING	316

Y-SEPARATE ILLUSTRATION

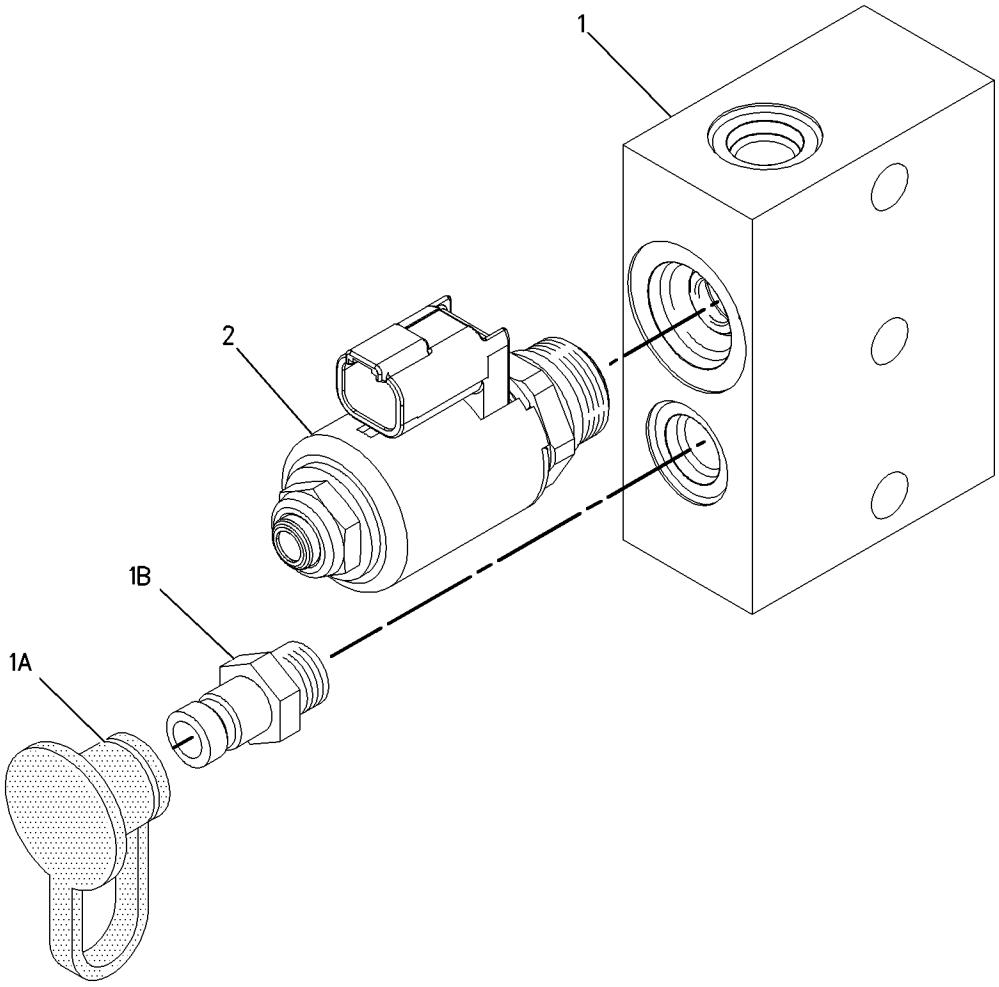

GRAPHIC #1 **<END>** g00756312

188-3826 COOLER GP-ENGINE OIL

S/N: THX1-UP
PART OF 261-4530, 261-4531, 261-4533, 261-4534, 261-4535, 261-4537 ENGINE
AR-CORE
ALSO AN ATTACHMENT

SMCS-1378 **i02014290**

NOTE	REF NO	GRAPHIC REF	PART NUMBER	QTY	PART NAME 1 2 3 4 5 6 (PRODUCT LEVEL)	SEE PAGE
	1	1	**237-4956**	1	CORE AS-OIL COOLER (ENGINE)	
	2	1	**209-7293**	1	GASKET	

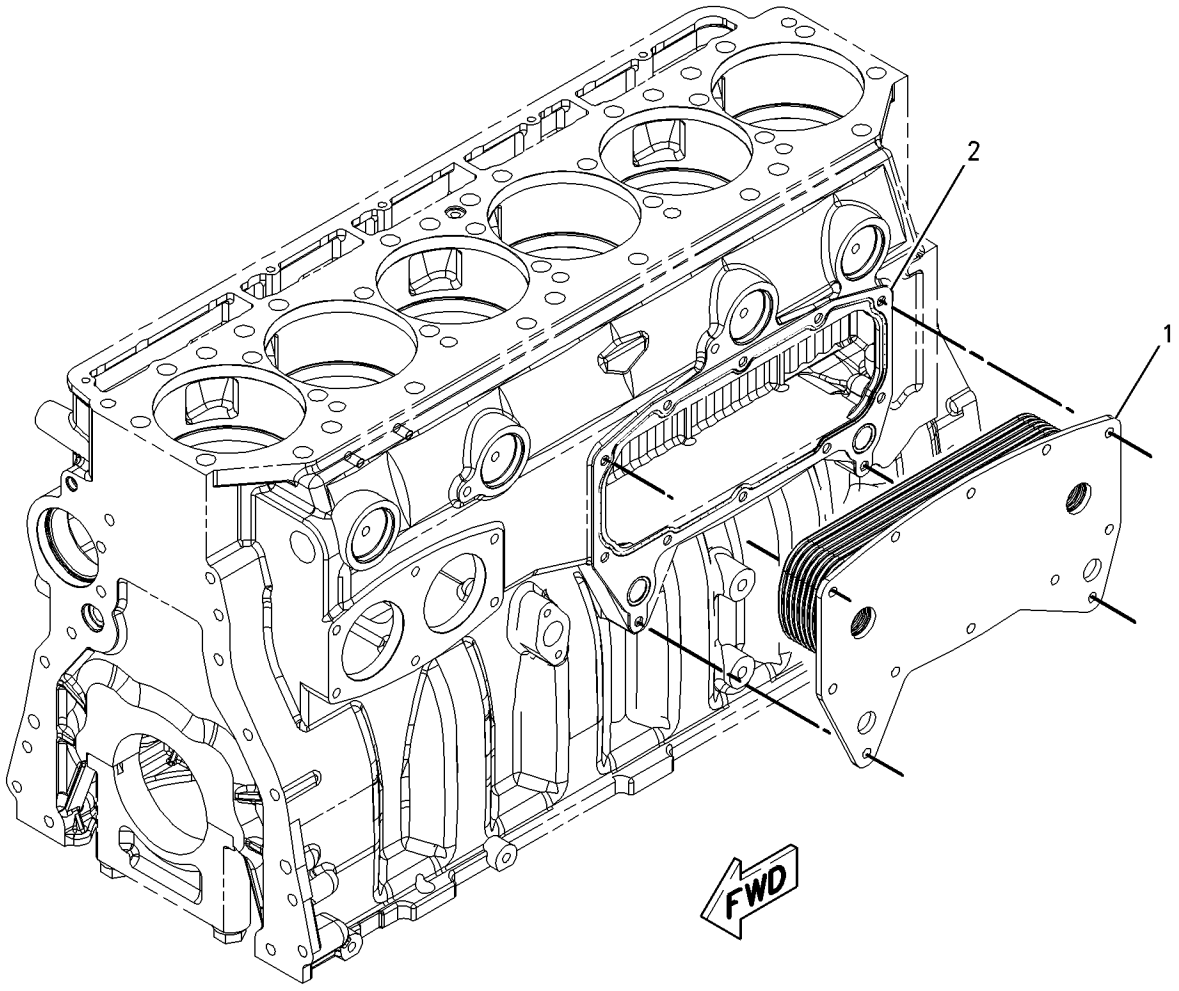

GRAPHIC #1 **<END>** g00837749

222-3892 COOLING AR-HIGH AMBIENT TEMP

S/N: JDL1-UP; GMT1-UP
PART OF 206-3676 FAN AR-EJECTOR
AN ATTACHMENT

SMCS-1353, 1374 **i02453904**

NOTE	PART NUMBER	QTY	PART NAME 1 2 3 4 5 6 (PRODUCT LEVEL)	SEE PAGE
Y	*206-3673*	1	PULLEY GP-FAN & ALT DRIVE	63
Y-SEPARATE ILLUSTRATION				

<END>

206-3676 FAN AR-EJECTOR

S/N: JDL1-UP; GMT1-UP
AN ATTACHMENT

SMCS-1356 **i02453891**

NOTE	PART NUMBER	QTY	PART NAME 1 2 3 4 5 6 (PRODUCT LEVEL)	SEE PAGE
Y	*222-3892*	1	COOLING AR-HIGH AMBIENT TEMP	97
	222-7094	1	BAFFLE AS-RADIATOR (LEFT SIDE) (RADIATOR)	
	222-7095	1	BAFFLE AS-RADIATOR (RIGHT SIDE) (RADIATOR)	
	8Q-1911	1	SPIDER AS-FAN	
Y-SEPARATE ILLUSTRATION				

<END>

COOLING SYSTEM

168-8376 FAN GP-BLOWER

S/N: JDL1-UP; GMT1-UP

PART OF 223-0551 INSTALLATION AR-ENGINE

SMCS-1356, 1360 **i02390612**

NOTE	REF NO	GRAPHIC REF	PART NUMBER	QTY	PART NAME 1 2 3 4 5 6 (PRODUCT LEVEL)	SEE PAGE
	1	1	**250-1911**	1	SPIDER AS-FAN (8-BLADE)	
	2	1	**195-7882**	4	GUARD AS	
	3	1	**8T-4222**	4	WASHER-PLATED (11X32X2.5-MM THK)	
	4	1	**7X-7729**	12	WASHER (11X25X3-MM THK)	
M	5	1	**8T-4137**	4	BOLT (M10X1.5X20-MM)	
M	6	1	**8T-4182**	2	BOLT (M10X1.5X45-MM)	
M	7	1	**8T-4196**	18	BOLT (M10X1.5X35-MM)	
	8	1	**8T-4121**	8	WASHER-HARD (11X21X2.5-MM THK)	

M-METRIC PART

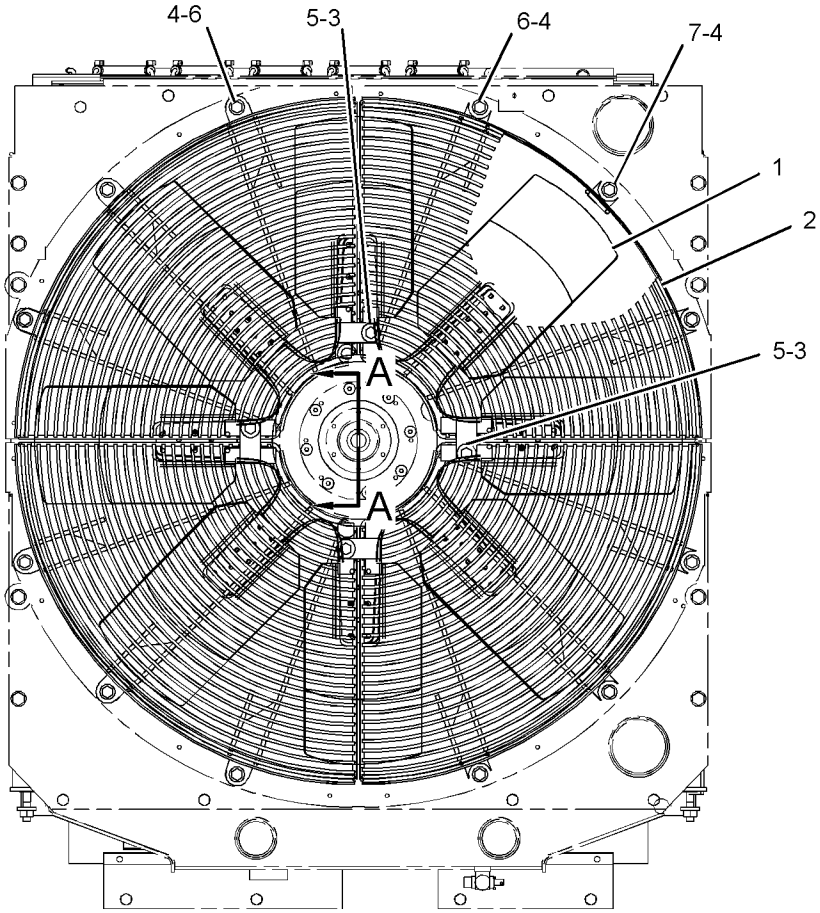

FRONT VIEW

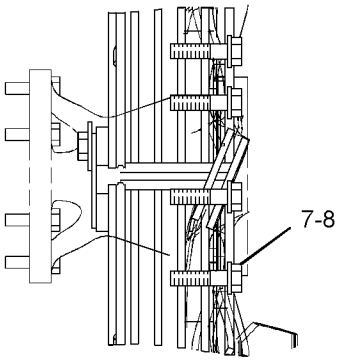

SECTION A-A

GRAPHIC #1 **<END>** g01213834

174-7414 FAN GP-REVERSIBLE

S/N: JDL1-UP; GMT1-UP
AN ATTACHMENT

SMCS-1356, 1360 **i02455805**

NOTE	REF NO	GRAPHIC REF	PART NUMBER	QTY	PART NAME 1 2 3 4 5 6 (PRODUCT LEVEL)	SEE PAGE
	1	1	**125-1362**	1	FAN AS-REVERSIBLE (8-BLADE)	
	2	1	**174-7412**	1	GUARD AS	
	3	1	**2W-5825**	1	PLATE	
	4	1	**7X-7729**	2	WASHER (11X25X3-MM THK)	
M	5	1	**8T-4137**	2	BOLT (M10X1.5X20-MM)	
	6	1	**8T-4896**	8	WASHER-HARD (10.2X18.5X2.5-MM THK)	
M	7	1	**8T-6466**	8	BOLT (M10X1.5X60-MM)	

M-METRIC PART

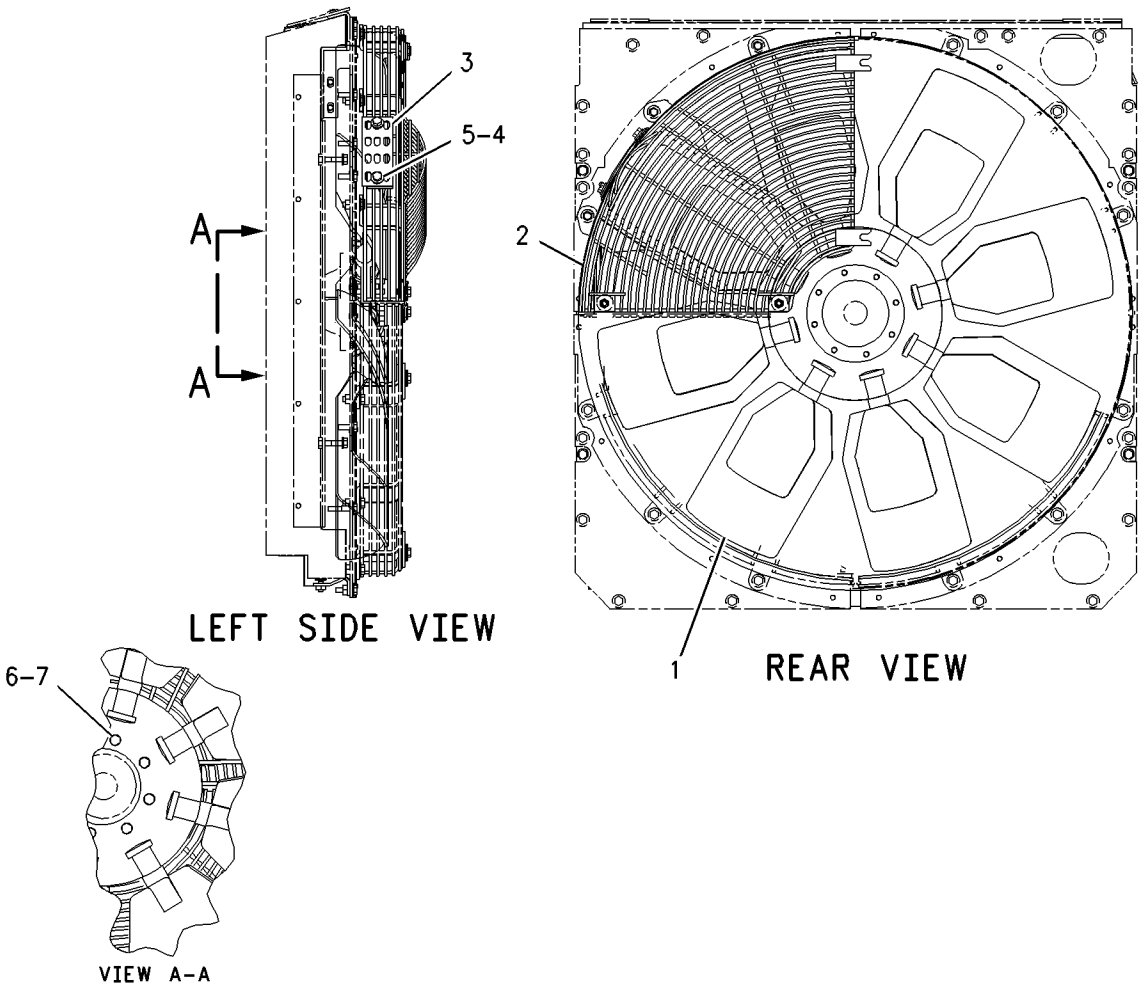

GRAPHIC #1 **<END>** g00859207

165-4461 LINES GP-WATER–REGULATOR

S/N: THX1-UP
TEMPERATURE
PART OF 261-4290, 261-4291, 261-4293, 261-4294, 261-4295, 261-4297 ENGINE AR
ALSO AN ATTACHMENT

SMCS-1355, 1380, 1393 **i02468738**

NOTE	REF NO	GRAPHIC REF	PART NUMBER	QTY	PART NAME 1 2 3 4 5 6 (PRODUCT LEVEL)	SEE PAGE
	1	1	**248-5513**	1	REGULATOR-WATER TEMPERATURE (92-DEG C) (COOLANT)	
	2	1	**224-8923**	2	CLAMP	
	3	1	**169-3124**	1	HOSE	
	4	1	**191-4457**	1	GASKET (WATER REGULATOR HOUSING)	
	5	1	**217-5200**	1	HOUSING AS	
		1	**217-5199**	1	HOUSING	
	5A	1	**3S-9643**	1	SEAL-LIP TYPE (WATER TEMPERATURE REGULATOR)	
	6	1	*148-8411*	2	PLUG AS	
					(EACH INCLUDES)	
		1	**9S-4185**	1	PLUG	
	6A	1	**3K-0360**	1	SEAL-O-RING	
	7	1	**4S-9191**	4	WASHER (12X22.5X5-MM THK)	
M	8	1	**8T-0644**	4	BOLT (M10X1.5X90-MM)	
	9	1	**8T-6762**	1	PLUG-PIPE	

M-METRIC PART

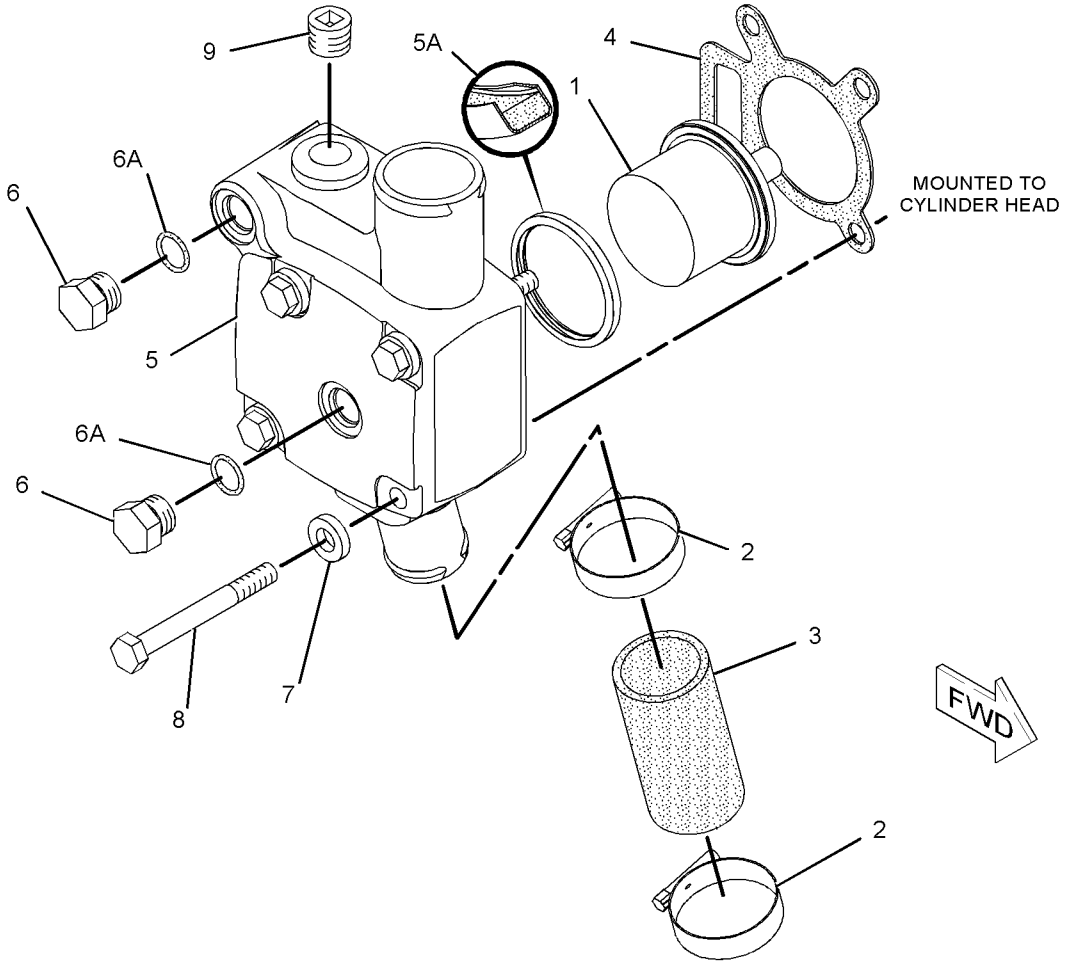

GRAPHIC #1 **<END>** g01142330

168-8378 LINES GP-WATER

S/N: JDL1-UP; GMT1-UP

PART OF 223-0551 INSTALLATION AR-ENGINE

SMCS-1355, 1380, 1393 **i02432436**

NOTE	REF NO	GRAPHIC REF	PART NUMBER	QTY	PART NAME 1 2 3 4 5 6 (PRODUCT LEVEL)	SEE PAGE
	1	1	**8T-4984**	5	CLAMP-HOSE	
	2	1	**157-0670**	1	CAP-DUST	
	3	1	**185-0844**	1	HOSE	
	4	1	**185-0845**	1	TUBE AS	
C	5	1	**254-5524**	1	BRACKET AS	
M		1	**8T-3490**	1	NUT-WELD (M10X1.5-THD)	
	6	1	**187-3961**	1	HOSE-RADIATOR	
	7	1	**190-7515**	1	BRACKET AS	
M		1	**8T-3490**	1	NUT-WELD (M10X1.5-THD)	
	8	1	**213-1723**	1	BRACKET AS	
M		1	**8T-3490**	2	NUT-WELD (M10X1.5-THD)	
	9	1	**213-1724**	1	HOSE	
	10	1	**219-3305**	1	BRACKET AS	
M		1	**8T-3490**	1	NUT-WELD (M10X1.5-THD)	
	11	1	**3E-9867**	2	CLIP (SLOT)	
	12	1	**3E-9868**	2	CLIP (TAB)	
	13	1	**3J-1907**	1	SEAL-O-RING	
	14	1	**3J-7354**	1	SEAL-O-RING	
	15	1	**5P-9617**	1	ADAPTER	
	16	1	**6V-1581**	3	CLIP (SLOT)	
	17	1	**6V-1582**	3	CLIP (TAB)	
	18	1	**7X-7729**	5	WASHER (11X25X3-MM THK)	
	19	1	**8C-3446**	1	VALVE-FLUID SAMPLING (COOLANT)	
	20	1	**8T-4121**	8	WASHER-HARD (11X21X2.5-MM THK)	
M	21	1	**8T-4136**	2	BOLT (M10X1.5X25-MM)	
M	22	1	**8T-4137**	2	BOLT (M10X1.5X20-MM)	
CM	23	1	**8T-4195**	5	BOLT (M10X1.5X30-MM)	
M	24	1	**8T-4196**	4	BOLT (M10X1.5X35-MM)	
	25	1	**8T-6703**	1	CLAMP-HOSE	

C-CHANGE FROM PREVIOUS TYPE
M-METRIC PART

168-8378 **LINES GP-WATER** *(contd.)* **i02432436**

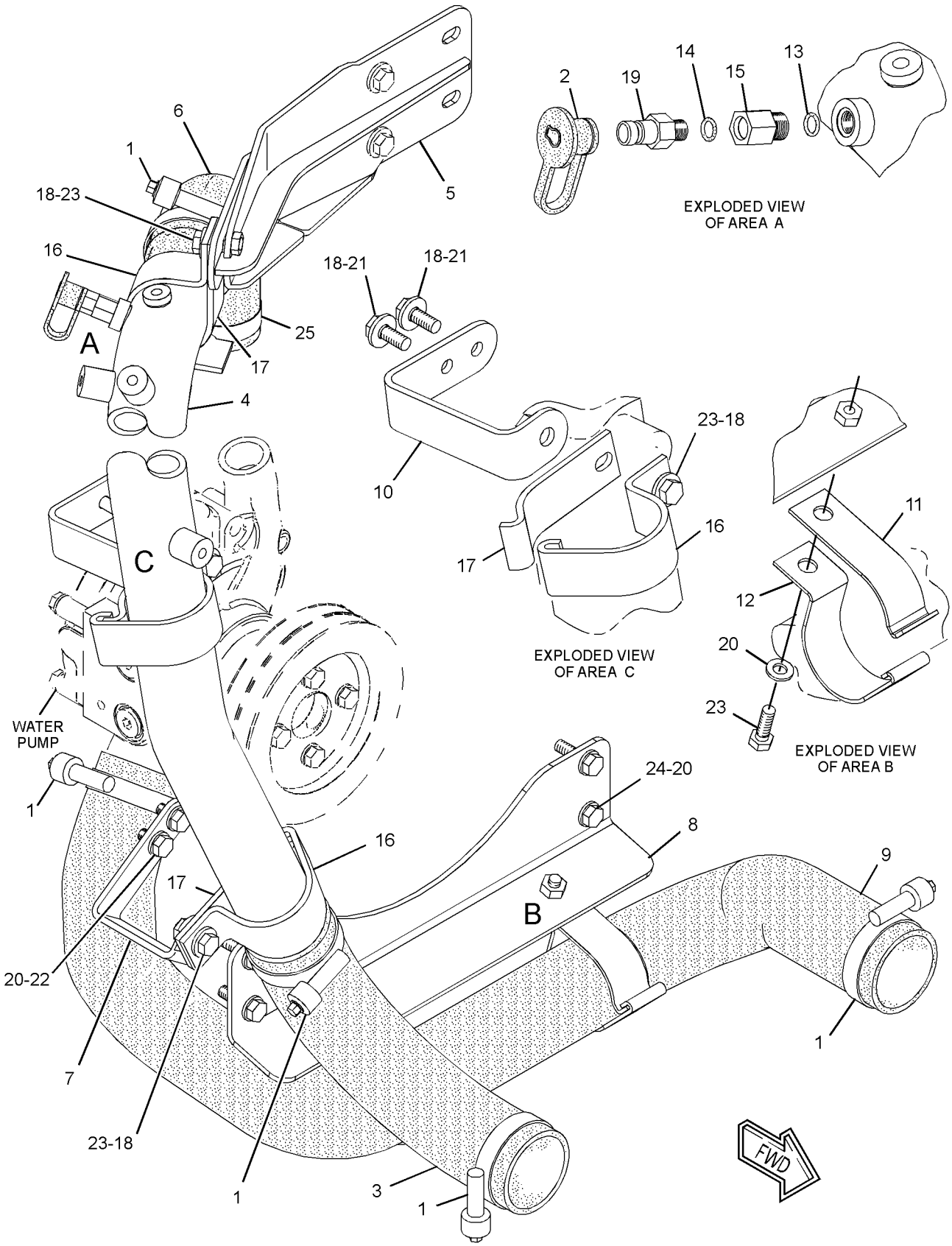

GRAPHIC #1 **<END>** g01207475

232-1240 LINES GP-WATER—TURBOCHARGER

S/N: JDL1-UP; GMT1-UP

PART OF 237-2569, 237-2707, 263-1982 SHIELD AR-THERMO AN ATTACHMENT

SMCS-1355, 1380, 1393 **i02455126**

NOTE	REF NO	GRAPHIC REF	PART NUMBER	QTY	PART NAME 1 2 3 4 5 6 (PRODUCT LEVEL)	SEE PAGE
	1	1	**121-4344**	3	SEAL-O-RING	
	2	1	**133-3260**	2	SPACER (11X19X10-MM THK)	
	3	1	**232-1133**	1	TUBE AS	
I	4	1	**232-1398**	1	HOSE AS	
	5	1	**233-5216**	1	TUBE AS	
	6	1	**234-1494**	1	BRACKET AS	
M		1	**8T-3612**	1	NUT-WELD (M8X1.25-THD)	
	7	1	**234-1496**	1	BRACKET AS	
M	8	1	**5C-7261**	2	NUT (M8X1.25-THD)	
	9	1	**5M-5689**	2	CLAMP	
	10	1	**6D-7128**	5	SEAL	
	11	1	**6V-3250**	1	SEAL-O-RING	
	12	1	**6V-8636**	1	CONNECTOR	
	13	1	**6V-8724**	1	ELBOW	
	14	1	**8T-1891**	1	CLIP (SLOT)	
	15	1	**8T-1892**	1	CLIP (TAB)	
	16	1	**8T-4121**	5	WASHER-HARD (11X21X2.5-MM THK)	
M	17	1	**8T-4136**	1	BOLT (M10X1.5X25-MM)	
M	18	1	**8T-4137**	2	BOLT (M10X1.5X20-MM)	
M	19	1	**8T-4189**	2	BOLT (M8X1.25X20-MM)	
	20	1	**8T-4224**	5	WASHER-HARD (8.8X16X2-MM THK)	
	21	1	**8T-5043**	2	CONNECTOR	
M	22	1	**8T-6466**	2	BOLT (M10X1.5X60-MM)	
M	23	1	**8T-7547**	1	BOLT (M8X1.25X30-MM)	
	24	1	**9S-4200**	2	CLIP	

I-REFER TO HYDRAULIC INFORMATION SYSTEM
M-METRIC PART

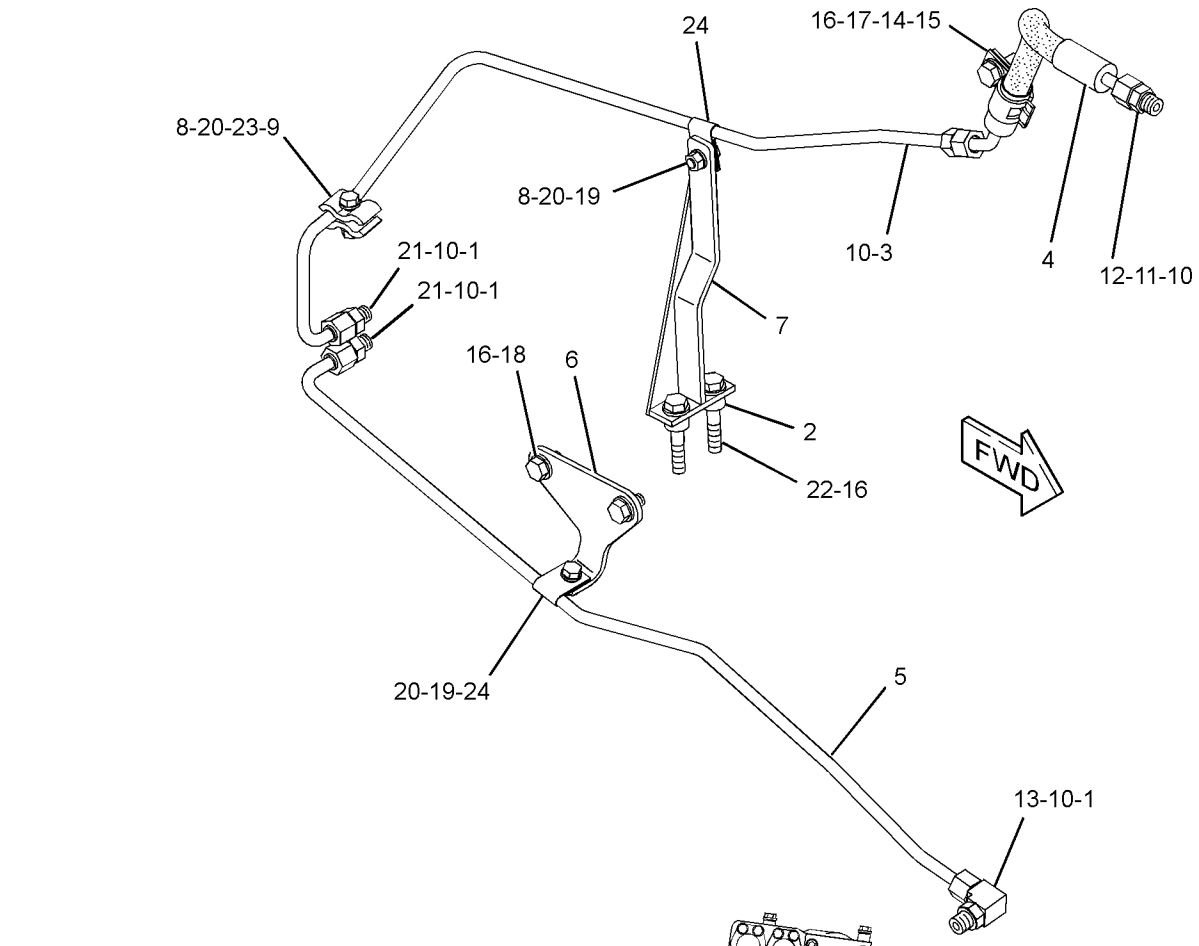

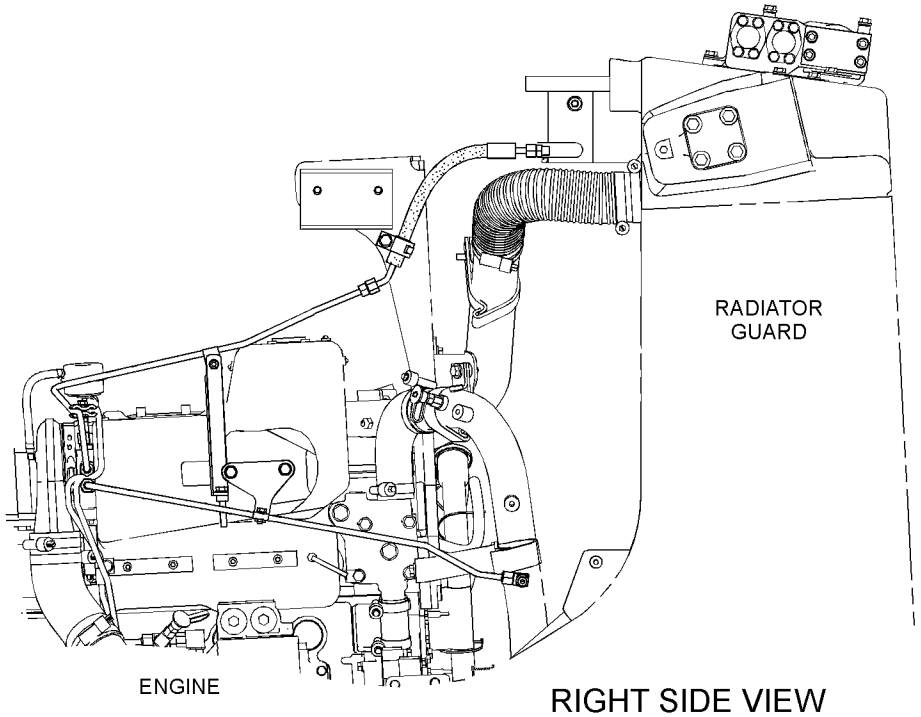

RIGHT SIDE VIEW

GRAPHIC #1

<END>

g01217685

COOLING SYSTEM

210-9096 PUMP GP-WATER

S/N: THX1-UP
PART OF 211-1812 PUMP GP-WATER
ALSO AN ATTACHMENT

SMCS-1361 **i01833056**

NOTE	REF NO	GRAPHIC REF	PART NUMBER	QTY	PART NAME 1 2 3 4 5 6 (PRODUCT LEVEL)	SEE PAGE
	1	1	**222-3901**	1	GASKET	
	2	1	**177-1044**	1	COVER	
M	3	1	**6V-3918**	4	BOLT (M8X1.25X50-MM)	
	4	1	**9M-1974**	4	WASHER-HARD (8.8X16X2-MM THK)	
Y	5	1	**210-9097**	1	PUMP GP-WATER	106
	6	1	**3D-2824**	1	SEAL-O-RING	
	7	1	**3K-0360**	2	SEAL-O-RING	
	8	1	**9S-8005**	2	PLUG-O RING	
	9	1	**9S-8008**	1	PLUG	

M-METRIC PART
Y-SEPARATE ILLUSTRATION

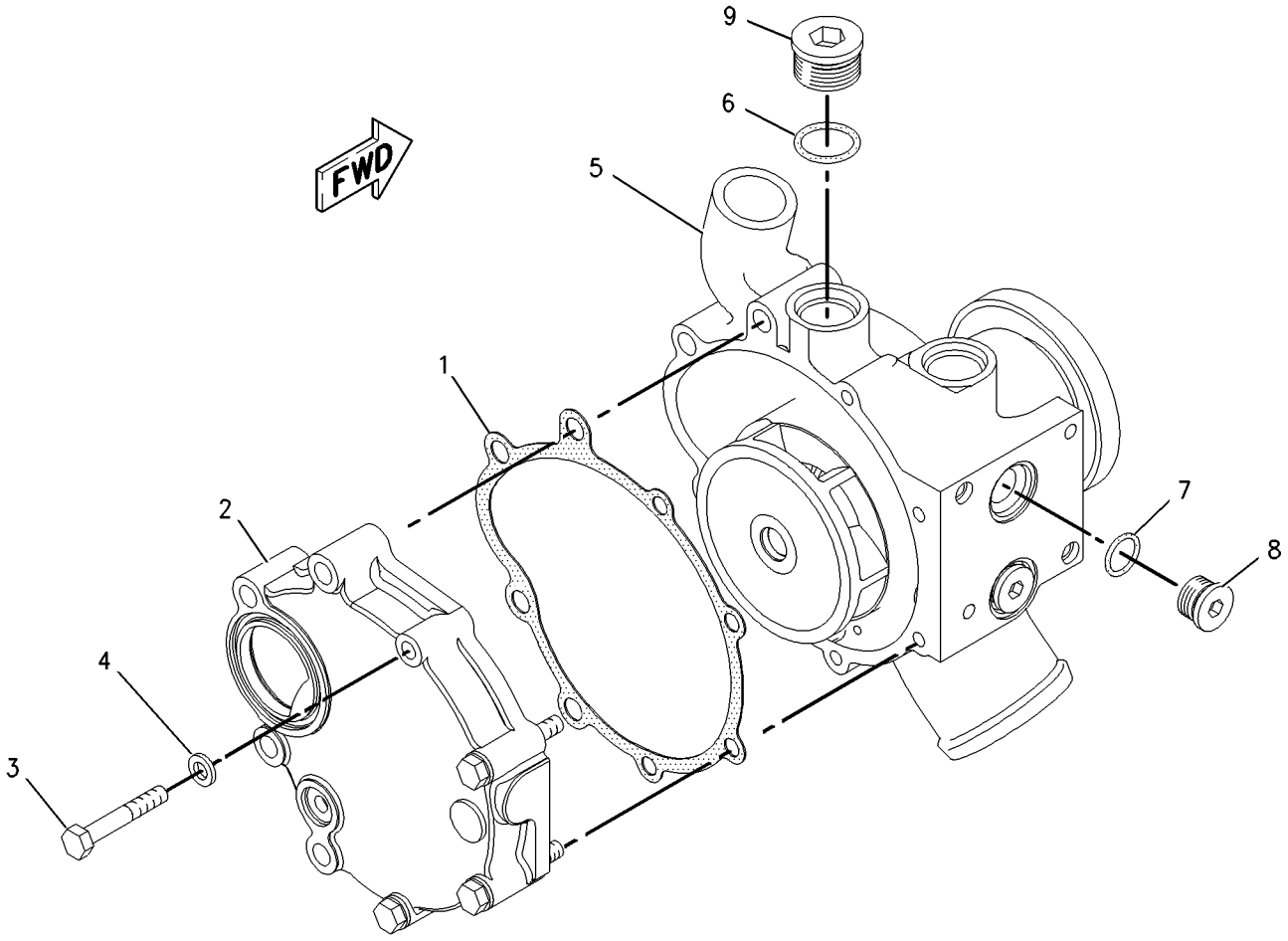

GRAPHIC #1 **<END>** g00864166

210-9097 PUMP GP-WATER

S/N: THX1-UP
PART OF 210-9096 PUMP GP-WATER
ALSO AN ATTACHMENT

SMCS-1361 **i01836227**

NOTE	REF NO	GRAPHIC REF	PART NUMBER	QTY	PART NAME 1 2 3 4 5 6 (PRODUCT LEVEL)	SEE PAGE
	1	1	**147-5088**	1	SEAL AS-WATER PUMP	
	2	1	**177-1050**	1	SHAFT AS	
	3	1	**177-1056**	1	IMPELLER-PUMP	
	4	1	**187-8984**	1	HOUSING-PUMP	
	5	1	**209-6692**	1	HUB	

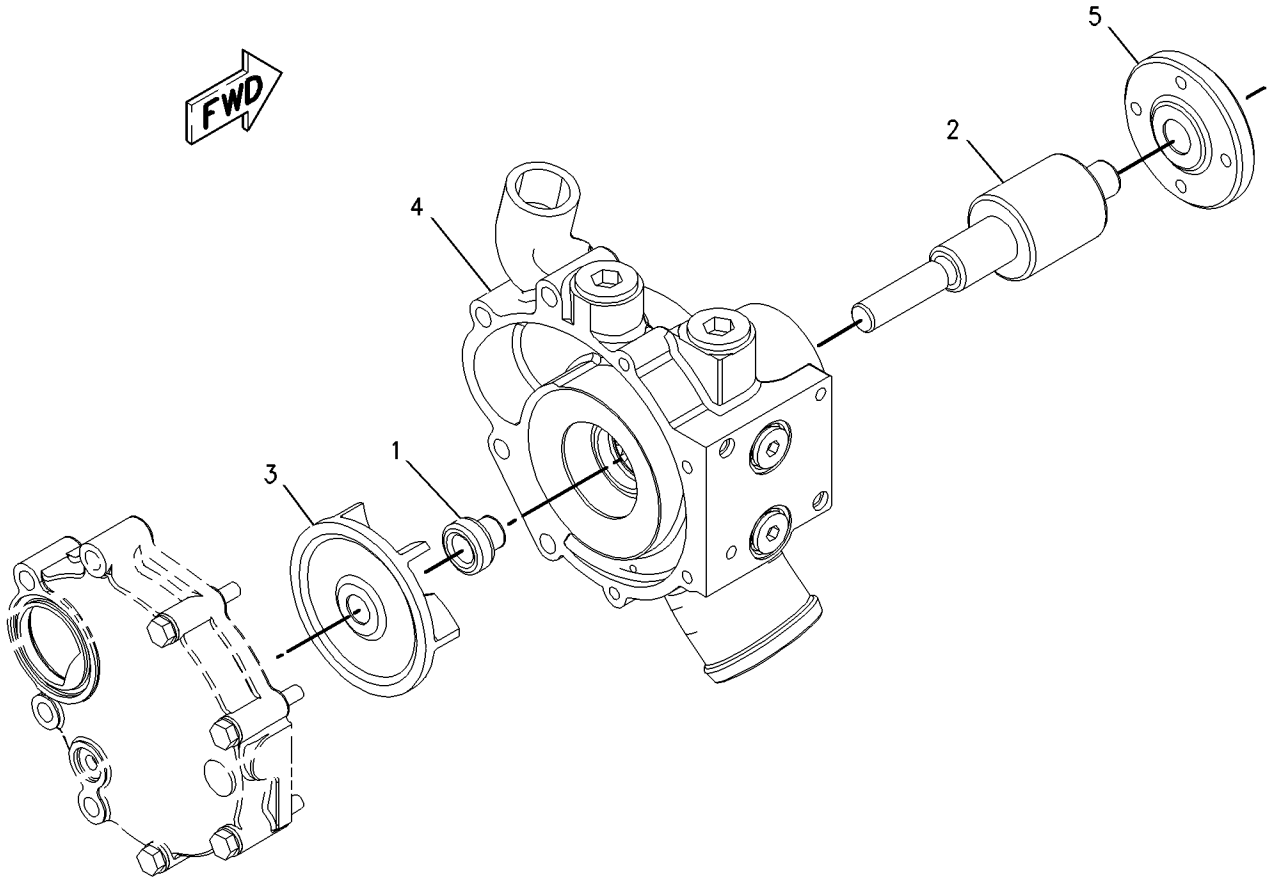

GRAPHIC #1 **<END>** g00864201

211-1812 PUMP GP-WATER

S/N: THX1-UP

PART OF 261-4290, 261-4291, 261-4293, 261-4294, 261-4295, 261-4297 ENGINE AR
ALSO AN ATTACHMENT

SMCS-1361 **i01998538**

NOTE	REF NO	GRAPHIC REF	PART NUMBER	QTY	PART NAME 1 2 3 4 5 6 (PRODUCT LEVEL)	SEE PAGE
Y	1	1	*210-9096*	1	PUMP GP-WATER	105
	2	1	**2M-4453**	1	SEAL-O-RING	
	3	1	**4J-0525**	1	SEAL-O-RING	
M	4	1	**8T-0644**	4	BOLT (M10X1.50X90MM)	

M-METRIC PART
Y-SEPARATE ILLUSTRATION

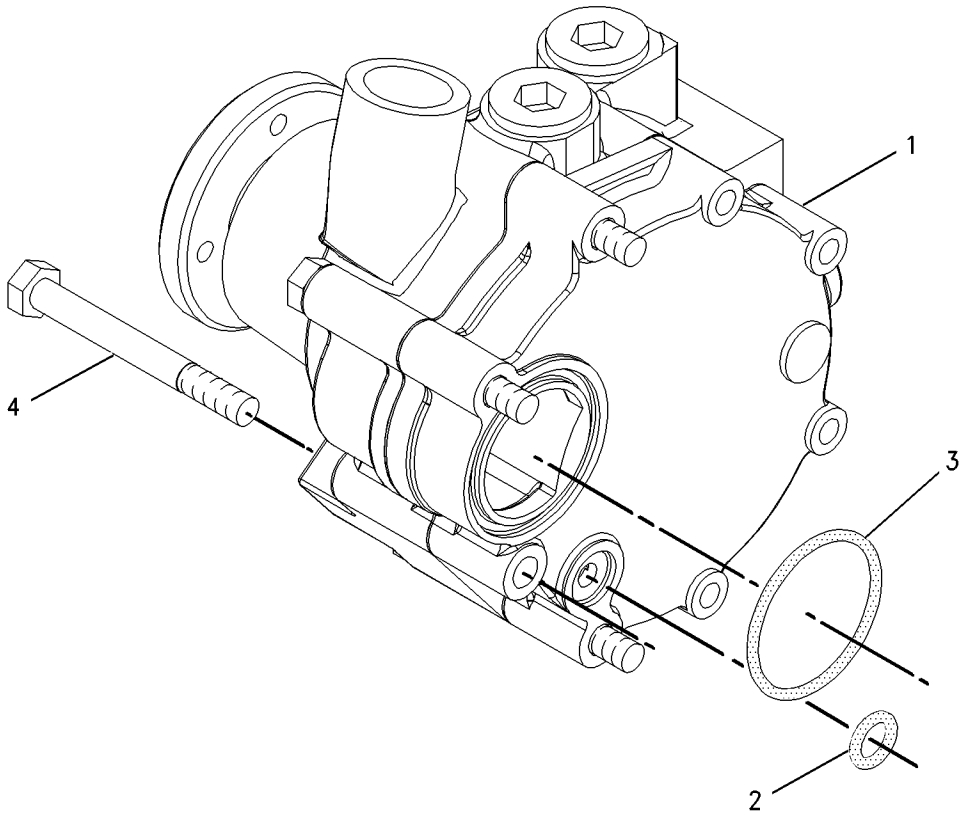

GRAPHIC #1 **<END>** g00924138

COOLING SYSTEM

266-9418 RADIATOR AR—TRASH RESISTANT

S/N: JDL1-UP; GMT1-UP
6-FINS PER INCH
FOR USE WITH WASTE HANDLING
AN ATTACHMENT

SMCS-1353 **i02455719**

NOTE	PART NUMBER	QTY	PART NAME 1 2 3 4 5 6 (PRODUCT LEVEL)	SEE PAGE
	223-5098	6	CORE AS-RADIATOR	

<END>

227-0833 RADIATOR GP

S/N: JDL1-UP; GMT1-UP

PART OF 223-0551 INSTALLATION AR-ENGINE

SMCS-1353 **i02441317**

NOTE	REF NO	GRAPHIC REF	PART NUMBER	QTY	PART NAME 1 2 3 4 5 6 (PRODUCT LEVEL)	SEE PAGE
	1	1	**1P-4278**	10	CLAMP-HOSE	
	2	1	**1Y-7452**	1	FITTING	
	3	1	**8F-8151**	1	VALVE AS-SHUTOFF (ENGINE COOLANT)	
	4	1	**106-4572**	5	HOSE	
	5	1	**169-3797**	1	BRACKET AS (BOTTOM)	
		1	**6B-4594**	4	RIVET	
M		1	**8T-3490**	8	NUT-WELD (M10X1.5-THD)	
	6	1	**169-3798**	1	SHIELD AS-BOTTOM (LH)	
		1	**4D-6716**	4	RIVET-POP	
		1	**7G-5186**	3	SPACER (13X19X4.5-MM THK)	
M		1	**8T-3490**	3	NUT-WELD (M10X1.5-THD)	
	7	1	**169-3799**	1	SHIELD AS-UPPER (LH)	
		1	**4D-6716**	4	RIVET-POP	
		1	**7G-5186**	3	SPACER (13X19X4.5-MM THK)	
M		1	**8T-3490**	2	NUT-WELD (M10X1.5-THD)	
	8	1	**169-3800**	1	SHIELD AS-BOTTOM (RH)	
		1	**4D-6716**	4	RIVET-POP	
		1	**7G-5186**	3	SPACER (13X19X4.5-MM THK)	
M		1	**8T-3490**	3	NUT-WELD (M10X1.5-THD)	
	9	1	**169-3801**	1	SHIELD AS-UPPER (RH)	
		1	**4D-6716**	4	RIVET-POP	
		1	**7G-5186**	3	SPACER (13X19X4.5-MM THK)	
M		1	**8T-3490**	2	NUT-WELD (M10X1.5-THD)	
	10	1	**169-3812**	1	BRACKET AS (RH)	
M		1	**8T-3490**	1	NUT-WELD (M10X1.5-THD)	
	11	1	**180-6695**	1	BAFFLE AS-RADIATOR	
		1	**6B-4594**	5	RIVET	
M		1	**8T-3490**	2	NUT-WELD (M10X1.5-THD)	
	12	1	**180-6696**	1	BAFFLE AS-RADIATOR	
		1	**6B-4594**	6	RIVET	
M		1	**8T-3490**	2	NUT-WELD (M10X1.5-THD)	
	13	1	**224-3981**	1	BRACKET AS (LH)	
	14	1	**224-4013**	1	BAFFLE AS (TOP)	
	15	1	**227-0835**	1	BAFFLE AS-RADIATOR (BOTTOM)	
		1	**6B-4594**	4	RIVET	
	16	1	**227-0836**	1	BAFFLE AS-RADIATOR (BOTTOM)	
		1	**6B-4594**	3	RIVET	
Y	17	1	*241-2756*	1	RADIATOR GP	111
	18	1	**003-2143**	1	ELBOW	
	19	1	**003-9514**	1	COUPLING-PIPE	
	20	1	**7X-7729**	23	WASHER (11X25X3-MM THK)	
	21	1	**8T-4121**	12	WASHER-HARD (11X21X2.5-MM THK)	
M	22	1	**8T-4136**	12	BOLT (M10X1.5X25-MM)	
M	23	1	**8T-4185**	4	BOLT (M10X1.5X50-MM)	
M	24	1	**8T-4195**	9	BOLT (M10X1.5X30-MM)	
M	25	1	**8T-4196**	10	BOLT (M10X1.5X35-MM)	

M-METRIC PART
Y-SEPARATE ILLUSTRATION

227-0833 **RADIATOR GP** *(contd.)* **i02441317**

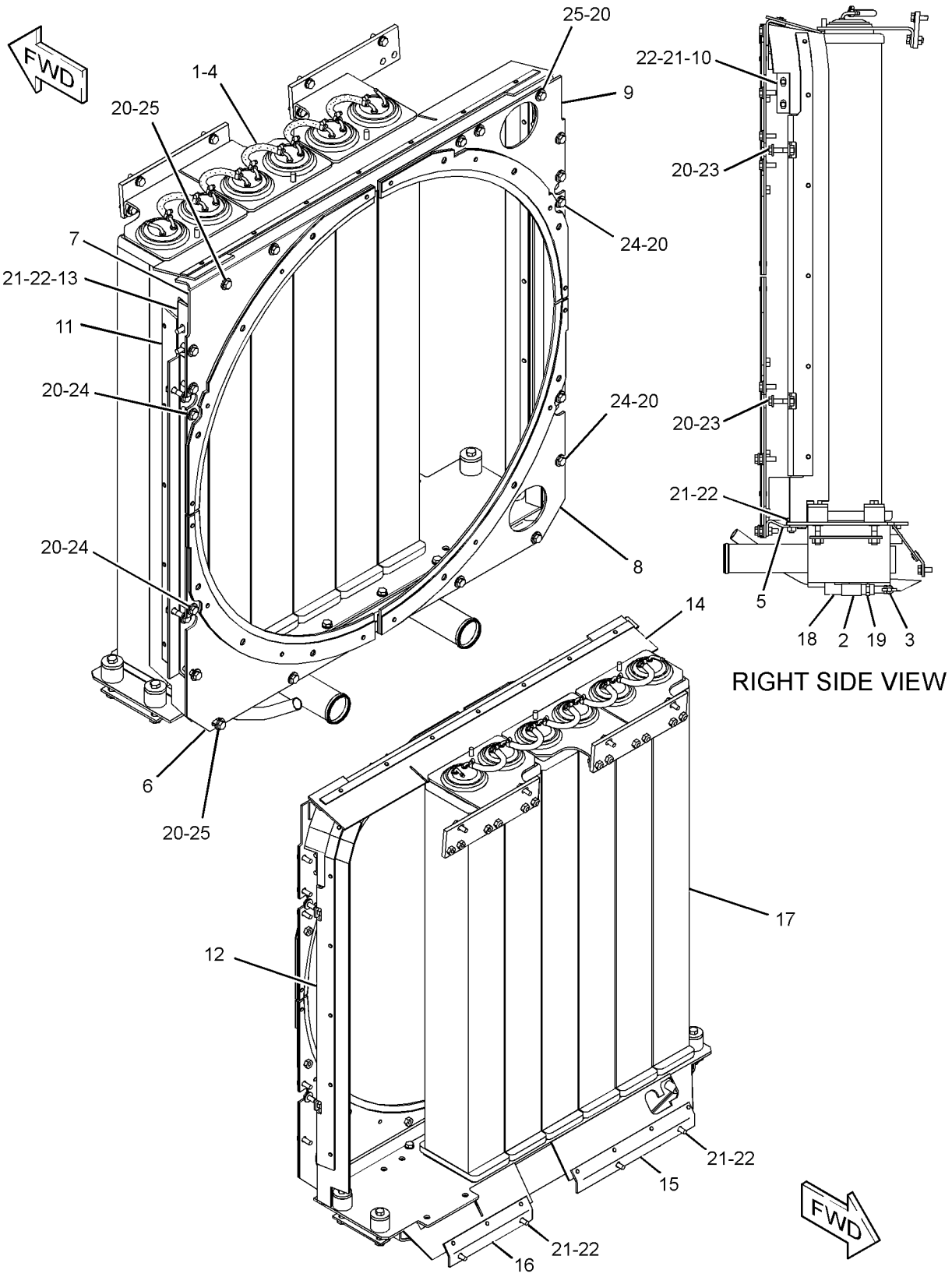

GRAPHIC #1 **<END>** g01206147

COOLING SYSTEM

241-2756 RADIATOR GP

S/N: JDL1-UP; GMT1-UP
PART OF 227-0833 RADIATOR GP

SMCS-1353 **i02441322**

NOTE	REF NO	GRAPHIC REF	PART NUMBER	QTY	PART NAME 1 2 3 4 5 6 (PRODUCT LEVEL)	SEE PAGE
	1	1	**6I-2431**	6	SEAL	
	2	1	**6I-2435**	6	SPACER (RUBBER)	
	3	1	**8K-8517**	4	WASHER (0.531X1.75X0.25-IN THK)	
	4	1	**9S-4497**	4	BLOCK-MOUNTING	
	5	1	**169-3796**	2	PLATE AS	
					(EACH INCLUDES)	
M		1	**8T-3597**	2	NUT-WELD (M12X1.75-THD)	
	6	1	**189-5586**	1	BRACKET AS	
	7	1	**189-5587**	2	BRACKET AS	
					(EACH INCLUDES)	
M		1	**8T-5413**	1	STUD-WELD (M10X1.5X25-MM OAL)	
	8	1	**189-5588**	2	PLATE AS	
	9	1	**223-5111**	6	CORE AS-RADIATOR	
	10	1	**240-9755**	1	TANK AS-BOTTOM	
		1	**6B-7246**	1	BOSS (3/8X1/2-IN)	
	11	1	**8T-4121**	13	WASHER-HARD (11X21X2.5-MM THK)	
M	12	1	**8T-4176**	4	BOLT (M12X1.75X90-MM)	
M	13	1	**8T-4195**	13	BOLT (M10X1.5X30-MM)	

M-METRIC PART

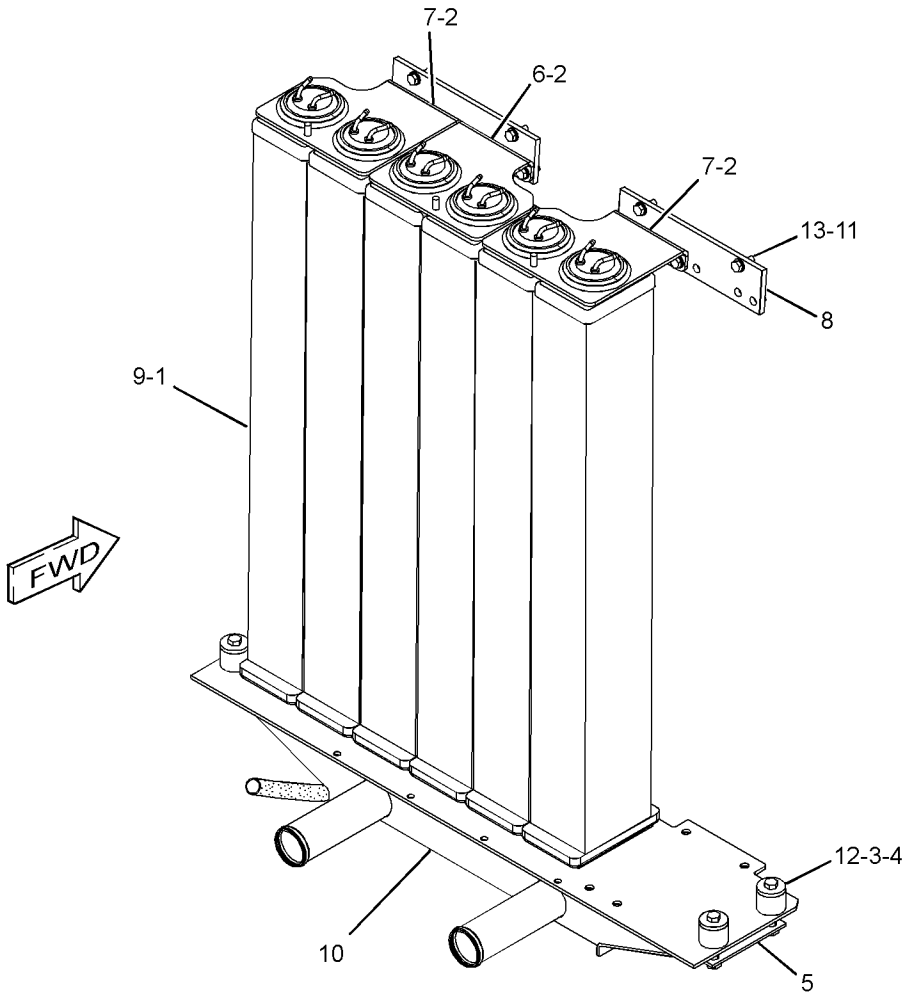

GRAPHIC #1 **<END>** g01209184

COOLING SYSTEM

169-1840 TANK GP-COOLANT

S/N: JDL1-UP; GMT1-UP

PART OF 255-5232 TANK GP-COOLANT

SMCS-1377 **i01830310**

NOTE	REF NO	GRAPHIC REF	PART NUMBER	QTY	PART NAME 1 2 3 4 5 6 (PRODUCT LEVEL)	SEE PAGE
	1	1	**031-1119**	1	CAP AS-RADIATOR	
	2	1	**169-1838**	1	TANK AS-EXPANSION	
		1	**3L-5893**	1	TUBE-OVERFLOW	
		1	**8N-8846**	1	NECK-FILLER	
		1	**7T-1099**	2	LINK	

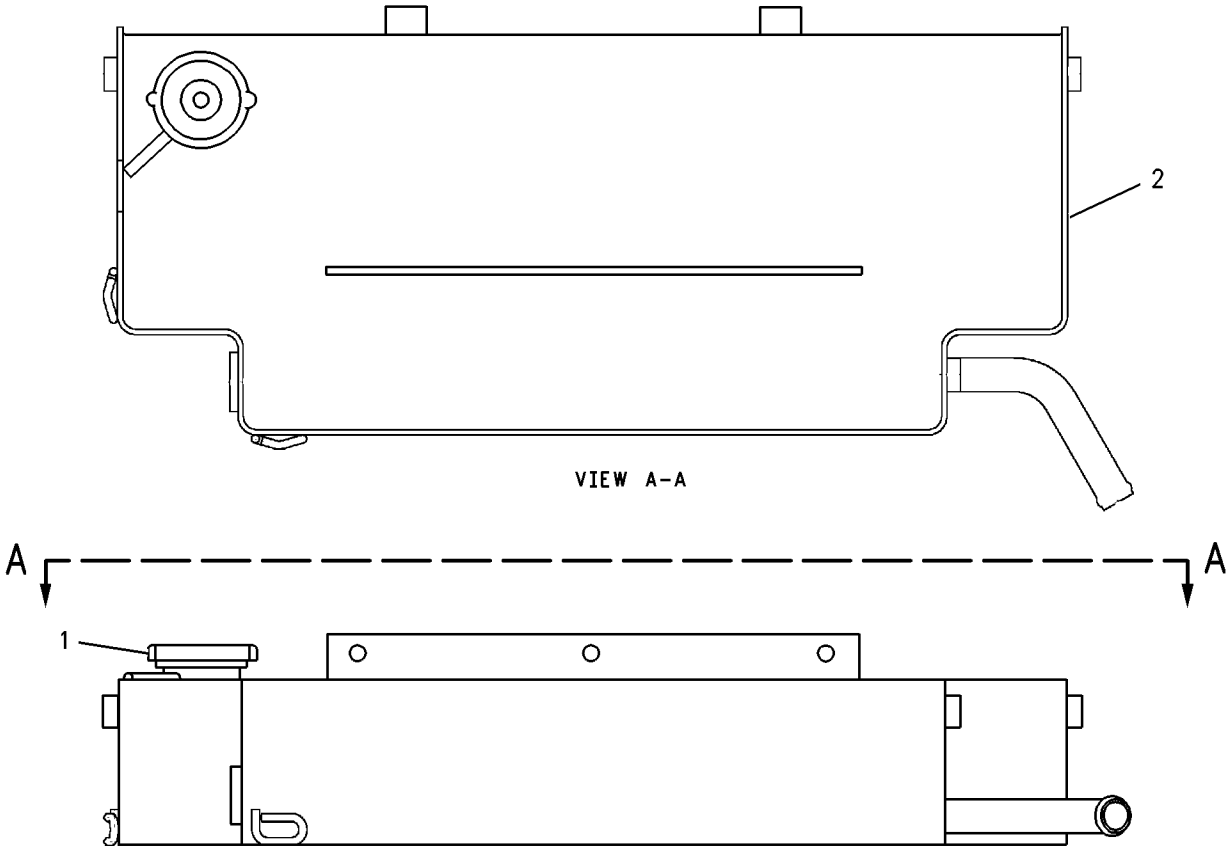

GRAPHIC #1 **<END>** g00828270

237-4214 TANK GP-COOLANT

S/N: JDL1-UP; GMT1-UP
PART OF 237-2569, 237-2707, 263-1982 SHIELD AR-THERMO
AN ATTACHMENT

SMCS-1377 **i02455306**

NOTE	REF NO	GRAPHIC REF	PART NUMBER	QTY	PART NAME 1 2 3 4 5 6 (PRODUCT LEVEL)	SEE PAGE
	1	1	**031-1119**	1	CAP AS-RADIATOR	
	2	1	**237-4213**	1	TANK AS-EXPANSION	
	2A	1	**3L-5893**	1	TUBE-OVERFLOW	
	2B	1	**7T-1099**	2	LINK	
	2C	1	**8N-8846**	1	NECK-FILLER	

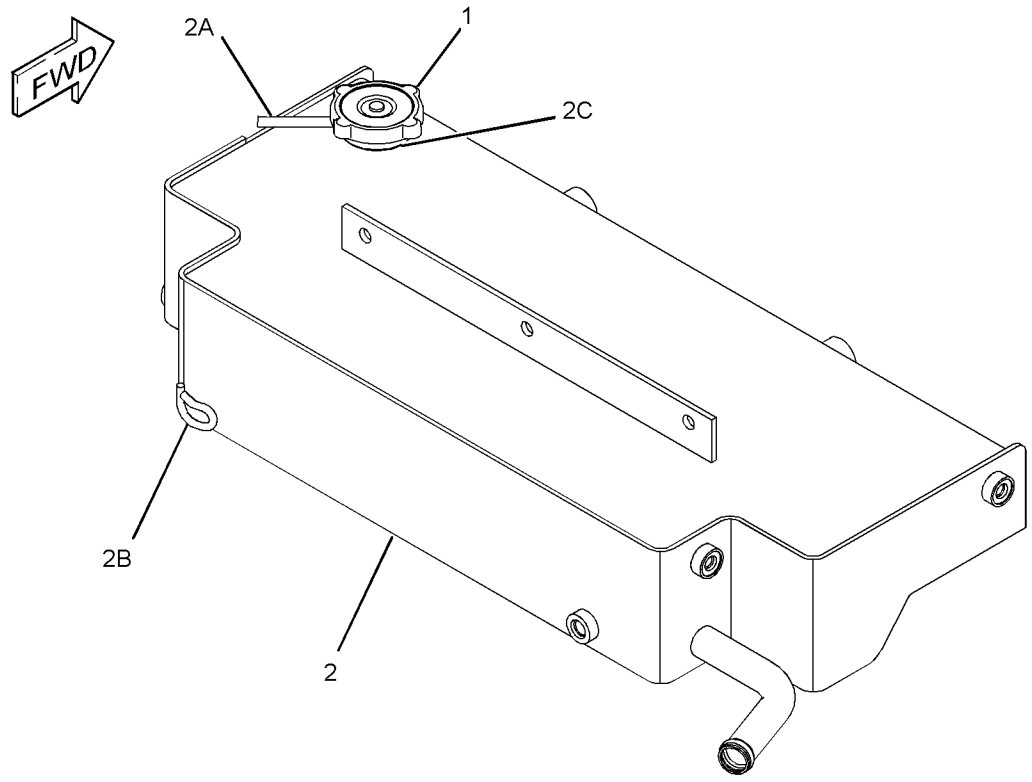

GRAPHIC #1 **<END>** g01215354

COOLING SYSTEM

255-5232 TANK GP-COOLANT

S/N: JDL1-UP; GMT1-UP

PART OF 223-0551 INSTALLATION AR-ENGINE

SMCS-1377 **i02441379**

NOTE	REF NO	GRAPHIC REF	PART NUMBER	QTY	PART NAME 1 2 3 4 5 6 (PRODUCT LEVEL)	SEE PAGE
	1	1	**1P-9328**	1	FITTING	
	2	1	**2V-4868**	1	FITTING	
	3	1	**5P-2937**	1	ADAPTER-O-RING	
	4	1	**110-2445**	2	CLAMP-HOSE	
Y	5	1	*169-1840*	1	TANK GP-COOLANT	112
	6	1	**169-3826**	1	BRACKET AS	
M		1	**8T-3490**	2	NUT-WELD (M10X1.5-THD)	
	7	1	*188-3034*	2	ELBOW AS	
					(EACH INCLUDES)	
		1	**6V-1355**	1	ELBOW	
		1	**3J-7354**	1	SEAL-O-RING	
	8	1	**196-9858**	1	TEE-SWIVEL	
	9	1	**069-4269**	1	STEM	
	10	1	*148-8347*	1	ELBOW AS	
		1	**6V-9007**	1	ELBOW	
		1	**3D-2824**	1	SEAL-O-RING	
		1	**6V-9746**	1	SEAL-O-RING	
	11	1	**1P-4278**	6	CLAMP-HOSE	
	12	1	**3D-2824**	1	SEAL-O-RING	
	13	1	**3J-7354**	1	SEAL-O-RING	
	14	1	**4P-7429**	2	CLIP	
	15	1	**6K-0806**	5	STRAP-CABLE	
	16	1	**7D-7233**	1	CLIP	
	17	1	**7M-8485**	1	SEAL-O-RING	
	18	1	**8L-5008**	1	ELBOW-PIPE	
	19	1	**8T-4121**	8	WASHER-HARD (11X21X2.5-MM THK)	
M	20	1	**8T-4136**	6	BOLT (M10X1.5X25-MM)	
	21	1	**9Y-9236**	1	GAUGE-SIGHT (WATER TANK)	
E	22	1	**5P-1251**		HOSE (105-CM)	
E	23	1	**5P-1465**		HOSE (72-CM)	
E	23A	1	**5P-1465**		HOSE (32-CM)	
E	23B	1	**5P-1465**		HOSE (28-CM)	
E	24	1	**8C-3681**		HOSE (140-CM)	
M	25	1	**8T-4196**	2	BOLT (M10X1.5X35-MM)	
	26	1	**267-2186**	1	BAFFLE AS-RADIATOR	
		1	**6B-4594**	16	RIVET	
		1	**7G-5186**	2	SPACER (13X19X4.5-MM THK)	

E-ORDER BY THE CENTIMETER
M-METRIC PART
Y-SEPARATE ILLUSTRATION

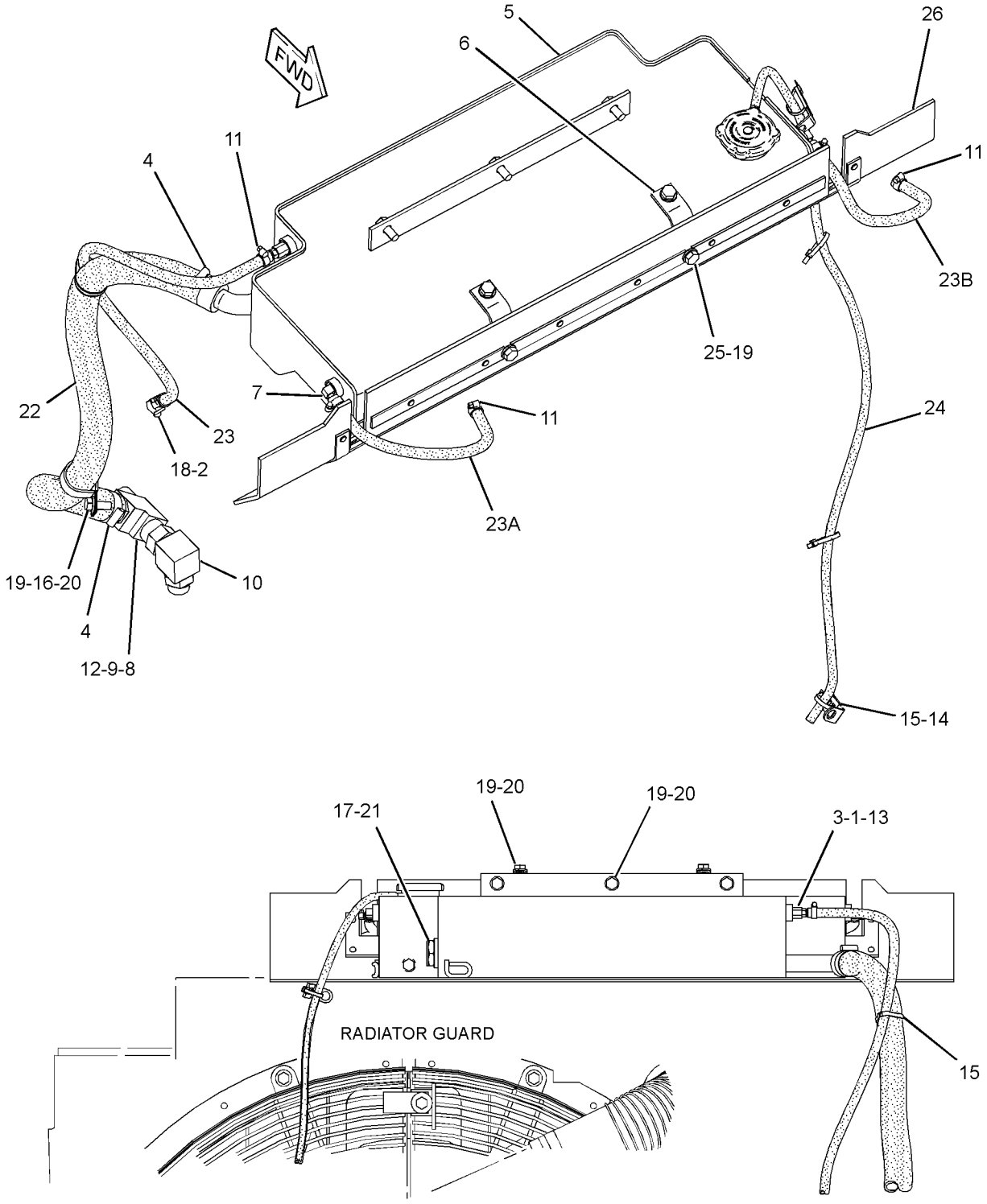

REAR VIEW

GRAPHIC #1 **<END>** g01208388

AIR INLET AND EXHAUST SYSTEM

250-6056 AFTERCOOLER GP-AIR

S/N: JDL1-UP; GMT1-UP

PART OF 223-0551 INSTALLATION AR-ENGINE

SMCS-1063 **i02441372**

NOTE	REF NO	GRAPHIC REF	PART NUMBER	QTY	PART NAME 1 2 3 4 5 6 (PRODUCT LEVEL)	SEE PAGE
	1	1	**4P-0489**	4	SPACER (11X25X26.8-MM THK)	
	2	1	**253-5369**	1	CORE AS-AFTERCOOLER	
	3	1	**7X-7729**	3	WASHER (11X25X3-MM THK)	
	4	1	**8T-4121**	4	WASHER-HARD (11X21X2.5-MM THK)	
M	5	1	**8T-4196**	3	BOLT (M10X1.5X35-MM)	
M	6	1	**8T-6466**	4	BOLT (M10X1.5X60-MM)	

M-METRIC PART

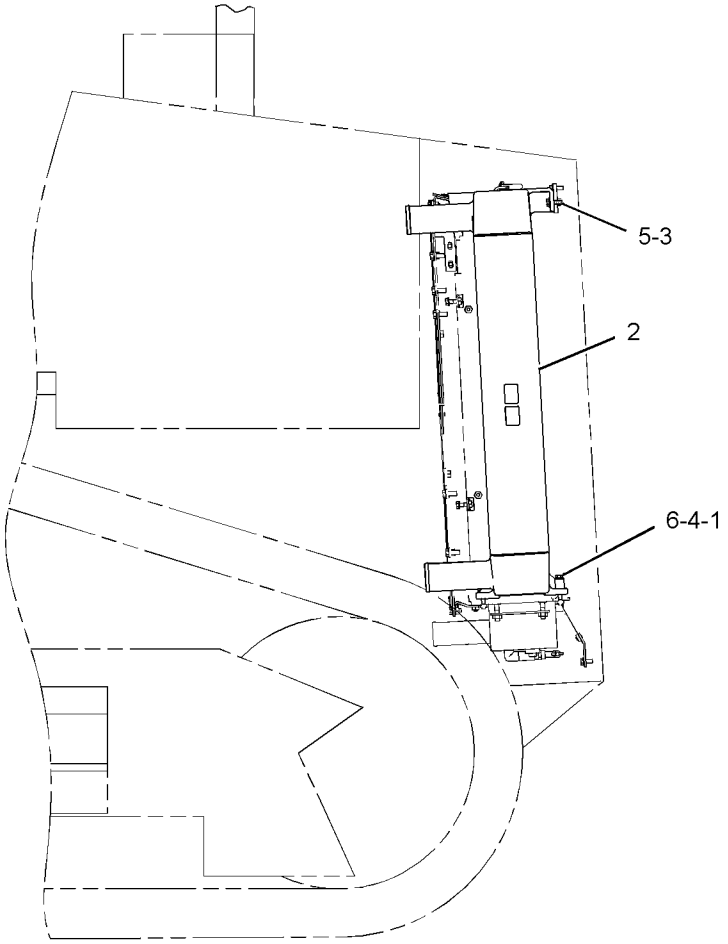

RIGHT SIDE VIEW

GRAPHIC #1 **<END>** g01209278

AIR INLET AND EXHAUST SYSTEM

205-8674 AIR CLEANER GP

S/N: JDL1-UP; GMT1-UP

PART OF 206-9000 AIR CLEANER GP

SMCS-1051, 1054 **i01830327**

NOTE	REF NO	GRAPHIC REF	PART NUMBER	QTY	PART NAME 1 2 3 4 5 6 (PRODUCT LEVEL)	SEE PAGE
	1	1	**6I-2501**	1	FILTER ELEMENT AS-AIR (PRIMARY)	
	2	1	**6I-2502**	1	FILTER ELEMENT AS-AIR (SECONDARY)	
	3	1	**6I-4464**	1	COVER AS-AIR CLEANER	
		1	**4P-5524**	1	SEAL-O-RING	
		1	**101-2850**	1	FILM-INFORMATION (AIR CLEANER)	
	4	1	**8N-4617**	2	KIT-AIR CLEANER CLAMP	
					(EACH INCLUDES)	
		1	**1N-4403**	1	CLIP AS	
		1	**9B-2596**	1	RIVET	

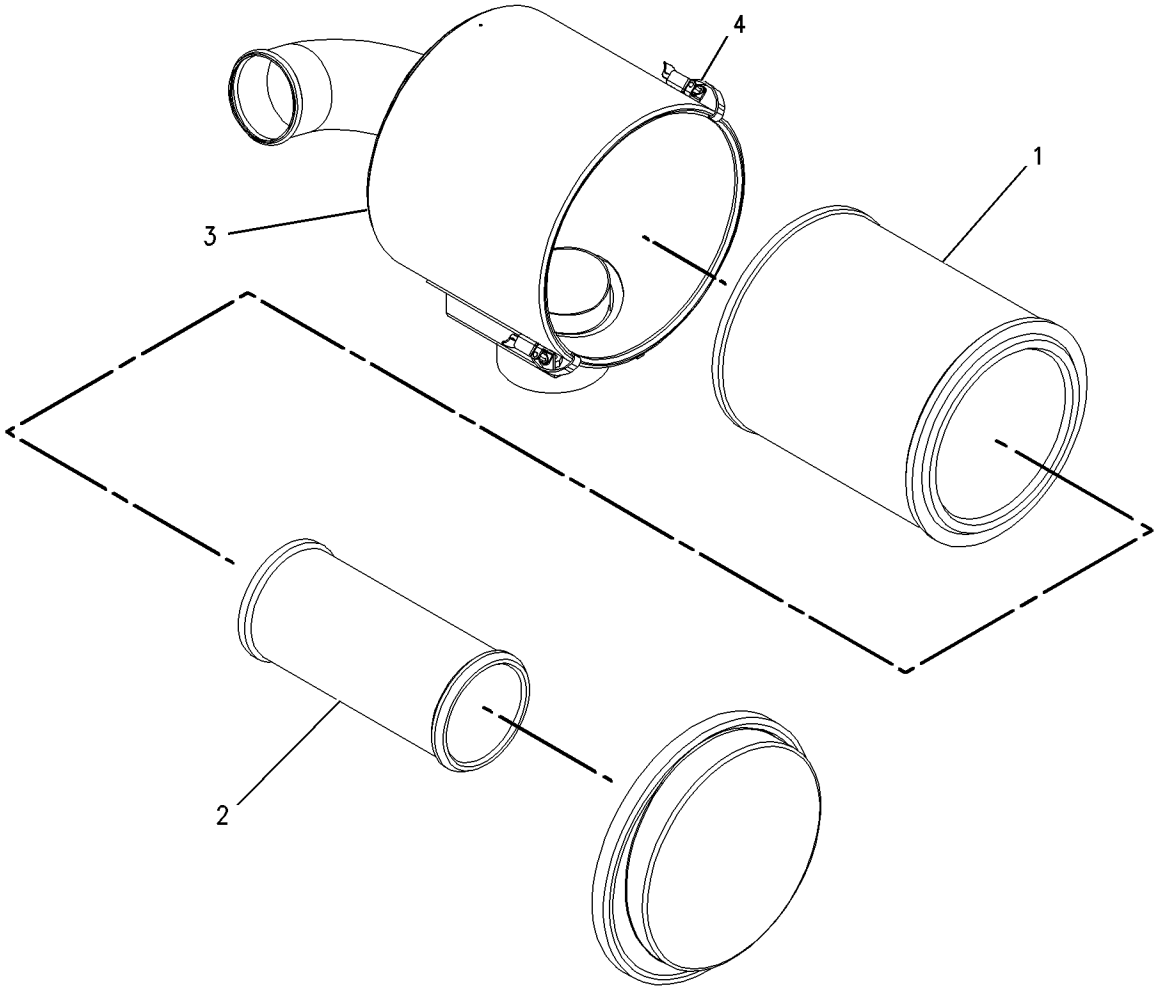

GRAPHIC #1 **<END>** g00805077

206-9000 AIR CLEANER GP

S/N: JDL1-UP; GMT1-UP

PART OF 223-0551 INSTALLATION AR-ENGINE

SMCS-1051, 1054 **i02432498**

NOTE	REF NO	GRAPHIC REF	PART NUMBER	QTY	PART NAME 1 2 3 4 5 6 (PRODUCT LEVEL)	SEE PAGE
	1	1	**9S-6758**	1	PRECLEANER AS	
		1	**0S-1591**	1	BOLT (3/8-16X1.5-IN)	
		1	**9S-8752**	1	NUT-FULL (3/8-16-THD)	
Y	2	1	**205-8674**	1	AIR CLEANER GP	117
	3	1	**205-8681**	1	BODY AS (PRECLEANER)	
C	4	1	**250-9290**	1	BRACKET AS	
C	5	1	**7X-7729**	7	WASHER (11X25X3-MM THK)	
	6	1	**8T-4121**	8	WASHER-HARD (11X21X2.5-MM THK)	
M	7	1	**8T-4133**	2	NUT (M10X1.5 THD)	
M	8	1	**8T-4136**	9	BOLT (M10X1.5X25-MM)	
M	9	1	**8T-4137**	4	BOLT (M10X1.5X20-MM)	

C-CHANGE FROM PREVIOUS TYPE
M-METRIC PART
Y-SEPARATE ILLUSTRATION

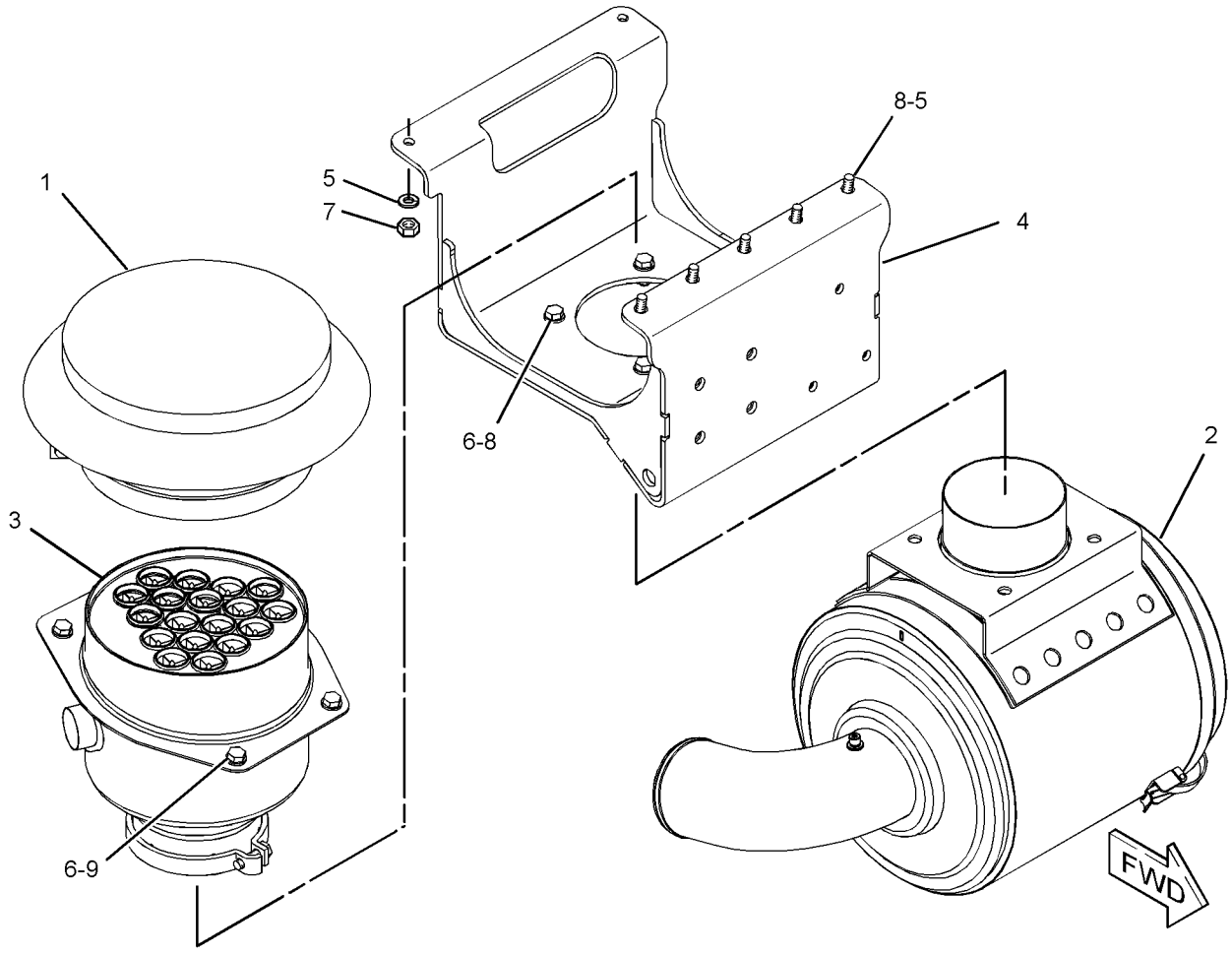

GRAPHIC #1 **<END>** g01181353

AIR INLET AND EXHAUST SYSTEM

241-4353 DUST EJECTOR GP

S/N: JDL1-UP; GMT1-UP

PART OF 223-0551 INSTALLATION AR-ENGINE

SMCS-1068 **i02441364**

NOTE	REF NO	GRAPHIC REF	PART NUMBER	QTY	PART NAME 1 2 3 4 5 6 (PRODUCT LEVEL)	SEE PAGE
	1	1	**7E-3870**	1	CLAMP	
	2	1	**9M-2904**	2	CLAMP-HOSE	
	3	1	**241-4354**	1	EJECTOR AS-EXHAUST	
E	4	1	**5P-2817**		HOSE (60-CM)	

E-ORDER BY THE CENTIMETER

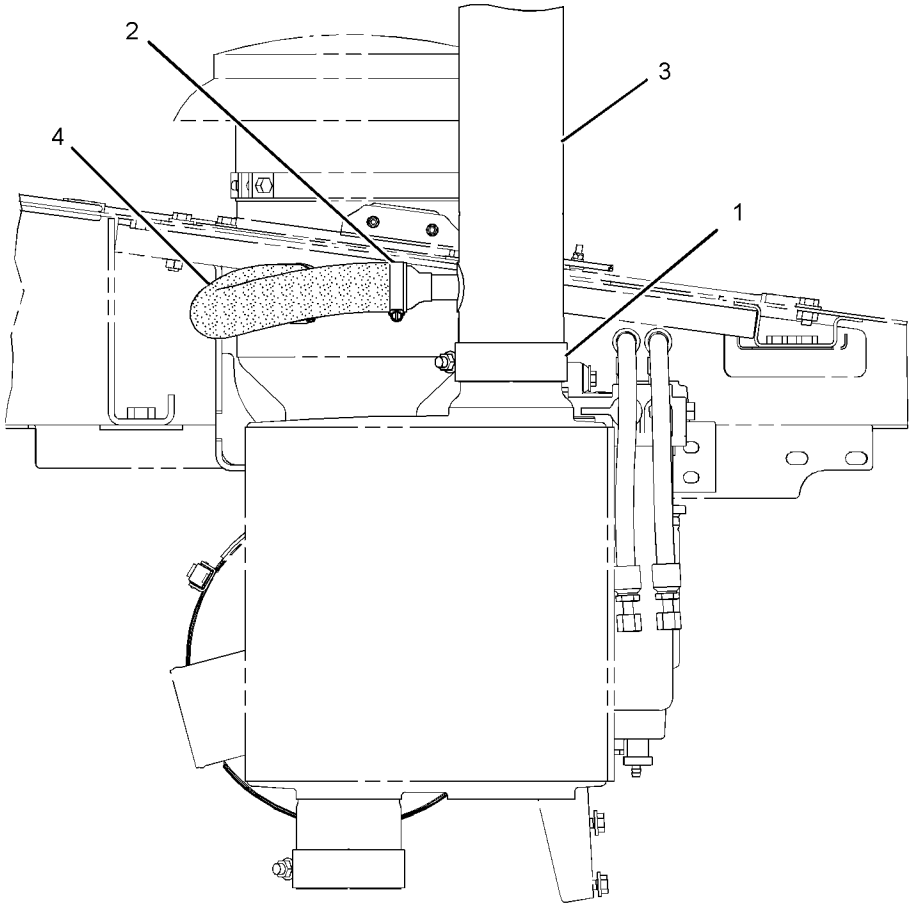

RIGHT SIDE VIEW

GRAPHIC #1 **<END>** g01210706

AIR INLET AND EXHAUST SYSTEM

246-0596 ELBOW GP-AIR INLET

S/N: THX1-UP

PART OF 261-4290, 261-4291, 261-4293, 261-4294, 261-4295, 261-4297 ENGINE AR

ALSO AN ATTACHMENT

SMCS-1087 **i02163265**

NOTE	REF NO	GRAPHIC REF	PART NUMBER	QTY	PART NAME 1 2 3 4 5 6 (PRODUCT LEVEL)	SEE PAGE
	1	1	**246-0597**	1	ELBOW-AIR INLET	
	2	1	**162-3148**	8	BOLT-SOCKET HEAD	
	3	1	**3E-4352**	2	WASHER-HARD (8.8X20.5X2.5-MM THK)	
	4	1	**9M-1974**	6	WASHER-HARD (8.8X16X2-MM THK)	
B	5	1	**1U-8846**		SEALANT-GASKET ((1 ML))	

B-USE AS REQUIRED

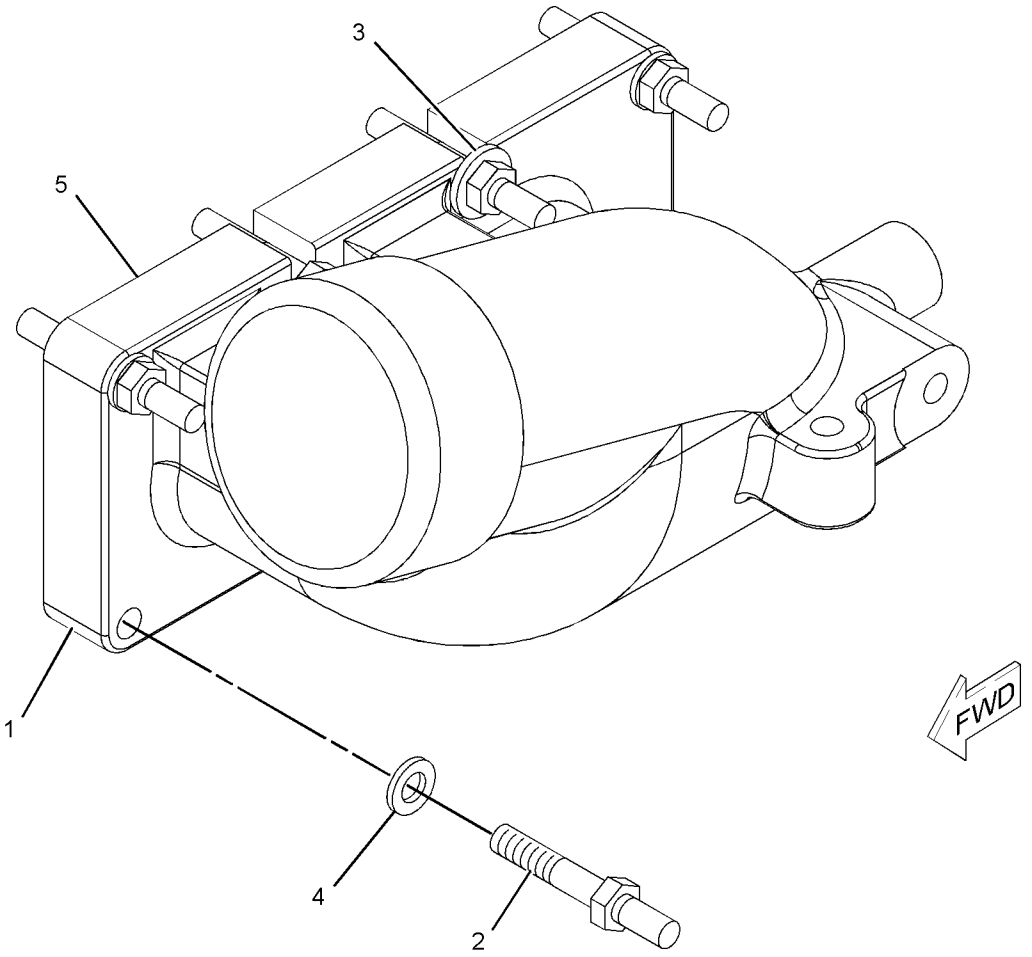

GRAPHIC #1 **<END>** g01101339

AIR INLET AND EXHAUST SYSTEM

215-1488 GUARD GP-PRECLEANER

S/N: JDL1-UP; GMT1-UP
AN ATTACHMENT

SMCS-1055 **i02148357**

NOTE	REF NO	GRAPHIC REF	PART NUMBER	QTY	PART NAME 1 2 3 4 5 6 (PRODUCT LEVEL)	SEE PAGE
	1	1	**215-1490**	1	GUARD AS	
	2	1	**7X-7729**	3	WASHER (11X25X3-MM THK)	
M	3	1	**8T-4137**	3	BOLT (M10X1.5X20-MM)	

M-METRIC PART

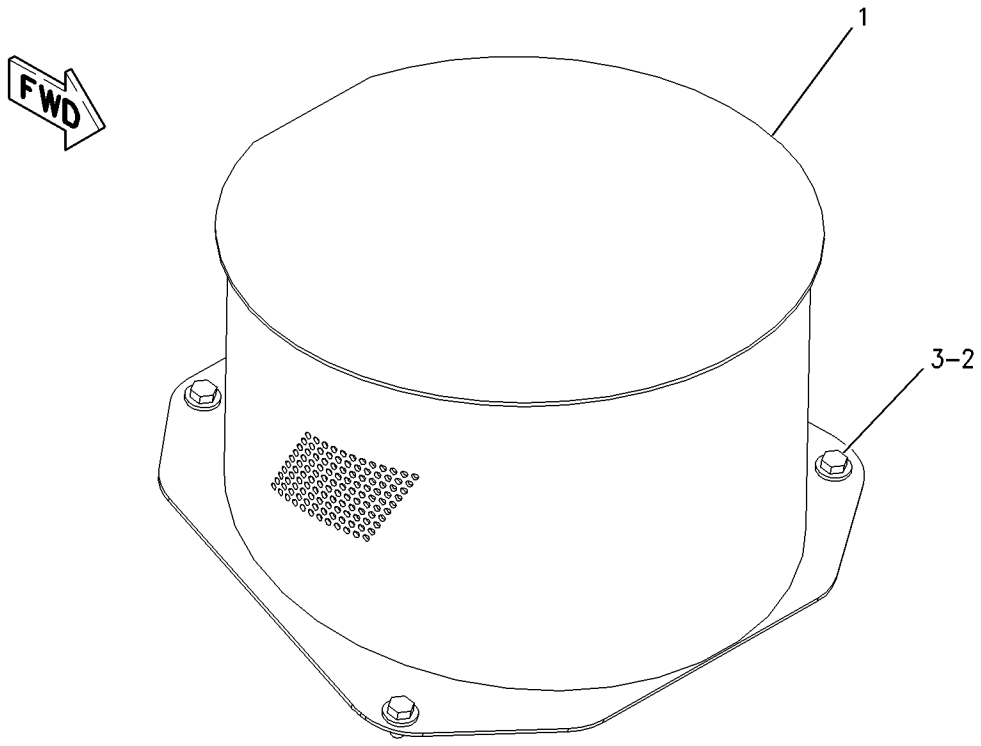

GRAPHIC #1 **<END>** g00909307

AIR INLET AND EXHAUST SYSTEM

168-8377 LINES GP-AIR

S/N: JDL1-UP; GMT1-UP
INTAKE HOSE & EXHAUST ELBOW
PART OF 223-0551 INSTALLATION AR-ENGINE

SMCS-1071 **i02281640**

NOTE	REF NO	GRAPHIC REF	PART NUMBER	QTY	PART NAME 1 2 3 4 5 6 (PRODUCT LEVEL)	SEE PAGE
	1	1	**1W-2431**	1	CLAMP-BAND	
		1	**8T-0193**	1	NUT-FULL (5/16-24-THD)	
	2	1	**6N-1558**	1	RING-SEAL	
	3	1	**8T-4986**	4	CLAMP-HOSE	
	4	1	**169-3883**	1	COUPLING	
	5	1	**214-1645**	1	ELBOW-EXHAUST	
C	6	1	**243-1588**	1	HOSE	
C	7	1	**243-1589**	1	HOSE	
C	8	1	**243-1590**	1	TUBE	
M	9	1	**6V-4249**	3	BOLT (M10X1.5X50-MM)	
	10	1	**6V-5839**	3	WASHER (11X21X2.5-MM THK)	

C-CHANGE FROM PREVIOUS TYPE
M-METRIC PART

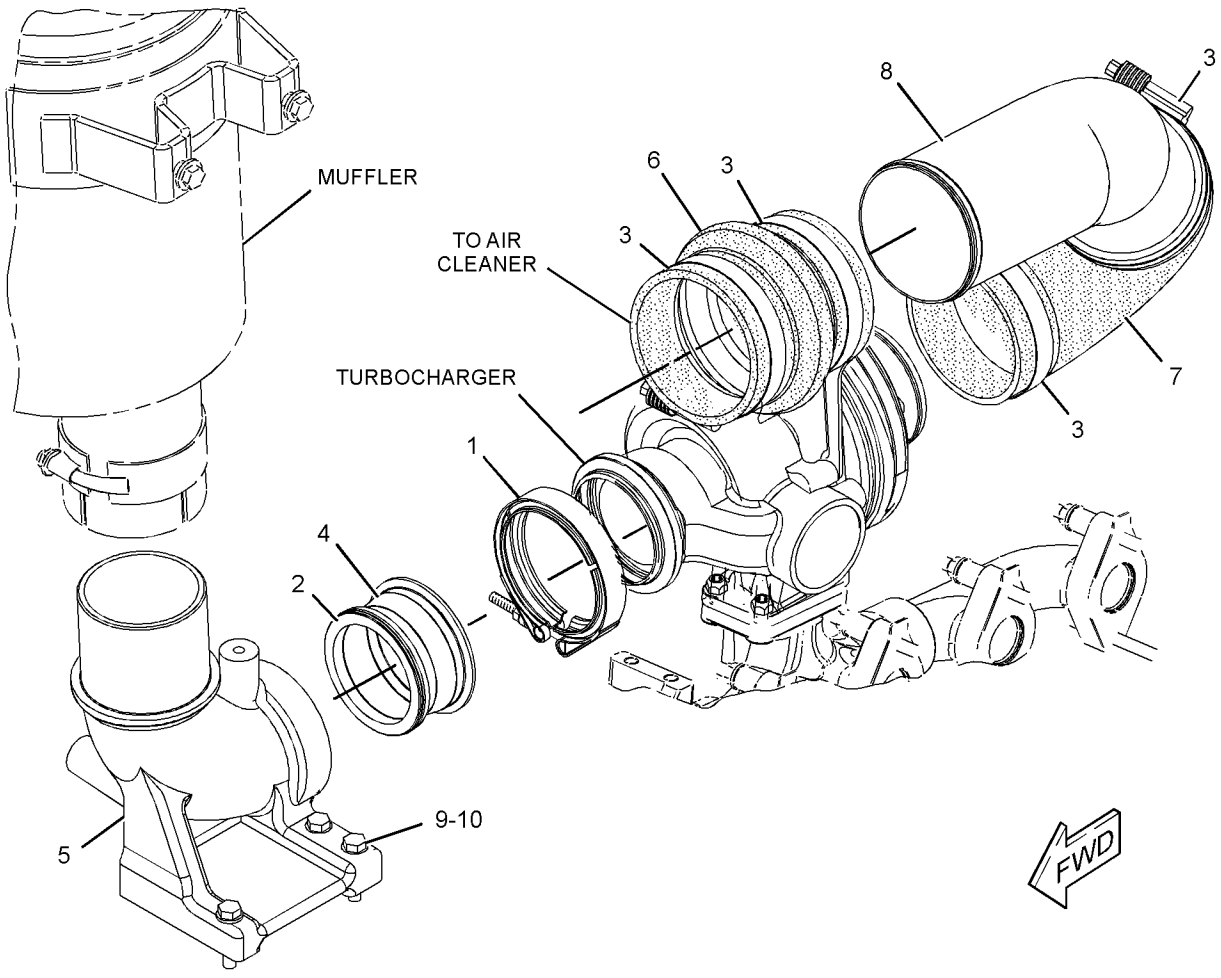

GRAPHIC #1 **<END>** g01151750

AIR INLET AND EXHAUST SYSTEM

251-4553 LINES GP-AIR–ATAAC

S/N: JDL1-UP; GMT1-UP

PART OF 223-0551 INSTALLATION AR-ENGINE

SMCS-1071 **i02441373**

NOTE	REF NO	GRAPHIC REF	PART NUMBER	QTY	PART NAME 1 2 3 4 5 6 (PRODUCT LEVEL)	SEE PAGE
	1	1	**144-0367**	16	CLAMP-HOSE	
	2	1,2	**201-1260**	2	HOSE	
	3	1	**250-6052**	1	HOSE	
	4	1,2	**250-6053**	1	TUBE AS	
	5	2	**250-6054**	1	TUBE AS	
	6	1	**250-7533**	1	HOSE	
	7	2	**251-0061**	1	BRACKET AS	
M		2	**8T-3490**	1	NUT-WELD (M10X1.5-THD)	
	8	1	**251-7214**	2	HOSE	
	9	1,2	**7X-7729**	6	WASHER (11X25X3-MM THK)	
M	10	1	**8T-4133**	2	NUT (M10X1.5 THD)	
M	11	2	**8T-4195**	2	BOLT (M10X1.5X30-MM)	
M	12	2	**8T-4196**	2	BOLT (M10X1.5X35-MM)	
	13	1,2	**9X-2646**	4	CLIP (SLOT)	
	14	1,2	**9X-2647**	4	CLIP (TAB)	

M-METRIC PART

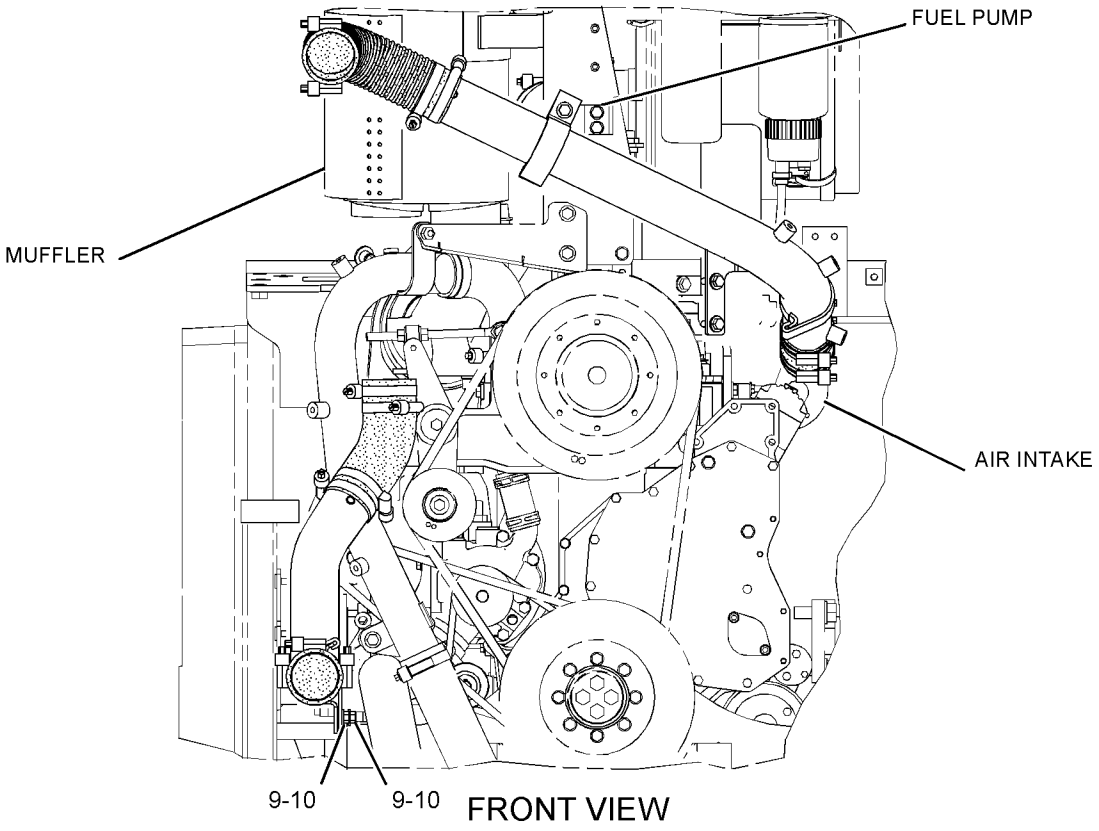

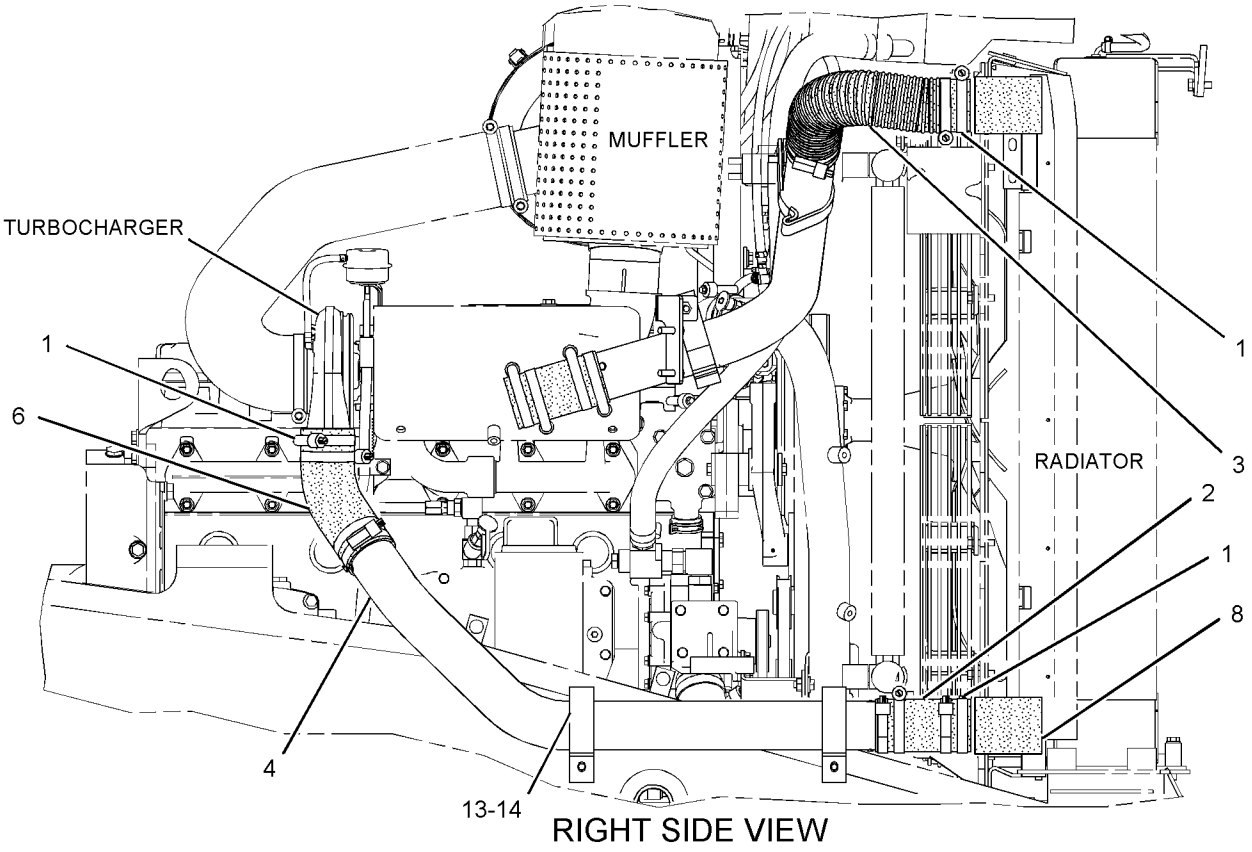

GRAPHIC #1 g01209164

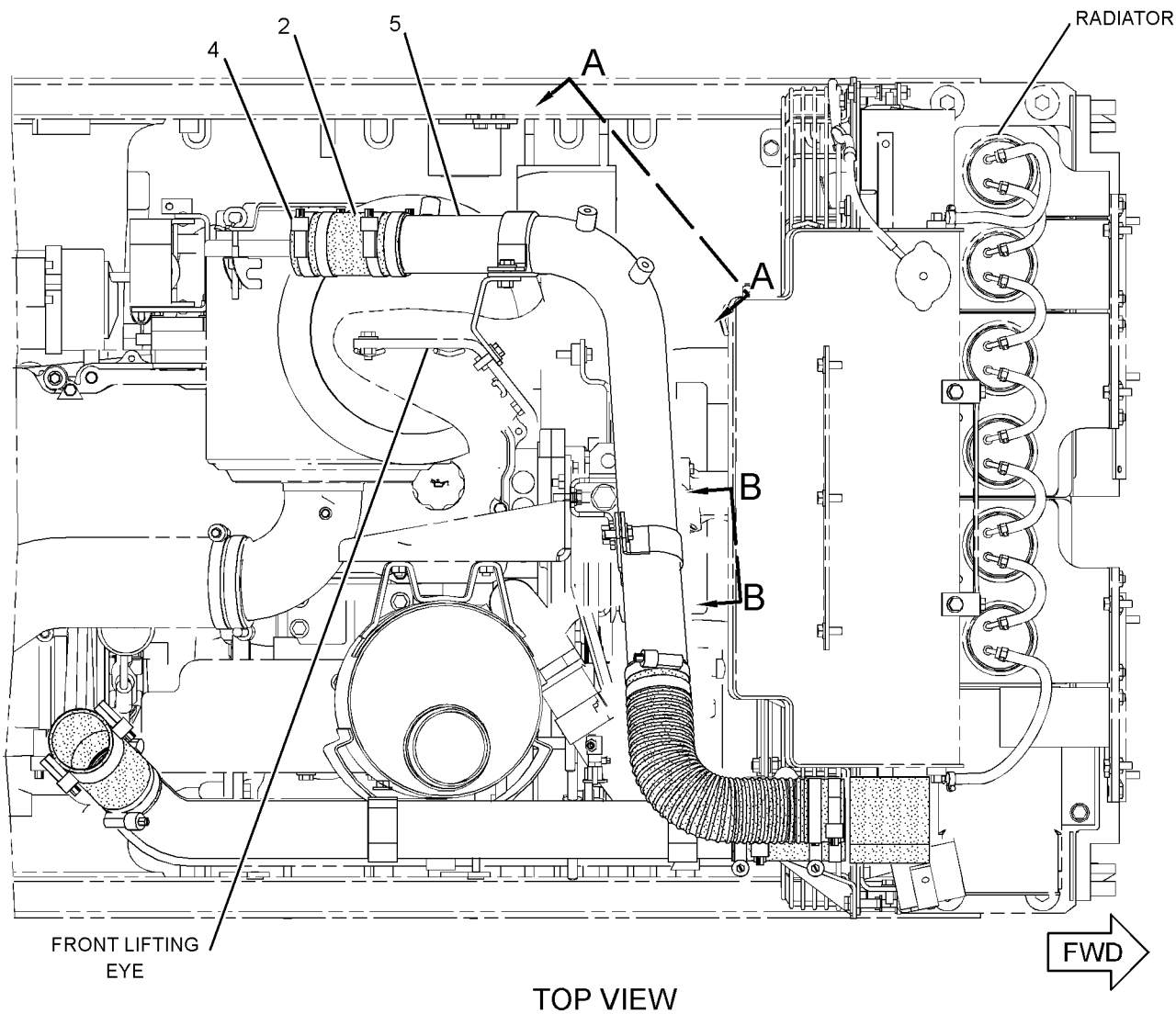

TOP VIEW

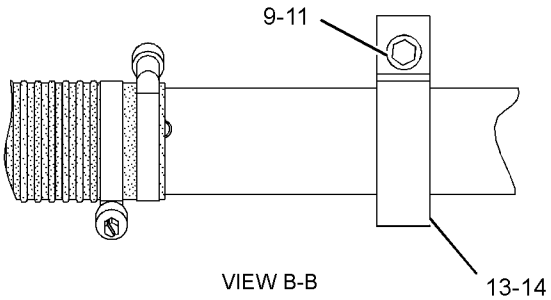

VIEW B-B

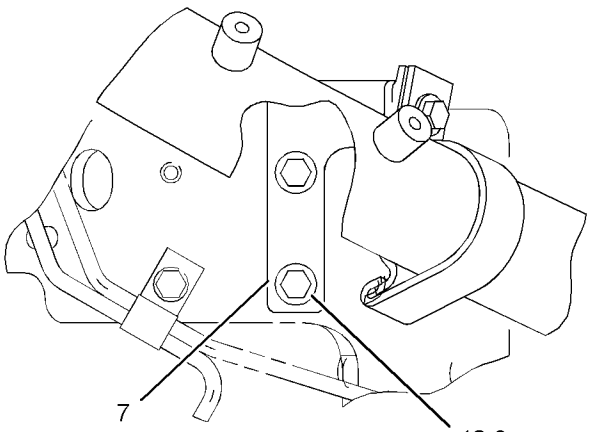

VIEW A-A

GRAPHIC #2 **<END>** g01209165

AIR INLET AND EXHAUST SYSTEM

165-4445 MANIFOLD GP-EXHAUST

S/N: THX1-UP

PART OF 261-4290, 261-4291, 261-4293, 261-4294, 261-4295, 261-4297 ENGINE AR

ALSO AN ATTACHMENT

SMCS-1059 **i01830356**

NOTE	REF NO	GRAPHIC REF	PART NUMBER	QTY	PART NAME 1 2 3 4 5 6 (PRODUCT LEVEL)	SEE PAGE
M	1	1	**3E-8017**	12	LOCKNUT (M10X1.5-MM THD)	
	2	1	**161-3398**	1	MANIFOLD-EXHAUST	
	3	1	**161-3411**	6	GASKET	
	4	1	**167-0172**	1	MANIFOLD-EXHAUST	
	5	1	**203-7775**	1	MANIFOLD-EXHAUST	
M	6	1	**116-3715**	12	STUD-TAPERLOCK (M10X1.5X85-MM)	
	7	1	**4P-4369**	6	SPACER (12X19X23.5-MM THK)	
	8	1	**6V-5839**	12	WASHER (11X21X2.5-MM THK)	
M	9	1	**8T-7044**	4	STUD-TAPERLOCK (M10X1.5X40-MM)	

M-METRIC PART

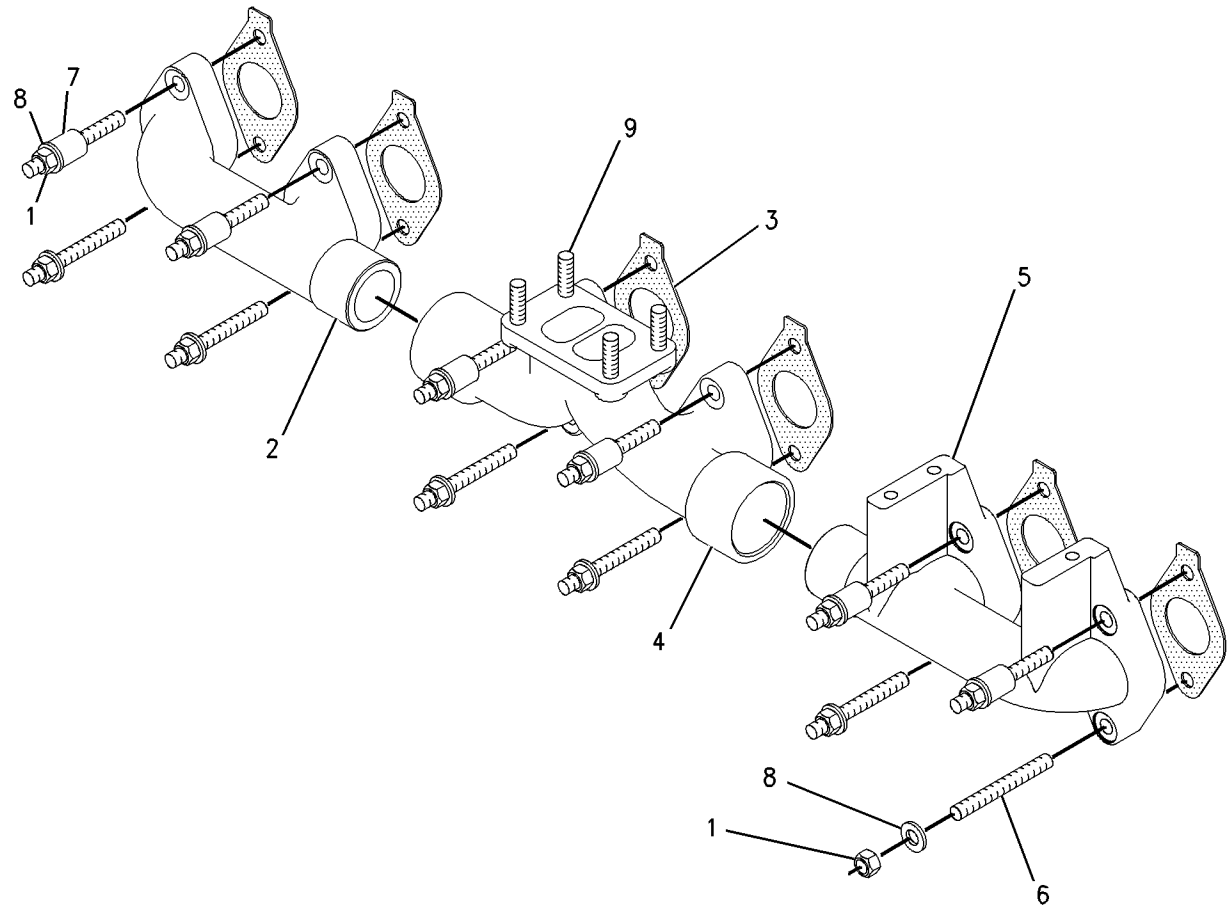

GRAPHIC #1 **<END>** g00741421

AIR INLET AND EXHAUST SYSTEM

239-3686 MUFFLER GP

S/N: JDL1-UP; GMT1-UP

PART OF 223-0551 INSTALLATION AR-ENGINE

SMCS-1062 **i02441359**

NOTE	REF NO	GRAPHIC REF	PART NUMBER	QTY	PART NAME 1 2 3 4 5 6 (PRODUCT LEVEL)	SEE PAGE
	1	1	**7E-3870**	1	CLAMP	
	2	1	**229-9601**	1	MUFFLER AS	
M		1	**8T-3490**	2	NUT-WELD (M10X1.5-THD)	
	3	1	**250-9286**	1	BRACKET AS	
M		1	**8T-3490**	6	NUT-WELD (M10X1.5-THD)	
	4	1	**7X-7729**	6	WASHER (11X25X3-MM THK)	
M	5	1	**8T-4196**	6	BOLT (M10X1.5X35-MM)	

M-METRIC PART

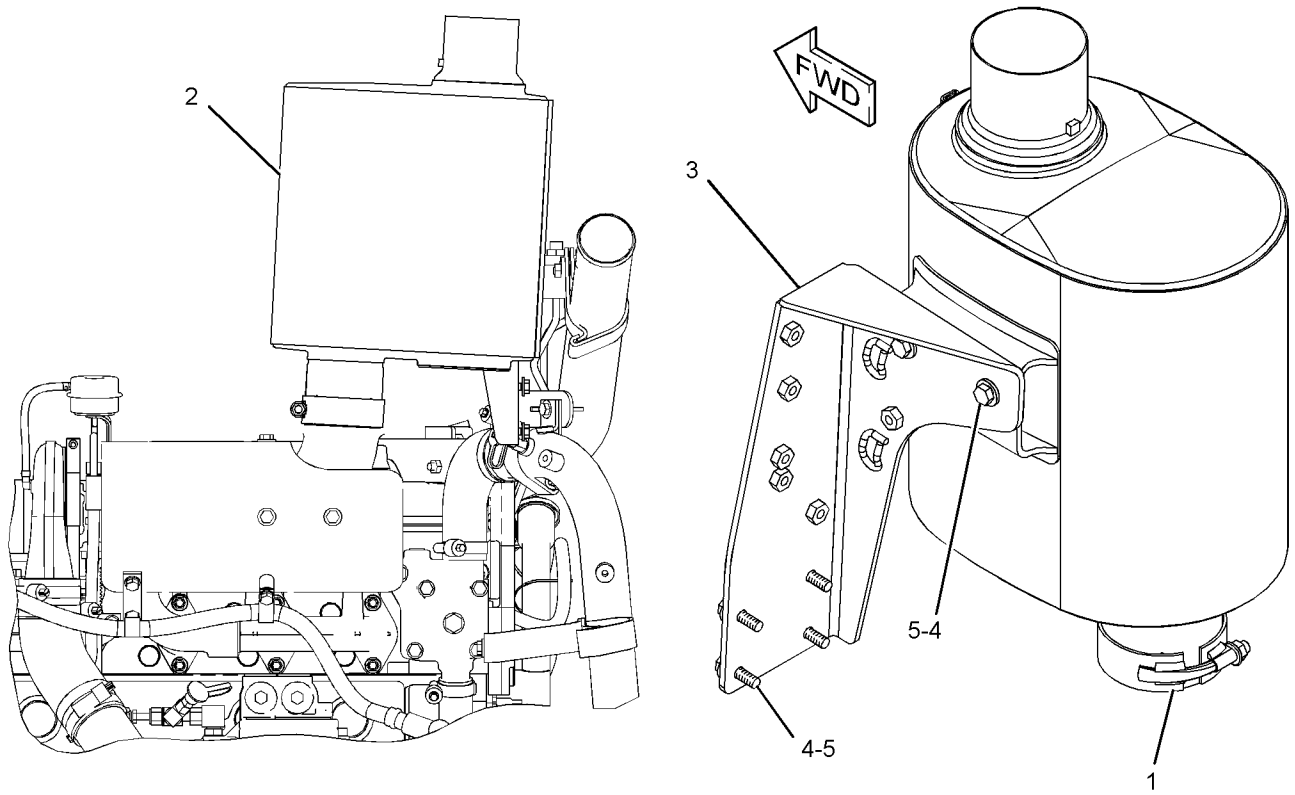

RIGHT SIDE VIEW

GRAPHIC #1 **<END>** g01209255

AIR INLET AND EXHAUST SYSTEM

256-2942 PRECLEANER AR—WITH PRESCREEN

S/N: JDL1-UP; GMT1-UP

CANNOT BE USED WITH 7S-9396—PAGE 133, 215-1488—PAGE 121

AN ATTACHMENT

SMCS-1055 **i02455703**

NOTE	REF NO	GRAPHIC REF	PART NUMBER	QTY	PART NAME 1 2 3 4 5 6 (PRODUCT LEVEL)	SEE PAGE
	1	1	**1W-4877**	1	HOSE-REDUCER	
	2	1	**5P-0599**	1	CLAMP	
	3	1	**9M-0164**	4	CLAMP-HOSE	
	4	1	**127-8178**	1	VALVE AS-CHECK (EXHAUST)	
	5	1	**193-5116**	1	HOSE	
Y	6	1	*237-9251*	1	PRECLEANER GP (TURBINE)	131
	7	1	**256-2941**	1	BASE AS	
	8	1	**5P-3860**	1	CLAMP-HOSE	
	9	1	**7X-7729**	9	WASHER (11X25X3-MM THK)	
M	10	1	**8T-4136**	9	BOLT (M10X1.5X25-MM)	
E	11	1	**5P-2817**		HOSE (27-CM)	

E-ORDER BY THE CENTIMETER
M-METRIC PART
Y-SEPARATE ILLUSTRATION

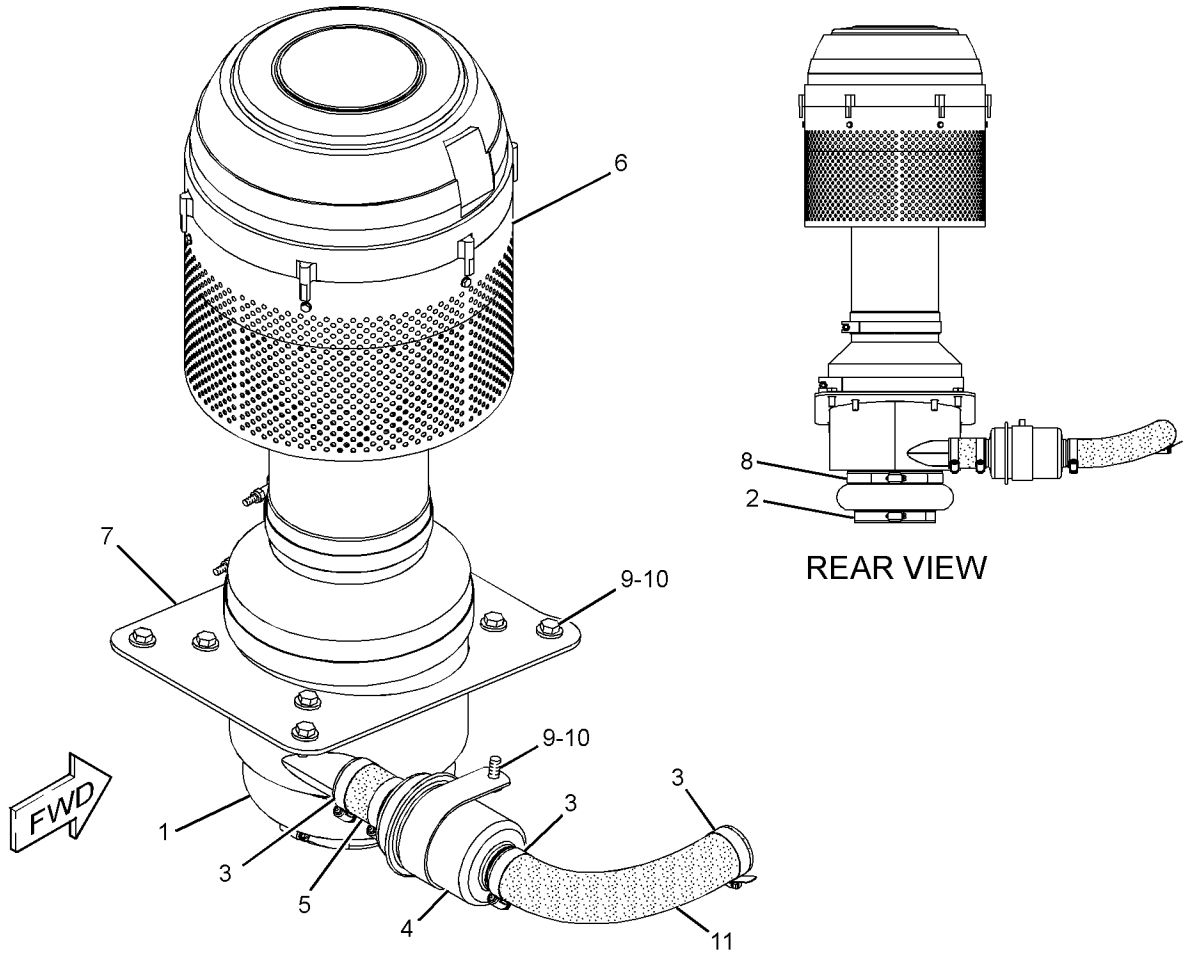

GRAPHIC #1 **<END>** g01208725

AIR INLET AND EXHAUST SYSTEM

256-2943 PRECLEANER AR—WITHOUT PRESCREEN

S/N: JDL1-UP; GMT1-UP

CANNOT BE USED WITH 7S-9396—PAGE 133, 215-1488—PAGE 121

AN ATTACHMENT

SMCS-1055 **i02455572**

NOTE	REF NO	GRAPHIC REF	PART NUMBER	QTY	PART NAME 1 2 3 4 5 6 (PRODUCT LEVEL)	SEE PAGE
	1	1	**1W-4877**	1	HOSE-REDUCER	
	2	1	**5P-0599**	1	CLAMP (BAND)	
	3	1	**9M-0164**	4	CLAMP-HOSE	
	4	1	**127-8178**	1	VALVE AS-CHECK (EXHAUST)	
	5	1	**193-5116**	1	HOSE	
Y	6	1	*237-9250*	1	PRECLEANER GP (TURBINE)	130
	7	1	**256-2941**	1	BASE AS (PRECLEANER)	
	8	1	**5P-3860**	1	CLAMP-HOSE	
	9	1	**7X-7729**	9	WASHER (11X25X3-MM THK)	
M	10	1	**8T-4136**	9	BOLT (M10X1.5X25-MM)	
E	11	1	**5P-2817**		HOSE (27-CM)	

E-ORDER BY THE CENTIMETER
M-METRIC PART
Y-SEPARATE ILLUSTRATION

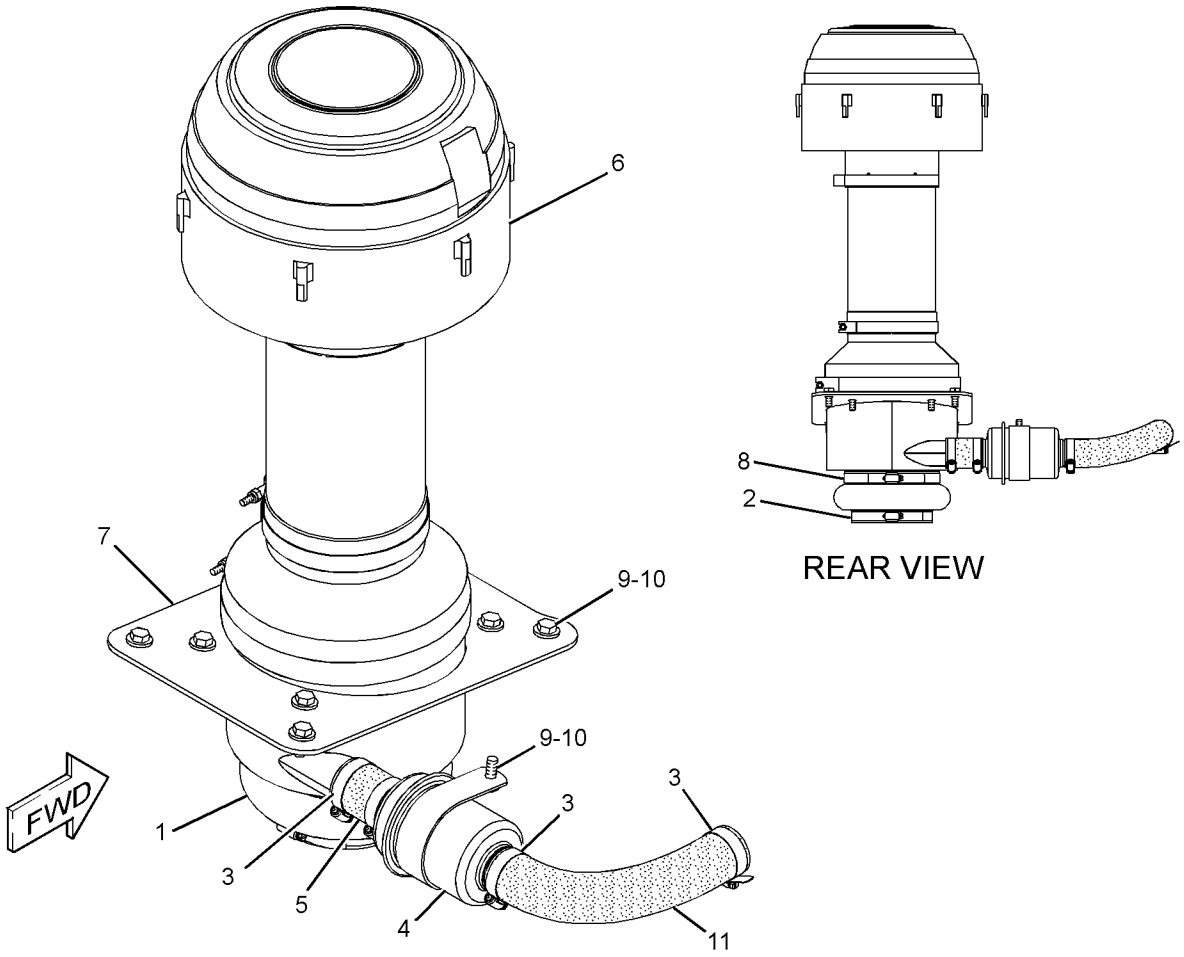

GRAPHIC #1 **<END>** g01208744

AIR INLET AND EXHAUST SYSTEM

237-9250 PRECLEANER GP—WITHOUT SCREEN

S/N: JDL1-UP; GMT1-UP
PART OF 256-2943 PRECLEANER AR
AN ATTACHMENT

SMCS-1055 **i02456143**

NOTE	REF NO	GRAPHIC REF	PART NUMBER	QTY	PART NAME 1 2 3 4 5 6 (PRODUCT LEVEL)	SEE PAGE
	1	1	**130-3280**	1	PRECLEANER AS	
		1	**174-5415**	1	CLAMP	
J	2	1	**237-9252**	1	TUBE AS	
J	3	1	**237-9255**	1	TUBE AS	
					AVAILABLE REPAIR KIT(S):	
J			**237-9254**	1	KIT-PRECLEANER (TURBINE)	
					(INCLUDES VALVE AS, TUBE, CLAMPS, HOSES, WASHERS, BOLTS, & TUBE AS)	

J-KIT MARKED J SERVICES PARTS MARKED J

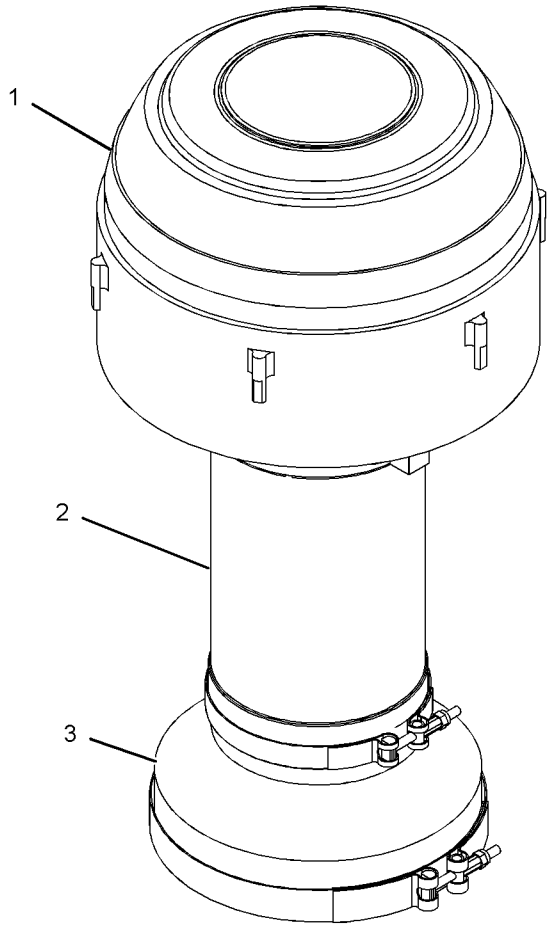

GRAPHIC #1 **<END>** g01149394

AIR INLET AND EXHAUST SYSTEM

237-9251 PRECLEANER GP—WITH SCREEN

S/N: JDL1-UP; GMT1-UP
PART OF 256-2942 PRECLEANER AR
AN ATTACHMENT

SMCS-1055 **i02455735**

NOTE	REF NO	GRAPHIC REF	PART NUMBER	QTY	PART NAME 1 2 3 4 5 6 (PRODUCT LEVEL)	SEE PAGE
	1	1	**130-3280**	1	PRECLEANER AS	
	1A	1	**174-5415**	1	CLAMP	
HZ	2	1		1	PRESCREEN	
	3	1	**145-6669**	6	SCREW-SELF-TAPPING	
J	4	1	**237-9252**	1	TUBE AS	
J	5	1	**237-9255**	1	TUBE AS	
					AVAILABLE REPAIR KIT(S):	
H			**153-1277**	1	KIT-SCREEN (PRECLEANER)	
					(INCLUDES PRESCREEN, DAMPER, CLAMP, SCREWS, & TUBE)	
J			**237-9254**	1	KIT-PRECLEANER (TURBINE)	
					(INCLUDES VALVE AS, TUBE, CLAMPS, HOSE, TUBE ASSEMBLIES, WASHERS, & BOLTS)	

H-PART MARKED H INCLUDED IN KIT MARKED H
J-PART MARKED J INCLUDED IN KIT MARKED J
Z-NOT SERVICED SEPARATELY

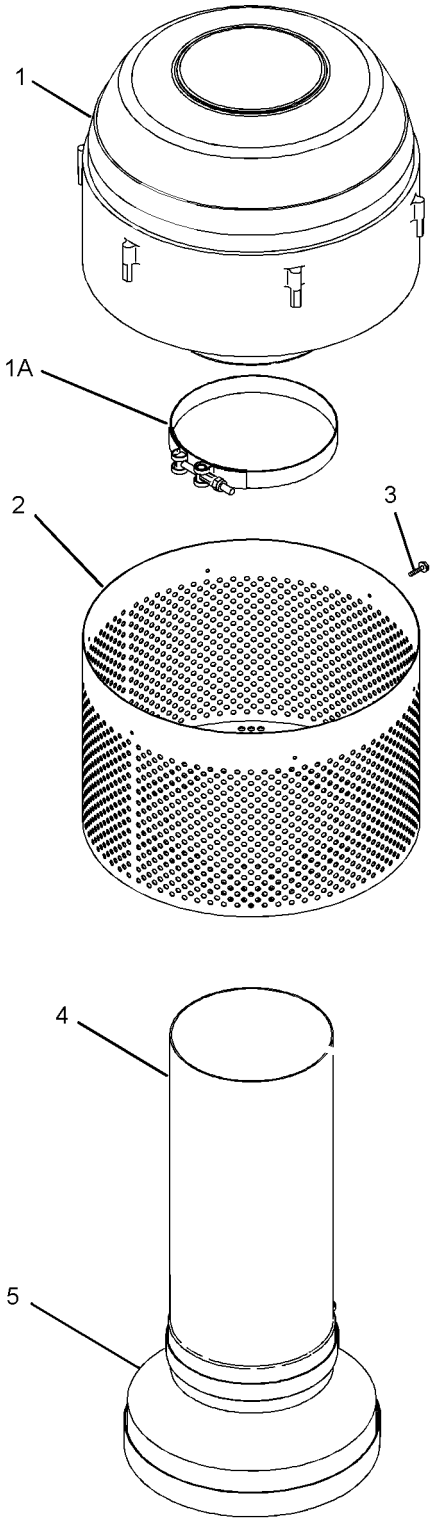

GRAPHIC #1 **<END>** g01146470

AIR INLET AND EXHAUST SYSTEM

7S-9396 PRESCREENER AS

S/N: JDL1-UP; GMT1-UP

CANNOT BE USED WITH 215-1488—PAGE 121, 256-2942—PAGE 128, 256-2943—PAGE 129 AN ATTACHMENT

SMCS-1055 **i02453693**

NOTE	REF NO	GRAPHIC REF	PART NUMBER	QTY	PART NAME 1 2 3 4 5 6 (PRODUCT LEVEL)	SEE PAGE
	1	1	**0S-1591**	1	BOLT (3/8-16X1.5-IN)	
	2	1	**6V-8801**	1	NUT (3/8-16-THD)	

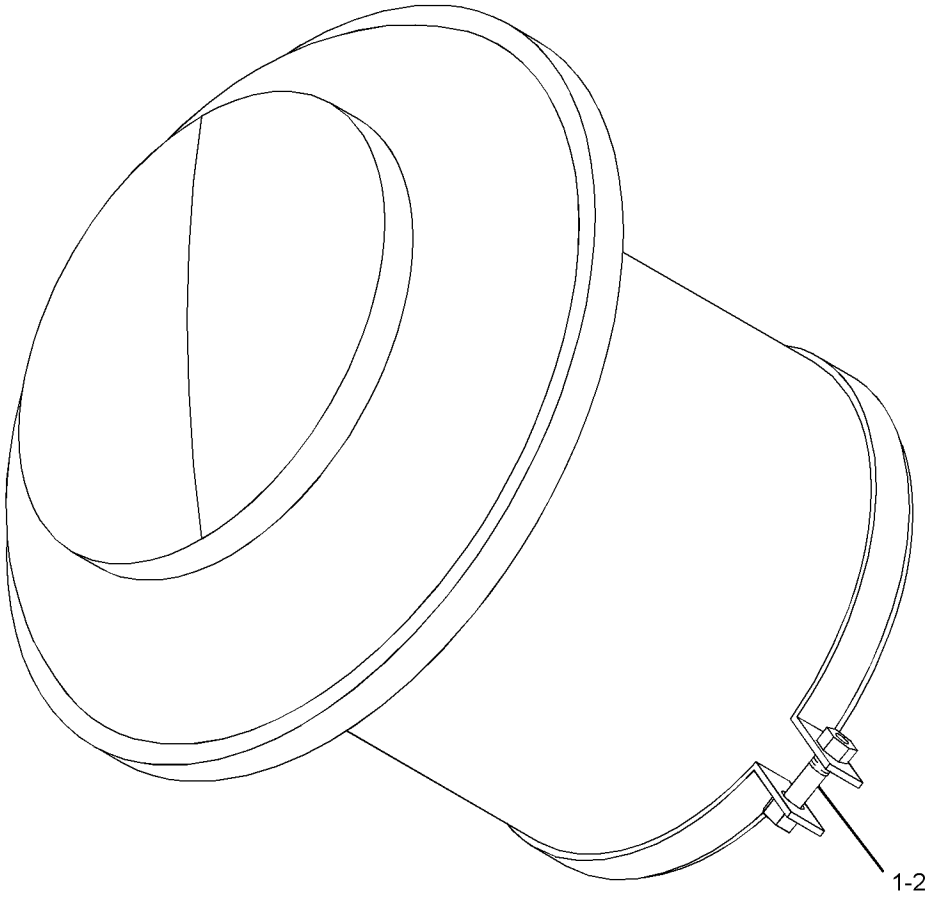

GRAPHIC #1 **<END>** g01208937

AIR INLET AND EXHAUST SYSTEM

237-2737 SHIELD GP-EXHAUST

S/N: JDL1-UP; GMT1-UP

PART OF 223-0551 INSTALLATION AR-ENGINE

SMCS-1067 **i02441348**

NOTE	REF NO	GRAPHIC REF	PART NUMBER	QTY	PART NAME 1 2 3 4 5 6 (PRODUCT LEVEL)	SEE PAGE
	1	1	**237-2738**	1	SHIELD AS-EXHAUST	
M		1	**8T-3490**	1	NUT-WELD (M10X1.5-THD)	
		1	**9R-2613**	1	BOSS-WELD (M10X1.5X25-MM OAL)	
	2	1	**7X-7729**	3	WASHER (11X25X3-MM THK)	
M	3	1	**8T-4136**	3	BOLT (M10X1.5X25-MM)	

M-METRIC PART

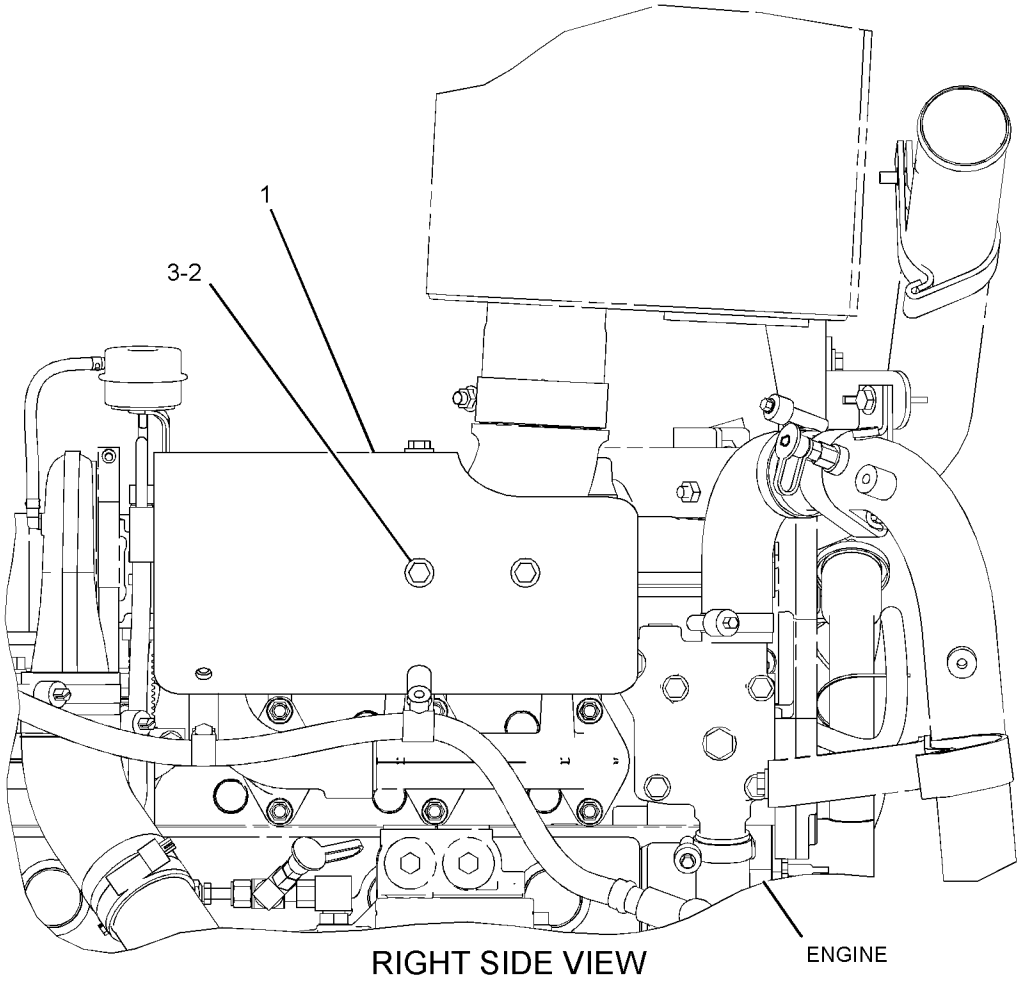

RIGHT SIDE VIEW

GRAPHIC #1 **<END>** g01209236

229-2913 TURBOCHARGER GP

S/N: THX1-UP
PART OF 237-2041 TURBOCHARGER GP
AN ATTACHMENT

SMCS-1052, 1053 **i02434510**

NOTE	REF NO	GRAPHIC REF	PART NUMBER	QTY	PART NAME 1 2 3 4 5 6 (PRODUCT LEVEL)	SEE PAGE
	1	1	**5P-4536**	1	ELBOW	
M	2	1	**7C-6670**	4	BOLT (M8X12.5-MM)	
	3	1	**7C-6672**	2	PLATE-CLAMP (TURBINE)	
	4	1	**158-6072**	1	CLAMP AS (COMPRESSOR)	
	5	1	**161-6963**	2	CLAMP	
	6	1	**177-6920**	1	HOSE	
	7	1	**196-5478**	1	HOUSING AS-TURBINE	
	8	1	**196-5962**	1	COVER-COMPRESSOR	
	9	1	**229-2914**	1	CARTRIDGE GP-TURBOCHARGER	

M-METRIC PART

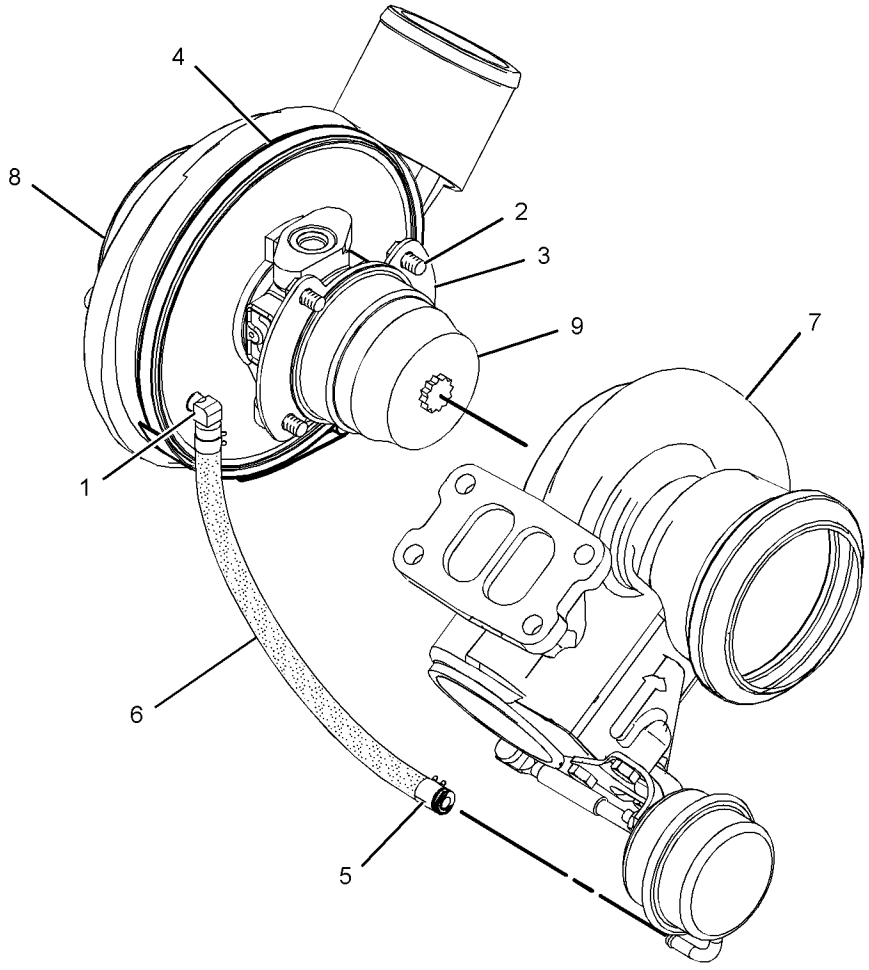

GRAPHIC #1 **<END>** g01207446

AIR INLET AND EXHAUST SYSTEM

237-2041 TURBOCHARGER GP

S/N: THX1-UP

PART OF 261-4533, 261-4535, 261-4537 ENGINE AR-CORE

AN ATTACHMENT

SMCS-1052, 1053 **i02434508**

NOTE	REF NO	GRAPHIC REF	PART NUMBER	QTY	PART NAME 1 2 3 4 5 6 (PRODUCT LEVEL)	SEE PAGE
Y	1	1	**229-2913**	1	TURBOCHARGER GP	135
M	2	1	**3E-8017**	4	LOCKNUT (M10X1.5-MM-THD)	
	3	1	**7C-7431**	1	GASKET	

M-METRIC PART
Y-SEPARATE ILLUSTRATION

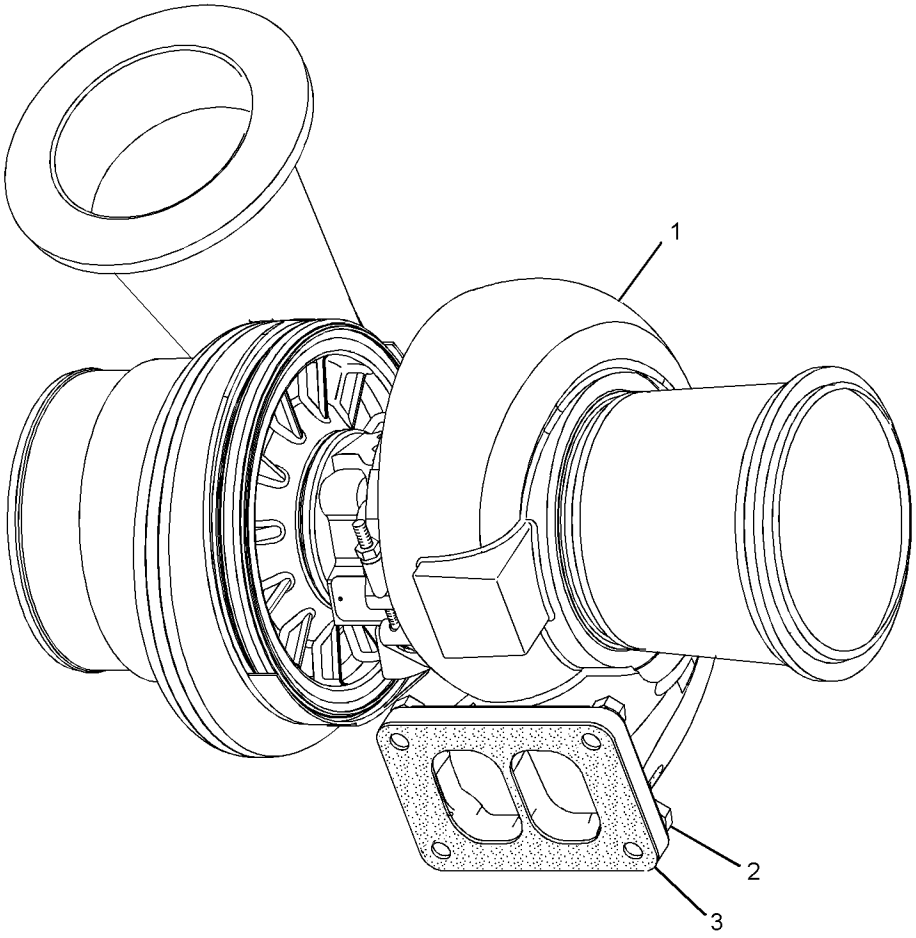

GRAPHIC #1 **<END>** g01206492

252-5165 TURBOCHARGER GP

S/N: THX1-UP

PART OF 262-5901 TURBOCHARGER GP

ALSO AN ATTACHMENT

SMCS-1052, 1053 **i02433948**

NOTE	REF NO	GRAPHIC REF	PART NUMBER	QTY	PART NAME 1 2 3 4 5 6 (PRODUCT LEVEL)	SEE PAGE
	1	1	**137-1602**	1	CLAMP AS (TURBINE)	
	2	1	**158-6072**	1	CLAMP AS (COMPRESSOR)	
	3	1	**161-6963**	2	CLAMP	
E	4	1	**242-3360**		HOSE (26-CM)	
	5	1	**262-2870**	1	CARTRIDGE GP-TURBOCHARGER	

E-ORDER BY THE CENTIMETER

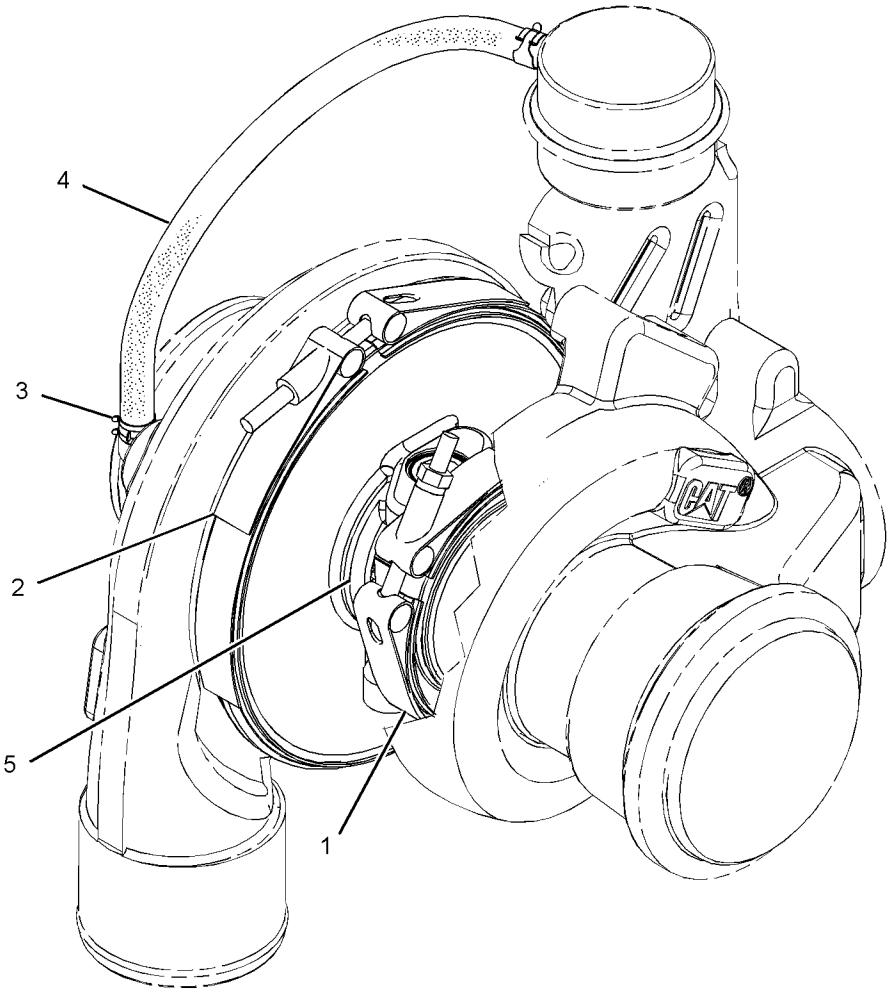

GRAPHIC #1 **<END>** g01214268

AIR INLET AND EXHAUST SYSTEM

262-5901 TURBOCHARGER GP

S/N: THX1-UP

PART OF 261-4530, 261-4531, 261-4534 ENGINE AR-CORE

ALSO AN ATTACHMENT

SMCS-1052, 1053 **i02433947**

NOTE	REF NO	GRAPHIC REF	PART NUMBER	QTY	PART NAME 1 2 3 4 5 6 (PRODUCT LEVEL)	SEE PAGE
	1	1	**7C-7431**	1	GASKET	
Y	2	1	**252-5165**	1	TURBOCHARGER GP	137
M	3	1	**3E-8017**	4	LOCKNUT (M10X1.5-MM-THD)	

M-METRIC PART
Y-SEPARATE ILLUSTRATION

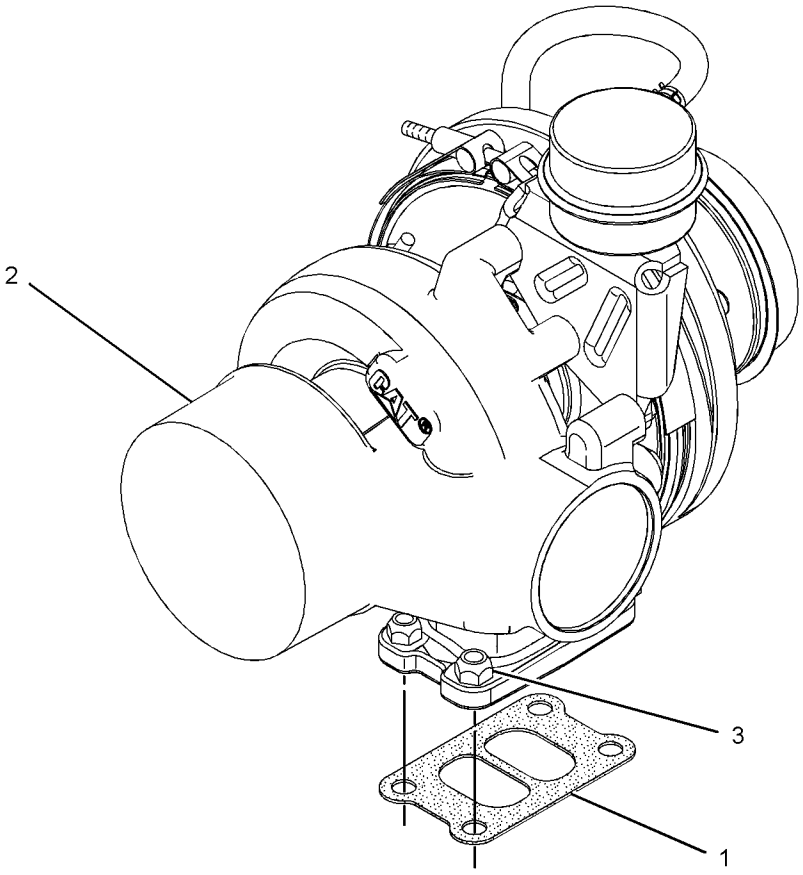

GRAPHIC #1 **<END>** g01205748

223-0560 FILTER & LINES GP-FUEL

S/N: JDL1-UP; GMT1-UP

PART OF 223-0551 INSTALLATION AR-ENGINE

SMCS-1261, 1274 **i02450438**

NOTE	REF NO	GRAPHIC REF	PART NUMBER	QTY	PART NAME 1 2 3 4 5 6 (PRODUCT LEVEL)	SEE PAGE
	1	1	**1P-4278**	1	CLAMP-HOSE	
	2	1	**1R-0762**	1	FILTER AS-FUEL (HIGH EFFICIENCY)	
	3	1	**6V-0852**	1	CAP-DUST	
	4	1	**8T-9655**	6	MOUNT-ISOLATION	
	5	1	**9R-0824**	1	SPACER (6.83X10.29X6.5-MM THK)	
I	6	1	**163-4770**	2	HOSE AS	
	7	1	**174-7599**	1	BASE AS-FUEL FILTER	
Y	8	1	*174-9570*	1	FILTER GP-WATER SEP & FUEL	141
	9	1	*183-3406*	4	PLUG AS	
					(EACH INCLUDES)	
		1	**9S-4191**	1	PLUG-O RING	
		1	**6V-5049**	1	SEAL-O-RING	
	10	1	**190-8970**	1	BASE AS (PUMP HOUSING)	
	11	1	**191-1782**	1	SPACER (8.5X12.7X38.2-MM THK)	
	12	1	**191-1783**	2	SPACER (8.5X12.7X87.3-MM THK)	
	13	1	**206-5017**	1	SPACER (11X20X5-MM THK)	
	14	1	**229-8609**	1	TUBE AS	
	15	1	**251-0062**	1	BRACKET AS	
M		1	**8T-3490**	1	NUT-WELD (M10X1.5-THD)	
	16	1	**279-2333**	1	TUBE AS	
	17	1	**2M-9780**	1	SEAL-O-RING	
M	18	1	**5C-2890**	1	NUT (M6X1-THD)	
	19	1	**6V-3965**	1	FITTING AS (QUICK DISCONNECT)	
	20	1	**6V-4589**	2	SEAL-O-RING	
	21	1	**6V-5049**	3	SEAL-O-RING	
M	22	1	**6V-7357**	1	BOLT (M6X1X25-MM)	
	23	1	**6V-8397**	7	SEAL-O-RING	
	24	1	**6V-8636**	2	CONNECTOR	
	25	1	**6V-8715**	1	CONNECTOR	
	26	1	**6V-8994**	2	UNION	
	27	1	**6V-9168**	2	NUT (11/16-16-THD)	
	28	1	**7E-2707**	2	CLIP	
	29	1	**7S-4244**	1	CLIP	
	30	1	**7X-0579**	6	WASHER-HARD (8.8X25.5X2-MM THK)	
M	31	1	**7X-2539**	2	BOLT (M8X1.25X110-MM)	
	32	1	**7X-7729**	4	WASHER (11X25X3-MM THK)	
	33	1	**8T-4121**	3	WASHER-HARD (11X21X2.5-MM THK)	
M	34	1,1	**8T-4195**	7	BOLT (M10X1.5X30-MM)	
M	35	1	**8T-6869**	1	BOLT (M8X1.25X60-MM)	
	36	1	**9S-4190**	2	PLUG	
	37	1	**9X-8256**	2	WASHER (6.6X12X2-MM THK)	
D	38	1	**5P-5991**	1	HOSE (0.7-M)	

D-ORDER BY THE METER
I-REFER TO HYDRAULIC INFORMATION SYSTEM
M-METRIC PART
Y-SEPARATE ILLUSTRATION

223-0560 **FILTER & LINES GP-FUEL** *(contd.)* **i02450438**

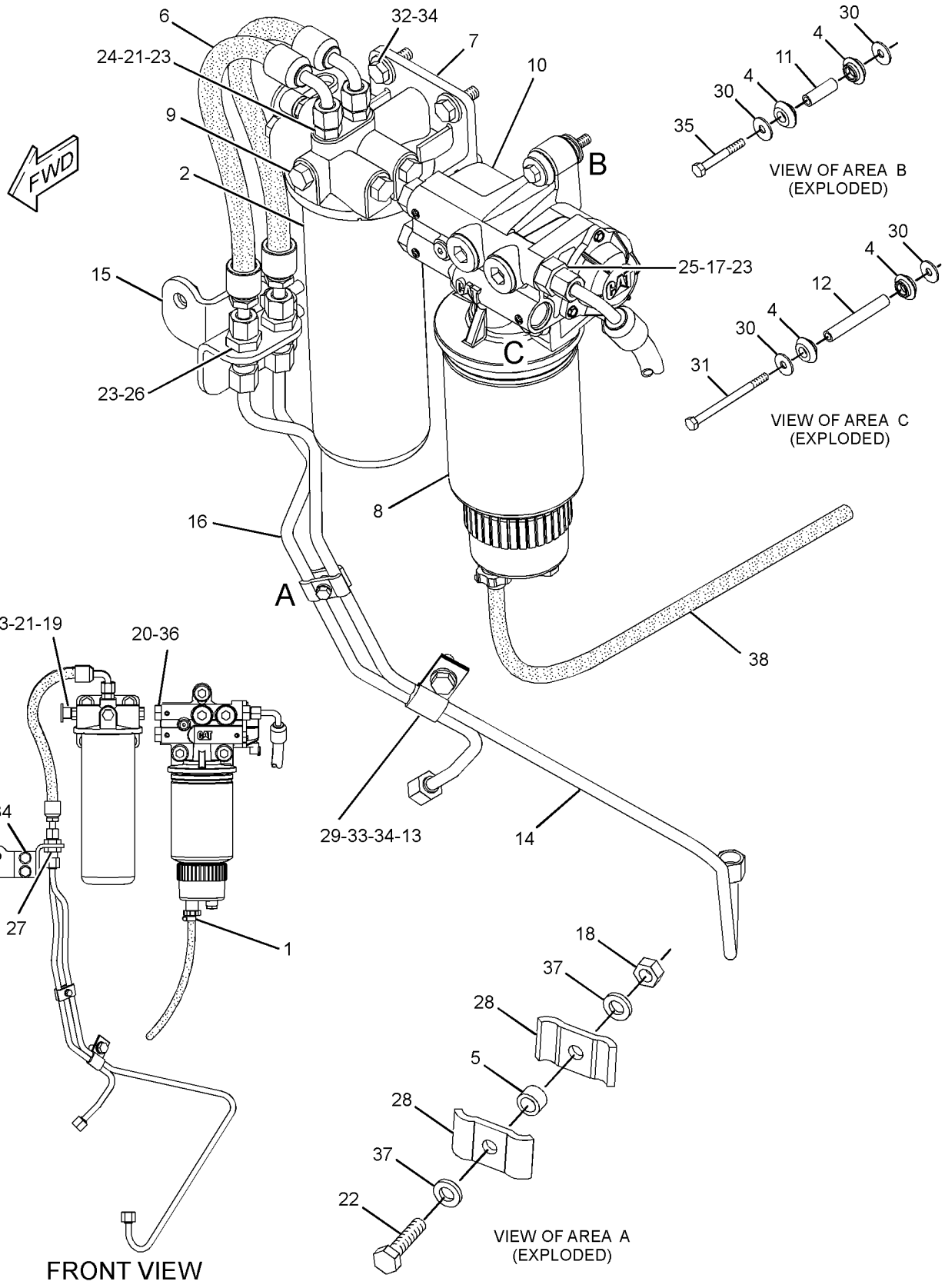

GRAPHIC #1 **<END>** g01207343

174-9570 FILTER GP-WATER SEP & FUEL

S/N: JDL1-UP; GMT1-UP

PART OF 223-0560 FILTER & LINES GP-FUEL

SMCS-1261, 1263 **i02390251**

NOTE	REF NO	GRAPHIC REF	PART NUMBER	QTY	PART NAME 1 2 3 4 5 6 (PRODUCT LEVEL)	SEE PAGE
	1	1	**1R-0770**	1	FILTER AS-WATER SEP & FUEL (PRIMARY)	
	1A	1	**220-8678**	1	SEAL	
	2	1	**270-5320**	1	BOWL AS (FUEL, WATER SEPARATOR)	

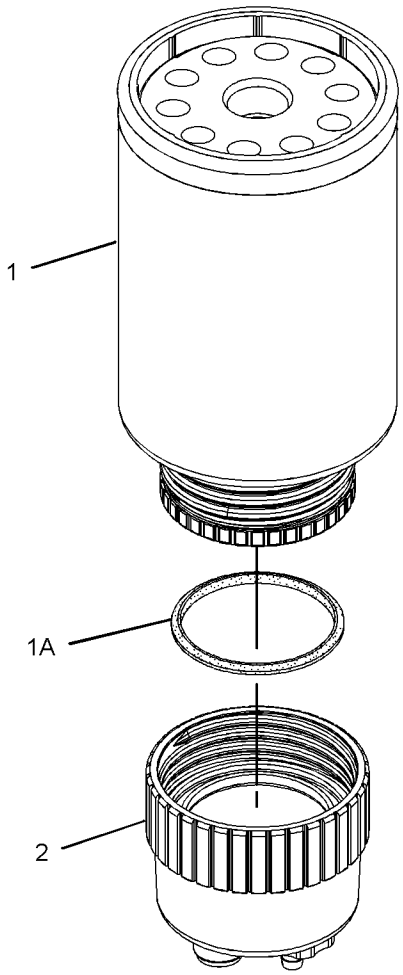

GRAPHIC #1 **<END>** g01179858

267-9734 INJECTOR GP-FUEL

S/N: THX1-UP
PART OF 267-9715 PUMP GP-FUEL INJECTION
ALSO AN ATTACHMENT

SMCS-1251, 1254, 1290, 1713 **i02443940**

NOTE	REF NO	GRAPHIC REF	PART NUMBER	QTY	PART NAME 1 2 3 4 5 6 (PRODUCT LEVEL)	SEE PAGE
	1	1	**149-5240**	1	RING-BACKUP	
	2	1	**169-3104**	1	RING-BACKUP	
	3	1	**169-8598**	1	SEAL-O-RING	
	5	1	**109-3207**	1	SEAL-O-RING	
	6	1	**148-2903**	1	SEAL-O-RING	
	7	1	**169-8586**	1	RING-BACKUP	

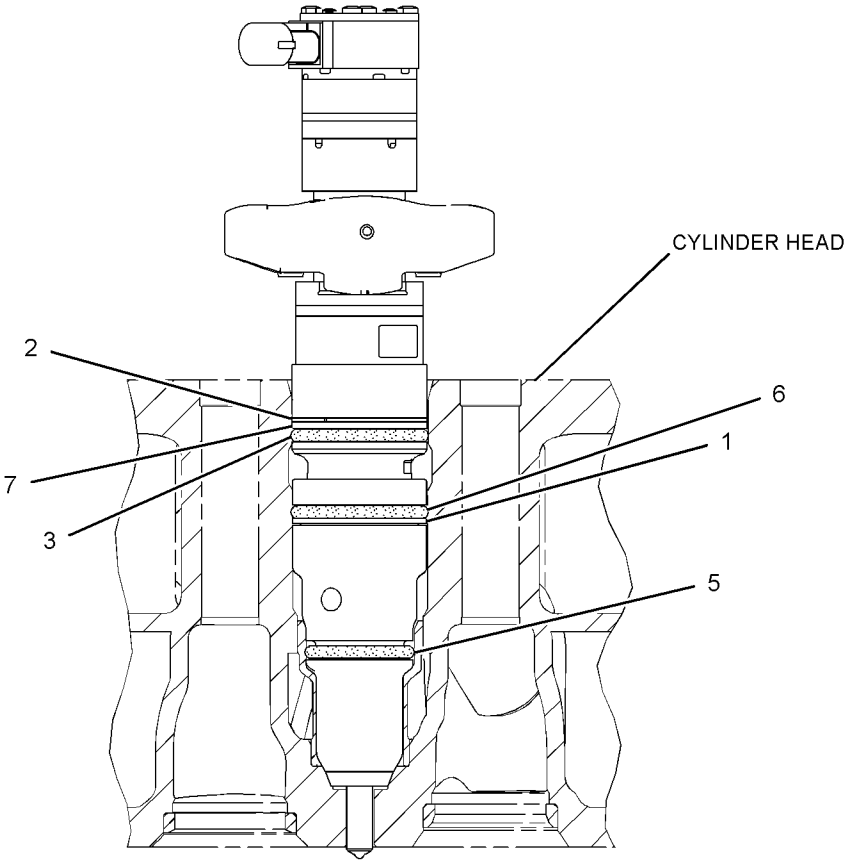

GRAPHIC #1 **<END>** g01221549

FUEL SYSTEM

223-1679 LINES GP-FUEL

S/N: JDL1-UP; GMT1-UP

PART OF 218-4978, 222-1592 CHASSIS AR

SMCS-1274 **i02431459**

NOTE	REF NO	GRAPHIC REF	PART NUMBER	QTY	PART NAME 1 2 3 4 5 6 (PRODUCT LEVEL)	SEE PAGE
	1	1	**1W-3011**	1	SPACER (10.5X22X73.5-MM THK)	
	2	1	**3W-2647**	1	SPACER (13.5X30X10-MM THK)	
	3	1	**8T-0119**	2	ELBOW	
	4	1	**8T-6723**	1	VALVE-BALL	
	5	1	**8T-6724**	1	VALVE-BALL	
	6	1	*150-3026*	1	ELBOW AS	
		1	**6V-4292**	1	ELBOW	
		1	**3K-0360**	1	SEAL-O-RING	
I	7	1	**230-3615**	1	HOSE AS	
	8	1	**226-3492**	1	BRACKET AS	
	9	1	**231-1345**	1	BRACKET AS	
I	10	1	**237-0984**	1	HOSE AS	
I	11	1	**237-0985**	1	HOSE AS	
	12	1	**067-2551**	3	CLIP	
	13	1	**100-4336**	5	CLIP	
M	14	1	**109-3001**	1	STUD-TAPERLOCK (M10X1.5X65-MM)	
	15	1	*148-8364*	1	ELBOW AS	
		1	**6V-8625**	1	ELBOW	
		1	**3K-0360**	1	SEAL-O-RING	
		1	**6V-8398**	1	SEAL-O-RING	
	16	1	*148-8372*	1	ELBOW AS	
		1	**6V-8721**	1	ELBOW	
		1	**2M-9780**	1	SEAL-O-RING	
		1	**6V-8398**	1	SEAL-O-RING	
	17	1	*148-8374*	1	ELBOW AS	
		1	**6V-8723**	1	ELBOW	
		1	**3K-0360**	1	SEAL-O-RING	
		1	**6V-8397**	1	SEAL-O-RING	
	18	1	*164-5570*	1	UNION AS	
		1	**6V-8730**	1	UNION	
		1	**6V-8397**	2	SEAL-O-RING	
	19	1	**1K-4649**	1	SPACER (0.516X1X1-IN THK)	
	20	1	**1S-0996**	1	CLIP	
	21	1	**3K-0360**	4	SEAL-O-RING	
	22	1	**4D-7735**	1	CLIP	
	23	1	**7X-7729**	1	WASHER (11X25X3-MM THK)	
	24	1	**8T-1887**	1	CLIP (SLOT)	
	25	1	**8T-1888**	1	CLIP (TAB)	
	26	1	**8T-1893**	2	CLIP (SLOT)	
	27	1	**8T-1894**	2	CLIP (TAB)	
	28	1	**8T-4121**	12	WASHER-HARD (11X21X2.5-MM THK)	
M	29	1	**8T-4133**	2	NUT (M10X1.5 THD)	
M	30	1	**8T-4136**	1	BOLT (M10X1.5X25-MM)	
M	31	1	**8T-4137**	6	BOLT (M10X1.5X20-MM)	
M	32	1	**8T-4179**	1	BOLT (M12X1.75X20-MM)	
M	33	1	**8T-4182**	1	BOLT (M10X1.5X45-MM)	
M	34	1	**8T-4195**	1	BOLT (M10X1.5X30-MM)	
M	35	1	**8T-4196**	1	BOLT (M10X1.5X35-MM)	
M	36	1	**8T-4198**	1	BOLT (M10X1.5X100-MM)	
	37	1	**8T-4223**	1	WASHER-HARD (13.5X25.5X3-MM THK)	
	38	1	**8T-4896**	1	WASHER-HARD (10.2X18.5X2.5-MM THK)	
E	39	1	**5P-1505**		HOSE (104-CM)	

E-ORDER BY THE CENTIMETER
I-REFER TO HYDRAULIC INFORMATION SYSTEM
M-METRIC PART

223-1679 **LINES GP-FUEL** *(contd.)* **i02431459**

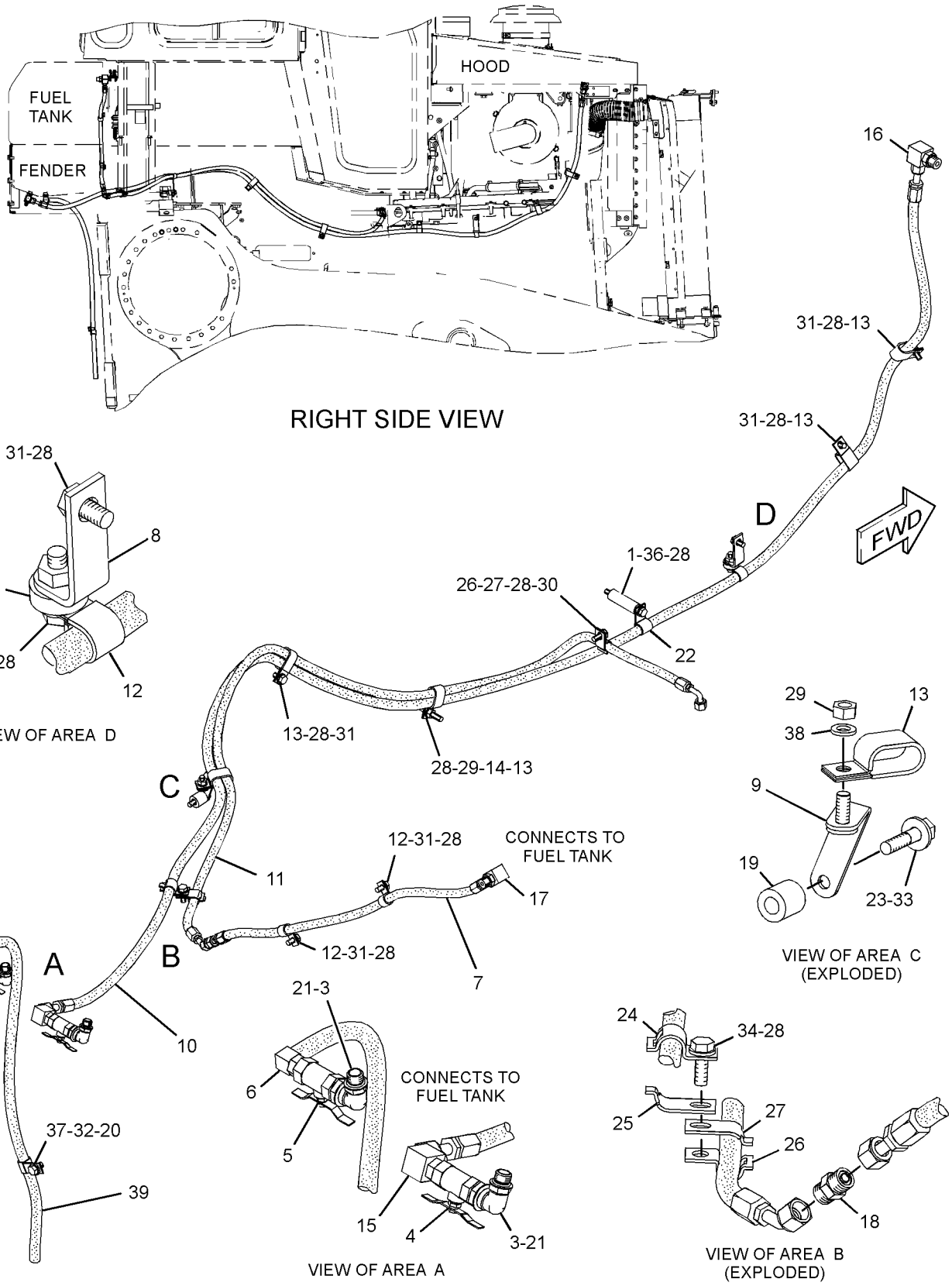

GRAPHIC #1

<END>

g01208640

FUEL SYSTEM

264-2014 LINES GP-FUEL

S/N: THX1-UP

PART OF 261-4290, 261-4291, 261-4293, 261-4294, 261-4295, 261-4297 ENGINE AR
ALSO AN ATTACHMENT

SMCS-1274 **i02431599**

NOTE	REF NO	GRAPHIC REF	PART NUMBER	QTY	PART NAME 1 2 3 4 5 6 (PRODUCT LEVEL)	SEE PAGE
	1	1	**3E-7410**	1	TEE-O-RING	
	2	1	**183-3401**	1	ELBOW AS	
		1	**6V-5049**	1	SEAL-O-RING	
		1	**6V-9001**	1	ELBOW	
		1	**8L-2779**	1	SEAL-O-RING	
Y	3	1	**194-6725**	1	SENSOR GP-PRESSURE (FUEL)	208
	4	1	**196-6838**	1	ELBOW AS	
	5	1	**229-8870**	1	REGULATOR AS (FUEL PRESSURE)	
	6	1	**263-7731**	1	HARNESS AS-WIRING (FUEL PRESSURE)	
		1	**102-8803**	1	KIT-RECEPTACLE (3-PIN)	
					(INCLUDES RECEPTACLE AS AND WEDGE)	
		1	**102-8806**	1	KIT-RECEPTACLE (8-PIN)	
					(INCLUDES RECEPTACLE AS AND WEDGE)	
	7	1	**1S-0994**	1	CLIP	
I	8	1	**224-2228**	1	HOSE AS	
M	9	1	**6V-4248**	1	BOLT (M10X1.5X25-MM)	
	10	1	**6V-5048**	1	SEAL-O-RING	
	11	1	**6V-5049**	7	SEAL-O-RING	
	12	1	**6V-5839**	1	WASHER (11X21X2.5-MM THK)	
	13	1	**6V-8636**	2	CONNECTOR	
	14	1	**6V-8724**	1	ELBOW	
	15	1	**8L-2779**	3	SEAL-O-RING	
	16	1	**9X-0261**	1	ADAPTER	

I-REFER TO HYDRAULIC INFORMATION SYSTEM
M-METRIC PART
Y-SEPARATE ILLUSTRATION

264-2014 **LINES GP-FUEL** *(contd.)* **i02431599**

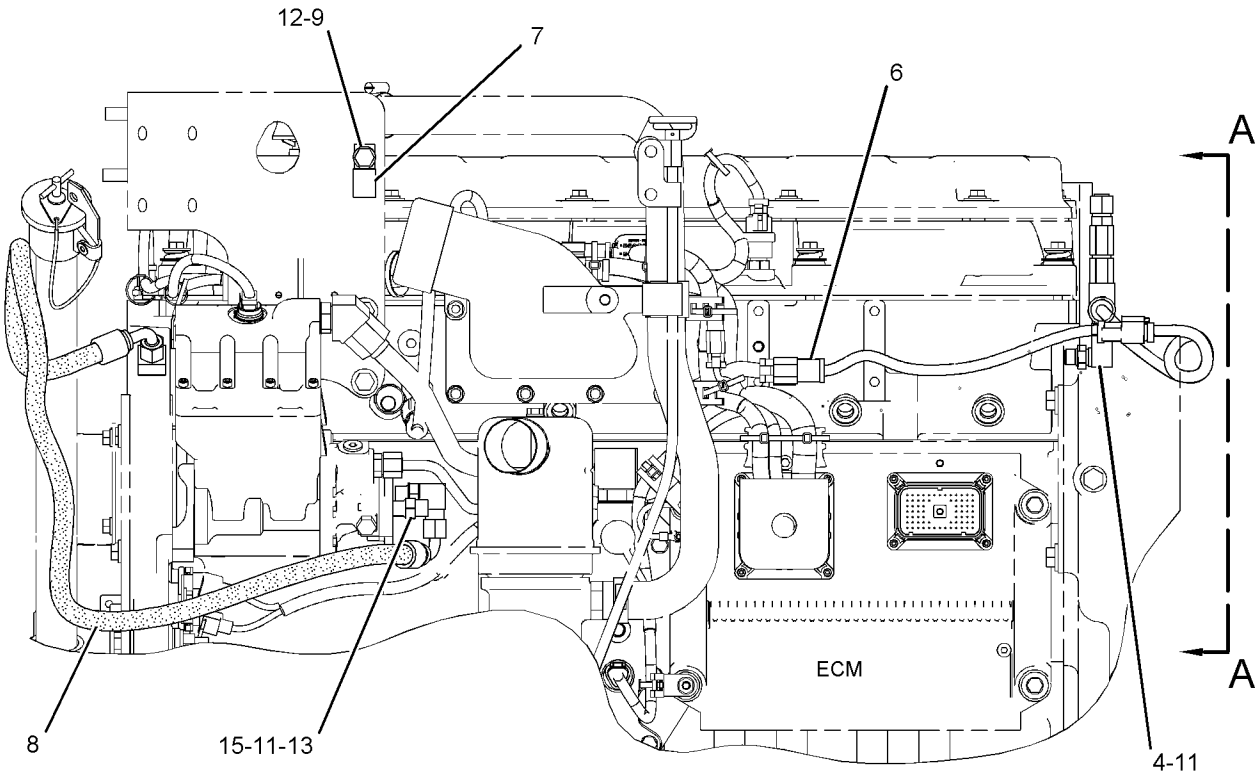

LEFT SIDE VIEW

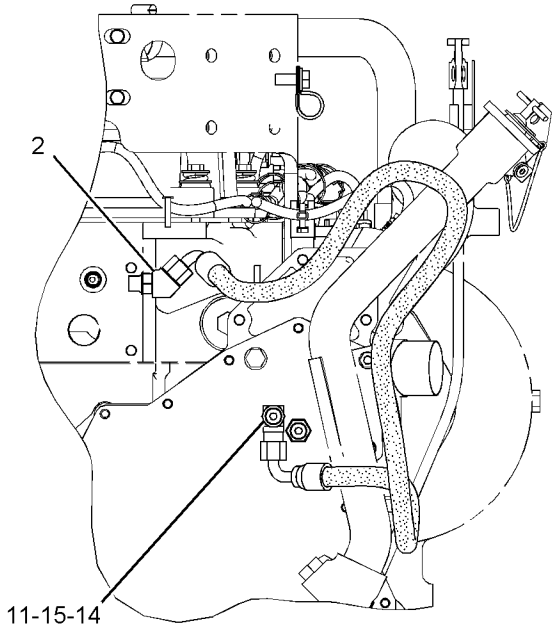

FRONT VIEW

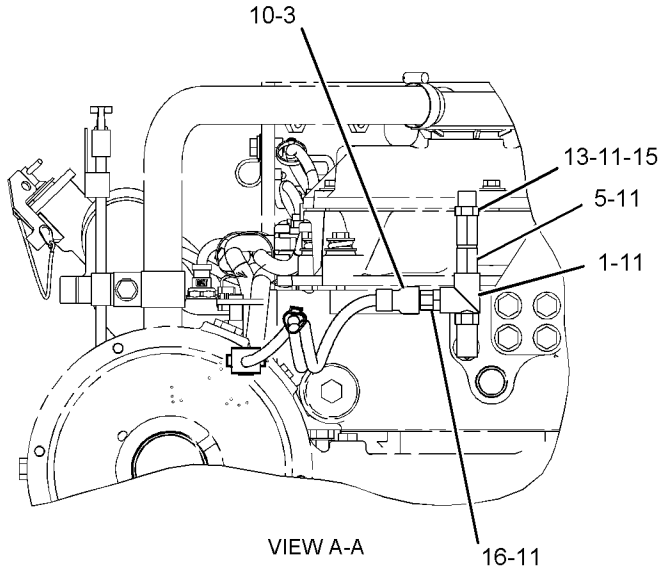

GRAPHIC #1 **<END>** g01207460

220-8233 PUMP & MTG GP-UNIT INJ HYD

S/N: THX1-UP

PART OF 261-4530, 261-4531, 261-4533, 261-4534, 261-4535, 261-4537 ENGINE

AR-CORE

ALSO AN ATTACHMENT

SMCS-1714 **i02433749**

NOTE	REF NO	GRAPHIC REF	PART NUMBER	QTY	PART NAME 1 2 3 4 5 6 (PRODUCT LEVEL)	SEE PAGE
	1	1	*183-3399*	2	CONNECTOR AS	
					(EACH INCLUDES)	
		1	**6V-8636**	1	CONNECTOR	
		1	**214-7568**	1	SEAL-O-RING	
		1	**221-3494**	1	SEAL-O-RING	
	2	1	*183-3407*	1	PLUG AS	
		1	**9S-8004**	1	PLUG (STRAIGHT THREAD O-RING)	
		1	**153-4906**	1	SEAL-O-RING	
	3	1	**227-5904**	1	SEAL-O-RING (UNIT INJECTOR HYD PUMP)	
	4	1	**209-3171**	1	TUBE AS	
	5	1	**209-3172**	1	TUBE AS	
YR	6	1	**254-4358**	1	PUMP GP-FUEL INJECTION	149
	7	1	**030-7950**	1	ELBOW (90-DEG)	
	8	1	**5P-3264**	1	ELBOW (45-DEG)	
	9	1	**6V-4589**	1	SEAL-O-RING	
	10	1	**6V-5050**	1	SEAL-O-RING	
	11	1	**6V-5839**	2	WASHER (11X21X2.5-MM THK)	
M	12	1	**6V-7981**	2	BOLT (M10X1.5X70-MM)	
	13	1	**3E-9412**	1	DOWEL	

M-METRIC PART
R-REMFG PART MAY BE AVAILABLE
Y-SEPARATE ILLUSTRATION

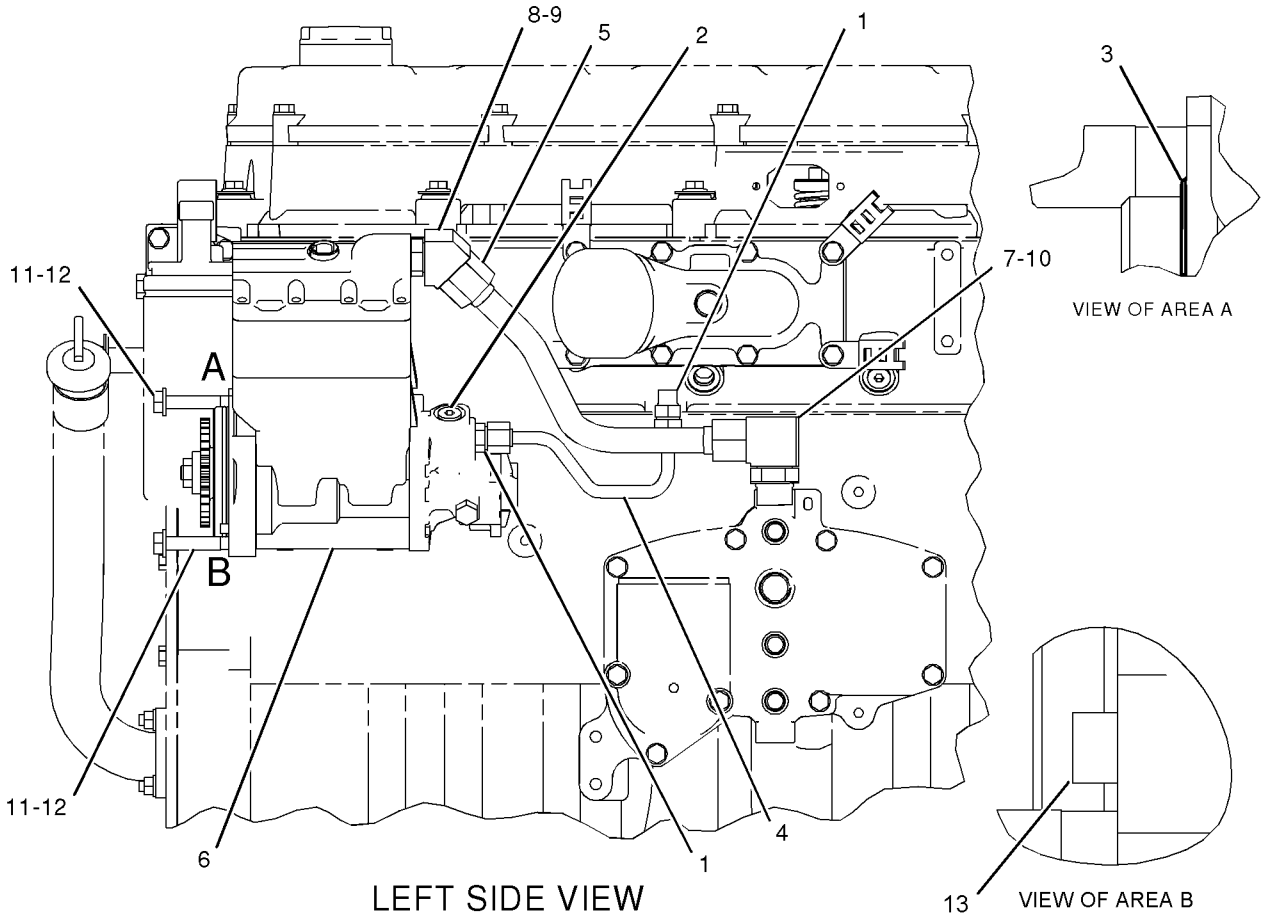

GRAPHIC #1

<END>

g01022226

254-4358 PUMP GP-FUEL INJECTION*R

S/N: THX1-UP
PART OF 220-8233 PUMP & MTG GP-UNIT INJ HYD
ALSO AN ATTACHMENT

SMCS-1251, 1290 **i02433806**

NOTE	REF NO	GRAPHIC REF	PART NUMBER	QTY	PART NAME 1 2 3 4 5 6 (PRODUCT LEVEL)	SEE PAGE
	1	1	**178-2357**	1	PUMP GP-FUEL TRANSFER	
	2	1	**179-8128**	1	SEAL-O-RING (FUEL TRANSFER PUMP)	
	3	1	**227-5904**	1	SEAL-O-RING (UNIT INJECTOR HYD PUMP)	

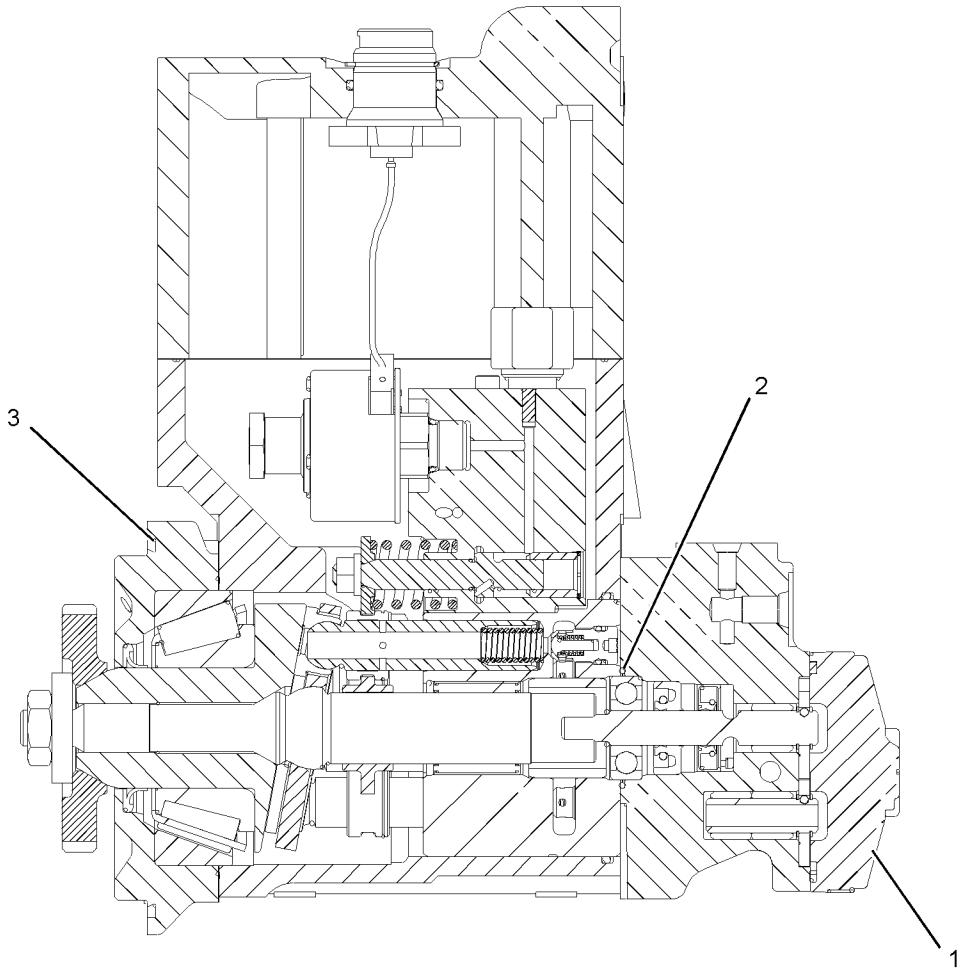

GRAPHIC #1 **<END>** g01190308

267-9715 PUMP GP-FUEL INJECTION

S/N: THX1-UP
PART OF 267-9720 PUMP GP-FUEL INJECTION
ALSO AN ATTACHMENT

SMCS-1251, 1290 **i02443933**

NOTE	REF NO	GRAPHIC REF	PART NUMBER	QTY	PART NAME 1 2 3 4 5 6 (PRODUCT LEVEL)	SEE PAGE
	1	1	**235-9651**	2	BOLT-SOCKET HEAD (M8X1.25X65-MM)	
Y	2	1	**267-9734**	1	INJECTOR GP-FUEL	142

Y-SEPARATE ILLUSTRATION

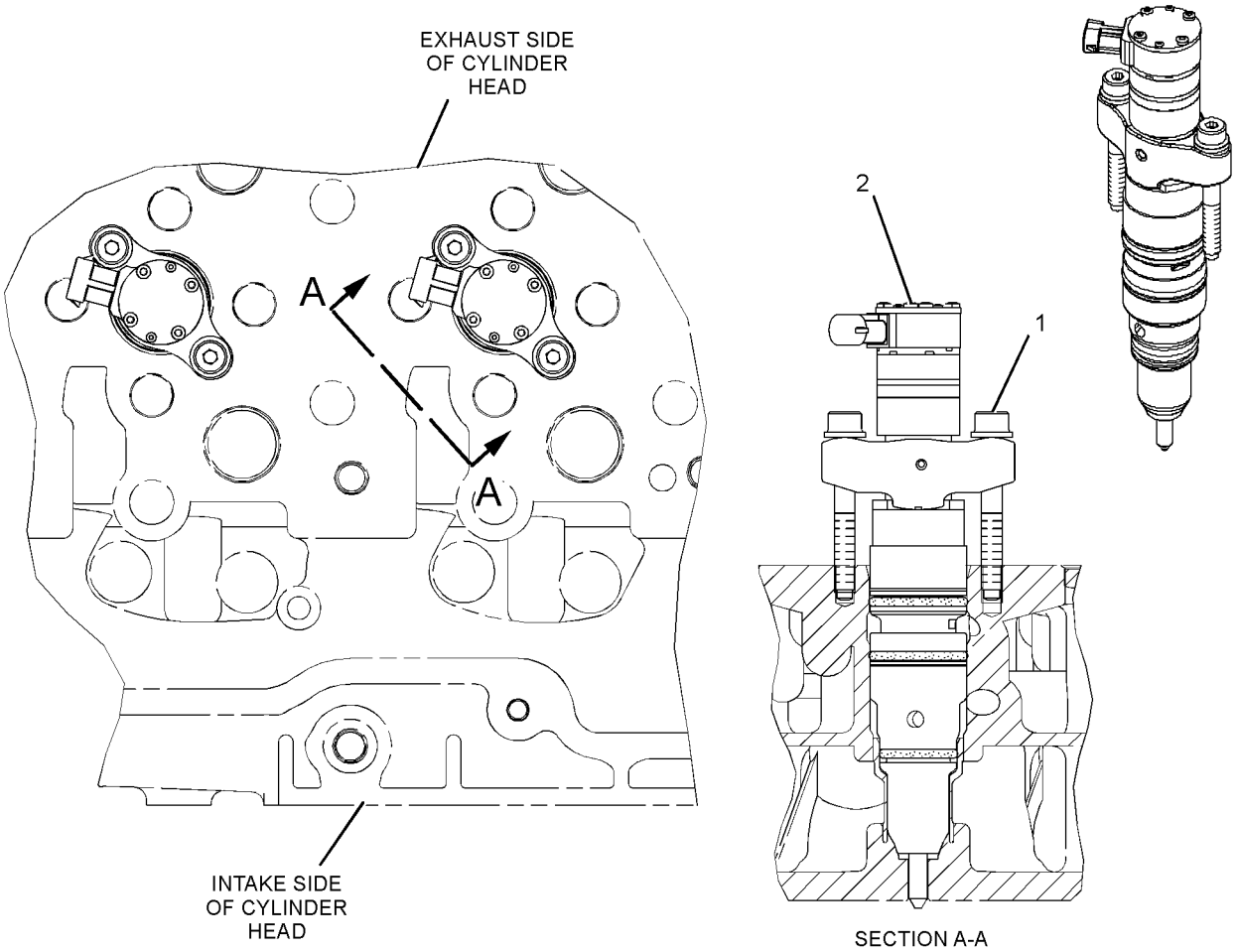

GRAPHIC #1 **<END>** g01221290

267-9720 PUMP GP-FUEL INJECTION

S/N: THX1-UP
PART OF 261-4530, 261-4531, 261-4533, 261-4534, 261-4535, 261-4537 ENGINE
AR-CORE
ALSO AN ATTACHMENT

SMCS-1251, 1290 **i02434206**

NOTE	PART NUMBER	QTY	PART NAME 1 2 3 4 5 6 (PRODUCT LEVEL)	SEE PAGE
Y	*267-9715*	6	PUMP GP-FUEL INJECTION	150
Y-SEPARATE ILLUSTRATION				

<END>

237-2569 SHIELD AR-THERMO

S/N: JDL1-UP
LAMINATE
FOR USE WITH DEMAND FAN
AN ATTACHMENT

SMCS-1067, 1073 **i02455114**

NOTE	PART NUMBER	QTY	PART NAME 1 2 3 4 5 6 (PRODUCT LEVEL)	SEE PAGE
Y	**261-4297**	1	ENGINE AR	9
Y	*232-1240*	1	LINES GP-WATER	103
Y	*264-7963*	1	SHIELD GP-HEAT	153
Y	*237-4214*	1	TANK GP-COOLANT	113
	266-7559	1	CORE AS-AFTERCOOLER	
	237-2708	1	ELBOW-EXHAUST	
	237-2568	1	TUBE AS	
Y-SEPARATE ILLUSTRATION				

<END>

237-2707 SHIELD AR-THERMO

S/N: JDL1-UP
LAMINATE
FOR USE WITH SOUND SUPPRESSION OR DIRECT DRIVE FAN
AN ATTACHMENT

SMCS-1067, 1073 **i02455535**

NOTE	PART NUMBER	QTY	PART NAME 1 2 3 4 5 6 (PRODUCT LEVEL)	SEE PAGE
Y	**261-4297**	1	ENGINE AR	9
Y	*232-1240*	1	LINES GP-WATER	103
Y	*264-7963*	1	SHIELD GP-HEAT	153
Y	*237-4214*	1	TANK GP-COOLANT	113
	266-7559	1	CORE AS-AFTERCOOLER	
	237-2708	1	ELBOW-EXHAUST	
	237-2568	1	TUBE AS	
Y-SEPARATE ILLUSTRATION				

<END>

263-1982 SHIELD AR-THERMO

S/N: GMT1-UP
LAMINATE
FOR USE WITH DIRECT DRIVE FAN
AN ATTACHMENT

SMCS-1067, 1073 **i02455678**

NOTE	PART NUMBER	QTY	PART NAME 1 2 3 4 5 6 (PRODUCT LEVEL)	SEE PAGE
Y	**261-4293**	1	ENGINE AR	6
Y	*232-1240*	1	LINES GP-WATER	103
Y	*264-7963*	1	SHIELD GP-HEAT	153
Y	*237-4214*	1	TANK GP-COOLANT	113
	266-7559	1	CORE AS-AFTERCOOLER	
	237-2708	1	ELBOW-EXHAUST	
	237-2568	1	TUBE AS	

Y-SEPARATE ILLUSTRATION

<END>

264-7963 SHIELD GP-HEAT

S/N: JDL1-UP; GMT1-UP
PART OF 237-2569, 237-2707, 263-1982 SHIELD AR-THERMO
AN ATTACHMENT

SMCS-1067 **i02455450**

NOTE	REF NO	GRAPHIC REF	PART NUMBER	QTY	PART NAME 1 2 3 4 5 6 (PRODUCT LEVEL)	SEE PAGE
	1	1	**212-4936**	1	SHIELD (MANIFOLD)	
	2	1	**264-7964**	1	SHIELD	
	3	1	**132-5789**	1	CLIP	
	4	1	**4P-7428**	1	CLIP	
	5	1	**5P-4116**	4	WASHER-HARD (8.8X20.5X2-MM THK)	
M	6	1	**8T-4189**	2	BOLT (M8X1.25X20-MM)	

M-METRIC PART

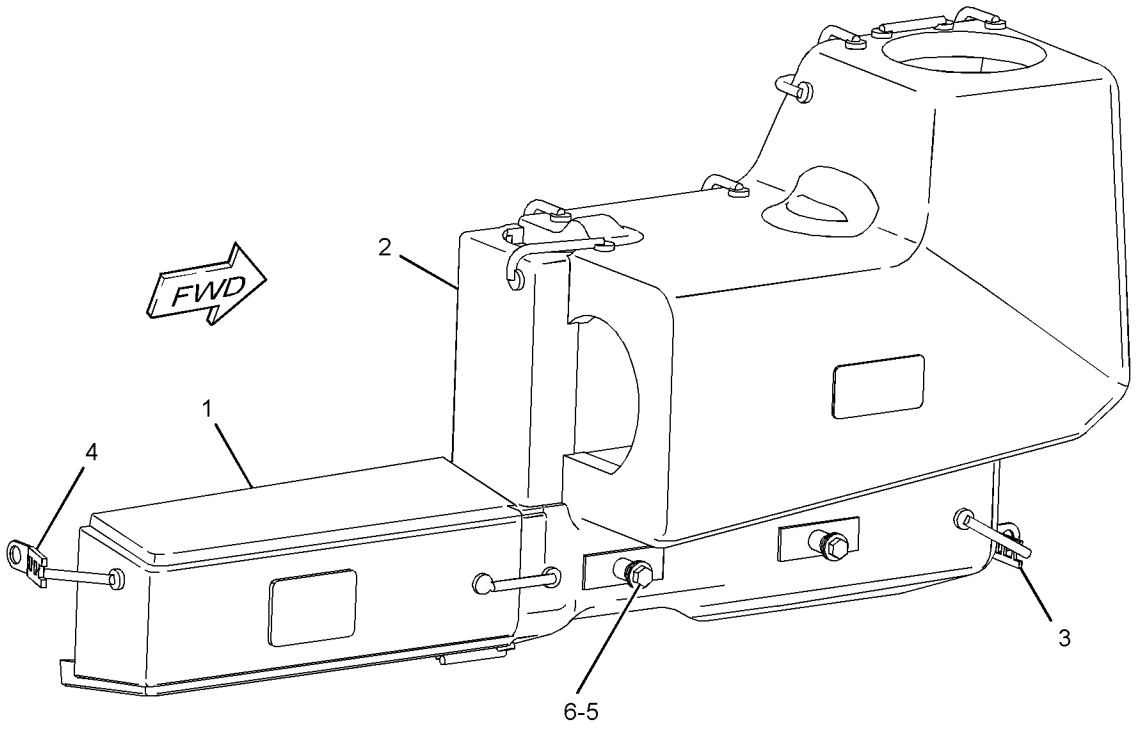

GRAPHIC #1 **<END>** g01215394

FUEL SYSTEM

218-1843 TANK GP-FUEL

S/N: JDL1-UP; GMT1-UP

PART OF 218-4978, 222-1592 CHASSIS AR

SMCS-1273 **i02431278**

NOTE	REF NO	GRAPHIC REF	PART NUMBER	QTY	PART NAME 1 2 3 4 5 6 (PRODUCT LEVEL)	SEE PAGE
	1	1	**246-2641**	1	PADLOCK GP (FUEL CAP)	
		1	**5P-8500**	2	KEY	
	2	1	**6T-1698**	8	MOUNT	
	3	1	**223-5365**	1	TANK GP-FUEL	
		1	**7X-7700**	1	CAP AS-FILLER (FUEL TANK)	
		1	**9X-8600**	1	SEAL-O-RING	
		1	**9X-2205**	1	KIT-CAP FILTER (FUEL TANK, VENTED)	
					(INCLUDES FILTER AS, SCREWS, GASKETS, & VALVE)	
		1	**9P-7121**	1	STRAINER-FUEL	
	4	1	**241-2501**	4	WASHER (22X82.55X11-MM THK)	
	5	1	**263-5792**	1	SENDER AS-FUEL LEVEL	
		1	**138-0444**	1	KIT-REPAIR (FUEL LEVEL GAUGE)	
					(INCLUDES SENSOR AS & SCREWS)	
		1	**186-3735**	2	PIN-CONNECTOR (16-GA TO 18-GA)	
		1	**102-8802**	1	KIT-RECEPTACLE (2-PIN)	
					(INCLUDES RECEPTACLE AS & WEDGE)	
M	6	1	**5C-9553**	6	BOLT (M6X1X16-MM)	
	7	1	**6C-3060**	1	GASKET	
	8	1	**6N-7523**	6	WASHER (6.48X11.9X1.57-MM THK)	
M	9	1	**7X-2565**	4	BOLT (M20X2.5X100-MM)	
	10	1	**8T-5439**	4	WASHER (21.5X45X6-MM THK)	

M-METRIC PART

218-1843 **TANK GP-FUEL** *(contd.)* **i02431278**

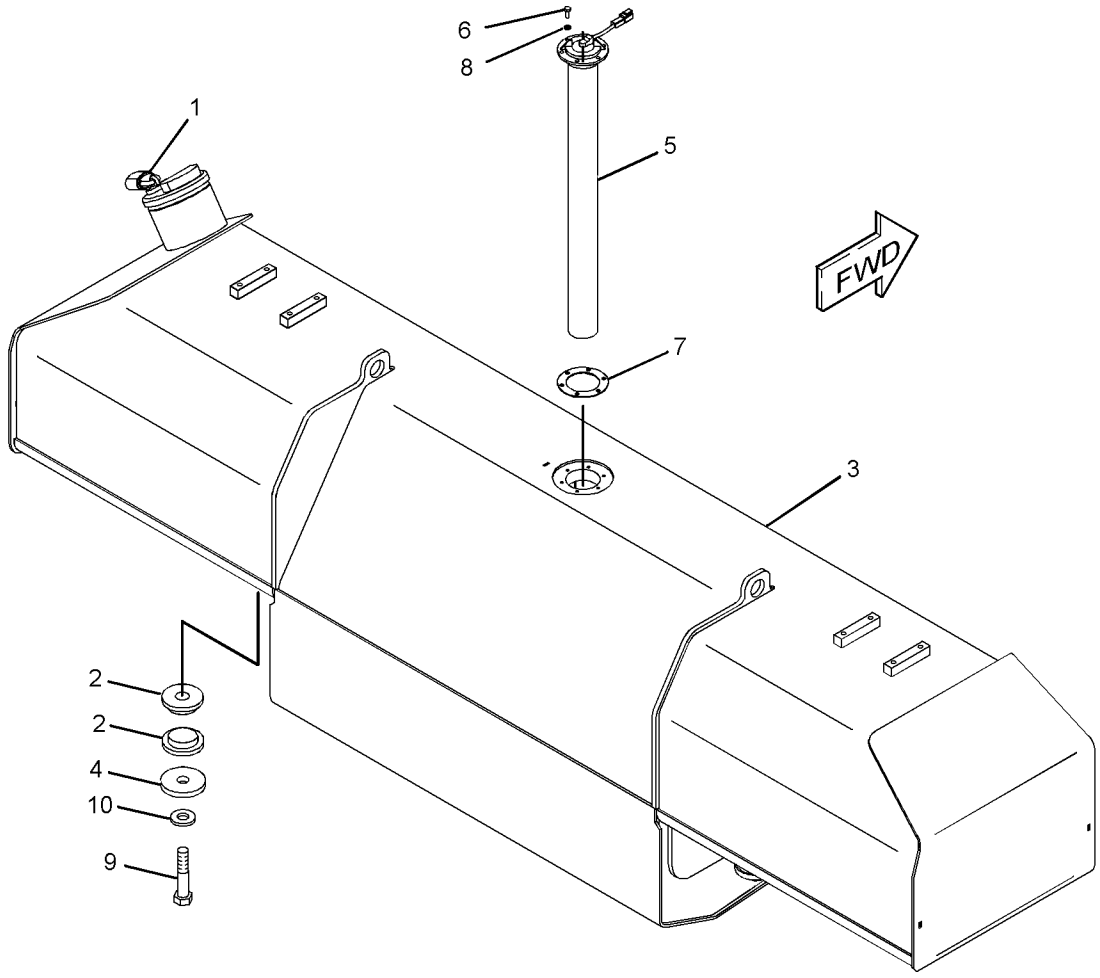

GRAPHIC #1 **<END>** g01205761

3E-6328 ALARM GP

S/N: JDL1-UP; GMT1-UP
24 VOLT
PART OF 222-1142 WIRING GP-PLATFORM

SMCS-7400, 7402, 7407 **i02021590**

NOTE	REF NO	GRAPHIC REF	PART NUMBER	QTY	PART NAME 1 2 3 4 5 6 (PRODUCT LEVEL)	SEE PAGE
	1	1	**102-8802**	1	KIT-RECEPTACLE (2-PIN)	
					(INCLUDES RECEPTACLE AS & WEDGE)	
	2	1	**186-3735**	2	PIN-CONNECTOR (16-GA TO 18-GA)	

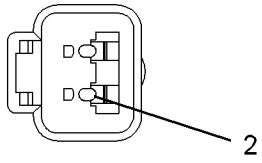

VIEW A–A

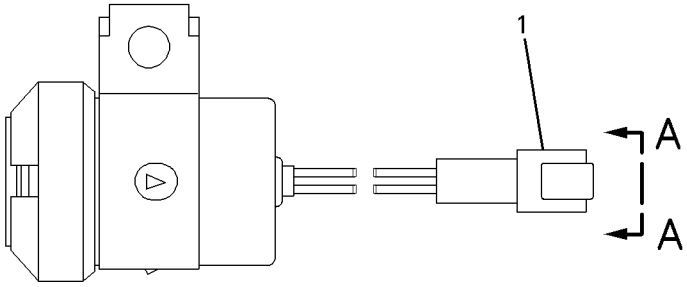

GRAPHIC #1 **<END>** g00697818

197-8820 ALTERNATOR GP-CHARGING*R

S/N: JDL1-UP; GMT1-UP
24 VOLT, 95 AMP
PART OF 280-2703 ALTERNATOR GP-CHARGING

SMCS-1405 **i02469493**

NOTE	REF NO	GRAPHIC REF	PART NUMBER	QTY	PART NAME 1 2 3 4 5 6 (PRODUCT LEVEL)	SEE PAGE
	1	1	**185-2653**	1	FRAME	
	2	1	**5S-7349**	1	BOLT (1/4-20X0.5-IN)	
	3	1	**185-2639**	1	FAN AS	
	4	1	**1H-3244**	1	LOCKWASHER	
	5	1	**185-2645**	1	FRAME	
	6	1	**2K-4821**	1	LOCKNUT (5/8-18-THD)	
	7	1	**5P-8247**	1	WASHER-HARD (17X32X3.5-MM THK)	
	8	1	**185-2651**	1	COVER	
	9	1	**8T-4205**	1	WASHER-HARD (7.2X14.5X2-MM THK)	
	10	1	**185-2647**	1	GROMMET	
	11	1	**9L-6770**	1	CAP (ALTERNATOR AC TAP)	
	12	1	**205-0626**	1	STATOR AS-ALTERNATOR	
	13	1	**185-2638**	2	COLLAR	
	14	1	**185-2654**	1	PLATE	
	15	1	**185-2650**	1	ROTOR AS	
	16	1	**185-2644**	1	COIL AS	
	17	1	**185-2648**	1	REGULATOR AS-VOLTAGE (24-VOLT)	
	18	1	**6V-8189**	1	NUT (5/16-18-THD)	
	19	1	**8T-4224**	1	WASHER-HARD (8.8X16X2-MM THK)	
	20	1	**3F-9556**	1	LOCKWASHER	
					AVAILABLE REPAIR KIT(S):	
			185-2655		KIT-BEARING (ALTERNATOR)	
					(INCLUDES 2 BEARINGS)	
			199-8436		KIT-TERMINAL (ALTERNATOR)	
					(INCLUDES HOLDER AS, PLATE, INSULATOR, PIN, BOLTS, GROMMET, & NUT	
			199-7891		KIT-TERMINAL (ALTERNATOR)	
					(INCLUDES INSULATORS, WASHERS, & NUTS)	
			185-2658		KIT-HARDWARE (ALTERNATOR)	
					(INCLUDES BOLTS)	

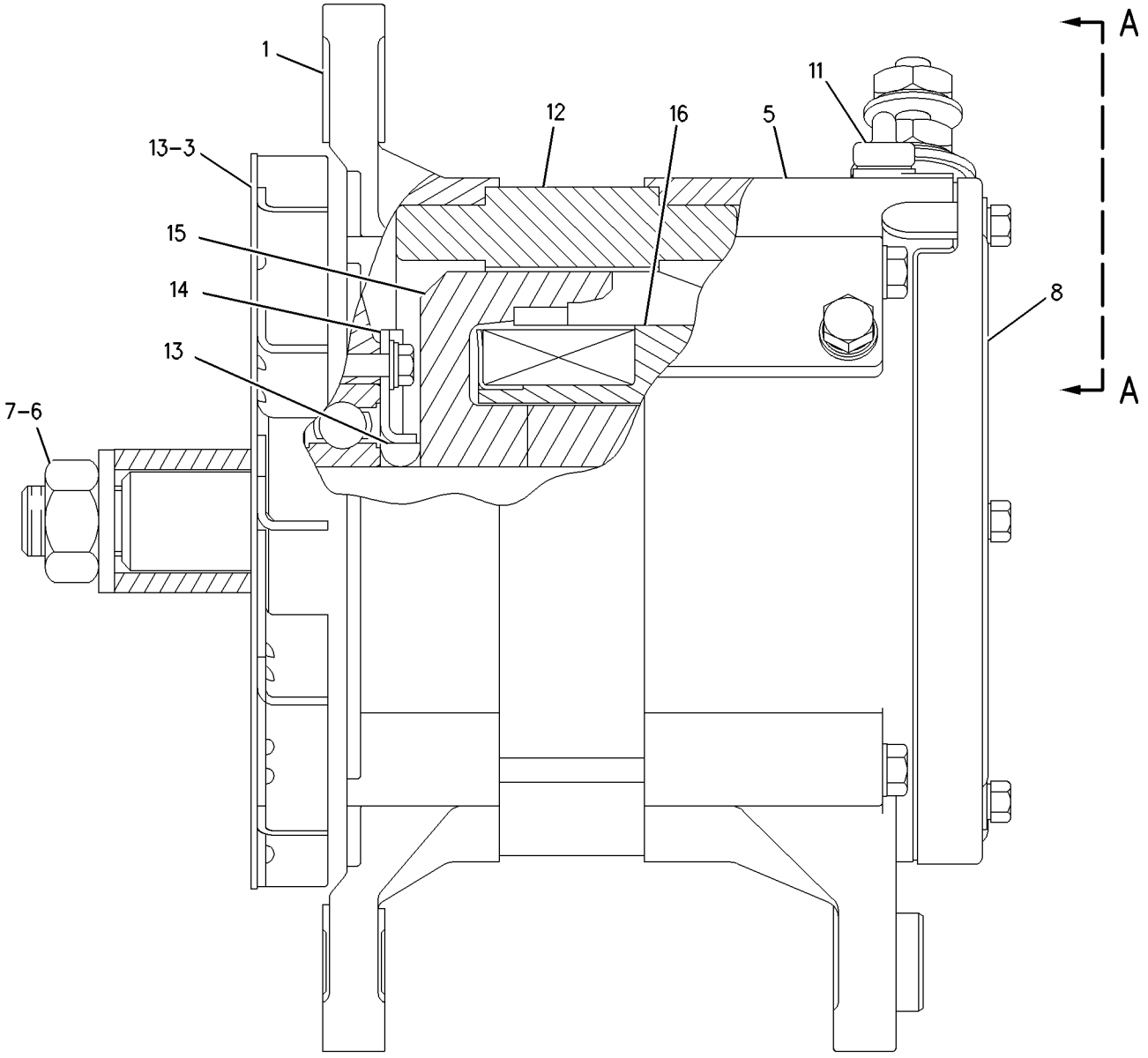

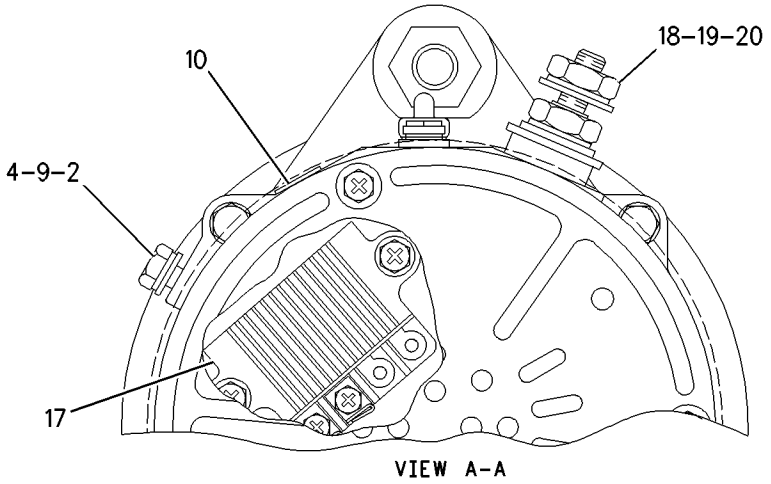

VIEW A-A

GRAPHIC #1 **<END>** g00873198

215-5568 ALTERNATOR GP-CHARGING

S/N: JDL1-UP; GMT1-UP
24 VOLT, 150 AMPERE
PART OF 231-7101 ALTERNATOR GP-CHARGING
AN ATTACHMENT

SMCS-1405 **i02469494**

NOTE	REF NO	GRAPHIC REF	PART NUMBER	QTY	PART NAME 1 2 3 4 5 6 (PRODUCT LEVEL)	SEE PAGE
	1	1	**198-0971**	1	GUARD	
	2	1	**045-4065**	1	SCREW-MACHINE (10-32X0.75-IN)	
	3	1	**6V-5764**	2	SCREW-MACHINE (10-32X0.625-IN)	

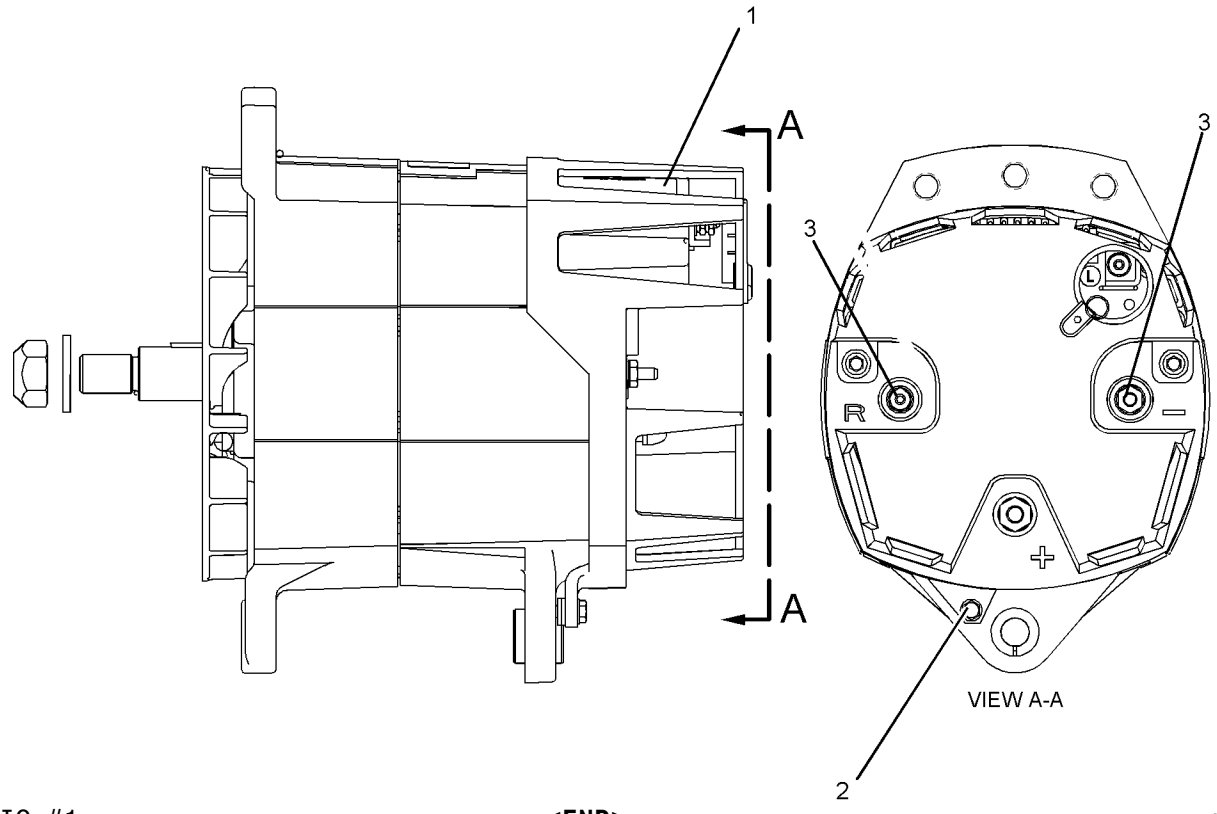

GRAPHIC #1 **<END>** g01055220

ELECTRICAL AND STARTING SYSTEM

231-7101 ALTERNATOR GP-CHARGING

S/N: JDL1-UP; GMT1-UP
24-VOLT, 150-AMPERE
AN ATTACHMENT

SMCS-1405 **i02456080**

NOTE	REF NO	GRAPHIC REF	PART NUMBER	QTY	PART NAME 1 2 3 4 5 6 (PRODUCT LEVEL)	SEE PAGE
	1	1	**9S-1240**	1	NUT AS	
		1	**1F-0748**	1	NUT-WELD (1/2-13-THD)	
	2	1	**138-2515**	1	PULLEY	
	3	1	**211-1044**	1	BLOCK	
	4	1	**214-9492**	1	ROD-ADJUSTING	
Y	5	1	**215-5568**	1	ALTERNATOR GP-CHARGING (24-VOLT, 150-AMPERE)	159
	6	1	**240-5679**	1	CABLE AS	
		1	**1S-4915**	2	LINER (CONDUIT)	
E		1	**5P-0695**		CONDUIT (267-CM)	
E		1	**5P-0760**		CABLE (00-GA, RED) (282-CM)	
		1	**8N-0869**	2	COVER-TERMINAL (RED)	
E		1	**8T-2225**		TUBE-HEAT SHRINK (24-CM)	
		1	**170-3794**	2	RING-TERMINAL	
B		1	**1P-0810**		TAPE-ELECTRICAL	
	7	1	**240-5706**	1	ADAPTER	
	8	1	**240-5918**	1	CABLE AS	
E		1	**5P-0746**		CABLE (0-GA, BLACK) (49-CM)	
		1	**030-1707**	1	TERMINAL-RING (FOR 3/8-IN BOLT)	
	9	1	**241-4982**	1	BELT (ALTERNATOR, WATER PUMP)	
	10	1	**7X-0339**	1	BOLT (1/2-13X6.25-IN)	
	11	1	**8T-4121**	1	WASHER-HARD (11X21X2.5-MM THK)	
M	12	1	**8T-4132**	2	NUT (M16X2-THD)	
M	13	1	**8T-4137**	1	BOLT (M10X1.5X20-MM)	
M	14	1	**8T-4193**	1	BOLT (M16X2X50-MM)	
	15	1	**8T-4223**	2	WASHER-HARD (13.5X25.5X3-MM THK)	
	16	1	**8T-8919**	1	BOLT (1/2-13X1.75-IN)	
	17	1	**9X-8257**	3	WASHER (17.5X30X3.5-MM THK)	

B-USE AS REQUIRED
E-ORDER BY THE CENTIMETER
M-METRIC PART
Y-SEPARATE ILLUSTRATION

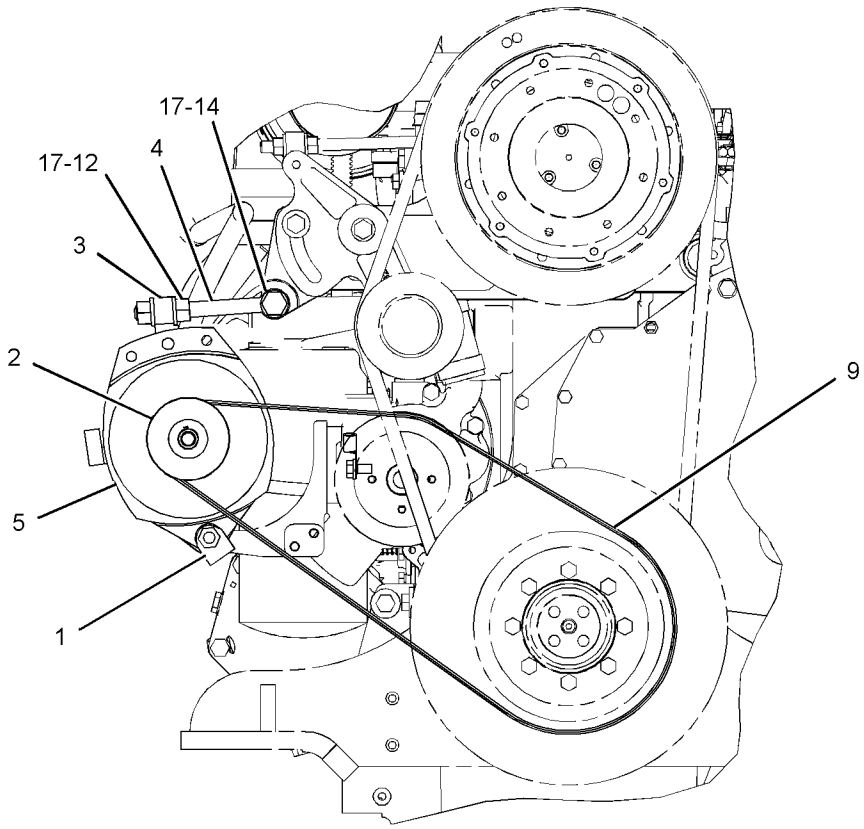

FRONT VIEW

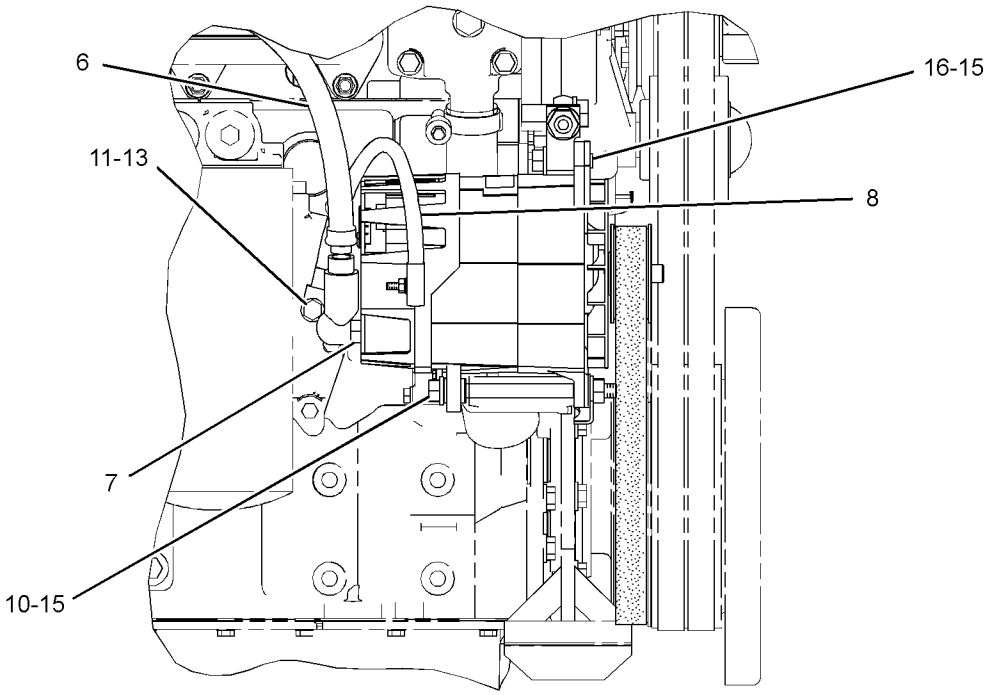

RIGHT SIDE VIEW

GRAPHIC #1 **<END>** g01209676

263-5030 ALTERNATOR GP-CHARGING

S/N: JDL1-UP; GMT1-UP
24- VOLT, 95-AMPERE
CANNOT BE USED WITH 231-7101—PAGE 160, 263-5028—PAGE 35, 263-5029—PAGE 35 AN ATTACHMENT

SMCS-1405 **i02455632**

NOTE	REF NO	GRAPHIC REF	PART NUMBER	QTY	PART NAME 1 2 3 4 5 6 (PRODUCT LEVEL)	SEE PAGE
	1	1	**1W-4724**	2	CLAMP-HOSE	
	2	1	**5P-0597**	1	CLAMP-HOSE	
	3	1	**8P-5411**	1	BUTTON-PLUG	
	4	1	**164-5798**	1	CAP-RAIN	
	5	1	**226-4909**	1	SCREEN	
	6	1	**258-5035**	1	COVER AS (ALTERNATOR)	
		1	**232-1318**	1	COVER AS	
	7	1	**263-5031**	1	DUCT AS	
	8	1	**267-4696**	1	HOOD AS	
M		1	**8T-3490**	26	NUT-WELD (M10X1.5-THD)	
M		1	**8T-5413**	2	STUD-WELD (M10X1.5X25-MM OAL)	
M		1	**9X-6269**	1	NUT-WELD (M16X2X13-MM OAL)	
		1	**126-7975**	2	HANDHOLD	
		1	**226-4911**	1	TUBE	
	9	1	**101-3625**	1	CLIP	
	10	1	**204-2281**	3	TIE	
	11	1	**4P-7581**	2	CLIP	
	12	1	**8T-4121**	1	WASHER-HARD (11X21X2.5-MM THK)	

M-METRIC PART

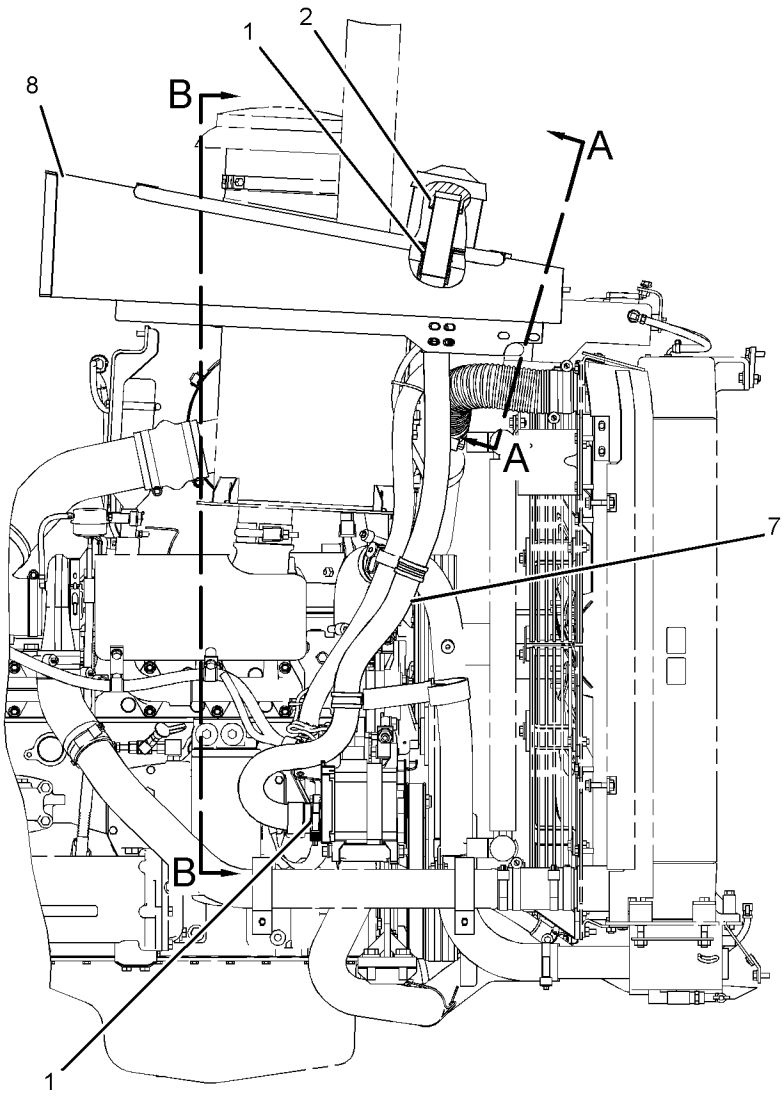

RIGHT SIDE VIEW

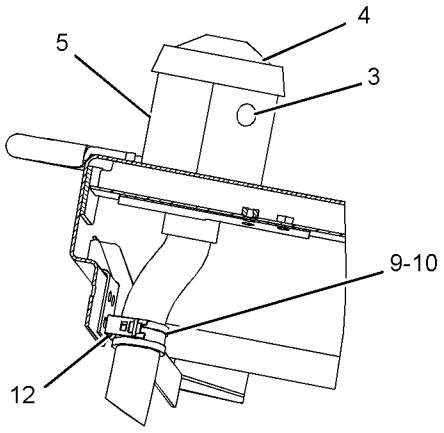

SECTION A-A

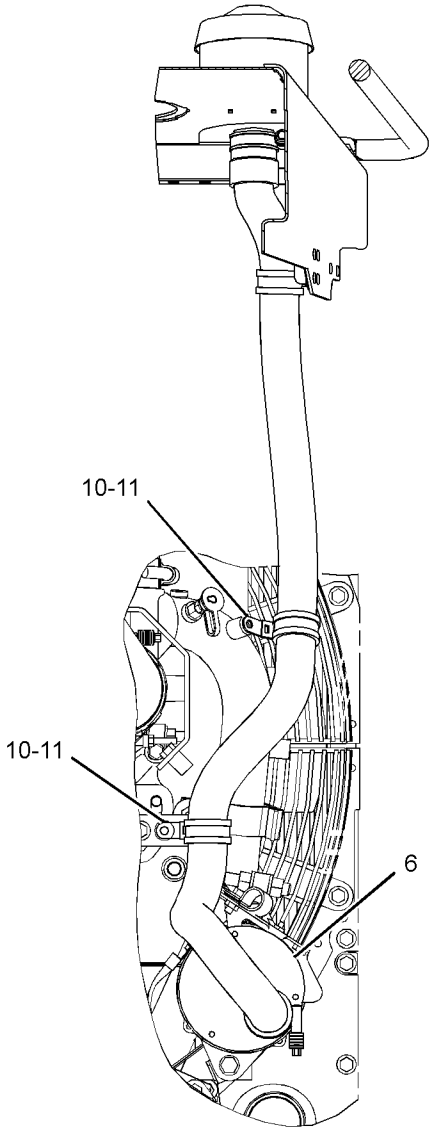

SECTION B-B

GRAPHIC #1 **<END>** g01209216

ELECTRICAL AND STARTING SYSTEM

280-2703 ALTERNATOR GP-CHARGING

S/N: JDL1-UP; GMT1-UP

PART OF 223-0551 INSTALLATION AR-ENGINE

SMCS-1405 **i02441394**

NOTE	REF NO	GRAPHIC REF	PART NUMBER	QTY	PART NAME 1 2 3 4 5 6 (PRODUCT LEVEL)	SEE PAGE
	1	1	**7K-1181**	1	STRAP-CABLE	
	2	1	**9S-1240**	1	NUT AS	
		1	**1F-0748**	1	NUT-WELD (1/2-13-THD)	
	3	1	**184-5498**	1	BRACKET AS	
YR	4	1	**197-8820**	1	ALTERNATOR GP-CHARGING (24-VOLT, 95-AMPERE)	157
	5	1	**208-4622**	1	STRAP AS	
	6	1	**211-1044**	1	BLOCK	
	7	1	**214-9492**	1	ROD-ADJUSTING	
	8	1	**1S-0994**	1	CLIP	
	9	1	**4L-6454**	1	BOLT (3/8-16X1-IN)	
	10	1	**4P-7581**	1	CLIP	
	11	1	**5P-1075**	1	WASHER-HARD (10.2X22.5X3-MM THK)	
	12	1	**7X-0339**	1	BOLT (1/2-13X6.25-IN)	
	13	1	**8T-4121**	1	WASHER-HARD (11X21X2.5-MM THK)	
M	14	1	**8T-4132**	2	NUT (M16X2-THD)	
M	15	1	**8T-4137**	1	BOLT (M10X1.5X20-MM)	
M	16	1	**8T-4193**	1	BOLT (M16X2X50-MM)	
	17	1	**8T-4223**	2	WASHER-HARD (13.5X25.5X3-MM THK)	
	18	1	**8T-8919**	1	BOLT (1/2-13X1.75-IN)	
	19	1	**9X-8257**	3	WASHER (17.5X30X3.5-MM THK)	

M-METRIC PART
R-REMFG PART MAY BE AVAILABLE
Y-SEPARATE ILLUSTRATION

280-2703 **ALTERNATOR GP-CHARGING** *(contd.)* **i02441394**

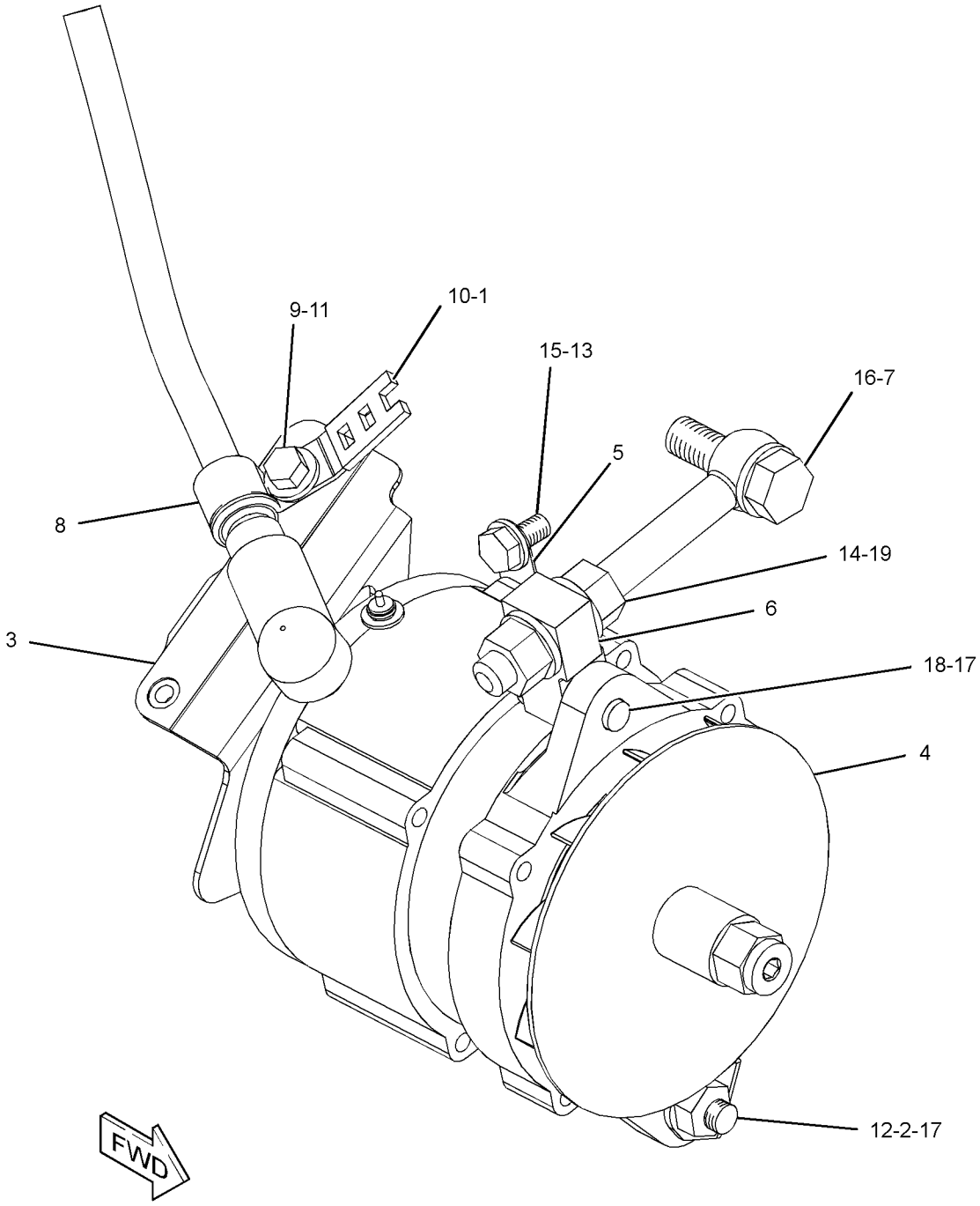

GRAPHIC #1 **<END>** g01210601

ELECTRICAL AND STARTING SYSTEM

222-1141 BATTERY & WIRING GP

S/N: JDL1-UP; GMT1-UP

PART OF 218-4978, 222-1592 CHASSIS AR

SMCS-1401, 1402, 1408 **i02431314**

NOTE	REF NO	GRAPHIC REF	PART NUMBER	QTY	PART NAME 1 2 3 4 5 6 (PRODUCT LEVEL)	SEE PAGE
	1	1,2	**7K-1181**	41	STRAP-CABLE	
Y	2	1	**7N-0718**	1	SWITCH GP-DISCONNECT (BATTERY)	233
	3	1	**7P-6682**	1	CABLE AS	
		1	**1S-7251**	2	TERMINAL-RING (FOR 1/2-IN BOLT)	
E		1	**5P-0747**		CABLE (00-GA, BLACK) (40-CM)	
	4	1	**9D-3437**	1	CABLE AS	
		1	**2M-0913**	2	TERMINAL	
E		1	**5P-0747**		CABLE (00-GA, BLACK) (177-CM)	
	5	1	**111-7978**	1	HOLD-DOWN AS	
	6	1	**128-0314**	1	CABLE AS	
E		1	**5P-0761**		CABLE (00-GA, RED) (29-CM)	
		1	**9G-0002**	1	COVER-TERMINAL (RED)	
		1	**9G-0005**	1	COVER-TERMINAL (BLACK)	
		1	**8C-5918**	1	TERMINAL AS (NEGATIVE)	
		1	**8T-9756**	1	TERMINAL AS (POSITIVE)	
Y	7	2	**145-7028**	1	SENSOR GP-TEMPERATURE (POWER TRAIN OIL)	218
Y	7A	2	**145-7028**	1	SENSOR GP-TEMPERATURE (TRANSMISSION LUBRICATION OIL)	218
Y	8	1	**158-6632**	1	SWITCH GP-PUSH BUTTON (PRIMING PUMP)	236
Y	9	2	**161-9926**	1	SENSOR GP-PRESSURE (TURBOCHARGER INLET)	207
	10	2	**172-4864**	1	GUARD AS	
M		2	**8T-3490**	1	NUT-WELD (M10X1.5-THD)	
	11	2	**174-7875**	1	HORN AS (24-VOLT, HIGH TONE)	
	12	1	**197-0668**	1	CABLE AS	
		1	**1S-4915**	2	LINER (CONDUIT)	
		1	**1S-7252**	1	TERMINAL-RING (FOR 3/8-IN BOLT)	
E		1	**5P-0695**		CONDUIT (69-CM)	
E		1	**5P-0747**		CABLE (00-GA, BLACK) (94-CM)	
E		1	**8T-2225**		TUBE-HEAT SHRINK (16-CM)	
		1	**9G-0003**	1	COVER-TERMINAL (BLACK)	
		1	**8L-8413**	1	STRAP-CABLE	
		1	**8T-9757**	1	TERMINAL AS-BATTERY (NEGATIVE)	
		1	**037-5197**	1	BOOT	
	13	2	**224-9222**	1	BRACKET	
	14	1	**226-9669**	1	HARNESS AS-CHASSIS	
		1	**102-8803**	2	KIT-RECEPTACLE (3-PIN)	
		1	**102-8804**	3	KIT-RECEPTACLE (4-PIN)	
					(EACH KIT INCLUDES RECEPTACLE AS & WEDGE)	
		1	**102-8806**	1	KIT-RECEPTACLE (8-PIN)	
		1	**102-8801**	1	KIT-RECEPTACLE (12-PIN)	
					(EACH KIT INCLUDES RECEPTACLE AS & WEDGE)	
		1	**155-2265**	1	KIT-CONNECTING PLUG (8-PIN)	
		1	**155-2260**	2	KIT-CONNECTING PLUG (3-PIN)	
		1	**155-2270**	3	KIT-CONNECTING PLUG (2-PIN)	
					(EACH INCLUDES PLUG AS , WEDGE, & INTERFACE SEAL)	
		1	**155-2272**	2	PLUG AS-CONNECTOR (4-PIN)	
		1	**155-2274**	1	KIT-CONNECTING PLUG (6-PIN)	
					(INCLUDES PLUG AS, WEDGE, & INTERFACE SEAL)	
		1	**190-7613**	1	RECEPTACLE AS-CONNECTOR (12-PIN)	
	15	1	**226-9670**	1	HARNESS AS-CHASSIS	
		1	**102-8803**	1	KIT-RECEPTACLE (3-PIN)	
					(INCLUDES RECEPTACLE AS & WEDGE)	
		1	**155-2270**	4	KIT-CONNECTING PLUG (2-PIN)	
					(INCLUDES PLUG AS, WEDGE, & INTERFACE SEAL)	

222-1141 **BATTERY & WIRING GP** *(contd.)* **i02431314**

NOTE	REF NO	GRAPHIC REF	PART NUMBER	QTY	PART NAME 1 2 3 4 5 6 (PRODUCT LEVEL)	SEE PAGE
	16	2	**226-9671**	1	HARNESS AS-CHASSIS	
		2	**102-8803**	1	KIT-RECEPTACLE (3-PIN)	
		2	**102-8806**	1	KIT-RECEPTACLE (8-PIN)	
					(EACH INCLUDES RECEPTACLE AS & WEDGE)	
		2	**155-2270**	3	KIT-CONNECTING PLUG (2-PIN)	
					(INCLUDES PLUG AS, WEDGE, & INTERFACE SEAL)	
	17	1	**237-4240**	1	CABLE AS	
		1	**1S-4915**	2	LINER (CONDUIT)	
E		1	**5P-0695**		CONDUIT (220-CM)	
E		1	**5P-0761**		CABLE (00-GA, RED) (246-CM)	
		1	**8N-1725**	1	COVER-TERMINAL (RED)	
		1	**8L-8413**	1	STRAP-CABLE	
E		1	**8T-2225**		TUBE-HEAT SHRINK (32-CM)	
		1	**3S-6049**	1	TERMINAL AS-BATTERY (POSITIVE)	
		1	**1M-6119**	1	BOLT (5/16-18X1.375-IN)	
		1	**1M-6120**	1	NUT (5/16-18-THD)	
		1	**170-3795**	1	RING-TERMINAL	
	18	1	**239-8155**	1	HARNESS AS-TRANSMISSION	
		1	**154-3172**	1	PLUG AS (14-PIN)	
		1	**155-2255**	1	KIT-CONNECTING PLUG (12-PIN)	
					(INCLUDES PLUG AS, WEDGE, & INTERFACE SEAL)	
		1	**155-2272**	1	PLUG AS-CONNECTOR (4-PIN)	
	19	1	**240-8317**	1	PLATE AS	
	20	1	**115-2422**	2	BATTERY (12-VOLT, WET)	
		1	**123-1373**	6	PLUG AS	
	21	1	**130-5300**	4	CLIP	
	22	2	**132-5789**	1	CLIP	
M	23	1,2	**133-7810**	3	STUD-TAPERLOCK (M10X1.15-THD)	
	24	2	**174-7876**	1	HORN AS (24-VOLT, LOW TONE)	
	25	1	**193-3973**	7	TIE (WRAP)	
	26	1,2	**1S-0994**	3	CLIP	
	27	2	**220-0230**	1	ALARM AS	
B		2	**5P-5623**		WIRE-ELECTRICAL (16-GA, BLACK)	
		2	**102-8802**	1	KIT-RECEPTACLE (2-PIN)	
					(INCLUDES RECEPTACLE AS & WEDGE)	
		2	**186-3735**	2	PIN-CONNECTOR (16-GA TO 18-GA)	
E		2	**9X-1813**		SLEEVE (31-CM)	
	28	1	**238-0303**	1	KNOB	
	29	2	**3J-7354**	1	SEAL-O-RING	
	30	2	**4P-7581**	3	CLIP	
	31	1	**4P-8134**	3	CLIP	
	32	1,2	**6D-4247**	3	CLIP	
	33	2	**7J-0204**	2	SEAL-O-RING	
M	34	2	**7X-2621**	1	BOLT (M10X1.5X12-MM)	
M	35	1,2	**8T-0722**	10	BOLT-LOCKING (M10X1.5X30-MM)	
	36	1,2	**8T-4121**	29	WASHER-HARD (11X21X2.5-MM THK)	
M	37	1,2	**8T-4133**	3	NUT (M10X1.5 THD)	
M	38	1,2	**8T-4137**	10	BOLT (M10X1.5X20-MM)	

B-USE AS REQUIRED
E-ORDER BY THE CENTIMETER
M-METRIC PART
Y-SEPARATE ILLUSTRATION

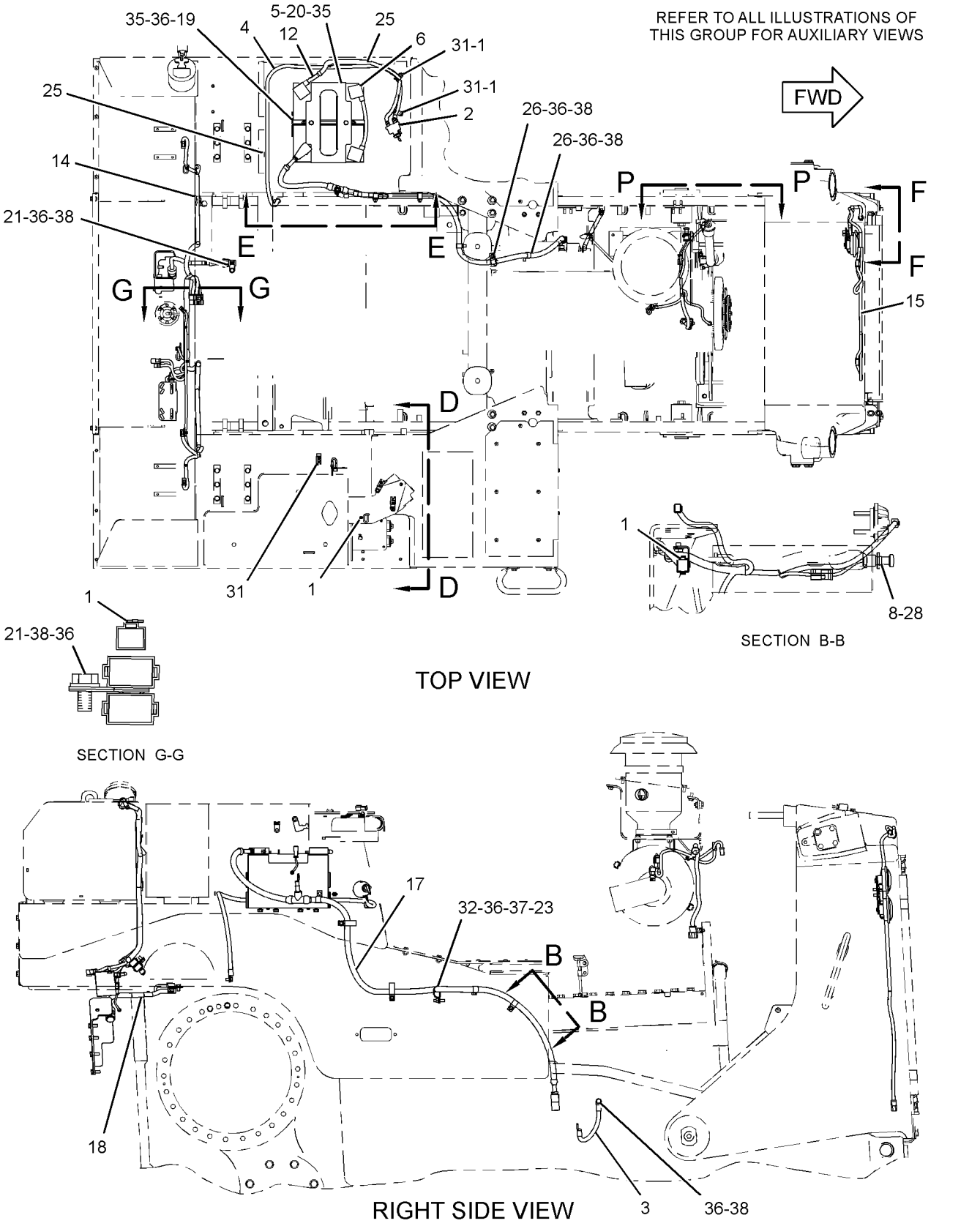

GRAPHIC #1

g01213233

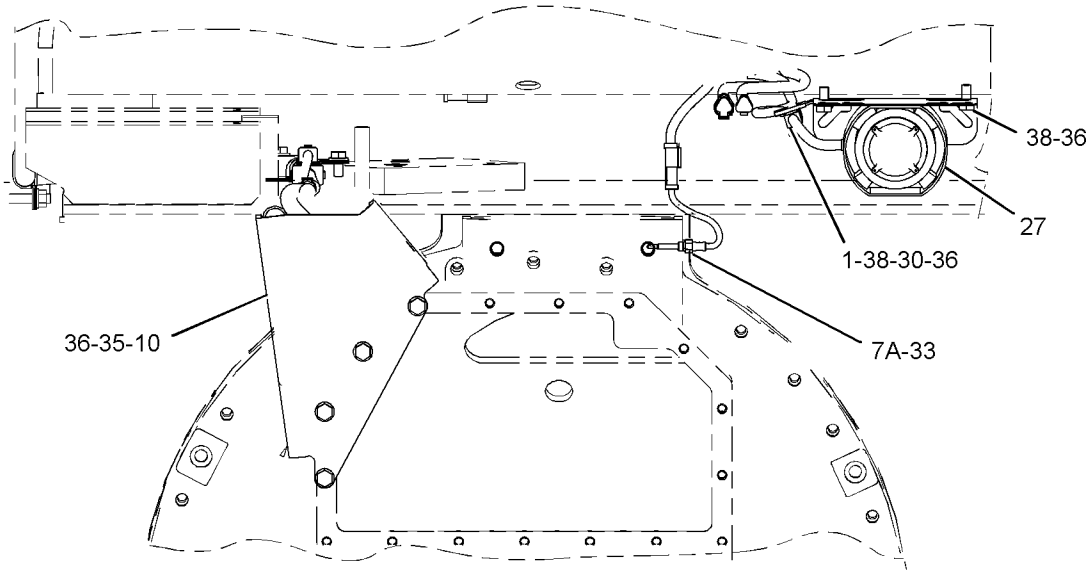

REAR VIEW

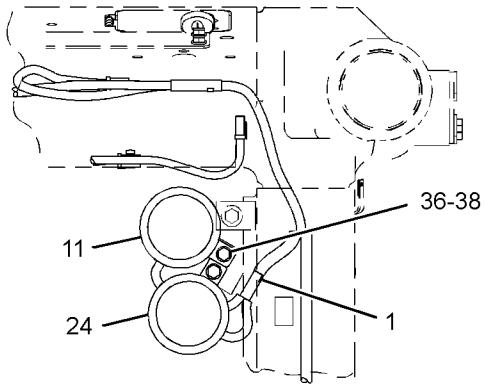

VIEW F-F

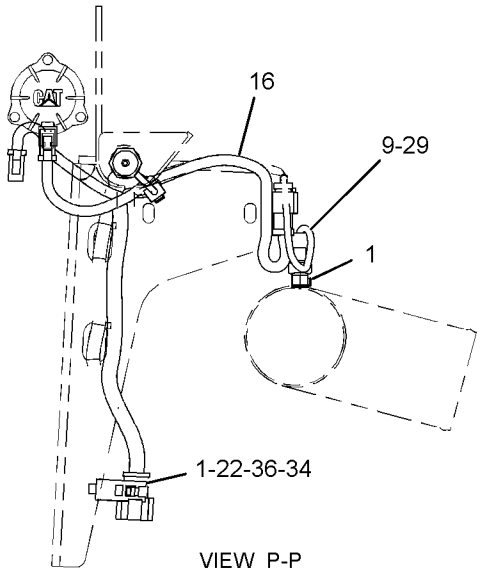

VIEW P-P

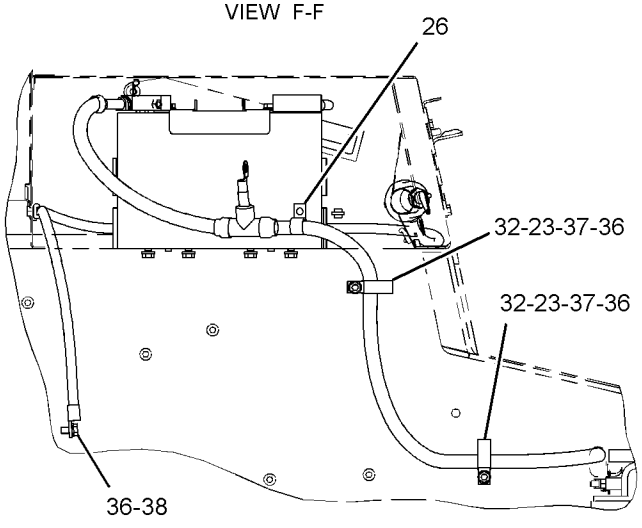

SECTION E-E

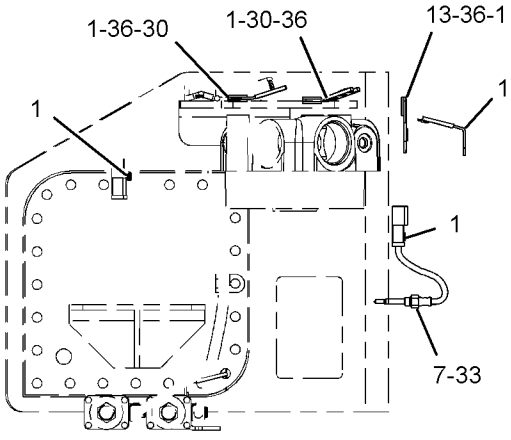

SECTION D-D

GRAPHIC #2 **<END>** g01213643

227-1229 BATTERY GP–HEAVY-DUTY

S/N: JDL1-UP; GMT1-UP
AN ATTACHMENT

SMCS-1401 **i02456048**

NOTE	REF NO	GRAPHIC REF	PART NUMBER	QTY	PART NAME 1 2 3 4 5 6 (PRODUCT LEVEL)	SEE PAGE
	1	1	**8V-0622**	1	CABLE AS	
		1	**8C-5917**	1	TERMINAL AS-BATTERY (POSITIVE)	
		1	**8T-9757**	1	TERMINAL AS-BATTERY (NEGATIVE)	
					(EACH TERMINAL AS INCLUDES)	
		1	**1M-6119**	2	BOLT (5/16-18X1.375-IN)	
		1	**1M-6120**	2	NUT (5/16-18-THD)	
E		1	**5P-0761**		CABLE (00-GA, RED) (14-CM)	
		1	**9G-0003**	1	COVER-TERMINAL (BLACK)	
		1	**9G-0004**	1	COVER-TERMINAL (RED)	
	2	1	**153-5710**	2	BATTERY (12-VOLT, MAINTENANCE FREE)	
	3	1	**153-6281**	1	HOLD-DOWN-BATTERY	
Y	4	1	*209-8423*	1	STARTING MOTOR GP-ELECTRIC	228
	5	1	**240-8321**	1	PLATE AS	

E-ORDER BY THE CENTIMETER
Y-SEPARATE ILLUSTRATION

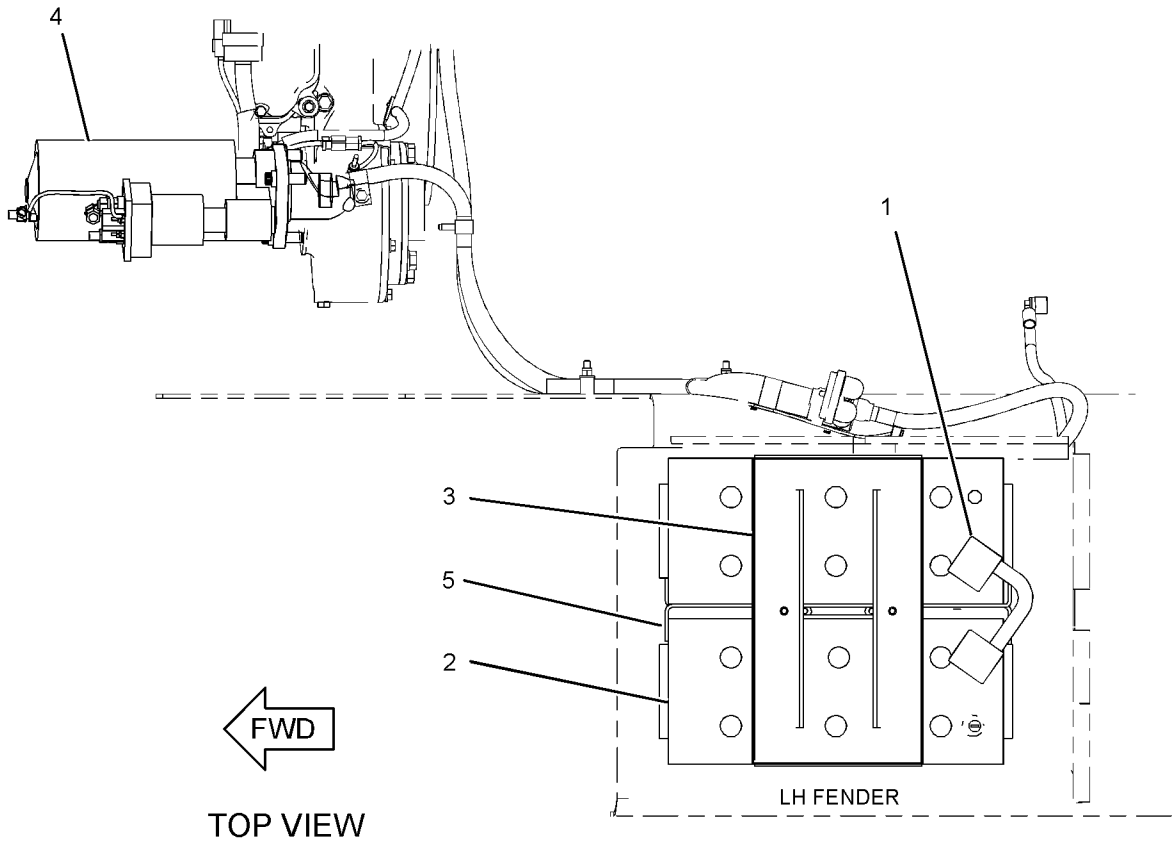

TOP VIEW

GRAPHIC #1 **<END>** g01207635

226-7473 CONTROL GP-ENGINE ELECTRONIC

S/N: THX1-UP

PART OF 231-1972 CONTROL GP-ENGINE ELECTRONIC

ALSO AN ATTACHMENT

SMCS-1901 **i02433822**

NOTE	REF NO	GRAPHIC REF	PART NUMBER	QTY	PART NAME 1 2 3 4 5 6 (PRODUCT LEVEL)	SEE PAGE
	1	1	**262-2878**	1	CONTROL GP-MACHINE	

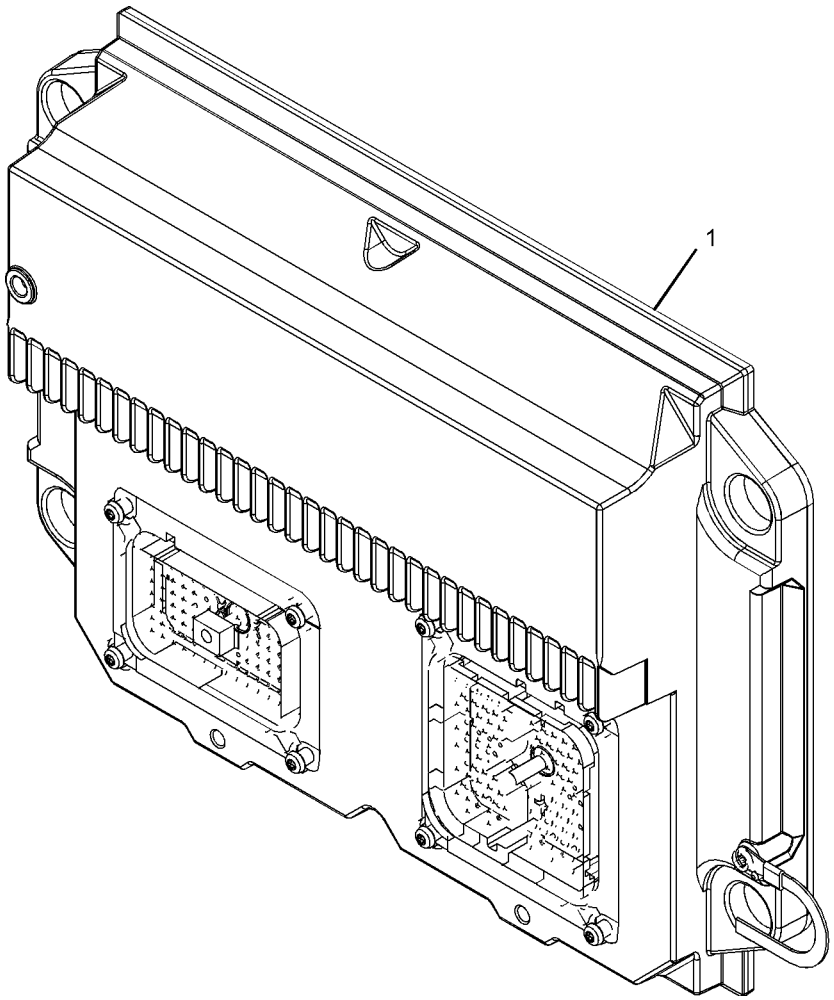

GRAPHIC #1 **<END>** g01101798

231-1972 CONTROL GP-ENGINE ELECTRONIC

S/N: THX1-UP

PART OF 261-4530, 261-4531, 261-4533, 261-4534, 261-4535, 261-4537 ENGINE

AR-CORE

ALSO AN ATTACHMENT

SMCS-1901 **i02433821**

NOTE	REF NO	GRAPHIC REF	PART NUMBER	QTY	PART NAME 1 2 3 4 5 6 (PRODUCT LEVEL)	SEE PAGE
	1	1	**8T-9655**	8	MOUNT-ISOLATION	
	2	1	**101-3128**	4	SPACER	
M	3	1	**143-9392**	1	STUD (M8X1.25-THD)	
Y	4	1	*226-7473*	1	CONTROL GP-ENGINE ELECTRONIC	171
	6	1	**233-0891**	1	BRACKET AS	
M	7	1	**6V-9804**	3	BOLT (M8X75-MM)	
	8	1	**9M-1974**	4	WASHER-HARD (8.8X16X2-MM THK)	
	9	1	**9N-0869**	4	WASHER-HARD (8.8X25.5X2-MM THK)	

M-METRIC PART
Y-SEPARATE ILLUSTRATION

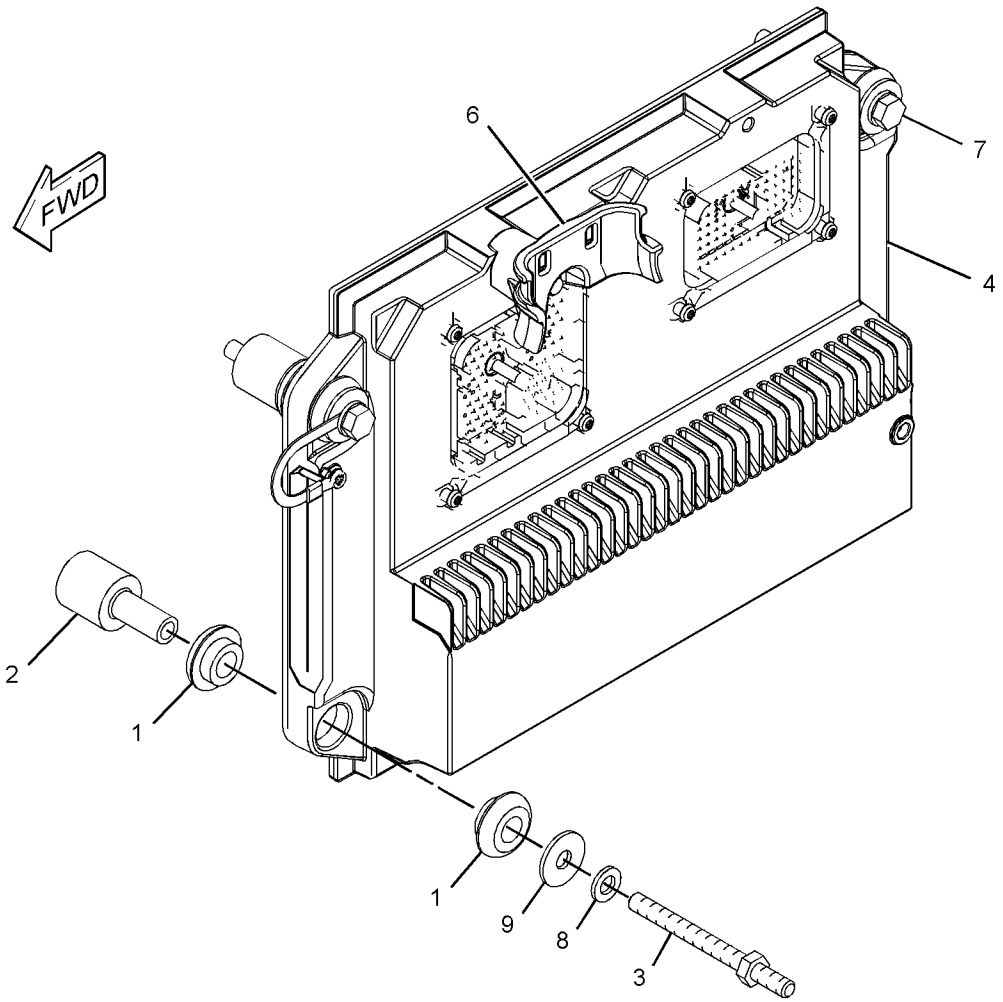

GRAPHIC #1 **<END>** g01173166

239-9954 CONTROL GP-UNPROGRAMMED–PRODUCT LINK 300

S/N: JDL1-UP; GMT1-UP

PART OF 235-6341, 278-5680 INSTALLATION GP-COMMUNICATION

AN ATTACHMENT

SMCS-7610 **i02363021**

NOTE	REF NO	GRAPHIC REF	PART NUMBER	QTY	PART NAME 1 2 3 4 5 6 (PRODUCT LEVEL)	SEE PAGE
	1	1	**7X-6315**	1	STRAP AS-GROUND	
	2	1	**126-7574**	1	SCREW-PAN HEAD (8-32X9.52-MM)	
	3	1	**134-4126**	1	WASHER (4.52X8.28X0.76-MM THK)	

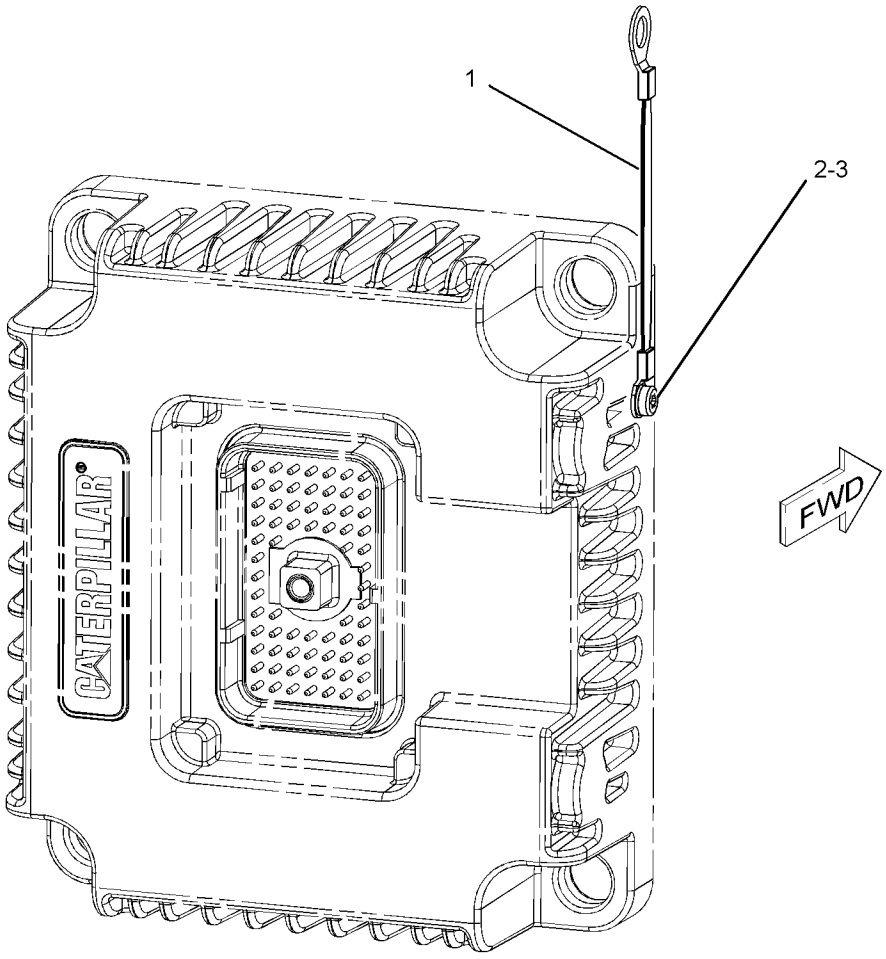

GRAPHIC #1 **<END>** g01145801

227-1226 CONVERTER GP-ELECTRICAL

S/N: JDL1-UP; GMT1-UP
20-AMP, 12-VOLT
AN ATTACHMENT

SMCS-1421 **i02456024**

NOTE	REF NO	GRAPHIC REF	PART NUMBER	QTY	PART NAME 1 2 3 4 5 6 (PRODUCT LEVEL)	SEE PAGE
	1	1	**239-3902**	1	CONVERTER-ELECTRICAL (24-VOLT TO 12-VOLT)	
	2	1	**242-1585**	1	HARNESS AS-POWER (ELECTRICAL CONVERTER)	
		1	**177-9653**	1	KIT-RECEPTACLE (4-PIN)	
					(INCLUDES RECEPTACLE AS & WEDGE)	
		1	**155-2274**	1	KIT-CONNECTING PLUG (6-PIN)	
					(INCLUDES PLUG AS, WEDGE, & INTERFACE SEAL)	
		1	**177-9656**	3	KIT-CONNECTING PLUG (4-PIN)	
					(EACH INCLUDES PLUG AS, WEDGE, & INTERFACE SEAL)	
	3	1	**7K-1181**	2	STRAP-CABLE	
M	4	1	**8T-0267**	4	BOLT-SOCKET HEAD (M6X1X12-MM)	
	5	1	**9X-8256**	4	WASHER (6.6X12X2-MM THK)	

M-METRIC PART

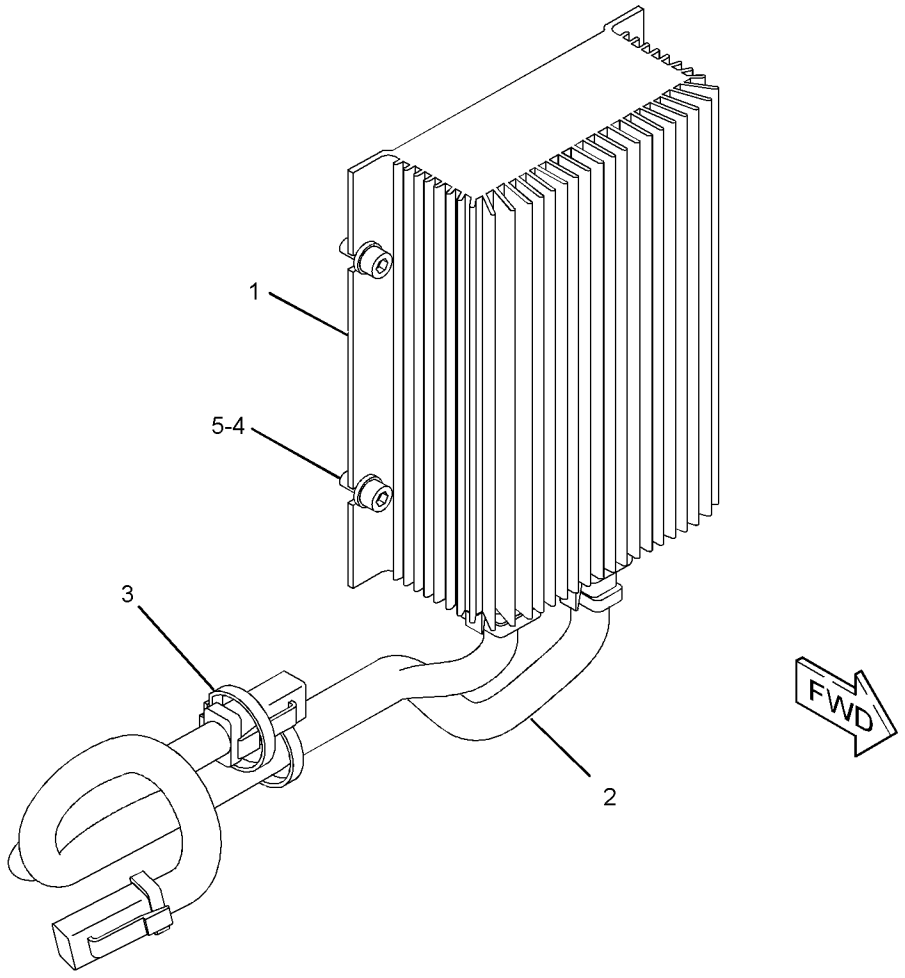

GRAPHIC #1 **<END>** g01214276

270-7621 ELECTRONICS AR-MACHINE

S/N: JDL1-UP; GMT1-UP

PART OF 218-4976, 222-1591 GENERAL AR

SMCS-7610, 7620 **i02456113**

NOTE	PART NUMBER	QTY	PART NAME 1 2 3 4 5 6 (PRODUCT LEVEL)	SEE PAGE
Y	*242-7099*	1	ELECTRONICS GP-MONITOR (CATERPILLAR MONITORING SYSTEM)	175
Y	*242-7100*	1	ELECTRONICS GP-POWER TRAIN	175

Y-SEPARATE ILLUSTRATION

<END>

242-7099 ELECTRONICS GP-MONITOR–CATERPILLAR MONITORING SYSTEM

S/N: JDL1-UP; GMT1-UP

PART OF 270-7621 ELECTRONICS AR-MACHINE

SMCS-7490, 7601, 7603, 7610, 7620 **i02457327**

NOTE	PART NUMBER	QTY	PART NAME 1 2 3 4 5 6 (PRODUCT LEVEL)	SEE PAGE
	242-0664	1	SOFTWARE GP-MONITOR	
			(SOFTWARE ONLY)	
			-OR-	
			(OPTIONAL SERVICE REPLACEMENT)	
	242-0665	1	SERVICE GP-MONITOR	
			(INCLUDES CONTROL GP & SOFTWARE)	

<END>

242-7100 ELECTRONICS GP-POWER TRAIN

S/N: JDL1-UP; GMT1-UP

PART OF 270-7621 ELECTRONICS AR-MACHINE

SMCS-4800, 4808, 7610, 7620 **i02457324**

NOTE	PART NUMBER	QTY	PART NAME 1 2 3 4 5 6 (PRODUCT LEVEL)	SEE PAGE
	273-9105	1	SOFTWARE GP-POWER TRAIN	
			(SOFTWARE ONLY)	
			-OR-	
			(OPTIONAL SERVICE REPLACEMENT)	
	273-9106	1	SERVICE GP-POWER TRAIN	
			(INCLUDES CONTROL GP & SOFTWARE)	

<END>

197-6280 HEATER GP-JACKET WATER

S/N: JDL1-UP; GMT1-UP
120 VOLT 15 AMPERE
AN ATTACHMENT

SMCS-1383 **i02430239**

NOTE	REF NO	GRAPHIC REF	PART NUMBER	QTY	PART NAME 1 2 3 4 5 6 (PRODUCT LEVEL)	SEE PAGE
C	1	1	**7K-1181**	11	STRAP-CABLE	
C	2	1	**9G-6655**	1	ELEMENT AS-JACKET WATER HEATER (120-VOLT, 1500-WATT)	
	3	1	**197-6281**	1	CORD AS	
	4	1	**7M-8485**	1	SEAL-O-RING	
C	5	1	**5P-0492**	1	ADAPTER	
C	6	1	**4P-7581**	1	CLIP	
	7	1	**214-9389**	1	FILM-IDENTIFICATION (WATER HEATER)	

C-CHANGE FROM PREVIOUS TYPE

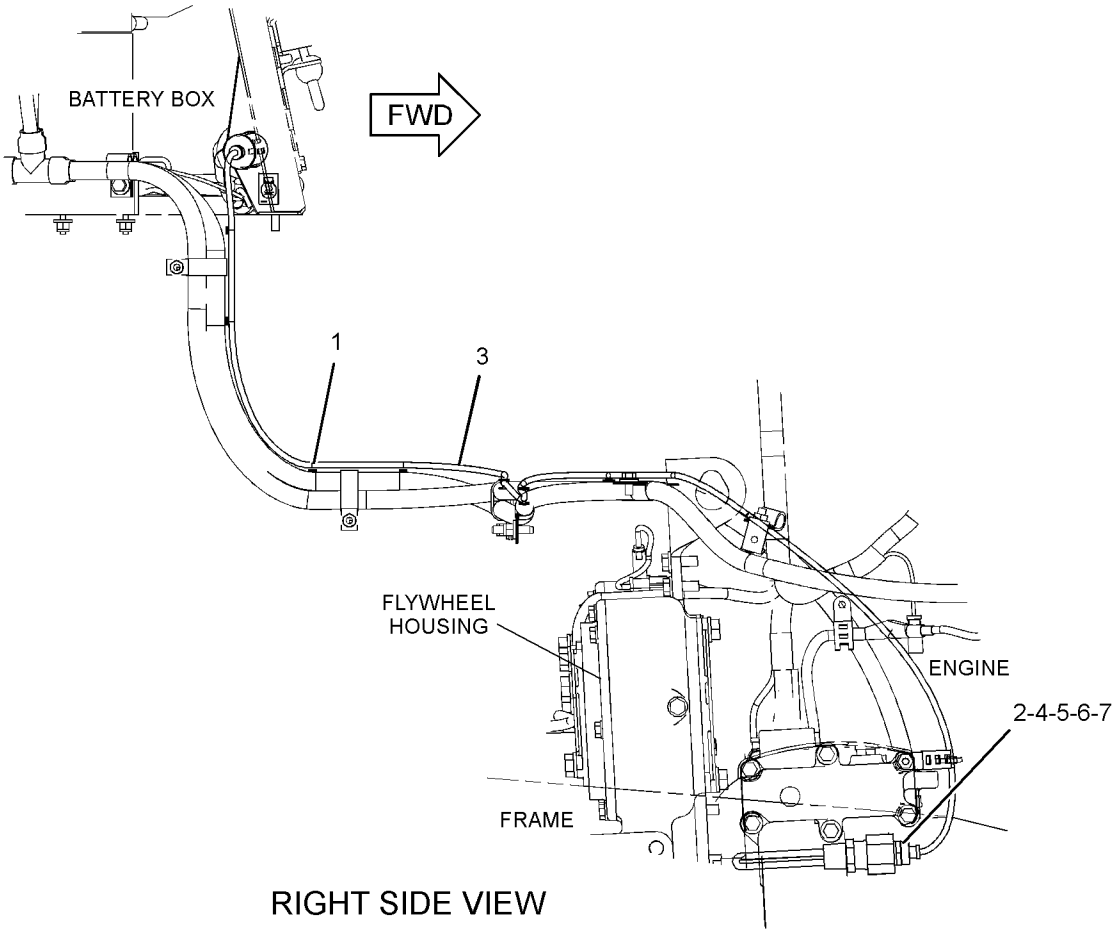

RIGHT SIDE VIEW

GRAPHIC #1 **<END>** g01195449

236-5880 INSTALLATION AR-GRADE CONTROL–ACCUGRADE

S/N: JDL1-UP; GMT1-UP
AN ATTACHMENT

SMCS-7220 **i02454103**

NOTE	PART NUMBER	QTY	PART NAME 1 2 3 4 5 6 (PRODUCT LEVEL)	SEE PAGE
Y	*239-5120*	1	INSTALLATION GP-GRADE CONTROL	182
Y	*240-3464*	1	MOUNTING GP-CONNECTOR (GRADE CONTROL)	201
Y	*252-6945*	1	MOUNTING GP-MONITOR (GRADE CONTROL)	658
Y	*236-5042*	1	WIRING GP-GRADE CONTROL (GRADE CONTROL)	243
	245-7725	1	FILM-IDENTIFICATION (JOYSTICK) (GRADE CONTROL)	
			ON RAISED SURFACE TO RIGHT OF CONTROL AND DIRECTLY BELOW BULLDOZER CONTROL FILM	
	266-1586	1	PLUG AS-CODE (GRADE CONTROL)	
			(ON DASH HARNESS)	
	102-8805	1	KIT-RECEPTACLE (6-PIN)	
			(INCLUDES PLUG AS, WEDGE, & INTERFACE SEAL)	
	8T-8737	3	PLUG-SEAL	
	9X-3401	3	PIN-CONNECTOR (16-GA TO 18-GA)	
	264-3177	1	SOFTWARE GP-COMMUNICATION (GRADE CONTROL)	
			(DLR INSTALL CONFIG: SEE IRM: EES03-01)	

Y-SEPARATE ILLUSTRATION

<END>

235-6341 INSTALLATION GP-COMMUNICATION

S/N: JDL1-UP; GMT1-UP

AN ATTACHMENT

SMCS-7606 **i02454101**

NOTE	REF NO	GRAPHIC REF	PART NUMBER	QTY	PART NAME 1 2 3 4 5 6 (PRODUCT LEVEL)	SEE PAGE
	1	1	**7K-1181**	9	STRAP-CABLE	
	2	1	**8C-5607**	8	MOUNT-ISOLATION	
	3	1	**8C-5608**	4	SPACER (6.5X9.5X25.4-MM THK)	
	4	1	**129-8331**	1	PLATE AS	
	5	1	**172-4869**	1	BRACKET	
	6	1	**208-4705**	1	BRACKET	
	7	1	**230-1340**	1	FILM-WARNING (PRODUCT LINK RADIO, NACD)	
Y	8	1	**239-9954**	1	CONTROL GP-UNPROGRAMMED (PRODUCT LINK 300)	173
	9	1	**263-9088**	1	RADIO GP-COMMUNICATION (PRODUCT LINK 121SR)	
		1	**282-0638**	1	SOFTWARE GP-COMMUNICATION (PRODUCT LINK 121SR)	
	10	1	**268-5986**	1	HARNESS AS-CONTROL (PRODUCT LINK) (COMMUNICATIONS)	
		1	**9X-6772**	2	STRAP-CABLE	
		1	**126-1774**	1	COVER	
		1	**155-2255**	1	KIT-CONNECTING PLUG (12-PIN)	
		1	**155-2271**	1	KIT-CONNECTING PLUG (4-PIN)	
					(INCLUDES PLUG AS, WEDGE, & INTERFACE SEAL)	
		1	**160-7690**	1	PLUG AS-CONNECTOR (70-PIN)	
	11	1	**268-5987**	1	HARNESS AS-RADIO (PRODUCT LINK) (COMMUNICATIONS)	
		1	**102-8806**	1	KIT-RECEPTACLE (8-PIN)	
					(INCLUDES RECEPTACLE AS & WEDGE)	
		1	**155-2255**	1	KIT-CONNECTING PLUG (12-PIN)	
					(INCLUDES PLUG AS, WEDGE, & INTERFACE SEAL)	
	12	1	**266-2861**	1	ANTENNA AS (PRODUCT LINK)	
	13	1	**5P-1075**	4	WASHER-HARD (10.2X22.5X3-MM THK)	
	14	1	**5S-7379**	2	BOLT (3/8-16X0.875-IN)	
	15	1	**6S-1066**	1	GROMMET (41.28-MM OD)	
	16	1	**6V-8801**	2	NUT (3/8-16-THD)	
M	17	1	**7X-2562**	2	BOLT (M20X2.5X45-MM)	
M	18	1	**8T-2192**	4	BOLT (M6X1X45-MM)	
	19	1	**8T-4123**	1	WASHER-PLATED (22X35X3.5-MM THK)	
M	20	1	**8T-4181**	4	BOLT (M6X1X20-MM)	
M	21	1	**8T-4780**	1	BOLT (M20X2.5X30-MM)	
	22	1	**8T-5439**	2	WASHER (21.5X45X6-MM THK)	
	23	1	**9X-6165**	4	WASHER (6.5X22X2.5-MM THK)	
	24	1	**9X-8256**	4	WASHER (6.6X12X2-MM THK)	

M-METRIC PART
Y-SEPARATE ILLUSTRATION

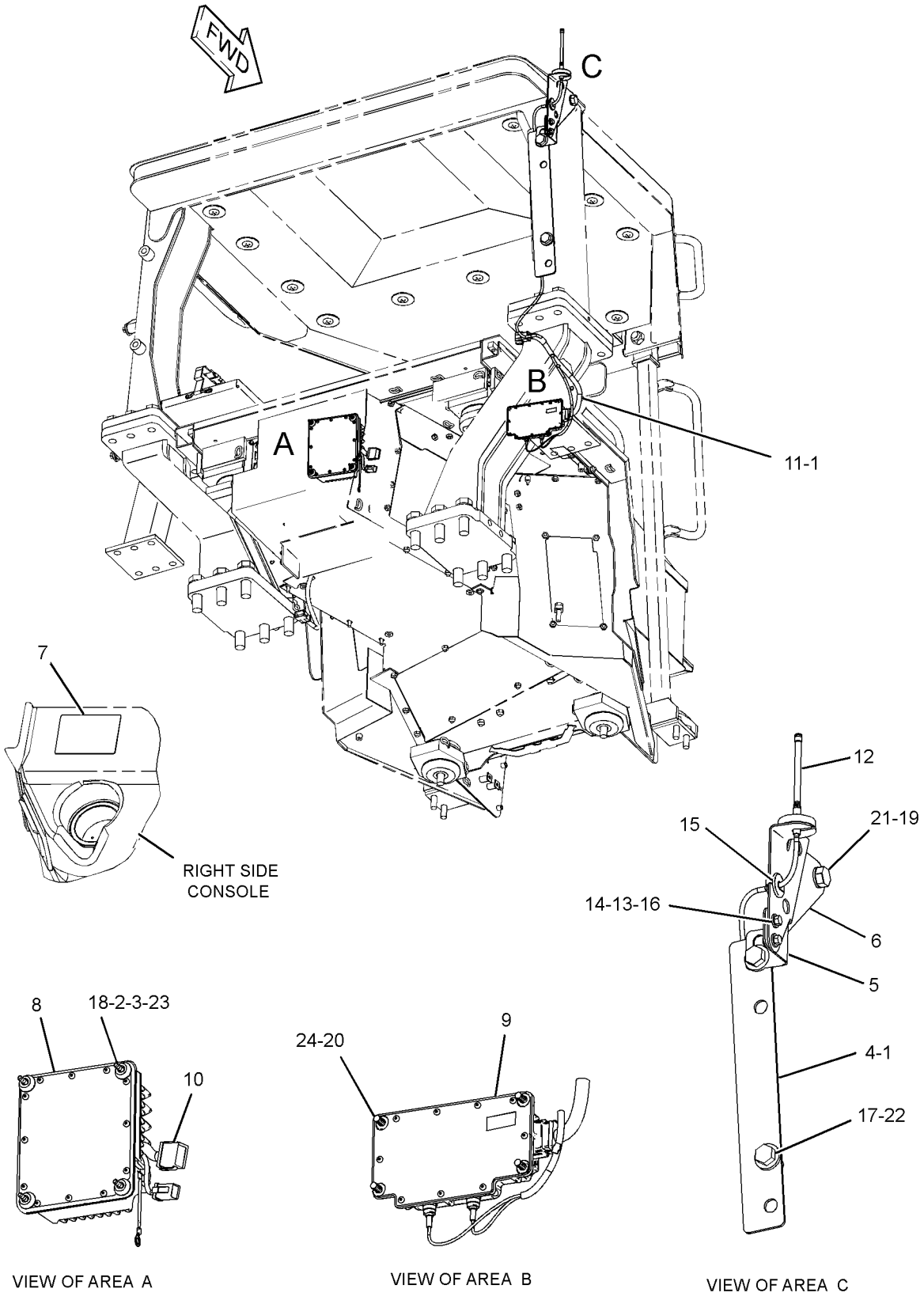

GRAPHIC #1

<END>

g01215056

278-5680 INSTALLATION GP-COMMUNICATION

S/N: JDL1-UP; GMT1-UP
FOR USE WITH REAR SCREEN
AN ATTACHMENT

SMCS-7606 **i02453704**

NOTE	REF NO	GRAPHIC REF	PART NUMBER	QTY	PART NAME 1 2 3 4 5 6 (PRODUCT LEVEL)	SEE PAGE
	1	1	**7K-1181**	9	STRAP-CABLE	
	2	1	**8C-5607**	8	MOUNT-ISOLATION	
	3	1	**8C-5608**	4	SPACER (6.5X9.5X25.4-MM THK)	
	4	1	**197-7447**	1	BRACKET	
	5	1	**230-1340**	1	FILM-WARNING (PRODUCT LINK RADIO, NACD)	
Y	6	1	**239-9954**	1	CONTROL GP-UNPROGRAMMED (PRODUCT LINK 300)	173
	7	1	**263-9088**	1	RADIO GP-COMMUNICATION (PRODUCT LINK 121SR)	
		1	**282-0638**	1	SOFTWARE GP-COMMUNICATION (PRODUCT LINK 121SR) (PRODUCT LINK 121SR)	
	8	1	**268-5986**	1	HARNESS AS-CONTROL (PRODUCT LINK)	
		1	**9X-6772**	2	STRAP-CABLE	
		1	**126-1774**	1	COVER	
		1	**155-2255**	1	KIT-CONNECTING PLUG (12-PIN)	
					(INCLUDES PLUG AS, WEDGE, & INTERFACE SEAL)	
		1	**155-2272**	1	PLUG AS-CONNECTOR (4-PIN)	
		1	**160-7690**	1	PLUG AS-CONNECTOR (70-PIN)	
	9	1	**268-5987**	1	HARNESS AS-RADIO (PRODUCT LINK)	
		1	**102-8806**	1	KIT-RECEPTACLE (8-PIN)	
					(INCLUDES RECEPTACLE AS & WEDGE)	
		1	**155-2255**	1	KIT-CONNECTING PLUG (12-PIN)	
					(INCLUDES PLUG AS, WEDGE, & INTERFACE SEAL)	
	10	1	**266-2861**	1	ANTENNA AS (PRODUCT LINK)	
	11	1	**5P-1075**	4	WASHER-HARD (10.2X22.5X3-MM THK)	
	12	1	**5S-7379**	2	BOLT (3/8-16X0.875-IN)	
	13	1	**6S-1066**	1	GROMMET (41.28-MM OD)	
	14	1	**6V-8801**	2	NUT (3/8-16-THD)	
M	15	1	**8T-2192**	4	BOLT (M6X1X45-MM)	
	16	1	**8T-4123**	1	WASHER-PLATED (22X35X3.5-MM THK)	
M	17	1	**8T-4181**	4	BOLT (M6X1X20-MM)	
M	18	1	**8T-4780**	1	BOLT (M20X2.5X30-MM)	
	19	1	**9X-6165**	4	WASHER (6.5X22X2.5-MM THK)	
	20	1	**9X-8256**	4	WASHER (6.6X12X2-MM THK)	

M-METRIC PART
Y-SEPARATE ILLUSTRATION

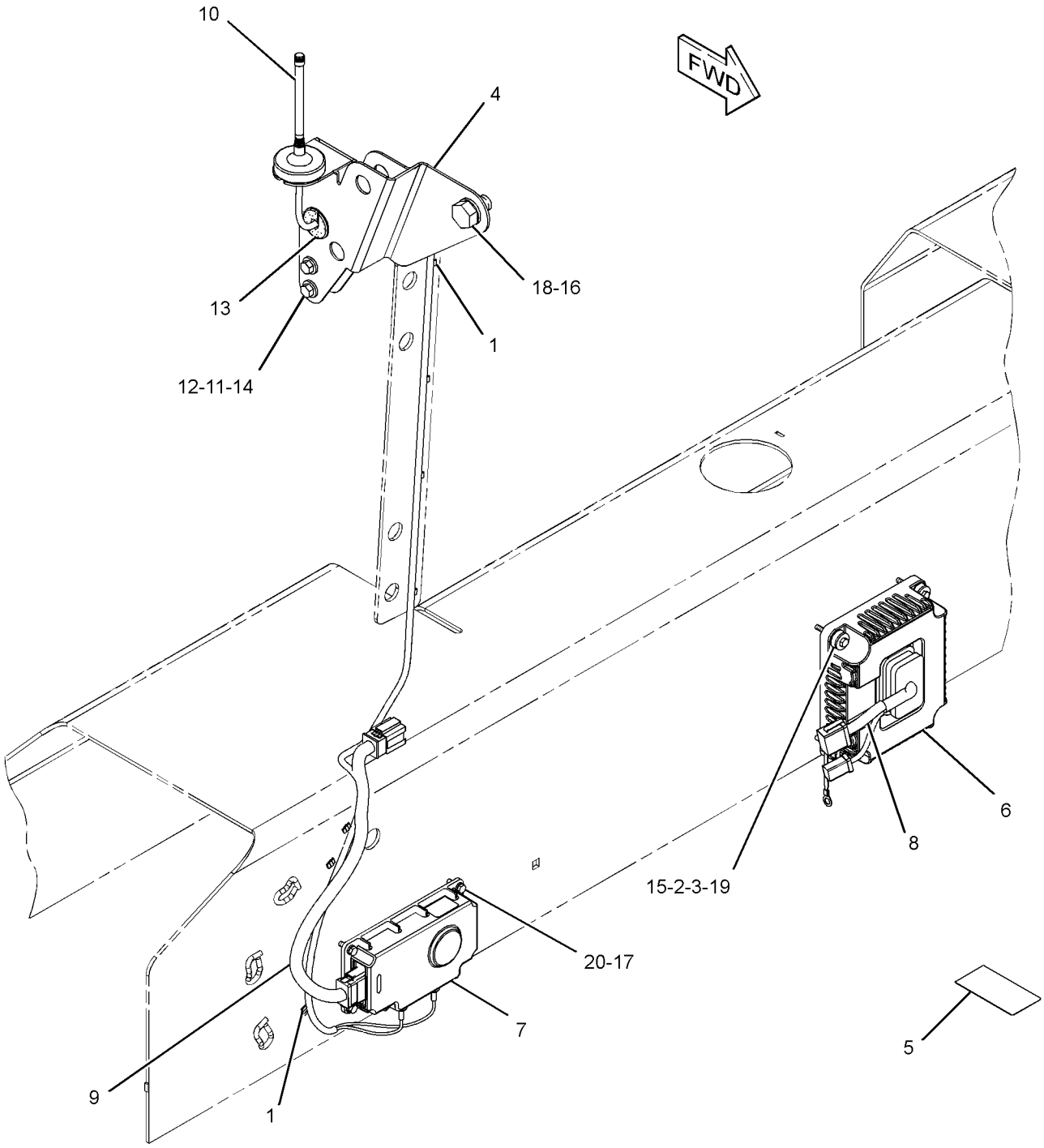

GRAPHIC #1 **<END>** g01209677

ELECTRICAL AND STARTING SYSTEM

239-5120 INSTALLATION GP-GRADE CONTROL

S/N: JDL1-UP; GMT1-UP
PART OF 236-5880 INSTALLATION AR-GRADE CONTROL
AN ATTACHMENT

SMCS-7220 **i02454117**

NOTE	PART NUMBER	QTY	PART NAME 1 2 3 4 5 6 (PRODUCT LEVEL)	SEE PAGE
Y	*242-8409*	1	MODULE & MTG GP-GRADE CONTROL	200
Y	*237-9140*	1	MOUNTING GP-ANTENNA	655
Y	*237-9130*	1	MOUNTING GP-MONITOR (GRADE CONTROL)	657

Y-SEPARATE ILLUSTRATION

<END>

227-1228 INSTALLATION GP-SECURITY

S/N: JDL1-UP; GMT1-UP
AN ATTACHMENT

SMCS-7631 **i02456033**

NOTE	REF NO	GRAPHIC REF	PART NUMBER	QTY	PART NAME 1 2 3 4 5 6 (PRODUCT LEVEL)	SEE PAGE
	1	1	**102-8802**	2	KIT-RECEPTACLE (2-PIN)	
					(EACH INCLUDES RECEPTACLE AS & WEDGE)	
	2	1	**8C-5607**	4	MOUNT-ISOLATION	
	3	1	**8C-5608**	2	SPACER (6.5X9.5X25.4-MM THK)	
	4	1	**192-9734**	1	FILM-IDENTIFICATION (SECURITY SYSTEM)	
	5	1	**206-5162**	2	KEY AS-ELECTRONIC (SECURITY) (YELLOW)	
					—OR—	
		1	**206-5165**	2	KEY AS-ELECTRONIC (SECURITY) (GRAY)	
	6	1	**205-8257**	1	COIL AS (EXCITER)	
D		1	**5P-5677**		WIRE (18-GA, BLACK) (0.4-M)	
		1	**186-3735**	2	PIN-CONNECTOR (16-GA TO 18-GA)	
	6A	1	**198-5389**	1	FILM-IDENTIFICATION (IGNITION SWITCH)	
	7	1	**218-0404**	1	MODULE GP-INTERFACE (KEY)	
	8	1	**219-6314**	2	KEY RING (IDENTIFICATION)	
	10	1	**242-1584**	1	HARNESS AS-WIRING (MACHINE SECURITY SYSTEM)	
		1	**102-8806**	1	KIT-RECEPTACLE (8-PIN)	
					(INCLUDES RECEPTACLE AS & WEDGE)	
		1	**155-2265**	1	KIT-CONNECTING PLUG (8-PIN)	
		1	**155-2270**	2	KIT-CONNECTING PLUG (2-PIN)	
					(EACH INCLUDES PLUG AS. WEDGE, & INTERFACE SEAL)	
	11	1	**242-3282**	1	LAMP-LED (24-VOLT, RED) (MACHINE SECURITY SYSTEM)	
	13	1	**4P-7581**	1	CLIP	
	14	1	**7K-1181**	10	STRAP-CABLE	
M	15	1	**8C-8451**	1	BOLT (M6X1X40-MM)	
M	16	1	**9X-2480**	1	BOLT (M6X1X45-MM)	
	17	1	**9X-6165**	3	WASHER (6.5X22X2.5-MM THK)	
F			**238-5017**	1	SOFTWARE GP-MACHINE (SECURITY)	
					(DLR INSTALL CONFIG: SEE IRM: EES03-01)	

D-ORDER BY THE METER
F-NOT SHOWN
M-METRIC PART

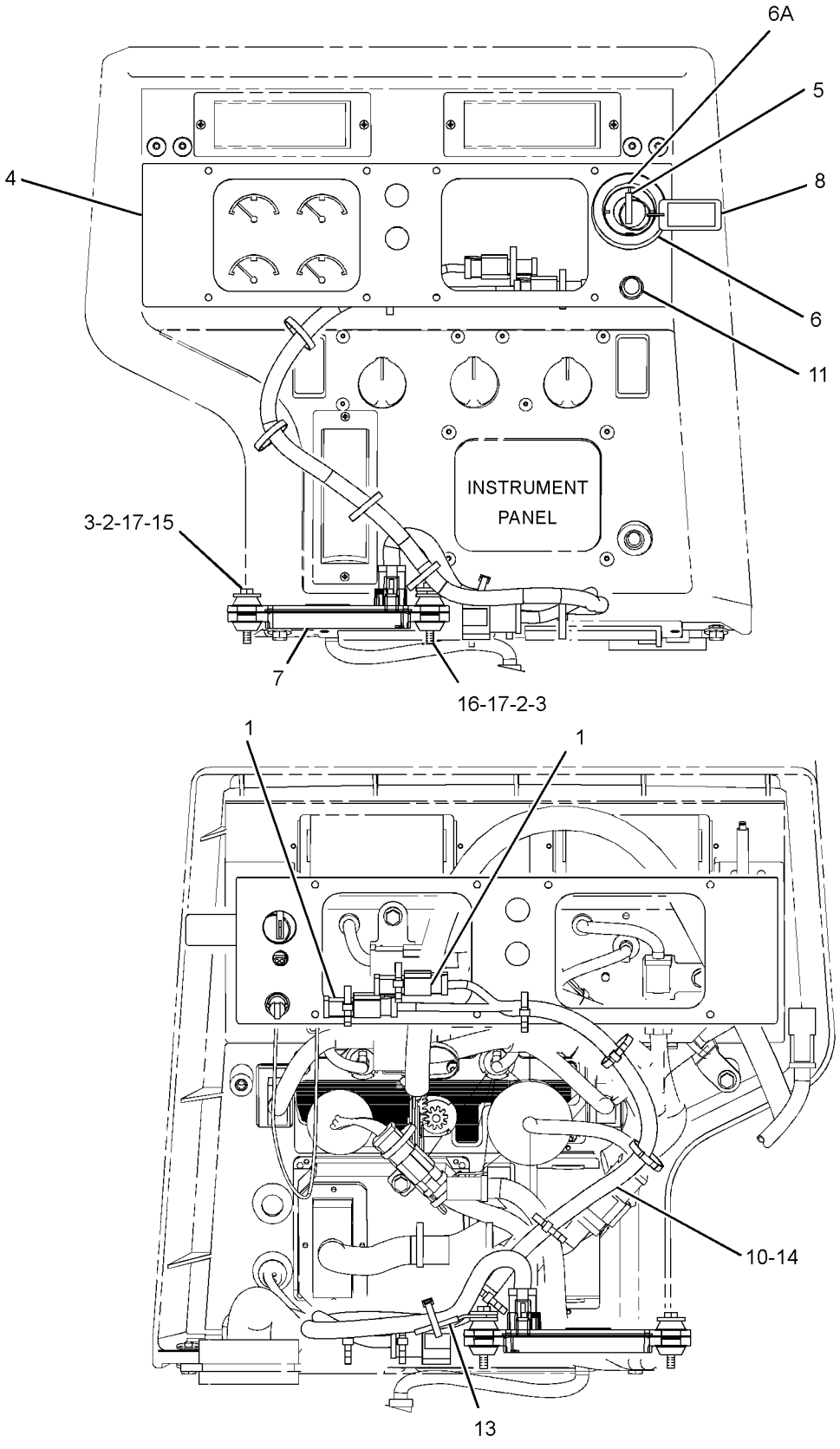

GRAPHIC #1 **<END>** g01215573

3E-6389 LAMP GP-DOME

S/N: JDL1-UP; GMT1-UP
24-VOLT, WITH SWITCH
PART OF 161-1096 LINER GP-CAB
ALSO AN ATTACHMENT

SMCS-1433 **i02207309**

NOTE	REF NO	GRAPHIC REF	PART NUMBER	QTY	PART NAME 1 2 3 4 5 6 (PRODUCT LEVEL)	SEE PAGE
	1	1	**7N-9943**	1	LAMP (24-VOLT)	
	2	1	**102-8803**	1	KIT-RECEPTACLE (3-PIN)	
					(INCLUDES RECEPTACLE AS & WEDGE)	
		1	**3E-3371**	1	WEDGE-RECEPTACLE LOCK (3-PIN)	
		1	**8T-8729**	3	PIN-CONNECTOR	
	3	1	**7T-0020**	1	LENS-DOME LAMP	

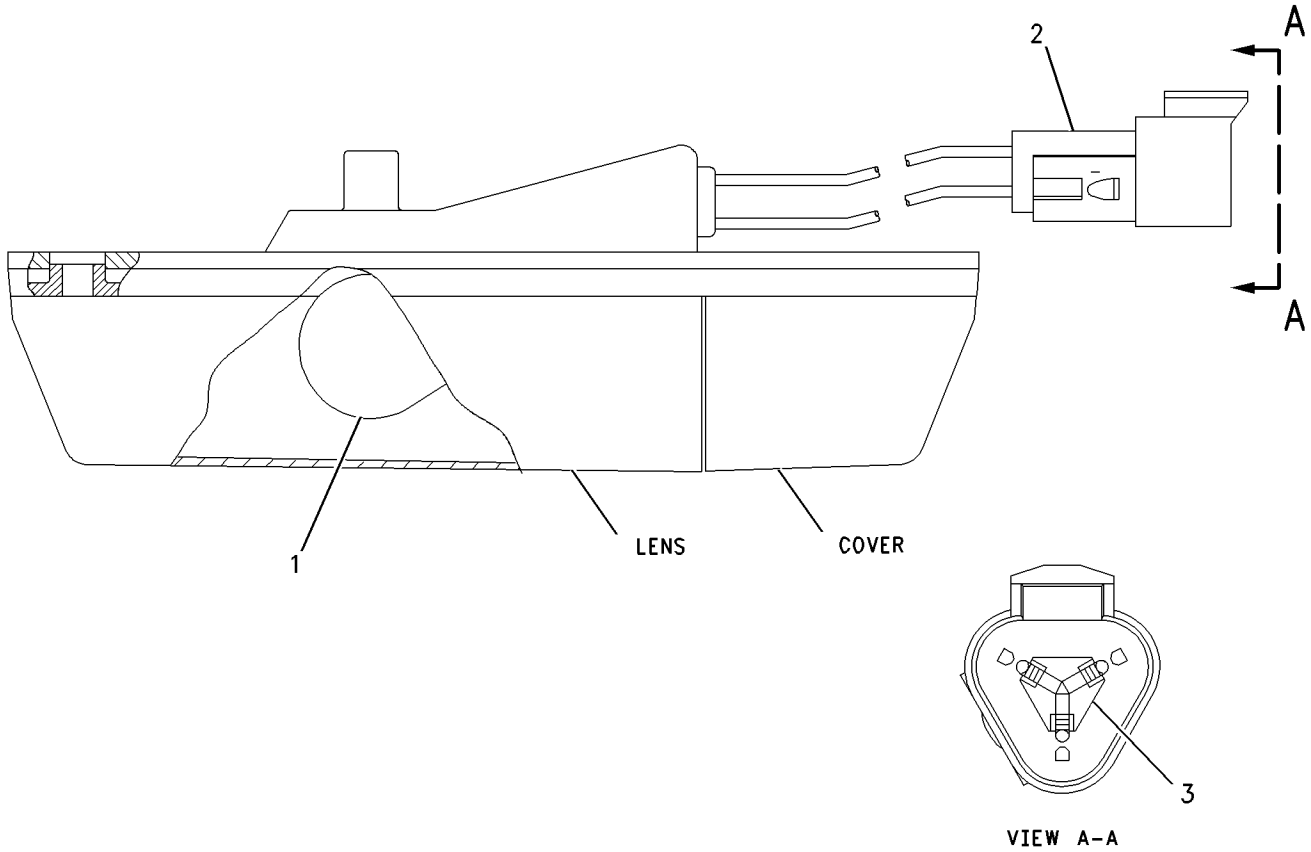

GRAPHIC #1 **<END>** g00892785

147-0319 LAMP GP-FLOOD—SUSPENDED MOUNT

S/N: JDL1-UP; GMT1-UP
24-VOLT
PART OF 152-8427, 235-6336, 235-6337, 235-6338, 235-6340 LIGHTING GP-FLOOD
AN ATTACHMENT

SMCS-1434 **i01867783**

NOTE	REF NO	GRAPHIC REF	PART NUMBER	QTY	PART NAME 1 2 3 4 5 6 (PRODUCT LEVEL)	SEE PAGE
	1	1	**9X-3463**	1	LAMP-HALOGEN (24-VOLT, 65-WATT) (FLOOD)	
	2	1	**158-0250**	1	BODY AS-LAMP	
	3	1	**158-0248**	1	LENS AS (FLOOD)	
	4	1	**158-0252**	1	BEZEL	
	5	1	**188-8849**	2	CLAMP	

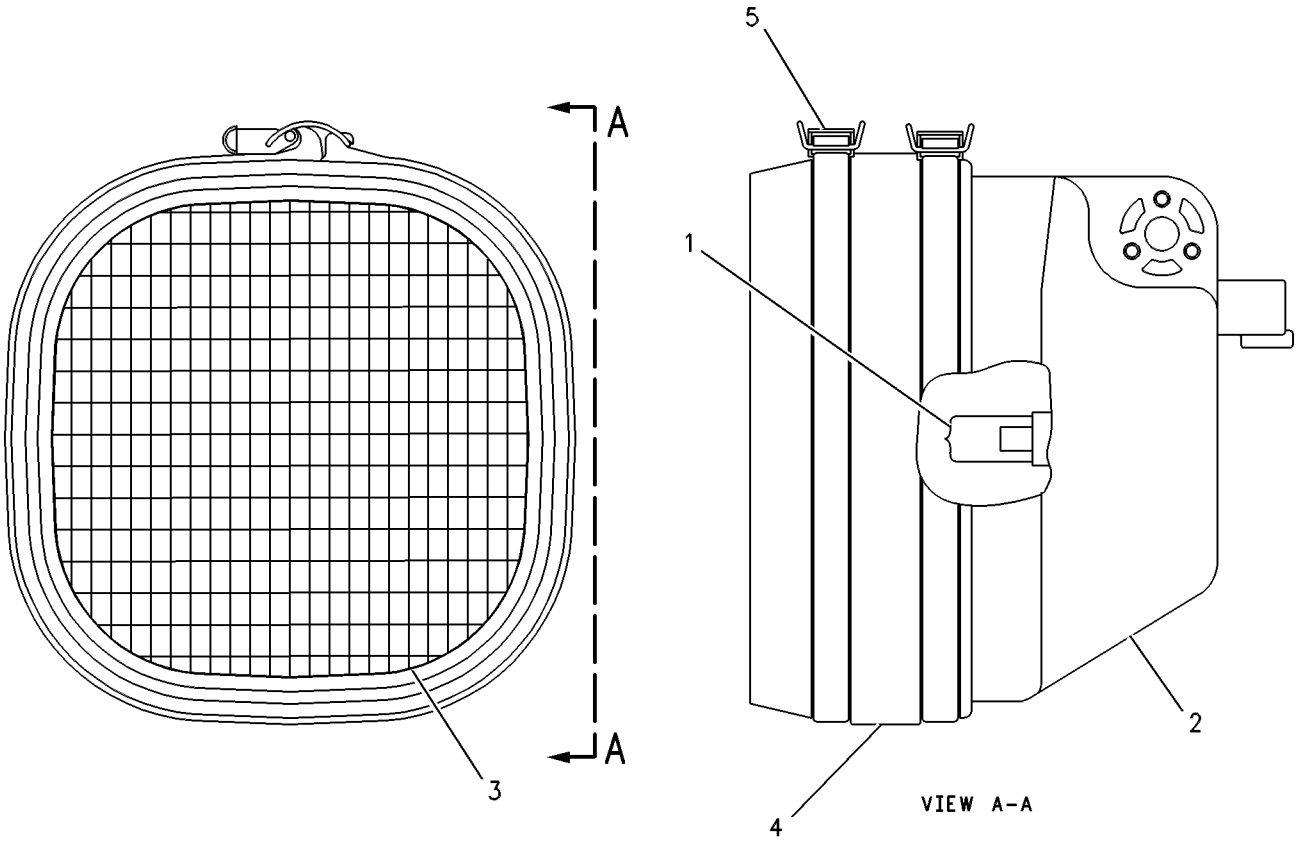

GRAPHIC #1 **<END>** g00458549

153-2073 LAMP GP-FLOOD–VERTICAL MOUNT

S/N: JDL1-UP; GMT1-UP
24-VOLT
PART OF 235-6340 LIGHTING GP-FLOOD
AN ATTACHMENT

SMCS-1434 **i02207331**

NOTE	REF NO	GRAPHIC REF	PART NUMBER	QTY	PART NAME 1 2 3 4 5 6 (PRODUCT LEVEL)	SEE PAGE
	1	1	**9X-3463**	1	LAMP-HALOGEN (24-VOLT, 65-WATT)	
	2	1	**158-0250**	1	BODY AS-LAMP	
	3	1	**158-0248**	1	LENS AS	
	4	1	**158-0252**	1	BEZEL	
	5	1	**188-8849**	2	CLAMP	

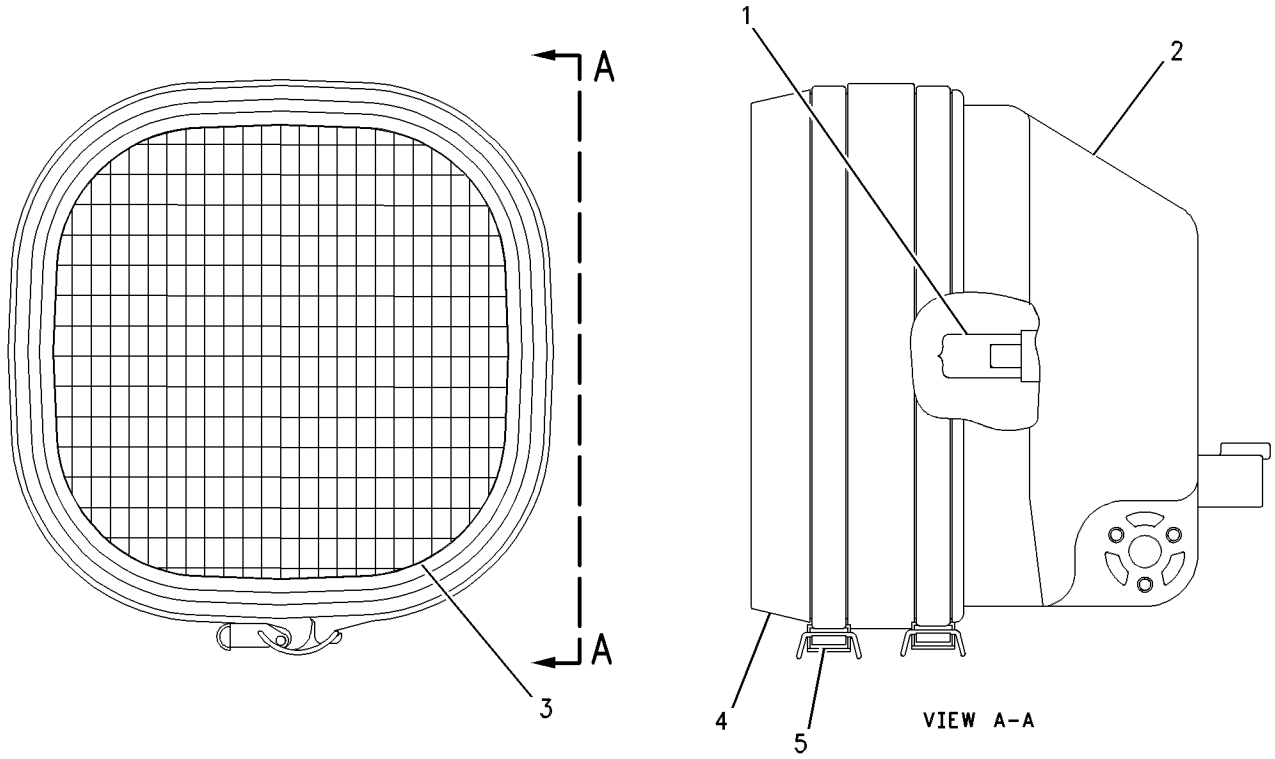

GRAPHIC #1 **<END>** g00449633

219-6487 LAMP GP-FLOOD—SUSPENDED MOUNT

S/N: JDL1-UP; GMT1-UP
24-VOLT
PART OF 235-6336, 235-6337, 235-6338, 235-6340 LIGHTING GP-FLOOD
AN ATTACHMENT

SMCS-1434 **i02286097**

NOTE	REF NO	GRAPHIC REF	PART NUMBER	QTY	PART NAME 1 2 3 4 5 6 (PRODUCT LEVEL)	SEE PAGE
	1	1	**9X-3463**	1	LAMP-HALOGEN (24-VOLT, 65-WATT) (FLOODLIGHT)	
M	2	1	**8T-6912**	1	BOLT (M8X1.25X50-MM)	
M	3	1	**5C-7261**	1	NUT (M8X1.25-THD)	
	4	1	**8T-4224**	2	WASHER-HARD (8.8X16X2-MM THK)	
	5	1	**9X-4244**	2	SCREW	
	6	1	**202-6612**	1	SEAL	
	7	1	**202-6614**	1	LENS AS (FLOODLIGHT) (ROPS)	
	8	1	**175-4292**	1	BODY AS	
	9	1	**164-7556**	1	CLIP	
	10	1	**175-4291**	1	BRACKET AS	

M-METRIC PART

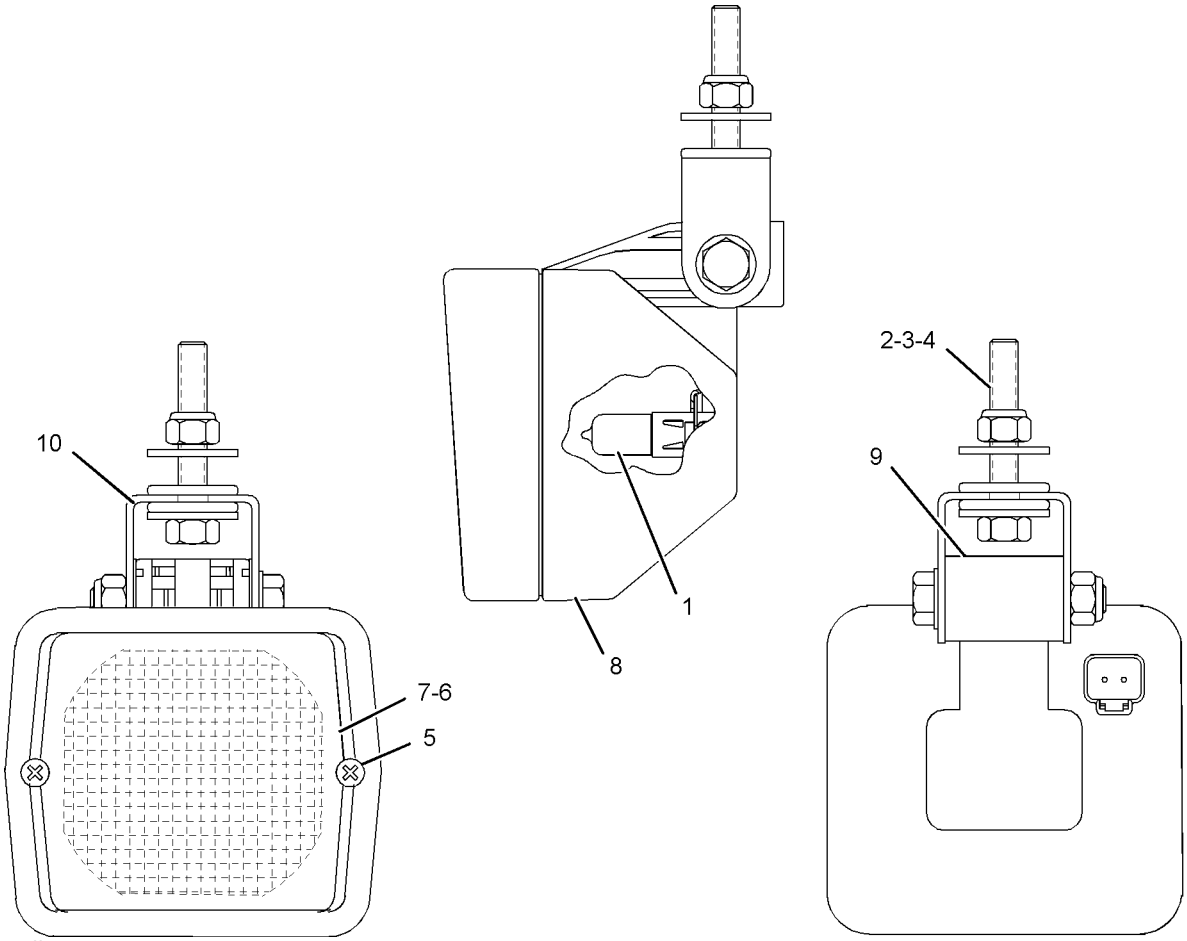

GRAPHIC #1 **<END>** g01021977

152-8427 LIGHTING GP-FLOOD–2-LAMP–ROPS MOUNTED

S/N: JDL1-UP; GMT1-UP
PART OF 235-6338 LIGHTING GP-FLOOD
AN ATTACHMENT

SMCS-1434 **i02243148**

NOTE	REF NO	GRAPHIC REF	PART NUMBER	QTY	PART NAME 1 2 3 4 5 6 (PRODUCT LEVEL)	SEE PAGE
	1	1	**9W-4361**	4	MOUNT-FLEXIBLE	
	2	1	**111-8314**	2	BRACKET AS	
	3	1	**8T-4224**	4	WASHER-HARD (8.8X16X2-MM THK)	
Y	4	1	**147-0319**	2	LAMP GP-FLOOD (24-VOLT, SUSPENDED MOUNT)	186
	5	1	**5M-3062**	2	BOLT (3/8-16X0.75-IN)	
	6	1	**5P-1065**	10	WASHER-HARD (10.2X22.5X3-MM THK)	
	7	1	**5P-2955**	2	BOLT (5/16-18X2.5-IN)	
	8	1	**6V-8189**	2	NUT (5/16-18-THD)	
	9	1	**6V-8801**	8	NUT (3/8-16-THD)	
	10	1	**114-9363**	1	GUARD AS	

Y-SEPARATE ILLUSTRATION

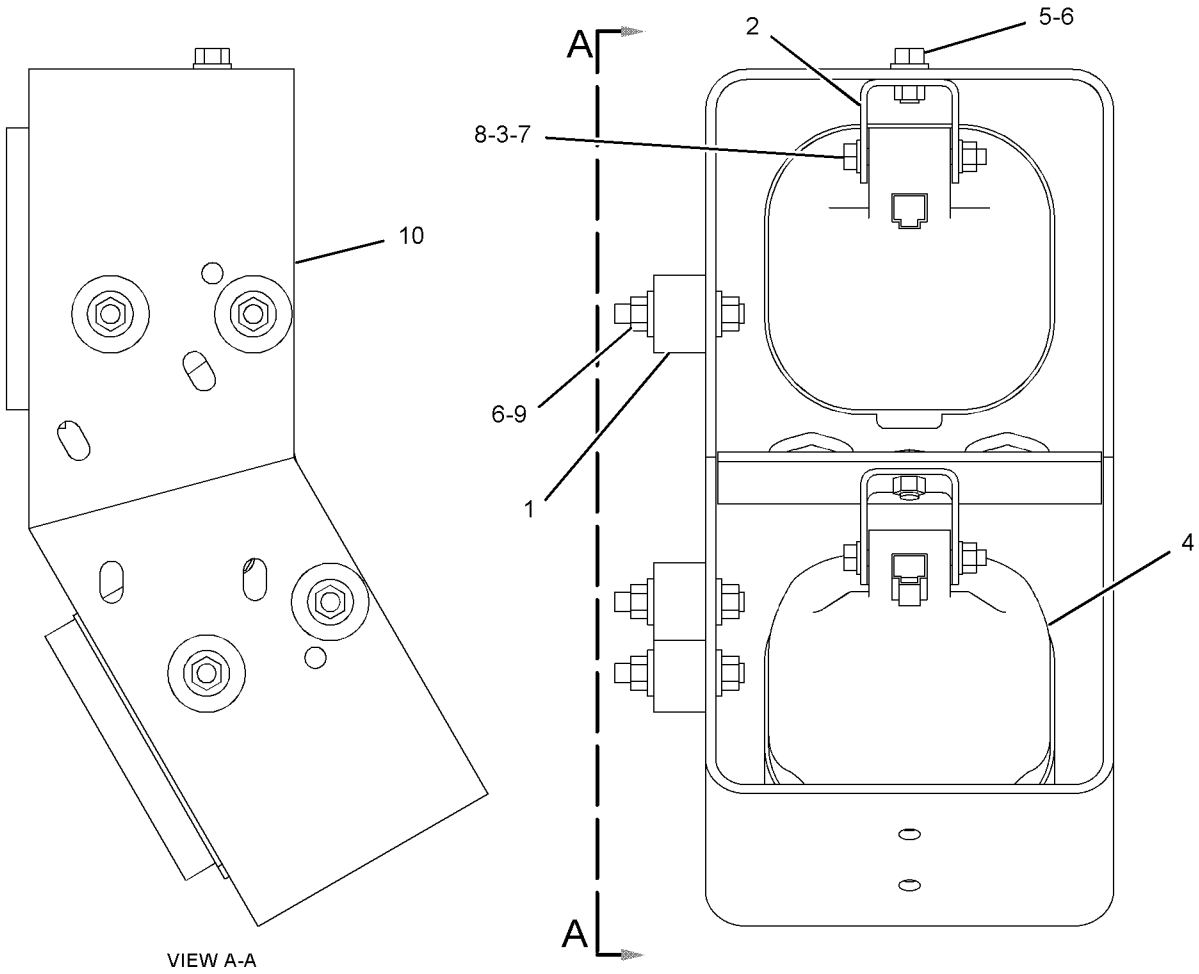

GRAPHIC #1 **<END>** g01130829

235-6336 LIGHTING GP-FLOOD–
5-LAMP, ENG COMPT, FRONT, REAR
S/N: JDL1-UP; GMT1-UP
AN ATTACHMENT

SMCS-1434 **i02456089**

NOTE	REF NO	GRAPHIC REF	PART NUMBER	QTY	PART NAME 1 2 3 4 5 6 (PRODUCT LEVEL)	SEE PAGE
	1	1	**111-8314**	4	BRACKET AS	
	2	1	**118-6299**	2	GUARD AS	
					(EACH INCLUDES)	
		1	**7T-1099**	1	LINK	
	3	1	**139-2116**	1	SWITCH AS-TOGGLE (UNDERHOOD SERVICE LIGHT)	
		1	**3E-3371**	1	WEDGE-RECEPTACLE LOCK (3-PIN)	
		1	**102-8803**	1	KIT-RECEPTACLE (3-PIN)	
					(INCLUDES RECEPTACLE AS & WEDGE)	
		1	**6T-3631**	2	NUT-HEX (15/32-32-THD)	
		1	**6T-3632**	1	LOCKWASHER	
		1	**6T-3633**	1	RING-LOCKING	
		1	**186-3735**	3	PIN-CONNECTOR (16-GA TO 18-GA)	
	4	1	**167-1884**	2	GUARD	
	5	1	**195-4989**	2	HARNESS AS-LIGHTING (FLOODLIGHT) (REAR)	
					(EACH INCLUDES)	
		1	**102-8804**	1	KIT-RECEPTACLE (4-PIN)	
					(INCLUDES RECEPTACLE AS & WEDGE)	
		1	**155-2270**	1	KIT-CONNECTING PLUG (2-PIN)	
					(INCLUDES RECEPTACLE AS & WEDGE)	
	6	1	**222-7885**	1	SWITCH AS-ROCKER (REAR FLOODLIGHTS)	
	7	1	**237-7308**	1	BRACKET	
Y	8	1	**147-0319**	4	LAMP GP-FLOOD (24-VOLT, SUSPENDED MOUNT)	186
Y	9	1	**219-6487**	1	LAMP GP-FLOOD (24-VOLT, SUSPENDED MOUNT)	188
	10	1	**5M-3062**	4	BOLT (3/8-16X0.75-IN)	
	11	1	**5P-1075**	16	WASHER-HARD (10.2X22.5X3-MM THK)	
	12	1	**5P-2955**	4	BOLT (5/16-18X2.5-IN)	
	13	1	**6H-4005**	2	GROMMET	
	14	1	**6V-8189**	4	NUT (5/16-18-THD)	
B	15	1	**7K-1181**	8	STRAP-CABLE	
M	16	1	**8T-4136**	14	BOLT (M10X1.5X25-MM)	
	17	1	**8T-4224**	8	WASHER-HARD (8.8X16X2-MM THK)	
	18	1	**8T-4896**	2	WASHER-HARD (10.2X18.5X2.5-MM THK)	
	19	1	**8T-7934**	2	WASHER-HARD (11X21X5-MM THK)	

B-USE AS REQUIRED
M-METRIC PART
Y-SEPARATE ILLUSTRATION

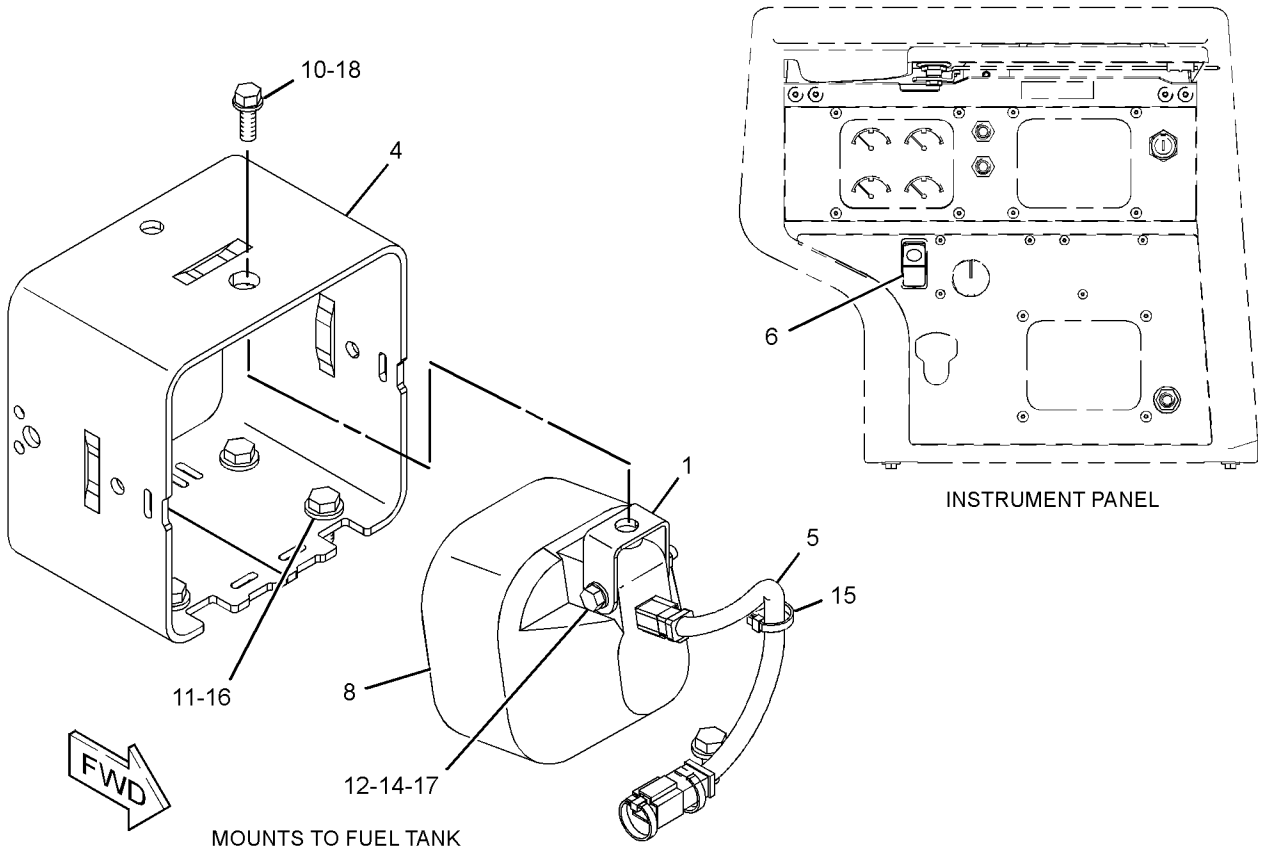

INSTRUMENT PANEL

MOUNTS TO FUEL TANK

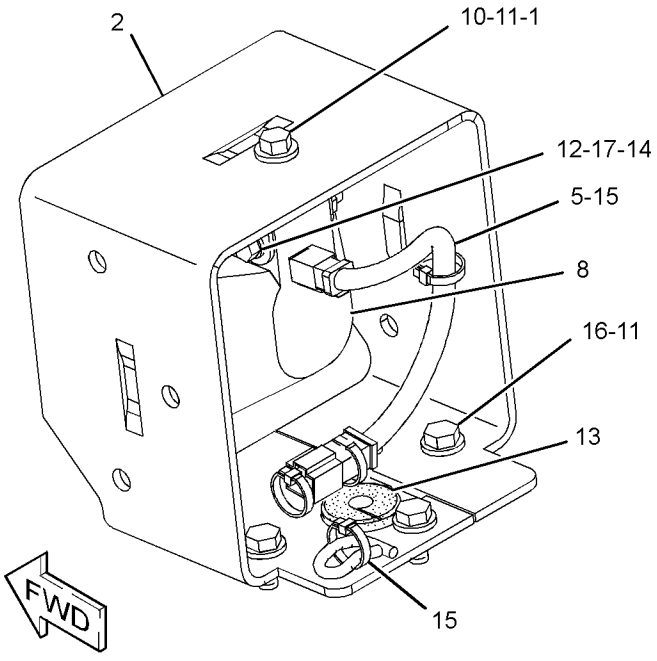

MOUNTS TO RADIATOR GUARD

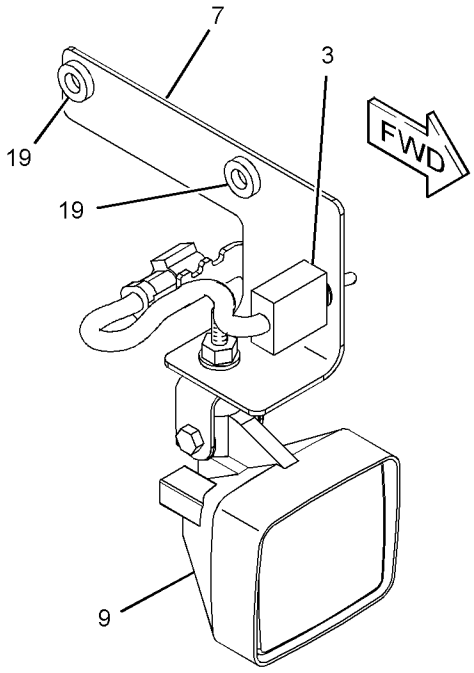

UNDERHOOD WORKLIGHT

GRAPHIC #1 **<END>** g01205592

235-6337 LIGHTING GP-FLOOD–7-LAMP

S/N: JDL1-UP; GMT1-UP
ROPS, CYLINDER, FUEL TANK MOUNTED, UNDERHOOD SERVICE
AN ATTACHMENT

SMCS-1434 **i02456075**

NOTE	REF NO	GRAPHIC REF	PART NUMBER	QTY	PART NAME 1 2 3 4 5 6 (PRODUCT LEVEL)	SEE PAGE
	1	1	**7K-1181**	26	STRAP-CABLE	
	2	1	**9W-4361**	16	MOUNT-FLEXIBLE	
	3	1	**111-8314**	6	BRACKET AS	
	4	1	**115-1024**	1	BRACKET AS (RH)	
	5	1	**115-1025**	1	BRACKET AS (LH)	
					(EACH BRACKET AS INCLUDES)	
		1	**1F-0750**	3	NUT-WELD (3/8-16-THD)	
	6	1	**129-8331**	2	PLATE AS	
	7	1	**139-2116**	1	SWITCH AS-TOGGLE (UNDERHOOD SERVICE LIGHT)	
		1	**3E-3371**	1	WEDGE-RECEPTACLE LOCK (3-PIN)	
		1	**102-8803**	1	KIT-RECEPTACLE (3-PIN)	
					(INCLUDES RECEPTACLE AS & WEDGE)	
		1	**6T-3631**	2	NUT-HEX (15/32-32-THD)	
		1	**6T-3632**	1	LOCKWASHER	
		1	**6T-3633**	1	RING-LOCKING	
		1	**186-3735**	3	PIN-CONNECTOR (16-GA TO 18-GA)	
	8	1	**167-1884**	6	GUARD	
	9	1	**167-2171**	2	HARNESS AS-FRONT LIGHTING (CYLINDER)	
					(EACH INCLUDES)	
		1	**102-8802**	1	KIT-RECEPTACLE (2-PIN)	
					(INCLUDES RECEPTCLE AS & WEDGE)	
		1	**155-2270**	1	KIT-CONNECTING PLUG (2-PIN)	
					(INCLUDES PLUG AS, WEDGE, & INTERFACE SEAL)	
	10	1	**172-4869**	2	BRACKET	
	11	1	**185-9607**	2	HARNESS AS-LIGHTING (ROPS)	
					(EACH INCLUDES)	
		1	**102-8804**	1	KIT-RECEPTACLE (4-PIN)	
					(INCLUDES RECEPTACLE AS & WEDGE)	
		1	**155-2270**	2	KIT-CONNECTING PLUG (2-PIN)	
					(EACH INCLUDES PLUG AS, WEDGE, & INTERFACE SEAL)	
B	12	1	**215-3662**	2	SPACER (22.2X50.8X31.8-MM THK)	
	13	1	**222-7885**	1	SWITCH AS-ROCKER (REAR FLOODLIGHTS)	
	14	1	**237-7308**	1	BRACKET	
Y	15	1	**147-0319**	6	LAMP GP-FLOOD (24-VOLT, SUSPENDED MOUNT)	186
Y	16	1	**219-6487**	1	LAMP GP-FLOOD (24-VOLT, SUSPENDED MOUNT)	188
	17	1	**4D-7794**	4	CLIP	
	18	1	**5M-3062**	6	BOLT (3/8-16X0.75-IN)	
	19	1	**5P-1075**	56	WASHER-HARD (10.2X22.5X3-MM THK)	
	20	1	**5P-2955**	6	BOLT (5/16-18X2.5-IN)	
	21	1	**5P-9085**	2	CLIP	
	22	1	**5S-7379**	4	BOLT (3/8-16X0.875-IN)	
	23	1	**6H-4005**	4	GROMMET	
	24	1	**6K-4934**	4	CLIP (SLOT)	
	25	1	**6K-4935**	4	CLIP (TAB)	
	26	1	**6V-8189**	6	NUT (5/16-18-THD)	
	27	1	**6V-8801**	32	NUT (3/8-16-THD)	
M	28	1	**7X-2562**	4	BOLT (M20X2.5X45-MM)	
M	29	1	**7X-2564**	2	BOLT (M20X2.5X90-MM)	
	30	1	**8P-8540**	2	GROMMET	
	31	1	**8T-4123**	2	WASHER-PLATED (22X35X3.5-MM THK)	
M	32	1	**8T-4133**	4	NUT (M10X1.5 THD)	
M	33	1	**8T-4136**	14	BOLT (M10X1.5X25-MM)	
	34	1	**8T-4224**	12	WASHER-HARD (8.8X16X2-MM THK)	

235-6337 **LIGHTING GP-FLOOD** *(contd.)* **i02456075**

NOTE	REF NO	GRAPHIC REF	PART NUMBER	QTY	PART NAME 1 2 3 4 5 6 (PRODUCT LEVEL)	SEE PAGE
	35	1	**8T-4896**	4	WASHER-HARD (10.2X18.5X2.5-MM THK)	
	36	1	**8T-5439**	4	WASHER (21.5X45X6-MM THK)	
	37	1	**8T-7934**	2	WASHER-HARD (11X21X5-MM THK)	

B-USE AS REQUIRED
M-METRIC PART
Y-SEPARATE ILLUSTRATION

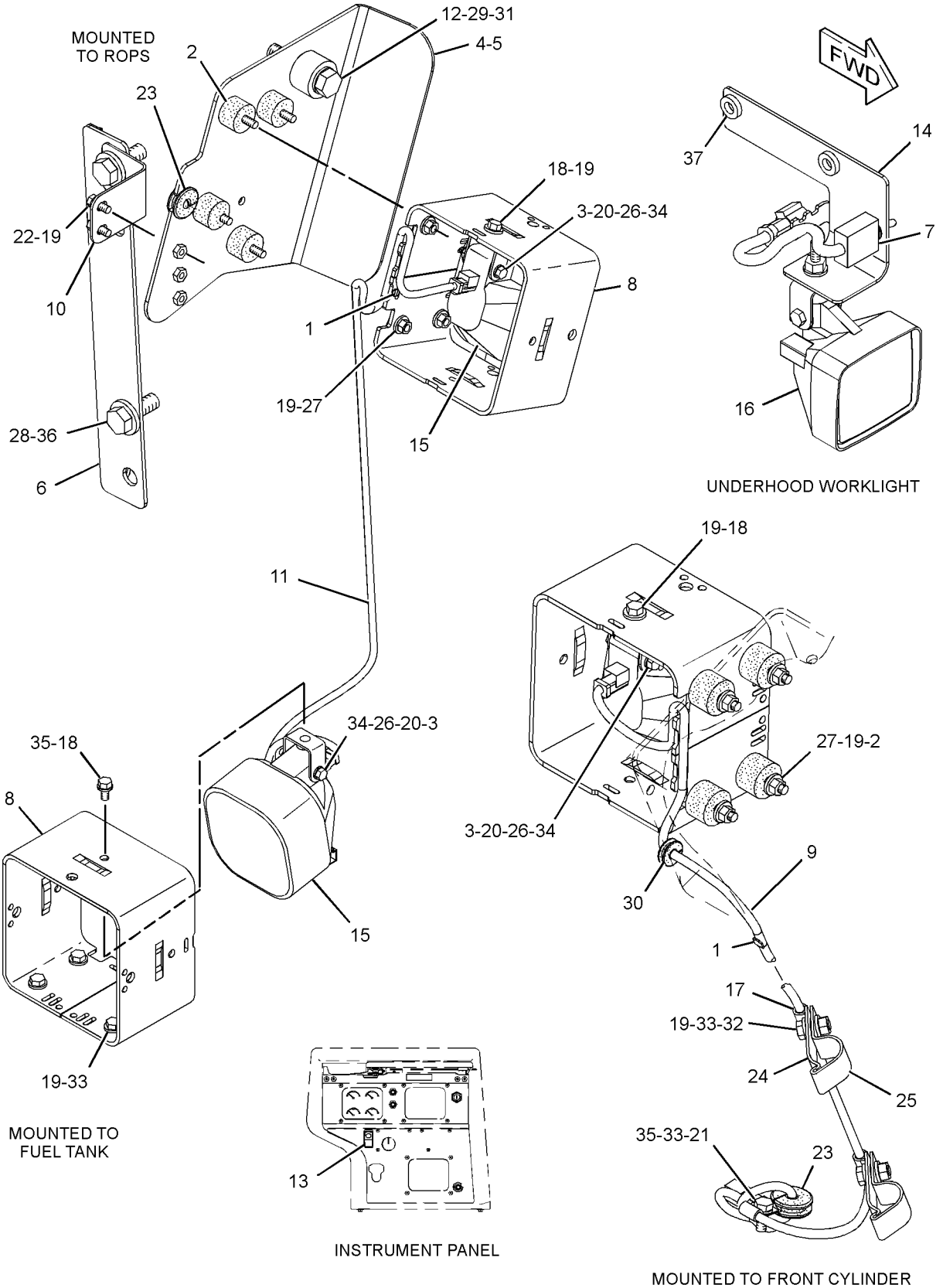

GRAPHIC #1 **<END>** g01209585

ELECTRICAL AND STARTING SYSTEM

235-6338 LIGHTING GP-FLOOD–11-LAMP

S/N: JDL1-UP; GMT1-UP
CONSTRUCTION
CANNOT BE USED WITH PAT BLADE
AN ATTACHMENT

SMCS-1434 **i02455946**

NOTE	REF NO	GRAPHIC REF	PART NUMBER	QTY	PART NAME 1 2 3 4 5 6 (PRODUCT LEVEL)	SEE PAGE
	1	1	**7K-1181**	36	STRAP-CABLE	
	2	1	**9W-4361**	16	MOUNT-FLEXIBLE	
	3	1	**111-8314**	6	BRACKET AS	
	4	1	**115-1024**	1	BRACKET AS (RH)	
	5	1	**115-1025**	1	BRACKET AS (LH)	
					(EACH BRACKET AS INCLUDES)	
		1	**1F-0750**	3	NUT-WELD (3/8-16-THD)	
	6	1	**129-8331**	2	PLATE AS	
	7	1	**139-2116**	1	SWITCH AS-TOGGLE (UNDERHOOD SERVICE LIGHT)	
		1	**3E-3371**	1	WEDGE-RECEPTACLE LOCK (3-PIN)	
		1	**102-8803**	1	KIT-RECEPTACLE (3-PIN)	
					(INCLUDES RECEPTACLE AS & WEDGE)	
		1	**6T-3631**	2	NUT-HEX (15/32-32-THD)	
		1	**6T-3632**	1	LOCKWASHER	
		1	**6T-3633**	1	RING-LOCKING	
		1	**186-3735**	3	PIN-CONNECTOR (16-GA TO 18-GA)	
B	8	1	**151-6689**	2	SPACER (21X50X31.7-MM THK)	
Y	9	1	*152-8427*	2	LIGHTING GP-FLOOD (2-LAMP)	189
	10	1	**167-1884**	6	GUARD	
	11	1	**172-4869**	2	BRACKET	
	12	1	**175-0451**	2	HARNESS AS-LIGHTING (REAR) (ROPS)	
					(EACH INCLUDES)	
		1	**102-8804**	1	KIT-RECEPTACLE (4-PIN)	
					(INCLUDES RECEPTACLE AS & WEDGE)	
		1	**155-2270**	3	KIT-CONNECTING PLUG (2-PIN)	
					(EACH INCLUDES PLUG AS, WEDGE, & INTERFACE SEAL)	
	13	1	**175-0452**	2	HARNESS AS-LIGHTING (FRONT) (CYLINDER)	
					(EACH INCLUDES)	
		1	**102-8802**	1	KIT-RECEPTACLE (2-PIN)	
					(INCLUDES RECEPTACLE AS & WEDGE)	
		1	**155-2270**	2	KIT-CONNECTING PLUG (2-PIN)	
					(EACH INCLUDES PLUG AS, WEDGE, & INTERFACE SEAL)	
	14	1	**205-8900**	2	GUARD AS	
	15	1	**222-7885**	1	SWITCH AS-ROCKER (REAR FLOODLIGHTS)	
	16	1	**237-7308**	1	BRACKET	
Y	17	1	**147-0319**	6	LAMP GP-FLOOD (24-VOLT, SUSPENDED MOUNT)	186
Y	18	1	**219-6487**	1	LAMP GP-FLOOD (24-VOLT, SUSPENDED MOUNT)	188
	19	1	**4D-7794**	4	CLIP	
	20	1	**4P-7581**	2	CLIP	
	21	1	**5M-3062**	6	BOLT (3/8-16X0.75-IN)	
	22	1	**5P-1075**	52	WASHER-HARD (10.2X22.5X3-MM THK)	
	23	1	**5P-2955**	6	BOLT (5/16-18X2.5-IN)	
	24	1	**5P-9085**	2	CLIP	
	25	1	**5S-7379**	4	BOLT (3/8-16X0.875-IN)	
	26	1	**6H-4005**	4	GROMMET	
	27	1	**6K-4934**	4	CLIP (SLOT)	
	28	1	**6K-4935**	4	CLIP (TAB)	
	29	1	**6V-8189**	6	NUT (5/16-18-THD)	
	30	1	**6V-8801**	32	NUT (3/8-16-THD)	
M	31	1	**7X-2562**	4	BOLT (M20X2.5X45-MM)	
M	32	1	**7X-2564**	2	BOLT (M20X2.5X90-MM)	
	33	1	**8P-8540**	4	GROMMET	

235-6338 **LIGHTING GP-FLOOD** *(contd.)* **i02455946**

NOTE	REF NO	GRAPHIC REF	PART NUMBER	QTY	PART NAME 1 2 3 4 5 6 (PRODUCT LEVEL)	SEE PAGE
	34	1	**8T-4123**	2	WASHER-PLATED (22X35X3.5-MM THK)	
M	35	1	**8T-4133**	4	NUT (M10X1.5 THD)	
M	36	1	**8T-4136**	14	BOLT (M10X1.5X25-MM)	
	37	1	**8T-4224**	12	WASHER-HARD (8.8X16X2-MM THK)	
	38	1	**8T-4896**	8	WASHER-HARD (10.2X18.5X2.5-MM THK)	
	39	1	**8T-5439**	4	WASHER (21.5X45X6-MM THK)	
	40	1	**8T-7934**	2	WASHER-HARD (11X21X5-MM THK)	

B-USE AS REQUIRED
M-METRIC PART
Y-SEPARATE ILLUSTRATION

235-6338 **LIGHTING GP-FLOOD** *(contd.)* **i02455946**

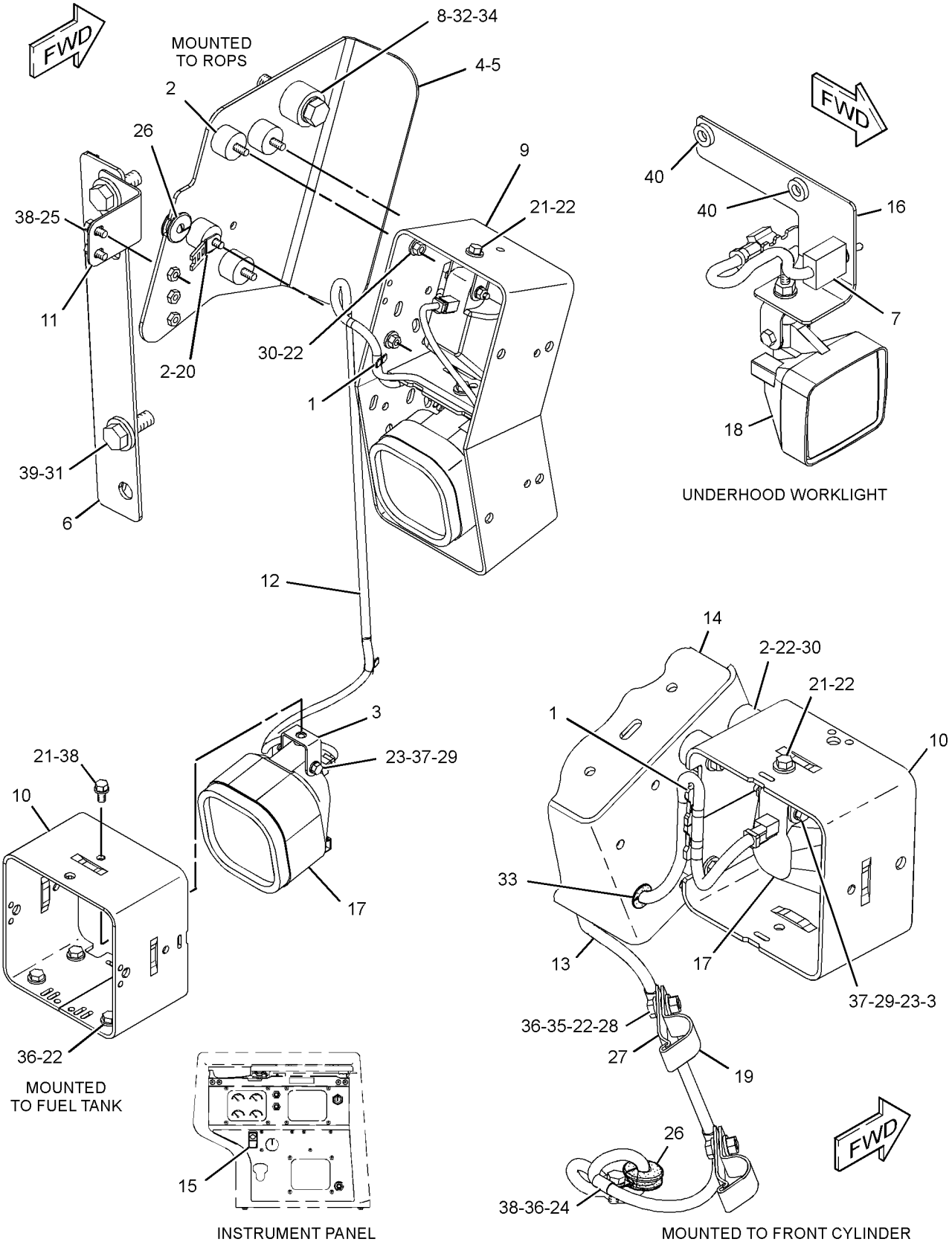

GRAPHIC #1 **<END>** g01205854

235-6340 LIGHTING GP-FLOOD–9-LAMP

S/N: JDL1-UP; GMT1-UP
SWEEPS MOUNTED, FUEL TANK MOUNTED, UNDERHOOD SERVICE
AN ATTACHMENT

SMCS-1434 **i02469498**

NOTE	REF NO	GRAPHIC REF	PART NUMBER	QTY	PART NAME 1 2 3 4 5 6 (PRODUCT LEVEL)	SEE PAGE
B	1	1	**7K-1181**	40	STRAP-CABLE	
	2	1	**9W-4361**	24	MOUNT-FLEXIBLE	
	3	1	**111-8314**	8	BRACKET AS	
	4	1	**129-8331**	2	PLATE AS	
	5	1	**139-2116**	1	SWITCH AS-TOGGLE (UNDERHOOD SERVICE LIGHT)	
		1	**3E-3371**	1	WEDGE-RECEPTACLE LOCK (3-PIN)	
		1	**102-8803**	1	KIT-RECEPTACLE (3-PIN)	
					(INCLUDES RECEPTACLE AS & WEDGE)	
		1	**6T-3631**	2	NUT-HEX (15/32-32-THD)	
		1	**6T-3632**	1	LOCKWASHER	
		1	**6T-3633**	1	RING-LOCKING	
		1	**186-3735**	3	PIN-CONNECTOR (16-GA TO 18-GA)	
	6	1	**167-1884**	6	GUARD	
	7	1	**168-8656**	2	PLATE	
	8	1	**186-0636**	2	HARNESS AS-LIGHTING (REAR) (SIDE FLOODLIGHTS)	
					(EACH INCLUDES)	
		1	**102-8804**	1	KIT-RECEPTACLE (4-PIN)	
					(INCLUDES RECEPTACLE AS & WEDGE)	
		1	**155-2270**	2	KIT-CONNECTING PLUG (2-PIN)	
					(EACH INCLUDES PLUG AS, WEDGE, & INTERFACE SEAL)	
	9	1	**213-4504**	2	GUARD AS	
	10	1	**222-7885**	1	SWITCH AS-ROCKER (REAR FLOODLIGHTS)	
	11	1	**234-5846**	2	PLATE	
	12	1	**237-7308**	1	BRACKET	
Y	13	1	**147-0319**	6	LAMP GP-FLOOD (24-VOLT, SUSPENDED MOUNT)	186
Y	14	1	**153-2073**	2	LAMP GP-FLOOD (24-VOLT, VERTICAL MOUNT)	187
	15	1	**168-8655**	2	HARNESS AS-LIGHTING (FRONT FLOODLIGHTS)	
					(EACH INCLUDES)	
		1	**102-8802**	1	KIT-RECEPTACLE (2-PIN)	
					(INCLUDES RECEPTACLE AS & WEDGE)	
		1	**155-2270**	2	KIT-CONNECTING PLUG (2-PIN)	
					(EACH INCLUDES PLUG AS, WEDGE, & INTERFACE SEAL)	
Y	16	1	**219-6487**	1	LAMP GP-FLOOD (24-VOLT, SUSPENDED MOUNT)	188
	17	1	**4L-6454**	2	BOLT (3/8-16X1-IN)	
	18	1	**5M-3062**	6	BOLT (3/8-16X0.75-IN)	
	19	1	**5P-1075**	72	WASHER-HARD (10.2X22.5X3-MM THK)	
	20	1	**5P-2955**	8	BOLT (5/16-18X2.5-IN)	
	21	1	**5P-9085**	2	CLIP	
	22	1	**6H-4005**	2	GROMMET	
	23	1	**6V-8189**	8	NUT (5/16-18-THD)	
	24	1	**6V-8801**	48	NUT (3/8-16-THD)	
M	25	1	**7X-2562**	4	BOLT (M20X2.5X45-MM)	
M	26	1	**8T-4136**	18	BOLT (M10X1.5X25-MM)	
M	27	1	**8T-4195**	8	BOLT (M10X1.5X30-MM)	
	28	1	**8T-4224**	16	WASHER-HARD (8.8X16X2-MM THK)	
	29	1	**8T-4896**	10	WASHER-HARD (10.2X18.5X2.5-MM THK)	
	30	1	**8T-5439**	4	WASHER (21.5X45X6-MM THK)	
	31	1	**8T-7934**	2	WASHER-HARD (11X21X5-MM THK)	

B-USE AS REQUIRED
M-METRIC PART
Y-SEPARATE ILLUSTRATION

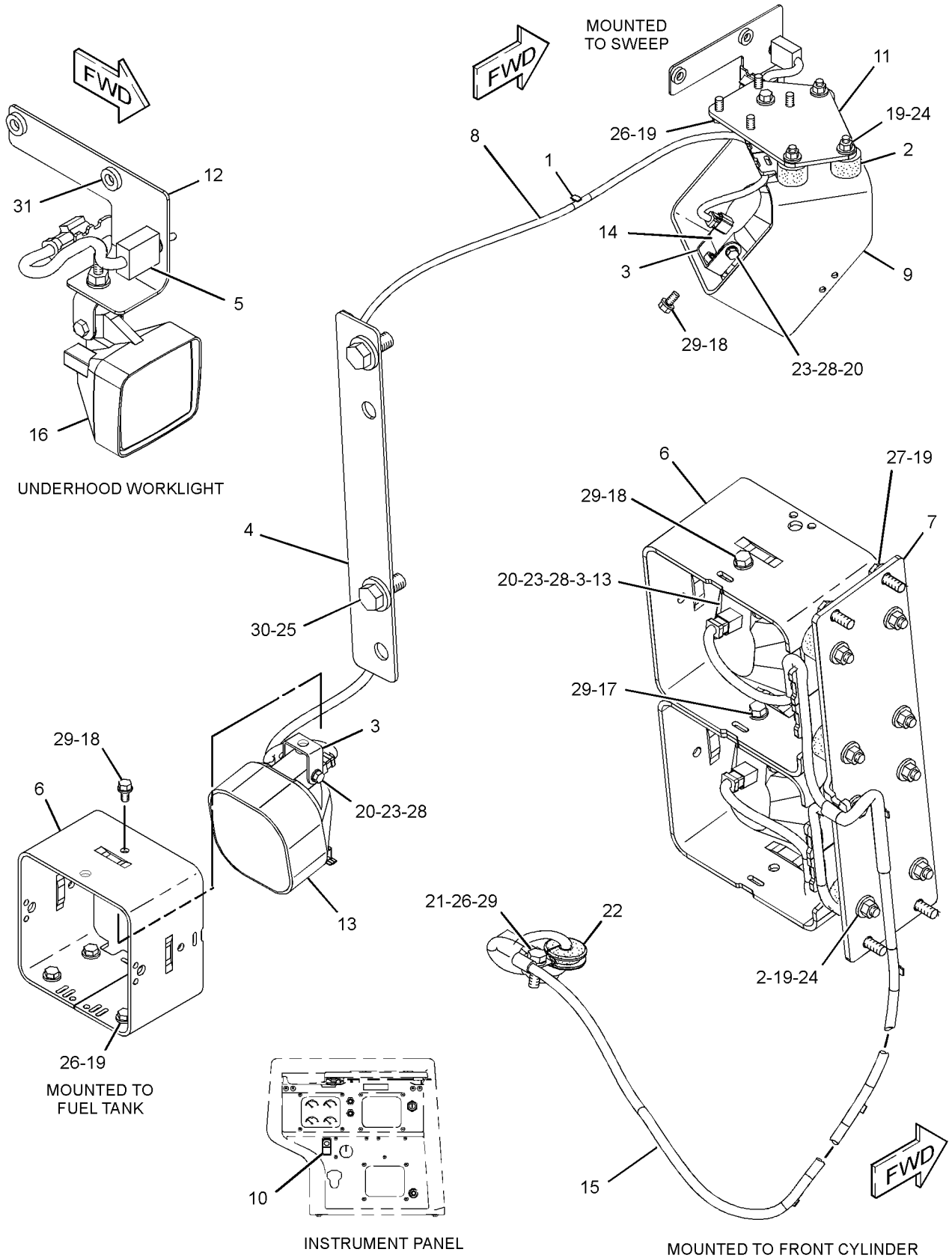

GRAPHIC #1 **<END>** g01209990

242-8409 MODULE & MTG GP-GRADE CONTROL

S/N: JDL1-UP; GMT1-UP
PART OF 239-5120 INSTALLATION GP-GRADE CONTROL
AN ATTACHMENT

SMCS-7220 **i02454129**

NOTE	REF NO	GRAPHIC REF	PART NUMBER	QTY	PART NAME 1 2 3 4 5 6 (PRODUCT LEVEL)	SEE PAGE
	1	1	**092-4924**	3	PLUG-BUTTON	
	2	1	**154-5629**	1	ASHTRAY AS	
	3	1	**226-9169**	1	MODULE GP-POWER SUPPLY	
	4	1	**242-8398**	1	COVER AS-ACCESS	
		1	**114-9125**	2	HOLDER-CUP	
	5	1	**242-8399**	1	PANEL-ACOUSTICAL	
	6	1	**252-6948**	1	SHROUD AS	
	7	1	**265-7316**	1	PANEL AS-INSTRUMENT	
		1	**7T-7388**	2	GUIDE	
	8	1	**269-3364**	6	PLUG	
M	9	1	**5C-9553**	4	BOLT (M6X1X16-MM)	
	10	1	**9X-8256**	4	WASHER (6.6X12X2-MM THK)	

M-METRIC PART

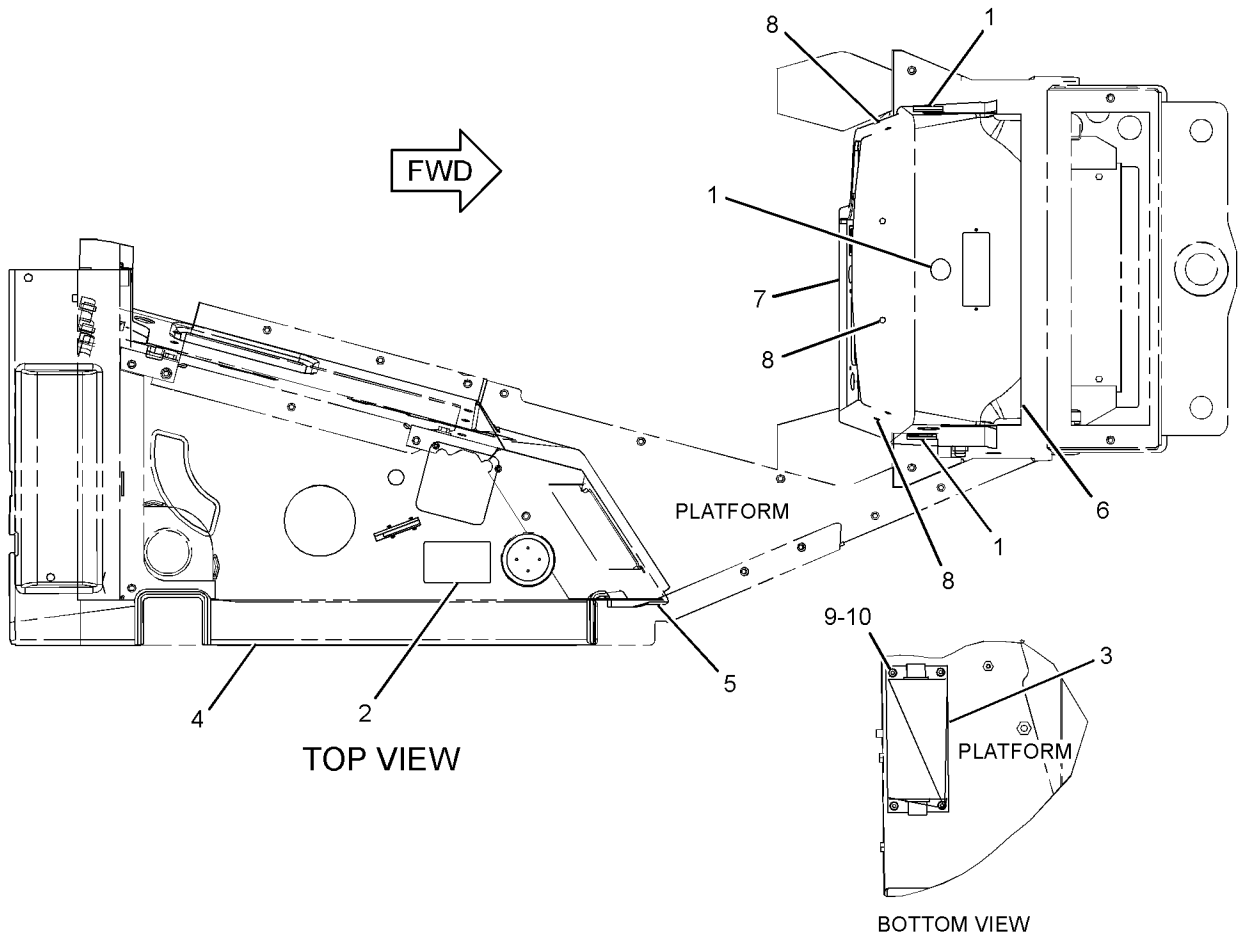

GRAPHIC #1 **<END>** g01210717

ELECTRICAL AND STARTING SYSTEM

240-3464 MOUNTING GP-CONNECTOR

S/N: JDL1-UP; GMT1-UP
PART OF 236-5880 INSTALLATION AR-GRADE CONTROL
AN ATTACHMENT

SMCS-1408 **i02454118**

NOTE	REF NO	GRAPHIC REF	PART NUMBER	QTY	PART NAME 1 2 3 4 5 6 (PRODUCT LEVEL)	SEE PAGE
	1	1	**236-8826**	3	BOSS	
	2	1	**240-3469**	1	COVER AS (RH)	
	3	1	**240-3470**	1	COVER AS (LH)	
	4	1	**246-5960**	1	BOX AS (LH)	
	5	1	**246-5961**	1	BOX AS (RH)	
M	6	1	**188-9644**	3	SCREW-FLAT HEAD (M8X1.25X25-MM)	
	7	1	**7X-7729**	4	WASHER (11X25X3-MM THK)	
M	8	1	**8T-4136**	4	BOLT (M10X1.5X25-MM)	

M-METRIC PART

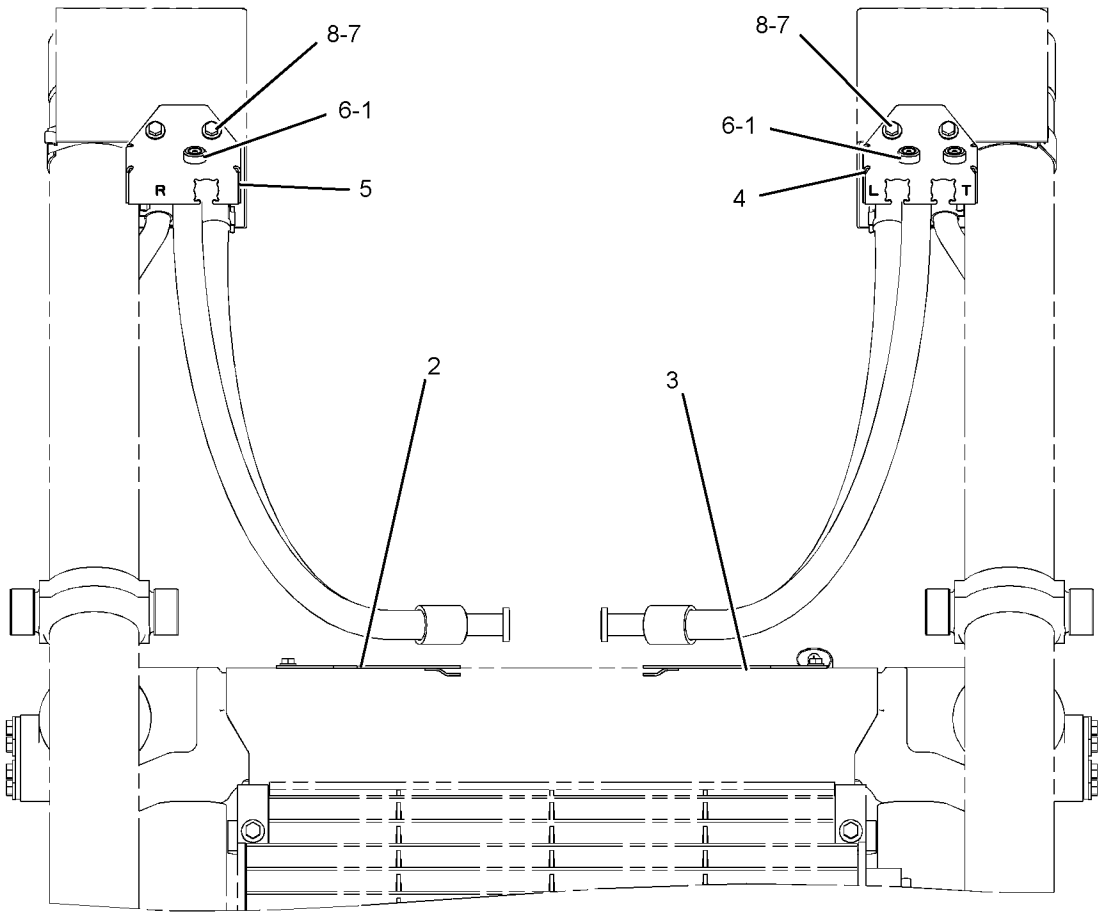

FRONT VIEW

GRAPHIC #1 **<END>** g01210766

ELECTRICAL AND STARTING SYSTEM

226-9674 PANEL GP-FUSE

S/N: JDL1-UP; GMT1-UP

PART OF 222-1142 WIRING GP-PLATFORM

SMCS-1417 **i02431365**

NOTE	REF NO	GRAPHIC REF	PART NUMBER	QTY	PART NAME 1 2 3 4 5 6 (PRODUCT LEVEL)	SEE PAGE
	1	1	**7K-1181**	4	STRAP-CABLE	
	2	1	**9W-1441**	20	FUSE (15-AMPERE)	
	3	1	**9W-1442**	2	FUSE (10-AMPERE)	
	4	1	**9W-1446**	2	FUSE (20-AMPERE)	
Y	5	1	**125-1302**	1	SWITCH GP-MAGNETIC (24-VOLT) (START RELAY)	234
	6	1	**172-4863**	1	JUNCTION BLOCK	
	7	1	**223-8173**	1	HOLDER AS-FUSE	
	8	1	**226-9675**	1	BLOCK AS (FUSE)	
		1	**225-8553**	1	BLOCK AS-FUSE	
		1	**151-1398**	2	KIT-TERMINAL (LOCK)	
		1	**227-0912**	1	BLOCK AS-FUSE	
		1	**1H-3244**	2	LOCKWASHER	
		1	**6V-8185**	2	NUT (1/4-20-THD)	
		1	**8T-4205**	2	WASHER-HARD (7.2X14.5X2-MM THK)	
		1	**237-0049**	1	HARNESS AS-PANEL	
		1	**102-8802**	2	KIT-RECEPTACLE (2-PIN)	
					(EACH INCLUDES RECEPTACLE AS & WEDGE)	
		1	**155-2270**	2	KIT-CONNECTING PLUG (2-PIN)	
					(EACH INCLUDES PLUG AS, WEDGE, & INTERFACE SEAL)	
		1	**214-4208**	1	RECEPTACLE AS-CONNECTOR (70-PIN)	
	9	1	**237-0048**	1	PANEL AS	
	10	1	**237-0050**	1	STRAP	
	11	1	**237-0051**	1	STRAP	
	12	1	**237-0052**	1	STRAP	
	13	1	**237-0053**	1	STRAP	
	14	1	**237-0225**	1	STRAP	
	15	1	**238-2014**	1	WIRE AS	
	16	1	**239-3354**	1	CAP AS	
D		1	**5P-5677**		WIRE (18-GA, BLACK) (0.3-M)	
E		1	**125-7875**		TUBE-HEAT SHRINK (3-CM)	
		1	**232-3402**	1	FILM-WARNING (ELECTRICAL SHOCK)	
	17	1	**239-8107**	1	FUSE (175-AMPERE)	
	18	1	**240-8917**	1	FILM-CIRCUIT BREAKER	
Y	19	1	**241-8368**	2	SWITCH GP-MAGNETIC (24-VOLT) (MAIN RELAY)	235
M	20	1	**5C-2890**	4	NUT (M6X1-THD)	
	21	1	**6T-3643**	1	CIRCUIT BREAKER AS (15-AMPERE) (FAN BLOWER MOTOR)	
		1	**6V-8376**	2	SCREW-MACHINE (8-32X0.25-IN)	
		1	**9B-7233**	2	LOCKWASHER	
	22	1	**6V-5645**	4	SCREW-MACHINE (10-32X0.87-IN)	
M	23	1	**6V-5683**	7	BOLT (M6X1X16-MM)	
	24	1	**7U-4892**	2	SCREW (8-32X0.75-IN)	
M	25	1	**7X-2548**	2	BOLT (M12X1.75X16-MM)	
M	26	1	**8T-3992**	4	SCREW (M6X1X12-MM)	
	27	1	**8T-4121**	2	WASHER-HARD (11X21X2.5-MM THK)	
M	28	1	**8T-4191**	2	BOLT (M10X1.5X16-MM)	
M	29	1	**8T-4199**	4	BOLT (M8X1.25X12-MM)	
	30	1	**8T-4223**	2	WASHER-HARD (13.5X25.5X3-MM THK)	
	31	1	**8T-4224**	4	WASHER-HARD (8.8X16X2-MM THK)	
	32	1	**9X-8256**	4	WASHER (6.6X12X2-MM THK)	

D-ORDER BY THE METER
E-ORDER BY THE CENTIMETER
M-METRIC PART
Y-SEPARATE ILLUSTRATION

226-9674 **PANEL GP-FUSE** *(contd.)* **i02431365**

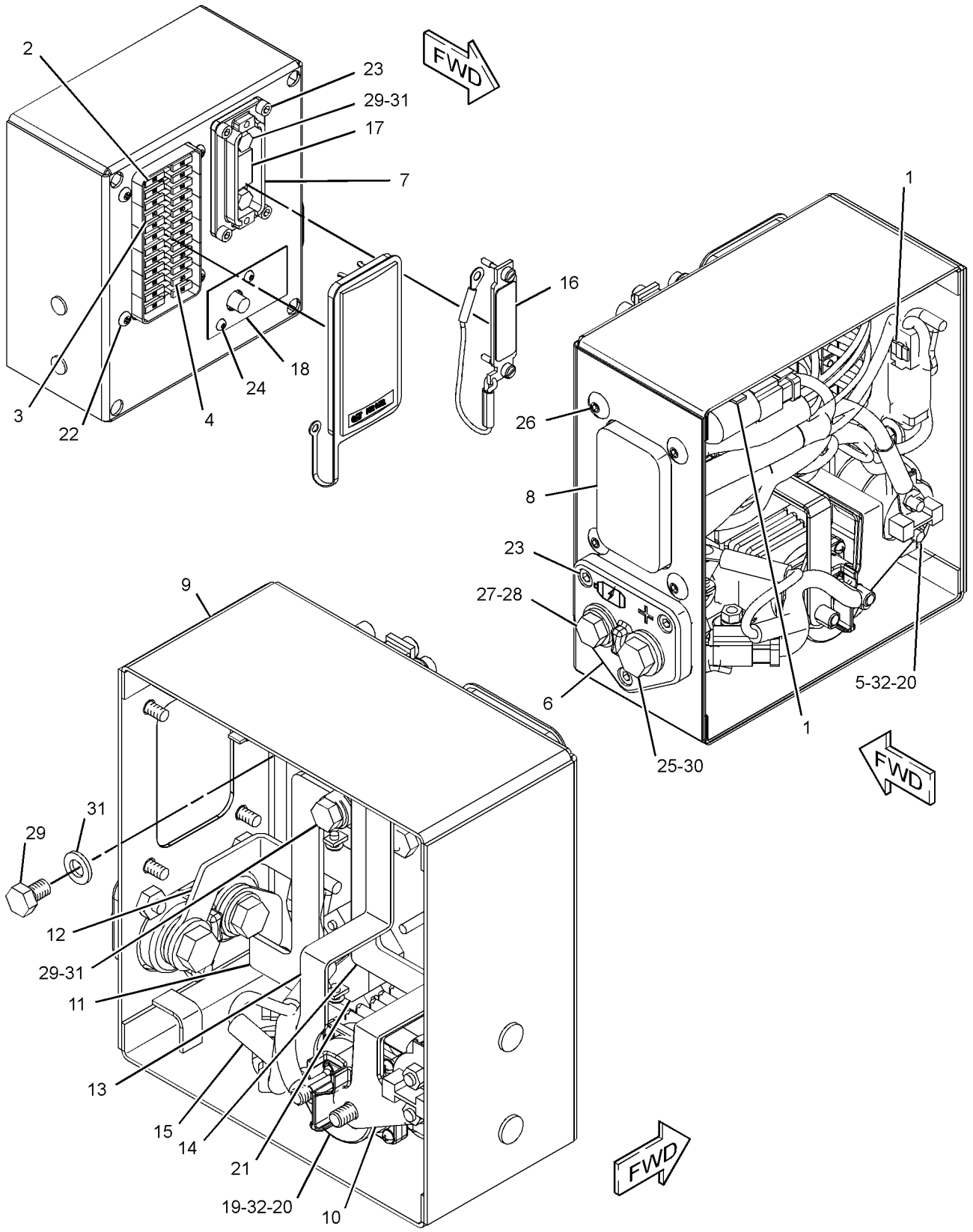

(HARNESS REMOVED FOR CLARITY)

GRAPHIC #1 **<END>** g01210774

231-1978 SENSOR GP-ENGINE

S/N: THX1-UP

PART OF 261-4290, 261-4291, 261-4293, 261-4294, 261-4295, 261-4297 ENGINE AR

ALSO AN ATTACHMENT

SMCS-1000, 1718, 1906, 1907, 1912, 1917, 1923, 1924, 1925, 1928, 1929, 7400, 7422 **i02431632**

NOTE	REF NO	GRAPHIC REF	PART NUMBER	QTY	PART NAME 1 2 3 4 5 6 (PRODUCT LEVEL)	SEE PAGE
	1	1	**9X-0262**	1	ADAPTER	
Y	2	1	*274-7395*	1	SENSOR GP-TEMPERATURE (AIR INLET MANIFOLD)	219
Y	3	1	*274-7396*	1	SENSOR GP-TEMPERATURE (WATER, COOLANT)	220
Y	4	1	*197-8393*	1	SENSOR GP-PRESSURE (ATMOSPHERIC AIR)	209
Y	5	1	*197-8394*	1	SENSOR GP-PRESSURE (ENGINE OIL)	210
Y	6	1	*210-1747*	1	SENSOR GP-PRESSURE (TURBOCHARGER OUTLET)	211
Y	7	1	*236-6220*	1	SENSOR GP-PRESSURE (INJECTION ACTUATION)	213
Y	8	1	*236-6221*	1	SENSOR GP-SPEED (ENGINE SPEED, TIMING)	217
	9	1	**3E-4352**	1	WASHER-HARD (8.8X20.5X2.5-MM THK)	
M	10	1	**6V-3940**	1	BOLT (M8X1.25X25-MM)	
	11	1	**6V-5048**	1	SEAL-O-RING	
	12	1	**6V-5049**	1	SEAL-O-RING	
	13	1	**9X-0261**	1	ADAPTER	

M-METRIC PART
Y-SEPARATE ILLUSTRATION

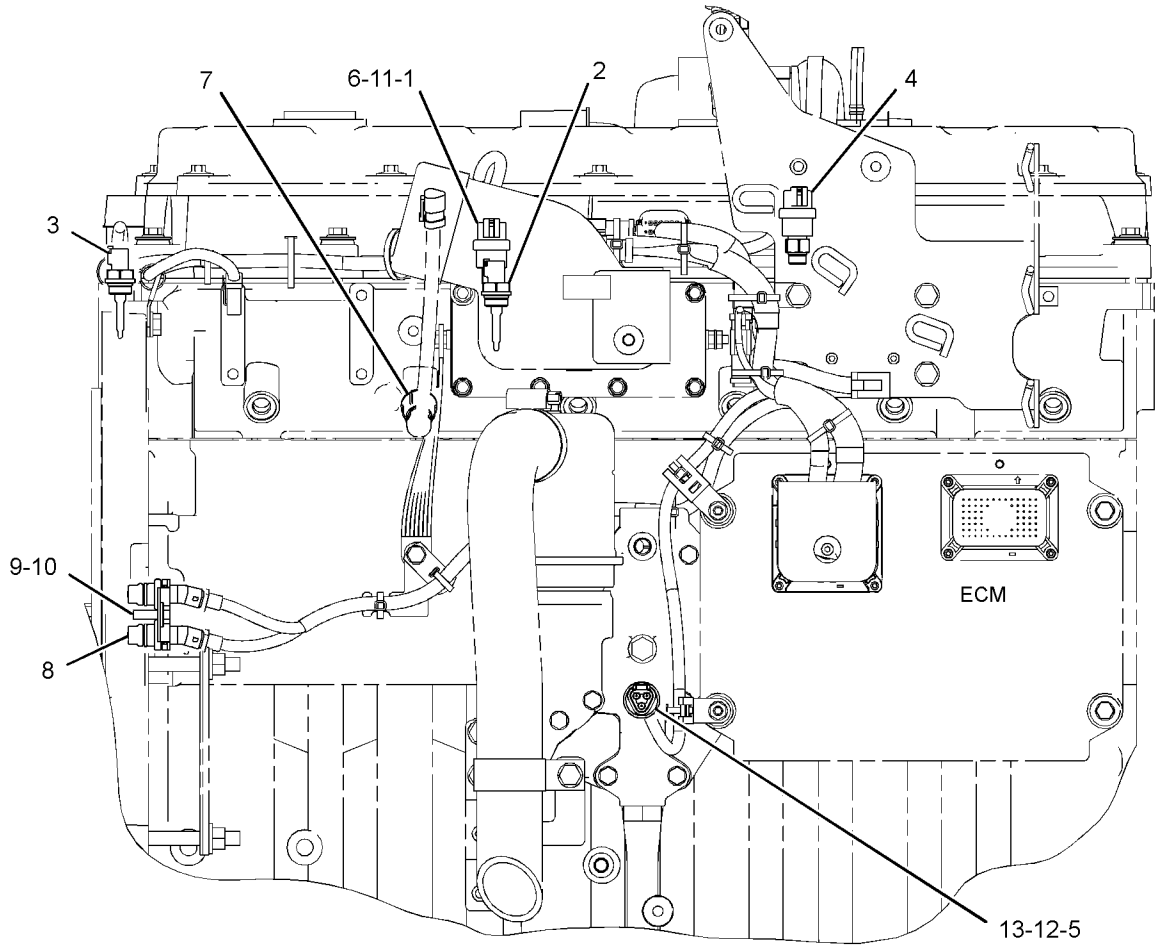

LEFT SIDE VIEW

GRAPHIC #1 **<END>** g01199708

160-2443 SENSOR GP-POSITION–SERVICE BRAKE PEDAL

S/N: JDL1-UP; GMT1-UP
ROTARY
PART OF 224-2791 PEDAL GP-GOVERNOR & BRAKE

SMCS-1905, 1911 **i01431988**

NOTE	REF NO	GRAPHIC REF	PART NUMBER	QTY	PART NAME 1 2 3 4 5 6 (PRODUCT LEVEL)	SEE PAGE
	1	1	**102-8803**	1	KIT-RECEPTACLE (3-PIN)	
					(INCLUDES RECEPTACLE AS & WEDGE)	
	2	1	**8T-8729**	3	PIN-CONNECTOR	
	3	1	**3E-3371**	1	WEDGE-RECEPTACLE LOCK (3-PIN)	

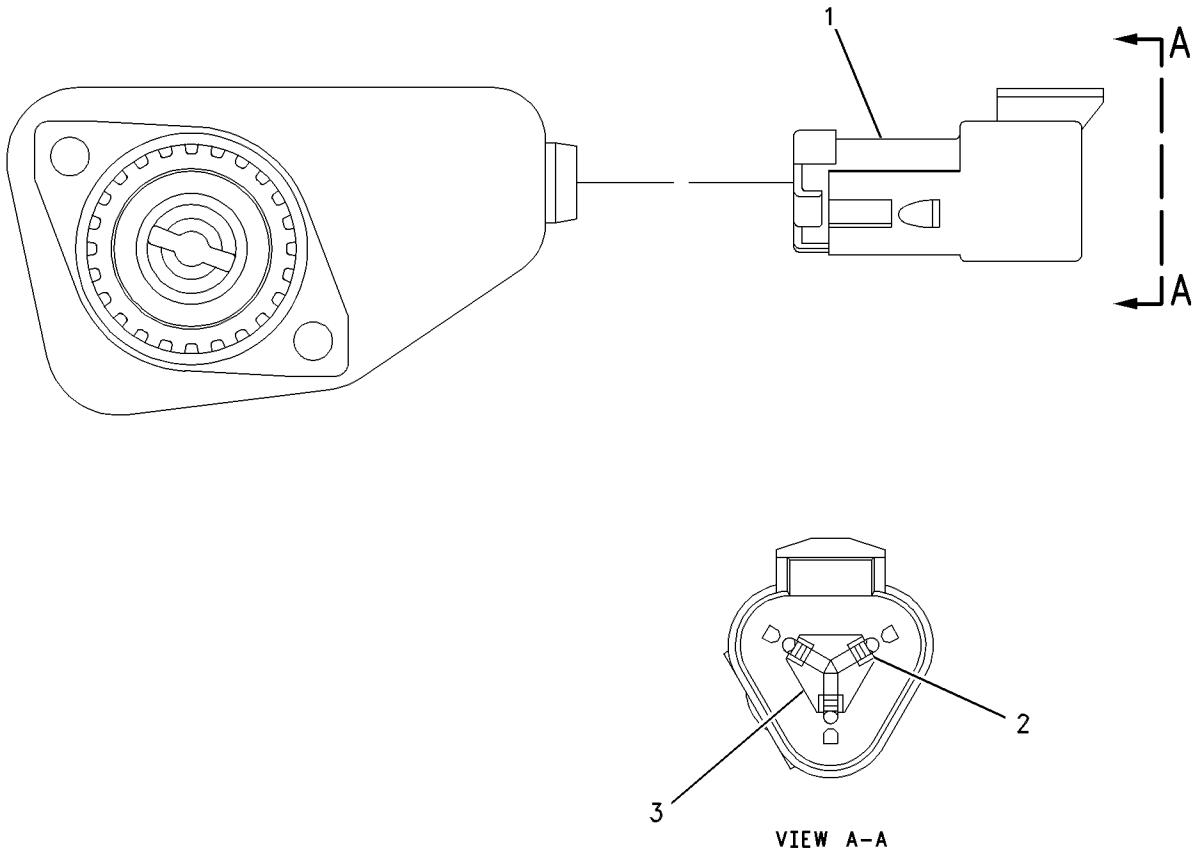

GRAPHIC #1 **<END>** g00637818

224-5530 SENSOR GP-POSITION—DECELERATOR PEDAL

S/N: JDL1-UP; GMT1-UP

PART OF 224-2791 PEDAL GP-GOVERNOR & BRAKE

SMCS-1905, 1911 **i02239742**

NOTE	REF NO	GRAPHIC REF	PART NUMBER	QTY	PART NAME 1 2 3 4 5 6 (PRODUCT LEVEL)	SEE PAGE
	2	1	**102-8803**	1	KIT-RECEPTACLE (3-PIN)	
					(INCLUDES RECEPTACLE AS & WEDGE)	
	3	1	**186-3735**	3	PIN-CONNECTOR (16-GA TO 18-GA)	
	4	1	**3E-3371**	1	WEDGE-RECEPTACLE LOCK (3-PIN)	
E	5	1	**9X-1813**		SLEEVE (13-CM)	

E-ORDER BY THE CENTIMETER

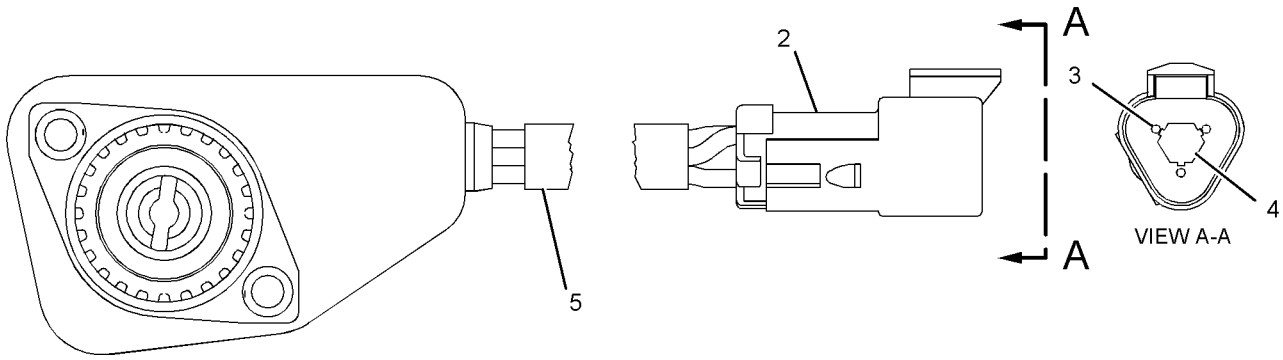

GRAPHIC #1 **<END>** g01107385

161-9926 SENSOR GP-PRESSURE–TURBOCHARGER INLET

S/N: JDL1-UP; GMT1-UP

PART OF 222-1141 BATTERY & WIRING GP

SMCS-1718, 1916, 1917, 1923, 1924, 1925 **i01426986**

NOTE	REF NO	GRAPHIC REF	PART NUMBER	QTY	PART NAME 1 2 3 4 5 6 (PRODUCT LEVEL)	SEE PAGE
E	1	1	**9X-1813**		SLEEVE (34CM)	
	2	1	**155-2260**	1	KIT-CONNECTING PLUG (3-PIN)	
					(INCLUDES PLUG AS & WEDGE)	
	3	1	**9X-3402**	1	SOCKET-CONNECTOR (16-GA TO 18-GA)	
					(FOR 16-18 GA WIRE)	
					–OR–	
		1	**126-1768**	1	SOCKET-CONNECTOR (14-GA)	
					(FOR 14 GA WIRE)	
	4	1	**3E-3368**	1	WEDGE-PLUG LOCK (3-PIN)	

E-ORDER BY THE CENTIMETER

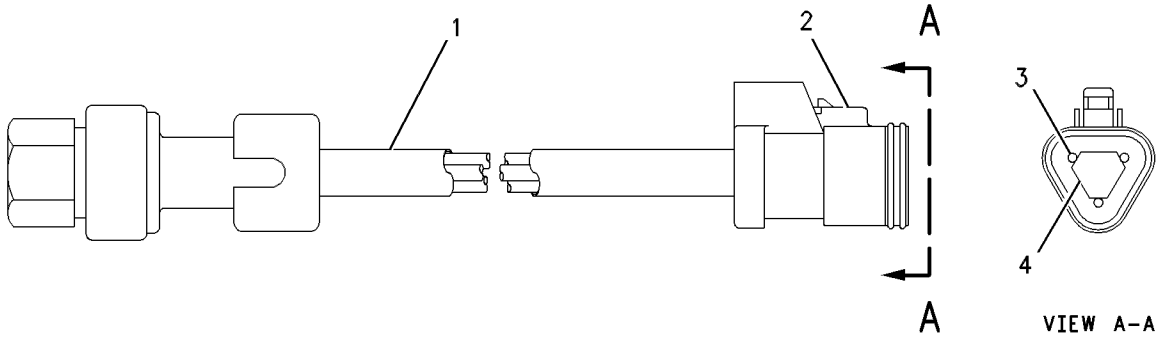

GRAPHIC #1 **<END>** g00513129

194-6725 SENSOR GP-PRESSURE–FUEL

S/N: THX1-UP
PART OF 264-2014 LINES GP-FUEL
ALSO AN ATTACHMENT

SMCS-1718, 1916, 1917, 1923, 1924, 1925 **i01681907**

NOTE	REF NO	GRAPHIC REF	PART NUMBER	QTY	PART NAME 1 2 3 4 5 6 (PRODUCT LEVEL)	SEE PAGE
BE	1	1	**9X-1813**		SLEEVE (34 CM)	
	2	1	**155-2260**	1	KIT-CONNECTING PLUG (3-PIN)	
					(INCLUDES PLUG AS AND WEDGE)	
	3	1	**180-9340**	3	SOCKET-CONNECTOR	
	4	1	**3E-3368**	1	WEDGE-PLUG LOCK (3-PIN)	

B-USE AS REQUIRED
E-ORDER BY THE CENTIMETER

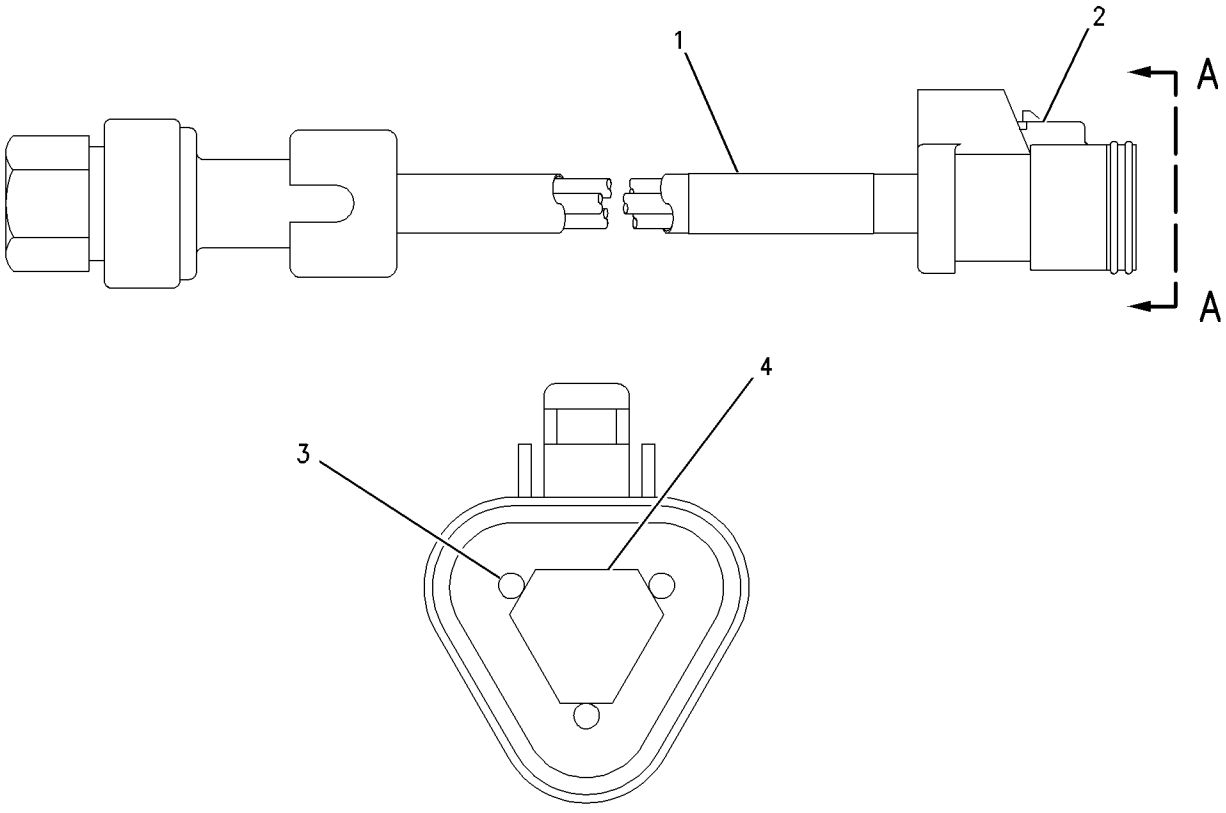

VIEW A-A

GRAPHIC #1 **<END>** g00851220

197-8393 SENSOR GP-PRESSURE–ATMOSPHERIC AIR

S/N: THX1-UP

PART OF 231-1978 SENSOR GP-ENGINE

ALSO AN ATTACHMENT

SMCS-1718, 1916, 1917, 1923, 1924, 1925 **i01855744**

NOTE	REF NO	GRAPHIC REF	PART NUMBER	QTY	PART NAME 1 2 3 4 5 6 (PRODUCT LEVEL)	SEE PAGE
	1	1	**161-1703**	1	SENSOR GP-PRESSURE	
	2	1	**6V-5049**	1	SEAL-O-RING	

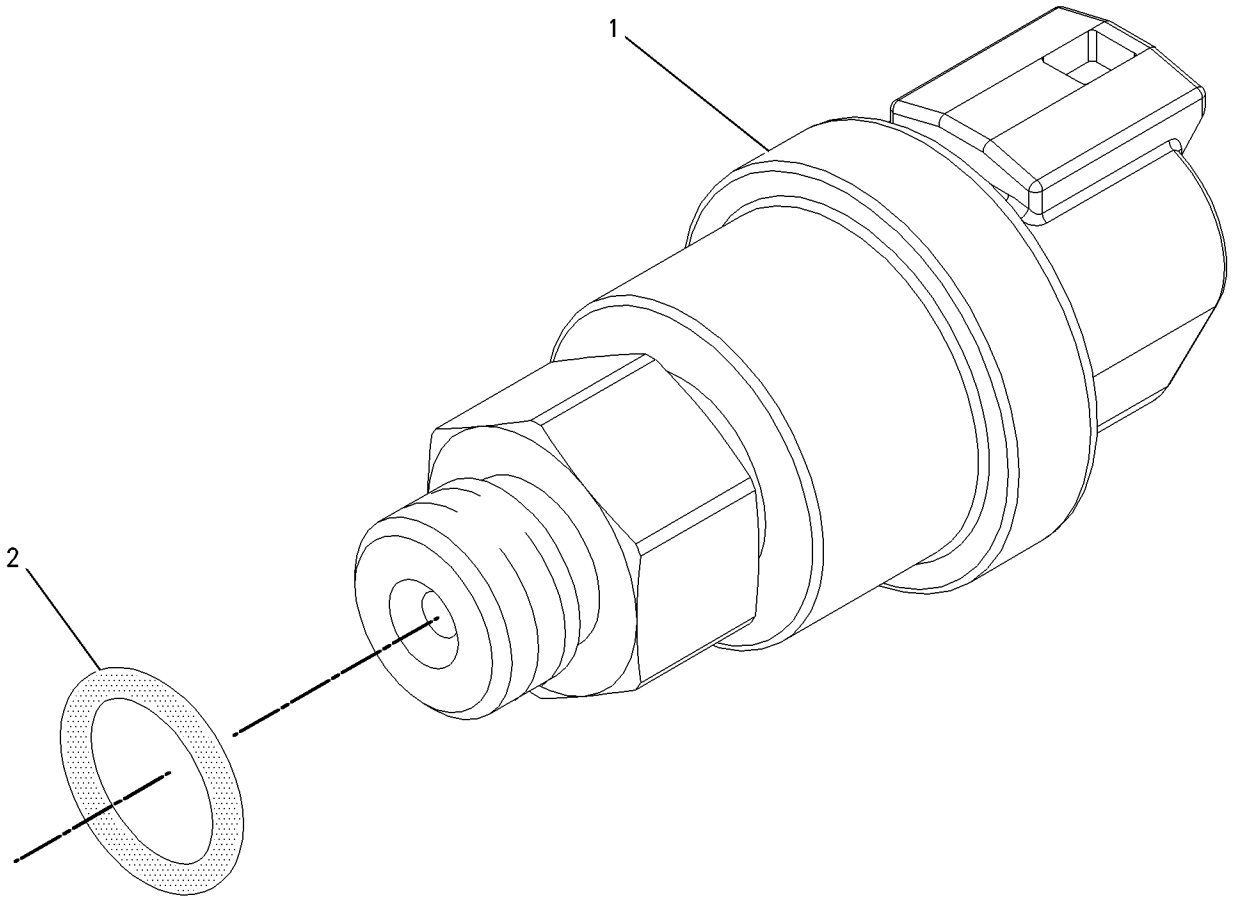

GRAPHIC #1 **<END>** g00855973

197-8394 SENSOR GP-PRESSURE–ENGINE OIL

S/N: THX1-UP

PART OF 231-1978 SENSOR GP-ENGINE

ALSO AN ATTACHMENT

SMCS-1718, 1916, 1917, 1923, 1924, 1925 **i01855745**

NOTE	REF NO	GRAPHIC REF	PART NUMBER	QTY	PART NAME 1 2 3 4 5 6 (PRODUCT LEVEL)	SEE PAGE
	1	1	**161-1705**	1	SENSOR GP-PRESSURE	
	2	1	**6V-5048**	1	SEAL-O-RING	

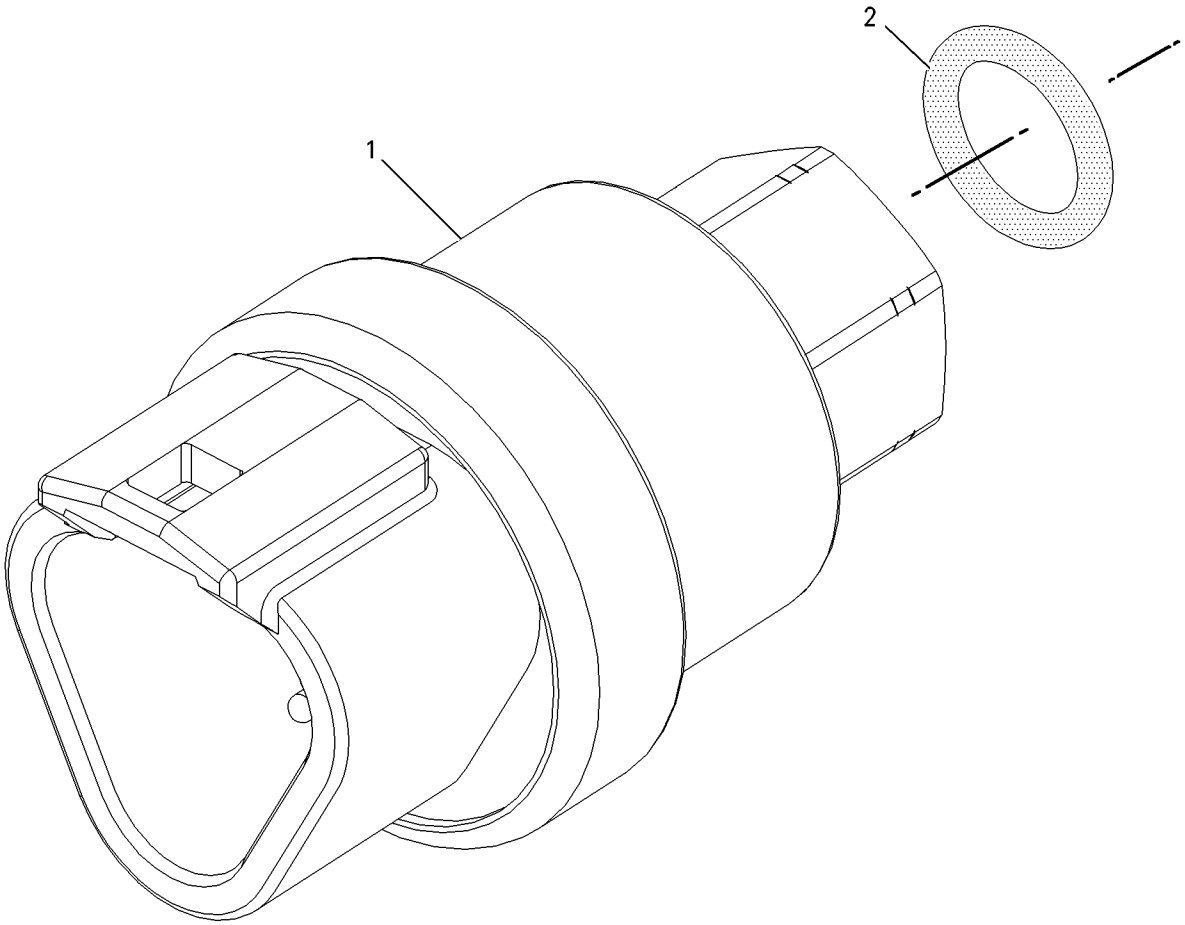

GRAPHIC #1 **<END>** g00856107

210-1747 SENSOR GP-PRESSURE

S/N: THX1-UP

PART OF 231-1978 SENSOR GP-ENGINE

ALSO AN ATTACHMENT

SMCS-1718, 1916, 1917, 1923, 1924, 1925 **i02147083**

NOTE	REF NO	GRAPHIC REF	PART NUMBER	QTY	PART NAME 1 2 3 4 5 6 (PRODUCT LEVEL)	SEE PAGE
	1	1	**161-1704**	1	SENSOR GP-PRESSURE	
	2	1	**6V-5048**	1	SEAL-O-RING	

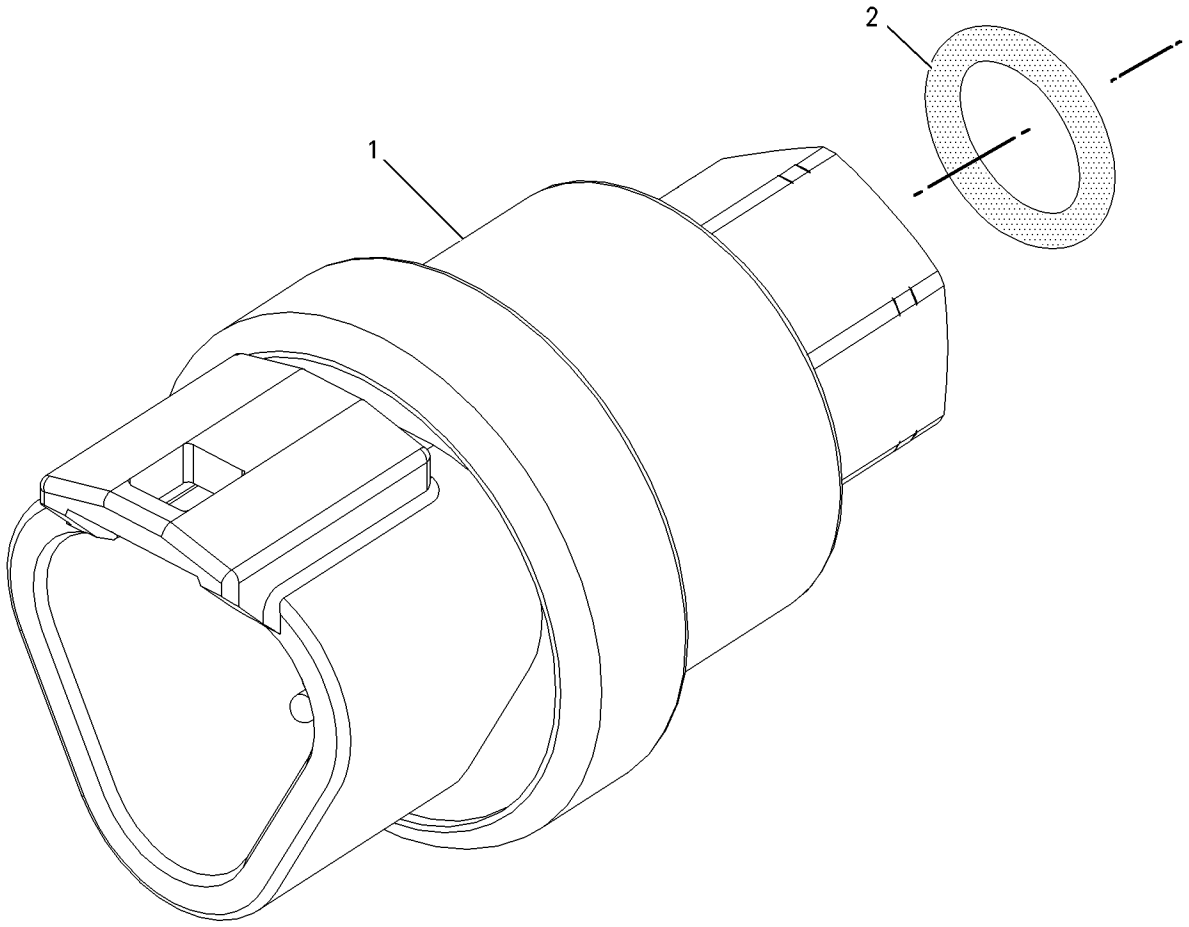

GRAPHIC #1 **<END>** g00856107

224-4536 SENSOR GP-PRESSURE–INJECTION ACTUATION

S/N: THX1-UP

PART OF 236-6220 SENSOR GP-PRESSURE

ALSO AN ATTACHMENT

SMCS-1718, 1916, 1917, 1923, 1924, 1925 **i02154692**

NOTE	REF NO	GRAPHIC REF	PART NUMBER	QTY	PART NAME 1 2 3 4 5 6 (PRODUCT LEVEL)	SEE PAGE
E	1	1	**9X-1813**		SLEEVE (35-CM)	
	2	1	**155-2260**	1	KIT-CONNECTING PLUG (3-PIN)	
					(INCLUDES PLUG AS AND WEDGE)	
	3	1	**194-5226**	1	WIRE AS-HARNESS (16-GA TO 18-GA) (INJECTION ACTUATION)	
					–OR–	
		1	**194-5227**	1	WIRE AS-HARNESS (14-GA WIRE) (INJECTION ACTUATION)	
	4	1	**155-2276**	1	WEDGE-PLUG LOCK (3-PIN)	

E-ORDER BY THE CENTIMETER

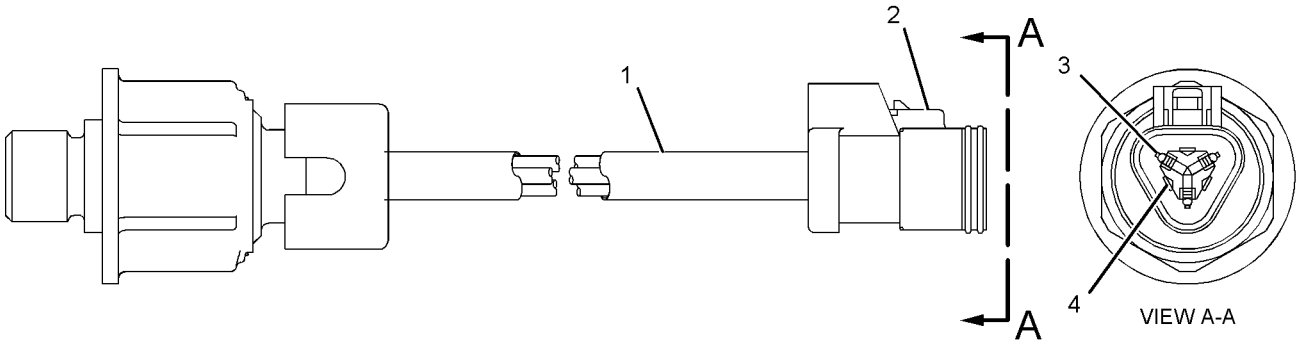

GRAPHIC #1 **<END>** g01040301

236-6220 SENSOR GP-PRESSURE–INJECTION ACTUATION

S/N: THX1-UP

PART OF 231-1978 SENSOR GP-ENGINE

ALSO AN ATTACHMENT

SMCS-1718, 1916, 1917, 1923, 1924, 1925 **i02455849**

NOTE	REF NO	GRAPHIC REF	PART NUMBER	QTY	PART NAME 1 2 3 4 5 6 (PRODUCT LEVEL)	SEE PAGE
	1	1	**214-7567**	1	SEAL-O-RING	
Y	2	1	**224-4536**	1	SENSOR GP-PRESSURE (INJECTION ACTUATION)	212

Y-SEPARATE ILLUSTRATION

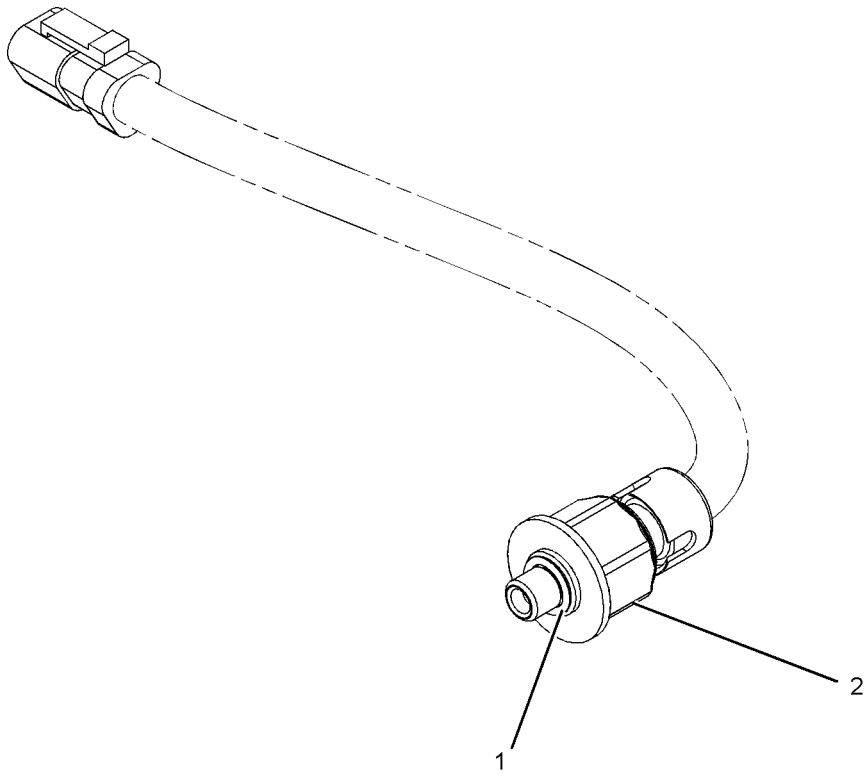

GRAPHIC #1 **<END>** g01054528

237-0957 SENSOR GP-PRESSURE–BULLDOZER PILOT OIL

S/N: JDL1-UP; GMT1-UP
PART OF 236-5042 WIRING GP-GRADE CONTROL
AN ATTACHMENT

SMCS-1718, 1916, 1917, 1923, 1924, 1925 **i02234198**

NOTE	REF NO	GRAPHIC REF	PART NUMBER	QTY	PART NAME 1 2 3 4 5 6 (PRODUCT LEVEL)	SEE PAGE
E	1	1	**9X-1813**		SLEEVE (35-CM)	
	2	1	**155-2260**	1	KIT-CONNECTING PLUG (3-PIN)	
					(INCLUDES PLUG AS & WEDGE)	

E-ORDER BY THE CENTIMETER

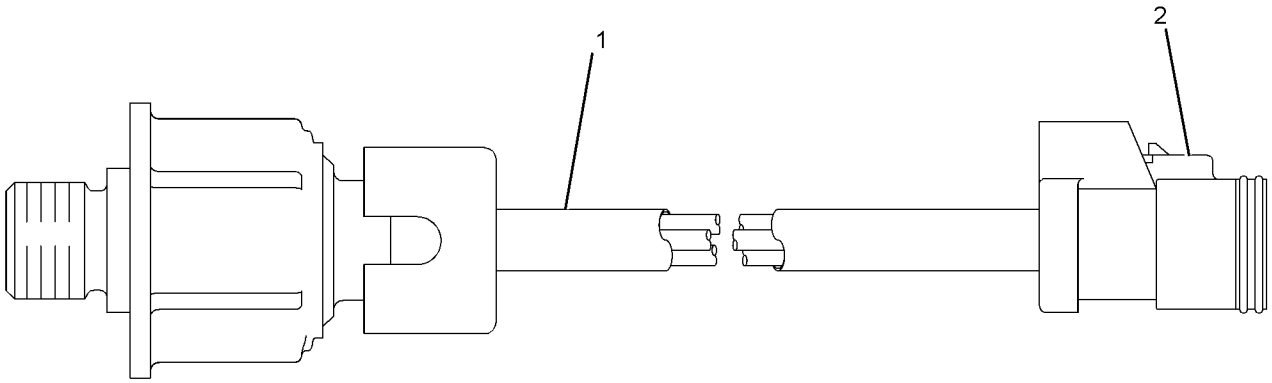

GRAPHIC #1 **<END>** g01126987

119-4166 SENSOR GP-SPEED–FAN DRIVE

S/N: JDL1-UP; GMT1-UP
PART OF 243-1872 DRIVE GP-FAN
AN ATTACHMENT

SMCS-1907 **i01391243**

NOTE	REF NO	GRAPHIC REF	PART NUMBER	QTY	PART NAME 1 2 3 4 5 6 (PRODUCT LEVEL)	SEE PAGE
	1	1	**3E-3371**	1	WEDGE-RECEPTACLE LOCK (3-PIN)	
	2	1	**033-6033**	1	SEAL-O-RING	
	3	1	**8H-3127**	1	BOLT (1/4-20X0.75-IN)	
	4	1	**6N-7523**	1	WASHER (6.48X11.9X1.57-MM THK)	
	5	1	**7X-2031**	1	RETAINER	
BE	6	1	**9X-1813**		SLEEVE	
	7	1	**102-8803**	1	KIT-RECEPTACLE (3-PIN)	
					(INCLUDES RECEPTACLE AS & WEDGE)	
	8	1	**8T-8729**	3	PIN-CONNECTOR	

B-USE AS REQUIRED
E-ORDER BY THE CENTIMETER

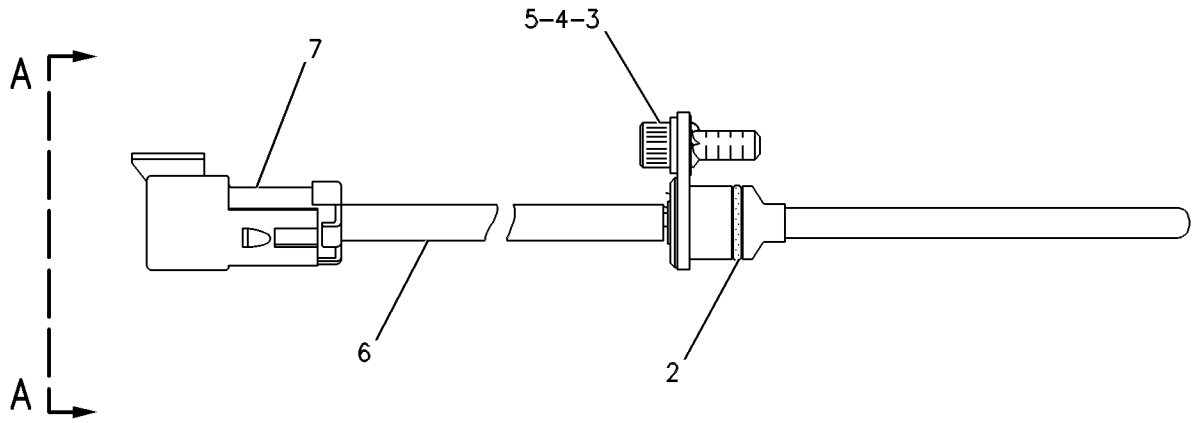

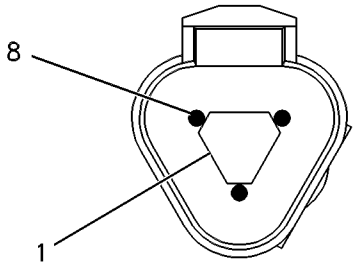

VIEW A–A

GRAPHIC #1 **<END>** g00087024

189-5746 SENSOR GP-SPEED—TORQUE CONVERTER

S/N: JDL1-UP; GMT1-UP

PART OF 222-1143 WIRING GP-ENGINE

SMCS-1907 **i01898173**

NOTE	REF NO	GRAPHIC REF	PART NUMBER	QTY	PART NAME 1 2 3 4 5 6 (PRODUCT LEVEL)	SEE PAGE
	1	1	**171-5349**	1	STRAP-MARKER	
	2	1	**102-8802**	1	KIT-RECEPTACLE (2-PIN)	
					(INCLUDES WEDGE AND RECEPTACLE ASSEMBLY)	
	3	1	**186-3735**	2	PIN-CONNECTOR (16-GA TO 18-GA)	
	4	1	**3E-3365**	1	WEDGE-RECEPTACLE LOCK (2-PIN)	
E	5	1	**9X-1386**		SLEEVE (14CM)	

E-ORDER BY THE CENTIMETER

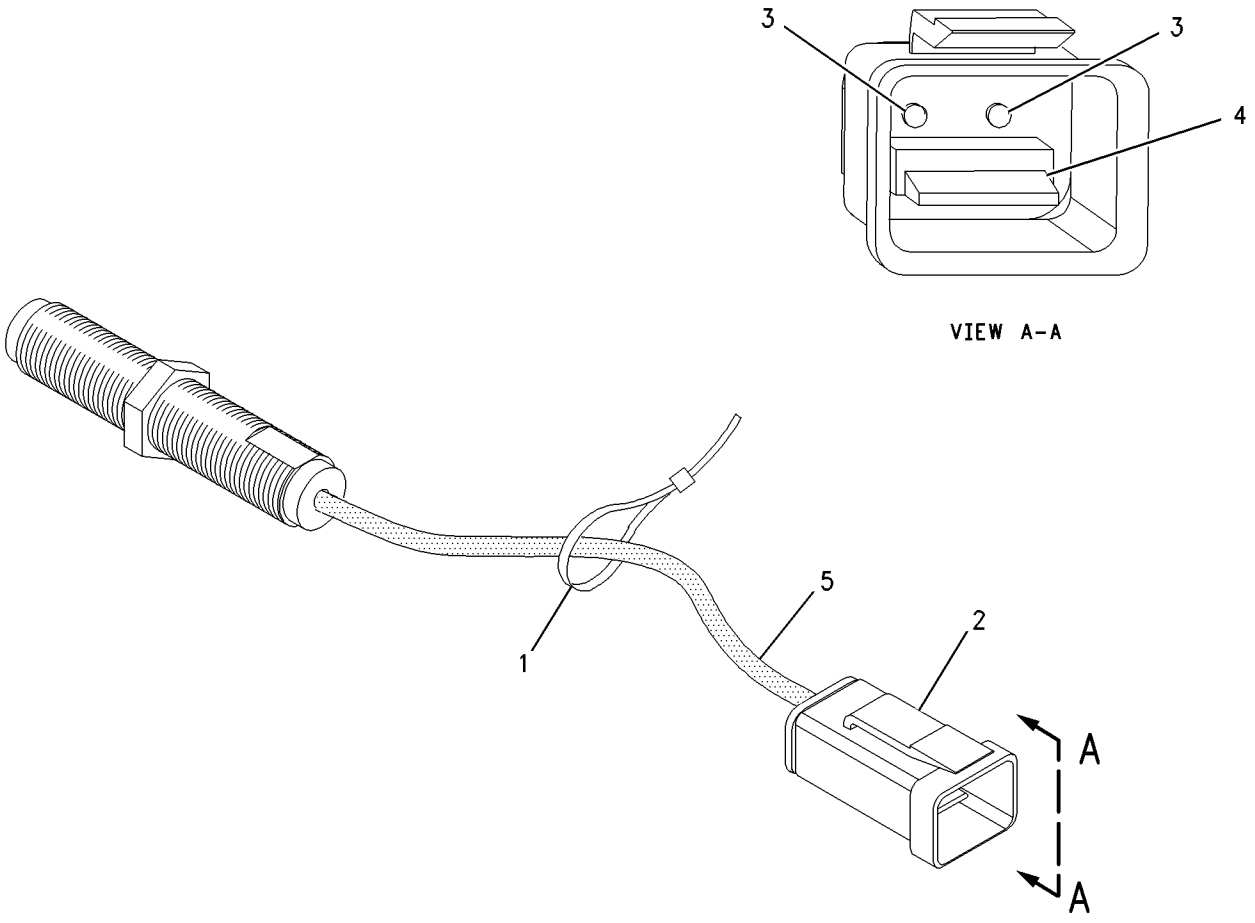

GRAPHIC #1 **<END>** g00837278

236-6221 SENSOR GP-SPEED–ENGINE TIMING

S/N: THX1-UP

PART OF 231-1978 SENSOR GP-ENGINE

ALSO AN ATTACHMENT

SMCS-1907 **i02421726**

NOTE	REF NO	GRAPHIC REF	PART NUMBER	QTY	PART NAME 1 2 3 4 5 6 (PRODUCT LEVEL)	SEE PAGE
	1	1	**203-3940**	2	SEAL-O-RING	
	2	1	**245-4630**	1	SENSOR GP-SPEED	

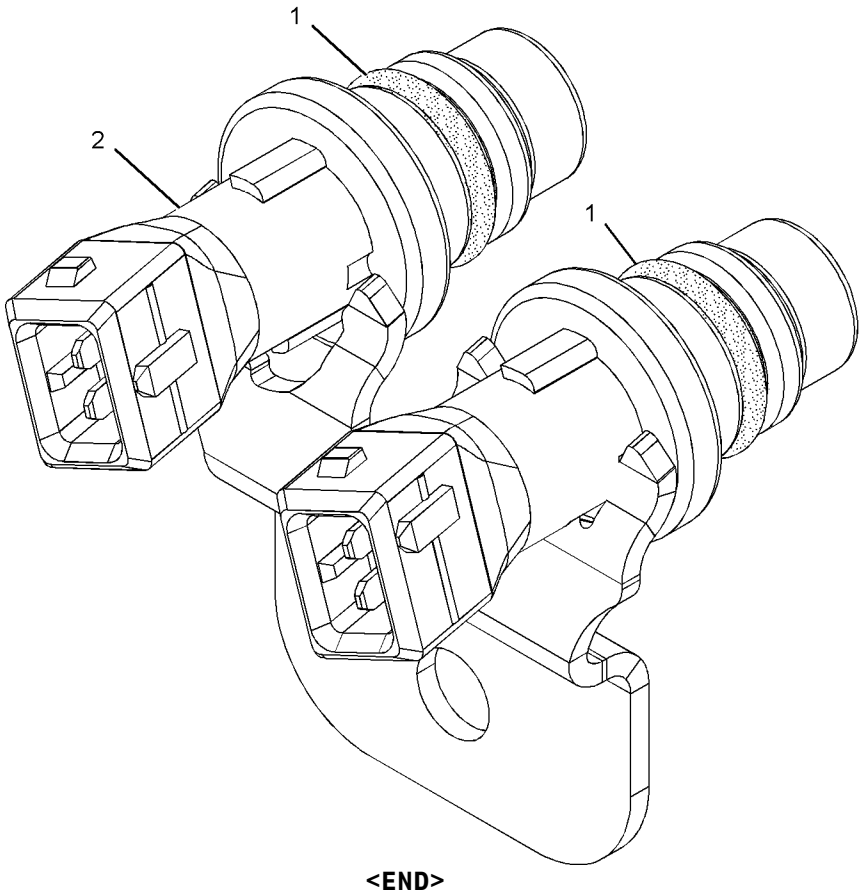

GRAPHIC #1 **<END>** g01013894

145-7028 SENSOR GP-TEMPERATURE–

TMSN, TORQUE CONVERTER OIL

S/N: JDL1-UP; GMT1-UP

PART OF 222-1141 BATTERY & WIRING GP, 222-1143 WIRING GP-ENGINE

SMCS-1906, 1919, 1921, 1922, 1928, 1929 **i01828633**

NOTE	REF NO	GRAPHIC REF	PART NUMBER	QTY	PART NAME 1 2 3 4 5 6 (PRODUCT LEVEL)	SEE PAGE
	1	1	**102-8802**	1	KIT-RECEPTACLE (2-PIN)	
					(INCLUDES RECEPTACLE AS & WEDGE)	
BJ	2	1	**153-5043**		SLEEVE	
	3	1	**8T-8729**	2	PIN-CONNECTOR	
	4	1	**3E-3365**	1	WEDGE-RECEPTACLE LOCK (2-PIN)	

B-USE AS REQUIRED
J-ORDER BY THE DECIMETER

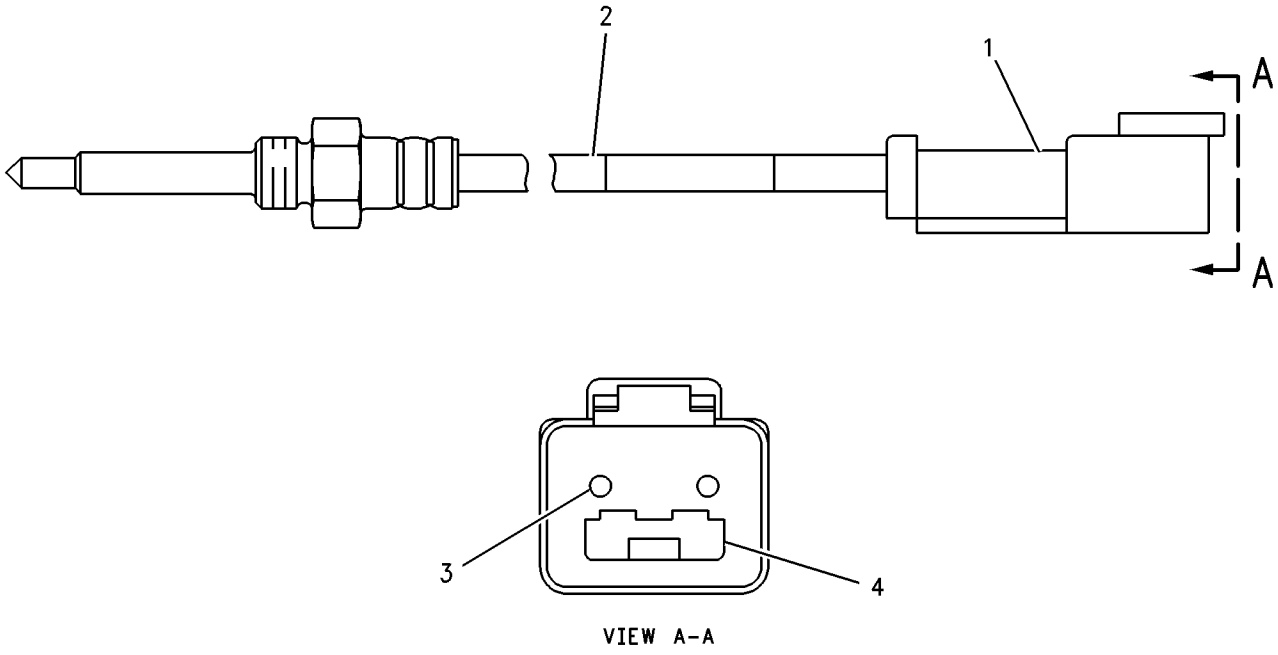

VIEW A-A

GRAPHIC #1 **<END>** g00917620

274-7395 SENSOR GP-TEMPERATURE–AIR INLET MANIFOLD

S/N: THX1-UP

PART OF 231-1978 SENSOR GP-ENGINE

ALSO AN ATTACHMENT

SMCS-1906, 1919, 1921, 1922, 1928, 1929 **i02379156**

NOTE	REF NO	GRAPHIC REF	PART NUMBER	QTY	PART NAME 1 2 3 4 5 6 (PRODUCT LEVEL)	SEE PAGE
	1	1	**130-9811**	1	SENSOR GP-TEMPERATURE (2-PIN)	
	2	1	**8L-2786**	1	SEAL-O-RING	

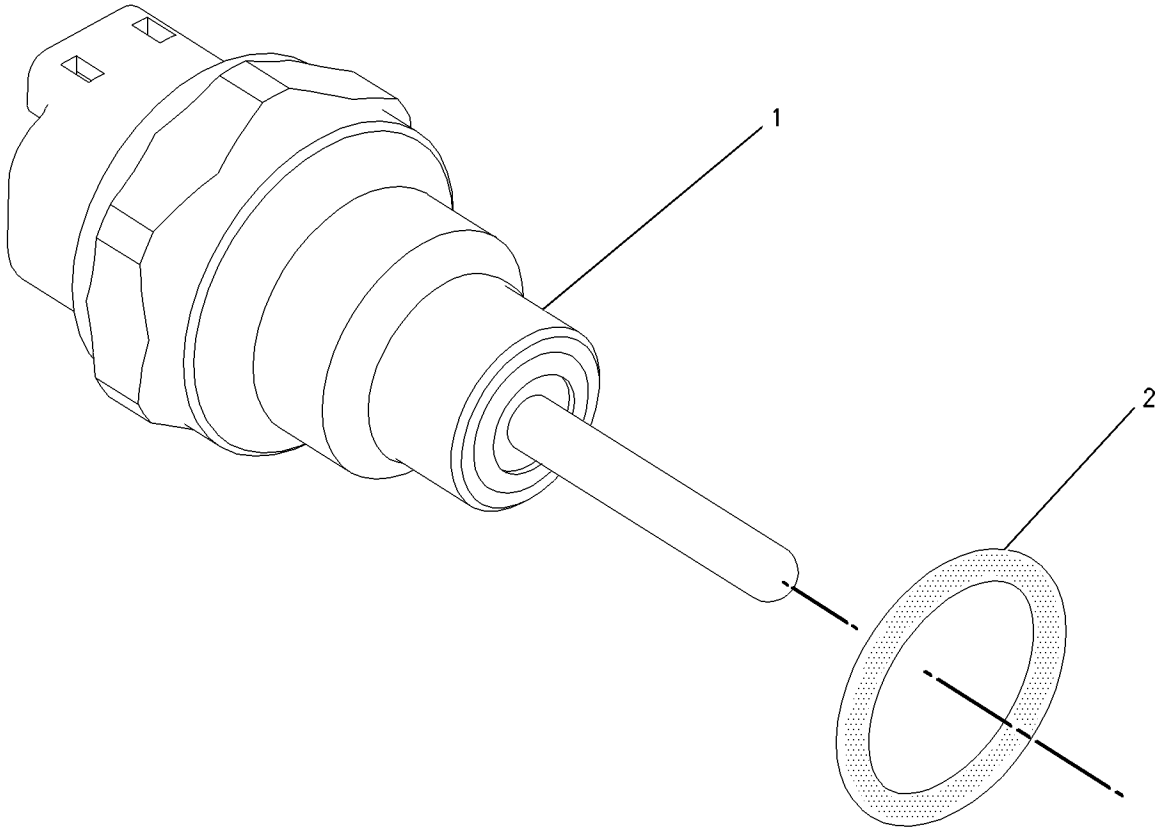

GRAPHIC #1 **<END>** g00856011

274-7396 SENSOR GP-TEMPERATURE–WATER, COOLANT

S/N: THX1-UP

PART OF 231-1978 SENSOR GP-ENGINE

ALSO AN ATTACHMENT

SMCS-1906, 1919, 1921, 1922, 1928, 1929 **i02379018**

NOTE	REF NO	GRAPHIC REF	PART NUMBER	QTY	PART NAME 1 2 3 4 5 6 (PRODUCT LEVEL)	SEE PAGE
	1	1	**130-9811**	1	SENSOR GP-TEMPERATURE (2-PIN)	
	2	1	**6V-6609**	1	SEAL-O-RING	

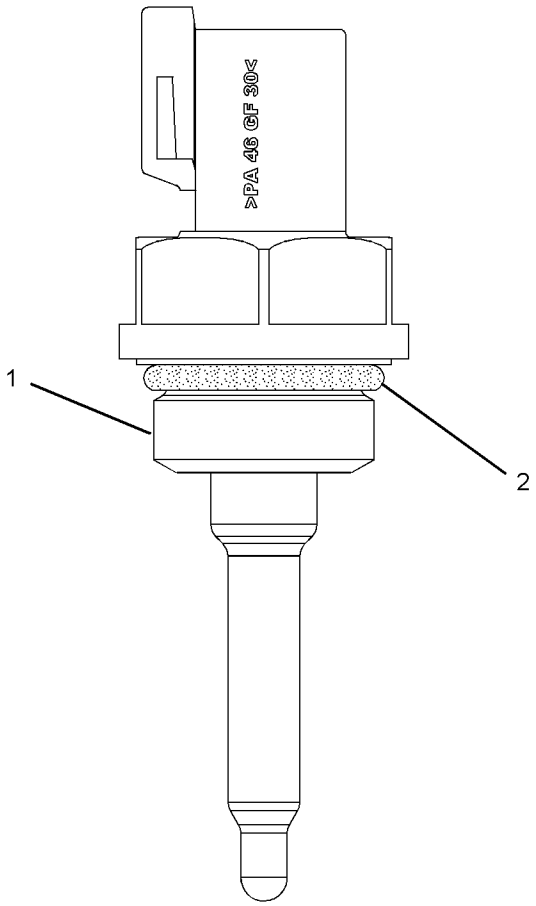

GRAPHIC #1 **<END>** g01193032

263-9012 STARTING AID GP-ETHER

S/N: JDL1-UP; GMT1-UP

PART OF 223-0551 INSTALLATION AR-ENGINE

SMCS-1456 **i02441389**

NOTE	REF NO	GRAPHIC REF	PART NUMBER	QTY	PART NAME 1 2 3 4 5 6 (PRODUCT LEVEL)	SEE PAGE
	1	1	**3Y-2888**	1	CONNECTOR	
	2	1	**5P-6313**	1	NUT-FLARELESS (5/16-24-THD)	
	3	1	**5P-6314**	1	SLEEVE	
	4	1	**7N-2059**	1	CLAMP AS	
Y	5	1	**239-1134**	1	VALVE GP-ETHER STARTING (24-VOLT)	237
	6	1	**241-4194**	1	FITTING	
	7	1	**251-4345**	1	ATOMIZER AS-ETHER	
	8	1	**260-3799**	1	BRACKET AS	
M		1	**8T-3612**	4	NUT-WELD (M8X1.25-THD)	
	9	1	**3J-1907**	1	SEAL-O-RING	
	10	1	**4P-8134**	1	CLIP	
	11	1	**5P-4116**	4	WASHER-HARD (8.8X20.5X2-MM THK)	
	12	1	**7X-7729**	2	WASHER (11X25X3-MM THK)	
M	13	1	**8T-4182**	2	BOLT (M10X1.5X45-MM)	
M	14	1	**8T-4189**	4	BOLT (M8X1.25X20-MM)	
E	15	1	**174-9169**		TUBE (40-CM)	
F			**7N-0296**	1	CYLINDER AS-ETHER	

E-ORDER BY THE CENTIMETER
F-NOT SHOWN
M-METRIC PART
Y-SEPARATE ILLUSTRATION

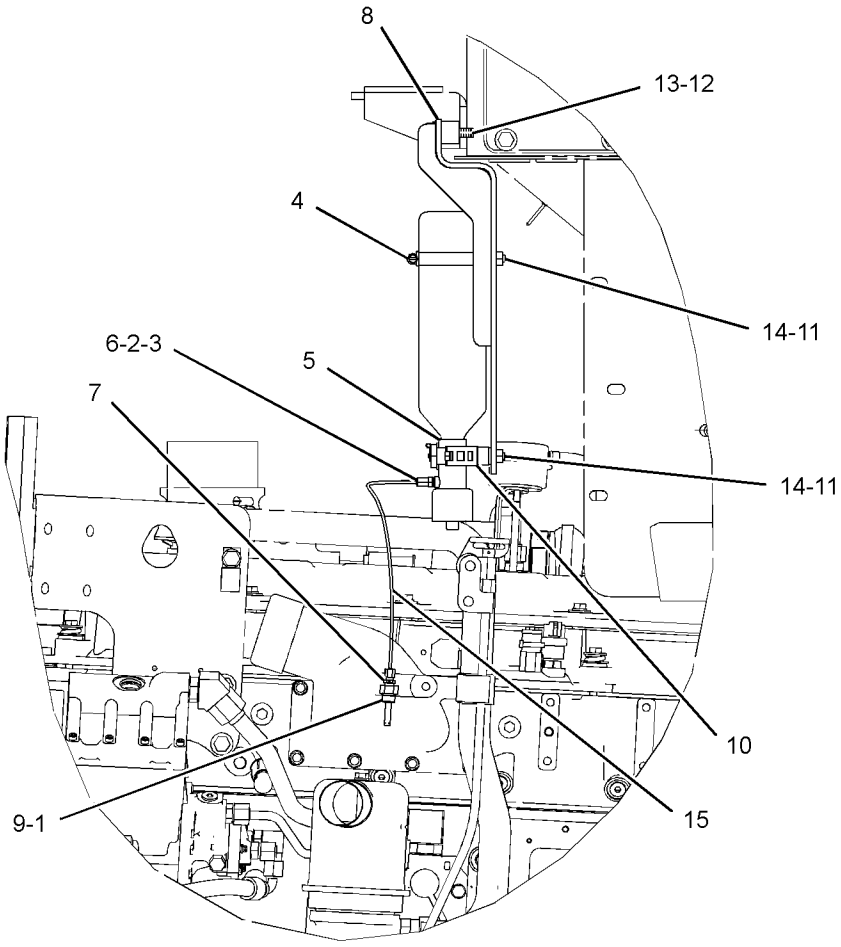

LEFT SIDE VIEW

GRAPHIC #1 **<END>** g01210682

ELECTRICAL AND STARTING SYSTEM

6V-5582 STARTING MOTOR GP-ELECTRIC

S/N: JDL1-UP; GMT1-UP
24 VOLT
PART OF 207-1556 STARTING MOTOR GP-ELECTRIC

SMCS-1453 **i01833045**

NOTE	REF NO	GRAPHIC REF	PART NUMBER	QTY	PART NAME 1 2 3 4 5 6 (PRODUCT LEVEL)	SEE PAGE
	1	1	**6V-8188**	3	NUT (1/2-13-THD)	
	2	1	**7X-0562**	3	WASHER-HARD (13.5X19X0.8-MM THK)	
	3	1	**4B-2049**	1	NUT (10-32-THD)	
	4	1	**8F-1434**	1	LOCKWASHER	
	5	1	**8T-0328**	1	WASHER-HARD (5.5X10X1-MM THK)	
M	6	1	**8T-4133**	1	NUT (M10X1.5 THD)	
	7	1	**8T-4121**	1	WASHER-HARD (11X21X2.5-MM THK)	
	8	1	**3E-0142**	1	HOUSING AS	
	9	1	**3E-0141**	1	STOP-STARTING MOTOR	
	10	1	**4N-7521**	1	RING-LOCK	
	11	1	**3E-0146**	1	DRIVE AS-STARTING MOTOR	
	12	1	**3E-0144**	1	HOUSING AS	
	13	1	**3E-0140**	1	LEVER AS-STARTING MOTOR	
	14	1	**3E-0138**	1	ARMATURE AS (24-VOLT)	
	15	1	**3E-0137**	1	HOLDER AS-BRUSH (STARTING MOTOR) (STARTING MOTOR)	
	16	1	**3E-0135**	1	SOLENOID AS (24-VOLT) (STARTING MOTOR)	
	17	1	**3E-0125**	1	COVER AS-STARTING MOTOR	
	18	1	**3E-0139**	1	HOUSING AS	
	19	1	**3E-0136**	1	HOUSING AS	
	20	1	**3E-0132**	1	CONNECTOR	
	21	1	**3E-0133**	1	WIRE AS-STARTING MOTOR	
	22	1	**3E-0134**	1	COVER-PLUNGER	
					AVAILABLE REPAIR KIT(S):	
			3E-0127	1	KIT-BEARING (STARTING MOTOR)	
					(INCLUDES BEARINGS, SEAL AND BUSHING)	
			3E-0128	1	KIT-BRUSH (STARTING MOTOR)	
					(INCLUDES O-RINGS, SCREW, SPRING, AND BRUSH)	
			3E-0129	1	KIT-HARDWARE (STARTING MOTOR)	
					(INCLUDES WASHERS, BOLTS, LOCKWASHERS, NUTS, BUSHINGS, AND PLATE)	
			3E-0145	1	KIT-STARTING MOTOR PIN	
					(INCLUDES O-RINGS, SHAFT, AND RING)	
			3E-0130	1	KIT-STARTING MOTOR SEAL	
					(INCLUDES SEAL AND O-RINGS)	
			3E-0131	1	KIT-WASHER (STARTING MOTOR)	
					(INCLUDES WASHERS)	

M-METRIC PART

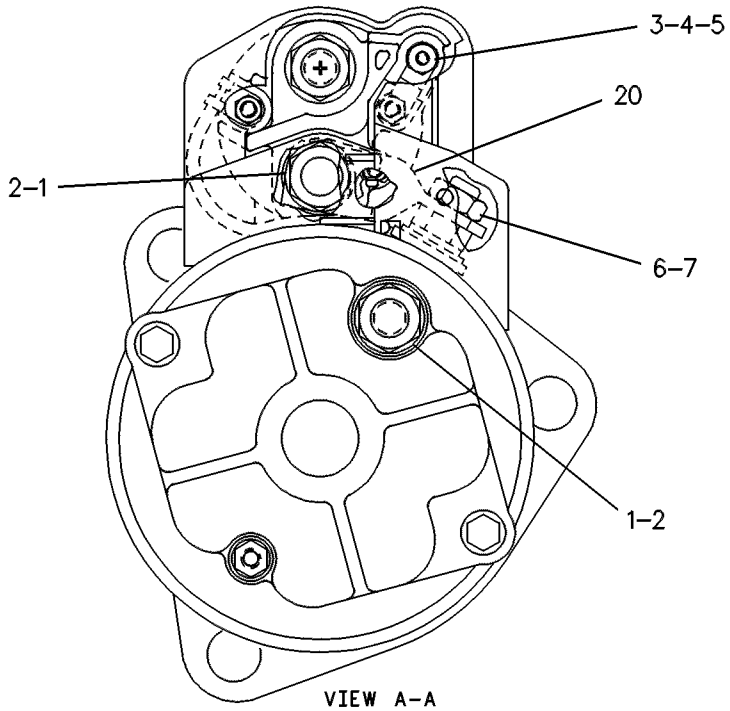

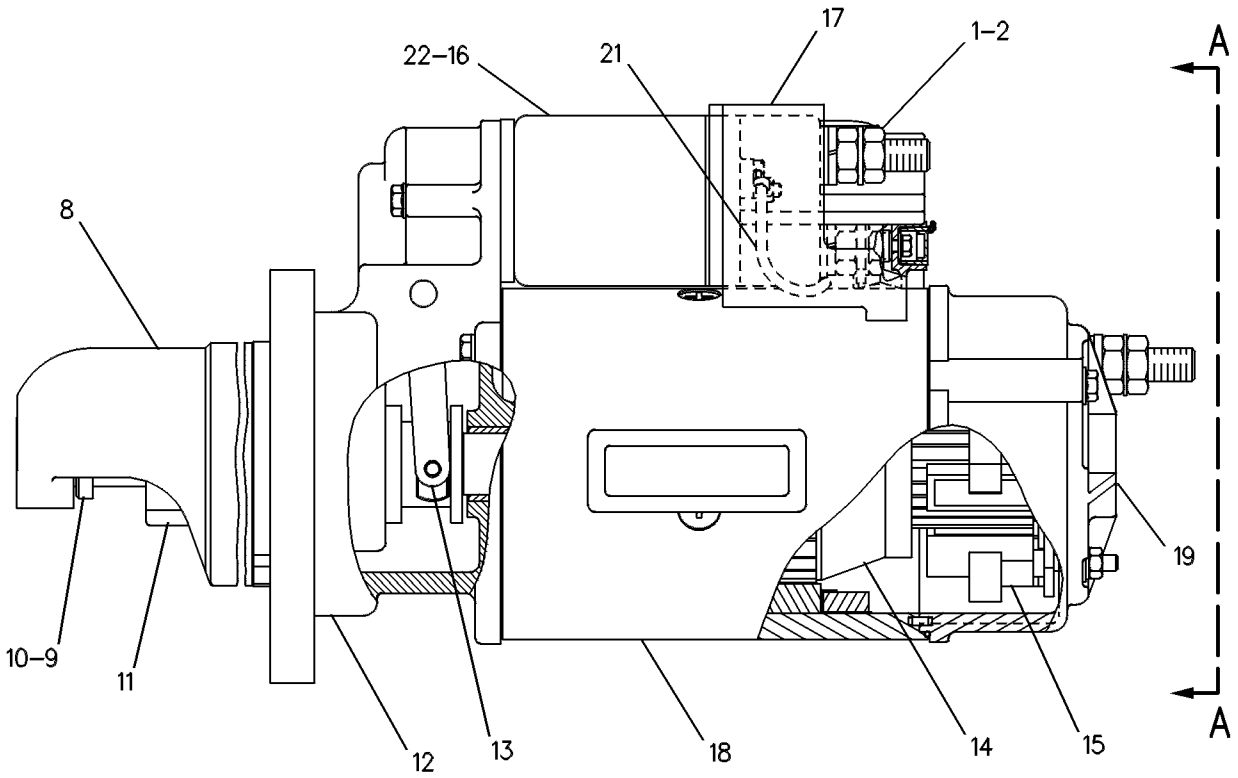

GRAPHIC #1 **<END>** g00084516

207-1556 STARTING MOTOR GP-ELECTRIC*R

S/N: JDL1-UP; GMT1-UP
24 VOLT
PART OF 223-0558 STARTING MOTOR GP-ELECTRIC
FIELD REPLACEMENT FOR 207-1557—PAGE 226

SMCS-1453 **i01827668**

NOTE	PART NUMBER	QTY	PART NAME 1 2 3 4 5 6 (PRODUCT LEVEL)	SEE PAGE
Y	*6V-5582*	1	STARTING MOTOR GP-ELECTRIC	223
			—OR—	
Y	*207-1557*	1	STARTING MOTOR GP-ELECTRIC	226
Y-SEPARATE ILLUSTRATION				

<END>

207-1557 STARTING MOTOR GP-ELECTRIC

S/N: JDL1-UP; GMT1-UP
24 VOLTS
PART OF 207-1556 STARTING MOTOR GP-ELECTRIC
FIELD REPLACEMENT ORDER 207-1556—PAGE 225

SMCS-1453 **i01833051**

NOTE	REF NO	GRAPHIC REF	PART NUMBER	QTY	PART NAME 1 2 3 4 5 6 (PRODUCT LEVEL)	SEE PAGE
	1	1	**3T-3434**	6	PLUG	
	2	1	**7T-3279**	1	HOUSING AS	
	3	1	**8T-8566**	1	TERMINAL AS	
	4	1	**6V-8188**	4	NUT (1/2-13 THD)	
	5	1	**7X-0562**	4	WASHER-HARD (13.5X19X0.8-MM THK)	
	6	1	**3T-3422**	1	WIRE AS	
	7	1	**7T-3278**	1	HOLDER AS-BRUSH (STARTING MOTOR)	
	8	1	**7T-3277**	1	COIL AS-FIELD	
	9	1	**7T-3454**	1	INSULATOR	
	10	1	**7T-3271**	1	CONNECTOR	
	11	1	**7T-3451**	1	INSULATOR-TERMINAL	
	12	1	**8T-8569**	1	INSULATOR-TERMINAL	
	13	1	**5S-7349**	4	BOLT (1/4-20X0.5-IN)	
	14	1	**8T-4205**	4	WASHER-HARD (7.2X14.5X2-MM THK)	
	15	1	**8H-1141**	4	SHOE-POLE	
	16	1	**3F-0379**	8	SCREW-POLE SHOE (3/8-24-THD)	
	17	1	**7T-3276**	1	ARMATURE AS (24-VOLT)	
	18	1	**3E-7775**	1	HOUSING AS	
	19	1	**4M-1831**	1	PLUG-LEVER HOUSING	
	20	1	**7L-2894**	1	GASKET	
	21	1	**036-9823**	5	BOLT (1/4-28X1-IN)	
	22	1	**6N-3826**	1	DRIVE AS-MOTOR	
	23	1	**7T-3974**	1	HOUSING AS-DRIVE	
	24	1	**7X-3373**	6	BOLT (5/16-18X0.88-IN)	
	25	1	**193-8570**	1	SOLENOID AS (24-VOLT) (STARTING MOTOR)	
	26	1	**6V-8378**	3	NUT (10-32-THD)	
	27	1	**8F-1434**	2	LOCKWASHER	
	28	1	**8T-0328**	3	WASHER-HARD (5.5X10X1-MM THK)	
	29	1	**9X-4824**	1	COVER-STARTING MOTOR	
	30	1	**8T-9884**	1	KIT-INSULATOR (STARTING MOTOR)	
					(INCLUDES INSULATORS AND BUSHING)	
	31	1	**8C-3655**	1	KIT-BRUSH (STARTING MOTOR)	
					(INCLUDES BRUSHES, SPRINGS, SCREWS, SCREW AS., SEAL)	
	32	1	**7T-3268**	1	KIT-LEVER (STARTING MOTOR)	
					(INCLUDES LEVER AS., SEALS, NUT, GASKET, RETAINER)	
					AVAILABLE REPAIR KIT(S):	
			7T-3267		KIT-BUSHING (STARTING MOTOR)	
					(INCLUDES BUSHINGS, WICKS, CUPS, SEALS, GASKET, SCREW ASSEMBLIES, WASHERS, SPACER & NUT)	

207-1557 **STARTING MOTOR GP-ELECTRIC** *(contd.)* **i01833051**

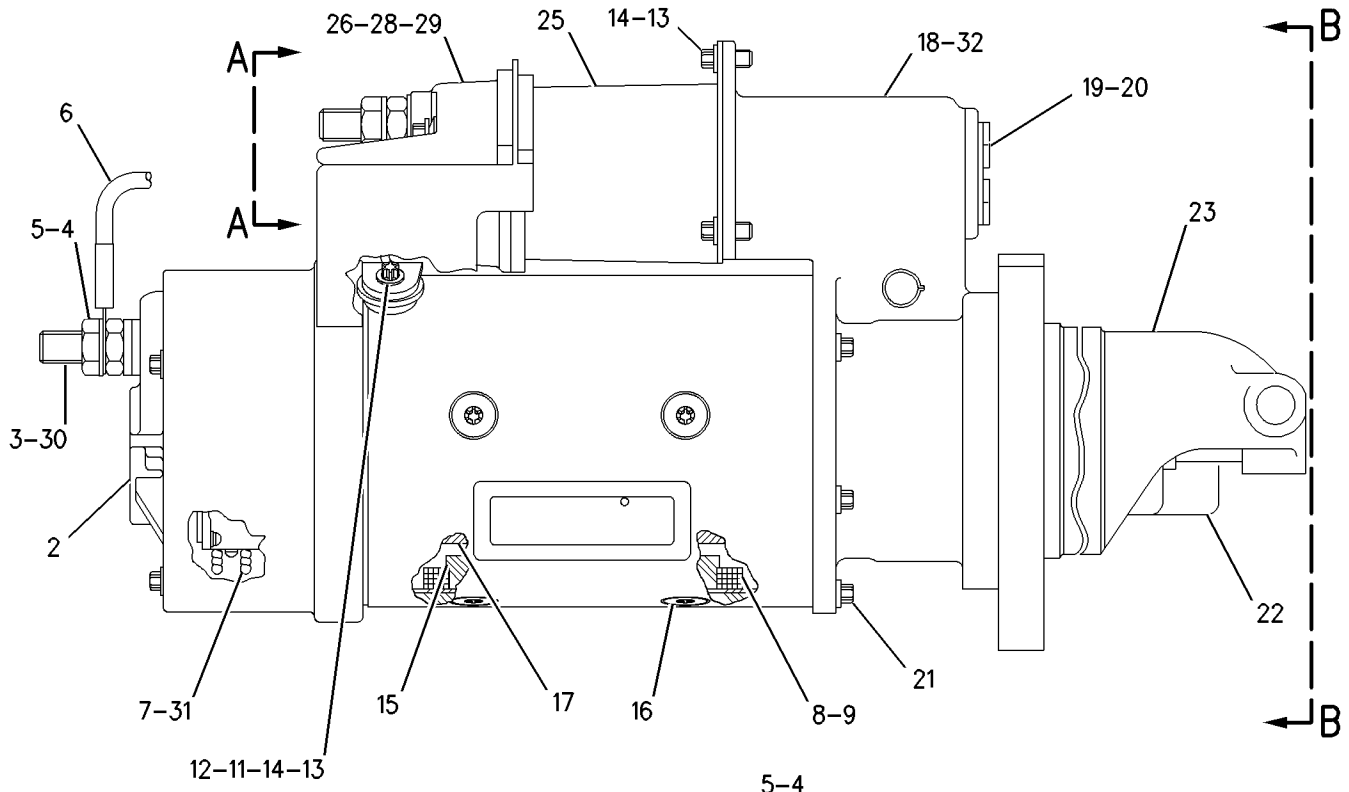

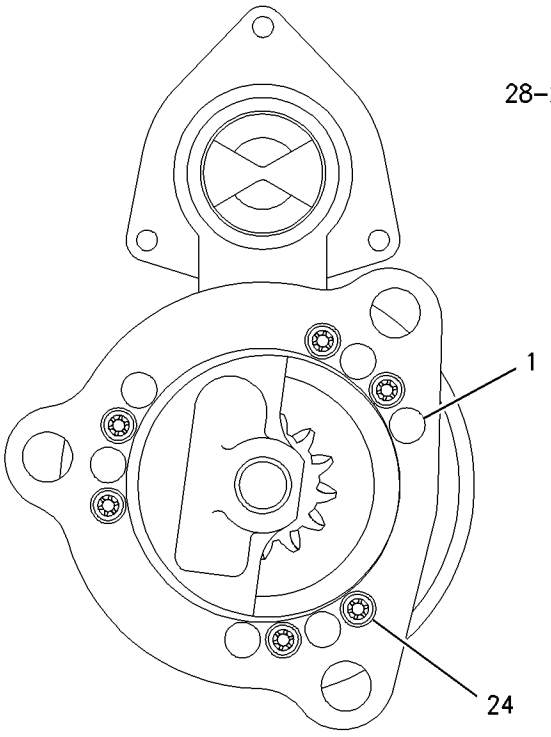

VIEW B-B

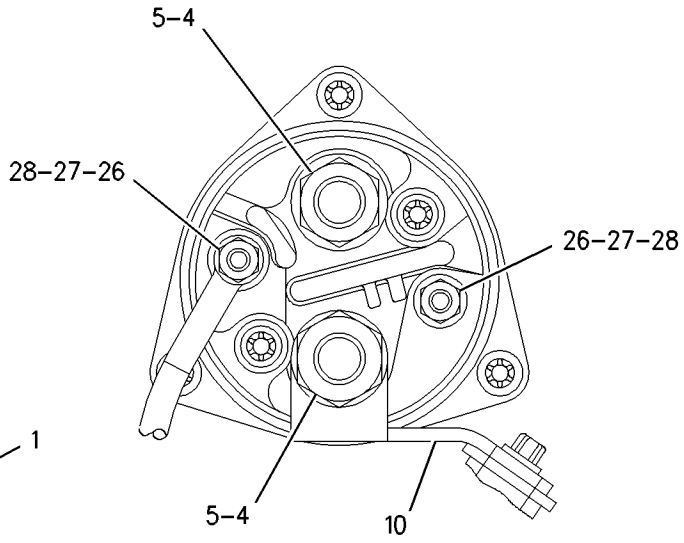

VIEW A-A

GRAPHIC #1 **<END>** g00937159

209-8423 STARTING MOTOR GP-ELECTRIC—HEAVY-DUTY

S/N: JDL1-UP; GMT1-UP
PART OF 227-1229 BATTERY GP
AN ATTACHMENT

SMCS-1453 **i02236267**

NOTE	REF NO	GRAPHIC REF	PART NUMBER	QTY	PART NAME 1 2 3 4 5 6 (PRODUCT LEVEL)	SEE PAGE
	1	1	**4N-1059**	1	GASKET	
	2	1	**185-6393**	1	CABLE AS-STARTING MOTOR	
E		1	**5P-0746**		CABLE (0-GA, BLACK) (30-CM)	
		1	**1M-4986**	1	TERMINAL-RING (0000-GA, 0.5-IN)	
		1	**030-1707**	1	TERMINAL-RING (FOR 3/8-IN BOLT)	
YR	3	1	**237-1962**	1	STARTING MOTOR GP-ELECTRIC	230
	4	1	**220-0771**	3	BOLT-12 POINT HEAD (M16X2X45-MM) (MJ16X2 THD)	

E-ORDER BY THE CENTIMETER
R-REMFG PART MAY BE AVAILABLE
Y-SEPARATE ILLUSTRATION

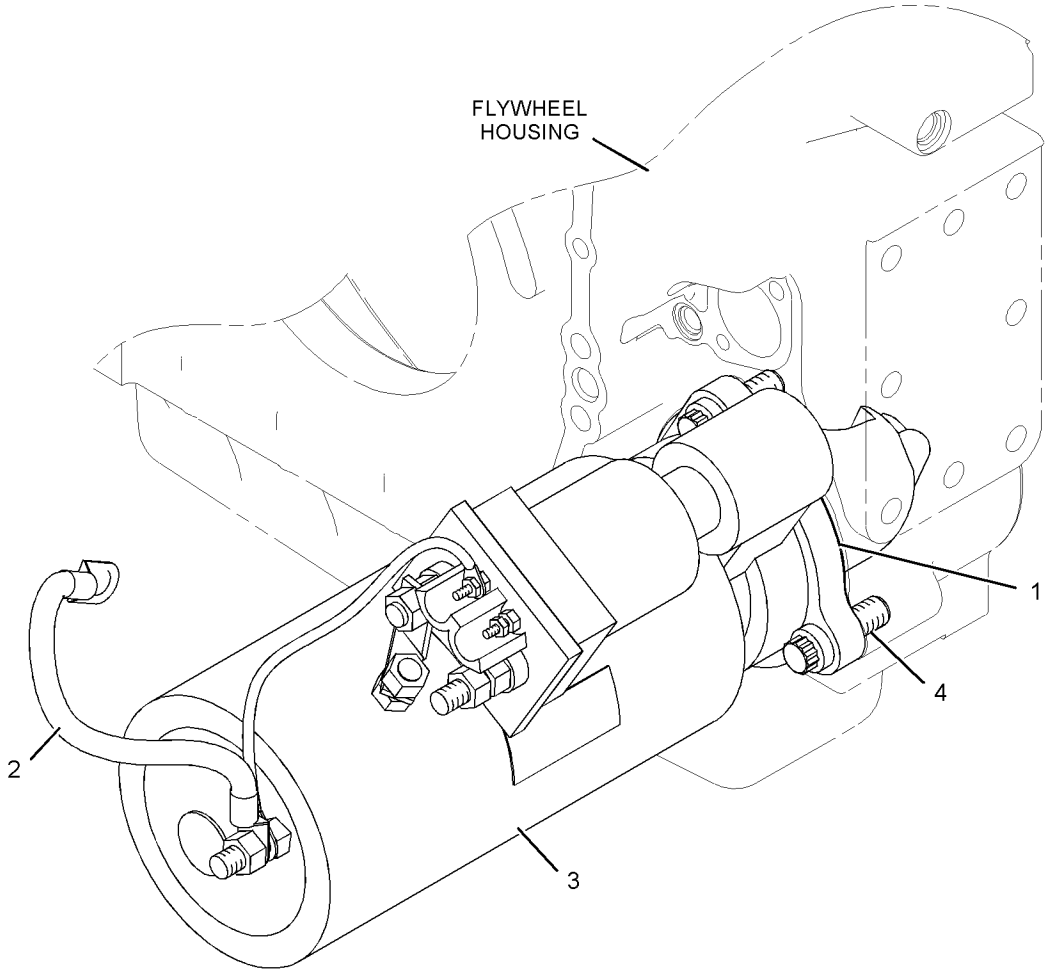

GRAPHIC #1 **<END>** g01023567

223-0558 STARTING MOTOR GP-ELECTRIC

S/N: JDL1-UP; GMT1-UP
24-VOLT
PART OF 223-0551 INSTALLATION AR-ENGINE

SMCS-1453 **i02432545**

NOTE	REF NO	GRAPHIC REF	PART NUMBER	QTY	PART NAME 1 2 3 4 5 6 (PRODUCT LEVEL)	SEE PAGE
	1	1	**4H-7869**	1	GASKET	
	2	1	**8Y-9603**	1	CABLE AS-STARTING MOTOR	
		1	**1S-7251**	1	TERMINAL-RING (FOR 1/2-IN BOLT)	
		1	**1S-7252**	1	TERMINAL-RING (FOR 3/8-IN BOLT)	
E		1	**5P-0747**		CABLE (OO-GA, BLACK) (28-CM)	
YR	3	1	**207-1556**	1	STARTING MOTOR GP-ELECTRIC	225
	4	1	**220-0771**	3	BOLT-12 POINT HEAD (M16X2X45-MM)	
	5	1	**6V-5839**	1	WASHER (11X21X2.5-MM THK)	
M	6	1	**6V-8212**	1	BOLT (M10X1.5X16-MM)	

E-ORDER BY THE CENTIMETER
M-METRIC PART
R-REMFG PART MAY BE AVAILABLE
Y-SEPARATE ILLUSTRATION

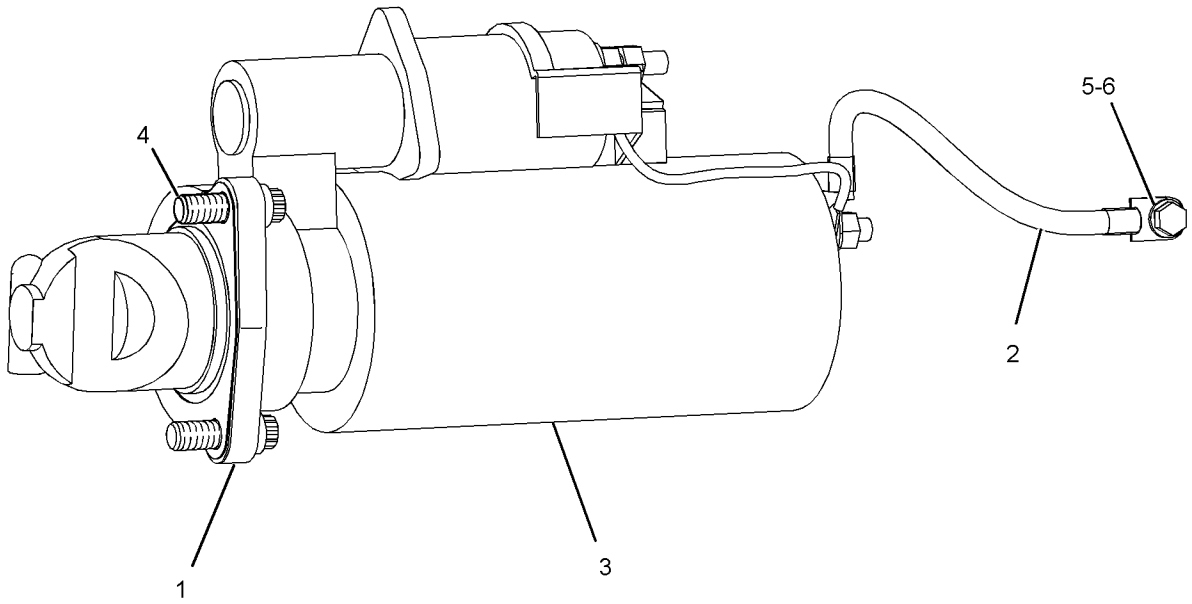

GRAPHIC #1 **<END>** g01206397

ELECTRICAL AND STARTING SYSTEM

237-1962 STARTING MOTOR GP-ELECTRIC*R

S/N: JDL1-UP; GMT1-UP
24-VOLT
PART OF 209-8423 STARTING MOTOR GP-ELECTRIC
AN ATTACHMENT

SMCS-1453 **i02003749**

NOTE	REF NO	GRAPHIC REF	PART NUMBER	QTY	PART NAME 1 2 3 4 5 6 (PRODUCT LEVEL)	SEE PAGE
	1	1	**7M-0326**	1	CONNECTOR	
	2	1	**9H-3757**	2	WASHER (0.516X1X0.094-IN THK)	
	3	1	**1S-7446**	3	SCREW-MACHINE (8-32X0.437-IN)	
	4	1	**8C-9660**	3	WASHER (4.6X7.9X0.8-MM THK)	
	5	1	**9S-2544**	9	SCREW-HEX HEAD (8-32X11.13-MM)	
	6	1	**7M-0327**	1	WASHER-THRUST (17.4X25.4X1.6-MM THK)	
	7	1	**3T-3418**	1	FRAME AS-END	
		1	**3T-3423**	1	CUP	
		1	**3T-3424**	1	PLUG-FELT	
		1	**9G-4101**	1	BUSHING-END	
	8	1	**3T-9525**	1	PLATE AS-BRUSH	
	8A	1	**6T-0371**	1	INSULATOR	
	8B	1	**5P-6298**	12	SCREW-MACHINE (10-32X0.5-IN)	
		1	**9F-5599**	12	LOCKWASHER	
	8C	1	**7F-3525**	6	WASHER-BUSHING (0.209X0.39X0.09-MM THK)	
	8D	1	**6T-0372**	1	PLATE	
	8E	1	**3T-4709**	3	PLATE	
	8F	1	**2L-6679**	3	PLATE-INSULATOR	
	8G	1	**3T-4710**	3	PLATE	
	8H	1	**6T-0363**	6	HOLDER AS-BRUSH (STARTING MOTOR)	
					(EACH INCLUDES)	
	8J	1	**3T-9494**	1	SPRING	
	9	1	**7F-3491**	2	WASHER (0.516X1X0.094-IN THK)	
	10	1	**3T-3422**	1	WIRE AS	
	11	1	**2J-8163**	2	SEAL-O-RING	
	12	1	**7X-3373**	1	BOLT (5/16-18X0.88-IN)	
	13	1	**3T-3434**	6	PLUG	
	14	1	**5J-5314**	5	BOLT (5/16-18X1.5-IN)	
	15	1	**3L-3380**	1	BUSHING-TERMINAL	
	16	1	**036-9821**	1	WASHER	
	17	1	**4M-1828**	1	RETAINER-SPRING	
	18	1	**4M-1829**	1	BOOT-RUBBER	
	19	1	**9M-7609**	1	SPRING (SHIFT LEVER)	
	20	1	**4M-1827**	1	RETAINER-SPRING	
	21	1	**8C-3089**	1	SEAL-O-RING	
	22	1	**4M-1853**	1	LEVER AS-SHIFT	
	23	1	**5M-3034**	1	LOCKNUT (5/16-24-IN THD)	
	24	1	**7L-2894**	4	GASKET	
	25	1	**4M-1831**	4	PLUG-LEVER HOUSING	
	26	1	**4M-1854**	1	SHAFT-LEVER	
	27	1	**1H-1023**	1	SEAL-O-RING	
	28	1	**2D-6392**	1	SEAL-O-RING	
	29	1	**7T-3974**	1	HOUSING AS-DRIVE	
	30	1	**6N-3826**	1	DRIVE AS-MOTOR	
	31	1	**2H-3429**	2	RING-RETAINING	
	32	1	**6V-1322**	4	BOLT (1/4-20X0.375-IN)	
	33	1	**8T-4205**	4	WASHER-HARD (7.2X14.5X2-MM THK)	
	34	1	**6N-3279**	1	INSULATOR	

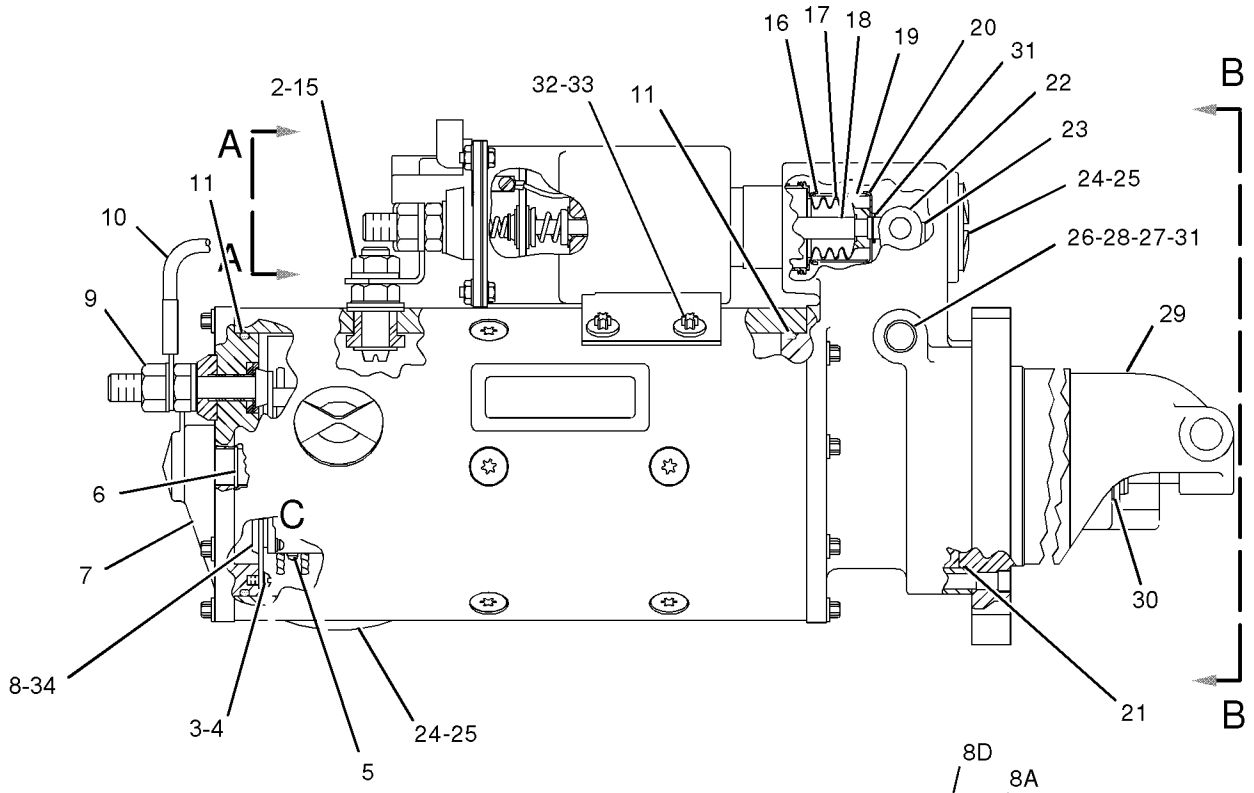

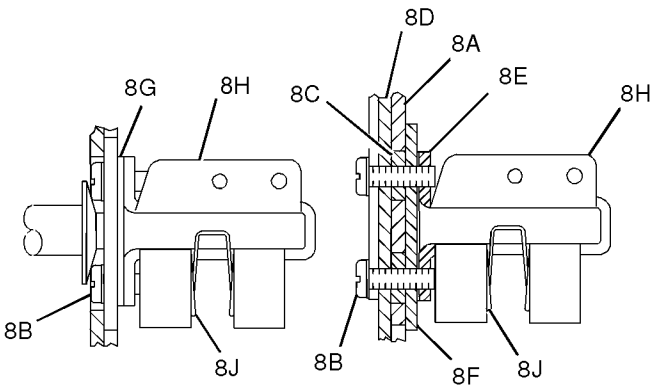

VIEW OF AREA C

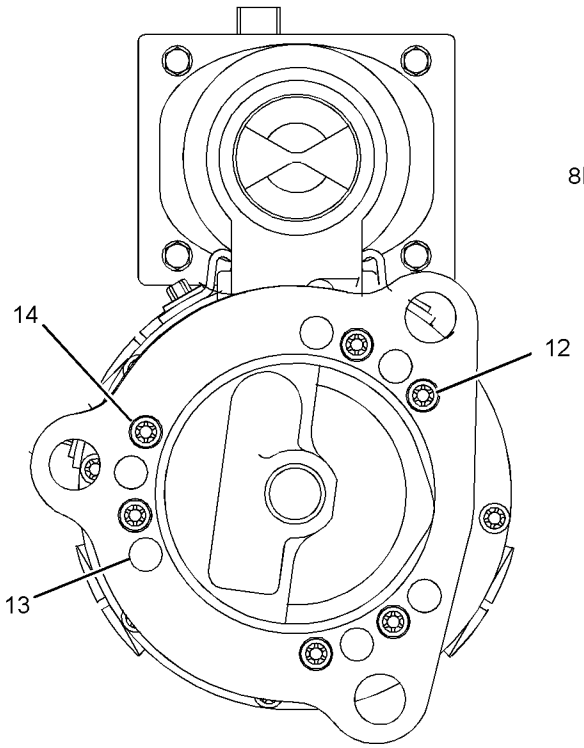

VIEW B-B

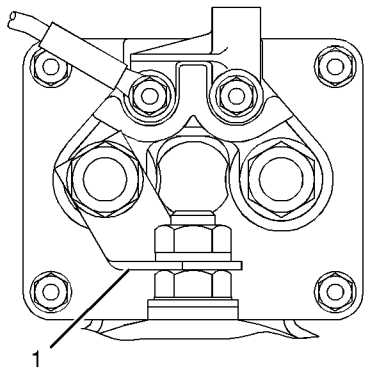

VIEW A-A

GRAPHIC #1 **<END>** g01026778

164-7577 SWITCH GP-BYPASS–POWER TRAIN OIL FILTER

S/N: JDL1-UP; GMT1-UP

PART OF 238-1029 BASE GP-OIL FILTER

SMCS-1408, 1435 **i02204195**

NOTE	REF NO	GRAPHIC REF	PART NUMBER	QTY	PART NAME 1 2 3 4 5 6 (PRODUCT LEVEL)	SEE PAGE
E	1	1	**9X-1813**		SLEEVE (19-CM)	
	2	1	**102-8802**	1	KIT-RECEPTACLE (2-PIN)	
					(INCLUDES RECEPTACLE AS & WEDGE)	
	3	1	**186-3735**	2	PIN-CONNECTOR (16-GA TO 18-GA)	
	4	1	**3E-3365**	1	WEDGE-RECEPTACLE LOCK (2-PIN)	
	5	1	**3D-2824**	1	SEAL-O-RING	
Z	6	1		1	SWITCH AS	

E-ORDER BY THE CENTIMETER
Z-NOT SERVICED SEPARATELY

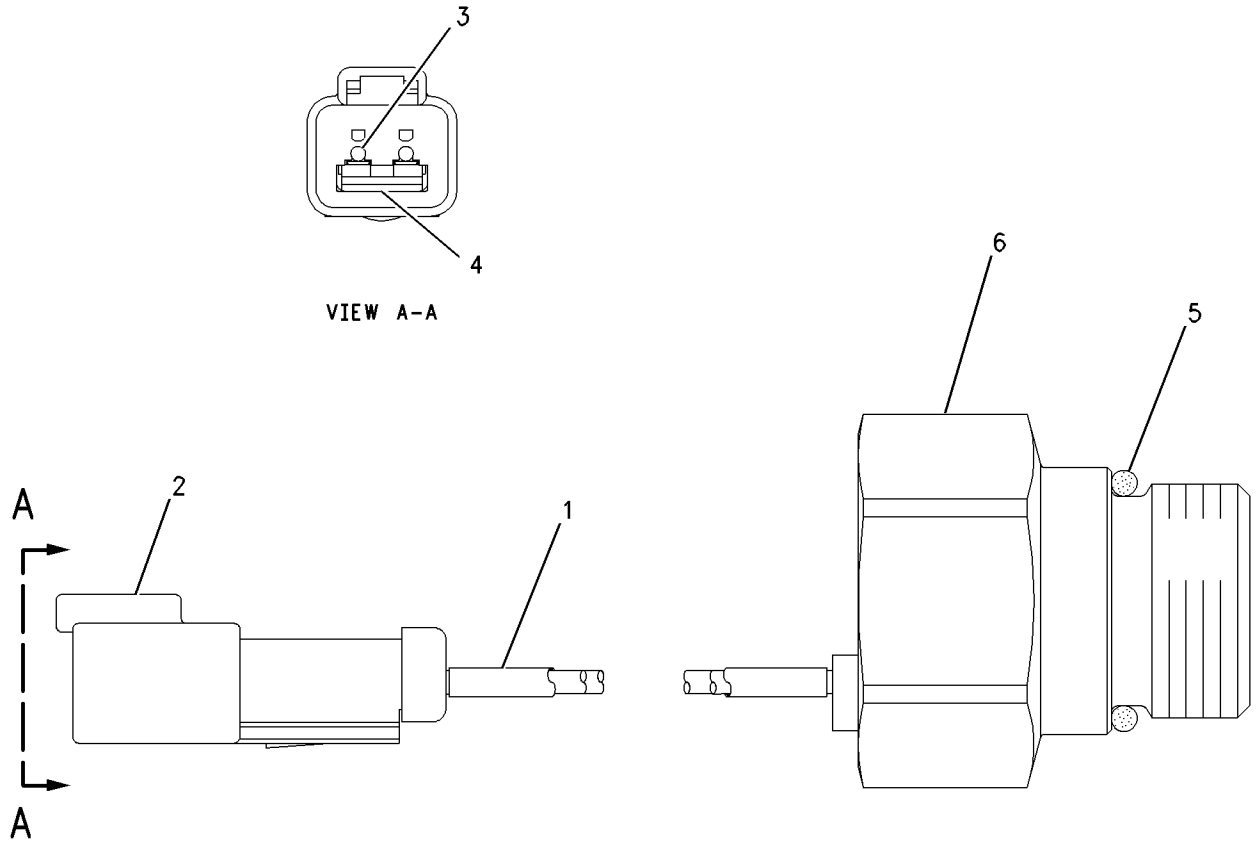

GRAPHIC #1 **<END>** g00750019

7N-0718 SWITCH GP-DISCONNECT–BATTERY

S/N: JDL1-UP; GMT1-UP

PART OF 222-1141 BATTERY & WIRING GP

SMCS-1411 **i01810002**

NOTE	REF NO	GRAPHIC REF	PART NUMBER	QTY	PART NAME 1 2 3 4 5 6 (PRODUCT LEVEL)	SEE PAGE
	1	1	**8H-5306**	1	KEY (BATTERY DISCONNECT)	
	2	1	**8H-5303**	1	NUT (3/4-16-THD)	
	3	1	**2H-3922**	2	LOCKWASHER	
	4	1	**9F-5644**	2	LOCKWASHER	
	5	1	**6F-7045**	2	NUT-FULL (3/8X24-THD)	

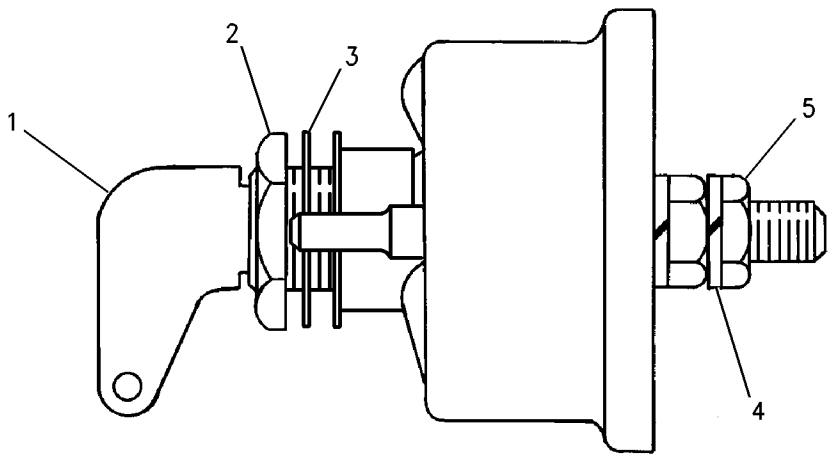

GRAPHIC #1 **<END>** g00715584

125-1302 SWITCH GP-MAGNETIC–START RELAY

S/N: JDL1-UP; GMT1-UP
PART OF 226-9674 PANEL GP-FUSE

SMCS-7499 **i01896616**

NOTE	REF NO	GRAPHIC REF	PART NUMBER	QTY	PART NAME 1 2 3 4 5 6 (PRODUCT LEVEL)	SEE PAGE
	1	1	**102-8802**	1	KIT-RECEPTACLE (2-PIN)	
					(INCLUDES RECEPTACLE AS & WEDGE)	
	2	1	**186-3735**	2	PIN-CONNECTOR (16-GA TO 18-GA)	
	3	1	**1H-3338**	2	LOCKWASHER	
	4	1	**012-0380**	2	LOCKWASHER	
M	5	1	**5C-2890**	2	NUT (M6X1-THD)	
E	6	1	**9X-1813**		SLEEVE (16CM)	

E-ORDER BY THE CENTIMETER
M-METRIC PART

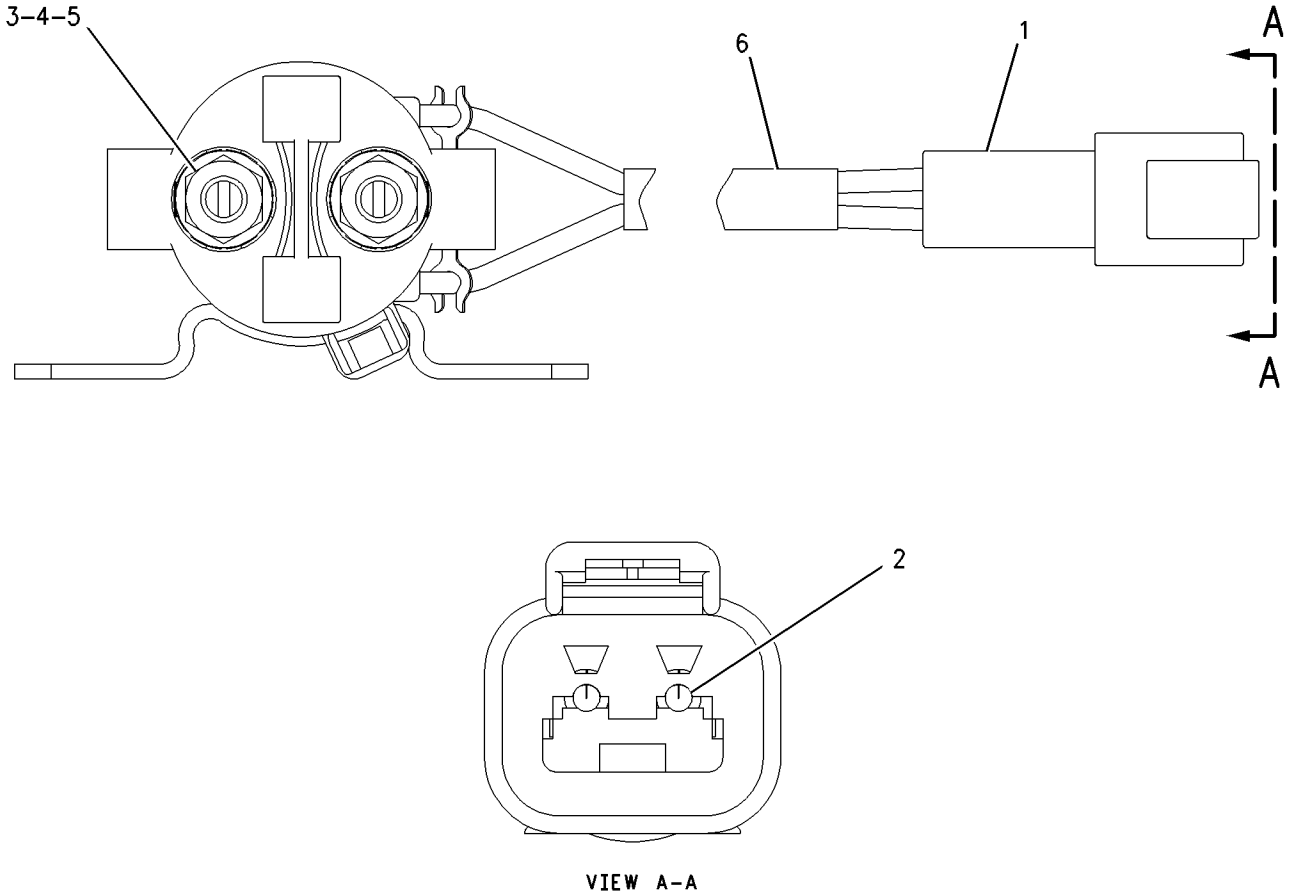

GRAPHIC #1 **<END>** g00987986

241-8368 SWITCH GP-MAGNETIC—MAIN RELAY

S/N: JDL1-UP; GMT1-UP

PART OF 226-9674 PANEL GP-FUSE

SMCS-7499 **i02290099**

NOTE	REF NO	GRAPHIC REF	PART NUMBER	QTY	PART NAME 1 2 3 4 5 6 (PRODUCT LEVEL)	SEE PAGE
	1	1	**155-2270**	1	KIT-CONNECTING PLUG (2-PIN)	
					(INCLUDES PLUG AS, WEDGE & INTERFACE SEAL)	
	2	1	**4F-2294**	2	NUT-JAM (5/16-24-THD)	
	3	1	**186-3736**	2	SOCKET-CONNECTOR (16-AWG TO 18-AWG)	

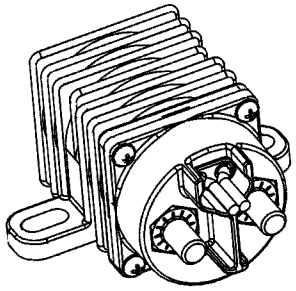

ISOMETRIC VIEW

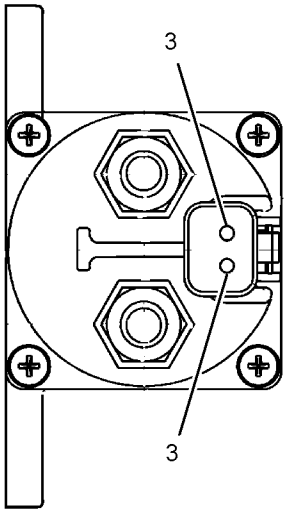

VIEW A-A

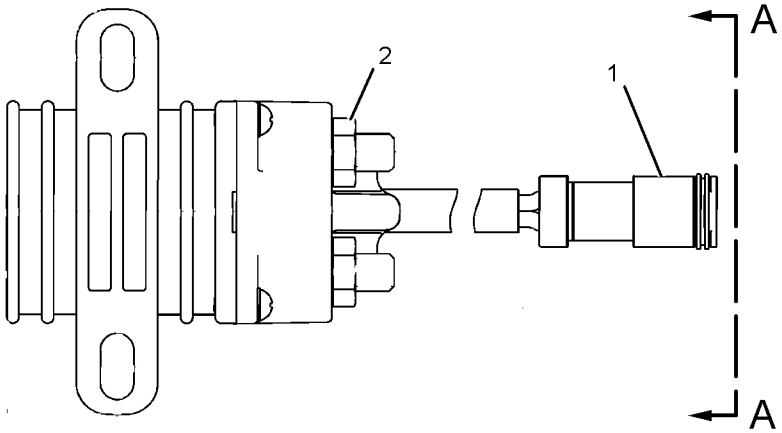

GRAPHIC #1 **<END>** g01077362

158-6632 SWITCH GP-PUSH BUTTON–HORN–PRIMING PUMP

S/N: JDL1-UP; GMT1-UP

PART OF 222-1141 BATTERY & WIRING GP, 222-1142 WIRING GP-PLATFORM

SMCS-1435, 7332 **i01837970**

NOTE	REF NO	GRAPHIC REF	PART NUMBER	QTY	PART NAME 1 2 3 4 5 6 (PRODUCT LEVEL)	SEE PAGE
	1	1	**9X-0199**	1	BOOT-SWITCH	
	2	1	**7T-9515**	1	KNOB-HORN	
	3	1	**5L-7200**	1	SCREW (8-32X0.375-IN)	
	4	1	**3B-4501**	1	LOCKWASHER	
	5	1	**6V-8370**	1	NUT-HEX (3/4-32-THD)	
	6	1	**2H-3922**	1	LOCKWASHER	
	7	1	**102-8802**	1	KIT-RECEPTACLE (2-PIN)	
					(INCLUDES RECEPTACLE AS & WEDGE)	
	8	1	**9X-3401**	2	PIN-CONNECTOR (16-GA TO 18-GA)	
	9	1	**3E-3365**	1	WEDGE-RECEPTACLE LOCK (2-PIN)	

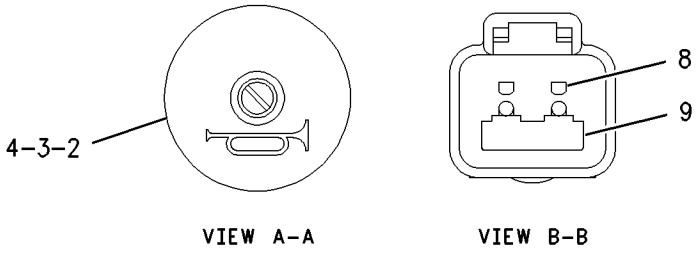

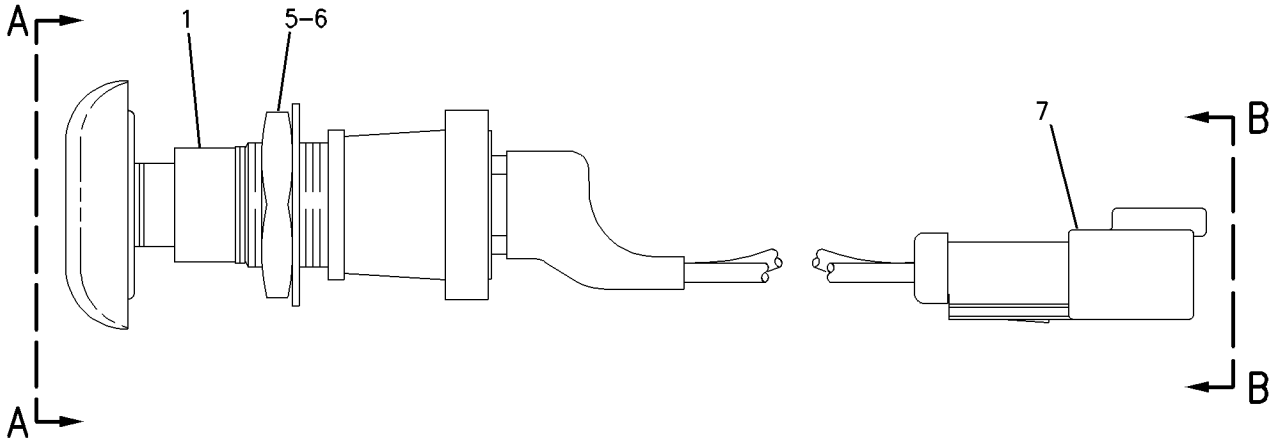

GRAPHIC #1 **<END>** g00942674

239-1134 VALVE GP-ETHER STARTING

S/N: JDL1-UP; GMT1-UP

PART OF 263-9012 STARTING AID GP-ETHER

SMCS-1456 **i02236256**

NOTE	REF NO	GRAPHIC REF	PART NUMBER	QTY	PART NAME 1 2 3 4 5 6 (PRODUCT LEVEL)	SEE PAGE
	1	1	**3E-3365**	1	WEDGE-RECEPTACLE LOCK (2-PIN)	
	2	1	**7N-9801**	1	GASKET	
	3	1	**102-8802**	1	KIT-RECEPTACLE (2-PIN)	
					(KIT INCLUDES RECEPTACLE AS & WEDGE)	
	4	1	**186-3735**	2	PIN-CONNECTOR (16-GA TO 18-GA)	

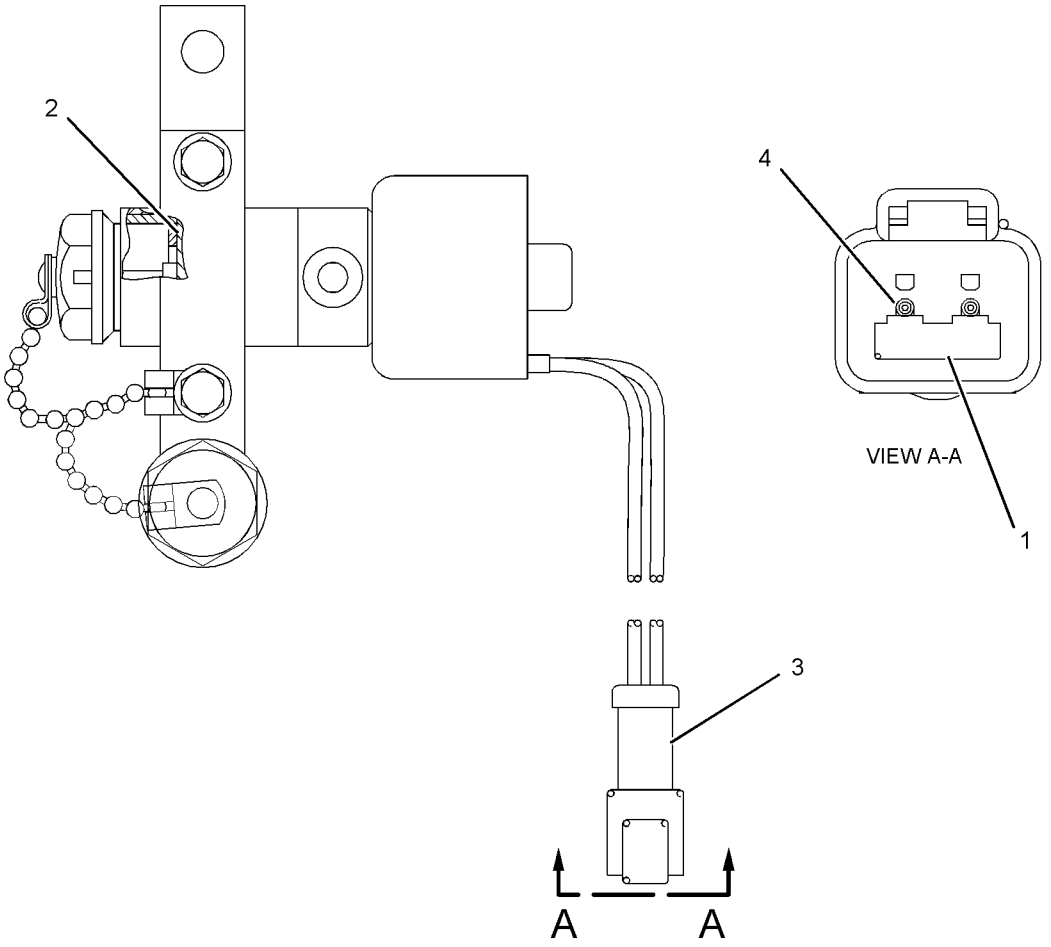

GRAPHIC #1 **<END>** g01053000

235-8203 WIRING GP-ELECTRONIC CONTROL

S/N: THX1-UP

PART OF 261-4290, 261-4291, 261-4293, 261-4294, 261-4295, 261-4297 ENGINE AR

ALSO AN ATTACHMENT

SMCS-1408, 1900 **i02431642**

NOTE	REF NO	GRAPHIC REF	PART NUMBER	QTY	PART NAME 1 2 3 4 5 6 (PRODUCT LEVEL)	SEE PAGE
	1	1	**3S-2093**	19	STRAP-CABLE	
	2	1	**4P-5918**	1	CLIP	
	3	1	**160-8124**	1	PLUG AS	
		1	**8T-8737**	2	PLUG-SEAL	
		1	**102-8802**	1	KIT-RECEPTACLE (2-PIN)	
					(INCLUDES RECEPTACLE AS. AND WEDGE)	
	4	1	**196-9654**	1	BRACKET AS	
	5	1	**215-3249**	1	HARNESS AS-ENGINE (UNIT INJECTOR)	
		1	**3S-2093**	5	STRAP-CABLE	
		1	**105-1797**	5	MOUNT	
		1	**191-7823**	1	RECEPTACLE AS	
	6	1	**235-8202**	1	HARNESS AS-ENGINE (ELECTRONIC CONTROL MODULE)	
		1	**227-4002**	1	PLUG AS-CONNECTOR (108-PIN)	
		1	**8T-8737**	12	PLUG-SEAL	
		1	**264-5732**	1	PLUG AS-CONNECTOR	
		1	**155-2265**	1	KIT-CONNECTING PLUG (8-PIN)	
					(INCLUDES PLUG AS. AND WEDGE)	
		1	**155-2270**	5	KIT-CONNECTING PLUG (2-PIN)	
					(EACH INCLUDES PLUG AS. AND WEDGE)	
		1	**155-2260**	3	KIT-CONNECTING PLUG (3-PIN)	
					(EACH INCLUDES PLUG AS. AND WEDGE)	
		1	**119-3662**		TUBE-HEAT SHRINK (33-CM)	
		1	**125-7874**		TUBE-HEAT SHRINK (5-CM)	
		1	**125-7875**		TUBE-HEAT SHRINK (10-CM)	
		1	**172-6062**	1	PLUG AS-CONNECTOR	
		1	**211-6807**	1	CONNECTOR	
		1	**102-8802**	1	KIT-RECEPTACLE (2-PIN)	
					(INCLUDES RECEPTACLE AS. AND WEDGE)	
		1	**102-8803**	1	KIT-RECEPTACLE (3-PIN)	
					(INCLUDES RECEPTACLE AS. AND WEDGE)	
		1	**100-3320**	1	PLUG AS-CONNECTOR (2-PIN)	
		1	**126-5011**	1	SEAL-CONNECTOR	
		1	**111-2416**	1	PLUG AS-CONNECTOR (2-PIN)	
		1	**126-5011**	1	SEAL-CONNECTOR	
	7	1	**4P-7581**	4	CLIP	
	8	1	**4P-8134**	2	CLIP	
M	9	1	**5P-7970**	2	NUT (M8X1.25-THD)	
	10	1	**6V-4369**	1	CLIP	
M	11	1	**6V-5217**	1	BOLT (M8X1.25X20-MM)	
	12	1	**6V-5839**	1	WASHER (11X21X2.5-MM THK)	
M	13	1	**6V-6317**	4	BOLT (M10X1.5X20-MM)	
M	14	1	**7I-2272**	2	BOLT (M5X0.8X12-MM)	
	15	1	**8T-0328**	2	WASHER-HARD (5.5X10X1-MM THK)	
M	16	1	**8T-4137**	1	BOLT (M10X1.5X20-MM)	
	17	1	**8T-4205**	1	WASHER-HARD (7.2X14.5X2-MM THK)	
M	18	1	**8T-5451**	1	BOLT (M6X1X12-MM)	
	19	1	**9M-1974**	3	WASHER-HARD (8.8X16X2-MM THK)	

M-METRIC PART

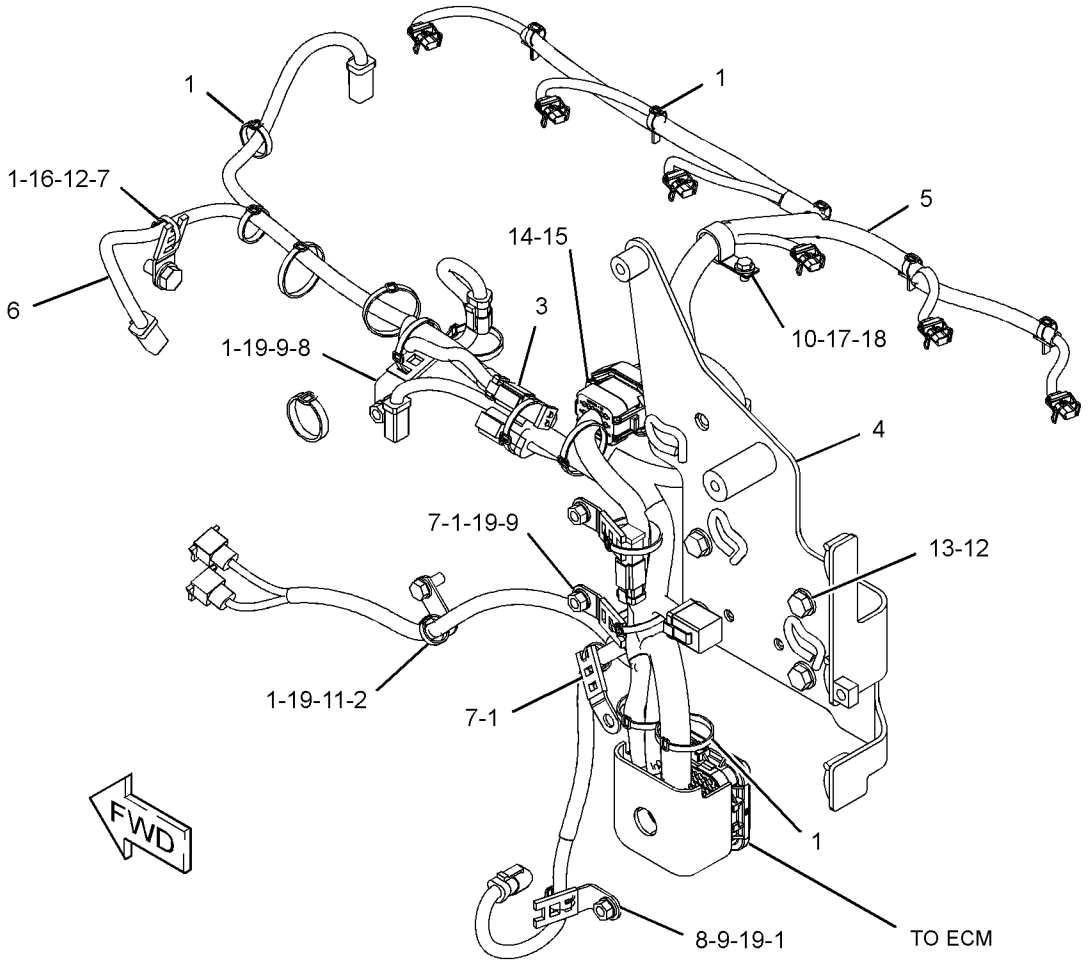

GRAPHIC #1 **<END>** g01207769

ELECTRICAL AND STARTING SYSTEM

222-1143 WIRING GP-ENGINE

S/N: JDL1-UP; GMT1-UP

PART OF 223-0551 INSTALLATION AR-ENGINE

SMCS-1000, 1408 **i02432521**

NOTE	REF NO	GRAPHIC REF	PART NUMBER	QTY	PART NAME 1 2 3 4 5 6 (PRODUCT LEVEL)	SEE PAGE
	1	1	**121-2844**	1	HARNESS AS-WIRING (CRANK WITHOUT INJECT)	
		1	**102-8803**	2	KIT-RECEPTACLE (3-PIN)	
					(EACH INCLUDES RECEPTACLE AS & WEDGE)	
		1	**155-2260**	1	KIT-CONNECTING PLUG (3-PIN)	
					(INCLUDES PLUG AS, WEDGE, & INTERFACE SEAL)	
Y	2	1	**145-7028**	1	SENSOR GP-TEMPERATURE (TRANSMISSION SUMP)	218
Y	2A	1	**145-7028**	1	SENSOR GP-TEMPERATURE (TORQUE CONVERTER OIL)	218
	3	1	**147-3150**	1	ANGLE AS	
M		1	**8T-3490**	1	NUT-WELD (M10X1.5-THD)	
	4	1	**183-4274**	1	BRACKET	
Y	5	1	**189-5746**	1	SENSOR GP-SPEED (TORQUE CONVERTER)	216
	6	1	**226-9672**	1	HARNESS AS-TRANSMISSION	
		1	**126-1774**	1	COVER	
		1	**113-0580**	1	RECEPTACLE AS-CONNECTOR (40-PIN)	
		1	**127-5486**	1	RECEPTACLE AS-CONNECTOR (1-PIN)	
		1	**134-2540**	1	RECEPTACLE AS-CONNECTOR (3-PIN)	
		1	**102-8802**	2	KIT-RECEPTACLE (2-PIN)	
		1	**102-8805**	1	KIT-RECEPTACLE (6-PIN)	
					(EACH INCLUDES RECEPTACLE AS & WEDGE)	
		1	**160-7689**	1	PLUG AS-CONNECTOR (70-PIN)	
		1	**155-2265**	1	KIT-CONNECTING PLUG (8-PIN)	
		1	**155-2260**	4	KIT-CONNECTING PLUG (3-PIN)	
		1	**155-2270**	6	KIT-CONNECTING PLUG (2-PIN)	
		1	**174-0503**	1	KIT-CONNECTING PLUG (3-PIN)	
		1	**155-2274**	1	KIT-CONNECTING PLUG (6-PIN)	
					(EACH INCLUDES PLUG AS, WEDGE, & INTERFACE SEAL)	
	7	1	**240-6902**	1	CABLE AS	
		1	**1S-4915**	2	LINER (CONDUIT)	
E		1	**5P-0695**		CONDUIT (255-CM)	
E		1	**159-8047**		CABLE-ELECTRICAL (0-GA, RED) (275-CM)	
		1	**8N-0869**	1	COVER-TERMINAL (RED)	
E		1	**8T-2225**		TUBE-HEAT SHRINK (16-CM)	
		1	**170-3793**	2	RING-TERMINAL	
	8	1	**242-3459**	1	BRACKET AS	
	9	1	**266-2404**	1	BRACKET AS	
	10	1	**278-7691**	1	BRACKET	
	11	1	**104-6202**	1	CLIP	
	12	1	**132-5789**	2	CLIP	
M	13	1	**133-7810**	1	STUD-TAPERLOCK (M10X1.15-THD)	
	14	1	**1S-0994**	6	CLIP	
	15	1	**4P-7428**	2	CLIP	
	16	1	**4P-7581**	7	CLIP	
	17	1	**4P-7582**	1	CLIP	
	18	1	**4P-8134**	5	CLIP	
M	19	1	**5C-7261**	2	NUT (M8X1.25-THD)	
	20	1	**6V-5839**	4	WASHER (11X21X2.5-MM THK)	
M	21	1	**6V-6317**	4	BOLT (M10X1.5X20-MM)	
M	22	1	**6V-7744**	1	LOCKNUT (M10X1.15-THD)	
	23	1	**7J-0204**	2	SEAL-O-RING	
	24	1	**7K-1181**	46	STRAP-CABLE	
	25	1	**7X-0515**	2	WASHER-HARD (17X35X5-MM THK)	
	26	1	**8T-4121**	9	WASHER-HARD (11X21X2.5-MM THK)	
M	27	1	**8T-4136**	5	BOLT (M10X1.5X25-MM)	
M	28	1	**8T-4137**	5	BOLT (M10X1.5X20-MM)	
M	29	1	**8T-4190**	2	BOLT (M16X2X25-MM)	

222-1143 **WIRING GP-ENGINE** *(contd.)* **i02432521**

NOTE	REF NO	GRAPHIC REF	PART NUMBER	QTY	PART NAME 1 2 3 4 5 6 (PRODUCT LEVEL)	SEE PAGE
	30	1	**8T-4224**	2	WASHER-HARD (8.8X16X2-MM THK)	
	31	1	**8T-4896**	1	WASHER-HARD (10.2X18.5X2.5-MM THK)	

E-ORDER BY THE CENTIMETER
M-METRIC PART
Y-SEPARATE ILLUSTRATION

222-1143 **WIRING GP-ENGINE** *(contd.)* **i02432521**

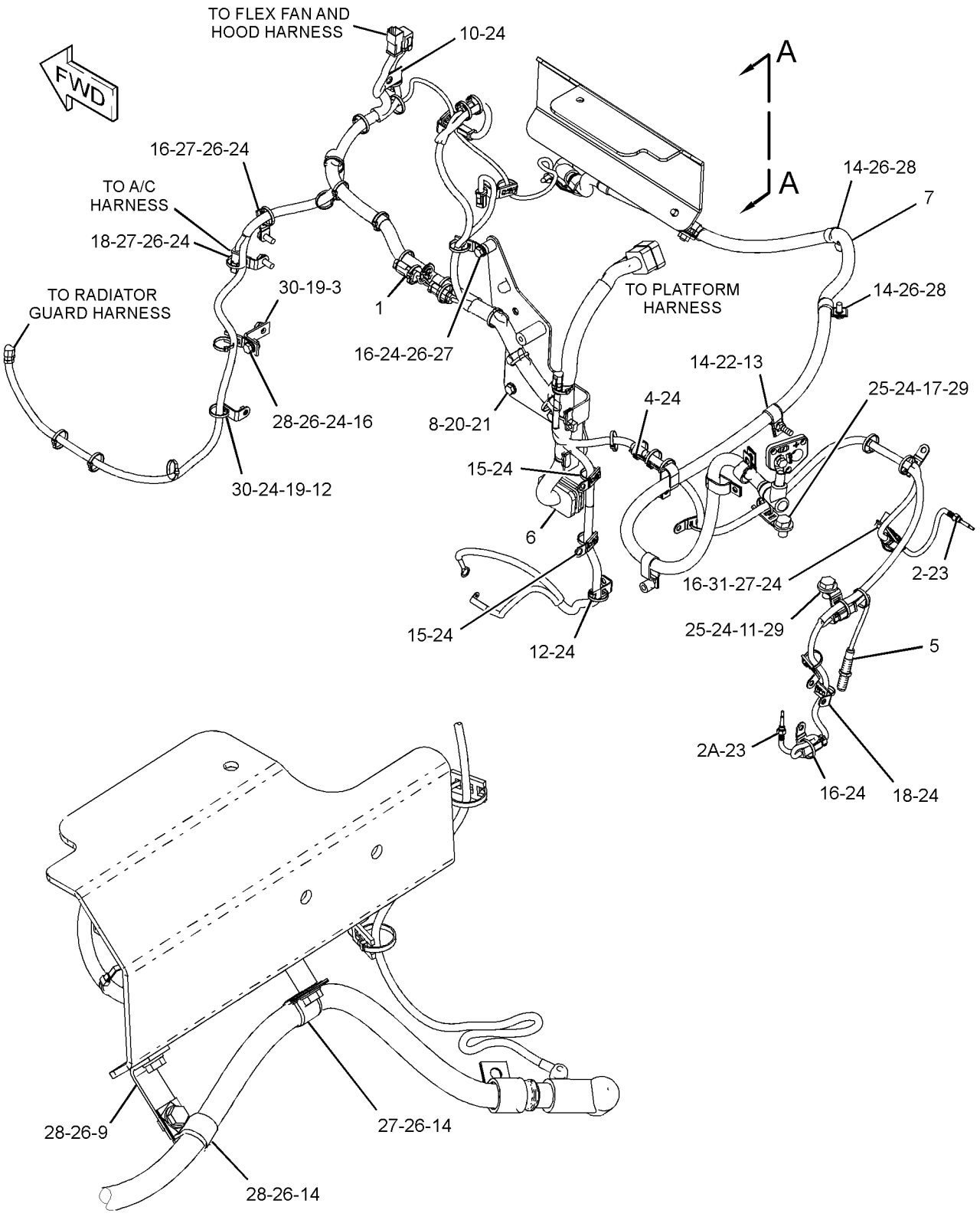

VIEW A-A

GRAPHIC #1 **<END>** g01209488

236-5042 WIRING GP-GRADE CONTROL

S/N: JDL1-UP; GMT1-UP
PART OF 236-5880 INSTALLATION AR-GRADE CONTROL
AN ATTACHMENT

SMCS-1408 **i02454115**

NOTE	REF NO	GRAPHIC REF	PART NUMBER	QTY	PART NAME 1 2 3 4 5 6 (PRODUCT LEVEL)	SEE PAGE
	1	1	**6D-3033**	12	SCREW-SOCKET HEAD (4-40X0.5-IN)	
	2	1,2	**7K-1181**	56	STRAP-CABLE	
	3	1	**7R-3029**	3	CAP-DUST	
	4	1	**123-0304**	1	INDICATOR AS (ACTION LIGHT)	
		1	**115-1748**	1	LAMP (24-VOLT, 3-WATT)	
		1	**123-0306**	1	SOCKET AS	
	5	1	**126-1773**	1	CAP-CONNECTOR	
	6	1	**129-8331**	1	PLATE AS	
	7	1	**132-8487**	3	NUT-RING	
	8	2	*168-1968*	1	TEE AS	
		2	**126-6872**	1	TEE	
		2	**3J-1907**	1	SEAL-O-RING	
		2	**6V-8397**	1	SEAL-O-RING	
	9	1	**200-6345**	3	MOUNT (DUAL SWIVEL)	
	10	2	**205-3079**	1	ADAPTER	
Y	11	2	**237-0957**	1	SENSOR GP-PRESSURE (BULLDOZER PILOT OIL)	214
	12	2	**242-7090**	1	HARNESS AS-PLATFORM	
		2	**102-8801**	2	KIT-RECEPTACLE (12-PIN)	
		2	**102-8802**	4	KIT-RECEPTACLE (2-PIN)	
		2	**102-8803**	1	KIT-RECEPTACLE (3-PIN)	
		2	**102-8804**	2	KIT-RECEPTACLE (4-PIN)	
		2	**102-8805**	1	KIT-RECEPTACLE (6-PIN)	
		2	**166-5229**	1	KIT-RECEPTACLE (12-PIN)	
		2	**197-7565**	2	KIT-RECEPTACLE (4-PIN)	
		2	**265-2106**	1	KIT-RECEPTACLE (4-PIN)	
					(EACH INCLUDES RECEPTACLE AS & WEDGE)	
		2	**214-4208**	2	RECEPTACLE AS-CONNECTOR (70-PIN)	
		2	**134-2540**	2	RECEPTACLE AS-CONNECTOR (3-PIN)	
		2	**190-7613**	1	RECEPTACLE AS-CONNECTOR (12-PIN)	
		2	**9W-1951**	1	RECEPTACLE (9-PIN)	
		2	**8T-8736**	1	RECEPTACLE-CONNECTOR (9-PIN)	
		2	**8C-6354**	1	CAP-RECEPTACLE	
		2	**155-2255**	7	KIT-CONNECTING PLUG (12-PIN)	
		2	**155-2257**	2	KIT-CONNECTING PLUG (12-PIN)	
		2	**155-2260**	1	KIT-CONNECTING PLUG (3-PIN)	
		2	**155-2270**	5	KIT-CONNECTING PLUG (2-PIN)	
		2	**155-2271**	6	KIT-CONNECTING PLUG (4-PIN)	
		2	**155-2274**	3	KIT-CONNECTING PLUG (6-PIN)	
		2	**174-0503**	2	KIT-CONNECTING PLUG (3-PIN)	
					(EACH INCLUDES PLUG AS, WEDGE, & INTERFACE SEAL)	
		2	**177-9656**	1	KIT-CONNECTING PLUG (4-PIN)	
					(INCLUDES PLUG AS & WEDGE)	
		2	**110-6845**	1	PLUG AS-CONNECTOR (40-PIN)	
		2	**127-5485**	1	PLUG AS-CONNECTOR (1-PIN)	
		2	**160-7689**	2	PLUG AS-CONNECTOR (70-PIN)	
		2	**9X-0196**	2	TERMINAL AS	
		2	**126-1774**	1	COVER	
	13	1	**242-7091**	1	HARNESS AS-CHASSIS	
		1	**102-8801**	1	KIT-RECEPTACLE (12-PIN)	
		1	**102-8803**	1	KIT-RECEPTACLE (3-PIN)	
		1	**102-8805**	1	KIT-RECEPTACLE (6-PIN)	
		1	**102-8806**	1	KIT-RECEPTACLE (8-PIN)	
					(EACH INCLUDES RECEPTACLE AS & WEDGE)	
		1	**190-7613**	1	RECEPTACLE AS-CONNECTOR (12-PIN)	

236-5042 **WIRING GP-GRADE CONTROL** *(contd.)* **i02454115**

NOTE	REF NO	GRAPHIC REF	PART NUMBER	QTY	PART NAME 1 2 3 4 5 6 (PRODUCT LEVEL)	SEE PAGE
		1	**155-2270**	5	KIT-CONNECTING PLUG (2-PIN)	
		1	**155-2271**	1	KIT-CONNECTING PLUG (4-PIN)	
					(EACH INCLUDES PLUG AS, WEDGE, & INTERFACE SEAL)	
		1	**9X-4385**	1	PLUG AS-CONNECTOR (6-PIN)	
	14	1	**242-7093**	1	HARNESS AS-CONTROL	
		1	**155-2255**	2	KIT-CONNECTING PLUG (12-PIN)	
		1	**155-2257**	1	KIT-CONNECTING PLUG (12-PIN)	
		1	**155-2265**	1	KIT-CONNECTING PLUG (8-PIN)	
		1	**155-2270**	2	KIT-CONNECTING PLUG (2-PIN)	
		1	**155-2274**	1	KIT-CONNECTING PLUG (6-PIN)	
		1	**174-0503**	2	KIT-CONNECTING PLUG (3-PIN)	
					(EACH INCLUDES PLUG AS, WEDGE, & INTERFACE SEAL)	
		1	**134-2540**	2	RECEPTACLE AS-CONNECTOR (3-PIN)	
	15	1	**242-7094**	1	HARNESS AS-WIRING (RH)	
		1	**228-3323**	1	CLIP-SPRING	
		1	**102-8801**	1	KIT-RECEPTACLE (12-PIN)	
					(INCLUDES RECEPTACLE AS & WEDGE)	
	16	1	**242-7095**	1	HARNESS AS-WIRING (LH)	
		1	**228-3323**	2	CLIP-SPRING	
		1	**102-8801**	1	KIT-RECEPTACLE (12-PIN)	
					(INCLUDES RECEPTACLE AS & WEDGE)	
		1	**190-7613**	1	RECEPTACLE AS-CONNECTOR (12-PIN)	
		1	**155-2271**	1	KIT-CONNECTING PLUG (4-PIN)	
					(INCLUDES PLUG AS, WEDGE, & INTERFACE SEAL)	
	17	1	**256-7789**	1	HARNESS AS-RADIO	
		1	**102-8801**	1	KIT-RECEPTACLE (12-PIN)	
					(INCLUDES RECEPTACLE AS & WEDGE)	
		1	**167-8987**	1	PLUG AS-CONNECTOR (8-PIN)	
		1	**268-3371**	1	CAP AS (CONNECTOR)	
	18	1	**256-8776**	1	HARNESS AS-MONITOR	
		1	**102-8804**	1	KIT-RECEPTACLE (4-PIN)	
					(INCLUDES RECEPTACLE AS & WEDGE)	
	19	2	**265-9040**	1	HARNESS AS-WIRING	
		2	**102-8805**	1	KIT-RECEPTACLE (6-PIN)	
					(INCLUDES RECEPTACLE AS & WEDGE)	
		2	**6D-5257**	1	PLUG AS-CONNECTOR (8-PIN)	
	20	2	**265-9042**	1	HARNESS AS-WIRING	
		2	**155-2274**	1	KIT-CONNECTING PLUG (6-PIN)	
					(INCLUDES PLUG AS, WEDGE, & INTERFACE SEAL)	
		2	**3R-9965**	1	PLUG AS-CONNECTOR (8-PIN)	
	21	1	**130-5300**	2	CLIP	
	22	2	**156-6175**	1	CLIP	
	23	2	**1J-9671**	1	SEAL-O-RING	
	24	1	**1S-6420**	4	CLIP	
	25	1	**3D-6209**	2	GROMMET	
M	26	1	**3E-8020**	4	SCREW-TRUSS HEAD (M6X1X25-MM)	
	27	2	**3J-1907**	2	SEAL-O-RING	
	28	2	**4P-7428**	3	CLIP	
	29	1,2	**4P-7581**	7	CLIP	
	30	2	**4P-7582**	1	CLIP	
	31	1	**5P-1075**	9	WASHER-HARD (10.2X22.5X3-MM THK)	
	32	1	**6K-4934**	4	CLIP (SLOT)	
	33	1	**6K-4935**	4	CLIP (TAB)	
	34	2	**6V-8076**	1	ELBOW	
M	35	1	**7X-2562**	2	BOLT (M20X2.5X45-MM)	
M	36	1	**8T-4133**	4	NUT (M10X1.5 THD)	
M	37	1	**8T-4136**	4	BOLT (M10X1.5X25-MM)	
M	38	1	**8T-4137**	1	BOLT (M10X1.5X20-MM)	

236-5042 **WIRING GP-GRADE CONTROL** *(contd.)* **i02454115**

NOTE	REF NO	GRAPHIC REF	PART NUMBER	QTY	PART NAME 1 2 3 4 5 6 (PRODUCT LEVEL)	SEE PAGE
	39	1	**8T-5439**	2	WASHER (21.5X45X6-MM THK)	

M-METRIC PART
Y-SEPARATE ILLUSTRATION

236-5042 **WIRING GP-GRADE CONTROL** *(contd.)* **i02454115**

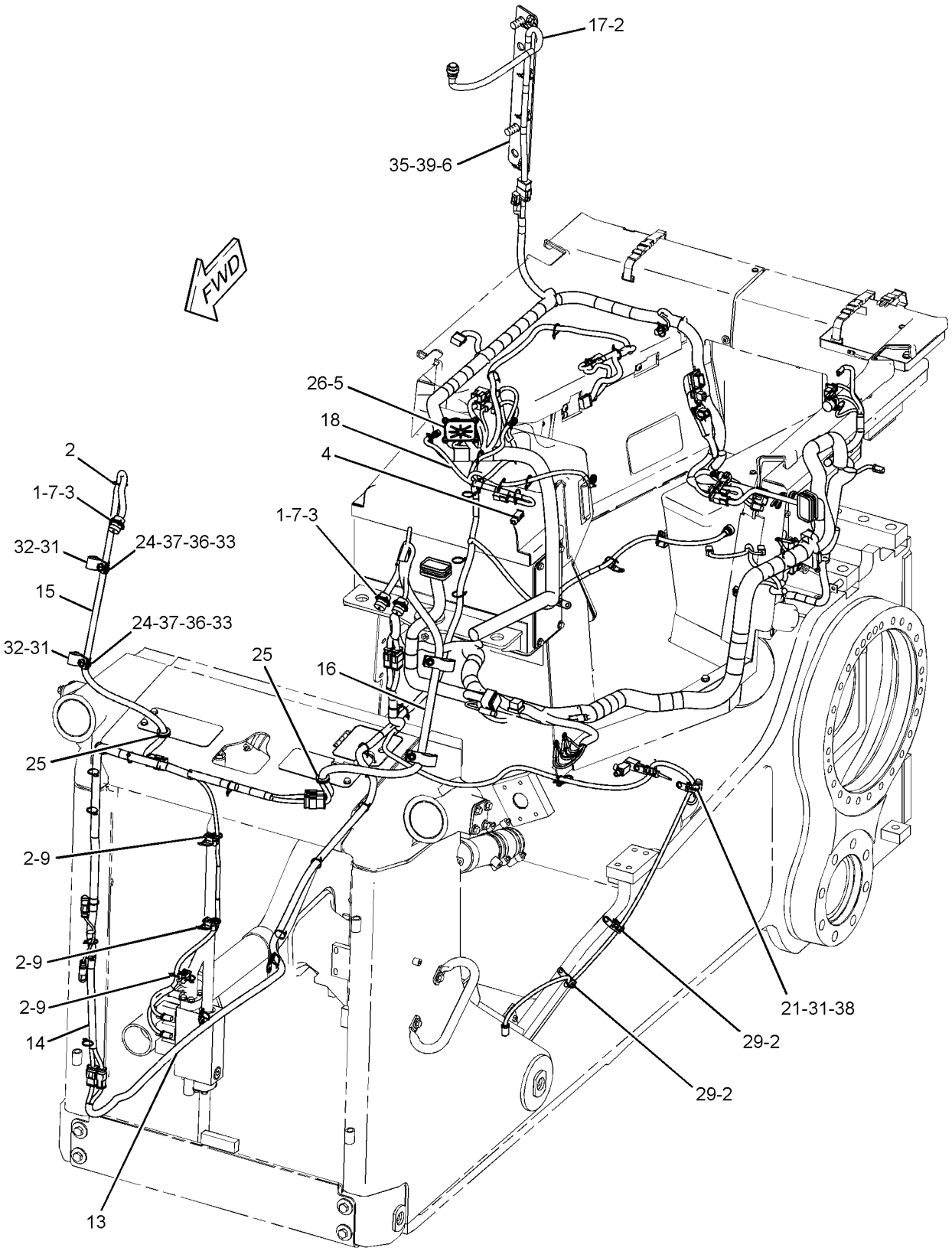

GRAPHIC #1 g01211077

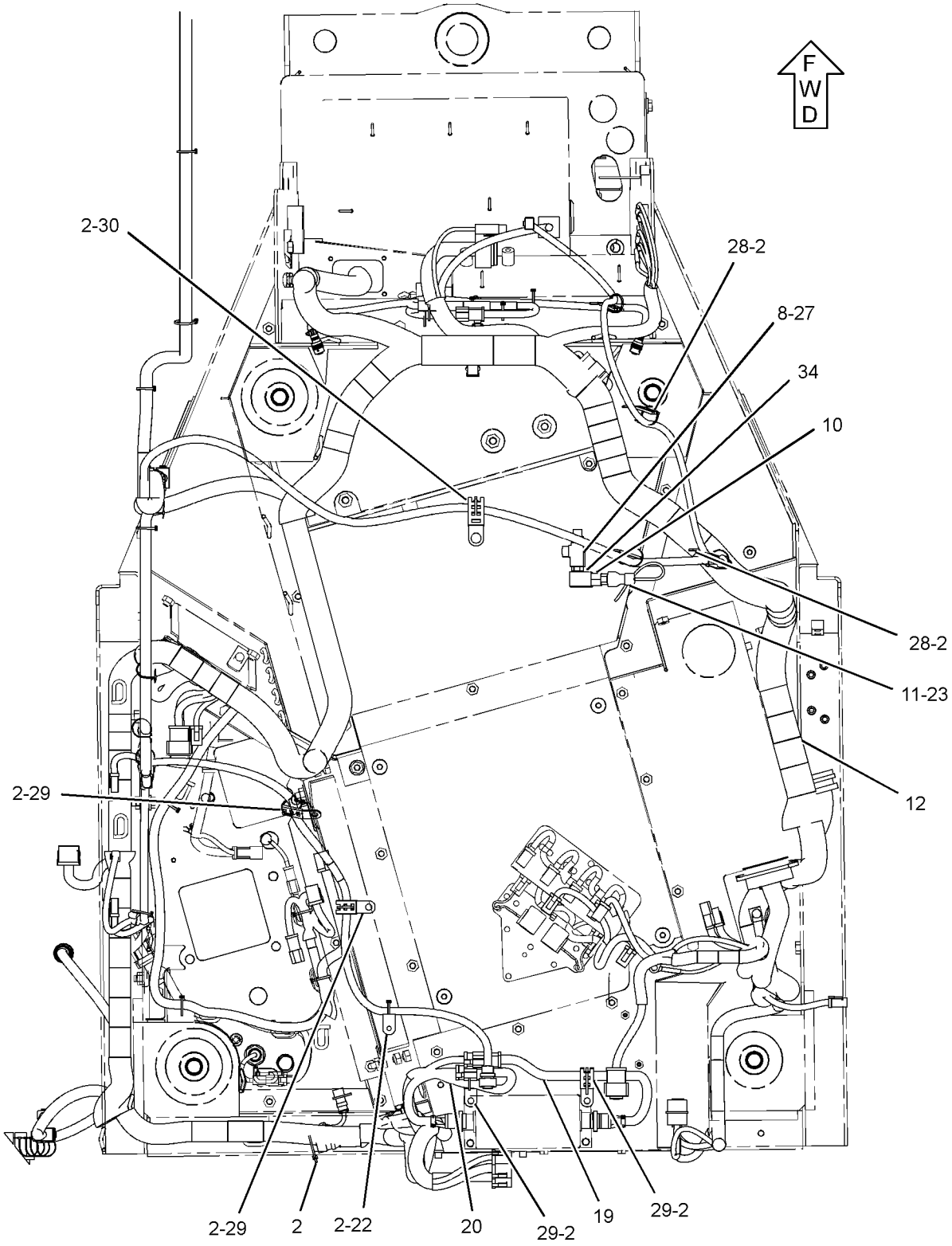

BOTTOM VIEW

GRAPHIC #2 **<END>** g01212450

ELECTRICAL AND STARTING SYSTEM

222-1142 WIRING GP-PLATFORM

S/N: JDL1-UP; GMT1-UP

PART OF 218-4978, 222-1592 CHASSIS AR

SMCS-1408 **i02469499**

NOTE	REF NO	GRAPHIC REF	PART NUMBER	QTY	PART NAME 1 2 3 4 5 6 (PRODUCT LEVEL)	SEE PAGE
Y	1	1	**3E-6328**	1	ALARM GP (24-VOLT)	156
	2	1	**6I-1418**	4	SPACER (8.2X12.7X28.7-MM THK)	
	3	1,2	**7K-1181**	33	STRAP-CABLE	
	4	1	**7N-1996**	1	LAMP (24-VOLT)	
	5	1	**8T-9655**	8	MOUNT-ISOLATION	
	6	1	**117-2311**	2	RECEPTACLE AS-POWER (12-VOLT)	
	7	1	**149-9818**	1	PLATE	
Y	8	1	**158-6632**	1	SWITCH GP-PUSH BUTTON (HORN)	236
	9	1	**170-3461**	1	LAMP AS-INDICATOR (ACTION LIGHT)	
		1	**102-8802**	1	KIT-RECEPTACLE (2-PIN)	
					(INCLUDES RECEPTACLE AS & WEDGE)	
		1	**3T-0304**	1	BASE-INDICATOR LIGHT	
D		1	**5P-5623**		WIRE-ELECTRICAL (16-GA, BLACK) (0.3-M)	
D		1	**6V-2689**		TUBE-HEAT SHRINK (0.1-M)	
		1	**186-3735**	2	PIN-CONNECTOR (16-GA TO 18-GA)	
E		1	**9X-1813**		SLEEVE (8-CM)	
	10	1	**172-4860**	1	WIRE AS	
D		1	**5P-5675**		WIRE (06-GA) (0.5-M)	
	11	1	**173-1566**	1	CAP AS	
D		1	**5P-5677**		WIRE (18-GA, BLACK) (0.6-M)	
		1	**8C-6354**	1	CAP-RECEPTACLE	
E		1	**125-7875**		TUBE-HEAT SHRINK (60-CM)	
		1	**155-2271**	1	KIT-CONNECTING PLUG (4-PIN)	
		1	**155-2271**	1	KIT-CONNECTING PLUG (4-PIN)	
					(EACH INCLUDES PLUG AS, WEDGE & INTERFACE SEAL)	
	12	1	**196-9852**	1	PLATE AS	
		1	**6V-6716**	2	RIVET-TRUSS HEAD	
M		1	**6V-9632**	2	NUT-WELD (M6X1-THD)	
		1	**7T-1099**	1	LINK	
		1	**109-1645**	1	CLIP	
	13	2	**202-4327**	1	PULLER-FUSE	
	14	1	**204-8000**	3	ANCHOR-TIE	
	15	2	**209-0381**	1	CONVERTER-POWER (24-VOLT TO 12-VOLT)	
	16	1	**222-7877**	1	SWITCH AS-ROCKER (THROTTLE)	
	17	1	**222-7883**	1	SWITCH AS-ROCKER (HYDRAULIC LOCKOUT)	
	18	1	**224-9222**	1	BRACKET	
	19	1	**226-9663**	1	HARNESS AS-CHASSIS	
		1	**102-8802**	3	KIT-RECEPTACLE (2-PIN)	
		1	**102-8803**	1	KIT-RECEPTACLE (3-PIN)	
		1	**102-8804**	1	KIT-RECEPTACLE (4-PIN)	
		1	**102-8801**	2	KIT-RECEPTACLE (12-PIN)	
		1	**166-5229**	1	KIT-RECEPTACLE (12-PIN)	
		1	**197-7565**	2	KIT-RECEPTACLE (4-PIN)	
					(EACH INCLUDES RECEPTACLE AS & WEDGE)	
		1	**155-2255**	3	KIT-CONNECTING PLUG (12-PIN)	
		1	**155-2257**	1	KIT-CONNECTING PLUG (12-PIN)	
		1	**155-2260**	1	KIT-CONNECTING PLUG (3-PIN)	
		1	**155-2270**	4	KIT-CONNECTING PLUG (2-PIN)	
		1	**155-2271**	4	KIT-CONNECTING PLUG (4-PIN)	
		1	**155-2274**	1	KIT-CONNECTING PLUG (6-PIN)	
		1	**177-9656**	1	KIT-CONNECTING PLUG (4-PIN)	
					(EACH INCLUDES PLUG AS, WEDGE & INTERFACE SEAL)	
		1	**110-6845**	1	PLUG AS-CONNECTOR (40-PIN)	
		1	**127-5485**	1	PLUG AS-CONNECTOR (1-PIN)	

222-1142 **WIRING GP-PLATFORM** *(contd.)* **i02469499**

NOTE	REF NO	GRAPHIC REF	PART NUMBER	QTY	PART NAME 1 2 3 4 5 6 (PRODUCT LEVEL)	SEE PAGE
		1	**160-7689**	2	PLUG AS-CONNECTOR (70-PIN)	
		1	**9X-0196**	2	TERMINAL AS	
		1	**190-7613**	1	RECEPTACLE AS-CONNECTOR (12-PIN)	
		1	**9W-1951**	1	RECEPTACLE (9-PIN)	
	20	1	**226-9665**	1	HARNESS AS-CONSOLE	
		1	**102-8803**	1	KIT-RECEPTACLE (3-PIN)	
		1	**102-8804**	2	KIT-RECEPTACLE (4-PIN)	
					(EACH INCLUDES RECEPTACLE AS & WEDGE)	
		1	**155-2255**	1	KIT-CONNECTING PLUG (12-PIN)	
		1	**155-2257**	1	KIT-CONNECTING PLUG (12-PIN)	
		1	**155-2260**	1	KIT-CONNECTING PLUG (3-PIN)	
		1	**155-2270**	3	KIT-CONNECTING PLUG (2-PIN)	
		1	**155-2271**	1	KIT-CONNECTING PLUG (4-PIN)	
					(EACH INCLUDES PLUG AS, WEDGE & INTERFACE SEAL)	
		1	**245-7434**	3	PLUG GP-CONNECTOR	
Y	21	2	*226-9674*	1	PANEL GP-FUSE	202
	22	1	**228-6089**	1	PLUG	
	23	1	**239-3355**	1	GASKET	
	24	2	**239-7392**	1	PLATE AS	
	25	2	**239-8107**	1	FUSE (175-AMPERE)	
	26	1	**246-4311**	1	GUARD (SWITCH)	
	27	1	**259-2093**	1	LENS (RED)	
	28	1	**261-7990**	1	GROMMET	
	29	1	**262-1408**	1	CONTROL GP-UNPROGRAMMED	
	30	2	**281-3179**	1	BRACKET	
M	31	2	**107-3786**	6	BOLT (M4X0.7X12-MM)	
	32	1	**130-5300**	2	CLIP	
	33	1	**141-4976**	4	SCREW-WASHER HEAD (NO 4X12.7-MM)	
M	34	1	**150-4086**	8	SCREW (M4X0.7X16-MM)	
	35	2	**199-4317**	4	BOLT (M10X1.5X115-MM)	
	36	1,2	**204-2281**	31	TIE	
	37	1	**4B-4863**	8	WASHER (4.7X11X1.2-MM THK)	
	38	1	**4P-8134**	1	CLIP	
M	39	1	**5C-9553**	4	BOLT (M6X1X16-MM)	
	40	1	**5F-9757**	2	GROMMET	
	41	2	**5P-1075**	2	WASHER-HARD (10.2X22.5X3-MM THK)	
M	42	1	**7X-0818**	4	BOLT (M8X1.25X45-MM)	
	43	2	**8T-0328**	6	WASHER-HARD (5.5X10X1-MM THK)	
M	44	2	**8T-0389**	2	LOCKNUT (M10X1.15-THD)	
M	45	1	**8T-2659**	8	LOCKNUT (M4X0.7-THD)	
	46	1,2	**8T-4121**	14	WASHER-HARD (11X21X2.5-MM THK)	
M	47	1,2	**8T-4137**	8	BOLT (M10X1.5X20-MM)	
M	48	1	**8T-4138**	4	BOLT (M6X1X20-MM)	
M	49	2	**8T-4191**	2	BOLT (M10X1.5X16-MM)	
M	50	2	**8T-4199**	1	BOLT (M8X1.25X12-MM)	
	51	2	**8T-4224**	1	WASHER-HARD (8.8X16X2-MM THK)	
	52	2	**8T-7934**	1	WASHER-HARD (11X21X5-MM THK)	
	53	1	**9N-0869**	4	WASHER-HARD (8.8X25.5X2-MM THK)	
	54	1	**9X-8256**	8	WASHER (6.6X12X2-MM THK)	

D-ORDER BY THE METER
E-ORDER BY THE CENTIMETER
M-METRIC PART
Y-SEPARATE ILLUSTRATION

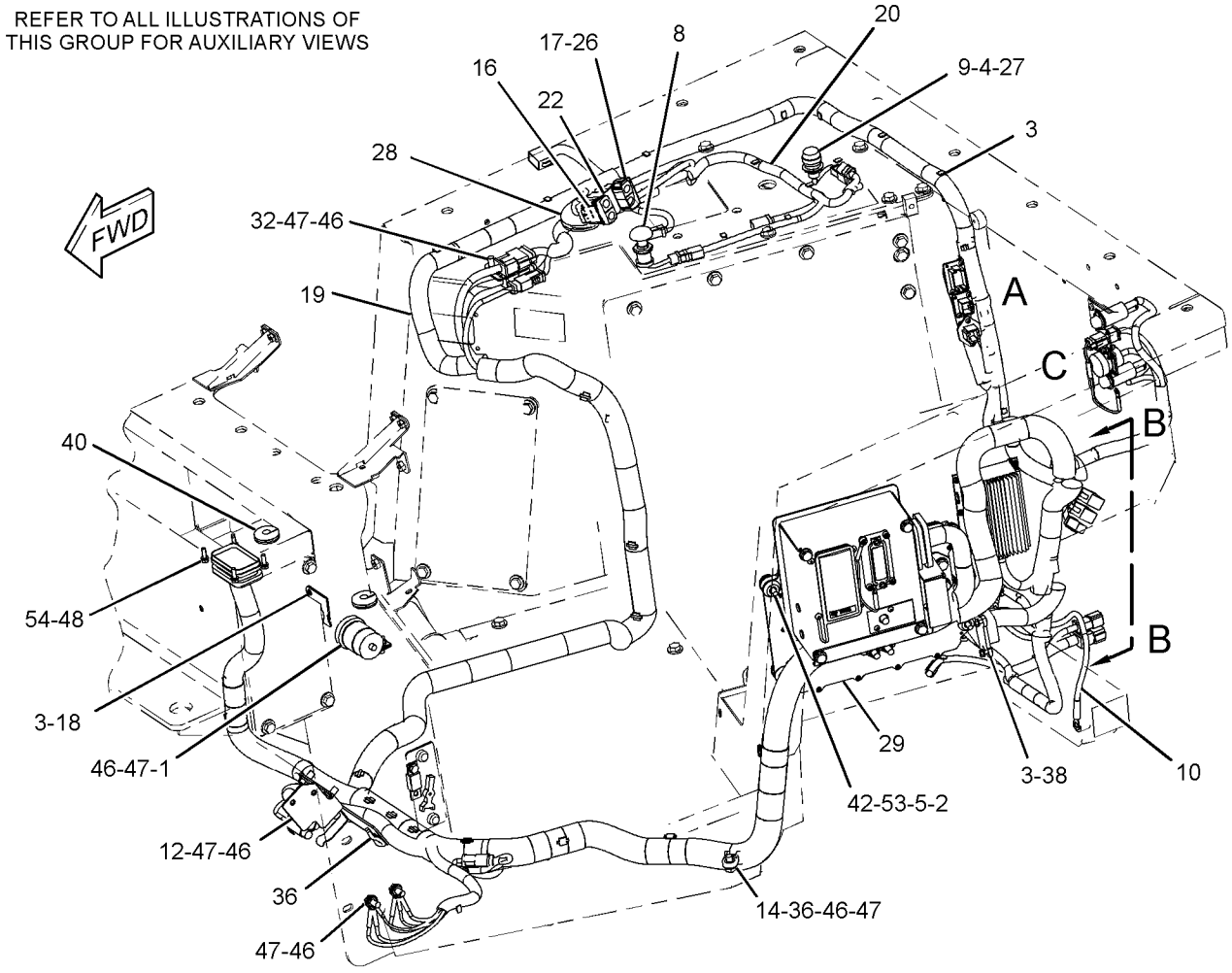

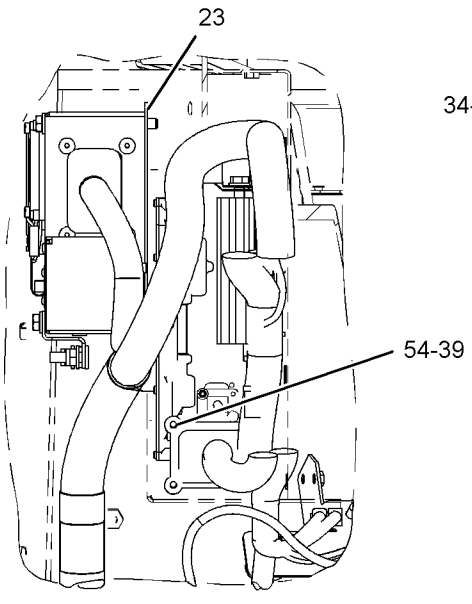

VIEW B-B

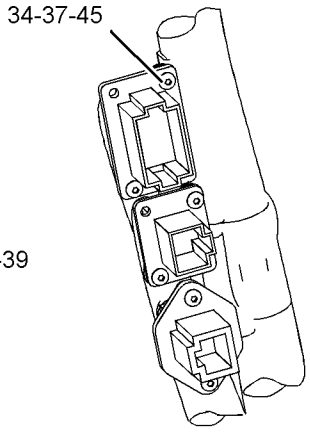

VIEW OF AREA A

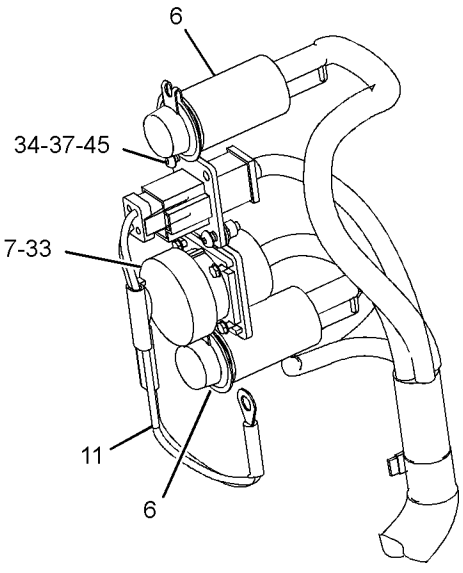

VIEW OF AREA C

GRAPHIC #1

g01210568

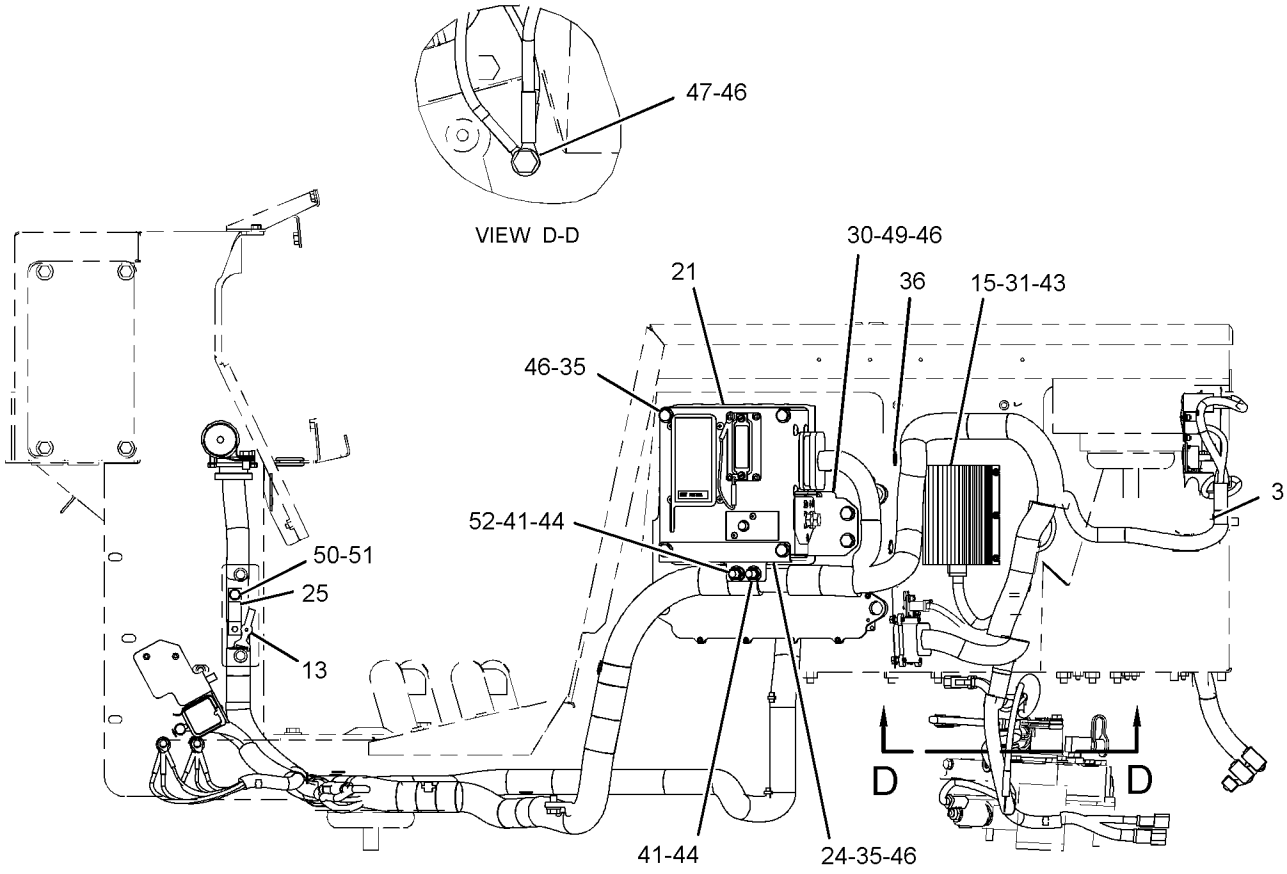

LEFT SIDE VIEW

GRAPHIC #2 **<END>** g01210569

255-6934 ACCUMULATOR GP–CHARGED

S/N: JDL1-UP; GMT1-UP
PART OF 223-0703 LINES GP-POWER TRAIN OIL
FIELD REPLACEMENT ORDER 255-6936–PAGE 253

SMCS-5077 **i02450539**

NOTE	REF NO	GRAPHIC REF	PART NUMBER	QTY	PART NAME 1 2 3 4 5 6 (PRODUCT LEVEL)	SEE PAGE
	1	1	**241-0037**	1	FILM-WARNING (HIGH PRESSURE, READ OMM)	
	2	1	**158-2336**	1	VALVE-GAS	
	3	1	**069-2536**	1	PROTECTOR-GAS VALVE	
	4	1	**030-9613**	2	SCREW-FORMING (10-24X0.37-IN)	
					AVAILABLE REPAIR KIT(S):	
			160-0496	1	KIT-SEAL (ACCUMULATOR)	
					(INCLUDES SEALS)	

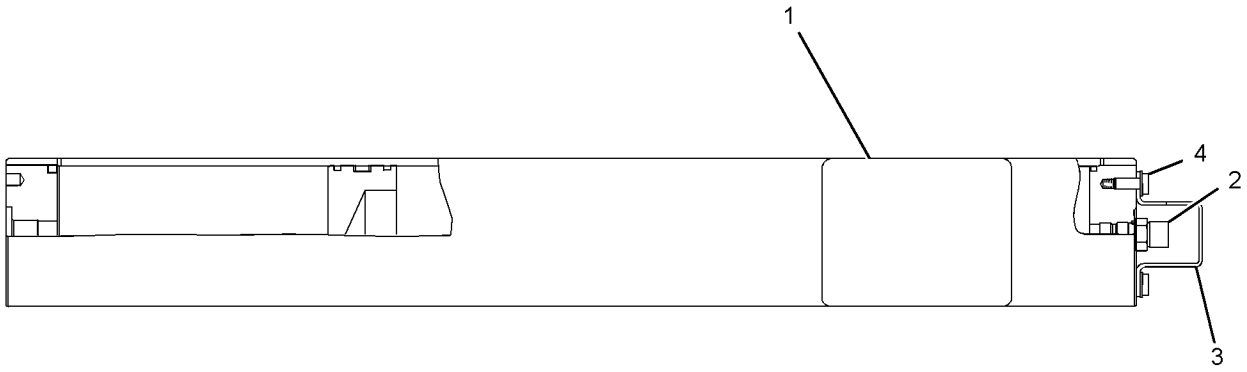

GRAPHIC #1 **<END>** g01209650

255-6936 ACCUMULATOR GP—UNCHARGED

S/N: JDL1-UP; GMT1-UP

FIELD REPLACEMENT FOR 255-6934—PAGE 252

SMCS-5077 **i02450547**

NOTE	REF NO	GRAPHIC REF	PART NUMBER	QTY	PART NAME 1 2 3 4 5 6 (PRODUCT LEVEL)	SEE PAGE
	1	1	**030-9613**	2	SCREW-FORMING (10-24XO.37-IN)	
	2	1	**158-2336**	1	VALVE-GAS	
	3	1	**069-2536**	1	PROTECTOR-GAS VALVE	
	4	1	**241-0037**	1	FILM-WARNING (HIGH PRESSURE, READ OMM)	
					AVAILABLE REPAIR KIT(S):	
			160-0496	1	KIT-SEAL (ACCUMULATOR)	

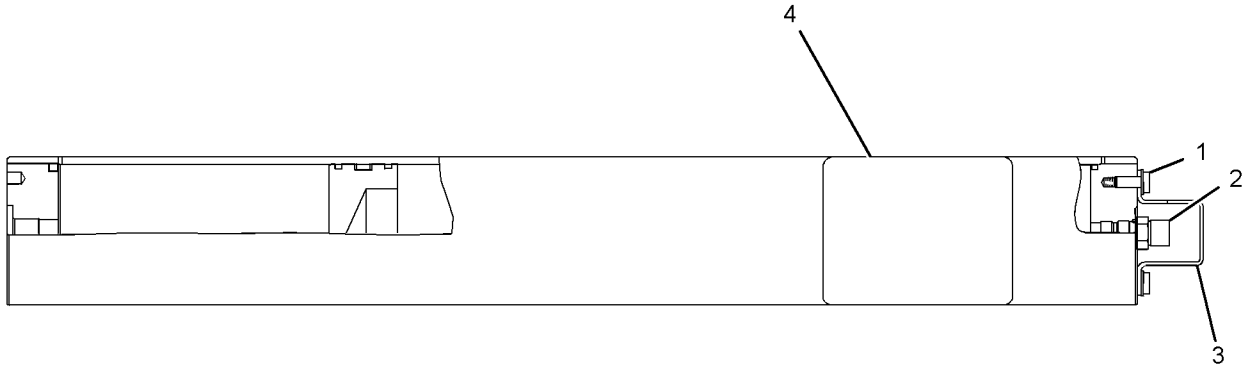

GRAPHIC #1 **<END>** g01209616

3W-6550 AXLE GP-POWER TRAIN

S/N: JDL1-UP; GMT1-UP
PART OF 218-4979 POWER TRAIN AR

SMCS-3282 **i00599820**

NOTE	REF NO	GRAPHIC REF	PART NUMBER	QTY	PART NAME 1 2 3 4 5 6 (PRODUCT LEVEL)	SEE PAGE
	1	1	**3W-6551**	1	SHAFT	
	2	1	**3T-5851**	1	SHAFT	
C	3	1	**9G-8637**	1	GEAR-SUN (11 TEETH)	

C-CHANGE FROM PREVIOUS TYPE

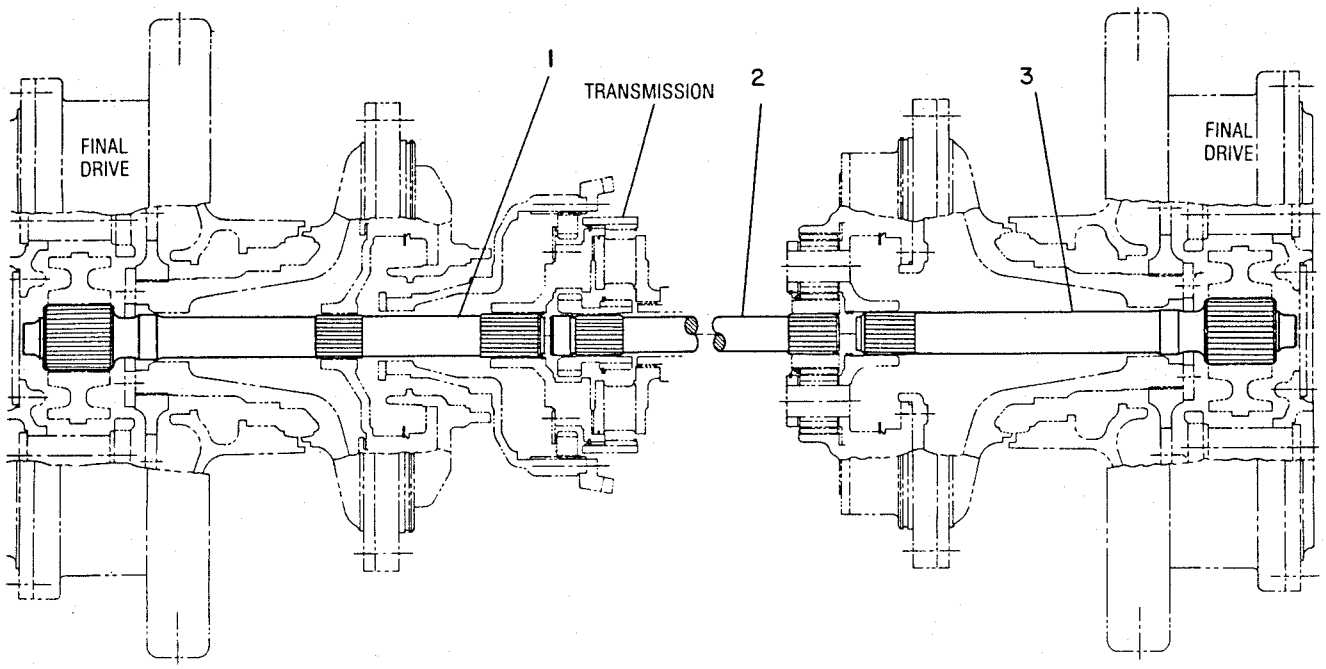

GRAPHIC #1 **<END>** g00188323

238-1029 BASE GP-OIL FILTER—POWER TRAIN

S/N: JDL1-UP; GMT1-UP
PART OF 235-5812 FILTER GP-OIL

SMCS-3004 **i02450519**

NOTE	REF NO	GRAPHIC REF	PART NUMBER	QTY	PART NAME 1 2 3 4 5 6 (PRODUCT LEVEL)	SEE PAGE
	1	1	**3T-9549**	1	ADAPTER	
	2	1	**7G-4998**	1	SPOOL-BYPASS	
	3	1	**7M-1297**	1	SPRING	
	4	1	**133-2198**	1	SPRING	
Y	5	1	**164-7577**	1	SWITCH GP-BYPASS (POWER TRAIN OIL FILTER)	232
Z	6	1		1	BASE-FILTER	
	7	1	**2S-4078**	1	SEAL-O-RING	
	8	1	**3D-2824**	1	SEAL-O-RING	
	9	1	**9S-8008**	1	PLUG	

Y-SEPARATE ILLUSTRATION
Z-NOT SERVICED SEPARATELY

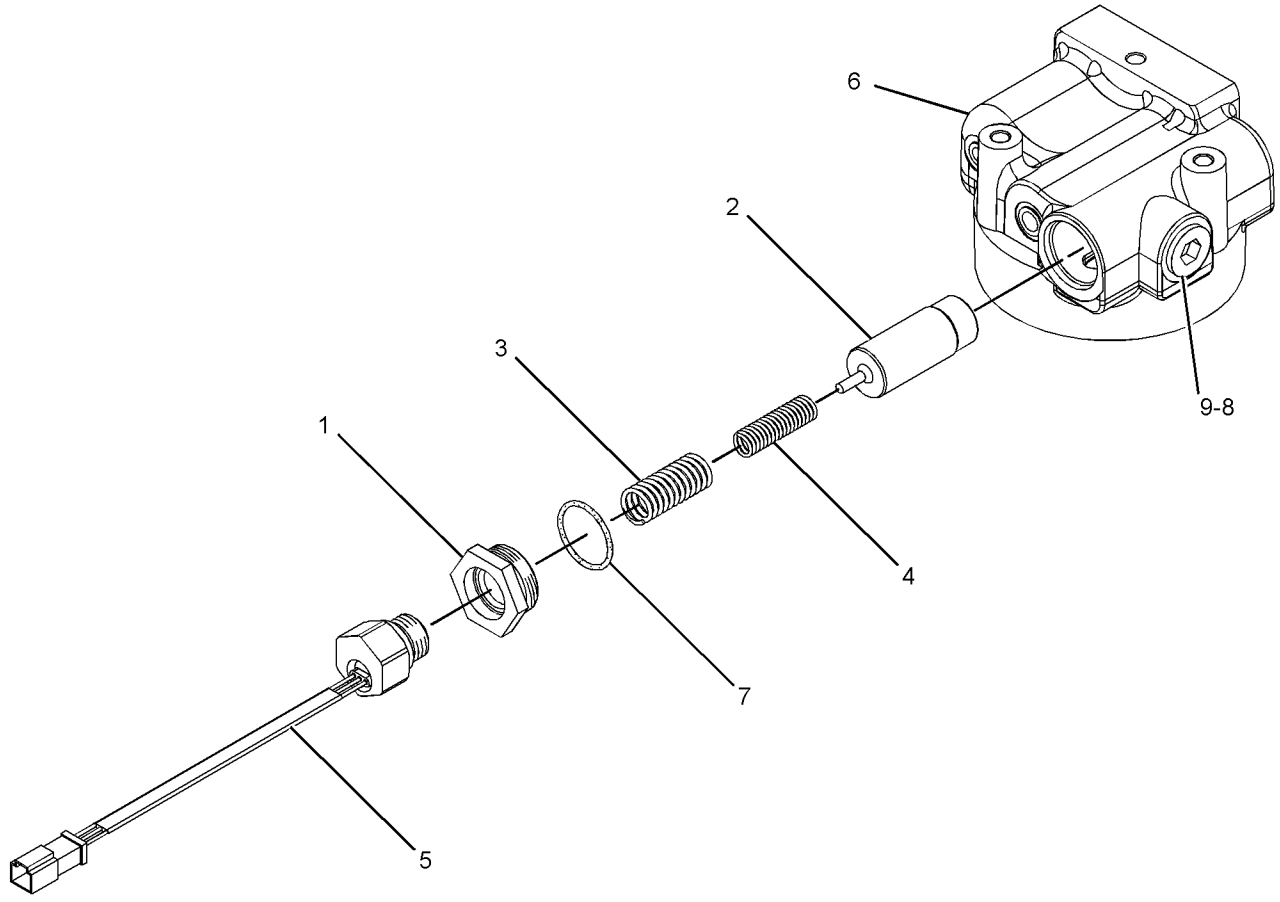

GRAPHIC #1 **<END>** g01218195

POWER TRAIN

231-5969 BRAKE & DIFFERENTIAL DRIVE GP

S/N: JDL1-UP; GMT1-UP

PART OF 218-4979 POWER TRAIN AR

SMCS-4131 **i02438192**

NOTE	REF NO	GRAPHIC REF	PART NUMBER	QTY	PART NAME 1 2 3 4 5 6 (PRODUCT LEVEL)	SEE PAGE
	1	1	**2K-5069**	1	CUP-BEARING (TAPERED ROLLER)	
	2	2	**2K-9295**	1	BEARING AS-TAPERED ROLLER	
	3	2	**3B-4124**	1	CUP-BEARING (TAPERED ROLLER)	
	4	3	**3S-2708**	7	PIN-SPRING	
	5	3	**3T-4568**	3	SHAFT-PLANETARY	
	6	3	**3T-4715**	1	GEAR-SUN (30, 24-TEETH)	
	7	3	**3T-4824**	4	GEAR-PLANETARY (30-TEETH)	
	8	3	**3T-5021**	1	CARRIER-PLANETARY	
	9	3	**3T-5200**	1	CARRIER-PLANETARY	
	10	3	**3T-6963**	1	SEAL-RING	
B	11	2	**3T-9272**	1	SHIM PACK (INCLUDES 8-SHIMS)	
	12	3	**5M-0578**	3	BEARING AS-ROLLER	
	13	3	**5M-7925**	4	BEARING AS-ROLLER	
	14	3	**6I-8724**	1	RING-LOCK	
	15	1	**6P-1735**	1	LOCKWASHER	
	16	1	**6P-1736**	1	WASHER (55.17X76.2X2.67-MM THK)	
	17	3	**6T-0062**	1	PLATE	
	18	3	**6T-0064**	4	SHAFT-PLANETARY	
	19	2	**6T-0850**	2	WASHER-THRUST (255X287.25X2.75-MM THK)	
	20	1	**6V-0855**	1	BEARING AS-TAPERED ROLLER	
		1	**8T-0072**	1	CONE-BEARING	
	21	1	**6V-7646**	3	WASHER-HARD (7.2X25X2-MM THK)	
	22	3	**6Y-0926**	3	GEAR-PLANETARY (23-TEETH)	
	23	3	**6Y-0984**	1	GEAR-RING (75-TEETH)	
	24	1	**6Y-2704**	1	SPRING-DISC	
	25	2	**6Y-9373**	4	DISC-FRICTION	
	26	3	**7G-1596**	1	RING-RETAINING	
	27	1	**7H-4566**	2	CUP-BEARING (TAPERED ROLLER)	
	28	1	**7T-1885**	1	RING	
	29	2	**7T-6994**	3	PLATE-CLUTCH & BRAKE	
	30	3	**7T-8130**	1	RING-RETAINING	
	31	2	**7T-9788**	1	HUB	
	32	2	**7T-9832**	1	RETAINER	
	33	2	**7T-9837**	1	PLATE	
	34	3	**8E-8307**	6	DISC-THRUST	
	35	3	**8E-8310**	8	DISC-THRUST	
	36	1	**9B-0576**	1	LOCKNUT-BEARING	
	37	3	**9W-1571**	1	SLINGER	
B	38	1	**9W-2853**	1	SHIM PACK (INCLUDES 21-SHIMS)	
	39	3	**9W-3937**	1	SPACER (90X107X36.65-MM THK)	
	40	3	**9W-3939**	1	RING-LOCK	
	41	3	**9W-6102**	1	GEAR-RING (84-TEETH)	
	42	3	**9W-6103**	1	RING-THRUST	
	43	1	**005-4834**	2	BEARING AS-TAPERED ROLLER	
	44	3	**136-1595**	1	HOUSING-ROTATING	
	45	1	**214-3573**	1	PISTON	
	46	1	**216-6371**	1	CARRIER	
	47	1	**217-2293**	1	RETAINER	
	48	3	**226-4462**	1	GEAR-BEVEL (74-TEETH)	
	49	1	**226-4464**	1	PINION-BEVEL (15-TEETH)	
	50	1	**227-2451**	1	HOUSING AS	
		1	**5P-8245**	12	WASHER-HARD (13.5X25.5X3-MM THK)	
		1	**1A-1460**	12	BOLT (1/2-13X2-IN)	
		1	**1A-2223**	2	DOWEL	
	51	3	**030-2135**	4	BOLT-LOCKING (5/16-18X0.625-IN)	
	52	3	**0L-1143**	21	BOLT (3/8-16X2.5-IN)	

231-5969 **BRAKE & DIFFERENTIAL DRIVE GP** *(contd.)* **i02438192**

NOTE	REF NO	GRAPHIC REF	PART NUMBER	QTY	PART NAME 1 2 3 4 5 6 (PRODUCT LEVEL)	SEE PAGE
	53	1	**0S-1614**	3	BOLT (1/4-20X0.5-IN)	
	54	2	**1A-2029**	6	BOLT (3/8-16X1.125-IN)	
	55	1	**2A-4639**	1	BOLT (3/8-16X1.625-IN)	
	56	1	**2B-0947**	6	BOLT (1/2-13X2.25-IN)	
	57	1	**3K-0360**	2	SEAL-O-RING	
	58	3	**5K-9107**	3	BOLT-LOCKING (3/8-16X0.75-IN)	
	59	1,2	**5M-2894**	7	WASHER-HARD (10.2X18.5X2.5-MM THK)	
	60	1	**5P-8245**	6	WASHER-HARD (13.5X25.5X3-MM THK)	
	61	1	**5S-7383**	2	BOLT (3/8-16X1.75-IN)	
	62	1	**6F-6673**	2	SEAL-O-RING	
	63	1	**6P-5317**	1	RING-SEAL	
	64	1	**7W-6534**	4	PLUG-PIPE	
	65	1	**8D-4771**	1	SEAL-O-RING	
	66	1	**8M-4438**	1	SEAL-O-RING	
	67	1	**8P-8357**	1	RING-SEAL	
	68	1	**8T-4896**	2	WASHER-HARD (10.2X18.5X2.5-MM THK)	
	69	3	**9L-9132**	3	WASHER (10.2X25.5X2.5-MM THK)	
	70	1	**9S-8005**	2	PLUG-O RING	
B	71	3	**1U-8846**		SEALANT-GASKET	

B-USE AS REQUIRED

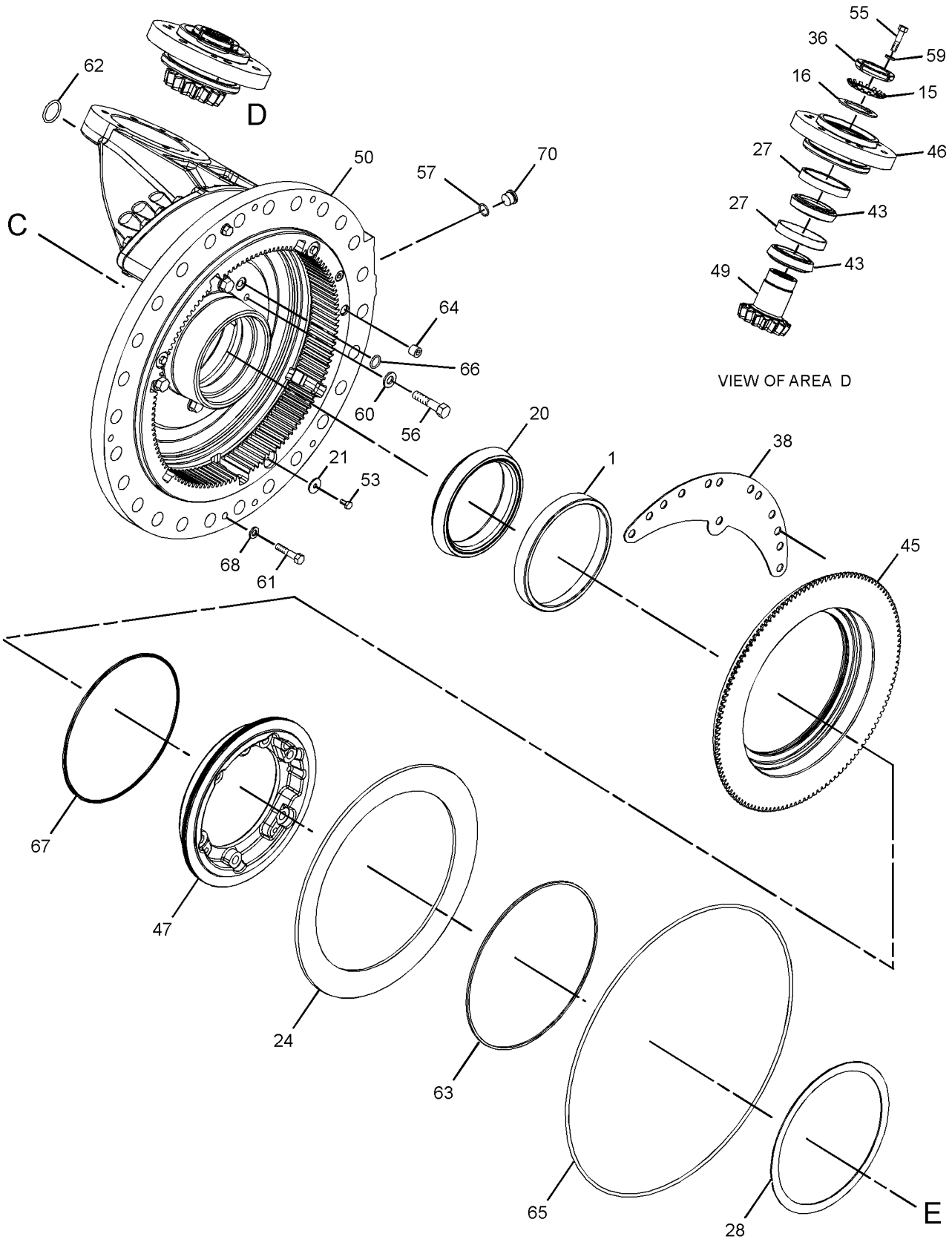

GRAPHIC #1

g01210194

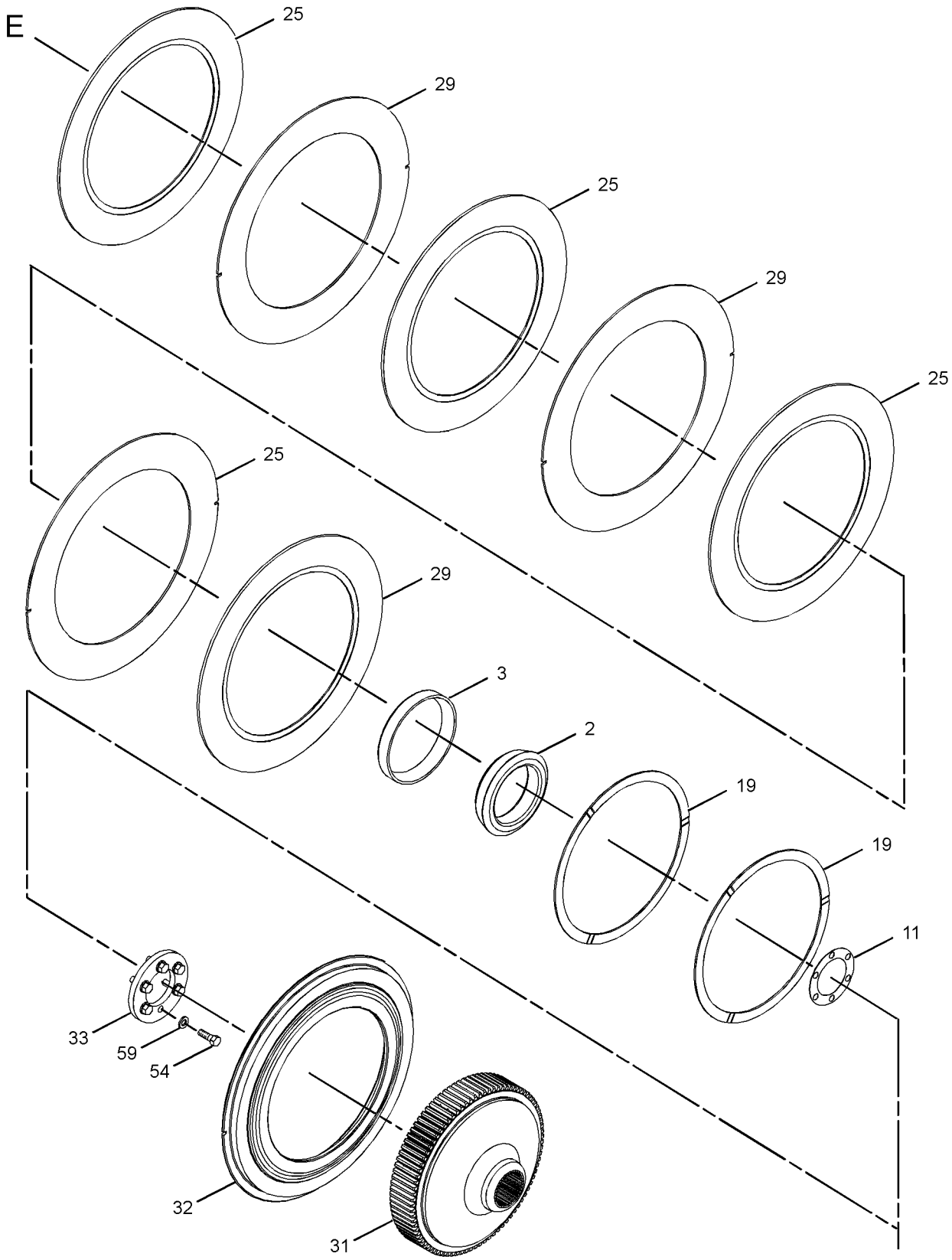

GRAPHIC #2 g01210197

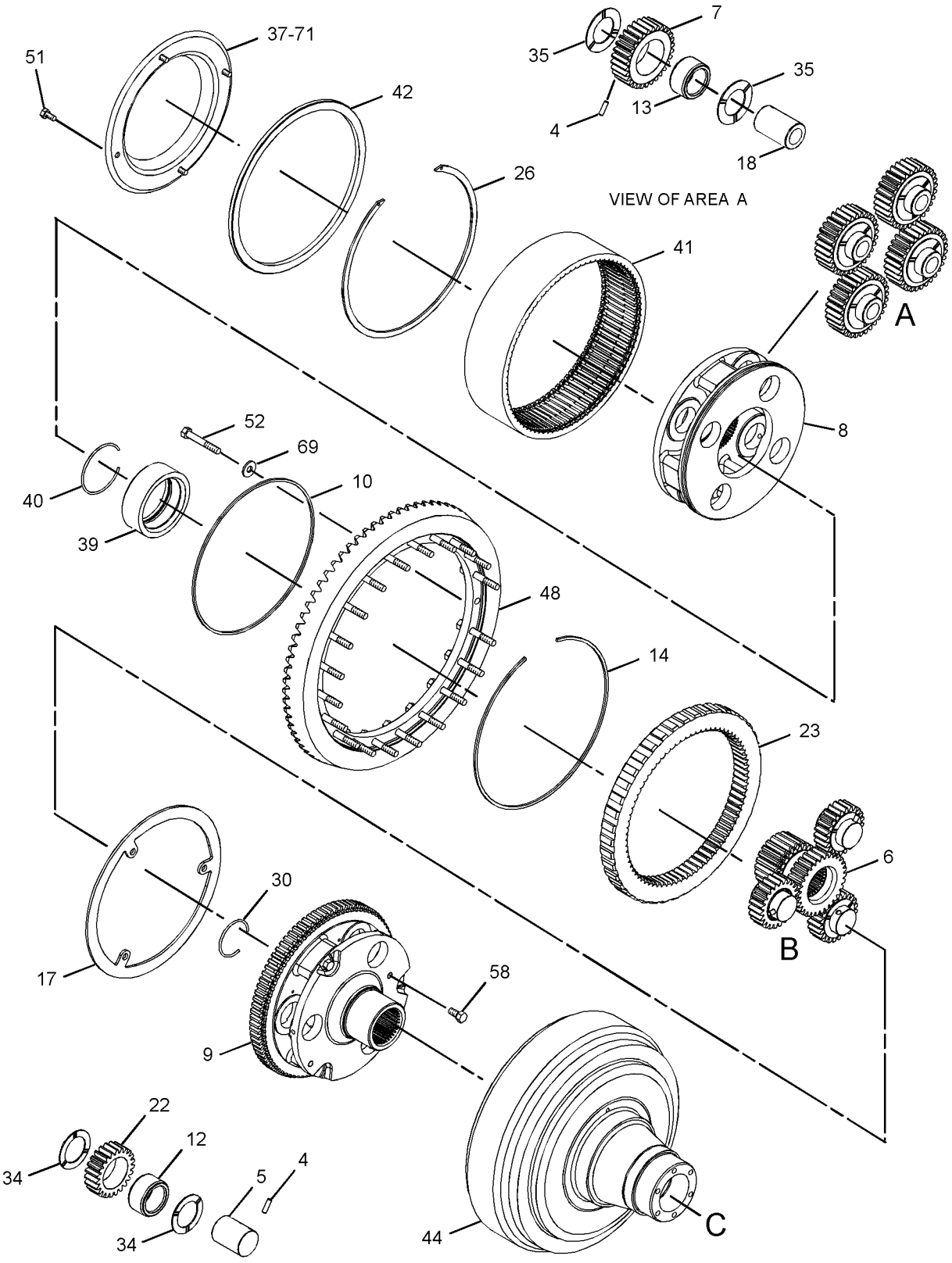

REFER TO ALL ILLUSTRATIONS OF THIS GROUP FOR AUXILIARY VIEWS

GRAPHIC #3 **<END>** g01212572

POWER TRAIN

231-5990 BRAKE & PLANETARY GP

S/N: JDL1-UP; GMT1-UP

PART OF 218-4979 POWER TRAIN AR

SMCS-4011, 4255 **i02438194**

NOTE	REF NO	GRAPHIC REF	PART NUMBER	QTY	PART NAME 1 2 3 4 5 6 (PRODUCT LEVEL)	SEE PAGE
	1	1	**3S-2708**	3	PIN-SPRING	
	2	1	**3T-5807**	1	SLINGER	
	3	1	**5M-0578**	6	BEARING AS-ROLLER	
	4	1	**6Y-2704**	1	SPRING-DISC	
	5	1	**6Y-9373**	4	DISC-FRICTION	
	6	1	**7T-1885**	1	RING	
	7	1	**7T-6994**	3	PLATE-CLUTCH & BRAKE	
	8	1	**7T-8136**	3	SHAFT-PLANETARY	
	9	1	**7T-9031**	1	GEAR (75-TEETH)	
	10	1	**7T-9837**	1	PLATE	
	11	1	**8E-8307**	6	DISC-THRUST	
	12	1	**9W-7925**	2	BEARING AS-TAPERED ROLLER	
	13	1	**9W-7926**	2	CUP-BEARING	
	14	1	**175-2166**	3	GEAR-PLANETARY (23-TEETH)	
	15	1	**198-4410**	1	GEAR AS-SUN (30-TEETH)	
		1	**3E-4354**	2	BALL	
	16	1	**205-5314**	1	HOUSING	
	17	1	**209-7193**	1	CARRIER	
	18	1	**214-3573**	1	PISTON	
	19	1	**216-4591**	1	RETAINER AS	
		1	**8S-0527**	1	PLUG-CUP	
	20	1	**0S-1585**	12	BOLT (1/2-13X1.5-IN)	
	21	1	**1A-1460**	6	BOLT (1/2-13X2-IN)	
	22	1	**1A-2029**	6	BOLT (3/8-16X1.125-IN)	
	23	1	**1C-0569**	6	BOLT (5/16-18X0.5-IN)	
	24	1	**3K-0360**	2	SEAL-O-RING	
	25	1	**5M-2894**	6	WASHER-HARD (10.2X18.5X2.5-MM THK)	
	26	1	**5P-8245**	18	WASHER-HARD (13.5X25.5X3-MM THK)	
	27	1	**6F-6673**	2	SEAL-O-RING	
	28	1	**6P-5317**	1	RING-SEAL	
	29	1	**8D-4771**	1	SEAL-O-RING	
	30	1	**8M-4438**	1	SEAL-O-RING	
	31	1	**8P-8357**	1	RING-SEAL	
	32	1	**9S-8005**	2	PLUG-O RING	
B	33	1	**1U-8846**		SEALANT-GASKET	

B-USE AS REQUIRED

231-5990 **BRAKE & PLANETARY GP** *(contd.)* **i02438194**

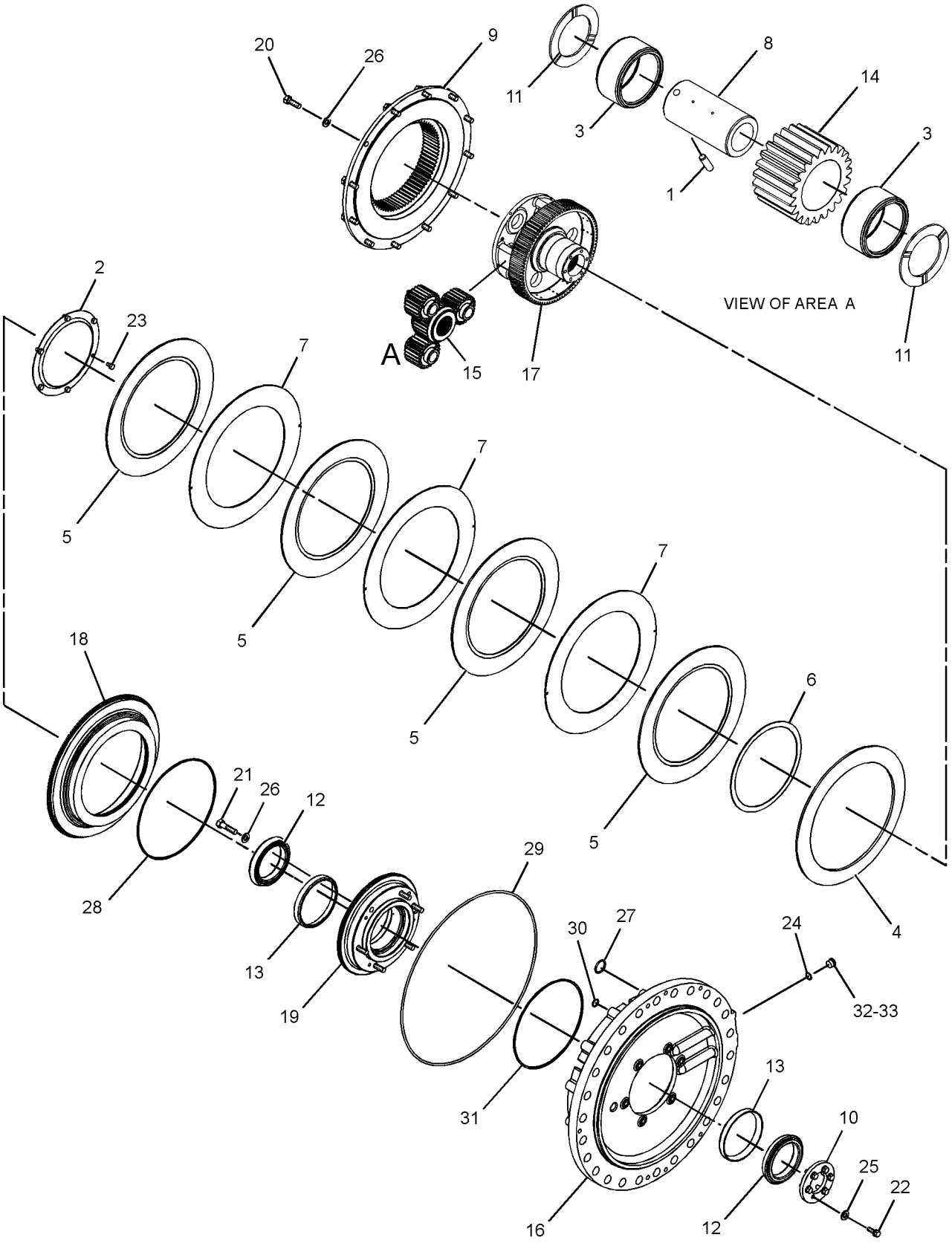

GRAPHIC #1 **<END>** g01214082

POWER TRAIN

221-3342 CASE & PARTS GP-PLANETARY

S/N: KKA1-UP

PART OF 220-1429 TRANSMISSION AR

SMCS-3064 **i02451031**

NOTE	REF NO	GRAPHIC REF	PART NUMBER	QTY	PART NAME 1 2 3 4 5 6 (PRODUCT LEVEL)	SEE PAGE
	1	1	**5K-5120**	1	STRIP	
	2	1	**5K-9246**	1	CONNECTOR	
	3	1	**5K-9988**	1	TEE-INVERTED FLARED	
	4	1	**6K-8498**	1	TEE-FLARED	
	5	1	**6V-0852**	7	CAP-DUST	
	6	1	**6V-1720**	1	PLATE-SERIAL NUMBER (TRANSMISSION)	
	7	1	**6V-3965**	7	FITTING AS (QUICK DISCONNECT)	
	8	1	**7T-8875**	1	TUBE AS	
	9	1	**7T-8876**	1	TUBE AS	
	10	1	**8S-9130**	1	SCREEN-SUCTION (TORQUE CONVERTER SCAVENGE)	
	11	1	**9G-8615**	1	COVER	
	12	1	**9P-1475**	1	SLEEVE	
	13	1	**9S-7710**	1	ELBOW-FLARED	
	14	1	**9W-4159**	1	TUBE AS	
	15	1	**9W-5334**	1	TUBE AS	
	16	1	**081-8353**	3	BOLT (3/8-16X0.625-IN)	
	17	1	**190-2278**	1	CASE AS-TRANSMISSION	
	17A	2	**4B-9782**	1	BALL	
	17B	2	**4B-9785**	1	BALL	
	17C	2	**1A-2610**	1	DOWEL	
	17D	2	**3F-3442**	2	DOWEL	
	17E	2	**7M-1201**	1	DOWEL	
	17F	2	**0S-1594**	6	BOLT (3/8-16X1-IN)	
	17G	2	**9X-6458**	6	WASHER-HARD (10.2X22.5X3-MM THK)	
	17H	2	**146-6669**	1	GASKET	
	17J	2	**146-6670**	1	COVER	
	18	1	**203-2288**	1	GASKET-COVER	
	19	1	**204-6499**	1	COVER	
	20	1	**210-0091**	1	COVER	
	21	1	**214-9408**	1	MANIFOLD	
	22	1	**216-6202**	1	ADAPTER	
	23	1	**221-0877**	1	GUARD AS	
	24	1	**031-0218**	1	BOLT-LOCKING (3/8-16X0.5-IN)	
	25	1	**0S-1585**	21	BOLT (1/2-13X1.5-IN)	
	26	1	**0T-0102**	1	BOLT (3/8-16X0.625-IN)	
	27	1	**1N-5999**	1	PLUG	
	28	1	**2M-9780**	1	SEAL-O-RING	
	29	1	**2S-4071**	1	SEAL-O-RING	
	30	1	**2S-4078**	3	SEAL-O-RING	
	31	1	**3J-1907**	7	SEAL-O-RING	
	32	1	**3S-7781**	1	GASKET	
	33	1	**4H-5440**	1	COVER	
	34	1	**5M-2894**	1	WASHER-HARD (10.2X18.5X2.5-MM THK)	
	35	1	**5P-4057**	1	SEAL-O-RING	
	36	1	**5P-8245**	21	WASHER-HARD (13.5X25.5X3-MM THK)	
	37	1	**5P-8998**	1	FITTING	
	38	1	**7J-0204**	1	SEAL-O-RING	
	39	1	**7J-8611**	1	ELBOW	
	40	1	**8H-1603**	1	CLIP	
	41	1	**8M-2530**	4	BOLT-12 POINT HEAD (1/2-13X1.25-IN)	
	42	1	**8M-4432**	2	SEAL-O-RING	
	43	1	**8M-5661**	1	SEAL-O-RING	
	44	1	**8P-0058**	1	GASKET-COVER	
	45	1	**9M-9647**	2	SEAL-O-RING	
	46	1	**9S-6130**	3	PLUG	
M	47	1	**9X-2125**	27	BOLT-LOCKING (M10X1.5X25-MM)	

M-METRIC PART

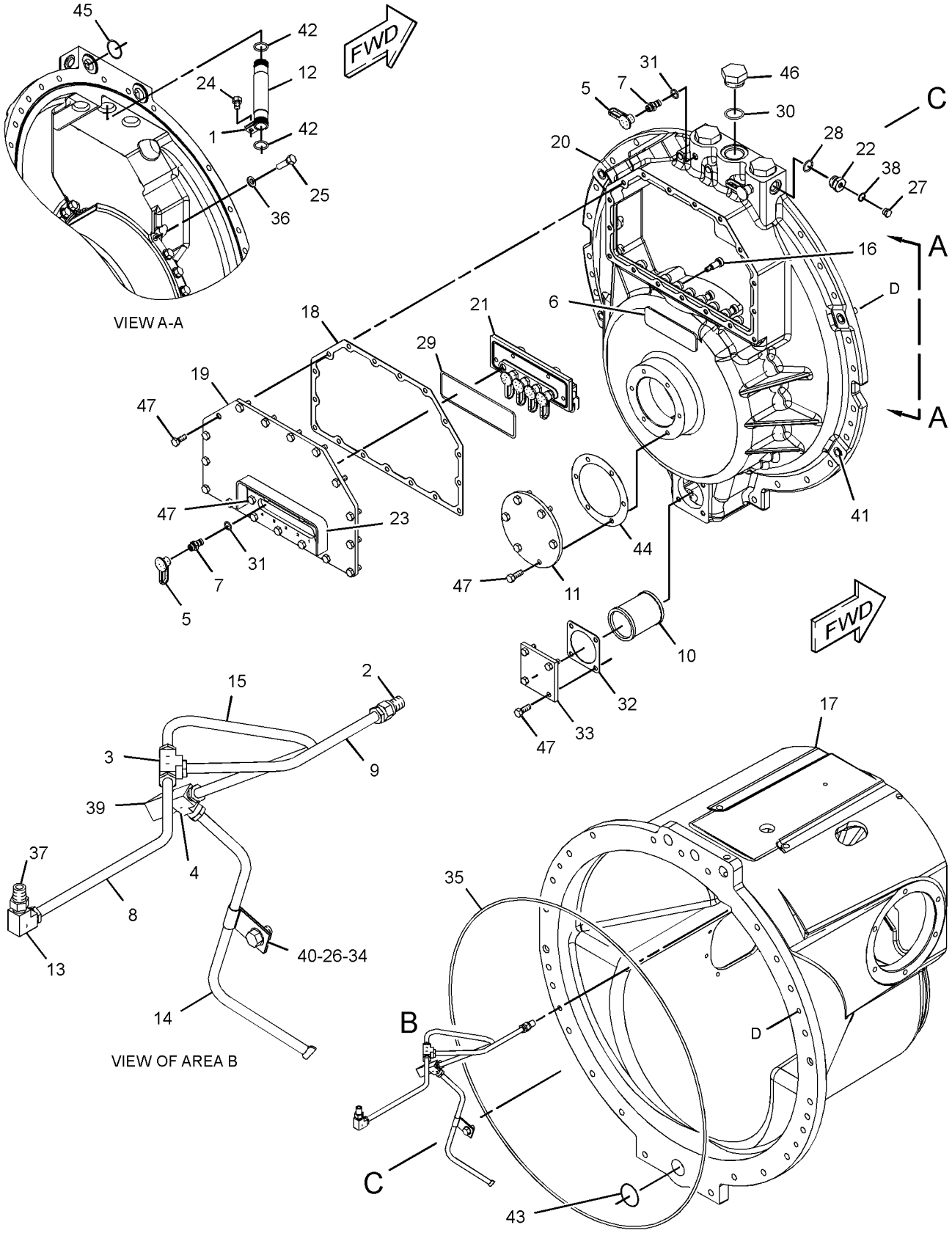

GRAPHIC #1 g01209779

221-3342 **CASE & PARTS GP-PLANETARY** *(contd.)* **i02451031**

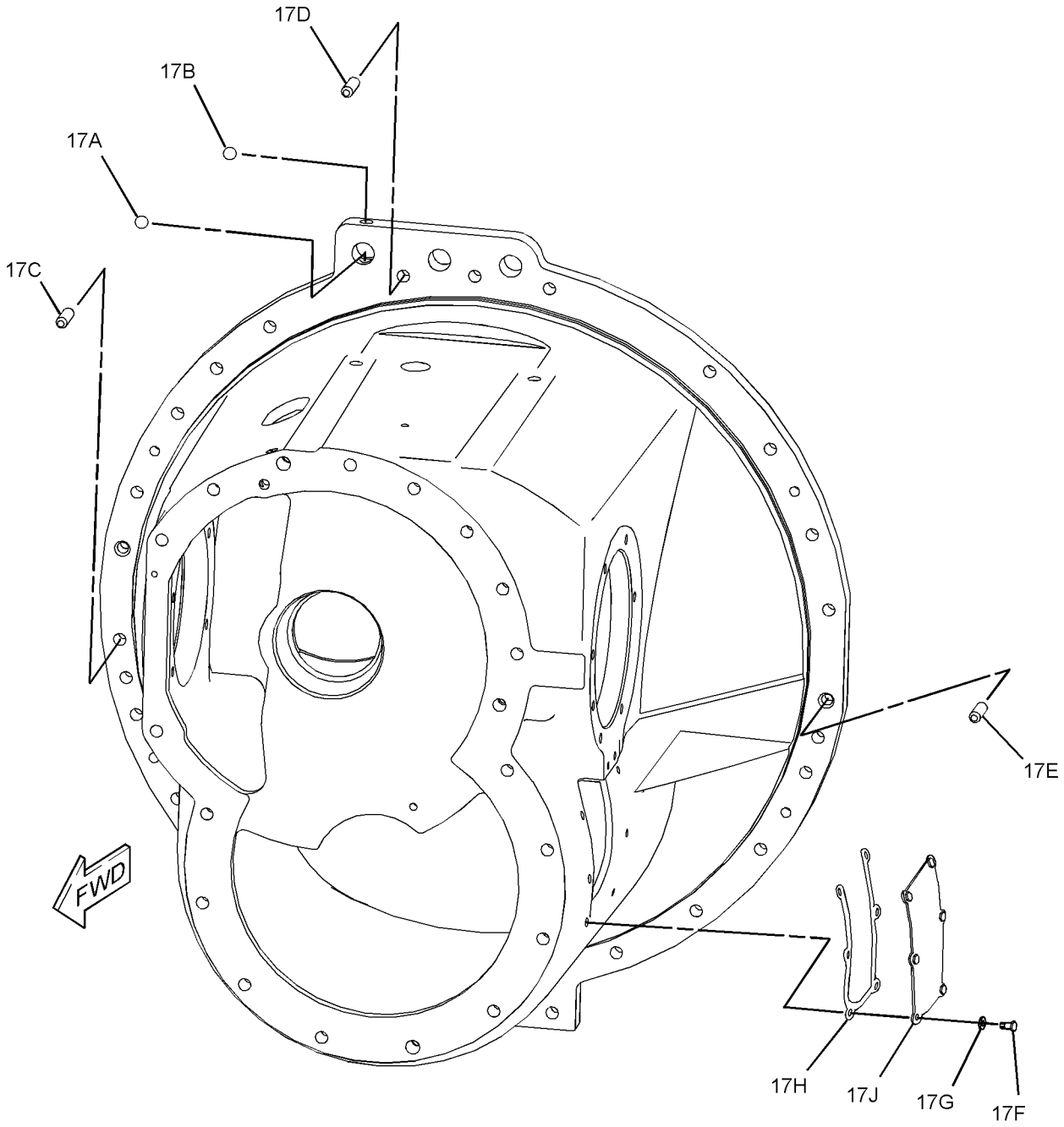

GRAPHIC #2 **<END>** g01213150

265-5278 CONTROL GP-TRANSMISSION HYD

S/N: KKA1-UP

PART OF 220-1429 TRANSMISSION AR

SMCS-3073, 3167 **i02451039**

NOTE	REF NO	GRAPHIC REF	PART NUMBER	QTY	PART NAME 1 2 3 4 5 6 (PRODUCT LEVEL)	SEE PAGE
	1	1	**5K-5120**	2	STRIP	
	2	1	**6P-4977**	2	SLEEVE	
	3	1	**104-6729**	1	RETAINER	
	4	1	**104-6730**	1	GASKET	
	5	1	**204-6501**	1	ELBOW	
	6	1	**205-7205**	5	SLEEVE	
Y	7	1	**213-4540**	1	VALVE GP-RELIEF (TRANSMISSION OIL PRESSURE)	319
Y	8	1	*220-4324*	5	VALVE GP-MODULATING (TRANSMISSION CLUTCH)	317
	9	1	**263-4081**	1	HARNESS AS-SENSOR	
		1	**3S-2093**	6	STRAP-CABLE	
		1	**4P-7581**	5	CLIP	
		1	**4P-8134**	1	CLIP	
		1	**6J-2419**	1	SEAL-O-RING	
		1	**155-2270**	7	KIT-CONNECTING PLUG (2-PIN) (EACH INCLUDES PLUG AS, WEDGE, & INTERFACE SEAL)	
	10	1	**031-0218**	2	BOLT-LOCKING (3/8-16X0.5-IN)	
	11	1	**0L-1352**	3	BOLT (3/8-16X3.25-IN)	
	12	1	**0S-0509**	2	BOLT (3/8-16X0.75-IN)	
	13	1	**1D-4540**	10	BOLT (5/16-18X2.75-IN)	
	14	1	**2H-3932**	2	SEAL-O-RING	
	15	1	**5F-4899**	4	BOLT (3/8-16X5.5-IN)	
	16	1	**5M-2894**	9	WASHER-HARD (10.2X18.5X2.5-MM THK)	
	17	1	**8M-4432**	4	SEAL-O-RING	
	18	1	**8M-8157**	10	SEAL-O-RING	
	19	1	**9M-1974**	10	WASHER-HARD (8.8X16X2-MM THK)	
M	20	1	**9X-2125**	2	BOLT-LOCKING (M10X1.5X25-MM)	

M-METRIC PART
Y-SEPARATE ILLUSTRATION

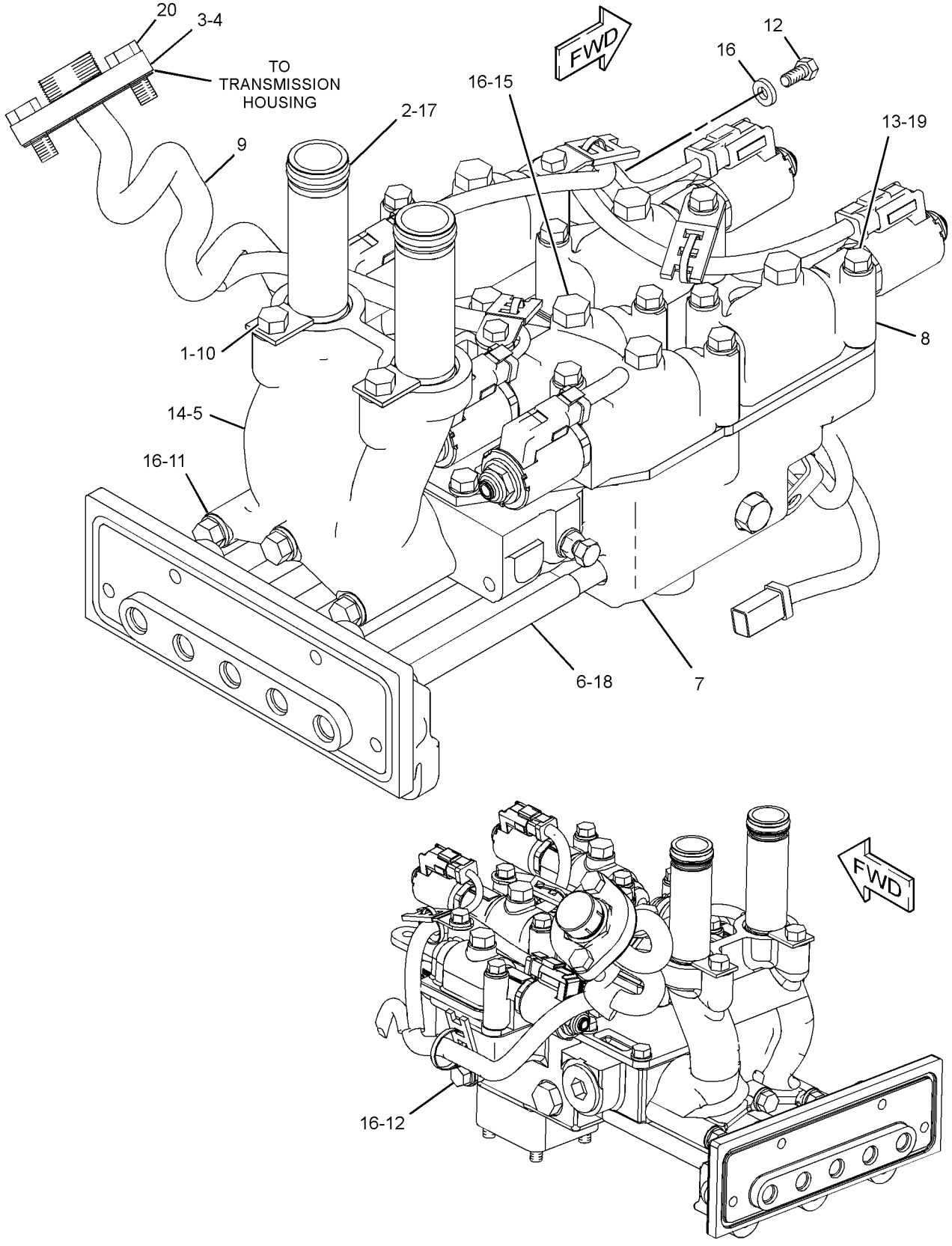

GRAPHIC #1 **<END>** g01209735

238-1116 COOLER GP-TRANSMISSION OIL

S/N: THX1-UP

PART OF 261-4290, 261-4291, 261-4293, 261-4294, 261-4295, 261-4297 ENGINE AR

ALSO AN ATTACHMENT

SMCS-1375 **i02163241**

NOTE	REF NO	GRAPHIC REF	PART NUMBER	QTY	PART NAME 1 2 3 4 5 6 (PRODUCT LEVEL)	SEE PAGE
	1	1	**2S-0795**	2	GASKET	
	2	1	**6F-7062**	1	WASHER (12.7X19.05X1.83-MM THK)	
	3	1	**8M-9307**	1	PLUG-DRAIN (TRANSMISSION OIL COOLER)	
	4	1	**8S-4304**	1	BONNET-TMSN OIL COOLER	
	5	1	**180-3907**	1	SEAL-INTEGRAL	
R	6	1	**187-3523**	1	CORE AS-OIL COOLER (TRANSMISSION)	
	6A	1	**8T-6764**	1	PLUG-PIPE	
	7	1	**198-3462**	1	DIVERTER	
	8	1	**238-1117**	1	BONNET	
	9	1	**238-2840**	1	BRACKET	
	10	1	*148-8407*	1	PLUG AS	
		1	**3J-1907**	1	SEAL-O-RING	
		1	**9S-4191**	1	PLUG-O RING	
	11	1	*148-8411*	1	PLUG AS	
		1	**3K-0360**	1	SEAL-O-RING	
		1	**9S-4185**	1	PLUG	
	12	1	*164-4180*	1	PLUG AS	
		1	**7M-8485**	1	SEAL-O-RING	
		1	**9S-4181**	1	PLUG	
M	13	1	**6V-3668**	6	BOLT (M12X1.75X30-MM)	
M	14	1	**6V-3823**	2	BOLT (M12X1.75X60-MM)	
M	15	1	**6V-5696**	6	BOLT (M12X1.75X80-MM)	
	16	1	**7D-1649**	4	WASHER-HARD (13.5X32X5-MM THK)	
M	17	1	**8T-5030**	2	BOLT (M10X1.5X120-MM)	
	18	1	**8T-6761**	1	PLUG-PIPE	
M	19	1	**8T-6854**	4	BOLT (M10X1.5X200-MM)	

M-METRIC PART
R-REMFG PART MAY BE AVAILABLE

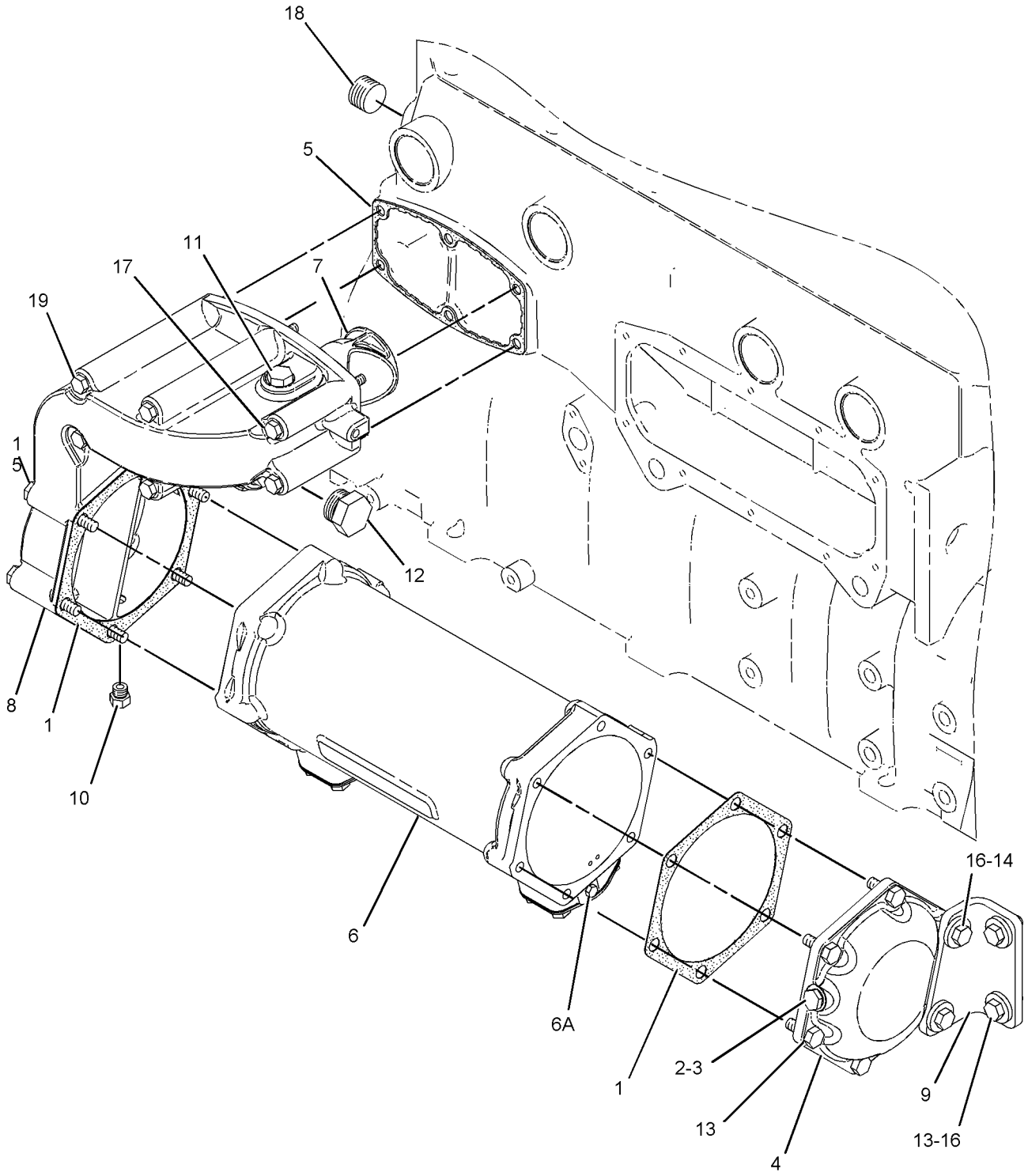

GRAPHIC #1 **<END>** g01097153

225-1506 COUPLING & GUARD GP

S/N: JDL1-UP; GMT1-UP
PART OF 218-4979 POWER TRAIN AR

SMCS-3279 **i02450594**

NOTE	REF NO	GRAPHIC REF	PART NUMBER	QTY	PART NAME 1 2 3 4 5 6 (PRODUCT LEVEL)	SEE PAGE
Y	1	1	*227-0924*	1	COUPLING GP-PUMP	271
	2	1	**284-0638**	1	GUARD AS	
	3	1	**284-0639**	1	BRACKET AS	
	4	1	**7X-7729**	4	WASHER (11X25X3-MM THK)	
M	5	1	**8T-4195**	4	BOLT (M10X1.5X30-MM)	

M-METRIC PART
Y-SEPARATE ILLUSTRATION

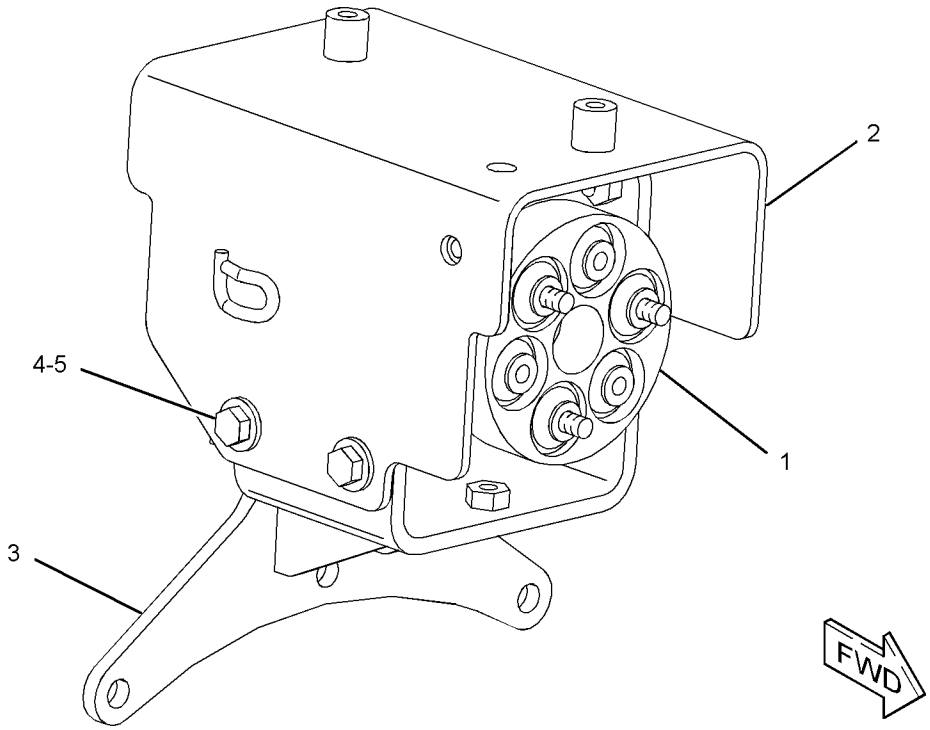

GRAPHIC #1 **<END>** g01217693

227-0924 COUPLING GP-PUMP

S/N: JDL1-UP; GMT1-UP

PART OF 225-1506 COUPLING & GUARD GP

SMCS-5062 **i02450605**

NOTE	REF NO	GRAPHIC REF	PART NUMBER	QTY	PART NAME 1 2 3 4 5 6 (PRODUCT LEVEL)	SEE PAGE
	1	1	**198-1883**	1	TUBE AS	
	2	1	**211-9087**	2	COUPLING AS	
					(EACH INCLUDES)	
		1	**6Y-2130**	3	BUSHING AS	
					(EACH INCLUDES)	
		1	**8E-5170**	1	SLEEVE	
		1	**211-9085**	3	BUSHING AS	
	3	1	**8T-4121**	12	WASHER-HARD (11X21X2.5-MM THK)	
M	4	1	**8T-4182**	6	BOLT (M10X1.5X45-MM)	
M	5	1	**8T-4185**	6	BOLT (M10X1.5X50-MM)	

M-METRIC PART

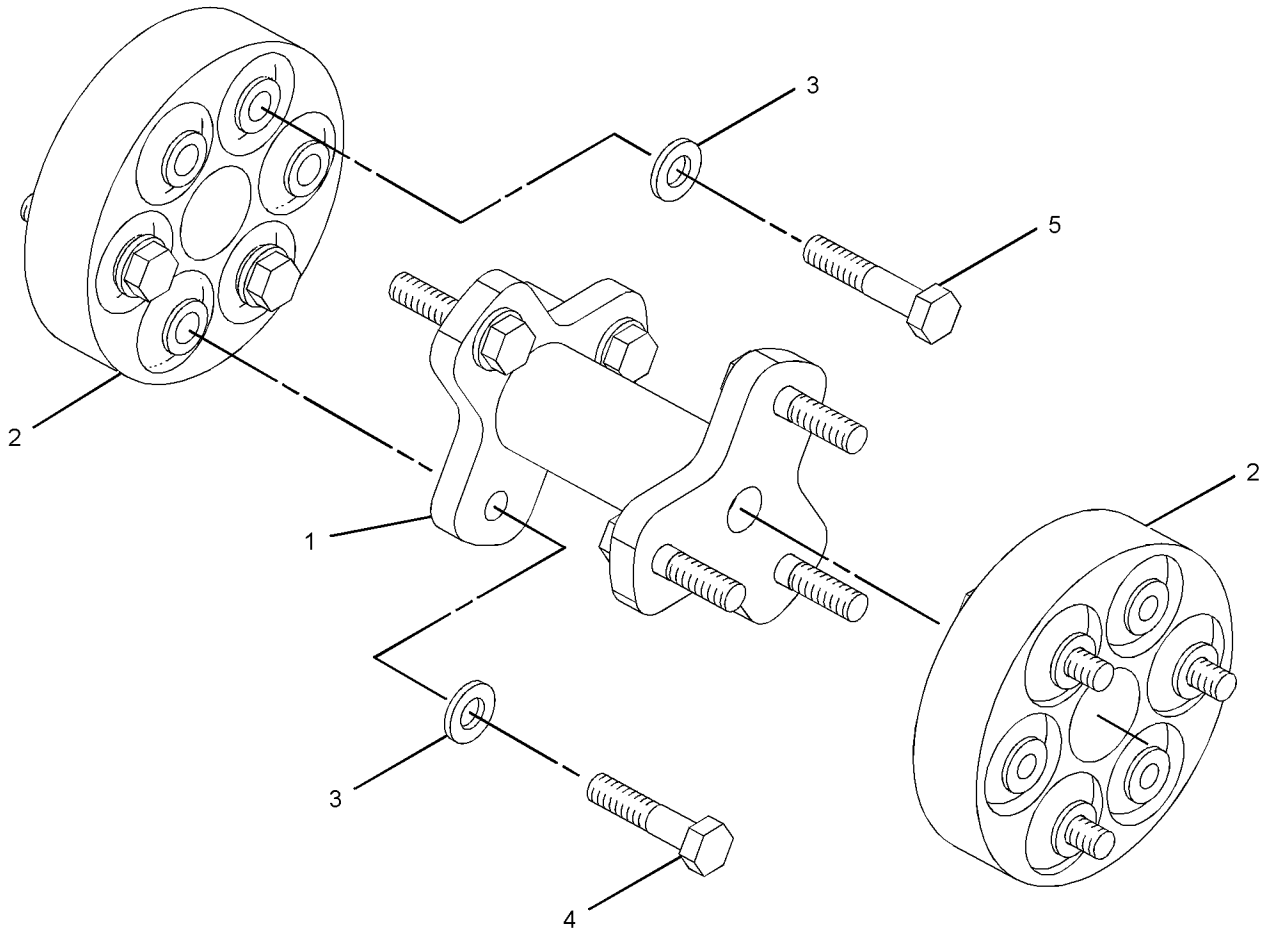

GRAPHIC #1 **<END>** g01208311

106-4150 DRAIN GP-ECOLOGY—POWER TRAIN

S/N: JDL1-UP; GMT1-UP
PART OF 256-9988 DRAIN GP-ECOLOGY
AN ATTACHMENT

SMCS-3100 **i01065592**

NOTE	REF NO	GRAPHIC REF	PART NUMBER	QTY	PART NAME 1 2 3 4 5 6 (PRODUCT LEVEL)	SEE PAGE
	1	1	**4N-3808**	1	PIN-SPRING	
	2	1	**5P-9658**	1	SEAL-O-RING	
A	3	1	**2H-3931**	1	SEAL-O-RING (82.14MM ID)	

A-NOT PART OF THIS GROUP

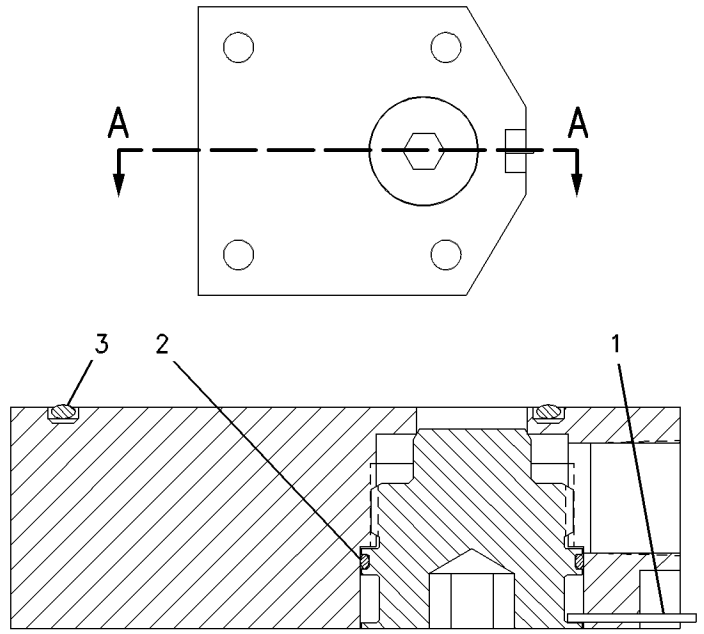

SECTION A-A

GRAPHIC #1 **<END>** g00543496

256-9988 DRAIN GP-ECOLOGY—POWER TRAIN

S/N: JDL1-UP; GMT1-UP
AN ATTACHMENT

SMCS-3100 **i02454291**

NOTE	REF NO	GRAPHIC REF	PART NUMBER	QTY	PART NAME 1 2 3 4 5 6 (PRODUCT LEVEL)	SEE PAGE
	1	1	**4B-7739**	1	PLUG-DRAIN (POWER TRAIN)	
	2	1	**8H-9819**	1	ADAPTER-PLUG	
Y	3	1	**106-4150**	1	DRAIN GP-ECOLOGY (POWER TRAIN)	272
	4	1	**2B-0858**	2	PLUG-PIPE	
	5	1	**2H-3931**	1	SEAL-O-RING	
	6	1	**8H-9818**	1	GASKET	
M	7	1	**8T-4136**	2	BOLT (M10X1.5X25-MM)	
M	8	1	**8T-4185**	4	BOLT (M10X1.5X50-MM)	

M-METRIC PART
Y-SEPARATE ILLUSTRATION

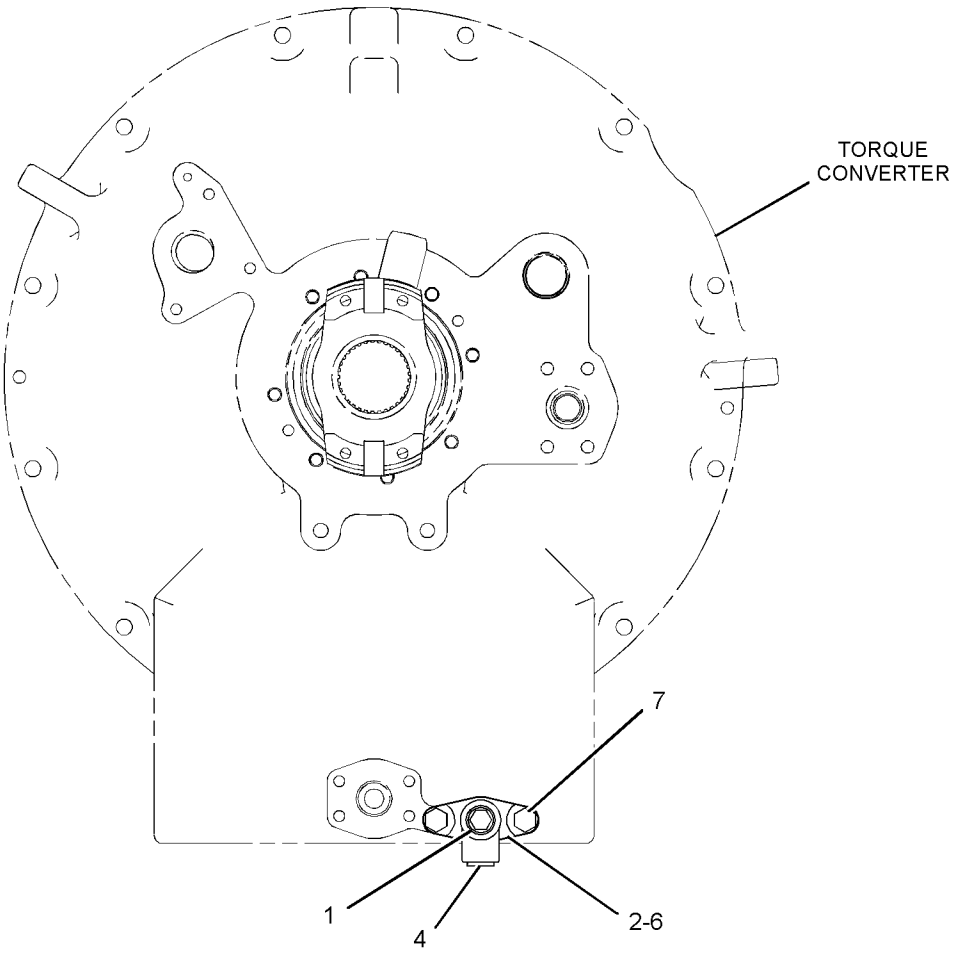

FRONT VIEW

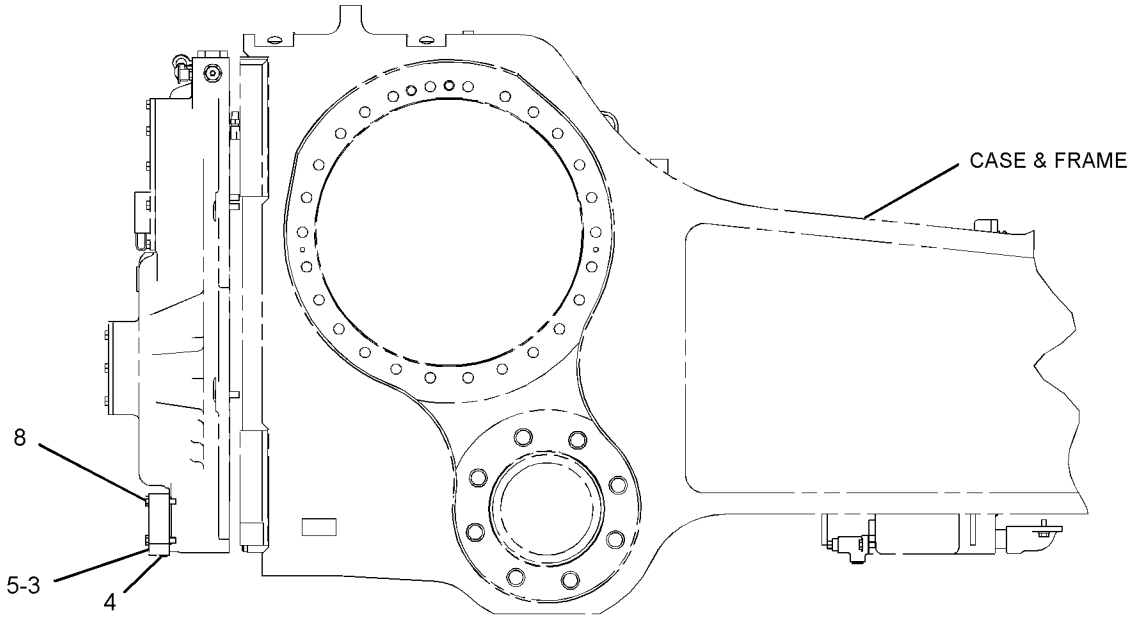

RIGHT SIDE VIEW

GRAPHIC #1 **<END>** g01209353

235-5812 FILTER GP-OIL—POWER TRAIN

S/N: JDL1-UP; GMT1-UP

PART OF 223-0703 LINES GP-POWER TRAIN OIL

SMCS-3004, 3067 **i02450516**

NOTE	REF NO	GRAPHIC REF	PART NUMBER	QTY	PART NAME 1 2 3 4 5 6 (PRODUCT LEVEL)	SEE PAGE
	1	1	**1R-1809**	1	FILTER ELEMENT AS-OIL (ULTRA HIGH EFFICIENCY)	
		1	**130-0229**	1	SEAL-O-RING	
	2	1	**6V-0852**	1	CAP-DUST	
	3	1	**8C-3447**	1	CAP-DUST	
Y	4	1	*238-1029*	1	BASE GP-OIL FILTER	255
	5	1	**241-3352**	1	HOUSING AS (OIL FILTER)	
		1	**3J-1907**	1	SEAL-O-RING	
		1	**9S-8004**	1	PLUG	
	6	1	**3J-1907**	1	SEAL-O-RING	
	7	1	**3J-7354**	1	SEAL-O-RING	
	8	1	**6V-3965**	1	FITTING AS (QUICK DISCONNECT)	
	9	1	**8C-3446**	1	VALVE-FLUID SAMPLING	
	10	1	**130-0229**	1	SEAL-O-RING	

Y-SEPARATE ILLUSTRATION

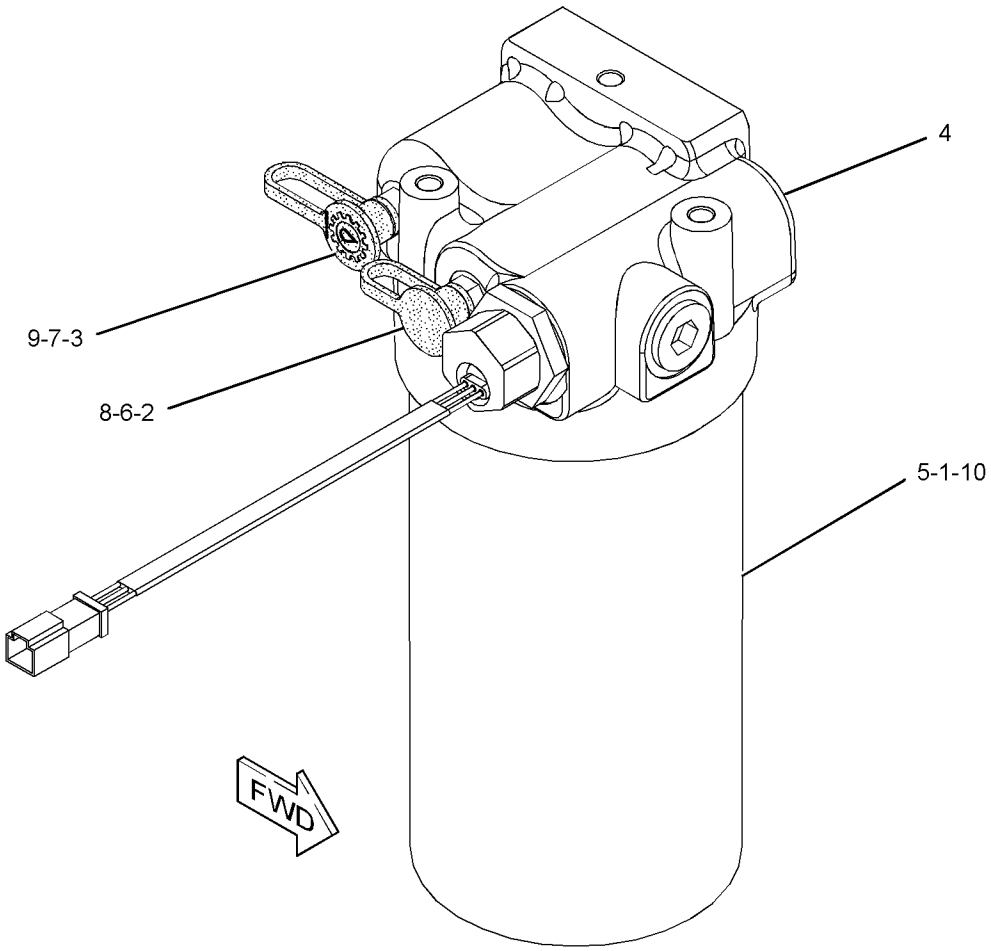

GRAPHIC #1 **<END>** g01217116

260-6649 FINAL DRIVE GP

S/N: JDL1-UP; GMT1-UP

PART OF 218-4979 POWER TRAIN AR

SMCS-4050 **i02438200**

NOTE	REF NO	GRAPHIC REF	PART NUMBER	QTY	PART NAME 1 2 3 4 5 6 (PRODUCT LEVEL)	SEE PAGE
	1	1	**1B-3978**	6	CUP-BEARING (TAPERED ROLLER)	
	2	1	**1P-9005**	1	SEAL-O-RING	
	3	1	**2P-3696**	3	RETAINER	
	4	1	**2R-0098**	1	SEAL-O-RING	
	5	1	**2S-4078**	1	SEAL-O-RING	
	6	1	**3K-0360**	1	SEAL-O-RING	
	7	1	**6V-0327**	1	CUP-BEARING (TAPERED ROLLER)	
	8	1	**6V-0328**	1	CONE-BEARING (TAPERED ROLLER)	
	9	1	**6V-0329**	1	CONE-BEARING (TAPERED ROLLER)	
	10	1	**6V-0330**	1	CUP-BEARING (TAPERED ROLLER)	
	11	1	**6V-0439**	1	PLUG-MAGNETIC (FINAL DRIVE, OIL FILL)	
	12	1	**6Y-0859**	1	SEAL GP-DUO-CONE	
	12A	1	**1M-9011**	2	RING-TORIC	
Z	12B	1		2	SEAL-RING	
	13	1	**8E-2748**	1	HUB-REACTION	
	14	1	**8G-8844**	1	RING-LOCK	
	15	1	**8G-8845**	1	COVER	
	16	1	**9G-8638**	3	GEAR-PLANETARY (40-TEETH)	
	17	1	**9G-8639**	1	GEAR-RING (94-TEETH)	
	18	1	**9G-9175**	1	CARRIER	
	19	1	**9G-9180**	1	HUB-SPROCKET	
	20	1	**9G-9181**	1	RETAINER	
	21	1	**9G-9183**	3	SHAFT	
	22	1	**9H-3360**	1	SEAL-O-RING	
	23	1	**9X-7671**	1	SEAL-LIP TYPE	
	24	1	**156-4593**	6	CONE-BEARING (TAPERED ROLLER)	
Y	25	1	*188-0908*	1	SEGMENT GP-SPROCKET	304
	26	1	**260-6642**	1	SPINDLE	
	27	1	**2B-0947**	10	BOLT (1/2-13X2.25-IN)	
	28	1	**4L-6454**	3	BOLT (3/8-16X1-IN)	
	29	1	**7X-0346**	3	BOLT (5/8-11X2-IN)	
	30	1	**8T-4223**	2	WASHER-HARD (13.5X25.5X3-MM THK)	
	31	1	**8T-4896**	3	WASHER-HARD (10.2X18.5X2.5-MM THK)	
	32	1	**8T-4994**	33	WASHER-HARD (20X36.5X3.5-MM THK)	
	33	1	**8T-8919**	2	BOLT (1/2-13X1.75-IN)	
	34	1	**8T-9399**	33	BOLT (3/4-10X2.25-IN)	
	35	1	**9S-4185**	1	PLUG (FINAL DRIVE, OIL DRAIN)	

Y-SEPARATE ILLUSTRATION
Z-NOT SERVICED SEPARATELY

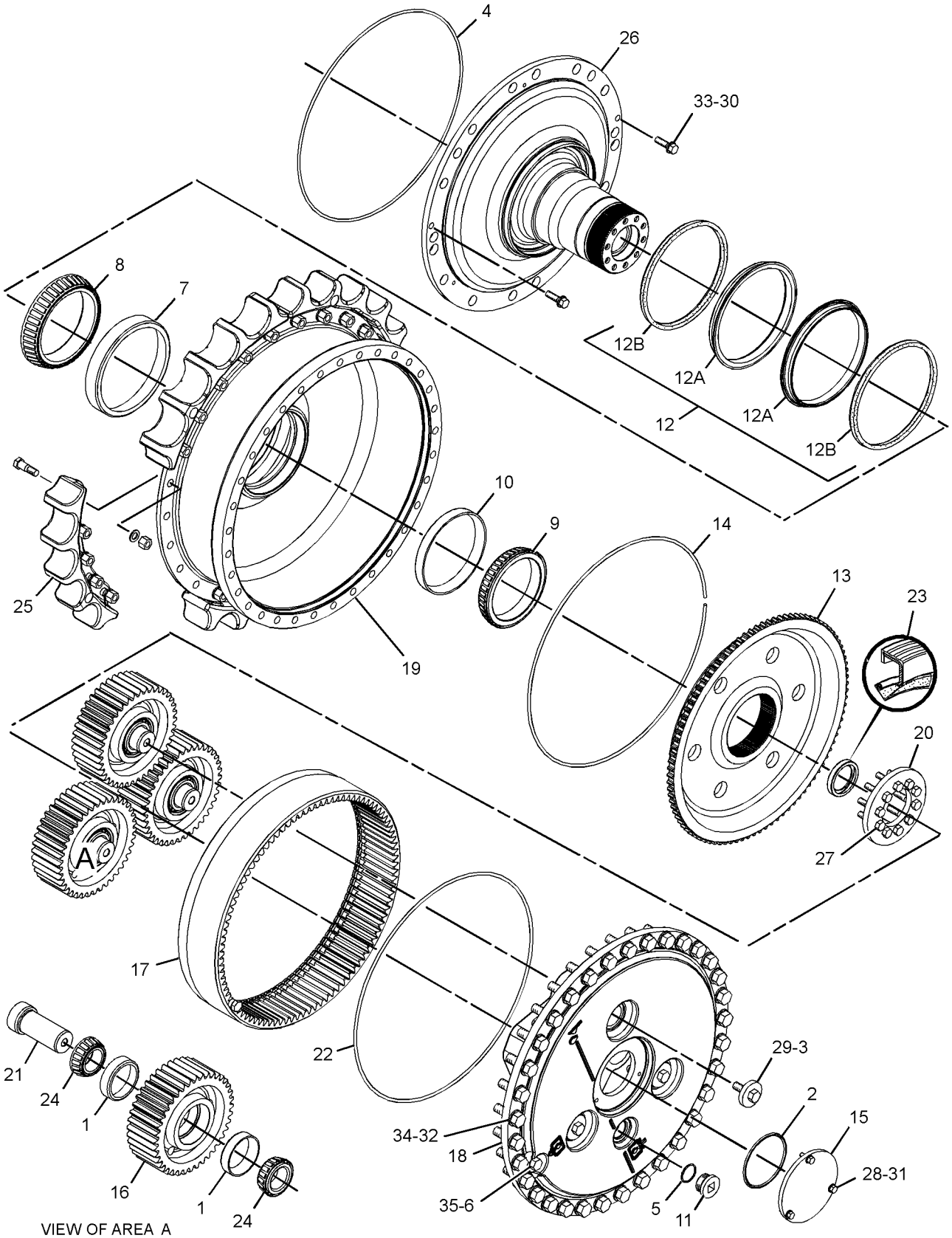

VIEW OF AREA A

GRAPHIC #1 **<END>** g01209832

260-6652 FINAL DRIVE GP—WASTE HANDLING

S/N: JDL1-UP; GMT1-UP
PART OF 262-0554 GUARD AR-FINAL DRIVE
AN ATTACHMENT

SMCS-4050 **i02456109**

NOTE	REF NO	GRAPHIC REF	PART NUMBER	QTY	PART NAME 1 2 3 4 5 6 (PRODUCT LEVEL)	SEE PAGE
	1	1	**1B-3978**	6	CUP-BEARING (TAPERED ROLLER)	
	2	1	**1P-9005**	1	SEAL-O-RING	
	3	1	**2P-3696**	3	RETAINER	
	4	1	**2R-0098**	1	SEAL-O-RING	
	5	1	**2S-4078**	1	SEAL-O-RING	
	6	1	**3K-0360**	1	SEAL-O-RING	
	7	1	**6V-0327**	1	CUP-BEARING (TAPERED ROLLER)	
	8	1	**6V-0328**	1	CONE-BEARING (TAPERED ROLLER)	
	9	1	**6V-0329**	1	CONE-BEARING (TAPERED ROLLER)	
	10	1	**6V-0330**	1	CUP-BEARING (TAPERED ROLLER)	
	11	1	**6V-0439**	1	PLUG-MAGNETIC (FINAL DRIVE, OIL FILL)	
	12	1	**6Y-0859**	1	SEAL GP-DUO-CONE	
Z	12A	1		2	SEAL-RING	
	12B	1	**1M-9011**	2	RING-TORIC	
	13	1	**8E-2748**	1	HUB-REACTION	
	14	1	**8G-8844**	1	RING-LOCK	
	15	1	**8G-8845**	1	COVER	
	16	1	**9G-8638**	3	GEAR-PLANETARY (40-TEETH)	
	17	1	**9G-8639**	1	GEAR-RING (94-TEETH)	
	18	1	**9G-9175**	1	CARRIER	
	19	1	**9G-9181**	1	RETAINER	
	20	1	**9G-9183**	3	SHAFT	
	21	1	**9H-3360**	1	SEAL-O-RING	
	22	1	**9X-7671**	1	SEAL-LIP TYPE	
	23	1	**137-4490**	2	RETAINER	
	24	1	**137-9810**	2	SEAL-PACKING	
	25	1	**156-4593**	6	CONE-BEARING (TAPERED ROLLER)	
	26	1	**180-7910**	1	HUB AS	
		1	**137-4488**	1	GUARD	
Y	27	1	*188-0908*	1	SEGMENT GP-SPROCKET	304
	28	1	**260-6644**	1	SPINDLE AS	
	29	1	**2B-0947**	10	BOLT (1/2-13X2.25-IN)	
	30	1	**4L-6454**	3	BOLT (3/8-16X1-IN)	
	31	1	**7X-0346**	3	BOLT (5/8-11X2-IN)	
	32	1	**8C-6561**	16	BOLT (5/16-18X1.375-IN)	
	33	1	**8T-4223**	2	WASHER-HARD (13.5X25.5X3-MM THK)	
	34	1	**8T-4224**	16	WASHER-HARD (8.8X16X2-MM THK)	
	35	1	**8T-4896**	3	WASHER-HARD (10.2X18.5X2.5-MM THK)	
	36	1	**8T-4994**	33	WASHER-HARD (20X36.5X3.5-MM THK)	
	37	1	**8T-8919**	2	BOLT (1/2-13X1.75-IN)	
	38	1	**8T-9399**	33	BOLT (3/4-10X2.25-IN)	
	39	1	**9S-4185**	1	PLUG (FINAL DRIVE, OIL DRAIN)	

Y-SEPARATE ILLUSTRATION
Z-NOT SERVICED SEPARATELY

260-6652 FINAL DRIVE GP *(contd.)* **i02456109**

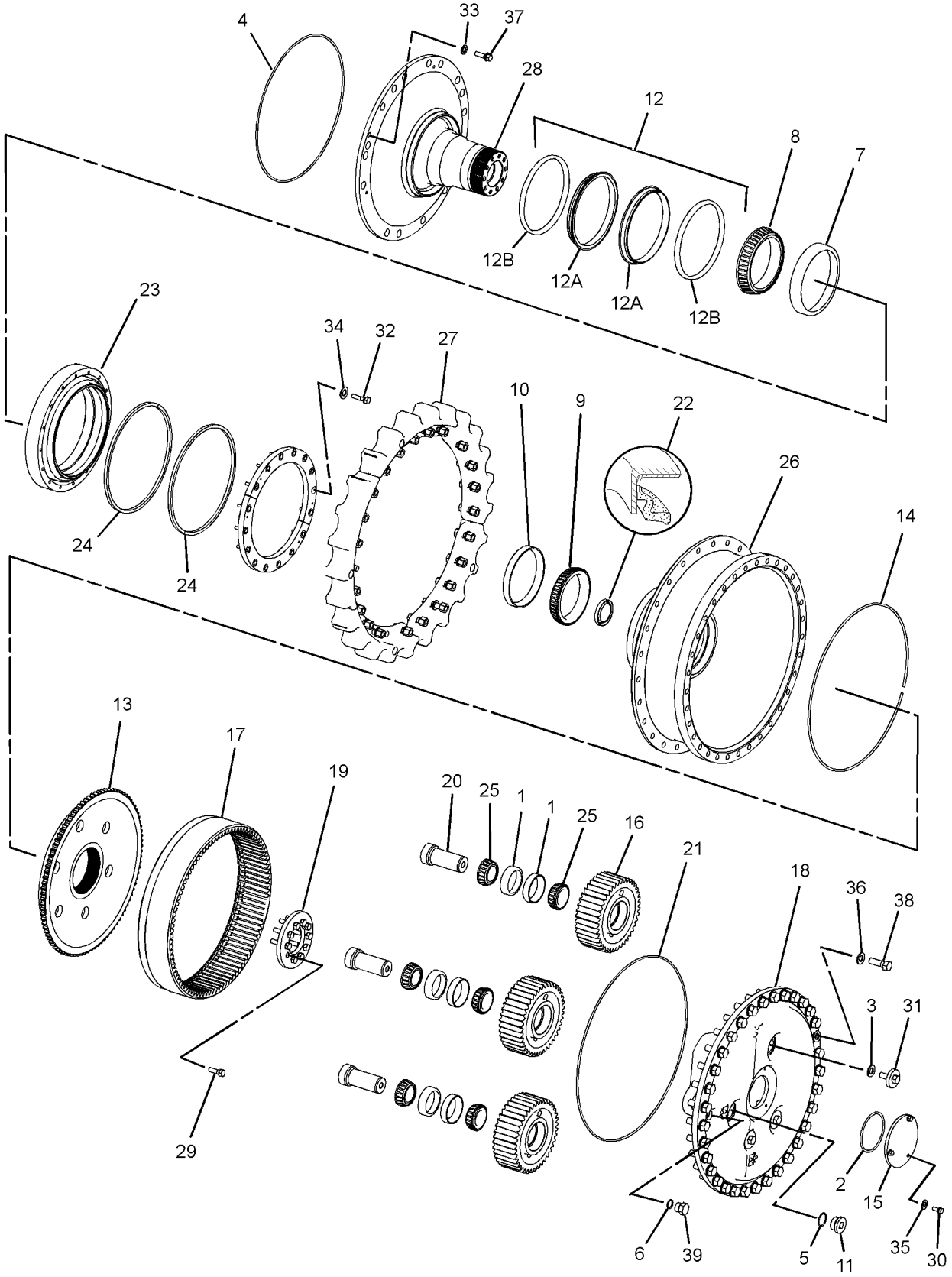

GRAPHIC #1 **<END>** g01210134

POWER TRAIN

244-2616 GEAR GP-BEVEL & TRANSFER

S/N: KKA1-UP

PART OF 220-1429 TRANSMISSION AR

SMCS-3011 **i02451035**

NOTE	REF NO	GRAPHIC REF	PART NUMBER	QTY	PART NAME 1 2 3 4 5 6 (PRODUCT LEVEL)	SEE PAGE
	1	1	**190-2277**	1	CASE AS	
		1	**2D-6642**	1	BALL	
B	2	1	**9P-1922**	1	SHIM PACK (INCLUDES 14-SHIMS)	
	3	1	**9W-2992**	1	CAGE-BEARING	
	4	1	**6S-2828**	2	CUP-BEARING	
	5	1	**6S-2829**	2	CONE-BEARING	
	6	1	**248-0849**	1	GEAR-TRANSFER (50-TEETH)	
	7	1	**9W-3660**	1	PINION-BEVEL (20-TEETH)	
B	8	1	**9P-1921**	1	SHIM PACK (INCLUDES 14-SHIMS)	
	9	1	**6I-8511**	1	CAGE-BEARING	
	10	1	**248-0848**	1	GEAR-TRANSFER (51-TEETH)	
	11	1	**7H-7628**	1	BEARING	
	12	1	**8D-1817**	2	CUP-BEARING	
	13	1	**8D-1819**	2	CONE-BEARING	
	14	1	**216-0273**	1	SEAL-LIP TYPE	
	15	1	**7T-1474**	1	BRACKET-ROLLER	
	16	1	**6T-3852**	2	ROLLER	
	17	1	**6T-3853**	2	SLEEVE	
	18	1	**6I-8507**	1	PLATE-RETAINER	
	19	1	**5M-2894**	4	WASHER-HARD (10.2X18.5X2.5-MM THK)	
	20	1	**0S-1591**	4	BOLT (3/8-16X1.5-IN)	
	21	1	**7D-1649**	2	WASHER-HARD (13.5X32X5-MM THK)	
	22	1	**1A-5822**	2	BOLT (1/2-13X2.75-IN)	
	23	1	**7T-1475**	1	BRACKET-ROLLER	
	24	1	**5P-8247**	16	WASHER-HARD (17X32X3.5-MM THK)	
	25	1	**1D-4601**	4	BOLT (5/8-11X8.5-IN)	
	26	1,2	**5P-8245**	24	WASHER-HARD (13.5X25.5X3-MM THK)	
	27	1,2	**7B-3235**	24	BOLT (1/2-13X1.375-IN)	
	28	1	**0L-1169**	12	BOLT (5/8-11X3.75-IN)	
	29	2	**9W-5150**	1	SHAFT-BEVEL GEAR	
	30	2	**9P-1925**	1	GEAR-BEVEL (35-TEETH)	
	31	2	**5P-7592**	1	RACE-ROLLER BEARING	
	32	2	**4H-0019**	1	RACE & ROLLER AS	
	33	2	**6J-3473**	1	RING-SNAP	
	34	2	**7T-9946**	1	CAGE-BEARING	
	35	2	**9G-0832**	1	DOWEL	
	36	2	**0S-1897**	12	BOLT (3/4-16X2.25-IN)	
	37	2	**1S-1860**	12	NUT-TRACK (3/4-16-THD)	
	38	2	**1P-3935**	2	CONE-BEARING	
	39	2	**9W-8612**	1	SPACER-BEARING	
	40	2	**6T-0364**	1	RING-RETAINING	
	41	2	**1P-3934**	2	CUP-BEARING	
	42	2	**9P-7072**	1	WASHER (90.6X115X2.5-MM THK)	
	43	2	**9W-1570**	1	CAGE AS-BEARING	
		2	**4B-9880**	1	BALL	
		2	**9W-1569**	1	PLUG-ORIFICE	
	44	2	**6V-2404**	1	LOCKWASHER-BEARING	
	45	2	**1L-6957**	1	LOCKNUT-BEARING	
B	46	2	**9P-1478**	2	SHIM PACK (INCLUDES 14-SHIMS)	
	47	1	**3T-6742**	1	RETAINER	
	48	1	**0S-1569**	1	BOLT (5/8-11X4-IN)	

B-USE AS REQUIRED

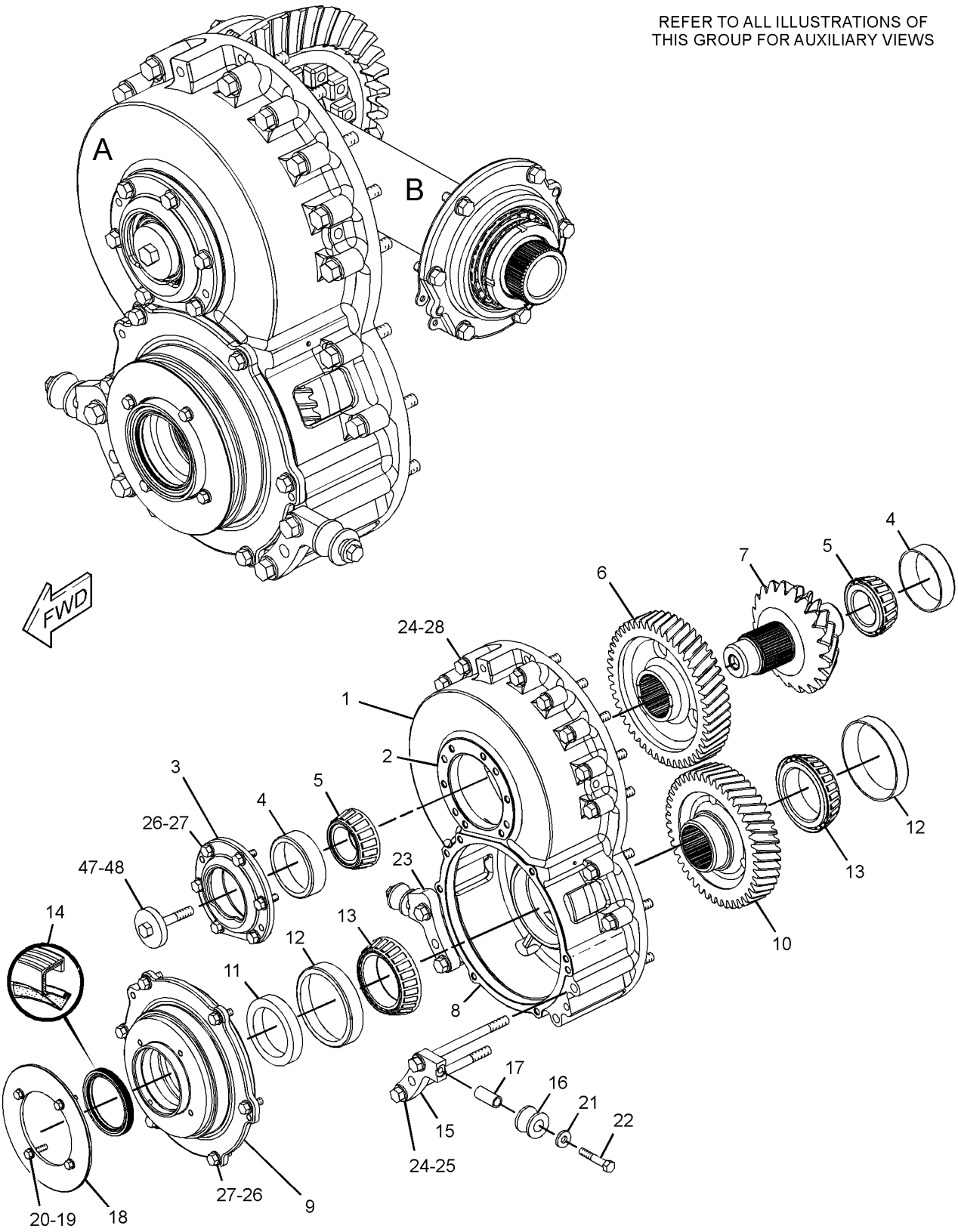

VIEW OF AREA A

GRAPHIC #1 g01210762

244-2616 **GEAR GP-BEVEL & TRANSFER** *(contd.)* **i02451035**

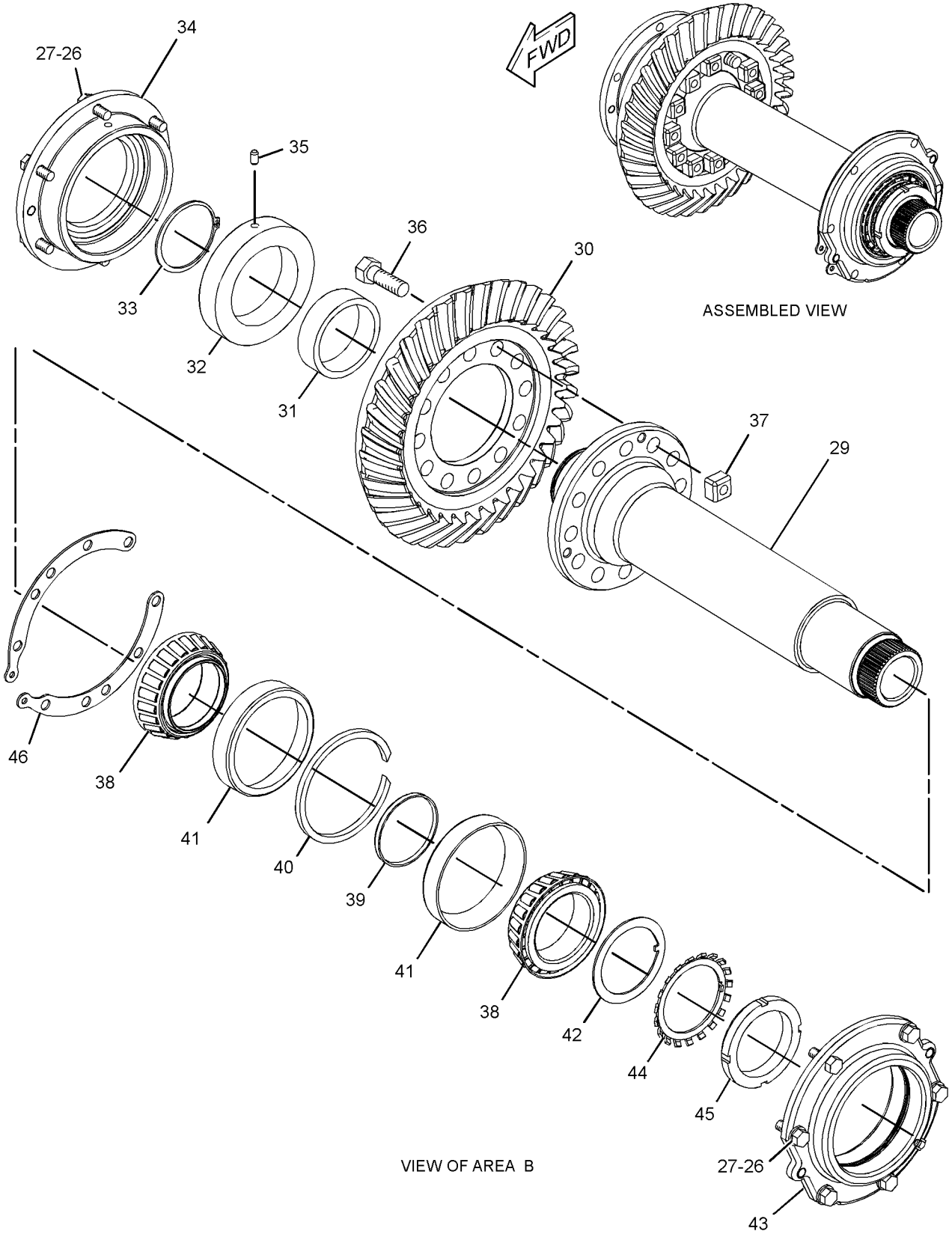

GRAPHIC #2 **<END>** g01210763

223-0703 LINES GP-POWER TRAIN OIL

S/N: JDL1-UP; GMT1-UP

PART OF 218-4979 POWER TRAIN AR

SMCS-3016 **i02433303**

NOTE	REF NO	GRAPHIC REF	PART NUMBER	QTY	PART NAME 1 2 3 4 5 6 (PRODUCT LEVEL)	SEE PAGE
	2	3	**3T-5301**	1	TUBE	
	3	3	**3T-5302**	1	FLANGE	
	4	3	**3T-6471**	1	SCREEN AS (TORQUE CONVERTER SCAVENGE)	
		3	**3T-6469**	1	WASHER (19X26X1.6-MM THK)	
I	5	1	**3W-2470**	1	HOSE AS	
	6	1	**6V-0852**	3	CAP-DUST	
	7	3	**6V-5387**	1	PLATE-ORIFICE	
	8	3	**7V-8532**	1	SPACER	
	9	1	**9G-5127**	1	BREATHER AS (TRANSMISSION)	
	10	1	**106-2105**	1	ELBOW	
I	11	1	**110-9709**	1	HOSE AS	
I	12	1	**174-6127**	1	HOSE AS	
	13	2	**203-2789**	1	BRACKET AS	
		2	**124-6998**	1	PLATE	
M		2	**8T-3490**	1	NUT-WELD (M10X1.5-THD)	
Y	14	3	**220-1418**	1	VALVE GP-RELIEF (TORQUE CONVERTER OUTLET)	321
Y	15	3	*231-4166*	1	SCREEN GP-MAGNETIC (TRANSMISSION)	303
	16	1	**235-4511**	1	HOSE AS	
	17	1	**235-4513**	1	HOSE AS	
	18	1	**235-4514**	1	BRACKET	
	19	1	**235-4515**	1	TUBE AS	
	20	1	**235-4516**	1	TUBE AS	
	21	2	**235-4826**	1	BRACKET AS	
M		2	**8T-3490**	1	NUT-WELD (M10X1.5-THD)	
Y	22	1	**235-5812**	1	FILTER GP-OIL (POWER TRAIN)	275
	23	1	**241-5634**	1	TUBE AS	
	24	1	**241-5635**	1	GAUGE AS-OIL LEVEL (TRANSMISSION CASE)	
	25	2	**248-6816**	3	MOUNT	
Y	26	1	*255-6934*	1	ACCUMULATOR GP (CHARGED)	252
	27	1	*260-9187*	3	CONNECTOR AS	
		1	**8T-9358**	1	CONNECTOR	
		1	**6V-8397**	1	SEAL-O-RING	
I	28	1	**263-3346**	1	HOSE AS	
I	29	1	**263-3348**	1	HOSE AS	
Y	30	3	**263-9949**	1	MANIFOLD GP-TRANSMISSION (LUBE DISTRIBUTION)	289
Y	31	2	*270-1762*	1	PUMP GP-GEAR (TRANSMISSION, TORQUE CONVERTER)	299
	32	1	**270-3434**	1	HOSE AS	
I	33	1	**270-3435**	1	HOSE AS	
I	34	1	**270-3436**	1	HOSE AS	
I	35	1	**270-3437**	1	HOSE AS	
I	36	1	**270-3438**	1	HOSE AS	
	37	2	**033-8248**	1	CLIP	
	38	1	*148-8335*	2	CONNECTOR AS	
					(EACH INCLUDES)	
		1	**6V-8635**	1	CONNECTOR	
		1	**5K-9090**	1	SEAL-O-RING	
		1	**7M-8485**	1	SEAL-O-RING	
	39	1	*148-8336*	1	CONNECTOR AS	
		1	**6V-8636**	1	CONNECTOR	
		1	**3J-1907**	1	SEAL-O-RING	
		1	**6V-8397**	1	SEAL-O-RING	
	40	2,3	*148-8368*	2	ELBOW AS	
					(EACH INCLUDES)	
		2,3	**6V-8627**	1	ELBOW	
		2,3	**3J-1907**	1	SEAL-O-RING	
		2,3	**4J-5477**	1	SEAL-O-RING	

223-0703 **LINES GP-POWER TRAIN OIL** *(contd.)* **i02433303**

NOTE	REF NO	GRAPHIC REF	PART NUMBER	QTY	PART NAME 1 2 3 4 5 6 (PRODUCT LEVEL)	SEE PAGE
	41	3	*148-8374*	1	ELBOW AS	
		3	**6V-8723**	1	ELBOW	
		3	**3K-0360**	1	SEAL-O-RING	
		3	**6V-8397**	1	SEAL-O-RING	
	42	1	*148-8381*	1	ELBOW AS	
		1	**8T-5429**	1	ELBOW	
		1	**3D-2824**	1	SEAL-O-RING	
		1	**6V-8398**	1	SEAL-O-RING	
	43	1	*148-8426*	1	TEE GP	
		1	**8T-6696**	1	TEE-O-RING	
		1	**3K-0360**	1	SEAL-O-RING	
		1	**6V-8398**	1	SEAL-O-RING	
		1	**6V-8397**	1	SEAL-O-RING	
	44	1	*150-3065*	1	ADAPTER AS	
		1	**6V-0484**	1	ADAPTER-O-RING	
		1	**3J-1907**	1	SEAL-O-RING	
	45	1	*153-6243*	1	TEE AS	
		1	**8T-1120**	1	TEE-O-RING PORT	
		1	**2S-4078**	1	SEAL-O-RING	
		1	**5K-9090**	1	SEAL-O-RING	
		1	**6V-9746**	1	SEAL-O-RING	
	46	1	*153-6252*	1	CONNECTOR AS	
		1	**9X-8408**	1	CONNECTOR	
		1	**6V-8398**	1	SEAL-O-RING	
		1	**7M-8485**	1	SEAL-O-RING	
	47	1	**162-9523**	2	GROMMET	
	48	1	*164-5567*	3	FITTING AS	
					(EACH INCLUDES)	
		1	**6V-3965**	1	FITTING AS (QUICK DISCONNECT)	
		1	**3J-1907**	1	SEAL-O-RING	
	49	1	**180-4362**	2	SEAL-RECTANGULAR	
	50	2	**1H-5728**	1	SEAL-O-RING	
	51	1,2,3	**1P-4578**	10	FLANGE-HALF	
	52	3	**1V-7753**	1	SPACER (0.546X0.841X1.75-IN THK)	
	53	2	**2K-8257**	1	SEAL-O-RING	
	54	1	**3G-4214**	2	CLIP (SLOT)	
	55	1	**3G-4218**	2	CLIP (TAB)	
	56	1	**3J-1907**	1	SEAL-O-RING	
	57	1,2,3	**4K-6177**	5	CLIP	
	58	2	**5P-1075**	1	WASHER-HARD (10.2X22.5X3-MM THK)	
	59	1	**5P-7085**	1	SEAL-RECTANGULAR	
	60	2	**5P-7468**	2	CLIP (SLOT)	
	61	2	**5P-7469**	2	CLIP (TAB)	
	62	3	**6L-1649**	2	SEAL-O-RING	
	63	3	**6L-5359**	1	SEAL-O-RING	
	64	1	**6V-1572**	2	CLIP (SLOT)	
	65	1	**6V-1573**	2	CLIP (TAB)	
	66	2	**6V-2381**	2	CLIP (SLOT)	
	67	2	**6V-2382**	2	CLIP (TAB)	
	68	1	**6V-9168**	3	NUT (11/16-16-THD)	
	69	1	**7D-1649**	2	WASHER-HARD (13.5X32X5-MM THK)	
	70	2	**7G-3832**	1	GROMMET	
	71	2	**7G-3833**	1	CLIP (TAB)	
	72	2	**7G-3834**	1	CLIP (SLOT)	
	73	2	**7S-8920**	1	CLIP (SLOT)	
	74	2	**7S-8921**	1	CLIP (TAB)	
	75	1	**7X-7729**	2	WASHER (11X25X3-MM THK)	
	76	2	**8C-3206**	2	FLANGE-HALF	
	77	1,3	**8M-4986**	9	SEAL-O-RING	

223-0703 LINES GP-POWER TRAIN OIL *(contd.)* i02433303

NOTE	REF NO	GRAPHIC REF	PART NUMBER	QTY	PART NAME 1 2 3 4 5 6 (PRODUCT LEVEL)	SEE PAGE
	78	1	**8M-4987**	3	SEAL-O-RING	
	79	2	**8M-5254**	4	SEAL-O-RING	
	80	3	**8M-8157**	1	SEAL-O-RING	
	81	3	**8S-0023**	1	CLIP (SLOT)	
	82	3	**8S-0024**	1	CLIP (TAB)	
	83	2	**8T-1893**	2	CLIP (SLOT)	
	84	2	**8T-1894**	2	CLIP (TAB)	
	85	1,2,3	**8T-4121**	51	WASHER-HARD (11X21X2.5-MM THK)	
M	86	1,2,3	**8T-4133**	6	NUT (M10X1.5 THD)	
M	87	1,2,3	**8T-4136**	12	BOLT (M10X1.5X25-MM)	
M	88	1	**8T-4137**	1	BOLT (M10X1.5X20-MM)	
M	89	3	**8T-4172**	3	BOLT (M10X1.5X80-MM)	
M	90	3	**8T-4178**	4	BOLT (M10X1.5X90-MM)	
M	91	1	**8T-4184**	2	BOLT (M12X1.75X45-MM)	
M	92	2	**8T-4186**	7	BOLT (M10X1.5X40-MM)	
M	93	2	**8T-4195**	4	BOLT (M10X1.5X30-MM)	
M	94	1,2,3	**8T-4196**	16	BOLT (M10X1.5X35-MM)	
	95	2	**8T-4222**	6	WASHER-PLATED (11X32X2.5-MM THK)	
	96	2,3	**8T-4223**	13	WASHER-HARD (13.5X25.5X3-MM THK)	
M	97	3	**8T-4648**	1	BOLT (M12X1.75X70-MM)	
	98	3	**8T-4896**	4	WASHER-HARD (10.2X18.5X2.5-MM THK)	
M	99	3	**8T-4956**	4	BOLT (M12X1.75X35-MM)	
M	100	3	**8T-5005**	8	BOLT (M10X1.5X70-MM)	
M	101	2	**8T-6868**	8	BOLT (M12X1.75X80-MM)	
	102	2	**8T-7087**	2	GROMMET	
	103	2	**9R-4764**	1	ROD	
	104	1	**9X-8257**	6	WASHER (17.5X30X3.5-MM THK)	

I-REFER TO HYDRAULIC INFORMATION SYSTEM
M-METRIC PART
Y-SEPARATE ILLUSTRATION

223-0703 **LINES GP-POWER TRAIN OIL** *(contd.)* **i02433303**

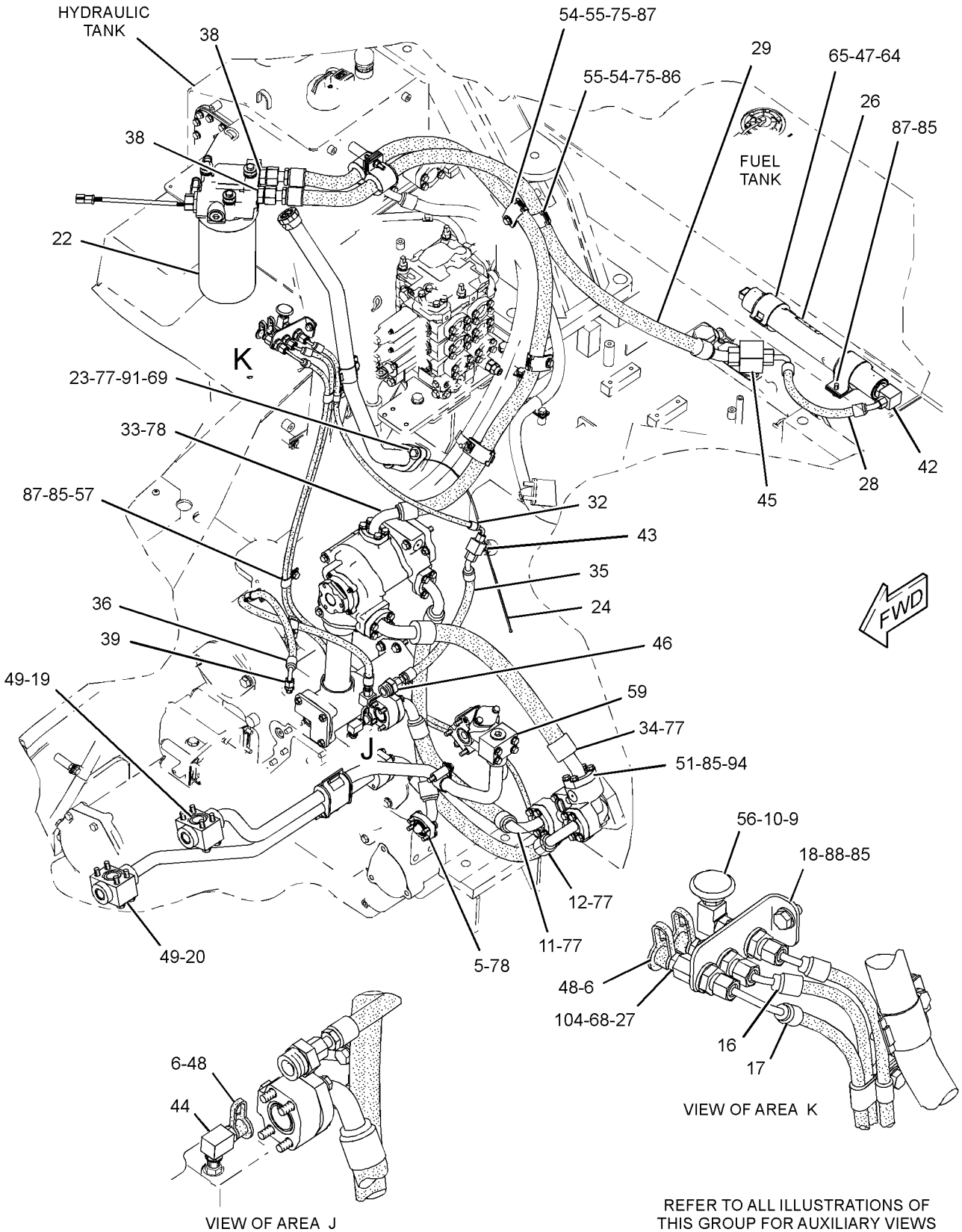

REFER TO ALL ILLUSTRATIONS OF THIS GROUP FOR AUXILIARY VIEWS

GRAPHIC #1

g01211790

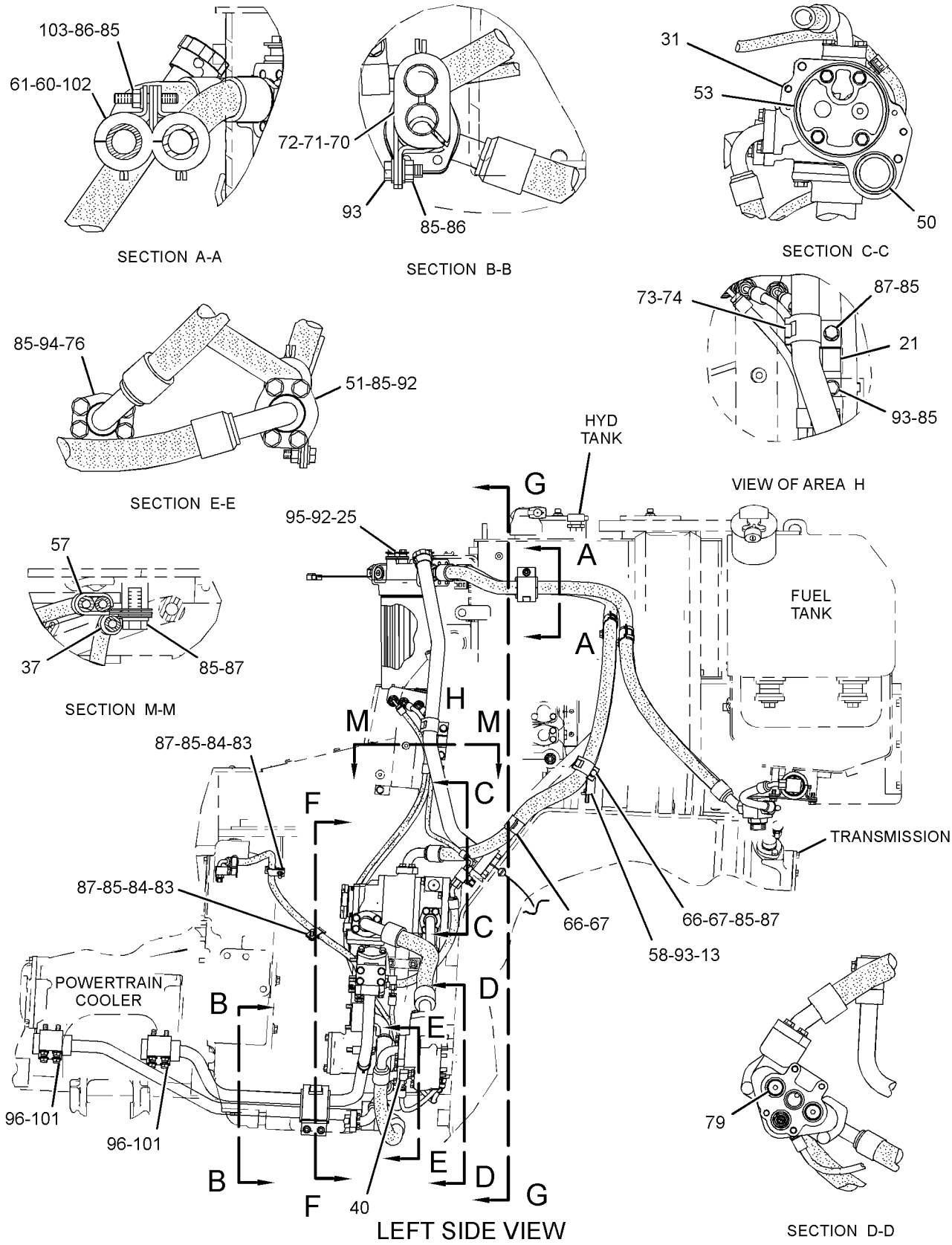

GRAPHIC #2

g01214011

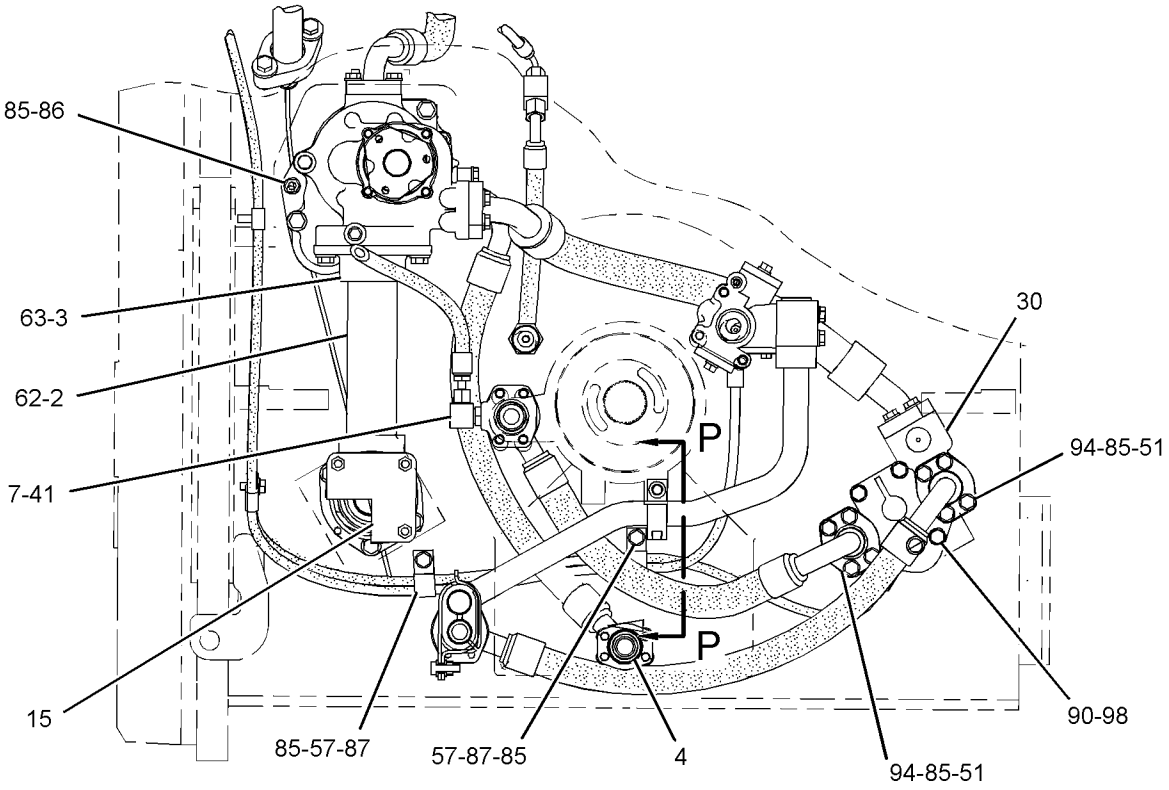

SECTION F-F

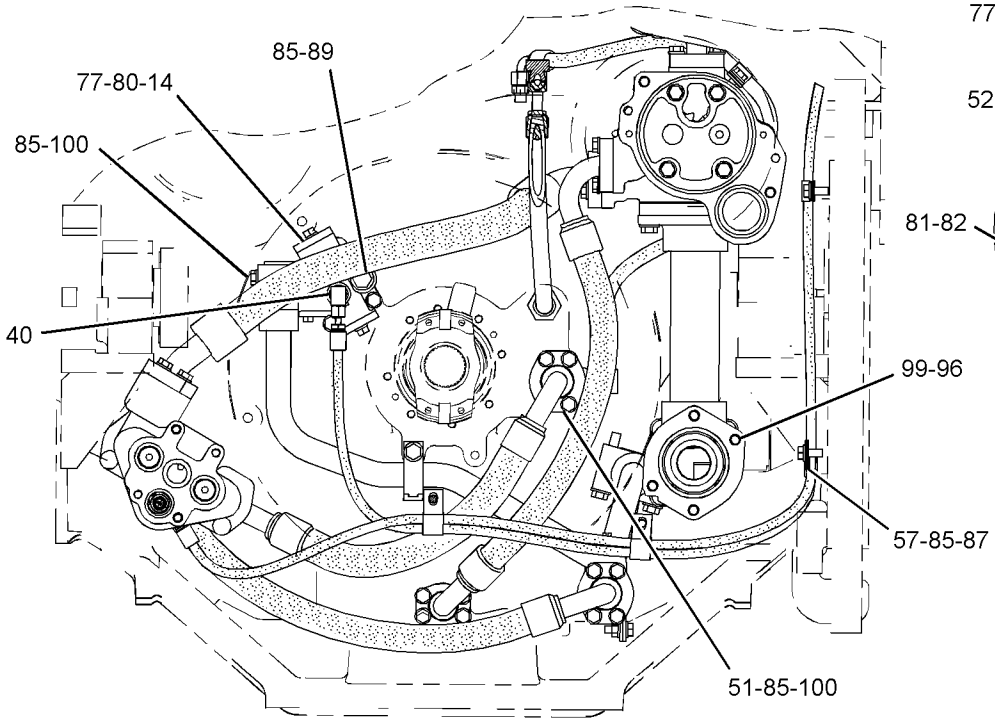

SECTION G-G

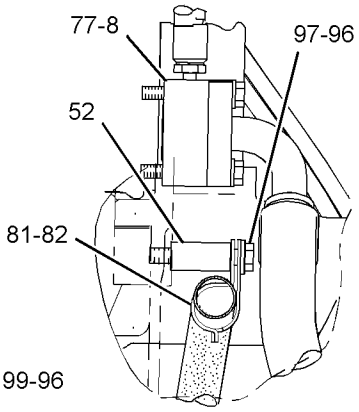

SECTION P-P

GRAPHIC #3 **<END>** g01211792

263-9949 MANIFOLD GP-TRANSMISSION

S/N: JDL1-UP; GMT1-UP

PART OF 223-0703 LINES GP-POWER TRAIN OIL

SMCS-5264 **i02438121**

NOTE	REF NO	GRAPHIC REF	PART NUMBER	QTY	PART NAME 1 2 3 4 5 6 (PRODUCT LEVEL)	SEE PAGE
	1	1	**6V-0852**	1	CAP-DUST	
	2	1	**8C-3428**	1	RING-RETAINING	
	3	1	**124-6655**	2	ORIFICE	
	4	1	**148-1928**	1	VALVE-RELIEF	
	5	1	**247-2959**	1	MANIFOLD	
	6	1	**250-8466**	1	ORIFICE	
	7	1	**263-9950**	1	RETAINER	
	8	1	**3J-1907**	1	SEAL-O-RING	
	9	1	**6V-3965**	1	FITTING AS (QUICK DISCONNECT)	
	10	1	**9X-4609**	1	SEAL-O-RING	

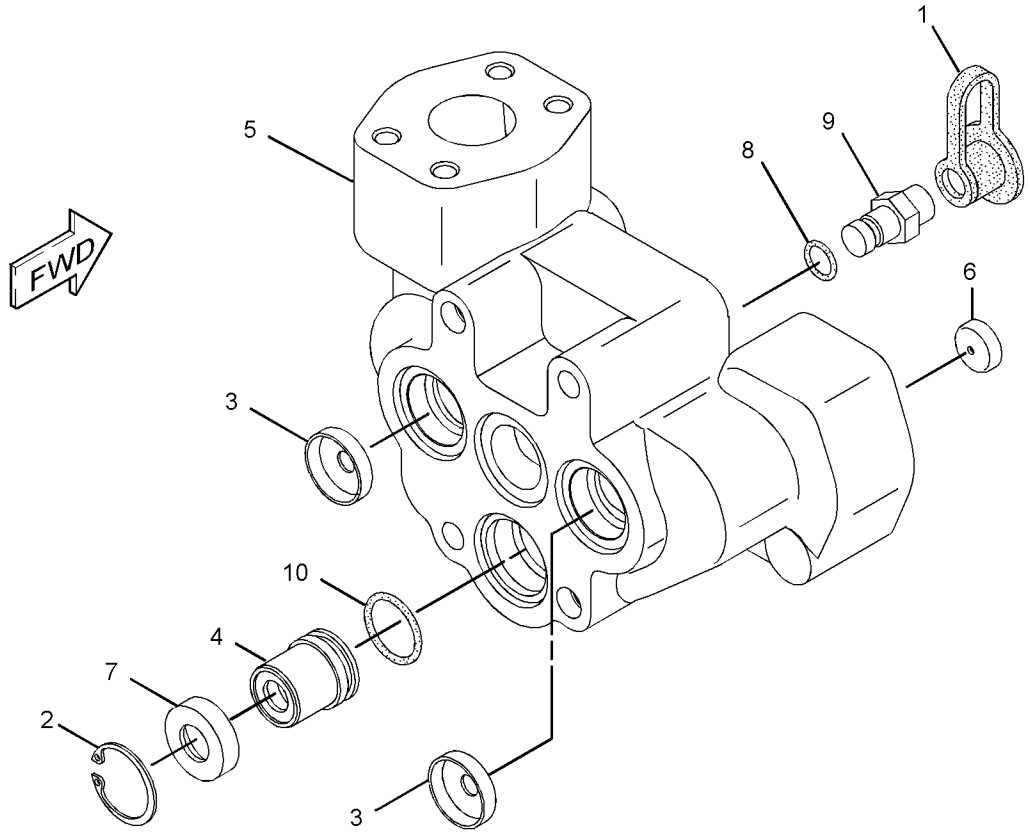

GRAPHIC #1 **<END>** g01208798

259-3119 MOUNTING GP-FINAL DRIVE

S/N: JDL1-UP; GMT1-UP

PART OF 218-4979 POWER TRAIN AR

SMCS-4050 **i02438205**

NOTE	REF NO	GRAPHIC REF	PART NUMBER	QTY	PART NAME 1 2 3 4 5 6 (PRODUCT LEVEL)	SEE PAGE
	1	1	**219-4481**	32	BOLT (M22X2.5X85-MM)	
	2	1	**6F-6673**	4	SEAL-O-RING	
	3	1	**8C-6913**	32	WASHER-HARD (24X41.5X4-MM THK)	
	4	1	**8D-4771**	2	SEAL-O-RING	
M	5	1	**8T-4182**	4	BOLT (M10X1.5X45-MM)	
	6	1	**9X-2027**	4	WASHER (11X18X2-MM THK)	

M-METRIC PART

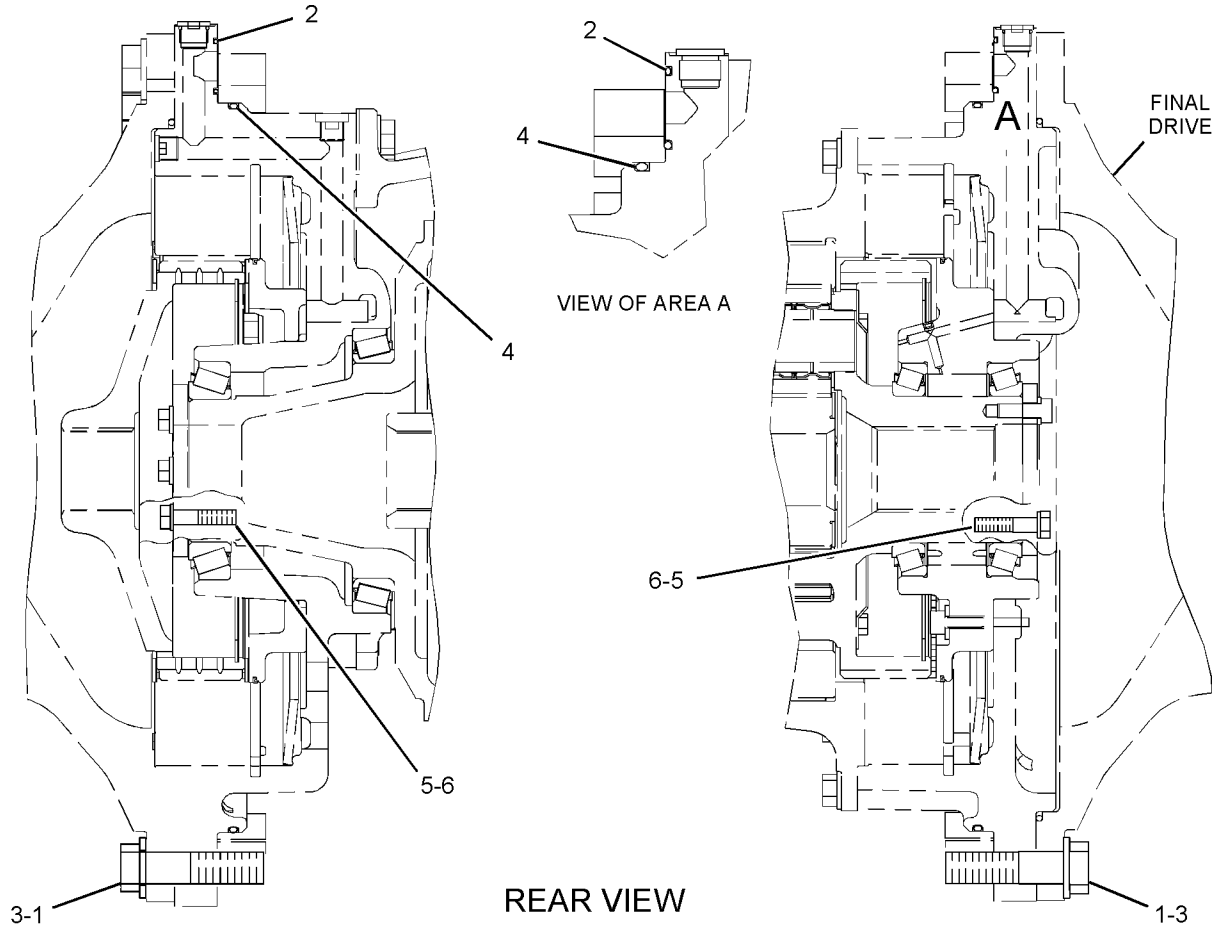

GRAPHIC #1

<END>

g01207792

227-0165 MOUNTING GP-TRANSMISSION

S/N: JDL1-UP; GMT1-UP

PART OF 218-4979 POWER TRAIN AR

SMCS-3082 **i02438193**

NOTE	REF NO	GRAPHIC REF	PART NUMBER	QTY	PART NAME 1 2 3 4 5 6 (PRODUCT LEVEL)	SEE PAGE
	1	1	**8G-9880**	2	TUBE AS	
	2	1	**1M-9011**	1	RING-TORIC	
	3	1	**2D-6506**	1	SEAL-O-RING	
	4	1	**8M-4390**	1	SEAL-O-RING	
	5	1	**8T-4121**	8	WASHER-HARD (11X21X2.5-MM THK)	
M	6	1	**6V-7744**	4	LOCKNUT (M10X1.15-THD)	
M	7	1	**8T-4196**	4	BOLT (M10X1.5X35-MM)	
	8	1	**8T-4223**	22	WASHER-HARD (13.5X25.5X3-MM THK)	
M	9	1	**8T-4648**	19	BOLT (M12X1.75X70-MM)	
M	10	1	**8T-5041**	3	BOLT (M12X1.75X120-MM)	
	11	1	**9M-7002**	2	SEAL-O-RING	

M-METRIC PART

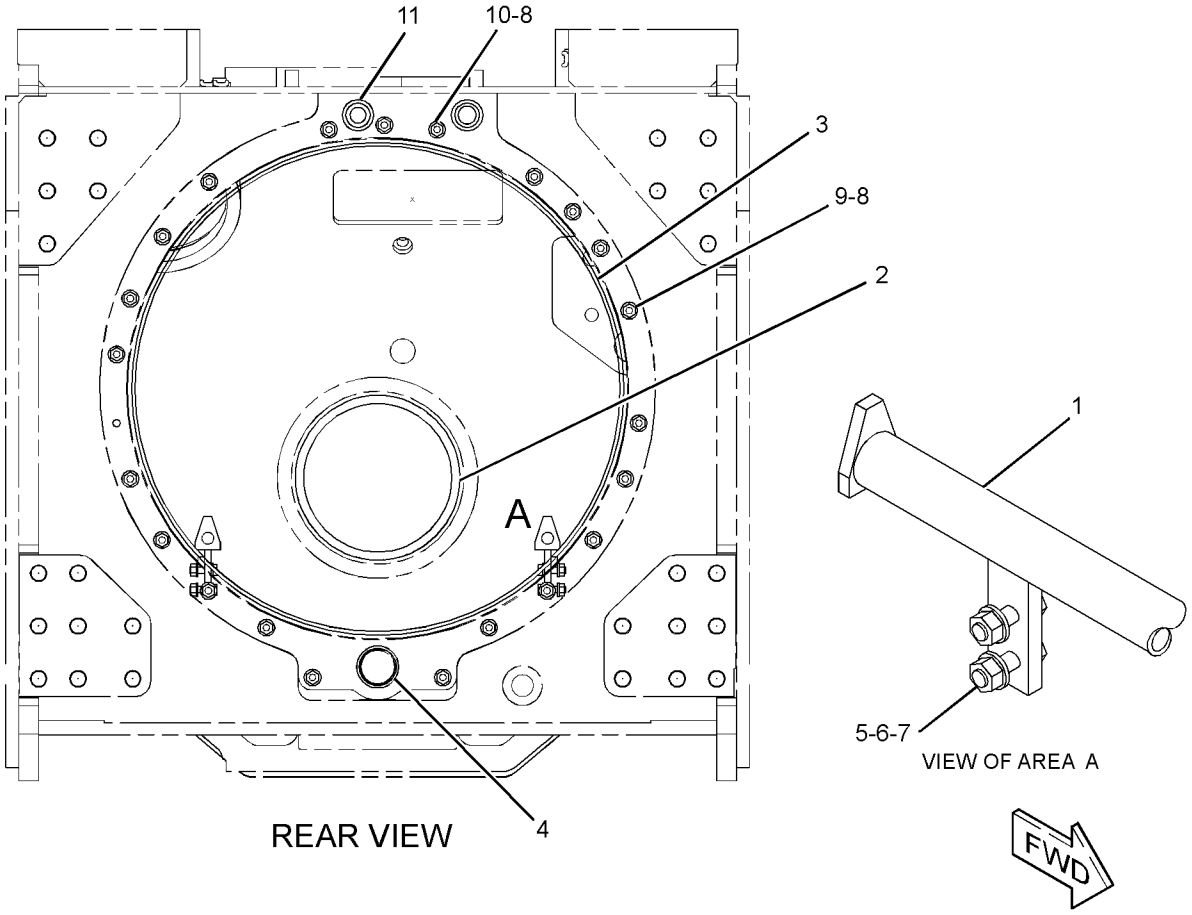

GRAPHIC #1 **<END>** g01206341

POWER TRAIN

220-1403 PLANETARY GP-TRANSMISSION

S/N: KKA1-UP

PART OF 220-1429 TRANSMISSION AR

SMCS-3160 **i02451017**

NOTE	REF NO	GRAPHIC REF	PART NUMBER	QTY	PART NAME 1 2 3 4 5 6 (PRODUCT LEVEL)	SEE PAGE
	1	4	**3T-4377**	2	SEAL-RING	
	2	2	**4M-9592**	20	SPRING	
	3	4	**5D-2989**	3	BEARING	
	4	3	**5M-6126**	6	BEARING AS-ROLLER	
	5	2	**5P-3930**	3	BEARING AS-ROLLER	
	6	1	**5P-8194**	1	RING-RETAINING	
	7	2	**6I-8500**	3	PLATE-CLUTCH	
	8	4	**6T-7882**	3	GEAR (25-TEETH)	
	9	2,3	**6V-0473**	3	RING-RETAINING	
	10	1	**6V-2478**	1	RING-RETAINING	
	11	4	**6Y-1602**	1	COUPLING	
	12	4	**6Y-4819**	1	CARRIER-PLANETARY	
	13	4	**6Y-4831**	1	PLATE AS	
		4	**5H-6202**	2	PIN	
		4	**7M-5130**	1	PIN-SPRING	
	14	2	**6Y-5911**	5	DISC-FRICTION	
	15	1	**6Y-5912**	4	DISC-FRICTION	
	16	3	**7G-2516**	6	GEAR-PLANETARY (24-TEETH)	
	17	1	**7G-2830**	2	RING-SEAL	
	18	3	**7G-6355**	1	GEAR-RING (90-TEETH)	
	19	2	**7G-7218**	1	CARRIER-PLANETARY	
	20	1	**7G-7724**	1	PISTON-CLUTCH	
	21	4	**7H-7658**	10	SPRING	
	22	3	**7T-3950**	1	GEAR (83-TEETH)	
	23	4	**7T-9272**	1	GEAR-SUN (34-TEETH)	
	24	2	**7T-9370**	1	GEAR-SUN (51-TEETH)	
	25	2	**8E-8299**	6	DISC-THRUST	
	26	3	**8E-8304**	12	DISC-THRUST	
	27	4	**8E-8305**	6	DISC-THRUST	
	28	2	**8P-1892**	1	PISTON-CLUTCH	
	29	2	**8P-1916**	3	GEAR-PLANETARY (20-TEETH)	
	30	1	**8P-1964**	3	PLATE-CLUTCH	
R	31	3,4	**8P-2051**	6	PLATE-CLUTCH	
	32	3	**8P-2053**	1	SEAL-RING	
	33	2,4	**8P-9507**	2	PISTON-CLUTCH	
	34	3	**9G-0284**	1	HOUSING-CLUTCH	
	35	3	**9G-0285**	1	PISTON-CLUTCH	
	36	2	**9G-0289**	3	SHAFT-PLANETARY	
	37	1	**9G-0290**	1	HUB-CLUTCH	
	38	1	**9G-8020**	1	PLATE-RETAINER	
	39	3	**9M-4355**	10	DAMPER-BOLT	
	40	3,4	**9P-7390**	8	DISC AS-FRICTION	
	41	3	**9P-7757**	1	GEAR-SUN (42-TEETH)	
	42	2	**9P-8614**	1	GEAR-RING (90-TEETH)	
	43	4	**9P-8623**	3	SHAFT-PLANETARY	
	44	3	**9P-8626**	1	GEAR-SUN (42-TEETH)	
	45	4	**9W-0645**	1	TUBE AS	
	46	1	**9W-8269**	1	PLATE-REACTION	
	47	1	**9W-8270**	1	GEAR-RING (90-TEETH)	
	48	1	**105-8183**	1	HOUSING AS	
		1	**6B-6863**	1	PIN-SPRING	
		1	**6P-7704**	1	CARRIER-RING	
	49	3	**112-4511**	3	PIN-SPRING	
	50	3	**112-5585**	3	SHAFT-PLANETARY	
	51	3	**112-8041**	1	CARRIER-PLANETARY	
	52	2	**117-7826**	1	HOUSING AS-CLUTCH	

220-1403 **PLANETARY GP-TRANSMISSION** *(contd.)* **i02451017**

NOTE	REF NO	GRAPHIC REF	PART NUMBER	QTY	PART NAME 1 2 3 4 5 6 (PRODUCT LEVEL)	SEE PAGE
		2	**1A-2223**	4	DOWEL	
	53	4	**131-4091**	1	SEAL-RING	
	54	2,3,4	**144-4284**	3	RING-LOCK	
	55	1	**144-7878**	1	MANIFOLD	
	56	1	**191-8304**	1	SENSOR GP-SPEED (TRANSMISSION OUTPUT 1)	
	57	1	**191-8305**	1	SENSOR GP-SPEED (TRANSMISSION OUTPUT 2)	
	58	4	**220-1411**	1	HOUSING AS	
		4	**3F-5022**	1	PLUG-CUP	
	59	4	**231-8855**	1	SHAFT AS-INPUT	
		4	**156-4406**	1	PLUG-PIPE	
	60	3	**234-9994**	1	SHAFT AS-OUTPUT	
		3	**3T-8729**	1	BEARING-SLEEVE	
		3	**9G-6744**	1	BEARING-SLEEVE	
	61	1	**237-2209**	1	ROTOR	
	62	1	**237-9601**	1	BRACKET AS	
		1	**8M-8489**	2	DOWEL	
	63	4	**030-8538**	1	BOLT (1/2-13X1.25-IN)	
	64	3,4	**061-6711**	2	RING-RETAINING	
	65	4	**068-8093**	2	RING-RETAINING	
	66	1	**0S-1619**	2	BOLT (3/8-16X3-IN)	
	67	1	**117-1385**	2	SEAL-O-RING	
	68	3	**1A-5183**	2	BOLT (3/8-16X4.75-IN)	
	69	1	**1L-7388**	1	RING-RETAINING	
	70	1	**1M-8657**	2	BOLT (1/2-13X15.69-IN)	
	71	1	**2H-3755**	2	BOLT (5/16-18X0.43-IN)	
	72	1	**3E-4352**	2	WASHER-HARD (8.8X20.5X2.5-MM THK)	
	73	2,3	**3K-2511**	10	DOWEL-REACTION	
	74	2,4	**3S-2708**	6	PIN-SPRING	
	75	1	**4M-2442**	8	BOLT (1/2-13X12.32-IN)	
	76	1	**5M-2894**	2	WASHER-HARD (10.2X18.5X2.5-MM THK)	
	77	2,4	**5M-3038**	2	SEAL-O-RING	
	78	1	**5P-5045**	1	BALL BEARING	
	79	1,3	**5P-5296**	4	RING-RETAINING	
	80	1	**5P-5297**	1	RING-RETAINING	
	81	1,4	**5P-8245**	11	WASHER-HARD (13.5X25.5X3-MM THK)	
	82	1	**7G-2343**	3	SPRING-DISC	
	83	2,3	**7T-8816**	3	BALL BEARING	
	84	1	**8D-9739**	1	SEAL-RING	
	85	4	**8H-5352**	2	BALL BEARING	
	86	4	**8M-5010**	2	SEAL-O-RING	
	87	1	**8M-5255**	1	SEAL-O-RING	
	88	4	**8M-5266**	1	SEAL-O-RING	
	89	2,4	**8P-2019**	3	RING-SEAL	
	90	2,3,4	**8P-2022**	4	RING-SEAL	
	91	1	**8P-2023**	1	RING-SEAL	
	92	3	**9G-0286**	1	RING-SEAL	

R-REMFG PART MAY BE AVAILABLE

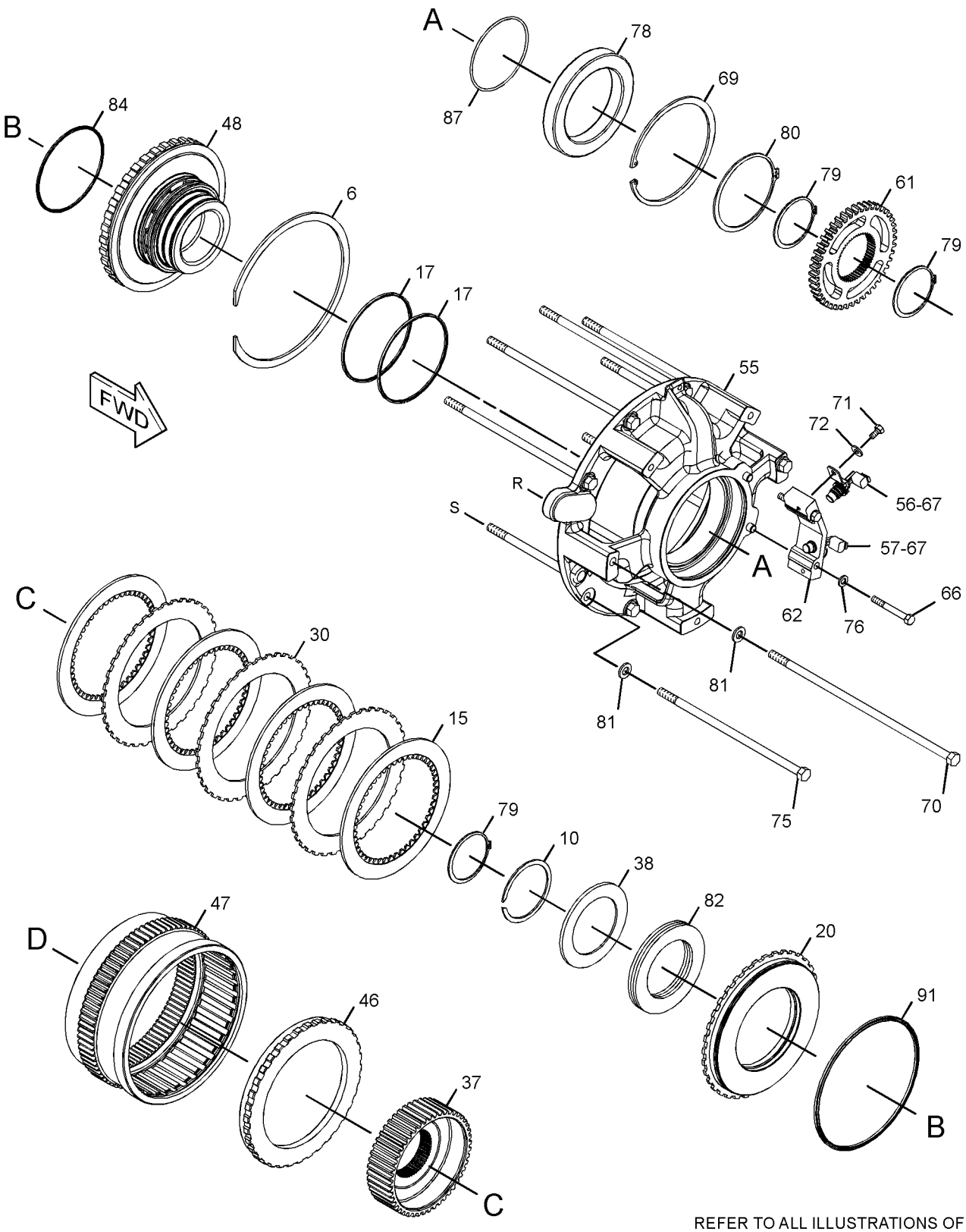

REFER TO ALL ILLUSTRATIONS OF
THIS GROUP FOR AUXILIARY VIEWS

GRAPHIC #1

g01211868

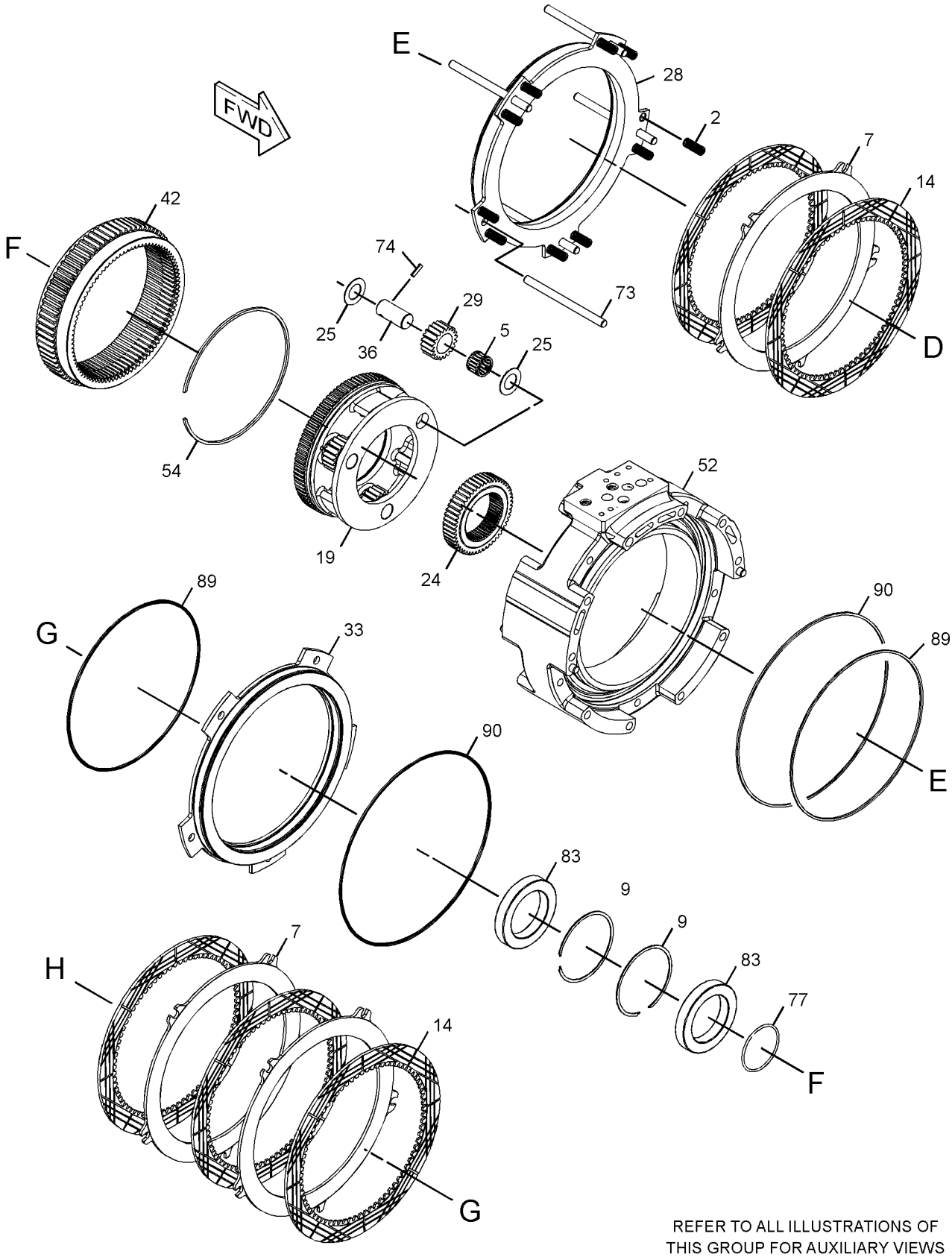

REFER TO ALL ILLUSTRATIONS OF
THIS GROUP FOR AUXILIARY VIEWS

GRAPHIC #2

g01210206

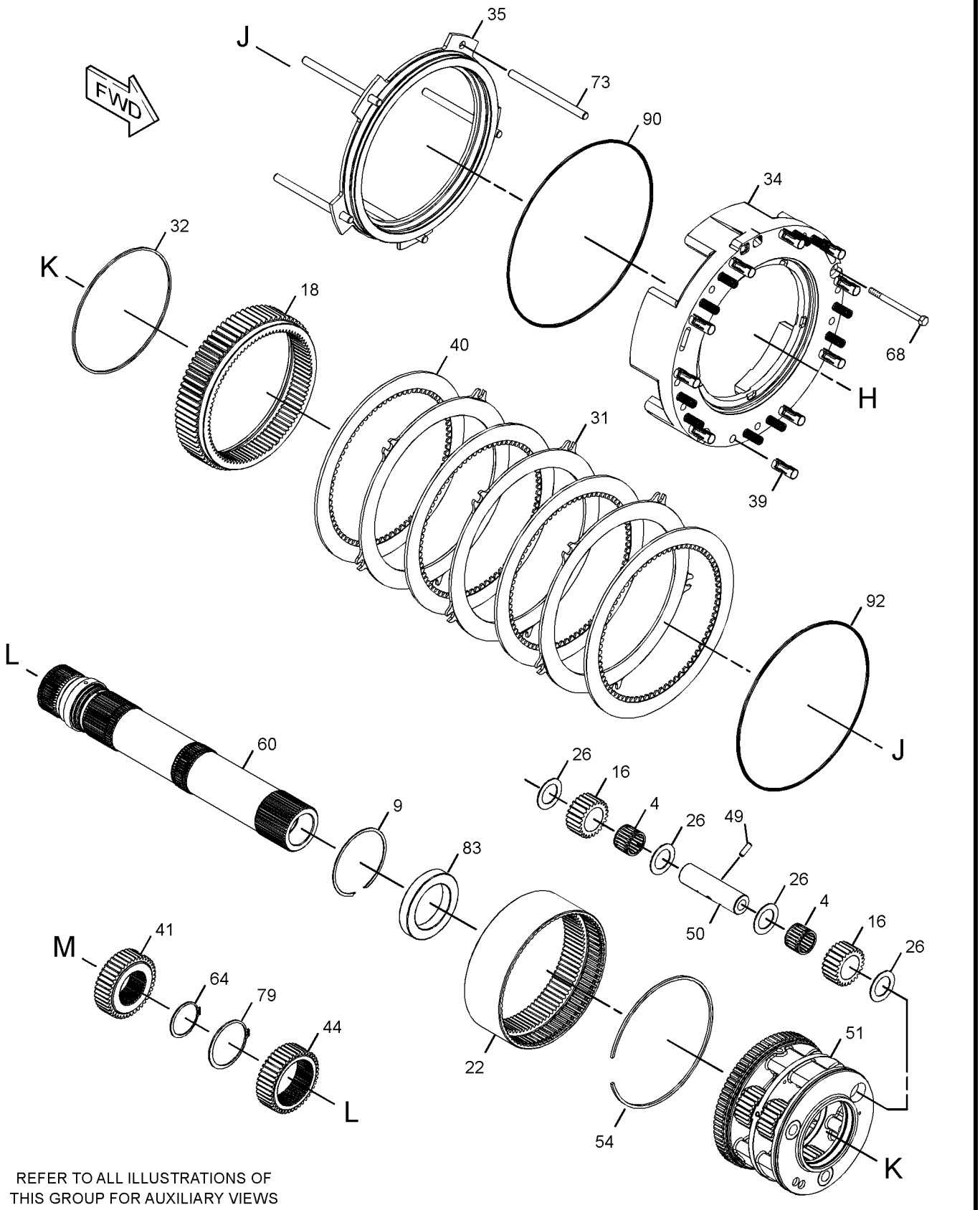

REFER TO ALL ILLUSTRATIONS OF
THIS GROUP FOR AUXILIARY VIEWS

GRAPHIC #3

g01210322

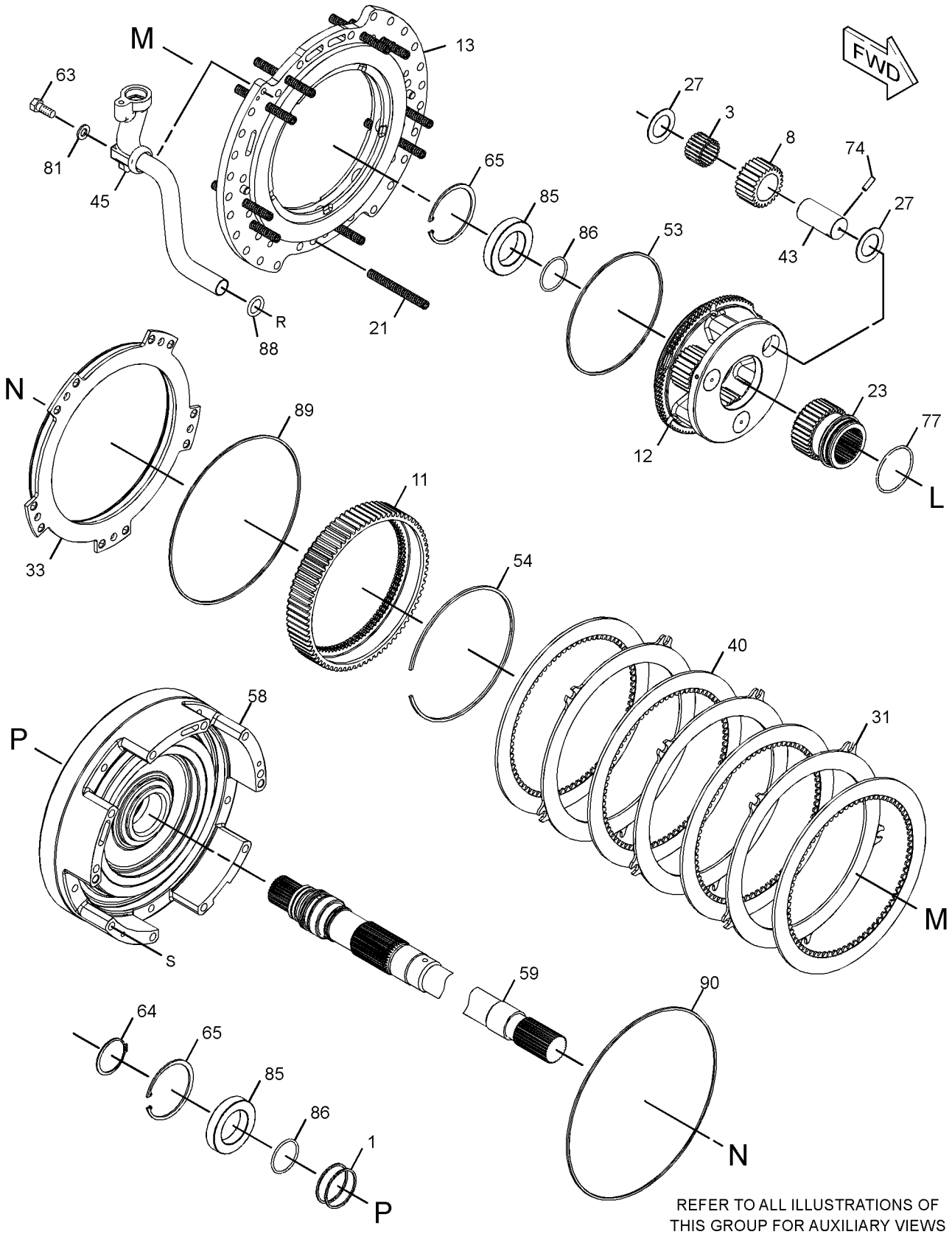

REFER TO ALL ILLUSTRATIONS OF THIS GROUP FOR AUXILIARY VIEWS

GRAPHIC #4 **<END>** g01211870

POWER TRAIN

218-4979 POWER TRAIN AR

S/N: JDL1-UP; GMT1-UP

PART OF 218-4976, 222-1591 GENERAL AR

SMCS-3000, 4000 **i02429834**

NOTE	PART NUMBER	QTY	PART NAME 1 2 3 4 5 6 (PRODUCT LEVEL)	SEE PAGE
Y	*3W-6550*	1	AXLE GP	254
Y	*231-5969*	1	BRAKE & DIFFERENTIAL DRIVE GP	256
Y	*231-5990*	1	BRAKE & PLANETARY GP	261
Y	*224-2793*	1	CONTROL & MTG GP-PEDAL	616
Y	*226-9715*	1	CONTROL GP-STEERING & TMSN	431
Y	*225-1506*	1	COUPLING & GUARD GP	270
Y	*260-6649*	2	FINAL DRIVE GP	276
Y	*223-0703*	1	LINES GP-POWER TRAIN OIL	283
Y	*259-3119*	1	MOUNTING GP-FINAL DRIVE	290
Y	*227-0165*	1	MOUNTING GP-TRANSMISSION	291
Y	*108-1696*	1	SHAFT GP-DRIVE	305
Y	*232-6207*	1	TORQUE CONVERTER GP	308
Y	**220-1429**	1	TRANSMISSION AR	313
Y	*213-1308*	1	VALVE & MTG GP-CONTROL	315

Y-SEPARATE ILLUSTRATION

<END>

270-1762 PUMP GP-GEAR–TRANSMISSION, TORQUE CONVERTER

S/N: JDL1-UP; GMT1-UP

PART OF 223-0703 LINES GP-POWER TRAIN OIL

SMCS-3066, 3115, 5073 **i02438128**

NOTE	REF NO	GRAPHIC REF	PART NUMBER	QTY	PART NAME 1 2 3 4 5 6 (PRODUCT LEVEL)	SEE PAGE
	1	1	**3T-5356**	1	CAGE-BEARING	
	2	1	**5H-4279**	1	PLUG-CUP	
	3	1	**212-2301**	1	FLANGE	
Y	4	1	**270-1763**	1	PUMP GP-GEAR (TRANSMISSION, TORQUE CONVERTER)	301
	5	1	**111-4919**	1	SEAL-LIP TYPE	
	6	1	**1P-4578**	2	FLANGE-HALF	
	7	1	**2M-3974**	1	RING-RETAINING	
	8	1	**5P-9439**	1	BALL BEARING	
	9	1	**6H-3977**	1	SEAL-O-RING	
	10	1	**6L-4783**	4	BOLT-12 POINT HEAD (5/16-18X1.25-IN)	
	11	1	**8C-3206**	4	FLANGE-HALF	
	12	1	**8T-4121**	12	WASHER-HARD (11X21X2.5-MM THK)	
M	13	1	**8T-4176**	2	BOLT (M12X1.75X90-MM)	
M	14	1	**8T-4196**	12	BOLT (M10X1.5X35-MM)	
	15	1	**8T-4223**	2	WASHER-HARD (13.5X25.5X3-MM THK)	

M-METRIC PART
Y-SEPARATE ILLUSTRATION

270-1762 **PUMP GP-GEAR** *(contd.)* **i02438128**

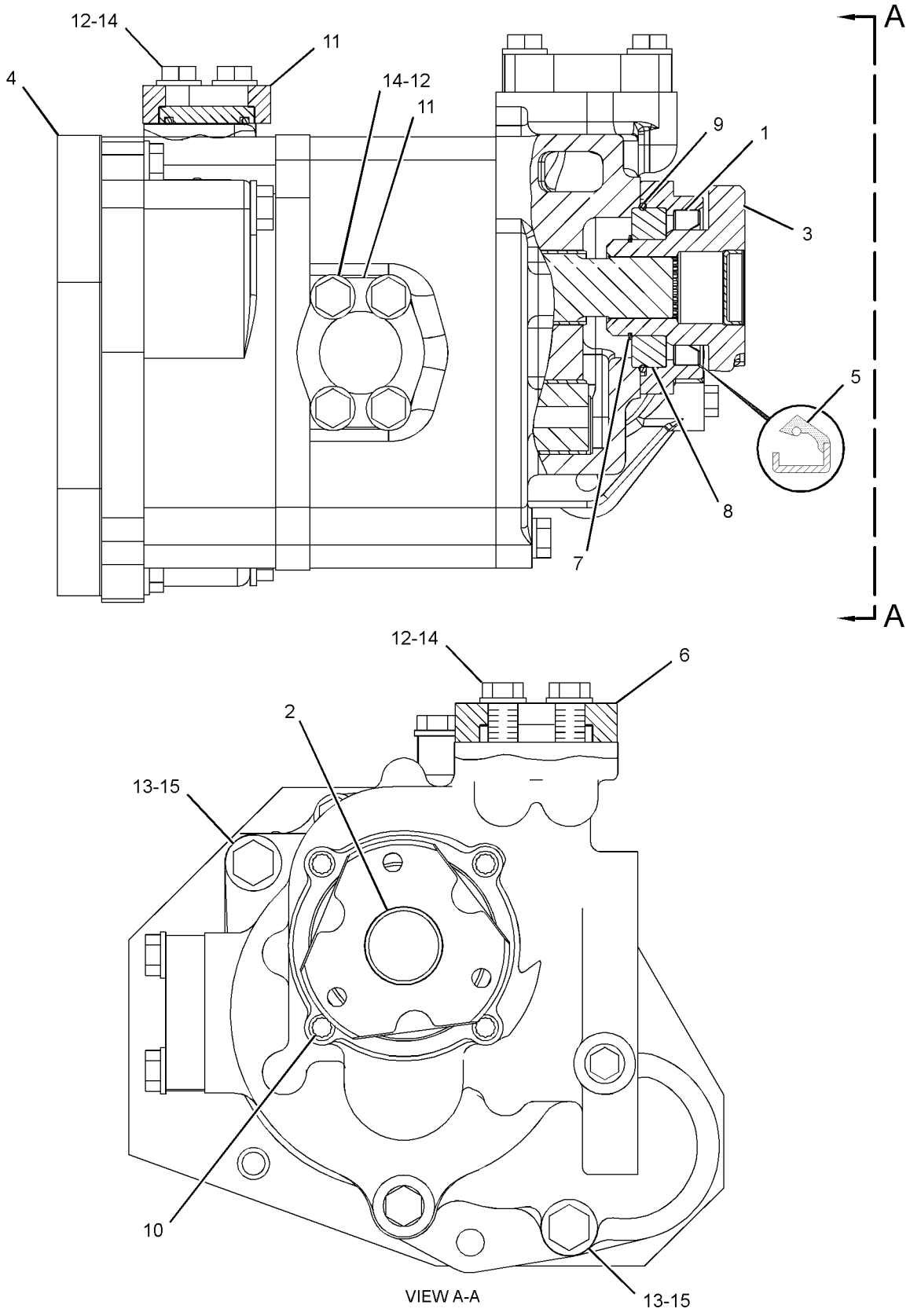

GRAPHIC #1 **<END>** g01208726

270-1763 PUMP GP-GEAR—TRANSMISSION, TORQUE CONVERTER

S/N: JDL1-UP; GMT1-UP

PART OF 270-1762 PUMP GP-GEAR

SMCS-3066, 3115, 5073 **i02460838**

NOTE	REF NO	GRAPHIC REF	PART NUMBER	QTY	PART NAME 1 2 3 4 5 6 (PRODUCT LEVEL)	SEE PAGE
	1	1	**3S-0004**	5	WASHER (0.406X0.728X0.09-IN THK)	
	2	1	**3T-1447**	2	GEAR (8-TEETH)	
	3	1	**3T-8757**	2	GEAR (12-TEETH)	
	4	1	**5M-4987**	2	DOWEL	
	5	1	**131-3278**	1	BODY AS-OIL PUMP	
		1	**5M-3605**	2	DOWEL	
	6	1	**133-1400**	1	GEAR AS-OIL PUMP (12-TEETH)	
	7	1	**133-1401**	1	GEAR AS-OIL PUMP (12-TEETH)	
	8	1	**226-3908**	1	BODY AS-OIL PUMP	
	8A	1	**131-0825**	2	BEARING-SLEEVE	
	9	1	**226-3910**	1	COVER	
	10	1	**270-1764**	1	COVER AS-PUMP	
	10A	1	**1M-3909**	2	BEARING-SLEEVE	
	11	1	**270-1766**	1	BODY AS-OIL PUMP	
	11A	1	**1M-3909**	2	BEARING-SLEEVE	
		1	**8M-8489**	2	DOWEL	
	12	1	**1B-8705**	1	KEY-WOODRUFF	
	13	1	**1H-5728**	1	SEAL-O-RING	
	14	1	**2B-9373**	1	KEY-WOODRUFF	
	15	1	**2D-8009**	4	SEAL-O-RING	
M	16	1	**7X-2547**	5	BOLT (M10X1.5X200-MM)	

M-METRIC PART

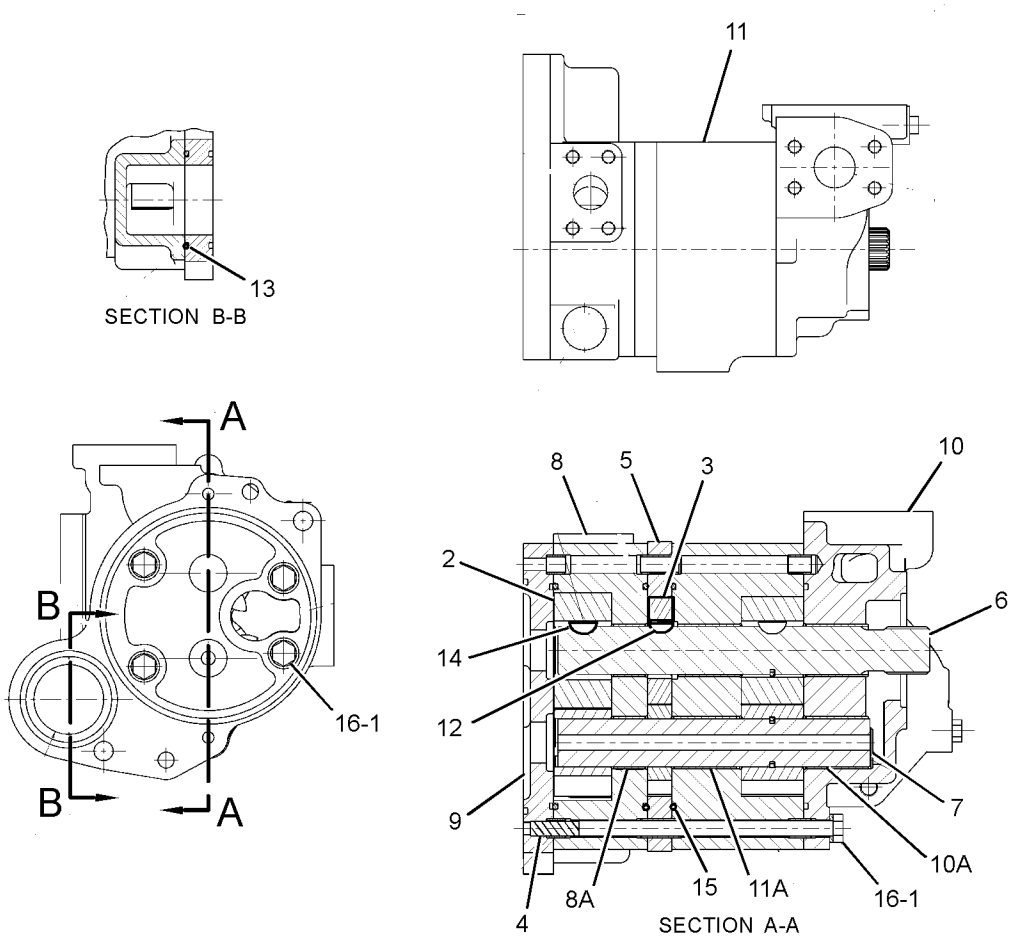

GRAPHIC #1 **<END>** g01228440

231-4166 SCREEN GP-MAGNETIC—TRANSMISSION

S/N: JDL1-UP; GMT1-UP

PART OF 223-0703 LINES GP-POWER TRAIN OIL

SMCS-3067 **i02438124**

NOTE	REF NO	GRAPHIC REF	PART NUMBER	QTY	PART NAME 1 2 3 4 5 6 (PRODUCT LEVEL)	SEE PAGE
	1	1	**3S-3440**	1	WASHER-WAVE	
	2	1	**4S-8598**	1	SCREEN-SUCTION (TRANSMISSION)	
	3	1	**4S-8603**	1	SCREEN GP-MAGNETIC (TRANSMISSION)	
		1	**8M-7160**	3	MAGNET	
	4	1	**231-4167**	1	HOUSING AS-SCREEN	
M		1	**8T-7044**	4	STUD-TAPERLOCK (M10X1.5X40-MM)	
	5	1	**3S-3439**	1	COVER-TOP	
	6	1	**6L-5359**	1	SEAL-O-RING	
	7	1	**6V-5188**	1	SEAL-O-RING	
M	8	1	**8T-4133**	4	NUT (M10X1.5 THD)	

M-METRIC PART

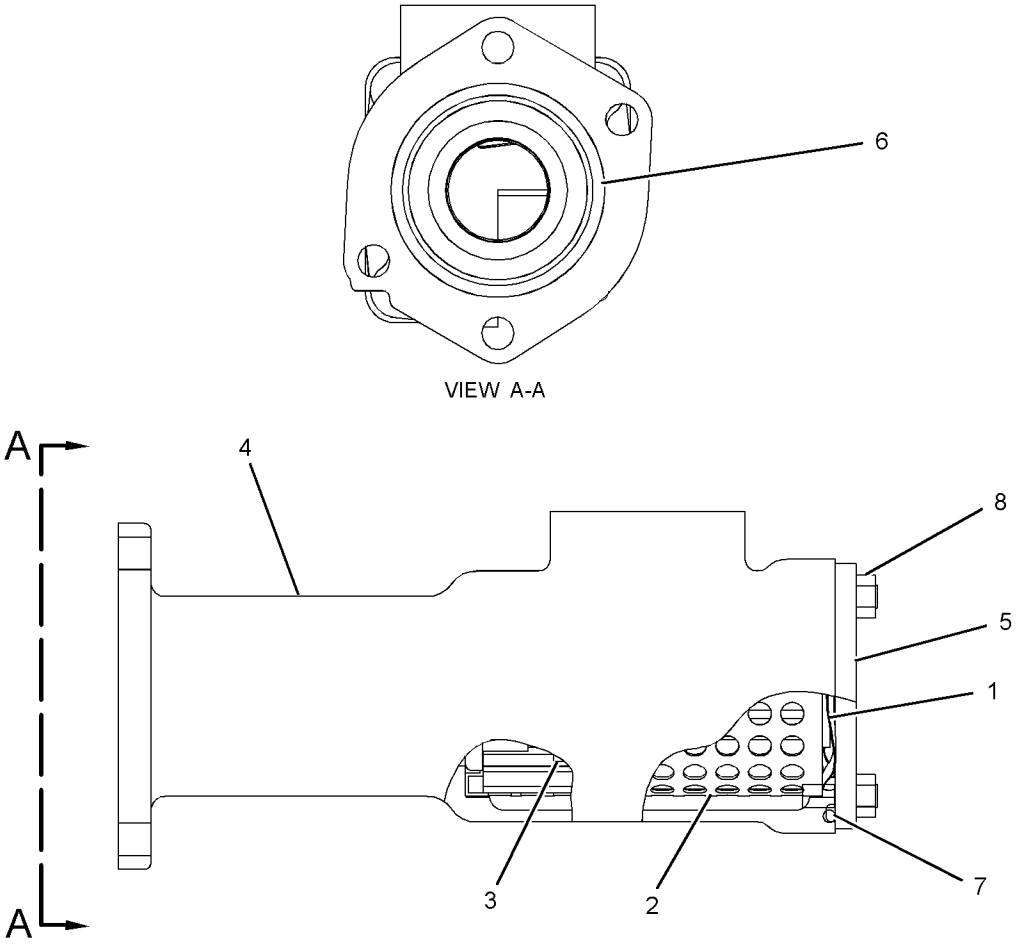

GRAPHIC #1 **<END>** g01209036

188-0908 SEGMENT GP-SPROCKET

S/N: JDL1-UP; GMT1-UP
PART OF 260-6649, 260-6652 FINAL DRIVE GP
ALSO AN ATTACHMENT

SMCS-4155 **i01796887**

NOTE	REF NO	GRAPHIC REF	PART NUMBER	QTY	PART NAME 1 2 3 4 5 6 (PRODUCT LEVEL)	SEE PAGE
	1	1	**173-0946**	5	SEGMENT-SPROCKET	
	2	1	**6V-0937**	25	BOLT-SPROCKET (5/8-18X2.1 IN)	
	3	1	**2S-5658**	25	WASHER-HARD (17X29X3MM THK)	
	4	1	**7H-3607**	25	NUT (5/8-18 THD)	

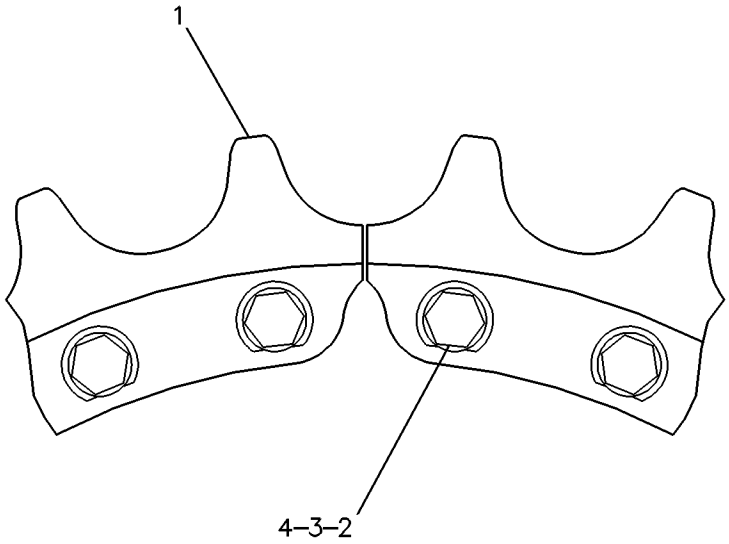

GRAPHIC #1 **<END>** g00223953

POWER TRAIN

108-1696 SHAFT GP-DRIVE

S/N: JDL1-UP; GMT1-UP

PART OF 218-4979 POWER TRAIN AR

SMCS-3253 **i01854370**

NOTE	REF NO	GRAPHIC REF	PART NUMBER	QTY	PART NAME 1 2 3 4 5 6 (PRODUCT LEVEL)	SEE PAGE
Y	1	1	**108-2106**	1	UNIVERSAL JOINT GP	314
	2	1	**7X-7477**	8	BOLT (3/8 24 THD)	
	3	1	**7X-0608**	8	WASHER-HARD (10.2X16X2.0MM THK)	
	4	1	**3T-8305**	1	YOKE AS	
		1	**7D-1677**	1	RACE-BEARING INNER	
		1	**8H-2768**	1	PLUG-CUP	

Y-SEPARATE ILLUSTRATION

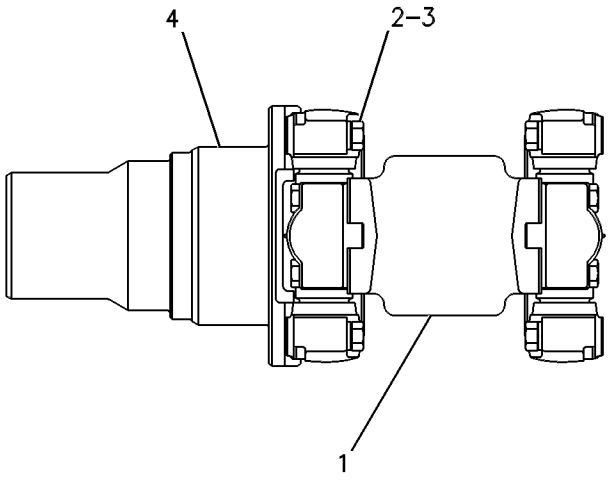

GRAPHIC #1 **<END>** g00254101

POWER TRAIN

1T-2083 TORQUE CONVERTER GP

S/N: T6K1-UP

PART OF 232-6208 TORQUE CONVERTER GP

SMCS-3101 **i02438206**

NOTE	REF NO	GRAPHIC REF	PART NUMBER	QTY	PART NAME 1 2 3 4 5 6 (PRODUCT LEVEL)	SEE PAGE
	1	1	**1T-2080**	1	HOUSING-ROTATING	
	2	1	**1T-1993**	1	WHEEL-TURBINE	
	3	1	**1T-2052**	1	STATOR AS	
	4	1	**1T-0438**	1	RETAINER-BEARING	
	5	1	**1T-0446**	6	BOLT (3/8-16X0.75-IN)	
	6	1	**1T-2086**	1	FLANGE AS-OUTPUT	
		1	**1T-0902**	2	BEARING-SLEEVE	
	7	1	**1T-0447**	1	CARRIER-RING	
	8	1	**1T-0097**	1	RING-METAL SEAL	
	9	1	**1T-0441**	1	BALL BEARING	
	10	1	**1T-0599**	1	SPACER (65.1X85X9.52-MM THK)	
	11	1	**3F-3727**	1	RING-SNAP	
	12	1	**1T-0414**	8	BOLT-12 POINT HEAD (5/16-18X1-IN)	
	13	1	**1T-2069**	1	CARRIER-BEARING	
	14	1	**1T-2077**	1	RETAINER-BEARING	
	15	1	**1A-2209**	8	BOLT (3/8-24X1.25-IN)	
	16	1	**1T-2081**	1	CARRIER AS-STATOR	
		1	**4S-8537**	1	DOWEL	
	17	1	**142-8540**	1	RING-SEAL	
	18	1	**179-9579**	1	BEARING	
	19	1	**1T-2079**	1	IMPELLER-CONVERTER	
	20	1	**1A-2029**	24	BOLT (3/8-16X1.125-IN)	
	21	1	**5M-2894**	24	WASHER-HARD (10.2X18.5X2.5-MM THK)	
	22	1	**4H-1440**	6	PIN-SPRING	
	23	1	**5B-0582**	1	DOWEL	

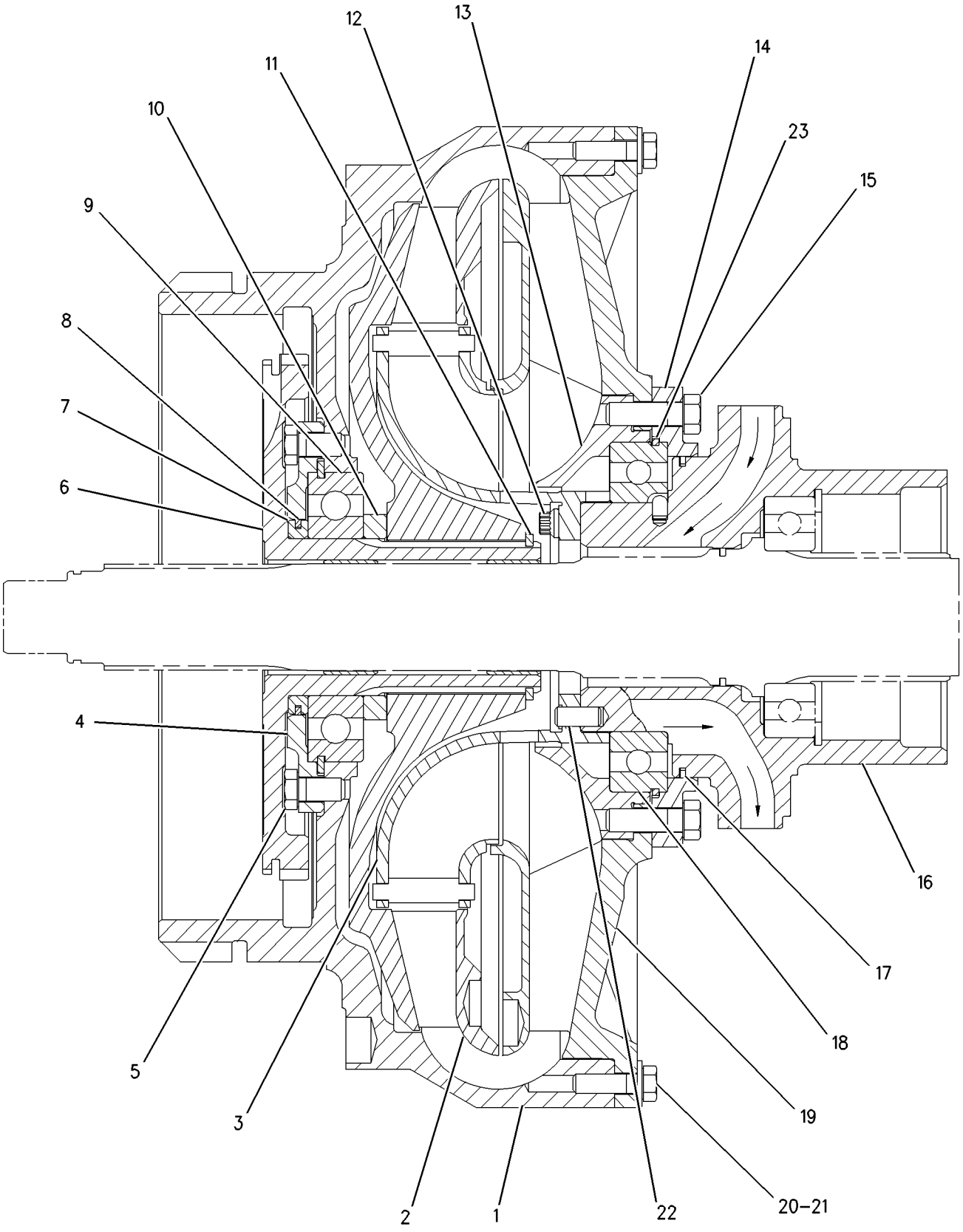

GRAPHIC #1 **<END>** g00799295

232-6207 TORQUE CONVERTER GP

S/N: JDL1-UP; GMT1-UP

PART OF 218-4979 POWER TRAIN AR

SMCS-3101 **i02438198**

NOTE	REF NO	GRAPHIC REF	PART NUMBER	QTY	PART NAME 1 2 3 4 5 6 (PRODUCT LEVEL)	SEE PAGE
Y	1	1	**232-6208**	1	TORQUE CONVERTER GP	311
	2	1	**136-2216**	1	SEAL-LIP TYPE	
	3	1	**232-6411**	1	RETAINER-SHAFT	
M	4	1	**8T-4176**	1	BOLT (M12X1.75X90-MM)	
	5	1	**108-6954**	1	YOKE-UNIVERSAL JOINT	
M	6	1	**8T-4195**	8	BOLT (M10X1.5X30-MM)	
	7	1	**8T-4121**	12	WASHER-HARD (11X21X2.5-MM THK)	
	8	1	**223-3400**	1	HOUSING-TORQUE CONVERTER	
	9	1	**165-4854**	2	SEAL-O-RING	
	10	1	**8S-9008**	1	SLEEVE	
	11	1	**210-4458**	1	ELBOW	
M	12	1	**8T-4137**	2	BOLT (M10X1.5X20-MM)	
	13	2	**110-0510**	1	COVER	
	14	1	**1S-9799**	1	SEAL-O-RING	
	15	1	**9P-3709**	1	GEAR-SUN (35-TEETH)	
	16	1	**9H-8712**	1	BEARING AS	
	17	1	**2D-1523**	1	RING-RETAINING	
	18	1	**9M-1976**	1	RING-RETAINING	
M	19	1	**8T-4139**	9	BOLT (M12X1.75X30-MM)	
	20	1,2	**8T-4223**	12	WASHER-HARD (13.5X25.5X3-MM THK)	
	21	1	**9H-0846**	1	SEAL-O-RING	
	22	1	**6F-4718**	1	SEAL-O-RING	
	23	1	**2S-2251**	1	SEAL-O-RING	
	24	2	**8H-9818**	1	GASKET	
M	25	2	**8T-4183**	3	BOLT (M12X1.75X40-MM)	
	26	1	**155-5161**	1	SEAL-OIL	
M	27	1	**8T-4136**	2	BOLT (M10X1.5X25-MM)	

M-METRIC PART
Y-SEPARATE ILLUSTRATION

232-6207 **TORQUE CONVERTER GP** *(contd.)* **i02438198**

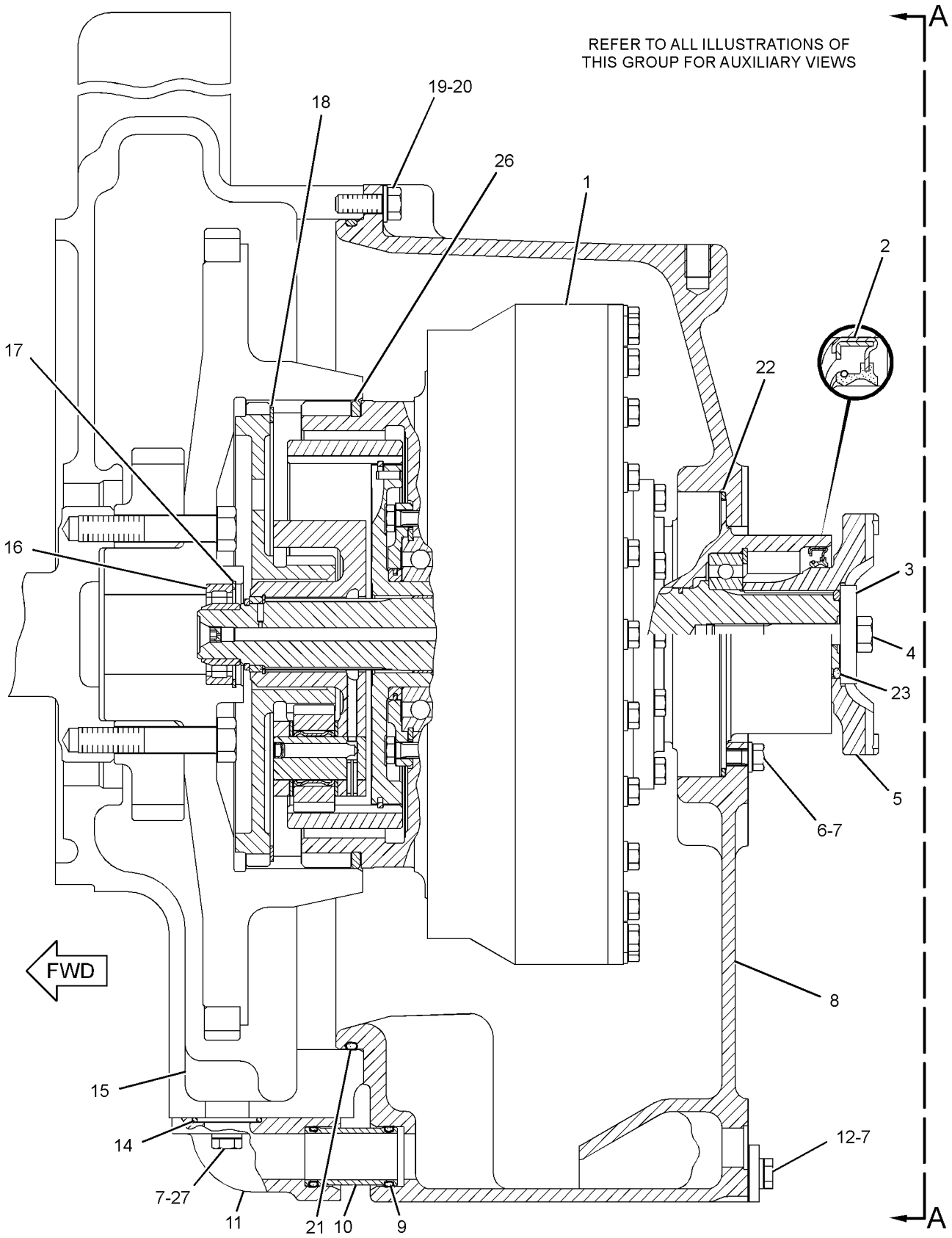

GRAPHIC #1

g01209092

232-6207 **TORQUE CONVERTER GP** *(contd.)* **i02438198**

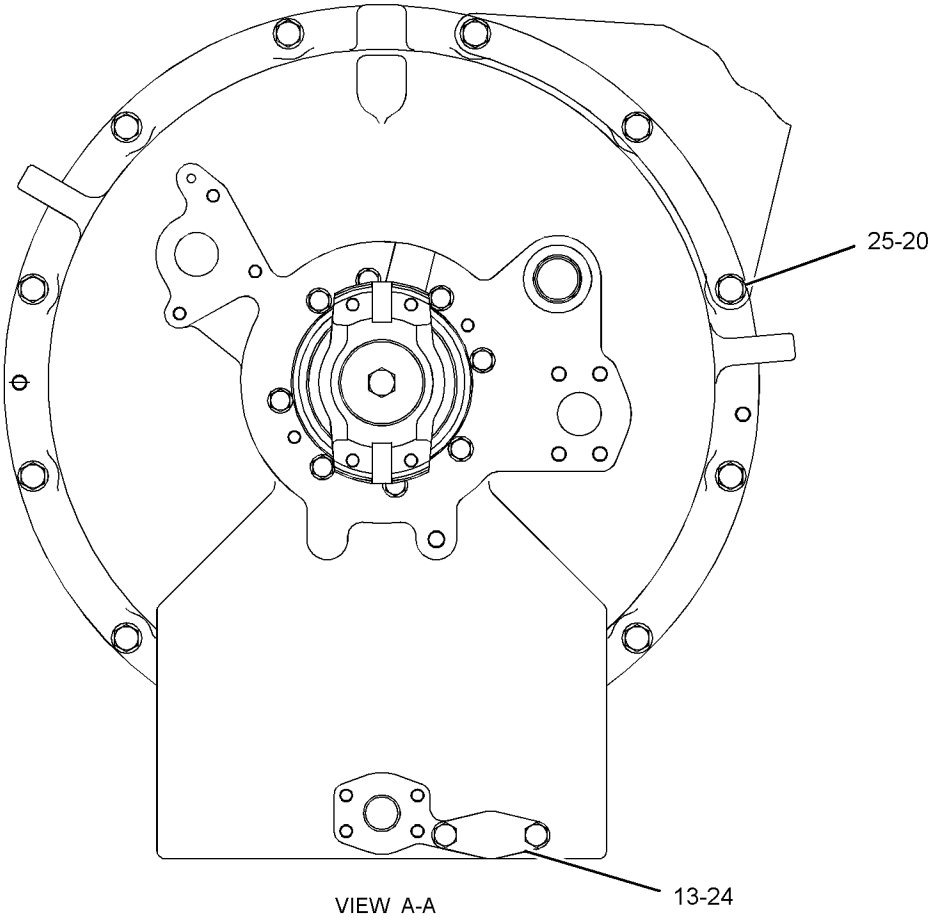

GRAPHIC #2 **<END>** g01209134

232-6208 TORQUE CONVERTER GP

S/N: T6K1-UP

PART OF 232-6207 TORQUE CONVERTER GP

SMCS-3101 **i02438199**

NOTE	REF NO	GRAPHIC REF	PART NUMBER	QTY	PART NAME 1 2 3 4 5 6 (PRODUCT LEVEL)	SEE PAGE
Y	1	1	*1T-2083*	1	TORQUE CONVERTER GP	306
	2	1	**5M-7878**	1	RING-SNAP	
	3	1	**3T-4009**	1	GEAR-RING (82-TEETH)	
	4	1	**3T-4008**	3	GEAR-PLANETARY (23-TEETH)	
	5	1	**5P-3930**	3	BEARING AS-ROLLER	
	6	1	**3T-4011**	3	SHAFT AS-PLANETARY	
					(EACH INCLUDES)	
		1	**2A-3746**	1	PLUG-CUP	
	7	1	**8E-8300**	6	DISC-THRUST	
	8	1	**3S-2708**	3	PIN-SPRING	
	9	1	**5P-7679**	1	RACE-SPECIAL ROLLER BEARING	
	10	1	**6K-3630**	1	RING	
	11	1	**3T-4013**	1	RETAINER-CARRIER	
	12	1	**3T-4007**	1	CARRIER-PLANETARY	
	13	1	**2K-5986**	2	PIN-SPRING	
	14	1	**9M-2008**	1	RING-METAL SEAL	
	15	1	**2D-5658**	1	BALL BEARING	
	16	1	**5J-3964**	1	RING-LOCK	
	17	1	**233-0668**	1	SHAFT AS	
		1	**5J-7386**	1	PLUG-ORIFICE	
	18	1	**6V-4583**	1	RING-RETAINING	

Y-SEPARATE ILLUSTRATION

232-6208 TORQUE CONVERTER GP *(contd.)* i02438199

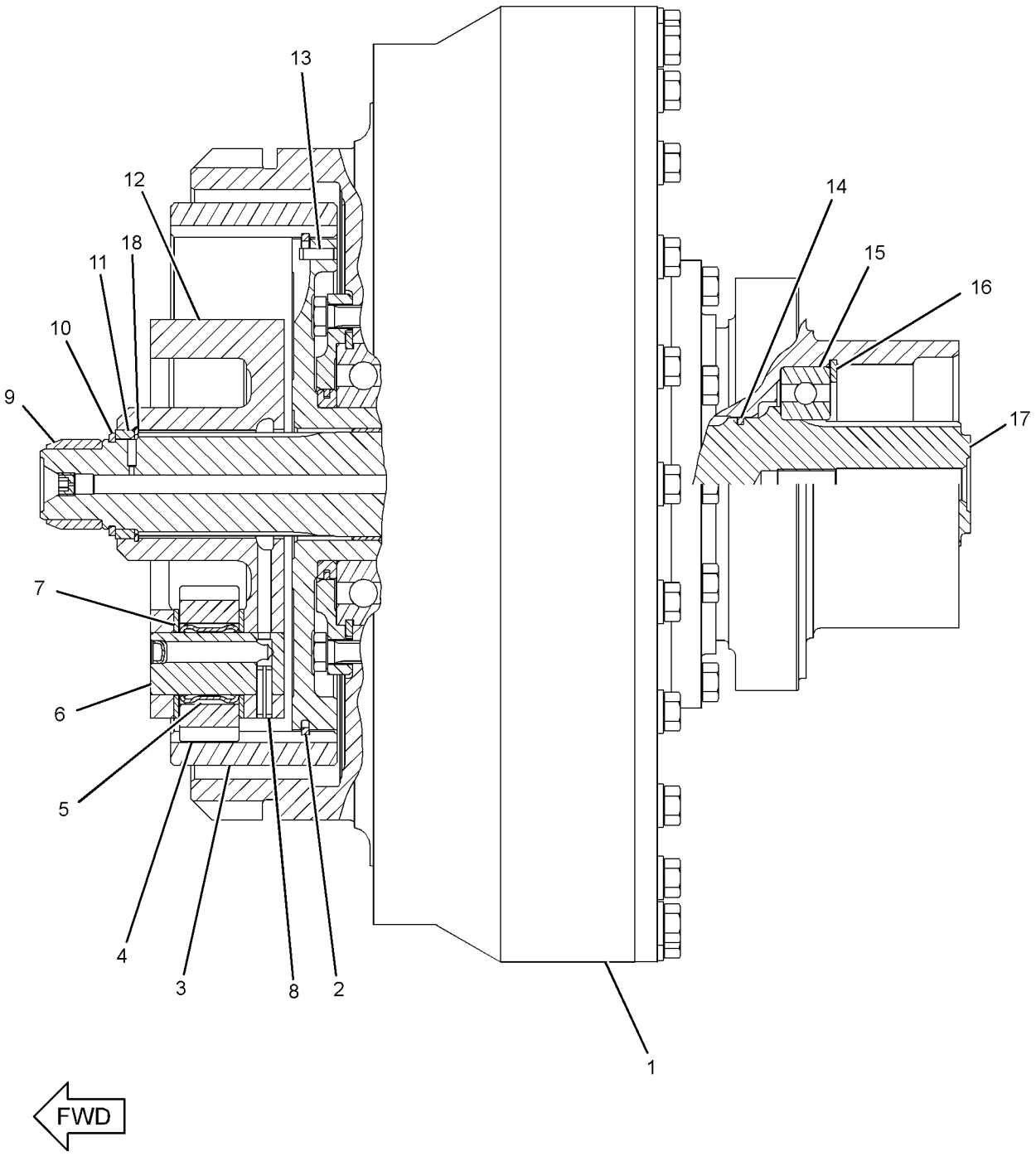

GRAPHIC #1 **<END>** g01209147

220-1429 TRANSMISSION AR

S/N: KKA1-UP

PART OF 218-4979 POWER TRAIN AR

SMCS-3030 **i02450715**

NOTE	REF NO	GRAPHIC REF	PART NUMBER	QTY	PART NAME 1 2 3 4 5 6 (PRODUCT LEVEL)	SEE PAGE
Y	1	1	*221-3342*	1	CASE & PARTS GP-PLANETARY	263
Y	2	1	*244-2616*	1	GEAR GP-BEVEL & TRANSFER	280
Y	3	1	*265-5278*	1	CONTROL GP-TRANSMISSION HYD	266
Y	4	1	*220-1403*	1	PLANETARY GP-TRANSMISSION	292

Y-SEPARATE ILLUSTRATION

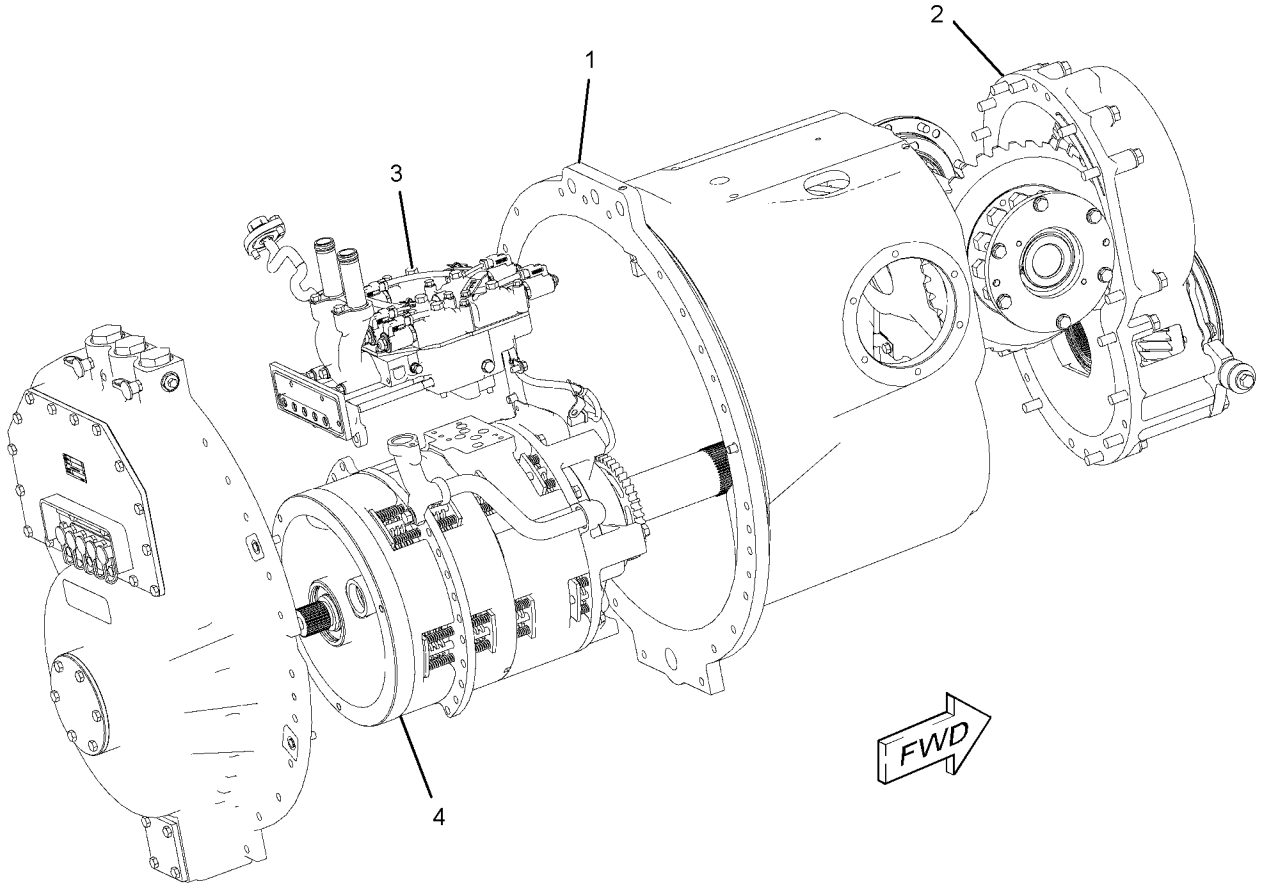

GRAPHIC #1 **<END>** g01210725

108-2106 UNIVERSAL JOINT GP

S/N: JDL1-UP; GMT1-UP
PART OF 108-1696 SHAFT GP-DRIVE

SMCS-3251, 3253 **i00599892**

NOTE	REF NO	GRAPHIC REF	PART NUMBER	QTY	PART NAME 1 2 3 4 5 6 (PRODUCT LEVEL)	SEE PAGE
	1	1	**3V-2431**	8	WASHER (2.0MM THK)	
	2	1	**7G-9555**	2	SPIDER & BEARING AS	
	3	1	**0L-0478**	8	BOLT (3/8-24X1.75IN)	

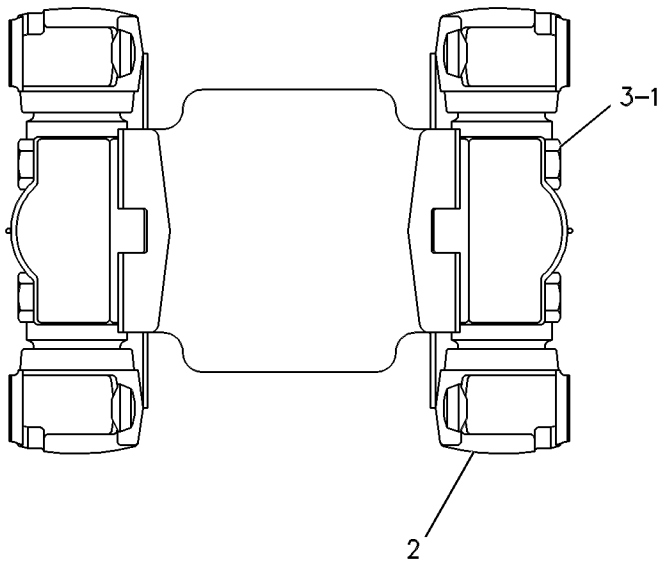

GRAPHIC #1 **<END>** g00254100

213-1308 VALVE & MTG GP-CONTROL–TRANSMISSION

S/N: JDL1-UP; GMT1-UP

PART OF 218-4979 POWER TRAIN AR

SMCS-5051 **i02438109**

NOTE	REF NO	GRAPHIC REF	PART NUMBER	QTY	PART NAME 1 2 3 4 5 6 (PRODUCT LEVEL)	SEE PAGE
	1	1	**3S-0004**	4	WASHER (0.406X0.728X0.09-IN THK)	
	2	1	**6V-0852**	1	CAP-DUST (POWER TRAIN CONTROL VALVE)	
Y	3	1	**201-7274**	1	VALVE GP-TRANSMISSION CONTROL	324
	4	1	**228-1850**	1	PLATE	
	5	1	**2M-9780**	1	SEAL-O-RING	
	6	1	**3J-1907**	2	SEAL-O-RING	
	7	1	**5P-1404**	1	ADAPTER-O-RING	
	8	1	**6V-0484**	1	ADAPTER-O-RING	
	9	1	**6V-3965**	1	FITTING AS (QUICK DISCONNECT)	
	10	1	**8M-5254**	4	SEAL-O-RING	
M	11	1	**8T-5030**	4	BOLT (M10X1.5X120-MM)	

M-METRIC PART
Y-SEPARATE ILLUSTRATION

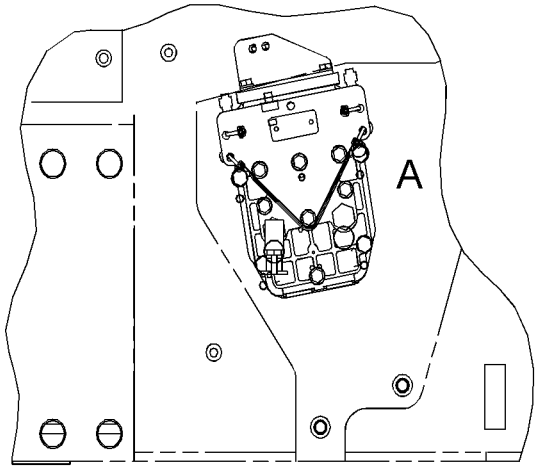

TOP VIEW

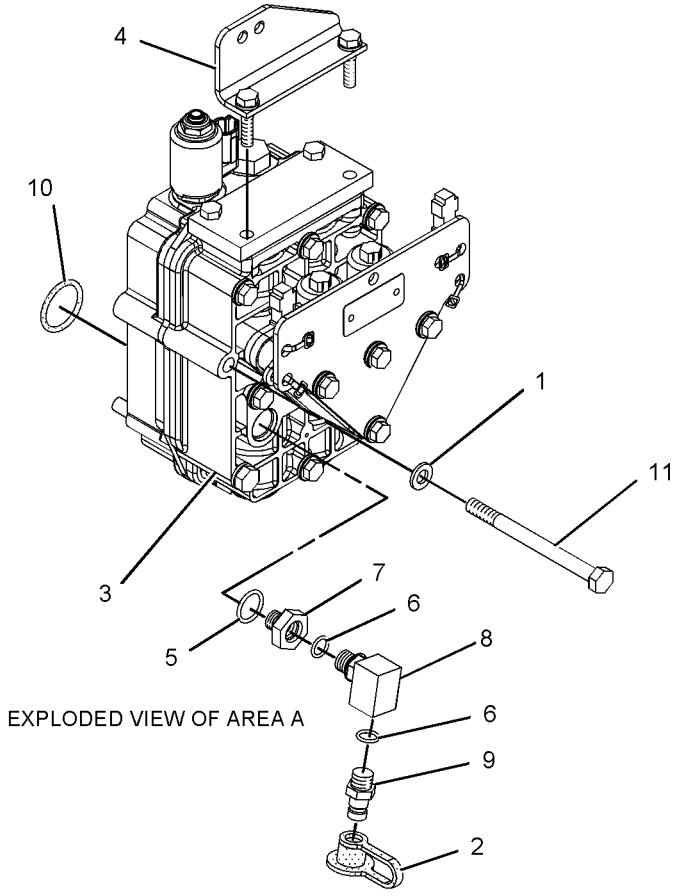

EXPLODED VIEW OF AREA A

GRAPHIC #1 **<END>** g01022397

176-5321 VALVE GP-MODULATING

S/N: JDL1-UP; GMT1-UP
PART OF 192-0729 VALVE GP-MODULATING
AN ATTACHMENT

SMCS-3139 **i02454355**

NOTE	REF NO	GRAPHIC REF	PART NUMBER	QTY	PART NAME 1 2 3 4 5 6 (PRODUCT LEVEL)	SEE PAGE
	1	1	**226-9629**	1	COIL AS-SOLENOID (12-VOLT) (HYDRAULIC FAN)	
	2	1	**167-9524**	1	NUT-SELF-LOCKING (1/2-28-THD)	
	3	1	**164-2108**	1	WASHER (13.03X25.4X2.38-MM THK)	
					AVAILABLE REPAIR KIT(S):	
			111-3203	1	KIT-SEAL (DEMAND FAN VALVE)	
					(INCLUDES SEALS)	

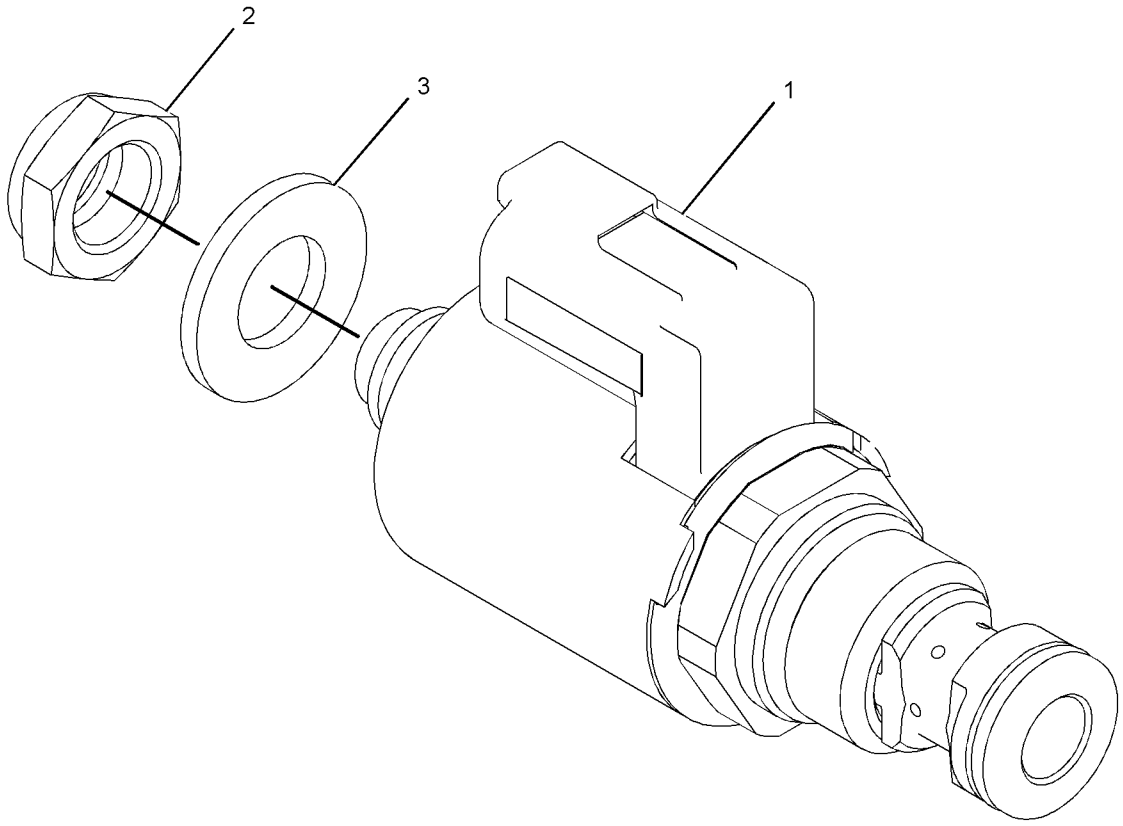

GRAPHIC #1 **<END>** g01113002

220-4324 VALVE GP-MODULATING—TRANSMISSION CLUTCH

S/N: KKA1-UP

PART OF 265-5278 CONTROL GP-TRANSMISSION HYD

FIELD REPLACEMENT ORDER 244-3114—PAGE 318

SMCS-3139 **i02235386**

NOTE	REF NO	GRAPHIC REF	PART NUMBER	QTY	PART NAME 1 2 3 4 5 6 (PRODUCT LEVEL)	SEE PAGE
	1	1	**226-9622**	1	COIL AS (24 VOLT)	
	2	1	**164-2108**	1	WASHER (13.03X25.4X2.38-MM THK)	
	3	1	**167-9524**	1	NUT-SELF-LOCKING (1/2-28-THD)	
Z	4	1		1	VALVE AS	
	5	1	**3J-1907**	1	SEAL-O-RING	
	6	1	**9S-4191**	1	PLUG-O RING	

Z-NOT SERVICED SEPARATELY

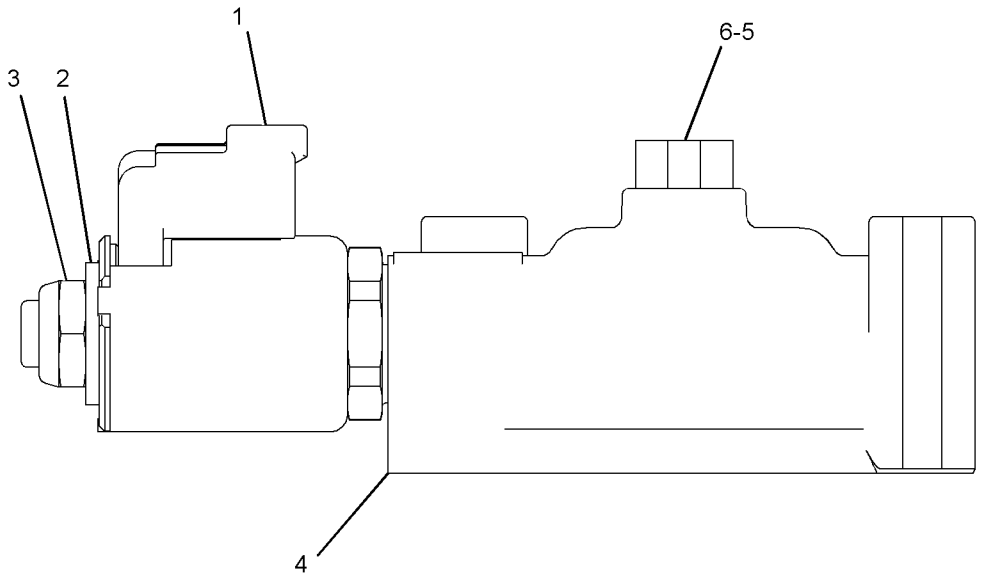

GRAPHIC #1 **<END>** g01127505

244-3114 VALVE GP-MODULATING

S/N: KKA1-UP
24-VOLT
FIELD REPLACEMENT FOR 220-4324—PAGE 317

SMCS-3139 **i02288028**

NOTE	REF NO	GRAPHIC REF	PART NUMBER	QTY	PART NAME 1 2 3 4 5 6 (PRODUCT LEVEL)	SEE PAGE
	1	1	**6V-3965**	1	FITTING AS (QUICK DISCONNECT)	
	2	1	**145-1144**	1	COIL AS	
	3	1	**3J-1907**	1	SEAL-O-RING	
	4	1	**164-2108**	1	WASHER (13.03X25.4X2.38-MM THK)	
	5	1	**167-9524**	1	NUT-SELF-LOCKING (1/2-28-THD)	

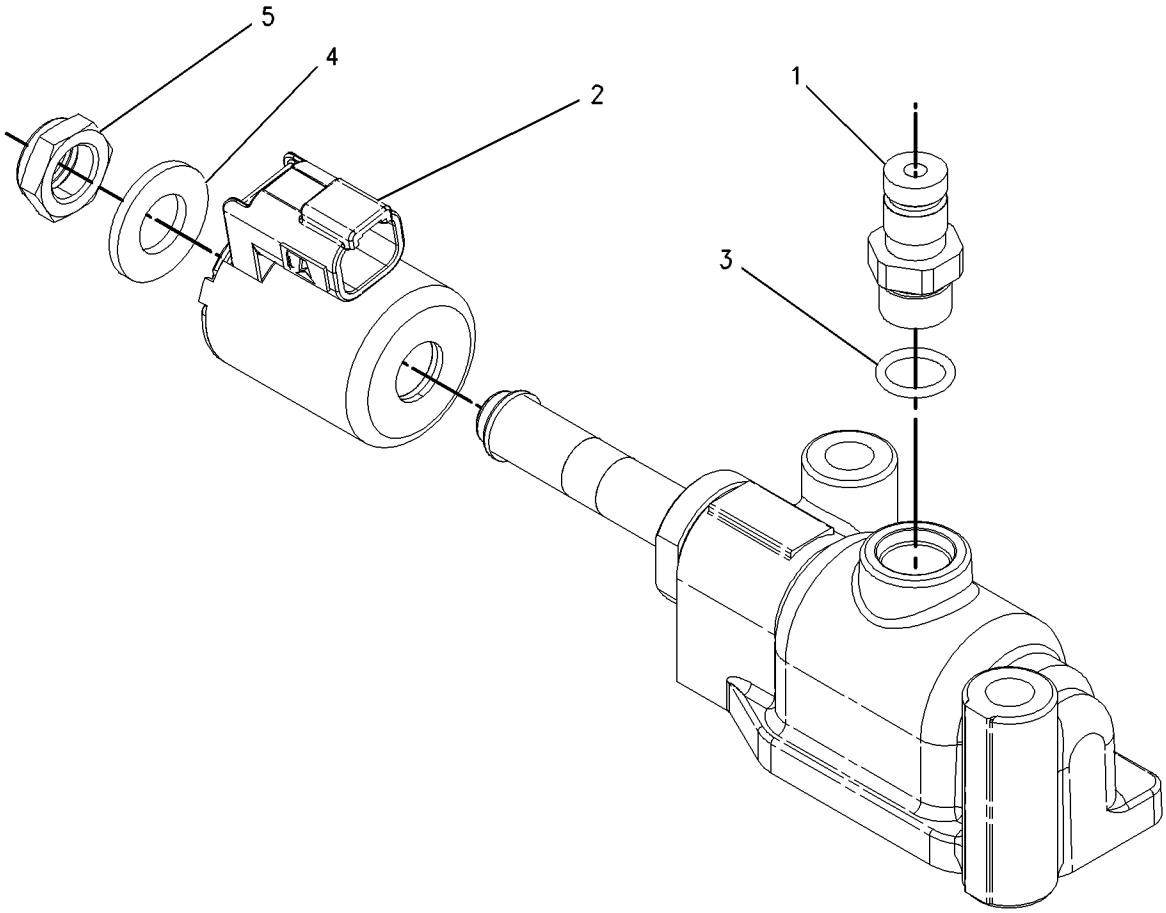

GRAPHIC #1 **<END>** g00919065

213-4540 VALVE GP-RELIEF—TRANSMISSION OIL PRESSURE

S/N: KKA1-UP

PART OF 265-5278 CONTROL GP-TRANSMISSION HYD

SMCS-3133, 3182 **i02235370**

NOTE	REF NO	GRAPHIC REF	PART NUMBER	QTY	PART NAME 1 2 3 4 5 6 (PRODUCT LEVEL)	SEE PAGE
	1	1	**2M-7041**	1	SLUG	
	2	1	**4M-5905**	1	SCREW-ADJUSTMENT (5/16-18X1-IN)	
	3	1	**5B-3180**	1	NUT (5/16-18-THD)	
	5	1	**9S-4191**	1	PLUG-O RING	
	6	1	**106-9212**	1	SPRING	
	7	1	**106-9214**	1	PLATE	
	8	1	**109-3968**	1	SPOOL AS-RELIEF	
	9	1	**153-4247**	1	STOP	
	10	1	**204-6502**	1	MANIFOLD	
	12	1	**0S-1617**	6	BOLT (5/16-18X0.75-IN)	
	13	1	**3J-1907**	1	SEAL-O-RING	
	14	1	**3K-0360**	1	SEAL-O-RING	
	15	1	**6Y-4638**	1	PLUG-HEX SOCKET (1-5/16-12-2A-THD)	
	16	1	**7M-8485**	1	SEAL-O-RING	
	17	1	**9M-1974**	7	WASHER-HARD (8.8X16X2-MM THK)	
	18	1	**9S-4185**	1	PLUG	

213-4540 **VALVE GP-RELIEF** *(contd.)* **i02235370**

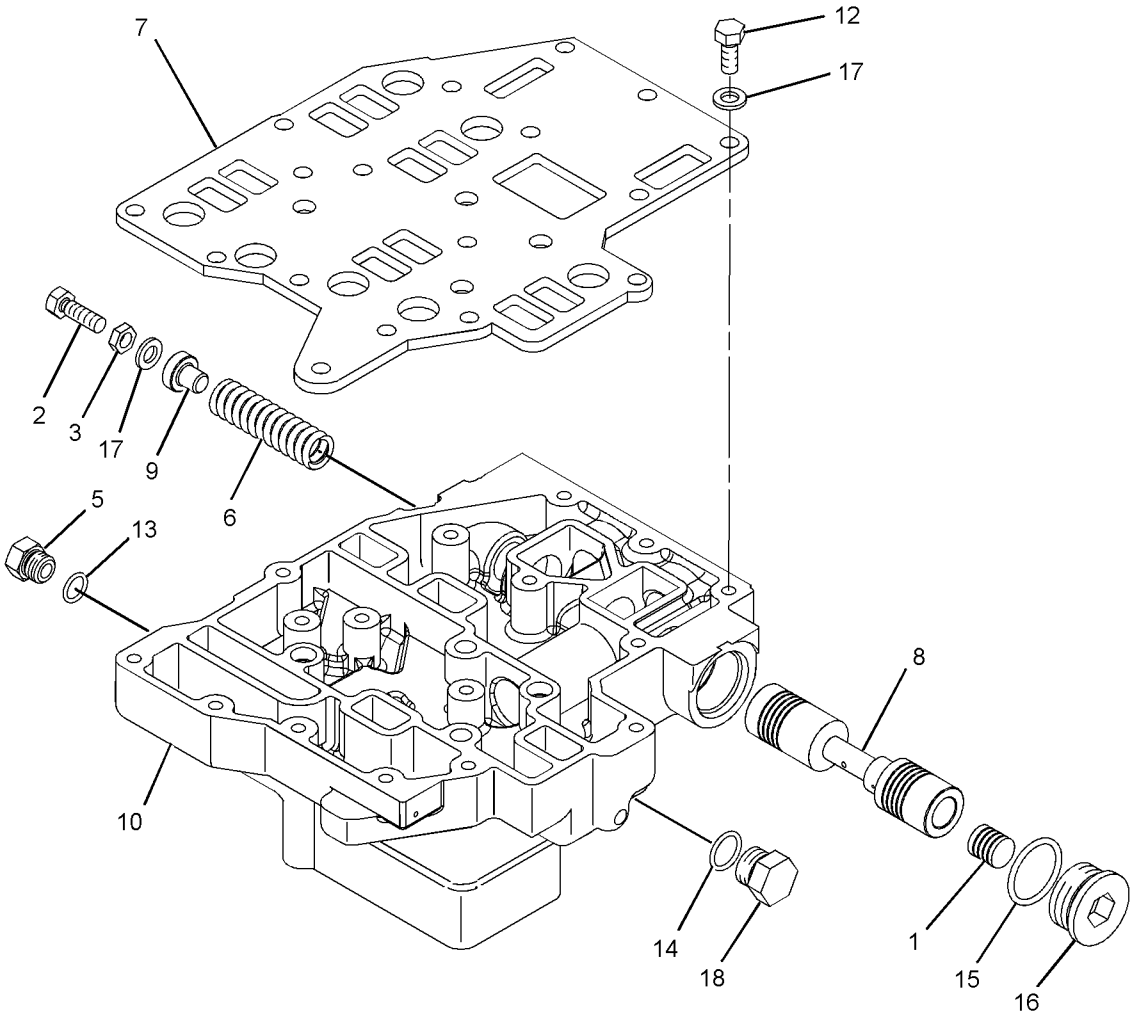

GRAPHIC #1 **<END>** g01127587

220-1418 VALVE GP-RELIEF–TORQUE CONVERTER OUTLET

S/N: JDL1-UP; GMT1-UP

PART OF 223-0703 LINES GP-POWER TRAIN OIL

SMCS-3133, 3182 **i02438117**

NOTE	REF NO	GRAPHIC REF	PART NUMBER	QTY	PART NAME 1 2 3 4 5 6 (PRODUCT LEVEL)	SEE PAGE
	1	1	**225-6363**	1	HOUSING AS-RELIEF VALVE	
		1	**7M-1377**	1	STOP-VALVE	
	2	1	**4M-8239**	2	COVER	
	3	1	**7M-1296**	1	VALVE-RELIEF	
B	4	1	**5M-9623**	5	SHIM (0.9-MM THK)	
M	5	1	**8T-4136**	4	BOLT (M10X1.5X25-MM)	
	6	1	**8T-4121**	7	WASHER-HARD (11X21X2.5-MM THK)	
	7	1	**7M-1297**	1	SPRING	
	8	1	**8M-4986**	2	SEAL-O-RING	
	11	1	**9W-5595**	1	SPRING	
M	12	1	**8T-4172**	3	BOLT (M10X1.5X80-MM)	

B-USE AS REQUIRED
M-METRIC PART

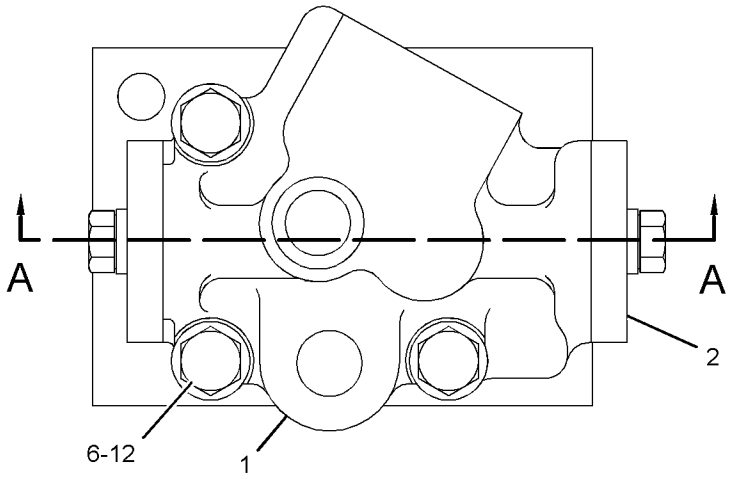

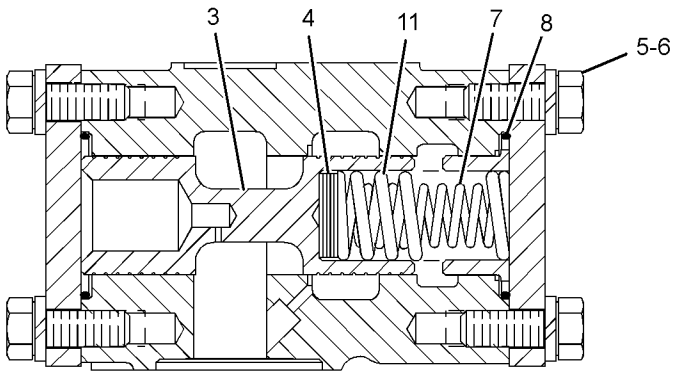

SECTION A-A

GRAPHIC #1 **<END>** g01206826

201-7269 VALVE GP-TRANSMISSION CONTROL

S/N: JDL1-UP; GMT1-UP

PART OF 201-7274 VALVE GP-TRANSMISSION CONTROL

SMCS-3073, 3167 **i01833567**

NOTE	REF NO	GRAPHIC REF	PART NUMBER	QTY	PART NAME 1 2 3 4 5 6 (PRODUCT LEVEL)	SEE PAGE
Z	1	1		1	BODY-VALVE	
	2	1	**188-7067**	2	SPRING	
	3	1	**188-7068**	2	RETAINER	
	4	1	**188-7069**	2	PISTON-LOAD	
	5	1	**108-4430**	2	SPRING	
	6	1	**110-2842**	1	PLATE-END	
	7	1	**137-6603**	2	SPOOL	
	8	1	*148-8410*	2	PLUG AS	
					(EACH INCLUDES)	
		1	**2M-9780**	1	SEAL-O-RING	
		1	**9S-4190**	1	PLUG	
	9	1	*148-8409*	2	PLUG AS	
					(EACH INCLUDES)	
		1	**3D-2824**	1	SEAL-O-RING	
		1	**9S-8008**	1	PLUG	
	10	1	**6J-2419**	2	SEAL-O-RING	
M	11	1	**7X-2537**	2	BOLT (M8X1.25X35-MM)	
	12	1	**8T-4224**	2	WASHER-HARD (8.8X16X2-MM THK)	
M	13	1	**8T-7547**	2	BOLT (M8X1.25X30-MM)	

M-METRIC PART
Z-NOT SERVICED SEPARATELY

201-7269 **VALVE GP-TRANSMISSION CONTROL** *(contd.)* **i01833567**

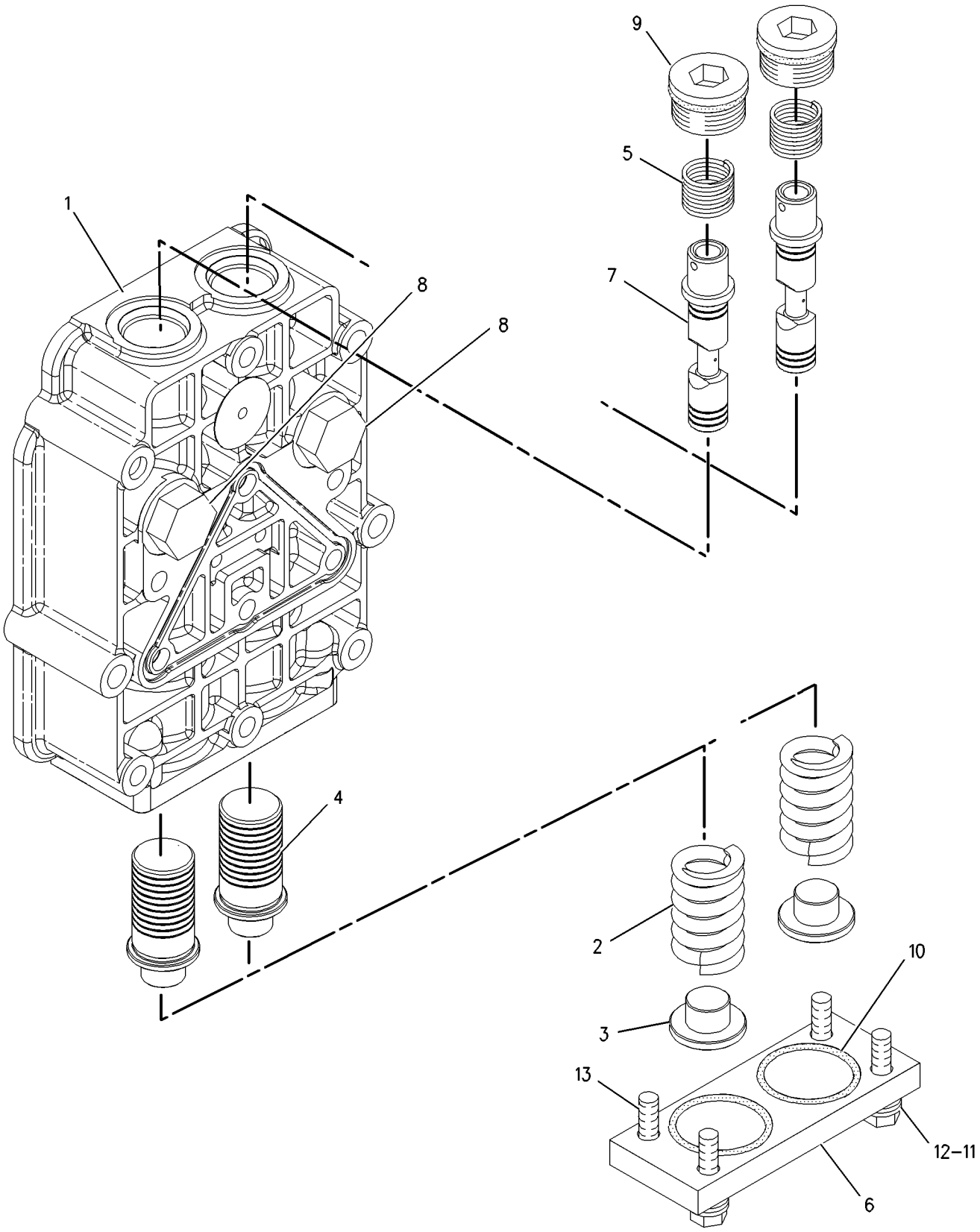

GRAPHIC #1 **<END>** g00936934

201-7274 VALVE GP-TRANSMISSION CONTROL

S/N: JDL1-UP; GMT1-UP

PART OF 213-1308 VALVE & MTG GP-CONTROL

SMCS-3073, 3167 **i02272819**

NOTE	REF NO	GRAPHIC REF	PART NUMBER	QTY	PART NAME 1 2 3 4 5 6 (PRODUCT LEVEL)	SEE PAGE
	1	1	**9L-9068**	4	DOWEL	
Y	2	1	*162-5357*	1	MANIFOLD & VALVE GP (SECONDARY BRAKE)	433
Y	3	1	*175-4972*	1	MANIFOLD & VALVE GP (PARKING, SECONDARY BRAKE)	435
	4	1	**176-0259**	1	PLUG AS (ORIFICE SCREEN)	
M	5	1	**8T-4177**	2	BOLT (M8X1.25X90-MM)	
Y	6	1	**201-7269**	1	VALVE GP-TRANSMISSION CONTROL	322
	7	1	**122-3771**	2	SEAL-O-RING	
	8	1	**132-9899**	1	PLATE	
	9	1	**132-9900**	1	PLATE	
	10	1	**134-1251**	1	PLATE-SEPARATOR	
	11	1	**185-3503**	2	SEAL-O-RING	
	12	1	**1T-0738**	10	WASHER (8.4X19X1.83-MM THK)	
	13	1	**3S-2093**	4	STRAP-CABLE	
	14	1	**4J-7533**	1	SEAL-O-RING	
M	15	1	**7X-2541**	4	BOLT (M8X1.25X140-MM)	
M	16	1	**8T-3647**	4	BOLT (M8X1.25X80-MM)	
	17	1	**9P-9150**	24	WASHER (8.25X18X0.84-MM THK)	

M-METRIC PART
Y-SEPARATE ILLUSTRATION

201-7274 VALVE GP-TRANSMISSION CONTROL *(contd.)* **i02272819**

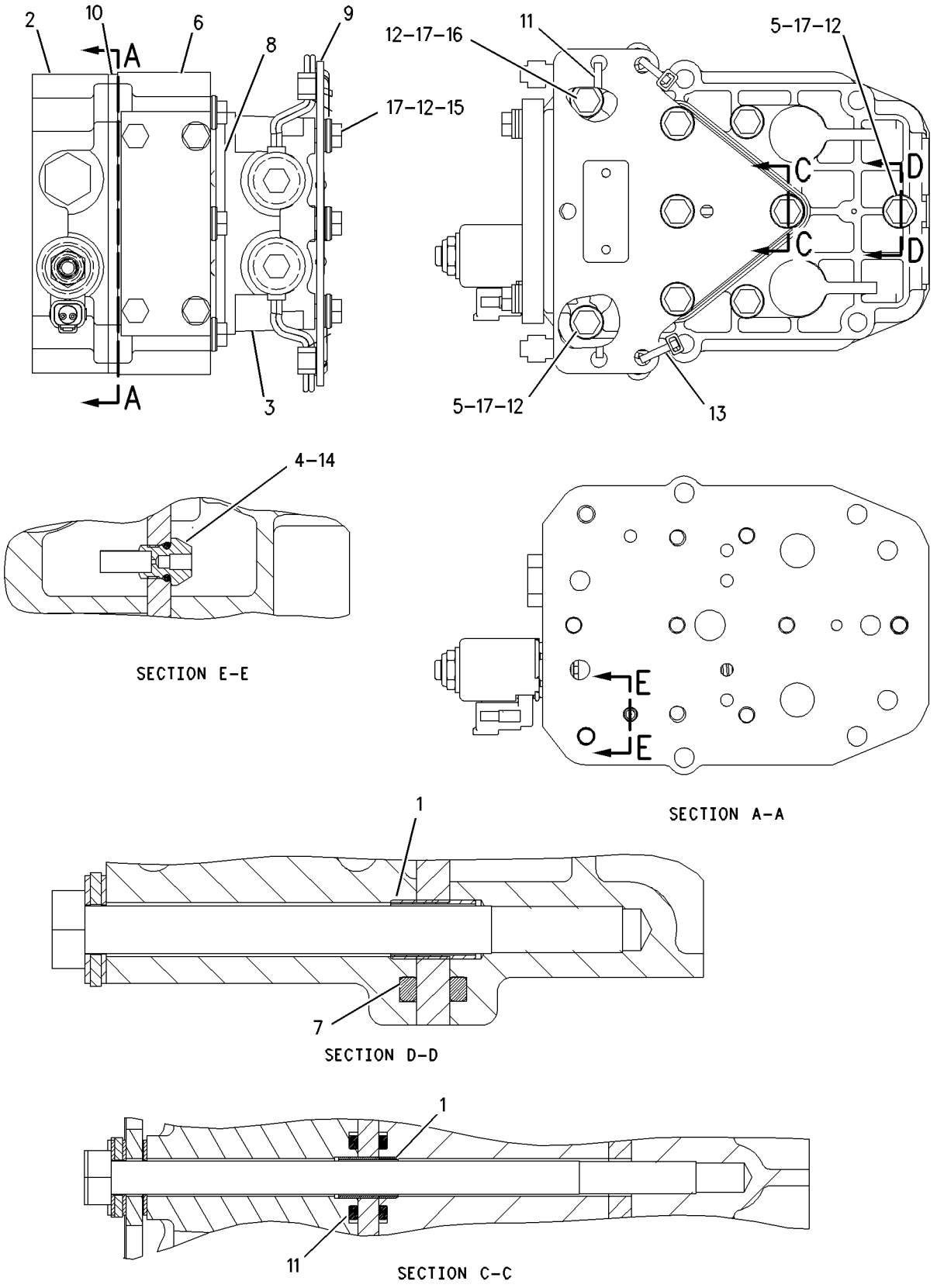

GRAPHIC #1 **<END>** g00936951

256-6021 BAR GP-STRIKER–REAR

S/N: JDL1-UP; GMT1-UP
PART OF 256-6020 STRIKER GP-REAR
AN ATTACHMENT

SMCS-7180 **i02455748**

NOTE	REF NO	GRAPHIC REF	PART NUMBER	QTY	PART NAME 1 2 3 4 5 6 (PRODUCT LEVEL)	SEE PAGE
	1	1	**1L-4418**	2	SPRING-SHUTOFF	
	2	1	**1P-2841**	2	SPACER (0.531X1X0.69-IN THK)	
	3	1	**1Z-9932**	2	HINGE AS	
	4	1	**8F-3556**	4	SPACER (0.75X1.25X1-IN THK)	
B	5	1	**8T-0232**	14	PLUG	
	6	1	**8T-1579**	1	PAWL	
	7	1	**8T-9496**	2	LOCKNUT (9/16-18-THD)	
Y	8	1	**8Y-6400**	1	LATCH GP	364
	9	1	**9Z-9211**	2	PLATE	
	10	1	**9Z-9214**	2	ROD AS	
	11	1	**197-7310**	1	PLATE AS	
	12	1	**198-8858**	2	PLATE	
	15	1	**201-2557**	2	HINGE AS	
	16	1	**223-8076**	1	DOOR AS	
	17	1	**225-8558**	1	DOOR AS	
	24	1	**2K-4973**	2	LOCKNUT (3/8-16-THD)	
	25	1	**2K-8467**	4	PIN-SPRING	
	26	1	**5P-1076**	4	WASHER-HARD (13.5X30X4-MM THK)	
	27	1	**5S-7382**	2	BOLT (3/8-16X1.375-IN)	
	28	1	**8T-4223**	10	WASHER-HARD (13.5X25.5X3-MM THK)	
	29	1	**8T-8919**	8	BOLT (1/2-13X1.75-IN)	

B-USE AS REQUIRED
Y-SEPARATE ILLUSTRATION

256-6021 **BAR GP-STRIKER** *(contd.)* **i02455748**

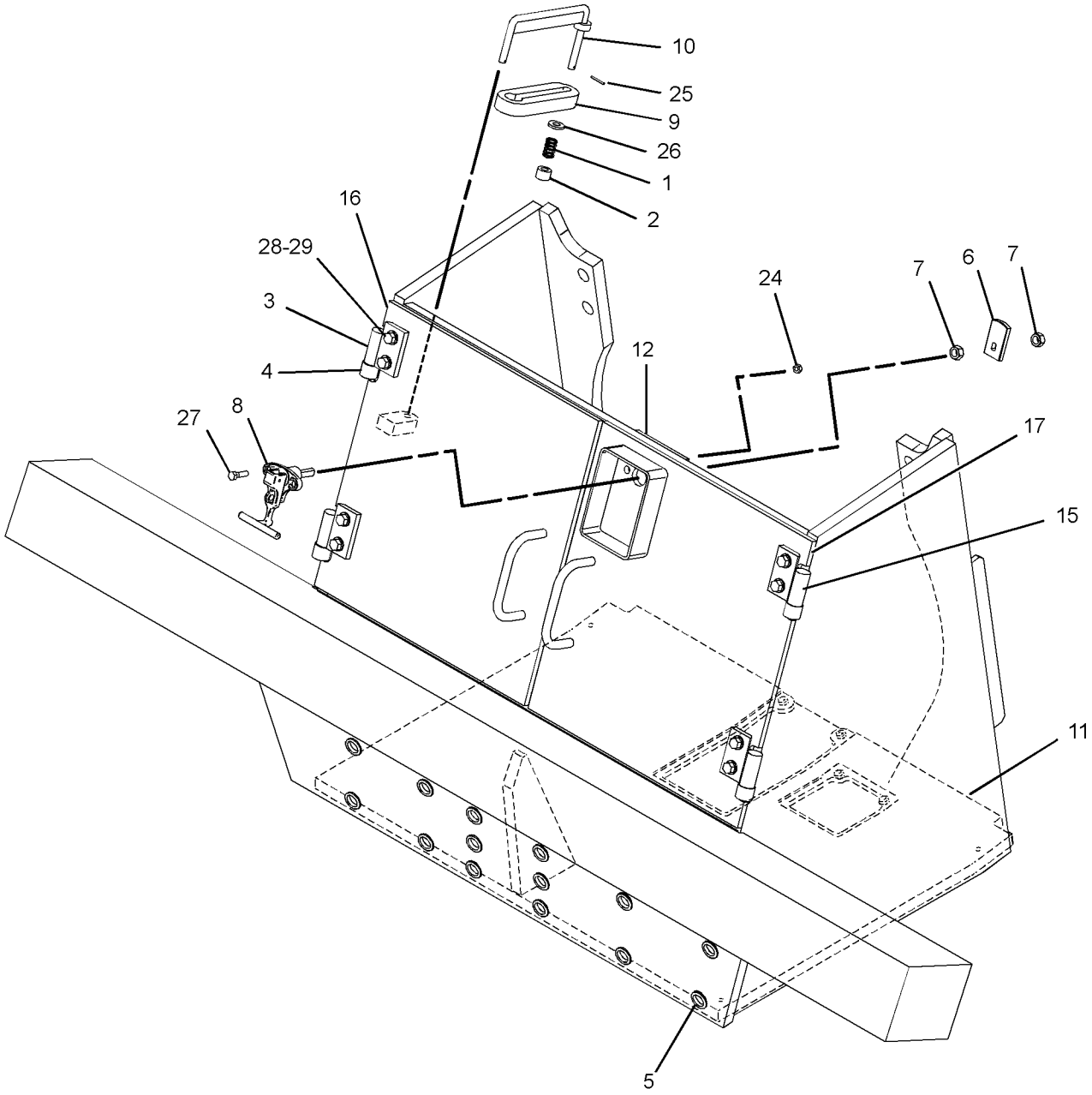

GRAPHIC #1 **<END>** g01227145

218-1838 BOX GP-BATTERY

S/N: JDL1-UP; GMT1-UP

PART OF 218-4978, 222-1592 CHASSIS AR

SMCS-7257 **i02431069**

NOTE	REF NO	GRAPHIC REF	PART NUMBER	QTY	PART NAME 1 2 3 4 5 6 (PRODUCT LEVEL)	SEE PAGE
	1	1	**246-2641**	2	PADLOCK GP (BATTERY BOX)	
					(EACH INCLUDES)	
		1	**5P-8500**	2	KEY	
Y	2	1	*218-1851*	1	BOX GP-BATTERY	329
	3	1	**231-4384**	2	BRACKET AS	
	4	1	**255-6387**	1	DOOR AS	
		1	**4H-1641**	1	PIN-SPRING	
		1	**8E-7561**	1	KNOB AS	
		1	**9S-8230**	1	PLATE AS	
	5	1	**255-6406**	1	BRACKET	
	6	1	**7X-7729**	14	WASHER (11X25X3-MM THK)	
M	7	1	**8T-4136**	12	BOLT (M10X1.5X25-MM)	
M	8	1	**8T-4191**	2	BOLT (M10X1.5X16-MM)	
M	9	1	**8T-4192**	2	BOLT (M12X1.75X25-MM)	
	10	1	**8T-4223**	2	WASHER-HARD (13.5X25.5X3-MM THK)	

M-METRIC PART
Y-SEPARATE ILLUSTRATION

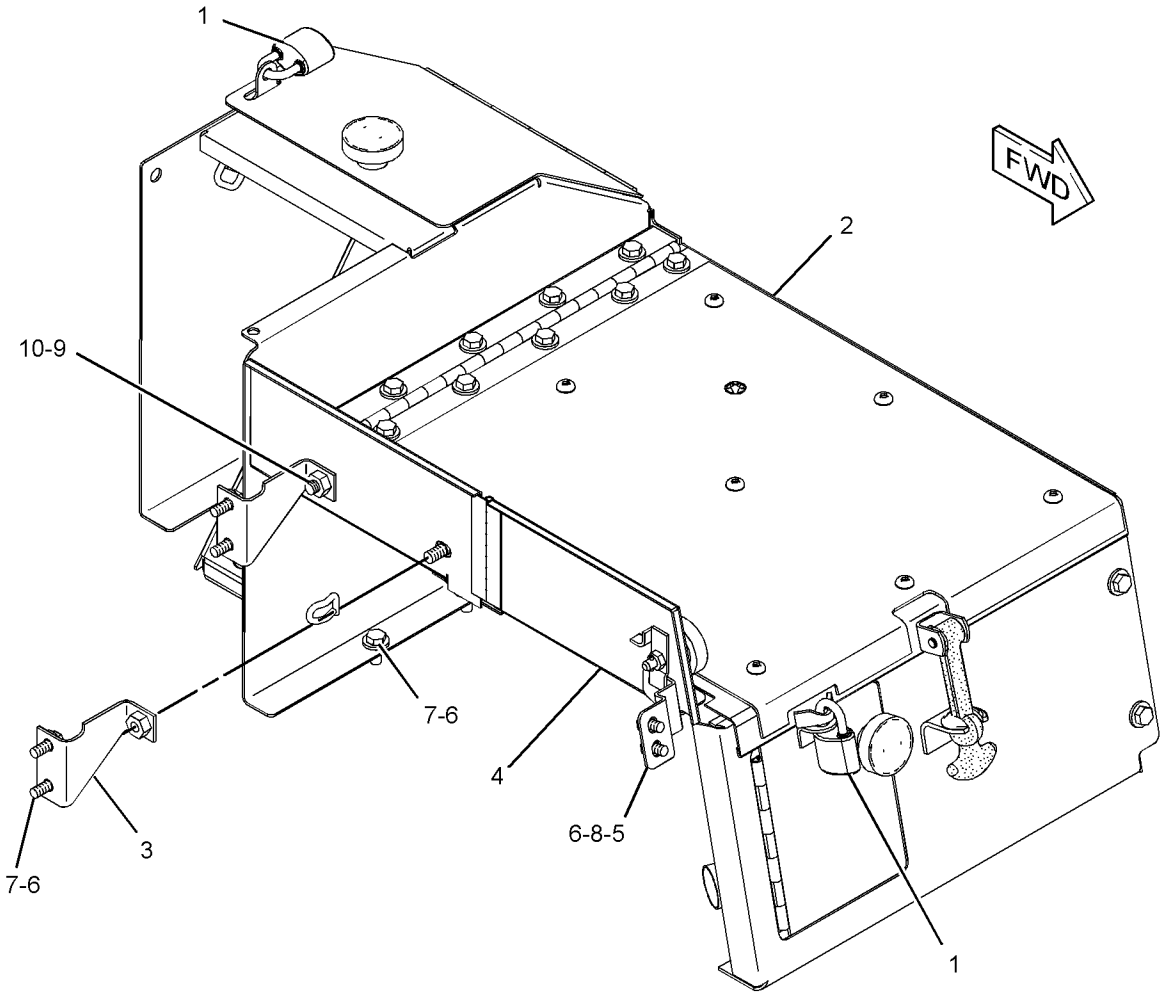

GRAPHIC #1 **<END>** g01205961

218-1851 BOX GP-BATTERY

S/N: JDL1-UP; GMT1-UP

PART OF 218-1838 BOX GP-BATTERY

SMCS-7257 **i02431128**

NOTE	REF NO	GRAPHIC REF	PART NUMBER	QTY	PART NAME 1 2 3 4 5 6 (PRODUCT LEVEL)	SEE PAGE
	1	1	**2M-5795**	1	PIN-CLEVIS	
	2	1	**5V-1496**	1	RETAINER	
	3	1	**6V-9197**	2	LOCK PIN	
	4	1	**6Y-3973**	1	LINK	
	5	1	**8E-7561**	2	KNOB AS (BATTERY BOX)	
					(EACH INCLUDES)	
		1	**8E-1205**	1	KNOB	
		1	**7S-2042**	1	STUD	
		1	**8T-7566**	1	PIN-SPRING	
	6	1	**9M-3835**	1	LATCH-RUBBER	
	7	1	**9S-8230**	2	PLATE AS	
					(EACH INCLUDES)	
		1	**1F-0750**	1	NUT-WELD (3/8-16-THD)	
	8	1	**231-4385**	1	COVER AS	
	9	1	**231-4386**	1	PLATE	
	10	1	**231-4387**	1	HINGE AS	
	11	1	**231-4389**	1	COVER AS	
	12	1	**255-5210**	1	COVER AS	
	13	1	**4H-1641**	2	PIN-SPRING	
	14	1	**7X-7729**	14	WASHER (11X25X3-MM THK)	
M	15	1	**8C-8585**	9	SCREW-BUTTON HEAD (M10X1.5X20-MM)	
M	16	1	**8T-4137**	13	BOLT (M10X1.5X20-MM)	
	17	1	**8T-4222**	2	WASHER-PLATED (11X32X2.5-MM THK)	

M-METRIC PART

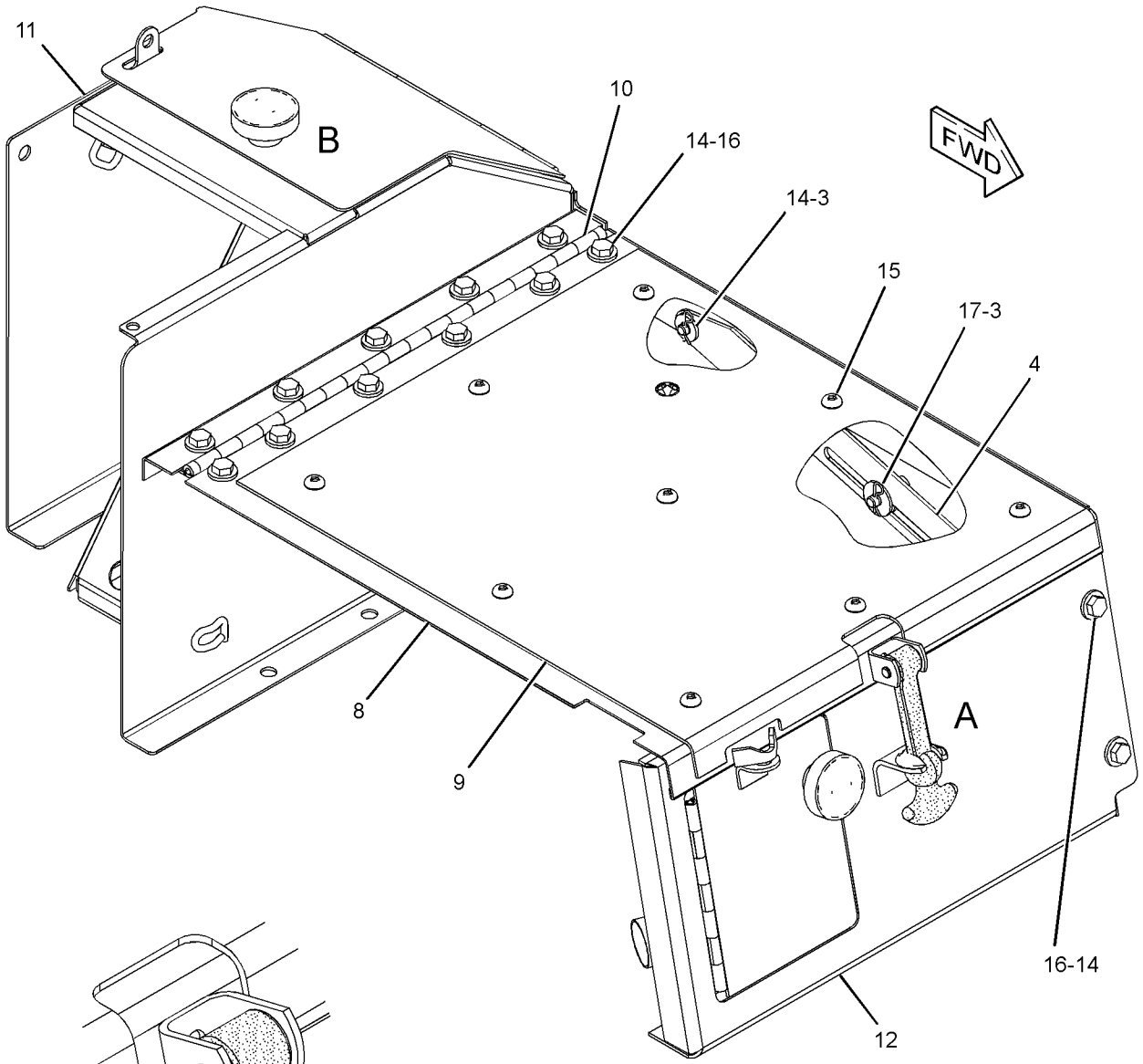

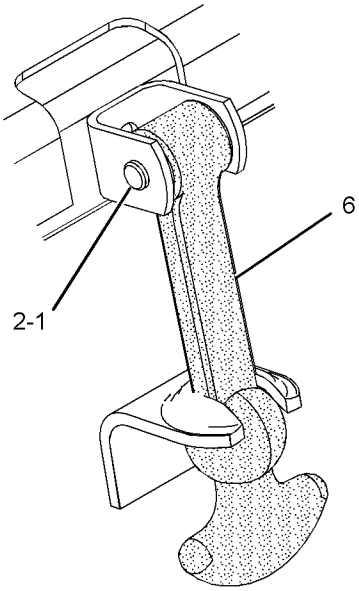

VIEW OF AREA A

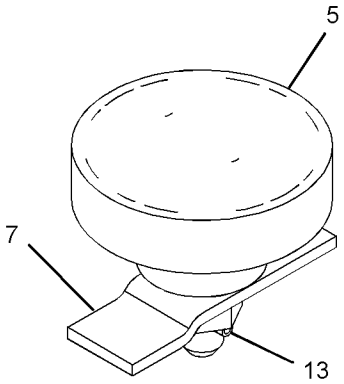

VIEW OF AREA B

GRAPHIC #1 **<END>** g01205974

223-0666 CASE & FRAME GP

S/N: JDL1-UP; GMT1-UP

PART OF 218-4978, 222-1592 CHASSIS AR

SMCS-7051 **i02431384**

NOTE	REF NO	GRAPHIC REF	PART NUMBER	QTY	PART NAME 1 2 3 4 5 6 (PRODUCT LEVEL)	SEE PAGE
	1	1	**7X-1456**	26	PLUG	
	2	1	**106-8186**	1	VALVE AS-DRAIN	
		1	**077-3241**	1	SEAL-O-RING	
	3	1	**106-8187**	1	PLUG (DRAIN) (TRANSMISSION CASE)	
	4	1	**227-7480**	1	CASE & FRAME AS	
	5	1	**264-0168**	2	STUD-TAPERLOCK	
	6	1	**3T-0996**	2	BEARING-SLEEVE	
	7	1	**6F-0711**	1	SEAL-O-RING	
	8	1	**258-2305**	4	BEARING-SLEEVE	

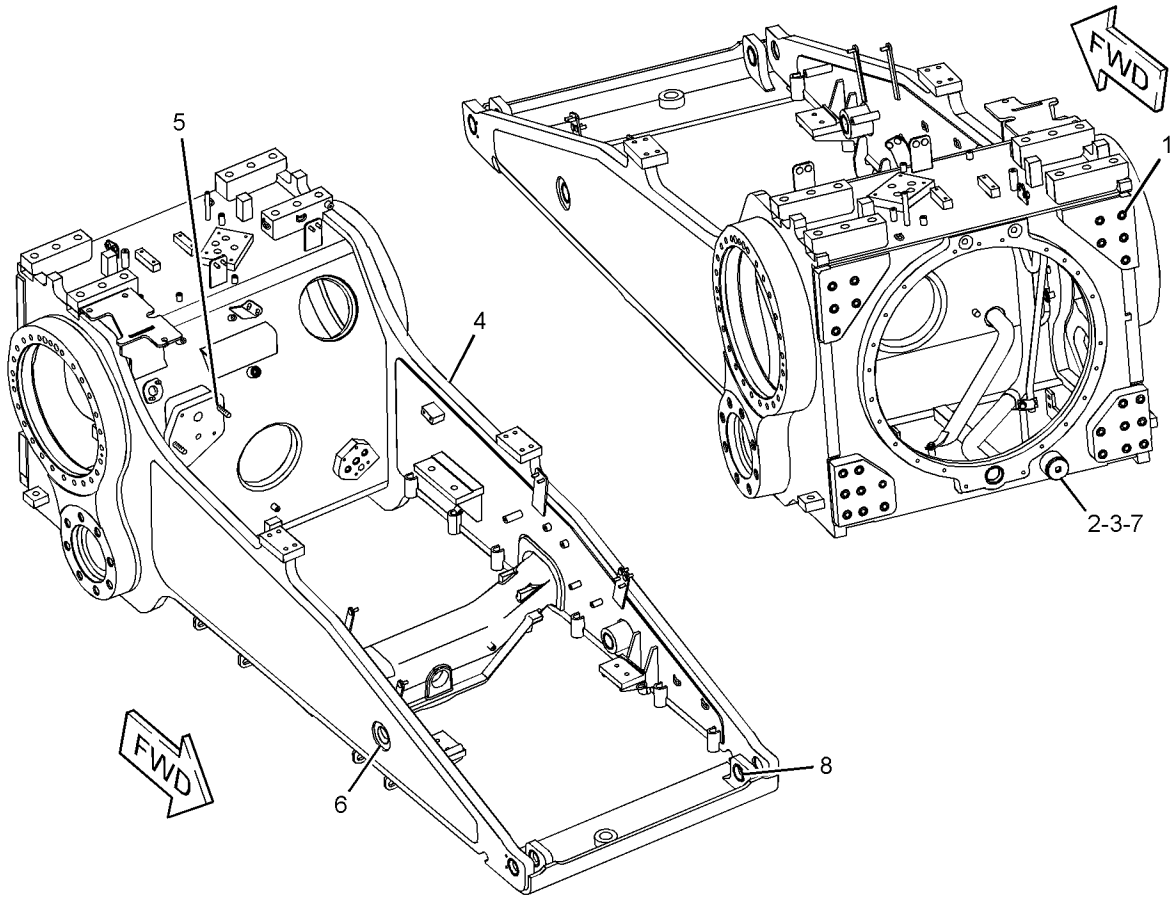

GRAPHIC #1 **<END>** g01205611

3W-6866 DRAWBAR GP–LONG

S/N: JDL1-UP; GMT1-UP
AN ATTACHMENT

SMCS-7105, 7119 **i02453529**

NOTE	REF NO	GRAPHIC REF	PART NUMBER	QTY	PART NAME 1 2 3 4 5 6 (PRODUCT LEVEL)	SEE PAGE
	1	1	**3W-6867**	1	DRAWBAR AS	
	2	1	**7B-0863**	1	LATCH-PIN	
	3	1	**7F-9547**	1	PIN AS-DRAWBAR	
		1	**7F-9543**	1	COLLAR	
	4	1	**3K-2889**	1	LOCKNUT (5/8-11-THD)	
	5	1	**5D-3118**	10	STUD-TAPERLOCK (1-8-THD)	
	6	1	**6V-8190**	10	NUT (1-8-THD)	
	7	1	**7X-0347**	1	BOLT (5/8-11X2.25-IN)	
	8	1	**8T-5361**	10	WASHER-HARD (28X49X5-MM THK)	
F			**7X-7644**	1	FILM-INFORMATION (TIE-DOWN) ON DRAWBAR CLEVIS	

F-NOT SHOWN

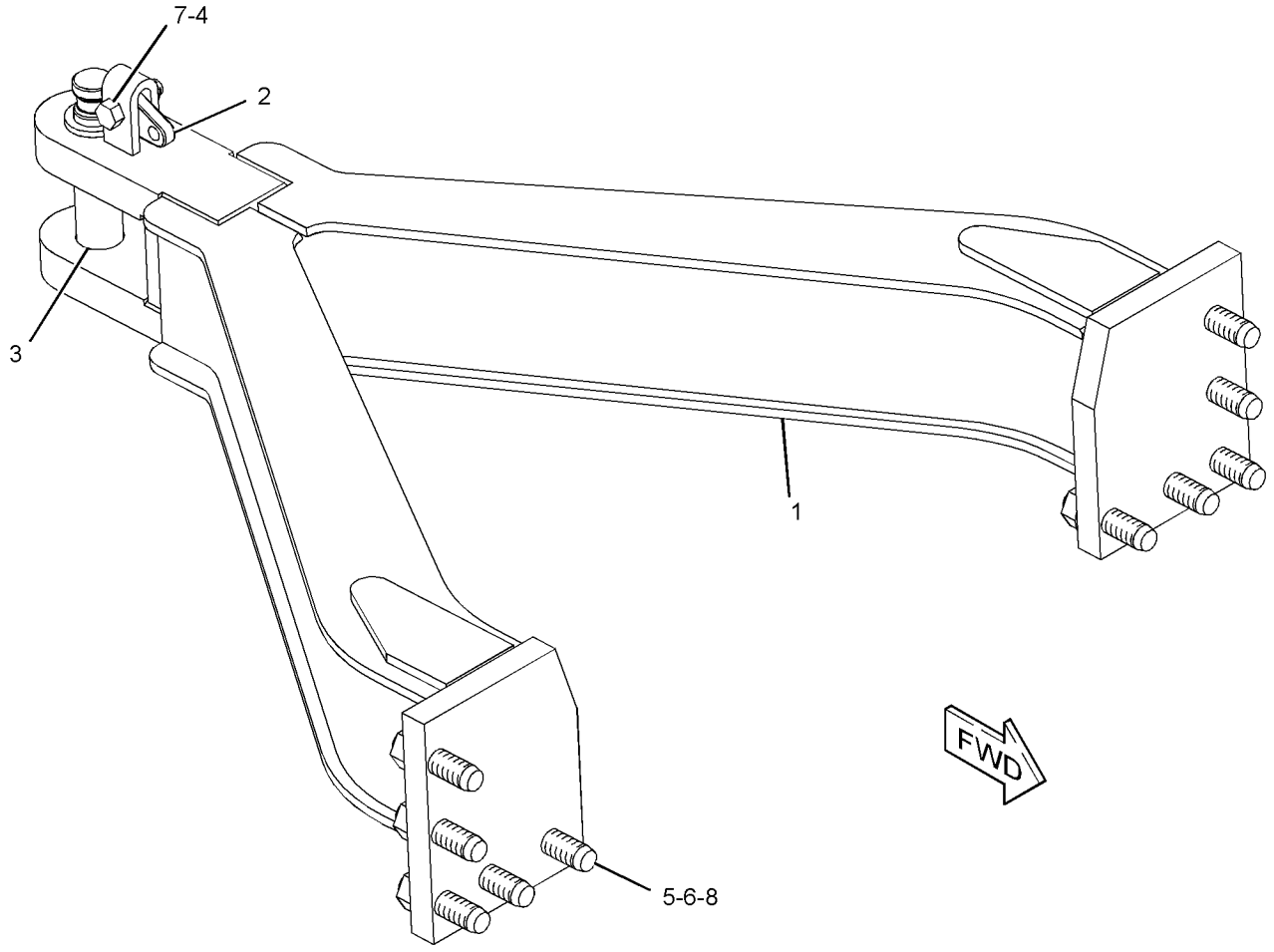

GRAPHIC #1 **<END>** g01214169

FRAME AND BODY

7G-8975 DRAWBAR GP

S/N: JDL1-UP; GMT1-UP
AN ATTACHMENT

SMCS-7105, 7119 **i02454210**

NOTE	REF NO	GRAPHIC REF	PART NUMBER	QTY	PART NAME 1 2 3 4 5 6 (PRODUCT LEVEL)	SEE PAGE
	1	1	**3W-2182**	1	DRAWBAR AS	
		1	**1P-1547**	1	PLATE-LOCK	
	2	1	**7B-0863**	1	LATCH-PIN	
	3	1	**7F-9547**	1	PIN AS-DRAWBAR	
		1	**7F-9543**	1	COLLAR	
	4	1	**3K-2889**	1	LOCKNUT (5/8-11-THD)	
	5	1	**5D-3118**	10	STUD-TAPERLOCK (1-8-THD)	
	6	1	**6V-8190**	10	NUT (1-8-THD)	
	7	1	**7X-0347**	1	BOLT (5/8-11X2.25-IN)	
	8	1	**8T-5361**	10	WASHER-HARD (28X49X5-MM THK)	
F			**7X-7644**	1	FILM-INFORMATION (TIE-DOWN)	
					ON DRAWBAR CLEVIS	

F-NOT SHOWN

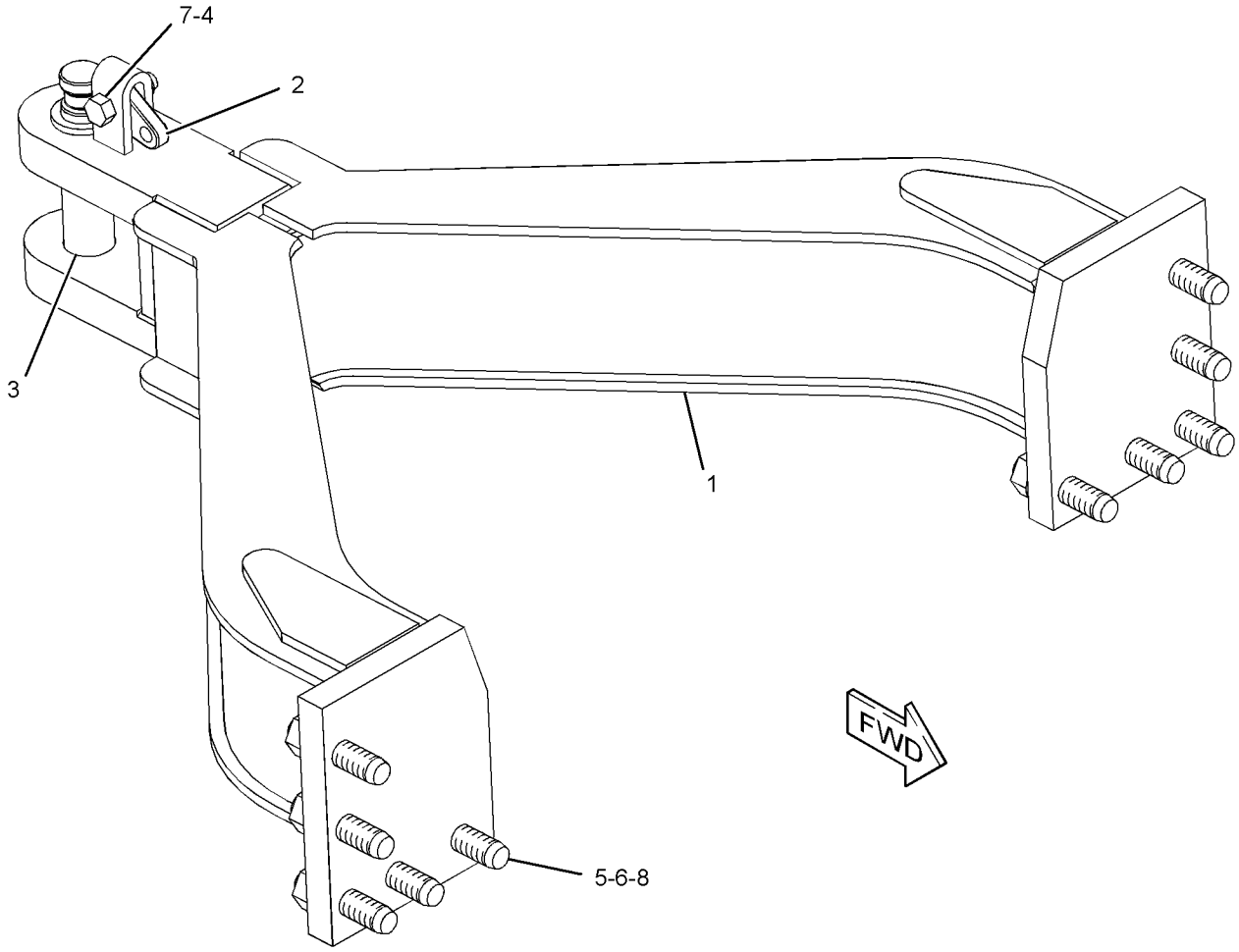

GRAPHIC #1 **<END>** g01214196

218-1835 ENCLOSURE GP-ENGINE

S/N: JDL1-UP; GMT1-UP

PART OF 218-4978, 222-1592 CHASSIS AR

SMCS-7263 **i02431013**

NOTE	REF NO	GRAPHIC REF	PART NUMBER	QTY	PART NAME 1 2 3 4 5 6 (PRODUCT LEVEL)	SEE PAGE
	1	2	**246-2641**	2	PADLOCK GP (ENGINE ENCLOSURE)	
					(EACH INCLUDES)	
		2	**5P-8500**	2	KEY	
	2	2	**6T-9927**	2	SLIDE	
	3	2	**9P-3066**	2	MOUNTING	
	4	1	**227-9307**	1	DOOR AS (LH)	
	5	1	**231-4382**	1	HOOD AS	
	6	1	**261-3864**	1	TREAD	
Y	7	1	*263-7724*	1	ENCLOSURE GP-ENGINE (RH)	337
Y	8	1	*263-7725*	1	ENCLOSURE GP-ENGINE (LH)	339
	9	1	**279-1127**	1	PLATE AS	
	10	2	**3W-3819**	2	PLATE	
	11	2	**6P-8269**	1	WASHER (20.5X88X6-MM THK)	
M	12	1	**6V-7743**	3	LOCKNUT (M6X1-THD)	
M	13	2	**7X-2555**	1	BOLT (M16X2X80-MM)	
	14	2	**7X-3392**	2	WASHER-HARD (13.5X22.5X3-MM THK)	
	15	1,2	**7X-7729**	48	WASHER (11X25X3-MM THK)	
M	16	1	**8C-8585**	4	SCREW-BUTTON HEAD (M10X1.5X20-MM)	
	17	1	**8E-3070**	1	PLATE	
	18	2	**8G-4014**	2	RETAINER	
	19	2	**8T-2561**	4	WASHER-HARD (10.5X28.5X5-MM THK)	
M	20	1,2	**8T-4136**	26	BOLT (M10X1.5X25-MM)	
M	21	1,2	**8T-4137**	28	BOLT (M10X1.5X20-MM)	
M	22	1	**8T-4971**	2	BOLT (M6X1X30-MM)	
	23	1	**9X-8256**	5	WASHER (6.6X12X2-MM THK)	
	24	2	**9X-8257**	1	WASHER (17.5X30X3.5-MM THK)	
	25	2	**9X-8266**	2	WASHER (10.2X63.5X6-MM THK)	
D	26	1	**5P-7211**		SEAL (1.1-M)	
D	27	1	**5P-8309**		SEAL (5.3-M)	

D-ORDER BY THE METER
M-METRIC PART
Y-SEPARATE ILLUSTRATION

218-1835 **ENCLOSURE GP-ENGINE** *(contd.)* **i02431013**

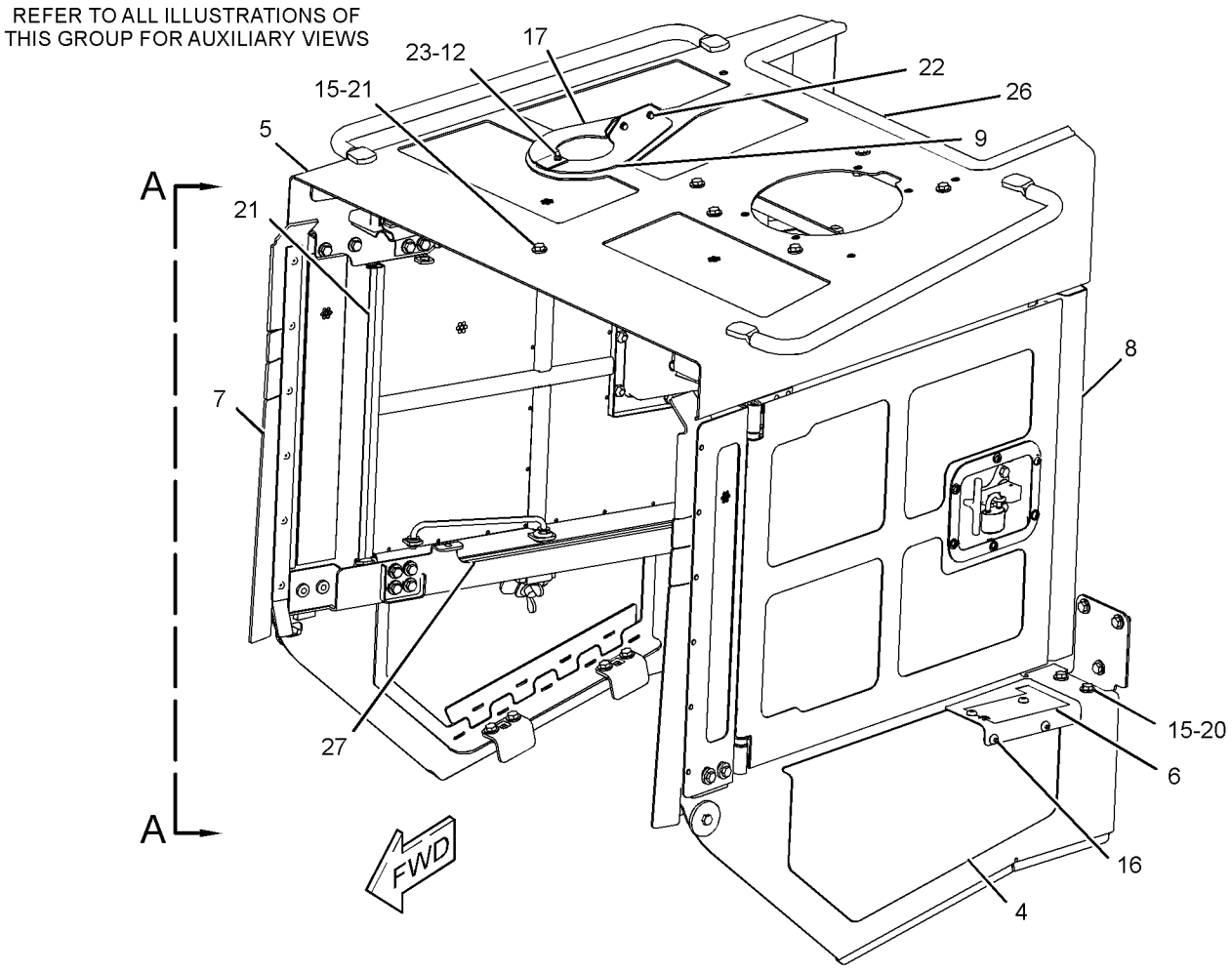

GRAPHIC #1 g01206987

218-1835 **ENCLOSURE GP-ENGINE** *(contd.)* **i02431013**

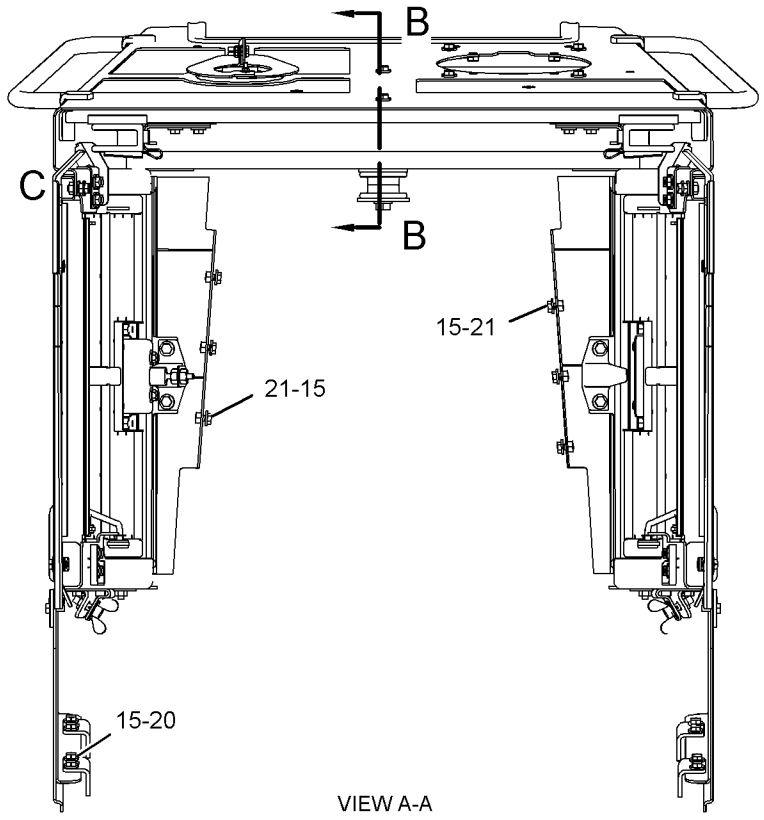

VIEW A-A

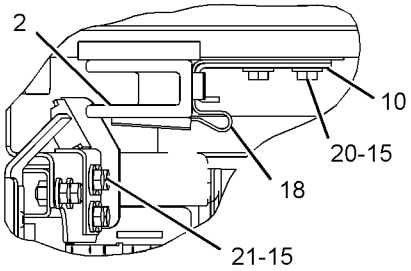

VIEW OF AREA C

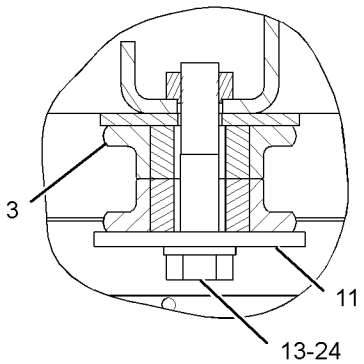

SECTION B-B

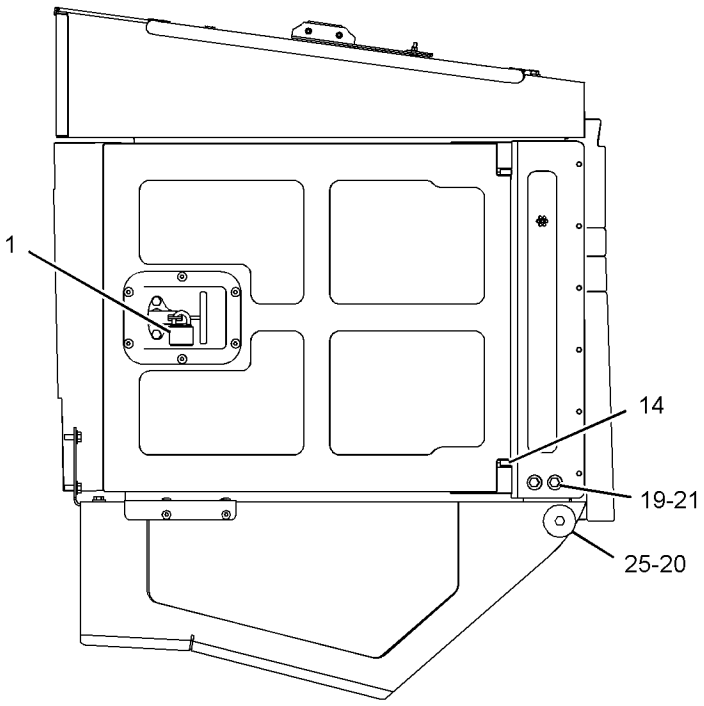

LEFT SIDE VIEW

GRAPHIC #2 **<END>** g01207102

263-7724 ENCLOSURE GP-ENGINE—RH

S/N: JDL1-UP; GMT1-UP

PART OF 218-1835 ENCLOSURE GP-ENGINE

SMCS-7263 **i02431045**

NOTE	REF NO	GRAPHIC REF	PART NUMBER	QTY	PART NAME 1 2 3 4 5 6 (PRODUCT LEVEL)	SEE PAGE
	1	1	**3B-4605**	1	PIN-COTTER	
	2	1	**3V-9399**	1	ROD AS	
		1	**4B-4278**	2	WASHER (10.2X20.5X1.6-MM THK)	
	3	1	**4B-4278**	1	WASHER (10.2X20.5X1.6-MM THK)	
	4	1	**8B-4624**	2	SHIM (0.032-IN THK)	
	5	1	**8T-9496**	2	LOCKNUT (9/16-18-THD)	
	6	1	**8Y-4000**	1	LATCH AS (T-BAR, COMPARTMENT)	
	7	1	**170-7694**	2	HINGE	
	8	1	**227-9304**	1	GUARD AS (RH)	
	9	1	**227-9305**	1	DOOR AS (RH)	
	10	1	**227-9310**	2	BRACKET	
	11	1	**237-2732**	1	PLATE AS (RH)	
	12	1	**261-3156**	1	DOOR AS	
	13	1	**261-3865**	1	TREAD	
	14	1	**262-7661**	1	SUPPORT AS (RH)	
	15	1	**264-6816**	1	BAFFLE AS (RH)	
	16	1	**275-4236**	1	SCREW-WING (M12X1.75X40-MM)	
	17	1	**3B-4610**	1	PIN-COTTER	
	18	1	**3W-9207**	1	GUIDE	
	19	1	**3W-9208**	1	PAWL	
	20	1	**4H-2558**	1	GROMMET	
	21	1	**4M-7470**	1	GROMMET	
M	22	1	**6V-7744**	2	LOCKNUT (M10X1.15-THD)	
	23	1	**7X-7729**	14	WASHER (11X25X3-MM THK)	
M	24	1	**8C-8585**	10	SCREW-BUTTON HEAD (M10X1.5X20-MM)	
	25	1	**8E-4832**	1	STRIKER	
M	26	1	**8T-4133**	2	NUT (M10X1.5 THD)	
M	27	1	**8T-4136**	2	BOLT (M10X1.5X25-MM)	
M	28	1	**8T-4137**	4	BOLT (M10X1.5X20-MM)	
M	29	1	**8T-4196**	2	BOLT (M10X1.5X35-MM)	
	30	1	**9W-8940**	1	PLATE	
D	31	1	**8T-5372**		SEAL (0.29-M)	
D	31A	1	**8T-5372**		SEAL (0.57-M)	
D	31B	1	**8T-5372**		SEAL (0.38-M)	

D-ORDER BY THE METER
M-METRIC PART

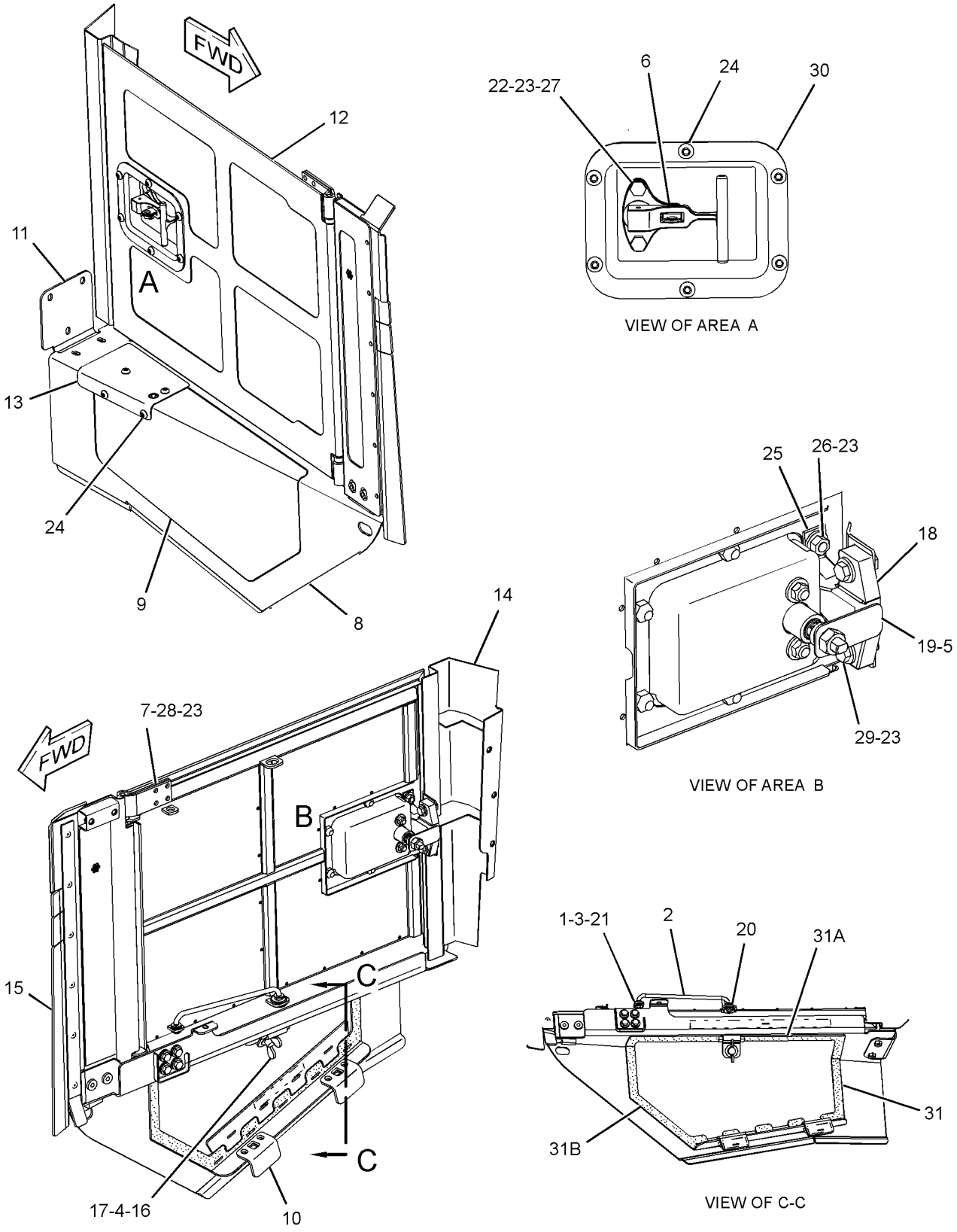

GRAPHIC #1 **<END>** g01212436

263-7725 ENCLOSURE GP-ENGINE–LH

S/N: JDL1-UP; GMT1-UP

PART OF 218-1835 ENCLOSURE GP-ENGINE

SMCS-7263 **i02431044**

NOTE	REF NO	GRAPHIC REF	PART NUMBER	QTY	PART NAME 1 2 3 4 5 6 (PRODUCT LEVEL)	SEE PAGE
	1	1	**3B-4605**	1	PIN-COTTER	
	2	1	**3V-9399**	1	ROD AS	
		1	**4B-4278**	2	WASHER (10.2X20.5X1.6-MM THK)	
	3	1	**4B-4278**	1	WASHER (10.2X20.5X1.6-MM THK)	
	4	1	**8B-4624**	1	SHIM (0.032-IN THK)	
	5	1	**8T-9496**	2	LOCKNUT (9/16-18-THD)	
J	6	1	**8Y-4000**	1	LATCH AS (T-BAR, COMPARTMENT)	
	7	1	**170-7694**	2	HINGE	
	8	1	**227-9306**	1	GUARD AS (LH)	
	9	1	**227-9310**	2	BRACKET	
	10	1	**237-2734**	1	PLATE AS (LH)	
	11	1	**261-3156**	1	DOOR AS	
	12	1	**262-7662**	1	SUPPORT AS (LH)	
	13	1	**264-6817**	1	BAFFLE AS (LH)	
	14	1	**275-4236**	1	SCREW-WING (M12X1.75X40-MM)	
	15	1	**3B-4610**	1	PIN-COTTER	
	16	1	**3W-9207**	1	GUIDE	
	17	1	**3W-9208**	1	PAWL	
	18	1	**4H-2558**	1	GROMMET	
	19	1	**4M-7470**	1	GROMMET	
M	20	1	**6V-7744**	2	LOCKNUT (M10X1.15-THD)	
	21	1	**7X-7729**	14	WASHER (11X25X3-MM THK)	
M	22	1	**8C-8585**	6	SCREW-BUTTON HEAD (M10X1.5X20-MM)	
	23	1	**8E-4832**	1	STRIKER	
M	24	1	**8T-4133**	2	NUT (M10X1.5 THD)	
M	25	1	**8T-4136**	2	BOLT (M10X1.5X25-MM)	
M	26	1	**8T-4137**	4	BOLT (M10X1.5X20-MM)	
M	27	1	**8T-4196**	2	BOLT (M10X1.5X35-MM)	
	28	1	**9W-8940**	1	PLATE	
D	29	1	**8T-5372**		SEAL (0.57-M)	
D	29A	1	**8T-5372**		SEAL (0.28-M)	
D	29B	1	**8T-5372**		SEAL (0.36-M)	

D-ORDER BY THE METER
J-REQUIRES 5P-8500 KEY
M-METRIC PART

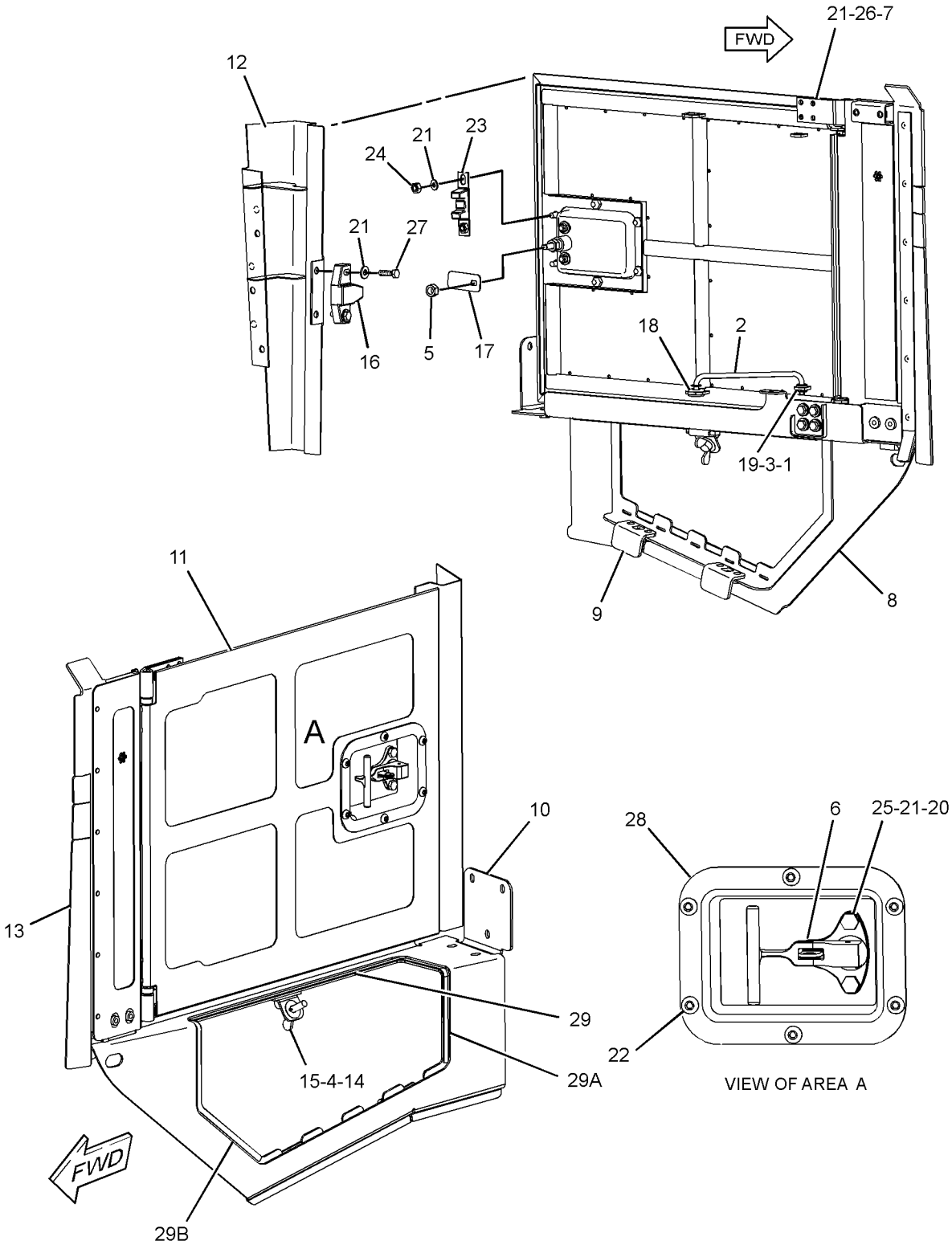

GRAPHIC #1 **<END>** g01209012

218-1839 ENCLOSURE GP-HYDRAULIC TANK

S/N: JDL1-UP; GMT1-UP

PART OF 218-4978, 222-1592 CHASSIS AR

SMCS-5056 **i02470026**

NOTE	REF NO	GRAPHIC REF	PART NUMBER	QTY	PART NAME 1 2 3 4 5 6 (PRODUCT LEVEL)	SEE PAGE
	1	1	**246-2641**	2	PADLOCK GP (HYDRAULIC TANK ENCLOSURE)	
					(EACH INCLUDES)	
		1	**5P-8500**	2	KEY	
	2	1	**8E-7561**	2	KNOB AS	
					(EACH INCLUDES)	
		1	**7S-2042**	1	STUD	
		1	**8E-1205**	1	KNOB	
		1	**8T-7566**	1	PIN-SPRING	
	3	1	**9S-8230**	2	PLATE AS	
					(EACH INCLUDES)	
		1	**1F-0750**	1	NUT-WELD (3/8-16-THD)	
	4	1	**231-4390**	1	COVER AS	
	5	1	**241-6498**	1	BRACKET AS	
	6	1	**241-6499**	1	PLATE	
	7	1	**241-6919**	1	BRACKET AS	
	8	1	**238-0251**	2	SCREW-BUTTON HEAD (M10X1.5X25-MM)	
	9	1	**4H-1641**	2	PIN-SPRING	
	10	1	**7X-7729**	8	WASHER (11X25X3-MM THK)	
M	11	1	**8T-4137**	2	BOLT (M10X1.5X20-MM)	
M	12	1	**8T-4136**	6	BOLT (M10X1.5X25-MM)	

M-METRIC PART

218-1839 **ENCLOSURE GP-HYDRAULIC TANK** *(contd.)* **i02470026**

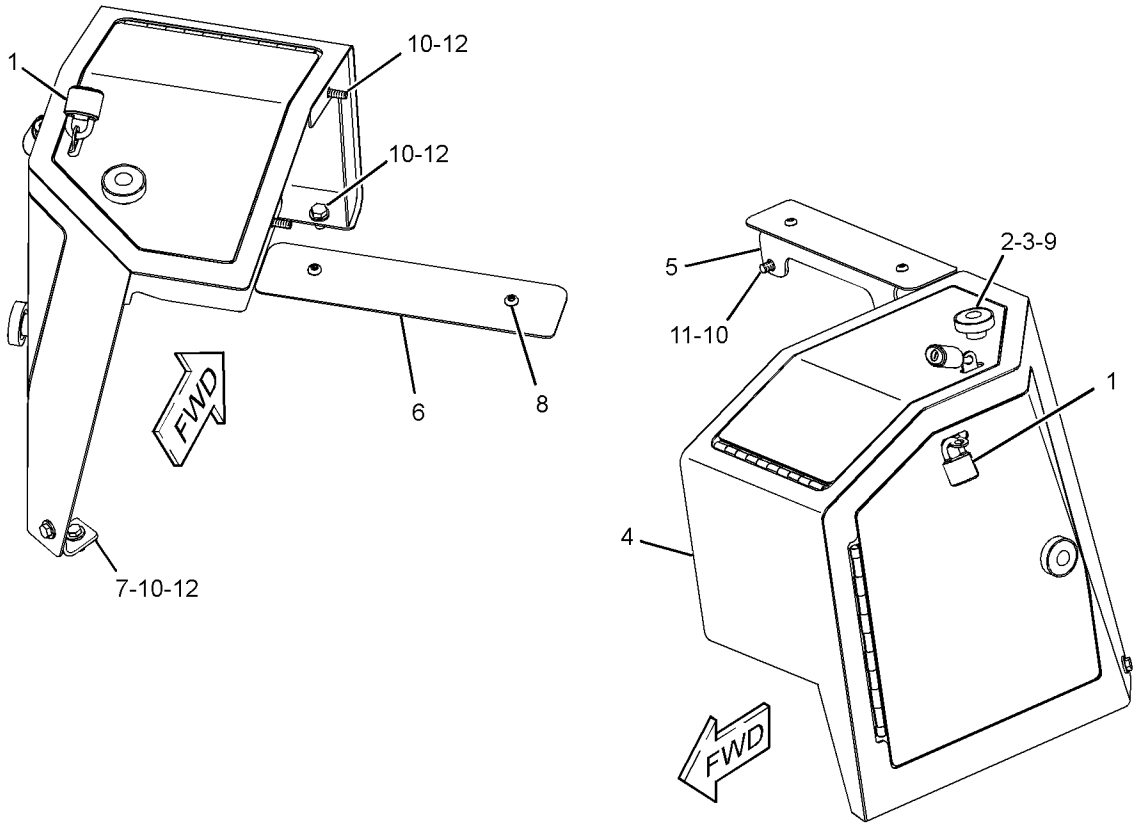

GRAPHIC #1 **<END>** g01232475

FRAME AND BODY

218-1841 FENDER GP

S/N: JDL1-UP; GMT1-UP

PART OF 218-4978, 222-1592 CHASSIS AR

SMCS-7252 **i02431201**

NOTE	REF NO	GRAPHIC REF	PART NUMBER	QTY	PART NAME 1 2 3 4 5 6 (PRODUCT LEVEL)	SEE PAGE
	1	1	**3W-3896**	2	HANDHOLD (GRAB)	
	2	1	**106-9361**	1	PLATE	
	3	1	**227-6656**	1	SUPPORT AS	
Y	4	1	*236-2218*	1	FENDER GP (RH)	344
Y	5	1	*236-2219*	1	FENDER GP (LH)	345
	6	1	**5P-1076**	8	WASHER-HARD (13.5X30X4-MM THK)	
M	7	1	**7X-2553**	8	BOLT (M16X2X40-MM)	
	8	1	**7X-3391**	12	WASHER-HARD (13.5X32X6-MM THK)	
	9	1	**8T-4121**	6	WASHER-HARD (11X21X2.5-MM THK)	
M	10	1	**8T-4136**	6	BOLT (M10X1.5X25-MM)	
M	11	1	**8T-4139**	4	BOLT (M12X1.75X30-MM)	
M	12	1	**8T-4183**	20	BOLT (M12X1.75X40-MM)	
M	13	1	**8T-4187**	4	BOLT (M20X2.5X80-MM)	
	14	1	**8T-4223**	4	WASHER-HARD (13.5X25.5X3-MM THK)	
	15	1	**8T-5439**	4	WASHER (21.5X45X6-MM THK)	
	16	1	**9X-8257**	8	WASHER (17.5X30X3.5-MM THK)	

M-METRIC PART
Y-SEPARATE ILLUSTRATION

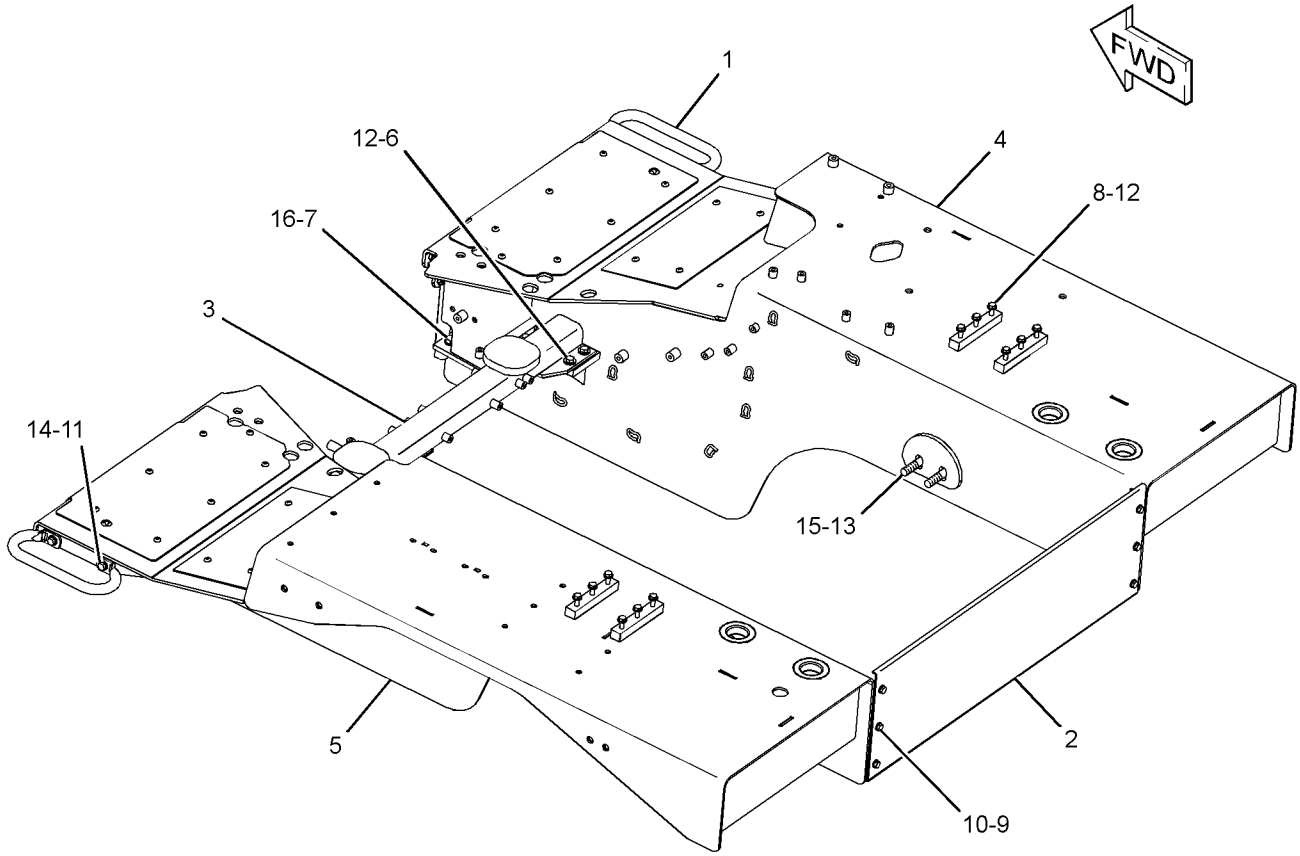

GRAPHIC #1 **<END>** g01206143

236-2218 FENDER GP–RH

S/N: JDL1-UP; GMT1-UP
PART OF 218-1841 FENDER GP

SMCS-7252 **i02431214**

NOTE	REF NO	GRAPHIC REF	PART NUMBER	QTY	PART NAME 1 2 3 4 5 6 (PRODUCT LEVEL)	SEE PAGE
	1	1	**8Y-0374**	1	PLATE	
	2	1	**226-5955**	1	FENDER AS (RH)	
	3	1	**236-2624**	1	PLATE	
	4	1	**238-0251**	13	SCREW-BUTTON HEAD (M10X1.5X25-MM)	

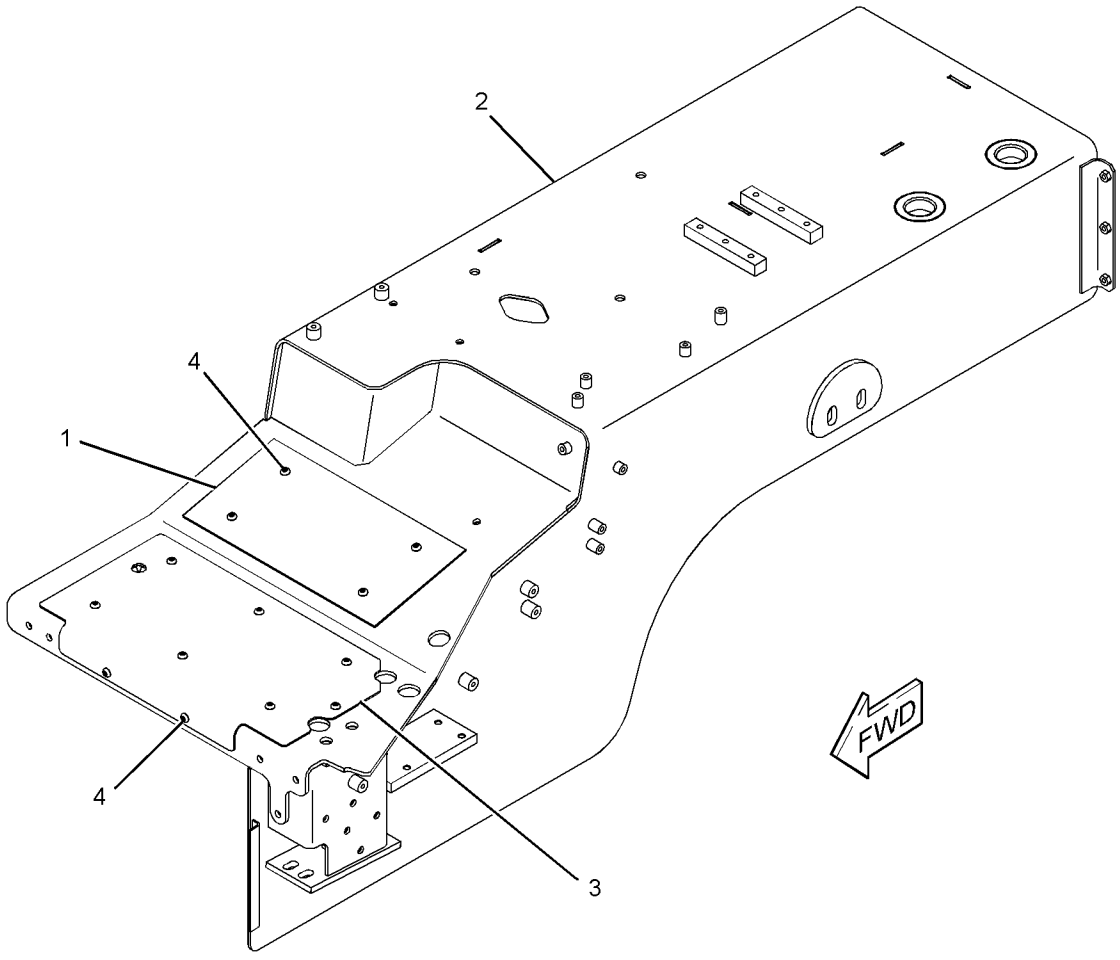

GRAPHIC #1 **<END>** g01205486

FRAME AND BODY

236-2219 FENDER GP–LH

S/N: JDL1-UP; GMT1-UP
PART OF 218-1841 FENDER GP

SMCS-7252 **i02431223**

NOTE	REF NO	GRAPHIC REF	PART NUMBER	QTY	PART NAME 1 2 3 4 5 6 (PRODUCT LEVEL)	SEE PAGE
	1	1	**8Y-0374**	1	PLATE	
	2	1	**226-5954**	1	FENDER AS (LH)	
	3	1	**236-5474**	1	PLATE	
	4	1	**238-0251**	13	SCREW-BUTTON HEAD (M10X1.5X25-MM)	

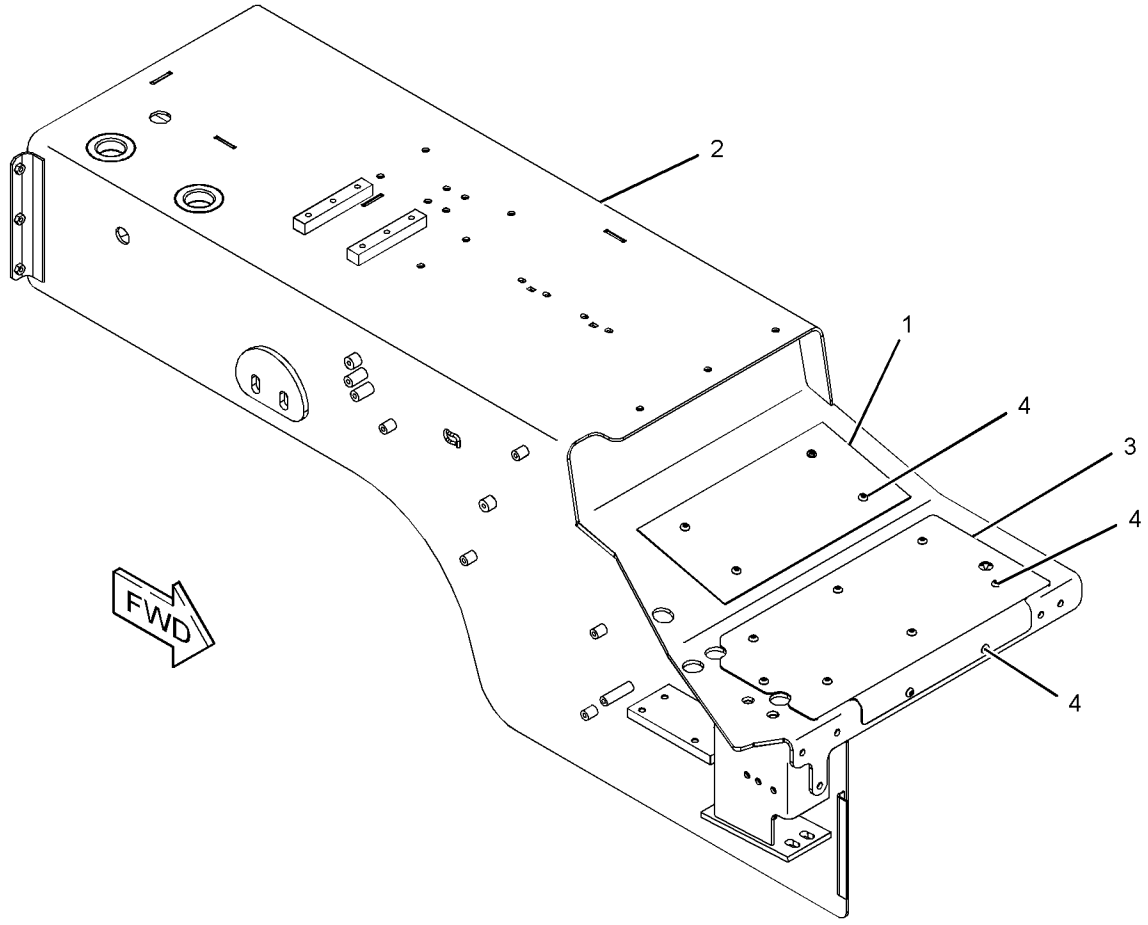

GRAPHIC #1 **<END>** g01210389

173-1852 GRID GP-SAND BLAST ERODING

S/N: JDL1-UP; GMT1-UP
CANNOT BE USED WITH REVERSIBLE FAN, FLEXXAIRE FAN
AN ATTACHMENT

SMCS-7179 **i01816402**

NOTE	REF NO	GRAPHIC REF	PART NUMBER	QTY	PART NAME 1 2 3 4 5 6 (PRODUCT LEVEL)	SEE PAGE
	1	1	**180-6693**	4	BRACKET	
	2	1	**180-6692**	1	GRID AS	
	3	1	**180-6694**	1	BRACKET AS	
M		1	**8T-3490**	4	NUT-WELD (M10X1.5-THD)	
	4	1	**7X-7729**	14	WASHER (11X25X3-MM THK)	
M	5	1	**8T-4133**	2	NUT (M10X1.5 THD)	
M	6	1	**8T-4136**	12	BOLT (M10X1.5X25-MM)	

M-METRIC PART

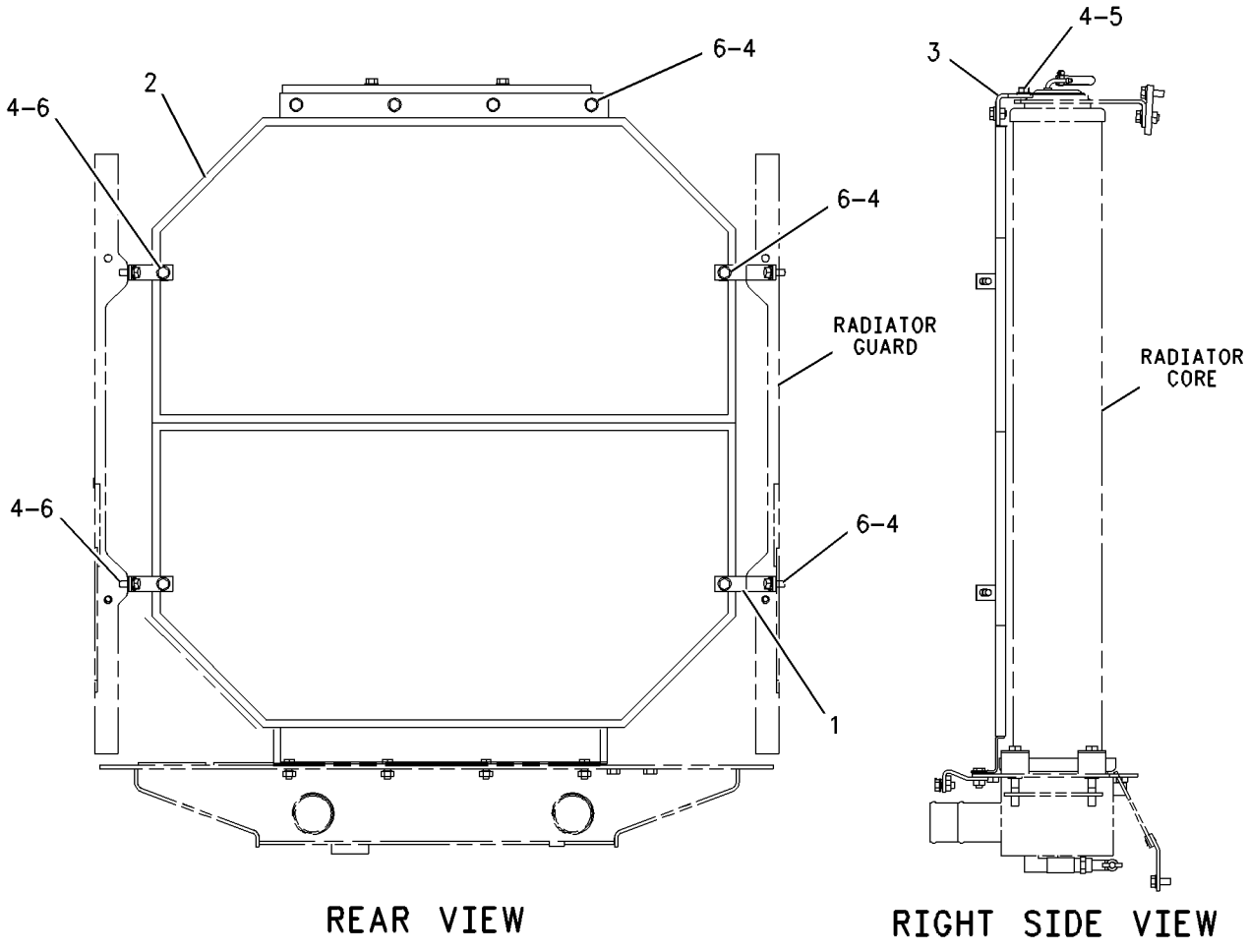

REAR VIEW

RIGHT SIDE VIEW

GRAPHIC #1 **<END>** g00742847

172-0962 GRILL GP-RADIATOR–HEAVY DUTY

S/N: JDL1-UP; GMT1-UP
PERFORATED
FOR USE WITH FORESTRY APPLICATION
AN ATTACHMENT

SMCS-7170 **i01816393**

NOTE	REF NO	GRAPHIC REF	PART NUMBER	QTY	PART NAME 1 2 3 4 5 6 (PRODUCT LEVEL)	SEE PAGE
	1	1	**8E-2014**	1	GRILL AS	
	2	1	**5P-1076**	4	WASHER-HARD (13.5X30X4-MM THK)	
M	3	1	**8T-6868**	4	BOLT (M12X1.75X80-MM)	

M-METRIC PART

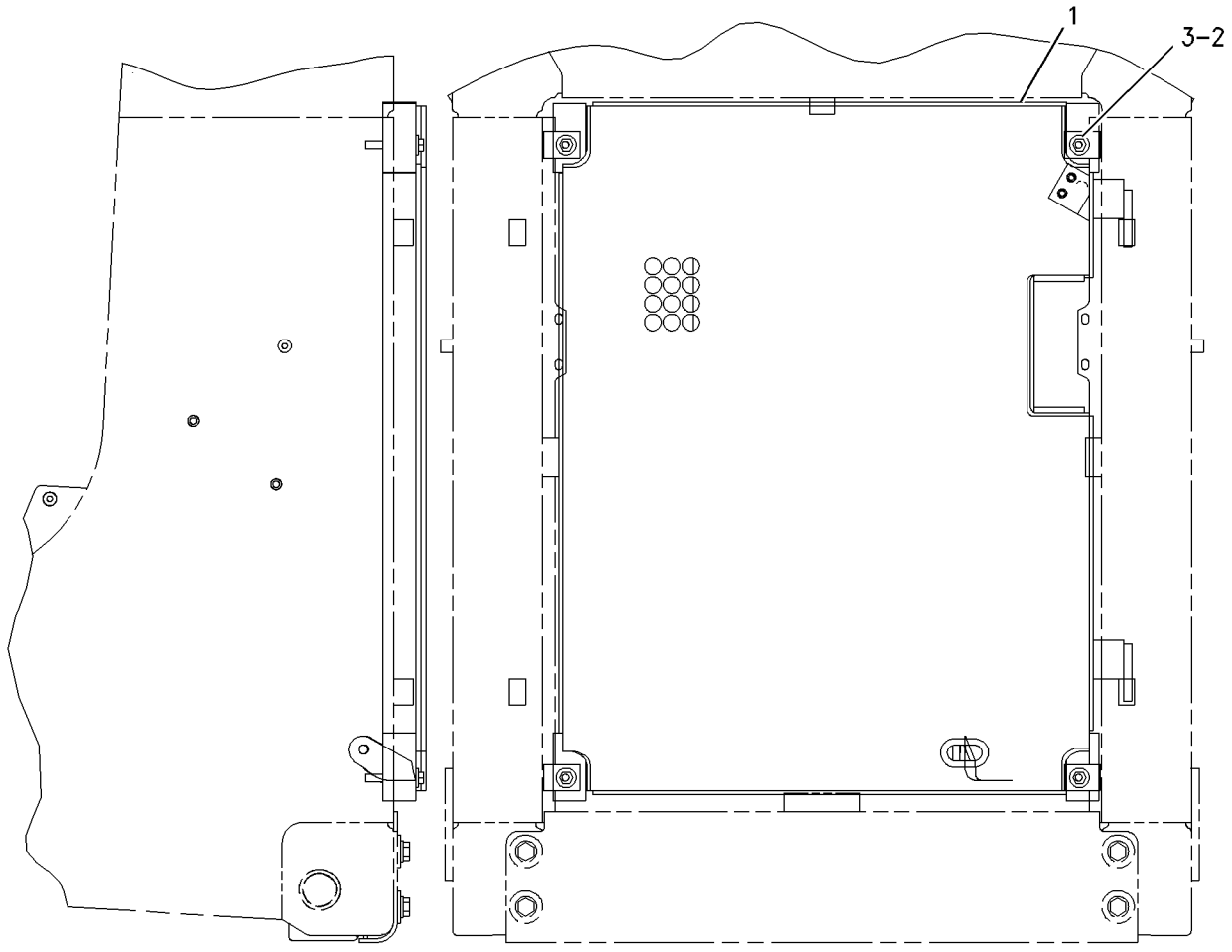

GRAPHIC #1 **<END>** g00741151

172-0964 GRILL GP-RADIATOR—HEAVY DUTY

S/N: JDL1-UP; GMT1-UP
LOUVERED
AN ATTACHMENT

SMCS-7170 **i02457311**

NOTE	REF NO	GRAPHIC REF	PART NUMBER	QTY	PART NAME 1 2 3 4 5 6 (PRODUCT LEVEL)	SEE PAGE
	1	1	**3W-1944**	1	GRILL AS	
	2	1	**172-0967**	1	GRILL AS	
	3	1	**5P-1076**	8	WASHER-HARD (13.5X30X4-MM THK)	
M	4	1	**8T-4194**	4	BOLT (M12X1.75X50-MM)	
M	5	1	**8T-6868**	4	BOLT (M12X1.75X80-MM)	
	6	1	**3B-4615**	2	PIN-COTTER	
	7	1	**8M-3175**	2	WASHER-HARD (10.2X16X3-MM THK)	
	8	1	**9W-2822**	1	ROD	

M-METRIC PART

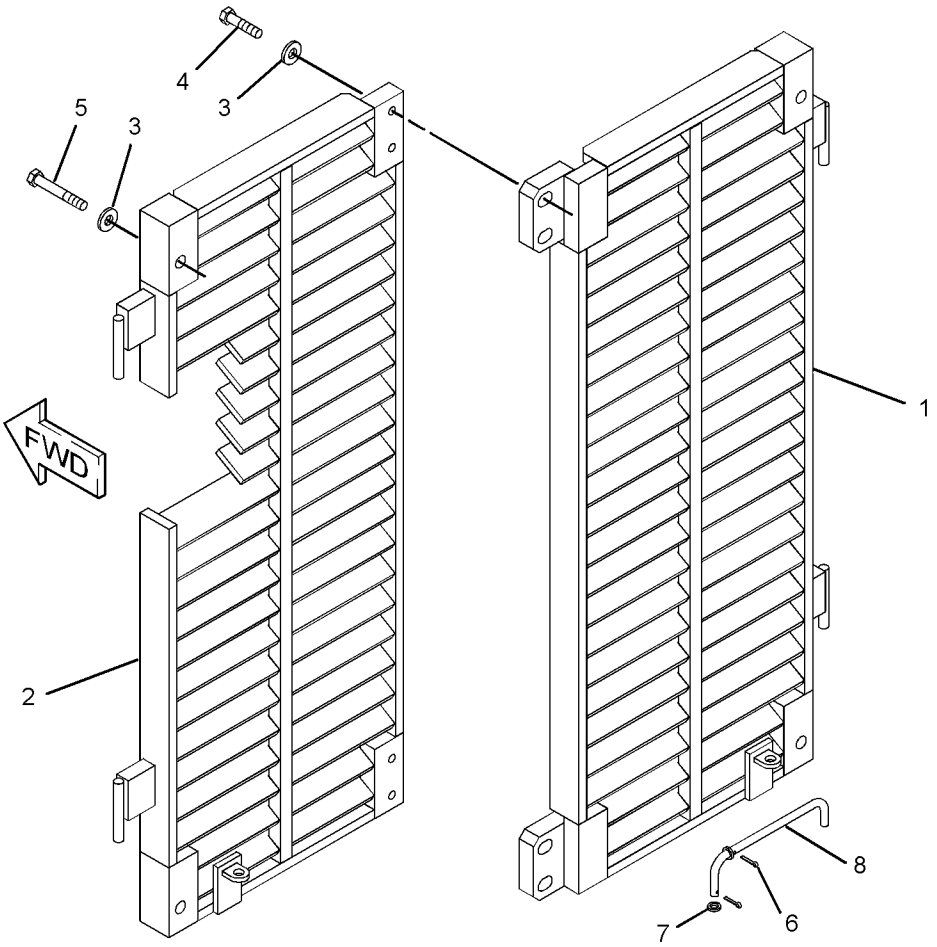

GRAPHIC #1 **<END>** g01227417

262-0554 GUARD AR-FINAL DRIVE

S/N: JDL1-UP; GMT1-UP
FOR USE WITH WASTE DISPOSAL AR
AN ATTACHMENT

SMCS-7172 **i02456107**

NOTE	PART NUMBER	QTY	PART NAME 1 2 3 4 5 6 (PRODUCT LEVEL)	SEE PAGE
Y	**260-6652**	2	FINAL DRIVE GP	278
Y-SEPARATE ILLUSTRATION				

<END>

261-6769 GUARD AR-IDLER

S/N: JDL1-UP; GMT1-UP
FOR USE WITH WASTE DISPOSAL AR
AN ATTACHMENT

SMCS-4159 **i02456100**

NOTE	PART NUMBER	QTY	PART NAME 1 2 3 4 5 6 (PRODUCT LEVEL)	SEE PAGE
Y	**258-8798**	4	IDLER GP-FRONT (SYSTEMONE)	389
Y-SEPARATE ILLUSTRATION				

<END>

FRAME AND BODY

218-1836 GUARD GP-BOTTOM

S/N: JDL1-UP; GMT1-UP

PART OF 218-4978, 222-1592 CHASSIS AR

SMCS-7153 **i02431070**

NOTE	REF NO	GRAPHIC REF	PART NUMBER	QTY	PART NAME 1 2 3 4 5 6 (PRODUCT LEVEL)	SEE PAGE
	1	1	**217-3655**	14	RETAINER	
	2	1	**227-8802**	1	GUARD AS	
	3	1	**230-7699**	1	GUARD AS	
	4	1	**230-7700**	1	GUARD AS	
	5	1	**240-4717**	1	COVER AS	
	6	1	**3B-4629**	4	PIN-COTTER	
	7	1	**4J-2036**	4	PIN	
	8	1	**7X-0594**	8	WASHER-HARD (20X38X3-MM THK)	
M	9	1	**8C-8478**	14	BOLT (M20X2.5X140-MM)	
	10	1	**8T-4121**	1	WASHER-HARD (11X21X2.5-MM THK)	
M	11	1	**8T-4131**	14	NUT (M20X2.5-THD)	
M	12	1	**8T-4196**	1	BOLT (M10X1.5X35-MM)	
	13	1	**8T-5439**	14	WASHER (21.5X45X6-MM THK)	

M-METRIC PART

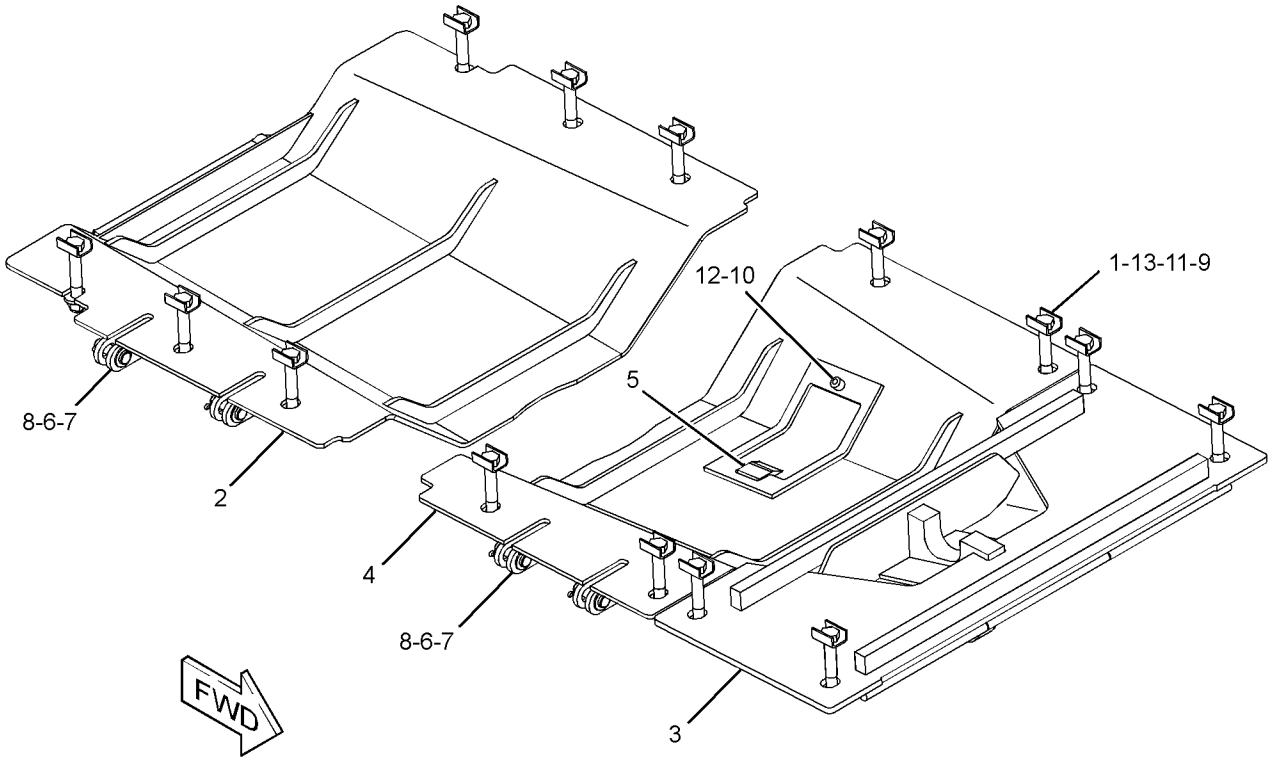

GRAPHIC #1 **<END>** g01206783

236-7241 GUARD GP-BOTTOM

S/N: JDL1-UP; GMT1-UP
EXTREME SERVICE, SEALED
AN ATTACHMENT

SMCS-7153 **i02454192**

NOTE	REF NO	GRAPHIC REF	PART NUMBER	QTY	PART NAME 1 2 3 4 5 6 (PRODUCT LEVEL)	SEE PAGE
E	1	1	**9X-8699**		SEAL (100-CM)	
	2	1	**217-3655**	14	RETAINER	
	3	1	**240-4717**	1	COVER AS	
	4	1	**258-6948**	1	GUARD AS	
	5	1	**258-6949**	1	GUARD AS	
	6	1	**260-3208**	1	GUARD AS	
	7	1	**3B-4629**	4	PIN-COTTER	
	8	1	**4J-2036**	4	PIN	
	9	1	**7X-0594**	8	WASHER-HARD (20X38X3-MM THK)	
M	10	1	**8C-8478**	14	BOLT (M20X2.5X140-MM)	
	11	1	**8T-4121**	1	WASHER-HARD (11X21X2.5-MM THK)	
M	12	1	**8T-4131**	14	NUT (M20X2.5-THD)	
M	13	1	**8T-4196**	1	BOLT (M10X1.5X35-MM)	
	14	1	**8T-5439**	14	WASHER (21.5X45X6-MM THK)	
D	15	1	**5P-7483**		SEAL (0.17-M)	
D	15A	1	**5P-7483**		SEAL (0.14-M EACH)	
D	15B	1	**5P-7483**		SEAL (1.18-M)	
D	16	1	**5P-5755**		SEAL (1.1-M)	
D	17	1	**5P-7514**		SEAL (1.1-M EACH)	

D-ORDER BY THE METER
E-ORDER BY THE CENTIMETER
M-METRIC PART

236-7241 **GUARD GP-BOTTOM** *(contd.)* **i02454192**

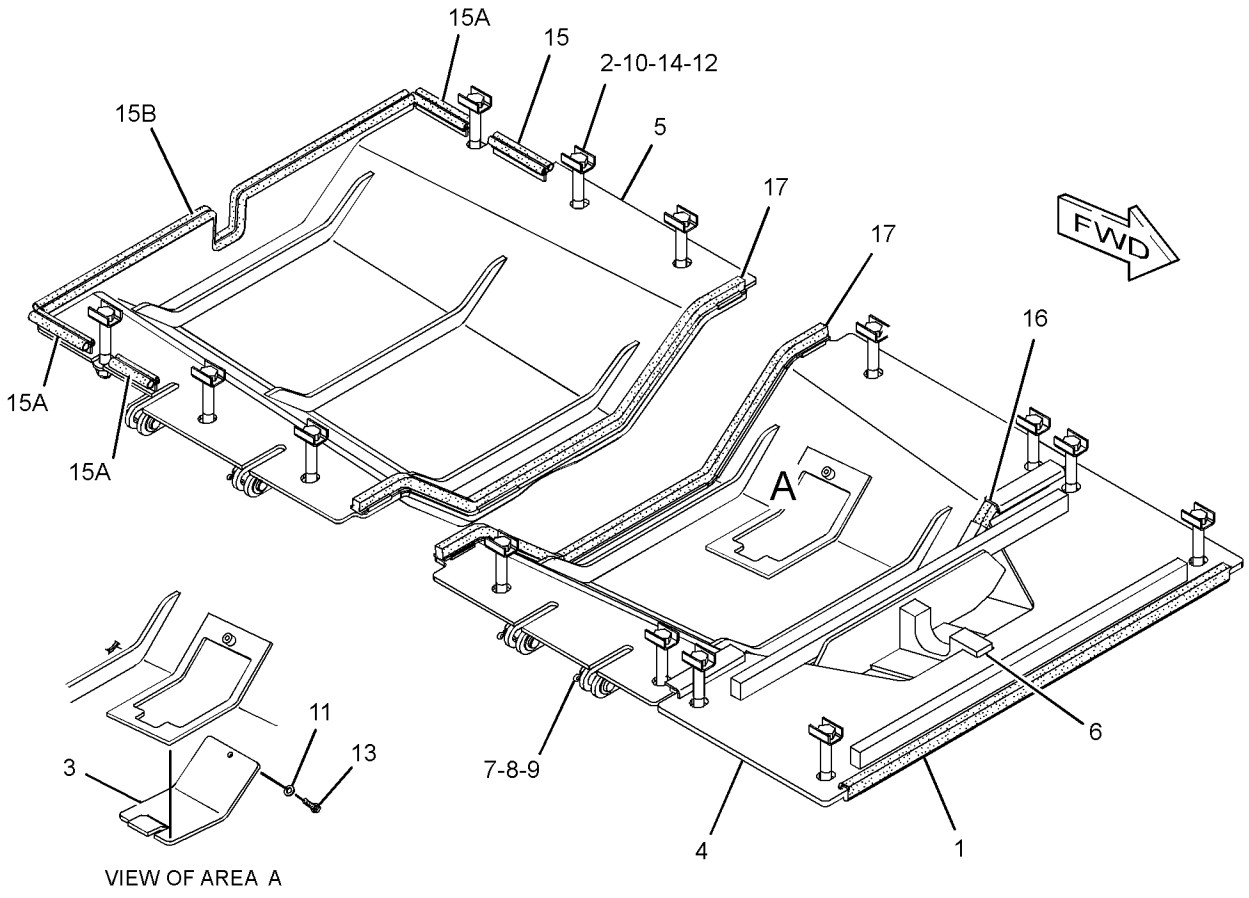

GRAPHIC #1 **<END>** g01209608

257-2696 GUARD GP-BOTTOM–HOOK

S/N: JDL1-UP; GMT1-UP
AN ATTACHMENT

SMCS-7153 **i02455949**

NOTE	REF NO	GRAPHIC REF	PART NUMBER	QTY	PART NAME 1 2 3 4 5 6 (PRODUCT LEVEL)	SEE PAGE
	1	1	**7S-6058**	1	HOOK-FRONT PULL	
	2	1	**217-3655**	14	RETAINER	
	3	1	**227-8802**	1	GUARD AS	
	4	1	**230-7700**	1	GUARD AS	
	5	1	**240-4717**	1	COVER AS	
	6	1	**258-7132**	1	GUARD AS	
	7	1	**3B-4629**	4	PIN-COTTER	
	8	1	**4J-2036**	4	PIN	
	9	1	**6V-8182**	6	NUT (3/4-10-THD)	
	10	1	**7X-0368**	6	BOLT (3/4-10X3-IN)	
	11	1	**7X-0594**	8	WASHER-HARD (20X38X3-MM THK)	
M	12	1	**8C-8478**	14	BOLT (M20X2.5X140-MM)	
	13	1	**8T-4121**	1	WASHER-HARD (11X21X2.5-MM THK)	
M	14	1	**8T-4131**	14	NUT (M20X2.5-THD)	
M	15	1	**8T-4196**	1	BOLT (M10X1.5X35-MM)	
	16	1	**8T-4994**	12	WASHER-HARD (20X36.5X3.5-MM THK)	
	17	1	**8T-5439**	14	WASHER (21.5X45X6-MM THK)	

M-METRIC PART

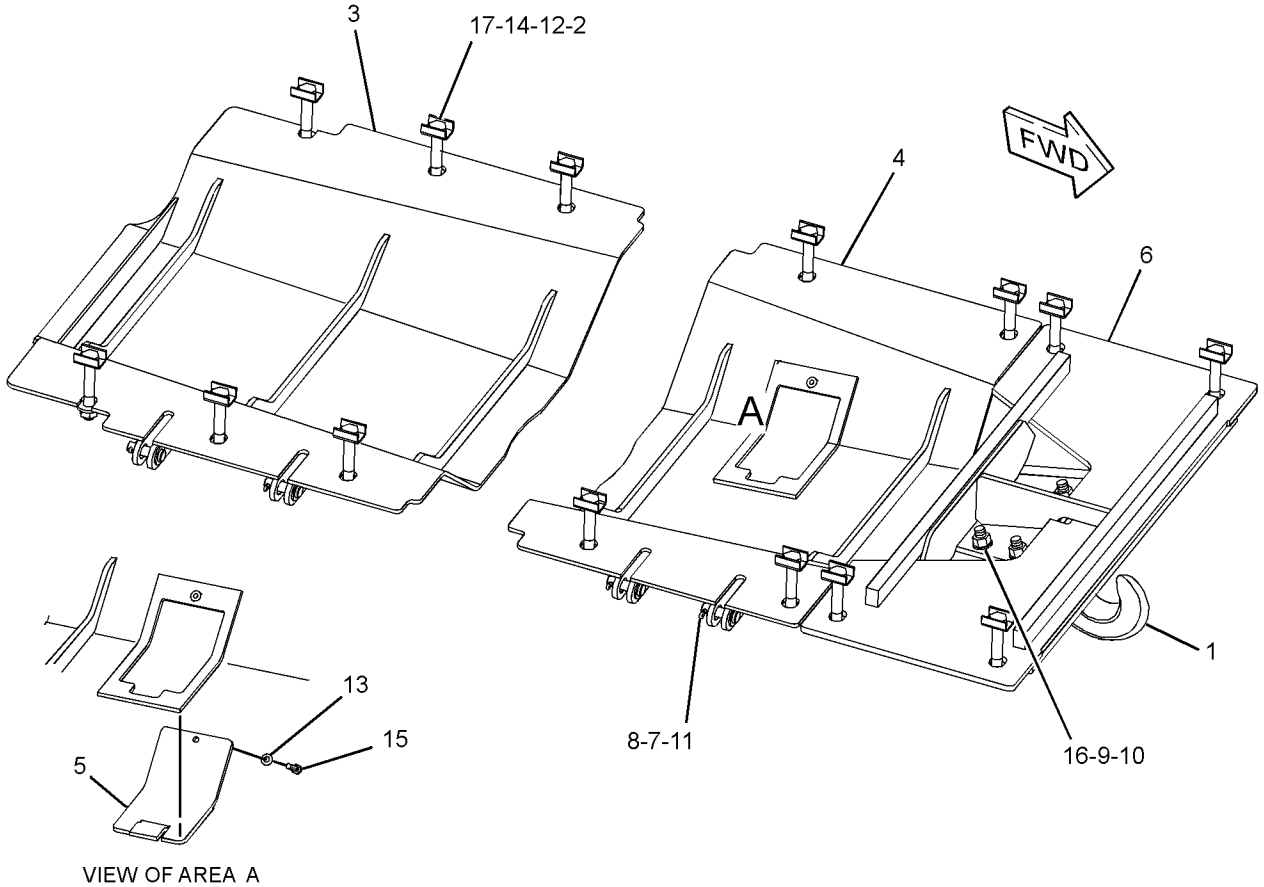

GRAPHIC #1 **<END>** g01226808

257-2698 GUARD GP-BOTTOM

S/N: JDL1-UP; GMT1-UP
EXTREME SERVICE, SEALED, WITH TOWING HOOK
AN ATTACHMENT

SMCS-7153 **i02456111**

NOTE	REF NO	GRAPHIC REF	PART NUMBER	QTY	PART NAME 1 2 3 4 5 6 (PRODUCT LEVEL)	SEE PAGE
	1	1	**7S-6058**	1	HOOK-FRONT PULL	
	2	1	**217-3655**	14	RETAINER	
	3	1	**240-4717**	1	COVER AS	
	4	1	**258-6948**	1	GUARD AS	
	5	1	**258-6949**	1	GUARD AS	
	6	1	**262-6796**	1	GUARD AS	
	7	1	**3B-4629**	4	PIN-COTTER	
	8	1	**4J-2036**	4	PIN	
	9	1	**6V-8182**	6	NUT (3/4-10-THD)	
	10	1	**7X-0368**	6	BOLT (3/4-10X3-IN)	
	11	1	**7X-0594**	8	WASHER-HARD (20X38X3-MM THK)	
M	12	1	**8C-8478**	14	BOLT (M20X2.5X140-MM)	
	13	1	**8T-4121**	1	WASHER-HARD (11X21X2.5-MM THK)	
M	14	1	**8T-4131**	14	NUT (M20X2.5-THD)	
M	15	1	**8T-4196**	1	BOLT (M10X1.5X35-MM)	
	16	1	**8T-4994**	12	WASHER-HARD (20X36.5X3.5-MM THK)	
	17	1	**8T-5439**	14	WASHER (21.5X45X6-MM THK)	
E	18	1	**9X-8699**		SEAL (100-CM)	
D	19	1	**5P-5755**		SEAL (1.1-M)	
D	20	1	**5P-7514**		SEAL (1.1-M EACH)	
D	21	1	**5P-7483**		SEAL (0.15-M EACH)	
D	21A	1	**5P-7483**		SEAL (1.2-M)	
D	21B	1	**5P-7483**		SEAL (0.2-M)	

D-ORDER BY THE METER
E-ORDER BY THE CENTIMETER
M-METRIC PART

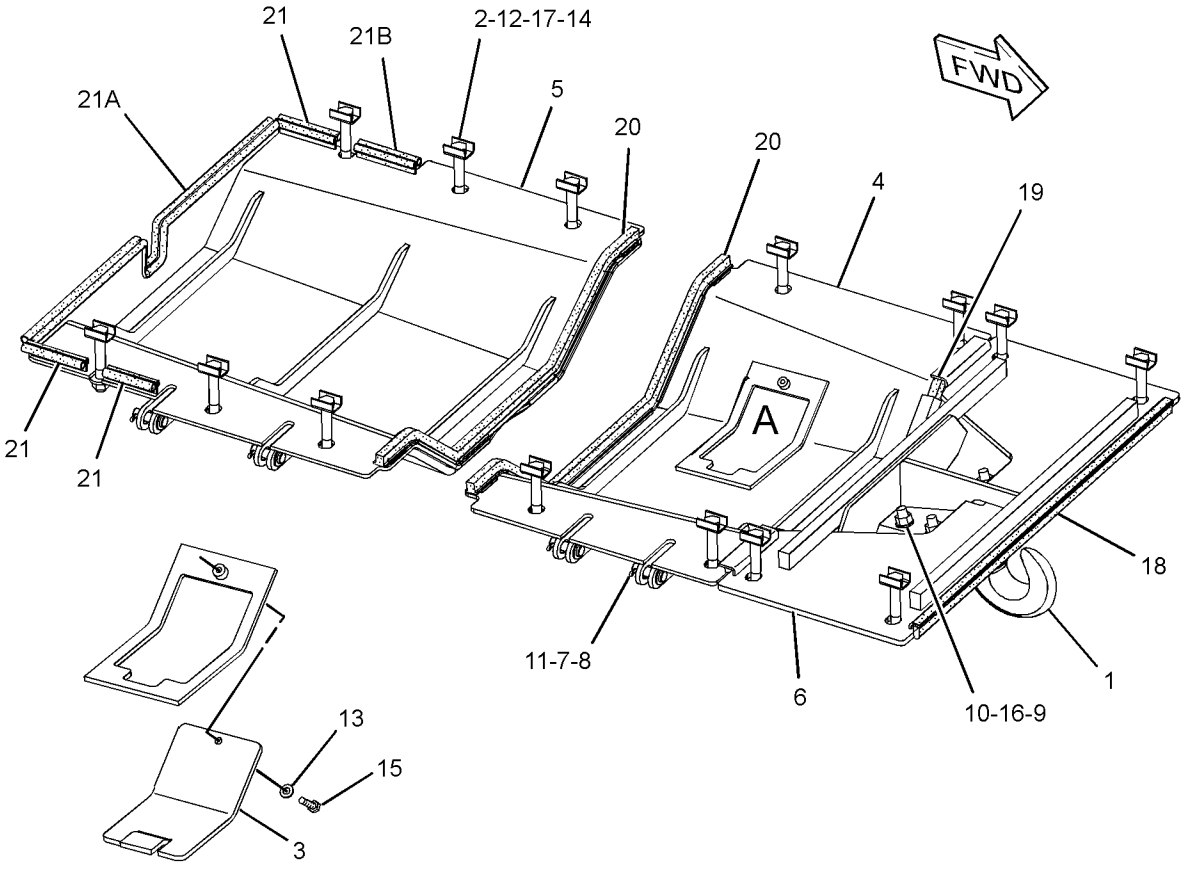

VIEW OF AREA A

GRAPHIC #1 **<END>** g01215849

223-5373 GUARD GP-FUEL TANK

S/N: JDL1-UP; GMT1-UP
CANNOT BE USED WITH RIPPER OR HYDRAULIC WINCH ATTACHMENT
AN ATTACHMENT

SMCS-1273, 7150 **i02453967**

NOTE	REF NO	GRAPHIC REF	PART NUMBER	QTY	PART NAME 1 2 3 4 5 6 (PRODUCT LEVEL)	SEE PAGE
	1	1	**255-1137**	1	GUARD AS-REAR (RH)	
	2	1	**255-1138**	1	GUARD AS (LH)	
	3	1	**255-1139**	1	GUARD AS (RH)	
	4	1	**256-7780**	1	GUARD AS-REAR (LH)	
	5	1	**256-7782**	1	PLATE	
	6	1	**264-7384**	1	PLATE AS	
	7	1	**5P-1076**	26	WASHER-HARD (13.5X30X4-MM THK)	
	8	1	**7X-7729**	6	WASHER (11X25X3-MM THK)	
M	9	1	**8T-4139**	4	BOLT (M12X1.75X30-MM)	
M	10	1	**8T-4195**	6	BOLT (M10X1.5X30-MM)	
M	11	1	**8T-4956**	16	BOLT (M12X1.75X35-MM)	
M	12	1	**8T-6868**	6	BOLT (M12X1.75X80-MM)	

M-METRIC PART

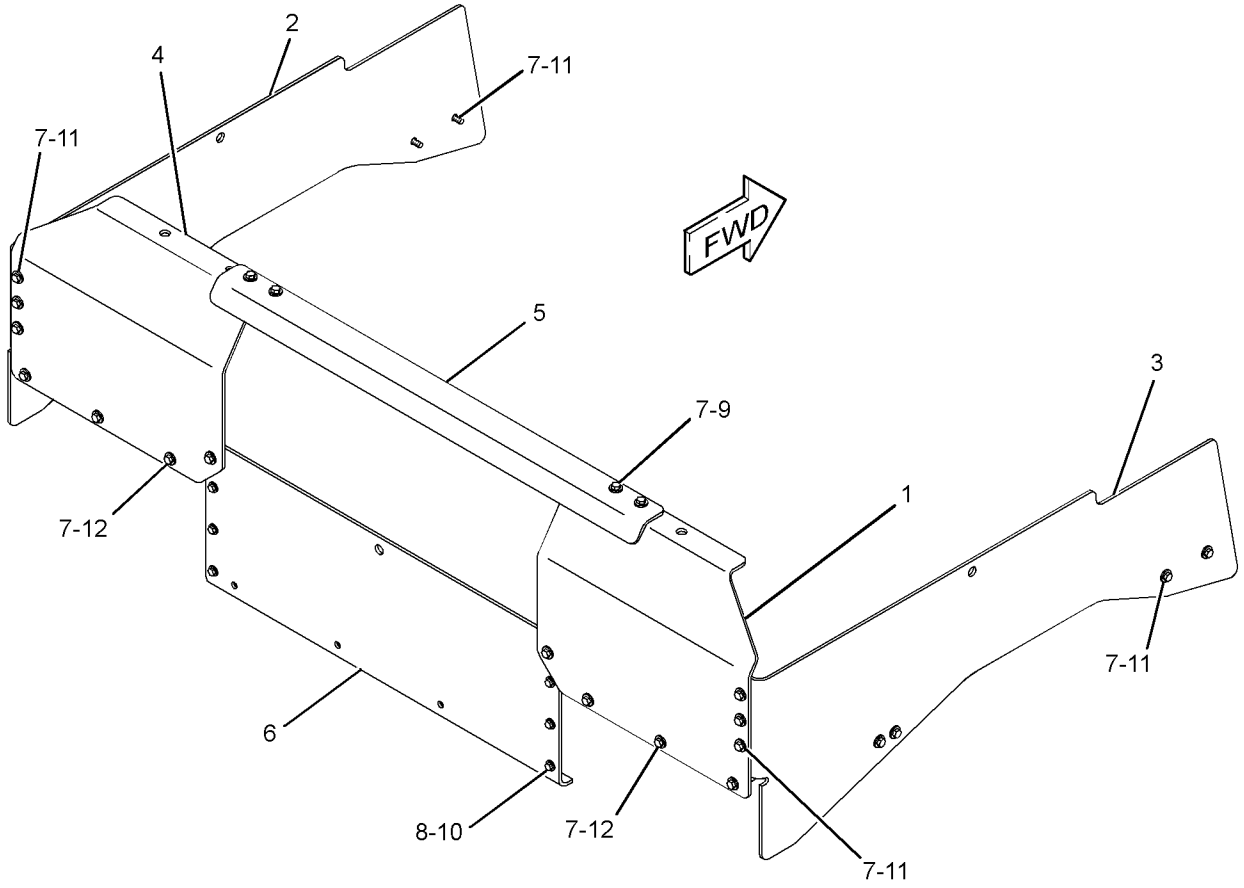

GRAPHIC #1 **<END>** g01211019

FRAME AND BODY

223-5374 GUARD GP-FUEL TANK

S/N: JDL1-UP; GMT1-UP
FOR USE WITH RIPPER
AN ATTACHMENT

SMCS-1273, 7150 **i02453972**

NOTE	REF NO	GRAPHIC REF	PART NUMBER	QTY	PART NAME 1 2 3 4 5 6 (PRODUCT LEVEL)	SEE PAGE
	1	1	**255-1137**	1	GUARD AS-REAR (RH)	
	2	1	**255-1138**	1	GUARD AS (LH)	
	3	1	**255-1139**	1	GUARD AS (RH)	
	4	1	**256-7780**	1	GUARD AS-REAR (LH)	
	5	1	**256-7781**	1	PLATE AS	
	6	1	**256-7782**	1	PLATE	
	7	1	**5P-1076**	26	WASHER-HARD (13.5X30X4-MM THK)	
	8	1	**7X-7729**	6	WASHER (11X25X3-MM THK)	
M	9	1	**8T-4139**	4	BOLT (M12X1.75X30-MM)	
M	10	1	**8T-4195**	6	BOLT (M10X1.5X30-MM)	
M	11	1	**8T-4956**	16	BOLT (M12X1.75X35-MM)	
M	12	1	**8T-6868**	6	BOLT (M12X1.75X80-MM)	

M-METRIC PART

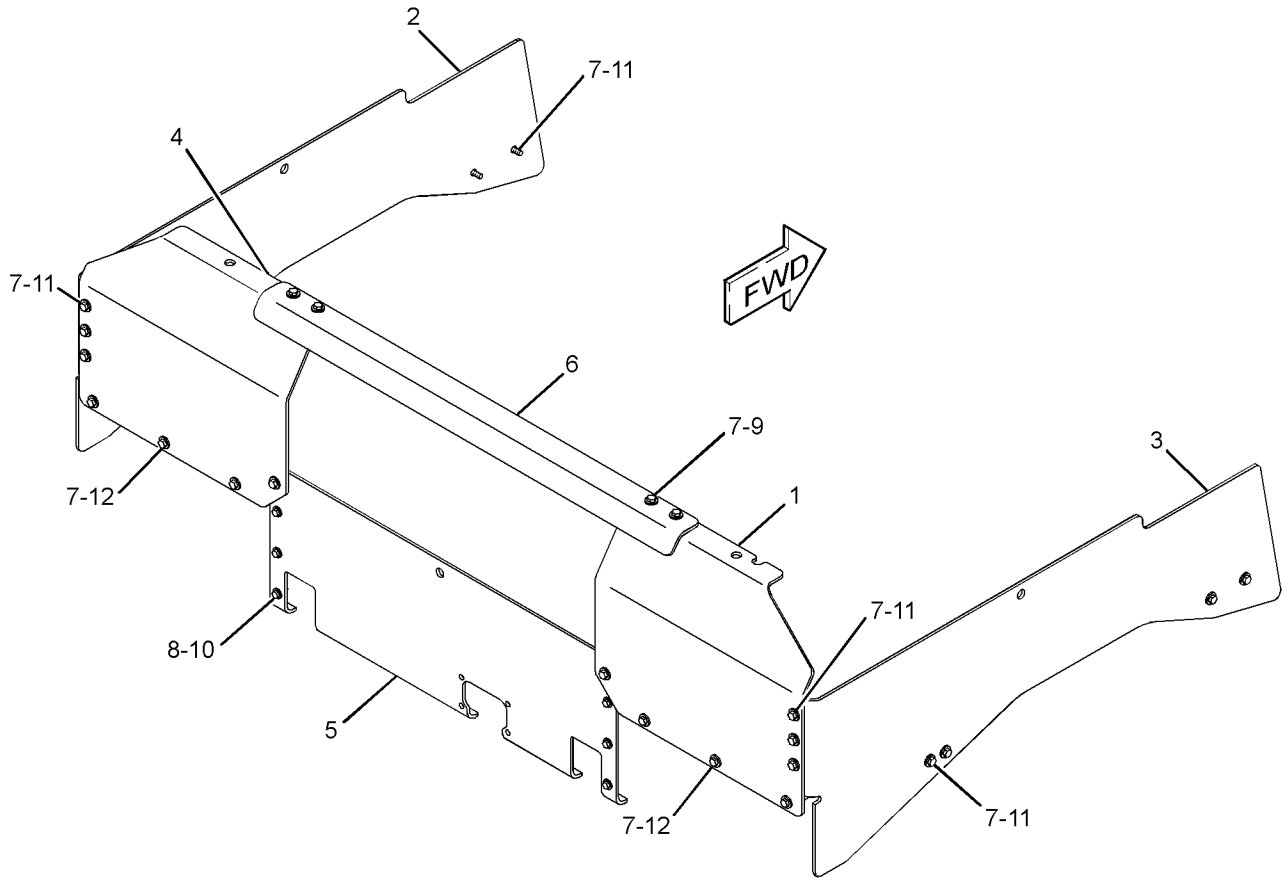

GRAPHIC #1 **<END>** g01208766

250-3411 GUARD GP-FUEL TANK

S/N: JDL1-UP; GMT1-UP
FOR USE WITH HYDRAULIC WINCH ATTACHMENT
AN ATTACHMENT

SMCS-1273, 7150 **i02455485**

NOTE	REF NO	GRAPHIC REF	PART NUMBER	QTY	PART NAME 1 2 3 4 5 6 (PRODUCT LEVEL)	SEE PAGE
	1	1	**255-1137**	1	GUARD AS-REAR (RH)	
	2	1	**255-1138**	1	GUARD AS (LH)	
	3	1	**255-1139**	1	GUARD AS (RH)	
	4	1	**256-7780**	1	GUARD AS-REAR (LH)	
	5	1	**256-7782**	1	PLATE	
	6	1	**264-7386**	1	PLATE AS	
	7	1	**5P-1076**	26	WASHER-HARD (13.5X30X4-MM THK)	
	8	1	**7X-7729**	6	WASHER (11X25X3-MM THK)	
M	9	1	**8T-4139**	4	BOLT (M12X1.75X30-MM)	
M	10	1	**8T-4195**	6	BOLT (M10X1.5X30-MM)	
M	11	1	**8T-4956**	16	BOLT (M12X1.75X35-MM)	
M	12	1	**8T-6868**	6	BOLT (M12X1.75X80-MM)	

M-METRIC PART

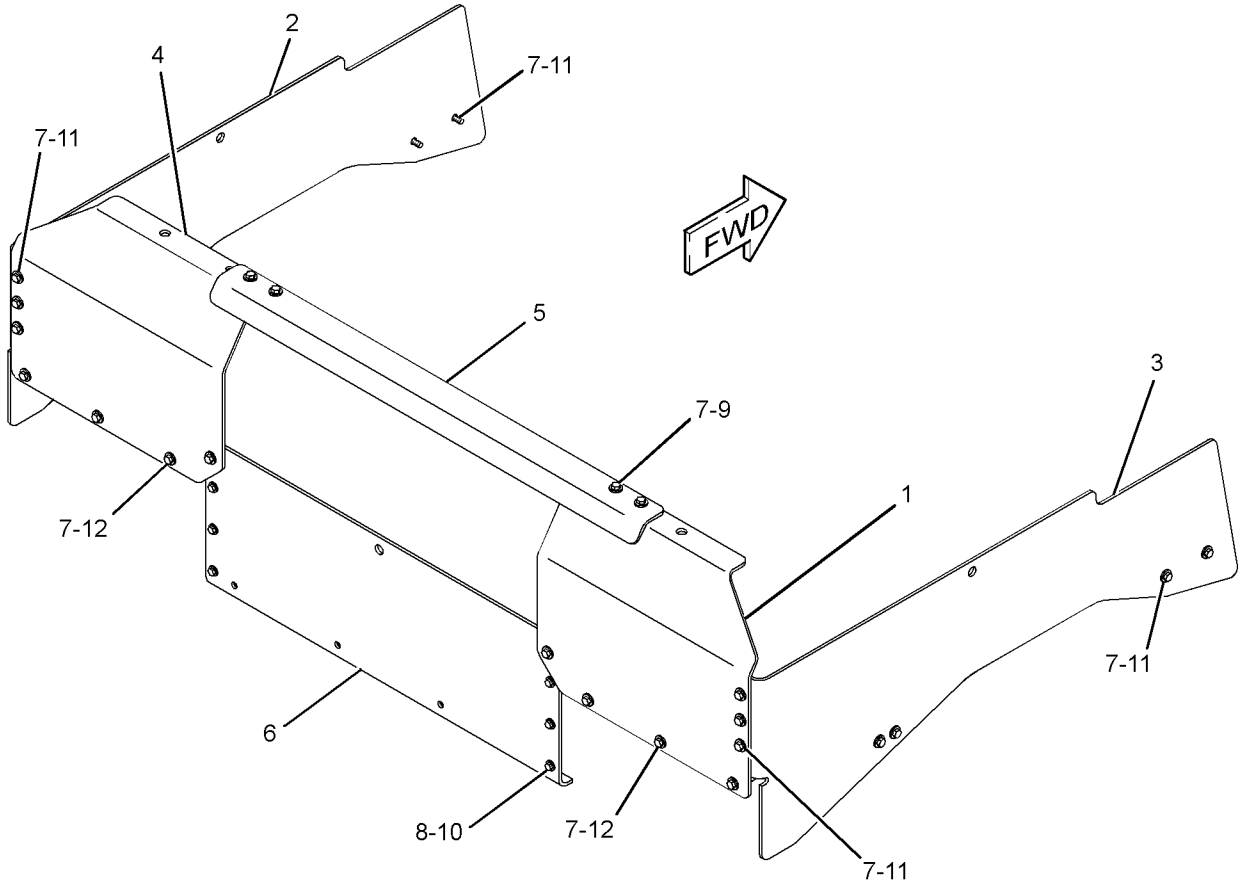

GRAPHIC #1 **<END>** g01211019

223-1540 GUARD GP-RADIATOR

S/N: JDL1-UP; GMT1-UP

PART OF 218-4978, 222-1592 CHASSIS AR

SMCS-7155 **i02431380**

NOTE	REF NO	GRAPHIC REF	PART NUMBER	QTY	PART NAME 1 2 3 4 5 6 (PRODUCT LEVEL)	SEE PAGE
	1	1	**3W-3742**	2	PLUG	
	2	1	**3W-3896**	2	HANDHOLD (GRAB)	
	3	1	**5G-9973**	2	COVER	
	4	1	**5G-9974**	2	GASKET	
	5	1	**246-2641**	1	PADLOCK GP (RADIATOR GUARD)	
		1	**5P-8500**	2	KEY	
	6	1	**9W-2822**	1	ROD	
	7	1	**109-4757**	1	GRILL AS	
	8	1	**155-8577**	2	COVER AS	
	9	1	**160-2351**	2	WASHER-HARD (22X76X6-MM THK)	
	10	1	**170-8592**	2	PIN	
	11	1	**223-1541**	1	GUARD AS-RADIATOR	
		1	**3G-6372**	2	BEARING-SLEEVE	
		1	**8E-9522**	2	BEARING-SLEEVE	
		1	**258-2303**	2	BEARING-SLEEVE	
		1	**258-2307**	2	BEARING-SLEEVE	
	12	1	**227-3149**	2	PIN	
	13	1	**227-3151**	1	PLATE AS	
	14	1	**2G-9245**	2	PLATE	
	15	1	**3B-4615**	2	PIN-COTTER	
	16	1	**3V-9244**	2	WASHER (16.5X50X5-MM THK)	
	17	1	**5M-6214**	2	PLUG-PIPE	
	18	1	**5P-1076**	16	WASHER-HARD (13.5X30X4-MM THK)	
	19	1	**6V-5839**	4	WASHER (11X21X2.5-MM THK)	
M	20	1	**7X-2553**	2	BOLT (M16X2X40-MM)	
	21	1	**8M-3175**	2	WASHER-HARD (10.2X16X3-MM THK)	
	22	1	**8T-4121**	4	WASHER-HARD (11X21X2.5-MM THK)	
M	23	1	**8T-4122**	4	WASHER-HARD (17X32X3.5-MM THK)	
M	24	1	**8T-4136**	8	BOLT (M10X1.5X25-MM)	
M	25	1	**8T-4139**	12	BOLT (M12X1.75X30-MM)	
M	26	1	**8T-4170**	2	BOLT (M20X2.5X150-MM)	
M	27	1	**8T-4910**	4	BOLT (M12X1.75X60-MM)	

M-METRIC PART

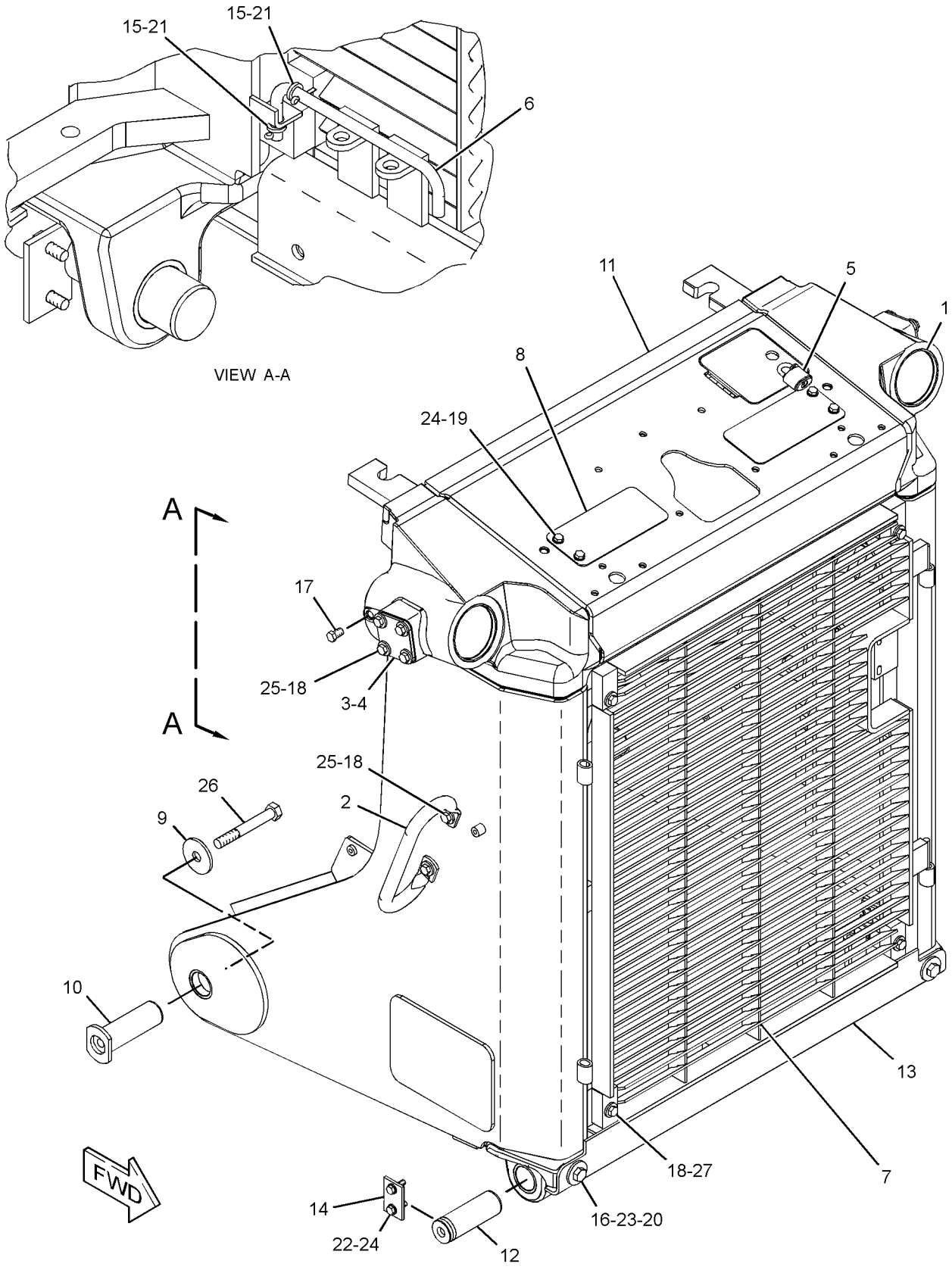

GRAPHIC #1 **<END>** g01206813

FRAME AND BODY

258-7597 GUARD GP-RADIATOR—BOTTOM

S/N: JDL1-UP; GMT1-UP

AN ATTACHMENT

SMCS-7155 **i02456106**

NOTE	REF NO	GRAPHIC REF	PART NUMBER	QTY	PART NAME 1 2 3 4 5 6 (PRODUCT LEVEL)	SEE PAGE
	1	1	**258-7607**	1	GUARD AS	
	2	1	**3V-9244**	2	WASHER (16.5X50X5-MM THK)	
M	3	1	**7X-2553**	2	BOLT (M16X2X40-MM)	
M	4	1	**8T-4122**	8	WASHER-HARD (17X32X3.5-MM THK)	

M-METRIC PART

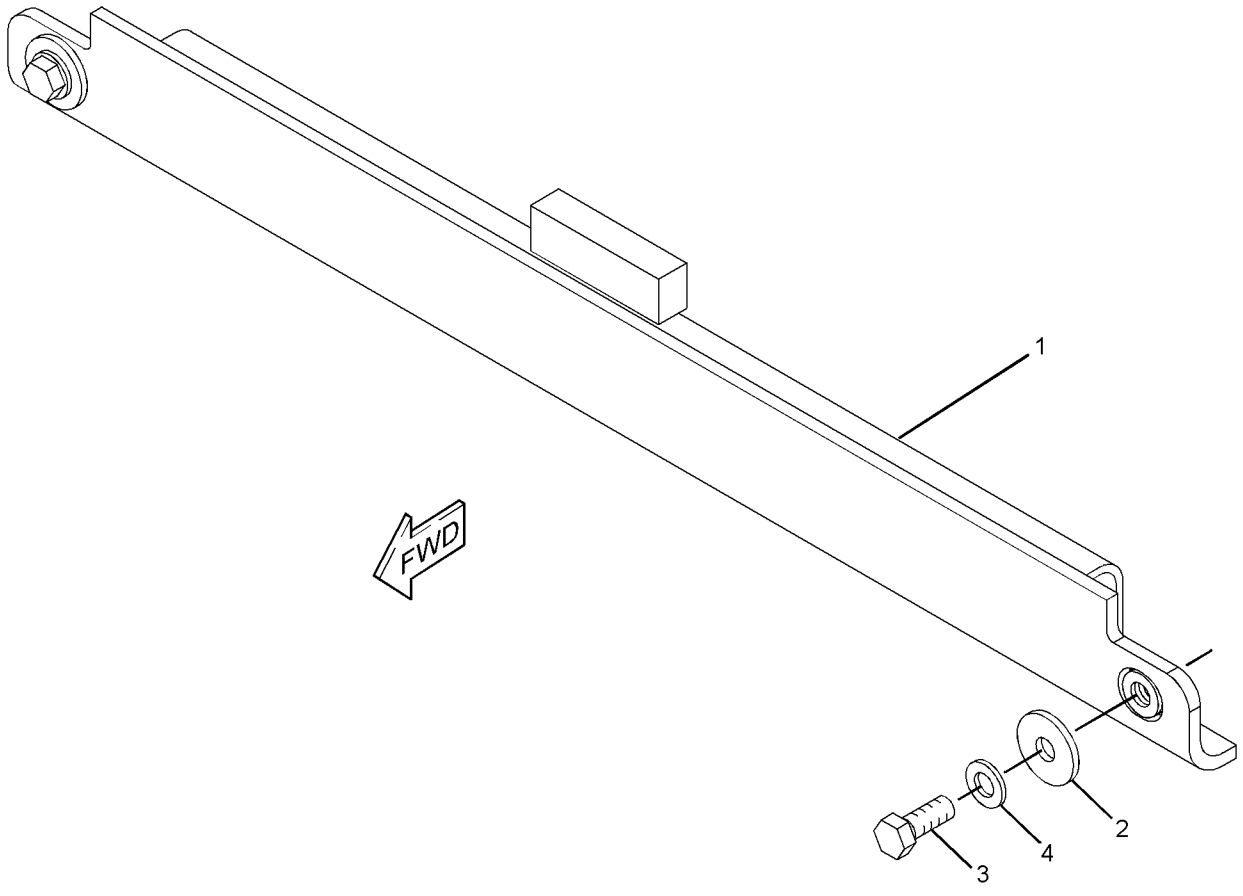

GRAPHIC #1 **<END>** g01205724

250-3413 GUARD GP-REAR

S/N: JDL1-UP; GMT1-UP
HEAVY-DUTY
AN ATTACHMENT

SMCS-7187 **i02455497**

NOTE	REF NO	GRAPHIC REF	PART NUMBER	QTY	PART NAME 1 2 3 4 5 6 (PRODUCT LEVEL)	SEE PAGE
	1	1	**1K-8850**	1	SPRING	
	2	1	**2P-8514**	4	SPACER (1.062X2X1-IN THK)	
	3	1	**5G-7183**	1	GUARD AS	
		1	**4K-7627**	1	BAR	
		1	**4K-8501**	2	CLIP	
		1	**7G-4262**	1	HINGE	
	4	1	**5D-3118**	4	STUD-TAPERLOCK (1-8-THD)	
	5	1	**6V-8190**	4	NUT (1-8-THD)	
	6	1	**8T-5361**	4	WASHER-HARD (28X49X5-MM THK)	
M	7	1	**9X-2125**	4	BOLT-LOCKING (M10X1.5X25-MM)	

M-METRIC PART

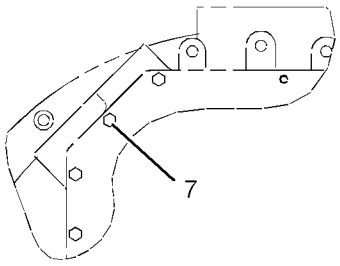

SECTION B-B

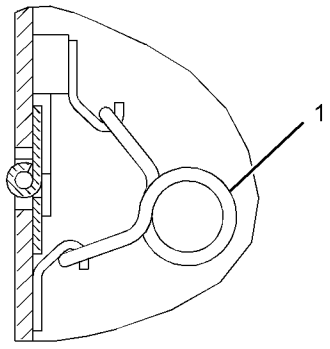

SECTION A-A

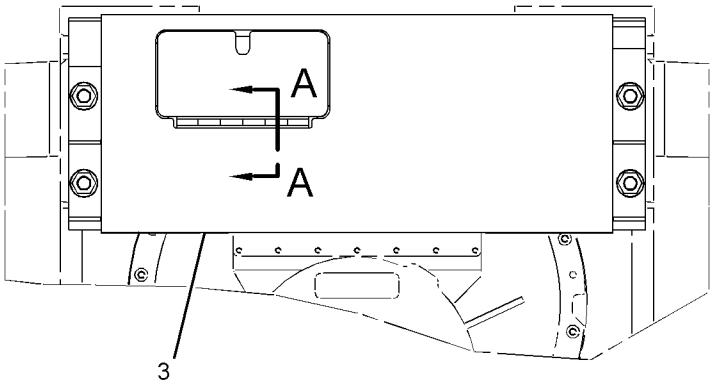

REAR VIEW

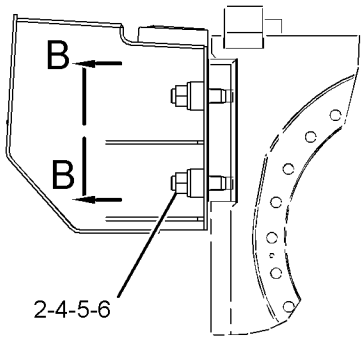

RIGHT SIDE VIEW

GRAPHIC #1 **<END>** g01225932

3W-1356 GUARD GP-TRANSMISSION

S/N: D6D1-UP; JDL1-UP; GMT1-UP
PART OF 239-5912 CONTROL AR-HYDRAULIC IMPLEMENT, 267-4491 INSTALLATION AR-WINCH, 224-4449 RIPPER AR AN ATTACHMENT

SMCS-7153 **i02069491**

NOTE	REF NO	GRAPHIC REF	PART NUMBER	QTY	PART NAME 1 2 3 4 5 6 (PRODUCT LEVEL)	SEE PAGE
	1	1	**3W-1357**	1	GUARD AS	
	2	1	**7X-0402**	4	BOLT (1-8X2-IN)	
	3	1	**8T-5361**	4	WASHER-HARD (28X49X5-MM THK)	

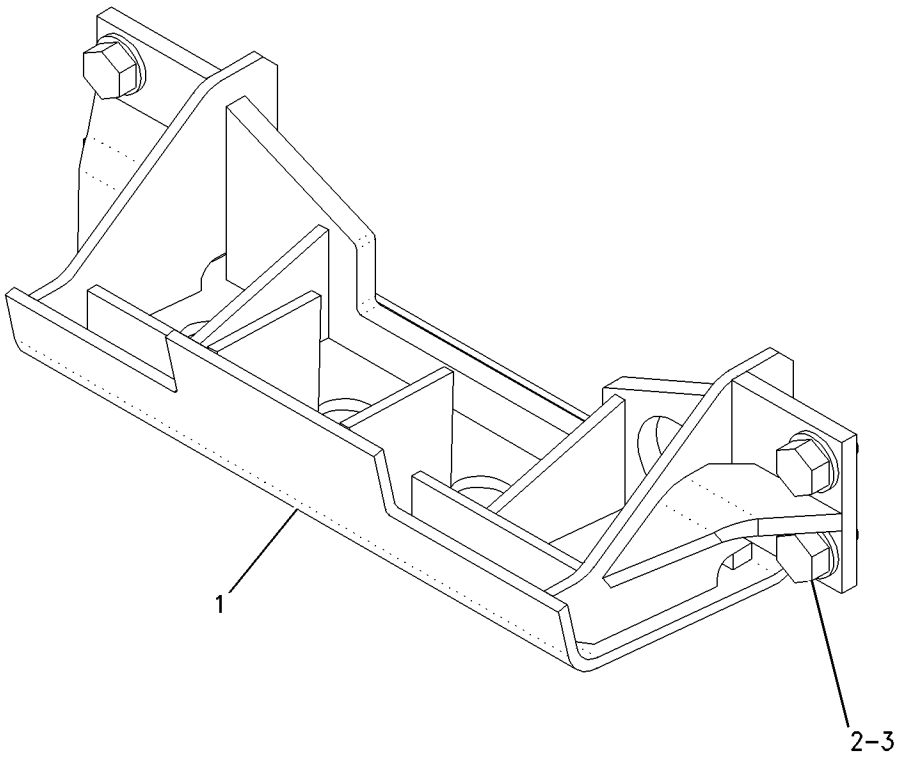

GRAPHIC #1 **<END>** g00862620

8Y-6400 LATCH GP

S/N: JDL1-UP; GMT1-UP
PART OF 256-6021 BAR GP-STRIKER
AN ATTACHMENT

SMCS-7251 **i02160253**

NOTE	REF NO	GRAPHIC REF	PART NUMBER	QTY	PART NAME 1 2 3 4 5 6 (PRODUCT LEVEL)	SEE PAGE
	1	1	**7X-0766**	1	SPRING-LATCH	
	2	1	**8Y-5747**	1	BRACKET-MOUNTING	
	3	1	**8Y-3998**	1	HANDLE-LATCH	
	4	1	**8Y-3966**	1	WASHER (14.7X35X1.57-MM THK)	
	5	1	**8Y-8306**	1	SHAFT-LATCH	
	6	1	**6H-3956**	1	PIN	

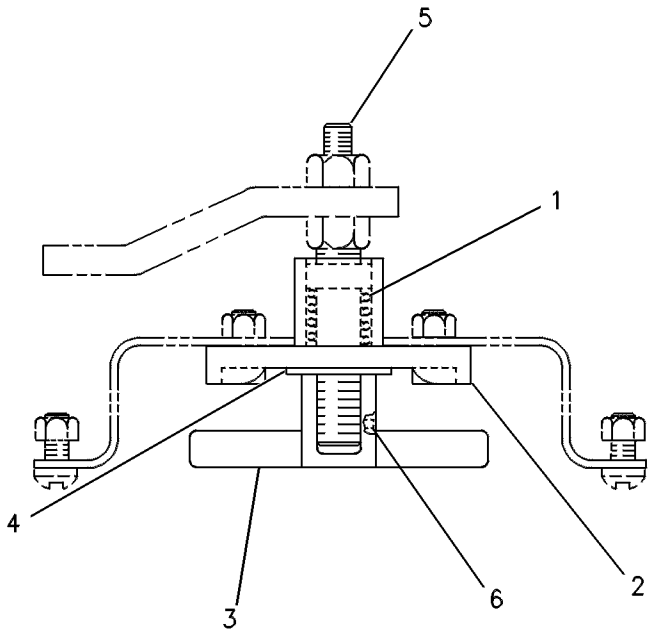

GRAPHIC #1 **<END>** g00236353

FRAME AND BODY

237-9318 SWEEP GP

S/N: JDL1-UP; GMT1-UP

AN ATTACHMENT

SMCS-7162 **i02455558**

NOTE	REF NO	GRAPHIC REF	PART NUMBER	QTY	PART NAME 1 2 3 4 5 6 (PRODUCT LEVEL)	SEE PAGE
	1	1	**1P-2772**	8	SPACER (1.031X1.219X0.75-IN THK)	
	2	1	**6T-1698**	8	MOUNT	
	3	1	**235-0541**	2	BLOCK AS	
	4	1	**235-0544**	8	PLATE	
	5	1	**235-0545**	2	SPACER	
	6	1	**256-7285**	1	BRACKET AS (LH)	
	7	1	**256-7286**	1	BRACKET AS (RH)	
	8	1	**256-7288**	2	PLATE	
	9	1	**8T-5439**	8	WASHER (21.5X45X6-MM THK)	
	10	1	**278-4696**	2	SPACER	
	11	1	**5P-1076**	12	WASHER-HARD (13.5X30X4-MM THK)	
M	12	1	**6V-7676**	4	NUT (M24X3-THD)	
M	13	1	**7X-2549**	8	BOLT (M12X1.75X100-MM)	
M	14	1	**7X-2563**	4	BOLT (M20X2.5X60-MM)	
M	15	1	**7X-2566**	4	BOLT (M20X2.5X110-MM)	
	16	1	**7X-7729**	4	WASHER (11X25X3-MM THK)	
	17	1	**8P-5244**	8	WASHER (33.3X69.8X6.35-MM THK)	
M	18	1	**8T-0363**	4	BOLT (M24X3X120-MM)	
M	19	1	**8T-4122**	4	WASHER-HARD (17X32X3.5-MM THK)	
M	20	1	**8T-4193**	4	BOLT (M16X2X50-MM)	
M	21	1	**8T-4194**	4	BOLT (M12X1.75X50-MM)	
M	22	1	**8T-4196**	4	BOLT (M10X1.5X35-MM)	
	23	1	*271-3863*	1	SWEEP AS	
	24	1	**1P-2772**	4	SPACER (1.031X1.219X0.75-IN THK)	
	25	1	**3W-6528**	2	TUBE AS	
	26	1	**9S-5187**	6	MOUNTING	
	27	1	**259-1289**	2	PLATE AS	
	28	1	**259-1291**	1	GUARD AS	
	29	1	**259-1292**	1	GUARD AS	
	30	1	**6K-3632**	2	LOCKNUT (1-8-THD)	
	31	1	**8C-8844**	2	BOLT (1-8X5-IN)	
	32	1	**8P-5244**	4	WASHER (33.3X69.8X6.35-MM THK)	

M-METRIC PART

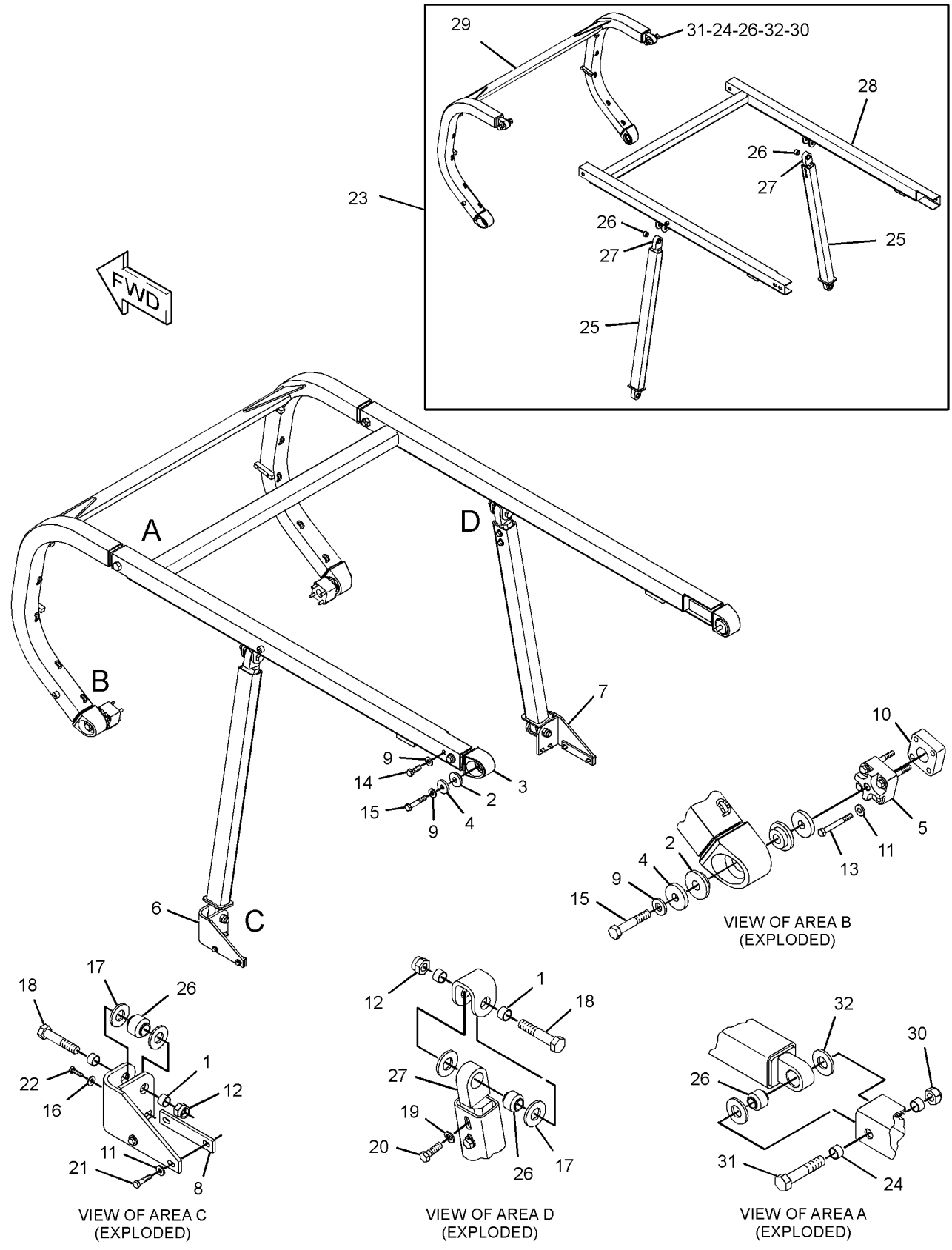

GRAPHIC #1

<END>

g01213304

214-6659 BAR AR-STRIKER–FRONT

S/N: GMT1-UP
AN ATTACHMENT

SMCS-7180 **i02453917**

NOTE	REF NO	GRAPHIC REF	PART NUMBER	QTY	PART NAME 1 2 3 4 5 6 (PRODUCT LEVEL)	SEE PAGE
	1	1	**194-6814**	1	PLATE AS	
		1	**194-6813**	1	BLOCK	
	2	1	**194-6816**	1	PLATE AS	
		1	**194-6813**	1	BLOCK	
	3	1	**194-6818**	1	PLATE AS	
		1	**194-6813**	1	BLOCK	
	4	1	**194-6820**	1	PLATE AS	
		1	**194-6813**	1	BLOCK	
	5	1	**194-6823**	1	PLATE AS	
	6	1	**213-4852**	1	FRAME AS	
	7	1	**214-6660**	1	PLATE AS	
	8	1	**7X-0402**	28	BOLT (1-8X2-IN)	
	9	1	**7X-0406**	12	BOLT (1-8X3-IN)	
	10	1	**8T-5361**	40	WASHER-HARD (28X49X5-MM THK)	

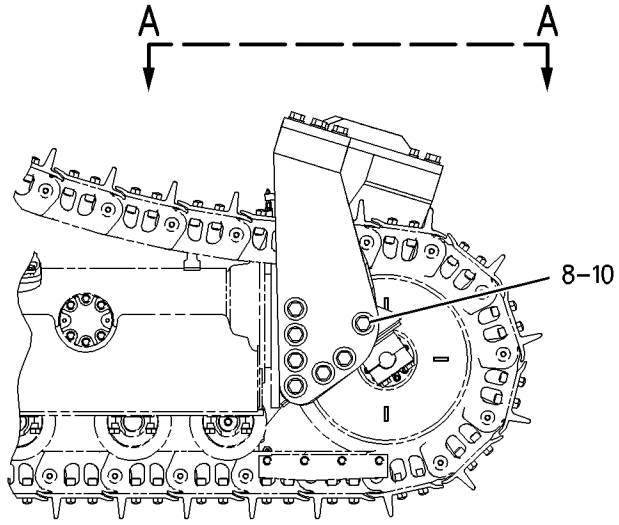

RIGHT SIDE VIEW

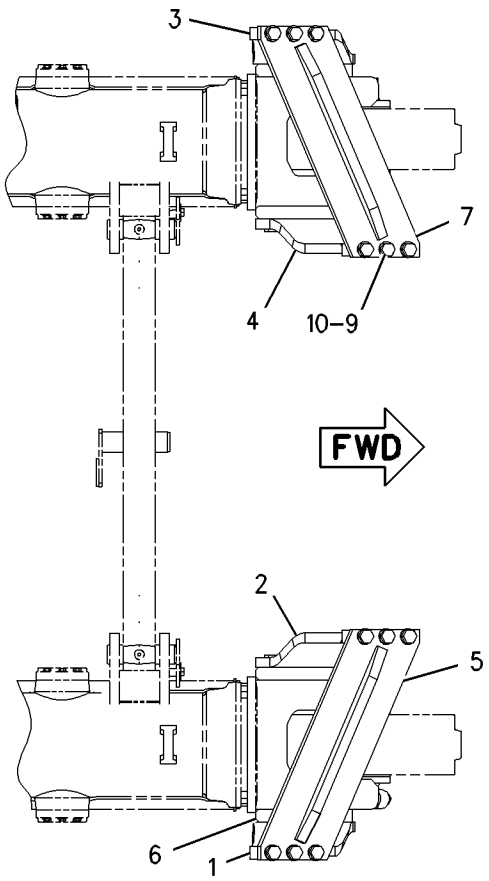

VIEW A-A

GRAPHIC #1 **<END>** g00919165

UNDERCARRIAGE

229-7373 BAR GP-EQUALIZER

S/N: JDL1-UP; GMT1-UP

PART OF 218-4982, 222-8667, 278-6367, 278-6368 UNDERCARRIAGE AR

ALSO AN ATTACHMENT

SMCS-7206 **i02430381**

NOTE	REF NO	GRAPHIC REF	PART NUMBER	QTY	PART NAME 1 2 3 4 5 6 (PRODUCT LEVEL)	SEE PAGE
	1	1	**3B-8489**	1	FITTING-GREASE	
	2	1	**3W-9678**	1	SPACER (27.5X55X12-MM THK)	
I	3	1	**5T-4374**	1	HOSE AS	
	4	1	**228-4093**	1	PIN AS	
	5	1	**228-4678**	2	SPACER (71.4X94X7-MM THK)	
Y	6	1	**281-8488**	1	BAR GP-EQUALIZER	370
	7	1	**282-2898**	4	GUARD	
	8	1	**030-7946**	1	ELBOW	
	9	1	**124-0174**	1	CLIP	
	10	1	**3J-7354**	1	SEAL-O-RING	
	11	1	**6V-8237**	8	WASHER (26X44X4-MM THK)	
	12	1	**7V-3715**	1	WASHER (28X85X8-MM THK)	
M	13	1	**7X-0851**	4	NUT (M24X3-THD)	
M	14	1	**7X-2575**	1	BOLT (M24X3X60-MM)	
	15	1	**7X-7729**	1	WASHER (11X25X3-MM THK)	
	16	1	**8L-6557**	1	CONNECTOR	
M	17	1	**8T-0364**	4	BOLT (M24X3X220-MM)	
M	18	1	**8T-4136**	1	BOLT (M10X1.5X25-MM)	

I-REFER TO HYDRAULIC INFORMATION SYSTEM
M-METRIC PART
Y-SEPARATE ILLUSTRATION

229-7373 **BAR GP-EQUALIZER** *(contd.)* **i02430381**

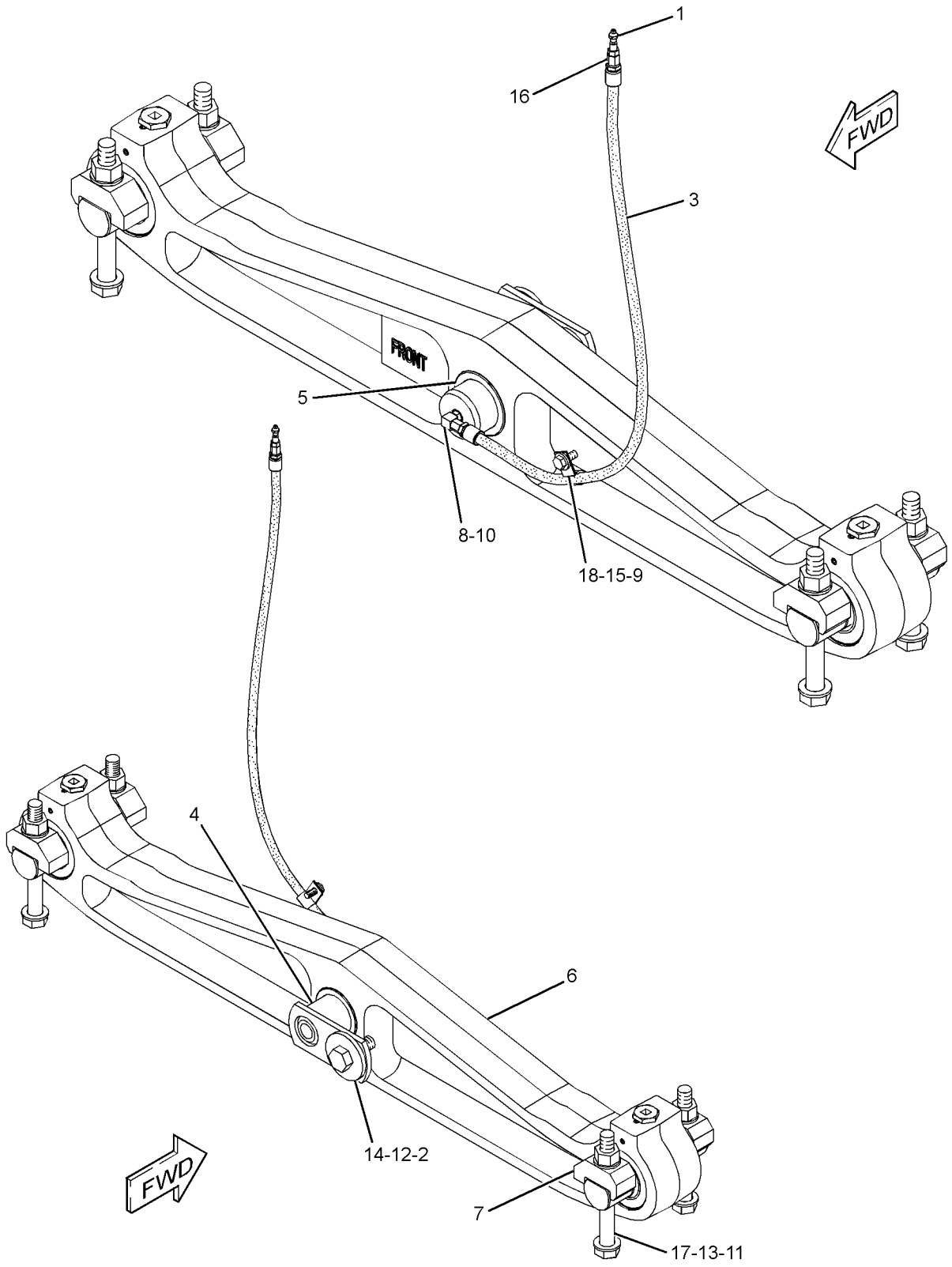

GRAPHIC #1 **<END>** g01210441

281-8488 BAR GP-EQUALIZER

S/N: JDL1-UP; GMT1-UP
PART OF 229-7373 BAR GP-EQUALIZER
ALSO AN ATTACHMENT

SMCS-7206 **i02430384**

NOTE	REF NO	GRAPHIC REF	PART NUMBER	QTY	PART NAME 1 2 3 4 5 6 (PRODUCT LEVEL)	SEE PAGE
	1	1	**3B-8489**	2	FITTING-GREASE	
	2	1	**8G-4189**	2	BEARING-SELF-ALIGNING	
	3	1	**133-5631**	2	PLUG	
	4	1	**139-0566**	4	SEAL AS	
					(EACH INCLUDES)	
		1	**139-0567**	1	RING-SEAL	
	5	1	**229-8352**	2	BEARING-SLEEVE	
	6	1	**229-9323**	2	SEAL-PIN	
Z	7	1		1	BAR-EQUALIZER	
	8	1	**1J-6472**	4	RING-RETAINING	
	9	1	**2F-5326**	8	SETSCREW (3/8-16X0.37-IN)	
	10	1	**5F-1678**	2	SEAL-O-RING	
	11	1	**281-4015**	2	PIN	

Z-NOT SERVICED SEPARATELY

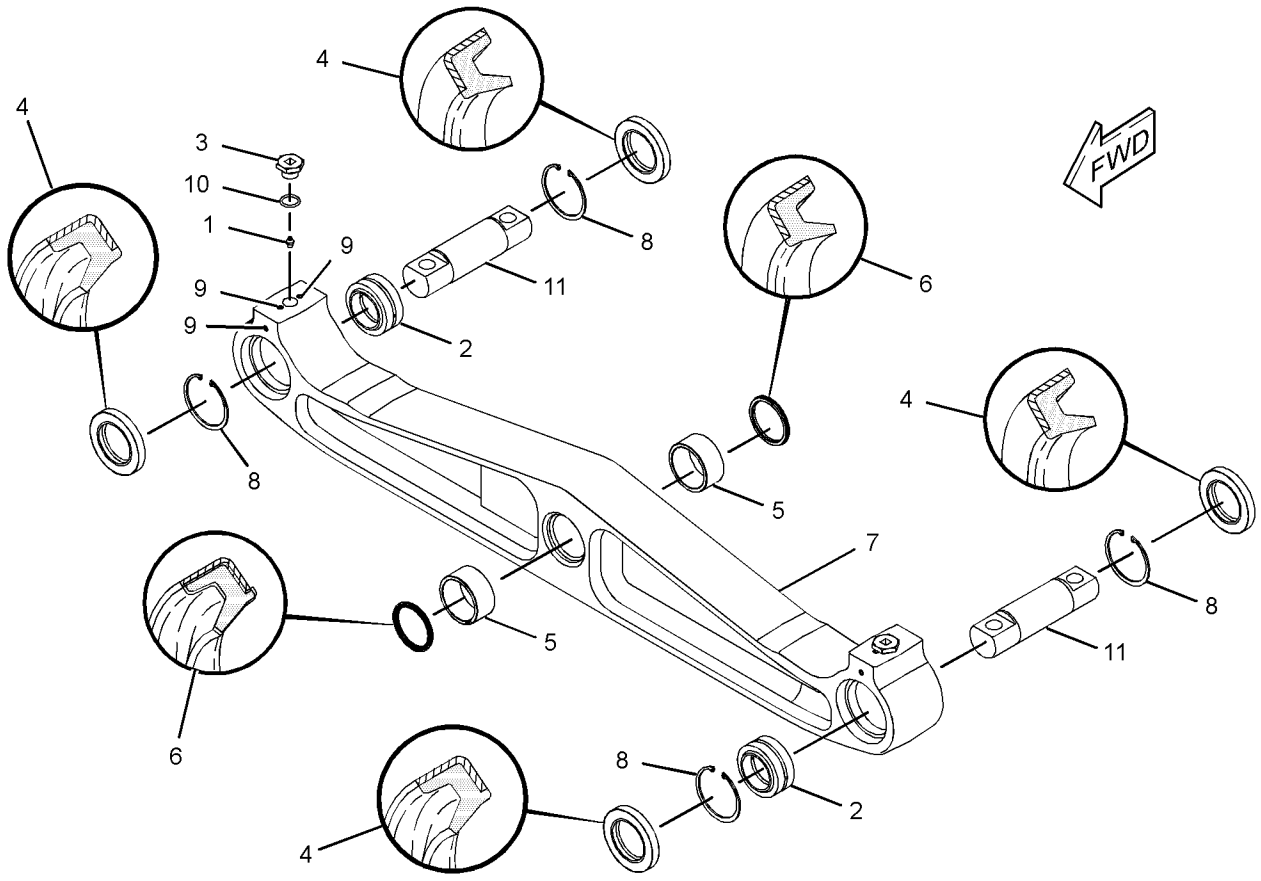

GRAPHIC #1 **<END>** g01210395

1Z-0982 BAR GP-STRIKER–REAR

S/N: JDL1-UP; GMT1-UP
TRACK ROLLER FRAME MOUNTED
AN ATTACHMENT

SMCS-7180 **i02453521**

NOTE	REF NO	GRAPHIC REF	PART NUMBER	QTY	PART NAME 1 2 3 4 5 6 (PRODUCT LEVEL)	SEE PAGE
	1	1	**7X-0406**	16	BOLT (1-8X3-IN)	
	2	1	**8T-5361**	16	WASHER-HARD (28X49X5-MM THK)	
	3	1	**7X-0349**	8	BOLT (5/8-11X3-IN)	
M	4	1	**8T-4122**	8	WASHER-HARD (17X32X3.5-MM THK)	
	5	1	**1Q-4202**	2	PLATE	
	6	1	**108-5483**	2	BAR	
	7	1	**1Q-4204**	4	BLOCK	
	8	1	**1Q-4203**	2	PLATE	
	9	1	**1Q-4205**	4	PLATE	

M-METRIC PART

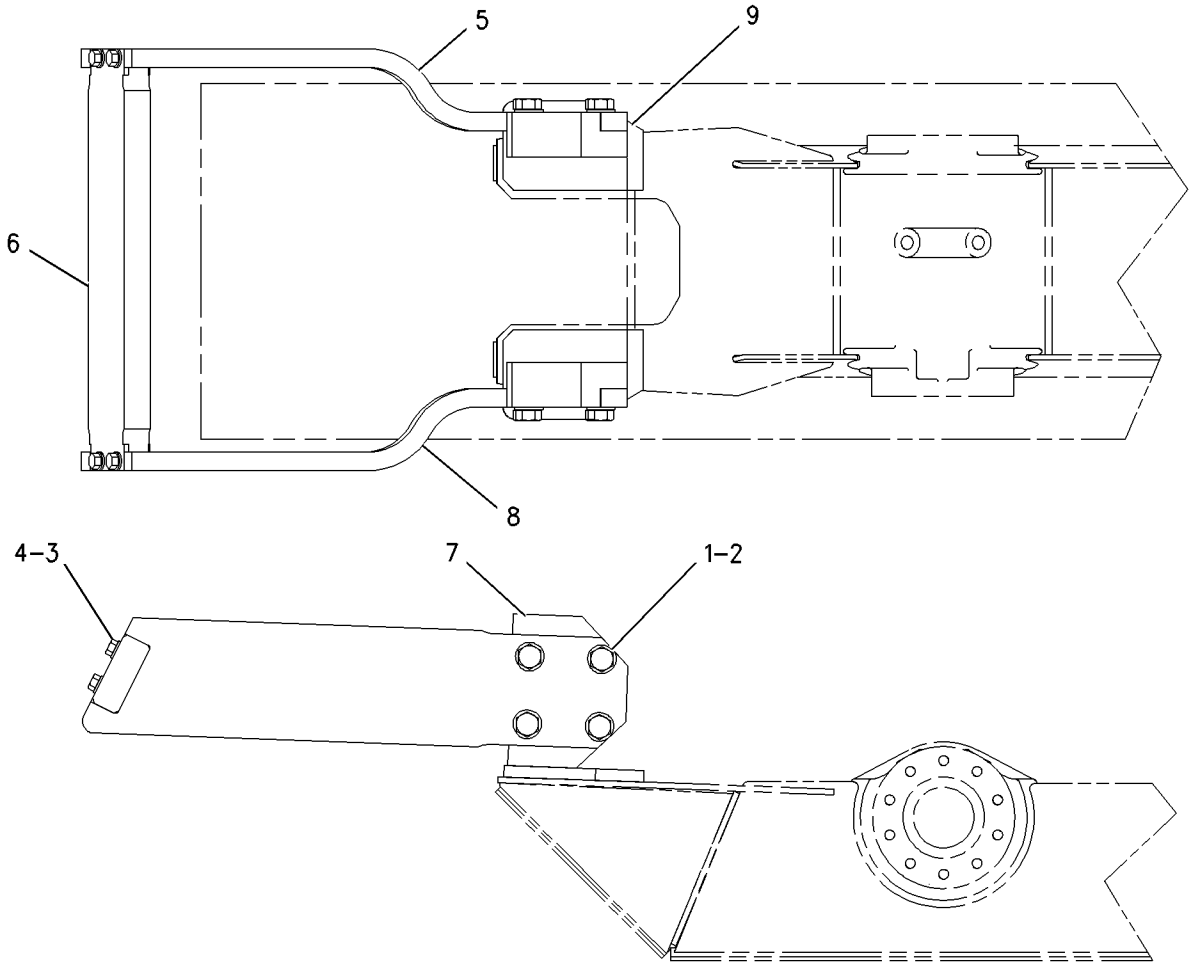

GRAPHIC #1 **<END>** g00669344

108-1091 CAP GP-TRACK IDLER–HEAVY-DUTY

S/N: JDL1-UP; GMT1-UP
PART OF 278-6367, 278-6368 UNDERCARRIAGE AR
AN ATTACHMENT

SMCS-4159 **i01349595**

NOTE	REF NO	GRAPHIC REF	PART NUMBER	QTY	PART NAME 1 2 3 4 5 6 (PRODUCT LEVEL)	SEE PAGE
	1	1	**165-6946**	1	BLOCK-TRACK IDLER	
	2	1	**152-3421**	1	CAP AS-TRACK IDLER	
	3	1	**1T-0068**	1	PIN-SPRING	
M	4	1	**6V-9167**	2	BOLT (M20X2.5X140MM)	
		1	**8T-3282**	2	WASHER-HARD (3.5MM THK)	

M-METRIC PART

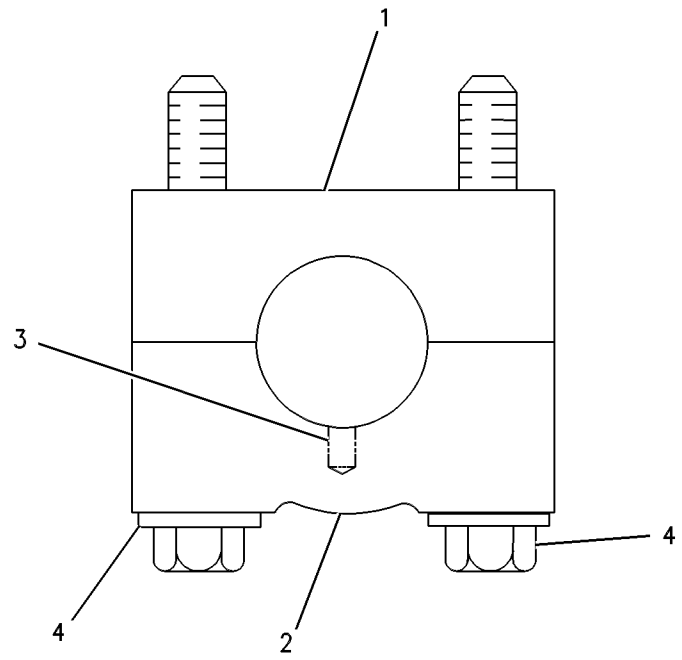

GRAPHIC #1 **<END>** g00254089

UNDERCARRIAGE

267-4746 CAP GP-TRACK IDLER

S/N: JDL1-UP; GMT1-UP

PART OF 218-4982, 222-8667 UNDERCARRIAGE AR

SMCS-4159 **i02439121**

NOTE	REF NO	GRAPHIC REF	PART NUMBER	QTY	PART NAME 1 2 3 4 5 6 (PRODUCT LEVEL)	SEE PAGE
	1	1	**152-3421**	1	CAP AS-TRACK IDLER	
		1	**1T-0068**	1	PIN-SPRING	
	2	1	**165-6946**	1	BLOCK-TRACK IDLER	
	3	1	**198-4769**	2	WASHER (22X40X10-MM THK)	
M	4	1	**8T-0656**	2	BOLT (M20X2.5X150-MM)	

M-METRIC PART

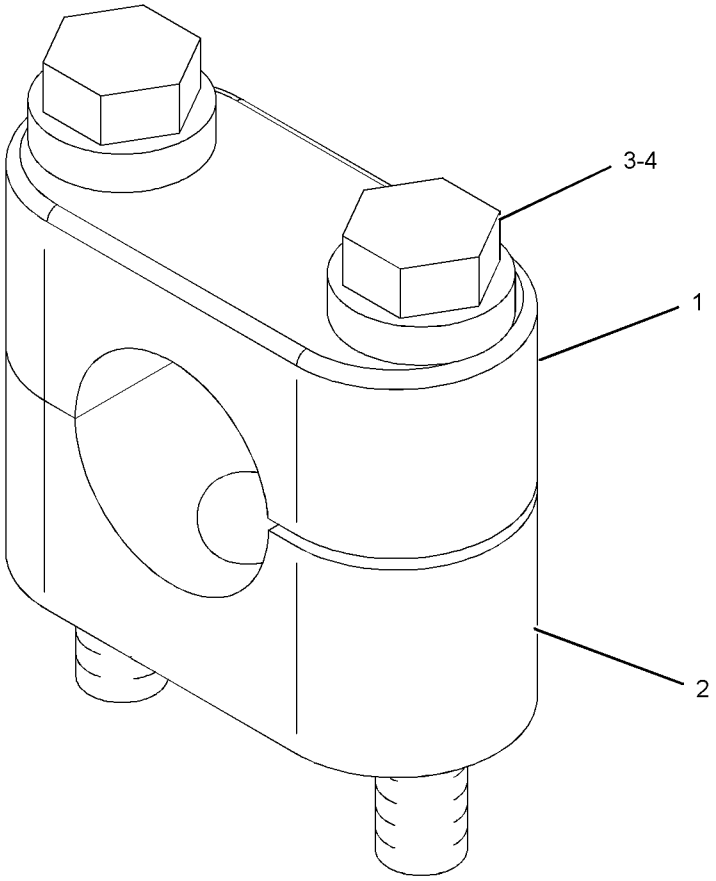

GRAPHIC #1 **<END>** g01145277

215-9599 CAP GP-TRACK ROLLER–SYSTEMONE

S/N: JDL1-UP; GMT1-UP
PART OF 218-4982, 222-8667 UNDERCARRIAGE AR
ALSO FIELD INSTALLATION

SMCS-4180 **i02390903**

NOTE	PART NUMBER	QTY	PART NAME 1 2 3 4 5 6 (PRODUCT LEVEL)	SEE PAGE
M	**8T-0360**	4	BOLT (M20X2.5X90-MM)	
	214-1109	2	CAP	
	8T-3282	4	WASHER-HARD (22X35X3.5-MM THK)	

M-METRIC PART

<END>

223-0652 FRAME GP-TELESCOPING RECOIL–RH, XL/XW

S/N: JDL1-UP

PART OF 218-4982 UNDERCARRIAGE AR

SMCS-4151 **i02438930**

NOTE	REF NO	GRAPHIC REF	PART NUMBER	QTY	PART NAME 1 2 3 4 5 6 (PRODUCT LEVEL)	SEE PAGE
	1	1	**9X-4582**	1	SEAL AS	
Y	2	1	*223-0659*	1	TRACK ADJUSTER & RECOIL GP	414
	3	1	**224-4121**	1	FRAME AS	
	3A	1	**3T-1162**	1	BEARING-SLEEVE	
	3B	1	**4B-4158**	4	SCREW-DRIVE (3/16XO.25-IN)	
	3C	1	**254-1686**	1	PLATE-WARNING (RECOIL SPRING)	
	4	1	**224-4124**	1	FRAME AS (RH)	
	4A	1	**221-3197**	1	BEARING-SLEEVE	
	4B	1	**221-3200**	1	BEARING-SLEEVE	
	5	1	**260-7733**	2	STRIP	
	6	1	**261-3257**	2	STRIP	
	7	1	**268-9709**	2	GUIDE AS	
	7A	1	**241-3720**	1	FILM-WARNING (RECOIL SPRING)	
	8	1	**268-9710**	1	COVER AS	
	8A	1	**253-1346**	1	PLATE-WARNING (HIGH PRESSURE CYLINDER)	
	8B	1	**7B-3028**	4	SCREW-DRIVE (NO 4X3/16-IN)	
	8C	1	**8E-1211**	1	COVER	
	9	1	**1B-5174**	2	PLUG-PIPE	
	10	1	**3T-2077**	1	BEARING	
	11	1	**3W-1852**	1	RING-RETAINING	
	12	1	**5H-6734**	1	SEAL-O-RING	
	13	1	**8T-4121**	4	WASHER-HARD (11X21X2.5-MM THK)	
M	14	1	**8T-4136**	4	BOLT (M10X1.5X25-MM)	
M	15	1	**8T-4184**	12	BOLT (M12X1.75X45-MM)	
	16	1	**8T-4223**	26	WASHER-HARD (13.5X25.5X3-MM THK)	
M	17	1	**8T-4956**	14	BOLT (M12X1.75X35-MM)	

M-METRIC PART
Y-SEPARATE ILLUSTRATION

223-0652 **FRAME GP-TELESCOPING RECOIL** *(contd.)* **i02438930**

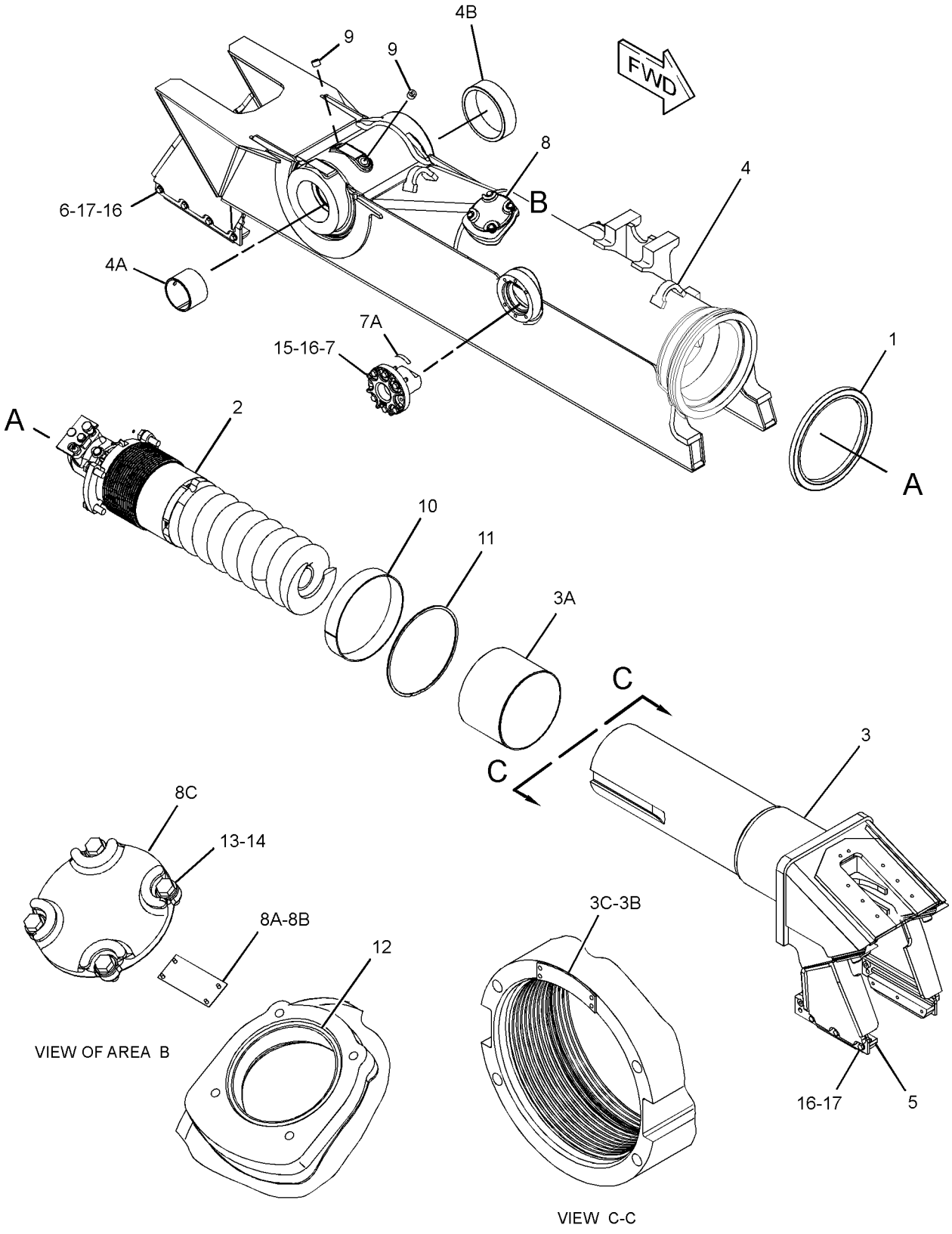

GRAPHIC #1 **<END>** g01219241

223-0656 FRAME GP-TELESCOPING RECOIL–LH, XL/XW

S/N: JDL1-UP

PART OF 218-4982 UNDERCARRIAGE AR

SMCS-4151 **i02438928**

NOTE	REF NO	GRAPHIC REF	PART NUMBER	QTY	PART NAME 1 2 3 4 5 6 (PRODUCT LEVEL)	SEE PAGE
	1	1	**9X-4582**	1	SEAL AS	
Y	2	1	*223-0659*	1	TRACK ADJUSTER & RECOIL GP	414
	3	1	**224-4121**	1	FRAME AS (FRONT)	
	3A	1	**3T-1162**	1	BEARING-SLEEVE	
	3B	1	**4B-4158**	4	SCREW-DRIVE (3/16XO.25-IN)	
	3C	1	**254-1686**	1	PLATE-WARNING (RECOIL SPRING)	
	4	1	**226-1335**	1	FRAME AS (LH)	
	4A	1	**221-3197**	1	BEARING-SLEEVE	
	4B	1	**221-3200**	1	BEARING-SLEEVE	
	5	1	**260-7733**	2	STRIP	
	6	1	**261-3257**	2	STRIP	
	7	1	**268-9709**	2	GUIDE AS	
	7A	1	**241-3720**	1	FILM-WARNING (RECOIL SPRING)	
	8	1	**268-9710**	1	COVER AS	
	8A	1	**253-1346**	1	PLATE-WARNING (HIGH PRESSURE CYLINDER)	
	8B	1	**7B-3028**	4	SCREW-DRIVE (NO 4X3/16-IN)	
	8C	1	**8E-1211**	1	COVER	
	9	1	**1B-5174**	2	PLUG-PIPE	
	10	1	**3T-2077**	1	BEARING	
	11	1	**3W-1852**	1	RING-RETAINING	
	12	1	**5H-6734**	1	SEAL-O-RING	
	13	1	**8T-4121**	4	WASHER-HARD (11X21X2.5-MM THK)	
M	14	1	**8T-4136**	4	BOLT (M10X1.5X25-MM)	
M	15	1	**8T-4184**	12	BOLT (M12X1.75X45-MM)	
	16	1	**8T-4223**	26	WASHER-HARD (13.5X25.5X3-MM THK)	
M	17	1	**8T-4956**	14	BOLT (M12X1.75X35-MM)	

M-METRIC PART
Y-SEPARATE ILLUSTRATION

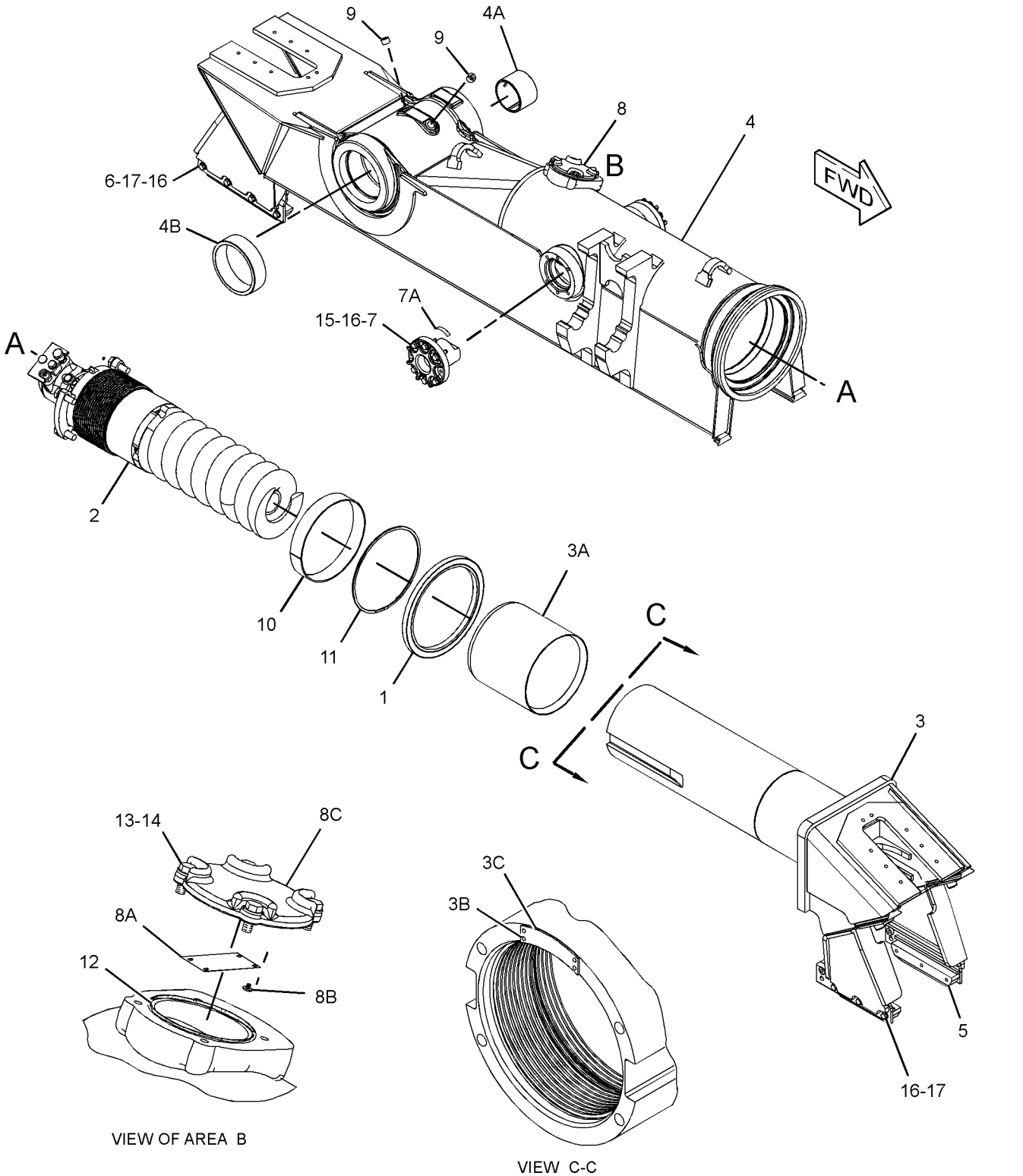

GRAPHIC #1 **<END>** g01222086

261-3077 FRAME GP-TELESCOPING RECOIL–RH

S/N: GMT1-UP

PART OF 222-8667 UNDERCARRIAGE AR

SMCS-4151 **i02430738**

NOTE	REF NO	GRAPHIC REF	PART NUMBER	QTY	PART NAME 1 2 3 4 5 6 (PRODUCT LEVEL)	SEE PAGE
	1	1	**268-9710**	1	COVER AS	
	1A	1	**8E-1211**	1	COVER	
	1B	1	**253-1346**	1	PLATE-WARNING (HIGH PRESSURE CYLINDER)	
	1C	1	**7B-3028**	4	SCREW-DRIVE (NO 4X3/16-IN)	
	2	1	**9X-4582**	1	SEAL AS	
	3	1	**268-9709**	2	GUIDE AS	
					(EACH INCLUDES)	
		1	**241-3720**	1	FILM-WARNING (RECOIL SPRING)	
Y	4	1	*223-0659*	1	TRACK ADJUSTER & RECOIL GP	414
	5	1	**244-6110**	1	FRAME AS (FRONT)	
	5A	1	**3T-1162**	1	BEARING-SLEEVE	
	5B	1	**4B-4158**	4	SCREW-DRIVE (3/16XO.25-IN)	
	5C	1	**254-1686**	1	PLATE-WARNING (RECOIL SPRING)	
	6	1	**261-3083**	1	FRAME AS (RH)	
	6A	1	**221-3197**	1	BEARING-SLEEVE	
	6B	1	**221-3200**	1	BEARING-SLEEVE	
	7	1	**1B-5174**	2	PLUG-PIPE	
	8	1	**3T-2077**	1	BEARING	
	9	1	**3W-1852**	1	RING-RETAINING	
	10	1	**5H-6734**	1	SEAL-O-RING	
	11	1	**8T-4121**	4	WASHER-HARD (11X21X2.5-MM THK)	
M	12	1	**8T-4136**	4	BOLT (M10X1.5X25-MM)	
M	13	1	**8T-4184**	28	BOLT (M12X1.75X45-MM)	
	14	1	**8T-4223**	28	WASHER-HARD (13.5X25.5X3-MM THK)	
	15	1,1	**261-3257**	4	STRIP	

M-METRIC PART
Y-SEPARATE ILLUSTRATION

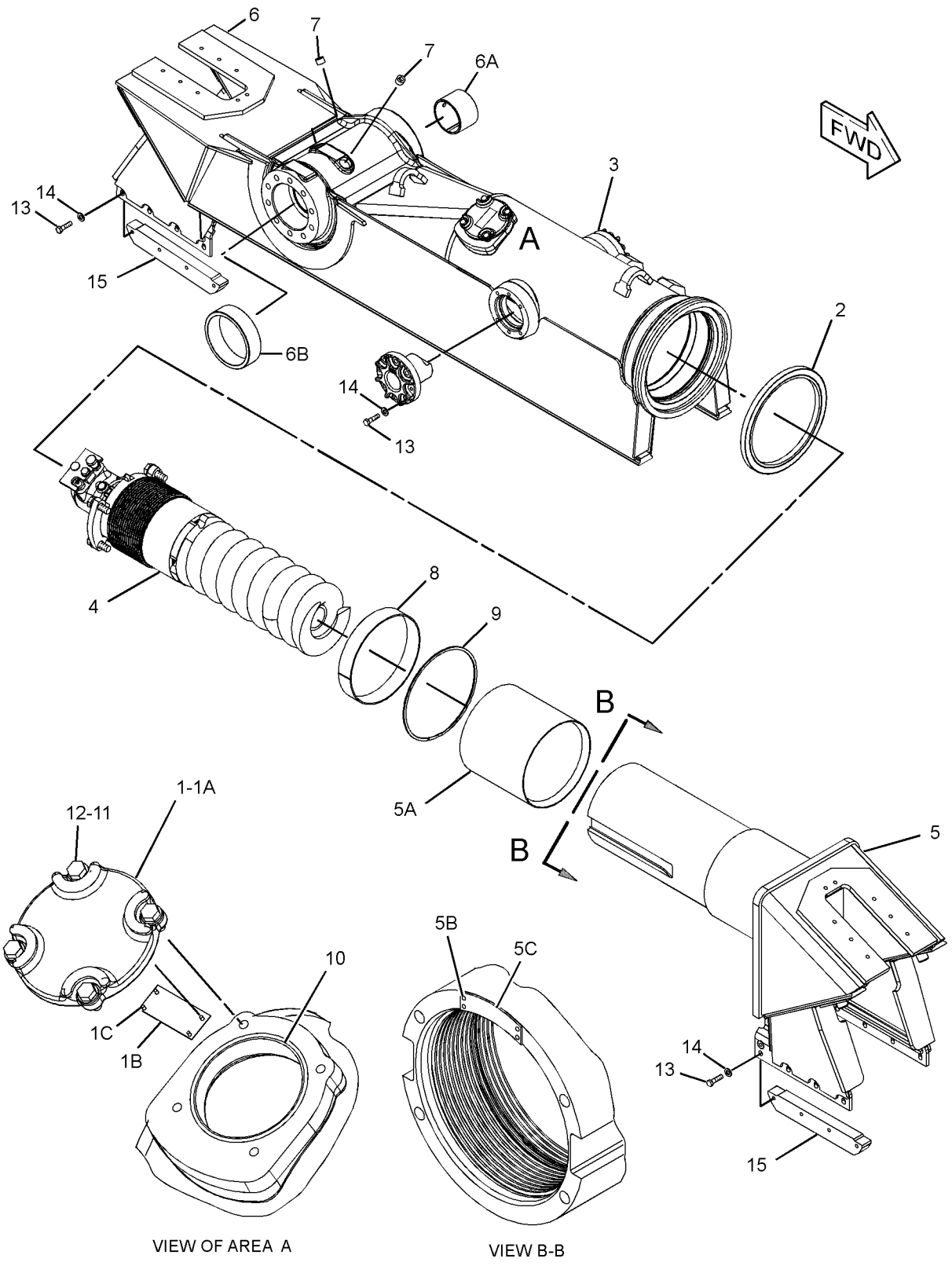

GRAPHIC #1 **<END>** g01210719

261-3080 FRAME GP-TELESCOPING RECOIL–LH

S/N: GMT1-UP

PART OF 222-8667 UNDERCARRIAGE AR

SMCS-4151 **i02430739**

NOTE	REF NO	GRAPHIC REF	PART NUMBER	QTY	PART NAME 1 2 3 4 5 6 (PRODUCT LEVEL)	SEE PAGE
	1	1	**268-9710**	1	COVER AS	
	1A	1	**8E-1211**	1	COVER	
	1B	1	**241-3720**	1	FILM-WARNING (RECOIL SPRING)	
	1C	1	**7B-3028**	4	SCREW-DRIVE (NO 4X3/16-IN)	
	2	1	**9X-4582**	1	SEAL AS	
	3	1	**268-9709**	2	GUIDE AS	
					(EACH INCLUDES)	
		1	**241-3720**	1	FILM-WARNING (RECOIL SPRING)	
Y	4	1	*223-0659*	1	TRACK ADJUSTER & RECOIL GP	414
	5	1	**244-6110**	1	FRAME AS (FRONT)	
	5A	1	**3T-1162**	1	BEARING-SLEEVE	
	5B	1	**4B-4158**	4	SCREW-DRIVE (3/16X0.25-IN)	
	5C	1	**6V-2226**	1	PLATE-WARNING (RECOIL SPRING)	
	6	1	**261-3087**	1	FRAME AS (LH)	
	6A	1	**221-3197**	1	BEARING-SLEEVE	
	6B	1	**221-3200**	1	BEARING-SLEEVE	
	7	1	**1B-5174**	2	PLUG-PIPE	
	8	1	**3T-2077**	1	BEARING	
	9	1	**3W-1852**	1	RING-RETAINING	
	10	1	**5H-6734**	1	SEAL-O-RING	
	11	1	**8T-4121**	4	WASHER-HARD (11X21X2.5-MM THK)	
M	12	1	**8T-4136**	4	BOLT (M10X1.5X25-MM)	
M	13	1	**8T-4184**	28	BOLT (M12X1.75X45-MM)	
	14	1	**8T-4223**	28	WASHER-HARD (13.5X25.5X3-MM THK)	
	15	1	**261-3257**	4	STRIP	

M-METRIC PART
Y-SEPARATE ILLUSTRATION

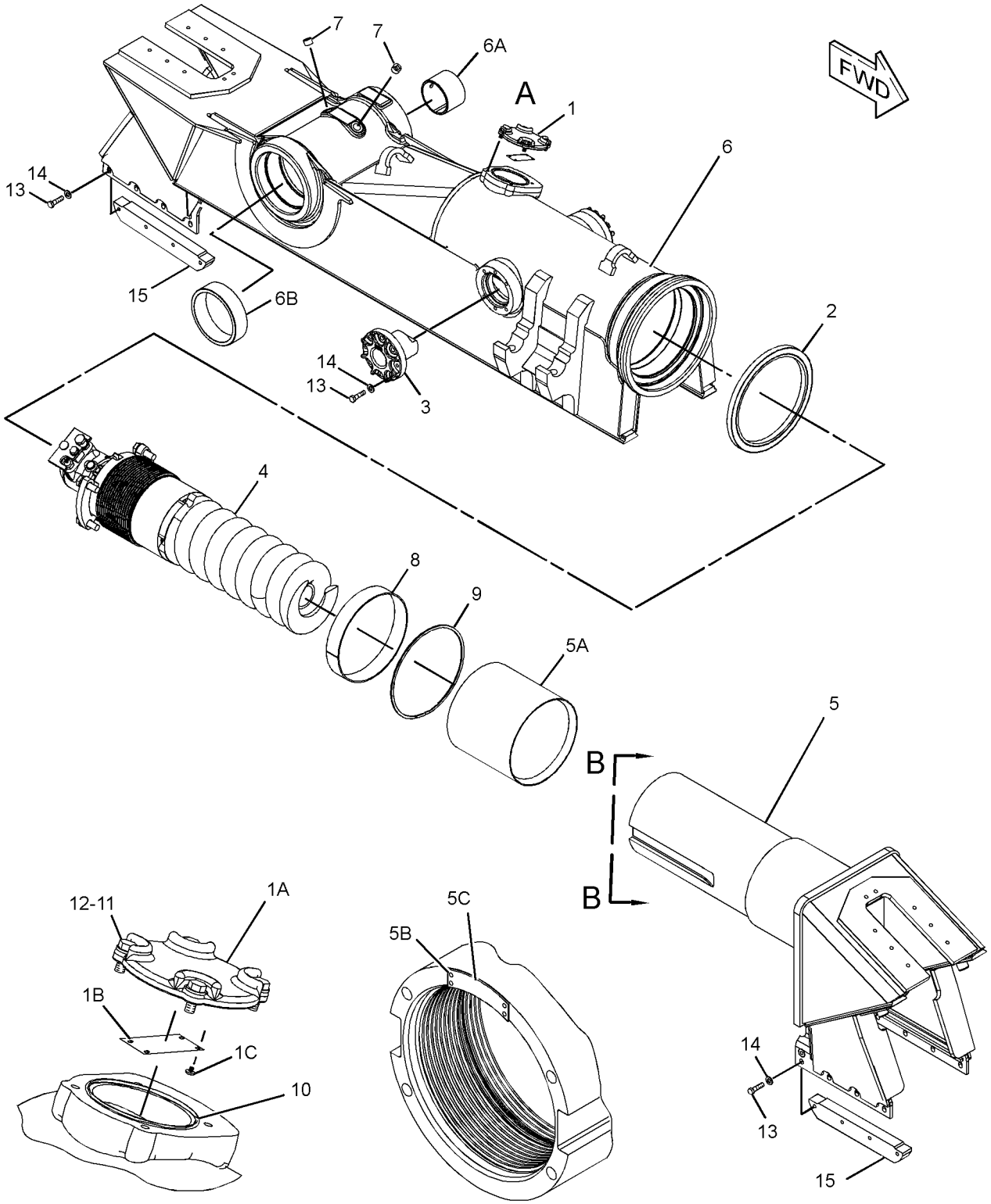

VIEW OF AREA A

VIEW B-B

GRAPHIC #1 **<END>** g01206809

164-0406 GUARD GP-TRACK GUIDE

S/N: JDL1-UP; GMT1-UP
PART OF 203-6415, 203-6440 GUIDING AR-UNDERCARRIAGE
AN ATTACHMENT

SMCS-4177 **i01816600**

NOTE	REF NO	GRAPHIC REF	PART NUMBER	QTY	PART NAME 1 2 3 4 5 6 (PRODUCT LEVEL)	SEE PAGE
	1	1	**134-5366**	4	TUBE	
	2	1	**134-5368**	4	ROD	
	3	1	**164-0403**	2	GUARD	
	4	1	**164-4611**	2	GUARD	
	5	1	**166-2287**	8	SPACER (40X40X20MM THK)	
M	6	1	**7Y-5233**	8	LOCKNUT	
M	7	1	**8T-4141**	8	BOLT (M20X2.5X70MM)	
	8	1	**8T-4167**	8	WASHER-HARD (26X44X4MM THK)	

QUANTITIES SHOWN ARE THOSE REQUIRED FOR BOTH LH AND RH SIDES
M-METRIC PART

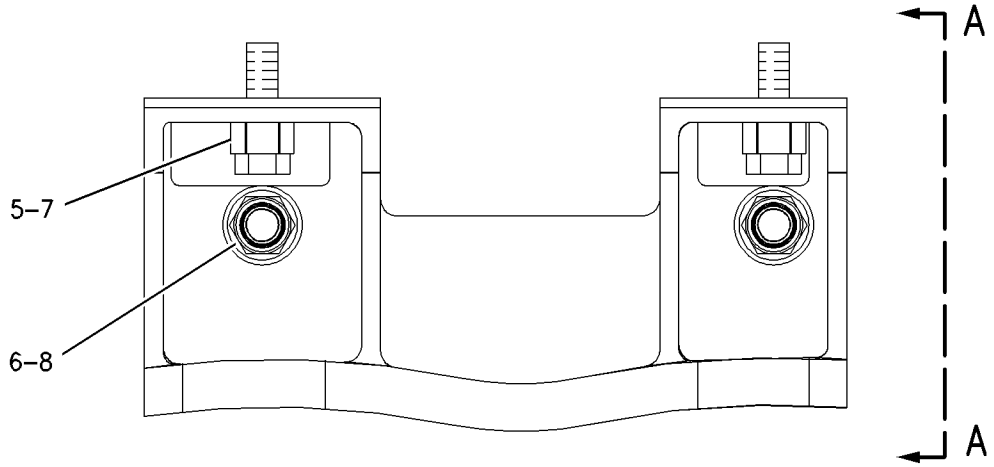

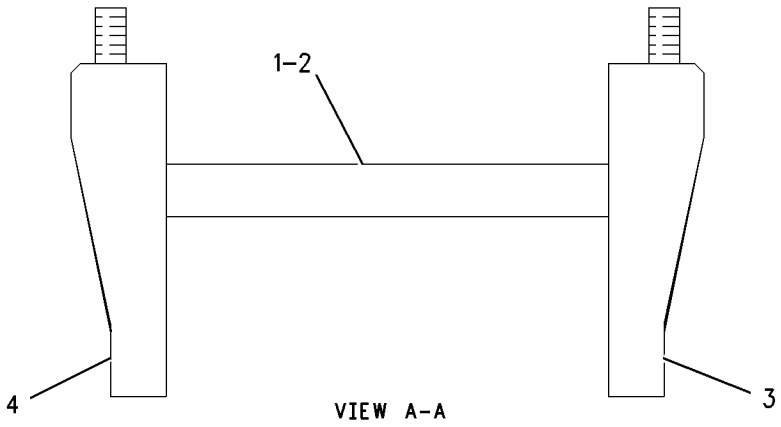

VIEW A-A

GRAPHIC #1 **<END>** g00650656

206-8836 GUARD GP-TRACK GUIDE–SYSTEMONE

S/N: JDL1-UP; GMT1-UP
PART OF 253-0395 GUIDING AR-UNDERCARRIAGE
AN ATTACHMENT

SMCS-4177 **i02317549**

NOTE	REF NO	GRAPHIC REF	PART NUMBER	QTY	PART NAME 1 2 3 4 5 6 (PRODUCT LEVEL)	SEE PAGE
	1	1	**166-2287**	8	SPACER (40X40X20-MM THK)	
	2	1	**206-8837**	2	GUARD AS-TRACK GUIDE	
M	3	1	**8T-4141**	8	BOLT (M20X2.5X70-MM)	

M-METRIC PART

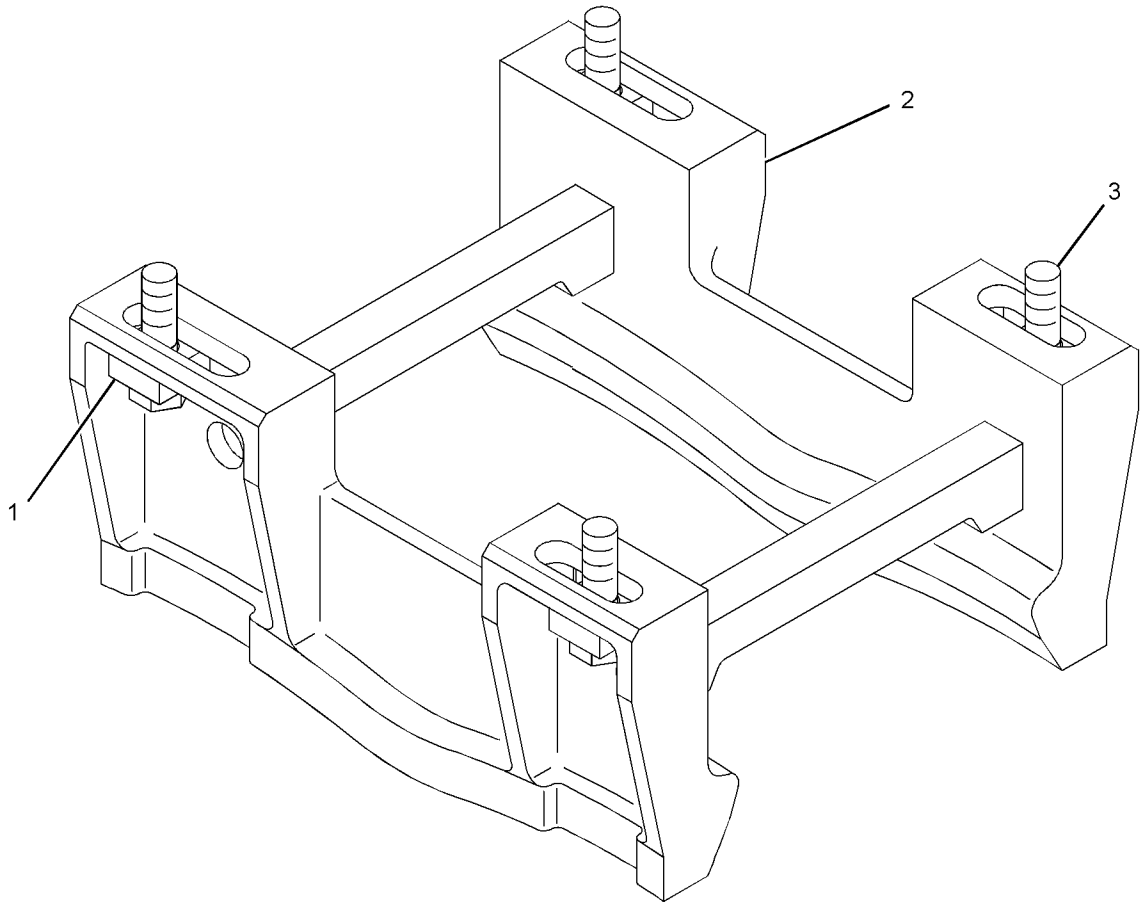

GRAPHIC #1 **<END>** g01152803

229-9560 GUARD GP-TRACK ROLLER

S/N: GMT1-UP
FOR USE WITH SYSTEMONE UNDERCARRIAGE
AN ATTACHMENT

SMCS-7152 **i02456079**

NOTE	REF NO	GRAPHIC REF	PART NUMBER	QTY	PART NAME 1 2 3 4 5 6 (PRODUCT LEVEL)	SEE PAGE
	1	1	**8E-9932**	4	PLATE	
	2	1	**134-5366**	10	TUBE	
	3	1	**134-5368**	10	ROD	
	4	1	**166-2287**	20	SPACER (22X40X20-MM THK)	
	5	1	**229-9556**	4	GUARD	
	6	1	**229-9557**	4	GUARD	
M	7	1	**7Y-5233**	20	LOCKNUT (M24X3-THD)	
M	8	1	**8T-4139**	4	BOLT (M12X1.75X30-MM)	
M	9	1	**8T-4141**	20	BOLT (M20X2.5X70-MM)	
	10	1	**8T-4167**	20	WASHER-HARD (26X44X4-MM THK)	
	11	1	**8T-4223**	8	WASHER-HARD (13.5X25.5X3-MM THK)	
M	12	1	**8T-4956**	4	BOLT (M12X1.75X35-MM)	

M-METRIC PART

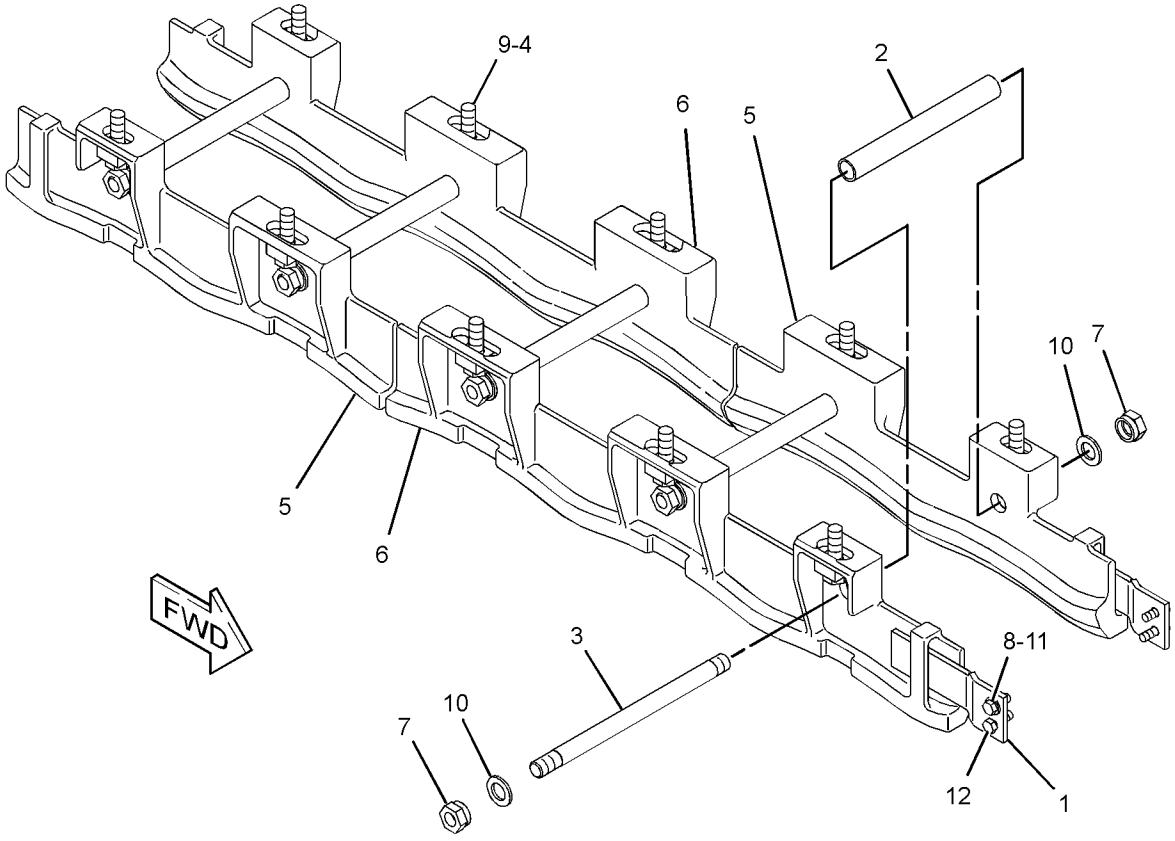

GRAPHIC #1 **<END>** g01165777

UNDERCARRIAGE

229-9570 GUARD GP-TRACK ROLLER

S/N: JDL1-UP
FOR USE WITH SYSTEMONE UNDERCARRIAGE
AN ATTACHMENT

SMCS-7152 **i02456115**

NOTE	REF NO	GRAPHIC REF	PART NUMBER	QTY	PART NAME 1 2 3 4 5 6 (PRODUCT LEVEL)	SEE PAGE
	1	1	**134-5366**	12	TUBE	
	2	1	**134-5368**	12	ROD	
	3	1	**166-2287**	24	SPACER (22X40X20-MM THK)	
	4	1	**229-9558**	4	GUARD	
	5	1	**229-9559**	4	GUARD	
M	6	1	**7Y-5233**	24	LOCKNUT (M24X3-THD)	
M	7	1	**8T-4141**	24	BOLT (M20X2.5X70-MM)	
	8	1	**8T-4167**	24	WASHER-HARD (26X44X4-MM THK)	

M-METRIC PART

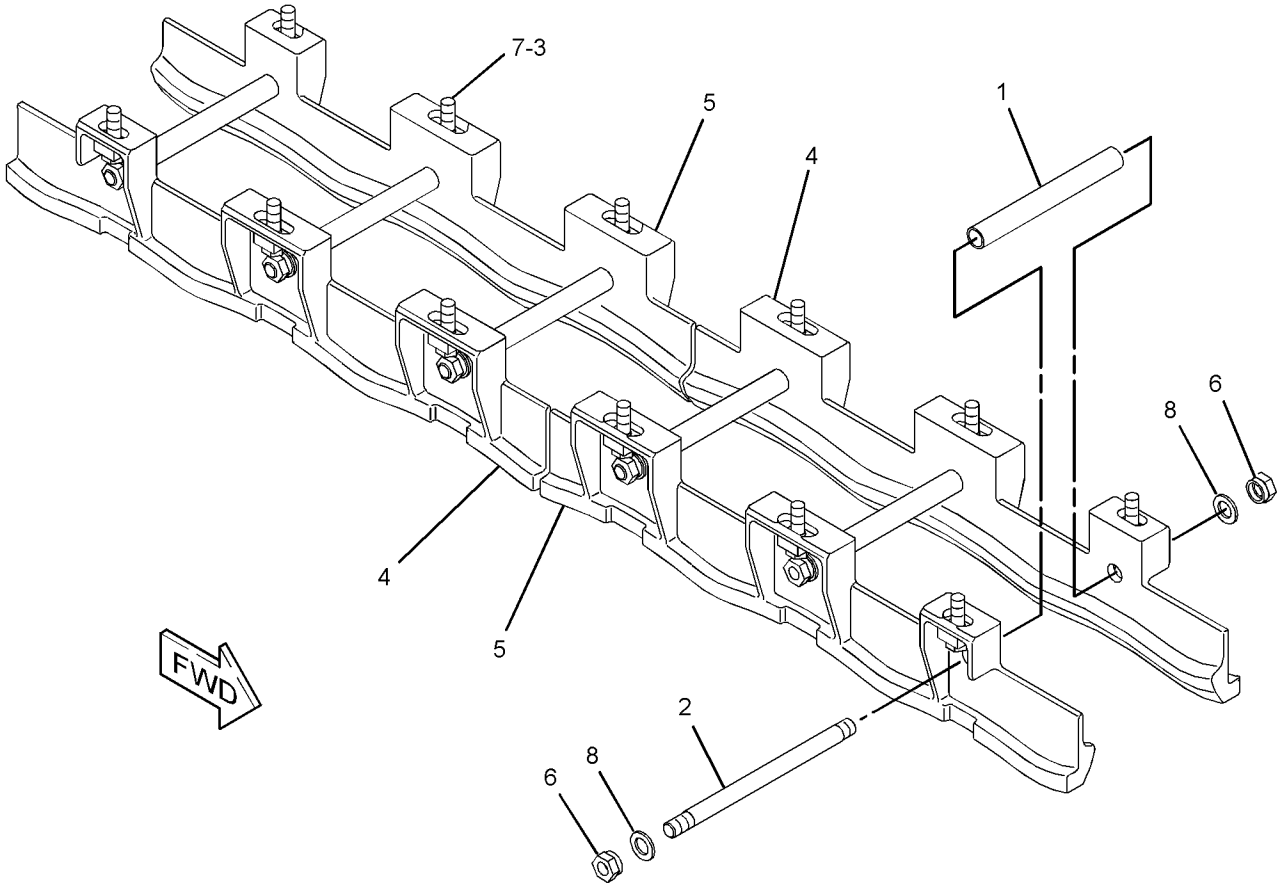

GRAPHIC #1 **<END>** g01165766

203-6415 GUIDING AR-UNDERCARRIAGE

S/N: GMT1-UP
MODERATE SERVICE
AN ATTACHMENT

SMCS-4150 **i01816568**

NOTE	PART NUMBER	QTY	PART NAME 1 2 3 4 5 6 (PRODUCT LEVEL)	SEE PAGE
Y	*164-0406*	2	GUARD GP-TRACK GUIDE	383
Y	*125-4177*	1	ROLLER AR-TRACK	402
Y-SEPARATE ILLUSTRATION				

<END>

203-6440 GUIDING AR-UNDERCARRIAGE

S/N: JDL1-UP
MODERATE SERVICE
AN ATTACHMENT

SMCS-4150 **i01818850**

NOTE	PART NUMBER	QTY	PART NAME 1 2 3 4 5 6 (PRODUCT LEVEL)	SEE PAGE
Y	*164-0406*	2	GUARD GP-TRACK GUIDE	383
Y	*125-5533*	1	ROLLER AR-TRACK	402
Y-SEPARATE ILLUSTRATION				

<END>

253-0395 GUIDING AR-UNDERCARRIAGE—SYSTEMONE

S/N: JDL1-UP; GMT1-UP
AN ATTACHMENT

SMCS-4150 **i02317541**

NOTE	PART NUMBER	QTY	PART NAME 1 2 3 4 5 6 (PRODUCT LEVEL)	SEE PAGE
Y	*206-8836*	2	GUARD GP-TRACK GUIDE	384
Y-SEPARATE ILLUSTRATION				

<END>

227-8715 IDLER GP-FRONT—SYSTEMONE

S/N: JDL1-UP; GMT1-UP

PART OF 218-4982, 222-8667 UNDERCARRIAGE AR

SMCS-4159 **i02429904**

NOTE	REF NO	GRAPHIC REF	PART NUMBER	QTY	PART NAME 1 2 3 4 5 6 (PRODUCT LEVEL)	SEE PAGE
	1	1	**2H-3928**	2	SEAL-O-RING	
	2	1	**7J-2036**	2	SEAL-O-RING	
	3	1	**6Y-0473**	1	PLUG-CLEAR	
	3A	1	**9G-5664**	1	STOPPER-RUBBER	
	4	1	**106-7691**	2	WASHER-THRUST (86X113.93X4.52-MM THK)	
	5	1	**107-3945**	2	COLLAR-SEAL	
	6	1	**149-2494**	1	SHAFT-TRACK IDLER	
	7	1	**149-2495**	2	RETAINER	
	8	1	**162-7862**	2	SEAL GP-DUO-CONE	
					(EACH INCLUDES)	
	8A	1	**162-2166**	2	RING-TORIC	
Z	8B	1		2	SEAL-RING	
	9	1	**227-8716**	1	IDLER & BEARING AS	
	9A	1	**9P-2245**	2	BEARING-SLEEVE	
Z	9B	1		1	IDLER	
	10	1	**1T-0765**	24	BOLT (3/8-16X1-IN)	
	11	1	**5M-2894**	24	WASHER-HARD (10.2X18.5X2.5-MM THK)	

Z-NOT SERVICED SEPARATELY

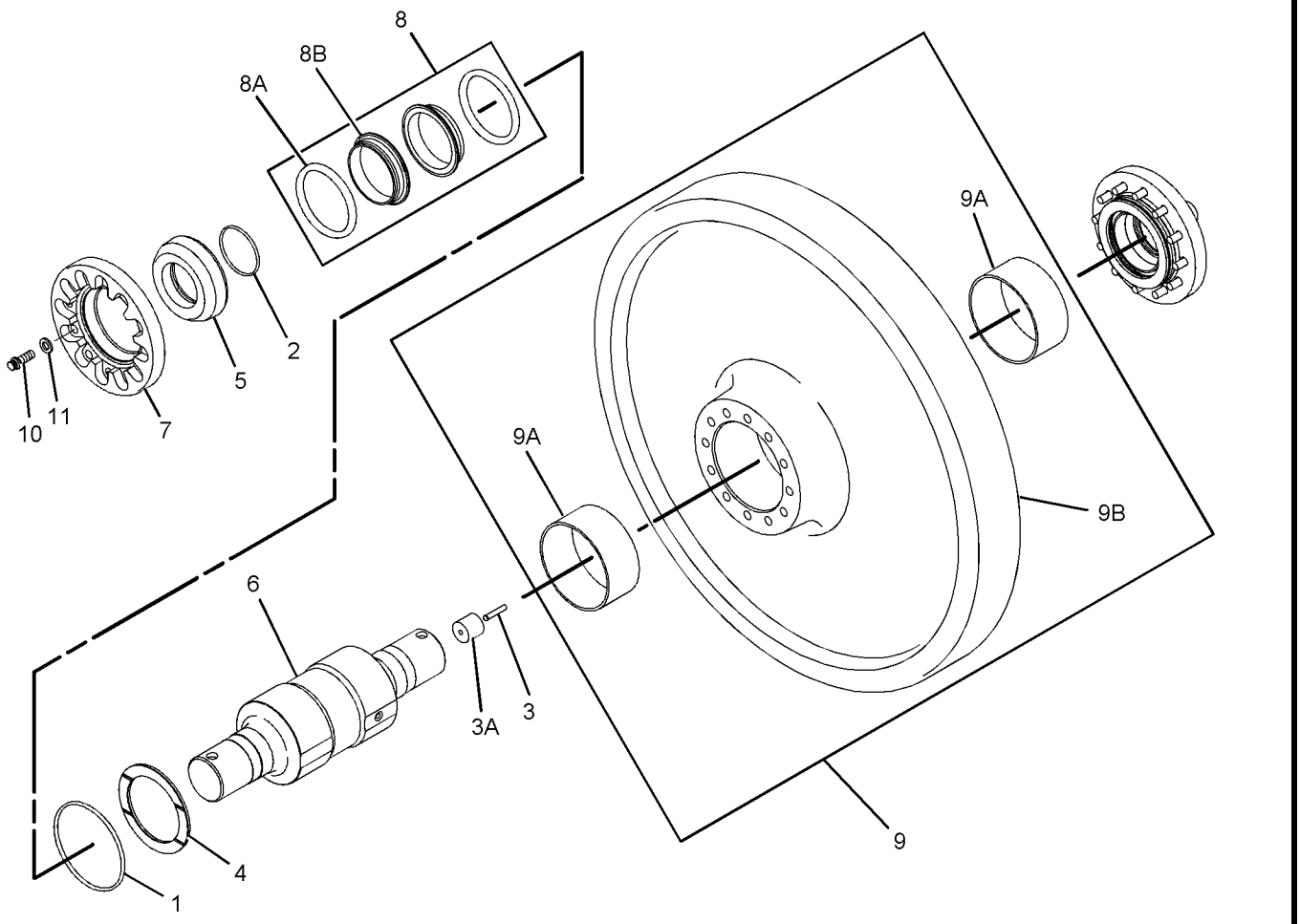

GRAPHIC #1 **<END>** g01122039

258-8798 IDLER GP-FRONT—WASTE HANDLING

S/N: JDL1-UP; GMT1-UP
PART OF 261-6769 GUARD AR-IDLER
FOR USE WITH SYSTEMONE UNDERCARRIAGE
AN ATTACHMENT

SMCS-4159 **i02456103**

NOTE	REF NO	GRAPHIC REF	PART NUMBER	QTY	PART NAME 1 2 3 4 5 6 (PRODUCT LEVEL)	SEE PAGE
	1	1	**2H-3928**	2	SEAL-O-RING	
	2	1	**7J-2036**	2	SEAL-O-RING	
	3	1	**6Y-0473**	1	PLUG-CLEAR	
	3A	1	**9G-5664**	1	STOPPER-RUBBER	
	4	1	**106-7691**	2	WASHER-THRUST (86X113.93X4.52-MM THK)	
	5	1	**149-2494**	1	SHAFT-TRACK IDLER	
	6	1	**162-7862**	2	SEAL GP-DUO-CONE	
					(EACH INCLUDES)	
Z	6A	1		2	SEAL-RING	
	6B	1	**162-2166**	2	RING-TORIC	
	7	1	**167-1950**	2	RETAINER	
	8	1	**167-1951**	2	COLLAR	
	9	1	**167-1952**	2	SEAL	
	10	1	**170-0792**	2	RING	
	11	1	**227-8716**	1	IDLER & BEARING AS	
	11A	1	**9P-2245**	2	BEARING-SLEEVE	
	12	1	**8T-4896**	24	WASHER-HARD (10.2X18.5X2.5-MM THK)	
	13	1	**9B-7237**	24	BOLT (3/8-16X1.25-IN)	

Z-NOT SERVICED SEPARATELY

258-8798 IDLER GP-FRONT *(contd.)* **i02456103**

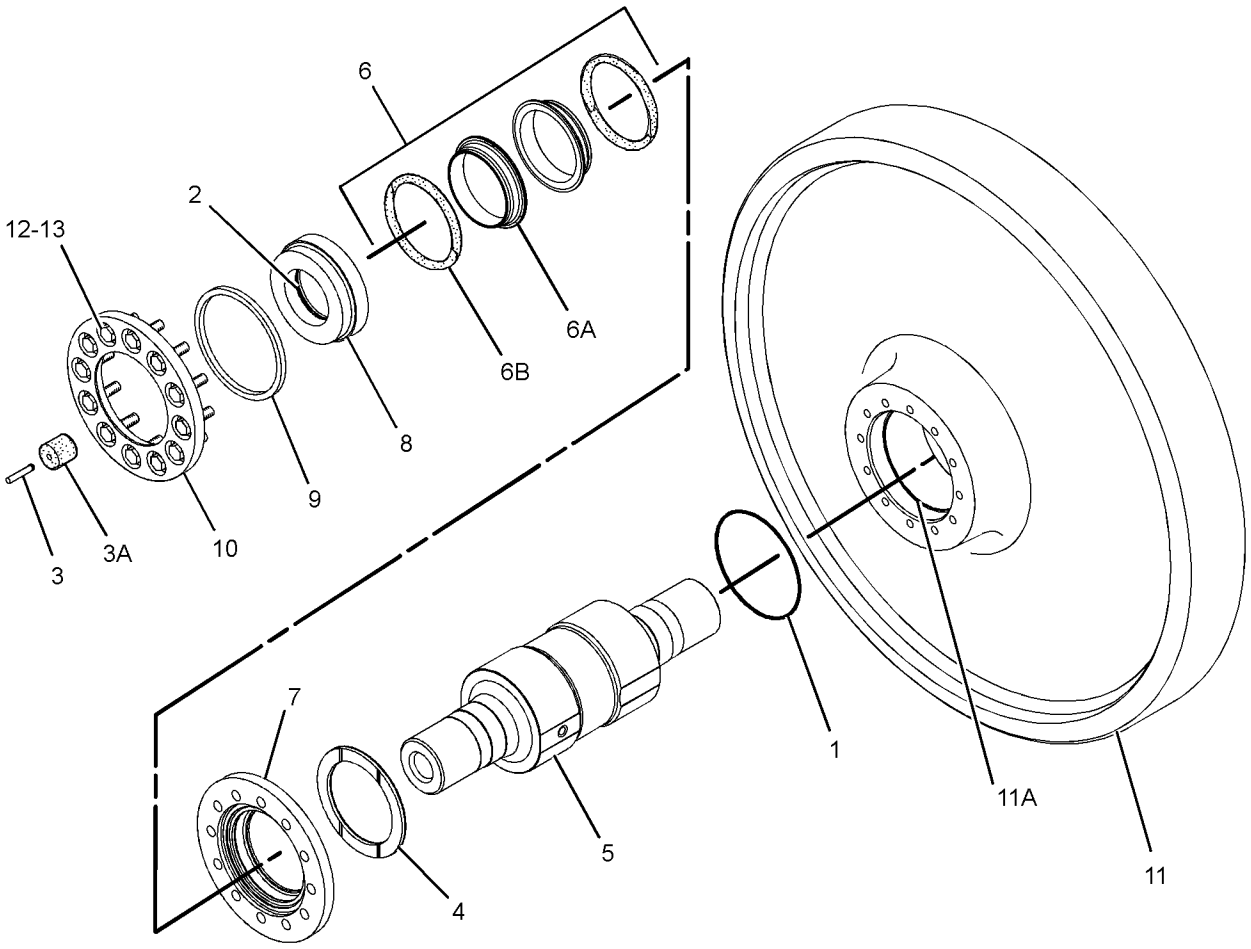

GRAPHIC #1 **<END>** g01225780

202-4304 IDLER GP-TRACK

S/N: JDL1-UP; GMT1-UP
PART OF 278-6367, 278-6368 UNDERCARRIAGE AR
AN ATTACHMENT

SMCS-4159 **i01770941**

NOTE	REF NO	GRAPHIC REF	PART NUMBER	QTY	PART NAME 1 2 3 4 5 6 (PRODUCT LEVEL)	SEE PAGE
	1	1	**2H-3928**	2	SEAL-O-RING	
	2	1	**202-4303**	1	IDLER & BEARING AS	
		1	**9P-2245**	2	BEARING-SLEEVE	
	3	1	**7J-2036**	2	SEAL-O-RING	
	4	1	**6Y-0473**	1	PLUG-CLEAR	
		1	**9G-5664**	1	STOPPER-RUBBER	
	5	1	**106-7691**	2	WASHER-THRUST (86X113.93X4.52-MM THK)	
	6	1	**107-3945**	2	COLLAR-SEAL	
	7	1	**149-2494**	1	SHAFT-TRACK IDLER	
	8	1	**149-2495**	2	RETAINER	
	9	1	**162-7862**	2	SEAL GP-DUO-CONE	
					(EACH INCLUDES)	
		1	**162-2166**	2	RING-TORIC	
	10	1	**1T-0765**	24	BOLT (3/8-16X1-IN)	
	11	1	**5M-2894**	24	WASHER-HARD (10.2X18.5X2.5-MM THK)	

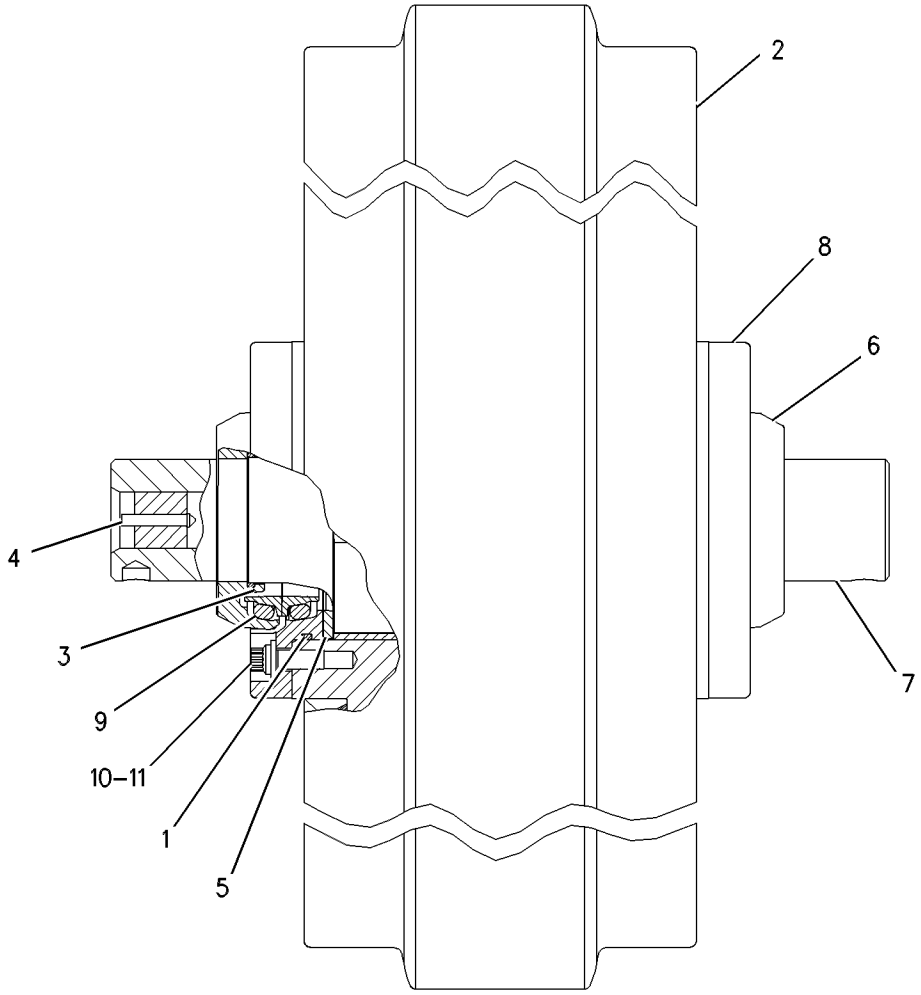

GRAPHIC #1 **<END>** g00579901

6I-9668 LINK AS-TRACK

S/N: GMT1-UP
SEALED, LUBRICATED, HEAVY DUTY
PART OF 6I-9641, 6I-9644 TRACK GP
AN ATTACHMENT

SMCS-4169, 4171 **i01851519**

NOTE	REF NO	GRAPHIC REF	PART NUMBER	QTY	PART NAME 1 2 3 4 5 6 (PRODUCT LEVEL)	SEE PAGE
	1	1	**8E-7406**	38	LINK-TRACK (LH)	
	2	1	**8E-7405**	38	LINK-TRACK (RH)	
	3	1	**8E-7410**	1	LINK-TRACK MASTER (BUSHING END, LH)	
	4	1	**8E-7409**	1	LINK-TRACK MASTER (BUSHING END, RH)	
	5	1	**8E-7407**	1	LINK-TRACK MASTER (PIN END, RH)	
	6	1	**8E-7408**	1	LINK-TRACK MASTER (PIN END, LH)	
	7	1	**152-8071**	78	RING-THRUST	
	8	1	**8E-9644**	78	SEAL AS	
	9	1	**8E-7222**	39	BUSHING-TRACK	
	10	1	**160-7820**	39	PIN-TRACK	
	11	1	**6Y-0473**	39	PLUG-CLEAR	
		1	**5G-2247**	39	STOPPER-RUBBER	
	12	1	**9S-1838**	4	BOLT-MASTER TRACK (3/4-16X4.13-IN)	

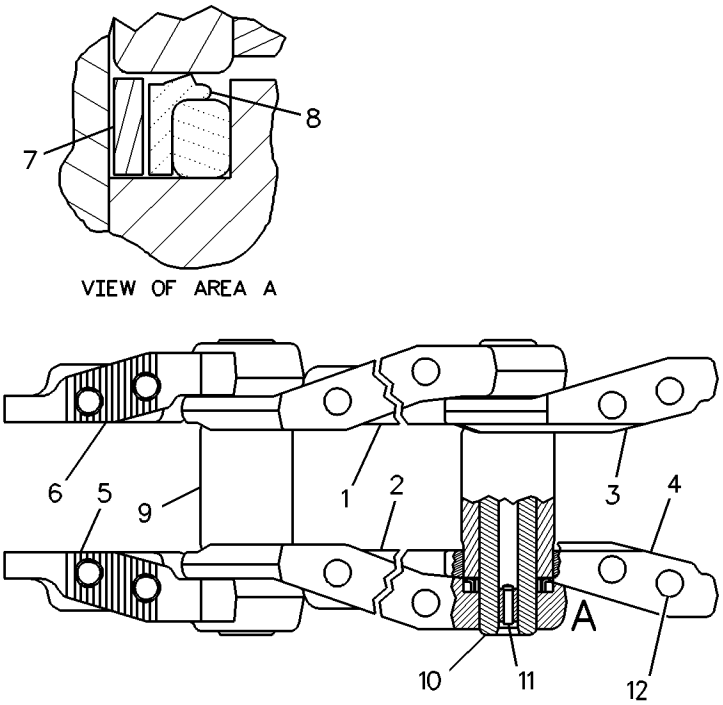

GRAPHIC #1 **<END>** g00943234

6I-9671 LINK AS-TRACK

S/N: JDL1-UP
SEALED, LUBRICATED, HEAVY DUTY
PART OF 1Q-4743, 6I-9653, 6I-9654, 6I-9656 TRACK GP
AN ATTACHMENT

SMCS-4169, 4171 **i02332731**

NOTE	REF NO	GRAPHIC REF	PART NUMBER	QTY	PART NAME 1 2 3 4 5 6 (PRODUCT LEVEL)	SEE PAGE
	1	1	**6Y-0473**	41	PLUG-CLEAR	
	2	1	**5G-2247**	41	STOPPER-RUBBER	
	3	1	**207-0544**	82	SEAL AS	
	4	1	**8E-7407**	1	LINK-TRACK MASTER (PIN END, RH)	
	5	1	**8E-7408**	1	LINK-TRACK MASTER (PIN END, LH)	
	6	1	**8E-7410**	1	LINK-TRACK MASTER (BUSHING END, LH)	
	7	1	**8E-7409**	1	LINK-TRACK MASTER (BUSHING END, RH)	
	8	1	**160-7820**	41	PIN-TRACK	
	9	1	**8E-7222**	41	BUSHING-TRACK	
	10	1	**8E-7406**	40	LINK-TRACK (LH)	
	11	1	**8E-7405**	40	LINK-TRACK (RH)	
	12	1	**152-8071**	82	RING-THRUST	

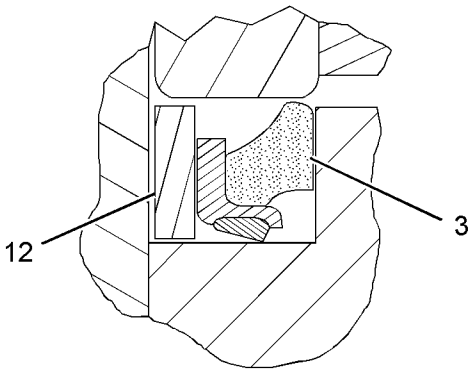

VIEW OF AREA A

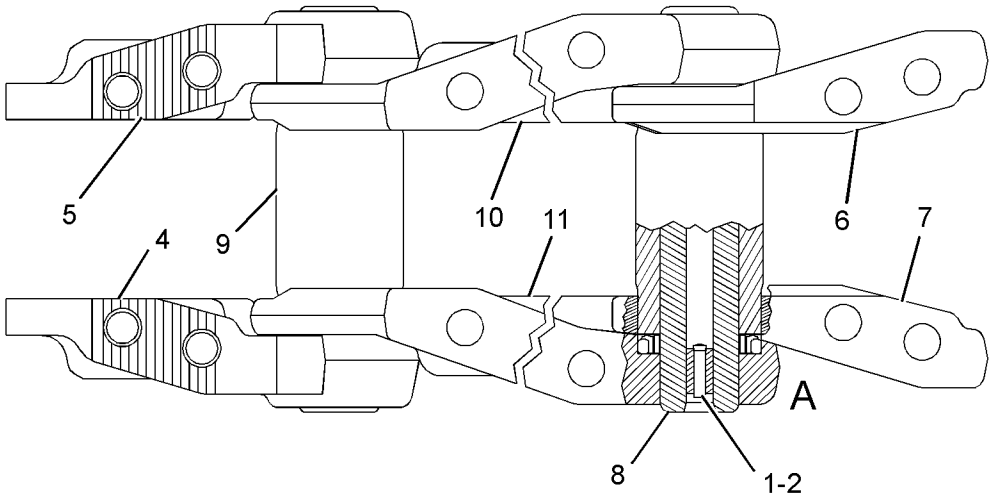

GRAPHIC #1 **<END>** g01184400

234-9679 LINK AS-TRACK BOX—LINK BOX

S/N: JDL1-UP; GMT1-UP
SEALED, LUBRICATED,
FOR FIELD REPLACEMENT OF LINK BOX THAT IS MORE THAN 40% WORN, ORDER 264-9763
PART OF 234-9681 LINK AS-TRACK BOX, 234-9672, 234-9678 LINK GP-TRACK
ALSO AN ATTACHMENT

SMCS-4169 **i02432306**

NOTE	REF NO	GRAPHIC REF	PART NUMBER	QTY	PART NAME 1 2 3 4 5 6 (PRODUCT LEVEL)	SEE PAGE
	1	1	**234-9699**	2	LINK-TRACK	
Z	2	1		2	CARTRIDGE AS-TRACK LINK	

Z-NOT SERVICED SEPARATELY

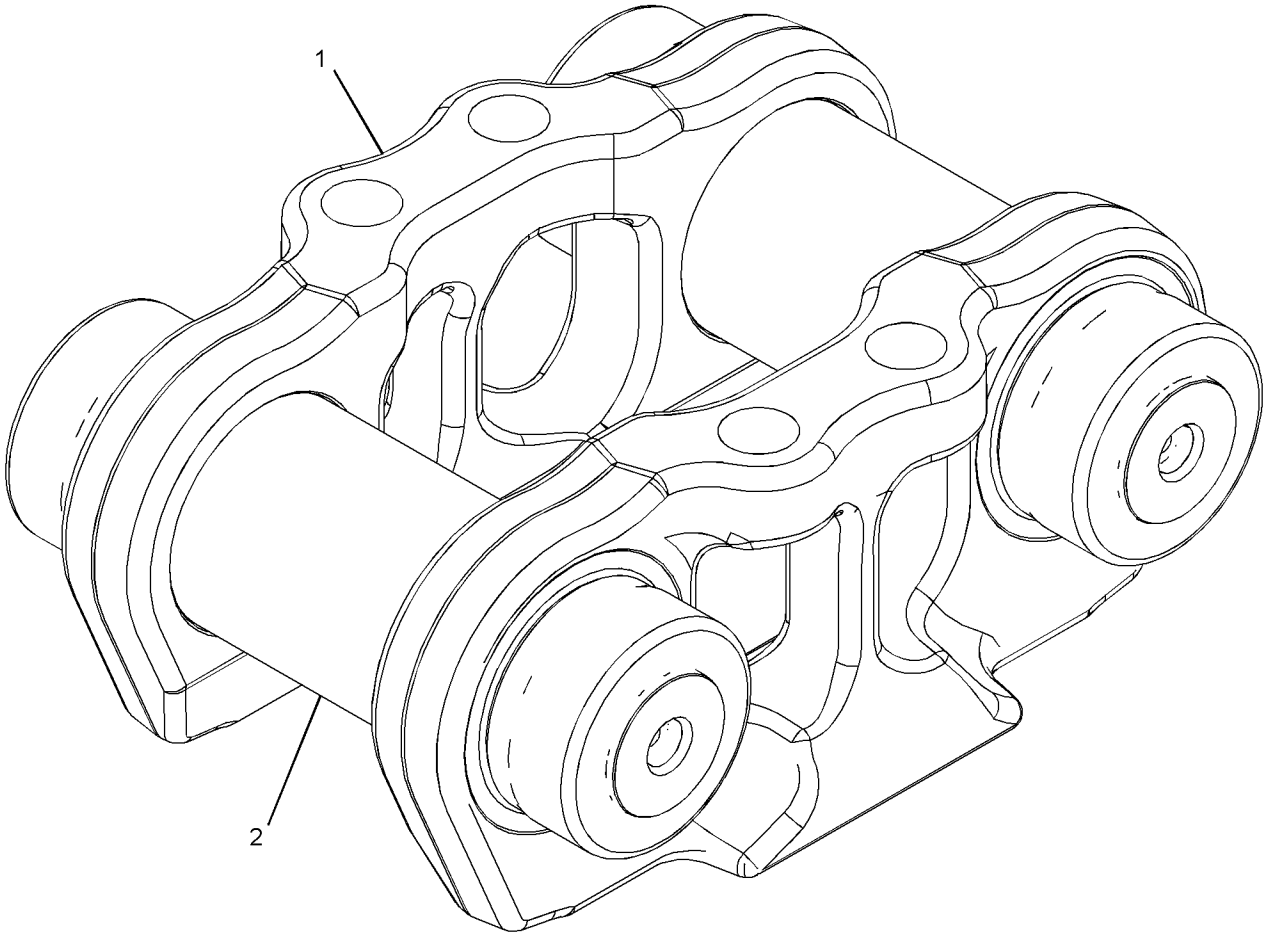

GRAPHIC #1 **<END>** g01193504

234-9681 LINK AS-TRACK BOX—LINK BOX, OFFSET

S/N: JDL1-UP; GMT1-UP
SEALED, LUBRICATED, FOR FIELD REPLACEMENT OF LINK BOX THAT IS MORE THAN 40% WORN, ORDER 264-9768 LINK AS
PART OF 234-9672, 234-9678 LINK GP-TRACK
ALSO AN ATTACHMENT

SMCS-4169 **i02432311**

NOTE	REF NO	GRAPHIC REF	PART NUMBER	QTY	PART NAME 1 2 3 4 5 6 (PRODUCT LEVEL)	SEE PAGE
Y	1	1	**234-9679**	1	LINK AS-TRACK BOX (LINK BOX)	394
Z	2	1		1	CARTRIDGE AS-TRACK LINK	
Z	3	1		1	LINK-TRACK (RH)	
Z	4	1		1	LINK-TRACK (LH)	

Y-SEPARATE ILLUSTRATION
Z-NOT SERVICED SEPARATELY

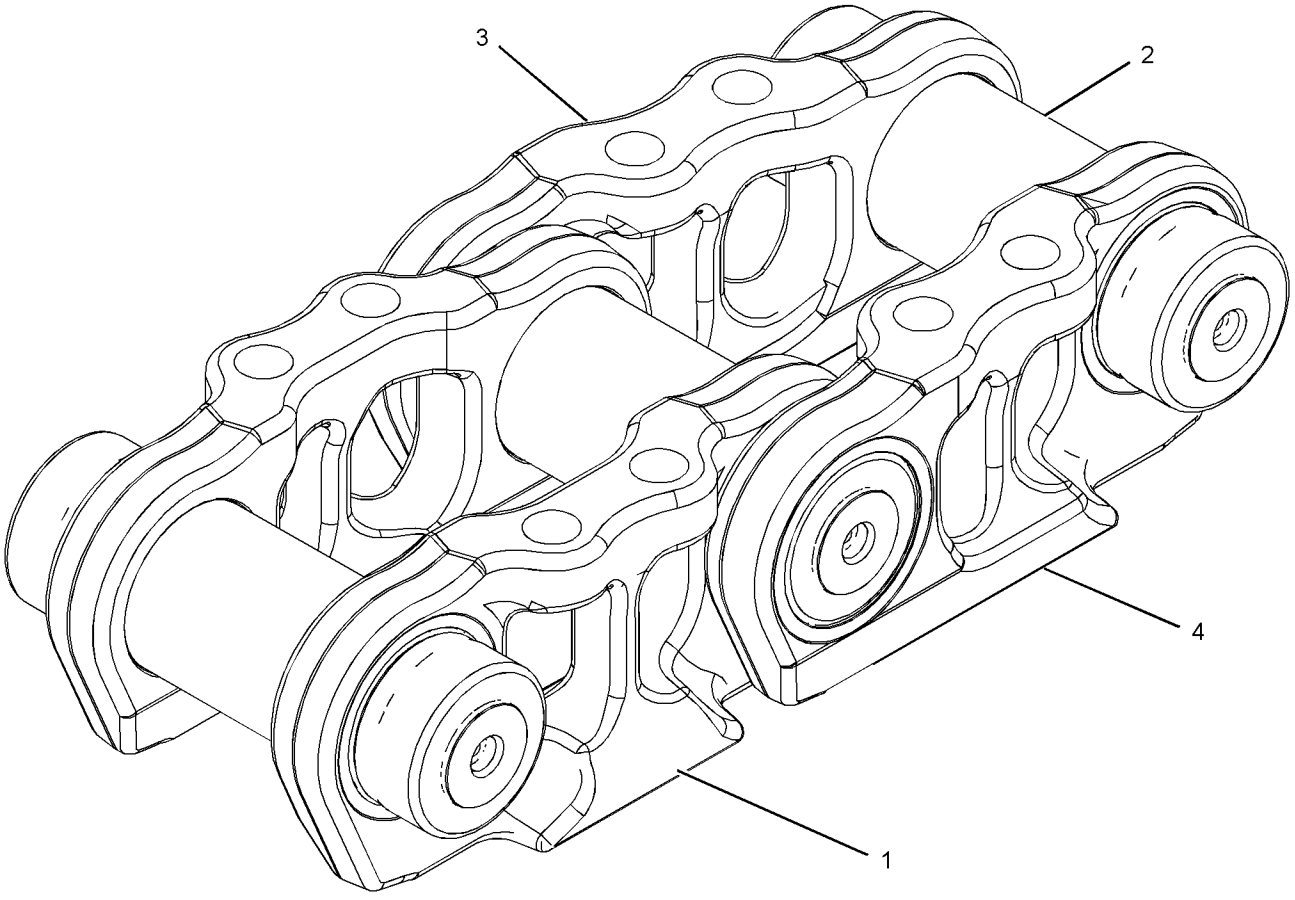

GRAPHIC #1 **<END>** g01196845

264-9763 LINK AS-TRACK BOX—LINK BOX

S/N: JDL1-UP; GMT1-UP
70% WORN. SEALED, LUBRICATED,
FIELD REPLACEMENT FOR 234-9679 LINK AS THAT IS MORE THAN 40% WORN
FIELD INSTALLATION

SMCS-4169 **i02450644**

NOTE	REF NO	GRAPHIC REF	PART NUMBER	QTY	PART NAME 1 2 3 4 5 6 (PRODUCT LEVEL)	SEE PAGE
					INDIVIDUAL PARTS ARE NOT SERVICED SEPARATELY	

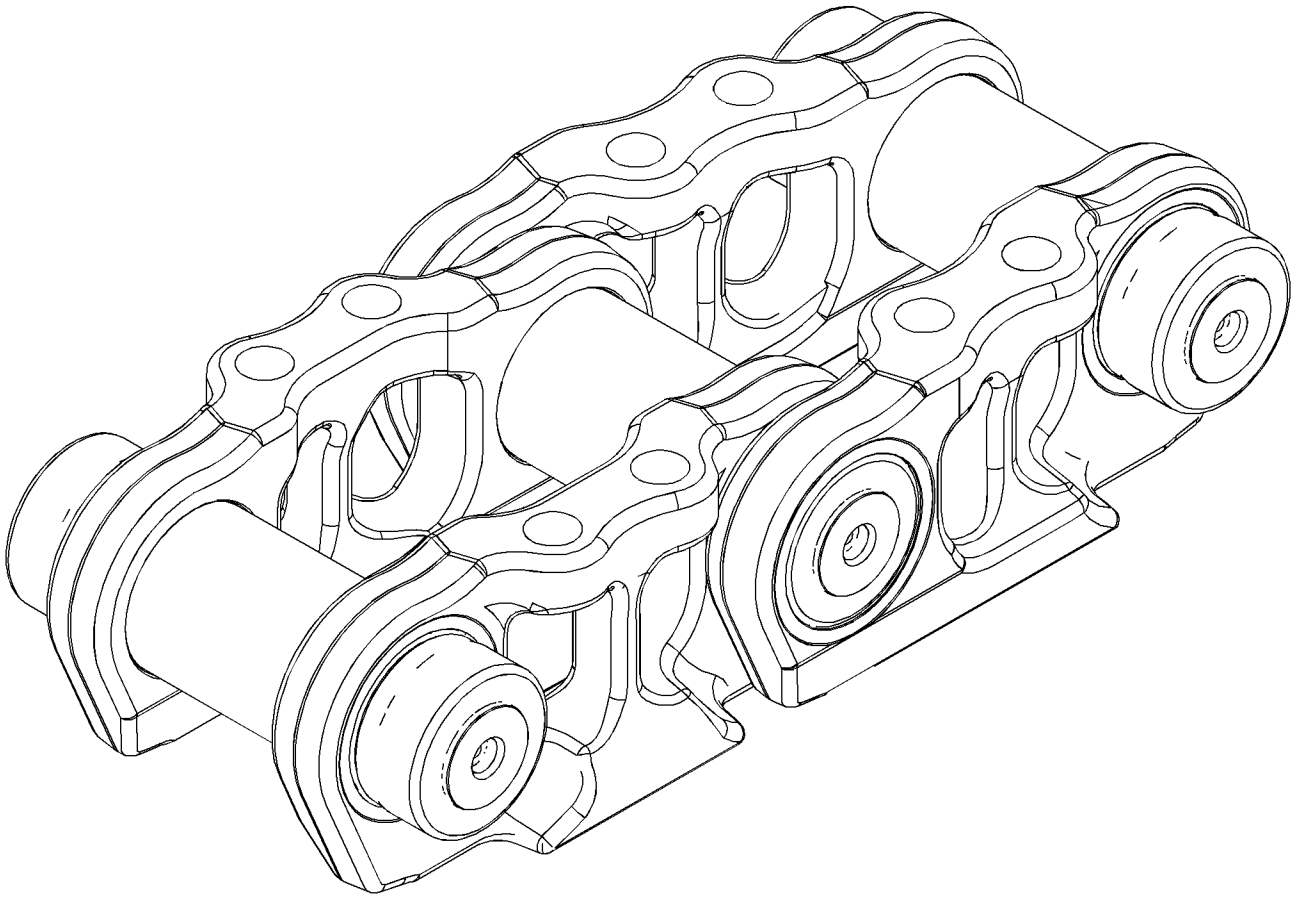

GRAPHIC #1 **<END>** g01197413

264-9768 LINK AS-TRACK BOX—LINK BOX, OFFSET

S/N: JDL1-UP; GMT1-UP
70% WORN. SEALED, LUBRICATED,
FIELD REPLACEMENT FOR 234-9681 LINK AS THAT IS MORE THAN 40% WORN
FIELD INSTALLATION

SMCS-4169 **i02454949**

NOTE	REF NO	GRAPHIC REF	PART NUMBER	QTY	PART NAME 1 2 3 4 5 6 (PRODUCT LEVEL)	SEE PAGE
					INDIVIDUAL PARTS ARE NOT SERVICED SEPARATELY	

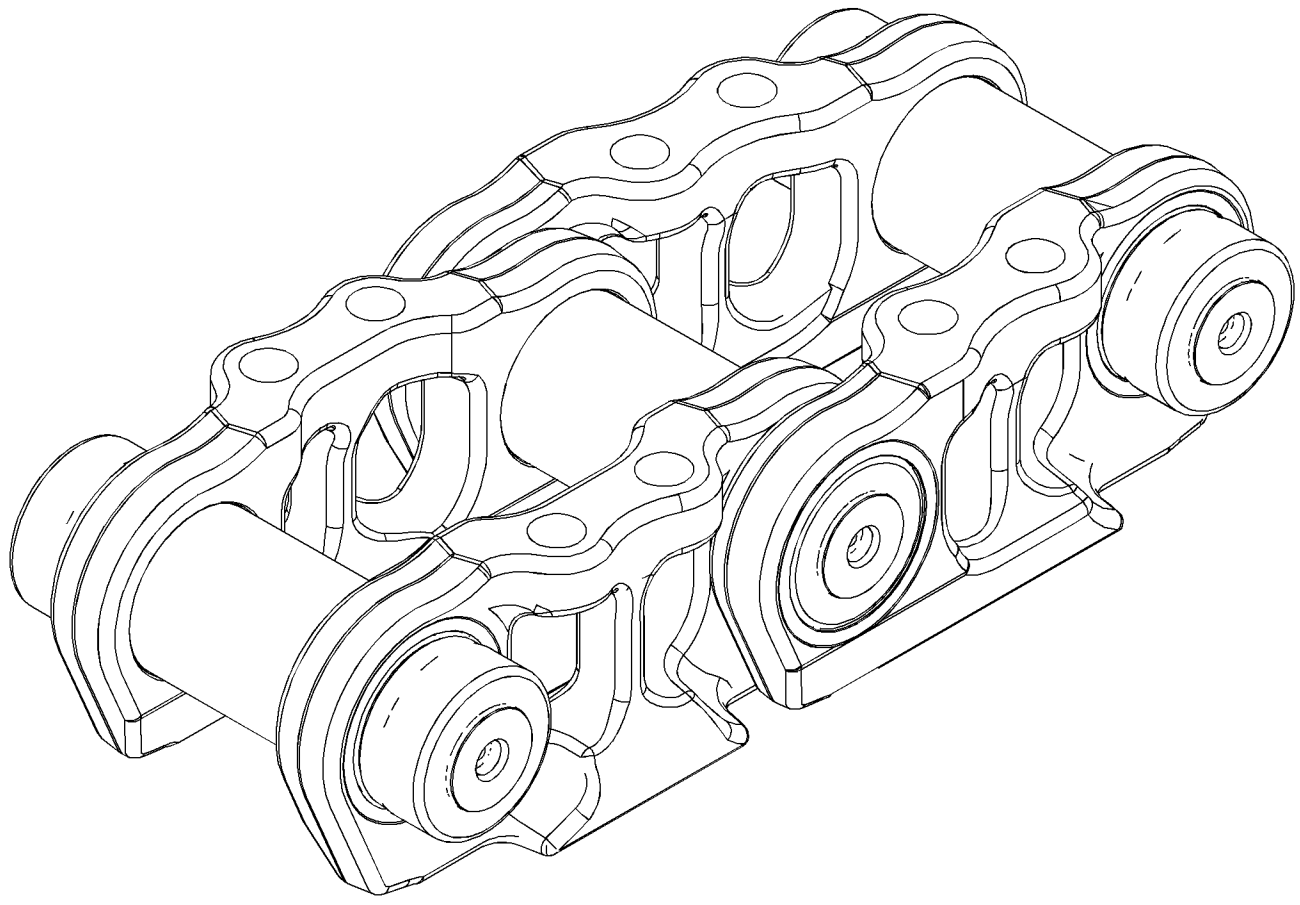

GRAPHIC #1 **<END>** g01197413

234-9672 LINK GP-TRACK—SYSTEMONE

S/N: GMT1-UP
39-JOINTS. SEALED, LUBRICATED
PART OF 234-9670, 234-9671, 246-5215, 246-5217 TRACK GP
FOR USE WITH SYSTEMONE ROLLERS, GUARDS, GUIDE STRIPS, SHOES
ALSO AN ATTACHMENT

SMCS-4169, 4171 **i02439146**

NOTE	REF NO	GRAPHIC REF	PART NUMBER	QTY	PART NAME 1 2 3 4 5 6 (PRODUCT LEVEL)	SEE PAGE
	1	1	**234-9699**	36	LINK-TRACK	
Y	2	1	**234-9679**	18	LINK AS-TRACK BOX (LINK BOX)	394
Y	3	1	**234-9681**	1	LINK AS-TRACK BOX (LINK BOX, OFFSET)	395

Y-SEPARATE ILLUSTRATION

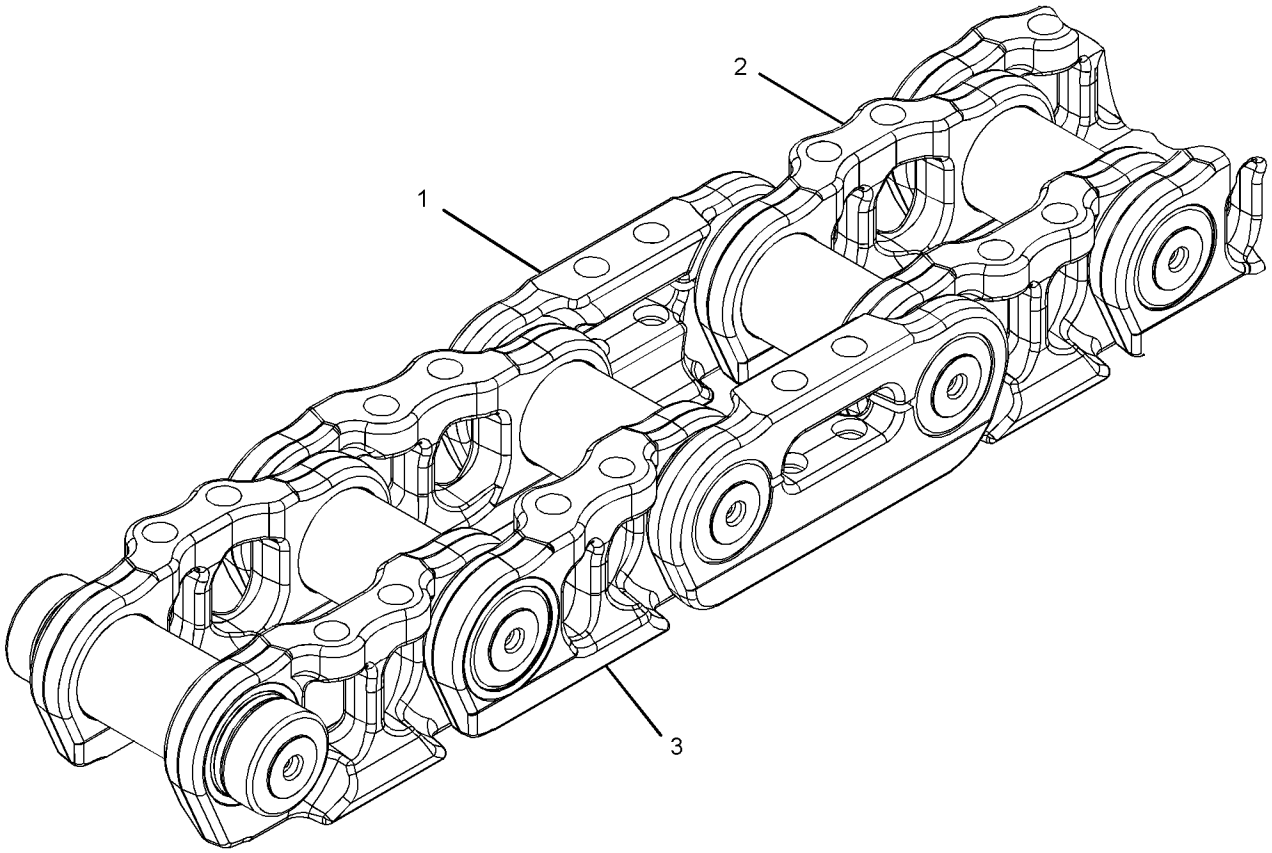

GRAPHIC #1 **<END>** g01197335

234-9678 LINK GP-TRACK–SYSTEMONE

S/N: JDL1-UP
41-JOINTS. SEALED, LUBRICATED
PART OF 234-9675, 234-9676, 246-5216, 246-5218 TRACK GP
FOR USE WITH SYSTEMONE ROLLERS, GUARDS, GUIDESTRIPS, SHOES
ALSO AN ATTACHMENT

SMCS-4169, 4171 **i02432130**

NOTE	REF NO	GRAPHIC REF	PART NUMBER	QTY	PART NAME 1 2 3 4 5 6 (PRODUCT LEVEL)	SEE PAGE
	1	1	**234-9699**	38	LINK-TRACK	
Y	2	1	**234-9679**	19	LINK AS-TRACK BOX (LINK BOX)	394
Y	3	1	**234-9681**	1	LINK AS-TRACK BOX (LINK BOX, OFFSET)	395

Y-SEPARATE ILLUSTRATION

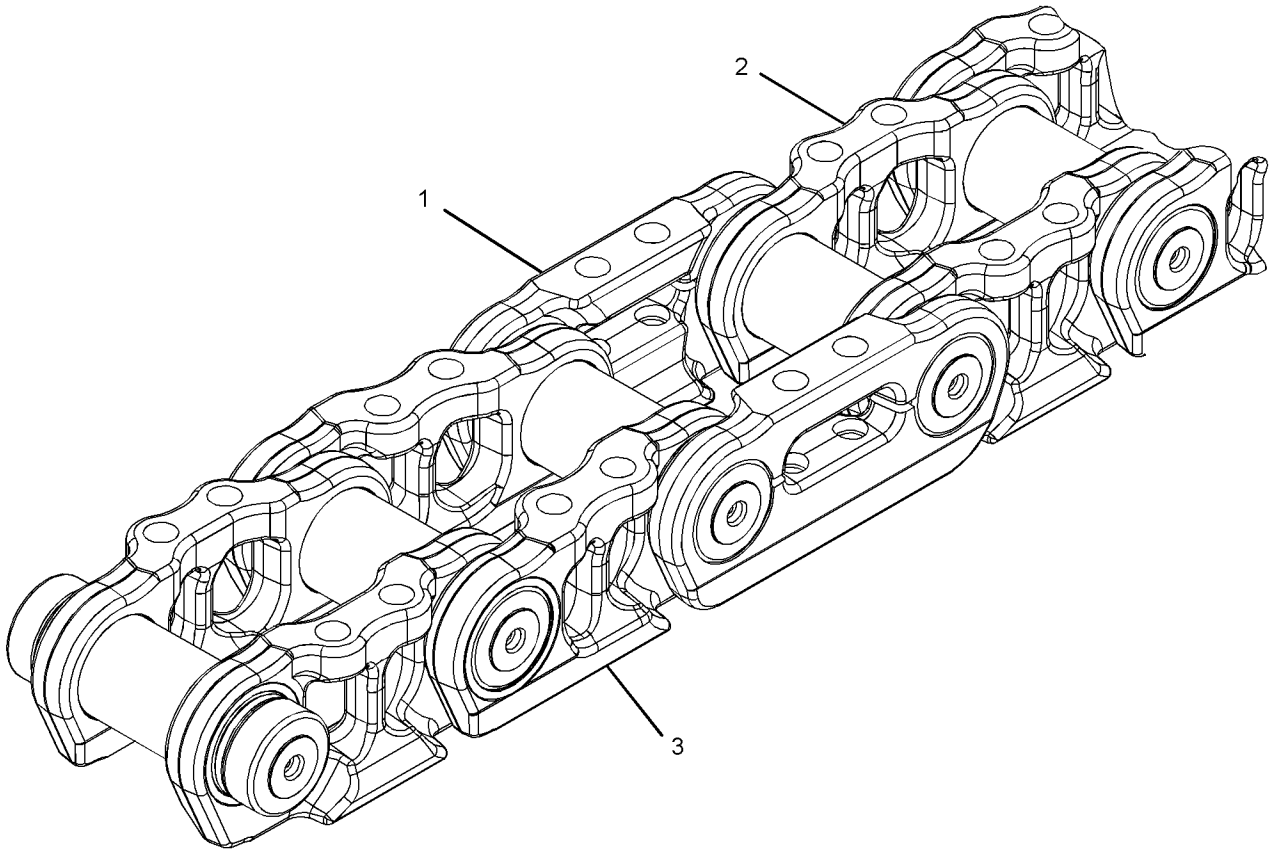

GRAPHIC #1 **<END>** g01197335

UNDERCARRIAGE

169-4368 MOUNTING GP-CARRIER ROLLER

S/N: JDL1-UP
PART OF 218-4982, 278-6368 UNDERCARRIAGE AR
ALSO AN ATTACHMENT

SMCS-4154 **i01349526**

NOTE	REF NO	GRAPHIC REF	PART NUMBER	QTY	PART NAME 1 2 3 4 5 6 (PRODUCT LEVEL)	SEE PAGE
M	1	1	**7X-2575**	4	BOLT (M24X3X60-MM)	
M	2	1	**8T-4187**	2	BOLT (M20X2.5X80-MM)	
	3	1	**8T-4123**	2	WASHER-PLATED (22X35X3.5-MM THK)	
	4	1	**171-0808**	1	BRACKET	
	5	1	**8T-4167**	4	WASHER-HARD (26X44X4-MM THK)	

M-METRIC PART

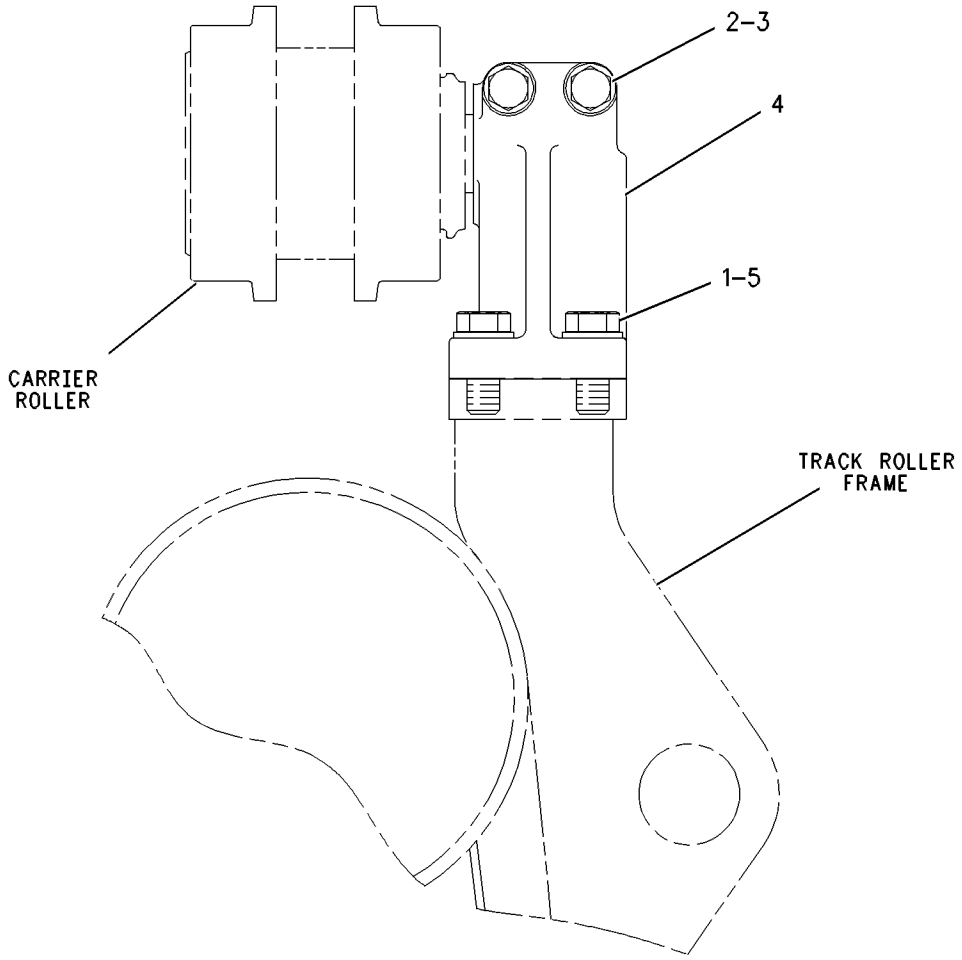

GRAPHIC #1 **<END>** g00607917

223-0647 PIVOT BAR GP

S/N: JDL1-UP; GMT1-UP
1880-MM (74-IN) GAUGE
PART OF 218-4982, 222-8667, 278-6367, 278-6368 UNDERCARRIAGE AR
ALSO AN ATTACHMENT

SMCS-4153 **i02429898**

NOTE	REF NO	GRAPHIC REF	PART NUMBER	QTY	PART NAME 1 2 3 4 5 6 (PRODUCT LEVEL)	SEE PAGE
	1	1	**5G-8993**	2	RETAINER	
	2	1	**5G-9842**	2	SEAL	
	3	1	**5G-9843**	2	PLATE	
	4	1	**224-0881**	2	SHAFT AS-PIVOT	
					(EACH INCLUDES)	
		1	**5G-9841**	1	RING	
	5	1	**238-4520**	2	PLATE AS	
M	6	1	**7X-2580**	16	BOLT (M30X3.5X90-MM)	
	7	1	**8E-1900**	2	WASHER-THRUST (112X150X6.35-MM THK)	
M	8	1	**8T-0375**	12	BOLT (M16X2X45-MM)	
	9	1	**8T-4123**	10	WASHER-PLATED (22X35X3.5-MM THK)	
M	10	1	**8T-5460**	10	BOLT (M20X2.5X40-MM)	
	11	1	**9M-3786**	2	SEAL-O-RING	

M-METRIC PART

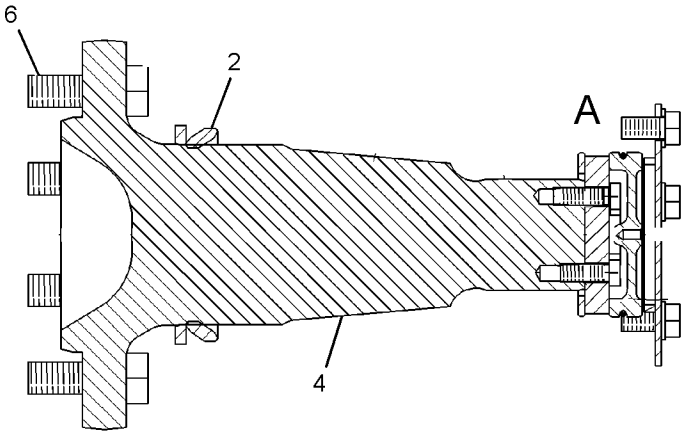

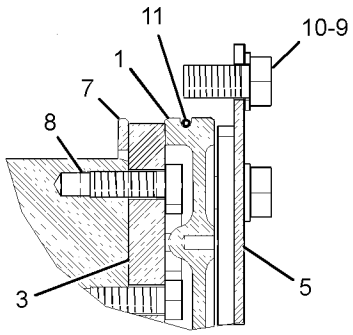

VIEW OF AREA A

GRAPHIC #1 **<END>** g01206580

UNDERCARRIAGE

125-4177 ROLLER AR-TRACK

S/N: GMT1-UP
PART OF 203-6415 GUIDING AR-UNDERCARRIAGE
AN ATTACHMENT

SMCS-4180 **i02462602**

NOTE	PART NUMBER	QTY	PART NAME 1 2 3 4 5 6 (PRODUCT LEVEL)	SEE PAGE
Y	**231-3089**	8	ROLLER GP-TRACK-DOUBLE FLANGE	407
Y-SEPARATE ILLUSTRATION				

<END>

125-5533 ROLLER AR-TRACK

S/N: JDL1-UP
PART OF 203-6440 GUIDING AR-UNDERCARRIAGE
AN ATTACHMENT

SMCS-4180 **i02462603**

NOTE	PART NUMBER	QTY	PART NAME 1 2 3 4 5 6 (PRODUCT LEVEL)	SEE PAGE
Y	**231-3089**	10	ROLLER GP-TRACK-DOUBLE FLANGE	407
Y-SEPARATE ILLUSTRATION				

<END>

235-5974 ROLLER GP-TRACK CARRIER–SYSTEMONE

S/N: JDL1-UP

PART OF 218-4982, 278-6368 UNDERCARRIAGE AR

ALSO AN ATTACHMENT

SMCS-4154 **i02430393**

NOTE	REF NO	GRAPHIC REF	PART NUMBER	QTY	PART NAME 1 2 3 4 5 6 (PRODUCT LEVEL)	SEE PAGE
	1	1	**6Y-0925**	1	SEAL GP-DUO-CONE	
		1	**8H-2262**	2	RING-TORIC	
	2	1	**8P-6188**	1	PLATE-RETAINER	
	3	1	**9W-2146**	1	PLUG	
	4	1	**126-1347**	2	BEARING AS-SPECIAL	
M	5	1	**192-4744**	2	BOLT (M10X1.5X20-MM)	

M-METRIC PART

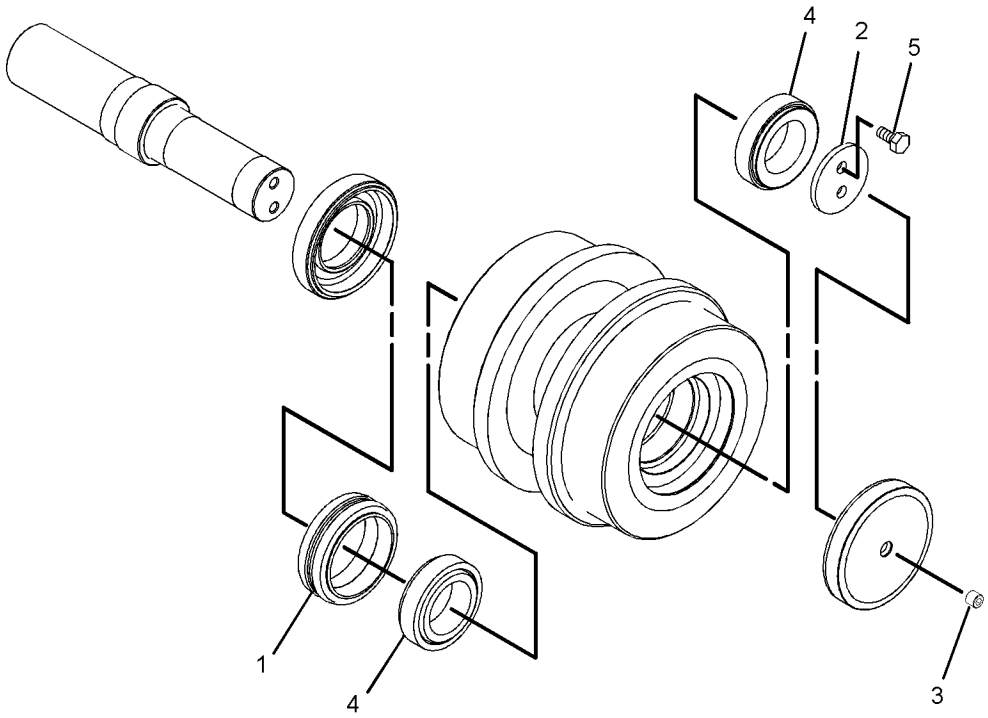

GRAPHIC #1 **<END>** g01102416

125-4176 ROLLER GP-TRACK-DOUBLE FLANGE—HEAVY-DUTY

S/N: JDL1-UP; GMT1-UP
PART OF 278-6367, 278-6368 UNDERCARRIAGE AR
FIELD REPLACEMENT ORDER 231-3088—PAGE 405
AN ATTACHMENT

SMCS-4180 **i02462605**

NOTE	PART NUMBER	QTY	PART NAME 1 2 3 4 5 6 (PRODUCT LEVEL)	SEE PAGE
YR	**231-3088**	1	ROLLER GP-TRACK-DOUBLE FLANGE	405
M	**6V-5845**	4	BOLT (M20X2.5X70-MM)	
	8T-3282	4	WASHER-HARD (22X35X3.5-MM THK)	

M-METRIC PART
R-REMFG PART MAY BE AVAILABLE
Y-SEPARATE ILLUSTRATION

<END>

231-3088 ROLLER GP-TRACK-DOUBLE FLANGE—HEAVY-DUTY*R

S/N: JDL1-UP; GMT1-UP
PART OF 125-4176 ROLLER GP-TRACK-DOUBLE FLANGE
FIELD REPLACEMENT FOR 125-4176—PAGE 404
AN ATTACHMENT

SMCS-4180 **i02294648**

NOTE	REF NO	GRAPHIC REF	PART NUMBER	QTY	PART NAME 1 2 3 4 5 6 (PRODUCT LEVEL)	SEE PAGE
	1	1	**116-6702**	1	SHAFT-TRACK ROLLER	
	2	1	**120-5785**	2	COLLAR-END	
	3	1	**117-9748**	2	RING-RETAINING	
	4	1	**2H-3928**	2	SEAL-O-RING	
	5	1	**120-5767**	1	RIM AS-DOUBLE FLANGE	
	6	1	**116-6698**	2	BUSHING AS	
					(EACH INCLUDES)	
	6A	1	**8P-5197**	1	BEARING AS	
	6B	1	**9B-2289**	2	PIN	
	7	1	**171-5882**	2	SEAL GP-DUO-CONE	
					(EACH INCLUDES)	
	7A	1	**162-2166**	2	RING-TORIC	
Z	7B	1		2	SEAL-RING	
	8	1	**5F-8000**	2	SEAL-O-RING	
	9	1	**5M-4443**	2	RING-LOCK	
	10	1	**6Y-0473**	1	PLUG-CLEAR	
	10A	1	**7G-4332**	1	STOPPER	

Z-NOT SERVICED SEPARATELY

231-3088 ROLLER GP-TRACK-DOUBLE FLANGE *(contd.)* i02294648

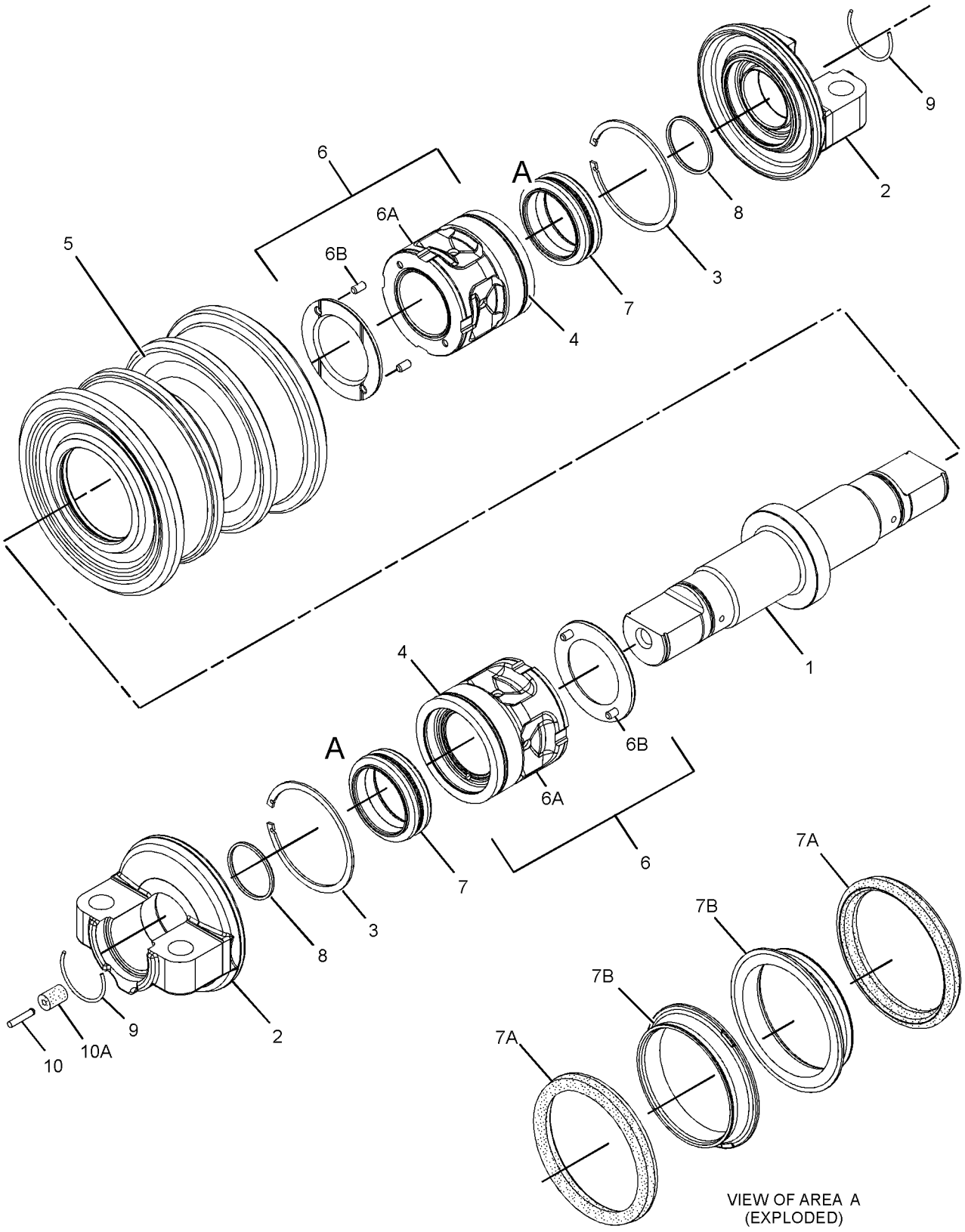

GRAPHIC #1 **<END>** g01157776

231-3089 ROLLER GP-TRACK-DOUBLE FLANGE

S/N: JDL1-UP; GMT1-UP
PART OF 125-4177, 125-5533 ROLLER AR-TRACK
AN ATTACHMENT

SMCS-4180 **i02331784**

NOTE	REF NO	GRAPHIC REF	PART NUMBER	QTY	PART NAME 1 2 3 4 5 6 (PRODUCT LEVEL)	SEE PAGE
	1	1	**116-6702**	1	SHAFT-TRACK ROLLER	
	2	1	**120-5785**	2	COLLAR-END	
	3	1	**117-9748**	2	RING-RETAINING	
	4	1	**2H-3928**	2	SEAL-O-RING	
	5	1	**120-5804**	1	RIM AS-DOUBLE FLANGE	
	6	1	**116-6698**	2	BUSHING AS	
					(EACH INCLUDES)	
		1	**2P-8046**	1	BEARING-SLEEVE	
		1	**9B-2289**	2	PIN	
	7	1	**171-5882**	2	SEAL GP-DUO-CONE	
					(EACH INCLUDES)	
	7A	1	**162-2166**	2	RING-TORIC	
Z	7B	1		2	SEAL-RING	
	8	1	**5F-8000**	2	SEAL-O-RING	
	9	1	**5M-4443**	2	RING-LOCK	
	10	1	**6Y-0473**	1	PLUG-CLEAR	
	11	1	**7G-4332**	1	STOPPER	

Z-NOT SERVICED SEPARATELY

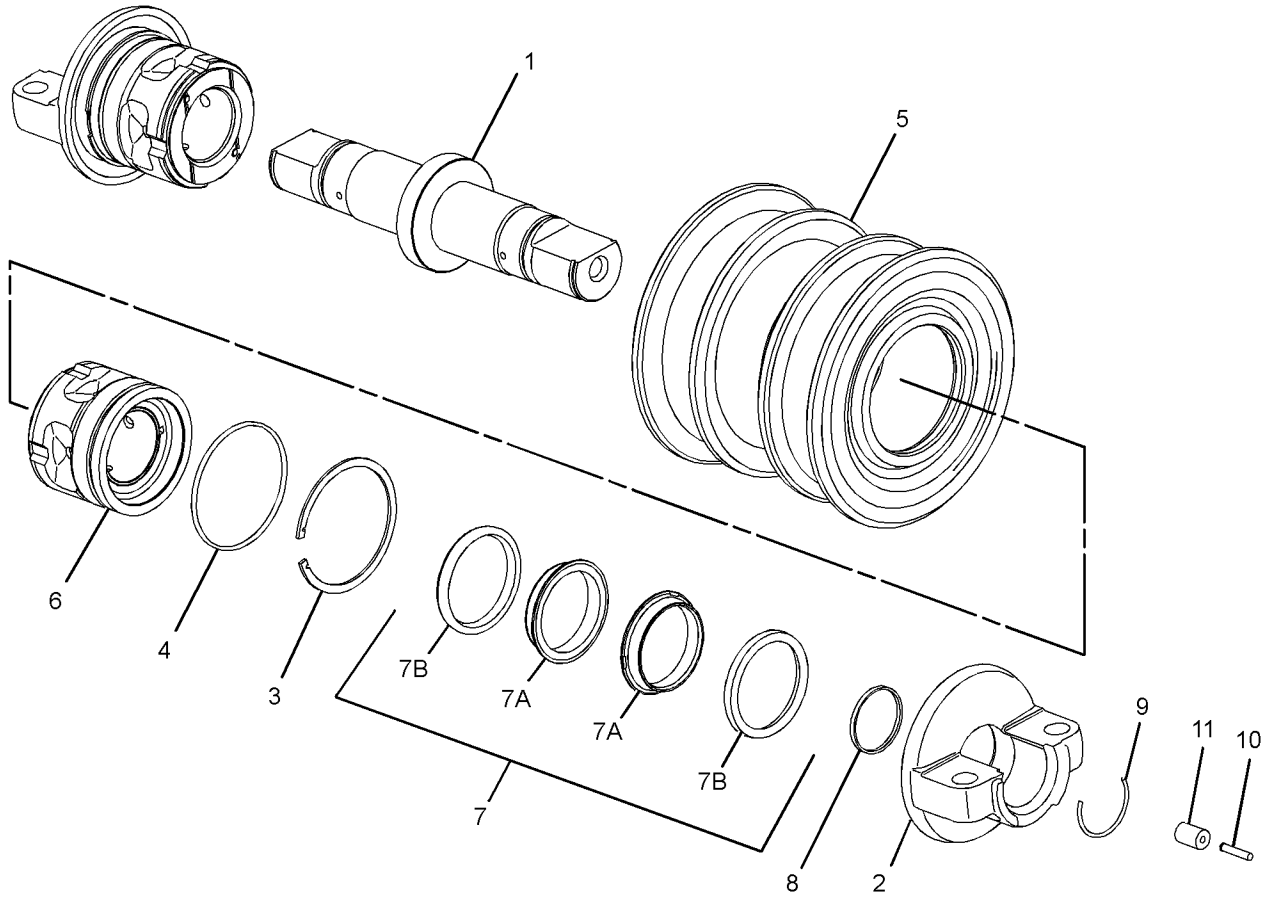

GRAPHIC #1 **<END>** g01185294

125-4175 ROLLER GP-TRACK-SINGLE FLANGE—HEAVY-DUTY

S/N: JDL1-UP; GMT1-UP
PART OF 278-6367, 278-6368 UNDERCARRIAGE AR
FIELD REPLACEMENT ORDER 231-3087—PAGE 409
AN ATTACHMENT

SMCS-4180 **i02462607**

NOTE	PART NUMBER	QTY	PART NAME 1 2 3 4 5 6 (PRODUCT LEVEL)	SEE PAGE
YR	**231-3087**	1	ROLLER GP-TRACK-SINGLE FLANGE	409
M	**6V-5845**	4	BOLT (M20X2.5X70-MM)	
	8T-3282	4	WASHER-HARD (22X35X3.5-MM THK)	

M-METRIC PART
R-REMFG PART MAY BE AVAILABLE
Y-SEPARATE ILLUSTRATION

<END>

231-3087 ROLLER GP-TRACK-SINGLE FLANGE–HEAVY-DUTY*R

S/N: JDL1-UP; GMT1-UP
PART OF 125-4175 ROLLER GP-TRACK-SINGLE FLANGE
FIELD REPLACEMENT FOR 125-4175–PAGE 408
AN ATTACHMENT

SMCS-4180 **i02342309**

NOTE	REF NO	GRAPHIC REF	PART NUMBER	QTY	PART NAME 1 2 3 4 5 6 (PRODUCT LEVEL)	SEE PAGE
	1	1	**116-6702**	1	SHAFT-TRACK ROLLER	
	2	1	**120-5785**	2	COLLAR-END	
	3	1	**117-9748**	2	RING-RETAINING	
	4	1	**2H-3928**	2	SEAL-O-RING	
	5	1	**120-5753**	1	RIM AS-SINGLE FLANGE	
	6	1	**5M-4443**	2	RING-LOCK	
	7	1	**171-5882**	2	SEAL GP-DUO-CONE	
					(EACH INCLUDES)	
	7A	1	**162-2166**	2	RING-TORIC	
Z	7B	1		2	SEAL-RING	
	8	1	**5F-8000**	2	SEAL-O-RING	
	9	1	**6Y-0473**	1	PLUG-CLEAR	
	10	1	**7G-4332**	1	STOPPER	
	11	1	**116-6698**	2	BUSHING AS	
			8P-5197	1	BEARING AS	
			9B-2289	2	PIN	

Z-NOT SERVICED SEPARATELY

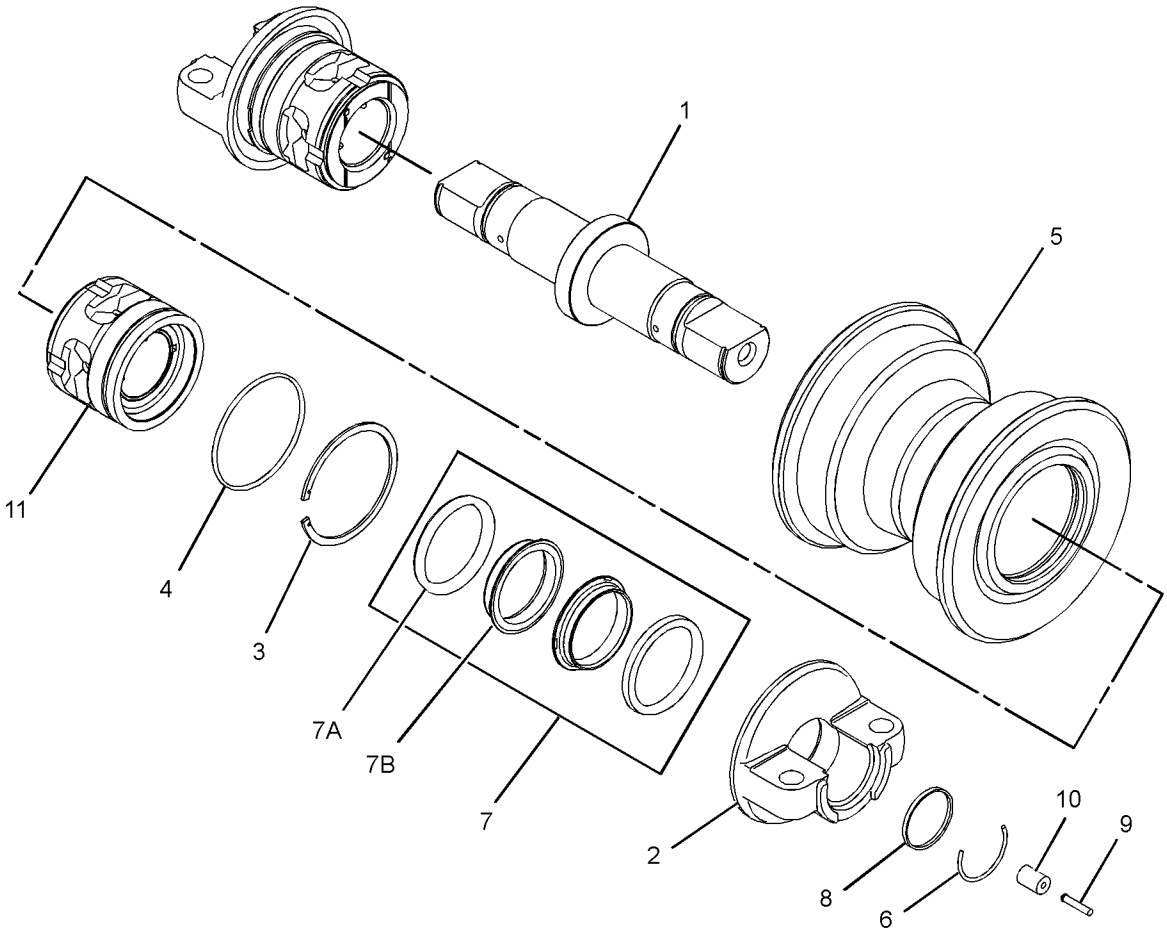

GRAPHIC #1 **<END>** g01190036

235-4157 ROLLER GP-TRACK-SINGLE FLANGE

S/N: JDL1-UP; GMT1-UP

PART OF 218-4982, 222-8667 UNDERCARRIAGE AR

SMCS-4180 **i02430436**

NOTE	REF NO	GRAPHIC REF	PART NUMBER	QTY	PART NAME 1 2 3 4 5 6 (PRODUCT LEVEL)	SEE PAGE
	1	1	**2H-3928**	2	SEAL-O-RING	
	2	1	**6Y-0473**	1	PLUG-CLEAR	
	2A	1	**7G-4332**	1	STOPPER	
	3	1	**116-6698**	2	BUSHING AS	
					(EACH INCLUDES)	
	3A	1	**8P-5197**	1	BEARING AS	
		1	**9B-2289**	2	PIN	
	4	1	**171-5882**	2	SEAL GP-DUO-CONE	
					(EACH INCLUDES)	
	4A	1	**162-2166**	2	RING-TORIC	
Z	4B	1		2	SEAL-RING	
Z	5	1		1	SHAFT-TRACK ROLLER	
Z	6	1		2	COLLAR-SEAL	
Z	7	1		1	RIM AS	
	8	1	**117-9748**	2	RING-RETAINING	

Z-NOT SERVICED SEPARATELY

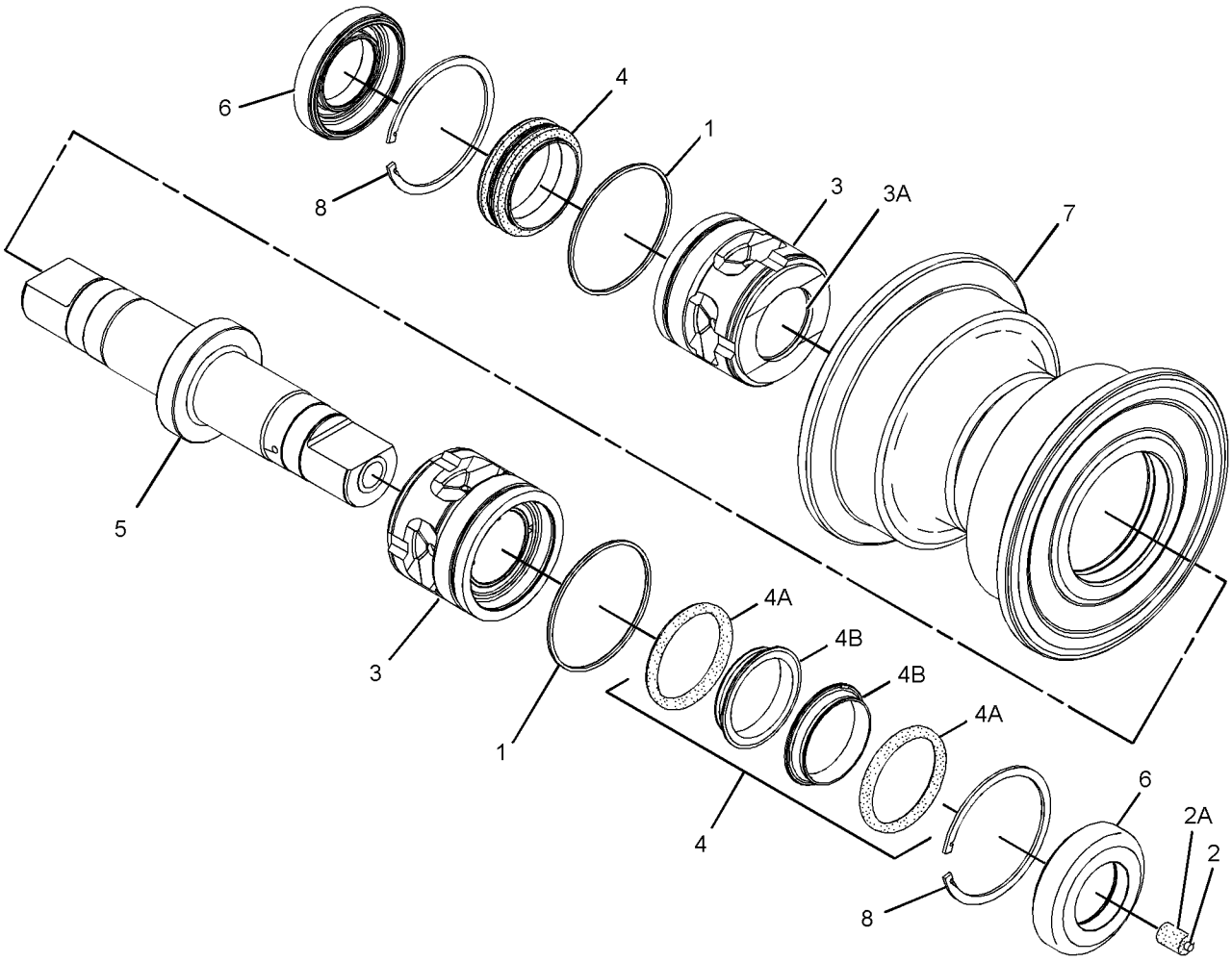

GRAPHIC #1 **<END>** g01216795

238-0451 SCRAPER GP-IDLER

S/N: JDL1-UP; GMT1-UP

PART OF 218-4982, 222-8667 UNDERCARRIAGE AR

SMCS-4152 **i02430389**

NOTE	REF NO	GRAPHIC REF	PART NUMBER	QTY	PART NAME 1 2 3 4 5 6 (PRODUCT LEVEL)	SEE PAGE
	1	1	**238-0452**	4	SCRAPER	
	2	1	**238-0453**	2	SCRAPER	
	3	1	**5P-1076**	16	WASHER-HARD (13.5X30X4-MM THK)	
M	4	1	**8T-4139**	16	BOLT (M12X1.75X30-MM)	

M-METRIC PART

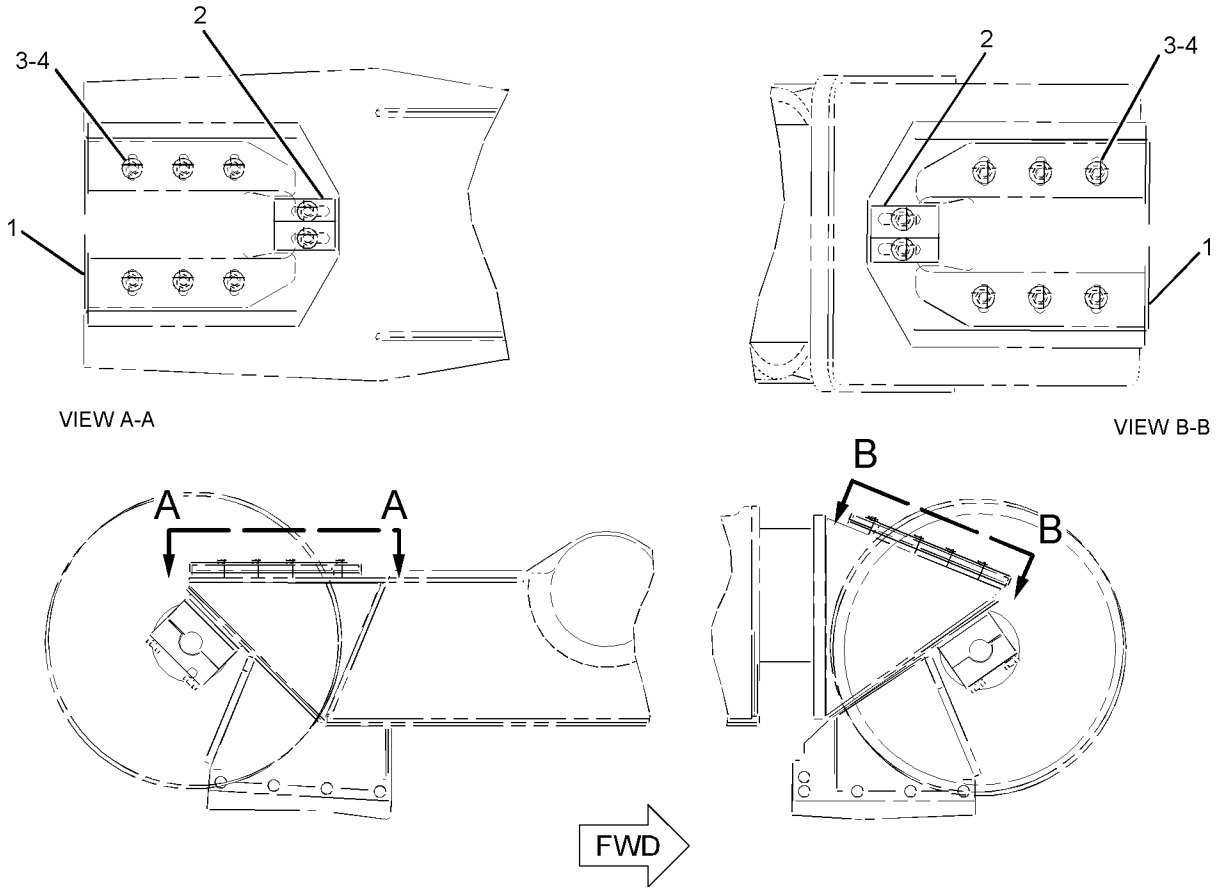

RIGHT SIDE VIEW

GRAPHIC #1 **<END>** g01122271

UNDERCARRIAGE

256-6020 STRIKER GP-REAR

S/N: JDL1-UP; GMT1-UP
CANNOT BE USED WITH RIPPER OR WINCH UNDERCARRIAGE AR
AN ATTACHMENT

SMCS-4150 **i02455660**

NOTE	REF NO	GRAPHIC REF	PART NUMBER	QTY	PART NAME 1 2 3 4 5 6 (PRODUCT LEVEL)	SEE PAGE
	1	1	**1H-4106**	1	PIN AS-DRAWBAR	
	2	1	**7G-6623**	1	HITCH	
	3	1	**8E-9289**	1	LATCH	
	4	1	**226-7269**	1	BAR	
Y	5	1	**256-6021**	1	BAR GP-STRIKER	326
	6	1	**256-6024**	2	BAR	
	7	1	**2J-3507**	10	NUT-FULL (1-8-THD)	
	8	1	**3K-2889**	1	LOCKNUT (5/8-11-THD)	
	9	1	**5D-3118**	10	STUD-TAPERLOCK (1-8-THD)	
	10	1	**5P-8250**	10	WASHER (28X49X5-MM THK)	
	11	1	**7B-9665**	1	PLUG	
	12	1	**7X-0349**	1	BOLT (5/8-11X3-IN)	
M	13	1	**7X-2585**	6	BOLT (M30X3.5X160-MM)	
	14	1	**9X-8258**	6	WASHER (33X56X6-MM THK)	
E	15	1	**149-5933**		SEAL (4-CM EACH)	
E	15A	1	**149-5933**		SEAL (43-CM EACH)	
E	16	1	**238-9166**		SEAL (100-CM)	

E-ORDER BY THE CENTIMETER
M-METRIC PART
Y-SEPARATE ILLUSTRATION

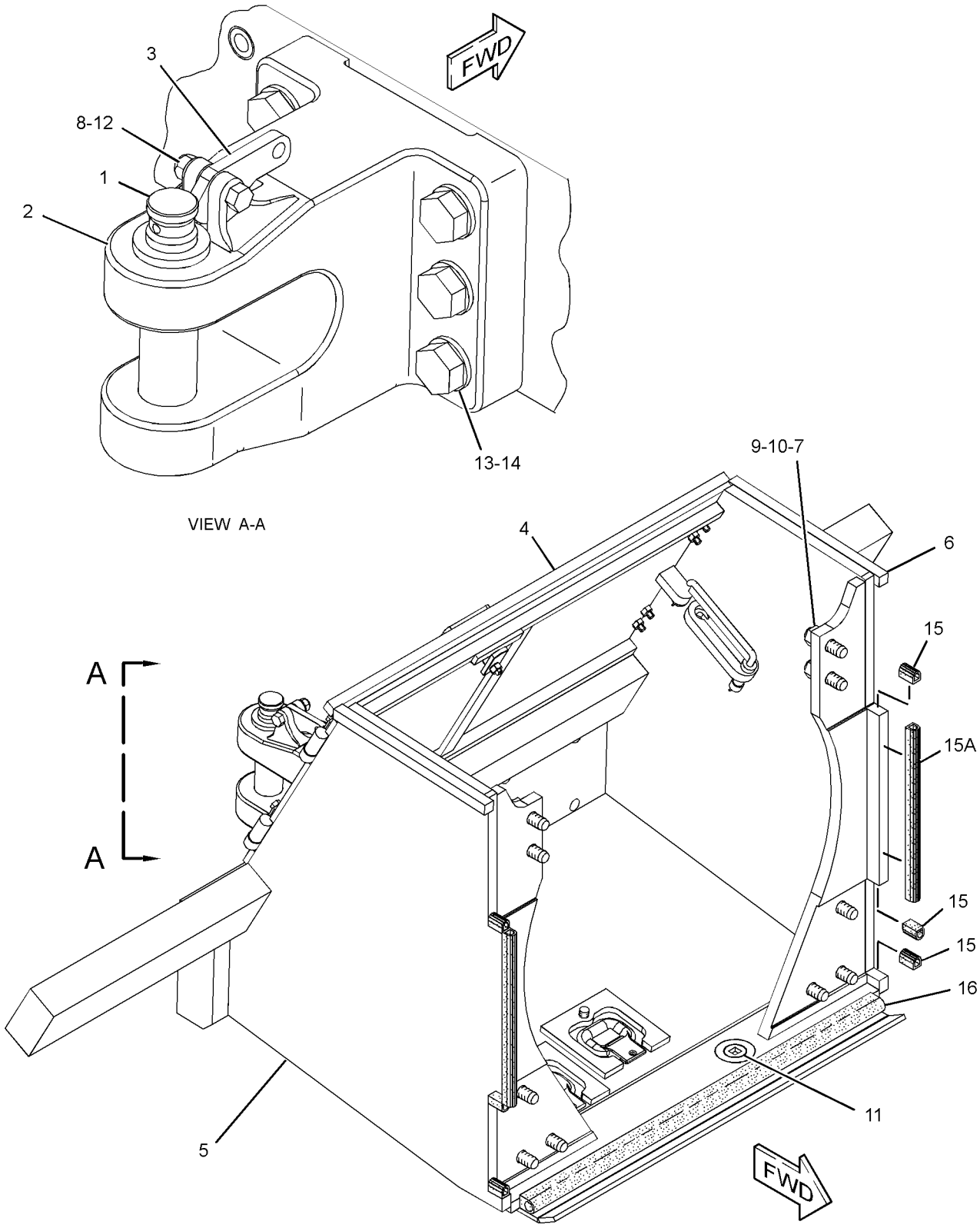

GRAPHIC #1 **<END>** g01210997

223-0659 TRACK ADJUSTER & RECOIL GP

S/N: JDL1-UP; GMT1-UP

PART OF 223-0652, 223-0656, 261-3077, 261-3080 FRAME GP-TELESCOPING RECOIL, 278-6367, 278-6368 UNDERCARRIAGE AR

ALSO AN ATTACHMENT

SMCS-4157, 4158 **i02429903**

NOTE	REF NO	GRAPHIC REF	PART NUMBER	QTY	PART NAME 1 2 3 4 5 6 (PRODUCT LEVEL)	SEE PAGE
	1	1	**2S-5926**	1	FITTING-GREASE	
	2	1	**3T-0598**	1	TUBE	
	3	1	**3W-0640**	1	PISTON	
	4	1	**3W-2369**	1	PLATE AS	
	5	1	**6Y-5799**	2	LOCK	
	6	1	**108-0200**	1	CYLINDER	
	7	1	**190-8609**	1	VALVE-FILL	
	8	1	**214-9080**	1	PLATE AS	
		1	**3W-0329**	1	PLATE	
	9	1	**226-1340**	1	SPRING-RECOIL	
	10	1	**167-2323**	1	SEAL-U-CUP	
	11	1	**2J-6274**	1	SEAL-O-RING	
	12	1	**2S-4078**	1	SEAL-O-RING	
M	13	1	**7X-2553**	4	BOLT (M16X2X40-MM)	
	14	1	**8T-4121**	2	WASHER-HARD (11X21X2.5-MM THK)	
M	15	1	**8T-4182**	2	BOLT (M10X1.5X45-MM)	
	16	1	**9S-8010**	1	PLUG	
	17	1	**9X-8257**	4	WASHER (17.5X30X3.5-MM THK)	

M-METRIC PART

223-0659 **TRACK ADJUSTER & RECOIL GP** *(contd.)* **i02429903**

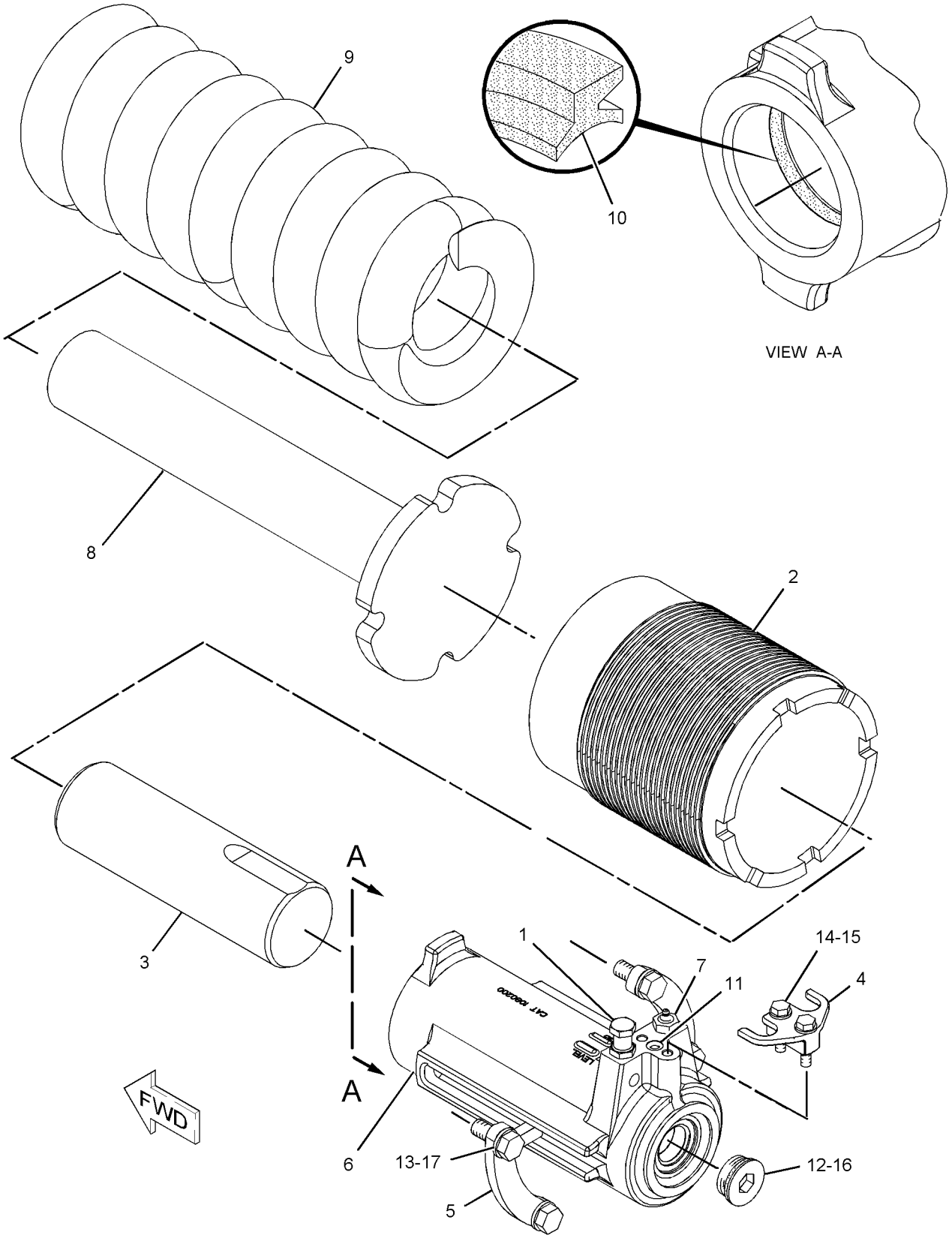

GRAPHIC #1 **<END>** g01145563

UNDERCARRIAGE

1Q-4743 TRACK GP–2-REQUIRED

S/N: JDL1-UP

610-MM (24-IN) GROUSER SHOE. SEALED, LUBRICATED, EXTREME SERVICE, HEAVY DUTY AN ATTACHMENT

SMCS-4170 **i01818064**

NOTE	PART NUMBER	QTY	PART NAME 1 2 3 4 5 6 (PRODUCT LEVEL)	SEE PAGE
Y	**6I-9671**	1	LINK AS-TRACK	393
	6V-1792	160	BOLT-TRACK (3/4-16X2.4-IN)	
	9S-1838	4	BOLT-MASTER TRACK (3/4-16X4.13-IN)	
	1S-1860	160	NUT-TRACK (3/4-16-THD)	
	6Y-6397	1	SHOE-MASTER TRACK	
	1Q-4930	40	SHOE-TRACK	
Y-SEPARATE ILLUSTRATION				

<END>

6I-9641 TRACK GP–2 REQUIRED

S/N: GMT1-UP

560MM (22 IN)GROUSER SHOE. SEALED, LUBRICATED, MODERATE SERVICE, HEAVY DUTY AN ATTACHMENT

SMCS-4170 **i01874003**

NOTE	PART NUMBER	QTY	PART NAME 1 2 3 4 5 6 (PRODUCT LEVEL)	SEE PAGE
Y	**6I-9668**	1	LINK AS-TRACK	392
	6V-1792	152	BOLT-TRACK (3/4-16X2.4 IN)	
	9S-1588	4	BOLT	
	1S-1860	152	NUT-TRACK (3/4-16 THD)	
	6Y-6294	1	SHOE-MASTER TRACK	
	6Y-6286	38	SHOE-TRACK	
Y-SEPARATE ILLUSTRATION				

<END>

6I-9644 TRACK GP–2-REQUIRED

S/N: GMT1-UP

560-MM (22-IN) GROUSER SHOE. SEALED, LUBRICATED, EXTREME SERVICE, HEAVY DUTY AN ATTACHMENT

SMCS-4170 **i01543713**

NOTE	PART NUMBER	QTY	PART NAME 1 2 3 4 5 6 (PRODUCT LEVEL)	SEE PAGE
Y	**6I-9668**	1	LINK AS-TRACK	392
	6V-1792	152	BOLT-TRACK (3/4-16X2.4-IN)	
	9S-1838	4	BOLT-MASTER TRACK (3/4-16X4.13-IN)	
	1S-1860	152	NUT-TRACK (3/4-16-THD)	
	6Y-6389	38	SHOE-TRACK	
	6Y-6412	1	SHOE-MASTER TRACK	
Y-SEPARATE ILLUSTRATION				

<END>

6I-9653 TRACK GP—2-REQUIRED

S/N: JDL1-UP
560-MM (22-IN) GROUSER SHOE.
SEALED, LUBRICATED, MODERATE SERVICE, HEAVY DUTY
AN ATTACHMENT

SMCS-4170 **i00599896**

NOTE	PART NUMBER	QTY	PART NAME 1 2 3 4 5 6 (PRODUCT LEVEL)	SEE PAGE
Y	**6I-9671**	1	LINK AS-TRACK	393
	9S-1838	4	BOLT-MASTER TRACK (3/4-16X4.13-IN)	
	6V-1792	160	BOLT-TRACK (3/4-16X2.4-IN)	
	1S-1860	160	NUT-TRACK (3/4-16-THD)	
	6Y-6294	1	SHOE-MASTER TRACK	
	6Y-6286	40	SHOE-TRACK	
Y-SEPARATE ILLUSTRATION				

<END>

6I-9654 TRACK GP—2-REQUIRED

S/N: JDL1-UP
610-MM (24-IN) GROUSER SHOE.
SEALED, LUBRICATED, MODERATE SERVICE, HEAVY DUTY
AN ATTACHMENT

SMCS-4170 **i01818443**

NOTE	PART NUMBER	QTY	PART NAME 1 2 3 4 5 6 (PRODUCT LEVEL)	SEE PAGE
Y	**6I-9671**	1	LINK AS-TRACK	393
	6V-1792	160	BOLT-TRACK (3/4-16X2.4-IN)	
	9S-1838	4	BOLT-MASTER TRACK (3/4-16X4.13-IN)	
	1S-1860	160	NUT-TRACK (3/4-16-THD)	
	6Y-6296	1	SHOE-MASTER TRACK	
	6Y-6287	40	SHOE-TRACK	
Y-SEPARATE ILLUSTRATION				

<END>

6I-9656 TRACK GP—2-REQUIRED

S/N: JDL1-UP
560-MM (22-IN) GROUSER SHOE. SEALED, LUBRICATED, EXTREME SERVICE, HEAVY DUTY
AN ATTACHMENT

SMCS-4170 **i01851562**

NOTE	PART NUMBER	QTY	PART NAME 1 2 3 4 5 6 (PRODUCT LEVEL)	SEE PAGE
Y	**6I-9671**	1	LINK AS-TRACK	393
	6V-1792	160	BOLT-TRACK (3/4-16X2.4-IN)	
	9S-1838	4	BOLT-MASTER TRACK (3/4-16X4.13-IN)	
	1S-1860	160	NUT-TRACK (3/4-16-THD)	
	6Y-6389	40	SHOE-TRACK	
	6Y-6412	1	SHOE-MASTER TRACK	
Y-SEPARATE ILLUSTRATION				

<END>

234-9670 TRACK GP—2-REQUIRED, SYSTEMONE

S/N: GMT1-UP
560-MM (22-IN) GROUSER SHOE. SEALED, LUBRICATED, MODERATE SERVICE
PART OF 222-8667 UNDERCARRIAGE AR

SMCS-4170 **i02431965**

NOTE	PART NUMBER	QTY	PART NAME 1 2 3 4 5 6 (PRODUCT LEVEL)	SEE PAGE
Y	**234-9672**	1	LINK GP-TRACK (SYSTEMONE)	398
M	**6Y-9024**	156	BOLT-TRACK (M22X1.5X67-MM)	
	234-9699	2	LINK-TRACK	
M	**9W-4381**	156	NUT-TRACK (M22X1.5-THD)	
	234-9704	39	SHOE-TRACK	

M-METRIC PART
Y-SEPARATE ILLUSTRATION

<END>

234-9671 TRACK GP—2-REQUIRED, SYSTEMONE

S/N: GMT1-UP
610-MM (24-IN) GROUSER SHOE. SEALED, LUBRICATED, MODERATE SERVICE
FOR USE WITH SYSTEMONE ROLLERS, GUARDS, & GUIDESTRIPS
AN ATTACHMENT

SMCS-4170 **i02455069**

NOTE	PART NUMBER	QTY	PART NAME 1 2 3 4 5 6 (PRODUCT LEVEL)	SEE PAGE
Y	**234-9672**	1	LINK GP-TRACK (SYSTEMONE)	398
M	**6Y-9024**	156	BOLT-TRACK (M22X1.5X67-MM)	
	234-9699	2	LINK-TRACK	
M	**9W-4381**	156	NUT-TRACK (M22X1.5-THD)	
	234-9705	39	SHOE-TRACK	

M-METRIC PART
Y-SEPARATE ILLUSTRATION

<END>

UNDERCARRIAGE

234-9675 TRACK GP–2-REQUIRED, SYSTEMONE

S/N: JDL1-UP

560-MM (22-IN) GROUSER SHOE. SEALED, LUBRICATED, MODERATE SERVICE

PART OF 218-4982 UNDERCARRIAGE AR

FOR USE WITH SYSTEMONE ROLLERS, GUARDS, GUIDE STRIPS

SMCS-4170 **i02430439**

NOTE	PART NUMBER	QTY	PART NAME 1 2 3 4 5 6 (PRODUCT LEVEL)	SEE PAGE
Y	**234-9678**	1	LINK GP-TRACK (SYSTEMONE)	399
M	**6Y-9024**	164	BOLT-TRACK (M22X1.5X67-MM)	
	234-9699	2	LINK-TRACK	
M	**9W-4381**	164	NUT-TRACK (M22X1.5-THD)	
	234-9704	41	SHOE-TRACK	

M-METRIC PART
Y-SEPARATE ILLUSTRATION

<END>

234-9676 TRACK GP–2-REQUIRED, SYSTEMONE

S/N: JDL1-UP

610-MM (24-IN) GROUSER SHOE. SEALED, LUBRICATED, MODERATE SERVICE

FOR USE WITH SYSTEMONE ROLLERS, GUARDS, GUIDE STRIPS

AN ATTACHMENT

SMCS-4170 **i02456924**

NOTE	PART NUMBER	QTY	PART NAME 1 2 3 4 5 6 (PRODUCT LEVEL)	SEE PAGE
Y	**234-9678**	1	LINK GP-TRACK (SYSTEMONE)	399
M	**6Y-9024**	164	BOLT-TRACK (M22X1.5X67-MM)	
	234-9699	2	LINK-TRACK	
M	**9W-4381**	164	NUT-TRACK (M22X1.5-THD)	
	234-9705	41	SHOE-TRACK	

M-METRIC PART
Y-SEPARATE ILLUSTRATION

<END>

246-5215 TRACK GP–2-REQUIRED, SYSTEMONE

S/N: GMT1-UP
560-MM (22-IN) GROUSER SHOE. SEALED, LUBRICATED, EXTREME SERVICE
AN ATTACHMENT

SMCS-4170 **i02454229**

NOTE	PART NUMBER	QTY	PART NAME 1 2 3 4 5 6 (PRODUCT LEVEL)	SEE PAGE
Y	**234-9672**	1	LINK GP-TRACK (SYSTEMONE)	398
M	**6Y-9024**	156	BOLT-TRACK (M22X1.5X67-MM)	
	234-9699	2	LINK-TRACK	
M	**9W-4381**	156	NUT-TRACK (M22X1.5-THD)	
	246-5140	39	SHOE-TRACK	

M-METRIC PART
Y-SEPARATE ILLUSTRATION

<END>

246-5216 TRACK GP–2-REQUIRED, SYSTEMONE

S/N: JDL1-UP
560-MM (22-IN) GROUSER SHOE. SEALED, LUBRICATED, EXTREME SERVICE
FOR USE WITH SYSTEMONE ROLLERS, GUARDS, GUIDE STRIPS
AN ATTACHMENT

SMCS-4170 **i02350252**

NOTE	PART NUMBER	QTY	PART NAME 1 2 3 4 5 6 (PRODUCT LEVEL)	SEE PAGE
Y	**234-9678**	1	LINK GP-TRACK (SYSTEMONE)	399
M	**6Y-9024**	164	BOLT-TRACK (M22X1.5X67-MM)	
	234-9699	2	LINK-TRACK	
M	**9W-4381**	164	NUT-TRACK (M22X1.5-THD)	
	246-5140	41	SHOE-TRACK	

M-METRIC PART
Y-SEPARATE ILLUSTRATION

<END>

246-5217 TRACK GP–2-REQUIRED, SYSTEMONE

S/N: GMT1-UP

610-MM (24-IN) GROUSER SHOE. SEALED, LUBRICATED, EXTREME SERVICE
FOR USE WITH SYSTEMONE ROLLERS, GUARDS, & GUIDESTRIPS
AN ATTACHMENT

SMCS-4170 **i02455063**

NOTE	PART NUMBER	QTY	PART NAME 1 2 3 4 5 6 (PRODUCT LEVEL)	SEE PAGE
Y	**234-9672**	1	LINK GP-TRACK (SYSTEMONE)	398
M	**6Y-9024**	156	BOLT-TRACK (M22X1.5X67-MM)	
	234-9699	2	LINK-TRACK	
M	**9W-4381**	156	NUT-TRACK (M22X1.5-THD)	
	246-5203	39	SHOE-TRACK	

M-METRIC PART
Y-SEPARATE ILLUSTRATION

<END>

246-5218 TRACK GP–2-REQUIRED, SYSTEMONE

S/N: JDL1-UP

610-MM (24-IN) GROUSER SHOE. SEALED, LUBRICATED, EXTREME SERVICE
FOR USE WITH SYSTEMONE ROLLERS, GUARDS, GUIDE STRIPS
AN ATTACHMENT

SMCS-4170 **i02456897**

NOTE	PART NUMBER	QTY	PART NAME 1 2 3 4 5 6 (PRODUCT LEVEL)	SEE PAGE
Y	**234-9678**	1	LINK GP-TRACK (SYSTEMONE)	399
M	**6Y-9024**	164	BOLT-TRACK (M22X1.5X67-MM)	
	234-9699	2	LINK-TRACK	
M	**9W-4381**	164	NUT-TRACK (M22X1.5-THD)	
	246-5203	41	SHOE-TRACK	

M-METRIC PART
Y-SEPARATE ILLUSTRATION

<END>

UNDERCARRIAGE

218-4982 UNDERCARRIAGE AR

S/N: JDL1-UP

PART OF 218-4976 GENERAL AR

SMCS-4150 **i02429896**

NOTE	PART NUMBER	QTY	PART NAME 1 2 3 4 5 6 (PRODUCT LEVEL)	SEE PAGE
Y	*229-7373*	1	BAR GP-EQUALIZER	368
Y	*267-4746*	8	CAP GP-TRACK IDLER (SYSTEMONE)	373
Y	*215-9599*	14	CAP GP-TRACK ROLLER (SYSTEMONE)	374
Y	*223-0652*	1	FRAME GP-TELESCOPING RECOIL (RH)	375
Y	*223-0656*	1	FRAME GP-TELESCOPING RECOIL (LH)	377
Y	**227-8715**	4	IDLER GP-FRONT	388
Y	*169-4368*	2	MOUNTING GP-CARRIER ROLLER (SYSTEMONE)	400
Y	*223-0647*	1	PIVOT BAR GP	401
Y	**235-5974**	2	ROLLER GP-TRACK CARRIER (SYSTEMONE)	403
Y	**235-4157**	14	ROLLER GP-TRACK-SINGLE FLANGE (SYSTEMONE)	410
Y	*238-0451*	2	SCRAPER GP-IDLER	411
Y	**234-9675**	2	TRACK GP	419
	156-5342	8	SHIM (10-MM THK)	

Y-SEPARATE ILLUSTRATION

<END>

222-8667 UNDERCARRIAGE AR

S/N: GMT1-UP

PART OF 222-1591 GENERAL AR

SMCS-4150 **i02429895**

NOTE	PART NUMBER	QTY	PART NAME 1 2 3 4 5 6 (PRODUCT LEVEL)	SEE PAGE
Y	*229-7373*	1	BAR GP-EQUALIZER	368
Y	*267-4746*	8	CAP GP-TRACK IDLER (SYSTEMONE)	373
Y	*215-9599*	12	CAP GP-TRACK ROLLER (SYSTEMONE)	374
Y	*261-3077*	1	FRAME GP-TELESCOPING RECOIL (RH)	379
Y	*261-3080*	1	FRAME GP-TELESCOPING RECOIL (LH)	381
Y	**227-8715**	4	IDLER GP-FRONT	388
Y	*223-0647*	1	PIVOT BAR GP	401
Y	**235-4157**	12	ROLLER GP-TRACK-SINGLE FLANGE (SYSTEMONE)	410
Y	*238-0451*	2	SCRAPER GP-IDLER	411
Y	**234-9670**	2	TRACK GP (SYSTEMONE)	418
	156-5342	8	SHIM (10-MM THK)	

Y-SEPARATE ILLUSTRATION

<END>

UNDERCARRIAGE

278-6367 UNDERCARRIAGE AR—HEAVY-DUTY

S/N: GMT1-UP
FOR USE WITH HEAVY-DUTY TRACK GP
AN ATTACHMENT

SMCS-4150 **i02454225**

NOTE	PART NUMBER	QTY	PART NAME 1 2 3 4 5 6 (PRODUCT LEVEL)	SEE PAGE
Y	*229-7373*	1	BAR GP-EQUALIZER	368
Y	*108-1091*	8	CAP GP-TRACK IDLER	372
Y	**202-4304**	4	IDLER GP-TRACK	391
Y	*223-0647*	1	PIVOT BAR GP	401
Y	*125-4176*	4	ROLLER GP-TRACK-DOUBLE FLANGE	404
Y	*125-4175*	8	ROLLER GP-TRACK-SINGLE FLANGE	408
Y	*223-0659*	2	TRACK ADJUSTER & RECOIL GP	414
	3T-2077	2	BEARING	
M	**8T-4136**	8	BOLT (M10X1.5X25-MM)	
M	**8T-4139**	32	BOLT (M12X1.75X30-MM)	
M	**8T-4184**	24	BOLT (M12X1.75X45-MM)	
	268-9710	2	COVER AS	
			(EACH INCLUDES)	
	8E-1211	1	COVER	
	7B-3028	4	SCREW-DRIVE (NO 4X3/16-IN)	
	253-1346	1	PLATE-WARNING (HIGH PRESSURE CYLINDER)	
	224-4120	2	FRAME AS (FRONT)	
			(EACH INCLUDES)	
	3T-1162	1	BEARING-SLEEVE	
	4B-4158	4	SCREW-DRIVE (3/16X0.25-IN)	
	254-1686	1	PLATE-WARNING (RECOIL SPRING)	
	224-4123	1	FRAME AS (RH)	
	221-3197	1	BEARING-SLEEVE	
	221-3200	1	BEARING-SLEEVE	
	226-1292	1	FRAME AS (LH)	
	221-3197	1	BEARING-SLEEVE	
	221-3200	1	BEARING-SLEEVE	
	268-9709	4	GUIDE AS	
			(EACH INCLUDES)	
	241-3720	1	FILM-WARNING (RECOIL SPRING)	
	1B-5174	4	PLUG-PIPE	
	3W-1852	2	RING-RETAINING	
	9X-4582	2	SEAL AS	
	5H-6734	2	SEAL-O-RING	
	8G-9530	4	SHIM (8-MM THK)	
	160-4103	4	STRIP	
	189-3032	4	STRIP	
	8T-4121	8	WASHER-HARD (11X21X2.5-MM THK)	
	8T-4223	56	WASHER-HARD (13.5X25.5X3-MM THK)	

M-METRIC PART
Y-SEPARATE ILLUSTRATION

<END>

UNDERCARRIAGE

278-6368 UNDERCARRIAGE AR—HEAVY-DUTY

S/N: JDL1-UP

AN ATTACHMENT

SMCS-4150 **i02456368**

NOTE	PART NUMBER	QTY	PART NAME 1 2 3 4 5 6 (PRODUCT LEVEL)	SEE PAGE
Y	*229-7373*	1	BAR GP-EQUALIZER	368
Y	*108-1091*	8	CAP GP-TRACK IDLER	372
Y	**202-4304**	4	IDLER GP-TRACK	391
Y	*169-4368*	2	MOUNTING GP-CARRIER ROLLER (SYSTEMONE)	400
Y	*223-0647*	1	PIVOT BAR GP	401
Y	**235-5974**	2	ROLLER GP-TRACK CARRIER (SYSTEMONE)	403
Y	*125-4176*	6	ROLLER GP-TRACK-DOUBLE FLANGE	404
Y	*125-4175*	8	ROLLER GP-TRACK-SINGLE FLANGE	408
Y	*223-0659*	2	TRACK ADJUSTER & RECOIL GP	414
	3T-2077	2	BEARING	
M	**8T-4136**	8	BOLT (M10X1.5X25-MM)	
M	**8T-4139**	28	BOLT (M12X1.75X30-MM)	
M	**8T-4184**	24	BOLT (M12X1.75X45-MM)	
	268-9710	2	COVER AS	
			(EACH INCLUDES)	
	8E-1211	1	COVER	
	7B-3028	4	SCREW-DRIVE (NO 4X3/16-IN)	
	253-1346	1	PLATE-WARNING (HIGH PRESSURE CYLINDER)	
	263-8976	1	FRAME AS (RH)	
	263-8977	1	FRAME AS (LH)	
			(EACH FRAME AS INCLUDES)	
	221-3197	1	BEARING-SLEEVE	
	221-3200	1	BEARING-SLEEVE	
	263-8978	2	FRAME AS	
			(EACH INCLUDES)	
	3T-1162	1	BEARING-SLEEVE	
	4B-4158	4	SCREW-DRIVE (3/16X0.25-IN)	
	254-1686	1	PLATE-WARNING (RECOIL SPRING)	
	268-9709	4	GUIDE AS	
			(EACH INCLUDES)	
	241-3720	1	FILM-WARNING (RECOIL SPRING)	
	1B-5174	4	PLUG-PIPE	
	3W-1852	2	RING-RETAINING	
	9X-4582	2	SEAL AS	
	5H-6734	2	SEAL-O-RING	
B	**8G-9530**	4	SHIM (8-MM THK)	
	189-3032	4	STRIP	
	279-2570	4	STRIP-WEAR	
	8T-4121	8	WASHER-HARD (11X21X2.5-MM THK)	
	8T-4223	52	WASHER-HARD (13.5X25.5X3-MM THK)	

B-USE AS REQUIRED
M-METRIC PART
Y-SEPARATE ILLUSTRATION

<END>

224-9450 CONTROL GP-HANDLE—STEERING, TRANSMISSION

S/N: JDL1-UP; GMT1-UP

PART OF 226-9713 CONTROL GP-STEERING & TMSN

SMCS-5063, 5705 **i02449878**

NOTE	REF NO	GRAPHIC REF	PART NUMBER	QTY	PART NAME 1 2 3 4 5 6 (PRODUCT LEVEL)	SEE PAGE
	1	1	**1H-3340**	1	BOLT (M10X24X25.4-MM)	
	2	1	**102-8805**	1	KIT-RECEPTACLE (6-PIN)	
					(INCLUDES RECEPTACLE AS & WEDGE)	
	3	1	**6V-3545**	1	BEARING-ROLLER	
	4	1	**7X-4771**	1	SEAL-V-RING	
	5	1	**186-3735**	6	PIN-CONNECTOR (16-GA TO 18-GA)	
	6	1	**9W-1464**	2	SCREW (1/4-20X1-IN)	
	7	1	**110-7882**	1	SWITCH AS-LIMIT (PARKING BRAKE)	
		1	**5S-4246**	3	LOCKWASHER	
		1	**6V-8818**	3	SCREW-MACHINE (4-40-THD)	
	8	1	**111-8642**	1	COVER-FRONT	
	9	1	**111-8950**	1	ANGLE	
	10	1	**112-4740**	1	HANDLE	
	11	1	**112-4757**	1	COVER	
	12	1	**131-0447**	2	NUT (15/32-32-THD)	
	13	1	**132-7419**	1	SWITCH AS-PUSH BUTTON (DOWNSHIFT)	
		1	**144-0331**	1	CAP-PUSH BUTTON	
	14	1	**132-7450**	1	SWITCH AS-PUSH BUTTON (UPSHIFT)	
		1	**144-0331**	1	CAP-PUSH BUTTON	
	15	1	**151-5803**	1	SHAFT AS-DETENT	
	16	1	**151-9275**	1	KIT-RECEPTACLE (6-PIN)	
					(INCLUDES RECEPTACLE AS & WEDGE)	
	17	1	**158-2734**	2	SPRING	
	18	1	**158-2735**	1	BASE	
	19	1	**226-9423**	2	SPRING	
	20	1	**229-5354**	1	WIRE AS	
	21	1	**103-6262**	2	SCREW-MACHINE (4-40X0.63-IN)	
	22	1	**110-2028**	2	SCREW-PAN HEAD (10-14X0.75-IN)	
	23	1	**219-2391**	1	SENSOR GP-POSITION (DIRECTION CONTROL)	
		1	**9G-3695**	1	PLUG (GROMMET SEALING)	
		1	**186-3735**	3	PIN-CONNECTOR (16-GA TO 18-GA)	
		1	**102-8804**	1	KIT-RECEPTACLE (4-PIN)	
					(INCLUDES RECEPTACLE AS & WEDGE)	
	24	1	**5H-9899**	1	RING-RETAINING (EXTERNAL)	
	25	1	**6V-1232**	2	SCREW-BUTTON HEAD (8-32X9.52-MM)	
M	26	1	**6V-2314**	2	BOLT (M5X0.8X35-MM)	
	27	1	**7X-0584**	1	WASHER-HARD (13.5X20.5X2-MM THK)	
M	28	1	**7Y-5226**	2	NUT (M5X0.8-THD)	
	29	1	**8M-2771**	1	CLIP	
	30	1	**8T-4205**	2	WASHER-HARD (7.2X14.5X2-MM THK)	
	31	1	**9X-8256**	3	WASHER (6.6X12X2-MM THK)	
D	32	1	**6V-2689**		TUBE-HEAT SHRINK (0.3-M)	

D-ORDER BY THE METER
M-METRIC PART

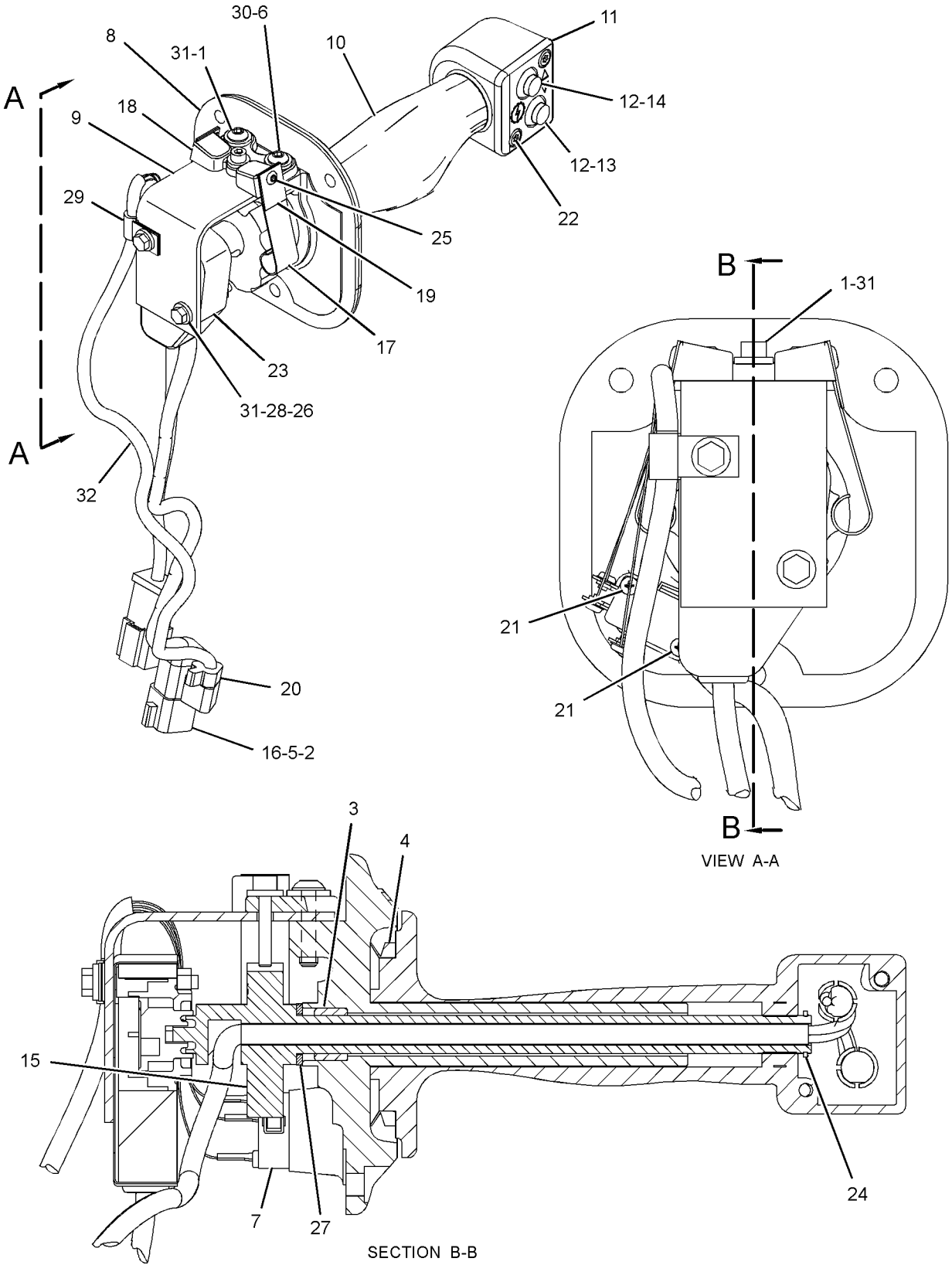

GRAPHIC #1 **<END>** g01210999

107-3881 CONTROL GP-PARKING BRAKE

S/N: JDL1-UP; GMT1-UP

PART OF 226-9713 CONTROL GP-STEERING & TMSN

SMCS-4269, 4284 **i01883328**

NOTE	REF NO	GRAPHIC REF	PART NUMBER	QTY	PART NAME 1 2 3 4 5 6 (PRODUCT LEVEL)	SEE PAGE
	1	1	**2N-3680**	3	SCREW-HEAD (1/4-20X0.75-IN)	
	2	1	**2R-5001**	1	DOWEL	
	3	1	**3B-4605**	2	PIN-COTTER	
	4	1	**4V-6981**	2	SCREW-BUTTON HEAD (1/4-20X0.75-IN)	
	5	1	**6V-8118**	2	SCREW-SOCKET HEAD (6/32X0.625-IN)	
	6	1	**7H-9737**	1	PIN-COTTER	
	7	1	**8T-5410**	2	SEAL-LIP TYPE	
	8	1	**9S-1305**	2	PIN-CLEVIS	
	9	1	**107-3888**	1	BRACKET AS	
	10	1	**9F-6445**	2	NUT-WELD (1/4-24-THD)	
	11	1	**112-2660**	1	COVER	
	12	1	**118-0639**	1	SWITCH AS-ROCKER (PARKING BRAKE)	
	13	1	**102-8801**	1	KIT-RECEPTACLE (12-PIN)	
					(INCLUDES WEDGE & RECEPTACLE AS)	
		1	**3E-5180**	1	WEDGE-RECEPTACLE LOCK (12-PIN)	
		1	**8T-8729**	12	PIN-CONNECTOR	
	14	1	**208-9647**	1	KNOB (PARKING BRAKE)	
	15	1	**167-7751**	1	PLATE AS	
	16	1	**127-1596**	1	SHAFT (69MM LG)	
	17	1	**127-1597**	1	SHAFT	
	18	1	**8T-0328**	2	WASHER-HARD (5.5X10X1-MM THK)	
	19	1	**8T-4205**	1	WASHER-HARD (7.2X14.5X2-MM THK)	
M	20	1	**5C-2890**	1	NUT (M6X1-THD)	
	21	1	**6V-8185**	3	NUT (1/4-20-THD)	
E	22	1	**8C-5063**		CONDUIT-FLEXIBLE (30CM)	

E-ORDER BY THE CENTIMETER
M-METRIC PART

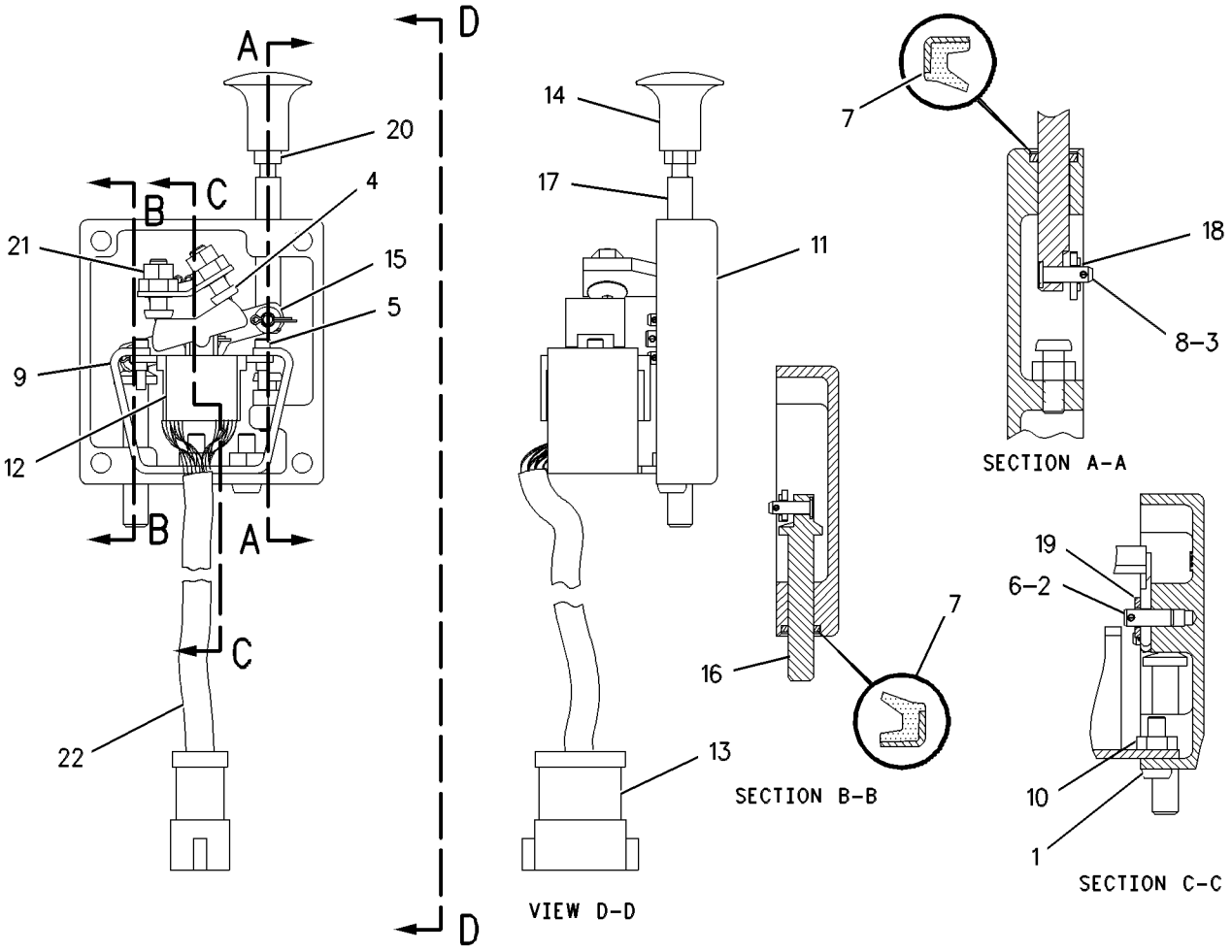

GRAPHIC #1 **<END>** g00597844

226-9713 CONTROL GP-STEERING & TMSN

S/N: JDL1-UP; GMT1-UP

PART OF 226-9715 CONTROL GP-STEERING & TMSN

SMCS-4122 **i02438145**

NOTE	REF NO	GRAPHIC REF	PART NUMBER	QTY	PART NAME 1 2 3 4 5 6 (PRODUCT LEVEL)	SEE PAGE
	1	1	**3S-2093**	1	STRAP-CABLE	
	2	1	**5D-3546**	1	COLLAR	
	3	1	**5L-2029**	1	BALL BEARING	
	4	1	**6T-8387**	1	BEARING	
	5	1	**6T-8388**	2	FLANGE	
Y	6	1	*107-3881*	1	CONTROL GP-PARKING BRAKE	427
	7	1	**112-4440**	1	HOUSING	
	8	1	**127-1598**	1	GASKET (FRONT COVER)	
	9	1	**127-1599**	1	GASKET (PARKING BRAKE)	
	10	1	**143-6871**	1	SPACER (26.93X31.75X58-MM THK)	
J	11	1	**5P-9000**	1	LOCK AS-CYLINDER	
	11A	1	**226-0336**	1	CAM	
	12	1	**158-6161**	1	SHAFT AS	
	13	1	**161-3963**	1	SUPPORT AS	
		1	**1V-8638**	2	NUT (3/8-16-THD)	
	14	1	**161-3964**	1	COVER AS	
	15	1	**166-9212**	1	LEVER	
	16	1	**200-4574**	1	PLATE AS	
	17	1	**201-9624**	1	HOUSING-MAIN	
Y	18	1	**224-9450**	1	CONTROL GP-HANDLE (STEERING, TRANSMISSION)	425
	19	1	**226-9673**	1	HARNESS AS-WIRING	
		1	**134-2540**	1	RECEPTACLE AS-CONNECTOR (3-PIN)	
		1	**102-8803**	1	KIT-RECEPTACLE (3-PIN)	
		1	**166-5229**	1	KIT-RECEPTACLE (12-PIN)	
					(EACH INCLUDES RECEPTACLE AS & WEDGE)	
		1	**147-1445**	1	PLUG AS-CONNECTOR (70-PIN)	
		1	**147-1446**	1	PLUG AS-CONNECTOR (70-PIN)	
		1	**160-7689**	1	PLUG AS-CONNECTOR (70-PIN)	
		1	**155-2272**	1	PLUG AS-CONNECTOR (4-PIN)	
		1	**155-2255**	2	KIT-CONNECTING PLUG (12-PIN)	
		1	**155-2274**	2	KIT-CONNECTING PLUG (6-PIN)	
		1	**174-0503**	1	KIT-CONNECTING PLUG (3-PIN)	
					(EACH INCLUDES PLUG AS, WEDGE, & INTERFACE SEAL)	
	20	1	**030-8537**	1	BOLT-LOCKING (3/8-16X1.5-IN)	
	21	1	**096-6166**	2	WASHER-HARD (4.5X9X1-MM THK)	
M	22	1	**170-5632**	2	BOLT (M4X0.7X16-MM)	
	23	1	**2N-3680**	3	SCREW-HEAD (1/4-20X0.75-IN)	
	24	1	**4H-9105**	1	SEAL-O-RING	
	25	1	**4L-9337**	2	BOLT (3/8-16X1.5-IN)	
	26	1	**4M-5282**	4	BOLT (1/4-20X1.5-IN)	
M	27	1	**5C-8312**	2	NUT (M4X0.7-THD)	
	28	1	**5P-1075**	5	WASHER-HARD (10.2X22.5X3-MM THK)	
	29	1	**5S-7379**	5	BOLT (3/8-16X0.875-IN)	
	30	1	**7X-7729**	7	WASHER (11X25X3-MM THK)	
M	31	1	**8T-4137**	7	BOLT (M10X1.5X20-MM)	
	32	1	**8T-4896**	2	WASHER-HARD (10.2X18.5X2.5-MM THK)	

J-REQUIRES 5P8500 KEY
M-METRIC PART
Y-SEPARATE ILLUSTRATION

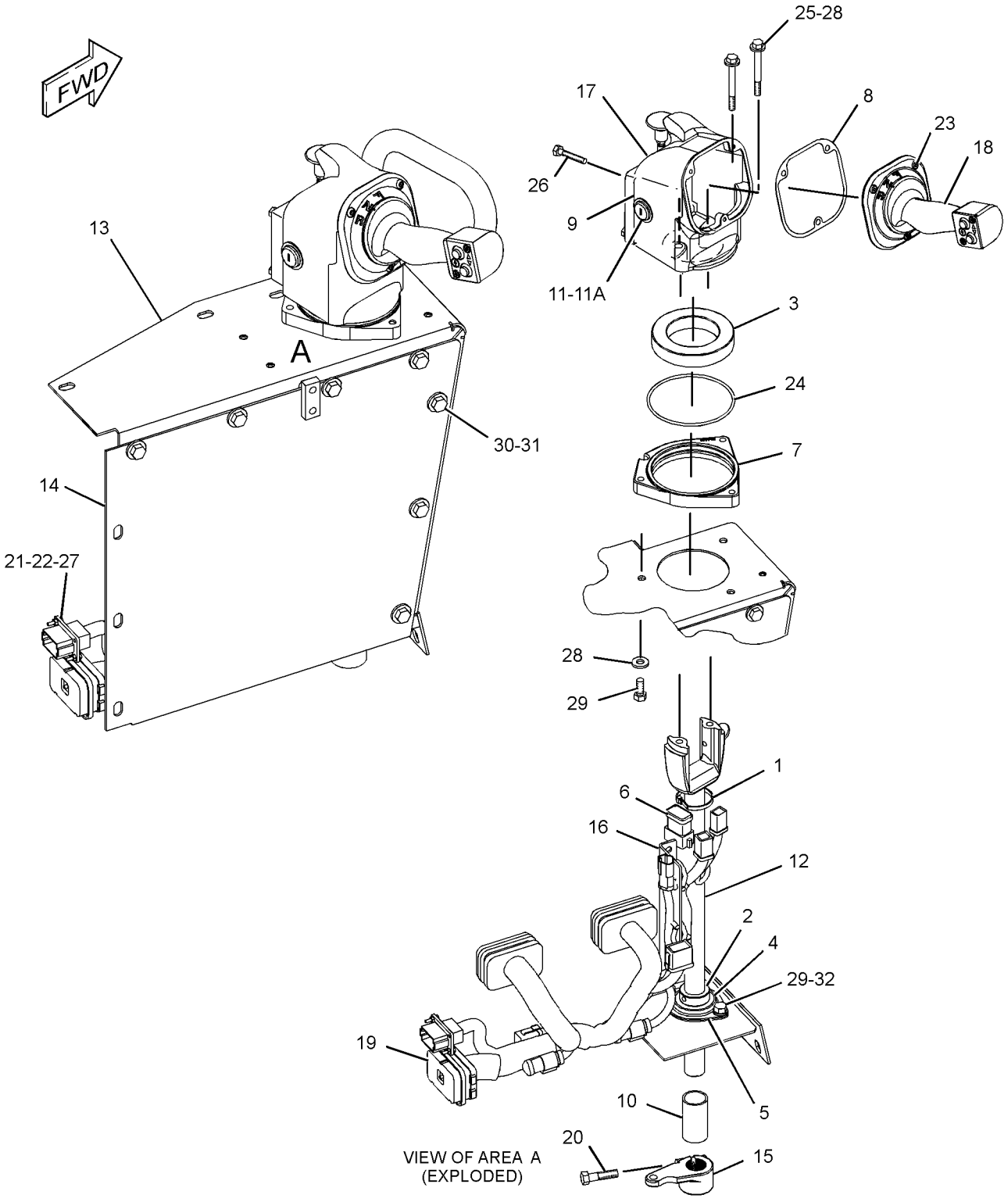

GRAPHIC #1 **<END>** g01218950

226-9715 CONTROL GP-STEERING & TMSN

S/N: JDL1-UP; GMT1-UP

PART OF 218-4979 POWER TRAIN AR

SMCS-4122 **i02438141**

NOTE	REF NO	GRAPHIC REF	PART NUMBER	QTY	PART NAME 1 2 3 4 5 6 (PRODUCT LEVEL)	SEE PAGE
	1	1	**3E-4374**	2	STUD (3/8-24X3.15-IN)	
	2	1	**6V-8183**	2	NUT-FULL (3/8-24-THD)	
	3	1	**7P-4190**	2	BEARING-ROLLER	
	4	1	**8T-8932**	2	PIN AS-SPRING	
	5	1	**136-6093**	1	SEAL	
	6	1	**147-3510**	1	LINK	
	7	1	**166-9204**	1	SHAFT	
	8	1	**166-9209**	1	BRACKET	
	9	1	**166-9211**	1	LEVER	
	10	1	**166-9213**	1	ROD	
	11	1	**174-7044**	1	LEVER	
Y	12	1	*226-9713*	1	CONTROL GP-STEERING & TMSN	429
	13	1	**266-1585**	1	PLUG AS-CODE (POWER TRAIN)	
		1	**102-8805**	1	KIT-RECEPTACLE (6-PIN)	
					(INCLUDES RECEPTACLE AS & WEDGE)	
		1	**9X-3401**	3	PIN-CONNECTOR (16-GA TO 18-GA)	
		1	**9G-3695**	3	PLUG (GROMMET SEALING)	
	14	1	**1B-8706**	2	KEY-WOODRUFF	
	15	1	**1M-1341**	2	END-YOKE ROD	
	16	1	**3B-4615**	2	PIN-COTTER	
	17	1	**7X-7729**	11	WASHER (11X25X3-MM THK)	
M	18	1	**8T-4137**	8	BOLT (M10X1.5X20-MM)	
M	19	1	**8T-4195**	3	BOLT (M10X1.5X30-MM)	
M	20	1	**8T-4196**	2	BOLT (M10X1.5X35-MM)	
	21	1	**8T-4896**	2	WASHER-HARD (10.2X18.5X2.5-MM THK)	
	22	1	**8T-4994**	2	WASHER-HARD (20X36.5X3.5-MM THK)	

M-METRIC PART
Y-SEPARATE ILLUSTRATION

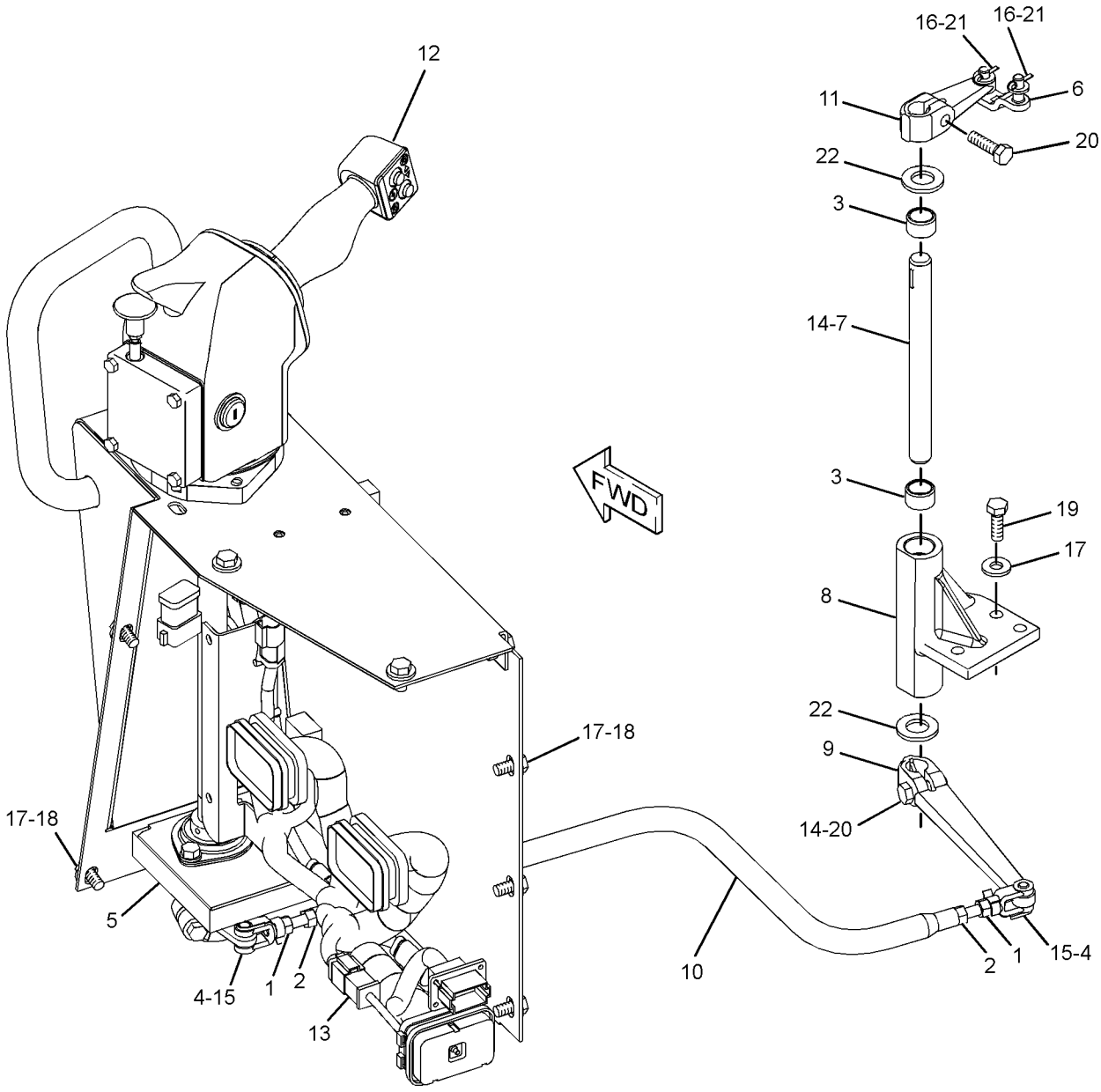

GRAPHIC #1 **<END>** g01207979

162-5357 MANIFOLD & VALVE GP—SECONDARY BRAKE

S/N: JDL1-UP; GMT1-UP

PART OF 201-7274 VALVE GP-TRANSMISSION CONTROL

SMCS-3206, 5479 **i02272795**

NOTE	REF NO	GRAPHIC REF	PART NUMBER	QTY	PART NAME 1 2 3 4 5 6 (PRODUCT LEVEL)	SEE PAGE
	1	1	**137-8794**	1	SPOOL AS	
	1A	1	**5L-4758**	1	SEAL-O-RING	
	1B	1	**137-8793**	1	SPRING	
	1C	1	**3D-7943**	1	RING-RETAINING	
	2	1	**148-8410**	1	PLUG AS	
	3	1	**162-5358**	1	MANIFOLD	
Y	4	1	**174-4909**	1	VALVE GP-SOLENOID (SECONDARY BRAKE)	437
	5	1	**1P-1744**	1	DOWEL	

Y-SEPARATE ILLUSTRATION

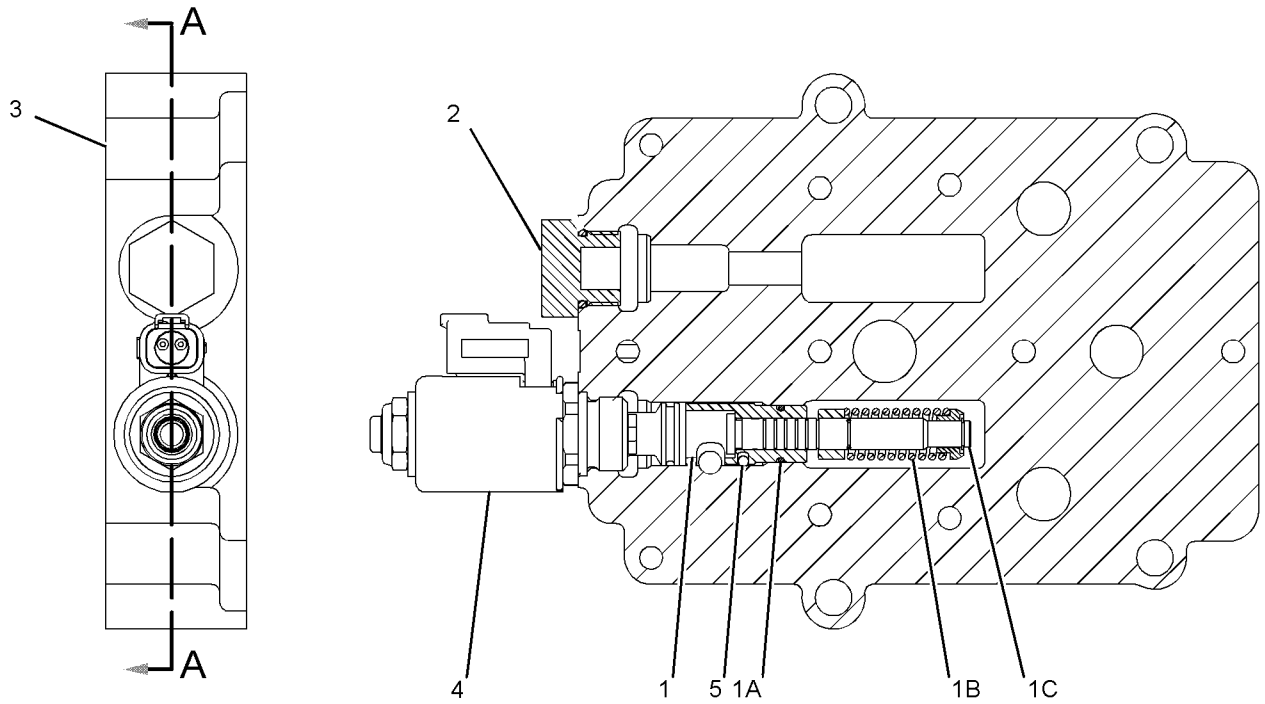

SECTION A-A

GRAPHIC #1 **<END>** g01129384

175-4972 MANIFOLD & VALVE GP–PARKING, SECONDARY BRAKE

S/N: JDL1-UP; GMT1-UP

PART OF 201-7274 VALVE GP-TRANSMISSION CONTROL

SMCS-3206, 5479 **i02272798**

NOTE	REF NO	GRAPHIC REF	PART NUMBER	QTY	PART NAME 1 2 3 4 5 6 (PRODUCT LEVEL)	SEE PAGE
	1	1	**132-9455**	1	MANIFOLD	
Y	2	1	**172-2392**	2	VALVE GP-SOLENOID (PARKING, SECONDARY BRAKE)	436

Y-SEPARATE ILLUSTRATION

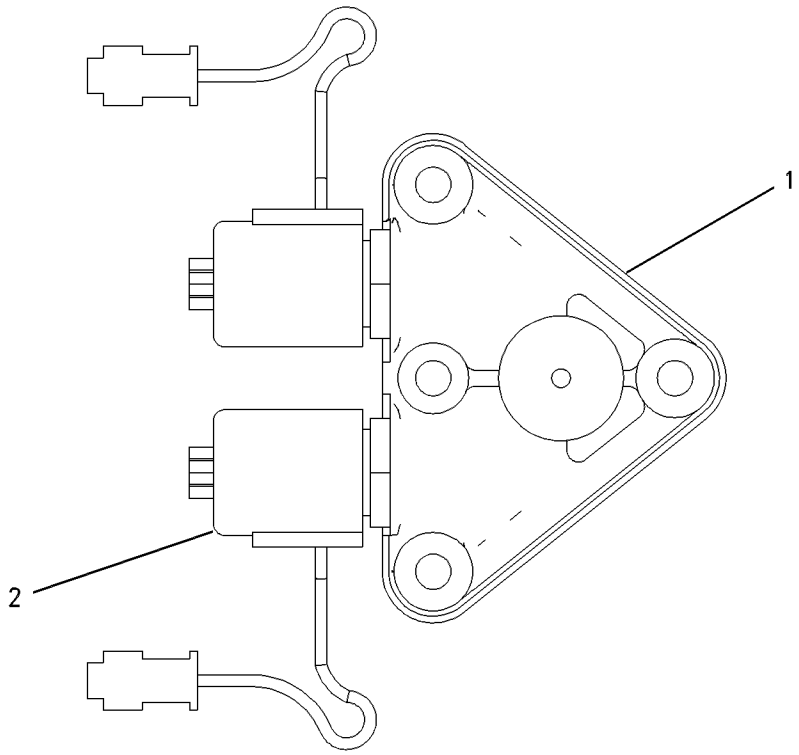

GRAPHIC #1 **<END>** g00653425

172-2392 VALVE GP-SOLENOID—PARKING, SECONDARY BRAKE

S/N: JDL1-UP; GMT1-UP
24 VOLT
PART OF 175-4972 MANIFOLD & VALVE GP

SMCS-4804 **i01883348**

NOTE	REF NO	GRAPHIC REF	PART NUMBER	QTY	PART NAME 1 2 3 4 5 6 (PRODUCT LEVEL)	SEE PAGE
	1	1	**156-5970**	1	NUT (1/2-20-2B THD)	
	2	1	**133-2249**	1	COIL AS	
		1	**1S-9593**	2	STRAP-CABLE	
		1	**8T-8729**	2	PIN-CONNECTOR	
		1	**8T-8737**	2	PLUG-SEAL	
		1	**102-8804**	1	KIT-RECEPTACLE (4-PIN)	
					(INCLUDES RECEPTACLE AS & WEDGE)	
	3	1	**172-2391**	1	SPOOL AS	
		1	**156-5970**	1	NUT (1/2-20-2B THD)	
					AVAILABLE REPAIR KIT(S):	
			189-1839	1	KIT-SEAL (SOLENOID VALVE)	
					(INCLUDES SEALS & RING-BACK UP)	

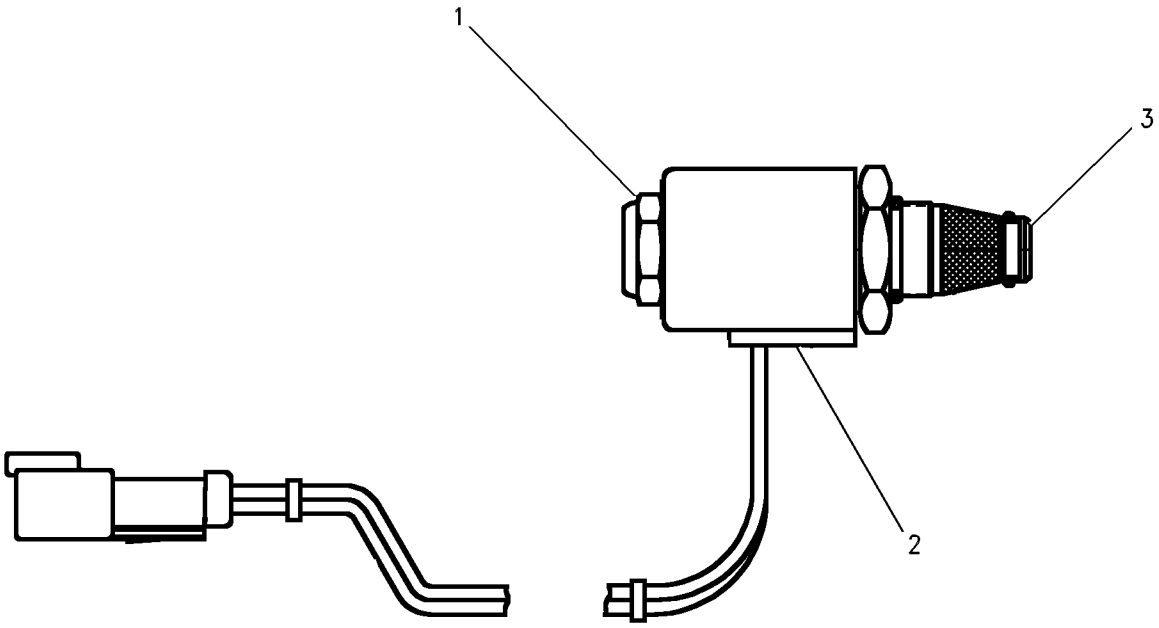

GRAPHIC #1 **<END>** g00653409

174-4909 VALVE GP-SOLENOID–SECONDARY BRAKE

S/N: JDL1-UP; GMT1-UP

PART OF 162-5357 MANIFOLD & VALVE GP

SMCS-4804 **i02426161**

NOTE	REF NO	GRAPHIC REF	PART NUMBER	QTY	PART NAME 1 2 3 4 5 6 (PRODUCT LEVEL)	SEE PAGE
	1	1	**226-9622**	1	COIL AS (24 VOLT)	
	2	1	**164-2108**	1	WASHER (13.03X25.4X2.38-MM THK)	
	3	1	**218-2373**	1	NUT (1/2-28-THD)	

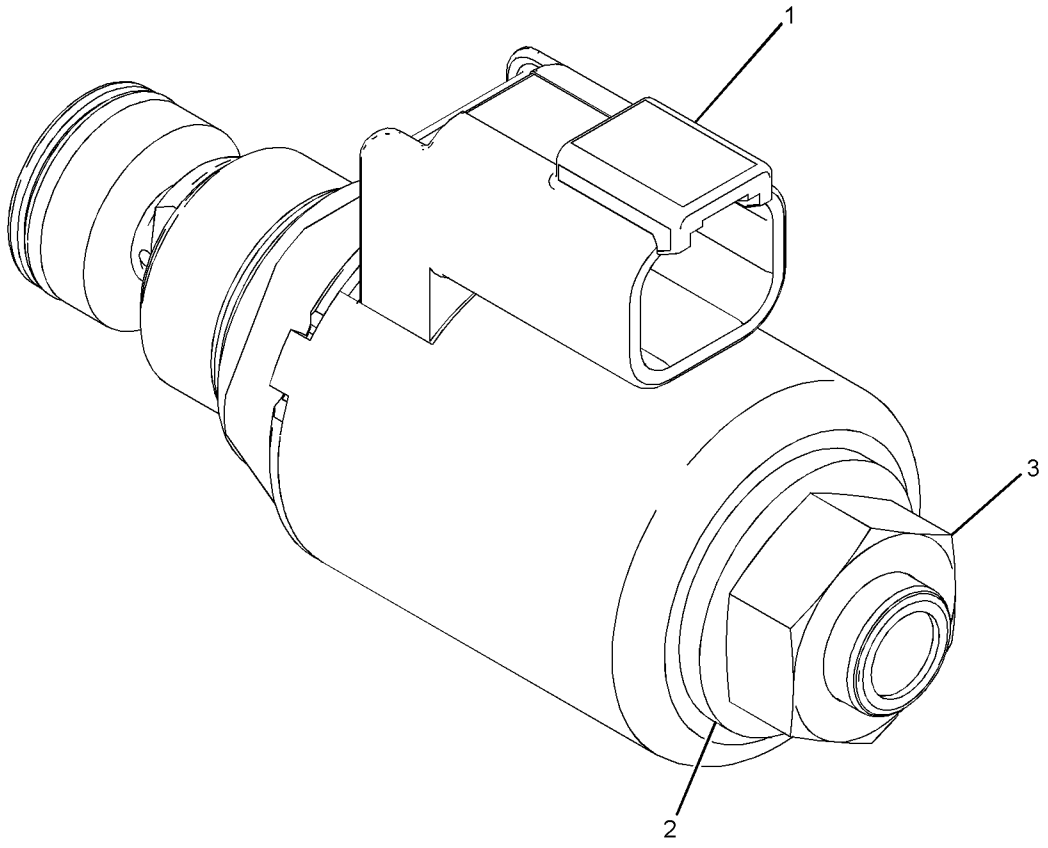

GRAPHIC #1 **<END>** g01139934

179-9387 ACCUMULATOR GP-PILOT OIL—UNCHARGED

S/N: JDL1-UP; GMT1-UP

FIELD REPLACEMENT FOR 200-0750—PAGE 439

SMCS-5077 **i02232516**

NOTE	REF NO	GRAPHIC REF	PART NUMBER	QTY	PART NAME 1 2 3 4 5 6 (PRODUCT LEVEL)	SEE PAGE
	1	1	**204-8758**	2	FILM-WARNING (ACCUMULATOR)	

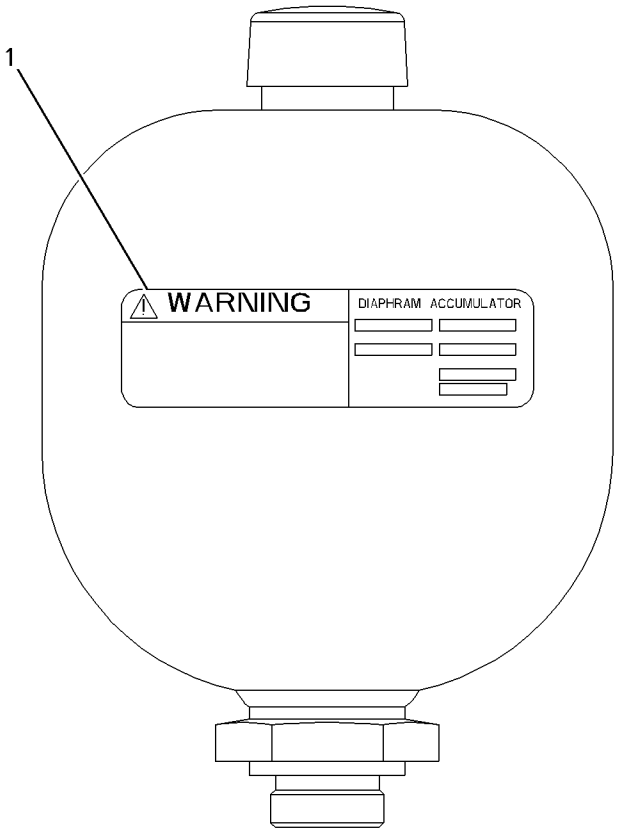

GRAPHIC #1 **<END>** g01004085

200-0750 ACCUMULATOR GP-PILOT OIL–CHARGED

S/N: JDL1-UP; GMT1-UP
PART OF 222-1164 LINES GP-PILOT
FIELD REPLACEMENT ORDER 179-9387–PAGE 438

SMCS-5077 **i02232482**

NOTE	REF NO	GRAPHIC REF	PART NUMBER	QTY	PART NAME 1 2 3 4 5 6 (PRODUCT LEVEL)	SEE PAGE
	1	1	**204-8758**	2	FILM-WARNING (ACCUMULATOR)	

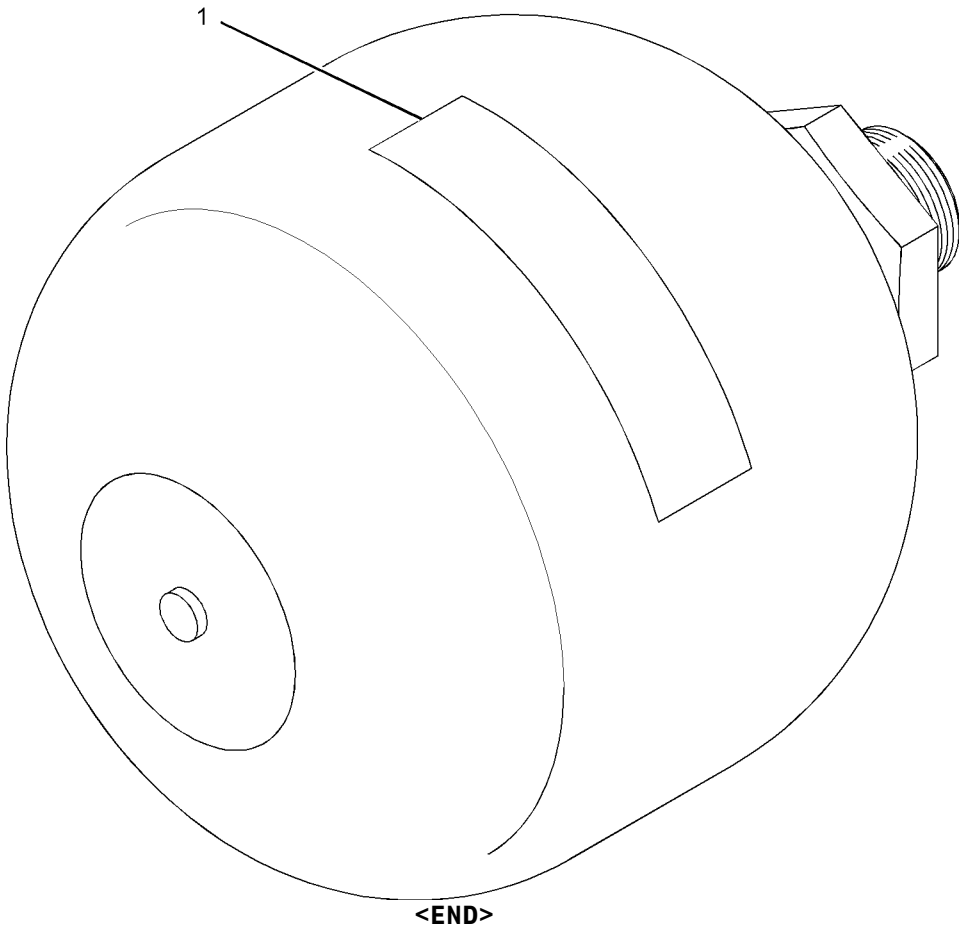

GRAPHIC #1 **<END>** g01034166

HYDRAULIC SYSTEM

229-5421 ADAPTER GP-MOTOR

S/N: JDL1-UP; GMT1-UP

PART OF 218-4981 HYDRAULIC AR-2 VALVE

SMCS-5058 **i02281849**

NOTE	REF NO	GRAPHIC REF	PART NUMBER	QTY	PART NAME 1 2 3 4 5 6 (PRODUCT LEVEL)	SEE PAGE
	1	1	**216-8585**	1	ADAPTER (MOTOR)	
	2	1	**3N-0759**	1	RING-SEALING	
	3	1	**7K-6058**	6	BOLT-12 POINT HEAD (1/2-13X2.5-IN)	
	4	1	**8C-6857**	2	BOLT (3/4-10X2.75-IN)	
	5	1	**8T-4994**	2	WASHER-HARD (20X36.5X3.5-MM THK)	
	6	1	**8T-7568**	1	SEAL-O-RING	

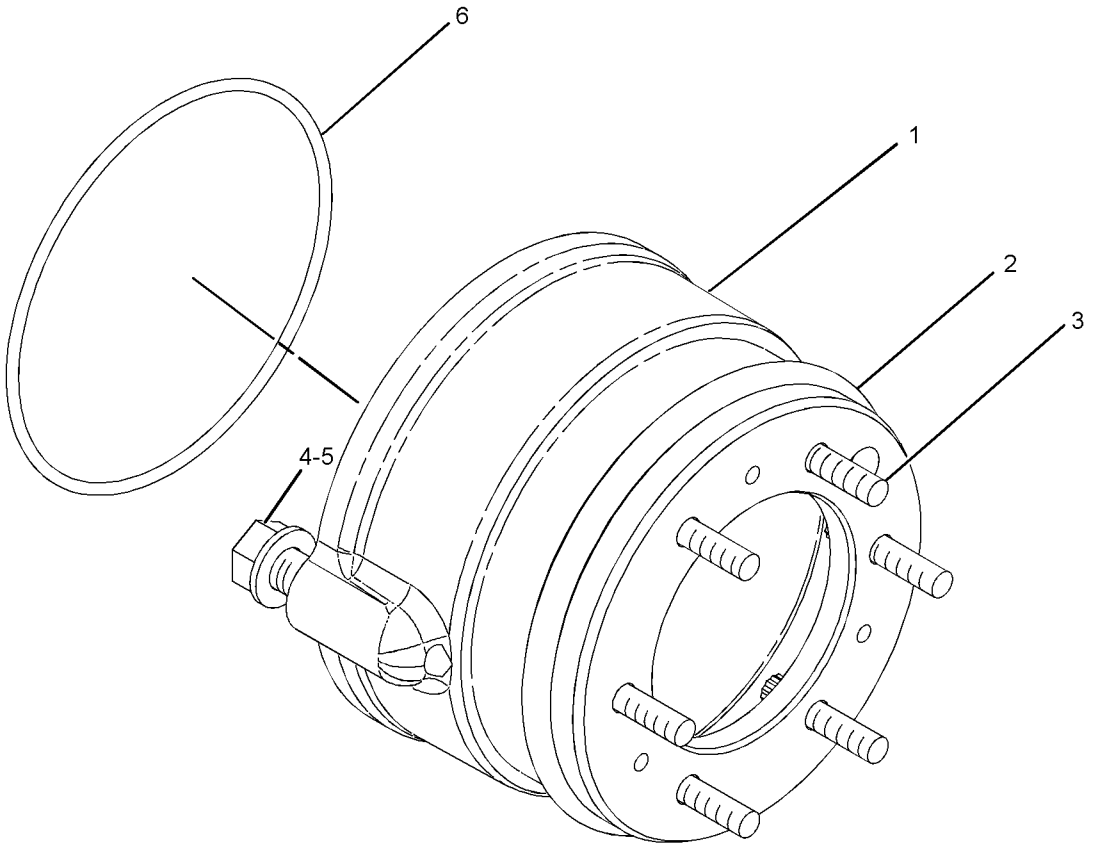

GRAPHIC #1 **<END>** g01126503

239-2385 CONTROL & MTG GP-JOYSTICK–GRADE CONTROL

S/N: JDL1-UP; GMT1-UP

PART OF 239-6331 CONTROL AR-HYDRAULIC IMPLEMENT

AN ATTACHMENT

SMCS-5063, 5705 **i02455372**

NOTE	REF NO	GRAPHIC REF	PART NUMBER	QTY	PART NAME 1 2 3 4 5 6 (PRODUCT LEVEL)	SEE PAGE
	1	1	**160-4702**	1	PLATE	
M	2	1	**172-5291**	3	SCREW (M10X1.5X30-MM)	
	3	1	**238-7793**	1	PLATE AS	
	4	1	**238-8270**	1	GASKET	
	5	1	**239-2247**	1	PLATE AS	
Y	6	1	**240-8613**	1	CONTROL GP-JOYSTICK (BULLDOZER)	445
	7	1	**242-5200**	1	GASKET	
	8	1	**242-8398**	1	COVER AS-ACCESS	
		1	**114-9125**	2	HOLDER-CUP	
	9	1	**242-8399**	1	PANEL-ACOUSTICAL	
M	10	1	**111-4627**	4	SCREW-MACHINE (M6X1X30-MM)	
M	11	1	**166-3777**	4	SCREW-BUTTON HEAD (M6X1X28-MM)	
	12	1	**7X-7729**	3	WASHER (11X25X3-MM THK)	
	13	1	**8T-4205**	4	WASHER-HARD (7.2X14.5X2-MM THK)	
	14	1	**9X-6381**	4	WASHER (6.5X12.5X1.6-MM THK)	

M-METRIC PART
Y-SEPARATE ILLUSTRATION

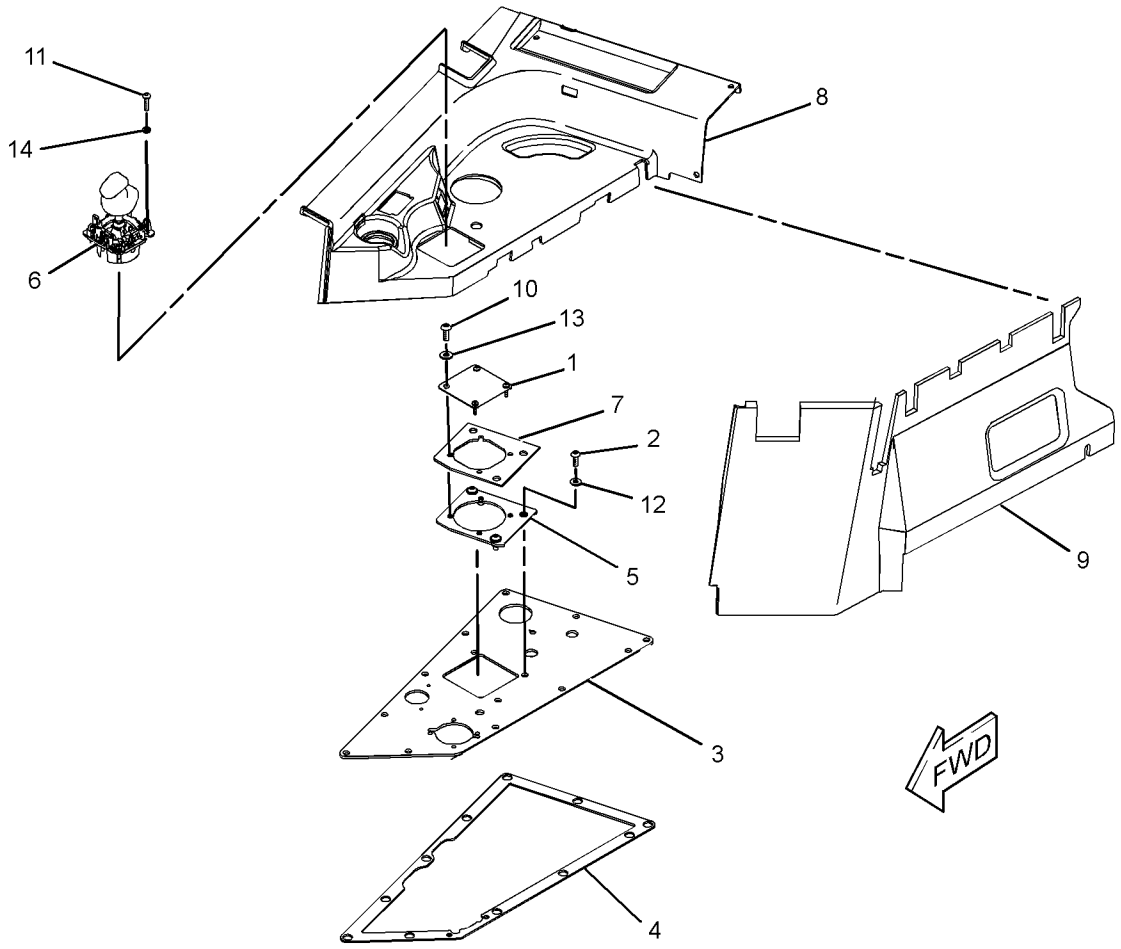

GRAPHIC #1 **<END>** g01213019

226-9130 CONTROL AR-HYDRAULIC IMPLEMENT–
BULLDOZER, RIPPER
S/N: JDL1-UP; GMT1-UP
AN ATTACHMENT

SMCS-5050 **i02455877**

NOTE	PART NUMBER	QTY	PART NAME 1 2 3 4 5 6 (PRODUCT LEVEL)	SEE PAGE
Y	*161-3616*	1	KNOB GP	635
Y	*222-1167*	1	LINES GP-PILOT	471
Y	*226-8197*	1	LINES GP-RIPPER	481
Y	**224-4937**	1	VALVE GP-BANK 4 (STEERING, BULLDOZER, RIPPER)	511
Y	**167-1177**	1	VALVE GP-PILOT	531
	102-9478	1	FILM-INSTRUCTION (RIPPER CONTROL)	
			ON THE RAISED SURFACE TO THE RIGHT OF THE RIPPER CONTROL HANDLE	

Y-SEPARATE ILLUSTRATION

<END>

239-5912 CONTROL AR-HYDRAULIC IMPLEMENT–
BULLDOZER, WINCH
S/N: JDL1-UP; GMT1-UP
AN ATTACHMENT

SMCS-5050 **i02454582**

NOTE	PART NUMBER	QTY	PART NAME 1 2 3 4 5 6 (PRODUCT LEVEL)	SEE PAGE
Y	*3W-1356*	1	GUARD GP-TRANSMISSION	363
Y	*238-7756*	1	LINES GP-PILOT	473
Y	*238-7757*	1	LINES GP-WINCH	582
Y	**239-6076**	1	VALVE GP-BANK 4 (BULLDOZER, STEERING, WINCH)	513
Y	**160-0766**	1	VALVE GP-PILOT	529
	164-9928	1	FILM-IDENTIFICATION (LOW SPEED, WINCH LIGHT)	
			ON CONSOLE COVER NEXT TO LIGHT	
	164-9930	1	FILM-IDENTIFICATION (WINCH CONTROL)	
			ON RAISED SURFACE TO THE RIGHT OF WINCH CONTROL	

Y-SEPARATE ILLUSTRATION

<END>

HYDRAULIC SYSTEM

239-6331 CONTROL AR-HYDRAULIC IMPLEMENT—ACCUGRADE

S/N: JDL1-UP; GMT1-UP
WITHOUT REAR HYDRAULICS
FOR USE WITH 236-5880—PAGE 177
AN ATTACHMENT

SMCS-5050 **i02454878**

NOTE	PART NUMBER	QTY	PART NAME 1 2 3 4 5 6 (PRODUCT LEVEL)	SEE PAGE
Y	*239-2385*	1	CONTROL & MTG GP-JOYSTICK	441
Y	*238-7759*	1	LINES GP-PILOT (GRADE CONTROL)	475
M	**8T-4136**	2	BOLT (M10X1.5X25-MM)	
M	**8T-4192**	2	BOLT (M12X1.75X25-MM)	
	235-2340	1	BRACKET	
	8T-4121	2	WASHER-HARD (11X21X2.5-MM THK)	
	8T-4223	2	WASHER-HARD (13.5X25.5X3-MM THK)	

M-METRIC PART
Y-SEPARATE ILLUSTRATION

<END>

268-3293 CONTROL GP-HANDLE–BULLDOZER

S/N: JDL1-UP; GMT1-UP
PART OF 240-8613 CONTROL GP-JOYSTICK
AN ATTACHMENT

SMCS-5063, 5705 **i02455331**

NOTE	REF NO	GRAPHIC REF	PART NUMBER	QTY	PART NAME 1 2 3 4 5 6 (PRODUCT LEVEL)	SEE PAGE
	1	1	**1S-9593**	1	STRAP-CABLE	
E	2	1	**218-7136**		SLEEVE (63-CM)	
	3	1	**8T-8737**	5	PLUG-SEAL	
	4	1	**186-3735**	7	PIN-CONNECTOR (16-GA TO 18-GA)	
	5	1	**174-3091**	1	KIT-RECEPTACLE (12-PIN)	
					(INCLUDES RECEPTACLE AS & WEDGE)	
	6	1	**144-0331**	3	CAP-PUSH BUTTON	

E-ORDER BY THE CENTIMETER

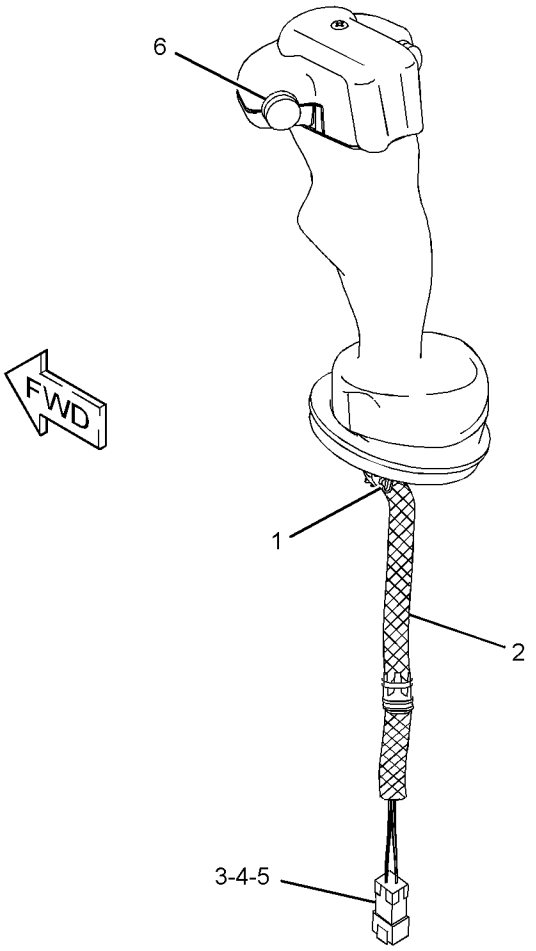

GRAPHIC #1 **<END>** g01212883

240-8613 CONTROL GP-JOYSTICK–BULLDOZER

S/N: JDL1-UP; GMT1-UP
PART OF 239-2385 CONTROL & MTG GP-JOYSTICK
AN ATTACHMENT

SMCS-5063 **i02455269**

NOTE	REF NO	GRAPHIC REF	PART NUMBER	QTY	PART NAME 1 2 3 4 5 6 (PRODUCT LEVEL)	SEE PAGE
Y	1	1	**268-3293**	1	CONTROL GP-HANDLE (BULLDOZER)	444
	2	1	**271-0475**	1	SENSOR AS-POSITION (JOYSTICK) (BULLDOZER CONTROL HANDLE)	
		1	**102-8805**	1	KIT-RECEPTACLE (6-PIN)	
					(INCLUDES RECEPTACLE AS & WEDGE)	
		1	**186-3735**	6	PIN-CONNECTOR (16-GA TO 18-GA)	
	3	1	**253-3351**	1	BOOT	
	4	1	**4B-9808**	2	SETSCREW (1/4-20X0.5-IN)	
	5	1	**174-3091**	1	KIT-RECEPTACLE (12-PIN)	
	6	1	**102-8805**	1	KIT-RECEPTACLE (6-PIN)	
					(EACH INCLUDES RECEPTACLE AS & WEDGE)	
	7	1	**186-3735**	17	PIN-CONNECTOR (16-GA TO 18-GA)	
	8	1	**8T-8737**	1	PLUG-SEAL	

Y-SEPARATE ILLUSTRATION

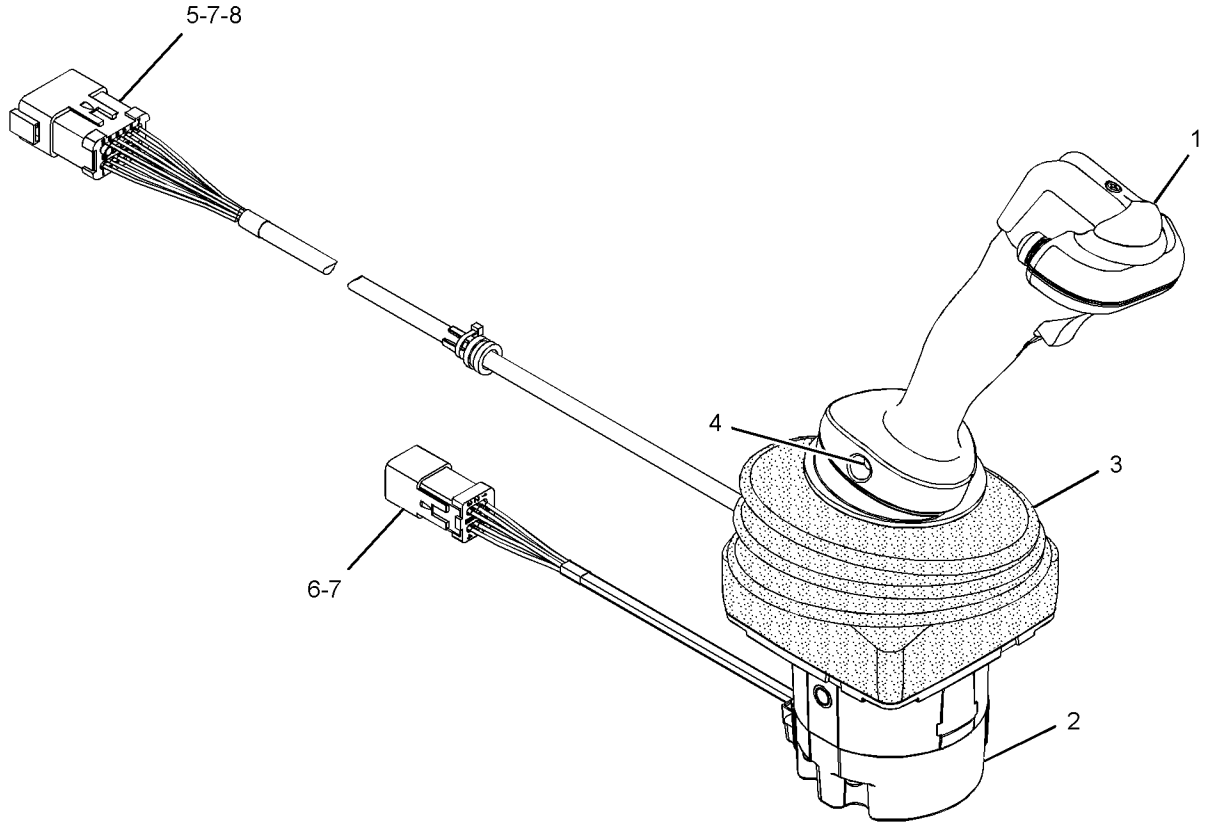

GRAPHIC #1 **<END>** g01212819

222-1150 CONTROL GP-PILOT OPERATED HYD–BULLDOZER

S/N: JDL1-UP; GMT1-UP

PART OF 218-4981 HYDRAULIC AR-2 VALVE

SMCS-5059, 5063, 5705 **i02434803**

NOTE	REF NO	GRAPHIC REF	PART NUMBER	QTY	PART NAME 1 2 3 4 5 6 (PRODUCT LEVEL)	SEE PAGE
	1	1	**160-4702**	1	PLATE	
Y	2	1	*161-3615*	1	HANDLE GP-CONTROL (BULLDOZER)	462
Y	3	1	**200-0189**	1	VALVE GP-PILOT (BULLDOZER CONTROL)	533
	4	1	**223-3313**	1	PLATE AS	
	5	1	**225-4134**	1	GASKET	
	6	1	**225-4135**	1	GASKET	
	7	1	**5P-1075**	4	WASHER-HARD (10.2X22.5X3-MM THK)	
M	8	1	**8T-4195**	4	BOLT (M10X1.5X30-MM)	
M	9	1	**8T-4971**	6	BOLT (M6X1X30-MM)	
	10	1	**9X-8256**	6	WASHER (6.6X12X2-MM THK)	

M-METRIC PART
Y-SEPARATE ILLUSTRATION

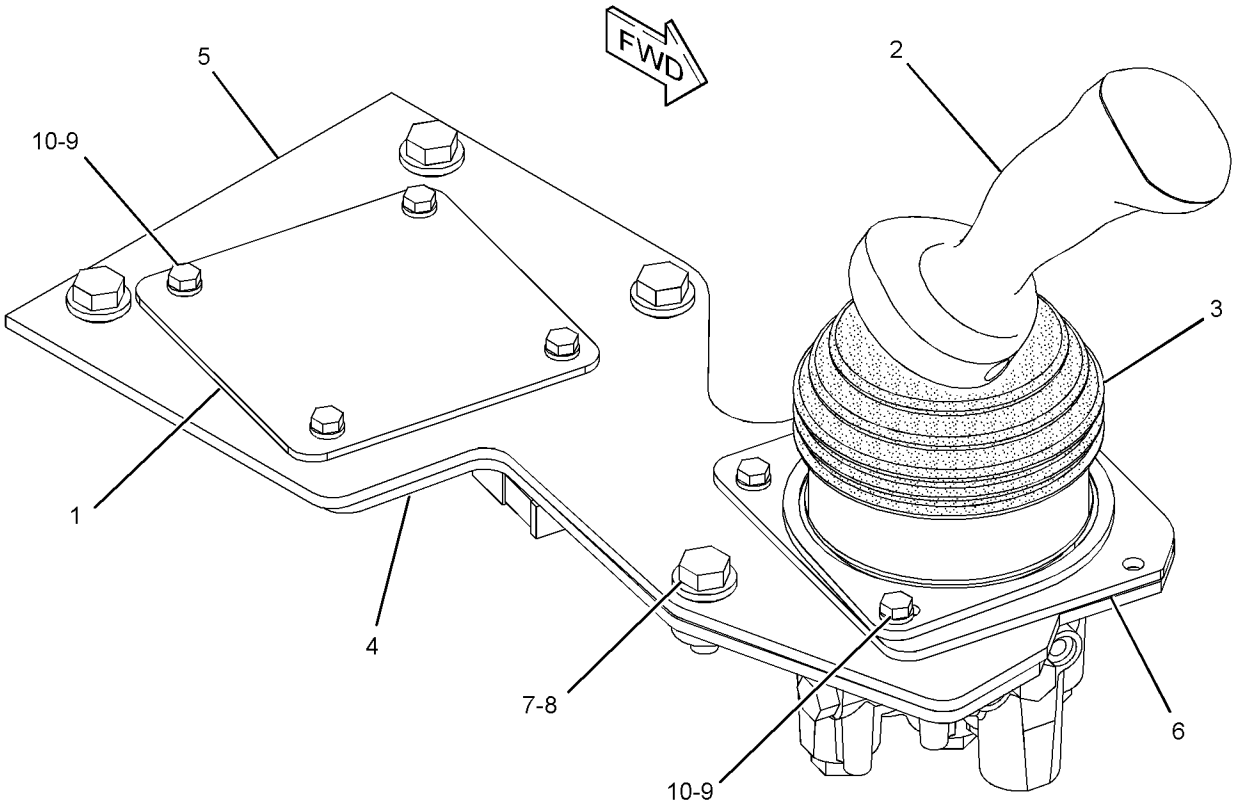

GRAPHIC #1 **<END>** g01205678

HYDRAULIC SYSTEM

169-3806 COOLER GP-HYDRAULIC OIL

S/N: JDL1-UP; GMT1-UP

PART OF 223-0551 INSTALLATION AR-ENGINE

SMCS-1374, 5071 **i01830002**

NOTE	REF NO	GRAPHIC REF	PART NUMBER	QTY	PART NAME 1 2 3 4 5 6 (PRODUCT LEVEL)	SEE PAGE
	1	1	**143-7397**	1	CORE AS-HYDRAULIC OIL COOLER	
	2	1	**169-3821**	1	BRACKET AS	
	3	1	**169-3822**	1	BRACKET AS	
M		1	**8T-3490**	2	NUT-WELD (M10X1.5-THD)	
	4	1	**8T-2561**	4	WASHER-HARD (10.5X28.5X5-MM THK)	
M	5	1	**8T-4133**	2	NUT (M10X1.5 THD)	
M	6	1	**8T-4136**	2	BOLT (M10X1.5X25-MM)	

M-METRIC PART

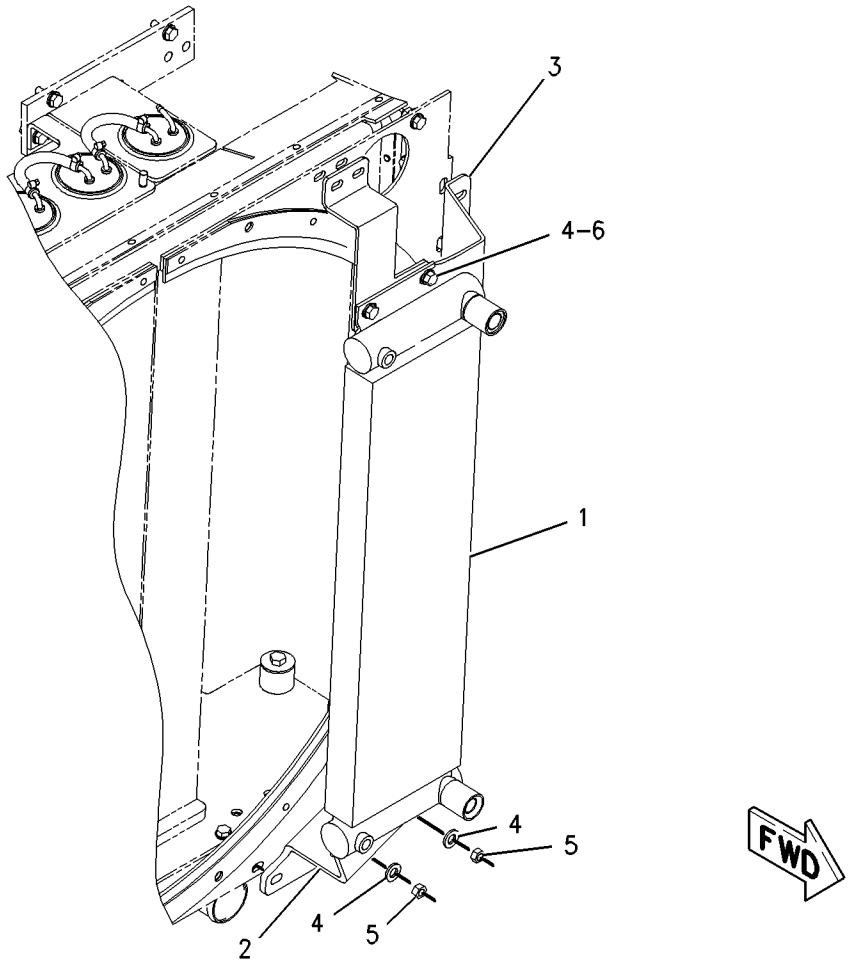

GRAPHIC #1 **<END>** g00805603

227-4005 CYLINDER & LINES GP-LIFT–RH

S/N: C4C1-UP; D6C1-UP; C4L1-UP; JDL1-UP; C4R1-UP; GMT1-UP
PART OF 251-6112, 251-6128 BULLDOZER AR-ANGLING, 230-5553, 252-5854 BULLDOZER AR-SEMI-UNIVERSAL AN ATTACHMENT

SMCS-5102 **i02454228**

NOTE	REF NO	GRAPHIC REF	PART NUMBER	QTY	PART NAME 1 2 3 4 5 6 (PRODUCT LEVEL)	SEE PAGE
	1	1	**9U-9121**	1	CLAMP	
	2	1	**9U-9122**	1	CLAMP	
I	3	1	**128-2569**	1	HOSE AS	
I	4	1	**128-2570**	1	HOSE AS	
	5	1	**129-3217**	1	GUARD AS	
	6	1	*153-6251*	1	CONNECTOR GP	
		1	**9X-8260**	1	CONNECTOR	
		1	**4K-1388**	1	SEAL-O-RING	
		1	**6V-8400**	1	SEAL-O-RING	
Y	7	1	**227-0844**	1	CYLINDER GP-LIFT	452
	8	1	**227-4303**	1	TUBE AS	
	9	1	*148-8391*	1	ELBOW AS	
		1	**8T-8987**	1	ELBOW	
		1	**2S-4078**	1	SEAL-O-RING	
		1	**5K-9090**	1	SEAL-O-RING	
	10	1	**4J-0520**	3	SEAL-O-RING	
	11	1	**5P-1075**	12	WASHER-HARD (10.2X22.5X3-MM THK)	
	12	1	**7S-8920**	1	CLIP (SLOT)	
	13	1	**7S-8921**	1	CLIP (TAB)	
	14	1	**8C-3206**	2	FLANGE-HALF	
	15	1	**8S-0023**	1	CLIP (SLOT)	
	16	1	**8S-0024**	1	CLIP (TAB)	
M	17	1	**8T-4133**	2	NUT (M10X1.5 THD)	
M	18	1	**8T-4136**	4	BOLT (M10X1.5X25-MM)	
M	19	1	**8T-4196**	6	BOLT (M10X1.5X35-MM)	

I-REFER TO HYDRAULIC INFORMATION SYSTEM
M-METRIC PART
Y-SEPARATE ILLUSTRATION

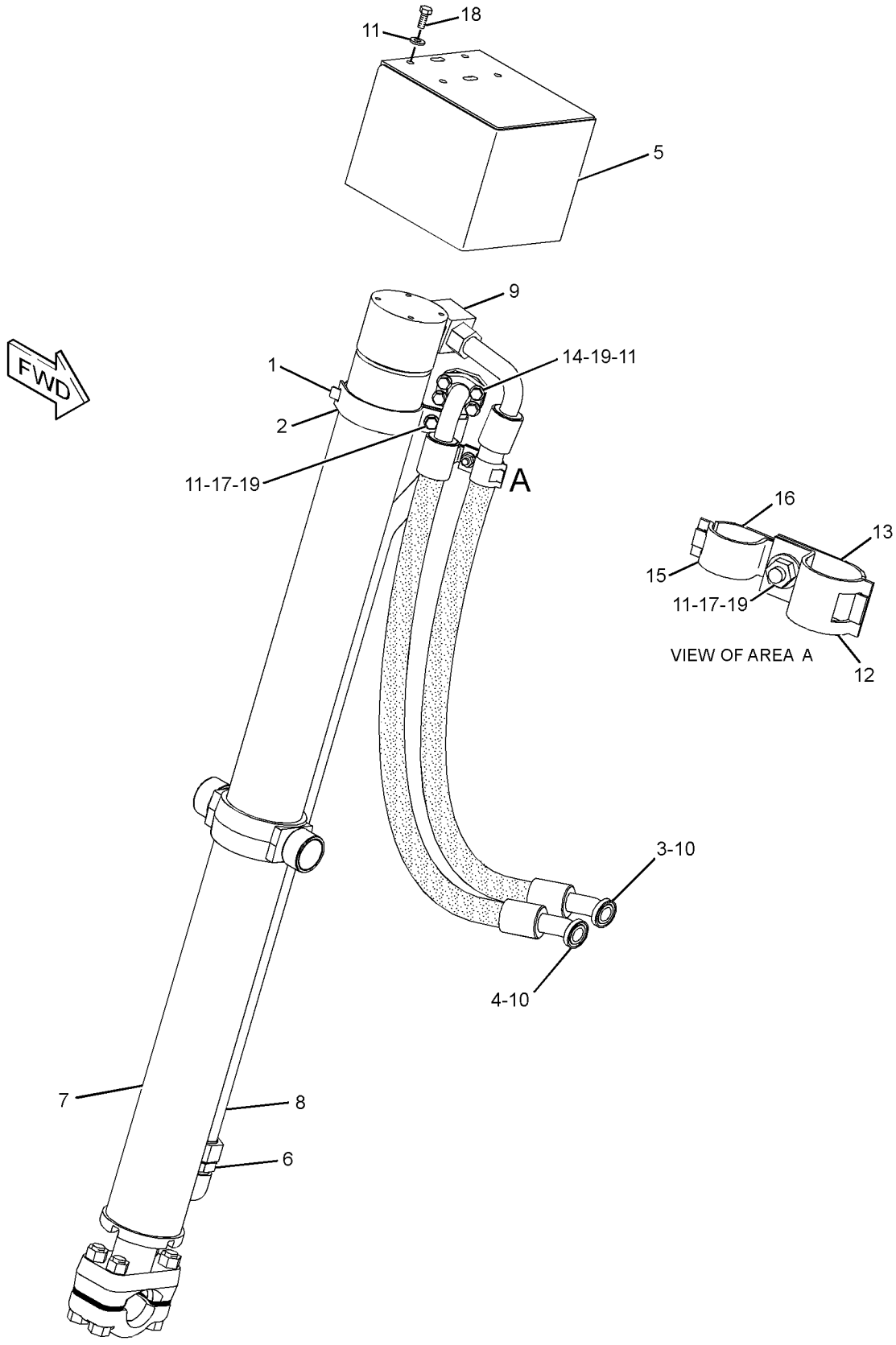

GRAPHIC #1 **<END>** g01209243

227-4006 CYLINDER & LINES GP-LIFT—LH

S/N: C4C1-UP; D6C1-UP; C4L1-UP; JDL1-UP; C4R1-UP; GMT1-UP
PART OF 251-6112, 251-6128 BULLDOZER AR-ANGLING, 230-5553, 252-5854 BULLDOZER AR-SEMI-UNIVERSAL
FOR USE WITH 227-4005—PAGE 448 AN ATTACHMENT

SMCS-5102 **i02462127**

NOTE	REF NO	GRAPHIC REF	PART NUMBER	QTY	PART NAME 1 2 3 4 5 6 (PRODUCT LEVEL)	SEE PAGE
I	1	1	**128-2571**	1	HOSE AS	
	2	1	**9U-9121**	1	CLAMP	
	3	1	**9U-9122**	1	CLAMP	
I	4	1	**128-2572**	1	HOSE AS	
	5	1	**129-3217**	1	GUARD AS	
	6	1	*153-6251*	1	CONNECTOR GP	
		1	**9X-8260**	1	CONNECTOR	
		1	**4K-1388**	1	SEAL-O-RING	
		1	**6V-8400**	1	SEAL-O-RING	
Y	7	1	**227-0844**	1	CYLINDER GP-LIFT	452
	8	1	**227-4304**	1	TUBE AS	
	9	1	*148-8391*	1	ELBOW AS	
		1	**8T-8987**	1	ELBOW	
		1	**2S-4078**	1	SEAL-O-RING	
		1	**5K-9090**	1	SEAL-O-RING	
	10	1	**4J-0520**	3	SEAL-O-RING	
	11	1	**5P-1075**	12	WASHER-HARD (10.2X22.5X3-MM THK)	
	12	1	**7S-8920**	1	CLIP (SLOT)	
	13	1	**7S-8921**	1	CLIP (TAB)	
	14	1	**8C-3206**	2	FLANGE-HALF	
	15	1	**8S-0023**	1	CLIP (SLOT)	
	16	1	**8S-0024**	1	CLIP (TAB)	
M	17	1	**8T-4133**	2	NUT (M10X1.5 THD)	
M	18	1	**8T-4136**	4	BOLT (M10X1.5X25-MM)	
M	19	1	**8T-4196**	6	BOLT (M10X1.5X35-MM)	

I-REFER TO HYDRAULIC INFORMATION SYSTEM
M-METRIC PART
Y-SEPARATE ILLUSTRATION

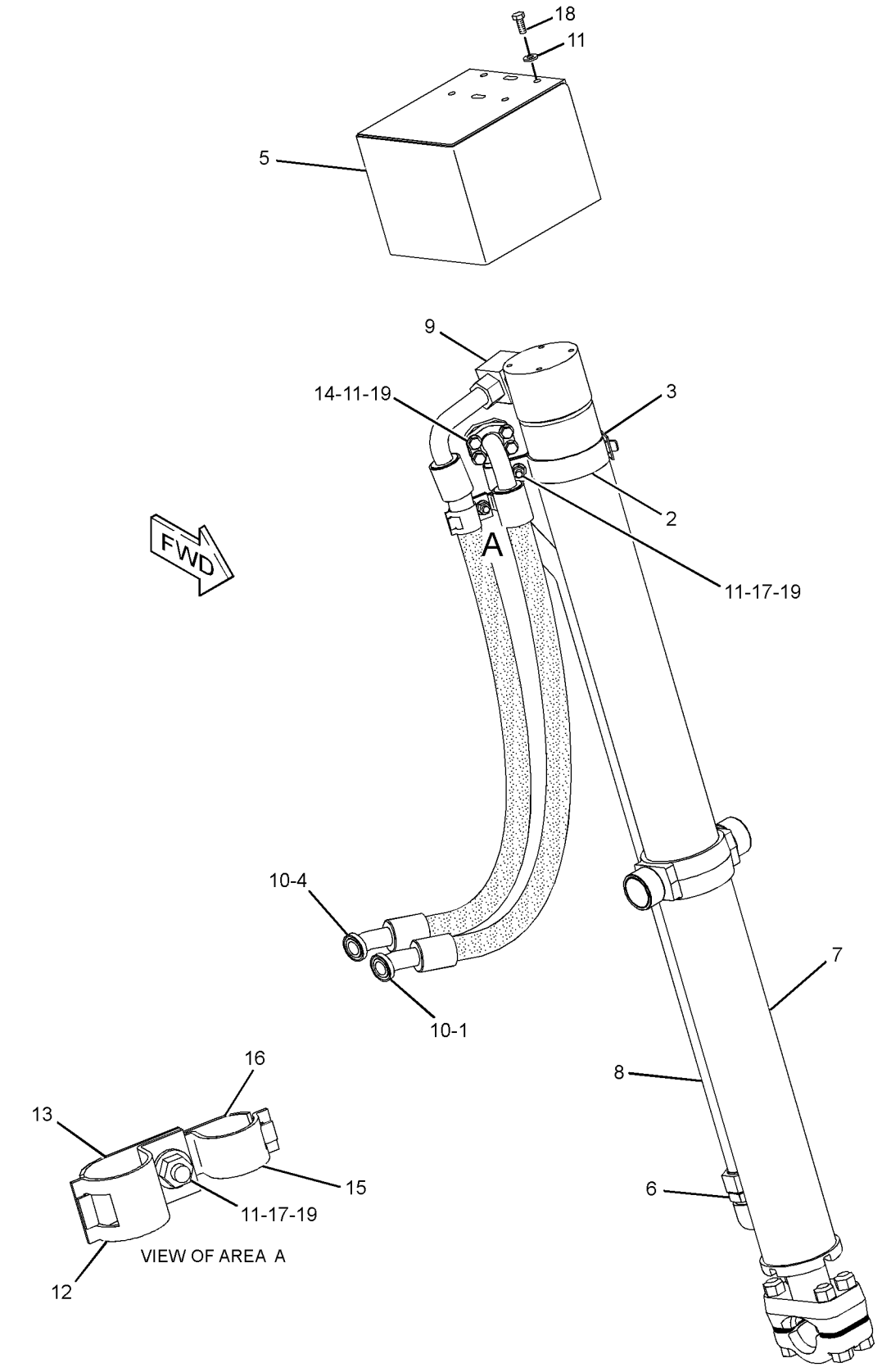

GRAPHIC #1 **<END>** g01209139

227-0844 CYLINDER GP-LIFT–BULLDOZER

S/N: C4C1-UP; D6C1-UP; C4L1-UP; JDL1-UP; C4R1-UP; GMT1-UP
102-MM (4-IN) BORE X 1262-MM (50 IN) STROKE
PART OF 227-4005, 227-4006 CYLINDER & LINES GP-LIFT
AN ATTACHMENT

SMCS-5102 **i02454230**

NOTE	REF NO	GRAPHIC REF	PART NUMBER	QTY	PART NAME 1 2 3 4 5 6 (PRODUCT LEVEL)	SEE PAGE
	1	1	**3G-8742**	1	WASHER (39.3X63.5X6-MM THK)	
	2	1	**9T-3885**	1	PISTON AS	
	2A	1	**8C-9160**	1	SEAL AS	
R	3	1	**114-4304**	1	ROD AS	
	4	1	**172-9981**	1	HEAD	
	5	1	**230-4876**	1	CYLINDER AS	
	5A	1	**4J-6374**	2	BEARING-SLEEVE	
	5B	1	**9T-8958**	1	TRUNNION	
	6	1	**167-2201**	1	SEAL AS-BUFFER	
	7	1	**167-2312**	1	SEAL-U-CUP	
	8	1	**175-7900**	1	SEAL-O-RING	
	9	1	**1F-6762**	1	BOLT (1-1/2-12X4.5-IN)	
	10	1	**1M-1571**	1	RING-WEAR	
	11	1	**225-3281**	1	SEAL-WIPER	
	12	1	**2K-6830**	1	RING-BACKUP	
	13	1	**4J-0121**	1	CAP-BEARING	
M	14	1	**6V-7742**	4	NUT-FULL (M20X2.5-THD)	
B	15	1	**8E-9212**	26	SHIM (0.8-MM THK)	
M	16	1	**8T-0362**	4	BOLT (M20X2.5X110-MM)	
	17	1	**8T-0785**	1	RING-WEAR	

B-USE AS REQUIRED
M-METRIC PART
R-REMFG PART MAY BE AVAILABLE

227-0844 CYLINDER GP-LIFT *(contd.)* **i02454230**

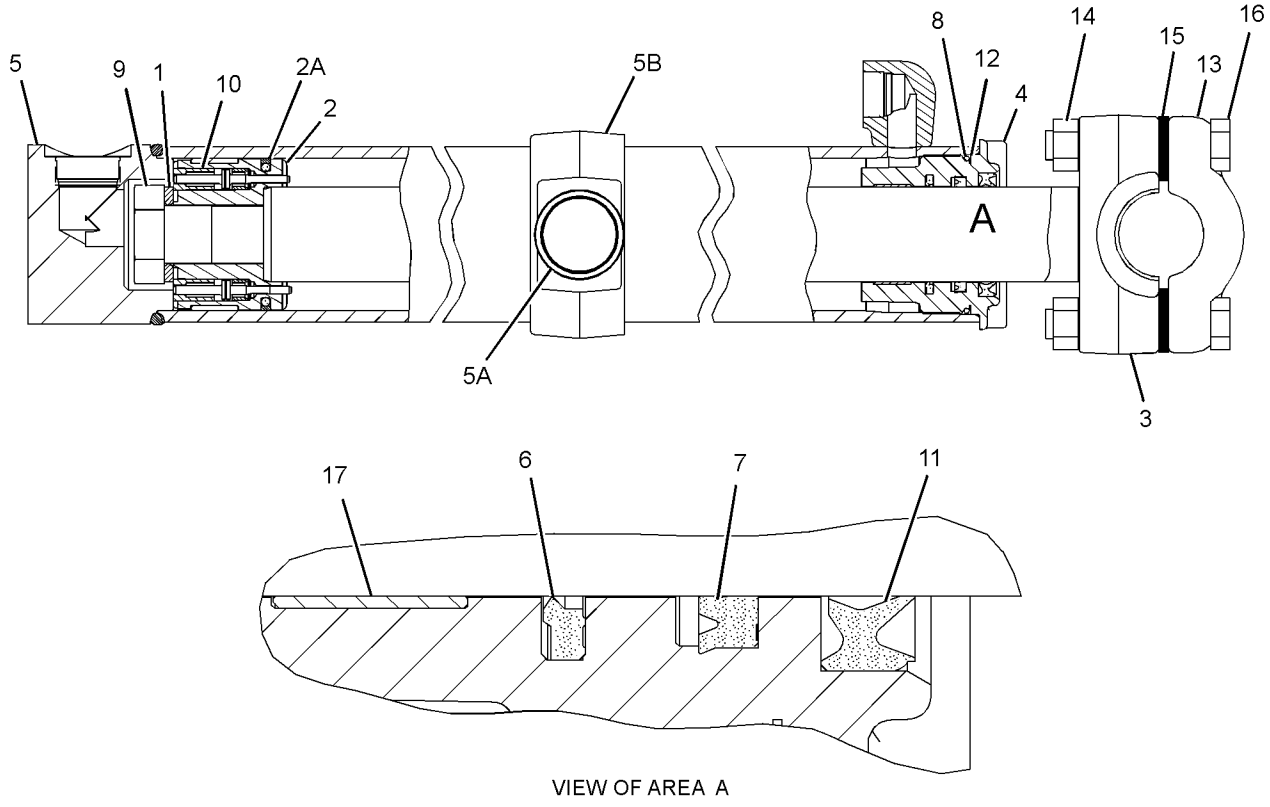

VIEW OF AREA A

GRAPHIC #1 **<END>** g01227064

227-0842 CYLINDER GP-RIPPER–LIFT

S/N: D6D1-UP
127-MM (5-IN) BORE X 362-MM (14-IN) STROKE
PART OF 224-4449 RIPPER AR
AN ATTACHMENT

SMCS-5352, 5356 **i02454035**

NOTE	REF NO	GRAPHIC REF	PART NUMBER	QTY	PART NAME 1 2 3 4 5 6 (PRODUCT LEVEL)	SEE PAGE
	1	1	**230-4873**	1	CYLINDER AS	
	1A	1	**4K-3128**	2	BEARING-SLEEVE	
	2	1	**2J-0564**	1	LOCKNUT (2-12-THD)	
	3	1	**3G-1753**	1	PISTON	
	4	1	**4J-3420**	1	RING-WEAR	
	5	1	**5J-5020**	1	SEAL AS	
		1	**5J-4974**	1	SEAL	
		1	**5J-4973**	1	RING-EXPANDER	
	6	1	**3G-1757**	1	WASHER (50.95X82X12-MM THK)	
	7	1	**2K-4096**	1	RING-BACKUP	
	8	1	**5F-3144**	1	SEAL-O-RING	
	9	1	**230-4872**	1	HEAD	
	10	1	**9T-2714**	1	ROD AS	
	10A	1	**2K-4507**	1	BEARING-SLEEVE	
	11	1	**8T-5668**	1	RING-WEAR	
	12	1	**167-2201**	1	SEAL AS-BUFFER	
	13	1	**167-2312**	1	SEAL-U-CUP	
	14	1	**225-3281**	1	SEAL-WIPER	
	15	1	**6V-8237**	4	WASHER (26X44X4-MM THK)	
M	16	1	**173-9779**	4	BOLT (M24X3X80-MM)	
	17	1	**1P-4576**	4	FLANGE-HALF	
M	18	1	**8T-4196**	8	BOLT (M10X1.5X35-MM)	
	19	1	**8T-4121**	8	WASHER-HARD (11X21X2.5-MM THK)	

M-METRIC PART

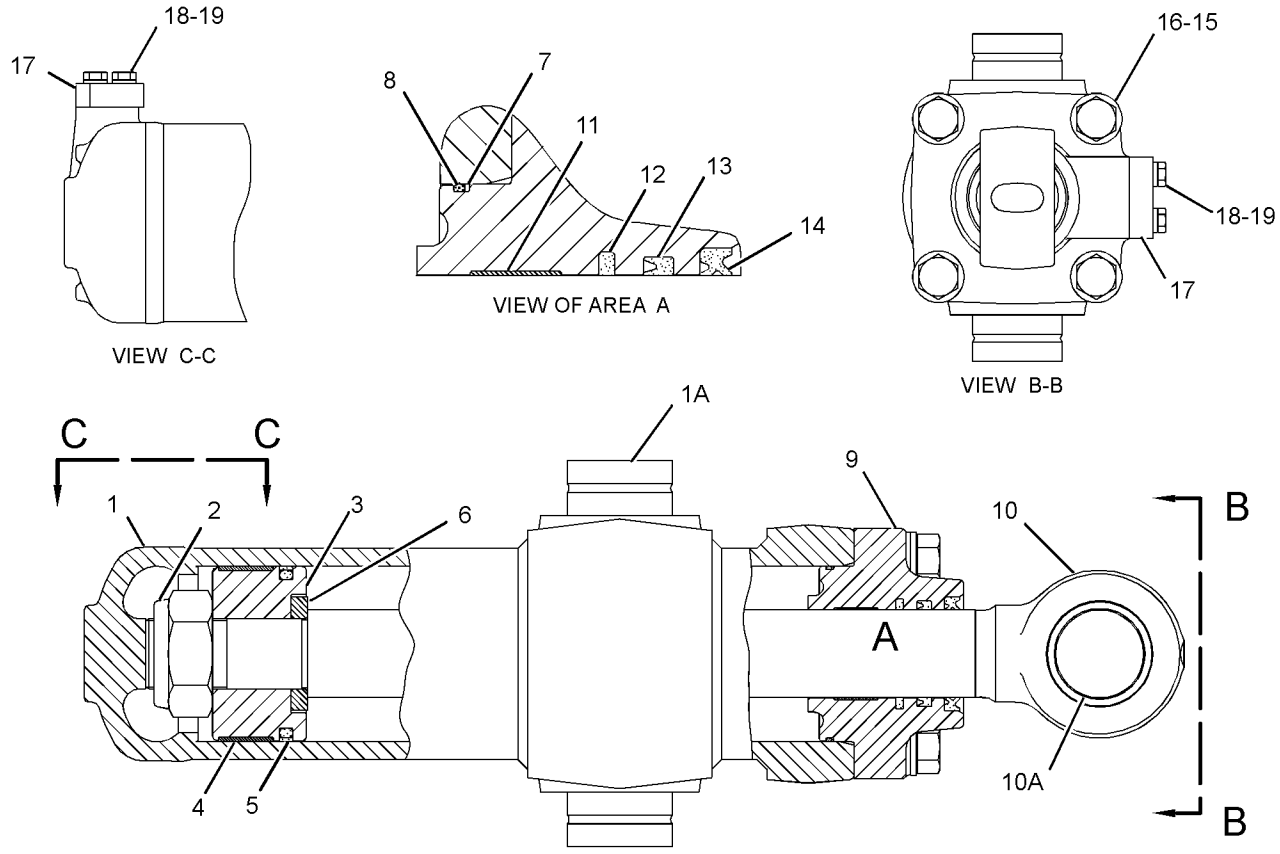

GRAPHIC #1 **<END>** g01224913

HYDRAULIC SYSTEM

166-2582 CYLINDER GP-TILT—SEMI-UNIVERSAL BULLDOZER

S/N: C4L1-UP; C4N1-UP
165.1MM(6.5 IN) BORE X 127MM (5 IN) STROKE
PART OF 252-5853 PUSH ARM GP
AN ATTACHMENT

SMCS-5104 **i02153200**

NOTE	REF NO	GRAPHIC REF	PART NUMBER	QTY	PART NAME 1 2 3 4 5 6 (PRODUCT LEVEL)	SEE PAGE
R	1	1	**166-2583**	1	CYLINDER AS	
		1	**166-2584**	1	CAP AS	
		1	**2J-8489**	1	BEARING	
	2	1	**1J-2921**	1	BOLT (1 1/2-12X3.82-IN)	
	3	1	**3S-6162**	1	WASHER-HARD (40.5X67X6-MM THK)	
J	4	1	**3J-9703**	1	RING-WEAR	
J	5	1	**5J-4991**	1	SEAL AS	
J	6	1	**7J-8955**	1	RING-BACKUP (RUBBER)	
J	7	1	**7J-8956**	1	SEAL-O-RING	
JLN	8	1	**8T-8379**	1	SEAL-HEAD	
JLN	9	1	**9T-0094**	1	RING-WEAR	
	10	1	**8E-5703**	24	SHIM (0.8-MM THK)	
	11	1	**8J-2880**	1	CAP-BEARING	
	12	1	**7X-0373**	4	BOLT (3/4-10X5.5-IN)	
	13	1	**6V-8182**	4	NUT (3/4-10-THD)	
	14	1	**1D-4709**	4	BOLT (1-8X3-IN)	
	15	1	**5P-8250**	4	WASHER (28X49X5-MM THK)	
	16	1	**6E-5527**	1	HEAD	
R	17	1	**1U-4069**	1	ROD AS	
B		1	**3J-6572**	14	SHIM (0.5-MM THK)	
	18	1	**4T-0259**	1	PISTON	
JLN	19	1	**167-2469**	1	SEAL-WIPER	
JLN	20	1	**167-2319**	1	SEAL-U-CUP	
JLN	21	1	**167-2208**	1	SEAL AS-BUFFER	
					AVAILABLE REPAIR KIT(S):	
			8T-1408	1	KIT-HYDRAULIC CYLINDER SEAL	
					(INCLUDES SEALS & RINGS)	
J			**112-6550**	1	KIT-HYDRAULIC CYLINDER SEAL	
					(INCLUDES SEAL-O RING & RING-BACK UP)	
L			**136-3752**	1	KIT-HYDRAULIC CYLINDER SEAL	
					(INCLUDES SEAL-O RING, RING-WEAR & SEAL AS)	
N			**136-8645**	1	KIT-HYDRAULIC CYLINDER SEAL	
					(INCLUDES SEAL-O RING, RING-WEAR & SEAL AS)	

B-USE AS REQUIRED
J-KIT MARKED J ALSO INCLUDES PART(S) MARKED J
L-KIT MARKED L ALSO INCLUDES PART(S) MARKED L
N-KIT MARKED N ALSO INCLUDES PART(S) MARKED N
R-REMFG PART MAY BE AVAILABLE

166-2582 CYLINDER GP-TILT *(contd.)* i02153200

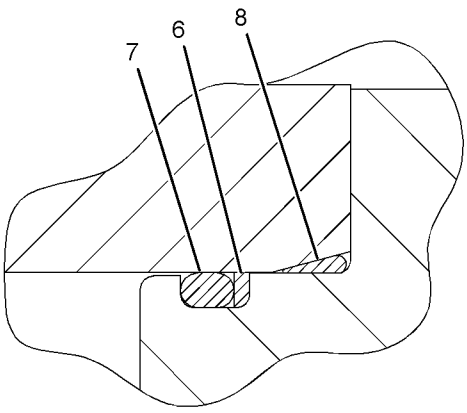

VIEW OF AREA A

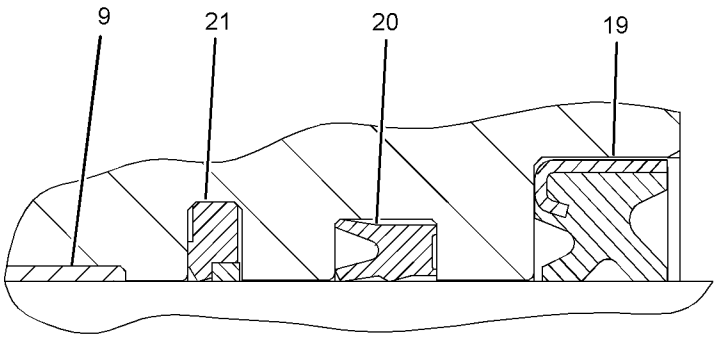

VIEW OF AREA B

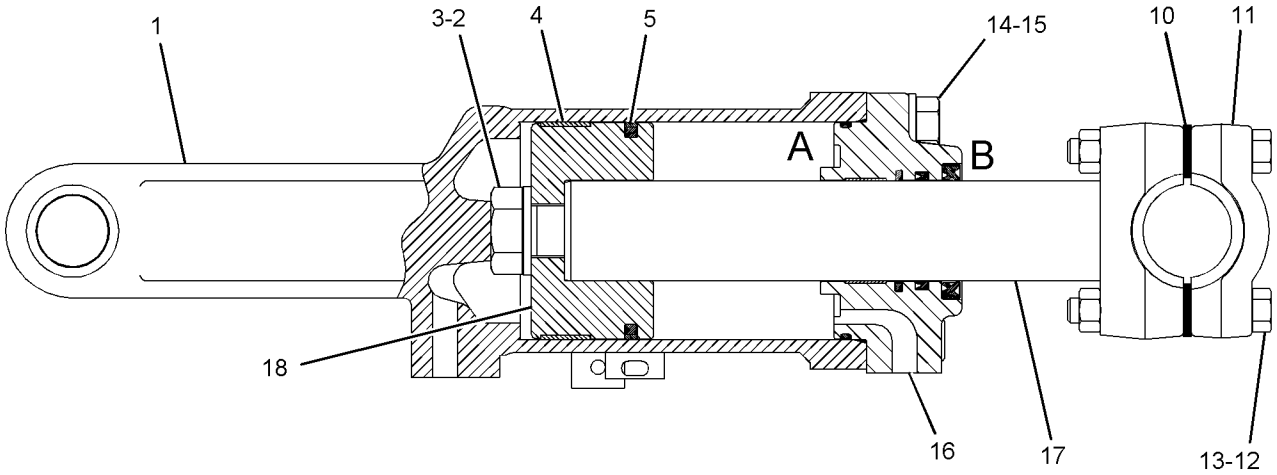

GRAPHIC #1 **<END>** g01098093

227-0841 CYLINDER GP-TILT—ANGLING BULLDOZER

S/N: C4C1-UP; C4K1-UP; C4R1-UP; C4T1-UP
152-MM (6-IN) BORE X 105-MM (4-IN) STROKE
PART OF 251-9814 BRACE GP-BULLDOZER
AN ATTACHMENT

SMCS-5104 **i02454622**

NOTE	REF NO	GRAPHIC REF	PART NUMBER	QTY	PART NAME 1 2 3 4 5 6 (PRODUCT LEVEL)	SEE PAGE
	1	1	**1J-0708**	1	RING-WEAR	
	2	1	**5J-4989**	1	SEAL AS	
		1	**5J-4418**	1	SEAL	
R	3	1	**9T-6093**	1	ROD-PISTON	
	4	1	**118-1170**	1	PISTON AS	
		1	**1J-8569**	2	INSERT-PISTON	
	5	1	**132-1249**	2	WASHER (44X84X6.35-MM THK)	
	6	1	**230-7887**	1	HEAD	
		1	**225-3281**	1	SEAL-WIPER	
	7	1	**230-7892**	1	CYLINDER AS	
		1	**2J-8489**	1	BEARING	
	8	1	**167-2201**	1	SEAL AS-BUFFER	
	9	1	**167-2312**	1	SEAL-U-CUP	
M	10	1	**173-9779**	4	BOLT (M24X3X80-MM)	
	11	1	**225-3281**	1	SEAL-WIPER	
	12	1	**2K-3258**	1	RING-BACKUP	
	13	1	**5H-3252**	1	SEAL-O-RING	
	14	1	**5J-5731**	1	LOCKNUT (1-3/4-12-THD)	
	15	1	**6V-8237**	4	WASHER (26X44X4-MM THK)	
	16	1	**8T-5668**	1	RING-WEAR	

M-METRIC PART
R-REMFG PART MAY BE AVAILABLE

227-0841 CYLINDER GP-TILT *(contd.)* **i02454622**

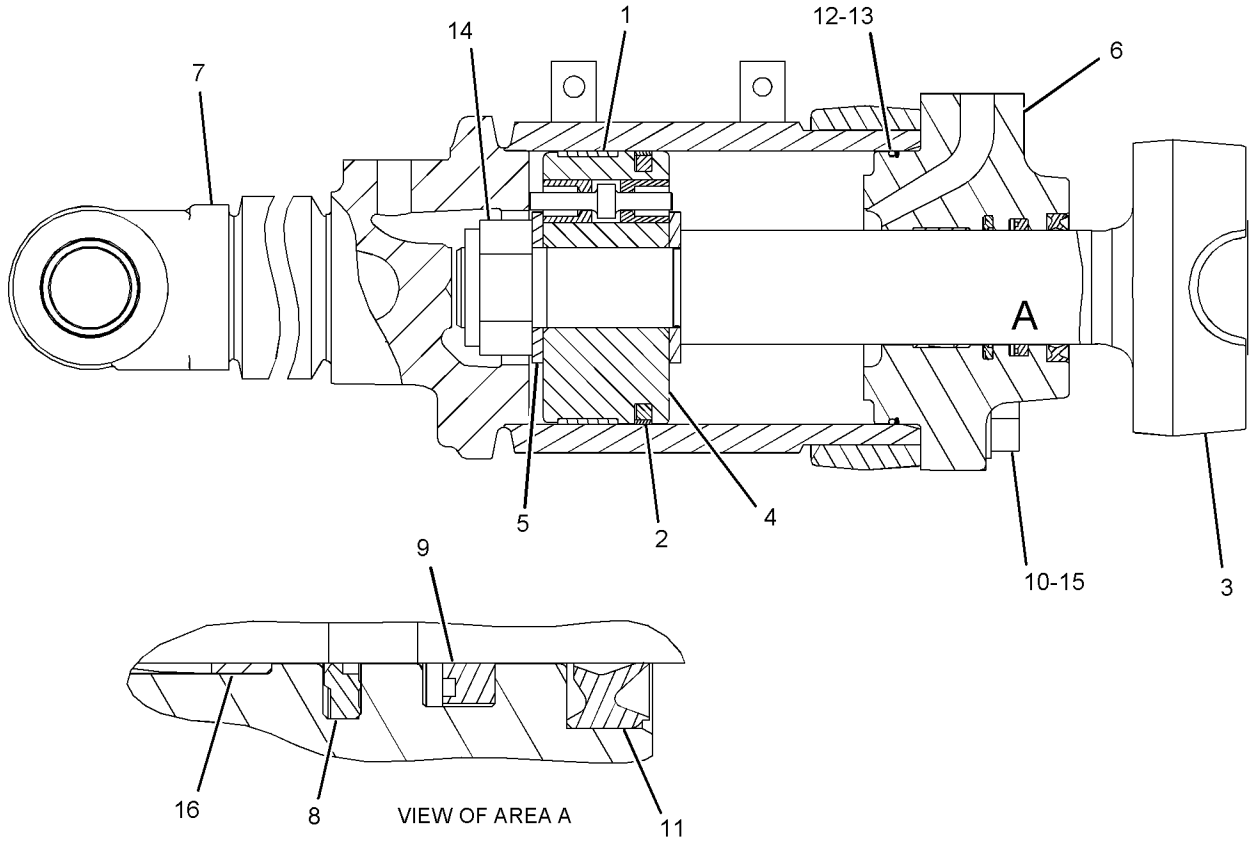

GRAPHIC #1 **<END>** g01207944

233-9134 CYLINDER GP-TILT—SEMI-UNIVERSAL BULLDOZER

S/N: D6C1-UP; C4W1-UP
165-MM (6.5-IN) BORE X 128-MM (5-IN) STROKE
PART OF 230-5554 PUSH ARM GP
AN ATTACHMENT

SMCS-5104 **i02454961**

NOTE	REF NO	GRAPHIC REF	PART NUMBER	QTY	PART NAME 1 2 3 4 5 6 (PRODUCT LEVEL)	SEE PAGE
R	1	1	**1U-4069**	1	ROD AS	
	2	1	**4T-0259**	1	PISTON	
B	3	1	**8E-5703**	24	SHIM (0.8-MM THK)	
	4	1	**8J-2880**	1	CAP-BEARING	
	5	1	**225-3284**	1	SEAL-WIPER	
	6	1	**233-9135**	1	CYLINDER AS	
	6A	1	**2J-8489**	1	BEARING	
	7	1	**233-9138**	1	HEAD-CYLINDER	
	8	1	**167-2208**	1	SEAL AS-BUFFER	
	9	1	**167-2319**	1	SEAL-U-CUP	
	10	1	**1J-2921**	1	BOLT (1-1/2-12X3.75-IN)	
	11	1	**3J-9703**	1	RING-WEAR	
	12	1	**3S-6162**	1	WASHER-HARD (40.5X67X6-MM THK)	
	13	1	**5J-4991**	1	SEAL AS	
M	14	1	**6V-7742**	4	NUT-FULL (M20X2.5-THD)	
M	15	1	**6V-8133**	4	BOLT (M24X3X80-MM)	
	16	1	**6V-8237**	4	WASHER (26X44X4-MM THK)	
M	17	1	**6V-9167**	4	BOLT (M20X2.5X140-MM)	
	18	1	**7J-8955**	1	RING-BACKUP	
	19	1	**7J-8956**	1	SEAL-O-RING	
	20	1	**8T-8379**	1	SEAL-HEAD	
	21	1	**9T-0094**	1	RING-WEAR	

B-USE AS REQUIRED
M-METRIC PART
R-REMFG PART MAY BE AVAILABLE

233-9134 CYLINDER GP-TILT *(contd.)* **i02454961**

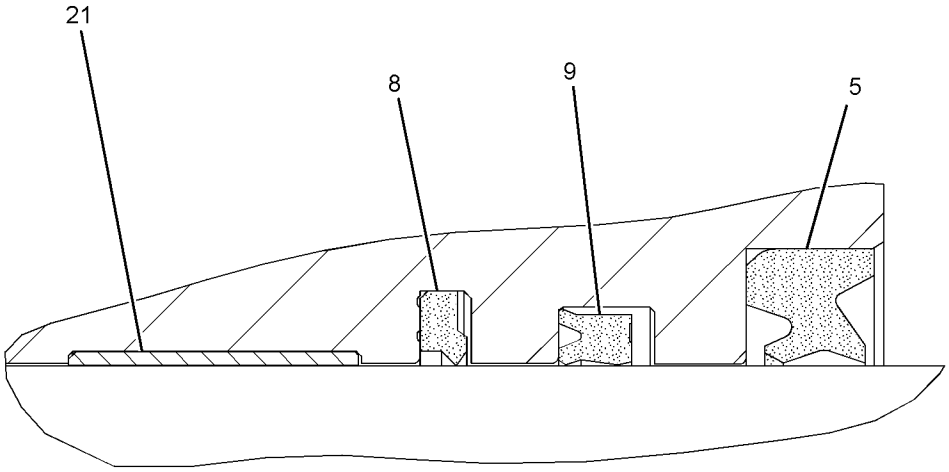

VIEW OF AREA A

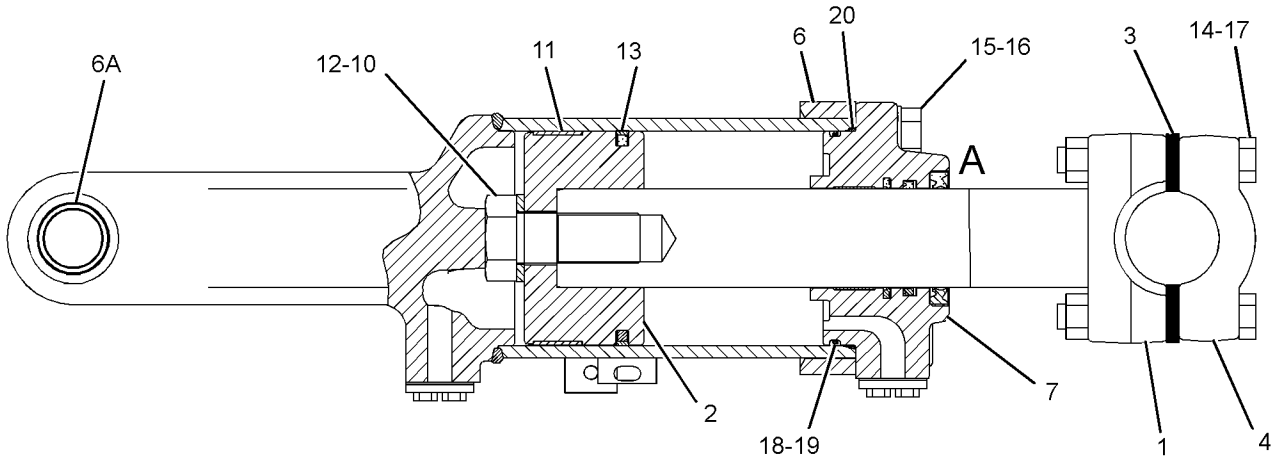

GRAPHIC #1 **<END>** g01209219

161-3615 HANDLE GP-CONTROL–BULLDOZER

S/N: JDL1-UP; GMT1-UP

PART OF 222-1150 CONTROL GP-PILOT OPERATED HYD

SMCS-3168 **i01811592**

NOTE	REF NO	GRAPHIC REF	PART NUMBER	QTY	PART NAME 1 2 3 4 5 6 (PRODUCT LEVEL)	SEE PAGE
Y	1	1	**188-1079**	1	HANDLE GP-CONTROL (DOZER)	463
	2	1	**4B-9808**	2	SETSCREW (1/4-20X0.5-IN)	

Y-SEPARATE ILLUSTRATION

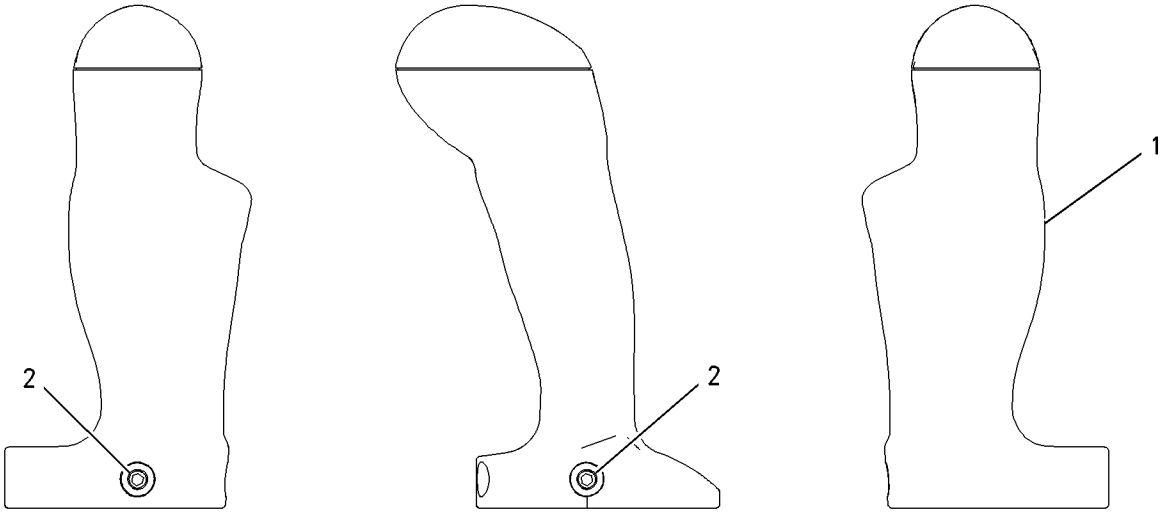

GRAPHIC #1 **<END>** g00763645

188-1079 HANDLE GP-CONTROL–BULLDOZER

S/N: JDL1-UP; GMT1-UP

PART OF 161-3615 HANDLE GP-CONTROL

SMCS-3168 **i01439692**

NOTE	REF NO	GRAPHIC REF	PART NUMBER	QTY	PART NAME 1 2 3 4 5 6 (PRODUCT LEVEL)	SEE PAGE
	1	1	**164-6963**	1	HANDGRIP AS	

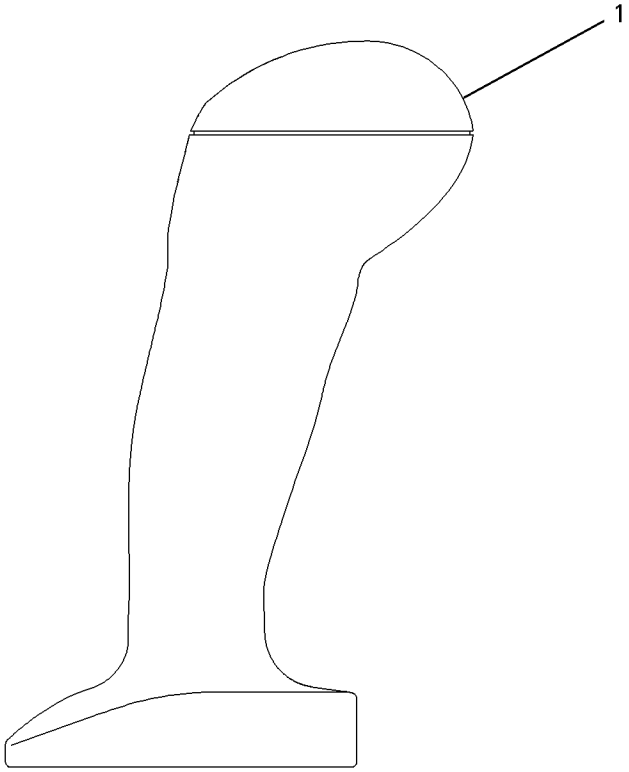

GRAPHIC #1 **<END>** g00721034

HYDRAULIC SYSTEM

218-4981 HYDRAULIC AR-2 VALVE

S/N: JDL1-UP; GMT1-UP

PART OF 218-4976, 222-1591 GENERAL AR

SMCS-5051 **i02429830**

NOTE	PART NUMBER	QTY	PART NAME 1 2 3 4 5 6 (PRODUCT LEVEL)	SEE PAGE
Y	*229-5421*	1	ADAPTER GP-MOTOR	440
Y	*222-1150*	1	CONTROL GP-PILOT OPERATED HYD	446
Y	*222-1165*	1	LINES GP-LIFT CYLINDER	465
Y	*222-1164*	1	LINES GP-PILOT	467
Y	*222-1163*	1	LINES GP-PUMP	478
Y	*222-1166*	1	LINES GP-TILT CYLINDER	483
YR	**159-7156**	1	MOTOR GP-PISTON	493
Y	*222-1159*	1	MOUNTING GP-VALVE	496
Y	*222-1161*	1	PUMP & MOUNTING GP	497
Y	*222-1162*	1	TANK & MTG GP-HYDRAULIC	503
Y	*222-1191*	1	VALVE & MTG GP-COUNTERBALANCE	508
Y	*222-1160*	1	VALVE GP-QUICK-DROP	540

R-REMFG PART MAY BE AVAILABLE
Y-SEPARATE ILLUSTRATION

<END>

222-1165 LINES GP-LIFT CYLINDER

S/N: JDL1-UP; GMT1-UP

PART OF 218-4981 HYDRAULIC AR-2 VALVE

SMCS-5057, 5102 **i02450267**

NOTE	REF NO	GRAPHIC REF	PART NUMBER	QTY	PART NAME 1 2 3 4 5 6 (PRODUCT LEVEL)	SEE PAGE
I	1	1	**111-7057**	2	HOSE AS	
	2	1	**226-7298**	1	TUBE AS	
	3	1	**226-7299**	1	TUBE AS	
M	4	1	**116-3715**	2	STUD-TAPERLOCK (M10X1.5X85-MM)	
	5	1	**1P-3704**	2	SEAL-RECTANGULAR	
	6	1	**4J-0520**	4	SEAL-O-RING	
	7	1	**5P-1075**	18	WASHER-HARD (10.2X22.5X3-MM THK)	
	8	1	**7G-5984**	4	CLIP (TAB)	
	9	1	**7G-5985**	4	CLIP (SLOT)	
	10	1	**7G-5986**	4	GROMMET	
	11	1	**7X-7729**	8	WASHER (11X25X3-MM THK)	
	12	1	**8C-3206**	4	FLANGE-HALF	
	13	1	**8S-0023**	2	CLIP (SLOT)	
	14	1	**8S-0024**	2	CLIP (TAB)	
M	15	1	**8T-4133**	8	NUT (M10X1.5 THD)	
M	16	1	**8T-4136**	2	BOLT (M10X1.5X25-MM)	
M	17	1	**8T-4185**	8	BOLT (M10X1.5X50-MM)	
M	18	1	**8T-4196**	8	BOLT (M10X1.5X35-MM)	

I-REFER TO HYDRAULIC INFORMATION SYSTEM
M-METRIC PART

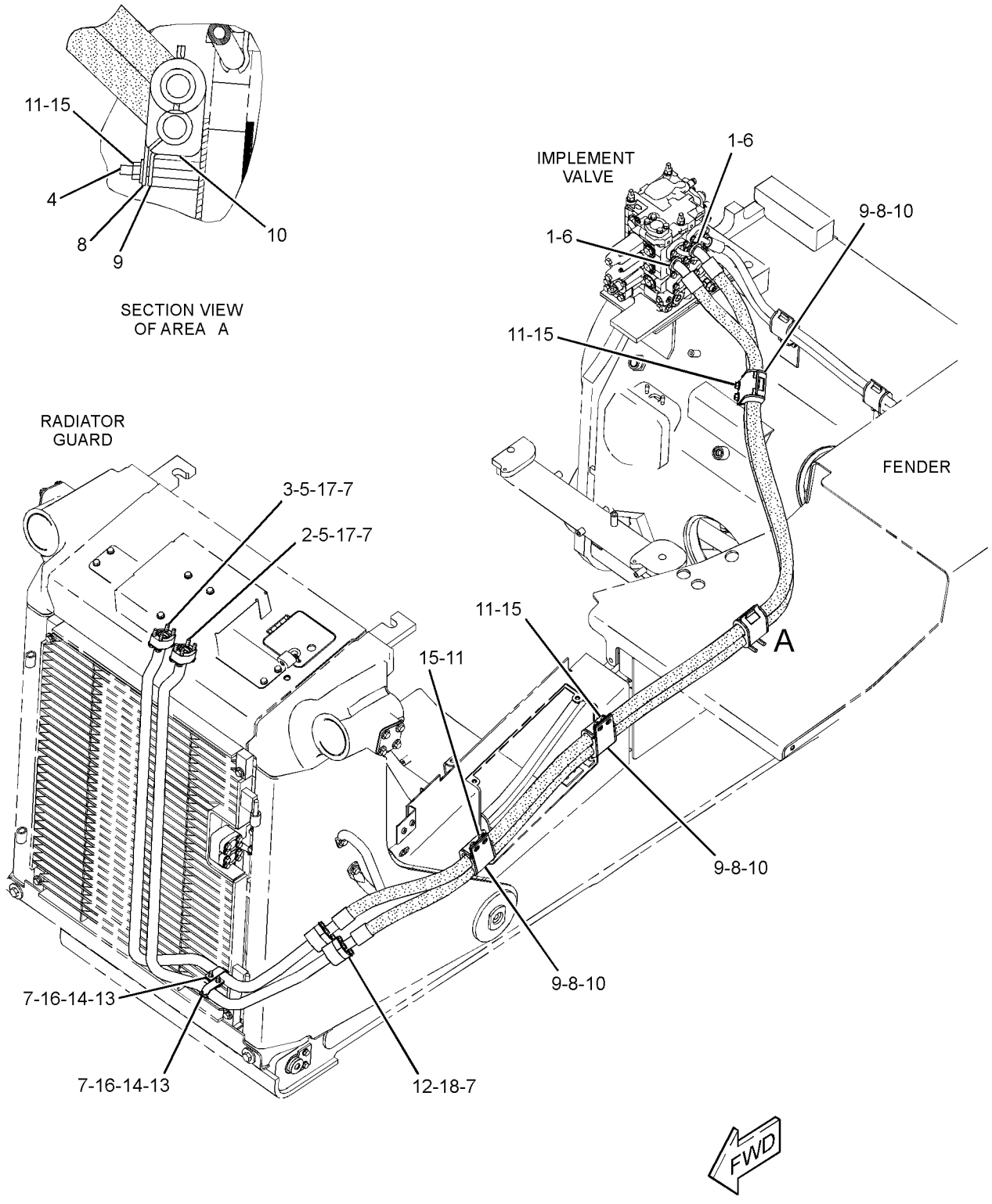

GRAPHIC #1 **<END>** g01207745

HYDRAULIC SYSTEM

222-1164 LINES GP-PILOT

S/N: JDL1-UP; GMT1-UP

PART OF 218-4981 HYDRAULIC AR-2 VALVE

SMCS-5057 **i02450236**

NOTE	REF NO	GRAPHIC REF	PART NUMBER	QTY	PART NAME 1 2 3 4 5 6 (PRODUCT LEVEL)	SEE PAGE
	1	2	**5I-4376**	2	FITTING	
	2	2	**6V-0852**	2	CAP-DUST	
	3	2	**8C-3451**	1	CAP-DUST	
	4	2	**8Y-7452**	1	TEE-O-RING	
	5	2	**126-0814**	1	FITTING AS (SWIVEL)	
		2	**6V-0852**	1	CAP-DUST	
Y	6	2	*200-0750*	1	ACCUMULATOR GP-PILOT OIL (CHARGED)	439
	7	2	**226-3493**	1	TUBE AS	
I	8	2	**226-3496**	1	HOSE AS	
I	9	1	**226-3497**	2	HOSE AS	
I	10	1	**226-3498**	1	HOSE AS	
	11	1	**226-3500**	1	HOSE AS	
	12	1	**226-3501**	1	HOSE AS	
	13	1	**226-3502**	1	HOSE AS	
	14	1	**226-3503**	1	HOSE AS	
I	15	1	**226-3504**	1	HOSE AS	
	16	1	**226-3505**	1	HOSE AS	
I	17	1	**226-3512**	1	HOSE AS	
Y	18	2	*226-4751*	1	MANIFOLD GP-CONTROL (IMPLEMENT PILOT PRESSURE)	491
	19	1	**226-9668**	1	HARNESS AS-SENSOR	
		1	**102-8801**	1	KIT-RECEPTACLE (12-PIN)	
					(INCLUDES RECEPTACLE AS & WEDGE)	
		1	**155-2270**	1	KIT-CONNECTING PLUG (2-PIN)	
					(INCLUDES PLUG AS, WEDGE, & INTERFACE SEAL)	
	20	2	*148-8305*	1	ADAPTER AS	
		2	**5P-9617**	1	ADAPTER	
		2	**3J-1907**	1	SEAL-O-RING	
	21	2	*148-8316*	1	CONNECTOR AS	
		2	**6V-8647**	1	CONNECTOR	
		2	**3J-7354**	1	SEAL-O-RING	
		2	**4J-5477**	1	SEAL-O-RING	
	22	2	*148-8318*	3	CONNECTOR AS	
					(EACH INCLUDES)	
		2	**6V-8634**	1	CONNECTOR	
		2	**3K-0360**	1	SEAL-O-RING	
		2	**6V-8397**	1	SEAL-O-RING	
	23	2	*148-8325*	3	CONNECTOR AS	
					(EACH INCLUDES)	
		2	**6V-8641**	1	CONNECTOR	
		2	**3J-1907**	1	SEAL-O-RING	
		2	**4J-5477**	1	SEAL-O-RING	
	24	2	*148-8326*	2	CONNECTOR AS	
					(EACH INCLUDES)	
		2	**6V-9872**	1	CONNECTOR	
		2	**3J-7354**	1	SEAL-O-RING	
		2	**6V-8397**	1	SEAL-O-RING	
	25	2	*148-8336*	3	CONNECTOR AS	
					(EACH INCLUDES)	
		2	**6V-8636**	1	CONNECTOR	
		2	**3J-1907**	1	SEAL-O-RING	
		2	**6V-8397**	1	SEAL-O-RING	
	26	2	*148-8351*	1	ELBOW AS	
		2	**6V-9849**	1	ELBOW (SWIVEL)	
		2	**4J-5477**	1	SEAL-O-RING	

222-1164 **LINES GP-PILOT** *(contd.)* **i02450236**

NOTE	REF NO	GRAPHIC REF	PART NUMBER	QTY	PART NAME 1 2 3 4 5 6 (PRODUCT LEVEL)	SEE PAGE
	27	2	*148-8367*	2	ELBOW AS	
					(EACH INCLUDES)	
		2	**6V-9850**	1	ELBOW	
		2	**6V-8397**	1	SEAL-O-RING	
	28	2	*148-8368*	4	ELBOW AS	
					(EACH INCLUDES)	
		2	**6V-8627**	1	ELBOW	
		2	**3J-1907**	1	SEAL-O-RING	
		2	**4J-5477**	1	SEAL-O-RING	
	29	2	*148-8369*	1	ELBOW AS	
		2	**6V-8628**	1	ELBOW	
		2	**3J-7354**	1	SEAL-O-RING	
		2	**4J-5477**	1	SEAL-O-RING	
	30	2	*148-8371*	1	ELBOW AS	
		2	**8C-8988**	1	ELBOW	
		2	**6V-8397**	1	SEAL-O-RING	
	31	1,2	*148-8378*	3	ELBOW AS	
					(EACH INCLUDES)	
		1,2	**6V-8724**	1	ELBOW	
		1,2	**3J-1907**	1	SEAL-O-RING	
		1,2	**6V-8397**	1	SEAL-O-RING	
	32	2	*148-8434*	1	TEE AS	
		2	**6V-9843**	1	TEE-SWIVEL	
		2	**6V-8397**	2	SEAL-O-RING	
	33	2	*148-8435*	1	TEE AS	
		2	**6V-8781**	1	TEE-FACE SEAL	
		2	**3J-1907**	1	SEAL-O-RING	
		2	**6V-8397**	2	SEAL-O-RING	
	34	2	*153-6246*	1	TEE AS	
		2	**7X-0820**	1	TEE-UNION	
		2	**6V-8397**	3	SEAL-O-RING	
	35	2	*164-5567*	2	FITTING AS	
					(EACH INCLUDES)	
		2	**6V-3965**	1	FITTING AS (QUICK DISCONNECT)	
		2	**3J-1907**	1	SEAL-O-RING	
	36	2	*164-5590*	1	VALVE AS-FLUID SAMPLING	
		2	**8C-3446**	1	VALVE-FLUID SAMPLING	
		2	**3J-7354**	1	SEAL-O-RING	
	37	2	**3D-2824**	1	SEAL-O-RING	
	38	2	**3J-1907**	1	SEAL-O-RING	
	39	2	**3J-7354**	1	SEAL-O-RING	
	40	1	**4J-0520**	1	SEAL-O-RING	
	41	1	**4J-0522**	1	SEAL-O-RING	
	42	2	**4J-5477**	1	SEAL-O-RING	
	43	1	**5P-1075**	2	WASHER-HARD (10.2X22.5X3-MM THK)	
	44	2	**6V-8076**	1	ELBOW	
	45	2	**6V-9168**	1	NUT (11/16-16-THD)	
	46	2	**6V-9829**	2	CAP AS	
M	47	2	**7X-2535**	2	BOLT (M6X1X60-MM)	
	48	1	**8T-1887**	3	CLIP (SLOT)	
	49	1	**8T-1888**	3	CLIP (TAB)	
M	50	1	**8T-4136**	2	BOLT (M10X1.5X25-MM)	
	51	2	**9X-8256**	2	WASHER (6.6X12X2-MM THK)	
	52	2	**9X-8268**	1	WASHER (17.5X30X3.5-MM THK)	

I-REFER TO HYDRAULIC INFORMATION SYSTEM
M-METRIC PART
Y-SEPARATE ILLUSTRATION

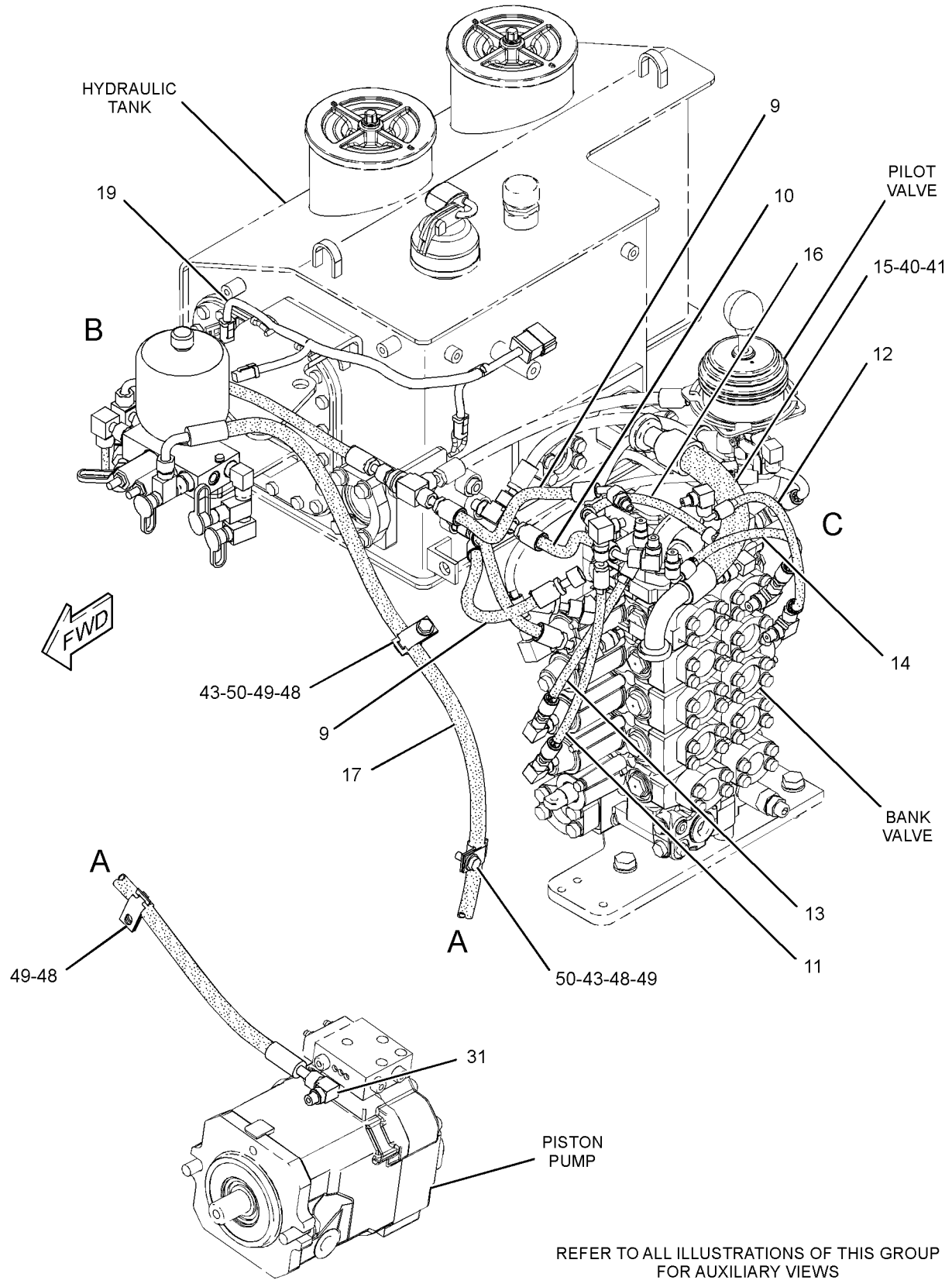

GRAPHIC #1

g01210326

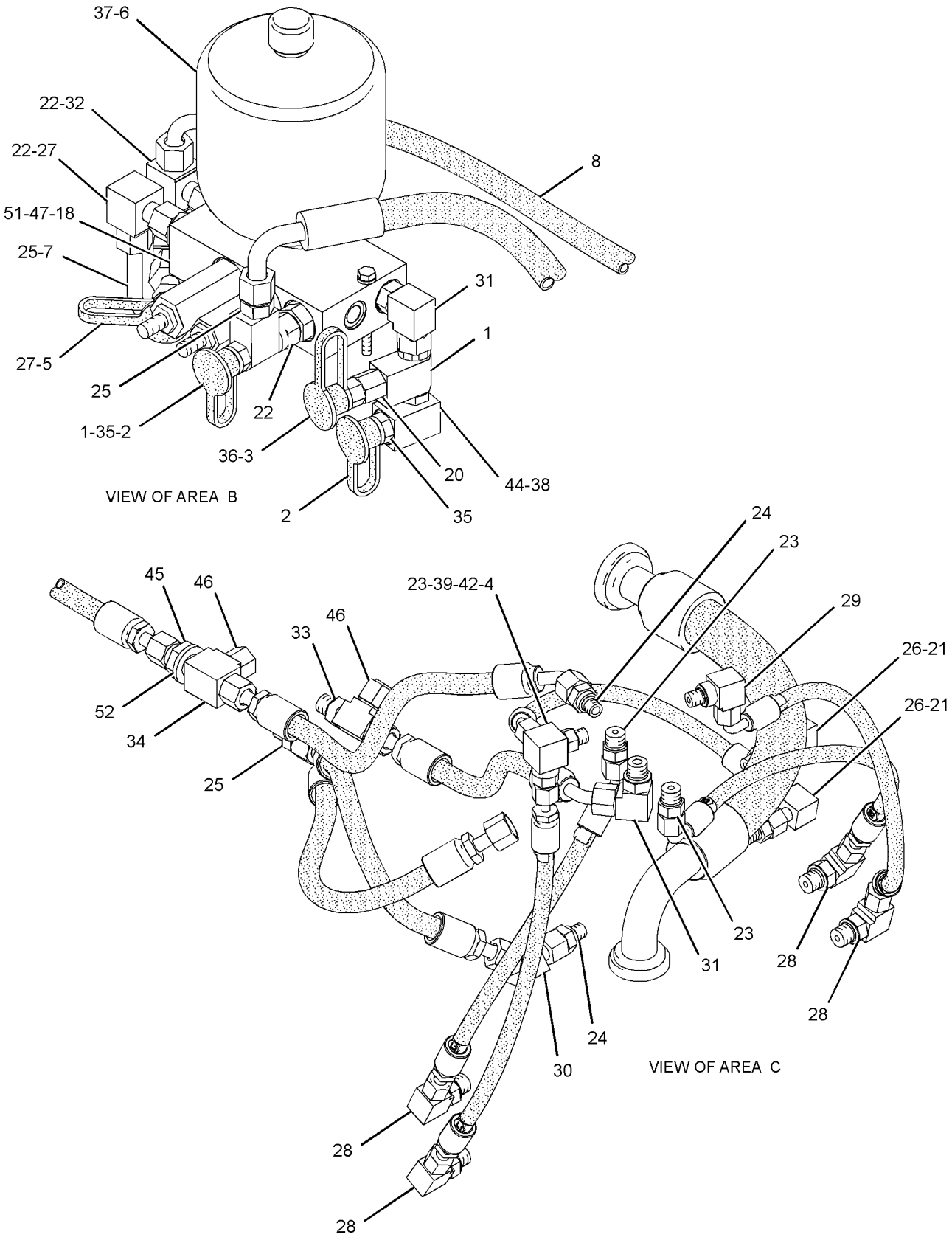

GRAPHIC #2 **<END>** g01210434

HYDRAULIC SYSTEM

222-1167 LINES GP-PILOT–RIPPER

S/N: JDL1-UP; GMT1-UP
PART OF 226-9130 CONTROL AR-HYDRAULIC IMPLEMENT
AN ATTACHMENT

SMCS-5057 **i02455906**

NOTE	REF NO	GRAPHIC REF	PART NUMBER	QTY	PART NAME 1 2 3 4 5 6 (PRODUCT LEVEL)	SEE PAGE
	1	1	**226-3506**	1	HOSE AS	
	2	1	**226-3507**	1	HOSE AS	
I	3	1	**226-3508**	1	HOSE AS	
	4	1	**226-3509**	1	HOSE AS	
I	5	1	**226-3510**	1	HOSE AS	
I	6	1	**226-3511**	1	HOSE AS	
	7	1	*148-8325*	1	CONNECTOR AS	
		1	**6V-8641**	1	CONNECTOR	
		1	**3J-1907**	1	SEAL-O-RING	
		1	**4J-5477**	1	SEAL-O-RING	
	8	1	*148-8326*	1	CONNECTOR AS	
		1	**6V-9872**	1	CONNECTOR	
		1	**3J-7354**	1	SEAL-O-RING	
		1	**6V-8397**	1	SEAL-O-RING	
	9	1	*148-8368*	2	ELBOW AS	
					(EACH INCLUDES)	
		1	**6V-8627**	1	ELBOW	
		1	**3J-1907**	1	SEAL-O-RING	
		1	**4J-5477**	1	SEAL-O-RING	
	10	1	*148-8369*	1	ELBOW AS	
		1	**6V-8628**	1	ELBOW	
		1	**3J-7354**	1	SEAL-O-RING	
		1	**4J-5477**	1	SEAL-O-RING	
	11	1	*148-8378*	1	ELBOW AS	
		1	**6V-8724**	1	ELBOW	
		1	**3J-1907**	1	SEAL-O-RING	
		1	**6V-8397**	1	SEAL-O-RING	
	12	1	**4J-0520**	1	SEAL-O-RING	
	13	1	**4J-0522**	1	SEAL-O-RING	

I-REFER TO HYDRAULIC INFORMATION SYSTEM

222-1167 **LINES GP-PILOT** *(contd.)* **i02455906**

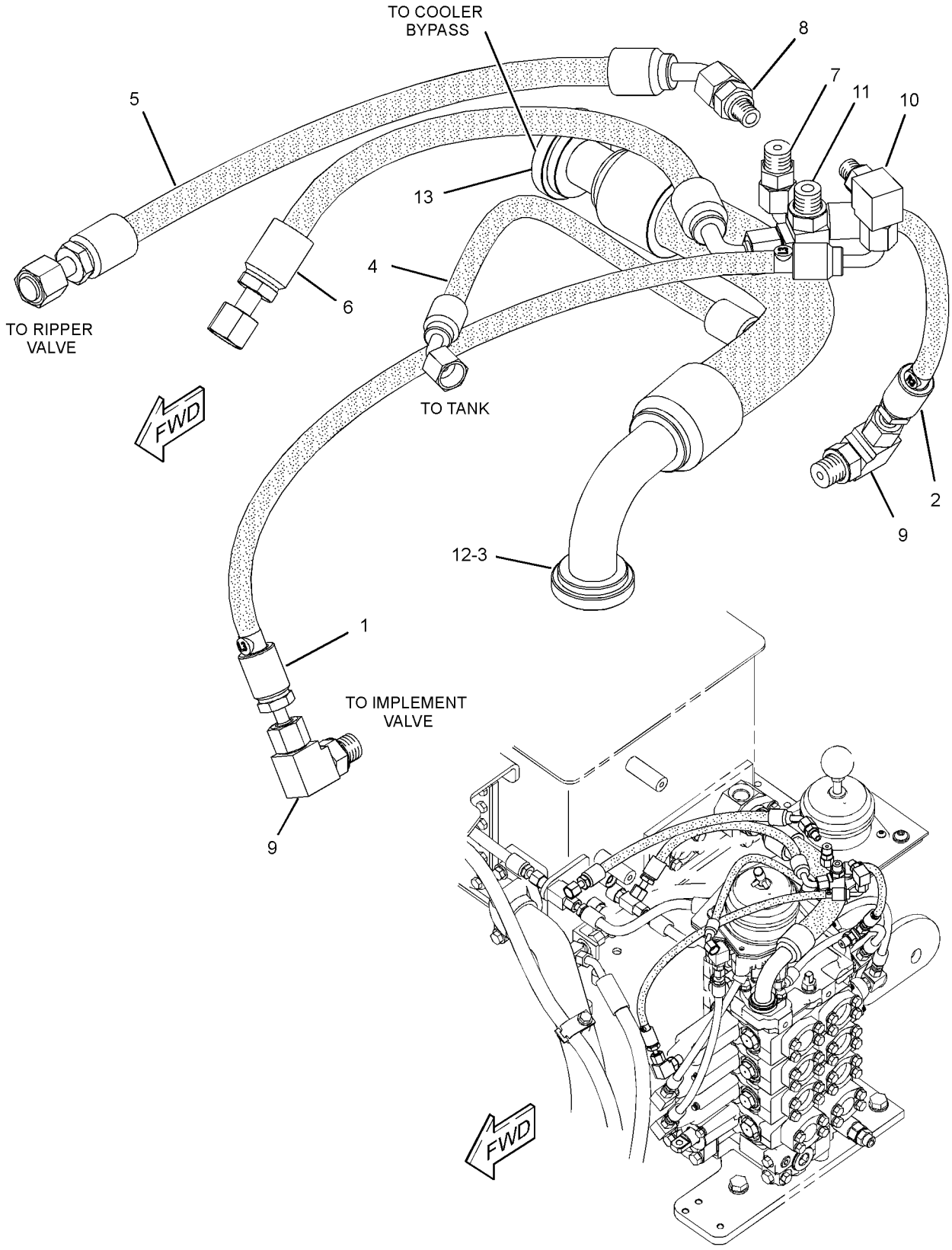

GRAPHIC #1 **<END>** g01206991

HYDRAULIC SYSTEM

238-7756 LINES GP-PILOT—WINCH

S/N: JDL1-UP; GMT1-UP
PART OF 239-5912 CONTROL AR-HYDRAULIC IMPLEMENT
AN ATTACHMENT

SMCS-5057 **i02454834**

NOTE	REF NO	GRAPHIC REF	PART NUMBER	QTY	PART NAME 1 2 3 4 5 6 (PRODUCT LEVEL)	SEE PAGE
	1	1	**126-0810**	1	LAMP-LED (24-VOLT, GREEN)	
	2	1	**165-0107**	1	HARNESS AS-CONSOLE (WINCH)	
		1	**102-8802**	1	KIT-RECEPTACLE (2-PIN)	
		1	**102-8803**	1	KIT-RECEPTACLE (3-PIN)	
					(EACH INCLUDES RECEPTACLE AS & WEDGE)	
I	3	1	**226-3508**	1	HOSE AS	
	4	1	**226-3509**	1	HOSE AS	
I	5	1	**226-3510**	1	HOSE AS	
I	6	1	**226-3511**	1	HOSE AS	
	7	1	**228-7946**	1	HOSE AS	
	8	1	**228-7948**	1	HOSE AS	
	9	1	**228-8364**	1	HOSE AS	
	10	1	**228-8365**	1	HOSE AS	
	11	1	*148-8326*	1	CONNECTOR AS	
		1	**6V-9872**	1	CONNECTOR	
		1	**3J-7354**	1	SEAL-O-RING	
		1	**6V-8397**	1	SEAL-O-RING	
	12	1	*148-8336*	2	CONNECTOR AS	
					(EACH INCLUDES)	
		1	**6V-8636**	1	CONNECTOR	
		1	**3J-1907**	1	SEAL-O-RING	
		1	**6V-8397**	1	SEAL-O-RING	
	13	1	*148-8367*	1	ELBOW AS	
		1	**6V-9850**	1	ELBOW	
		1	**6V-8397**	1	SEAL-O-RING	
	14	1	*148-8368*	2	ELBOW AS	
					(EACH INCLUDES)	
		1	**6V-8627**	1	ELBOW	
		1	**3J-1907**	1	SEAL-O-RING	
		1	**4J-5477**	1	SEAL-O-RING	
	15	1	*148-8369*	2	ELBOW AS	
					(EACH INCLUDES)	
		1	**6V-8628**	1	ELBOW	
		1	**3J-7354**	1	SEAL-O-RING	
		1	**4J-5477**	1	SEAL-O-RING	
	16	1	*148-8378*	1	ELBOW AS	
		1	**6V-8724**	1	ELBOW	
		1	**3J-1907**	1	SEAL-O-RING	
		1	**6V-8397**	1	SEAL-O-RING	
	17	1	**4D-6466**	1	CLIP	
	18	1	**4J-0520**	1	SEAL-O-RING	
	19	1	**4J-0522**	1	SEAL-O-RING	
	20	1	**4S-1936**	2	CLIP	
	21	1	**5P-1075**	1	WASHER-HARD (10.2X22.5X3-MM THK)	
M	22	1	**8T-4136**	1	BOLT (M10X1.5X25-MM)	

I-REFER TO HYDRAULIC INFORMATION SYSTEM
M-METRIC PART

238-7756 **LINES GP-PILOT** *(contd.)* **i02454834**

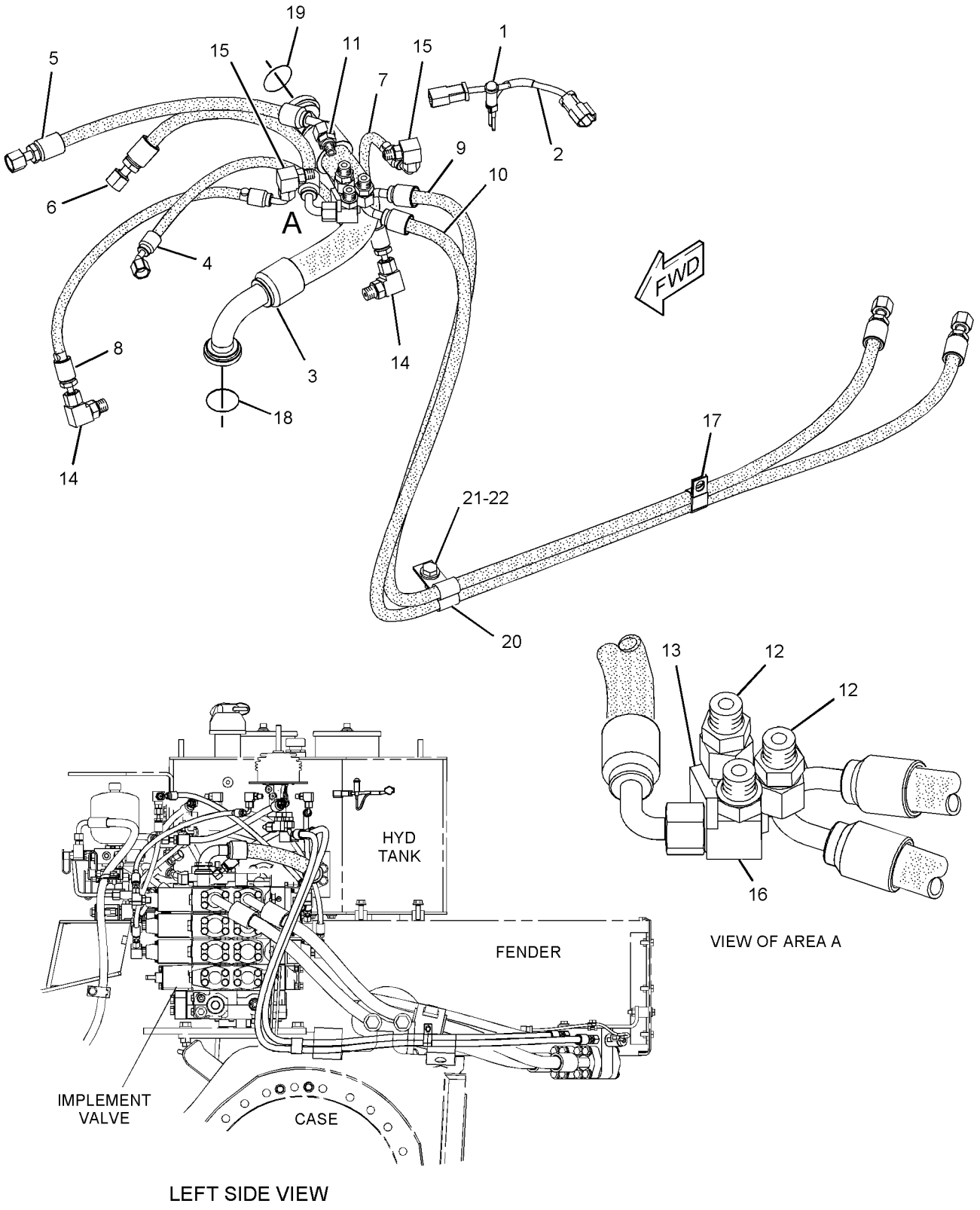

GRAPHIC #1 **<END>** g01211563

HYDRAULIC SYSTEM

238-7759 LINES GP-PILOT—GRADE CONTROL

S/N: JDL1-UP; GMT1-UP
PART OF 239-6331 CONTROL AR-HYDRAULIC IMPLEMENT
AN ATTACHMENT

SMCS-5057 **i02454899**

NOTE	REF NO	GRAPHIC REF	PART NUMBER	QTY	PART NAME 1 2 3 4 5 6 (PRODUCT LEVEL)	SEE PAGE
I	1	1	**226-3497**	1	HOSE AS	
I	2	2	**226-3511**	1	HOSE AS	
	3	2	**233-6942**	1	VALVE	
	4	1	**239-3875**	1	TUBE AS	
	5	1	**239-3876**	1	TUBE AS	
	6	1	**239-4119**	1	TUBE AS	
	7	1	**239-4120**	1	TUBE AS	
Y	8	1	**239-5317**	1	VALVE & MTG GP-BULLDOZER (GRADE CONTROL)	507
	9	2	**264-3883**	1	TUBE AS	
	10	2	*148-8305*	1	ADAPTER AS	
		2	**5P-9617**	1	ADAPTER	
		2	**3J-1907**	1	SEAL-O-RING	
	11	2	*148-8336*	1	CONNECTOR AS	
		2	**6V-8636**	1	CONNECTOR	
		2	**3J-1907**	1	SEAL-O-RING	
		2	**6V-8397**	1	SEAL-O-RING	
	12	2	*148-8361*	3	ELBOW AS	
					(EACH INCLUDES)	
		2	**6V-9200**	1	ELBOW	
		2	**3J-7354**	1	SEAL-O-RING	
		2	**6V-8397**	1	SEAL-O-RING	
	13	2	*148-8378*	5	ELBOW AS	
					(EACH INCLUDES)	
		2	**6V-8724**	1	ELBOW	
		2	**3J-1907**	1	SEAL-O-RING	
		2	**6V-8397**	1	SEAL-O-RING	
	14	2	*150-4047*	1	ADAPTER AS	
		2	**8T-2353**	1	ADAPTER	
		2	**3J-7354**	1	SEAL-O-RING	
	15	2	*173-7225*	1	TEE AS	
		2	**6V-9161**	1	TEE	
		2	**3J-7354**	1	SEAL-O-RING	
		2	**6V-8397**	2	SEAL-O-RING	
	16	1	**264-4006**	1	HOSE AS	
	17	2	**3J-7354**	1	SEAL-O-RING	
	18	2	**6V-8397**	2	SEAL-O-RING	

I-REFER TO HYDRAULIC INFORMATION SYSTEM
Y-SEPARATE ILLUSTRATION

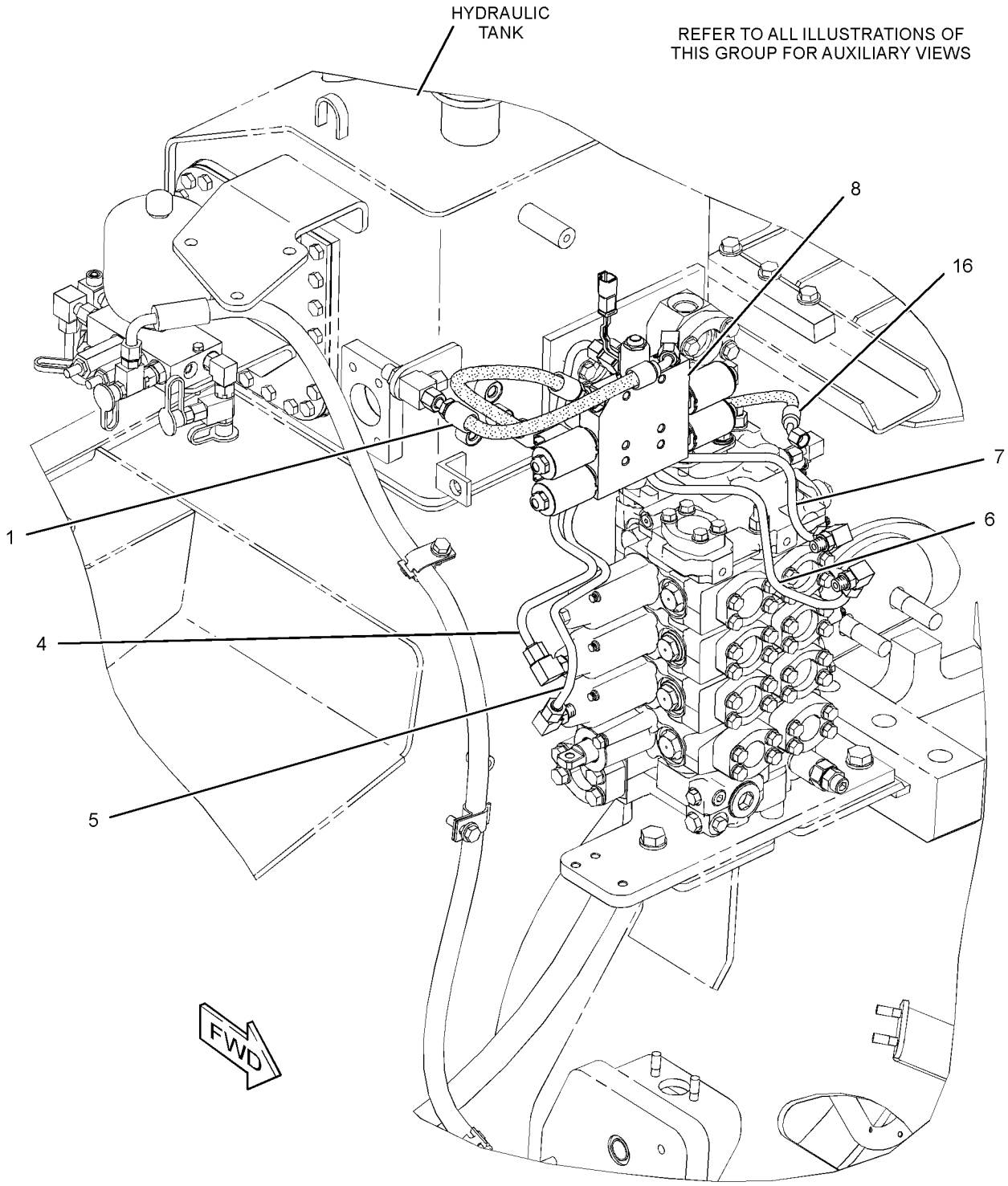

GRAPHIC #1 g01209588

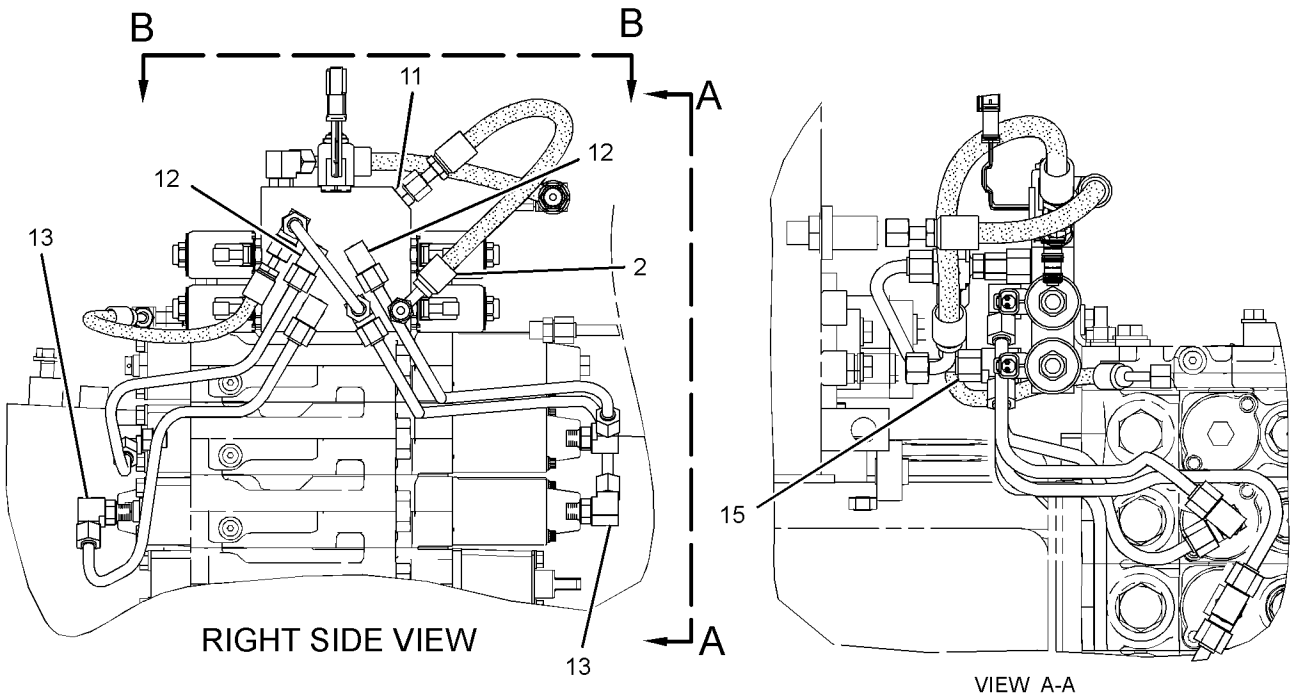

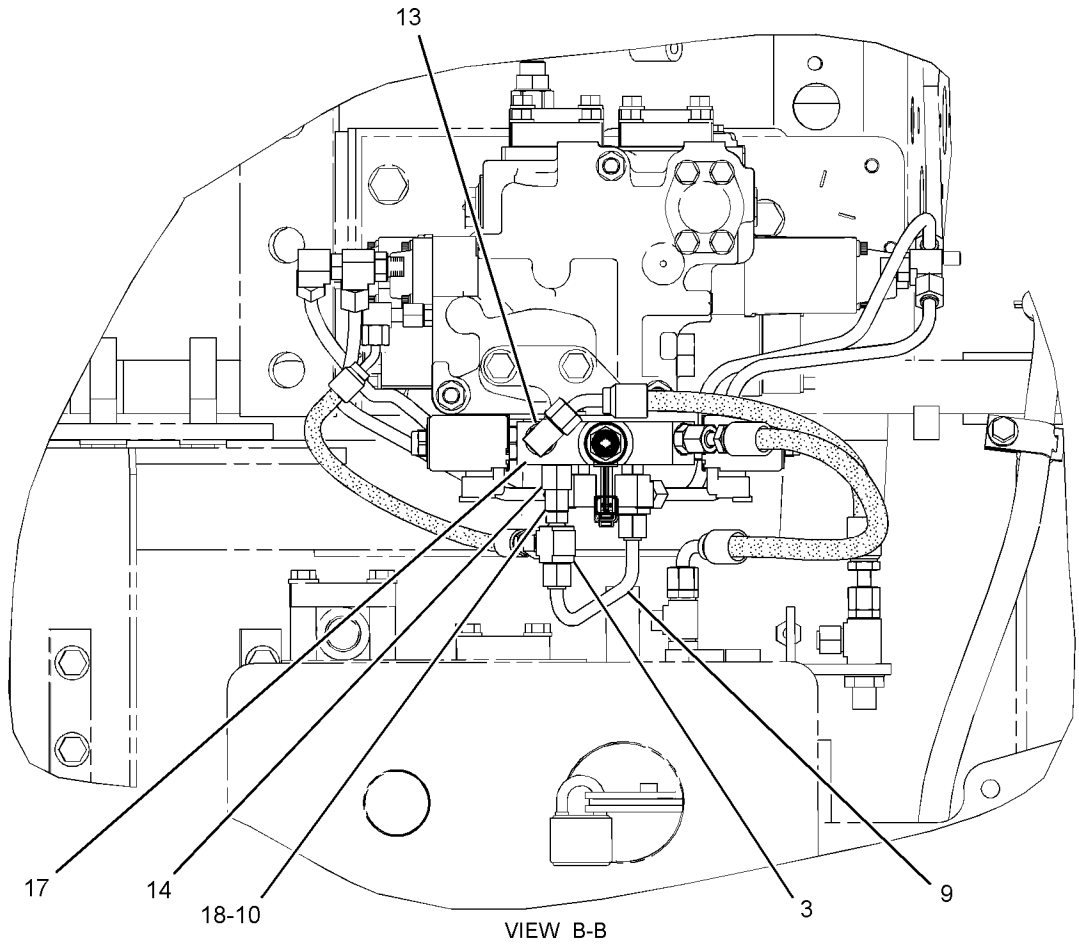

GRAPHIC #2 **<END>** g01209591

HYDRAULIC SYSTEM

222-1163 LINES GP-PUMP

S/N: JDL1-UP; GMT1-UP

PART OF 218-4981 HYDRAULIC AR-2 VALVE

SMCS-5057 **i02450235**

NOTE	REF NO	GRAPHIC REF	PART NUMBER	QTY	PART NAME 1 2 3 4 5 6 (PRODUCT LEVEL)	SEE PAGE
	1	1	**5G-7191**	1	SPRING	
	2	1	**6V-0852**	1	CAP-DUST	
	3	1	**8C-8433**	1	SPACER	
E	4	1	**5P-1294**		HOSE (69-CM)	
	5	1	**8J-9990**	1	PLUG-ORIFICE	
	6	1	**8T-4984**	4	CLAMP-HOSE	
	7	1	**8X-1144**	1	CLAMP	
	8	1	**126-0814**	1	FITTING AS (SWIVEL)	
I	9	1	**173-4607**	1	HOSE AS	
I	10	1	**173-4608**	1	HOSE AS	
I	11	1	**173-4611**	1	HOSE AS	
	12	1	*201-0782*	1	ELBOW AS	
		1	**201-0781**	1	ELBOW	
		1	**2M-9780**	1	SEAL-O-RING	
		1	**6V-9746**	1	SEAL-O-RING	
	13	1	**226-6583**	2	BRACKET AS	
	14	1	**226-6584**	1	PLATE AS	
	15	1	**226-6585**	1	TUBE AS	
	16	1	**226-6586**	1	TUBE AS	
I	17	1	**226-6587**	1	HOSE AS	
I	18	1	**226-6588**	1	HOSE AS	
I	19	1	**226-6589**	1	HOSE AS	
I	20	1	**226-6590**	1	HOSE AS	
I	21	1	**226-6591**	1	HOSE AS	
I	22	1	**226-7140**	1	HOSE AS	
I	23	1	**258-0763**	1	HOSE AS	
M	24	1	**109-3001**	1	STUD-TAPERLOCK (M10X1.5X65-MM)	
	25	1	**134-7317**	1	PLATE	
	26	1	**148-8006**	2	ROD	
	27	1	*148-8372*	2	ELBOW AS	
					(EACH INCLUDES)	
		1	**6V-8721**	1	ELBOW	
		1	**2M-9780**	1	SEAL-O-RING	
		1	**6V-8398**	1	SEAL-O-RING	
	28	1	*148-8378*	1	ELBOW AS	
		1	**6V-8724**	1	ELBOW	
		1	**3J-1907**	1	SEAL-O-RING	
		1	**6V-8397**	1	SEAL-O-RING	
	29	1	*148-8388*	2	ELBOW AS	
					(EACH INCLUDES)	
		1	**6V-8629**	1	ELBOW	
		1	**2M-9780**	1	SEAL-O-RING	
		1	**6V-9746**	1	SEAL-O-RING	
	30	1	*148-8418*	1	REDUCER GP	
		1	**6V-8942**	1	REDUCER-O-RING	
		1	**6V-8398**	1	SEAL-O-RING	
	31	1	*148-8449*	2	TEE AS-SWIVEL	
					(EACH INCLUDES)	
		1	**6V-9839**	1	TEE-SWIVEL	
		1	**6V-9746**	2	SEAL-O-RING	
	32	1	*150-4050*	1	ELBOW AS	
		1	**8T-0788**	1	ELBOW	
		1	**3J-1907**	1	SEAL-O-RING	
	33	1	*153-6244*	1	ELBOW GP	
		1	**8T-5389**	1	ELBOW	
		1	**2M-9780**	1	SEAL-O-RING	

222-1163 **LINES GP-PUMP** *(contd.)* **i02450235**

NOTE	REF NO	GRAPHIC REF	PART NUMBER	QTY	PART NAME 1 2 3 4 5 6 (PRODUCT LEVEL)	SEE PAGE
		1	**6V-9746**	1	SEAL-O-RING	
	34	1	*153-6246*	1	TEE AS	
		1	**7X-0820**	1	TEE-UNION	
		1	**6V-8397**	3	SEAL-O-RING	
	35	1	**164-4227**	3	CLIP	
	36	1	*164-5570*	1	UNION AS	
		1	**6V-8724**	1	ELBOW	
		1	**3J-1907**	1	SEAL-O-RING	
		1	**6V-8397**	1	SEAL-O-RING	
	37	1	*168-1969*	1	ADAPTER AS	
		1	**5P-1318**	1	ADAPTER	
		1	**1J-9671**	1	SEAL-O-RING	
	38	1	**1P-3702**	2	SEAL-RECTANGULAR	
	39	1	**1P-3703**	4	SEAL-RECTANGULAR	
	40	1	**1P-3704**	1	SEAL-RECTANGULAR	
	41	1	**3J-1907**	2	SEAL-O-RING	
	42	1	**4J-0520**	1	SEAL-O-RING	
	43	1	**4J-0527**	2	SEAL-O-RING	
	44	1	**5P-1075**	16	WASHER-HARD (10.2X22.5X3-MM THK)	
	45	1	**6V-0267**	1	CLIP (TAB)	
	46	1	**6V-0268**	1	CLIP (SLOT)	
	47	1	**6V-0400**	2	FLANGE-HALF	
	48	1	**6V-3965**	1	FITTING AS (QUICK DISCONNECT)	
	49	1	**6V-8556**	1	NUT (1-3/16-12-THD)	
	50	1	**6V-9168**	1	NUT (11/16-16-THD)	
	51	1	**6W-6220**	2	SPACER (0.493X0.675X2.55-IN THK)	
M	52	1	**7X-2543**	2	BOLT (M10X1.5X120-MM)	
	53	1	**7X-7729**	1	WASHER (11X25X3-MM THK)	
	54	1	**8T-1887**	3	CLIP (SLOT)	
	55	1	**8T-1888**	3	CLIP (TAB)	
	56	1	**8T-1895**	10	CLIP (SLOT)	
	57	1	**8T-1896**	10	CLIP (TAB)	
	58	1	**8T-4121**	1	WASHER-HARD (11X21X2.5-MM THK)	
M	59	1	**8T-4133**	4	NUT (M10X1.5 THD)	
M	60	1	**8T-4136**	1	BOLT (M10X1.5X25-MM)	
M	61	1	**8T-4137**	1	BOLT (M10X1.5X20-MM)	
M	62	1	**8T-4176**	8	BOLT (M12X1.75X90-MM)	
M	63	1	**8T-4184**	4	BOLT (M12X1.75X45-MM)	
M	64	1	**8T-4195**	7	BOLT (M10X1.5X30-MM)	
M	65	1	**8T-4196**	2	BOLT (M10X1.5X35-MM)	
	66	1	**8T-4223**	14	WASHER-HARD (13.5X25.5X3-MM THK)	
M	67	1	**8T-4244**	2	NUT (M12X1.75-THD)	
	68	1	**8T-7529**	1	CLIP	
	69	1	**8X-1141**	1	CLAMP	
	70	1	**9X-8268**	2	WASHER (17.5X30X3.5-MM THK)	

E-ORDER BY THE CENTIMETER
I-REFER TO HYDRAULIC INFORMATION SYSTEM
M-METRIC PART

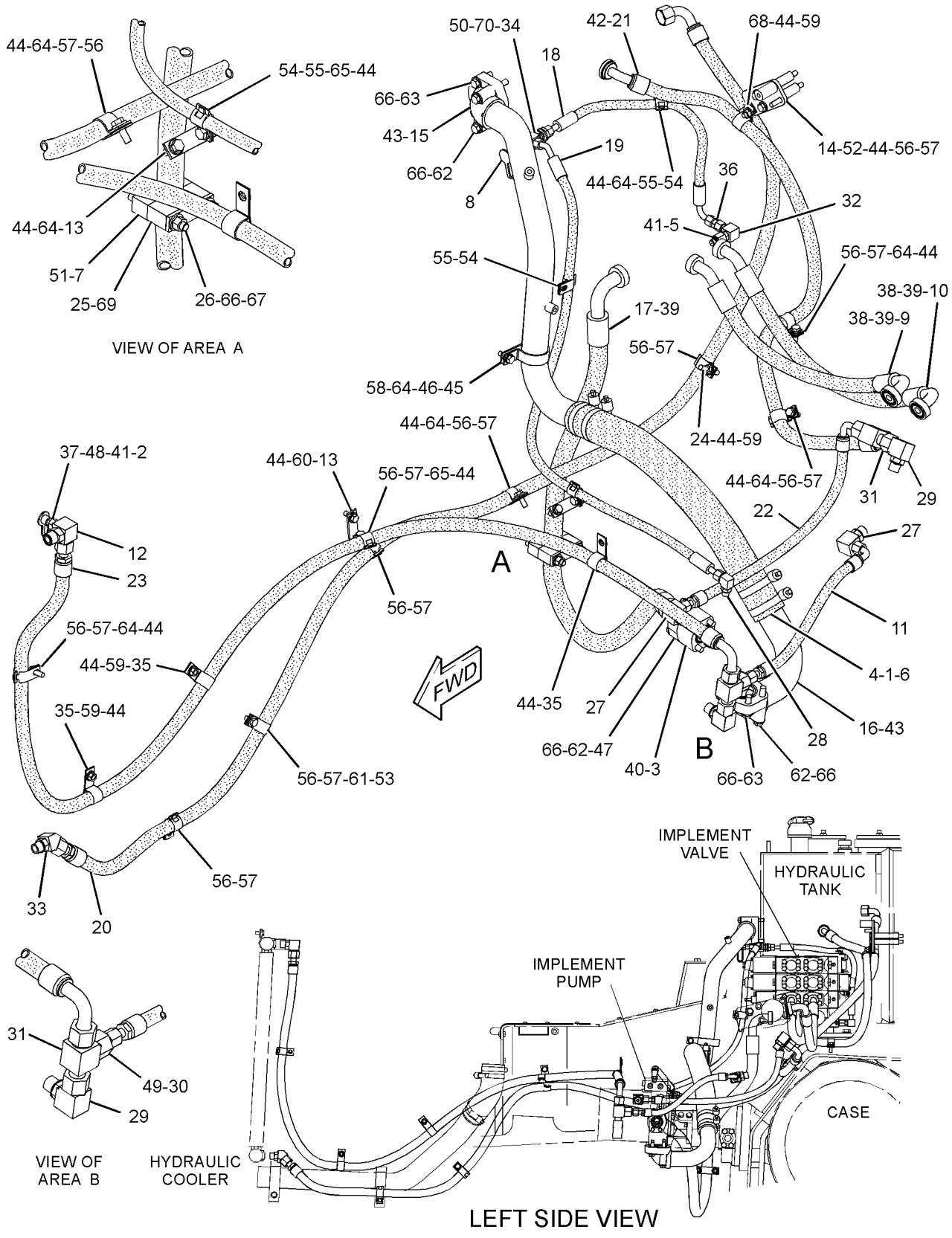

GRAPHIC #1 **<END>** g01210660

226-8197 LINES GP-RIPPER

S/N: JDL1-UP; GMT1-UP
PART OF 226-9130 CONTROL AR-HYDRAULIC IMPLEMENT
AN ATTACHMENT

SMCS-5057, 5352, 5356 **i02456014**

NOTE	REF NO	GRAPHIC REF	PART NUMBER	QTY	PART NAME 1 2 3 4 5 6 (PRODUCT LEVEL)	SEE PAGE
	1	1	**217-6887**	1	MANIFOLD	
	2	1	**226-8206**	1	GUARD	
I	3	1	**226-8234**	1	HOSE AS	
I	4	1	**226-8235**	1	HOSE AS	
	5	1	**4J-0520**	2	SEAL-O-RING	
	6	1	**4J-5267**	2	SEAL-O-RING	
	7	1	**7G-3832**	1	GROMMET	
	8	1	**7G-3833**	1	CLIP (TAB)	
	9	1	**7G-3834**	1	CLIP (SLOT)	
	10	1	**8C-3205**	8	FLANGE-HALF	
	11	1	**8T-4121**	20	WASHER-HARD (11X21X2.5-MM THK)	
M	12	1	**8T-4136**	4	BOLT (M10X1.5X25-MM)	
M	13	1	**8T-4196**	16	BOLT (M10X1.5X35-MM)	
	14	1	**8T-4223**	2	WASHER-HARD (13.5X25.5X3-MM THK)	
M	15	1	**8T-4956**	2	BOLT (M12X1.75X35-MM)	

I-REFER TO HYDRAULIC INFORMATION SYSTEM
M-METRIC PART

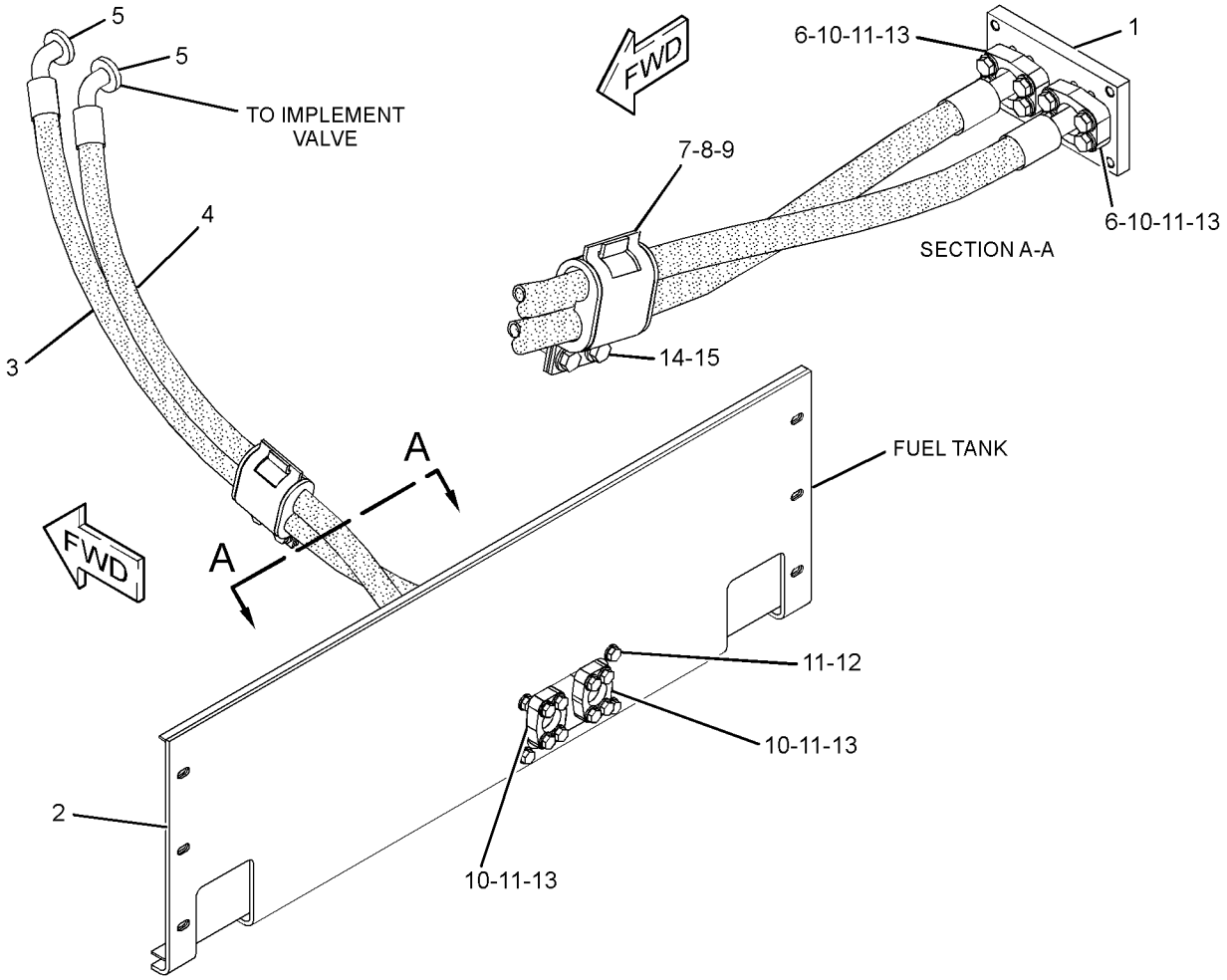

GRAPHIC #1 **<END>** g01206629

HYDRAULIC SYSTEM

235-8180 LINES GP-RIPPER

S/N: D6D1-UP
PART OF 224-4449 RIPPER AR
AN ATTACHMENT

SMCS-5057, 5352, 5356 **i02454065**

NOTE	REF NO	GRAPHIC REF	PART NUMBER	QTY	PART NAME 1 2 3 4 5 6 (PRODUCT LEVEL)	SEE PAGE
	1	1	**9M-2904**	8	CLAMP-HOSE	
I	2	1	**9W-2390**	2	HOSE AS	
	3	1	**112-4368**	4	SHIELD	
	4	1	**130-1977**	8	SHIELD	
B	5	1	**130-9192**	8	GROMMET	
	6	1	**4J-5267**	2	SEAL-O-RING	

B-USE AS REQUIRED
I-REFER TO HYDRAULIC INFORMATION SYSTEM

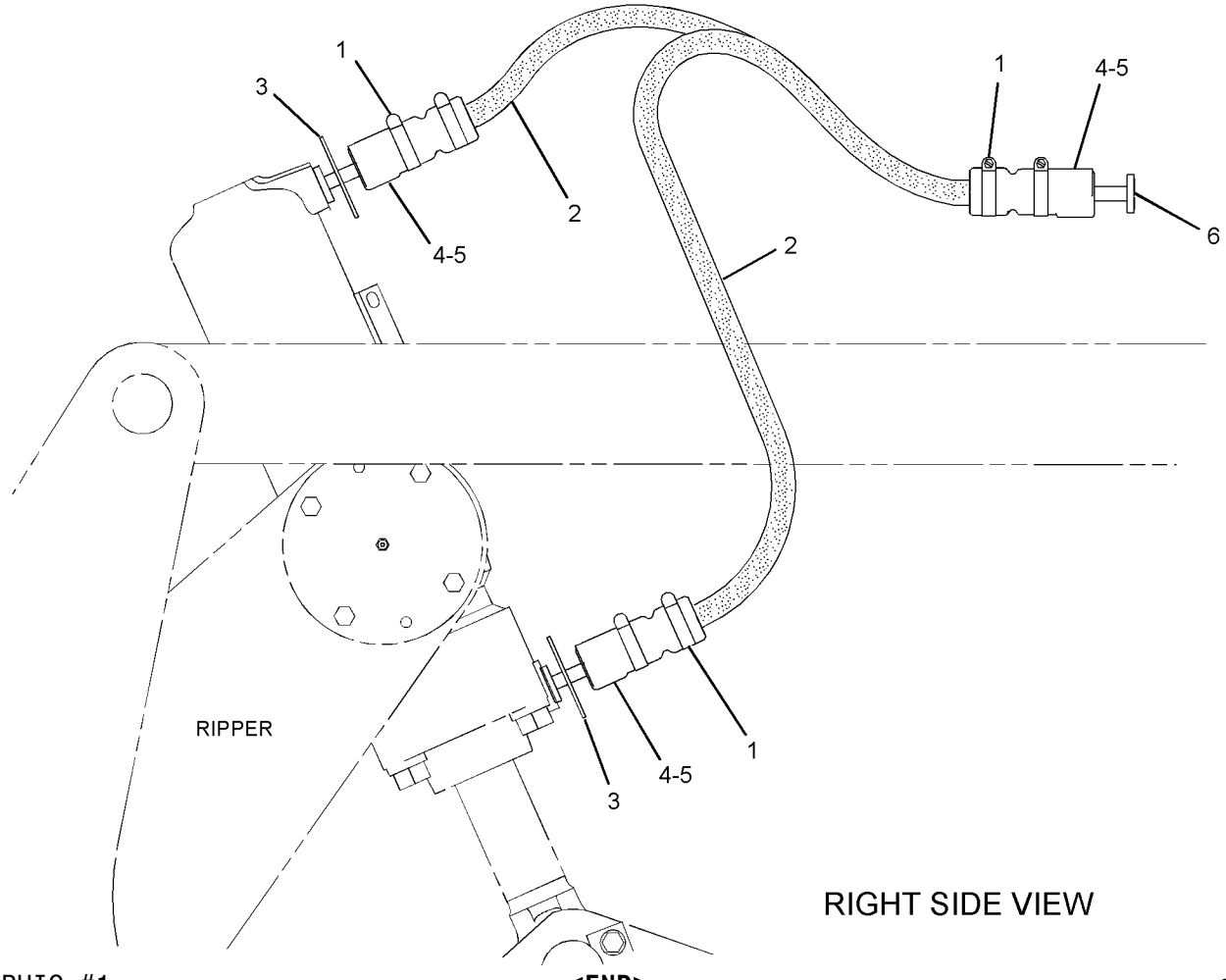

RIGHT SIDE VIEW

GRAPHIC #1 **<END>** g01227537

HYDRAULIC SYSTEM

222-1166 LINES GP-TILT CYLINDER

S/N: JDL1-UP; GMT1-UP

PART OF 218-4981 HYDRAULIC AR-2 VALVE

SMCS-5057, 5104 **i02450268**

NOTE	REF NO	GRAPHIC REF	PART NUMBER	QTY	PART NAME 1 2 3 4 5 6 (PRODUCT LEVEL)	SEE PAGE
	1	1	**1K-5888**	2	SPACER (0.42X0.67X0.63-IN THK)	
	2	1	**226-7810**	1	TUBE AS	
	3	1	**226-7906**	1	MANIFOLD	
I	4	1	**226-7923**	2	HOSE AS	
	5	1	**226-7924**	1	TUBE AS	
	6	1	**1P-3703**	2	SEAL-RECTANGULAR	
	7	1	**3G-8047**	4	GROMMET	
	8	1	**3G-8054**	4	CLIP (TAB)	
	9	1	**3G-8057**	4	CLIP (SLOT)	
	10	1	**3H-8683**	4	CLIP	
	11	1	**4J-0520**	2	SEAL-O-RING	
	12	1	**4J-5267**	2	SEAL-O-RING	
	13	1	**5H-4018**	2	COVER	
	14	1	**5P-1075**	29	WASHER-HARD (10.2X22.5X3-MM THK)	
	15	1	**6V-8398**	2	SEAL-O-RING	
	16	1	**8C-3205**	4	FLANGE-HALF	
	17	1	**8T-1887**	2	CLIP (SLOT)	
	18	1	**8T-1888**	2	CLIP (TAB)	
M	19	1	**8T-4133**	6	NUT (M10X1.5 THD)	
M	20	1	**8T-4182**	10	BOLT (M10X1.5X45-MM)	
M	21	1	**8T-4186**	2	BOLT (M10X1.5X40-MM)	
M	22	1	**8T-4195**	2	BOLT (M10X1.5X30-MM)	
M	23	1	**8T-4196**	9	BOLT (M10X1.5X35-MM)	

I-REFER TO HYDRAULIC INFORMATION SYSTEM
M-METRIC PART

222-1166 **LINES GP-TILT CYLINDER** *(contd.)* **i02450268**

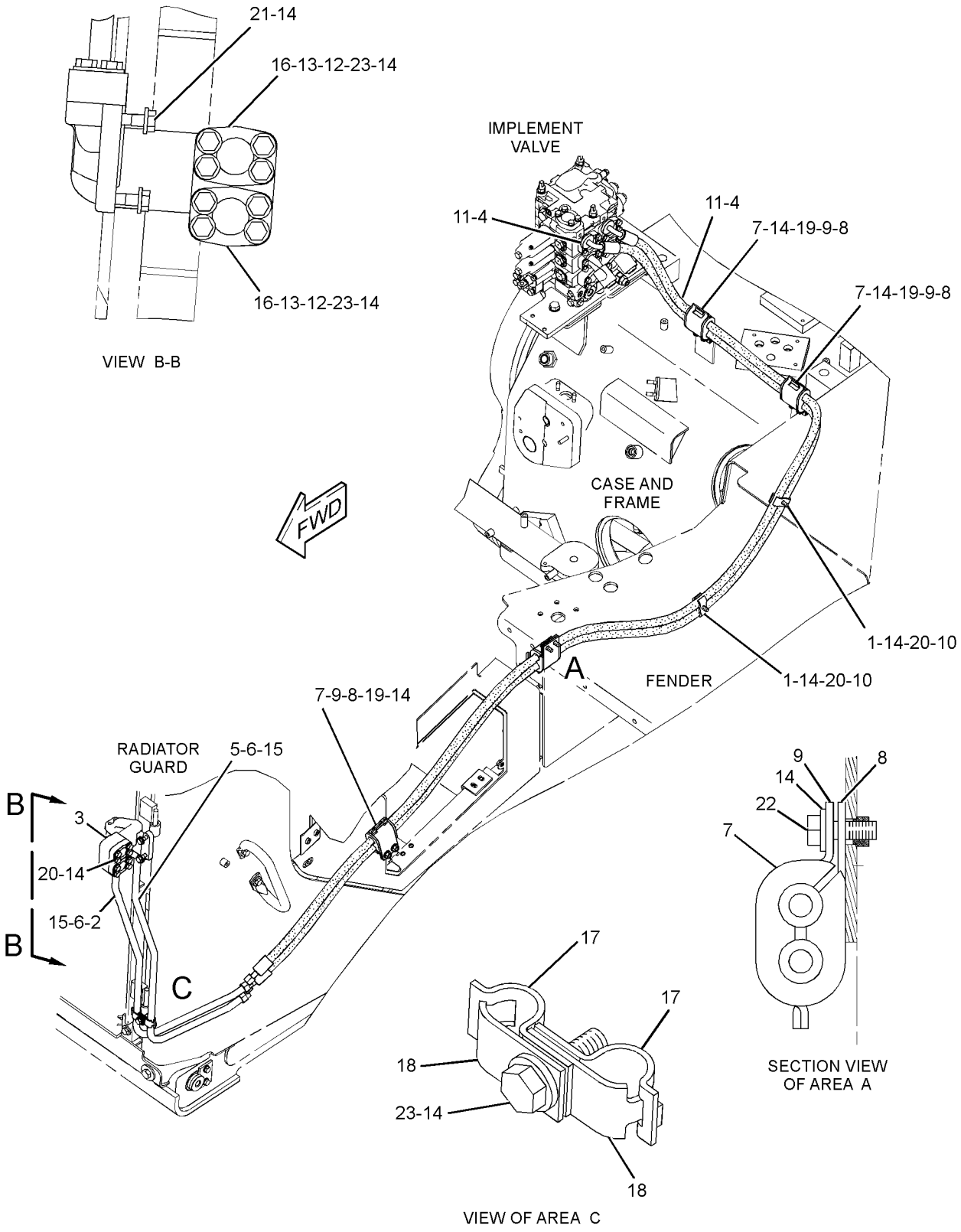

GRAPHIC #1 **<END>** g01207627

230-5555 LINES GP-TILT CYLINDER–

SEMI-UNIVERSAL BULLDOZER

S/N: D6C1-UP; C4W1-UP

PART OF 230-5553, 251-6120 BULLDOZER AR-SEMI-UNIVERSAL AN ATTACHMENT

SMCS-5057, 5104 **i02454967**

NOTE	REF NO	GRAPHIC REF	PART NUMBER	QTY	PART NAME 1 2 3 4 5 6 (PRODUCT LEVEL)	SEE PAGE
	1	1	**3Y-5405**	2	RUBBER	
I	2	1	**6Y-5706**	1	HOSE AS	
I	3	1	**6Y-5707**	1	HOSE AS	
I	4	1	**7T-6934**	1	HOSE AS	
	5	1	**145-5181**	4	SPACER (13.5X25X12-MM THK)	
	6	1	**213-2282**	2	GUARD	
I	7	1	**168-2599**	1	HOSE AS	
	8	1	**4J-5267**	4	SEAL-O-RING	
	9	1	**4T-1563**	1	GUARD AS	
	10	1	**6V-8398**	4	SEAL-O-RING	
	11	1	**6V-8981**	2	ELBOW	
	12	1	**6V-9169**	2	NUT-BULKHEAD (13/16-16-THD)	
	13	1	**8C-3205**	4	FLANGE-HALF	
	14	1	**8T-4121**	8	WASHER-HARD (11X21X2.5-MM THK)	
M	15	1	**8T-4139**	4	BOLT (M12X1.75X30-MM)	
M	16	1	**8T-4196**	8	BOLT (M10X1.5X35-MM)	
	17	1	**8T-4223**	4	WASHER-HARD (13.5X25.5X3-MM THK)	
M	18	1	**8T-4956**	4	BOLT (M12X1.75X35-MM)	

I-REFER TO HYDRAULIC INFORMATION SYSTEM
M-METRIC PART

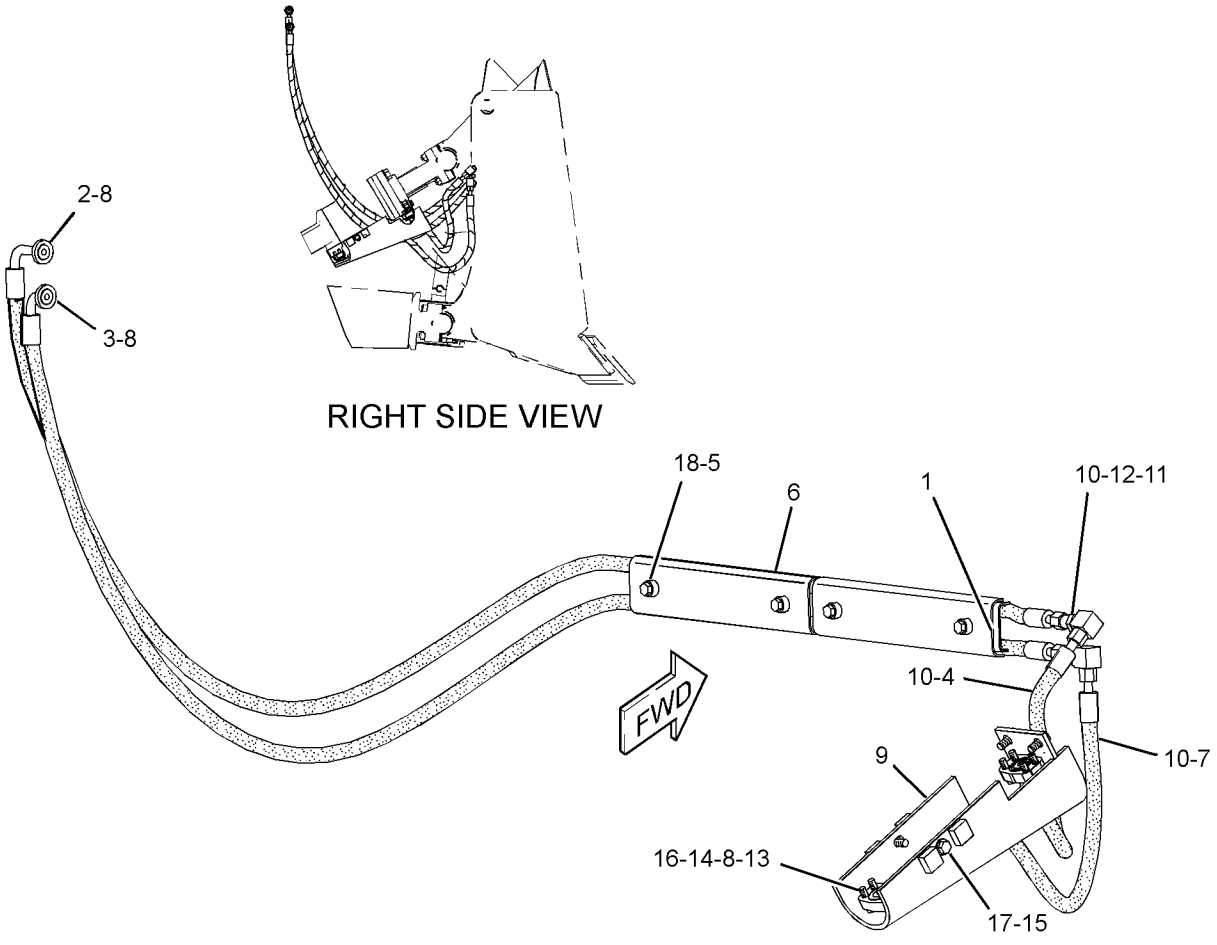

GRAPHIC #1 **<END>** g01207513

252-5849 LINES GP-TILT CYLINDER–

SEMI-UNIVERSAL BULLDOZER

S/N: C4L1-UP; C4N1-UP

PART OF 252-5854, 252-5855 BULLDOZER AR-SEMI-UNIVERSAL

AN ATTACHMENT

SMCS-5057, 5104 **i02454873**

NOTE	REF NO	GRAPHIC REF	PART NUMBER	QTY	PART NAME 1 2 3 4 5 6 (PRODUCT LEVEL)	SEE PAGE
	1	1	**3Y-5405**	2	RUBBER	
	2	1	**145-5181**	4	SPACER (13.5X25X12-MM THK)	
	3	1	**213-2282**	2	GUARD	
I	4	1	**168-2599**	1	HOSE AS	
	5	1	**4J-5267**	4	SEAL-O-RING	
	6	1	**4T-1563**	1	GUARD AS	
	7	1	**6V-8398**	4	SEAL-O-RING	
	8	1	**6V-8981**	2	ELBOW	
	9	1	**6V-9169**	2	NUT-BULKHEAD (13/16-16-THD)	
I	10	1	**6Y-3472**	1	HOSE AS	
I	11	1	**6Y-3474**	1	HOSE AS	
I	12	1	**7T-6934**	1	HOSE AS	
	13	1	**8C-3205**	4	FLANGE-HALF	
	14	1	**8T-4121**	8	WASHER-HARD (11X21X2.5-MM THK)	
M	15	1	**8T-4139**	4	BOLT (M12X1.75X30-MM)	
M	16	1	**8T-4196**	8	BOLT (M10X1.5X35-MM)	
	17	1	**8T-4223**	4	WASHER-HARD (13.5X25.5X3-MM THK)	
M	18	1	**8T-4956**	4	BOLT (M12X1.75X35-MM)	

I-REFER TO HYDRAULIC INFORMATION SYSTEM
M-METRIC PART

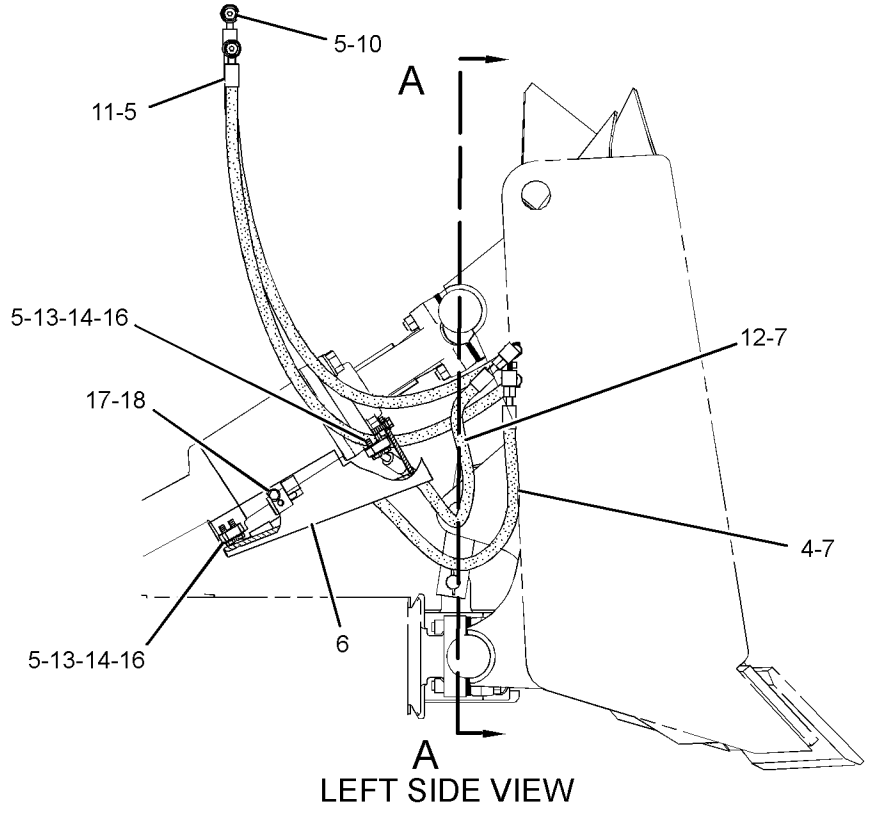

LEFT SIDE VIEW

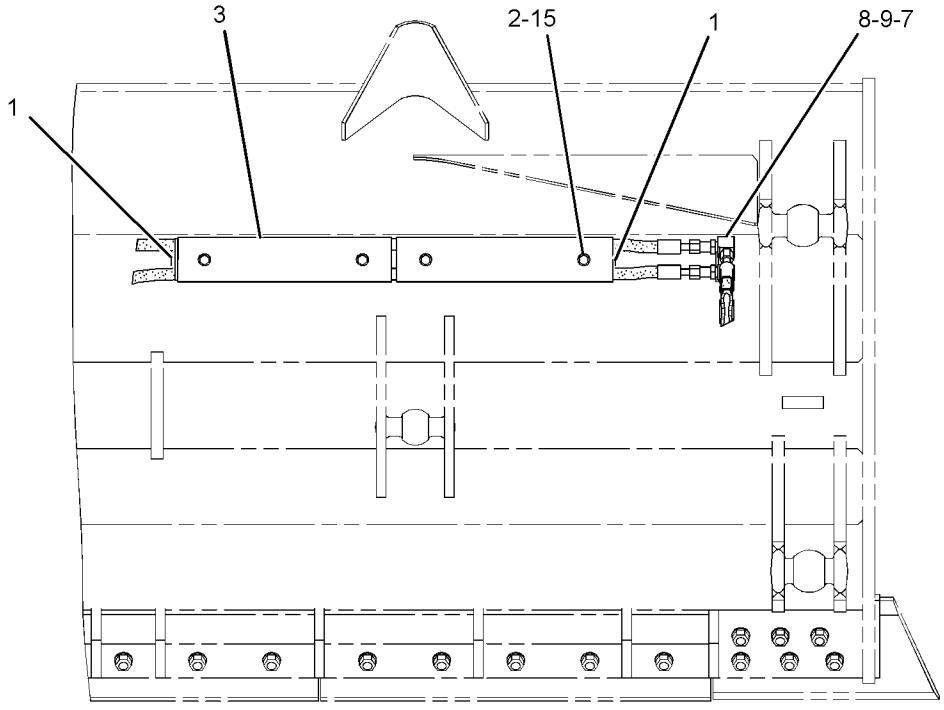

SECTION A-A

GRAPHIC #1 **<END>** g01210731

HYDRAULIC SYSTEM

255-8954 LINES GP-TILT CYLINDER—ANGLING BULLDOZER

S/N: C4C1-UP; C4K1-UP; C4R1-UP; C4T1-UP

PART OF 251-6112, 251-6113, 251-6128, 251-6129 BULLDOZER AR-ANGLING AN ATTACHMENT

SMCS-5057, 5104 **i02454694**

NOTE	REF NO	GRAPHIC REF	PART NUMBER	QTY	PART NAME 1 2 3 4 5 6 (PRODUCT LEVEL)	SEE PAGE
	1	1	**2P-6588**	2	HEAD-ADAPTER	
	2	1	**5S-8709**	1	GUARD-CENTER	
	3	1	**5S-8765**	1	GUARD (RH)	
	4	1	**5S-8766**	1	GUARD (LH)	
	5	1	**6Y-0596**	1	GUARD AS (LH)	
	6	1	**6Y-0597**	1	GUARD AS (RH)	
I	7	1	**8E-8261**	1	HOSE AS	
I	8	1	**8E-8625**	1	HOSE AS	
I	9	1	**9W-9082**	2	HOSE AS	
I	10	1	**9W-9083**	2	HOSE AS	
	11	1	**245-4230**	1	BRACKET AS (RH)	
	12	1	**245-4231**	1	BRACKET AS (LH)	
	13	1	**251-9839**	6	BLOCK	
	14	1	**251-9840**	2	TUBE AS	
	15	1	**251-9841**	1	TUBE AS	
	16	1	**3G-8047**	1	GROMMET	
	17	1	**3G-8054**	1	CLIP (TAB)	
	18	1	**3G-8057**	1	CLIP (SLOT)	
	19	1	**3K-0360**	2	SEAL-O-RING	
	20	1	**4J-5267**	12	SEAL-O-RING	
	21	1	**5P-7464**	2	CLIP (SLOT)	
	22	1	**5P-7465**	2	CLIP (TAB)	
	23	1	**6V-1249**	2	GROMMET	
	24	1	**6V-8398**	2	SEAL-O-RING	
	25	1	**6V-8625**	2	ELBOW	
	26	1	**8C-3205**	20	FLANGE-HALF	
	27	1	**8T-4121**	48	WASHER-HARD (11X21X2.5-MM THK)	
M	28	1	**8T-4139**	10	BOLT (M12X1.75X30-MM)	
M	29	1	**8T-4182**	6	BOLT (M10X1.5X45-MM)	
M	30	1	**8T-4195**	42	BOLT (M10X1.5X30-MM)	
	31	1	**8T-4223**	16	WASHER-HARD (13.5X25.5X3-MM THK)	
M	32	1	**8T-4910**	6	BOLT (M12X1.75X60-MM)	

I-REFER TO HYDRAULIC INFORMATION SYSTEM
M-METRIC PART

255-8954 **LINES GP-TILT CYLINDER** *(contd.)* **i02454694**

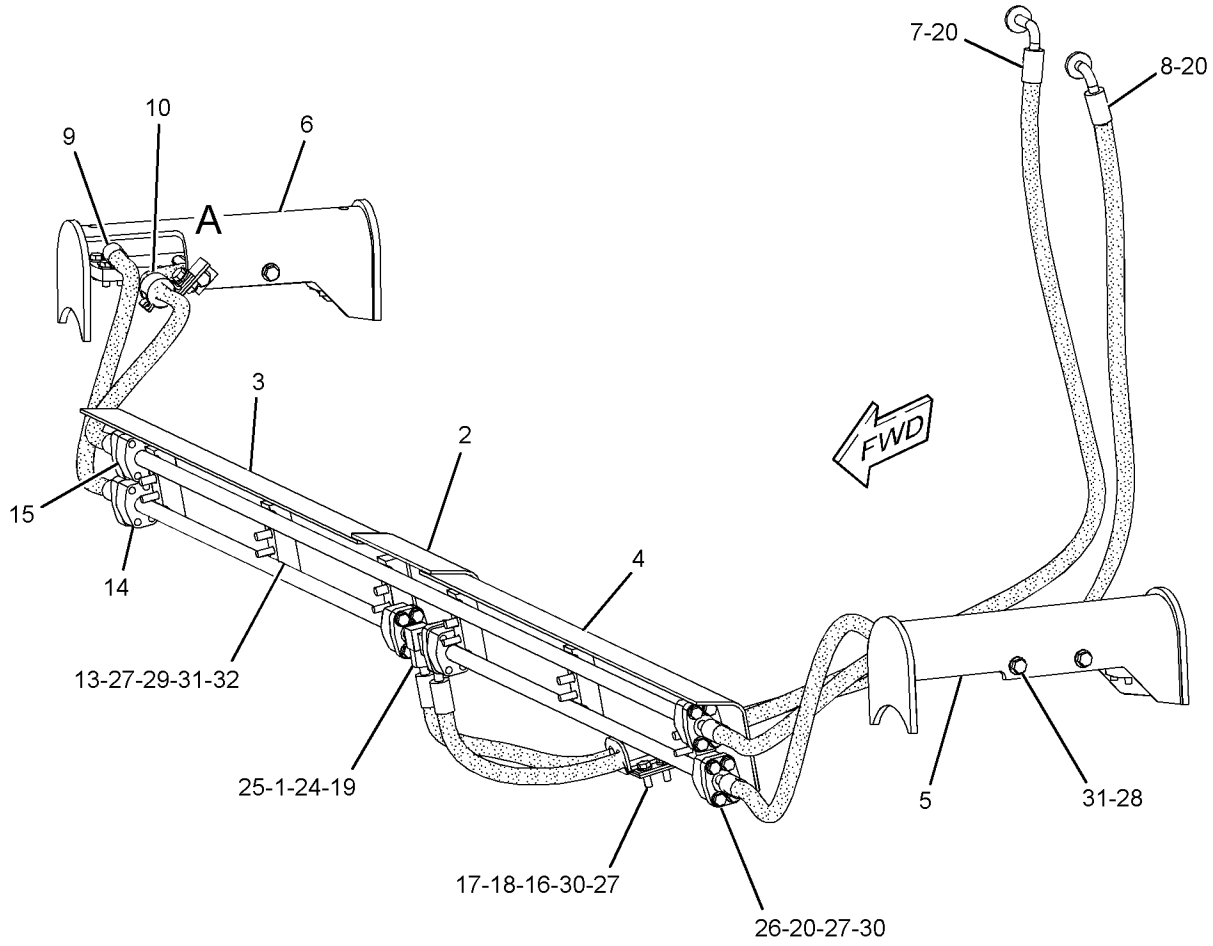

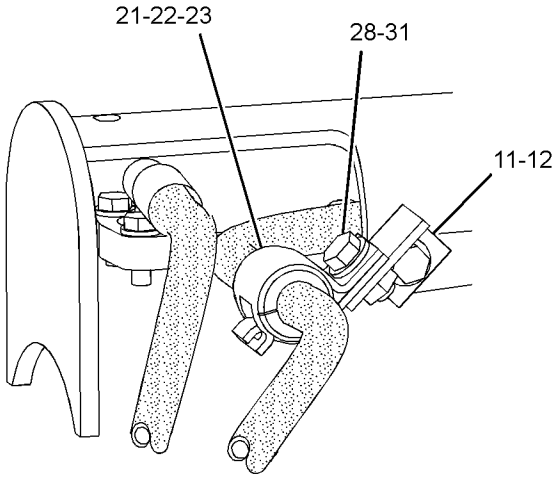

VIEW OF AREA A

GRAPHIC #1 **<END>** g01209381

226-4751 MANIFOLD GP-CONTROL–IMPLEMENT PILOT PRESSURE

S/N: JDL1-UP; GMT1-UP

PART OF 222-1164 LINES GP-PILOT

SMCS-5264 **i02470704**

NOTE	REF NO	GRAPHIC REF	PART NUMBER	QTY	PART NAME 1 2 3 4 5 6 (PRODUCT LEVEL)	SEE PAGE
Y	1	1	**158-9956**	1	VALVE GP-CHECK (PILOT PRESSURE SUPPLY)	515
Y	2	1	**170-3357**	1	VALVE GP-PRESSURE REDUCING (IMPLEMENT PILOT OIL)	537
Y	3	1	**225-8026**	1	VALVE GP-RELIEF (IMPLEMENT PILOT OIL)	546
Y	4	1	**201-0950**	1	VALVE GP-SOLENOID (HYDRAULIC LOCKOUT)	549
	5	1	**6E-5066**	1	SCREEN (IMPLEMENT PILOT OIL)	
	6	1	**9S-8001**	1	PLUG	
	7	1	**9S-8004**	1	PLUG	
	8	1	**4J-7533**	1	SEAL-O-RING	
	9	1	**3J-1907**	1	SEAL-O-RING	

Y-SEPARATE ILLUSTRATION

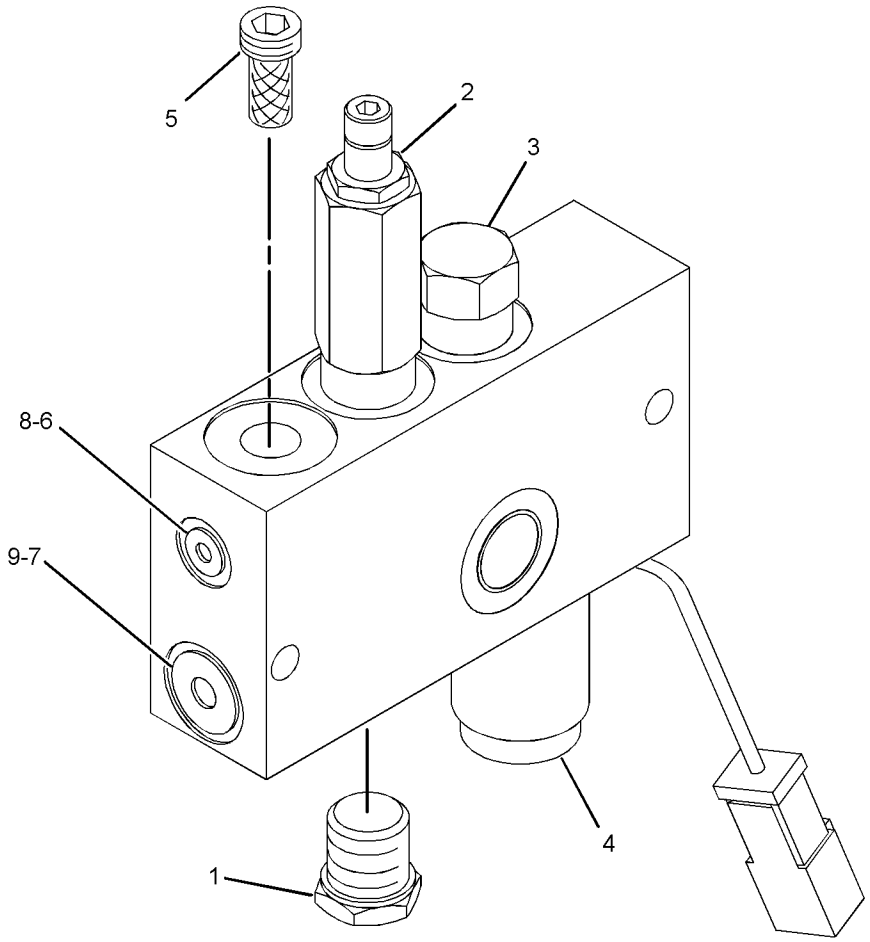

GRAPHIC #1 **<END>** g01205803

HYDRAULIC SYSTEM

235-0401 MANIFOLD GP-VALVE

S/N: JDL1-UP; GMT1-UP
PART OF 224-4936 VALVE GP-BANK 3, 224-4937, 239-6076 VALVE GP-BANK 4
ALSO AN ATTACHMENT

SMCS-5264 **i02434812**

NOTE	REF NO	GRAPHIC REF	PART NUMBER	QTY	PART NAME 1 2 3 4 5 6 (PRODUCT LEVEL)	SEE PAGE
	1	1	**6V-0400**	2	FLANGE-HALF	
M	2	1	**8T-4184**	4	BOLT (M12X1.75X45-MM)	
	3	1	**8T-4223**	4	WASHER-HARD (13.5X25.5X3-MM THK)	
Y	4	1	**9T-3541**	1	VALVE GP-RELIEF (MAIN)	543

M-METRIC PART
Y-SEPARATE ILLUSTRATION

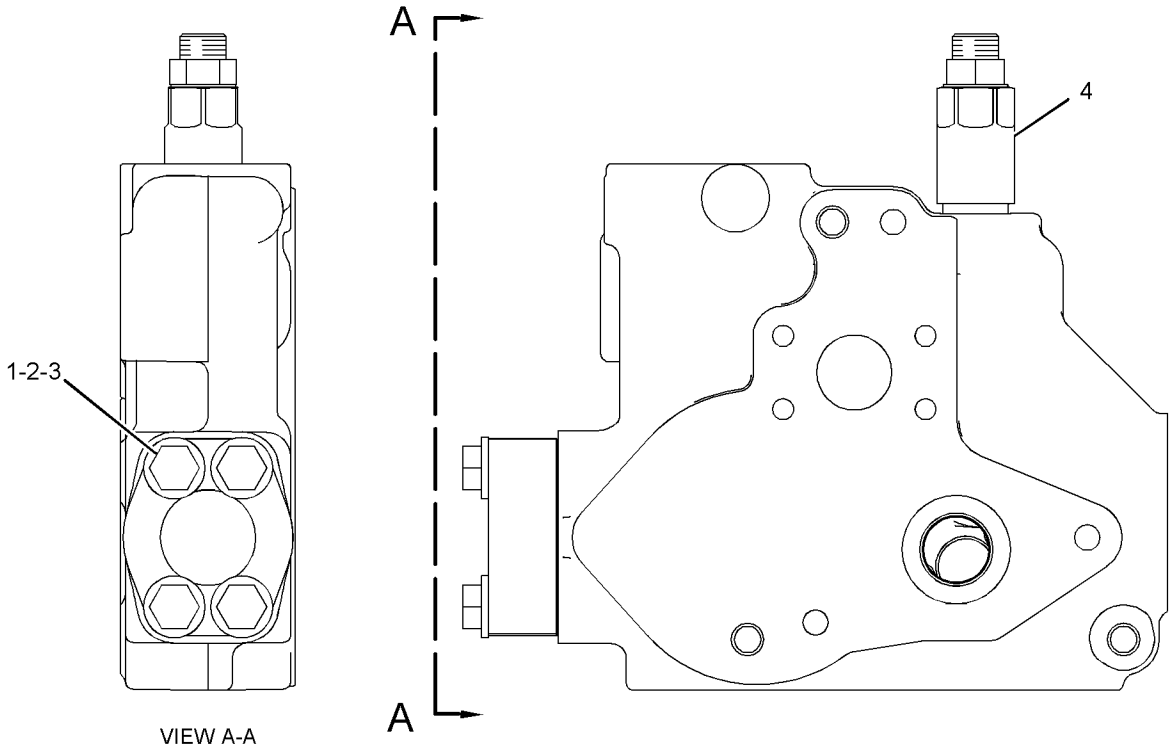

VIEW A-A

GRAPHIC #1 **<END>** g01218600

159-7156 MOTOR GP-PISTON*R

S/N: JDL1-UP; GMT1-UP

PART OF 218-4981 HYDRAULIC AR-2 VALVE

SMCS-5058 **i01223922**

NOTE	REF NO	GRAPHIC REF	PART NUMBER	QTY	PART NAME 1 2 3 4 5 6 (PRODUCT LEVEL)	SEE PAGE
Y	1	1	*171-6001*	1	ROTATING GP-MOTOR	501
	2	1	**106-1227**	1	HOUSING	
	3	1	**2H-3934**	1	SEAL-O-RING	
	4	1	**9T-4849**	1	HEAD	
	5	1	**8T-4231**	1	DOWEL	
M	6	1	**8T-3957**	6	BOLT-SOCKET HEAD (M12X1.75X30-MM)	

M-METRIC PART
Y-SEPARATE ILLUSTRATION

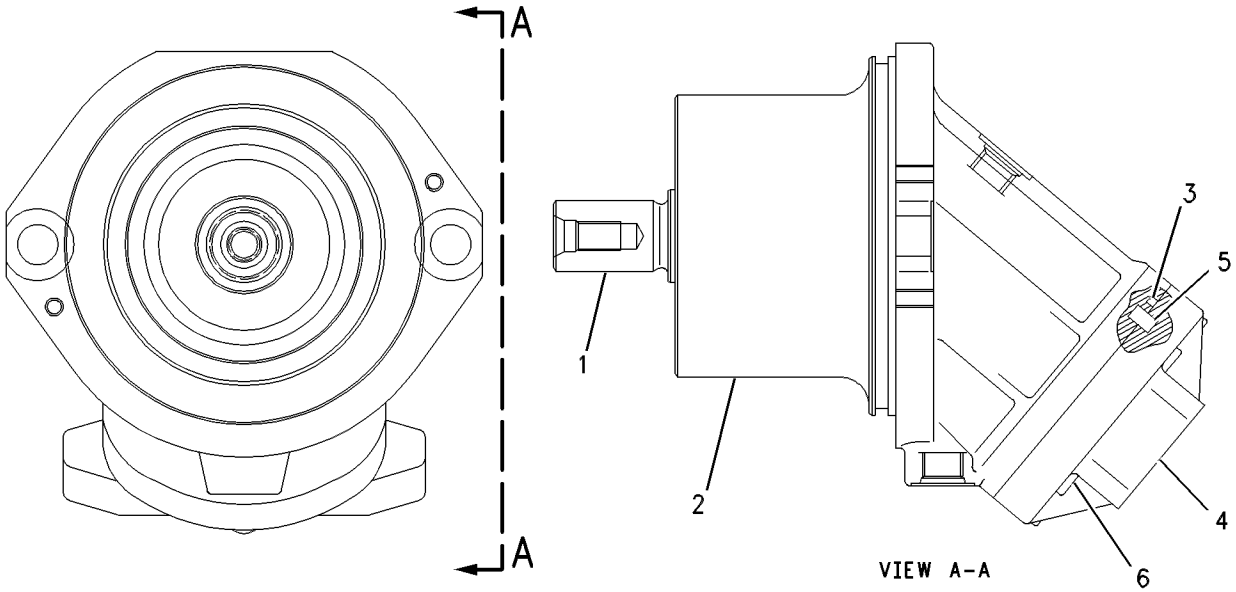

GRAPHIC #1 **<END>** g00592780

238-9559 MOUNTING GP-CYLINDER

S/N: C4C1-UP; D6C1-UP; C4L1-UP; JDL1-UP; C4R1-UP; GMT1-UP
PART OF 251-6112, 251-6128 BULLDOZER AR-ANGLING, 230-5553, 252-5854 BULLDOZER AR-SEMI-UNIVERSAL AN ATTACHMENT

SMCS-7562 **i02454573**

NOTE	REF NO	GRAPHIC REF	PART NUMBER	QTY	PART NAME 1 2 3 4 5 6 (PRODUCT LEVEL)	SEE PAGE
	1	1	**3B-8489**	2	FITTING-GREASE	
	2	1	**3G-9405**	4	CAP AS	
					(EACH INCLUDES)	
	2A	1	**3G-9402**	1	BEARING-SLEEVE	
	3	1	**4T-4875**	2	PIN	
	4	1	**5P-2671**	2	SEAL-LIP TYPE	
	5	1	**6Y-9280**	2	CLAMP (TAB)	
	6	1	**6Y-9281**	2	CLAMP (SLOT)	
	7	1	**9N-4233**	2	STRAP	
	8	1	**233-4656**	2	YOKE	
M	9	1	**7X-2557**	8	BOLT (M16X2X140-MM)	
	10	1	**8T-2561**	2	WASHER-HARD (10.5X28.5X5-MM THK)	
	11	1	**8T-4123**	2	WASHER-PLATED (22X35X3.5-MM THK)	
M	12	1	**8T-4137**	2	BOLT (M10X1.5X20-MM)	
M	13	1	**8T-4183**	2	BOLT (M12X1.75X40-MM)	
	14	1	**8T-4223**	4	WASHER-HARD (13.5X25.5X3-MM THK)	
M	15	1	**8T-4244**	2	NUT (M12X1.75-THD)	

M-METRIC PART

238-9559 **MOUNTING GP-CYLINDER** *(contd.)* **i02454573**

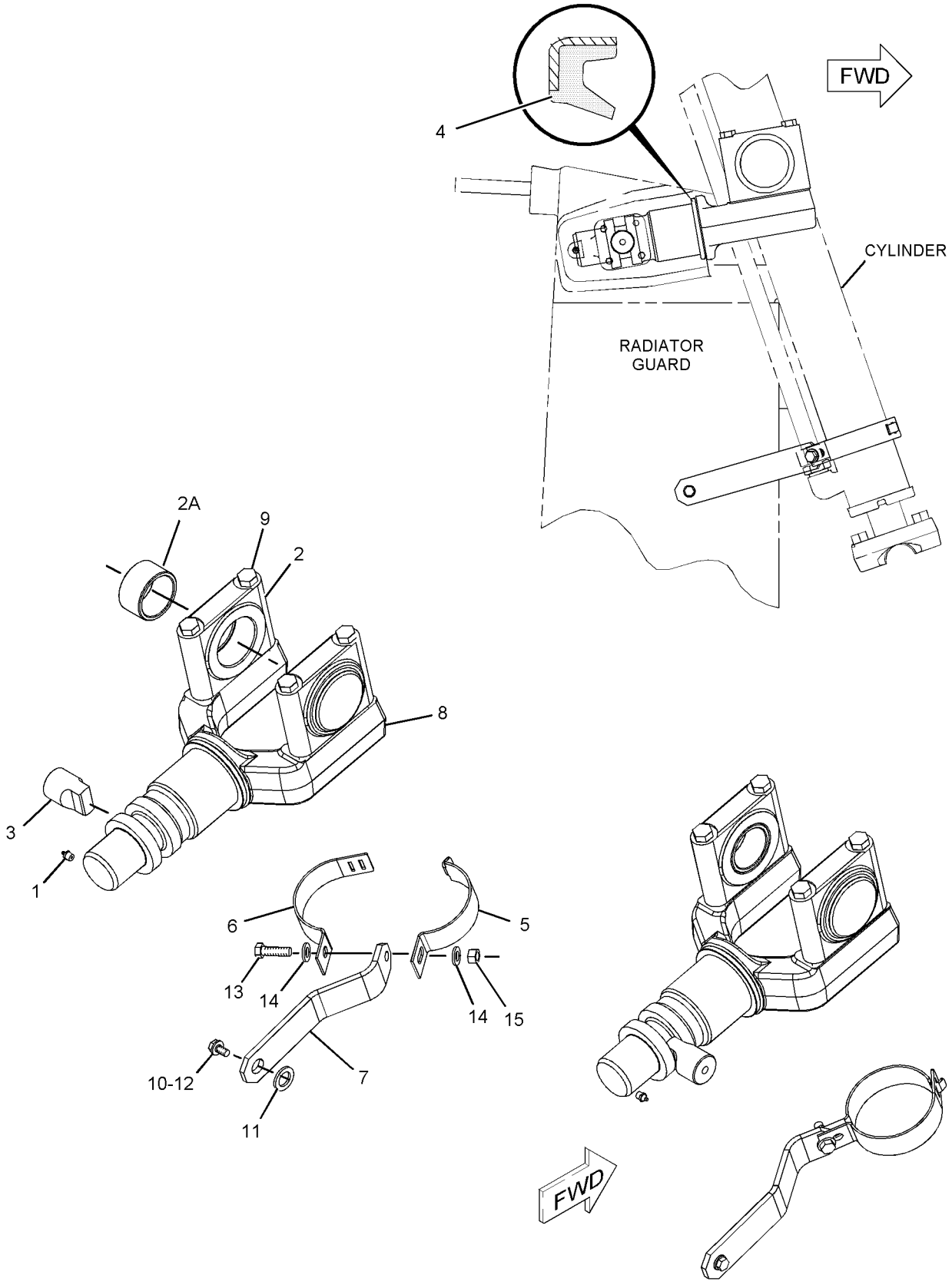

GRAPHIC #1 **<END>** g01150508

222-1159 MOUNTING GP-VALVE–IMPLEMENT

S/N: JDL1-UP; GMT1-UP

PART OF 218-4981 HYDRAULIC AR-2 VALVE

SMCS-5051 **i02434810**

NOTE	REF NO	GRAPHIC REF	PART NUMBER	QTY	PART NAME 1 2 3 4 5 6 (PRODUCT LEVEL)	SEE PAGE
	1	1	**223-3421**	1	PLATE AS	
		1	**3F-4360**	3	SPACER (0.563X1X0.844-IN THK)	
Y	2	1	**224-4936**	1	VALVE GP-BANK 3 (BULLDOZER LIFT, TILT, STEERING)	509
M	3	1	**8T-4193**	3	BOLT (M16X2X50-MM)	
	4	1	**8T-4223**	3	WASHER-HARD (13.5X25.5X3-MM THK)	
M	5	1	**8T-4910**	3	BOLT (M12X1.75X60-MM)	
	6	1	**9X-8257**	3	WASHER (17.5X30X3.5-MM THK)	

M-METRIC PART
Y-SEPARATE ILLUSTRATION

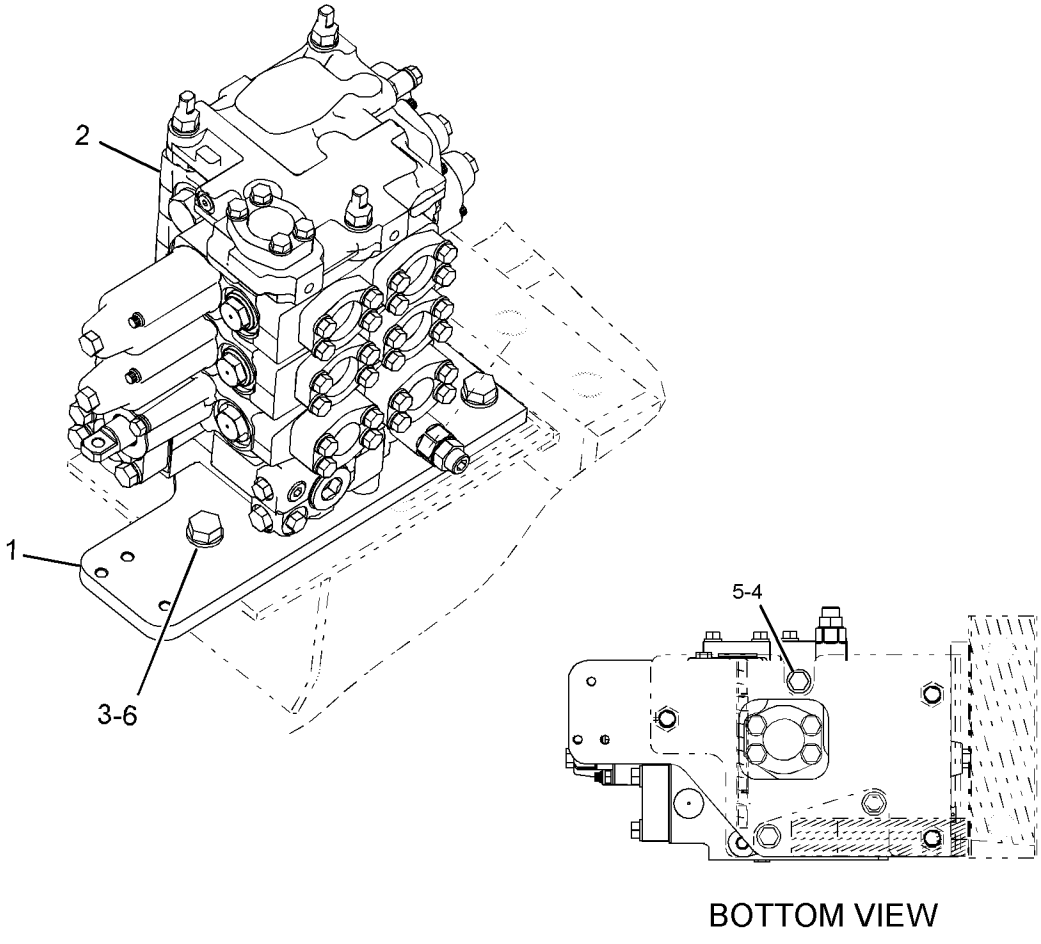

BOTTOM VIEW

GRAPHIC #1 **<END>** g01206215

HYDRAULIC SYSTEM

222-1161 PUMP & MOUNTING GP

S/N: JDL1-UP; GMT1-UP

PART OF 218-4981 HYDRAULIC AR-2 VALVE

SMCS-5084 **i02450197**

NOTE	REF NO	GRAPHIC REF	PART NUMBER	QTY	PART NAME 1 2 3 4 5 6 (PRODUCT LEVEL)	SEE PAGE
Y	1	1	**227-0830**	1	PUMP GP-PISTON (IMPLEMENT)	498
	2	1	**4S-5898**	1	SEAL-O-RING	
M	3	1	**8T-7338**	2	BOLT (M16X2X45-MM)	
	4	1	**9X-8257**	2	WASHER (17.5X30X3.5-MM THK)	

M-METRIC PART
Y-SEPARATE ILLUSTRATION

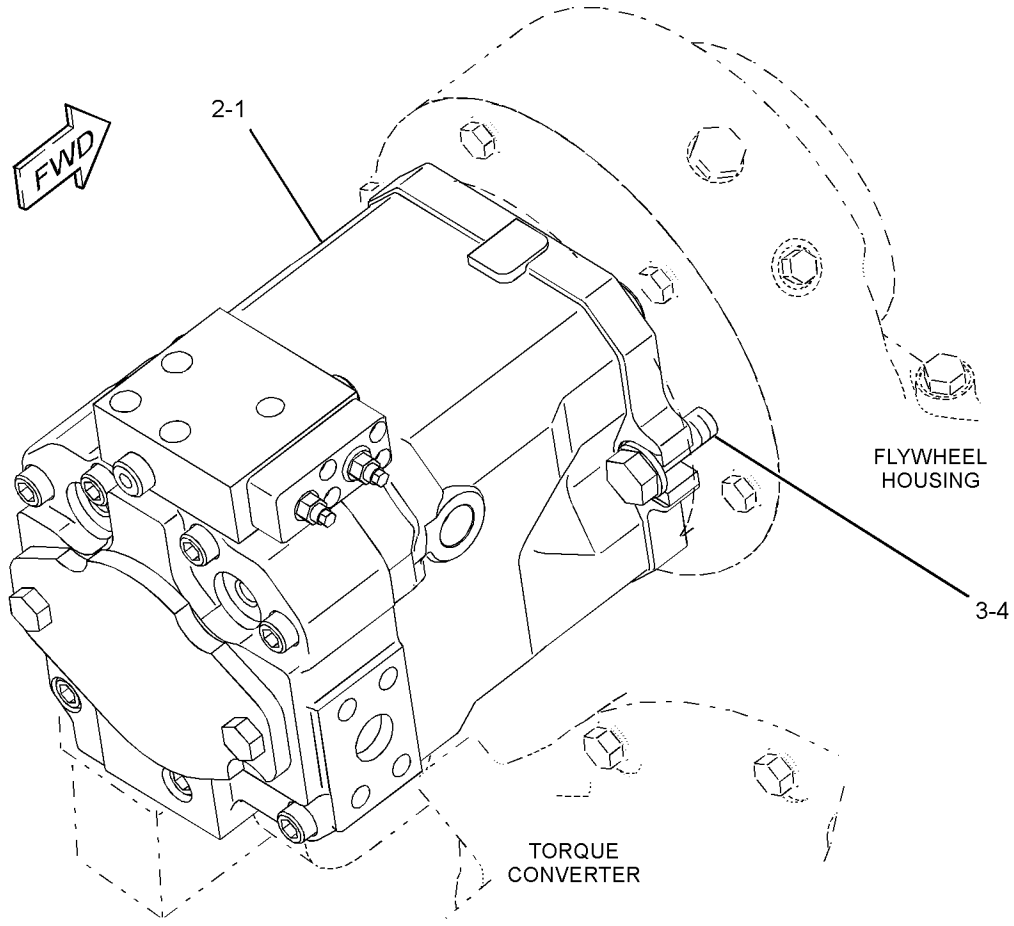

GRAPHIC #1 **<END>** g01206305

HYDRAULIC SYSTEM

227-0830 PUMP GP-PISTON—IMPLEMENT

S/N: JDL1-UP; GMT1-UP

PART OF 222-1161 PUMP & MOUNTING GP

SMCS-5070 **i02450202**

NOTE	REF NO	GRAPHIC REF	PART NUMBER	QTY	PART NAME 1 2 3 4 5 6 (PRODUCT LEVEL)	SEE PAGE
	1	1	**095-0940**	1	RING-RETAINING	
	2	1	**7X-1553**	1	SEAL-LIP TYPE	
	3	1	**197-0074**	1	HOUSING	
	4	1	**9S-8006**	2	PLUG	
	5	1	**2M-9780**	2	SEAL-O-RING	
	6	1	**197-0075**	1	RACE	
	7	1	**197-0076**	1	BEARING	
	8	1	**197-0077**	1	SHAFT	
	9	1	**8U-9480**	2	PIN	
	10	1	**197-0078**	2	BEARING	
	11	1	**131-4647**	1	CRADLE	
	12	1	**121-9915**	3	SLEEVE	
	13	1	**197-0079**	9	PISTON AS	
	14	1	**131-4649**	1	WASHER (61X123X5.5-MM THK)	
	15	1	**197-0080**	1	PLATE	
	16	1	**131-4657**	1	PLATE	
M	17	1	**8U-3297**	4	BOLT (M10X25X25-MM)	
	18	1	**197-0081**	1	BARREL AS	
	19	1	**197-0082**	1	WASHER (39.2X53.8X4-MM THK)	
	20	1	**197-0083**	1	SPRING	
	21	1	**197-0084**	1	RING	
	22	1	**197-0085**	1	SPACER (41X46X19.2-MM THK)	
	23	1	**195-6882**	1	RING	
	24	1	**121-9943**	1	RING	
	25	1	**197-0086**	1	SPACER (47X54X38-MM THK)	
	26	1	**197-0087**	1	RING	
	27	1	**197-0090**	1	PLATE	
	28	1	**101-2862**	2	DOWEL	
	29	1	**197-0088**	1	RING	
	30	1	**197-0089**	1	BEARING	
M	31	1	**6V-5192**	3	BOLT-SOCKET HEAD (M8X1.25X30-MM)	
	32	1	**8C-3131**	2	SEAL-O-RING	
	33	1	**121-9941**	2	RING	
	34	1	**131-4674**	2	PIPE	
	35	1	**131-4675**	1	RING	
	36	1	**131-4676**	1	PISTON	
	37	1	**284-3781**	1	PISTON	
	38	1	**197-0093**	1	RETAINER	
	39	1	**197-0094**	1	SPRING	
	40	1	**197-0095**	1	RETAINER	
	41	1	**284-3782**	1	PISTON	
M	42	1	**9T-4901**	1	NUT (M12X1-THD)	
	43	1	**121-9946**	1	PIN	
M	44	1	**3E-6910**	9	BOLT-SOCKET HEAD (M12X1.75X70-MM)	
	45	1	**117-8765**	1	SEAL-O-RING	
M	46	1	**6A-5591**	2	BOLT (M12X1.75X25-MM)	
	47	1	**195-6932**	1	COVER	
Y	48	1	**227-3021**	1	VALVE GP-PUMP CONTROL (PRESSURE, FLOW COMPENSATOR)	538
	49	1	**268-9076**	1	HOUSING AS	
	50	1	**8U-3875**	1	PLUG	
B	51	1	**5W-7461**	1	SHIM (1.05-MM THK)	
B	52	1	**5W-7462**	1	SHIM (1.1-MM THK)	
B	53	1	**5W-7463**	1	SHIM (1.15-MM THK)	
B	54	1	**5W-7464**	1	SHIM (1.25-MM THK)	
B	55	1	**5W-7465**	1	SHIM (1.5-MM THK)	

227-0830 **PUMP GP-PISTON** *(contd.)* **i02450202**

NOTE	REF NO	GRAPHIC REF	PART NUMBER	QTY	PART NAME 1 2 3 4 5 6 (PRODUCT LEVEL)	SEE PAGE
B	56	1	**5W-7466**	1	SHIM (1.75-MM THK)	
B	57	1	**131-4654**	1	PLATE (0.05-MM THK)	
B	58	1	**131-4655**	1	PLATE (0.075-MM THK)	
B	59	1	**131-4656**	1	PLATE (0.1-MM THK)	
B	60	1	**131-4650**	1	PLATE (0.05-MM THK)	
B	61	1	**131-4651**	1	PLATE (0.075-MM THK)	
B	62	1	**131-4652**	1	PLATE (0.1-MM THK)	
B	63	1	**285-5644**	1	RING-RETAINING (PISTON PUMP)	
B	64	1	**199-4193**	1	KIT-SHIM (21-SHIMS) (PISTON PUMP)	

B-USE AS REQUIRED
M-METRIC PART
Y-SEPARATE ILLUSTRATION

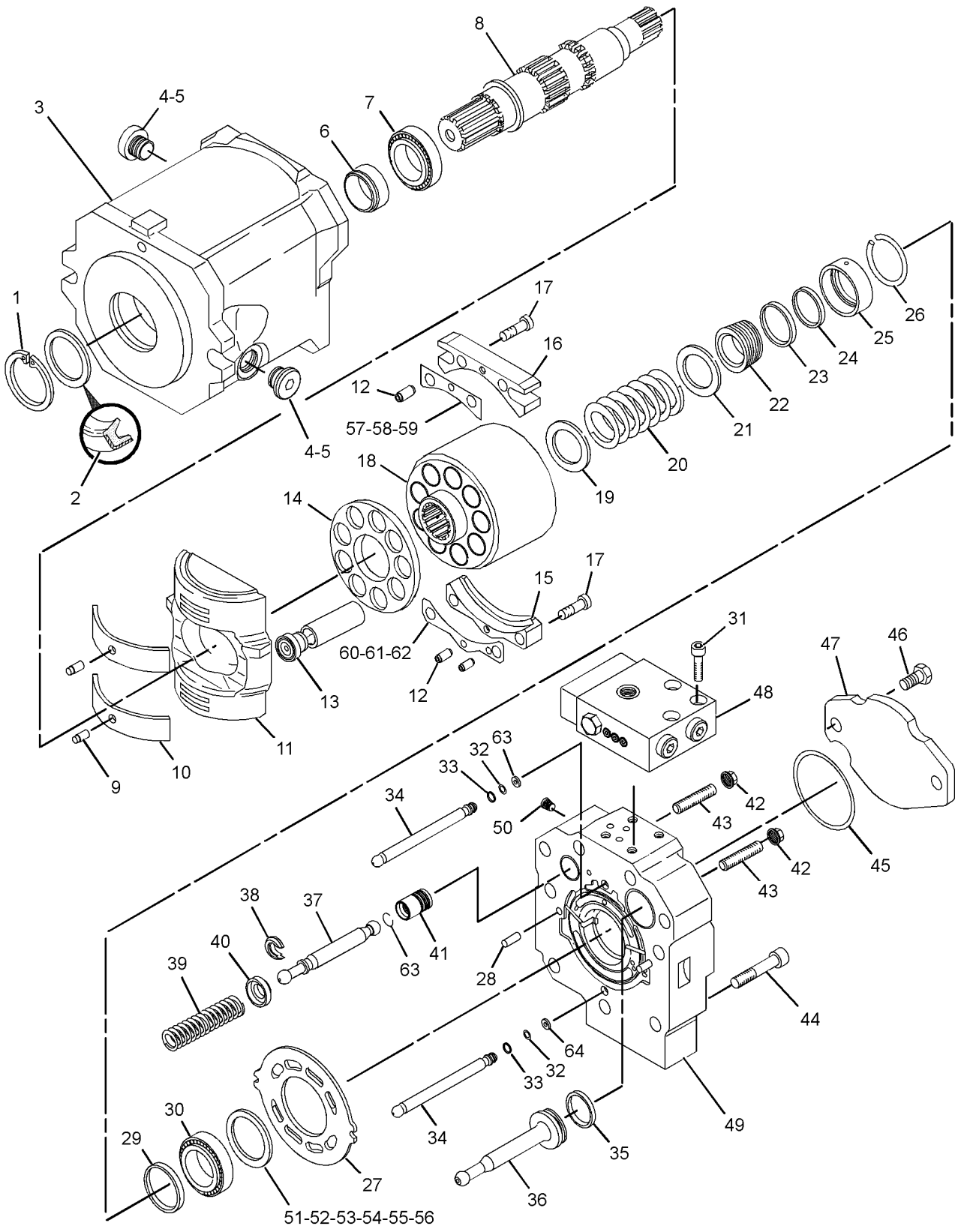

GRAPHIC #1 **<END>** g01227561

171-6001 ROTATING GP-MOTOR

S/N: JDL1-UP; GMT1-UP

PART OF 159-7156 MOTOR GP-PISTON

SMCS-5058 **i01874448**

NOTE	REF NO	GRAPHIC REF	PART NUMBER	QTY	PART NAME 1 2 3 4 5 6 (PRODUCT LEVEL)	SEE PAGE
	1	1	**171-3068**	1	SHAFT-MOTOR	
	2	1	**123-5748**	1	SEAL-SHAFT	
	3	1	**9T-1637**	1	COVER-FRONT	
	4	1	**6V-3326**	1	RING-RETAINING	
	5	1	**2J-8163**	1	SEAL-O-RING	
	6	1	**9T-1576**	1	SHIM (0.1-MM THK)	
	7	1	**9T-1579**	2	SHIM (0.3-MM THK)	
M	8	1	**113-4420**	7	SCREW (M6X20-MM)	
	9	1	**9T-1687**	1	BARREL-CYLINDER	
	10	1	**171-3054**	1	PIN-CENTER	
	11	1	**171-3061**	1	SPRING	
B	12	1	**171-3055**	1	SHIM (4-MM THK)	
B	13	1	**171-3057**	1	SHIM (3.9-MM THK)	
B	14	1	**171-3058**	1	SHIM (3.8-MM THK)	
B	15	1	**171-3059**	1	SHIM (3.7-MM THK)	
B	16	1	**171-3060**	1	SHIM (3.6-MM THK)	
	17	1	**171-5999**	1	PLATE-PORT	
	18	1	**165-6969**	1	PISTON AS	
	19	1	**9T-1642**	7	PLATE-RETAINING	
	20	1	**171-5989**	1	KIT-BEARING (MOTOR ROTATING GROUP) (ROTATING PISTON MOTOR)	

B-USE AS REQUIRED
M-METRIC PART

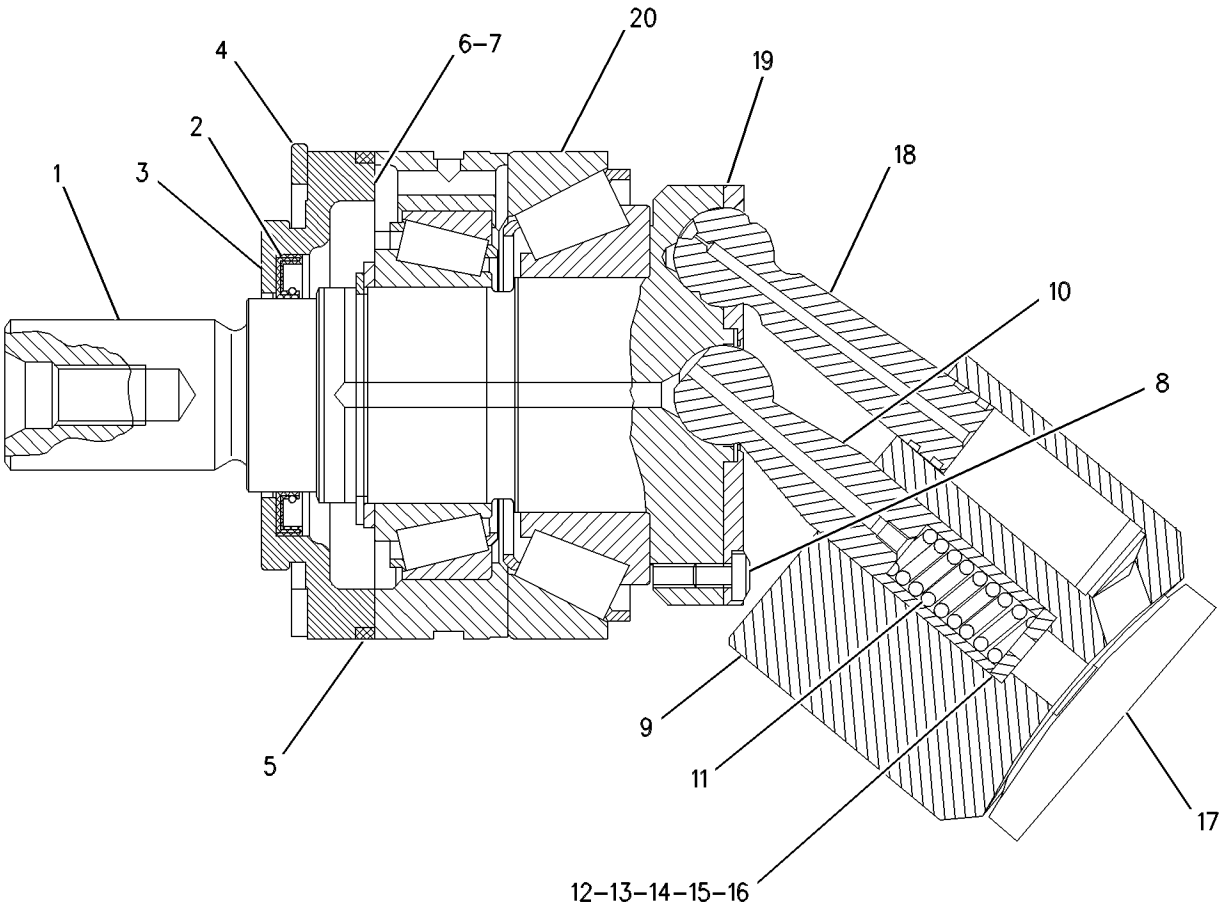

GRAPHIC #1 **<END>** g00592930

HYDRAULIC SYSTEM

222-1162 TANK & MTG GP-HYDRAULIC

S/N: JDL1-UP; GMT1-UP

PART OF 218-4981 HYDRAULIC AR-2 VALVE

SMCS-5056 **i02450218**

NOTE	REF NO	GRAPHIC REF	PART NUMBER	QTY	PART NAME 1 2 3 4 5 6 (PRODUCT LEVEL)	SEE PAGE
	1	1	**191-5439**	1	VALVE-BREAKER RELIEF	
	2	1	**246-2641**	1	PADLOCK GP (HYDRAULIC TANK FILL)	
		1	**5P-8500**	2	KEY	
	3	1	**164-3651**	1	ADAPTER	
Y	4	1	*224-4946*	1	TANK GP-HYDRAULIC	504
	5	1	**3D-2824**	1	SEAL-O-RING	
	6	1	**3J-1907**	1	SEAL-O-RING	
M	7	1	**8T-4779**	3	BOLT (M16X2X35-MM)	
	8	1	**9X-8257**	3	WASHER (17.5X30X3.5-MM THK)	

M-METRIC PART
Y-SEPARATE ILLUSTRATION

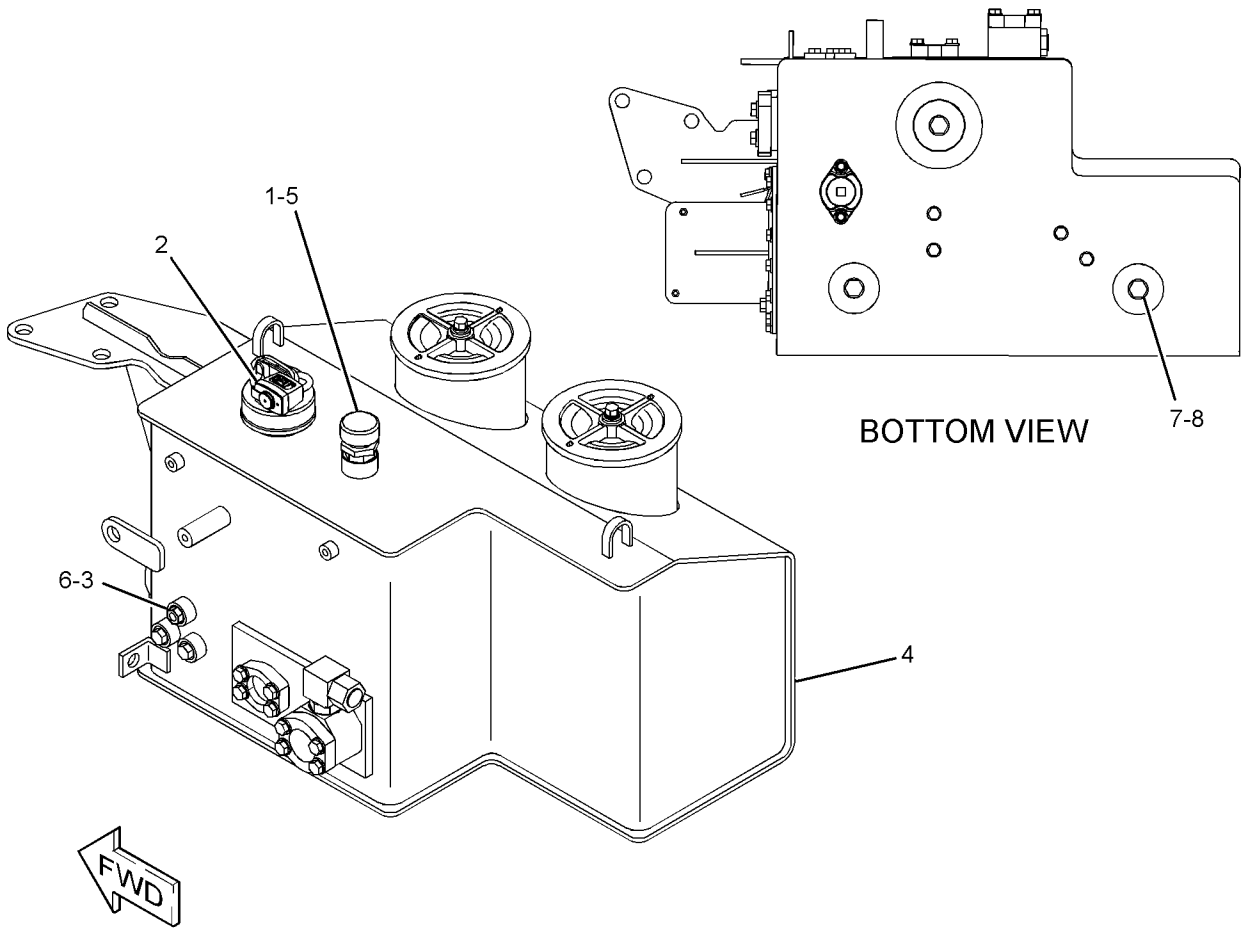

GRAPHIC #1 **<END>** g01209855

HYDRAULIC SYSTEM

224-4946 TANK GP-HYDRAULIC

S/N: JDL1-UP; GMT1-UP

PART OF 222-1162 TANK & MTG GP-HYDRAULIC

SMCS-5056 **i02450219**

NOTE	REF NO	GRAPHIC REF	PART NUMBER	QTY	PART NAME 1 2 3 4 5 6 (PRODUCT LEVEL)	SEE PAGE
	1	1	**1U-2827**	1	GUIDE-VALVE	
	2	1	**4J-8251**	1	GROMMET	
	3	1	**4J-8252**	1	GAUGE-SIGHT (HYDRAULIC TANK)	
	4	1	**4T-0521**	2	BOLT (5/8-11X17.1-IN)	
	5	1	**5D-1911**	1	COVER-HYDRAULIC CAP	
	6	1	**5D-7927**	1	STRAINER AS (HYDRAULIC TANK FILL)	
	7	1	**7B-3039**	1	SPRING	
	8	1	**7H-1447**	1	CAP-FILLER (HYDRAULIC TANK)	
	9	1	**8J-6913**	1	RETAINER-SIGHT GLASS	
	10	1	**8J-8443**	2	SPRING	
	11	1	**8J-8468**	2	VALVE	
	12	1	**8J-8782**	1	BODY-DRAIN VALVE	
	13	1	**8J-8783**	1	VALVE	
	14	1	**8T-3298**	1	SEAL-RECTANGULAR	
	15	1	**9J-2914**	2	SPACER	
	16	1	**9J-7031**	1	PLUG-DRAIN (HYDRAULIC TANK)	
	17	1	**9M-7394**	1	LEVER (COVER)	
	18	1	**9T-3004**	1	VALVE	
	19	1	**9T-3005**	1	SPRING	
	20	1	**9T-3264**	2	COVER	
	21	1	**9T-7677**	1	RETAINER	
	22	1	**187-9194**	1	PLATE (SIGHT GLASS)	
	23	1	**235-0891**	1	TANK AS-HYDRAULIC	
	24	1	**235-0892**	1	TUBE AS	
	25	1	**235-0893**	1	TUBE AS	
	26	1	**235-0895**	1	COVER AS	
	27	1	**235-0907**	2	BASE-FILTER	
	28	1	**257-9788**	1	GASKET	
	29	1	**268-0066**	1	SPACER	
	30	1	*148-8347*	1	ELBOW AS	
		1	**6V-9007**	1	ELBOW	
		1	**3D-2824**	1	SEAL-O-RING	
		1	**6V-9746**	1	SEAL-O-RING	
	31	1	**154-1580**	1	WASHER-HARD (M22X38X6-MM THK)	
	32	1	**1L-5072**	1	DOWEL	
	33	1	**1P-4578**	2	FLANGE-HALF	
	34	1	**1P-4582**	2	FLANGE-HALF	
	35	1	**1R-0777**	2	FILTER ELEMENT AS-OIL (ADVANCED EFFICIENCY)	
					—OR—	
		1	**1R-0735**	2	FILTER ELEMENT AS-OIL (STANDARD EFFICIENCY) (STANDARD)	
					—OR—	
		1	**139-1537**	2	FILTER ELEMENT AS-OIL (ULTRA HIGH EFFICIENCY)	
					—OR—	
		1	**104-6931**	2	FILTER ELEMENT AS-OIL (FIRE RESISTANT FLUID)	
	36	1	**270-9433**	2	BOLT-SOCKET HEAD	
	37	1	**2D-4202**	1	PLATE	
	38	1	**2J-7761**	1	RING-RETAINING	
	39	1	**3G-3267**	2	SCREEN AS (HYDRAULIC TANK)	
	40	1	**4F-7389**	2	SEAL-O-RING	
	41	1	**4K-0367**	2	NUT-FULL (5/8-11-THD)	
	42	1	**4P-7581**	1	CLIP	
	43	1	**4P-8134**	2	CLIP	
	44	1	**5F-1678**	4	SEAL-O-RING	
	45	1	**5M-2057**	1	SEAL-O-RING	
	46	1	**6H-9361**	1	RING-RETAINING	

224-4946 **TANK GP-HYDRAULIC** *(contd.)* **i02450219**

NOTE	REF NO	GRAPHIC REF	PART NUMBER	QTY	PART NAME 1 2 3 4 5 6 (PRODUCT LEVEL)	SEE PAGE
	47	1	**6V-5839**	8	WASHER (11X21X2.5-MM THK)	
M	48	1	**6V-7732**	4	BOLT (M10X1.5X25-MM)	
M	49	1	**6V-7744**	6	LOCKNUT (M10X1.15-THD)	
	50	1	**6V-9633**	2	GASKET	
	51	1	**7D-9749**	1	SEAL-O-RING	
	52	1	**7F-8267**	2	SEAL-O-RING	
	53	1	**8C-3206**	2	FLANGE-HALF	
	54	1	**8F-9206**	2	SEAL-O-RING	
	55	1	**8J-8322**	2	RING-RETAINING	
	56	1	**8J-8436**	2	TUBE AS	
	57	1	**8T-2275**	1	BALL	
	58	1	**8T-4121**	34	WASHER-HARD (11X21X2.5-MM THK)	
M	59	1	**8T-4136**	20	BOLT (M10X1.5X25-MM)	
M	60	1	**8T-4172**	4	BOLT (M10X1.5X80-MM)	
M	61	1	**8T-4196**	4	BOLT (M10X1.5X35-MM)	
	62	1	**8T-4223**	4	WASHER-HARD (13.5X25.5X3-MM THK)	
M	63	1	**8T-4956**	4	BOLT (M12X1.75X35-MM)	
	64	1	**9H-6454**	1	GASKET	
M	65	1	**9X-2125**	4	BOLT-LOCKING (M10X1.5X25-MM)	

M-METRIC PART

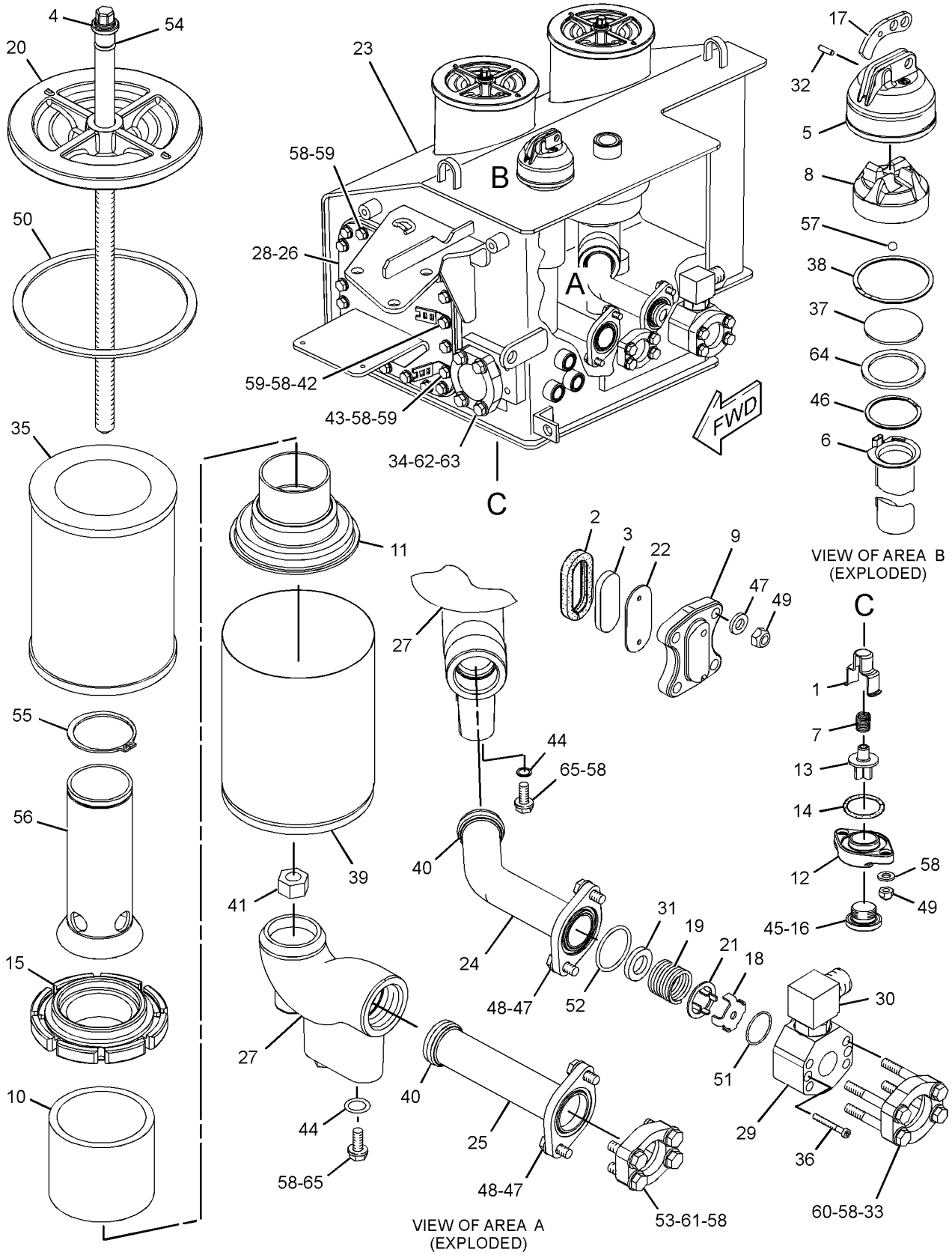

GRAPHIC #1 **<END>** g01212472

HYDRAULIC SYSTEM

239-5317 VALVE & MTG GP-BULLDOZER–GRADE CONTROL

S/N: JDL1-UP; GMT1-UP
PART OF 238-7759 LINES GP-PILOT
AN ATTACHMENT

SMCS-5051 **i02454887**

NOTE	REF NO	GRAPHIC REF	PART NUMBER	QTY	PART NAME 1 2 3 4 5 6 (PRODUCT LEVEL)	SEE PAGE
Y	1	1	**201-0950**	1	VALVE GP-SOLENOID (HYDRAULIC LOCKOUT)	549
Y	2	1	**235-4605**	4	VALVE GP-SOLENOID (BLADE CONTROL)	550
	3	1	**239-5318**	1	MANIFOLD AS	

Y-SEPARATE ILLUSTRATION

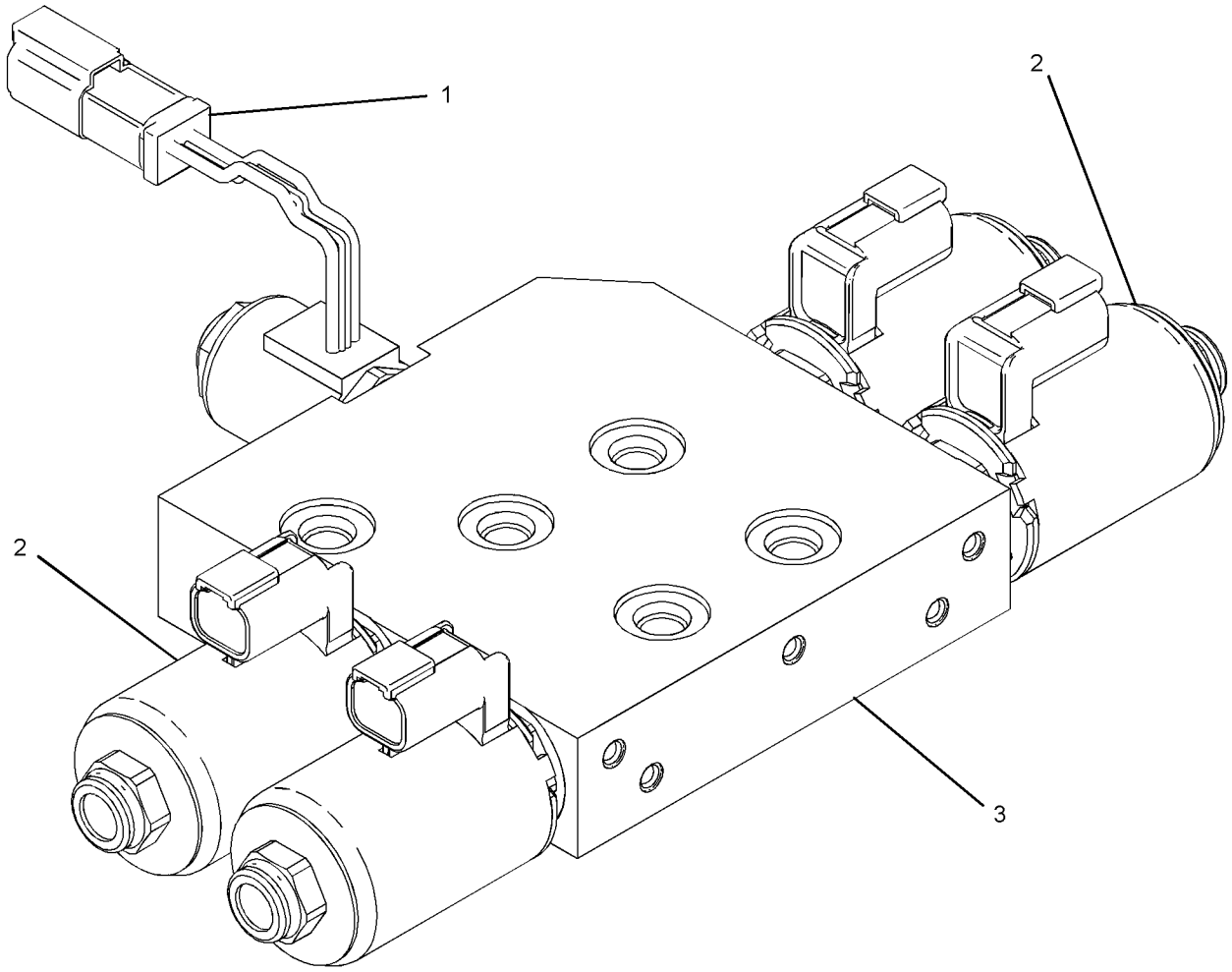

GRAPHIC #1 **<END>** g01210119

HYDRAULIC SYSTEM

222-1191 VALVE & MTG GP-COUNTERBALANCE

S/N: JDL1-UP; GMT1-UP

PART OF 218-4981 HYDRAULIC AR-2 VALVE

SMCS-5420 **i02450271**

NOTE	REF NO	GRAPHIC REF	PART NUMBER	QTY	PART NAME 1 2 3 4 5 6 (PRODUCT LEVEL)	SEE PAGE
Y	1	1	**227-0832**	1	VALVE GP-COUNTERBALANCE	528
M	2	1	**160-8493**	6	BOLT-SOCKET HEAD (M14X2X80-MM)	
	3	1	**4J-0520**	2	SEAL-O-RING	
	4	1	**6V-0400**	4	FLANGE-HALF	
M	5	1	**8T-4184**	8	BOLT (M12X1.75X45-MM)	
	6	1	**8T-4223**	8	WASHER-HARD (13.5X25.5X3-MM THK)	

M-METRIC PART
Y-SEPARATE ILLUSTRATION

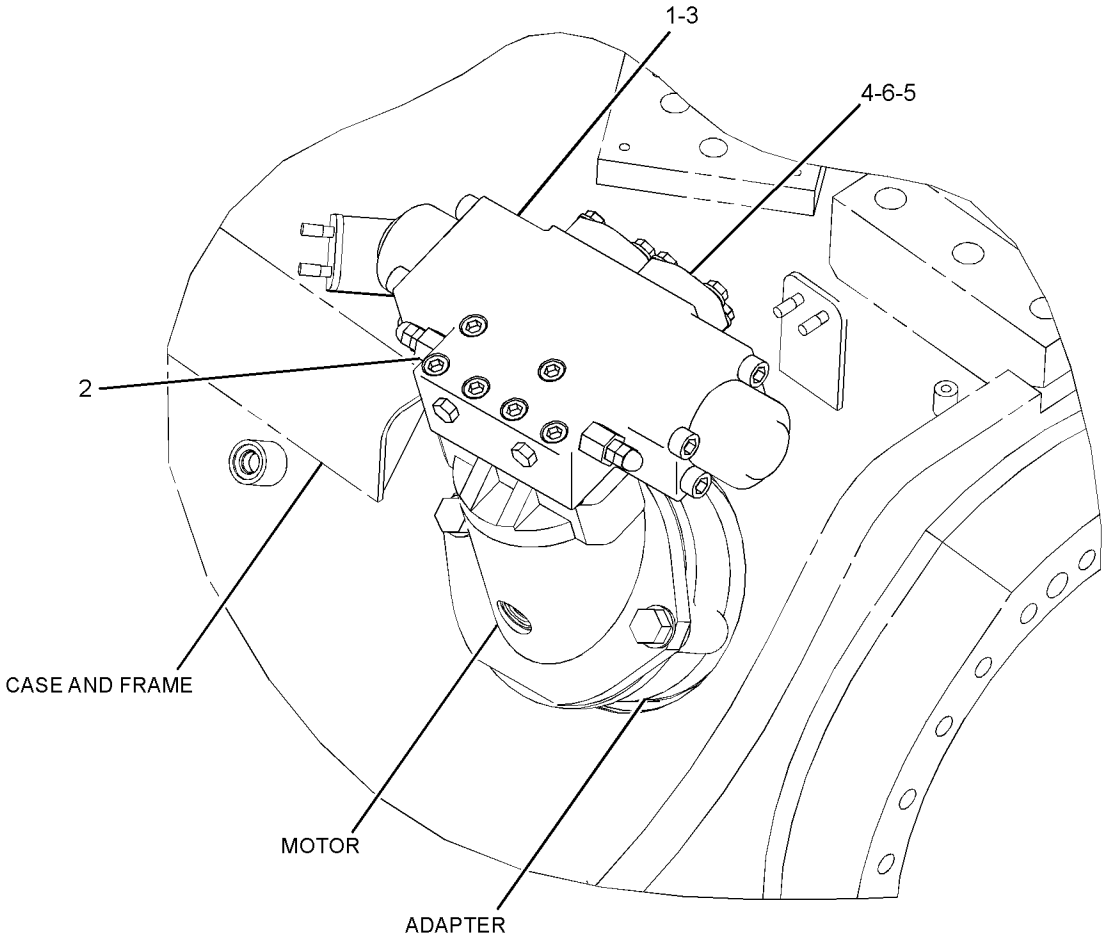

GRAPHIC #1 **<END>** g01206728

224-4936 VALVE GP-BANK 3—BULLDOZER LIFT, TILT, STEERING

S/N: JDL1-UP; GMT1-UP

PART OF 222-1159 MOUNTING GP-VALVE

SMCS-5051 **i02434811**

NOTE	REF NO	GRAPHIC REF	PART NUMBER	QTY	PART NAME 1 2 3 4 5 6 (PRODUCT LEVEL)	SEE PAGE
	2	1	**6V-8188**	3	NUT (1/2-13-THD)	
	3	1	**164-7677**	3	ROD	
	5	1	**235-0399**	1	COVER	
Y	6	1	**235-0401**	1	MANIFOLD GP-VALVE	492
Y	7	1	**235-0402**	1	VALVE GP-CONTROL (STEERING)	516
Y	8	1	**235-0403**	1	VALVE GP-CONTROL (BULLDOZER LIFT)	518
Y	9	1	**235-0404**	1	VALVE GP-CONTROL (BULLDOZER TILT)	521
	10	1	*155-3624*	2	PLUG AS	
					(EACH INCLUDES)	
		1	**9S-4182**	1	PLUG	
		1	**3J-7354**	1	SEAL-O-RING	
	11	1	**1P-3702**	1	SEAL-RECTANGULAR	
	12	1	**1P-4578**	2	FLANGE-HALF	
	13	1	*207-7899*	1	PLUG AS	
		1	**9S-4188**	1	PLUG	
		1	**4K-1388**	1	SEAL-O-RING	
	14	1	**4J-0522**	12	SEAL-O-RING	
	15	1	**4J-8997**	3	SEAL-O-RING	
	16	1	**6V-5555**	12	SEAL-O-RING	
	17	1	**8C-3206**	10	FLANGE-HALF	
	18	1	**8T-4121**	32	WASHER-HARD (11X21X2.5-MM THK)	
M	19	1	**8T-4182**	8	BOLT (M10X1.5X45-MM)	
M	20	1	**8T-4196**	24	BOLT (M10X1.5X35-MM)	
	21	1	**8T-4223**	3	WASHER-HARD (13.5X25.5X3-MM THK)	
	22	1	**8T-9403**	4	FLANGE-HALF	

M-METRIC PART
Y-SEPARATE ILLUSTRATION

224-4936 VALVE GP-BANK 3 *(contd.)* **i02434811**

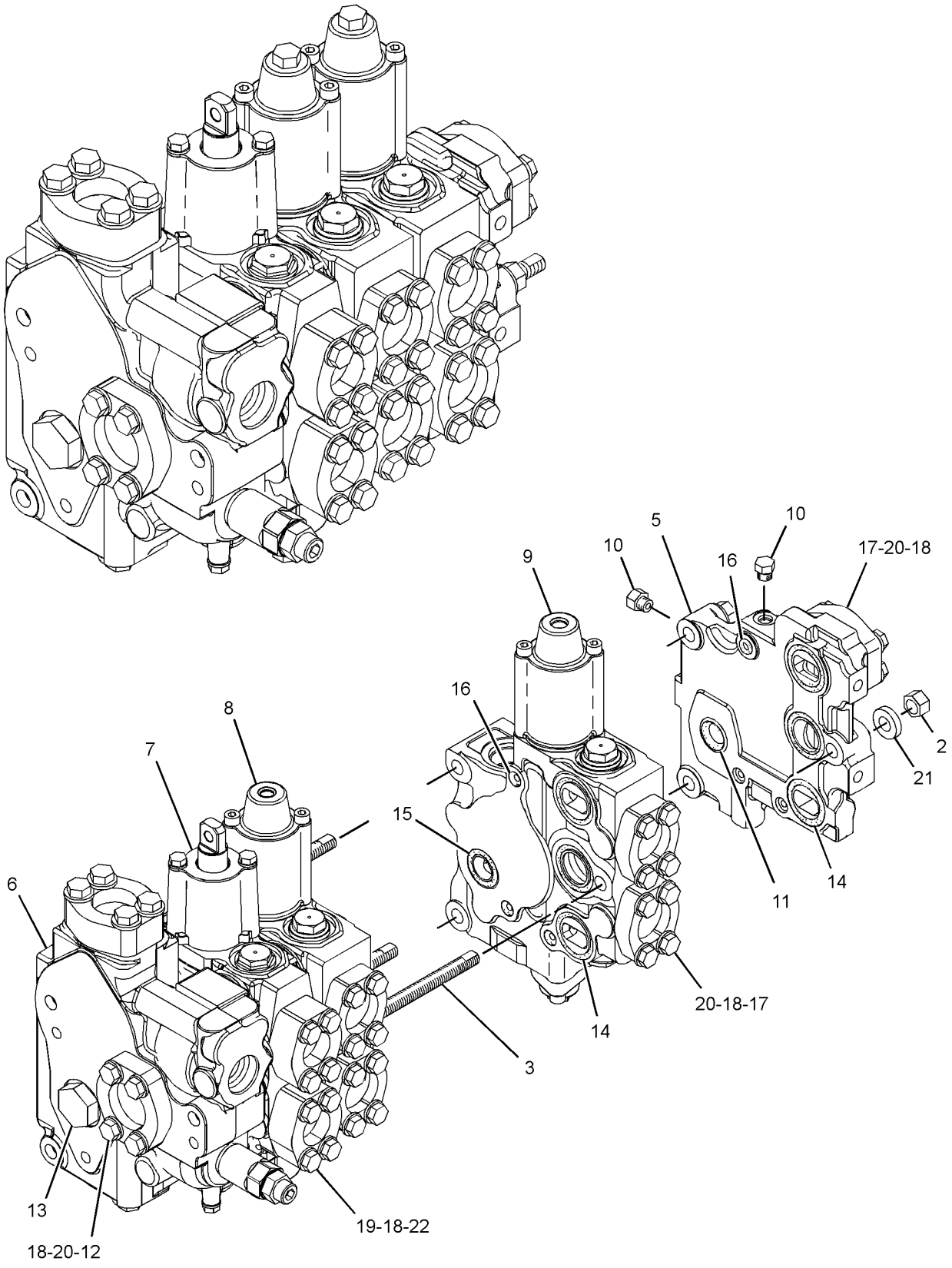

GRAPHIC #1 **<END>** g01213083

224-4937 VALVE GP-BANK 4—STEERING, BULLDOZER, RIPPER

S/N: JDL1-UP; GMT1-UP
PART OF 226-9130 CONTROL AR-HYDRAULIC IMPLEMENT
AN ATTACHMENT

SMCS-5051 **i02455936**

NOTE	REF NO	GRAPHIC REF	PART NUMBER	QTY	PART NAME 1 2 3 4 5 6 (PRODUCT LEVEL)	SEE PAGE
	2	1	**164-6174**	3	ROD	
	4	1	**235-0399**	1	COVER	
Y	5	1	**235-0401**	1	MANIFOLD GP-VALVE	492
Y	6	1	**235-0402**	1	VALVE GP-CONTROL (STEERING)	516
Y	7	1	**235-0403**	1	VALVE GP-CONTROL (BULLDOZER LIFT)	518
Y	8	1	**235-0404**	1	VALVE GP-CONTROL (BULLDOZER TILT)	521
Y	9	1	**235-0405**	1	VALVE GP-CONTROL (RIPPER LIFT)	523
	10	1	*155-3624*	2	PLUG AS	
					(EACH INCLUDES)	
		1	**9S-4182**	1	PLUG	
		1	**3J-7354**	1	SEAL-O-RING	
	11	1	**1P-3702**	1	SEAL-RECTANGULAR	
	12	1	**1P-4578**	2	FLANGE-HALF	
	13	1	*207-7899*	1	PLUG AS	
		1	**4K-1388**	1	SEAL-O-RING	
		1	**9S-4188**	1	PLUG	
	14	1	**4J-0522**	15	SEAL-O-RING	
	15	1	**4J-8997**	4	SEAL-O-RING	
	16	1	**6V-5555**	15	SEAL-O-RING	
	17	1	**6V-8188**	3	NUT (1/2-13-THD)	
	18	1	**8C-3206**	14	FLANGE-HALF	
	19	1	**8T-4121**	40	WASHER-HARD (11X21X2.5-MM THK)	
M	20	1	**8T-4182**	8	BOLT (M10X1.5X45-MM)	
M	21	1	**8T-4196**	32	BOLT (M10X1.5X35-MM)	
	22	1	**8T-4223**	3	WASHER-HARD (13.5X25.5X3-MM THK)	
	23	1	**8T-9403**	4	FLANGE-HALF	

M-METRIC PART
Y-SEPARATE ILLUSTRATION

224-4937 VALVE GP-BANK 4 *(contd.)* i02455936

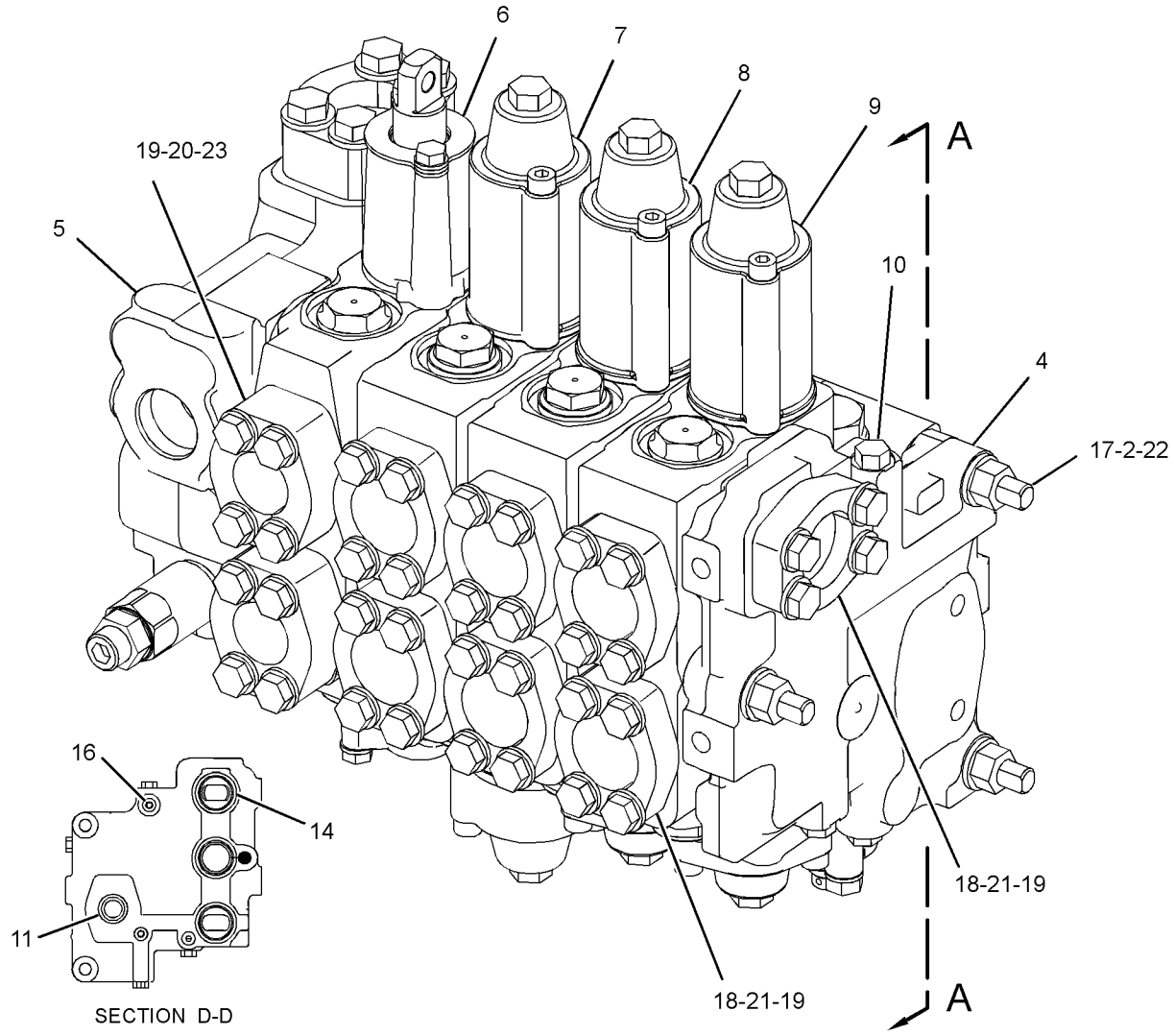

SECTION D-D

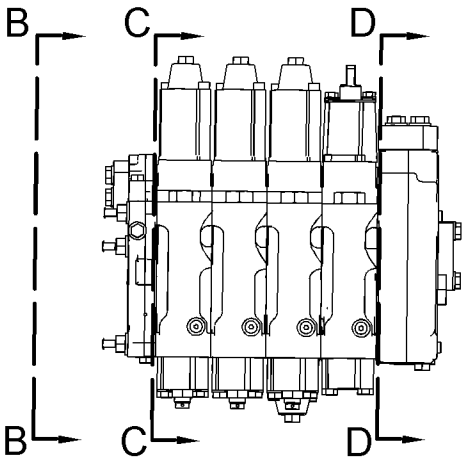

VIEW A-A

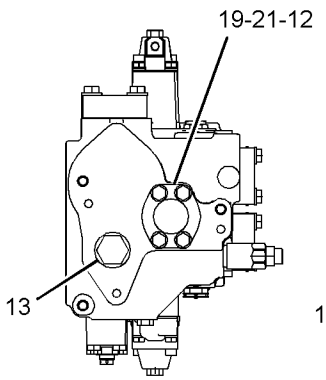

VIEW B-B

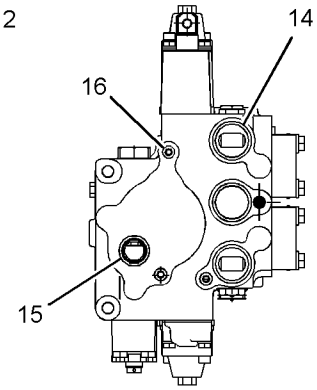

SECTION C-C

GRAPHIC #1 **<END>** g01208575

239-6076 VALVE GP-BANK 4—BULLDOZER, STEERING, WINCH

S/N: JDL1-UP; GMT1-UP
PART OF 239-5912 CONTROL AR-HYDRAULIC IMPLEMENT
AN ATTACHMENT

SMCS-5051 **i02454844**

NOTE	REF NO	GRAPHIC REF	PART NUMBER	QTY	PART NAME 1 2 3 4 5 6 (PRODUCT LEVEL)	SEE PAGE
	2	1	**164-6174**	3	ROD	
	3	1	**235-0399**	1	COVER	
Y	4	1	**235-0401**	1	MANIFOLD GP-VALVE (INLET)	492
Y	5	1	**235-0402**	1	VALVE GP-CONTROL (STEERING)	516
Y	6	1	**235-0403**	1	VALVE GP-CONTROL (BULLDOZER LIFT)	518
Y	7	1	**235-0404**	1	VALVE GP-CONTROL (BULLDOZER TILT)	521
Y	9	1	**239-6074**	1	VALVE GP-CONTROL (WINCH)	526
	10	1	*155-3624*	2	PLUG AS	
					(EACH INCLUDES)	
		1	**9S-4182**	1	PLUG	
		1	**3J-7354**	1	SEAL-O-RING	
	11	1	**1P-3702**	1	SEAL-RECTANGULAR	
	12	1	**1P-4578**	2	FLANGE-HALF	
	13	1	*207-7899*	1	PLUG AS	
		1	**9S-4188**	1	PLUG	
		1	**4K-1388**	1	SEAL-O-RING	
	14	1	**4J-0522**	15	SEAL-O-RING	
	15	1	**4J-8997**	4	SEAL-O-RING	
	16	1	**6V-5555**	15	SEAL-O-RING	
	17	1	**6V-8188**	3	NUT (1/2-13-THD)	
	18	1	**8C-3206**	10	FLANGE-HALF	
	19	1	**8T-4121**	40	WASHER-HARD (11X21X2.5-MM THK)	
M	20	1	**8T-4182**	16	BOLT (M10X1.5X45-MM)	
M	21	1	**8T-4196**	24	BOLT (M10X1.5X35-MM)	
	22	1	**8T-4223**	3	WASHER-HARD (13.5X25.5X3-MM THK)	
	23	1	**8T-9403**	8	FLANGE-HALF	

M-METRIC PART
Y-SEPARATE ILLUSTRATION

239-6076 VALVE GP-BANK 4 *(contd.)* i02454844

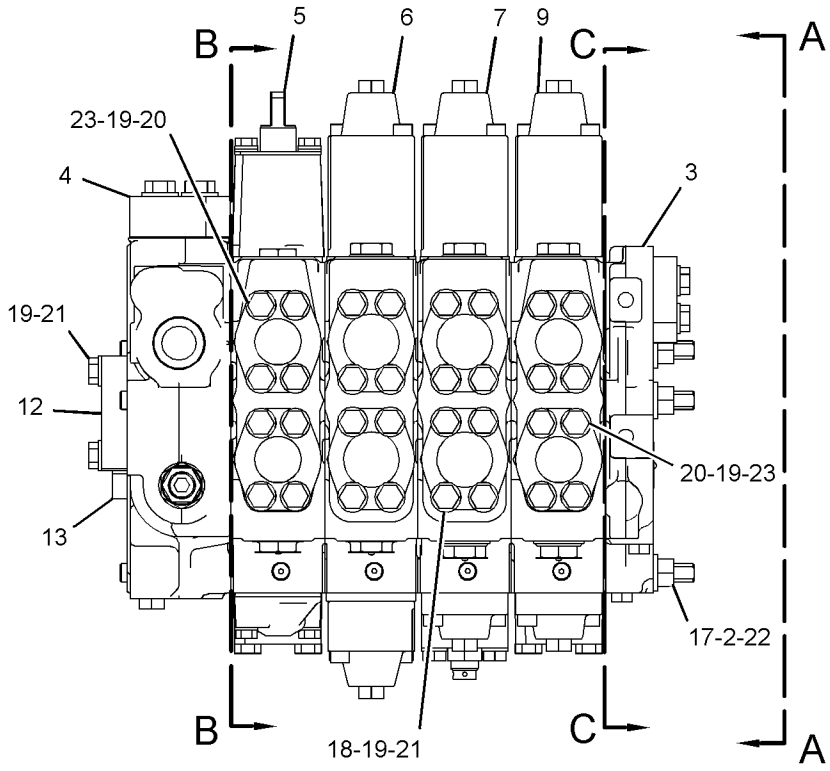

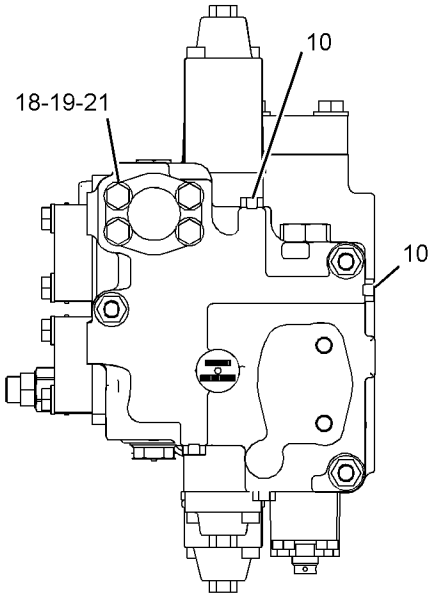

VIEW A-A

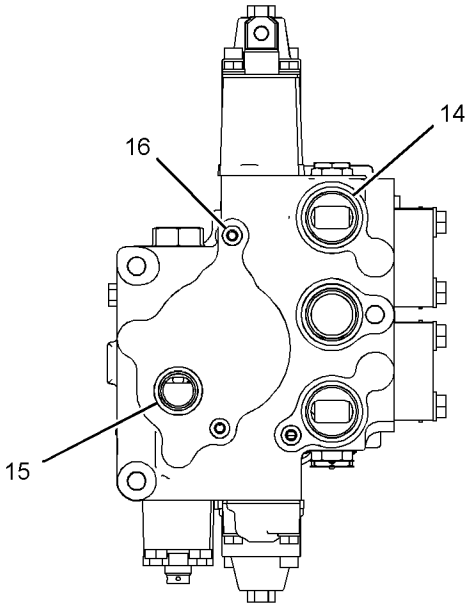

SECTION B-B

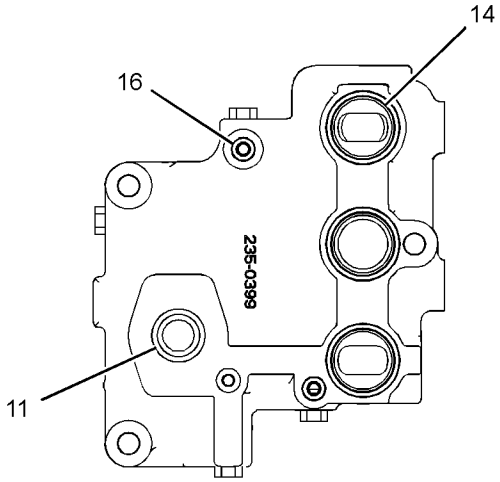

SECTION C-C

GRAPHIC #1 **<END>** g01210908

158-9956 VALVE GP-CHECK–PILOT PRESSURE SUPPLY

S/N: JDL1-UP; GMT1-UP

PART OF 226-4751 MANIFOLD GP-CONTROL

SMCS-5067 **i02106248**

NOTE	REF NO	GRAPHIC REF	PART NUMBER	QTY	PART NAME 1 2 3 4 5 6 (PRODUCT LEVEL)	SEE PAGE
	1	1	**3K-0360**	1	SEAL-O-RING	
	2	1	**161-6154**	1	SEAL-O-RING	
	3	1	**6E-0381**	1	RING-BACKUP	

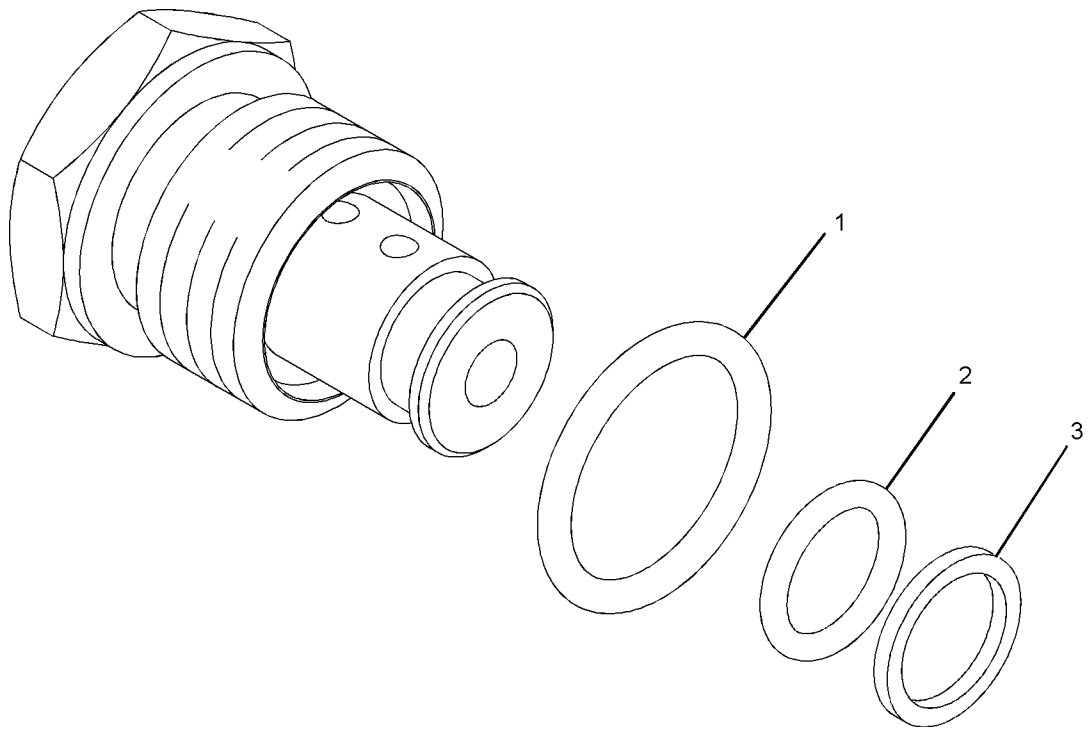

GRAPHIC #1 **<END>** g01016882

HYDRAULIC SYSTEM

235-0402 VALVE GP-CONTROL—STEERING

S/N: JDL1-UP; GMT1-UP

PART OF 224-4936 VALVE GP-BANK 3, 224-4937, 239-6076 VALVE GP-BANK 4

ALSO AN ATTACHMENT

SMCS-5051 **i02470720**

NOTE	REF NO	GRAPHIC REF	PART NUMBER	QTY	PART NAME 1 2 3 4 5 6 (PRODUCT LEVEL)	SEE PAGE
	1	1	**2S-2596**	3	SPRING	
B	3	1	**4J-6806**	2	SHIM (1.2-MM THK)	
	4	1	**4T-0993**	2	RETAINER	
	5	1	**4T-1021**	2	RETAINER	
	6	1	**4T-1649**	1	HOUSING	
	7	1	**4T-1850**	1	HOUSING	
Y	8	1	**4T-1860**	1	VALVE GP-SHUTTLE	547
	9	1	**4T-4511**	1	SLEEVE	
	10	1	**4T-5074**	1	RING-BACKUP	
	11	1	**6E-0486**	1	VALVE GP-FLOW CONTROL	
	12	1	**6L-9716**	1	PLUG-PIPE	
	13	1	**9T-6316**	1	SPRING	
	14	1	**9T-6688**	1	SPRING	
	15	1	**100-8012**	2	BODY	
	16	1	**107-1177**	1	HOUSING	
	17	1	**107-1179**	1	PLATE-SEAL	
	19	1	**208-5498**	1	SEAL AS	
B	22	1	**256-9637**	2	SHIM (0.61-MM THK)	
M	23	1	**099-3649**	2	BOLT (M8X1.25X40-MM)	
	24	1	**100-8010**	3	VALVE-CHECK	
	25	1	**100-8011**	1	PLUG	
	26	1	*162-6448*	1	PLUG AS	
		1	**1N-5999**	1	PLUG	
		1	**7J-0204**	1	SEAL-O-RING	
	27	1	*173-3993*	2	PLUG AS	
					(EACH INCLUDES)	
		1	**9S-8001**	1	PLUG	
		1	**4J-7533**	1	SEAL-O-RING	
	28	1	*183-7263*	1	PLUG AS	
		1	**9S-8002**	1	PLUG	
		1	**3J-7354**	1	SEAL-O-RING	
	29	1	**2D-0598**	1	SEAL-O-RING	
	30	1	**4K-1388**	2	SEAL-O-RING	
	31	1	**4T-5073**	2	RING-BACKUP	
	32	1	**5M-2057**	1	SEAL-O-RING	
	33	1	**6V-5556**	1	SEAL-O-RING	
	34	1	**7D-9749**	1	SEAL-O-RING	
	35	1	**7J-9933**	2	SEAL-O-RING	
	36	1	**7M-8485**	1	SEAL-O-RING	
M	37	1	**8T-4177**	2	BOLT (M8X1.25X90-MM)	
M	38	1	**8T-4185**	2	BOLT (M10X1.5X50-MM)	
	39	1	**8T-4224**	6	WASHER-HARD (8.8X16X2-MM THK)	

B-USE AS REQUIRED
M-METRIC PART
Y-SEPARATE ILLUSTRATION

235-0402 **VALVE GP-CONTROL** *(contd.)* **i02470720**

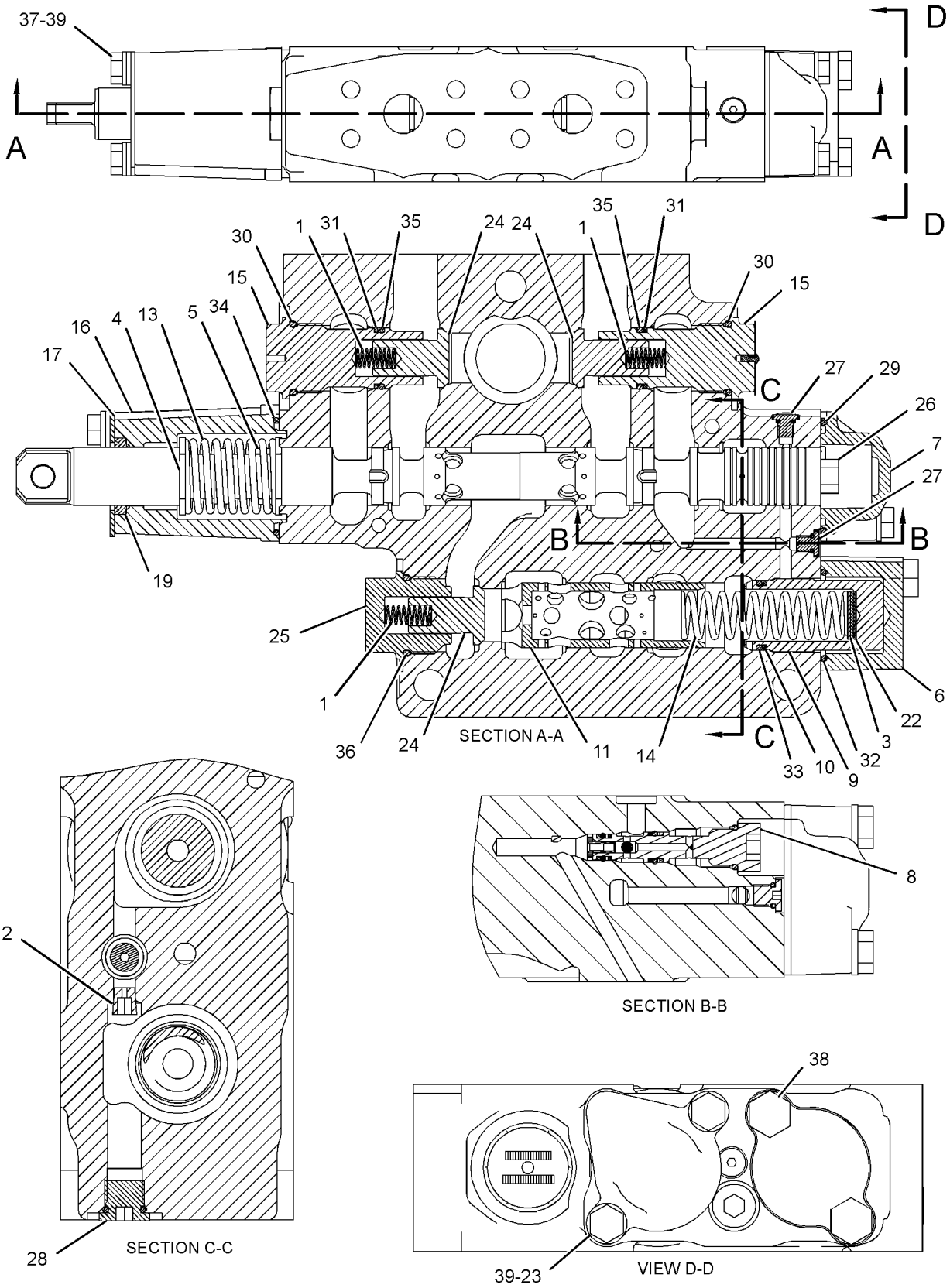

GRAPHIC #1 **<END>** g01218385

235-0403 VALVE GP-CONTROL—BULLDOZER LIFT

S/N: JDL1-UP; GMT1-UP

PART OF 224-4936 VALVE GP-BANK 3, 224-4937, 239-6076 VALVE GP-BANK 4

ALSO AN ATTACHMENT

SMCS-5051 **i02435786**

NOTE	REF NO	GRAPHIC REF	PART NUMBER	QTY	PART NAME 1 2 3 4 5 6 (PRODUCT LEVEL)	SEE PAGE
	1	1	**2S-2596**	2	SPRING	
	3	1	**4T-1108**	1	PLUG	
B	4	2	**4T-4628**	5	SHIM (0.5-MM THK)	
	5	1	**4T-5072**	1	RING-BACKUP	
	6	1	**100-8012**	1	BODY	
Y	7	1	**121-6649**	1	VALVE GP-RELIEF (PILOT OIL PRESSURE)	545
	9	2	**153-7067**	1	RETAINER	
	10	1	**153-7549**	1	RETAINER	
	11	2	**153-7550**	1	RETAINER	
	12	1	**153-7553**	1	SPRING	
	13	2	**161-2685**	1	SCREW	
	14	1	**163-5671**	1	WASHER (17X39X2-MM THK)	
	15	2	**164-0938**	1	SPRING	
	17	2	**170-4001**	1	SPRING	
	18	1	**173-0511**	1	HOUSING	
	19	1	**173-0512**	1	HOUSING	
	20	1	**173-0515**	1	SPACER	
M	23	2	**085-8091**	2	BOLT (M10X1.5X55-MM)	
	24	1	**100-8010**	2	VALVE-CHECK	
	25	1	**100-8011**	1	PLUG	
M	26	1	**102-7365**	2	BOLT-SOCKET HEAD (M8X1.25X100-MM)	
	27	1	**123-9624**	1	SPRING	
	28	1	*173-3993*	2	PLUG AS	
					(EACH INCLUDES)	
		1	**4J-7533**	1	SEAL-O-RING	
		1	**9S-8001**	1	PLUG	
	29	2	*183-7263*	1	PLUG AS	
		2	**3J-7354**	1	SEAL-O-RING	
		2	**9S-8002**	1	PLUG	
B	30	2	**2J-2866**	3	SHIM (0.12-MM THK)	
	31	1	**4J-5351**	1	SEAL-O-RING	
	32	1	**4K-1388**	2	SEAL-O-RING	
Y	33	2	**4T-1860**	1	VALVE GP-SHUTTLE	547
	34	1	**4T-5073**	2	RING-BACKUP	
	35	1,2	**5K-0227**	2	SEAL-O-RING	
	36	1	**5M-2057**	2	SEAL-O-RING	
	37	1	**6E-1637**	3	SHIM (1-MM THK)	
	38	2	**7J-0204**	1	SEAL-O-RING	
	39	1	**7J-9933**	2	SEAL-O-RING	
	40	1	**7M-8485**	1	SEAL-O-RING	
	41	1	**8J-8462**	2	SHIM (0.254-MM THK)	
	42	2	**9J-8126**	1	PLUG-ORIFICE	
	43	2	**9X-2027**	2	WASHER (11X18X2-MM THK)	
M	44	1	**9X-6154**	2	BOLT-SOCKET HEAD (M8X1.25-THD)	

B-USE AS REQUIRED
M-METRIC PART
Y-SEPARATE ILLUSTRATION

235-0403 VALVE GP-CONTROL *(contd.)* i02435786

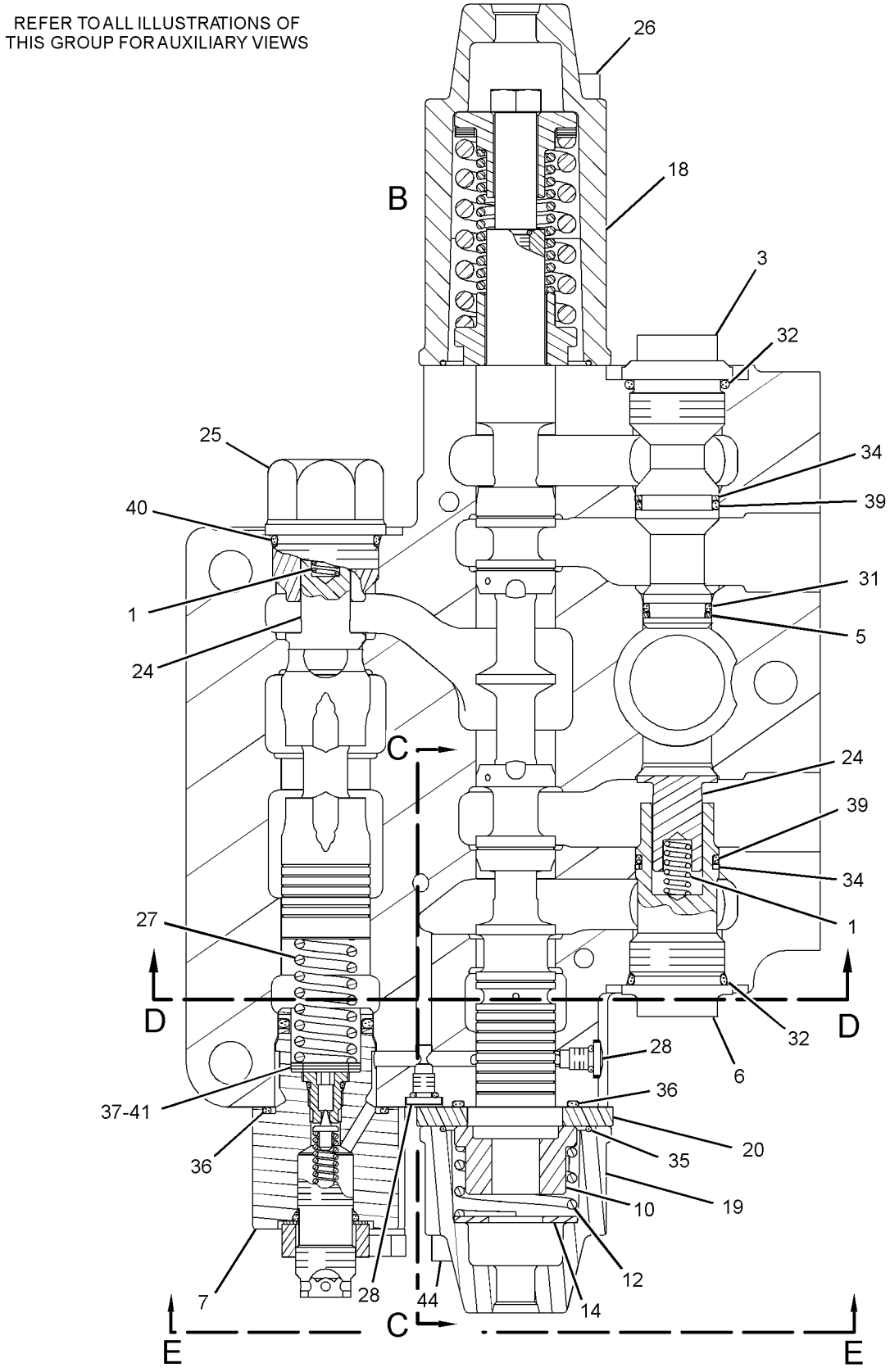

GRAPHIC #1 g01218394

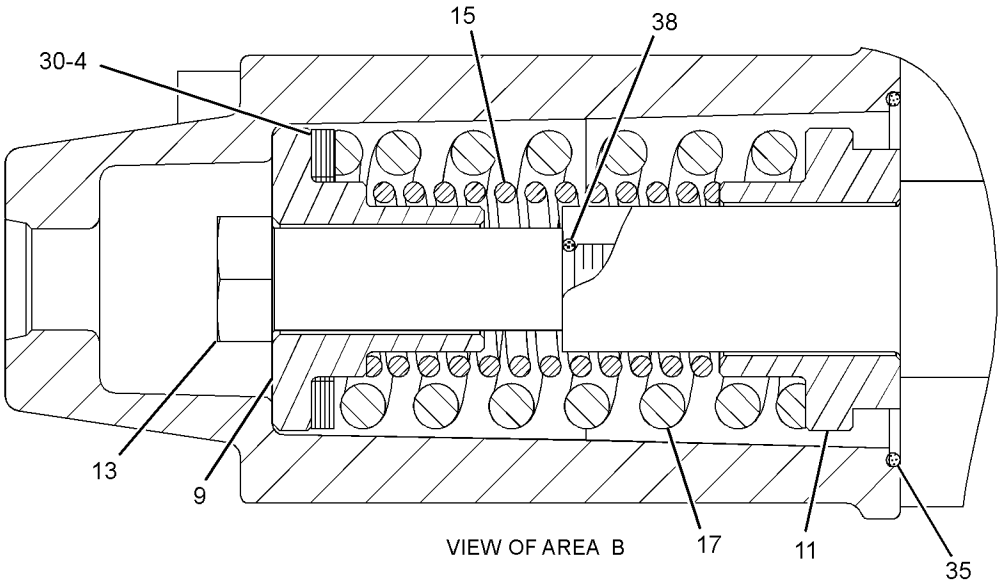

VIEW OF AREA B

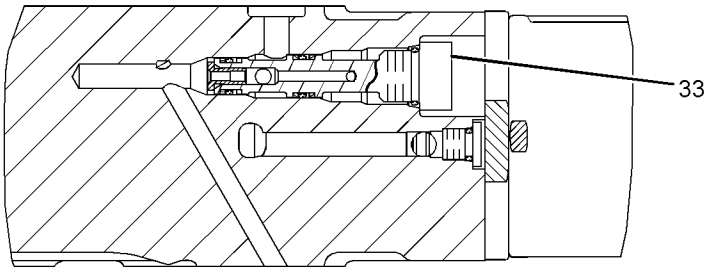

SECTION C-C

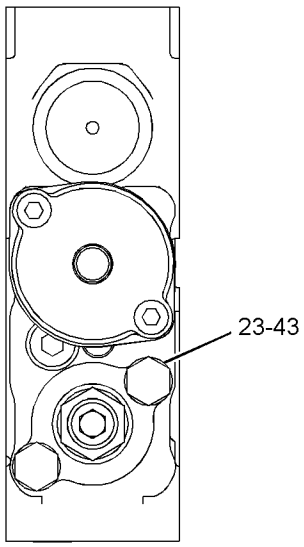

SECTION E-E

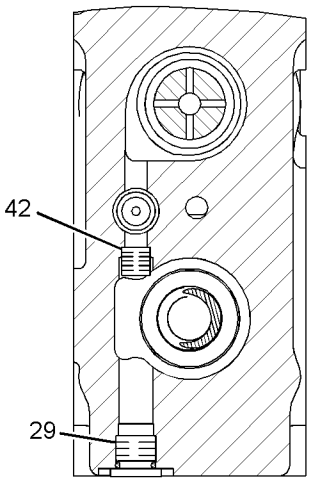

SECTION D-D

GRAPHIC #2 **<END>** g01209850

235-0404 VALVE GP-CONTROL—BULLDOZER TILT

S/N: JDL1-UP; GMT1-UP

PART OF 224-4936 VALVE GP-BANK 3, 224-4937, 239-6076 VALVE GP-BANK 4

ALSO AN ATTACHMENT

SMCS-5051 **i02436160**

NOTE	REF NO	GRAPHIC REF	PART NUMBER	QTY	PART NAME 1 2 3 4 5 6 (PRODUCT LEVEL)	SEE PAGE
	1	1	**123-9624**	1	SPRING	
	2	1	**2S-2596**	1	SPRING	
	4	1	**4T-1108**	2	PLUG	
B	5	1	**4T-4628**	6	SHIM (0.5-MM THK)	
	6	1	**4T-4631**	1	SPRING	
Y	7	1	**121-6649**	1	VALVE GP-RELIEF (PILOT OIL PRESSURE)	545
	9	1	**153-6976**	1	SPRING	
	10	1	**153-7067**	1	RETAINER	
	11	1	**153-7551**	1	RETAINER	
	12	1	**161-2684**	1	SCREW (3/8-24X2.48-IN)	
	14	1	**173-0511**	1	HOUSING	
	15	1	**173-0514**	1	COVER	
M	18	1	**085-8091**	2	BOLT (M10X1.5X55-MM)	
	19	1	**100-8010**	1	VALVE-CHECK	
	20	1	**100-8011**	1	PLUG	
M	21	1	**102-7365**	2	BOLT-SOCKET HEAD (M8X1.25X100-MM)	
	22	1	*173-3993*	2	PLUG AS	
					(EACH INCLUDES)	
		1	**9S-8001**	1	PLUG	
		1	**4J-7533**	1	SEAL-O-RING	
	23	1	*183-7263*	1	PLUG AS	
		1	**9S-8002**	1	PLUG	
		1	**3J-7354**	1	SEAL-O-RING	
B	24	1	**2J-2866**	2	SHIM (0.12-MM THK)	
	25	1	**4J-5351**	2	SEAL-O-RING	
	26	1	**4K-1388**	2	SEAL-O-RING	
Y	27	1	**4T-1860**	1	VALVE GP-SHUTTLE	547
	28	1	**4T-5072**	2	RING-BACKUP	
	29	1	**4T-5073**	2	RING-BACKUP	
	30	1	**5K-0227**	1	SEAL-O-RING	
	31	1	**5M-2057**	2	SEAL-O-RING	
M	32	1	**6V-5192**	2	BOLT-SOCKET HEAD (M8X1.25X30-MM)	
	33	1	**7J-0204**	1	SEAL-O-RING	
	34	1	**7J-9933**	2	SEAL-O-RING	
	35	1	**7M-8485**	1	SEAL-O-RING	
	36	1	**9J-8126**	1	PLUG-ORIFICE	
	37	1	**9X-2027**	2	WASHER (11X18X2-MM THK)	

B-USE AS REQUIRED
M-METRIC PART
Y-SEPARATE ILLUSTRATION

235-0404 VALVE GP-CONTROL *(contd.)* i02436160

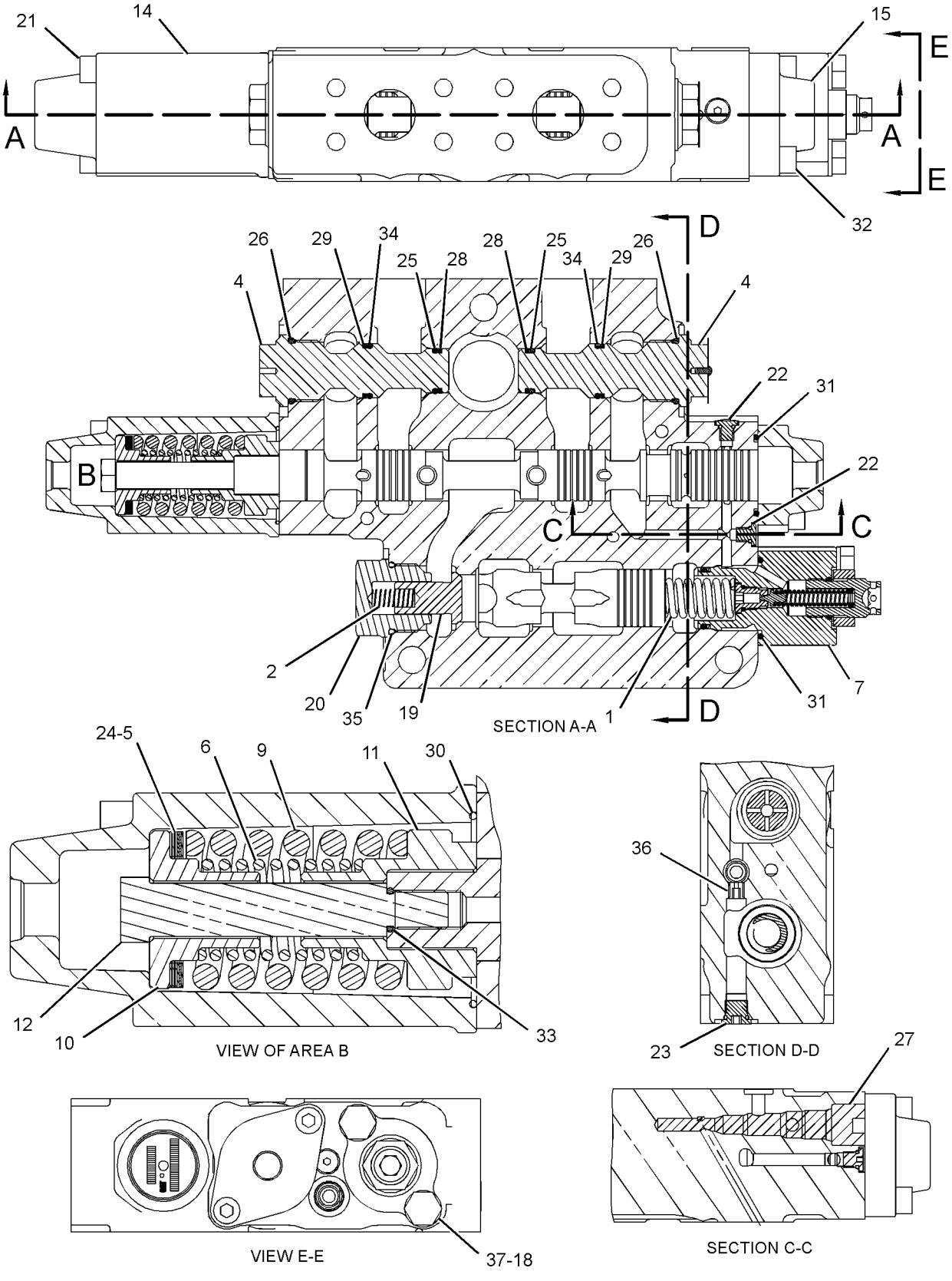

GRAPHIC #1 **<END>** g01218399

235-0405 VALVE GP-CONTROL—RIPPER LIFT

S/N: JDL1-UP; GMT1-UP
PART OF 224-4937 VALVE GP-BANK 4
AN ATTACHMENT

SMCS-5051 **i02455977**

NOTE	REF NO	GRAPHIC REF	PART NUMBER	QTY	PART NAME 1 2 3 4 5 6 (PRODUCT LEVEL)	SEE PAGE
	1	1	**2S-2596**	2	SPRING	
	3	1	**4T-1108**	1	PLUG	
B	4	2	**4T-4628**	5	SHIM (0.5-MM THK)	
	5	2	**4T-4631**	1	SPRING	
	6	1	**100-8012**	1	BODY	
Y	7	1	**121-6649**	1	VALVE GP-RELIEF (PILOT OIL PRESSURE)	545
	9	2	**153-6976**	1	SPRING	
	10	2	**153-7067**	1	RETAINER	
	11	2	**153-7551**	1	RETAINER	
	12	2	**161-2684**	1	SCREW (3/8-24X2.48-IN)	
	14	1	**173-0511**	1	HOUSING	
	15	1	**173-0514**	1	COVER	
M	18	2	**085-8091**	2	BOLT (M10X1.5X55-MM)	
	19	1	**100-8010**	2	VALVE-CHECK	
	20	1	**100-8011**	1	PLUG	
M	21	1	**102-7365**	2	BOLT-SOCKET HEAD (M8X1.25X100-MM)	
	22	1	**123-9624**	1	SPRING	
	23	1	*173-3993*	2	PLUG AS	
					(EACH INCLUDES)	
		1	**9S-8001**	1	PLUG	
		1	**4J-7533**	1	SEAL-O-RING	
	24	2	*183-7263*	1	PLUG AS	
		2	**9S-8002**	1	PLUG	
		2	**3J-7354**	1	SEAL-O-RING	
B	25	2	**2J-2866**	2	SHIM (0.12-MM THK)	
	26	1	**4J-5351**	1	SEAL-O-RING	
	27	1	**4K-1388**	2	SEAL-O-RING	
Y	28	2	**4T-1860**	1	VALVE GP-SHUTTLE	547
	29	1	**4T-5072**	1	RING-BACKUP	
	30	1	**4T-5073**	2	RING-BACKUP	
	31	2	**5K-0227**	1	SEAL-O-RING	
	32	1	**5M-2057**	2	SEAL-O-RING	
B	33	1	**6E-1637**	2	SHIM (1-MM THK)	
M	34	1	**6V-5192**	2	BOLT-SOCKET HEAD (M8X1.25X30-MM)	
	35	2	**7J-0204**	1	SEAL-O-RING	
	36	1	**7J-9933**	2	SEAL-O-RING	
	37	1	**7M-8485**	1	SEAL-O-RING	
	38	2	**9J-8126**	1	PLUG-ORIFICE	
	39	2	**9X-2027**	2	WASHER (11X18X2-MM THK)	

B-USE AS REQUIRED
M-METRIC PART
Y-SEPARATE ILLUSTRATION

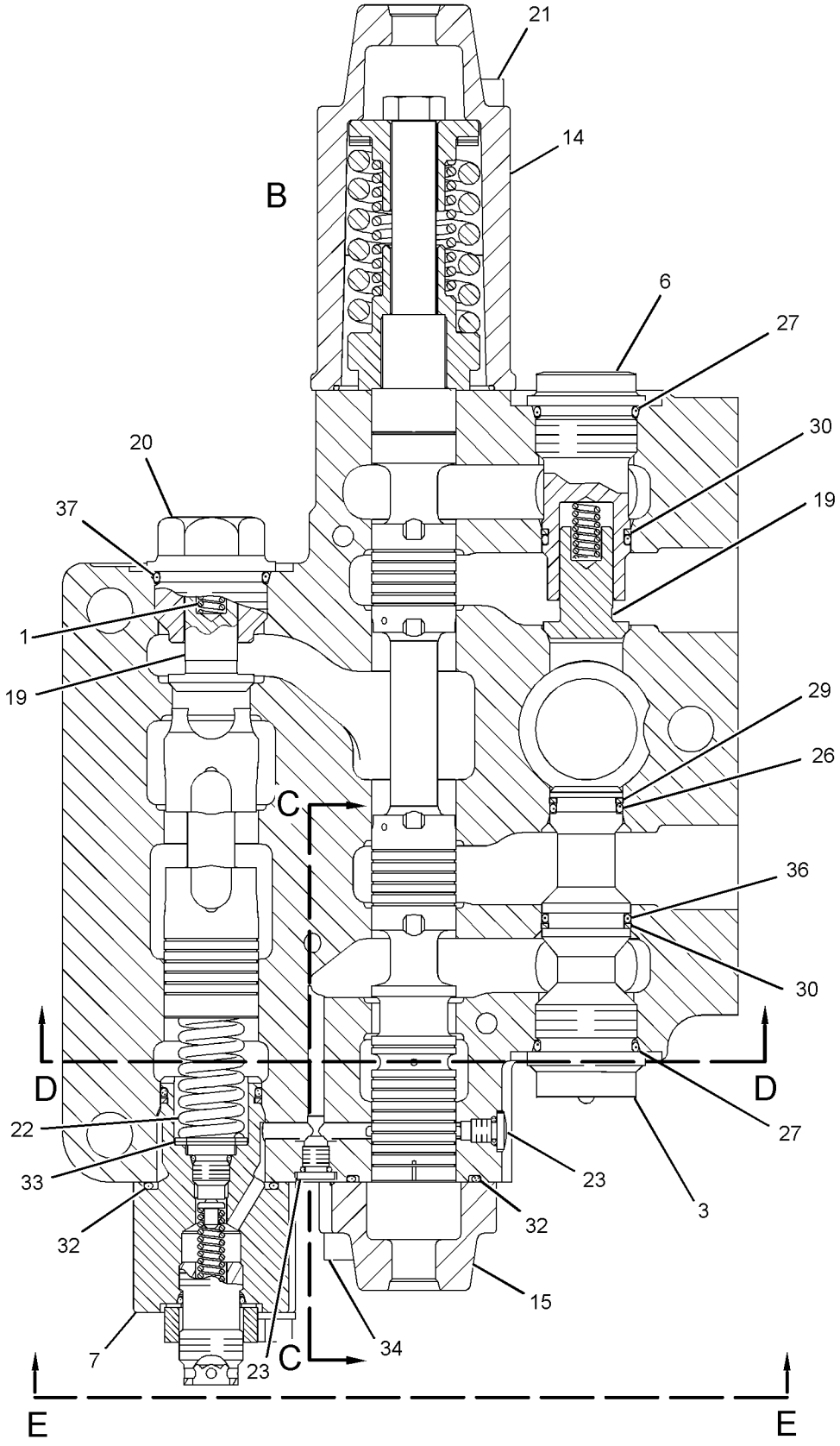

GRAPHIC #1

g01218408

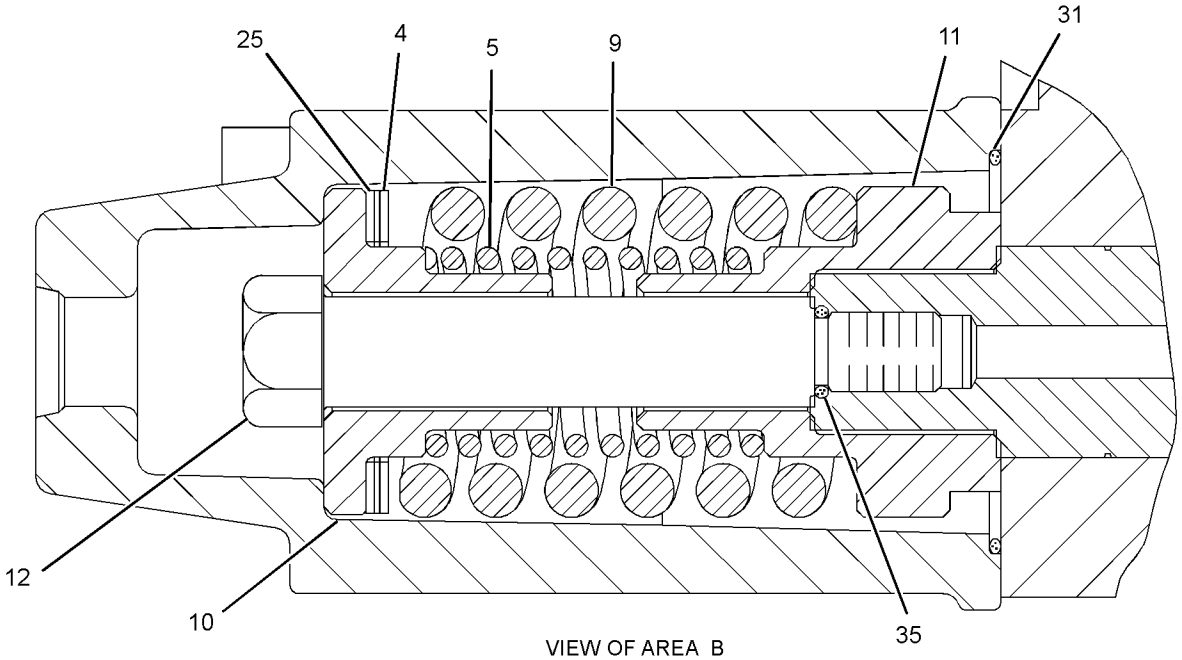

VIEW OF AREA B

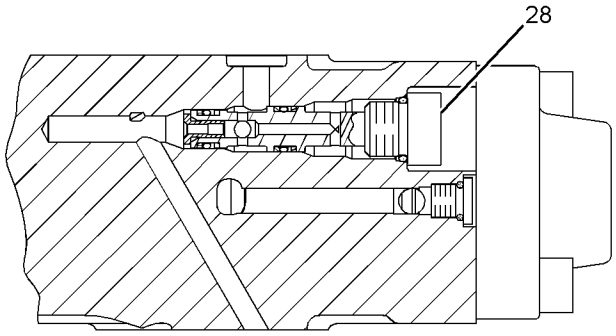

SECTION C-C

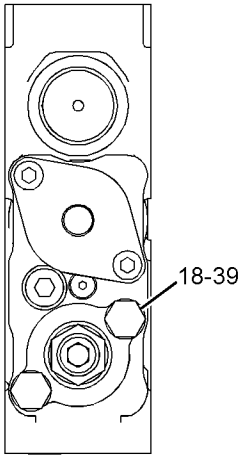

SECTION E-E

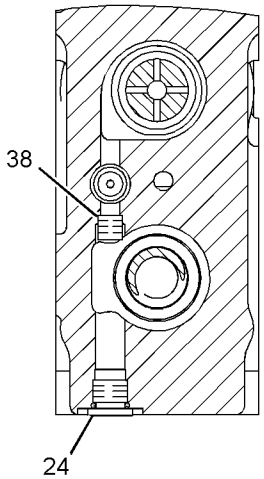

SECTION D-D

GRAPHIC #2 **<END>** g01212475

HYDRAULIC SYSTEM

239-6074 VALVE GP-CONTROL—WINCH

S/N: JDL1-UP; GMT1-UP
PART OF 239-6076 VALVE GP-BANK 4
AN ATTACHMENT

SMCS-5051 **i02454862**

NOTE	REF NO	GRAPHIC REF	PART NUMBER	QTY	PART NAME 1 2 3 4 5 6 (PRODUCT LEVEL)	SEE PAGE
	1	1	**2S-2596**	1	SPRING	
	2	1	*3J-3679*	1	PLUG AS	
		1	**1J-9671**	1	SEAL-O-RING	
		1	**9S-8003**	1	PLUG	
	4	1	**4B-4278**	3	WASHER (10.2X20.5X1.6-MM THK)	
	5	1	**4T-1108**	2	PLUG	
	6	1	**4T-1649**	1	HOUSING	
	7	1	**4T-1701**	1	SPRING	
	8	1	**4T-4511**	1	SLEEVE	
B	9	1	**4T-4628**	5	SHIM (0.5-MM THK)	
	10	1	**4T-4629**	1	SCREW	
	11	1	**4T-4631**	1	SPRING	
	12	1	**4T-4635**	1	RETAINER	
	13	1	**7N-4333**	1	PLUG-ORIFICE	
	14	1	**7Y-4224**	1	ORIFICE	
	16	1	**173-0511**	1	HOUSING	
	17	1	**173-0514**	1	COVER	
	21	1	**100-8010**	1	VALVE-CHECK	
	22	1	**100-8011**	1	PLUG	
M	23	1	**102-7365**	2	BOLT-SOCKET HEAD (M8X1.25X100-MM)	
	24	1	*173-3993*	2	PLUG AS	
					(EACH INCLUDES)	
		1	**4J-7533**	1	SEAL-O-RING	
		1	**9S-8001**	1	PLUG	
Y	25	1	**260-8590**	1	VALVE GP-SHUTTLE	548
B	26	1	**2J-2866**	2	SHIM (0.12-MM THK)	
	27	1	**4J-5351**	2	SEAL-O-RING	
	28	1	**4K-1388**	2	SEAL-O-RING	
	29	1	**4T-4630**	1	SPRING (39-MM OD)	
	30	1	**4T-4633**	1	RETAINER	
	31	1	**4T-5072**	2	RING-BACKUP	
	32	1	**4T-5073**	2	RING-BACKUP	
	33	1	**4T-5074**	1	RING-BACKUP	
	34	1	**5K-0227**	1	SEAL-O-RING	
	35	1	**5M-2057**	2	SEAL-O-RING	
B	36	1	**6E-1637**	2	SHIM (1-MM THK)	
M	37	1	**6V-5192**	2	BOLT-SOCKET HEAD (M8X1.25X30-MM)	
	38	1	**6V-5556**	1	SEAL-O-RING	
	39	1	**7J-0204**	1	SEAL-O-RING	
	40	1	**7J-9933**	2	SEAL-O-RING	
	41	1	**7M-8485**	1	SEAL-O-RING	
M	42	1	**8T-4185**	2	BOLT (M10X1.5X50-MM)	

B-USE AS REQUIRED
M-METRIC PART
Y-SEPARATE ILLUSTRATION

239-6074 VALVE GP-CONTROL *(contd.)* i02454862

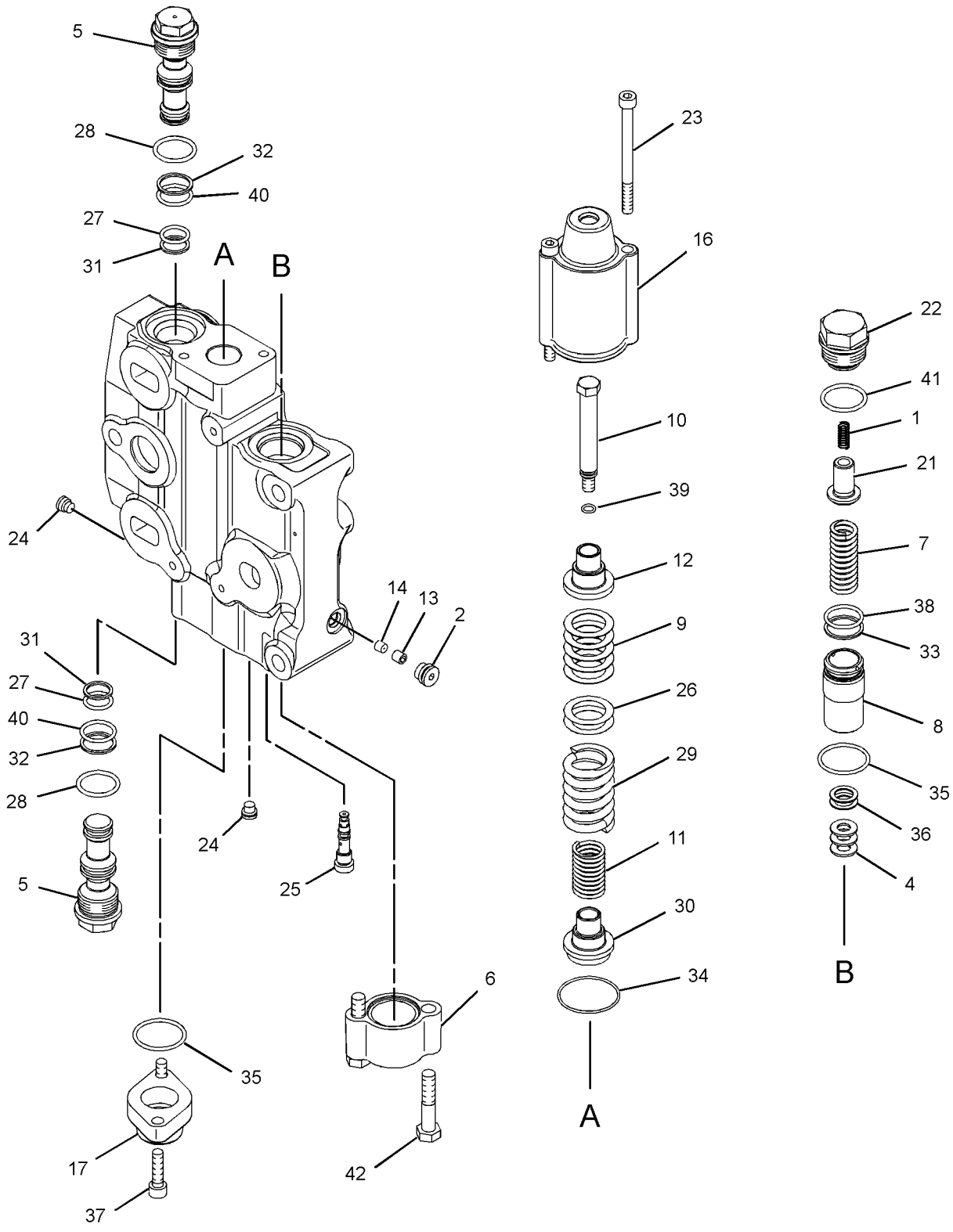

GRAPHIC #1 **<END>** g01217975

227-0832 VALVE GP-COUNTERBALANCE

S/N: JDL1-UP; GMT1-UP

PART OF 222-1191 VALVE & MTG GP-COUNTERBALANCE

SMCS-4340 **i02450285**

NOTE	REF NO	GRAPHIC REF	PART NUMBER	QTY	PART NAME 1 2 3 4 5 6 (PRODUCT LEVEL)	SEE PAGE
	1	1	**9T-8571**	2	COVER	
	2	1	**4J-0528**	2	SEAL-O-RING	
	3	1	**9T-5948**	2	RING	
	4	1	**9T-5949**	2	SPRING	
	5	1	**9T-5950**	4	RETAINER	
M	6	1	**8T-1447**	8	BOLT-SOCKET HEAD (M16X2X70-MM)	
	7	1	**9T-8980**	2	RING	
Y	8	1	**9T-5364**	2	VALVE GP-RELIEF (CROSSOVER)	544
	9	1	**5P-6719**	2	PLUG	
	10	1	**3J-1907**	2	SEAL-O-RING	
	11	1	**4J-0522**	2	SEAL-O-RING	

M-METRIC PART
Y-SEPARATE ILLUSTRATION

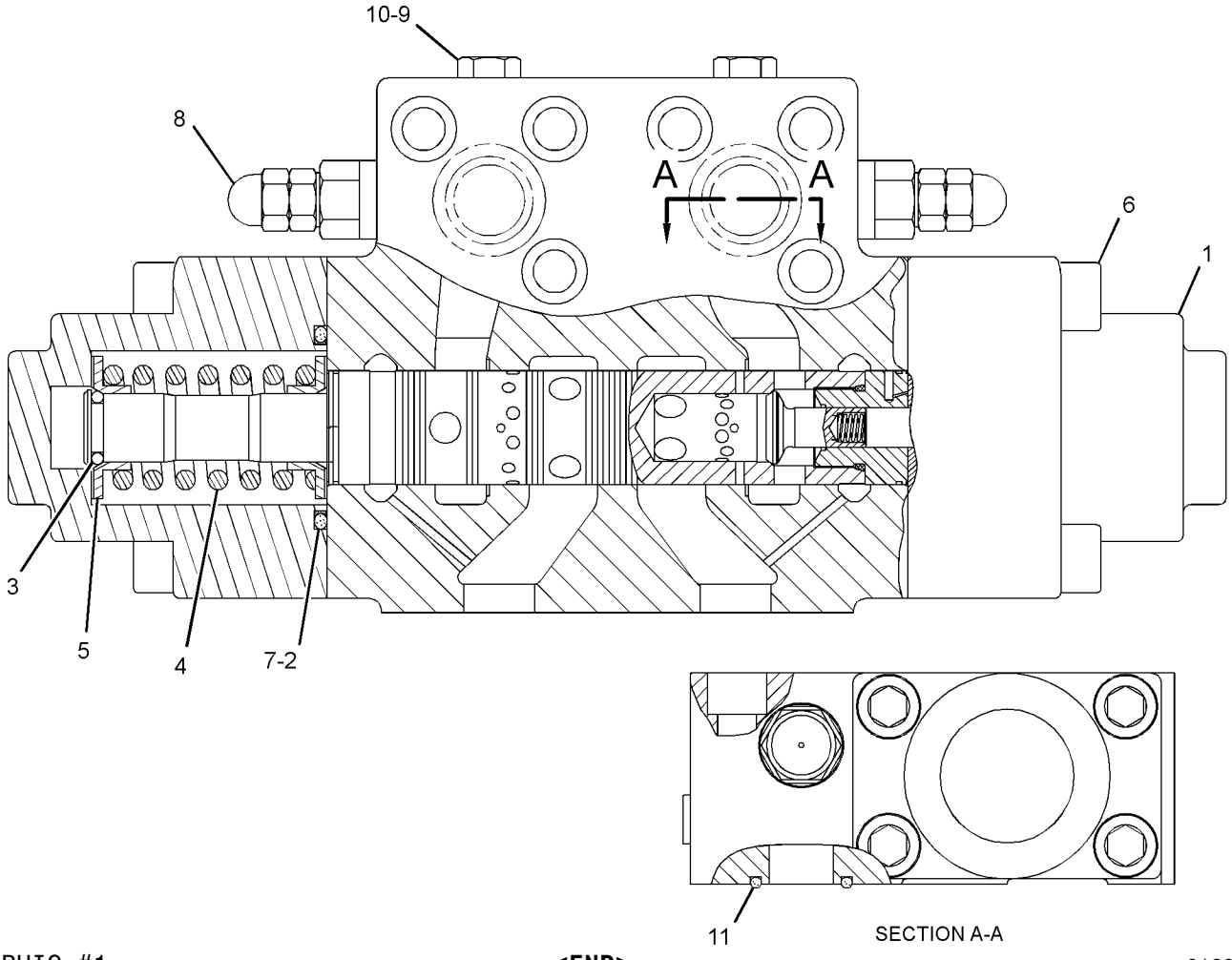

GRAPHIC #1 **<END>** g01208374

160-0766 VALVE GP-PILOT–WINCH

S/N: JDL1-UP; GMT1-UP
PART OF 239-5912 CONTROL AR-HYDRAULIC IMPLEMENT
AN ATTACHMENT

SMCS-5059 **i01915986**

NOTE	REF NO	GRAPHIC REF	PART NUMBER	QTY	PART NAME 1 2 3 4 5 6 (PRODUCT LEVEL)	SEE PAGE
E	1	1	**201-3304**		CONDUIT (5CM)	
	2	1	**141-4852**	1	BOOT	
	3	1	**145-2334**	1	ADAPTER	
	4	1	**213-6658**	1	PLATE AS	
	5	1	**163-5512**	2	GROMMET	
	6	1	**164-9657**	1	CONTROL GP-HANDLE (WINCH)	
		1	**8T-8730**	2	SOCKET-CONNECTOR	
		1	**155-2261**	2	WEDGE-PLUG LOCK (2-PIN)	
		1	**155-2270**	2	KIT-CONNECTING PLUG (2-PIN)	
					(EACH INCLUDES PLUG AS, WEDGE & INTERFACE SEAL)	
	7	1	**180-6152**	1	RETAINER	
	8	1	**188-2892**	1	LEVER AS-GATE	
M	8A	1	**5C-2890**	4	NUT (M6X1-THD)	
	8B	1	**146-6315**	4	PIN-ADJUSTMENT	
	8C	1	**146-6317**	1	RETAINER	
	8D	1	**159-3781**	1	SPRING	
	9	1	**194-5031**	1	PLUNGER AS	
	9A	1	**3K-0360**	1	SEAL-O-RING	
	9B	1	**4K-2039**	1	SEAL-O-RING	
	9C	1	**6M-5062**	1	SEAL-O-RING	
	10	1	**9S-8002**	5	PLUG	
	11	1	**9S-8004**	4	PLUG	
	12	1	**136-9297**	1	PLATE	
	13	1	**136-9298**	1	RETAINER	
	14	1	**137-9755**	1	COIL AS-DETENT (24 VDC)	
BD		1	**6V-2689**		TUBE-HEAT SHRINK	
		1	**186-3735**	2	PIN-CONNECTOR (16-GA TO 18-GA)	
	15	1	**149-5470**	1	PLATE	
M	16	1	**150-1293**	2	SCREW-BUTTON HEAD (M4X0.7X12-MM)	
M	17	1	**191-8921**	4	BOLT-SOCKET HEAD (M6X1X25-MM)	
	18	1	**102-8802**	2	KIT-RECEPTACLE (2-PIN)	
					(EACH INCLUDES RECEPTACLE AS & WEDGE)	
	19	1	**3E-3365**	1	WEDGE-RECEPTACLE LOCK (2-PIN)	
	20	1	**3J-1907**	4	SEAL-O-RING	
	21	1	**3J-7354**	5	SEAL-O-RING	
	22	1	**8L-2786**	1	SEAL-O-RING	
Y	23	1	**194-5033**	1	VALVE GP-PILOT CARTRIDGE (WINCH-FREE SPOOL)	536
Y	24	1	**194-5033**	1	VALVE GP-PILOT CARTRIDGE (WINCH SPOOL-OUT)	536
Y	25	1	**194-5033**	1	VALVE GP-PILOT CARTRIDGE (WINCH SPOOL-IN)	536

B-USE AS REQUIRED
D-ORDER BY THE METER
E-ORDER BY THE CENTIMETER
M-METRIC PART
Y-SEPARATE ILLUSTRATION

160-0766 VALVE GP-PILOT *(contd.)* i01915986

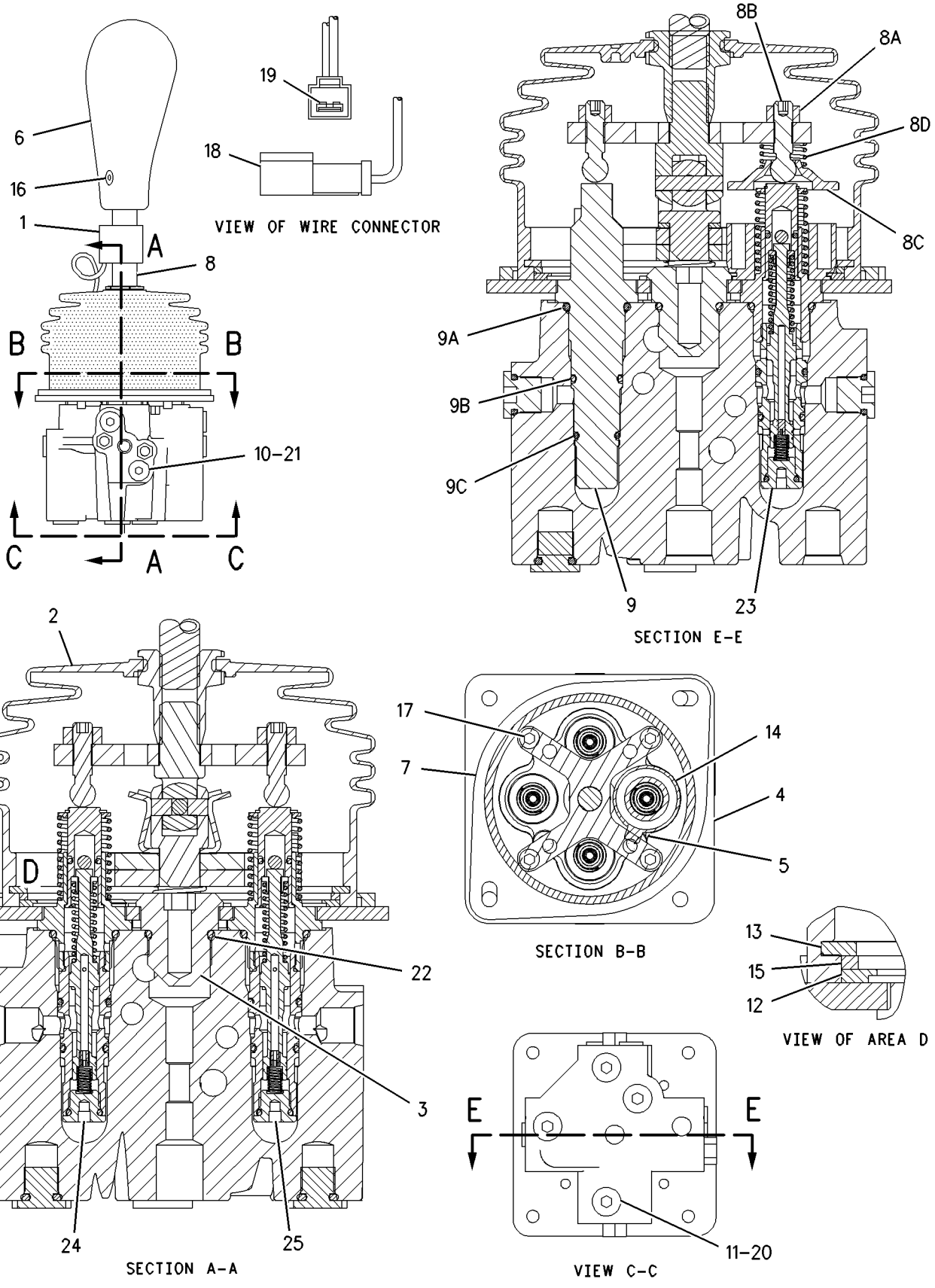

GRAPHIC #1 **<END>** g00936315

HYDRAULIC SYSTEM

167-1177 VALVE GP-PILOT–RIPPER

S/N: JDL1-UP; GMT1-UP
PART OF 226-9130 CONTROL AR-HYDRAULIC IMPLEMENT
AN ATTACHMENT

SMCS-5059 **i01851605**

NOTE	REF NO	GRAPHIC REF	PART NUMBER	QTY	PART NAME 1 2 3 4 5 6 (PRODUCT LEVEL)	SEE PAGE
	1	1	**9S-8004**	2	PLUG	
	2	1	**141-4852**	1	BOOT	
	3	1	**145-2334**	1	ADAPTER	
	4	1	**146-8477**	1	BRACKET	
	5	1	**146-8981**	1	PIN	
	6	1	**9S-8002**	6	PLUG	
Y	7	1	**194-5033**	1	VALVE GP-PILOT CARTRIDGE (RIPPER LOWER)	536
	8	1	**163-5512**	2	GROMMET	
	9	1	**213-6659**	1	PLATE AS	
M	10	1	**191-8920**	4	BOLT-SOCKET HEAD (M6X1X12-MM)	
	11	1	**033-9139**	2	RING-RETAINING	
M	12	1	**105-3481**	1	BOLT-SOCKET HEAD (M8X1.25X20-MM)	
	13	1	**136-9297**	1	PLATE	
	14	1	**136-9298**	1	RETAINER	
	15	1	**149-5470**	1	PLATE	
	16	1	**3J-1907**	2	SEAL-O-RING	
	17	1	**3J-7354**	6	SEAL-O-RING	
	18	1	**7W-2632**	1	WASHER (8.5X16.8X1.6-MM THK)	
	19	1	**8L-2786**	1	SEAL-O-RING	
	20	1	**201-9127**	1	LEVER AS	
	20A	1	**139-4189**	1	PLATE	
	20B	1	**199-6609**	1	SPACER	
	20C	1	**146-8479**	1	SWIVEL	
M	20D	1	**178-7877**	2	SETSCREW (M6X1X25-MM)	
M	20E	1	**5C-2890**	2	NUT (M6X1-THD)	
Y	21	1	**194-5033**	1	VALVE GP-PILOT CARTRIDGE (RIPPER LIFT)	536
	22	1	**180-6152**	1	RETAINER	

M-METRIC PART
Y-SEPARATE ILLUSTRATION

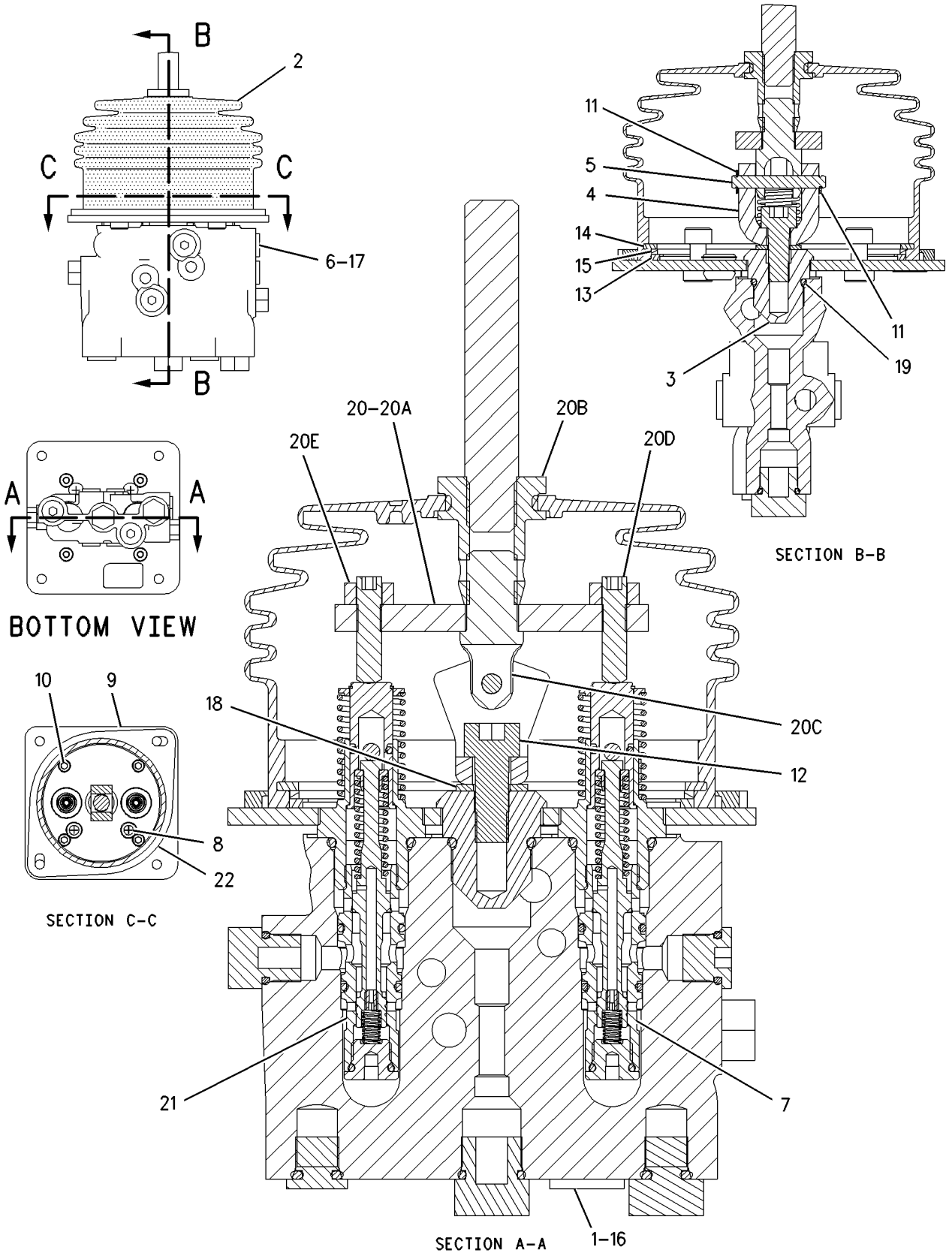

GRAPHIC #1 **<END>** g00907176

200-0189 VALVE GP-PILOT—BULLDOZER CONTROL

S/N: JDL1-UP; GMT1-UP

PART OF 222-1150 CONTROL GP-PILOT OPERATED HYD

SMCS-5059 **i01851606**

NOTE	REF NO	GRAPHIC REF	PART NUMBER	QTY	PART NAME 1 2 3 4 5 6 (PRODUCT LEVEL)	SEE PAGE
Z	1	1		1	BODY	
	2	1	**141-4852**	1	BOOT	
	3	1	**145-2334**	1	ADAPTER	
	4	1	**163-5512**	2	GROMMET	
	5	1	**213-6657**	1	PLATE AS	
	6	1	**180-6152**	1	RETAINER	
Y	7	1	**194-5032**	1	VALVE GP-PILOT CARTRIDGE (DOZER RAISE)	535
Y	8	1	**194-5033**	1	VALVE GP-PILOT CARTRIDGE (DOZER TILT LEFT)	536
	9	1	**196-5515**	1	LEVER AS	
	9A	1	**146-6315**	3	PIN-ADJUSTMENT	
	9B	1	**199-7834**	1	DETENT AS	
		1	**8S-7499**	2	PIN-SPRING	
		1	**202-0599**	1	SPRING	
	9C	1	**146-6317**	1	RETAINER	
	9D	1	**159-3781**	1	SPRING	
M	9E	1	**5C-2890**	3	NUT (M6X1-THD)	
M	9F	1	**191-8920**	2	BOLT-SOCKET HEAD (M6X1X12-MM)	
	10	1	**206-2800**	1	PLATE-DETENT	
	11	1	**9S-8004**	3	PLUG	
	12	1	**200-5003**	8	SHIM (0.25-MM THK)	
	13	1	**136-9297**	1	PLATE	
	14	1	**136-9298**	1	RETAINER	
	15	1	**137-9755**	1	COIL AS-DETENT (24 VDC)	
BD		1	**6V-2689**		TUBE-HEAT SHRINK	
		1	**8T-8729**	2	PIN-CONNECTOR	
	16	1	**149-5470**	1	PLATE	
M	17	1	**191-8921**	4	BOLT-SOCKET HEAD (M6X1X25-MM)	
	18	1	**102-8802**	1	KIT-RECEPTACLE (2-PIN)	
					(INCLUDES RECEPTACLE AS & WEDGE)	
	19	1	**3E-3365**	1	WEDGE-RECEPTACLE LOCK (2-PIN)	
	20	1	**3J-1907**	3	SEAL-O-RING	
	21	1	**3J-7354**	5	SEAL-O-RING	
	22	1	**8L-2786**	1	SEAL-O-RING	
	23	1	**9S-8002**	5	PLUG	
Y	24	1	**194-5032**	1	VALVE GP-PILOT CARTRIDGE (DOZER LOWER)	535
Y	25	1	**194-5033**	1	VALVE GP-PILOT CARTRIDGE (DOZER TILT RIGHT)	536

B-USE AS REQUIRED
D-ORDER BY THE METER
M-METRIC PART
Y-SEPARATE ILLUSTRATION
Z-NOT SERVICED SEPARATELY

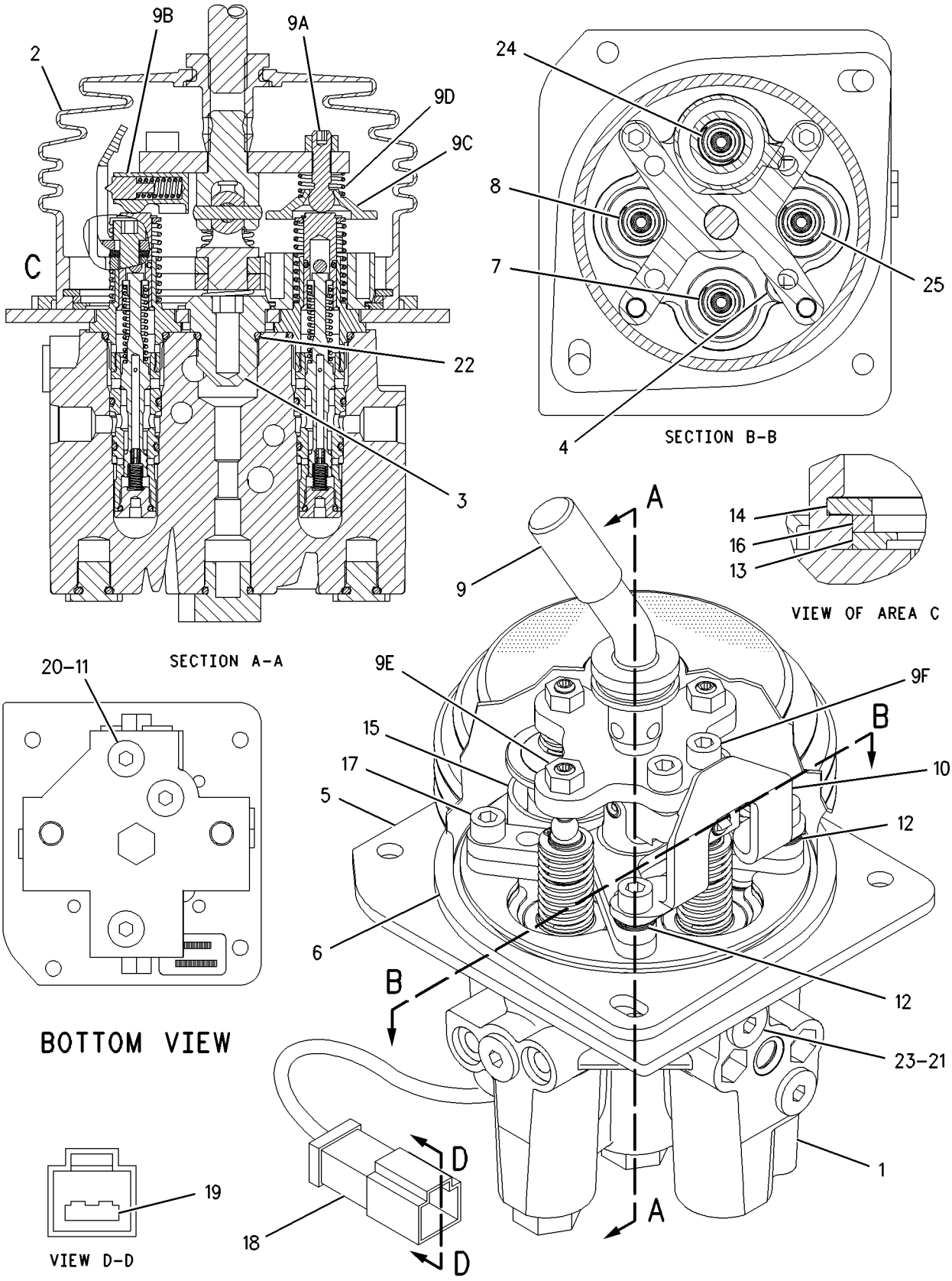

GRAPHIC #1 **<END>** g00767886

194-5032 VALVE GP-PILOT CARTRIDGE–
BULLDOZER LIFT, LOWER
S/N: JDL1-UP; GMT1-UP
PART OF 200-0189 VALVE GP-PILOT

SMCS-5059 **i02439260**

NOTE	REF NO	GRAPHIC REF	PART NUMBER	QTY	PART NAME 1 2 3 4 5 6 (PRODUCT LEVEL)	SEE PAGE
	1	1	**3K-0360**	1	SEAL-O-RING	
	2	1	**4K-2039**	1	SEAL-O-RING	
	3	1	**6M-5062**	1	SEAL-O-RING	

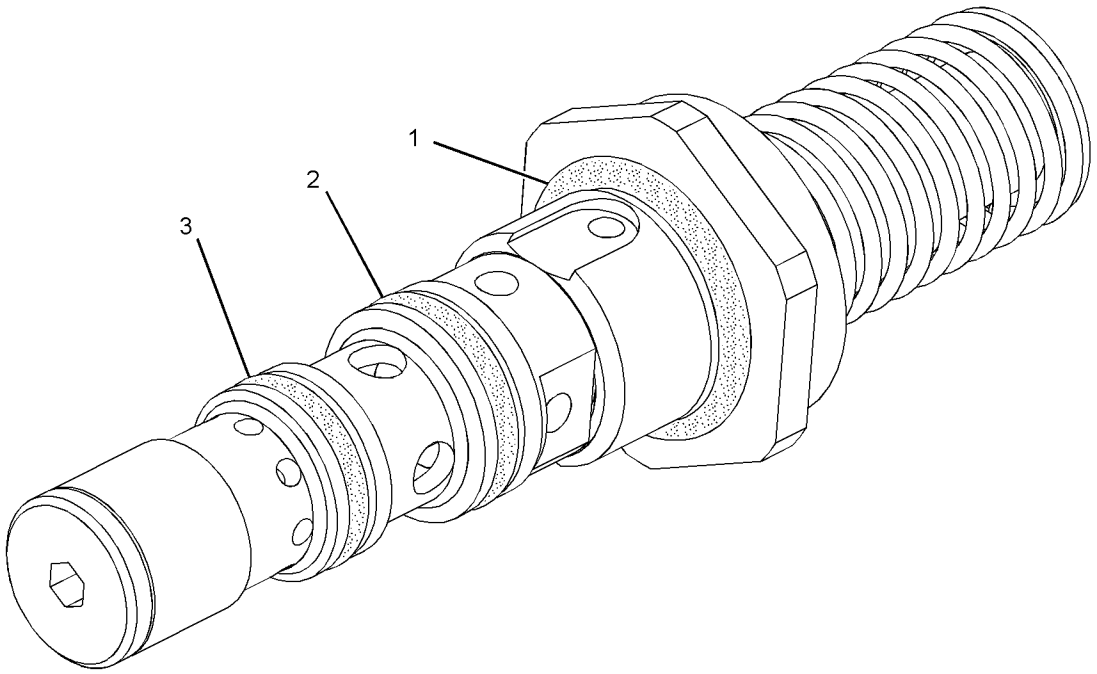

GRAPHIC #1 **<END>** g01218398

HYDRAULIC SYSTEM

194-5033 VALVE GP-PILOT CARTRIDGE–IMPLEMENT

S/N: JDL1-UP; GMT1-UP
PART OF 160-0766, 167-1177, 200-0189 VALVE GP-PILOT
ALSO AN ATTACHMENT

SMCS-5059 **i02434809**

NOTE	REF NO	GRAPHIC REF	PART NUMBER	QTY	PART NAME 1 2 3 4 5 6 (PRODUCT LEVEL)	SEE PAGE
	1	1	**3K-0360**	1	SEAL-O-RING	
	2	1	**4K-2039**	1	SEAL-O-RING	
	3	1	**6M-5062**	1	SEAL-O-RING	

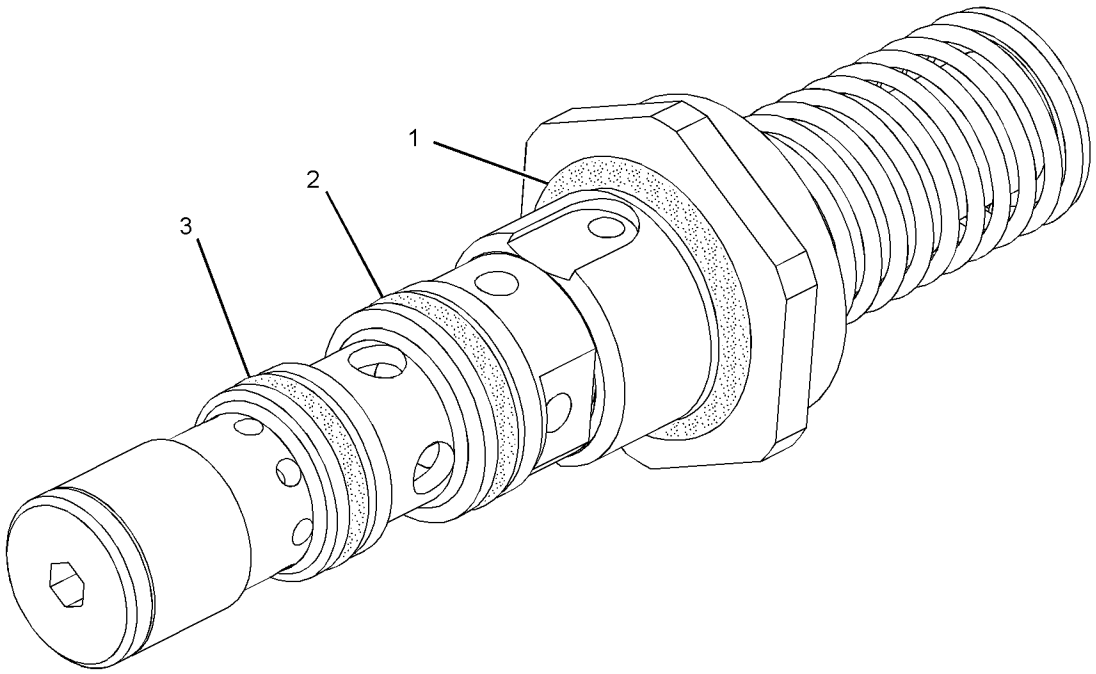

GRAPHIC #1 **<END>** g01218398

170-3357 VALVE GP-PRESSURE REDUCING–
IMPLEMENT PILOT OIL
S/N: JDL1-UP; GMT1-UP
PART OF 226-4751 MANIFOLD GP-CONTROL

SMCS-5117 **i01452696**

NOTE	REF NO	GRAPHIC REF	PART NUMBER	QTY	PART NAME 1 2 3 4 5 6 (PRODUCT LEVEL)	SEE PAGE
	1	1	**3K-0360**	1	SEAL-O-RING	
	2	1	**161-6149**	1	SEAL-O-RING	
	3	1	**095-1750**	1	SEAL-O-RING	
	4	1	**161-6161**	2	RING-BACKUP	
	5	1	**187-0541**	2	RING-BACKUP	

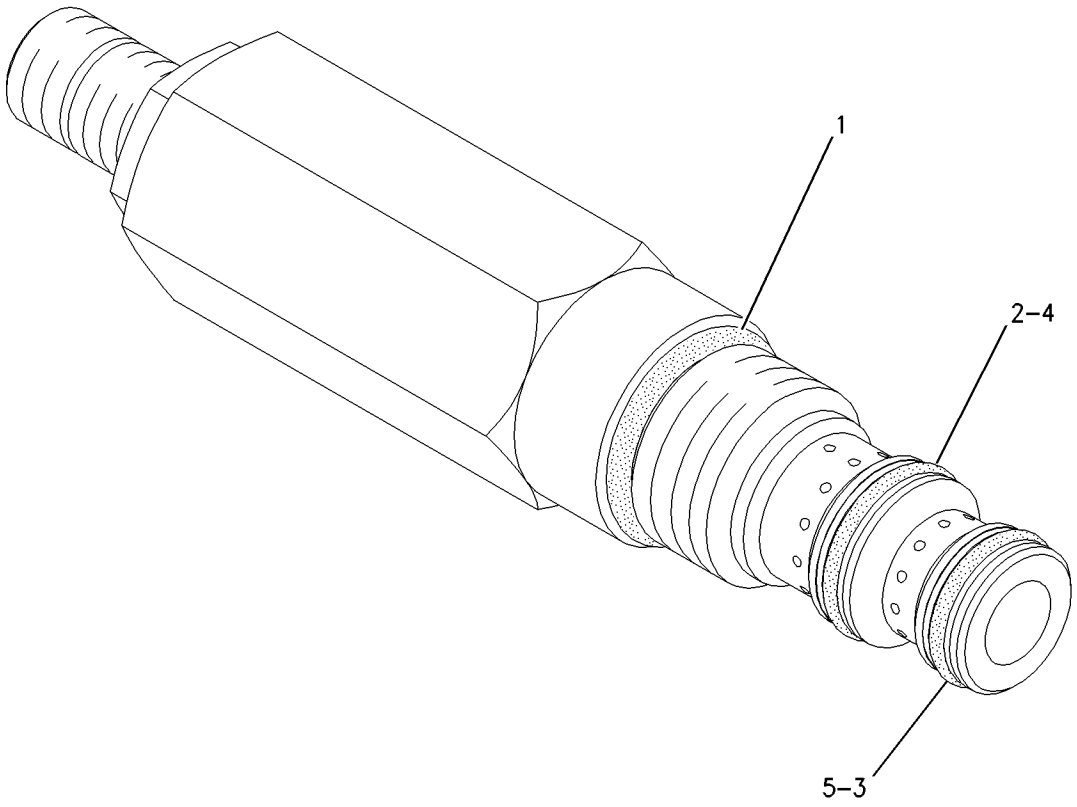

GRAPHIC #1 **<END>** g00777733

HYDRAULIC SYSTEM

227-3021 VALVE GP-PUMP CONTROL–

PRESSURE, FLOW COMPENSATOR

S/N: JDL1-UP; GMT1-UP

PART OF 227-0830 PUMP GP-PISTON

SMCS-5455 **i02460105**

NOTE	REF NO	GRAPHIC REF	PART NUMBER	QTY	PART NAME 1 2 3 4 5 6 (PRODUCT LEVEL)	SEE PAGE
	1	1	**227-3023**	1	HOUSING AS	
M	2	1	**096-3218**	1	SETSCREW-SOCKET (M4X0.4X6-MM)	
	3	1	**195-6944**	2	RETAINER	
	4	1	**9T-4186**	1	SPRING-CONTROL	
	5	1	**195-6947**	1	SPRING	
	6	1	**195-6945**	1	RETAINER	
	7	1	**095-1574**	2	SEAL-O-RING	
	8	1	**195-6948**	2	WASHER (10X13X1-MM THK)	
	9	1	**195-6949**	2	ADJUSTER	
	10	1	**6V-6580**	1	SEAL-O-RING	
	11	1	**8T-9529**	1	SEAL-O-RING	
	12	1	**099-8111**	2	PIN-SPRING	
	13	1	**195-6950**	1	COVER	
M	14	1	**6C-9048**	2	NUT (M8X1-THD)	
M	15	1	**3T-0849**	4	BOLT-SOCKET HEAD (M6X1X25-MM)	
	16	1	**9T-4143**	1	PISTON-PRESS REGULATOR	
	17	1	**9T-6322**	2	PLUG AS	
					(EACH INCLUDES)	
		1	**8C-3082**	1	SEAL-O-RING	
	18	1	**9S-4191**	2	PLUG-O RING	
	19	1	**3J-1907**	2	SEAL-O-RING	
	20	1	**8U-3875**	3	PLUG	
	21	1	**3E-4297**	3	SEAL-O-RING	
	22	1	**9T-5039**	1	PLUG	

M-METRIC PART

227-3021 VALVE GP-PUMP CONTROL *(contd.)* i02460105

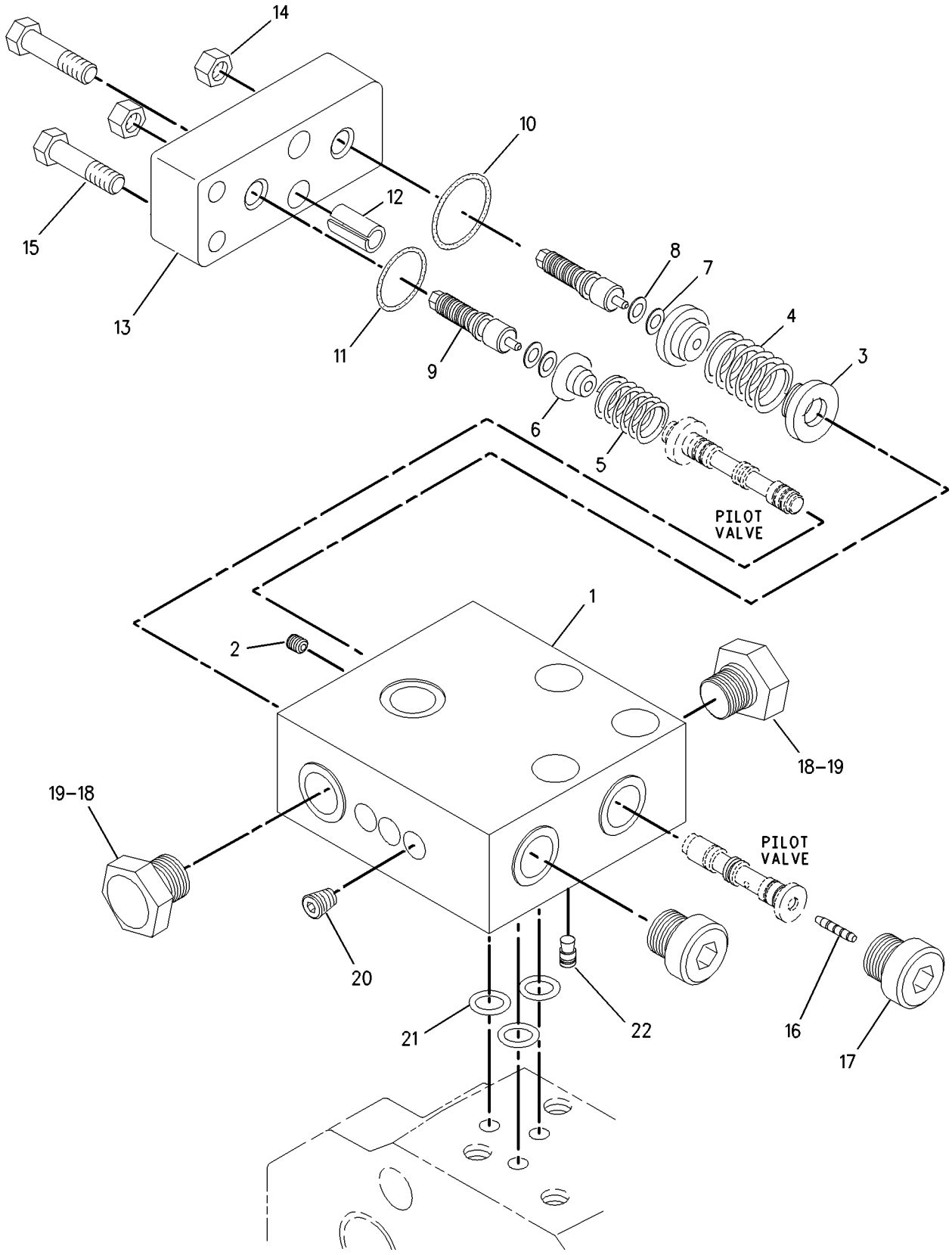

GRAPHIC #1 **<END>** g00923819

222-1160 VALVE GP-QUICK-DROP

S/N: JDL1-UP; GMT1-UP

PART OF 218-4981 HYDRAULIC AR-2 VALVE

SMCS-5110 **i02436165**

NOTE	REF NO	GRAPHIC REF	PART NUMBER	QTY	PART NAME 1 2 3 4 5 6 (PRODUCT LEVEL)	SEE PAGE
	1	1	**8E-8434**	1	GUARD	
Y	2	1	**227-0831**	1	VALVE GP-QUICK-DROP	541
	3	1	**5P-1075**	6	WASHER-HARD (10.2X22.5X3-MM THK)	
M	4	1	**8T-4186**	3	BOLT (M10X1.5X40-MM)	
M	5	1	**8T-4191**	3	BOLT (M10X1.5X16-MM)	

M-METRIC PART
Y-SEPARATE ILLUSTRATION

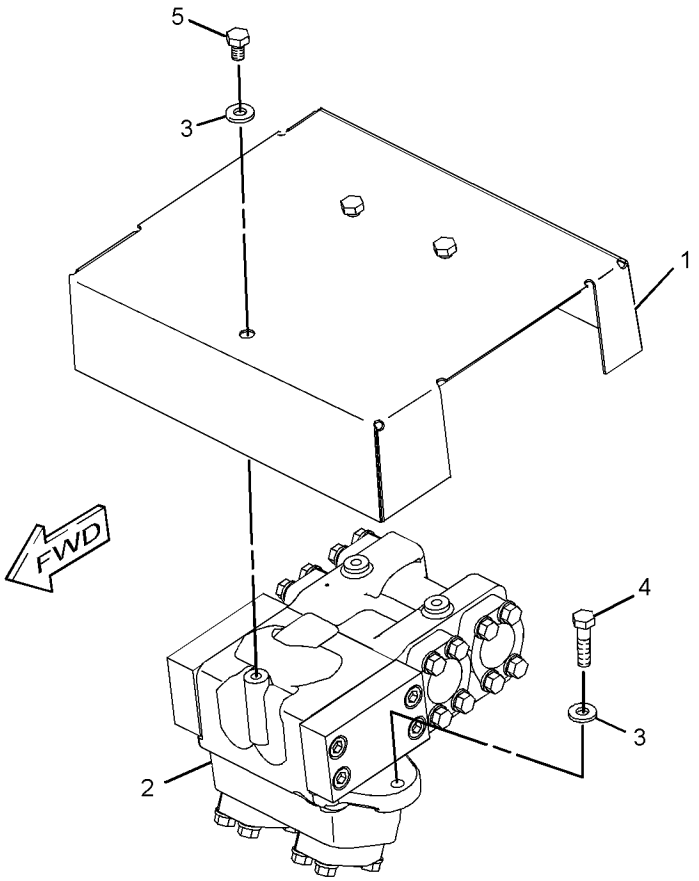

(MOUNTS TO TOP OF RADIATOR GUARD)

GRAPHIC #1 **<END>** g01206278

HYDRAULIC SYSTEM

227-0831 VALVE GP-QUICK-DROP

S/N: JDL1-UP; GMT1-UP

PART OF 222-1160 VALVE GP-QUICK-DROP

SMCS-5110 **i02436166**

NOTE	REF NO	GRAPHIC REF	PART NUMBER	QTY	PART NAME 1 2 3 4 5 6 (PRODUCT LEVEL)	SEE PAGE
	1	1	*3J-3679*	2	PLUG AS	
					(EACH INCLUDES)	
		1	**9S-8003**	1	PLUG (HEX)	
		1	**1J-9671**	1	SEAL-O-RING	
B	3	1	**4T-4659**	3	SHIM (0.8-MM THK)	
	4	1	**6E-4907**	1	STOP	
	5	1	**9T-9836**	1	SLEEVE-ORIFICE	
B	6	1	**083-7784**	2	SHIM (2-MM THK)	
	7	1	**100-6211**	1	PISTON	
	8	1	**108-1847**	1	SPRING	
Z	9	1		1	STEM AS	
	10	1	**234-3043**	1	COVER	
Z	11	1		1	BODY	
	12	1	**234-3451**	1	COVER	
	14	1	**164-5619**	1	PLUG AS	
		1	**9S-8006**	1	PLUG	
		1	**2M-9780**	1	SEAL-O-RING	
	15	1	**1P-3706**	2	SEAL-RECTANGULAR	
	16	1	**3L-3813**	1	PIN	
B	17	1	**4M-6980**	3	SHIM (0.25-MM THK)	
	18	1	**6K-8162**	1	RING-RETAINING	
M	19	1	**6V-8200**	8	BOLT-SOCKET HEAD (M12X1.75X35-MM)	
	20	1	**8C-3206**	12	FLANGE-HALF	
	21	1	**8T-4121**	24	WASHER-HARD (11X21X2.5-MM THK)	
M	22	1	**8T-4196**	24	BOLT (M10X1.5X35-MM)	

B-USE AS REQUIRED
M-METRIC PART
Z-NOT SERVICED SEPARATELY

227-0831 VALVE GP-QUICK-DROP *(contd.)* i02436166

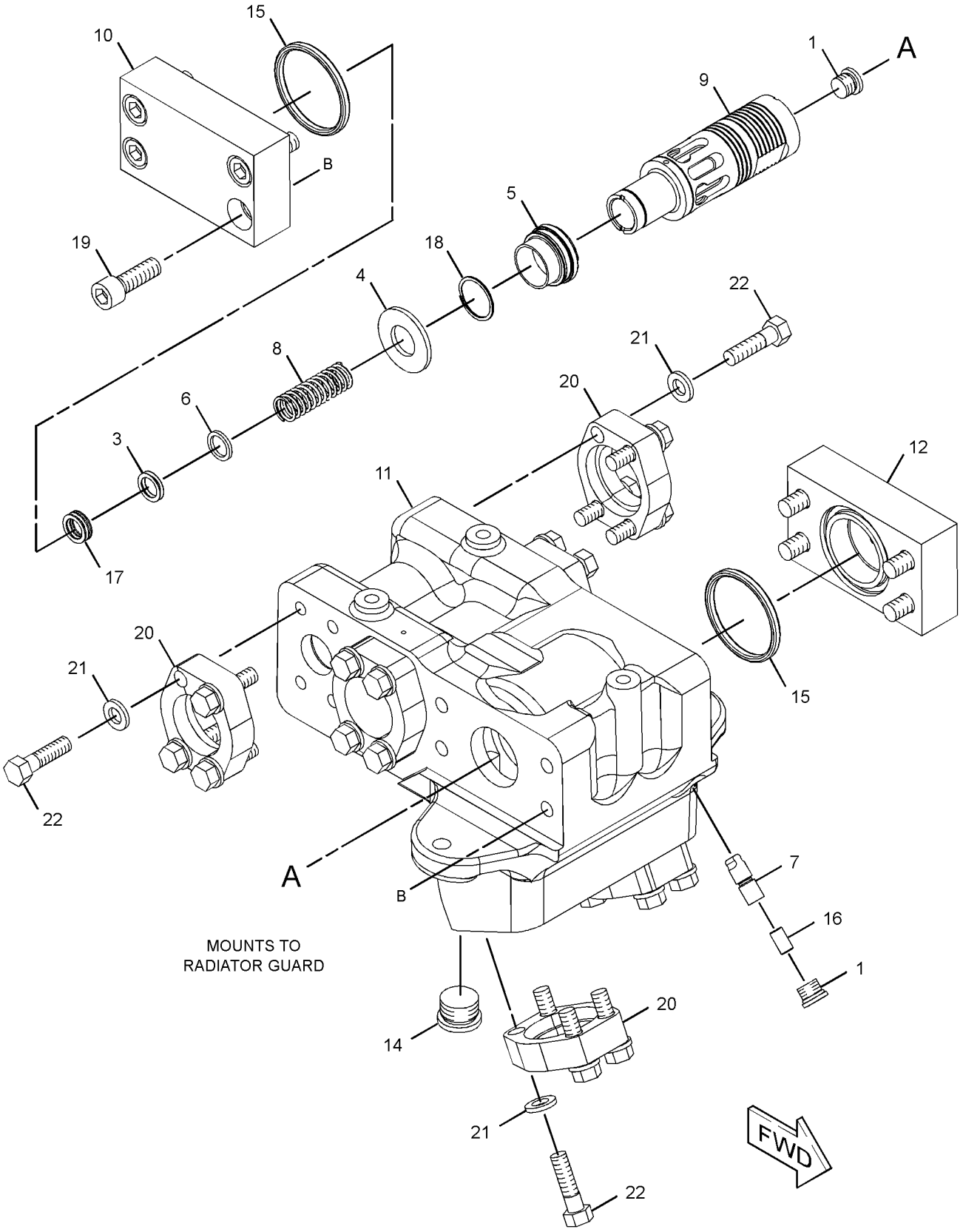

GRAPHIC #1 **<END>** g01210614

9T-3541 VALVE GP-RELIEF–MAIN

S/N: JDL1-UP; GMT1-UP
DIRECT OPERATED
PART OF 235-0401 MANIFOLD GP-VALVE
ALSO AN ATTACHMENT

SMCS-5069, 5117 **i01854530**

NOTE	REF NO	GRAPHIC REF	PART NUMBER	QTY	PART NAME 1 2 3 4 5 6 (PRODUCT LEVEL)	SEE PAGE
	1	1	**3K-0360**	2	SEAL-O-RING	
	2	1	**4T-4942**	1	SPRING	
	3	1	**7J-9933**	1	SEAL-O-RING	
	4	1	**4T-7571**	1	PLATE	
	5	1	**6J-6439**	1	VALVE-POPPET	
	6	1	**6E-1835**	1	RETAINER AS	
	7	1	**9X-6395**	1	NUT (3/4-16-THD)	

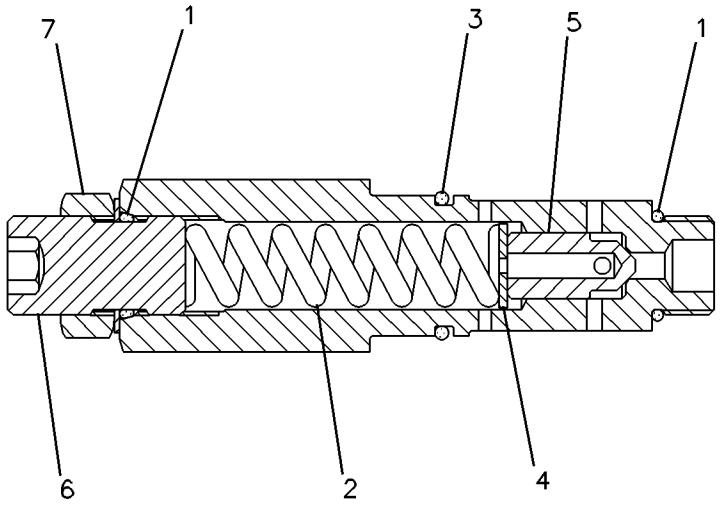

GRAPHIC #1 **<END>** g00082770

9T-5364 VALVE GP-RELIEF–CROSSOVER

S/N: JDL1-UP; GMT1-UP

PART OF 227-0832 VALVE GP-COUNTERBALANCE

SMCS-5069, 5117 **i01854533**

NOTE	REF NO	GRAPHIC REF	PART NUMBER	QTY	PART NAME 1 2 3 4 5 6 (PRODUCT LEVEL)	SEE PAGE
	1	1	**4J-5351**	1	SEAL-O-RING	
	2	1	**6V-5326**	1	SEAL-O-RING	
M	3	1	**9T-6521**	1	NUT	
		1	**6V-5758**	2	SEAL-O-RING	
	4	1	**9T-6522**	1	CAP	
M	5	1	**9T-6523**	1	SCREW	
	6	1	**9T-6827**	1	RING	
	7	1	**9T-6828**	1	RING	

M-METRIC PART

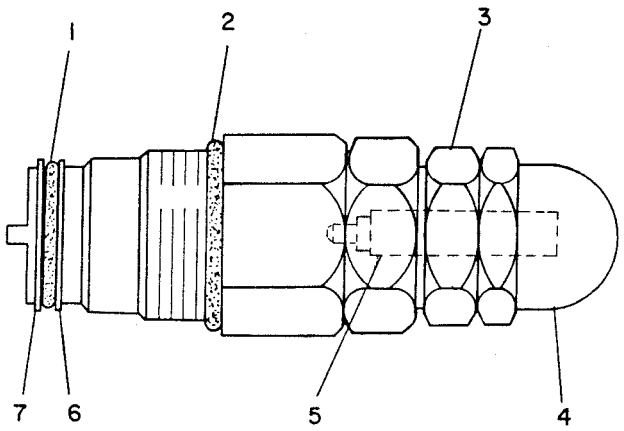

GRAPHIC #1 **<END>** g00186400

121-6649 VALVE GP-RELIEF–PILOT OIL PRESSURE

S/N: JDL1-UP; GMT1-UP
PART OF 235-0403, 235-0404, 235-0405 VALVE GP-CONTROL
ALSO AN ATTACHMENT

SMCS-5069, 5117 **i01819637**

NOTE	REF NO	GRAPHIC REF	PART NUMBER	QTY	PART NAME 1 2 3 4 5 6 (PRODUCT LEVEL)	SEE PAGE
	1	1	**3J-7354**	1	SEAL-O-RING	
	2	1	**4T-5074**	1	RING-BACKUP	
	3	1	**6V-5556**	1	SEAL-O-RING	
	4	1	**4T-4509**	1	SEAT	
	5	1	**108-5157**	1	VALVE	
	6	1	**4T-1700**	1	SPRING	
	7	1	**3K-0360**	1	SEAL-O-RING	
	8	1	**9X-6395**	1	NUT (3/4-16-THD)	
	9	1	**6E-5200**	1	RETAINER AS	
B	10	1	**096-6166**	3	WASHER-HARD (4.5X9X1-MM THK)	

B-USE AS REQUIRED

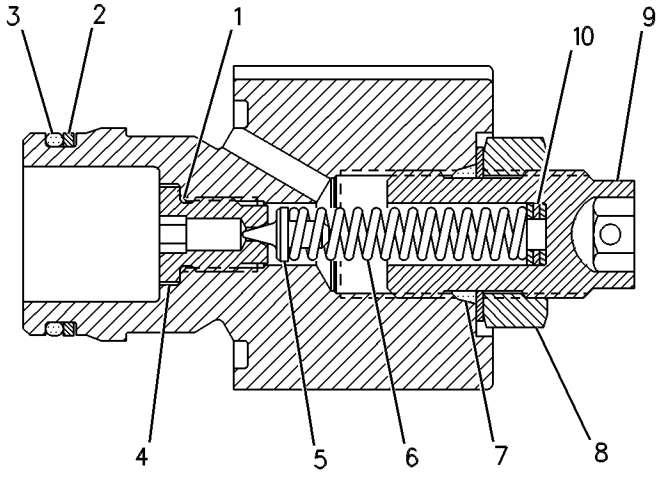

GRAPHIC #1 **<END>** g00263606

225-8026 VALVE GP-RELIEF–IMPLEMENT PILOT OIL

S/N: JDL1-UP; GMT1-UP

PART OF 226-4751 MANIFOLD GP-CONTROL

SMCS-5069, 5117 **i02071342**

NOTE	REF NO	GRAPHIC REF	PART NUMBER	QTY	PART NAME 1 2 3 4 5 6 (PRODUCT LEVEL)	SEE PAGE
J	1	1	**161-6149**	1	SEAL-O-RING	
J	2	1	**161-6161**	2	RING-BACKUP	
J	3	1	**2M-9780**	1	SEAL-O-RING	
					AVAILABLE REPAIR KIT(S):	
J			**133-5545**	1	KIT-SEAL (RELIEF VALVE)	

J-KIT MARKED J SERVICES PARTS MARKED J

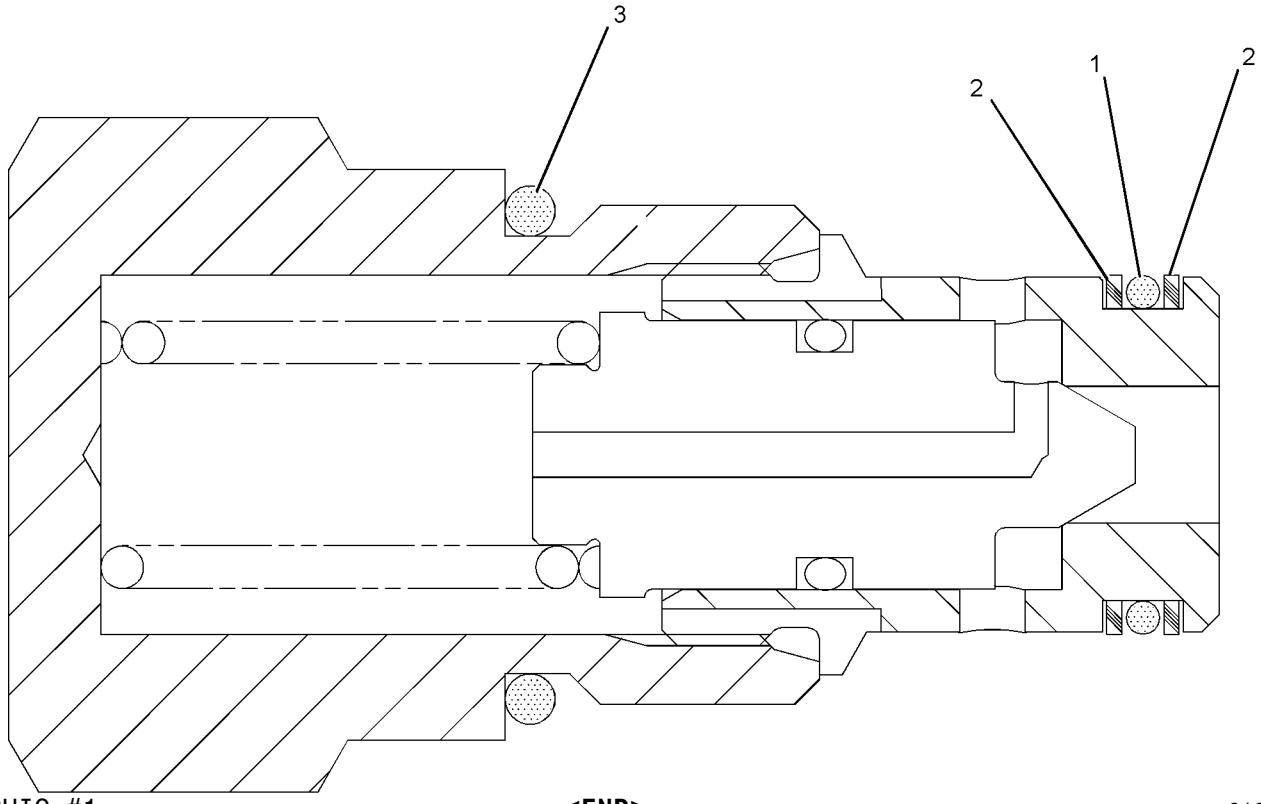

GRAPHIC #1 **<END>** g01019745

HYDRAULIC SYSTEM

4T-1860 VALVE GP-SHUTTLE

S/N: JDL1-UP; GMT1-UP

PART OF 235-0402, 235-0403, 235-0404, 235-0405 VALVE GP-CONTROL

ALSO AN ATTACHMENT

SMCS-5079 **i02400665**

NOTE	REF NO	GRAPHIC REF	PART NUMBER	QTY	PART NAME 1 2 3 4 5 6 (PRODUCT LEVEL)	SEE PAGE
Z	1	1		1	SEAT	
	2	1	**1M-6718**	1	BALL	
Z	3	1		1	VALVE	
	4	1	**6V-5324**	1	SEAL-O-RING	
	5	1	**147-6603**	1	SEAL-O-RING	
	6	1	**3J-1907**	1	SEAL-O-RING	
	7	1	**147-6604**	2	RING-BACKUP	
	8	1	**147-6605**	2	RING-BACKUP	

Z-NOT SERVICED SEPARATELY

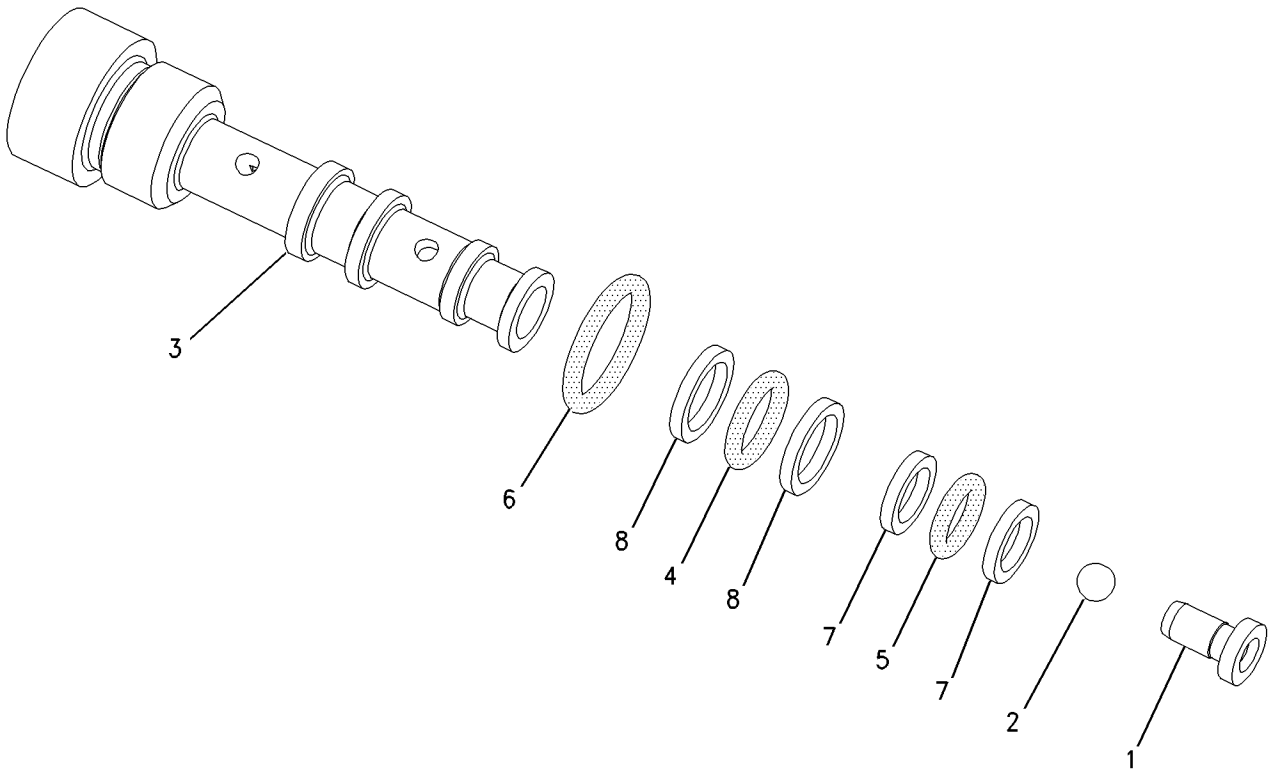

GRAPHIC #1 **<END>** g00775006

HYDRAULIC SYSTEM

260-8590 VALVE GP-SHUTTLE

S/N: JDL1-UP; GMT1-UP
PART OF 239-6074 VALVE GP-CONTROL
AN ATTACHMENT

SMCS-5079 **i02233009**

NOTE	REF NO	GRAPHIC REF	PART NUMBER	QTY	PART NAME 1 2 3 4 5 6 (PRODUCT LEVEL)	SEE PAGE
J	1	1	**3J-7354**	1	SEAL-O-RING	
J	2	1	**9N-1756**	1	SEAL-O-RING	
J	3	1	**3H-0442**	1	SEAL-O-RING	
					AVAILABLE REPAIR KIT(S):	
J			**240-7356**	1	KIT-SEAL (SHUTTLE VALVE) (IMPLEMENT CONTROL)	

J-(KIT MARKED J INCLUDES PARTS MARKED J)

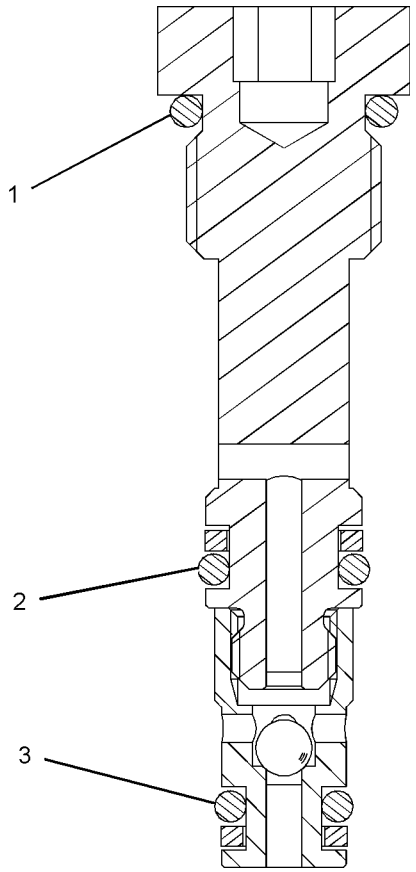

GRAPHIC #1 **<END>** g01018080

201-0950 VALVE GP-SOLENOID–HYDRAULIC LOCKOUT

S/N: JDL1-UP; GMT1-UP
24 VOLT. RIDE CONTROL
PART OF 238-7757 LINES GP-WINCH, 226-4751 MANIFOLD GP-CONTROL, 239-5317 VALVE & MTG GP-BULLDOZER
ALSO AN ATTACHMENT

SMCS-5479 **i02470752**

NOTE	REF NO	GRAPHIC REF	PART NUMBER	QTY	PART NAME 1 2 3 4 5 6 (PRODUCT LEVEL)	SEE PAGE
	1	1	**122-1133**	1	COIL AS (24-VOLT)	
		1	**1S-9593**	2	STRAP-CABLE	
		1	**186-3735**	2	PIN-CONNECTOR (16-GA TO 18-GA)	
		1	**102-8802**	1	KIT-RECEPTACLE (2-PIN)	
	2	1	**156-5970**	1	NUT (1/2-20-2B-THD)	
	3	1	**171-8772**	1	VALVE AS-SOLENOID	
		1	**156-5970**	1	NUT (1/2-20-2B-THD)	
					AVAILABLE REPAIR KIT(S):	
			195-7430	1	KIT-SEAL (SOLENOID VALVE)	

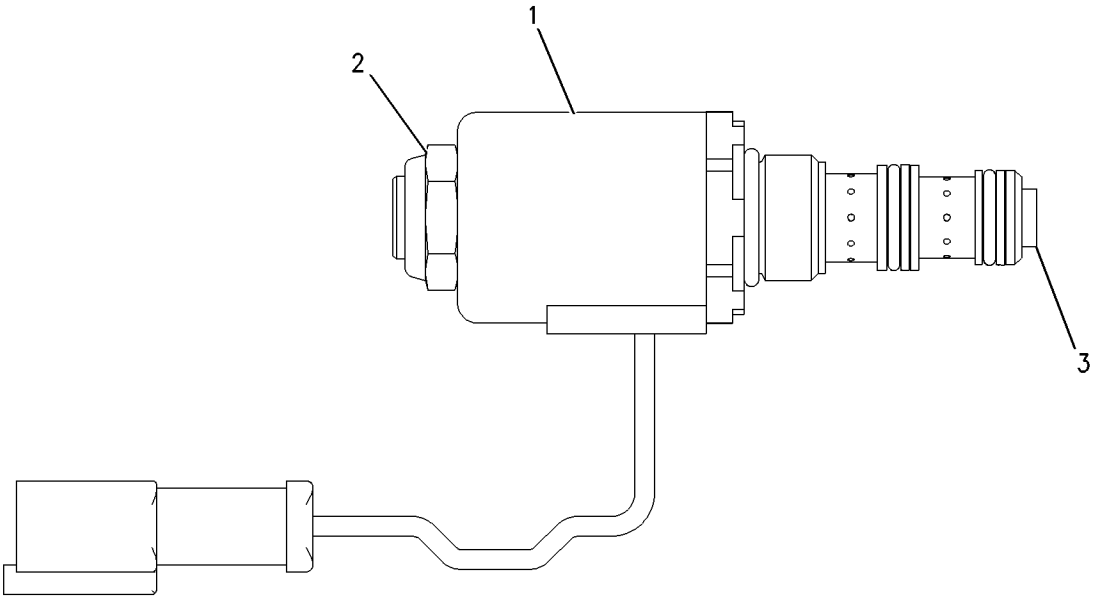

GRAPHIC #1 **<END>** g00888488

235-4605 VALVE GP-SOLENOID—BLADE CONTROL

S/N: JDL1-UP; GMT1-UP
PART OF 239-5317 VALVE & MTG GP-BULLDOZER
AN ATTACHMENT

SMCS-5479 **i02397651**

NOTE	REF NO	GRAPHIC REF	PART NUMBER	QTY	PART NAME 1 2 3 4 5 6 (PRODUCT LEVEL)	SEE PAGE
Z	1	1		1	CARTRIDGE AS	
Z	2	1		1	COIL AS	
Z	3	1		1	CARTRIDGE AS-VALVE	
Z	4	1		1	WASHER-SPRING	
	5	1	**033-6043**	1	SEAL-O-RING	
	6	1	**6V-4589**	1	SEAL-O-RING	
	7	1	**8L-2746**	1	SEAL-O-RING	

Z-NOT SERVICED SEPARATELY

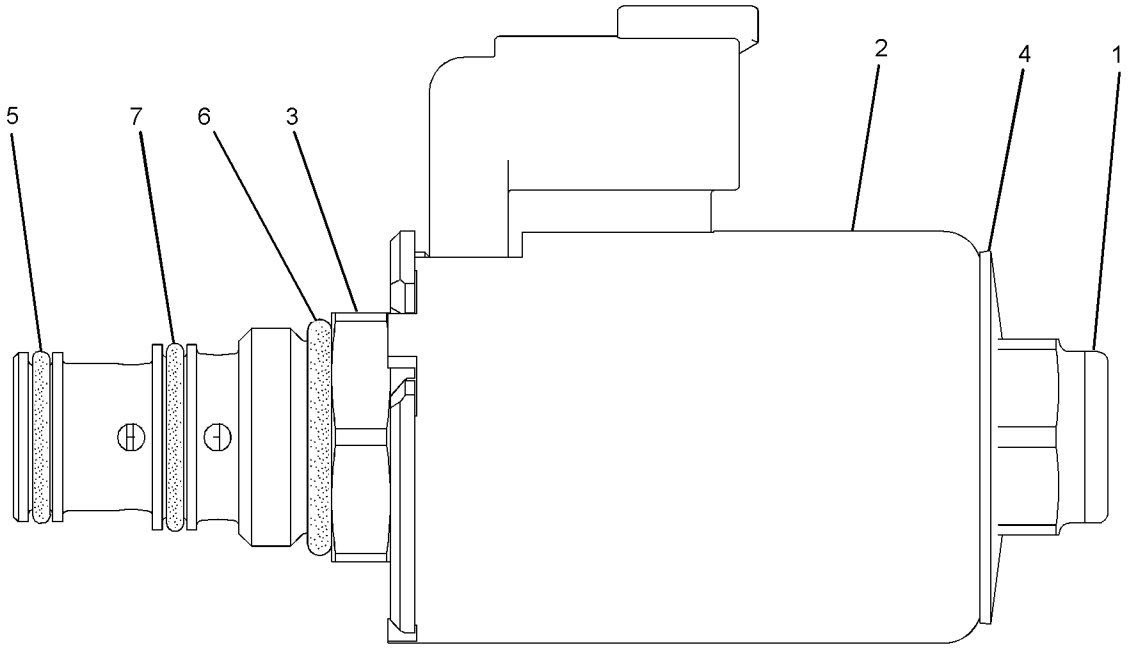

GRAPHIC #1 **<END>** g01022105

251-9814 BRACE GP-BULLDOZER

S/N: C4C1-UP; C4K1-UP; C4R1-UP; C4T1-UP
PART OF 251-6112, 251-6113, 251-6128, 251-6129 BULLDOZER AR-ANGLING
AN ATTACHMENT

SMCS-6074 **i02454607**

NOTE	REF NO	GRAPHIC REF	PART NUMBER	QTY	PART NAME 1 2 3 4 5 6 (PRODUCT LEVEL)	SEE PAGE
	1	1	**1U-1176**	2	PIN	
	2	1	**3B-4626**	2	PIN-COTTER	
	3	1	**3J-6573**	2	SCREW-ADJUSTMENT	
	4	1	**4F-0255**	2	PIN	
	5	1	**4F-1252**	2	PIN	
	6	1	**4T-5495**	2	STUD-BALL	
B	7	1	**8E-5701**	52	SHIM (0.8-MM THK)	
	8	1	**160-6306**	2	CAP-BEARING	
Y	9	1	**227-0841**	2	CYLINDER GP-TILT	458
	10	1	**251-9815**	1	ARM AS (LH)	
	11	1	**251-9816**	1	ARM AS (RH)	
					(EACH ARM ASSEMBLY INCLUDES)	
		1	**1U-1173**	1	BRACKET (RH)	
		1	**1U-1174**	1	BRACKET (LH)	
		1	**1U-1175**	2	PLATE	
		1	**3Y-3866**	1	NUT	
		1	**4B-4098**	1	PLUG-CUP	
		1	**251-9817**	1	BEARING	
	12	1	**251-9828**	4	CAP-BEARING	
B	13	1	**251-9834**	104	SHIM (0.8-MM THK)	
M	14	1	**7X-2564**	8	BOLT (M20X2.5X90-MM)	
	15	1	**8T-4123**	8	WASHER-PLATED (22X35X3.5-MM THK)	
M	16	1	**8T-4141**	4	BOLT (M20X2.5X70-MM)	
M	17	1	**8T-6381**	8	BOLT (M20X2.5X120-MM)	

B-USE AS REQUIRED
M-METRIC PART
Y-SEPARATE ILLUSTRATION

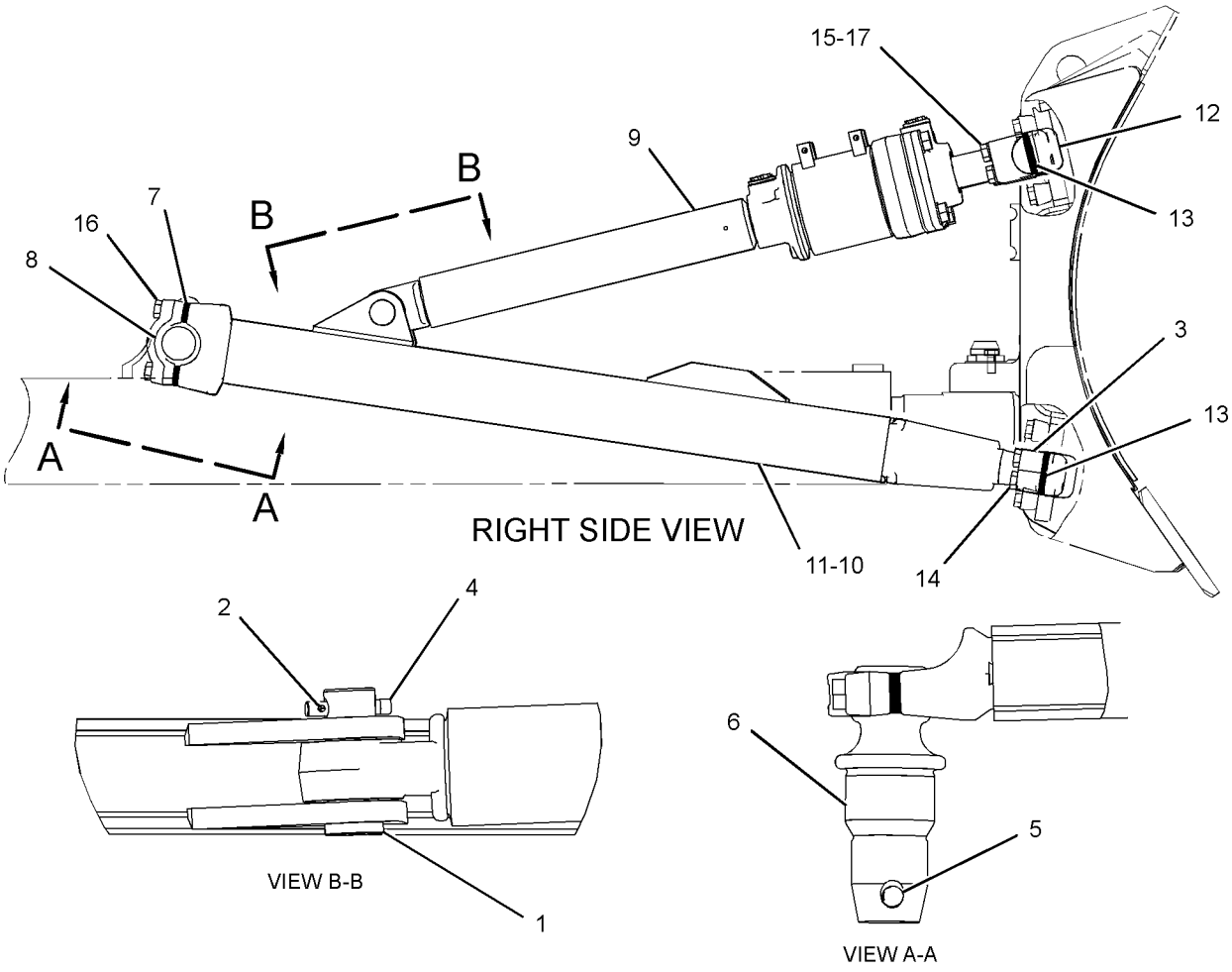

GRAPHIC #1 **<END>** g01209039

251-6112 BULLDOZER AR-ANGLING

S/N: C4R1-UP

AN ATTACHMENT

SMCS-6050, 6052 **i02454226**

NOTE	REF NO	GRAPHIC REF	PART NUMBER	QTY	PART NAME 1 2 3 4 5 6 (PRODUCT LEVEL)	SEE PAGE
Y	1	1	*109-1352*	1	TRUNNION GP-BULLDOZER	568
Y	2	1	*227-4005*	1	CYLINDER & LINES GP-LIFT (RH)	448
Y	3	1	*227-4006*	1	CYLINDER & LINES GP-LIFT (LH)	450
Y	4	1	*238-9559*	1	MOUNTING GP-CYLINDER	494
Y	5	1	*251-9814*	1	BRACE GP-BULLDOZER	551
Y	6	1	*251-9818*	1	BLADE GP-ANGLING	575
Y	7	1	*251-9830*	1	C-FRAME GP	562
Y	8	1	*255-8954*	1	LINES GP-TILT CYLINDER	489
F			**8T-7371**	1	PLATE-SERIAL NUMBER (BULLDOZER)	
F			**4B-4158**	2	SCREW-DRIVE (3/16X0.25-IN)	

F-NOT SHOWN
Y-SEPARATE ILLUSTRATION

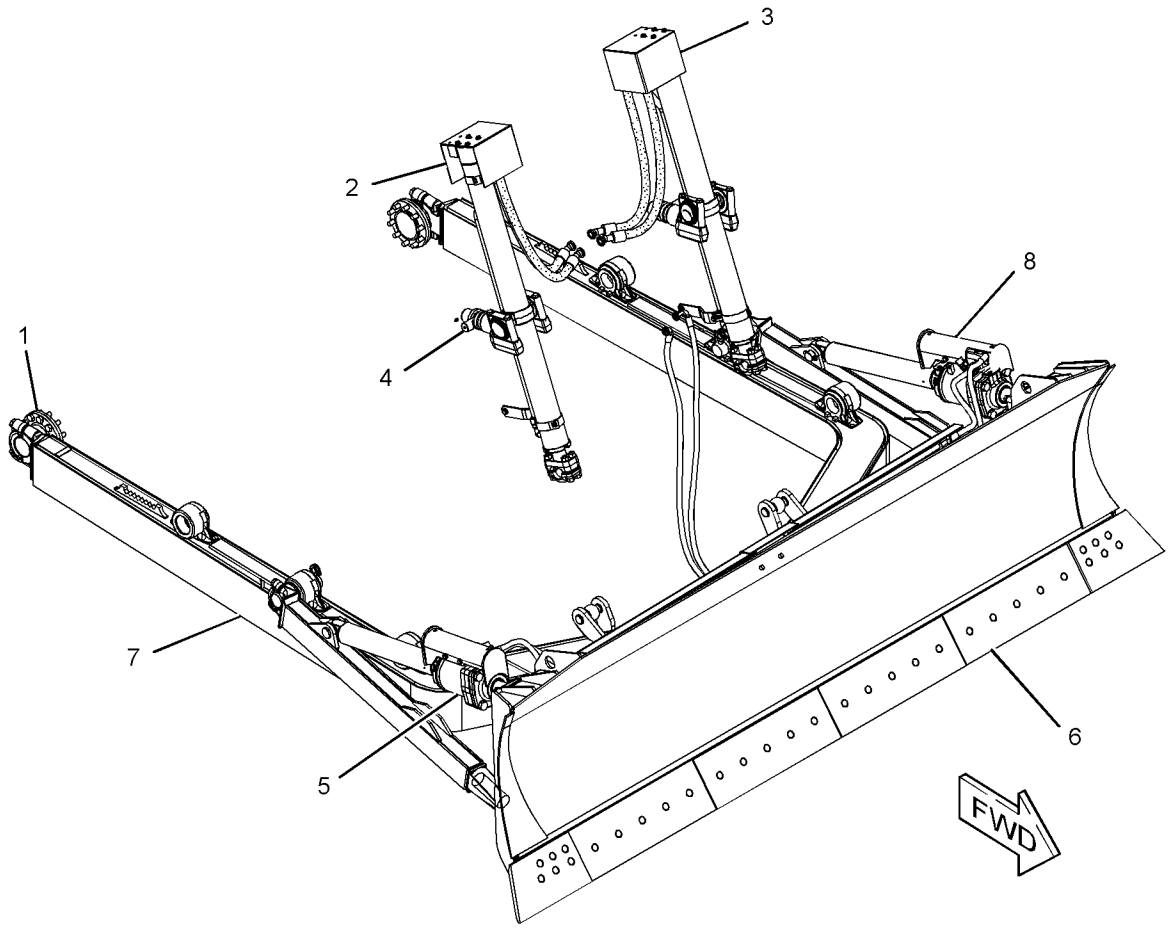

GRAPHIC #1 **<END>** g01210484

IMPLEMENTS

251-6113 BULLDOZER AR-ANGLING

S/N: C4T1-UP

FOR USE WITH 227-4005—PAGE 448, 227-4006—PAGE 450, 238-9559—PAGE 494

AN ATTACHMENT

SMCS-6050, 6052 **i02454874**

NOTE	REF NO	GRAPHIC REF	PART NUMBER	QTY	PART NAME 1 2 3 4 5 6 (PRODUCT LEVEL)	SEE PAGE
Y	1	1	*109-1352*	1	TRUNNION GP-BULLDOZER	568
Y	2	1	*251-9814*	1	BRACE GP-BULLDOZER	551
Y	3	1	*251-9818*	1	BLADE GP-ANGLING	575
Y	4	1	*251-9830*	1	C-FRAME GP	562
Y	5	1	*255-8954*	1	LINES GP-TILT CYLINDER	489
F			**8T-7371**	1	PLATE-SERIAL NUMBER (BULLDOZER)	
F			**4B-4158**	2	SCREW-DRIVE (3/16X0.25-IN)	

F-NOT SHOWN
Y-SEPARATE ILLUSTRATION

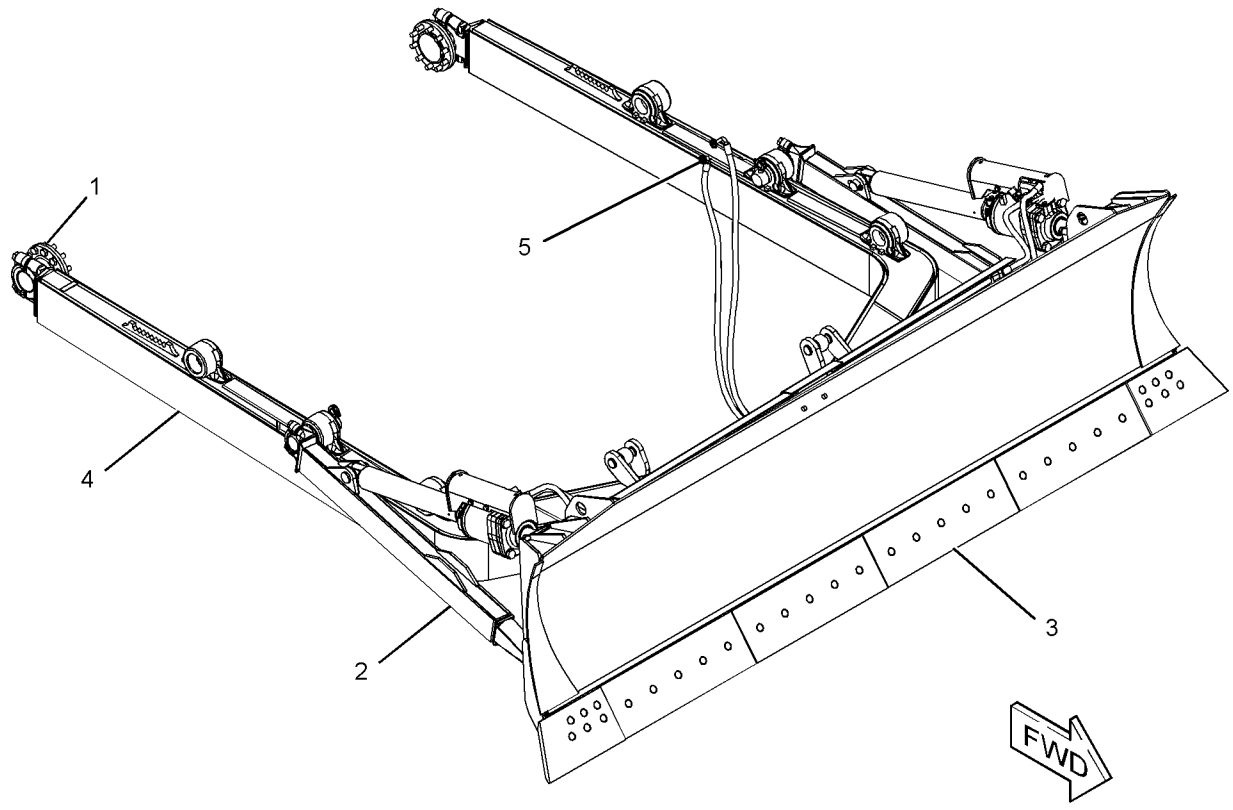

GRAPHIC #1 **<END>** g01210525

IMPLEMENTS

251-6128 BULLDOZER AR-ANGLING

S/N: C4C1-UP

AN ATTACHMENT

SMCS-6050, 6052 **i02454587**

NOTE	REF NO	GRAPHIC REF	PART NUMBER	QTY	PART NAME 1 2 3 4 5 6 (PRODUCT LEVEL)	SEE PAGE
Y	1	1	*109-1352*	1	TRUNNION GP-BULLDOZER	568
Y	2	1	*227-4005*	1	CYLINDER & LINES GP-LIFT (RH)	448
Y	3	1	*227-4006*	1	CYLINDER & LINES GP-LIFT (LH)	450
Y	4	1	*238-9559*	1	MOUNTING GP-CYLINDER	494
Y	5	1	*251-9814*	1	BRACE GP-BULLDOZER	551
Y	6	1	*251-9818*	1	BLADE GP-ANGLING	575
Y	7	1	*255-8951*	1	C-FRAME GP	563
Y	8	1	*255-8954*	1	LINES GP-TILT CYLINDER	489
F			**8T-7371**	1	PLATE-SERIAL NUMBER (BULLDOZER)	
F			**4B-4158**	2	SCREW-DRIVE (3/16X0.25-IN)	

F-NOT SHOWN
Y-SEPARATE ILLUSTRATION

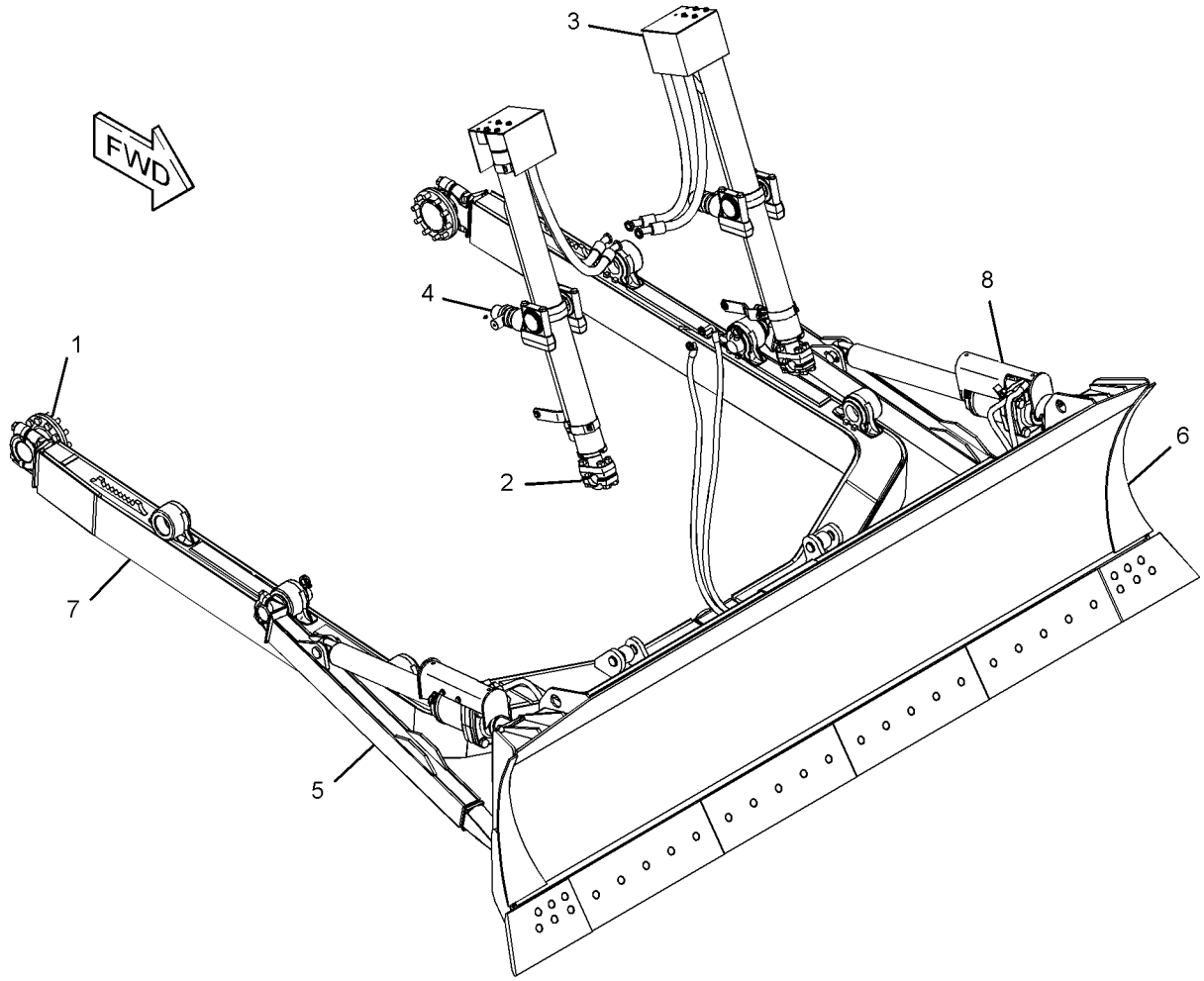

GRAPHIC #1 **<END>** g01225350

251-6129 BULLDOZER AR-ANGLING

S/N: C4K1-UP

FOR USE WITH 227-4005—PAGE 448, 227-4006—PAGE 450, 238-9559—PAGE 494

AN ATTACHMENT

SMCS-6050, 6052 **i02454741**

NOTE	REF NO	GRAPHIC REF	PART NUMBER	QTY	PART NAME 1 2 3 4 5 6 (PRODUCT LEVEL)	SEE PAGE
Y	1	1	*109-1352*	1	TRUNNION GP-BULLDOZER	568
Y	2	1	*251-9814*	1	BRACE GP-BULLDOZER	551
Y	3	1	*251-9818*	1	BLADE GP-ANGLING	575
Y	4	1	*255-8951*	1	C-FRAME GP	563
Y	5	1	*255-8954*	1	LINES GP-TILT CYLINDER	489
F			**8T-7371**	1	PLATE-SERIAL NUMBER (BULLDOZER)	
F			**4B-4158**	2	SCREW-DRIVE (3/16X0.25-IN)	

F-NOT SHOWN
Y-SEPARATE ILLUSTRATION

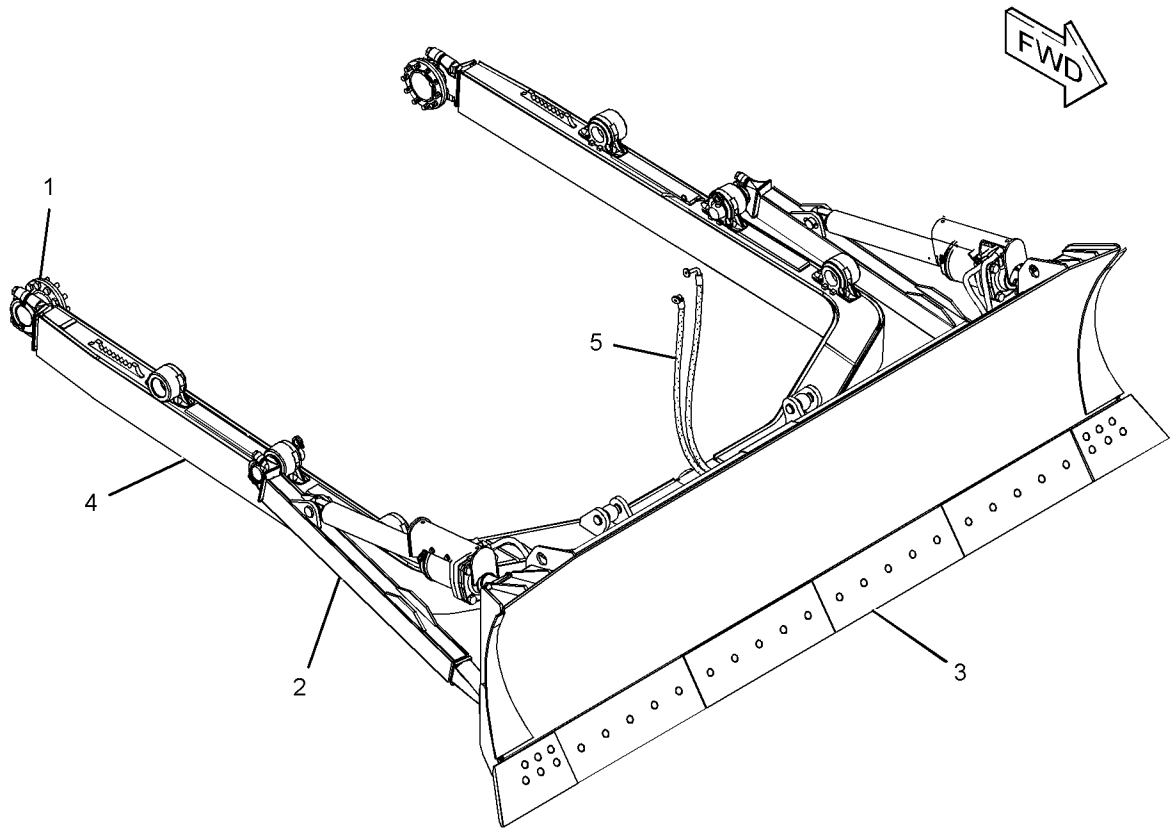

GRAPHIC #1 **<END>** g01225486

IMPLEMENTS

230-5553 BULLDOZER AR-SEMI-UNIVERSAL

S/N: D6C1-UP

AN ATTACHMENT

SMCS-6050, 6078 **i02455464**

NOTE	REF NO	GRAPHIC REF	PART NUMBER	QTY	PART NAME 1 2 3 4 5 6 (PRODUCT LEVEL)	SEE PAGE
Y	1	1	*109-1352*	1	TRUNNION GP-BULLDOZER	568
Y	2	1	*227-4005*	1	CYLINDER & LINES GP-LIFT (RH)	448
Y	3	1	*227-4006*	1	CYLINDER & LINES GP-LIFT (LH)	450
Y	4	1	*230-5554*	1	PUSH ARM GP	564
Y	5	1	*230-5555*	1	LINES GP-TILT CYLINDER	485
Y	6	1	*230-5558*	1	BLADE GP-SEMI-UNIVERSAL	576
Y	7	1	*238-9559*	1	MOUNTING GP-CYLINDER	494
F			**8T-7371**	1	PLATE-SERIAL NUMBER (BULLDOZER)	
					(ON UPPER RH CORNER OF BLADE)	
F			**4B-4158**	2	SCREW-DRIVE (3/16X0.25-IN)	

F-NOT SHOWN
Y-SEPARATE ILLUSTRATION

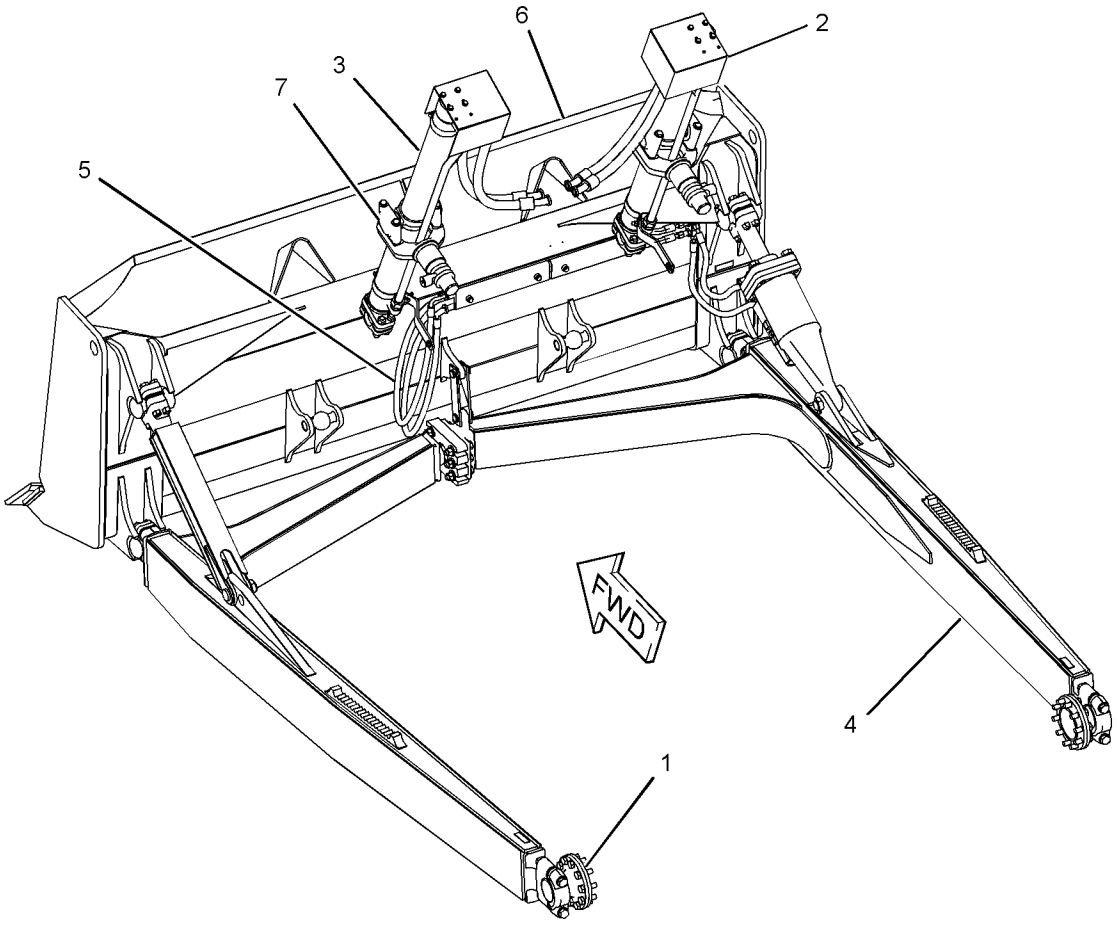

GRAPHIC #1 **<END>** g01207569

IMPLEMENTS

251-6120 BULLDOZER AR-SEMI-UNIVERSAL

S/N: C4W1-UP

FOR USE WITH 227-4005—PAGE 448, 227-4006—PAGE 450, 238-9559—PAGE 494

AN ATTACHMENT

SMCS-6050, 6078 **i02454926**

NOTE	REF NO	GRAPHIC REF	PART NUMBER	QTY	PART NAME 1 2 3 4 5 6 (PRODUCT LEVEL)	SEE PAGE
Y	1	1	*109-1352*	1	TRUNNION GP-BULLDOZER	568
Y	2	1	*230-5554*	1	PUSH ARM GP	564
Y	3	1	*230-5555*	1	LINES GP-TILT CYLINDER	485
Y	4	1	*230-5558*	1	BLADE GP-SEMI-UNIVERSAL	576
F			**8T-7371**	1	PLATE-SERIAL NUMBER (BULLDOZER)	
F			**4B-4158**	2	SCREW-DRIVE (3/16X0.25-IN)	

F-NOT SHOWN
Y-SEPARATE ILLUSTRATION

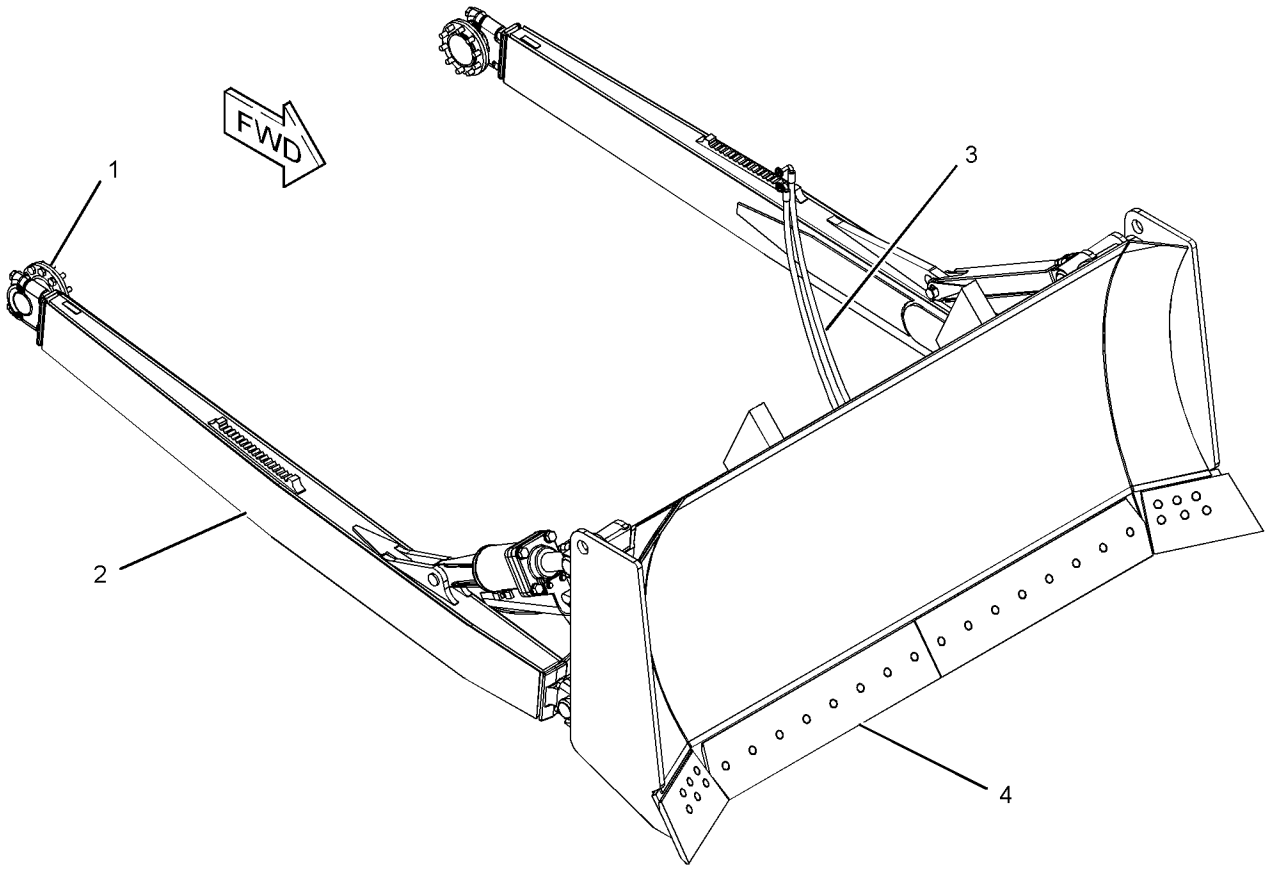

GRAPHIC #1 **<END>** g01209016

IMPLEMENTS

252-5854 BULLDOZER AR-SEMI-UNIVERSAL

S/N: C4L1-UP

AN ATTACHMENT

SMCS-6050, 6078 **i02454810**

NOTE	REF NO	GRAPHIC REF	PART NUMBER	QTY	PART NAME 1 2 3 4 5 6 (PRODUCT LEVEL)	SEE PAGE
Y	1	1	*109-1352*	1	TRUNNION GP-BULLDOZER	568
Y	2	1	*227-4005*	1	CYLINDER & LINES GP-LIFT (RH)	448
Y	3	1	*227-4006*	1	CYLINDER & LINES GP-LIFT (LH)	450
Y	4	1	*238-9559*	1	MOUNTING GP-CYLINDER	494
Y	5	1	*252-5849*	1	LINES GP-TILT CYLINDER	487
Y	6	1	*252-5853*	1	PUSH ARM GP	566
Y	7	1	*252-5856*	1	BLADE GP-SEMI-UNIVERSAL	577
F			**8T-7371**	1	PLATE-SERIAL NUMBER (BULLDOZER)	
					(ON UPPER RH CORNER OF BLADE)	
F			**4B-4158**	2	SCREW-DRIVE (3/16X0.25-IN)	

F-NOT SHOWN
Y-SEPARATE ILLUSTRATION

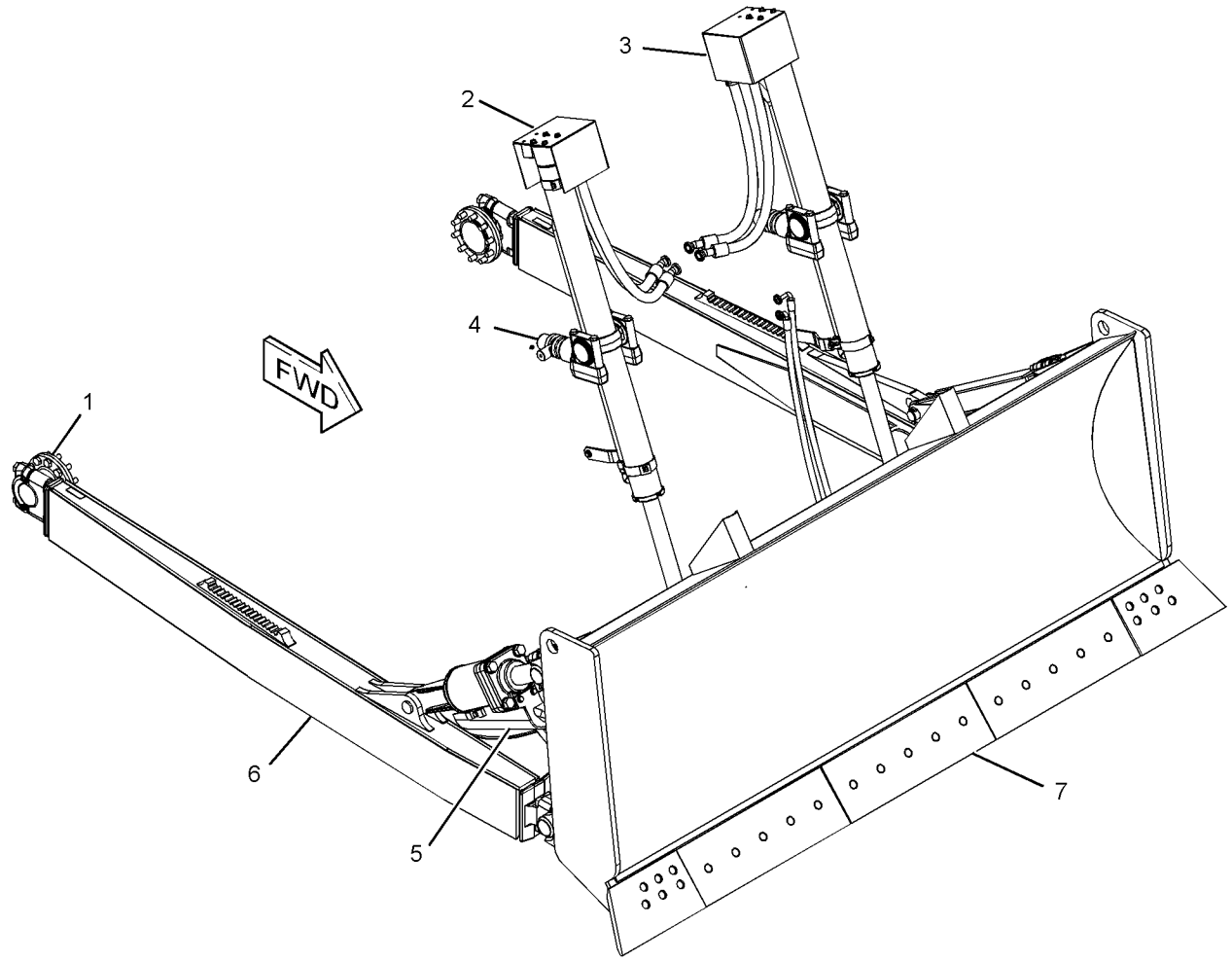

GRAPHIC #1 **<END>** g01206974

IMPLEMENTS

252-5855 BULLDOZER AR-SEMI-UNIVERSAL

S/N: C4N1-UP

FOR USE WITH 227-4005—PAGE 448, 227-4006—PAGE 450, 238-9559—PAGE 494

AN ATTACHMENT

SMCS-6050, 6078 **i02455229**

NOTE	REF NO	GRAPHIC REF	PART NUMBER	QTY	PART NAME 1 2 3 4 5 6 (PRODUCT LEVEL)	SEE PAGE
Y	1	1	*109-1352*	1	TRUNNION GP-BULLDOZER	568
Y	2	1	*252-5849*	1	LINES GP-TILT CYLINDER	487
Y	3	1	*252-5853*	1	PUSH ARM GP	566
Y	4	1	*252-5856*	1	BLADE GP-SEMI-UNIVERSAL	577
F			**8T-7371**	1	PLATE-SERIAL NUMBER	
					(ON UPPER RH CORNER OF BLADE)	
F			**4B-4158**	2	SCREW-DRIVE (3/16X0.25-IN)	

F-NOT SHOWN
Y-SEPARATE ILLUSTRATION

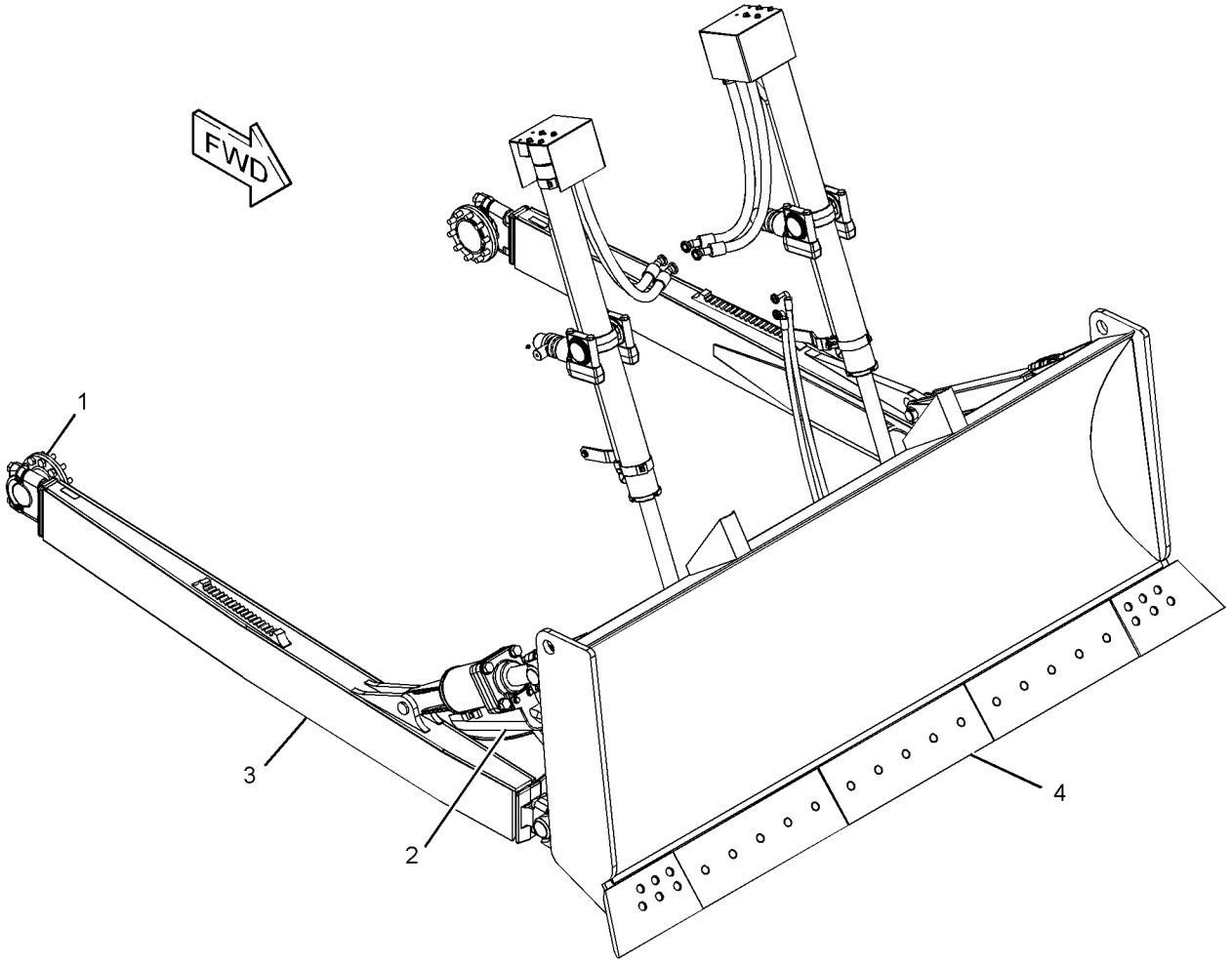

GRAPHIC #1 **<END>** g01206977

255-8952 C-FRAME AS—ANGLING BULLDOZER

S/N: C4C1-UP; C4K1-UP
PART OF 255-8951 C-FRAME GP
AN ATTACHMENT

SMCS-6063 **i02454782**

NOTE	REF NO	GRAPHIC REF	PART NUMBER	QTY	PART NAME 1 2 3 4 5 6 (PRODUCT LEVEL)	SEE PAGE
	1	1	**6J-9187**	1	BRACKET AS (RH)	
	2	1	**6J-9188**	1	BRACKET AS (LH)	
					(EACH BRACKET AS INCLUDES)	
		1	**7J-2595**	2	BRACKET	
		1	**4J-2414**	1	TRUNNION	
	3	1	**8P-9770**	1	PLATE	
	4	1	**9W-4897**	6	BRACKET AS	
					(EACH INCLUDES)	
		1	**3J-2682**	1	BRACKET	
		1	**8F-4387**	2	PLATE	
	5	1	**9W-5375**	2	BAR	
	6	1	**9W-9000**	1	ADAPTER AS	
		1	**5M-6214**	1	PLUG-PIPE	
		1	**8E-5486**	2	BEARING-SLEEVE	
	7	1	**251-9835**	2	BEARING	

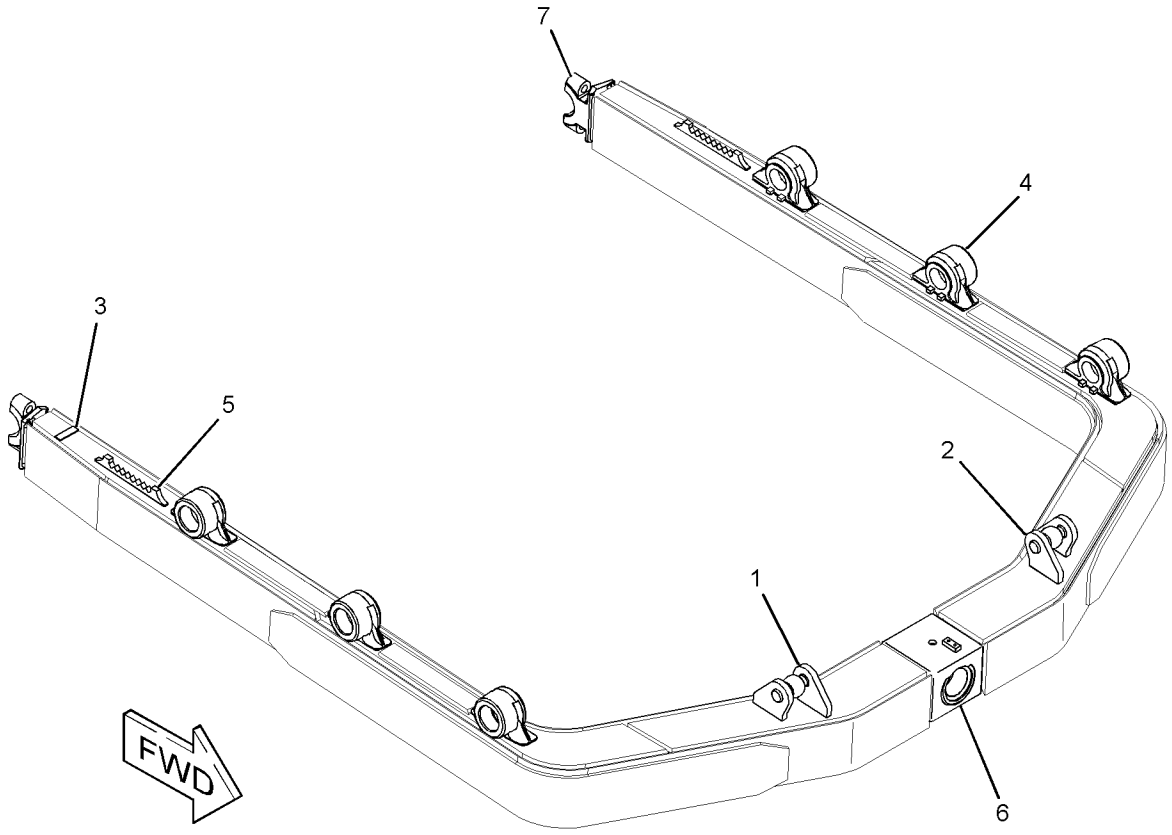

GRAPHIC #1 **<END>** g01207457

251-9830 C-FRAME GP–ANGLING BULLDOZER

S/N: C4R1-UP; C4T1-UP
PART OF 251-6112, 251-6113 BULLDOZER AR-ANGLING
AN ATTACHMENT

SMCS-6063 **i02454847**

NOTE	REF NO	GRAPHIC REF	PART NUMBER	QTY	PART NAME 1 2 3 4 5 6 (PRODUCT LEVEL)	SEE PAGE
	1	1	**1U-0725**	1	RETAINER	
B	2	1	**4T-4866**	52	SHIM (0.8-MM THK)	
	3	1	**251-8203**	4	NUT (M24X3-THD)	
	4	1	**251-9831**	1	C-FRAME AS	
	4A	1	**4J-2414**	1	TRUNNION	
	4B	1	**8E-5486**	2	BEARING-SLEEVE	
	4C	1	**251-9835**	2	BEARING	
	5	1	**251-9832**	1	PIN-PIVOT	
	6	1	**251-9836**	2	CAP-BEARING	
M	7	1	**7X-2562**	2	BOLT (M20X2.5X45-MM)	
M	8	1	**7X-2567**	4	BOLT (M24X3X160-MM)	
	9	1	**8T-4167**	4	WASHER-HARD (26X44X4-MM THK)	

B-USE AS REQUIRED
M-METRIC PART

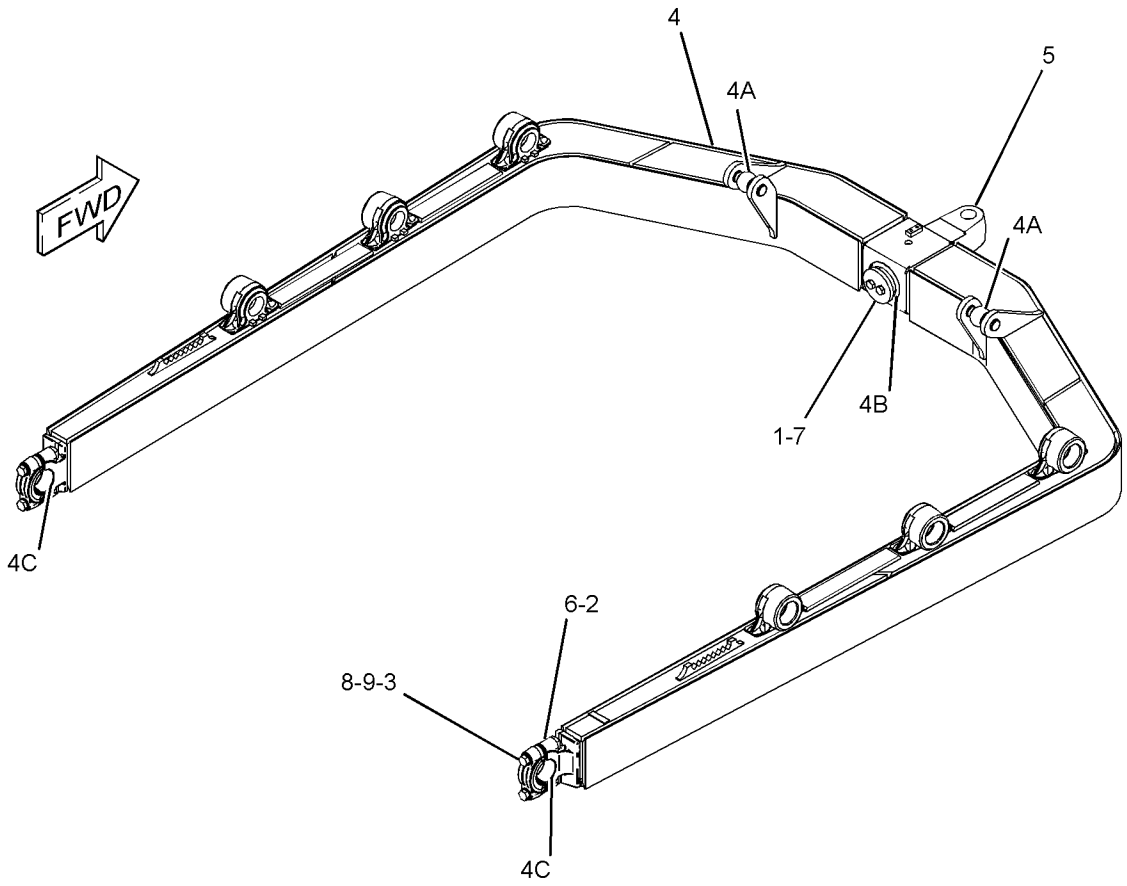

GRAPHIC #1 **<END>** g01225229

255-8951 C-FRAME GP—ANGLING BULLDOZER

S/N: C4C1-UP; C4K1-UP
PART OF 251-6128, 251-6129 BULLDOZER AR-ANGLING
AN ATTACHMENT

SMCS-6063 **i02454671**

NOTE	REF NO	GRAPHIC REF	PART NUMBER	QTY	PART NAME 1 2 3 4 5 6 (PRODUCT LEVEL)	SEE PAGE
	1	1	**1U-0725**	1	RETAINER	
	2	1	**251-8203**	4	NUT (M24X3-THD)	
	3	1	**251-9832**	1	PIN-PIVOT	
	4	1	**251-9836**	2	CAP-BEARING	
Y	5	1	**255-8952**	1	C-FRAME AS	561
M	6	1	**7X-2562**	2	BOLT (M20X2.5X45-MM)	
M	7	1	**7X-2567**	4	BOLT (M24X3X160-MM)	
	8	1	**8T-4167**	4	WASHER-HARD (26X44X4-MM THK)	
B	9	1	**4T-4866**	52	SHIM (0.8-MM THK)	

B-USE AS REQUIRED
M-METRIC PART
Y-SEPARATE ILLUSTRATION

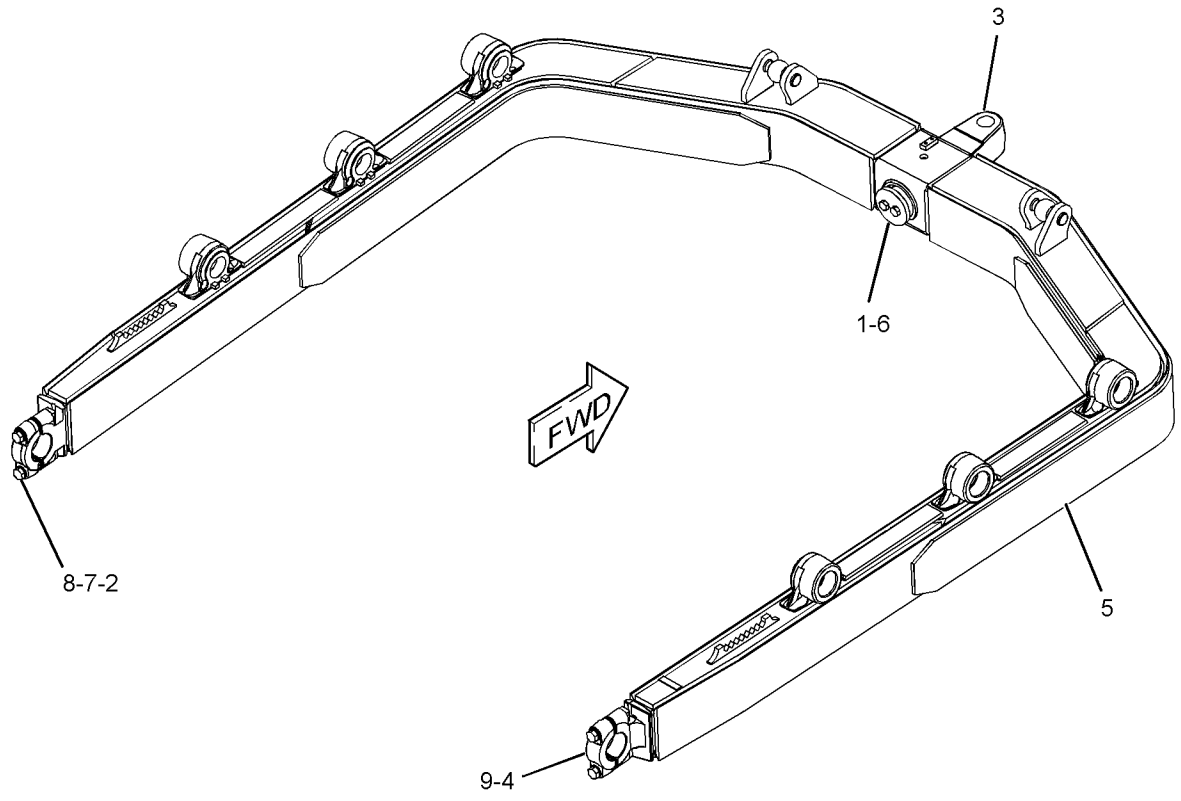

GRAPHIC #1 **<END>** g01207710

230-5554 PUSH ARM GP—SEMI-UNIVERSAL BULLDOZER

S/N: D6C1-UP; C4W1-UP

PART OF 230-5553, 251-6120 BULLDOZER AR-SEMI-UNIVERSAL

AN ATTACHMENT

SMCS-6061 **i02454939**

NOTE	REF NO	GRAPHIC REF	PART NUMBER	QTY	PART NAME 1 2 3 4 5 6 (PRODUCT LEVEL)	SEE PAGE
	1	1	**4F-0255**	2	PIN	
	2	1	**4T-1520**	1	CAGE AS	
	2A	1	**6J-5383**	1	BEARING	
B	3	1	**4T-4866**	52	SHIM (0.8-MM THK) (EACH)	
M	4	1	**7Y-5235**	4	BOLT (M24X3X190-MM)	
B	5	1	**8E-5703**	78	SHIM (0.8-MM THK) (EACH)	
	6	1	**8J-2880**	3	CAP-BEARING	
	7	1	**124-9672**	1	BRACE AS-TILT	
	8	1	**160-6305**	2	CAP-BEARING	
	9	1	**194-0935**	1	PUSH ARM AS (LH)	
	9A	1	**4T-0780**	1	TRUNNION	
	9B	1	**8P-9770**	1	PLATE	
	9C	1	**124-9666**	1	BRACKET	
	9D	1	**179-6152**	1	BEARING	
	9E	1	**179-6153**	1	BEARING	
	9F	1	**209-2152**	1	BAR	
	10	1	**194-0936**	1	PUSH ARM AS (RH)	
	10A	1	**4T-0732**	1	BRACKET	
	10B	1	**8P-9770**	1	PLATE	
	10C	1	**9W-2579**	1	PLATE	
	10D	1	**179-6152**	1	BEARING	
	10E	1	**179-6153**	1	BEARING	
	10F	1	**209-2152**	1	BAR	
Y	11	1	**233-9134**	1	CYLINDER GP-TILT	460
	12	1	**251-8202**	8	NUT (M20X2.5-THD)	
	13	1	**251-8203**	4	NUT (M24X3-THD)	
	14	1	**3B-4626**	2	PIN-COTTER	
	15	1	**3F-6185**	2	PIN	
M	16	1	**7X-2566**	6	BOLT (M20X2.5X110-MM)	
M	17	1	**8C-8478**	12	BOLT (M20X2.5X140-MM)	
	18	1	**8T-4123**	6	WASHER-PLATED (22X35X3.5-MM THK)	
M	19	1	**8T-4131**	10	NUT (M20X2.5-THD)	
	20	1	**8T-4167**	4	WASHER-HARD (26X44X4-MM THK)	
	21	1	**8T-5439**	6	WASHER (21.5X45X6-MM THK)	

B-USE AS REQUIRED
M-METRIC PART
Y-SEPARATE ILLUSTRATION

230-5554 **PUSH ARM GP** *(contd.)* **i02454939**

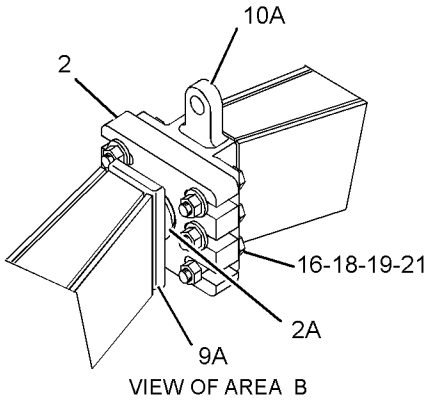

VIEW OF AREA B

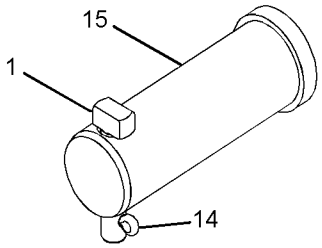

VIEW OF AREA A

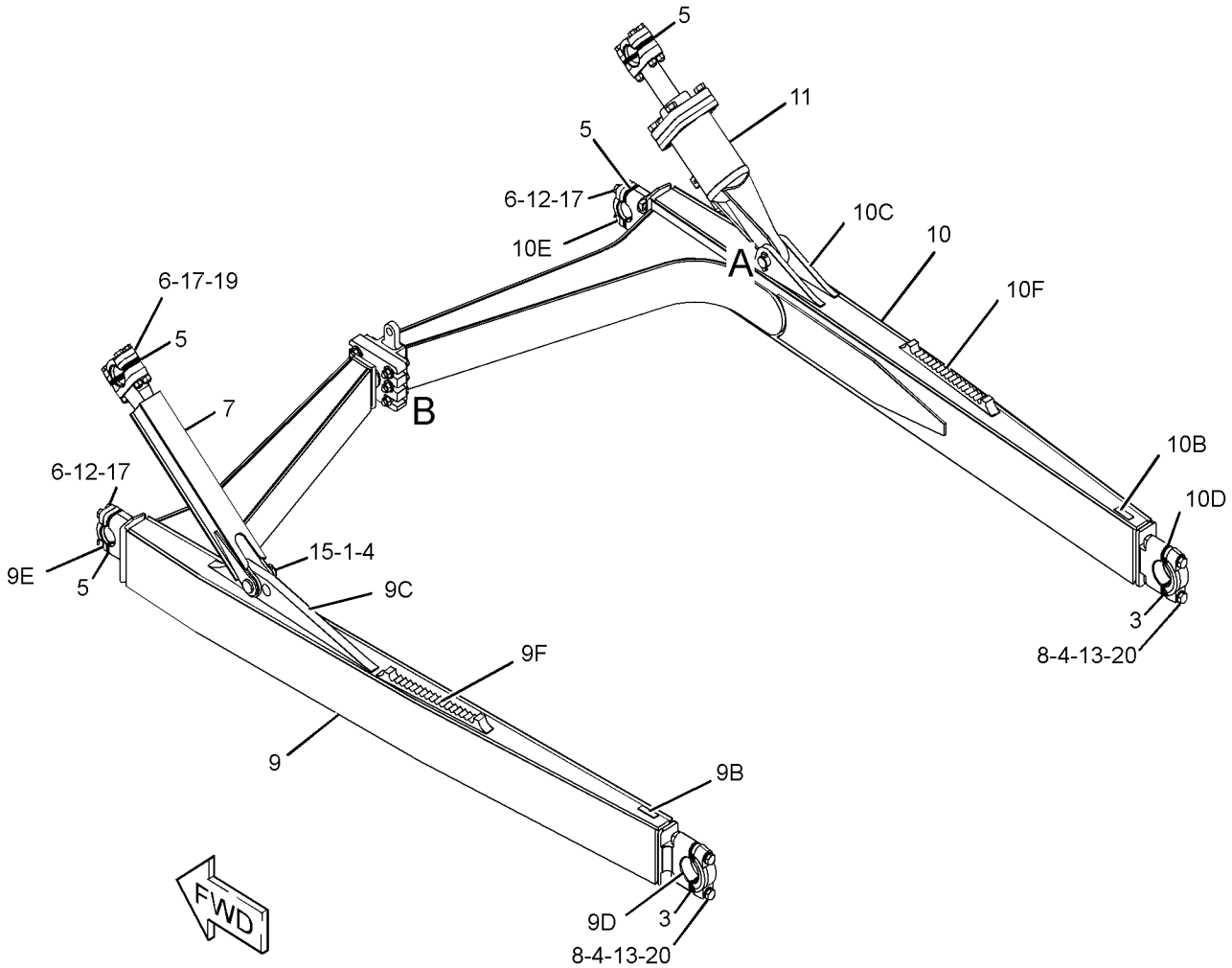

GRAPHIC #1 **<END>** g01225405

252-5853 PUSH ARM GP—SEMI-UNIVERSAL BULLDOZER

S/N: C4L1-UP; C4N1-UP

PART OF 252-5854, 252-5855 BULLDOZER AR-SEMI-UNIVERSAL

AN ATTACHMENT

SMCS-6061 **i02454876**

NOTE	REF NO	GRAPHIC REF	PART NUMBER	QTY	PART NAME 1 2 3 4 5 6 (PRODUCT LEVEL)	SEE PAGE
	1	1	**4T-1520**	1	CAGE AS	
	1A	1	**6J-5383**	1	BEARING	
B	2	1	**4T-4866**	52	SHIM (0.8-MM THK) (EACH)	
M	3	1	**7Y-5235**	4	BOLT (M24X3X190-MM)	
B	4	1	**8E-5703**	78	SHIM (0.8-MM THK) (EACH)	
	5	1	**8J-2880**	3	CAP-BEARING	
	6	1	**124-9672**	1	BRACE AS-TILT	
	7	1	**160-6305**	2	CAP-BEARING	
Y	8	1	**166-2582**	1	CYLINDER GP-TILT	456
	9	1	**179-6151**	1	PUSH ARM AS-LH	
	9A	1	**4T-0780**	1	TRUNNION	
	9B	1	**8P-9770**	1	PLATE	
	9C	1	**124-9666**	1	BRACKET	
	9D	1	**179-6152**	1	BEARING	
	9E	1	**179-6153**	1	BEARING	
	9F	1	**209-2152**	1	BAR	
	10	1	**179-6162**	1	PUSH ARM AS-RH	
	10A	1	**4T-0732**	1	BRACKET	
	10B	1	**8P-9770**	1	PLATE	
	10C	1	**9W-2579**	2	PLATE	
	10D	1	**179-6152**	1	BEARING	
	10E	1	**179-6153**	1	BEARING	
	10F	1	**209-2152**	1	BAR	
	11	1	**251-8202**	8	NUT (M20X2.5-THD)	
	12	1	**251-8203**	4	NUT (M24X3-THD)	
	13	1	**255-8030**	2	PIN	
	14	1	**282-9090**	2	RETAINER	
M	15	1	**7X-2566**	6	BOLT (M20X2.5X110-MM)	
M	16	1	**8C-8478**	12	BOLT (M20X2.5X140-MM)	
	17	1	**8T-4123**	6	WASHER-PLATED (22X35X3.5-MM THK)	
M	18	1	**8T-4131**	10	NUT (M20X2.5-THD)	
	19	1	**8T-4167**	4	WASHER-HARD (26X44X4-MM THK)	
M	20	1	**8T-4779**	2	BOLT (M16X2X35-MM)	
	21	1	**8T-5439**	6	WASHER (21.5X45X6-MM THK)	
	22	1	**9X-8257**	2	WASHER (17.5X30X3.5-MM THK)	

B-USE AS REQUIRED
M-METRIC PART
Y-SEPARATE ILLUSTRATION

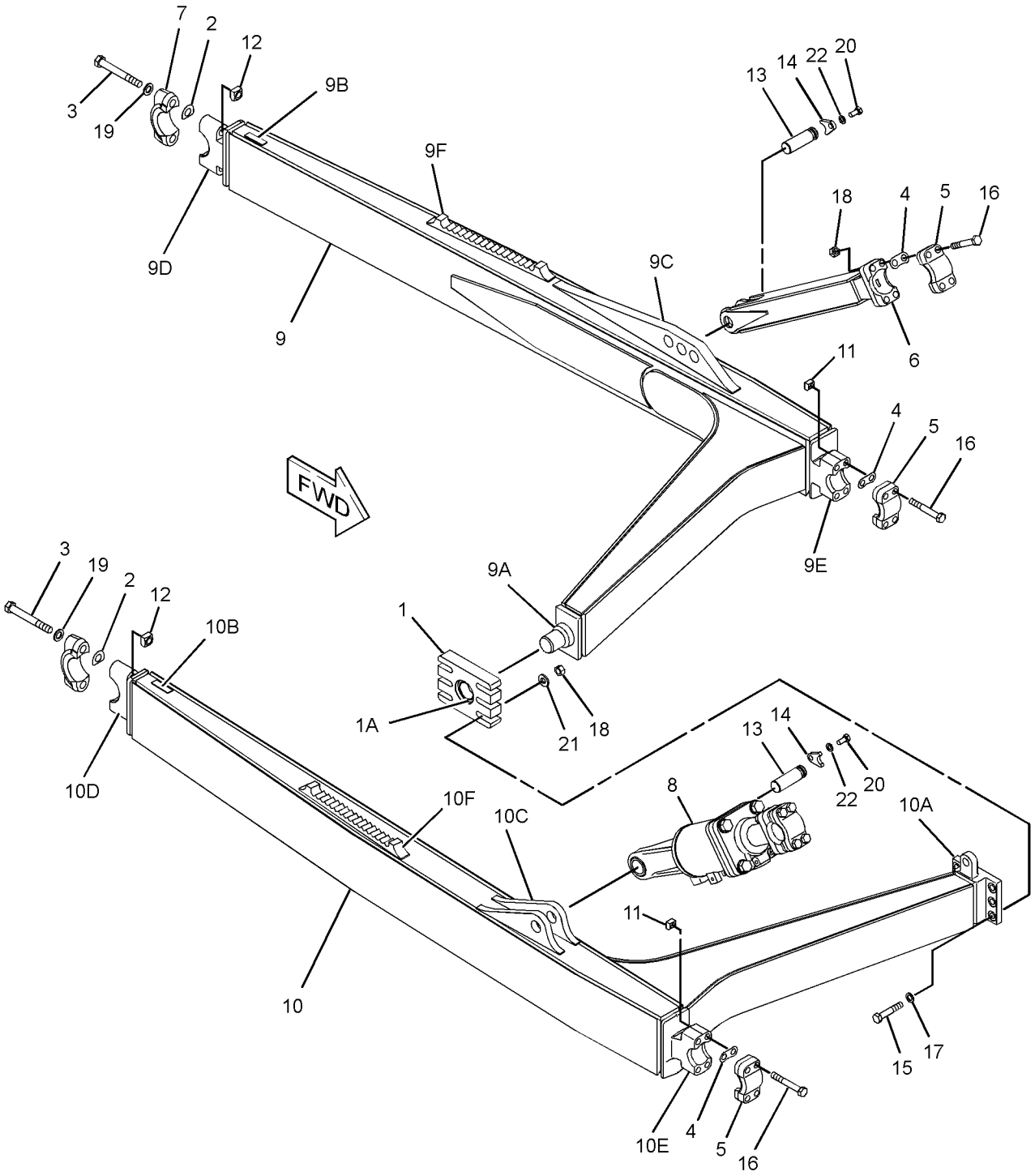

GRAPHIC #1 **<END>** g01225461

109-1352 TRUNNION GP-BULLDOZER

S/N: C4C1-UP; D6C1-UP; C4K1-UP; C4L1-UP; JDL1-UP; C4N1-UP; C4R1-UP; C4T1-UP; GMT1-UP; C4W1-UP

PART OF 251-6112, 251-6113, 251-6128, 251-6129 BULLDOZER AR-ANGLING, 230-5553, 251-6120, 252-5854, 252-5855 BULLDOZER AR-SEMI-UNIVERSAL AN ATTACHMENT

SMCS-6069 **i01166629**

NOTE	REF NO	GRAPHIC REF	PART NUMBER	QTY	PART NAME 1 2 3 4 5 6 (PRODUCT LEVEL)	SEE PAGE
	1	1	**1U-4103**	2	TRUNNION	
M	2	1	**7X-2563**	20	BOLT (M20X2.5X60MM)	

M-METRIC PART

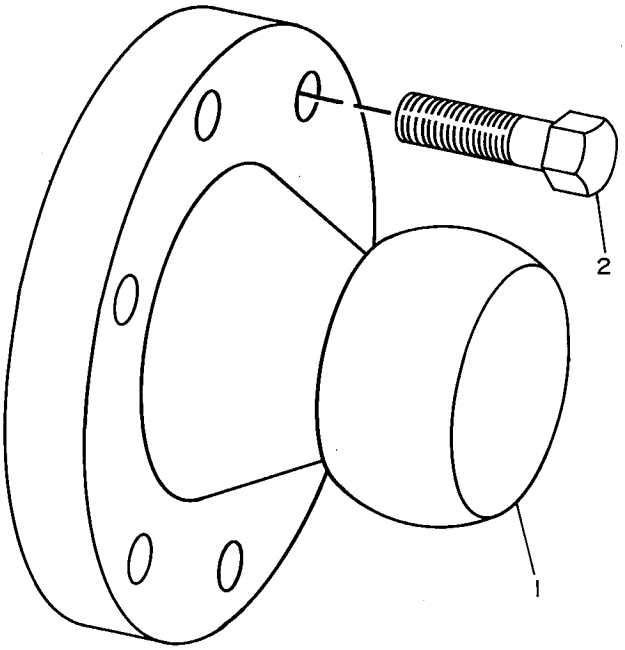

GRAPHIC #1 **<END>** g00174192

251-9819 BLADE & EDGE GP-ANGLING

S/N: C4C1-UP; C4K1-UP; C4R1-UP; C4T1-UP
PART OF 251-9818 BLADE GP-ANGLING
AN ATTACHMENT

SMCS-6060 **i02454659**

NOTE	REF NO	GRAPHIC REF	PART NUMBER	QTY	PART NAME 1 2 3 4 5 6 (PRODUCT LEVEL)	SEE PAGE
Y	1	1	*6Y-2039*	1	EDGE GP-BIT & CUTTING	579
	2	1	**251-9820**	1	BLADE AS	

Y-SEPARATE ILLUSTRATION

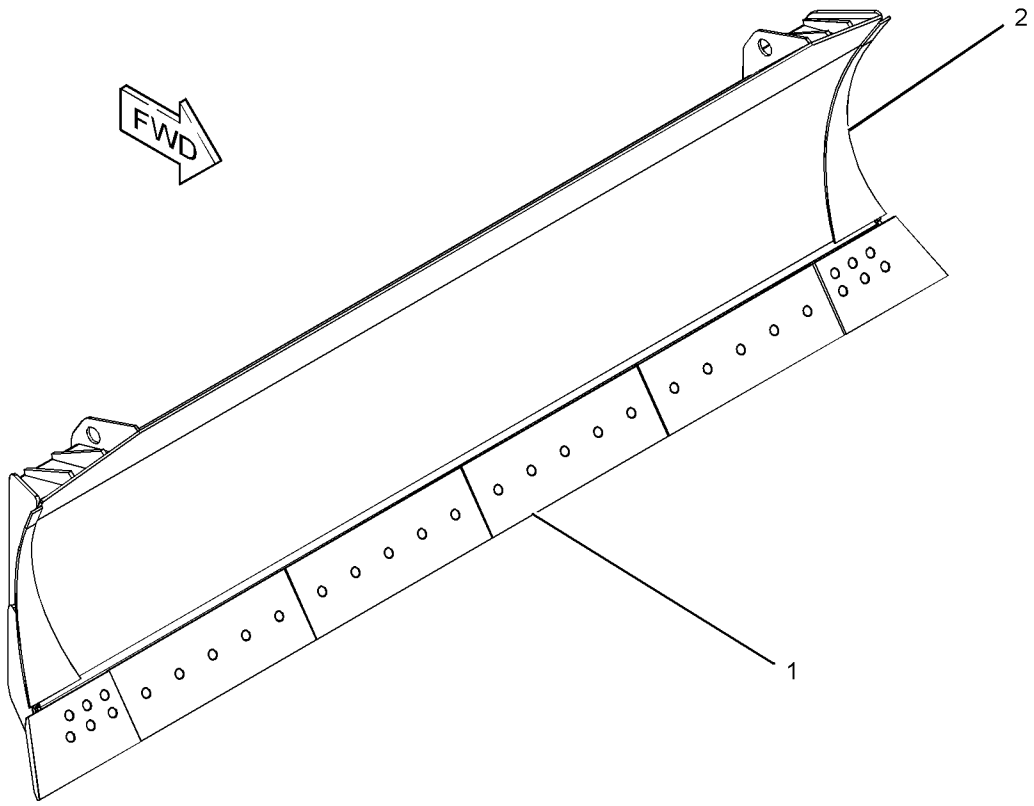

GRAPHIC #1 **<END>** g01209769

WORK TOOLS

230-5557 BLADE & EDGE GP-SEMI-UNIVERSAL

S/N: D6C1-UP; C4W1-UP
PART OF 230-5558 BLADE GP-SEMI-UNIVERSAL
AN ATTACHMENT

SMCS-6060 **i02455554**

NOTE	REF NO	GRAPHIC REF	PART NUMBER	QTY	PART NAME 1 2 3 4 5 6 (PRODUCT LEVEL)	SEE PAGE
Y	1	1	*9W-3762*	1	EDGE GP-BIT & CUTTING	580
Y	2	1	**230-5556**	1	BLADE AS-SEMI-UNIVERSAL	572

Y-SEPARATE ILLUSTRATION

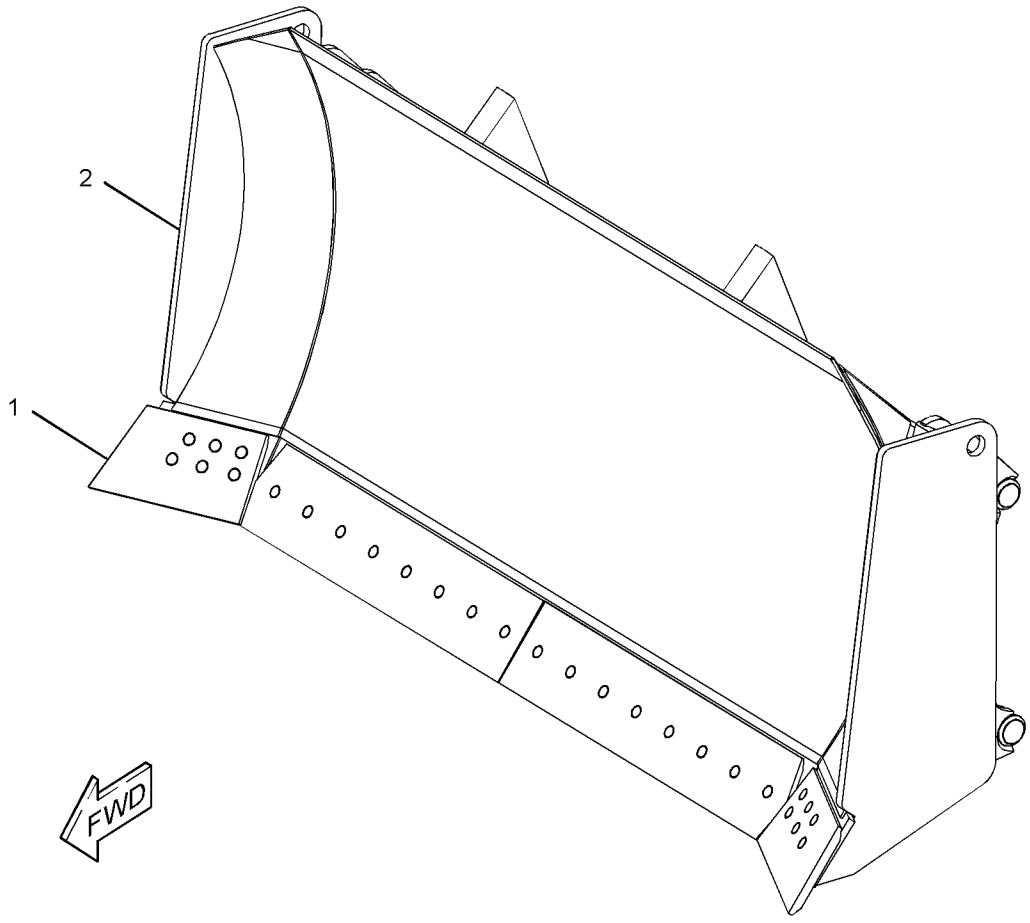

GRAPHIC #1 **<END>** g01209001

WORK TOOLS

252-5857 BLADE & EDGE GP-SEMI-UNIVERSAL

S/N: C4L1-UP; C4N1-UP
PART OF 252-5856 BLADE GP-SEMI-UNIVERSAL
AN ATTACHMENT

SMCS-6060 **i02455195**

NOTE	REF NO	GRAPHIC REF	PART NUMBER	QTY	PART NAME 1 2 3 4 5 6 (PRODUCT LEVEL)	SEE PAGE
Y	1	1	*9W-3762*	1	EDGE GP-BIT & CUTTING	580
Y	2	1	**252-5858**	1	BLADE AS-SEMI-UNIVERSAL	574

Y-SEPARATE ILLUSTRATION

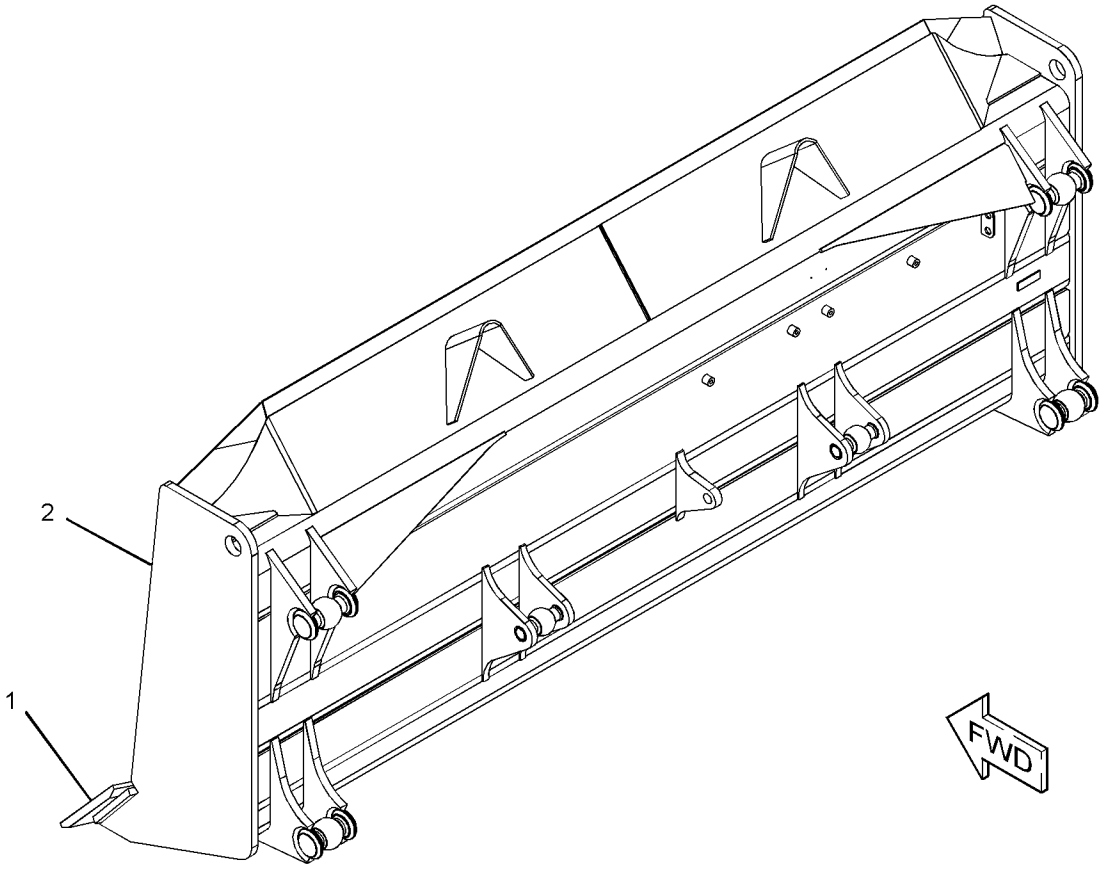

GRAPHIC #1 **<END>** g01208942

WORK TOOLS

230-5556 BLADE AS-SEMI-UNIVERSAL

S/N: D6C1-UP; C4W1-UP
PART OF 230-5557 BLADE & EDGE GP-SEMI-UNIVERSAL
AN ATTACHMENT

SMCS-6060 **i02455516**

NOTE	REF NO	GRAPHIC REF	PART NUMBER	QTY	PART NAME 1 2 3 4 5 6 (PRODUCT LEVEL)	SEE PAGE
	1	1	**1U-0183**	2	DEFLECTOR	
	2	1	**6Y-1390**	1	SUPPORT	
	3	1	**8E-5205**	2	SUPPORT	
	4	1	**8P-9770**	1	PLATE	
	5	1	**9W-6381**	1	PLATE	
	6	1	**135-2964**	1	BRACKET AS (LH)	
	6A	1	**7J-5131**	1	TRUNNION	
	7	1	**135-2966**	1	BRACKET AS (RH)	
	7A	1	**7J-5131**	1	TRUNNION	
	8	1	**135-3084**	2	BRACKET AS	
					(EACH INCLUDES)	
	8A	1	**4J-1641**	1	TRUNNION	
	9	1	**142-2328**	1	BRACKET	
	10	1	**142-9643**	2	BRACKET AS	
					(EACH INCLUDES)	
	10A	1	**4T-1504**	1	TRUNNION	

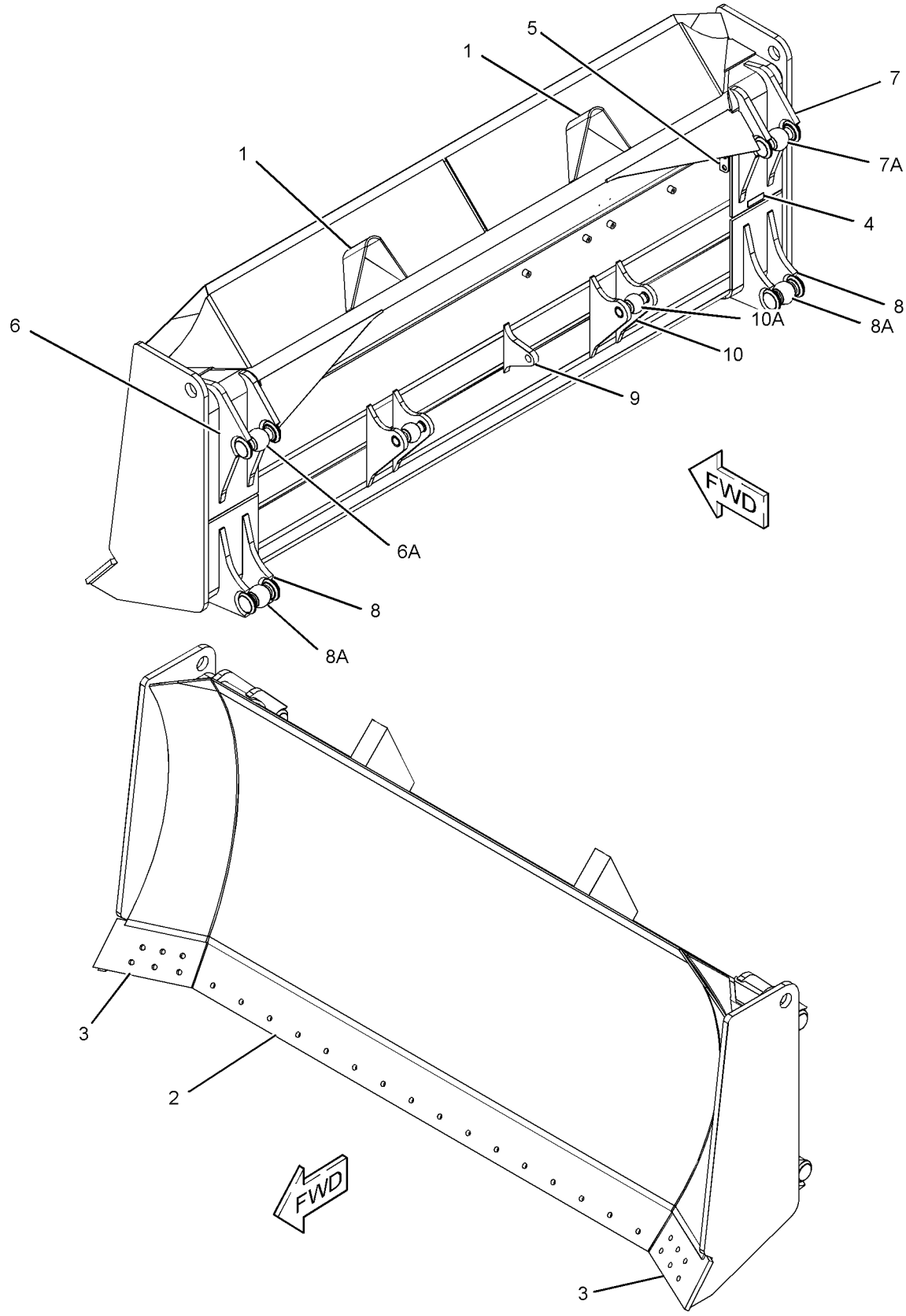

GRAPHIC #1 **<END>** g01213373

252-5858 BLADE AS-SEMI-UNIVERSAL

S/N: C4L1-UP; C4N1-UP
PART OF 252-5857 BLADE & EDGE GP-SEMI-UNIVERSAL
AN ATTACHMENT

SMCS-6060 **i02455217**

NOTE	REF NO	GRAPHIC REF	PART NUMBER	QTY	PART NAME 1 2 3 4 5 6 (PRODUCT LEVEL)	SEE PAGE
	1	1	**1U-0183**	2	DEFLECTOR	
	2	1	**8P-9770**	1	PLATE	
	3	1	**9W-6381**	1	PLATE	
	4	1	**8E-5188**	2	BRACKET AS	
					(EACH INCLUDES)	
	4A	1	**7J-5131**	1	TRUNNION	
	5	1	**6Y-1387**	1	PLATE	
	6	1	**8E-5190**	2	BRACKET AS	
					(EACH INCLUDES)	
	6A	1	**4T-1504**	1	TRUNNION	
	7	1	**6Y-1390**	1	SUPPORT	
	8	1	**8E-5194**	1	BRACKET	
	9	1	**8E-5192**	2	BRACKET AS	
					(EACH INCLUDES)	
	9A	1	**4J-1641**	1	TRUNNION	
	10	1	**8E-5205**	2	SUPPORT	

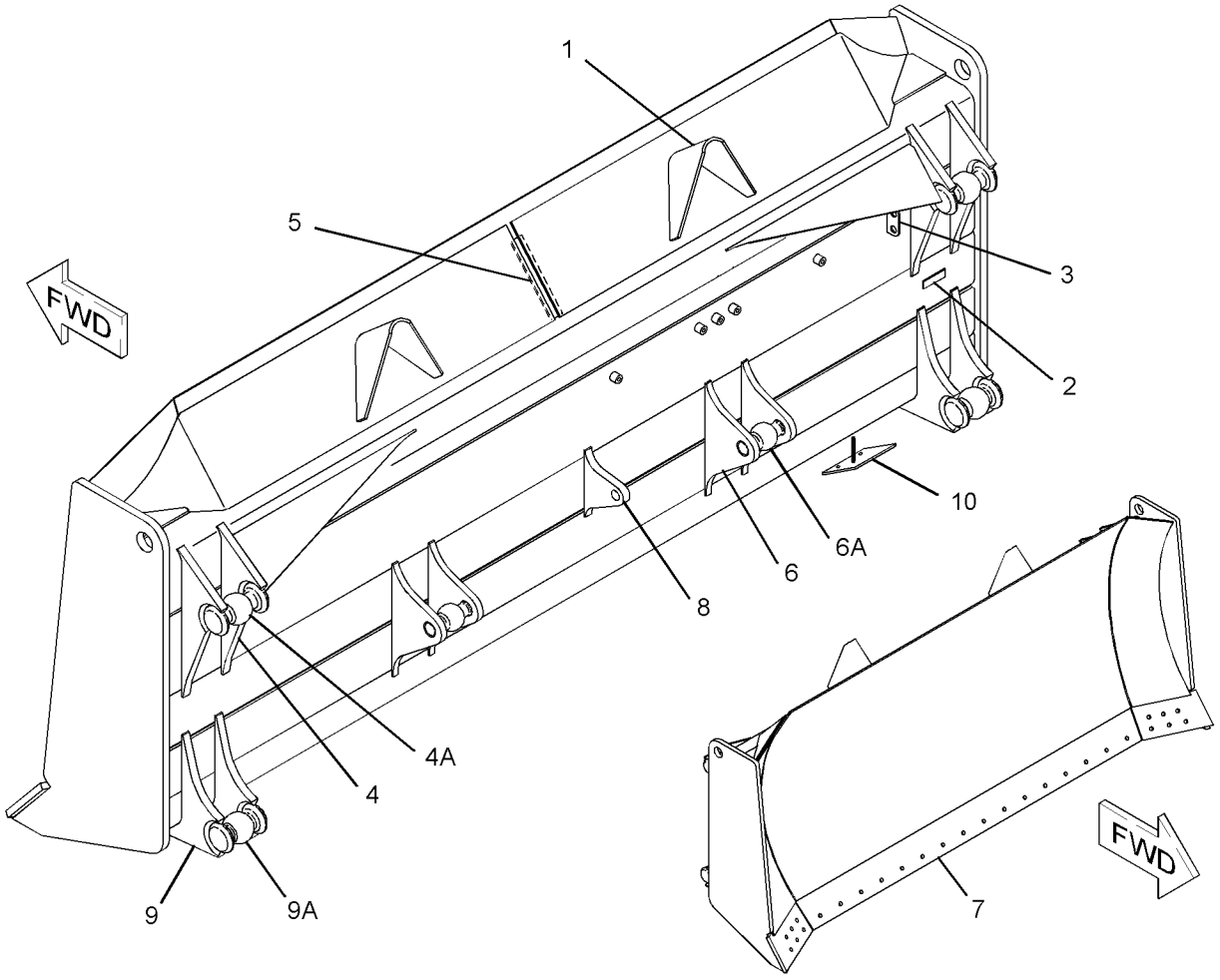

GRAPHIC #1 **<END>** g01205475

WORK TOOLS

251-9818 BLADE GP-ANGLING

S/N: C4C1-UP; C4K1-UP; C4R1-UP; C4T1-UP
PART OF 251-6112, 251-6113, 251-6128, 251-6129 BULLDOZER AR-ANGLING
AN ATTACHMENT

SMCS-6052, 6060 **i02454638**

NOTE	REF NO	GRAPHIC REF	PART NUMBER	QTY	PART NAME 1 2 3 4 5 6 (PRODUCT LEVEL)	SEE PAGE
	1	1	**6Y-6751**	1	PIN	
Y	2	1	*251-9819*	1	BLADE & EDGE GP-ANGLING	569
	3	1	**251-9827**	4	TRUNNION	
	4	1	**251-9829**	1	RETAINER	
M	5	1	**7X-2553**	1	BOLT (M16X2X40-MM)	
M	6	1	**7X-2563**	16	BOLT (M20X2.5X60-MM)	

M-METRIC PART
Y-SEPARATE ILLUSTRATION

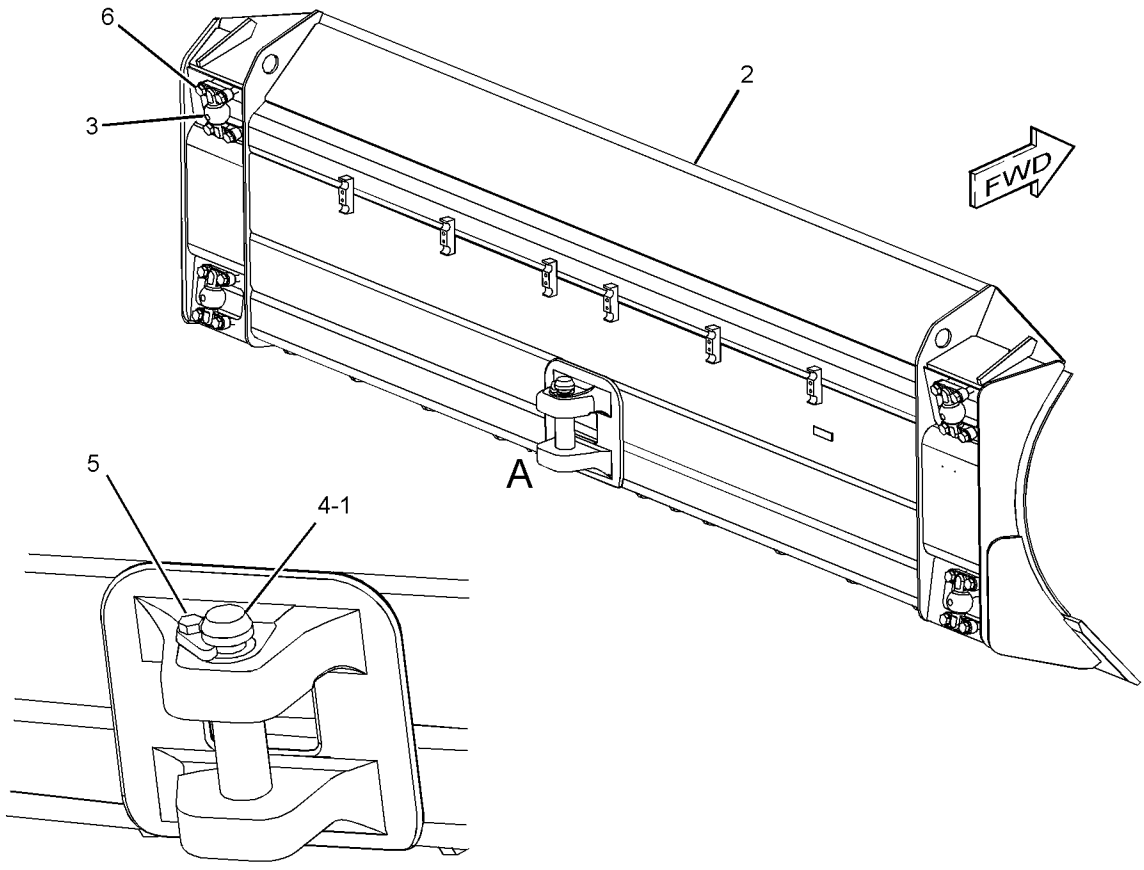

VIEW OF AREA A

GRAPHIC #1 **<END>** g01206822

230-5558 BLADE GP-SEMI-UNIVERSAL

S/N: D6C1-UP; C4W1-UP
PART OF 230-5553, 251-6120 BULLDOZER AR-SEMI-UNIVERSAL
AN ATTACHMENT

SMCS-6060, 6078 **i02454968**

NOTE	REF NO	GRAPHIC REF	PART NUMBER	QTY	PART NAME 1 2 3 4 5 6 (PRODUCT LEVEL)	SEE PAGE
	1	1	**4T-1481**	1	LINK AS	
Y	2	1	*230-5557*	1	BLADE & EDGE GP-SEMI-UNIVERSAL	570
	3	1	**3B-4632**	2	PIN-COTTER	
	4	1	**8H-8898**	2	PIN	

Y-SEPARATE ILLUSTRATION

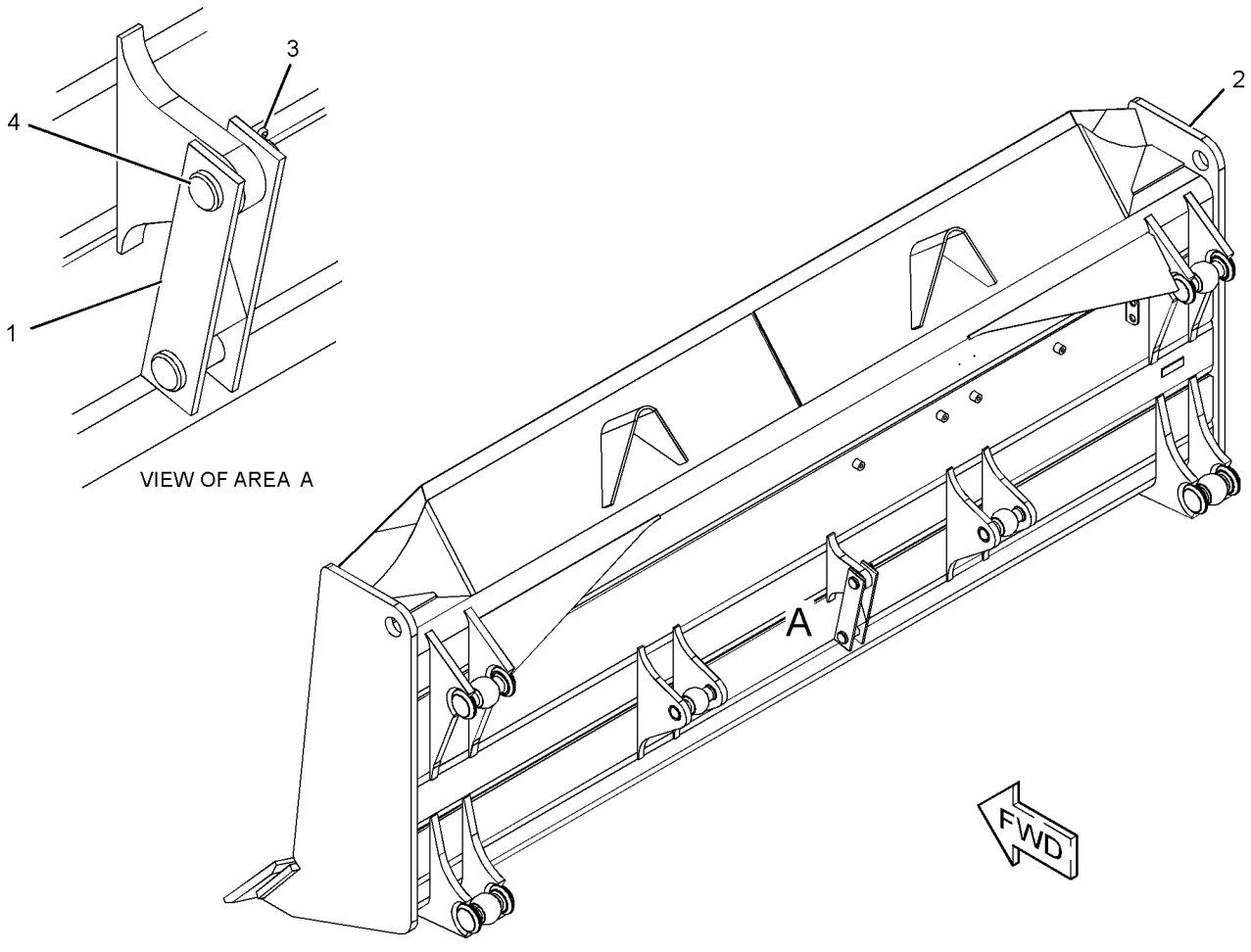

GRAPHIC #1 **<END>** g01208962

WORK TOOLS

252-5856 BLADE GP-SEMI-UNIVERSAL

S/N: C4L1-UP; C4N1-UP

PART OF 252-5854, 252-5855 BULLDOZER AR-SEMI-UNIVERSAL

AN ATTACHMENT

SMCS-6060, 6078 **i02454886**

NOTE	REF NO	GRAPHIC REF	PART NUMBER	QTY	PART NAME 1 2 3 4 5 6 (PRODUCT LEVEL)	SEE PAGE
	1	1	**4T-1481**	1	LINK AS	
Y	2	1	*252-5857*	1	BLADE & EDGE GP-SEMI-UNIVERSAL	571
	3	1	**3B-4632**	2	PIN-COTTER	
	4	1	**8H-8898**	2	PIN	

Y-SEPARATE ILLUSTRATION

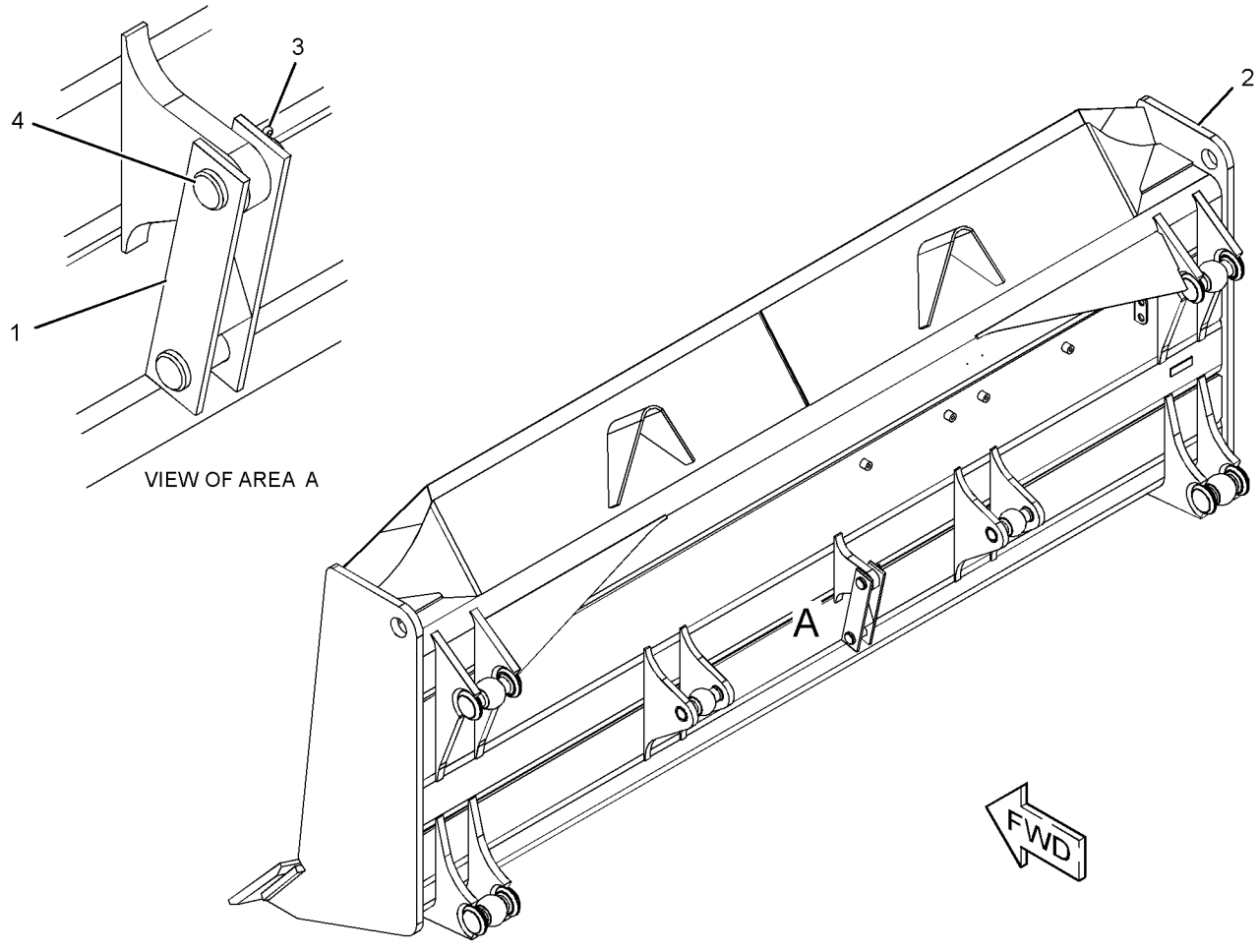

GRAPHIC #1 **<END>** g01208962

WORK TOOLS

267-4492 CONTROL GP-WINCH

S/N: JDL1-UP; GMT1-UP
PART OF 267-4491 INSTALLATION AR-WINCH
AN ATTACHMENT

SMCS-5161, 5170 **i02455618**

NOTE	REF NO	GRAPHIC REF	PART NUMBER	QTY	PART NAME 1 2 3 4 5 6 (PRODUCT LEVEL)	SEE PAGE
	1	1	**7K-1181**	6	STRAP-CABLE	
	2	1	**138-2434**	1	LAMP (24-VOLT)	
	3	1	**138-2435**	1	FILM-IDENTIFICATION (WINCH FREESPOOL)	
	4	1	**163-3205**	1	CONTROL GP-HANDLE (WINCH CONTROL)	
B	5	1	**166-4841**	1	BOOT	
	6	1	**166-4842**	1	PLATE	
	7	1	**173-8938**	1	FILM-IDENTIFICATION (FILTER)	
	8	1	**249-2804**	1	HARNESS AS-WIRING	
	9	1	**4P-7429**	1	CLIP	
	10	1	**5M-3062**	1	BOLT (3/8-16X0.75-IN)	
	11	1	**8T-4896**	1	WASHER-HARD (10.2X18.5X2.5-MM THK)	
	12	1	**8T-9394**	4	BOLT-SOCKET HEAD (10-24-2AX0.5-IN)	

B-USE AS REQUIRED

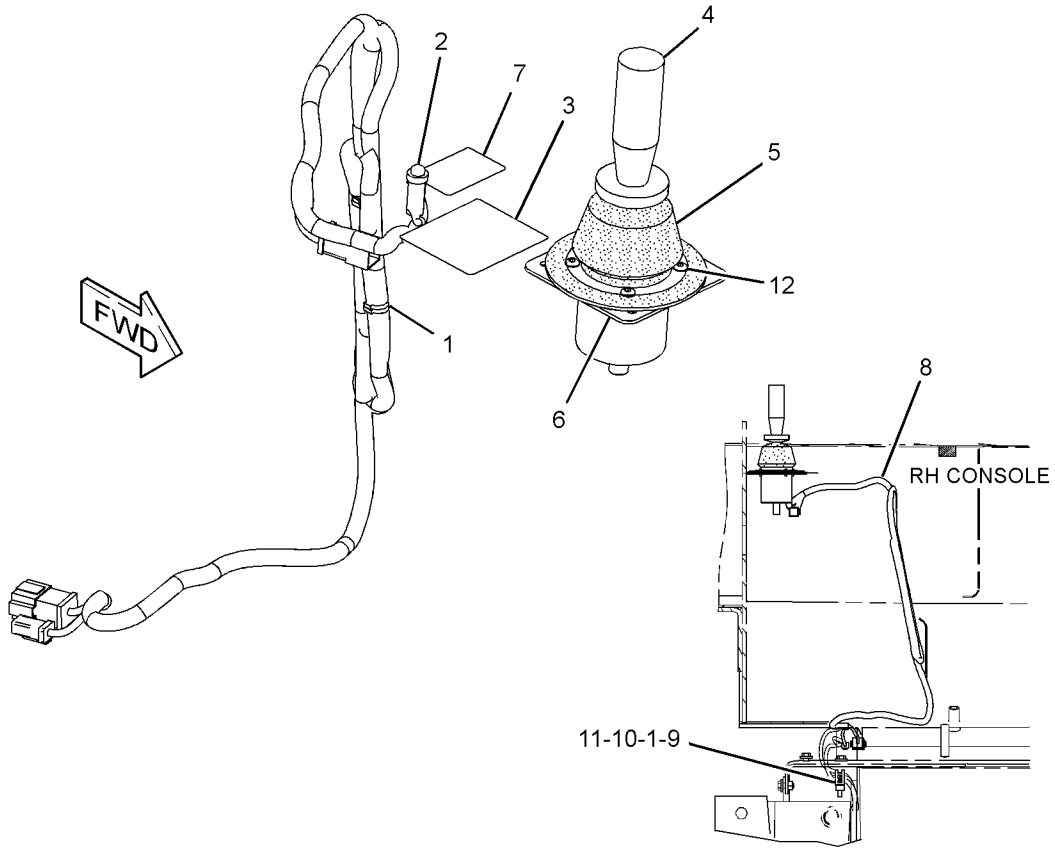

RIGHT SIDE VIEW

GRAPHIC #1 **<END>** g01214134

6Y-2039 EDGE GP-BIT & CUTTING—ANGLING

S/N: C4C1-UP; C4K1-UP; C4R1-UP; C4T1-UP
PART OF 251-9819 BLADE & EDGE GP-ANGLING
AN ATTACHMENT

SMCS-6801, 6804 **i00601010**

NOTE	REF NO	GRAPHIC REF	PART NUMBER	QTY	PART NAME 1 2 3 4 5 6 (PRODUCT LEVEL)	SEE PAGE
	1	1	**9W-8874**	1	BIT-END-RH	
		1	**9W-8875**	1	BIT-END-LH	
	2	1	**5J-4773**	32	BOLT-PLOW (3/4-10X2.5IN)	
		1	**5P-8248**	32	WASHER-HARD (3.5MM THK)	
		1	**2J-3506**	32	NUT-FULL (3/4-10 THD)	
	3	1	**4T-2952**	4	EDGE-CUTTING	

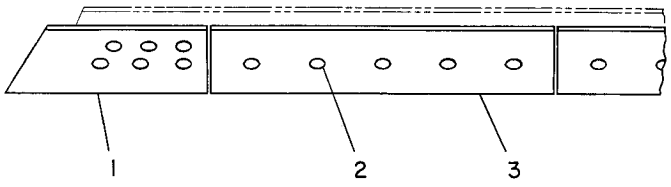

GRAPHIC #1 **<END>** g00195495

9W-3762 EDGE GP-BIT & CUTTING—SEMI-UNIVERSAL

S/N: D6C1-UP; C4L1-UP; C4N1-UP; C4W1-UP

PART OF 230-5557, 252-5857 BLADE & EDGE GP-SEMI-UNIVERSAL

AN ATTACHMENT

SMCS-6801, 6804 **i02455657**

NOTE	REF NO	GRAPHIC REF	PART NUMBER	QTY	PART NAME 1 2 3 4 5 6 (PRODUCT LEVEL)	SEE PAGE
	1	1	**9W-8874**	1	BIT-END (RH)	
	2	1	**9W-8875**	1	BIT-END (LH)	
	3	1	**9W-1878**	2	EDGE-CUTTING	
	4	1	**5J-4773**	28	BOLT-PLOW (3/4-10X2.5-IN)	
	5	1	**5P-8248**	28	WASHER-HARD (20X36.5X3.5-MM THK)	
	6	1	**2J-3506**	28	NUT-FULL (3/4-10-THD)	

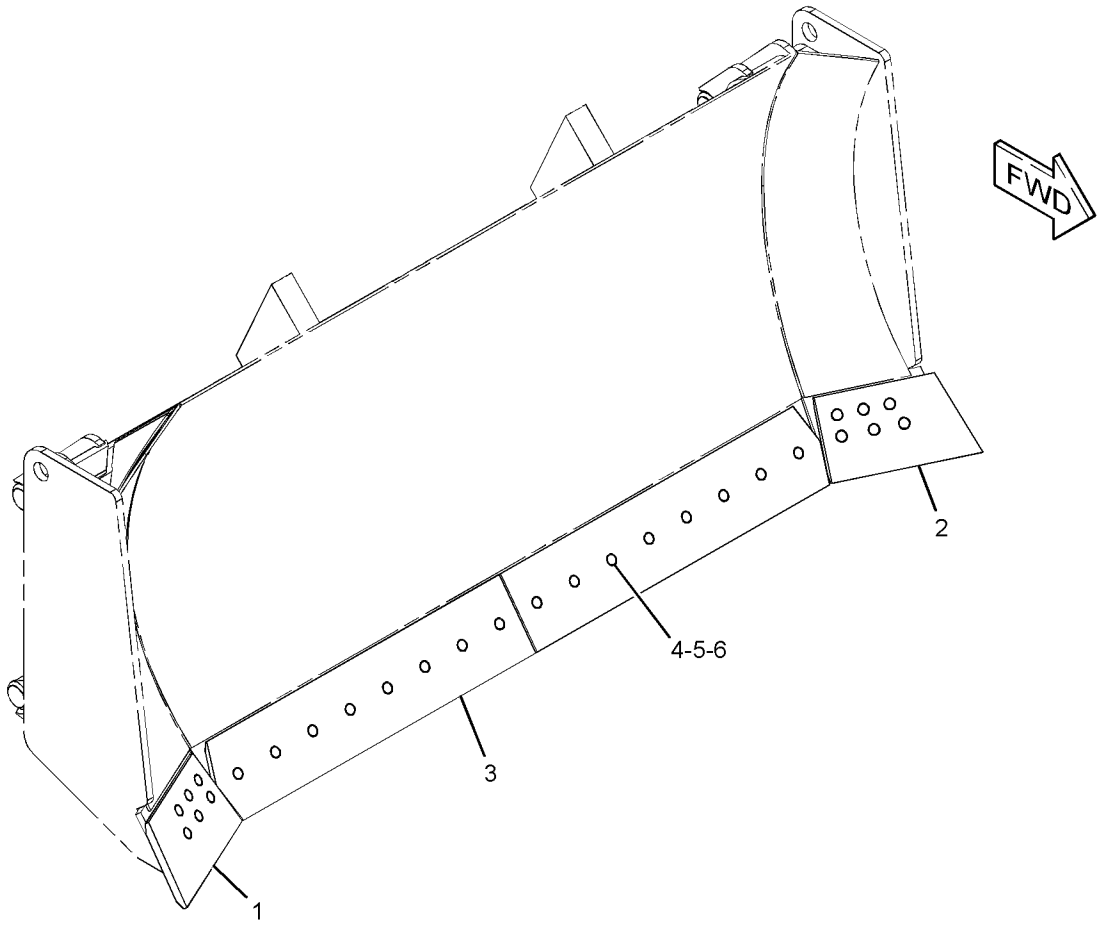

GRAPHIC #1 **<END>** g01225785

WORK TOOLS

267-4491 INSTALLATION AR-WINCH

S/N: JDL1-UP; GMT1-UP

FOR USE WITH REAR SCREEN ATTACHMENT. CANNOT BE USED WITH OTHER REAR ATTACHMENTS THAT BOLT TO THE BACK OF THE BEVEL GEAR CASE

AN ATTACHMENT

SMCS-5163 **i02455605**

NOTE	PART NUMBER	QTY	PART NAME 1 2 3 4 5 6 (PRODUCT LEVEL)	SEE PAGE
Y	*267-4492*	1	CONTROL GP-WINCH	578
Y	*3W-1356*	1	GUARD GP-TRANSMISSION	363
	7X-7644	1	FILM-INFORMATION (TIE-DOWN)	
			(ON WINCH DRAWBAR CLEVIS)	

Y-SEPARATE ILLUSTRATION

<END>

WORK TOOLS

238-7757 LINES GP-WINCH

S/N: JDL1-UP; GMT1-UP
PART OF 239-5912 CONTROL AR-HYDRAULIC IMPLEMENT
AN ATTACHMENT

SMCS-5179 **i02454835**

NOTE	REF NO	GRAPHIC REF	PART NUMBER	QTY	PART NAME 1 2 3 4 5 6 (PRODUCT LEVEL)	SEE PAGE
	1	1	**2H-9233**	2	SPACER (0.563X1X1-IN THK)	
	2	1	**7K-1181**	1	STRAP-CABLE	
	3	1	**170-4891**	1	HARNESS AS-SOLENOID (WINCH, REAR)	
		1	**155-2260**	1	KIT-CONNECTING PLUG (3-PIN)	
		1	**155-2270**	1	KIT-CONNECTING PLUG (2-PIN)	
					(EACH INCLUDES PLUG AS, WEDGE, & INTERFACE SEAL)	
Y	4	1	**201-0950**	1	VALVE GP-SOLENOID (HYDRAULIC LOCKOUT)	549
	5	1	**226-6583**	1	BRACKET AS	
	6	1	**234-2869**	1	MANIFOLD	
I	7	1	**234-3422**	1	HOSE AS	
	8	1	**234-3425**	1	GUARD	
	9	1	**239-5235**	1	BRACKET AS	
M		1	**8T-3490**	2	NUT-WELD (M10X1.5-THD)	
I	10	1	**258-5489**	1	HOSE AS	
I	11	1	**258-5490**	1	HOSE AS	
	12	1	**260-6479**	1	BRACKET AS	
	13	1	*148-8336*	2	CONNECTOR AS	
					(EACH INCLUDES)	
		1	**6V-8636**	1	CONNECTOR	
		1	**3J-1907**	1	SEAL-O-RING	
		1	**6V-8397**	1	SEAL-O-RING	
	14	1	*148-8340*	1	CONNECTOR AS	
		1	**6V-8639**	1	CONNECTOR	
		1	**3K-0360**	1	SEAL-O-RING	
		1	**6V-8398**	1	SEAL-O-RING	
	15	1	*148-8411*	1	PLUG AS	
		1	**9S-4185**	1	PLUG	
		1	**3K-0360**	1	SEAL-O-RING	
	16	1	*155-3624*	1	PLUG AS	
		1	**9S-4182**	1	PLUG	
		1	**3J-7354**	1	SEAL-O-RING	
	17	1	*164-9904*	1	TEE GP	
		1	**122-9088**	1	TEE	
		1	**2M-9780**	1	SEAL-O-RING	
		1	**6V-9746**	2	SEAL-O-RING	
	18	1	*183-3406*	1	PLUG AS	
		1	**9S-4191**	1	PLUG-O RING	
		1	**6V-5049**	1	SEAL-O-RING	
	19	1	**1P-3702**	2	SEAL-RECTANGULAR	
	20	1	**1P-3703**	4	SEAL-RECTANGULAR	
	21	1	**1S-0994**	2	CLIP	
	22	1	**4P-7581**	1	CLIP	
	23	1	**5P-0047**	2	COVER	
	24	1	**5P-1075**	5	WASHER-HARD (10.2X22.5X3-MM THK)	
	25	1	**6V-0400**	8	FLANGE-HALF	
	26	1	**7G-3832**	1	GROMMET	
	27	1	**7G-3834**	1	CLIP (SLOT)	
	28	1	**8T-4121**	1	WASHER-HARD (11X21X2.5-MM THK)	
M	29	1	**8T-4136**	2	BOLT (M10X1.5X25-MM)	
M	30	1	**8T-4184**	16	BOLT (M12X1.75X45-MM)	
M	31	1	**8T-4195**	2	BOLT (M10X1.5X30-MM)	
	32	1	**8T-4223**	18	WASHER-HARD (13.5X25.5X3-MM THK)	
M	33	1	**8T-4956**	2	BOLT (M12X1.75X35-MM)	
M	34	1	**8T-6466**	2	BOLT (M10X1.5X60-MM)	

I-REFER TO HYDRAULIC INFORMATION SYSTEM
M-METRIC PART
Y-SEPARATE ILLUSTRATION

238-7757 **LINES GP-WINCH** *(contd.)* **i02454835**

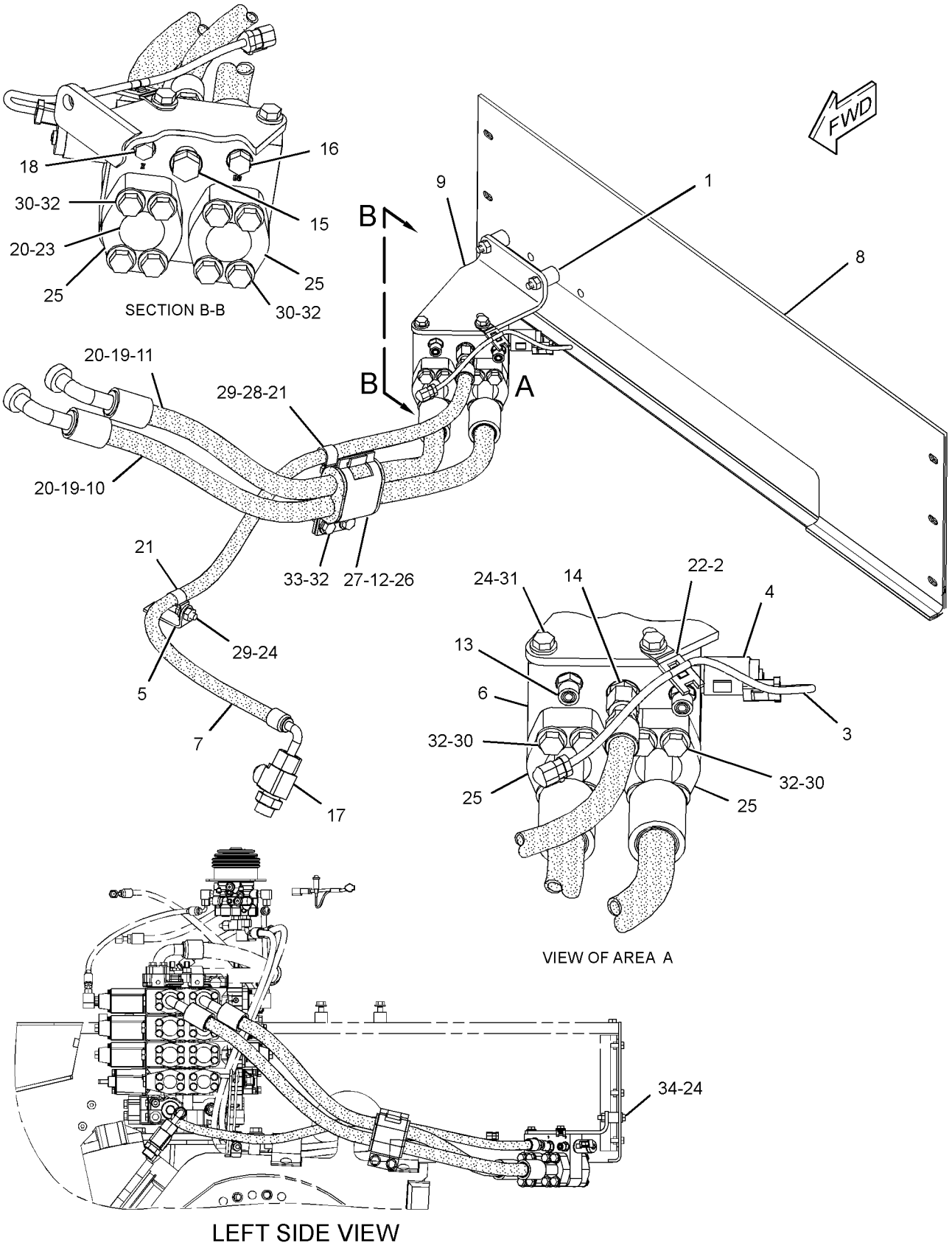

GRAPHIC #1 **<END>** g01212454

245-4122 MOUNTING GP-MAST–GRADE CONTROL

S/N: GMT1-UP
LASER APPLICATION
FOR USE WITH SEMI-UNIVERSAL BLADE
AN ATTACHMENT

SMCS-79NS **i02455477**

NOTE	REF NO	GRAPHIC REF	PART NUMBER	QTY	PART NAME 1 2 3 4 5 6 (PRODUCT LEVEL)	SEE PAGE
	1	1	**247-5689**	3	BRACKET AS	
	2	1	**248-2336**	1	PLATE AS	

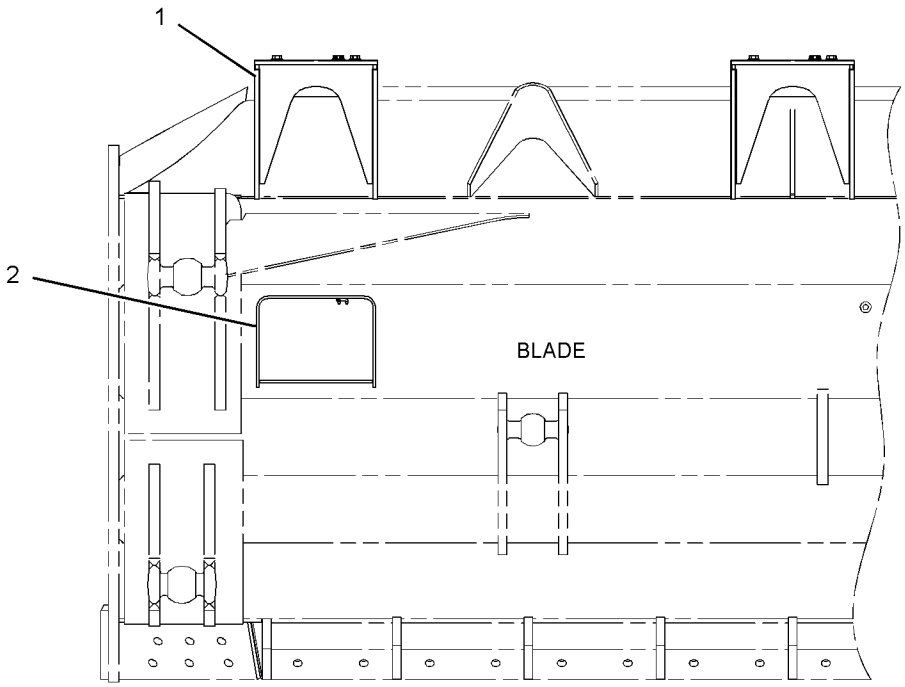

REAR VIEW

GRAPHIC #1 **<END>** g01215488

WORK TOOLS

245-4123 MOUNTING GP-MAST—GRADE CONTROL

S/N: JDL1-UP
FOR USE WITH SEMI-UNIVERSAL BLADE
AN ATTACHMENT

SMCS-79NS **i02456694**

NOTE	REF NO	GRAPHIC REF	PART NUMBER	QTY	PART NAME 1 2 3 4 5 6 (PRODUCT LEVEL)	SEE PAGE
	1	1	**247-5683**	3	BRACKET AS	
					(EACH INCLUDES)	
M		1	**8T-4183**	10	BOLT (M12X1.75X40-MM)	
		1	**8T-4223**	10	WASHER-HARD (13.5X25.5X3-MM THK)	
	2	1	**248-2336**	1	PLATE AS	

M-METRIC PART

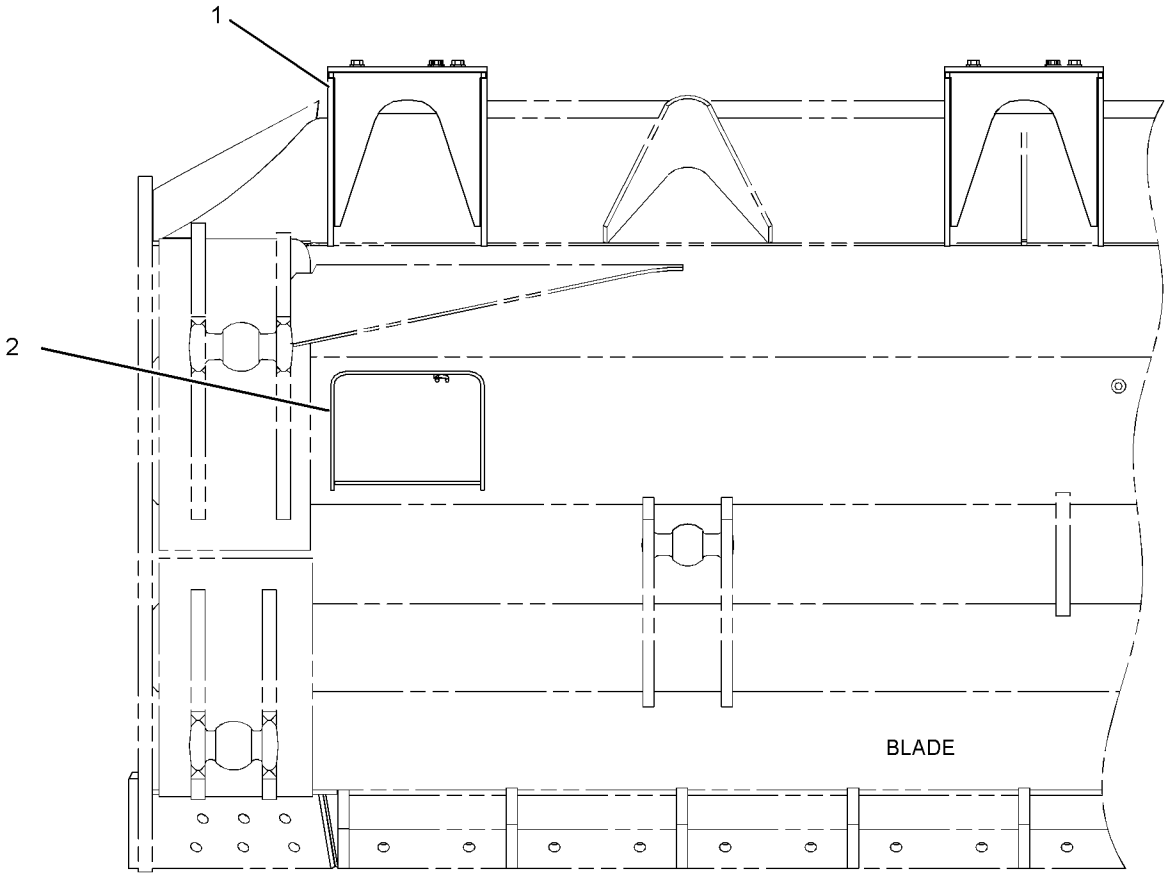

REAR VIEW

GRAPHIC #1 **<END>** g01215478

WORK TOOLS

245-4142 MOUNTING GP-MAST—GRADE CONTROL

S/N: JDL1-UP
FOR USE WITH ANGLING BLADE
AN ATTACHMENT

SMCS-79NS **i02456841**

NOTE	REF NO	GRAPHIC REF	PART NUMBER	QTY	PART NAME 1 2 3 4 5 6 (PRODUCT LEVEL)	SEE PAGE
	1	1	**247-5700**	2	BRACKET AS	
	2	1	**248-5035**	1	BRACKET AS	
					(EACH BRACKET ASSEMBLY INCLUDES)	
M		1	**8T-4183**	10	BOLT (M12X1.75X40-MM)	
		1	**8T-4223**	10	WASHER-HARD (13.5X25.5X3-MM THK)	

M-METRIC PART

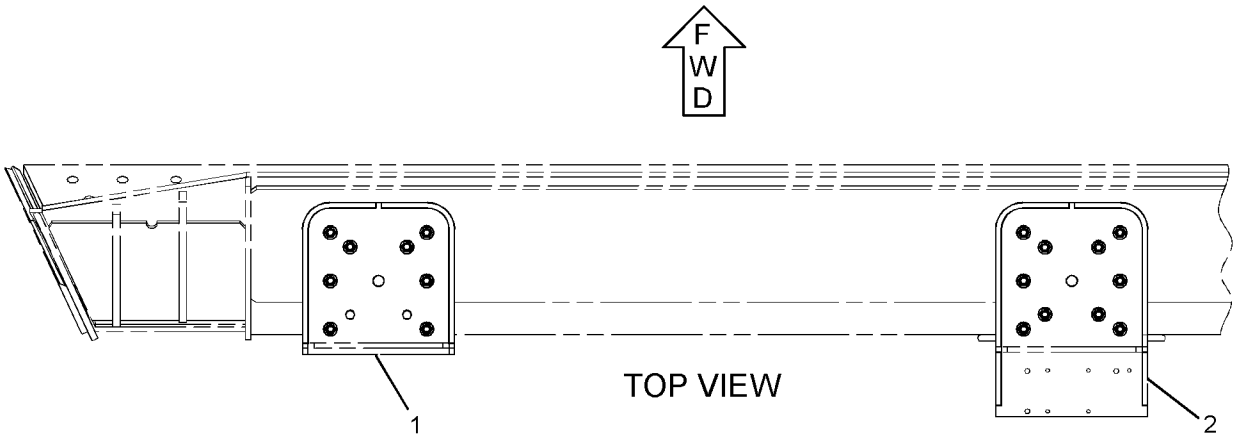

GRAPHIC #1 **<END>** g01210632

WORK TOOLS

224-4454 MOUNTING GP-RIPPER

S/N: D6D1-UP
PART OF 224-4449 RIPPER AR
AN ATTACHMENT

SMCS-6165, 6310, 6324 **i02454032**

NOTE	REF NO	GRAPHIC REF	PART NUMBER	QTY	PART NAME 1 2 3 4 5 6 (PRODUCT LEVEL)	SEE PAGE
	1	1	**1U-0300**	1	BRACKET AS	
		1	**3G-9995**	2	PLATE	
	2	1	**1U-0301**	2	BRACKET AS	
					(EACH INCLUDES)	
		1	**2K-6279**	1	BOSS	
	3	1	**7T-1975**	1	BRACKET AS	
		1	**3G-9995**	2	PLATE	
B	4	1	**9N-4449**	12	SPACER (68X121X1.5-MM THK)	
B	5	1	**9N-4450**	4	SPACER (68X120X5-MM THK)	
	6	1	**9W-0609**	4	SPACER (53X100X35-MM THK)	
	7	1	**1U-0159**	2	PIN	
	8	1	**1U-0612**	2	PIN	
	9	1	**5D-3118**	20	STUD-TAPERLOCK (1-8-THD)	
M	10	1	**6V-7687**	2	LOCKNUT (M12X1.75-THD)	
M	11	1	**6V-7744**	2	LOCKNUT (M10X1.15-THD)	
	12	1	**6V-8190**	20	NUT (1-8-THD)	
M	13	1	**7X-2543**	2	BOLT (M10X1.5X120-MM)	
	14	1	**8T-5361**	20	WASHER-HARD (28X49X5-MM THK)	
M	15	1	**8T-5412**	2	BOLT (M12X1.75X140-MM)	

B-USE AS REQUIRED
M-METRIC PART

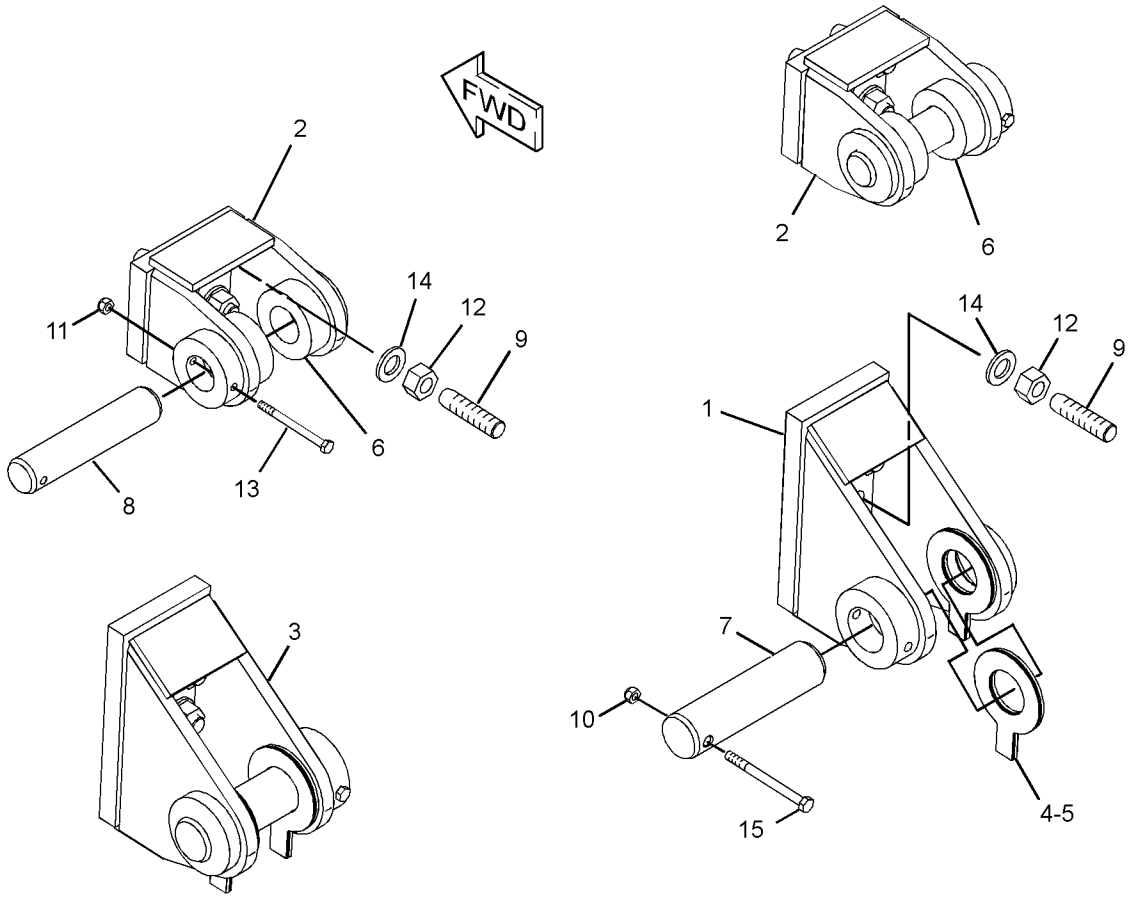

GRAPHIC #1 **<END>** g01208561

WORK TOOLS

224-4449 RIPPER AR

S/N: D6D1-UP
FOR USE WITH 226-9130—PAGE 442
AN ATTACHMENT

SMCS-6310 **i02470875**

NOTE	REF NO	GRAPHIC REF	PART NUMBER	QTY	PART NAME 1 2 3 4 5 6 (PRODUCT LEVEL)	SEE PAGE
Y	1	1	*3W-1356*	1	GUARD GP-TRANSMISSION	363
Y	2	1	*224-4454*	1	MOUNTING GP-RIPPER	588
Y	3	1	**227-0842**	1	CYLINDER GP-RIPPER	454
Y	4	1	*235-8180*	1	LINES GP-RIPPER	482
Y	5	1	*235-8805*	1	RIPPER GP	591
F			**8M-3494**	1	PLATE-SERIAL NUMBER (RIPPER)	
					ON CARRIAGE ASSEMBLY ON RH SIDE OF RH TOWER	
F			**4B-4158**	2	SCREW-DRIVE (3/16X0.25-IN)	
F			**7X-7644**	2	FILM-INFORMATION (TIE-DOWN)	
					1-ON RH SIDE OF TRACK ROLLER FRAME CENTERED BETWEEN FRONT ROLLER & REAR IDLER	
					1-ON LH SIDE OF TRACK ROLLER FRAME CENTERED BETWEEN FRONT ROLLER & REAR IDLER	

F-NOT SHOWN
Y-SEPARATE ILLUSTRATION

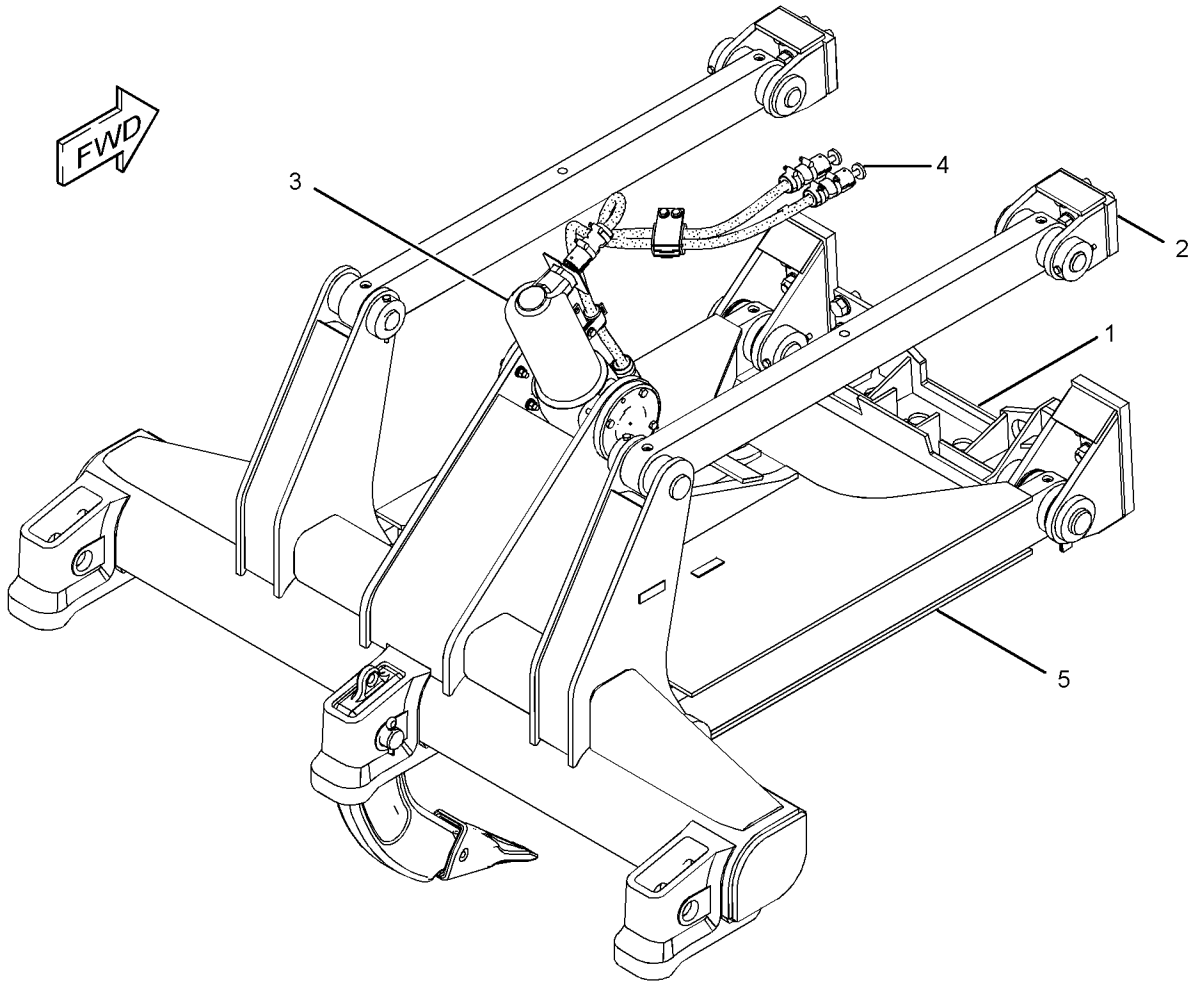

GRAPHIC #1 **<END>** g01208685

WORK TOOLS

235-8805 RIPPER GP

S/N: D6D1-UP
PART OF 224-4449 RIPPER AR
AN ATTACHMENT

SMCS-6310, 6325 **i02454060**

NOTE	REF NO	GRAPHIC REF	PART NUMBER	QTY	PART NAME 1 2 3 4 5 6 (PRODUCT LEVEL)	SEE PAGE
	1	1	**2K-0703**	1	BAR	
	2	1	**3B-8489**	3	FITTING-GREASE	
	3	1	**3K-8510**	1	PIN	
	4	1	**4K-3004**	2	BEARING-TRUNNION SUPPLEMENTARY	
Y	5	1	*9J-8926*	1	TOOTH GP-RIPPER	595
	6	1	**9J-9598**	2	PIN	
	7	1	**9W-0201**	1	CARRIAGE AS	
		1	**8P-9770**	1	PLATE	
		1	**9W-0513**	2	PLATE AS	
		1	**9W-0553**	1	PLATE AS	
	8	1	**9W-0873**	2	LINK AS	
					(EACH INCLUDES)	
		1	**3B-8489**	2	FITTING-GREASE	
		1	**9W-0876**	2	BEARING-SLEEVE	
	9	1	**189-0985**	1	FRAME & BEARING AS	
		1	**3B-8489**	4	FITTING-GREASE	
		1	**9W-0099**	4	BEARING-SLEEVE	
	10	1	**1U-0159**	2	PIN	
	11	1	**5C-6565**	2	BOLT (1/2-13X1.125-IN)	
M	12	1	**6V-7687**	2	LOCKNUT (M12X1.75-THD)	
M	13	1	**6V-7744**	2	LOCKNUT (M10X1.15-THD)	
M	14	1	**7X-2543**	2	BOLT (M10X1.5X120-MM)	
	15	1	**8T-4223**	18	WASHER-HARD (13.5X25.5X3-MM THK)	
M	16	1	**8T-4244**	8	NUT (M12X1.75-THD)	
M	17	1	**8T-4648**	8	BOLT (M12X1.75X70-MM)	
M	18	1	**8T-7930**	2	BOLT (M12X1.75X160-MM)	

M-METRIC PART
Y-SEPARATE ILLUSTRATION

235-8805 **RIPPER GP** *(contd.)* **i02454060**

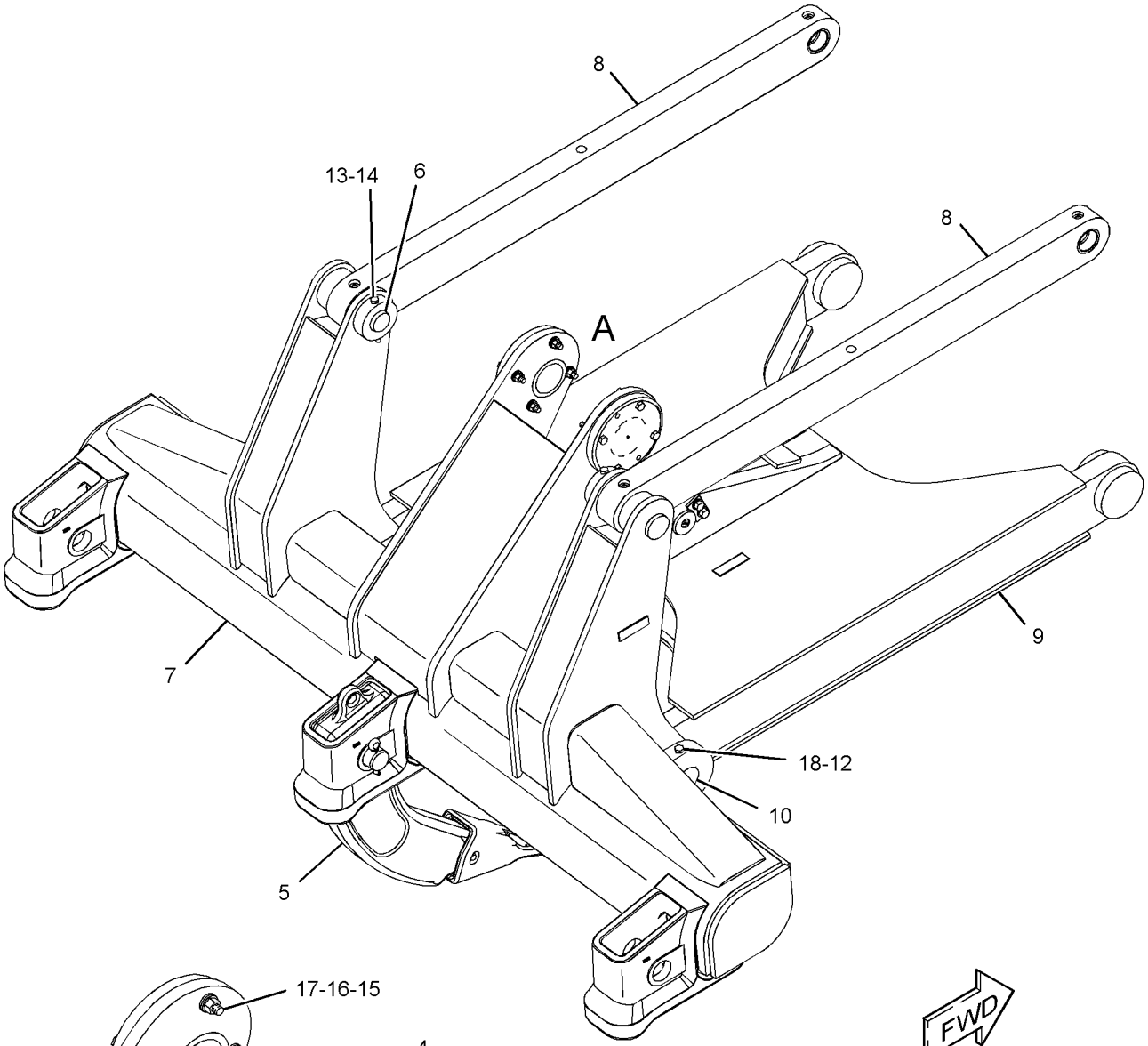

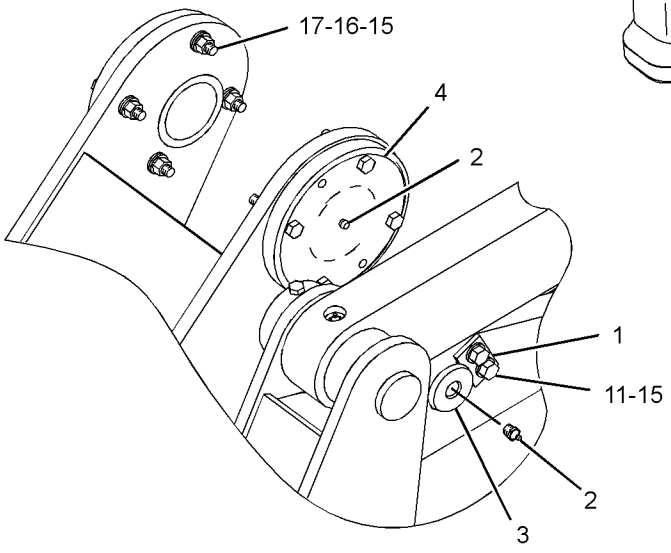

VIEW OF AREA A

GRAPHIC #1 **<END>** g01208692

WORK TOOLS

3A-7880 TOOTH GP-RIPPER—STRAIGHT SHANK-3 TEETH

S/N: JDL1-UP; GMT1-UP

AN ATTACHMENT

SMCS-6808, 6810 **i01814150**

NOTE	PART NUMBER	QTY	PART NAME 1 2 3 4 5 6 (PRODUCT LEVEL)	SEE PAGE
Y	*8J-2189*	3	TOOTH GP-RIPPER	594
Y-SEPARATE ILLUSTRATION				

<END>

8J-2189 TOOTH GP-RIPPER—STRAIGHT SHANK

S/N: JDL1-UP; GMT1-UP

PART OF 174-9198, 174-9199, 3A-7880 TOOTH GP-RIPPER

AN ATTACHMENT

SMCS-6808, 6810 **i01893140**

NOTE	REF NO	GRAPHIC REF	PART NUMBER	QTY	PART NAME 1 2 3 4 5 6 (PRODUCT LEVEL)	SEE PAGE
	1	1	**3B-5325**	2	PIN-COTTER	
	2	1	**8J-2190**	1	PIN	
	3	1	**9J-3139**	1	SHANK-RIPPER	
C	4	1	**114-0358**	1	PIN	
C		1	**114-0359**	1	RETAINER AS (G.E.T.)	
	5	1	**6Y-0359**	1	TIP-RIPPER	

C-CHANGE FROM PREVIOUS TYPE

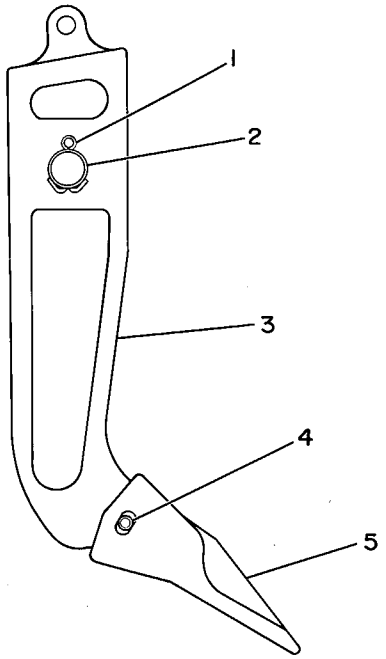

GRAPHIC #1 **<END>** g00081660

WORK TOOLS

9J-8926 TOOTH GP-RIPPER—CURVED SHANK

S/N: D6D1-UP; JDL1-UP; GMT1-UP
PART OF 235-8805 RIPPER GP
AN ATTACHMENT

SMCS-6808, 6810 **i01095060**

NOTE	REF NO	GRAPHIC REF	PART NUMBER	QTY	PART NAME 1 2 3 4 5 6 (PRODUCT LEVEL)	SEE PAGE
	1	1	**3B-5325**	2	PIN-COTTER	
	2	1	**8J-2190**	1	PIN	
	3	1	**9J-8923**	1	SHANK-RIPPER	
	4	1	**114-0358**	1	PIN	
	5	1	**6Y-0352**	1	TIP-RIPPER	
	6	1	**114-0359**	1	RETAINER AS (G.E.T.)	

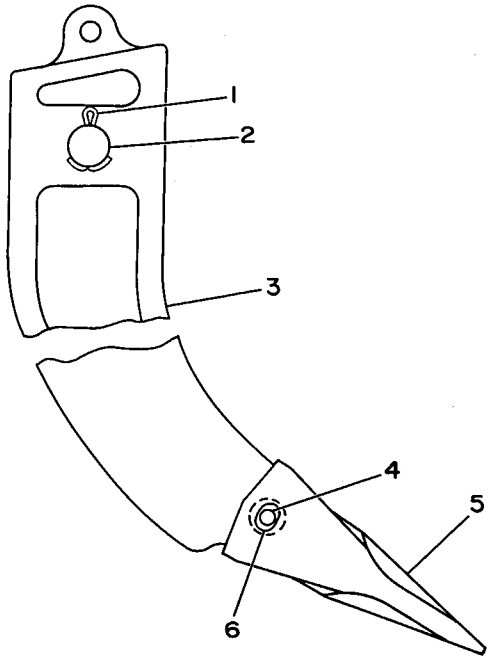

GRAPHIC #1 **<END>** g00174183

174-9198 TOOTH GP-RIPPER—STRAIGHT SHANK-1 TOOTH

S/N: JDL1-UP; GMT1-UP
AN ATTACHMENT

SMCS-6808, 6810 **i01816428**

NOTE	PART NUMBER	QTY	PART NAME 1 2 3 4 5 6 (PRODUCT LEVEL)	SEE PAGE
Y	*8J-2189*	1	TOOTH GP-RIPPER	594
Y-SEPARATE ILLUSTRATION				

<END>

174-9199 TOOTH GP-RIPPER—STRAIGHT SHANK-2 TEETH

S/N: JDL1-UP; GMT1-UP
AN ATTACHMENT

SMCS-6808, 6810 **i01816437**

NOTE	PART NUMBER	QTY	PART NAME 1 2 3 4 5 6 (PRODUCT LEVEL)	SEE PAGE
Y	*8J-2189*	2	TOOTH GP-RIPPER	594
Y-SEPARATE ILLUSTRATION				

<END>

OPERATOR STATION

173-1028 ADJUSTER GP-SEAT

S/N: JDL1-UP; GMT1-UP
PART OF 178-0603, 180-7304 SEAT GP
ALSO AN ATTACHMENT

SMCS-7321 **i01582195**

NOTE	REF NO	GRAPHIC REF	PART NUMBER	QTY	PART NAME 1 2 3 4 5 6 (PRODUCT LEVEL)	SEE PAGE
	1	1	**4V-8256**	4	SPRING	
	2	1	**117-4492**	1	ROD	
	3	1	**136-1544**	1	LATCH AS-LH	
	4	1	**156-5545**	1	LATCH AS-RH	
	5	1	**164-4531**	1	ROD	
	6	1	**170-1112**	1	PLATE AS	
	7	1	**170-1114**	1	HANDLE (SLIDE ADJUSTMENT)	
	8	1	**170-1115**	1	HANDLE (TILT ADJUSTMENT)	
	9	1	**132-0338**	2	WASHER-PLASTIC (13X31.7X.8-MM THK)	
	10	1	**2K-4973**	2	LOCKNUT (3/8-16-THD)	
	11	1	**7X-0608**	2	WASHER-HARD (10.2X16X2-MM THK)	

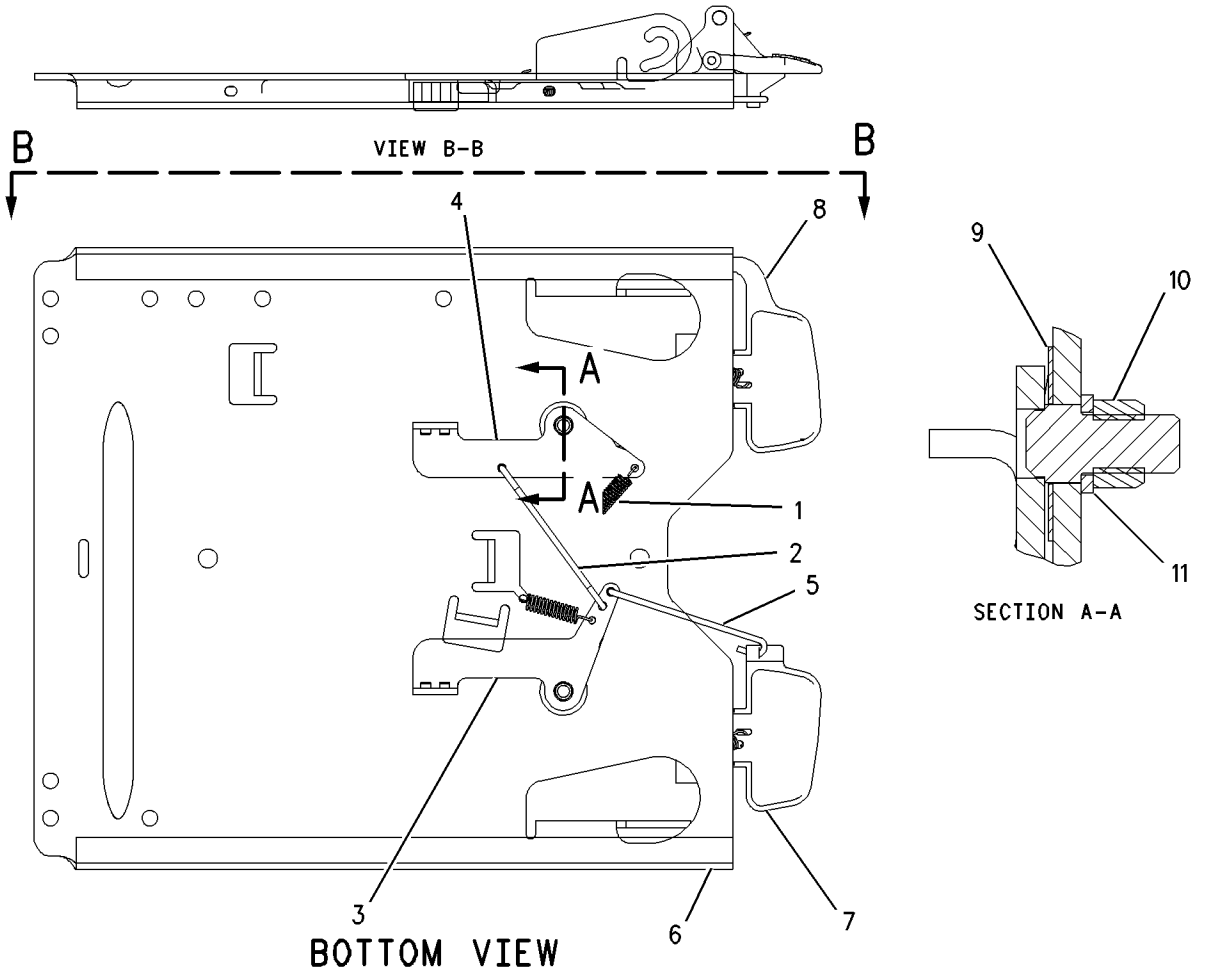

GRAPHIC #1 **<END>** g00816460

OPERATOR STATION

228-7854 AIR CONDITIONER AR

S/N: JDL1-UP; GMT1-UP

AN ATTACHMENT

SMCS-7320 **i02456068**

NOTE	PART NUMBER	QTY	PART NAME 1 2 3 4 5 6 (PRODUCT LEVEL)	SEE PAGE
Y	*237-1000*	1	CONDENSER & MTG GP-REFRIGERANT	612
Y	*223-1678*	1	LINES GP-AIR CONDITIONER	643
	110-6393	1	PLATE-INSTRUCTION (AIR CONDITIONER)	
			ON LH SIDE OF DASH TO BE READ THROUGH CAB DOOR	
	227-5055	1	ROPS AS	
M	**9R-2640**	1	BOSS (M12X1.75X25-MM)	
	227-5054	1	ROPS AS	

M-METRIC PART
Y-SEPARATE ILLUSTRATION

<END>

OPERATOR STATION

279-2591 AIR CONDITIONER GP

S/N: JDL1-UP; GMT1-UP
PART OF 223-0535 CAB AR

SMCS-7320 **i02433638**

NOTE	REF NO	GRAPHIC REF	PART NUMBER	QTY	PART NAME 1 2 3 4 5 6 (PRODUCT LEVEL)	SEE PAGE
	1	1	**3E-5464**	1	SWITCH AS-TEMPERATURE (REFRIGERANT)	
	2	1	**109-6406**	1	COIL AS	
	3	1	**2V-1937**	2	GROMMET	
	4	1	**5P-1075**	2	WASHER-HARD (10.2X22.5X3-MM THK)	
	5	1	**6L-7159**	2	SCREW-MACHINE (8-32X0.313-IN)	
	6	1	**8T-4121**	2	WASHER-HARD (11X21X2.5-MM THK)	
M	7	1	**8T-4137**	2	BOLT (M10X1.5X20-MM)	
M	8	1	**8T-4191**	2	BOLT (M10X1.5X16-MM)	
E	9	1	**144-0195**		HOSE (12-CM)	
D	10	1	**5P-5643**		SEAL (0.40-M EACH)	

D-ORDER BY THE METER
E-ORDER BY THE CENTIMETER
M-METRIC PART

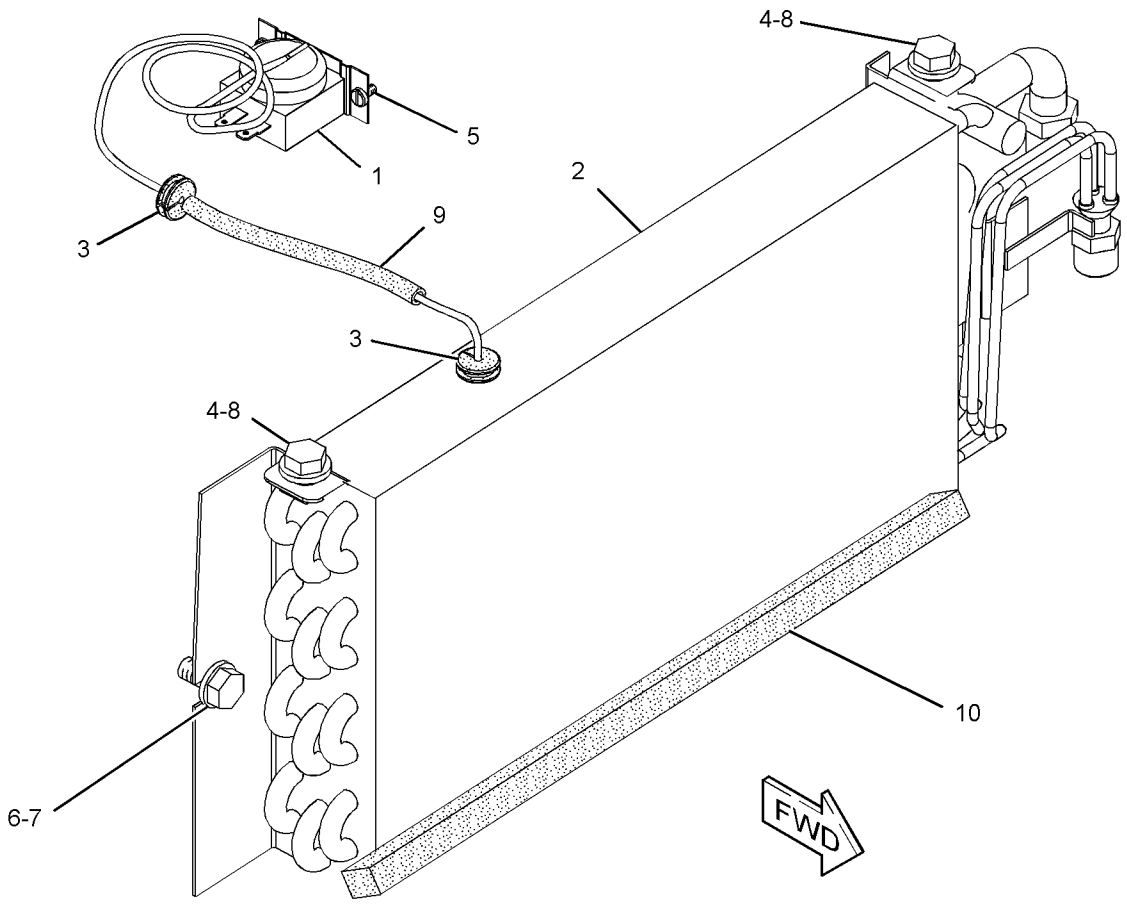

GRAPHIC #1 **<END>** g01210735

OPERATOR STATION

230-5388 BLOWER GP-CAB

S/N: JDL1-UP; GMT1-UP
PART OF 230-4700 PRESSURIZER GP-CAB
ALSO AN ATTACHMENT

SMCS-7316 **i02450628**

NOTE	REF NO	GRAPHIC REF	PART NUMBER	QTY	PART NAME 1 2 3 4 5 6 (PRODUCT LEVEL)	SEE PAGE
	1	1	**3S-2093**	1	STRAP-CABLE	
	2	1	**229-6635**	1	GASKET	
	3	1	**230-5385**	2	PLATE AS	
	4	1	**237-0934**	1	PLATE AS	
	5	1	**237-0956**	1	PLATE AS	
	6	1	**257-5029**	1	RESISTOR AS	
	7	1	**260-1914**	1	HARNESS AS-MOTOR	
		1	**102-8805**	1	KIT-RECEPTACLE (6-PIN)	
					(INCLUDES RECEPTACLE AS & WEDGE)	
		1	**155-2270**	1	KIT-CONNECTING PLUG (2-PIN)	
					(INCLUDES PLUG AS, WEDGE, & INTERFACE SEAL)	
	8	1	**275-6706**	1	BLOWER AS	
	9	1	**282-1951**	1	PLATE AS	
	10	1	**282-1952**	1	COVER AS-ACCESS	
	11	1	**282-1953**	1	GUARD (RESISTOR)	
	12	1	**2M-1444**	2	SCREW-TAPPING (NO 8-18X.299-IN)	
M	13	1	**5C-9553**	2	BOLT (M6X1X16-MM)	
	14	1	**6H-4005**	1	GROMMET	
M	15	1	**8T-0337**	8	SCREW-MACHINE (M4X0.7X12-MM)	

M-METRIC PART

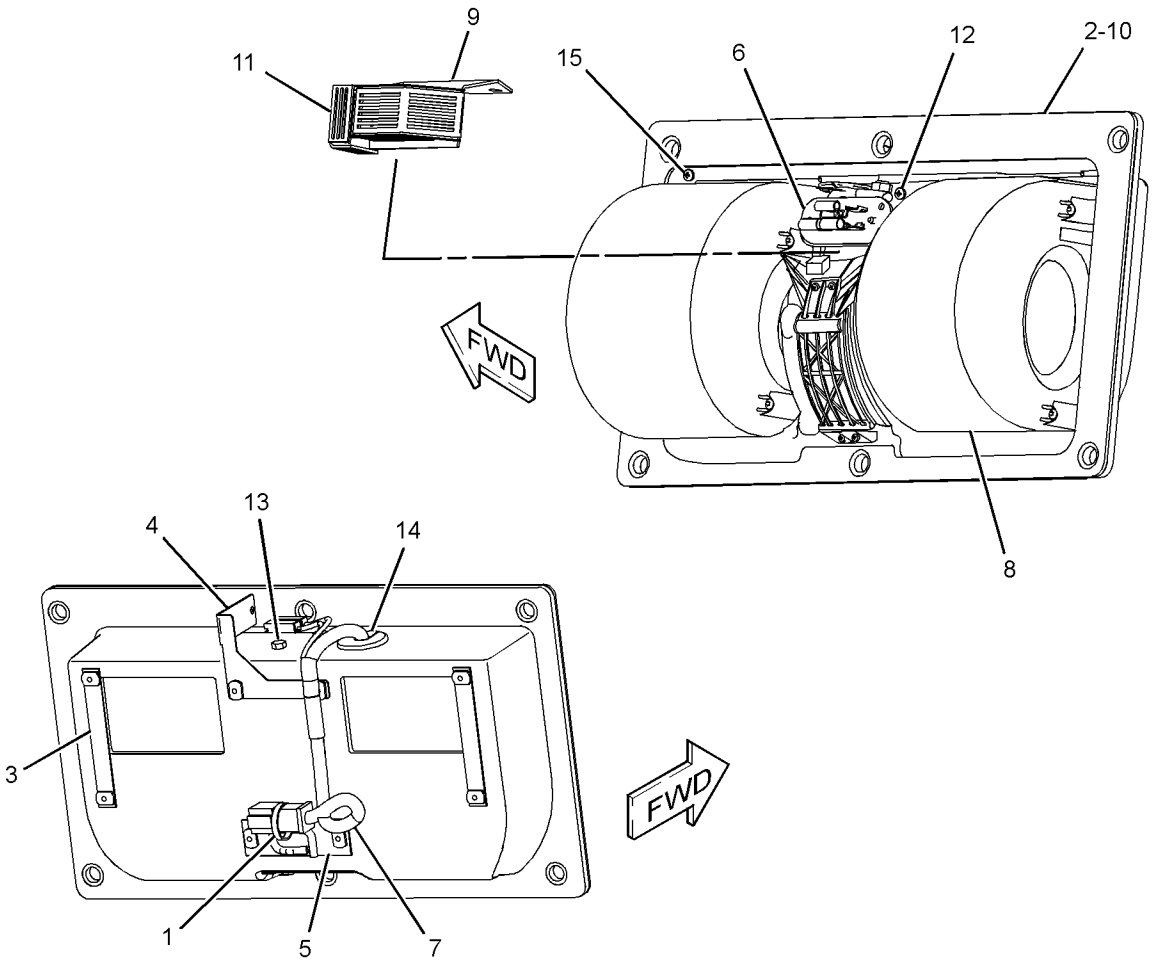

GRAPHIC #1 **<END>** g01212751

OPERATOR STATION

158-7694 CAB AR

S/N: JDL1-UP; GMT1-UP
PART OF 223-0535, 279-4412 CAB AR
ALSO AN ATTACHMENT

SMCS-7301 **i01815662**

NOTE	PART NUMBER	QTY	PART NAME 1 2 3 4 5 6 (PRODUCT LEVEL)	SEE PAGE
Y	*158-7696*	1	CAB GP	604
Y	*108-1335*	1	HANDHOLD GP	621
Y	*105-9657*	1	INSTALLATION GP-RADIO	627
Y	*158-7695*	1	LINER GP-CAB	636
Y	*105-9659*	1	MIRROR GP-REAR VIEW	650
Y	*158-7690*	1	WASHER GP-WINDOW	698
Y	*224-4357*	1	WIPER GP-WINDOW	716

Y-SEPARATE ILLUSTRATION

<END>

223-0535 CAB AR

S/N: JDL1-UP; GMT1-UP
PART OF 218-4978, 222-1592 CHASSIS AR

SMCS-7301 **i02431513**

NOTE	PART NUMBER	QTY	PART NAME 1 2 3 4 5 6 (PRODUCT LEVEL)	SEE PAGE
Y	*279-2591*	1	AIR CONDITIONER GP	599
Y	*158-7694*	1	CAB AR	602
Y	*242-8397*	1	COVER GP-CONSOLE	619
Y	*279-2590*	1	HEATER GP-CAB	623
Y	*223-1677*	1	LINES GP-AIR CONDITIONER	640
Y	*223-1680*	1	LINES GP-HEATER	647
Y	*169-9637*	1	MOUNTING GP-CAB	656
Y	*230-4700*	1	PRESSURIZER GP-CAB	671
Y	*262-5079*	1	TANK GP-WINDOW WASHER	697

Y-SEPARATE ILLUSTRATION

<END>

OPERATOR STATION

279-4412 CAB AR

S/N: JDL1-UP; GMT1-UP
WITHOUT AIR CONDITIONING
AN ATTACHMENT

SMCS-7301 **i02453699**

NOTE	PART NUMBER	QTY	PART NAME 1 2 3 4 5 6 (PRODUCT LEVEL)	SEE PAGE
Y	*158-7694*	1	CAB AR	602
Y	*242-8397*	1	COVER GP-CONSOLE	619
Y	*279-2590*	1	HEATER GP-CAB	623
Y	*223-1680*	1	LINES GP-HEATER	647
Y	*169-9637*	1	MOUNTING GP-CAB	656
Y	*230-4700*	1	PRESSURIZER GP-CAB	671
Y	*262-5079*	1	TANK GP-WINDOW WASHER	697
M	**8T-4137**	2	BOLT (M10X1.5X20-MM)	
M	**8T-4133**	1	NUT (M10X1.5 THD)	
	228-6089	1	PLUG	
	6V-1178	1	PLUG-BUTTON	
	6V-1790	3	PLUG-BUTTON	
	8T-4121	3	WASHER-HARD (11X21X2.5-MM THK)	

M-METRIC PART
Y-SEPARATE ILLUSTRATION

<END>

OPERATOR STATION

158-7696 CAB GP

S/N: JDL1-UP; GMT1-UP
PART OF 158-7694 CAB AR
ALSO AN ATTACHMENT

SMCS-7301 **i02470919**

NOTE	REF NO	GRAPHIC REF	PART NUMBER	QTY	PART NAME 1 2 3 4 5 6 (PRODUCT LEVEL)	SEE PAGE
	1	2	**5G-8655**	2	LEVER	
	2	2	**6I-9386**	2	BRACKET AS	
					(EACH INCLUDES)	
		2	**7P-7610**	2	PLATE	
	3	2	**6V-2331**	2	HANDLE AS	
	4	2	**6V-2375**	2	HANDLE AS-INSIDE	
	5	2	**6V-3260**	8	BOLT-SOCKET HEAD (1/4-20X0.75-IN)	
	6	2	**6V-7190**	2	LEVER AS	
					(EACH INCLUDES)	
		2	**6V-8129**	2	SETSCREW-SOCKET	
	7	2	**6V-7636**	4	PIN AS-SPRING	
	8	2	**6V-8073**	2	LINK-CONNECTING	
	9	1	**7G-2454**	1	GLASS (TINTED)	
	10	2	**8C-3442**	2	SPRING-COIL	
Y	11	1	**8E-5112**	1	WINDOW GP-SLIDING (REAR)	715
Y	12	1	**8E-5113**	1	WINDOW GP-SLIDING (RH)	715
Y	13	1	**8E-5114**	1	WINDOW GP-SLIDING (LH)	715
B	14	2	**8T-0318**	8	SHIM (0.8-MM THK)	
	15	2	**8T-1979**	1	LINKAGE AS (LH)	
		2	**8T-8914**	1	SEAL-LINKAGE	
	16	2	**8T-1980**	1	LINKAGE AS (RH)	
		2	**8T-8914**	1	SEAL-LINKAGE	
	17	2	**8T-3561**	1	PLATE-IDENTIFICATION (SEQUENCE)	
	18	2	**8Y-8304**	2	STRIKER AS-LATCH	
					(EACH INCLUDES)	
		2	**8T-4158**	1	WASHER	
	19	1	**9G-1127**	2	GLASS	
	20	2	**109-9828**	1	LATCH AS-ROTARY	
	21	2	**109-9829**	1	LATCH AS-ROTARY	
	22	2	**118-0693**	2	ROD	
	23	1	**125-8254**	2	GLASS (TINTED)	
	24	1	**224-5000**	1	DOOR AS (LH)	
	25	1	**224-4998**	1	DOOR AS (RH)	
					(EACH DOOR AS INCLUDES)	
M		1	**6V-9632**	2	NUT-WELD (M6X1-THD)	
M		1	**3E-4304**	6	INSERT-THREADED (M6X1-6H-THD)	
		1	**120-4921**	1	HINGE	
	26	1	**158-7697**	1	CAB AS	
M		1	**6V-9632**	13	NUT-WELD (M6X1-THD)	
		1	**1K-5888**	2	SPACER (0.42X0.67X0.63-IN THK)	
		1	**8E-3276**	4	SPACER (7.5X15X5-MM THK)	
		1	**5G-8871**	2	BOSS (M6X1-6H-THD)	
		1	**7T-1099**	14	LINK	
M		1	**9T-6001**	2	BOSS-THREADED (M10X1.5X25-MM)	
	27	2	**170-5854**	1	BRACKET (RH)	
	28	2	**170-5855**	1	BRACKET (LH)	
	29	2	**1B-8735**	2	KEY-WOODRUFF	
	30	2	**4K-3533**	2	WASHER (9.7X17.5X1.6-MM THK)	
	31	2	**4M-6425**	2	BOLT (5/16-18X1-IN)	
	32	2	**5M-8500**	2	KNOB	
	33	1	**5P-1076**	1	WASHER-HARD (13.5X30X4-MM THK)	
	34	2	**6V-8189**	2	NUT (5/16-18-THD)	
	35	2	**7X-0623**	12	WASHER (10.5X21X2-MM THK)	
	36	2	**7X-7729**	12	WASHER (11X25X3-MM THK)	
M	37	2	**8T-4136**	24	BOLT (M10X1.5X25-MM)	

158-7696 **CAB GP** *(contd.)* **i02470919**

NOTE	REF NO	GRAPHIC REF	PART NUMBER	QTY	PART NAME 1 2 3 4 5 6 (PRODUCT LEVEL)	SEE PAGE
M	38	2	**8T-4181**	8	BOLT (M6X1X20-MM)	
M	39	1	**8T-4192**	1	BOLT (M12X1.75X25-MM)	
	40	2	**8T-9043**	2	BOLT (5/16-18X0.875-IN)	
	41	2	**9D-9736**	2	BUMPER	
	42	2	**9N-1995**	2	RIVET-POP	
BD	43	1	**5P-6605**		SEAL	
BD	44	2	**5P-5930**		SEAL	
BE	45	2	**103-2543**		SEAL	
BD	46	2	**5P-5643**		SEAL	
BD	47	2	**5P-7483**		SEAL	
BD	48	2	**8T-6936**		SEAL	

B-USE AS REQUIRED
D-ORDER BY THE METER
E-ORDER BY THE CENTIMETER
M-METRIC PART
Y-SEPARATE ILLUSTRATION

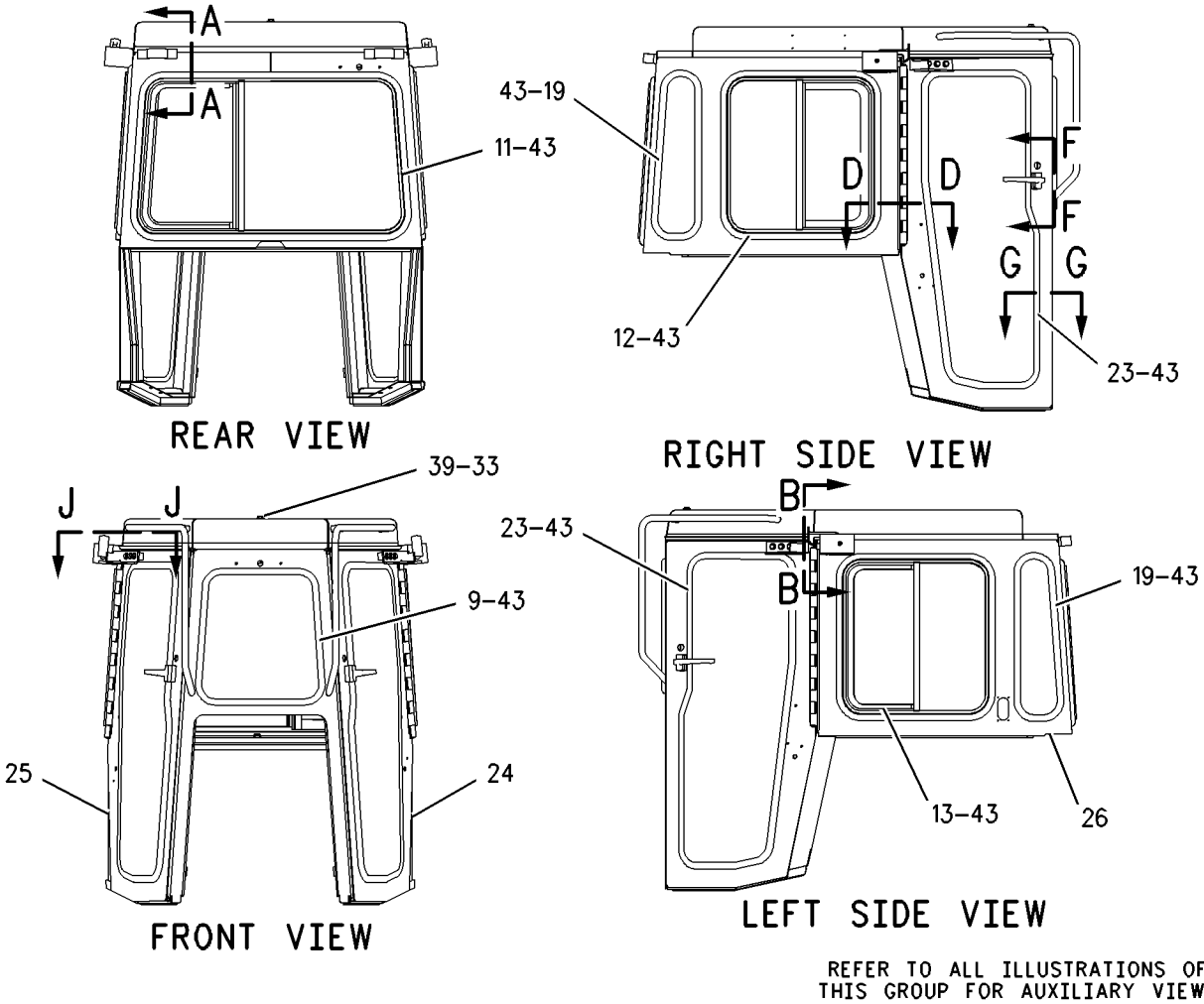

GRAPHIC #1

g00672173

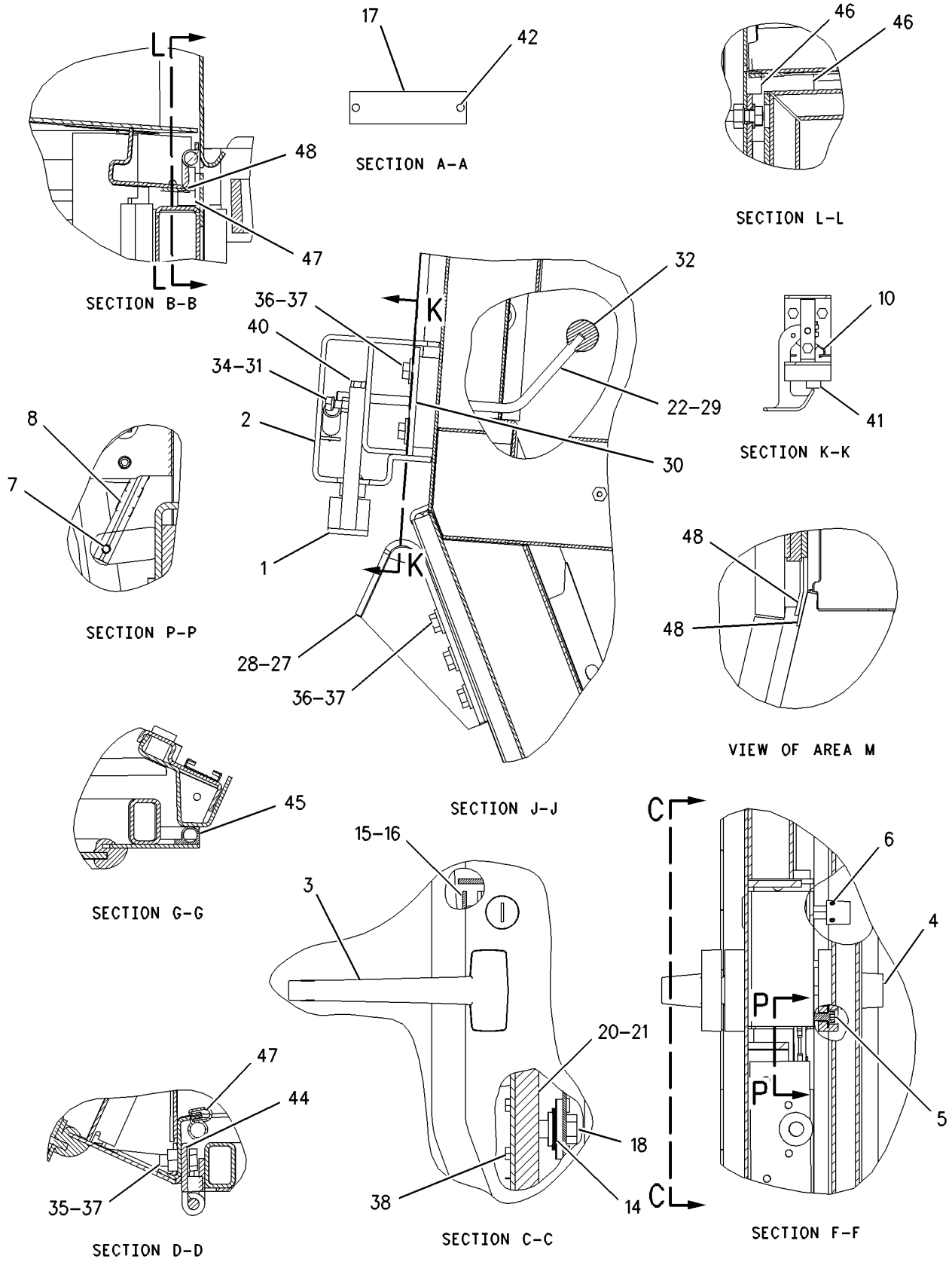

GRAPHIC #2 **<END>** g00745481

OPERATOR STATION

252-8337 CANOPY AR-OPEN ROPS

S/N: JDL1-UP; GMT1-UP

AN ATTACHMENT

SMCS-7302, 7323 **i02455521**

NOTE	PART NUMBER	QTY	PART NAME 1 2 3 4 5 6 (PRODUCT LEVEL)	SEE PAGE
Y	*238-7606*	1	INSTRUMENT GP-CAB	631
Y	*220-2810*	1	MOUNTING GP-PLATFORM	659
Y	*208-8706*	1	ROPS GP-OPEN	675
Y	*214-1197*	1	SEAT GP (VINYL)	686
	219-0305	1	FILM-WARNING (NO WELD, NO DRILL, READ OMM)	
			ON LH ROPS POST VIEWABLE FROM GROUND	
	259-9250	1	FILM-WARNING (ROPS/FOPS)	
			ON LH ROPS POST VIEWABLE FROM GROUND	
	6V-1971	1	LITERATURE GP (MACHINE)	
	246-2641	1	PADLOCK GP (LITERATURE COMPARTMENT)	
			(ON LITERATURE COMPARTMENT)	
	5P-8500	2	KEY	
	148-8411	1	PLUG AS	
	9S-4185	1	PLUG	
	3K-0360	1	SEAL-O-RING	

Y-SEPARATE ILLUSTRATION

<END>

OPERATOR STATION

106-5122 COMPRESSOR GP-REFRIGERANT

S/N: JDL1-UP; GMT1-UP

PART OF 241-8240 COMPRESSOR GP-REFRIGERANT

SMCS-1802 **i01990787**

NOTE	REF NO	GRAPHIC REF	PART NUMBER	QTY	PART NAME 1 2 3 4 5 6 (PRODUCT LEVEL)	SEE PAGE
	1	1	**102-8802**	1	KIT-RECEPTACLE (2-PIN)	
					(INCLUDES RECEPTACLE AS & WEDGE)	
	2	1	**114-3469**	1	VALVE GP-RELIEF (REFRIGERANT COMPRESSOR)	
		1	**9X-7378**	1	SEAL-O-RING	
	3	1	**7T-4532**	1	PLUG AS	
	4	1	**9X-7385**	2	SEAL-O-RING	

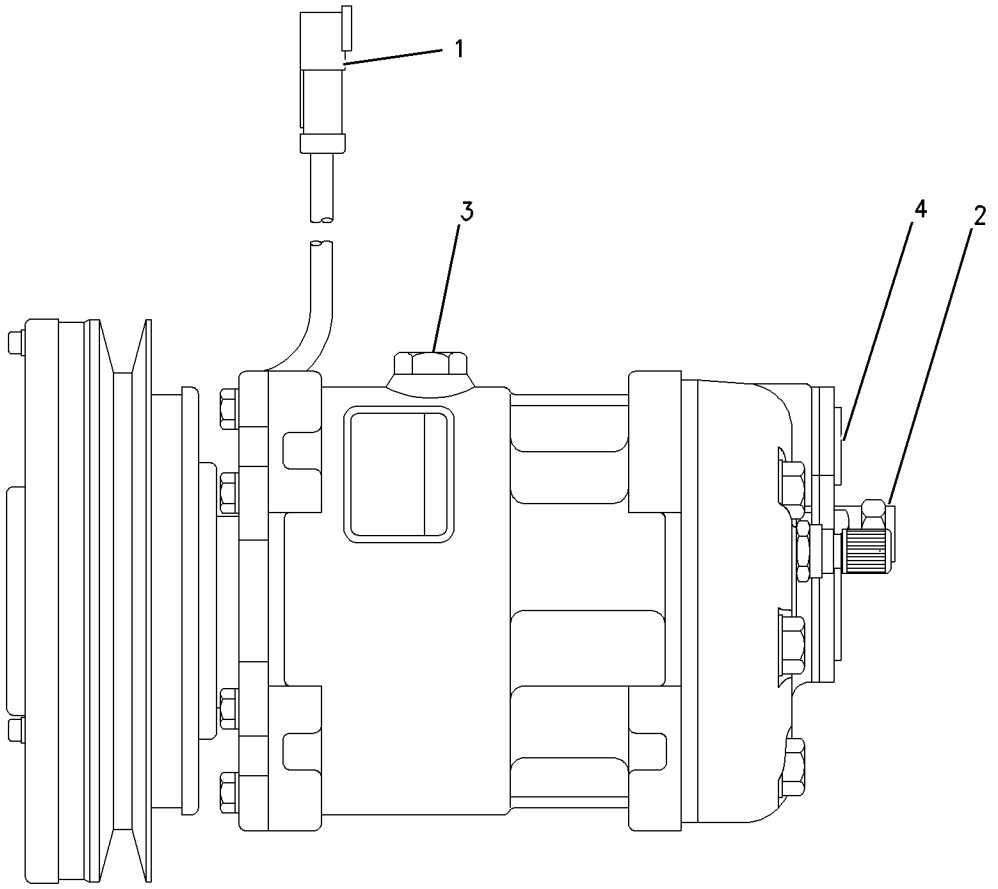

GRAPHIC #1 **<END>** g00979825

OPERATOR STATION

241-8240 COMPRESSOR GP-REFRIGERANT

S/N: JDL1-UP; GMT1-UP

PART OF 223-0551 INSTALLATION AR-ENGINE

SMCS-1802 **i02441367**

NOTE	REF NO	GRAPHIC REF	PART NUMBER	QTY	PART NAME 1 2 3 4 5 6 (PRODUCT LEVEL)	SEE PAGE
M	1	1	**4Y-6353**	1	BOLT-SPECIAL (M10X1.5X130-MM)	
	2	1	**8S-5383**	1	BLOCK	
Y	3	1	**106-5122**	1	COMPRESSOR GP-REFRIGERANT	608
	4	1	**188-1012**	1	BRACKET	
	5	1	**188-1013**	1	PLATE	
	6	1	**214-9492**	1	ROD-ADJUSTING	
	7	1	**216-0349**	1	V-BELT (REFRIGERANT COMPRESSOR)	
M	8	1	**6V-3823**	1	BOLT (M12X1.75X60-MM)	
	9	1	**8T-4121**	6	WASHER-HARD (11X21X2.5-MM THK)	
M	10	1	**8T-4132**	2	NUT (M16X2-THD)	
M	11	1	**8T-4133**	3	NUT (M10X1.5 THD)	
M	12	1	**8T-4182**	1	BOLT (M10X1.5X45-MM)	
M	13	1	**8T-4185**	3	BOLT (M10X1.5X50-MM)	
M	14	1	**8T-4186**	2	BOLT (M10X1.5X40-MM)	
M	15	1	**8T-4193**	1	BOLT (M16X2X50-MM)	
	16	1	**8T-4223**	2	WASHER-HARD (13.5X25.5X3-MM THK)	
M	17	1	**8T-4244**	1	NUT (M12X1.75-THD)	
	18	1	**9X-8257**	3	WASHER (17.5X30X3.5-MM THK)	

M-METRIC PART
Y-SEPARATE ILLUSTRATION

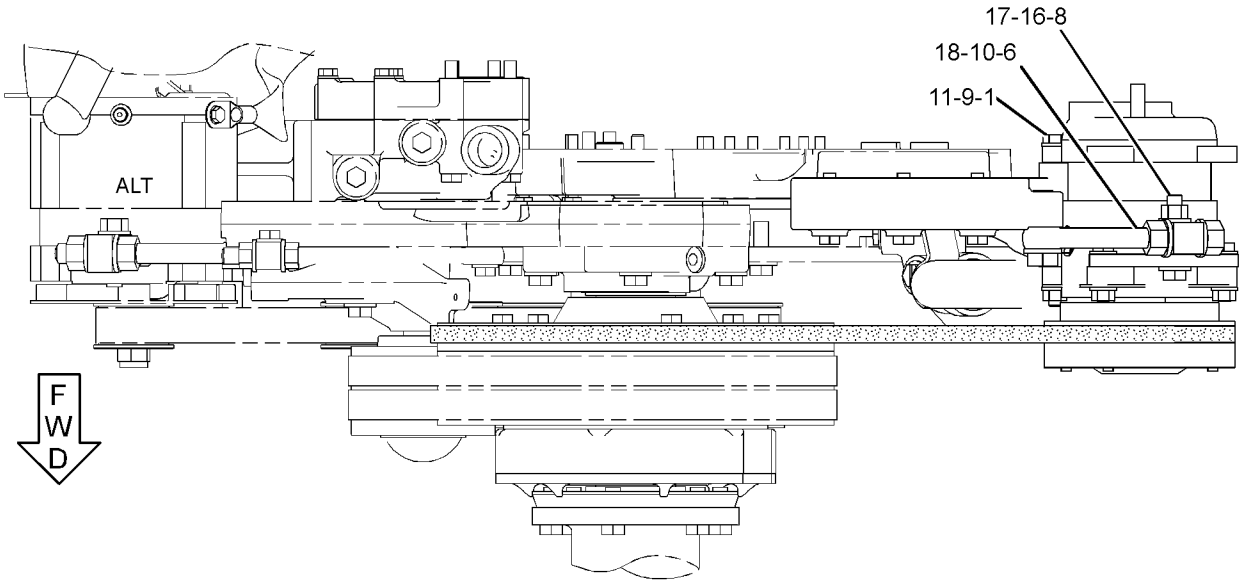

TOP VIEW

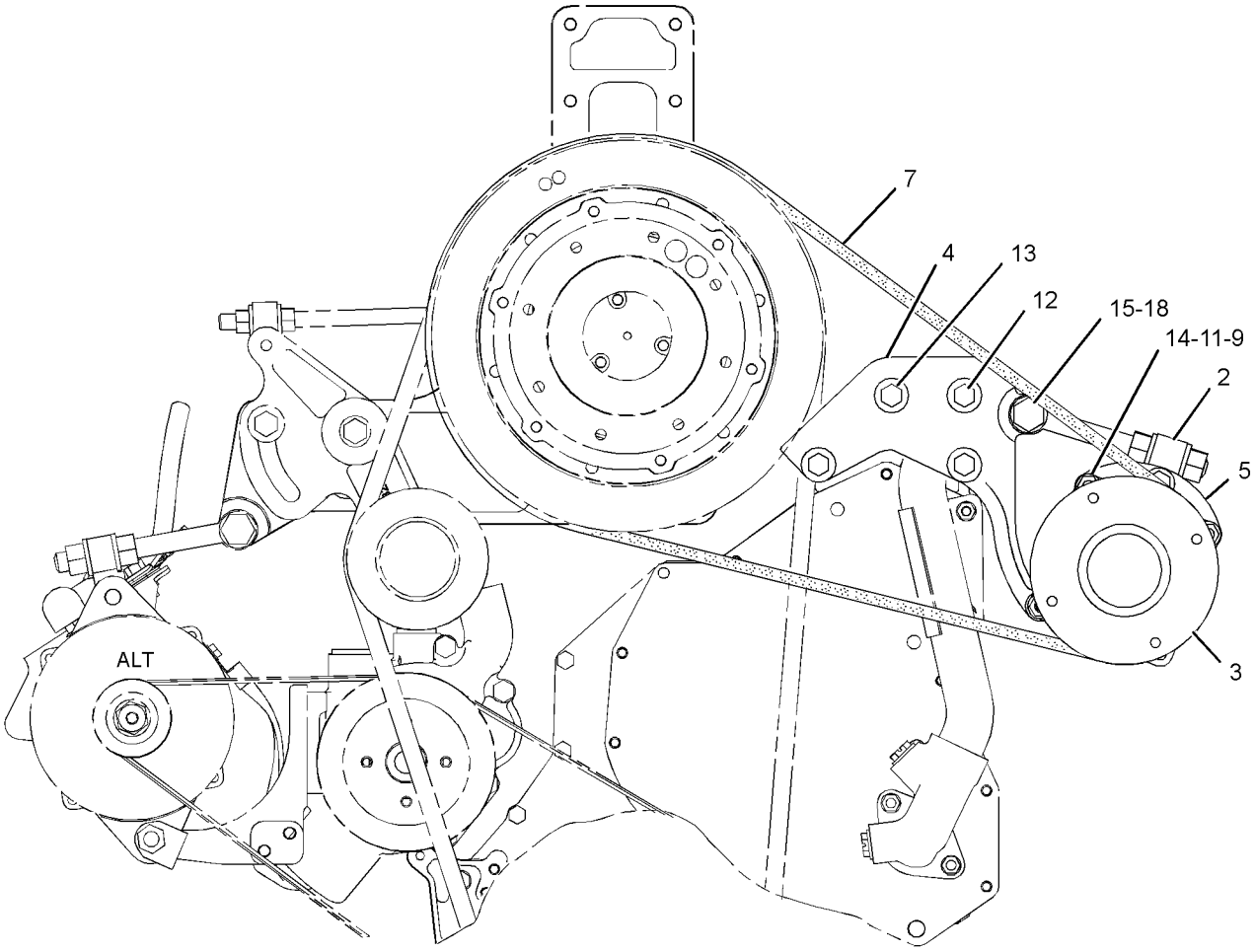

FRONT VIEW

GRAPHIC #1 **<END>** g01209678

OPERATOR STATION

168-8783 CONDENSER & MTG GP-REFRIGERANT

S/N: JDL1-UP; GMT1-UP

PART OF 223-0551 INSTALLATION AR-ENGINE

SMCS-1805 **i02450424**

NOTE	REF NO	GRAPHIC REF	PART NUMBER	QTY	PART NAME 1 2 3 4 5 6 (PRODUCT LEVEL)	SEE PAGE
	1	1	**6N-8744**	4	MOUNT	
	2	1	**110-3844**	2	BRACKET	
	3	1	**252-4915**	1	COIL AS (AIR CONDITIONER)	
C	4	1	**232-7583**	1	BRACKET AS	
C	5	1	**232-7586**	1	BRACKET AS	
M	6	1	**8T-4136**	8	BOLT (M10X1.5X25-MM)	
C	7	1	**7X-0632**	4	WASHER-HARD (11X36X6-MM THK)	
	8	1	**6K-0806**	1	STRAP-CABLE	
M	9	1	**8T-4133**	4	NUT (M10X1.5 THD)	
	10	1	**8T-4121**	8	WASHER-HARD (11X21X2.5-MM THK)	

C-CHANGE FROM PREVIOUS TYPE
M-METRIC PART

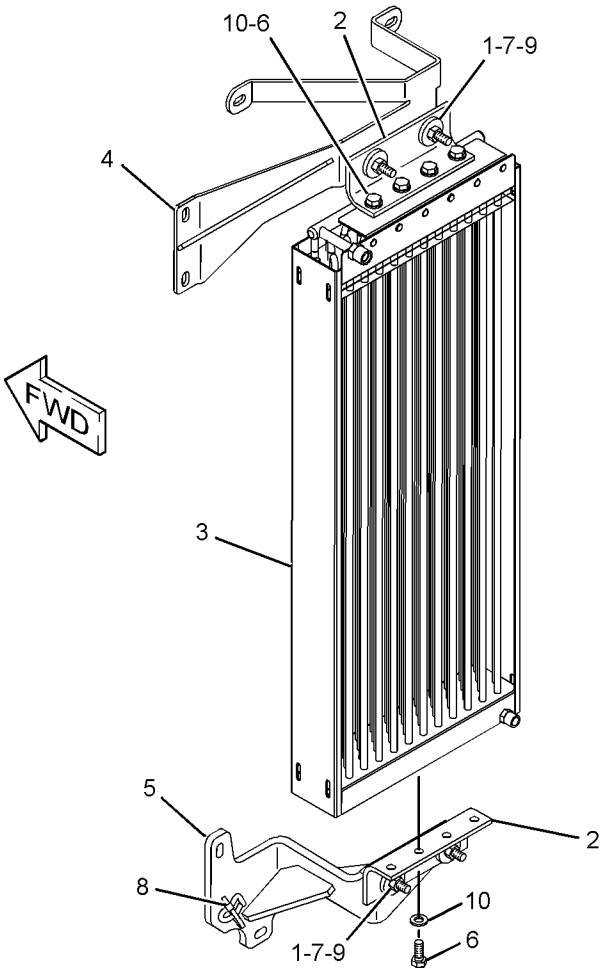

GRAPHIC #1 **<END>** g01206041

OPERATOR STATION

237-1000 CONDENSER & MTG GP-REFRIGERANT–

ROPS MOUNTED

S/N: JDL1-UP; GMT1-UP

PART OF 228-7854 AIR CONDITIONER AR

AN ATTACHMENT

SMCS-1805 **i02470959**

NOTE	REF NO	GRAPHIC REF	PART NUMBER	QTY	PART NAME 1 2 3 4 5 6 (PRODUCT LEVEL)	SEE PAGE
	1	1	**8D-0983**	6	MOUNT AS	
	2	1	**8D-7185**	6	WASHER (11.9X38.1X3-MM THK)	
Y	3	1	**103-9527**	1	CONDENSER GP-REFRIGERANT (AIR CONDITIONER)	614
	4	1	**109-5498**	1	SCREEN AS (AIR CONDITIONER)	
	5	1	**170-3399**	2	BRACKET	
	6	1	**172-5989**	2	BRACKET	
	7	1	**263-7805**	1	SUPPORT AS	
	8	1	**277-5801**	1	PLATE AS	
	9	1	**277-5802**	1	PLATE AS	
	10	1	**1M-4543**	2	GROMMET	
M	11	1	**6V-7357**	6	BOLT (M6X1X25-MM)	
M	12	1	**7X-2562**	4	BOLT (M20X2.5X45-MM)	
M	13	1	**7X-2563**	2	BOLT (M20X2.5X60-MM)	
	14	1	**7X-7729**	14	WASHER (11X25X3-MM THK)	
	15	1	**7X-7742**	2	WASHER-PULLEY (20.6X63.5X14-MM THK)	
M	16	1	**8T-4133**	6	NUT (M10X1.5 THD)	
M	17	1	**8T-4137**	2	BOLT (M10X1.5X20-MM)	
M	18	1	**8T-4139**	4	BOLT (M12X1.75X30-MM)	
M	19	1	**8T-4185**	6	BOLT (M10X1.5X50-MM)	
M	20	1	**8T-4194**	3	BOLT (M12X1.75X50-MM)	
	21	1	**8T-4223**	7	WASHER-HARD (13.5X25.5X3-MM THK)	
	22	1	**8T-5439**	4	WASHER (21.5X45X6-MM THK)	
	23	1	**9X-8256**	6	WASHER (6.6X12X2-MM THK)	

M-METRIC PART
Y-SEPARATE ILLUSTRATION

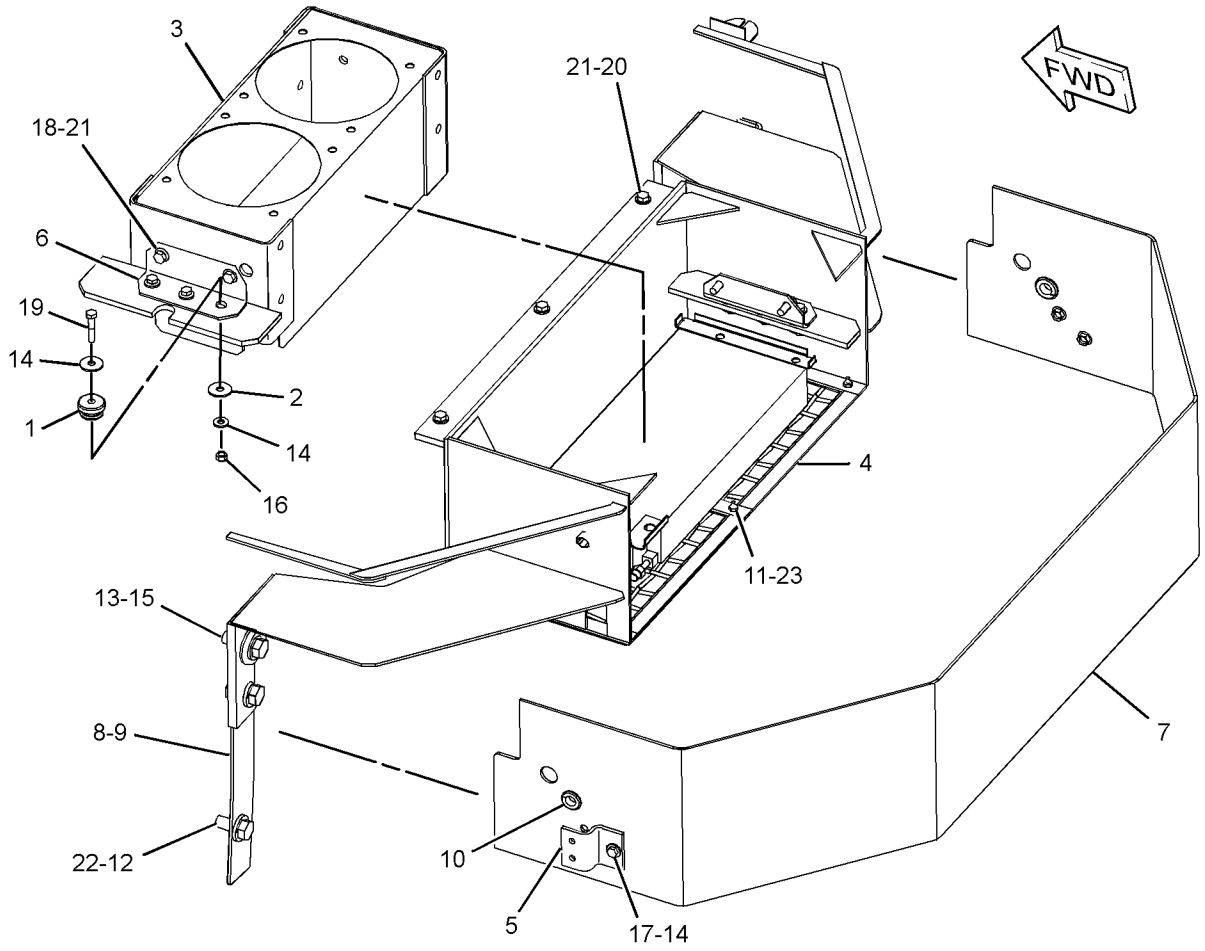

GRAPHIC #1 **<END>** g01209237

OPERATOR STATION

103-9527 CONDENSER GP-REFRIGERANT

S/N: JDL1-UP; GMT1-UP
PART OF 237-1000 CONDENSER & MTG GP-REFRIGERANT
AN ATTACHMENT

SMCS-1805 **i01870664**

NOTE	REF NO	GRAPHIC REF	PART NUMBER	QTY	PART NAME 1 2 3 4 5 6 (PRODUCT LEVEL)	SEE PAGE
	1	1	**3E-5239**	1	RELAY AS (24-VOLT) (CONDENSER BLOWER MOTOR)	
	2	1	**3S-2093**	7	STRAP-CABLE	
C	3	1	**7K-1181**	2	STRAP-CABLE	
	4	1	**7T-5856**	4	CLAMP	
	5	1	**8C-3756**	1	FILM-IDENTIFICATION (GROUP NUMBER) (REFRIGERANT CONDENSER)	
	6	1	**8P-6363**	1	PLUG	
	7	1	**9X-3452**	2	GUARD AS-FAN	
C	8	1	**124-8490**	1	HARNESS AS-HEATER & AIR COND (CONDENSER BLOWER MOTORS) (A/C)	
		1	**155-2270**	1	KIT-CONNECTING PLUG (2-PIN)	
					(INCLUDES PLUG AS & WEDGE)	
		1	**102-8803**	1	KIT-RECEPTACLE (3-PIN)	
					(INCLUDES RECEPTACLE AS & WEDGE)	
		1	**9X-1054**	1	PLUG AS-CONNECTOR (4-PIN)	
	9	1	**142-8620**	2	FAN AS-CONDENSER	
J	10	1	**174-1495**	2	MOTOR GP-ELECTRIC	
					(EACH INCLUDES)	
		1	**3E-3365**	1	WEDGE-RECEPTACLE LOCK (2-PIN)	
		1	**9W-0852**	2	PIN-CONNECTOR (14-GA)	
		1	**102-8802**	1	KIT-RECEPTACLE (2-PIN)	
					(INCLUDES WEDGE & RECEPTACLE AS)	
C	11	1	**203-2070**	8	MOUNT	
C	12	1	**204-9530**	4	TUBE	
C	13	1	**204-9531**	1	COIL-CONDENSER	
C	14	1	**204-9532**	1	CASE AS	
M		1	**8T-3490**	12	NUT-WELD (M10X1.5-THD)	
		1	**9G-9151**	2	CLIP	
		1	**7T-1099**	4	LINK	
M		1	**8T-3597**	12	NUT-WELD (M12X1.75-THD)	
C	15	1	**4P-8134**	2	CLIP	
M	16	1	**5C-2890**	1	NUT (M6X1-THD)	
	17	1	**5P-1075**	8	WASHER-HARD (10.2X22.5X3-MM THK)	
	18	1	**5P-8441**	1	GROMMET	
	19	1	**7X-0578**	4	WASHER-HARD (10.2X32X2.5-MM THK)	
C	20	1	**8T-4121**	4	WASHER-HARD (11X21X2.5-MM THK)	
M	21	1	**8T-4133**	4	NUT (M10X1.5 THD)	
M	22	1	**8T-4137**	8	BOLT (M10X1.5X20-MM)	
M	23	1	**8T-4192**	12	BOLT (M12X1.75X25-MM)	
	24	1	**8T-4205**	1	WASHER-HARD (7.2X14.5X2-MM THK)	
	25	1	**8T-4223**	12	WASHER-HARD (13.5X25.5X3-MM THK)	
CM	26	1	**8T-6685**	4	BOLT (M10X1.5X110-MM)	
	27	1	**9X-7373**	1	GROMMET	
BD	28	1	**5P-5924**		SEAL	
BCD	29	1	**5P-5672**		SEAL	
BD	30	1	**5P-5908**		SEAL	

B-USE AS REQUIRED
C-CHANGE FROM PREVIOUS TYPE
D-ORDER BY THE METER
J-REPAIR KIT(S) MARKED J AVAILABLE FOR PART MARKED J
M-METRIC PART

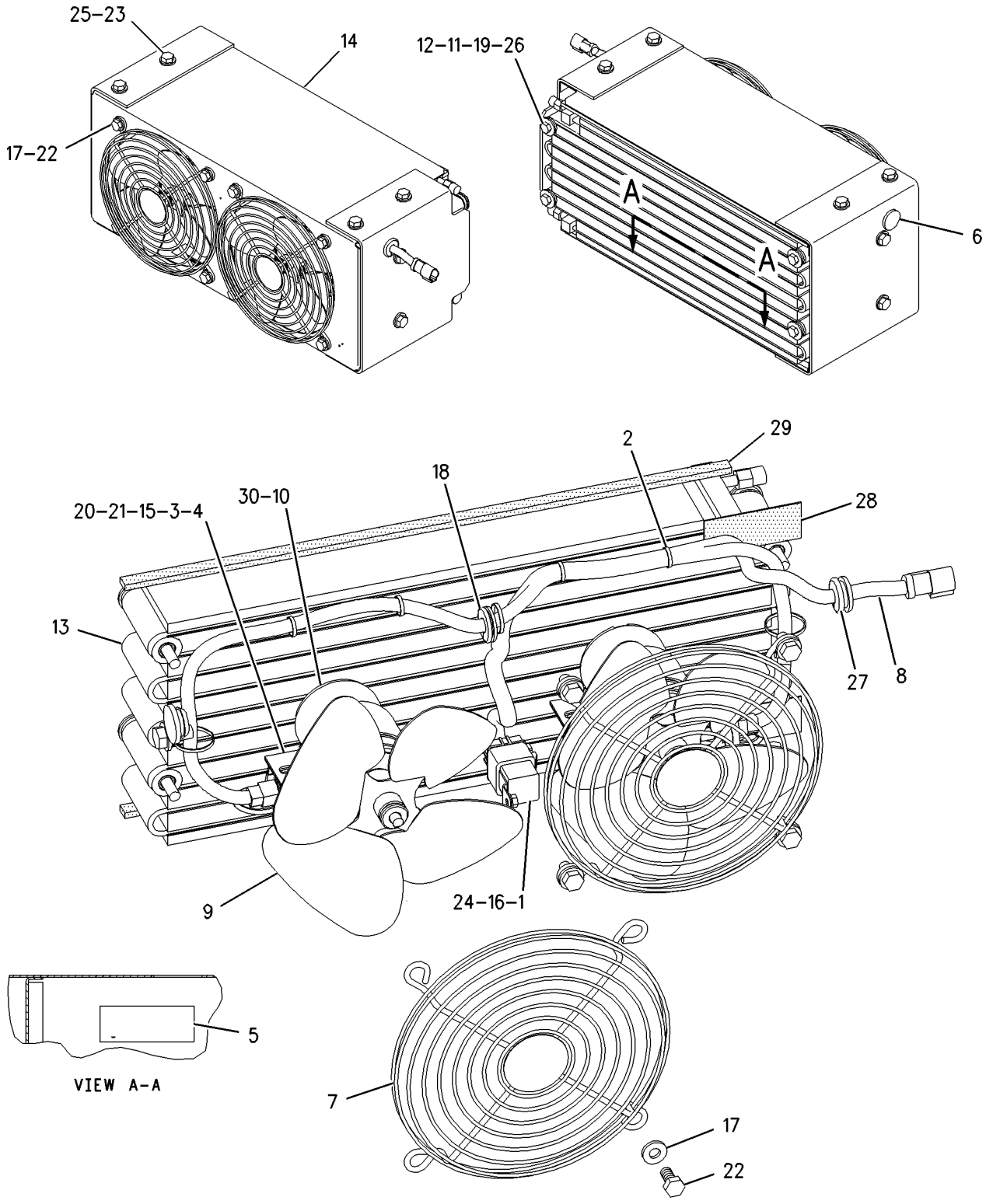

(COVER AND MTG HARDWARE REMOVED)

GRAPHIC #1 **<END>** g00938782

OPERATOR STATION

224-2793 CONTROL & MTG GP-PEDAL

S/N: JDL1-UP; GMT1-UP

PART OF 218-4979 POWER TRAIN AR

SMCS-5462 **i02438134**

NOTE	REF NO	GRAPHIC REF	PART NUMBER	QTY	PART NAME 1 2 3 4 5 6 (PRODUCT LEVEL)	SEE PAGE
	1	1	**171-7077**	2	ROD-THREADED	
Y	2	1	*224-2791*	1	PEDAL GP-GOVERNOR & BRAKE	665
	3	1	**8T-4121**	4	WASHER-HARD (11X21X2.5-MM THK)	
M	4	1	**8T-4133**	2	NUT (M10X1.5 THD)	
M	5	1	**8T-4195**	2	BOLT (M10X1.5X30-MM)	

M-METRIC PART
Y-SEPARATE ILLUSTRATION

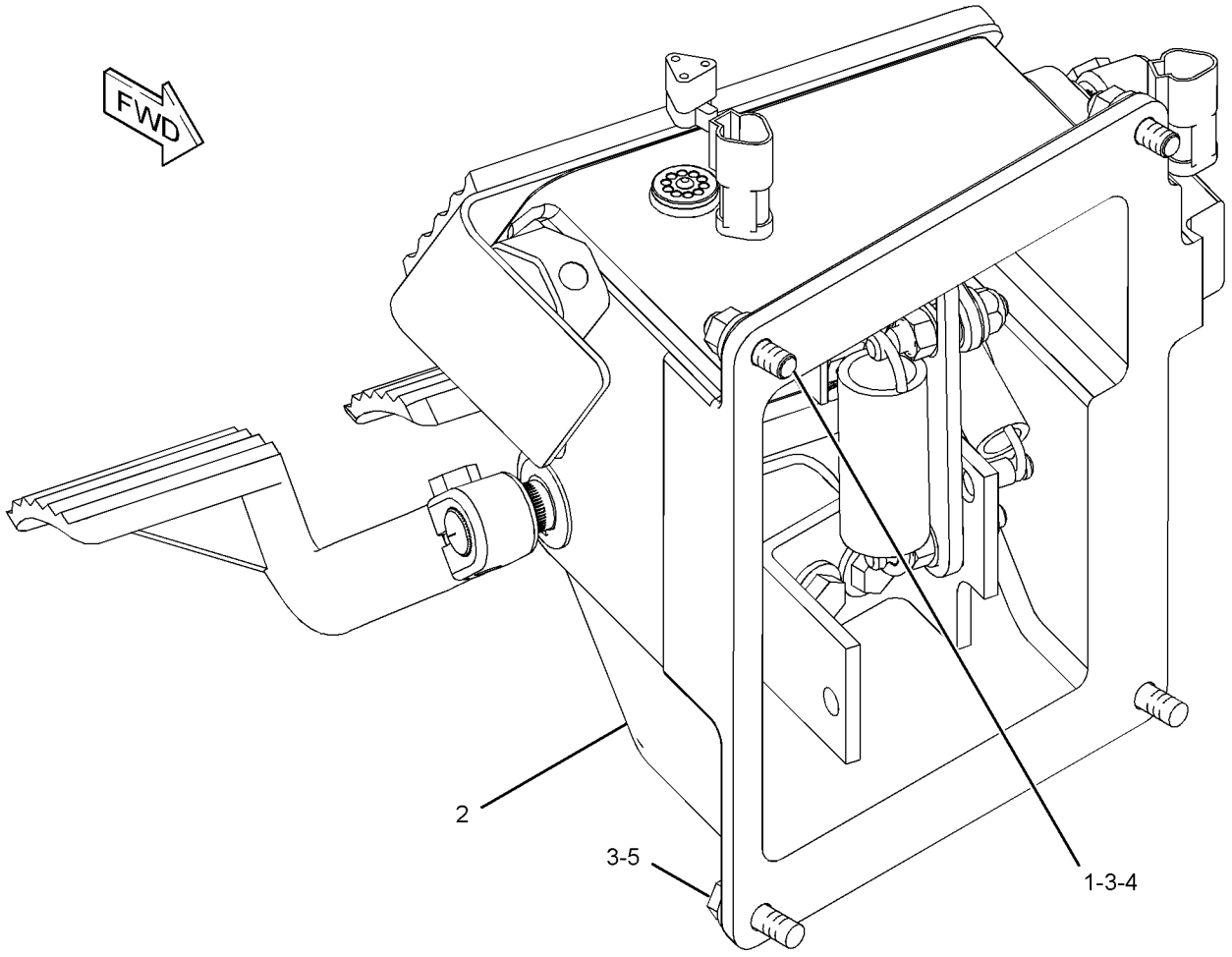

GRAPHIC #1 **<END>** g01208192

OPERATOR STATION

154-7443 CONTROL GP-UNPRGMED MONITOR–
CATERPILLAR MONITORING SYSTEM
S/N: JDL1-UP; GMT1-UP
PART OF 238-7605, 238-7606 INSTRUMENT GP-CAB
ALSO AN ATTACHMENT

SMCS-7610 **i01829251**

NOTE	PART NUMBER	QTY	PART NAME 1 2 3 4 5 6 (PRODUCT LEVEL)	SEE PAGE
			(NO SERVICED PARTS)	

<END>

OPERATOR STATION

192-3016 COVER GP-CONSOLE–OPEN ROPS

S/N: JDL1-UP; GMT1-UP
PART OF 220-2810 MOUNTING GP-PLATFORM
AN ATTACHMENT

SMCS-5258 **i01809884**

NOTE	REF NO	GRAPHIC REF	PART NUMBER	QTY	PART NAME 1 2 3 4 5 6 (PRODUCT LEVEL)	SEE PAGE
	1	1	**169-9639**	1	COVER AS	
	2	1	**192-3017**	2	ROLLER	
	3	1	**192-3018**	1	ROD	
	4	1	**193-7377**	2	PANEL	
	5	1	**5P-7177**	2	RETAINER	
BD	6	1	**6V-1359**		SEAL	
BD	7	1	**6V-2803**		SEAL	

B-USE AS REQUIRED
D-ORDER BY THE METER

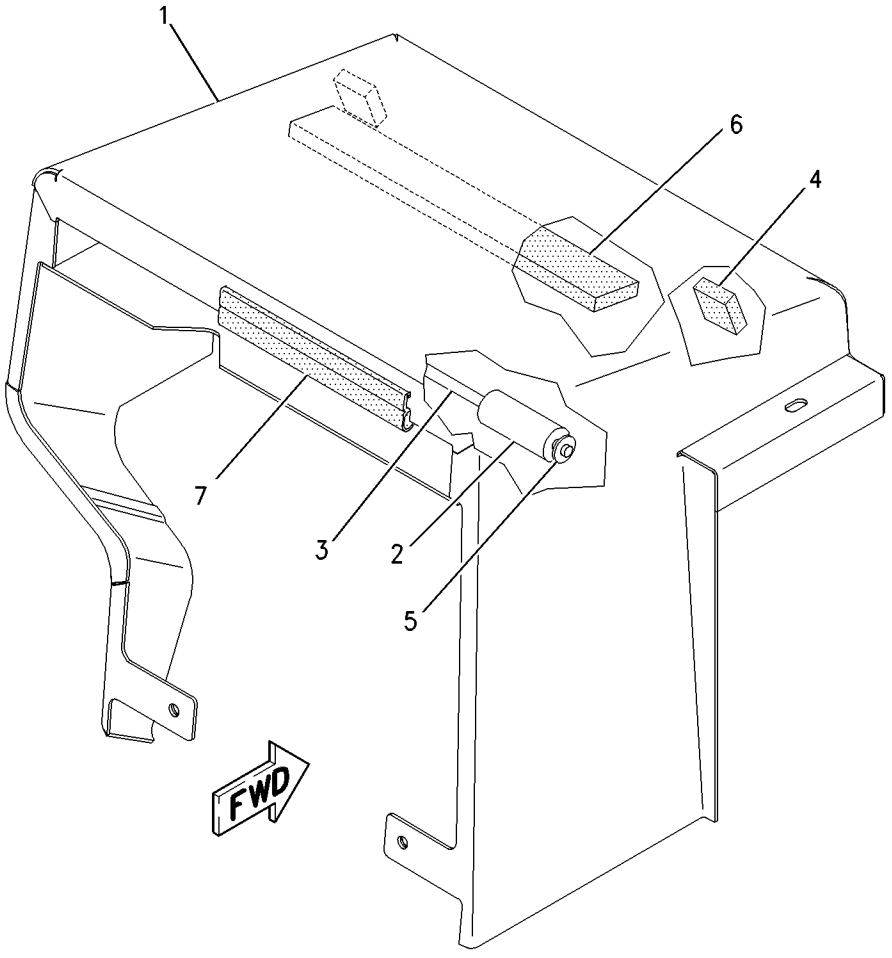

GRAPHIC #1 **<END>** g00764398

OPERATOR STATION

242-8397 COVER GP-CONSOLE—CAB

S/N: JDL1-UP; GMT1-UP
PART OF 223-0535, 279-4412 CAB AR
ALSO AN ATTACHMENT

SMCS-5258 **i02433641**

NOTE	REF NO	GRAPHIC REF	PART NUMBER	QTY	PART NAME 1 2 3 4 5 6 (PRODUCT LEVEL)	SEE PAGE
	1	1	**6Y-0206**	4	RETAINER	
	2	1	**7G-4824**	2	STRAP	
	3	1	**8E-7791**	2	STRAP	
	4	1	**8Y-6388**	3	LOUVER AS	
	5	1	**154-5629**	1	ASHTRAY AS	
	6	1	**156-7410**	1	COVER AS	
	7	1	**159-7943**	1	PANEL-ACOUSTICAL (LH)	
	8	1	**159-7946**	1	PANEL-ACOUSTICAL	
	9	1	**159-7948**	1	FLOOR MAT	
	10	1	**159-7949**	1	FLOOR MAT	
	11	1	**159-8108**	1	COVER	
	12	1	**159-8109**	1	COVER	
	13	1	**161-4024**	2	BOOT	
	14	1	**170-5849**	1	SHROUD AS	
	15	1	**211-0220**	1	COVER AS	
	16	1	**241-7913**	1	COVER AS-ACCESS	
	17	1	**241-7919**	1	PLATE	
	18	1	**242-8403**	1	PANEL AS-CONSOLE	
	19	1	**242-8404**	1	PANEL	
	20	1	**243-1171**	1	PANEL-ACOUSTICAL	
	21	1	**111-5147**	6	SCREW-MACHINE (6-32X0.625-IN)	
	22	1	**198-9706**	4	SCREW-TRUSS HEAD (M5X0.8X16-MM)	
	23	1	**5P-4116**	4	WASHER-HARD (8.8X20.5X2-MM THK)	
	24	1	**7D-6922**	6	LOCKNUT (6-32-THD)	
M	25	1	**8T-4189**	4	BOLT (M8X1.25X20-MM)	
	26	1	**9N-0869**	3	WASHER-HARD (8.8X25.5X2-MM THK)	
	27	1	**9X-2038**	5	WASHER (7X19X2-MM THK)	
M	28	1	**9X-2043**	9	SCREW-TRUSS HEAD (M6X1X14-MM)	
M	29	1	**9X-2045**	8	SCREW-TRUSS HEAD (M6X1X20-MM)	
E	30	1	**124-3243**		SEAL (56-CM)	

E-ORDER BY THE CENTIMETER
M-METRIC PART

242-8397 **COVER GP-CONSOLE** *(contd.)* **i02433641**

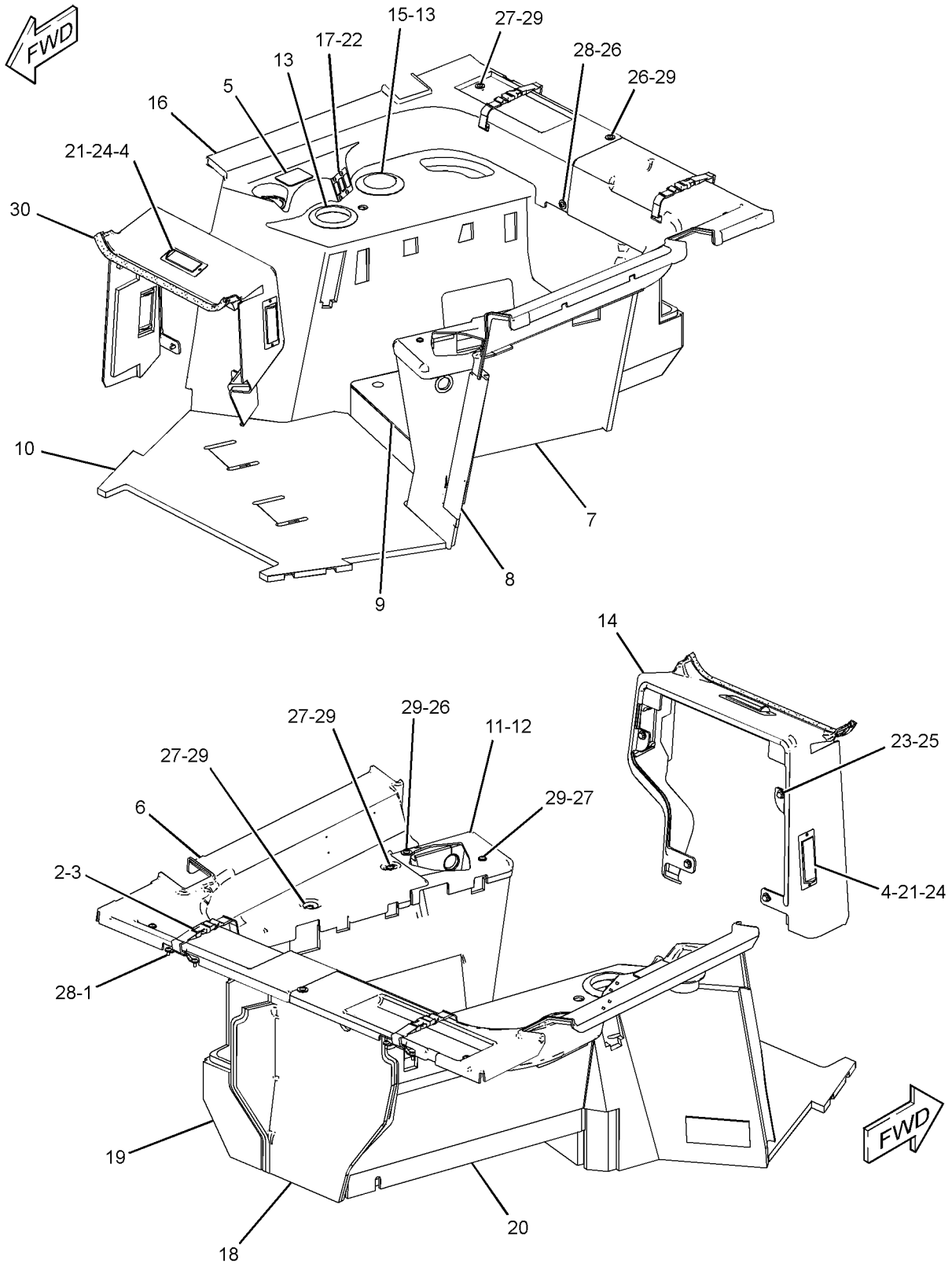

GRAPHIC #1 **<END>** g01209561

OPERATOR STATION

108-1335 HANDHOLD GP–CAB ASSIST

S/N: JDL1-UP; GMT1-UP
PART OF 158-7694 CAB AR
ALSO AN ATTACHMENT

SMCS-7256 **i02227444**

NOTE	REF NO	GRAPHIC REF	PART NUMBER	QTY	PART NAME 1 2 3 4 5 6 (PRODUCT LEVEL)	SEE PAGE
	1	1	**9W-5343**	2	HANDHOLD	

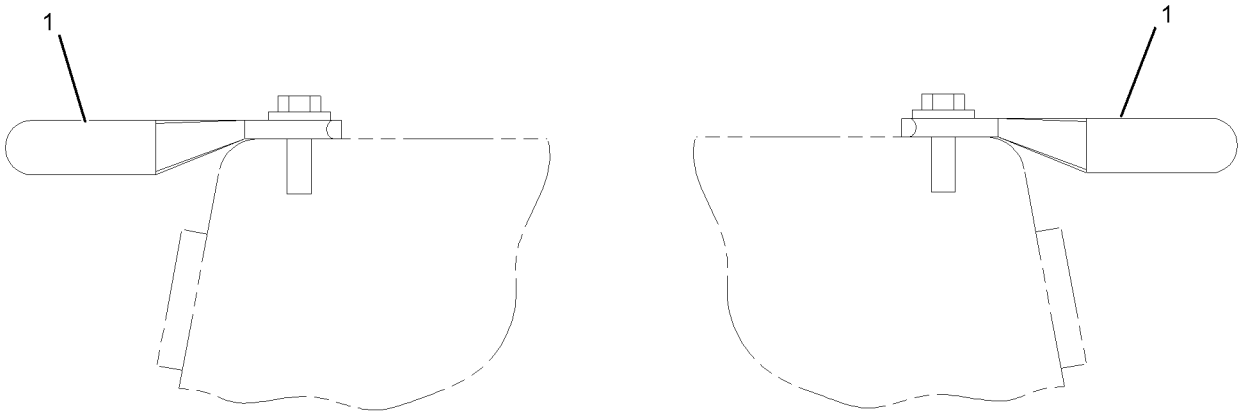

REAR VIEW

GRAPHIC #1 **<END>** g01107680

OPERATOR STATION

209-5113 HANDHOLD GP—WASTE HANDLING

S/N: JDL1-UP; GMT1-UP
CANNOT BE USED WITH DISPOSAL AR
AN ATTACHMENT

SMCS-7256 **i02453872**

NOTE	REF NO	GRAPHIC REF	PART NUMBER	QTY	PART NAME 1 2 3 4 5 6 (PRODUCT LEVEL)	SEE PAGE
	1	1	**1Q-2423**	2	HANDLE AS	
	2	1	**104-5944**	2	HANDLE AS	
M	3	1	**8T-4184**	8	BOLT (M12X1.75X45-MM)	
	4	1	**8T-4223**	8	WASHER-HARD (13.5X25.5X3-MM THK)	

M-METRIC PART

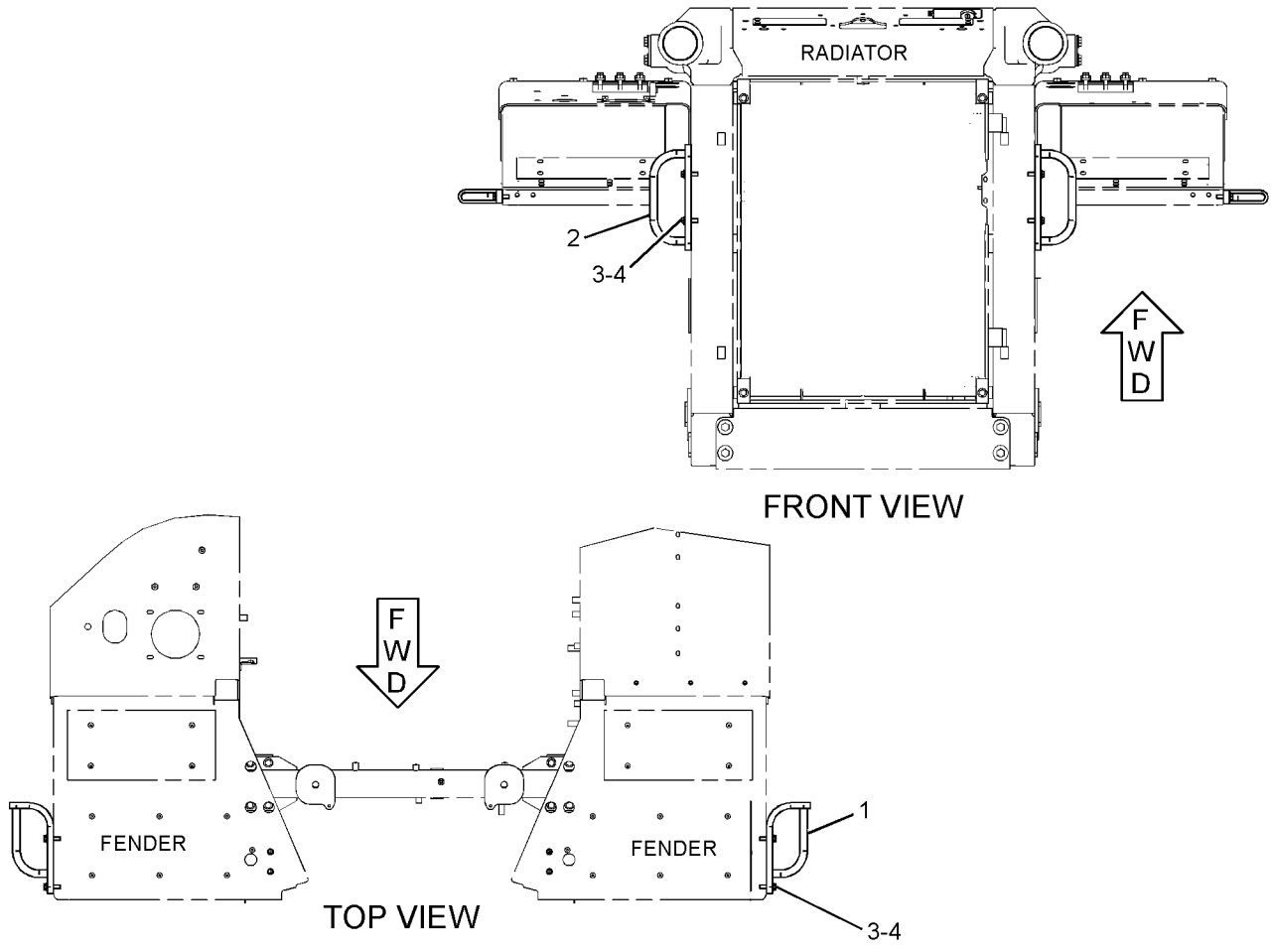

GRAPHIC #1 **<END>** g01206810

OPERATOR STATION

279-2590 HEATER GP-CAB

S/N: JDL1-UP; GMT1-UP
PART OF 223-0535, 279-4412 CAB AR
ALSO AN ATTACHMENT

SMCS-7304 **i02433642**

NOTE	REF NO	GRAPHIC REF	PART NUMBER	QTY	PART NAME 1 2 3 4 5 6 (PRODUCT LEVEL)	SEE PAGE
	1	1	**5D-1026**	2	CLAMP-HOSE	
	2	1	**6T-5617**	1	PLATE	
	3	1	**7T-6299**	1	GROMMET	
	4	1	**9X-2185**	4	SCREW (8-15X11.11-MM)	
	5	1	**109-5761**	1	COIL AS-HEATER	
	6	1	**134-9602**	1	VALVE AS-WATER	
	6A	1	**3E-1841**	1	LEVER	
	6B	1	**6V-6717**	1	SCREW-WASHER HEAD (8-32X9.52-MM)	
	6C	1	**8Y-5737**	1	CLAMP	
	6D	1	**037-4426**	1	RETAINER	
	6E	1	**102-0341**	1	CLIP (TAB)	
	7	1	**141-4123**	1	PLATE	
	8	1	**8T-4121**	2	WASHER-HARD (11X21X2.5-MM THK)	
M	9	1	**8T-4137**	2	BOLT (M10X1.5X20-MM)	
E	10	1	**5P-0767**		HOSE (12-CM)	
D	11	1	**5P-5639**		SEAL (0.25-M EACH)	
D	12	1	**5P-5643**		SEAL (0.4-M EACH)	

D-ORDER BY THE METER
E-ORDER BY THE CENTIMETER
M-METRIC PART

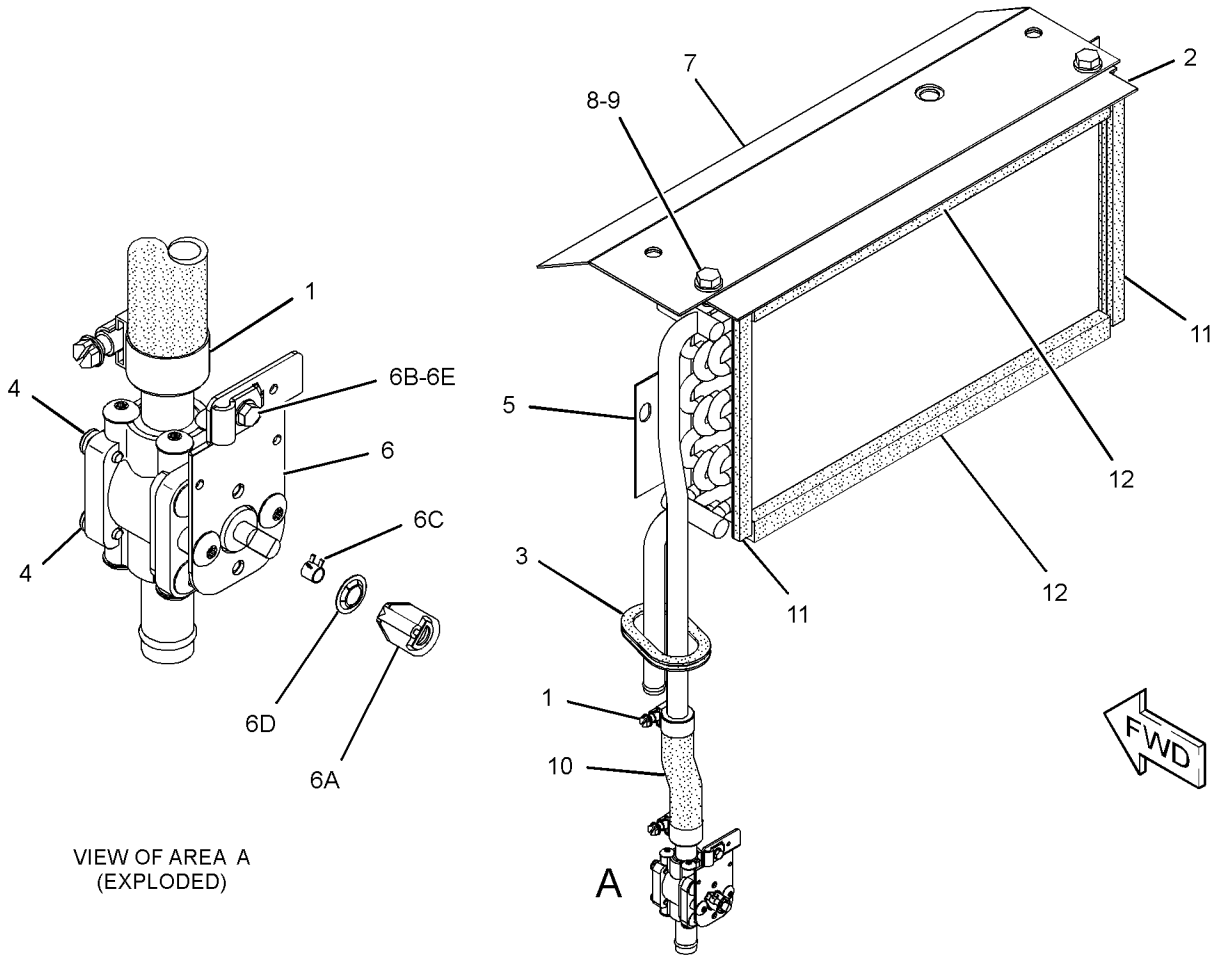

GRAPHIC #1 **<END>** g01220273

OPERATOR STATION

174-2231 HOUSING GP-SEAT SUSPENSION

S/N: JDL1-UP; GMT1-UP
PART OF 160-7165 SUSPENSION GP-SEAT
ALSO AN ATTACHMENT

SMCS-7321 **i01883773**

NOTE	REF NO	GRAPHIC REF	PART NUMBER	QTY	PART NAME 1 2 3 4 5 6 (PRODUCT LEVEL)	SEE PAGE
	1	1	**1Y-7927**	1	PIN	
	2	1	**2D-6235**	2	LOCKNUT (1/4-20 THD)	
	3	1	**2M-7819**	4	RING-RETAINING	
	4	1	**3D-2975**	2	RING-RETAINING	
	5	1	**4B-5059**	6	WASHER (15X29.5X2.5-MM THK)	
	6	1	**4N-2927**	2	RACE-THRUST BEARING	
	7	1	**5D-4822**	2	RING-RETAINING	
	8	1	**5P-8445**	4	RING-RETAINING	
	9	1	**5V-0770**	2	BOLT-CARRIAGE (1/4-20X0.74-IN)	
	10	1	**7M-7219**	1	BEARING-THRUST	
	11	1	**7V-5191**	2	SPACER (28X10X7.1-MM THK)	
	12	1	**8L-8413**	2	STRAP-CABLE	
	13	1	**8S-7803**	4	RING-RETAINING	
	14	1	**8Y-6041**	1	ARM AS	
	15	1	**8Y-6045**	1	CAM	
	16	1	**8Y-6046**	1	PIN	
	17	1	**8Y-6047**	2	PIN	
	18	1	**8Y-6060**	2	ROLLER	
	19	1	**8Y-6062**	1	LINK-ACTUATOR	
	20	1	**8Y-6063**	1	LINK-ACTUATOR	
	21	1	**8Y-6064**	2	ROLLER-SLIDER	
	22	1	**8Y-6066**	1	SPRING	
	23	1	**8Y-6067**	1	SPACER (10.54-MM THK)	
	24	1	**8Y-6068**	1	NUT (3/8X16-THD)	
	25	1	**8Y-6069**	1	ADJUSTER AS	
	26	1	**9X-8918**	3	SCREW-FLAT HEAD (8-32X0.5-IN)	
	27	1	**095-0878**	1	PIN-SPRING	
	28	1	**131-4242**	1	BOLT (3/8-16X5.18-IN)	
	29	1	**131-5167**	1	KNOB AS-ADJUSTMENT (SEAT SUSPENSION)	
	30	1	**161-5967**	1	SHAFT	
	31	1	**174-2237**	1	HOUSING AS-UPPER	
JZ	32	1		1	KNOB-HEIGHT (SEAT SUSPENSION)	
JZ	33	1		1	KNOB-HEIGHT (SEAT SUSPENSION)	
LZ	34	1		2	SPRING	
LZ	35	1		2	BUSHING	
VZ	36	1		2	SPRING	
VZ	37	1		2	SPACER	
VZ	38	1		2	BUSHING-GUIDE	
VZ	39	1		2	ROD	
PZ	40	1		1	TAPE-INDICATOR	
PZ	41	1		1	GUIDE	
SZ	42	1		1	PIN	
SZ	43	1		1	FOLLOWER-CAM	
TZ	44	1		1	PIN	
TZ	45	1		1	FOLLOWER-CAM	
UZ	46	1		2	ROLLER AS	
UZ	47	1		1	ROLLER AS	
QZ	48	1		3	BUMPER	
					AVAILABLE REPAIR KIT(S):	
J			**8Y-5945**	1	KIT-SUSPENSION KNOB (HEIGHT ADJUSTMENT) (SUSPENSION SEAT)	
L			**8Y-6859**	1	KIT-SPRING (SUSPENSION SEAT)	
V			**8Y-6860**	1	KIT-SPRING (HEIGHT ADJUSTMENT) (SUSPENSION SEAT)	

174-2231 **HOUSING GP-SEAT SUSPENSION** *(contd.)* **i01883773**

NOTE	REF NO	GRAPHIC REF	PART NUMBER	QTY	PART NAME 1 2 3 4 5 6 (PRODUCT LEVEL)	SEE PAGE
P			**100-3224**	1	KIT-INDICATOR (WEIGHT ADJUSTMENT) (SUSPENSION SEAT)	
Q			**100-5179**	1	KIT-BUMPER (WEIGHT ADJUSTMENT) (SUSPENSION SEAT)	
S			**108-4086**	1	KIT-FOLLOWER (SUSPENSION SEAT)	
T			**108-4087**	1	KIT-FOLLOWER (SUSPENSION SEAT)	
U			**108-4103**	1	KIT-BEARING (SUSPENSION SEAT)	

J-KIT MARKED J INCLUDES PARTS MARKED J
L-KIT MARKED L INCLUDES PARTS MARKED L AND RETAINING RING
P-KIT MARKED P INCLUDES PARTS MARKED P AND CABLE STRAP
Q-KIT MARKED Q INCLUDES PARTS MARKED Q
S-KIT MARKED S INCLUDES PARTS MARKED S
T-KIT MARKED T INCLUDES PARTS MARKED T
U-KIT MARKED U INCLUDES PARTS MARKED U
V-KIT MARKED V INCLUDES PARTS MARKED V
Z-NOT SERVICED SEPARATELY

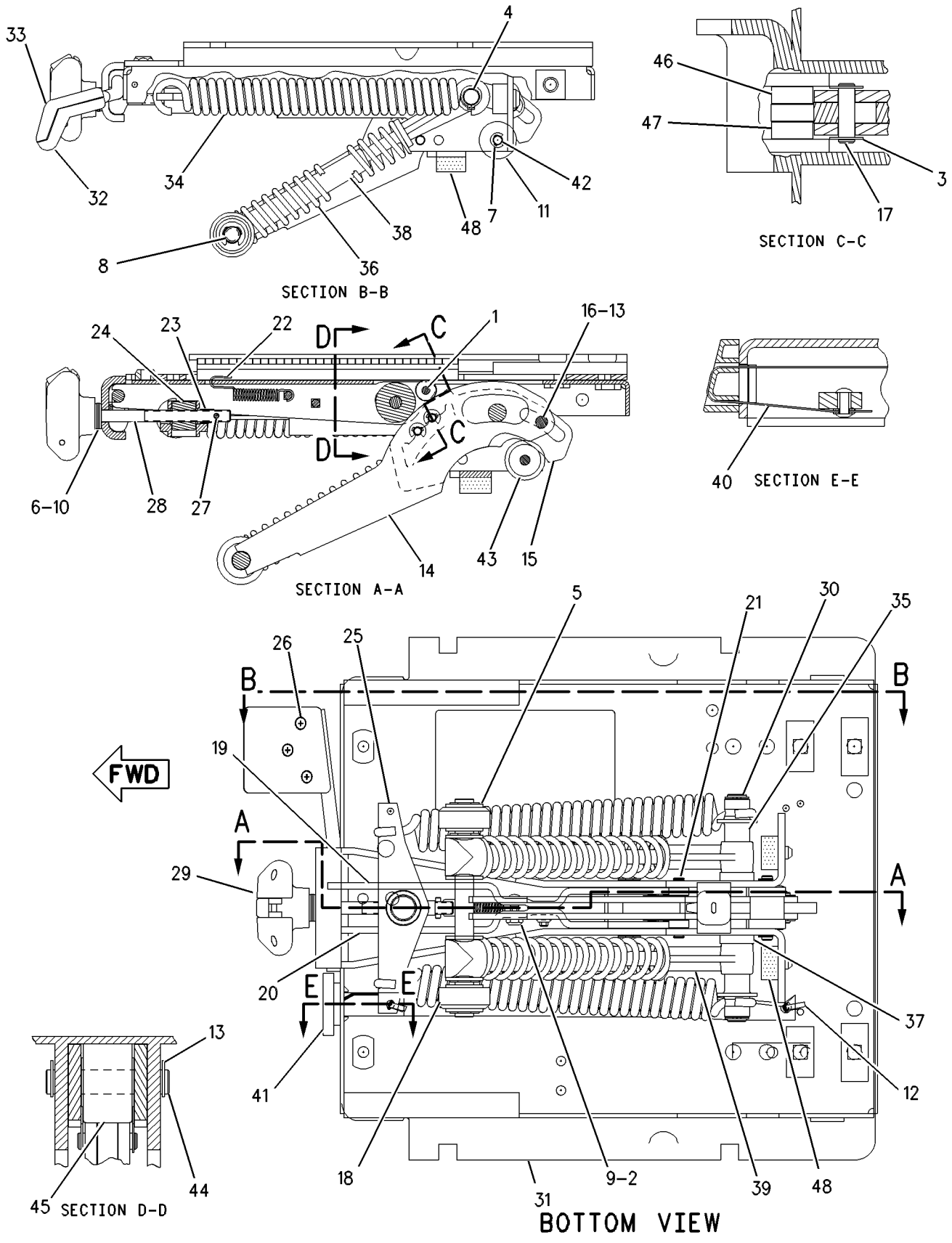

GRAPHIC #1 **<END>** g00608620

105-9657 INSTALLATION GP-RADIO

S/N: JDL1-UP; GMT1-UP
PART OF 158-7694 CAB AR
ALSO AN ATTACHMENT

SMCS-7338 **i01815841**

NOTE	REF NO	GRAPHIC REF	PART NUMBER	QTY	PART NAME 1 2 3 4 5 6 (PRODUCT LEVEL)	SEE PAGE
	1	1	**108-3138**	1	BRACKET AS	
M		1	**6V-9632**	1	NUT-WELD (M6X1-THD)	
	2	1	**6Y-7385**	1	BRACKET	
M	3	1	**8T-4171**	1	BOLT (M6X1X12-MM)	
	4	1	**9X-8256**	1	WASHER (6.6X12X2-MM THK)	
	5	1	**8E-1118**	1	ANTENNA AS	
	6	1	**9U-8263**	1	COVER	
	7	1	**9U-8746**	1	CABLE AS-COAXIAL	
	8	1	**6V-7646**	4	WASHER-HARD (7.2X25X2-MM THK)	
M	9	1	**5C-2890**	4	NUT (M6X1-THD)	
	10	1	**217-8433**	1	FILM-NOTICE (RADIO)	
	11	1	**8K-1433**	1	GROMMET	
	12	1	**4N-9915**	4	GROMMET AS	
	13	1	**3E-4356**	4	WASHER-HARD (17.5X30X6-MM THK)	

M-METRIC PART

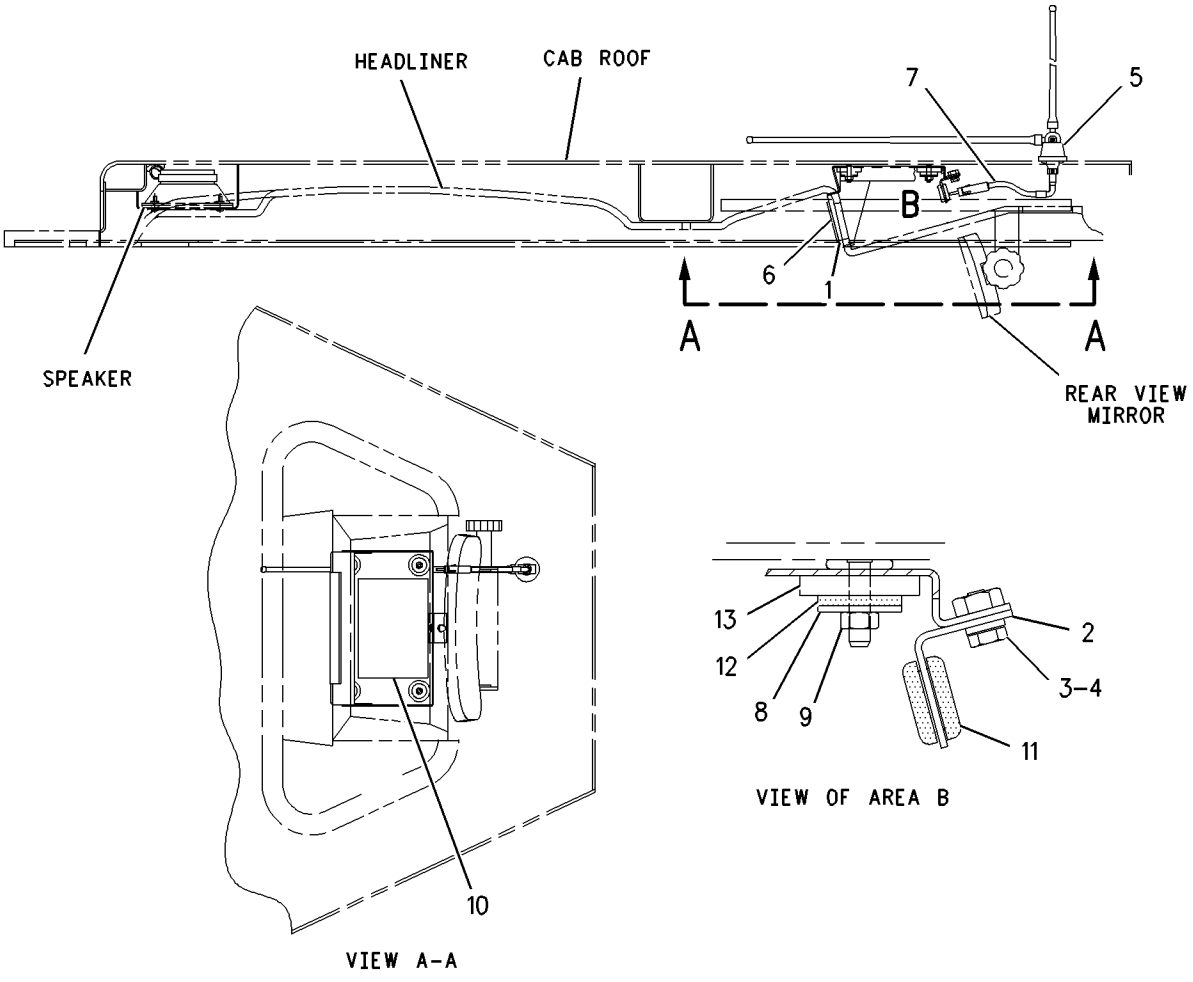

GRAPHIC #1 **<END>** g00906643

OPERATOR STATION

238-7605 INSTRUMENT GP-CAB

S/N: JDL1-UP; GMT1-UP

PART OF 218-4978, 222-1592 CHASSIS AR

SMCS-7451 **i02431405**

NOTE	REF NO	GRAPHIC REF	PART NUMBER	QTY	PART NAME 1 2 3 4 5 6 (PRODUCT LEVEL)	SEE PAGE
	1	1	**2P-4339**	1	NUT-JAM (7/16-28-THD)	
	2	1	**3S-2093**	18	STRAP-CABLE	
	3	1	**7F-6998**	1	LOCKWASHER	
	4	1	**8Y-6388**	5	LOUVER AS	
	5	1	**083-9527**	2	SPACER (13X20X1.5-MM THK)	
	6	1	**110-6109**	3	KNOB-CONTROL (LIGHTS)	
	7	1	**116-6203**	1	RESISTOR AS	
		1	**102-8802**	1	KIT-RECEPTACLE (2-PIN)	
					(INCLUDES RECEPTACLE AS & WEDGE)	
		1	**186-3735**	2	PIN-CONNECTOR (16-GA TO 18-GA)	
	8	1	**122-7127**	6	NUT (NYLON)	
	9	1	**123-0304**	1	INDICATOR AS (ACTION LIGHT)	
		1	**115-1748**	1	LAMP (24-VOLT, 3-WATT)	
		1	**123-0306**	1	SOCKET AS	
	10	1	**123-9294**	4	LAMP (24-VOLT)	
	11	1	**133-9405**	1	SWITCH AS-PUSH BUTTON (AUTOMATIC KICKDOWN)	
	11A	1	**133-9405**	1	SWITCH AS-PUSH BUTTON (BIDIRECTIONAL MODE)	
	11B	1	**133-9405**	1	SWITCH AS-PUSH BUTTON (DISPLAY MODES)	
					(EACH INCLUDES)	
		1	**102-8803**	1	KIT-RECEPTACLE (3-PIN)	
					(INCLUDES RECEPTACLE AS & WEDGE)	
		1	**3K-0835**	1	NUT (5/8-24-THD)	
		1	**6F-0253**	1	LOCKWASHER	
		1	**186-3735**	1	PIN-CONNECTOR (16-GA TO 18-GA)	
	12	1	**142-8858**	1	SWITCH AS-KEY START (IGNITION)	
		1	**167-1530**	1	NUT (1-32-THD)	
Y	13	1	**154-7443**	1	CONTROL GP-UNPRGMED MONITOR (CATERPILLAR MONITORING SYSTEM)	617
	14	1	**157-1361**	1	SWITCH AS-ROTARY (BLOWER)	
		1	**102-8805**	1	KIT-RECEPTACLE (6-PIN)	
					(INCLUDES RECEPTACLE AS & WEDGE)	
		1	**9W-0852**	6	PIN-CONNECTOR (14-GA)	
	15	1	**159-4712**	1	FILM-IDENTIFICATION (INSTRUMENT PANEL)	
	16	1	**159-9257**	1	PANEL-DASH (LIGHT)	
	17	1	**164-0847**	1	CABLE	
Y	18	1	**166-6928**	1	MODULE GP-QUAD GAUGE	652
Y	19	1	**168-0369**	1	MODULE GP-DISPLAY	651
	20	1	**175-1349**	1	PLATE	
	21	1	**175-3950**	1	SWITCH AS (LIGHTS)	
		1	**102-8806**	1	KIT-RECEPTACLE (8-PIN)	
					(INCLUDES RECEPTACLE AS & WEDGE)	
		1	**9W-0852**	7	PIN-CONNECTOR (14-GA)	
	22	1	**175-4393**	1	SPACER (11.4X17.5X2-MM THK)	
	23	1	**185-3533**	7	CLIP	
	24	1	**193-3356**	1	CABLE	
	25	1	**193-3359**	1	CONTROL AS (TEMPERATURE)	
		1	**129-1831**	1	CLAMP	
	26	1	**213-7315**	6	SCREW-TRUSS HEAD (M4X0.7X25-MM)	
	27	1	**226-9666**	1	HARNESS AS-PANEL (INSTRUMENT)	
		1	**102-8804**	1	KIT-RECEPTACLE (4-PIN)	
		1	**102-8805**	2	KIT-RECEPTACLE (6-PIN)	
		1	**102-8806**	2	KIT-RECEPTACLE (8-PIN)	
					(EACH INCLUDES RECEPTACLE AS & WEDGE)	
		1	**155-2265**	2	KIT-CONNECTING PLUG (8-PIN)	
		1	**155-2260**	5	KIT-CONNECTING PLUG (3-PIN)	
		1	**155-2270**	4	KIT-CONNECTING PLUG (2-PIN)	

238-7605 **INSTRUMENT GP-CAB** *(contd.)* **i02431405**

NOTE	REF NO	GRAPHIC REF	PART NUMBER	QTY	PART NAME 1 2 3 4 5 6 (PRODUCT LEVEL)	SEE PAGE
		1	**155-2271**	4	KIT-CONNECTING PLUG (4-PIN)	
		1	**155-2274**	4	KIT-CONNECTING PLUG (6-PIN)	
					(EACH INCLUDES PLUG AS, WEDGE & INTERFACE SEAL)	
		1	**8T-9834**	1	PLUG AS-CONNECTOR (40-PIN)	
		1	**214-4208**	1	RECEPTACLE AS-CONNECTOR (70-PIN)	
		1	**3T-3158**	4	SOCKET-LAMP	
		1	**3T-3278**	4	BOOT	
		1	**3T-3159**	4	SPRING	
		1	**6D-4161**	4	CONTACT	
	28	1	**228-6089**	1	PLUG	
	29	1	**252-0063**	1	PLUG AS-CODE (MONITOR)	
		1	**155-2265**	1	KIT-CONNECTING PLUG (8-PIN)	
					(INCLUDES PLUG AS, WEDGE & INTERFACE SEAL)	
		1	**9G-3695**	4	PLUG (GROMMET SEALING)	
		1	**126-1766**	4	SOCKET-CONNECTOR	
	30	1	**265-7314**	1	PANEL AS-INSTRUMENT	
	31	1	**130-5300**	3	CLIP	
	32	1	**132-5789**	1	CLIP	
	33	1	**198-9706**	12	SCREW-TRUSS HEAD (M5X0.8X16-MM)	
	34	1	**198-9707**	4	SCREW-TRUSS HEAD (M6X1X35-MM)	
	35	1	**204-6101**	12	WASHER-HARD (5.3X10X1-MM THK)	
	36	1	**204-6102**	6	WASHER-HARD (4.45X9.52X1-MM THK)	
	37	1	**251-1198**	1	SWITCH AS-ROCKER (AIR CONDITIONER CONTROL)	
	38	1	**266-5851**	1	FILM-IDENTIFICATION (LIGHTS)	
	39	1	**3E-6922**	10	SCREW-RECESS FLAT HEAD (NO 6X19X12.7-MM)	
	40	1	**4M-5281**	2	BOLT (1/4-20X0.75-IN)	
	41	1	**4P-7581**	1	CLIP	
	42	1	**4P-8134**	1	CLIP	
	43	1	**5P-4115**	2	WASHER-HARD (7.2X19X2-MM THK)	
M	44	1	**8T-4138**	1	BOLT (M6X1X20-MM)	
	45	1	**8T-4205**	12	WASHER-HARD (7.2X14.5X2-MM THK)	
M	46	1	**8T-4970**	10	BOLT (M6X1X14-MM)	

M-METRIC PART
Y-SEPARATE ILLUSTRATION

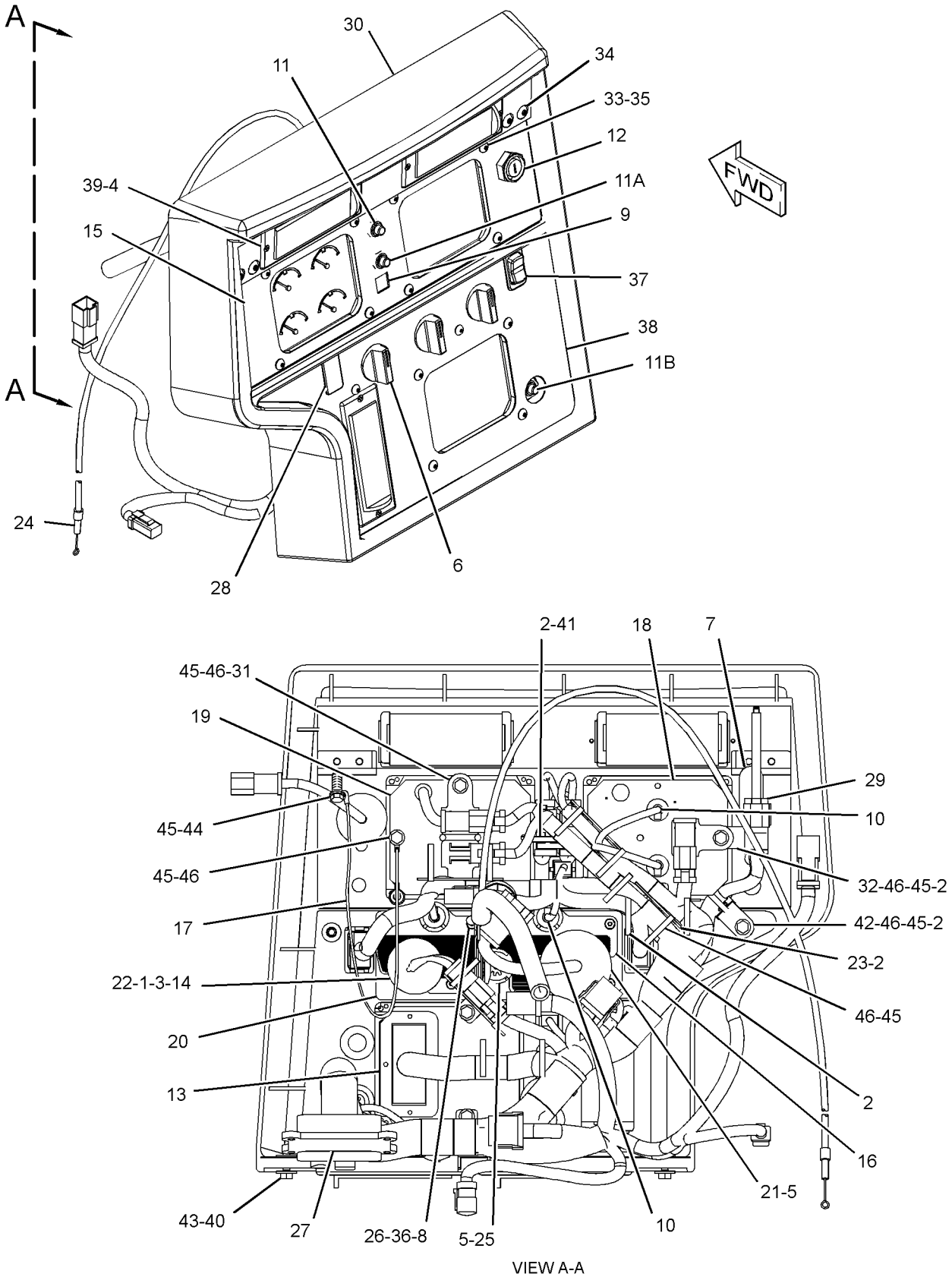

VIEW A-A

GRAPHIC #1 **<END>** g01210337

OPERATOR STATION

238-7606 INSTRUMENT GP-CAB—OPEN ROPS

S/N: JDL1-UP; GMT1-UP

PART OF 252-8337 CANOPY AR-OPEN ROPS

AN ATTACHMENT

SMCS-7451 **i02470863**

NOTE	REF NO	GRAPHIC REF	PART NUMBER	QTY	PART NAME 1 2 3 4 5 6 (PRODUCT LEVEL)	SEE PAGE
	1	2	**3S-2093**	17	STRAP-CABLE	
	2	2	**083-9527**	1	SPACER (13X20X1.5-MM THK)	
	3	1	**110-6109**	1	KNOB-CONTROL (LIGHTS)	
	4	2	**116-6203**	1	RESISTOR AS	
		2	**102-8802**	1	KIT-RECEPTACLE (2-PIN)	
					(INCLUDES RECEPTACLE AS & WEDGE)	
		2	**186-3735**	2	PIN-CONNECTOR (16-GA TO 18-GA)	
	5	2	**122-7127**	6	NUT (NYLON)	
	6	1	**123-0304**	1	INDICATOR AS (ACTION LIGHT)	
		1	**115-1748**	1	LAMP (24-VOLT, 3-WATT)	
		1	**123-0306**	1	SOCKET AS	
	7	2	**123-9294**	4	LAMP (24-VOLT)	
	8	1	**133-9405**	1	SWITCH AS-PUSH BUTTON (AUTO KICK-DOWN)	
	8A	1	**133-9405**	1	SWITCH AS-PUSH BUTTON (BIDIRECTIONAL MODE)	
	8B	1	**133-9405**	1	SWITCH AS-PUSH BUTTON (DISPLAY MODES)	
					(EACH SWITCH AS INCLUDES)	
		1	**102-8803**	1	KIT-RECEPTACLE (3-PIN)	
					(INCLUDES RECEPTACLE AS & WEDGE)	
		1	**3K-0835**	1	NUT (5/8-24-THD)	
		1	**6F-0253**	1	LOCKWASHER	
		1	**186-3735**	3	PIN-CONNECTOR (16-GA TO 18-GA)	
	9	1	**142-8858**	1	SWITCH AS-KEY START (IGNITION)	
		1	**167-1530**	1	NUT (1-32-THD)	
Y	10	2	**154-7443**	1	CONTROL GP-UNPRGMED MONITOR (CATERPILLAR MONITORING SYSTEM)	617
	11	1	**157-2741**	1	GUARD-VANDALISM	
	12	1	**159-4712**	1	FILM-IDENTIFICATION (INSTRUMENT PANEL)	
	13	2	**159-9257**	1	PANEL-DASH (LIGHT)	
	14	2	**164-0847**	1	CABLE	
	15	1	**164-9929**	1	FILM-IDENTIFICATION (ACTION LIGHT)	
Y	16	2	**166-6928**	1	MODULE GP-QUAD GAUGE	652
Y	17	2	**168-0369**	1	MODULE GP-DISPLAY	651
	18	2	**175-1349**	1	PLATE	
	19	2	**175-3950**	1	SWITCH AS (LIGHTS)	
		2	**102-8806**	1	KIT-RECEPTACLE (8-PIN)	
					(INCLUDES RECEPTACLE AS & WEDGE)	
		2	**9W-0852**	7	PIN-CONNECTOR (14-GA)	
	20	2	**178-3003**	1	COVER	
	21	2	**185-3533**	7	CLIP	
	22	1	**186-5097**	1	ROD	
	23	1	**186-5099**	1	LOCK AS-CYLINDER	
		1	**226-0293**	1	LOCK AS	
		1	**226-0337**	1	CAM	
M	24	2	**187-7719**	4	BOLT (M5X2.24X14-MM)	
	25	2	**194-1466**	1	CLIP	
	26	2	**213-7315**	6	SCREW-TRUSS HEAD (M4X0.7X25-MM)	
	27	2	**226-9666**	1	HARNESS AS-PANEL (INSTRUMENT)	
		2	**8T-9834**	1	PLUG AS-CONNECTOR (40-PIN)	
		2	**214-4208**	1	RECEPTACLE AS-CONNECTOR (70-PIN)	
		2	**102-8804**	1	KIT-RECEPTACLE (4-PIN)	
		2	**102-8805**	2	KIT-RECEPTACLE (6-PIN)	
		2	**102-8806**	2	KIT-RECEPTACLE (8-PIN)	
					(EACH INCLUDES RECEPTACLE AS & WEDGE)	
		2	**155-2265**	2	KIT-CONNECTING PLUG (8-PIN)	
		2	**155-2260**	5	KIT-CONNECTING PLUG (3-PIN)	

238-7606 **INSTRUMENT GP-CAB** *(contd.)* **i02470863**

NOTE	REF NO	GRAPHIC REF	PART NUMBER	QTY	PART NAME 1 2 3 4 5 6 (PRODUCT LEVEL)	SEE PAGE
		2	**155-2270**	4	KIT-CONNECTING PLUG (2-PIN)	
		2	**155-2271**	4	KIT-CONNECTING PLUG (4-PIN)	
		2	**155-2274**	4	KIT-CONNECTING PLUG (6-PIN)	
					(EACH INCLUDES PLUG AS, WEDGE, & INTERFACE SEAL)	
		2	**3T-3158**	4	SOCKET-LAMP	
		2	**3T-3159**	4	SPRING	
		2	**3T-3278**	4	BOOT	
		2	**6D-4161**	4	CONTACT	
	28	1	**228-6089**	1	PLUG	
	29	2	**252-0063**	1	PLUG AS-CODE (MONITOR)	
		2	**9G-3695**	3	PLUG (GROMMET SEALING)	
		2	**126-1766**	5	SOCKET-CONNECTOR	
		2	**155-2265**	1	KIT-CONNECTING PLUG (8-PIN)	
					(INCLUDES PLUG AS, WEDGE, & INTERFACE SEAL)	
	30	1	**265-7315**	1	PANEL AS-INSTRUMENT	
		1	**7T-7388**	2	GUIDE	
	31	2	**130-5300**	3	CLIP	
	32	2	**132-5789**	1	CLIP	
	33	1	**198-9706**	12	SCREW-TRUSS HEAD (M5X0.8X16-MM)	
	34	1	**198-9707**	4	SCREW-TRUSS HEAD (M6X1X35-MM)	
	35	1	**204-6101**	12	WASHER-HARD (5.3X10X1-MM THK)	
	36	2	**204-6102**	6	WASHER-HARD (4.45X9.52X1-MM THK)	
	37	1	**268-1825**	1	FILM-IDENTIFICATION (INSTRUMENT PANEL)	
	38	2	**4M-5281**	2	BOLT (1/4-20X0.75-IN)	
	39	2	**4P-7581**	1	CLIP	
	40	2	**4P-8134**	1	CLIP	
	41	2	**5P-4115**	2	WASHER-HARD (7.2X19X2-MM THK)	
M	42	2	**8T-0337**	1	SCREW-MACHINE (M4X0.7X12-MM)	
M	43	2	**8T-2659**	1	LOCKNUT (M4X0.7-THD)	
M	44	2	**8T-4138**	1	BOLT (M6X1X20-MM)	
	45	2	**8T-4205**	12	WASHER-HARD (7.2X14.5X2-MM THK)	
M	46	2	**8T-4970**	10	BOLT (M6X1X14-MM)	

M-METRIC PART
Y-SEPARATE ILLUSTRATION

REFER TO ALL ILLUSTRATIONS OF
THIS GROUP FOR AUXILIARY VIEWS

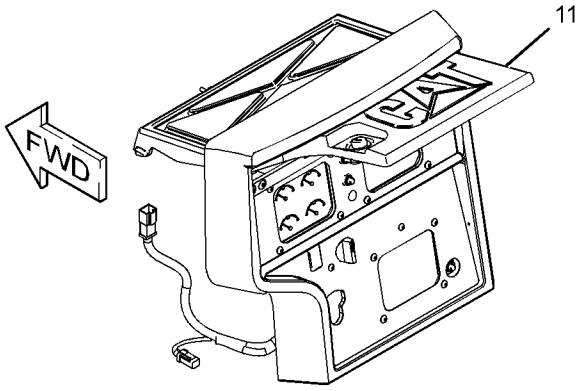

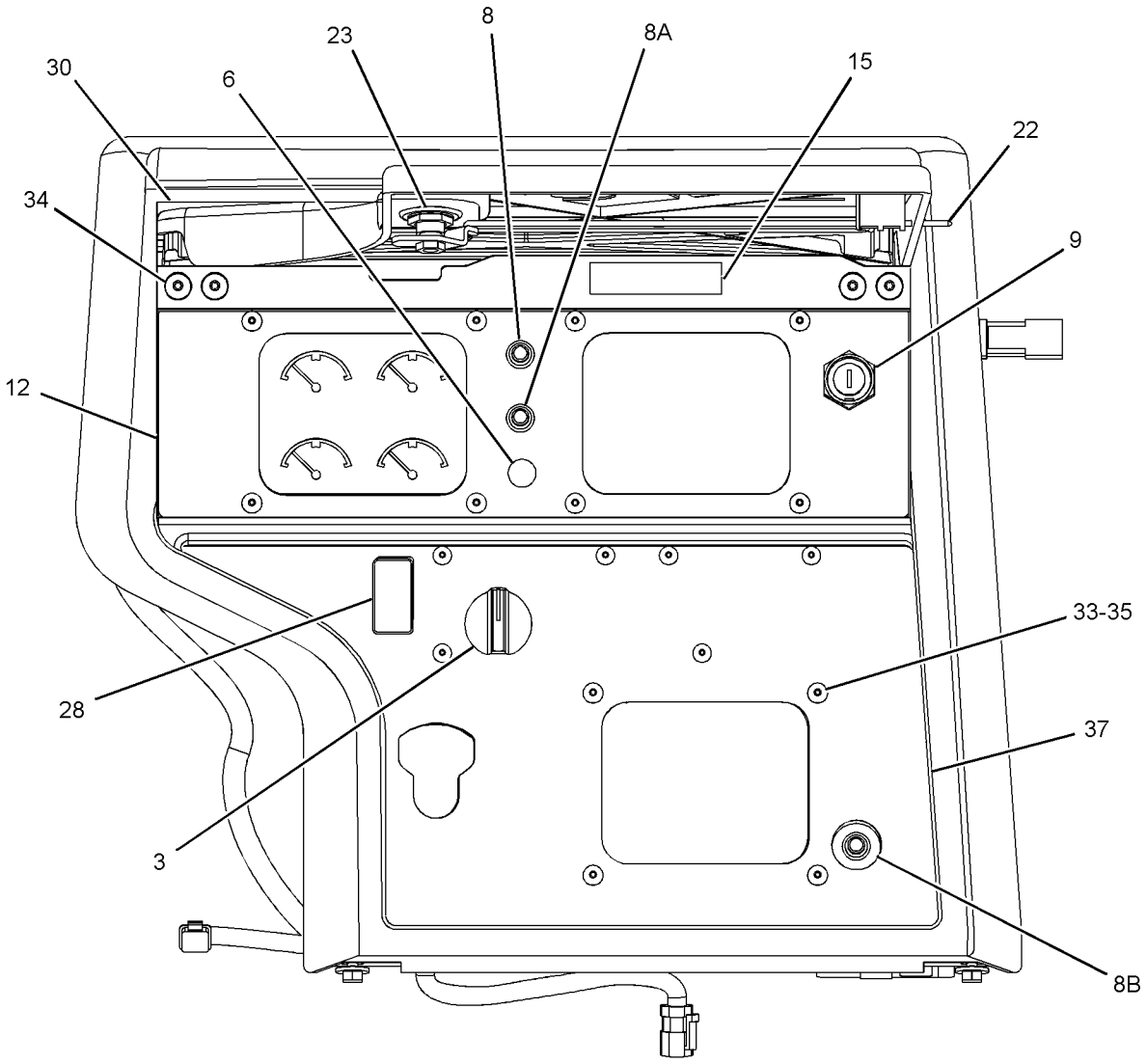

FRONT VIEW

GRAPHIC #1 g01212522

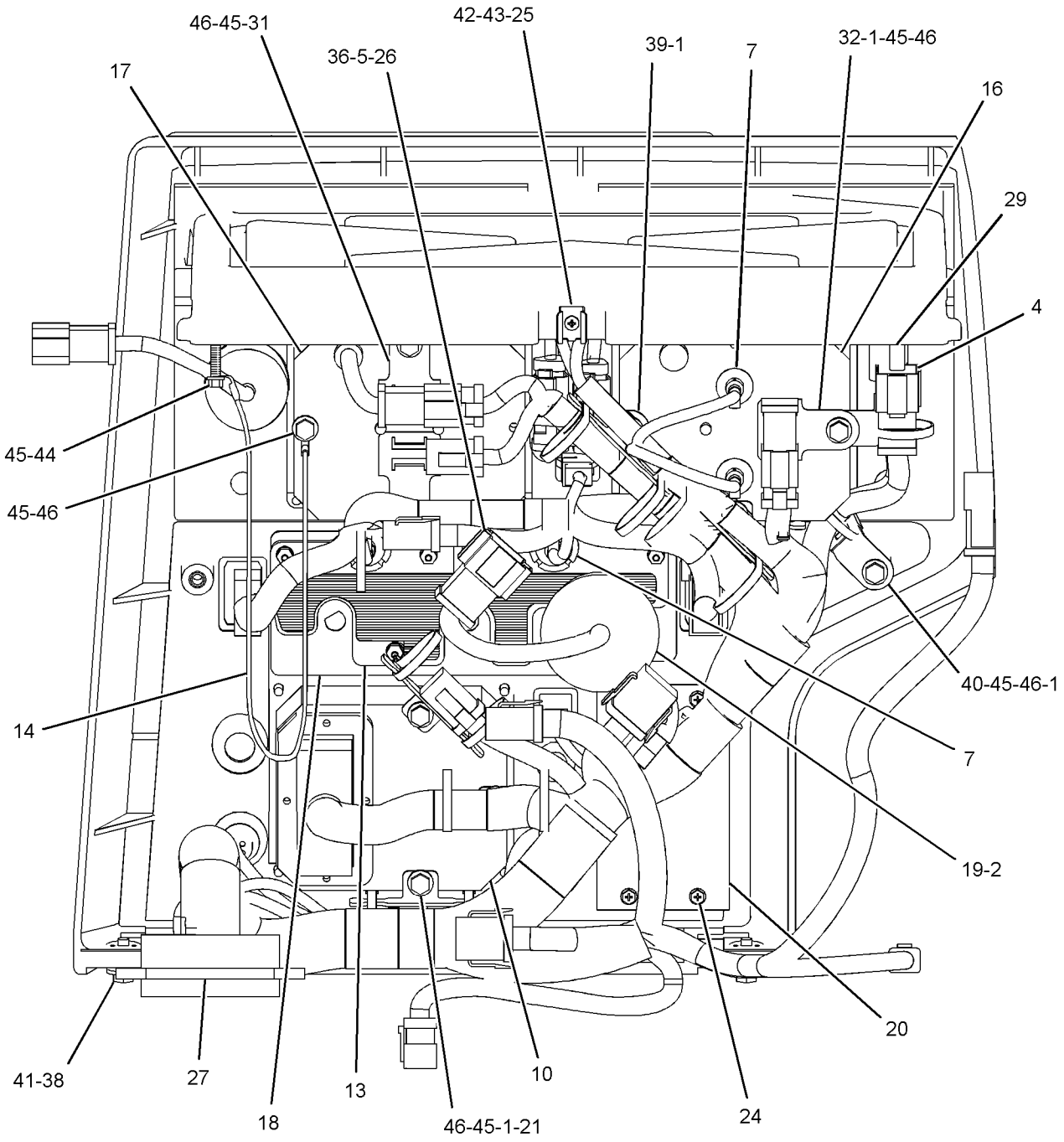

REAR VIEW

GRAPHIC #2 **<END>** g01212531

OPERATOR STATION

161-3616 KNOB GP

S/N: JDL1-UP; GMT1-UP
PART OF 226-9130 CONTROL AR-HYDRAULIC IMPLEMENT
AN ATTACHMENT

SMCS-5800 **i01488877**

NOTE	REF NO	GRAPHIC REF	PART NUMBER	QTY	PART NAME 1 2 3 4 5 6 (PRODUCT LEVEL)	SEE PAGE
	1	1	**2A-1736**	1	HANDLE	
	2	1	**7X-3374**	1	NUT-FULL (1/2-20-THD)	

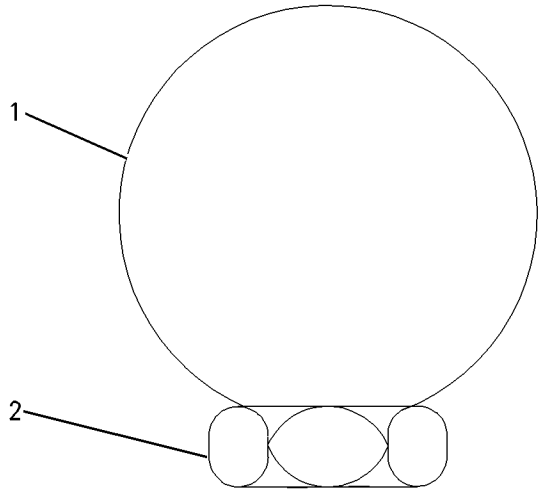

GRAPHIC #1 **<END>** g00763264

OPERATOR STATION

158-7695 LINER GP-CAB

S/N: JDL1-UP; GMT1-UP
PART OF 158-7694 CAB AR
ALSO AN ATTACHMENT

SMCS-7329 **i02148373**

NOTE	REF NO	GRAPHIC REF	PART NUMBER	QTY	PART NAME 1 2 3 4 5 6 (PRODUCT LEVEL)	SEE PAGE
	1	1	**6V-8928**	1	HOOK-COAT	
	2	1	**110-8152**	2	HANDLE AS-PULL (LH, RH)	
	3	1	**158-8906**	2	BLOCK-FOAM	
	4	1	**161-1083**	1	COVER-DOOR (RH)	
	5	1	**161-1084**	1	COVER-DOOR (LH)	
	6	1	**161-1085**	1	COVER-FRONT	
	7	1	**161-1091**	1	COVER-POST (RH)	
	8	1	**161-1092**	1	COVER-POST (LH)	
	9	1	**161-1093**	2	TRIM-POST	
	10	1	**161-1094**	1	LINER-CAB	
Y	11	1	*161-1096*	1	LINER GP-CAB	638
	12	1	**161-1098**	1	RETAINER	
C	13	1	**228-6787**	1	COVER (TOP)	
M	14	1	**3E-8020**	4	SCREW-TRUSS HEAD (M6X1X25-MM)	
M	15	1	**6V-5683**	4	BOLT (M6X1X16-MM)	
CM	16	1	**9X-2043**	18	SCREW-TRUSS HEAD (M6X1X14-MM)	
M	17	1	**9X-2045**	1	SCREW-TRUSS HEAD (M6X1X20-MM)	

C-CHANGE FROM PREVIOUS TYPE
M-METRIC PART
Y-SEPARATE ILLUSTRATION

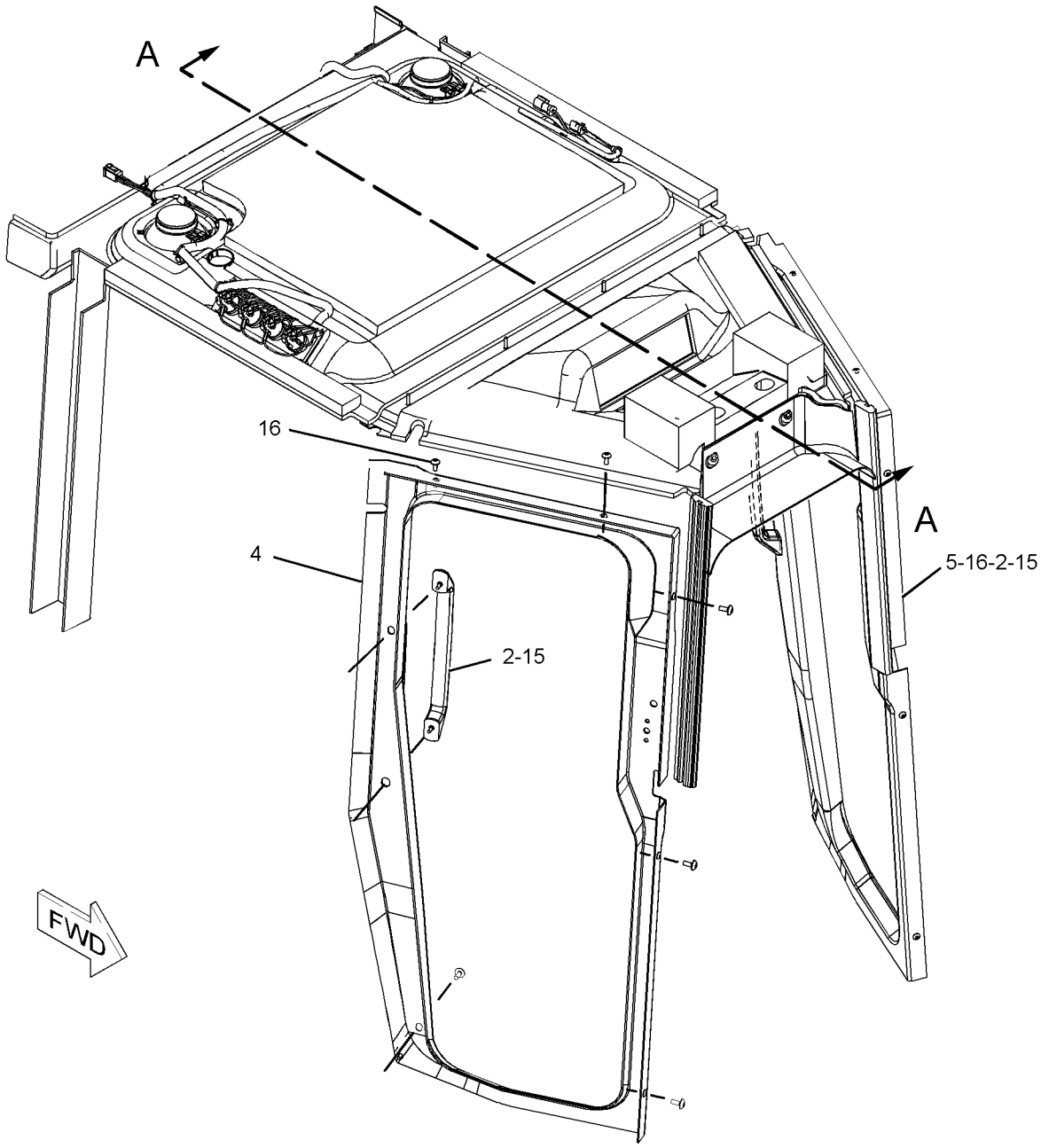

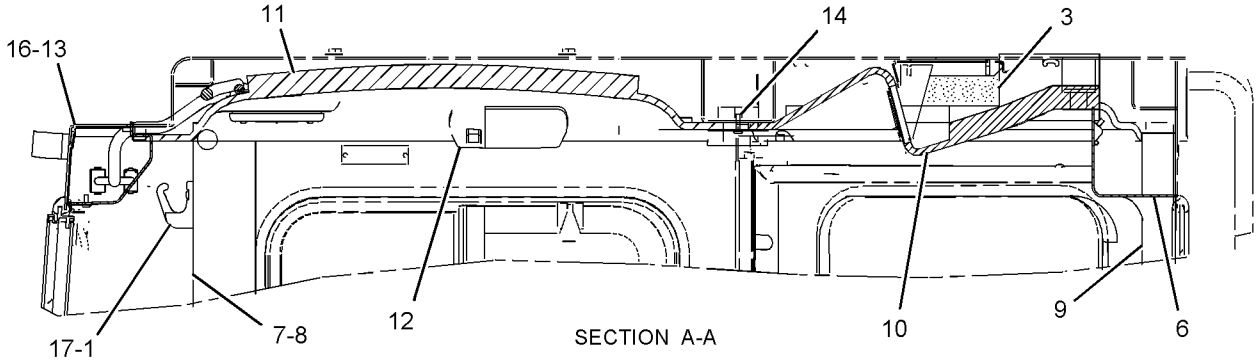

SECTION A-A

GRAPHIC #1

<END>

g01097790

OPERATOR STATION

161-1096 LINER GP-CAB

S/N: JDL1-UP; GMT1-UP
PART OF 158-7695 LINER GP-CAB
ALSO AN ATTACHMENT

SMCS-7329 **i02438821**

NOTE	REF NO	GRAPHIC REF	PART NUMBER	QTY	PART NAME 1 2 3 4 5 6 (PRODUCT LEVEL)	SEE PAGE
Y	1	1	**3E-6389**	1	LAMP GP-DOME (24-VOLT, WITH SWITCH)	185
	2	1	**3S-2093**	11	STRAP-CABLE	
M	3	1	**7Y-7388**	4	SCREW-BUTTON HEAD (M5X0.8X12-MM)	
	4	1	**6T-7695**	2	SPEAKER AS-RADIO	
	5	1	**8T-4752**	4	NUT (M5X0.8-6H-THD)	
	6	1	**267-8685**	1	FILM-IDENTIFICATION (WINDOW WIPER CONTROLS)	
	7	1	**101-3055**	2	COVER-SPEAKER	
	8	1	**131-5137**	1	PLUG	
	9	1	**161-1097**	1	LINER-CAB	
	10	1	**161-1099**	1	PLATE	
	11	1	**166-3733**	11	NUT-SPEED (NO 8-32-MM)	
	12	1	**169-9636**	1	HARNESS AS-CAB (WIPER, SPEAKER)	
		1	**102-8801**	1	KIT-RECEPTACLE (12-PIN)	
					(INCLUDES RECEPTACLE AS, & WEDGE)	
		1	**155-2255**	1	KIT-CONNECTING PLUG (12-PIN)	
		1	**155-2260**	1	KIT-CONNECTING PLUG (3-PIN)	
		1	**155-2274**	1	KIT-CONNECTING PLUG (6-PIN)	
					(EACH INCLUDES PLUG AS, WEDGE, & INTERFACE SEAL)	
	13	1	**103-9425**	11	SCREW-MACHINE (8-32X1-IN)	
	14	1	**7T-9303**	1	SWITCH AS-ROTARY (RH DOOR)	
	14A	1	**7T-9303**	1	SWITCH AS-ROTARY (LH DOOR)	
	14B	1	**7T-9303**	1	SWITCH AS-ROTARY (FRONT)	
	14C	1	**7T-9303**	1	SWITCH AS-ROTARY (REAR)	
					(EACH SWITCH AS INCLUDES)	
		1	**2H-3920**	1	LOCKWASHER	
		1	**6V-8369**	1	NUT (7/16-28-THD)	
	15	1	**110-6109**	4	KNOB-CONTROL (AUTODIG SELECT SWITCH)	

M-METRIC PART
Y-SEPARATE ILLUSTRATION

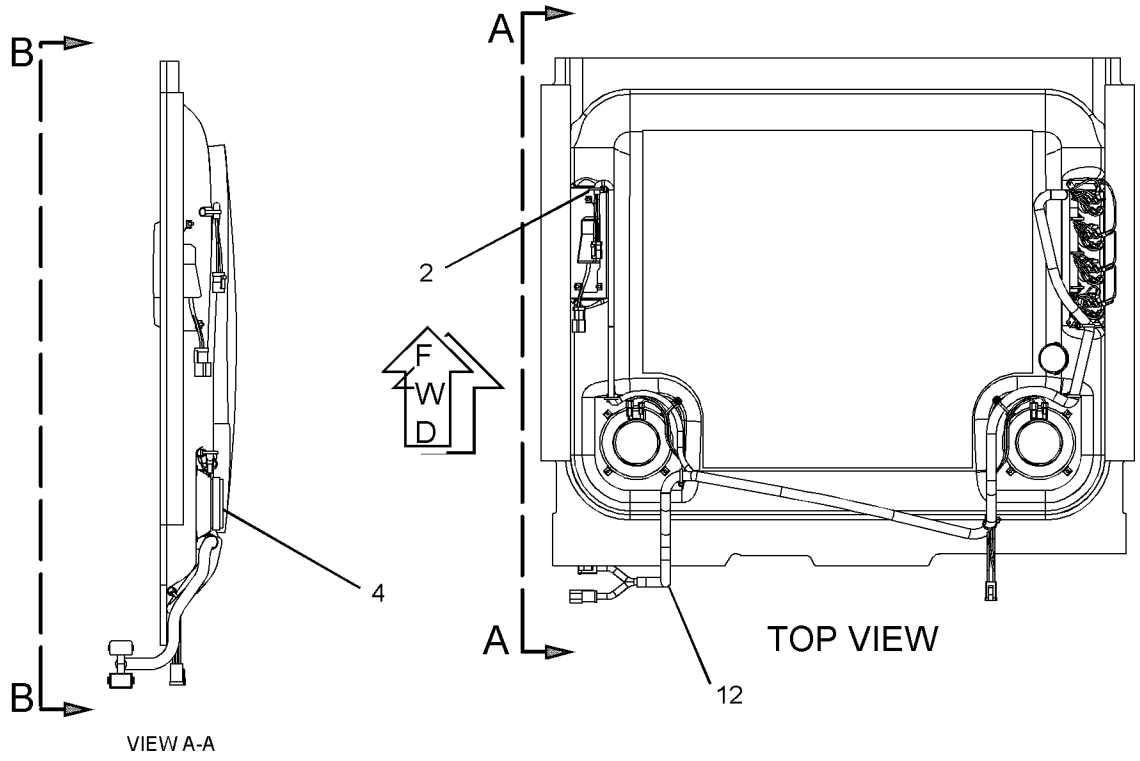

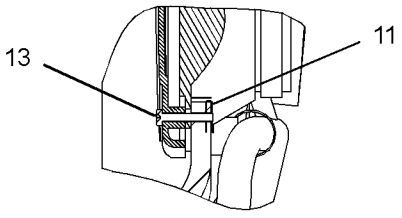

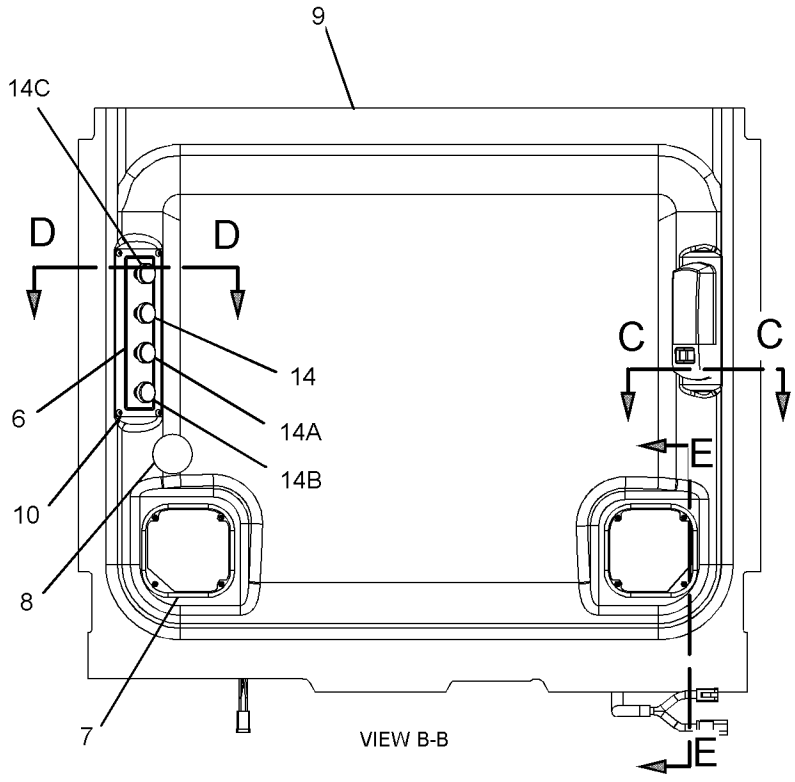

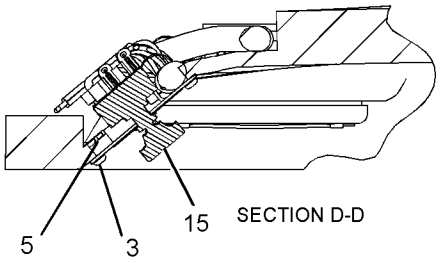

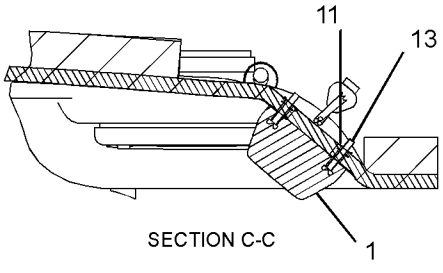

GRAPHIC #1 **<END>** g01208854

OPERATOR STATION

223-1677 LINES GP-AIR CONDITIONER

S/N: JDL1-UP; GMT1-UP
PART OF 223-0535 CAB AR

SMCS-1808 **i02433633**

NOTE	REF NO	GRAPHIC REF	PART NUMBER	QTY	PART NAME 1 2 3 4 5 6 (PRODUCT LEVEL)	SEE PAGE
	1	1	**1P-6356**	1	PLATE	
	2	1	**175-7162**	1	RECEIVER-DRYER GP (AIR CONDITIONER)	
		1	**7X-2049**	1	TUBE AS-REFRIGERANT ORIFICE	
	3	1	**5N-9204**	1	BRACKET AS	
M		1	**8T-3490**	1	NUT-WELD (M10X1.5-THD)	
D	4	1	**6V-2495**	1	SEAL (0.02-M)	
	5	1	**7T-9426**	1	GROMMET	
	6	1	**8C-5682**	1	TEE	
	7	1	**8R-3393**	1	STRAP	
	8	1	**103-6100**	2	FITTING AS-AIR CONDITIONER (QUICK DISCONNECT)	
		1	**9X-7382**	2	SEAL-O-RING	
	9	1	**114-5333**	1	SWITCH AS-PRESSURE (REFRIGERANT)	
		1	**102-8802**	1	KIT-RECEPTACLE (2-PIN)	
					(INCLUDES RECEPTACLE AS & WEDGE)	
		1	**186-3735**	2	PIN-CONNECTOR (16-GA TO 18-GA)	
E		1	**9X-1386**		SLEEVE (25-CM)	
	10	1	**116-6202**	2	BOOT	
	11	1	**128-5924**	1	CLAMP	
	12	1	*173-9598*	1	BRACKET AS	
		1	**8T-5912**	2	NUT-WELD (3/8-16-THD)	
I	13	1	**173-9815**	1	HOSE AS	
I	14	1	**173-9816**	1	HOSE AS	
	15	1	**180-9236**	1	BRACKET AS	
M		1	**8T-3490**	1	NUT-WELD (M10X1.5-THD)	
	16	1	**183-4273**	1	HARNESS AS-WIRING (AIR CONDITIONER COMPRESSOR)	
		1	**155-2270**	4	KIT-CONNECTING PLUG (2-PIN)	
					(EACH INCLUDES PLUG AS, WEDGE, & INTERFACE SEAL)	
	17	1	**186-6189**	1	ACCUMULATOR GP-REFRIGERANT	
I	18	1	**230-5106**	1	HOSE AS	
I	19	1	**266-1961**	1	HOSE AS	
	20	1	**106-8704**	1	SUPPRESSOR AS-ARC	
		1	**102-8802**	1	KIT-RECEPTACLE (2-PIN)	
					(INCLUDES RECEPTACLE AS & WEDGE)	
		1	**186-3735**	1	PIN-CONNECTOR (16-GA TO 18-GA)	
	21	1	**109-1633**	1	CLIP (SLOT)	
	22	1	**109-1634**	1	CLIP (TAB)	
I	23	1	**236-5132**	1	HOSE AS	
	24	1	**3E-4067**	1	FITTING AS-COMPRESSOR	
		1	**3E-4052**	1	CAP-SEAL (AIR CONDITIONER)	
		1	**3E-4058**	1	VALVE AS	
	25	1	**3E-4087**	1	FITTING AS-AIR CONDITIONER	
		1	**3E-4051**	1	CAP-SEAL (AIR CONDITIONER)	
		1	**3E-4057**	1	VALVE AS	
	26	1	**3S-2093**	5	STRAP-CABLE	
	27	1	**3S-8664**	2	CLIP	
	28	1	**4P-8134**	2	CLIP	
M	29	1	**5C-7261**	1	NUT (M8X1.25-THD)	
	30	1	**6K-8178**	1	CLIP	
	31	1	**6V-1228**	1	CLIP	
	32	1	**6V-2372**	1	ELBOW	
	33	1	**7T-8894**	1	GROMMET	
	34	1	**7T-8895**	1	GROMMET	
	35	1	**7T-9793**	1	VALVE (CHECK)	
	36	1	**7X-7729**	2	WASHER (11X25X3-MM THK)	

223-1677 **LINES GP-AIR CONDITIONER** *(contd.)* **i02433633**

NOTE	REF NO	GRAPHIC REF	PART NUMBER	QTY	PART NAME 1 2 3 4 5 6 (PRODUCT LEVEL)	SEE PAGE
	37	1	**8T-4121**	9	WASHER-HARD (11X21X2.5-MM THK)	
M	38	1	**8T-4133**	2	NUT (M10X1.5 THD)	
M	39	1	**8T-4136**	4	BOLT (M10X1.5X25-MM)	
M	40	1	**8T-4137**	2	BOLT (M10X1.5X20-MM)	
M	41	1	**8T-4182**	2	BOLT (M10X1.5X45-MM)	
M	42	1	**8T-4196**	1	BOLT (M10X1.5X35-MM)	
	43	1	**8T-4224**	1	WASHER-HARD (8.8X16X2-MM THK)	
	44	1	**8T-4896**	1	WASHER-HARD (10.2X18.5X2.5-MM THK)	
M	45	1	**8T-6466**	1	BOLT (M10X1.5X60-MM)	
	46	1	**9M-8406**	1	CLIP	
	47	1	**9X-7378**	1	SEAL-O-RING	
	48	1	**9X-7380**	3	SEAL-O-RING	
	49	1	**9X-7381**	3	SEAL-O-RING	
	50	1	**9X-7382**	2	SEAL-O-RING	
	51	1	**9X-7383**	2	SEAL-O-RING	
	52	1	**9X-7385**	2	SEAL-O-RING	
D	53	1	**5P-6129**		TUBE (0.36-M)	
D	53A	1	**5P-6129**		TUBE (0.2-M)	
D	53B	1	**5P-6129**		TUBE (0.14-M)	
D	53C	1	**5P-6129**		TUBE (0.7-M)	

D-ORDER BY THE METER
E-ORDER BY THE CENTIMETER
I-REFER TO HYDRAULIC INFORMATION SYSTEM
M-METRIC PART

223-1677 **LINES GP-AIR CONDITIONER** *(contd.)* **i02433633**

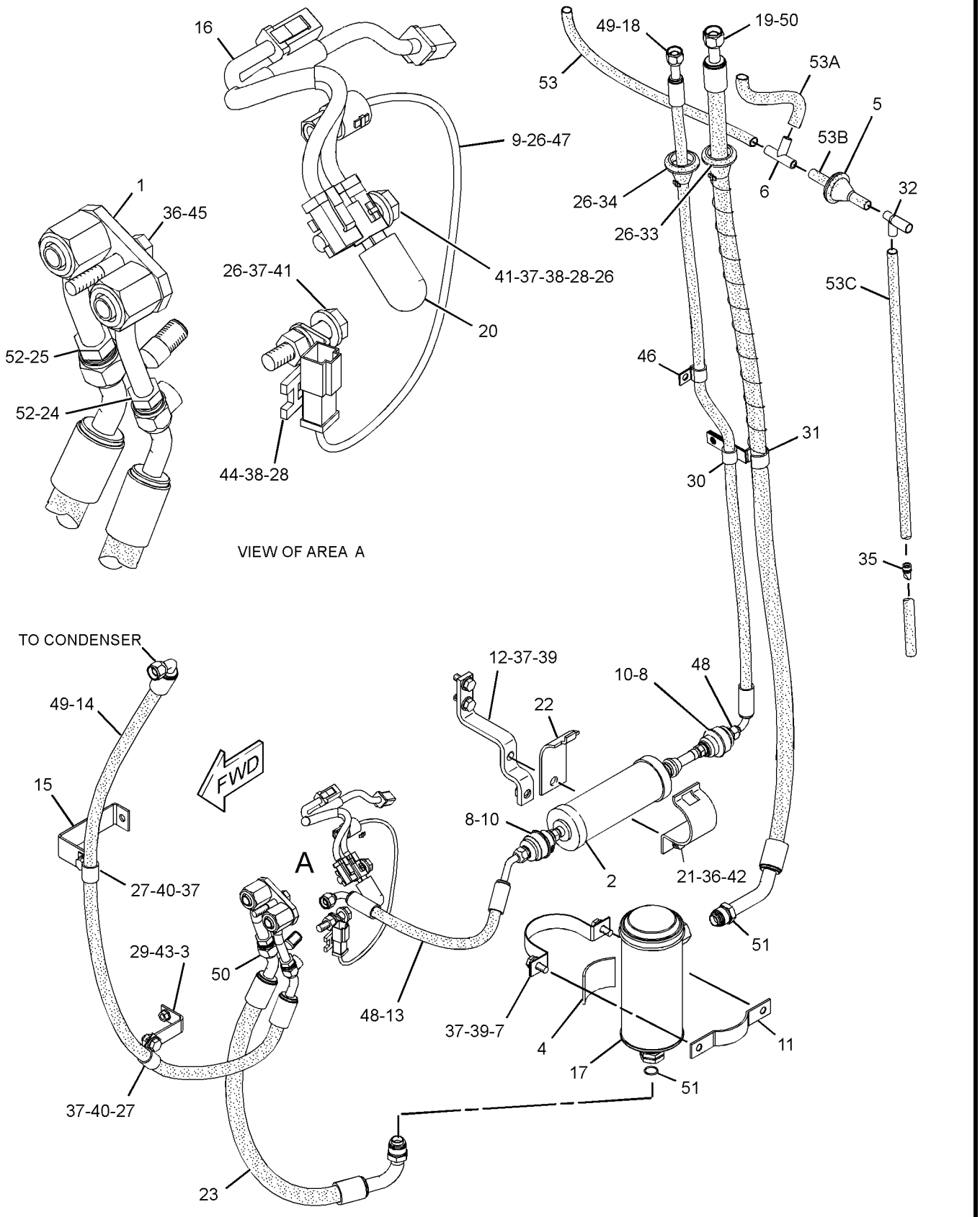

GRAPHIC #1 **<END>** g01209020

OPERATOR STATION

223-1678 LINES GP-AIR CONDITIONER—ROPS MOUNTED

S/N: JDL1-UP; GMT1-UP
PART OF 228-7854 AIR CONDITIONER AR
AN ATTACHMENT

SMCS-1808 **i02456078**

NOTE	REF NO	GRAPHIC REF	PART NUMBER	QTY	PART NAME 1 2 3 4 5 6 (PRODUCT LEVEL)	SEE PAGE
	1	2	**1P-6356**	1	PLATE	
	2	2	**175-7162**	1	RECEIVER-DRYER GP (AIR CONDITIONER)	
		2	**7X-2049**	1	TUBE AS-REFRIGERANT ORIFICE	
	3	1	**5P-3948**	2	COUPLING AS-REFRIGERANT	
					(EACH INCLUDES)	
		1	**7F-8607**	1	SEAL-O-RING	
		1	**107-4399**	1	VALVE AS	
D	4	2	**6V-2495**		SEAL (0.02-M)	
	5	1,2	**7K-1181**	4	STRAP-CABLE	
	6	1	**7K-3176**	2	COUPLING AS-REFRIGERANT	
					(EACH INCLUDES)	
		1	**107-4393**	1	VALVE AS	
		1	**107-4394**	1	GASKET	
	7	2	**7T-9426**	2	GROMMET	
	8	2	**8C-5682**	1	TEE	
	9	2	**8R-3393**	1	STRAP	
	10	2	**103-6100**	2	FITTING AS-AIR CONDITIONER (QUICK DISCONNECT)	
					(EACH INCLUDES)	
		2	**9X-7382**	2	SEAL-O-RING	
I	11	2	**109-4044**	1	HOSE AS	
I	12	2	**110-8834**	1	HOSE AS	
	13	2	**114-5333**	1	SWITCH AS-PRESSURE (REFRIGERANT)	
		2	**102-8802**	1	KIT-RECEPTACLE (2-PIN)	
					(INCLUDES RECEPTACLE AS & WEDGE)	
		2	**186-3735**	2	PIN-CONNECTOR (16-GA TO 18-GA)	
E		2	**9X-1386**		SLEEVE (25-CM)	
	14	2	**116-6202**	2	BOOT	
	15	2	**128-5924**	1	CLAMP	
I	16	2	**160-5804**	1	HOSE AS	
	17	2	**173-9598**	1	BRACKET AS	
	18	2	**183-4273**	1	HARNESS AS-WIRING (AIR CONDITIONER COMPRESSOR)	
		2	**155-2270**	4	KIT-CONNECTING PLUG (2-PIN)	
					(EACH INCLUDES PLUG AS, WEDGE, & INTERFACE SEAL)	
	19	2	**186-6189**	1	ACCUMULATOR GP-REFRIGERANT	
I	20	2	**230-5106**	1	HOSE AS	
	21	1	**231-1271**	1	BRACKET AS	
I	22	2	**236-5131**	1	HOSE AS	
	23	2	**265-9718**	1	HARNESS AS-WIRING (ROPS)	
		2	**102-8805**	1	KIT-RECEPTACLE (6-PIN)	
					(INCLUDES RECEPTACLE AS & WEDGE)	
		2	**155-2260**	1	KIT-CONNECTING PLUG (3-PIN)	
					(INCLUDES PLUG AS, WEDGE, & INTERFACE SEAL)	
I	24	2	**266-1961**	1	HOSE AS	
	25	2	**106-8704**	1	SUPPRESSOR AS-ARC	
		2	**102-8802**	1	KIT-RECEPTACLE (2-PIN)	
					(INCLUDES RECEPTACLE AS & WEDGE)	
		2	**186-3735**	2	PIN-CONNECTOR (16-GA TO 18-GA)	
	26	2	**109-1633**	1	CLIP (SLOT)	
	27	2	**109-1634**	1	CLIP (TAB)	
I	28	2	**236-5132**	1	HOSE AS	
	29	2	**3E-4080**	1	FITTING AS-AIR CONDITIONER	
		2	**3E-4052**	1	CAP-SEAL (AIR CONDITIONER)	

223-1678 **LINES GP-AIR CONDITIONER** *(contd.)* **i02456078**

NOTE	REF NO	GRAPHIC REF	PART NUMBER	QTY	PART NAME 1 2 3 4 5 6 (PRODUCT LEVEL)	SEE PAGE
		2	**3E-4058**	1	VALVE AS	
	30	2	**3E-4087**	1	FITTING AS-AIR CONDITIONER	
		2	**3E-4051**	1	CAP-SEAL (AIR CONDITIONER)	
		2	**3E-4057**	1	VALVE AS	
	31	2	**3S-2093**	5	STRAP-CABLE	
	32	1	**4D-7733**	5	CLIP	
	33	1,2	**4H-2558**	1	GROMMET	
	34	1,2	**4K-8302**	2	CLIP	
	35	2	**4P-7428**	1	CLIP	
	36	2	**4P-7429**	2	CLIP	
	37	1	**4P-7581**	1	CLIP	
	38	2	**4P-8134**	2	CLIP	
	39	1,2	**5P-4295**	2	CLIP	
	40	1	**6D-1641**	1	CLIP	
	41	2	**6K-8178**	1	CLIP	
	42	2	**6V-1228**	1	CLIP	
	43	2	**6V-2372**	1	ELBOW	
	44	2	**7T-8894**	1	GROMMET	
	45	2	**7T-9793**	1	VALVE (CHECK)	
	46	1,2	**7X-7729**	3	WASHER (11X25X3-MM THK)	
	47	1,2	**8T-4121**	10	WASHER-HARD (11X21X2.5-MM THK)	
M	48	2	**8T-4133**	2	NUT (M10X1.5 THD)	
M	49	1,2	**8T-4136**	6	BOLT (M10X1.5X25-MM)	
M	50	1	**8T-4137**	2	BOLT (M10X1.5X20-MM)	
M	51	1,2	**8T-4139**	2	BOLT (M12X1.75X30-MM)	
M	52	2	**8T-4196**	3	BOLT (M10X1.5X35-MM)	
	53	2	**8T-4223**	2	WASHER-HARD (13.5X25.5X3-MM THK)	
	54	1	**8T-4896**	1	WASHER-HARD (10.2X18.5X2.5-MM THK)	
M	55	2	**8T-6466**	1	BOLT (M10X1.5X60-MM)	
	56	2	**9M-8406**	2	CLIP	
	57	2	**9X-7378**	1	SEAL-O-RING	
	58	2	**9X-7380**	3	SEAL-O-RING	
	59	2	**9X-7381**	3	SEAL-O-RING	
	60	2	**9X-7382**	2	SEAL-O-RING	
	61	1,2	**9X-7383**	6	SEAL-O-RING	
	62	2	**9X-7385**	2	SEAL-O-RING	
D	63	2	**5P-6129**		TUBE (0.7-M)	
D	63A	2	**5P-6129**		TUBE (0.2-M)	
D	63B	2	**5P-6129**		TUBE (0.14-M)	
D	63C	2	**5P-6129**		TUBE (0.36-M)	

D-ORDER BY THE METER
E-ORDER BY THE CENTIMETER
I-REFER TO HYDRAULIC INFORMATION SYSTEM
M-METRIC PART

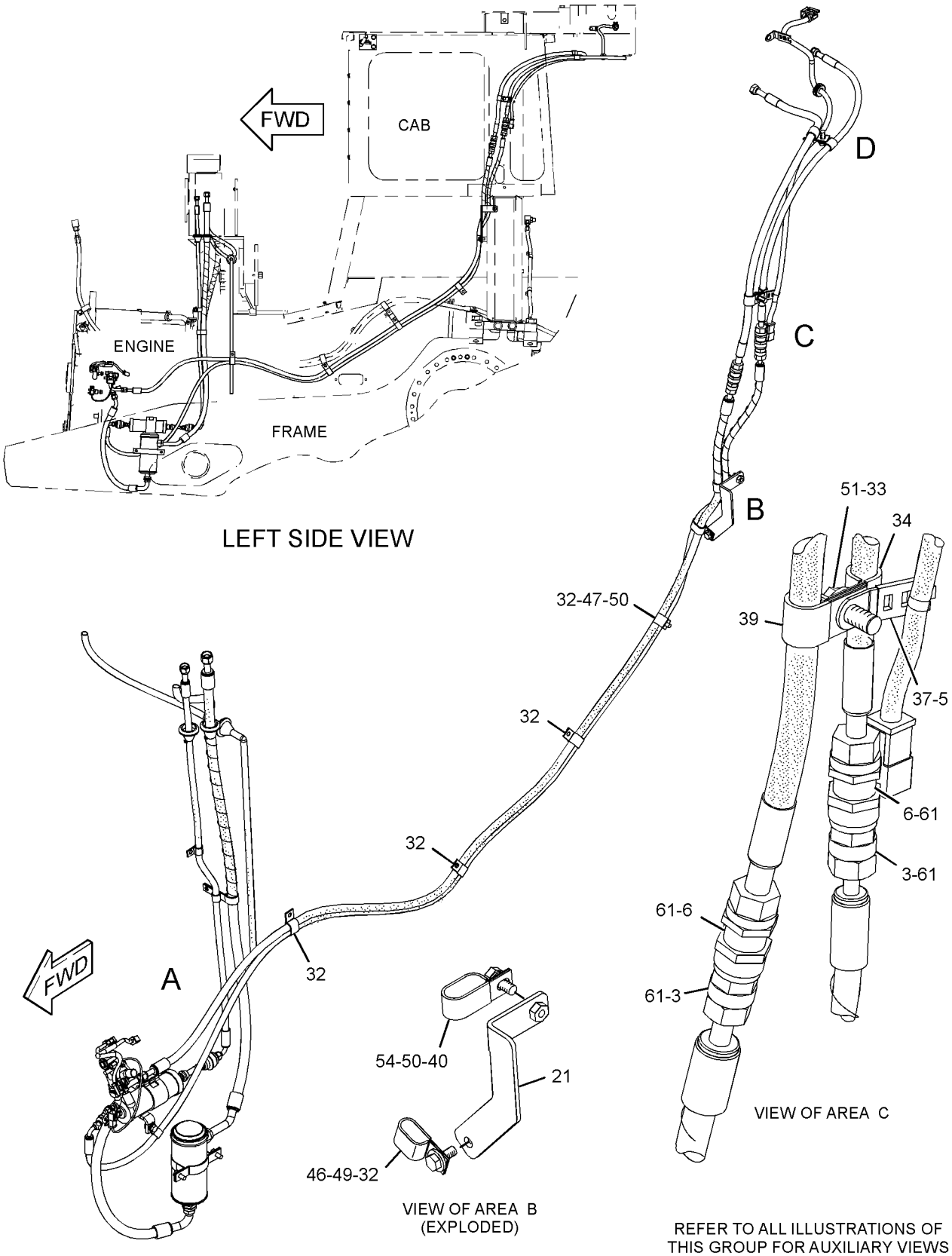

GRAPHIC #1

g01209102

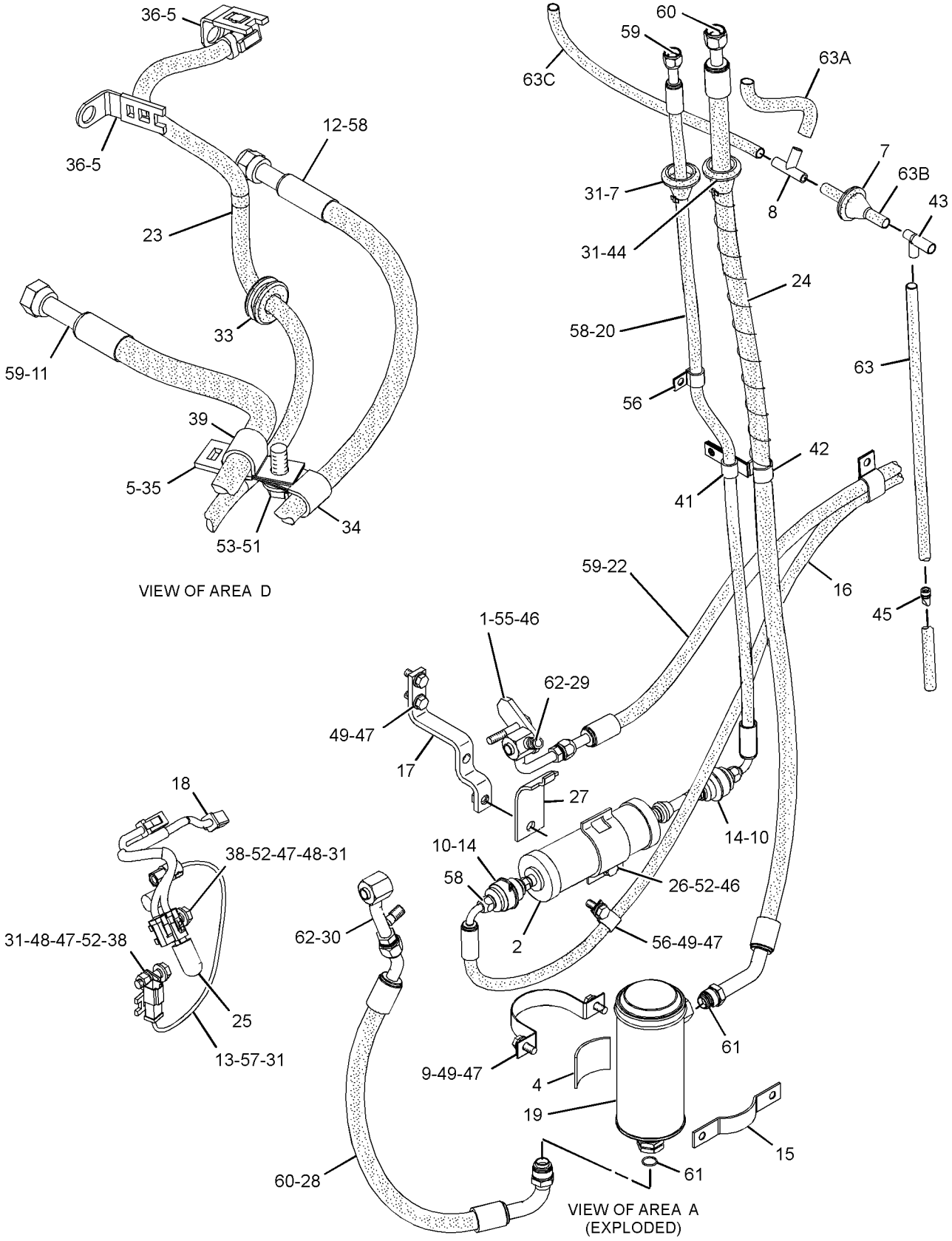

GRAPHIC #2

<END>

g01209103

OPERATOR STATION

223-1680 LINES GP-HEATER

S/N: JDL1-UP; GMT1-UP
PART OF 223-0535, 279-4412 CAB AR
ALSO AN ATTACHMENT

SMCS-7304 **i02433639**

NOTE	REF NO	GRAPHIC REF	PART NUMBER	QTY	PART NAME 1 2 3 4 5 6 (PRODUCT LEVEL)	SEE PAGE
	1	1	**1W-2860**	1	BRACKET	
	2	1	**7C-8246**	1	SPACER (10.5X20X24-MM THK)	
	3	1	**9G-7101**	1	SPACER (10.5X20X30-MM THK)	
	4	1	*165-2273*	2	VALVE GP-SHUTOFF	
					(EACH INCLUDES)	
		1	**6V-7238**	1	VALVE-SHUTOFF	
		1	**3K-0360**	1	SEAL-O-RING	
	5	1	**188-2501**	1	PLATE AS	
	6	1	**203-2789**	1	BRACKET AS	
	7	1	**039-8557**	1	WASHER (13X26X6-MM THK)	
	8	1	**137-6722**	1	CLIP	
	9	1	**159-1503**	4	CLAMP-HOSE	
	10	1	**3P-2404**	1	CLIP	
	11	1	**6D-4247**	4	CLIP	
	12	1	**6D-4636**	1	CLIP	
	13	1	**8S-0948**	2	CLIP	
	14	1	**8T-4121**	11	WASHER-HARD (11X21X2.5-MM THK)	
M	15	1	**8T-4133**	1	NUT (M10X1.5 THD)	
M	16	1	**8T-4136**	5	BOLT (M10X1.5X25-MM)	
M	17	1	**8T-4137**	1	BOLT (M10X1.5X20-MM)	
M	18	1	**8T-4182**	1	BOLT (M10X1.5X45-MM)	
M	19	1	**8T-4185**	1	BOLT (M10X1.5X50-MM)	
M	20	1	**8T-4195**	2	BOLT (M10X1.5X30-MM)	
	21	1	**8T-4223**	1	WASHER-HARD (13.5X25.5X3-MM THK)	
M	22	1	**8T-4779**	1	BOLT (M16X2X35-MM)	
M	23	1	**8T-4956**	1	BOLT (M12X1.75X35-MM)	
	24	1	**9X-8257**	1	WASHER (17.5X30X3.5-MM THK)	
E	25	1	**7X-7702**		CONDUIT-FLEXIBLE (48-CM)	
E	26	1	**5P-0767**		HOSE (297-CM)	
E	26A	1	**5P-0767**		HOSE (235-CM)	

E-ORDER BY THE CENTIMETER
M-METRIC PART

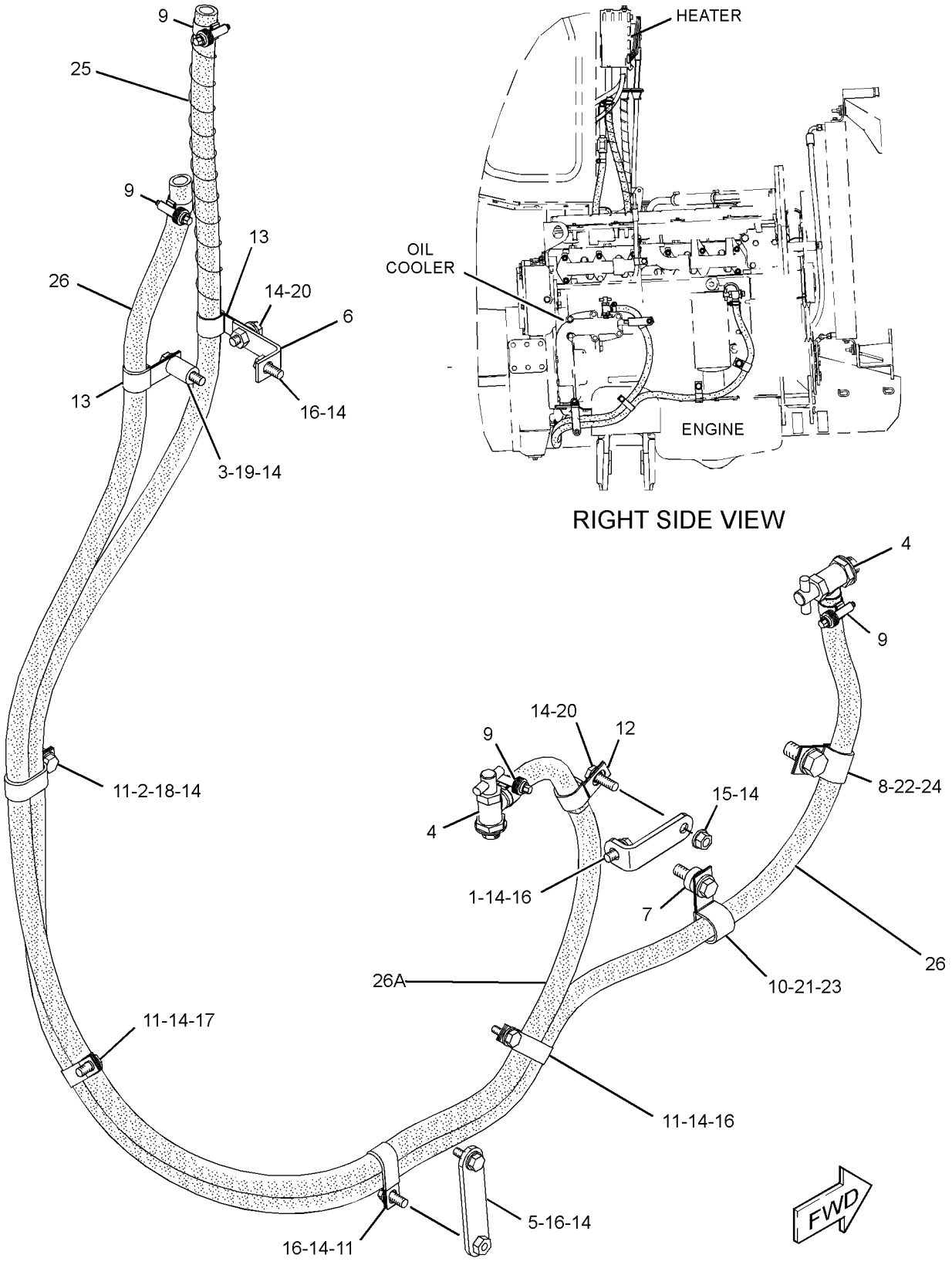

GRAPHIC #1 **<END>** g01209721

OPERATOR STATION

9P-9392 MIRROR GP-REAR VIEW—OPEN ROPS

S/N: JDL1-UP; GMT1-UP
PART OF 208-8706 ROPS GP-OPEN
AN ATTACHMENT

SMCS-7319 **i00568406**

NOTE	REF NO	GRAPHIC REF	PART NUMBER	QTY	PART NAME 1 2 3 4 5 6 (PRODUCT LEVEL)	SEE PAGE
	1	1	**5S-7379**	2	BOLT (3/8-16X.875IN)	
		1	**5P-1075**	2	WASHER-HARD (3MM THK)	
	2	1	**9P-9390**	1	BRACKET	
	3	1	**9P-9388**	1	KNOB	
	4	1	**5P-6874**	1	MIRROR	
	5	1	**5K-9179**	1	BOLT-ROUND HEAD	

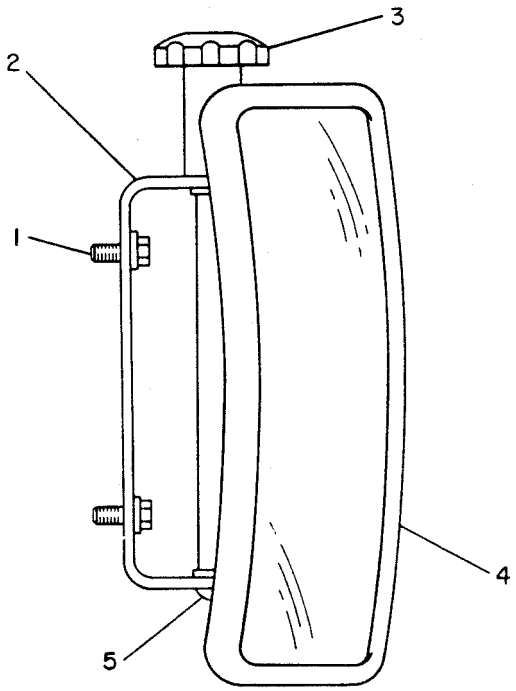

GRAPHIC #1 **<END>** g00143265

OPERATOR STATION

105-9659 MIRROR GP-REAR VIEW—CAB

S/N: JDL1-UP; GMT1-UP
PART OF 158-7694 CAB AR
ALSO AN ATTACHMENT

SMCS-7319 **i00599732**

NOTE	REF NO	GRAPHIC REF	PART NUMBER	QTY	PART NAME 1 2 3 4 5 6 (PRODUCT LEVEL)	SEE PAGE
	1	1	**9P-9388**	1	KNOB	
	2	1	**5P-6874**	1	MIRROR	
	3	1	**5K-9179**	1	BOLT-ROUND HEAD (3/8-16X11-IN)	
	4	1	**6Y-5113**	1	BRACKET	
	5	1	**8T-4121**	2	WASHER-HARD (11X21X2.5-MM THK)	
M	6	1	**8T-4195**	2	BOLT (M10X1.5X30-MM)	

M-METRIC PART

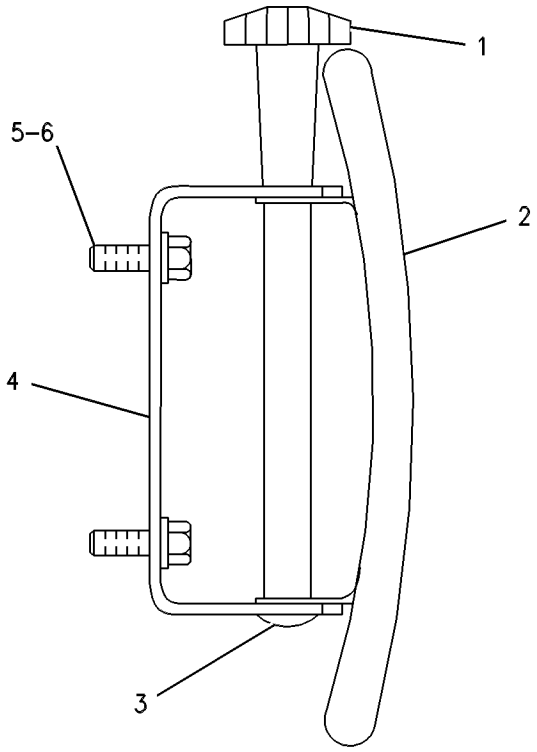

GRAPHIC #1 **<END>** g00254288

OPERATOR STATION

168-0369 MODULE GP-DISPLAY

S/N: JDL1-UP; GMT1-UP
DISPLAYS THE GEAR, RPM & WARNING INDICATORS
PART OF 238-7605, 238-7606 INSTRUMENT GP-CAB
ALSO AN ATTACHMENT

SMCS-7490 **i01434433**

NOTE	REF NO	GRAPHIC REF	PART NUMBER	QTY	PART NAME 1 2 3 4 5 6 (PRODUCT LEVEL)	SEE PAGE
	1	1	**102-8805**	1	KIT-RECEPTACLE (6-PIN)	
					(INCLUDES RECEPTACLE AS & WEDGE)	
	2	1	**3E-3383**	1	WEDGE-RECEPTACLE LOCK (6-PIN)	
	3	1	**8T-8729**	6	PIN-CONNECTOR	
	4	1	**179-6874**	1	CONTROL AS-ELECTRONIC	

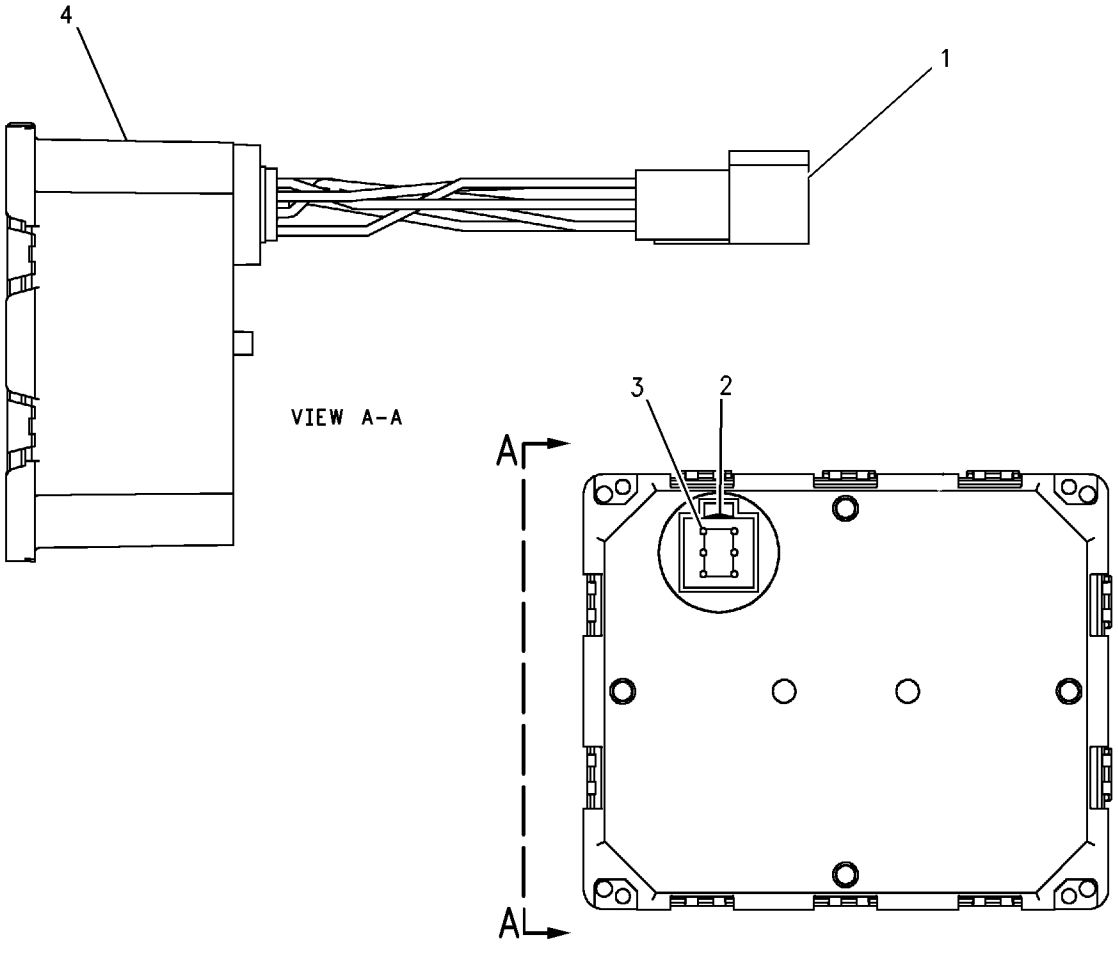

GRAPHIC #1 **<END>** g00638395

OPERATOR STATION

166-6928 MODULE GP-QUAD GAUGE

S/N: JDL1-UP; GMT1-UP
PART OF 238-7605, 238-7606 INSTRUMENT GP-CAB
ALSO AN ATTACHMENT

SMCS-7450, 7451, 7490 **i01883788**

NOTE	REF NO	GRAPHIC REF	PART NUMBER	QTY	PART NAME 1 2 3 4 5 6 (PRODUCT LEVEL)	SEE PAGE
	1	1	**102-8805**	1	KIT-RECEPTACLE (6-PIN)	
					(INCLUDES RECEPTACLE AS & WEDGE)	
	2	1	**8T-8729**	6	PIN-CONNECTOR	
	3	1	**3E-3383**	1	WEDGE-RECEPTACLE LOCK (6-PIN)	

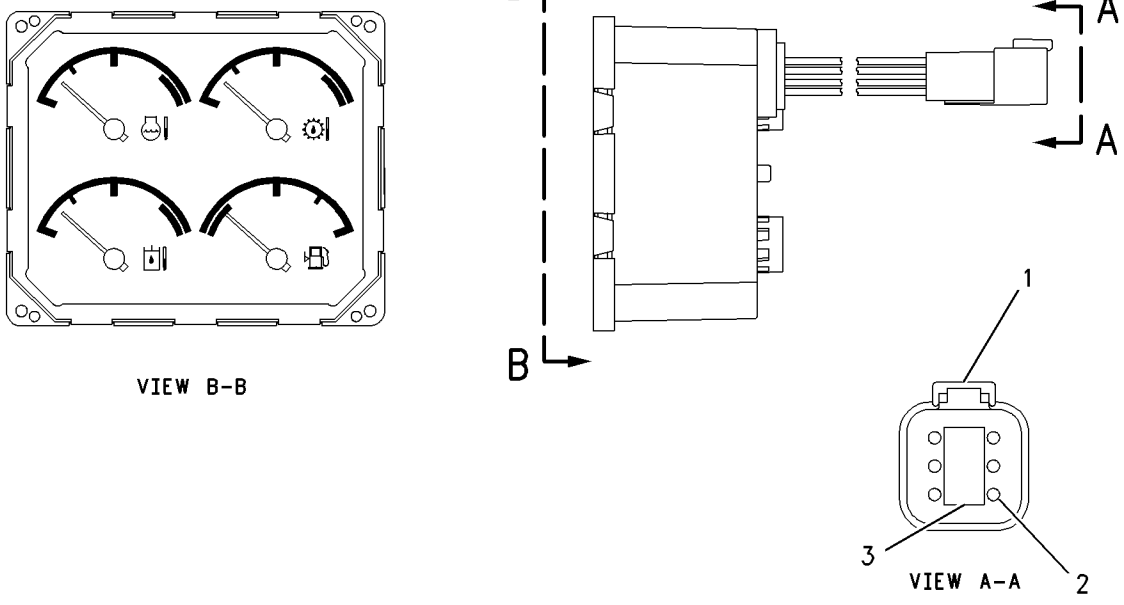

GRAPHIC #1 **<END>** g00690309

OPERATOR STATION

147-7976 MOTOR GP-WINDOW WIPER–FRONT

S/N: JDL1-UP; GMT1-UP
PART OF 224-4357 WIPER GP-WINDOW
ALSO AN ATTACHMENT

SMCS-7305 **i01871612**

NOTE	REF NO	GRAPHIC REF	PART NUMBER	QTY	PART NAME 1 2 3 4 5 6 (PRODUCT LEVEL)	SEE PAGE
M	1	1	**5C-7261**	1	NUT (M8X1.25-THD)	
	2	1	**3F-9556**	1	LOCKWASHER	
	3	1	**102-8805**	1	KIT-RECEPTACLE (6-PIN)	
					(INCLUDES RECEPTACLE AND WEDGE)	
	4	1	**9G-3695**	1	PLUG (GROMMET SEALING)	
	5	1	**8T-8729**	5	PIN-CONNECTOR	

M-METRIC PART

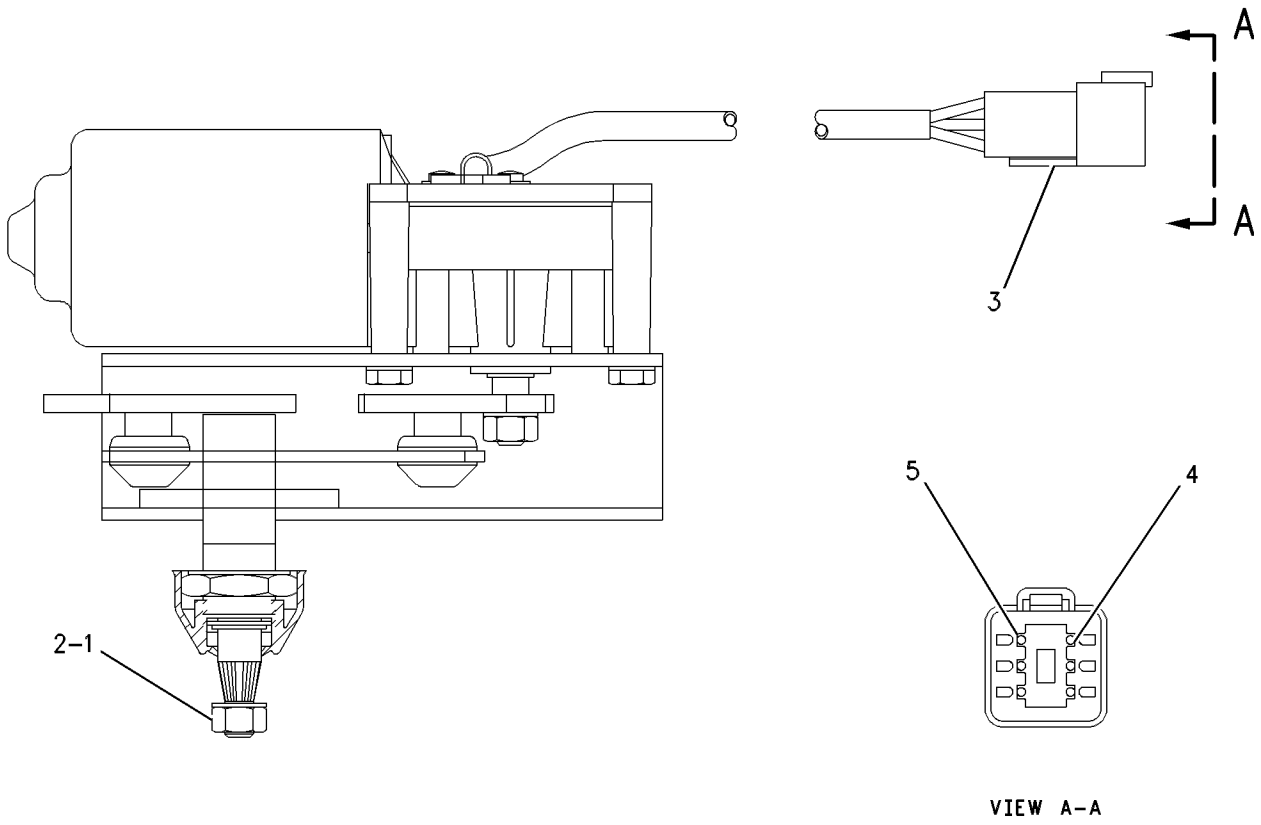

GRAPHIC #1 **<END>** g00464037

147-7979 MOTOR GP-WINDOW WIPER–REAR

S/N: JDL1-UP; GMT1-UP
24 VOLT
PART OF 224-4357 WIPER GP-WINDOW
ALSO AN ATTACHMENT

SMCS-7305 **i01082860**

NOTE	REF NO	GRAPHIC REF	PART NUMBER	QTY	PART NAME 1 2 3 4 5 6 (PRODUCT LEVEL)	SEE PAGE
M	1	1	**5C-7261**	1	NUT (M8X1.25-THD)	
	2	1	**3F-9556**	1	LOCKWASHER	
	3	1	**102-8805**	1	KIT-RECEPTACLE (6-PIN)	
					(INCLUDES RECEPTACLE AS & WEDGE)	
	4	1	**9G-3695**	1	PLUG (GROMMET SEALING)	
	5	1	**8T-8729**	5	PIN-CONNECTOR	

M-METRIC PART

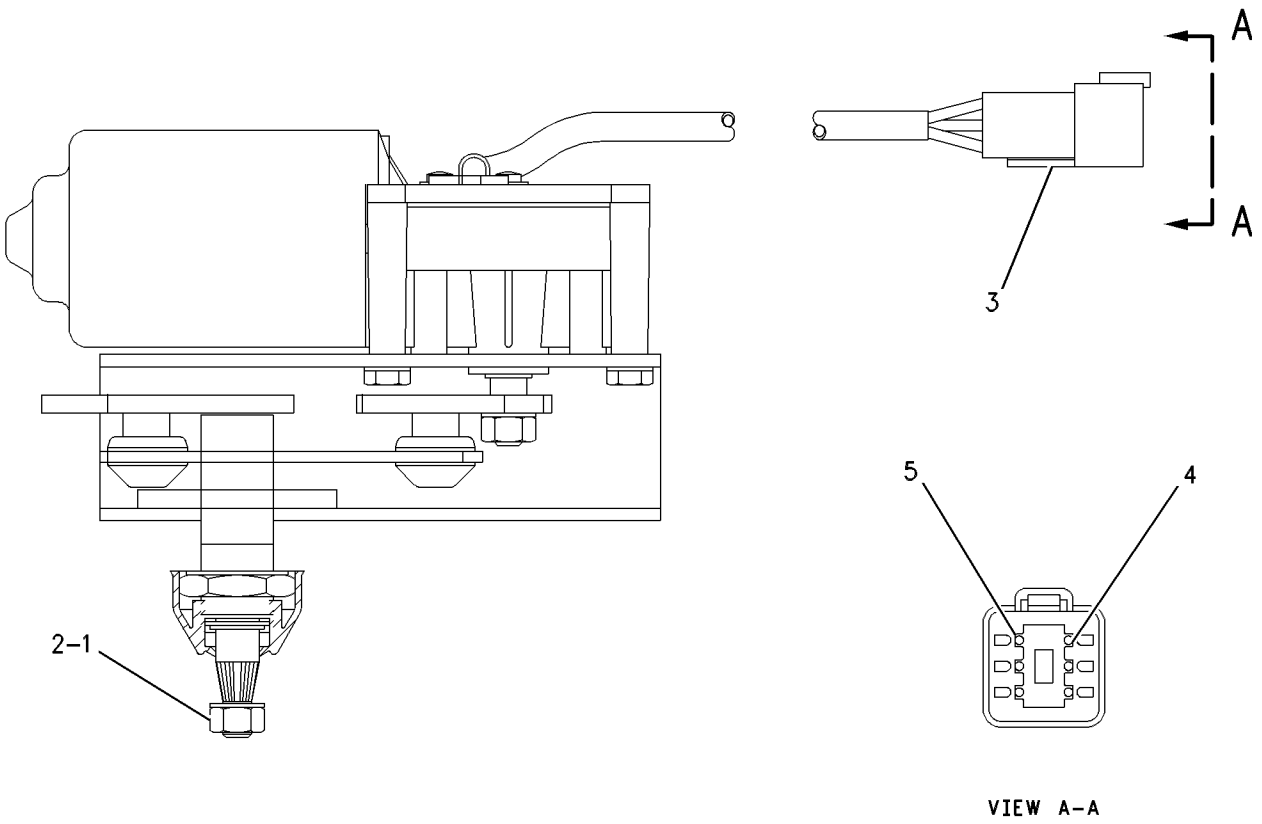

GRAPHIC #1 **<END>** g00464037

OPERATOR STATION

237-9140 MOUNTING GP-ANTENNA–ACCUGRADE

S/N: JDL1-UP; GMT1-UP
PART OF 239-5120 INSTALLATION GP-GRADE CONTROL
AN ATTACHMENT

SMCS-7606 **i02454131**

NOTE	REF NO	GRAPHIC REF	PART NUMBER	QTY	PART NAME 1 2 3 4 5 6 (PRODUCT LEVEL)	SEE PAGE
	1	1	**239-5103**	1	PLATE AS	
	2	1	**5P-1076**	2	WASHER-HARD (13.5X30X4-MM THK)	
M	3	1	**8T-4139**	2	BOLT (M12X1.75X30-MM)	

M-METRIC PART

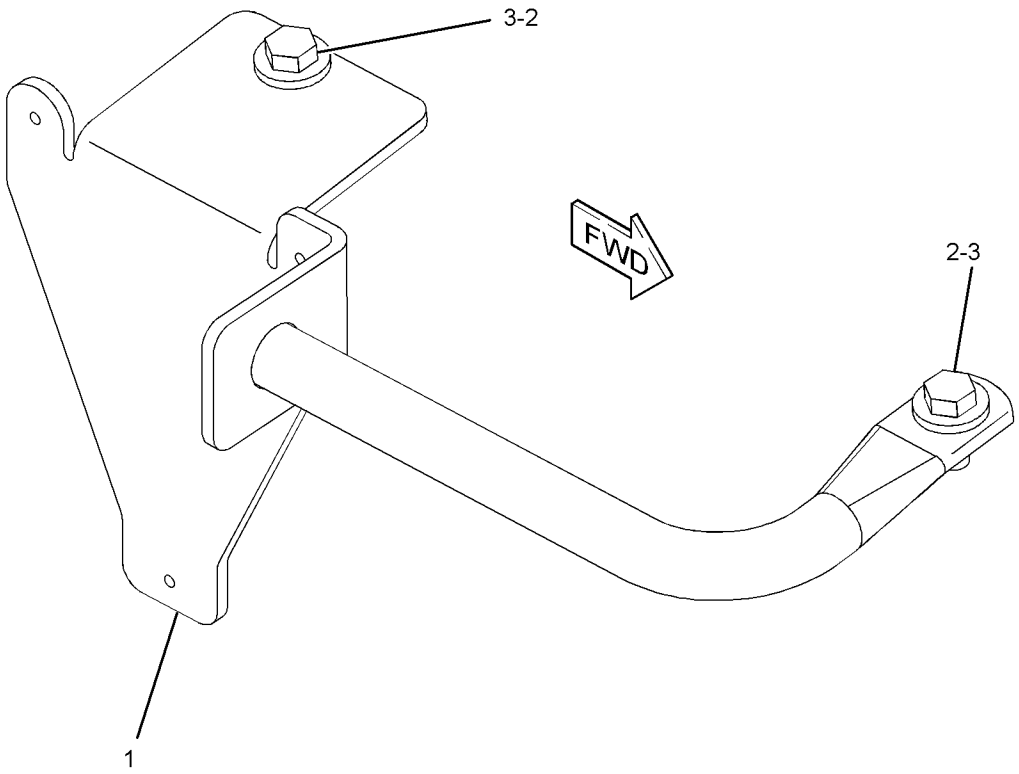

GRAPHIC #1 **<END>** g01164187

OPERATOR STATION

169-9637 MOUNTING GP-CAB

S/N: JDL1-UP; GMT1-UP
PART OF 223-0535, 279-4412 CAB AR
ALSO AN ATTACHMENT

SMCS-7266, 7301 **i02438814**

NOTE	REF NO	GRAPHIC REF	PART NUMBER	QTY	PART NAME 1 2 3 4 5 6 (PRODUCT LEVEL)	SEE PAGE
	1	1	**9G-0986**	1	SEAL	
	2	1	**9G-0983**	2	SEAL	
D	3	1	**5P-7514**		SEAL (2.1-M)	
	4	1	**9G-0990**	1	SEAL	
	5	1	**113-6033**	1	ANGLE	
M	6	1	**189-5358**	2	BOLT (M10X1.5X60-MM)	
	7	1	**7X-3392**	31	WASHER-HARD (13.5X22.5X3-MM THK)	
	8	1	**171-2438**	7	BOLT-12 POINT HEAD (M12X1.75X30-MM)	
M	9	1	**8T-4136**	8	BOLT (M10X1.5X25-MM)	
	10	1	**7X-7729**	8	WASHER (11X25X3-MM THK)	
D	11	1	**5P-7513**		SEAL (4.2-M)	
	12	1	**277-8990**	2	WASHER-HARD (11X25X3-MM THK)	
	13	1	**189-6123**	12	BOLT-12 POINT HEAD (M12X1.75X60-MM)	

D-ORDER BY THE METER
M-METRIC PART

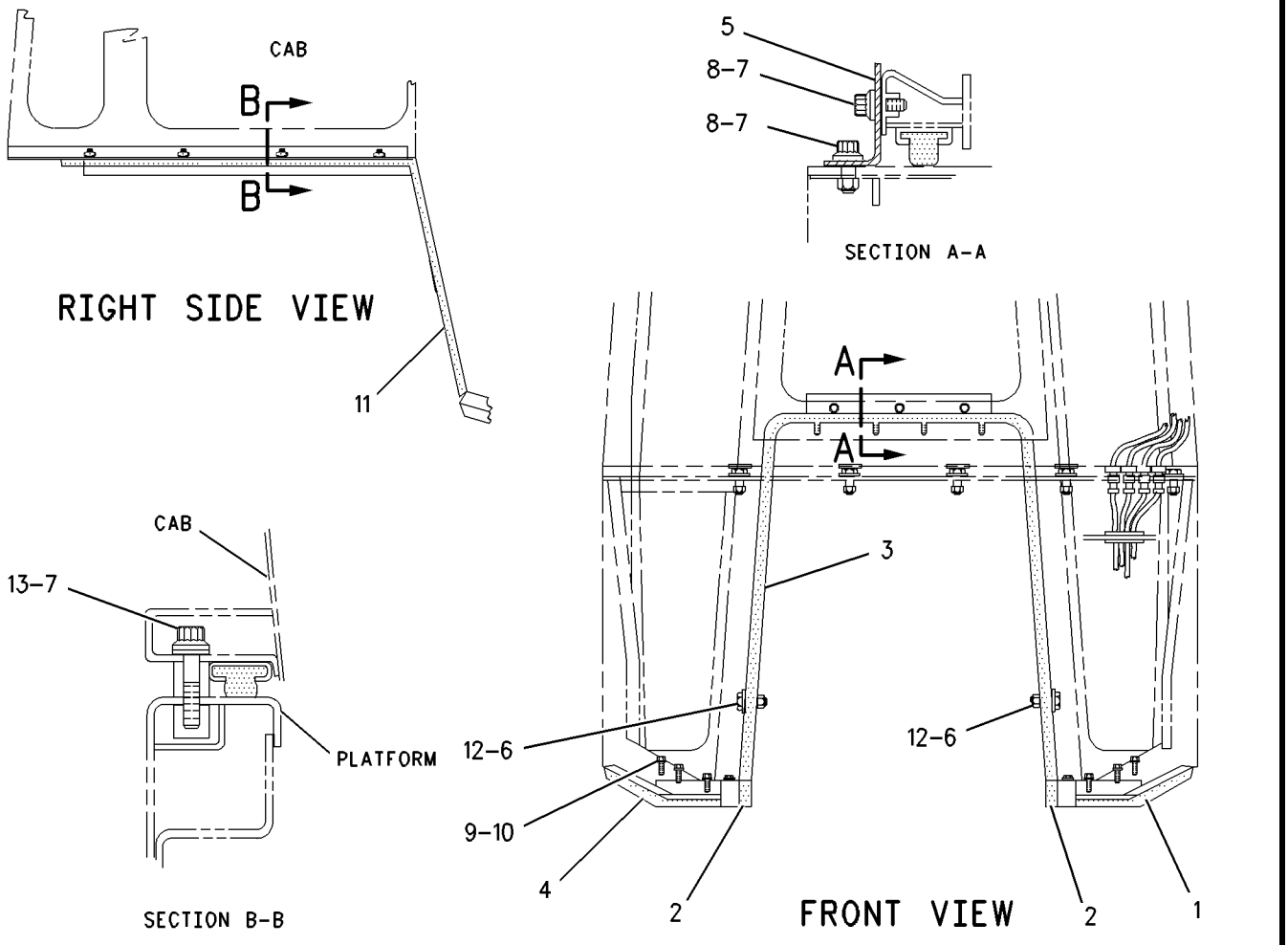

GRAPHIC #1 **<END>** g00722402

OPERATOR STATION

237-9130 MOUNTING GP-MONITOR—GRADE CONTROL—CAB

S/N: JDL1-UP; GMT1-UP
PART OF 239-5120 INSTALLATION GP-GRADE CONTROL
AN ATTACHMENT

SMCS-7490 **i02389397**

NOTE	REF NO	GRAPHIC REF	PART NUMBER	QTY	PART NAME 1 2 3 4 5 6 (PRODUCT LEVEL)	SEE PAGE
	1	1	**252-6944**	1	MOUNT	
	2	1	**260-4868**	1	BRACKET	
M	3	1	**5C-9553**	5	BOLT (M6X1X16-MM)	
	4	1	**9X-8256**	5	WASHER (6.6X12X2-MM THK)	

M-METRIC PART

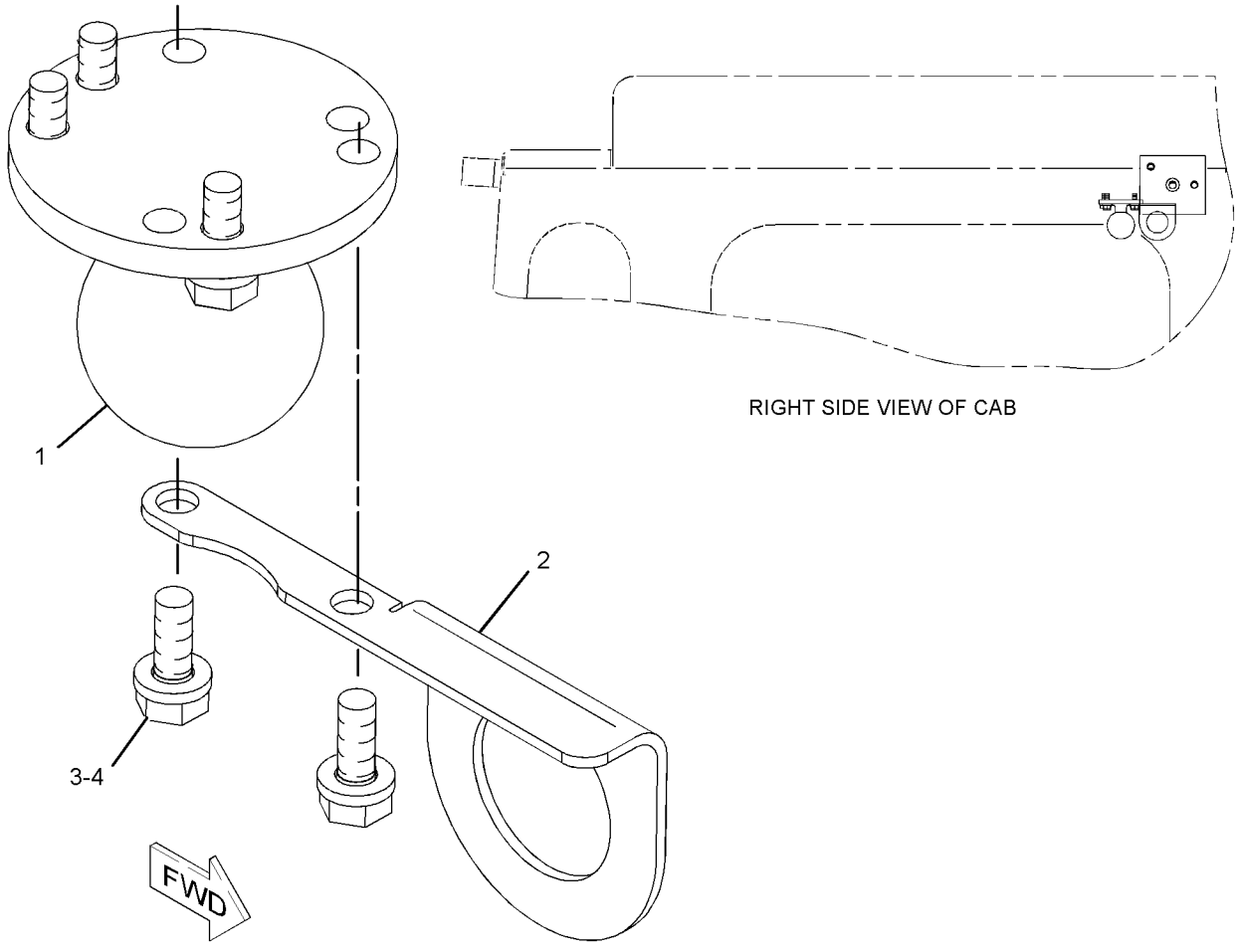

RIGHT SIDE VIEW OF CAB

GRAPHIC #1 **<END>** g01136972

OPERATOR STATION

252-6945 MOUNTING GP-MONITOR—GRADE CONTROL—CHASSIS

S/N: JDL1-UP; GMT1-UP
DISPLAY
PART OF 236-5880 INSTALLATION AR-GRADE CONTROL
AN ATTACHMENT

SMCS-7490 **i02454119**

NOTE	PART NUMBER	QTY	PART NAME 1 2 3 4 5 6 (PRODUCT LEVEL)	SEE PAGE
	252-6946	1	ARM AS (CONNECTOR)	
M	**5C-9553**	8	BOLT (M6X1X16-MM)	
M	**8T-2659**	6	LOCKNUT (M4X0.7-THD)	
	252-6944	1	MOUNT	
	252-6941	1	MOUNT AS	
M	**6V-9632**	5	NUT-WELD (M6X1-THD)	
M	**5C-2890**	4	NUT (M6X1-THD)	
	239-5105	1	PLATE	
	198-9706	6	SCREW-TRUSS HEAD (M5X0.8X16-MM)	
	4B-4863	12	WASHER (4.7X11X1.2-MM THK)	
	9X-8256	12	WASHER (6.6X12X2-MM THK)	

M-METRIC PART

<END>

OPERATOR STATION

220-2810 MOUNTING GP-PLATFORM

S/N: JDL1-UP; GMT1-UP
PART OF 252-8337 CANOPY AR-OPEN ROPS
AN ATTACHMENT

SMCS-7253 **i02455543**

NOTE	REF NO	GRAPHIC REF	PART NUMBER	QTY	PART NAME 1 2 3 4 5 6 (PRODUCT LEVEL)	SEE PAGE
	1	1	**3T-3634**	1	HANDHOLD	
	2	1	**5P-0998**	3	PLUG-SEAL	
	3	1	**6I-9706**	1	RETAINER AS	
M		1	**6V-9632**	4	NUT-WELD (M6X1-THD)	
	4	1	**6Y-0206**	2	RETAINER	
	5	1	**6Y-8114**	2	SPACER (13.8X23.75X12.7-MM THK)	
	6	1	**7G-4824**	1	STRAP	
	7	1	**7T-6299**	1	GROMMET	
	8	1	**8E-7791**	1	STRAP	
	9	1	**127-3018**	1	HANDHOLD	
	10	1	**141-2240**	1	PLATE	
M	11	1	**184-0982**	4	SCREW-PAN HEAD (M6X1X16-MM)	
Y	12	1	*192-3016*	1	COVER GP-CONSOLE	618
	13	1	**237-0204**	1	FLOORPLATE AS	
	14	1	**237-0205**	1	FLOORPLATE AS	
	15	1	**241-4342**	1	GASKET	
	16	1	**241-4344**	1	GASKET	
	17	1	**241-7917**	1	HOUSING	
	18	1	**241-7919**	1	PLATE	
	19	1	**261-8619**	1	FLOOR MAT	
	20	1	**198-9706**	4	SCREW-TRUSS HEAD (M5X0.8X16-MM)	
	21	1	**5P-1076**	10	WASHER-HARD (13.5X30X4-MM THK)	
	22	1	**5P-4115**	2	WASHER-HARD (7.2X19X2-MM THK)	
	23	1	**5P-4116**	2	WASHER-HARD (8.8X20.5X2-MM THK)	
	24	1	**7X-7729**	10	WASHER (11X25X3-MM THK)	
M	25	1	**8T-4136**	8	BOLT (M10X1.5X25-MM)	
M	26	1	**8T-4137**	2	BOLT (M10X1.5X20-MM)	
M	27	1	**8T-4138**	2	BOLT (M6X1X20-MM)	
M	28	1	**8T-4139**	10	BOLT (M12X1.75X30-MM)	
M	29	1	**8T-4189**	2	BOLT (M8X1.25X20-MM)	
M	30	1	**8T-4194**	2	BOLT (M12X1.75X50-MM)	
	31	1	**8T-4223**	2	WASHER-HARD (13.5X25.5X3-MM THK)	
	32	1	**8T-8908**	2	BOLT (1/4-20X1-IN)	
	33	1	**9D-3769**	1	GROMMET	
	34	1	**9X-8256**	2	WASHER (6.6X12X2-MM THK)	

M-METRIC PART
Y-SEPARATE ILLUSTRATION

220-2810 **MOUNTING GP-PLATFORM** *(contd.)* **i02455543**

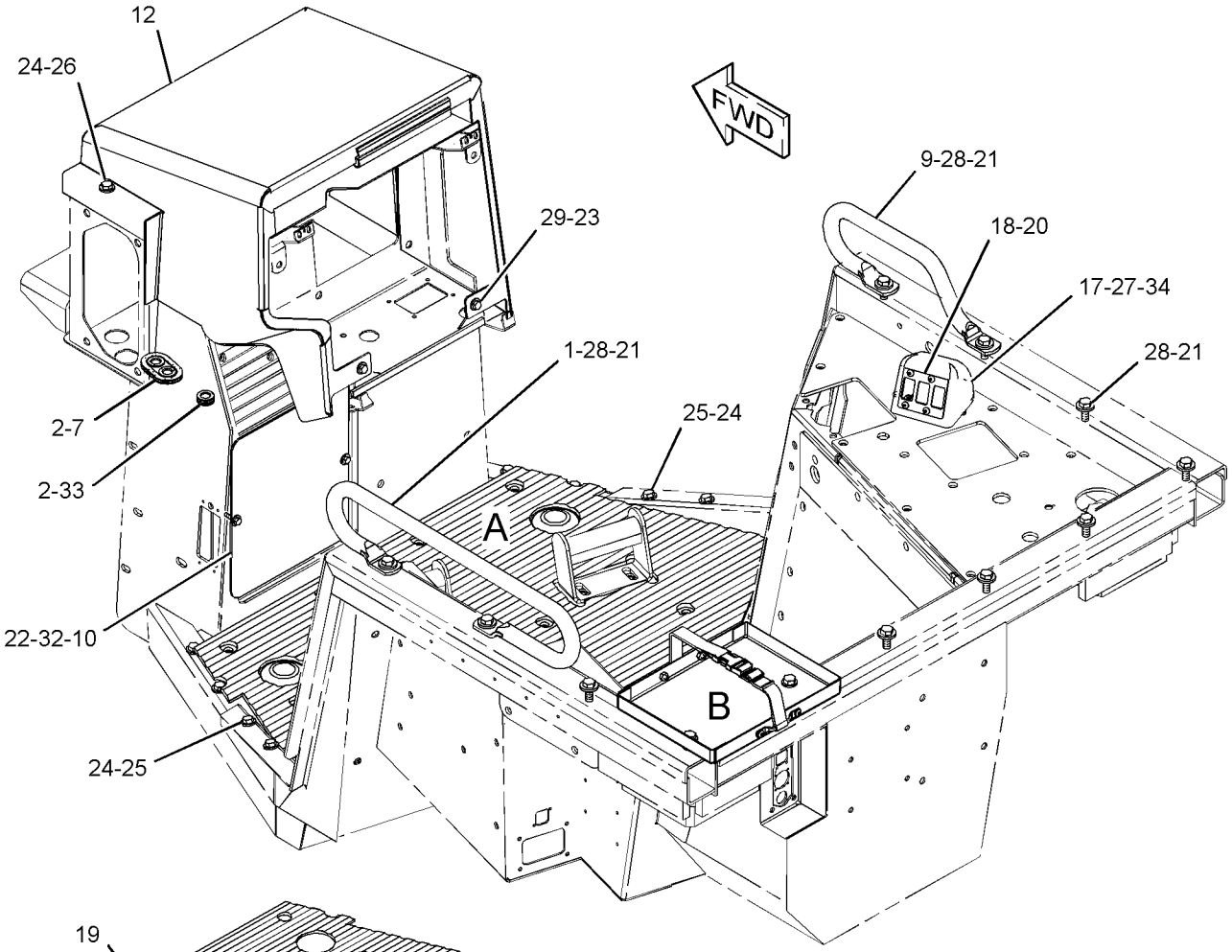

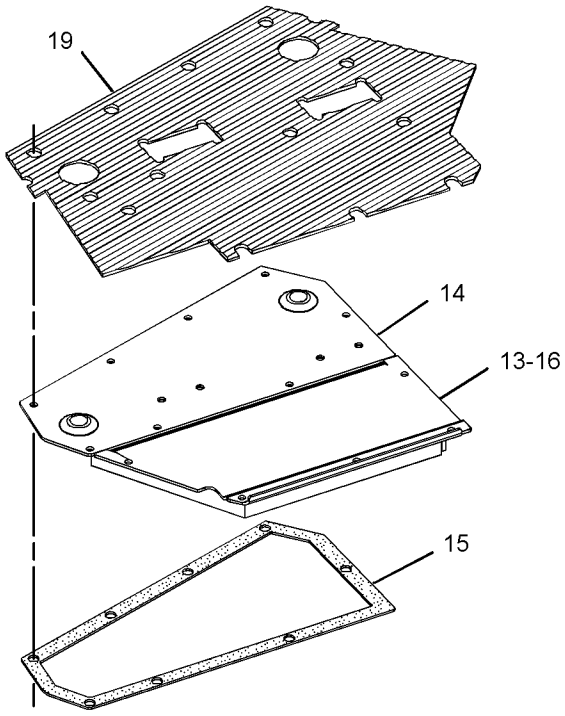

VIEW OF AREA A

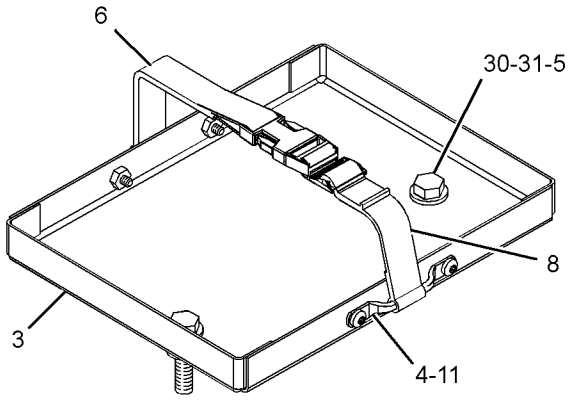

VIEW OF AREA B

GRAPHIC #1 **<END>** g01206550

OPERATOR STATION

208-8699 MOUNTING GP-ROPS

S/N: JDL1-UP; GMT1-UP

PART OF 218-4978, 222-1592 CHASSIS AR

SMCS-7266 **i02443937**

NOTE	REF NO	GRAPHIC REF	PART NUMBER	QTY	PART NAME 1 2 3 4 5 6 (PRODUCT LEVEL)	SEE PAGE
	1	1	**227-5058**	1	SUPPORT AS-ROPS (LH)	
	2	1	**227-5059**	1	SUPPORT AS-ROPS (RH)	
M	3	1	**7X-2581**	12	BOLT (M30X3.5X100-MM)	
	4	1	**9X-8258**	12	WASHER (33X56X6-MM THK)	

M-METRIC PART

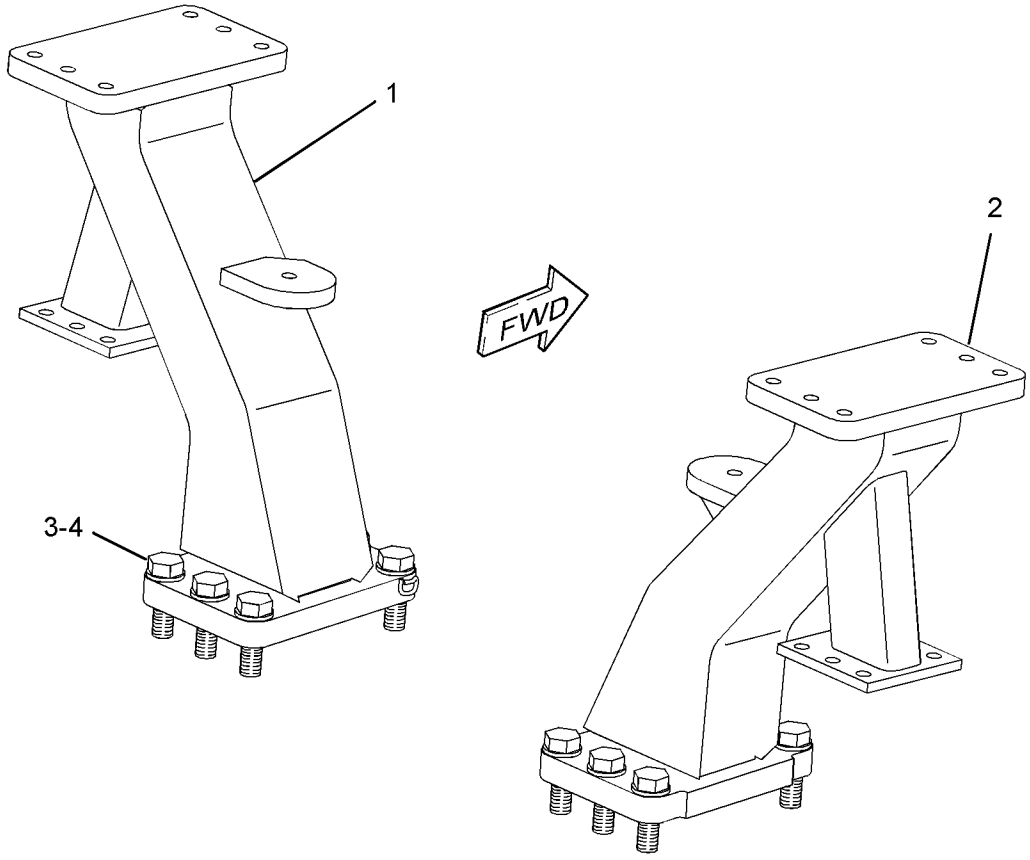

GRAPHIC #1 **<END>** g01205588

OPERATOR STATION

178-0604 PAN GP-BACKREST—CLOTH

S/N: JDL1-UP; GMT1-UP
PART OF 178-0603 SEAT GP
ALSO AN ATTACHMENT

SMCS-7312 **i02122340**

NOTE	REF NO	GRAPHIC REF	PART NUMBER	QTY	PART NAME 1 2 3 4 5 6 (PRODUCT LEVEL)	SEE PAGE
	1	1	**164-4883**	1	KNOB-LUMBAR	
Y	2	1	*178-0605*	1	PAN GP-BACKREST	663
	3	1	**233-6745**	1	CUSHION AS (CLOTH)	
	4	1	**250-4628**	3	PLUG	
	5	1	**8T-7566**	1	PIN-SPRING	

Y-SEPARATE ILLUSTRATION

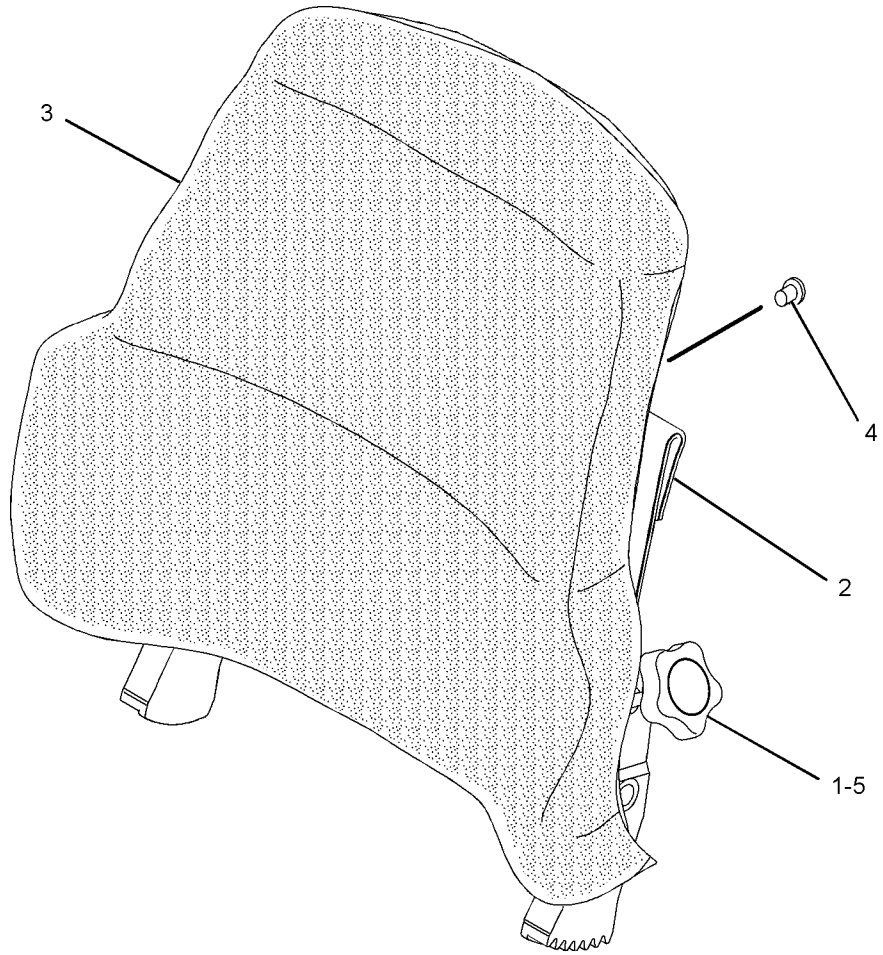

GRAPHIC #1 **<END>** g01092296

OPERATOR STATION

178-0605 PAN GP-BACKREST

S/N: JDL1-UP; GMT1-UP
PART OF 178-0604, 180-7305 PAN GP-BACKREST
ALSO AN ATTACHMENT

SMCS-7312 **i01437598**

NOTE	REF NO	GRAPHIC REF	PART NUMBER	QTY	PART NAME 1 2 3 4 5 6 (PRODUCT LEVEL)	SEE PAGE
	1	1	**4K-9429**	8	RIVET-POP	
	2	1	**5P-7957**	1	LANYARD	
	3	1	**136-1543**	1	PLATE AS-LUMBAR	
	4	1	**173-2052**	1	RETAINER	
	5	1	**178-7907**	1	HOLDER	
	6	1	**177-4930**	1	PAN AS-BACK	

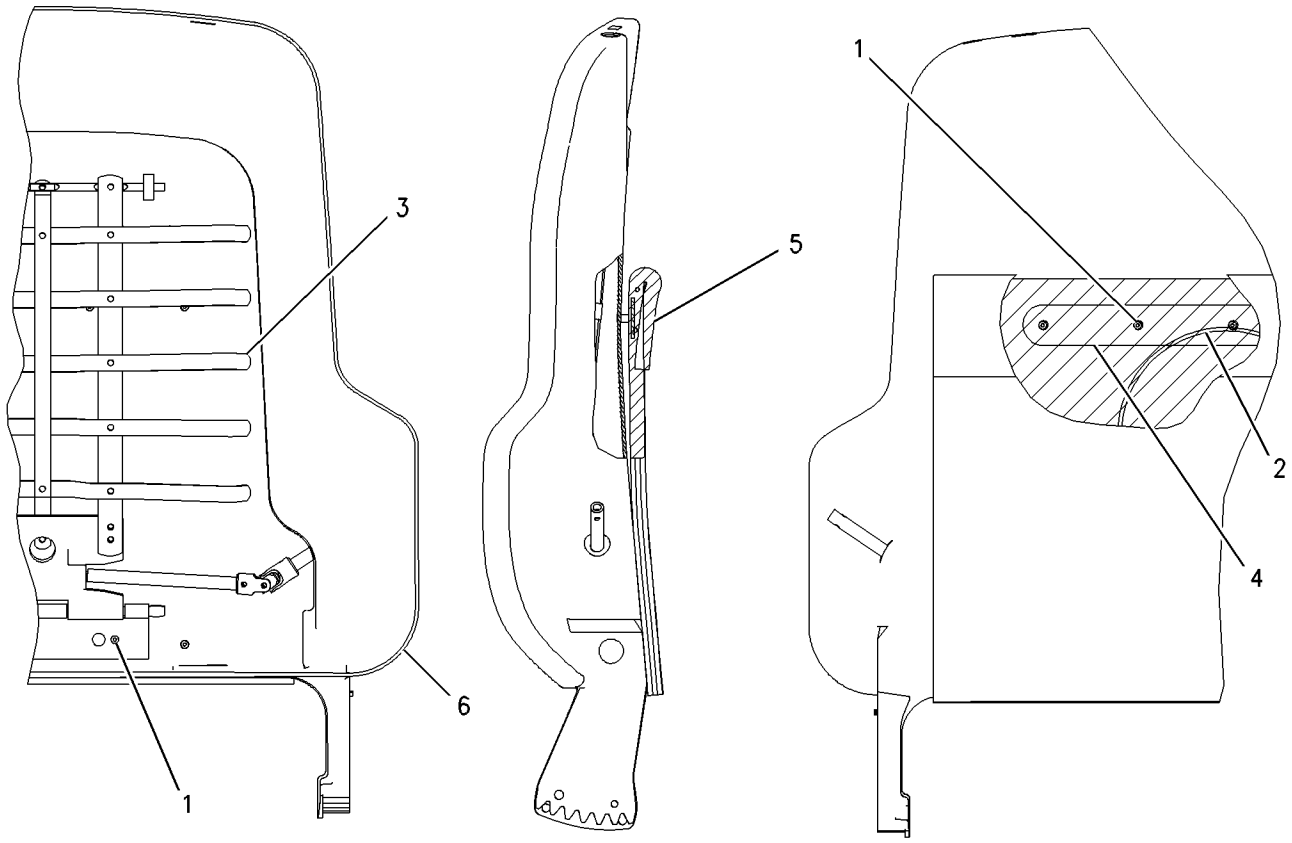

GRAPHIC #1 **<END>** g00716497

180-7305 PAN GP-BACKREST—VINYL SEAT

S/N: JDL1-UP; GMT1-UP
PART OF 180-7304 SEAT GP
AN ATTACHMENT

SMCS-7312 **i02122315**

NOTE	REF NO	GRAPHIC REF	PART NUMBER	QTY	PART NAME 1 2 3 4 5 6 (PRODUCT LEVEL)	SEE PAGE
	1	1	**164-4883**	1	KNOB-LUMBAR	
	2	1	**169-0697**	1	CUSHION AS	
Y	3	1	*178-0605*	1	PAN GP-BACKREST	663
	4	1	**250-4628**	3	PLUG	
	5	1	**8T-7566**	1	PIN-SPRING	

Y-SEPARATE ILLUSTRATION

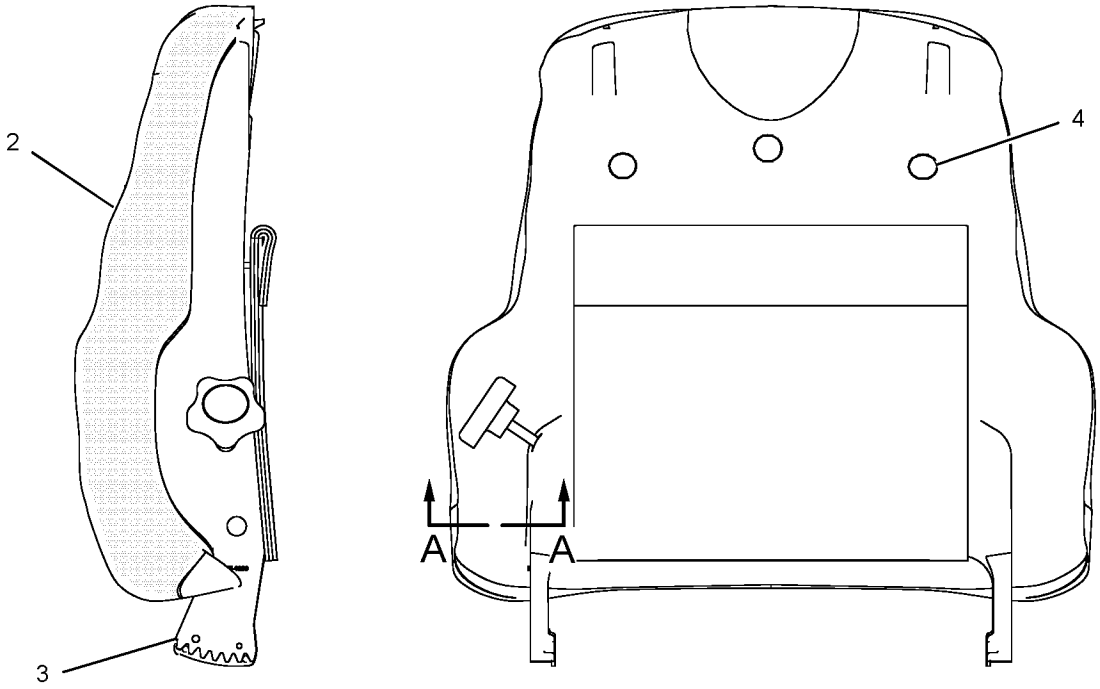

LEFT SIDE VIEW

REAR VIEW

SECTION A-A

<END>

GRAPHIC #1

g01082619

OPERATOR STATION

224-2791 PEDAL GP-GOVERNOR & BRAKE

S/N: JDL1-UP; GMT1-UP

PART OF 224-2793 CONTROL & MTG GP-PEDAL

SMCS-4122 **i02438135**

NOTE	REF NO	GRAPHIC REF	PART NUMBER	QTY	PART NAME 1 2 3 4 5 6 (PRODUCT LEVEL)	SEE PAGE
	1	1	**1B-8706**	1	KEY-WOODRUFF	
	2	1	**1B-8714**	1	KEY-WOODRUFF	
	3	1	**7P-4190**	4	BEARING-ROLLER	
	4	1	**9M-5731**	2	RIVET-POP	
M	5	1	**9X-6615**	4	BOLT (M5X0.8X30-MM)	
M	6	1	**105-3482**	6	BOLT-SOCKET HEAD (M8X1.25X16-MM)	
	7	1	**110-8379**	1	PEDAL (BRAKE)	
	8	1	**111-3780**	1	SPRING	
	9	1	**111-3781**	2	BOLT-ANCHOR (M10X1.5X23-MM)	
	10	1	**132-7077**	1	SWITCH AS-LIMIT (SERVICE BRAKE PEDAL)	
		1	**6V-8376**	3	SCREW-MACHINE (8-32X0.25-IN)	
		1	**9B-7233**	3	LOCKWASHER	
	11	1	**145-3405**	2	SPACER (10.3X16.7X8-MM THK)	
	12	1	**160-1431**	1	SHAFT	
	13	1	**160-1432**	1	SHAFT	
	14	1	**160-1433**	1	LEVER	
	15	1	**160-1434**	1	LEVER	
	16	1	**160-1435**	1	HOUSING	
Y	17	1	**160-2443**	1	SENSOR GP-POSITION (ROTARY) (SERVICE BRAKE PEDAL)	205
	18	1	**164-9541**	1	HARNESS AS-SWITCH (SERVICE BRAKE)	
		1	**102-8804**	1	KIT-RECEPTACLE (4-PIN) (INCLUDES RECEPTACLE AS & WEDGE)	
	19	1	**165-6779**	1	GASKET	
	20	1	**165-9100**	1	LINK	
	21	1	**165-9102**	1	PLATE	
	22	1	**165-9103**	1	SPRING	
	23	1	**165-9104**	1	SPACER (6.5X9.5X10-MM THK)	
	24	1	**184-8060**	1	PEDAL (DECELERATOR)	
	25	1	**186-4998**	1	PAD AS-FOOT	
	26	1	**194-7034**	1	SPRING	
	27	1	**205-7331**	1	SPACER (20.32X28.01X0.41-MM THK)	
	28	1	**215-9801**	1	BRACKET AS	
Y	29	1	**224-5530**	1	SENSOR GP-POSITION (DECELERATOR PEDAL)	206
	30	1	**096-5962**	2	WASHER-HARD (3.4X7X0.8-MM THK)	
M	31	1	**106-5472**	1	SETSCREW-HEX SOCKET (M5X0.8X20-MM)	
	32	1	**111-9251**	4	WASHER-HARD (20X35X1.6-MM THK)	
	33	1	**1B-2578**	1	NUT (3/8-16-THD)	
	34	1	**2J-6356**	4	RING-RETAINING	
	35	1	**4B-3609**	1	SETSCREW-SQUARE HEAD (3/8-16X1.5-IN)	
	36	1	**6V-0894**	2	SEAL-O-RING	
M	37	1	**6V-7357**	1	BOLT (M6X1X25-MM)	
M	38	1	**6V-7744**	2	LOCKNUT (M10X1.15-THD)	
	39	1	**7X-7729**	2	WASHER (11X25X3-MM THK)	
	40	1	**8F-7702**	2	SEAL-LIP TYPE	
	41	1	**8T-4121**	4	WASHER-HARD (11X21X2.5-MM THK)	
M	42	1	**8T-4136**	2	BOLT (M10X1.5X25-MM)	
M	43	1	**8T-4186**	2	BOLT (M10X1.5X40-MM)	
M	44	1	**8T-4195**	2	BOLT (M10X1.5X30-MM)	
	45	1	**8T-4205**	2	WASHER-HARD (7.2X14.5X2-MM THK)	
M	46	1	**8T-4970**	2	BOLT (M6X1X14-MM)	
	47	1	**9X-6281**	2	SCREW-MACHINE (4-40X1-IN)	
	48	1	**9X-8256**	2	WASHER (6.6X12X2-MM THK)	

M-METRIC PART
Y-SEPARATE ILLUSTRATION

224-2791 **PEDAL GP-GOVERNOR & BRAKE** *(contd.)* **i02438135**

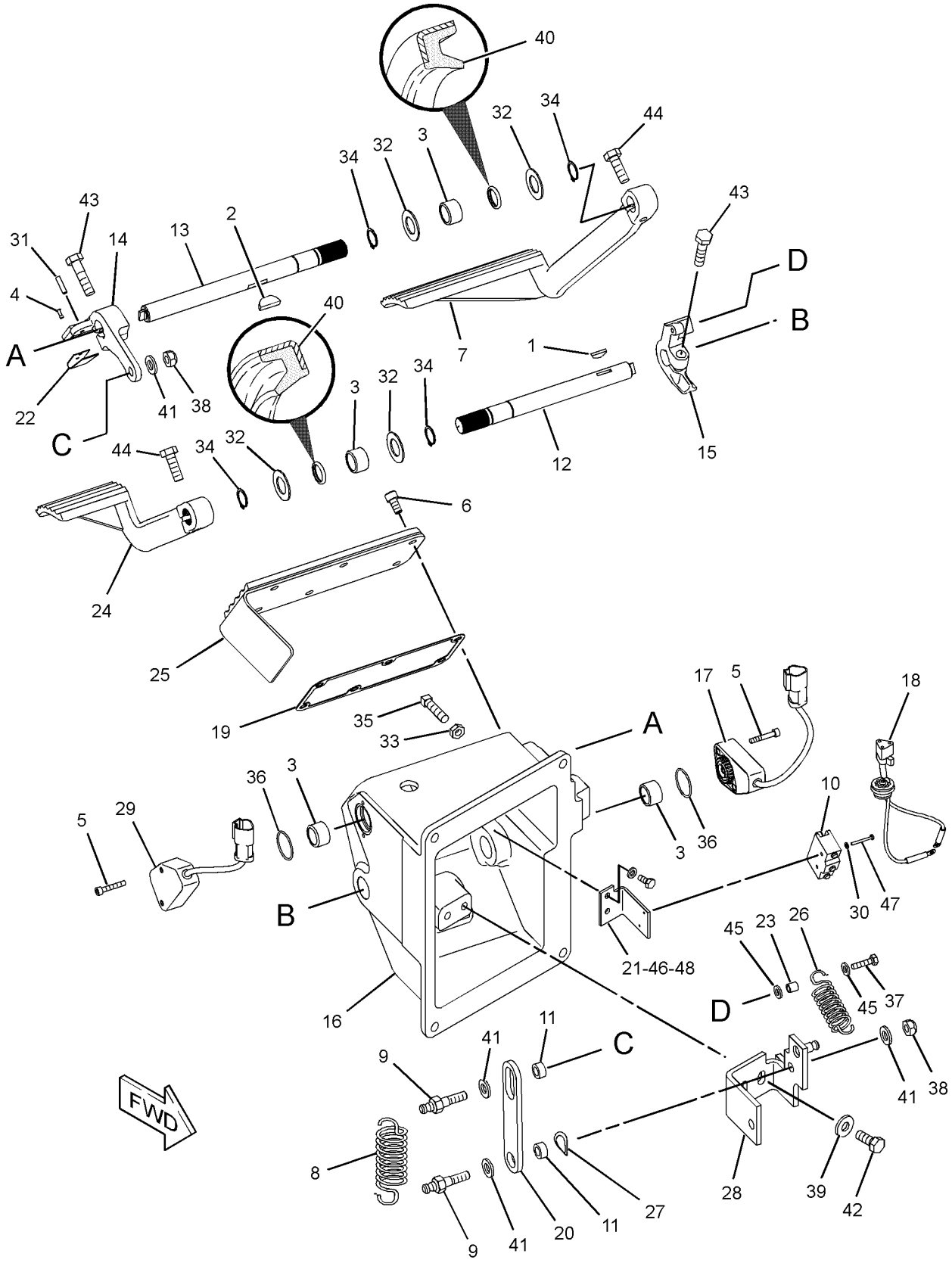

GRAPHIC #1 **<END>** g01211417

OPERATOR STATION

225-9480 PLATFORM GP

S/N: JDL1-UP; GMT1-UP

PART OF 220-2800 PLATFORM GP-OPERATOR

SMCS-7253, 7254 **i02431295**

NOTE	REF NO	GRAPHIC REF	PART NUMBER	QTY	PART NAME 1 2 3 4 5 6 (PRODUCT LEVEL)	SEE PAGE
	1	1	**169-6902**	1	BRACKET AS	
M		1	**8T-3490**	9	NUT-WELD (M10X1.5-THD)	
	2	1	**229-6640**	1	PLATFORM AS	
	3	1	**7X-7729**	2	WASHER (11X25X3-MM THK)	
M	4	1	**8T-4136**	2	BOLT (M10X1.5X25-MM)	

M-METRIC PART

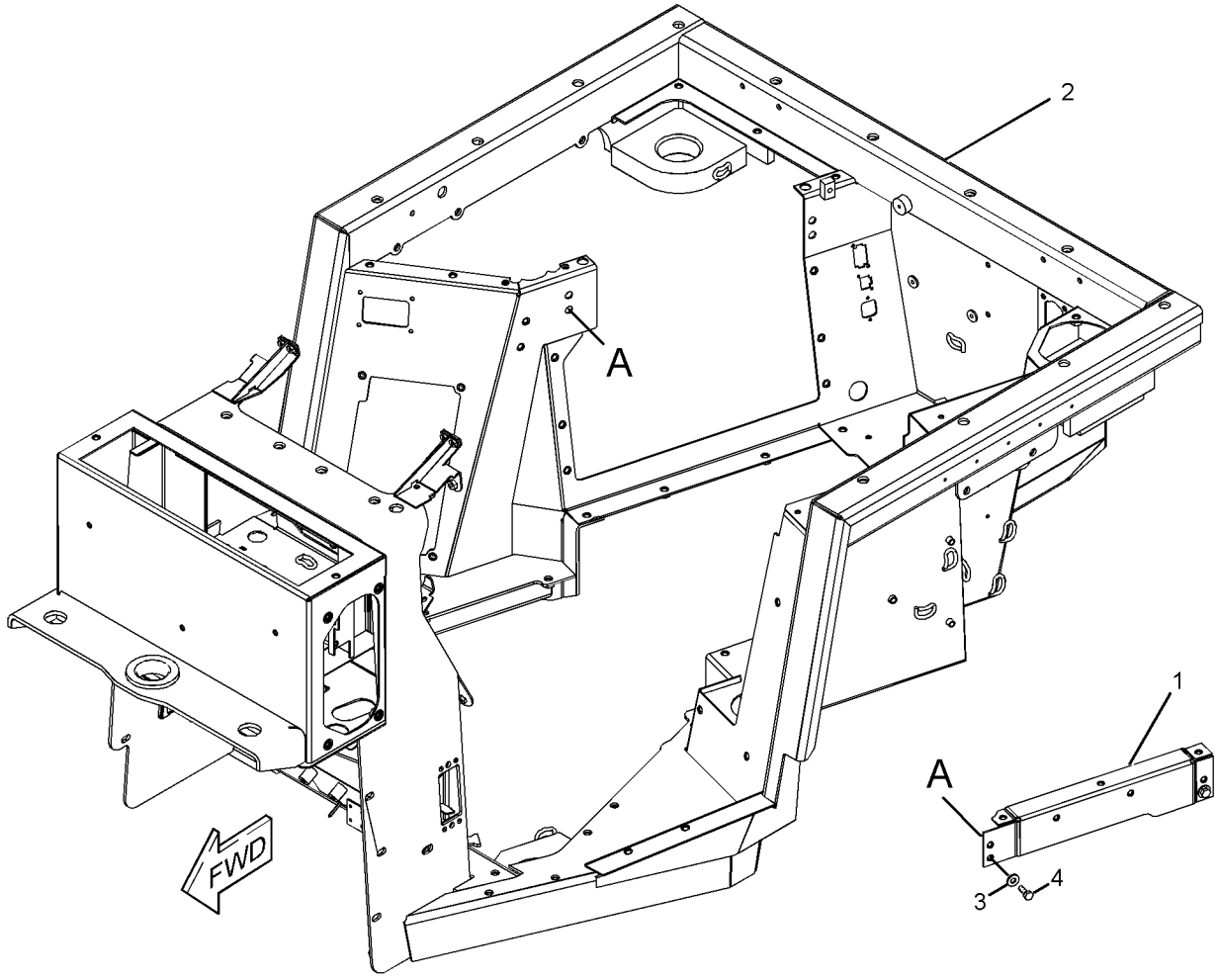

GRAPHIC #1 **<END>** g01208667

OPERATOR STATION

220-2800 PLATFORM GP-OPERATOR

S/N: JDL1-UP; GMT1-UP

PART OF 218-4978, 222-1592 CHASSIS AR

SMCS-7253 **i02431282**

NOTE	REF NO	GRAPHIC REF	PART NUMBER	QTY	PART NAME 1 2 3 4 5 6 (PRODUCT LEVEL)	SEE PAGE
	1	1	**4H-0407**	6	PLUG-PROTECTION	
	2	1	**5P-7509**	1	PLUG-BUTTON	
	3	1	**6T-4556**	1	COVER	
	4	1	**6T-4557**	1	GASKET	
	5	1	**6V-1790**	3	PLUG-BUTTON	
	6	1	**6V-8547**	1	PLUG-BUTTON	
	7	1	**6Y-0206**	2	RETAINER	
	8	1	**7G-4824**	1	STRAP	
	9	1	**8C-5226**	1	PLUG-SEAL	
	10	1	**8E-7791**	1	STRAP	
	11	1	**8T-4943**	1	PLUG	
	12	1	**117-8131**	8	MOUNT AS	
	13	1	**117-9966**	1	PLUG	
	14	1	**161-3958**	1	GASKET	
	15	1	**164-0758**	1	BOLT (9/16-18X2-IN)	
	16	1	**165-6857**	1	PAD AS-RUBBER	
	17	1	**170-0251**	2	STRIP	
M	18	1	**184-0982**	12	SCREW-PAN HEAD (M6X1X16-MM)	
	19	1	**185-2076**	2	SUPPORT AS (FT)	
	20	1	**185-3666**	4	SLEEVE	
	21	1	**205-2203**	1	PLATE	
	22	1	**208-0375**	2	SCREW-PAN HEAD (M6X1X35-MM)	
Y	23	1	*225-9480*	1	PLATFORM GP	667
	24	1	**237-4266**	1	PLATE AS	
		1	**7T-1099**	7	LINK	
	25	1	**237-4268**	1	COVER AS-PLATFORM	
	26	1	**237-4269**	1	PLATE AS	
	27	1	**237-4270**	1	PLATE AS	
	28	1	**239-5113**	1	COVER AS	
		1	**6P-6926**	2	SCREW-KNURLED	
		1	**131-5492**	2	RETAINER-CAPTIVE	
	29	1	**241-4343**	1	FLOORPLATE AS	
		1	**184-3289**	1	PANEL	
		1	**237-0205**	1	FLOORPLATE AS	
		1	**241-4342**	1	GASKET	
	30	1	**241-4345**	1	FLOORPLATE AS	
		1	**184-3285**	1	PANEL	
		1	**237-0204**	1	FLOORPLATE AS	
		1	**241-4344**	1	GASKET	
	31	1	**241-4346**	1	PLATE AS	
	32	1	**241-4348**	1	GASKET	
	33	1	**241-4349**	1	GASKET	
	34	1	**242-8405**	1	BRACKET AS	
	35	1	**242-8407**	1	GASKET	
	36	1	**243-5168**	1	GASKET	
	37	1	**243-5170**	1	COVER AS	
		1	**9X-8256**	1	WASHER (6.6X12X2-MM THK)	
	38	1	**248-8866**	4	CAP	
M	39	1	**5C-2890**	4	NUT (M6X1-THD)	
	40	1	**5P-1076**	4	WASHER-HARD (13.5X30X4-MM THK)	
	41	1	**6T-8714**	4	WASHER-HARD (28X125X12-MM THK)	
M	42	1	**6V-7357**	4	BOLT (M6X1X25-MM)	
	43	1	**7X-7729**	58	WASHER (11X25X3-MM THK)	
M	44	1	**8C-3290**	2	BOLT (M24X3X150-MM)	
M	45	1	**8T-4136**	38	BOLT (M10X1.5X25-MM)	
M	46	1	**8T-4137**	3	BOLT (M10X1.5X20-MM)	

220-2800 **PLATFORM GP-OPERATOR** *(contd.)* **i02431282**

NOTE	REF NO	GRAPHIC REF	PART NUMBER	QTY	PART NAME 1 2 3 4 5 6 (PRODUCT LEVEL)	SEE PAGE
M	47	1	**8T-4139**	4	BOLT (M12X1.75X30-MM)	
	48	1	**8T-4167**	4	WASHER-HARD (26X44X4-MM THK)	
M	49	1	**8T-4195**	11	BOLT (M10X1.5X30-MM)	
M	50	1	**8T-4196**	6	BOLT (M10X1.5X35-MM)	
M	51	1	**8T-4649**	2	BOLT (M24X3X140-MM)	
	52	1	**9D-3769**	1	GROMMET	
	53	1	**9X-8256**	10	WASHER (6.6X12X2-MM THK)	
D	54	1	**5P-9909**	1	SEAL (0.1-M)	
E	55	1	**3E-3892**	30	SEAL (31-CM)	

D-ORDER BY THE METER
E-ORDER BY THE CENTIMETER
M-METRIC PART
Y-SEPARATE ILLUSTRATION

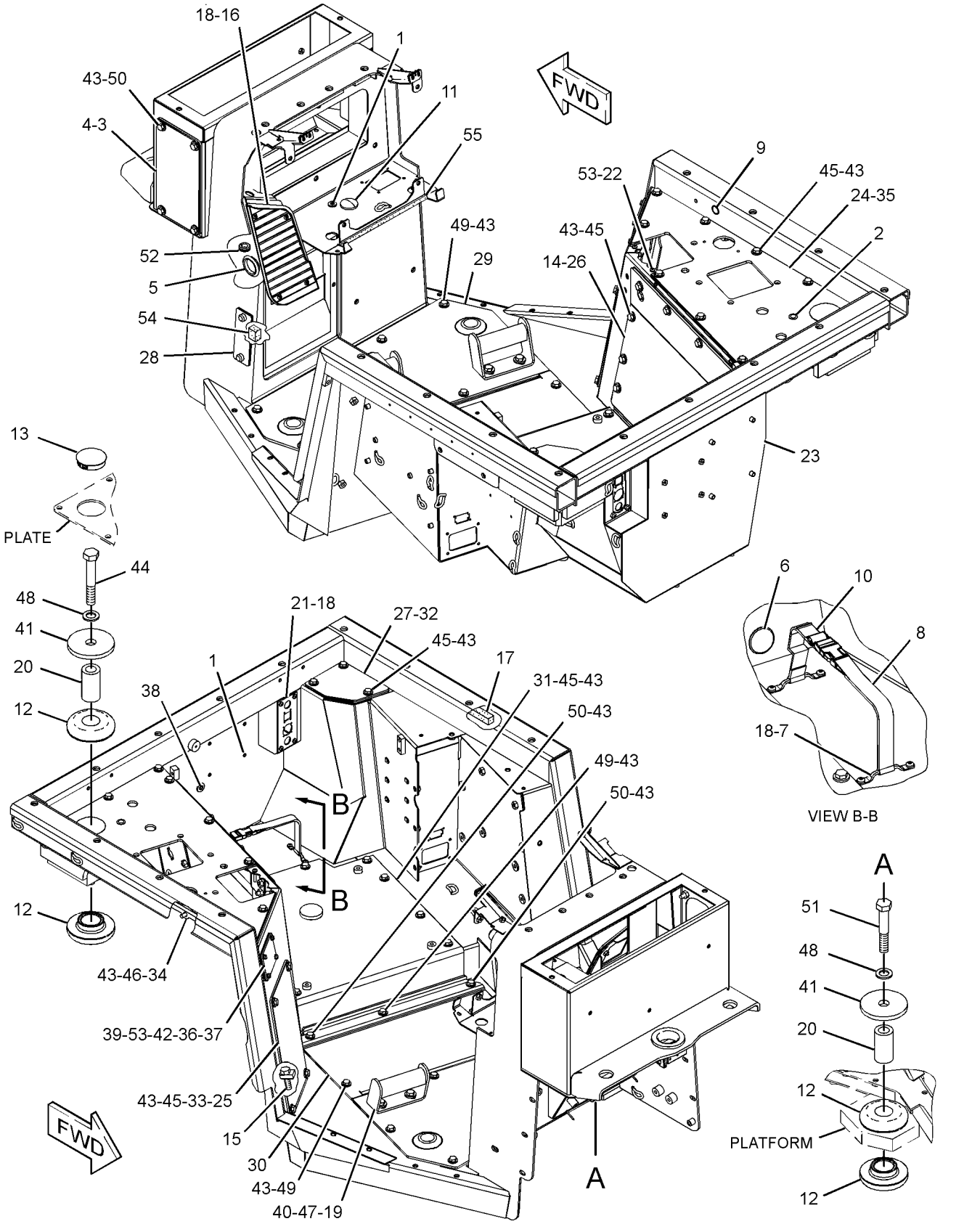

GRAPHIC #1 **<END>** g01206773

OPERATOR STATION

230-4700 PRESSURIZER GP-CAB

S/N: JDL1-UP; GMT1-UP
PART OF 223-0535, 279-4412 CAB AR
ALSO AN ATTACHMENT

SMCS-7311 **i02433635**

NOTE	REF NO	GRAPHIC REF	PART NUMBER	QTY	PART NAME 1 2 3 4 5 6 (PRODUCT LEVEL)	SEE PAGE
	1	1	**3L-0594**	3	SPACER (8.7X15.9X15.9-MM THK)	
	2	1	**3W-6756**	2	KNOB (AIR FILTER COVER)	
	3	1	**6P-2216**	7	CAP (PUSH ON)	
	4	1	**6T-0988**	1	FILTER-AIR (FRESH AIR)	
	5	1	**6T-5067**	1	LINER	
	6	1	**6T-5068**	1	FILTER AS (AIR RECIRCULATION)	
	7	1	**7D-8431**	2	RING-RETAINING	
	8	1	**111-4482**	1	COVER AS	
	9	1	**117-8863**	1	LINER	
	10	1	**127-1043**	1	LINER	
	11	1	**127-1044**	1	LINER	
	12	1	**127-1045**	1	LINER	
	13	1	**127-1046**	1	LINER	
	14	1	**127-1048**	1	LINER	
	15	1	**141-4044**	1	PANEL	
	16	1	**224-9072**	2	KNOB (AIR FILTER COVER)	
Y	17	1	**230-5388**	1	BLOWER GP-CAB	600
	18	1	**7X-0603**	3	WASHER-HARD (9.9X35X2.5-MM THK)	
	19	1	**8T-4121**	6	WASHER-HARD (11X21X2.5-MM THK)	
M	20	1	**8T-4136**	6	BOLT (M10X1.5X25-MM)	
M	21	1	**8T-4971**	3	BOLT (M6X1X30-MM)	
	22	1	**9X-8256**	3	WASHER (6.6X12X2-MM THK)	
E	23	1	**7X-7877**		STRIP-EDGING (47-CM)	

E-ORDER BY THE CENTIMETER
M-METRIC PART
Y-SEPARATE ILLUSTRATION

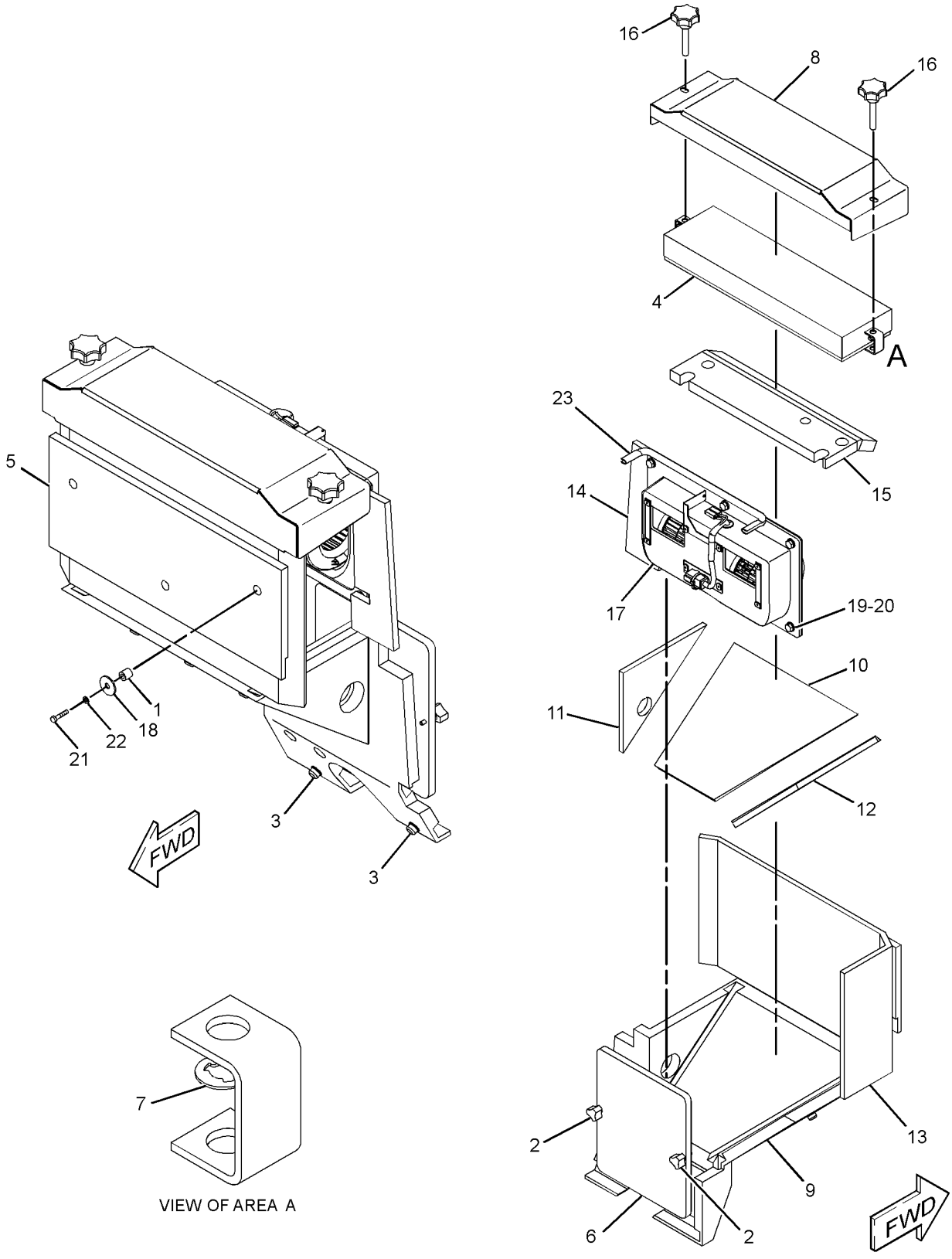

GRAPHIC #1 **<END>** g01209668

OPERATOR STATION

177-4935 RECLINER GP-SEAT

S/N: JDL1-UP; GMT1-UP
PART OF 178-0603, 180-7304 SEAT GP
ALSO AN ATTACHMENT

SMCS-7312 **i01809930**

NOTE	REF NO	GRAPHIC REF	PART NUMBER	QTY	PART NAME 1 2 3 4 5 6 (PRODUCT LEVEL)	SEE PAGE
	1	1	**217-7933**	1	LATCH	
	2	1	**164-4146**	1	SPRING	
	3	1	**177-1860**	1	GEAR (14 TEETH) (LOCK)	
	4	1	**177-1862**	1	BRACKET	
	5	1	**178-0607**	1	SHAFT AS	
	5A	1	**2K-9111**	2	PIN-SPRING	
	5B	1	**9M-6803**	2	DOWEL	
	5C	1	**170-8590**	1	SPRING	
	6	1	**178-0608**	1	BRACKET AS	
	7	1	**178-0609**	1	BRACKET AS	
	8	1	**031-0214**	1	BOLT-LOCKING (1/4-20X0.5 IN)	
	9	1	**101-2867**	1	WASHER-HARD (7.2X25X2MM THK)	
	10	1	**4M-6425**	1	BOLT (5/16-18X1 IN)	
	11	1	**5S-7383**	1	BOLT (3/8-16X1.75 IN)	
	12	1	**8T-4224**	1	WASHER-HARD (8.8X16X2MM THK)	

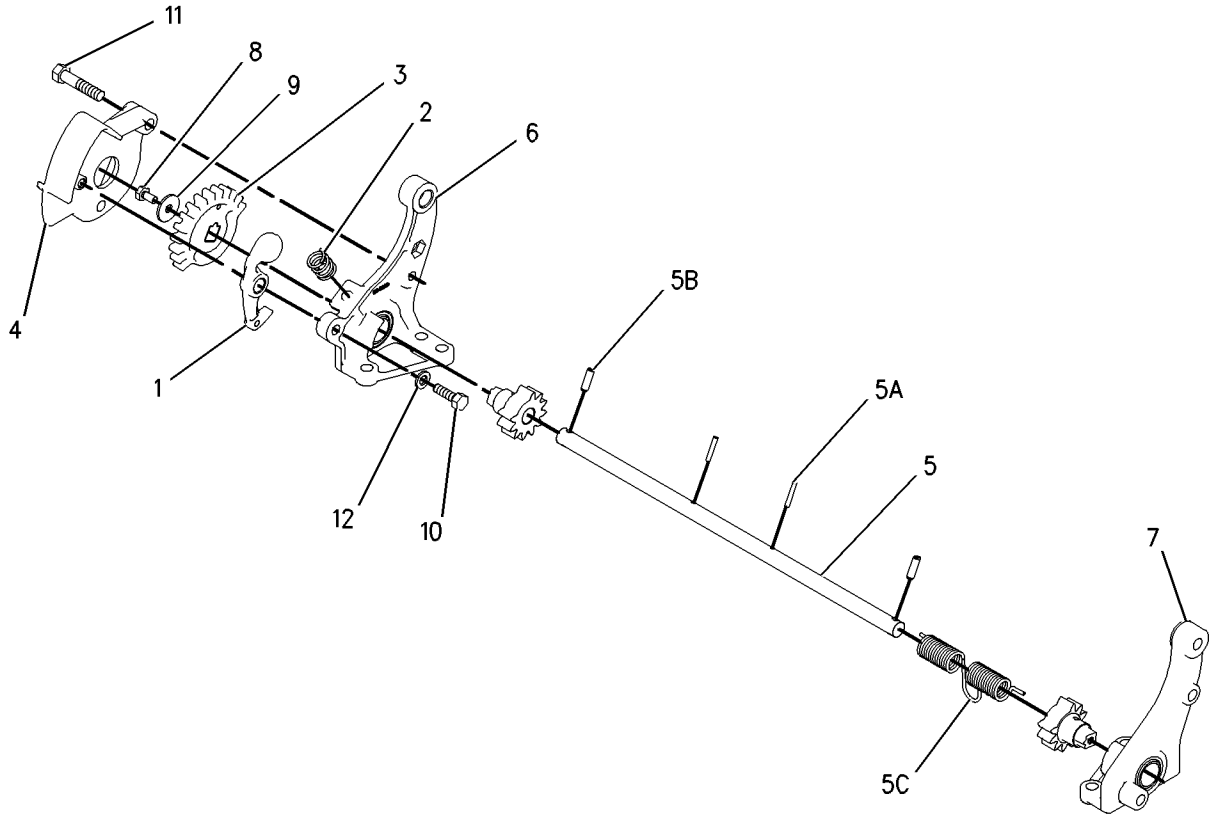

GRAPHIC #1 **<END>** g00673022

OPERATOR STATION

208-8705 ROPS GP

S/N: JDL1-UP; GMT1-UP

PART OF 218-4978, 222-1592 CHASSIS AR

SMCS-7177, 7301 **i02431000**

NOTE	REF NO	GRAPHIC REF	PART NUMBER	QTY	PART NAME 1 2 3 4 5 6 (PRODUCT LEVEL)	SEE PAGE
	1	1	**180-6600**	1	HANDHOLD	
	2	1	**227-5054**	1	ROPS AS	
	3	1	**5P-1076**	3	WASHER-HARD (13.5X30X4-MM THK)	
M	4	1	**7X-2576**	12	BOLT (M24X3X70-MM)	
M	5	1	**8T-4139**	2	BOLT (M12X1.75X30-MM)	
	6	1	**8T-4167**	12	WASHER-HARD (26X44X4-MM THK)	

M-METRIC PART

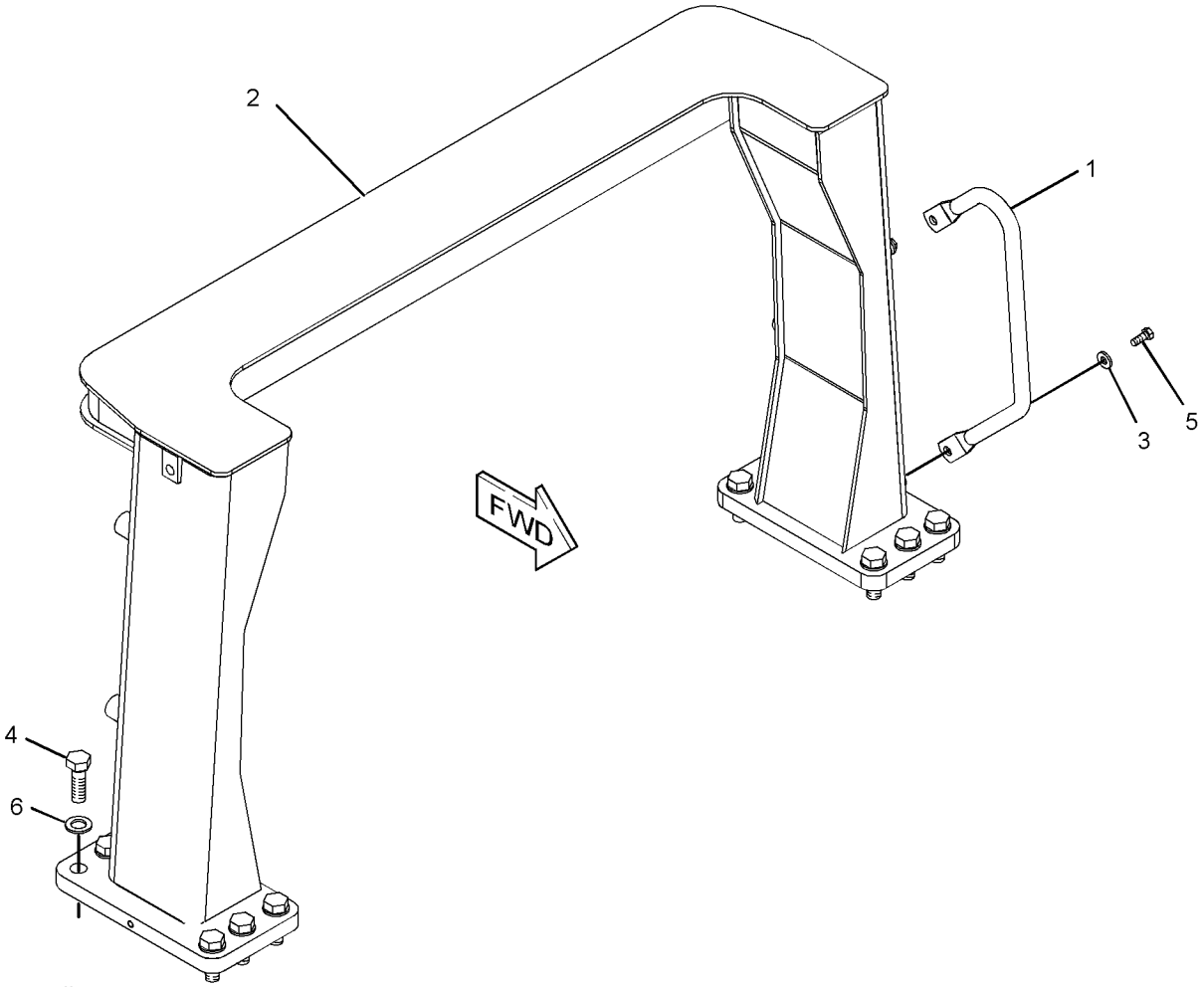

GRAPHIC #1 **<END>** g01205546

OPERATOR STATION

208-8706 ROPS GP-OPEN

S/N: JDL1-UP; GMT1-UP
PART OF 252-8337 CANOPY AR-OPEN ROPS
AN ATTACHMENT

SMCS-7323 **i02455532**

NOTE	REF NO	GRAPHIC REF	PART NUMBER	QTY	PART NAME 1 2 3 4 5 6 (PRODUCT LEVEL)	SEE PAGE
	1	1	**1P-2772**	4	SPACER (1.031X1.219X0.75-IN THK)	
	2	1	**8P-9747**	1	HANDHOLD	
	3	1	**9G-0992**	2	HANDHOLD	
Y	4	1	*9P-9392*	1	MIRROR GP-REAR VIEW	649
	5	1	**9S-5187**	2	MOUNTING	
	6	1	**180-6600**	1	HANDHOLD	
	7	1	**198-6574**	14	WASHER (16X75X3.5-MM THK)	
	8	1	**198-6575**	14	BUTTON	
	9	1	**227-5056**	1	ROLLOVER AS	
	10	1	**228-4051**	1	TUBE AS	
	11	1	**228-4052**	1	TUBE AS	
	12	1	**263-2601**	1	HEADLINER	
	13	1	**5P-1076**	9	WASHER-HARD (13.5X30X4-MM THK)	
	14	1	**6K-3632**	2	LOCKNUT (1-8-THD)	
M	15	1	**7X-2563**	4	BOLT (M20X2.5X60-MM)	
M	16	1	**7X-2576**	12	BOLT (M24X3X70-MM)	
	17	1	**8C-8843**	2	BOLT (1-8X4.5-IN)	
	18	1	**8P-5244**	4	WASHER (33.3X69.8X6.35-MM THK)	
	19	1	**8T-4123**	4	WASHER-PLATED (22X35X3.5-MM THK)	
M	20	1	**8T-4139**	8	BOLT (M12X1.75X30-MM)	
	21	1	**8T-4167**	12	WASHER-HARD (26X44X4-MM THK)	

M-METRIC PART
Y-SEPARATE ILLUSTRATION

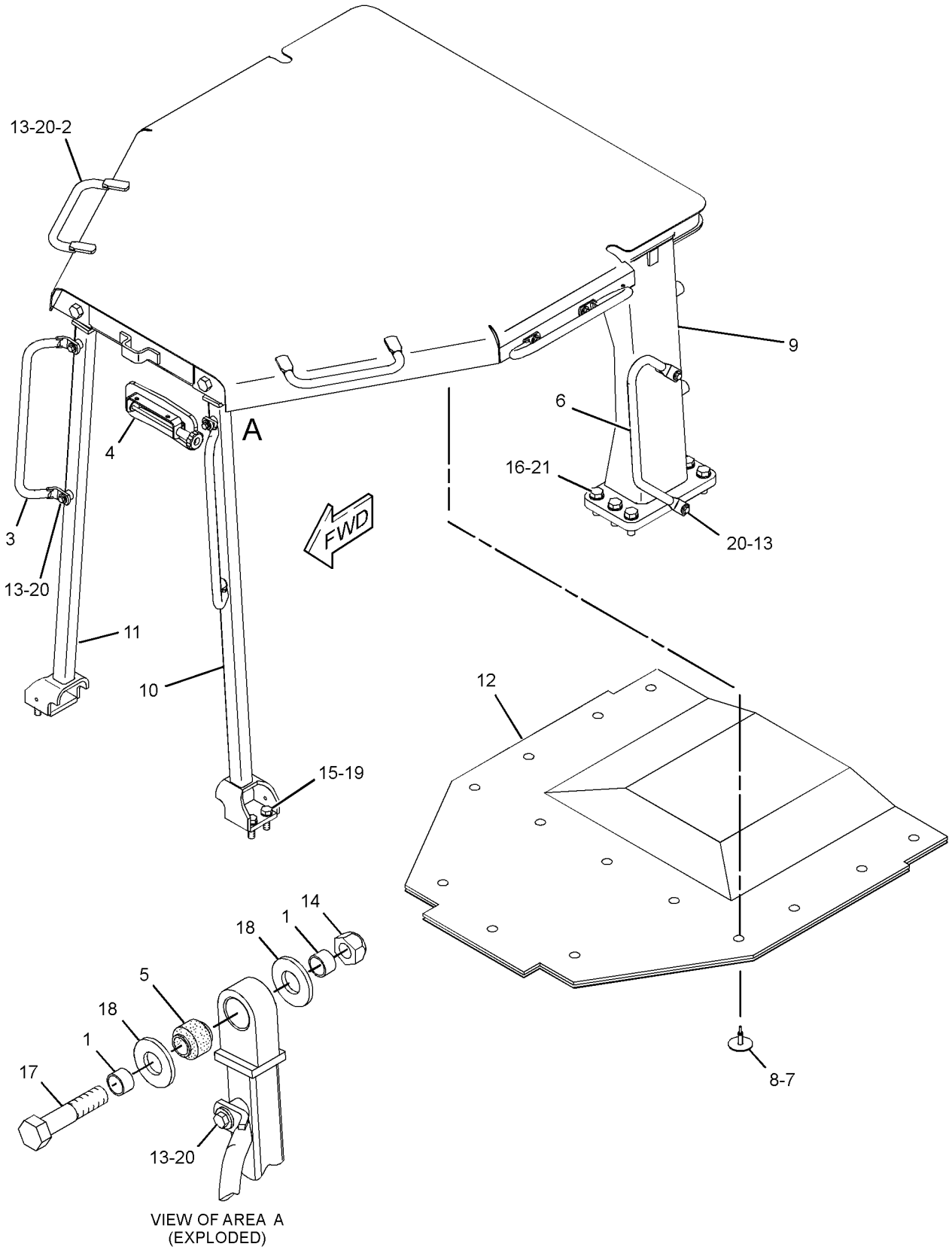

VIEW OF AREA A
(EXPLODED)

GRAPHIC #1 **<END>** g01205598

OPERATOR STATION

213-7064 SCREEN GP-PROTECTION–REAR

S/N: JDL1-UP; GMT1-UP
AN ATTACHMENT

SMCS-7165 **i02470862**

NOTE	REF NO	GRAPHIC REF	PART NUMBER	QTY	PART NAME 1 2 3 4 5 6 (PRODUCT LEVEL)	SEE PAGE
	1	1	**165-2577**	1	SCREEN AS (PROTECTIVE)	
	2	1	**8T-5439**	4	WASHER (21.5X45X6-MM THK)	
M	3	1	**8T-6430**	4	BOLT (M20X2.5X50-MM)	

M-METRIC PART

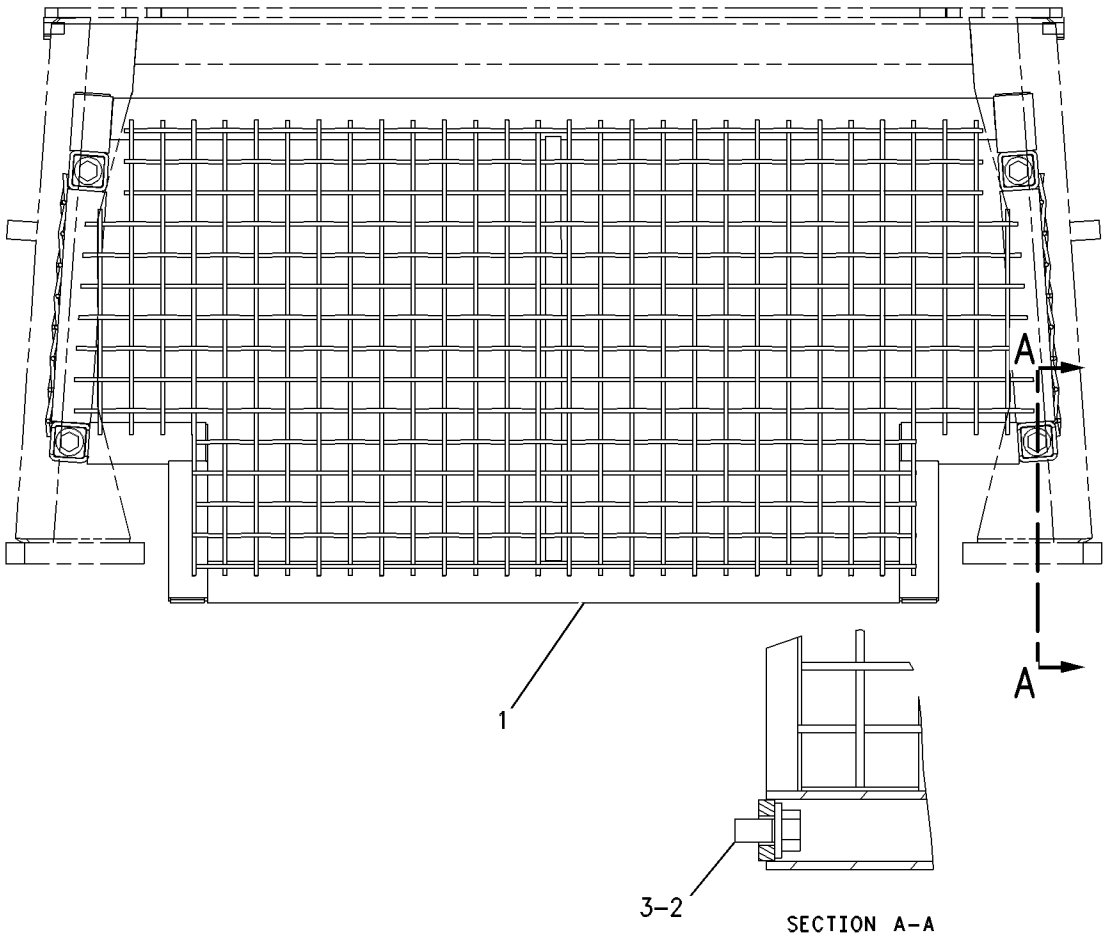

GRAPHIC #1 **<END>** g00569648

OPERATOR STATION

226-3400 SCREEN GP-PROTECTION–REAR

S/N: JDL1-UP; GMT1-UP
FOR USE WITH ROPS MOUNTED AIR CONDITIONER
AN ATTACHMENT

SMCS-7165 **i02454070**

NOTE	REF NO	GRAPHIC REF	PART NUMBER	QTY	PART NAME 1 2 3 4 5 6 (PRODUCT LEVEL)	SEE PAGE
	1	1	**166-2153**	1	SCREEN AS	
		1	**7T-1099**	6	LINK	
	2	1	**194-3708**	2	BOSS	
M	3	1	**7X-2566**	2	BOLT (M20X2.5X110-MM)	
M	4	1	**8T-4131**	2	NUT (M20X2.5-THD)	
	5	1	**8T-5439**	6	WASHER (21.5X45X6-MM THK)	
M	6	1	**8T-6430**	2	BOLT (M20X2.5X50-MM)	

M-METRIC PART

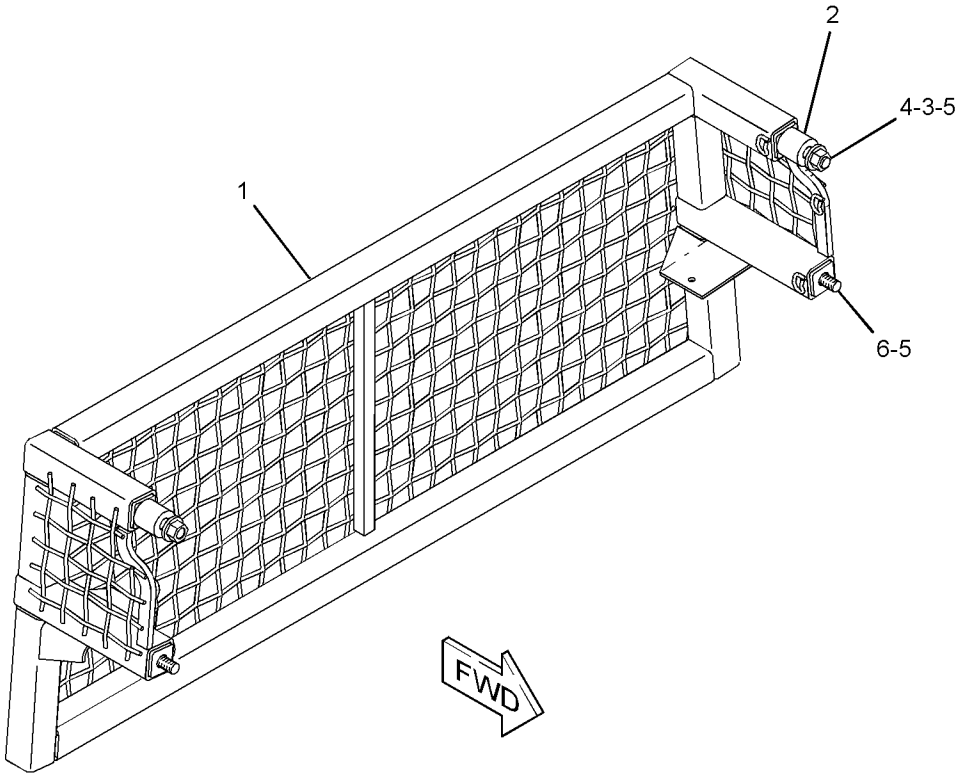

GRAPHIC #1 **<END>** g01214257

OPERATOR STATION

178-0603 SEAT GP–CLOTH

S/N: JDL1-UP; GMT1-UP
PART OF 178-0606 SEAT GP
ALSO AN ATTACHMENT

SMCS-7312 **i01852208**

NOTE	REF NO	GRAPHIC REF	PART NUMBER	QTY	PART NAME 1 2 3 4 5 6 (PRODUCT LEVEL)	SEE PAGE
	1	1	**135-5499**	1	PAN AS	
		1	**8T-9082**	5	RIVET-POP	
		1	**117-4506**	1	CUSHION AS	
	2	1	**143-1288**	8	LOCKNUT-FLANGE (3/8-16-THD)	
	3	1	**171-1230**	6	SCREW-BUTTON HEAD (3/8-16X1-IN)	
	4	1	**171-6682**	1	BAR	
	5	1	**172-2416**	2	PIN	
Y	6	1	*173-1028*	1	ADJUSTER GP-SEAT	597
	7	1	**177-1863**	2	BOLT-PIVOT (3/8-16X2.89-IN)	
Y	8	1	*177-4935*	1	RECLINER GP-SEAT	673
Y	9	1	*178-0604*	1	PAN GP-BACKREST (CLOTH)	662
	10	1	**184-2298**	1	ROD	
	11	1	**184-2299**	4	WASHER (7X25.4X2.54-MM THK)	
	12	1	**095-0843**	2	PIN-COTTER	
	13	1	**5V-1496**	2	RETAINER	
	14	1	**6V-7646**	2	WASHER-HARD (7.2X25X2-MM THK)	
	15	1	**8T-0328**	1	WASHER-HARD (5.5X10X1-MM THK)	
	16	1	**8T-4205**	1	WASHER-HARD (7.2X14.5X2-MM THK)	
	17	1	**8Y-6277**	2	SPACER (10.5X28.6X10-MM THK)	

Y-SEPARATE ILLUSTRATION

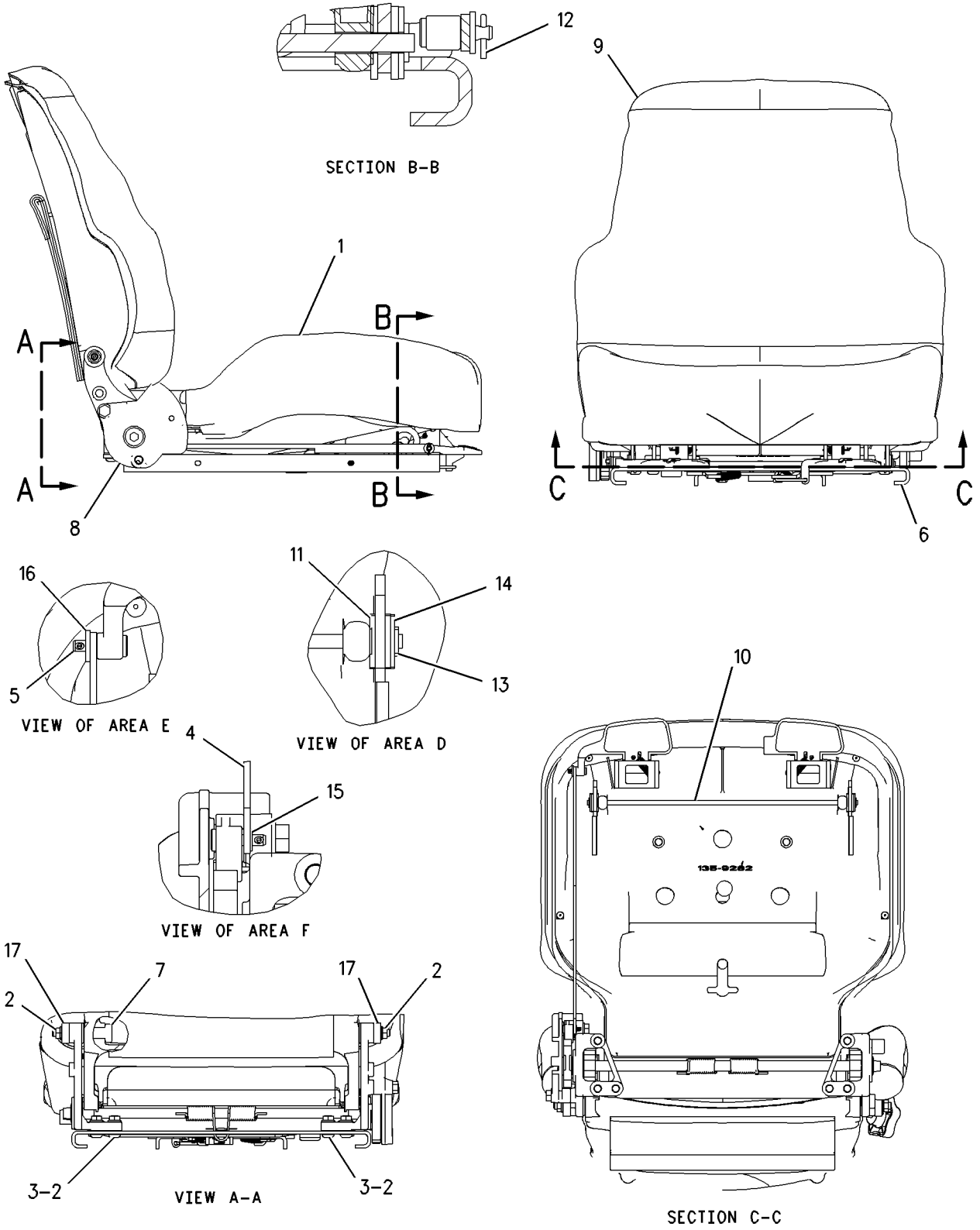

GRAPHIC #1 **<END>** g00729407

OPERATOR STATION

178-0606 SEAT GP–CLOTH

S/N: JDL1-UP; GMT1-UP
PART OF 160-7186, 200-3174 SEAT GP-SUSPENSION
ALSO AN ATTACHMENT

SMCS-7312 **i02123119**

NOTE	REF NO	GRAPHIC REF	PART NUMBER	QTY	PART NAME 1 2 3 4 5 6 (PRODUCT LEVEL)	SEE PAGE
	1	1	**177-4937**	1	SPACER (11.7X19.8X20.3-MM THK)	
Y	2	1	**178-0603**	1	SEAT GP (CLOTH)	679
	3	1	**222-0345**	1	SEAT BELT GP	
C	4	1	**229-1494**	1	EXTENSION GP-BACKREST (CLOTH)	
	5	1	**0T-0244**	1	BOLT (7/16-20X1.25-IN)	
	6	1	**205-6388**	1	BOLT (7/16-20X1.75-IN)	

C-CHANGE FROM PREVIOUS TYPE
Y-SEPARATE ILLUSTRATION

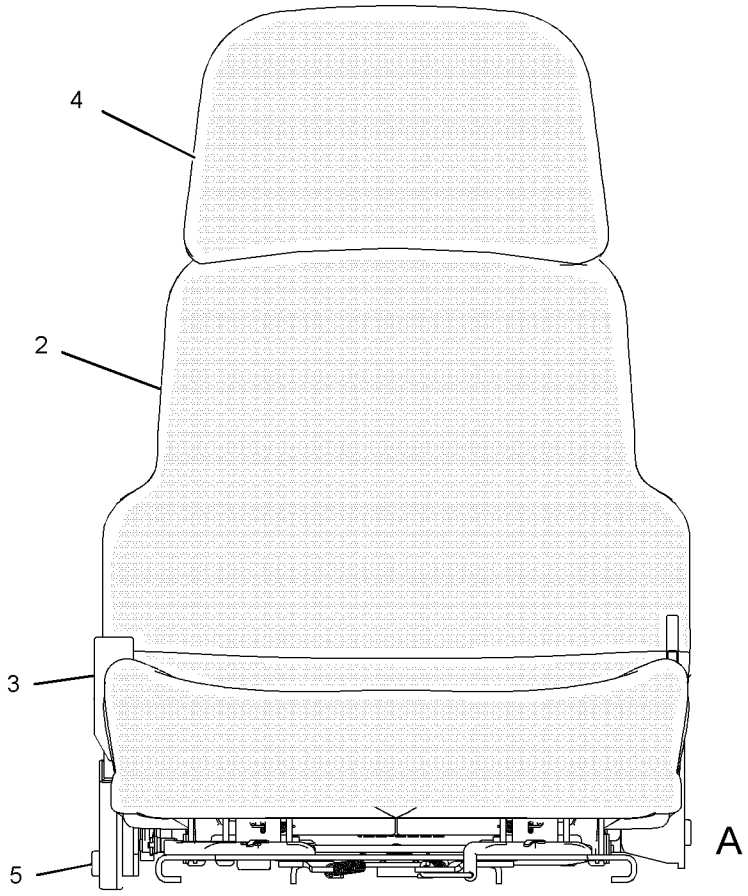

FRONT VIEW

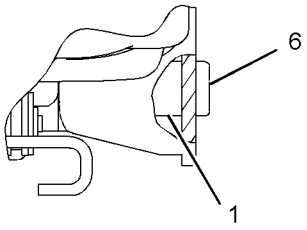

VIEW A

GRAPHIC #1

<END>

g01084230

OPERATOR STATION

180-7304 SEAT GP—VINYL

S/N: JDL1-UP; GMT1-UP
PART OF 184-6011 SEAT GP
AN ATTACHMENT

SMCS-7312 **i01883816**

NOTE	REF NO	GRAPHIC REF	PART NUMBER	QTY	PART NAME 1 2 3 4 5 6 (PRODUCT LEVEL)	SEE PAGE
	1	1	**6K-3273**	5	RIVET-POP	
		1	**169-1026**	1	CUSHION AS	
	2	1	**143-1288**	8	LOCKNUT-FLANGE (3/8-16-THD)	
	3	1	**171-1230**	6	SCREW-BUTTON HEAD (3/8-16X1-IN)	
	4	1	**171-6682**	1	BAR	
	5	1	**172-2416**	2	PIN	
Y	6	1	*173-1028*	1	ADJUSTER GP-SEAT	597
	7	1	**177-1863**	2	BOLT-PIVOT (3/8-16X2.89-IN)	
Y	8	1	*177-4935*	1	RECLINER GP-SEAT	673
Y	9	1	*180-7305*	1	PAN GP-BACKREST	664
	10	1	**184-2298**	1	ROD	
	11	1	**184-2299**	4	WASHER (7X25.4X2.54-MM THK)	
	12	1	**095-0843**	2	PIN-COTTER	
	13	1	**8Y-6277**	2	SPACER (10.5X28.6X10-MM THK)	
	14	1	**5V-1496**	2	RETAINER	
	15	1	**6V-7646**	2	WASHER-HARD (7.2X25X2-MM THK)	
	16	1	**8T-0328**	1	WASHER-HARD (5.5X10X1-MM THK)	
	17	1	**8T-4205**	1	WASHER-HARD (7.2X14.5X2-MM THK)	

Y-SEPARATE ILLUSTRATION

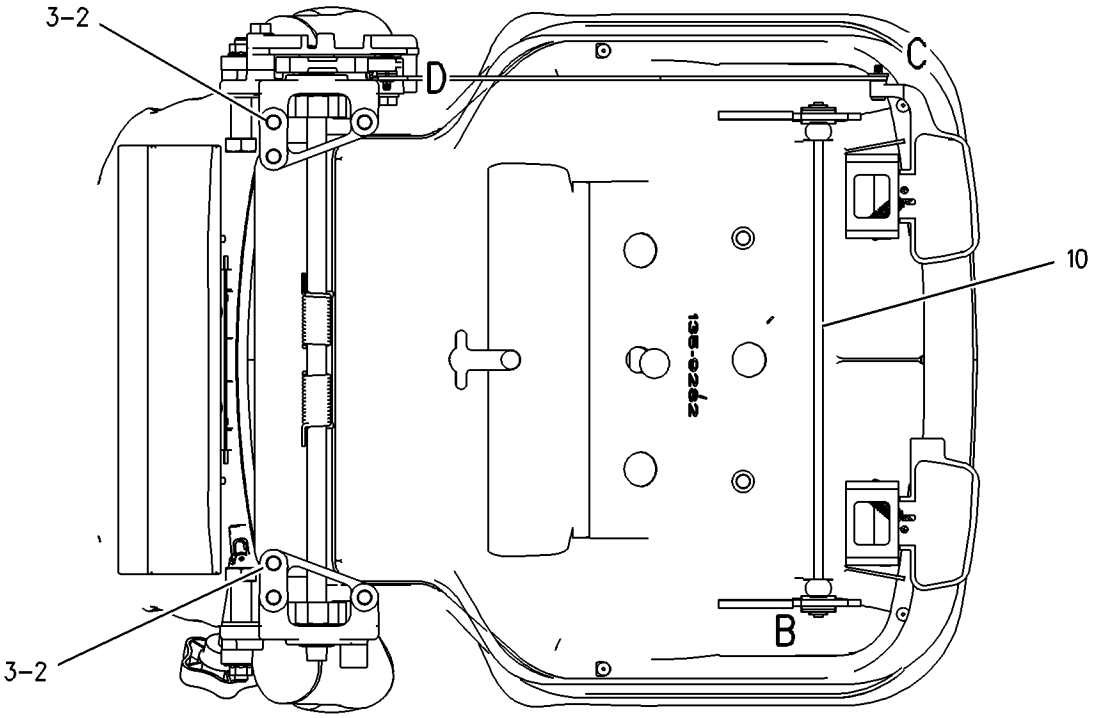

SECTION A-A

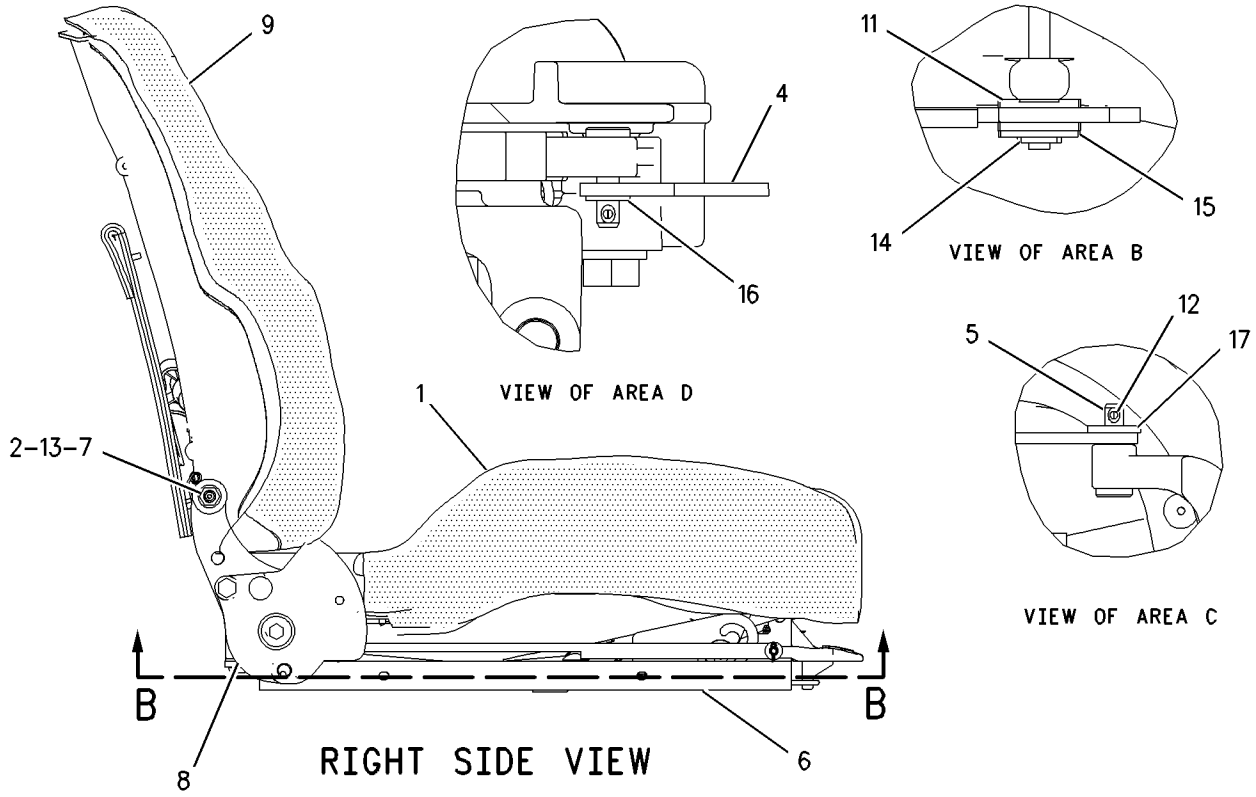

GRAPHIC #1 **<END>** g00726860

OPERATOR STATION

184-6011 SEAT GP–VINYL

S/N: JDL1-UP; GMT1-UP
PART OF 159-2950 SEAT GP-SUSPENSION
AN ATTACHMENT

SMCS-7312 **i01899322**

NOTE	REF NO	GRAPHIC REF	PART NUMBER	QTY	PART NAME 1 2 3 4 5 6 (PRODUCT LEVEL)	SEE PAGE
	1	1	**173-3083**	1	EXTENSION GP-BACKREST (VINYL) (SEAT)	
		1	**117-4491**	1	ROD	
	2	1	**177-4937**	1	SPACER (11.7X19.8X20.3-MM THK)	
	3	1	**205-6388**	1	BOLT (7/16-20X1.75-IN)	
	4	1	**0T-0244**	1	BOLT (7/16-20X1.25-IN)	
Y	5	1	**180-7304**	1	SEAT GP (VINYL)	682
	6	1	**222-0345**	1	SEAT BELT GP	

Y-SEPARATE ILLUSTRATION

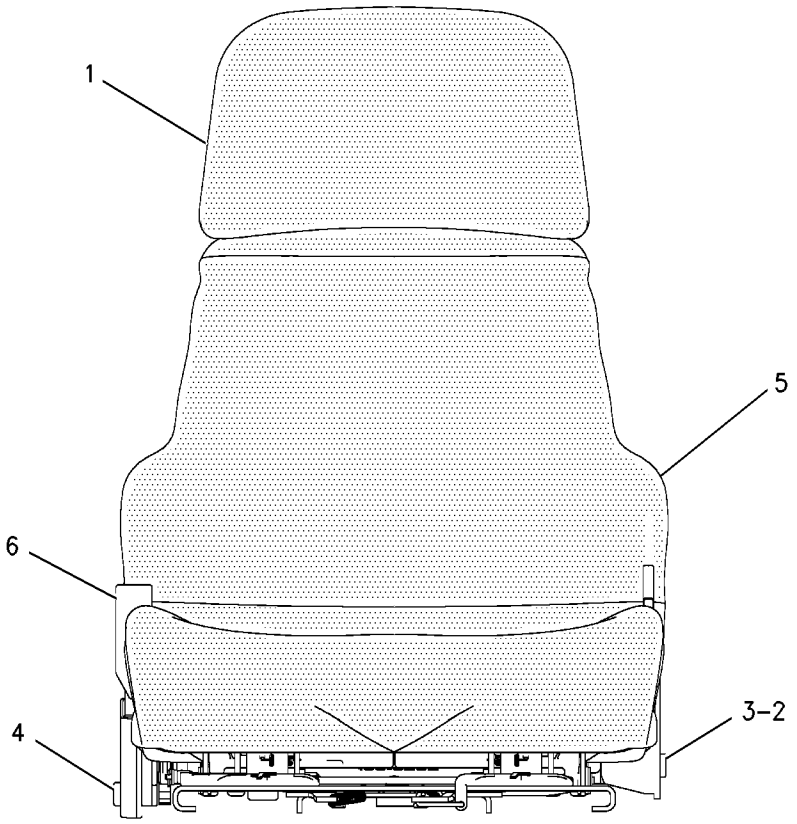

FRONT VIEW

GRAPHIC #1 **<END>** g00683843

214-1196 SEAT GP—AIR SUSPENSION, CLOTH

S/N: JDL1-UP; GMT1-UP
AN ATTACHMENT

SMCS-7312 **i02242454**

NOTE	REF NO	GRAPHIC REF	PART NUMBER	QTY	PART NAME 1 2 3 4 5 6 (PRODUCT LEVEL)	SEE PAGE
Y	1	1	**200-3174**	1	SEAT GP-SUSPENSION (AIR)	690
	2	1	**9V-2818**	1	GROMMET	

Y-SEPARATE ILLUSTRATION

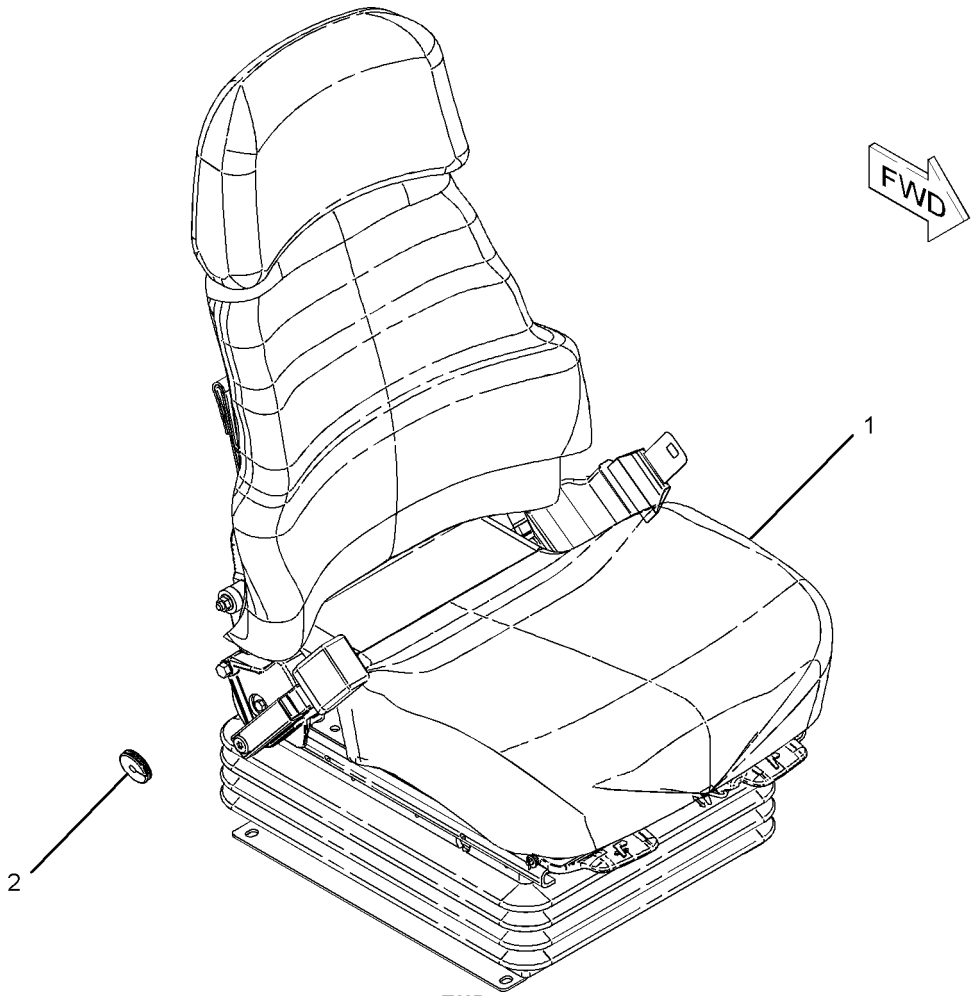

GRAPHIC #1 **<END>** g01021550

OPERATOR STATION

214-1197 SEAT GP—AIR SUSPENSION, VINYL

S/N: JDL1-UP; GMT1-UP
PART OF 252-8337 CANOPY AR-OPEN ROPS
AN ATTACHMENT

SMCS-7312 **i02246066**

NOTE	REF NO	GRAPHIC REF	PART NUMBER	QTY	PART NAME 1 2 3 4 5 6 (PRODUCT LEVEL)	SEE PAGE
Y	1	1	**159-2950**	1	SEAT GP-SUSPENSION (AIR)	688

Y-SEPARATE ILLUSTRATION

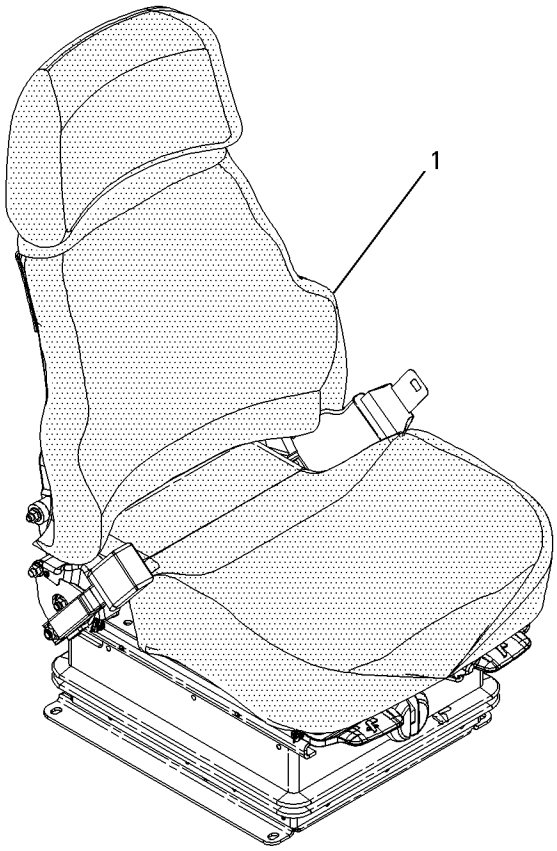

GRAPHIC #1 **<END>** g00695004

OPERATOR STATION

223-2205 SEAT GP–CLOTH

S/N: JDL1-UP; GMT1-UP

PART OF 218-4978, 222-1592 CHASSIS AR

SMCS-7312 **i02431486**

NOTE	REF NO	GRAPHIC REF	PART NUMBER	QTY	PART NAME 1 2 3 4 5 6 (PRODUCT LEVEL)	SEE PAGE
	1	1	**126-3700**	1	ARMREST AS (RH)	
	2	1	**126-3701**	1	ARMREST AS (LH)	
Y	3	1	**160-7186**	1	SEAT GP-SUSPENSION	689
	4	1	**184-1503**	2	KNOB	
	5	1	**184-3269**	1	PLATE AS	
		1	**1F-0750**	1	NUT-WELD (3/8-16-THD)	
	6	1	**184-3270**	1	PLATE AS	
M		1	**8T-3490**	2	NUT-WELD (M10X1.5-THD)	
	7	1	**5P-1075**	2	WASHER-HARD (10.2X22.5X3-MM THK)	
	8	1	**7X-7729**	6	WASHER (11X25X3-MM THK)	
	9	1	**8T-4121**	2	WASHER-HARD (11X21X2.5-MM THK)	
M	10	1	**8T-4137**	4	BOLT (M10X1.5X20-MM)	
M	11	1	**8T-4196**	2	BOLT (M10X1.5X35-MM)	
	12	1	**8T-7971**	2	WASHER-HARD (13.5X25.5X5-MM THK)	
M	13	1	**9X-2125**	4	BOLT-LOCKING (M10X1.5X25-MM)	

M-METRIC PART
Y-SEPARATE ILLUSTRATION

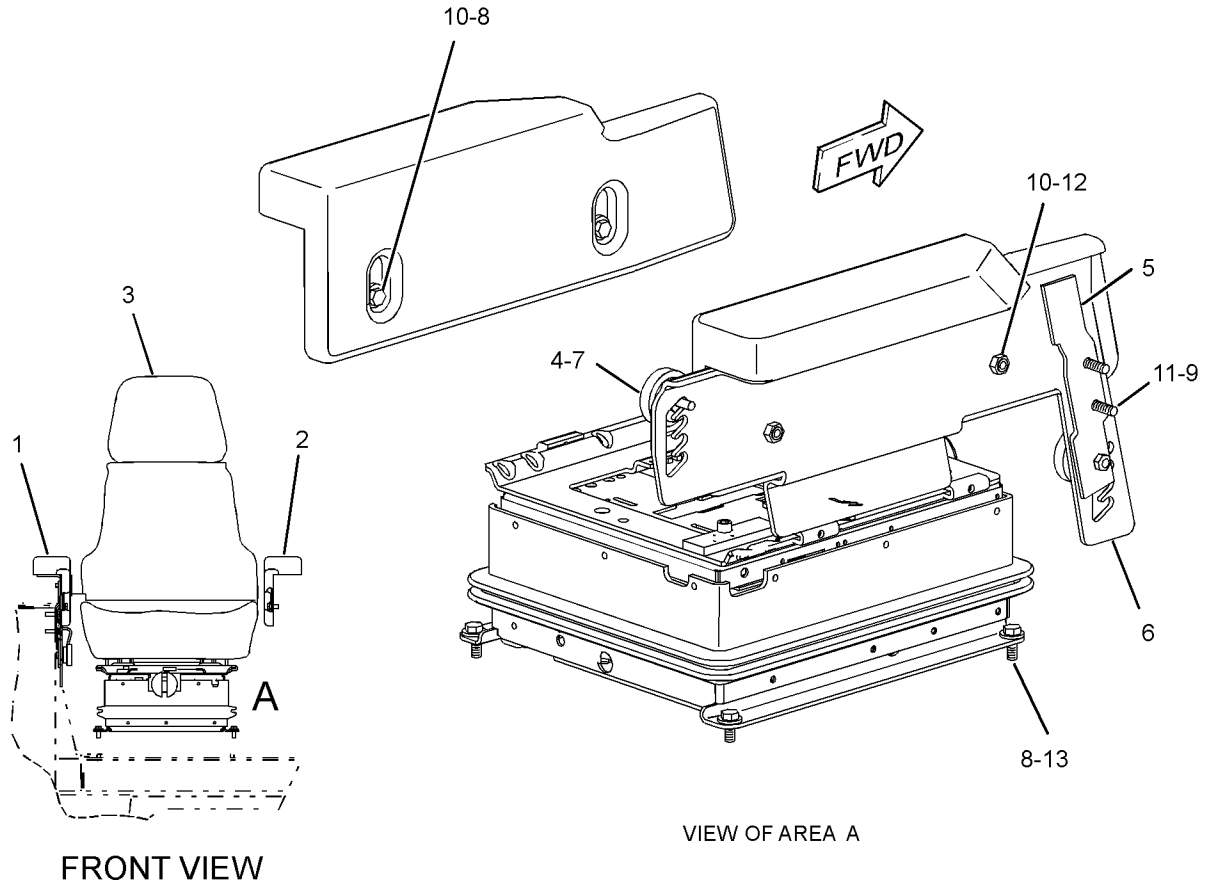

GRAPHIC #1 **<END>** g01206790

OPERATOR STATION

159-2950 SEAT GP-SUSPENSION–VINYL, AIR

S/N: JDL1-UP; GMT1-UP
PART OF 214-1197 SEAT GP
AN ATTACHMENT

SMCS-7321, 7324, 7336 **i01871053**

NOTE	REF NO	GRAPHIC REF	PART NUMBER	QTY	PART NAME 1 2 3 4 5 6 (PRODUCT LEVEL)	SEE PAGE
Y	1	1	**160-7165**	1	SUSPENSION GP-SEAT	691
Y	2	1	*184-6011*	1	SEAT GP	684
JZ	3	1		4	BLOCK-SLIDER	
	4	1	**4F-4879**	1	BOLT (3/8-16X0.5-IN)	
	5	1	**203-7703**	2	WASHER-HARD (10.2X22.22X2.38-MM THK)	
J	6	1	**173-5787**	4	SETSCREW (1/4-20-THD)	
					AVAILABLE REPAIR KIT(S):	
J			**173-7035**	1	KIT-SLIDER BLOCK (SUSPENSION SEAT)	

J-KIT MARKED J INCLUDES PART(S) MARKED J
Y-SEPARATE ILLUSTRATION
Z-NOT SERVICED SEPARATELY

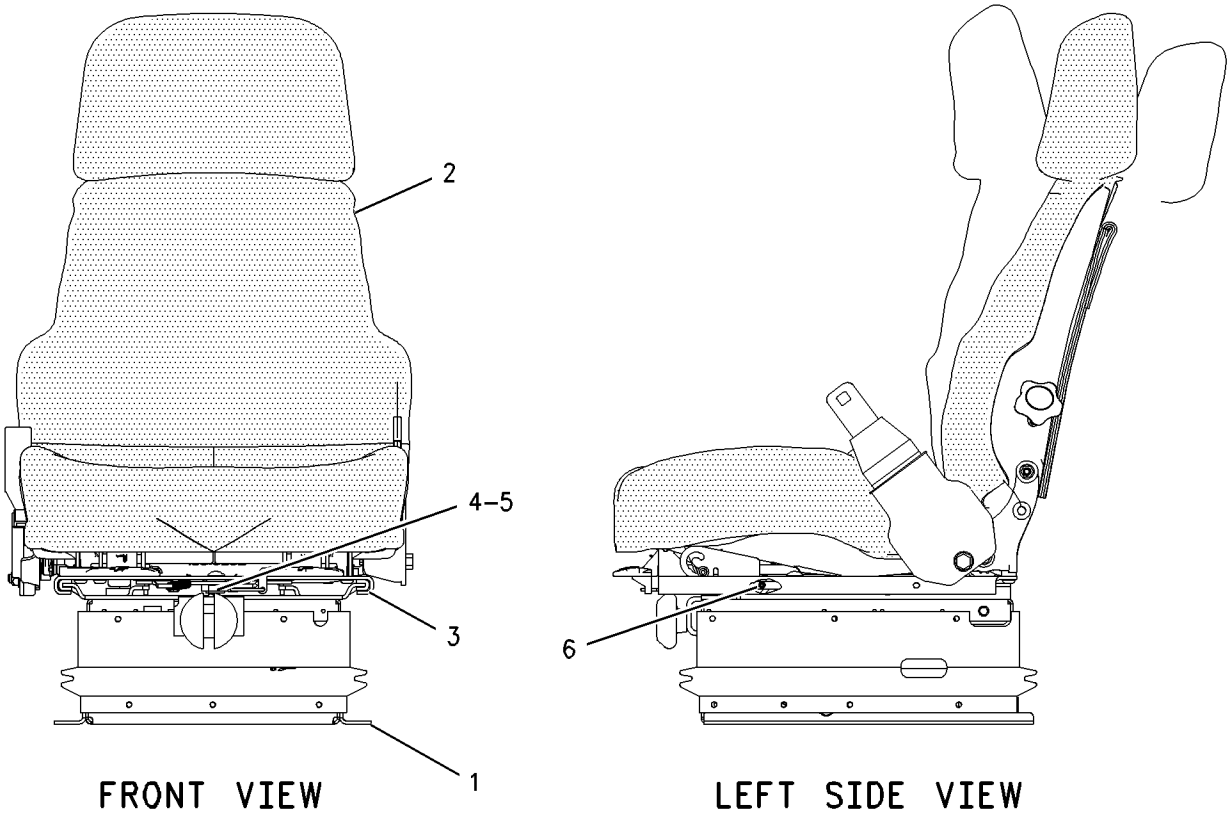

GRAPHIC #1 **<END>** g00819547

160-7186 SEAT GP-SUSPENSION—CLOTH

S/N: JDL1-UP; GMT1-UP
PART OF 223-2205 SEAT GP

SMCS-7321, 7324, 7336 **i01871057**

NOTE	REF NO	GRAPHIC REF	PART NUMBER	QTY	PART NAME 1 2 3 4 5 6 (PRODUCT LEVEL)	SEE PAGE
Y	1	1	**160-7165**	1	SUSPENSION GP-SEAT	691
Y	2	1	**178-0606**	1	SEAT GP	681
	3	1	**173-5787**	4	SETSCREW (1/4-20-THD)	
	4	1	**4F-4879**	1	BOLT (3/8-16X0.5-IN)	
		1	**203-7703**	2	WASHER-HARD (10.2X22.22X2.38-MM THK)	
					AVAILABLE REPAIR KIT(S):	
			173-7035	1	KIT-SLIDER BLOCK (SUSPENSION SEAT)	

Y-SEPARATE ILLUSTRATION

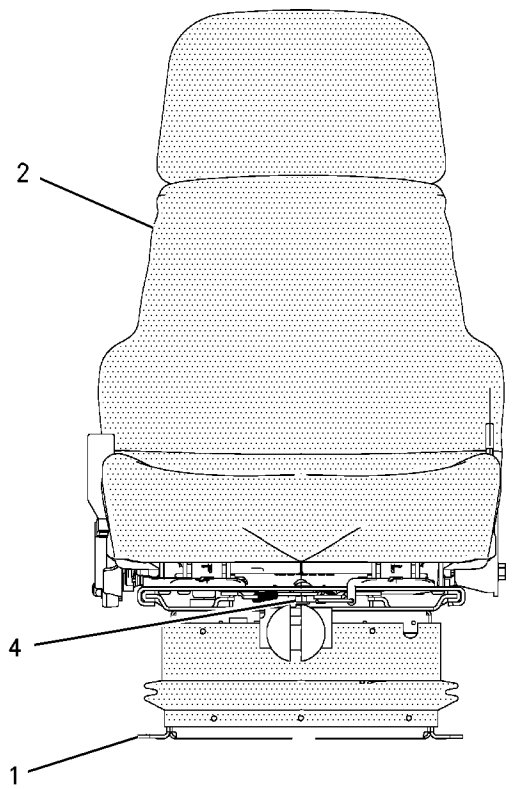

FRONT VIEW

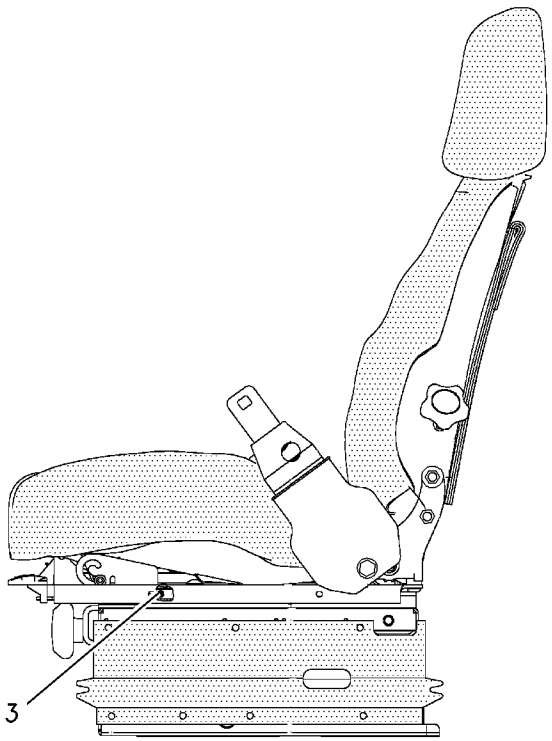

LEFT SIDE VIEW

GRAPHIC #1 **<END>** g00825453

OPERATOR STATION

200-3174 SEAT GP-SUSPENSION—CLOTH, AIR

S/N: JDL1-UP; GMT1-UP
PART OF 214-1196 SEAT GP
AN ATTACHMENT

SMCS-7321, 7324, 7336 **i01871059**

NOTE	REF NO	GRAPHIC REF	PART NUMBER	QTY	PART NAME 1 2 3 4 5 6 (PRODUCT LEVEL)	SEE PAGE
J	1	1	**161-9289**	4	BLOCK-SLIDER	
J	2	1	**173-5787**	4	SETSCREW (1/4-20-THD)	
Y	3	1	**178-0606**	1	SEAT GP	681
Y	4	1	**191-2933**	1	SUSPENSION GP-SEAT (AIR)	693
J	5	1	**203-7703**	2	WASHER-HARD (10.2X22.22X2.38-MM THK)	
J	6	1	**4F-4879**	1	BOLT (3/8-16X0.5-IN)	
					AVAILABLE REPAIR KIT(S):	
J			**173-7035**	1	KIT-SLIDER BLOCK (SUSPENSION SEAT)	

J-KIT MARKED J INCLUDES PARTS MARKED J
Y-SEPARATE ILLUSTRATION

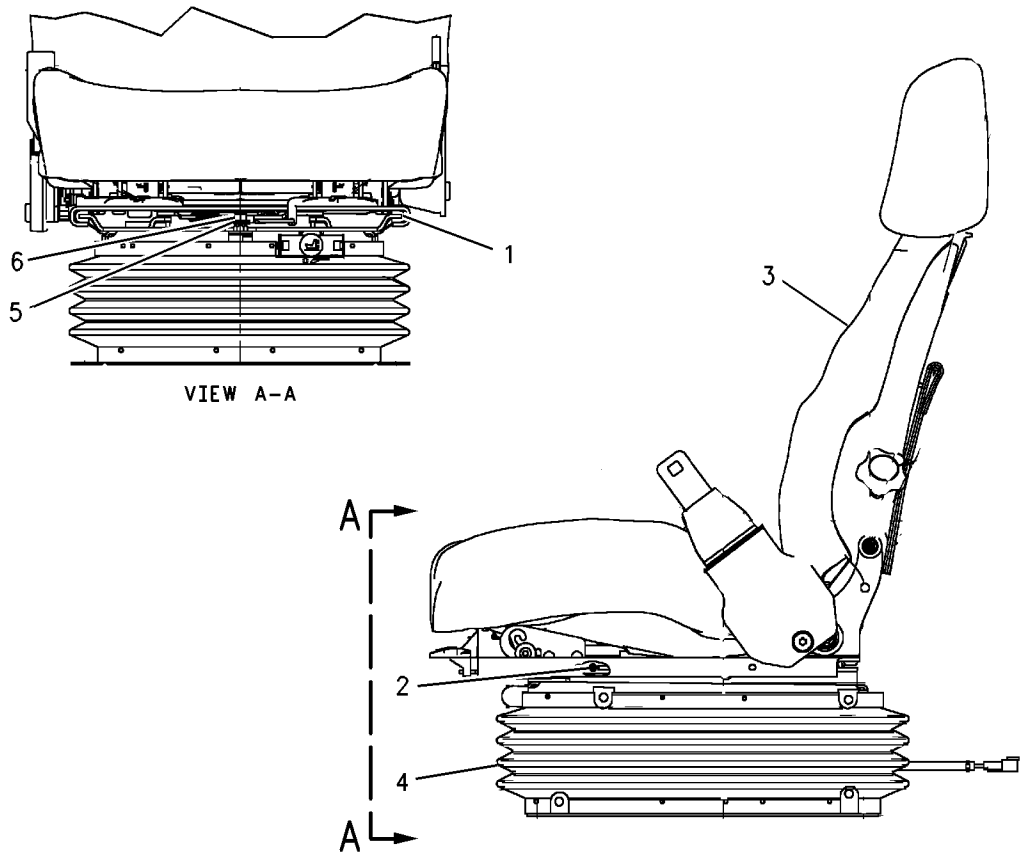

GRAPHIC #1 **<END>** g00933544

OPERATOR STATION

160-7165 SUSPENSION GP-SEAT

S/N: JDL1-UP; GMT1-UP
PART OF 159-2950, 160-7186 SEAT GP-SUSPENSION
ALSO AN ATTACHMENT

SMCS-7324 **i02238203**

NOTE	REF NO	GRAPHIC REF	PART NUMBER	QTY	PART NAME 1 2 3 4 5 6 (PRODUCT LEVEL)	SEE PAGE
	1	1	**2K-4973**	2	LOCKNUT (3/8-16-THD)	
	2	1	**4V-7884**	2	BEARING	
	3	1	**4V-8577**	4	BEARING	
	4	1	**5V-1497**	1	RETAINER	
	5	1	**8Y-5965**	1	ABSORBER AS-SHOCK	
	6	1	**8Y-6012**	1	ARM AS-SUSPENSION	
	7	1	**8Y-6014**	1	HOUSING AS-LOWER	
	8	1	**8Y-6024**	2	SHAFT AS	
J	9	1	**101-0003**	20	FASTENER	
J	10	1	**166-6781**	6	FASTENER	
J	11	1	**163-1146**	3	FASTENER	
	12	1	**145-0326**	1	FILM-INSTRUCTION (SEAT ADJUSTMENT)	
	13	1	**169-7380**	1	BOLT-SOCKET HEAD (3/8-16X0.375-IN)	
Y	14	1	**174-2231**	1	HOUSING GP-SEAT SUSPENSION	624
J	15	1	**197-7689**	3	FASTENER	
					AVAILABLE REPAIR KIT(S):	
J				1	KIT-SUSPENSION BOOT	
					(INCLUDES BOOT, RETAINER & FASTENERS)	
				1	KIT-BELT TETHER	
					(INCLUDES BELTS)	
				1	KIT-SUSPENSION ROLLER	
					(INCLUDES ROLLERS)	

J-KIT MARKED J INCLUDES PARTS MARKED J
Y-SEPARATE ILLUSTRATION

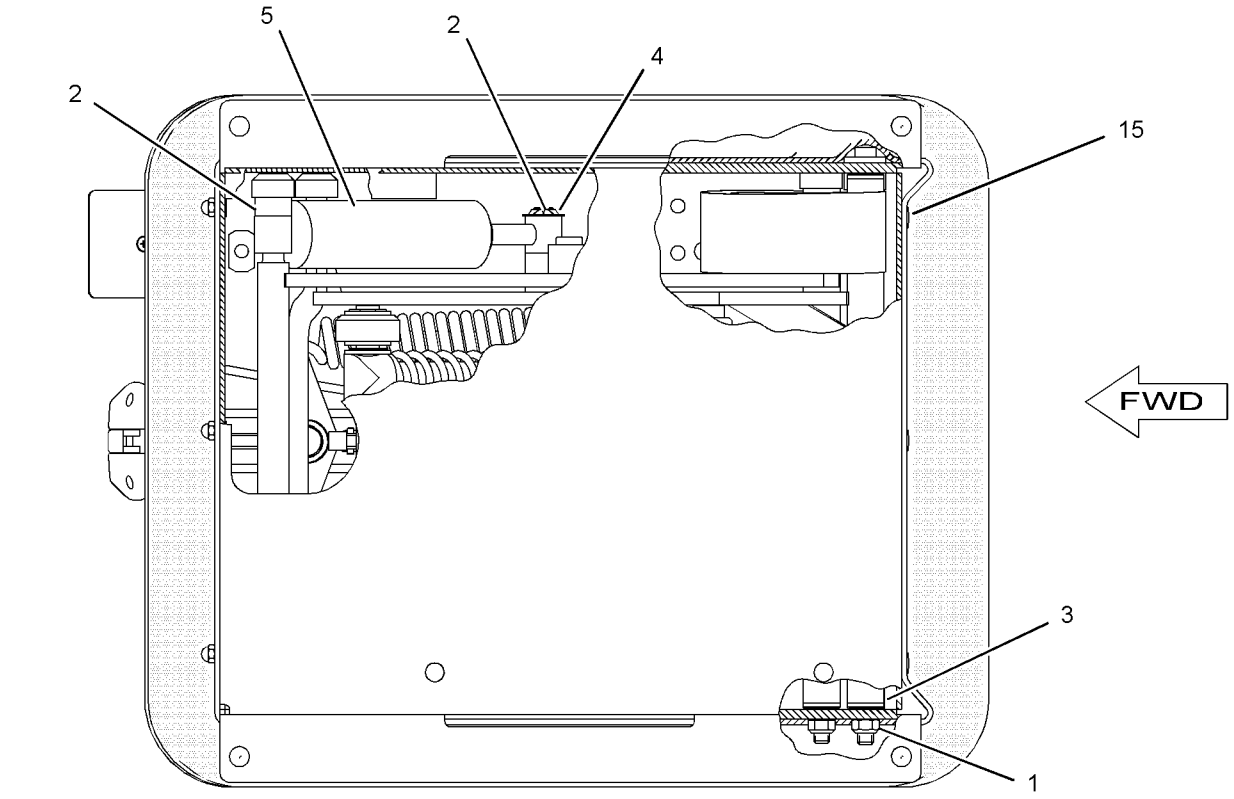

BOTTOM VIEW

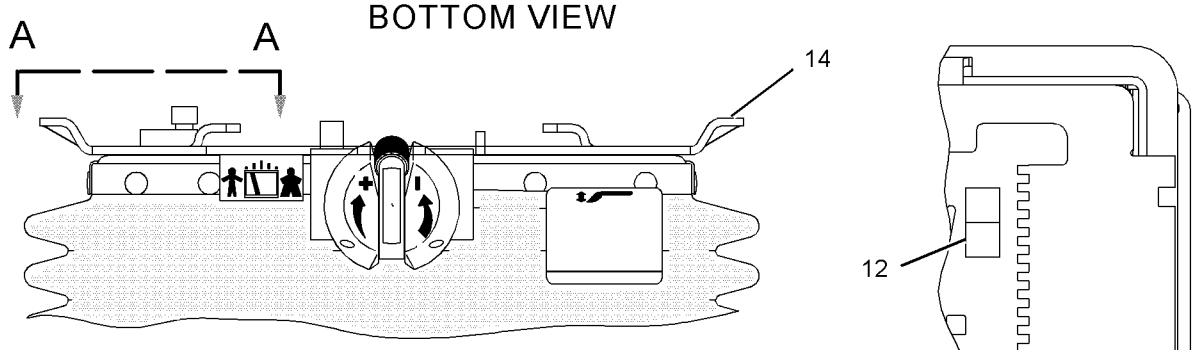

FRONT VIEW

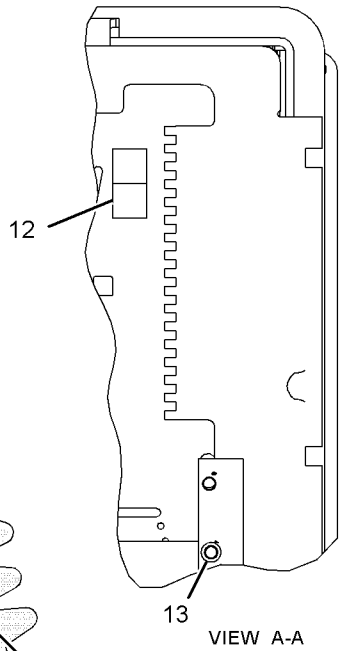

VIEW A-A

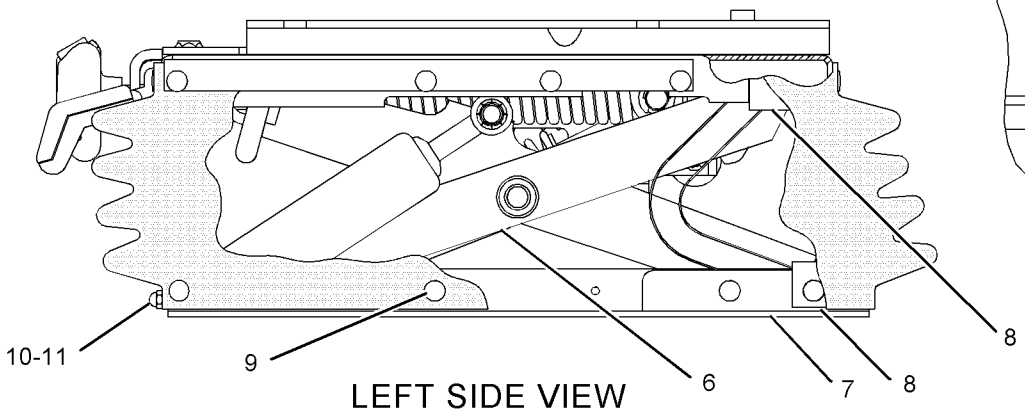

LEFT SIDE VIEW

GRAPHIC #1 **<END>** g01129757

OPERATOR STATION

191-2933 SUSPENSION GP-SEAT—AIR

S/N: JDL1-UP; GMT1-UP
PART OF 200-3174 SEAT GP-SUSPENSION
AN ATTACHMENT

SMCS-7324 **i02470861**

NOTE	REF NO	GRAPHIC REF	PART NUMBER	QTY	PART NAME 1 2 3 4 5 6 (PRODUCT LEVEL)	SEE PAGE
	1	1	**3P-9900**	5	WASHER (10.5X30X3-MM THK)	
	2	1	**4B-4278**	2	WASHER (10.2X20.5X1.6-MM THK)	
	3	1	**4V-8577**	12	BEARING	
	4	1	**8L-8413**	1	STRAP-CABLE	
	5	1	**145-0326**	1	FILM-INSTRUCTION (SEAT ADJUSTMENT)	
	6	1	**164-1234**	1	PLATE	
	7	1	**101-0003**	33	FASTENER	
	8	1	**169-7380**	1	BOLT-SOCKET HEAD (3/8-16X0.375-IN)	
	9	1	**186-5107**	2	SCREW (NO 8X1.25-IN)	
	10	1	**192-7752**	4	SHAFT AS	
	11	1	**192-7755**	1	HOUSING AS	
	12	1	**192-7760**	1	SHAFT	
	13	1	**192-7767**	1	SCISSORS AS	
	14	1	**192-7783**	1	TOGGLE AS	
	15	1	**192-7787**	1	TOGGLE AS	
	16	1	**192-7790**	1	HOUSING AS	
	17	1	**192-7795**	1	BOOT	
	18	1	**192-7805**	1	HARNESS AS-VALVE (SEAT AIR COMPRESSOR)	
		1	**102-8802**	1	KIT-RECEPTACLE (2-PIN)	
					(INCLUDES RECEPTACLE AS & WEDGE)	
	19	1	**192-7810**	1	SPRING AS-AIR	
		1	**5P-4423**	1	ELBOW	
		1	**163-1135**	1	SPRING	
	20	1	**192-7812**	1	BOLT-SHOULDER	
	21	1	**192-7820**	3	BUMPER	
	22	1	**192-7822**	1	SHAFT	
	23	1	**237-3943**	1	BRACKET	
	24	1	**237-3970**	1	AIR COMPRESSOR GP-SEAT	
	25	1	**1H-8296**	1	SCREW-MACHINE (3/8-16X0.52-IN)	
	26	1	**2K-4973**	8	LOCKNUT (3/8-16-THD)	
	27	1	**3J-4818**	1	LOCKWASHER	
M	28	1	**5C-2890**	3	NUT (M6X1-THD)	
	29	1	**8T-9371**	1	BOLT (3/8-16X0.5-IN)	
E	30	1	**211-5358**		CONDUIT (100-CM)	
BD	31	1	**5P-6010**		TUBE	
					AVAILABLE REPAIR KIT(S):	
			192-7799	1	KIT-AIR VALVE (SUSPENSION SEAT)	
					(INCLUDES KNOB AS, NUT, VALVE, LOCKWASHER & FITTING)	
			192-7848	1	KIT-SHOCK ABSORBER (SUSPENSION SEAT)	
					(INCLUDES LOCKNUT, LOCKWASHER, SHOCK ABSORBER, BEARING, WASHER, & BOLTS)	
			211-9294	1	KIT-TETHER (SUSPENSION SEAT)	
					(INCLUDES TETHERS)	

B-USE AS REQUIRED
D-ORDER BY THE METER
E-ORDER BY THE CENTIMETER
M-METRIC PART

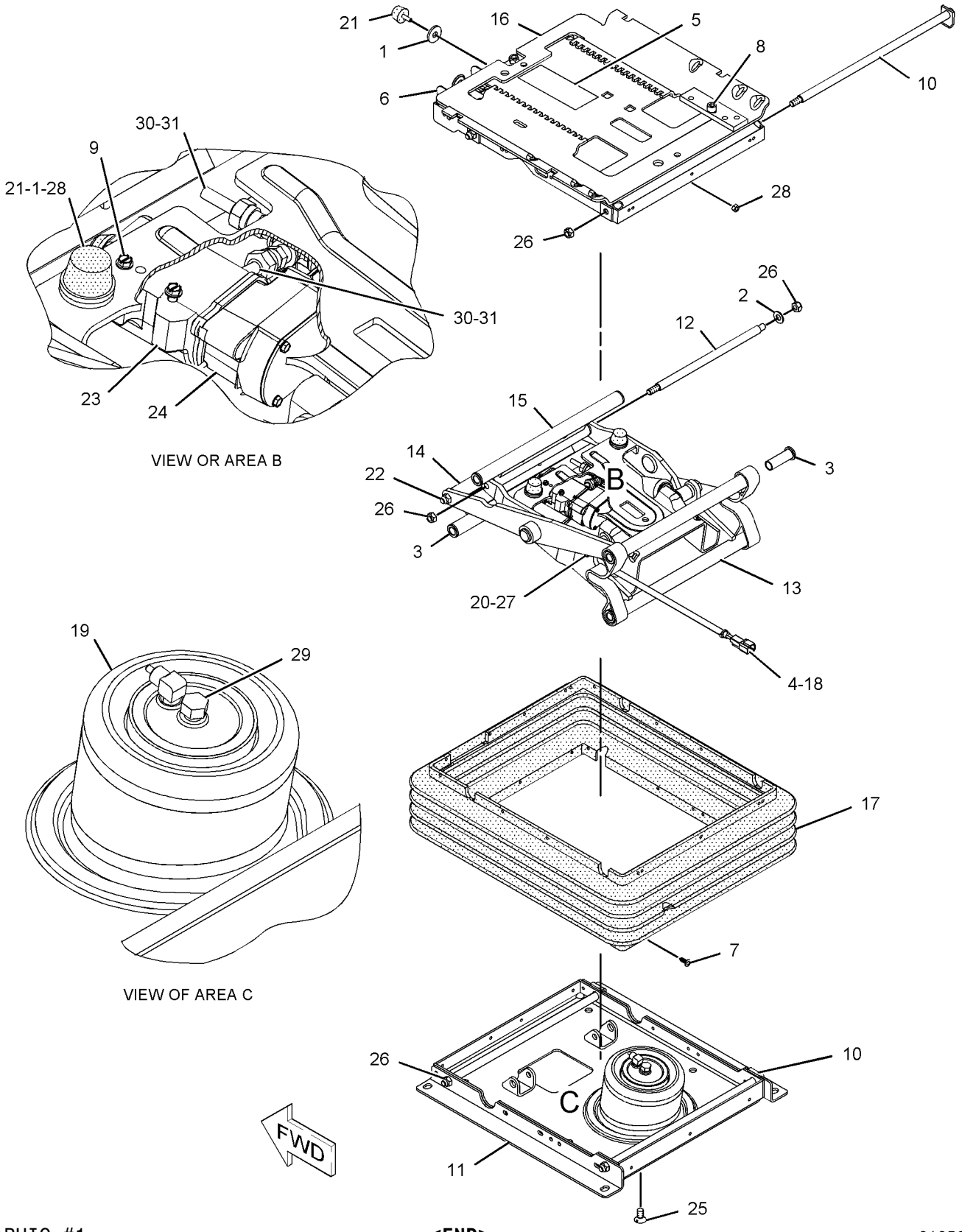

GRAPHIC #1 **<END>** g01056291

OPERATOR STATION

169-9649 TANK GP-WINDOW WASHER

S/N: JDL1-UP; GMT1-UP
PART OF 262-5079 TANK GP-WINDOW WASHER
ALSO AN ATTACHMENT

SMCS-7306 **i02375124**

NOTE	REF NO	GRAPHIC REF	PART NUMBER	QTY	PART NAME 1 2 3 4 5 6 (PRODUCT LEVEL)	SEE PAGE
	1	1	**169-9650**	1	TANK-WASHER	
	2	1	**8E-8292**	1	CAP-VENTED (WINDOW WASHER TANK)	
	3	1	**186-4857**	1	HARNESS AS-WIRING (WINDOW WASHER)	
		1	**9X-0194**	4	TERMINAL AS	
		1	**102-8805**	1	KIT-RECEPTACLE (6-PIN)	
					(INCLUDES RECEPTACLE AS & WEDGE)	
	4	1	**7T-8891**	4	PUMP AS-WASHER	
D	5	1	**6V-5817**		CONDUIT-FLEXIBLE (0.4-M)	
E	6	1	**144-0195**		HOSE (61-CM EACH)	
E	6A	1	**144-0195**		HOSE (15-CM EACH)	
E	6B	1	**144-0195**		HOSE (57-CM EACH)	
B	7	1	**3S-2093**	7	STRAP-CABLE	
BE	8	1	**7X-7927**		TAPE (A)	
BE	9	1	**7X-7928**		TAPE (B)	
BE	10	1	**7X-7929**		TAPE (C)	
BE	11	1	**7X-7930**		TAPE (D)	

B-USE AS REQUIRED
D-ORDER BY THE METER
E-ORDER BY THE CENTIMETER

169-9649 **TANK GP-WINDOW WASHER** *(contd.)* **i02375124**

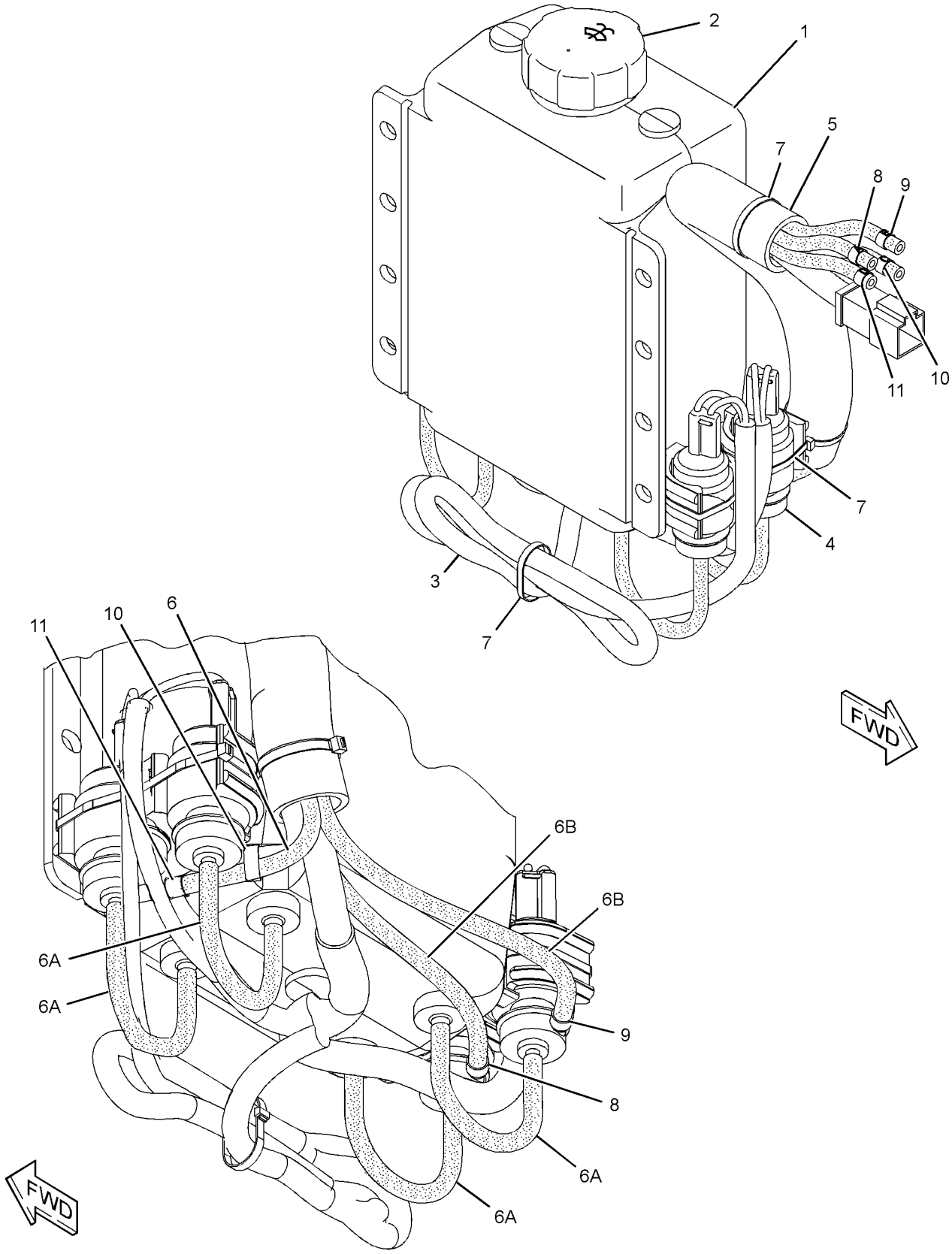

GRAPHIC #1 **<END>** g01191550

OPERATOR STATION

262-5079 TANK GP-WINDOW WASHER

S/N: JDL1-UP; GMT1-UP
PART OF 223-0535, 279-4412 CAB AR
ALSO AN ATTACHMENT

SMCS-7306 **i02433637**

NOTE	REF NO	GRAPHIC REF	PART NUMBER	QTY	PART NAME 1 2 3 4 5 6 (PRODUCT LEVEL)	SEE PAGE
	1	1	**3S-2093**	1	STRAP-CABLE	
	2	1	**8T-5383**	4	VALVE AS-CHECK (WASHER, WIPER SYSTEM)	
Y	3	1	**169-9649**	1	TANK GP-WINDOW WASHER	695
M	4	1	**8T-4200**	4	BOLT (M8X1.25X16-MM)	
	5	1	**8T-4224**	4	WASHER-HARD (8.8X16X2-MM THK)	

M-METRIC PART
Y-SEPARATE ILLUSTRATION

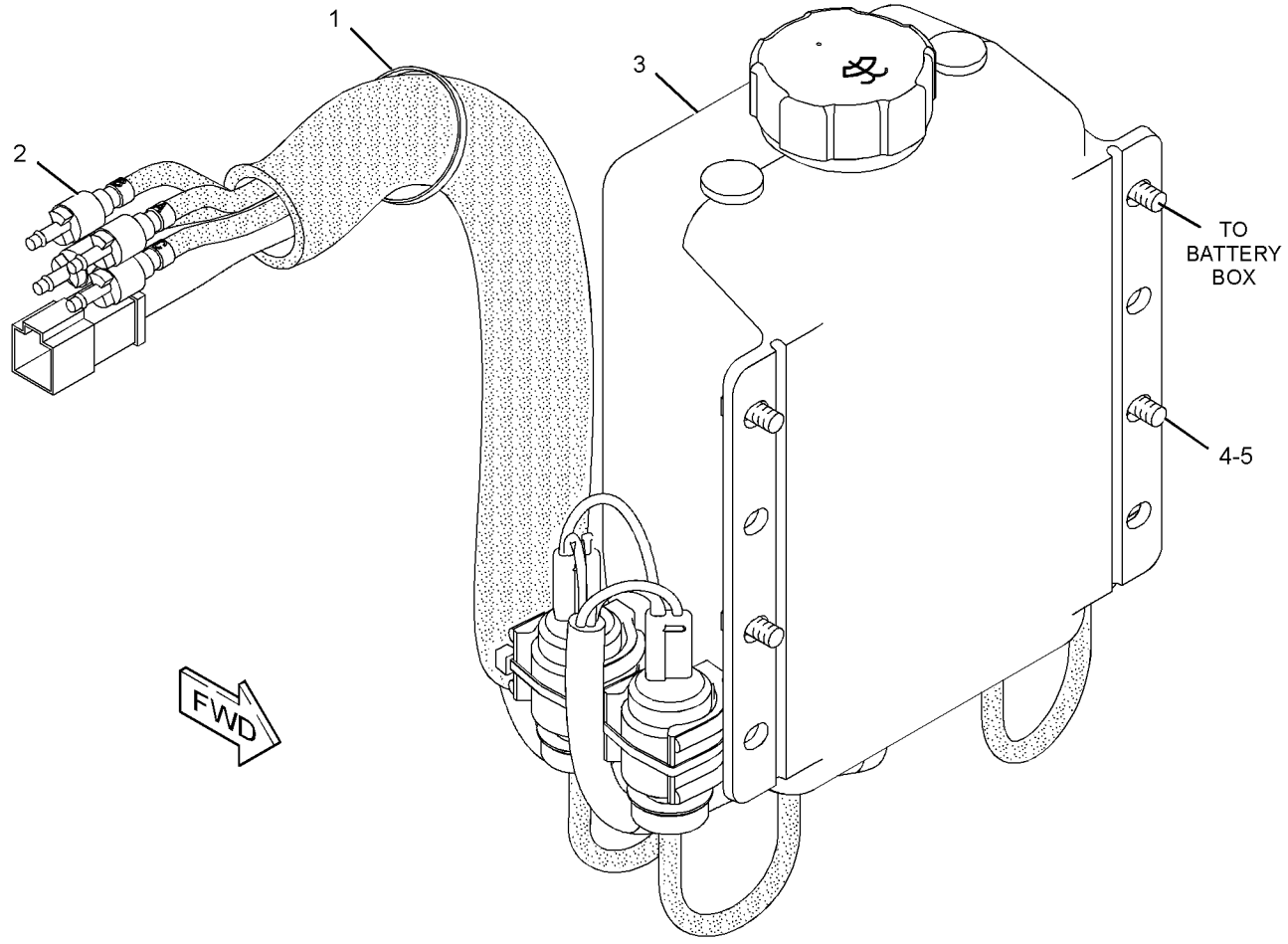

GRAPHIC #1 **<END>** g01210012

OPERATOR STATION

158-7690 WASHER GP-WINDOW

S/N: JDL1-UP; GMT1-UP
PART OF 158-7694 CAB AR
ALSO AN ATTACHMENT

SMCS-7306 **i02470864**

NOTE	REF NO	GRAPHIC REF	PART NUMBER	QTY	PART NAME 1 2 3 4 5 6 (PRODUCT LEVEL)	SEE PAGE
	1	1	**8T-5400**	4	CONNECTOR	
E	2	1	**7X-7702**		CONDUIT-FLEXIBLE (83-CM)	
	3	1	**9N-1995**	4	RIVET-POP	
	4	1	**3S-2093**	19	STRAP-CABLE	
	5	1	**8E-6856**	1	COVER	
M	6	1	**8T-4133**	1	NUT (M10X1.5 THD)	
E	7	1	**144-0195**		HOSE (250-CM)	
	8	1	**169-9635**	1	HARNESS AS-WIRING (WIPER, WASHER, RADIO)	
		1	**102-8801**	1	KIT-RECEPTACLE (12-PIN)	
					(INCLUDES RECEPTACLE AS & WEDGE)	
		1	**155-2274**	3	KIT-CONNECTING PLUG (6-PIN)	
		1	**155-2265**	1	KIT-CONNECTING PLUG (8-PIN)	
		1	**102-8800**	1	KIT-CONNECTING PLUG (12-PIN)	
					(EACH INCLUDES PLUG AS, WEDGE, & INTERFACE SEAL)	
		1	**3E-3373**	1	PLUG AS-CONNECTOR	
	9	1	**8T-4896**	1	WASHER-HARD (10.2X18.5X2.5-MM THK)	
D	10	1	**6V-5818**		CONDUIT-FLEXIBLE (0.8-M)	
	11	1	**155-2274**	1	KIT-CONNECTING PLUG (6-PIN)	
					(INCLUDES PLUG AS, WEDGE, & INTERFACE SEAL)	
	12	1	**3E-3380**	1	WEDGE-PLUG LOCK	
	13	1	**8T-8737**	1	PLUG-SEAL	
E	14	1	**144-0195**		HOSE (450-CM)	
E	15	1	**144-0195**		HOSE (350-CM)	
E	16	1	**144-0195**		HOSE (350-CM)	
E	17	1	**144-0195**	2	HOSE (2-CM EACH)	
	18	1	**7Y-3281**	3	GROMMET	
	19	1	**145-7328**	2	ELBOW-HOSE	
	20	1	**2G-8097**	1	MOUNTING	

D-ORDER BY THE METER
E-ORDER BY THE CENTIMETER
M-METRIC PART

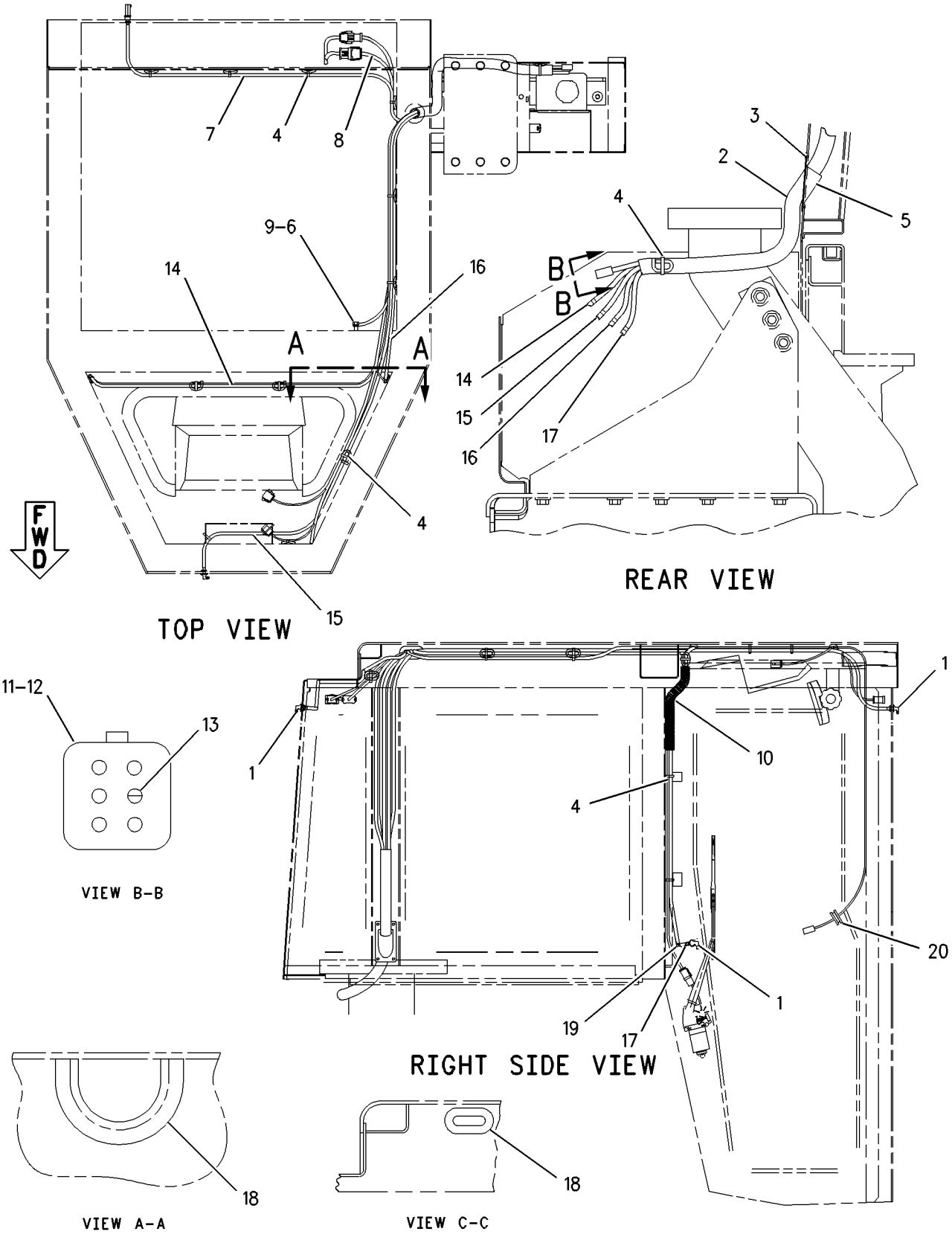

GRAPHIC #1 **<END>** g00699988

OPERATOR STATION

6T-5005 WINDOW GP-CAB–REAR

S/N: JDL1-UP; GMT1-UP
PART OF 6T-5008 WINDOW GP-CAB
ALSO AN ATTACHMENT

SMCS-7310 **i01815849**

NOTE	REF NO	GRAPHIC REF	PART NUMBER	QTY	PART NAME 1 2 3 4 5 6 (PRODUCT LEVEL)	SEE PAGE
	1	1	**3T-1121**	1	LOCK AS	
	2	1	**2H-6622**	2	SCREW-MACHINE	
	3	1	**9P-7860**	1	LOCK AS	
	4	1	**9P-7859**	2	SCREW	
BD	5	1	**5P-5680**		SEAL	
BD	6	1	**6V-5833**		SEAL	
BD	7	1	**5P-8918**		SEAL	
	8	1	**8Y-6447**	1	GLASS (TINTED)	
BE	9	1	**8Y-6839**		SEAL	

B-USE AS REQUIRED
D-ORDER BY THE METER
E-ORDER BY THE CENTIMETER

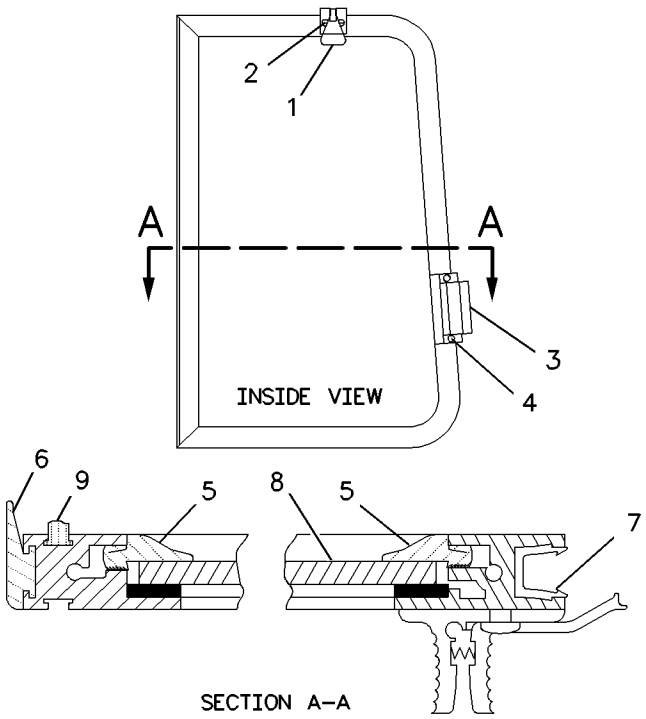

GRAPHIC #1 **<END>** g00834666

6T-5008 WINDOW GP-CAB–REAR

S/N: JDL1-UP; GMT1-UP
SLIDING
PART OF 8E-5112 WINDOW GP-SLIDING
ALSO AN ATTACHMENT

SMCS-7310 **i01815853**

NOTE	REF NO	GRAPHIC REF	PART NUMBER	QTY	PART NAME 1 2 3 4 5 6 (PRODUCT LEVEL)	SEE PAGE
Y	1	1	**6T-5005**	1	WINDOW GP-CAB (REAR)	700
	2	1	**9P-7855**	1	GLASS (TINTED)	
BD	3	1	**5P-5680**		SEAL	
BE	4	1	**8Y-6839**		SEAL	
BD	5	1	**6V-5833**		SEAL	
DB	6	1	**8T-0687**		FILLER	

B-USE AS REQUIRED
D-ORDER BY THE METER
E-ORDER BY THE CENTIMETER
Y-SEPARATE ILLUSTRATION

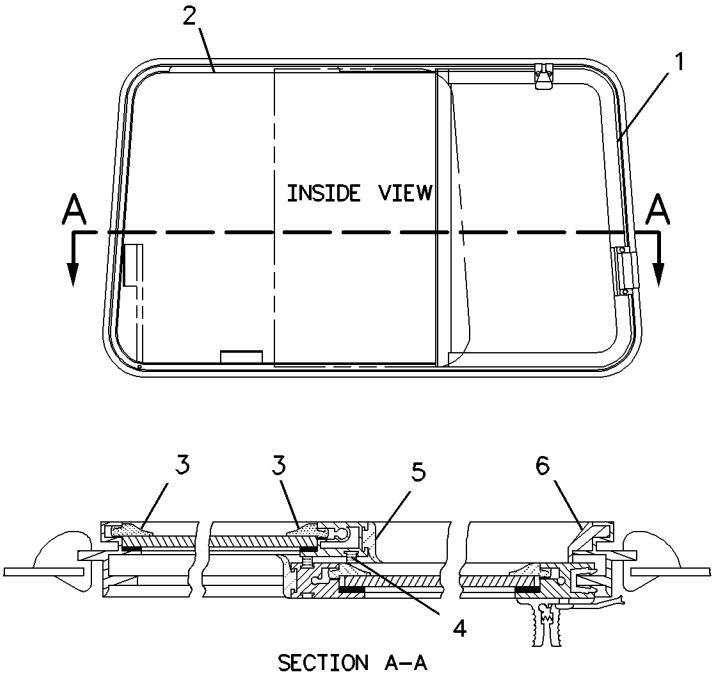

GRAPHIC #1 **<END>** g00853624

6T-8402 WINDOW GP-CAB–RH

S/N: JDL1-UP; GMT1-UP
SLIDING
PART OF 8E-5113 WINDOW GP-SLIDING
ALSO AN ATTACHMENT

SMCS-7310 **i01815990**

NOTE	REF NO	GRAPHIC REF	PART NUMBER	QTY	PART NAME 1 2 3 4 5 6 (PRODUCT LEVEL)	SEE PAGE
Y	1	1	**7T-1068**	1	WINDOW GP-CAB (RH)	704
	2	1	**7T-1330**	1	GLASS (TINTED)	
D	3	1	**5P-5680**		SEAL (1.14M)	
DB	4	1	**8T-0687**		FILLER	
D	5	1	**5P-5680**		SEAL (.66M)	
D	6	1	**6V-5833**		SEAL (.64M)	
E	7	1	**8Y-6839**		SEAL (64CM)	

B-USE AS REQUIRED
D-ORDER BY THE METER
E-ORDER BY THE CENTIMETER
Y-SEPARATE ILLUSTRATION

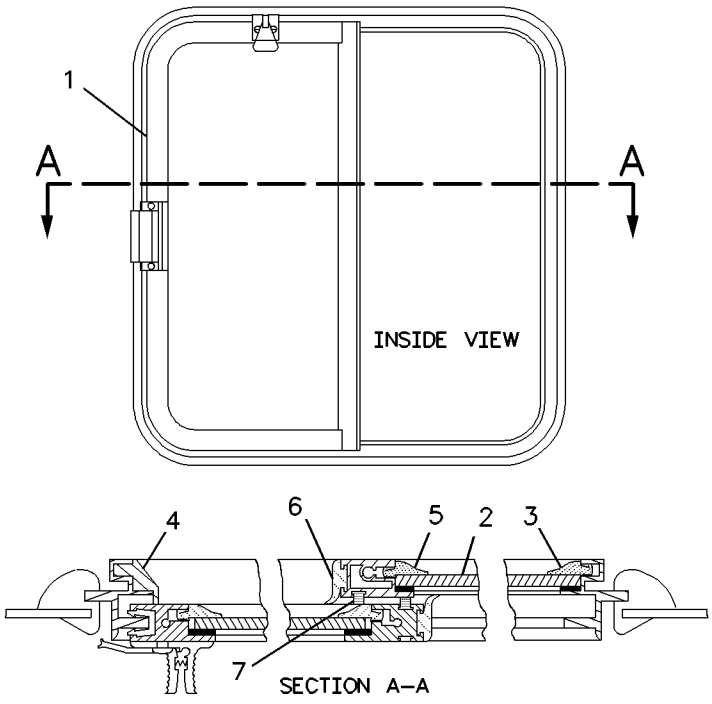

GRAPHIC #1 **<END>** g00844619

OPERATOR STATION

6T-8403 WINDOW GP-CAB—LH

S/N: JDL1-UP; GMT1-UP
SLIDING
PART OF 8E-5114 WINDOW GP-SLIDING
ALSO AN ATTACHMENT

SMCS-7310 **i01815970**

NOTE	REF NO	GRAPHIC REF	PART NUMBER	QTY	PART NAME 1 2 3 4 5 6 (PRODUCT LEVEL)	SEE PAGE
BD	1	1	**5P-5680**		SEAL	
BD	2	1	**8T-0687**		FILLER	
BD	3	1	**6V-5833**		SEAL	
Y	4	1	**7T-1069**	1	WINDOW GP-CAB (LH)	705
BE	5	1	**8Y-6839**		SEAL	
	6	1	**7T-1330**	1	GLASS (TINTED)	

B-USE AS REQUIRED
D-ORDER BY THE METER
E-ORDER BY THE CENTIMETER
Y-SEPARATE ILLUSTRATION

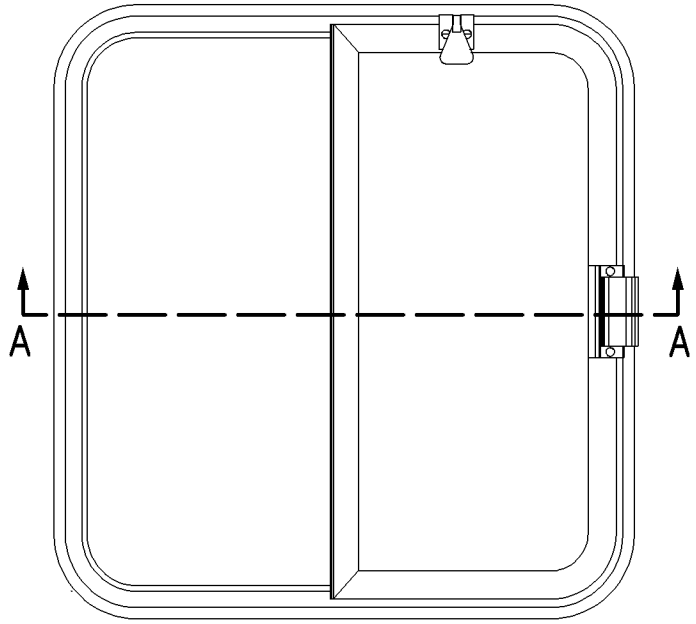

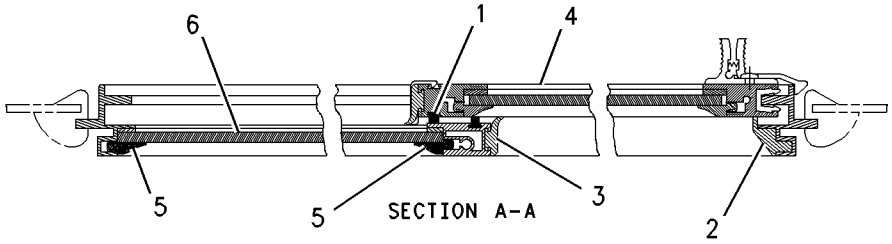

GRAPHIC #1 **<END>** g00842070

OPERATOR STATION

7T-1068 WINDOW GP-CAB—RH

S/N: JDL1-UP; GMT1-UP
PART OF 6T-8402 WINDOW GP-CAB
ALSO AN ATTACHMENT

SMCS-7310 **i01815997**

NOTE	REF NO	GRAPHIC REF	PART NUMBER	QTY	PART NAME 1 2 3 4 5 6 (PRODUCT LEVEL)	SEE PAGE
	1	1	**3T-1121**	1	LOCK AS	
	2	1	**2H-6622**	2	SCREW-MACHINE	
	3	1	**9P-7860**	1	LOCK AS	
	4	1	**9P-7859**	2	SCREW	
BD	5	1	**5P-5680**		SEAL	
BD	6	1	**6V-5833**		SEAL	
BD	7	1	**5P-8918**		SEAL	
BD	8	1	**8Y-6448**	1	GLASS	
BE	9	1	**8Y-6839**		SEAL	

B-USE AS REQUIRED
D-ORDER BY THE METER
E-ORDER BY THE CENTIMETER

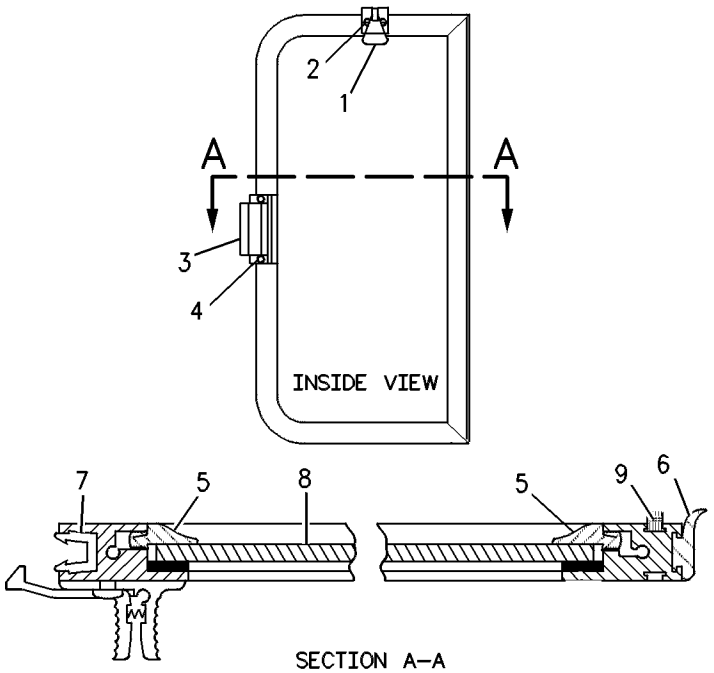

SECTION A—A

GRAPHIC #1 **<END>** g00834657

OPERATOR STATION

7T-1069 WINDOW GP-CAB—LH

S/N: JDL1-UP; GMT1-UP
PART OF 6T-8403 WINDOW GP-CAB
ALSO AN ATTACHMENT

SMCS-7310 **i01815972**

NOTE	REF NO	GRAPHIC REF	PART NUMBER	QTY	PART NAME 1 2 3 4 5 6 (PRODUCT LEVEL)	SEE PAGE
	1	1	**3T-1121**	1	LOCK AS	
	2	1	**2H-6622**	2	SCREW-MACHINE	
	3	1	**9P-7860**	1	LOCK AS	
	4	1	**9P-7859**	2	SCREW	
BD	5	1	**5P-5680**		SEAL	
BD	6	1	**6V-5833**		SEAL	
BD	7	1	**5P-8918**		SEAL	
	8	1	**8Y-6448**	1	GLASS	
BE	9	1	**8Y-6839**		SEAL	

B-USE AS REQUIRED
D-ORDER BY THE METER
E-ORDER BY THE CENTIMETER

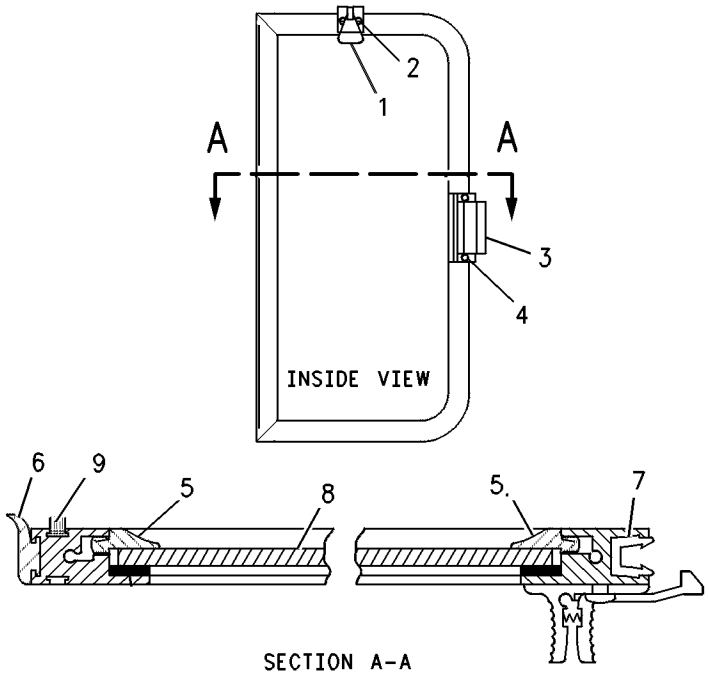

SECTION A-A

GRAPHIC #1 **<END>** g00834641

8E-3446 WINDOW GP-CAB—RH

S/N: JDL1-UP; GMT1-UP
SLIDING
PART OF 8E-5113 WINDOW GP-SLIDING
ALSO AN ATTACHMENT

SMCS-7310 **i02470867**

NOTE	REF NO	GRAPHIC REF	PART NUMBER	QTY	PART NAME 1 2 3 4 5 6 (PRODUCT LEVEL)	SEE PAGE
E	1	1	**8Y-6423**		SEAL (65-CM)	
E	1A	1	**8Y-6423**		SEAL (130-CM)	
B	2	1	**8Y-6459**		TAPE-BUTYL	
	3	1	**8Y-6430**	1	SEAL-WINDOW	
Y	4	1	**8Y-6433**	1	WINDOW GP-CAB (RH)	710
	5	1	**8Y-6462**	1	KIT-LEAF SPRING (CAB WINDOW)	
					(INCLUDES SPRING AS & RIVET)	
	6	1	**8Y-6432**	1	GLASS-CAB (FIXED) (TINTED)	
E	7	1	**8Y-6424**		SEAL (122-CM)	
E	8	1	**8Y-6910**		WEATHERSTRIP (68-CM)	

B-USE AS REQUIRED
E-ORDER BY THE CENTIMETER
Y-SEPARATE ILLUSTRATION

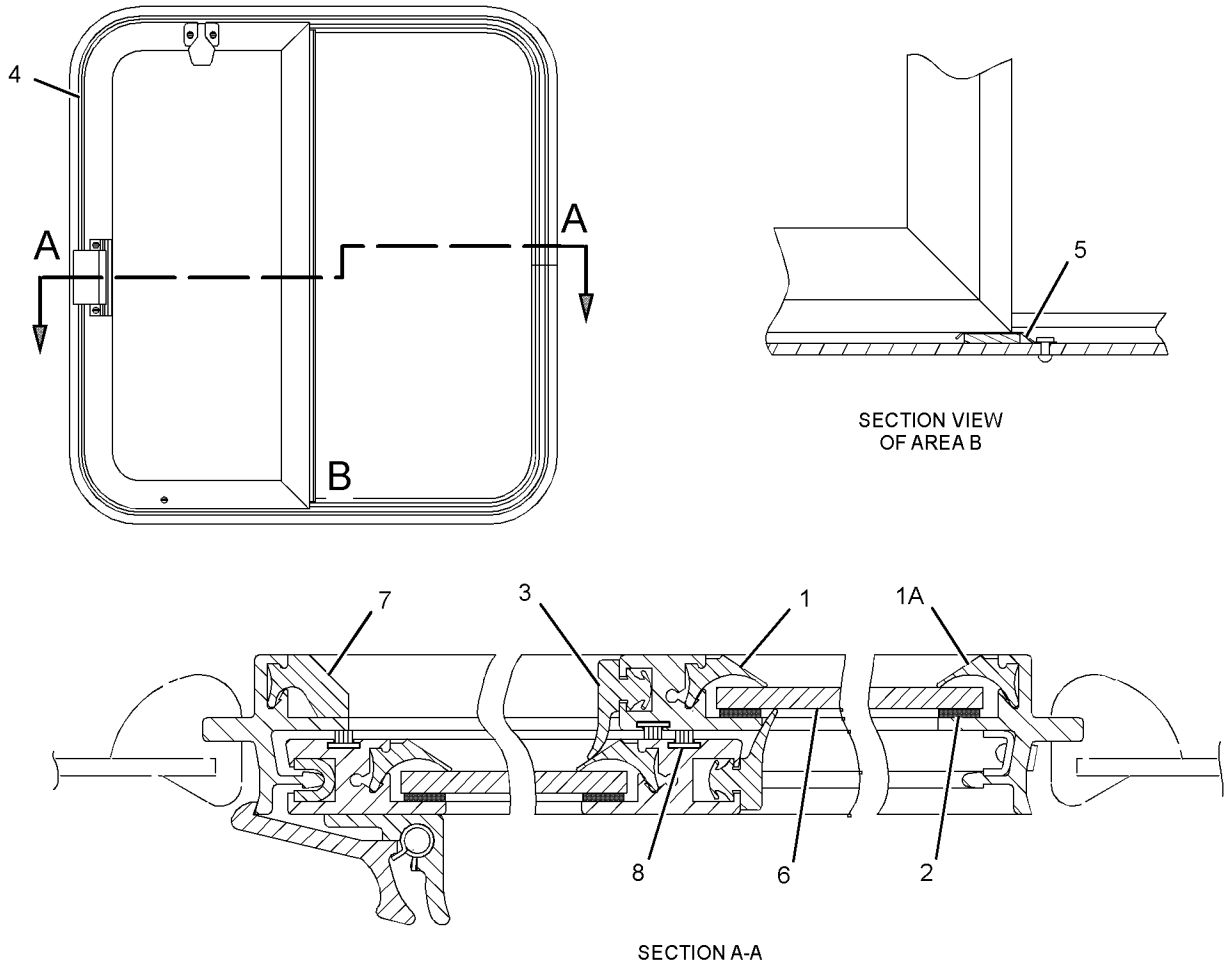

GRAPHIC #1 **<END>** g01232319

8E-3447 WINDOW GP-CAB–LH

S/N: JDL1-UP; GMT1-UP
SLIDING
PART OF 8E-5114 WINDOW GP-SLIDING
ALSO AN ATTACHMENT

SMCS-7310 **i02470866**

NOTE	REF NO	GRAPHIC REF	PART NUMBER	QTY	PART NAME 1 2 3 4 5 6 (PRODUCT LEVEL)	SEE PAGE
E	1	1	**8Y-6423**		SEAL (65-CM)	
E	1A	1	**8Y-6423**		SEAL (130-CM)	
B	2	1	**8Y-6459**		TAPE-BUTYL	
	3	1	**8Y-6430**	1	SEAL-WINDOW	
Y	4	1	**8Y-6420**	1	WINDOW GP-CAB (LH)	708
	5	1	**8Y-6462**	1	KIT-LEAF SPRING (CAB WINDOW)	
					(INCLUDES SPRING AS & RIVET)	
	6	1	**8Y-6419**	1	GLASS-CAB (FIXED) (TINTED)	
E	7	1	**8Y-6424**		SEAL (122-CM)	
E	8	1	**8Y-6910**		WEATHERSTRIP (68-CM)	

B-USE AS REQUIRED
E-ORDER BY THE CENTIMETER
Y-SEPARATE ILLUSTRATION

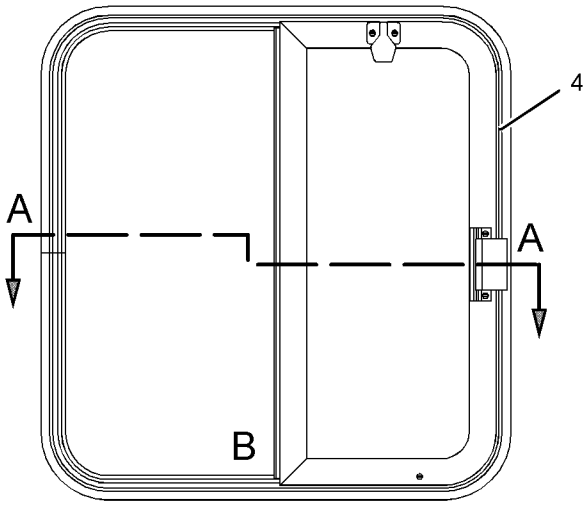

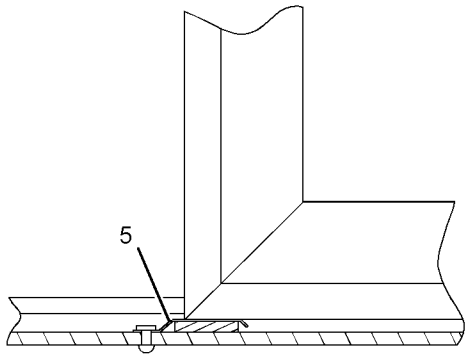

SECTION VIEW
OF AREA B

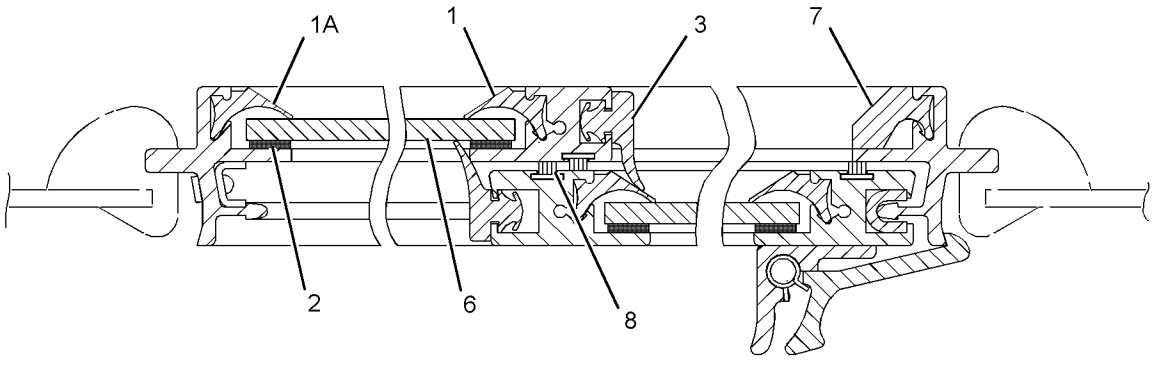

SECTION A-A

GRAPHIC #1 **<END>** g01232324

OPERATOR STATION

8Y-6420 WINDOW GP-CAB—LH

S/N: JDL1-UP; GMT1-UP
PART OF 8E-3447 WINDOW GP-CAB
ALSO AN ATTACHMENT

SMCS-7310 **i02470865**

NOTE	REF NO	GRAPHIC REF	PART NUMBER	QTY	PART NAME 1 2 3 4 5 6 (PRODUCT LEVEL)	SEE PAGE
	1	1	**8Y-6454**	1	KIT-CATCH (CAB WINDOW)	
					(INCLUDES CATCH AS & PARTS MARKED J)	
JM	2	1	**084-4111**	2	SCREW-PAN HEAD	
	3	1	**8Y-6455**	1	KIT-CATCH (CAB WINDOW)	
					(INCLUDES CATCH AS & 2 SCREWS)	
M	4	1	**8T-4777**	2	SCREW-MACHINE (M5X0.8X12-MM)	
	5	1	**8Y-6460**	1	KIT-RUNNER GUIDE (CAB WINDOW)	
					(INCLUDES GUIDE & SCREW)	
	6	1	**3S-9557**	2	SCREW-PAN HEAD (4-40X0.5-IN)	
	7	1	**8Y-6461**	1	KIT-RUNNER GUIDE (CAB WINDOW)	
					(INCLUDES GUIDE & PARTS MARKED L)	
LM	8	1	**6V-2312**	2	SCREW-MACHINE (M6X1X25-MM)	
E	9	1	**8Y-6423**		SEAL (59-CM)	
E	9A	1	**8Y-6423**		SEAL (125-CM)	
	10	1	**8Y-6430**	1	SEAL-WINDOW	
B	11	1	**8Y-6459**		TAPE-BUTYL	
	12	1	**8Y-6422**	1	GLASS-CAB (SLIDING, TINTED)	
E	13	1	**8Y-6910**		WEATHERSTRIP (165-CM)	

B-USE AS REQUIRED
E-ORDER BY THE CENTIMETER
J-KIT MARKED J SERVICES PART MARKED J
L-KIT MARKED L SERVICES PART MARKED L
M-METRIC PART

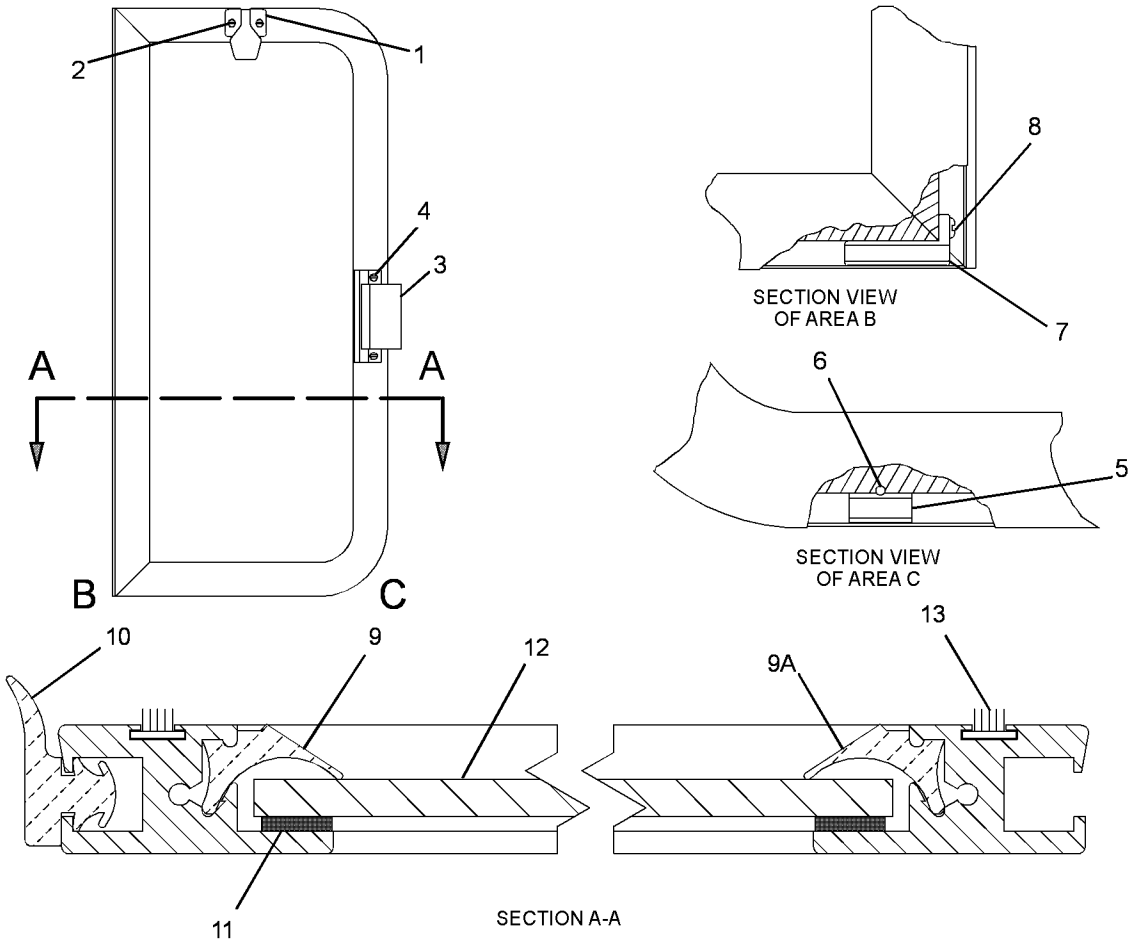

GRAPHIC #1 **<END>** g01232364

OPERATOR STATION

8Y-6433 WINDOW GP-CAB–RH

S/N: JDL1-UP; GMT1-UP
PART OF 8E-3446 WINDOW GP-CAB
ALSO AN ATTACHMENT

SMCS-7310 **i01871077**

NOTE	REF NO	GRAPHIC REF	PART NUMBER	QTY	PART NAME 1 2 3 4 5 6 (PRODUCT LEVEL)	SEE PAGE
	1	1	**8Y-6454**	1	KIT-CATCH (CAB WINDOW)	
					INCL CATCH AS & 2 SCREWS	
M	2	1	**084-4111**	2	SCREW-PAN HEAD	
	3	1	**8Y-6455**	1	KIT-CATCH (CAB WINDOW)	
					INCL CATCH AS & 2 SCREWS	
M	4	1	**8T-4777**	2	SCREW-MACHINE (M5X0.8X12MM) (CAB WINDOW)	
	5	1	**8Y-6460**	1	KIT-RUNNER GUIDE (INCL GUIDE & SCREW)	
					INCL GUIDE & SCREW	
M	6	1	**6V-2312**	2	SCREW-MACHINE (M6X1X25MM)	
	7	1	**8Y-6461**	1	KIT-RUNNER GUIDE (INCL GUIDE & SCREW)	
BE	8	1	**8Y-6423**		SEAL	
	9	1	**8Y-6430**	1	SEAL-WINDOW	
BE	10	1	**8Y-6459**		TAPE-BUTYL	
BE	11	1	**8Y-6423**		SEAL	
	12	1	**8Y-6431**	1	GLASS-SLIDER-RH (TINTED) (TINTED)	
BE	13	1	**8Y-6910**		WEATHERSTRIP	

B-USE AS REQUIRED
E-ORDER BY THE CENTIMETER
M-METRIC PART

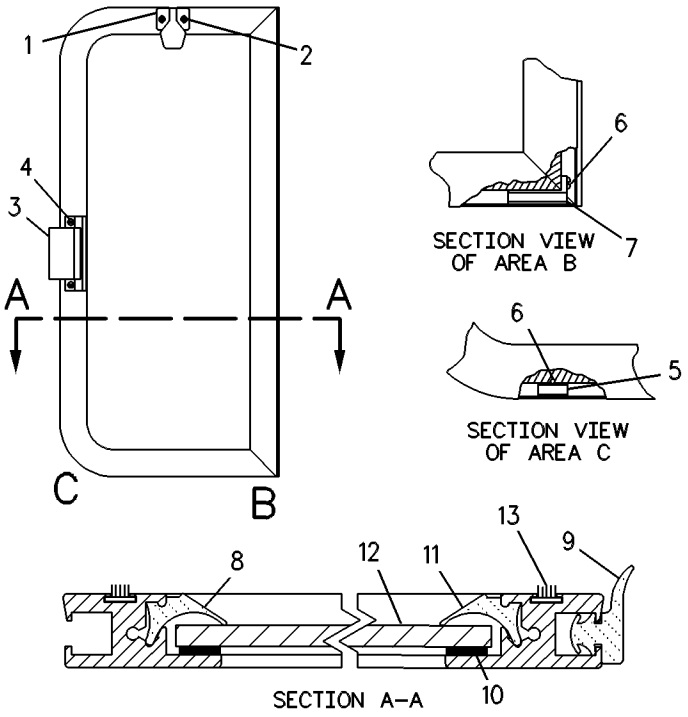

GRAPHIC #1 **<END>** g00326281

OPERATOR STATION

8Y-6446 WINDOW GP-CAB—REAR

S/N: JDL1-UP; GMT1-UP
PART OF 9N-4369 WINDOW GP-CAB
ALSO AN ATTACHMENT

SMCS-7310 **i01871080**

NOTE	REF NO	GRAPHIC REF	PART NUMBER	QTY	PART NAME 1 2 3 4 5 6 (PRODUCT LEVEL)	SEE PAGE
	1	1	**8Y-6454**	1	KIT-CATCH (CAB WINDOW)	
					(INCLUDES CATCH AS & 2 SCREWS)	
M	2	1	**084-4111**	2	SCREW-PAN HEAD	
	3	1	**8Y-6455**	1	KIT-CATCH (CAB WINDOW)	
					(INCLUDES CATCH AS & 2 SCREWS)	
M	4	1	**8T-4777**	2	SCREW-MACHINE (M5XO.8X12MM)	
	5	1	**8Y-6460**	1	KIT-RUNNER GUIDE (CAB WINDOW)	
					(INCLUDES GUIDE & SCREW)	
M	6	1	**6V-2312**	1	SCREW-MACHINE (M6X1X25MM)	
	7	1	**8Y-6461**	1	KIT-RUNNER GUIDE (CAB WINDOW)	
					(INCLUDES GUIDE & SCREW)	
M	8	1	**6V-2312**	1	SCREW-MACHINE (M6X1X25MM)	
	9	1	**8Y-6430**	1	SEAL-WINDOW	
EB	10	1	**8Y-6459**		TAPE-BUTYL	
EB	11	1	**8Y-6423**		SEAL	
	12	1	**8Y-6443**	1	GLASS-REAR SLIDER (TINTED)	
EB	13	1	**8Y-6910**		WEATHERSTRIP	

B-USE AS REQUIRED
E-ORDER BY THE CENTIMETER
M-METRIC PART

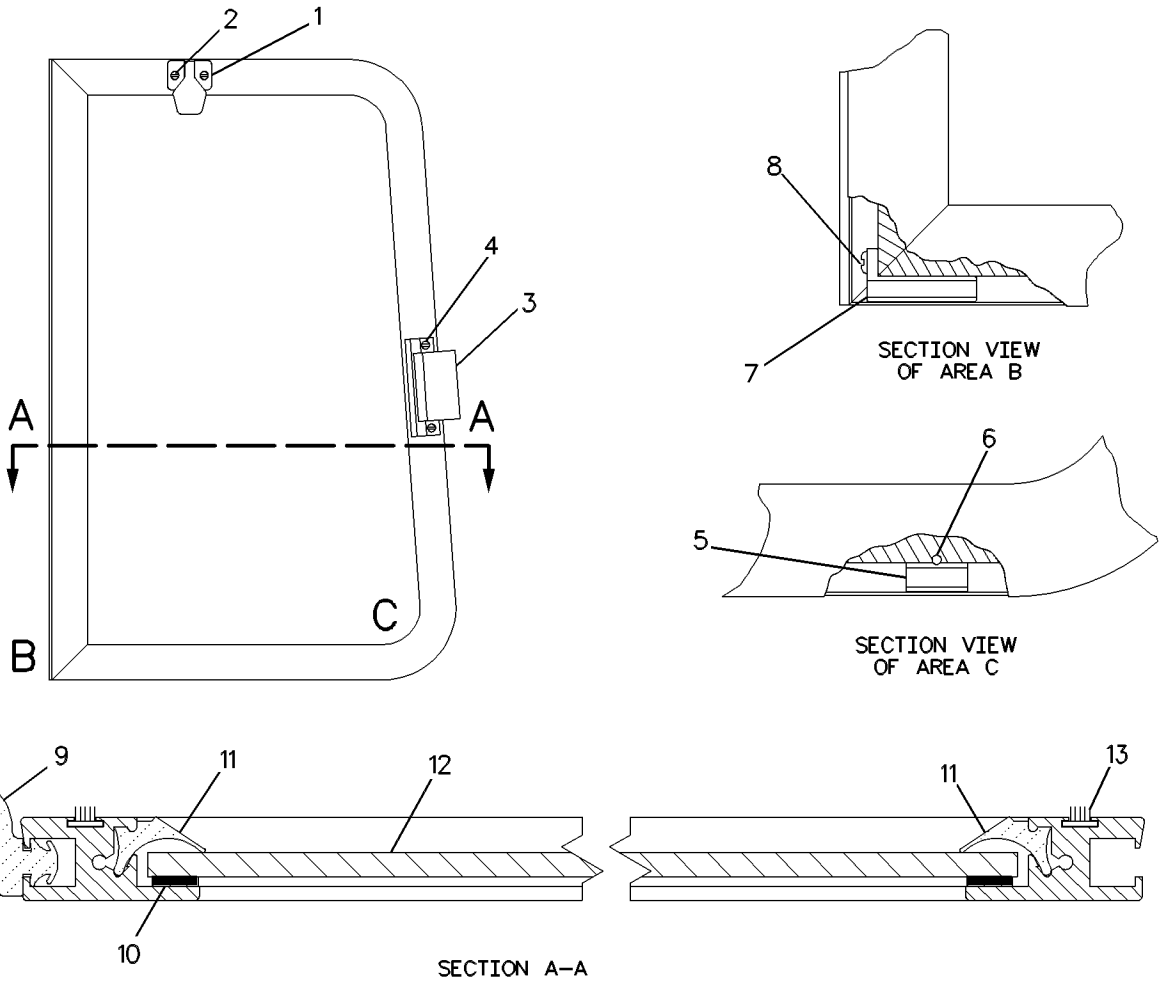

GRAPHIC #1 **<END>** g00544049

9N-4369 WINDOW GP-CAB–REAR

S/N: JDL1-UP; GMT1-UP
SLIDING
PART OF 8E-5112 WINDOW GP-SLIDING
ALSO AN ATTACHMENT

SMCS-7310 **i01871084**

NOTE	REF NO	GRAPHIC REF	PART NUMBER	QTY	PART NAME 1 2 3 4 5 6 (PRODUCT LEVEL)	SEE PAGE
BE	1	1	**8Y-6423**		SEAL	
BE	2	1	**8Y-6459**		TAPE-BUTYL	
	3	1	**8Y-6430**	1	SEAL-WINDOW	
Y	4	1	**8Y-6446**	1	WINDOW GP-CAB (REAR)	711
	5	1	**8Y-6463**	1	KIT-STOP RAIL (CAB WINDOW)	
JM	6	1	**8C-4982**	1	BOLT-SOCKET HEAD (M4X0.7X20 MM)	
J	7	1	**8Y-6428**	1	STOP-RUBBER	
J	8	1	**8Y-6429**	1	CLIP	
	9	1	**8Y-6462**	1	KIT-LEAF SPRING (CAB WINDOW)	
					(INCLUDES SPRING AS & RIVET)	
	10	1	**8Y-6445**	1	GLASS-FIXED REAR (TINTED)	
BE	11	1	**8Y-6424**		SEAL	
BE	12	1	**8Y-6910**		WEATHERSTRIP	

B-USE AS REQUIRED
E-ORDER BY THE CENTIMETER
J-INCLUDED IN 8Y6463 STOP RAIL KIT
M-METRIC PART
Y-SEPARATE ILLUSTRATION

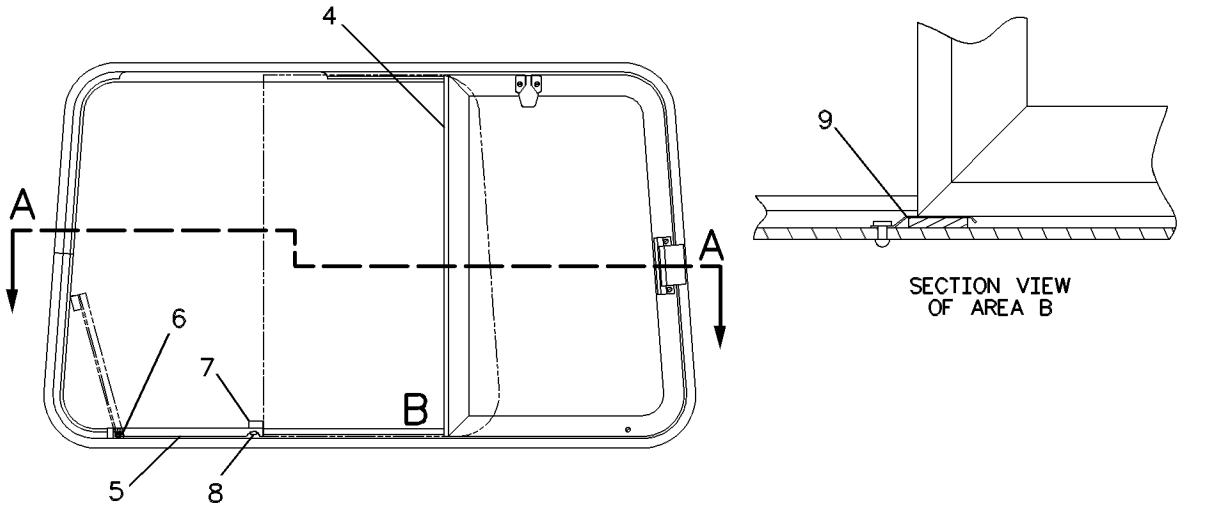

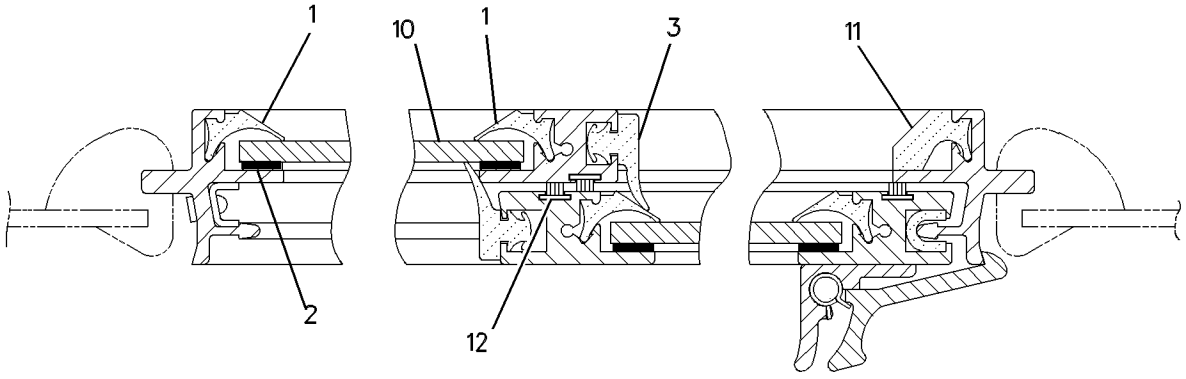

SECTION A–A

GRAPHIC #1 **<END>** g00544830

8E-5112 WINDOW GP-SLIDING—REAR

S/N: JDL1-UP; GMT1-UP
PART OF 158-7696 CAB GP
ALSO AN ATTACHMENT

SMCS-7310 **i01871065**

NOTE	PART NUMBER	QTY	PART NAME 1 2 3 4 5 6 (PRODUCT LEVEL)	SEE PAGE
Y	**6T-5008**	1	WINDOW GP-CAB	701
			—OR—	
Y	*9N-4369*	1	WINDOW GP-CAB	713
Y-SEPARATE ILLUSTRATION				

<END>

8E-5113 WINDOW GP-SLIDING—RH

S/N: JDL1-UP; GMT1-UP
PART OF 158-7696 CAB GP
ALSO AN ATTACHMENT

SMCS-7310 **i00569833**

NOTE	PART NUMBER	QTY	PART NAME 1 2 3 4 5 6 (PRODUCT LEVEL)	SEE PAGE
Y	*6T-8402*	1	WINDOW GP-CAB (RH)	702
			-OR-	
Y	*8E-3446*	1	WINDOW GP-CAB (RH)	706
Y-SEPARATE ILLUSTRATION				

<END>

8E-5114 WINDOW GP-SLIDING—LH

S/N: JDL1-UP; GMT1-UP
PART OF 158-7696 CAB GP
ALSO AN ATTACHMENT

SMCS-7310 **i00570466**

NOTE	PART NUMBER	QTY	PART NAME 1 2 3 4 5 6 (PRODUCT LEVEL)	SEE PAGE
Y	*6T-8403*	1	WINDOW GP-CAB (LH)	703
			-OR-	
Y	*8E-3447*	1	WINDOW GP-CAB (LH)	707
Y-SEPARATE ILLUSTRATION				

<END>

OPERATOR STATION

224-4357 WIPER GP-WINDOW

S/N: JDL1-UP; GMT1-UP
PART OF 158-7694 CAB AR
ALSO AN ATTACHMENT

SMCS-7305 **i02372819**

NOTE	REF NO	GRAPHIC REF	PART NUMBER	QTY	PART NAME 1 2 3 4 5 6 (PRODUCT LEVEL)	SEE PAGE
Y	1	1	**147-7976**	1	MOTOR GP-WINDOW WIPER (FRONT)	653
	2	1	**145-8741**	1	ARM AS-WIPER (FRONT)	
		1	**136-3188**	1	CLIP	
		1	**136-3191**	1	NOZZLE AS-WASHER	
E		1	**194-5171**		HOSE (53-CM)	
	3	1	**6V-5851**	2	BLADE AS-WIPER (FRONT, REAR)	
	4	1	**6V-5849**	2	BLADE AS-WIPER (DOOR, RH, LH)	
					(EACH INCLUDES)	
		1	**8C-5060**	1	KIT-WIPER BLADE (WINDOW)	
					(INCLUDES WIPER BLADE ASSEMBLIES)	
	5	1	**151-0254**	1	ARM AS-WIPER (DOOR, RH)	
		1	**136-3192**	1	NOZZLE AS-WASHER	
	6	1	**221-3451**	1	MOTOR AS (DOOR, LH)	
	7	1	**221-3450**	1	MOTOR AS (DOOR, RH)	
	8	1	**151-0255**	1	ARM AS-WIPER (DOOR, LH)	
		1	**136-3193**	1	NOZZLE AS-WASHER	
	9	1	**224-6829**	2	SPACER (17X24.5X17-MM THK)	
	10	1	**8V-5455**	1	BOSS	
	11	1	**6N-7523**	2	WASHER (6.48X11.9X1.57-MM THK)	
Y	12	1	**101-0742**	1	WIPER PIVOT GP	718
	13	1	**151-0256**	1	ARM AS-WIPER (WIPER, REAR)	
		1	**136-3192**	1	NOZZLE AS-WASHER	
M	14	1	**6V-7357**	2	BOLT (M6X1X25-MM)	
Y	15	1	**147-7979**	1	MOTOR GP-WINDOW WIPER (REAR)	654
	16	1	**222-2209**	2	CLIP	

E-ORDER BY THE CENTIMETER
M-METRIC PART
Y-SEPARATE ILLUSTRATION

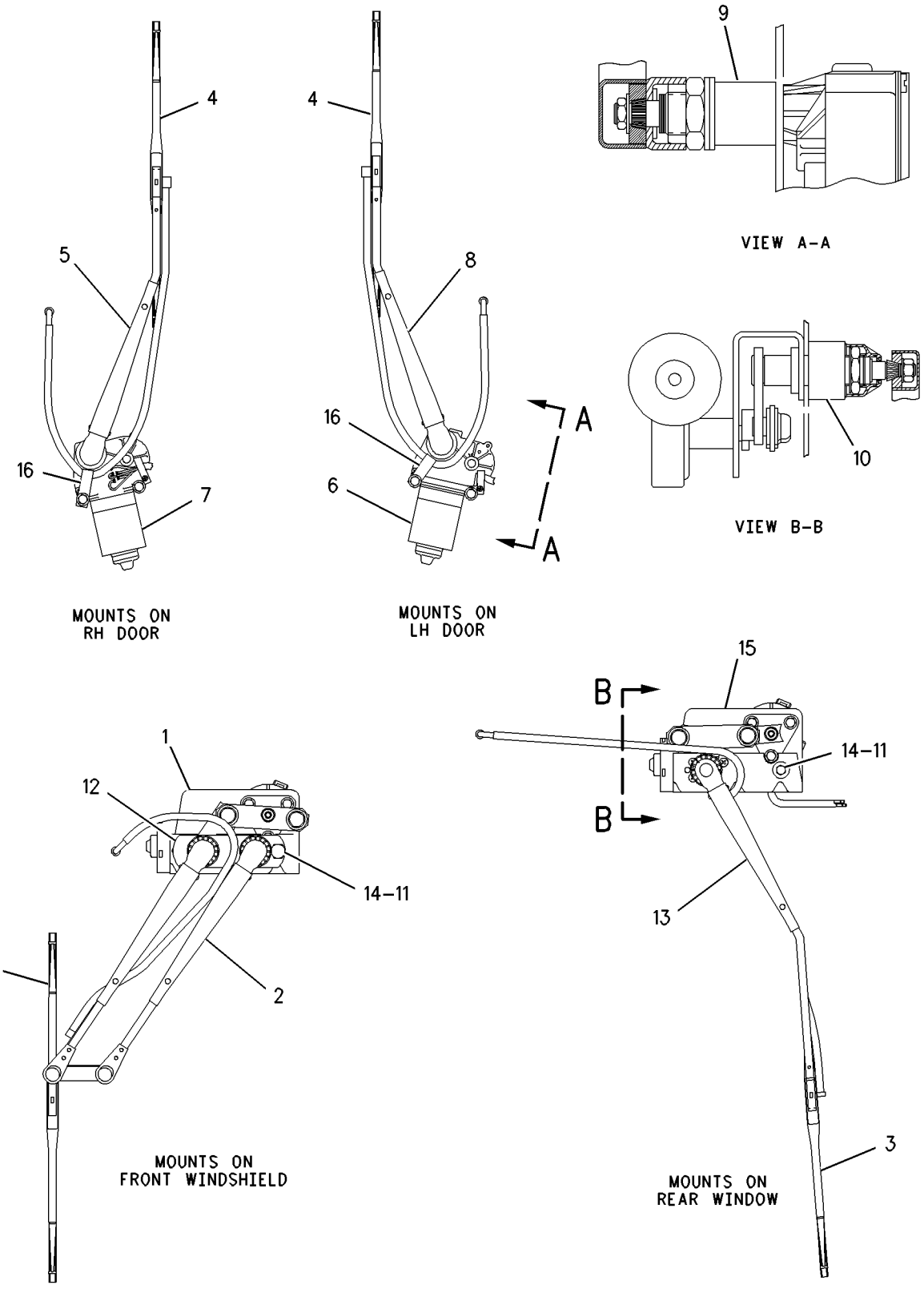

GRAPHIC #1 **<END>** g00908690

OPERATOR STATION

101-0742 WIPER PIVOT GP

S/N: JDL1-UP; GMT1-UP
PART OF 224-4357 WIPER GP-WINDOW
ALSO AN ATTACHMENT

SMCS-7305 **i00528010**

NOTE	REF NO	GRAPHIC REF	PART NUMBER	QTY	PART NAME 1 2 3 4 5 6 (PRODUCT LEVEL)	SEE PAGE
M	1	1	**6V-6889**	1	NUT (M8X1.25-THD)	
	2	1	**6A-9718**	1	WASHER (8.1X12.5X1-MM THK)	
	3	1	**6V-6209**	1	CAP-WIPER	

M-METRIC PART

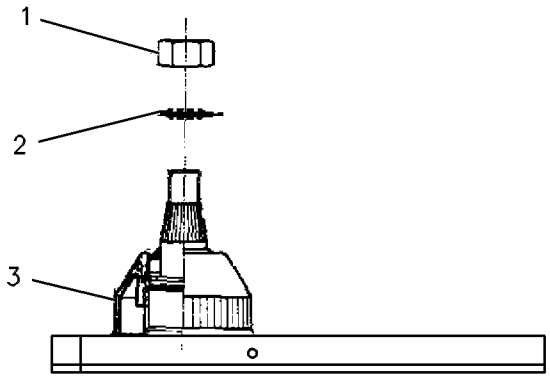

GRAPHIC #1 **<END>** g00084472

SERVICE EQUIPMENT AND SUPPLIES

259-1790 FILM GP

S/N: JDL1-UP

PART OF 228-0542 PLATE & FILM GP

SMCS-7000 **i02456404**

NOTE	REF NO	GRAPHIC REF	PART NUMBER	QTY	PART NAME 1 2 3 4 5 6 (PRODUCT LEVEL)	SEE PAGE
	1	1	**262-7783**	1	FILM-IDENTIFICATION (CATERPILLAR)	
	2	1	**262-7787**	1	FILM-STRIPE (CAT, LH)	
	3	1	**262-7790**	1	FILM-STRIPE (REAR, LH)	
	4	1	**267-9895**	1	FILM-STRIPE (D6R XL, LH)	
	5	1	**262-7795**	1	FILM-IDENTIFICATION (CAT)	
	6	1	**262-7797**	1	FILM-STRIPE (CAT, RH)	
	7	1	**262-7801**	1	FILM-STRIPE (RH, REAR)	
	8	1	**262-7803**	1	FILM-STRIPE (RH, FRONT)	
	9	1	**267-9896**	1	FILM-STRIPE (D6R XL, RH)	
	10	1	**262-7809**	2	FILM-STRIPE (RH, LH, REAR)	
	11	1	**253-0861**	2	FILM-INFORMATION (CAT POWER, ACERT TECHNOLOGY)	

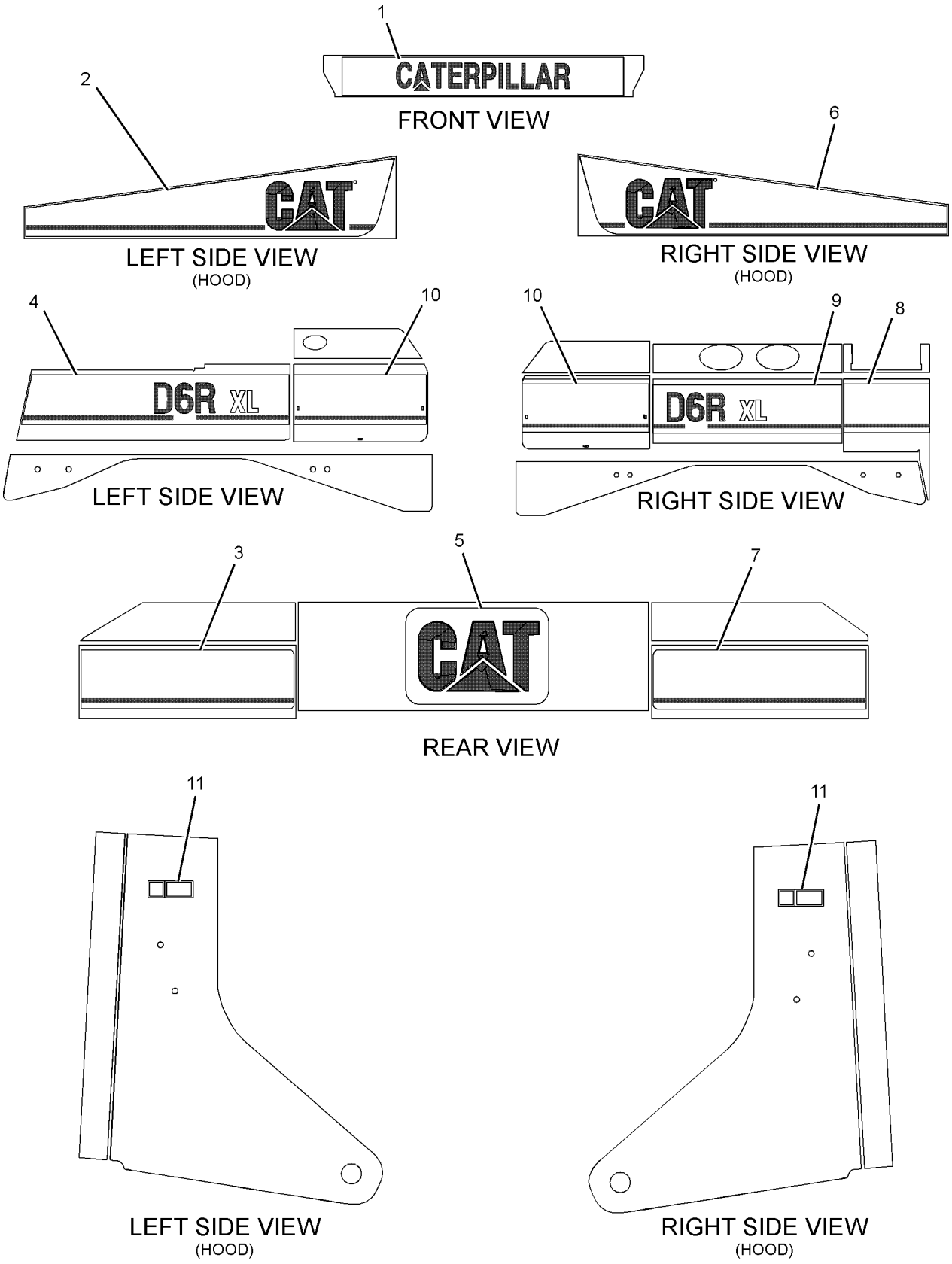

GRAPHIC #1 **<END>** g01209466

SERVICE EQUIPMENT AND SUPPLIES

259-1796 FILM GP

S/N: GMT1-UP

PART OF 228-0541 PLATE & FILM GP

SMCS-7000 **i02456401**

NOTE	REF NO	GRAPHIC REF	PART NUMBER	QTY	PART NAME 1 2 3 4 5 6 (PRODUCT LEVEL)	SEE PAGE
	1	1	**262-7783**	1	FILM-IDENTIFICATION (CATERPILLAR)	
	2	1	**262-7787**	1	FILM-STRIPE (CAT, LH)	
	3	1	**262-7790**	1	FILM-STRIPE (REAR, LH)	
	4	1	**267-9893**	1	FILM-STRIPE (D6R, LH)	
	5	1	**262-7795**	1	FILM-IDENTIFICATION (CAT)	
	6	1	**262-7797**	1	FILM-STRIPE (CAT, RH)	
	7	1	**262-7801**	1	FILM-STRIPE (RH, REAR)	
	8	1	**262-7803**	1	FILM-STRIPE (RH, FRONT)	
	9	1	**267-9894**	1	FILM-STRIPE (D6R, RH)	
	10	1	**262-7809**	2	FILM-STRIPE (RH, LH, REAR)	
	11	1	**253-0861**	2	FILM-INFORMATION (CAT POWER, ACERT TECHNOLOGY)	

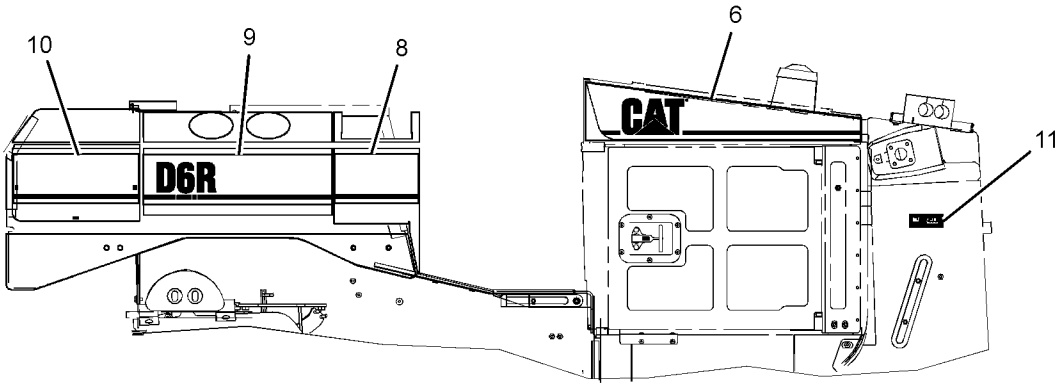

RIGHT SIDE VIEW

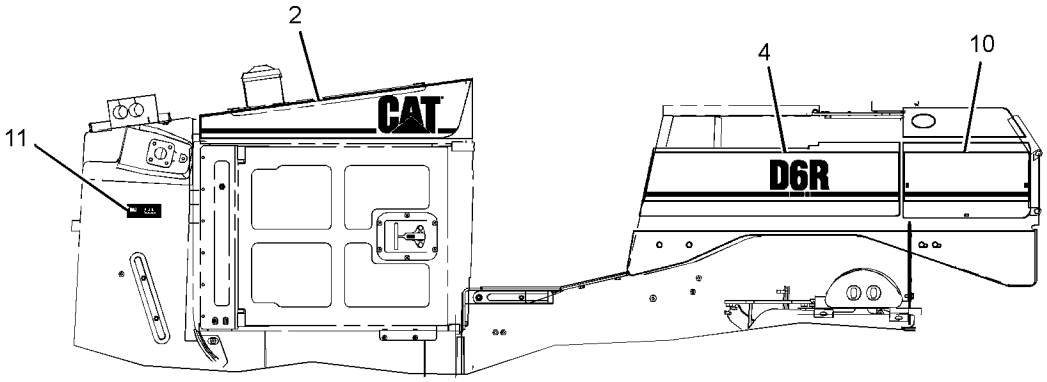

LEFT SIDE VIEW

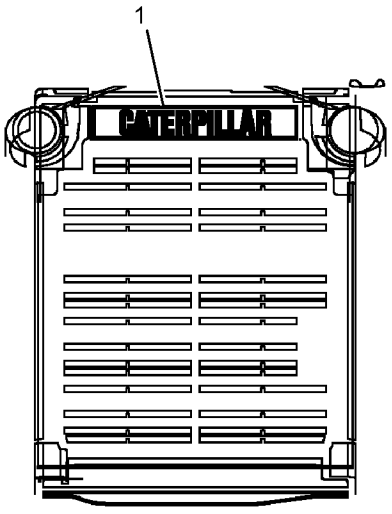

FRONT VIEW

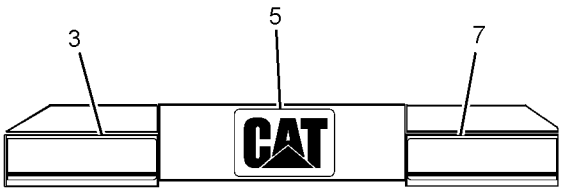

REAR VIEW

GRAPHIC #1 **<END>** g01214606

SERVICE EQUIPMENT AND SUPPLIES

228-0541 PLATE & FILM GP

S/N: GMT1-UP

PART OF 222-1592 CHASSIS AR

SMCS-7557, 7563 **i02452550**

NOTE	PART NUMBER	QTY	PART NAME 1 2 3 4 5 6 (PRODUCT LEVEL)	SEE PAGE
Y	*259-1796*	1	FILM GP	721
	214-8976	1	PLATE-IDENTIFICATION (FUEL DRAIN VALVE)	
			ON FUEL TANK DRAIN VALVE	
	239-6986	1	PLATE-PRODUCT IDENTIFICATION	
			ON ROPS MOUNTING PAD ON TRANSMISSION	
	174-4590	1	PLATE-INFORMATION (SERVICE INFORMATION NUMBERS)	
			SECURE PLATE TO STEEL AREA OF LH DASH UPRIGHT WITH TACK FASTENERS	
	110-6393	1	PLATE-INSTRUCTION (AIR CONDITIONER)	
			ON LH SIDE OF DASH TO BE READ THROUGH CAB DOOR	
A	**4W-1413**	1	PLATE-SERIAL NUMBER (ENGINE)	
			ON LH SIDE OF CYCLINDER BLOCK TOWARD TOP & REAR	
	9F-6656	1	RING-RETAINING	
			ON FUEL TANK DRAIN VALVE	
	8T-9530	4	TACK-FASTENER	
			USE FASTENERS WHEN MOUNTING PLATES	
	269-0174	1	FILM-FOPS	
			ON LH ROPS POST INSIDE CAB	
	241-4287	1	FILM-IDENTIFICATION (FUSE PANEL)	
			ON BOTTOM OF BATTERY BOX COVER	
	245-8456	1	FILM-IDENTIFICATION (FUEL PUMP)	
			NEXT TO FUEL PRIMING PUMP SWITCH	
			ON LH SIDE POST INSIDE CAB	
	258-2355	1	FILM-IDENTIFICATION (FUSE)	
			ON STEEL AREA ON DASH UPRIGHT	
	152-1482	1	FILM-IDENTIFICATION (HYDRAULIC CONTROL LOCK)	
			INSTALL NEXT TO HYDRAULIC CONTROL LOCK KNOB	
	173-1601	1	FILM-MONITOR (CAT MONITORING SYSTEM)	
			ON EMS MODULE INSTRUMENT PANEL	
	169-2876	2	FILM-IDENTIFICATION (12-VOLT)	
			2-ON RH CONSOLE NEAR 12V POWER OUTLETS	
	190-5386	2	FILM-IDENTIFICATION (ROUND RED REFLECTIVE)	
			1-ON THE REAR LH SIDE OF MACHINE ON FILM STRIPE	
			1-ON THE REAR RH SIDE OF MACHINE ON FILM STRIPE	
	4P-6464	1	FILM-INFORMATION (AIR CLEANER)	
			ON EXTERIOR OF AIR CLEANER COVER	
	146-6747	1	FILM-INFORMATION (24-VOLT)	
			ON BOTTOM OF BATTERY BOX COVER	
	235-8026	1	FILM-INFORMATION (TRANSMISSION OIL LEVEL)	
			ON TOP PORTION OF TRANSMISSION OIL FILL TUBE	
	7X-7644	3	FILM-INFORMATION (TIE-DOWN)	
			1-ON FRONT TOWING EYE	
			2-ON SIDE OF TRACK ROLLER FRAME CENTERED BETWEEN FRONT & REAR IDLERS. (1 EACH SIDE)	
	8T-4999	1	FILM-INSTRUCTION (BATTERY DISCONNECT)	
			ON FACE OF DISCONNECT SWITCH	
	102-2913	1	FILM-INSTRUCTION (BULLDOZER CONTROL)	
			ON RAISED SURFACE TO THE RIGHT OF BULLDOZER CONTROL	

228-0541 **PLATE & FILM GP** *(contd.)* **i02452550**

NOTE	PART NUMBER	QTY	PART NAME 1 2 3 4 5 6 (PRODUCT LEVEL)	SEE PAGE
	9X-6340	1	FILM-INSTRUCTION (ENGINE OIL)	
			ON ENGINE OIL FILL TUBE	
	158-7864	1	FILM-INSTRUCTION (HYDRAULIC OIL)	
			ON REAR TANK LIFT HOOK-ADJACENT TO HYDRAULIC TANK FILLER SPOUT	
	7X-3229	4	FILM-INSTRUCTION (LIFT EYE, TIE-DOWN LOCATION)	
			WITHOUT RIPPER	
			2-ON RH SIDE OF TRACK ROLLER FRAME BETWEEN FRONT ROLLER & IDLER & BETWEEN REAR ROLLER & IDLER	
			2-ON LH SIDE OF TRACK ROLLER FRAME BETWEEN FRONT ROLLER & IDLER & BETWEEN REAR ROLLER & IDLER	
			WITH RIPPER	
			2-ON RH SIDE OF TRACK ROLLER FRAME BETWEEN FRONT ROLLER & IDLER & ON SIDE OF LOWER RIPPER FRAME BY REAR PIN.	
			2-ON LH SIDE OF TRACK ROLLER FRAME BETWEEN FRONT ROLLER & IDLER & ON SIDE OF LOWER RIPPER FRAME BY REAR PIN.	
	142-2769	1	FILM-NOTICE (STEERING)	
			ON TOP OF DIFFERENTIAL STEERING CONTROL	
	247-6875	1	FILM-WARNING (READ OMM)	
			ON UPPER LEDGE OF LH CONSOLE OF OPERATOR'S STATION	
	224-7830	1	FILM-WARNING (HIGH PRESSURE, READ OMM, ANSI)	
			ON PLATFORM	
	105-3330	1	FILM-WARNING (ACCUMULATOR PRESSURE)	
			APPLY TO PLATFORM	
	190-2938	1	FILM-WARNING (ENG COOLANT PRESSURE, READ OMM)	
			TO THE RIGHT OF RADIATOR FILL COVER	
	225-0313	1	FILM-WARNING (JUMP START, READ OMM)	
			ON BOTTOM OF BATTERY BOX COVER	
	119-6613	1	FILM-WARNING (ROPS)	
			ON LH ROPS POST	
	219-0305	1	FILM-WARNING (NO WELD, NO DRILL, READ OMM)	
			ON LH ROPS POST	
	247-6877	1	FILM-WARNING (SEAT BELT)	
			ON RH CONSOLE ON HORIZONTAL SUFACE TO THE RIGHT OF BULLDOZER CONTROL	

A-NOT PART OF THIS GROUP
Y-SEPARATE ILLUSTRATION

<END>

228-0542 PLATE & FILM GP

S/N: JDL1-UP

PART OF 218-4978 CHASSIS AR

SMCS-7557, 7563 **i02452478**

NOTE	PART NUMBER	QTY	PART NAME 1 2 3 4 5 6 (PRODUCT LEVEL)	SEE PAGE
Y	*259-1790*	1	FILM GP	719
	214-8976	1	PLATE-IDENTIFICATION (FUEL DRAIN VALVE)	
			ON FUEL TANK DRAIN VALVE	
	239-6986	1	PLATE-PRODUCT IDENTIFICATION	
			ON ROPS MOUNTING PAD ON TRANSMISSION	
	174-4590	1	PLATE-INFORMATION (SERVICE INFORMATION NUMBERS)	

228-0542 **PLATE & FILM GP** *(contd.)* **i02452478**

NOTE	PART NUMBER	QTY	PART NAME 1 2 3 4 5 6 (PRODUCT LEVEL)	SEE PAGE
			SECURE PLATE TO STEEL AREA OF LH DASH UPRIGHT WITH TACK FASTENERS	
	110-6393	1	PLATE-INSTRUCTION (AIR CONDITIONER)	
			ON LH SIDE OF DASH TO BE READ THROUGH CAB DOOR	
A	**4W-1413**	1	PLATE-SERIAL NUMBER (ENGINE)	
			ON LH SIDE OF CYCLINDER BLOCK TOWARD TOP & REAR	
	9F-6656	1	RING-RETAINING	
			ON FUEL TANK DRAIN VALVE	
	8T-9530	4	TACK-FASTENER	
			USE FASTENERS WHEN MOUNTING PLATES	
	269-0174	1	FILM-FOPS	
			ON LH ROPS POST INSIDE CAB	
	245-8456	1	FILM-IDENTIFICATION (FUEL PUMP)	
			NEXT TO THE FUEL PRIMING PUMP SWITCH	
	258-2355	1	FILM-IDENTIFICATION (FUSE)	
			ON STEEL AREA ON DASH SUPPORT	
	241-4287	1	FILM-IDENTIFICATION (FUSE PANEL)	
			ON BOTTOM OF BATTERY BOX COVER	
	259-1819	1	FILM-IDENTIFICATION (CATERPILLAR MONITORING SYSTEM)	
			ON EMS MODULE INSTRUMENT PANEL	
	190-5386	2	FILM-IDENTIFICATION (ROUND RED REFLECTIVE)	
			ON REAR SIDE OF MACHINE ON FILM STRIPE (1 EACH SIDE)	
	169-2876	2	FILM-IDENTIFICATION (12-VOLT)	
			2-ON RH CONSOLE NEAR 12V POWER OUTLETS	
	229-0887	1	FILM-INFORMATION (AIR CLEANER)	
			ON EXTERIOR OF AIR CLEANER COVER	
	134-7258	1	FILM-INFORMATION (EXTENDED LIFE COOLANT-READ OMM)	
			TO THE RIGHT RADIATOR FILL COVER	
	7X-7644	3	FILM-INFORMATION (TIE-DOWN)	
			1-ON FRONT TOWING EYE	
			2-ON SIDE OF TRACK ROLLER FRAME CENTERED BETWEEN FRONT & REAR IDLERS (1 EACH SIDE)	
	235-8026	1	FILM-INFORMATION (TRANSMISSION OIL LEVEL)	
			ON TOP PORTION OF TRANSMISSION OIL FILL TUBE	
	146-6747	1	FILM-INFORMATION (24-VOLT)	
			ON BOTTOM OF BATTERY BOX COVER	
	7X-3229	4	FILM-INSTRUCTION (LIFT EYE, TIE-DOWN LOCATION)	
			WITHOUT RIPPER	
			4-ON SIDE OF TRACK ROLLER BETWEEN FRONT ROLLER & IDLER & BETWEEN REAR ROLLER & IDLER(2 EACH SIDE)	
			WITH RIPPER	
			4-ON SIDE OF TRACK ROLLER FRAME BETWEEN FRONT ROLLER & IDLER & ON SIDE OF LOWER RIPPER FRAME BY REAR PIN (2 EACH SIDE)	
	8T-4999	1	FILM-INSTRUCTION (BATTERY DISCONNECT)	
			ON FACE OF DISCONNECT SWITCH	
	102-2913	1	FILM-INSTRUCTION (BULLDOZER CONTROL)	
			ON RAISED SURFACE TO THE RIGHT OF BULLDOZER CONTROL	
	9X-6340	1	FILM-INSTRUCTION (ENGINE OIL)	
			ON ENGINE OIL FILL TUBE	
	158-7864	1	FILM-INSTRUCTION (HYDRAULIC OIL)	

228-0542 **PLATE & FILM GP** *(contd.)* **i02452478**

NOTE	PART NUMBER	QTY	PART NAME 1 2 3 4 5 6 (PRODUCT LEVEL)	SEE PAGE
			ON REAR TANK LIFT HOOK	
	241-4167	1	FILM-INSTRUCTION (READ OMM, STEERING)	
			ON TOP OF DIFFERENTIAL STEERING CONTROL	
	119-6613	1	FILM-WARNING (ROPS)	
			ON LH ROPS POST	
	224-7830	1	FILM-WARNING (HIGH PRESSURE, READ OMM, ANSI)	
			ON PLATFORM	
	225-4256	1	FILM-WARNING (HOT FLUID UNDER PRESSURE)	
			TO THE RIGHT OF RADIATOR FILL COVER	
	225-0313	1	FILM-WARNING (JUMP START, READ OMM)	
			ON BOTTOM OF BATTERY BOX COVER	
	219-0305	1	FILM-WARNING (NO WELD, NO DRILL, READ OMM)	
			ON LH ROPS POST	
	247-6875	1	FILM-WARNING (READ OMM)	
			ON UPPER LEDGE OF LH CONSOLE OF OPERATOR'S STATION	
	247-6877	1	FILM-WARNING (SEAT BELT)	
			ON RH CONSOLE ON HORIZONTAL SURFACE TO THE RIGHT OF THE BULLDOZER CONTROL	

A-NOT PART OF THIS GROUP
Y-SEPARATE ILLUSTRATION

<END>

253-1450 PLATE & FILM GP

S/N: JDL1-UP; GMT1-UP
AN ATTACHMENT

SMCS-7557, 7563 **i02455697**

NOTE	PART NUMBER	QTY	PART NAME 1 2 3 4 5 6 (PRODUCT LEVEL)	SEE PAGE
	247-6876	1	FILM-WARNING (DO NOT OPERATE, READ OMM)	
			ON UPPER LEDGE OF LH CONSOLE OF OPERATOR'S STATION	
	224-0672	1	FILM-WARNING (HIGH PRESSURE, READ OMM, ISO)	
			ON PLATFORM	
	225-4257	1	FILM-WARNING (HOT FLUID UNDER PRESSURE)	
			TO THE RIGHT OF RADIATOR FILL COVER	
	225-0312	1	FILM-WARNING (JUMP START, READ OMM)	
			ON BOTTOM OF BATTERY BOX COVER	
	230-1341	1	FILM-WARNING (PRODUCT LINK RADIO, NON NACD)	
			ON UPPER RH CONSOLE INSIDE CAB	
	247-6878	1	FILM-WARNING (SEAT BELT)	
			ON RH CONSOLE ON HORIZONTAL SURFACE TO THE RIGHT OF BULLDOZER CONTROL	

<END>

PART NUMBER INDEX

Part	Page
0	
0L-0478	314
0L-1026	24
0L-1143	256
0L-1169	280
0L-1352	266
0S-0509	266
0S-0519	26
0S-1569	280
0S-1585	261
	263
0S-1588	40
0S-1591	118
	133
	280
0S-1594	263
0S-1595	40
0S-1614	257
0S-1617	319
0S-1619	293
0S-1897	280
0T-0102	263
0T-0244	681
	684
1	
1A-1460	256
	261
1A-2029	257
	261
	306
1A-2209	306
1A-2223	256
	293
1A-2610	263
1A-5183	293
1A-5822	280
1B-2578	665
1B-3978	276
	278
1B-5174	375
	377
	379
	381
	423
	424
1B-8705	17
	23
	301
1B-8706	431
	665
1B-8714	665
1B-8735	604
1C-0569	261
1D-4540	266
1D-4601	280
1D-4709	456
1F-0748	160
	164
1F-0750	192
	195
	329
1F-6762	452
1H-1023	230
1H-3244	157
	202
1H-3338	234
1H-3340	425
1H-4106	412
1H-5728	284
	301
1H-8296	693
1J-0708	458
1J-2921	456
	460
1J-6472	370
1J-8569	458
1J-9671	51
	244
	479
	526
	541
1K-4649	143
1K-5888	483
	604
1K-8850	362
1L-4418	326
1L-4775	75
1L-5072	504
1L-6957	280
1L-7388	293
1L-8545	63
	65
1M-1341	431
1M-1571	452
1M-3909	301
1M-4543	612
1M-4986	228
1M-6119	167
	170
1M-6120	167
	170
1M-6718	547
1M-8657	293
1M-9011	276
	278
	291
1N-4403	117
1N-4556	40
1N-5999	263
	516
1P-0810	160
1P-1547	333
1P-1744	433
1P-2772	365
	675
1P-2841	326
1P-3702	479
	509
	511
	513
	582
1P-3703	479
	483
	582
1P-3704	465
	479
1P-3706	541
1P-3934	280
1P-3935	280
1P-4278	109
	114
	139
1P-4576	454
1P-4578	284
	299
	504
	509
	511
	513
1P-4582	504
1P-6356	640
	643
1P-9005	276
	278
1P-9328	114
1Q-2423	622
1Q-4202	371
1Q-4203	371
1Q-4204	371
1Q-4205	371
1Q-4743	▶416
1Q-4930	416
1R-0735	504
1R-0762	139
1R-0770	141
1R-0777	504
1R-1808	77
1R-1809	275
1S-0994	145
	164
	167
	240
	582
1S-0996	143
1S-1860	280
	416
	417
1S-4915	160
	166
	167
	240
1S-6420	244
1S-7251	166
	229
1S-7252	166
	229
1S-7446	230
1S-9593	436
	444
	549
1S-9799	308
1T-0068	372
	373
1T-0097	306
1T-0414	306
1T-0438	306
1T-0441	306
1T-0446	306
1T-0447	306
1T-0599	306
1T-0738	324
1T-0765	388
	391
1T-0902	306
1T-1993	306
1T-2052	306
1T-2069	306
1T-2077	306
1T-2079	306
1T-2080	306
1T-2081	306
1T-2083	▶306
	311
1T-2086	306
1U-0159	588
	591
1U-0183	572
	574
1U-0300	588
1U-0301	588
1U-0612	588
1U-0725	562
	563
1U-1173	551
1U-1174	551
1U-1175	551
1U-1176	551
1U-2827	504
1U-4069	456
	460
1U-4103	568
1U-8846	52
	54
	59
	120
	257
	261
1V-3713	91
1V-7753	284
1V-8638	429
1V-9365	91
1W-2431	122
1W-2715	31
1W-2860	647
1W-3011	143
1W-4724	162
1W-4738	50
1W-4741	50
1W-4746	50
1W-4877	128
	129
1W-8407	26
1Y-7452	109
1Y-7927	624
1Z-0982	▶371
1Z-9932	326
2	
2A-1162	51
2A-1736	635
2A-3746	30
	311

▶ **PRIMARY REFERENCE**

PART NUMBER INDEX

Part	Page	Part	Page	Part	Page	Part	Page
2A-4429	31	2K-5986	311		68	3E-0144	223
2A-4639	257	2K-6279	588		87	3E-0145	223
2B-0858	273	2K-6830	452		89	3E-0146	223
2B-0947	257	2K-8257	284			3E-1841	623
	276	2K-8467	326			3E-3365	216
	278	2K-9111	673	**3**			218
2B-9373	301	2K-9295	256				232
2D-0598	516	2L-6679	230	3A-7880	▶593		236
2D-1523	308	2M-0913	166	3B-0623	24		237
2D-4202	504	2M-1444	600	3B-4124	256		529
2D-5658	311	2M-3974	299	3B-4501	236		533
2D-6235	624	2M-4453	107	3B-4605	337		614
2D-6392	230	2M-5795	329		339	3E-3368	207
2D-6506	291	2M-7041	319		427		208
2D-6642	280	2M-7819	624	3B-4610	337	3E-3371	185
2D-8009	301	2M-9780	139		339		190
2F-5326	370		143	3B-4615	348		192
2G-8097	698		263		359		195
2G-9245	359		315		431		198
2H-3429	230		322	3B-4626	551		205
2H-3755	293		478		564		206
2H-3920	638		498	3B-4629	350		215
2H-3922	233		541		351	3E-3373	698
	236		546		353	3E-3380	698
2H-3928	388		582		354	3E-3383	651
	389	2N-3680	427	3B-4632	576		652
	391		429		577	3E-3892	669
	405	2P-1286	91	3B-5325	594	3E-4051	640
	407	2P-3696	276		595		644
	409		278	3B-8489	368	3E-4052	640
	410	2P-4304	77		370		643
2H-3931	272	2P-4339	628		494	3E-4057	640
	273	2P-6588	489		591		644
2H-3932	266	2P-8046	407	3D-2824	61	3E-4058	640
2H-3934	493	2P-8514	362		81		644
2H-6622	700	2R-0098	276		91	3E-4067	640
	704		278		105	3E-4080	643
	705	2R-5001	427		114	3E-4087	640
2H-9233	582	2S-0795	268		232		644
2J-0564	454	2S-2251	308		255	3E-4297	538
2J-2866	518	2S-2596	516		284	3E-4304	604
	521		518		322	3E-4352	120
	523		521		468		204
	526		523		503		293
2J-3506	579		526		504	3E-4353	55
	580	2S-3029	75	3D-2975	624		58
2J-3507	412	2S-3440	80	3D-6209	244	3E-4354	261
2J-6274	414	2S-4071	263	3D-7943	433	3E-4356	627
2J-6356	665	2S-4078	255	3E-0125	223	3E-4374	431
2J-7761	504		263	3E-0127	223	3E-4999	63
2J-8163	230		276	3E-0128	223		65
	501		278	3E-0129	223	3E-5180	427
2J-8489	456		284	3E-0130	223	3E-5239	614
	458		414	3E-0131	223	3E-5464	599
	460		448	3E-0132	223	3E-6328	▶156
2K-0703	591		450	3E-0133	223		248
2K-3258	458	2S-5658	304	3E-0134	223	3E-6389	▶185
2K-4096	454	2S-5926	414	3E-0135	223		638
2K-4507	454	2V-1937	599	3E-0136	223	3E-6910	498
2K-4821	157	2V-2043	91	3E-0137	223	3E-6922	629
2K-4973	326	2V-4868	114	3E-0138	223	3E-7410	145
	597	2W-5825	99	3E-0139	223	3E-7775	226
	691	2W-7381	62	3E-0140	223	3E-8005	18
	693	2W-8147	23	3E-0141	223	3E-8017	126
2K-5069	256	2Y-5829	67	3E-0142	223		136

▶ **PRIMARY REFERENCE**

PART NUMBER INDEX

Part	Page	Part	Page	Part	Page	Part	Page
	138		582	3K-8460	51	3T-3278	629
3E-8020	244	3J-2682	561	3K-8510	591		632
	636	3J-3679	526	3L-0594	671	3T-3418	230
3E-9412	147		541	3L-3380	230	3T-3422	226
3E-9867	101	3J-4818	693	3L-3813	541		230
3E-9868	101	3J-6572	456	3L-5893	112	3T-3423	230
3F-0379	226	3J-6573	551		113	3T-3424	230
3F-3442	263	3J-7354	51	3M-7045	91	3T-3434	226
3F-3727	306		84	3N-0759	440		230
3F-4360	496		101	3P-2404	647	3T-3634	659
3F-5022	293		114	3P-9900	693	3T-4007	311
3F-5792	52		167	3R-9965	244	3T-4008	311
3F-6185	564		275	3S-0004	301	3T-4009	311
3F-9556	157		368		315	3T-4011	311
	653		467	3S-2093	238	3T-4013	311
	654		468		266	3T-4377	292
3G-1753	454		471		324	3T-4568	256
3G-1757	454		473		429	3T-4709	230
3G-3267	504		475		600	3T-4710	230
3G-4214	284		509		614	3T-4715	256
3G-4218	284		511		628	3T-4824	256
3G-6372	359		513		631	3T-5021	256
3G-8047	483		516		638	3T-5200	256
	489		518		640	3T-5301	283
3G-8054	483		521		644	3T-5302	283
	489		523		695	3T-5356	299
3G-8057	483		529		697	3T-5807	261
	489		531		698	3T-5851	254
3G-8742	452		533	3S-2708	256	3T-6469	283
3G-9402	494		545		261	3T-6471	283
3G-9405	494		548		293	3T-6742	280
3G-9995	588		582		311	3T-6963	256
3H-0442	548	3J-9703	456	3S-3439	303	3T-8305	305
3H-8683	483		460	3S-3440	303	3T-8729	293
3J-1907	51	3K-0360	31	3S-6049	167	3T-8757	301
	84		51	3S-6162	456	3T-9272	256
	101		84		460	3T-9494	230
	221		100	3S-7781	263	3T-9525	230
	243		105	3S-8664	640	3T-9549	255
	244		143	3S-9557	708	3V-2431	314
	263		257	3S-9643	100	3V-9244	359
	268		261	3T-0304	248		361
	275		268	3T-0598	414	3V-9399	337
	283		276	3T-0849	538		339
	284		278	3T-0996	331	3W-0329	414
	289		284	3T-1121	700	3W-0640	414
	315		319		704	3W-1356	▶363
	317		467		705		442
	318		489	3T-1162	375		581
	319		515		377		590
	467		529		379	3W-1357	363
	468		535		381	3W-1852	375
	471		536		423		377
	473		537		424		379
	475		543	3T-1447	301		381
	478		545	3T-2077	375		423
	479		582		377		424
	491		607		379	3W-1944	348
	503		647		381	3W-2182	333
	528	3K-0835	628		423	3W-2369	414
	529		631		424	3W-2470	283
	531	3K-2511	293	3T-3158	629	3W-2647	91
	533	3K-2889	332		632		143
	538		333	3T-3159	629	3W-3742	359
	547		412		632	3W-3819	334

▶ **PRIMARY REFERENCE**

PART NUMBER INDEX

Part	Page
3W-3896	343
	359
3W-6528	365
3W-6550	▶254
	298
3W-6551	254
3W-6756	671
3W-6866	▶332
3W-6867	332
3W-9207	337
	339
3W-9208	337
	339
3W-9678	368
3Y-2888	221
3Y-3866	551
3Y-5405	485
	487
4	
4B-2049	223
4B-3609	665
4B-4098	36
	551
4B-4158	375
	377
	379
	381
	423
	424
	553
	554
	555
	556
	557
	558
	559
	560
	590
4B-4278	337
	339
	526
	693
4B-4863	249
	658
4B-5059	624
4B-7739	273
4B-9782	263
4B-9785	263
4B-9808	445
	462
4B-9880	280
4D-6466	473
4D-6716	109
4D-7388	81
4D-7733	644
4D-7735	143
4D-7794	192
	195
4F-0255	551
	564
4F-1252	551
4F-2294	235
4F-4879	688
	689
	690
4F-5695	24
4F-6024	50
4F-7389	504
4G-4972	26
4H-0019	280
4H-0407	668
4H-1440	306
4H-1641	328
	329
	341
4H-2558	337
	339
	644
4H-5440	263
4H-7869	229
4H-9105	429
4J-0121	452
4J-0520	448
	450
	465
	468
	471
	473
	479
	481
	483
	508
4J-0522	468
	471
	473
	509
	511
	513
	528
4J-0525	107
4J-0527	479
4J-0528	528
4J-1641	572
	574
4J-2036	350
	351
	353
	354
4J-2414	561
	562
4J-3420	454
4J-5267	481
	482
	483
	485
	487
	489
4J-5351	518
	521
	523
	526
	544
4J-5477	84
	283
	467
	468
	471
	473
4J-6374	452
4J-6806	516
4J-7533	324
	491
	516
	518
	521
	523
	526
4J-8251	504
4J-8252	504
4J-8997	509
	511
	513
4K-0367	504
4K-1388	448
	450
	509
	511
	513
	516
	518
	521
	523
	526
4K-2039	529
	535
	536
4K-3004	591
4K-3128	454
4K-3533	604
4K-6177	284
4K-7627	362
4K-8302	644
4K-8501	362
4K-9429	663
4L-6454	84
	164
	198
	276
	278
4L-9337	429
4M-0189	52
4M-1827	230
4M-1828	230
4M-1829	230
4M-1831	226
	230
4M-1853	230
4M-1854	230
4M-2442	293
4M-5281	629
	632
4M-5282	429
4M-5905	319
4M-6425	604
	673
4M-6980	541
4M-7470	337
	339
4M-8239	321
4M-9592	292
4N-1059	228
4N-1230	50
4N-2514	48
4N-2927	624
4N-3808	272
4N-7521	223
4N-9915	627
4P-0489	116
4P-2102	4
	5
	6
	7
	8
	9
	▶34
4P-4369	126
4P-5524	117
4P-5918	238
4P-6464	723
4P-7428	55
	153
	240
	244
	644
4P-7429	114
	578
	644
4P-7581	40
	162
	164
	167
	176
	183
	195
	238
	240
	244
	266
	504
	582
	629
	632
	644
4P-7582	240
	244
4P-8087	65
4P-8134	167
	221
	238
	240
	249
	266
	504
	614
	629
	632
	640
	644
4R-9999	70
4S-1936	473
4S-5898	497
4S-8537	306
4S-8598	303
4S-8603	303
4S-9191	100
4T-0259	456
	460

▶ **PRIMARY REFERENCE**

PART NUMBER INDEX

Part	Page	Part	Page	Part	Page	Part	Page
4T-0521	504	4V-6981	427		393		266
4T-0732	564	4V-7884	691	5G-7183	362		280
	566	4V-8256	597	5G-7191	478		293
4T-0780	564	4V-8577	691	5G-8655	604		306
	566		693	5G-8871	604		388
4T-0993	516	4W-1203	36	5G-8993	401		391
4T-1021	516	4W-1204	36	5G-9841	401	5M-3034	230
4T-1108	518	4W-1413	723	5G-9842	401	5M-3038	293
	521		725	5G-9843	401	5M-3062	189
	523	4W-2026	20	5G-9973	359		190
	526	4Y-6353	609	5G-9974	359		192
4T-1481	576			5H-3252	458		195
	577			5H-4018	483		198
4T-1504	572	**5**		5H-4279	299		578
	574			5H-6202	292	5M-3605	301
4T-1520	564	5B-0582	306	5H-6734	375	5M-4443	405
	566	5B-3180	319		377		407
4T-1563	485	5C-2890	139		379		409
	487		202		381	5M-4987	301
4T-1649	516		234		423	5M-5689	103
	526		427		424	5M-6126	292
4T-1700	545		529	5H-9899	425	5M-6214	359
4T-1701	526		531	5I-4376	467		561
4T-1850	516		533	5J-3964	311	5M-7878	311
4T-1860	516		614	5J-4418	458	5M-7925	256
	518		627	5J-4773	579	5M-8500	604
	521		658		580	5M-9623	321
	523		668	5J-4973	454	5M-9735	63
	►547		693	5J-4974	454		65
4T-2952	579	5C-6565	591	5J-4989	458	5N-8780	34
4T-4509	545	5C-7261	84	5J-4991	456	5N-9204	640
4T-4511	516		103		460	5P-0047	582
	526		188	5J-5020	454	5P-0492	176
4T-4628	518		240	5J-5314	230	5P-0597	162
	521		640	5J-5731	458	5P-0599	128
	523		653	5J-7386	311		129
	526		654	5K-0227	518	5P-0695	160
4T-4629	526	5C-8312	429		521		166
4T-4630	526	5C-9553	154		523		167
4T-4631	521		200		526		240
	523		249	5K-5120	263	5P-0746	160
	526		600		266		228
4T-4633	526		657	5K-9090	283	5P-0747	166
4T-4635	526		658		284		229
4T-4659	541	5D-1026	623		448	5P-0760	160
4T-4866	562	5D-1911	504		450	5P-0761	166
	563	5D-2989	292	5K-9107	257		167
	564	5D-3118	332	5K-9179	649		170
	566		333		650	5P-0767	623
4T-4875	494		362	5K-9246	263		647
4T-4942	543		412	5K-9988	263	5P-0998	659
4T-5072	518		588	5L-2029	429	5P-1075	164
	521	5D-3546	429	5L-4758	433		178
	523	5D-4822	624	5L-7200	236		180
	526	5D-7927	504	5M-0578	256		189
4T-5073	516	5F-0304	51		261		190
	518	5F-1678	370	5M-2057	504		192
	521		504		516		195
	523	5F-3144	454		518		198
	526	5F-4899	266		521		244
4T-5074	516	5F-8000	405		523		249
	526		407		526		284
	545		409	5M-2894	257		429
4T-5495	551	5F-9757	249		261		446
4T-7571	543	5G-2247	392		263		448

► **PRIMARY REFERENCE**

PART NUMBER INDEX

Part	Page
	450
	465
	468
	473
	479
	483
	540
	582
	599
	614
	649
	687
5P-1076	63
	65
	326
	343
	347
	348
	356
	357
	358
	359
	365
	411
	604
	655
	659
	668
	674
	675
5P-1251	114
5P-1294	478
5P-1318	479
5P-1404	315
5P-1465	114
5P-1505	143
5P-2671	494
5P-2817	119
	128
	129
5P-2937	114
5P-2955	189
	190
	192
	195
	198
5P-3264	147
5P-3860	128
	129
5P-3930	292
	311
5P-3948	643
5P-4057	263
5P-4115	629
	632
	659
5P-4116	34
	153
	221
	619
	659
5P-4295	84
	644
5P-4423	693
5P-4536	135
5P-5045	293
5P-5296	293
5P-5297	293
5P-5623	167
	248
5P-5639	623
5P-5643	599
	605
	623
5P-5672	614
5P-5675	248
5P-5677	183
	202
	248
5P-5680	700
	701
	702
	703
	704
	705
5P-5755	351
	354
5P-5908	614
5P-5924	614
5P-5930	605
5P-5991	139
5P-6010	693
5P-6129	641
	644
5P-6298	230
5P-6313	221
5P-6314	221
5P-6605	605
5P-6719	528
5P-6874	649
	650
5P-7085	284
5P-7177	618
5P-7211	334
5P-7464	489
5P-7465	489
5P-7468	284
5P-7469	284
5P-7483	351
	354
	605
5P-7509	668
5P-7513	656
5P-7514	351
	354
	656
5P-7530	83
	87
	89
5P-7592	280
5P-7679	311
5P-7854	91
5P-7957	663
5P-7958	1
	2
5P-7970	76
	238
5P-8194	292
5P-8196	77
5P-8245	20
	40
	52
	55
	71
	72
	73
	256
	257
	261
	263
	280
	293
5P-8247	157
	280
5P-8248	579
	580
5P-8250	412
	456
5P-8309	334
5P-8441	614
5P-8445	624
5P-8500	1
	2
	154
	328
	334
	341
	359
	503
	607
5P-8918	700
	704
	705
5P-8998	263
5P-9000	429
5P-9085	192
	195
	198
5P-9297	89
5P-9439	299
5P-9617	77
	101
	467
	475
5P-9658	272
5P-9909	669
5S-4246	425
5S-7349	157
	226
5S-7379	178
	180
	192
	195
	429
	649
5S-7382	326
5S-7383	257
	673
5S-8709	489
5S-8765	489
5S-8766	489
5S-9062	36
5T-4374	368
5V-0770	624
5V-1496	329
	679
	682
5V-1497	691
5W-7461	498
5W-7462	498
5W-7463	498
5W-7464	498
5W-7465	498
5W-7466	499

6

Part	Page
6A-5591	52
	498
6A-9718	718
6B-1124	63
	65
6B-4594	109
	114
6B-6863	292
6B-7246	111
6C-3060	154
6C-9048	538
6D-1641	644
6D-3033	243
6D-4161	629
	632
6D-4247	167
	647
6D-4636	647
6D-5257	244
6D-7128	103
6E-0381	515
6E-0486	516
6E-1637	518
	523
	526
6E-1835	543
6E-4907	541
6E-5066	491
6E-5200	545
6E-5527	456
6F-0253	628
	631
6F-0711	331
6F-4718	308
6F-6673	257
	261
	290
6F-7045	233
6F-7062	268
6H-3956	364
6H-3977	299
6H-4005	190
	192
	195
	198
	600
6H-9361	504
6I-1418	248
6I-2431	111
6I-2435	111
6I-2501	117
6I-2502	117

PART NUMBER INDEX

Part	Page	Part	Page	Part	Page	Part	Page
6I-4464	117		261		582	6V-2803	618
6I-8500	292	6P-6926	668	6V-0439	276	6V-3250	103
6I-8507	280	6P-7704	292		278	6V-3260	604
6I-8511	280	6P-8269	334	6V-0473	292	6V-3326	501
6I-8724	256	6S-1066	178	6V-0484	284	6V-3538	26
6I-9386	604		180		315	6V-3545	425
6I-9641	▶416	6S-2828	280	6V-0852	94	6V-3668	36
6I-9644	▶416	6S-2829	280		95		268
6I-9653	▶417	6T-0062	256		139	6V-3823	268
6I-9654	▶417	6T-0064	256		263		609
6I-9656	▶417	6T-0363	230		275	6V-3918	18
6I-9668	▶392	6T-0364	280		283		54
	416	6T-0371	230		289		59
6I-9671	▶393	6T-0372	230		315		105
	416	6T-0850	256		467	6V-3940	17
	417	6T-0988	671		478		18
6I-9706	659	6T-1698	154	6V-0855	256		60
6J-2419	266		365	6V-0894	665		83
	322	6T-3631	190	6V-0937	304		87
6J-3473	280		192	6V-1178	603		89
6J-5383	564		195	6V-1228	640		204
	566		198		644	6V-3965	94
6J-6439	543	6T-3632	190	6V-1232	425		95
6J-9187	561		192	6V-1249	489		139
6J-9188	561		195	6V-1322	230		263
6K-0806	114		198	6V-1355	114		275
	611	6T-3633	190	6V-1359	618		284
6K-3273	682		192	6V-1572	284		289
6K-3630	311		195	6V-1573	284		315
6K-3632	365		198	6V-1581	101		318
	675	6T-3643	202	6V-1582	101		468
6K-4934	192	6T-3852	280	6V-1720	263		479
	195	6T-3853	280	6V-1790	603	6V-4248	63
	244	6T-4556	668		668		65
6K-4935	192	6T-4557	668	6V-1792	416		81
	195	6T-5005	▶700		417		89
	244		701	6V-1819	93		145
6K-8162	541	6T-5008	▶701	6V-1820	50	6V-4249	87
6K-8178	640		715		55		122
	644	6T-5067	671	6V-1889	80	6V-4292	143
6K-8498	263	6T-5068	671	6V-1970	1	6V-4369	238
6L-1649	284	6T-5617	623		2	6V-4583	311
6L-1987	40	6T-7695	638	6V-1971	607	6V-4589	77
6L-4783	299	6T-7882	292	6V-2226	381		139
6L-5359	284	6T-8387	429	6V-2312	708		147
	303	6T-8388	429		710		550
6L-7159	599	6T-8402	▶702		711	6V-5048	77
6L-9716	516		715	6V-2314	425		145
6M-5062	529	6T-8403	▶703	6V-2317	41		204
	535		715		45		210
	536	6T-8714	668		56		211
6N-1558	122	6T-9927	334	6V-2331	604	6V-5049	61
6N-2985	76	6V-0267	479	6V-2372	640		77
6N-3279	230	6V-0268	479		644		84
6N-3826	226	6V-0327	276	6V-2375	604		94
	230		278	6V-2381	284		139
6N-7523	154	6V-0328	276	6V-2382	284		145
	215		278	6V-2404	280		204
	716	6V-0329	276	6V-2478	292		209
6N-8744	611		278	6V-2495	640		582
6P-1735	256	6V-0330	276		643	6V-5050	147
6P-1736	256		278	6V-2689	248	6V-5188	303
6P-2216	671	6V-0400	479		425	6V-5192	498
6P-4977	266		492		529		521
6P-5317	257		508		533		523

▶ **PRIMARY REFERENCE**

PART NUMBER INDEX

Part	Page	Part	Page	Part	Page	Part	Page
	526	6V-6889	718	6V-8212	229	6V-8637	91
6V-5217	54	6V-7190	604	6V-8237	368	6V-8639	84
	83	6V-7238	647		454		582
	238	6V-7357	139		458	6V-8641	84
6V-5218	77		612		460		467
	87		665	6V-8260	75		471
	89		668	6V-8336	52	6V-8647	467
6V-5219	77		716	6V-8369	638	6V-8675	55
6V-5220	77	6V-7604	28	6V-8370	236		71
6V-5324	547	6V-7636	604	6V-8376	202	6V-8715	139
6V-5326	544	6V-7646	256		665	6V-8716	91
6V-5387	283		627	6V-8378	226	6V-8721	143
6V-5555	509		679	6V-8397	84		478
	511		682		139	6V-8723	77
	513	6V-7673	40		143		143
6V-5556	516		50		243		284
	526	6V-7676	365		283	6V-8724	84
	545	6V-7687	588		284		103
6V-5582	▶223		591		467		145
	225	6V-7732	505		468		468
6V-5645	202	6V-7742	452		471		471
6V-5683	202		460		473		473
	636	6V-7743	334		475		475
6V-5696	20	6V-7744	240		478		478
	72		291		479		479
	268		337		582	6V-8730	143
6V-5758	544		339	6V-8398	84	6V-8781	84
6V-5764	159		505		143		468
6V-5817	695		588		284	6V-8801	133
6V-5818	698		591		478		178
6V-5833	700		665		483		180
	701	6V-7981	147		485		189
	702	6V-8073	604		487		192
	703	6V-8076	244		489		195
	704		468		582		198
	705	6V-8077	77	6V-8400	448	6V-8818	425
6V-5839	50	6V-8118	427		450	6V-8928	636
	81	6V-8129	604	6V-8547	668	6V-8942	478
	87	6V-8133	460	6V-8556	479	6V-8981	485
	89	6V-8149	20	6V-8625	143		487
	93	6V-8182	353		489	6V-8994	139
	122		354	6V-8627	283	6V-9001	145
	126		456		468	6V-9002	84
	145	6V-8183	431		471	6V-9007	114
	147	6V-8185	202		473		504
	229		427	6V-8628	84	6V-9161	475
	238	6V-8188	223		468	6V-9167	372
	240		226		471		460
	359		509		473	6V-9168	139
	505		511	6V-8629	478		284
6V-5843	49		513	6V-8634	84		468
	58	6V-8189	157		467		479
6V-5844	52		189	6V-8635	283	6V-9169	485
	75		190	6V-8636	84		487
6V-5845	404		192		87	6V-9197	329
	408		195		89	6V-9200	475
6V-5849	716		198		103	6V-9632	248
6V-5851	716		604		139		604
6V-6209	718	6V-8190	332		145		627
6V-6317	238		333		147		658
	240		362		283		659
6V-6580	538		588		467	6V-9633	505
6V-6609	220	6V-8197	52		473	6V-9746	91
6V-6716	248		55		475		114
6V-6717	623	6V-8200	541		582		284

▶ **PRIMARY REFERENCE**

PART NUMBER INDEX

Part	Page
	478
	479
	504
	582
6V-9748	36
6V-9804	172
6V-9829	468
6V-9839	478
6V-9843	468
6V-9849	467
6V-9850	468
	473
6V-9872	467
	471
	473
6W-6220	479
6Y-0206	619
	659
	668
6Y-0352	595
6Y-0359	594
6Y-0473	388
	389
	391
	392
	393
	405
	407
	409
	410
6Y-0596	489
6Y-0597	489
6Y-0859	276
	278
6Y-0925	403
6Y-0926	256
6Y-0984	256
6Y-1387	574
6Y-1390	572
	574
6Y-1602	292
6Y-2039	569
	▶579
6Y-2130	271
6Y-2704	256
	261
6Y-3472	487
6Y-3474	487
6Y-3973	329
6Y-4638	319
6Y-4819	292
6Y-4831	292
6Y-5113	650
6Y-5706	485
6Y-5707	485
6Y-5799	414
6Y-5911	292
6Y-5912	292
6Y-6286	416
	417
6Y-6287	417
6Y-6294	416
	417
6Y-6296	417
6Y-6389	416
	417
6Y-6397	416
6Y-6412	416
	417
6Y-6751	575
6Y-7385	627
6Y-8114	659
6Y-9024	418
	419
	420
	421
6Y-9280	494
6Y-9281	494
6Y-9373	256
	261
7B-0863	332
	333
7B-3028	375
	377
	379
	381
	423
	424
7B-3039	504
7B-3235	280
7B-9665	412
7C-1493	77
7C-2164	63
	65
7C-3567	57
7C-4354	87
	89
7C-4355	91
7C-6670	135
7C-6672	135
7C-7431	136
	138
7C-8246	647
7C-8370	63
	65
7C-8634	36
7D-1649	55
	268
	280
	284
7D-1677	305
7D-6922	619
7D-7233	114
7D-8431	671
7D-9749	505
	516
7E-2707	139
7E-3870	119
	127
7F-3491	230
7F-3525	230
7F-6998	628
7F-8267	505
7F-8607	643
7F-9543	332
	333
7F-9547	332
	333
7G-1596	256
7G-2343	293
7G-2454	604
7G-2516	292
7G-2830	292
7G-3832	284
	481
	582
7G-3833	284
	481
7G-3834	284
	481
	582
7G-4262	362
7G-4332	405
	407
	409
	410
7G-4824	619
	659
	668
7G-4998	255
7G-5186	109
	114
7G-5984	465
7G-5985	465
7G-5986	465
7G-6355	292
7G-6623	412
7G-7218	292
7G-7724	292
7G-8975	▶333
7G-9555	314
7H-1447	504
7H-3607	304
7H-4566	256
7H-7628	280
7H-7658	292
7H-9737	427
7I-2272	238
7J-0204	167
	240
	263
	516
	518
	521
	523
	526
7J-2036	388
	389
	391
7J-2595	561
7J-5131	572
	574
7J-8611	263
7J-8955	456
	460
7J-8956	456
	460
7J-9108	91
7J-9933	516
	518
	521
7K-1181	40
	164
	166
	174
	176
	178
	180
	183
	190
	192
	195
	198
	202
	240
	243
	248
	578
	582
	614
	643
7K-3176	643
7K-6058	440
7L-2894	226
	230
7M-0326	230
7M-0327	230
7M-1201	263
7M-1296	321
7M-1297	255
	321
7M-1377	321
7M-5130	292
7M-7219	624
7M-8485	91
	114
	176
	268
	283
	284
	319
	516
	518
	521
	523
	526
7N-0296	221
7N-0718	166
	▶233
7N-1996	248
7N-2059	221
7N-4333	526
7N-5683	26
7N-9801	237
7N-9943	185
7P-4190	431
	665
7P-6682	166
7P-7610	604
7P-9231	84
7R-3029	243
7S-2042	329
	341

7

▶ **PRIMARY REFERENCE**

PART NUMBER INDEX

Part	Page
7S-4244	139
7S-6058	353
	354
7S-8920	284
	448
	450
7S-8921	284
	448
	450
7S-9396	▶133
7T-0020	185
7T-1068	702
	▶704
7T-1069	703
	▶705
7T-1099	112
	113
	190
	248
	604
	614
	668
	678
7T-1330	702
	703
7T-1474	280
7T-1475	280
7T-1885	256
	261
7T-1975	588
7T-3267	226
7T-3268	226
7T-3271	226
7T-3276	226
7T-3277	226
7T-3278	226
7T-3279	226
7T-3451	226
7T-3454	226
7T-3950	292
7T-3974	226
	230
7T-4532	608
7T-5856	614
7T-6299	623
	659
7T-6934	485
	487
7T-6994	256
	261
7T-7388	200
	632
7T-8130	256
7T-8136	261
7T-8816	293
7T-8875	263
7T-8876	263
7T-8891	695
7T-8894	640
	644
7T-8895	640
7T-9031	261
7T-9272	292
7T-9303	638
7T-9370	292
7T-9426	640
	643
7T-9515	236
7T-9788	256
7T-9793	640
	644
7T-9832	256
7T-9837	256
	261
7T-9946	280
7U-4892	202
7V-3715	368
7V-5191	624
7V-8532	283
7W-2632	531
7W-3872	56
7W-6534	257
7W-7381	84
7X-0339	160
	164
7X-0346	276
	278
7X-0347	332
	333
7X-0349	371
	412
7X-0368	353
	354
7X-0373	456
7X-0402	363
	367
7X-0406	367
	371
7X-0515	57
	240
7X-0562	223
	226
7X-0578	614
7X-0579	139
7X-0584	425
7X-0594	350
	351
	353
	354
7X-0603	671
7X-0608	305
	597
7X-0623	604
7X-0632	611
7X-0766	364
7X-0818	249
7X-0820	468
	479
7X-0851	368
7X-1456	331
7X-1553	498
7X-2031	215
7X-2049	640
	643
7X-2535	468
7X-2537	34
	322
7X-2539	139
7X-2541	324
7X-2543	479
	588
	591
7X-2547	301
7X-2548	202
7X-2549	365
7X-2552	91
7X-2553	343
	359
	361
	414
	575
7X-2555	334
7X-2557	494
7X-2562	178
	192
	195
	198
	244
	562
	563
	612
7X-2563	365
	568
	575
	612
	675
7X-2564	192
	195
	551
7X-2565	154
7X-2566	365
	564
	566
	678
7X-2567	562
	563
7X-2575	368
	400
7X-2576	674
	675
7X-2580	401
7X-2581	661
7X-2585	412
7X-2621	167
7X-2908	60
7X-3229	724
	725
7X-3373	226
	230
7X-3374	635
7X-3391	343
7X-3392	334
	656
7X-4771	425
7X-6315	173
7X-7477	305
7X-7644	332
	333
	581
	590
	723
	725
7X-7700	154
7X-7702	647
	698
7X-7729	98
	99
	101
	109
	116
	118
	121
	123
	127
	128
	129
	134
	139
	143
	201
	221
	270
	284
	328
	329
	334
	337
	339
	341
	346
	356
	357
	358
	365
	368
	429
	431
	441
	465
	479
	604
	612
	640
	644
	656
	659
	665
	667
	668
	687
7X-7742	612
7X-7877	671
7X-7927	695
7X-7928	695
7X-7929	695
7X-7930	695
7Y-3281	698
7Y-4224	526
7Y-5226	425
7Y-5233	383
	385
	386
7Y-5235	564
	566
7Y-7388	638
8B-4624	337

8

▶ **PRIMARY REFERENCE**

PART NUMBER INDEX

Part	Page	Part	Page	Part	Page	Part	Page
	339	8C-8843	675	8E-7409	392	8J-6913	504
8C-0563	28	8C-8844	365		393	8J-8322	505
8C-3082	538	8C-8988	468	8E-7410	392	8J-8436	505
8C-3089	230	8C-9160	452		393	8J-8443	504
8C-3131	498	8C-9660	230	8E-7561	328	8J-8462	518
8C-3205	481	8D-0983	612		329	8J-8468	504
	483	8D-1817	280		341	8J-8782	504
	485	8D-1819	280	8E-7791	619	8J-8783	504
	487	8D-4771	257		659	8J-9990	478
	489		261		668	8K-1433	627
8C-3206	284		290	8E-8261	489	8K-8517	111
	299	8D-7185	612	8E-8292	695	8L-2746	550
	448	8D-9739	293	8E-8299	292	8L-2779	77
	450	8E-1118	627	8E-8300	311		145
	465	8E-1205	329	8E-8304	292	8L-2786	61
	505		341	8E-8305	292		77
	509	8E-1211	375	8E-8307	256		219
	511		377		261		529
	513		379	8E-8310	256		531
	541		381	8E-8434	540		533
8C-3290	668		423	8E-8625	489	8L-5008	114
8C-3428	289		424	8E-9212	452	8L-6557	368
8C-3442	604	8E-1900	401	8E-9289	412	8L-8413	166
8C-3445	77	8E-2014	347	8E-9522	359		167
8C-3446	77	8E-2748	276	8E-9644	392		624
	101		278	8E-9932	385		693
	275	8E-3070	334	8F-1434	223	8M-2530	263
	468	8E-3276	604		226	8M-2771	425
8C-3447	275	8E-3446	▶706	8F-3556	326	8M-2773	84
8C-3451	467		715	8F-4387	561		91
8C-3655	226	8E-3447	▶707	8F-6575	73	8M-3175	348
8C-3681	114		715	8F-7702	665		359
8C-3756	614	8E-4832	337	8F-8151	109	8M-3494	590
8C-4982	713		339	8F-9206	505	8M-4390	291
8C-4984	43	8E-5112	604	8G-4014	334	8M-4432	263
8C-5060	716		▶715	8G-4189	370		266
8C-5063	427	8E-5113	604	8G-8844	276	8M-4438	257
8C-5226	668		▶715		278		261
8C-5607	178	8E-5114	604	8G-8845	276	8M-4986	284
	180		▶715		278		321
	183	8E-5170	271	8G-9530	423	8M-4987	285
8C-5608	178	8E-5188	574		424	8M-5010	293
	180	8E-5190	574	8G-9880	291	8M-5254	285
	183	8E-5192	574	8H-1141	226		315
8C-5682	640	8E-5194	574	8H-1603	263	8M-5255	293
	643	8E-5205	572	8H-2262	403	8M-5266	293
8C-5917	170		574	8H-2768	305	8M-5661	263
8C-5918	166	8E-5486	561	8H-3127	215	8M-5860	28
8C-6354	243		562	8H-5303	233	8M-7160	303
	248	8E-5701	551	8H-5306	233	8M-8157	266
8C-6561	278	8E-5703	456	8H-5352	293		285
8C-6857	440		460	8H-8898	576	8M-8489	293
8C-6913	290		564		577		301
8C-8433	478		566	8H-9818	273	8M-9307	268
8C-8451	183	8E-6856	698		308	8M-9315	51
8C-8478	350	8E-7222	392	8H-9819	273	8N-0869	160
	351		393	8J-2189	593		240
	353	8E-7405	392		▶594	8N-1725	167
	354		393		596	8N-4617	117
	564	8E-7406	392	8J-2190	594	8N-6849	34
	566		393		595	8N-6854	34
8C-8585	329	8E-7407	392	8J-2880	456		91
	334		393		460	8N-8846	112
	337	8E-7408	392		564		113
	339		393		566	8P-0058	263

▶ **PRIMARY REFERENCE**

PART NUMBER INDEX

Part	Page
8P-1892	292
8P-1916	292
8P-1964	292
8P-2019	293
8P-2022	293
8P-2023	293
8P-2051	292
8P-2053	292
8P-5197	405
	409
	410
8P-5244	365
	675
8P-5411	162
8P-6188	403
8P-6363	614
8P-8357	257
	261
8P-8540	192
	195
8P-9507	292
8P-9747	675
8P-9770	561
	564
	566
	572
	574
	591
8Q-1911	97
8R-3393	640
	643
8S-0023	285
	448
	450
	465
8S-0024	285
	448
	450
	465
8S-0527	261
8S-0948	647
8S-4304	268
8S-5383	609
8S-7499	533
8S-7803	624
8S-9008	308
8S-9130	263
8T-0072	256
8T-0100	45
	47
8T-0119	143
8T-0193	122
8T-0232	326
8T-0267	174
8T-0292	83
8T-0318	604
8T-0328	223
	226
	238
	249
	427
	679
	682
8T-0337	600
	632
8T-0360	374
8T-0362	452
8T-0363	365
8T-0364	368
8T-0375	401
8T-0389	249
8T-0404	91
8T-0644	100
	107
8T-0646	73
8T-0656	373
8T-0687	701
	702
	703
8T-0722	167
8T-0785	452
8T-0788	478
8T-1120	284
8T-1408	456
8T-1447	528
8T-1579	326
8T-1887	143
	468
	479
	483
8T-1888	143
	468
	479
	483
8T-1891	103
8T-1892	103
8T-1893	143
	285
8T-1894	143
	285
8T-1895	479
8T-1896	479
8T-1979	604
8T-1980	604
8T-2192	178
	180
8T-2225	160
	166
	167
	240
8T-2275	505
8T-2353	475
8T-2561	334
	447
	494
8T-2659	249
	632
	658
8T-3282	372
	374
	404
	408
8T-3298	504
8T-3490	71
	101
	109
	114
	123
	127
	134
	139
	162
	166
	240
	283
	346
	447
	582
	614
	640
	667
	687
8T-3561	604
8T-3597	111
	614
8T-3612	103
	221
8T-3647	324
8T-3666	62
8T-3957	493
8T-3992	202
8T-4121	63
	65
	80
	84
	91
	98
	101
	103
	109
	111
	114
	116
	118
	139
	143
	160
	162
	164
	167
	202
	223
	240
	249
	271
	285
	291
	299
	308
	321
	343
	350
	351
	353
	354
	359
	375
	377
	379
	381
	414
	423
	424
	443
	454
	479
	481
	485
	487
	489
	505
	509
	511
	513
	541
	582
	599
	603
	609
	611
	614
	616
	623
	641
	644
	647
	650
	665
	671
	687
8T-4122	91
	359
	361
	365
	371
8T-4123	57
	178
	180
	192
	196
	400
	401
	494
	551
	564
	566
	675
8T-4131	350
	351
	353
	354
	564
	566
	678
8T-4132	160
	164
	609
8T-4133	80
	84
	91
	118
	123
	143
	167
	192
	196
	223
	244
	285
	303

► **PRIMARY REFERENCE**

PART NUMBER INDEX

Part	Page	Part	Page	Part	Page	Part	Page
	337		481		485	8T-4184	285
	339		505		487		375
	346		582		489		377
	447		604		612		379
	448		611		644		381
	450		641		655		423
	465		644		659		424
	479		647		669		479
	483		656		674		492
	603		659		675		508
	609		665	8T-4141	383		582
	611		667		384		622
	612		668		385	8T-4185	84
	614		671		386		91
	616	8T-4137	91		551		109
	641		98	8T-4158	604		271
	644		99	8T-4167	383		273
	647		101		385		465
	698		103		386		516
8T-4136	80		118		400		526
	84		121		562		609
	91		143		563		612
	101		160		564		647
	103		164		566	8T-4186	63
	109		167		669		65
	114		238		674		91
	118		240		675		285
	128		244	8T-4170	57		483
	129		249		359		540
	134		285	8T-4171	627		609
	143		308	8T-4172	285		665
	190		329		321	8T-4187	343
	192		334		505		400
	196		337	8T-4176	111	8T-4189	103
	198		339		299		153
	201		341		308		221
	240		429		479		619
	244		431	8T-4177	324		659
	273		479		516	8T-4190	240
	285		494	8T-4178	285	8T-4191	202
	308		599	8T-4179	143		249
	321		603	8T-4181	178		328
	328		612		180		540
	334		614		605		599
	337		623	8T-4182	38	8T-4192	328
	339		641		80		443
	341		644		98		605
	343		647		143		614
	346		659		221	8T-4193	57
	359		668		271		160
	368		687		290		164
	375	8T-4138	249		414		365
	377		629		483		496
	379		632		489		609
	381		659		509	8T-4194	348
	423	8T-4139	308		511		365
	424		343		513		612
	443		356		609		659
	447		357		641	8T-4195	84
	448		358		647		91
	450		359	8T-4183	308		101
	465		385		343		109
	468		411		494		111
	473		423		586		123
	479		424		587		139

► **PRIMARY REFERENCE**

PART NUMBER INDEX

Part	Page
	143
	198
	270
	285
	308
	356
	357
	358
	431
	446
	479
	483
	489
	582
	616
	647
	650
	665
	669
8T-4196	63
	65
	91
	98
	101
	109
	114
	116
	123
	127
	143
	285
	291
	299
	337
	339
	350
	351
	353
	354
	365
	431
	448
	450
	454
	465
	479
	481
	483
	485
	487
	505
	509
	511
	513
	541
	641
	644
	669
	687
8T-4198	63
	65
	143
8T-4199	202
	249
8T-4200	697
8T-4205	157
	202
	226
	230
	238
	425
	427
	441
	614
	629
	632
	665
	679
	682
8T-4222	98
	285
	329
8T-4223	63
	65
	143
	160
	164
	202
	276
	278
	285
	291
	299
	308
	326
	328
	343
	375
	377
	379
	381
	385
	423
	424
	443
	479
	481
	485
	487
	489
	492
	494
	496
	505
	508
	509
	511
	513
	582
	586
	587
	591
	609
	612
	614
	622
	644
	647
	659
8T-4224	46
	84
	103
	157
	188
	189
	190
	192
	196
	198
	202
	241
	249
	278
	322
	516
	641
	673
	697
8T-4231	493
8T-4244	63
	65
	479
	494
	591
	609
8T-4648	285
	291
	591
8T-4649	669
8T-4752	638
8T-4777	708
	710
	711
8T-4779	503
	566
	647
8T-4780	178
	180
8T-4896	85
	99
	143
	190
	193
	196
	198
	241
	257
	276
	278
	285
	389
	429
	431
	578
	641
	644
	698
8T-4910	63
	65
	359
	489
	496
8T-4943	668
8T-4956	285
	356
	357
	358
	375
	377
	385
	481
	485
	487
	505
	582
	647
8T-4970	629
	632
	665
8T-4971	334
	446
	671
8T-4984	101
	478
8T-4986	122
8T-4994	276
	278
	353
	354
	431
	440
8T-4999	723
	725
8T-5005	285
8T-5030	268
	315
8T-5041	291
8T-5043	103
8T-5361	332
	333
	362
	363
	367
	371
	588
8T-5372	337
	339
8T-5383	697
8T-5389	478
8T-5400	698
8T-5410	427
8T-5412	588
8T-5413	111
	162
8T-5429	284
8T-5439	154
	178
	193
	196
	198
	245
	343
	350
	351
	353
	354
	365
	564
	566
	612

► **PRIMARY REFERENCE**

PART NUMBER INDEX

Part	Page	Part	Page	Part	Page	Part	Page
	677		249	8V-0622	170	8Y-6447	700
	678	8T-7971	687	8V-5455	716	8Y-6448	704
8T-5451	238	8T-8379	456	8W-0327	91		705
8T-5460	401		460	8X-1141	479	8Y-6454	708
8T-5668	454	8T-8566	226	8X-1144	478		710
	458	8T-8569	226	8Y-0374	344		711
8T-5912	640	8T-8729	185		345	8Y-6455	708
8T-6381	551		205	8Y-3966	364		710
8T-6430	57		215	8Y-3998	364		711
	677		218	8Y-4000	337	8Y-6459	706
	678		427		339		707
8T-6466	85		436	8Y-5737	623		708
	91		533	8Y-5747	364		710
	99		651	8Y-5945	624		711
	103		652	8Y-5965	691		713
	116		653	8Y-6012	691	8Y-6460	708
	582		654	8Y-6014	691		710
	641	8T-8730	529	8Y-6024	691		711
	644	8T-8736	243	8Y-6041	624	8Y-6461	708
8T-6685	614	8T-8737	177	8Y-6045	624		710
8T-6696	284		238	8Y-6046	624		711
8T-6703	101		436	8Y-6047	624	8Y-6462	706
8T-6723	143		444	8Y-6060	624		707
8T-6724	143		445	8Y-6062	624		713
8T-6761	268		698	8Y-6063	624	8Y-6463	713
8T-6762	100	8T-8902	77	8Y-6064	624	8Y-6839	700
8T-6764	31	8T-8908	659	8Y-6066	624		701
	268	8T-8914	604	8Y-6067	624		702
8T-6854	268	8T-8919	160	8Y-6068	624		703
8T-6868	63		164	8Y-6069	624		704
	65		276	8Y-6277	679		705
	285		278		682	8Y-6859	624
	347		326	8Y-6388	619	8Y-6860	624
	348	8T-8932	431		628	8Y-6910	706
	356	8T-8987	448	8Y-6400	326		707
	357		450		▶364		708
	358	8T-9043	605	8Y-6419	707		710
8T-6869	139	8T-9082	679	8Y-6420	707		711
8T-6912	188	8T-9358	283		▶708		713
8T-6936	605	8T-9371	693	8Y-6422	708	8Y-7452	467
8T-7044	126	8T-9394	578	8Y-6423	706	8Y-8304	604
	303	8T-9399	276		707	8Y-8306	364
8T-7087	285		278		708	8Y-9603	229
8T-7338	497	8T-9403	509		710		
8T-7371	553		511		711		
	554		513		713		
	555	8T-9496	326	8Y-6424	706		
	556		337		707	9B-0576	256
	557		339		713	9B-2289	405
	558	8T-9529	538	8Y-6428	713		407
	559	8T-9530	723	8Y-6429	713		409
	560		725	8Y-6430	706		410
8T-7529	479	8T-9655	139		707	9B-2596	117
8T-7547	103		172		708	9B-7233	202
	322		248		710		665
8T-7566	329	8T-9756	166		711	9B-7237	389
	341	8T-9757	166		713	9D-3437	166
	662		170	8Y-6431	710	9D-3769	659
	664	8T-9834	629	8Y-6432	706		669
8T-7568	440		631	8Y-6433	706	9D-9736	605
8T-7930	591	8T-9884	226		▶710	9F-4446	18
8T-7934	190	8U-3297	498	8Y-6443	711	9F-5599	230
	193	8U-3875	498	8Y-6445	713	9F-5644	233
	196		538	8Y-6446	▶711	9F-6445	427
	198	8U-9480	498		713	9F-6656	723

9

▶ PRIMARY REFERENCE

PART NUMBER INDEX

Part	Page
	725
9G-0002	166
9G-0003	166
	170
9G-0004	170
9G-0005	166
9G-0284	292
9G-0285	292
9G-0286	293
9G-0289	292
9G-0290	292
9G-0832	280
9G-0983	656
9G-0986	656
9G-0990	656
9G-0992	675
9G-1127	604
9G-3695	425
	431
	629
	632
	653
	654
9G-4101	230
9G-5127	283
9G-5664	388
	389
	391
9G-6655	176
9G-6744	293
9G-7101	647
9G-8020	292
9G-8615	263
9G-8637	254
9G-8638	276
	278
9G-8639	276
	278
9G-9151	614
9G-9175	276
	278
9G-9180	276
9G-9181	276
	278
9G-9183	276
	278
9H-0846	308
9H-3360	276
	278
9H-3757	230
9H-6454	505
9H-8712	308
9J-2914	504
9J-3139	594
9J-7031	504
9J-8126	518
	521
	523
9J-8923	595
9J-8926	591
	▶595
9J-9598	591
9L-6770	157
9L-9068	324
9L-9132	257
9M-0164	80
	128
	129
9M-1974	18
	41
	43
	54
	56
	59
	76
	77
	83
	87
	89
	105
	120
	172
	238
	266
	319
9M-1976	308
9M-2008	311
9M-2904	119
	482
9M-3786	401
9M-3835	329
9M-4355	292
9M-5731	665
9M-6803	673
9M-7002	291
9M-7394	504
9M-7609	230
9M-7958	81
9M-8406	641
	644
9M-9647	263
9N-0869	47
	172
	249
	619
9N-1756	548
9N-1995	605
	698
9N-4233	494
9N-4369	▶713
	715
9N-4449	588
9N-4450	588
9N-4685	87
9P-1475	263
9P-1478	280
9P-1921	280
9P-1922	280
9P-1925	280
9P-2245	388
	389
	391
9P-3066	334
9P-3709	308
9P-7072	280
9P-7121	154
9P-7390	292
9P-7757	292
9P-7855	701
9P-7859	700
	704
	705
9P-7860	700
	704
	705
9P-8614	292
9P-8623	292
9P-8626	292
9P-9150	324
9P-9388	649
	650
9P-9390	649
9P-9392	▶649
	675
9R-0824	139
9R-2613	134
9R-2640	598
9R-4764	285
9S-1240	160
	164
9S-1305	427
9S-1588	416
9S-1838	392
	416
	417
9S-2544	230
9S-4181	268
9S-4182	51
	509
	511
	513
	582
9S-4183	61
9S-4185	77
	100
	268
	276
	278
	319
	582
	607
9S-4188	509
	511
	513
9S-4190	139
	322
9S-4191	51
	61
	139
	268
	317
	319
	538
	582
9S-4200	103
9S-4497	111
9S-5187	365
	675
9S-6130	263
9S-6758	118
9S-7710	263
9S-8001	491
	516
	518
	521
	523
	526
9S-8002	516
	518
	521
	523
	529
	531
	533
9S-8003	526
	541
9S-8004	31
	61
	147
	275
	491
	529
	531
	533
9S-8005	31
	51
	61
	105
	257
	261
9S-8006	498
	541
9S-8008	105
	255
	322
9S-8010	414
9S-8230	328
	329
	341
9S-8752	118
9T-0094	456
	460
9T-1576	501
9T-1579	501
9T-1637	501
9T-1642	501
9T-1687	501
9T-2714	454
9T-3004	504
9T-3005	504
9T-3264	504
9T-3541	492
	▶543
9T-3885	452
9T-4143	538
9T-4186	538
9T-4849	493
9T-4901	498
9T-5039	538
9T-5364	528
	▶544
9T-5948	528
9T-5949	528
9T-5950	528
9T-6001	604
9T-6093	458
9T-6316	516
9T-6322	538
9T-6521	544
9T-6522	544

PART NUMBER INDEX

Part	Page
9T-6523	544
9T-6688	516
9T-6827	544
9T-6828	544
9T-7677	504
9T-8571	528
9T-8958	452
9T-8980	528
9T-9836	541
9U-6993	81
9U-8263	627
9U-8746	627
9U-9121	448
	450
9U-9122	448
	450
9V-2818	685
9W-0099	591
9W-0201	591
9W-0513	591
9W-0553	591
9W-0609	588
9W-0645	292
9W-0852	614
	628
	631
9W-0873	591
9W-0876	591
9W-1441	202
9W-1442	202
9W-1446	202
9W-1464	425
9W-1569	280
9W-1570	280
9W-1571	256
9W-1878	580
9W-1951	243
	249
9W-2146	403
9W-2390	482
9W-2579	564
	566
9W-2822	348
	359
9W-2853	256
9W-2992	280
9W-3660	280
9W-3762	570
	571
	▶580
9W-3937	256
9W-3939	256
9W-4159	263
9W-4361	189
	192
	195
	198
9W-4381	418
	419
	420
	421
9W-4897	561
9W-5150	280
9W-5334	263
9W-5343	621
9W-5375	561
9W-5595	321
9W-6102	256
9W-6103	256
9W-6381	572
	574
9W-7925	261
9W-7926	261
9W-8269	292
9W-8270	292
9W-8612	280
9W-8874	579
	580
9W-8875	579
	580
9W-8940	337
	339
9W-9000	561
9W-9082	489
9W-9083	489
9X-0194	695
9X-0196	243
	249
9X-0199	236
9X-0261	145
	204
9X-0262	204
9X-1054	614
9X-1386	216
	640
	643
9X-1813	167
	206
	207
	208
	212
	214
	215
	232
	234
	248
9X-2027	290
	518
	521
	523
9X-2038	619
9X-2043	619
	636
9X-2045	619
	636
9X-2053	48
9X-2099	45
9X-2125	263
	266
	362
	505
	687
9X-2185	623
9X-2205	154
9X-2480	183
9X-2646	123
9X-2647	123
9X-3401	177
	236
	431
9X-3402	207
9X-3452	614
9X-3463	186
	187
	188
9X-4244	188
9X-4385	244
9X-4582	375
	377
	379
	381
	423
	424
9X-4609	289
9X-4824	226
9X-6154	518
9X-6165	178
	180
	183
9X-6269	162
9X-6281	665
9X-6340	724
	725
9X-6381	441
9X-6395	543
	545
9X-6458	263
9X-6615	665
9X-6772	178
	180
9X-7373	614
9X-7378	608
	641
	644
9X-7380	641
	644
9X-7381	641
	644
9X-7382	640
	641
	643
	644
9X-7383	641
	644
9X-7385	608
	641
9X-7671	276
	278
9X-8256	139
	174
	178
	180
	200
	202
	249
	334
	425
	446
	468
	612
	627
	657
	658
	659
9X-8257	160
	164
	285
	334
	343
	414
	496
	497
	503
	566
	609
	647
9X-8258	412
	661
9X-8260	448
	450
9X-8266	334
9X-8268	24
	42
	48
	52
	75
	468
	479
9X-8408	284
9X-8600	154
9X-8699	351
	354
9X-8918	624
9Y-0810	23
9Y-7595	91
9Y-9236	114
9Z-9211	326
9Z-9214	326
0	
003-2143	109
003-9514	109
005-4834	256
012-0380	234
030-1707	160
	228
030-2135	256
030-7946	368
030-7950	147
030-8537	429
030-8538	293
030-9613	252
	253
031-0214	673
031-0218	263
	266
031-1119	112
	113
033-6033	215
033-6034	83
033-6043	550
033-8248	283
033-9139	531

▶ **PRIMARY REFERENCE**

PART NUMBER INDEX

Part	Page
036-9821	230
036-9823	226
037-4426	623
037-5197	166
039-8557	647
045-4065	159
061-6711	293
061-9455	76
067-2551	143
068-8093	293
069-2536	252
	253
069-4269	114
077-3241	331
081-8353	263
083-7784	541
083-9527	628
	631
084-4111	708
	710
	711
085-8091	518
	521
	523
092-4924	200
095-0843	679
	682
095-0878	624
095-0940	498
095-1574	538
095-1750	537
096-3218	538
096-5962	665
096-6166	429
	545
099-3649	46
	516
099-8111	538
1	
100-3224	625
100-3320	238
100-4336	143
100-5179	625
100-6211	541
100-8010	516
	518
	521
	523
	526
100-8011	516
	518
	521
	523
	526
100-8012	516
	518
	523
101-0003	691
	693
101-0742	716
	▶718
101-2850	117
101-2862	498
101-2867	673
101-3055	638
101-3128	172
101-3625	162
101-3934	52
102-0341	623
102-2913	723
	725
102-7365	518
	521
	523
	526
102-8800	698
102-8801	166
	243
	244
	248
	427
	467
	638
	698
102-8802	154
	156
	167
	183
	192
	195
	198
	202
	216
	218
	232
	234
	236
	237
	238
	240
	243
	248
	473
	529
	533
	549
	608
	614
	628
	631
	640
	643
	693
102-8803	145
	166
	167
	185
	190
	192
	195
	198
	205
	206
	215
	238
	240
	243
	248
	249
	429
	473
	614
	628
	631
	640
	643
	651
	652
	653
	654
	695
102-8804	166
	190
	192
	195
	198
	243
	244
	248
	249
	425
	436
	628
	631
	665
102-8805	177
	240
	243
	244
	425
	431
	445
	600
	628
	631
	643
	651
	652
	653
	654
	695
102-8806	145
	166
	167
	178
	180
	183
	243
	628
	631
102-9478	442
103-2543	605
103-6100	640
	643
103-6262	425
103-9425	638
103-9527	612
	▶614
104-5944	622
104-6202	240
104-6729	266
104-6730	266
104-6931	504
105-1797	238
105-3330	724
105-3481	531
105-3482	665
105-8183	292
105-9657	602
105-9659	602
	▶650
106-1227	493
106-2105	283
106-4150	▶272
	273
106-4572	109
106-5122	▶608
	609
106-5472	665
106-7691	388
	389
	391
106-8186	331
106-8187	331
106-8704	640
	643
106-9212	319
106-9214	319
106-9361	343
107-1177	516
107-1179	516
107-3786	249
107-3881	▶427
	429
107-3888	427
107-3945	388
	391
107-4393	643
107-4394	643
107-4399	643
107-7694	17
108-0200	414
108-1091	▶372
	423
	424
108-1335	602
	▶621
108-1696	298
	▶305
108-1847	541
108-2106	305
	▶314
108-3138	627
108-4086	625
108-4087	625
108-4103	625
108-4430	322
108-5157	545
108-5483	371
108-6954	308
108-8089	91
109-1352	553
	554
	555
	556
	557
	558
	559
	560
	▶568
109-1633	640
	643
109-1634	640

▶ PRIMARY REFERENCE

PART NUMBER INDEX

Part	Page	Part	Page	Part	Page	Part	Page
	643	113-6033	656	119-3662	238		▶402
109-1645	248	113-6069	49	119-4166	39	125-7874	238
109-3001	143	114-0358	594		▶215	125-7875	202
	478		595	119-6613	724		238
109-3207	142	114-0359	594		726		248
109-3968	319		595	120-4921	604	125-8254	604
109-4044	643	114-3469	608	120-5753	409	126-0810	473
109-4757	359	114-4304	452	120-5767	405	126-0814	467
109-5498	612	114-5333	640	120-5785	405		478
109-5761	623		643		407	126-1347	403
109-6406	599	114-9125	200		409	126-1757	21
109-9828	604		441	120-5804	407	126-1766	629
109-9829	604	114-9223	80	121-2844	240		632
110-0510	308	114-9363	189	121-4344	103	126-1768	207
110-2028	425	115-1024	192	121-6649	518	126-1773	243
110-2445	114		195		521	126-1774	178
110-2842	322	115-1025	192		523		180
110-3844	611		195		▶545		240
110-6109	628	115-1748	243	121-9915	498		243
	631		628	121-9941	498	126-3700	687
	638		631	121-9943	498	126-3701	687
110-6393	598	115-2422	167	121-9946	498	126-5011	238
	723	115-4072	49	122-1133	549	126-6872	243
	725	115-4219	49	122-3771	324	126-7574	173
110-6845	243	116-3715	126	122-7127	628	126-7975	162
	248		465		631	127-1043	671
110-7882	425	116-6202	640	122-9088	582	127-1044	671
110-8152	636		643	123-0304	243	127-1045	671
110-8318	91	116-6203	628		628	127-1046	671
110-8319	91		631		631	127-1048	671
110-8379	665	116-6698	405	123-0306	243	127-1596	427
110-8826	91		407		628	127-1597	427
110-8827	91		409		631	127-1598	429
110-8834	643		410	123-0790	65	127-1599	429
110-9709	283	116-6702	405	123-1373	167	127-3018	659
111-2416	238		407	123-5748	501	127-5485	243
111-3203	316		409	123-9294	628		248
111-3780	665	117-1385	293		631	127-5486	240
111-3781	665	117-2311	248	123-9624	518	127-8178	128
111-4482	671	117-4491	684		521		129
111-4627	441	117-4492	597		523	128-0314	166
111-4919	299	117-4506	679	124-0174	87	128-2569	448
111-5147	619	117-7826	292		368	128-2570	448
111-7057	465	117-8131	668	124-0506	22	128-2571	450
111-7978	166	117-8765	498	124-3243	619	128-2572	450
111-8314	189	117-8863	671	124-6655	289	128-3341	75
	190	117-9748	405	124-6998	283	128-3813	75
	192		407	124-7000	84	128-5924	640
	195		409	124-8490	614		643
	198		410	124-9666	564	129-1831	628
111-8642	425	117-9966	668		566	129-3217	448
111-8950	425	118-0639	427	124-9672	564		450
111-9251	665	118-0693	604		566	129-8331	178
112-2660	427	118-1170	458	125-1302	202		192
112-4368	482	118-1727	4		▶234		195
112-4440	429		5	125-1362	99		198
112-4511	292		6	125-4175	▶408		243
112-4740	425		7		423	130-0229	275
112-4757	425		8		424	130-1977	482
112-5585	292		9	125-4176	▶404	130-3216	63
112-6550	456		▶20		423	130-3280	130
112-8041	292	118-6299	190		424		131
113-0580	240	118-6878	91	125-4177	387	130-5300	167
113-4420	501	119-2921	▶69		▶402		244
113-5336	34		70	125-5533	387		249

▶ **PRIMARY REFERENCE**

PART NUMBER INDEX

Part	Page	Part	Page	Part	Page	Part	Page
	629	134-9602	623	143-9392	172		471
	632	135-2964	572	144-0195	599		473
130-9192	482	135-2966	572		695	148-8327	91
130-9811	219	135-3084	572		698	148-8335	283
	220	135-5499	679	144-0331	425	148-8336	84
131-0447	425	135-9819	20		444		283
131-0825	301	136-0822	21	144-0367	123		467
131-3278	301	136-1543	663	144-4284	293		473
131-4091	293	136-1544	597	144-7878	293		475
131-4242	624	136-1595	256	145-0326	691		582
131-4647	498	136-2216	308		693	148-8339	91
131-4649	498	136-3188	716	145-1144	318	148-8340	84
131-4650	499	136-3191	716	145-2334	529		582
131-4651	499	136-3192	716		531	148-8347	114
131-4652	499	136-3193	716		533		504
131-4654	499	136-3752	456	145-3405	665	148-8351	467
131-4655	499	136-4183	49	145-5181	485	148-8354	84
131-4656	499	136-6093	431		487	148-8361	475
131-4657	498	136-8645	456	145-6669	131	148-8364	143
131-4674	498	136-9297	529	145-7028	166	148-8367	468
131-4675	498		531		▶218		473
131-4676	498		533		240	148-8368	283
131-5137	638	136-9298	529	145-7328	698		468
131-5167	624		531	145-8741	716		471
131-5492	668		533	146-6315	529		473
132-0338	597	137-1602	137		533	148-8369	84
132-1249	458	137-4488	278	146-6317	529		468
132-5789	153	137-4490	278		533		471
	167	137-6603	322	146-6669	263		473
	240	137-6722	647	146-6670	263	148-8371	468
	629	137-8793	433	146-6747	723	148-8372	143
	632	137-8794	433		725		478
132-7077	665	137-9755	529	146-8477	531	148-8374	143
132-7419	425		533	146-8479	531		284
132-7450	425	137-9810	278	146-8981	531	148-8378	84
132-8487	243	138-0444	154	147-0319	▶186		468
132-9455	435	138-2434	578		189		471
132-9899	324	138-2435	578		190		473
132-9900	324	138-2515	160		192		475
133-1400	301	139-0566	370		195		478
133-1401	301	139-0567	370		198	148-8381	284
133-2198	255	139-1537	504	147-1445	429	148-8382	91
133-2249	436	139-2116	190	147-1446	429	148-8388	478
133-3260	103		192	147-3150	240	148-8391	448
133-5545	546		195	147-3510	431		450
133-5631	370		198	147-5088	106	148-8395	31
133-6379	74	139-4189	531	147-6603	547		51
133-7810	167	141-2240	659	147-6604	547	148-8405	51
	240	141-4044	671	147-6605	547	148-8407	51
133-9405	628	141-4123	623	147-7976	▶653		268
	631	141-4852	529		716	148-8408	61
134-1251	324		531	147-7979	▶654	148-8409	322
134-2540	240		533		716	148-8410	322
	243	141-4976	249	148-1928	289		433
	244	142-2328	572	148-2903	142	148-8411	100
	429	142-2769	724	148-8006	478		268
134-4126	173	142-8540	306	148-8305	467		582
134-5366	383	142-8620	614		475		607
	385	142-8858	628	148-8316	467	148-8418	478
	386		631	148-8318	84	148-8426	284
134-5368	383	142-9643	572		467	148-8434	468
	385	143-1288	679	148-8325	84	148-8435	84
	386		682		467		468
134-7258	725	143-6871	429		471	148-8449	478
134-7317	478	143-7397	447	148-8326	467	149-2494	388

▶ **PRIMARY REFERENCE**

PART NUMBER INDEX

Part	Page
	389
	391
149-2495	388
	391
149-5240	142
149-5470	529
	531
	533
149-5933	412
149-9818	248
150-1293	529
150-3026	143
150-3065	284
150-4047	475
150-4050	478
150-4086	249
151-0254	716
151-0255	716
151-0256	716
151-1398	202
151-2939	23
151-5803	425
151-6689	195
151-9275	425
152-1482	723
152-3421	372
	373
152-8071	392
	393
152-8427	▶189
	195
153-1277	131
153-2073	▶187
	198
153-4247	319
153-4906	31
	147
153-5043	218
153-5710	170
153-6243	284
153-6244	478
153-6246	468
	479
153-6251	448
	450
153-6252	284
153-6281	170
153-6976	521
	523
153-7067	518
	521
	523
153-7549	518
153-7550	518
153-7551	521
	523
153-7553	518
154-1580	504
154-2302	84
154-3172	167
154-3358	50
154-5629	200
	619
154-7443	▶617
	628
	631
155-2255	167
	178
	180
	243
	244
	248
	249
	429
	638
155-2257	243
	244
	248
	249
155-2260	166
	207
	208
	212
	214
	238
	240
	243
	248
	249
	582
	628
	631
	638
	643
155-2261	529
155-2265	166
	183
	238
	240
	244
	628
	629
	631
	632
	638
	643
155-2270	166
	167
	183
	190
	192
	195
	198
	202
	235
	238
	240
	243
	244
	248
	249
	266
	467
	529
	582
	600
	614
	628
	632
	640
	643
155-2271	178
	243
	244
	248
	249
	248
155-2272	166
	167
	180
	429
155-2274	166
	174
	240
	243
	244
	248
	429
	629
	632
	638
	698
155-2276	212
155-3624	51
	509
	511
	513
	582
155-5161	308
155-8577	359
156-4406	293
156-4593	276
	278
156-5342	422
156-5545	597
156-5970	436
	549
156-6175	244
156-7410	619
157-0670	101
157-1361	628
157-2741	631
158-0248	186
	187
158-0250	186
	187
158-0252	186
	187
158-2336	252
	253
158-2734	425
158-2735	425
158-6072	135
	137
158-6161	429
158-6632	166
	▶236
	248
158-7690	602
	▶698
158-7694	▶602
	603
158-7695	602
	▶636
158-7696	602
	▶604
158-7697	604
158-7864	724
	725
158-8906	636
158-9956	491
	▶515
159-1503	647
159-2950	686
	▶688
159-3781	529
	533
159-4712	628
	631
159-7156	464
	▶493
159-7943	619
159-7946	619
159-7948	619
159-7949	619
159-8047	240
159-8108	619
159-8109	619
159-9257	628
	631
160-0496	252
	253
160-0526	22
160-0766	442
	▶529
160-1431	665
160-1432	665
160-1433	665
160-1434	665
160-1435	665
160-2351	359
160-2443	▶205
	665
160-4103	423
160-4702	441
	446
160-5804	643
160-6305	564
	566
160-6306	551
160-7165	688
	689
	▶691
160-7186	687
	▶689
160-7689	240
	243
	249
	429
160-7690	178
	180
160-7820	392
	393
160-8124	238
160-8147	23
160-8184	50
160-8194	60
160-8197	60
160-8199	60
160-8493	508

▶ **PRIMARY REFERENCE**

PART NUMBER INDEX

Part	Page	Part	Page	Part	Page	Part	Page
161-1083	636	163-2437	74		7		429
161-1084	636	163-2445	73		8	166-6781	691
161-1085	636	163-2447	67		9	166-6928	628
161-1091	636	163-2459	73		▶126		631
161-1092	636	163-2478	31	165-4459	4		▶652
161-1093	636	163-3205	578		5	166-9204	431
161-1094	636	163-4770	139		6	166-9209	431
161-1096	636	163-5512	529		7	166-9211	431
	▶638		531		8	166-9212	429
161-1097	638		533		9	166-9213	431
161-1098	636	163-5671	518		▶59	167-0024	27
161-1099	638	164-0403	383	165-4461	4	167-0168	87
161-1703	209	164-0406	▶383		5	167-0171	▶42
161-1704	211		387		6		43
161-1705	210	164-0758	668		7	167-0172	126
161-2684	521	164-0847	628		8	167-1177	442
	523		631		9		▶531
161-2685	518	164-0938	518		▶100	167-1530	628
161-3398	126	164-1234	693	165-4854	308		631
161-3406	10	164-2108	316	165-6779	665	167-1884	190
	11		317	165-6857	668		192
	12		318	165-6946	372		195
	13		437		373		198
	14	164-3651	503	165-6969	501	167-1950	389
	15	164-4146	673	165-9100	665	167-1951	389
	▶26	164-4180	268	165-9102	665	167-1952	389
161-3411	126	164-4227	479	165-9103	665	167-2171	192
161-3424	60	164-4531	597	165-9104	665	167-2201	452
161-3615	446	164-4611	383	166-1784	4		454
	▶462	164-4883	662		5		458
161-3616	442		664		6	167-2208	456
	▶635	164-5567	284		7		460
161-3958	668		468		8	167-2312	452
161-3963	429	164-5570	143		9		454
161-3964	429		479		▶55		458
161-4024	619	164-5590	468	166-1790	4	167-2319	456
161-5967	624	164-5619	541		5		460
161-6149	537	164-5669	73		6	167-2323	414
	546	164-5798	162		7	167-2469	456
161-6154	515	164-6148	10		8	167-7751	427
161-6161	537		11		9	167-8987	244
	546		12		▶71	167-9524	316
161-6963	135		13	166-1792	4		317
	137		14		5		318
161-9289	690		15		6	168-0369	628
161-9926	166		▶23		7		631
	▶207	164-6174	511		8		▶651
162-2166	388		513		9	168-1968	243
	389	164-6963	463		▶72	168-1969	479
	391	164-7556	188	166-2153	678	168-2599	485
	405	164-7577	▶232	166-2287	383		487
	407		255		384	168-7211	60
	409	164-7677	509		385	168-8376	16
	410	164-9541	665		386		▶98
162-3148	120	164-9657	529	166-2582	▶456	168-8377	16
162-5357	324	164-9904	582		566		▶122
	▶433	164-9928	442	166-2583	456	168-8378	16
162-5358	433	164-9929	631	166-2584	456		▶101
162-6448	516	164-9930	442	166-3648	60	168-8655	198
162-7862	388	165-0107	473	166-3733	638	168-8656	198
	389	165-2273	647	166-3777	441	168-8783	16
	391	165-2577	677	166-4841	578		▶611
162-9523	284	165-4445	4	166-4842	578	169-0697	664
163-1135	693		5	166-5229	243	169-1026	682
163-1146	691		6		248	169-1838	112

▶ **PRIMARY REFERENCE**

PART NUMBER INDEX

Part	Page
169-1840	▶112
	114
169-2876	723
	725
169-3104	142
169-3124	100
169-3796	111
169-3797	109
169-3798	109
169-3799	109
169-3800	109
169-3801	109
169-3806	16
	▶447
169-3812	109
169-3821	447
169-3822	447
169-3826	114
169-3883	122
169-3895	72
169-3899	71
169-4368	▶400
	422
	424
169-6902	667
169-7380	691
	693
169-8586	142
169-8598	142
169-9635	698
169-9636	638
169-9637	602
	603
	▶656
169-9639	618
169-9649	▶695
	697
169-9650	695
170-0251	668
170-0792	389
170-1112	597
170-1114	597
170-1115	597
170-3357	491
	▶537
170-3399	612
170-3461	248
170-3793	240
170-3794	160
170-3795	167
170-4001	518
170-4891	582
170-5632	429
170-5849	619
170-5854	604
170-5855	604
170-7694	337
	339
170-8590	673
170-8592	359
171-0808	400
171-1230	679
	682
171-2438	656
171-3054	501
171-3055	501
171-3057	501
171-3058	501
171-3059	501
171-3060	501
171-3061	501
171-3068	501
171-5349	216
171-5882	405
	407
	409
	410
171-5989	501
171-5999	501
171-6001	493
	▶501
171-6682	679
	682
171-7077	616
171-8772	549
172-0962	▶347
172-0964	▶348
172-0967	348
172-2391	436
172-2392	435
	▶436
172-2416	679
	682
172-4860	248
172-4863	202
172-4864	166
172-4869	178
	192
	195
172-5291	441
172-5989	612
172-6062	238
172-9981	452
173-0511	518
	521
	523
	526
173-0512	518
173-0514	521
	523
	526
173-0515	518
173-0946	304
173-1028	▶597
	679
	682
173-1566	248
173-1601	723
173-1852	▶346
173-2052	663
173-3083	684
173-3993	516
	518
	521
	523
	526
173-4607	478
173-4608	478
173-4611	478
173-5787	688
173-7035	688
	689
	690
173-7225	475
173-8938	578
173-9598	640
	643
173-9779	454
	458
173-9815	640
173-9816	640
174-0503	240
	243
	244
	429
174-1495	614
174-2231	▶624
	691
174-2237	624
174-3091	444
	445
174-3847	59
174-4590	723
	724
174-4909	433
	▶437
174-5415	130
	131
174-6127	283
174-7044	431
174-7412	99
174-7414	▶99
174-7599	139
174-7875	166
174-7876	167
174-9169	221
174-9198	▶596
174-9199	▶596
174-9570	139
	▶141
175-0451	195
175-0452	195
175-0454	24
175-1349	628
	631
175-2166	261
175-3616	95
175-3721	52
175-3950	628
	631
175-4291	188
175-4292	188
175-4393	628
175-4972	324
	▶435
175-6260	4
	5
	6
	7
	8
	9
	▶50
175-7162	640
	643
175-7900	452
176-0259	324
176-5321	95
	▶316
176-5913	73
176-5914	73
177-1044	105
177-1050	106
177-1056	106
177-1860	673
177-1862	673
177-1863	679
	682
177-4930	663
177-4935	▶673
	679
	682
177-4937	681
	684
177-6920	135
177-9653	174
177-9656	174
	243
	248
178-0603	▶679
	681
178-0604	▶662
	679
178-0605	662
	▶663
	664
178-0606	▶681
	689
	690
178-0607	673
178-0608	673
178-0609	673
178-2357	149
178-3003	631
178-7877	531
178-7907	663
179-6151	566
179-6152	564
	566
179-6153	564
	566
179-6162	566
179-6874	651
179-8128	149
179-9387	▶438
179-9579	306
180-3907	268
180-4362	284
180-6152	529
	531
	533
180-6600	674
	675
180-6692	346
180-6693	346
180-6694	346
180-6695	109
180-6696	109
180-7304	▶682

▶ **PRIMARY REFERENCE**

PART NUMBER INDEX

Part	Page
	684
180-7305	▶664
	682
180-7910	278
180-9236	640
180-9340	208
183-2097	4
	5
	6
	7
	8
	9
	▶77
183-2317	31
183-3399	87
	89
	147
183-3401	145
183-3406	61
	139
	582
183-3407	31
	147
183-3408	61
183-4273	640
	643
183-4274	240
183-4365	67
	68
183-5163	42
183-7263	516
	518
	521
	523
183-9374	57
184-0982	659
	668
184-1503	687
184-2298	679
	682
184-2299	679
	682
184-3269	687
184-3270	687
184-3285	668
184-3289	668
184-5498	164
184-6011	▶684
	688
184-7211	80
184-8060	665
185-0838	63
	65
185-0843	40
185-0844	101
185-0845	101
185-2076	668
185-2638	157
185-2639	157
185-2644	157
185-2645	157
185-2647	157
185-2648	157
185-2650	157
185-2651	157
185-2653	157
185-2654	157
185-2655	157
185-2658	157
185-3159	22
185-3503	324
185-3533	628
	631
185-3666	668
185-6393	228
185-9607	192
186-0636	198
186-3735	154
	156
	167
	183
	190
	192
	195
	198
	206
	216
	232
	234
	237
	248
	425
	444
	445
	529
	549
	628
	631
	640
	643
186-3736	235
186-4857	695
186-4998	665
186-5097	631
186-5099	631
186-5107	693
186-6189	640
	643
187-0541	537
187-1315	30
187-3523	268
187-3961	101
187-3974	84
187-7719	631
187-8194	50
187-8195	50
187-8222	50
187-8971	70
187-8984	106
187-9194	504
188-0908	276
	278
	▶304
188-1012	609
188-1013	609
188-1017	55
188-1079	462
	▶463
188-2501	647
188-2892	529
188-3034	114
188-3548	39
188-3826	10
	11
	12
	13
	14
	15
	▶96
188-7067	322
188-7068	322
188-7069	322
188-8849	186
	187
188-9644	201
189-0985	591
189-1839	436
189-3032	423
	424
189-5358	656
189-5576	84
189-5577	84
189-5586	111
189-5587	111
189-5588	111
189-5746	▶216
	240
189-6123	656
189-9306	4
	5
	6
	7
	8
	9
	▶70
190-2277	280
190-2278	263
190-2938	724
190-3562	27
190-5386	723
	725
190-6114	59
190-6115	31
190-6117	31
190-7515	101
190-7613	166
	243
	244
	249
190-8609	414
190-8970	139
191-1782	139
191-1783	139
191-2933	690
	▶693
191-4457	100
191-5439	503
191-7823	238
191-8304	293
191-8305	293
191-8920	531
	533
191-8921	529
	533
192-0729	84
	▶95
192-3016	▶618
	659
192-3017	618
192-3018	618
192-4744	403
192-7752	693
192-7755	693
192-7760	693
192-7767	693
192-7783	693
192-7787	693
192-7790	693
192-7795	693
192-7799	693
192-7805	693
192-7810	693
192-7812	693
192-7820	693
192-7822	693
192-7848	693
192-9734	183
193-3356	628
193-3359	628
193-3973	167
193-5116	128
	129
193-7377	618
193-8570	226
194-0935	564
194-0936	564
194-1466	631
194-3708	678
194-5031	529
194-5032	533
	▶535
194-5033	529
	531
	533
	▶536
194-5171	716
194-5226	212
194-5227	212
194-6725	145
	▶208
194-6813	367
194-6814	367
194-6816	367
194-6818	367
194-6820	367
194-6823	367
194-7034	665
195-0452	83
195-4989	190
195-6882	498
195-6932	498
195-6944	538
195-6945	538
195-6947	538
195-6948	538
195-6949	538
195-6950	538
195-7430	549
195-7882	98
195-8098	10

▶ **PRIMARY REFERENCE**

PART NUMBER INDEX

Part	Page
	11
	12
	13
	14
	15
	▶93
196-5478	135
196-5515	533
196-5962	135
196-6838	145
196-9654	238
196-9852	248
196-9858	114
197-0074	498
197-0075	498
197-0076	498
197-0077	498
197-0078	498
197-0079	498
197-0080	498
197-0081	498
197-0082	498
197-0083	498
197-0084	498
197-0085	498
197-0086	498
197-0087	498
197-0088	498
197-0089	498
197-0090	498
197-0093	498
197-0094	498
197-0095	498
197-0668	166
197-6280	▶176
197-6281	176
197-7310	326
197-7447	180
197-7565	243
	248
197-7689	691
197-8393	204
	▶209
197-8394	204
	▶210
197-8419	87
	89
197-8820	▶157
	164
197-9367	60
197-9392	60
198-0921	4
	5
	6
	7
	8
	9
	▶94
198-0971	159
198-1319	4
	5
	6
	7
	8
	9
	▶83
198-1883	271
198-3462	268
198-4410	261
198-4769	373
198-5389	183
198-6574	675
198-6575	675
198-8858	326
198-9706	619
	629
	632
	658
	659
198-9707	629
	632
199-4193	499
199-4317	249
199-6163	70
199-6609	531
199-7834	533
199-7891	157
199-8436	157
	2
200-0189	446
	▶533
200-0750	▶439
	467
200-3174	685
	▶690
200-4495	49
200-4574	429
200-5003	533
200-6345	243
201-0781	478
201-0782	478
201-0950	491
	507
	▶549
	582
201-1260	123
201-2557	326
201-3304	529
201-7269	▶322
	324
201-7274	315
	▶324
201-9127	531
201-9624	429
202-0599	533
202-4303	391
202-4304	▶391
	423
	424
202-4327	248
202-6612	188
202-6614	188
203-2070	614
203-2288	263
203-2789	283
	647
203-3940	217
203-5805	24
203-6090	24
203-6415	▶387
203-6440	▶387
203-7703	688
	689
	690
203-7775	126
204-2281	162
	249
204-4444	22
204-6101	629
	632
204-6102	629
	632
204-6499	263
204-6501	266
204-6502	319
204-8000	248
204-8758	438
	439
204-9530	614
204-9531	614
204-9532	614
205-0626	157
205-1320	49
205-1321	10
	11
	12
	13
	14
	15
	▶49
205-2203	668
205-3079	243
205-5285	18
205-5314	261
205-6388	681
	684
205-7205	266
205-7331	665
205-8257	183
205-8674	▶117
	118
205-8681	118
205-8900	195
206-2800	533
206-3673	▶63
	97
206-3676	▶97
206-3719	70
206-5017	139
206-5162	183
206-5165	183
206-7870	63
206-8836	▶384
	387
206-8837	384
206-9000	16
	▶118
207-0544	393
207-1556	▶225
	229
207-1557	225
	▶226
207-7899	509
	511
	513
208-0375	668
208-4622	164
208-4705	178
208-5498	516
208-8699	1
	2
	▶661
208-8705	1
	2
	▶674
208-8706	607
	▶675
208-9282	83
208-9619	33
208-9647	427
209-0381	248
209-0760	21
209-0762	21
209-2152	564
	566
209-3171	147
209-3172	147
209-3672	63
209-5113	▶622
209-6692	106
209-7193	261
209-7290	77
209-7293	96
209-8423	170
	▶228
210-0091	263
210-1747	204
	▶211
210-4458	308
210-5522	93
210-9096	▶105
	107
210-9097	105
	▶106
211-0220	619
211-0546	93
211-1044	160
	164
211-1812	4
	5
	6
	7
	8
	▶107
211-2134	31
211-5358	693
211-6807	238
211-8041	4
	5
	6
	7
	8
	9
	▶33
211-9085	271
211-9087	271

▶ **PRIMARY REFERENCE**

PART NUMBER INDEX

Part	Page
211-9294	693
212-2301	299
212-4936	153
212-5839	36
212-5844	36
212-7002	24
212-8917	28
212-8926	▶73
	74
213-1308	298
	▶315
213-1723	101
213-1724	101
213-2282	485
	487
213-3190	60
213-4363	10
	11
	12
	13
	14
	15
	▶43
213-4504	198
213-4540	266
	▶319
213-4852	367
213-5206	22
213-6657	533
213-6658	529
213-6659	531
213-7064	▶677
213-7315	628
	631
213-8516	83
213-9320	▶67
	73
214-1109	374
214-1196	▶685
214-1197	607
	▶686
214-1645	122
214-3573	256
	261
214-4208	202
	243
	629
	631
214-5705	63
	65
214-6659	▶367
214-6660	367
214-7567	213
214-7568	87
	89
	147
214-8976	723
	724
214-9080	414
214-9389	176
214-9408	263
214-9492	160
	164
	609
215-1488	▶121
215-1490	121
215-3222	36
215-3249	238
215-3250	▶36
	38
215-3251	16
	▶38
215-3291	40
	63
215-3296	63
	65
215-3662	192
215-3742	63
215-4441	18
215-5568	▶159
	160
215-9599	▶374
	422
215-9801	665
216-0273	280
216-0349	609
216-1598	74
216-4591	261
216-5586	24
216-6202	263
216-6371	256
216-8585	440
217-0609	31
217-2293	256
217-3655	350
	351
	353
	354
217-5199	100
217-5200	100
217-5701	22
217-6887	481
217-7933	673
217-8433	627
217-8669	10
	11
	12
	13
	14
	15
	▶21
218-0404	183
218-1835	1
	2
	▶334
218-1836	1
	2
	▶350
218-1838	1
	2
	▶328
218-1839	1
	2
	▶341
218-1841	1
	2
	▶343
218-1843	1
	2
	▶154
218-1851	328
	▶329
218-2373	437
218-4976	▶2
218-4978	▶1
	2
218-4979	2
	3
	▶298
218-4981	2
	3
	▶464
218-4982	2
	▶422
218-7136	444
219-0305	607
	724
	726
219-2391	425
219-3305	101
219-4481	290
219-6314	183
219-6487	▶188
	190
	192
	195
	198
219-8666	4
	5
	6
	7
	8
	9
	▶52
219-8675	55
219-8681	4
	5
	6
	7
	8
	9
	▶45
220-0230	167
220-0771	228
	229
220-1403	▶292
	313
220-1411	293
220-1418	283
	▶321
220-1429	298
	▶313
220-1952	26
	▶27
220-2800	1
	2
	▶668
220-2810	607
	▶659
220-4324	266
	▶317
220-8233	10
	11
	12
	13
	14
	▶329
	15
	▶147
220-8678	141
221-0144	93
221-0877	263
221-3197	375
	377
	379
	381
	423
	424
221-3200	375
	377
	379
	381
	423
	424
221-3248	▶24
	27
221-3342	▶263
	313
221-3450	716
221-3451	716
221-3494	87
	89
	147
221-5461	▶51
	52
222-0345	681
	684
222-1141	1
	2
	▶166
222-1142	1
	2
	▶248
222-1143	16
	▶240
222-1150	▶446
	464
222-1159	464
	▶496
222-1160	464
	▶540
222-1161	464
	▶497
222-1162	464
	▶503
222-1163	464
	▶478
222-1164	464
	▶467
222-1165	464
	▶465
222-1166	464
	▶483
222-1167	442
	▶471
222-1191	464
	▶508
222-1591	▶3
222-1592	▶2
	3
222-1783	4

▶ **PRIMARY REFERENCE**

PART NUMBER INDEX

Part	Page	Part	Page	Part	Page	Part	Page
	5		▶640	224-9222	166	226-5955	344
	6	223-1678	598		248	226-6583	478
	7		▶643	224-9450	▶425		582
	8	223-1679	1		429	226-6584	478
	9		2	225-0312	726	226-6585	478
	▶22		▶143	225-0313	724	226-6586	478
222-2209	716	223-1680	602		726	226-6587	478
222-2409	4		603	225-1506	▶270	226-6588	478
	5		▶647		298	226-6589	478
	6	223-2205	1	225-2412	91	226-6590	478
	7		2	225-3281	452	226-6591	478
	8		▶687		454	226-7140	478
	9	223-3313	446		458	226-7269	412
	▶44	223-3400	308	225-3284	460	226-7298	465
222-3892	▶97	223-3421	496	225-4134	446	226-7299	465
222-3901	105	223-5098	108	225-4135	446	226-7473	▶171
222-7094	97	223-5111	111	225-4256	726		172
222-7095	97	223-5365	154	225-4257	726	226-7810	483
222-7877	248	223-5373	▶356	225-6363	321	226-7906	483
222-7883	248	223-5374	▶357	225-8026	491	226-7923	483
222-7885	190	223-8076	326		▶546	226-7924	483
	192	223-8173	202	225-8553	202	226-8197	442
	195	224-0672	726	225-8558	326		▶481
	198	224-0821	35	225-9480	▶667	226-8206	481
222-8667	3		▶84		668	226-8234	481
	▶422	224-0881	401	226-0293	631	226-8235	481
222-9151	63	224-2228	145	226-0336	429	226-9130	▶442
	65	224-2693	16	226-0337	631	226-9169	200
223-0535	1		▶75	226-1292	423	226-9423	425
	2	224-2694	75	226-1335	377	226-9622	317
	▶602	224-2695	57	226-1340	414		437
223-0551	2	224-2791	616	226-3400	▶678	226-9629	316
	3		▶665	226-3492	143	226-9663	248
	▶16	224-2793	298	226-3493	467	226-9665	249
223-0556	16		▶616	226-3496	467	226-9666	628
	▶57	224-3247	17	226-3497	467		631
223-0558	16	224-3981	109		475	226-9668	467
	▶229	224-4013	109	226-3498	467	226-9669	166
223-0560	16	224-4120	423	226-3500	467	226-9670	166
	▶139	224-4121	375	226-3501	467	226-9671	167
223-0647	▶401		377	226-3502	467	226-9672	240
	422	224-4123	423	226-3503	467	226-9673	429
	423	224-4124	375	226-3504	467	226-9674	▶202
	424	224-4357	602	226-3505	467		249
223-0652	▶375		▶716	226-3506	471	226-9675	202
	422	224-4449	▶590	226-3507	471	226-9713	▶429
223-0656	▶377	224-4454	▶588	226-3508	471		431
	422		590		473	226-9715	298
223-0659	375	224-4536	▶212	226-3509	471		▶431
	377		213		473	227-0165	▶291
	379	224-4936	496	226-3510	471		298
	381		▶509		473	227-0830	497
	▶414	224-4937	442	226-3511	471		▶498
	423		▶511		473	227-0831	540
	424	224-4946	503		475		▶541
223-0666	1		▶504	226-3512	467	227-0832	508
	2	224-4998	604	226-3908	301		▶528
	▶331	224-5000	604	226-3910	301	227-0833	16
223-0703	▶283	224-5530	▶206	226-4462	256		▶109
	298		665	226-4464	256	227-0835	109
223-1540	1	224-6829	716	226-4751	467	227-0836	109
	2	224-7830	724		▶491	227-0841	▶458
	▶359		726	226-4909	162		551
223-1541	359	224-8923	100	226-4911	162	227-0842	▶454
223-1677	602	224-9072	671	226-5954	345		590

▶ **PRIMARY REFERENCE**

PART NUMBER INDEX

Part	Page
227-0844	448
	450
	▶452
227-0912	202
227-0924	270
	▶271
227-1200	28
227-1226	▶174
227-1228	▶183
227-1229	▶170
227-2451	256
227-3021	498
	▶538
227-3023	538
227-3149	359
227-3151	359
227-4002	238
227-4005	▶448
	553
	555
	557
	559
227-4006	▶450
	553
	555
	557
	559
227-4303	448
227-4304	450
227-5054	598
	674
227-5055	598
227-5056	675
227-5058	661
227-5059	661
227-5904	147
	149
227-6656	343
227-7480	331
227-8715	▶388
	422
227-8716	388
	389
227-8802	350
	353
227-9304	337
227-9305	337
227-9306	339
227-9307	334
227-9310	337
	339
228-0541	2
	▶723
228-0542	1
	▶724
228-1850	315
228-3323	244
228-3621	44
228-4051	675
228-4052	675
228-4093	368
228-4678	368
228-6089	249
	603
	629
	632
228-6787	636
228-7854	▶598
228-7946	473
228-7948	473
228-8364	473
228-8365	473
229-0887	725
229-1494	681
229-2913	▶135
	136
229-2914	135
229-5354	425
229-5421	▶440
	464
229-6635	600
229-6640	667
229-7373	▶368
	422
	423
	424
229-8352	370
229-8609	139
229-8870	145
229-9281	51
229-9323	370
229-9556	385
229-9557	385
229-9558	386
229-9559	386
229-9560	▶385
229-9570	▶386
229-9601	127
230-1340	178
	180
230-1341	726
230-3615	143
230-4118	4
	5
	6
	7
	8
	9
	▶76
230-4119	76
230-4700	602
	603
	▶671
230-4872	454
230-4873	454
230-4876	452
230-5106	640
	643
230-5385	600
230-5388	▶600
	671
230-5553	▶557
230-5554	557
	558
	▶564
230-5555	▶485
	557
	558
230-5556	570
	▶572
230-5557	▶570
	576
230-5558	557
	558
	▶576
230-5585	16
	▶80
230-7699	350
230-7700	350
	353
230-7887	458
230-7892	458
230-9796	80
231-1271	643
231-1345	143
231-1972	10
	11
	12
	13
	14
	15
	▶172
231-1978	4
	5
	6
	7
	8
	9
	▶204
231-3087	408
	▶409
231-3088	404
	▶405
231-3089	402
	▶407
231-4166	283
	▶303
231-4167	303
231-4382	334
231-4384	328
231-4385	329
231-4386	329
231-4387	329
231-4389	329
231-4390	341
231-5969	▶256
	298
231-5990	▶261
	298
231-7101	▶160
231-8855	293
232-1133	103
232-1240	▶103
	151
	152
232-1318	162
232-1398	103
232-3402	202
232-6207	298
	▶308
232-6208	308
	▶311
232-6411	308
232-7583	611
232-7586	611
233-0668	311
233-0891	172
233-4656	494
233-5216	103
233-6745	662
233-6942	475
233-9134	▶460
	564
233-9135	460
233-9138	460
234-0203	83
234-1494	103
234-1496	103
234-2869	582
234-3043	541
234-3422	582
234-3425	582
234-3451	541
234-5846	198
234-7526	89
234-9670	▶418
	422
234-9671	▶418
234-9672	▶398
	418
	420
	421
234-9675	▶419
	422
234-9676	▶419
234-9678	▶399
	419
	420
	421
234-9679	▶394
	395
	398
	399
234-9681	▶395
	398
	399
234-9699	394
	398
	399
	418
	419
	420
	421
234-9704	418
	419
234-9705	418
	419
234-9994	293
235-0399	509
	511
	513
235-0401	▶492
	509
	511
	513
235-0402	509
	511
	513
	▶516
235-0403	509

▶ PRIMARY REFERENCE

PART NUMBER INDEX

Part	Page	Part	Page	Part	Page	Part	Page
	511	236-5880	▶177	237-4268	668		559
	513	236-6220	204	237-4269	668	239-1134	221
	▶518		▶213	237-4270	668		▶237
235-0404	509	236-6221	204	237-4956	96	239-2247	441
	511		▶217	237-7308	190	239-2385	▶441
	513	236-6742	84		192		443
	▶521	236-6743	84		195	239-3354	202
235-0405	511	236-7241	▶351		198	239-3355	249
	▶523	236-7315	4	237-9130	182	239-3686	16
235-0541	365		5		▶657		▶127
235-0544	365		6	237-9140	182	239-3875	475
235-0545	365		7		▶655	239-3876	475
235-0891	504		8	237-9250	129	239-3902	174
235-0892	504		9		▶130	239-4119	475
235-0893	504		▶46	237-9251	128	239-4120	475
235-0895	504	236-8191	57		▶131	239-5103	655
235-0907	504	236-8239	62	237-9252	130	239-5105	658
235-2340	443	236-8240	41		131	239-5113	668
235-4157	▶410	236-8826	201	237-9254	130	239-5120	177
	422	237-0048	202		131		▶182
235-4511	283	237-0049	202	237-9255	130	239-5235	582
235-4513	283	237-0050	202		131	239-5317	475
235-4514	283	237-0051	202	237-9318	▶365		▶507
235-4515	283	237-0052	202	237-9601	293	239-5318	507
235-4516	283	237-0053	202	238-0251	341	239-5912	▶442
235-4605	507	237-0204	659		344	239-6074	513
	▶550		668		345		▶526
235-4826	283	237-0205	659	238-0303	167	239-6076	442
235-5812	▶275		668	238-0451	▶411		▶513
	283	237-0225	202		422	239-6331	▶443
235-5974	▶403	237-0229	48	238-0452	411	239-6986	723
	422	237-0934	600	238-0453	411		724
	424	237-0956	600	238-1029	▶255	239-7392	249
235-6336	▶190	237-0957	▶214		275	239-8107	202
235-6337	▶192		243	238-1116	4		249
235-6338	▶195	237-0984	143		5	239-8155	167
235-6340	▶198	237-0985	143		6	239-9954	▶173
235-6341	▶178	237-1000	598		7		178
235-6529	84		▶612		8		180
235-8026	723	237-1962	228		9	240-0041	18
	725		▶230		▶268	240-3464	177
235-8180	▶482	237-2041	12	238-1117	268		▶201
	590		14	238-2014	202	240-3469	201
235-8202	238		15	238-2709	60	240-3470	201
235-8203	4		▶136	238-2840	268	240-4717	350
	5	237-2209	293	238-4520	401		351
	6	237-2568	151	238-5017	183		353
	7		152	238-7605	1		354
	8	237-2569	▶151		2	240-5679	160
	9	237-2707	▶151		▶628	240-5706	160
	▶238	237-2708	151	238-7606	607	240-5918	160
235-8805	590		152		▶631	240-6902	240
	▶591	237-2732	337	238-7756	442	240-7356	548
235-9651	150	237-2734	339		▶473	240-8317	167
236-2218	343	237-2737	16	238-7757	442	240-8321	170
	▶344		▶134		▶582	240-8613	441
236-2219	343	237-2738	134	238-7759	443		▶445
	▶345	237-3943	693		▶475	240-8917	202
236-2624	344	237-3970	693	238-7793	441	240-9755	111
236-5042	177	237-4213	113	238-8270	441	241-0037	252
	▶243	237-4214	▶113	238-9166	412		253
236-5131	643		151	238-9559	▶494	241-2501	154
236-5132	640		152		553	241-2756	109
	643	237-4240	167		555		▶111
236-5474	345	237-4266	668		557	241-3352	275

▶ **PRIMARY REFERENCE**

PART NUMBER INDEX

Part	Page
241-3718	4
	5
	6
	7
	8
	9
	▶48
241-3719	4
	5
	6
	7
	8
	9
	▶81
241-3720	375
	377
	379
	381
	423
	424
241-4167	726
241-4194	221
241-4287	723
	725
241-4342	659
	668
241-4343	668
241-4344	659
	668
241-4345	668
241-4346	668
241-4348	668
241-4349	668
241-4353	16
	▶119
241-4354	119
241-4815	74
241-4981	65
241-4982	160
241-5634	283
241-5635	283
241-6498	341
241-6499	341
241-6919	341
241-7913	619
241-7917	659
241-7919	619
	659
241-8240	16
	▶609
241-8368	202
	▶235
241-8382	31
241-8383	31
241-8384	31
241-8385	31
241-8386	31
241-8387	31
241-8388	28
241-8389	31
241-8390	31
241-8474	58
241-8475	56
242-0328	68
242-0329	▶68
	73
242-0447	10
	11
	12
	13
	14
	15
	▶74
242-0664	175
242-0665	175
242-0672	10
	11
	12
	13
	14
	15
	▶30
242-0673	17
242-0674	10
	11
	12
	13
	14
	15
	▶17
242-1584	183
242-1585	174
242-3282	183
242-3360	137
242-3459	240
242-3864	77
242-5200	441
242-7090	243
242-7091	243
242-7093	244
242-7094	244
242-7095	244
242-7099	▶175
242-7100	175
242-8397	602
	603
	▶619
242-8398	200
	441
242-8399	200
	441
242-8403	619
242-8404	619
242-8405	668
242-8407	668
242-8409	182
	▶200
243-1171	619
243-1588	122
243-1589	122
243-1590	122
243-1872	▶39
	40
243-5007	40
243-5008	40
243-5168	668
243-5170	668
243-6492	63
244-2616	▶280
	313
244-3114	▶318
244-4500	47
244-5891	74
244-6110	379
	381
245-3261	54
245-3262	10
	11
	12
	13
	14
	15
	▶54
245-4122	▶585
245-4123	▶586
245-4142	▶587
245-4230	489
245-4231	489
245-4630	217
245-7434	249
245-7725	177
245-8456	723
	725
246-0596	4
	5
	6
	7
	8
	9
	▶120
246-0597	120
246-0598	4
	5
	6
	7
	8
	9
	▶58
246-0599	4
	5
	6
	7
	8
	9
	▶56
246-0601	4
	5
	6
	7
	8
	9
	▶82
246-0602	4
	5
	6
	7
	8
	9
	▶62
246-0604	81
246-0605	4
	5
	6
	7
	8
	9
	▶18
246-2641	154
	328
	334
	341
	359
	503
	607
246-3150	23
246-4311	249
246-5083	22
246-5140	420
246-5203	421
246-5215	▶420
246-5216	▶420
246-5217	▶421
246-5218	▶421
246-5960	201
246-5961	201
246-6036	87
	89
246-7899	82
247-2959	289
247-5683	586
247-5689	585
247-5700	587
247-6875	724
	726
247-6876	726
247-6877	724
	726
247-6878	726
248-0848	280
248-0849	280
248-2336	585
	586
248-5035	587
248-5513	100
248-6816	283
248-8866	668
249-0159	77
249-2804	578
250-1911	98
250-3411	▶358
250-3413	▶362
250-4628	662
	664
250-6052	123
250-6053	123
250-6054	123
250-6056	16
	▶116
250-7533	123
250-8466	289
250-9286	127
250-9290	118
251-0061	123

▶ PRIMARY REFERENCE

PART NUMBER INDEX

Part	Page	Part	Page	Part	Page	Part	Page
251-0062	139	252-5853	559	255-8952	▶561	259-1796	▶721
251-1198	629		560		563		723
251-4345	221		▶566	255-8954	▶489	259-1819	725
251-4553	16	252-5854	▶559		553	259-2093	249
	▶123	252-5855	▶560		554	259-2358	22
251-6112	▶553	252-5856	559		555	259-2364	22
251-6113	▶554		560		556	259-3119	▶290
251-6120	▶558		▶577	256-2941	128		298
251-6128	▶555	252-5857	▶571		129	259-9250	607
251-6129	▶556		577	256-2942	▶128	260-1914	600
251-7214	123	252-5858	571	256-2943	▶129	260-3208	351
251-8202	564		▶574	256-6020	▶412	260-3799	221
	566	252-6941	658	256-6021	▶326	260-4856	31
251-8203	562	252-6944	657		412	260-4868	657
	563		658	256-6024	412	260-6479	582
	564	252-6945	177	256-7285	365	260-6642	276
	566		▶658	256-7286	365	260-6644	278
251-9814	▶551	252-6946	658	256-7288	365	260-6649	▶276
	553	252-6948	200	256-7780	356		298
	554	252-8337	▶607		357	260-6652	▶278
	555	252-8438	▶28		358		349
	556		31	256-7781	357	260-7733	375
251-9815	551	252-8439	30	256-7782	356		377
251-9816	551		▶31		357	260-8590	526
251-9817	551	253-0395	▶387		358		▶548
251-9818	553	253-0861	719	256-7789	244	260-9187	283
	554		721	256-8776	244	261-3077	▶379
	555	253-1346	375	256-9637	516		422
	556		377	256-9988	▶273	261-3080	▶381
	▶575		379	257-2696	▶353		422
251-9819	▶569		423	257-2698	▶354	261-3083	379
	575		424	257-5029	600	261-3087	381
251-9820	569	253-1450	▶726	257-5858	87	261-3156	337
251-9827	575	253-3351	445		89		339
251-9828	551	253-5369	116	257-9788	504	261-3162	82
251-9829	575	254-1686	375	258-0763	478	261-3257	375
251-9830	553		377	258-2303	359		377
	554		379	258-2305	331		379
	▶562		423	258-2307	359		381
251-9831	562		424	258-2355	723	261-3864	334
251-9832	562	254-4358	147		725	261-3865	337
	563		▶149	258-5035	162	261-4290	2
251-9834	551	254-5524	101	258-5489	582		▶4
251-9835	561	254-8108	91	258-5490	582	261-4291	▶5
	562	255-1137	356	258-6948	351		35
251-9836	562		357		354	261-4293	▶6
	563		358	258-6949	351		152
251-9839	489	255-1138	356		354	261-4294	3
251-9840	489		357	258-7132	353		▶7
251-9841	489		358	258-7597	▶361	261-4295	▶8
252-0063	629	255-1139	356	258-7607	361	261-4297	▶9
	632		357	258-8728	4		151
252-1567	4		358		5	261-4530	4
	5	255-5210	329		6		▶10
	6	255-5232	16		7	261-4531	5
	7		▶114		8		▶11
	8	255-6387	328		9	261-4533	6
	9	255-6406	328		▶47		▶12
	▶61	255-6934	▶252	258-8798	349	261-4534	7
252-4915	611		283		▶389		▶13
252-5165	▶137	255-6936	▶253	259-1289	365	261-4535	8
	138	255-8030	566	259-1291	365		▶14
252-5849	▶487	255-8951	555	259-1292	365	261-4537	9
	559		556	259-1790	▶719		▶15
	560		▶563		724	261-6769	▶349

▶ **PRIMARY REFERENCE**

PART NUMBER INDEX

Part	Page
261-7971	10
261-7972	11
261-7973	12
	13
261-7974	14
261-7975	15
261-7990	249
261-8619	659
262-0554	▶349
262-1408	249
262-2027	16
	▶65
262-2870	137
262-2878	171
262-5079	602
	603
	▶697
262-5901	10
	11
	13
	▶138
262-6796	354
262-7661	337
262-7662	339
262-7783	719
	721
262-7787	719
	721
262-7790	719
	721
262-7795	719
	721
262-7797	719
	721
262-7801	719
	721
262-7803	719
	721
262-7809	719
	721
263-0853	▶91
263-1982	▶152
263-2601	675
263-3346	283
263-3348	283
263-3464	87
	89
263-4081	266
263-5028	▶35
263-5029	▶35
263-5030	▶162
263-5031	162
263-5792	154
263-7724	334
	▶337
263-7725	334
	▶339
263-7731	145
263-7805	612
263-8976	424
263-8977	424
263-8978	424
263-9012	16
	▶221
263-9088	178
	180
263-9949	283
	▶289
263-9950	289
264-0168	331
264-2014	4
	5
	6
	7
	8
	9
	▶145
264-3177	177
264-3883	475
264-4006	475
264-5336	91
264-5352	91
264-5732	238
264-6816	337
264-6817	339
264-7384	356
264-7386	358
264-7963	151
	152
	▶153
264-7964	153
264-9763	▶396
264-9768	▶397
265-1400	10
	11
	12
	13
	14
	15
	▶60
265-1401	60
265-2106	243
265-5278	▶266
	313
265-7314	629
265-7315	632
265-7316	200
265-9040	244
265-9042	244
265-9718	643
266-1585	431
266-1586	177
266-1961	640
	643
266-2404	240
266-2861	178
	180
266-5851	629
266-7559	151
	152
266-9418	▶108
266-9810	4
	5
	7
	▶87
266-9811	6
	8
	9
	▶89
267-2186	114
267-4491	▶581
267-4492	▶578
	581
267-4696	162
267-4746	▶373
	422
267-7507	65
267-7508	65
267-7509	65
267-8685	638
267-9715	▶150
	151
267-9720	10
	11
	12
	13
	14
	15
	▶151
267-9734	▶142
	150
267-9893	721
267-9894	721
267-9895	719
267-9896	719
268-0066	504
268-1825	632
268-3293	▶444
	445
268-3371	244
268-5986	178
	180
268-5987	178
	180
268-9076	498
268-9709	375
	377
	379
	381
	423
	424
268-9710	375
	377
	379
	381
	423
	424
269-0174	723
	725
269-3364	200
269-8788	87
	89
270-1762	283
	▶299
270-1763	299
	▶301
270-1764	301
270-1766	301
270-3434	283
270-3435	283
270-3436	283
270-3437	283
270-3438	283
270-5320	141
270-7621	2
	3
	▶175
270-9433	504
271-0475	445
271-3863	365
271-7442	31
273-9105	175
273-9106	175
274-7395	204
	▶219
274-7396	204
	▶220
275-4236	337
	339
275-6706	600
277-5801	612
277-5802	612
277-8990	656
278-4696	365
278-5680	▶180
278-6367	▶423
278-6368	▶424
278-7691	240
279-1127	334
279-2333	139
279-2570	424
279-2590	602
	603
	▶623
279-2591	▶599
	602
279-4412	▶603
280-2703	16
	▶164
281-3179	249
281-4015	370
281-8488	368
	▶370
282-0638	178
	180
282-1951	600
282-1952	600
282-1953	600
282-2594	35
	▶40
282-2898	368
282-9090	566
284-0638	270
284-0639	270
284-3781	498
284-3782	498
285-5644	499

▶ PRIMARY REFERENCE



© 2005 Caterpillar
All Rights Reserved

Printed in U.S.A.