CATERPILLAR®

SEBP4963
July 2007

RUTHZIL TRATOR COMERCIAL DE PEÇAS LTDA 11 97083-6812 ROLANDO CITRANGULO

Parts Manual

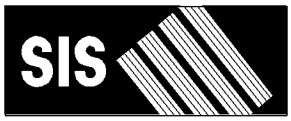

See "General Information" for New Parts Manual Features.

D6T TRACK-TYPE TRACTOR
Std, XL, Differential Steering

GCT1-Up (Machine)
SMC1-Up (Machine)
THX8900-Up (Engine)
KKA1-Up (Transmission)
C4C1-Up (Bulldozer)
C4K1-Up (Bulldozer)
C4L1-Up (Bulldozer)
C4R1-Up (Bulldozer)
C4T1-Up (Bulldozer)
C4W1-Up (Bulldozer)
D6C1-Up (Bulldozer)
D6D1-Up (Ripper)
BZS1-Up (Torque Converter)

Powered By C9 Engine
This Parts Manual is also available in .PDF format on Compact Disc(CD-ROM)-Caterpillar Form No. SERP4963

Product and Dealer Information

Note: For product identification plate locations, see the section “Product Identification Information” in the Operation and Maintenance Manual.

Delivery Date: _____

Product Information

Model: _____

Product Identification Number: _____

Engine Serial Number: _____

Transmission Serial Number: _____

Generator Serial Number: _____

Attachment Serial Numbers: _____

Attachment Information: _____

Customer Equipment Number: _____

Dealer Equipment Number: _____

Dealer Information

Name: _____ Branch: _____

Address: _____

_____

_____

	Dealer Contact	Phone Number	Hours
Sales:	_____	_____	_____
Parts:	_____	_____	_____
Service:	_____	_____	_____

Informations produit et concessionnaire

Nota: Voir l'emplacement de la plaque signalétique du produit au chapitre "Informations produit" du guide d'utilisation et d'entretien.

Date de livraison: _____

Informations produit

Modèle: _____

Numéro d'identification produit: _____

Numéro de série du moteur: _____

Numéro de série de la boîte de vitesses: _____

Numéro de série de l'alternateur: _____

Numéros de série d'équipement: _____

Informations sur l'équipement: _____

Numéro matériel client: _____

Numéro matériel concessionnaire: _____

Informations concessionnaire

Nom: _____ Agence: _____

Adresse: _____

_____

_____

	Contact concessionnaire	Numéro de téléphone	Heures
Ventes:			
Pièces:			
Service:			

Información del Producto/Distribuidor

Nota: Para saber la ubicación de las placas de identificación del producto, ver la sección “Información sobre identificación del producto” en el Manual de Operación y Mantenimiento.

Fecha de entrega: _____

Información del producto

Modelo: _____

Número de identificación del producto: _____

Número de serie del motor: _____

Número de serie de la transmisión: _____

Número de serie del generador: _____

Números de serie de los accesorios: _____

Información sobre los accesorios: _____

Número del equipo del cliente: _____

Número del equipo del distribuidor: _____

Información del distribuidor

Nombre: _____ Sucursal: _____

Dirección: _____

_____

_____

Comunicación con el distribuidor	Número de teléfono	Horas
Ventas: _____	_____	_____
Piezas: _____	_____	_____
Servicio: _____	_____	_____

Informações Sobre Produto e Revendedor

Nota: Para localizações da placa de identificação do produto, consulte a seção, “Informações Sobre Identificação do Produto” no Manual de Operação e Manutenção.

Data de Entrega: _____

Informações Sobre o Produto

Modelo: _____

Número de Identificação do Produto: _____

Número de Série do Motor: _____

Número de Série da Transmissão: _____

Número de Série do Gerador: _____

Números de Série de Acessórios: _____

Informações Sobre Acessórios: _____

Número do Equipamento do Cliente: _____

Número do Equipamento do Revendedor: _____

Informações Sobre o Revendedor

Nome: _____ Filial: _____

Endereço: _____

_____

_____

	Contato do Revendedor	Telefone	Horas
Vendas:	_____	_____	_____
Peças:	_____	_____	_____
Serviço:	_____	_____	_____

Produkt- und Händlerinformation

Anmerkung: Für die Lage der Produkt-Identnummer und Seriennummern siehe Abschnitt “Produkt-Identinformation” im Betriebs- und Wartungshandbuch.

Lieferdatum: _____

Produkt-Identinformation

Modell: _____

Produkt-Identnummer: _____

Seriennummer des Motors: _____

Seriennummer des Getriebes: _____

Seriennummer des Generators: _____

Seriennummern der Arbeitsgeräte: _____

Arbeitsgeräteinformation: _____

Kundennummer: _____

Händlernummer: _____

Händlerinformation

Name: _____ Niederlassung: _____

Adresse: _____

_____

_____

	Kontaktperson beim Händler	Telefon	Dienststunden
Verkauf:	_____	_____	_____
Ersatzteile:	_____	_____	_____
Service:	_____	_____	_____

MEMORANDA

TABLE OF CONTENTS

Name	Page
GENERAL INFORMATION	A24
REPAIR ALTERNATIVES	A43
SUPPLEMENTAL COOLANT ADDITIVES	A48
ENGLISH-PORTUGUESE PARTS NOMENCLATURE	A53
MAINTENANCE PARTS	A61
INDEX	A79
MACHINE ARRANGEMENT	1
CHASSIS AR	1
CONVERSION AR-HEAT SHIELD	1
GENERAL AR	3
ENGINE ARRANGEMENT	4
ENGINE AR	4
ENGINE AR-CORE	9
INSTALLATION AR-ENGINE	14
BASIC ENGINE	15
CAMSHAFT GP	15
COVER GP-CYLINDER BLOCK	16
COVER GP-FRONT HOUSING	17
COVER GP-VALVE MECHANISM	19
CRANKSHAFT GP	20
CYLINDER BLOCK AS	21
CYLINDER BLOCK GP	23
CYLINDER HEAD AS	25
CYLINDER HEAD GP	27
DAMPER GP	30
DRAIN GP-ENGINE OIL	31
DRIVE AR-FAN	32
DRIVE GP-FAN	33
FASTENER GP-CYLINDER HEAD	37
FASTENER GP-DAMPER & PULLEY	38
FASTENER GP-FRONT HOUSING	39
FASTENER GP-VALVE COVER	40
FASTENER GP-VALVE COVER BASE	41
FLYWHEEL GP	42
GEAR GP-FRONT	43
GEAR GP-REAR	44
HOUSING AS-FLYWHEEL	45
HOUSING GP-FLYWHEEL	46
HOUSING GP-FRONT	48
LIFTING GP-ENGINE	49
MOUNTING GP-ALTERNATOR	50
MOUNTING GP-ENGINE	51
MOUNTING GP-FAN DRIVE	52
PAN GP-OIL	53
PISTON & ROD GP	54
PLUG GP-ENGINE	55
PULLEY GP-CRANKSHAFT	56
PULLEY GP-FAN & ALT DRIVE	57
ROCKER ARM GP	59
SEAL GP-CRANKSHAFT	61
SUPPORT GP-ENGINE	63
TRUNNION GP-ENGINE	64
VALVE MECHANISM GP	65
YOKE GP	67
LUBRICATION SYSTEM	68
FILLER GP-ENGINE OIL	68
FILTER GP-ENGINE OIL	69
FUMES DISPOSAL GP	72
GAUGE GP-OIL LEVEL (DIPSTICK)	74
LINES GP-ENGINE OIL	75
LINES GP-OIL SUPPLY	76
LINES GP-TURBOCHARGER OIL	79
OIL CHANGE GP-HIGH SPEED	82
PUMP GP-ENGINE OIL	84
VALVE GP-FLUID SAMPLING	85
VALVE GP-MODULATING	86
COOLING SYSTEM	88
COOLER GP-ENGINE OIL	88
FAN AR-EJECTOR	89
FAN GP-BLOWER	90
FAN GP-REVERSIBLE	91
LINES GP-WATER	92
PUMP GP-WATER	97
RADIATOR AR	100
RADIATOR GP	101
TANK GP-COOLANT	104
AIR INLET AND EXHAUST SYSTEM	108
AFTERCOOLER GP-AIR	108
AIR CLEANER GP	109
DUST EJECTOR GP	111
ELBOW GP-AIR INLET	112
GUARD GP-PRECLEANER	113
LINES GP-AIR	114
MANIFOLD GP-EXHAUST	118
MUFFLER GP	119
PRECLEANER AR	120
PRECLEANER GP	122
PRESCREENER AS	125
SHIELD GP-EXHAUST	126
SHIELD GP-HEAT	127
TURBOCHARGER GP	128
FUEL SYSTEM	132
FILTER & LINES GP-FUEL	132
FILTER GP-WATER SEP & FUEL	134
INJECTOR GP-FUEL	135
LINES GP-FUEL	136
PUMP & MTG GP-UNIT INJ HYD	141

TABLE OF CONTENTS

Name	Page
PUMP GP-FUEL INJECTION	142
PUMP GP-UNIT INJECTOR HYD	144
REGULATOR GP-FUEL PRESSURE	145
TANK GP-FUEL	146
ELECTRICAL AND STARTING SYSTEM	148
ALARM GP	148
ALTERNATOR GP-CHARGING	149
BATTERY & WIRING GP	155
BATTERY GP	161
CABLE AS-COILED	162
CONTROL & MTG GP-ENGINE ELEK	163
CONTROL GP-ENGINE ELECTRONIC	165
CONVERTER GP-ELECTRICAL	166
DISPLAY GP-CAMERA	167
ELECTRONICS AR-MACHINE	168
ELECTRONICS GP-COMMUNICATION	169
ELECTRONICS GP-IMPLEMENT	170
ELECTRONICS GP-MONITOR	170
ELECTRONICS GP-POWER TRAIN	170
GRADE CONTROL AR	171
GRADE CONTROL AR-LASER	171
GRADE CONTROL AR-SATELLITE	172
HEATER GP-JACKET WATER	173
INSTALLATION GP-CAMERA	174
INSTALLATION GP-COMMUNICATION	176
INSTALLATION GP-SECURITY	180
LAMP GP-DOME	182
LAMP GP-FLOOD	183
LIGHTING GP-FLOOD	186
MOUNTING GP-CONNECTOR	205
MOUNTING GP-GRADE CONTROL	206
MOUNTING GP-RECEIVER	209
PANEL GP-FUSE	211
RADIO GP-COMMUNICATION	213
RECEIVER GP-LASER	213
RECEIVER GP-SATELLITE	213
SENSOR GP-ENGINE	215
SENSOR GP-POSITION	216
SENSOR GP-PRESSURE	218
SENSOR GP-SPEED	225
SENSOR GP-TEMPERATURE	227
STARTING AID GP-ETHER	230
STARTING MOTOR GP-ELECTRIC	232
SWITCH GP-BYPASS	238
SWITCH GP-DISCONNECT	239
SWITCH GP-MAGNETIC	240
SWITCH GP-PUSH BUTTON	242
VALVE GP-ETHER STARTING	243
WIRING GP-ELECTRONIC CONTROL	244
WIRING GP-ENGINE	246
WIRING GP-GRADE CONTROL	251
WIRING GP-PLATFORM	256
POWER TRAIN	260
ACCUMULATOR GP	260
AXLE GP	262
BASE GP-OIL FILTER	263
BRAKE & DIFFERENTIAL DRIVE GP	264
BRAKE & PLANETARY GP	268
CASE & PARTS GP-PLANETARY	270
CASE GP-TRANSMISSION	272
CONTROL GP-TRANSMISSION HYD	273
COOLER GP-TRANSMISSION OIL	275
COUPLING & GUARD GP	277
COUPLING GP-PUMP	278
DRAIN GP-ECOLOGY	279
DRIVE GP-PUMP	282
FILTER GP-OIL	283
FINAL DRIVE GP	284
GEAR GP-BEVEL & TRANSFER	288
LINES GP-POWER TRAIN OIL	291
MANIFOLD GP-TRANSMISSION	298
MOUNTING GP-FINAL DRIVE	299
MOUNTING GP-TRANSMISSION	300
PLANETARY GP-TRANSMISSION	301
POWER TRAIN AR	307
PUMP GP-GEAR	308
SCREEN GP-MAGNETIC	312
SEGMENT GP-SPROCKET	313
SHAFT GP-DRIVE	314
TORQUE CONVERTER GP	315
TRANSMISSION AR	321
UNIVERSAL JOINT GP	322
VALVE GP-MODULATING	323
VALVE GP-RELIEF	324
FRAME AND BODY	327
BAR GP-STRIKER	327
BOX GP-BATTERY	329
CASE & FRAME GP	332
COUNTERWEIGHT GP	334
DRAWBAR GP	335
ENCLOSURE GP-ENGINE	337
ENCLOSURE GP-HYDRAULIC TANK	344
FENDER GP	345
GRID GP-SAND BLAST ERODING	348
GRILL GP-RADIATOR	349
GUARD & SCRAPER GP-IDLER	350
GUARD AR-FINAL DRIVE	350
GUARD GP-BOTTOM	351
GUARD GP-FUEL TANK	357
GUARD GP-RADIATOR	360
GUARD GP-REAR	363
GUARD GP-TRANSMISSION	364
LATCH GP	365
PLATE GP-RADIATOR	366
SWEEP GP	367

TABLE OF CONTENTS

Name	Page
UNDERCARRIAGE	369
BAR GP-EQUALIZER	369
CAP GP-TRACK IDLER	372
FRAME GP-TELESCOPING RECOIL	374
GUARD AR-IDLER	382
GUARD GP-IDLER	383
GUARD GP-TRACK GUIDE	385
GUARD GP-TRACK ROLLER	387
GUIDING AR-UNDERCARRIAGE	390
IDLER GP-FRONT	390
IDLER GP-TRACK	393
LINK AS-TRACK	395
LINK AS-TRACK BOX	397
LINK GP-TRACK	403
MOUNTING GP-CARRIER ROLLER	406
PIVOT BAR GP	408
ROLLER AR-TRACK	409
ROLLER GP-TRACK CARRIER	410
ROLLER GP-TRACK-DOUBLE FLANGE	411
ROLLER GP-TRACK-SINGLE FLANGE	416
SCRAPER GP-IDLER	422
STRIKER GP-REAR	423
TRACK ADJUSTER & RECOIL GP	424
TRACK GP	426
UNDERCARRIAGE AR	431
STEERING AND BRAKING SYSTEM	434
ACTUATOR GP-PUMP	434
FILTER GP-OIL	435
HEAD GP-PUMP	436
LINES GP-STEERING	438
MANIFOLD & VALVE GP	443
PUMP & MTG GP-STEERING	446
PUMP GP-CHARGE	447
PUMP GP-PISTON	448
ROTATING GP-PUMP	450
VALVE GP-BRAKE CONTROL	452
VALVE GP-BYPASS	456
VALVE GP-PUMP CONTROL	457
VALVE GP-RELIEF	459
VALVE GP-SOLENOID	462
HYDRAULIC SYSTEM	464
ACCUMULATOR GP-PILOT OIL	464
ADAPTER GP-MOTOR	466
CONTROL AR-HYDRAULIC IMPLEMENT	467
COOLER GP-HYDRAULIC OIL	469
CYLINDER & LINES GP-LIFT	470
CYLINDER GP-BULLDOZER LIFT	474
CYLINDER GP-RIPPER LIFT	476
CYLINDER GP-TILT	478
HYDRAULIC AR-2 VALVE	482
LINES GP-LIFT CYLINDER	483
LINES GP-PILOT	485
LINES GP-PUMP	495
LINES GP-RIPPER	499
LINES GP-TILT CYLINDER	501
MANIFOLD GP-CONTROL	509
MANIFOLD GP-VALVE	510
MOTOR GP-PISTON	512
MOUNTING GP-CYLINDER	513
PUMP & MTG GP-IMPLEMENT	515
PUMP GP-PISTON	516
ROTATING GP-MOTOR	520
ROTATING GP-PUMP	522
TANK & FILTER GP-HYDRAULIC	523
TANK & MTG GP-HYDRAULIC	526
VALVE & MTG GP-BULLDOZER	527
VALVE & MTG GP-CONTROL	528
VALVE & MTG GP-IMPLEMENT CONT	530
VALVE GP-BANK 2	531
VALVE GP-BANK 3	533
VALVE GP-CHECK	537
VALVE GP-CONTROL	538
VALVE GP-PILOT	552
VALVE GP-PILOT CARTRIDGE	560
VALVE GP-PRESSURE REDUCING	562
VALVE GP-PUMP CONTROL	563
VALVE GP-QUICK-DROP	564
VALVE GP-RELIEF	567
VALVE GP-SHUTTLE	571
VALVE GP-SOLENOID	573
IMPLEMENTS	575
BRACE GP-BULLDOZER	575
BULLDOZER AR-ANGLING	577
BULLDOZER AR-SEMI-UNIVERSAL	581
C-FRAME AS	585
C-FRAME GP	586
PUSH ARM GP	588
TRUNNION GP-BULLDOZER	592
WORK TOOLS	593
BLADE & EDGE GP-ANGLING	593
BLADE & EDGE GP-SEMI-UNIVERSAL	594
BLADE AS-SEMI-UNIVERSAL	598
BLADE GP-ANGLING	603
BLADE GP-SEMI-UNIVERSAL	604
EDGE GP-BIT & CUTTING	606
LINES GP-WINCH	608
MAST GP	612
MOUNTING GP-MAST	612
MOUNTING GP-RIPPER	614
RIPPER AR	616
RIPPER GP	617
TOOTH GP-RIPPER	619

TABLE OF CONTENTS

Name	Page
OPERATOR STATION	623
ADJUSTER GP-SEAT	623
AIR COMPRESSOR GP-SEAT	624
AIR CONDITIONER AR	626
AIR CONDITIONER GP	627
BLOWER GP-CAB	628
CAB AR	629
CAB GP	631
CANOPY AR	634
COMPRESSOR GP-REFRIGERANT	635
CONDENSER & MTG GP-REFRIGERANT	638
CONDENSER GP-REFRIGERANT	641
CONTROL & MTG GP-JOYSTICK	643
CONTROL & MTG GP-PEDAL	644
CONTROL GP-HANDLE	645
CONTROL GP-JOYSTICK	650
CONTROL GP-PARKING BRAKE	651
CONTROL GP-PILOT OPERATED HYD	653
CONTROL GP-STEERING & TMSN	654
COVER GP-CONSOLE	656
DISPLAY GP-MONITOR	659
HANDHOLD GP	660
HEATER GP-CAB	662
HOUSING GP-SEAT SUSPENSION	663
INSTALLATION GP-RADIO	666
INSTRUMENT GP	667
KNOB GP	674
LINER GP-CAB	675
LINES GP-AIR CONDITIONER	679
LINES GP-HEATER	686
MIRROR GP-REAR VIEW	688
MODULE GP-QUAD GAUGE	690
MONITOR AS	691
MOTOR GP-WINDOW WIPER	692
MOUNTING GP-ANTENNA	696
MOUNTING GP-CAB	697
MOUNTING GP-CONTROL	698
MOUNTING GP-MONITOR	699
MOUNTING GP-PLATFORM	701
MOUNTING GP-RADIO	703
MOUNTING GP-ROPS	704
PAN GP-BACKREST	705
PEDAL GP-GOVERNOR & BRAKE	708
PLATFORM GP	710
PLATFORM GP-OPERATOR	711
PRESSURIZER GP-CAB	714
RECLINER GP-SEAT	716
ROPS GP	717
ROPS GP-OPEN	718
SCREEN GP-PROTECTION	720
SEAT GP	722
SEAT GP-SUSPENSION	731
SUSPENSION GP-SEAT	734
TANK GP-WINDOW WASHER	738
WASHER GP-WINDOW	741
WINDOW GP-CAB	743
WINDOW GP-SLIDING	757
WIPER GP-WINDOW	758
WIPER PIVOT GP	760
SERVICE EQUIPMENT AND SUPPLIES	761
FILM GP	761
PLATE & FILM GP	763
PART NUMBER INDEX	B1

TABLE DES MATIÈRES

Désignation	Page
GÉNÉRALITÉS	A27
OPTIONS DE RÉPARATION	A44
ADDITIFS POUR LIQUIDE DE REFROIDISSEMENT	A49
PIÈCES DE RECHANGE	A64
INDEX	A91
VERSION DE MACHINE	1
VERSION DE CHASSIS	1
VERSION DE TRANSFORMATION-ÉCRAN THERMIQUE	1
VUE DU MODÈLE	3
VERSION DE MOTEUR	4
MOTEUR (VERSION)	4
MOTEUR - PARTIE CENTRALE (VERSION)	9
MONTAGE DE MOTEUR (VERSION)	14
MOTEUR STANDARD	15
ARBRE A CAMES (ASS)	15
BLOC-CYLINDRES - COUVERCLE (ASS)	16
COUVERCLE DE CARTER AV (ASS)	17
CACHE-SOUPAPES (ASS)	19
VILEBREQUIN (ASS)	20
BLOC-CYLINDRES (ENS)	21
BLOC-CYLINDRES (ASS)	23
CULASSE (ENS)	25
CULASSE (ASS)	27
AMORTISSEUR DE VIBRATIONS (ASS)	30
VIDANGE-HUILE DE MOTEUR (ASS)	31
ENTRAINEMENT DE VENTILATEUR (VERSION)	32
ENTRAÎNEMENT DE VENTILATEUR (ASS)	33
BOULONNERIE DE LA CULASSE (ASS)	37
BOULONNERIE D'AMORTISSEUR ET DE POULIE	38
BOULONNERIE DE CARTER AV (ASS)	39
CACHE-SOUPAPE - BOULONNERIE (ASS)	40
FIXATION DE SUPPORT DE CACHE-SOUPAPES (ASS)	41
VOLANT MOTEUR (ASS)	42
PIGNONNERIE AV (ASS)	43
PIGNON AR (ASS)	44
CARTER DE VOLANT (ENS)	45
CARTER DE VOLANT (ASS)	46
CARTER AV (ASS)	48
OEILLETONS DE LEVAGE MOTEUR (ASS)	49
MONTAGE D'ALTERNATEUR (ASS)	50
MONTAGE DE MOTEUR (ASS)	51
MONTAGE D'ENTRAÎNEMENT DE VENTILATEUR (ASS)	52
HUILE MOTEUR - CARTER (ASS)	53
PISTON ET BIELLE (ASS)	54
BOUCHON DE MOTEUR (ASS)	55
VILEBREQUIN - POULIE (ASS)	56
POULIE - ENTRAÎNEMENT D'ALTERNA. ET DE VENTI.	57
AXE DE CULBUTEUR (ASS)	59
JOINT DE VILEBREQUIN (ASS)	61
SUPPORT DE MOTEUR (ASS)	63
TOURILLON DE MOTEUR (ASS)	64
CULBUTERIE (ASS)	65
ETRIER (ASS)	67
CIRCUIT DE GRAISSAGE	68
BOUCHON DE REMPLISSAGE D'HUILE MOTEUR (ASS)	68
FILTRE À HUILE MOTEUR (ASS)	69
DISPOSITIF D'EVACUATION DES VAPEURS DE CARTER	72
JAUGE D'HUILE MOTEUR (BAIONNETTE) (ASS)	74
CANALISATIONS D'HUILE MOTEUR (ASS)	75
CANALISATIONS D'ALIMENTATION D'HUILE (ASS)	76
CANALISATIONS D'HUILE DE TURBOCOMPRESSEUR (ASS)	79
DISPOSITIF DE VIDANGE RAPIDE D'HUILE (ASS)	82
POMPE A HUILE MOTEUR (ASS)	84
ROBINET-PRÉLÈVEMENT D'ÉCHANTILLON DE LIQUIDE (ASS)	85
SOUPAPE DE MODULATION (ASS)	86
CIRCUIT DE REFROIDISSEMENT	88
REFROIDISSEUR D'HUILE MOTEUR (ASS)	88
VENTILATEUR - ÉJECTEUR (VERSION)	89
VENTILATEUR SOUFFLANT (ASS)	90
VENTILATEUR A PALES RÉVERSIBLES (ASS)	91
CANALISATIONS D'EAU (ASS)	92
POMPE A EAU (ASS)	97
RADIATEUR (VERSION)	100
RADIATEUR (ASS)	101
RÉSERVOIR DU LIQUIDE DE REFROIDISSEMENT (ASS)	104

TABLE DES MATIÈRES

Désignation	Page
CIRCUIT D'ADMISSION D'AIR ET D'ECHAPPEMENT	108
REFROIDISSEUR D'ADMISSION D'AIR (ASS)	108
FILTRE A AIR (ASS)	109
ÉJECTEUR AUTOMATIQUE DE POUSSIÈRE (ASS)	111
COUDE D'ADMISSION D'AIR (ASS)	112
PROTECTION DE PRÉFILTRE (ASS)	113
CANALISATIONS D'AIR (ASS)	114
COLLECTEUR D'ÉCHAPPEMENT (ASS)	118
SILENCIEUX (ASS)	119
PREFILTRE (VERSION)	120
PREFILTRE (ASS)	122
ÉPURATEUR (ENS)	125
DEFLECTEUR D'ECHAPPEMENT (ASS)	126
ÉCRAN THERMIQUE (ASS)	127
TURBOCOMPRESSEUR (ASS)	128
CIRCUIT DE CARBURANT	132
FILTRE ET CANALISATIONS DE CARBURANT (ASS)	132
FILTRE DE SÉPARATEUR D'EAU ET DE CARBURANT (ASS)	134
INJECTEUR DE CARBURANT (ASS)	135
CANALISATIONS DE CARBURANT (ASS)	136
POMPE D'INJECTEURS-POMPES HYDRAU. ET MONTAGE	141
POMPE D'INJECTION DE CARBURANT (ASS)	142
INJECTEURS-POMPES HYDRAULIQUES (ENS)	144
REGULATEUR DE PRESSION DE CARBURANT (ASS)	145
RÉSERVOIR DE CARBURANT (ASS)	146
CIRCUIT DE DÉMARRAGE ET ÉLECTRIQUE	148
AVERTISSEUR (ASS)	148
ALTERNATEUR DE CHARGE (ASS)	149
BATTERIE ET CÂBLAGE	155
BATTERIE (ASS)	161
CÂBLE EXTENSIBLE (ENS)	162
COMMANDE ET MONTAGE - MOTEUR	163
COMMANDE ELECTRONIQUE DE MOTEUR (ASS)	165
TRANSFORMATION ELECTRIQUE (ASS)	166
AFFICHAGE DE LA CAMÉRA (ASS)	167
COMPOSANTS ÉLECTRONIQUES DE LA MACHINE (VERSION)	168
ÉLECTRONIQUE - COMMUNICATION (ASS)	169
COMMANDE ÉLECTRONIQUE D'ÉQUIPEMENT (ASS)	170
ÉLECTRONIQUE-MONITEUR (ASS)	170
ÉLECTRONIQUE DE TRANSMISSION (ASS)	170
VERSION DE COMMANDE DE PROFIL LONGITUDINAL	171
VERSION DE COMMANDE DE PENTE-LASER	171
VERSION DE COMMANDE DE PENTE-SATELLITE	172
EAU DES CHEMISES - RECHAUFFEUR (ASS)	173
POSE DE LA CAMÉRA (ASS)	174
MONTAGE-COMMUNICATION (ASS)	176
MONTAGE-SÉCURITÉ (ASS)	180
PLAFONNIER (ASS)	182
LAMPE - PHARE (ASS)	183
ÉCLAIRAGE - PROJECTEURS (ASS)	186
MONTAGE DE CONNECTEUR (ASS)	205
MONTAGE DE COMMANDE DE PENTE (ASS)	206
MONTAGE DE RÉCEPTEUR (ASS)	209
PANNEAU - FUSIBLES (ASS)	211
RADIO -COMMUNICATION (ASS)	213
RÉCEPTEUR LASER (ASS)	213
RÉCEPTEUR DE SATELLITE (ASS)	213
CAPTEUR - MOTEUR (ASS)	215
SONDE - CIRCUIT DE CARBURANT	216
CAPTEUR DE PRESSION (ASS)	218
CAPTEUR DE VITESSE (ASS)	225
CAPTEUR DE TEMPERATURE (ASS)	227
AUXILIAIRE DE DÉMARRAGE À L'ÉTHER	230
DÉMARREUR ÉLECTRIQUE (ASS)	232
INTERRUPTEUR - DÉRIVATION (ASS)	238
ROBINET DE BATTERIE (ASS)	239
CONTACTEUR MAGNETIQUE (ASS)	240
CONTACTEUR DE BOUTON-POUSSOIR (ASS)	242
SOUPAPE DE DÉMARRAGE À L'ÉTHER (ASS)	243
COMMANDE ÉLECTRONIQUE - CABLAGE	244
CABLAGE DE MOTEUR (ASS)	246
AVERTISSEMENT DE PROFIL LONGITUDINAL (ASS)	251
CABLAGE - PLATE-FORME (ASS)	256
TRANSMISSION	260
ACCUMULATEUR (ASS)	260
ESSIEU (ASS)	262
SUPPORT DE FILTRE À HUILE (ASS)	263

TABLE DES MATIÈRES

Désignation	Page
FREIN ET ENTRAÎNEMENT DE DIFFÉRENTIEL (ASS)	264
FREIN ET TRAINS PLANÉTAIRES (ASS)	268
TRAINS PLANÉTAIRES - CARTER ET PIÈCES	270
CARTER DE BOITE	272
COMMANDE HYDRAULIQUE DE BOÎTE (ASS)	273
REFROIDISSEUR D'HUILE DE BOÎTE (ASS)	275
RACCORD ET PROTECTION (ASS)	277
ACCOUPLEMENT DE POMPE (ASS)	278
VIDANGE-ÉCOLOGIE (ASS)	279
ENTRAÎNEMENT DE POMPE (ASS)	282
FILTRE A HUILE (ASS)	283
RÉDUCTEURS (ASS)	284
COURONNE ET ENGRENAGES DE TRANSFERT (ASS)	288
CANALISATIONS D'HUILE DE TRANSMISSION (ASS)	291
COLLECTEUR DE TRANSMISSION (ASS)	298
MONTAGE DE RÉDUCTEURS (ASS)	299
REDUCTEUR MARIN - MONTAGE (ASS)	300
BOÎTE PLANÉTAIRE (ASS)	301
TRANSMISSION (VERSION)	307
POMPE A ENGRENAGES (ASS)	308
ÉCRAN MAGNÉTIQUE (ASS)	312
SEGMENT DE BARBOTIN (ASS)	313
ARBRE D'ENTRAÎNEMENT (ASS)	314
CONVERTISSEUR DE COUPLE (ASS)	315
BOÎTE DE VITESSES (VERSION)	321
JOINT UNIVERSEL (ASS)	322
SOUPAPE DE MODULATION (ASS)	323
CLAPET DE DECHARGE (ASS)	324
CHÂSSIS ET BENNE	327
BARRE DÉFLECTRICE (ASS)	327
COMPARTIMENT DE BATTERIE (ASS)	329
CHÂSSIS ET CARTER (ASS)	332
CONTREPOIDS (ASS)	334
BARRE D'ATTELAGE (ASS)	335
CARENAGE DE MOTEUR (ASS)	337
CARENAGE - RESERVOIR HYDRAULIQUE (ASS)	344
GARDE-BOUE (ASS)	345
DEFLECTEUR PARE-SABLE (ASS)	348
GRILLE DE RADIATEUR (ASS)	349
ROUE LIBRE DE PROTECTION ET DÉCAPEUSE (ASS)	350
PROTECTEUR DE RÉDUCTEURS (VERSION)	350
BLINDAGE INFÉRIEUR (ASS)	351
PROTECTION DU RÉSERVOIR DE CARBURANT (ASS)	357
PROTÈGE-RADIATEUR (ASS)	360
BLINDAGE AR	363
BLINDAGE DE TRANSMISSION	364
VERROU (ASS)	365
PLAQUE DE RADIATEUR (ASS)	366
ARCEAUX DE DÉBARDAGE (ASS)	367
TRAIN DE ROULEMENT	369
BALANCIER DE SUSPENSION (ASS)	369
CHAPEAU DE ROUE AV (CHAINE) (ASS)	372
CARTER TELESCOPIQUE DE MECANISME AMORTISSEUR	374
PROTECTION DE ROUE LIBRE (VERSION)	382
BLINDAGE DE ROUE AV (ASS)	383
GUIDE PROTECTEUR DE CHAÎNE (ASS)	385
PROTEGE-GALETS (ASS)	387
VERSION DE GUIDAGE DE TRAIN DE ROULEMENT	390
ROUE AV (ASS)	390
ROUE AV - CHAINES (ASS)	393
MAILLON DE CHAINE (ENS)	395
BIELLE DE CARTER DE CHAÎNE (ENS)	397
BIELLETTE - CHAÎNE (ASS)	403
MONTAGE DE GALET SUPÉRIEUR	406
TRAVERSE PIVOT (ASS)	408
GALET INFÉRIEUR (VERSION)	409
GALET SUPERIEUR (ASS)	410
GALET A BOUDIN DOUBLE (ASS)	411
GALET A BOUDIN SIMPLE (ASS)	416
ROUE AV DE SCRAPER (ASS)	422
LOQUET TOURNANT ARRIÈRE (ASS)	423
MECANISME AMORTISSEUR ET REGLAGE DE CHAINES (ASS)	424
CHAINES (ASS)	426
TRAIN DE ROULEMENT	431
CIRCUIT DE DIRECTION ET DE FREIN	434
MECANISME DE COMMANDE DE POMPE (ASS)	434
FILTRE A HUILE (ASS)	435
TÊTE DE POMPE (ASS)	436
CANALISATIONS DE DIRECTION (ASS)	438
COLLECTEUR ET SOUPAPE (ASS)	443
POMPE DE DIRECTION ET MONTAGE (ASS)	446
POMPE DE GAVAGE (ASS)	447
POMPE A PISTONS (ASS)	448
GROUPE DE ROTATION DE POMPE	450

TABLE DES MATIÈRES

Désignation	Page
DISTRIBUTEUR DE FREIN (ASS)	452
SOUPAPE DE DÉRIVATION (ASS)	456
DISTRIBUTEUR DE POMPE (ASS)	457
CLAPET DE DECHARGE (ASS)	459
SOUPAPE - SOLÉNOÏDE (ASS)	462
CIRCUIT HYDRAULIQUE	464
ACCUMULATEUR - HUILE PILOTE (ASS)	464
ADAPTATEUR DE MOTEUR (ASS)	466
VERSION DE COMMANDE D'ÉQUIPEMENT HYDRAULIQUE	467
REFROIDISSEUR D'HUILE HYDRAULIQUE (ASS)	469
VÉRIN DE LEVAGE ET CANALISATIONS (ASS)	470
VÉRIN DE LEVAGE DE LAME DE BULLDOZER (ASS)	474
VERIN DE LEVAGE DE RIPPER (ASS)	476
VÉRIN D'INCLINAISON (ASS)	478
DISTRIBUTEUR - 2 VOIES (VERSION)	482
CANALISATIONS DE VÉRIN DE LEVAGE (ASS)	483
CANALISATIONS A COMMANDE PILOTE (ASS)	485
CANALISATIONS DE POMPE (ASS)	495
CANALISATIONS DU RIPPER (ASS)	499
CANALISATIONS DU VÉRIN D'INCLINAISON (ASS)	501
COLLECTEUR - COMMANDE (ASS)	509
COLLECTEUR - SOUPAPE (ASS)	510
GROUPE DE MOTEUR A PISTONS	512
MONTAGE DE VÉRIN (ASS)	513
POMPE D'EQUIPEMENT ET MONTAGE (ASS)	515
POMPE A PISTONS (ASS)	516
GROUPE DE ROTATION DE MOTEUR	520
GROUPE DE ROTATION DE POMPE	522
RÉSERVOIR HYDRAULIQUE ET FILTRE (ASS)	523
RÉSERVOIR HYDRAULIQUE ET MONTAGE (ASS)	526
SOUPAPE DE BULLDOZER ET MONTAGE (ASS)	527
DISTRIBUTEUR ET MONTAGE (ASS)	528
SOUPAPE ET MONTAGE-COMMANDE D'ÉQUIPEMENT (ASS)	530
DISTRIBUTEUR DOUBLE ÉLÉMENT (ASS)	531
DISTRIBUTEUR TRIPLE ÉLÉMENT (ASS)	533
CLAPET DE RETENUE (ENS)	537
DISTRIBUTEUR (ASS)	538
SOUPAPE PILOTE (ASS)	552
SOUPAPE - CARTOUCHE PILOTE (ASS)	560
SOUPAPE RÉDUCTRICE DE PRESSION (ASS)	562
DISTRIBUTEUR DE POMPE (ASS)	563
SOUPAPE D'ABAISSEMENT RAPIDE (ASS)	564
CLAPET DE DECHARGE (ASS)	567
VANNE PILOTE (ASS)	571
SOUPAPE - SOLÉNOÏDE (ASS)	573
ÉQUIPEMENTS	575
TIRANT DE BULLDOZER (ASS)	575
BULLDOZER À ORIENTATION (VERSION)	577
LAME DE BULLDOZER SEMI-UNIVERSELLE (VERSION)	581
BATI EN C (ENS)	585
BATI EN C (ASS)	586
BRAS DE POUSSÉE (ASS)	588
TOURILLON DE BULLDOZER (ASS)	592
OUTILS DE TRAVAIL	593
LAME ORIENTABLE (ASS)	593
LAME DE COUPE SEMI-UNIVERSELLE (ASS)	594
LAME SEMI-UNIVERSELLE (ENS)	598
LAME À ORIENTATION (ASS)	603
LAME SEMI-UNIVERSELLE (ASS)	604
EMBOUT ET LAME DE COUPE (ASS)	606
CANALISATIONS DE TREUIL (ASS)	608
MÂT (ASS)	612
MONTAGE DU MAT (ASS)	612
MONTAGE DE RIPPER (ASS)	614
RIPPER (VERSION)	616
RIPPER (ASS)	617
DENT DE RIPPER (ASS)	619
POSTE DE CONDUITE	623
REGLAGE DE SIEGE (ASS)	623
SIÈGE - COMPRESSEUR D'AIR (ASS)	624
CLIMATISEUR (VERSION)	626
CLIMATISEUR (ASS)	627
VENTILATEUR SOUFFLANT DE CABINE (ASS)	628
CABINE (VERSION)	629
CABINE (ASS)	631
TOIT (VERSION)	634
COMPRESSEUR DE REFRIGERANT (ASS)	635
CONDENSATEUR ET MONTAGE (RÉFRIGÉRANT)	638
CONDENSEUR DE RÉFRIGÉRANT	641
COMMANDE ET MONTAGE - LEVIER (ASS)	643

TABLE DES MATIÈRES

Désignation	Page
COMMANDE ET MONTAGE DE PÉDALE (ASS)	644
COMMANDE DE POIGNÉE (ASS)	645
PALONNIER - GROUPE DE COMMANDE (ASS)	650
COMMANDE DE FREIN DE STATIONNEMENT (ASS)	651
COMMANDE HYDRAULIQUE PILOTE (ASS)	653
COMMANDE DE DIRECTION ET BOITE DE VITESSES	654
COUVERCLE DE LA CONSOLE (ASS)	656
ÉCRAN DU MONITEUR (ASS)	659
POIGNÉE	660
CHAUFFAGE DE CABINE (ASS)	662
SUSPENSION DE SIEGE - CARTER (ASS)	663
MONTAGE DE RADIO (ASS)	666
TABLEAU DE BORD (ASS)	667
BOUTON (ASS)	674
CABINE - REVÊTEMENT (ASS)	675
CANALISATIONS DE CLIMATISEUR (ASS)	679
CANALISATIONS DE CHAUFFAGE (ASS)	686
RÉTROVISEUR (ASS)	688
MODULE - QUATRE INSTRUMENTS (ASS)	690
MONITEUR (ENS)	691
MOTEUR D'ESSUIE-GLACE (ASS)	692
MONTAGE-ANTENNE (ASS)	696
MONTAGE DE CABINE (ASS)	697
MONTAGE DE GROUPE DE COMMANDE	698
MONTAGE DE MONITEUR (ASS)	699
MONTAGE DE PLATE-FORME (ASS)	701
MONTAGE DE RADIO (ASS)	703
MONTAGE DU TOIT ROPS (ASS)	704
COUVERCLE INFÉRIEUR-DOSSIER (ASS)	705
PÉDALE DE RÉGULATEUR ET DE FREIN (ASS)	708
PLATE-FORME (ASS)	710
PLATE-FORME DE CABINE	711
SURPRESSEUR (ASS)	714
SIÈGE INCLINABLE (ASS)	716
TOIT ROPS (ASS)	717
TOIT ROPS - OUVERT (ASS)	718
GRILLE DE PROTECTION (ASS)	720
SIÈGE (ASS)	722
SIÈGE AVEC SUSPENSION (ASS)	731
RÉSERVOIR - LAVE-GLACE (ASS)	738
LAVE-GLACE - VITRE (ASS)	741
VITRE DE CABINE (ASS)	743
FENETRE COULISSANTE (ASS)	757
ESSUIE-GLACE (ASS)	758
PIVOT D'ESSUIE-GLACE (ASS)	760
MATÉRIEL ET FOURNITURES D'ENTRETIEN	761
PLAQUE SIGNALÉTIQUE (ASS)	761
PLAQUES SIGNALETIQUES ET AUTOCOLLANTS (ASS)	763
INDEX DE NUMÉROS DE PIÈCES	B1

CONTENIDO

Nombre	Página
INFORMACIÓN GENERAL	A31
ALTERNATIVAS DE REPARACIÓN	A45
ADITIVOS DE REFRIGERANTE SUPLEMENTARIOS	A50
PIEZAS DE MANTENIMIENTO	A68
INDICE	A104
CONFIGURACIÓN DE MÁQUINA	1
CHASIS (CONFIG)	1
*CONVERSION AR-HEAT SHIELD	1
CONFIGURACIÓN GENERAL	3
CONFIGURACIÓN DE MOTOR	4
CONFIGURACIÓN DE MOTORES	4
MOTOR - NÚCLEO (CONFIG)	9
CONFIGURACIÓN DE INSTALACIÓN DEL MOTOR	14
MOTOR BÁSICO	15
ÁRBOL DE LEVAS (GR)	15
TAPA DEL BLOQUE MOTOR (GR)	16
TAPA DE LA CAJA DELANTERA (GR)	17
TAPA DEL MECANISMO DE VÁLVULAS (GR)	19
CIGÜEÑAL (GR)	20
BLOQUE MOTOR (CONJ)	21
BLOQUE MOTOR (GR)	23
CULATA DE CILINDROS (CONJ)	25
CULATA DE CILINDROS (GR)	27
AMORTIGUADOR DE VIBRACIONES (GR)	30
DRENAJE DEL ACEITE DE MOTOR	31
MANDO DE VENTILADOR (CONFIG)	32
IMPULSOR DE VENTILADOR (GR)	33
CULATA DE CILINDROS - TORNILLERÍA DE LA (GR)	37
GRUPO DE TORNILLERIA-AMORTIGUADOR Y POLEA	38
CAJA DELANTERA - TORNILLERÍA DE LA (GR)	39
TORNILLERÍA DE LA TAPA DE VÁLVULAS (GR)	40
*FASTENER GP-VALVE COVER BASE	41
VOLANTE (GR)	42
ENGRANAJE DELANTERO (GR)	43
ENGRANAJE TRASERO (GR)	44
CAJA DE VOLANTE (CONJ)	45
VOLANTE - CAJA DE (GR)	46
CAJA DELANTERA (GR)	48
CÁNCAMOS DE LEVANTAMIENTO DEL MOTOR (GR)	49
MONTAJE DEL ALTERNADOR (GR)	50
MONTAJE DEL MOTOR (GR)	51
MONTAJE DEL MANDO DE VENTILADOR (GR)	52
CÁRTER - COLECTOR DEL (GR)	53
PISTÓN Y BIELA (GR)	54
TAPÓN DEL MOTOR (GR)	55
CIGÜEÑAL - POLEA DE (GR)	56
POLEA DE MANDO DEL ALTERNADOR Y VENTILADOR (GR)	57
BALANCÍN (GR)	59
SELLO DE CIGÜEÑAL (GR)	61
MOTOR - SOPORTE DEL (GR)	63
MUÑÓN DEL MOTOR (GR)	64
MECANISMO DE VÁLVULAS (GR)	65
YUGO (GR)	67
SISTEMA DE LUBRICACIÓN	68
TUBO DE LLENADO DE ACEITE (GR)	68
FILTRO DE ACEITE DEL MOTOR (GR)	69
ESCAPE DE GASES (GR)	72
INDICADOR DEL NIVEL DE ACEITE (VARILLA) (GR)	74
TUBERÍAS DE ACEITE DEL MOTOR (GR)	75
TUBERIAS DE ACEITE (GR)	76
TURBOCOMPRESOR - TUBERÍAS DE ACEITE DEL (GR)	79
CAMBIO RÁPIDO DE ACEITE (GR)	82
BOMBA DE ACEITE DEL MOTOR (GR)	84
VÁLVULA DE MUESTREO (GR)	85
VÁLVULA DE MODULACIÓN (GR)	86
SISTEMA DE ENFRIAMIENTO	88
ENFRIADOR DE ACEITE DEL MOTOR (GR)	88
VENTILADOR EXPULSOR (CONFIG)	89
SOPLADOR - VENTILADOR (GR)	90
VENTILADOR REVERSIBLE (GR)	91
TUBERÍAS DEL AGUA (GR)	92
BOMBA DE AGUA (GR)	97
RADIADOR (CONFIG)	100
RADIADOR (GR)	101
TANQUE DE REFRIGERANTE (GR)	104
SISTEMA DE ADMISIÓN Y ESCAPE DE AIRE	108
POSENFRIADOR DE AIRE (GR)	108
FILTRO DE AIRE (GR)	109
EXPULSOR DE POLVO (GR)	111
CODO DE ADMISIÓN DE AIRE (GR)	112

* NO HAY TRADUCCION DISPONIBLE EN EL MOMENTO DE LA IMPRESION

CONTENIDO

Nombre	Página
PROTECTOR DEL ANTEFILTRO (GR)	113
AIRE - TUBERÍAS DE (GR)	114
MÚLTIPLE DE ESCAPE (GR)	118
SILENCIADOR (GR)	119
ANTEFILTRO (CONFIG)	120
ANTEFILTRO (GR)	122
ANTEFILTRO (CONJ)	125
PROTECTOR DEL ESCAPE (GR)	126
PROTECTOR TÉRMICO (GR)	127
TURBOCOMPRESOR (GR)	128
SISTEMA DE COMBUSTIBLE	132
FILTRO Y TUBERÍAS DE COMBUSTIBLE (GR)	132
FILTRO DE COMBUSTIBLE Y SEPARADOR DE AGUA (GR)	134
INYECTOR DE COMBUSTIBLE (GR)	135
TUBERÍAS DE COMBUSTIBLE (GR)	136
BOMBA HIDRÁULICA DEL INYECTOR UNITARIO Y MONTAJE	141
BOMBA DE INYECCIÓN DE COMBUSTIBLE (GR)	142
BOMBA HIDRÁULICA DEL INYECTOR UNITARIO (GR)	144
REGULADOR DE LA PRESION DE COMBUSTIBLE (GR)	145
COMBUSTIBLE - TANQUE DE (GR)	146
SISTEMA ELÉCTRICO Y DE ARRANQUE	148
ALARMA (GR)	148
CARGA - ALTERNADOR DE (GR)	149
BATERÍA Y CABLES (GR)	155
BATERÍA (GR)	161
*CABLE AS-COILED	162
CONTROL ELECTRÓNICO DEL MOTOR Y MONTAJE	163
CONTROL ELECTRÓNICO DEL MOTOR (GR)	165
CONVERTIDOR ELÉCTRICO (GR)	166
*DISPLAY GP-CAMERA	167
CONFIGURACIÓN ELECTRÓNICA DE LA MÁQUINA	168
GRUPO ELECTRONICO-COMUNICACION	169
IMPLEMENTOS (GR ELECTRÓNICO)	170
ELECTRONICA DE MONITOR (GR)	170
TREN DE FUERZA-GRUPO ELECTRÓNICO	170
CONTROL DE GRADO, CONFIGURACIÓN	171
*GRADE CONTROL AR-LASER	171
*GRADE CONTROL AR-SATELLITE	172
AGUA DE LAS CAMISAS - CALENTADOR DEL (GR)	173
*INSTALLATION GP-CAMERA	174
INSTALACION DE COMUNICACION (GR)	176
INSTALACION DE SEGURIDAD (GR)	180
LÁMPARA DEL TECHO (GR)	182
REFLECTOR (GR)	183
LUCES DE REFLECTOR (GR)	186
GRUPO DE MONTAJE-CONECTOR	205
*MOUNTING GP-GRADE CONTROL	206
MONTAJE DEL RECEPTOR (GR)	209
PANEL DE FUSIBLES (GR)	211
*RADIO GP-COMMUNICATION	213
*RECEIVER GP-LASER	213
*RECEIVER GP-SATELLITE	213
SENSOR DEL MOTOR (GR)	215
DETECTOR DE POSICIÓN (SISTEMA DE COMBUST.) (GR)	216
SENSOR DE PRESIÓN (GR)	218
SENSOR DE VELOCIDAD (GR)	225
SENSOR DE TEMPERATURA (GR)	227
AUXILIAR DE ARRANQUE CON ÉTER (GR)	230
MOTOR DE ARRANQUE ELÉCTRICO (GR)	232
INTERRUPTOR DE DERIVACIÓN	238
DISYUNTOR (GR)	239
INTERRUPTOR MAGNÉTICO (GR)	240
GRUPO DE INTERRUPTOR-BOTON PULSADOR	242
GRUPO DE VÁLVULA-ARRANQUE CON ÉTER	243
CABLES DEL CONTROL ELECTRÓNICO (GR)	244
CABLES DEL MOTOR (GR)	246
CABLE GR-GRADO DE CONTROL	251
CABLES DE LA PLATAFORMA (GR)	256
TREN DE FUERZA	260
ACUMULADOR (GR)	260
EJE (GR)	262
FILTRO DE ACEITE - BASE DEL (GR)	263
FRENO Y MANDO DE DIFERENCIAL (GR)	264
FRENO Y PLANETARIOS (GR)	268
CAJA Y PIEZAS DE LOS PLANETARIOS	270
CAJA DE LA TRANSMISIÓN (GR)	272
CONTROL HIDRÁULICO DE LA TRANSMISIÓN (GR)	273
ENFRIADOR DE ACEITE DE LA TRANSMISIÓN (GR)	275

* NO HAY TRADUCCION DISPONIBLE EN EL MOMENTO DE LA IMPRESION

CONTENIDO

Nombre	Página
ACOPLAMIENTO Y PROTECCION (GR)	277
ACOPLAMIENTO DE BOMBA (GR)	278
DRENAJE DE SEGURIDAD ECOLÓGICA (GR)	279
MANDO DE BOMBA (GR)	282
FILTRO DE ACEITE (GR)	283
MANDO FINAL (GR)	284
ENGRANAJE DE TRANSFERENCIA Y CORONA (GR)	288
TUBERÍAS DE ACEITE DEL TREN DE FUERZA (GR)	291
*MANIFOLD GP-TRANSMISSION	298
MONTAJE DE MANDO FINAL (GR)	299
MONTAJE DE LA TRANSMISIÓN (GR)	300
TRANSMISIÓN PLANETARIA (GR)	301
TREN DE FUERZA (CONFIG)	307
BOMBA DE ENGRANAJES (GR)	308
REJILLA MAGNÉTICA (GR)	312
SEGMENTO DE RUEDA MOTRIZ (GR)	313
EJE DE MANDO (GR)	314
CONVERTIDOR DE PAR (GR)	315
TRANSMISION (CONFIG)	321
JUNTA UNIVERSAL (GR)	322
VÁLVULA DE MODULACIÓN (GR)	323
VÁLVULA DE ALIVIO (GR)	324
BASTIDOR Y CAJA	327
BARRA LIMPIADORA (GR)	327
CAJA DE BATERÍA	329
CAJA Y BASTIDOR (GR)	332
CONTRAPESO (GR)	334
BARRA DE TIRO (GR)	335
COMPARTIMIENTO DEL MOTOR (GR)	337
COMPARTIMIENTO DEL TANQUE HIDRÁULICO (GR)	344
GUARDABARROS (GR)	345
PROTECTOR CONTRA ARENA (GR)	348
REJILLA DEL RADIADOR (GR)	349
*GUARD & SCRAPER GP-IDLER	350
PROTECTOR DE MANDO FINAL (GR)	350
PROTECTOR INFERIOR (GR)	351
PROTECTOR DEL TANQUE DE COMBUSTIBLE (GR)	357
PROTECTOR DEL RADIADOR (GR)	360
PROTECTOR POSTERIOR (GR)	363
PROTECTOR DE LA TRANSMISIÓN (GR)	364
RETÉN (GR)	365
*PLATE GP-RADIATOR	366
PROTECTORES DE RAMAS (GR)	367
TREN DE RODAJE	369
BARRA COMPENSADORA (GR)	369
TAPA DE RUEDA GUÍA (GR)	372
BASTIDOR TELESCÓPICO DEL RESORTE TENSOR (GR)	374
PROTECTOR DE LA RUEDA GUÍA (CONFIG)	382
PROTECTOR DE RUEDA GUÍA	383
PROTECTOR GUÍA DE CADENA (GR)	385
PROTECTOR DE RODILLOS INFERIORES (GR)	387
GUIAJE DE TREN DE RODAJE (CONFIG)	390
RUEDA GUÍA DELANTERA (GR)	390
RUEDA GUÍA DE CADENA (GR)	393
ESLABÓN DE CADENA (CONJ)	395
CONJUNTO DE ESLABÓN DE LA CAJA DE CADENA	397
ESLABON DE CADENA (GR)	403
MONTAJE DE RODILLOS SUPERIORES (GR)	406
BARRA PIVOTE (GR)	408
RODILLO DE CADENA (CONFIG)	409
RODILLO SUPERIOR DE CADENAS (GR)	410
RODILLOS DE PESTAÑA DOBLE (GR)	411
RODILLOS DE PESTAÑA SIMPLE (GR)	416
RUEDA GUÍA DE LA TRAÍLLA (GR)	422
GRUPO DEFLECTOR, TRASERO	423
RESORTE TENSOR Y AJUSTADOR DE LA CADENA (GR)	424
CADENAS (GR)	426
TREN DE RODAJE (CONFIG)	431
SISTEMA DE FRENOS Y DIRECCIÓN	434
ACTIVADOR DE LA BOMBA (GR)	434
FILTRO DE ACEITE (GR)	435
CABEZA DE BOMBA (GR)	436
TUBERÍAS DE DIRECCIÓN (GR)	438
MÚLTIPLE Y VÁLVULA (GR)	443
BOMBA DE DIRECCIÓN Y MONTAJE (GR)	446
BOMBA DE CARGA HIDRÁULICA (GR)	447
BOMBA DE PISTONES (GR)	448
GRUPO GIRATORIO DE BOMBA	450
VÁLVULA DE CONTROL DEL FRENO (GR)	452
DERIVACIÓN - VÁLVULA DE (GR)	456
VALVULA DE CONTROL DE LA BOMBA (GR)	457
VÁLVULA DE ALIVIO (GR)	459
VÁLVULA DE SOLENOIDE (GR)	462

* NO HAY TRADUCCION DISPONIBLE EN EL MOMENTO DE LA IMPRESION

CONTENIDO

Nombre	Página
SISTEMA HIDRÁULICO	464
ACUMULADOR DE ACEITE PILOTO (GR)	464
ADAPTADOR DE MOTOR (GR)	466
CONTROL HIDRAULICO DE IMPLEMENTO (CONFIG)	467
ENFRIADOR DEL ACEITE HIDRAULICO (GR)	469
CILINDRO DE LEVANTAMIENTO Y TUBERÍAS (GR)	470
CILINDRO DE LEVANTAMIENTO DE LA HOJA TOPADORA (GR)	474
CILINDRO DE LEVANTAMIENTO DEL DESGARRADOR (GR)	476
INCLINACIÓN HORIZONTAL - CILINDRO DE (GR)	478
CONFIGURACIÓN HIDRÁULICA DE 2 VÁLVULAS	482
CILINDRO DE LEVANTAMIENTO - TUBERÍAS DEL (GR)	483
TUBERÍAS CON SERVOMANDO (GR)	485
BOMBA - TUBERÍAS DE (GR)	495
TUBERÍAS DEL DESGARRADOR (GR)	499
TUBERÍAS DEL CILINDRO DE INCLINACIÓN (GR)	501
CONTROL DEL MULTIPLE (GR)	509
MULTIPLE DE VALVULA (GR)	510
PISTONES DEL MOTOR (GR)	512
MONTAJE DE CILINDRO (GR)	513
BOMBA DE IMPLEMENTOS Y MONTAJE (GR)	515
BOMBA DE PISTONES (GR)	516
GRUPO DE ROTACIÓN DEL MOTOR (GR)	520
GRUPO GIRATORIO DE BOMBA	522
TANQUE Y FILTRO HIDRÁULICOS (GR)	523
TANQUE HIDRÁULICO Y MONTAJE (GR)	526
GRUPO DE MONTAJE Y VÁLVULA, HOJA TOPADORA	527
VÁLVULA DE CONTROL Y MONTAJE (GR)	528
VÁLVULA DE CONTROL DE EQUIPO DE ACCESORIOS Y MONTAJE (GR)	530
VÁLVULAS HIDRÁULICAS - GRUPO DE 2	531
GRUPO DE 3 VÁLVULAS HIDRÁULICAS	533
VÁLVULA DE RETENCIÓN (GR)	537
VÁLVULA DE CONTROL (GR)	538
VÁLVULA PILOTO (GR)	552
VALVULA PILOTO DE CARTUCHO (GR)	560
VÁLVULA REDUCTORA DE PRESIÓN (GR)	562
VALVULA DE CONTROL DE LA BOMBA (GR)	563
VÁLVULA DE CAÍDA RÁPIDA (GR)	564
VÁLVULA DE ALIVIO (GR)	567
VÁLVULA DE LANZADERA (GR)	571
VÁLVULA DE SOLENOIDE (GR)	573
IMPLEMENTOS	575
SOPORTE DE LA HOJA TOPADORA	575
HOJA TOPADORA ORIENTABLE (CONFIG)	577
HOJA TOPADORA SEMIUNIVERSAL	581
BASTIDOR EN C (CONJ)	585
BASTIDOR EN C (GR)	586
BRAZO DE EMPUJE (GR)	588
MUÑÓN DE LA HOJA TOPADORA (GR)	592
HERRAMIENTAS	593
HOJA ORIENTABLE (GR)	593
HOJA Y CUCHILLA SEMIUNIVERSAL (GR)	594
HOJA SEMIUNIVERSAL (CONJ)	598
HOJA ORIENTABLE (GR)	603
HOJA SEMIUNIVERSAL (GR)	604
GRUPO DE CANTONERA Y CUCHILLA	606
TUBERÍAS DEL MALACATE (GR)	608
*MAST GP	612
MASTIL - MONTAJE DEL (GR)	612
MONTAJE DEL DESGARRADOR (GR)	614
DESGARRADOR (CONFIG)	616
DESGARRADOR (GR)	617
DIENTE DE DESGARRADOR (GR)	619
CABINA DEL OPERADOR	623
AJUSTADOR DEL ASIENTO (GR)	623
COMPRESOR DE AIRE DEL ASIENTO (GR)	624
ACONDICIONADOR DE AIRE (CONFIG)	626
ACONDICIONADOR DE AIRE (GR)	627
VENTILADOR SOPLADOR DE LA CABINA (GR)	628
CABINA (CONFIG)	629
CABINA (GR)	631
TECHO (CONFIG)	634
COMPRESOR DE REFRIGERANTE (GR)	635

* NO HAY TRADUCCION DISPONIBLE EN EL MOMENTO DE LA IMPRESION

CONTENIDO

Nombre	Página
CONDENSADOR DEL REFRIGERANTE Y MONTAJE (GR)	638
CONDENSADOR DE REFRIGERANTE (GR)	641
PALANCA UNIVERSAL-CONTROL Y MONTAJE (GR)	643
PEDAL-GRUPO DE CONTROL Y MONTAJE	644
CONTROL DE MANIJA (GR)	645
PALANCA UNIVERSAL DE CONTROL (GR)	650
CONTROL DEL FRENO DE ESTACIONAMIENTO	651
CONTROL HIDRÁULICO DE OPERACIÓN PILOTO (GR)	653
CONTROL DE DIRECCIÓN Y TRANSMISIÓN (GR)	654
TAPA DE LA CONSOLA (GR)	656
PANTALLA DEL MONITOR (GR)	659
PASAMANOS (GR)	660
CALEFACCIÓN DE LA CABINA (GR)	662
CAJA DE LA SUSPENSIÓN DEL ASIENTO (GR)	663
INSTALACIÓN DE RADIO (GR)	666
INSTRUMENTOS (GR)	667
GRUPO DE PARILLA	674
REVESTIMIENTO DE LA CABINA (GR)	675
TUBERÍAS DE ACONDICIONADOR DE AIRE (GR)	679
TUBERÍAS DE LA CALEFACCIÓN (GR)	686
RETROVISOR (GR)	688
MODULO ELECTRÓNICO DE CUATRO INDICADORES (GR)	690
MONITOR (CONJ)	691
MOTOR-LIMPIAPARABRISAS (GR)	692
MONTAJE DE ANTENA (GR)	696
GRUPO DE MONTAJE DE LA CABINA	697
MONTAJE DE CONTROL (GR)	698
MONTAJE GR-MONITOR	699
MONTAJE DE LA PLATAFORMA (GR)	701
MONTAJE DE LA RADIO (GR)	703
MONTAJE DE LA ESTRUCTURA ROPS (GR)	704
SOPORTE DEL RESPALDO (GR)	705
REGULADOR Y PEDAL DEL FRENO (GR)	708
PLATAFORMA (GR)	710
PLATAFORMA DE LA CABINA	711
PRESURIZADOR (GR)	714
RECLINACION DE ASIENTO (GR)	716
ESTRUCTURA ROPS (GR)	717
ESTRUCTURA ROPS ABIERTA (GR)	718
REJILLA PROTECTORA (GR)	720
ASIENTO (GR)	722
SUSPENSIÓN - ASIENTO CON (GR)	731
ASIENTO CON SUSPENSIÓN (GR)	734
TANQUE DEL LAVAPARABRISAS (GR)	738
LAVAPARABRISAS DE LA VENTANA (GR)	741
VENTANA DE LA CABINA (GR)	743
VENTANA DESLIZANTE (GR)	757
LIMPIAPARABRISAS DE LA VENTANA (GR)	758
PIVOTE DEL LIMPIADOR (GR)	760
EQUIPOS Y SUMINISTRO DE SERVICIOS	761
ETIQUETA DE ADVERTENCIA (GR)	761
CALCOMANÍAS Y PLACAS DE IDENTIFICACIÓN (GR)	763
INDICE DE NUMEROS DE PIEZA	B1

* NO HAY TRADUCCION DISPONIBLE EN EL MOMENTO DE LA IMPRESION

ÍNDICE

Designação	Página
INFORMAÇÃO GERAL	A35
ALTERNATIVAS DE REPARO	A46
ADITIVOS SUPLEMENTARES DO LÍQUIDO ARREFECEDOR	A51
NOMENCLATURA DE PEÇAS INGLÊS-PORTUGUÊS	A53
PEÇAS DE MANUTENÇÃO	A72
ÍNDICE	A117
MÁQUINA - ARRANJO	1
CHASSI	1
CONVERSÃO-PROTETOR CONTRA CALOR	1
ARRANJO GERAL	3
MOTOR - ARRANJO	4
MOTOR	4
MOTOR - NÚCLEO	9
GRUPO DE INSTALAÇÃO - MOTOR	14
MOTOR BÁSICO	15
EIXO-COMANDO DE VÁLVULA	15
TAMPA - BLOCO DO MOTOR	16
TAMPA - CAIXA DIANTEIRA	17
TAMPA - MECANISMO DAS VÁLVULAS	19
VIRABREQUIM	20
BLOCO DO MOTOR	21
CABEÇOTE DO MOTOR	25
AMORTECEDOR	30
DRENO - ÓLEO DO MOTOR	31
COMANDO DO VENTILADOR	32
FIXADORES - CABEÇOTE DO MOTOR	37
FIXADOR - AMORTECEDOR E POLIA	38
FIXADORES - CAIXA DIANTEIRA	39
FIXADORES - TAMPA DA VÁLVULA	40
FIXADOR-BASE DA TAMPA DA VÁLVULA	41
VOLANTE DO MOTOR	42
ENGRENAGENS DE DISTRIBUIÇÃO	43
ENGRENAGENS DE COMANDO TRASEIRO	44
CAIXA DO VOLANTE DO MOTOR	45
CAIXA DIANTEIRA	48
LEVANTAMENTO DO MOTOR	49
MONTAGEM - ALTERNADOR	50
MONTAGEM - MOTOR	51
MONTAGEM - COMANDO DO VENTILADOR	52
CÁRTER DO ÓLEO DO MOTOR	53
PISTÃO E BIELA	54
BUJÃO DO MOTOR	55
POLIA DO VIRABREQUIM	56
POLIA - VENTILADOR E COMANDO DO ALTERNADOR	57
BALANCIM	59
RETENTOR DO VIRABREQUIM	61
SUPORTE DO MOTOR	63
MUNHÃO DO MOTOR	64
MECANISMO DAS VÁLVULAS	65
GARFO	67
SISTEMA DE LUBRIFICAÇÃO	68
BOCAL DE ENCHIMENTO DE ÓLEO DO MOTOR	68
FILTRO - ÓLEO DO MOTOR	69
ELIMINAÇÃO DE VAPORES DO CÁRTER	72
INDICADOR - NÍVEL DO ÓLEO (VARETA)	74
TUBOS - ÓLEO DO MOTOR	75
TUBOS - SUPRIMENTO DE ÓLEO	76
TUBOS - ÓLEO DO TURBOALIMENTADOR	79
ÓLEO - ARRANJO PARA TROCA RÁPIDA	82
BOMBA DE ÓLEO - MOTOR	84
VÁLVULA PARA TIRAR AMOSTRAS DE FLUIDOS	85
VÁLVULA DE MODULAÇÃO	86
SISTEMA DE ARREFECIMENTO	88
ARREFECEDOR - ÓLEO DO MOTOR	88
VENTILADOR - EJETOR	89
VENTILADOR DE SOPRO	90
VENTILADOR REVERSÍVEL	91
TUBOS - ÁGUA	92
BOMBA DE ÁGUA	97
RADIADOR	100
TANQUE - LÍQUIDO ARREFECEDOR	104
SISTEMA DA ADMISSÃO DE AR E DE ESCAPE	108
PÓS-ARREFECEDOR DA ADMISSÃO DE AR	108
PURIFICADOR DE AR	109
EJETOR DE POEIRA	111
COTOVELO DE ADMISSÃO DE AR	112
PROTETOR - PRÉ-PURIFICADOR	113
TUBOS - AR	114
COLETOR DE ESCAPE	118
SILENCIADOR	119
PRÉ-PURIFICADOR	120
PRÉ-PURIFICADOR COM TELA	125

ÍNDICE

Designação	Página
BLINDAGEM DO COLETOR DE ESCAPE	126
DEFLETOR TÉRMICO DE CALOR	127
TURBOALIMENTADOR	128
SISTEMA DE COMBUSTÍVEL	132
FILTRO E TUBOS - COMBUSTÍVEL	132
FILTRO DE COMBUSTÍVEL E SEPARADOR DE ÁGUA	134
INJETOR DE COMBUSTÍVEL	135
TUBOS - COMBUSTÍVEL	136
BOMBA HIDRÁULICA E MONTAGEM - UNIDADE INJETORA	141
BOMBA DE INJEÇÃO DO COMBUSTÍVEL	142
BOMBA HIDRÁULICA - UNIDADE INJETORA	144
REGULADOR DE PRESSÃO DO COMBUSTÍVEL	145
TANQUE DE COMBUSTÍVEL	146
SISTEMA ELÉTRICO E DE PARTIDA	148
ALARME	148
ALTERNADOR DE CORRENTE	149
BATERIA E CABOS / FIOS ELÉTRICOS	155
BATERIA	161
CABO-ESPIRAL	162
CONTROLE ELETRÔNICO E MONTAGEM - MOTOR	163
CONTROLE ELETRÔNICO - MOTOR	165
CONVERSOR ELÉTRICO	166
VISOR-CÂMERA	167
SISTEMA ELETRÔNICO - MÁQUINA	168
SISTEMA ELETRÔNICO-COMUNICAÇÃO	169
SIST. ELETRÔNICO - ACESSÓRIO	170
SISTEMA ELETRÔNICO - MONITOR	170
SISTEMA ELETRÔNICO - TREM DE FORÇA	170
CONTROLE DO GRAU	171
CONTROLE DE INCLINAÇÃO - LASER	171
CONTROLE DA INCLINAÇÃO-SATÉLITE	172
AQUECEDOR DA ÁGUA DO MOTOR	173
INSTALAÇÃO - CÂMERA	174
INSTALAÇÃO-COMUNICAÇÃO	176
INSTALAÇÃO-SEGURANÇA	180
LÂMPADA - TETO	182
LÂMPADA - FAROL	183
SISTEMA DE ILUMINAÇÃO - FARÓIS	186
MONTAGEM-CONECTOR	205
MONTAGEM-CONTROLE DO DECLIVE	206
MONTAGEM - RECEPTOR	209
PAINEL DE FUSÍVEIS	211
RÁDIO - COMUNICAÇÃO	213
RECEPTOR-LASER	213
RECEPTOR-SATÉLITE	213
SENSOR DO MOTOR	215
EMISSOR - POSIÇÃO	216
SENSOR - PRESSÃO	218
SENSOR DE VELOCIDADE	225
SENSOR - TEMPERATURA	227
AUXILIAR DE PARTIDA A ÉTER	230
MOTOR ELÉTRICO DE PARTIDA	232
INTERRUPTOR DE DERIVAÇÃO	238
CHAVE GERAL	239
INTERRUPTOR - MAGNÉTICO	240
INTERRUPTOR-BOTÃO	242
VALVULA - PARTIDA A ETER	243
CABOS/FIOS ELÉTRICOS - CONTROLE ELETRÔNICO	244
CABOS/FIOS ELÉTRICOS - MOTOR	246
FIACAO - CONTROLE DO NIVEL	251
CABOS/FIOS ELÉTRICOS - PLATAFORMA	256
TREM DE FORÇA	260
ACUMULADOR	260
EIXO	262
BASE DO FILTRO DE ÓLEO	263
FREIO E COMANDO DO DIFERENCIAL	264
FREIOS E ENGRENAGENS PLANETARIAS	268
CARCAÇA DAS ENGRENAGENS PLANETÁRIAS E COMPONENTES	270
CARCAÇA DA TRANSMISSÃO	272
CONTROLE HIDRÁULICO DA TRANSMISSÃO	273
ARREFECEDOR DE ÓLEO DA TRANSMISSÃO	275
ACOPLAMENTO E PROTETOR	277
ACOPLAMENTO DA BOMBA	278
DRENO - ECOLOGIA	279
COMANDO DA BOMBA	282
FILTRO - ÓLEO	283
COMANDO FINAL	284
COROA E ENGRENAGEM DE TRANFERÊNCIA	288
TUBOS - ÓLEO DA TRANSMISSÃO	291
COLETOR-TRANSMISSÃO	298
MONTAGEM - COMANDO FINAL	299
MONTAGEM - TRANSMISSÃO	300
ENGRENAGENS PLANETÁRIAS - TRANSMISSÃO	301
TREM DE FORÇA	307
BOMBA DE ENGRENAGENS	308
FILTRO - MAGNÉTICO	312
SEGMENTO DA RODA MOTRIZ	313

ÍNDICE

Designação	Página
EIXO DE TRANSMISSÃO	314
CONVERSOR DE TORQUE	315
TRANSMISSÃO	321
JUNTA UNIVERSAL	322
VÁLVULA DE MODULAÇÃO	323
VÁLVULA DE ALÍVIO	324
CHASSI E CARROCERIA	327
BARRA LIMPADORA DOS ROLOS	327
CAIXA - BATERIA	329
CAIXA E CHASSI	332
CONTRAPESO	334
BARRA DE TRAÇÃO	335
COBERTURA DO MOTOR	337
COBERTURA - TANQUE HIDRÁULICO	344
PÁRA-LAMA	345
GRADE DO RADIADOR CONTRA EROSÃO	348
GRADE DO RADIADOR	349
PROTETOR E ESCREIPER-R0DA-GUIA	350
PROTETOR - COMANDO FINAL	350
PROTETOR INFERIOR	351
PROTETOR - TANQUE DE COMBUSTÍVEL	357
PROTETOR - RADIADOR	360
PROTETOR - TRASEIRO	363
PROTETOR - TRANSMISSÃO	364
TRINCO	365
PLACA-RADIADOR	366
BARRAS DE PROTEÇÃO DO CAPÔ	367
MATERIAL RODANTE	369
BARRA DE SUSPENSÃO	369
TAMPA DA RODA-GUIA	372
ARMAÇÃO TELESCÓPICA DA MOLA TENSORA	374
PROTETOR - RODA-GUIA	382
PROTETOR - GUIA DOS ROLETES DAS ESTEIRAS	385
PROTETOR - ROLETES DAS ESTEIRAS	387
GUIA-MATERIAL RODANTE	390
RODA-GUIA DIANTEIRA	390
RODA-GUIA DAS ESTEIRAS	393
ELO DA ESTEIRA	395
ELO-CAIXA DA ESTEIRA	397
ELO DA ESTEIRA	403
MONTAGEM - ROLETE SUPERIOR	406
BARRA DE ARTICULAÇÃO	408
ROLETE DAS ESTEIRAS	409
ROLETE SUPERIOR DA ESTEIRA	410
ROLETE DE ESTEIRA DE FLANGE DUPLO	411
ROLETE DE ESTEIRA DE FLANGE SIMPLES	416
RASPADOR - RODA-GUIA	422
BATENTE - TRASEIRO	423
AJUSTADOR DE ESTEIRAS E MOLA TENSORA	424
ESTEIRA	426
MATERIAL RODANTE	431
SISTEMA DE DIREÇÃO E DE FREIO	434
ACIONADOR DA BOMBA	434
FILTRO - ÓLEO	435
CABEÇA DA BOMBA	436
TUBOS - DIREÇÃO	438
COLETOR E VÁLVULA	443
BOMBA E MONTAGEM - DIREÇÃO	446
BOMBA DE CARGA	447
BOMBA DE PISTÃO	448
GRUPO ROTATIVO DA BOMBA	450
VÁLVULA DE CONTROLE DOS FREIOS	452
VÁLVULA DE DERIVAÇÃO	456
VÁLVULA DE CONTROLE DA BOMBA	457
VÁLVULA DE ALÍVIO	459
VÁLVULA SOLENÓIDE	462
SISTEMA HIDRÁULICO	464
ACUMULADOR D ÓLEO - PILOTO	464
ADAPTADOR DO MOTOR	466
CONTROLE HIDRÁULICO DO ACESSÓRIO	467
ARREFECEDOR DO ÓLEO HIDRÁULICO	469
CILINDRO DE LEVANTAMENTO E TUBOS	470
CILINDRO - LEVANTAMENTO DA LÂMINA	474
CILINDRO DE LEVANTAMENTO DO RIPER	476
CILINDRO DE INCLINAÇÃO	478
ARRANJO HIDRÁULICO - 2 VÁLVULAS	482
TUBOS - CILINDRO DE LEVANTAMENTO	483
TUBOS - CIRCUITO PILOTO	485
TUBOS - BOMBA	495
TUBOS - RIPER	499
TUBOS - CILINDRO DE INCLINAÇÃO	501
COLETOR - CONTROLE	509
COLETOR - VÁLVULA	510
MOTOR - PISTÃO	512
MONTAGEM - CILINDRO	513
BOMBA E MONTAGEM - ACESSÓRIO	515
BOMBA DE PISTÃO	516
MOTOR DO GRUPO ROTATIVO	520

ÍNDICE

Designação	Página
GRUPO ROTATIVO DA BOMBA	522
TANQUE HIDRÁULICO E FILTRO	523
TANQUE DE ÓLEO HIDRÁULICO E MONTAGEM	526
VÁLVULA E MONTAGEM - LÂMINA	527
VÁLVULA DE CONTROLE E MONTAGEM	528
VÁLVULA DE CONTROLE DO ACESSÓRIO E MONTAGEM	530
GRUPO DE VÁLVULAS DE CONTROLE - DUPLO	531
GRUPO DE VÁLVULAS DE CONTROLE - TRIPLO	533
VÁLVULA DE RETENÇÃO	537
VÁLVULA DE CONTROLE	538
VÁLVULA DE CONTROLE PILOTO	552
VÁLVULA DO CARTUCHO PILOTO	560
VÁLVULA DE REDUÇÃO DE PRESSÃO	562
VÁLVULA DE CONTROLE DA BOMBA	563
VÁLVULA DE QUEDA RÁPIDA	564
VÁLVULA DE ALÍVIO	567
VÁLVULA DE SEPARAÇÃO	571
VÁLVULA SOLENÓIDE	573
ACESSÓRIOS	575
TIRANTE DA LÂMINA	575
LÂMINA ANGULÁVEL	577
LÂMINA SEMI-UNIVERSAL	581
ARMAÇÃO C	585
BRAÇO DE EMPUXO	588
MUNHÃO DA LÂMINA	592
FERRAMENTAS DE TRABALHO	593
LÂMINA ANGULÁVEL E BORDA CORTANTE	593
LÂMINA E BORDA CORTANTE SEMI-UNIVERSAL	594
LÂMINA SEMI-UNIVERSAL	598
LÂMINA ANGULÁVEL	603
LÂMINA SEMI-UNIVERSAL	604
BEIRA - PONTA CORTANTE	606
TUBOS - GUINCHO	608
MASTRO	612
MONTAGEM - MASTRO	612
MONTAGEM - RIPER	614
RIPER	616
DENTE DO RÍPER	619
POSTO DO OPERADOR	623
AJUSTADOR DO ASSENTO	623
COMPRESSOR DE AR - ASSENTO	624
CONDICIONADOR DE AR	626
VENTILADOR DA CABINE	628
CABINE	629
TOLDO	634
COMPRESSOR DE REFRIGERANTE	635
CONDENSADOR DO REFRIGERANTE E MONTAGEM	638
CONDENSADOR DE REFRIGERANTE	641
ALAVANCA DE CONTROLE E MONTAGEM	643
CONTROLE DO PEDAL E MONTAGEM	644
CONTROLE-CABO	645
CONTROLE - ALAVANCA	650
CONTROLE DO FREIO DE ESTACIONAMENTO	651
CONTROLE HIDRÁULICO DE OPERAÇÃO PILOTO	653
CONTROLE DE DIREÇÃO E TRANSMISSÃO	654
TAMPA - CONSOLO	656
VISOR - MONITOR	659
PEGA-MÃO	660
AQUECEDOR DA CABINE	662
CAIXA - SUSPENSÃO DO ASSENTO	663
INSTALAÇÃO DO RÁDIO	666
INSTRUMENTOS	667
BOTÃO	674
REVESTIMENTO DA CABINE	675
TUBOS - AR CONDICIONADO	679
TUBOS - AQUECEDOR	686
ESPELHO RETROVISOR	688
MÓDULO ELETRÔNICO DE QUATRO INDICADORES	690
MONITOR	691
MOTOR - LIMPADOR DO VIDRO	692
MONTAGEM-ANTENA	696
MONTAGEM - CABINE	697
MONTAGEM - CONTROLE	698
MONTAGEM - MONITOR	699
MONTAGEM - PLATAFORMA	701
MONTAGEM - RÁDIO	703
MONTAGEM - ESTRUTURA ROPS	704
FUNDO - ENCOSTO	705
PEDAL - GOVERNADOR E FREIO	708
PLATAFORMA	710
PLATAFORMA DO OPERADOR	711
PRESSURIZADOR	714
RECLINAÇÃO - ASSENTO	716
ESTRUTURA ROPS	717
ROPS ABERTA	718
TELA DE PROTEÇÃO	720
ASSENTO	722
ASSENTO COM SUSPENSÃO	731
SUSPENSÃO - ASSENTO	734
TANQUE - LAVADOR DE JANELA	738
LAVADOR DO VIDRO	741
JANELA DA CABINE	743
VIDRO - DESLIZANTE	757

ÍNDICE

Designação	Página	Designação	Página
LIMPADOR DO VIDRO	758		
PIVÔ DO LIMPADOR	760		
EQUIPAMENTO DE SERVIÇO E SUPRIMENTOS	761		
DECALQUE	761		
PLACA E DECALQUE	763		
ÍNDICE DE NÚMERO DE PEÇA	B1		

INHALTSVERZEICHNIS

Bezeichnung	Seite
ALLGEMEINE HINWEISE	A39
REPARATURALTERNATIVEN	A47
KÜHLMITTELZUSATZ	A52
WARTUNGSTEILE	A76
STICHWORTVERZEICHNIS	A129
MASCHINE	1
FAHRWERK	1
UMRÜSTSATZ, HITZESCHILD	1
GRUNDAUSFÜHRUNG	3
MOTORAUSFÜHRUNG	4
MOTORAUSFÜHRUNG	4
MOTORKÜHLERBLOCK	9
MOTOR-EINBAUSATZ	14
MOTOR (GRUNDAUSFÜHRUNG)	15
NOCKENWELLE	15
MOTORBLOCKDECKEL	16
STIRNRADGEHÄUSEDECKEL	17
VENTILDECKEL	19
KURBELWELLE	20
MOTORBLOCK	21
ZYLINDERKOPF	25
DÄMPFER	30
MOTORÖLABLASS	31
LÜFTERANTRIEB	32
ZYLINDERKOPF-HALTETEILE	37
BEFESTIGUNG - DÄMPFER U. RIEMENSCHEIBE	38
STIRNRADGEHÄUSE-HALTETEILE	39
VENTILDECKELBEFESTIGUNG	40
*FASTENER GP-VALVE COVER BASE	41
SCHWUNGRAD	42
STIRNRAD	43
ZAHNRADVORGELEGE	44
SCHWUNGRADGEHÄUSE	45
STIRNRADGEHÄUSE	48
MOTORHUBÖSE	49
DREHSTROMGENERATOR - BEFESTIGUNG	50
MOTORAUFLAGER	51
LÜFTERANTRIEBSAUFHÄNGUNG	52
ÖLWANNE	53
PLEUELSTANGE UND KOLBEN	54
MOTORSTOPFEN	55
KURBELWELLEN-RIEMENSCHEIBE	56
RIEMENSCHEIBE - LÜFTER- U. DREHSTROMGENERATOR	57
VENTILKIPPHEBEL	59
KURBELWELLENDICHTUNG	61
MOTORAUFHÄNGUNG	63
MONTAGEZAPFEN	64
VENTILSTEUERUNG	65
JOCHSATZ	67
SCHMIERSYSTEM	68
MOTORÖLEINFÜLLSTUTZEN	68
ÖLFILTER	69
ENTDUNSTER	72
ÖLMESSSTAB	74
MOTORÖLLEITUNGEN	75
ÖLZUFUHRLEITUNGEN	76
TURBOLADERÖLLEITUNGEN	79
ÖLSCHNELLWECHSELANSCHLUSS	82
SCHMIERPUMPE	84
PROBEENTNAHMEVENTIL	85
MODULATORVENTIL	86
KÜHLSYSTEM	88
MOTORÖLKÜHLER	88
AUSWERFERLÜFTER	89
DRUCKLÜFTER	90
UMKEHRLÜFTER	91
KÜHLWASSERLEITUNGEN	92
KÜHLWASSERPUMPE	97
KÜHLER	100
KÜHLMITTELBEHÄLTER	104
LUFTEINLASS- UND ABGASSYSTEM	108
LADELUFTKÜHLER	108
LUFTREINIGER	109
STAUBAUSWERFER	111
LUFTEINLASSBOGEN	112
VORREINIGERSCHUTZ	113
DRUCKLUFTLEITUNGEN	114
AUSPUFFKRÜMMER	118
SCHALLDÄMPFER	119
VORREINIGER	120
VORABSCHEIDER	125
AUSPUFFABSCHIRMUNG	126
WÄRMESCHIRM	127
TURBOLADER	128
KRAFTSTOFFSYSTEM	132
KRAFTSTOFFILTER UND LEITUNGEN	132
WASSERABSCHEIDER- U. KRAFTSTOFFILTER	134
KRAFTSTOFFEINSPRITZDÜSE	135
KRAFTSTOFFLEITUNGEN	136
PUMPE UND BEFESTIGUNGSTEILE	141
KRAFTSTOFFEINSPRITZPUMPE	142

* ÜBERSETZUNG ZUM ZEITPUNKT DER DRUCKLEGUNG NICHT VORHANDEN

INHALTSVERZEICHNIS

Bezeichnung	Seite
PUMPENDÜSE, HYDRAULISCH	144
KRAFTSTOFFDRUCKREGLER	145
KRAFTSTOFFTANK	146
ELEKTRISCHE ANLAGE UND STARTSYSTEM	148
WARNVORRICHTUNG	148
DREHSTROMGENERATOR	149
BATTERIE UND VERDRAHTUNG	155
BATTERIE	161
*CABLE AS-COILED	162
STEUERUNGSEINHEIT, ELEKTRON. FÜR MOTOR UND BEFEST.	163
MOTORSTEUERUNG, ELEKTRON.	165
ELEKTR. UMFORMER	166
ANZEIGE - KAMERA	167
ELEKTRONIK - MASCHINE	168
ELEKTRONIK, KOMMUNIKATION	169
ARBEITSGERÄTEELEKTRONIK	170
ELEKTRONIK - MONITOR	170
KRAFTÜBERTRAGUNGSELEKTRONIK	170
PLANIERSTEUERUNG	171
*GRADE CONTROL AR-LASER	171
NEIGUNGSSTEUERUNG - SATELLIT	172
UMLAUFKÜHLWASSERHEIZUNG	173
*INSTALLATION GP-CAMERA	174
KOMMUNIKATIONSEINBAUSATZ	176
SICHERHEITSEINBAUSATZ	180
FAHRERHAUSBELEUCHTUNG	182
ARBEITSLEUCHTEN	183
BEFESTIGUNG - VERBINDER	205
NIVELLIERAUTOMATIK	206
EMPFÄNGERBEFESTIGUNG	209
INSTRUMENTENTAFEL-SICHERUNG	211
RADIO - KOMMUNIKATION	213
EMPFÄNGER, LASER	213
*RECEIVER GP-SATELLITE	213
MOTORSENSOR	215
STELLUNGSSENSOR	216
DRUCKSENSOR	218
DREHZAHLSENSOR	225
TEMPERATURSENSOR	227
ÄTHERSTARTHILFE	230
STARTERMOTOR	232
UMGEHUNGSSCHALTER	238
TRENNSCHALTER	239
MAGNETSCHALTER	240
DRUCKKOPFSCHALTER	242
ÄTHERSTARTVENTIL	243
VERDRAHTUNG (ELEKTRON. STEUERUNG)	244
MOTORVERDRAHTUNG	246
NIEGUNGSSTEUER VERDRAHTUNG	251
FAHRERPLATTFORMVERDRAHTUNG	256
KRAFTÜBERTRAGUNG	260
DRUCKSPEICHER	260
ACHSE	262
ÖLFILTERSOCKEL	263
BREMSE UND DIFFERENTIALANTRIEB	264
BREMSE UND PLANETENGETRIEBE	268
PLANETENANTRIEBSGEHÄUSE U. TEILE	270
GETRIEBEGEHÄUSE	272
GETRIEBEHYDRAULIK	273
GETRIEBEÖLKÜHLER	275
KUPPLUNG UND VERKLEIDUNG	277
PUMPENANSCHLUSS	278
ABLASS (UMWELTFREUNDLICH)	279
PUMPENANTRIEB	282
ÖLFILTER	283
SEITENANTRIEB	284
TELLERRAD- UND VORGELEGERADSATZ	288
ÖLLEITUNGEN - KRAFTÜBERTRAGUNG	291
KRÜMMER - GETRIEBE	298
SEITENANTRIEBSBEFESTIGUNG	299
GETRIEBEAUFLAGER	300
PLANETENGETRIEBE	301
KRAFTÜBERTRAGUNG	307
ZAHNRADPUMPE	308
MAGNETSIEB	312
KETTENRADSEGMENT	313
ANTRIEBSWELLE	314
DREHMOMENTWANDLER	315
GETRIEBE	321
KREUZGELENK	322
MODULATORVENTIL	323
ÜBERDRUCKVENTIL	324
RAHMEN UND AUFBAU	327
ABSTREIFBALKEN	327
BATTERIEKASTEN	329
RAHMEN UND GEHÄUSE	332
GEGENGEWICHT	334
ZUGHAKEN	335
MOTORVERKLEIDUNG	337
HYDRAULIKTANKVERKLEIDUNG	344
SCHUTZBLECHE	345
SANDSTRAHLSCHUTZGITTER	348
KÜHLERGRILL	349
*GUARD & SCRAPER GP-IDLER	350

* ÜBERSETZUNG ZUM ZEITPUNKT DER DRUCKLEGUNG NICHT VORHANDEN

INHALTSVERZEICHNIS

Bezeichnung	Seite
SEITENANTRIEBSVERKLEIDUNG	350
PANZERWANNE	351
KRAFTSTOFFTANKVERKLEIDUNG	357
KÜHLERSCHUTZ	360
HECKVERKLEIDUNG	363
GETRIEBESCHUTZ	364
VERRIEGELUNG	365
KÜHLERPLATTE	366
SCHUTZBÜGEL	367
LAUFWERK	369
QUERTRAVERSE	369
LEITRADAUFSATZ	372
LAUFROLLENRAHMEN (TELESKOPRÜCK-LAUF)	374
LEITRADSCHUTZ	382
KETTENFÜHRUNGSSCHUTZ	385
LAUFROLLENSCHUTZ	387
LAUFWERKFÜHRUNG	390
LEITRAD, VORN	390
LEITRAD	393
KETTENGLIEDER	395
KETTENKASTEN - GLIEDERKETTE	397
KETTENGLIED	403
TRAGROLLENAUFHÄNGUNG	406
ACHSWELLE	408
LAUFROLLE	409
TRAGROLLE	410
DOPPELFLANSCHROLLEN	411
EINZELFLANSCHROLLEN	416
LEITRADABSTREIFER	422
ABSTREIFER, HINTEN	423
KETTENSPANNER UND -FEDERRÜCK-LAUF	424
LAUFWERKSKETTE	426
LAUFWERKSRAHMEN	431
LENK- UND BREMSSYSTEM	434
PUMPENSTELLGLIED	434
ÖLFILTER	435
PUMPENKOPF	436
LENKÖLLEITUNGEN	438
KRÜMMER UND VENTIL	443
LENKPUMPE UND AUFHÄNGUNG	446
LADEPUMPE	447
KOLBENPUMPE	448
KOLBENPUMPENUMLAUFSATZ	450
BREMSSTEUERVENTIL	452
NEBENSTROMVENTIL	456
PUMPENSTEUERVENTIL	457
ÜBERDRUCKVENTIL	459
MAGNETVENTIL	462

Bezeichnung	Seite
HYDRAULIKSYSTEM	464
VORSTEUERÖLDRUCKSAMMLER	464
MOTORANSCHLUSS	466
ARBEITSGERÄT - HYDRAULIKSTEUE-RUNG	467
HYDRAULIKÖLKÜHLER	469
HUBZYLINDER U. LEITUNGEN	470
PLANIERSCHILDHUBZYLINDER	474
AUFREISSERHUBZYLINDER	476
KIPPZYLINDER	478
HYDRAULIKANORDNUNG (2-VENTIL-HYDRAULIK)	482
HUBZYLINDERLEITUNGEN	483
VORSTEUERLEITUNGEN	485
HYDRAULIKPUMPE UND LEITUNGEN	495
AUFREISSERLEITUNGEN	499
NEIGEZYLINDERLEITUNGEN	501
STEUERKRÜMMER	509
KRÜMMERVENTIL	510
KOLBENMOTOR	512
ZYLINDERAUFHÄNGUNG	513
ARBEITSGERÄTEPUMPE UND AUFHÄNGUNG	515
KOLBENPUMPE	516
MOTORDREHVORRICHTUNG	520
KOLBENPUMPENUMLAUFSATZ	522
HYDRAULIKTANK UND SCHMIERFIL-TER	523
HYDRAULIKTANK UND BEFESTIGUNGS-TEILE	526
VENTIL U. BEFESTIGUNG - DOZER	527
STEUERVENTIL UND BEFESTIGUNGSTEI-LE	528
ARBEITSGERÄTESTEUERVENTIL U. BEFESTIGUNGSTEILE	530
VENTILSATZ (2-VENTIL)	531
VENTILSATZ (3-VENTIL)	533
SPERRVENTIL	537
STEUERVENTIL	538
VORSTEUERVENTIL	552
EINBAUVORSTEUERVENTIL	560
DRUCKREDUZIERVENTIL	562
PUMPENSTEUERVENTIL	563
SCHNELLSENKVENTIL	564
ÜBERDRUCKVENTIL	567
PENDELVENTIL	571
MAGNETVENTIL	573
ARBEITSGERÄTE	575
SCHILDSTREBE	575
SCHWENKPLANIERSCHILD	577
SU-SCHILD	581
C-RAHMEN	585

* ÜBERSETZUNG ZUM ZEITPUNKT DER DRUCKLEGUNG NICHT VORHANDEN

INHALTSVERZEICHNIS

Bezeichnung	Seite
SCHUBARM	588
MONTAGEZAPFEN (PLANIERSCHILDEINRICHTUNG)	592
ARBEITSGERÄTE	593
SCHWENKSCHILD U. SCHNEIDMESSER	593
SU-PLANIERSCHILD U. ECKMESSER	594
SU-SCHILD	598
SCHWENKSCHILD	603
SU-SCHILD	604
SCHNEIDMESSER UND EINSATZSTÜCK	606
WINDEN-ÖLLEITUNGEN	608
*MAST GP	612
HUBMASTBEFESTIGUNG	612
AUFREISSERBEFESTIGUNG	614
AUFREISSER	616
AUFREISSERZAHN	619
FAHRERHAUS	623
FAHRERSITZVERSTELLER	623
LUFTKOMPRESSORSITZ	624
KLIMAANLAGE	626
FAHRERHAUS-DRUCKLÜFTER	628
FAHRERHAUS	629
WETTERDACH	634
KÄLTEMITTELKOMPRESSOR	635
KÄLTEMITTELKONDENSATOR U. BEFESTIGUNGSTEILE	638
KÄLTEMITTELKONDENSATOR	641
JOYSTICKSTEUERUNG U. BEFESTIGUNG	643
STEUERPEDAL U. BEFESTIGUNG	644
STEUERHEBEL	645
JOYSTICK -STEUERUNG	650
FESTSTELLBREMSGESTÄNGE	651
HYDRAULIKBEDIENUNG (MIT VORSTEUERUNG)	653
LENK- UND GETRIEBESTEUERUNG	654
STEUERKONSOLENABDECKUNG	656
MONITORDISPLAY	659
HALTEGRIFF	660
FAHRERHAUSHEIZUNG	662
FAHRERSITZFEDERUNGSGEHÄUSE	663
RADIOEINBAUSATZ	666
INSTRUMENTENGRUPPE	667
KNOPF	674
FAHRERHAUSAUSKLEIDUNG	675
KLIMAANLAGENLEITUNGEN	679
HEIZUNGSLEITUNGEN	686
RÜCKSPIEGEL	688
MODUL - VIER ELEKTRON. ANZEIGEN	690
MONITOR	691
SCHEIBENWISCHERMOTOR	692
ANTENNENBEFESTIGUNG	696
FAHRERHAUSANBAUSATZ	697
GESTÄNGE UND ANBAUSATZ	698
MONITORBEFESTIGUNG	699
PLATTFORM-ANBAUSATZ	701
RADIOANBAUSATZ	703
ÜBERROLLSCHUTZAUFLAGER	704
SCHALE - RÜCKENLEHNE	705
GAS- U. BREMSPEDAL	708
PLATTFORM	710
FAHRERPLATTFORM	711
FAHRERHAUSBELÜFTUNG	714
VERSTELLBARER SITZ	716
ÜBERROLLSCHUTZ	717
ÜBERROLL-SCHUTZDACH	718
SCHUTZGITTER	720
FAHRERSITZ	722
SCHWINGSITZ	731
FAHRERSITZFEDERUNG	734
SCHEIBENWASCHMITTELBEHÄLTER	738
SCHEIBENWASCHANLAGE	741
FAHRERHAUSFENSTER	743
SCHIEBEFENSTER	757
SCHEIBENWISCHER	758
WISCHERARM	760
WARTUNGSAUSRÜSTUNG UND -ZUBEHÖR	761
AUFKLEBER	761
SCHILD UND AUFKLEBER	763
ERSATZTEILNUMMERNINDEX	B1

* ÜBERSETZUNG ZUM ZEITPUNKT DER DRUCKLEGUNG NICHT VORHANDEN

GENERAL INFORMATION

1. MACHINE IDENTIFICATION

Caterpillar machines are identified by Product Identification Numbers (PIN). Some components included in a machine may be identified by Serial Numbers (S/N). Typical components that will be serialized include engines, transmissions, bulldozers, and rippers. The machine and engine are further identified by arrangement numbers and in some cases modification numbers. These numbers are shown on the product identification plate(s) and on the master plate in the operator's compartment.

Caterpillar dealers need all of these numbers to determine accurate parts identification.

SIS *New Feature*

Effective First Quarter 2001 the Caterpillar Product Identification Number (PIN) changed from 8 to 17 characters. In an effort to provide uniform equipment identification, Caterpillar and other construction equipment manufacturers are moving to comply with the latest version of the product identification numbering standard. Non-road machine PINs are defined by ISO 10261. The new PIN format will apply to all Caterpillar machines and generator sets. The PIN plates and frame marking will display the 17 character PIN. The new format will look like the following:

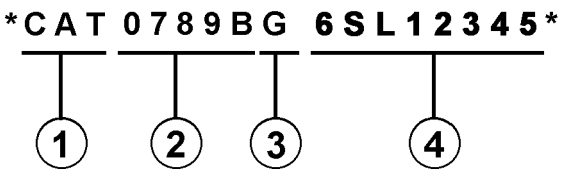

Where:

1. Caterpillar's World Manufacturing Code (characters 1-3)

2. Machine Descriptor (characters 4-8)

3. Check Character (character 9)

4. Machine Indicator Section (MIS) or Product Sequence Number (characters 10-17). These were previously referred to as the Serial Number.

Machines and generator sets produced before First Quarter 2001 will maintain their 8 character PIN format.

Components such as engines, transmissions, axles, etc. and work tools will continue to use an 8 character Serial Number (S/N).

2. ORDERING PARTS

⚠ WARNING

When replacement parts are required for this product Caterpillar recommends using Caterpillar replacement parts or parts with equivalent specifications including, but not limited to, physical dimensions, type, strength and material.

Failure to heed this warning can lead to premature failures, product damage, personal injury or death.

Quality Caterpillar replacement parts are available from Caterpillar dealers throughout the world. Their parts inventories are up to date and include all parts normally required to protect your investment in Caterpillar machines. Dealers may offer repair kits or remanufactured parts to allow selection of the most effective repair alternative for a particular situation. When ordering parts, your order should specify the quantity, part number, part name, and the serial number/product identification number of the machine for which the parts are needed.

3. PARTS MANUAL ORGANIZATION

Product information in this manual is presented as "information elements" that represent all of the components for the specific model. Engine Arrangement and Seat Group are examples of information elements. The information elements are organized alphabetically by part name and secondarily by part number within each major section of the manual.

4. TABLE OF CONTENTS

A table of contents (TOC) is found at the beginning of the manual. The TOC lists each section of the manual with a complete list of all information elements organized as they appear in the manual. Page numbers are provided for quick reference to detailed parts identification illustrations and serviceable consist lists.

5. MAINTENANCE PARTS INDEX

The Maintenance Parts Index, located near the beginning of the manual, references most frequently used maintenance part numbers, providing description, quantity, usage and page number. This information is organized alphabetically by part description.

6. INDEX

The index located near the front of the manual is an alphabetical listing of all information elements included in the manual. Page numbers are provided for quick reference to detailed parts identification illustrations and serviceable consist lists.

7. PART NUMBER INDEX

A numerical index listing all part numbers and the corresponding page number(s) appears at the back of the manual.

8. CAPTIONS

Captions located at the beginning of each information element identify the part number and part name along with additional descriptive information. PIN and S/N information found in each caption should be used to select correct information for a specific machine. Field replacement options, identification of optional attachment components, and where used ("part of") information is also provided.

The first line of a caption is shown in larger type font to indicate the beginning of an information element. Captions for additional pages that may be required to illustrate an information element will be shown in standard type font and will include the term *(contd.)* .

9. NON-SERVICED PARTS

In some instances it is necessary to display non-serviced parts that are a link to a lower level serviceable consist lists. These non-serviced part numbers are shown in *italic* type indicating that they are not available.

10. PARTS LIST REFERENCE NUMBERS

Numbers shown in the Ref No column correspond to numbers used in the associated graphic(s). An alphabetic suffix may be added to a reference number to identify lower level consist items. Numbers shown in the Graphic Ref column refer to the graphic number identifier displayed in the lower left corner of each illustration. The Graphic Ref number may be used in combination with the item Ref No to determine the correct part number. There may be intentional omission of a Ref No in a consist list as information is updated to reflect the latest serviceable part numbers.

11. INDENTED PART NAMES

When a part name is indented in a parts list, it is part of (included in) the group or assembly under which it is indented.

12. ILLUSTRATION REFERENCE LETTERS

When necessary, illustrations contain reference letters (A, B, C etc.) that are intended to track lines and harnesses from one point to another. They are also used to show where to reconnect illustrations that have been separated.

13. ABBREVIATIONS AND SYMBOLS

O.D. – Outside Diameter
I.D. – Inside Diameter
A – Not Part Of This Group
B – Use As Required
C – Change From Previous Type
D – Order By The Meter
E – Order By The Centimeter
F – Not Shown
G – Order By The Inch
I – Refer To Hydraulic Information System
M – Metric Part
R – Remfg Part May Be Available
Y – Separate Illustration
Z – Not Serviced Separately

SIS *New Feature*

14. DESCRIPTION OF TYPE CHANGES

Type - A type is defined as any configuration change that requires an additional Information Element for an Arrangement, Group, or Assembly. If serial number breaks for types are not available, a type # (Type 1, Type 2, etc.) will be displayed in the caption. These "type" changes are identified with a "C" note (change from previous type) in the Parts List. Only the "types" that apply to this Parts Manual will be included. Additional types may exist causing "C" notes to appear on an Information Element when no other types are shown.

15.<END>

This symbol indicates the end of an information element.

NOTE:

Continuing improvement and advancement of product design may cause changes to your machine which may not be included in this publication. Whenever a question arises regarding your caterpillar product or this publication, please consult your caterpillar dealer for the latest available information.

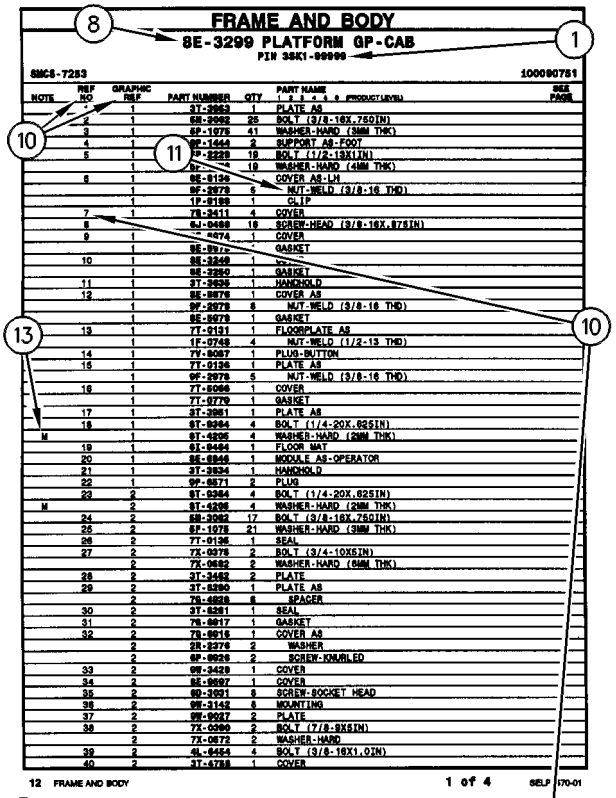

FRAME AND BODY

8E-3299 PLATFORM GP-CAB

PIN 3SK1-99999

SMCS-7283 100090751

NOTE	REF NO	GRAPHIC REF	PART NUMBER	QTY	PART NAME 1 2 3 4 5 6 (PRODUCT LEVEL)	SEE PAGE
	*	1	3T-3963	1	PLATE AS	
	2	1	6M-2062	25	BOLT (3/8-16X.750IN)	
	3	1	6P-1075	41	WASHER-HARD (3MM THK)	
	4	1	9E-1444	2	SUPPORT AS-FOOT	
	5	1	9P-2229	19	BOLT (1/2-13X1IN)	
		1	6P-[illegible]	19	WASHER-HARD (4MM THK)	
	6	1	9E-9139	*	COVER AS-LH	
		1	9F-2979	6	NUT-WELD (3/8-16 THD)	
		1	1P-0189	1	CLIP	
	7	1	7S-3411	4	COVER	
	8	1	6J-0468	18	SCREW-HEAD (3/8-16X.87SIN)	
	9	1	[illegible]-9974	1	COVER	
		1	9E-[illegible]	*	GASKET	
	10	1	9E-3249	1	[illegible]	
		1	9E-2950	1	GASKET	
	11	1	3T-3936	1	HANDHOLD	
	12	1	9E-9976	1	COVER AS	
		1	9F-2979	8	NUT-WELD (3/8-16 THD)	
		1	9E-9978	1	GASKET	
	13	1	7T-9131	1	FLOORPLATE AS	
		1	1F-0749	4	NUT-WELD (1/2-13 THD)	
	14	1	7V-9057	1	PLUG-BUTTON	
	15	1	7T-9136	1	PLATE AS	
		1	9F-2979	5	NUT-WELD (3/8-16 THD)	
	16	1	7T-5066	1	COVER	
		1	7T-9779	1	GASKET	
	17	1	3T-3961	1	PLATE AS	
	18	1	9T-0264	4	BOLT (1/4-20X.62SIN)	
M		1	9T-4295	4	WASHER-HARD (2MM THK)	
	19	1	9X-9464	1	FLOOR MAT	
	20	1	9E-6946	1	MODULE AS-OPERATOR	
	21	1	3T-3934	1	HANDHOLD	
	22	1	9F-9571	2	PLUG	
	23	2	9T-0364	4	BOLT (1/4-20X.62SIN)	
M		2	9T-4295	4	WASHER-HARD (2MM THK)	
	24	2	6M-2062	17	BOLT (3/8-16X.75QIN)	
	25	2	6P-1075	21	WASHER-HARD (3MM THK)	
	26	2	7T-0136	1	SEAL	
	27	2	7X-0075	2	BOLT (3/4-10X5IN)	
		2	7X-0682	2	WASHER-HARD (6MM THK)	
	28	2	3T-3482	2	PLATE	
	29	2	3T-5290	1	PLATE AS	
		2	7S-4828	6	SPACER	
	30	2	3T-5281	1	SEAL	
	31	2	7S-9017	1	GASKET	
	32	2	7S-9016	1	COVER AS	
		2	5R-2276	2	WASHER	
		2	9F-9026	2	SCREW-KNURLED	
	33	2	9M-3429	1	COVER	
	34	2	8E-9697	1	COVER	
	35	2	9D-3091	8	SCREW-SOCKET HEAD	
	36	2	9M-3142	8	MOUNTING	
	37	2	9M-9017	2	PLATE	
	38	2	7X-0360	2	BOLT (7/8-9X5IN)	
		2	7X-0672	2	WASHER-HARD	
	39	2	4L-6454	4	BOLT (3/8-16X1.0IN)	
	40	2	3T-4788	1	COVER	

12 FRAME AND BODY 1 of 4 SELP4570-01

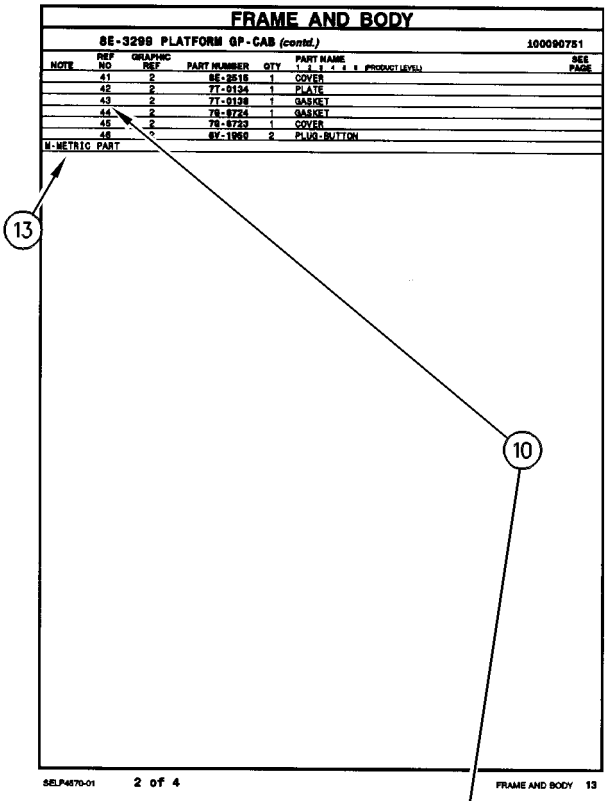

FRAME AND BODY

8E-3299 PLATFORM GP-CAB (contd.) 100090751

NOTE	REF NO	GRAPHIC REF	PART NUMBER	QTY	PART NAME 1 2 3 4 5 6 (PRODUCT LEVEL)	SEE PAGE
	41	2	8E-2515	1	COVER	
	42	2	7T-9134	1	PLATE	
	43	2	7T-9138	1	GASKET	
	44	2	7S-9724	1	GASKET	
	45	2	7S-9723	1	COVER	
	46	*	8Y-1950	2	PLUG-BUTTON	

M-METRIC PART

SELP4570-01 2 of 4 FRAME AND BODY 13

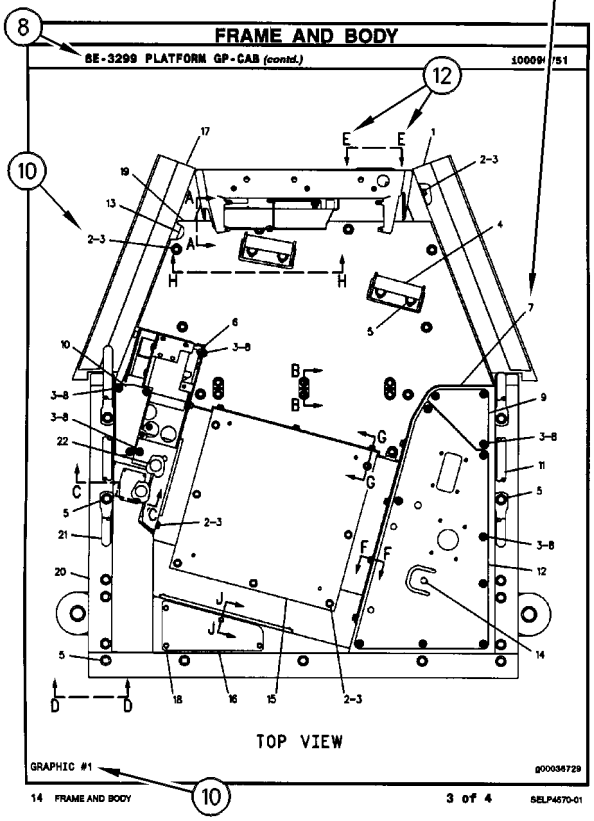

FRAME AND BODY

8E-3299 PLATFORM GP-CAB (contd.) 100090751

TOP VIEW

GRAPHIC #1 g00036729

14 FRAME AND BODY 3 of 4 SELP4570-01

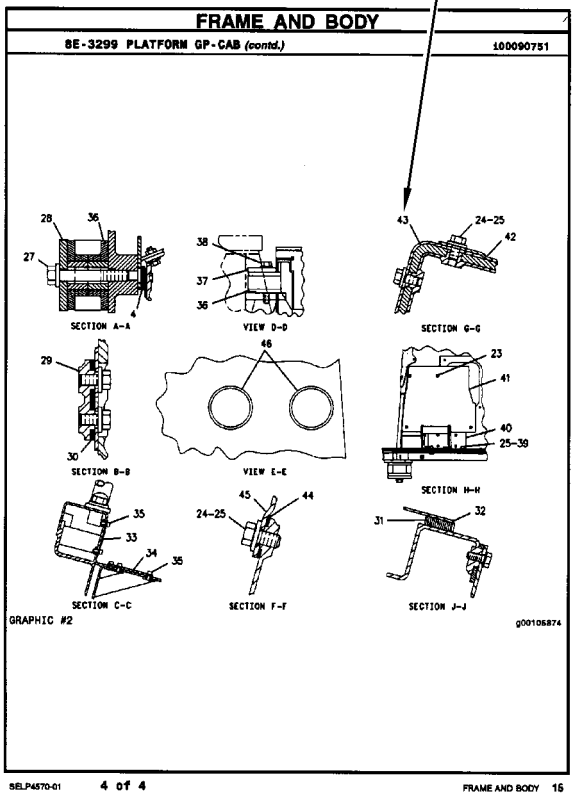

FRAME AND BODY

8E-3299 PLATFORM GP-CAB (contd.) 100090751

SECTION A-A

VIEW D-D

SECTION G-G

SECTION B-B

VIEW E-E

SECTION H-H

SECTION C-C

SECTION F-F

SECTION J-J

GRAPHIC #2 g00105874

SELP4570-01 4 of 4 FRAME AND BODY 15

1. IDENTIFICATION DE LA MACHINE

Toutes les machines Caterpillar portent un numéro d'identification (PIN). Certains composants des machines peuvent porter des numéros de série (S/N). En général, parmi les composants qui portent des numéros de série il y a les moteurs, les transmissions, les bulldozers et les rippers. En plus, la machine et le moteur peuvent recevoir des numéros de version, et dans certains cas, de modification. Ces numéros figurent sur les plaques de numéro de série et sur la plaque signalétique principale qui se trouve dans le poste de conduite.

Les concessionnaires Caterpillar doivent connaître tous ces numéros pour identifier correctement les pièces.

SIS *Nouvelle Caractéristique*

À partir du premier trimestre 2001, le numéro d'identification produit (PIN) Caterpillar passe de 8 à 17 caractères. Afin de permettre une identification uniforme des matériels, Caterpillar et d'autres constructeurs de machines de travaux publics s'efforcent de se conformer à la norme la plus récente portant sur les numéros d'identification des produits. Les numéros d'identification (PIN) de machines de chantier sont définis par la norme ISO 10261. Le nouveau format du numéro d'identification est valable pour toutes les machines et tous les groupes électrogènes Caterpillar. Le numéro d'identification produit (PIN) figurant sur la plaque et sur le châssis se composera de 17 caractères. Le nouveau format ressemblera à ceci:

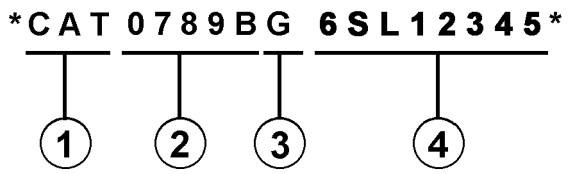

Il se décomposera de la façon suivante:

1. Code international de fabrication de Caterpillar (caractères 1 à 3)

2. Descriptif de la machine (caractères 4 à 8)

3. Contrôle (caractère 9)

4. Indicateur machine (MIS) ou numéro de séquence produit (caractères 10 à 17). Ceux-ci étaient auparavant désignés sous le terme de numéro de série.

Les machines et les groupes électrogènes construits avant le premier trimestre 2001 garderont le format à 8 caractères du numéro d'identification produit (PIN).

Les organes tels que les moteurs, les boîtes de vitesses, les essieux, etc., continueront d'être désignés par un numéro de série (S/N) à 8 caractères.

2. COMMANDE DE PIÈCES

⚠ DANGER

Lorsqu'il faut remplacer des pièces de rechange pour ce produit Caterpillar recommande d'utiliser les pièces de rechange Caterpillar ou les pièces qui ont des spécifications équivalentes dont les dimensions physiques, le type, la force et le matériau. Ces équivalences ne se limitent pas à l'énoncé précédent.

L'inobservation de cette mise en garde peut entraîner des défaillances prématurées, des dommages au produit, des blessures ou même la mort.

Les concessionnaires Caterpillar fournissent dans le monde entier des pièces de rechange de qualité Caterpillar. Leurs stocks de pièces sont constamment réapprovisionnés et comptent toutes les pièces nécessaires pour assurer la bonne marche de vos machines Caterpillar. Certains concessionnaires proposent également des kits de réparation ou des pièces rénovées, ce qui permet de choisir la solution la plus économique dans une situation donnée. Lors des commandes de pièces, mentionner la quantité, le numéro et la désignation des pièces ainsi que le numéro de série ou le numéro d'identification (PIN) de la machine pour laquelle ces pièces sont requises.

3. ORGANISATION DU CATALOGUE DE PIÈCES

Les renseignements sur les produits sont présentés sous forme de "Information element" (élément d'information) représentant tous les composants d'un modèle donné. "Engine Arrangement" (version de moteur) et "Seat Group" (assemblage de siège)" sont des exemples d'éléments d'information. Les éléments d'information sont classés par ordre alphabétique par la désignation standard des pièces et par numéros de pièces dans chaque partie importante du manuel.

4. TABLE DES MATIÈRES

SIS *Nouvelle Caractéristique*

La table des matières se trouve au début du manuel. La table des matières fournit la liste de tous les chapitres du manuel avec une liste complète de tous les éléments d'information classés par ordre d'apparition dans le manuel. Les numéros de page sont fournis afin que l'utilisateur puisse trouver rapidement les illustrations détaillées concernant l'identification des pièces et les listes des pièces d'entretien.

5. INDEX DES PIÈCES D'ENTRETIEN

La rubrique "Index des pièces d'entretien" qui se trouve au début du manuel renvoie aux pièces d'entretien les plus fréquemment utilisées en précisant la désignation, la quantité, là où la pièce est utilisée et le numéro de page. Ces pièces sont classés par ordre alphabétique.

6. INDEX

L'index qui se trouve vers le début du manuel est une liste alphabétique de tous les éléments d'information du manuel. Les numéros de page sont fournis afin que l'utilisateur puisse trouver rapidement les illustrations détaillées concernant l'identification des pièces et les listes des pièces d'entretien.

7. INDEX DES NUMÉROS DE PIÈCES

Une liste numérique de tous les numéros de pièces et des pages correspondantes se trouve à la fin du manuel.

8. LÉGENDES

Les légendes qui se trouvent en haut de chaque page de chaque élément d'information fournissent le numéro de pièce, la désignation ainsi que des renseignements supplémentaires sur les pièces. Les renseignements concernant les numéros de série (S/N) qui se trouvent dans chaque légende doivent être utilisés pour sélectionner les informations correctes pour un moteur donné. Les informations concernant les options de remplacement sur le chantier, l'identification des composants des équipements offerts en option et les lieux d'application sont aussi fournies.

SIS *Nouvelle Caractéristique*

Les lettres de la première ligne d'une légende sont présentées en police plus grande afin d'indiquer le début d'une unité d'information. Les légendes qui pourraient être requises pour des pages supplémentaires afin d'illustrer une unité d'information seront présentées en police standard et comprendront le terme (à suivre).

9. PIÈCES NON FOURNIES

SIS *Nouvelle Caractéristique*

Dans certains cas, il est nécessaire d'indiquer les pièces non fournies qui sont en aval de la liste des pièces d'entretien. Les numéros des pièces non fournies dans la liste des pièces et les légendes seront en italique pour signaler qu'ils ne sont pas disponibles.

10. NUMÉROS DE RÉFÉRENCE DE LA LISTE DES PIÈCES

SIS *Nouvelle Caractéristique*

Les numéros indiqués dans la colonne des numéros de références correspondent aux numéros utilisés dans les illustrations auxquelles ils sont associés. Un suffixe alphabétique peut être ajouté à un numéro de référence pour identifier la liste des articles en aval. Les numéros indiqués dans la colonne de référence de l'illustration renvoient à l'identification du numéro affiché dans le coin inférieur gauche de chaque illustration. Le numéro de référence de l'illustration pourrait être utilisé avec le numéro de référence de l'article pour déterminer le numéro de pièce correct. Il peut y avoir une omission intentionnelle d'un numéro de référence dans une liste de pièces suite à la mise à jour des informations en vue de refléter les numéros de pièces les plus récentes.

11. DÉSIGNATIONS DE PIÈCES EN RETRAIT

Lorsqu'une désignation de pièce est en retrait, cela veut dire que l'article en regard fait partie de l'ensemble sous lequel il figure.

12. LETTRES DE RÉFÉRENCE DES ILLUSTRATIONS

Quand cela est nécessaire, les illustrations comportent des lettres de référence (A, B, C, etc.) pour montrer le trajet des canalisations et faisceaux de câbles d'un point à l'autre. Elles sont utilisées également pour indiquer où relier les illustrations séparées auparavant.

13. ABRÉVIATIONS ET SYMBOLES

O.D. – Diamètre extérieur
I.D. – Diamètre intérieur
A – Ne fait pas partie de ce groupe
B – Utiliser selon besoin
C – Modification
D – Commander par mètre
E – Commander par centimètre
F – Non représenté
G – Commander par pouce
I – Voir "Hydraulic Information System"
M – Pièce métrique
R – Pièce rénovée éventuellement disponible
Y – Illustration séparée
Z – Non fourni séparément

NOTA:

En raison du progrès technique et des améliorations continuelles apportées au matériel, votre machine comporte peut-être des modifications qui n'apparaissent pas dans la présente publication. En cas de doute sur un détail de votre machine Caterpillar ou sur le texte de la présente publication, adressez-vous à votre concessionnaire Caterpillar.

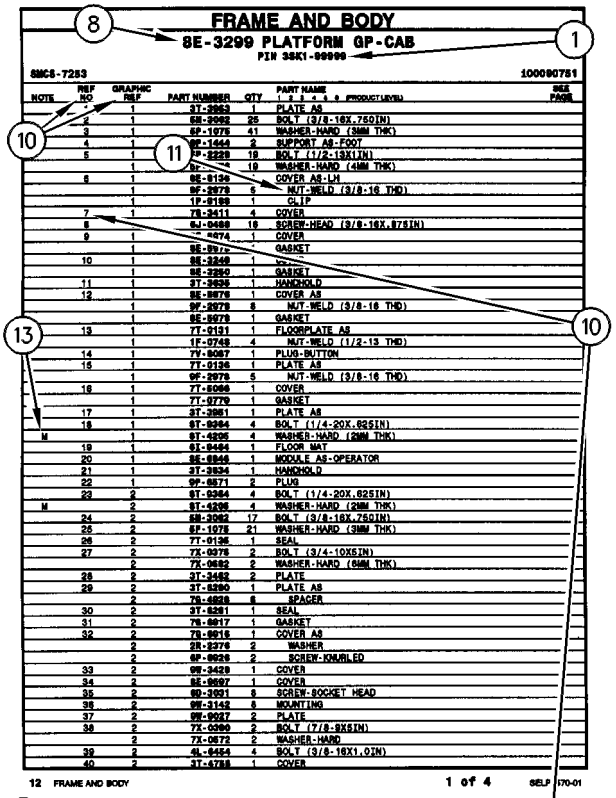
FRAME AND BODY
8E-3299 PLATFORM GP-CAB
PIN 3SK1-99999
SMCS-7283
100090751
1 of 4
SELP4570-01

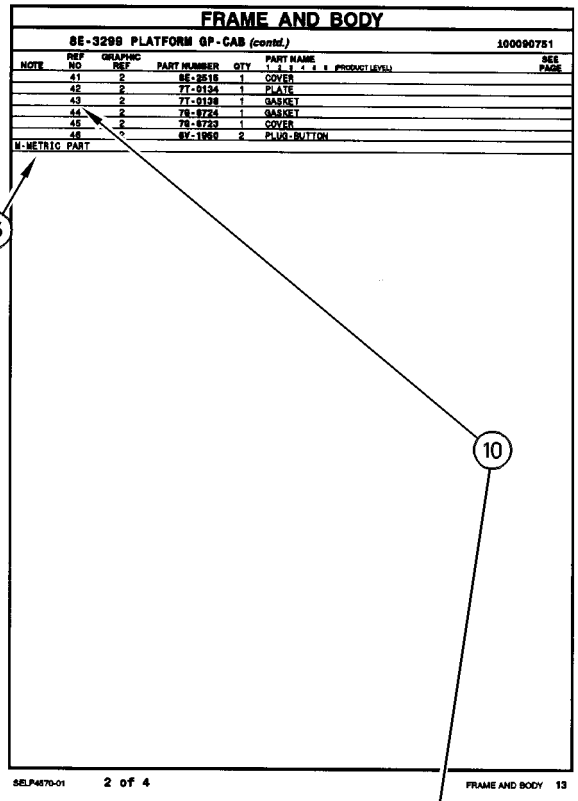
FRAME AND BODY
8E-3299 PLATFORM GP-CAB (contd.)
100090751
2 of 4
SELP4570-01

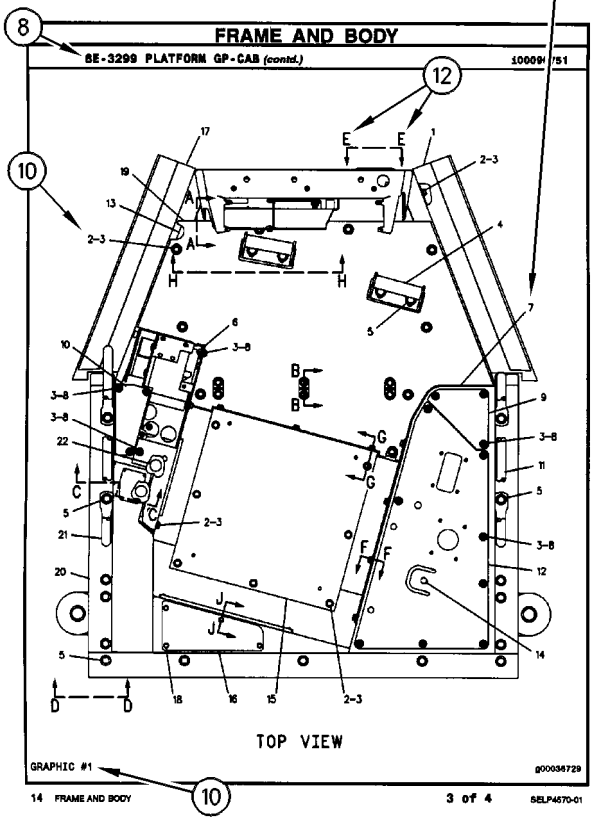
FRAME AND BODY
8E-3299 PLATFORM GP-CAB (contd.)
TOP VIEW
GRAPHIC #1
g00036729
3 of 4
SELP4570-01

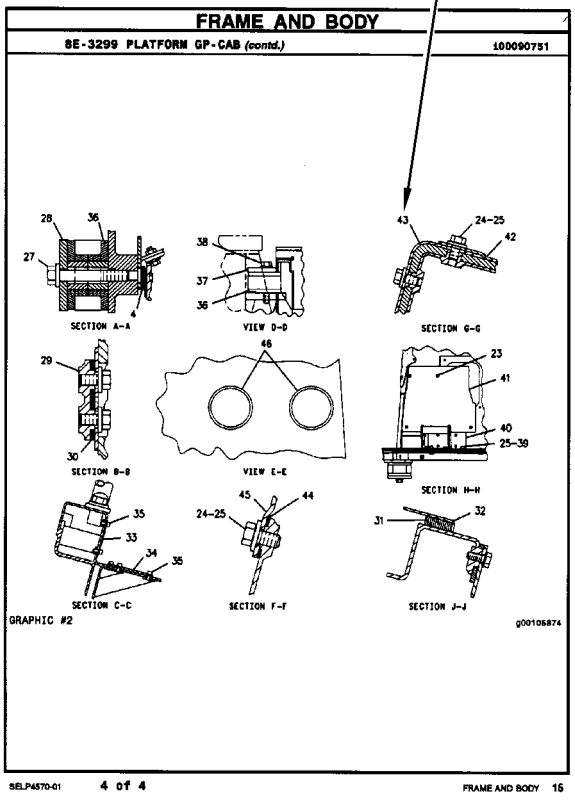
FRAME AND BODY
8E-3299 PLATFORM GP-CAB (contd.)
100090751
SECTION A-A
VIEW D-D
SECTION G-G
SECTION B-B
VIEW E-E
SECTION H-H
SECTION C-C
SECTION F-F
SECTION J-J
GRAPHIC #2
g00105874
4 of 4
SELP4570-01

INFORMACIÓN GENERAL

1. MÁQUINAS

Las máquinas Caterpillar se identifican con Números de Identificación del Producto (PIN). Algunos componentes incluídos en la máquina pueden estar identificados con Números de Serie (N/S). Los componentes que tienen típicamente esta identificación incluyen motores, transmisiones, hojas topadoras y desgarradores. La máquina y el motor se identifican además con Números de Configuración y en algunos casos, Números de Modificación. Estos números están en las placas de identificación del producto o en la placa principal en la cabina del operador.

Los distribuidores Caterpillar necesitan estos números para identificar con exactitud los números de piezas de repuesto.

SIS *Nueva Característica*

A partir del primer trimestre del 2001, el Número de Identificación de Producto (PIN) de Caterpillar cambió de 8 a 17 caracteres. Para hacer más uniforme el método de identificación de equipos, Caterpillar y otros fabricantes de equipo de construcción han tomado medidas para cumplir con la versión más reciente de la norma de numeración de identificación de productos. Los Números de Identificación de Producto para máquinas que no se operan en carreteras son definidos por la norma ISO 10261. El nuevo formato PIN corresponderá a todas las máquinas y grupos electrógenos Caterpillar. Las placas y los caracteres PIN estampados en el bastidor mostrarán el PIN de 17 caracteres. El nuevo formato tendrá la apariencia siguiente:

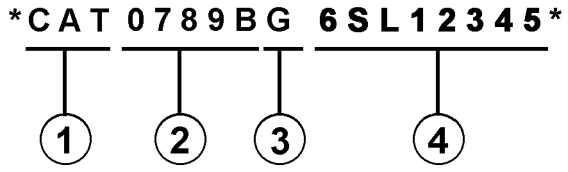

Significado de los caracteres:

1. Código de Fabricación Mundial de Caterpillar (caracteres 1-3)

2. Sección Descriptor de la Máquina (caracteres 4-8)

3. Carácter de Verificación (carácter 9)

4. Sección Indicador de la Máquina (MIS) o Número de Secuencia de Producto (caracteres 10-17). Anteriormente, estos caracteres constituían el Número de Serie.

Las máquinas y grupos electrógenos producidos antes del primer semestre del 2001 mantendrán su formato PIN de 8 caracteres.

Los componentes como motores, transmisiones, ejes, herramientas de trabajo, etc., continuarán usando un Número de Serie (S/N) de 8 caracteres.

2. COMO PEDIR REPUESTOS

⚠ ADVERTENCIA

Cuando se necesiten piezas de repuesto para este producto, Caterpillar recomienda usar piezas de repuesto Caterpillar o piezas que tengan especificaciones equivalentes incluyendo, pero sin estar limitadas a, dimensiones físicas, tipo, fortaleza y material.

El no hacer caso de esta advertencia puede llevar a fallas prematuras, daños al producto y lesiones graves o mortales.

Las piezas de repuesto Caterpillar de calidad están a la disposición de los distribuidores Caterpillar en todo el mundo. Sus existencias actualizadas incluyen todas las piezas normalmente requeridas para proteger su inversión en máquinas Caterpillar. Los distribuidores pueden tener juegos de reparación o piezas remanufacturadas para permitir la selección de la mejor alternativa de reparación en un caso en particular. Al pedir piezas de repuesto, especifique en su pedido la cantidad, el número de pieza, el nombre de la pieza y el número de serie/número de identificación del producto, de la máquina para la cual se necesitan estas piezas.

3. ORGANIZACION DEL MANUAL DE PIEZAS

La información sobre el producto, se presenta en este manual, como "elementos de información" que representan todos los componentes de un modelo específico. Las configuraciones de motores y los grupos de asientos son ejemplos de elementos de información. Los elementos de información están organizados primeramente por nombres de piezas en orden alfabético y en segundo lugar, por el número de pieza dentro de cada sección principal del manual.

4. CONTENIDO

La página de Contenido se encuentra al principio del manual. El Contenido indica cada sección del manual con una lista completa de todos los elementos de información organizados en el orden que aparecen en el manual. Los números de página proporcionan una referencia rápida a las ilustraciones detalladas de identificación de piezas y a las listas de componentes de repuesto de dichas piezas.

5. ÍNDICE DE PIEZAS DE MANTENIMIENTO

Al principio de este catálogo se encuentra un índice de los números de piezas utilizadas más frecuentemente para el mantenimiento, que incluye descripción, cantidad necesaria, lugar de utilización y número de página. Esta información está organizada alfabéticamente, por descripción de la pieza.

6. ÍNDICE

El Índice, ubicado cerca del principio del manual, es una lista en orden alfabético de todos los elementos de información incluídos en el manual. Los números de página proporcionan una referencia rápida a las ilustraciones detalladas de identificación de piezas y a las listas de componentes de repuesto de dichas piezas.

7. INDICE NUMÉRICO DE PIEZAS

Un índice numérico de piezas con el correspondiente número de página aparece al final de este catálogo.

8. TÍTULOS

Los títulos ubicados al principio de cada elemento de información identifican el número y el nombre de la pieza junto con información descriptiva. Se debe usar información sobre los Números de Identificación de Pieza (PIN) y los números de serie (S/N) para seleccionar la información que corresponda a una máquina en particular. También se suministra información sobre las opciones de reparación en el campo, la identificación de componentes de accesorios optativos y el lugar de ubicación de la pieza ("es parte de").

La primera línea del título se muestra con un tipo de letra más grande para indicar el comienzo de un elemento de información. Si se requieren páginas adicionales para ilustrar un elemento de información, los títulos se muestran con un tipo de letra normal y la continuación se indica entre paréntesis.

9. PIEZAS QUE NO SE SUMINISTRAN COMO REPUESTO

En algunos casos es necesario indicar piezas que no se suministran como repuesto pero que pueden estar conectadas a listas de componentes de otras piezas de repuesto. En tal caso, dichas piezas se muestran en cursiva para indicar que no son piezas disponibles.

10. NÚMEROS DE REFERENCIA

Los números en la columna de No. de Referencia corresponden a los números indicados en la ilustración que pertenece a ese número de pieza. Los números que tienen un sufijo alfabético identifican artículos de las listas de componentes de piezas. Los números en la columna de Referencia de la ilustración se identifican en la esquina inferior izquierda de cada ilustración. Para determinar el número de pieza correcto se puede utilizar tanto el No. de Referencia de la ilustración como el No. de Referencia del artículo. A medida que se actualiza la información para indicar los más recientes números de piezas de repuesto, puede omitirse intencionalmente un No. de Referencia en una lista de componentes de piezas.

11. NOMBRES DE PIEZA SANGRADOS

Cuando el nombre de una pieza está sangrado en una lista, significa que esta pieza forma parte del grupo o conjunto del renglón inmediatamente superior.

12. LETRAS DE REFERENCIA DE ILUSTRACIONES

Las ilustraciones contienen algunas veces letras de referencia (A, B, C etc.) cuyo propósito es seguir el trayecto de líneas y mazos de cables de un punto a otro. También se utilizan para mostrar dónde volver a unir ilustraciones que se habían separado.

13. ABREVIATURAS Y SIMBOLOS

O.D. – Diámetro exterior
I.D. – Diámetro interior
A – No es pieza de este grupo
B – Utilizado según la demanda
C – Indica cambio
D – Se pide por metro
E – Se pide por centímetro
F – No se muestra
G – Se pide por pulgada
I – Consulte el sistema de información hidráulica
M – Pieza métrica
R – Puede estar disponible como pieza remanufacturada
Y – Ilustración separada
Z – No se suministra por separado

SIS *Nueva Característica*

14. DESCRIPCIÓN DE LOS CAMBIOS DE TIPO

Tipo – Un tipo se define como cualquier cambio de configuración que requiere un Elemento de información adicional de una Configuración, Grupo o Conjunto. Si el número de serie se clasifica por tipos que no están disponibles, se mostrará un número de tipo (Tipo 1,Tipo 2,etc.) en el comentario de la fotografía. Estos cambios de "tipo" se identifican con una nota "C" (cambio con respecto al tipo anterior) en la Lista de Piezas. Se incluirían sólo los "tipos" que aplican a este Manual de Piezas. Es posible que haya tipos adicionales que causen la aparición de notas "C" en el Elemento de Información cuando no se muestran otros tipos."

15.<END>

Este símbolo indica el final de un elemento de información.

NOTA:

Las contínuas mejoras y adelantos en diseño podrían originar cambios a su máquina que no se incluyen en esta publicación. Cuando tenga alguna pregunta acerca de su producto Caterpillar o de esta publicación, consulte al distribuidor Caterpillar para obtener la información más reciente.

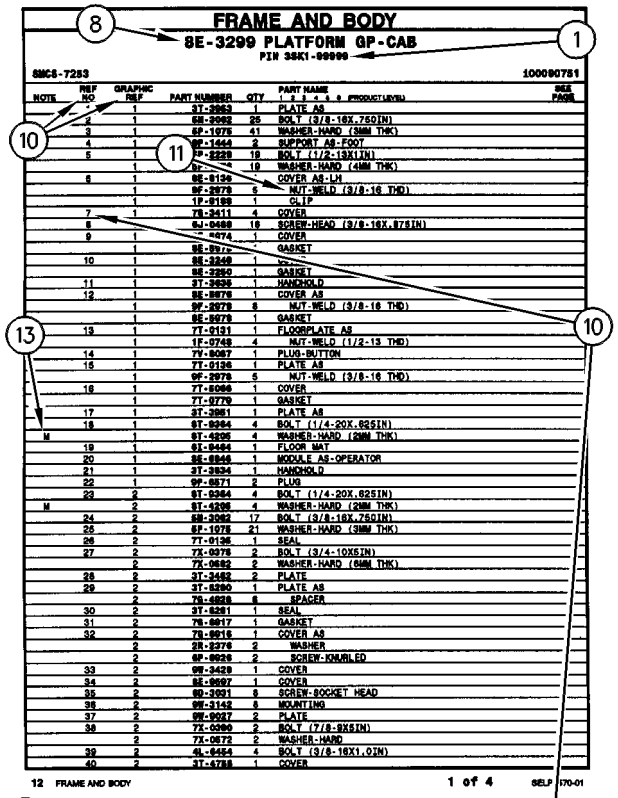

FRAME AND BODY

8E-3299 PLATFORM GP-CAB

PIN 3SK1-99999

SMCS-7283 100090751

NOTE	REF NO	GRAPHIC REF	PART NUMBER	QTY	PART NAME 1 2 3 4 5 6 (PRODUCT LEVEL)	SEE PAGE
	*	1	3T-3963	1	PLATE AS	
	2	1	5B-3062	25	BOLT (3/8-16X.750IN)	
	3	1	6P-1075	41	WASHER-HARD (3MM THK)	
	4	1	9F-1443	2	SUPPORT AS-FOOT	
	5	1	9P-2229	19	BOLT (1/2-13X1IN)	
		1	6P-[illegible]	19	WASHER-HARD (4MM THK)	
	6	1	8E-8136	*	COVER AS-LH	
		1	9F-2979	6	NUT-WELD (3/8-16 THD)	
		1	1P-8189	1	CLIP	
	7	1	7S-3411	4	COVER	
	8	1	6J-0468	18	SCREW-HEAD (3/8-16X.87SIN)	
	9	1	[illegible]-0074	1	COVER	
		1	8E-8976	*	GASKET	
	10	1	8E-3249	1	[illegible]	
		1	8E-2260	1	GASKET	
	11	1	3T-3636	1	HANDHOLD	
	12	1	8E-8976	1	COVER AS	
		1	9F-2979	8	NUT-WELD (3/8-16 THD)	
		1	8E-8978	1	GASKET	
	13	1	7T-0131	1	FLOORPLATE AS	
		1	1F-0748	4	NUT-WELD (1/2-13 THD)	
	14	1	7Y-8067	1	PLUG-BUTTON	
	15	1	7T-0126	1	PLATE AS	
		1	9F-2978	5	NUT-WELD (3/8-16 THD)	
	16	1	7T-8066	1	COVER	
		1	7T-0779	1	GASKET	
	17	1	3T-3961	1	PLATE AS	
	18	1	9T-0264	4	BOLT (1/4-20X.62SIN)	
M		1	9T-4295	4	WASHER-HARD (2MM THK)	
	19	1	9X-8464	1	FLOOR MAT	
	20	1	8E-8848	1	MODULE AS-OPERATOR	
	21	1	3T-3834	1	HANDHOLD	
	22	1	9F-8871	2	PLUG	
	23	2	9T-0264	4	BOLT (1/4-20X.62SIN)	
M		2	9T-4295	4	WASHER-HARD (2MM THK)	
	24	2	5B-3062	17	BOLT (3/8-16X.75QIN)	
	25	2	6P-1075	21	WASHER-HARD (3MM THK)	
	26	2	7T-0136	1	SEAL	
	27	2	7X-0078	2	BOLT (3/4-10X5IN)	
		2	7X-0682	2	WASHER-HARD (6MM THK)	
	28	2	3T-3482	2	PLATE	
	29	2	3T-8290	1	PLATE AS	
		2	7S-4828	8	SPACER	
	30	2	3T-8281	1	SEAL	
	31	2	7S-8817	1	GASKET	
	32	2	7S-8816	1	COVER AS	
		2	2R-2276	2	WASHER	
		2	9F-8826	2	SCREW-KNURLED	
	33	2	9M-3429	1	COVER	
	34	2	8E-8697	1	COVER	
	35	2	9D-3091	8	SCREW-SOCKET HEAD	
	36	2	9M-3142	8	MOUNTING	
	37	2	9M-9017	2	PLATE	
	38	2	7X-0360	2	BOLT (7/8-9X5IN)	
		2	7X-0672	2	WASHER-HARD	
	39	2	4L-8454	4	BOLT (3/8-16X1.0IN)	
	40	2	3T-4788	1	COVER	

12 FRAME AND BODY 1 of 4 SELP4570-01

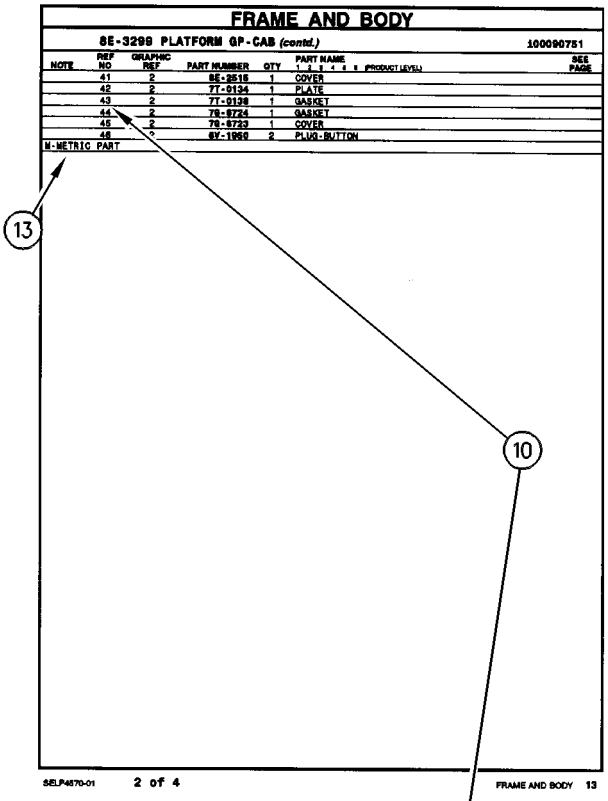

FRAME AND BODY

8E-3299 PLATFORM GP-CAB (contd.) 100090751

NOTE	REF NO	GRAPHIC REF	PART NUMBER	QTY	PART NAME 1 2 3 4 5 6 (PRODUCT LEVEL)	SEE PAGE
	41	2	8E-2515	1	COVER	
	42	2	7T-0134	1	PLATE	
	43	2	7T-0136	1	GASKET	
	44	2	7S-8724	1	GASKET	
	45	2	7S-8723	1	COVER	
	46	*	8Y-1950	2	PLUG-BUTTON	

M-METRIC PART

SELP4570-01 2 of 4 FRAME AND BODY 13

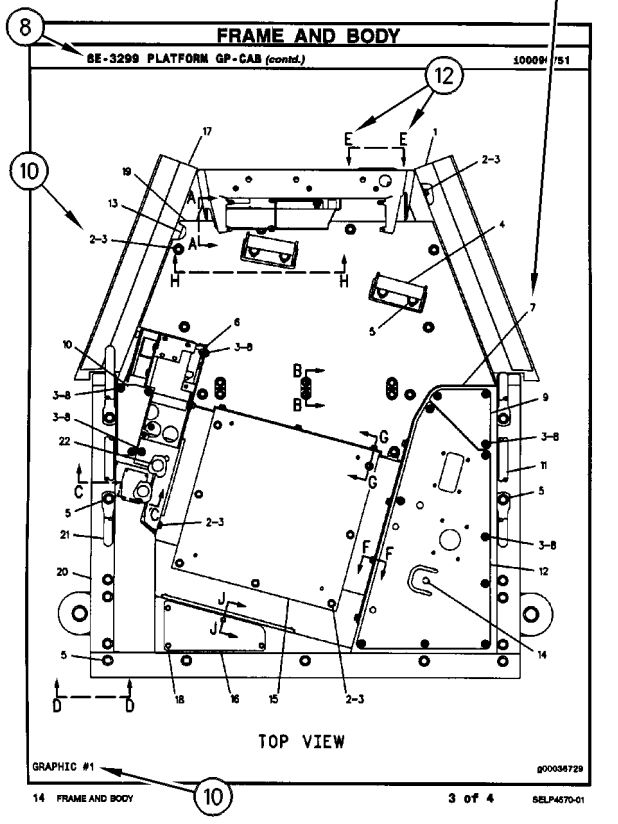

FRAME AND BODY

8E-3299 PLATFORM GP-CAB (contd.) 100090751

TOP VIEW

GRAPHIC #1 g00036729

14 FRAME AND BODY 3 of 4 SELP4570-01

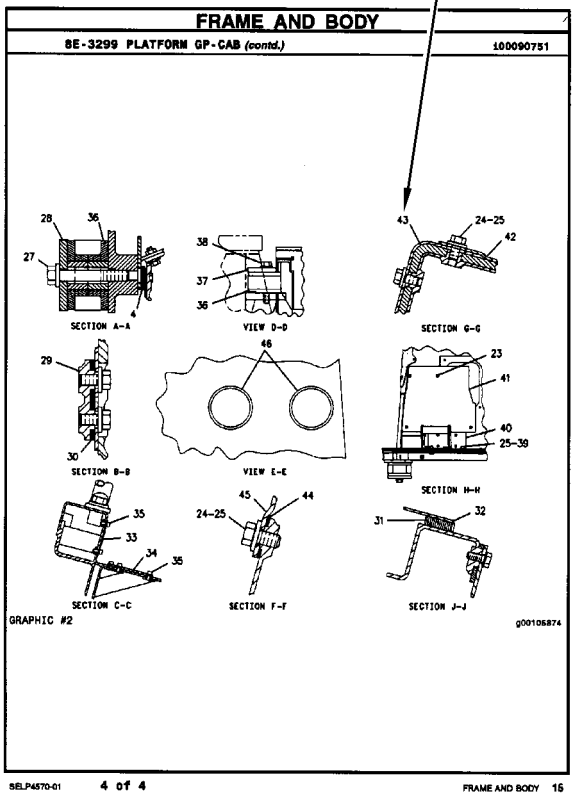

FRAME AND BODY

8E-3299 PLATFORM GP-CAB (contd.) 100090751

SECTION A-A

VIEW D-D

SECTION G-G

SECTION B-B

VIEW E-E

SECTION H-H

SECTION C-C

SECTION F-F

SECTION J-J

GRAPHIC #2 g00105874

SELP4570-01 4 of 4 FRAME AND BODY 15

INFORMAÇÃO GERAL

1. IDENTIFICAÇÃO DA MÁQUINA

As máquinas Caterpillar são identificadas pelos Números de Informação do Produto (PIN). Alguns componentes incluídos numa máquina podem ser identificados por Números de Série (S/N). Componentes típicos que serão enumerados com números de série incluem motores, transmissões, lâminas e ríperes. Além do número de série, a máquina e o motor são ainda identificados por números de arranjo e, em alguns casos, números de modificações. Tais números encontram-se na(s) placa(s) de identificação do produto e na placa mestre no compartimento do operador.

SIS *Novidades*

A partir do primeiro trimestre de 2001 o Número de Identificação de Produto da Caterpillar (PIN) precisa ser mudado de 8 para 17 caracteres. Esforçando-se para fornecer uma identificação uniforme de equipamentos, a Caterpillar e outros fabricantes de equipamento de construção estão mudando para atender a versão mais atualizada do padrão de identificação de produtos. Os números de PIN para produtos de aplicações não rodoviárias são definidos pela ISO 10261. O novo formato de número PIN será adotado em todas as máquinas e grupos geradores Caterpillar. As placas e as marcações do chassi mostrarão os 17 dígitos de PIN. O novo formato terá a seguinte disposição:

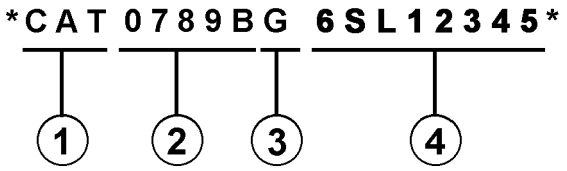

Onde:

1. Código de Fabricação Mundial da Caterpillar (dígitos 1-3)

2. Descrição da Máquina (dígitos 4-8)

3. Dígito de Verificação (dígito 9)

4. Seção de Indicador da Máquina (MIS) ou Número de Seqüência de Produto (dígitos 10-17). Estes eram anteriormente chamados de Número de Série.

Máquinas e grupos geradores produzidos antes do primeiro trimestre de 2001 manterão o formato de 8 caracteres de PIN.

Componentes como motores, transmissões, eixos, ferramentas de trabalho, etc. continuarão a usar Número de Série (S/N) com oito caracteres.

2. COMO OBTER PEÇAS

⚠ CUIDADO

Quando peças de substituição são exigidas para este produto, a Caterpillar recomenda a utilização de peças de substituição Caterpillar ou peças com as especificações equivalentes incluindo, mas não limitadas, à dimensões físicas, tipos, resistência e materiais.

A inobservância desta advertência poderá resultar em falhas prematuras, danos ao produto, ferimentos ou morte.

As Peças de Reposição de Qualidade Caterpillar encontram-se disponíveis nos revendedores Caterpillar no mundo inteiro. Seus estoques de peças são atualizados e incluem todas as peças normalmente necessárias para proteger seu investimento em máquinas Caterpillar. Alguns revendedores podem oferecer jogos de reparo ou peças de troca/remanufaturadas disponíveis como uma opção da alternativa de reparo mais eficaz para uma situação específica. Ao encomendar peças, seu pedido deve especificar a quantidade, o número e o nome da peça e o número de série/número de identificação do produto referentes à máquina para a qual as peças se destinam.

3. ORGANIZAÇÃO DO MANUAL DE PEÇAS

A informação do produto neste manual é apresentada em forma de "elementos de informação" que representam todos os componentes para o modelo específico. Arranjo de Motor e Grupo de Assento são exemplos de elementos de informação. Os elementos de informação são organizados em ordem alfabética por nome de peça ou secundariamente, por número de peça incluído em cada seção principal do manual.

4. LISTA DE CONTEÚDOS

A Lista de Conteúdos (TOC) se encontra no princípio do manual. A Lista de Conteúdos (TOC) relaciona em cada seção do manual uma lista completa com todos os elementos de informação organizados conforme aparecem no manual. Números de página são fornecidos para que se tenha referência rápida de ilustrações de peças detalhadas e listas de conteúdos que podem receber serviço de manutenção.

5. ÍNDICE DE PEÇAS DE MANUTENÇÃO

O Índice de Peças de Manutenção, localizado perto do princípio do manual, faz referência aos números de peça de manutenção usados com maior frequência, fornecendo uma descrição, a quantidade, o uso e o número de página. Esta informação é organizada com a descrição da peça em ordem alfabética.

6. ÍNDICE

O Índice localizado perto do princípio do manual, consiste de uma lista em ordem alfabética de todos os elementos de informação incluídos no manual. Números de página são fornecidos para que se tenha referência rápida de ilustrações de peças detalhadas e listas de conteúdos que podem receber serviço de manutenção.

7. ÍNDICE DE NÚMERO DE PEÇA

Um índice numérico relacionando todos os números de peça e a(s) página(s) correspondentes, aparece no final do manual.

8. LEGENDAS

As legendas localizadas no início de cada elemento de informação identificam o número e o nome de peça, juntamente com informação descritiva adicional. Informações sobre o Número de Informação do Produto (PIN) e o Número de Série (S/N) encontradas em cada legenda devem ser usadas para selecionar a informação correta sobre uma máquina específica. Opções de substituição no campo, identificação de componentes de acessórios opcionais e informações sobre onde são utilizados ("parte de") são também fornecidas.

A primeira linha de uma legenda é indicada em tipo maior para indicar o princípio de um elemento de informação. Legendas para páginas adicionais que podem ser necessárias para ilustrar um elemento de informação serão apresentadas em tipo padrão e incluirão o termo *(continua)* .

9. NÃO DISPONÍVEL SEPARADAMENTE

Em alguns casos, é necessário mostrar peças não disponíveis separadamente que têm uma ligação com listas de conteúdos de nível inferior que podem receber serviço de manutenção. Os números de peça destes componentes não disponíveis aparecerão em *itálico* , a fim de indicar que não estão disponíveis.

10. NÙMEROS DE REFERÊNCIA À LISTA DE PEÇAS

Os números indicados na coluna Ref No (No. de Referência) correspondem-se aos números usados no(s) gráfico(s) correspondente(s). Um sufixo com letras pode ser acrescentado a um número de referência para identificar itens de conteúdo de nível inferior. Os números indicados na coluna Graphic Ref (Referência de Gráfico) referem-se ao identificador de número de gráfico presente no canto esquerdo inferior de cada ilustração. O número de Referência de Gráfico pode ser usado em combinação com o item Ref No para determinar-se o número de peça correto. Poderá haver omissão intencional de um número de referência (Ref No) de uma lista de conteúdos uma vez que as informações são atualizadas para refletir os números de peça mais recentes que podem receber serviço de manutenção.

11. NOMES DE PEÇAS DESALINHADOS

Quando um nome de peça encontra-se desalinhado numa lista de peças, significa que tal item faz parte do (está incluído no) grupo ou conjunto sob o qual está relacionado.

12. LETRAS DE REFERÊNCIA NAS ILUSTRAÇÕES

Quando necessário, as ilustrações contêm letras de referência (A, B, C, etc.) que são utilizadas para seguir tubulações e cabos elétricos de um ponto a outro. Também foram utilizadas para indicar onde se pode reconectar as ilustrações que foram separadas.

13. ABREVIAÇÕES E SÍMBOLOS

O.D. – "Outside Diameter" (Diâmetro Externo)
I.D. – "Inside Diameter" (Diâmetro Interno)
A – Não faz parte deste grupo
B – Use conforme necessário
C – Indica modificação
D – Vendido por metro
E – Vendido por centímetro
F – Não ilustrado
G – Vendido por polegada
I – Consultar o Sistema de Informações Hidráulicas
M – Peça métrica
R – Peça remanufaturada pode estar disponível; consulte o seu revendedor Cat
Y – Ilustração separada
Z – Não disponível separadamente

SIS *Novidades*

14. <END>

Este símbolo indica o final de um elemento de informação.

NOTA:

Os contínuos aperfeiçoamentos e avanços no projeto do produto podem ocasionar modificações em sua máquina que talvez ainda não estejam incluídas nesta publicação. Sempre que surgirem dúvidas quanto a um produto Caterpillar ou quanto à presente publicação, consulte o seu revendedor Caterpillar para obter as informações mais recentes disponíveis.

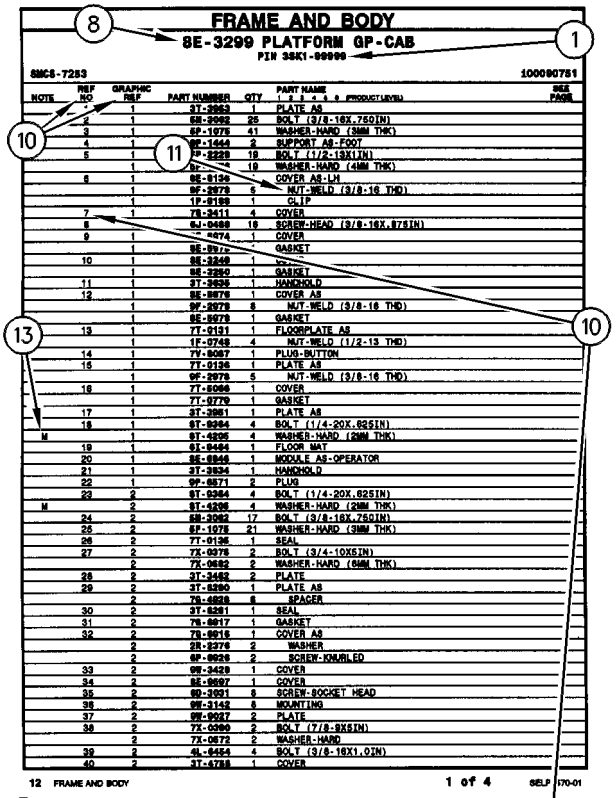

FRAME AND BODY

8E-3299 PLATFORM GP-CAB

PIN 3SK1-99999

SMCS-7283 100090751

NOTE	REF NO	GRAPHIC REF	PART NUMBER	QTY	PART NAME 1 2 3 4 5 6 (PRODUCT LEVEL)	SEE PAGE
	*	1	3T-3963	1	PLATE AS	
	2	1	6M-2062	25	BOLT (3/8-16X.750IN)	
	3	1	6P-1075	41	WASHER-HARD (3MM THK)	
	4	1	9F-1443	2	SUPPORT AS-FOOT	
	5	1	9P-2229	19	BOLT (1/2-13X1IN)	
		1	6P-[illegible]	19	WASHER-HARD (4MM THK)	
	6	1	8E-8136	*	COVER AS-LH	
		1	9F-2078	6	NUT-WELD (3/8-16 THD)	
		1	1P-8189	1	CLIP	
	7	1	7X-3411	4	COVER	
	8	1	6J-0468	18	SCREW-HEAD (3/8-16X.875IN)	
	9	1	[illegible]-8074	1	COVER	
		1	8E-8976	*	GASKET	
	10	1	8E-3249	1	[illegible]	
		1	8E-2260	1	GASKET	
	11	1	3T-3636	1	HANDHOLD	
	12	1	8E-8976	1	COVER AS	
		1	9F-2078	8	NUT-WELD (3/8-16 THD)	
		1	8E-8978	1	GASKET	
	13	1	7T-0131	1	FLOORPLATE AS	
		1	1F-0748	4	NUT-WELD (1/2-13 THD)	
	14	1	7Y-8067	1	PLUG-BUTTON	
	15	1	7T-0126	1	PLATE AS	
		1	9F-2078	5	NUT-WELD (3/8-16 THD)	
	16	1	7T-8066	1	COVER	
		1	7T-0779	1	GASKET	
	17	1	3T-3961	1	PLATE AS	
	18	1	9T-0264	4	BOLT (1/4-20X.625IN)	
M		1	9T-4295	4	WASHER-HARD (2MM THK)	
	19	1	9X-8464	1	FLOOR MAT	
	20	1	8E-8848	1	MODULE AS-OPERATOR	
	21	1	3T-3834	1	HANDHOLD	
	22	1	9F-8871	2	PLUG	
	23	2	9T-0264	4	BOLT (1/4-20X.625IN)	
M		2	9T-4295	4	WASHER-HARD (2MM THK)	
	24	2	6M-2062	17	BOLT (3/8-16X.750IN)	
	25	2	6P-1075	21	WASHER-HARD (3MM THK)	
	26	2	7T-0136	1	SEAL	
	27	2	7X-0078	2	BOLT (3/4-10X5IN)	
		2	7X-0682	2	WASHER-HARD (6MM THK)	
	28	2	3T-3482	2	PLATE	
	29	2	3T-8290	1	PLATE AS	
		2	7X-4828	6	SPACER	
	30	2	3T-8281	1	SEAL	
	31	2	7X-8817	1	GASKET	
	32	2	7X-8816	1	COVER AS	
		2	2R-2276	2	WASHER	
		2	9F-8826	2	SCREW-KNURLED	
	33	2	9M-3429	1	COVER	
	34	2	8E-8697	1	COVER	
	35	2	9D-3091	8	SCREW-SOCKET HEAD	
	36	2	9M-3142	8	MOUNTING	
	37	2	9M-9017	2	PLATE	
	38	2	7X-0360	2	BOLT (7/8-9X5IN)	
		2	7X-0672	2	WASHER-HARD	
	39	2	4L-8454	4	BOLT (3/8-16X1.0IN)	
	40	2	3T-4788	1	COVER	

12 FRAME AND BODY 1 of 4 SELP4570-01

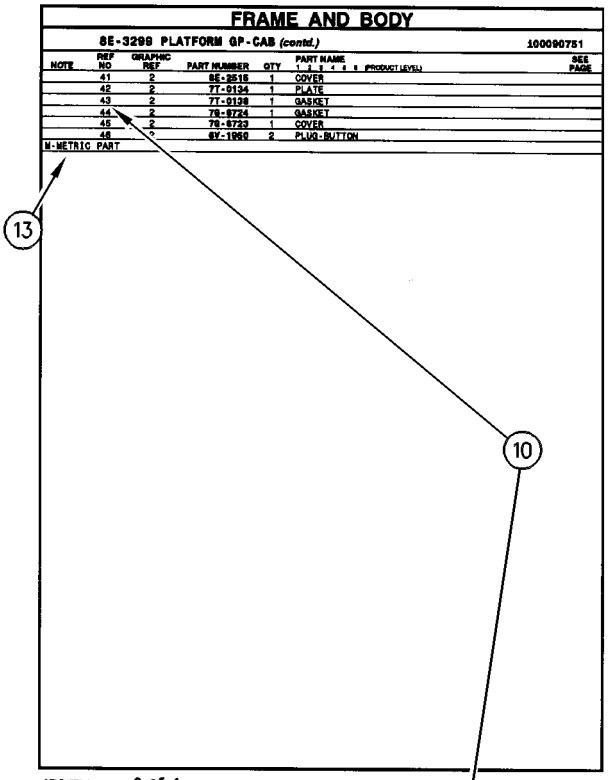

FRAME AND BODY

8E-3299 PLATFORM GP-CAB (contd.) 100090751

NOTE	REF NO	GRAPHIC REF	PART NUMBER	QTY	PART NAME 1 2 3 4 5 6 (PRODUCT LEVEL)	SEE PAGE
	41	2	8E-2515	1	COVER	
	42	2	7T-0134	1	PLATE	
	43	2	7T-0138	1	GASKET	
	44	2	7G-8724	1	GASKET	
	45	2	7G-8723	1	COVER	
	46	*	8Y-1952	2	PLUG-BUTTON	

M-METRIC PART

SELP4570-01 2 of 4 FRAME AND BODY 13

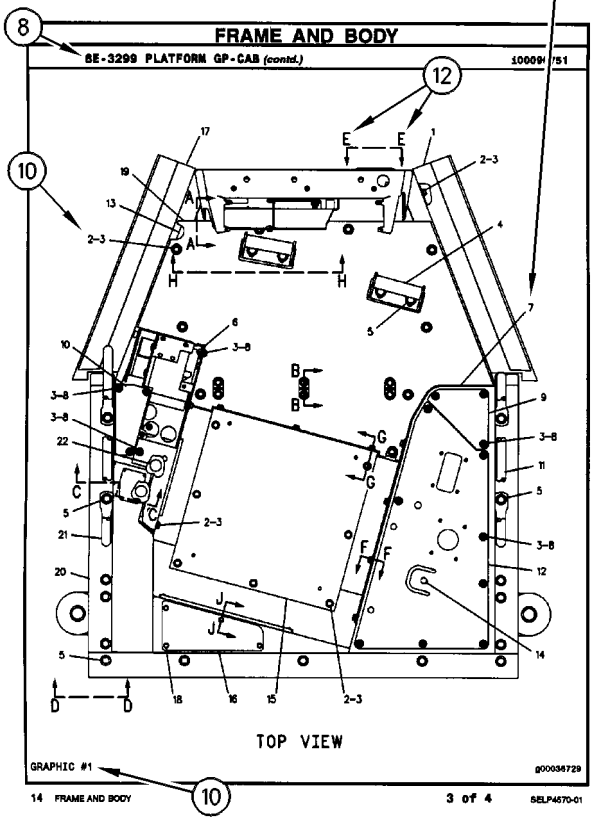

FRAME AND BODY

8E-3299 PLATFORM GP-CAB (contd.) 100090751

TOP VIEW

GRAPHIC #1 g00036729

14 FRAME AND BODY 3 of 4 SELP4570-01

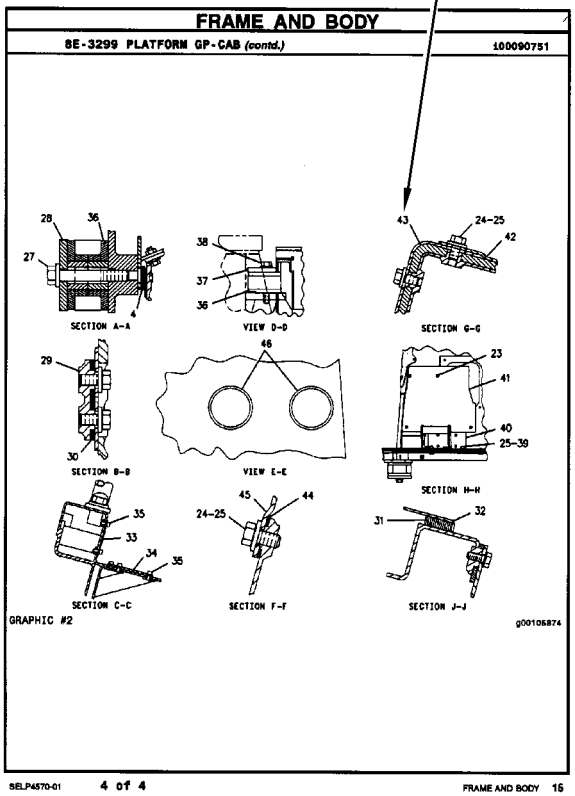

FRAME AND BODY

8E-3299 PLATFORM GP-CAB (contd.) 100090751

SECTION A-A

VIEW D-D

SECTION G-G

SECTION B-B

VIEW E-E

SECTION H-H

SECTION C-C

SECTION F-F

SECTION J-J

GRAPHIC #2 g00105874

SELP4570-01 4 of 4 FRAME AND BODY 15

ALLGEMEINE HINWEISE

1. MASCHINENKENNZEICHNUNG

Caterpillar-Maschinen sind mit PRODUCT IDENTIFICATION NUMBERS (PIN) (Produkt-Identnummern) gekennzeichnet. Einige Baugruppen, z.B. Motoren, Getriebe, Planierschilde und Aufreißer, sind mit SERIAL NUMBERS (S/N) (Seriennummern) gekennzeichnet. An der Maschine und am Motor befinden sich außerdem ARRANGEMENT NUMBERS (Ausrüstungsnummern) sowie in einigen Fällen MODIFICATION NUMBERS (Änderungsnummern). Sie befinden sich auf den PIN-Schildern und auf dem Typenschild im Fahrerhaus.

Bei Ersatzteilbestellungen müssen dem Händler alle diese Nummern zur Verfügung gestellt werden.

SIS *Neu im Parts Manual*

Vom ersten Quartal 2001 ab wurde die Caterpillar Produkt-Identnummer (PIN) von 8 auf 17 Zeichen geändert. Um zur Standardisierung der Produkt-Identnummer beizutragen, sind Caterpillar und andere Baumaschinenhersteller bestrebt, die aktuellste Norm zur Produkt-Identnummerierung einzuführen. Produkt-Identnummern für Baumaschinen sind durch ISO 10261 definiert. Das neue Format der Produkt-Identnummern gilt für alle Caterpillar-Maschinen und -Stromaggregate. Die Produkt-Identschilder und -Identrahmenmarkierung enthalten die aus 17 Zeichen bestehende Identnummer. Das neue Format hat folgende Abschnitte:

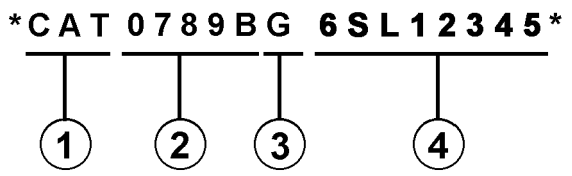

Abschnitte:

1. Caterpillars weltweiter Herstellungscode (Zeichen 1-3)

2. Modell (Zeichen 4-8)

3. Kontrollzeichen (Zeichen 9)

4. Maschinenspezifische Kennung (MIS) oder Produktsequenznummer (Zeichen 10-17). Diese wurde früher als Seriennummer bezeichnet.

Für vor dem ersten Quartal 2001 hergestellte Maschinen und Stromaggregate wird das aus 8 Zeichen bestehende PIN-Format beibehalten.

Bauteile wie z.B. Motoren, Getriebe, Achsen sowie Arbeitsgeräte werden weiterhin eine aus 8 Zeichen bestehende Seriennummer (S/N) aufweisen.

2. BESTELLEN VON ERSATZTEILEN

⚠ WARNUNG

Wenn für diese Maschine Ersatzteile benötigt werden, empfiehlt Caterpillar, ausschließlich Caterpillar-Ersatzteile oder solche zu verwenden, die die gleichen technischen Merkmale hinsichtlich Typ, Festigkeit, Werkzeugeigenschaften und die gleichen Maße aufweisen.

Bei Nichtbeachtung dieser Warnung besteht Verletzungs- oder sogar Lebensgefahr! Ferner kann Nichtbeachtung vorzeitige Ausfälle der Teile und Beschädigung der Maschine zur Folge haben.

Original Caterpillar-Ersatzteile können weltweit bei jedem Caterpillar-Händlern bestellt werden. Die umfangreichen Händlerlager enthalten normalerweise alle Teile, die Sie für Ihre Caterpillar-Maschine benötigen. Einige Händler bieten Reparatursätze, Austausch- oder werküberholte Teile an, so daß Sie eine Auswahl unter verschiedenen Reparaturmöglichkeiten treffen können. Ihre Bestellung muß folgende Angaben enthalten: Anzahl der benötigten Teile, Bestellnummer, Bezeichnung des Teils, Serien-Nr./Produkt-Ident-Nr., Ausrüstungs-Nr. und Änderungs-Nr. der Maschine, für die diese Teile benötigt werden.

3. AUFBAU DES PARTS MANUAL

Die Produktinformationen für alle Komponenten eines bestimmten Modells sind in INFORMATION ELEMENTS (Informationseinheiten) gegliedert. ENGINE ARRANGEMENT (Motorausführung) und SEAT GROUP (Fahrersitz) sind Beispiele für solche Informationseinheiten. Sie sind innerhalb jeder Gruppe alphabetisch, entsprechend der Ersatzteilbezeichnung, und zusätzlich numerisch, entsprechend der Ersatzteilnummer, geordnet.

4. INHALTSVERZEICHNIS

Das Inhaltsverzeichnis befindet sich am Anfang des Buches. Im Inhaltsverzeichnis werden die einzelnen Abschnitte des Buches aufgeführt. Die Abschnitte enthalten eine vollständige Aufstellung aller Informationseinheiten. Diese sind entsprechend ihrem Erscheinen im Buch geordnet. Das Inhaltsverzeichnis enthält Seitenangaben für Schnellverweise auf detaillierte Abbildungen und Teillisten.

ALLGEMEINE HINWEISE

5. INDEX FÜR WARTUNGSTEILE

Der Index für Wartungsteile vorn im Buch enthält die Bestellnummern, Seitenangaben, Mengenangaben und Informationen über den Einsatzbereich für die am häufigsten benötigten Ersatzteile. Die Angaben sind alphabetisch entsprechend der Teilebezeichnung geordnet.

6. INDEX

Der Index vorn im Buch enthält eine alphabetische Liste aller Informationseinheiten. Er enthält Seitenangaben für Schnellverweise auf detaillierte Abbildungen und Teillisten.

7. INDEX FÜR BESTELLNUMMERN

Hinten im Buch befindet sich ein numerischer Index, mit allen Bestellnummern und dem Hinweis auf die Seite, auf der sich die betreffende Abbildung befindet.

8. ÜBERSCHRIFTEN

Die Überschriften, die sich am Anfang jeder der Informationseinheiten befinden, enthalten Bestellnummern, Ersatzteilbezeichnungen und zusätzliche beschreibende Informationen. Produkt-Ident- und Seriennummern in den Überschriften sollten zur Auswahl der richtigen Informationen für die betreffende Maschine verwendet werden. Die Überschriften enthalten außerdem Informationen über möglichen Außendienstersatz, mögliche Baugerätekomponenten und die Baugruppe, zu der das Teil gehört.

Die erste Zeile einer Überschrift erscheint in einer größeren Schriftart, um den Anfang einer Informationseinheit zu kennzeichnen. Überschriften für zusätzliche Seiten, die zur Erläuterung einer Informationseinheit notwendig sind, erscheinen in normaler Schriftart und enthalten den Begriff "(contd.)".

9. NICHT EINZELN LIEFERBARE TEILE

In einigen Fällen ist es notwendig nicht lieferbare Teile, die selbst mit einer eigenen Teilliste im Buch vertreten sind, aufzuführen. Die Bestellnummern dieser nicht einzeln lieferbaren Teile erscheinen kursiv, wodurch angezeigt wird, daß sie nur in Verbindung mit anderen Teilen lieferbar sind.

10. REFERENZNUMMER FÜR ERSATZTEILE

Die Zahlen, die in der Spalte "Ref No" aufgeführt sind, stimmen mit den Zahlen in den beigefügten Abbildungen überein. Ein Buchstaben-Suffix kann zu einer Referenznummer hinzugefügt werden, um zu kennzeichnen, daß das Teil mit einer eigenen Teilliste im Buch aufgeführt ist. Die in der Spalte "Graphic Ref" angeführten Zahlen verweisen auf die Identifikationsnummer der Abbildung, die sich in der linken unteren Ecke der Abbildung befindet. Diese Nummer kann zusammen mit der Referenznummer des Teils angegeben werden, um die richtige Ersatzteilnummer zu ermitteln. Referenznummern können absichtlich weggelassen werden, da die Nummern der lieferbaren Ersatzteile ständig aktualisiert werden.

11. EINGERÜCKTE BEZEICHNUNGEN

Wenn eine Bezeichnung eingerückt ist, wird dadurch angezeigt, daß das Teil zu einer Baugruppe gehört, unter deren Bezeichnung es eingerückt ist.

12. REFERENZBUCHSTABEN

Falls erforderlich sind in den Abbildungen Referenzbuchstaben enthalten (z.B. A, B, C, usw.), die Leitungen und Kabelbäume von einem Punkt zum anderen verfolgen. Außerdem geben sie die Stelle an, an der getrennte Abbildungen fortgesetzt werden.

13. ABKÜRZUNGEN UND SYMBOLE

O.D. – Außendurchmesser
I.D. – Innendurchmesser
A – kein Teil dieser Gruppe
B – nach Bedarf verwenden
C – Hinweis auf eine Änderung
D – in Meter-Länge bestellen
E – in Zentimeter-Länge bestellen
F – nicht gezeigt
G – in Zoll-Länge bestellen
I – siehe Hydraulikinformationssystem
M – metrisches Teil
R – werküberholtes Teil unter Umständen lieferbar
Y – separate Abbildung
Z – nicht einzeln lieferbar

SIS *Neu im Parts Manual*

14. BESCHREIBUNG DER TYPENÄNDERUNGEN

Typ-A bezieht sich auf alle Konfigurationsänderungen, die ein zusätzliches Informationselement für Ausführung, Gruppe oder Einheit benötigen. Wenn kein Seriennummernumbruch für Typen erhältlich ist, wird in der Überschrift eine Typennummer (Typ 1, Typ 2, etc.) angegeben. Diese "Typenänderungen" sind in der Teileliste mit der Anmerkung "C" (Änderung des vorherigen Typs) versehen. Es werden nur die für dieses Ersatzteilhandbuch relevanten "Typen" angegeben. Es können zusätzliche Typen vorhanden sein, was zu "C" Anmerkungen zu einem Informationselement führen kann, wenn keine anderen Typen angegeben werden.

15. <END>

Dieses Symbol zeigt das Ende eines Informationselements an.

ANMERKUNG:

Ständig vorgenommene Verbesserungen und Weiterentwicklungen an Ihrer Maschine können Änderungen verursachen, die in der vorliegenden Ausgabe noch nicht berücksichtigt sind. Fragen zu Ihrer Caterpillar-Maschine oder diesem Ersatzteilbuch beantwortet Ihr Caterpillar-Händler.

ALLGEMEINE HINWEISE

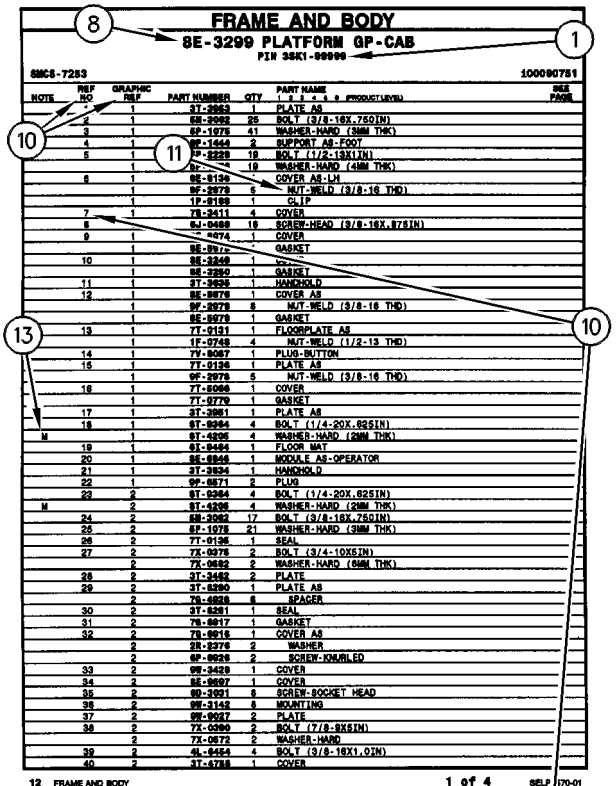

NOTE	REF NO	GRAPHIC REF	PART NUMBER	QTY	PART NAME (1 2 3 4 5 6 PRODUCT LEVEL)	SEE PAGE
	*	1	3T-3963	1	PLATE AS	
	2	1	6M-2062	25	BOLT (3/8-16X.750IN)	
	3	1	6P-1075	41	WASHER-HARD (3MM THK)	
	4	1	9F-1444	2	SUPPORT AS-FOOT	
	5	1	9P-2229	19	BOLT (1/2-13X1IN)	
		1	9P-[illegible]	19	WASHER-HARD (4MM THK)	
	6	1	8E-8136	*	COVER AS-LH	
		1	9F-2979	6	NUT-WELD (3/8-16 THD)	
		1	1P-8189	1	CLIP	
	7	1	7X-3411	4	COVER	
	8	1	6J-0468	18	SCREW-HEAD (3/8-16X.875IN)	
	9	1	[illegible]-8974	1	COVER	
		1	8E-8976	*	GASKET	
	10	1	8E-3249	1	[illegible]	
		1	8E-3250	1	GASKET	
	11	1	3T-3636	1	HANDHOLD	
	12	1	8E-8976	1	COVER AS	
		1	9F-2979	8	NUT-WELD (3/8-16 THD)	
		1	8E-8978	1	GASKET	
	13	1	7T-9131	1	FLOORPLATE AS	
		1	1F-0748	4	NUT-WELD (1/2-13 THD)	
	14	1	7Y-8067	1	PLUG-BUTTON	
	15	1	7T-0136	1	PLATE AS	
		1	9F-2978	5	NUT-WELD (3/8-16 THD)	
	16	1	7T-8066	1	COVER	
		1	7T-9779	1	GASKET	
	17	1	3T-3961	1	PLATE AS	
	18	1	9T-0264	4	BOLT (1/4-20X.625IN)	
M		1	9T-4295	4	WASHER-HARD (2MM THK)	
	19	1	9X-8464	1	FLOOR MAT	
	20	1	8E-8848	1	MODULE AS-OPERATOR	
	21	1	3T-3834	1	HANDHOLD	
	22	1	9F-8871	2	PLUG	
	23	2	9T-0264	4	BOLT (1/4-20X.625IN)	
M		2	9T-4295	4	WASHER-HARD (2MM THK)	
	24	2	6M-2062	17	BOLT (3/8-16X.750IN)	
	25	2	6P-1075	21	WASHER-HARD (3MM THK)	
	26	2	7T-0136	1	SEAL	
	27	2	7X-0078	2	BOLT (3/4-10X5IN)	
		2	7X-0682	2	WASHER-HARD (6MM THK)	
	28	2	3T-3482	2	PLATE	
	29	2	3T-8290	1	PLATE AS	
		2	7S-4828	6	SPACER	
	30	2	3T-8281	1	SEAL	
	31	2	7S-8817	1	GASKET	
	32	2	7S-8816	1	COVER AS	
		2	2R-2276	2	WASHER	
		2	9F-8826	2	SCREW-KNURLED	
	33	2	9M-3429	1	COVER	
	34	2	8E-8697	1	COVER	
	35	2	9D-3931	8	SCREW-SOCKET HEAD	
	36	2	9M-3142	8	MOUNTING	
	37	2	9M-9017	2	PLATE	
	38	2	7X-0360	2	BOLT (7/8-9X5IN)	
		2	7X-0672	2	WASHER-HARD	
	39	2	4L-8454	4	BOLT (3/8-16X1.0IN)	
	40	2	3T-4788	1	COVER	

12 FRAME AND BODY 1 of 4 SELP4570-01

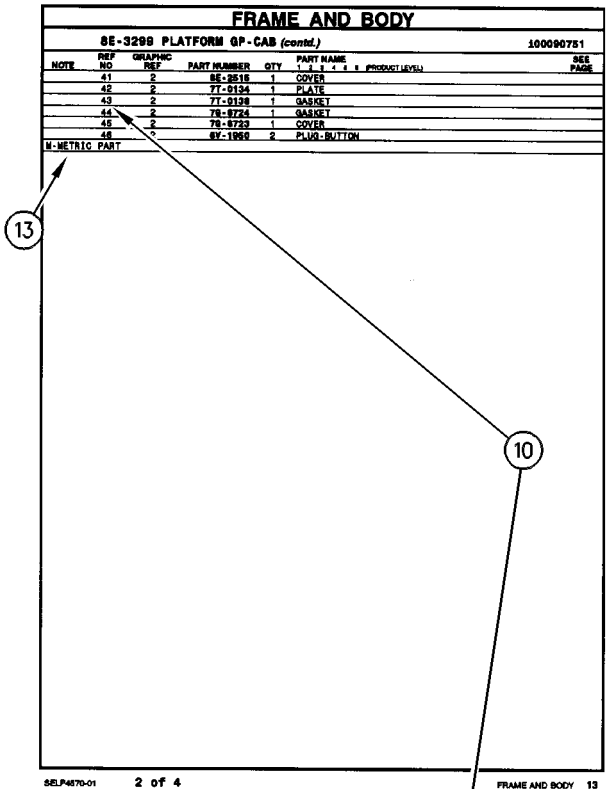

NOTE	REF NO	GRAPHIC REF	PART NUMBER	QTY	PART NAME (1 2 3 4 5 6 PRODUCT LEVEL)	SEE PAGE
	41	2	8E-2515	1	COVER	
	42	2	7T-0134	1	PLATE	
	43	2	7T-0138	1	GASKET	
	44	2	7S-8724	1	GASKET	
	45	2	7S-8723	1	COVER	
	46	*	8Y-1950	2	PLUG-BUTTON	

M-METRIC PART

SELP4570-01 2 of 4 FRAME AND BODY 13

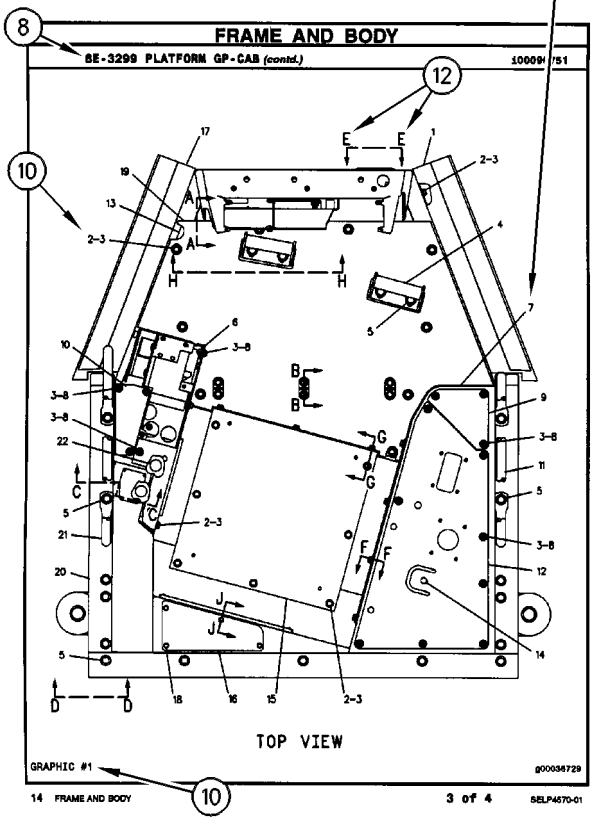

14 FRAME AND BODY 3 of 4 SELP4570-01

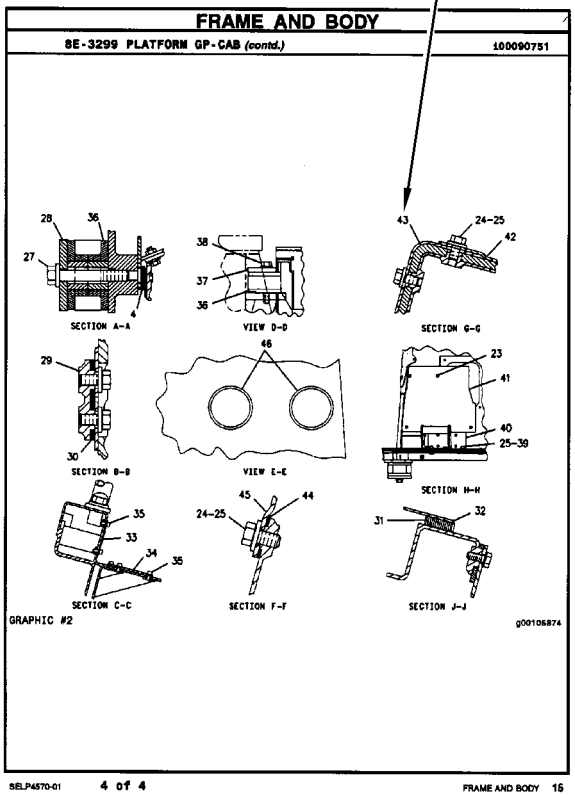

SELP4570-01 4 of 4 FRAME AND BODY 15

REMANUFACTURED COMPONENTS

As an option when making repairs consider Caterpillar Remanufactured Components. Components that are available through the Caterpillar Remanufactured Program are identified three ways in the parts book:

- with the letter R in the note field of the parts list
- with an R* at the beginning of the first line of the caption
- with an *R at the end of the first line of the caption

Typical components included in the Remanufacturing Program include:

ALTERNATORS
CONNECTING RODS
CRANKSHAFTS - UNDERSIZE
CRANKSHAFTS - UPGRADE TO NEW
CYLINDER HEADS
ELECTRONIC CONTROL MODULES (ECM)
ELECTRONIC SENSORS
FUEL INJECTORS
FUEL NOZZLES
FUEL PUMPS
GOVERNORS
OIL PUMPS
PISTONS
SHORT BLOCKS
STARTERS
TURBOCHARGERS - COMPLETE
TURBOCHARGER CARTRIDGES
WATER PUMPS

Caterpillar Remanufactured engines for many engine arrangements are also available.

OPTIONS DE RÉPARATION

COMPOSANTS RÉNOVÉS

Comme option de réparation, considérer les composants rénovés Caterpillar. Les composants disponibles dans le cadre du programme Caterpillar de composants rénovés sont identifiés de trois façons dans le catalogue de pièces:

- avec la lettre "R" dans l'espace note de la liste des pièces
- avec R* au début de la première ligne des légendes
- avec *R à la fin de la première ligne des légendes

Les composants suivants figurent parmi les composants typiques du programme de rénovation:

ALTERNATEURS
BIELLES
VILEBREQUINS - SOUS-DIMENSIONNÉS
VILEBREQUINS - REMIS À NEUF
CULASSES
MODULES DE COMMANDE ÉLECTRONIQUE (ECM)
CAPTEURS ÉLECTRONIQUES
INJECTEURS
TÊTES D'INJECTEURS
POMPES À CARBURANT
RÉGULATEURS
POMPES À HUILE
PISTONS
BLOCS EMBIELLÉS
DÉMARREURS
TURBOCOMPRESSEURS - COMPLETS
CARTOUCHES DE TURBOCOMPRESSEUR
POMPES À EAU

Des moteurs rénovés sont aussi disponibles pour plusieurs versions de moteur.

ALTERNATIVAS DE REPARACIÓN

COMPONENTES REMANUFACTURADOS

Al hacer reparaciones, tenga en cuenta la opción de Componentes Remanufacturados Caterpillar. Los componentes que están disponibles por medio del programa de Productos Remanufacturados Caterpillar se identifican de tres maneras en el manual de piezas:

- con la letra R en el espacio de Nota de la lista de piezas
- con una R* al comienzo de la primera línea de la leyenda
- con una *R al final de la primera línea de la leyenda

Los componentes que se incluyen típicamente en el Programa de Productos Remanufacturados son:

ALTERNADORES
BIELAS
CIGÜEÑALES - BAJOMEDIDA
CIGÜEÑALES - REMANUFACTURADOS A NUEVO
CULATAS
MÓDULOS DE CONTROL ELECTRÓNICO (ECM)
SENSORES ELECTRONICOS
INYECTORES
BOQUILLAS
BOMBAS DE COMBUSTIBLE
REGULADORES
BOMBAS DE ACEITE
PISTONES
MONOBLOQUES
MOTORES DE ARRANQUE
TURBOCOMPRESORES - COMPLETOS
NÚCLEOS DE TURBOCOMPRESOR
BOMBAS DE AGUA

También hay disponibles motores Remanufacturados Caterpillar para muchas de las configuraciones de motores.

ALTERNATIVAS DE REPARO

COMPONENTES REMANUFATURADOS

Considere o uso de Componentes Remanufaturados Caterpillar ao efetuar reparos. Os componentes disponíveis através do Programa de Remanufatura Caterpillar são identificados de três formas no manual de peças:

- com um R na área da nota da lista de peças
- com um R* no princípio da primeira linha da legenda
- com um *R no final da primeira linha da legenda

Os componentes típicos que constam no Programa de Remanufatura incluem:

ALTERNADORES
BIELAS
VIRABREQUINS - SUBMEDIDAS
VIRABREQUINS - ATUALIZAÇÃO
CABEÇOTES
MÓDULOS DE CONTROLE ELETRÔNICO (ECM)
SENSORES ELETRÔNICOS
INJETORES DE COMBUSTÍVEL
BICOS DE ABASTECIMENTO DE COMBUSTÍVEL
BOMBAS DE COMBUSTÍVEL
GOVERNADORES
BOMBAS DE ÓLEO
PISTÕES
BLOCOS BÁSICOS DO MOTOR
MOTORES DE PARTIDA
TURBOALIMENTADORES - COMPLETOS
CARTUCHOS DE TURBOALIMENTADORES
BOMBAS D'ÁGUA

Motores Remanufaturados Caterpillar também encontram-se disponíveis para diversos arranjos de motor.

REPARATURALTERNATIVEN

WERKÜBERHOLTE AT-PRODUKTE

Bei Reparaturen sollten werküberholte AT-Produkte von Caterpillar in Betracht gezogen werden. Die durch das AT-Programm von Caterpillar erhältlichen Teile sind im Parts Book auf drei verschiedene Arten gekennzeichnet:

- mit dem Buchstaben R in der Spalte NOTE der Ersatzteilliste
- mit einem R* am Anfang der ersten Zeile der Überschrift
- mit einem *R am Ende der ersten Zeile der Überschrift

Das AT-Programm umfaßt u.a. folgende Produkte:

DREHSTROMGENERATOREN
PLEUELSTANGEN
KURBELWELLEN - MIT UNTERMASS
KURBELWELLEN - MIT ORIGINALMASS
ZYLINDERKÖPFE
ELEKTRONISCHE STEUEREINHEITEN (EMC)
ELEKTRONISCHE SENSOREN
PUMPENDÜSEN
EINSPRITZDÜSEN
KRAFTSTOFFPUMPEN
DREHZAHLREGLER
ÖLPUMPEN
KOLBEN
TEILMOTOREN
ANLASSER
TURBOLADER - KOMPLETT
TURBOLADERLAUFZEUGE
KÜHLWASSERPUMPEN

Viele Motoren können durch werküberholte AT-Motoren von Caterpillar ersetzt werden.

SUPPLEMENTAL COOLANT ADDITIVES

CUSTOMER BENEFITS:

Protects against cavitation, foam, erosion, corrosion, and scale buildup in cooling systems.

- Provides measured coolant conditioner.

DESCRIPTION:

Additives deplete from the coolant with normal operation. For this reason, Supplemental Coolant Additives (SCA) must be added to all heavy duty coolants at regular intervals. In addition, when not using a fully formulated, pre-charged antifreeze, like Caterpillar's DEAC, an initial charge of SCA must be added to the cooling system. The amount of SCA added to the system is dependent on the capacity of the system.

The SCA for initial fill is provided as a liquid. SCA's for maintenance intervals are available in liquid form and as a spin-on element. (No Spin-on available for 3600 Family of Engines)

NOTE:

The amount of SCA added at initial fill is not the same as the amount added at maintenance intervals.

The coolant additive elements can be used with any ethylene or propylene glycol type antifreeze which meets ASTM D4985 or ASTM D5345 Specifications.

NOTE:

For use with standard heavy duty coolant only, not for use with Extended Life Coolant.

PARTS NEEDED:

Cooling System Capacity		Liquid SCA at Initial Fill	Liquid SCA at Maintenance*	Spin-on SCA Maintenance Element*
Liters	Gallons			
22-30	(6-8)	3P-2044 (1)	6V-3542 (1)	111-2370 (1)
30-38	(8-10)	3P-2044 (1) 6V-3542 (1)	111-2372 (1)	111-2369 (1)
38-49	(10-13)	3P-2044 (1) 8T-1589 (1)	111-2372 (1)	111-2369 (1)
49-64	(13-17)	3P-2044 (2)	8T-1589 (1)	9N-3368 (1)
64-83	(17-22)	3P-2044 (2) 8T-1589 (1)	111-2372 (1) 6V-3542 (1)	111-2371 (1)
83-114	(22-30)	3P-2044 (3) 8T-1589 (1)	3P-2044 (1)	9N-3718 (1)
114-163	(30-43)	3P-2044 (5)	3P-2044 (1) 6V-3542 (1)	111-2371 (2)
163-242	(43-64)	3P-2044 (8)	3P-2044 (2)	9N-3718 (2)

** Normal maintenance period is 250 hrs. See your Operation and Maintenance Manual for complete coolant maintenance instructions.*

( ) Indicates quantity required.

ADDITIFS POUR LIQUIDE DE REFROIDISSEMENT

AVANTAGES POUR LE CLIENT

L'additif protège contre la cavitation, la mousse, l'érosion, la corrosion et l'accumulation de dépôts dans le circuit de refroidissement.

- L'additif complémentaire fournit une quantité mesurée d'additif.

DESCRIPTION:

Les additifs s'épuisent pendant l'utilisation du moteur. C'est pourquoi l'on doit ajouter de l'additif au liquide de refroidissement/antigel pour moteurs diesel à intervalles réguliers. En plus, si l'on n'utilise pas de l'antigel entièrement formulé et pré-chargé comme le liquide de refroidissement/antigel Caterpillar pour moteurs diesel, une quantité initiale d'additif doit être ajoutée au circuit de refroidissement. La quantité d'additif à ajouter au circuit dépend de la contenance du circuit.

L'additif pour le remplissage initial est fourni sous forme liquide. L'additif pour l'entretien ultérieur est disponible sous forme liquide et sous forme d'élément à visser. (Il n'y a pas d'élément à visser pour les moteurs de la famille 3600).

NOTA:

La quantité d'additif à ajouter au remplissage initial diffère de la quantité à ajouter aux intervalles d'entretien.

Les éléments d'additif peuvent être utilisés avec tout antigel de type éthylène ou propylène-glycol conforme à la norme ASTM D4985 ou ASTM D5345.

NOTA:

A utiliser uniquement avec du liquide de refroidissement pour moteurs diesel et non avec le liquide de refroidissement longue durée.

PIÈCES NÉCESSAIRES:

Contenance du circuit de refroidissement		Additif liquide au remplissage initial	Additif liquide aux intervalles d'entretien*	Elément d'additif à visser aux intervalles d'entretien*
Litres	Gallons U.S.			
22-30	(6-8)	3P-2044 (1)	6V-3542 (1)	111-2370 (1)
30-38	(8-10)	3P-2044 (1) 6V-3542 (1)	111-2372 (1)	111-2369 (1)
38-49	(10-13)	3P-2044 (1) 8T-1589 (1)	111-2372 (1)	111-2369 (1)
49-64	(13-17)	3P-2044 (2)	8T-1589 (1)	9N-3368 (1)
64-83	(17-22)	3P-2044 (2) 8T-1589 (1)	111-2372 (1) 6V-3542 (1)	111-2371 (1)
83-114	(22-30)	3P-2044 (3) 8T-1589 (1)	3P-2044 (1)	9N-3718 (1)
114-163	(30-43)	3P-2044 (5)	3P-2044 (1) 6V-3542 (1)	111-2371 (2)
163-242	(43-64)	3P-2044 (8)	3P-2044 (2)	9N-3718 (2)

** L'intervalle d'entretien normal est de 250 heures-service. Voir le Guide d'utilisation et d'entretien pour de plus amples renseignements concernant l'entretien du circuit de refroidissement.*

( ) Indique la quantité exigée.

ADITIVOS DE REFRIGERANTE SUPLEMENTARIOS

VENTAJAS PARA EL USUARIO:

Protegen contra la cavitación, la formación de espuma, la corrosión y la acumulación de escamas en los sistemas de enfriamiento.

- Suministra un acondicionador dosificado de refrigerante.

DESCRIPCIÓN:

Los aditivos en el refrigerante se agotan con la operación normal. Por esta razón, se debe agregar Aditivo de refrigerante suplementario (SCA) a todos los refrigerantes para servicio pesado, a intervalos regulares. Además, cuando no se usa un anticongelante de precarga completo, tal como el DEAC de Caterpillar, es necesario agregar una cantidad de aditivo de refrigerante suplementario inicial al sistema de enfriamiento. La cantidad de aditivo que se debe agregar depende de la capacidad del sistema.

El SCA de llenado inicial es líquido. El que se usa para el mantenimiento está disponible tanto en líquido como en un elemento enroscable. (No hay elemento enroscable disponible para la Familia de Motores 3600).

NOTA:

La cantidad de aditivo de llenado inicial no es la misma que se agrega en los intervalos de mantenimiento.

Los elementos de aditivo de refrigerante se pueden usar con cualquier anticongelante de tipo glicol etilénico o propílico que esté de acuerdo con las especificaciones de las normas ASTM D4985 o ASTM D5345.

NOTA:

Se debe utilizar únicamente con refrigerante estándar para servicio pesado; no se debe usar con Refrigerante de Larga Duración.

PIEZAS NECESARIAS:

Capacidad del Sistema de Enfriamiento		SCA líquido de llenado inicial	SCA líquido de mantenimiento*	Elemento de mantenimiento enroscable*
litros	gal EE.UU.			
22-30	6-8	3P-2044 (1)	6V-3542 (1)	111-2370 (1)
30-38	8-10	3P-2044 (1) 6V-3542 (1)	111-2372 (1)	111-2369 (1)
38-49	10-13	3P-2044 (1) 8T-1589 (1)	111-2372 (1)	111-2369 (1)
49-64	13-17	3P-2044 (2)	8T-1589 (1)	9N-3368 (1)
64-83	17-22	3P-2044 (2) 8T-1589 (1)	111-2372 (1) 6V-3542 (1)	111-2371 (1)
83-114	22-30	3P-2044 (3) 8T-1589 (1)	3P-2044 (1)	9N-3718 (1)
114-163	30-43	3P-2044 (5)	3P-2044 (1) 6V-3542 (1)	111-2371 (2)
163-242	43-64	3P-2044 (8)	3P-2044 (2)	9N-3718 (2)

** El período normal de mantenimiento es de 250 horas. Para ver las instrucciones completas sobre el mantenimiento del refrigerante, consulte el Manual de Operación y Mantenimiento.*

( ) Indica la cantidad necesaria.

ADITIVOS SUPLEMENTARES DO LÍQUIDO ARREFECEDOR

BENEFÍCIOS PARA O CLIENTE:

Protege contra cavitação, espuma, erosão, corrosão e acúmulo de crostas nos sistemas de arrefecimento.

- Fornece uma quantidade pré-determinada de condicionador de arrefecimento.

DESCRIÇÃO:

Com a operação normal, os aditivos se esgotam do líquido arrefecedor. Por isso, Aditivos Suplementares do Líquido Arrefecedor (SCA) devem ser acrescentados a todos os líquidos arrefecedores para serviço pesado em intervalos regulares. Além disso, quando um anticongelante pré-carregado, totalmente formulado não for usado, como o DEAC Caterpillar, uma carga inicial de SCA deve ser acrescentada ao sistema de arrefecimento. A quantidade de SCA acrescentada ao sistema depende da capacidade do sistema.

O SCA para abastecimento inicial é fornecido em forma de líquido. Os aditivos suplementares (SCA) para intervalos de manutenção estão à disposição em forma líquida e como um elemento com roscas. (Exceto os Motores da Família 3600)

NOTA:

A quantidade de SCA adicionada no abastecimento inicial não é a mesma que a acrescentada nos intervalos de manutenção.

Os elementos do aditivo do líquido arrefecedor podem ser usados com qualquer tipo de anticongelante etileno ou propileno que satisfaz as Especificações ASTM D4985 ou ASTM D5345.

NOTA:

Para uso apenas com líquido arrefecedor para serviço pesado padrão, não deve ser usado com Líquido Arrefecedor de Vida Longa.

PEÇAS NECESSÁRIAS:

Capacidade do Sistema de Arrefecimento		Líquido SCA Durante Abastecimento Inicial	Líquido SCA Durante Manutenção*	Elemento de Manutenção de SCA com Roscas*
Litros	Galões			
22-30	6-8	3P-2044 (1)	6V-3542 (1)	111-2370 (1)
30-38	8-10	3P-2044 (1) 6V-3542 (1)	111-2372 (1)	111-2369 (1)
38-49	10-13	3P-2044 (1) 8T-1589 (1)	111-2372 (1)	111-2369 (1)
49-64	13-17	3P-2044 (2)	8T-1589 (1)	9N-3368 (1)
64-83	17-22	3P-2044 (2) 8T-1589 (1)	111-2372 (1) 6V-3542 (1)	111-2371 (1)
83-114	22-30	3P-2044 (3) 8T-1589 (1)	3P-2044 (1)	9N-3718 (1)
114-163	30-43	3P-2044 (5)	3P-2044 (1) 6V-3542 (1)	111-2371 (2)
163-242	43-64	3P-2044 (8)	3P-2044 (2)	9N-3718 (2)

** O período normal de manutenção é de 250 horas. Consulte o Manual de Operação e Manutenção para obter instruções completas quanto à manutenção do líquido arrefecedor.*

( ) Indica a quantidade exigida.

KÜHLMITTELZUSATZ

VORTEILE FÜR DEN KUNDEN:

Schutz gegen Kavitation, Schaumbildung, Erosion, Korrosion und Kesselsteinbildung in Kühlsystemen.

- Richtig dosierter Kühlmittelzusatz

BESCHREIBUNG:

Additive erschöpfen sich während des Motorbetriebs. Deshalb muß allen HD-Kühlmitteln regelmäßig Kühlmittelzusatz beigefügt werden. Wenn bei Erstfüllung kein vollwertiges Fertigkühlmittel, wie das Frostschutz- und Kühlmittel für Dieselmotoren von Caterpiller (DEAC), verwendet wird, muß bei Erstfüllung Kühlmittelzusatz beigefügt werden. Wieviel Kühlmittelzusatz beigefügt werden muß, hängt vom Inhalt des Kühlsystems ab.

Für Erstfüllung ist Kühlmittelzusatz nur in flüssiger Form erhältlich. Für Wartungsintervalle ist Kühlmittelzusatz in flüssiger Form und als Zusatzelement erhältlich. (Für die Motorbaureihe 3600 sind keine Zusatzelemente erhältlich.)

ANMERKUNG:

Die Kühlmittelmenge bei Erstfüllung ist nicht die gleiche Menge, die bei Wartungsintervallen beigefügt werden muß.

Die Kühlmittelzusatzelemente können mit allen Frostschutzmitteln auf Ethylen- oder Propylenglykolbasis verwendet werden, die den Standards nach ASTM D4985 oder ASTM D5345 entsprechen.

ANMERKUNG:

Den Kühlmittelzusatz nicht mit Langzeitkühlmittel (ELC) von Caterpillar verwenden. Der Kühlmittelzusatz ist nur für HD-Kühlmittel bestimmt.

TEILEBEZEICHNUNG:

Kühlsysteminhalt		Kühlmittelzusatz bei Erstfüllung	Flüssiger Kühlmittelzusatz bei Wartung*	Kühlmittelzusatzelement bei Wartung*
Liter	US-Gall.			
22-30	(6-8)	3P-2044 (1)	6V-3542 (1)	111-2370 (1)
30-38	(8-10)	3P-2044 (1) 6V-3542 (1)	111-2372 (1)	111-2369 (1)
38-49	(10-13)	3P-2044 (1) 8T-1589 (1)	111-2372 (1)	111-2369 (1)
49-64	(13-17)	3P-2044 (2)	8T-1589 (1)	9N-3368 (1)
64-83	(17-22)	3P-2044 (2) 8T-1589 (1)	111-2372 (1) 6V-3542 (1)	111-2371 (1)
83-114	(22-30)	3P-2044 (3) 8T-1589 (1)	3P-2044 (1)	9N-3718 (1)
114-163	(30-43)	3P-2044 (5)	3P-2044 (1) 6V-3542 (1)	111-2371 (2)
163-242	(43-64)	3P-2044 (8)	3P-2044 (2)	9N-3718 (2)

** Der normale Wartungsintervall beträgt 250 Betriebsstunden. Für vollständige Anweisungen zur Wartung des Kühlsystems, siehe Betriebs- und Wartungshandbuch.*

( ) Erforderliche Anzahl

NOMENCLATURA DE PEÇAS INGLÊS-PORTUGUÊS

INGLÊS	PORTUGUÊS
ABOVE	Acima
ABSORBER	Amortecedor
ACCESSORY	Acessório
ACTUATOR	Acionador
ADAPTER	Adaptador
ADHESIVE	Adesivo
ADJUSTER	Adjustador
AFTERCOOLER	Pós-resfriador
AIR	Ar
AIR CLEANER	Purificador de ar
AIR SYSTEM	Sistema de ar
ALARM	Alarme
ALTERNATOR	Alternador
AMMETER	Amperímetro
ANCHOR	Âncora, fixador
ANGLE	Ângulo, canto
ANVIL A.	Bigorna conj.
ARBOR	Mandril, eixo
ARM	Braço
ARMATURE	Armadura, Induzida
ARM REST	Apoio para braço
ARRESTER	Detentor
ASSEM. = ASSEMBLY	Conjunto
ATTACHMENT	Acessório
AVAILABLE	Disponível
AXLE	Eixo
AXLE SHAFT	Semi-eixo, ponta
BACK-UP ALARM	Alarme de marcha à ré
BACK-UP LIGHT	Luz da marcha à ré
BACK-UP SWITCH	Interruptor de marcha à ré
BACKBOARD	Prancha traseira
BACK CUSHION	Encosto
BACKHOE	Retroescavadeira
BAFFLE	Defletor
BAG	Saco, sacola
BAIL	Alça
BALANCER	Balanceador
BALL	Esfera
BALLCHECK ASSEMBLY	Conjunto de (válvula) de esfera de retenção
BALL JOINT	Junta esférica
BALLSTUD	Munhão esférica
BAND	Banda, cinta, tira
BAND & LINING	Banda e revestimento
BAR	Barra
BARREL	Cilindro
BARRIER	Barreira
BASE	Base
BASIN	Bacia, coletor
BATTERY	Bateria
BEAM	Barra, viga, trave
BEARING	Mancal, rolamento
BEARING BALL	Rolamento de esferas
BEARING-SLEEVE	Mancal tipo luva
BEARING-NEEDLE	Rolamento de agulha
BEARING-ROLLER	Rolamento tipo roletes
BELL	Campânula
BELLCRANK	Alavanca angular
BELLOWS	Fole
BELOW	Abaixo
BELT	Correia, cinto
BELT TIGHTENER	Ajustador de correia
BEVEL GEAR	Coroa
BIT-CUTTER	Broca, fresa
BLACK	Preto
BLADE	Lâmina
BLEEDER	Sangrador
BLOCK	Bloco, calço
BLOWER	Ventilador
BLUE	Azul
BOARD	Prancha, tábua
BODY	Corpo
BOLT	Parafuso
BONNET	Tampa
BOOM	Lança
BOOSTER	Reforçador
BOOT	Protetor contra poeira
BORE	Furo
BOSS	Ressalto
BOTH	Ambos (as)
BOTTOM	Fundo
BOWL	Caçamba
BOX	Caixa
BRACE	Tirante
BRACKET	Suporte
BRAKE	Freio
BREAKER	Interruptor
BREATHER	Respiro
BRIDGE	Braço
BROWN	Marrom
BRUSH	Escova
BUCKET	Caçamba
BULB	Bulbo
BULLDOZER	Bulldozer
BUMPER	Pára-choque
BUSHING	Bucha
BUTTON	Botão
BUZZER WARNING	Alarme sonoro
C = CHANGE	Alteração
CAB	Cabina
CABINET	Gabinete
CABLE	Cabo
CAGE	Alojamento
CALIPER	Calibrador
CAM	Excêntrico, ressalto
CAMSHAFT	Eixo-comando-de-válvulas
CANOPY	Coberta, toldo

NOMENCLATURA DE PEÇAS INGLÊS-PORTUGUÊS

INGLÊS	PORTUGUÊS
CAP	Tampa
CAPACITOR	Capacitor, condensador
CARBURETOR	Caburador
CARCASS	Carcaça
CARRIER	Suporte
CARTON	Caixa de papelão
CARTRIDGE	Cartucho
CASE	Caixa, alojamento
CASING	Invólucro, revestimento
CASTER	Rolete, roldana
CAST IRON	Ferro fundido
CATWALK	Passadiço
CENTER	Centro
CHAIN	Corrente
CHAMBER	Câmara
CHANGEOVER	Modificação
CHANNEL	Canal
CHASSIS	Chassi, armação
CHECK-VALVE	Válvula de retenção
CIRCUIT	Circuito
CIRCUIT BREAKER	Interruptor de circuito
CLAMP	Braçadeira
CLASP	Fecho, grampo
CLEANER	Purificador
CLEVIS	Forquilha, garfo
CLIP	Clipe, presilha, grampo
CLOSURE	Fecho
CLUTCH	Embreagem
COARSE	Grosso, áspero
COATING	Capa, revestimento
COCK	Torneira
COIL	Bobina, serpentina
COLLAR	Colar
COLLECTOR	Coletor
COLLET	Mandril
COLUMN	Coluna
COMPACTOR	Compactador
COMPARTMENT	Compartimento
COMPLETE	Completo
COMPOUND	Composto
COMPRESSOR	Compressor
CONCAVE	Côncavo
CONDITIONER	Condicionador
CONDUIT	Conduite, eletroduto
CONE	Cone
CONNECTING	Ligação
CONNECTED ROD	Biela
CONNECTION	Conexão
CONNECTOR	Conetor
CONSISTS OF	Consiste de
CONSOLE	Consolo
CONTACT	Contato, platinado
CONTACTOR	Contactador
CONTINUED FROM	Continuação de
CONTROL	Controle
CONVERSION	Conversão
CONVERTER	Conversor
COOLER	Arrefecedor
COOLING	Arrefecimento
CORK	Cortiça
CORE	Núcleo
CORNER	Canto
COTTER PIN	Contrapino
COUNTER	Contador, tacômetro
COUNTERWEIGHT	Contrapeso
COUPLER	Acoplador, engate
COUPLING	Acoplamento, conexão
COVER	Tampa
COWL	Capota
COWLING	Capota
CRADLE	Armação, suporte
CRANK	Manivela
CRANKCASE	Cárter
CRANKSHAFT	Virabrequim
CROSS UNION	Junta transversal
CROSSBAR	Barra transversal
CUP	Capa, anel externa
CURTAIN	Cortina
CUSHION	Almofada, amortecedor
CUTTER	Fresa, cortador
CUTTING EDGE	Borda cortante
CYLINDER	Cilindro
CYLINDER BLOCK	Bloco do motor
CYLINDER HEAD	Cabeçote
DAMPER	Amortecedor
DARK GREEN	Verde escuro
DASH	Painel
DASH PANEL	Painel de Instrumento
DECELERATOR	Desacelerador
DEFLECTOR	Defletor
DETENT	Retém, pino de trava
DIAGRAM-WIRING	Diagrama dos circuitos elétricos
DIAL	Medidor de dial
DIAPHRAGM	Diafragma
DIESEL ENGINE COMPLETE	Motor diesel completo
DIFFERENTIAL	Diferencial
DIFFUSER	Difusor
DIMMER	Redutor de luminosidade
DIODE	Diodo
DIRECTOR	Diretor
DISC	Disco
DISCONNECT	Desligar
DISPOSABLE	Disponível, substituível
DISSIPATOR	Dissipador de calor
DISTRIBUTOR	Distribuidor
DM = DECIMETER	dm = decímetro

NOMENCLATURA DE PEÇAS INGLÊS-PORTUGUÊS

INGLÊS	PORTUGUÊS
DOME LIGHT	Lâmpada do teto
DOOR	Porta
DOWEL	Pino-guia, cavilha
DOWNSHIFT	Mudança para marcha mais baixa
DOZER	Bulldozer (lâmina)
DRAIN	Dreno
DRAWBAR	Barra de tração
DRILL	Broca
DRILLED	Broqueado, perturado
DRIVE	Comando, acionamento, propulsão
DRIVER	Acionador, mecanismo propulsor
DRIVESHAFT	Eixo acionador, eixo de transmissão
DRUM	Tambor
DUCT	Conduto, canal
EACH	Cada
EDGE	Borda, canto
EFFECTIVE WITH	Efetivo a partir de
EJECTOR	Ejetor
ELBOW	Cotovelo
ELEMENT	Elemento
ENCLOSURE	Cobertura
END	Extremidade
END BIT	Canto de lâmina
END VIEW	Vista traseira
ENGINE	Motor
ENGINE ARRANGEMENT	Arranjo do motor
EXCEPT	Exceto
EXHAUST	Escape
EXHAUST PIPE	Cano de escape
EXPANDER	Expansor
EXPANSION PLUG	Bujão de expansão
EXTENSION	Extensão
EXTINGUISHER	Extintor
EXTRACTOR	Extrator
EYE	Olhal
EYEBOLT	Parafuso de olhal
FABRIC	Tecido, tela textura
FACING	Revestimento, forro
FAN	Ventilador
FASTENED	Fixo, preso
FASTENER	Fixador, prendedor
FENDER	Pára-lamas
FERRULE	Virola
FIELD COIL	Bobina indutora, ou de campo
FIELD REPLACEMENT	Reposicão ou substituicão no campo
FILLER	Bocal de enchimento
FILM	Película
FILTER	Filtro
FINAL DRIVE	Comando final
FINGER	Dedo
FIREWALL	Parede contra fogo
FITTING	Graxeira, conexão
FIXTURE	Dispositivo, Aparelho
FLANGE	Flange
FLASHER	Luz intermitente
FLOAT	Flutuar, livre
FLOOD-LAMP	Farol
FLOOR	Piso
FLOORMAT	Tapete
FLOORPLATE	Chapa do piso
FLYWEIGHT	Peso volante
FLYWHEEL	Volante
FOLLOWER	Seguidor
FOOT	Pé
FORK	Garfo
FOR USE WITH	Para usar com
FOUNDATION	Assentamento, alicerce
FRAME	Armacão, chassi
FRONT	Frente, dianteiro
FT = FOOT	Pé
FUEL INJECTION	Injecão de combustível
FUEL PUMP	Bomba de combustível
FUEL RATIO	Limitador de combustível
FUEL SYSTEM	Sistema do combustível
FUEL TANK	Tanque do combustível
FUMES DISPOSAL	Eliminação de vapores do cárter
FUSE	Fusível
G = GROUP	Grupo
GAGE	Indicador, manômetro
GAP	Folga, lacuna, intervalo
GASKET	Junta
GASKET KIT	Jogo de junta
GATE	Entrada, trava
GAUGE	Indicador, manômetro
GEAR	Engrenagem, marcha
GEAR BOX	Caixa de engrenagem
GEAR PUMP	Bomba de engrenagem
GENERATOR	Gerador
GLAND	Junta, gaxeta, vedacão sobreposta
GLASS	Vidro
GLOW PLUG	Vela incandescente
GOVERNOR	Governador
GRAB IRON	Balaústre corrimão
GRATE	Grade, grelha
GRAY	Cinza
GRID	Grade, grelha
GRILL	Grade, grelha
GRIP	Pega, garra, cabo

NOMENCLATURA DE PEÇAS INGLÊS-PORTUGUÊS

INGLÊS	PORTUGUÊS
GROMMET	Ilhós
GROUND BRUSH	Escova-terra
GROUND (ELECTRIC)	Terra (eletricidade)
GROUSER	Garra (de sapata)
GUARD	Protetor
GUIDE	Guia
GUSSET	Cantoneira
HACKSAW	Serra para metais
HALF	Metade, meio (a)
HALF LINK	Semi-elo
HAMMER	Martelo
HAND CONTROL	Controle manual
HANDLE	Cabo, alça
HANDRAIL	Corrimão, balaústre
HANGER	Suporte, dispositivo de suspensão
HARDWARE	Ferragem
HARDWARE KIT	Jogo de ferragem
HARNESS	Chicote
HEAD = HD	Cabeça
HEADER	Coletor
HEADLAMP	Farol dianteiro
HEADLIGHT	Farol dianteiro
HEAT SINK	Difusor de calor
HEATER	Aquecedor
HIGH-IDLE	Marcha acelerada em vazio
HINGE	Dobradiça, articulacão
HITCH	Engate
HOIST	Guincho, talha
HOLD	Suporte, fixador
HOLD DOWN	Fixar, reter, manter abaixado
HOLDER	Fixador, suporte
HOLE	Furo, buraco
HOOD	Capô
HOOD & DASH	Capô e painel
HOOK	Gancho
HORN	Buzina
HOSE	Mangueira
HOUSING	Alojamento
HUB	Cubo
HYDRAULIC	Hidráulico
ID = INSIDE DIAMETER	Diâmetro interno
IDLER	Roda-guia
IDLER & SHAFT	Roda-guia e eixo
IDLER GEAR	Engrenagem intermediária
IDLER PULLEY	Polia intermediária
IMPELLER	Impulsor, rotor
IN = INCH	Polegada
INCLUDES	Inclui
INDICATE	Indicam
INDICATOR	Indicador
INLAY	Incrustação
INLET	Admissão, entrada
INPUT	Entrada
INSERT	Inserção
INSTALLATION	Instalação
INSTALLED ON MODEL	Instalação no modelo
INSTRUCTION	Instrução
INSTRUMENT	Instrumento
INSULATED BRUSH	Escova isolada
INSULATION	Isolação, isolamento
INSULATOR	Isolante, isolador
INTAKE	Admissão
INTERLOCK	Trava interna
INTERMEDIATE	Intermediário
INTERNAL	Interno
INVERTER	Inversor
IRON	Ferro
JACK	Macaco
JAW	Mandíbula, garra
JET	Jato, vaporizador
JOINT	Junta, articulação
JUNCTION	Junção
KEY	Chaveta
KINGBOLT	Pino de engate
KNIFE	Faca, lâmina
KNOB	Maçaneta, botão
LADDER	Escada
LAMP	Lâmpada
LARGE	Grande
LATCH	Trinco, lingüeta
LEAD	Condutor, cabo
LEG	Perna
LENS	Lente
LEVEL	Nível
LEVER	Alavanca
L.H. = LEFT HAND	Lado esquerdo
LID	Placa, tampa
LIFT	Levantar
LIFT CYLINDER	Cilindro de levantamento
LIFTER	Tucho
LIFTING EYE	Olhal de levantamento
LIGHT GREEN	Verde claro
LIGHTING	Sistema de iluminação
LINE	Tubulação
LINER	Camisa
LINES & PUMP	Tubulação e bomba
LINES & VALVE	Tubulação e válvula
LINING	Revestimento, lona
LINK	Elo
LINKAGE	Articulação
LIP	Lábio, borda
LISTED	Relacionamento
LITERATURE	Literatura
LOCATED	Localizado

NOMENCLATURA DE PEÇAS INGLÊS-PORTUGUÊS

INGLÊS	PORTUGUÊS
LOCATOR	Localizador
LOCK	Trava
LOCKNUT	Contraporca
LOCKWASHER	Arruela de pressão
LOCKWIRE	Arame de trava
LONG	Longo
LOOM	Tubo isolador
LOW IDLE	Marcha lenta
LOUVER	Persiana
LOWER	Abaixar, inferior
LUBRICANT	Lubrificante
LUG	Ressalto, orelha
MACHINE SCREW	Parafuso de fenda
MAGNET	Imã magneto
MAIN	Principal
MAINTENANCE	Manutenção
MANIFOLD	Coletor
MARKED	Marcado (a)
MARKER	Marcador
MASTER PIN	Pino mestre
MAT	Capacho, esteira
METER	Medidor, contador
MINOR	Menor
MIRROR	Espelho
MISCELLANEOUS	Miscelânea
MODIFICATION	Modificação
MOLDBOARD	Armação da lâmina
MOTOR	Motor
MOULDING	Moldura
MOUNT	Montar
MOUNTED	Montado (a)
MOUNTING	Montagem
MUFFLER	Silenciador
NAMEPLATE	Plaqueta de identificação
N.C. (THREAD)	Rosca grossa
NEEDLE	Agulha
N.F. (THREAD)	Rosca fina
NIB	Ponta, bico
NIPPLE	Conexão
NONE	Nenhum (a)
NORMALIZING	Normalização
NOT PART OF	Não faz parte de
NOZZLE	Bocal, bico injetor
N/S = NOT SERVICED	Não vendável
NUMBER (No)	Número (No)
NUT	Porca
NUT-WING	Porca borboleta
NUT-CASTLE	Porca acastelada
NUT-WELD	Porca-soldada
NUT-CAP	Porca cega
NUT-HEX	Porca sextavada
NUT-LOCK	Contraporca
NUT-IMPERIAL	Porca imperial
NUT-JAM	Porca de trava, contraporca
NUT-LOW CROWN	Porca de meia coroa
NUT-RETAINING	Porca de retenção
NUT-SELF LOCK	Porca de autotravamento
NUT-SLOTTED	Porca fendada
NUT-SPANNER	Porca para chaves
O.D. = OUTSIDE DIAMETER	Diâmetro externo
O-RING	Anel "O"
OIL	Óleo
OILPAN	Cárter
OIL PUMP	Bomba de óleo
OIL SYSTEM	Sistema de lubrificação
OILER	Almotolia, lubrificador
ORANGE	Laranja
TO ORDER	Para pedir
ORIFICE	Orifício
OUTER	Externo
OUTER RACE	Anel externo
OUTPUT	Saída
OVERALL	Geral, total
OVERHAUL	Revisão
OVER SIZE	Sobremedida
PACKING	Embalagem, gaxeta
PAD	Coxim, calço
PADLOCK	Cadeado
PAINT	Pintura
PAN	Cárter
PANEL	Painel
PARKING BRAKE	Freio de estacionamento
PARTITION	Separacão
PARTS G	Grupo de peças
PARTS OF	Peça de
PARTS OF ALL ENGINE ARRANGEMENTS	Peças de todos os arranjos do motor exceto
PAWL	Garra
PEDAL	Pedal
PEDESTAL	Pedestal
PERFORMANCE	Desempenho
PILOT	Piloto
PIN	Pino
PIN & BUSHING	Pino e bucha
PIN-COTTER	Contrapino
PINCH BAR	Pé de cabra
PINION	Pinhão
PIPE	Tubo
PISTON	Pistão
PIVOT	Articulação, pivô
PLANETARY	Planetário
PLATE	Placa
PLATFORM	Plataforma
PLUG	Bujão
PLUNGER	Pistão, êmbolo

NOMENCLATURA DE PEÇAS INGLÊS-PORTUGUÊS

INGLÊS	PORTUGUÊS
POINT	Ponta, ponto
POINTER	Ponteiro
POLE & COIL	Polo e bobina
POLE	Polo, lança, vara
POPPET	Gatilho
POST	Poste, coluna
POTENTIOMETER	Potenciômetro
POWER TAKE OFF	Tomada de força
POWER TRAIN	Trem de força
PRE-SCREENER	Tela protetora
PRECHAMBER	Câmara de pré-combustão
PRECLEANER	Pré-purificador
PRECOMBUSTION	Pré-combustão
PRESS	Prensa
PRESS = PRESSURE	Pressão
PREVIOUS	Prévio, anterior
PRIMARY	Primário, principal
PROBE	Prova
PROJECTOR	Projeter
PROTECTION	Proteção
PROTECTOR	Proteter
PULLER	Extrator, sacador
PULLEY	Polia
PUMP	Bomba
PURPLE	Roxo
PUSHROD	Haste de empuxo
QTY = QUANTITY	Quantidade
RACE	Pista
RACE & ROLLER	Pista e rolete
RACK	Cremalheira
RADIATOR	Radiador
RAIL	Trilho, guia
RANGE TRANSM	Transmissão manual
RATCHET	Catraca
REAR	Traseiro (a)
REBORED	Escareado, alargado
REBUILD KIT	Jogo de recondicionamento
RECEPTACLE	Recipiente
RECTIFIER	Retificador
RED	Vermelho
REDUCER	Redutor
REFER	Referir
REGULATOR	Regulador
RELATED REPAIR ITEMS	Itens de reparos relacionados
RELAY	Relé
RELIEF VALVE	Válvula de alívio
REPAIR G	Grupo de reparo
REPAIR KIT	Jogo de reparo
REPAIR ITEMS	Itens de reparo
REPLACEMENT	Reposição, substituição
REQUIRED	Necessário
RESERVOIR A	Reservatôrio
RESIN	Resina
RESISTOR	Resistência
RETAINER	Fixador
RETARDER	Retardador
REVERSIBLE	Reversível
R.H. = RIGHT HAND	Lado direito
RIM	Aro
RIM & TIRE	Aro e pneu
RING	Anel
RIVET	Rebite
ROCKET	Balancim
ROD	Haste
ROD END	Extremidade da haste
ROLLER	Rolete
ROPE-STARTING	Partida à corda
ROTATOR	Girador
ROTOCHAMBER	Càmara pneumática
ROTOCOIL	Girador de válvula
ROTOR	Rotor
RUST INHIBITOR	Antioxidante
SADDLE	Sela, assento
SAFETY	Segurança
SAFETY TREAD	Tiras antiderrapante
SCRAPER	Tampa
SCREEN	Tela
SCREW	Parafuso
SCREW-HEX HD	Parafuso de cabeça hexagonal
SCREW-KIT	Jogos de parafuso
SCREW-MACHINE	Parafuso de fenda
SCREW-ROUND HD	Parafuso de cabeça redonda
SCREW-FLANGED	Parafuso com flange
SCREW-LOCKING	Parafuso de trava
SCREW-THUMB	Parafuso de orelhas
SCREWDRIVER	Chave de fenda
SEAL	Retentor
SEALED UNIT	Unidade vedada
SEALER	Vedador isolante
SEAT	Assento
SECONDARY	Secundário
SECTION	Seção
SEGMENT	Segmento
SENDER	Emissor
SENSOR	Sensor
SEPARATE	Separar, separado
SEPARATOR	Separador
SERIAL NUMBER PLATE	Placa de número de série
SERVICE	Serviço, manutenção
SERVICE KIT	Jogo de manutenção
SERVICE METER	Horômetro
SETSCREW	Parafuso de fixação
SHACKLE	Grilheto, anel, manilha
SHAFT	Eixo

NOMENCLATURA DE PEÇAS INGLÊS-PORTUGUÊS

INGLÊS	PORTUGUÊS
SHANK	Porta-ponta do escarificador
SHEAVE	Polia, roldana
SHEET	Folha, lâmina
SHELL	Invólucro, cápsula, casquilho
SHIELD	Blindagem, protetor
SHIFT	Mudança
SHIM	Calço
SHIPPING	Embarque
SHOCK ABSORBER	Amortecedor de choques
SHOCKMOUNT	Montagem a prova de choques
SHOE	Sapata
SHORT	Curto
SHOWN	Ilustrado, mostrado
SHROUD	Tampa de proteção
SHUNT	Derivação
SHUT OFF	Desligar, parada
SHUTTLE	Pistão de vaivém
SIDE	Lateral
SIDE VIEW	Vista lateral
SILICONE	Silicone
SINK	Absorvente de calor
SKIVING	Desbaste
SLACK ADJUSTER	Adjustador de folga
SLEEVE	Luva, manga, camisa
SLIDER	Cursor, deslizador
SLIDE RAIL	Trilho deslizante
SLING	Cabos, amarras, linga
SLINGER	Defletor
SLUG	Pistão de reação, pistãozinho
SMALL	Pequeno
SNAP RING	Anel de retenção, anel de pressão
SNUBBER	Amortecedor
SOCKET	Soquete, tomada
SOLENOID	Solenóide
SPACER	Espaçador
SPARE	Sobressalente
SPARK PLUG	Vela de ignição
SPECIAL	Especial
SPEEDOMETER	Velocimetro
SPIDER	Cruzeta
SPINDLE	Ponta de eixo
SPLINE	Estria
SPOOL	Carretel
SPOUT	Calha, tubo
SPRING	Mola
SPROCKET	Roda motriz, roda dentada
STABILIZER	Estabilizador
STACK	Chaminé, cano de escapamento
STAND	Suporte, cavalete
STANDPIPE	Suporte vertical de sucção
STAPLE	Grampo
STARTER	Arranque motor de partida
STATOR	Estator
STEERING	Direção
STEM	Haste
STEP	Degrau
STICK	Vareta
STOP	Parar
STORAGE	Armazenagem
STRAINER	Tela filtrante
STRAP	Tira, cinta, suporte de fixação
STREET ELL	Conexão cotovelo
STRIP	Tira, fita, listra
STROKE	Curso do pistão
STUD	Prisioneiro
SUMP	Tanque, reservatório
SUPPLY VALVE	Válvula de suprimento
SUPPORT	Suporte
SUSPENSION	Suspensão
SWITCH	Interruptor
SWIVEL	Articulação giratória
TAB	Tira, aba, lingüeta
TABLE	Mesa
TACHOGRAPH	Tacógrafo
TACHOMETER	Tacômetro
TAG	Etiqueta
TAIL LAMP	Farol traseiro
TAN	Castanho
TANG	Lingüeta
TANK	Tanque
TAP	Macho
TAPE	Fita
TAPPET	Tucho
TEE	Conexão em "T"
TEMP. = TEMPERATURE	Temperatura
TERMINAL	Terminal
TEST UNIT	Unidade de teste
TESTER	Aparelho de teste
THERMISTOR	Termistor
THERMOCOUPLE	Termopar
THERMOMETER	Termômetro
THERMOSTAT	Termostato
THERMOSWITCH	Interruptor térmico
THICK	Grosso (a) espesso (a)
TIE	Ligação, tirante
THREAD (OF NUT)	Rosca (de porca)
THROTTLE	Acelerador de
THROWER	Defletor
THRU = THROUGH	Através de
TIGHTENER	Tensor
TILT CYLINDER	Cilindro de inclinação
TIMING	Sincronização, Distribuição

NOMENCLATURA DE PEÇAS INGLÊS-PORTUGUÊS

INGLÊS	PORTUGUÊS
TIP	Ponta
TIRE	Pneu
TIRE & RIM	Pneu e aro
TONGUE	Língua, lingueta
TOOL	Ferramenta
TOOLCABINET	Armário para ferramenta
TOOTH/TEETH	Dente/dentes
TOP	Topo, parte superior
TORQUE	Torque
TORQ. CONV.	Conversor de torque
TORQ. DIVIDER	Divisor de torque
TOWER	Torre
TRACK	Esteira
TRACK PIN	Pino de esteira
TRACTOR	Trator
TRAILING UNIT	Unidade rebocada
TRANSFER	Decalcomania
TRANSFORMER	Transformador
TRANSISTOR	Transistor
TRANSMISSION	Transmissão
TRANSMISSION OVERHAUL	Revisão da transmissão
TREAD	Piso, banda de rodagem
TREADLE	Pedal
TROLLY	Carrinho
TRUCK	Caminhão
TRUNNION	Munhão
TUBE	Tubo, cano
TUBING	Tubulagem canalização
TURBINE	Turbina
TURBOCHARGER	Turboalimentador
U-BOLT	Parafuso em "U"
U-JOINT	Junta universal
UNDERSIZE	Submedida
UNION	União
UPPER	Superior
USE AS REQUIRED	Usar conforme necessitar
VALUE	Valor
VALVE	Válvula
VALVE GRINDING	Retificação das válvulas
VEE BELT	Correia "V"
VEE BELT SET	Jogo de correia em "V"
VENT	Respiro
VIEW	Vista
VISE	Morsa, torno
VISOR	Pára-sol
WALKWAY	Passadiço, corredor
WARNING G.	Grupo de alarma
WASHER	Arruela
WATER PUMP	Bomba d'água
WEARPLATE	Placa de desgaste
WEDGE	Cunha
WEIGHT	Peso
WELD	Solda
WELDNUT	Porca soldada
WHEEL	Roda
WHITE	Branco
WICK	Mecha, pavio
WINCH	Guincho
WINDOW	Janela
WINDSHIELD	Pára-brisa
WIPER	Limpador
WIRE	Fio
WIRING	Sistema elétrico
WIRING DIAGRAM	Diagrama do sistema elétrico
WITH	Com
WRAPPER	Invólucro, envoltório
WRENCH	Chave
YELLOW	Amarelo
YOKE	Garfo

MAINTENANCE PARTS

DESCRIPTION	PART NUMBER	QTY	WHERE USED	PAGE
AIR INLET AND EXHAUST SYSTEM				
FILTER ELEMENT AS-AIR (PRIMARY)	6I-2501	1	AIR CLEANER GP	109
FILTER ELEMENT AS-AIR (SECONDARY)	6I-2502	1	AIR CLEANER GP	109
BASIC ENGINE				
BELT-SERPENTINE (ALTERNATOR)	241-4981	1	PULLEY GP-FAN & ALT DRIVE	57
BREATHER AS (CRANKCASE)	204-4444	1	COVER GP-VALVE MECHANISM	19
	240-0041	1	COVER GP-CYLINDER BLOCK	16
ELEMENT (BREATHER) (CRANKCASE)	185-3159	1	COVER GP-VALVE MECHANISM	19
PLUG-DRAIN	5F-0304	1	HOUSING AS-FLYWHEEL	45
SEAL-VALVE COVER	268-3490	1	COVER GP-VALVE MECHANISM	19
V-BELT SET (FAN DRIVE)	216-7877	1	DRIVE GP-FAN	34
V-BELT SET (INCLUDES 3-BELTS) (FAN)	4P-8087	1	PULLEY GP-FAN & ALT DRIVE	57
COOLING SYSTEM				
CAP AS-RADIATOR	031-1119	1	TANK GP-COOLANT	104
		1	TANK GP-COOLANT	105
GASKET (WATER REGULATOR HOUSING)	191-4457	1	LINES GP-WATER	92
HOSE-RADIATOR	187-3961	1	LINES GP-WATER	93
REGULATOR-WATER TEMPERATURE (92-DEG C) (COOLANT)	248-5513	1	LINES GP-WATER	92
SEAL-LIP TYPE (WATER TEMPERATURE REGULATOR)	3S-9643	1	LINES GP-WATER	92
ELECTRICAL AND STARTING SYSTEM				
BATTERY GP (12-VOLT, MAINTENANCE FREE, WET)	115-2422	2	BATTERY & WIRING GP	156
BATTERY (12-VOLT, MAINTENANCE FREE)	153-5710	2	BATTERY GP	161
CIRCUIT BREAKER AS (15-AMPERE) (FAN BLOWER MOTOR)	6T-3643	1	PANEL GP-FUSE	211
FUSE (10-AMPERE)	9W-1442	2	PANEL GP-FUSE	211
FUSE (15-AMPERE)	9W-1441	21	PANEL GP-FUSE	211
FUSE (175-AMPERE)	239-8107	1	PANEL GP-FUSE	211
FUSE (175-AMPERE) (ALTERNATOR, MAIN)	239-8107	1	WIRING GP-PLATFORM	257
FUSE (20-AMPERE)	9W-1446	1	PANEL GP-FUSE	211
KEY AS-ELECTRONIC (SECURITY) (GRAY)	206-5165	2	INSTALLATION GP-SECURITY	180
KEY AS-ELECTRONIC (SECURITY) (YELLOW)	206-5162	2	INSTALLATION GP-SECURITY	180
KEY (BATTERY DISCONNECT)	8H-5306	1	SWITCH GP-DISCONNECT	239
LAMP AS-INDICATOR (ACTION LIGHT)	170-3461	1	WIRING GP-PLATFORM	256
LAMP-HALOGEN (24-VOLT, 65-WATT)	9X-3463	1	LAMP GP-FLOOD	183
		1	LAMP GP-FLOOD	184
		1	LAMP GP-FLOOD	185
LAMP-LED (RED, 24-VOLT) (MACHINE SECURITY SYSTEM)	242-3282	1	INSTALLATION GP-SECURITY	180
LAMP (24-VOLT)	7N-1996	1	WIRING GP-PLATFORM	256
	7N-9943	1	LAMP GP-DOME	182
LAMP (24-VOLT, 3-WATT)	115-1748	1	WIRING GP-GRADE CONTROL	251

MAINTENANCE PARTS

DESCRIPTION	PART NUMBER	QTY	WHERE USED	PAGE
ENGINE ARRANGEMENT				
FILTER GP-ENGINE OIL	183-2097	1	ENGINE AR	4
FRAME AND BODY				
PLUG-DRAIN (TRANSMISSION CASE)	106-8187	1	CASE & FRAME GP	332
FUEL SYSTEM				
CAP AS-FILLER (FUEL TANK)	7X-7700	1	TANK GP-FUEL	146
FILTER AS-FUEL (ADVANCED EFFICIENCY)	1R-0762	1	FILTER & LINES GP-FUEL	132
FILTER AS-WATER SEP & FUEL (PRIMARY)	1R-0770	1	FILTER GP-WATER SEP & FUEL	134
STRAINER-FUEL	9P-7121	1	TANK GP-FUEL	146
HYDRAULIC SYSTEM				
CAP-FILLER (HYDRAULIC TANK)	7H-1447	1	TANK & FILTER GP-HYDRAULIC	523
FILTER ELEMENT AS-OIL (ADVANCED EFFICIENCY)	1R-0777	1	TANK & FILTER GP-HYDRAULIC	523
FILTER ELEMENT AS-OIL (FIRE RESISTANT FLUID)	104-6931	1	TANK & FILTER GP-HYDRAULIC	523
FILTER ELEMENT AS-OIL (ULTRA HIGH EFFICIENCY)	139-1537	1	TANK & FILTER GP-HYDRAULIC	523
GASKET	9H-6454	1	TANK & FILTER GP-HYDRAULIC	524
LAMP-LED (24-VOLT)	126-0810	1	LINES GP-PILOT	491
PLUG-DRAIN (HYDRAULIC TANK)	9J-7031	1	TANK & FILTER GP-HYDRAULIC	523
SCREEN AS (HYDRAULIC TANK)	3G-3267	1	TANK & FILTER GP-HYDRAULIC	523
SCREEN (HYDRAULIC TANK)	6E-1752	1	TANK & FILTER GP-HYDRAULIC	523
STRAINER AS-OIL (HYDRAULIC TANK FILL)	5D-7927	1	TANK & FILTER GP-HYDRAULIC	523
LUBRICATION SYSTEM				
CAP AS-FILLER (ENGINE)	6N-2985	1	FILLER GP-ENGINE OIL	68
FILTER AS-ENGINE OIL (ADVANCED EFFICIENCY)	1R-1808	1	FILTER GP-ENGINE OIL	69

MAINTENANCE PARTS

DESCRIPTION	PART NUMBER	QTY	WHERE USED	PAGE
OPERATOR STATION				
BLADE AS-WIPER (350-MM) (DOOR, RH, LH)	6V-5849	2	WIPER GP-WINDOW	758
BLADE AS-WIPER (400-MM) (FRONT, REAR WINDOW)	6V-5851	2	WIPER GP-WINDOW	758
CAP-VENTED (WINDOW WASHER TANK)	8E-8292	1	TANK GP-WINDOW WASHER	738
FILTER-AIR (STANDARD) (FRESH AIR)	6T-0988	1	PRESSURIZER GP-CAB	714
FILTER AS (AIR RECIRCULATION)	6T-5068	1	PRESSURIZER GP-CAB	714
LAMP GP-DOME (24-VOLT)	3E-6389	1	LINER GP-CAB	677
LAMP (24-VOLT)	123-9294	4	INSTRUMENT GP	667
		4	INSTRUMENT GP	670
LAMP (24-VOLT, 3-WATT)	115-1748	1	INSTRUMENT GP	667
		1	INSTRUMENT GP	670
RECEIVER-DRYER GP (REFRIGERANT)	175-7162	1	LINES GP-AIR CONDITIONER	679
		1	LINES GP-AIR CONDITIONER	682
SEAT BELT GP (RETRACTABLE)	222-0345	1	SEAT GP	724
		1	SEAT GP	727
V-BELT (REFRIGERANT COMPRESSOR)	216-0349	1	COMPRESSOR GP-REFRIGERANT	636
POWER TRAIN				
BREATHER AS (TRANSMISSION)	9G-5127	1	LINES GP-POWER TRAIN OIL	291
FILTER ELEMENT AS-OIL (ULTRA HIGH EFFICIENCY)	1R-1809	1	FILTER GP-OIL	283
		1	LINES GP-POWER TRAIN OIL	291
PLUG-DRAIN (POWER TRAIN)	4B-7739	1	DRAIN GP-ECOLOGY	280
PLUG-DRAIN (TRANSMISSION OIL COOLER)	8M-9307	1	COOLER GP-TRANSMISSION OIL	275
PLUG-MAGNETIC (FINAL DRIVE, OIL FILL)	6V-0439	1	FINAL DRIVE GP	284
		1	FINAL DRIVE GP	286
SCREEN AS (TORQUE CONVERTER SCAVENGE)	3T-6471	1	LINES GP-POWER TRAIN OIL	291
SCREEN-SUCTION (TRANSMISSION)	4S-8598	1	SCREEN GP-MAGNETIC	312
SCREEN-SUCTION (TRANSMISSION SCAVENGE)	8S-9130	1	CASE & PARTS GP-PLANETARY	270
STEERING AND BRAKING SYSTEM				
FILTER AS-OIL (FIRE RESISTANT FLUID)	156-0214	1	FILTER GP-OIL	435
FILTER AS-OIL (ULTRA HIGH EFFICIENCY)	102-2828	1	FILTER GP-OIL	435

PIÈCES DE RECHANGE

DESCRIPTION	NUMÉRO DE PIECÈS	QTÉ	DOMAINE D'APPLICATION	PAGE
CHÂSSIS ET BENNE				
BOUCHON DE VIDANGE (CARTER DE BOITE DE VITESSES)	106-8187	1	CHÂSSIS ET CARTER (ASS)	332
CIRCUIT D'ADMISSION D'AIR ET D'ECHAPPEMENT				
ÉLÉMENT DE FILTRE À AIR (ENS) (PRINCIPAL)	6I-2501	1	FILTRE A AIR (ASS)	109
ÉLÉMENT DE FILTRE À AIR (ENS) (SECONDAIRE)	6I-2502	1	FILTRE A AIR (ASS)	109
CIRCUIT DE CARBURANT				
BOUCHON DE GOULOTTE DE REMPLISSAGE (ENS) (RÉSERVOIR DE CARBURANT)	7X-7700	1	RÉSERVOIR DE CARBURANT (ASS)	146
FILTRE - SÉPARATEUR D'EAU ET DE CARBURANT (ENS) (PRINCIPAL)	1R-0770	1	FILTRE DE SÉPARATEUR D'EAU ET DE CARBURANT (ASS)	134
FILTRE À CARBURANT	9P-7121	1	RÉSERVOIR DE CARBURANT (ASS)	146
FILTRE A CARBURANT (ENS) (EFFICACITÉ AVANCÉE)	1R-0762	1	FILTRE ET CANALISATIONS DE CARBURANT (ASS)	132
CIRCUIT DE DÉMARRAGE ET ÉLECTRIQUE				
AMPOULE (24 VOLTS)	7N-1996	1	CABLAGE - PLATE-FORME (ASS)	256
	7N-9943	1	PLAFONNIER (ASS)	182
AMPOULE (24V, 3W)	115-1748	1	AVERTISSEMENT DE PROFIL LONGITUDINAL (ASS)	251
BATTERIE (ASS) (12V, SANS ENTRETIEN, À BAIN D'HUILE)	115-2422	2	BATTERIE ET CÂBLAGE	156
BATTERIE (12V, SANS ENTRETIEN)	153-5710	2	BATTERIE (ASS)	161
CLÉ (COUPE-BATTERIE)	8H-5306	1	ROBINET DE BATTERIE (ASS)	239
CLÉ ÉLECTRONIQUE (ENS) (SÉCURITÉ) (GRIS)	206-5165	2	MONTAGE-SÉCURITÉ (ASS)	180
CLÉ ÉLECTRONIQUE (ENS) (SÉCURITÉ) (JAUNE)	206-5162	2	MONTAGE-SÉCURITÉ (ASS)	180
DIODE (ROUGE, 24-VOLTS) (SYSTÈME DE SÉCURITÉ DE LA MACHINE)	242-3282	1	MONTAGE-SÉCURITÉ (ASS)	180
DISJONCTEUR (ENS) (15A) (MOTEUR DE SOUFFLANTE DE VENTILATEUR)	6T-3643	1	PANNEAU - FUSIBLES (ASS)	211
FUSIBLE (10A)	9W-1442	2	PANNEAU - FUSIBLES (ASS)	211
FUSIBLE (15A)	9W-1441	21	PANNEAU - FUSIBLES (ASS)	211
FUSIBLE (175A)	239-8107	1	PANNEAU - FUSIBLES (ASS)	211
FUSIBLE (175A) (ALTERNATEUR PRINCIPAL)	239-8107	1	CABLAGE - PLATE-FORME (ASS)	257
FUSIBLE (20A)	9W-1446	1	PANNEAU - FUSIBLES (ASS)	211
LAMPE DE TÉMOIN (ENS) (TÉMOIN D'ACTIONNEMENT)	170-3461	1	CABLAGE - PLATE-FORME (ASS)	256
LAMPE HALOGÈNE (24V, 65W)	9X-3463	1	LAMPE - PHARE (ASS)	183
		1	LAMPE - PHARE (ASS)	184
		1	LAMPE - PHARE (ASS)	185

* TRADUCTION NON DISPONIBLE AU MOMENT DE LA PUBLICATION

PIÈCES DE RECHANGE

DESCRIPTION	NUMÉRO DE PIECÈS	QTÉ	DOMAINE D'APPLICATION	PAGE
CIRCUIT DE DIRECTION ET DE FREIN				
FILTRE À HUILE (ENS) (LIQUIDE RÉSISTANT AU FEU)	156-0214	1	FILTRE A HUILE (ASS)	435
FILTRE À HUILE (ENS) (ULTRA-GRANDE EFFICACITÉ)	102-2828	1	FILTRE A HUILE (ASS)	435
CIRCUIT DE GRAISSAGE				
BOUCHON DE GOULOTTE DE REMPLISSAGE (ENS) (MOTEUR)	6N-2985	1	BOUCHON DE REMPLISSAGE D'HUILE MOTEUR (ASS)	68
FILTRE A HUILE MOTEUR (ENS) (EFFICACITÉ AVANCÉE)	1R-1808	1	FILTRE À HUILE MOTEUR (ASS)	69
CIRCUIT DE REFROIDISSEMENT				
BOUCHON DE RADIATEUR (ENS)	031-1119	1	RÉSERVOIR DU LIQUIDE DE REFROIDISSEMENT (ASS)	104
		1	RÉSERVOIR DU LIQUIDE DE REFROIDISSEMENT (ASS)	105
FLEXIBLE DE RADIATEUR	187-3961	1	CANALISATIONS D'EAU (ASS)	93
JOINT PLAT (BOÎTIER DE RÉGULATEUR D'EAU)	191-4457	1	CANALISATIONS D'EAU (ASS)	92
THERMOSTAT-TEMPÉRATURE D'EAU (92-DEG C) (LIQUIDE DE REFROIDISSEMENT)	248-5513	1	CANALISATIONS D'EAU (ASS)	92
TYPE LÈVRE À JOINT (RÉGULATEUR DE TEMPÉRATURE D'EAU)	3S-9643	1	CANALISATIONS D'EAU (ASS)	92
CIRCUIT HYDRAULIQUE				
BOUCHON DE GOULOTTE DE REMPLISSAGE (RÉSERVOIR HYDRAULIQUE)	7H-1447	1	RÉSERVOIR HYDRAULIQUE ET FILTRE (ASS)	523
BOUCHON DE VIDANGE (RÉSERVOIR HYDRAULIQUE)	9J-7031	1	RÉSERVOIR HYDRAULIQUE ET FILTRE (ASS)	523
DIODE (24 VOLTS)	126-0810	1	CANALISATIONS A COMMANDE PILOTE (ASS)	491
ÉCRAN (ENS) (RÉSERVOIR HYDRAULIQUE)	3G-3267	1	RÉSERVOIR HYDRAULIQUE ET FILTRE (ASS)	523
ÉCRAN (RÉSERVOIR HYDRAULIQUE)	6E-1752	1	RÉSERVOIR HYDRAULIQUE ET FILTRE (ASS)	523
ÉLÉMENT DE FILTRE À HUILE (ENS) (EFFICACITÉ AVANCÉE)	1R-0777	1	RÉSERVOIR HYDRAULIQUE ET FILTRE (ASS)	523
ÉLÉMENT DE FILTRE À HUILE (ENS) (LIQUIDE RÉSISTANT AU FEU)	104-6931	1	RÉSERVOIR HYDRAULIQUE ET FILTRE (ASS)	523
ÉLÉMENT DE FILTRE À HUILE (ENS) (ULTRA-GRANDE EFFICACITÉ)	139-1537	1	RÉSERVOIR HYDRAULIQUE ET FILTRE (ASS)	523
FILTRE À HUILE (ENS) (REMPLISSAGE DE RÉSERVOIR HYDRAULIQUE)	5D-7927	1	RÉSERVOIR HYDRAULIQUE ET FILTRE (ASS)	523
JOINT PLAT	9H-6454	1	RÉSERVOIR HYDRAULIQUE ET FILTRE (ASS)	524

* TRADUCTION NON DISPONIBLE AU MOMENT DE LA PUBLICATION

PIÈCES DE RECHANGE

DESCRIPTION	NUMÉRO DE PIECÈS	QTÉ	DOMAINE D'APPLICATION	PAGE
MOTEUR STANDARD				
BOUCHON DE VIDANGE	5F-0304	1	CARTER DE VOLANT (ENS)	45
COURROIE MULTIPLE (ALTERNATEUR)	241-4981	1	POULIE - ENTRAÎNEMENT D'ALTERNA. ET DE VENTI.	57
ÉLÉMENT (RENIFLARD) (CARTER)	185-3159	1	CACHE-SOUPAPES (ASS)	19
JEU DE COURROIES TRAPEZOIDALES (COMPREND 3 COURROIES) (VENTILATEUR)	4P-8087	1	POULIE - ENTRAÎNEMENT D'ALTERNA. ET DE VENTI.	57
JEU DE COURROIES TRAPEZOIDALES (ENTRAÎNEMENT DE VENTILATEUR)	216-7877	1	ENTRAÎNEMENT DE VENTILATEUR (ASS)	34
JOINT DE CACHE-SOUPAPES	268-3490	1	CACHE-SOUPAPES (ASS)	19
RENIFLARD (ENS) (VILEBREQUIN)	204-4444	1	CACHE-SOUPAPES (ASS)	19
	240-0041	1	BLOC-CYLINDRES - COUVERCLE (ASS)	16
POSTE DE CONDUITE				
AMPOULE (24 VOLTS)	123-9294	4	TABLEAU DE BORD (ASS)	667
		4	TABLEAU DE BORD (ASS)	670
AMPOULE (24V, 3W)	115-1748	1	TABLEAU DE BORD (ASS)	667
		1	TABLEAU DE BORD (ASS)	670
BALAI D'ESSUIE-GLACE (ENS) (*350-MM) (PORTE, DROITE, GAUCHE)	6V-5849	2	ESSUIE-GLACE (ASS)	758
BALAI D'ESSUIE-GLACE (ENS) (400-M) (VITRE AVANT, ARRIÈRE)	6V-5851	2	ESSUIE-GLACE (ASS)	758
BOUCHON À ÉVENT (RÉSERVOIR DE LAVE-GLACE DE VITRE)	8E-8292	1	RÉSERVOIR - LAVE-GLACE (ASS)	738
CEINTURE DE SECURITE (ASS) (RÉTRACTABLE)	222-0345	1	SIÈGE (ASS)	724
		1	SIÈGE (ASS)	727
COURROIE TRAPEZOIDALE (COMPRESSEUR DE RÉFRIGÉRANT)	216-0349	1	COMPRESSEUR DE REFRIGERANT (ASS)	636
FILTRE À AIR (STANDARD) (AIR FRAIS)	6T-0988	1	SURPRESSEUR (ASS)	714
FILTRE (ENS) (RECIRCULATION D'AIR)	6T-5068	1	SURPRESSEUR (ASS)	714
PLAFONNIER (ASS) (24 VOLTS)	3E-6389	1	CABINE - REVÊTEMENT (ASS)	677
RÉCEPTEUR-DÉSHYDRATEUR (ASS) (RÉFRIGÉRANT)	175-7162	1	CANALISATIONS DE CLIMATISEUR (ASS)	679
		1	CANALISATIONS DE CLIMATISEUR (ASS)	682

* TRADUCTION NON DISPONIBLE AU MOMENT DE LA PUBLICATION

PIÈCES DE RECHANGE

DESCRIPTION	NUMÉRO DE PIECÈS	QTÉ	DOMAINE D'APPLICATION	PAGE
TRANSMISSION				
BOUCHON AIMANTÉ (RÉDUCTEUR, REMPLISSAGE D'HUILE)	6V-0439	1	RÉDUCTEURS (ASS)	284
		1	RÉDUCTEURS (ASS)	286
BOUCHON DE VIDANGE (REFROIDISSEUR D'HUILE DE BOÎTE)	8M-9307	1	REFROIDISSEUR D'HUILE DE BOÎTE (ASS)	275
BOUCHON DE VIDANGE (TRANSMISSION)	4B-7739	1	VIDANGE-ÉCOLOGIE (ASS)	280
ÉCRAN (ENS) (GAVAGE DU CONVERTISSEUR DE COUPLE)	3T-6471	1	CANALISATIONS D'HUILE DE TRANSMISSION (ASS)	291
ÉLÉMENT DE FILTRE À HUILE (ENS) (ULTRA-GRANDE EFFICACITÉ)	1R-1809	1	FILTRE A HUILE (ASS)	283
		1	CANALISATIONS D'HUILE DE TRANSMISSION (ASS)	291
RENIFLARD (ENS) (BOîTE DE VITESSES)	9G-5127	1	CANALISATIONS D'HUILE DE TRANSMISSION (ASS)	291
TAMIS D'ASPIRATION (BOîTE DE VITESSES)	4S-8598	1	ÉCRAN MAGNÉTIQUE (ASS)	312
TAMIS D'ASPIRATION (REPRISE DE BOÎTE)	8S-9130	1	TRAINS PLANÉTAIRES - CARTER ET PIÈCES	270
VERSION DE MOTEUR				
FILTRE À HUILE MOTEUR (ASS)	183-2097	1	MOTEUR (VERSION)	4

* TRADUCTION NON DISPONIBLE AU MOMENT DE LA PUBLICATION

PIEZAS DE MANTENIMIENTO

DESCRIPCION	NUMERO DE PIEZA	CANT	SE UTILIZA EN	PAGINA
BASTIDOR Y CAJA				
TAPÓN DE DRENAJE (CAJA DE TRANSMISION)	106-8187	1	CAJA Y BASTIDOR (GR)	332
CABINA DEL OPERADOR				
CINTURÓN DE SEGURIDAD (GR) (RETRACTIL)	222-0345	1	ASIENTO (GR)	724
		1	ASIENTO (GR)	727
CORREA TRAPEZOIDAL (COMPRESOR DEL REFRIGERANTE)	216-0349	1	COMPRESOR DE REFRIGERANTE (GR)	636
FILTRO (CONJ) (RECIRCULACIÓN DE AIRE)	6T-5068	1	PRESURIZADOR (GR)	714
FILTRO DE AIRE (ESTANDAR) (AIRE FRESCO)	6T-0988	1	PRESURIZADOR (GR)	714
HOJA DE LIMPIAPARABRISAS (CONJ) (*350-MM) (PUERTA, MANO DERECHA , MANO IZQUIERDA)	6V-5849	2	LIMPIAPARABRISAS DE LA VENTANA (GR)	758
HOJA DE LIMPIAPARABRISAS (CONJ) (*400-MM) (*FRONT, REAR WINDOW)	6V-5851	2	LIMPIAPARABRISAS DE LA VENTANA (GR)	758
LÁMPARA DEL TECHO (GR) (24 VOLTIOS)	3E-6389	1	REVESTIMIENTO DE LA CABINA (GR)	677
LÁMPARA (24 VOLTIOS)	123-9294	4	INSTRUMENTOS (GR)	667
		4	INSTRUMENTOS (GR)	670
LÁMPARA (24-VOLTIOS, 3-VATIOS)	115-1748	1	INSTRUMENTOS (GR)	667
		1	INSTRUMENTOS (GR)	670
RECEPTOR-SECADOR (GR) (REFRIGERANTE)	175-7162	1	TUBERÍAS DE ACONDICIONADOR DE AIRE (GR)	679
		1	TUBERÍAS DE ACONDICIONADOR DE AIRE (GR)	682
TAPA CON RESPIRADERO (TANQUE DE LIMPIPARABRISA)	8E-8292	1	TANQUE DEL LAVAPARABRISAS (GR)	738
CONFIGURACIÓN DE MOTOR				
FILTRO DE ACEITE DEL MOTOR (GR)	183-2097	1	CONFIGURACIÓN DE MOTORES	4
MOTOR BÁSICO				
CORREA-SERPENTIN (ALTERNADOR)	241-4981	1	POLEA DE MANDO DEL ALTERNADOR Y VENTILADOR (GR)	57
ELEMENTO (RESPIRADERO) (CÁRTER DEL MOTOR)	185-3159	1	TAPA DEL MECANISMO DE VÁLVULAS (GR)	19
JUEGO DE CORREAS TRAPEZOIDALES (INCLUYE 3 CORREAS) (VENTILADOR)	4P-8087	1	POLEA DE MANDO DEL ALTERNADOR Y VENTILADOR (GR)	57
JUEGO DE CORREAS TRAPEZOIDALES (MANDO DE VENTILADOR)	216-7877	1	IMPULSOR DE VENTILADOR (GR)	34
RESPIRADERO (CONJ) (CÁRTER DEL MOTOR)	204-4444	1	TAPA DEL MECANISMO DE VÁLVULAS (GR)	19
	240-0041	1	TAPA DEL BLOQUE MOTOR (GR)	16
*SEAL-VALVE COVER	268-3490	1	TAPA DEL MECANISMO DE VÁLVULAS (GR)	19
TAPÓN DE DRENAJE	5F-0304	1	CAJA DE VOLANTE (CONJ)	45

* NO HAY TRADUCCION DISPONIBLE EN EL MOMENTO DE LA IMPRESION

PIEZAS DE MANTENIMIENTO

DESCRIPCION	NUMERO DE PIEZA	CANT	SE UTILIZA EN	PAGINA
SISTEMA DE ADMISIÓN Y ESCAPE DE AIRE				
ELEMENTO DEL FILTRO DE AIRE (CONJ) (PRIMARIO)	6I-2501	1	FILTRO DE AIRE (GR)	109
ELEMENTO DEL FILTRO DE AIRE (CONJ) (SECUNDARIO)	6I-2502	1	FILTRO DE AIRE (GR)	109
SISTEMA DE COMBUSTIBLE				
COLADOR DE COMBUSTIBLE	9P-7121	1	COMBUSTIBLE - TANQUE DE (GR)	146
FILTRO DE COMBUSTIBLE (CONJ) (EFICIENCIA AVANZADA)	1R-0762	1	FILTRO Y TUBERÍAS DE COMBUSTIBLE (GR)	132
FILTRO DE COMBUSTIBLE Y SEPARADOR DE AGUA (CONJ) (PRIMARIO)	1R-0770	1	FILTRO DE COMBUSTIBLE Y SEPARADOR DE AGUA (GR)	134
TAPA DE LLENADO (CONJ) (TANQUE DE COMBUSTIBLE)	7X-7700	1	COMBUSTIBLE - TANQUE DE (GR)	146
SISTEMA DE ENFRIAMIENTO				
EMPAQUETADURA (CAJA DEL TERMOSTATO DE AGUA)	191-4457	1	TUBERÍAS DEL AGUA (GR)	92
MANGUERA DE RADIADOR	187-3961	1	TUBERÍAS DEL AGUA (GR)	93
REGULADOR DE TEMPERATURA DEL AGUA (92 GRADOS CENTÍGRADOS) (REFRIGERANTE)	248-5513	1	TUBERÍAS DEL AGUA (GR)	92
SELLO DE LABIO (REGULADOR DE TEMPERATURA DEL AGUA)	3S-9643	1	TUBERÍAS DEL AGUA (GR)	92
TAPA DE RADIADOR (CONJ)	031-1119	1	TANQUE DE REFRIGERANTE (GR)	104
		1	TANQUE DE REFRIGERANTE (GR)	105
SISTEMA DE FRENOS Y DIRECCIÓN				
FILTRO DE ACEITE (CONJ) (EFICIENCIA ULTRA ALTA)	102-2828	1	FILTRO DE ACEITE (GR)	435
FILTRO DE ACEITE (CONJ) (FLUÍDO RESISTENTE AL FUEGO)	156-0214	1	FILTRO DE ACEITE (GR)	435
SISTEMA DE LUBRICACIÓN				
FILTRO DE ACEITE DEL MOTOR (CONJ) (EFICIENCIA AVANZADA)	1R-1808	1	FILTRO DE ACEITE DEL MOTOR (GR)	69
TAPA DE LLENADO (CONJ) (MOTOR)	6N-2985	1	TUBO DE LLENADO DE ACEITE (GR)	68

* NO HAY TRADUCCION DISPONIBLE EN EL MOMENTO DE LA IMPRESION

PIEZAS DE MANTENIMIENTO

DESCRIPCION	NUMERO DE PIEZA	CANT	SE UTILIZA EN	PAGINA
SISTEMA ELÉCTRICO Y DE ARRANQUE				
BATERÍA (GR) (12 VOLTIOS, LIBRE DE MANTENIMIENTO, HUMEDO)	115-2422	2	BATERÍA Y CABLES (GR)	156
BATERÍA (12-VOLTIOS, LIBRE DE MANTENIMIENTO)	153-5710	2	BATERÍA (GR)	161
CONJUNTO DE LLAVE, ELECTRONICA (SEGURIDAD) (AMARILLO)	206-5162	2	INSTALACION DE SEGURIDAD (GR)	180
CONJUNTO DE LLAVE, ELECTRONICA (SEGURIDAD) (GRIS)	206-5165	2	INSTALACION DE SEGURIDAD (GR)	180
DISYUNTOR (CONJ) (15 AMPERIOS) (MOTOR DE SOPLADOR DE VENTILADOR)	6T-3643	1	PANEL DE FUSIBLES (GR)	211
FUSIBLE (10-AMPERIOS)	9W-1442	2	PANEL DE FUSIBLES (GR)	211
FUSIBLE (15 AMPERIOS)	9W-1441	21	PANEL DE FUSIBLES (GR)	211
FUSIBLE (175-AMPERIOS)	239-8107	1	PANEL DE FUSIBLES (GR)	211
FUSIBLE (175-AMPERIOS) (ALTERNADOR PRINCIPAL)	239-8107	1	CABLES DE LA PLATAFORMA (GR)	257
FUSIBLE (20-AMPERIOS)	9W-1446	1	PANEL DE FUSIBLES (GR)	211
LAMPARA INDICADORA (CONJ) (LUZ DE ACCIÓN)	170-3461	1	CABLES DE LA PLATAFORMA (GR)	256
LAMPARA-LED (*RED, 24-VOLT) (SISTEMA DE SEGURIDAD DE LA MÁQUINA)	242-3282	1	INSTALACION DE SEGURIDAD (GR)	180
LÁMPARA (24 VOLTIOS)	7N-1996	1	CABLES DE LA PLATAFORMA (GR)	256
	7N-9943	1	LÁMPARA DEL TECHO (GR)	182
LÁMPARA (24-VOLTIOS, 3-VATIOS)	115-1748	1	CABLE GR-GRADO DE CONTROL	251
LLAVE (INTERRUPTOR GENERAL)	8H-5306	1	DISYUNTOR (GR)	239
LUCES DE ALÓGENO (24 VOLTIOS, 65 VATIOS)	9X-3463	1	REFLECTOR (GR)	183
		1	REFLECTOR (GR)	184
		1	REFLECTOR (GR)	185

* NO HAY TRADUCCION DISPONIBLE EN EL MOMENTO DE LA IMPRESION

PIEZAS DE MANTENIMIENTO

DESCRIPCION	NUMERO DE PIEZA	CANT	SE UTILIZA EN	PAGINA
SISTEMA HIDRÁULICO				
ELEMENTO DE FILTRO DE ACEITE (CONJ) (EFICIENCIA AVANZADA)	1R-0777	1	TANQUE Y FILTRO HIDRÁULICOS (GR)	523
ELEMENTO DE FILTRO DE ACEITE (CONJ) (EFICIENCIA ULTRA ALTA)	139-1537	1	TANQUE Y FILTRO HIDRÁULICOS (GR)	523
ELEMENTO DE FILTRO DE ACEITE (CONJ) (FLUÍDO RESISTENTE AL FUEGO)	104-6931	1	TANQUE Y FILTRO HIDRÁULICOS (GR)	523
EMPAQUETADURA	9H-6454	1	TANQUE Y FILTRO HIDRÁULICOS (GR)	524
LAMPARA-LED (24 VOLTIOS)	126-0810	1	TUBERÍAS CON SERVOMANDO (GR)	491
PANTALLA (CONJ) (TANQUE HIDRÁULICO)	3G-3267	1	TANQUE Y FILTRO HIDRÁULICOS (GR)	523
REJILLA (TANQUE HIDRÁULICO)	6E-1752	1	TANQUE Y FILTRO HIDRÁULICOS (GR)	523
*STRAINER AS-OIL (LLENADO DEL TANQUE HIDRÁULICO)	5D-7927	1	TANQUE Y FILTRO HIDRÁULICOS (GR)	523
TAPA DEL TUBO DE LLENADO (TANQUE HIDRÁULICO)	7H-1447	1	TANQUE Y FILTRO HIDRÁULICOS (GR)	523
TAPÓN DE DRENAJE (TANQUE HIDRÁULICO)	9J-7031	1	TANQUE Y FILTRO HIDRÁULICOS (GR)	523
TREN DE FUERZA				
ELEMENTO DE FILTRO DE ACEITE (CONJ) (EFICIENCIA ULTRA ALTA)	1R-1809	1	FILTRO DE ACEITE (GR)	283
		1	TUBERÍAS DE ACEITE DEL TREN DE FUERZA (GR)	291
PANTALLA (CONJ) (BARRIDO DE CONVERTIDOR DE PAR)	3T-6471	1	TUBERÍAS DE ACEITE DEL TREN DE FUERZA (GR)	291
REJILLA DE SUCCIÓN (BARRIDO DE TRANSMISION)	8S-9130	1	CAJA Y PIEZAS DE LOS PLANETARIOS	270
REJILLA DE SUCCIÓN (TRANSMISION)	4S-8598	1	REJILLA MAGNÉTICA (GR)	312
RESPIRADERO (CONJ) (TRANSMISION)	9G-5127	1	TUBERÍAS DE ACEITE DEL TREN DE FUERZA (GR)	291
TAPÓN DE DRENAJE (REFRIGERANTE DE ACEITE DE TRANSMISIÓN)	8M-9307	1	ENFRIADOR DE ACEITE DE LA TRANSMISIÓN (GR)	275
TAPÓN DE DRENAJE (TREN DE FUERZA)	4B-7739	1	DRENAJE DE SEGURIDAD ECOLÓGICA (GR)	280
TAPÓN MAGNÉTICO (MANDO FINAL, LLENADO DE ACEITE)	6V-0439	1	MANDO FINAL (GR)	284
		1	MANDO FINAL (GR)	286

* NO HAY TRADUCCION DISPONIBLE EN EL MOMENTO DE LA IMPRESION

PEÇAS DE MANUTENÇÃO

DESCRIÇÃO	NÚMERO DE PEÇA	QUANT	UTILIZADA EM	PÁGINA
CHASSI E CARROCERIA				
BUJÃO DO DRENO (CAIXA DE TRANSMISSÃO)	106-8187	1	CAIXA E CHASSI	332
MOTOR - ARRANJO				
FILTRO - ÓLEO DO MOTOR	183-2097	1	MOTOR	4
MOTOR BÁSICO				
BUJÃO DO DRENO	5F-0304	1	CAIXA DO VOLANTE DO MOTOR	45
CORREIA- SERPENTINA (ALTERNADOR)	241-4981	1	POLIA - VENTILADOR E COMANDO DO ALTERNADOR	57
ELEMENTO (RESPIRO) (CÁRTER DO MOTOR)	185-3159	1	TAMPA - MECANISMO DAS VÁLVULAS	19
JOGO DE CORREIAS EM V (COMANDO DO VENTILADOR)	216-7877	1	COMANDO DO VENTILADOR	34
JOGO DE CORREIAS EM V (INCLUI 3 CORREIAS) (VENTILADOR)	4P-8087	1	POLIA - VENTILADOR E COMANDO DO ALTERNADOR	57
RESPIRO (CÁRTER)	204-4444	1	TAMPA - MECANISMO DAS VÁLVULAS	19
	240-0041	1	TAMPA - BLOCO DO MOTOR	16
RETENTOR - TAMPA DA VÁLVULA	268-3490	1	TAMPA - MECANISMO DAS VÁLVULAS	19
POSTO DO OPERADOR				
CINTO DE SEGURANÇA (RETRÁTIL)	222-0345	1	ASSENTO	724
		1	ASSENTO	727
CORREIA EM V (COMPRESSOR DO REFRIGERANTE)	216-0349	1	COMPRESSOR DE REFRIGERANTE	636
FILTRO - AR (PADRÃO) (AR FRESCO)	6T-0988	1	PRESSURIZADOR	714
FILTRO (RECIRCULAÇÃO DO AR)	6T-5068	1	PRESSURIZADOR	714
LÂMINA DO LIMPADOR DE PÁRA-BRISA (*350-MM) (PORTA, LD, LE)	6V-5849	2	LIMPADOR DO VIDRO	758
LÂMINA DO LIMPADOR DE PÁRA-BRISA (400 MM) (VIDRO DIANTEIRO, TRASEIRO)	6V-5851	2	LIMPADOR DO VIDRO	758
LÂMPADA - TETO (24 VOLTS)	3E-6389	1	REVESTIMENTO DA CABINE	677
LÂMPADA (24 VOLTS)	123-9294	4	INSTRUMENTOS	667
		4	INSTRUMENTOS	670
LÂMPADA (24 VOLTS, 3 WATTS)	115-1748	1	INSTRUMENTOS	667
		1	INSTRUMENTOS	670
RECEPTOR - SECADOR (REFRIGERANTE)	175-7162	1	TUBOS - AR CONDICIONADO	679
		1	TUBOS - AR CONDICIONADO	682
TAMPA COM RESPIRO (TANQUE DO LAVADOR DE VIDROS)	8E-8292	1	TANQUE - LAVADOR DE JANELA	738
SISTEMA DA ADMISSÃO DE AR E DE ESCAPE				
ELEMENTO DO FILTRO DE AR (PRIMÁRIO)	6I-2501	1	PURIFICADOR DE AR	109
ELEMENTO DO FILTRO DE AR (SECUNDÁRIO)	6I-2502	1	PURIFICADOR DE AR	109

* TRADUÇÃO NÃO DISPONÍVEL NO MOMENTO DA IMPRESSÃO

PEÇAS DE MANUTENÇÃO

DESCRIÇÃO	NÚMERO DE PEÇA	QUANT	UTILIZADA EM	PÁGINA
SISTEMA DE ARREFECIMENTO				
JUNTA (ALOJAMENTO DO REGULADOR DA ÁGUA)	191-4457	1	TUBOS - ÁGUA	92
MANGUEIRA - RADIADOR	187-3961	1	TUBOS - ÁGUA	93
REGULADOR DE TEMPERATURA DA ÁGUA (92 GRAUS C) (LÍQUIDO ARREFECEDOR)	248-5513	1	TUBOS - ÁGUA	92
TAMPA - RADIADOR	031-1119	1	TANQUE - LÍQUIDO ARREFECEDOR	104
		1	TANQUE - LÍQUIDO ARREFECEDOR	105
VEDADOR TIPO LABIO (REGULADOR DA TEMPERATURA DA ÁGUA)	3S-9643	1	TUBOS - ÁGUA	92
SISTEMA DE COMBUSTÍVEL				
FILTRO - COMBUSTÍVEL	9P-7121	1	TANQUE DE COMBUSTÍVEL	146
FILTRO - COMBUSTÍVEL (EFICIÊNCIA AVANÇADA)	1R-0762	1	FILTRO E TUBOS - COMBUSTÍVEL	132
FILTRO - SEPARADOR DE ÁGUA E COMBUSTÍVEL (PRIMÁRIO)	1R-0770	1	FILTRO DE COMBUSTÍVEL E SEPARADOR DE ÁGUA	134
TAMPA - BOCAL DE ENCHIMENTO (TANQUE DE COMBUSTÍVEL)	7X-7700	1	TANQUE DE COMBUSTÍVEL	146
SISTEMA DE DIREÇÃO E DE FREIO				
FILTRO - ÓLEO (EXTREMA EFICIÊNCIA)	102-2828	1	FILTRO - ÓLEO	435
FILTRO - ÓLEO (FLUIDO À PROVA DE FOGO)	156-0214	1	FILTRO - ÓLEO	435
SISTEMA DE LUBRIFICAÇÃO				
FILTRO - ÓLEO DO MOTOR (EFICIÊNCIA AVANÇADA)	1R-1808	1	FILTRO - ÓLEO DO MOTOR	69
TAMPA - BOCAL DE ENCHIMENTO (MOTOR)	6N-2985	1	BOCAL DE ENCHIMENTO DE ÓLEO DO MOTOR	68

* TRADUÇÃO NÃO DISPONÍVEL NO MOMENTO DA IMPRESSÃO

PEÇAS DE MANUTENÇÃO

DESCRIÇÃO	NÚMERO DE PEÇA	QUANT	UTILIZADA EM	PÁGINA
SISTEMA ELÉTRICO E DE PARTIDA				
BATERIA (12 VOLTS, ISENTA DE MANUTENÇÃO, ÚMIDA)	115-2422	2	BATERIA E CABOS / FIOS ELÉTRICOS	156
BATERIA (12 VOLTS, ISENTO DE MANUTENÇÃO)	153-5710	2	BATERIA	161
CHAVE - ELETRÔNICO (SEGURANÇA) (AMARELO)	206-5162	2	INSTALAÇÃO-SEGURANÇA	180
CHAVE - ELETRÔNICO (SEGURANÇA) (CINZA)	206-5165	2	INSTALAÇÃO-SEGURANÇA	180
CHAVE (DESCONEXÃO DA BATERIA)	8H-5306	1	CHAVE GERAL	239
DISJUNTOR AUTOMÁTICO DE CIRCUITO (15 AMPERES) (MOTOR DO VENTILADOR)	6T-3643	1	PAINEL DE FUSÍVEIS	211
FUSÍVEL (10 AMPERES)	9W-1442	2	PAINEL DE FUSÍVEIS	211
FUSÍVEL (15 AMPERES)	9W-1441	21	PAINEL DE FUSÍVEIS	211
FUSÍVEL (175 AMPÈRES)	239-8107	1	PAINEL DE FUSÍVEIS	211
FUSÍVEL (175 AMPÈRES) (ALTERNADOR PRINCIPAL)	239-8107	1	CABOS/FIOS ELÉTRICOS - PLATAFORMA	257
FUSÍVEL (20-AMPERES)	9W-1446	1	PAINEL DE FUSÍVEIS	211
LÂMPADA - HALOGÊNEO (24 VOLTS, 65 WATTS)	9X-3463	1	LÂMPADA - FAROL	183
		1	LÂMPADA - FAROL	184
		1	LÂMPADA - FAROL	185
LÂMPADA - LED (VERMELHA, 24 VOLTS) (SISTEMA DE SEGURANÇA DA MÁQUINA)	242-3282	1	INSTALAÇÃO-SEGURANÇA	180
LÂMPADA INDICADORA (LUZ DE AÇÃO)	170-3461	1	CABOS/FIOS ELÉTRICOS - PLATAFORMA	256
LÂMPADA (24 VOLTS)	7N-1996	1	CABOS/FIOS ELÉTRICOS - PLATAFORMA	256
	7N-9943	1	LÂMPADA - TETO	182
LÂMPADA (24 VOLTS, 3 WATTS)	115-1748	1	FIACAO - CONTROLE DO NIVEL	251
SISTEMA HIDRÁULICO				
BUJÃO DO DRENO (TANQUE HIDRÁULICO)	9J-7031	1	TANQUE HIDRÁULICO E FILTRO	523
ELEMENTO FILTRANTE - ÓLEO (EFICIÊNCIA AVANÇADA)	1R-0777	1	TANQUE HIDRÁULICO E FILTRO	523
ELEMENTO FILTRANTE - ÓLEO (EXTREMA EFICIÊNCIA)	139-1537	1	TANQUE HIDRÁULICO E FILTRO	523
ELEMENTO FILTRANTE - ÓLEO (FLUIDO À PROVA DE FOGO)	104-6931	1	TANQUE HIDRÁULICO E FILTRO	523
JUNTA	9H-6454	1	TANQUE HIDRÁULICO E FILTRO	524
LÂMPADA - LED (24 VOLTS)	126-0810	1	TUBOS - CIRCUITO PILOTO	491
TAMPA - BOCAL DE ENCHIMENTO (TANQUE HIDRÁULICO)	7H-1447	1	TANQUE HIDRÁULICO E FILTRO	523
TELA FILTRANTE-ÓLEO (ENCHIMENTO DO TANUQE HIDRÁULICO)	5D-7927	1	TANQUE HIDRÁULICO E FILTRO	523
TELA FILTRANTE (TANQUE HIDRÁULICO)	3G-3267	1	TANQUE HIDRÁULICO E FILTRO	523
	6E-1752	1	TANQUE HIDRÁULICO E FILTRO	523

* TRADUÇÃO NÃO DISPONÍVEL NO MOMENTO DA IMPRESSÃO

PEÇAS DE MANUTENÇÃO

DESCRIÇÃO	NÚMERO DE PEÇA	QUANT	UTILIZADA EM	PÁGINA
TREM DE FORÇA				
BUJÃO DO DRENO (ARREFECEDOR DO ÓLEO DA TRANSMISSÃO)	8M-9307	1	ARREFECEDOR DE ÓLEO DA TRANSMISSÃO	275
BUJÃO DO DRENO (TREM DE FORÇA)	4B-7739	1	DRENO - ECOLOGIA	280
BUJÃO MAGNÉTICO (COMANDO FINAL, ENCHIMENTO DE ÓLEO)	6V-0439	1	COMANDO FINAL	284
		1	COMANDO FINAL	286
ELEMENTO FILTRANTE - ÓLEO (EXTREMA EFICIÊNCIA)	1R-1809	1	FILTRO - ÓLEO	283
		1	TUBOS - ÓLEO DA TRANSMISSÃO	291
RESPIRO (TRANSMISSÃO)	9G-5127	1	TUBOS - ÓLEO DA TRANSMISSÃO	291
TELA DE SUCÇÃO (RETORNO - TRANSMISSÃO)	8S-9130	1	CARCAÇA DAS ENGRENAGENS PLANETÁRIAS E COMPONENTES	270
TELA DE SUCÇÃO (TRANSMISSÃO)	4S-8598	1	FILTRO - MAGNÉTICO	312
TELA FILTRANTE (RETORNO DO CONVERSOR DE TORQUE)	3T-6471	1	TUBOS - ÓLEO DA TRANSMISSÃO	291

* TRADUÇÃO NÃO DISPONÍVEL NO MOMENTO DA IMPRESSÃO

WARTUNGSTEILE

BESCHREIBUNG	ERSATZTEIL-NUMMER	MENGE	VERWENDET IN	SEITE
ELEKTRISCHE ANLAGE UND STARTSYSTEM				
BATTERIE (12 V, WARTUNGSFREI)	153-5710	2	BATTERIE	161
BATTERIE (12 V, WARTUNGSFREI, NASS)	115-2422	2	BATTERIE UND VERDRAHTUNG	156
ELEKTRONISCHER SCHLÜSSEL (SICHERHEIT) (GELB)	206-5162	2	SICHERHEITSEINBAUSATZ	180
ELEKTRONISCHER SCHLÜSSEL (SICHERHEIT) (GRAU)	206-5165	2	SICHERHEITSEINBAUSATZ	180
HALOGENSCHINWERFER (24V)(65W)	9X-3463	1	ARBEITSLEUCHTEN	183
		1	ARBEITSLEUCHTEN	184
		1	ARBEITSLEUCHTEN	185
KONTROLLEUCHTE (WARNLEUCHTE)	170-3461	1	FAHRERPLATTFORMVERDRAHTUNG	256
LEUCHTE, ROT (*RED, 24-VOLT) (MASCHINENSICHERHEITSSYSTEM)	242-3282	1	SICHERHEITSEINBAUSATZ	180
LEUCHTE (24 V)	7N-1996	1	FAHRERPLATTFORMVERDRAHTUNG	256
	7N-9943	1	FAHRERHAUSBELEUCHTUNG	182
LEUCHTE (24 V, 3 W)	115-1748	1	NIEGUNGSSTEUER VERDRAHTUNG	251
SCHLÜSSEL (ELEKTRISCHER HAUPTSCHALTER)	8H-5306	1	TRENNSCHALTER	239
SICHERUNG (10 A)	9W-1442	2	INSTRUMENTENTAFEL-SICHERUNG	211
SICHERUNG (15 A)	9W-1441	21	INSTRUMENTENTAFEL-SICHERUNG	211
SICHERUNG (175 A)	239-8107	1	INSTRUMENTENTAFEL-SICHERUNG	211
SICHERUNG (175 A) (DREHSTROMGENERATOR, HAUPT-)	239-8107	1	FAHRERPLATTFORMVERDRAHTUNG	257
SICHERUNG (20 A)	9W-1446	1	INSTRUMENTENTAFEL-SICHERUNG	211
UNTERBRECHER (15 A) (LÜFTERMOTOR)	6T-3643	1	INSTRUMENTENTAFEL-SICHERUNG	211
FAHRERHAUS				
FAHRERHAUSBELEUCHTUNG (24 V)	3E-6389	1	FAHRERHAUSAUSKLEIDUNG	677
FILTERSATZ (UMLAUFLUFT)	6T-5068	1	FAHRERHAUSBELÜFTUNG	714
KÄLTEMITTELTROCKNER (KÜHLMITTEL)	175-7162	1	KLIMAANLAGENLEITUNGEN	679
		1	KLIMAANLAGENLEITUNGEN	682
KAPPE MIT ENTLÜFTER (SCHEIBENWASCHMITTELBEHÄLTER)	8E-8292	1	SCHEIBENWASCHMITTELBEHÄLTER	738
KEILRIEMEN (KÄLTEMITTELKOMPRESSOR)	216-0349	1	KÄLTEMITTELKOMPRESSOR	636
LEUCHTE (24 V)	123-9294	4	INSTRUMENTENGRUPPE	667
		4	INSTRUMENTENGRUPPE	670
LEUCHTE (24 V, 3 W)	115-1748	1	INSTRUMENTENGRUPPE	667
		1	INSTRUMENTENGRUPPE	670
LUFTFILTER (STANDARD) (FRISCHLUFT)	6T-0988	1	FAHRERHAUSBELÜFTUNG	714
SCHEIBENWISCHERBLATT (*350-MM) (TÜR, RECHTS, LINKS)	6V-5849	2	SCHEIBENWISCHER	758
SCHEIBENWISCHERBLATT (*400-MM) (VORDERES, HINTERES FENSTER)	6V-5851	2	SCHEIBENWISCHER	758
SICHERHEITSGURT ((AUTOMATIKSICHERHEITSGURT))	222-0345	1	FAHRERSITZ	724
		1	FAHRERSITZ	727

* ÜBERSETZUNG ZUM ZEITPUNKT DER DRUCKLEGUNG NICHT VORHANDEN

WARTUNGSTEILE

BESCHREIBUNG	ERSATZTEIL-NUMMER	MENGE	VERWENDET IN	SEITE
HYDRAULIKSYSTEM				
ABLASSSTOPFEN (HYDRAULIKTANK)	9J-7031	1	HYDRAULIKTANK UND SCHMIERFILTER	523
DICHTUNG	9H-6454	1	HYDRAULIKTANK UND SCHMIERFILTER	524
EINFÜLLSTUTZENKAPPE (HYDRAULIKTANK)	7H-1447	1	HYDRAULIKTANK UND SCHMIERFILTER	523
LEUCHTE, ROT (24 V)	126-0810	1	VORSTEUERLEITUNGEN	491
ÖLFILTERELEMENT (FEINSTFILTER)	139-1537	1	HYDRAULIKTANK UND SCHMIERFILTER	523
ÖLFILTERELEMENT (HOCHLEISTUNG)	1R-0777	1	HYDRAULIKTANK UND SCHMIERFILTER	523
ÖLFILTERELEMENT (NICHT BRENNBARE FLÜSSIGKEIT)	104-6931	1	HYDRAULIKTANK UND SCHMIERFILTER	523
ÖLSIEB (HYDRAULIKTANKEINFÜLLSIEB)	5D-7927	1	HYDRAULIKTANK UND SCHMIERFILTER	523
SCREEN (HYDRAULIKTANK)	6E-1752	1	HYDRAULIKTANK UND SCHMIERFILTER	523
SIEB (HYDRAULIKTANK)	3G-3267	1	HYDRAULIKTANK UND SCHMIERFILTER	523
KRAFTSTOFFSYSTEM				
EINFÜLLKAPPE (KRAFTSTOFFTANK)	7X-7700	1	KRAFTSTOFFTANK	146
KRAFTSTOFFILTER (HOCHLEISTUNG)	1R-0762	1	KRAFTSTOFFILTER UND LEITUNGEN	132
KRAFTSTOFFSIEB	9P-7121	1	KRAFTSTOFFTANK	146
WASSERABSCHEIDER UND KRAFTSTOFFILTER (HAUPTELEMENT)	1R-0770	1	WASSERABSCHEIDER- U. KRAFTSTOFFILTER	134
KRAFTÜBERTRAGUNG				
ABLASSSTOPFEN (GETRIEBESÖLKÜHLER)	8M-9307	1	GETRIEBEÖLKÜHLER	275
ABLASSSTOPFEN (KRAFTÜBERTRAGUNG)	4B-7739	1	ABLASS (UMWELTFREUNDLICH)	280
ANSAUGSIEB (GETRIEBE)	4S-8598	1	MAGNETSIEB	312
ANSAUGSIEB (GETRIEBESPÜLUNG)	8S-9130	1	PLANETENANTRIEBSGEHÄUSE U. TEILE	270
ENTLÜFTER (GETRIEBE)	9G-5127	1	ÖLLEITUNGEN - KRAFTÜBERTRAGUNG	291
MAGNETSTOPFEN (SEITENANTRIEB, ÖLEINFÜLLUNG)	6V-0439	1	SEITENANTRIEB	284
		1	SEITENANTRIEB	286
ÖLFILTERELEMENT (FEINSTFILTER)	1R-1809	1	ÖLFILTER	283
		1	ÖLLEITUNGEN - KRAFTÜBERTRAGUNG	291
SIEB (WANDLERRÜCKLAUFSIEB)	3T-6471	1	ÖLLEITUNGEN - KRAFTÜBERTRAGUNG	291

* ÜBERSETZUNG ZUM ZEITPUNKT DER DRUCKLEGUNG NICHT VORHANDEN

WARTUNGSTEILE

BESCHREIBUNG	ERSATZTEIL-NUMMER	MENGE	VERWENDET IN	SEITE
KÜHLSYSTEM				
DICHTUNG (THERMOSTATGEHÄUSE)	191-4457	1	KÜHLWASSERLEITUNGEN	92
KÜHLERKAPPE	031-1119	1	KÜHLMITTELBEHÄLTER	104
		1	KÜHLMITTELBEHÄLTER	105
KÜHLERSCHLAUCH	187-3961	1	KÜHLWASSERLEITUNGEN	93
LIPPENDICHTUNG (KÜHLWASSER-THERMOSTAT)	3S-9643	1	KÜHLWASSERLEITUNGEN	92
WASSERTEMPERATURREGLER (92 GRAD) (KÜHLMITTEL)	248-5513	1	KÜHLWASSERLEITUNGEN	92
LENK- UND BREMSSYSTEM				
ÖLFILTER (FEINSTFILTER)	102-2828	1	ÖLFILTER	435
ÖLFILTER (NICHT BRENNBARE FLÜSSIGKEIT)	156-0214	1	ÖLFILTER	435
LUFTEINLASS- UND ABGASSYSTEM				
LUFTFILTER (HAUPTELEMENT)	6I-2501	1	LUFTREINIGER	109
LUFTFILTER (HILFSELEMENT)	6I-2502	1	LUFTREINIGER	109
MOTOR (GRUNDAUSFÜHRUNG)				
ABLASSSTOPFEN	5F-0304	1	SCHWUNGRADGEHÄUSE	45
ELEMENT (ENTLÜFTER) (KURBELGEHÄUSE)	185-3159	1	VENTILDECKEL	19
ENTLÜFTER (KURBELGEHÄUSE)	204-4444	1	VENTILDECKEL	19
	240-0041	1	MOTORBLOCKDECKEL	16
KEILRIEMENSATZ (EINSCHL. 3 RIEMEN) (LÜFTER)	4P-8087	1	RIEMENSCHEIBE - LÜFTER- U. DREHSTROMGENERATOR	57
KEILRIEMENSATZ (LÜFTERANTRIEB)	216-7877	1	LÜFTERANTRIEB	34
SERPENTINENFÖRMIGER RIEMEN (DREHSTROMGENERATOR)	241-4981	1	RIEMENSCHEIBE - LÜFTER- U. DREHSTROMGENERATOR	57
VENTILDECKELDICHTUNG	268-3490	1	VENTILDECKEL	19
MOTORAUSFÜHRUNG				
ÖLFILTER	183-2097	1	MOTORAUSFÜHRUNG	4
RAHMEN UND AUFBAU				
ABLASSSTOPFEN (GETRIEBEGEHÄUSE)	106-8187	1	RAHMEN UND GEHÄUSE	332
SCHMIERSYSTEM				
EINFÜLLKAPPE (MOTOR)	6N-2985	1	MOTORÖLEINFÜLLSTUTZEN	68
ÖLFILTER (HOCHLEISTUNG)	1R-1808	1	ÖLFILTER	69

* ÜBERSETZUNG ZUM ZEITPUNKT DER DRUCKLEGUNG NICHT VORHANDEN

INDEX

Name	Page
A	
ACCUMULATOR GP–CHARGED	260
ACCUMULATOR GP–UNCHARGED	261
ACCUMULATOR GP-PILOT OIL–CHARGED	465
ACCUMULATOR GP-PILOT OIL–UNCHARGED	464
ACCUMULATOR-REFRIGERANT	679, 682
ACTUATOR GP-PUMP–STEERING	434
ADAPTER GP-MOTOR	466
ADJUSTER GP-SEAT	623
AFTERCOOLER GP-AIR	108
AIR CLEANER GP	109, 110
AIR COMPRESSOR GP-SEAT	625, 736
AIR COMPRESSOR GP-SEAT–HEAVY-DUTY	624
AIR CONDITIONER AR–EEC	626
AIR CONDITIONER GP	627
ALARM GP–FAULT INDICATOR	148
ALTERNATOR GP-CHARGING	149, 151, 153
AXLE GP	262
B	
BAR GP-EQUALIZER	369, 371
BAR GP-STRIKER–REAR	327
BASE AS-INDICATOR LIGHT	256
BASE GP-OIL FILTER–POWER TRAIN	263
BATTERY & WIRING GP	155
BATTERY GP–HEAVY-DUTY	161
BATTERY GP (12-VOLT, MAINTENANCE FREE, WET)	156
BATTERY (12-VOLT, MAINTENANCE FREE)	161
BELT-SERPENTINE (ALTERNATOR)	57
BLADE & EDGE GP-ANGLING	593
BLADE & EDGE GP-SEMI-UNIVERSAL	594, 595, 596, 597
BLADE AS-SEMI-UNIVERSAL	598, 600, 601, 602
BLADE AS-WIPER (350-MM) (DOOR, RH, LH)	758
BLADE AS-WIPER (400-MM) (FRONT, REAR WINDOW)	758
BLADE GP-ANGLING	603
BLADE GP-SEMI-UNIVERSAL	604, 605
BLOWER GP-CAB	628
BOX GP-BATTERY	329, 330
BRACE GP-BULLDOZER	575
BRAKE & DIFFERENTIAL DRIVE GP	264
BRAKE & PLANETARY GP	268
BREATHER AS (CRANKCASE)	16, 19
BREATHER AS (TRANSMISSION)	291
BULLDOZER AR-ANGLING	577, 578, 579, 580
BULLDOZER AR-SEMI-UNIVERSAL	581, 582, 583, 584
C	
C-FRAME AS–ANGLING BULLDOZER	585
C-FRAME GP–ANGLING BULLDOZER	586, 587
CAB AR	629
CAB AR–WITHOUT AIR CONDITIONER	630
CAB GP	631
CABLE AS-COILED–LASER RECEIVER	162
CAMERA GP (115-DEG, COLOR)	174
CAMSHAFT GP	15
CANOPY AR	634
CAP AS-FILLER (ENGINE)	68
CAP AS-FILLER (FUEL TANK)	146
CAP AS-RADIATOR	104, 105
CAP-FILLER (HYDRAULIC TANK)	523
CAP GP-TRACK IDLER	373
CAP GP-TRACK IDLER–HEAVY-DUTY	372
CAP-VENTED (WINDOW WASHER TANK)	738
CASE & FRAME GP	332
CASE & PARTS GP-PLANETARY	270
CASE GP-TRANSMISSION	272
CHASSIS AR	1
CIRCUIT BREAKER AS (15-AMPERE) (FAN BLOWER MOTOR)	211
CLUTCH GP-FAN	34
COIL AS-SOLENOID (12-VOLT) (HYDRAULIC FAN)	86
COMPRESSOR GP-REFRIGERANT	635, 636
CONDENSER & MTG GP-REFRIGERANT	638
CONDENSER & MTG GP-REFRIGERANT–ROPS MOUNTED	639
CONDENSER GP-REFRIGERANT–WITH FANS	641
CONNECTOR GP	495
CONTROL & MTG GP-ENGINE ELEK	163

INDEX

Name	Page
	164
CONTROL & MTG GP-JOYSTICK–GRADE CONTROL	643
CONTROL & MTG GP-PEDAL–GOVERNOR, BRAKE	644
CONTROL AR-HYDRAULIC IMPLEMENT–ACCUGRADE	467
CONTROL AR-HYDRAULIC IMPLEMENT–BULLDOZER, RIPPER	467
CONTROL AR-HYDRAULIC IMPLEMENT–BULLDOZER, WINCH	468
CONTROL AS (TEMPERATURE)	667
CONTROL GP-ENGINE ELECTRONIC	165
CONTROL GP-HANDLE–BULLDOZER	645
	646
	649
CONTROL GP-HANDLE–STEERING, TRANSMISSION	647
CONTROL GP-HANDLE (DOZER)	645
CONTROL GP-HANDLE (WINCH)	554
CONTROL GP-JOYSTICK–BULLDOZER	650
CONTROL GP-MACHINE	165
CONTROL GP-PARKING BRAKE	651
CONTROL GP-PILOT OPERATED HYD	653
CONTROL GP-STEERING & TMSN	654
CONTROL GP-TRANSMISSION HYD	273
CONTROL GP-UNPRGMED MONITOR (CATERPILLAR MONITORING SYSTEM)	668
	670
CONTROL GP-UNPROGRAMMED (MACHINE)	257
CONVERSION AR-HEAT SHIELD–LAMINATE	1
	2
CONVERTER GP-ELECTRICAL	166
COOLANT HEATER LINES	686
COOLER GP-ENGINE OIL	88
COOLER GP-HYDRAULIC OIL	469
COOLER GP-TRANSMISSION OIL	275
CORE AS-AFTERCOOLER	1
	2
	108
CORE AS-OIL COOLER (ENGINE)	88
CORE AS-OIL COOLER (TRANSMISSION)	275
CORE AS-RADIATOR	100
COUNTERWEIGHT GP	334
COUPLING & GUARD GP	277
COUPLING GP-PUMP	278
COVER GP-CONSOLE–CAB	657
COVER GP-CONSOLE–INSTRUMENT PANEL–OPEN ROPS	656
COVER GP-CYLINDER BLOCK	16
COVER GP-FRONT HOUSING	17
	18
COVER GP-VALVE MECHANISM	19
CRANKSHAFT GP	20
CYLINDER & LINES GP-LIFT–LH	472
CYLINDER & LINES GP-LIFT–RH	470
CYLINDER BLOCK AS	21
CYLINDER BLOCK GP	23
	24
CYLINDER GP-BULLDOZER LIFT	474
CYLINDER GP-RIPPER LIFT	476
CYLINDER GP-TILT–ANGLING BULLDOZER	478
CYLINDER GP-TILT–SEMI-UNIVERSAL BULLDOZER	480
CYLINDER HEAD AS	25
CYLINDER HEAD GP	27
	28

D

Name	Page
DAMPER GP	30
DISPLAY GP-CAMERA–WORK AREA VISUAL SYSTEM	167
DISPLAY GP-MONITOR–CD610	659
DISPLAY GP-MONITOR–CD700	659
DISPLAY GP-MONITOR (CD610)	659
DISPLAY GP-MONITOR (CD700)	659
DRAIN GP-ECOLOGY	279
	280
DRAIN GP-ENGINE OIL	31
DRAWBAR GP	336
DRAWBAR GP–LONG	335
DRIVE AR-FAN–MODULATING	32
DRIVE GP-FAN	33
	36
DRIVE GP-FAN–MODULATING	34
DRIVE GP-PUMP–WATER	282
DUST EJECTOR GP	111

E

Name	Page
EDGE GP-BIT & CUTTING–ANGLING BULLDOZER	606
EDGE GP-BIT & CUTTING–SEMI-UNIVERSAL	607
ELBOW GP-AIR INLET	112
ELECTRONICS AR-MACHINE	168
ELECTRONICS GP-COMMUNICATION–PRODUCT LINK 300	169
ELECTRONICS GP-ENGINE RATINGS	9
ELECTRONICS GP-IMPLEMENT	170
ELECTRONICS GP-MONITOR	170
ELECTRONICS GP-POWER TRAIN	170
ELEMENT (BREATHER) (CRANKCASE)	19
ENCLOSURE GP-ENGINE	337
ENCLOSURE GP-ENGINE–LH	342
ENCLOSURE GP-ENGINE–RH	340
ENCLOSURE GP-HYDRAULIC TANK	344
ENGINE AR	4

INDEX

Name	Page
	5
	6
	7
	8
ENGINE AR-CORE	9
	10
	11
	12
	13
EXTENSION GP-BACKREST (CLOTH)	724
EXTENSION GP-BACKREST (VINYL) (SEAT)	727

F

FAN AR-EJECTOR	89
FAN GP-BLOWER	90
FAN GP-REVERSIBLE	91
FASTENER GP-CYLINDER HEAD	37
FASTENER GP-DAMPER & PULLEY	38
FASTENER GP-FRONT HOUSING	39
FASTENER GP-VALVE COVER	40
FASTENER GP-VALVE COVER BASE	41
FENDER GP	345
FENDER GP–LH	347
FENDER GP–RH	346
FILLER GP-ENGINE OIL	68
FILM-CIRCUIT BREAKER	211
FILM GP	761
	762
FILM-IDENTIFICATION (ACTION LIGHT) (MANUAL OPERATION LOCK)	670
FILM-IDENTIFICATION (GROUP NUMBER) (REFRIGERANT CONDENSER)	641
FILM-IDENTIFICATION (IGNITION SWITCH)	180
FILM-IDENTIFICATION (INSTRUMENT PANEL)	667
	670
	671
FILM-IDENTIFICATION (JOYSTICK)	171
FILM-IDENTIFICATION (LIGHTS)	668
FILM-IDENTIFICATION (LOW SPEED, WINCH LIGHT)	468
FILM-IDENTIFICATION (MONITOR)	668
	671
FILM-IDENTIFICATION (SECURITY SYSTEM)	180
FILM-IDENTIFICATION (WATER HEATER)	173
FILM-IDENTIFICATION (WINCH CONTROL)	468
FILM-IDENTIFICATION (WINDOW WIPER CONTROLS)	677
FILM-IDENTIFICATION (WORK LIGHT)	187
	190
	193
	196
	198
	203
	246
FILM-IDENTIFICATION (12-VOLT)	763
	765
FILM-INFORMATION (AIR CLEANER)	109
FILM-INFORMATION (EXTENDED LIFE COOLANT-READ OMM)	764
	765
FILM-INFORMATION (TIE-DOWN)	335
	336
	764
	765
FILM-INFORMATION (TIE-DOWN)	616
FILM-INSTRUCTION (BATTERY DISCONNECT)	764
	765
FILM-INSTRUCTION (BULLDOZER CONTROL)	764
	766
FILM-INSTRUCTION (RIPPER CONTROL)	467
FILM-INSTRUCTION (SEAT ADJUSTMENT)	734
	736
FILM-NOTICE (RADIO)	666
FILM-WARNING (ACCUMULATOR)	464
	465
FILM-WARNING (BLADE, DO NOT CLIMB, READ OMM)	612
	613
FILM-WARNING (ELECTRICAL SHOCK)	211
FILM-WARNING (HIGH PRESSURE, READ OMM)	260
	261
FILM-WARNING (HIGH PRESSURE, READ OMM, INTL)	763
FILM-WARNING (HOT FLUID UNDER PRESSURE)	764
	766
FILM-WARNING (LASER TRANSMITTER)	612
FILM-WARNING (NO WELD, NO DRILL, READ OMM)	764
	766
FILM-WARNING (NO WELD, NO DRILL, READ OMM)	634
FILM-WARNING (PRODUCT LINK RADIO, NON NACD)	763
FILM-WARNING (PRODUCT LINK RADIO, U.S.)	176
	178
FILM-WARNING (RECOIL SPRING)	378
	380
FILM-WARNING (RECOIL SPRING)	374
	376
	432
	433
FILM-WARNING (ROPS, FOPS)	634
FILTER & LINES GP-FUEL	132

INDEX

Name	Page
FILTER-AIR (STANDARD) (FRESH AIR)	714
FILTER AS (AIR RECIRCULATION)	714
FILTER AS-ENGINE OIL (ADVANCED EFFICIENCY)	69
FILTER AS-FUEL (ADVANCED EFFICIENCY)	132
FILTER AS-OIL (FIRE RESISTANT FLUID)	435
FILTER AS-OIL (ULTRA HIGH EFFICIENCY)	435
FILTER AS-WATER SEP & FUEL (PRIMARY)	134
FILTER ELEMENT AS-AIR (PRIMARY)	109
FILTER ELEMENT AS-AIR (SECONDARY)	109
FILTER ELEMENT AS-OIL (ADVANCED EFFICIENCY)	523
FILTER ELEMENT AS-OIL (FIRE RESISTANT FLUID)	523
FILTER ELEMENT AS-OIL (ULTRA HIGH EFFICIENCY)	283
	291
	523
FILTER GP-ENGINE OIL	4
	69
FILTER GP-OIL–BYPASS–POWER TRAIN	283
FILTER GP-OIL–HYDRAULIC FAN, STEERING	435
FILTER GP-WATER SEP & FUEL	134
FINAL DRIVE GP	284
FINAL DRIVE GP–WASTE HANDLING	286
FITTING GP	73
FLOOR MAT	657
	701
FLYWHEEL GP	42
FRAME GP-TELESCOPING RECOIL–LH	380
FRAME GP-TELESCOPING RECOIL–LH, XL	376
FRAME GP-TELESCOPING RECOIL–RH	378
FRAME GP-TELESCOPING RECOIL–RH, XL	374
FUMES DISPOSAL GP	73
FUMES DISPOSAL GP–CRANKCASE	72
FUSE (10-AMPERE)	211
FUSE (15-AMPERE)	211
FUSE (175-AMPERE)	211
FUSE (175-AMPERE) (ALTERNATOR, MAIN)	257
FUSE (20-AMPERE)	211
GLASS-CAB (SLIDING, TINTED)	754
GLASS (TINTED)	743
	744
	745
	746
GRADE CONTROL AR–ACCUGRADE LASER	171
GRADE CONTROL AR-LASER–ACCUGRADE, DUAL	171
GRADE CONTROL AR-LASER–ACCUGRADE, SINGLE	171
GRADE CONTROL AR-SATELLITE–ACCUGRADE, DUAL GNSS	172
GRADE CONTROL AR-SATELLITE–ACCUGRADE, SINGLE GNSS	172
GRID GP-SAND BLAST ERODING	348
GRILL GP-RADIATOR–HEAVY DUTY	349
GUARD & SCRAPER GP-IDLER	350
GUARD AR-FINAL DRIVE	350
GUARD AR-IDLER	382
GUARD GP-BOTTOM	351
GUARD GP-BOTTOM–EXTREME SERVICE, SEALED	352
GUARD GP-BOTTOM–HOOK	354
	355
GUARD GP-FUEL TANK	357
	358
	359
GUARD GP-IDLER	383
GUARD GP-IDLER–SYSTEMONE	384
GUARD GP-PRECLEANER	113
GUARD GP-RADIATOR	360
GUARD GP-RADIATOR–BOTTOM	362
GUARD GP-REAR	363
GUARD GP-TRACK GUIDE	385
GUARD GP-TRACK GUIDE–SYSTEMONE	386
GUARD GP-TRACK ROLLER–SYSTEMONE	387
	389
GUARD GP-TRANSMISSION	364
GUIDING AR-UNDERCARRIAGE	390
GUIDING AR-UNDERCARRIAGE–SYSTEMONE	390

G

Name	Page
GASKET	524
GASKET (WATER REGULATOR HOUSING)	92
GAUGE AS-OIL LEVEL (TRANSMISSION CASE)	291
GAUGE GP-OIL LEVEL (DIPSTICK)–ENGINE	74
GAUGE-SIGHT (HYDRAULIC TANK)	523
GAUGE-SIGHT (WATER TANK)	106
GEAR GP-BEVEL & TRANSFER	288
GEAR GP-FRONT	43
GEAR GP-REAR	44
GENERAL AR	3

H

Name	Page
HANDHOLD GP	660
HANDHOLD GP–HEAVY-DUTY	661
HARNESS AS-CAB	741
HARNESS AS-CAB (WIPER, SPEAKER)	677
HARNESS AS-CHASSIS	155
	156
	256
HARNESS AS-CONSOLE	257
HARNESS AS-CONTROL	174
	252
HARNESS AS-CONTROL (PRODUCT LINK)	176

INDEX

Name	Page
	178
HARNESS AS-ENGINE	246
HARNESS AS-ENGINE (ELECTRONIC CONTROL MODULE)	244
HARNESS AS-ENGINE (UNIT INJECTOR)	244
HARNESS AS-FRONT LIGHTING	202
HARNESS AS-FRONT LIGHTING (CYLINDER)	189
HARNESS AS-HEATER & AIR COND (A/C)	641
HARNESS AS-LIGHTING	202
	252
HARNESS AS-LIGHTING (FLOODLIGHT) (REAR)	187
HARNESS AS-LIGHTING (FRONT)	195
HARNESS AS-LIGHTING (FRONT) (CYLINDER)	192
HARNESS AS-LIGHTING (FRONT FLOODLIGHTS)	198
HARNESS AS-LIGHTING (REAR)	195
HARNESS AS-LIGHTING (REAR) (ROPS)	192
HARNESS AS-LIGHTING (REAR) (SIDE FLOODLIGHT)	198
HARNESS AS-LIGHTING (ROPS)	189
HARNESS AS-MONITOR (GPS)	699
HARNESS AS-MONITOR (LASER)	699
HARNESS AS-MOTOR	628
HARNESS AS-PANEL	211
	667
	670
HARNESS AS-PLATFORM	251
HARNESS AS-POWER (ELECTRICAL CONVERTER)	166
HARNESS AS-RADIO (GRADE CONTROL)	251
HARNESS AS-RADIO (PRODUCT LINK)	178
HARNESS AS-SENSOR	34
	252
	273
	485
HARNESS AS-SOLENOID	156
HARNESS AS-SOLENOID (WINCH, REAR)	608
HARNESS AS-SWITCH (SERVICE BRAKE)	708
HARNESS AS-TRANSMISSION	156
HARNESS AS-VALVE	491
HARNESS AS-VALVE (SEAT AIR COMPRESSOR)	736
HARNESS AS-WIRING	156
	654
HARNESS AS-WIRING (AIR CONDITIONER COMPRESSOR)	679
	682
HARNESS AS-WIRING (CRANK WITHOUT INJECT)	246
HARNESS AS-WIRING (FUEL PRESSURE)	139
HARNESS AS-WIRING (JUMPER)	251
	252
HARNESS AS-WIRING (MACHINE SECURITY SYSTEM)	180
HARNESS AS-WIRING (ROPS)	682
HARNESS AS-WIRING (WINDOW WASHER)	738
HEAD GP-PUMP–STEERING PISTON PUMP	436
HEATER GP-CAB	662
HEATER GP-JACKET WATER	173
HOSE-RADIATOR	93
HOUSING AS-FLYWHEEL	45
HOUSING GP-FLYWHEEL	46
HOUSING GP-FRONT	48
HOUSING GP-SEAT SUSPENSION	663
HYDRAULIC AR-2 VALVE	482

I

IDLER GP-FRONT	391
IDLER GP-FRONT–RETROFIT KIT	392
IDLER GP-FRONT–SYSTEMONE	390
IDLER GP-TRACK–HEAVY-DUTY	393
IDLER GP-TRACK–SYSTEMONE	394
INDICATOR AS (ACTION LIGHT)	667
INDICATOR AS (ACTION LIGHT)	670
INDICATOR AS (ENGINE OIL PRESSURE)	251
INJECTOR GP-FUEL	135
INSTALLATION AR-ENGINE	14
INSTALLATION GP-CAMERA	174
INSTALLATION GP-COMMUNICATION–PRODUCT LINK 321SR	176
	178
INSTALLATION GP-RADIO	666
INSTALLATION GP-SECURITY	180
INSTRUMENT GP	667
INSTRUMENT GP–OPEN ROPS	670

K

KEY AS-ELECTRONIC (SECURITY) (GRAY)	180
KEY AS-ELECTRONIC (SECURITY) (YELLOW)	180
KEY (BATTERY DISCONNECT)	239
KIT-BEARING (ALTERNATOR)	149
KIT-BEARING (SUSPENSION SEAT)	664
KIT-BUMPER (WEIGHT ADJUSTMENT) (SUSPENSION SEAT)	664
KIT-CONNECTING PLUG (6-PIN)	166
KIT-FOLLOWER (SUSPENSION SEAT)	664
KIT-HARDWARE (ALTERNATOR)	149
KIT-INDICATOR (WEIGHT ADJUSTMENT) (SUSPENSION SEAT)	664
KIT-PRECLEANER (TURBINE)	122
	123
KIT-SCREEN (PRECLEANER)	123
KIT-SEAL (RELIEF VALVE)	570
KIT-SEAL (RELIEF VALVE) (RELIEF VALVE)	461

INDEX

Name	Page
KIT-SEAL (SHUTTLE VALVE) (IMPLEMENT CONTROL)	572
KIT-SEAL (SOLENOID VALVE)	462
KIT-SLIDER BLOCK (SUSPENSION SEAT)	731
	732
	733
KIT-SPRING (HEIGHT ADJUSTMENT) (SUSPENSION SEAT)	663
KIT-SPRING (SUSPENSION SEAT)	663
KIT-SUSPENSION KNOB (HEIGHT ADJUSTMENT) (SUSPENSION SEAT)	663
KIT-TERMINAL (ALTERNATOR)	149
KNOB GP–RIPPER	674

L

Name	Page
LAMP AS-INDICATOR (ACTION LIGHT)	256
LAMP GP-DOME	182
LAMP GP-DOME (24-VOLT)	677
LAMP GP-FLOOD	183
	184
	185
LAMP-HALOGEN (24-VOLT, 65-WATT)	183
	184
	185
LAMP-LED (RED, 24-VOLT) (MACHINE SECURITY SYSTEM)	180
LAMP-LED (24-VOLT)	491
LAMP (24-VOLT)	182
	256
	667
	670
LAMP (24-VOLT, 3-WATT)	251
	667
	670
LATCH GP–STRIKER BAR, REAR	365
LIFTING GP-ENGINE	49
LIGHTING GP-FLOOD	186
LIGHTING GP-FLOOD– CYL, ENG COMP, FUEL TANK, ROPS	189
	192
	195
	202
LIGHTING GP-FLOOD– ENG COMP, FUEL TANK, RAD GUARD	187
LIGHTING GP-FLOOD– ENG COMP, FUEL TANK, SWEEP	198
LINER GP-CAB	675
	677
LINES GP-AIR	114
LINES GP-AIR–ATAAC	115
LINES GP-AIR CONDITIONER	679
LINES GP-AIR CONDITIONER– ROPS MOUNTED	682
LINES GP-ENGINE OIL	75
LINES GP-FUEL	136
	139
LINES GP-HEATER	686
LINES GP-LIFT CYLINDER	483
LINES GP-OIL SUPPLY	76
LINES GP-PILOT–BULLDOZER	485
LINES GP-PILOT–GRADE CONTROL	493
LINES GP-PILOT–RIPPER	489
LINES GP-PILOT–WINCH	491
LINES GP-POWER TRAIN OIL	291
LINES GP-PUMP–IMPLEMENT, STEERING	495
LINES GP-RIPPER	499
	500
LINES GP-STEERING	438
LINES GP-TILT CYLINDER	503
	505
	507
LINES GP-TILT CYLINDER– SEMI-UNIVERSAL BULLDOZER	501
LINES GP-TURBOCHARGER OIL	79
	81
LINES GP-WATER	93
LINES GP-WATER–REGULATOR	92
LINES GP-WATER–TURBOCHARGER	95
LINES GP-WINCH	608
LINK AS-TRACK	395
	396
LINK AS-TRACK BOX–LINK BOX	397
	399
	401
LINK AS-TRACK BOX–LINK BOX, OFFSET	398
	400
	402
LINK GP-TRACK–SYSTEMONE	403
	404
	405
LOCK GP-CYLINDER	654

M

Name	Page
MANIFOLD & VALVE GP– PARKING, SECONDARY BRAKE	445
MANIFOLD & VALVE GP– SECONDARY BRAKE	443
MANIFOLD GP-CONTROL– IMPLEMENT PILOT PRESSURE	509
MANIFOLD GP-EXHAUST	118
MANIFOLD GP-TRANSMISSION	298
MANIFOLD GP-VALVE–INLET	510
	511
MAST GP–LASER RECEIVER	612
MAST GP–SATELLITE RECEIVER	612
MIRROR GP-REAR VIEW–CAB	689
MIRROR GP-REAR VIEW–OPEN ROPS	688

INDEX

Name	Page
MODULE AS-POWER SUPPLY	207
MODULE GP-DISPLAY (WORK AREA VISUAL SYSTEM)	167
MODULE GP-INTERFACE (KEY)	180
MODULE GP-QUAD GAUGE	690
MONITOR AS–LIGHT BAR	691
MOTOR GP-ELECTRIC (CONDENSER BLOWER)	641
MOTOR GP-PISTON–IMPLEMENT, STEERING PUMP–STEERING	512
MOTOR GP-WINDOW WIPER–DOOR, LH	695
MOTOR GP-WINDOW WIPER–DOOR, RH	694
MOTOR GP-WINDOW WIPER–FRONT	692
MOTOR GP-WINDOW WIPER–REAR	693
MOUNTING GP-ALTERNATOR	50
MOUNTING GP-ANTENNA–GRADE CONTROL	696
MOUNTING GP-CAB	697
MOUNTING GP-CAMERA DISPLAY (WORK AREA VISUAL SYSTEM)	167
MOUNTING GP-CARRIER ROLLER	406
	407
MOUNTING GP-CONNECTOR	205
MOUNTING GP-CONTROL–CONSOLE, LH	698
MOUNTING GP-CYLINDER	513
MOUNTING GP-ENGINE	51
MOUNTING GP-FAN DRIVE	52
MOUNTING GP-FINAL DRIVE	299
MOUNTING GP-GRADE CONTROL	208
MOUNTING GP-GRADE CONTROL–CAB	206
MOUNTING GP-GRADE CONTROL–MODULE	207
MOUNTING GP-MAST–LASER RECEIVER	612
MOUNTING GP-MAST–SATELLITE RECEIVER	613
MOUNTING GP-MONITOR–GRADE CONTROL	699
	700
MOUNTING GP-PLATFORM–OPEN ROPS	701
MOUNTING GP-RADIO–GRADE CONTROL	703
MOUNTING GP-RECEIVER–MAST	209
MOUNTING GP-RIPPER	614
MOUNTING GP-ROPS	704
MOUNTING GP-TRANSMISSION	300
MUFFLER GP	119

O

OIL CHANGE GP-HIGH SPEED	82

P

PADLOCK GP	136
	146
	329
	337
	344
	360
	634
PAN GP-BACKREST	705
	706
	707
PAN GP-OIL	53
PANEL GP-FUSE	211
PEDAL GP-GOVERNOR & BRAKE	708
PISTON & ROD GP	54
PIVOT BAR GP	408
PLANETARY GP-TRANSMISSION	301
PLATE & FILM GP	763
	765
PLATE GP-RADIATOR–HEAVY DUTY	366
PLATE-IDENTIFICATION (MACHINE)	332
PLATE-IDENTIFICATION (SEQUENCE) (CAB)	631
PLATE-INFORMATION	588
	590
PLATE-INSTRUCTION (AIR CONDITIONER)	626
	763
	765
PLATE-SERIAL NUMBER	584
PLATE-SERIAL NUMBER (BULLDOZER)	577
	578
	579
	580
	581
	582
	583
PLATE-SERIAL NUMBER (RIPPER)	616
PLATE-SERIAL NUMBER (TRANSMISSION)	270
PLATE-WARNING (HIGH PRESSURE CYLINDER)	374
	376
	378
	380
	432
	433
PLATE-WARNING (RECOIL SPRING)	374
	376
	378
	380
	432
	433
PLATFORM GP	710
PLATFORM GP-OPERATOR	711
PLUG-DRAIN	45
PLUG-DRAIN (HYDRAULIC TANK)	523
PLUG-DRAIN (POWER TRAIN)	280
PLUG-DRAIN (TRANSMISSION CASE)	332
PLUG-DRAIN (TRANSMISSION OIL COOLER)	275

INDEX

Name	Page
PLUG GP-ENGINE	55
PLUG-MAGNETIC (FINAL DRIVE, OIL FILL)	284, 286
POWER TRAIN AR	307
PRECLEANER AR–WITH PRESCREEN	120
PRECLEANER AR–WITHOUT PRESCREEN	121
PRECLEANER GP–WITH SCREEN	123
PRECLEANER GP–WITHOUT SCREEN	122
PRESCREENER AS	125
PRESSURIZER GP-CAB	714
PULLEY GP-CRANKSHAFT	56
PULLEY GP-FAN & ALT DRIVE	57
PUMP & MTG GP-IMPLEMENT	515
PUMP & MTG GP-STEERING	446
PUMP & MTG GP-UNIT INJ HYD	141
PUMP GP-CHARGE–STEERING	447
PUMP GP-ENGINE OIL	84
PUMP GP-FUEL INJECTION	142, 143
PUMP GP-FUEL TRANSFER	144
PUMP GP-GEAR–TRANSMISSION, TORQUE CONVERTER	308, 310
PUMP GP-PISTON–IMPLEMENT	516
PUMP GP-PISTON–IMPLEMENT, WINCH	518
PUMP GP-PISTON–STEERING	448
PUMP GP-UNIT INJECTOR HYD	144
PUMP GP-WATER	97, 98, 99
PUSH ARM GP–SEMI-UNIVERSAL BULLDOZER	588, 590

R

Name	Page
RADIATOR AR–TRASH RESISTANT	100
RADIATOR GP	101, 103
RADIO GP-COMMUNICATION–PRODUCT LINK 121SR	213
RECEIVER-DRYER GP (REFRIGERANT)	682
RECEIVER-DRYER GP (REFRIGERANT)	679
RECEIVER GP-LASER–GRADE CONTROL	213
RECEIVER GP-LASER (LR410)	213
RECEIVER GP-SATELLITE–DUAL GNSS, MS990	213
RECEIVER GP-SATELLITE–SINGLE GNSS, MS990	214
RECLINER GP-SEAT	716
REGULATOR AS-VOLTAGE (24-VOLT)	149
REGULATOR GP-FUEL PRESSURE	145
REGULATOR-WATER TEMPERATURE (92-DEG C) (COOLANT)	92
RELAY AS (24-VOLT) (CONDENSER BLOWER MOTOR)	641
RELAY AS (24-VOLT) (GRADE, SLOPE)	251
RELAY AS (24-VOLT) (WINCH)	491
RIPPER AR	616
RIPPER GP	617
ROCKER ARM GP–EXHAUST	59
ROCKER ARM GP–INLET	60
ROLLER AR-TRACK	409
ROLLER GP-TRACK CARRIER–SYSTEMONE	410
ROLLER GP-TRACK-DOUBLE FLANGE–COLD WEATHER	414
ROLLER GP-TRACK-DOUBLE FLANGE–HEAVY-DUTY	411, 412
ROLLER GP-TRACK-DOUBLE FLANGE–HIGH HEAT	415
ROLLER GP-TRACK-DOUBLE FLANGE–TALL LINK, SLEEVE BEARING	413
ROLLER GP-TRACK-SINGLE FLANGE–COLD WEATHER	419
ROLLER GP-TRACK-SINGLE FLANGE–HEAVY-DUTY	416, 418
ROLLER GP-TRACK-SINGLE FLANGE–HIGH HEAT	420
ROLLER GP-TRACK-SINGLE FLANGE–SYSTEMONE	417, 421
ROPS GP	717
ROPS GP-OPEN	718
ROTATING GP-MOTOR–IMPLEMENT, STEERING PUMP	520
ROTATING GP-PUMP	522
ROTATING GP-PUMP–STEERING	450

S

Name	Page
SCRAPER GP-IDLER	422
SCREEN AS (HYDRAULIC TANK)	523
SCREEN AS (TORQUE CONVERTER SCAVENGE)	291
SCREEN GP-MAGNETIC–TRANSMISSION	312
SCREEN GP-MAGNETIC (TRANSMISSION)	312
SCREEN GP-PROTECTION–REAR	720, 721
SCREEN (HYDRAULIC TANK)	523
SCREEN-SUCTION (TRANSMISSION)	312
SCREEN-SUCTION (TRANSMISSION SCAVENGE)	270
SEAL GP-CRANKSHAFT	61, 62
SEAL GP-DUO-CONE	284, 286

INDEX

Name	Page
SEAL-LIP TYPE (WATER TEMPERATURE REGULATOR)	92
SEAL-VALVE COVER	19
SEAT BELT GP (RETRACTABLE)	724
	727
SEAT GP–AIR SUSPENSION, CLOTH	728
SEAT GP–AIR SUSPENSION, VINYL	729
SEAT GP–CLOTH	722
	724
	730
SEAT GP–VINYL	725
	727
SEAT GP-SUSPENSION–CLOTH	732
SEAT GP-SUSPENSION–CLOTH, AIR	733
SEAT GP-SUSPENSION–VINYL, AIR	731
SEGMENT GP-SPROCKET	313
SENDER AS-FUEL LEVEL	146
SENSOR AS-POSITION (ANGLE)	172
SENSOR AS-POSITION (JOYSTICK) (BULLDOZER CONTROL HANDLE)	650
SENSOR AS-PRESSURE	221
SENSOR GP-ENGINE	4
	5
	6
	7
	8
	215
SENSOR GP-POSITION	216
	217
SENSOR GP-POSITION (DECELERATOR PEDAL)	708
SENSOR GP-POSITION (DIRECTION CONTROL)	647
SENSOR GP-POSITION (ROTARY) (SERVICE BRAKE PEDAL)	708
SENSOR GP-PRESSURE	218
	219
	220
	221
	222
	223
	224
SENSOR GP-PRESSURE (ATMOSPHERIC AIR)	215
SENSOR GP-PRESSURE (BULLDOZER PILOT OIL)	251
SENSOR GP-PRESSURE (ENGINE OIL)	215
SENSOR GP-PRESSURE (FUEL)	139
SENSOR GP-PRESSURE (INJECTION ACTUATION)	215
SENSOR GP-PRESSURE (TURBOCHARGER INLET)	155
SENSOR GP-PRESSURE (TURBOCHARGER OUTLET)	215
SENSOR GP-SPEED	225
	226
SENSOR GP-SPEED (ENGINE TIMING) (ENGINE SPEED, TIMING)	215
SENSOR GP-SPEED (FAN DRIVE)	34
SENSOR GP-SPEED (TORQUE CONVERTER)	246
SENSOR GP-SPEED (TRANSMISSION OUTPUT 1)	302
SENSOR GP-SPEED (TRANSMISSION OUTPUT 2)	302
SENSOR GP-TEMPERATURE	227
	228
	229
SENSOR GP-TEMPERATURE (AIR INLET MANIFOLD)	215
SENSOR GP-TEMPERATURE (HYDRAULIC OIL)	155
SENSOR GP-TEMPERATURE (TORQUE CONVERTER OIL)	246
SENSOR GP-TEMPERATURE (TRANSMISSION LUBRICATION OIL)	155
SENSOR GP-TEMPERATURE (TRANSMISSION SUMP)	246
SENSOR GP-TEMPERATURE (WATER, COOLANT)	215
SERVICE GP-COMMUNICATION (PRODUCT LINK 300)	169
SERVICE GP-MONITOR	170
SERVICE GP-POWER TRAIN	170
SHAFT GP-DRIVE	314
SHIELD GP-EXHAUST	126
SHIELD GP-HEAT	127
SOFTWARE (ANGLE SENSOR)	172
SOFTWARE GP-COMMUNICATION (PRODUCT LINK 121SR)	213
SOFTWARE GP (MAST)	612
SOFTWARE GP-MONITOR	213
	659
SOFTWARE (RECEIVER)	213
	214
SOFTWARE (RECEIVER, LOADER)	213
	214
SOLENOID AS (24-VOLT) (STARTING MOTOR)	232
STARTING AID GP-ETHER	230
STARTING MOTOR GP-ELECTRIC	232
	235
STARTING MOTOR GP-ELECTRIC–HEAVY-DUTY	234
	236
STRAINER AS-OIL (HYDRAULIC TANK FILL)	523
STRAINER-FUEL	146
STRIKER GP-REAR	423
SUPPORT GP-ENGINE	63
SUSPENSION GP-SEAT	734

INDEX

Name	Page
SUSPENSION GP-SEAT–AIR	736
SWEEP GP	367
SWITCH AS-KEY START (IGNITION)	667, 670
SWITCH AS-LIMIT (PARKING BRAKE)	647
SWITCH AS-LIMIT (SERVICE BRAKE PEDAL)	708
SWITCH AS-PRESSURE (COMPRESSOR, HIGH SIDE)	682
SWITCH AS-PRESSURE (COMPRESSOR, HIGH SIDE)	679
SWITCH AS-PRESSURE (OIL FILTER BYPASS)	435
SWITCH AS-PUSH BUTTON (AUTOMATIC KICKDOWN)	667, 670
SWITCH AS-PUSH BUTTON (BIDIRECTIONAL MODE)	667, 670
SWITCH AS-PUSH BUTTON (DOWNSHIFT)	647
SWITCH AS-PUSH BUTTON (OPERATOR SELECT)	667, 670
SWITCH AS-PUSH BUTTON (UPSHIFT)	647
SWITCH AS-ROCKER (AIR CONDITIONER)	668
SWITCH AS-ROCKER (HYDRAULIC LOCKOUT)	256
SWITCH AS-ROCKER (MULTIVELOCITY PROGRAM)	257
SWITCH AS-ROCKER (PARKING BRAKE)	651
SWITCH AS-ROCKER (24-VOLT, ILLUMINATED) (REAR FLOODLIGHTS)	189, 198, 202
SWITCH AS-ROCKER (24-VOLT, ILLUMINATED) (REAR FLOODLIGHTS)	187
SWITCH AS-ROCKER (24-VOLT, ILLUMINATED) (REAR FLOODLIGHTS)	192, 195
SWITCH AS-ROCKER (24-VOLT, SEALED, ILLUMINATED) (THROTTLE)	256
SWITCH AS-ROTARY (FAN SPEED)	667
SWITCH AS-ROTARY (FRONT)	677
SWITCH AS-ROTARY (LH DOOR)	677
SWITCH AS-ROTARY (LIGHTS)	667, 670
SWITCH AS-ROTARY (REAR)	677
SWITCH AS-ROTARY (RH DOOR)	677
SWITCH AS-TEMPERATURE (REFRIGERANT)	627
SWITCH AS-TOGGLE (ENGINE SERVICE FLOODLAMP)	246
SWITCH AS-TOGGLE (UNDER HOOD SERVICE LIGHT)	187, 189, 192, 195, 198, 202
SWITCH GP-BYPASS– POWER TRAIN OIL FILTER	238
SWITCH GP-DISCONNECT–BATTERY	239
SWITCH GP-MAGNETIC–MAIN RELAY	241
SWITCH GP-MAGNETIC–START RELAY	240
SWITCH GP-PUSH BUTTON–HORN– PRIMING PUMP	242

T

Name	Page
TANK & FILTER GP-HYDRAULIC	523
TANK & MTG GP-HYDRAULIC	526
TANK GP-COOLANT	104, 106
TANK GP-COOLANT– WITH HEAT SHIELDING	105
TANK GP-FUEL	146
TANK GP-WINDOW WASHER	738, 740
TOOTH GP-RIPPER–CURVED	621
TOOTH GP-RIPPER–STRAIGHT	619, 622
TOOTH GP-RIPPER–STRAIGHT SHANK	620
TORQUE CONVERTER GP	315
TORQUE CONVERTER GP–WITH DIVIDER	317
TORQUE CONVERTER GP–WITH HOUSING	319
TRACK ADJUSTER & RECOIL GP	424
TRACK GP–2 REQUIRED	426
TRACK GP–2-REQUIRED	426, 427
TRACK GP–2-REQUIRED, SYSTEMONE	428, 429, 430
TRANSMISSION AR	321
TRUNNION GP-BULLDOZER	592
TRUNNION GP-ENGINE	64
TURBOCHARGER GP	128, 129, 130, 131

U

Name	Page
UNDERCARRIAGE AR–HEAVY-DUTY	432, 433
UNDERCARRIAGE AR–SYSTEMONE	431
UNIVERSAL JOINT GP	322

V

Name	Page
V-BELT (REFRIGERANT COMPRESSOR)	636

INDEX

Name	Page
V-BELT SET (FAN DRIVE)	34
V-BELT SET (INCLUDES 3-BELTS) (FAN)	57
VALVE & MTG GP-BULLDOZER–GRADE CONTROL	527
VALVE & MTG GP-CONTROL–TRANSMISSION	528
VALVE & MTG GP-IMPLEMENT CONT	530
VALVE AS-CHECK	740
VALVE AS-DRAIN (ECOLOGY)	332
VALVE AS-FLUID SAMPLING	486
VALVE GP-BANK 2–BULLDOZER LIFT, TILT	531
VALVE GP-BANK 3–BULLDOZER LIFT, TILT, RIPPER	535
VALVE GP-BANK 3–BULLDOZER LIFT, TILT, WINCH	533
VALVE GP-BRAKE CONTROL	452, 454
VALVE GP-BYPASS–STEERING LINES	456
VALVE GP-CHECK–PILOT PRESSURE SUPPLY	537
VALVE GP-CONTROL	541
VALVE GP-CONTROL–BULLDOZER LIFT	538, 549
VALVE GP-CONTROL–BULLDOZER TILT	547
VALVE GP-CONTROL–RIPPER LIFT	545
VALVE GP-CONTROL–WINCH	543
VALVE GP-ETHER STARTING	243
VALVE GP-FLUID SAMPLING	85
VALVE GP-FLUSHING	520
VALVE GP-MODULATING	86
VALVE GP-MODULATING–PILOT OIL	87
VALVE GP-MODULATING–TRANSMISSION CLUTCH	323
VALVE GP-PILOT–BULLDOZER CONTROL	558
VALVE GP-PILOT–RIPPER	556
VALVE GP-PILOT–STEERING, TMSN CONTROL	552
VALVE GP-PILOT–WINCH	554
VALVE GP-PILOT CARTRIDGE–BULLDOZER LIFT, LOWER	560
VALVE GP-PILOT CARTRIDGE–IMPLEMENT	561
VALVE GP-PRESSURE REDUCING–IMPLEMENT PILOT OIL	562
VALVE GP-PUMP CONTROL–PRESSURE, FLOW COMPENSATOR–IMPLEMENT	563
VALVE GP-PUMP CONTROL–PRESSURE, FLOW COMPENSATOR–STEERING PUMP PILOT PRESSURE	457
VALVE GP-PUMP CONTROL (PRESSURE COMPENSATOR) (PUMP HEAD)	436
VALVE GP-QUICK-DROP	564, 565
VALVE GP-RELIEF	569
VALVE GP-RELIEF–IMPLEMENT PILOT OIL	570
VALVE GP-RELIEF–MAIN	567, 568
VALVE GP-RELIEF–STEERING LINES PRESSURE	460, 461
VALVE GP-RELIEF–STEERING PUMP	459
VALVE GP-RELIEF–TORQUE CONVERTER OUTLET	326
VALVE GP-RELIEF–TRANSMISSION OIL PRESSURE	324
VALVE GP-RELIEF (PUMP HEAD)	436
VALVE GP-RELIEF (REFRIGERANT COMPRESSOR)	635
VALVE GP-SHUTTLE–SIGNAL–BULLDOZER LIFT, TILT, RIPPER	571
VALVE GP-SHUTTLE–WINCH	572
VALVE GP-SOLENOID	462, 463, 573, 574
VALVE GP-SOLENOID (BLADE CONTROL)	527
VALVE GP-SOLENOID (HYDRAULIC LOCKOUT)	509, 527
VALVE GP-SOLENOID (PARKING, SECONDARY BRAKE)	445
VALVE GP-SOLENOID (SECONDARY BRAKE)	443
VALVE GP-SOLENOID (WINCH)	608
VALVE MECHANISM GP	65, 66

W

WASHER GP-WINDOW	741
WINDOW GP-CAB–LH	748, 751
WINDOW GP-CAB–REAR	743, 754
WINDOW GP-CAB–REAR, SLIDING	744, 756
WINDOW GP-CAB–RH	747, 753
WINDOW GP-CAB–SLIDING, LH	746, 750
WINDOW GP-CAB–SLIDING, RH	745, 749
WINDOW GP-CAB (LH)	746
WINDOW GP-CAB (REAR)	744, 757
WINDOW GP-CAB (RH)	745
WINDOW GP-SLIDING–LH	757
WINDOW GP-SLIDING–REAR	757
WINDOW GP-SLIDING–RH	757

INDEX

Name	Page	Name	Page
WIPER GP-WINDOW	758		
WIPER PIVOT GP	760		
WIRING GP-ELECTRONIC CONTROL	244		
WIRING GP-ENGINE	246		
WIRING GP-GRADE CONTROL	251		
WIRING GP-PLATFORM	256		

Y

YOKE GP	67		

INDEX

Désignation	Page
A	
ACCOUPLEMENT DE POMPE (ASS)	278
ACCUMULATEUR - HUILE PILOTE (ASS)	464
ACCUMULATEUR - HUILE PILOTE (ASS)	465
ACCUMULATEUR - RÉFRIGÉRANT	679
	682
ACCUMULATEUR (ASS)	260
	261
ADAPTATEUR DE MOTEUR (ASS)	466
AFFICHAGE DE LA CAMÉRA (ASS)	167
ALTERNATEUR DE CHARGE (ASS)	151
	153
ALTERNATEUR DE CHARGE (ASS)	149
AMORTISSEUR DE VIBRATIONS (ASS)	30
AMPOULE (24 VOLTS)	182
	256
AMPOULE (24 VOLTS)	667
	670
AMPOULE (24V, 3W)	251
	667
	670
ARBRE A CAMES (ASS)	15
ARBRE D'ENTRAÎNEMENT (ASS)	314
ARCEAUX DE DÉBARDAGE (ASS)	367
AUTOCOLLANT DE DISJONCTEUR	211
AUTOCOLLANT DE MISE EN GARDE (ACCUMULATEUR)	464
	465
AUTOCOLLANT DE MISE EN GARDE (ÉLECTROCUTION)	211
AUTOCOLLANT DE MISE EN GARDE (HAUTE PRESSION, LIRE LE GUIDE D'UTILISATION ET D'ENTRETIEN)	260
	261
AUTOCOLLANT DE MISE EN GARDE (HAUTE PRESSION, LIRE LE GUIDE D'UTILISATION ET D'ENTRETIEN, INTERNATIONAL)	763
AUTOCOLLANT DE MISE EN GARDE (LAME, NE PAS MONTER, LIRE LE MANUEL)	612
	613
AUTOCOLLANT DE MISE EN GARDE (LIQUIDE CHAUD SOUS PRESSION)	764
	766
AUTOCOLLANT DE MISE EN GARDE (PAS DE SOUDAGE, PAS DE PERÇAGE, LIRE LE GUIDE D'UTILISATION ET D'ENTRETIEN)	764
	766
AUTOCOLLANT DE MISE EN GARDE (PAS DE SOUDAGE, PAS DE PERÇAGE, LIRE LE GUIDE D'UTILISATION ET D'ENTRETIEN)	634
AUTOCOLLANT DE MISE EN GARDE (PRODUCT LINK RADIO, U.S.)	176
	178
AUTOCOLLANT DE MISE EN GARDE (RADIO PRODUCT LINK, AUTRE QUE NACD)	763
AUTOCOLLANT DE MISE EN GARDE (RESSORT AMORTISSEUR)	374
	376
	378
	380
	432
	433
AUTOCOLLANT DE MISE EN GARDE (ROPS, FOPS)	634
AUTOCOLLANT DE MISE EN GARDE (TRANSMETTEUR AU LASER)	612
AUTOCOLLANT D'IDENTIFICATION (COMMANDE DE TREUIL)	468
AUTOCOLLANT D'IDENTIFICATION (COMMANDES D'ESSUIE-GLACE)	677
AUTOCOLLANT D'IDENTIFICATION (CONTACTEUR D'ALLUMAGE)	180
AUTOCOLLANT D'IDENTIFICATION (FEUX)	668
AUTOCOLLANT D'IDENTIFICATION (LEVIER)	171
AUTOCOLLANT D'IDENTIFICATION (MONITEUR)	671
AUTOCOLLANT D'IDENTIFICATION (MONITEUR)	668
AUTOCOLLANT D'IDENTIFICATION (NUMÉRO D'ASSEMBLAGE) (CONDENSEUR DE RÉFRIGÉRANT)	641
AUTOCOLLANT D'IDENTIFICATION (PROJECTEUR)	246
AUTOCOLLANT D'IDENTIFICATION (PROJECTEUR)	187
	190
	193
	196
	198
	203
AUTOCOLLANT D'IDENTIFICATION (RÉCHAUFFEUR D'EAU)	173
AUTOCOLLANT D'IDENTIFICATION (SYSTÈME DE SÉCURITÉ)	180
AUTOCOLLANT D'IDENTIFICATION (TABLEAU DE BORD)	667
	670
	671
AUTOCOLLANT D'IDENTIFICATION (TÉMOIN D'ACTIONNEMENT) (VERROUILLAGE DE FONCTIONNEMENT MANUEL)	670
AUTOCOLLANT D'IDENTIFICATION (VITESSE LENTE, ÉCLAIRAGE DE TREUIL)	468
AUTOCOLLANT D'IDENTIFICATION (12 VOLTS)	763

* TRADUCTION NON DISPONIBLE AU MOMENT DE LA PUBLICATION

INDEX

Désignation	Page
	765
AUTOCOLLANT-INFORMATION (FILTRE À AIR)	109
AUTOCOLLANT-INFORMATION (LIQUIDE DE REFROIDISSEMENT LONGUE DURÉE-LIRE LE GUIDE D'UTILISATION ET D'ENTRETIEN)	764
	765
AUTOCOLLANT-INFORMATION (TIRANT)	335
	336
	616
	764
	765
AUXILIAIRE DE DÉMARRAGE À L'ÉTHER	230
AVERTISSEMENT DE PROFIL LONGITUDINAL (ASS)	251
AVERTISSEUR (ASS)	148
AXE DE CULBUTEUR (ASS)	59
	60

B

BALAI D'ESSUIE-GLACE (ENS) (*350-MM) (PORTE, DROITE, GAUCHE)	758
BALAI D'ESSUIE-GLACE (ENS) (400-M) (VITRE AVANT, ARRIÈRE)	758
BALANCIER DE SUSPENSION (ASS)	369
	371
BARRE D'ATTELAGE (ASS)	335
BARRE D'ATTELAGE (ASS)	336
BARRE DÉFLECTRICE (ASS)	327
BASE - TÉMOIN LUMINEUX (ENS)	256
BATI EN C (ASS)	586
	587
BATI EN C (ENS)	585
BATTERIE (ASS)	161
BATTERIE (ASS) (12V, SANS ENTRETIEN, À BAIN D'HUILE)	156
BATTERIE ET CÂBLAGE	155
BATTERIE (12V, SANS ENTRETIEN)	161
BIELLE DE CARTER DE CHAÎNE (ENS)	397
	398
	399
	400
	401
	402
BIELLETTE - CHAÎNE (ASS)	403
	404
	405
BLINDAGE AR	363
BLINDAGE DE ROUE AV (ASS)	383
	384
BLINDAGE DE TRANSMISSION	364
BLINDAGE INFÉRIEUR (ASS)	351
	352
	354
	355
BLOC-CYLINDRES - COUVERCLE (ASS)	16
BLOC-CYLINDRES (ASS)	23
	24
BLOC-CYLINDRES (ENS)	21
BOBINE DE SOLÉNOÏDE (ENS) (12 VOLTS) (VENTILATEUR HYDRAULIQUE)	86
BOÎTE DE VITESSES (VERSION)	321
BOÎTE PLANÉTAIRE (ASS)	301
BOUCHON À ÉVENT (RÉSERVOIR DE LAVE-GLACE DE VITRE)	738
BOUCHON AIMANTÉ (RÉDUCTEUR, REMPLISSAGE D'HUILE)	284
	286
BOUCHON DE GOULOTTE DE REMPLISSAGE (ENS) (MOTEUR)	68
BOUCHON DE GOULOTTE DE REMPLISSAGE (ENS) (RÉSERVOIR DE CARBURANT)	146
BOUCHON DE GOULOTTE DE REMPLISSAGE (RÉSERVOIR HYDRAULIQUE)	523
BOUCHON DE MOTEUR (ASS)	55
BOUCHON DE RADIATEUR (ENS)	104
	105
BOUCHON DE REMPLISSAGE D'HUILE MOTEUR (ASS)	68
BOUCHON DE VIDANGE	45
BOUCHON DE VIDANGE (CARTER DE BOITE DE VITESSES)	332
BOUCHON DE VIDANGE (REFROIDISSEUR D'HUILE DE BOÎTE)	275
BOUCHON DE VIDANGE (RÉSERVOIR HYDRAULIQUE)	523
BOUCHON DE VIDANGE (TRANSMISSION)	280
BOULONNERIE D'AMORTISSEUR ET DE POULIE	38
BOULONNERIE DE CARTER AV (ASS)	39
BOULONNERIE DE LA CULASSE (ASS)	37
BOUTON (ASS)	674
BRAS DE POUSSÉE (ASS)	588
	590
BULLDOZER À ORIENTATION (VERSION)	578
	579
	580
BULLDOZER À ORIENTATION (VERSION)	577

C

CABINE - REVÊTEMENT (ASS)	675
	677
CABINE (ASS)	631

* TRADUCTION NON DISPONIBLE AU MOMENT DE LA PUBLICATION

INDEX

Désignation	Page
CABINE-FAISCEAU DE CÂBLES (ENS)	741
CABINE-FAISCEAU DE CÂBLES (ENS) (ESSUIE-GLACE, HAUT-PARLEUR)	677
CABINE (VERSION)	629
	630
CABLAGE - PLATE-FORME (ASS)	256
CABLAGE DE MOTEUR (ASS)	246
CÂBLAGE-MONITEUR (GPS)	699
CÂBLAGE-MONITEUR (LASER)	699
CABLAGE MOTEUR (ENS)	246
CABLAGE MOTEUR (ENS) (INJECTEUR D'UNITÉ)	244
CABLAGE MOTEUR (ENS) (MODULE DE COMMANDE ÉLECTRONIQUE)	244
CÂBLE EXTENSIBLE (ENS)	162
CACHE-SOUPAPE - BOULONNERIE (ASS)	40
CACHE-SOUPAPES (ASS)	19
CADENAS (ASS)	136
	146
	329
	337
	344
	360
CADENAS (ASS)	634
CAMÉRA (ASS) (115-DEG, COULEUR)	174
CANALISATIONS A COMMANDE PILOTE (ASS)	489
	491
	493
CANALISATIONS A COMMANDE PILOTE (ASS)	485
CANALISATIONS D'AIR (ASS)	114
	115
CANALISATIONS D'ALIMENTATION D'HUILE (ASS)	76
CANALISATIONS DE CARBURANT (ASS)	136
	139
CANALISATIONS DE CHAUFFAGE (ASS)	686
CANALISATIONS DE CLIMATISEUR (ASS)	679
	682
CANALISATIONS DE DIRECTION (ASS)	438
CANALISATIONS DE POMPE (ASS)	495
CANALISATIONS DE RÉCHAUFFEUR DE LIQUIDE DE REFROIDISSEMENT	686
CANALISATIONS DE TREUIL (ASS)	608
CANALISATIONS DE VÉRIN DE LEVAGE (ASS)	483
CANALISATIONS D'EAU (ASS)	92
	93
	95
CANALISATIONS D'HUILE DE TRANSMISSION (ASS)	291
CANALISATIONS D'HUILE DE TURBOCOMPRESSEUR (ASS)	79
	81
CANALISATIONS D'HUILE MOTEUR (ASS)	75
CANALISATIONS DU RIPPER (ASS)	499
	500
CANALISATIONS DU VÉRIN D'INCLINAISON (ASS)	501
	503
	505
	507
CAPTEUR - MOTEUR (ASS)	4
	5
	6
	7
	8
	215
CAPTEUR DE POSITION (ENS) (ANGLE)	172
CAPTEUR DE POSITION (ENS) (LEVIER) (POIGNÉE DE COMMANDE DE LAME)	650
CAPTEUR DE PRESSION (ASS)	218
	219
	220
	221
	222
	223
	224
CAPTEUR DE PRESSION (ASS) (ADMISSION DE TURBOCOMPRESSEUR)	155
CAPTEUR DE PRESSION (ASS) (AIR ATMOSPHÉRIQUE)	215
CAPTEUR DE PRESSION (ASS) (CARBURANT)	139
CAPTEUR DE PRESSION (ASS) (COMMANDE D'INJECTION)	215
CAPTEUR DE PRESSION (ASS) (HUILE MOTEUR)	215
CAPTEUR DE PRESSION (ASS) (HUILE PILOTE DE BULLDOZER)	251
CAPTEUR DE PRESSION (ASS) (SORTIE DE TURBOCOMPRESSEUR)	215
CAPTEUR DE PRESSION (ENS)	221
CAPTEUR DE TEMPERATURE (ASS)	227
	228
	229
CAPTEUR DE TEMPERATURE (ASS) (CARTER DE TRANSMISSION)	246
CAPTEUR DE TEMPERATURE (ASS) (COLLECTEUR D'ADMISSION D'AIR)	215
CAPTEUR DE TEMPERATURE (ASS) (EAU, LIQUIDE DE REFROIDISSEMENT)	215
CAPTEUR DE TEMPERATURE (ASS) (HUILE DE GRAISSAGE DE BOÎTE)	155

* TRADUCTION NON DISPONIBLE AU MOMENT DE LA PUBLICATION

INDEX

Désignation	Page
CAPTEUR DE TEMPERATURE (ASS) (HUILE DU CONV. DE COUPLE)	246
CAPTEUR DE TEMPERATURE (ASS) (HUILE HYDRAULIQUE)	155
CAPTEUR DE VITESSE (ASS)	225
	226
CAPTEUR DE VITESSE (ASS) (CALAGE DU MOTEUR) (CALAGE, VITESSE DU MOTEUR)	215
CAPTEUR DE VITESSE (ASS) (CONVERTISSEUR DE COUPLE)	246
CAPTEUR DE VITESSE (ASS) (ENTRAÎNEMENT DE VENTILATEUR)	34
CAPTEUR DE VITESSE (ASS) (SORTIE 1 DE BOÎTE)	302
CAPTEUR DE VITESSE (ASS) (SORTIE 2 DE BOÎTE)	302
CARENAGE - RESERVOIR HYDRAULIQUE (ASS)	344
CARENAGE DE MOTEUR (ASS)	337
	340
	342
CARTER AV (ASS)	48
CARTER DE BOITE	272
CARTER DE VOLANT (ASS)	46
CARTER DE VOLANT (ENS)	45
CARTER TELESCOPIQUE DE MECANISME AMORTISSEUR	374
	376
	378
	380
CEINTURE DE SECURITE (ASS) (RÉTRACTABLE)	724
	727
CHAINES (ASS)	426
	427
	428
	429
	430
CHAPEAU DE ROUE AV (CHAINE) (ASS)	372
	373
CHÂSSIS ET CARTER (ASS)	332
CHAUFFAGE DE CABINE (ASS)	662
CLAPET DE DECHARGE (ASS)	324
	326
	459
	460
	461
	567
	568
	569
	570
CLAPET DE DECHARGE (ASS) (COMPRESSEUR DE RÉFRIGÉRANT)	635
CLAPET DE DECHARGE (ASS) (TÉTE DE POMPE)	436
CLAPET DE RETENUE (ENS)	537
CLAPET DE RETENUE (ENS)	740
CLÉ (COUPE-BATTERIE)	239
CLÉ ÉLECTRONIQUE (ENS) (SÉCURITÉ) (GRIS)	180
CLÉ ÉLECTRONIQUE (ENS) (SÉCURITÉ) (JAUNE)	180
CLIMATISEUR (ASS)	627
CLIMATISEUR (VERSION)	626
COLLECTEUR - COMMANDE (ASS)	509
COLLECTEUR - SOUPAPE (ASS)	510
	511
COLLECTEUR DE TRANSMISSION (ASS)	298
COLLECTEUR D'ÉCHAPPEMENT (ASS)	118
COLLECTEUR ET SOUPAPE (ASS)	443
COLLECTEUR ET SOUPAPE (ASS)	445
COMMANDE DE DIRECTION ET BOITE DE VITESSES	654
COMMANDE DE FAISCEAU (ENS)	174
COMMANDE DE FAISCEAU (ENS)	252
COMMANDE DE FAISCEAU (ENS)	252
COMMANDE DE FAISCEAU (ENS) (LIAISON DE PRODUIT)	176
	178
COMMANDE DE FREIN DE STATIONNEMENT (ASS)	651
COMMANDE DE MACHINE (ASS)	165
COMMANDE DE MONITEUR NON PROGRAMMÉE (ASS) (SYSTÈME DE SURVEILLANCE CATERPILLAR)	668
	670
COMMANDE DE POIGNÉE (ASS)	645
	646
	647
	649
COMMANDE DE POIGNÉE (ASS) (BULLDOZER)	645
COMMANDE DE POIGNÉE (ASS) (TREUIL)	554
COMMANDE ÉLECTRONIQUE - CABLAGE	244
COMMANDE ELECTRONIQUE DE MOTEUR (ASS)	165
COMMANDE ÉLECTRONIQUE D'ÉQUIPEMENT (ASS)	170
COMMANDE (ENS) (TEMPÉRATURE)	667
COMMANDE ET MONTAGE - LEVIER (ASS)	643
COMMANDE ET MONTAGE - MOTEUR	163
	164
COMMANDE ET MONTAGE DE PÉDALE (ASS)	644

* TRADUCTION NON DISPONIBLE AU MOMENT DE LA PUBLICATION

INDEX

Désignation	Page
COMMANDE HYDRAULIQUE DE BOÎTE (ASS)	273
COMMANDE HYDRAULIQUE PILOTE (ASS)	653
COMMANDE NON PROGRAMMEE (ASS) (MACHINE)	257
COMPARTIMENT DE BATTERIE (ASS)	329
	330
COMPOSANTS ÉLECTRONIQUES DE LA MACHINE (VERSION)	168
COMPRESSEUR DE REFRIGERANT (ASS)	635
	636
CONDENSATEUR ET MONTAGE (RÉFRIGÉRANT)	638
	639
CONDENSEUR DE RÉFRIGÉRANT	641
CONNEXION (ASS)	495
CONSOLE DE FAISCEAU (ENS)	257
CONTACTEUR DE BOUTON-POUSSOIR (ASS)	242
CONTACTEUR DE DÉMARRAGE À CLÉ (ENS) (ALLUMAGE)	667
	670
CONTACTEUR MAGNETIQUE (ASS)	240
	241
CONTREPOIDS (ASS)	334
CONVERTISSEUR DE COUPLE (ASS)	315
	317
	319
COUDE D'ADMISSION D'AIR (ASS)	112
COURONNE ET ENGRENAGES DE TRANSFERT (ASS)	288
COURROIE MULTIPLE (ALTERNATEUR)	57
COURROIE TRAPEZOIDALE (COMPRESSEUR DE RÉFRIGÉRANT)	636
COUVERCLE DE CARTER AV (ASS)	17
	18
COUVERCLE DE LA CONSOLE (ASS)	656
	657
COUVERCLE INFÉRIEUR-DOSSIER (ASS)	705
	706
	707
CULASSE (ASS)	27
	28
CULASSE (ENS)	25
CULBUTERIE (ASS)	65
	66

D

Désignation	Page
DEFLECTEUR D'ECHAPPEMENT (ASS)	126
DEFLECTEUR PARE-SABLE (ASS)	348
DÉMARREUR ÉLECTRIQUE (ASS)	234
	235
	236
DÉMARREUR ÉLECTRIQUE (ASS)	232
DENT DE RIPPER (ASS)	619
	620
	621
	622
DIODE (ROUGE, 24-VOLTS) (SYSTÈME DE SÉCURITÉ DE LA MACHINE)	180
DIODE (24 VOLTS)	491
DISJONCTEUR DE SECURITE (ENS) (FREIN DE STATIONNEMENT)	647
DISJONCTEUR DE SECURITE (ENS) (PÉDALE DE FREIN DE MANOEUVRE)	708
DISJONCTEUR (ENS) (15A) (MOTEUR DE SOUFFLANTE DE VENTILATEUR)	211
DISPOSITIF DE VIDANGE RAPIDE D'HUILE (ASS)	82
DISPOSITIF D'EVACUATION DES VAPEURS DE CARTER	72
	73
DISTRIBUTEUR - 2 VOIES (VERSION)	482
DISTRIBUTEUR (ASS)	538
	541
	543
	545
	547
	549
DISTRIBUTEUR DE FREIN (ASS)	452
	454
DISTRIBUTEUR DE POMPE (ASS)	457
	563
DISTRIBUTEUR DE POMPE (ASS) (COMPENSATEUR DE PRESSION) (TÉTE DE POMPE)	436
DISTRIBUTEUR DOUBLE ÉLÉMENT (ASS)	531
DISTRIBUTEUR ET MONTAGE (ASS)	528
DISTRIBUTEUR TRIPLE ÉLÉMENT (ASS)	533
	535

E

Désignation	Page
EAU DES CHEMISES - RECHAUFFEUR (ASS)	173
ÉCLAIRAGE - PROJECTEURS (ASS)	186
	187
ÉCLAIRAGE - PROJECTEURS (ASS)	189
	192
	195
	198
	202
ÉCRAN DU MONITEUR (ASS)	659
ÉCRAN DU MONITEUR (ASS) (CD610)	659
ÉCRAN DU MONITEUR (ASS) (CD700)	659

* TRADUCTION NON DISPONIBLE AU MOMENT DE LA PUBLICATION

INDEX

Désignation	Page
ÉCRAN (ENS) (GAVAGE DU CONVERTISSEUR DE COUPLE)	291
ÉCRAN (ENS) (RÉSERVOIR HYDRAULIQUE)	523
ÉCRAN MAGNÉTIQUE (ASS)	312
ÉCRAN MAGNÉTIQUE (ASS) (BOÎTE DE VITESSES)	312
ÉCRAN (RÉSERVOIR HYDRAULIQUE)	523
ÉCRAN THERMIQUE (ASS)	127
ÉJECTEUR AUTOMATIQUE DE POUSSIÈRE (ASS)	111
ÉLECTRONIQUE - COMMUNICATION (ASS)	169
ÉLECTRONIQUE DE TRANSMISSION (ASS)	170
ÉLECTRONIQUE-MONITEUR (ASS)	170
ÉLÉMENT DE FILTRE À AIR (ENS) (PRINCIPAL)	109
ÉLÉMENT DE FILTRE À AIR (ENS) (SECONDAIRE)	109
ÉLÉMENT DE FILTRE À HUILE (ENS) (EFFICACITÉ AVANCÉE)	523
ÉLÉMENT DE FILTRE À HUILE (ENS) (LIQUIDE RÉSISTANT AU FEU)	523
ÉLÉMENT DE FILTRE À HUILE (ENS) (ULTRA-GRANDE EFFICACITÉ)	291 523
ÉLÉMENT DE FILTRE À HUILE (ENS) (ULTRA-GRANDE EFFICACITÉ)	283
ÉLÉMENT (RENIFLARD) (CARTER)	19
EMBOUT ET LAME DE COUPE (ASS)	606 607
EMBRAYAGE DE VENTILATEUR (ASS)	34
ENTRAÎNEMENT DE POMPE (ASS)	282
ENTRAÎNEMENT DE VENTILATEUR (ASS)	36
ENTRAÎNEMENT DE VENTILATEUR (ASS)	33 34
ENTRAINEMENT DE VENTILATEUR (VERSION)	32
ENTRETIEN - COMMUNICATION (ASS) (PRODUCT LINK 300)	169
ENTRETIEN DE LA TRANSMISSION (ASS)	170
ENTRETIEN DU MONITEUR (ASS)	170
ÉPURATEUR (ENS)	125
ESSIEU (ASS)	262
ESSUIE-GLACE (ASS)	758
ETRIER (ASS)	67

F

Désignation	Page
FAISCEAU-BOÎTE DE TRANSMISSION	156
FAISCEAU DE CABLES - CAPTEUR (ENS)	34 252 485
FAISCEAU DE CABLES - CAPTEUR (ENS)	273
FAISCEAU DE CABLES DE LA PLATE-FORME	251
FAISCEAU DE CABLES (ENS)	156 654
FAISCEAU DE CABLES (ENS) (CAVALIER)	251 252
FAISCEAU DE CABLES (ENS) (COMPRESSEUR DE CLIMATISEUR)	679 682
FAISCEAU DE CABLES (ENS) (LANCEMENT DU MOTEUR SANS INJECTION)	246
FAISCEAU DE CABLES (ENS) (LAVE-VITRE)	738
FAISCEAU DE CABLES (ENS) (PRESSION DU CARBURANT)	139
FAISCEAU DE CABLES (ENS) (ROPS)	682
FAISCEAU DE CABLES (ENS) (SYSTÈME DE SÉCURITÉ DE LA MACHINE)	180
FAISCEAU DE CHÂSSIS (ENS)	155 156 256
FAISCEAU DE CHAUFFAGE ET CLIMATISATION (CLIMATISEUR)	641
FAISCEAU DE CONTACTEUR (ENS) (FREIN DE MANOEUVRE)	708
FAISCEAU DE MOTEUR (ENS)	628
FAISCEAU DE RADIO (ENS) (COMMANDE DE PENTE)	251
FAISCEAU DE RADIO (ENS) (LIAISON DE PRODUIT)	178
FAISCEAU DE REFROIDISSEUR D'ADMISSION (ENS)	1 2
FAISCEAU DE REFROIDISSEUR D'ADMISSION (ENS)	108
FAISCEAU DE SOLÉNOÏDE (ENS)	156
FAISCEAU DE SOLÉNOÏDE (ENS) (TREUIL ARRIÈRE)	608
FAISCEAU DE SOUPAPE (ENS)	491
FAISCEAU DE SOUPAPE (ENS) (COMPRESSEUR PNEUMATIQUE DE SIÈGE)	736
FAISCEAU D'ÉCLAIRAGE AVANT (ENS)	202
FAISCEAU D'ÉCLAIRAGE AVANT (ENS) (VÉRIN)	189
FAISCEAU D'ÉCLAIRAGE (ENS)	252
FAISCEAU D'ÉCLAIRAGE (ENS)	202
FAISCEAU D'ÉCLAIRAGE (ENS) (ARRIÈRE)	195
FAISCEAU D'ÉCLAIRAGE (ENS) (ARRIÈRE) (PROJECTEUR LATÉRAL)	198
FAISCEAU D'ÉCLAIRAGE (ENS) (ARRIÈRE) (ROPS)	192
FAISCEAU D'ÉCLAIRAGE (ENS) (AVANT)	195

* TRADUCTION NON DISPONIBLE AU MOMENT DE LA PUBLICATION

INDEX

Désignation	Page
FAISCEAU D'ÉCLAIRAGE (ENS) (AVANT) (VÉRIN)	192
FAISCEAU D'ÉCLAIRAGE (ENS) (PLAFONNIER) (ARRIÈRE)	187
FAISCEAU D'ÉCLAIRAGE (ENS) (PROJECTEURS AVANT)	198
FAISCEAU D'ÉCLAIRAGE (ENS) (ROPS)	189
FAISCEAU DU REFROIDISSEUR D'HUILE (ENS) (BOÎTE DE VITESSES)	275
FAISCEAU DU REFROIDISSEUR D'HUILE (ENS) (MOTEUR)	88
FENETRE COULISSANTE (ASS)	757
FILTRE - SÉPARATEUR D'EAU ET DE CARBURANT (ENS) (PRINCIPAL)	134
FILTRE A AIR (ASS)	109
	110
FILTRE À AIR (STANDARD) (AIR FRAIS)	714
FILTRE À CARBURANT	146
FILTRE A CARBURANT (ENS) (EFFICACITÉ AVANCÉE)	132
FILTRE A HUILE (ASS)	283
	435
FILTRE À HUILE (ENS) (LIQUIDE RÉSISTANT AU FEU)	435
FILTRE À HUILE (ENS) (REMPLISSAGE DE RÉSERVOIR HYDRAULIQUE)	523
FILTRE À HUILE (ENS) (ULTRA-GRANDE EFFICACITÉ)	435
FILTRE À HUILE MOTEUR (ASS)	4
	69
FILTRE A HUILE MOTEUR (ENS) (EFFICACITÉ AVANCÉE)	69
FILTRE DE SÉPARATEUR D'EAU ET DE CARBURANT (ASS)	134
FILTRE (ENS) (RECIRCULATION D'AIR)	714
FILTRE ET CANALISATIONS DE CARBURANT (ASS)	132
FIXATION DE SUPPORT DE CACHE-SOUPAPES (ASS)	41
FLEXIBLE DE RADIATEUR	93
FREIN ET ENTRAÎNEMENT DE DIFFÉRENTIEL (ASS)	264
FREIN ET TRAINS PLANÉTAIRES (ASS)	268
FUSIBLE (10A)	211
FUSIBLE (15A)	211
FUSIBLE (175A)	211
FUSIBLE (175A) (ALTERNATEUR PRINCIPAL)	257
FUSIBLE (20A)	211

G

Désignation	Page
GALET A BOUDIN DOUBLE (ASS)	411
	412
	413
	414
	415
GALET A BOUDIN SIMPLE (ASS)	416
	417
	418
	419
	420
	421
GALET INFÉRIEUR (VERSION)	409
GALET SUPERIEUR (ASS)	410
GARDE-BOUE (ASS)	345
	346
	347
GRILLE DE PROTECTION (ASS)	720
	721
GRILLE DE RADIATEUR (ASS)	349
GROUPE DE MOTEUR A PISTONS	512
GROUPE DE ROTATION DE MOTEUR	520
GROUPE DE ROTATION DE POMPE	450
	522
GUIDE PROTECTEUR DE CHAÎNE (ASS)	385
	386

H

Désignation	Page
HUILE MOTEUR - CARTER (ASS)	53

I

Désignation	Page
INDICATEUR (ENS) (PRESSION D'HUILE MOTEUR)	251
INDICATEUR (ENS) (TÉMOIN D'ACTIONNEMENT)	670
INDICATEUR (ENS) (TÉMOIN D'ACTIONNEMENT)	667
INJECTEUR DE CARBURANT (ASS)	135
INJECTEURS-POMPES HYDRAULIQUES (ENS)	144
INTERRUPTEUR - BOUTON-POUSSOIR (ENS) (CHANG. DE VITESSE)	647
INTERRUPTEUR - BOUTON-POUSSOIR (ENS) (MODE BIDIRECTIONNEL)	667
	670
INTERRUPTEUR - BOUTON-POUSSOIR (ENS) (PASSAGE DE VITESSE)	647
INTERRUPTEUR - BOUTON-POUSSOIR (ENS) (RÉTROGRADAGE AUTOMATIQUE)	667
	670
INTERRUPTEUR - BOUTON-POUSSOIR (ENS) (SÉLECTEUR DE CONDUCTEUR)	667

* TRADUCTION NON DISPONIBLE AU MOMENT DE LA PUBLICATION

INDEX

Désignation	Page
INTERRUPTEUR - BOUTON-POUSSOIR (ENS) (SÉLECTEUR DE CONDUCTEUR)	670
INTERRUPTEUR - DÉRIVATION (ASS)	238
INTERRUPTEUR À BASCULE (ENS) (PROJECTEUR POUR ENTRETIEN DE MOTEUR)	246
INTERRUPTEUR À BASCULE (ENS) (*UNDER HOOD SERVICE LIGHT)	187 189 192 195 198 202
INTERRUPTEUR BALANCIER (ENS) (BLOCAGE HYDRAULIQUE)	256
INTERRUPTEUR BALANCIER (ENS) (CLIMATISEUR)	668
INTERRUPTEUR BALANCIER (ENS) (FREIN DE STATIONNEMENT)	651
INTERRUPTEUR BALANCIER (ENS) (PROGRAMME DE VITESSE MULTIPLE)	257
INTERRUPTEUR BALANCIER (ENS) (24V, ALLUMÉ) (PROJECTEURS ARRIÈRE)	187 189 198
INTERRUPTEUR BALANCIER (ENS) (24V, ALLUMÉ) (PROJECTEURS ARRIÈRE)	192 195
INTERRUPTEUR BALANCIER (ENS) (24V, ALLUMÉ) (PROJECTEURS ARRIÈRE)	202
INTERRUPTEUR BALANCIER (ENS) (24V, ÉTANCHE, ALLUMÉ) (ACCÉLÉRATEUR)	256
INTERRUPTEUR ROTATIF (ENS) (ARRIÈRE)	677
INTERRUPTEUR ROTATIF (ENS) (AVANT)	677
INTERRUPTEUR ROTATIF (ENS) (ÉCLAIRAGE)	667 670
INTERRUPTEUR ROTATIF (ENS) (PORTE GAUCHE)	677
INTERRUPTEUR ROTATIF (ENS) (PORTIERE DROITE)	677
INTERRUPTEUR ROTATIF (ENS) (VITESSE DU VENTILATEUR)	667

J

Désignation	Page
JAUGE DE NIVEAU D'HUILE (ENS) (CARTER DE BOITE DE VITESSES)	291
JAUGE D'HUILE MOTEUR (BAIONNETTE) (ASS)	74
JEU DE COURROIES TRAPEZOIDALES (COMPREND 3 COURROIES) (VENTILATEUR)	57
JEU DE COURROIES TRAPEZOIDALES (ENTRAÎNEMENT DE VENTILATEUR)	34
JOINT DE CACHE-SOUPAPES	19
JOINT DE VILEBREQUIN (ASS)	61 62
JOINT DUO-CONE (ASS)	284 286
JOINT PLAT	524
JOINT PLAT (BOÎTIER DE RÉGULATEUR D'EAU)	92
JOINT UNIVERSEL (ASS)	322

K

Désignation	Page
KIT DE BLOC COULISSANT (SIEGE A SUSPENSION)	731 732 733
KIT DE BORNE (ALTERNATEUR)	149
KIT DE BOUGIE (6 BROCHES)	166
KIT DE BOULONNERIE (ALTERNATEUR)	149
KIT DE BOUTON (REGLAGE DE HAUTEUR) (SIEGE A SUSPENSION)	663
KIT DE COUSSINET (ALTERNATEUR)	149
KIT DE COUSSINET (SIEGE A SUSPENSION)	664
KIT DE JOINTS (CLAPET DE DÉCHARGE)	570
KIT DE JOINTS (CLAPET DE DÉCHARGE) (CLAPET DE DÉCHARGE)	461
KIT DE JOINTS (ÉLECTROVANNE)	462
KIT DE JOINTS (VANNE-PILOTE) (COMMANDE D'ÉQUIPEMENT)	572
KIT DE PARE-CHOCS (RÉGLAGE DU POIDS) (SIEGE A SUSPENSION)	664
KIT DE POUSSOIR (SIEGE A SUSPENSION)	664
KIT DE PRÉFILTRE (TURBINE)	122 123
KIT DE RESSORTS (REGLAGE DE HAUTEUR) (SIEGE A SUSPENSION)	663
KIT DE RESSORTS (SIEGE A SUSPENSION)	663
KIT DE TAMIS (PRÉFILTRE)	123
KIT D'INDICATEUR (RÉGLAGE DU POIDS) (SIEGE A SUSPENSION)	664

L

Désignation	Page
LAME À ORIENTATION (ASS)	603
LAME DE BULLDOZER SEMI-UNIVERSELLE (VERSION)	581

* TRADUCTION NON DISPONIBLE AU MOMENT DE LA PUBLICATION

INDEX

Désignation	Page
	582
	583
	584
LAME DE COUPE SEMI-UNIVERSELLE (ASS)	594
	595
	596
	597
LAME ORIENTABLE (ASS)	593
LAME SEMI-UNIVERSELLE (ASS)	604
	605
LAME SEMI-UNIVERSELLE (ENS)	598
	600
	601
	602
LAMPE - PHARE (ASS)	183
LAMPE - PHARE (ASS)	184
	185
LAMPE DE TÉMOIN (ENS) (TÉMOIN D'ACTIONNEMENT)	256
LAMPE HALOGÈNE (24V, 65W)	183
	184
	185
LAVE-GLACE - VITRE (ASS)	741
LOGICIEL - ÉLECTROMODULE (ASS)	213
LOGICIEL - ÉLECTROMODULE (ASS)	659
LOGICIEL (ASS) (MÂT)	612
LOGICIEL (CAPTEUR D'ANGLE)	172
LOGICIEL DE COMMUNICATION (ASS) (PRODUCT LINK 121SR)	213
LOGICIEL (RÉCEPTEUR)	213
	214
LOGICIEL (RÉCEPTEUR, CHARGEUSE)	213
	214
LOQUET TOURNANT ARRIÈRE (ASS)	423

M

Désignation	Page
MAILLON DE CHAINE (ENS)	395
	396
MANOCONTACT (ENS) (COMPRESSEUR, CÔTÉ ÉLEVÉ)	679
	682
MANOCONTACT (ENS) (DÉRIVATION DU FILTRE À HUILE)	435
MÂT (ASS)	612
MECANISME AMORTISSEUR ET REGLAGE DE CHAINES (ASS)	424
MECANISME DE COMMANDE DE POMPE (ASS)	434
MODULE - QUATRE INSTRUMENTS (ASS)	690
MODULE D'AFFICHAGE (ASS) (SYSTÈME DE VISION DE L'AIRE DE TRAVAIL)	167
MODULE D'ALIMENTATION (ENS)	207
MODULE-INTERFACE (ASS) (CLAVETTE)	180
MONITEUR (ENS)	691
MONTAGE-ANTENNE (ASS)	696
MONTAGE-COMMUNICATION (ASS)	176
	178
MONTAGE D'ALTERNATEUR (ASS)	50
MONTAGE DE CABINE (ASS)	697
MONTAGE DE COMMANDE DE PENTE (ASS)	206
	207
	208
MONTAGE DE CONNECTEUR (ASS)	205
MONTAGE DE GALET SUPÉRIEUR	406
	407
MONTAGE DE GROUPE DE COMMANDE	698
MONTAGE DE L'AFFICHAGE DE LA CAMÉRA (ASS) (SYSTÈME DE VISION DE L'AIRE DE TRAVAIL)	167
MONTAGE DE MONITEUR (ASS)	699
	700
MONTAGE DE MOTEUR (ASS)	51
MONTAGE DE MOTEUR (VERSION)	14
MONTAGE DE PLATE-FORME (ASS)	701
MONTAGE DE RADIO (ASS)	666
MONTAGE DE RADIO (ASS)	703
MONTAGE DE RÉCEPTEUR (ASS)	209
MONTAGE DE RÉDUCTEURS (ASS)	299
MONTAGE DE RIPPER (ASS)	614
MONTAGE DE VÉRIN (ASS)	513
MONTAGE D'ENTRAÎNEMENT DE VENTILATEUR (ASS)	52
MONTAGE DU MAT (ASS)	612
	613
MONTAGE DU TOIT ROPS (ASS)	704
MONTAGE-SÉCURITÉ (ASS)	180
MOTEUR - PARTIE CENTRALE (VERSION)	9
	10
	11
	12
	13
MOTEUR D'ESSUIE-GLACE (ASS)	692
	693
	694
	695
MOTEUR ELECTRIQUE (ASS) (SOUFFLANTE DE CONDENSEUR)	641
MOTEUR (VERSION)	4
MOTEUR (VERSION)	5
	6
	7
	8

* TRADUCTION NON DISPONIBLE AU MOMENT DE LA PUBLICATION

INDEX

Désignation	Page
O	
OEILLETONS DE LEVAGE MOTEUR (ASS)	49
P	
PALONNIER - GROUPE DE COMMANDE (ASS)	650
PANNEAU - FUSIBLES (ASS)	211
PANNEAU DE FAISCEAU (ENS)	667
PANNEAU DE FAISCEAU (ENS)	211
PANNEAU DE FAISCEAU (ENS)	670
PÉDALE DE RÉGULATEUR ET DE FREIN (ASS)	708
PIGNON AR (ASS)	44
PIGNONNERIE AV (ASS)	43
PISTON ET BIELLE (ASS)	54
PIVOT D'ESSUIE-GLACE (ASS)	760
PLAFONNIER (ASS)	182
PLAFONNIER (ASS) (24 VOLTS)	677
PLAQUE - AVERTISSEMENT (RESSORT AMORTISSEUR)	374 378 380
PLAQUE - AVERTISSEMENT (RESSORT AMORTISSEUR)	376 432 433
PLAQUE - AVERTISSEMENT (VÉRIN HAUTE PRESSION)	374 376 378 380 432 433
PLAQUE DE NUMÉRO DE SÉRIE	584
PLAQUE DE NUMÉRO DE SÉRIE (BOITE DE VITESSE)	270
PLAQUE DE NUMÉRO DE SÉRIE (BULLDOZER)	577 578 579 580 581 582 583
PLAQUE DE NUMÉRO DE SÉRIE (RIPPER)	616
PLAQUE DE RADIATEUR (ASS)	366
PLAQUE D'INSTRUCTIONS (CLIMATISEUR)	626 763 765
PLAQUE (IDENTIFICATION) (MACHINE)	332
PLAQUE (IDENTIFICATION) (ORDRE) (CABINE)	631
PLAQUE SIGNALÉTIQUE	588 590
PLAQUE SIGNALÉTIQUE (ASS)	761 762
PLAQUE SIGNALÉTIQUE (REMARQUE) (RADIO)	666
PLAQUES SIGNALETIQUES ET AUTOCOLLANTS (ASS)	763 765
PLATE-FORME (ASS)	710
PLATE-FORME DE CABINE	711
POIGNÉE	660 661
POMPE A EAU (ASS)	97 98 99
POMPE A ENGRENAGES (ASS)	308 310
POMPE A HUILE MOTEUR (ASS)	84
POMPE A PISTONS (ASS)	448 516 518
POMPE D'ALIMENTATION EN CARBURANT (ASS)	144
POMPE DE DIRECTION ET MONTAGE (ASS)	446
POMPE DE GAVAGE (ASS)	447
POMPE D'EQUIPEMENT ET MONTAGE (ASS)	515
POMPE D'INJECTEURS-POMPES HYDRAU. ET MONTAGE	141
POMPE D'INJECTION DE CARBURANT (ASS)	142 143
POSE DE LA CAMÉRA (ASS)	174
POULIE - ENTRAÎNEMENT D'ALTERNA. ET DE VENTI.	57
PREFILTRE (ASS)	123
PREFILTRE (ASS)	122
PREFILTRE (VERSION)	120 121
PROTECTEUR DE RÉDUCTEURS (VERSION)	350
PROTECTION DE PRÉFILTRE (ASS)	113
PROTECTION DE ROUE LIBRE (VERSION)	382
PROTECTION DU RÉSERVOIR DE CARBURANT (ASS)	357 358 359
PROTEGE-GALETS (ASS)	387 389
PROTÈGE-RADIATEUR (ASS)	360 362

* TRADUCTION NON DISPONIBLE AU MOMENT DE LA PUBLICATION

INDEX

Désignation	Page
PUISSANCE DE FAISCEAU (ENS) (CONVERTISSEUR ÉLECTRIQUE)	166

R

RACCORD (ASS)	73
RACCORD ET PROTECTION (ASS)	277
RADIATEUR (ASS)	101, 103
RADIATEUR-CORPS (ENS)	100
RADIATEUR (VERSION)	100
RADIO -COMMUNICATION (ASS)	213
RALLONGE DU DOSSIER DE SIEGE (TOILE)	724
RALLONGE DU DOSSIER DE SIEGE (VINYLE) (SIÈGE)	727
RÉCEPTEUR DE SATELLITE (ASS)	213, 214
RÉCEPTEUR-DÉSHYDRATEUR (ASS) (RÉFRIGÉRANT)	679, 682
RÉCEPTEUR LASER (ASS)	213
RÉCEPTEUR LASER (ASS) (LR410)	213
REDUCTEUR MARIN - MONTAGE (ASS)	300
RÉDUCTEURS (ASS)	284, 286
REFROIDISSEUR D'ADMISSION D'AIR (ASS)	108
REFROIDISSEUR D'HUILE DE BOÎTE (ASS)	275
REFROIDISSEUR D'HUILE HYDRAULIQUE (ASS)	469
REFROIDISSEUR D'HUILE MOTEUR (ASS)	88
REGARD DE NIVEAU (RÉSERVOIR D'EAU)	106
REGARD DE NIVEAU (RÉSERVOIR HYDRAULIQUE)	523
REGLAGE DE SIEGE (ASS)	623
RÉGLAGE ÉLECTRO. DE PUISSANCE DU MOTEUR	9
REGULATEUR DE LA TENSION (ENS) (24 VOLTS)	149
REGULATEUR DE PRESSION DE CARBURANT (ASS)	145
RELAIS (ENS) (24 VOLTS) (LONGITUDINAL, TRANSVERSAL)	251
RELAIS (ENS) (24 VOLTS) (MOTEUR SOUFFLANT DE CONDENSATEUR)	641
RELAIS (ENS) (24 VOLTS) (TREUIL)	491
RENIFLARD (ENS) (BOÎTE DE VITESSES)	291
RENIFLARD (ENS) (VILEBREQUIN)	16, 19
RÉSERVOIR - LAVE-GLACE (ASS)	738
RÉSERVOIR - LAVE-GLACE (ASS)	740
RÉSERVOIR DE CARBURANT (ASS)	146
RÉSERVOIR DU LIQUIDE DE REFROIDISSEMENT (ASS)	104, 105, 106
RÉSERVOIR HYDRAULIQUE ET FILTRE (ASS)	523
RÉSERVOIR HYDRAULIQUE ET MONTAGE (ASS)	526
RÉTROVISEUR (ASS)	688, 689
RIPPER (ASS)	617
RIPPER (VERSION)	616
ROBINET DE BATTERIE (ASS)	239
ROBINET DE VIDANGE (ENS) (ÉCOLOGIE)	332
ROBINET-ÉCHANTILLON DE LIQUIDE (ENS)	486
ROBINET-PRÉLÈVEMENT D'ÉCHANTILLON DE LIQUIDE (ASS)	85
ROTATION DE LA ROUE DU VENTILATEUR SOUFFLANT (COMMANDE DE BULLDOZER)	764, 766
ROTATION DE LA ROUE DU VENTILATEUR SOUFFLANT (COMMANDE DE RIPPER)	467
ROTATION DE LA ROUE DU VENTILATEUR SOUFFLANT (COUPE-BATTERIE)	764, 765
ROTATION DE LA ROUE DU VENTILATEUR SOUFFLANT (RÉGLAGE DU SIÈGE)	734, 736
ROUE AV - CHAINES (ASS)	393, 394
ROUE AV (ASS)	390, 391, 392
ROUE AV DE SCRAPER (ASS)	422
ROUE LIBRE DE PROTECTION ET DÉCAPEUSE (ASS)	350

S

SEGMENT DE BARBOTIN (ASS)	313
SIÈGE - COMPRESSEUR D'AIR (ASS)	736
SIÈGE - COMPRESSEUR D'AIR (ASS)	624, 625
SIÈGE (ASS)	722, 724, 725, 727, 728, 729, 730
SIÈGE AVEC SUSPENSION (ASS)	731, 736
SIÈGE AVEC SUSPENSION (ASS)	732, 733

* TRADUCTION NON DISPONIBLE AU MOMENT DE LA PUBLICATION

INDEX

Désignation	Page
	734
SIÈGE INCLINABLE (ASS)	716
SILENCIEUX (ASS)	119
SOLÉNOÏDE (ENS) (24 VOLTS) (DÉMARREUR)	232
SONDE - CIRCUIT DE CARBURANT	216
	217
SONDE - CIRCUIT DE CARBURANT (COMMANDE DE DIRECTION)	647
SONDE - CIRCUIT DE CARBURANT (PÉDALE DE DÉCÉLÉRATEUR)	708
SONDE - CIRCUIT DE CARBURANT (ROTATIF) (PÉDALE DE FREIN DE MANOEUVRE)	708
SONDE - NIVEAU DE CARBURANT (ENS)	146
SOUPAPE - CARTOUCHE PILOTE (ASS)	560
	561
SOUPAPE - SOLÉNOÏDE (ASS)	462
	463
	573
	574
SOUPAPE - SOLÉNOÏDE (ASS) (BLOCAGE HYDRAULIQUE)	527
SOUPAPE - SOLÉNOÏDE (ASS) (BLOCAGE HYDRAULIQUE)	509
SOUPAPE - SOLÉNOÏDE (ASS) (COMMANDE DE LAME)	527
SOUPAPE - SOLÉNOÏDE (ASS) (FREIN AUXILIAIRE)	443
SOUPAPE - SOLÉNOÏDE (ASS) (FREIN SECONDAIRE, STATIONNEMENT)	445
SOUPAPE - SOLÉNOÏDE (ASS) (TREUIL)	608
SOUPAPE D'ABAISSEMENT RAPIDE (ASS)	564
	565
SOUPAPE DE BULLDOZER ET MONTAGE (ASS)	527
SOUPAPE DE DÉMARRAGE À L'ÉTHER (ASS)	243
SOUPAPE DE DÉRIVATION (ASS)	456
SOUPAPE DE MODULATION (ASS)	86
	323
SOUPAPE DE MODULATION (ASS)	87
SOUPAPE ET MONTAGE-COMMANDE D'ÉQUIPEMENT (ASS)	530
SOUPAPE PILOTE (ASS)	552
	554
	556
	558
SOUPAPE RÉDUCTRICE DE PRESSION (ASS)	562
SUPPORT DE FILTRE À HUILE (ASS)	263
SUPPORT DE MOTEUR (ASS)	63
SURPRESSEUR (ASS)	714
SUSPENSION DE SIEGE - CARTER (ASS)	663

T

Désignation	Page
TABLEAU DE BORD (ASS)	667
	670
TAMIS D'ASPIRATION (BOÎTE DE VITESSES)	312
TAMIS D'ASPIRATION (REPRISE DE BOÎTE)	270
TAPIS DE PLANCHER	657
	701
TÊTE DE POMPE (ASS)	436
THERMOCONTACT (ENS) (RÉFRIGÉRANT)	627
THERMOSTAT-TEMPÉRATURE D'EAU (92-DEG C) (LIQUIDE DE REFROIDISSEMENT)	92
TIRANT DE BULLDOZER (ASS)	575
TOIT ROPS - OUVERT (ASS)	718
TOIT ROPS (ASS)	717
TOIT (VERSION)	634
TOURILLON DE BULLDOZER (ASS)	592
TOURILLON DE MOTEUR (ASS)	64
TRAIN DE ROULEMENT	431
	432
	433
TRAINS PLANÉTAIRES - CARTER ET PIÈCES	270
TRANSFORMATION ELECTRIQUE (ASS)	166
TRANSMISSION (VERSION)	307
TRAVERSE PIVOT (ASS)	408
TURBOCOMPRESSEUR (ASS)	128
	129
	130
	131
TYPE LÈVRE À JOINT (RÉGULATEUR DE TEMPÉRATURE D'EAU)	92

V

Désignation	Page
VANNE DE RINÇAGE (ASS)	520
VANNE PILOTE (ASS)	571
	572
VENTILATEUR - ÉJECTEUR (VERSION)	89
VENTILATEUR A PALES RÉVERSIBLES (ASS)	91
VENTILATEUR SOUFFLANT (ASS)	90
VENTILATEUR SOUFFLANT DE CABINE (ASS)	628
VÉRIN DE LEVAGE DE LAME DE BULLDOZER (ASS)	474
VERIN DE LEVAGE DE RIPPER (ASS)	476
VÉRIN DE LEVAGE ET CANALISATIONS (ASS)	470
	472
VÉRIN D'INCLINAISON (ASS)	478
	480
VERROU (ASS)	365

* TRADUCTION NON DISPONIBLE AU MOMENT DE LA PUBLICATION

INDEX

Désignation	Page	Désignation	Page
VERROUILLAGE DE VÉRIN (ASS)	654		
VERSION DE CHASSIS	1		
VERSION DE COMMANDE DE PENTE-LASER	171		
VERSION DE COMMANDE DE PENTE-SATELLITE	172		
VERSION DE COMMANDE DE PROFIL LONGITUDINAL	171		
VERSION DE COMMANDE D'ÉQUIPEMENT HYDRAULIQUE	467		
	468		
VERSION DE GUIDAGE DE TRAIN DE ROULEMENT	390		
VERSION DE TRANSFORMATION-ÉCRAN THERMIQUE	1		
	2		
VIDANGE-ÉCOLOGIE (ASS)	279		
	280		
VIDANGE-HUILE DE MOTEUR (ASS)	31		
VILEBREQUIN - POULIE (ASS)	56		
VILEBREQUIN (ASS)	20		
VITRE DE CABINE (ASS)	743		
	744		
	745		
	746		
	747		
	748		
	749		
	750		
	751		
	753		
	754		
	756		
VITRE DE CABINE (ASS) (ARRIÈRE)	744		
VITRE DE CABINE (ASS) (ARRIÈRE)	757		
VITRE DE CABINE (ASS) (DROITE)	745		
VITRE DE CABINE (ASS) (GAUCHE)	746		
VITRE DE CABINE (COULISSANTE, TINTÉE)	754		
VITRE (TEINTÉ)	743		
	744		
	745		
	746		
VOLANT MOTEUR (ASS)	42		
VUE DU MODÈLE	3		

* TRADUCTION NON DISPONIBLE AU MOMENT DE LA PUBLICATION

INDICE

Nombre	Página

A

ACONDICIONADOR DE AIRE (CONFIG) 626
ACONDICIONADOR DE AIRE (GR) 627
ACOPLAMIENTO DE BOMBA (GR) 278
ACOPLAMIENTO Y PROTECCION (GR) 277
ACTIVADOR DE LA BOMBA (GR) 434
ACUMULADOR DE ACEITE PILOTO (GR) 464
465
ACUMULADOR DE REFRIGERANTE 679
682
ACUMULADOR (GR) 260
261
ADAPTADOR DE MOTOR (GR) 466
AGUA DE LAS CAMISAS - CALENTADOR DEL (GR) 173
AIRE - TUBERÍAS DE (GR) 114
115
AJUSTADOR DEL ASIENTO (GR) 623
ALARMA (GR) 148
ALFOMBRILLA DEL PISO 657
701
AMORTIGUADOR DE VIBRACIONES (GR) 30
ANTEFILTRO (CONFIG) 120
121
ANTEFILTRO (CONJ) 125
ANTEFILTRO (GR) 123
ANTEFILTRO (GR) 122
ÁRBOL DE LEVAS (GR) 15
ASIENTO CON SUSPENSIÓN (GR) 736
ASIENTO CON SUSPENSIÓN (GR) 734
ASIENTO (GR) 722
724
725
727
728
729
730
AUXILIAR DE ARRANQUE CON ÉTER (GR) 230

B

BALANCÍN (GR) 59
60
BARRA COMPENSADORA (GR) 369
371
BARRA DE TIRO (GR) 336
BARRA DE TIRO (GR) 335
BARRA LIMPIADORA (GR) 327
BARRA PIVOTE (GR) 408
BASTIDOR EN C (CONJ) 585
BASTIDOR EN C (GR) 586
587
BASTIDOR TELESCÓPICO DEL RESORTE TENSOR (GR) 376
378
380
BASTIDOR TELESCÓPICO DEL RESORTE TENSOR (GR) 374
BATERÍA (GR) 161
BATERÍA (GR) (12 VOLTIOS, LIBRE DE MANTENIMIENTO, HUMEDO) 156
BATERÍA Y CABLES (GR) 155
BATERÍA (12-VOLTIOS, LIBRE DE MANTENIMIENTO) 161
BLOQUE DESLIZANTE-JUEGO (ASIENTO DE SUSPENSION) 731
732
733
BLOQUE MOTOR (CONJ) 21
BLOQUE MOTOR (GR) 23
24
BOMBA - TUBERÍAS DE (GR) 495
BOMBA DE ACEITE DEL MOTOR (GR) 84
BOMBA DE AGUA (GR) 97
98
99
BOMBA DE CARGA HIDRÁULICA (GR) 447
BOMBA DE DIRECCIÓN Y MONTAJE (GR) 446
BOMBA DE ENGRANAJES (GR) 308
310
BOMBA DE IMPLEMENTOS Y MONTAJE (GR) 515
BOMBA DE INYECCIÓN DE COMBUSTIBLE (GR) 142
143
BOMBA DE PISTONES (GR) 448
516
518
BOMBA DE TRANSFERENCIA DE COMBUSTIBLE (GR) 144
BOMBA HIDRÁULICA DEL INYECTOR UNITARIO (GR) 144
BOMBA HIDRÁULICA DEL INYECTOR UNITARIO Y MONTAJE 141
BRAZO DE EMPUJE (GR) 588
590

C

CABEZA DE BOMBA (GR) 436
CABINA - MAZO DE CABLES DE LA 741
CABINA - MAZO DE CABLES DE LA (LIMPIAPARABRISAS, ALTAVOZ) 677
CABINA (CONFIG) 629
630

* NO HAY TRADUCCION DISPONIBLE EN EL MOMENTO DE LA IMPRESION

INDICE

Nombre	Página
CABINA (GR)	631
*CABLE AS-COILED	162
CABLE GR-GRADO DE CONTROL	251
CABLES DE LA PLATAFORMA (GR)	256
CABLES DEL CONTROL ELECTRÓNICO (GR)	244
CABLES DEL MOTOR (GR)	246
CADENAS (GR)	426
	427
	428
	429
	430
CAJA DE BATERÍA	329
	330
CAJA DE LA SUSPENSIÓN DEL ASIENTO (GR)	663
CAJA DE LA TRANSMISIÓN (GR)	272
CAJA DE VOLANTE (CONJ)	45
CAJA DELANTERA - TORNILLERÍA DE LA (GR)	39
CAJA DELANTERA (GR)	48
CAJA Y BASTIDOR (GR)	332
CAJA Y PIEZAS DE LOS PLANETARIOS	270
CALCOMANÍA DE ADVERTENCIA (ACUMULADOR)	464
	465
CALCOMANÍA DE ADVERTENCIA (ALTA PRESIÓN, LEER OMM, INTL)	763
CALCOMANÍA DE ADVERTENCIA (ASIENTO AJUSTABLE)	734
	736
CALCOMANÍA DE ADVERTENCIA (CONTROL DE DESGARRADOR)	467
CALCOMANÍA DE ADVERTENCIA (CONTROL DE HOJA TOPADORA)	764
	766
CALCOMANÍA DE ADVERTENCIA (DESCARGA ELECTRICA)	211
CALCOMANÍA DE ADVERTENCIA (ESTRUCTURA DE PROTECCIÓN CONTRA VUELCOS , ESTRUCTURA DE PROTECCIÓN CONTRA OBJETOS QUE CAEN)	634
CALCOMANÍA DE ADVERTENCIA (FLUIDO CALIENTE BAJO PRESION)	764
	766
CALCOMANÍA DE ADVERTENCIA (HOJA, NO ESCALAR, LEER OMM)	612
	613
CALCOMANÍA DE ADVERTENCIA (INTERRUPTOR GENERAL)	764
	765
CALCOMANÍA DE ADVERTENCIA (NO SUELDE, NO TALADRE, LEA EL OMM)	764
	766
CALCOMANÍA DE ADVERTENCIA (NO SUELDE, NO TALADRE, LEA EL OMM)	634
CALCOMANÍA DE ADVERTENCIA (PRESIÓN ALTA, LEA EL OMM)	260
	261
CALCOMANÍA DE ADVERTENCIA (*PRODUCT LINK RADIO, U.S.)	178
CALCOMANÍA DE ADVERTENCIA (*PRODUCT LINK RADIO, U.S.)	176
CALCOMANÍA DE ADVERTENCIA (PRODUCTO DE ENLACE DE RADIO, NO NACD)	763
CALCOMANÍA DE ADVERTENCIA (RADIO)	666
CALCOMANÍA DE ADVERTENCIA (RESORTE DE AMORTIGUACION)	374
	376
	378
	380
	432
	433
CALCOMANÍA DE ADVERTENCIA (TRANSMISOR DE LASER)	612
CALCOMANÍA DE IDENTIFICACIÓN (BAJA VELOCIDAD, LUZ DE CABRESTANTE)	468
CALCOMANÍA DE IDENTIFICACIÓN (CALENTADOR DE AGUA)	173
CALCOMANÍA DE IDENTIFICACIÓN (CONTROL DE CABRESTANTE)	468
CALCOMANÍA DE IDENTIFICACIÓN (INTERRUPTOR DE ENCENDIDO)	180
CALCOMANÍA DE IDENTIFICACIÓN (*LIGHTS)	668
CALCOMANÍA DE IDENTIFICACIÓN (LUZ DE ACCION) (TRABA MANUAL)	670
CALCOMANÍA DE IDENTIFICACIÓN (LUZ DE TRABAJ0)	246
CALCOMANÍA DE IDENTIFICACIÓN (LUZ DE TRABAJ0)	187
	190
	193
	196
	198
	203
CALCOMANÍA DE IDENTIFICACIÓN (MONITOR)	671
CALCOMANÍA DE IDENTIFICACIÓN (MONITOR)	668
CALCOMANÍA DE IDENTIFICACIÓN (NOMBRE DE GRUPO) (CONDENSADOR DE REFRIGERANTE)	641
CALCOMANÍA DE IDENTIFICACIÓN (PALANCA UNIVERSAL)	171

* NO HAY TRADUCCION DISPONIBLE EN EL MOMENTO DE LA IMPRESION

INDICE

Nombre	Página
CALCOMANÍA DE IDENTIFICACIÓN (SISTEMA DE SEGURIDAD)	180
CALCOMANÍA DE IDENTIFICACIÓN (TABLERO DE INSTRUMENTOS)	670
	671
CALCOMANÍA DE IDENTIFICACIÓN (TABLERO DE INSTRUMENTOS)	667
CALCOMANÍA DE IDENTIFICACIÓN (*WINDOW WIPER CONTROLS)	677
CALCOMANÍA DE IDENTIFICACIÓN (12 VOLTIOS)	763
	765
CALCOMANIA, DISYUNTOR	211
CALCOMANÍAS Y PLACAS DE IDENTIFICACIÓN (GR)	763
	765
CALEFACCIÓN DE LA CABINA (GR)	662
CAMBIO RÁPIDO DE ACEITE (GR)	82
CÁNCAMOS DE LEVANTAMIENTO DEL MOTOR (GR)	49
CANDADO (GR)	136
	146
	329
	337
	344
	360
	634
CARGA - ALTERNADOR DE (GR)	149
	151
	153
CÁRTER - COLECTOR DEL (GR)	53
CHASIS (CONFIG)	1
CIGÜEÑAL - POLEA DE (GR)	56
CIGÜEÑAL (GR)	20
CILINDRO DE LEVANTAMIENTO - TUBERÍAS DEL (GR)	483
CILINDRO DE LEVANTAMIENTO DE LA HOJA TOPADORA (GR)	474
CILINDRO DE LEVANTAMIENTO DEL DESGARRADOR (GR)	476
CILINDRO DE LEVANTAMIENTO Y TUBERÍAS (GR)	470
	472
CINTURÓN DE SEGURIDAD (GR) (RETRACTIL)	727
CINTURÓN DE SEGURIDAD (GR) (RETRACTIL)	724
CODO DE ADMISIÓN DE AIRE (GR)	112
*COIL AS-SOLENOID (12 VOLTIOS) (VENTILADOR HIDRAULICO)	86
COLADOR DE COMBUSTIBLE	146
COMBUSTIBLE - TANQUE DE (GR)	146
COMPARTIMIENTO DEL MOTOR (GR)	337
	340
	342
COMPARTIMIENTO DEL TANQUE HIDRÁULICO (GR)	344
COMPRESOR DE AIRE DEL ASIENTO (GR)	624
	625
	736
COMPRESOR DE REFRIGERANTE (GR)	635
	636
CONDENSADOR DE REFRIGERANTE (GR)	641
CONDENSADOR DEL REFRIGERANTE Y MONTAJE (GR)	638
	639
CONEXIÓN (GR)	73
CONFIGURACIÓN DE CABLERIA, CALENTADOR Y ACONDICIONADOR DE AIRE (A/A)	641
CONFIGURACIÓN DE INSTALACIÓN DEL MOTOR	14
CONFIGURACIÓN DE MOTORES	4
	5
	6
	7
	8
CONFIGURACIÓN ELECTRÓNICA DE LA MÁQUINA	168
CONFIGURACIÓN GENERAL	3
CONFIGURACIÓN HIDRÁULICA DE 2 VÁLVULAS	482
CONJUNTO DE CABLERIA, RADIO (CONTROL DE PENDIENTE)	251
CONJUNTO DE CABLERIA, RADIO (ESLABON DE PRODUCTO)	178
CONJUNTO DE CABLES, VÁLVULA	491
CONJUNTO DE CABLES, VÁLVULA (COMPRESOR DE AIRE DEL ASIENTO)	736
CONJUNTO DE CONTROL (TEMPERATURA)	667
CONJUNTO DE ESLABÓN DE LA CAJA DE CADENA	397
	398
	399
	400
	401
	402
CONJUNTO DE LLAVE, ELECTRONICA (SEGURIDAD) (AMARILLO)	180
CONJUNTO DE LLAVE, ELECTRONICA (SEGURIDAD) (GRIS)	180
CONJUNTO DE MAZO DE CABLES DE LA CONSOLA	257
CONJUNTO DE MAZO DE CABLES DE SOLENOIDE	156

* NO HAY TRADUCCION DISPONIBLE EN EL MOMENTO DE LA IMPRESION

INDICE

Nombre	Página
CONJUNTO DE MAZO DE CABLES DE SOLENOIDE (CABRESTANTE, TRASERO)	608
CONJUNTO, MAZO DE CABLES, LUCES DELANTERAS	202
CONJUNTO, MAZO DE CABLES, LUCES DELANTERAS (CILINDRO)	189
CONTRAPESO (GR)	334
CONTROL DE DIRECCIÓN Y TRANSMISIÓN (GR)	654
CONTROL DE GRADO, CONFIGURACIÓN	171
CONTROL DE MANIJA (GR)	645
	646
	647
	649
CONTROL DE MANIJA (GR) (HOJA TOPADORA)	645
CONTROL DE MANIJA (GR) (MALACATE)	554
CONTROL DE MAQUINA (GR)	165
CONTROL DEL FRENO DE ESTACIONAMIENTO	651
CONTROL DEL MULTIPLE (GR)	509
CONTROL ELECTRÓNICO DEL MOTOR (GR)	165
CONTROL ELECTRÓNICO DEL MOTOR Y MONTAJE	163
	164
CONTROL HIDRAULICO DE IMPLEMENTO (CONFIG)	467
	468
CONTROL HIDRÁULICO DE LA TRANSMISIÓN (GR)	273
CONTROL HIDRÁULICO DE OPERACIÓN PILOTO (GR)	653
CONTROL NO PROGRAMADO (GR) (MAQUINA)	257
*CONVERSION AR-HEAT SHIELD	1
	2
CONVERTIDOR DE PAR (GR)	315
	317
	319
CONVERTIDOR ELÉCTRICO (GR)	166
CORREA-SERPENTIN (ALTERNADOR)	57
CORREA TRAPEZOIDAL (COMPRESOR DEL REFRIGERANTE)	636
CULATA DE CILINDROS - TORNILLERÍA DE LA (GR)	37
CULATA DE CILINDROS (CONJ)	25
CULATA DE CILINDROS (GR)	27
	28
DESGARRADOR (CONFIG)	616
DESGARRADOR (GR)	617
DETECTOR DE NIVEL DEL COMBUSTIBLE	146
DETECTOR DE POSICIÓN (SISTEMA DE COMBUST.) (GR)	216
	217
DETECTOR DE POSICIÓN (SISTEMA DE COMBUST.) (GR) (CONTROL DE SENTIDO)	647
DETECTOR DE POSICIÓN (SISTEMA DE COMBUST.) (GR) (PEDAL DECELERADOR)	708
DETECTOR DE POSICIÓN (SISTEMA DE COMBUST.) (GR) (ROTATORIO) (PEDAL DE FRENO DE SEVICIO)	708
DETECTOR DE PRESIÓN (CONJ)	221
DIENTE DE DESGARRADOR (GR)	619
	620
	621
	622
*DISPLAY GP-CAMERA	167
DISYUNTOR (CONJ) (15 AMPERIOS) (MOTOR DE SOPLADOR DE VENTILADOR)	211
DISYUNTOR (GR)	239
DRENAJE DE SEGURIDAD ECOLÓGICA (GR)	279
	280
DRENAJE DEL ACEITE DE MOTOR	31
EJE DE MANDO (GR)	314
EJE (GR)	262
ELECTRONICA DE MONITOR (GR)	170
ELEMENTO DE FILTRO DE ACEITE (CONJ) (EFICIENCIA AVANZADA)	523
ELEMENTO DE FILTRO DE ACEITE (CONJ) (EFICIENCIA ULTRA ALTA)	283
	291
ELEMENTO DE FILTRO DE ACEITE (CONJ) (EFICIENCIA ULTRA ALTA)	523
ELEMENTO DE FILTRO DE ACEITE (CONJ) (FLUÍDO RESISTENTE AL FUEGO)	523
ELEMENTO DEL FILTRO DE AIRE (CONJ) (PRIMARIO)	109
ELEMENTO DEL FILTRO DE AIRE (CONJ) (SECUNDARIO)	109
ELEMENTO (RESPIRADERO) (CÁRTER DEL MOTOR)	19
EMBRAGUE DE VENTILADOR (GR)	34
EMPAQUETADURA	524
EMPAQUETADURA (CAJA DEL TERMOSTATO DE AGUA)	92

D

E

* NO HAY TRADUCCION DISPONIBLE EN EL MOMENTO DE LA IMPRESION

INDICE

Nombre	Página
ENFRIADOR DE ACEITE DE LA TRANSMISIÓN (GR)	275
ENFRIADOR DE ACEITE DEL MOTOR (GR)	88
ENFRIADOR DEL ACEITE HIDRAULICO (GR)	469
ENGRANAJE DE TRANSFERENCIA Y CORONA (GR)	288
ENGRANAJE DELANTERO (GR)	43
ENGRANAJE TRASERO (GR)	44
ESCAPE DE GASES (GR)	72, 73
ESLABÓN DE CADENA (CONJ)	395, 396
ESLABON DE CADENA (GR)	403, 404, 405
ESTRUCTURA ROPS ABIERTA (GR)	718
ESTRUCTURA ROPS (GR)	717
ETIQUETA DE ADVERTENCIA (GR)	761, 762
EXPULSOR DE POLVO (GR)	111
EXTENSIÓN DEL RESPALDO (GR) (DE TELA)	724
EXTENSIÓN DEL RESPALDO (GR) (VINILO) (ASIENTO)	727

F

*FASTENER GP-VALVE COVER BASE	41
FILTRO (CONJ) (RECIRCULACIÓN DE AIRE)	714
FILTRO DE ACEITE - BASE DEL (GR)	263
FILTRO DE ACEITE (CONJ) (EFICIENCIA ULTRA ALTA)	435
FILTRO DE ACEITE (CONJ) (FLUÍDO RESISTENTE AL FUEGO)	435
FILTRO DE ACEITE DEL MOTOR (CONJ) (EFICIENCIA AVANZADA)	69
FILTRO DE ACEITE DEL MOTOR (GR)	4
FILTRO DE ACEITE DEL MOTOR (GR)	69
FILTRO DE ACEITE (GR)	283
FILTRO DE ACEITE (GR)	435
FILTRO DE AIRE (ESTANDAR) (AIRE FRESCO)	714
FILTRO DE AIRE (GR)	109, 110
FILTRO DE COMBUSTIBLE (CONJ) (EFICIENCIA AVANZADA)	132
FILTRO DE COMBUSTIBLE Y SEPARADOR DE AGUA (CONJ) (PRIMARIO)	134
FILTRO DE COMBUSTIBLE Y SEPARADOR DE AGUA (GR)	134
FILTRO Y TUBERÍAS DE COMBUSTIBLE (GR)	132
FRENO Y MANDO DE DIFERENCIAL (GR)	264
FRENO Y PLANETARIOS (GR)	268
FUSIBLE (10-AMPERIOS)	211
FUSIBLE (15 AMPERIOS)	211
FUSIBLE (175-AMPERIOS)	211
FUSIBLE (175-AMPERIOS) (ALTERNADOR PRINCIPAL)	257
FUSIBLE (20-AMPERIOS)	211

G

*GLASS-CAB (*SLIDING, TINTED)	754
*GRADE CONTROL AR-LASER	171
*GRADE CONTROL AR-SATELLITE	172
GRUPO DE CÁMARA (*115-DEG, COLOR)	174
GRUPO DE CANTONERA Y CUCHILLA	606, 607
GRUPO DE CONEXIÓN	495
GRUPO DE CONTROL-MONITOR NO PROGRAMADO (SISTEMA MONITOR CATERPILLAR)	668
GRUPO DE CONTROL-MONITOR NO PROGRAMADO (SISTEMA MONITOR CATERPILLAR)	670
GRUPO DE INTERRUPTOR-BOTON PULSADOR	242
GRUPO DE MONTAJE-CONECTOR	205
GRUPO DE MONTAJE DE LA CABINA	697
GRUPO DE MONTAJE DE PANTALLA DE CÁMARA (*WORK AREA VISUAL SYSTEM)	167
GRUPO DE MONTAJE Y VÁLVULA, HOJA TOPADORA	527
GRUPO DE PARILLA	674
GRUPO DE ROTACIÓN DEL MOTOR (GR)	520
GRUPO DE SERVICIO DE COMUNICACIONES (PRODUCT LINK 300)	169
GRUPO DE SOFTWARE, COMUNICACIÓN (PRODUCT LINK 121SR)	213
GRUPO DE TORNILLERIA-AMORTIGUADOR Y POLEA	38
GRUPO DE TRABA-CILINDRO	654
GRUPO DE VÁLVULA-ARRANQUE CON ÉTER	243
GRUPO DE 3 VÁLVULAS HIDRÁULICAS	533, 535
GRUPO DEFLECTOR, TRASERO	423
GRUPO ELECTRONICO-COMUNICACION	169
GRUPO ELECTRONICO DE CLASIFICACION DE MOTORES	9
GRUPO GIRATORIO DE BOMBA	450, 522
*GUARD & SCRAPER GP-IDLER	350
GUARDABARROS (GR)	345, 346

* NO HAY TRADUCCION DISPONIBLE EN EL MOMENTO DE LA IMPRESION

INDICE

Nombre	Página
	347
GUIAJE DE TREN DE RODAJE (CONFIG)	390

H

Nombre	Página
HOJA DE LIMPIAPARABRISAS (CONJ) (*350-MM) (PUERTA, MANO DERECHA , MANO IZQUIERDA)	758
HOJA DE LIMPIAPARABRISAS (CONJ) (*400-MM) (*FRONT, REAR WINDOW)	758
HOJA ORIENTABLE (GR)	593
	603
HOJA SEMIUNIVERSAL (CONJ)	598
	600
	601
	602
HOJA SEMIUNIVERSAL (GR)	604
	605
HOJA TOPADORA ORIENTABLE (CONFIG)	577
HOJA TOPADORA ORIENTABLE (CONFIG)	578
	579
	580
HOJA TOPADORA SEMIUNIVERSAL	581
	582
	583
	584
HOJA Y CUCHILLA SEMIUNIVERSAL (GR)	594
	595
	596
	597

I

Nombre	Página
IMPLEMENTOS (GR ELECTRÓNICO)	170
IMPULSOR DE VENTILADOR (GR)	36
IMPULSOR DE VENTILADOR (GR)	33
	34
INCLINACIÓN HORIZONTAL - CILINDRO DE (GR)	478
	480
INDICADOR (CONJ) (LUZ DE ACCIÓN)	667
	670
INDICADOR (CONJ) (PRESIÓN DEL ACEITE DE MOTOR)	251
INDICADOR DEL NIVEL DE ACEITE (VARILLA) (GR)	74
INSTALACION DE COMUNICACION (GR)	178
INSTALACION DE COMUNICACION (GR)	176
INSTALACIÓN DE RADIO (GR)	666
INSTALACION DE SEGURIDAD (GR)	180
*INSTALLATION GP-CAMERA	174
INSTRUMENTOS (GR)	667
	670
INTERRUPTOR DE ARRANQUE CON LLAVE (CONJ) (ENCENDIDO)	667
	670
INTERRUPTOR DE DERIVACIÓN	238
INTERRUPTOR DE LÍMITE (CONJ) (FRENO DE ESTACIONAMIENTO)	647
INTERRUPTOR DE LÍMITE (CONJ) (PEDAL DE FRENO DE SEVICIO)	708
INTERRUPTOR DE PRESIÓN (CONJ) (COMPRESOR, LADO ALTO)	679
	682
INTERRUPTOR DE PRESIÓN (CONJ) (DERIVACIÓN DEL FILTRO DE ACEITE)	435
INTERRUPTOR DE TEMPERATURA (CONJ) (REFRIGERANTE)	627
INTERRUPTOR DE VOLQUETE (CONJ) (AIRE ACONDICIONADO)	668
INTERRUPTOR DE VOLQUETE (CONJ) (DESCONEXIÓN HIDRÁULICA)	256
INTERRUPTOR DE VOLQUETE (CONJ) (FRENO DE ESTACIONAMIENTO)	651
INTERRUPTOR DE VOLQUETE (CONJ) (LAMPARA DE SERVICIO AL MOTOR)	246
INTERRUPTOR DE VOLQUETE (CONJ) (*MULTIVELOCITY PROGRAM)	257
INTERRUPTOR DE VOLQUETE (CONJ) (*UNDER HOOD SERVICE LIGHT)	187
INTERRUPTOR DE VOLQUETE (CONJ) (*UNDER HOOD SERVICE LIGHT)	189
	192
	195
	198
	202
INTERRUPTOR DE VOLQUETE (CONJ) (24-VOLTIOS, ILUMINADO) (REFLECTORES TRASEROS)	189
INTERRUPTOR DE VOLQUETE (CONJ) (24-VOLTIOS, ILUMINADO) (REFLECTORES TRASEROS)	198
INTERRUPTOR DE VOLQUETE (CONJ) (24-VOLTIOS, ILUMINADO) (REFLECTORES TRASEROS)	187
INTERRUPTOR DE VOLQUETE (CONJ) (24-VOLTIOS, ILUMINADO) (REFLECTORES TRASEROS)	195
INTERRUPTOR DE VOLQUETE (CONJ) (24-VOLTIOS, ILUMINADO) (REFLECTORES TRASEROS)	192
INTERRUPTOR DE VOLQUETE (CONJ) (24-VOLTIOS, ILUMINADO) (REFLECTORES TRASEROS)	202

* NO HAY TRADUCCION DISPONIBLE EN EL MOMENTO DE LA IMPRESION

INDICE

Nombre	Página
INTERRUPTOR DE VOLQUETE (CONJ) (24-VOLTIOS, SELLADO, ILUMINADO) (ACELERACIÓN)	256
INTERRUPTOR MAGNÉTICO (GR)	240 241
INTERRUPTOR PULSADOR (CONJ) (CAMBIAR A UNA MARCHA SUPERIOR)	647
INTERRUPTOR PULSADOR (CONJ) (CAMBIO DESCENDENTE)	647
INTERRUPTOR PULSADOR (CONJ) (CAMBIOS DESCENDENTES AUTOMÁTICOS)	667 670
INTERRUPTOR PULSADOR (CONJ) (MODO BIDIRECCIONAL)	667 670
INTERRUPTOR PULSADOR (CONJ) (*OPERATOR SELECT)	667 670
INTERRUPTOR ROTATIVO (CONJ) (DELANTERO)	677
INTERRUPTOR ROTATIVO (CONJ) (LUCES)	667 670
INTERRUPTOR ROTATIVO (CONJ) (PARTE TRASERA)	677
INTERRUPTOR ROTATIVO (CONJ) (PUERTA DE LADO DERECHO)	677
INTERRUPTOR ROTATIVO (CONJ) (PUERTA IZQUIERDA)	677
INTERRUPTOR ROTATIVO (CONJ) (VELOCIDAD DEL VENTILADOR)	667
INYECTOR DE COMBUSTIBLE (GR)	135

J

Nombre	Página
JUEGO-ANTEFILTRO (TURBINA)	122
JUEGO-ANTEFILTRO (TURBINA)	123
JUEGO DE BOTÓN (AJUSTE DE ALTURA) (ASIENTO DE SUSPENSION)	663
JUEGO DE COJINETES (ALTERNADOR)	149
JUEGO DE COJINETES (ASIENTO DE SUSPENSION)	664
JUEGO DE CORREAS TRAPEZOIDALES (INCLUYE 3 CORREAS) (VENTILADOR)	57
JUEGO DE CORREAS TRAPEZOIDALES (MANDO DE VENTILADOR)	34
JUEGO DE ENCHUFE (6-CLAVIJAS)	166
JUEGO DE INDICADOR (AJUSTE DE PESO) (ASIENTO DE SUSPENSION)	664
JUEGO DE PANTALLA (ANTEFILTRO)	123
JUEGO DE PARAGOLPES (AJUSTE DE PESO) (ASIENTO DE SUSPENSION)	664
JUEGO DE RESORTES (AJUSTE DE ALTURA) (ASIENTO DE SUSPENSION)	663
JUEGO DE RESORTES (ASIENTO DE SUSPENSION)	663
JUEGO DE SEGUIDOR (ASIENTO DE SUSPENSION)	664
JUEGO DE SELLOS (VALVULA DE ALIVIO)	570
JUEGO DE SELLOS (VALVULA DE ALIVIO) (VALVULA DE ALIVIO)	461
JUEGO DE SELLOS (VÁLVULA DE LANZADERA) (IMPLEMENTO DE CONTROL)	572
JUEGO DE SELLOS (VALVULA DE SOLENOIDE)	462
JUEGO DE TERMINAL (ALTERNADOR)	149
JUEGO DE TORNILLERÍA (ALTERNADOR)	149
JUNTA UNIVERSAL (GR)	322

L

Nombre	Página
LÁMPARA DEL TECHO (GR)	182
LÁMPARA DEL TECHO (GR) (24 VOLTIOS)	677
LAMPARA INDICADORA (CONJ) (LUZ DE ACCIÓN)	256
LAMPARA-LED (*RED, 24-VOLT) (SISTEMA DE SEGURIDAD DE LA MÁQUINA)	180
LAMPARA-LED (24 VOLTIOS)	491
LÁMPARA (24 VOLTIOS)	182 256 667 670
LÁMPARA (24-VOLTIOS, 3-VATIOS)	251 667 670
LAVAPARABRISAS DE LA VENTANA (GR)	741
LIMPIAPARABRISAS DE LA VENTANA (GR)	758
LLAVE (INTERRUPTOR GENERAL)	239
LUCES DE ALÓGENO (24 VOLTIOS, 65 VATIOS)	183 184 185
LUCES DE REFLECTOR (GR)	186 187 189 192 195 198 202
LUZ INDICADORA DE BASE (CONJ)	256

M

Nombre	Página
MANDO DE BOMBA (GR)	282
MANDO DE VENTILADOR (CONFIG)	32
MANDO FINAL (GR)	284 286

* NO HAY TRADUCCION DISPONIBLE EN EL MOMENTO DE LA IMPRESION

INDICE

Nombre	Página
MANGUERA DE RADIADOR	93
*MANIFOLD GP-TRANSMISSION	298
*MAST GP	612
MASTIL - MONTAJE DEL (GR)	612
MASTIL - MONTAJE DEL (GR)	613
MAZO DE CABLES (CONJ)	156
	654
MAZO DE CABLES (CONJ) (CARTER SIN INYECCIÓN)	246
MAZO DE CABLES (CONJ) (COMPRESOR DE AIRE ACONDICIONADO)	679
	682
MAZO DE CABLES (CONJ) (LAVAPARABRISAS)	738
MAZO DE CABLES (CONJ) (PRESION DE COMBUSTIBLE)	139
MAZO DE CABLES (CONJ) (PUENTE)	251
	252
MAZO DE CABLES (CONJ) (ROPS)	682
MAZO DE CABLES (CONJ) (SISTEMA DE SEGURIDAD DE LA MÁQUINA)	180
MAZO DE CABLES DE CONTROL (CONJ)	252
MAZO DE CABLES DE CONTROL (CONJ)	174
MAZO DE CABLES DE CONTROL (CONJ) (ESLABON DE PRODUCTO)	176
	178
MAZO DE CABLES DE LA PLATAFORMA (CONJ)	251
MAZO DE CABLES DE LA TRANSMISION	156
MAZO DE CABLES DE POTENCIA (CONJ) (CONVERTIDOR ELECTRICO)	166
MAZO DE CABLES DE SENSOR (CONJ)	34
	273
	485
MAZO DE CABLES DE SENSOR (CONJ)	252
MAZO DE CABLES DEL CHASIS (CONJ)	155
	156
MAZO DE CABLES DEL CHASIS (CONJ)	256
MAZO DE CABLES DEL INTERRUPTOR (CONFIG) (FRENO DE SERVICIO)	708
MAZO DE CABLES DEL MONITOR (CONJ) (*GPS)	699
MAZO DE CABLES DEL MONITOR (CONJ) (*LASER)	699
MAZO DE CABLES DEL MOTOR (CONJ)	246
MAZO DE CABLES DEL MOTOR (CONJ) (BOMBA INYECTORA INDIVIDUAL)	244
MAZO DE CABLES DEL MOTOR (CONJ) (MODULO DE CONTROL ELECTRONICO)	244
MAZO DE CABLES DEL TABLERO (CONJ)	211
	667
	670
MAZO DE CABLES, LUCES	202
	252
MAZO DE CABLES, LUCES (FRENTE)	195
MAZO DE CABLES, LUCES (FRENTE) (CILINDRO)	192
MAZO DE CABLES, LUCES (REFLECTOR) (PARTE TRASERA)	187
MAZO DE CABLES, LUCES (REFLECTORES DELANTEROS)	198
MAZO DE CABLES, LUCES (ROPS)	189
MAZO DE CABLES, LUCES (SELECTOR DE MARCHAS AUTOMÁTICO/MANUAL)	195
MAZO DE CABLES, LUCES (SELECTOR DE MARCHAS AUTOMÁTICO/MANUAL) (ROPS)	192
MAZO DE CABLES, LUCES (SELECTOR DE MARCHAS AUTOMÁTICO/MANUAL) (*SIDE FLOODLIGHT)	198
MAZO DE CABLES-MOTOR	628
MECANISMO DE VÁLVULAS (GR)	65
	66
MIRILLA (TANQUE DE AGUA)	106
MIRILLA (TANQUE HIDRÁULICO)	523
*MODULE AS-POWER SUPPLY	207
MODULO DE INTERFAZ (GR) (LLAVE)	180
MODULO DE LA PANTALLA (GR) (*WORK AREA VISUAL SYSTEM)	167
MODULO ELECTRÓNICO DE CUATRO INDICADORES (GR)	690
MONITOR (CONJ)	691
MONTAJE DE ANTENA (GR)	696
MONTAJE DE CILINDRO (GR)	513
MONTAJE DE CONTROL (GR)	698
MONTAJE DE LA ESTRUCTURA ROPS (GR)	704
MONTAJE DE LA PLATAFORMA (GR)	701
MONTAJE DE LA RADIO (GR)	703
MONTAJE DE LA TRANSMISIÓN (GR)	300
MONTAJE DE MANDO FINAL (GR)	299
MONTAJE DE RODILLOS SUPERIORES (GR)	406
	407
MONTAJE DEL ALTERNADOR (GR)	50
MONTAJE DEL DESGARRADOR (GR)	614
MONTAJE DEL MANDO DE VENTILADOR (GR)	52
MONTAJE DEL MOTOR (GR)	51
MONTAJE DEL RECEPTOR (GR)	209
MONTAJE GR-MONITOR	699
	700
MOTOR - NÚCLEO (CONFIG)	9
	10
	11
	12
	13
MOTOR - SOPORTE DEL (GR)	63

* NO HAY TRADUCCION DISPONIBLE EN EL MOMENTO DE LA IMPRESION

INDICE

Nombre	Página
MOTOR DE ARRANQUE ELÉCTRICO (GR)	232, 234, 235, 236
MOTOR ELÉCTRICO (GR) (SOPLADOR DEL CONDENSADOR)	641
MOTOR-LIMPIAPARABRISAS (GR)	692, 693, 694, 695
*MOUNTING GP-GRADE CONTROL	206, 207, 208
MÚLTIPLE DE ESCAPE (GR)	118
MULTIPLE DE VALVULA (GR)	510, 511
MÚLTIPLE Y VÁLVULA (GR)	443, 445
MUÑÓN DE LA HOJA TOPADORA (GR)	592
MUÑÓN DEL MOTOR (GR)	64

N

NUCLEO DE RADIADOR (CONJ)	100
NÚCLEO DEL ENFRIADOR DE ACEITE (CONJ) (MOTOR)	88
NÚCLEO DEL ENFRIADOR DE ACEITE (CONJ) (TRANSMISION)	275
NÚCLEO DEL POSENFRIADOR (CONJ)	1, 2
NÚCLEO DEL POSENFRIADOR (CONJ)	108

P

PALANCA UNIVERSAL-CONTROL Y MONTAJE (GR)	643
PALANCA UNIVERSAL DE CONTROL (GR)	650
PANEL DE FUSIBLES (GR)	211
PANTALLA (CONJ) (BARRIDO DE CONVERTIDOR DE PAR)	291
PANTALLA (CONJ) (TANQUE HIDRÁULICO)	523
PANTALLA DEL MONITOR (GR)	659
PANTALLA DEL MONITOR (GR) (*CD610)	659
PANTALLA DEL MONITOR (GR) (*CD700)	659
PASAMANOS (GR)	660, 661
PEDAL-GRUPO DE CONTROL Y MONTAJE	644
PISTÓN Y BIELA (GR)	54
PISTONES DEL MOTOR (GR)	512
PIVOTE DEL LIMPIADOR (GR)	760
PLACA DE ADVERTENCIA (CILINDRO PARA ALTA PRESION)	374, 376, 378, 380, 432, 433
PLACA DE ADVERTENCIA (RESORTE DE AMORTIGUACION)	374, 376, 378, 380, 432, 433
PLACA DE IDENTIFICACION (*MACHINE)	332
PLACA DE IDENTIFICACION (SECUENCIAS) (CABINA)	631
PLACA DE INFORMACION	588, 590
PLACA DE INFORMACION (AMARRE)	335, 336, 616, 764, 765
PLACA DE INFORMACION (*EXTENDED LIFE COOLANT-READ OMM)	764, 765
PLACA DE INFORMACION (FILTRO DE AIRE)	109
PLACA DE INSTRUCCIONES (ACONDICIONADOR DE AIRE)	626, 763, 765
PLACA DEL NÚMERO DE SERIE	584
PLACA DEL NÚMERO DE SERIE (DESGARRADOR)	616
PLACA DEL NÚMERO DE SERIE (HOJA TOPADORA)	577, 578, 579, 580, 581, 582, 583
PLACA DEL NÚMERO DE SERIE (TRANSMISION)	270
PLATAFORMA DE LA CABINA	711
PLATAFORMA (GR)	710
*PLATE GP-RADIATOR	366
POLEA DE MANDO DEL ALTERNADOR Y VENTILADOR (GR)	57
POSENFRIADOR DE AIRE (GR)	108
POSICIÓN DEL SENSOR (CONJ) (ORIENTACIÓN)	172
POSICIÓN DEL SENSOR (CONJ) (PALANCA UNIVERSAL) (MANILLA DE CONTROL DE LA HOJA TOPADORA)	650

* NO HAY TRADUCCION DISPONIBLE EN EL MOMENTO DE LA IMPRESION

INDICE

Nombre	Página
PRESURIZADOR (GR)	714
PROTECTOR CONTRA ARENA (GR)	348
PROTECTOR DE LA RUEDA GUÍA (CONFIG)	382
PROTECTOR DE LA TRANSMISIÓN (GR)	364
PROTECTOR DE MANDO FINAL (GR)	350
PROTECTOR DE RODILLOS INFERIORES (GR)	387
	389
PROTECTOR DE RUEDA GUÍA	383
	384
PROTECTOR DEL ANTEFILTRO (GR)	113
PROTECTOR DEL ESCAPE (GR)	126
PROTECTOR DEL RADIADOR (GR)	360
	362
PROTECTOR DEL TANQUE DE COMBUSTIBLE (GR)	357
	358
	359
PROTECTOR GUÍA DE CADENA (GR)	385
	386
PROTECTOR INFERIOR (GR)	351
	352
	354
	355
PROTECTOR POSTERIOR (GR)	363
PROTECTOR TÉRMICO (GR)	127
PROTECTORES DE RAMAS (GR)	367

R

Nombre	Página
RADIADOR (CONFIG)	100
RADIADOR (GR)	101
	103
*RADIO GP-COMMUNICATION	213
*RECEIVER GP-LASER	213
*RECEIVER GP-LASER (*LR410)	213
*RECEIVER GP-SATELLITE	213
	214
RECEPTOR-SECADOR (GR) (REFRIGERANTE)	679
	682
RECLINACION DE ASIENTO (GR)	716
REFLECTOR (GR)	183
	184
	185
REGULADOR DE LA PRESION DE COMBUSTIBLE (GR)	145
REGULADOR DE TEMPERATURA DEL AGUA (92 GRADOS CENTÍGRADOS) (REFRIGERANTE)	92
REGULADOR DE VOLTAJE (24 VOLTIOS)	149
REGULADOR Y PEDAL DEL FRENO (GR)	708
REJILLA DE SUCCIÓN (BARRIDO DE TRANSMISION)	270
REJILLA DE SUCCIÓN (TRANSMISION)	312
REJILLA DEL RADIADOR (GR)	349
REJILLA MAGNÉTICA (GR)	312
REJILLA MAGNÉTICA (GR) (TRANSMISION)	312
REJILLA PROTECTORA (GR)	720
	721
REJILLA (TANQUE HIDRÁULICO)	523
RELÉ (CONJ) (24 VOLTIOS) (GRADO DE DECLIVE)	251
RELÉ (CONJ) (24 VOLTIOS) (MALACATE)	491
RELÉ (CONJ) (24 VOLTIOS) (MOTOR DE SOPLADOR DE CONDENSADOR)	641
RESORTE TENSOR Y AJUSTADOR DE LA CADENA (GR)	424
RESPIRADERO (CONJ) (CÁRTER DEL MOTOR)	19
RESPIRADERO (CONJ) (CÁRTER DEL MOTOR)	16
RESPIRADERO (CONJ) (TRANSMISION)	291
RETÉN (GR)	365
RETROVISOR (GR)	688
	689
REVESTIMIENTO DE LA CABINA (GR)	675
	677
RODILLO DE CADENA (CONFIG)	409
RODILLO SUPERIOR DE CADENAS (GR)	410
RODILLOS DE PESTAÑA DOBLE (GR)	411
	412
	413
	414
	415
RODILLOS DE PESTAÑA SIMPLE (GR)	416
	417
	418
	419
	420
	421
RUEDA GUÍA DE CADENA (GR)	393
	394
RUEDA GUÍA DE LA TRAÍLLA (GR)	422
RUEDA GUÍA DELANTERA (GR)	390
	391
	392

S

Nombre	Página
*SEAL-VALVE COVER	19
SEGMENTO DE RUEDA MOTRIZ (GR)	313
SELLO DE CIGÜEÑAL (GR)	61
	62

* NO HAY TRADUCCION DISPONIBLE EN EL MOMENTO DE LA IMPRESION

INDICE

Nombre	Página
SELLO DE LABIO (REGULADOR DE TEMPERATURA DEL AGUA)	92
SELLO DUOCONE (GR)	284, 286
SENSOR DE PRESIÓN (GR)	218, 219, 220, 221, 222, 223, 224
SENSOR DE PRESIÓN (GR) (ACCIONAMIENTO DE INYECCION)	215
SENSOR DE PRESIÓN (GR) (ACEITE DEL MOTOR)	215
SENSOR DE PRESIÓN (GR) (ACEITE PILOTO DE HOJATOPADORA)	251
SENSOR DE PRESIÓN (GR) (AIRE ATMOSFERICO)	215
SENSOR DE PRESIÓN (GR) (COMBUSTIBLE)	139
SENSOR DE PRESIÓN (GR) (ENTRADA DE TURBOALIMENTADOR)	155
SENSOR DE PRESIÓN (GR) (SALIDA DEL TURBOALIMENTADOR)	215
SENSOR DE TEMPERATURA (GR)	227, 228, 229
SENSOR DE TEMPERATURA (GR) (ACEITE DE CONVERTIDOR DE PAR)	246
SENSOR DE TEMPERATURA (GR) (ACEITE DE TRANSMISION Y LUBRICACIÓN)	155
SENSOR DE TEMPERATURA (GR) (ACEITE HIDRÁULICO)	155
SENSOR DE TEMPERATURA (GR) (MÚLTIPLE DE ADMISIÓN DE AIRE)	215
SENSOR DE TEMPERATURA (GR) (REFRIGERANTE, AGUA)	215
SENSOR DE TEMPERATURA (GR) (SUMIDERO DE LA TRANSMISIÓN)	246
SENSOR DE VELOCIDAD (GR)	225, 226
SENSOR DE VELOCIDAD (GR) (CONVERTIDOR DE PAR)	246
SENSOR DE VELOCIDAD (GR) (MANDO DE VENTILADOR)	34
SENSOR DE VELOCIDAD (GR) (SALIDA DE TRANSMISIÓN 1)	302
SENSOR DE VELOCIDAD (GR) (SALIDA DE TRANSMISIÓN 2)	302
SENSOR DE VELOCIDAD (GR) (SINCRONIZACIÓN DE MOTOR) (VELOCIDAD DEL MOTOR, SINCRONIZADOR)	215
SENSOR DEL MOTOR (GR)	4, 5, 6, 7, 8, 215
SERVICIO DE MONITOR (GR)	170
SERVICIO DE TREN DE FUERZA (GR)	170
SILENCIADOR (GR)	119
SOFTWARE (*ANGLE SENSOR)	172
SOFTWARE DEL MONITOR (GR)	213, 659
SOFTWARE (GR) (MÁSTIL)	612
SOFTWARE (*RECEIVER, LOADER)	213, 214
SOFTWARE (RECEPTOR)	213, 214
SOLENOIDE (CONJ) (24 VOLTIOS) (MOTOR DE ARRANQUE)	232
SOPLADOR - VENTILADOR (GR)	90
SOPORTE DE LA HOJA TOPADORA	575
SOPORTE DEL RESPALDO (GR)	705, 706, 707
*STRAINER AS-OIL (LLENADO DEL TANQUE HIDRÁULICO)	523
SUSPENSIÓN - ASIENTO CON (GR)	732, 733
SUSPENSIÓN - ASIENTO CON (GR)	731

T

TANQUE DE REFRIGERANTE (GR)	104, 105, 106
TANQUE DEL LAVAPARABRISAS (GR)	738, 740
TANQUE HIDRÁULICO Y MONTAJE (GR)	526
TANQUE Y FILTRO HIDRÁULICOS (GR)	523
TAPA CON RESPIRADERO (TANQUE DE LIMPIPARABRISA)	738
TAPA DE LA CAJA DELANTERA (GR)	17, 18
TAPA DE LA CONSOLA (GR)	656, 657
TAPA DE LLENADO (CONJ) (MOTOR)	68
TAPA DE LLENADO (CONJ) (TANQUE DE COMBUSTIBLE)	146
TAPA DE RADIADOR (CONJ)	104

* NO HAY TRADUCCION DISPONIBLE EN EL MOMENTO DE LA IMPRESION

INDICE

Nombre	Página
	105
TAPA DE RUEDA GUÍA (GR)	372
	373
TAPA DEL BLOQUE MOTOR (GR)	16
TAPA DEL MECANISMO DE VÁLVULAS (GR)	19
TAPA DEL TUBO DE LLENADO (TANQUE HIDRÁULICO)	523
TAPÓN DE DRENAJE	45
TAPÓN DE DRENAJE (CAJA DE TRANSMISION)	332
TAPÓN DE DRENAJE (REFRIGERANTE DE ACEITE DE TRANSMISIÓN)	275
TAPÓN DE DRENAJE (TANQUE HIDRÁULICO)	523
TAPÓN DE DRENAJE (TREN DE FUERZA)	280
TAPÓN DEL MOTOR (GR)	55
TAPÓN MAGNÉTICO (MANDO FINAL, LLENADO DE ACEITE)	284
	286
TECHO (CONFIG)	634
TORNILLERÍA DE LA TAPA DE VÁLVULAS (GR)	40
TRANSMISION (CONFIG)	321
TRANSMISIÓN PLANETARIA (GR)	301
TREN DE FUERZA (CONFIG)	307
TREN DE FUERZA-GRUPO ELECTRÓNICO	170
TREN DE RODAJE (CONFIG)	431
	432
	433
TUBERÍAS CON SERVOMANDO (GR)	485
TUBERÍAS CON SERVOMANDO (GR)	489
	491
	493
TUBERÍAS DE ACEITE DEL MOTOR (GR)	75
TUBERÍAS DE ACEITE DEL TREN DE FUERZA (GR)	291
TUBERIAS DE ACEITE (GR)	76
TUBERÍAS DE ACONDICIONADOR DE AIRE (GR)	679
	682
TUBERIAS DE CALEFACCION	686
TUBERÍAS DE COMBUSTIBLE (GR)	136
	139
TUBERÍAS DE DIRECCIÓN (GR)	438
TUBERÍAS DE LA CALEFACCIÓN (GR)	686
TUBERÍAS DEL AGUA (GR)	92
	93
	95
TUBERÍAS DEL CILINDRO DE INCLINACIÓN (GR)	501
	503
	505
	507
TUBERÍAS DEL DESGARRADOR (GR)	499
	500
TUBERÍAS DEL MALACATE (GR)	608
TUBO DE LLENADO DE ACEITE (GR)	68
TURBOCOMPRESOR - TUBERÍAS DE ACEITE DEL (GR)	79
	81
TURBOCOMPRESOR (GR)	128
	129
	130
	131

V

VÁLVULA DE ALIVIO (GR)	459
	460
	461
	567
	568
	569
	570
VÁLVULA DE ALIVIO (GR)	324
	326
VÁLVULA DE ALIVIO (GR) (CABEZAL DE LA BOMBA)	436
VÁLVULA DE ALIVIO (GR) (COMPRESOR DEL REFRIGERANTE)	635
VÁLVULA DE CAÍDA RÁPIDA (GR)	564
	565
VÁLVULA DE CONTROL DE EQUIPO DE ACCESORIOS Y MONTAJE (GR)	530
VALVULA DE CONTROL DE LA BOMBA (GR)	457
	563
VALVULA DE CONTROL DE LA BOMBA (GR) (*PRESSURE COMPENSATOR) (CABEZAL DE LA BOMBA)	436
VÁLVULA DE CONTROL DEL FRENO (GR)	452
	454
VÁLVULA DE CONTROL (GR)	538
	541
	543
	545
	547
	549
VÁLVULA DE CONTROL Y MONTAJE (GR)	528
VÁLVULA DE DESCARGA (GR)	520
VALVULA DE DRENAJE (CONJ) (ECOLOGÍA)	332
VÁLVULA DE LANZADERA (GR)	571
	572
VÁLVULA DE MODULACIÓN (GR)	86
	87
VÁLVULA DE MODULACIÓN (GR)	323
VALVULA DE MUESTRA DE FLUIDO (CONJ)	486

* NO HAY TRADUCCION DISPONIBLE EN EL MOMENTO DE LA IMPRESION

INDICE

Nombre	Página
VÁLVULA DE MUESTREO (GR)	85
VÁLVULA DE RETENCIÓN (CONJ)	740
VÁLVULA DE RETENCIÓN (GR)	537
VÁLVULA DE SOLENOIDE (GR)	462
	463
	573
	574
VÁLVULA DE SOLENOIDE (GR) (CONTROL DE LA HOJA)	527
VÁLVULA DE SOLENOIDE (GR) (DESCONEXIÓN HIDRÁULICA)	509
VÁLVULA DE SOLENOIDE (GR) (DESCONEXIÓN HIDRÁULICA)	527
VÁLVULA DE SOLENOIDE (GR) (FRENO SECUNDARIO)	443
VÁLVULA DE SOLENOIDE (GR) (MALACATE)	608
VÁLVULA DE SOLENOIDE (GR) (*PARKING, SECONDARY BRAKE)	445
VALVULA PILOTO DE CARTUCHO (GR)	560
	561
VÁLVULA PILOTO (GR)	552
	554
	556
	558
VÁLVULA REDUCTORA DE PRESIÓN (GR)	562
VÁLVULAS HIDRÁULICAS - GRUPO DE 2	531
VARILLA DE NIVEL DE ACEITE (CONJ) (CAJA DE TRANSMISION)	291
VENTANA DE LA CABINA (GR)	743
	744
	745
	746
	747
	748
	749
	750
	751
	753
	754
	756
VENTANA DE LA CABINA (GR) (LADO DERECHO)	745
VENTANA DE LA CABINA (GR) (LADO IZQUIERDO)	746
VENTANA DE LA CABINA (GR) (PARTE TRASERA)	744
VENTANA DE LA CABINA (GR) (PARTE TRASERA)	757
VENTANA DESLIZANTE (GR)	757
VENTILADOR EXPULSOR (CONFIG)	89
VENTILADOR REVERSIBLE (GR)	91
VENTILADOR SOPLADOR DE LA CABINA (GR)	628
VIDRIO (AHUMADO)	743
	744
	745
	746
VOLANTE - CAJA DE (GR)	46
VOLANTE (GR)	42

Y

YUGO (GR)	67

* NO HAY TRADUCCION DISPONIBLE EN EL MOMENTO DE LA IMPRESION

ÍNDICE

Designação	Página
A	
ACIONADOR DA BOMBA	434
ACOPLAMENTO DA BOMBA	278
ACOPLAMENTO E PROTETOR	277
ACUMULADOR	260 261
ACUMULADOR - REFRIGERANTE	679 682
ACUMULADOR D ÓLEO - PILOTO	464 465
ADAPTADOR DO MOTOR	466
AJUSTADOR DE ESTEIRAS E MOLA TENSORA	424
AJUSTADOR DO ASSENTO	623
ALARME	148
ALAVANCA DE CONTROLE E MONTAGEM	643
ALTERNADOR DE CORRENTE	149 151 153
AMORTECEDOR	30
AQUECEDOR DA ÁGUA DO MOTOR	173
AQUECEDOR DA CABINE	662
ARMAÇÃO C	585 586 587
ARMAÇÃO TELESCÓPICA DA MOLA TENSORA	374 376 378 380
ARRANJO GERAL	3
ARRANJO HIDRÁULICO - 2 VÁLVULAS	482
ARREFECEDOR - ÓLEO DO MOTOR	88
ARREFECEDOR DE ÓLEO DA TRANSMISSÃO	275
ARREFECEDOR DO ÓLEO HIDRÁULICO	469
ASSENTO	722 724 725 727 728 729 730
ASSENTO COM SUSPENSÃO	731 732 733
AUXILIAR DE PARTIDA A ÉTER	230
B	
BALANCIM	59 60
BARRA DE ARTICULAÇÃO	408
BARRA DE SUSPENSÃO	369 371
BARRA DE TRAÇÃO	335 336
BARRA LIMPADORA DOS ROLOS	327
BARRAS DE PROTEÇÃO DO CAPÔ	367
BASE DO FILTRO DE ÓLEO	263
BATENTE - TRASEIRO	423
BATERIA	161
BATERIA E CABOS / FIOS ELÉTRICOS	155
BATERIA (12 VOLTS, ISENTA DE MANUTENÇÃO, ÚMIDA)	156
BATERIA (12 VOLTS, ISENTO DE MANUTENÇÃO)	161
BEIRA - PONTA CORTANTE	606 607
BLINDAGEM DO COLETOR DE ESCAPE	126
BLOCO DO MOTOR	21 23 24
BOBINA-SOLENÓIDE (12-VOLTS) (VENTILADOR HIDRÁULICO)	86
BOCAL DE ENCHIMENTO DE ÓLEO DO MOTOR	68
BOMBA DE ÁGUA	97 98 99
BOMBA DE CARGA	447
BOMBA DE ENGRENAGENS	308 310
BOMBA DE INJEÇÃO DO COMBUSTÍVEL	142 143
BOMBA DE ÓLEO - MOTOR	84
BOMBA DE PISTÃO	448 516 518
BOMBA DE TRANSFERÊNCIA DO COMBUSTÍVEL	144
BOMBA E MONTAGEM - ACESSÓRIO	515
BOMBA E MONTAGEM - DIREÇÃO	446
BOMBA HIDRÁULICA - UNIDADE INJETORA	144
BOMBA HIDRÁULICA E MONTAGEM - UNIDADE INJETORA	141
BOTÃO	674
BRAÇO DE EMPUXO	588 590
BUJÃO DO DRENO	45
BUJÃO DO DRENO (ARREFECEDOR DO ÓLEO DA TRANSMISSÃO)	275
BUJÃO DO DRENO (CAIXA DE TRANSMISSÃO)	332
BUJÃO DO DRENO (TANQUE HIDRÁULICO)	523
BUJÃO DO DRENO (TREM DE FORÇA)	280

* TRADUÇÃO NÃO DISPONÍVEL NO MOMENTO DA IMPRESSÃO

ÍNDICE

Designação	Página
BUJÃO DO MOTOR	55
BUJÃO MAGNÉTICO (COMANDO FINAL, ENCHIMENTO DE ÓLEO)	284, 286

C

CABEÇA DA BOMBA	436
CABEÇOTE DO MOTOR	25, 27, 28
CABINE	629, 630, 631
CABO-ESPIRAL	162
CABOS/FIOS ELÉTRICOS - CONTROLE ELETRÔNICO	244
CABOS/FIOS ELÉTRICOS - MOTOR	246
CABOS/FIOS ELÉTRICOS - PLATAFORMA	256
CADEADO	136, 146, 329, 337, 344, 360, 634
CAIXA - BATERIA	329, 330
CAIXA - SUSPENSÃO DO ASSENTO	663
CAIXA DIANTEIRA	48
CAIXA DO VOLANTE DO MOTOR	45, 46
CAIXA E CHASSI	332
CÂMERA (115 GRAUS, COR)	174
CARCAÇA DA TRANSMISSÃO	272
CARCAÇA DAS ENGRENAGENS PLANETÁRIAS E COMPONENTES	270
CÁRTER DO ÓLEO DO MOTOR	53
CHASSI	1
CHAVE - ELETRÔNICO (SEGURANÇA) (AMARELO)	180
CHAVE - ELETRÔNICO (SEGURANÇA) (CINZA)	180
CHAVE (DESCONEXÃO DA BATERIA)	239
CHAVE GERAL	239
CHAVE INTERRUPTORA DE PARTIDA (IGNIÇÃO)	667, 670
CHICOTE - CABINE	741
CHICOTE - CABINE (LIMPADOR, ALTO-FALANTE)	677
CHICOTE - CABOS ELÉTRICOS	156, 654
CHICOTE - CABOS ELÉTRICOS (CABO AUXILIAR DE PARTIDA)	251, 252
CHICOTE - CABOS ELÉTRICOS (COMPRESSOR DO CONDICIONADOR DE AR)	679, 682
CHICOTE - CABOS ELÉTRICOS (LAVADOR DE VIDROS)	738
CHICOTE - CABOS ELÉTRICOS (PARTIDA SEM INJEÇÃO)	246
CHICOTE - CABOS ELÉTRICOS (PRESSÃO DO COMBUSTÍVEL)	139
CHICOTE - CABOS ELÉTRICOS (ROPS)	682
CHICOTE - CABOS ELÉTRICOS (SISTEMA DE SEGURANÇA DA MÁQUINA)	180
CHICOTE - CHASSI	155, 156, 256
CHICOTE - CONSOLO	257
CHICOTE - ILUMINAÇÃO	202, 252
CHICOTE - ILUMINAÇÃO (DIANTEIRO)	195
CHICOTE - ILUMINAÇÃO (DIANTEIRO) (CILINDRO)	192
CHICOTE - ILUMINAÇÃO (FARÓIS DIANTEIROS)	198
CHICOTE - ILUMINAÇÃO (HOLOFOTE) (TRASEIRO)	187
CHICOTE - ILUMINAÇÃO (PARTE TRASEIRA)	195
CHICOTE - ILUMINAÇÃO (PARTE TRASEIRA) (FAROL LATERAL)	198
CHICOTE - ILUMINAÇÃO (PARTE TRASEIRA) (ROPS)	192
CHICOTE - ILUMINAÇÃO (ROPS)	189
CHICOTE - MONITOR (GPS)	699
CHICOTE - MONITOR (LASER)	699
CHICOTE - MOTOR	246
CHICOTE - MOTOR (MÓDULO DE CONTROLE ELETRÔNICO)	244
CHICOTE - MOTOR (UNIDADE INJETORA)	244
CHICOTE - PLATAFORMA	251
CHICOTE - SENSOR	34, 252, 273, 485
CHICOTE - SOLENÓIDE	156
CHICOTE - SOLENÓIDE (GUINCHO, TRASEIRO)	608
CHICOTE - TRANSMISSÃO	156
CHICOTE - VÁLVULA	491
CHICOTE - VÁLVULA (COMPRESSOR DE AR DO ASSENTO)	736

* TRADUÇÃO NÃO DISPONÍVEL NO MOMENTO DA IMPRESSÃO

ÍNDICE

Designação	Página
CILINDRO - LEVANTAMENTO DA LÂMINA	474
CILINDRO DE INCLINAÇÃO	478
	480
CILINDRO DE LEVANTAMENTO DO RIPER	476
CILINDRO DE LEVANTAMENTO E TUBOS	470
	472
CINTO DE SEGURANÇA (RETRÁTIL)	724
	727
COBERTURA - TANQUE HIDRÁULICO	344
COBERTURA DO MOTOR	337
	340
	342
COLETOR - CONTROLE	509
COLETOR - VÁLVULA	510
	511
COLETOR DE ESCAPE	118
COLETOR E VÁLVULA	443
	445
COLETOR-TRANSMISSÃO	298
COLMÉIA - ARREFECEDOR DE ÓLEO (MOTOR)	88
COLMÉIA - ARREFECEDOR DE ÓLEO (TRANSMISSÃO)	275
COLMEIA DO ARREFECEDOR DA ADMISSAO	108
COLMEIA DO RADIADOR	100
COLMÉIA-PÓS-ARREFECEDOR	1
	2
COMANDO DA BOMBA	282
COMANDO DO VENTILADOR	32
	33
	34
	36
COMANDO FINAL	284
	286
COMPRESSOR DE AR - ASSENTO	624
	625
	736
COMPRESSOR DE REFRIGERANTE	635
	636
CONDENSADOR DE REFRIGERANTE	641
CONDENSADOR DO REFRIGERANTE E MONTAGEM	638
	639
CONDICIONADOR DE AR	626
	627
CONECTOR	495
CONEXÃO	73
CONTRAPESO	334
CONTROLE - ALAVANCA	650
CONTROLE - NÃO PROGRAMADO (MÁQUINA)	257
CONTROLE-CABO	645
	646
	647
	649
CONTROLE-CABO (GUINCHO)	554
CONTROLE-CABO (LÂMINA)	645
CONTROLE DA INCLINAÇÃO-SATÉLITE	172
CONTROLE DA MÁQUINA	165
CONTROLE DE DIREÇÃO E TRANSMISSÃO	654
CONTROLE DE INCLINAÇÃO - LASER	171
CONTROLE DO FREIO DE ESTACIONAMENTO	651
CONTROLE DO GRAU	171
CONTROLE DO PEDAL E MONTAGEM	644
CONTROLE ELETRÔNICO - MOTOR	165
CONTROLE ELETRÔNICO E MONTAGEM - MOTOR	163
	164
CONTROLE HIDRÁULICO DA TRANSMISSÃO	273
CONTROLE HIDRÁULICO DE OPERAÇÃO PILOTO	653
CONTROLE HIDRÁULICO DO ACESSÓRIO	467
	468
CONTROLE-MONITOR NÃO PROGRAMADO (SISTEMA DE MONITORIZAÇÃO CATERPILLAR)	668
	670
CONTROLE (TEMPERATURA)	667
CONVERSÃO-PROTETOR CONTRA CALOR	1
	2
CONVERSOR DE TORQUE	315
	317
	319
CONVERSOR ELÉTRICO	166
COROA E ENGRENAGEM DE TRANFERÊNCIA	288
CORREIA- SERPENTINA (ALTERNADOR)	57
CORREIA EM V (COMPRESSOR DO REFRIGERANTE)	636
COTOVELO DE ADMISSÃO DE AR	112

D

DECALQUE	761
	762
DECALQUE - ADVERTÊNCIA (ACUMULADOR)	464
	465
DECALQUE - ADVERTÊNCIA (ALTA PRESSÃO, CONSULTAR OMM)	260
	261
DECALQUE - ADVERTÊNCIA (ALTA PRESSÃO, CONSULTAR OMM, INTERNACIONAL)	763

* TRADUÇÃO NÃO DISPONÍVEL NO MOMENTO DA IMPRESSÃO

ÍNDICE

Designação	Página
DECALQUE - ADVERTÊNCIA (CHOQUE ELÉTRICO)	211
DECALQUE - ADVERTÊNCIA (FLUIDO QUENTE SOB PRESSÃO)	764, 766
DECALQUE - ADVERTÊNCIA (LÂMINA, NÃO SUBA, LEIA O OMM)	612, 613
DECALQUE - ADVERTÊNCIA (MOLA TENSORA)	374, 376, 378, 380, 432, 433
DECALQUE - ADVERTÊNCIA (NÃO SOLDAR, NÃO PERFURAR, CONSULTAR OMM)	634, 764, 766
DECALQUE - ADVERTÊNCIA (RÁDIO DO PRODUCT LINK, NÃO NACD)	763
DECALQUE - ADVERTÊNCIA (RAIO DO PRODUCT LINK, EUA)	178
DECALQUE - ADVERTÊNCIA (RAIO DO PRODUCT LINK, EUA)	176
DECALQUE - ADVERTÊNCIA (ROPS, FOPS)	634
DECALQUE - ADVERTÊNCIA (TRANSMISSOR A LASER)	612
DECALQUE - AVISO (RÁDIO)	666
DECALQUE - IDENTIFICAÇÃO (ALAVANCA DE CONTROLE)	171
DECALQUE - IDENTIFICAÇÃO (AQUECEDOR DE ÁGUA)	173
DECALQUE - IDENTIFICAÇÃO (BAIXA VELOCIDADE, LUZ DO GUINCHO)	468
DECALQUE - IDENTIFICAÇÃO (CONTROLE DO GUINCHO)	468
DECALQUE - IDENTIFICAÇÃO (CONTROLES DO LIMPADOR DE PÁRA-BRISA)	677
DECALQUE - IDENTIFICAÇÃO (IGNIÇÃO)	180
DECALQUE - IDENTIFICAÇÃO (LUZ DE AÇÃO) (TRAVA MANUAL DE OPERAÇÃO)	670
DECALQUE - IDENTIFICAÇÃO (LUZ DE TRABALHO)	187, 190, 193, 196, 198, 203, 246
DECALQUE - IDENTIFICAÇÃO (LUZES)	668
DECALQUE - IDENTIFICAÇÃO (MONITOR)	668, 671
DECALQUE - IDENTIFICAÇÃO (NÚMERO DE GRUPO) (CONDENSADOR DO REFRIGERANTE)	641
DECALQUE - IDENTIFICAÇÃO (PAINEL DE INSTRUMENTOS)	667, 670, 671
DECALQUE - IDENTIFICAÇÃO (SISTEMA DE SEGURANÇA)	180
DECALQUE - IDENTIFICAÇÃO (12-VOLTS)	763, 765
DECALQUE - INFORMAÇÕES (AMARRAÇÃO)	335, 336
DECALQUE - INFORMAÇÕES (AMARRAÇÃO)	764, 765
DECALQUE - INFORMAÇÕES (AMARRAÇÃO)	616
DECALQUE - INFORMAÇÕES (LÍQUIDO ARREFECEDOR DE VIDA PROLONGADA - CONSULTE OMM)	764, 765
DECALQUE - INFORMAÇÕES (PURIFICADOR DE AR)	109
DECALQUE - INSTRUÇÃO (AJUSTE DO ASSENTO)	734, 736
DECALQUE - INSTRUÇÃO (CONTROLE DA LÂMINA)	764, 766
DECALQUE - INSTRUÇÃO (CONTROLE DE RÍPER)	467
DECALQUE - INSTRUÇÃO (DESCONEXÃO DA BATERIA)	764, 765
DEFLETOR TÉRMICO DE CALOR	127
DENTE DO RÍPER	619, 620, 621, 622
DISJUNTOR AUTOMÁTICO DE CIRCUITO (15 AMPERES) (MOTOR DO VENTILADOR)	211
DRENO - ECOLOGIA	279, 280
DRENO - ÓLEO DO MOTOR	31

E

EIXO	262
EIXO-COMANDO DE VÁLVULA	15
EIXO DE TRANSMISSÃO	314

* TRADUÇÃO NÃO DISPONÍVEL NO MOMENTO DA IMPRESSÃO

ÍNDICE

Designação	Página
EJETOR DE POEIRA	111
ELEMENTO DO FILTRO DE AR (PRIMÁRIO)	109
ELEMENTO DO FILTRO DE AR (SECUNDÁRIO)	109
ELEMENTO FILTRANTE - ÓLEO (EFICIÊNCIA AVANÇADA)	523
ELEMENTO FILTRANTE - ÓLEO (EXTREMA EFICIÊNCIA)	283 291
ELEMENTO FILTRANTE - ÓLEO (EXTREMA EFICIÊNCIA)	523
ELEMENTO FILTRANTE - ÓLEO (FLUIDO À PROVA DE FOGO)	523
ELEMENTO (RESPIRO) (CÁRTER DO MOTOR)	19
ELIMINAÇÃO DE VAPORES DO CÁRTER	72 73
ELO-CAIXA DA ESTEIRA	397 398 399 400 401 402
ELO DA ESTEIRA	395 396 403 404 405
EMBREAGEM - VENTILADOR	34
EMISSOR - NÍVEL DO COMBUSTÍVEL	146
EMISSOR - POSIÇÃO	216 217
EMISSOR - POSIÇÃO (CONTROLE DE DIREÇÃO)	647
EMISSOR - POSIÇÃO (GIRATÓRIO) (PEDALDO FREIO DE SERVIÇO)	708
EMISSOR - POSIÇÃO (PEDAL DESACELERADOR)	708
ENGRENAGENS DE COMANDO TRASEIRO	44
ENGRENAGENS DE DISTRIBUIÇÃO	43
ENGRENAGENS PLANETÁRIAS - TRANSMISSÃO	301
ESPELHO RETROVISOR	688 689
ESTEIRA	426 427 428 429 430
ESTRUTURA ROPS	717
EXTENSÃO - ENCOSTO (TECIDO)	724
EXTENSÃO - ENCOSTO (VINIL) (ASSENTO)	727

F

Designação	Página
FIAÇÃO - AQUECEDOR E AR CONDICIONADO (AR CONDICIONADO)	641
FIAÇÃO - CONTROLE	174 252
FIACAO - CONTROLE DO NIVEL	251
FIAÇÃO - CONTROLE (PRODUCT LINK)	176 178
FIAÇÃO - INTERRUPTOR (FREIO DE SERVIÇO)	708
FIAÇÃO - PAINEL	211 667 670
FIAÇÃO -LUZES DIANTEIRAS	202
FIAÇÃO -LUZES DIANTEIRAS (CILINDRO)	189
FIAÇÃO ELÉTRICA (CONVERSOR ELÉTRICO)	166
FIAÇÃO-MOTOR	628
FIAÇÃO-RÁDIO (CONTROLE DO GRAU)	251
FIAÇÃO-RÁDIO (PRODUCT LINK)	178
FILTRO - AR (PADRÃO) (AR FRESCO)	714
FILTRO - COMBUSTÍVEL	146
FILTRO - COMBUSTÍVEL (EFICIÊNCIA AVANÇADA)	132
FILTRO - MAGNÉTICO	312
FILTRO - MAGNÉTICO (TRANSMISSÃO)	312
FILTRO - ÓLEO	283 435
FILTRO - ÓLEO DO MOTOR	4 69
FILTRO - ÓLEO DO MOTOR (EFICIÊNCIA AVANÇADA)	69
FILTRO - ÓLEO (EXTREMA EFICIÊNCIA)	435
FILTRO - ÓLEO (FLUIDO À PROVA DE FOGO)	435
FILTRO - SEPARADOR DE ÁGUA E COMBUSTÍVEL (PRIMÁRIO)	134
FILTRO DE COMBUSTÍVEL E SEPARADOR DE ÁGUA	134
FILTRO E TUBOS - COMBUSTÍVEL	132
FILTRO (RECIRCULAÇÃO DO AR)	714
FIXADOR - AMORTECEDOR E POLIA	38
FIXADOR-BASE DA TAMPA DA VÁLVULA	41
FIXADORES - CABEÇOTE DO MOTOR	37
FIXADORES - CAIXA DIANTEIRA	39
FIXADORES - TAMPA DA VÁLVULA	40
FREIO E COMANDO DO DIFERENCIAL	264
FREIOS E ENGRENAGENS PLANETARIAS	268
FUNDO - ENCOSTO	705 706 707
FUSÍVEL (10 AMPERES)	211
FUSÍVEL (15 AMPERES)	211
FUSÍVEL (175 AMPÈRES)	211

* TRADUÇÃO NÃO DISPONÍVEL NO MOMENTO DA IMPRESSÃO

ÍNDICE

Designação	Página
FUSÍVEL (175 AMPÈRES) (ALTERNADOR PRINCIPAL)	257
FUSÍVEL (20-AMPERES)	211

G

GARFO	67
GR. DE SERVICO - TREM DE FORÇA	170
GRADE DO RADIADOR	349
GRADE DO RADIADOR CONTRA EROSÃO	348
GRUPO DE INSTALAÇÃO - MOTOR	14
GRUPO DE VÁLVULAS DE CONTROLE - DUPLO	531
GRUPO DE VÁLVULAS DE CONTROLE - TRIPLO	533 535
GRUPO ROTATIVO DA BOMBA	450 522
GUIA-MATERIAL RODANTE	390

I

INDICADOR - NÍVEL DE ÓLEO (CAIXA DE TRANSMISSÃO)	291
INDICADOR - NÍVEL DO ÓLEO (VARETA)	74
INDICADOR (LUZ DE AÇÃO)	670
INDICADOR (LUZ DE AÇÃO)	667
INDICADOR (PRESSÃO DO ÓLEO DO MOTOR)	251
INJETOR DE COMBUSTÍVEL	135
INSTALAÇÃO - CÂMERA	174
INSTALAÇÃO-COMUNICAÇÃO	176 178
INSTALAÇÃO DO RÁDIO	666
INSTALAÇÃO-SEGURANÇA	180
INSTRUMENTOS	667 670
INTERRUPTOR - BALANCIM (AR CONDICIONADO)	668
INTERRUPTOR - BALANCIM (FAROL DE SERVIÇO DO MOTOR)	246
INTERRUPTOR - BALANCIM (FREIO DE ESTACIONAMENTO)	651
INTERRUPTOR - BALANCIM (PROGRAMA DE VELOCIDADES MÚLTIPLAS)	257
INTERRUPTOR - BALANCIM (TRAVA HIDRÁULICA)	256
INTERRUPTOR - BALANCIM (*UNDER HOOD SERVICE LIGHT)	187 189 192 195 198
	202
INTERRUPTOR - BALANCIM (24 VOLTS, ILUMINADO) (FARÓIS TRASEIROS)	198
INTERRUPTOR - BALANCIM (24 VOLTS, ILUMINADO) (FARÓIS TRASEIROS)	189 195 202
INTERRUPTOR - BALANCIM (24 VOLTS, ILUMINADO) (FARÓIS TRASEIROS)	192
INTERRUPTOR - BALANCIM (24 VOLTS, ILUMINADO) (FARÓIS TRASEIROS)	187
INTERRUPTOR - BALANCIM (24 VOLTS, VEDADO, ILUMINADO) (ACELERADOR)	256
INTERRUPTOR - BOTÃO (DESENGATE AUTOMÁTICO)	667 670
INTERRUPTOR - BOTÃO (MODO BIDIRECIONAL)	667 670
INTERRUPTOR - BOTÃO (MUDANÇA MARCHAS ACIMA)	647
INTERRUPTOR - BOTÃO (REDUÇÃO DE MARCHA)	647
INTERRUPTOR - BOTÃO (SELEÇÃO DO OPERADOR)	667
INTERRUPTOR - BOTÃO (SELEÇÃO DO OPERADOR)	670
INTERRUPTOR - LIMITADOR (FREIO DE ESTACIONAMENTO)	647
INTERRUPTOR - LIMITADOR (PEDALDO FREIO DE SERVIÇO)	708
INTERRUPTOR - MAGNÉTICO	240 241
INTERRUPTOR - PRESSÃO (COMPRESSOR, LADO ALTO)	679 682
INTERRUPTOR - PRESSÃO (DERIVAÇÃO DO FILTRO DE ÓLEO)	435
INTERRUPTOR - ROTATIVO (DIANTEIRO)	677
INTERRUPTOR - ROTATIVO (LUZES)	667 670
INTERRUPTOR - ROTATIVO (PORTA - LADO ESQUERDO)	677
INTERRUPTOR - ROTATIVO (PORTA-LADO DIREITO)	677
INTERRUPTOR - ROTATIVO (TRASEIRO)	677
INTERRUPTOR - ROTATIVO (VELOCIDADE DO VENTILADOR)	667

* TRADUÇÃO NÃO DISPONÍVEL NO MOMENTO DA IMPRESSÃO

ÍNDICE

Designação	Página
INTERRUPTOR - TEMPERATURA (REFRIGERANTE)	627
INTERRUPTOR-BOTÃO	242
INTERRUPTOR DE DERIVAÇÃO	238
J	
JANELA DA CABINE	743 744 745 746 747 748 749 750 751 753 754 756
JANELA DA CABINE (DIREITO)	745
JANELA DA CABINE (ESQUERDO)	746
JANELA DA CABINE (TRASEIRO)	744 757
JOGO - PRÉ-PURIFICADOR (TURBINA)	122 123
JOGO DE BLOCO DESLIZADOR (ASSENTO DA SUSPENSÃO)	731 732 733
JOGO DE BOTÃO DE SUSPENSÃO (AJUSTE DE ALTURA) (ASSENTO DA SUSPENSÃO)	663
JOGO DE CORREIAS EM V (COMANDO DO VENTILADOR)	34
JOGO DE CORREIAS EM V (INCLUI 3 CORREIAS) (VENTILADOR)	57
JOGO DE FIXADORES (ALTERNADOR)	149
JOGO DE INDICADOR (AJUSTAGEM DO PESO) (ASSENTO DA SUSPENSÃO)	664
JOGO DE MANCAL (ALTERNADOR)	149
JOGO DE MANCAL (ASSENTO DA SUSPENSÃO)	664
JOGO DE MOLA (AJUSTE DE ALTURA) (ASSENTO DA SUSPENSÃO)	663
JOGO DE MOLA (ASSENTO DA SUSPENSÃO)	663
JOGO DE PÁRA-CHOQUE (AJUSTAGEM DO PESO) (ASSENTO DA SUSPENSÃO)	664
JOGO DE RETENTOR (VALVULA DE ALIVIO)	570
JOGO DE RETENTOR (VALVULA DE ALIVIO) (VÁLVULA DE ALÍVIO)	461
JOGO DE RETENTOR (VÁLVULA DE VAIVÉM) (CONTROLE DO IMPLEMENTO)	572
JOGO DE RETENTOR (VÁLVULA SOLENÓIDE)	462
JOGO DE SEGUIDOR (ASSENTO DA SUSPENSÃO)	664
JOGO DE TELA (PRÉ-PURIFICADOR)	123
JOGO DE TERMINAL (ALTERNADOR)	149
JOGO DE TOMADA DE CONEXÃO (6 PINOS)	166
JUNTA	524
JUNTA (ALOJAMENTO DO REGULADOR DA ÁGUA)	92
JUNTA UNIVERSAL	322
L	
LÂMINA ANGULÁVEL	577 578 579 580 603
LÂMINA ANGULÁVEL E BORDA CORTANTE	593
LÂMINA DO LIMPADOR DE PÁRA-BRISA (*350-MM) (PORTA, LD, LE)	758
LÂMINA DO LIMPADOR DE PÁRA-BRISA (400 MM) (VIDRO DIANTEIRO, TRASEIRO)	758
LÂMINA E BORDA CORTANTE SEMI-UNIVERSAL	594 595 596 597
LÂMINA SEMI-UNIVERSAL	581 582 583 584 598 600 601 602 604 605
LÂMPADA - FAROL	183 184 185
LÂMPADA - HALOGÊNEO (24 VOLTS, 65 WATTS)	183 184 185
LÂMPADA - LED (VERMELHA, 24 VOLTS) (SISTEMA DE SEGURANÇA DA MÁQUINA)	180
LÂMPADA - LED (24 VOLTS)	491
LÂMPADA - TETO	182

* TRADUÇÃO NÃO DISPONÍVEL NO MOMENTO DA IMPRESSÃO

ÍNDICE

Designação	Página
LÂMPADA - TETO (24 VOLTS)	677
LÂMPADA INDICADORA (LUZ DE AÇÃO)	256
LÂMPADA (24 VOLTS)	182
	256
	667
	670
LÂMPADA (24 VOLTS, 3 WATTS)	251
	667
	670
LAVADOR DO VIDRO	741
LEVANTAMENTO DO MOTOR	49
LIMPADOR DO VIDRO	758

M

MANGUEIRA - RADIADOR	93
MASTRO	612
MATERIAL RODANTE	431
	432
	433
MECANISMO DAS VÁLVULAS	65
	66
MÓDULO - INTERFACE (CHAVE)	180
MÓDULO DO VISOR (SISTEMA VISUAL DA ÁREA DE TRABALHO)	167
MÓDULO ELETRÔNICO DE QUATRO INDICADORES	690
MÓDULO-SUPRIMENTO DE FORÇA	207
MONITOR	691
MONITOR DE SERVIÇO	170
MONTAGEM - ALTERNADOR	50
MONTAGEM - CABINE	697
MONTAGEM - CILINDRO	513
MONTAGEM - COMANDO DO VENTILADOR	52
MONTAGEM - COMANDO FINAL	299
MONTAGEM - CONTROLE	698
MONTAGEM - ESTRUTURA ROPS	704
MONTAGEM - MASTRO	612
	613
MONTAGEM - MONITOR	699
	700
MONTAGEM - MOTOR	51
MONTAGEM - PLATAFORMA	701
MONTAGEM - RÁDIO	703
MONTAGEM - RECEPTOR	209
MONTAGEM - RIPER	614
MONTAGEM - ROLETE SUPERIOR	406
	407
MONTAGEM - TRANSMISSÃO	300
MONTAGEM-ANTENA	696
MONTAGEM-CONECTOR	205
MONTAGEM-CONTROLE DO DECLIVE	206
	207
	208
MONTAGEM-VISOR DA CÂMERA (SISTEMA VISUAL DA ÁREA DE TRABALHO)	167
MOTOR	4
	5
	6
	7
	8
MOTOR - LIMPADOR DO VIDRO	692
	693
	694
	695
MOTOR - NÚCLEO	9
	10
	11
	12
	13
MOTOR - PISTÃO	512
MOTOR DO GRUPO ROTATIVO	520
MOTOR ELÉTRICO (COMPRESSOR DO CONDENSADOR)	641
MOTOR ELÉTRICO DE PARTIDA	232
	234
	235
	236
MUNHÃO DA LÂMINA	592
MUNHÃO DO MOTOR	64

O

ÓLEO - ARRANJO PARA TROCA RÁPIDA	82

P

PAINEL DE FUSÍVEIS	211
PÁRA-LAMA	345
	346
	347
PEDAL - GOVERNADOR E FREIO	708
PEGA-MÃO	660
	661
PELÍCULA - DISJUNTOR	211
PISTÃO E BIELA	54
PIVÔ DO LIMPADOR	760
PLACA - NÚMERO DE SÉRIE	584
PLACA - NÚMERO DE SÉRIE (LÂMINA)	577
	578
	579
	580
	581
	582
	583
PLACA - NÚMERO DE SÉRIE (RÍPER)	616

* TRADUÇÃO NÃO DISPONÍVEL NO MOMENTO DA IMPRESSÃO

ÍNDICE

Designação	Página
PLACA - NÚMERO DE SÉRIE (TRANSMISSÃO)	270
PLACA DE ADVERTÊNCIA (CILINDRO DE ALTA PRESSÃO)	374 376 378 380 432 433
PLACA DE ADVERTÊNCIA (MOLA TENSORA)	374 376 378 380 432 433
PLACA DE IDENTIFICAÇÃO (MÁQUINA)	332
PLACA DE IDENTIFICAÇÃO (SEQÜÊNCIA) (CABINE)	631
PLACA DE INFORMAÇÃO	588 590
PLACA DE INSTRUÇÃO (CONDICIONADOR DE AR)	626 763 765
PLACA E DECALQUE	763 765
PLACA-RADIADOR	366
PLATAFORMA	710
PLATAFORMA DO OPERADOR	711
POLIA - VENTILADOR E COMANDO DO ALTERNADOR	57
POLIA DO VIRABREQUIM	56
PÓS-ARREFECEDOR DA ADMISSÃO DE AR	108
POSIÇÃO DO SENSOR (ALAVANCA DE CONTROLE) (ALAVANCA DE CONTROLE DA LÂMINA)	650
POSIÇÃO DO SENSOR (ANGULAGEM)	172
PRÉ-PURIFICADOR	120 121 122 123
PRÉ-PURIFICADOR COM TELA	125
PRESSURIZADOR	714
PROTETOR - COMANDO FINAL	350
PROTETOR - GUIA DOS ROLETES DAS ESTEIRAS	385 386
PROTETOR - PRÉ-PURIFICADOR	113
PROTETOR - RADIADOR	360 362
PROTETOR - RODA-GUIA	382 383 384
PROTETOR - ROLETES DAS ESTEIRAS	387 389
PROTETOR - TANQUE DE COMBUSTÍVEL	357 358 359
PROTETOR - TRANSMISSÃO	364
PROTETOR - TRASEIRO	363
PROTETOR E ESCREIPER-R0DA-GUIA	350
PROTETOR INFERIOR	351 352 354 355
PURIFICADOR DE AR	109 110

R

Designação	Página
RADIADOR	100 101 103
RÁDIO - COMUNICAÇÃO	213
RASPADOR - RODA-GUIA	422
RECEPTOR - SECADOR (REFRIGERANTE)	682
RECEPTOR - SECADOR (REFRIGERANTE)	679
RECEPTOR-LASER	213
RECEPTOR-LASER (LR410)	213
RECEPTOR-SATÉLITE	213 214
RECLINAÇÃO - ASSENTO	716
REGULADOR DE PRESSÃO DO COMBUSTÍVEL	145
REGULADOR DE TEMPERATURA DA ÁGUA (92 GRAUS C) (LÍQUIDO ARREFECEDOR)	92
REGULADOR DE VOLTAGEM (24 VOLTS)	149
RELÉ (CONJ) (24 VOLTS) (GRAU, INCLINAÇÃO)	251
RELÉ (CONJ) (24 VOLTS) (GUINCHO)	491
RELÉ (CONJ) (24 VOLTS) (MOTOR DO VENTILADOR DO CONDENSADOR)	641
RESPIRO (CÁRTER)	16 19
RESPIRO (TRANSMISSÃO)	291
RETENTOR - TAMPA DA VÁLVULA	19
RETENTOR DO VIRABREQUIM	61 62
RETENTOR DUO-CONE	284 286
REVESTIMENTO DA CABINE	675 677
RIPER	616 617
RODA-GUIA DAS ESTEIRAS	393

* TRADUÇÃO NÃO DISPONÍVEL NO MOMENTO DA IMPRESSÃO

ÍNDICE

Designação	Página
	394
RODA-GUIA DIANTEIRA	390
	391
	392
ROLETE DAS ESTEIRAS	409
ROLETE DE ESTEIRA DE FLANGE DUPLO	411
	412
	413
	414
	415
ROLETE DE ESTEIRA DE FLANGE SIMPLES	416
	417
	418
	419
	420
	421
ROLETE SUPERIOR DA ESTEIRA	410
ROPS ABERTA	718

S

Designação	Página
SEGMENTO DA RODA MOTRIZ	313
SENSOR - PRESSÃO	218
	219
	220
	221
	222
	223
	224
SENSOR - PRESSÃO (ACIONAMENTO DA INJEÇÃO)	215
SENSOR - PRESSÃO (ADMISSÃO DO TURBOALIMENTADOR)	155
SENSOR - PRESSÃO (AR ATMOSFÉRICO)	215
SENSOR - PRESSÃO (COMBUSTÍVEL)	139
SENSOR - PRESSÃO (ÓLEO DO MOTOR)	215
SENSOR - PRESSÃO (ÓLEO PILOTO DA LÂMINA)	251
SENSOR - PRESSÃO (SAÍDA DO TURBOALIMENTADOR)	215
SENSOR - TEMPERATURA	227
	228
	229
SENSOR - TEMPERATURA (ÁGUA, LÍQUIDO ARREFECEDOR)	215
SENSOR - TEMPERATURA (COLETOR DA ADMISSÃO DE AR)	215
SENSOR - TEMPERATURA (ÓLEO DO CONVERSOR DE TORQUE)	246
SENSOR - TEMPERATURA (ÓLEO HIDRÁULICO)	155
SENSOR - TEMPERATURA (ÓLEO LUBRIFICANTE DA TRANSMISSÃO)	155
SENSOR - TEMPERATURA (TANQUE DA TRANSMISSÃO)	246
SENSOR DE PRESSÃO	221
SENSOR DE VELOCIDADE	225
	226
SENSOR DE VELOCIDADE (COMANDO DO VENTILADOR)	34
SENSOR DE VELOCIDADE (CONVERSOR DE TORQUE)	246
SENSOR DE VELOCIDADE (REGULAGEM DO MOTOR) (ROTAÇÃO DO MOTOR, REGULAGEM)	215
SENSOR DE VELOCIDADE (SAÍDA DA TRANSMISSÃO 1)	302
SENSOR DE VELOCIDADE (SAÍDA DA TRANSMISSÃO 2)	302
SENSOR DO MOTOR	4
	5
	6
	7
	8
	215
SERVIÇO-COMUNICAÇÃO (PRODUCT LINK 300)	169
SILENCIADOR	119
SIST. ELETRÔNICO - ACESSÓRIO	170
SISTEMA DE ILUMINAÇÃO - FARÓIS	186
	187
	189
	192
	195
	198
	202
SISTEMA ELETRÔNICO - CLASSIFICAÇÕES DO MOTOR	9
SISTEMA ELETRÔNICO - MÁQUINA	168
SISTEMA ELETRÔNICO - MONITOR	170
SISTEMA ELETRÔNICO - TREM DE FORÇA	170
SISTEMA ELETRÔNICO-COMUNICAÇÃO	169
SOFTWARE - COMUNICAÇÃO (PRODUCT LINK 121SR)	213
SOFTWARE - MONITOR	213
	659
SOFTWARE (MASTRO)	612
SOFTWARE (RECEPTOR)	213
	214
SOFTWARE (RECEPTOR, CARREGADEIRA)	213
	214
SOFTWARE (SENSOR DE ÂNGULO)	172
SOLENÓIDE (24 VOLTS) (MOTOR DE PARTIDA)	232
SUPORTE DA LÂMPADA INDICADORA	256
SUPORTE DO MOTOR	63

* TRADUÇÃO NÃO DISPONÍVEL NO MOMENTO DA IMPRESSÃO

ÍNDICE

Designação	Página
SUSPENSÃO - ASSENTO	734, 736

T

Designação	Página
TAMPA - BLOCO DO MOTOR	16
TAMPA - BOCAL DE ENCHIMENTO (MOTOR)	68
TAMPA - BOCAL DE ENCHIMENTO (TANQUE DE COMBUSTÍVEL)	146
TAMPA - BOCAL DE ENCHIMENTO (TANQUE HIDRÁULICO)	523
TAMPA - CAIXA DIANTEIRA	17, 18
TAMPA - CONSOLO	656, 657
TAMPA - MECANISMO DAS VÁLVULAS	19
TAMPA - RADIADOR	104, 105
TAMPA COM RESPIRO (TANQUE DO LAVADOR DE VIDROS)	738
TAMPA DA RODA-GUIA	372, 373
TANQUE - LAVADOR DE JANELA	738, 740
TANQUE - LÍQUIDO ARREFECEDOR	104, 105, 106
TANQUE DE COMBUSTÍVEL	146
TANQUE DE ÓLEO HIDRÁULICO E MONTAGEM	526
TANQUE HIDRÁULICO E FILTRO	523
TAPETE	657, 701
TELA DE PROTEÇÃO	720, 721
TELA DE SUCÇÃO (RETORNO - TRANSMISSÃO)	270
TELA DE SUCÇÃO (TRANSMISSÃO)	312
TELA FILTRANTE-ÓLEO (ENCHIMENTO DO TANUQE HIDRÁULICO)	523
TELA FILTRANTE (RETORNO DO CONVERSOR DE TORQUE)	291
TELA FILTRANTE (TANQUE HIDRÁULICO)	523
TIRANTE DA LÂMINA	575
TOLDO	634
TRANSMISSÃO	321
TRAVA-CILINDRO	654
TREM DE FORÇA	307
TRINCO	365
TUBOS - ÁGUA	92, 93, 95
TUBOS - AQUECEDOR	686
TUBOS - AR	114, 115
TUBOS - AR CONDICIONADO	679, 682
TUBOS - BOMBA	495
TUBOS - CILINDRO DE INCLINAÇÃO	501, 503, 505, 507
TUBOS - CILINDRO DE LEVANTAMENTO	483
TUBOS - CIRCUITO PILOTO	485, 489, 491, 493
TUBOS - COMBUSTÍVEL	136, 139
TUBOS - DIREÇÃO	438
TUBOS - GUINCHO	608
TUBOS - ÓLEO DA TRANSMISSÃO	291
TUBOS - ÓLEO DO MOTOR	75
TUBOS - ÓLEO DO TURBOALIMENTADOR	79, 81
TUBOS - RIPER	499, 500
TUBOS - SUPRIMENTO DE ÓLEO	76
TUBOS DO AQUECEDOR	686
TURBOALIMENTADOR	128, 129, 130, 131

V

Designação	Página
VÁLVULA - AMOSTRA DE FLUIDOS	486
VALVULA - PARTIDA A ETER	243
VÁLVULA DE ALÍVIO	324, 326, 459, 460, 461, 567, 568, 569, 570
VÁLVULA DE ALÍVIO (CABEÇOTE DA BOMBA)	436
VÁLVULA DE ALÍVIO (COMPRESSOR DO REFRIGERANTE)	635
VÁLVULA DE CONTROLE	538, 541, 543, 545, 547

* TRADUÇÃO NÃO DISPONÍVEL NO MOMENTO DA IMPRESSÃO

ÍNDICE

Designação	Página
	549
VÁLVULA DE CONTROLE DA BOMBA	457
	563
VÁLVULA DE CONTROLE DA BOMBA (COMPENSADOR DE PRESSÃO) (CABEÇOTE DA BOMBA)	436
VÁLVULA DE CONTROLE DO ACESSÓRIO E MONTAGEM	530
VÁLVULA DE CONTROLE DOS FREIOS	452
	454
VÁLVULA DE CONTROLE E MONTAGEM	528
VÁLVULA DE CONTROLE PILOTO	552
	554
	556
	558
VÁLVULA DE DERIVAÇÃO	456
VÁLVULA DE DRENAGEM (ECOLOGIA)	332
VÁLVULA DE ENXAGUAR	520
VÁLVULA DE MODULAÇÃO	86
	87
	323
VÁLVULA DE QUEDA RÁPIDA	564
	565
VÁLVULA DE REDUÇÃO DE PRESSÃO	562
VÁLVULA DE RETENÇÃO	537
	740
VÁLVULA DE SEPARAÇÃO	571
	572
VÁLVULA DO CARTUCHO PILOTO	560
	561
VÁLVULA E MONTAGEM - LÂMINA	527
VÁLVULA PARA TIRAR AMOSTRAS DE FLUIDOS	85
VÁLVULA SOLENÓIDE	462
	463
	573
	574
VÁLVULA SOLENÓIDE (CONTROLE DA LÀMINA)	527
VÁLVULA SOLENÓIDE (ESTACIONAMENTO, FREIO SECUNDÁRIO)	445
VÁLVULA SOLENÓIDE (FREIO SECUNDÁRIO)	443
VÁLVULA SOLENÓIDE (GUINCHO)	608
VÁLVULA SOLENÓIDE (TRAVA HIDRÁULICA)	509
	527
VEDADOR TIPO LABIO (REGULADOR DA TEMPERATURA DA ÁGUA)	92
VENTILADOR - EJETOR	89
VENTILADOR DA CABINE	628
VENTILADOR DE SOPRO	90
VENTILADOR REVERSÍVEL	91
VIDRO - DESLIZANTE	757
VIDRO-CABINE (DESLIZANTE, MATIZADO)	754
VIDRO (MATIZADO)	743
VIDRO (MATIZADO)	744
	745
	746
VIGIA (TANQUE DE ÁGUA)	106
VIGIA (TANQUE HIDRÁULICO)	523
VIRABREQUIM	20
VISOR - MONITOR	659
VISOR - MONITOR (CD610)	659
VISOR - MONITOR (CD700)	659
VISOR-CÂMERA	167
VOLANTE DO MOTOR	42

* TRADUÇÃO NÃO DISPONÍVEL NO MOMENTO DA IMPRESSÃO

STICHWORTVERZEICHNIS

Bezeichnung	Seite
A	
ABLASS (UMWELTFREUNDLICH)	279, 280
ABLASSSTOPFEN	45
ABLASSSTOPFEN (GETRIEBEGEHÄUSE)	332
ABLASSSTOPFEN (GETRIEBESÖLKÜHLER)	275
ABLASSSTOPFEN (HYDRAULIKTANK)	523
ABLASSSTOPFEN (KRAFTÜBERTRAGUNG)	280
ABLASSVENTIL (UMWELTFREUNDLICH)	332
ABSTREIFBALKEN	327
ABSTREIFER, HINTEN	423
ACHSE	262
ACHSWELLE	408
ANSAUGSIEB (GETRIEBE)	312
ANSAUGSIEB (GETRIEBESPÜLUNG)	270
ANSCHLUSSKLEMMENSATZ (DREHSTROM-GENERATOR)	149
ANSCHLUSSSTÜCK	73
ANTENNENBEFESTIGUNG	696
ANTRIEBSSTRANG-WARTUNGSSATZ	170
ANTRIEBSWELLE	314
ANZEIGE - KAMERA	167
ANZEIGE (MOTORÖLDRUCK)	251
ANZEIGE (WARNLEUCHTE)	667, 670
ANZEIGEMODUL (*WORK AREA VISUAL SYSTEM)	167
ANZEIGEN-EINBAUSATZ (GEWICHTSEINSTELLUNG) (SCHWINGSITZ)	664
ARBEITSGERÄT - HYDRAULIKSTEUERUNG	467, 468
ARBEITSGERÄTEELEKTRONIK	170
ARBEITSGERÄTEPUMPE UND AUFHÄNGUNG	515
ARBEITSGERÄTESTEUERVENTIL U. BEFESTIGUNGSTEILE	530
ARBEITSLEUCHTEN	183, 184, 185, 186, 187, 189, 192, 195, 198, 202
ÄTHERSTARTHILFE	230
ÄTHERSTARTVENTIL	243
AUFKLEBER	761, 762
AUFKLEBER - INFORMATION (FESTZURREN)	335, 336
	616
	764
	765
AUFKLEBER - INFORMATION (LANGZEITKÜHLMITTEL - HANDBUCH LESEN)	764, 765
AUFKLEBER - INFORMATION (LUFTREINIGER)	109
AUFKLEBER (RADIO)	666
AUFREISSER	616, 617
AUFREISSERBEFESTIGUNG	614
AUFREISSERHUBZYLINDER	476
AUFREISSERLEITUNGEN	499, 500
AUFREISSERZAHN	619, 620, 621, 622
AUSPUFFABSCHIRMUNG	126
AUSPUFFKRÜMMER	118
AUSWERFERLÜFTER	89
B	
BATTERIE	161
BATTERIE UND VERDRAHTUNG	155
BATTERIE (12 V, WARTUNGSFREI)	161
BATTERIE (12 V, WARTUNGSFREI, NASS)	156
BATTERIEKASTEN	329, 330
BEFESTIGUNG - DÄMPFER U. RIEMENSCHEIBE	38
BEFESTIGUNG - VERBINDER	205
BEFESTIGUNGSTEILE (DREHSTROMGENERATOR)	149
BELEUCHTUNGSKABELSTRANG	202, 252
BELEUCHTUNGSKABELSTRANG (ARBEITSSCHEINWERFER) (HINTEN)	187
BELEUCHTUNGSKABELSTRANG (HINTEN)	195
BELEUCHTUNGSKABELSTRANG (HINTEN) (ARBEITSCHEINWERFER, SEITE)	198
BELEUCHTUNGSKABELSTRANG (HINTEN) (ÜBERROLLSCHUTZ)	192
BELEUCHTUNGSKABELSTRANG (ÜBERROLLSCHUTZ)	189
BELEUCHTUNGSKABELSTRANG (VORDERE ARBEITSLEUCHTEN)	198
BELEUCHTUNGSKABELSTRANG (VORN)	195
BELEUCHTUNGSKABELSTRANG (VORN) (ZYLINDER)	192
BREMSE UND DIFFERENTIALANTRIEB	264

* ÜBERSETZUNG ZUM ZEITPUNKT DER DRUCKLEGUNG NICHT VORHANDEN

STICHWORTVERZEICHNIS

Bezeichnung	Seite
BREMSE UND PLANETENGETRIEBE	268
BREMSSTEUERVENTIL	452, 454

C

C-RAHMEN	585, 586, 587
*CABLE AS-COILED	162
CAMERA (*115-DEG, COLOR)	174
CAMERADISPALYBEFESTIGUNG (*WORK AREA VISUAL SYSTEM)	167

D

DÄMPFER	30
DICHTUNG	524
DICHTUNG (THERMOSTATGEHÄUSE)	92
DICHTUNGSSATZ (AUSGELEICHSVENTIL)	570
DICHTUNGSSATZ (AUSGELEICHSVENTIL) (DRUCKBEGRENZUNGSVENTIL)	461
DICHTUNGSSATZ (SOLENOIDVENTIL)	462
DICHTUNGSSATZ (WECHSELVENTIL) (ARBEITSGERÄTESTEUERUNG)	572
DOPPELFLANSCHROLLEN	411, 412, 413, 414, 415
DREHKNOPFSCHALTER (GEBLÄSEGE-SCHWINDIGKEIT)	667
DREHKNOPFSCHALTER (HINTEN)	677
DREHKNOPFSCHALTER (LEUCHTEN)	667, 670
DREHKNOPFSCHALTER (LINKE TÜR)	677
DREHKNOPFSCHALTER (RECHTE TÜRY)	677
DREHKNOPFSCHALTER (VORNE)	677
DREHMOMENTWANDLER	315, 317, 319
DREHSTROMGENERATOR	149, 151, 153
DREHSTROMGENERATOR - BEFESTIGUNG	50
DREHZAHLSENSOR	225, 226
DREHZAHLSENSOR (DREHMOMENTWAND-LER)	246
DREHZAHLSENSOR (GETRIEBEAUSGANG 1)	302
DREHZAHLSENSOR (GETRIEBEAUSGANG 2)	302
DREHZAHLSENSOR (LÜFTERANTRIEB)	34
DREHZAHLSENSOR (MOTOREINSTELLUNG) (MOTORDREHZAHL, EINSTELLUNG)	215
DRUCKKNOPFSCHALTER (AUTOM. KICKDOWN)	667
DRUCKKNOPFSCHALTER (AUTOM. KICKDOWN)	670
DRUCKKNOPFSCHALTER (BIDIREKTIONAL)	667, 670
DRUCKKNOPFSCHALTER (HERUNTERSCHAL-TEN)	647
DRUCKKNOPFSCHALTER (HOCHSCHAL-TEN)	647
DRUCKKNOPFSCHALTER (*OPERATOR SELECT)	667
DRUCKKNOPFSCHALTER (*OPERATOR SELECT)	670
DRUCKKOPFSCHALTER	242
DRUCKLÜFTER	90
DRUCKLUFTLEITUNGEN	114, 115
DRUCKREDUZIERVENTIL	562
DRUCKSCHALTER (KOMPRESSOR, OBERE SEITE)	679, 682
DRUCKSCHALTER (ÖLFILTERUMGEHUNG)	435
DRUCKSENSOR	218, 219, 220, 221, 222, 223, 224
DRUCKSENSOR (AUSSENLUFT)	215
DRUCKSENSOR (DOZERVORSTEUERÖL)	251
DRUCKSENSOR (EINSPRITZBETÄTIGUNG)	215
DRUCKSENSOR (KRAFTSTOFF)	139
DRUCKSENSOR (MOTORÖL)	215
DRUCKSENSOR (TURBILADEREINLASS)	155
DRUCKSENSOR (TURBOLADERAUSLASS)	215
DRUCKSPEICHER	260, 261

E

EINBAUVORSTEUERVENTIL	560, 561
EINFÜLLKAPPE (KRAFTSTOFFTANK)	146
EINFÜLLKAPPE (MOTOR)	68
EINFÜLLSTUTZENKAPPE (HYDRAULIK-TANK)	523
EINZELFLANSCHROLLEN	416, 417

* ÜBERSETZUNG ZUM ZEITPUNKT DER DRUCKLEGUNG NICHT VORHANDEN

STICHWORTVERZEICHNIS

Bezeichnung	Seite
	418
	419
	420
	421
ELEKTR. UMFORMER	166
ELEKTRONIK - MASCHINE	168
ELEKTRONIK - MONITOR	170
ELEKTRONIK - MOTORNENNLEISTUNG	9
ELEKTRONIK, KOMMUNIKATION	169
ELEKTRONISCHER SCHLÜSSEL (SICHERHEIT) (GELB)	180
ELEKTRONISCHER SCHLÜSSEL (SICHERHEIT) (GRAU)	180
ELEMENT (ENTLÜFTER) (KURBELGEHÄUSE)	19
EMPFÄNGER, LASER	213
EMPFÄNGER, LASER (*LR410)	213
EMPFÄNGERBEFESTIGUNG	209
ENDSCHALTER (BETRIEBSBREMSPEDAL)	708
ENDSCHALTER (FESTSTELLBREMSE)	647
ENTDUNSTER	72
	73
ENTLÜFTER (GETRIEBE)	291
ENTLÜFTER (KURBELGEHÄUSE)	16
	19

F

FAHRERHAUS	629
	630
	631
FAHRERHAUS-DRUCKLÜFTER	628
FAHRERHAUS-KABELBAUM	741
FAHRERHAUS-KABELBAUM (SCHEIBENWISCHER, LAUTSPRECHER)	677
FAHRERHAUSANBAUSATZ	697
FAHRERHAUSAUSKLEIDUNG	675
	677
FAHRERHAUSBELEUCHTUNG	182
FAHRERHAUSBELEUCHTUNG (24 V)	677
FAHRERHAUSBELÜFTUNG	714
FAHRERHAUSFENSTER	743
	744
	745
	746
	747
	748
	749
	750
	751
	753
	754
	756
FAHRERHAUSFENSTER (HINTEN)	744
FAHRERHAUSFENSTER (HINTEN)	757
FAHRERHAUSFENSTER (LINKS)	746
FAHRERHAUSFENSTER (RECHTS)	745
FAHRERHAUSHEIZUNG	662
FAHRERPLATTFORM	711
FAHRERPLATTFORM-KABELSTRANG	251
FAHRERPLATTFORMVERDRAHTUNG	256
FAHRERSITZ	722
	724
	725
	727
	728
	729
	730
FAHRERSITZFEDERUNG	734
	736
FAHRERSITZFEDERUNGSGEHÄUSE	663
FAHRERSITZVERSTELLER	623
FAHRWERK	1
FAHRWERK-KABELBAUM	155
	156
	256
*FASTENER GP-VALVE COVER BASE	41
FEDER-EINBAUSATZ (HÖHENEINSTELLUNG) (SCHWINGSITZ)	663
FEDER-EINBAUSATZ (SCHWINGSITZ)	663
FEDERUNGS-EINBAUSATZ (EINSTELLKNOPF) (HÖHENEINSTELLUNG) (SCHWINGSITZ)	663
FESTSTELLBREMSGESTÄNGE	651
FILTERSATZ (UMLAUFLUFT)	714
FUSSMATTE	657
	701

G

GAS- U. BREMSPEDAL	708
GEGENGEWICHT	334
GESTÄNGE UND ANBAUSATZ	698
GETRIEBE	321
GETRIEBE-KABELBAUM	156
GETRIEBEAUFLAGER	300
GETRIEBEGEHÄUSE	272
GETRIEBEHYDRAULIK	273
GETRIEBEÖLKÜHLER	275
GETRIEBESCHUTZ	364
GLAS (GETÖNT)	743
	744
	745
	746
GLASS - FAHRERHAUS (SCHIEBEFENSTER, GETÖNT)	754
GLEITRINGDICHTUNG	284

* ÜBERSETZUNG ZUM ZEITPUNKT DER DRUCKLEGUNG NICHT VORHANDEN

STICHWORTVERZEICHNIS

Bezeichnung	Seite
	286
GLEITSCHIENENBLOCK-EINBAUSATZ (SCHWINGSITZ)	731
	732
	733
*GRADE CONTROL AR-LASER	171
GRUNDAUSFÜHRUNG	3
*GUARD & SCRAPER GP-IDLER	350

H

HALOGENSCHINWERFER (24V)(65W)	183
	184
	185
HALTEGRIFF	660
	661
HECKVERKLEIDUNG	363
HEIZUNGSLEITUNGEN	686
HUBMASTBEFESTIGUNG	612
	613
HUBZYLINDER U. LEITUNGEN	470
	472
HUBZYLINDERLEITUNGEN	483
HYDRAULIKANORDNUNG (2-VENTIL-HYDRAULIK)	482
HYDRAULIKBEDIENUNG (MIT VORSTEUERUNG)	653
HYDRAULIKÖLKÜHLER	469
HYDRAULIKPUMPE UND LEITUNGEN	495
HYDRAULIKTANK UND BEFESTIGUNGSTEILE	526
HYDRAULIKTANK UND SCHMIERFILTER	523
HYDRAULIKTANKVERKLEIDUNG	344

I

IDENTIFIKATIONSSCHILD (MASCHINE)	332
IDENTIFIKATIONSSCHILD (SEQUENZ) (FAHRERHAUS)	631
IDENTIFIZIERUNGS-AUFKLEBER (ARBEITSSCHEINWERFER)	187
	190
	193
	196
	198
	203
	246
IDENTIFIZIERUNGS-AUFKLEBER (BELEUCHTUNG)	668
IDENTIFIZIERUNGS-AUFKLEBER (GRUPPENNUMMER) (KÄLTEMITTELKONDENSATOR)	641
IDENTIFIZIERUNGS-AUFKLEBER (INSTRUMENTENTAFEL)	667
	670
	671
IDENTIFIZIERUNGS-AUFKLEBER (JOYSTICK)	171
IDENTIFIZIERUNGS-AUFKLEBER (SCHEIBENWISCHERSTEUERUNG)	677
IDENTIFIZIERUNGS-AUFKLEBER (SICHERHEITSSYSTEM)	180
IDENTIFIZIERUNGS-AUFKLEBER (STARTSCHLÜSSELSCHALTER)	180
IDENTIFIZIERUNGS-AUFKLEBER (ÜBERWACHUNGSTAFEL)	668
	671
IDENTIFIZIERUNGS-AUFKLEBER (UNTERE DREHZAHL, WINDENLEUCHTE)	468
IDENTIFIZIERUNGS-AUFKLEBER (WARNLEUCHTE) (SPERRE, MANUELLER BETRIEB)	670
IDENTIFIZIERUNGS-AUFKLEBER (WASSERHEIZUNG)	173
IDENTIFIZIERUNGS-AUFKLEBER (WINDENSTEUERUNG)	468
IDENTIFIZIERUNGS-AUFKLEBER (12 V)	765
IDENTIFIZIERUNGS-AUFKLEBER (12 V)	763
INFORMATIONSSCHILD	588
	590
*INSTALLATION GP-CAMERA	174
INSTRUKTIONS-AUFKLEBER (AUFREISSERSTEUERUNG)	467
INSTRUKTIONS-AUFKLEBER (ELEKTRISCHER HAUPTSCHALTER)	764
	765
INSTRUKTIONS-AUFKLEBER (FÜR SITZVERSTELLUNG)	734
	736
INSTRUKTIONS-AUFKLEBER (PLANIERSCHILDSTEUERUNG)	764
	766
INSTRUKTONSSCHILD (KLIMAANLAGE)	626
	763
	765
INSTRUMENTENGRUPPE	667
	670
INSTRUMENTENTAFEL-KABELSTRANG	211
	667
	670
INSTRUMENTENTAFEL-SICHERUNG	211

J

JOCHSATZ	67

* ÜBERSETZUNG ZUM ZEITPUNKT DER DRUCKLEGUNG NICHT VORHANDEN

STICHWORTVERZEICHNIS

Bezeichnung	Seite
JOYSTICK -STEUERUNG	650
JOYSTICKSTEUERUNG U. BEFESTIGUNG	643

K

KABELSTRANG - HEIZUNG U. KLIMAANLAGE (A/C)	641
KABELSTRANG - MOTOR	628
KABELSTRANG - VORDERE BELEUCHTUNG	202
KABELSTRANG - VORDERE BELEUCHTUNG (ZYLINDER)	189
KABELSTRANG (UMFORMER)	166
KÄLTEMITTEL-DRUCKSPEICHER	679
	682
KÄLTEMITTELKOMPRESSOR	635
	636
KÄLTEMITTELKONDENSATOR	641
KÄLTEMITTELKONDENSATOR U. BEFESTIGUNGSTEILE	638
	639
KÄLTEMITTELTROCKNER (KÜHLMITTEL)	679
	682
KAPPE MIT ENTLÜFTER (SCHEIBENWASCH-MITTELBEHÄLTER)	738
KEILRIEMEN (KÄLTEMITTELKOMPRESSOR)	636
KEILRIEMENSATZ (EINSCHL. 3 RIEMEN) (LÜFTER)	57
KEILRIEMENSATZ (LÜFTERANTRIEB)	34
KETTENFÜHRUNGSSCHUTZ	385
	386
KETTENGLIED	403
	404
	405
KETTENGLIEDER	395
	396
KETTENKASTEN - GLIEDERKETTE	397
	398
	399
	400
	401
	402
KETTENRADSEGMENT	313
KETTENSPANNER UND -FEDERRÜCKLAUF	424
KIPPSCHALTER (FESTSTELLBREMSE)	651
KIPPSCHALTER (HYDRAULIKSPERRE)	256
KIPPSCHALTER (KLIMAANLAGE)	668
KIPPSCHALTER (MOTORSERVICE-ARBEITSLEUCHTE)	246
KIPPSCHALTER (*MULTIVELOCITY PROGRAM)	257
KIPPSCHALTER (*UNDER HOOD SERVICE LIGHT)	187
	189
	192
	195
	198
	202
KIPPSCHALTER (24 V, GEKAPSELT, ERLEUCHTET) (GASSTEUERUNG)	256
KIPPSCHALTER (24V, ERLEUCHTET) (HINTERE ARBEITSLEUCHTEN)	202
KIPPSCHALTER (24V, ERLEUCHTET) (HINTERE ARBEITSLEUCHTEN)	187
	189
	192
KIPPSCHALTER (24V, ERLEUCHTET) (HINTERE ARBEITSLEUCHTEN)	195
KIPPSCHALTER (24V, ERLEUCHTET) (HINTERE ARBEITSLEUCHTEN)	198
KIPPZYLINDER	478
	480
KLIMAANLAGE	626
	627
KLIMAANLAGENLEITUNGEN	679
	682
KNOPF	674
KOLBENMOTOR	512
KOLBENPUMPE	448
	516
	518
KOLBENPUMPENUMLAUFSATZ	450
	522
KOMMUNIKATIONSEINBAUSATZ	176
	178
KONSOLEN-VERDRAHTUNG	257
KONTROLLEUCHTE (WARNLEUCHTE)	256
KONTROLLEUCHTENSOCKEL	256
KRAFTSTOFFDRUCKREGLER	145
KRAFTSTOFFEINSPRITZDÜSE	135
KRAFTSTOFFEINSPRITZPUMPE	142
	143
KRAFTSTOFFILTER (HOCHLEISTUNG)	132
KRAFTSTOFFILTER UND LEITUNGEN	132
KRAFTSTOFFLEITUNGEN	136
	139
KRAFTSTOFFÖRDERPUMPE	144
KRAFTSTOFFSIEB	146
KRAFTSTOFFSTANDGEBER	146
KRAFTSTOFFTANK	146
KRAFTSTOFFTANKVERKLEIDUNG	357
	358
	359
KRAFTÜBERTRAGUNG	307
KRAFTÜBERTRAGUNGSELEKTRONIK	170
KREUZGELENK	322

* ÜBERSETZUNG ZUM ZEITPUNKT DER DRUCKLEGUNG NICHT VORHANDEN

STICHWORTVERZEICHNIS

Bezeichnung	Seite
KRÜMMER - GETRIEBE	298
KRÜMMER UND VENTIL	443
	445
KRÜMMERVENTIL	510
	511
KÜHLER	100
	101
	103
KÜHLERBLOCK	100
KÜHLERGRILL	349
KÜHLERKAPPE	104
	105
KÜHLERPLATTE	366
KÜHLERSCHLAUCH	93
KÜHLERSCHUTZ	360
	362
KÜHLMITTELBEHÄLTER	104
	105
	106
KÜHLWASSERLEITUNGEN	92
	93
	95
KÜHLWASSERPUMPE	97
	98
	99
KUPPLUNG UND VERKLEIDUNG	277
KURBELWELLE	20
KURBELWELLEN-RIEMENSCHEIBE	56
KURBELWELLENDICHTUNG	61
	62
LADELUFTKÜHLER	108
LADELUFTKÜHLERBLOCK	1
	2
	108
LADEPUMPE	447
LAGERSATZ (DREHSTROMGENERATOR)	149
LAGERSATZ (SCHWINGSITZ)	664
LAUFROLLE	409
LAUFROLLENRAHMEN (TELESKOPRÜCK-LAUF)	374
	376
	378
	380
LAUFROLLENSCHUTZ	387
	389
LAUFWERKFÜHRUNG	390
LAUFWERKSKETTE	426
	427
	428
	429
	430
LAUFWERKSRAHMEN	431
	432
	433
LEITRAD	393
	394
LEITRAD, VORN	390
	391
	392
LEITRADABSTREIFER	422
LEITRADAUFSATZ	372
	373
LEITRADSCHUTZ	382
	383
	384
LENK- UND GETRIEBESTEUERUNG	654
LENKÖLLEITUNGEN	438
LENKPUMPE UND AUFHÄNGUNG	446
LEUCHTE, ROT (*RED, 24-VOLT) (MASCHINENSICHERHEITSSYSTEM)	180
LEUCHTE, ROT (24 V)	491
LEUCHTE (24 V)	182
	256
	667
	670
LEUCHTE (24 V, 3 W)	251
LEUCHTE (24 V, 3 W)	667
	670
LIPPENDICHTUNG (KÜHLWASSERTHERMO-STAT)	92
LUFTEINLASSBOGEN	112
LÜFTERANTRIEB	32
	33
	34
	36
LÜFTERANTRIEBSAUFHÄNGUNG	52
LÜFTERKUPPLUNG	34
LUFTFILTER (HAUPTELEMENT)	109
LUFTFILTER (HILFSELEMENT)	109
LUFTFILTER (STANDARD) (FRISCHLUFT)	714
LUFTKOMPRESSORSITZ	624
	625
	736
LUFTREINIGER	109
	110
MAGNETSCHALTER	240
	241
MAGNETSIEB	312
MAGNETSIEB (GETRIEBE)	312
MAGNETSPULE (24 V) (STARTERMOTOR)	232

* ÜBERSETZUNG ZUM ZEITPUNKT DER DRUCKLEGUNG NICHT VORHANDEN

STICHWORTVERZEICHNIS

Bezeichnung	Seite
MAGNETSTOPFEN (SEITENANTRIEB, ÖLEINFÜLLUNG)	284, 286
MAGNETVENTIL	462, 463, 573, 574
MAGNETVENTIL (HYDRAULIKSPERRE)	509, 527
MAGNETVENTIL (NOTBREMSE)	443
MAGNETVENTIL (*PARKING, SECONDARY BRAKE)	445
MAGNETVENTIL (SCHILDSTEUERUNG)	527
MAGNETVENTIL (SEILWINDE)	608
MASCHINENSTEUERUNG	165
*MAST GP	612
MODUL - VIER ELEKTRON. ANZEIGEN	690
MODULATORVENTIL	86, 87, 323
*MODULE AS-POWER SUPPLY	207
MONITOR	691
MONITOR - KABELBAUM (*GPS)	699
MONITOR - KABELBAUM (*LASER)	699
MONITOR - SERVICE	170
MONITOR - SOFTWARE	213, 659
MONITORBEFESTIGUNG	699, 700
MONITORDISPLAY	659
MONITORDISPLAY (*CD610)	659
MONITORDISPLAY (*CD700)	659
MONTAGEZAPFEN	64
MONTAGEZAPFEN (PLANIERSCHILDEINRICHTUNG)	592
MOTOR-EINBAUSATZ	14
MOTOR, ELEKTR. (KONDENSATORGEBLÄSE)	641
MOTORANSCHLUSS	466
MOTORAUFHÄNGUNG	63
MOTORAUFLAGER	51
MOTORAUSFÜHRUNG	4, 5, 6, 7, 8
MOTORBLOCK	21, 23, 24
MOTORBLOCKDECKEL	16
MOTORDREHVORRICHTUNG	520
MOTORHUBÖSE	49
MOTORKABELSTRANG	246
MOTORKABELSTRANG (ELEKTRON. STEUERMODUL)	244
MOTORKABELSTRANG (PUMPENDÜSE)	244
MOTORKÜHLERBLOCK	9, 10, 11, 12, 13
MOTORÖLABLASS	31
MOTORÖLEINFÜLLSTUTZEN	68
MOTORÖLKÜHLER	88
MOTORÖLLEITUNGEN	75
MOTORSENSOR	4, 5, 6, 7, 8, 215
MOTORSTEUERUNG, ELEKTRON.	165
MOTORSTOPFEN	55
MOTORVERDRAHTUNG	246
MOTORVERKLEIDUNG	337, 340, 342

N

Bezeichnung	Seite
NEBENSTROMVENTIL	456
NEIGEZYLINDERLEITUNGEN	501, 503, 505, 507
NEIGUNGSSTEUERUNG - SATELLIT	172
NIEGUNGSSTEUER VERDRAHTUNG	251
NIVELLIERAUTOMATIK	206, 207, 208
NOCKENWELLE	15

O

Bezeichnung	Seite
ÖLFILTER	4, 69, 283, 435
ÖLFILTER (FEINSTFILTER)	435
ÖLFILTER (HOCHLEISTUNG)	69
ÖLFILTER (NICHT BRENNBARE FLÜSSIGKEIT)	435
ÖLFILTERELEMENT (FEINSTFILTER)	283, 291, 523
ÖLFILTERELEMENT (HOCHLEISTUNG)	523

* ÜBERSETZUNG ZUM ZEITPUNKT DER DRUCKLEGUNG NICHT VORHANDEN

STICHWORTVERZEICHNIS

Bezeichnung	Seite
ÖLFILTERELEMENT (NICHT BRENNBARE FLÜSSIGKEIT)	523
ÖLFILTERSOCKEL	263
ÖLKÜHLERBLOCK (GETRIEBE)	275
ÖLKÜHLERBLOCK (MOTOR)	88
ÖLLEITUNGEN - KRAFTÜBERTRAGUNG	291
ÖLMESSSTAB	74
ÖLMESSSTAB (GETRIEBEGEHÄUSE)	291
ÖLSCHNELLWECHSELANSCHLUSS	82
ÖLSIEB (HYDRAULIKTANKEINFÜLLSIEB)	523
ÖLWANNE	53
ÖLZUFUHRLEITUNGEN	76

P

PANZERWANNE	351 352 354 355
PENDELVENTIL	571 572
PLANETENANTRIEBSGEHÄUSE U. TEILE	270
PLANETENGETRIEBE	301
PLANIERSCHILDHUBZYLINDER	474
PLANIERSTEUERUNG	171
PLATTFORM	710
PLATTFORM-ANBAUSATZ	701
PLEUELSTANGE UND KOLBEN	54
PROBEENTNAHMEVENTIL	85
PROBEENTNAHMEVENTIL F. WARTUNGS-FL.	486
PUMPE UND BEFESTIGUNGSTEILE	141
PUMPENANSCHLUSS	278
PUMPENANTRIEB	282
PUMPENDÜSE, HYDRAULISCH	144
PUMPENKOPF	436
PUMPENSTELLGLIED	434
PUMPENSTEUERVENTIL	457 563
PUMPENSTEUERVENTIL (*PRESSURE COMPENSATOR) (PUMPENKOPF)	436

Q

QUERTRAVERSE	369 371

R

RADIO - KABELSTRANG (NEIGUNGSSTEUE-RUNG)	251
RADIO - KABELSTRANG (PRODUCT LINK RADIO)	178
RADIO - KOMMUNIKATION	213
RADIOANBAUSATZ	703
RADIOEINBAUSATZ	666
RAHMEN UND GEHÄUSE	332
*RECEIVER GP-SATELLITE	213 214
RELAIS (24 V) (KONDENSATORGEBLÄSEMO-TOR)	641
RELAIS (24 V) (NIVELLIERUNG)	251
RELAIS (24 V) (SEILWINDE)	491
RIEMENSCHEIBE - LÜFTER- U. DREHSTROM-GENERATOR	57
RÜCKLEHNENVERLÄNGERUNG (PVC) (SITZ)	727
RÜCKLEHNENVERLÄNGERUNG (STOFF)	724
RÜCKSPIEGEL	688 689

S

SANDSTRAHLSCHUTZGITTER	348
SCHALE - RÜCKENLEHNE	705 706 707
SCHALLDÄMPFER	119
SCHALTERKABELSTRANG (BETRIEBSBREM-SE)	708
SCHAUGLAS (HYDRAULIKTANK)	523
SCHAUGLAS (WASSERTANK)	106
SCHEIBENWASCHANLAGE	741
SCHEIBENWASCHMITTELBEHÄLTER	738 740
SCHEIBENWISCHER	758
SCHEIBENWISCHERBLATT (*350-MM) (TÜR, RECHTS, LINKS)	758
SCHEIBENWISCHERBLATT (*400-MM) (VORDERES, HINTERES FENSTER)	758
SCHEIBENWISCHERMOTOR	692 693 694 695
SCHIEBEFENSTER	757
SCHILD UND AUFKLEBER	763 765
SCHILDSTREBE	575
SCHLÜSSEL (ELEKTRISCHER HAUPTSCHAL-TER)	239
SCHMIERPUMPE	84
SCHNEIDMESSER UND EINSATZSTÜCK	606 607
SCHNELLSENKVENTIL	564 565
SCHNITTSTELLENMODUL (TASTE)	180

* ÜBERSETZUNG ZUM ZEITPUNKT DER DRUCKLEGUNG NICHT VORHANDEN

STICHWORTVERZEICHNIS

Bezeichnung	Seite
SCHUBARM	588, 590
SCHUTZBLECHE	345, 346, 347
SCHUTZBÜGEL	367
SCHUTZGITTER	720, 721
SCHUTZSCHLATERAUFKLEBER	211
SCHWENKPLANIERSCHILD	577, 578, 579, 580
SCHWENKSCHILD	603
SCHWENKSCHILD U. SCHNEIDMESSER	593
SCHWINGSITZ	731, 732, 733
SCHWUNGRAD	42
SCHWUNGRADGEHÄUSE	45, 46
SCREEN (HYDRAULIKTANK)	523
SEITENANTRIEB	284, 286
SEITENANTRIEBSBEFESTIGUNG	299
SEITENANTRIEBSVERKLEIDUNG	350
SENSOR, KABELSTRANG	34, 252, 273, 485
SENSORANSCHLUSSSATZ (6 STIFTE)	166
SERIENNUMMERNSCHILD	584
SERIENNUMMERNSCHILD (AUFREISSER)	616
SERIENNUMMERNSCHILD (GETRIEBE)	270
SERIENNUMMERNSCHILD (PLANIER-SCHILD)	577, 578, 579, 580, 581, 582, 583
SERPENTINENFÖRMIGER RIEMEN (DREHSTROMGENERATOR)	57
SERVICE GP- KOMMUNIKATION (PRODUCT LINK 300)	169
SICHERHEITSEINBAUSATZ	180
SICHERHEITSGURT ((AUTOMATIKSICHERHEITSGURT))	724, 727
SICHERUNG (10 A)	211
SICHERUNG (15 A)	211
SICHERUNG (175 A)	211
SICHERUNG (175 A) (DREHSTROMGENERATOR, HAUPT-)	257
SICHERUNG (20 A)	211
SIEB-EINBAUSATZ (VORREINIGER)	123
SIEB (HYDRAULIKTANK)	523
SIEB (WANDLERRÜCKLAUFSIEB)	291
SOFTWARE - KOMMUNIKATION (PRODUCT LINK 212SR)	213
SOFTWARE (*ANGLE SENSOR)	172
SOFTWARE (EMPFÄNGER)	213, 214
SOFTWARE (MAST)	612
SOFTWARE (*RECEIVER, LOADER)	213, 214
SOLENOIDSPULE (12 V) (HYDRAULIKLÜFTER)	86
SPANNUNGSREGLER (24 V)	149
SPERRVENTIL	537, 740
SPÜLVENTIL	520
STARTERMOTOR	232, 234, 235, 236
STARTSCHLÜSSELSCHALTER (ZÜNDUNG)	667, 670
STAUBAUSWERFER	111
STELLUNGSSENSOR	216, 217
STELLUNGSSENSOR (*ANGLE)	172
STELLUNGSSENSOR (GASREDUZIERPEDAL)	708
STELLUNGSSENSOR (JOYSTICK) (PLANIERSCHILDSTEUERUNG, HANDGRIFF)	650
STELLUNGSSENSOR (RICHUTNGSSTEUERUNG)	647
STELLUNGSSENSOR (ROTIEREND) (BETRIEBSBREMSPEDAL)	708
STEUERHEBEL	645, 646, 647, 649
STEUERHEBEL (PLANIERSCHILD)	645
STEUERHEBEL (SEILWINDE)	554
STEUERKONSOLENABDECKUNG	656, 657
STEUERKRÜMMER	509
STEUERPEDAL U. BEFESTIGUNG	644
STEUERUNG - NICHT PROGRAMMIERT (MASCHINE)	257

* ÜBERSETZUNG ZUM ZEITPUNKT DER DRUCKLEGUNG NICHT VORHANDEN

STICHWORTVERZEICHNIS

Bezeichnung	Seite
STEUERUNG, NICHT PROGRAMMIERTER MONITOR (CATERPILLAR ÜBERWACHUNGSSYSTEM)	668, 670
STEUERUNG (TEMPERATUR)	667
STEUERUNGS-KABELSTRANG	174, 252
STEUERUNGS-KABELSTRANG (PRODUCT LINK RADIO)	176, 178
STEUERUNGSEINHEIT, ELEKTRON. FÜR MOTOR UND BEFEST.	163, 164
STEUERVENTIL	538, 541, 543, 545, 547, 549
STEUERVENTIL UND BEFESTIGUNGSTEILE	528
STIRNRAD	43
STIRNRADGEHÄUSE	48
STIRNRADGEHÄUSE-HALTETEILE	39
STIRNRADGEHÄUSEDECKEL	17, 18
STOSSSTANGEN-EINBAUSATZ (GEWICHTSEINSTELLUNG) (SCHWINGSITZ)	664
SU-PLANIERSCHILD U. ECKMESSER	594, 595, 596, 597
SU-SCHILD	581, 582, 583, 584, 598, 600, 601, 602, 604, 605

T

Bezeichnung	Seite
TELLERRAD- UND VORGELEGERADSATZ	288
TEMPERATURSCHALTER (KÜHLMITTEL)	627
TEMPERATURSENSOR	227, 228, 229
TEMPERATURSENSOR (DREHMOMENTWANDLERÖL)	246
TEMPERATURSENSOR (GETRIEBESCHMIERÖL)	155
TEMPERATURSENSOR (GETRIEBESUMPF)	246
TEMPERATURSENSOR (HYDRAULIKÖL)	155
TEMPERATURSENSOR (LUFTEINLASSKRÜMMER)	215
TEMPERATURSENSOR (WASSER, KÜHLMITTEL)	215
TRAGROLLE	410
TRAGROLLENAUFHÄNGUNG	406, 407
TRENNSCHALTER	239
TURBOLADER	128, 129, 130, 131
TURBOLADERÖLLEITUNGEN	79, 81

U

Bezeichnung	Seite
ÜBERDRUCKVENTIL	324, 326, 459, 460, 461, 567, 568, 569, 570
ÜBERDRUCKVENTIL (KÄLTEMITTELKOMPRESSOR)	635
ÜBERDRUCKVENTIL (PUMPENKOPF)	436
ÜBERROLL-SCHUTZDACH	718
ÜBERROLLSCHUTZ	717
ÜBERROLLSCHUTZAUFLAGER	704
UMGEHUNGSSCHALTER	238
UMKEHRLÜFTER	91
UMLAUFKÜHLWASSERHEIZUNG	173
UMRÜSTSATZ, HITZESCHILD	1, 2
UNTERBRECHER (15 A) (LÜFTERMOTOR)	211

V

Bezeichnung	Seite
VEDRAHTUNG - SOLENOID	156
VEDRAHTUNG - SOLENOID (WINDE, HINTEN)	608
VENTIL U. BEFESTIGUNG - DOZER	527
VENTILDECKEL	19
VENTILDECKELBEFESTIGUNG	40
VENTILDECKELDICHTUNG	19
VENTILKABELSTRANG	491
VENTILKABELSTRANG (SITZ LUFTKOMPRESSOR)	736

* ÜBERSETZUNG ZUM ZEITPUNKT DER DRUCKLEGUNG NICHT VORHANDEN

STICHWORTVERZEICHNIS

Bezeichnung	Seite
VENTILKIPPHEBEL	59, 60
VENTILSATZ (2-VENTIL)	531
VENTILSATZ (3-VENTIL)	533, 535
VENTILSTEUERUNG	65, 66
VENTILSTÖSSELSATZ (SCHWINGSITZ)	664
VERBINDER	495
VERDRAHTUNG (ELEKTRON. STEUERUNG)	244
VERDRAHTUNGSKABELBAUM	156, 654
VERDRAHTUNGSKABELBAUM (DURCHDREHEN OHNE EINSPRITZUNG)	246
VERDRAHTUNGSKABELBAUM (KLIMAANLAGE - KOMPRESSOR)	679, 682
VERDRAHTUNGSKABELBAUM (KRAFTSTOFFDRUCK)	139
VERDRAHTUNGSKABELBAUM (MASCHINENSICHERHEITSSYSTEM)	180
VERDRAHTUNGSKABELBAUM (SCHEIBENWASCHER)	738
VERDRAHTUNGSKABELBAUM (ÜBERBRÜCKUNG)	251, 252
VERDRAHTUNGSKABELBAUM (ÜBERROLLSCHUTZ)	682
VERRIEGELUNG	365
VERSTELLBARER SITZ	716
VORABSCHEIDER	125
VORHÄNGESCHLOSS	136, 146, 329, 337, 344, 360, 634
VORREINIGER	120, 121, 122, 123
VORREINIGERSATZ (TURBINE)	122, 123
VORREINIGERSCHUTZ	113
VORSTEUERLEITUNGEN	485, 489, 491, 493
VORSTEUERÖLDRUCKSAMMLER	464, 465
VORSTEUERVENTIL	552, 554, 556, 558

W

Bezeichnung	Seite
WÄRMESCHIRM	127
WARNAUFKLEBER (DRUCKSPEICHER)	464, 465
WARNAUFKLEBER (HEISSE FLÜSSIGKEIT STEHT UNTER DRUCK)	764, 766
WARNAUFKLEBER (HOCHDRUCK, HANDBICH LESEN, INTL)	763
WARNAUFKLEBER (HOCHDRUCK, HANDBUCH LESEN)	260, 261
WARNAUFKLEBER (KETTENSPANNFEDER)	374, 376, 378, 380, 432, 433
WARNAUFKLEBER (LASERSENDER)	612
WARNAUFKLEBER (NICHT SCHWEISSEN, NICHT BOHREN, HANDBUCH LESEN)	634, 764, 766
WARNAUFKLEBER (PRODUCT LINK RADIO, NICHT NACD)	763
WARNAUFKLEBER (*PRODUCT LINK RADIO, U.S.)	178
WARNAUFKLEBER (*PRODUCT LINK RADIO, U.S.)	176
WARNAUFKLEBER (SCHILD, NICHT BESTEIGEN, BETRIEBS- UND WARTUNGSHANDBUCH LESEN)	612, 613
WARNAUFKLEBER (STROMSCHLAGGEFAHR)	211
WARNAUFKLEBER (ÜBERROLLSCHUTZ, STEINSCHLAGSCHUTZ)	634
WARNSCHILD (HOCHDRUCKZYLINDER)	374, 376, 378, 380, 432, 433
WARNSCHILD (KETTENSPANNFEDER)	374, 376, 378, 380
WARNSCHILD (KETTENSPANNFEDER)	432, 433

* ÜBERSETZUNG ZUM ZEITPUNKT DER DRUCKLEGUNG NICHT VORHANDEN

STICHWORTVERZEICHNIS

Bezeichnung	Seite
WARNVORRICHTUNG	148
WASSERABSCHEIDER- U. KRAFTSTOFFILTER	134
WASSERABSCHEIDER UND KRAFTSTOFFILTER (HAUPTELEMENT)	134
WASSERTEMPERATURREGLER (92 GRAD) (KÜHLMITTEL)	92
WETTERDACH	634
WINDEN-ÖLLEITUNGEN	608
WISCHERARM	760

Z

Bezeichnung	Seite
ZAHNRADPUMPE	308 310
ZAHNRADVORGELEGE	44
ZUGHAKEN	335 336
ZYLINDER - SPERRVORRICHTUNG	654
ZYLINDERAUFHÄNGUNG	513
ZYLINDERKOPF	25 27 28
ZYLINDERKOPF-HALTETEILE	37

* ÜBERSETZUNG ZUM ZEITPUNKT DER DRUCKLEGUNG NICHT VORHANDEN

MACHINE ARRANGEMENT

269-2044 CHASSIS AR

S/N: SMC1-UP; GCT1-UP

PART OF 269-2037, 269-2038 GENERAL AR

SMCS-7000 **i02752128**

NOTE	PART NUMBER	QTY	PART NAME 1 2 3 4 5 6 (PRODUCT LEVEL)	SEE PAGE
Y	*279-9548*	1	BATTERY & WIRING GP	155
Y	*271-0461*	1	BOX GP-BATTERY	329
Y	*272-3477*	1	CAB AR	629
Y	*280-0942*	1	CASE & FRAME GP	332
Y	*218-1835*	1	ENCLOSURE GP-ENGINE	337
Y	*218-1839*	1	ENCLOSURE GP-HYDRAULIC TANK	344
Y	*218-1841*	1	FENDER GP	345
Y	*218-1836*	1	GUARD GP-BOTTOM	351
Y	*223-1540*	1	GUARD GP-RADIATOR	360
Y	*283-0655*	1	INSTRUMENT GP	667
Y	*223-1679*	1	LINES GP-FUEL	136
Y	*208-8699*	1	MOUNTING GP-ROPS	704
Y	*220-2800*	1	PLATFORM GP-OPERATOR	711
Y	*208-8705*	1	ROPS GP	717
Y	*223-2205*	1	SEAT GP	730
Y	*218-1843*	1	TANK GP-FUEL	146
Y	*279-9547*	1	WIRING GP-PLATFORM	256
	6V-1970	1	LITERATURE GP (MACHINE)	
			(IN OPERATOR'S COMPARTMENT)	
	5P-7958	1	SLEEVE-CABLE SPLICE	
	5P-8500	2	KEY	

Y-SEPARATE ILLUSTRATION

<END>

282-9553 CONVERSION AR-HEAT SHIELD—LAMINATE

S/N: SMC1-UP

FOR USE WITH DEMAND FAN, SOUND SUPPRESSION

AN ATTACHMENT

SMCS-1067 **i02763985**

NOTE	PART NUMBER	QTY	PART NAME 1 2 3 4 5 6 (PRODUCT LEVEL)	SEE PAGE
Y	**282-3824**	1	ENGINE AR	5
Y	*232-1240*	1	LINES GP-WATER (TURBOCHARGER)	95
Y	*264-7963*	1	SHIELD GP-HEAT	127
Y	*237-4214*	1	TANK GP-COOLANT	105
	266-7559	1	CORE AS-AFTERCOOLER	
	237-2708	1	ELBOW-EXHAUST	
	237-2568	1	TUBE AS	

Y-SEPARATE ILLUSTRATION

<END>

MACHINE ARRANGEMENT

282-9554 CONVERSION AR-HEAT SHIELD—LAMINATE

S/N: GCT1-UP
FOR USE WITH DEMAND FAN
AN ATTACHMENT

SMCS-1067 **i02775075**

NOTE	PART NUMBER	QTY	PART NAME 1 2 3 4 5 6 (PRODUCT LEVEL)	SEE PAGE
Y	**282-3826**	1	ENGINE AR	7
Y	*232-1240*	1	LINES GP-WATER (TURBOCHARGER)	95
Y	*264-7963*	1	SHIELD GP-HEAT	127
Y	*237-4214*	1	TANK GP-COOLANT	105
	266-7559	1	CORE AS-AFTERCOOLER	
	237-2708	1	ELBOW-EXHAUST	
	237-2568	1	TUBE AS	

Y-SEPARATE ILLUSTRATION

<END>

282-9555 CONVERSION AR-HEAT SHIELD—LAMINATE

S/N: GCT1-UP
FOR USE WITH DIRECT DRIVE FAN
AN ATTACHMENT

SMCS-1067 **i02775126**

NOTE	PART NUMBER	QTY	PART NAME 1 2 3 4 5 6 (PRODUCT LEVEL)	SEE PAGE
Y	**282-3826**	1	ENGINE AR	7
Y	*232-1240*	1	LINES GP-WATER (TURBOCHARGER)	95
Y	*264-7963*	1	SHIELD GP-HEAT	127
Y	*237-4214*	1	TANK GP-COOLANT	105
	266-7559	1	CORE AS-AFTERCOOLER	
	237-2708	1	ELBOW-EXHAUST	
	237-2568	1	TUBE AS	

Y-SEPARATE ILLUSTRATION

<END>

282-9556 CONVERSION AR-HEAT SHIELD—LAMINATE

S/N: GCT1-UP
FOR USE WITH SOUND SUPPRESSION. CANNOT BE USED WITH DEMAND FAN
AN ATTACHMENT

SMCS-1067 **i02775145**

NOTE	PART NUMBER	QTY	PART NAME 1 2 3 4 5 6 (PRODUCT LEVEL)	SEE PAGE
Y	**282-3826**	1	ENGINE AR	7
Y	*232-1240*	1	LINES GP-WATER (TURBOCHARGER)	95
Y	*264-7963*	1	SHIELD GP-HEAT	127
Y	*237-4214*	1	TANK GP-COOLANT	105
	266-7559	1	CORE AS-AFTERCOOLER	
	237-2708	1	ELBOW-EXHAUST	
	237-2568	1	TUBE AS	

Y-SEPARATE ILLUSTRATION

<END>

MACHINE ARRANGEMENT

269-2037 GENERAL AR

S/N: SMC1-UP

SMCS-7000 **i02761204**

NOTE	PART NUMBER	QTY	PART NAME 1 2 3 4 5 6 (PRODUCT LEVEL)	SEE PAGE
Y	*269-2044*	1	CHASSIS AR	1
Y	*279-8995*	1	ELECTRONICS AR-MACHINE	168
Y	**282-3825**	1	ENGINE AR	6
Y	*269-2050*	1	HYDRAULIC AR-2 VALVE	482
Y	*279-9549*	1	INSTALLATION AR-ENGINE	14
Y	*269-2052*	1	PLATE & FILM GP	763
Y	*269-2046*	1	POWER TRAIN AR	307
Y	*222-8667*	1	UNDERCARRIAGE AR	431

Y-SEPARATE ILLUSTRATION

<END>

269-2038 GENERAL AR

S/N: GCT1-UP

SMCS-7000 **i02743890**

NOTE	PART NUMBER	QTY	PART NAME 1 2 3 4 5 6 (PRODUCT LEVEL)	SEE PAGE
Y	*269-2044*	1	CHASSIS AR	1
Y	*279-8995*	1	ELECTRONICS AR-MACHINE	168
Y	**301-5768**	1	ENGINE AR	8
Y	*269-2050*	1	HYDRAULIC AR-2 VALVE	482
Y	*279-9549*	1	INSTALLATION AR-ENGINE	14
Y	*269-2053*	1	PLATE & FILM GP	765
Y	*269-2046*	1	POWER TRAIN AR	307
Y	*218-4982*	1	UNDERCARRIAGE AR	431

Y-SEPARATE ILLUSTRATION

<END>

ENGINE ARRANGEMENT

282-3823 ENGINE AR

S/N: THX8900-UP
149 BRAKE KW (200 BHP) AT 1850 RPM
PART OF 282-2871 DRIVE AR-FAN
AN ATTACHMENT

SMCS-1000 **i02787596**

NOTE	PART NUMBER	QTY	PART NAME 1 2 3 4 5 6 (PRODUCT LEVEL)	SEE PAGE
Y	*238-1116*	1	COOLER GP-TRANSMISSION OIL	275
Y	*246-0605*	1	COVER GP-CYLINDER BLOCK	16
Y	*118-1727*	1	COVER GP-FRONT HOUSING (ACCESSORY DRIVE)	17
Y	*222-1783*	1	COVER GP-VALVE MECHANISM	19
Y	*211-8041*	1	DAMPER GP	30
Y	*4P-2102*	1	DRAIN GP-ENGINE OIL	31
Y	*246-0599*	1	DRIVE GP-PUMP	282
Y	*246-0596*	1	ELBOW GP-AIR INLET	112
Y	*282-3827*	1	ENGINE AR-CORE	9
Y	*222-2409*	1	FASTENER GP-DAMPER & PULLEY	38
Y	*219-8681*	1	FASTENER GP-FRONT HOUSING	39
Y	*236-7315*	1	FASTENER GP-VALVE COVER	40
Y	*233-0423*	1	FASTENER GP-VALVE COVER BASE	41
Y	*230-4118*	1	FILLER GP-ENGINE OIL	68
Y	*183-2097*	1	FILTER GP-ENGINE OIL	69
Y	*241-3718*	1	FLYWHEEL GP	42
Y	*241-3719*	1	FUMES DISPOSAL GP	73
Y	*246-0601*	1	GAUGE GP-OIL LEVEL (DIPSTICK) (ENGINE)	74
Y	*175-6260*	1	GEAR GP-REAR	44
Y	*219-8666*	1	HOUSING GP-FLYWHEEL	46
Y	*166-1784*	1	LIFTING GP-ENGINE	49
Y	*198-1319*	1	LINES GP-ENGINE OIL	75
Y	*264-2014*	1	LINES GP-FUEL	139
Y	*266-9810*	1	LINES GP-TURBOCHARGER OIL	79
Y	*165-4461*	1	LINES GP-WATER	92
Y	*165-4445*	1	MANIFOLD GP-EXHAUST	118
Y	*246-0600*	1	MOUNTING GP-ALTERNATOR	50
Y	*246-0598*	1	MOUNTING GP-FAN DRIVE	52
Y	*165-4459*	1	PAN GP-OIL	53
Y	*252-1567*	1	PLUG GP-ENGINE	55
Y	*246-0602*	1	PULLEY GP-CRANKSHAFT	56
Y	*211-1812*	1	PUMP GP-WATER	99
Y	*189-9306*	1	SEAL GP-CRANKSHAFT	61
Y	*231-1978*	1	SENSOR GP-ENGINE	215
Y	*166-1790*	1	SUPPORT GP-ENGINE	63
Y	*166-1792*	1	TRUNNION GP-ENGINE	64
Y	*198-0921*	1	VALVE GP-FLUID SAMPLING	85
Y	*235-8203*	1	WIRING GP-ELECTRONIC CONTROL	244
			PLEASE USE THE GASKET KIT LINK IN SIS OR CONTACT YOUR LOCAL DEALER FOR THE LATEST GASKET KIT INFORMATION	

Y-SEPARATE ILLUSTRATION

ENGINE ARRANGEMENT

282-3824 ENGINE AR

S/N: THX8900-UP

PART OF 282-9553 CONVERSION AR-HEAT SHIELD

AN ATTACHMENT

SMCS-1000 **i02750318**

NOTE	PART NUMBER	QTY	PART NAME 1 2 3 4 5 6 (PRODUCT LEVEL)	SEE PAGE
Y	*238-1116*	1	COOLER GP-TRANSMISSION OIL	275
Y	*246-0605*	1	COVER GP-CYLINDER BLOCK	16
Y	*118-1727*	1	COVER GP-FRONT HOUSING (ACCESSORY DRIVE)	17
Y	*222-1783*	1	COVER GP-VALVE MECHANISM	19
Y	*211-8041*	1	DAMPER GP	30
Y	*4P-2102*	1	DRAIN GP-ENGINE OIL	31
Y	*246-0599*	1	DRIVE GP-PUMP	282
Y	*246-0596*	1	ELBOW GP-AIR INLET	112
Y	*282-3828*	1	ENGINE AR-CORE	10
Y	*222-2409*	1	FASTENER GP-DAMPER & PULLEY	38
Y	*219-8681*	1	FASTENER GP-FRONT HOUSING	39
Y	*236-7315*	1	FASTENER GP-VALVE COVER	40
Y	*233-0423*	1	FASTENER GP-VALVE COVER BASE (BASE)	41
Y	*230-4118*	1	FILLER GP-ENGINE OIL	68
Y	*183-2097*	1	FILTER GP-ENGINE OIL	69
Y	*241-3718*	1	FLYWHEEL GP	42
Y	*241-3719*	1	FUMES DISPOSAL GP	73
Y	*246-0601*	1	GAUGE GP-OIL LEVEL (DIPSTICK)	74
Y	*175-6260*	1	GEAR GP-REAR	44
Y	*219-8666*	1	HOUSING GP-FLYWHEEL	46
Y	*166-1784*	1	LIFTING GP-ENGINE	49
Y	*198-1319*	1	LINES GP-ENGINE OIL	75
Y	*264-2014*	1	LINES GP-FUEL	139
Y	*266-9811*	1	LINES GP-TURBOCHARGER OIL	81
Y	*165-4461*	1	LINES GP-WATER	92
Y	*165-4445*	1	MANIFOLD GP-EXHAUST	118
Y	*246-0600*	1	MOUNTING GP-ALTERNATOR	50
Y	*246-0598*	1	MOUNTING GP-FAN DRIVE	52
Y	*165-4459*	1	PAN GP-OIL	53
Y	*252-1567*	1	PLUG GP-ENGINE	55
Y	*246-0602*	1	PULLEY GP-CRANKSHAFT	56
Y	*211-1812*	1	PUMP GP-WATER	99
Y	*189-9306*	1	SEAL GP-CRANKSHAFT	61
Y	*231-1978*	1	SENSOR GP-ENGINE	215
Y	*166-1790*	1	SUPPORT GP-ENGINE	63
Y	*166-1792*	1	TRUNNION GP-ENGINE	64
Y	*198-0921*	1	VALVE GP-FLUID SAMPLING	85
Y	*235-8203*	1	WIRING GP-ELECTRONIC CONTROL	244
			PLEASE USE THE GASKET KIT LINK IN SIS OR CONTACT YOUR LOCAL DEALER FOR THE LATEST GASKET KIT INFORMATION	

Y-SEPARATE ILLUSTRATION

ENGINE ARRANGEMENT

282-3825 ENGINE AR

S/N: THX8900-UP

PART OF 269-2037 GENERAL AR

SMCS-1000 **i02749694**

NOTE	PART NUMBER	QTY	PART NAME 1 2 3 4 5 6 (PRODUCT LEVEL)	SEE PAGE
Y	*238-1116*	1	COOLER GP-TRANSMISSION OIL	275
Y	*246-0605*	1	COVER GP-CYLINDER BLOCK	16
Y	*118-1727*	1	COVER GP-FRONT HOUSING (ACCESSORY DRIVE)	17
Y	*222-1783*	1	COVER GP-VALVE MECHANISM	19
Y	*211-8041*	1	DAMPER GP	30
Y	*4P-2102*	1	DRAIN GP-ENGINE OIL	31
Y	*246-0599*	1	DRIVE GP-PUMP	282
Y	*246-0596*	1	ELBOW GP-AIR INLET	112
Y	*282-3829*	1	ENGINE AR-CORE	11
Y	*222-2409*	1	FASTENER GP-DAMPER & PULLEY	38
Y	*219-8681*	1	FASTENER GP-FRONT HOUSING	39
Y	*236-7315*	1	FASTENER GP-VALVE COVER	40
Y	*233-0423*	1	FASTENER GP-VALVE COVER BASE (BASE)	41
Y	*230-4118*	1	FILLER GP-ENGINE OIL	68
Y	*183-2097*	1	FILTER GP-ENGINE OIL	69
Y	*241-3718*	1	FLYWHEEL GP	42
Y	*241-3719*	1	FUMES DISPOSAL GP	73
Y	*246-0601*	1	GAUGE GP-OIL LEVEL (DIPSTICK)	74
Y	*175-6260*	1	GEAR GP-REAR	44
Y	*219-8666*	1	HOUSING GP-FLYWHEEL	46
Y	*166-1784*	1	LIFTING GP-ENGINE	49
Y	*198-1319*	1	LINES GP-ENGINE OIL	75
Y	*264-2014*	1	LINES GP-FUEL	139
Y	*266-9810*	1	LINES GP-TURBOCHARGER OIL	79
Y	*165-4461*	1	LINES GP-WATER	92
Y	*165-4445*	1	MANIFOLD GP-EXHAUST	118
Y	*246-0600*	1	MOUNTING GP-ALTERNATOR	50
Y	*246-0598*	1	MOUNTING GP-FAN DRIVE	52
Y	*165-4459*	1	PAN GP-OIL	53
Y	*252-1567*	1	PLUG GP-ENGINE	55
Y	*246-0602*	1	PULLEY GP-CRANKSHAFT	56
Y	*211-1812*	1	PUMP GP-WATER	99
Y	*189-9306*	1	SEAL GP-CRANKSHAFT	61
Y	*231-1978*	1	SENSOR GP-ENGINE	215
Y	*166-1790*	1	SUPPORT GP-ENGINE	63
Y	*166-1792*	1	TRUNNION GP-ENGINE	64
Y	*198-0921*	1	VALVE GP-FLUID SAMPLING	85
Y	*235-8203*	1	WIRING GP-ELECTRONIC CONTROL	244
			PLEASE USE THE GASKET KIT LINK IN SIS OR CONTACT YOUR LOCAL DEALER FOR THE LATEST GASKET KIT INFORMATION	

Y-SEPARATE ILLUSTRATION

ENGINE ARRANGEMENT

282-3826 ENGINE AR

S/N: THX8900-UP

PART OF 282-9554, 282-9555, 282-9556 CONVERSION AR-HEAT SHIELD AN ATTACHMENT

SMCS-1000 **i02749695**

NOTE	PART NUMBER	QTY	PART NAME 1 2 3 4 5 6 (PRODUCT LEVEL)	SEE PAGE
Y	*238-1116*	1	COOLER GP-TRANSMISSION OIL	275
Y	*246-0605*	1	COVER GP-CYLINDER BLOCK	16
Y	*118-1727*	1	COVER GP-FRONT HOUSING (ACCESSORY DRIVE)	17
Y	*222-1783*	1	COVER GP-VALVE MECHANISM	19
Y	*211-8041*	1	DAMPER GP	30
Y	*4P-2102*	1	DRAIN GP-ENGINE OIL	31
Y	*246-0599*	1	DRIVE GP-PUMP	282
Y	*246-0596*	1	ELBOW GP-AIR INLET	112
Y	*282-3830*	1	ENGINE AR-CORE	12
Y	*222-2409*	1	FASTENER GP-DAMPER & PULLEY	38
Y	*219-8681*	1	FASTENER GP-FRONT HOUSING	39
Y	*236-7315*	1	FASTENER GP-VALVE COVER	40
Y	*233-0423*	1	FASTENER GP-VALVE COVER BASE (BASE)	41
Y	*230-4118*	1	FILLER GP-ENGINE OIL	68
Y	*183-2097*	1	FILTER GP-ENGINE OIL	69
Y	*241-3718*	1	FLYWHEEL GP	42
Y	*241-3719*	1	FUMES DISPOSAL GP	73
Y	*246-0601*	1	GAUGE GP-OIL LEVEL (DIPSTICK)	74
Y	*175-6260*	1	GEAR GP-REAR	44
Y	*219-8666*	1	HOUSING GP-FLYWHEEL	46
Y	*166-1784*	1	LIFTING GP-ENGINE	49
Y	*198-1319*	1	LINES GP-ENGINE OIL	75
Y	*264-2014*	1	LINES GP-FUEL	139
Y	*266-9811*	1	LINES GP-TURBOCHARGER OIL	81
Y	*165-4461*	1	LINES GP-WATER	92
Y	*165-4445*	1	MANIFOLD GP-EXHAUST	118
Y	*246-0600*	1	MOUNTING GP-ALTERNATOR	50
Y	*246-0598*	1	MOUNTING GP-FAN DRIVE	52
Y	*165-4459*	1	PAN GP-OIL	53
Y	*252-1567*	1	PLUG GP-ENGINE	55
Y	*246-0602*	1	PULLEY GP-CRANKSHAFT	56
Y	*211-1812*	1	PUMP GP-WATER	99
Y	*189-9306*	1	SEAL GP-CRANKSHAFT	61
Y	*231-1978*	1	SENSOR GP-ENGINE	215
Y	*166-1790*	1	SUPPORT GP-ENGINE	63
Y	*166-1792*	1	TRUNNION GP-ENGINE	64
Y	*198-0921*	1	VALVE GP-FLUID SAMPLING	85
Y	*235-8203*	1	WIRING GP-ELECTRONIC CONTROL	244
			PLEASE USE THE GASKET KIT LINK IN SIS OR CONTACT YOUR LOCAL DEALER FOR THE LATEST GASKET KIT INFORMATION	

Y-SEPARATE ILLUSTRATION

ENGINE ARRANGEMENT

301-5768 ENGINE AR

S/N: THX8900-UP

PART OF 269-2038 GENERAL AR

SMCS-1000 **i02749697**

NOTE	PART NUMBER	QTY	PART NAME 1 2 3 4 5 6 (PRODUCT LEVEL)	SEE PAGE
Y	*238-1116*	1	COOLER GP-TRANSMISSION OIL	275
Y	*246-0605*	1	COVER GP-CYLINDER BLOCK	16
Y	*118-1727*	1	COVER GP-FRONT HOUSING (ACCESSORY DRIVE)	17
Y	*222-1783*	1	COVER GP-VALVE MECHANISM	19
Y	*211-8041*	1	DAMPER GP	30
Y	*4P-2102*	1	DRAIN GP-ENGINE OIL	31
Y	*246-0599*	1	DRIVE GP-PUMP	282
Y	*246-0596*	1	ELBOW GP-AIR INLET	112
Y	*301-5769*	1	ENGINE AR-CORE	13
Y	*222-2409*	1	FASTENER GP-DAMPER & PULLEY	38
Y	*219-8681*	1	FASTENER GP-FRONT HOUSING	39
Y	*233-0423*	1	FASTENER GP-VALVE COVER BASE (BASE)	41
Y	*236-7315*	1	FASTENER GP-VALVE COVER	40
Y	*230-4118*	1	FILLER GP-ENGINE OIL	68
Y	*183-2097*	1	FILTER GP-ENGINE OIL	69
Y	*241-3718*	1	FLYWHEEL GP	42
Y	*241-3719*	1	FUMES DISPOSAL GP	73
Y	*246-0601*	1	GAUGE GP-OIL LEVEL (DIPSTICK)	74
Y	*175-6260*	1	GEAR GP-REAR	44
Y	*219-8666*	1	HOUSING GP-FLYWHEEL	46
Y	*166-1784*	1	LIFTING GP-ENGINE	49
Y	*198-1319*	1	LINES GP-ENGINE OIL	75
Y	*264-2014*	1	LINES GP-FUEL	139
Y	*266-9810*	1	LINES GP-TURBOCHARGER OIL	79
Y	*165-4461*	1	LINES GP-WATER	92
Y	*165-4445*	1	MANIFOLD GP-EXHAUST	118
Y	*246-0600*	1	MOUNTING GP-ALTERNATOR	50
Y	*246-0598*	1	MOUNTING GP-FAN DRIVE	52
Y	*165-4459*	1	PAN GP-OIL	53
Y	*252-1567*	1	PLUG GP-ENGINE	55
Y	*246-0602*	1	PULLEY GP-CRANKSHAFT	56
Y	*211-1812*	1	PUMP GP-WATER	99
Y	*189-9306*	1	SEAL GP-CRANKSHAFT	61
Y	*231-1978*	1	SENSOR GP-ENGINE	215
Y	*166-1790*	1	SUPPORT GP-ENGINE	63
Y	*166-1792*	1	TRUNNION GP-ENGINE	64
Y	*198-0921*	1	VALVE GP-FLUID SAMPLING	85
Y	*235-8203*	1	WIRING GP-ELECTRONIC CONTROL	244
			PLEASE USE THE GASKET KIT LINK IN SIS OR CONTACT YOUR LOCAL DEALER FOR THE LATEST GASKET KIT INFORMATION	

Y-SEPARATE ILLUSTRATION

ENGINE ARRANGEMENT

282-3827 ENGINE AR-CORE

S/N: THX8900-UP
PART OF 282-3823 ENGINE AR
AN ATTACHMENT

SMCS-1000 **i02787629**

NOTE	PART NUMBER	QTY	PART NAME 1 2 3 4 5 6 (PRODUCT LEVEL)	SEE PAGE
Y	*242-0674*	1	CAMSHAFT GP	15
Y	*246-9365*	1	CONTROL & MTG GP-ENGINE ELEK	164
Y	*188-3826*	1	COOLER GP-ENGINE OIL	88
Y	*217-8669*	1	COVER GP-FRONT HOUSING	18
Y	*164-6148*	1	CRANKSHAFT GP	20
Y	*161-3406*	1	CYLINDER BLOCK GP	23
Y	*242-0672*	1	CYLINDER HEAD GP	27
Y	*213-4363*	1	FASTENER GP-CYLINDER HEAD	37
Y	*205-1321*	1	GEAR GP-FRONT	43
Y	*245-3262*	1	HOUSING GP-FRONT	48
Y	*265-1400*	6	PISTON & ROD GP	54
Y	*220-8233*	1	PUMP & MTG GP-UNIT INJ HYD	141
Y	*195-8098*	1	PUMP GP-ENGINE OIL	84
Y	*267-9720*	1	PUMP GP-FUEL INJECTION	143
Y	*262-5901*	1	TURBOCHARGER GP	131
Y	*242-0447*	1	VALVE MECHANISM GP	66
	282-9934	1	ELECTRONICS GP-ENGINE RATINGS	

Y-SEPARATE ILLUSTRATION

ENGINE ARRANGEMENT

282-3828 ENGINE AR-CORE

S/N: THX8900-UP
PART OF 282-3824 ENGINE AR
AN ATTACHMENT

SMCS-1000 **i02750475**

NOTE	PART NUMBER	QTY	PART NAME 1 2 3 4 5 6 (PRODUCT LEVEL)	SEE PAGE
Y	*242-0674*	1	CAMSHAFT GP	15
Y	*231-1972*	1	CONTROL & MTG GP-ENGINE ELEK	163
Y	*188-3826*	1	COOLER GP-ENGINE OIL	88
Y	*217-8669*	1	COVER GP-FRONT HOUSING	18
Y	*164-6148*	1	CRANKSHAFT GP	20
Y	*161-3406*	1	CYLINDER BLOCK GP	23
Y	*242-0672*	1	CYLINDER HEAD GP	27
Y	*213-4363*	1	FASTENER GP-CYLINDER HEAD	37
Y	*205-1321*	1	GEAR GP-FRONT	43
Y	*245-3262*	1	HOUSING GP-FRONT	48
Y	*265-1400*	6	PISTON & ROD GP	54
Y	*220-8233*	1	PUMP & MTG GP-UNIT INJ HYD	141
Y	*195-8098*	1	PUMP GP-ENGINE OIL	84
Y	*267-9720*	1	PUMP GP-FUEL INJECTION	143
Y	*237-2041*	1	TURBOCHARGER GP	129
Y	*242-0447*	1	VALVE MECHANISM GP	66
	282-9936	1	ELECTRONICS GP-ENGINE RATINGS	

Y-SEPARATE ILLUSTRATION

ENGINE ARRANGEMENT

282-3829 ENGINE AR-CORE

S/N: THX8900-UP

PART OF 282-3825 ENGINE AR

SMCS-1000 **i02750476**

NOTE	PART NUMBER	QTY	PART NAME 1 2 3 4 5 6 (PRODUCT LEVEL)	SEE PAGE
Y	*242-0674*	1	CAMSHAFT GP	15
Y	*231-1972*	1	CONTROL & MTG GP-ENGINE ELEK	163
Y	*188-3826*	1	COOLER GP-ENGINE OIL	88
Y	*217-8669*	1	COVER GP-FRONT HOUSING	18
Y	*164-6148*	1	CRANKSHAFT GP	20
Y	*161-3406*	1	CYLINDER BLOCK GP	23
Y	*242-0672*	1	CYLINDER HEAD GP	27
Y	*213-4363*	1	FASTENER GP-CYLINDER HEAD	37
Y	*205-1321*	1	GEAR GP-FRONT	43
Y	*245-3262*	1	HOUSING GP-FRONT	48
Y	*265-1400*	6	PISTON & ROD GP	54
Y	*220-8233*	1	PUMP & MTG GP-UNIT INJ HYD	141
Y	*195-8098*	1	PUMP GP-ENGINE OIL	84
Y	*267-9720*	1	PUMP GP-FUEL INJECTION	143
Y	*262-5901*	1	TURBOCHARGER GP	131
Y	*242-0447*	1	VALVE MECHANISM GP	66
	282-9936	1	ELECTRONICS GP-ENGINE RATINGS	

Y-SEPARATE ILLUSTRATION

ENGINE ARRANGEMENT

282-3830 ENGINE AR-CORE

S/N: THX8900-UP
PART OF 282-3826 ENGINE AR
AN ATTACHMENT

SMCS-1000 **i02750478**

NOTE	PART NUMBER	QTY	PART NAME 1 2 3 4 5 6 (PRODUCT LEVEL)	SEE PAGE
Y	*242-0674*	1	CAMSHAFT GP	15
Y	*231-1972*	1	CONTROL & MTG GP-ENGINE ELEK	163
Y	*188-3826*	1	COOLER GP-ENGINE OIL	88
Y	*217-8669*	1	COVER GP-FRONT HOUSING	18
Y	*164-6148*	1	CRANKSHAFT GP	20
Y	*161-3406*	1	CYLINDER BLOCK GP	23
Y	*242-0672*	1	CYLINDER HEAD GP	27
Y	*213-4363*	1	FASTENER GP-CYLINDER HEAD	37
Y	*205-1321*	1	GEAR GP-FRONT	43
Y	*245-3262*	1	HOUSING GP-FRONT	48
Y	*265-1400*	6	PISTON & ROD GP	54
Y	*220-8233*	1	PUMP & MTG GP-UNIT INJ HYD	141
Y	*195-8098*	1	PUMP GP-ENGINE OIL	84
Y	*267-9720*	1	PUMP GP-FUEL INJECTION	143
Y	*237-2041*	1	TURBOCHARGER GP	129
Y	*242-0447*	1	VALVE MECHANISM GP	66
	282-9935	1	ELECTRONICS GP-ENGINE RATINGS	

Y-SEPARATE ILLUSTRATION

ENGINE ARRANGEMENT

301-5769 ENGINE AR-CORE

S/N: THX8900-UP

PART OF 301-5768 ENGINE AR

SMCS-1000 **i02751856**

NOTE	PART NUMBER	QTY	PART NAME 1 2 3 4 5 6 (PRODUCT LEVEL)	SEE PAGE
Y	*242-0674*	1	CAMSHAFT GP	15
Y	*246-9365*	1	CONTROL & MTG GP-ENGINE ELEK	164
Y	*188-3826*	1	COOLER GP-ENGINE OIL	88
Y	*217-8669*	1	COVER GP-FRONT HOUSING	18
Y	*164-6148*	1	CRANKSHAFT GP	20
Y	*161-3406*	1	CYLINDER BLOCK GP	23
Y	*242-0672*	1	CYLINDER HEAD GP	27
Y	*213-4363*	1	FASTENER GP-CYLINDER HEAD	37
Y	*205-1321*	1	GEAR GP-FRONT	43
Y	*245-3262*	1	HOUSING GP-FRONT	48
Y	*265-1400*	6	PISTON & ROD GP	54
Y	*220-8233*	1	PUMP & MTG GP-UNIT INJ HYD	141
Y	*195-8098*	1	PUMP GP-ENGINE OIL	84
Y	*267-9720*	1	PUMP GP-FUEL INJECTION	143
Y	*262-5901*	1	TURBOCHARGER GP	131
Y	*242-0447*	1	VALVE MECHANISM GP	66
	302-3904	1	ELECTRONICS GP-ENGINE RATINGS	

Y-SEPARATE ILLUSTRATION

ENGINE ARRANGEMENT

279-9549 INSTALLATION AR-ENGINE

S/N: SMC1-UP; GCT1-UP

PART OF 269-2037, 269-2038 GENERAL AR

SMCS-1000 **i02755641**

NOTE	PART NUMBER	QTY	PART NAME 1 2 3 4 5 6 (PRODUCT LEVEL)	SEE PAGE
Y	*250-6056*	1	AFTERCOOLER GP-AIR	108
Y	*206-9000*	1	AIR CLEANER GP	110
Y	*280-2703*	1	ALTERNATOR GP-CHARGING	153
Y	*241-8240*	1	COMPRESSOR GP-REFRIGERANT	636
Y	*168-8783*	1	CONDENSER & MTG GP-REFRIGERANT	638
Y	*169-3806*	1	COOLER GP-HYDRAULIC OIL	469
Y	*215-3251*	1	DRIVE GP-FAN	33
Y	*241-4353*	1	DUST EJECTOR GP	111
Y	*168-8376*	1	FAN GP-BLOWER	90
Y	*295-7933*	1	FILTER & LINES GP-FUEL	132
Y	*230-5585*	1	FUMES DISPOSAL GP	72
Y	*168-8377*	1	LINES GP-AIR	114
Y	*251-4553*	1	LINES GP-AIR (ATAAC)	115
Y	*168-8378*	1	LINES GP-WATER	93
Y	*223-0556*	1	MOUNTING GP-ENGINE	51
Y	*239-3686*	1	MUFFLER GP	119
Y	*262-2027*	1	PULLEY GP-FAN & ALT DRIVE	57
Y	*227-0833*	1	RADIATOR GP	101
Y	*237-2737*	1	SHIELD GP-EXHAUST	126
Y	*263-9012*	1	STARTING AID GP-ETHER	230
Y	*223-0558*	1	STARTING MOTOR GP-ELECTRIC	235
Y	*255-5232*	1	TANK GP-COOLANT	106
Y	*279-9544*	1	WIRING GP-ENGINE	246
Y	*224-2693*	1	YOKE GP	67

Y-SEPARATE ILLUSTRATION

242-0674 CAMSHAFT GP

S/N: THX8900-UP

PART OF 282-3827, 282-3828, 282-3829, 282-3830, 301-5769 ENGINE AR-CORE

ALSO AN ATTACHMENT

SMCS-1210 **i02433943**

NOTE	REF NO	GRAPHIC REF	PART NUMBER	QTY	PART NAME 1 2 3 4 5 6 (PRODUCT LEVEL)	SEE PAGE
	1	1	**107-7694**	1	PLATE-THRUST	
	2	1	**242-0673**	1	CAMSHAFT AS	
	2A	1	**1B-8705**	1	KEY-WOODRUFF	
	2B	1	**224-3247**	1	GEAR (100-TEETH)	
M	3		**6V-3940**	2	BOLT (M8X1.25X25-MM)	

M-METRIC PART

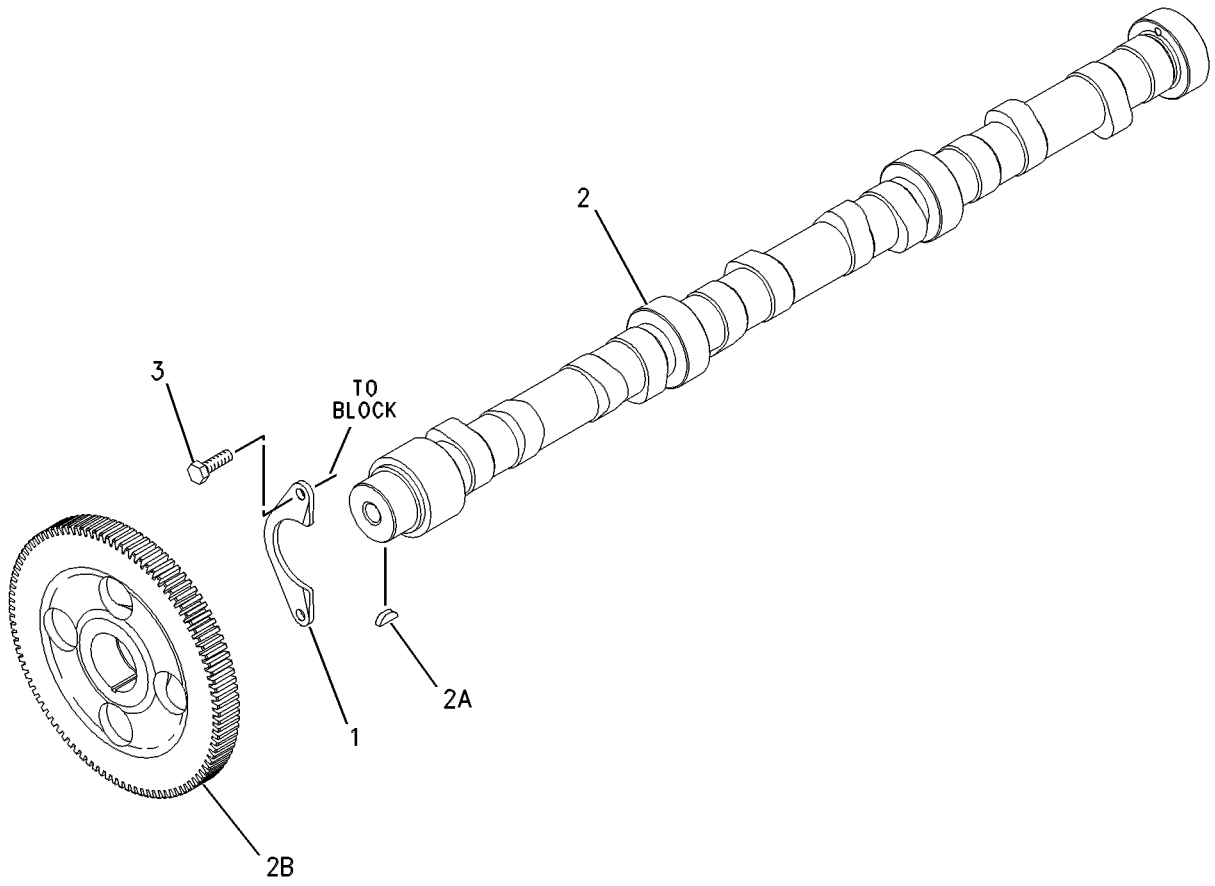

GRAPHIC #1 **<END>** g00626400

246-0605 COVER GP-CYLINDER BLOCK

S/N: THX8900-UP

PART OF 282-3823, 282-3824, 282-3825, 282-3826, 301-5768 ENGINE AR

ALSO AN ATTACHMENT

SMCS-1201 **i02613000**

NOTE	REF NO	GRAPHIC REF	PART NUMBER	QTY	PART NAME 1 2 3 4 5 6 (PRODUCT LEVEL)	SEE PAGE
	1	1	**205-5285**	1	GASKET	
	2	1	**215-4441**	1	COVER	
	3	1	**240-0041**	1	BREATHER AS (CRANKCASE)	
M	4	1	**3E-8005**	1	BOLT (M8X1.25X160-MM)	
M	5	1	**6V-3918**	2	BOLT (M8X1.25X50-MM)	
M	6	1	**6V-3940**	9	BOLT (M8X1.25X25-MM)	
	7	1	**9F-4446**	1	SEAL-O-RING	
	8	1	**9M-1974**	11	WASHER-HARD (8.8X16X2-MM THK)	
	9	1	**5N-4185**	1	WASHER-SEAL	

M-METRIC PART

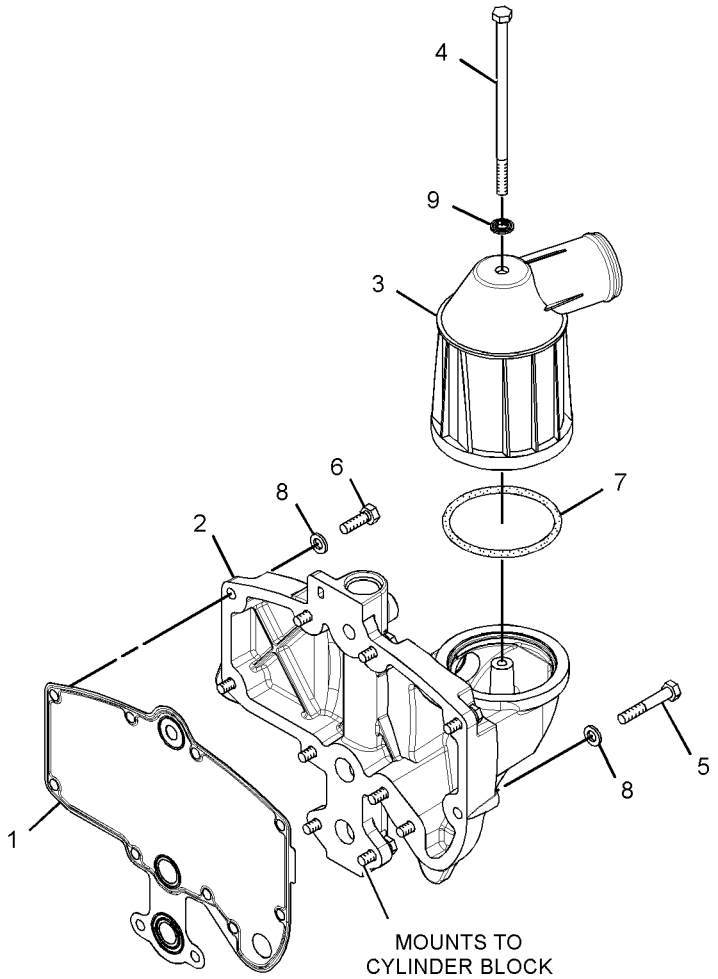

GRAPHIC #1 **<END>** g01309024

118-1727 COVER GP-FRONT HOUSING

S/N: THX8900-UP

PART OF 282-3823, 282-3824, 282-3825, 282-3826, 301-5768 ENGINE AR

ALSO AN ATTACHMENT

SMCS-1151, 1166 **i01671188**

NOTE	REF NO	GRAPHIC REF	PART NUMBER	QTY	PART NAME 1 2 3 4 5 6 (PRODUCT LEVEL)	SEE PAGE
	1	1	**5P-8245**	4	WASHER-HARD (13.5X25.5X3-MM THK)	
M	2	1	**6V-5696**	2	BOLT (M12X1.75X80-MM)	
	3	1	**4W-2026**	1	COVER	
	4	1	**135-9819**	1	SEAL-INTEGRAL	
M	5	1	**6V-8149**	2	NUT (M12X1.75-THD)	

M-METRIC PART

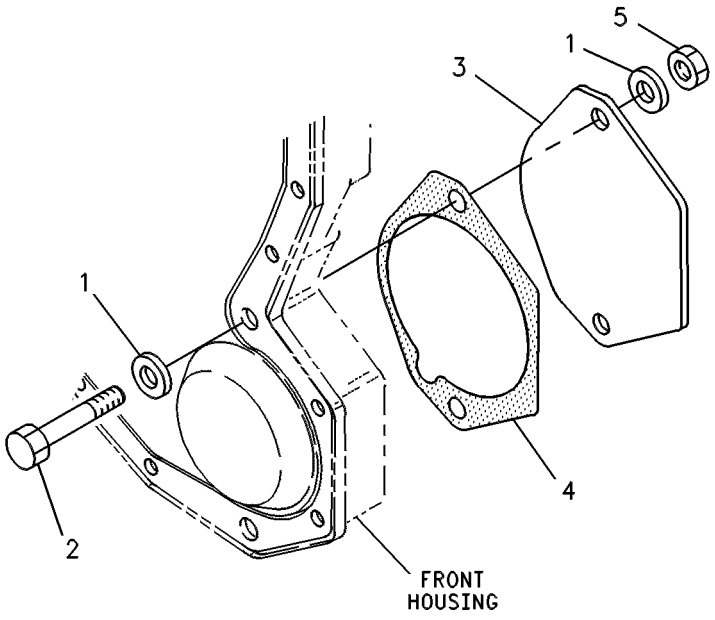

GRAPHIC #1 **<END>** g00245495

217-8669 COVER GP-FRONT HOUSING

S/N: THX8900-UP

PART OF 282-3827, 282-3828, 282-3829, 282-3830, 301-5769 ENGINE AR-CORE

ALSO AN ATTACHMENT

SMCS-1151, 1166 **i02433730**

NOTE	REF NO	GRAPHIC REF	PART NUMBER	QTY	PART NAME 1 2 3 4 5 6 (PRODUCT LEVEL)	SEE PAGE
	1	1	**209-0760**	1	COVER AS-FRONT	
	1A	1	**126-1757**	2	WASHER (10.85X19.3X1.27-MM THK)	
	1B	1	**136-0822**	2	STUD	
	2	1	**209-0762**	1	GASKET AS	

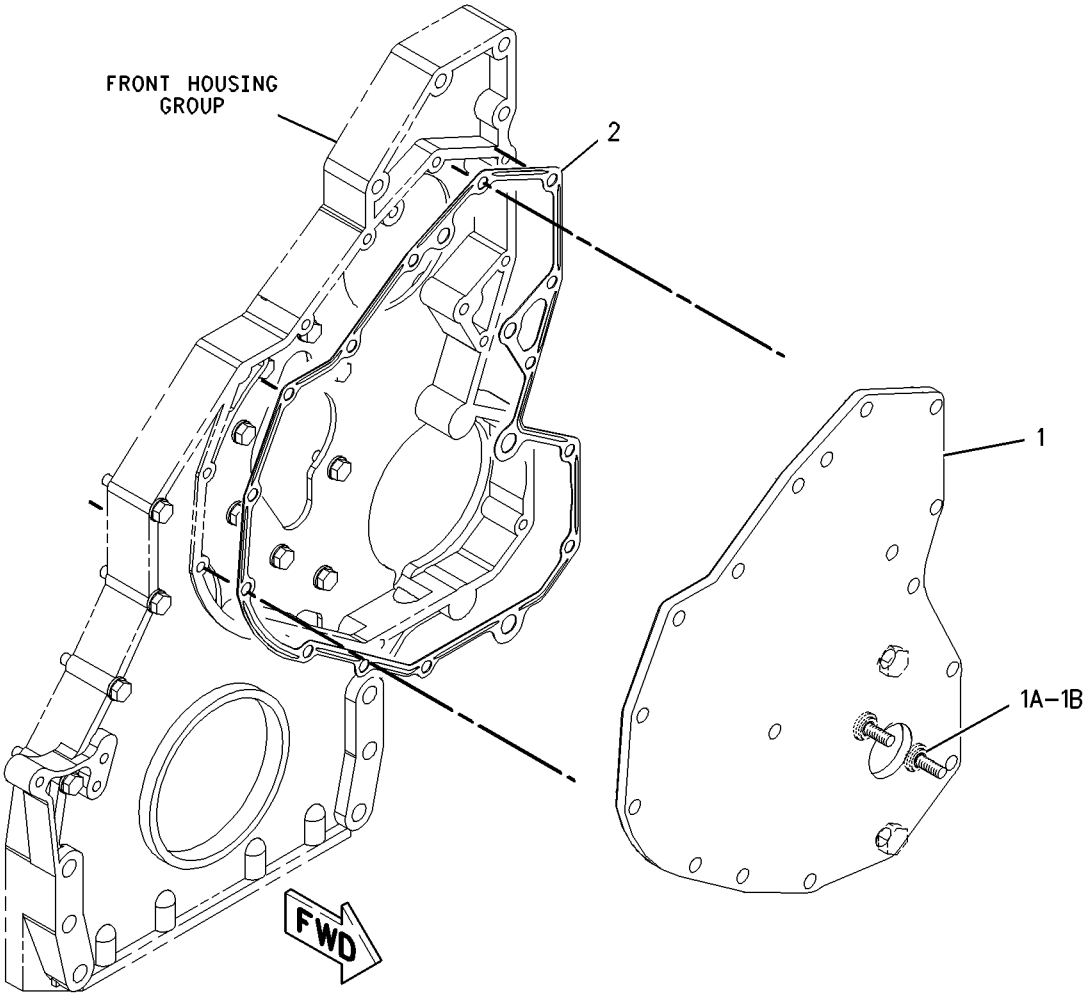

GRAPHIC #1 **<END>** g00849279

222-1783 COVER GP-VALVE MECHANISM

S/N: THX8900-UP

PART OF 282-3823, 282-3824, 282-3825, 282-3826, 301-5768 ENGINE AR

ALSO AN ATTACHMENT

SMCS-1107 **i02675237**

NOTE	REF NO	GRAPHIC REF	PART NUMBER	QTY	PART NAME 1 2 3 4 5 6 (PRODUCT LEVEL)	SEE PAGE
	1	1	**246-5083**	11	SLEEVE-SPACER	
C	2	1	**263-7821**	1	COVER GP-VALVE MECHANISM	
J		1	**217-5701**		SEAL-BULK (23-DM)	
C	3	1	**271-2418**	1	BASE GP-VALVE COVER (VALVE MECHANISM)	
	3A	1	**268-3490**	1	SEAL-VALVE COVER	
	4	1	**204-4444**	1	BREATHER AS (CRANKCASE)	
		1	**124-0506**	1	SEAL	
		1	**160-0526**	1	SEAL-O-RING	
		1	**185-3159**	1	ELEMENT (BREATHER) (CRANKCASE)	
BF			**4C-9612**		SEALANT-SILICONE	

B-USE AS REQUIRED
C-CHANGE FROM PREVIOUS TYPE
F-NOT SHOWN
J-SOLD BY THE DECIMETER

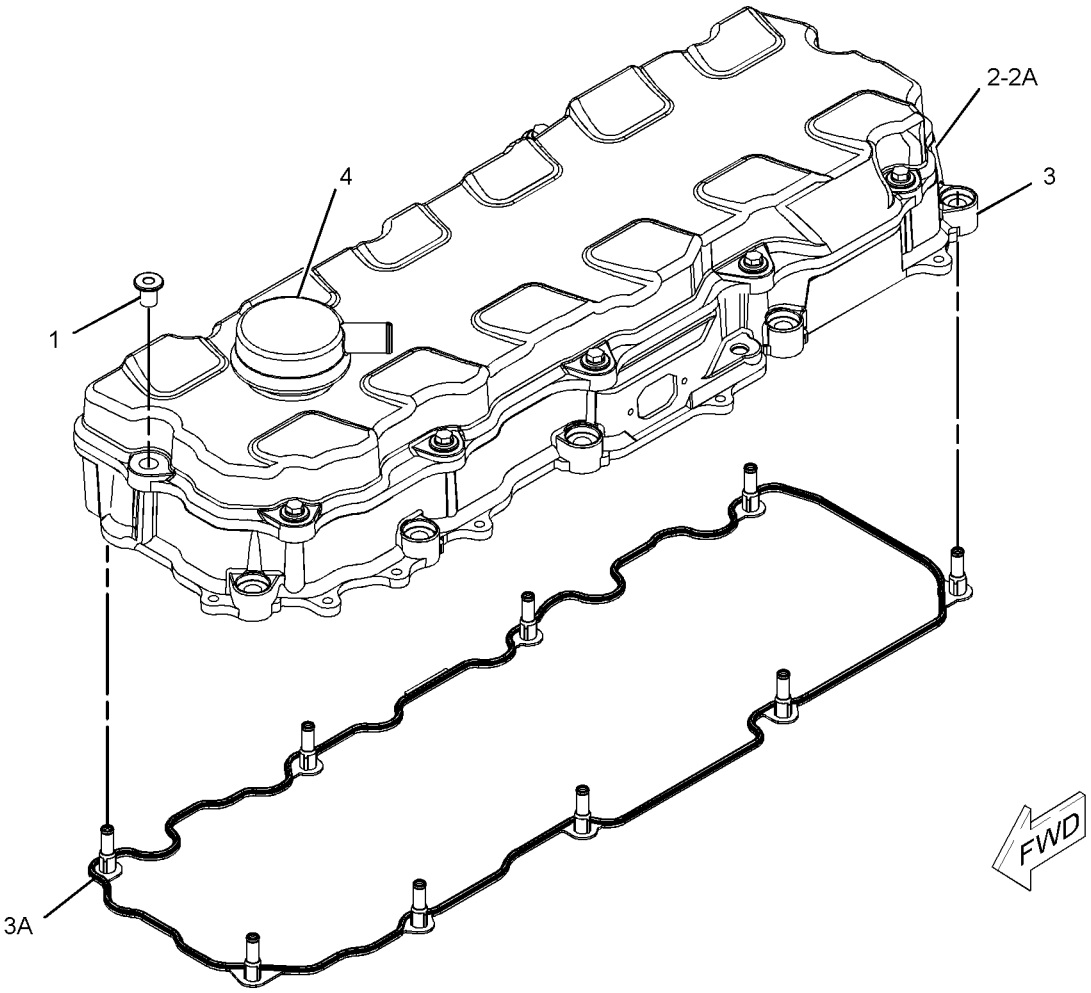

GRAPHIC #1 **<END>** g01304662

BASIC ENGINE

164-6148 CRANKSHAFT GP

S/N: THX8900-UP

PART OF 282-3827, 282-3828, 282-3829, 282-3830, 301-5769 ENGINE AR-CORE

ALSO AN ATTACHMENT

SMCS-1202 **i02569821**

NOTE	REF NO	GRAPHIC REF	PART NUMBER	QTY	PART NAME 1 2 3 4 5 6 (PRODUCT LEVEL)	SEE PAGE
	1	1	**151-2939**	7	BEARING-MAIN (STANDARD)	
R	2	1	**261-1544**	1	CRANKSHAFT AS	
	2A	1	**1B-8705**	1	KEY-WOODRUFF	
	2B	1	**2W-8147**	1	GEAR (50-TEETH)	
	2C	1	**9Y-0810**	1	SLEEVE-WEAR	
	3	1	**246-3150**	2	PLATE-THRUST	

R-REMFG PART MAY BE AVAILABLE

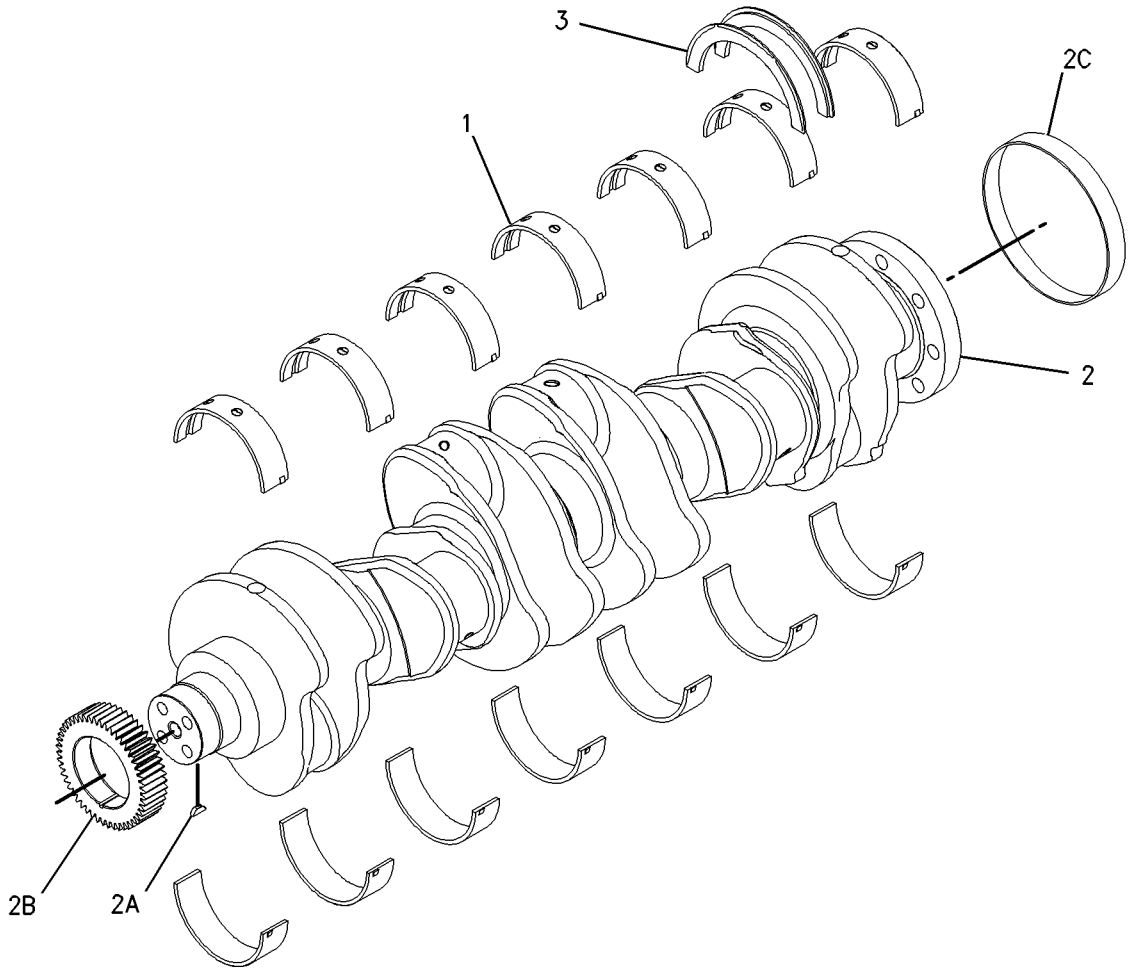

GRAPHIC #1 **<END>** g00789955

BASIC ENGINE

221-3248 CYLINDER BLOCK AS

S/N: THX8900-UP
PART OF 220-1952 CYLINDER BLOCK GP
ALSO AN ATTACHMENT

SMCS-1201 **i02293480**

NOTE	REF NO	GRAPHIC REF	PART NUMBER	QTY	PART NAME 1 2 3 4 5 6 (PRODUCT LEVEL)	SEE PAGE
	1	1	**0L-1026**	2	PLUG-CUP	
	2	1	**3B-0623**	2	PLUG-CUP	
	3	1	**4F-5695**	4	PLUG-CUP	
M	4	1	**175-0454**	14	BOLT (M16X2X160-MM)	
	5	1	**203-5805**	2	BEARING-SLEEVE	
	6	1	**203-6090**	1	BEARING-SLEEVE	
	7	1	**212-7002**	7	CAP-BEARING	
	8	1	**216-5586**	1	BEARING-SLEEVE (CAMSHAFT)	
	10	1	**9X-8268**	14	WASHER (17.5X30X3.5-MM THK)	

M-METRIC PART

221-3248 **CYLINDER BLOCK AS** *(contd.)* **i02293480**

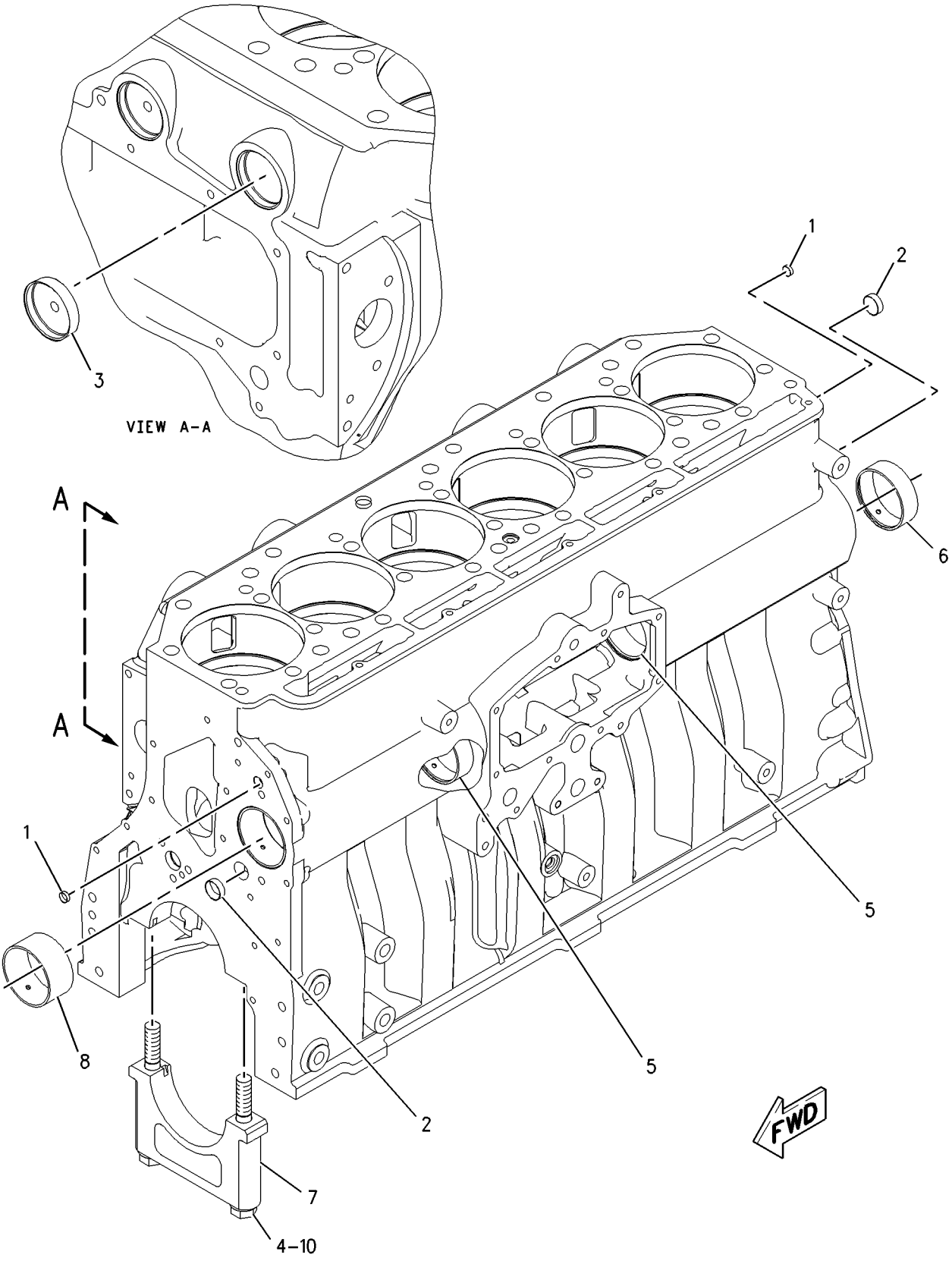

GRAPHIC #1 **<END>** g00920253

161-3406 CYLINDER BLOCK GP

S/N: THX8900-UP

PART OF 282-3827, 282-3828, 282-3829, 282-3830, 301-5769 ENGINE AR-CORE

ALSO AN ATTACHMENT

SMCS-1201 **i01833065**

NOTE	REF NO	GRAPHIC REF	PART NUMBER	QTY	PART NAME 1 2 3 4 5 6 (PRODUCT LEVEL)	SEE PAGE
	1	1	**0S-0519**	1	PLUG-CUP	
	2	1	**1W-8407**	2	SLEEVE	
	3	1	**4G-4972**	1	SEAL-O-RING	
CY	4	1	*220-1952*	1	CYLINDER BLOCK GP	24
	5	1	**6V-3538**	2	DOWEL	
	6	1	**7N-5683**	2	DOWEL	

C-CHANGE FROM PREVIOUS TYPE
Y-SEPARATE ILLUSTRATION

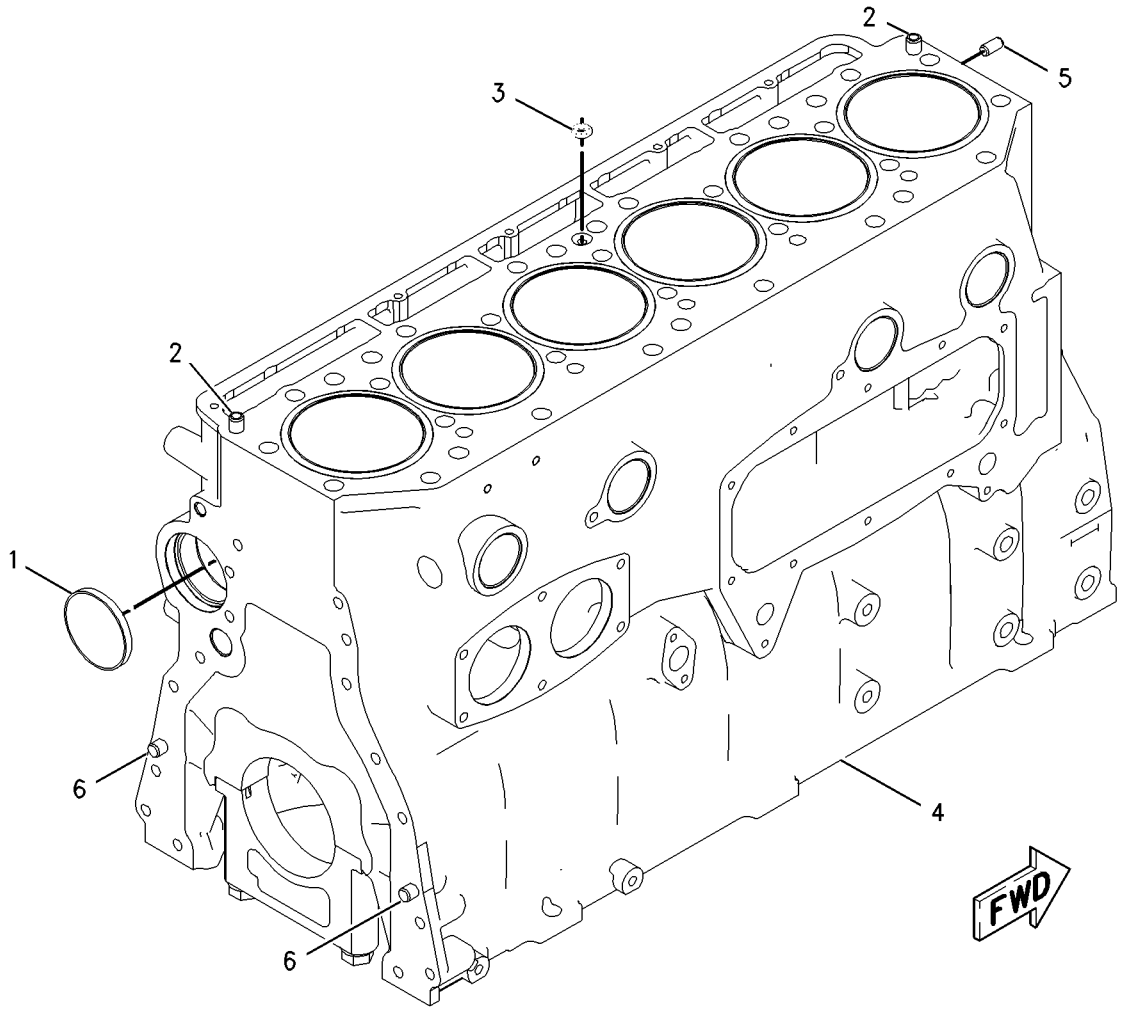

GRAPHIC #1 **<END>** g00838255

BASIC ENGINE

220-1952 CYLINDER BLOCK GP

S/N: THX8900-UP

PART OF 161-3406 CYLINDER BLOCK GP

ALSO AN ATTACHMENT

SMCS-1201 **i02293446**

NOTE	REF NO	GRAPHIC REF	PART NUMBER	QTY	PART NAME 1 2 3 4 5 6 (PRODUCT LEVEL)	SEE PAGE
	1	1	**167-0024**	6	SEAL-LINER	
	2	1	**190-3562**	6	LINER-CYLINDER	
Y	3	1	**221-3248**	1	CYLINDER BLOCK AS	21

Y-SEPARATE ILLUSTRATION

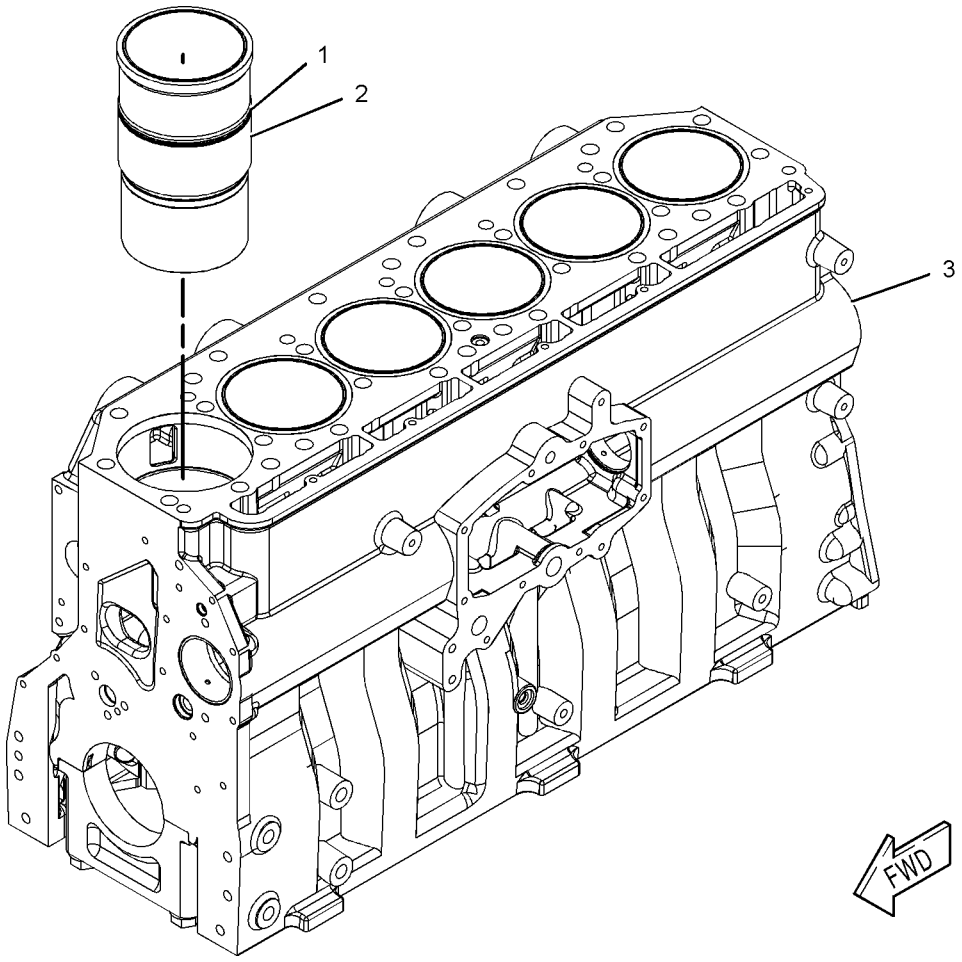

GRAPHIC #1 **<END>** g01032547

252-8438 CYLINDER HEAD AS

S/N: THX8900-UP

PART OF 252-8439 CYLINDER HEAD GP

ALSO AN ATTACHMENT

SMCS-1100, 1101 **i02433926**

NOTE	REF NO	GRAPHIC REF	PART NUMBER	QTY	PART NAME 1 2 3 4 5 6 (PRODUCT LEVEL)	SEE PAGE
	1	1	**6V-7604**	6	PLUG-CUP	
	2	1	**8M-5860**	18	PLUG-CUP	
	3	1	**212-8917**	12	INSERT-VALVE SEAT (EXHAUST)	
	4	1	**227-1200**	6	SLEEVE-INJECTOR	
	5	1	**241-8388**	12	INSERT-VALVE SEAT (INLET)	
	7	1	**8C-0563**	12	SEAL-O-RING	

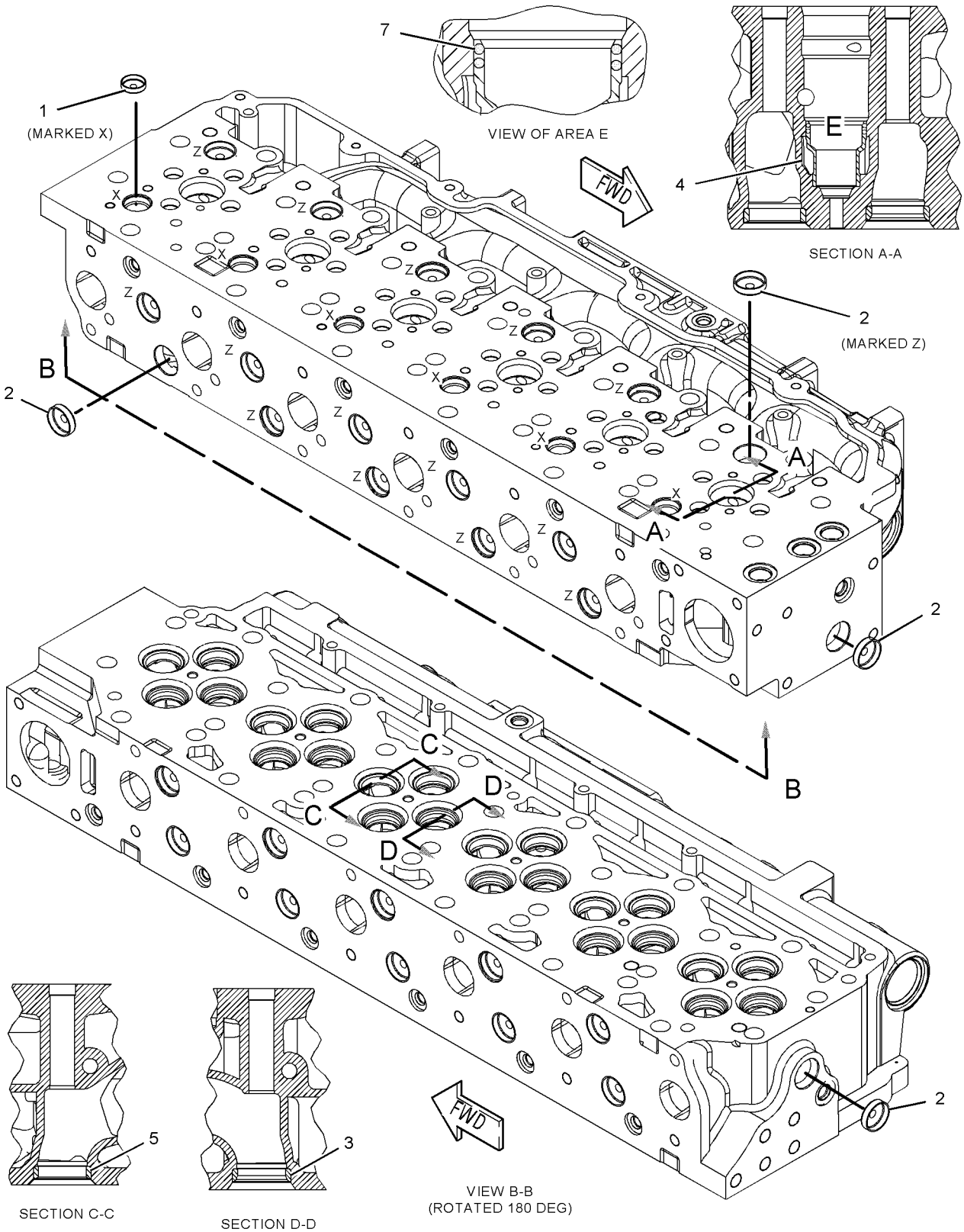

GRAPHIC #1

<END>

g01089169

242-0672 CYLINDER HEAD GP

S/N: THX8900-UP

PART OF 282-3827, 282-3828, 282-3829, 282-3830, 301-5769 ENGINE AR-CORE

ALSO AN ATTACHMENT

SMCS-1100 **i02721753**

NOTE	REF NO	GRAPHIC REF	PART NUMBER	QTY	PART NAME 1 2 3 4 5 6 (PRODUCT LEVEL)	SEE PAGE
	1	1	**2A-3746**	1	PLUG-CUP	
	2	1	**187-1315**	1	GASKET AS	
Y	3	1	**252-8439**	1	CYLINDER HEAD GP	28

Y-SEPARATE ILLUSTRATION

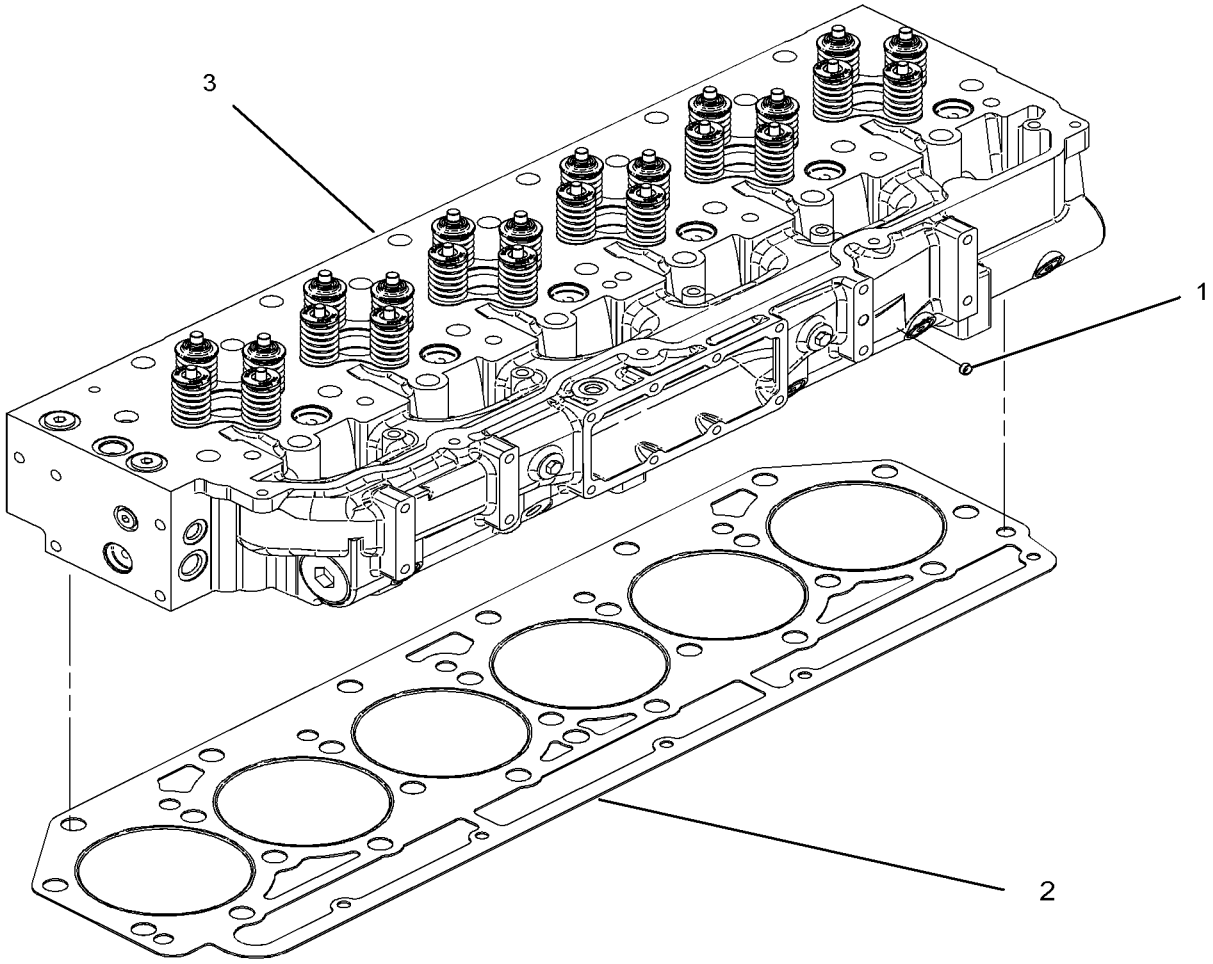

GRAPHIC #1 **<END>** g01305570

252-8439 CYLINDER HEAD GP

S/N: THX8900-UP

PART OF 242-0672 CYLINDER HEAD GP

ALSO AN ATTACHMENT

SMCS-1100 **i02490673**

NOTE	REF NO	GRAPHIC REF	PART NUMBER	QTY	PART NAME 1 2 3 4 5 6 (PRODUCT LEVEL)	SEE PAGE
	1	1	**1W-2715**	24	LOCK-RETAINER	
	2	1	**2A-4429**	24	LOCK-RETAINER	
	3	1	**260-4856**	12	GUIDE-VALVE	
	4	1	**163-2478**	12	SEAL-VALVE STEM	
	5	1	*183-3407*	6	PLUG AS	
					(EACH INCLUDES)	
		1	**9S-8004**	1	PLUG-O-RING	
		1	**153-4906**	1	SEAL-O-RING	
	6	1	**271-7442**	2	PLUG (HEX HEAD)	
	7	1	**183-2317**	2	SEAL-O-RING	
	8	1	**190-6115**	12	SPRING-VALVE (INNER)	
	9	1	**190-6117**	12	SPRING-VALVE (OUTER)	
	10	1	**211-2134**	12	RETAINER (VALVE SPRING)	
	11	1	**217-0609**	6	SEAT-VALVE SPRING	
	12	1	**241-8382**	12	VALVE-INLET	
	13	1	**241-8383**	12	VALVE-EXHAUST	
	14	1	**241-8384**	12	RETAINER (VALVE SPRING)	
	15	1	**241-8385**	12	SPRING-VALVE (OUTER)	
	16	1	**241-8386**	12	SPRING-VALVE (INNER)	
	17	1	**241-8387**	6	SEAT	
	18	1	**259-5829**	12	GUIDE-VALVE	
	19	1	**241-8390**	12	SEAL-VALVE STEM	
Y	20	1	*252-8438*	1	CYLINDER HEAD AS	25
	21	1	*148-8395*	2	PLUG AS	
					(EACH INCLUDES)	
		1	**3K-0360**	1	SEAL-O-RING	
		1	**9S-8005**	1	PLUG-O-RING (HEX HEAD)	
	22	1	**8T-6764**	2	PLUG-PIPE	

Y-SEPARATE ILLUSTRATION

252-8439 **CYLINDER HEAD GP** *(contd.)* **i02490673**

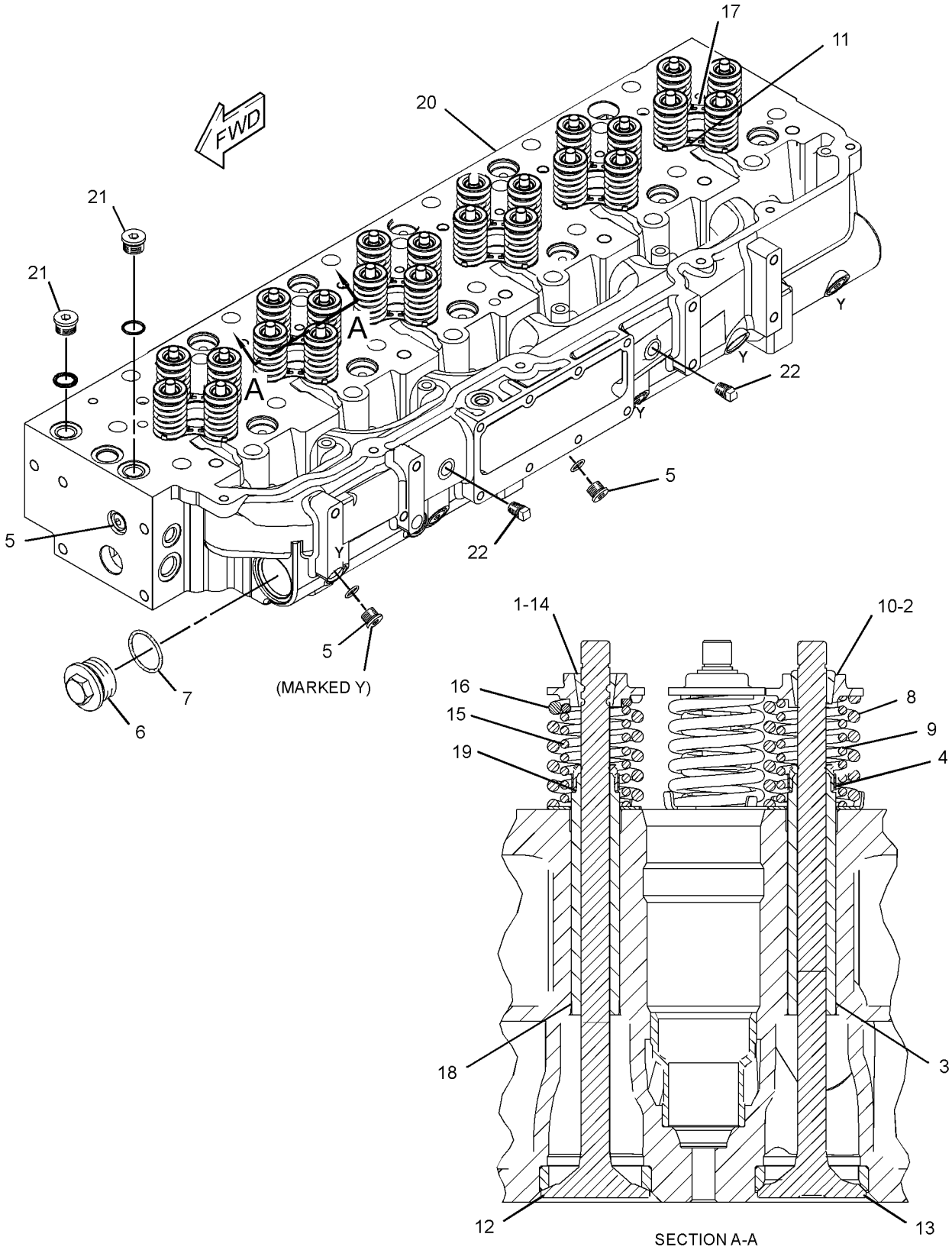

GRAPHIC #1 **<END>** g01191136

211-8041 DAMPER GP

S/N: THX8900-UP
13 INCH
PART OF 282-3823, 282-3824, 282-3825, 282-3826, 301-5768 ENGINE AR
FOR USE WITH CRANK PULLEY GP
ALSO AN ATTACHMENT

SMCS-1205 **i01830638**

NOTE	REF NO	GRAPHIC REF	PART NUMBER	QTY	PART NAME 1 2 3 4 5 6 (PRODUCT LEVEL)	SEE PAGE
	1	1	**208-9619**	1	DAMPER AS	

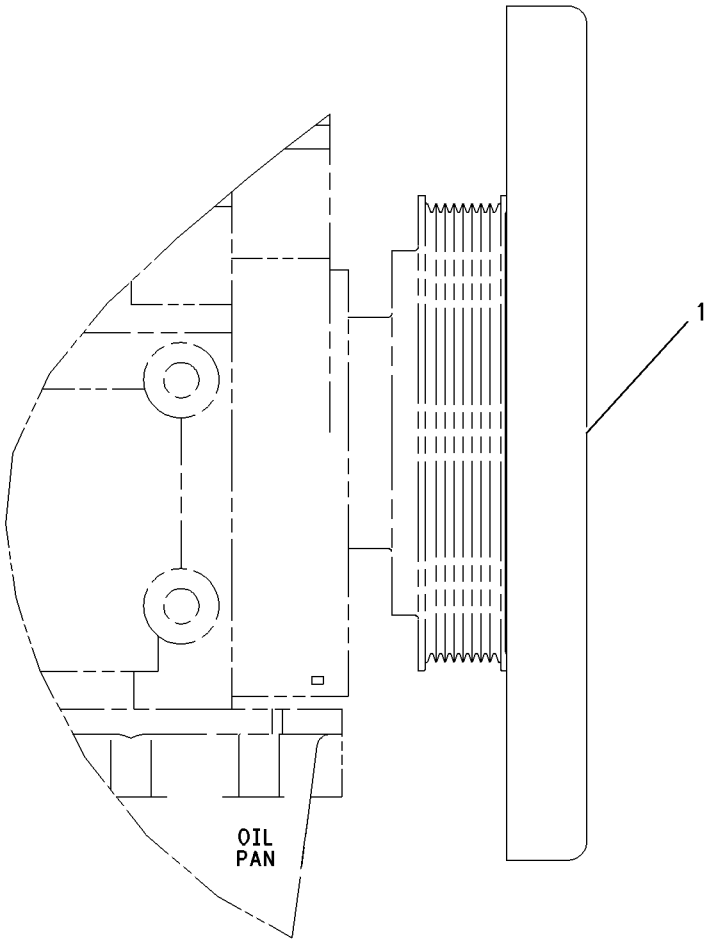

RIGHT SIDE VIEW

GRAPHIC #1 **<END>** g00919128

4P-2102 DRAIN GP-ENGINE OIL

S/N: THX8900-UP

PART OF 282-3823, 282-3824, 282-3825, 282-3826, 301-5768 ENGINE AR

ALSO AN ATTACHMENT

SMCS-1302 **i01232254**

NOTE	REF NO	GRAPHIC REF	PART NUMBER	QTY	PART NAME 1 2 3 4 5 6 (PRODUCT LEVEL)	SEE PAGE
	1	1	**8N-6854**	1	GASKET-ADAPTER	
	2	1	**113-5336**	1	ADAPTER AS-DRAIN	
	2A	1	**5N-8780**	1	PLUG-DRAIN	
		1	**8N-6849**	1	ADAPTER-PLUG	
	3	1	**5P-4116**	2	WASHER (2MM THK)	
M	4	1	**7X-2537**	2	BOLT (M8X1.25X35MM)	

M-METRIC PART

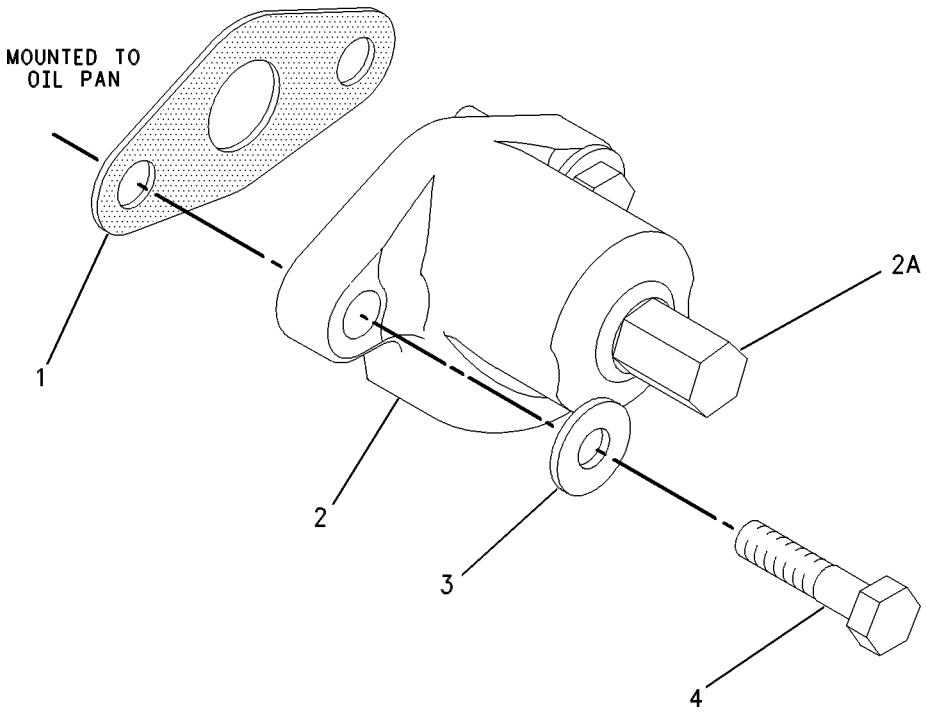

GRAPHIC #1 **<END>** g00659483

282-2870 DRIVE AR-FAN—MODULATING

S/N: SMC1-UP

AN ATTACHMENT

SMCS-1359 **i02760675**

NOTE	PART NUMBER	QTY	PART NAME 1 2 3 4 5 6 (PRODUCT LEVEL)	SEE PAGE
Y	*262-2029*	1	DRIVE GP-FAN (MODULATING)	34
Y	*224-0821*	1	LINES GP-OIL SUPPLY (DEMAND FAN)	76

Y-SEPARATE ILLUSTRATION

<END>

282-2871 DRIVE AR-FAN—MODULATING

S/N: GCT1-UP

AN ATTACHMENT

SMCS-1359 **i02775036**

NOTE	PART NUMBER	QTY	PART NAME 1 2 3 4 5 6 (PRODUCT LEVEL)	SEE PAGE
Y	*262-2029*	1	DRIVE GP-FAN (MODULATING)	34
Y	**282-3823**	1	ENGINE AR	4
Y	*224-0821*	1	LINES GP-OIL SUPPLY (DEMAND FAN)	76

Y-SEPARATE ILLUSTRATION

<END>

215-3251 DRIVE GP-FAN

S/N: SMC1-UP; GCT1-UP

PART OF 279-9549 INSTALLATION AR-ENGINE

SMCS-1359 **i02612391**

NOTE	REF NO	GRAPHIC REF	PART NUMBER	QTY	PART NAME 1 2 3 4 5 6 (PRODUCT LEVEL)	SEE PAGE
CY	1	1	**285-6396**	1	DRIVE GP-FAN	36
M	2	1	**8T-4182**	4	BOLT (M10X1.5X45-MM)	

C-CHANGE FROM PREVIOUS TYPE
M-METRIC PART
Y-SEPARATE ILLUSTRATION

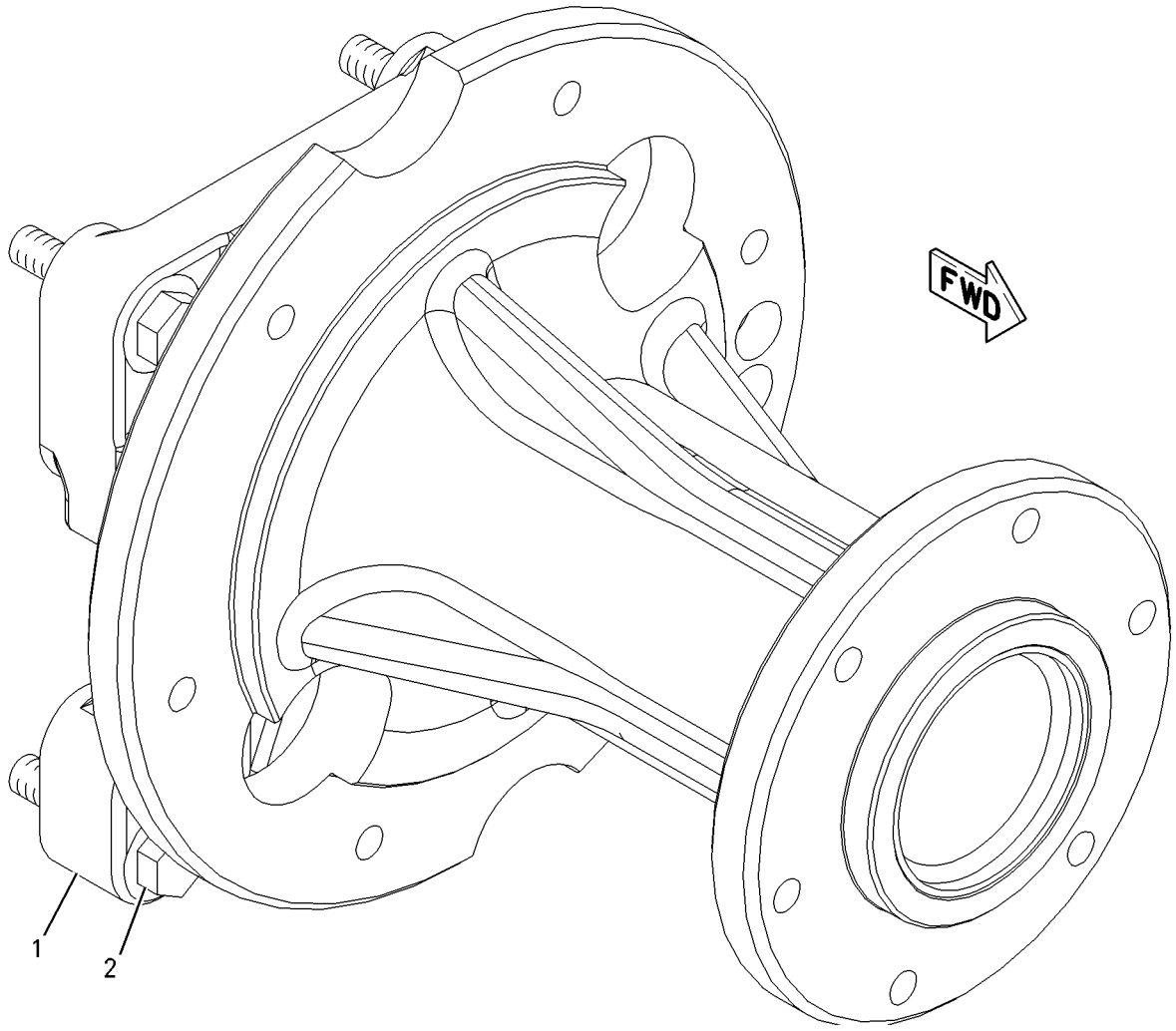

GRAPHIC #1 **<END>** g00851243

BASIC ENGINE

262-2029 DRIVE GP-FAN—MODULATING

S/N: SMC1-UP; GCT1-UP

PART OF 282-2870, 282-2871 DRIVE AR-FAN

AN ATTACHMENT

SMCS-1359 **i02796989**

NOTE	REF NO	GRAPHIC REF	PART NUMBER	QTY	PART NAME 1 2 3 4 5 6 (PRODUCT LEVEL)	SEE PAGE
	1	1	**216-7877**	1	V-BELT SET (FAN DRIVE)	
J	2	1	**251-3600**	1	CLUTCH GP-FAN	
		1	**251-3626**	1	SENSOR GP-SPEED (FAN DRIVE)	
		1	**6N-7523**	1	WASHER (6.48X11.9X1.57-MM THK)	
		1	**8H-3127**	1	BOLT (1/4-20X0.75-IN)	
	3	1	**253-0459**	1	ADAPTER-FAN	
	4	1	**262-2030**	1	PULLEY-FAN	
	5	1	**262-2031**	1	PULLEY	
	6	1	**4P-7581**	1	CLIP	
	7	1	**7K-1181**	1	STRAP-CABLE	
	8	1	**8T-4121**	12	WASHER-HARD (11X21X2.5-MM THK)	
M	9	1	**8T-4194**	4	BOLT (M12X1.75X50-MM)	
M	10	1	**8T-4195**	12	BOLT (M10X1.5X30-MM)	
	11	1	**8T-4223**	4	WASHER-HARD (13.5X25.5X3-MM THK)	
	12	1	**303-4138**	1	HARNESS AS-SENSOR	
		1	**226-0936**	1	RESISTOR AS	
		1	**102-8803**	1	KIT-RECEPTACLE (3-PIN)	
					(INCLUDES RECEPTACLE AS & WEDGE)	
		1	**155-2260**	1	KIT-CONNECTING PLUG (3-PIN)	
		1	**155-2270**	1	KIT-CONNECTING PLUG (2-PIN)	
					(EACH INCLUDES PLUG AS, WEDGE, & INTERFACE SEAL)	
					AVAILABLE REPAIR KIT(S):	
J			**287-2083**	1	KIT-SEAL & RING (FAN CLUTCH)	
					(INCLUDES SEALS & RINGS)	
J			**306-6621**	1	KIT-OVERHAUL (FAN CLUTCH)	
					(INCLUDES BEARINGS, PLATES, RETAINERS, FRICTION DISCS, MAGNETS, SPRING, & SEAL & RING KIT)	

J-KIT MARKED J SERVICES PART(S) MARKED J
M-METRIC PART

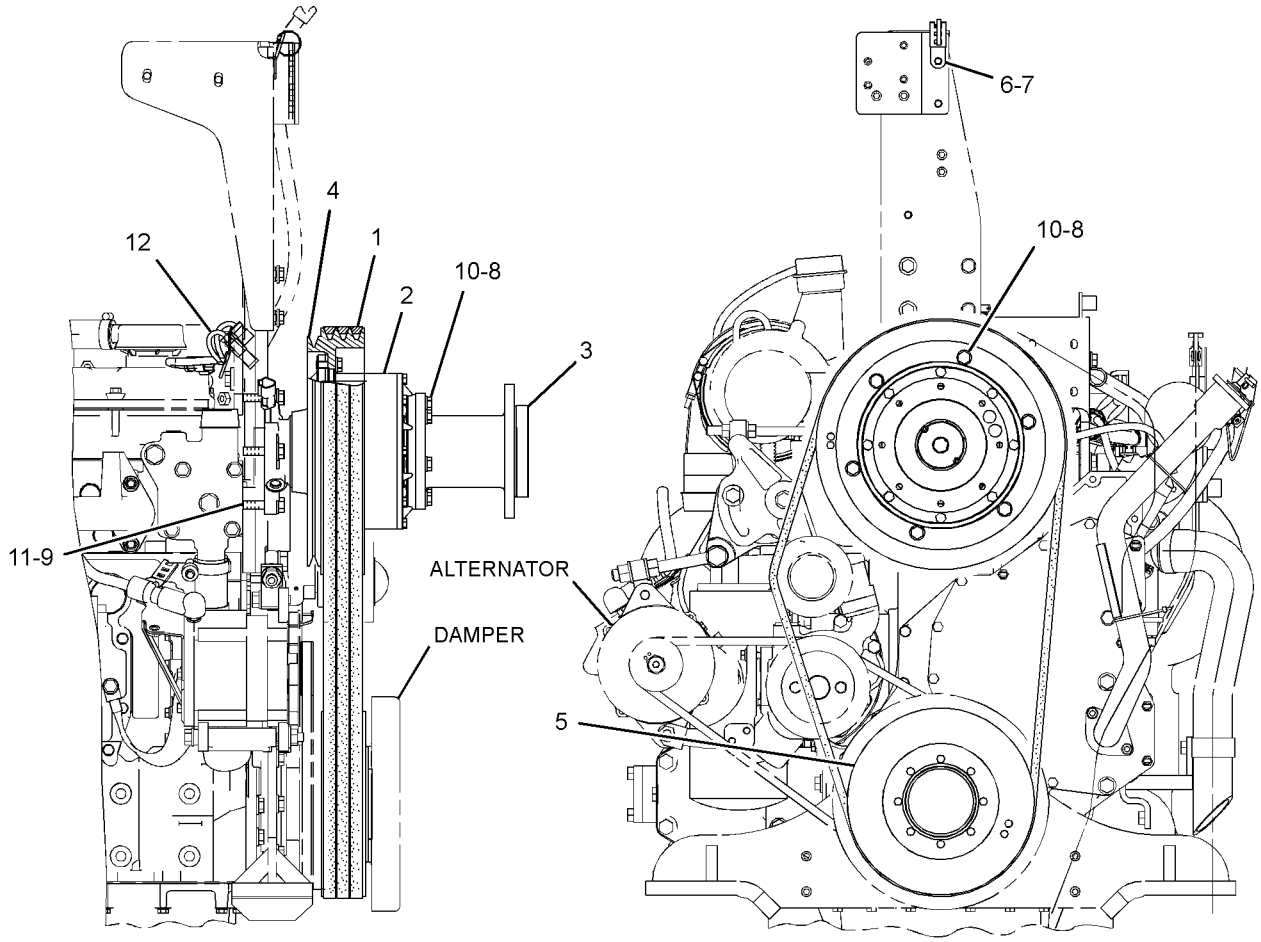

RIGHT SIDE VIEW OF ENGINE

FRONT VIEW OF ENGINE

GRAPHIC #1

<END>

g01365475

BASIC ENGINE

285-6396 DRIVE GP-FAN

S/N: SMC1-UP; GCT1-UP

PART OF 215-3251 DRIVE GP-FAN

SMCS-1359 **i02612404**

NOTE	REF NO	GRAPHIC REF	PART NUMBER	QTY	PART NAME 1 2 3 4 5 6 (PRODUCT LEVEL)	SEE PAGE
	1	1	**4B-4098**	1	PLUG-CUP	
	2	1	**4W-1203**	2	CUP-BEARING	
	3	1	**4W-1204**	2	CONE-BEARING	
	4	1	**7C-8634**	1	PLATE	
	5	1	**212-5839**	1	HUB	
	6	1	**212-5844**	1	SPACER (35.3X45.5X93-MM THK)	
	7	1	**285-5093**	1	BRACKET AS	
	8	1	**5S-9062**	1	SPACER (35.032X50.8X15.88-MM THK)	
M	9	1	**6V-7673**	1	BOLT (M12X1.75X50-MM)	
	10	1	**6V-9748**	1	SEAL-LIP TYPE	

M-METRIC PART

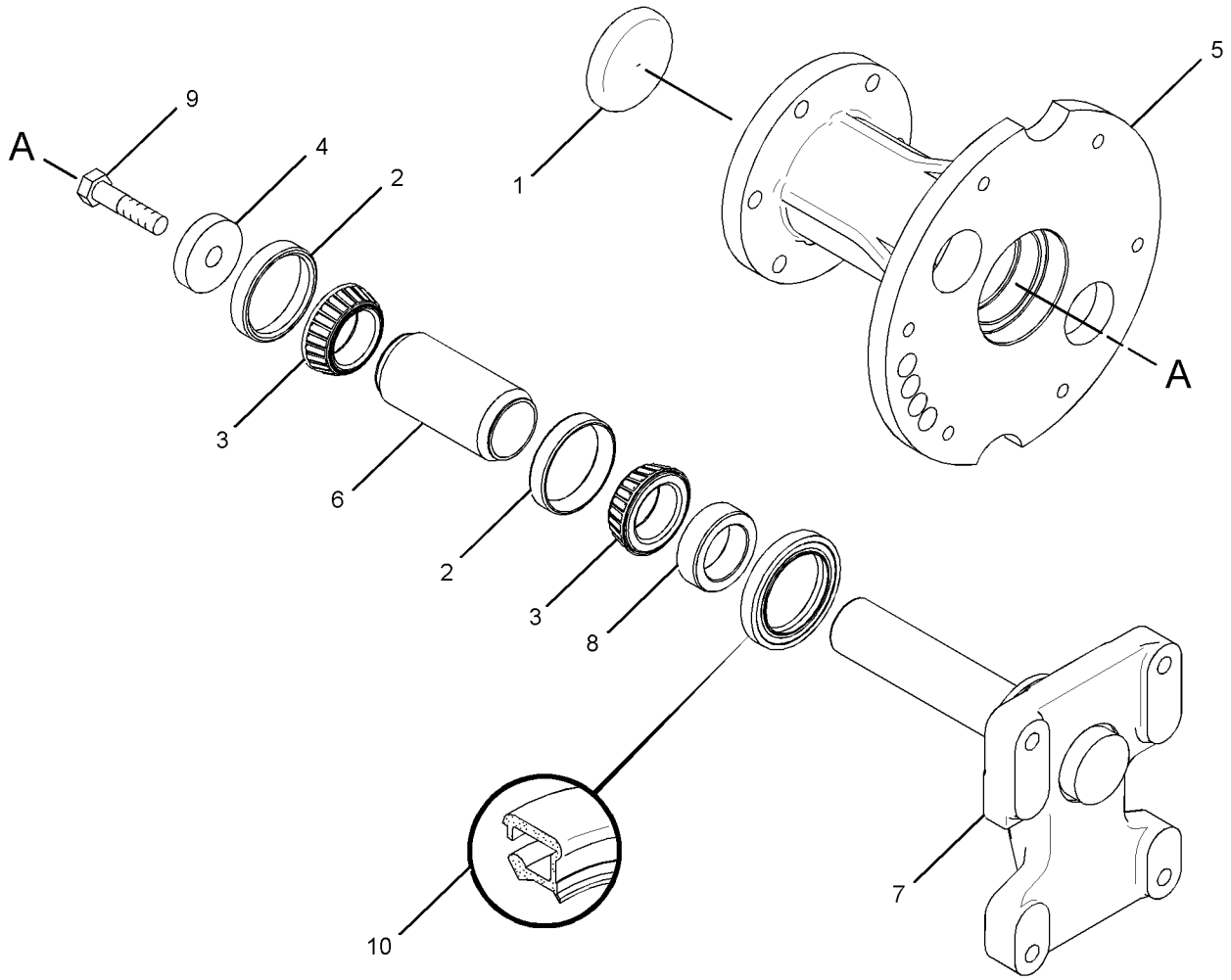

GRAPHIC #1 **<END>** g01314722

213-4363 FASTENER GP-CYLINDER HEAD

S/N: THX8900-UP

PART OF 282-3827, 282-3828, 282-3829, 282-3830, 301-5769 ENGINE AR-CORE

ALSO AN ATTACHMENT

SMCS-1100 **i02747975**

NOTE	REF NO	GRAPHIC REF	PART NUMBER	QTY	PART NAME 1 2 3 4 5 6 (PRODUCT LEVEL)	SEE PAGE
C	1	1	*290-6884*	26	FASTENER GP-CYLINDER HEAD	
		1	**9X-8268**	26	WASHER (17.5X30X3.5-MM THK)	
M		1	**263-2915**	26	BOLT-12 POINT HEAD (M16X2X180-MM)	
M	2	1	**8C-4984**	5	BOLT (M8X1.25X150-MM)	
	3	1	**9M-1974**	5	WASHER-HARD (8.8X16X2-MM THK)	

C-CHANGE FROM PREVIOUS TYPE
M-METRIC PART

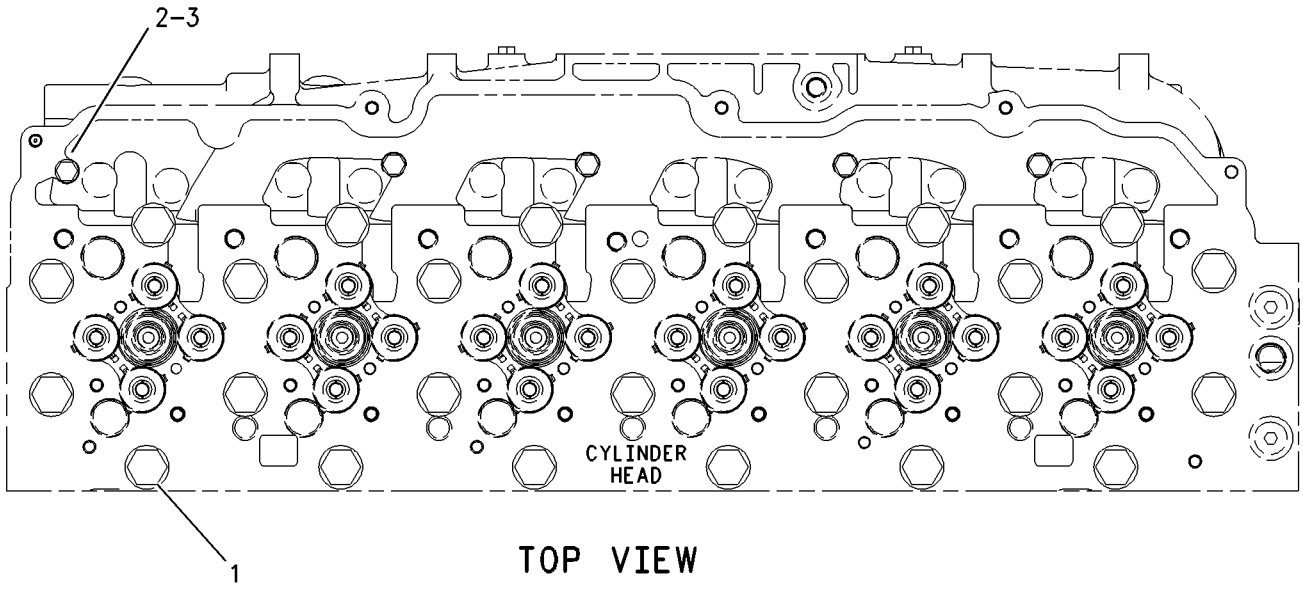

TOP VIEW

GRAPHIC #1 **<END>** g00919169

222-2409 FASTENER GP-DAMPER & PULLEY

S/N: THX8900-UP

PART OF 282-3823, 282-3824, 282-3825, 282-3826, 301-5768 ENGINE AR

ALSO AN ATTACHMENT

SMCS-1205, 7553 **i02159846**

NOTE	REF NO	GRAPHIC REF	PART NUMBER	QTY	PART NAME 1 2 3 4 5 6 (PRODUCT LEVEL)	SEE PAGE
C	1	1	**228-3621**	1	SPACER (101.5X167X8-MM THK)	

C-CHANGE FROM PREVIOUS TYPE

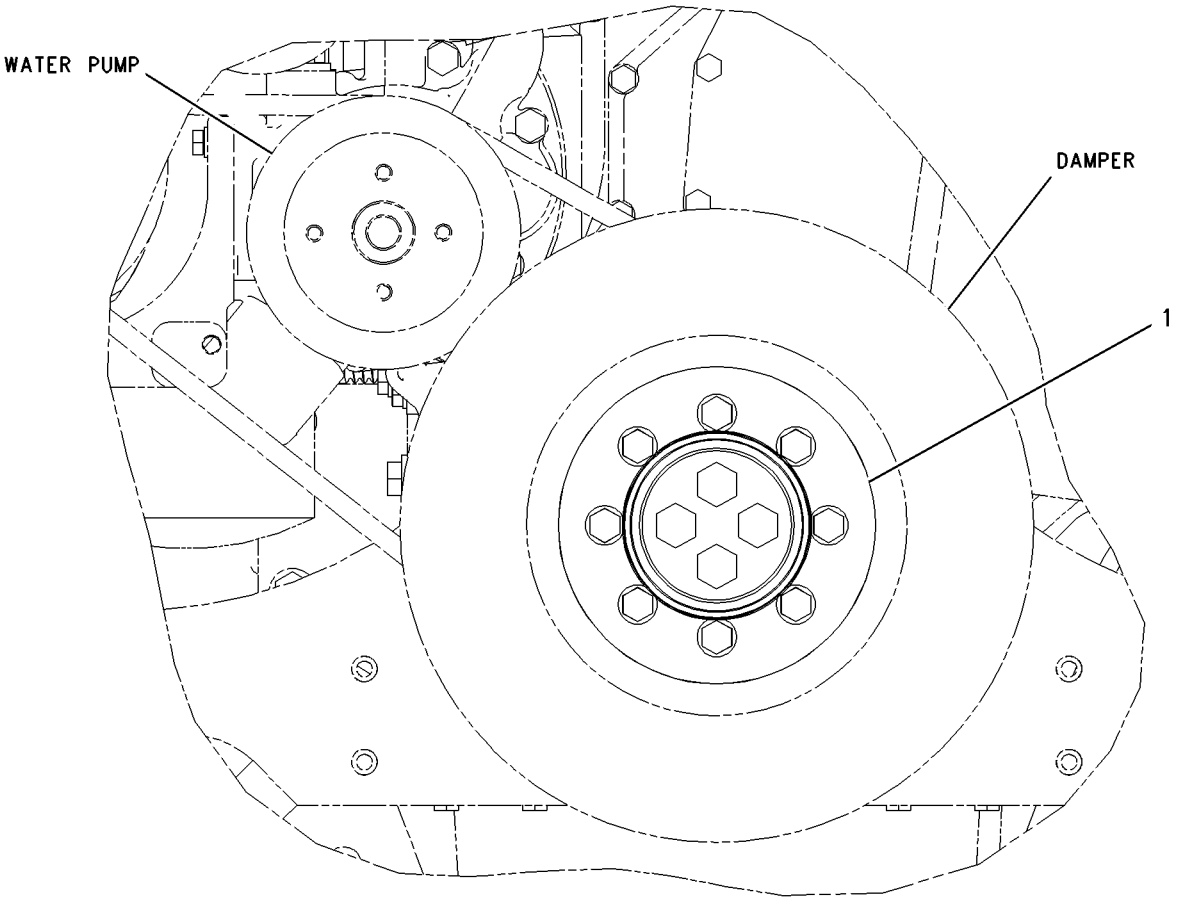

FRONT VIEW

GRAPHIC #1 **<END>** g00923791

219-8681 FASTENER GP-FRONT HOUSING

S/N: THX8900-UP

PART OF 282-3823, 282-3824, 282-3825, 282-3826, 301-5768 ENGINE AR

ALSO AN ATTACHMENT

SMCS-1151, 1162 **i02431537**

NOTE	REF NO	GRAPHIC REF	PART NUMBER	QTY	PART NAME 1 2 3 4 5 6 (PRODUCT LEVEL)	SEE PAGE
M	1	1	**9X-2099**	6	STUD (M8X1.25-THD)	
M	2	1	**6V-2317**	6	BOLT (M8X1.25X30-MM)	
M	3	1	**8T-0100**	2	BOLT (M8X1.25X60-MM)	

M-METRIC PART

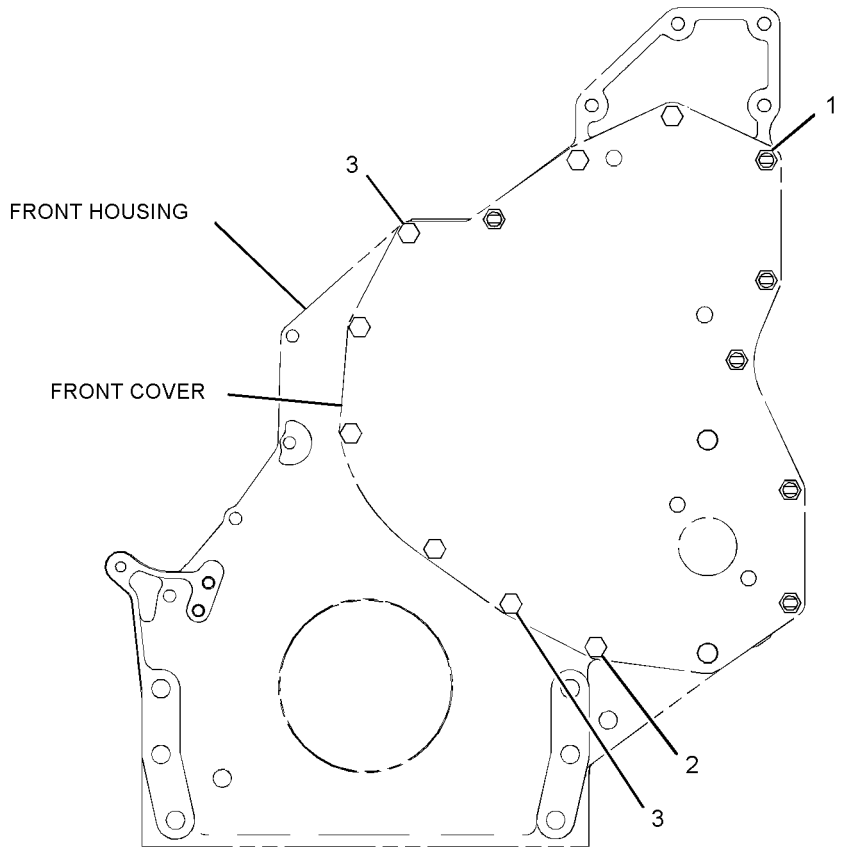

FRONT VIEW

GRAPHIC #1 **<END>** g01146786

236-7315 FASTENER GP-VALVE COVER

S/N: THX8900-UP

PART OF 282-3823, 282-3824, 282-3825, 282-3826, 301-5768 ENGINE AR

ALSO AN ATTACHMENT

SMCS-1107 **i02431566**

NOTE	REF NO	GRAPHIC REF	PART NUMBER	QTY	PART NAME 1 2 3 4 5 6 (PRODUCT LEVEL)	SEE PAGE
M	1	1	**099-3649**	11	BOLT (M8X1.25X40-MM)	
	2	1	**8T-4224**	11	WASHER-HARD (8.8X16X2-MM THK)	

M-METRIC PART

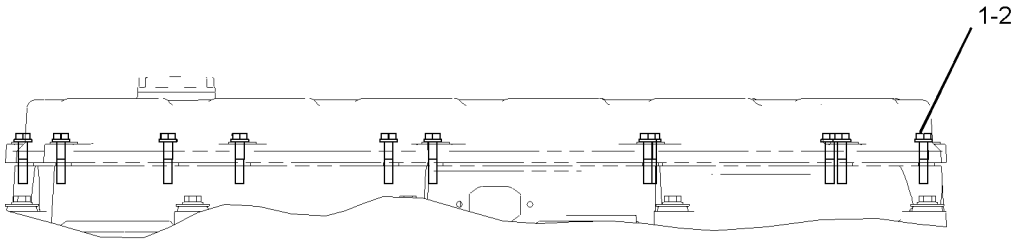

GRAPHIC #1 **<END>** g01013698

233-0423 FASTENER GP-VALVE COVER BASE

S/N: THX8900-UP

PART OF 282-3823, 282-3824, 282-3825, 282-3826, 301-5768 ENGINE AR

ALSO AN ATTACHMENT

SMCS-1120 **i02637720**

NOTE	REF NO	GRAPHIC REF	PART NUMBER	QTY	PART NAME 1 2 3 4 5 6 (PRODUCT LEVEL)	SEE PAGE
	1	1	**244-4500**	9	SPRING	
M	2	1	**8T-0100**	9	BOLT (M8X1.25X60-MM)	
	3	1	**9N-0869**	9	WASHER-HARD (8.8X25.5X2-MM THK)	

M-METRIC PART

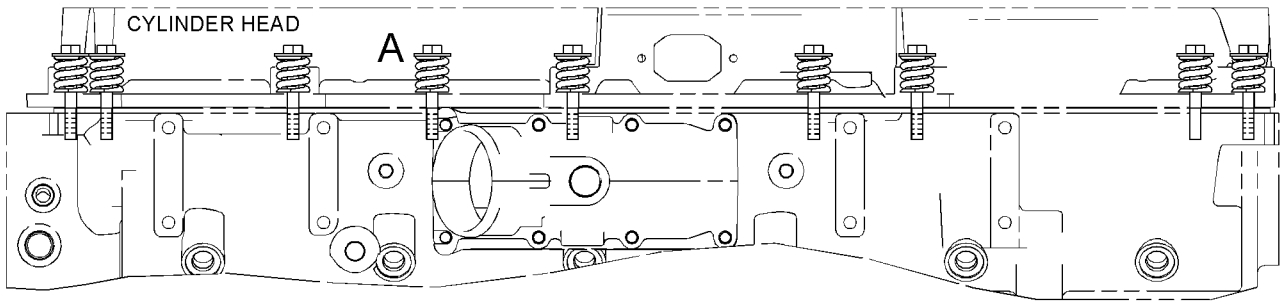

LEFT SIDE VIEW

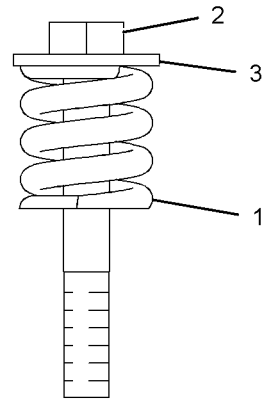

VIEW OF AREA A

GRAPHIC #1 **<END>** g01207018

BASIC ENGINE

241-3718 FLYWHEEL GP

S/N: THX8900-UP

PART OF 282-3823, 282-3824, 282-3825, 282-3826, 301-5768 ENGINE AR

ALSO AN ATTACHMENT

SMCS-1156 **i02431564**

NOTE	REF NO	GRAPHIC REF	PART NUMBER	QTY	PART NAME 1 2 3 4 5 6 (PRODUCT LEVEL)	SEE PAGE
M	1	1	**9X-2053**	8	BOLT	
	2	1	**237-0229**	1	FLYWHEEL AS	
		1	**4N-2514**	1	GEAR (113-TEETH)	
	3	1	**9X-8268**	8	WASHER (17.5X30X3.5-MM THK)	

M-METRIC PART

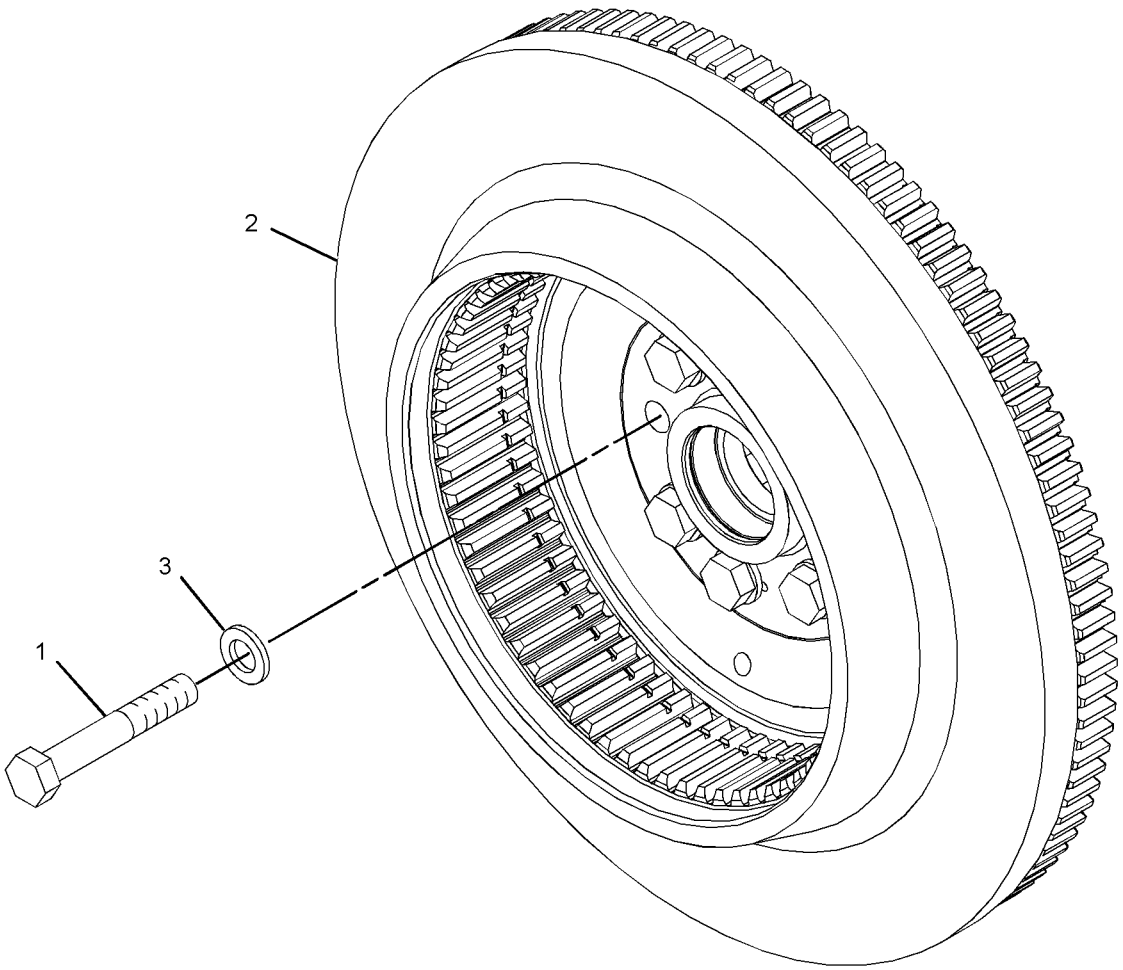

GRAPHIC #1 **<END>** g01205624

205-1321 GEAR GP-FRONT

S/N: THX8900-UP

PART OF 282-3827, 282-3828, 282-3829, 282-3830, 301-5769 ENGINE AR-CORE

ALSO AN ATTACHMENT

SMCS-1151, 1162, 1206 **i01696307**

NOTE	REF NO	GRAPHIC REF	PART NUMBER	QTY	PART NAME 1 2 3 4 5 6 (PRODUCT LEVEL)	SEE PAGE
	1	1	**113-6069**	1	PLATE-THRUST	
	2	1	**115-4219**	1	PLATE-RETAINING	
	3	1	**200-4495**	1	SHAFT-IDLER	
	4	1	**205-1320**	1	GEAR AS-IDLER (50 TEETH)	
	4A	1	**115-4072**	1	BEARING	
M	5	1	**136-4183**	1	BOLT-12 POINT HEAD (M10X1.5X30MM)	
M	6	1	**6V-5843**	2	BOLT (M10X1.50X45MM)	

M-METRIC PART

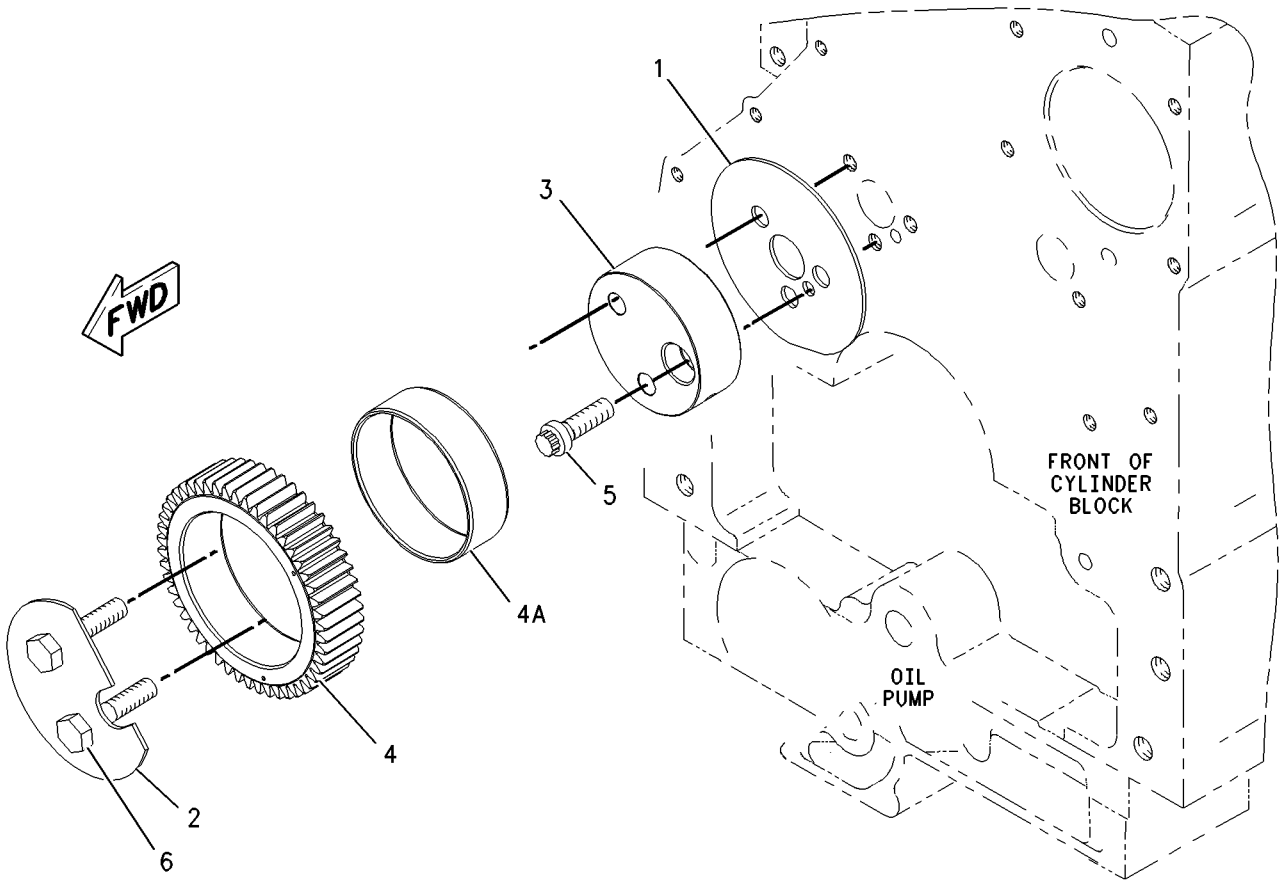

GRAPHIC #1 **<END>** g00873940

175-6260 GEAR GP-REAR

S/N: THX8900-UP

PART OF 282-3823, 282-3824, 282-3825, 282-3826, 301-5768 ENGINE AR

ALSO AN ATTACHMENT

SMCS-1204 **i01830860**

NOTE	REF NO	GRAPHIC REF	PART NUMBER	QTY	PART NAME 1 2 3 4 5 6 (PRODUCT LEVEL)	SEE PAGE
	1	1	**187-8194**	1	GEAR AS-DRIVE (64 TEETH)	
		1	**4F-6024**	1	PIN	
	2	1	**1W-4741**	2	GEAR AS-IDLER (70 TEETH)	
					(EACH INCLUDES)	
		1	**1W-4738**	1	BEARING-SLEEVE	
	3	1	**1W-4746**	2	RETAINER-GEAR	
	4	1	**187-8195**	1	GEAR AS-DRIVE (64 TEETH)	
	4A	1	**4F-6024**	1	PIN	
	5	1	**154-3358**	1	GEAR-ADAPTER (68 TEETH)	
	6	1	**187-8222**	2	ADAPTER AS-PUMP	
					(EACH INCLUDES)	
		1	**160-8184**	1	BEARING-SLEEVE	
	7	1	**4N-1230**	2	SEAL-O-RING	
M	8	1	**6V-1820**	12	BOLT (M10X1.50X30MM)	
	9	1	**6V-5839**	12	WASHER (11X21X2.5MM THK)	
M	10	1	**6V-7673**	6	BOLT (M12X1.75X50MM)	

M-METRIC PART

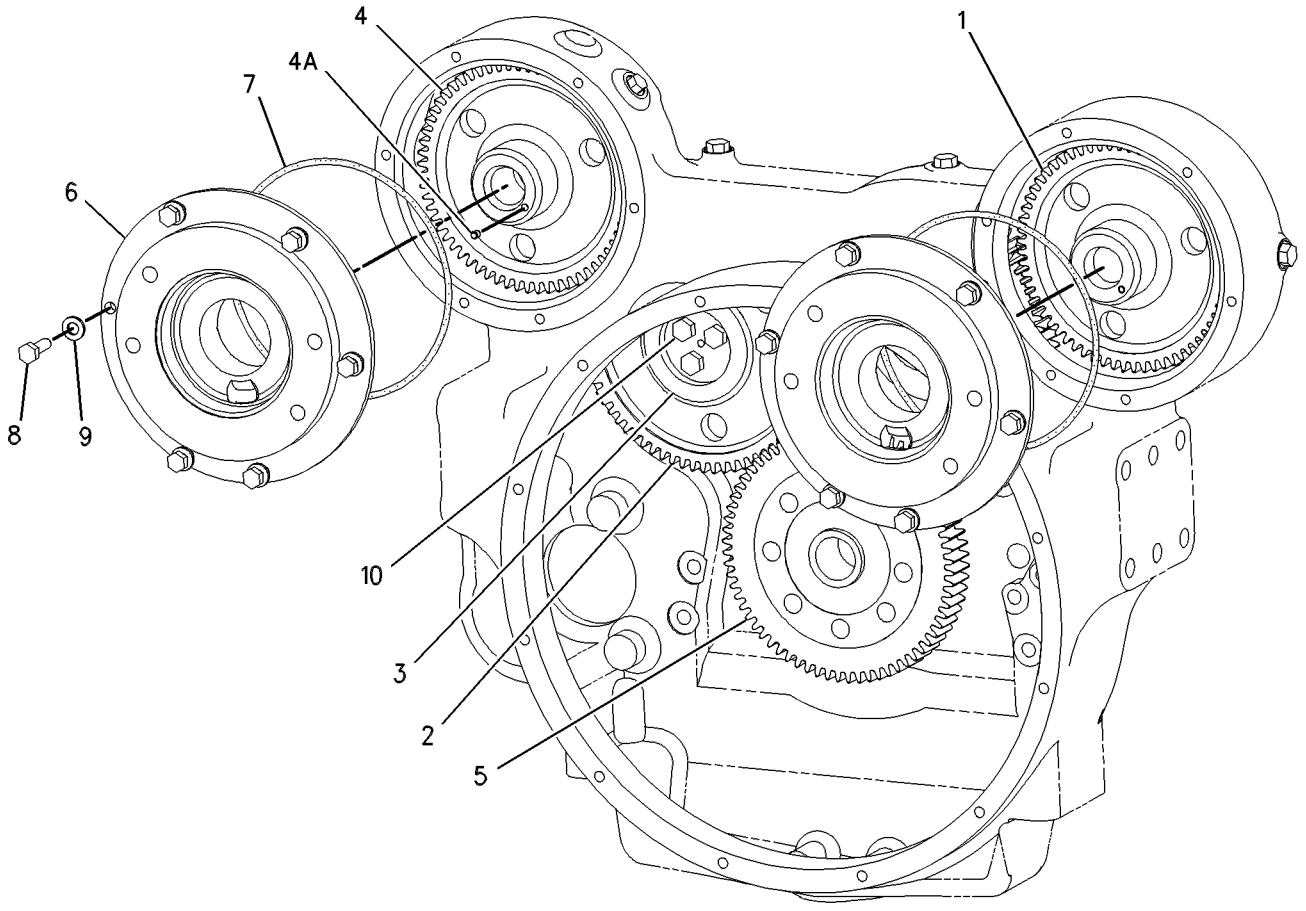

GRAPHIC #1 **<END>** g00639229

221-5461 HOUSING AS-FLYWHEEL

S/N: THX8900-UP
PART OF 219-8666 HOUSING GP-FLYWHEEL
ALSO AN ATTACHMENT

SMCS-1157 **i02431610**

NOTE	REF NO	GRAPHIC REF	PART NUMBER	QTY	PART NAME 1 2 3 4 5 6 (PRODUCT LEVEL)	SEE PAGE
	1	1	**2A-1162**	1	GASKET	
	2	1	**5F-0304**	1	PLUG-DRAIN	
	3	1	**229-9281**	1	HOUSING-FLYWHEEL	
	4	1	*148-8395*	2	PLUG AS	
					(EACH INCLUDES)	
	4A	1	**3K-0360**	1	SEAL-O-RING	
		1	**9S-8005**	1	PLUG-O-RING	
	5	1	*148-8405*	1	PLUG AS	
	5A	1	**1J-9671**	1	SEAL-O-RING	
		1	**3K-8460**	1	PLUG	
	6	1	*148-8407*	4	PLUG AS	
					(EACH INCLUDES)	
	6A	1	**3J-1907**	1	SEAL-O-RING	
		1	**9S-4191**	1	PLUG-O-RING	
	7	1	*155-3624*	1	PLUG AS	
	7A	1	**3J-7354**	1	SEAL-O-RING	
		1	**9S-4182**	1	PLUG-O-RING	
	8	1	**8M-9315**	2	BEARING-SLEEVE	

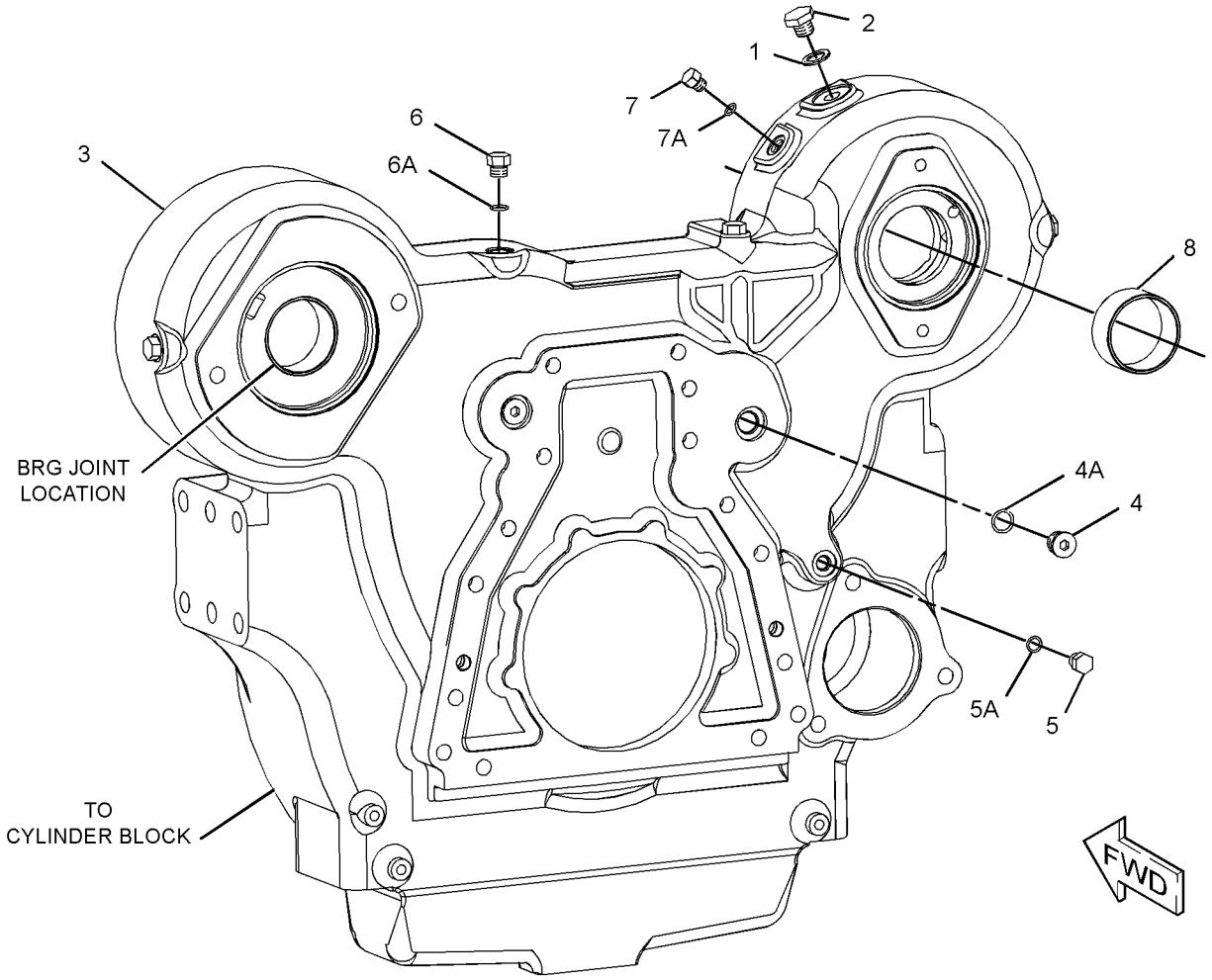

GRAPHIC #1 **<END>** g01210643

BASIC ENGINE

219-8666 HOUSING GP-FLYWHEEL

S/N: THX8900-UP

PART OF 282-3823, 282-3824, 282-3825, 282-3826, 301-5768 ENGINE AR

ALSO AN ATTACHMENT

SMCS-1157 **i02431592**

NOTE	REF NO	GRAPHIC REF	PART NUMBER	QTY	PART NAME 1 2 3 4 5 6 (PRODUCT LEVEL)	SEE PAGE
	1	1	**9X-8268**	2	WASHER (17.5X30X3.5-MM THK)	
	2	1	**175-3721**	1	COVER	
Y	3	1	**221-5461**	1	HOUSING AS-FLYWHEEL	45
	4	1	**101-3934**	1	COVER	
	5	1	**3F-5792**	1	SEAL-O-RING	
	6	1	**4M-0189**	1	SEAL-O-RING	
	7	1	**5P-8245**	17	WASHER-HARD (13.5X25.5X3-MM THK)	
M	8	1	**6A-5591**	2	BOLT (M12X1.75X25-MM)	
M	9	1	**6V-5844**	2	BOLT (M16X2X35-MM)	
M	10	1	**6V-8197**	9	BOLT (M12X1.75X40-MM)	
M	11	1	**6V-8336**	6	BOLT (M12X1.75X70-MM)	
BF			**1U-8846**		SEALANT-GASKET (10-ML)	

B-USE AS REQUIRED
F-NOT SHOWN
M-METRIC PART
Y-SEPARATE ILLUSTRATION

219-8666 **HOUSING GP-FLYWHEEL** *(contd.)* **i02431592**

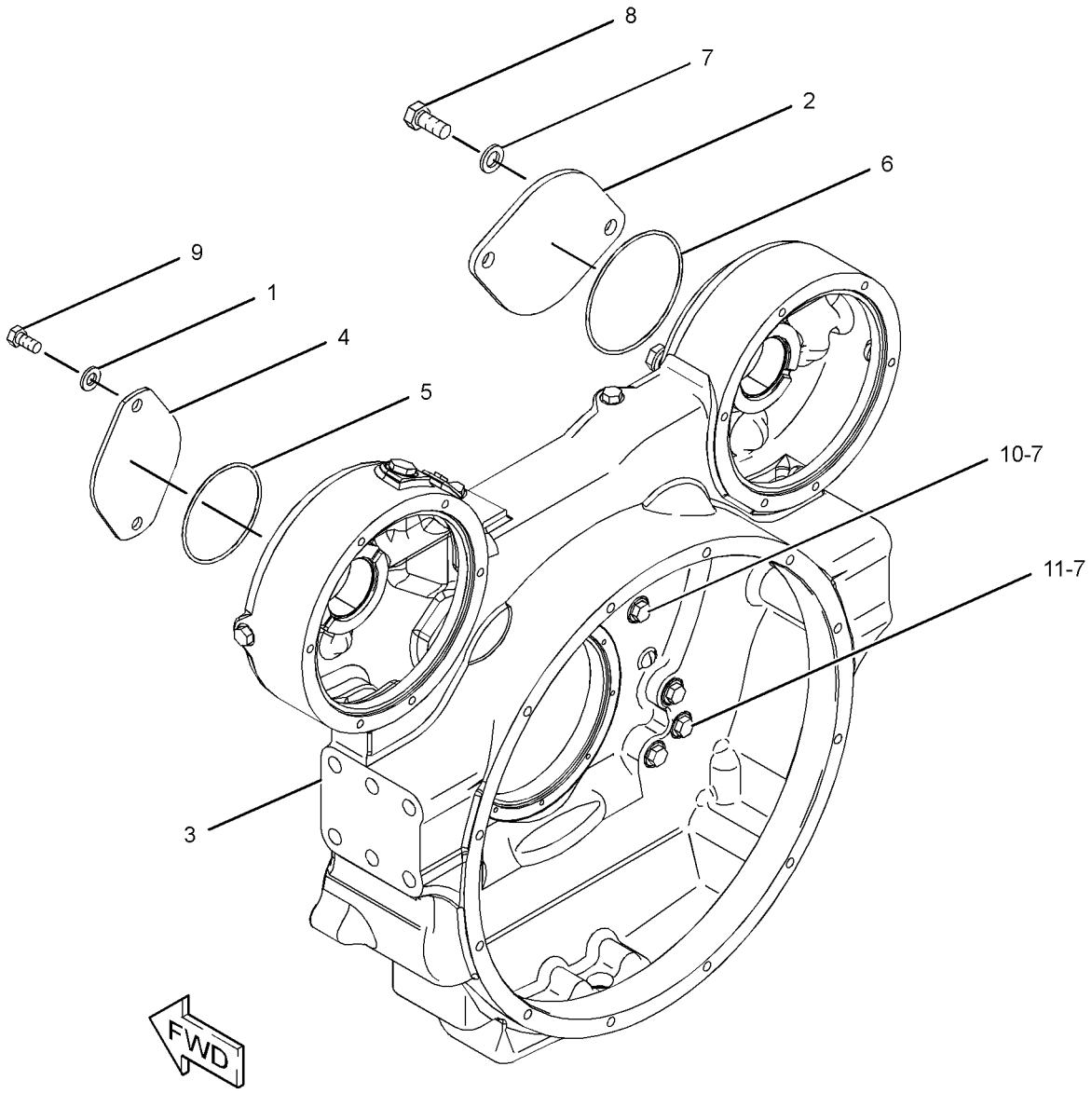

GRAPHIC #1 **<END>** g01208984

BASIC ENGINE

245-3262 HOUSING GP-FRONT

S/N: THX8900-UP

PART OF 282-3827, 282-3828, 282-3829, 282-3830, 301-5769 ENGINE AR-CORE

ALSO AN ATTACHMENT

SMCS-1151, 1162, 1206 **i02433945**

NOTE	REF NO	GRAPHIC REF	PART NUMBER	QTY	PART NAME 1 2 3 4 5 6 (PRODUCT LEVEL)	SEE PAGE
	1	1	**245-3261**	1	HOUSING-FRONT	
M	2	1	**6V-3918**	4	BOLT (M8X1.25X50-MM)	
M	3	1	**6V-5217**	8	BOLT (M8X1.25X20-MM)	
	4	1	**9M-1974**	12	WASHER-HARD (8.8X16X2-MM THK)	
BF			**1U-8846**		SEALANT-GASKET	

B-USE AS REQUIRED
F-NOT SHOWN
M-METRIC PART

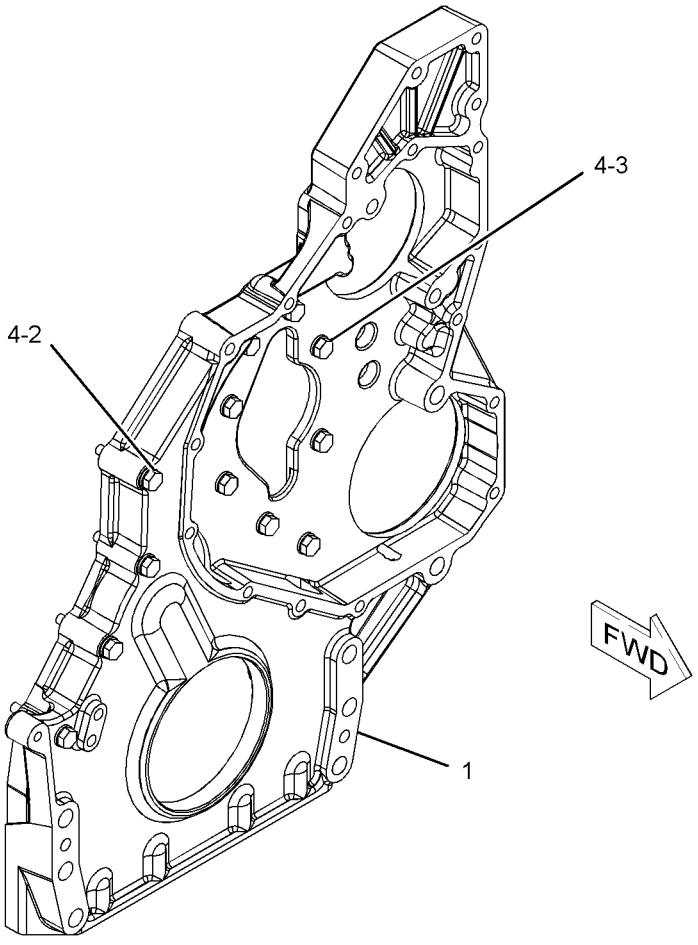

GRAPHIC #1 **<END>** g01216556

166-1784 LIFTING GP-ENGINE

S/N: THX8900-UP

PART OF 282-3823, 282-3824, 282-3825, 282-3826, 301-5768 ENGINE AR

ALSO AN ATTACHMENT

SMCS-1122 **i02504714**

NOTE	REF NO	GRAPHIC REF	PART NUMBER	QTY	PART NAME 1 2 3 4 5 6 (PRODUCT LEVEL)	SEE PAGE
C	1	1	**188-1017**	1	PLATE-LIFTING	
	2	1	**219-8675**	1	BRACKET AS	
	3	1	**3E-4353**	2	WASHER-HARD (11X25X3-MM THK)	
C	4	1	**4P-7428**	2	CLIP	
C	5	1	**5P-8245**	6	WASHER-HARD (13.5X25.5X3-MM THK)	
M	6	1	**6V-1820**	2	BOLT (M10X1.5X30-MM)	
CM	7	1	**6V-5684**	2	BOLT (M12X1.75X45-MM)	
CM	8	1	**6V-8197**	2	BOLT (M12X1.75X40-MM)	
CM	9	1	**6V-8675**	4	BOLT (M12X1.75X35-MM)	
	10	1	**7D-1649**	4	WASHER-HARD (13.5X32X5-MM THK)	

C-CHANGE FROM PREVIOUS TYPE
M-METRIC PART

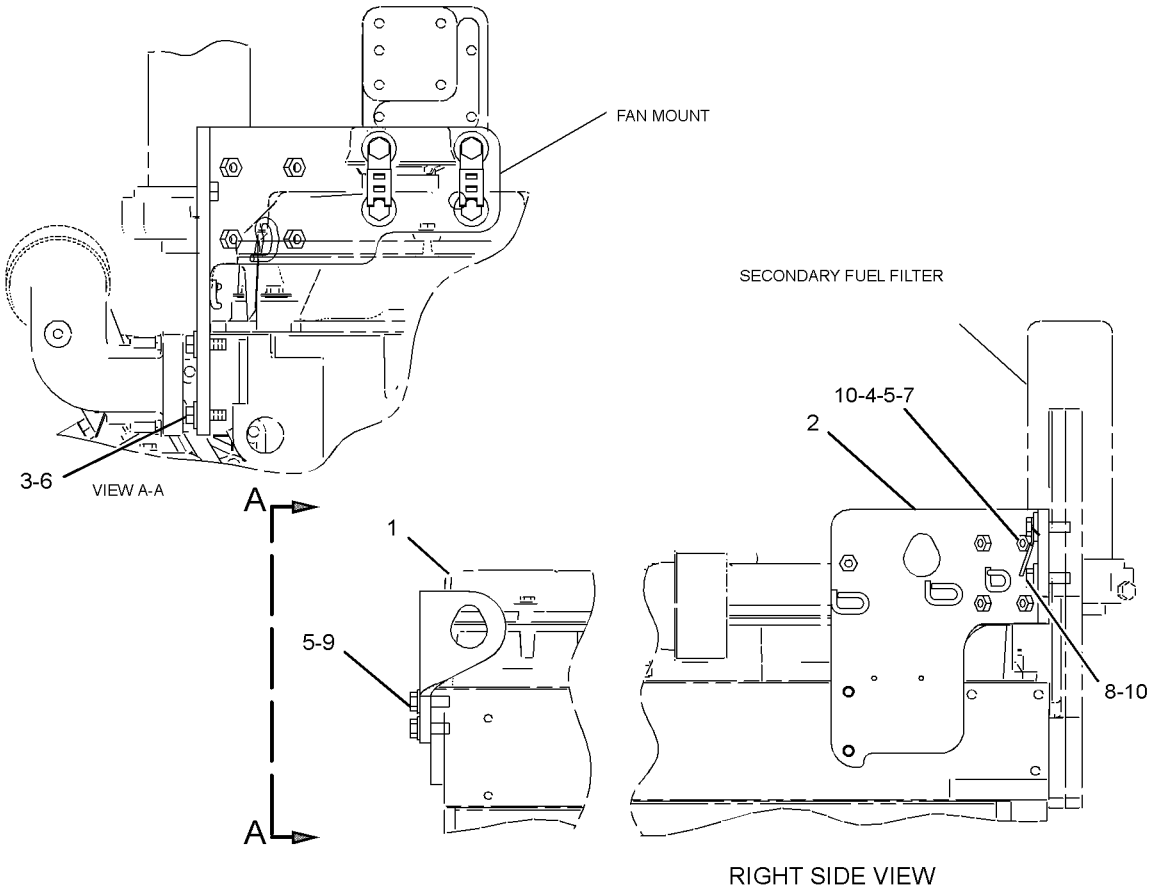

GRAPHIC #1 **<END>** g01304624

BASIC ENGINE

246-0600 MOUNTING GP-ALTERNATOR

S/N: THX8900-UP

PART OF 282-3823, 282-3824, 282-3825, 282-3826, 301-5768 ENGINE AR

ALSO AN ATTACHMENT

SMCS-1405 **i02431616**

NOTE	REF NO	GRAPHIC REF	PART NUMBER	QTY	PART NAME 1 2 3 4 5 6 (PRODUCT LEVEL)	SEE PAGE
	1	1	**7W-3872**	2	SLEEVE	
	2	1	**241-8475**	1	BRACKET	
M	3	1	**6V-2317**	4	BOLT (M8X1.25X30-MM)	
	4	1	**9M-1974**	4	WASHER-HARD (8.8X16X2-MM THK)	

M-METRIC PART

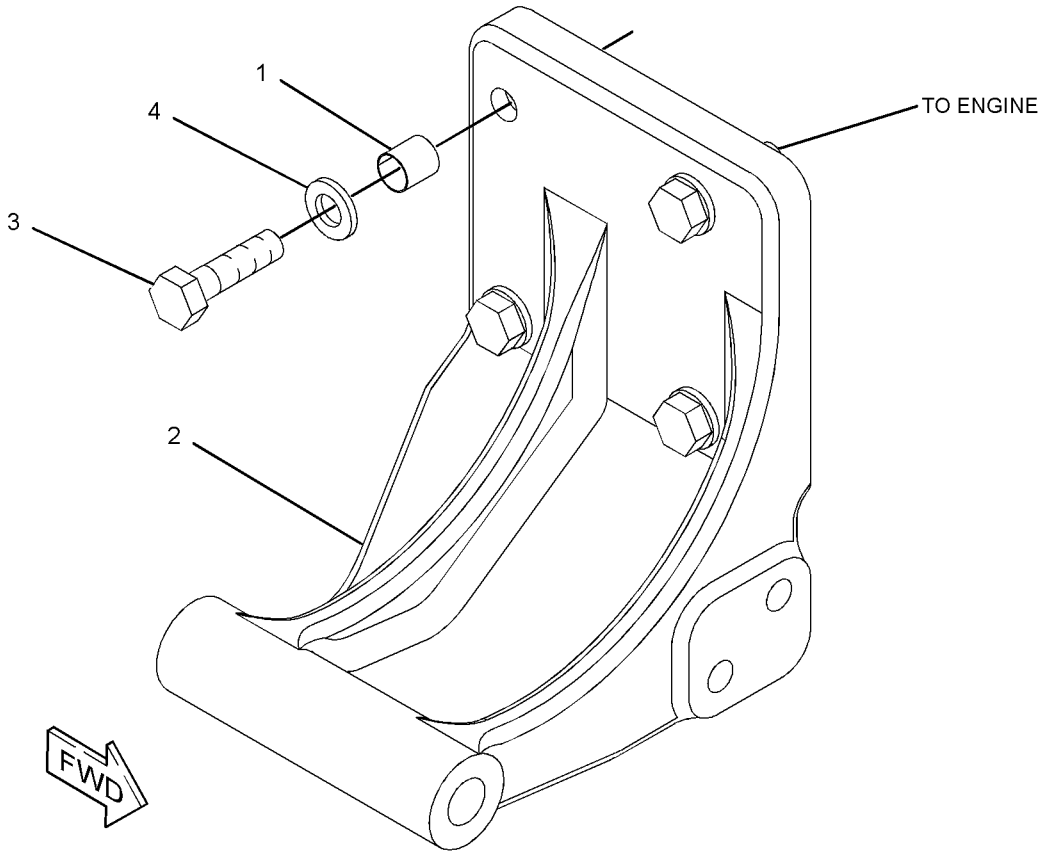

GRAPHIC #1 **<END>** g01206788

223-0556 MOUNTING GP-ENGINE

S/N: SMC1-UP; GCT1-UP

PART OF 279-9549 INSTALLATION AR-ENGINE

SMCS-1152, 1153, 1154 **i02432536**

NOTE	REF NO	GRAPHIC REF	PART NUMBER	QTY	PART NAME 1 2 3 4 5 6 (PRODUCT LEVEL)	SEE PAGE
	1	1	**7C-3567**	2	MOUNT AS	
	2	1	**183-9374**	2	BLOCK	
	3	1	**224-2695**	2	SUPPORT-ENGINE	
	4	1	**236-8191**	2	CAP-MOUNT	
	5	1	**7X-0515**	4	WASHER-HARD (17X35X5-MM THK)	
	6	1	**8T-4123**	16	WASHER (22X35X3.5-MM THK)	
M	7	1	**8T-4170**	4	BOLT (M20X2.5X150-MM)	
M	8	1	**8T-4193**	4	BOLT (M16X2X50-MM)	
M	9	1	**8T-6430**	12	BOLT (M20X2.5X50-MM)	

M-METRIC PART

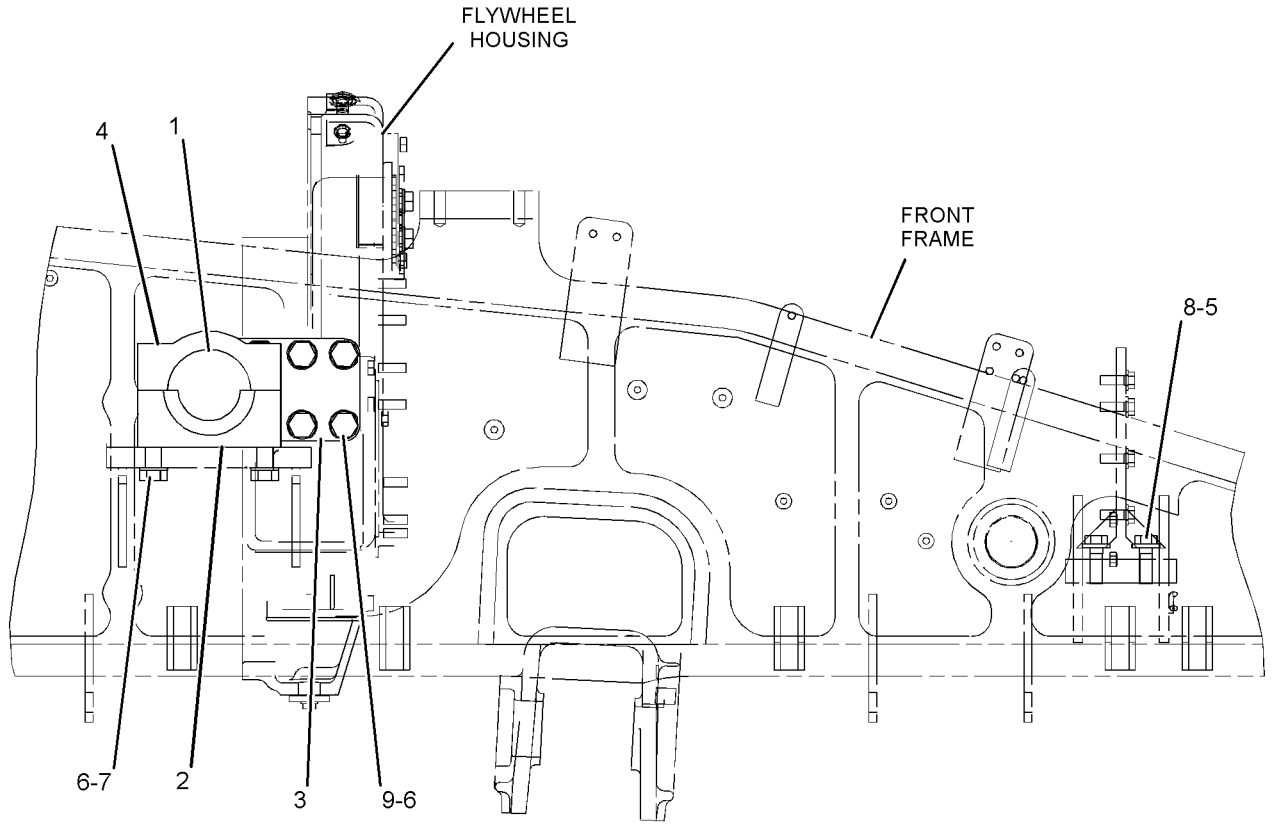

RIGHT SIDE VIEW

GRAPHIC #1 **<END>** g01209988

246-0598 MOUNTING GP-FAN DRIVE

S/N: THX8900-UP

PART OF 282-3823, 282-3824, 282-3825, 282-3826, 301-5768 ENGINE AR

ALSO AN ATTACHMENT

SMCS-1359 **i02431621**

NOTE	REF NO	GRAPHIC REF	PART NUMBER	QTY	PART NAME 1 2 3 4 5 6 (PRODUCT LEVEL)	SEE PAGE
	1	1	**241-8474**	1	SUPPORT	
	2	1	**3E-4353**	5	WASHER-HARD (11X25X3-MM THK)	
M	3	1	**6V-5843**	5	BOLT (M10X1.5X45-MM)	

M-METRIC PART

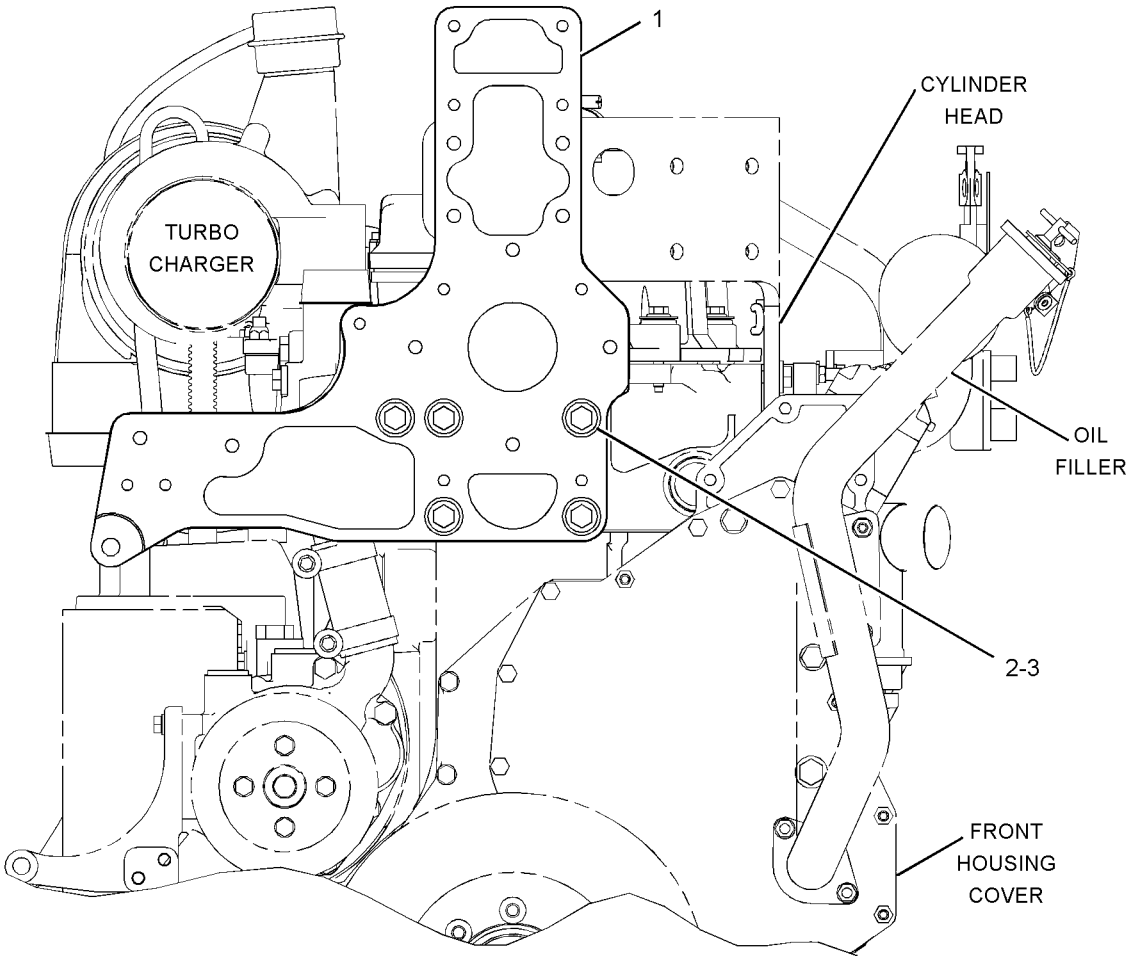

FRONT VIEW

GRAPHIC #1

<END>

g01206764

165-4459 PAN GP-OIL

S/N: THX8900-UP

PART OF 282-3823, 282-3824, 282-3825, 282-3826, 301-5768 ENGINE AR

ALSO AN ATTACHMENT

SMCS-1302 **i01830123**

NOTE	REF NO	GRAPHIC REF	PART NUMBER	QTY	PART NAME 1 2 3 4 5 6 (PRODUCT LEVEL)	SEE PAGE
	1	1	**1U-8846**		SEALANT-GASKET	
	2	1	**190-6114**	1	GASKET-OIL PAN	
	3	1	**174-3847**	1	PAN-OIL	
M	4	1	**6V-3918**	32	BOLT (M8X1.25X50-MM)	
	5	1	**9M-1974**	32	WASHER-HARD (8.8X16X2-MM THK)	

M-METRIC PART

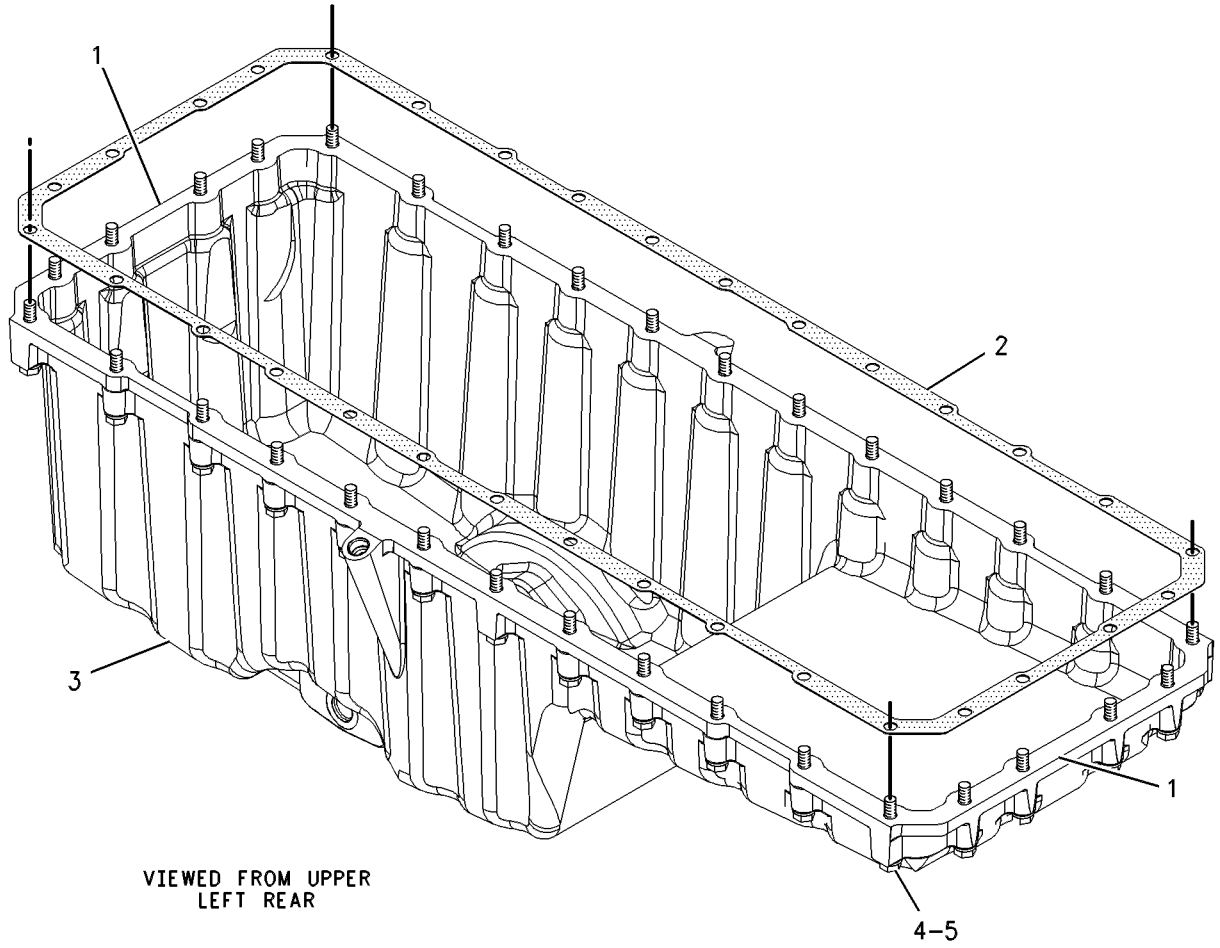

GRAPHIC #1 **<END>** g00637845

265-1400 PISTON & ROD GP

S/N: THX8900-UP
16.1:1 COMPRESSION RATIO
PART OF 282-3827, 282-3828, 282-3829, 282-3830, 301-5769 ENGINE AR-CORE
ALSO AN ATTACHMENT

SMCS-1225 **i02434196**

NOTE	REF NO	GRAPHIC REF	PART NUMBER	QTY	PART NAME 1 2 3 4 5 6 (PRODUCT LEVEL)	SEE PAGE
	1	1	**213-3190**	1	BEARING (CONNECTING ROD)	
R	2	1	**160-8199**	1	ROD AS	
	2A	1	**160-8194**	1	BEARING (CONNECTING ROD)	
M	2B	1	**160-8197**	2	BOLT	
	3	1	**166-3648**	1	PIN-PISTON	
	4	1	**168-7211**	1	RING-PISTON (OIL CONTROL)	
	5	1	**265-1401**	1	CROWN AS-PISTON	
	6	1	**161-3424**	1	RING-PISTON (INTERMEDIATE)	
	7	1	**197-9367**	1	TUBE AS (PISTON COOLING JET)	
	8	1	**197-9392**	1	RING-PISTON (TOP)	
	9	1	**238-2709**	1	SKIRT-PISTON	
M	10	1	**6V-3940**	1	BOLT (M8X1.25X25-MM)	
	11	1	**7X-2908**	2	RING-RETAINING	

M-METRIC PART
R-REMFG PART MAY BE AVAILABLE

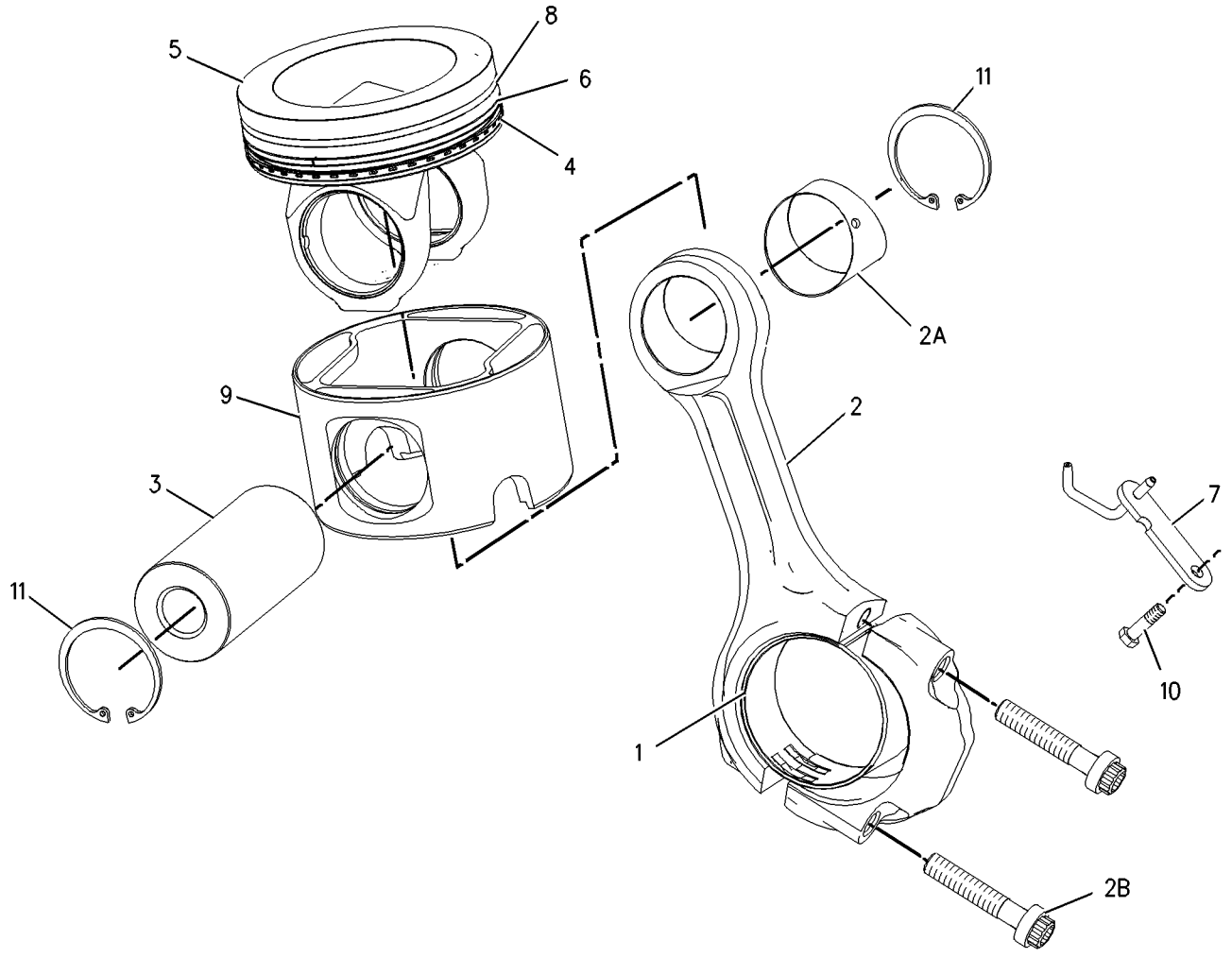

GRAPHIC #1 **<END>** g00922644

252-1567 PLUG GP-ENGINE

S/N: THX8900-UP

PART OF 282-3823, 282-3824, 282-3825, 282-3826, 301-5768 ENGINE AR

ALSO AN ATTACHMENT

SMCS-1000 **i02163217**

NOTE	REF NO	GRAPHIC REF	PART NUMBER	QTY	PART NAME 1 2 3 4 5 6 (PRODUCT LEVEL)	SEE PAGE
	1	1	*148-8408*	1	PLUG AS	
		1	**3D-2824**	1	SEAL-O-RING	
		1	**9S-4183**	1	PLUG-O-RING	
	2	1	*183-3406*	1	PLUG AS	
		1	**6V-5049**	1	SEAL-O-RING	
		1	**9S-4191**	1	PLUG-O-RING	
	3	1	*183-3408*	1	PLUG AS	
		1	**6V-5049**	1	SEAL-O-RING	
		1	**9S-8004**	1	PLUG-O-RING	
	4	1	**8L-2786**	1	SEAL-O-RING	
	5	1	**9S-8005**	1	PLUG-O-RING	

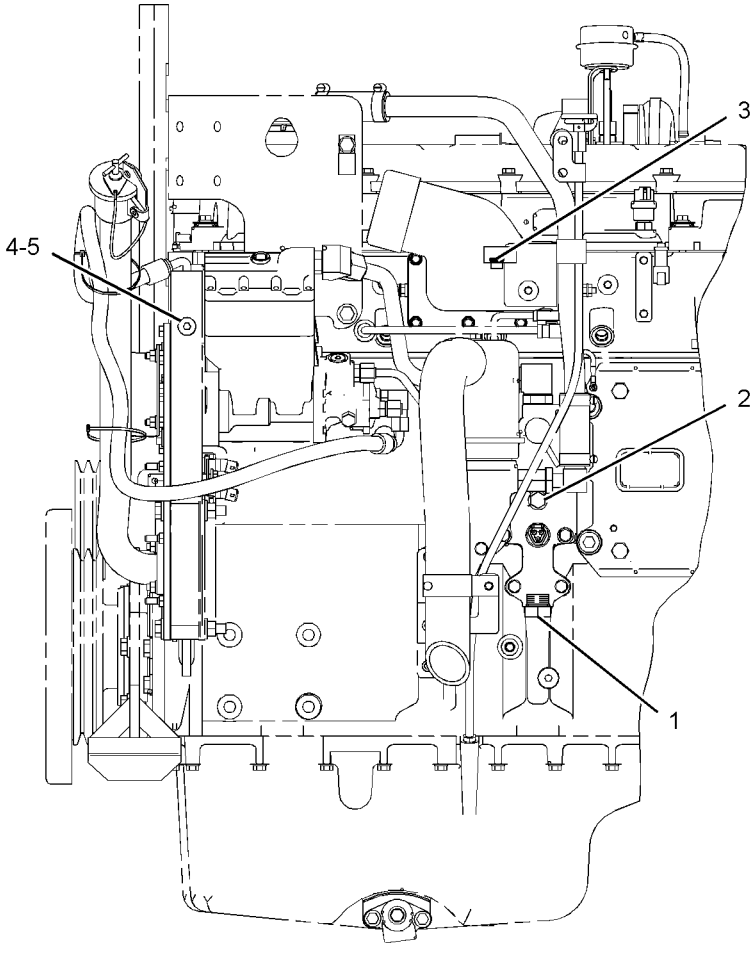

LEFT SIDE VIEW

GRAPHIC #1

<END>

g01101305

246-0602 PULLEY GP-CRANKSHAFT

S/N: THX8900-UP

PART OF 282-3823, 282-3824, 282-3825, 282-3826, 301-5768 ENGINE AR

ALSO AN ATTACHMENT

SMCS-1205 **i02431623**

NOTE	REF NO	GRAPHIC REF	PART NUMBER	QTY	PART NAME 1 2 3 4 5 6 (PRODUCT LEVEL)	SEE PAGE
	1	1	**2W-7381**	1	WASHER	
	2	1	**236-8239**	1	PULLEY-CRANKSHAFT	
M	3	1	**8T-3666**	4	BOLT (M14X2X60-MM)	

M-METRIC PART

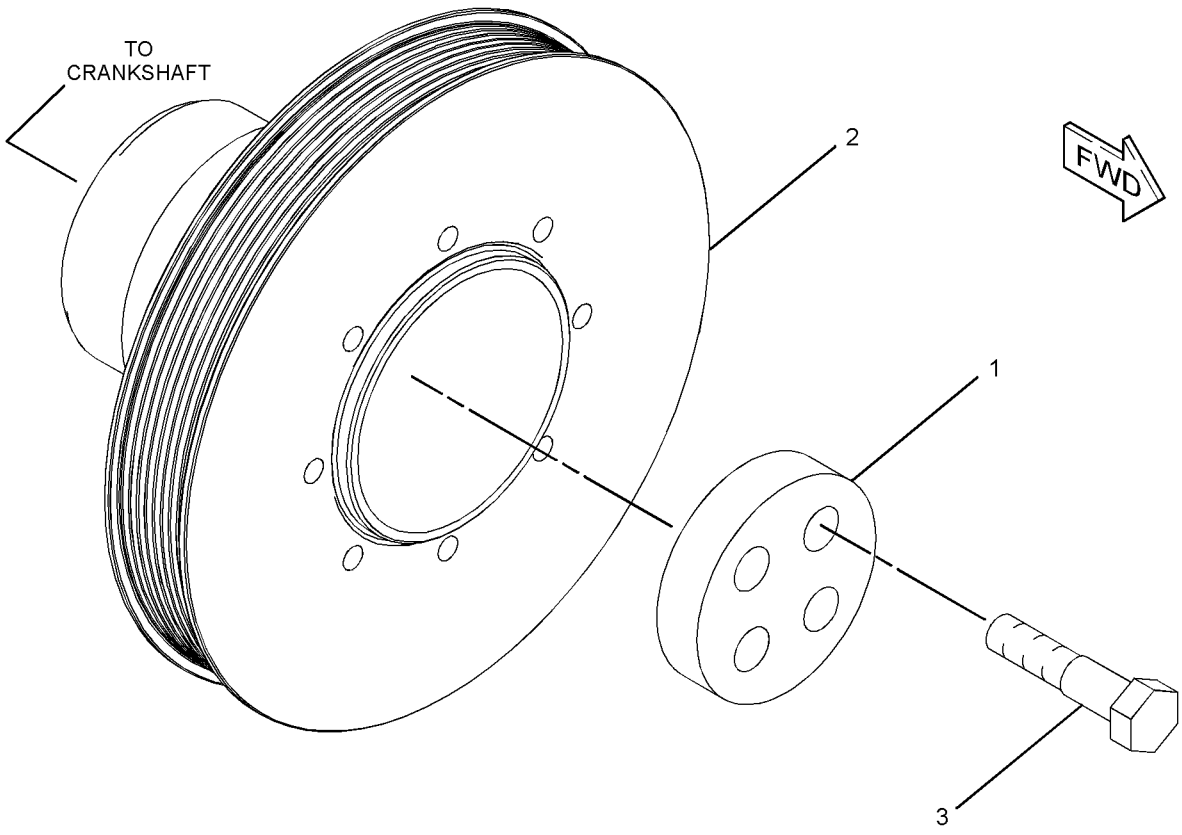

GRAPHIC #1 **<END>** g01206786

262-2027 PULLEY GP-FAN & ALT DRIVE

S/N: SMC1-UP; GCT1-UP

PART OF 279-9549 INSTALLATION AR-ENGINE

SMCS-1359, 1425 **i02441383**

NOTE	REF NO	GRAPHIC REF	PART NUMBER	QTY	PART NAME 1 2 3 4 5 6 (PRODUCT LEVEL)	SEE PAGE
	1	1	**1L-8545**	1	SPACER (1X1.25X0.99-IN THK)	
	2	1	**4P-8087**	1	V-BELT SET (INCLUDES 3-BELTS) (FAN)	
	3	1	**5M-9735**	1	SEAL-LIP TYPE	
	4	1	**6B-1124**	2	BALL BEARING	
	5	1	**7C-8370**	1	CAP-DUST	
	6	1	**123-0790**	1	PULLEY (8-GROOVE)	
	7	1	**185-0838**	1	ROD-ADJUSTING	
	8	1	**214-5705**	1	ADAPTER	
	9	1	**215-3296**	1	ARM AS	
		1	**3E-4999**	1	PIN-SPRING	
	10	1	**222-9151**	1	WASHER-HARD (11X32X5-MM THK)	
	11	1	**241-4981**	1	BELT-SERPENTINE (ALTERNATOR)	
	12	1	**267-7507**	1	PULLEY-FAN	
	13	1	**267-7508**	1	PULLEY	
	14	1	**267-7509**	1	PULLEY	
	15	1	**5P-1076**	1	WASHER-HARD (13.5X30X4-MM THK)	
M	16	1	**6V-4248**	1	BOLT (M10X1.5X25-MM)	
	17	1	**7C-2164**	1	BLOCK	
	18	1	**8T-4121**	14	WASHER-HARD (11X21X2.5-MM THK)	
M	19	1	**8T-4186**	7	BOLT (M10X1.5X40-MM)	
M	20	1	**8T-4196**	7	BOLT (M10X1.5X35-MM)	
M	21	1	**8T-4198**	8	BOLT (M10X1.5X100-MM)	
	22	1	**8T-4223**	3	WASHER-HARD (13.5X25.5X3-MM THK)	
M	23	1	**8T-4244**	2	NUT (M12X1.75-THD)	
M	24	1	**8T-4910**	1	BOLT (M12X1.75X60-MM)	
M	25	1	**8T-6868**	1	BOLT (M12X1.75X80-MM)	

M-METRIC PART

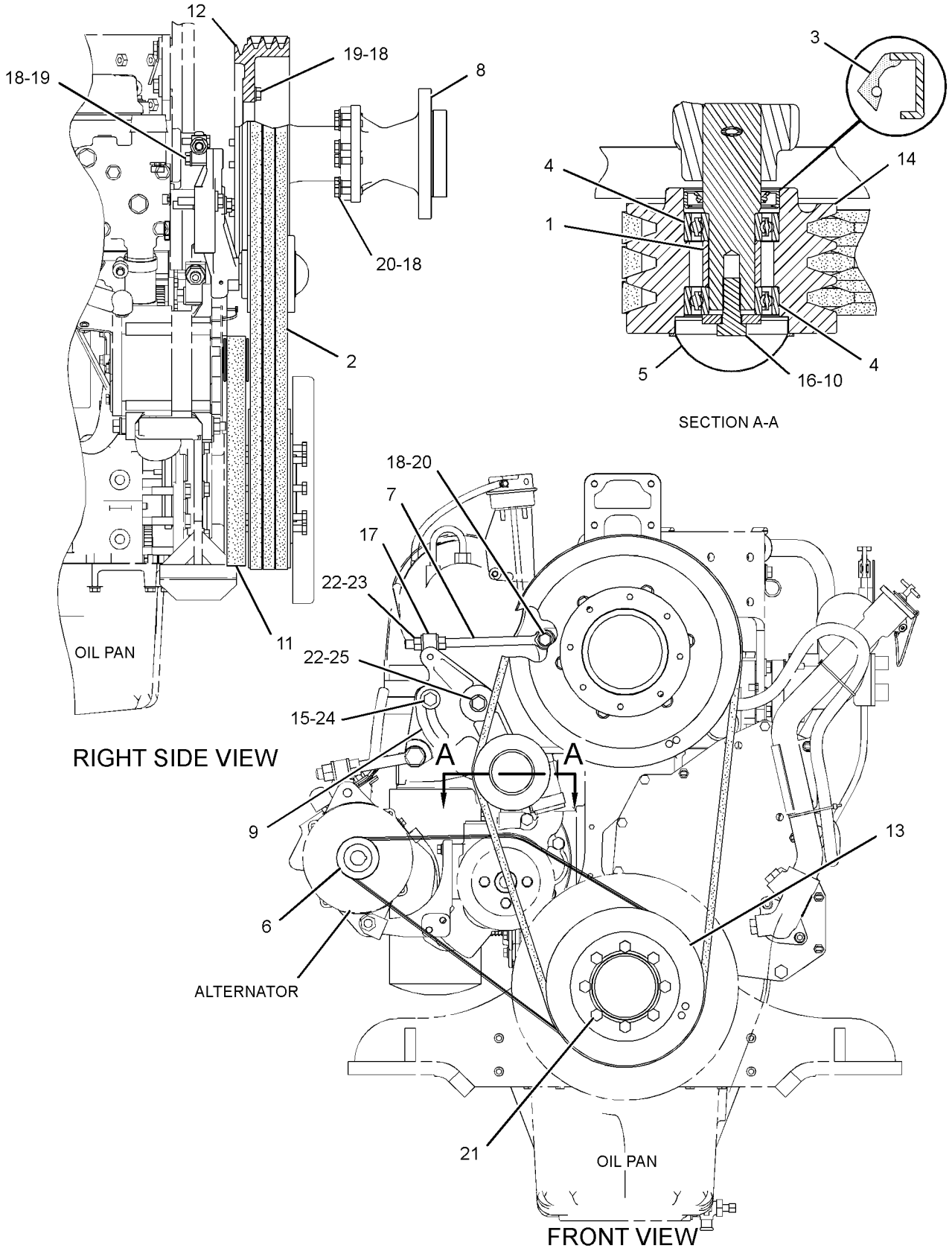

GRAPHIC #1 **<END>** g01209602

213-9320 ROCKER ARM GP–EXHAUST

S/N: THX8900-UP
PART OF 212-8926 VALVE MECHANISM GP
ALSO AN ATTACHMENT

SMCS-1123 **i02585214**

NOTE	REF NO	GRAPHIC REF	PART NUMBER	QTY	PART NAME 1 2 3 4 5 6 (PRODUCT LEVEL)	SEE PAGE
R	1	1	**163-2447**	1	ROCKER ARM AS	
	2	1	**260-7524**	1	SCREW-VALVE ADJUSTMENT	
M	3	1	**2Y-5829**	1	NUT (M10X1.15-THD)	

M-METRIC PART
R-REMFG PART MAY BE AVAILABLE

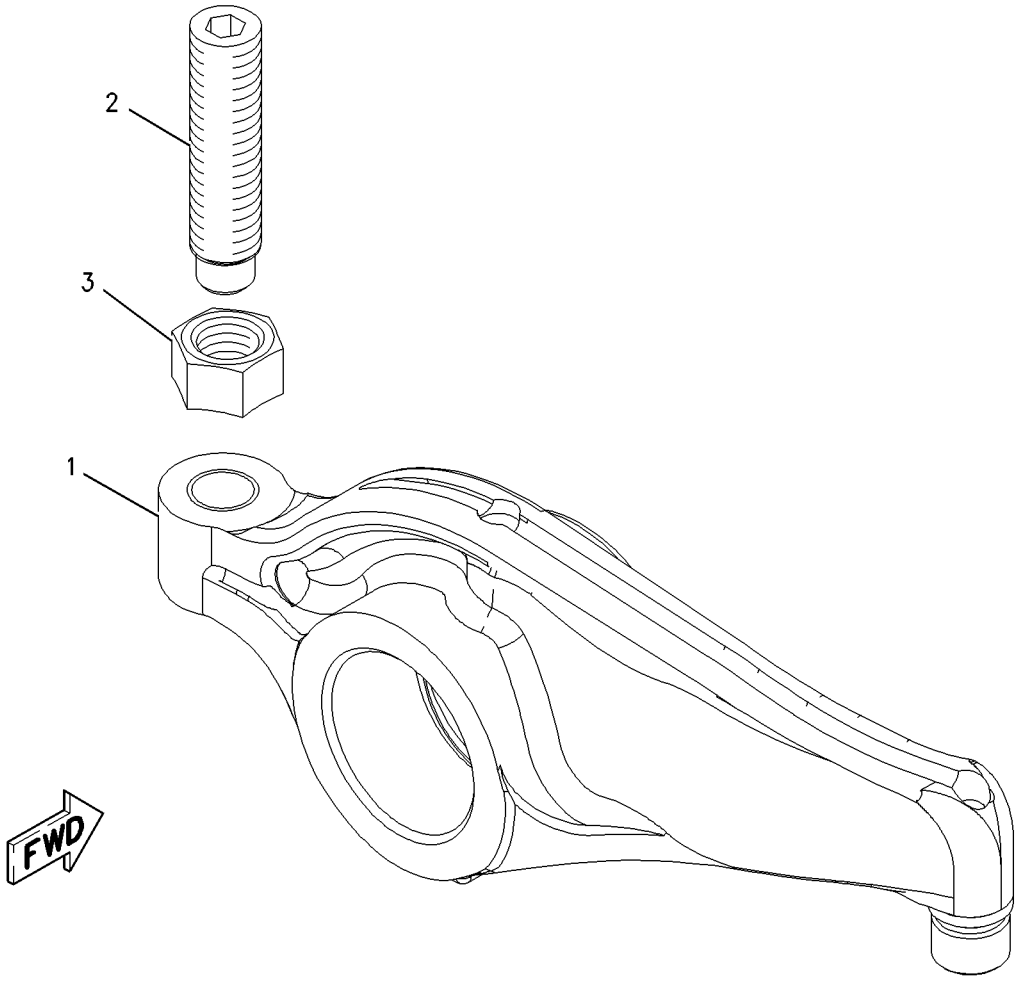

GRAPHIC #1 **<END>** g00979393

242-0329 ROCKER ARM GP–INLET

S/N: THX8900-UP
PART OF 212-8926 VALVE MECHANISM GP
ALSO AN ATTACHMENT

SMCS-1123 **i02585530**

NOTE	REF NO	GRAPHIC REF	PART NUMBER	QTY	PART NAME 1 2 3 4 5 6 (PRODUCT LEVEL)	SEE PAGE
	1	1	**260-7524**	1	SCREW-VALVE ADJUSTMENT	
	2	1	**242-0328**	1	ROCKER ARM AS	
M	3	1	**2Y-5829**	1	NUT (M10X1.15-THD)	

M-METRIC PART

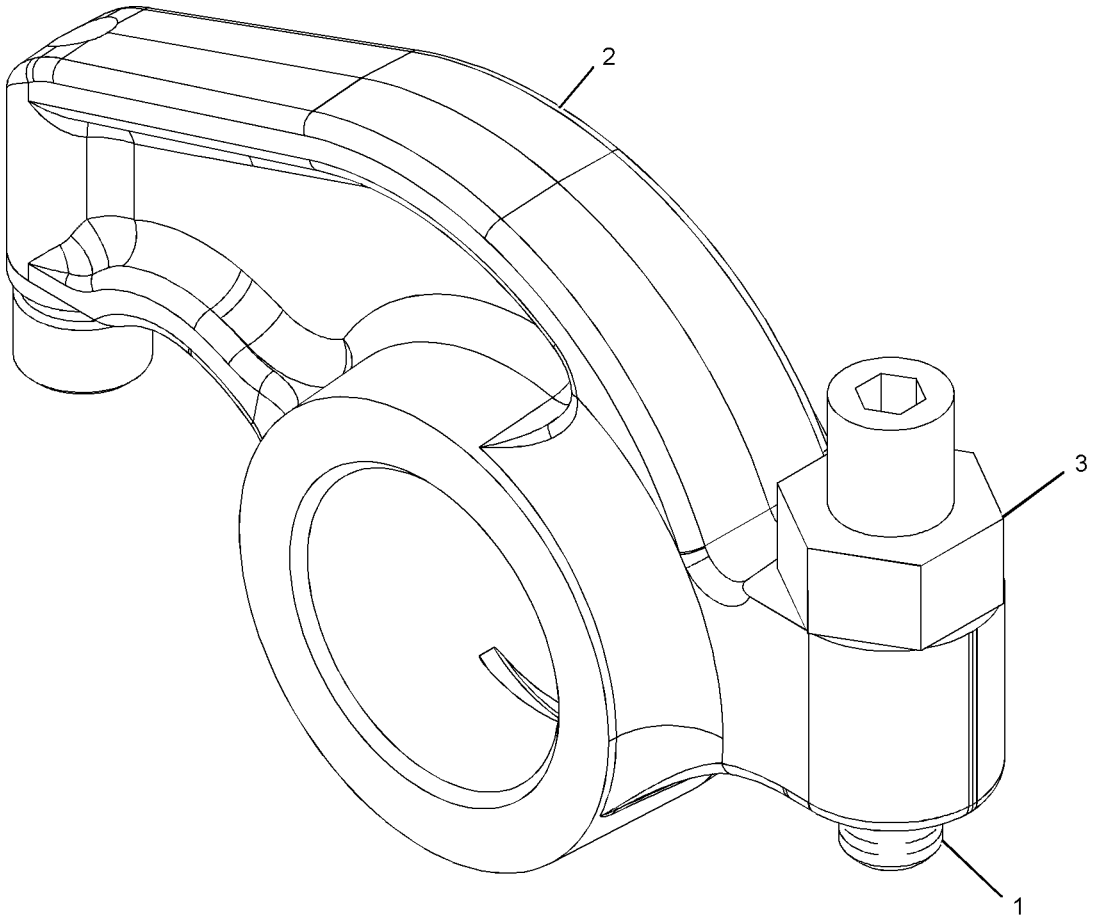

GRAPHIC #1 **<END>** g01056688

189-9306 SEAL GP-CRANKSHAFT

S/N: THX8900-UP
FRONT AND REAR
PART OF 282-3823, 282-3824, 282-3825, 282-3826, 301-5768 ENGINE AR
FOR USE WITH WET FLYWHEEL HSG AND FRONT DUST EXCLUDER
ALSO AN ATTACHMENT

SMCS-1160, 1161 **i02492774**

NOTE	REF NO	GRAPHIC REF	PART NUMBER	QTY	PART NAME 1 2 3 4 5 6 (PRODUCT LEVEL)	SEE PAGE
	1	1	**4R-9999**	1	EXCLUDER-CRANKSHAFT SEAL	
	2	1	**206-3719**	9	BOLT AS	
	3	1	**245-7339**	1	SEAL-CRANKSHAFT (FRONT)	
Y	4	1	**285-4074**	1	SEAL GP-CRANKSHAFT (REAR)	62

Y-SEPARATE ILLUSTRATION

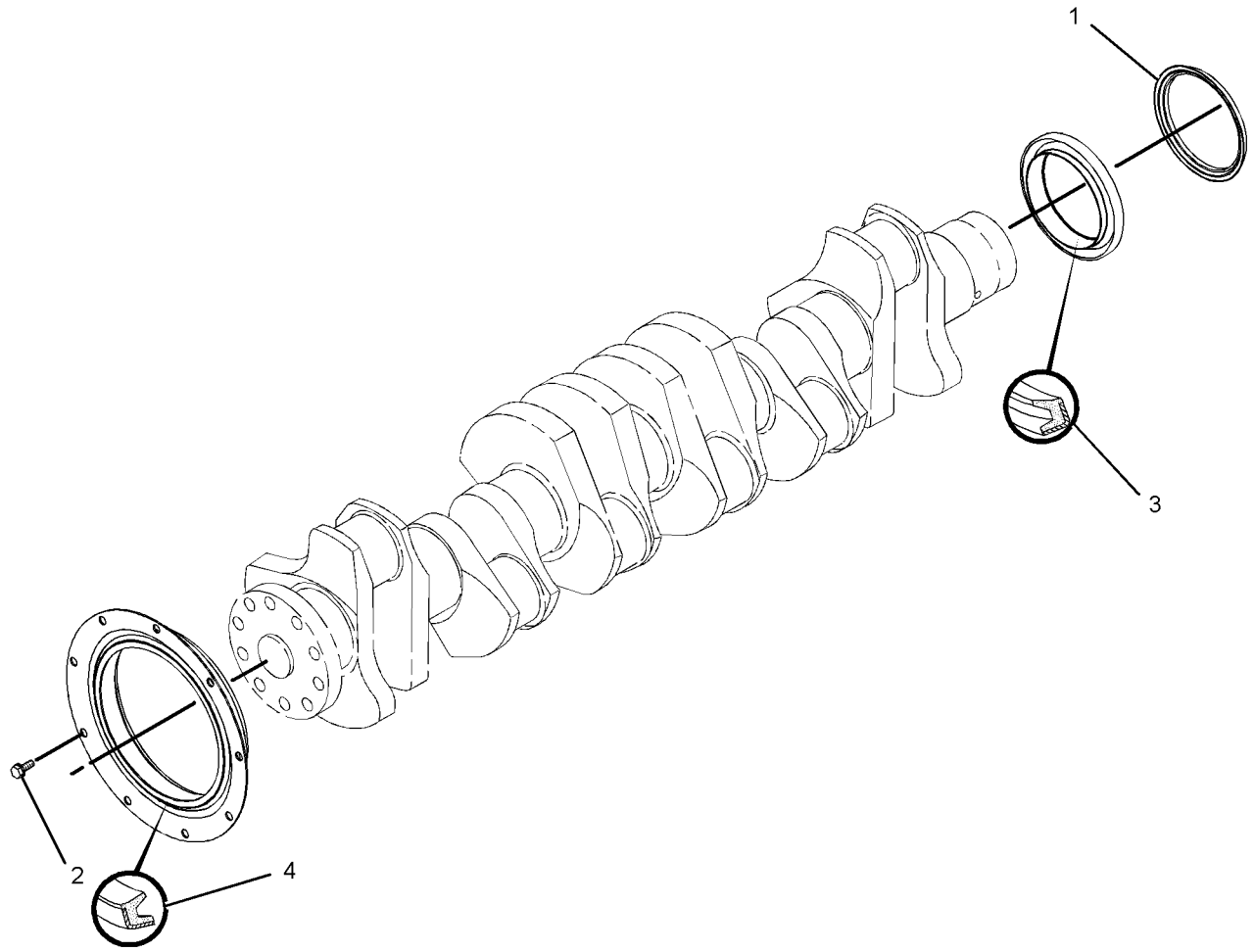

GRAPHIC #1 **<END>** g01250958

BASIC ENGINE

285-4074 SEAL GP-CRANKSHAFT

S/N: THX8900-UP
PART OF 189-9306 SEAL GP-CRANKSHAFT
ALSO AN ATTACHMENT

SMCS-1160, 1161 **i02492956**

NOTE	REF NO	GRAPHIC REF	PART NUMBER	QTY	PART NAME 1 2 3 4 5 6 (PRODUCT LEVEL)	SEE PAGE
	1	1	**187-8971**	1	SEAL GP-CRANKSHAFT	
	2	1	**107-6280**	1	SEAL-O-RING	

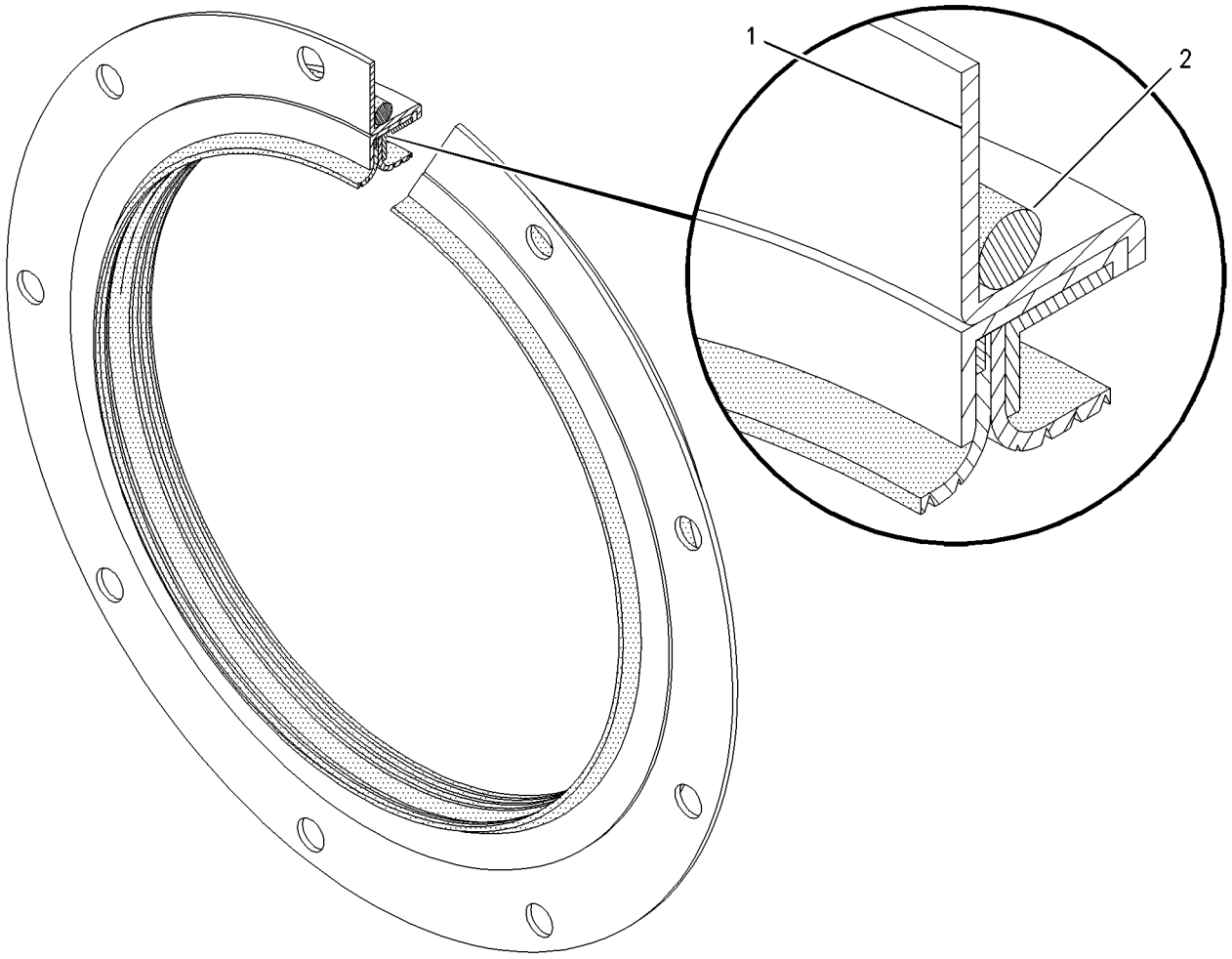

GRAPHIC #1 **<END>** g00985056

166-1790 SUPPORT GP-ENGINE

S/N: THX8900-UP

PART OF 282-3823, 282-3824, 282-3825, 282-3826, 301-5768 ENGINE AR

FOR USE WITH FRONT TRUNNION ENGINE SUPPORT

ALSO AN ATTACHMENT

SMCS-1152, 1153, 1154 **i01827674**

NOTE	REF NO	GRAPHIC REF	PART NUMBER	QTY	PART NAME 1 2 3 4 5 6 (PRODUCT LEVEL)	SEE PAGE
	1	1	**169-3899**	1	SUPPORT AS-ENGINE	
M	1A	1	**8T-3490**	4	NUT-WELD (M10X1.5 THD)	
	2	1	**5P-8245**	6	WASHER-HARD (13.5X25.5X3-MM THK)	
M	3	1	**6V-8675**	6	BOLT (M12X1.75X35-MM)	

M-METRIC PART

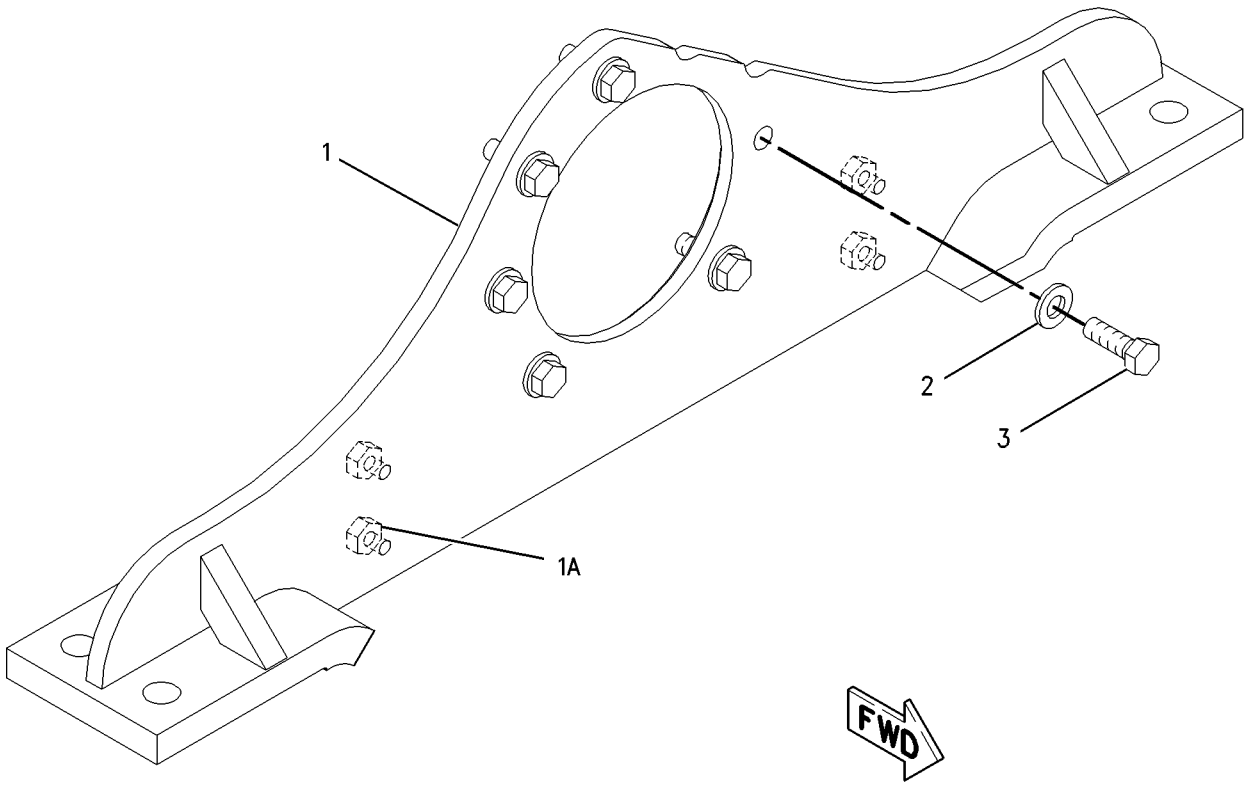

GRAPHIC #1 **<END>** g00852403

BASIC ENGINE

166-1792 TRUNNION GP-ENGINE

S/N: THX8900-UP

PART OF 282-3823, 282-3824, 282-3825, 282-3826, 301-5768 ENGINE AR

ALSO AN ATTACHMENT

SMCS-1153 **i01827686**

NOTE	REF NO	GRAPHIC REF	PART NUMBER	QTY	PART NAME 1 2 3 4 5 6 (PRODUCT LEVEL)	SEE PAGE
	1	1	**169-3895**	1	TRUNNION AS	
	2	1	**5P-8245**	6	WASHER-HARD (13.5X25.5X3-MM THK)	
M	3	1	**6V-5696**	6	BOLT (M12X1.75X80-MM)	

M-METRIC PART

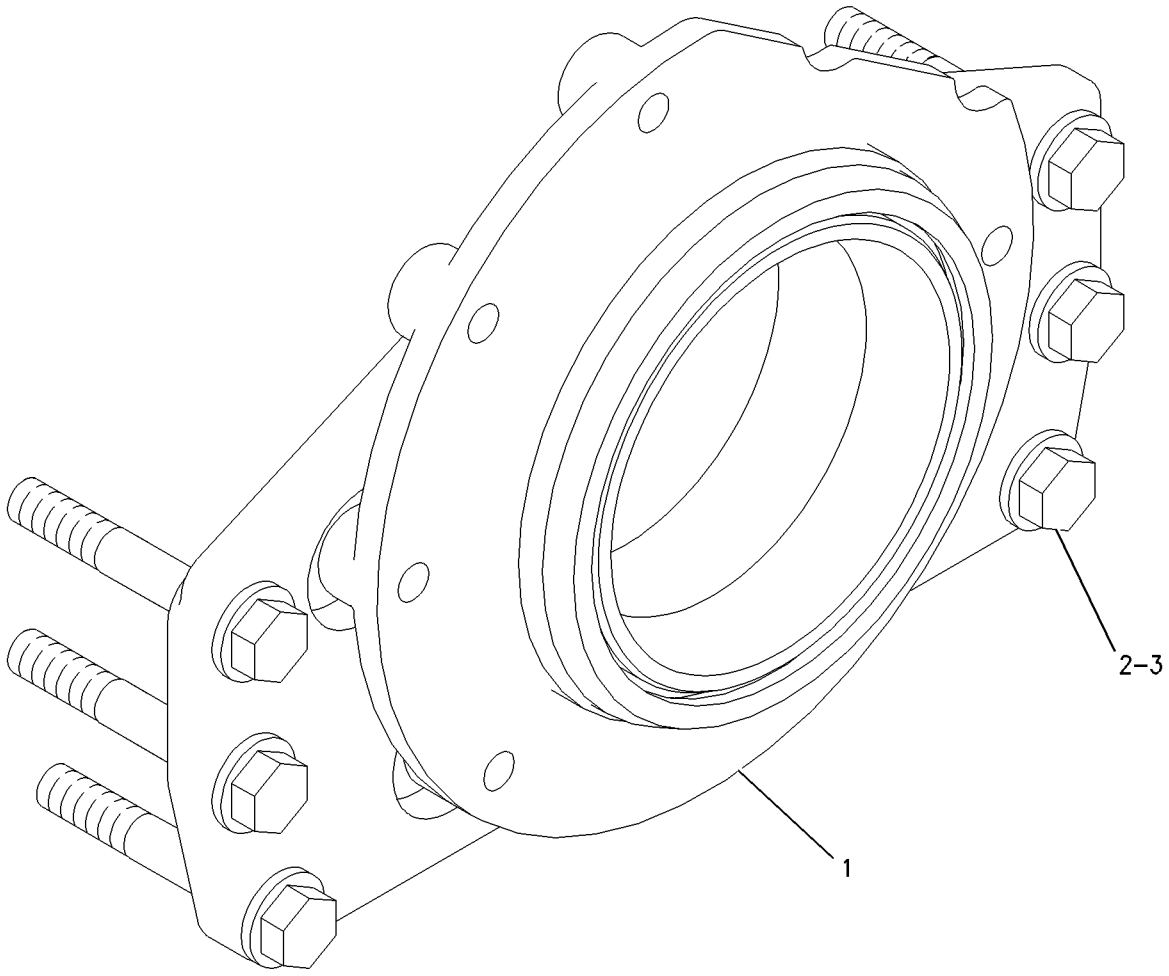

GRAPHIC #1 **<END>** g00935295

212-8926 VALVE MECHANISM GP

S/N: THX8900-UP
PART OF 242-0447 VALVE MECHANISM GP
ALSO AN ATTACHMENT

SMCS-1102, 1121, 1123 **i02433895**

NOTE	REF NO	GRAPHIC REF	PART NUMBER	QTY	PART NAME 1 2 3 4 5 6 (PRODUCT LEVEL)	SEE PAGE
	1	1	**163-2445**	1	SHAFT AS-ROCKER ARM	
		1	**8F-6575**	2	PLUG-CUP	
	2	1	**163-2459**	6	SPRING	
	3	1	**164-5669**	2	STAND (END)	
	4	1	**176-5913**	4	STAND (MIDDLE)	
	5	1	**176-5914**	1	STAND (OIL)	
Y	6	1	*213-9320*	6	ROCKER ARM GP (EXHAUST)	59
Y	7	1	*242-0329*	6	ROCKER ARM GP (INLET)	60
	8	1	**5P-8245**	7	WASHER-HARD (13.5X25.5X3-MM THK)	
M	9	1	**8T-0646**	7	BOLT (M12X1.75X110-MM)	

M-METRIC PART
Y-SEPARATE ILLUSTRATION

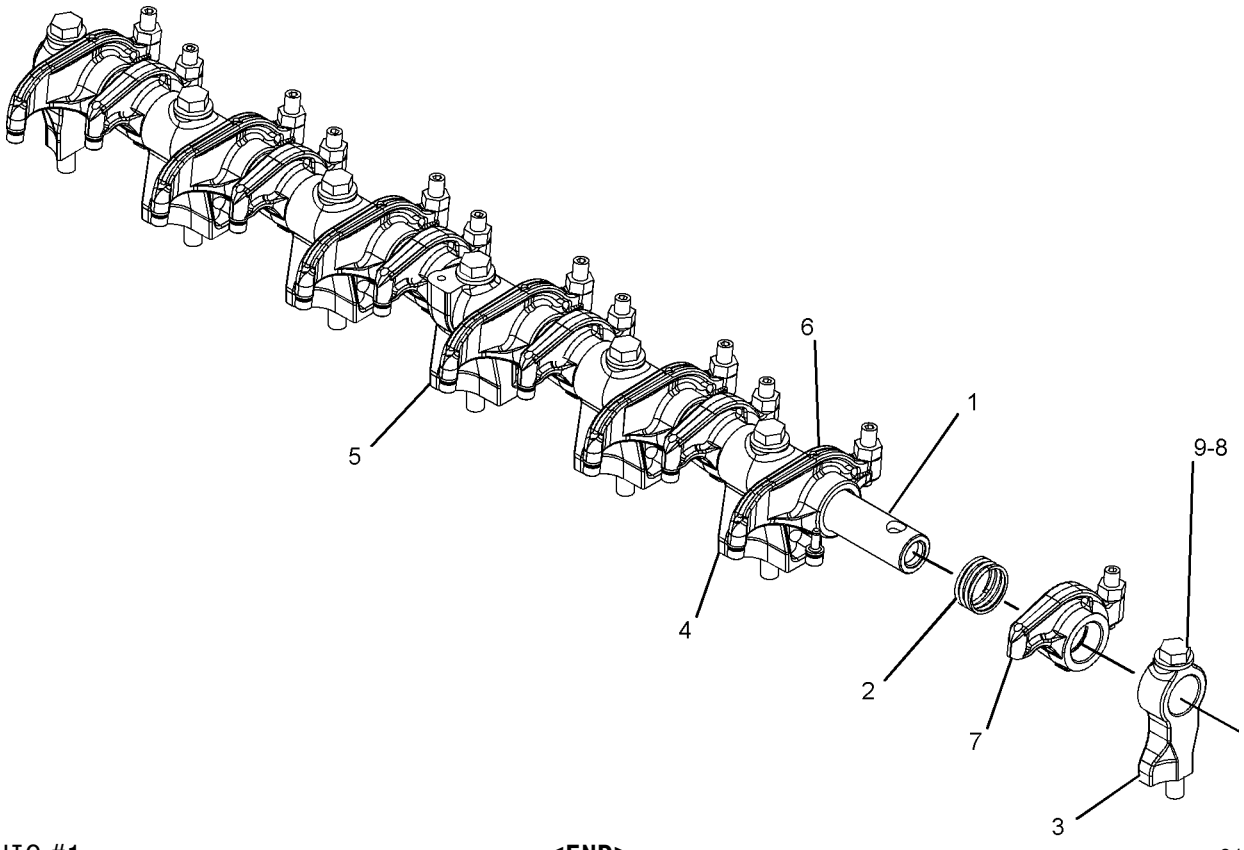

GRAPHIC #1 **<END>** g01069313

242-0447 VALVE MECHANISM GP

S/N: THX8900-UP

PART OF 282-3827, 282-3828, 282-3829, 282-3830, 301-5769 ENGINE AR-CORE

ALSO AN ATTACHMENT

SMCS-1102, 1121, 1123 **i02748257**

NOTE	REF NO	GRAPHIC REF	PART NUMBER	QTY	PART NAME 1 2 3 4 5 6 (PRODUCT LEVEL)	SEE PAGE
	1	1	**304-5260**	12	SPRING-GUIDE	
	2	1	**264-6156**	12	ROD-VALVE PUSH	
	3	1	**163-2437**	12	LIFTER AS-VALVE	
Y	4	1	*212-8926*	1	VALVE MECHANISM GP	65
	5	1	**244-5891**	6	BRIDGE-VALVE	
	6	1	**255-8674**	6	BRIDGE-VALVE	

Y-SEPARATE ILLUSTRATION

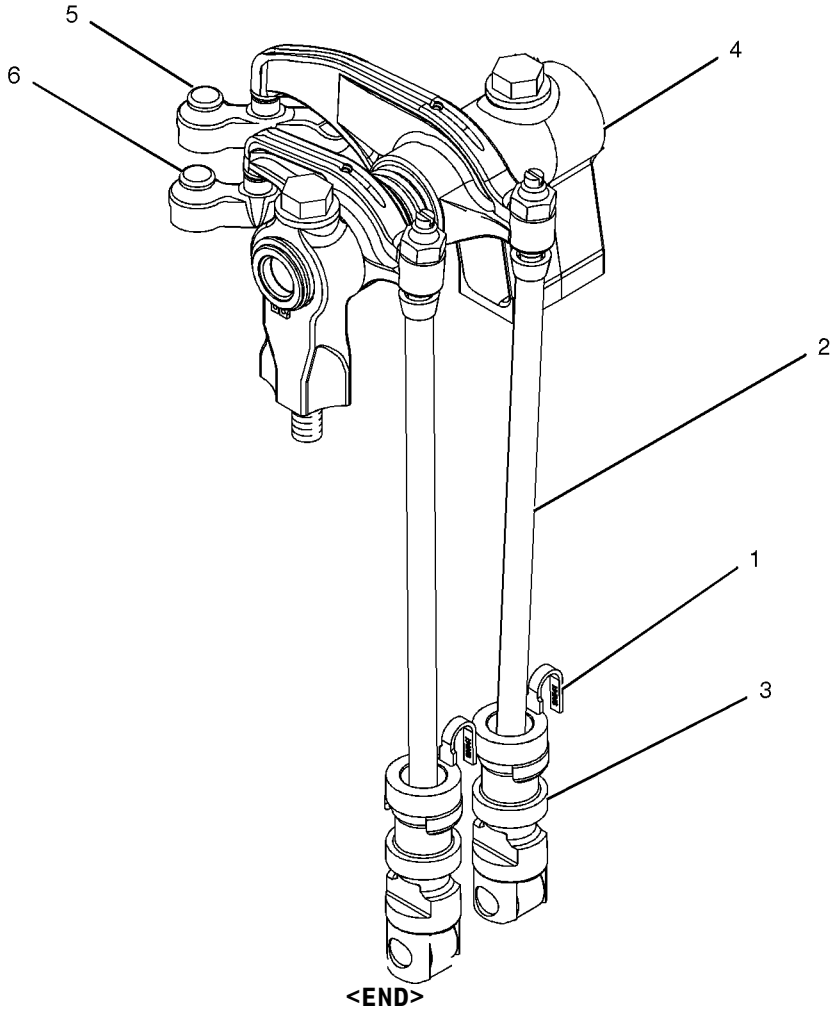

GRAPHIC #1 **<END>** g01043825

224-2693 YOKE GP

S/N: SMC1-UP; GCT1-UP

PART OF 279-9549 INSTALLATION AR-ENGINE

SMCS-3108 **i02432576**

NOTE	REF NO	GRAPHIC REF	PART NUMBER	QTY	PART NAME 1 2 3 4 5 6 (PRODUCT LEVEL)	SEE PAGE
	1	1	**128-3341**	1	COVER	
	2	1	**224-2694**	1	FLANGE	
	3	1	**128-3813**	1	SEAL-LIP TYPE	
	4	1	**1L-4775**	1	RING-RETAINING	
	5	1	**2S-3029**	1	BALL BEARING	
M	6	1	**6V-5844**	2	BOLT (M16X2X35-MM)	
	7	1	**6V-8260**	1	SEAL-O-RING	
	8	1	**9X-8268**	2	WASHER (17.5X30X3.5-MM THK)	

M-METRIC PART

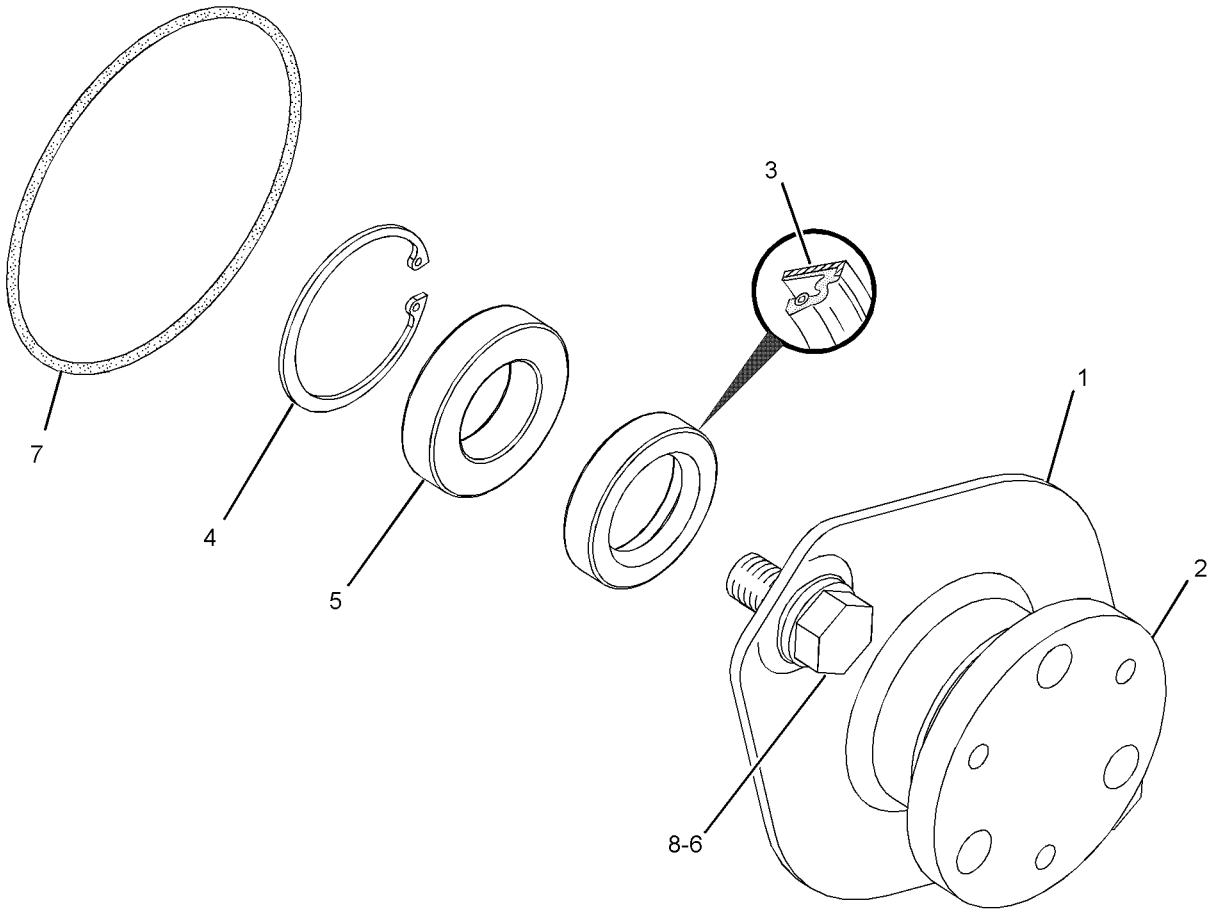

GRAPHIC #1 **<END>** g01210810

230-4118 FILLER GP-ENGINE OIL

S/N: THX8900-UP

PART OF 282-3823, 282-3824, 282-3825, 282-3826, 301-5768 ENGINE AR

ALSO AN ATTACHMENT

SMCS-1316 **i02090568**

NOTE	REF NO	GRAPHIC REF	PART NUMBER	QTY	PART NAME 1 2 3 4 5 6 (PRODUCT LEVEL)	SEE PAGE
	1	1	**230-4119**	1	TUBE AS	
		1	**6N-2985**	1	CAP AS-FILLER (ENGINE)	
	2	1	**061-9455**	1	SEAL-O-RING	
M	3	1	**5P-7970**	4	NUT (M8X1.25-THD)	
	4	1	**9M-1974**	4	WASHER-HARD (8.8X16X2-MM THK)	

M-METRIC PART

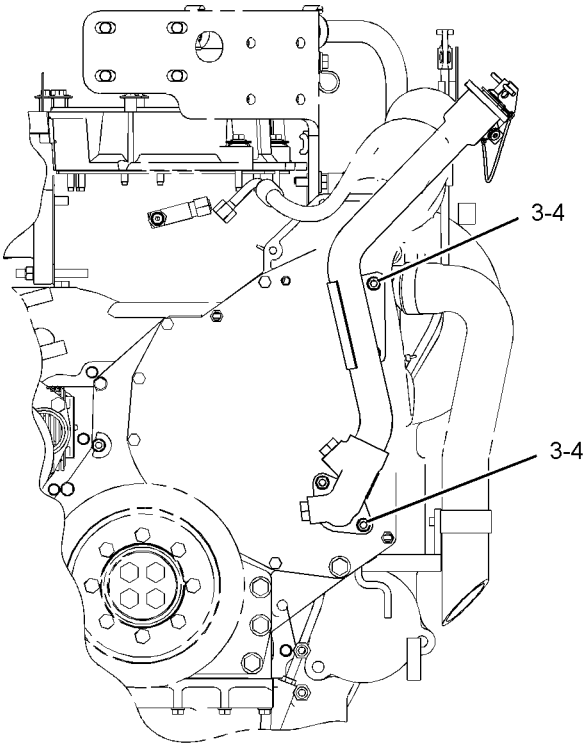

FRONT VIEW

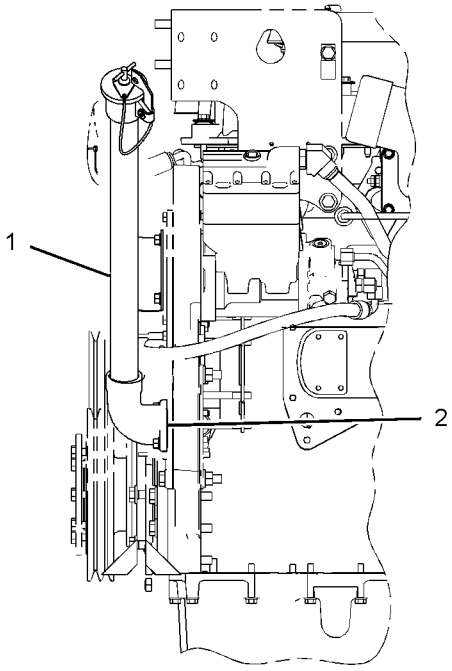

LEFT SIDE VIEW

GRAPHIC #1 **<END>** g01072234

183-2097 FILTER GP-ENGINE OIL

S/N: THX8900-UP

PART OF 282-3823, 282-3824, 282-3825, 282-3826, 301-5768 ENGINE AR

ALSO AN ATTACHMENT

SMCS-1306, 1308 **i02201158**

NOTE	REF NO	GRAPHIC REF	PART NUMBER	QTY	PART NAME 1 2 3 4 5 6 (PRODUCT LEVEL)	SEE PAGE
C	1	2	**1R-1808**	1	FILTER AS-ENGINE OIL (ADVANCED EFFICIENCY)	
	2	2	**7C-1493**	2	VALVE AS-BYPASS (ENGINE OIL FILTER)	
	3	2	**8C-3445**	1	CAP-DUST	
	4	2	**8T-8902**	1	TEE	
C	5	2	**209-7290**	1	GASKET	
C	6	2	**249-0159**	1	BASE AS-OIL FILTER	
C	6A	1	**2P-4304**	1	STUD-HOLLOW	
	7	2	**242-3864**	2	SPRING	
M	8	2	**5P-8196**	3	PLUG	
	9	2	**5P-9617**	1	ADAPTER	
	10	2	**6V-4589**	3	SEAL-O-RING	
	11	2	**6V-5048**	1	SEAL-O-RING	
	12	2	**6V-5049**	2	SEAL-O-RING	
M	13	1	**6V-5218**	2	BOLT (M8X1.25X35-MM)	
M	14	1	**6V-5219**	8	BOLT (M8X1.25X40-MM)	
M	15	1	**6V-5220**	2	BOLT (M8X1.25X65-MM)	
	16	2	**6V-8077**	1	ELBOW	
	17	2	**6V-8723**	1	ELBOW	
	18	2	**8C-3446**	1	VALVE-FLUID SAMPLING (ENGINE OIL)	
	19	2	**8L-2779**	2	SEAL-O-RING	
	20	2	**8L-2786**	2	SEAL-O-RING	
	21	1	**9M-1974**	12	WASHER-HARD (8.8X16X2-MM THK)	
	22	2	**9S-4185**	1	PLUG-O-RING	

C-CHANGE FROM PREVIOUS TYPE
M-METRIC PART

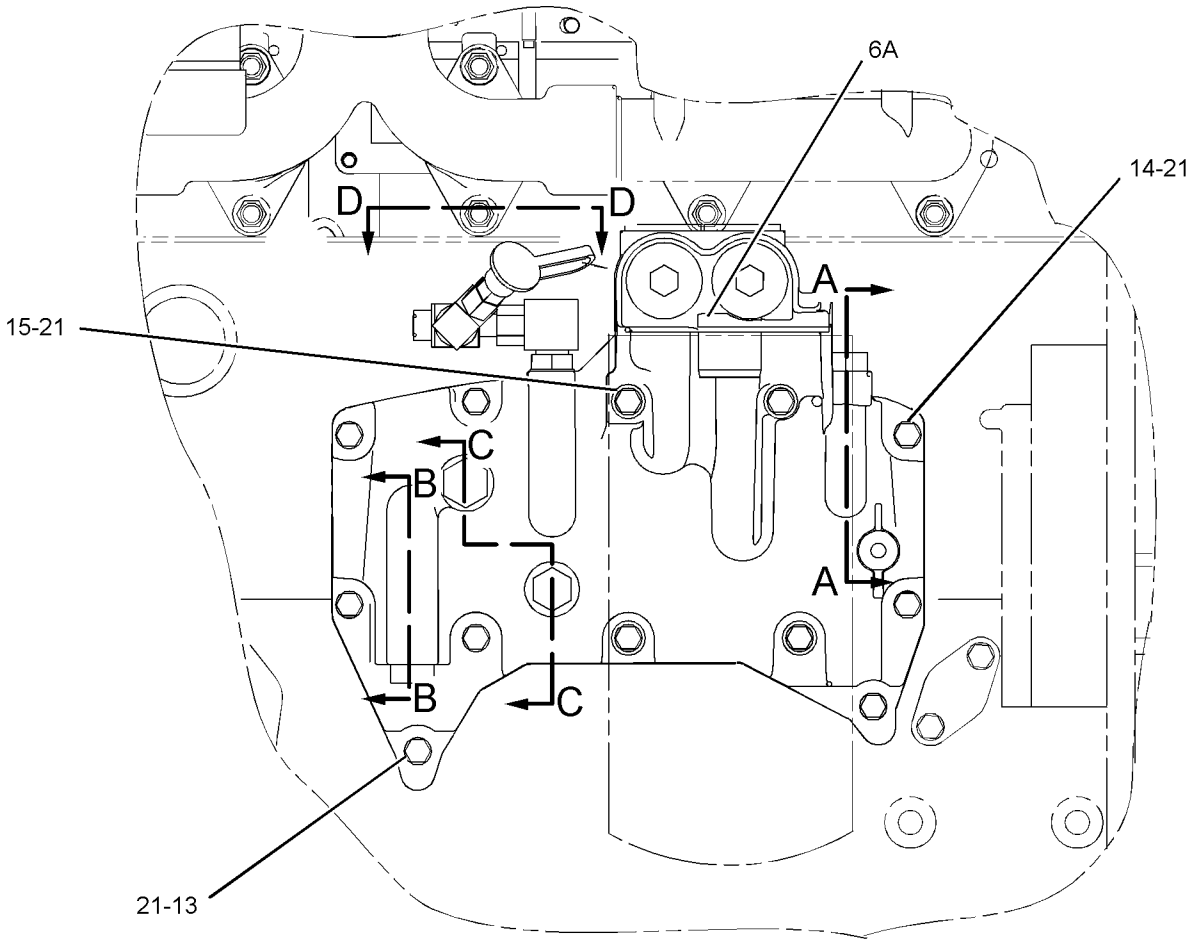

RIGHT SIDE VIEW

GRAPHIC #1 g01062689

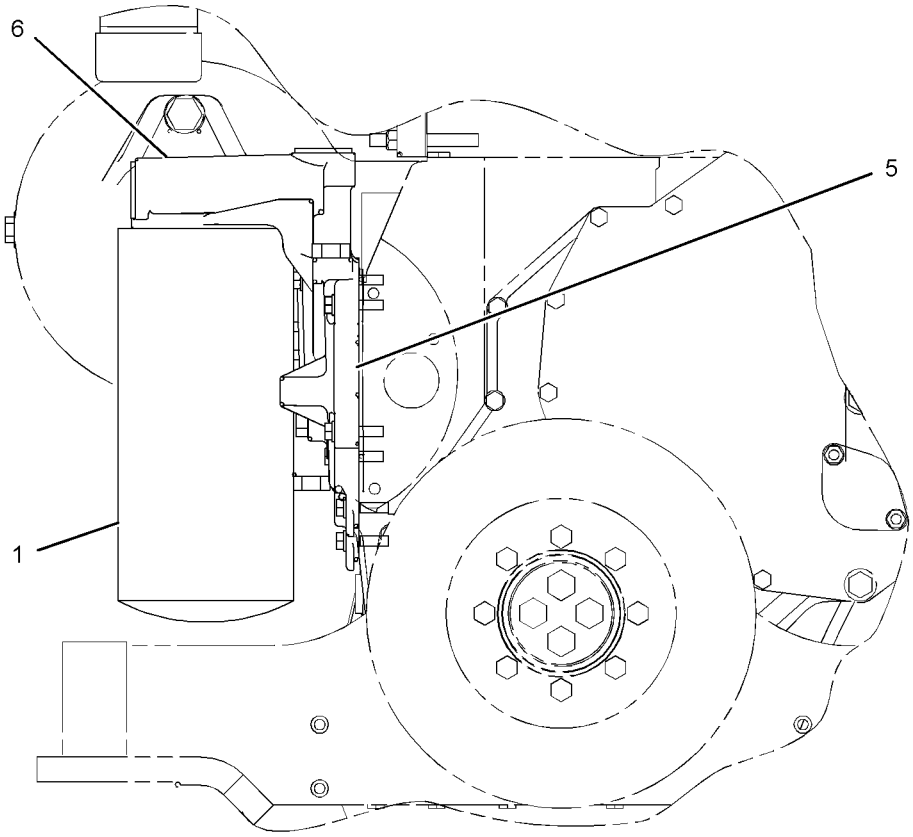

FRONT VIEW

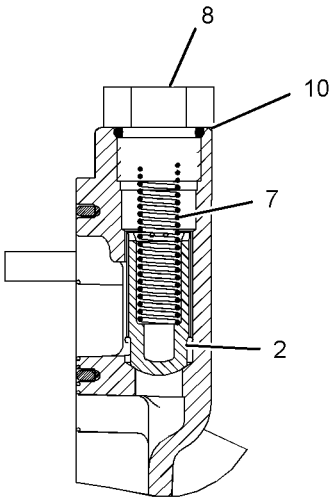

SECTION A-A

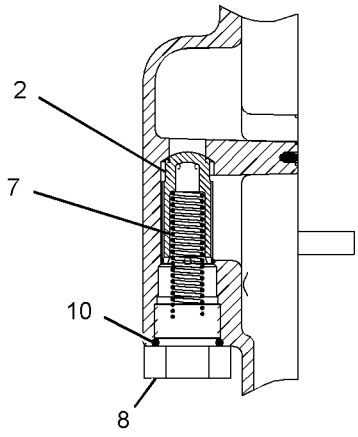

SECTION B-B

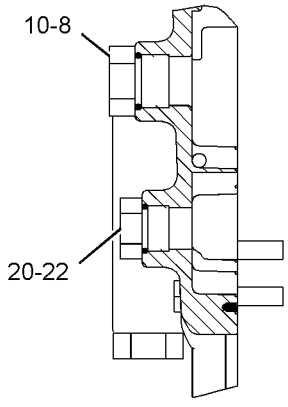

SECTION C-C

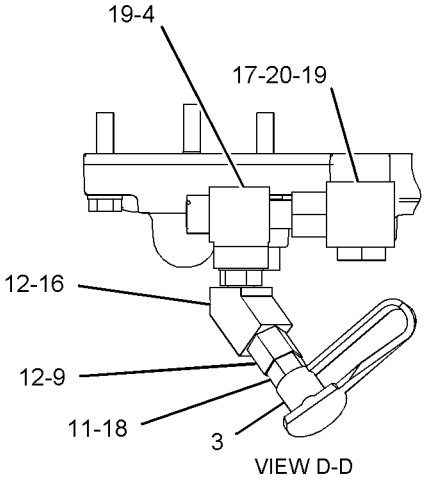

VIEW D-D

GRAPHIC #2 **<END>** g01062704

230-5585 FUMES DISPOSAL GP–CRANKCASE

S/N: SMC1-UP; GCT1-UP

PART OF 279-9549 INSTALLATION AR-ENGINE

SMCS-1317 **i02750861**

NOTE	REF NO	GRAPHIC REF	PART NUMBER	QTY	PART NAME 1 2 3 4 5 6 (PRODUCT LEVEL)	SEE PAGE
	1	1	**2S-3440**	1	CLAMP-HOSE	
	2	1	**9M-0164**	1	CLAMP-HOSE	
	3	1	**184-7211**	2	CLIP	
	4	1	**230-9796**	1	DUCT AS	
	5	1	**6V-1889**	3	CLIP	
	6	1	**8T-4121**	5	WASHER-HARD (11X21X2.5-MM THK)	
M	7	1	**8T-4133**	2	NUT (M10X1.5-THD)	
M	8	1	**8T-4136**	1	BOLT (M10X1.5X25-MM)	
M	9	1	**8T-4195**	1	BOLT (M10X1.5X30-MM)	

M-METRIC PART

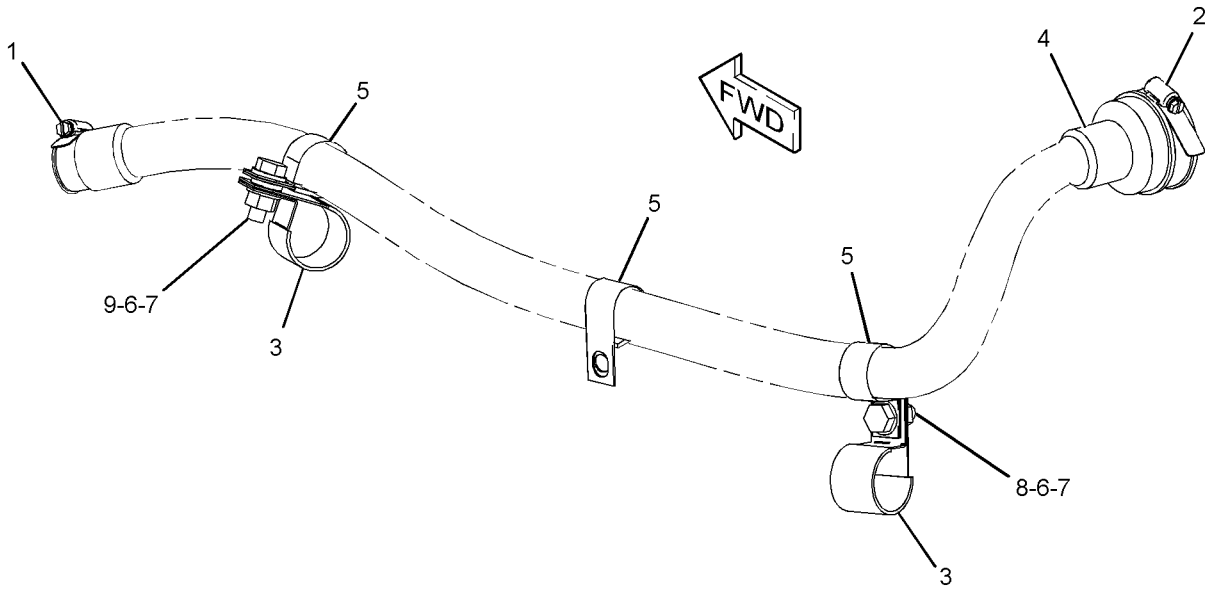

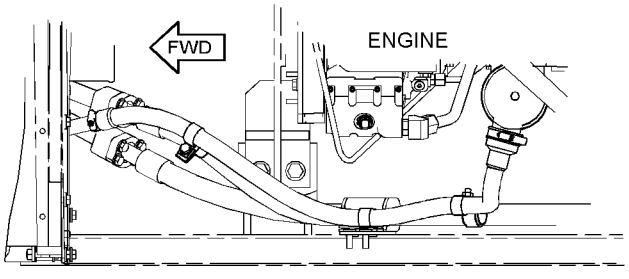

TOP VIEW

GRAPHIC #1 **<END>** g01353930

241-3719 FUMES DISPOSAL GP

S/N: THX8900-UP

PART OF 282-3823, 282-3824, 282-3825, 282-3826, 301-5768 ENGINE AR

ALSO AN ATTACHMENT

SMCS-1317 **i02707084**

NOTE	REF NO	GRAPHIC REF	PART NUMBER	QTY	PART NAME 1 2 3 4 5 6 (PRODUCT LEVEL)	SEE PAGE
	1	1	**9M-7958**	2	CLAMP-HOSE	
	2	1	**9U-6993**	1	FITTING GP	
		1	**3D-2824**	1	SEAL-O-RING	
C	3	1	**295-1771**	1	HOSE-FUMES DISP	
	4	1	**4D-7388**	1	CLIP	
M	5	1	**6V-4248**	1	BOLT (M10X1.5X25-MM)	
	6	1	**6V-5839**	1	WASHER (11X21X2.5-MM THK)	

C-CHANGE FROM PREVIOUS TYPE
M-METRIC PART

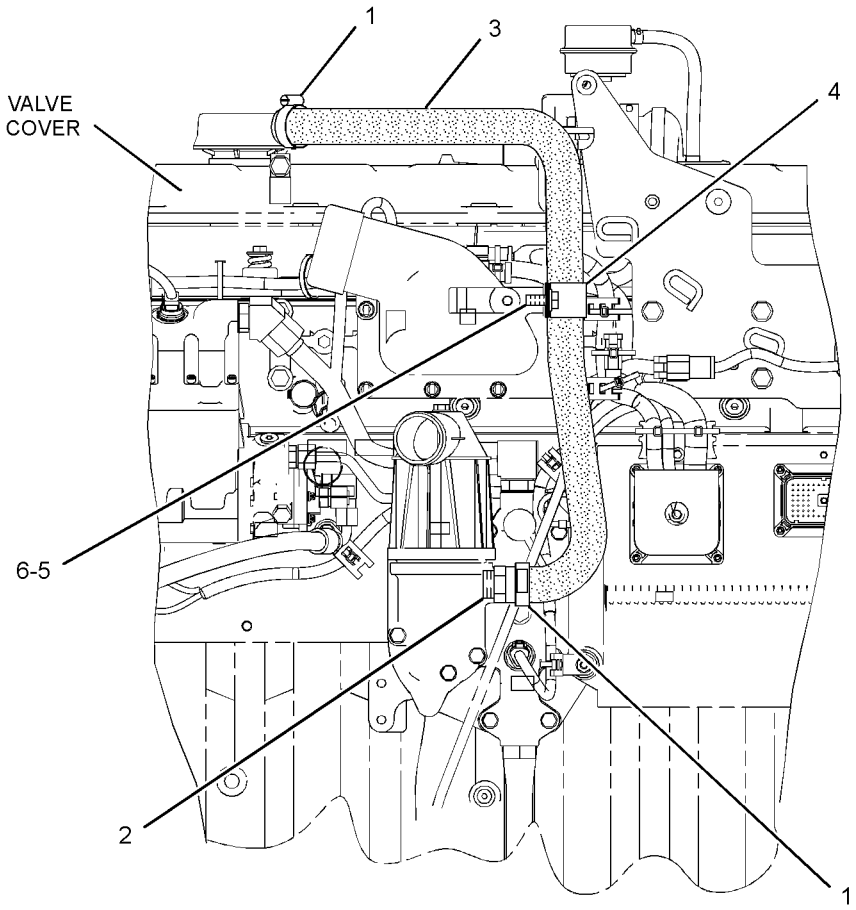

LEFT SIDE VIEW OF ENGINE

GRAPHIC #1 **<END>** g01364932

246-0601 GAUGE GP-OIL LEVEL (DIPSTICK)–ENGINE

S/N: THX8900-UP

PART OF 282-3823, 282-3824, 282-3825, 282-3826, 301-5768 ENGINE AR

ALSO AN ATTACHMENT

SMCS-1326 **i02241489**

NOTE	REF NO	GRAPHIC REF	PART NUMBER	QTY	PART NAME 1 2 3 4 5 6 (PRODUCT LEVEL)	SEE PAGE
	1	1	**261-3162**	1	GAUGE-OIL LEVEL (DIPSTICK) (ENGINE)	
	2	1	**246-7899**	1	TUBE AS	

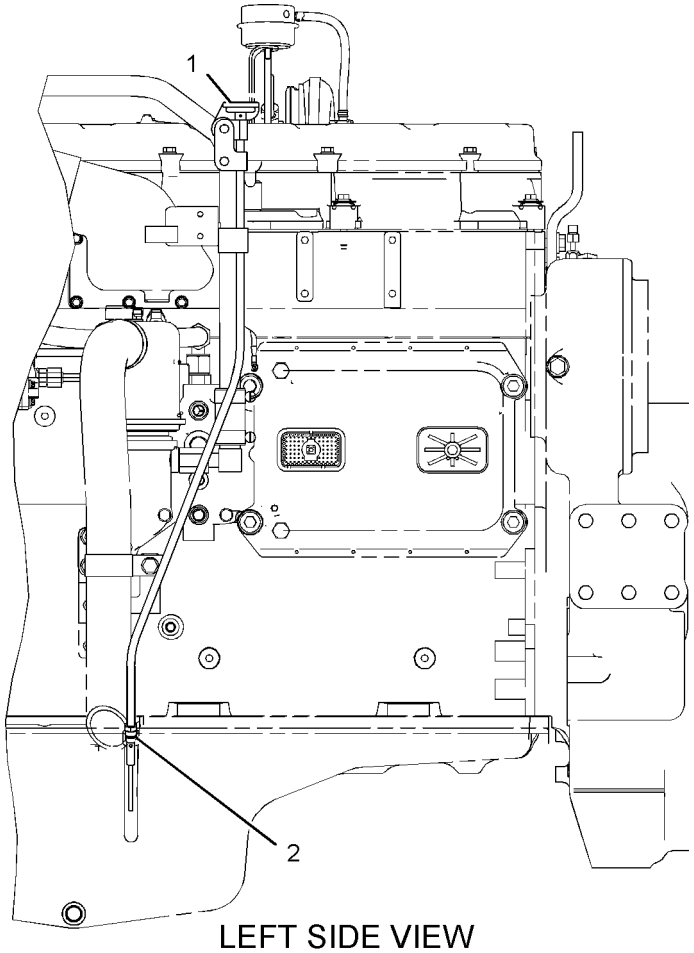

LEFT SIDE VIEW

GRAPHIC #1

<END>

g01101373

198-1319 LINES GP-ENGINE OIL

S/N: THX8900-UP
FRONT SUMP
PART OF 282-3823, 282-3824, 282-3825, 282-3826, 301-5768 ENGINE AR
ALSO AN ATTACHMENT

SMCS-1307 **i02094237**

NOTE	REF NO	GRAPHIC REF	PART NUMBER	QTY	PART NAME 1 2 3 4 5 6 (PRODUCT LEVEL)	SEE PAGE
	2	1	**234-0203**	1	ELBOW-OUTLET	
	3	1	**195-0452**	1	GASKET	
	4	1	**213-8516**	1	TUBE AS	
	5	1	**033-6034**	1	SEAL-O-RING	
M	7	1	**208-9282**	1	BOLT (M8X1.25X25-MM)	
	8	1	**5P-7530**	1	SEAL-O-RING	
M	9	1	**6V-5217**	2	BOLT (M8X1.25X20-MM)	
M	11	1	**8T-0292**	1	BOLT (M8X1.25X90-MM)	
M	12	1	**6V-3940**	2	BOLT (M8X1.25X25-MM)	
	13	1	**9M-1974**	5	WASHER-HARD (8.8X16X2-MM THK)	

M-METRIC PART

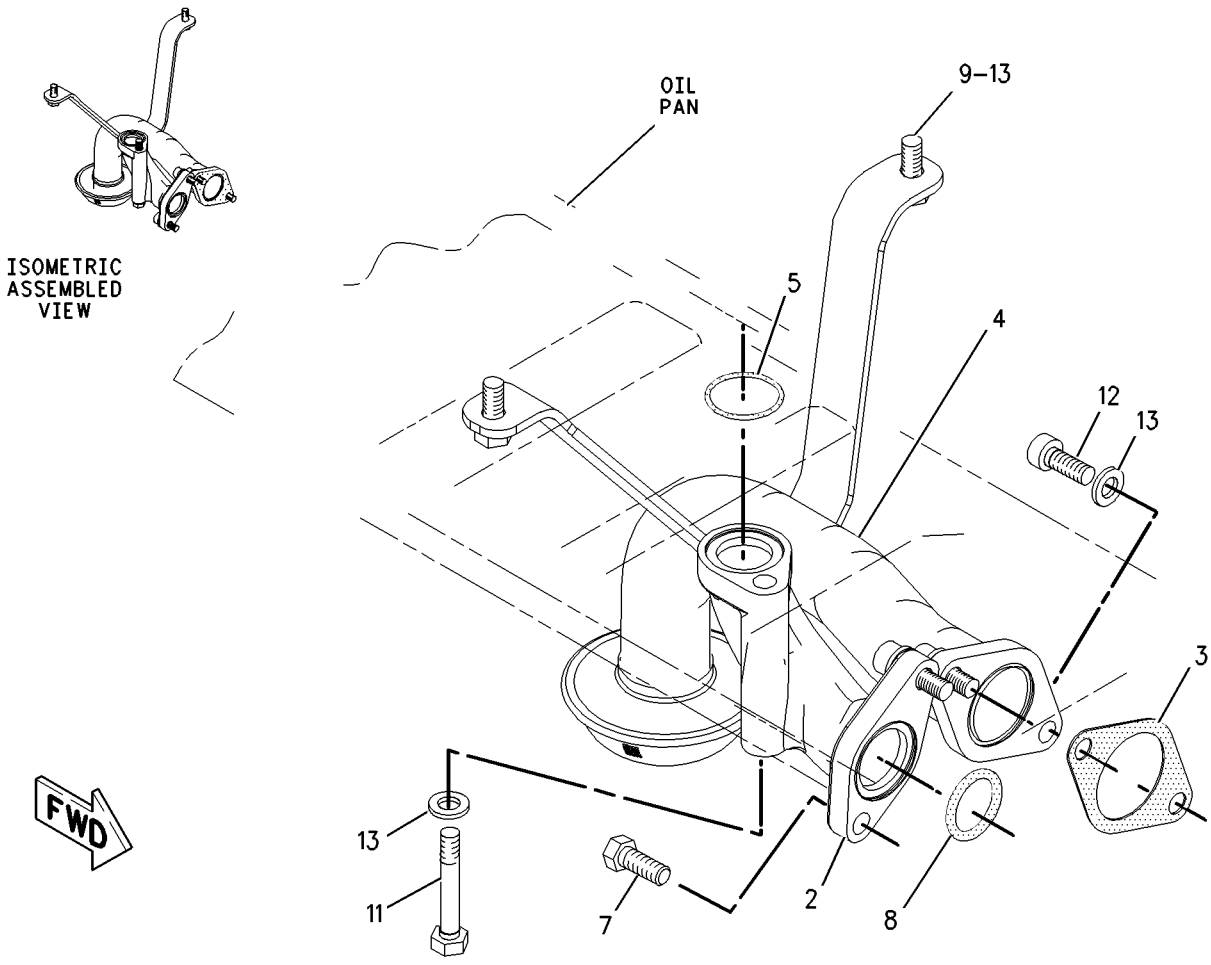

GRAPHIC #1 **<END>** g00934978

LUBRICATION SYSTEM

224-0821 LINES GP-OIL SUPPLY

S/N: SMC1-UP; GCT1-UP
PART OF 282-2870, 282-2871 DRIVE AR-FAN
AN ATTACHMENT

SMCS-1307 **i02624587**

NOTE	REF NO	GRAPHIC REF	PART NUMBER	QTY	PART NAME 1 2 3 4 5 6 (PRODUCT LEVEL)	SEE PAGE
	2	1	**218-4160**	1	BRACKET AS	
	3	1	*148-8369*	1	ELBOW AS	
		1	**6V-8628**	1	ELBOW	
		1	**3J-7354**	1	SEAL-O-RING	
		1	**4J-5477**	1	SEAL-O-RING	
C	4	1	*148-8378*	1	ELBOW AS	
		1	**6V-8724**	1	ELBOW	
		1	**3J-1907**	1	SEAL-O-RING	
		1	**6V-8397**	1	SEAL-O-RING	
	5	1	*148-8435*	1	TEE AS	
		1	**6V-8781**	1	TEE-FACE SEAL	
		1	**3J-1907**	1	SEAL-O-RING	
		1	**6V-8397**	2	SEAL-O-RING	
	7	1	**187-3974**	1	TUBE AS	
	8	1	**189-5576**	1	TUBE AS	
	9	1	**189-5577**	1	TUBE AS	
Y	10	1	**192-0729**	1	VALVE GP-MODULATING (PILOT OIL)	87
	11	1	**235-6529**	1	BRACKET AS	
I	12	1	**236-6742**	1	HOSE AS	
I	13	1	**236-6743**	1	HOSE AS	
C	14	1	*148-8318*	1	CONNECTOR AS	
		1	**6V-8634**	1	CONNECTOR	
		1	**3K-0360**	1	SEAL-O-RING	
		1	**6V-8397**	1	SEAL-O-RING	
	15	1	*148-8325*	1	CONNECTOR AS	
		1	**6V-8641**	1	CONNECTOR	
		1	**3J-1907**	1	SEAL-O-RING	
		1	**4J-5477**	1	SEAL-O-RING	
	16	1	*148-8336*	1	CONNECTOR AS	
		1	**6V-8636**	1	CONNECTOR	
		1	**3J-1907**	1	SEAL-O-RING	
		1	**6V-8397**	1	SEAL-O-RING	
	17	1	*148-8340*	1	CONNECTOR AS	
		1	**6V-8639**	1	CONNECTOR	
		1	**3K-0360**	1	SEAL-O-RING	
		1	**6V-8398**	1	SEAL-O-RING	
	18	1	*148-8354*	1	ELBOW AS	
		1	**6V-9002**	1	ELBOW	
		1	**6V-8398**	1	SEAL-O-RING	
		1	**3K-0360**	1	SEAL-O-RING	
M	20	1	**8T-4137**	1	BOLT (M10X1.5X20-MM)	
	22	1	**5P-4295**	1	CLIP	
	23	1	**6V-5049**	1	SEAL-O-RING	
	24	1	**7W-7381**	1	FITTING-OUTLET	
	25	1	**8M-2773**	3	CLIP	
C	26	1	**8T-4121**	6	WASHER-HARD (11X21X2.5-MM THK)	
	27	1	*148-8374*	1	ELBOW AS	
		1	**6V-8723**	1	ELBOW	
		1	**3K-0360**	1	SEAL-O-RING	
		1	**6V-8397**	1	SEAL-O-RING	
	28	1	**1S-6420**	1	CLIP	
M	30	1	**8T-4195**	2	BOLT (M10X1.5X30-MM)	
M	33	1	**8T-6466**	2	BOLT (M10X1.5X60-MM)	
	34	1	**136-1122**	1	BUSHING	
CM	35	1	**8T-4136**	1	BOLT (M10X1.5X25-MM)	

224-0821 **LINES GP-OIL SUPPLY** *(contd.)* **i02624587**

C-CHANGE FROM PREVIOUS TYPE
I-REFER TO HYDRAULIC INFORMATION SYSTEM
M-METRIC PART
Y-SEPARATE ILLUSTRATION

224-0821 **LINES GP-OIL SUPPLY** *(contd.)* **i02624587**

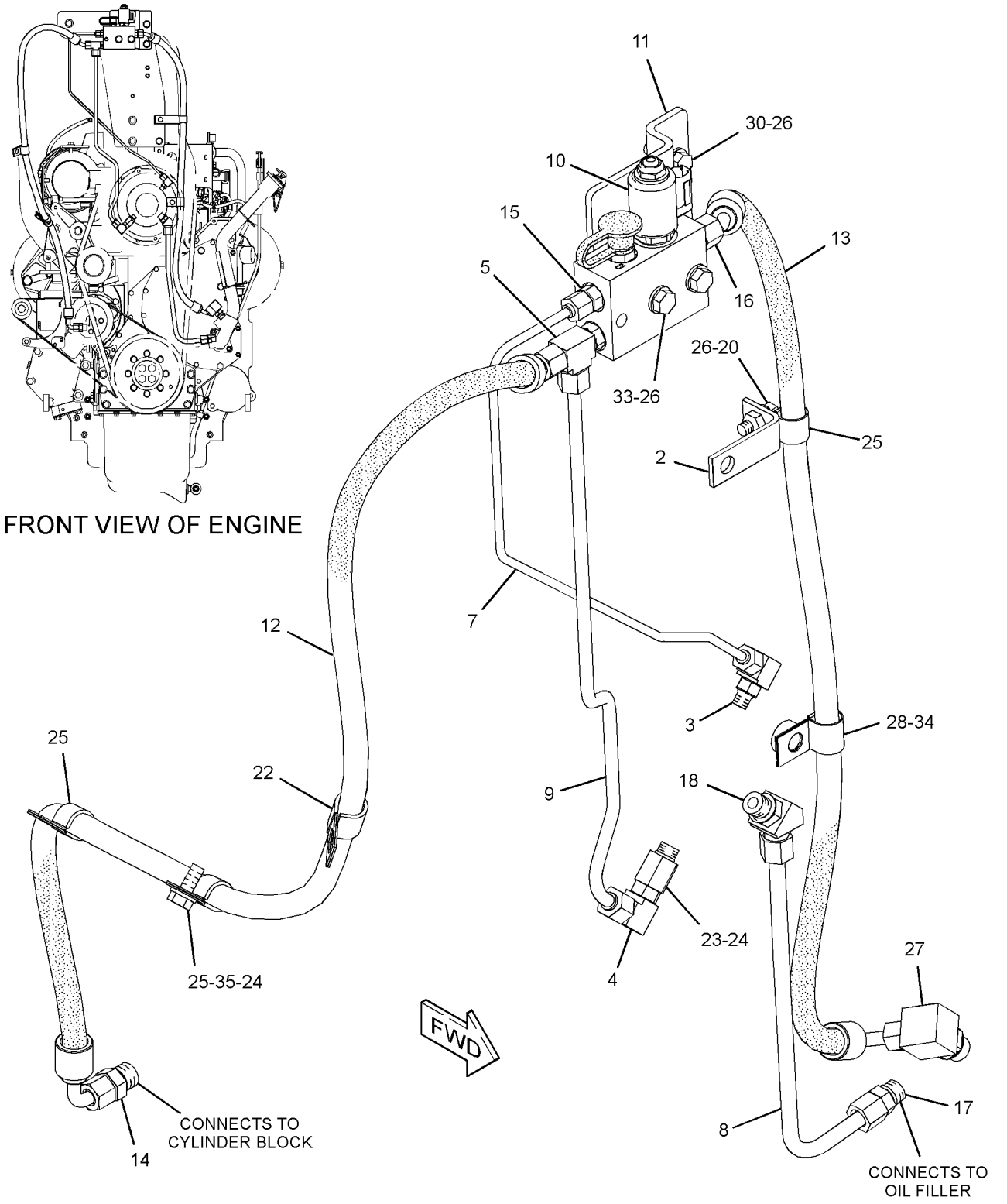

GRAPHIC #1 **<END>** g01359176

LUBRICATION SYSTEM

266-9810 LINES GP-TURBOCHARGER OIL

S/N: THX8900-UP

PART OF 282-3823, 282-3825, 301-5768 ENGINE AR

ALSO AN ATTACHMENT

SMCS-1052, 1307 **i02375415**

NOTE	REF NO	GRAPHIC REF	PART NUMBER	QTY	PART NAME 1 2 3 4 5 6 (PRODUCT LEVEL)	SEE PAGE
	1	1	**9N-4685**	1	BLOCK	
	2	1	**167-0168**	1	HOSE AS-OIL SUPPLY	
	3	1	*183-3399*	1	CONNECTOR AS	
		1	**214-7568**	1	SEAL-O-RING	
		1	**6V-8636**	1	CONNECTOR	
		1	**221-3494**	1	SEAL-O-RING	
	4	1	**197-8419**	1	GASKET (TURBOCHARGER OIL)	
	5	1	**246-6036**	1	HOSE	
	6	1	**257-5858**	1	TUBE AS	
	7	1	**263-3464**	1	TUBE AS	
	8	1	**269-8788**	2	CLAMP-BAND	
	9	1	**124-0174**	1	CLIP	
M	10	1	**2Y-5829**	1	NUT (M10X1.15-THD)	
	11	1	**5P-7530**	1	SEAL-O-RING	
M	12	1	**6V-3940**	2	BOLT (M8X1.25X25-MM)	
M	13	1	**6V-4249**	1	BOLT (M10X1.5X50-MM)	
M	14	1	**6V-5218**	2	BOLT (M8X1.25X35-MM)	
	15	1	**6V-5839**	2	WASHER (11X21X2.5-MM THK)	
	16	1	**7C-4354**	1	CLIP	
	17	1	**9M-1974**	4	WASHER-HARD (8.8X16X2-MM THK)	

M-METRIC PART

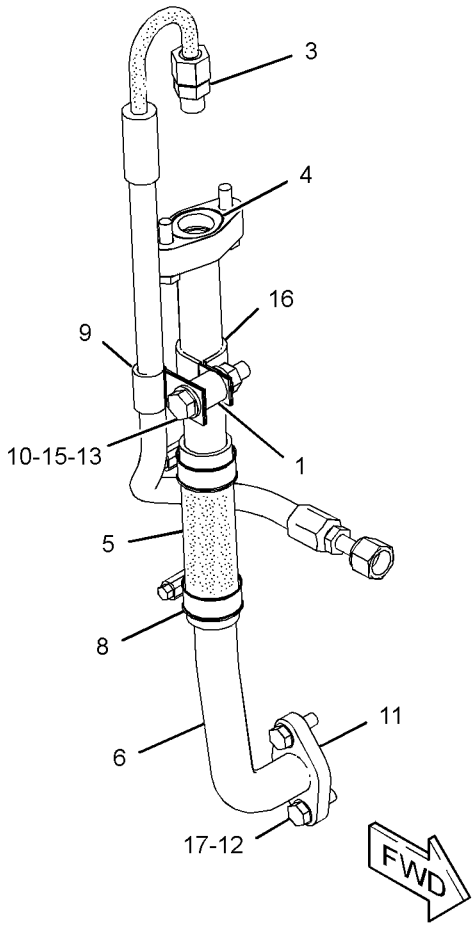

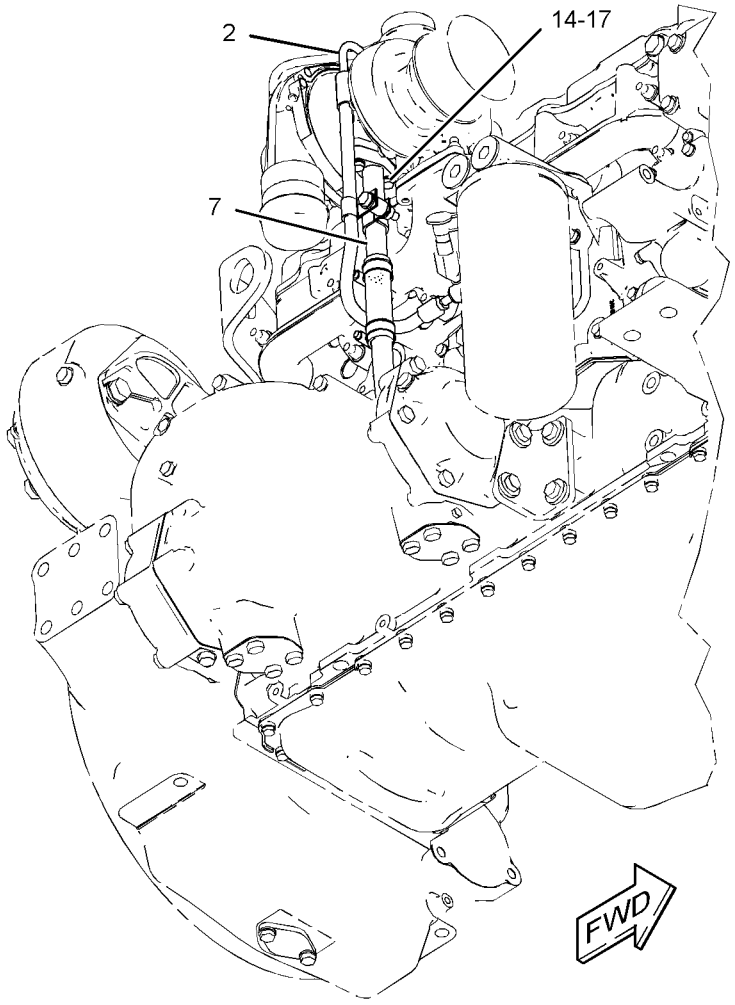

GRAPHIC #1 **<END>** g01214244

266-9811 LINES GP-TURBOCHARGER OIL

S/N: THX8900-UP
PART OF 282-3824, 282-3826 ENGINE AR
AN ATTACHMENT

SMCS-1052, 1307 **i02434349**

NOTE	REF NO	GRAPHIC REF	PART NUMBER	QTY	PART NAME 1 2 3 4 5 6 (PRODUCT LEVEL)	SEE PAGE
	1	1	*183-3399*	1	CONNECTOR AS	
		1	**6V-8636**	1	CONNECTOR	
		1	**214-7568**	1	SEAL-O-RING	
		1	**221-3494**	1	SEAL-O-RING	
	2	1	**197-8419**	1	GASKET (TURBOCHARGER OIL)	
	3	1	**234-7526**	1	TUBE AS	
	4	1	**246-6036**	1	HOSE	
	5	1	**257-5858**	1	TUBE AS	
	6	1	**263-3464**	1	TUBE AS	
	7	1	**269-8788**	2	CLAMP-BAND	
M	8	1	**2Y-5829**	1	NUT (M10X1.15-THD)	
	9	1	**5P-7530**	1	SEAL-O-RING	
	10	1	**5P-9297**	1	CLIP	
M	11	1	**6V-3940**	2	BOLT (M8X1.25X25-MM)	
M	12	1	**6V-4248**	1	BOLT (M10X1.5X25-MM)	
M	13	1	**6V-5218**	2	BOLT (M8X1.25X35-MM)	
	14	1	**6V-5839**	2	WASHER (11X21X2.5-MM THK)	
	15	1	**7C-4354**	1	CLIP	
	16	1	**9M-1974**	4	WASHER-HARD (8.8X16X2-MM THK)	

M-METRIC PART

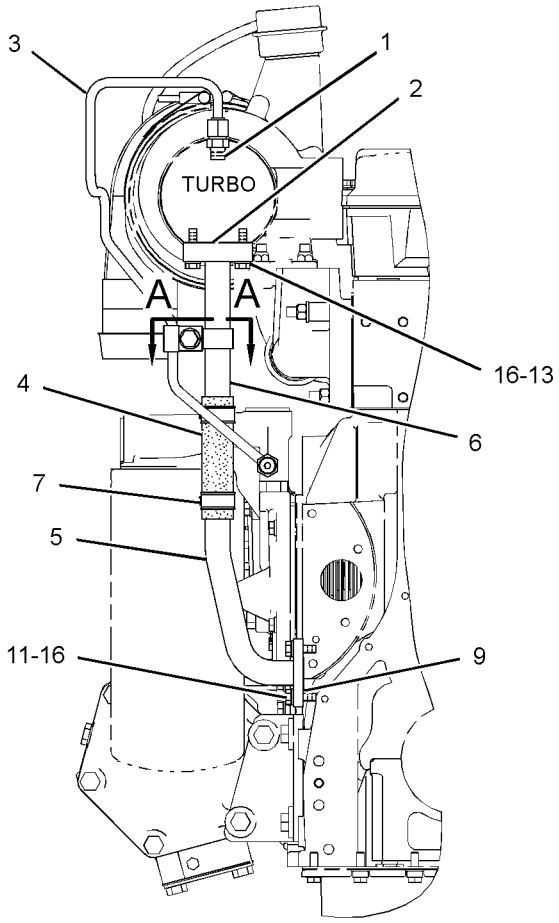

REAR VIEW

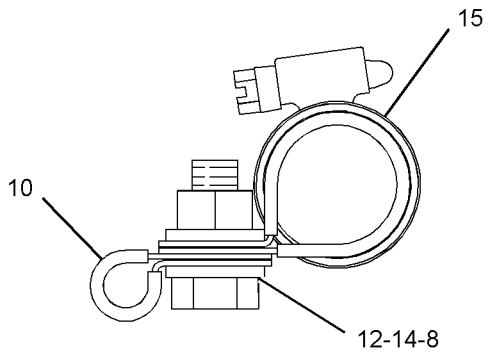

SECTION A-A

GRAPHIC #1 **<END>** g01207395

LUBRICATION SYSTEM

263-0853 OIL CHANGE GP-HIGH SPEED

S/N: SMC1-UP; GCT1-UP

AN ATTACHMENT

SMCS-1325 **i02759199**

NOTE	REF NO	GRAPHIC REF	PART NUMBER	QTY	PART NAME 1 2 3 4 5 6 (PRODUCT LEVEL)	SEE PAGE
	1	1	**1V-3713**	1	ANGLE	
	2	1	**2P-1286**	1	LOCKNUT-BULKHEAD (1-5/16-12-THD)	
	3	1	**2V-2043**	1	LOCKNUT-FLARED (1-5/8-12-THD)	
	4	1	**3W-2647**	1	SPACER (13.5X30X10-MM THK)	
	5	1	**8N-6854**	1	GASKET	
	6	1	**8W-0327**	1	ADAPTER	
	8	1	**110-8319**	1	FITTING AS (QUICK DISCONNECT)	
		1	**110-8318**	1	CAP-DUST	
	9	1	**110-8827**	1	FITTING AS (QUICK DISCONNECT)	
		1	**110-8826**	1	CAP-DUST	
	10	1	**300-4939**	2	PLATE AS	
	11	1	**225-2412**	1	BRACKET	
I	12	1	**254-8108**	1	HOSE AS	
	13	1	**8P-4233**	1	LEVER	
I	14	1	**264-5352**	1	HOSE AS	
	15	1	**108-8089**	1	COVER-TOP	
	16	1	**118-6878**	1	BRACKET AS	
	17	1	*148-8327*	2	CONNECTOR AS	
					(EACH INCLUDES)	
		1	**6V-8637**	1	CONNECTOR	
		1	**3D-2824**	1	SEAL-O-RING	
		1	**6V-9746**	1	SEAL-O-RING	
	18	1	*148-8339*	1	CONNECTOR AS	
		1	**6V-8716**	1	CONNECTOR	
		1	**6V-9746**	1	SEAL-O-RING	
		1	**7M-8485**	1	SEAL-O-RING	
	19	1	*148-8382*	1	ELBOW AS	
		1	**8T-0404**	1	ELBOW	
		1	**3D-2824**	1	SEAL-O-RING	
		1	**7J-9108**	1	SEAL-O-RING	
	20	1	**1V-5872**	1	SPACER (0.493X0.675X0.95-IN THK)	
	21	1	**3M-7045**	1	PLUG	
	22	1	**5P-7854**	7	CLIP	
	23	1	**7C-4355**	2	CLIP	
M	24	1	**7X-2552**	1	BOLT (M16X2X30-MM)	
	26	1	**8T-4121**	11	WASHER-HARD (11X21X2.5-MM THK)	
	27	1	**8T-4122**	1	WASHER-HARD (17X32X3.5-MM THK)	
M	28	1	**8T-4133**	2	NUT (M10X1.5-THD)	
M	29	1	**8T-4136**	3	BOLT (M10X1.5X25-MM)	
M	30	1	**8T-4137**	2	BOLT (M10X1.5X20-MM)	
M	31	1	**8T-4185**	1	BOLT (M10X1.5X50-MM)	
M	32	1	**8T-4186**	1	BOLT (M10X1.5X40-MM)	
M	33	1	**8T-4195**	1	BOLT (M10X1.5X30-MM)	
M	34	1	**8T-4196**	2	BOLT (M10X1.5X35-MM)	
M	35	1	**5C-7261**	1	NUT (M8X1.25-THD)	
	36	1	**8T-4224**	4	WASHER-HARD (8.8X16X2-MM THK)	
M	37	1	**241-0542**	1	STUD (M8X1.25X30-MM)	

I-REFER TO HYDRAULIC INFORMATION SYSTEM
M-METRIC PART

263-0853 **OIL CHANGE GP-HIGH SPEED** *(contd.)* **i02759199**

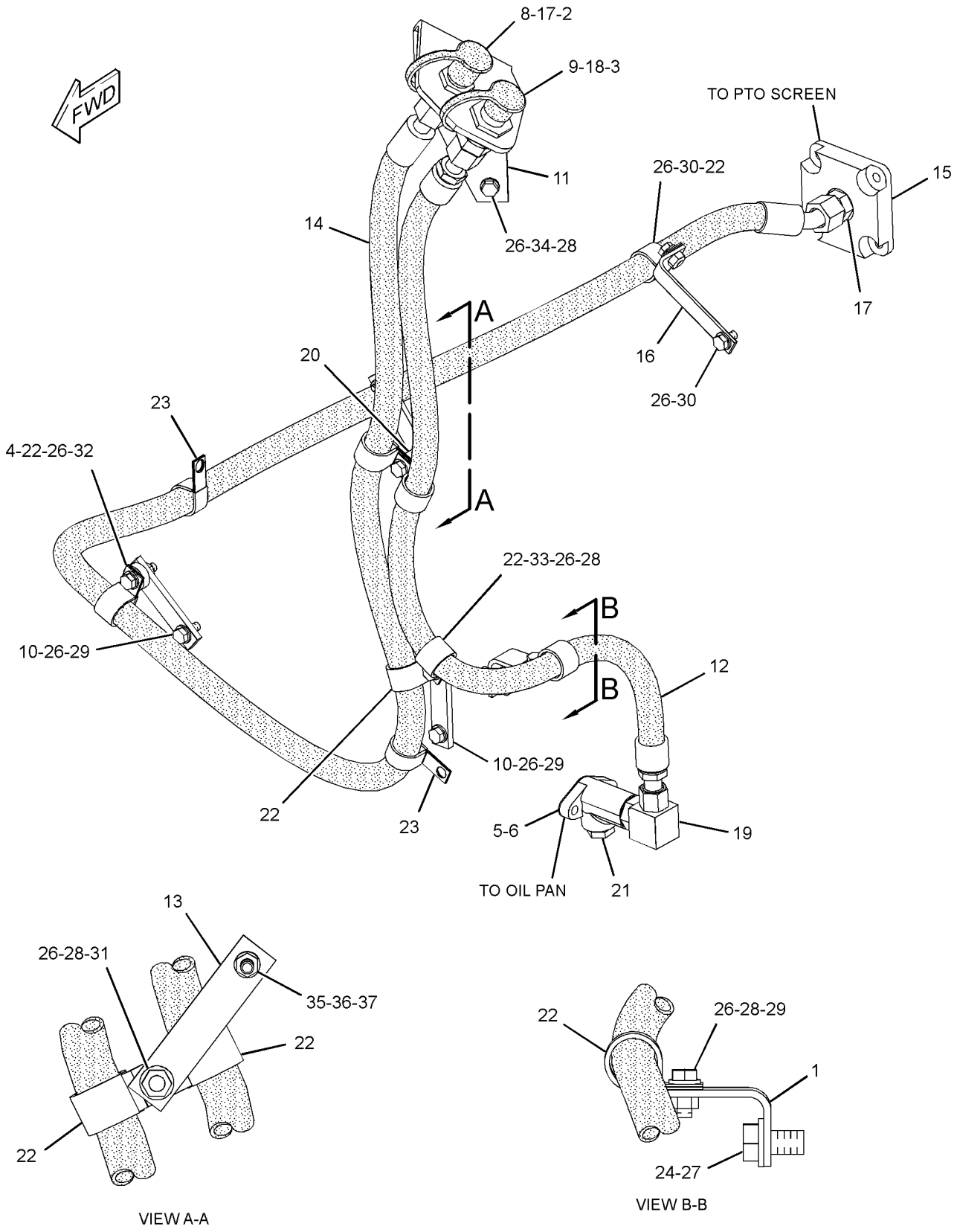

GRAPHIC #1 **<END>** g01364182

LUBRICATION SYSTEM

195-8098 PUMP GP-ENGINE OIL

S/N: THX8900-UP

PART OF 282-3827, 282-3828, 282-3829, 282-3830, 301-5769 ENGINE AR-CORE

ALSO AN ATTACHMENT

SMCS-1304, 1315 **i01836187**

NOTE	REF NO	GRAPHIC REF	PART NUMBER	QTY	PART NAME 1 2 3 4 5 6 (PRODUCT LEVEL)	SEE PAGE
	1	1	**211-0546**	1	PUMP GP-ENGINE OIL	
		1	**210-5522**	1	PUMP AS-ENGINE OIL	
	1A	1	**221-0144**	1	GEAR AS (60 TEETH)	
M	2	1	**6V-1819**	2	BOLT (M10X1.50X100MM)	
	3	1	**6V-5839**	2	WASHER (11X21X2.5MM THK)	

M-METRIC PART

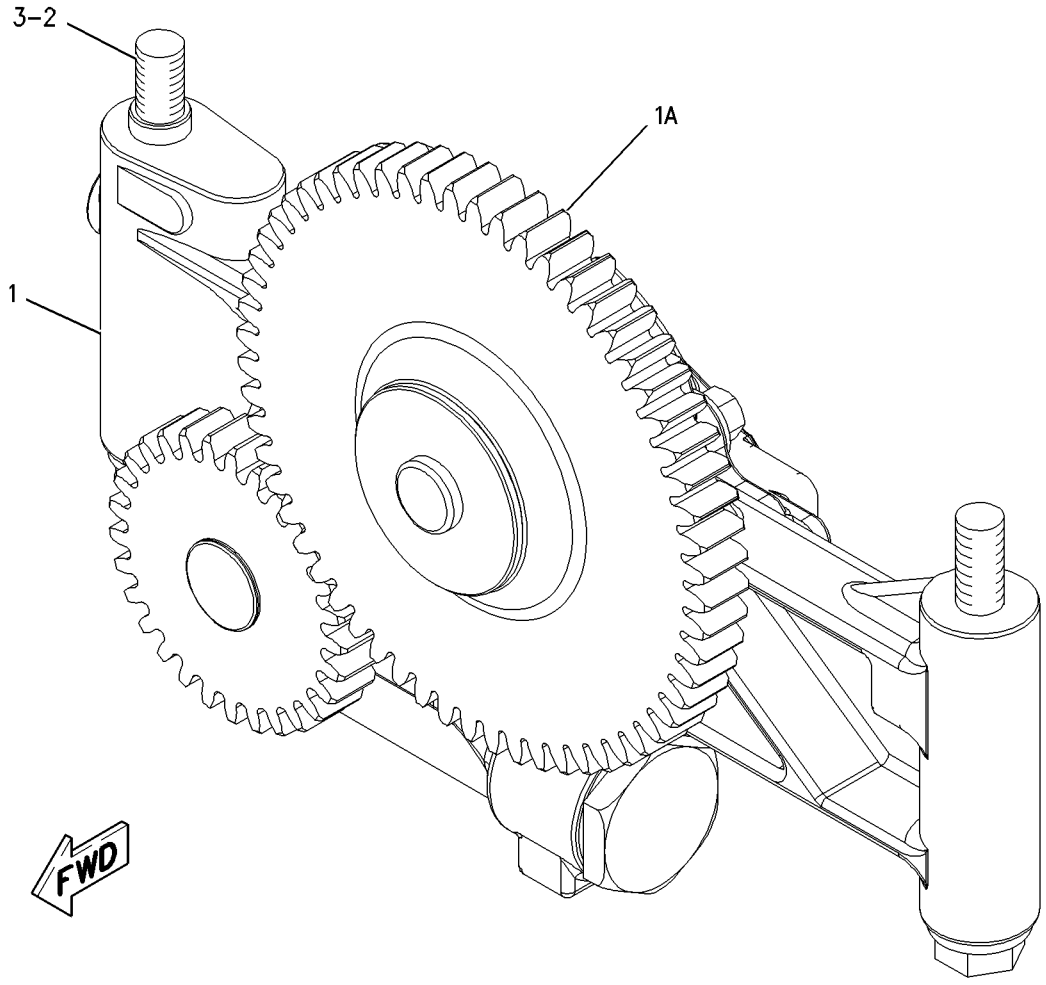

GRAPHIC #1 **<END>** g00909910

198-0921 VALVE GP-FLUID SAMPLING

S/N: THX8900-UP

PART OF 282-3823, 282-3824, 282-3825, 282-3826, 301-5768 ENGINE AR

ALSO AN ATTACHMENT

SMCS-7542 **i01830867**

NOTE	REF NO	GRAPHIC REF	PART NUMBER	QTY	PART NAME 1 2 3 4 5 6 (PRODUCT LEVEL)	SEE PAGE
	2	1	**6V-0852**	1	CAP-DUST	
	3	1	**6V-3965**	1	FITTING-COUPLER	
	4	1	**6V-5049**	1	SEAL-O-RING	

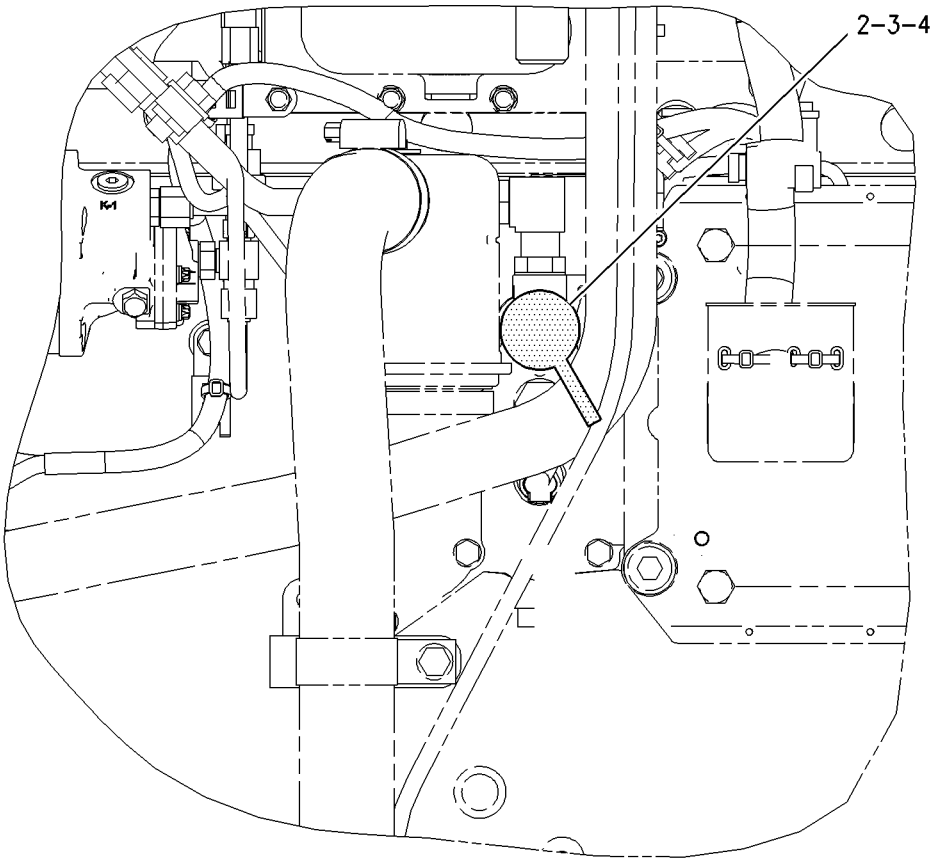

LEFT SIDE VIEW

GRAPHIC #1 **<END>** g00935554

LUBRICATION SYSTEM

176-5321 VALVE GP-MODULATING

S/N: SMC1-UP; GCT1-UP
PART OF 192-0729 VALVE GP-MODULATING
AN ATTACHMENT

SMCS-1359, 5479 **i02454355**

NOTE	REF NO	GRAPHIC REF	PART NUMBER	QTY	PART NAME 1 2 3 4 5 6 (PRODUCT LEVEL)	SEE PAGE
	1	1	**226-9629**	1	COIL AS-SOLENOID (12-VOLT) (HYDRAULIC FAN)	
	2	1	**167-9524**	1	NUT-SELF-LOCKING (1/2-28-THD)	
	3	1	**164-2108**	1	WASHER (13.03X25.4X2.38-MM THK)	
					AVAILABLE REPAIR KIT(S):	
			111-3203	1	KIT-SEAL (DEMAND FAN VALVE)	
					(INCLUDES SEALS)	

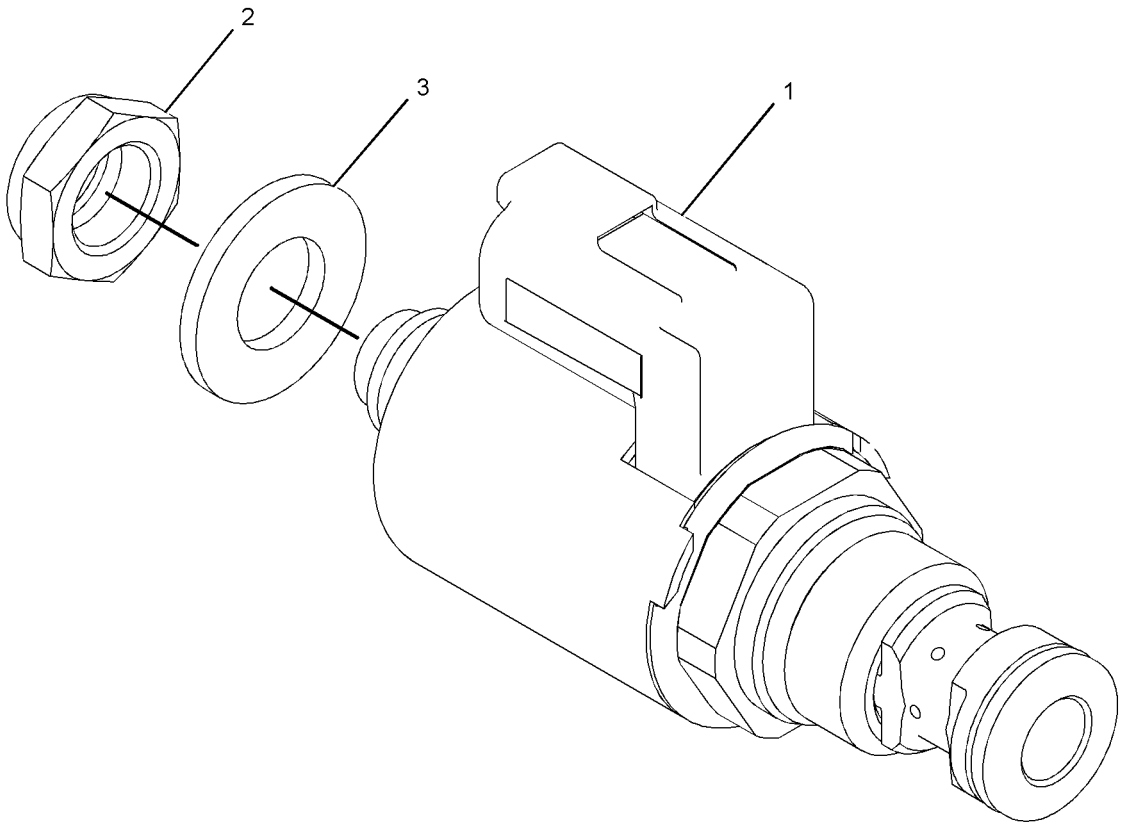

GRAPHIC #1 **<END>** g01113002

192-0729 VALVE GP-MODULATING–PILOT OIL

S/N: SMC1-UP; GCT1-UP
PART OF 224-0821 LINES GP-OIL SUPPLY
AN ATTACHMENT

SMCS-1359, 5479 **i02157382**

NOTE	REF NO	GRAPHIC REF	PART NUMBER	QTY	PART NAME 1 2 3 4 5 6 (PRODUCT LEVEL)	SEE PAGE
	1	1	**175-3616**	1	MANIFOLD AS	
	1A	1	**6V-0852**	1	CAP-DUST	
	1B	1	**6V-3965**	1	FITTING-COUPLER	
Y	2	1	**176-5321**	1	VALVE GP-MODULATING	86

Y-SEPARATE ILLUSTRATION

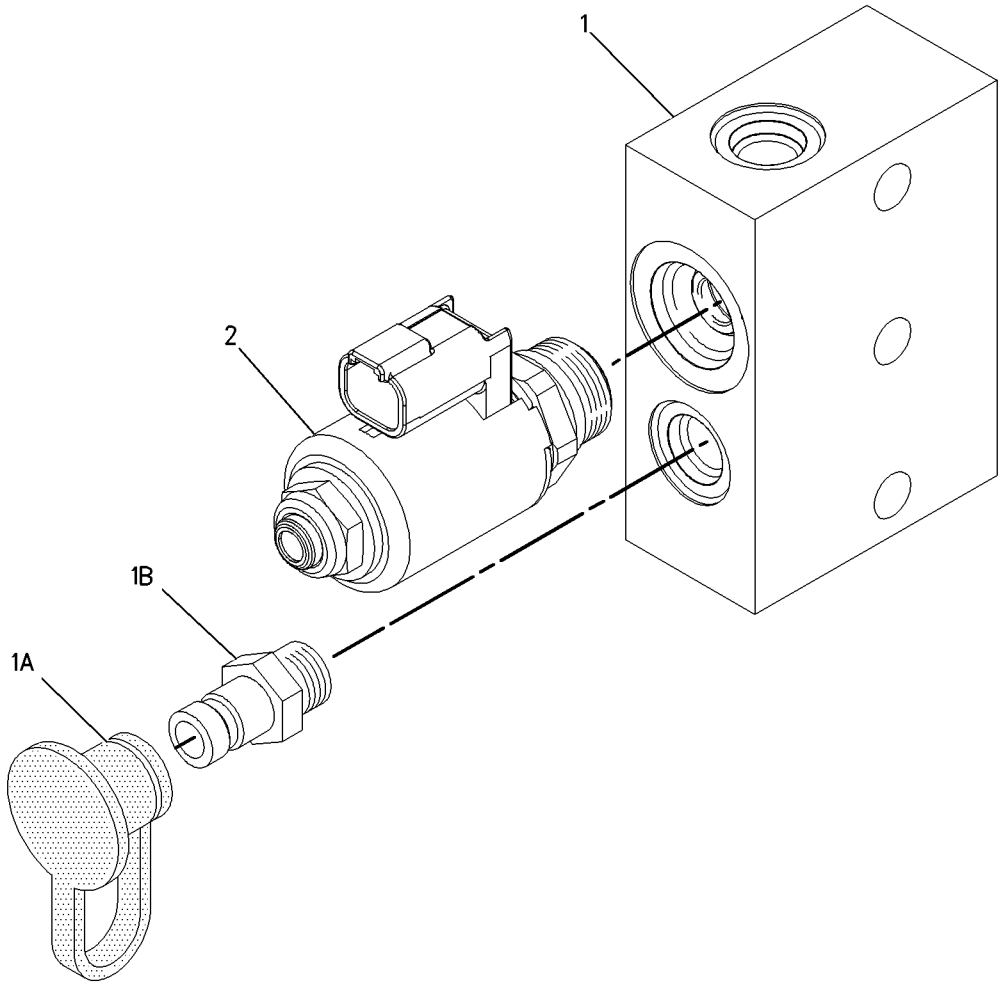

GRAPHIC #1 **<END>** g00756312

188-3826 COOLER GP-ENGINE OIL

S/N: THX8900-UP

PART OF 282-3827, 282-3828, 282-3829, 282-3830, 301-5769 ENGINE AR-CORE

ALSO AN ATTACHMENT

SMCS-1378 **i02014290**

NOTE	REF NO	GRAPHIC REF	PART NUMBER	QTY	PART NAME 1 2 3 4 5 6 (PRODUCT LEVEL)	SEE PAGE
R	1	1	**237-4956**	1	CORE AS-OIL COOLER (ENGINE)	
	2	1	**209-7293**	1	GASKET	

R-REMFG PART MAY BE AVAILABLE

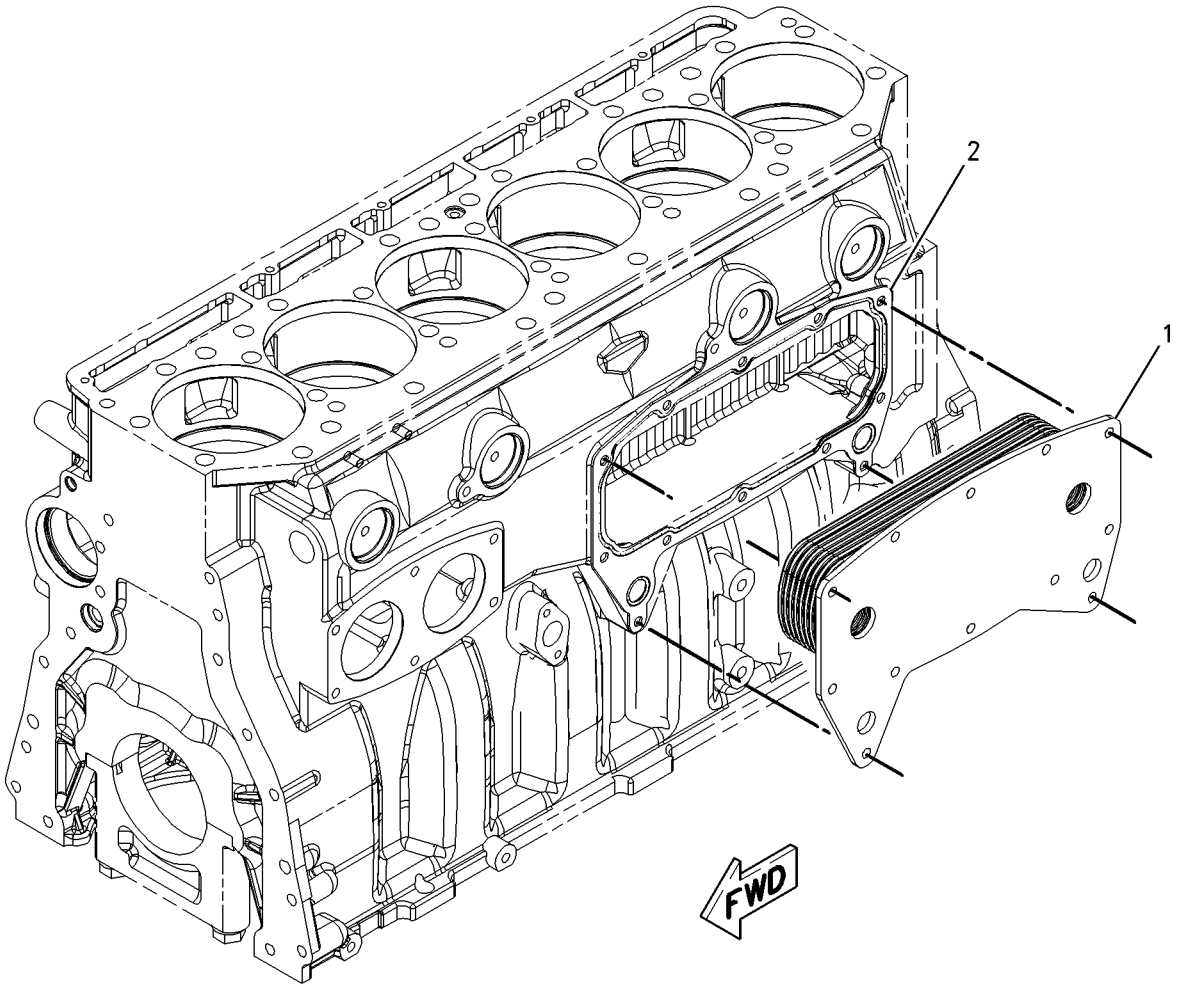

GRAPHIC #1 **<END>** g00837749

281-7405 FAN AR-EJECTOR

S/N: SMC1-UP
AN ATTACHMENT

SMCS-1356 **i02760669**

NOTE	REF NO	GRAPHIC REF	PART NUMBER	QTY	PART NAME 1 2 3 4 5 6 (PRODUCT LEVEL)	SEE PAGE
	1	1	**8Q-1911**	1	SPIDER AS-FAN (8-BLADE)	
	2	1	**222-7094**	1	BAFFLE AS-RADIATOR (LEFT SIDE)	
	3	1	**222-7095**	1	BAFFLE AS-RADIATOR (RIGHT SIDE)	

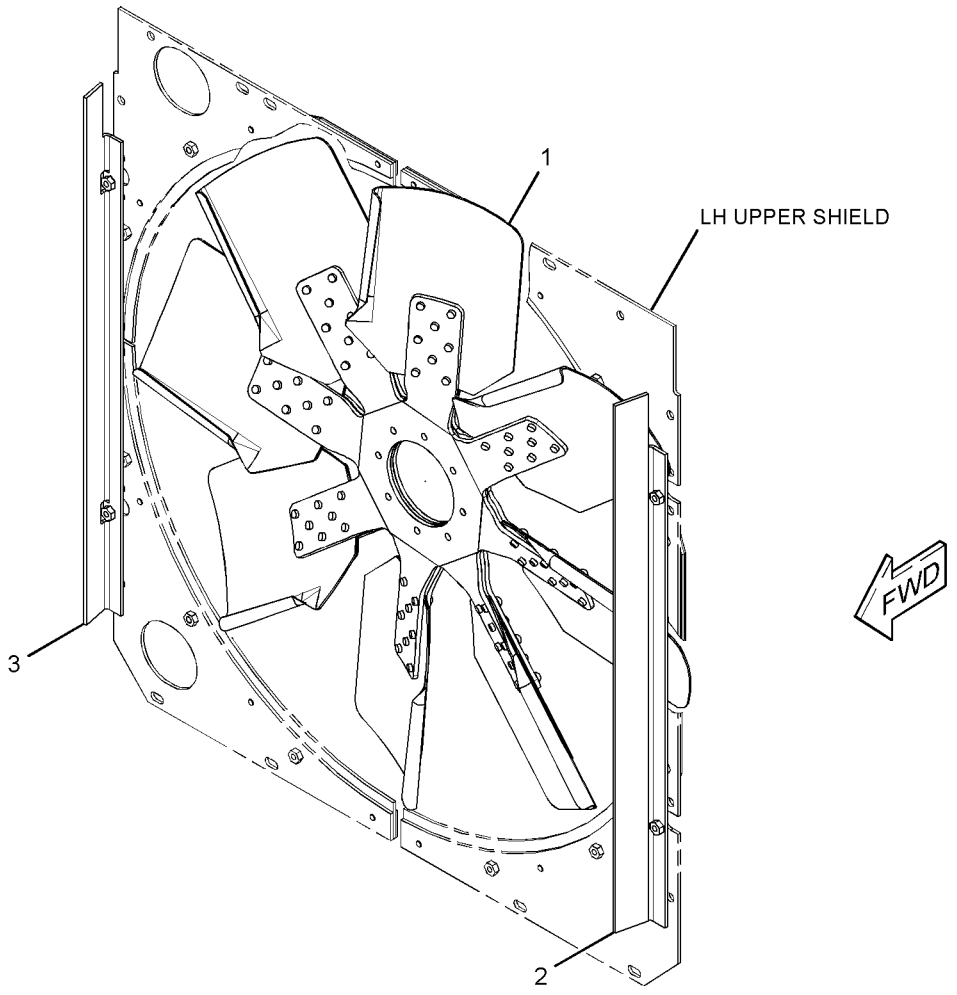

GRAPHIC #1 **<END>** g01343568

COOLING SYSTEM

168-8376 FAN GP-BLOWER

S/N: SMC1-UP; GCT1-UP

PART OF 279-9549 INSTALLATION AR-ENGINE

SMCS-1356, 1360 **i02390612**

NOTE	REF NO	GRAPHIC REF	PART NUMBER	QTY	PART NAME 1 2 3 4 5 6 (PRODUCT LEVEL)	SEE PAGE
	1	1	**250-1911**	1	SPIDER AS-FAN (8-BLADE)	
	2	1	**195-7882**	4	GUARD AS	
	3	1	**8T-4222**	4	WASHER-PLATED (11X32X2.5-MM THK)	
	4	1	**7X-7729**	12	WASHER (11X25X3-MM THK)	
M	5	1	**8T-4137**	4	BOLT (M10X1.5X20-MM)	
M	6	1	**8T-4182**	2	BOLT (M10X1.5X45-MM)	
M	7	1	**8T-4196**	18	BOLT (M10X1.5X35-MM)	
	8	1	**8T-4121**	8	WASHER-HARD (11X21X2.5-MM THK)	

M-METRIC PART

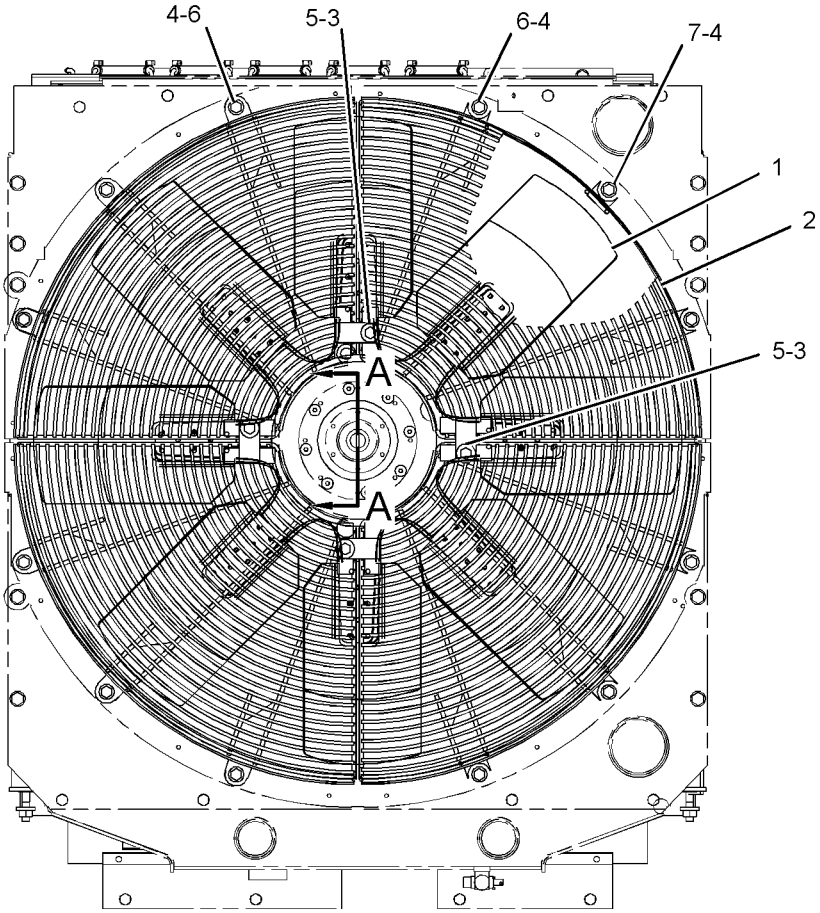

FRONT VIEW

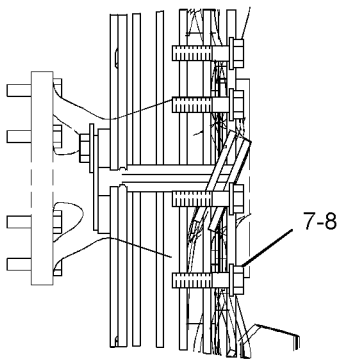

SECTION A-A

GRAPHIC #1 **<END>** g01213834

174-7414 FAN GP-REVERSIBLE

S/N: SMC1-UP; GCT1-UP
CANNOT BE USED WITH UNDERHOOD AIR CONDITIONING CONDENSER, SAND BLAST GRID, EJECTOR FAN, WASTE HANDLING AR, FLEXXAIRE FAN AN ATTACHMENT

SMCS-1356, 1360 **i02455805**

NOTE	REF NO	GRAPHIC REF	PART NUMBER	QTY	PART NAME 1 2 3 4 5 6 (PRODUCT LEVEL)	SEE PAGE
	1	1	**125-1362**	1	FAN AS-REVERSIBLE (8-BLADE)	
	2	1	**174-7412**	1	GUARD AS	
	3	1	**2W-5825**	1	PLATE	
	4	1	**7X-7729**	2	WASHER (11X25X3-MM THK)	
M	5	1	**8T-4137**	2	BOLT (M10X1.5X20-MM)	
	6	1	**8T-4896**	8	WASHER-HARD (10.2X18.5X2.5-MM THK)	
M	7	1	**8T-6466**	8	BOLT (M10X1.5X60-MM)	

M-METRIC PART

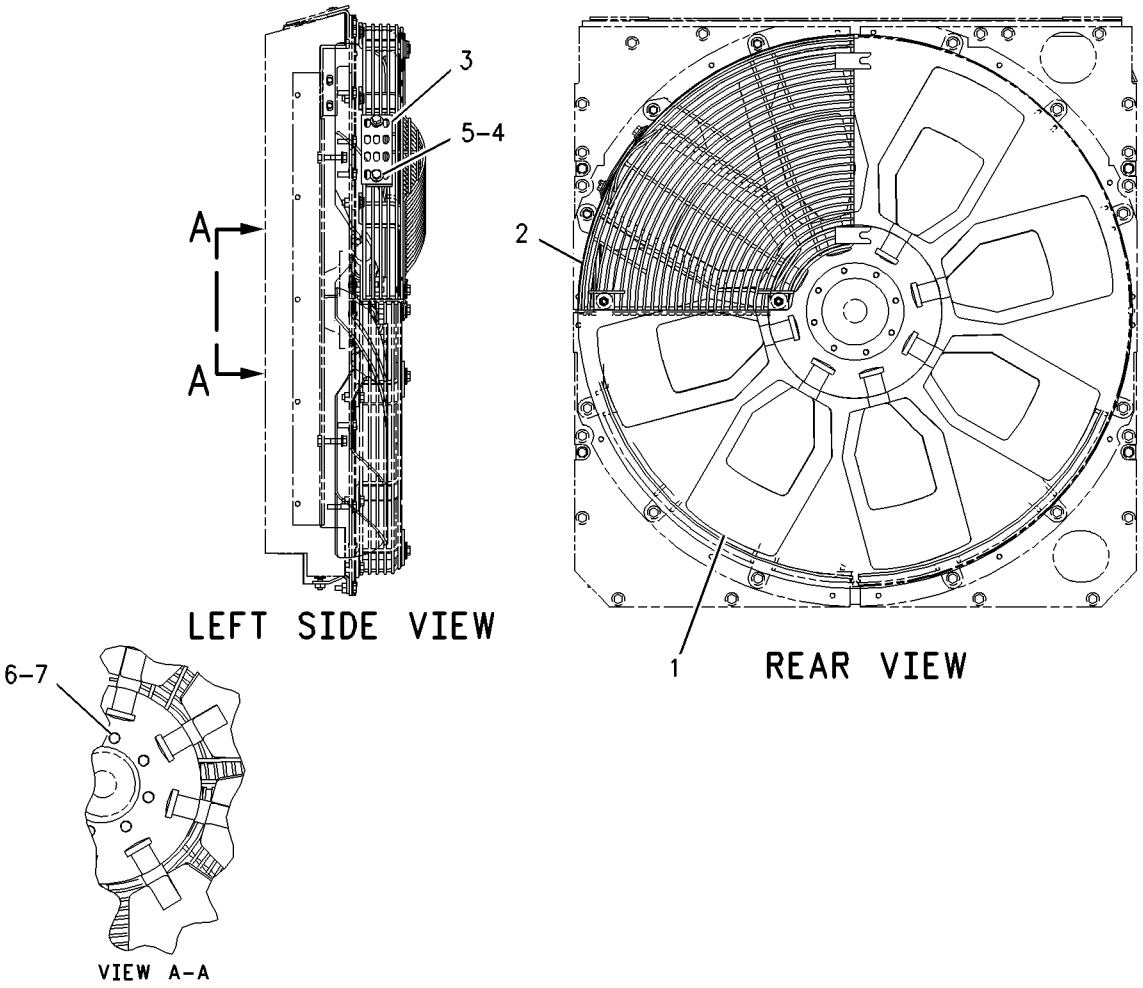

GRAPHIC #1 **<END>** g00859207

165-4461 LINES GP-WATER–REGULATOR

S/N: THX8900-UP
TEMPERATURE
PART OF 282-3823, 282-3824, 282-3825, 282-3826, 301-5768 ENGINE AR
ALSO AN ATTACHMENT

SMCS-1380 **i02495376**

NOTE	REF NO	GRAPHIC REF	PART NUMBER	QTY	PART NAME 1 2 3 4 5 6 (PRODUCT LEVEL)	SEE PAGE
	1	1	**248-5513**	1	REGULATOR-WATER TEMPERATURE (92-DEG C) (COOLANT)	
	2	1	**237-5176**	2	CLAMP-BAND	
	3	1	**280-6794**	1	HOSE	
	4	1	**191-4457**	1	GASKET (WATER REGULATOR HOUSING)	
	5	1	**217-5200**	1	HOUSING AS	
		1	**217-5199**	1	HOUSING	
	5A	1	**3S-9643**	1	SEAL-LIP TYPE (WATER TEMPERATURE REGULATOR)	
	6	1	*148-8411*	2	PLUG AS	
					(EACH INCLUDES)	
		1	**9S-4185**	1	PLUG-O-RING	
	6A	1	**3K-0360**	1	SEAL-O-RING	
	7	1	**4S-9191**	4	WASHER (12X22.5X5-MM THK)	
M	8	1	**8T-0644**	4	BOLT (M10X1.5X90-MM)	
	9	1	**8T-6762**	1	PLUG-PIPE	

M-METRIC PART

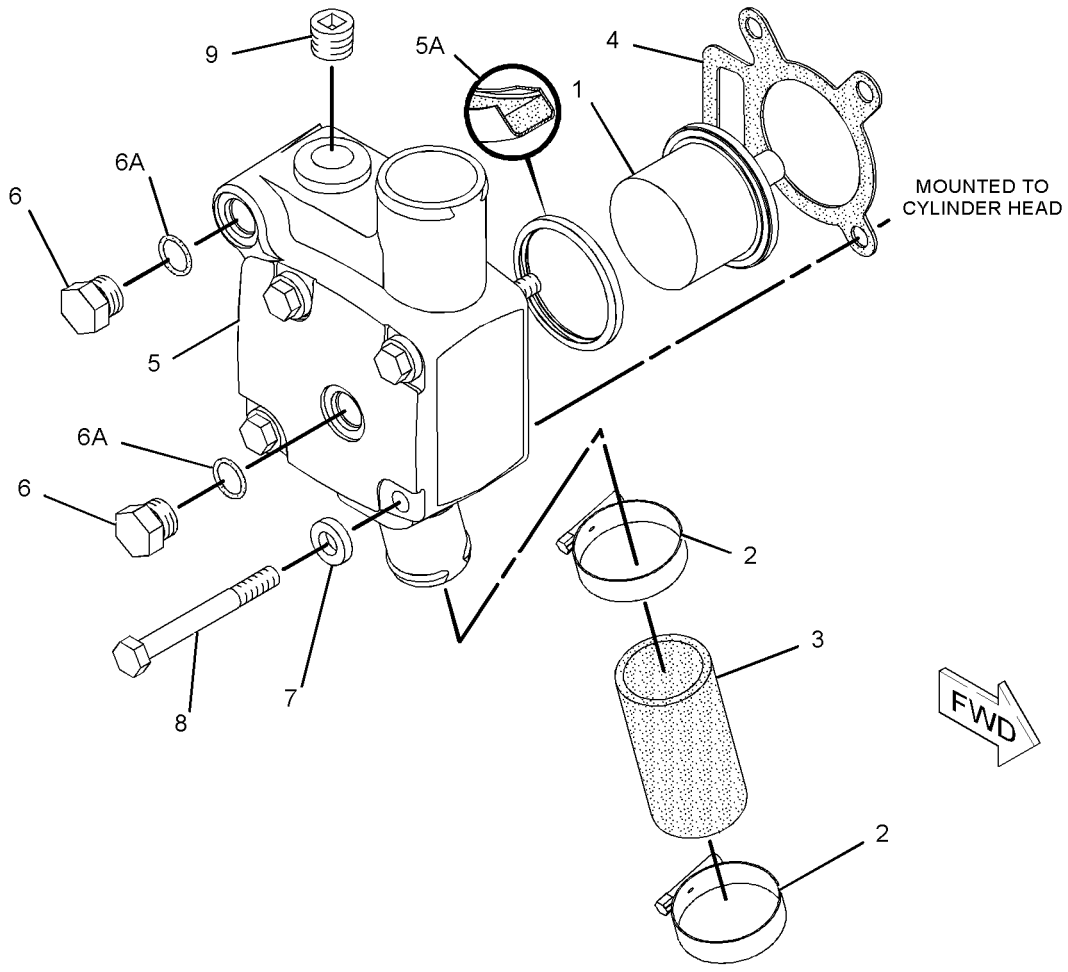

GRAPHIC #1 **<END>** g01142330

COOLING SYSTEM

168-8378 LINES GP-WATER

S/N: SMC1-UP; GCT1-UP

PART OF 279-9549 INSTALLATION AR-ENGINE

SMCS-1380 **i02757334**

NOTE	REF NO	GRAPHIC REF	PART NUMBER	QTY	PART NAME 1 2 3 4 5 6 (PRODUCT LEVEL)	SEE PAGE
	1	1	**8T-4984**	5	CLAMP-HOSE	
	2	1	**157-0670**	1	CAP-DUST	
	3	1	**185-0844**	1	HOSE	
	4	1	**185-0845**	1	TUBE AS	
	5	1	**187-3961**	1	HOSE-RADIATOR	
	6	1	**190-7515**	1	BRACKET AS	
M		1	**8T-3490**	1	NUT-WELD (M10X1.5-THD)	
	7	1	**213-1724**	1	HOSE	
	8	1	**219-3305**	1	BRACKET AS	
M		1	**8T-3490**	1	NUT-WELD (M10X1.5-THD)	
	9	1	**254-5524**	1	BRACKET AS	
M		1	**8T-3490**	1	NUT-WELD (M10X1.5-THD)	
C	10	1	**290-3970**	1	BRACKET AS	
M		1	**8T-3490**	2	NUT-WELD (M10X1.5-THD)	
	11	1	**3E-9867**	2	CLIP (SLOT)	
	12	1	**3E-9868**	2	CLIP (TAB)	
	13	1	**3J-1907**	1	SEAL-O-RING	
	14	1	**3J-7354**	1	SEAL-O-RING	
	15	1	**5P-9617**	1	ADAPTER	
	16	1	**6V-1581**	3	CLIP (SLOT)	
	17	1	**6V-1582**	3	CLIP (TAB)	
	18	1	**7X-7729**	5	WASHER (11X25X3-MM THK)	
	19	1	**8C-3446**	1	VALVE-FLUID SAMPLING (COOLANT)	
C	20	1	**8T-4121**	6	WASHER-HARD (11X21X2.5-MM THK)	
M	21	1	**8T-4136**	2	BOLT (M10X1.5X25-MM)	
CM	22	1	**8T-4137**	4	BOLT (M10X1.5X20-MM)	
M	23	1	**8T-4195**	5	BOLT (M10X1.5X30-MM)	
	24	1	**8T-6703**	1	CLAMP-HOSE	

C-CHANGE FROM PREVIOUS TYPE
M-METRIC PART

168-8378 **LINES GP-WATER** *(contd.)* **i02757334**

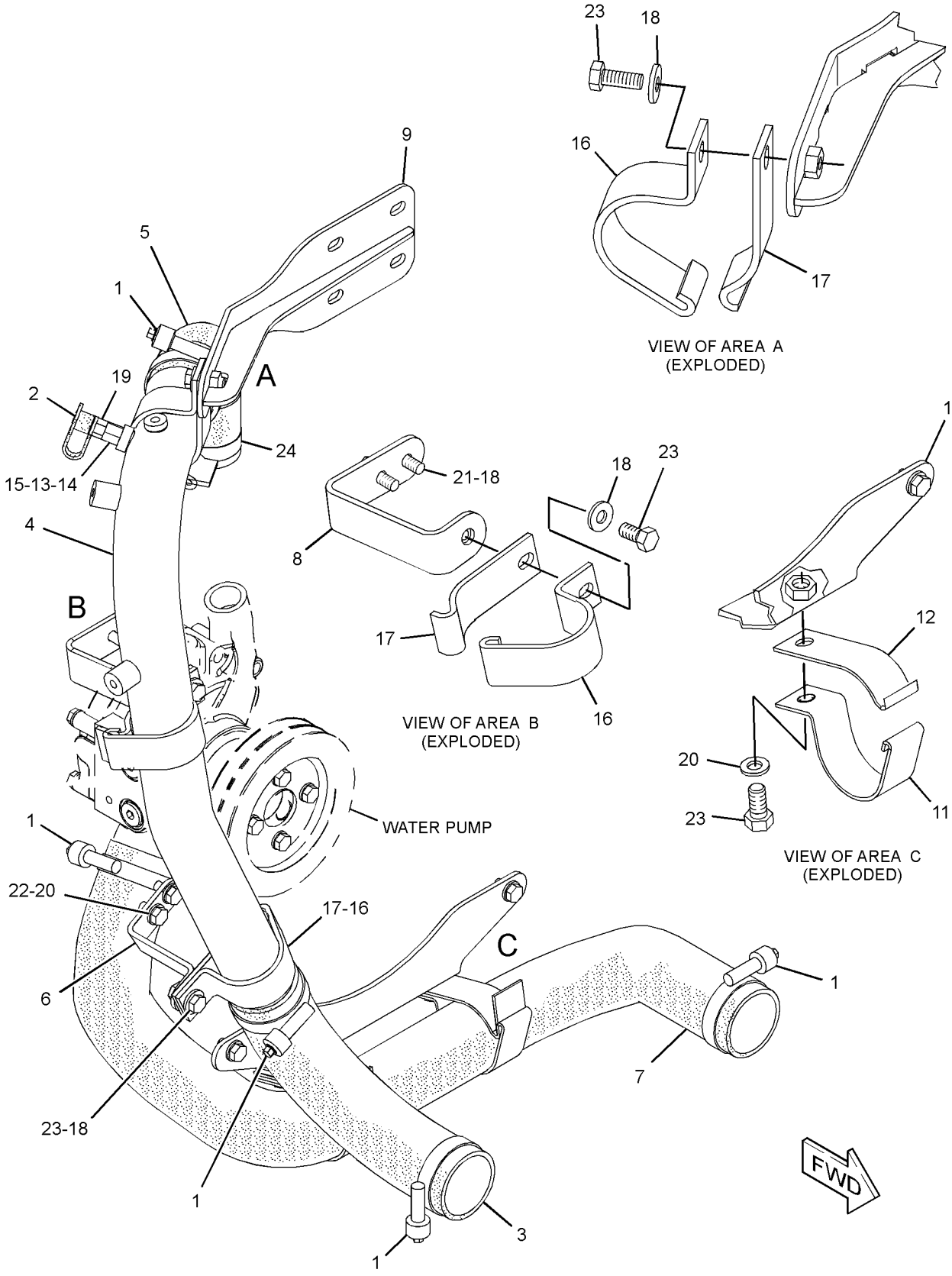

GRAPHIC #1 **<END>** g01359690

232-1240 LINES GP-WATER—TURBOCHARGER

S/N: SMC1-UP; GCT1-UP

PART OF 282-9553, 282-9554, 282-9555, 282-9556 CONVERSION AR-HEAT SHIELD AN ATTACHMENT

SMCS-1380 **i02455126**

NOTE	REF NO	GRAPHIC REF	PART NUMBER	QTY	PART NAME 1 2 3 4 5 6 (PRODUCT LEVEL)	SEE PAGE
	1	1	**121-4344**	3	SEAL-O-RING	
	2	1	**133-3260**	2	SPACER (11X19X10-MM THK)	
	3	1	**232-1133**	1	TUBE AS	
I	4	1	**232-1398**	1	HOSE AS	
	5	1	**233-5216**	1	TUBE AS	
	6	1	**234-1494**	1	BRACKET AS	
M		1	**8T-3612**	1	NUT-WELD (M8X1.25-THD)	
	7	1	**234-1496**	1	BRACKET AS	
M	8	1	**5C-7261**	2	NUT (M8X1.25-THD)	
	9	1	**5M-5689**	2	CLAMP	
	10	1	**6D-7128**	5	SEAL-O RING	
	11	1	**6V-3250**	1	SEAL-O-RING	
	12	1	**6V-8636**	1	CONNECTOR	
	13	1	**6V-8724**	1	ELBOW	
	14	1	**8T-1891**	1	CLIP (SLOT)	
	15	1	**8T-1892**	1	CLIP (TAB)	
	16	1	**8T-4121**	5	WASHER-HARD (11X21X2.5-MM THK)	
M	17	1	**8T-4136**	1	BOLT (M10X1.5X25-MM)	
M	18	1	**8T-4137**	2	BOLT (M10X1.5X20-MM)	
M	19	1	**8T-4189**	2	BOLT (M8X1.25X20-MM)	
	20	1	**8T-4224**	5	WASHER-HARD (8.8X16X2-MM THK)	
	21	1	**8T-5043**	2	CONNECTOR	
M	22	1	**8T-6466**	2	BOLT (M10X1.5X60-MM)	
M	23	1	**8T-7547**	1	BOLT (M8X1.25X30-MM)	
	24	1	**9S-4200**	2	CLIP	

I-REFER TO HYDRAULIC INFORMATION SYSTEM
M-METRIC PART

232-1240 **LINES GP-WATER** *(contd.)* **i02455126**

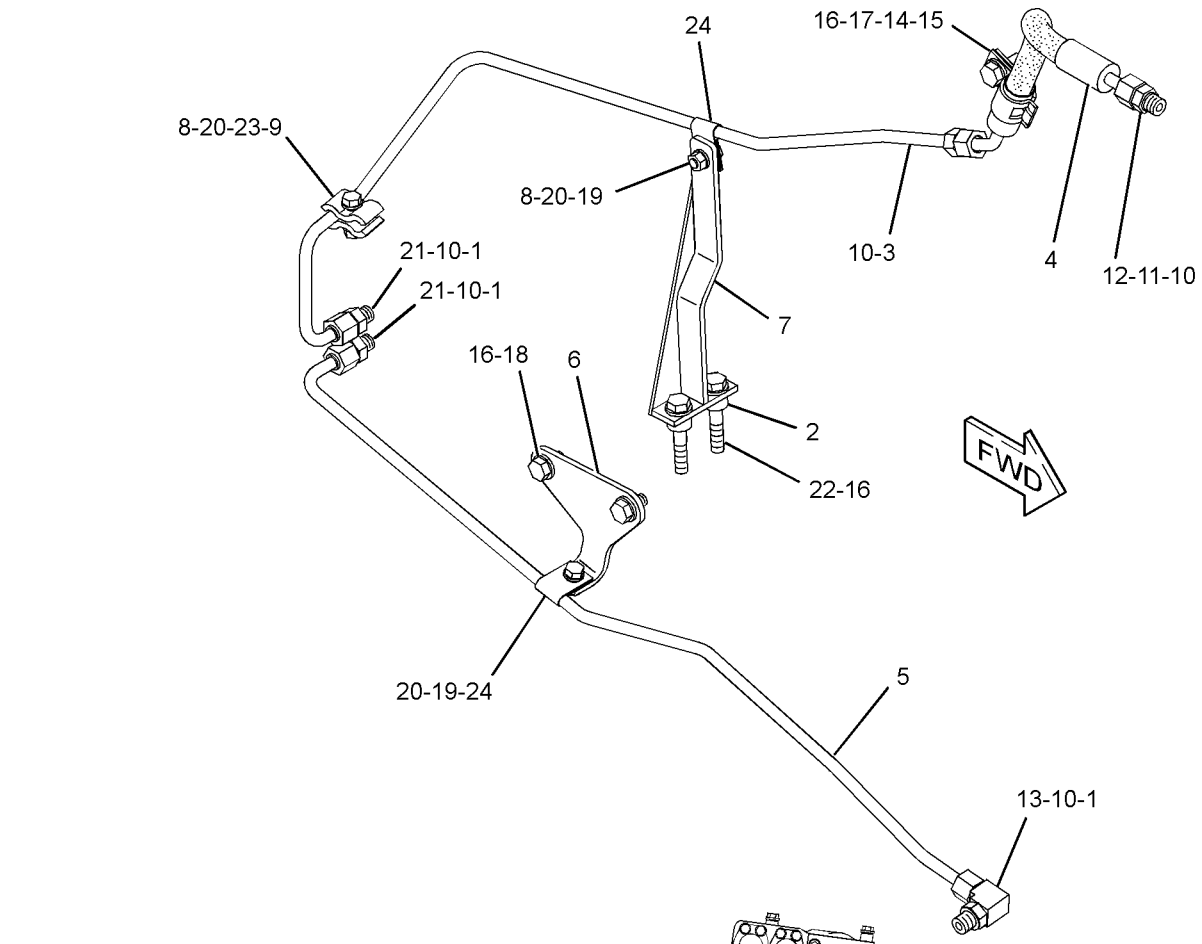

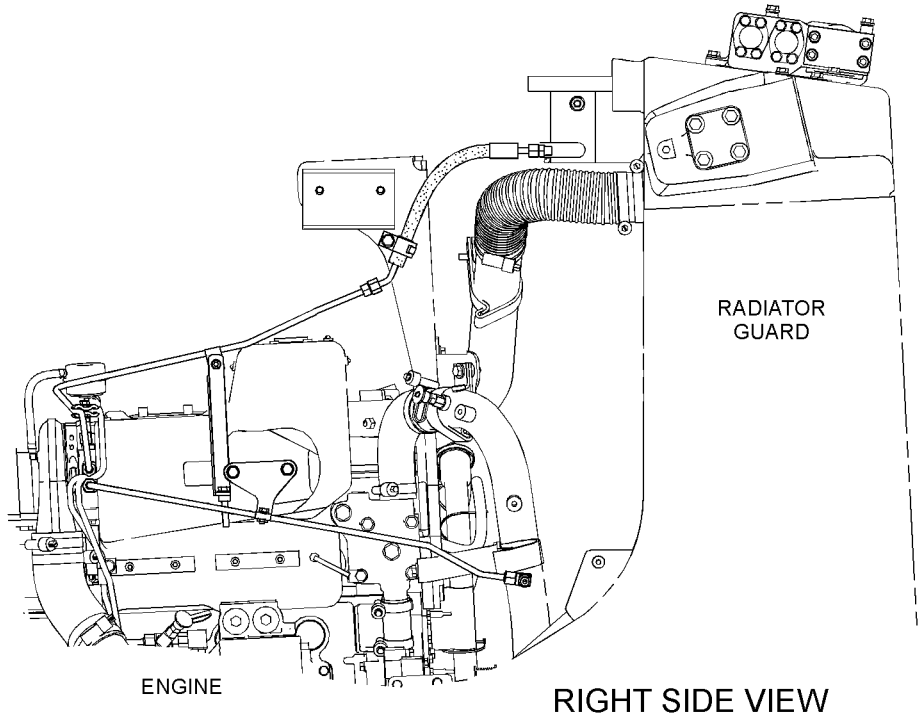

RIGHT SIDE VIEW

GRAPHIC #1 **<END>** g01217685

COOLING SYSTEM

210-9096 PUMP GP-WATER

S/N: THX8900-UP
PART OF 211-1812 PUMP GP-WATER
ALSO AN ATTACHMENT

SMCS-1361 **i01833056**

NOTE	REF NO	GRAPHIC REF	PART NUMBER	QTY	PART NAME 1 2 3 4 5 6 (PRODUCT LEVEL)	SEE PAGE
	1	1	**222-3901**	1	GASKET	
	2	1	**177-1044**	1	COVER	
M	3	1	**6V-3918**	4	BOLT (M8X1.25X50-MM)	
	4	1	**9M-1974**	4	WASHER-HARD (8.8X16X2-MM THK)	
Y	5	1	**210-9097**	1	PUMP GP-WATER	98
	6	1	**3D-2824**	1	SEAL-O-RING	
	7	1	**3K-0360**	2	SEAL-O-RING	
	8	1	**9S-8005**	2	PLUG-O RING	
	9	1	**9S-8008**	1	PLUG-O RING	

M-METRIC PART
Y-SEPARATE ILLUSTRATION

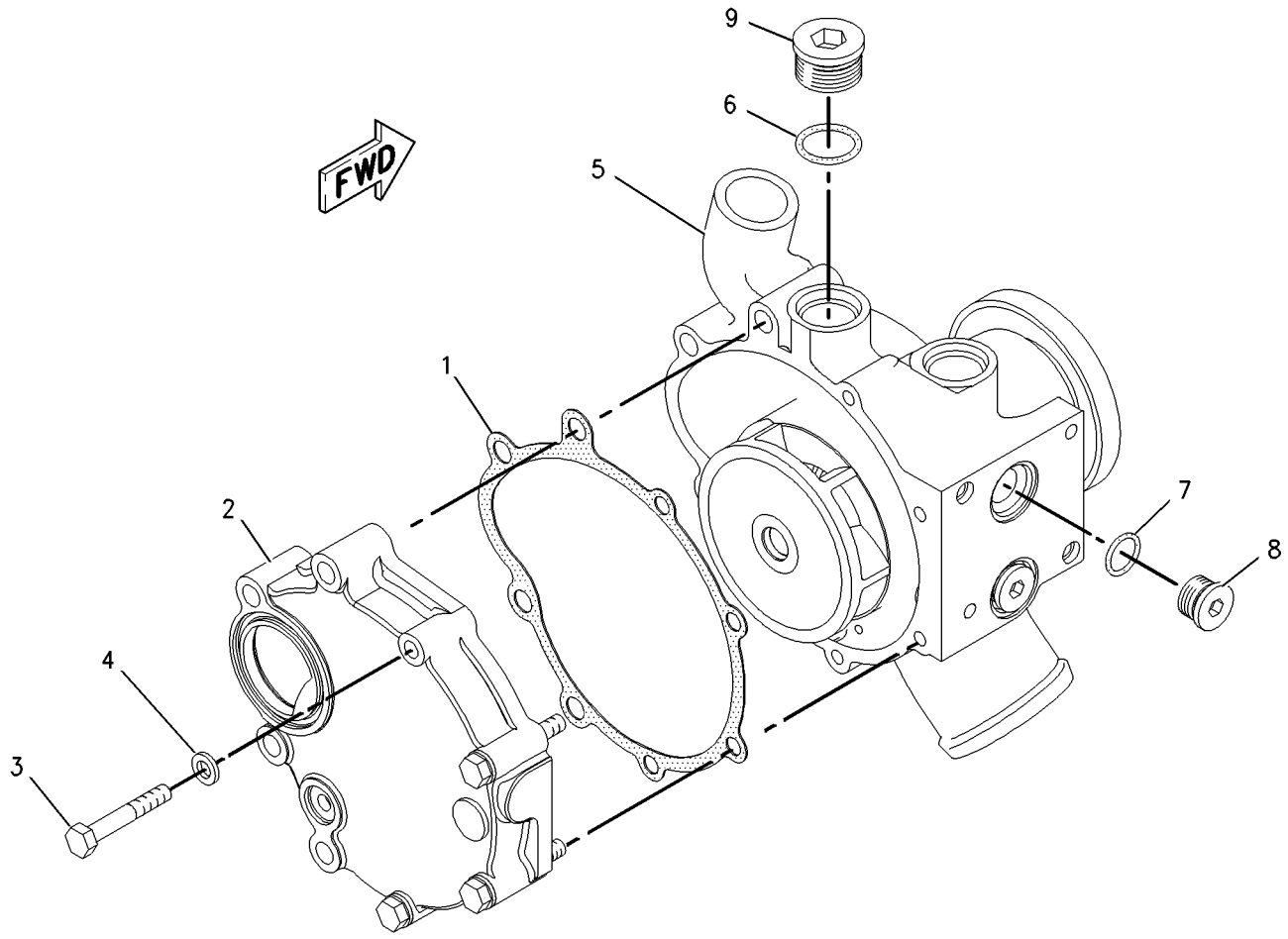

GRAPHIC #1 **<END>** g00864166

COOLING SYSTEM

210-9097 PUMP GP-WATER

S/N: THX8900-UP
PART OF 210-9096 PUMP GP-WATER
ALSO AN ATTACHMENT

SMCS-1361 **i01836227**

NOTE	REF NO	GRAPHIC REF	PART NUMBER	QTY	PART NAME 1 2 3 4 5 6 (PRODUCT LEVEL)	SEE PAGE
	1	1	**147-5088**	1	SEAL AS-WATER PUMP	
	2	1	**177-1050**	1	SHAFT AS	
	3	1	**177-1056**	1	IMPELLER-PUMP	
	4	1	**187-8984**	1	HOUSING-PUMP	
	5	1	**209-6692**	1	HUB	

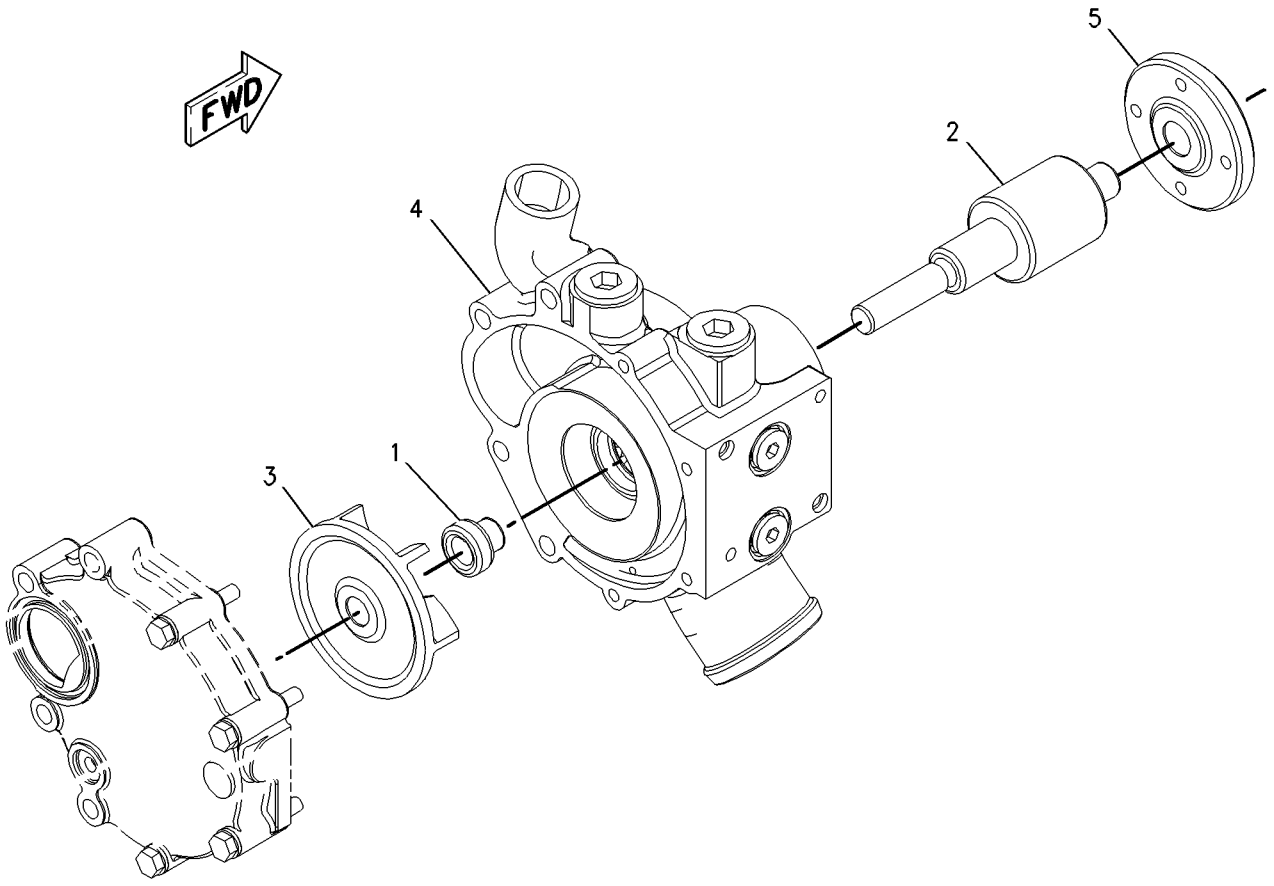

GRAPHIC #1 **<END>** g00864201

COOLING SYSTEM

211-1812 PUMP GP-WATER

S/N: THX8900-UP

PART OF 282-3823, 282-3824, 282-3825, 282-3826, 301-5768 ENGINE AR

ALSO AN ATTACHMENT

SMCS-1361 **i01998538**

NOTE	REF NO	GRAPHIC REF	PART NUMBER	QTY	PART NAME 1 2 3 4 5 6 (PRODUCT LEVEL)	SEE PAGE
Y	1	1	*210-9096*	1	PUMP GP-WATER	97
	2	1	**2M-4453**	1	SEAL-O-RING	
	3	1	**4J-0525**	1	SEAL-O-RING	
M	4	1	**8T-0644**	4	BOLT (M10X1.5X90-MM)	

M-METRIC PART
Y-SEPARATE ILLUSTRATION

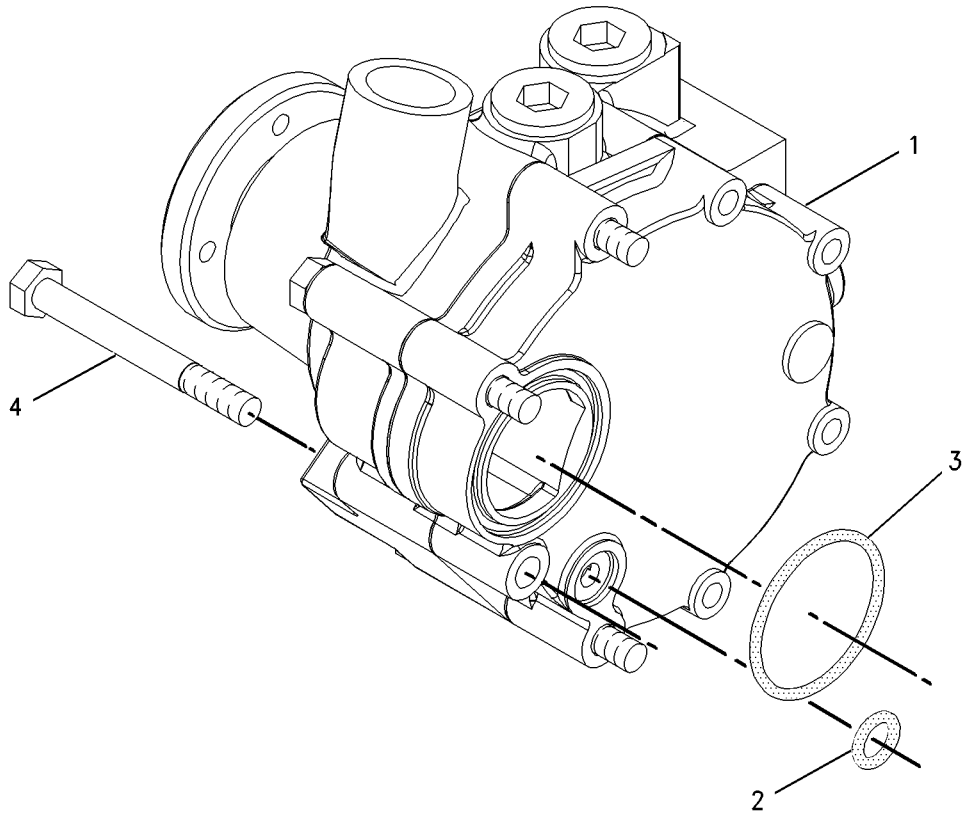

GRAPHIC #1 **<END>** g00924138

COOLING SYSTEM

266-9418 RADIATOR AR–TRASH RESISTANT

S/N: SMC1-UP; GCT1-UP
6-FINS PER INCH
FOR USE WITH WASTE HANDLING
AN ATTACHMENT

SMCS-1353 **i02455719**

NOTE	PART NUMBER	QTY	PART NAME 1 2 3 4 5 6 (PRODUCT LEVEL)	SEE PAGE
	223-5098	6	CORE AS-RADIATOR	

<END>

227-0833 RADIATOR GP

S/N: SMC1-UP; GCT1-UP

PART OF 279-9549 INSTALLATION AR-ENGINE

SMCS-1353 **i02742898**

NOTE	REF NO	GRAPHIC REF	PART NUMBER	QTY	PART NAME 1 2 3 4 5 6 (PRODUCT LEVEL)	SEE PAGE
	1	1	**1P-4278**	10	CLAMP-HOSE	
	2	1	**1Y-7452**	1	FITTING	
	3	1	**8F-8151**	1	VALVE AS-SHUTOFF (ENGINE COOLANT)	
	4	1	**106-4572**	5	HOSE	
	5	1	**169-3797**	1	BRACKET AS (BOTTOM)	
		1	**6B-4594**	4	RIVET	
M		1	**8T-3490**	8	NUT-WELD (M10X1.5-THD)	
	6	1	**169-3798**	1	SHIELD AS-BOTTOM (LH)	
		1	**4D-6716**	4	RIVET-POP	
		1	**7G-5186**	3	SPACER (13X19X4.5-MM THK)	
M		1	**8T-3490**	3	NUT-WELD (M10X1.5-THD)	
	7	1	**169-3799**	1	SHIELD AS-UPPER (LH)	
		1	**4D-6716**	4	RIVET-POP	
		1	**7G-5186**	3	SPACER (13X19X4.5-MM THK)	
M		1	**8T-3490**	2	NUT-WELD (M10X1.5-THD)	
	8	1	**169-3800**	1	SHIELD AS-BOTTOM (RH)	
		1	**4D-6716**	4	RIVET-POP	
		1	**7G-5186**	3	SPACER (13X19X4.5-MM THK)	
M		1	**8T-3490**	3	NUT-WELD (M10X1.5-THD)	
	9	1	**169-3801**	1	SHIELD AS-UPPER (RH)	
		1	**4D-6716**	4	RIVET-POP	
		1	**7G-5186**	3	SPACER (13X19X4.5-MM THK)	
M		1	**8T-3490**	2	NUT-WELD (M10X1.5-THD)	
	10	1	**169-3812**	1	BRACKET AS (RH)	
M		1	**8T-3490**	1	NUT-WELD (M10X1.5-THD)	
	11	1	**180-6695**	1	BAFFLE AS-RADIATOR	
		1	**6B-4594**	5	RIVET	
M		1	**8T-3490**	2	NUT-WELD (M10X1.5-THD)	
	12	1	**180-6696**	1	BAFFLE AS-RADIATOR	
		1	**6B-4594**	6	RIVET	
M		1	**8T-3490**	2	NUT-WELD (M10X1.5-THD)	
	13	1	**224-3981**	1	BRACKET AS (LH)	
	14	1	**224-4013**	1	BAFFLE AS (TOP)	
	15	1	**227-0835**	1	BAFFLE AS-RADIATOR (BOTTOM)	
		1	**6B-4594**	4	RIVET	
	16	1	**227-0836**	1	BAFFLE AS-RADIATOR (BOTTOM)	
		1	**6B-4594**	3	RIVET	
Y	17	1	*241-2756*	1	RADIATOR GP	103
	18	1	**003-2143**	1	ELBOW	
	19	1	**003-9514**	1	COUPLING-PIPE	
	20	1	**7X-7729**	23	WASHER (11X25X3-MM THK)	
	21	1	**8T-4121**	12	WASHER-HARD (11X21X2.5-MM THK)	
M	22	1	**8T-4136**	12	BOLT (M10X1.5X25-MM)	
M	23	1	**8T-4185**	4	BOLT (M10X1.5X50-MM)	
M	24	1	**8T-4195**	9	BOLT (M10X1.5X30-MM)	
M	25	1	**8T-4196**	10	BOLT (M10X1.5X35-MM)	

M-METRIC PART
Y-SEPARATE ILLUSTRATION

227-0833 **RADIATOR GP** *(contd.)* **i02742898**

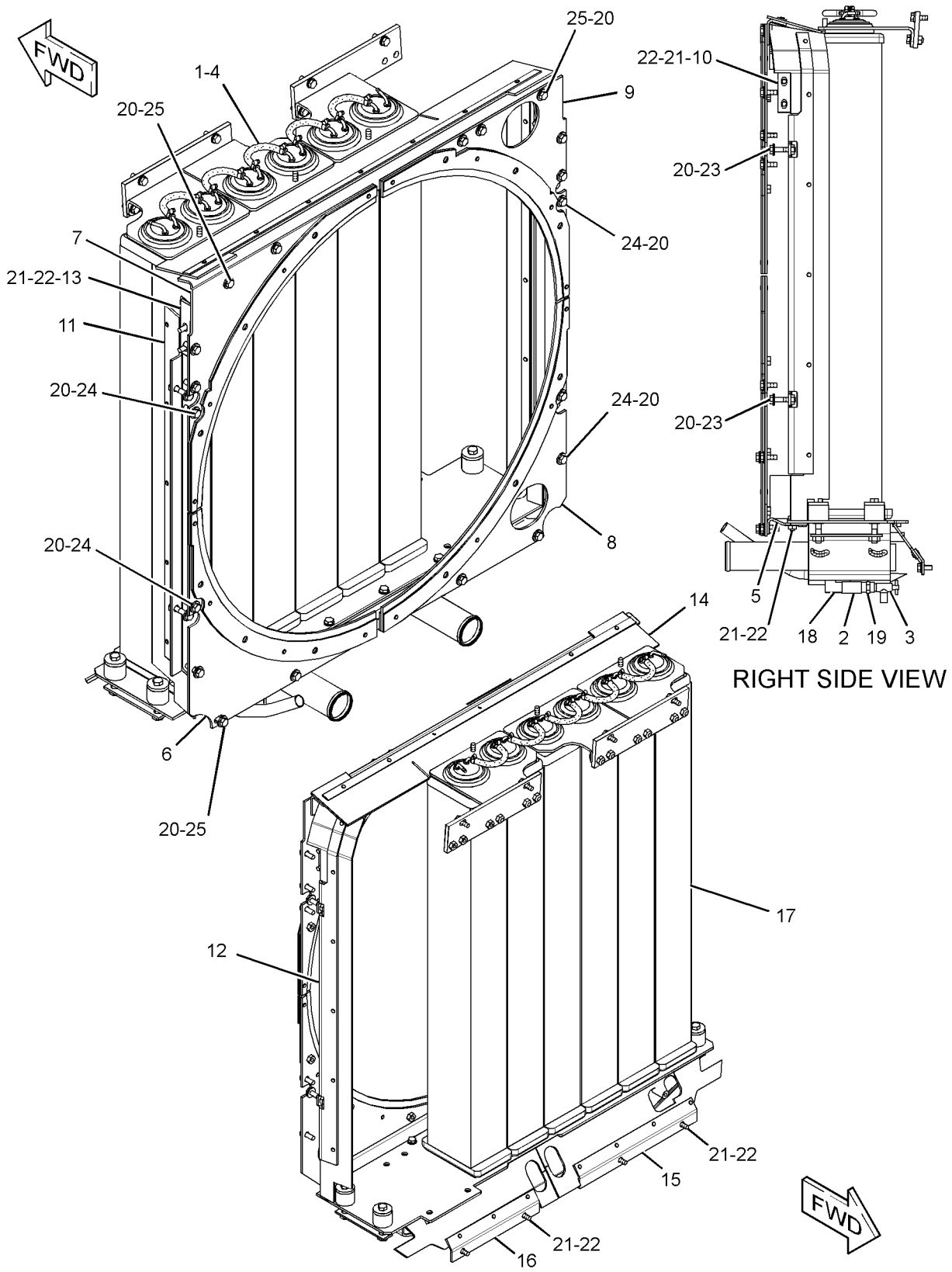

GRAPHIC #1 **<END>** g01379120

COOLING SYSTEM

241-2756 RADIATOR GP

S/N: SMC1-UP; GCT1-UP
PART OF 227-0833 RADIATOR GP

SMCS-1353 **i02441322**

NOTE	REF NO	GRAPHIC REF	PART NUMBER	QTY	PART NAME 1 2 3 4 5 6 (PRODUCT LEVEL)	SEE PAGE
	1	1	**6I-2431**	6	SEAL	
	2	1	**6I-2435**	6	SPACER (RUBBER)	
	3	1	**8K-8517**	4	WASHER (0.531X1.75X0.25-IN THK)	
	4	1	**9S-4497**	4	BLOCK-MOUNTING	
	5	1	**169-3796**	2	PLATE AS	
					(EACH INCLUDES)	
M		1	**8T-3597**	2	NUT-WELD (M12X1.75-THD)	
	6	1	**189-5586**	1	BRACKET AS	
	7	1	**189-5587**	2	BRACKET AS	
					(EACH INCLUDES)	
M		1	**8T-5413**	1	STUD-WELD (M10X1.5X25-MM OAL)	
	8	1	**189-5588**	2	PLATE AS	
	9	1	**223-5111**	6	CORE AS-RADIATOR	
	10	1	**240-9755**	1	TANK AS-BOTTOM	
		1	**6B-7246**	1	BOSS (3/8X1/2-IN)	
	11	1	**8T-4121**	13	WASHER-HARD (11X21X2.5-MM THK)	
M	12	1	**8T-4176**	4	BOLT (M12X1.75X90-MM)	
M	13	1	**8T-4195**	13	BOLT (M10X1.5X30-MM)	

M-METRIC PART

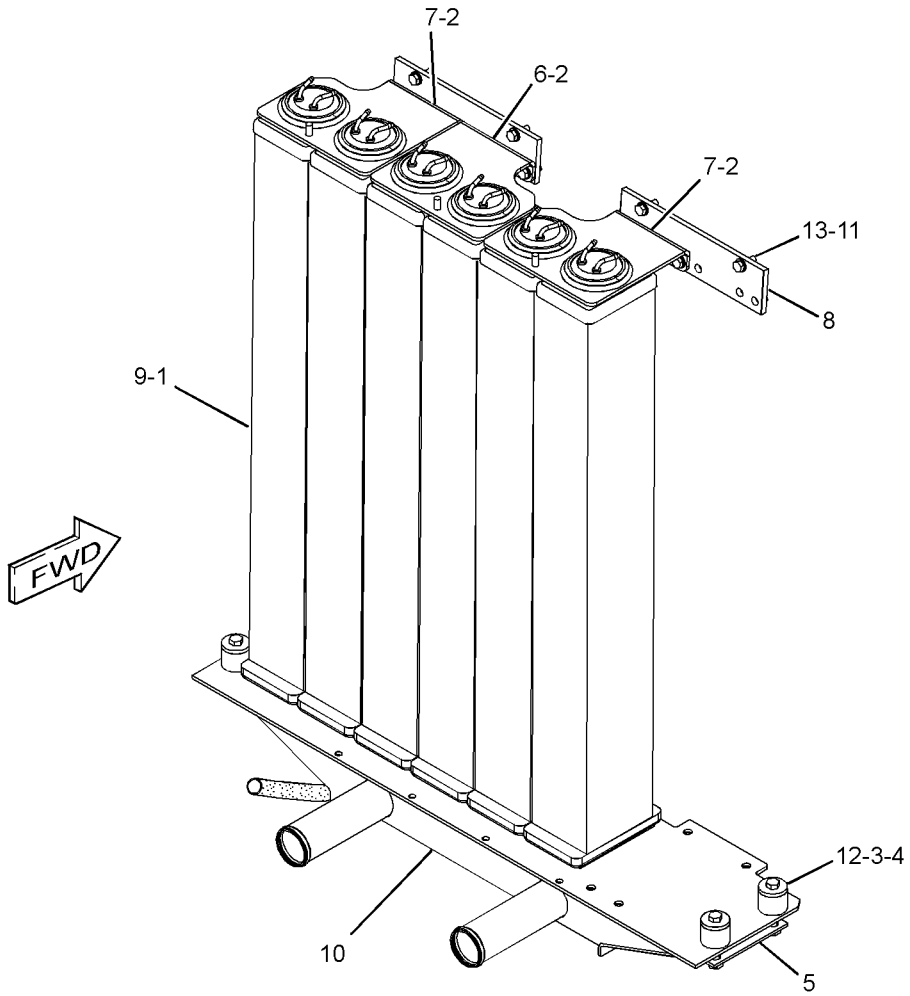

GRAPHIC #1 **<END>** g01209184

COOLING SYSTEM

169-1840 TANK GP-COOLANT

S/N: SMC1-UP; GCT1-UP

PART OF 255-5232 TANK GP-COOLANT

SMCS-1377 **i01830310**

NOTE	REF NO	GRAPHIC REF	PART NUMBER	QTY	PART NAME 1 2 3 4 5 6 (PRODUCT LEVEL)	SEE PAGE
	1	1	**031-1119**	1	CAP AS-RADIATOR	
	2	1	**169-1838**	1	TANK AS-EXPANSION	
		1	**3L-5893**	1	TUBE-OVERFLOW	
		1	**8N-8846**	1	NECK-FILLER	
		1	**7T-1099**	2	LINK	

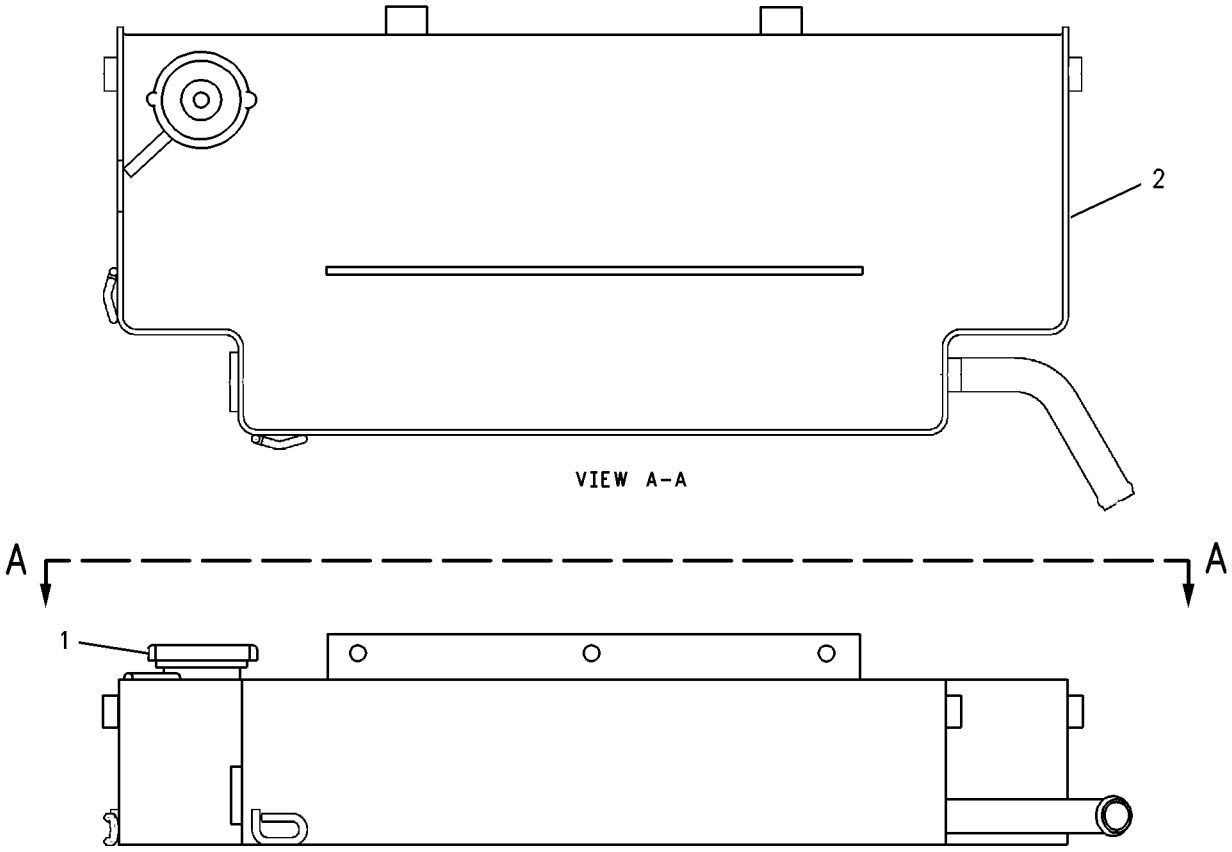

GRAPHIC #1 **<END>** g00828270

237-4214 TANK GP-COOLANT—WITH HEAT SHIELDING

S/N: SMC1-UP; GCT1-UP

PART OF 282-9553, 282-9554, 282-9555, 282-9556 CONVERSION AR-HEAT SHIELD AN ATTACHMENT

SMCS-1377 **i02455306**

NOTE	REF NO	GRAPHIC REF	PART NUMBER	QTY	PART NAME 1 2 3 4 5 6 (PRODUCT LEVEL)	SEE PAGE
	1	1	**031-1119**	1	CAP AS-RADIATOR	
	2	1	**237-4213**	1	TANK AS-EXPANSION	
	2A	1	**3L-5893**	1	TUBE-OVERFLOW	
	2B	1	**7T-1099**	2	LINK	
	2C	1	**8N-8846**	1	NECK-FILLER	

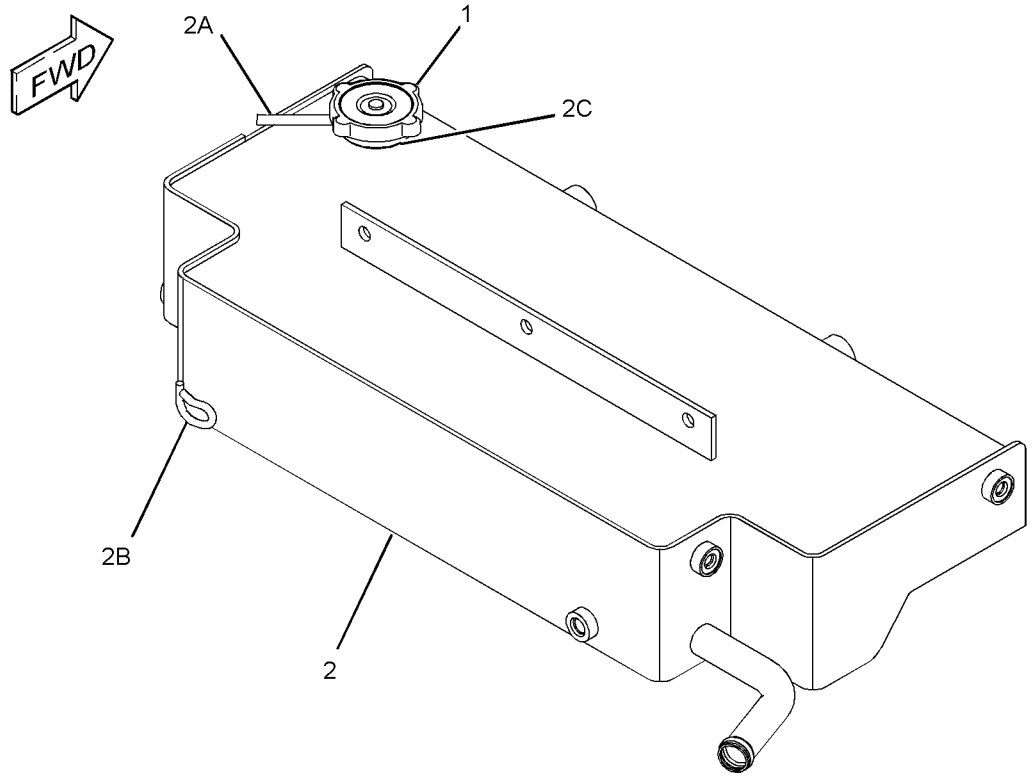

GRAPHIC #1 **<END>** g01215354

COOLING SYSTEM

255-5232 TANK GP-COOLANT

S/N: SMC1-UP; GCT1-UP

PART OF 279-9549 INSTALLATION AR-ENGINE

SMCS-1377 **i02750910**

NOTE	REF NO	GRAPHIC REF	PART NUMBER	QTY	PART NAME 1 2 3 4 5 6 (PRODUCT LEVEL)	SEE PAGE
	1	1	**1P-9328**	1	FITTING	
	2	1	**2V-4868**	1	FITTING	
	3	1	**5P-2937**	1	ADAPTER-O-RING	
	4	1	**110-2445**	2	CLAMP-HOSE	
Y	5	1	*169-1840*	1	TANK GP-COOLANT	104
	6	1	**169-3826**	1	BRACKET AS	
M		1	**8T-3490**	2	NUT-WELD (M10X1.5-THD)	
	7	1	*188-3034*	2	ELBOW AS	
					(EACH INCLUDES)	
		1	**6V-1355**	1	ELBOW	
		1	**3J-7354**	1	SEAL-O-RING	
	8	1	**196-9858**	1	TEE-SWIVEL	
	9	1	**267-2186**	1	BAFFLE AS-RADIATOR	
		1	**6B-4594**	16	RIVET	
		1	**7G-5186**	2	SPACER (13X19X4.5-MM THK)	
	10	1	**069-4269**	1	STEM	
	11	1	*148-8347*	1	ELBOW AS	
		1	**6V-9007**	1	ELBOW	
		1	**3D-2824**	1	SEAL-O-RING	
		1	**6V-9746**	1	SEAL-O-RING	
	12	1	**1P-4278**	6	CLAMP-HOSE	
	13	1	**3D-2824**	1	SEAL-O-RING	
	14	1	**3J-7354**	1	SEAL-O-RING	
	15	1	**4P-7429**	2	CLIP	
	16	1	**6K-0806**	7	STRAP-CABLE	
	17	1	**6V-7535**	1	ELBOW-PIPE	
	18	1	**7D-7233**	1	CLIP	
	19	1	**7M-8485**	1	SEAL-O-RING	
	20	1	**8L-5008**	1	ELBOW-PIPE	
	21	1	**8T-4121**	8	WASHER-HARD (11X21X2.5-MM THK)	
M	22	1	**8T-4136**	6	BOLT (M10X1.5X25-MM)	
M	23	1	**8T-4196**	2	BOLT (M10X1.5X35-MM)	
	24	1	**9Y-9236**	1	GAUGE-SIGHT (WATER TANK)	
E	25	1	**5P-1251**		HOSE (99-CM)	
E	26	1	**5P-1465**		HOSE (61-CM)	
E	26A	1	**5P-1465**		HOSE (32-CM)	
E	26B	1	**5P-1465**		HOSE (30-CM)	
E	27	1	**8C-3681**		HOSE (140-CM)	

E-ORDER BY THE CENTIMETER
M-METRIC PART
Y-SEPARATE ILLUSTRATION

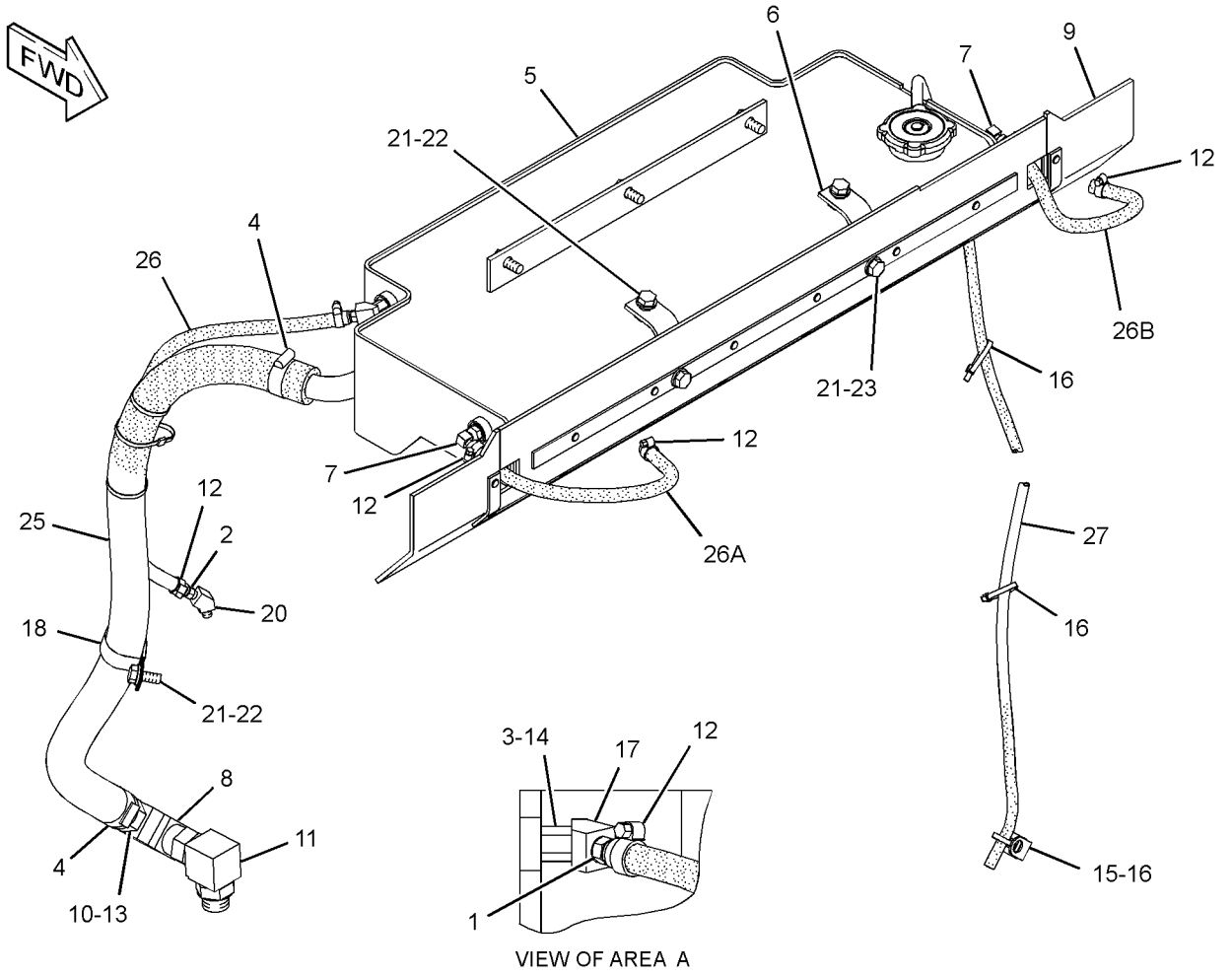

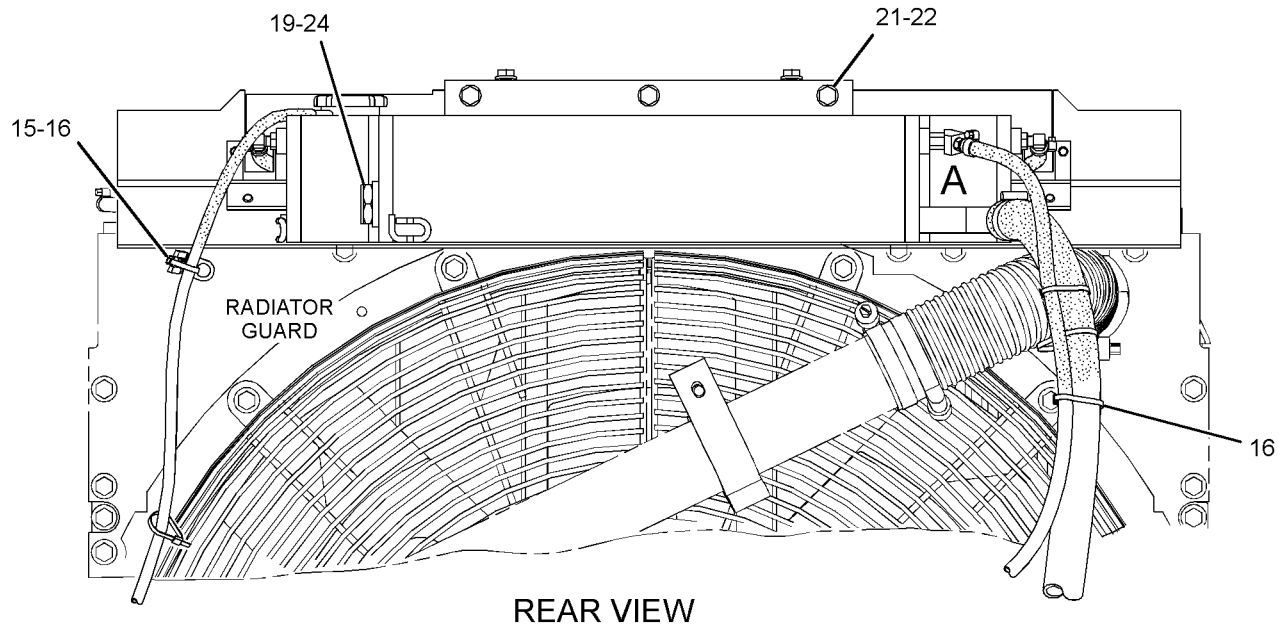

REAR VIEW

GRAPHIC #1 **<END>** g01361130

AIR INLET AND EXHAUST SYSTEM

250-6056 AFTERCOOLER GP-AIR

S/N: SMC1-UP; GCT1-UP

PART OF 279-9549 INSTALLATION AR-ENGINE

SMCS-1063 **i02757419**

NOTE	REF NO	GRAPHIC REF	PART NUMBER	QTY	PART NAME 1 2 3 4 5 6 (PRODUCT LEVEL)	SEE PAGE
	1	1	**133-6934**	4	SPACER (11X20X25-MM THK)	
	2	1	**253-5369**	1	CORE AS-AFTERCOOLER	
	3	1	**7X-7729**	3	WASHER (11X25X3-MM THK)	
	4	1	**8T-4121**	4	WASHER-HARD (11X21X2.5-MM THK)	
M	5	1	**8T-4196**	3	BOLT (M10X1.5X35-MM)	
M	6	1	**8T-6466**	4	BOLT (M10X1.5X60-MM)	

M-METRIC PART

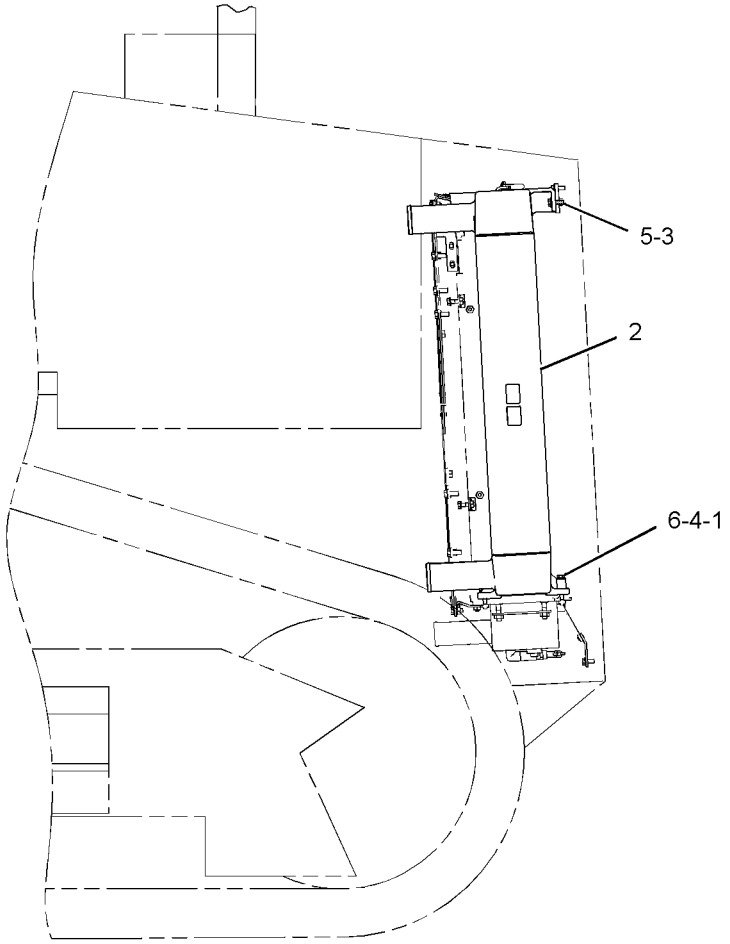

RIGHT SIDE VIEW

GRAPHIC #1 **<END>** g01209278

AIR INLET AND EXHAUST SYSTEM

205-8674 AIR CLEANER GP

S/N: SMC1-UP; GCT1-UP

PART OF 206-9000 AIR CLEANER GP

SMCS-1051, 1054 **i01830327**

NOTE	REF NO	GRAPHIC REF	PART NUMBER	QTY	PART NAME 1 2 3 4 5 6 (PRODUCT LEVEL)	SEE PAGE
	1	1	**6I-2501**	1	FILTER ELEMENT AS-AIR (PRIMARY)	
	2	1	**6I-2502**	1	FILTER ELEMENT AS-AIR (SECONDARY)	
	3	1	**6I-4464**	1	COVER AS-AIR CLEANER	
		1	**4P-5524**	1	SEAL-O-RING	
		1	**101-2850**	1	FILM-INFORMATION (AIR CLEANER)	
	4	1	**8N-4617**	2	KIT-AIR CLEANER CLAMP	
					(EACH INCLUDES)	
		1	**1N-4403**	1	CLIP AS	
		1	**9B-2596**	1	RIVET	

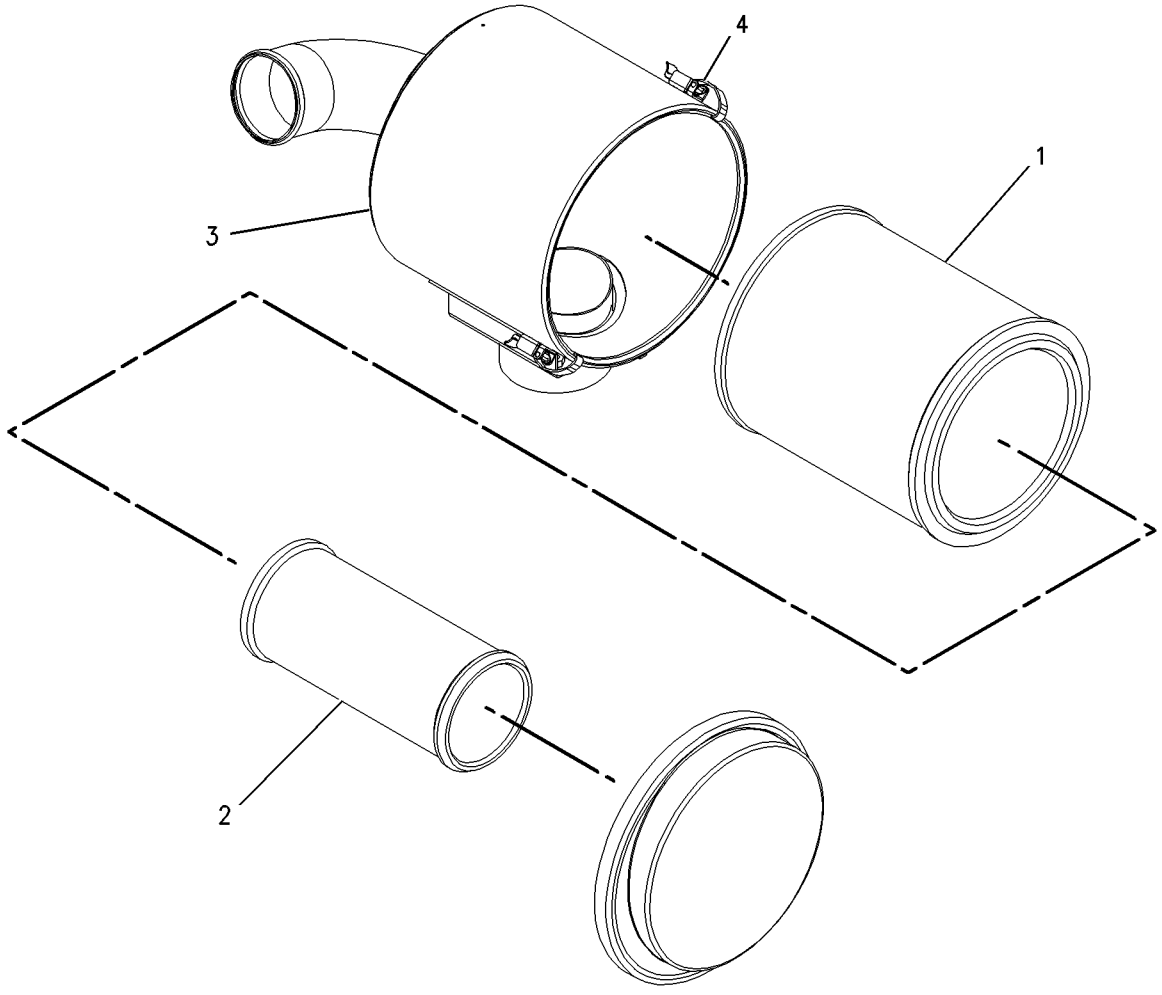

GRAPHIC #1 **<END>** g00805077

AIR INLET AND EXHAUST SYSTEM

206-9000 AIR CLEANER GP

S/N: SMC1-UP; GCT1-UP

PART OF 279-9549 INSTALLATION AR-ENGINE

SMCS-1051, 1054 **i02432498**

NOTE	REF NO	GRAPHIC REF	PART NUMBER	QTY	PART NAME 1 2 3 4 5 6 (PRODUCT LEVEL)	SEE PAGE
	1	1	**9S-6758**	1	PRECLEANER AS	
		1	**0S-1591**	1	BOLT (3/8-16X1.5-IN)	
		1	**9S-8752**	1	NUT-FULL (3/8-16-THD)	
Y	2	1	**205-8674**	1	AIR CLEANER GP	109
	3	1	**205-8681**	1	BODY AS (PRECLEANER)	
C	4	1	**250-9290**	1	BRACKET AS	
C	5	1	**7X-7729**	7	WASHER (11X25X3-MM THK)	
	6	1	**8T-4121**	8	WASHER-HARD (11X21X2.5-MM THK)	
M	7	1	**8T-4133**	2	NUT (M10X1.5-THD)	
M	8	1	**8T-4136**	9	BOLT (M10X1.5X25-MM)	
M	9	1	**8T-4137**	4	BOLT (M10X1.5X20-MM)	

C-CHANGE FROM PREVIOUS TYPE
M-METRIC PART
Y-SEPARATE ILLUSTRATION

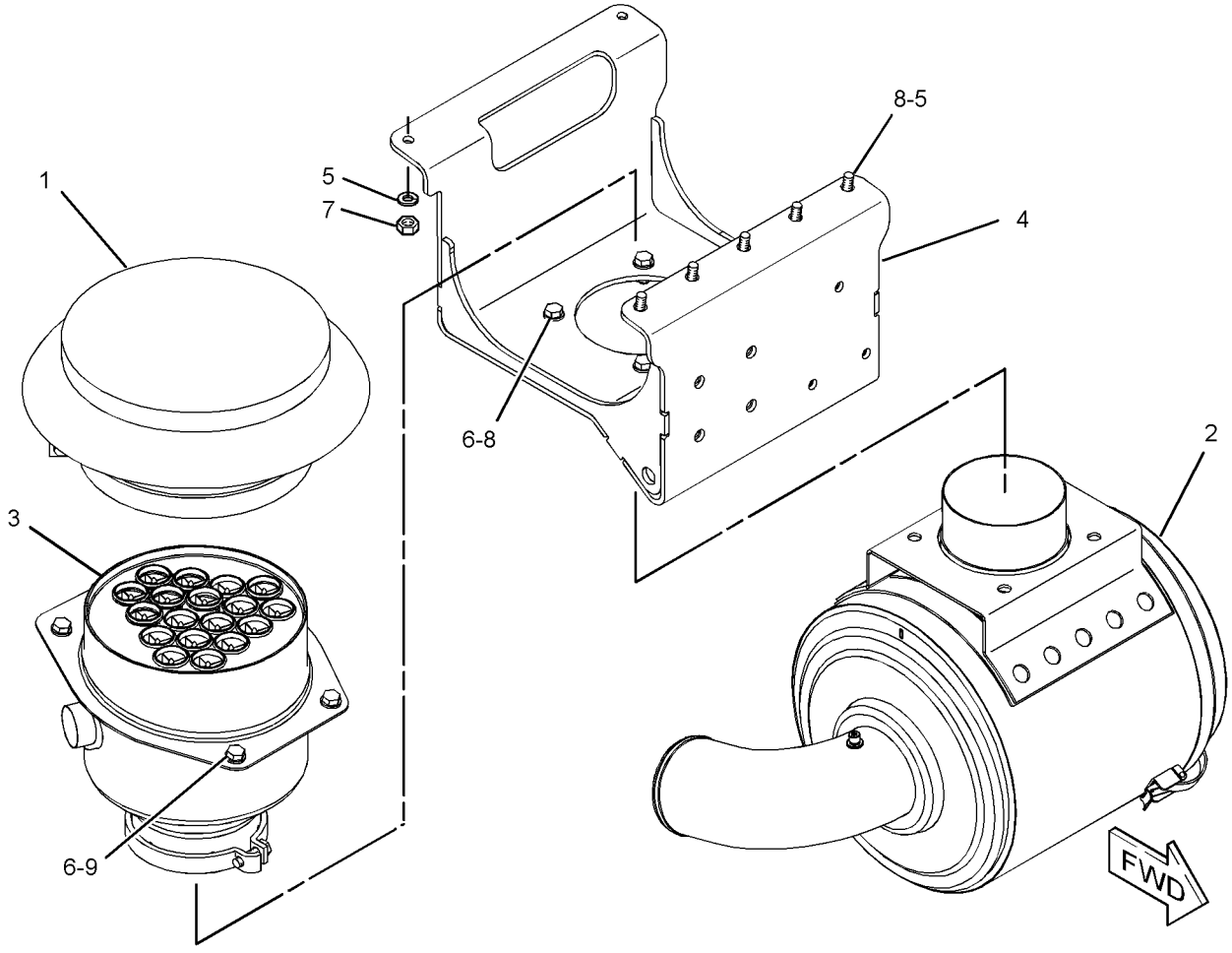

GRAPHIC #1 **<END>** g01181353

241-4353 DUST EJECTOR GP

S/N: SMC1-UP; GCT1-UP

PART OF 279-9549 INSTALLATION AR-ENGINE

SMCS-1068 **i02726252**

NOTE	REF NO	GRAPHIC REF	PART NUMBER	QTY	PART NAME 1 2 3 4 5 6 (PRODUCT LEVEL)	SEE PAGE
	1	1	**308-7112**	1	CLAMP-WIRE	
	2	1	**9M-2904**	2	CLAMP-HOSE	
	3	1	**241-4354**	1	EJECTOR AS-EXHAUST	
E	4	1	**5P-2817**		HOSE (48-CM)	

E-ORDER BY THE CENTIMETER

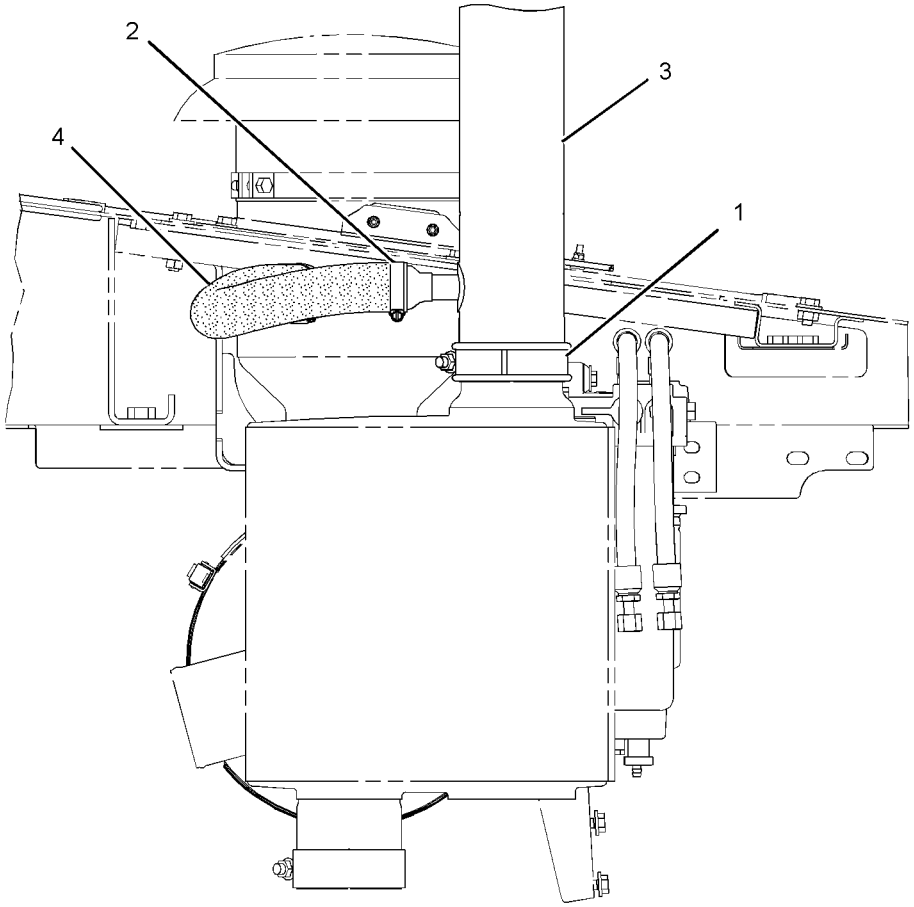

RIGHT SIDE VIEW

GRAPHIC #1 **<END>** g01380979

AIR INLET AND EXHAUST SYSTEM

246-0596 ELBOW GP-AIR INLET

S/N: THX8900-UP

PART OF 282-3823, 282-3824, 282-3825, 282-3826, 301-5768 ENGINE AR

ALSO AN ATTACHMENT

SMCS-1087 **i02163265**

NOTE	REF NO	GRAPHIC REF	PART NUMBER	QTY	PART NAME 1 2 3 4 5 6 (PRODUCT LEVEL)	SEE PAGE
	1	1	**246-0597**	1	ELBOW-AIR INLET	
	2	1	**162-3148**	8	STUD (M8X1.25X62.75-MM)	
	3	1	**3E-4352**	2	WASHER-HARD (8.8X20.5X2.5-MM THK)	
	4	1	**9M-1974**	6	WASHER-HARD (8.8X16X2-MM THK)	
B	5	1	**1U-8846**		SEALANT-GASKET ((1 ML))	

B-USE AS REQUIRED

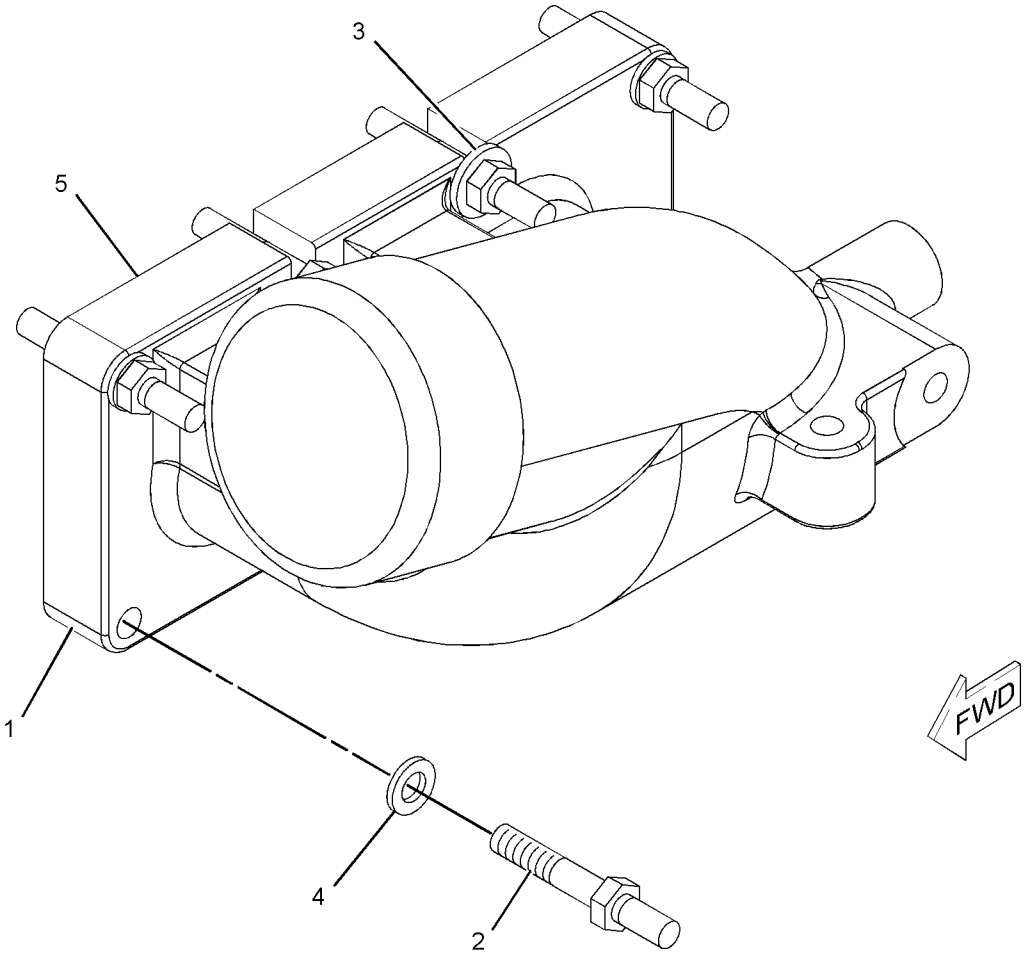

GRAPHIC #1

<END>

g01101339

AIR INLET AND EXHAUST SYSTEM

215-1488 GUARD GP-PRECLEANER

S/N: SMC1-UP; GCT1-UP
AN ATTACHMENT

SMCS-1055 **i02148357**

NOTE	REF NO	GRAPHIC REF	PART NUMBER	QTY	PART NAME 1 2 3 4 5 6 (PRODUCT LEVEL)	SEE PAGE
	1	1	**215-1490**	1	GUARD AS	
	2	1	**7X-7729**	3	WASHER (11X25X3-MM THK)	
M	3	1	**8T-4137**	3	BOLT (M10X1.5X20-MM)	

M-METRIC PART

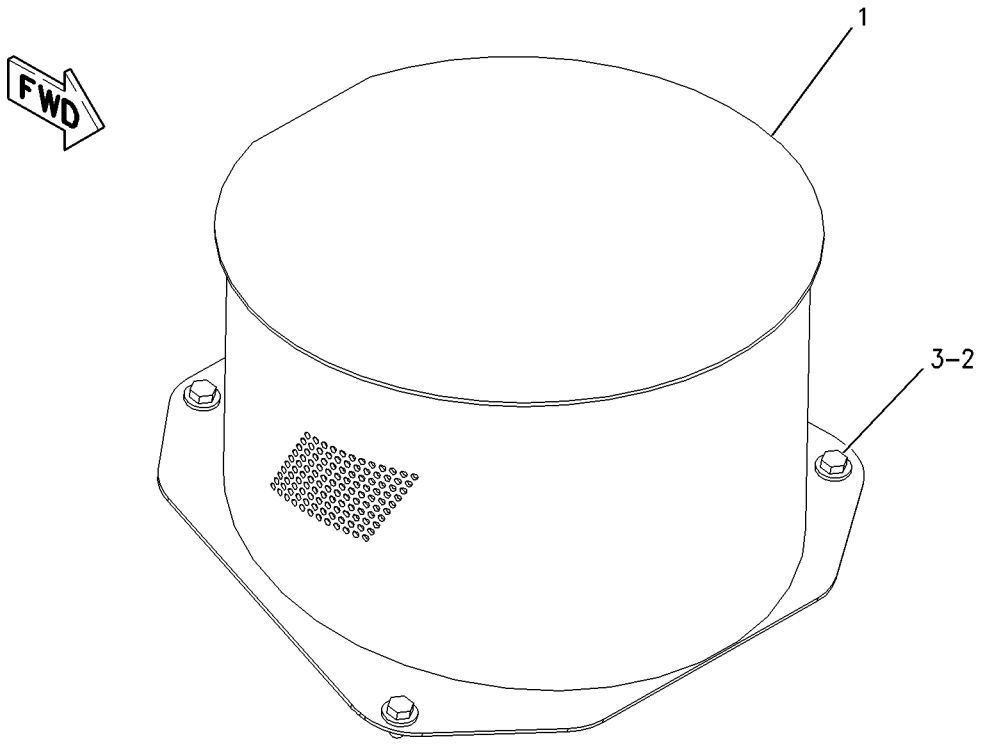

GRAPHIC #1 **<END>** g00909307

AIR INLET AND EXHAUST SYSTEM

168-8377 LINES GP-AIR

S/N: SMC1-UP; GCT1-UP

INTAKE HOSE & EXHAUST ELBOW

PART OF 279-9549 INSTALLATION AR-ENGINE

SMCS-1071 **i02281640**

NOTE	REF NO	GRAPHIC REF	PART NUMBER	QTY	PART NAME 1 2 3 4 5 6 (PRODUCT LEVEL)	SEE PAGE
	1	1	**1W-2431**	1	CLAMP-BAND	
		1	**8T-0193**	1	NUT-FULL (5/16-24-THD)	
	2	1	**6N-1558**	1	RING-SEAL	
	3	1	**8T-4986**	4	CLAMP-HOSE	
	4	1	**169-3883**	1	COUPLING	
	5	1	**214-1645**	1	ELBOW-EXHAUST	
C	6	1	**243-1588**	1	HOSE	
C	7	1	**243-1589**	1	HOSE	
C	8	1	**243-1590**	1	TUBE	
M	9	1	**6V-4249**	3	BOLT (M10X1.5X50-MM)	
	10	1	**6V-5839**	3	WASHER (11X21X2.5-MM THK)	

C-CHANGE FROM PREVIOUS TYPE
M-METRIC PART

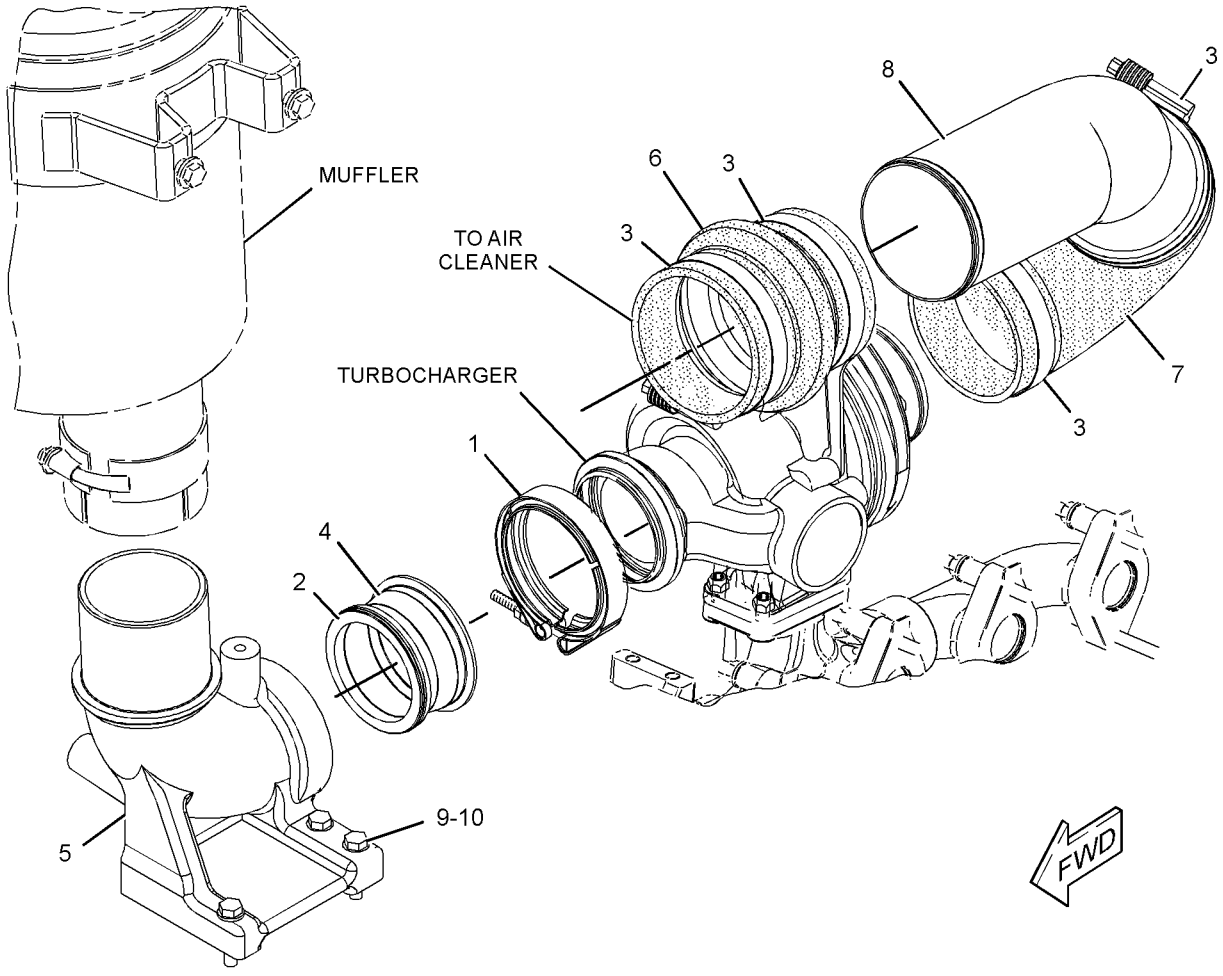

GRAPHIC #1 **<END>** g01151750

AIR INLET AND EXHAUST SYSTEM

251-4553 LINES GP-AIR–ATAAC

S/N: SMC1-UP; GCT1-UP

PART OF 279-9549 INSTALLATION AR-ENGINE

SMCS-1071 **i02751074**

NOTE	REF NO	GRAPHIC REF	PART NUMBER	QTY	PART NAME 1 2 3 4 5 6 (PRODUCT LEVEL)	SEE PAGE
	1	1	**144-0367**	16	CLAMP-HOSE	
	2	1,2	**201-1260**	2	HOSE	
	3	1	**250-6052**	1	HOSE	
	4	1,2	**250-6053**	1	TUBE AS	
	5	2	**250-6054**	1	TUBE AS	
	6	1	**250-7533**	1	HOSE	
	7	2	**251-0061**	1	BRACKET AS	
	8	1	**251-7214**	2	HOSE	
	9	1,2	**7X-7729**	6	WASHER (11X25X3-MM THK)	
M	10	1	**8T-4133**	2	NUT (M10X1.5-THD)	
M	11	2	**8T-4195**	1	BOLT (M10X1.5X30-MM)	
M	12	2	**8T-4196**	2	BOLT (M10X1.5X35-MM)	
	13	1,2	**9X-2646**	4	CLIP (SLOT)	
	14	1,2	**9X-2647**	4	CLIP (TAB)	
M	15	1	**8T-4186**	1	BOLT (M10X1.5X40-MM)	

M-METRIC PART

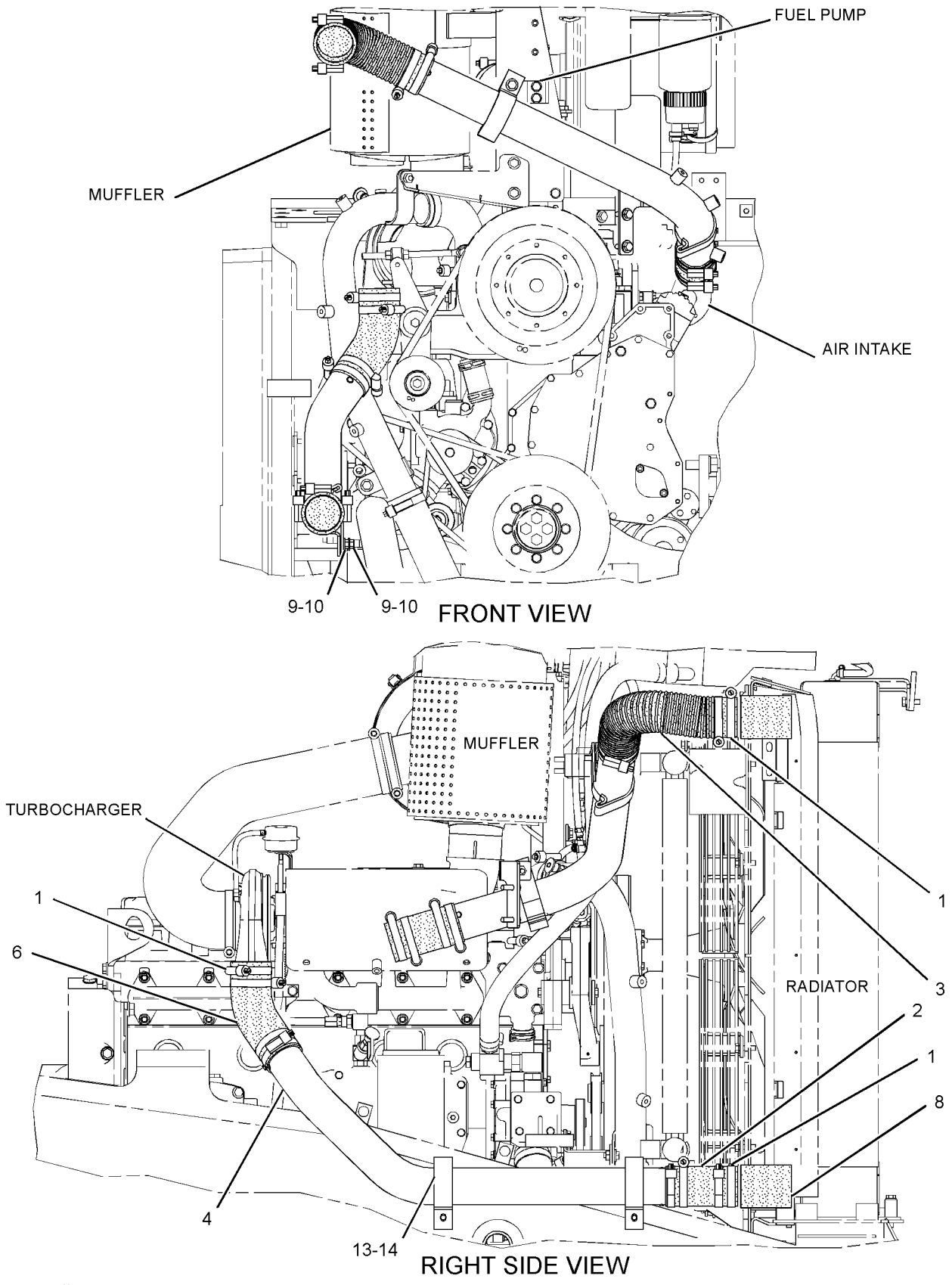

GRAPHIC #1 g01209164

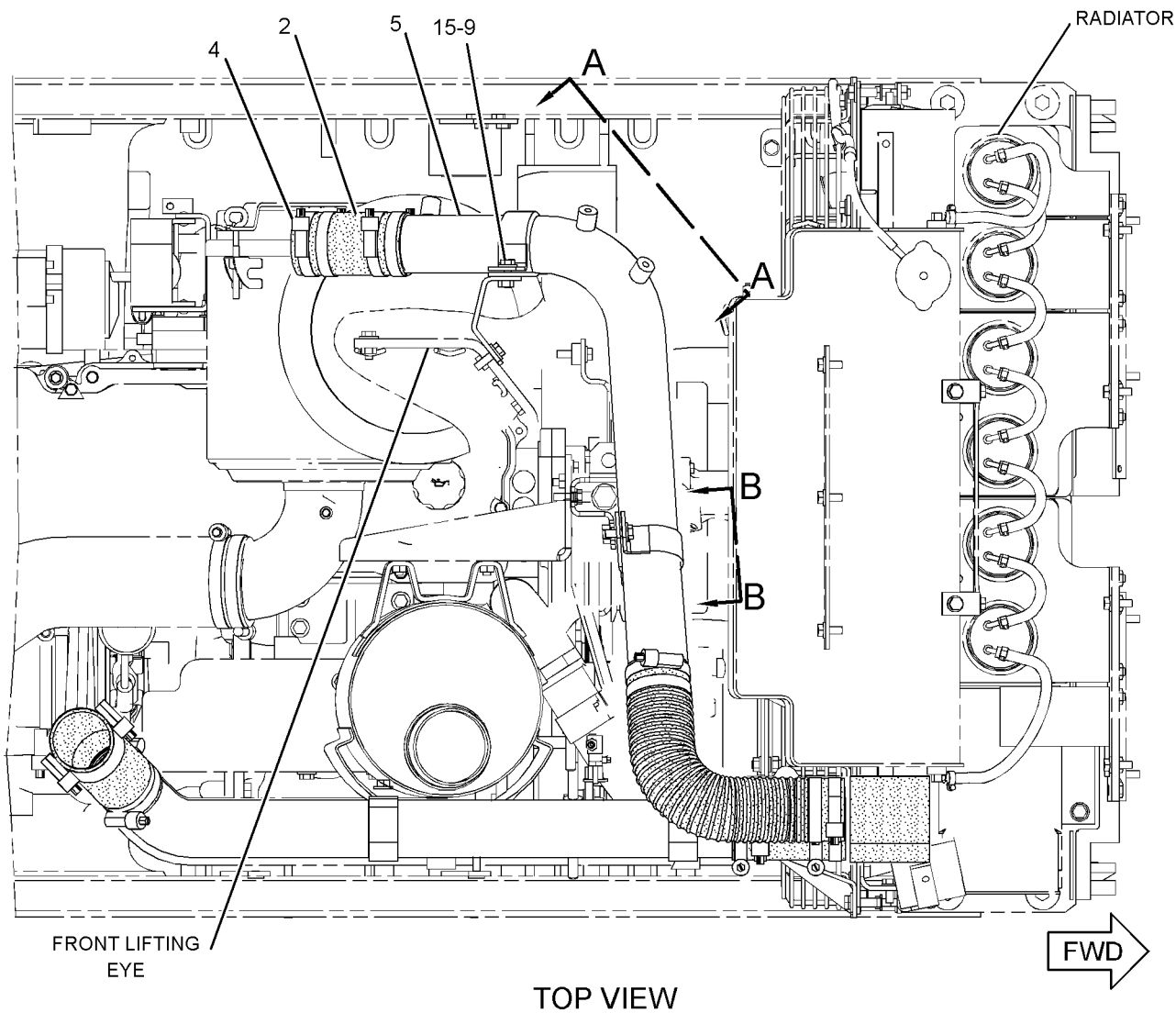

TOP VIEW

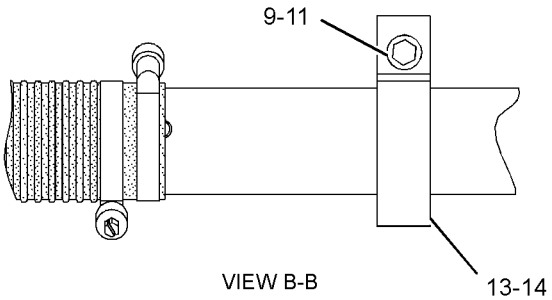

VIEW B-B

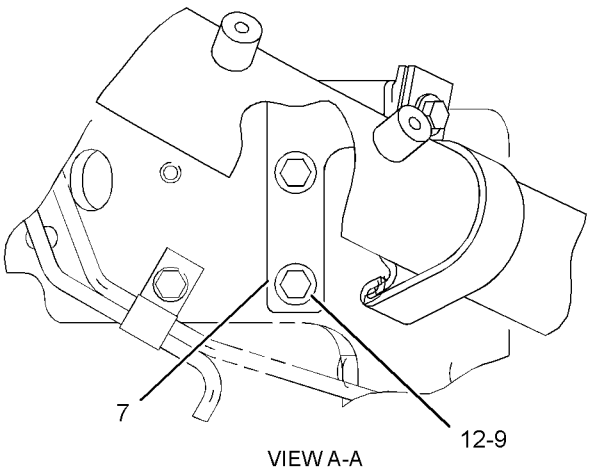

VIEW A-A

GRAPHIC #2 **<END>** g01382408

AIR INLET AND EXHAUST SYSTEM

165-4445 MANIFOLD GP-EXHAUST

S/N: THX8900-UP

PART OF 282-3823, 282-3824, 282-3825, 282-3826, 301-5768 ENGINE AR

ALSO AN ATTACHMENT

SMCS-1059 **i01830356**

NOTE	REF NO	GRAPHIC REF	PART NUMBER	QTY	PART NAME 1 2 3 4 5 6 (PRODUCT LEVEL)	SEE PAGE
M	1	1	**3E-8017**	12	LOCKNUT (M10X1.5-MM THD)	
	2	1	**161-3398**	1	MANIFOLD-EXHAUST	
	3	1	**161-3411**	6	GASKET	
	4	1	**167-0172**	1	MANIFOLD-EXHAUST	
	5	1	**203-7775**	1	MANIFOLD-EXHAUST	
M	6	1	**116-3715**	12	STUD-TAPERLOCK (M10X1.5X85-MM)	
	7	1	**4P-4369**	6	SPACER (12X19X23.5-MM THK)	
	8	1	**6V-5839**	12	WASHER (11X21X2.5-MM THK)	
M	9	1	**8T-7044**	4	STUD-TAPERLOCK (M10X1.5X40-MM)	

M-METRIC PART

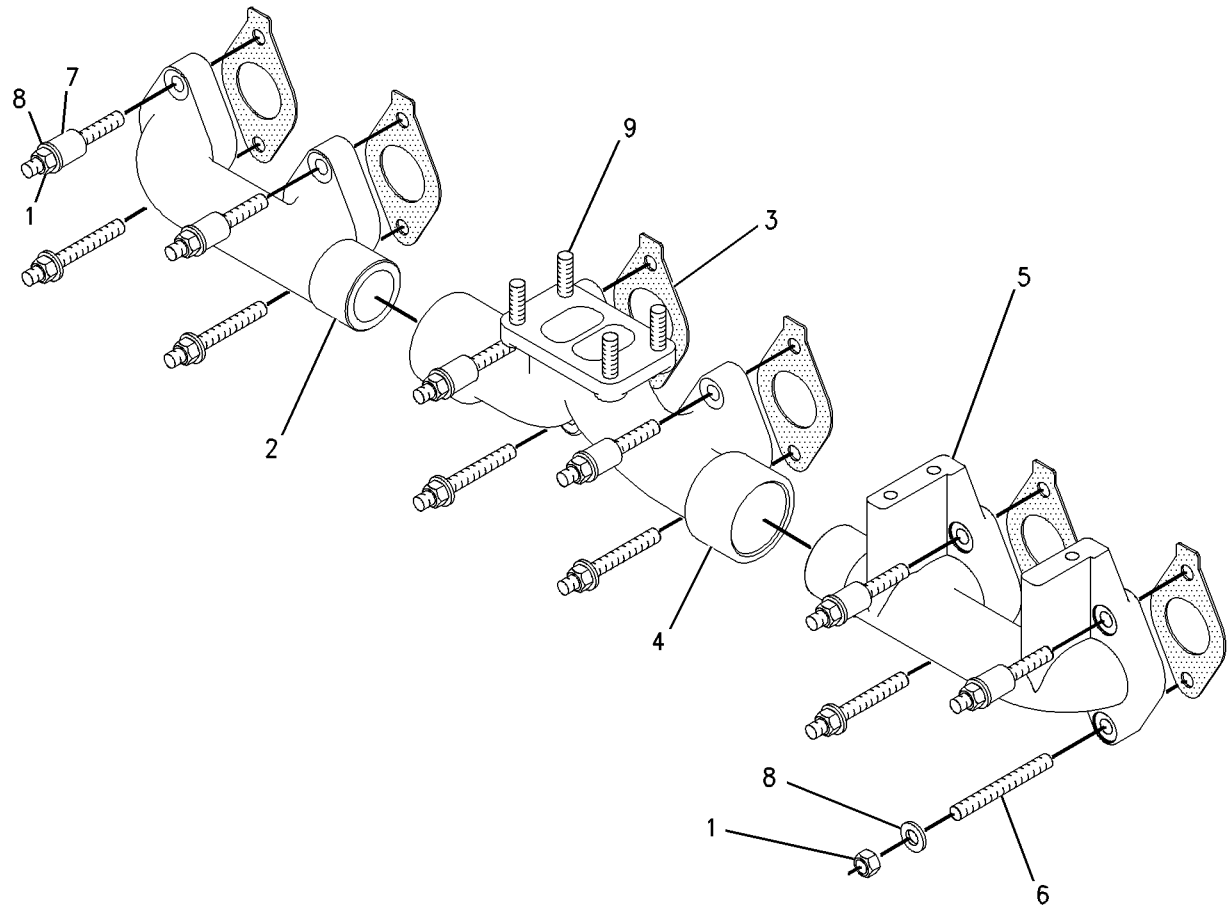

GRAPHIC #1 **<END>** g00741421

AIR INLET AND EXHAUST SYSTEM

239-3686 MUFFLER GP

S/N: SMC1-UP; GCT1-UP

PART OF 279-9549 INSTALLATION AR-ENGINE

SMCS-1062 **i02757378**

NOTE	REF NO	GRAPHIC REF	PART NUMBER	QTY	PART NAME 1 2 3 4 5 6 (PRODUCT LEVEL)	SEE PAGE
	1	1	**308-7112**	1	CLAMP-WIRE	
	2	1	**229-9601**	1	MUFFLER AS	
M		1	**8T-3490**	2	NUT-WELD (M10X1.5-THD)	
	3	1	**250-9286**	1	BRACKET AS	
		1	**7T-1099**	3	LINK	
	4	1	**7X-7729**	6	WASHER (11X25X3-MM THK)	
M	5	1	**8T-4196**	6	BOLT (M10X1.5X35-MM)	

M-METRIC PART

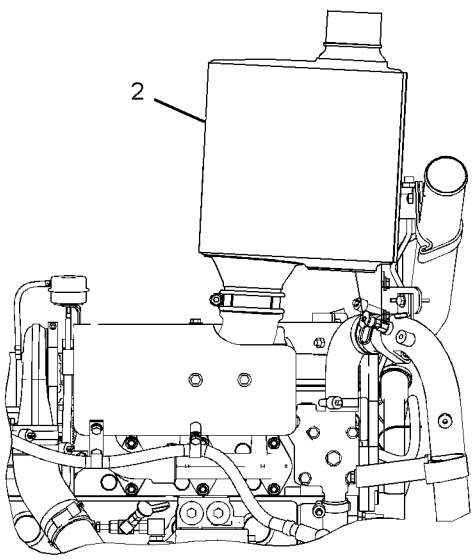

RIGHT SIDE VIEW

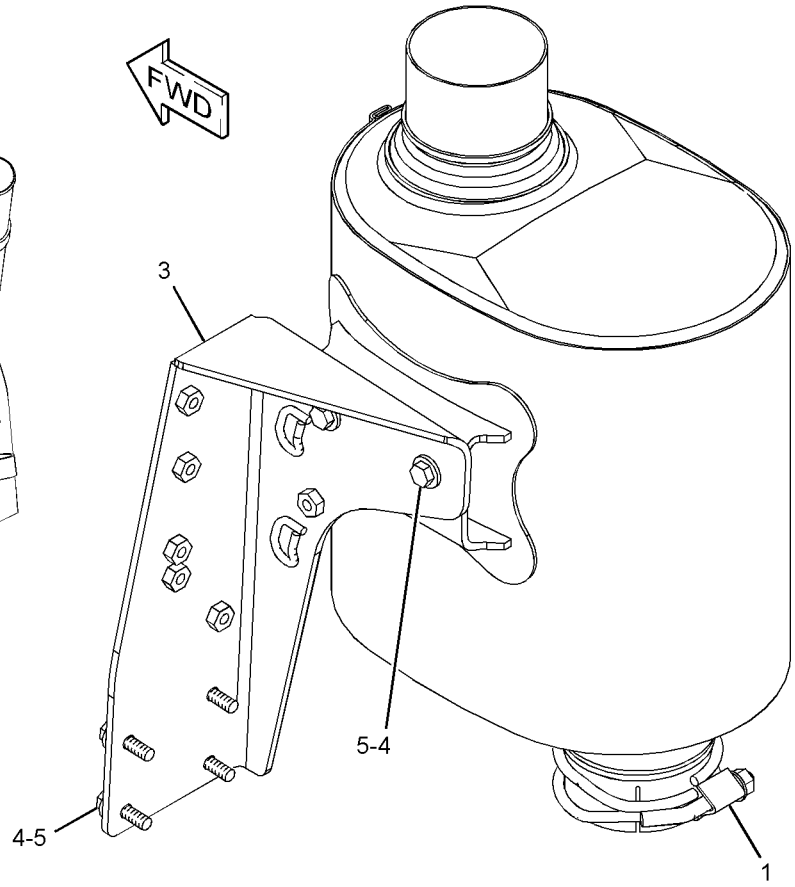

GRAPHIC #1 **<END>** g01391058

AIR INLET AND EXHAUST SYSTEM

256-2942 PRECLEANER AR—WITH PRESCREEN

S/N: SMC1-UP; GCT1-UP

CANNOT BE USED WITH 7S-9396—PAGE 125, 215-1488—PAGE 113

AN ATTACHMENT

SMCS-1055 **i02758981**

NOTE	REF NO	GRAPHIC REF	PART NUMBER	QTY	PART NAME 1 2 3 4 5 6 (PRODUCT LEVEL)	SEE PAGE
	1	1	**1W-4877**	1	HOSE-REDUCER	
	2	1	**5P-0599**	1	CLAMP-BAND	
	3	1	**9M-0164**	4	CLAMP-HOSE	
	4	1	**127-8178**	1	VALVE AS-CHECK (EXHAUST)	
	5	1	**193-5116**	1	HOSE	
Y	6	1	*237-9251*	1	PRECLEANER GP (TURBINE)	123
	7	1	**256-2941**	1	BASE AS	
	8	1	**5P-3860**	1	CLAMP-HOSE	
	9	1	**7X-7729**	9	WASHER (11X25X3-MM THK)	
M	10	1	**8T-4136**	9	BOLT (M10X1.5X25-MM)	
E	11	1	**5P-2817**		HOSE (24-CM)	

E-ORDER BY THE CENTIMETER
M-METRIC PART
Y-SEPARATE ILLUSTRATION

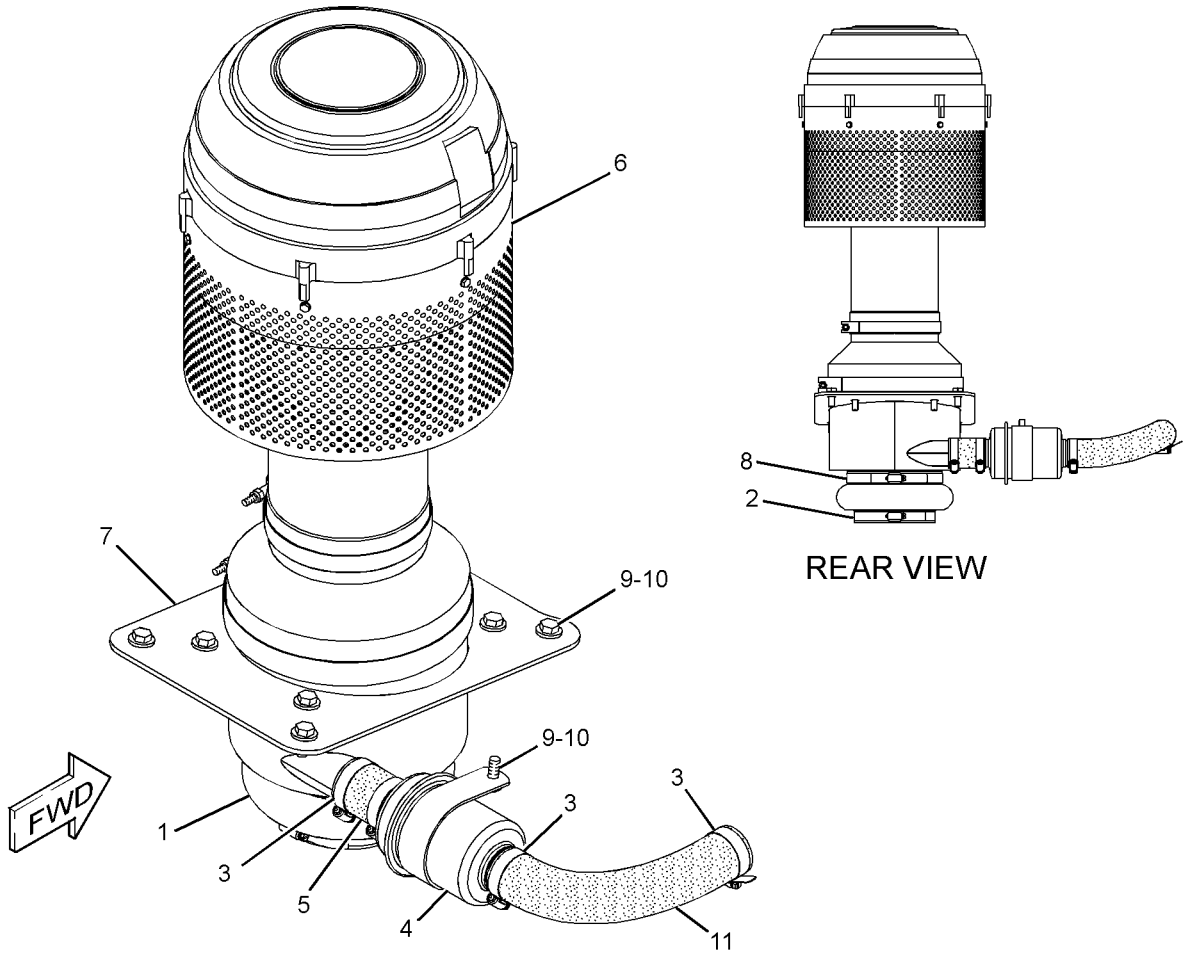

GRAPHIC #1 **<END>** g01208725

AIR INLET AND EXHAUST SYSTEM

256-2943 PRECLEANER AR—WITHOUT PRESCREEN

S/N: SMC1-UP; GCT1-UP

CANNOT BE USED WITH 7S-9396—PAGE 125, 215-1488—PAGE 113

AN ATTACHMENT

SMCS-1055 **i02759057**

NOTE	REF NO	GRAPHIC REF	PART NUMBER	QTY	PART NAME 1 2 3 4 5 6 (PRODUCT LEVEL)	SEE PAGE
	1	1	**1W-4877**	1	HOSE-REDUCER	
	2	1	**5P-0599**	1	CLAMP-BAND (BAND)	
	3	1	**9M-0164**	4	CLAMP-HOSE	
	4	1	**127-8178**	1	VALVE AS-CHECK (EXHAUST)	
	5	1	**193-5116**	1	HOSE	
Y	6	1	*237-9250*	1	PRECLEANER GP (TURBINE)	122
	7	1	**256-2941**	1	BASE AS (PRECLEANER)	
	8	1	**5P-3860**	1	CLAMP-HOSE	
	9	1	**7X-7729**	9	WASHER (11X25X3-MM THK)	
M	10	1	**8T-4136**	9	BOLT (M10X1.5X25-MM)	
E	11	1	**5P-2817**		HOSE (24-CM)	

E-ORDER BY THE CENTIMETER
M-METRIC PART
Y-SEPARATE ILLUSTRATION

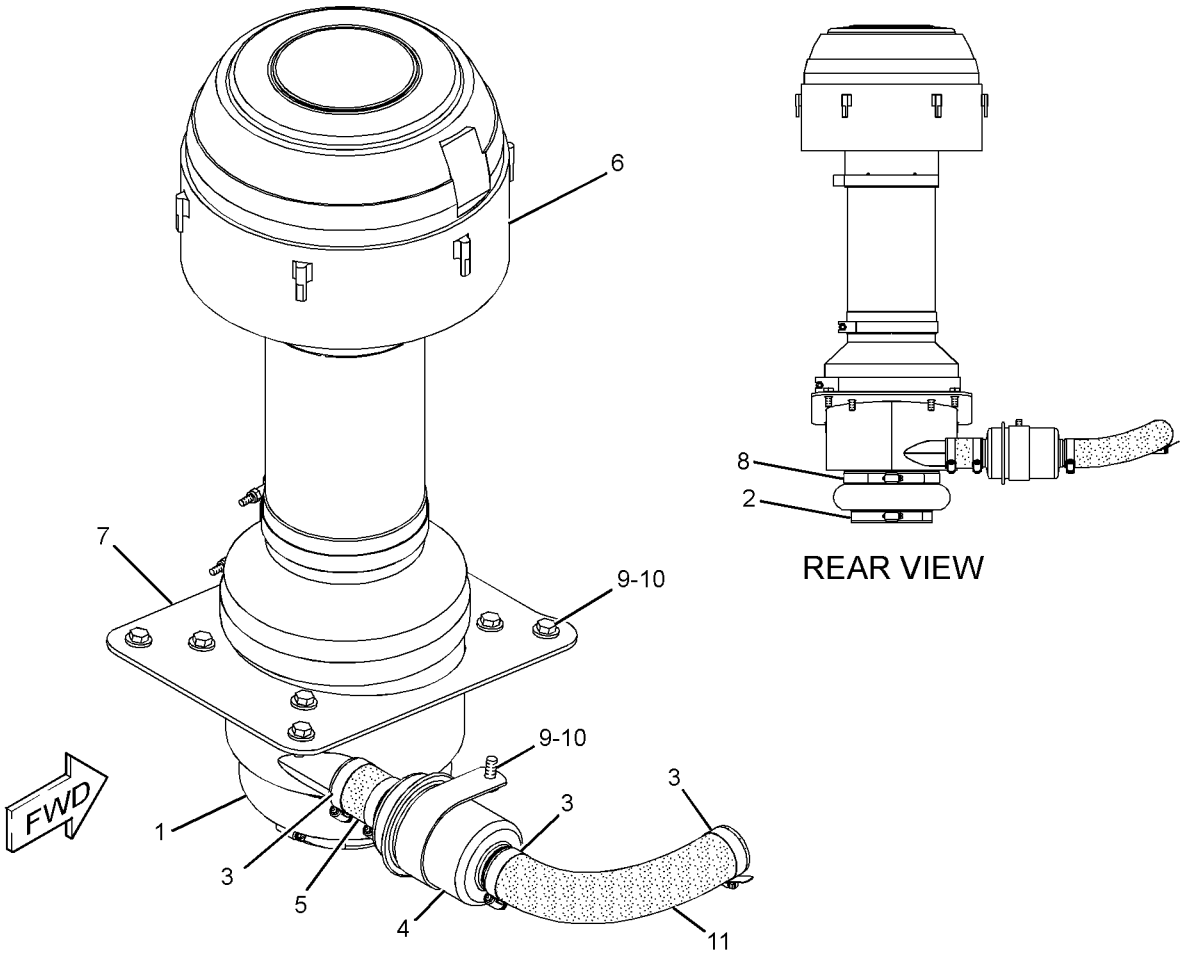

GRAPHIC #1 **<END>** g01208744

AIR INLET AND EXHAUST SYSTEM

237-9250 PRECLEANER GP—WITHOUT SCREEN

S/N: SMC1-UP; GCT1-UP
PART OF 256-2943 PRECLEANER AR
AN ATTACHMENT

SMCS-1055 **i02456143**

NOTE	REF NO	GRAPHIC REF	PART NUMBER	QTY	PART NAME 1 2 3 4 5 6 (PRODUCT LEVEL)	SEE PAGE
	1	1	**130-3280**	1	PRECLEANER AS	
		1	**174-5415**	1	CLAMP	
J	2	1	**237-9252**	1	TUBE AS	
J	3	1	**237-9255**	1	TUBE AS	
					AVAILABLE REPAIR KIT(S):	
J			**237-9254**	1	KIT-PRECLEANER (TURBINE)	
					(INCLUDES VALVE AS, TUBE, CLAMPS, HOSES, WASHERS, BOLTS, & TUBE AS)	

J-KIT MARKED J SERVICES PARTS MARKED J

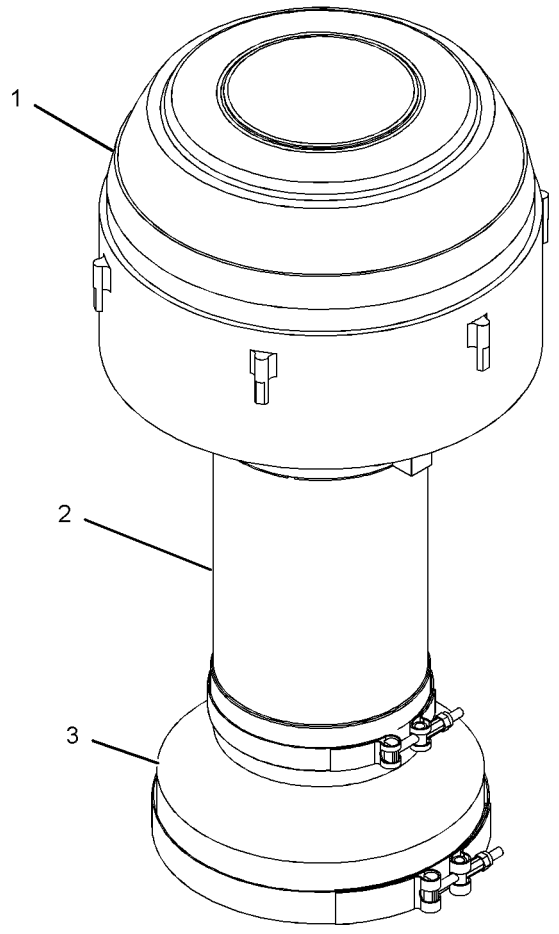

GRAPHIC #1 **<END>** g01149394

AIR INLET AND EXHAUST SYSTEM

237-9251 PRECLEANER GP—WITH SCREEN

S/N: SMC1-UP; GCT1-UP
PART OF 256-2942 PRECLEANER AR
AN ATTACHMENT

SMCS-1055 **i02455735**

NOTE	REF NO	GRAPHIC REF	PART NUMBER	QTY	PART NAME 1 2 3 4 5 6 (PRODUCT LEVEL)	SEE PAGE
	1	1	**130-3280**	1	PRECLEANER AS	
	1A	1	**174-5415**	1	CLAMP	
HZ	2	1		1	PRESCREEN	
	3	1	**145-6669**	6	SCREW-SELF-TAPPING (NO 10X16.6-MM)	
J	4	1	**237-9252**	1	TUBE AS	
J	5	1	**237-9255**	1	TUBE AS	
					AVAILABLE REPAIR KIT(S):	
H			**153-1277**	1	KIT-SCREEN (PRECLEANER)	
					(INCLUDES PRESCREEN, DAMPER, CLAMP, SCREWS, & TUBE)	
J			**237-9254**	1	KIT-PRECLEANER (TURBINE)	
					(INCLUDES VALVE AS, TUBE, CLAMPS, HOSE, TUBE ASSEMBLIES, WASHERS, & BOLTS)	

H-PART MARKED H INCLUDED IN KIT MARKED H
J-PART MARKED J INCLUDED IN KIT MARKED J
Z-NOT SERVICED SEPARATELY

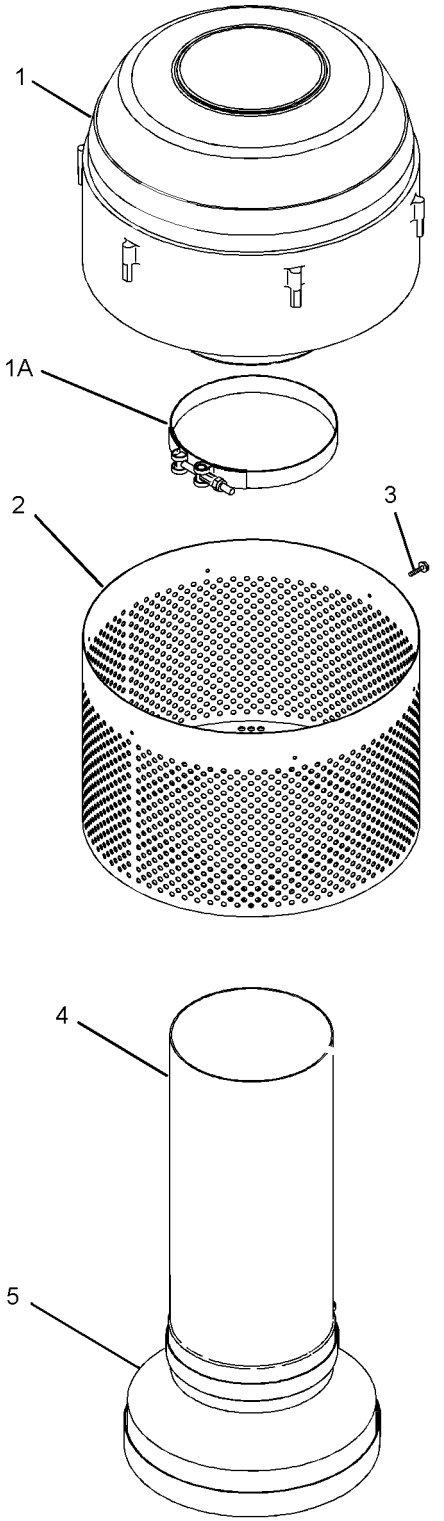

GRAPHIC #1 **<END>** g01146470

AIR INLET AND EXHAUST SYSTEM

7S-9396 PRESCREENER AS

S/N: SMC1-UP; GCT1-UP

CANNOT BE USED WITH 215-1488—PAGE 113, 256-2942—PAGE 120, 256-2943—PAGE 121 AN ATTACHMENT

SMCS-1055 **i02453693**

NOTE	REF NO	GRAPHIC REF	PART NUMBER	QTY	PART NAME 1 2 3 4 5 6 (PRODUCT LEVEL)	SEE PAGE
	1	1	**0S-1591**	1	BOLT (3/8-16X1.5-IN)	
	2	1	**6V-8801**	1	NUT (3/8-16-THD)	

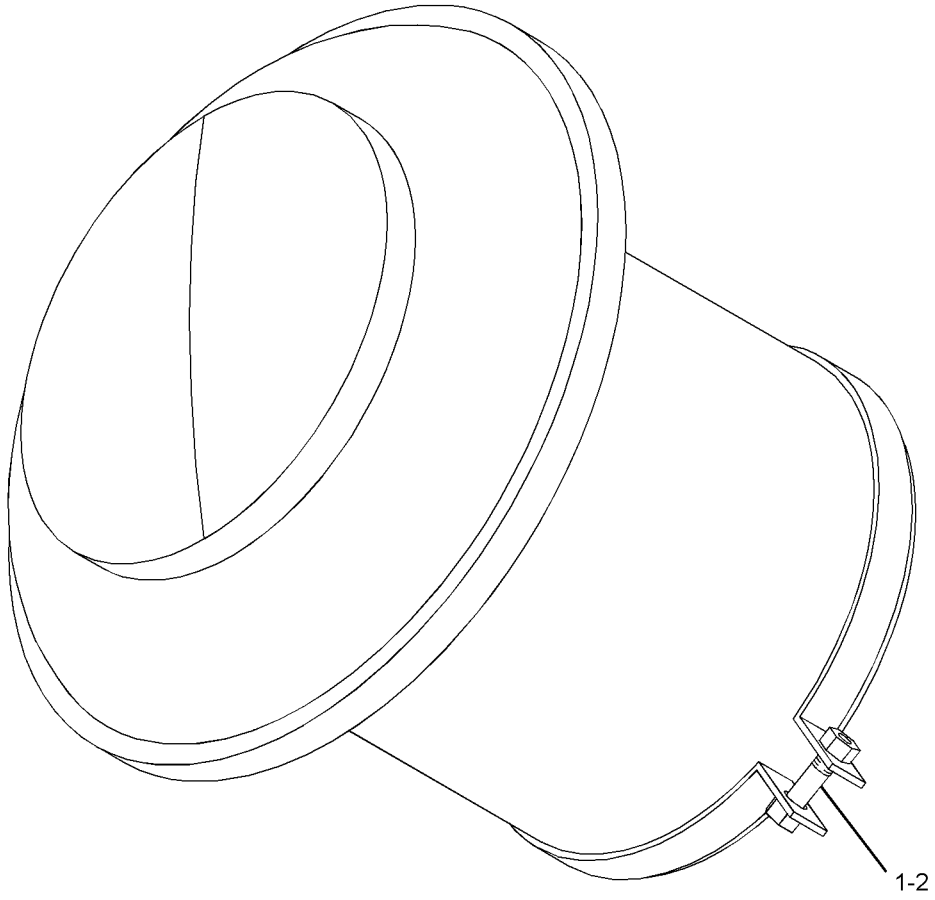

GRAPHIC #1 **<END>** g01208937

AIR INLET AND EXHAUST SYSTEM

237-2737 SHIELD GP-EXHAUST

S/N: SMC1-UP; GCT1-UP

PART OF 279-9549 INSTALLATION AR-ENGINE

SMCS-1067 **i02698747**

NOTE	REF NO	GRAPHIC REF	PART NUMBER	QTY	PART NAME 1 2 3 4 5 6 (PRODUCT LEVEL)	SEE PAGE
	1	1	**237-2738**	1	SHIELD AS-EXHAUST	
M		1	**9R-2613**	2	BOSS-WELD (M10X1.5X25-MM OAL)	
	2	1	**7X-7729**	3	WASHER (11X25X3-MM THK)	
M	3	1	**8T-4136**	3	BOLT (M10X1.5X25-MM)	

M-METRIC PART

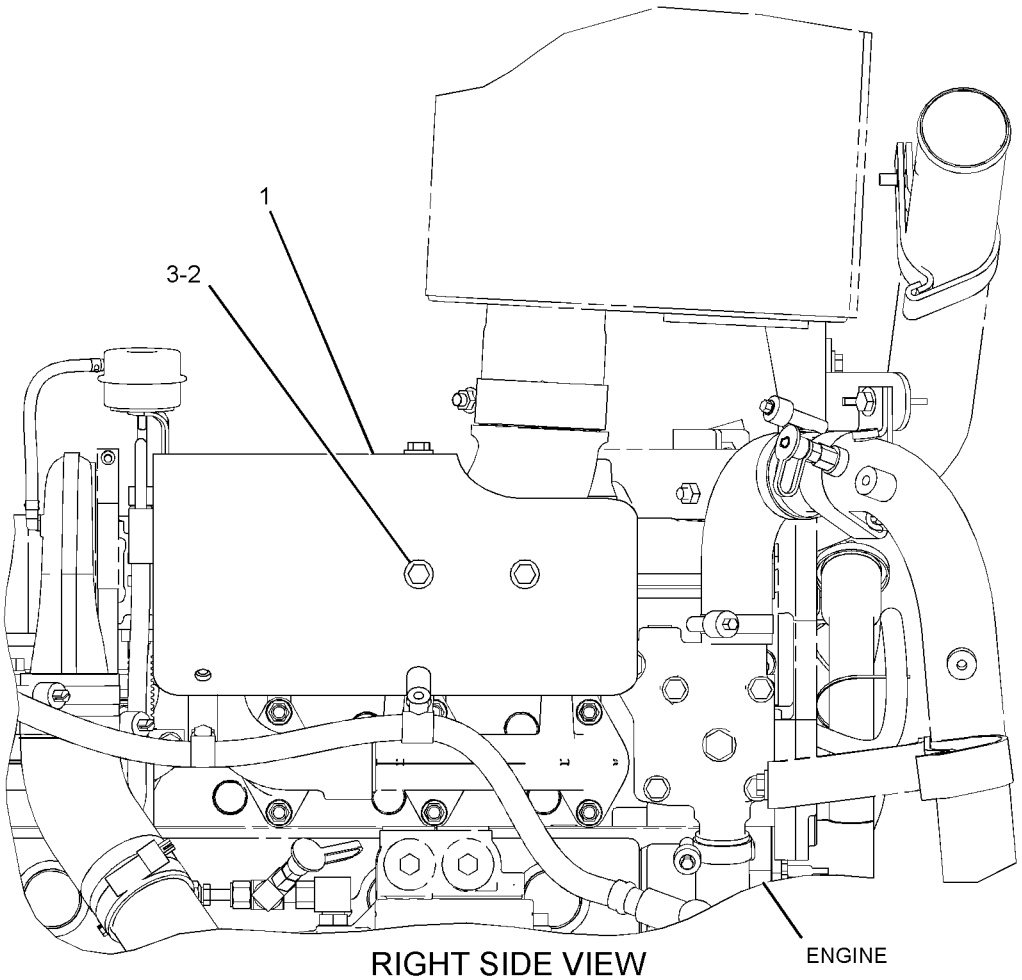

RIGHT SIDE VIEW

GRAPHIC #1 **<END>** g01209236

AIR INLET AND EXHAUST SYSTEM

264-7963 SHIELD GP-HEAT

S/N: SMC1-UP; GCT1-UP

PART OF 282-9553, 282-9554, 282-9555, 282-9556 CONVERSION AR-HEAT SHIELD AN ATTACHMENT

SMCS-1067 **i02455450**

NOTE	REF NO	GRAPHIC REF	PART NUMBER	QTY	PART NAME 1 2 3 4 5 6 (PRODUCT LEVEL)	SEE PAGE
	1	1	**212-4936**	1	SHIELD (MANIFOLD)	
	2	1	**264-7964**	1	SHIELD	
	3	1	**132-5789**	1	CLIP	
	4	1	**4P-7428**	1	CLIP	
	5	1	**5P-4116**	4	WASHER-HARD (8.8X20.5X2-MM THK)	
M	6	1	**8T-4189**	2	BOLT (M8X1.25X20-MM)	

M-METRIC PART

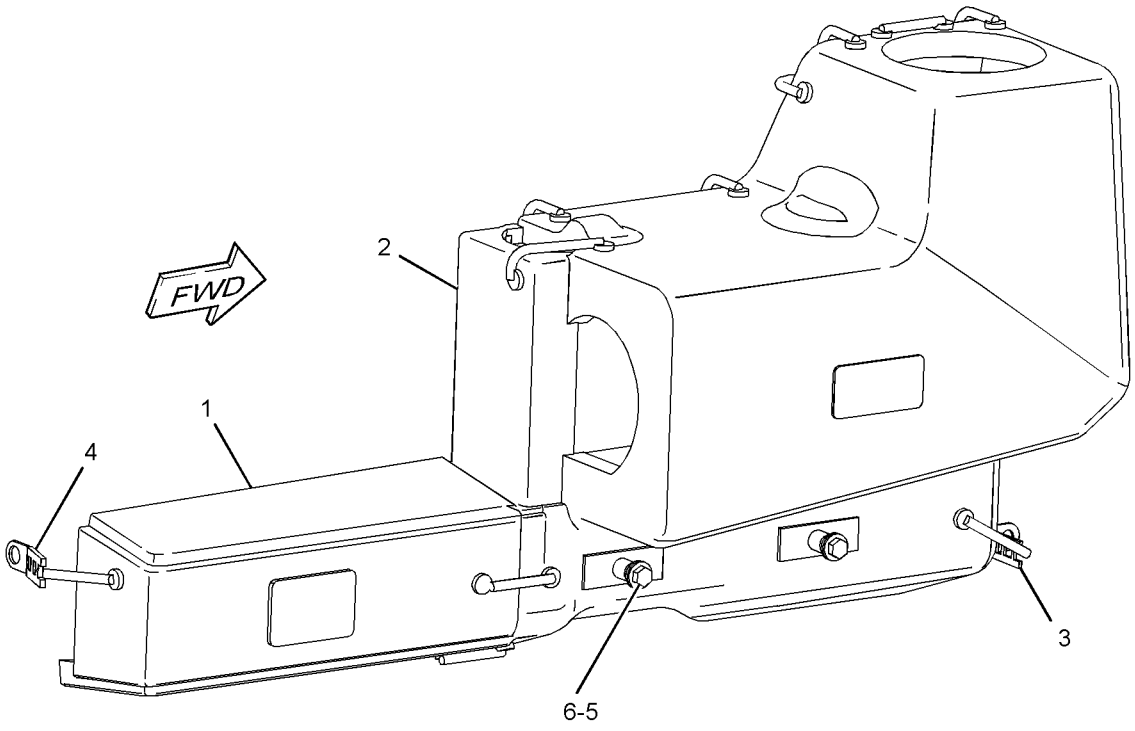

GRAPHIC #1 **<END>** g01215394

AIR INLET AND EXHAUST SYSTEM

229-2913 TURBOCHARGER GP

S/N: THX8900-UP
PART OF 237-2041 TURBOCHARGER GP
AN ATTACHMENT

SMCS-1052, 1053 **i02710350**

NOTE	REF NO	GRAPHIC REF	PART NUMBER	QTY	PART NAME 1 2 3 4 5 6 (PRODUCT LEVEL)	SEE PAGE
	1	1	**5P-4536**	1	ELBOW	
M	2	1	**7C-6670**	4	BOLT (M8X12.5-MM)	
	3	1	**7C-6672**	2	PLATE-CLAMP (TURBINE)	
	4	1	**158-6072**	1	CLAMP AS (COMPRESSOR)	
	5	1	**161-6963**	2	CLAMP	
E	6	1	**242-3360**		HOSE (25-CM)	
	7	1	**229-2914**	1	CARTRIDGE GP-TURBOCHARGER	
					PARTS SHOWN IN GRAPHIC(S) WITHOUT A REFERENCE NUMBER ARE NOT SERVICED SEPARATELY	

E-ORDER BY THE CENTIMETER
M-METRIC PART

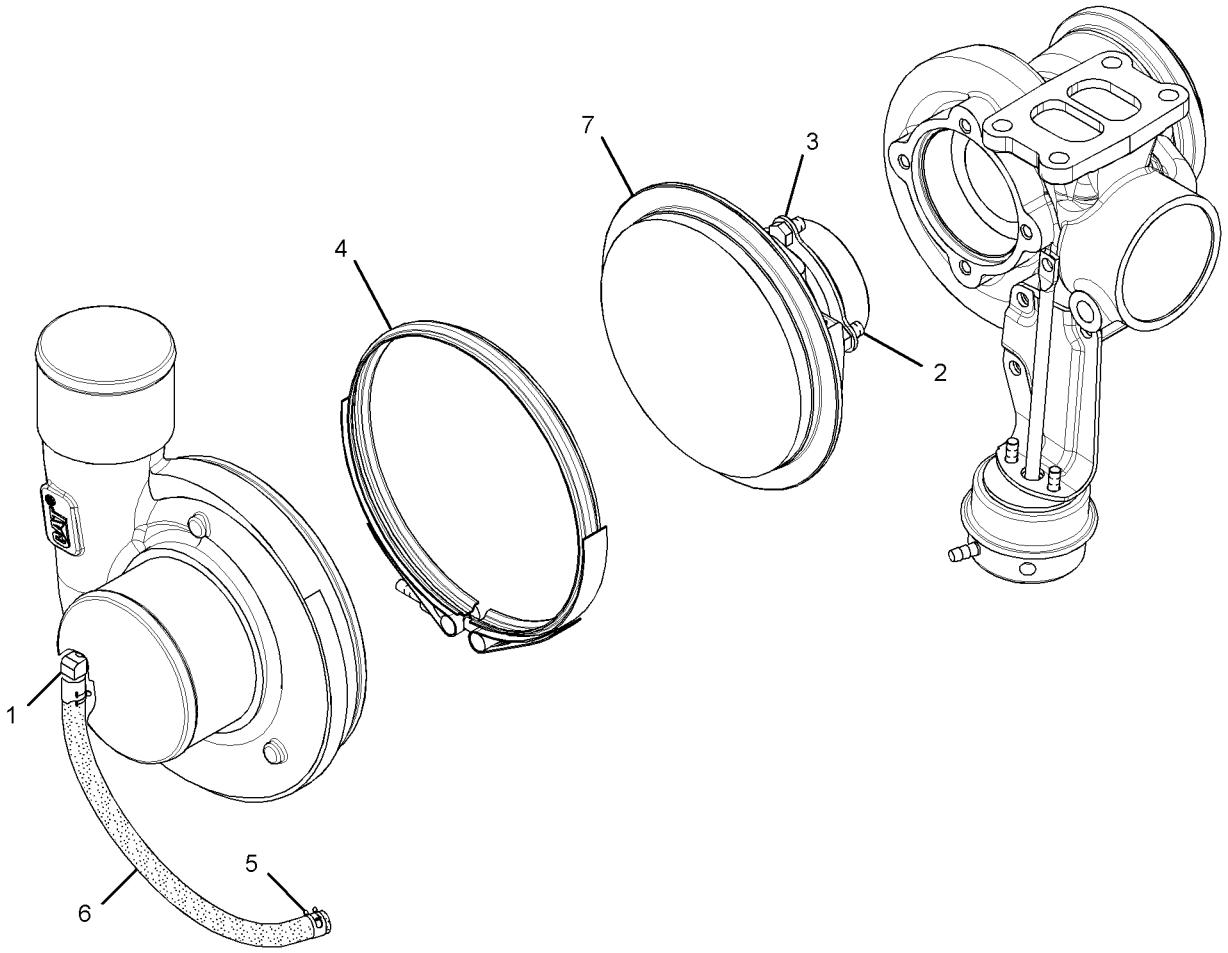

GRAPHIC #1 **<END>** g01382175

237-2041 TURBOCHARGER GP

S/N: THX8900-UP
PART OF 282-3828, 282-3830 ENGINE AR-CORE
AN ATTACHMENT

SMCS-1052, 1053 **i02434508**

NOTE	REF NO	GRAPHIC REF	PART NUMBER	QTY	PART NAME 1 2 3 4 5 6 (PRODUCT LEVEL)	SEE PAGE
Y	1	1	**229-2913**	1	TURBOCHARGER GP	128
M	2	1	**3E-8017**	4	LOCKNUT (M10X1.5-MM-THD)	
	3	1	**7C-7431**	1	GASKET	

M-METRIC PART
Y-SEPARATE ILLUSTRATION

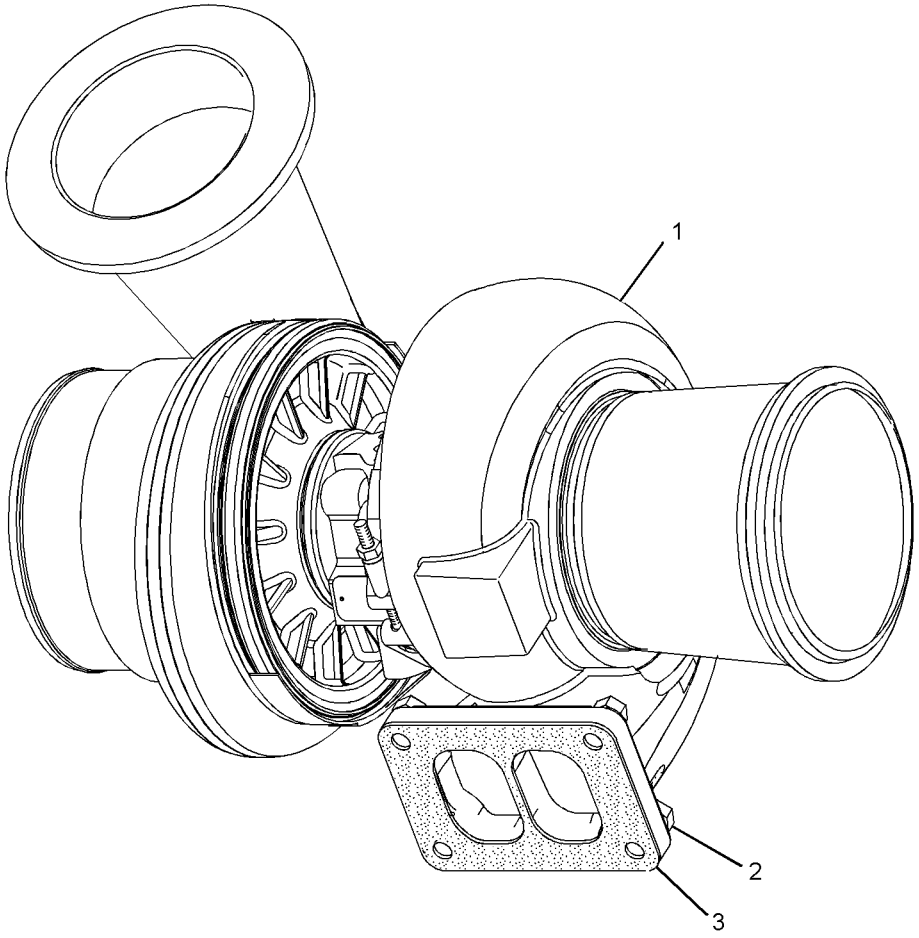

GRAPHIC #1 **<END>** g01206492

AIR INLET AND EXHAUST SYSTEM

252-5165 TURBOCHARGER GP

S/N: THX8900-UP
PART OF 262-5901 TURBOCHARGER GP
ALSO AN ATTACHMENT

SMCS-1052, 1053 **i02433948**

NOTE	REF NO	GRAPHIC REF	PART NUMBER	QTY	PART NAME 1 2 3 4 5 6 (PRODUCT LEVEL)	SEE PAGE
	1	1	**137-1602**	1	CLAMP AS (TURBINE) (TURBINE)	
	2	1	**158-6072**	1	CLAMP AS (COMPRESSOR)	
	3	1	**161-6963**	2	CLAMP	
E	4	1	**242-3360**		HOSE (26-CM)	
	5	1	**262-2870**	1	CARTRIDGE GP-TURBOCHARGER	

E-ORDER BY THE CENTIMETER

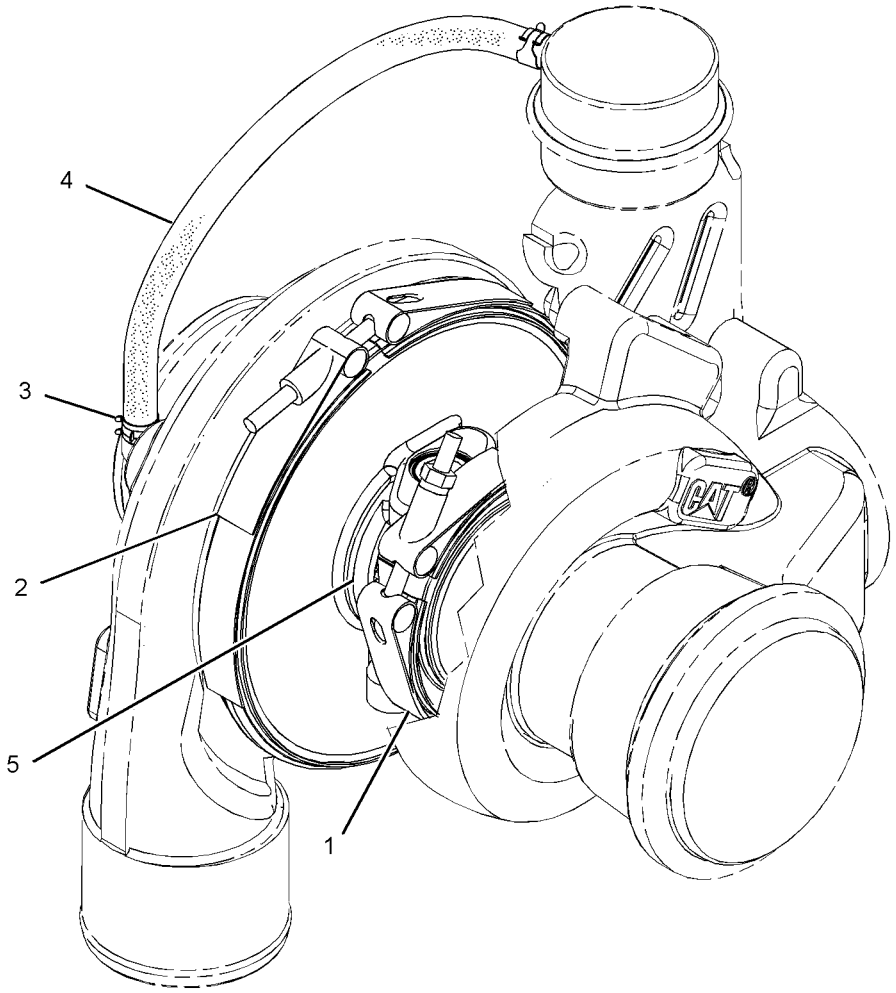

GRAPHIC #1 **<END>** g01214268

262-5901 TURBOCHARGER GP

S/N: THX8900-UP
PART OF 282-3827, 282-3829, 301-5769 ENGINE AR-CORE
ALSO AN ATTACHMENT

SMCS-1052, 1053 **i02433947**

NOTE	REF NO	GRAPHIC REF	PART NUMBER	QTY	PART NAME 1 2 3 4 5 6 (PRODUCT LEVEL)	SEE PAGE
	1	1	**7C-7431**	1	GASKET	
Y	2	1	**252-5165**	1	TURBOCHARGER GP	130
M	3	1	**3E-8017**	4	LOCKNUT (M10X1.5-MM-THD)	

M-METRIC PART
Y-SEPARATE ILLUSTRATION

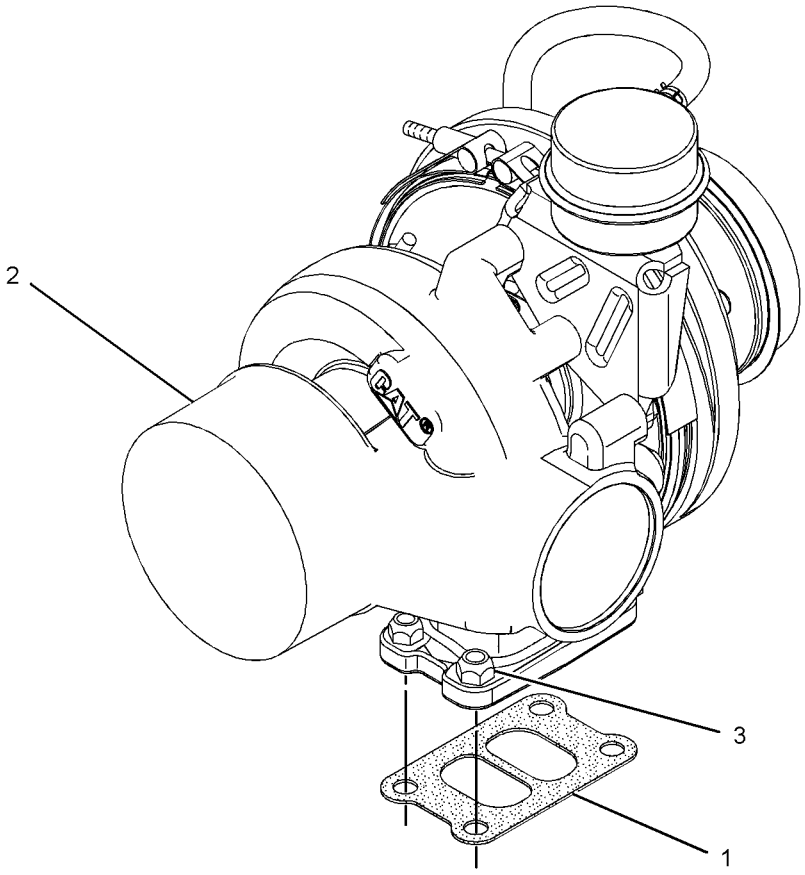

GRAPHIC #1 **<END>** g01205748

FUEL SYSTEM

295-7933 FILTER & LINES GP-FUEL

S/N: SMC1-UP; GCT1-UP

PART OF 279-9549 INSTALLATION AR-ENGINE

SMCS-1261, 1274 **i02757459**

NOTE	REF NO	GRAPHIC REF	PART NUMBER	QTY	PART NAME 1 2 3 4 5 6 (PRODUCT LEVEL)	SEE PAGE
	1	1	**1P-4278**	1	CLAMP-HOSE	
	2	1	**1R-0762**	1	FILTER AS-FUEL (ADVANCED EFFICIENCY)	
	3	1	**6V-0852**	1	CAP-DUST	
	4	1	**8T-9655**	6	MOUNT-ISOLATION	
	5	1	**174-7599**	1	BASE AS-FUEL FILTER	
		1	**9S-4167**	1	STUD-HOLLOW (1-14X1.47-IN)	
Y	6	1	*174-9570*	1	FILTER GP-WATER SEP & FUEL	134
	7	1	*183-3406*	4	PLUG AS	
					(EACH INCLUDES)	
		1	**9S-4191**	1	PLUG-O-RING	
		1	**6V-5049**	1	SEAL-O-RING	
	8	1	**190-8970**	1	BASE AS (FUEL PRIMING PUMP)	
	9	1	**191-1782**	1	SPACER (8.5X12.7X38.2-MM THK)	
	10	1	**191-1783**	2	SPACER (8.5X12.7X87.3-MM THK)	
	11	1	**206-5017**	1	SPACER (11X20X5-MM THK)	
	12	1	*241-6215*	1	ELBOW AS	
		1	**6V-8076**	1	ELBOW	
		1	**3J-1907**	1	SEAL-O-RING	
	13	1	**284-7650**	1	BRACKET AS	
	14	1	**284-9639**	1	HOSE AS	
	15	1	**284-9640**	1	HOSE AS	
	16	1	**306-9621**	1	BRACKET AS	
	17	1	**100-4336**	2	CLIP	
	18	1	*148-8378*	2	ELBOW AS	
					(EACH INCLUDES)	
		1	**6V-8724**	1	ELBOW	
		1	**3J-1907**	1	SEAL-O-RING	
		1	**6V-8397**	1	SEAL-O-RING	
	19	1	**1S-0994**	2	CLIP	
	20	1	**2M-9780**	1	SEAL-O-RING	
	21	1	**5P-9297**	1	CLIP	
	22	1	**6V-3965**	1	FITTING-COUPLER	
	23	1	**6V-4589**	2	SEAL-O-RING	
	24	1	**6V-5049**	1	SEAL-O-RING	
	25	1	**6V-8397**	1	SEAL-O-RING	
	26	1	**6V-8715**	1	CONNECTOR	
	27	1	**7X-0579**	6	WASHER-HARD (8.8X25.5X2-MM THK)	
M	28	1	**7X-2539**	2	BOLT (M8X1.25X110-MM)	
	29	1	**7X-7729**	4	WASHER (11X25X3-MM THK)	
	30	1	**8T-4121**	5	WASHER-HARD (11X21X2.5-MM THK)	
M	31	1	**8T-4136**	2	BOLT (M10X1.5X25-MM)	
M	32	1	**8T-4195**	9	BOLT (M10X1.5X30-MM)	
	33	1	**8T-4896**	2	WASHER-HARD (10.2X18.5X2.5-MM THK)	
M	34	1	**8T-6869**	1	BOLT (M8X1.25X60-MM)	
	35	1	**9S-4190**	2	PLUG-O-RING	
D	36	1	**5P-5991**		HOSE (0.7-M)	

D-ORDER BY THE METER
M-METRIC PART
Y-SEPARATE ILLUSTRATION

295 - 7933 **FILTER & LINES GP - FUEL** *(contd.)* **i02757459**

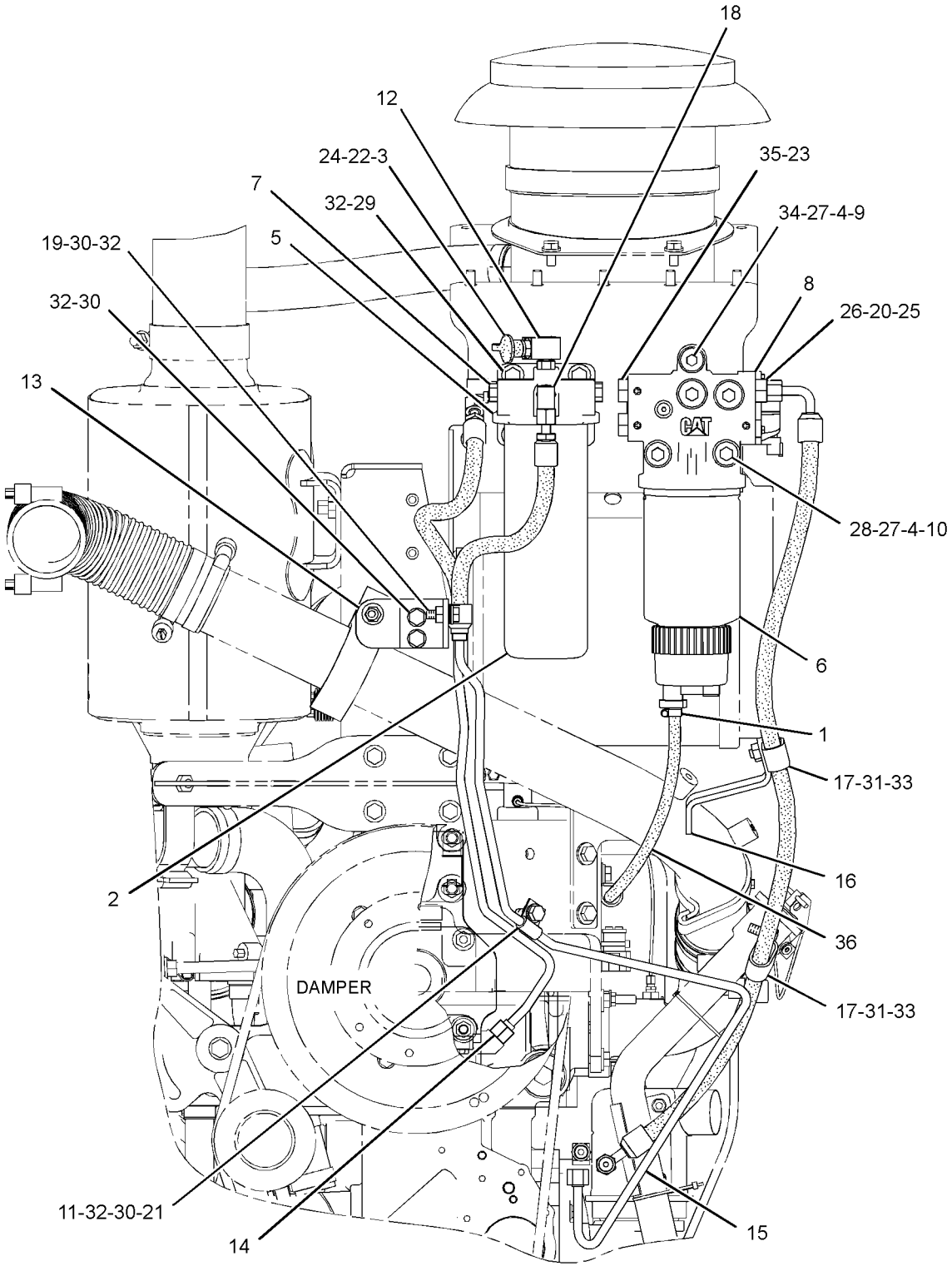

FRONT VIEW OF ENGINE

GRAPHIC #1 **<END>** g01358188

174-9570 FILTER GP-WATER SEP & FUEL

S/N: SMC1-UP; GCT1-UP

PART OF 295-7933 FILTER & LINES GP-FUEL

SMCS-1261, 1263 **i02390251**

NOTE	REF NO	GRAPHIC REF	PART NUMBER	QTY	PART NAME 1 2 3 4 5 6 (PRODUCT LEVEL)	SEE PAGE
	1	1	**1R-0770**	1	FILTER AS-WATER SEP & FUEL (PRIMARY)	
	1A	1	**220-8678**	1	SEAL-RING	
	2	1	**270-5320**	1	BOWL AS (FUEL, WATER SEPARATOR)	

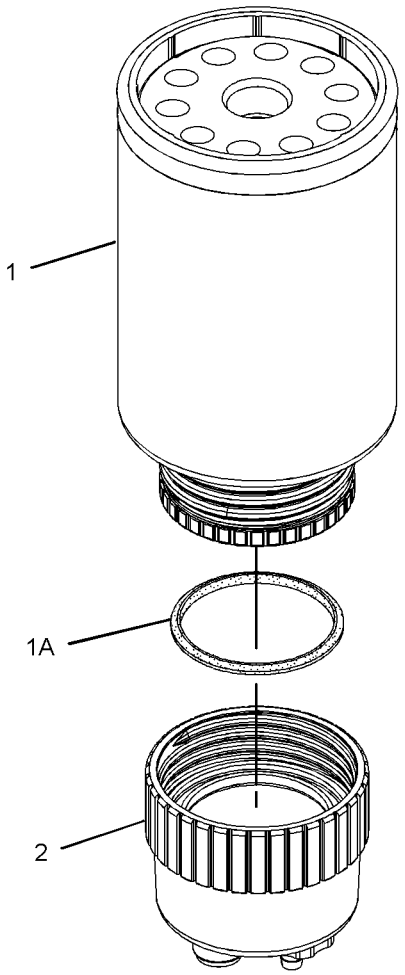

GRAPHIC #1 **<END>** g01179858

293-4071 INJECTOR GP-FUEL

S/N: THX8900-UP
PART OF 267-9715 PUMP GP-FUEL INJECTION
ALSO AN ATTACHMENT

SMCS-1251, 1254, 1290 **i02583007**

NOTE	REF NO	GRAPHIC REF	PART NUMBER	QTY	PART NAME 1 2 3 4 5 6 (PRODUCT LEVEL)	SEE PAGE
	1	1	**149-5240**	1	RING-BACKUP	
	2	1	**293-0730**	1	RING-BACKUP	
	3	1	**109-3207**	1	SEAL-O-RING	
	4	1	**148-2903**	2	SEAL-O-RING	

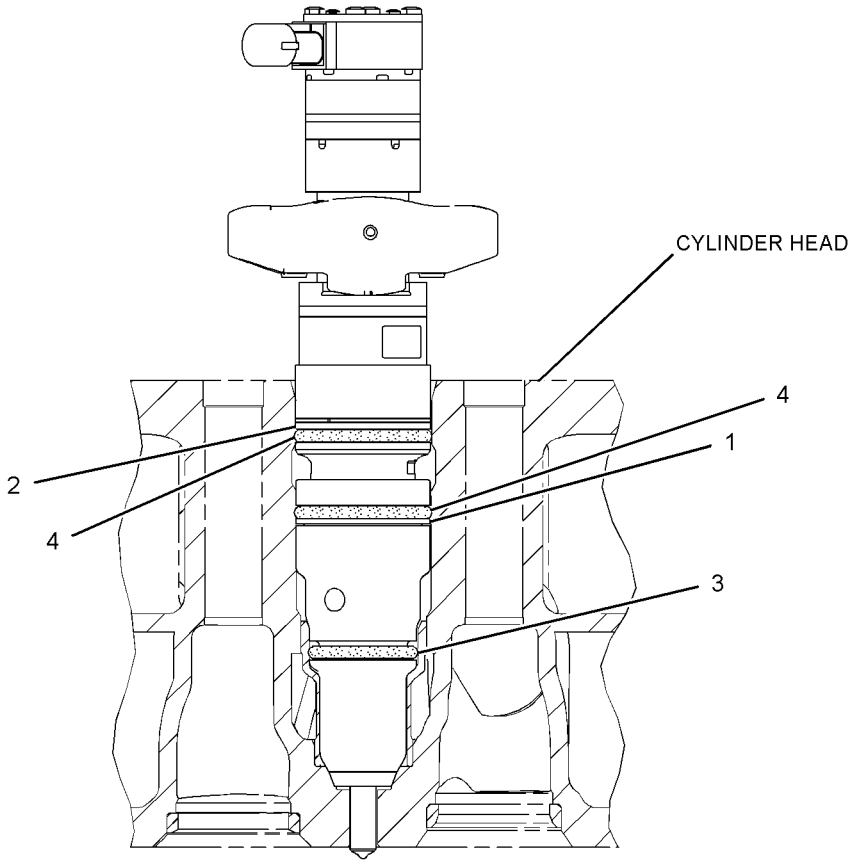

GRAPHIC #1 **<END>** g01294201

FUEL SYSTEM

223-1679 LINES GP-FUEL

S/N: SMC1-UP; GCT1-UP

PART OF 269-2044 CHASSIS AR

SMCS-1274 **i02747639**

NOTE	REF NO	GRAPHIC REF	PART NUMBER	QTY	PART NAME 1 2 3 4 5 6 (PRODUCT LEVEL)	SEE PAGE
	1	1	**1W-3011**	1	SPACER (10.5X22X73.5-MM THK)	
	2	1	**3W-2647**	1	SPACER (13.5X30X10-MM THK)	
	3	1	**5D-1026**	1	CLAMP-HOSE	
	4	1	**246-2641**	1	PADLOCK GP	
		1	**5P-8500**	1	KEY	
	5	1	**8T-0119**	2	ELBOW	
	6	1	**8T-6723**	1	VALVE-BALL	
	7	1	**8T-6724**	1	VALVE-BALL	
	8	1	*150-3026*	1	ELBOW AS	
		1	**6V-4292**	1	ELBOW	
		1	**3K-0360**	1	SEAL-O-RING	
	9	1	**226-3492**	1	BRACKET AS	
I	10	1	**230-3615**	1	HOSE AS	
	11	1	**231-1345**	1	BRACKET AS	
I	12	1	**237-0984**	1	HOSE AS	
I	13	1	**237-0985**	1	HOSE AS	
C	14	1	**300-8554**	1	BRACKET AS	
	15	1	**067-2551**	3	CLIP	
C	16	1	**100-4336**	5	CLIP	
M	17	1	**109-3001**	1	STUD-TAPERLOCK (M10X1.5X65-MM)	
	18	1	*148-8364*	1	ELBOW AS	
		1	**6V-8625**	1	ELBOW	
		1	**3K-0360**	1	SEAL-O-RING	
		1	**6V-8398**	1	SEAL-O-RING	
	19	1	*148-8372*	1	ELBOW AS	
		1	**6V-8721**	1	ELBOW	
		1	**2M-9780**	1	SEAL-O-RING	
		1	**6V-8398**	1	SEAL-O-RING	
	20	1	*148-8374*	1	ELBOW AS	
		1	**6V-8723**	1	ELBOW	
		1	**3K-0360**	1	SEAL-O-RING	
		1	**6V-8397**	1	SEAL-O-RING	
	21	1	*164-5570*	1	UNION AS	
		1	**6V-8730**	1	UNION (FACE SEAL)	
		1	**6V-8397**	2	SEAL-O-RING	
	22	1	**1K-4649**	1	SPACER (0.516X1X1-IN THK)	
	23	1	**1S-0996**	1	CLIP	
	24	1	**3K-0360**	4	SEAL-O-RING	
	25	1	**4D-7735**	1	CLIP	
	26	1	**7X-7729**	1	WASHER (11X25X3-MM THK)	
	27	1	**8T-1887**	1	CLIP (SLOT)	
	28	1	**8T-1888**	1	CLIP (TAB)	
	29	1	**8T-1893**	1	CLIP (SLOT)	
	30	1	**8T-1894**	1	CLIP (TAB)	
C	31	1	**8T-4121**	12	WASHER-HARD (11X21X2.5-MM THK)	
M	32	1	**8T-4133**	2	NUT (M10X1.5-THD)	
M	33	1	**8T-4137**	7	BOLT (M10X1.5X20-MM)	
M	34	1	**8T-4179**	1	BOLT (M12X1.75X20-MM)	
M	35	1	**8T-4182**	1	BOLT (M10X1.5X45-MM)	
M	36	1	**8T-4195**	1	BOLT (M10X1.5X30-MM)	
M	37	1	**8T-4196**	1	BOLT (M10X1.5X35-MM)	
M	38	1	**8T-4198**	1	BOLT (M10X1.5X100-MM)	
	39	1	**8T-4223**	1	WASHER-HARD (13.5X25.5X3-MM THK)	
	40	1	**8T-4896**	1	WASHER-HARD (10.2X18.5X2.5-MM THK)	
E	41	1	**5P-1505**		HOSE (104-CM)	

223-1679 **LINES GP-FUEL** ***(contd.)*** **i02747639**

C-CHANGE FROM PREVIOUS TYPE
E-ORDER BY THE CENTIMETER
I-REFER TO HYDRAULIC INFORMATION SYSTEM
M-METRIC PART

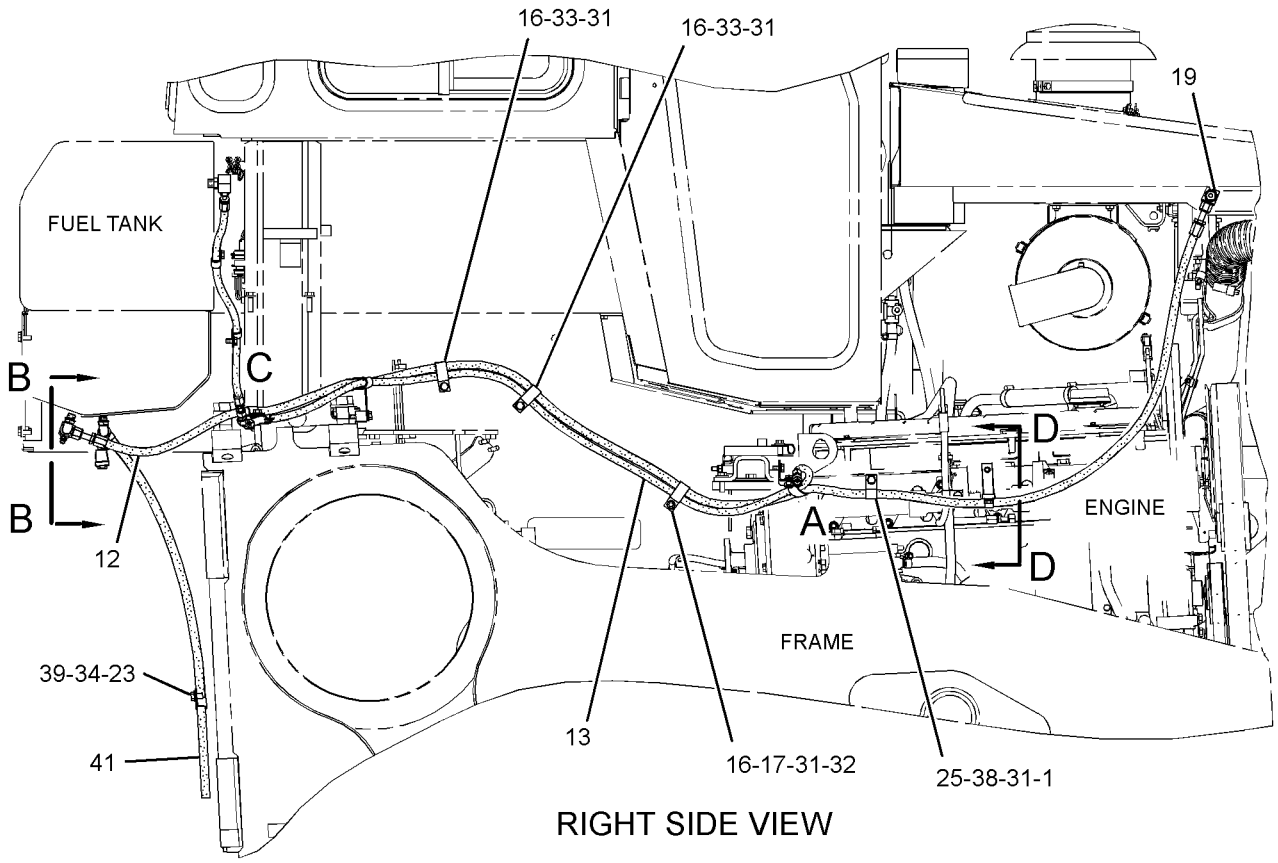

RIGHT SIDE VIEW

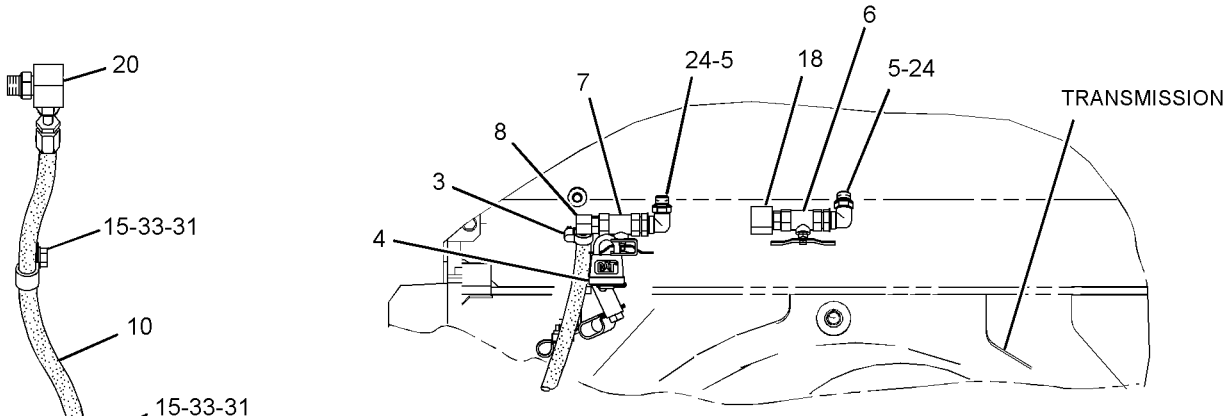

VIEW B-B

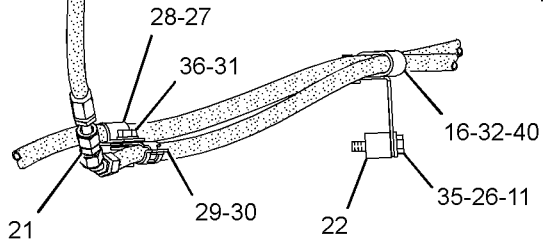

VIEW OF AREA C

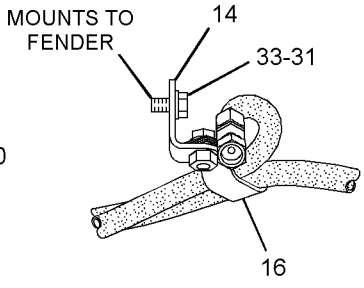

VIEW OF AREA A

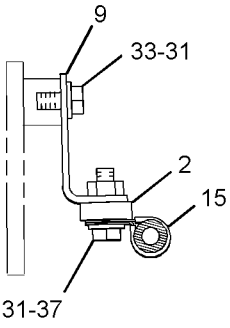

SECTION D-D

GRAPHIC #1 **<END>** g01358530

FUEL SYSTEM

264-2014 LINES GP-FUEL

S/N: THX8900-UP

PART OF 282-3823, 282-3824, 282-3825, 282-3826, 301-5768 ENGINE AR

ALSO AN ATTACHMENT

SMCS-1274 **i02767627**

NOTE	REF NO	GRAPHIC REF	PART NUMBER	QTY	PART NAME 1 2 3 4 5 6 (PRODUCT LEVEL)	SEE PAGE
	1	1	**3E-7410**	1	TEE-O-RING	
	2	1	**3S-2093**	1	STRAP-CABLE	
	3	1	**183-3401**	1	ELBOW AS	
		1	**6V-5049**	1	SEAL-O-RING	
		1	**6V-9001**	1	ELBOW	
		1	**8L-2779**	1	SEAL-O-RING	
Y	4	1	**194-6725**	1	SENSOR GP-PRESSURE (FUEL)	219
	5	1	*295-1803*	1	ELBOW AS	
		1	**6V-5049**	1	SEAL-O-RING	
		1	**196-6838**	1	ELBOW	
Y	6	1	*232-0343*	1	REGULATOR GP-FUEL PRESSURE	145
	7	1	**263-7731**	1	HARNESS AS-WIRING (FUEL PRESSURE)	
		1	**102-8803**	1	KIT-RECEPTACLE (3-PIN)	
					(INCLUDES RECEPTACLE AS AND WEDGE)	
		1	**102-8806**		KIT-RECEPTACLE (8-PIN)	
					(INCLUDES RECEPTACLE AS AND WEDGE)	
	8	1	**1S-0994**	1	CLIP	
I	9	1	**224-2228**	1	HOSE AS	
M	10	1	**6V-4248**	1	BOLT (M10X1.5X25-MM)	
	11	1	**6V-5048**	1	SEAL-O-RING	
	12	1	**6V-5049**	5	SEAL-O-RING	
	13	1	**6V-5839**	1	WASHER (11X21X2.5-MM THK)	
	14	1	**6V-8636**	2	CONNECTOR	
	15	1	**6V-8724**	1	ELBOW	
	16	1	**8L-2779**	3	SEAL-O-RING	
	17	1	**9X-0261**	1	ADAPTER	

I-REFER TO HYDRAULIC INFORMATION SYSTEM
M-METRIC PART
Y-SEPARATE ILLUSTRATION

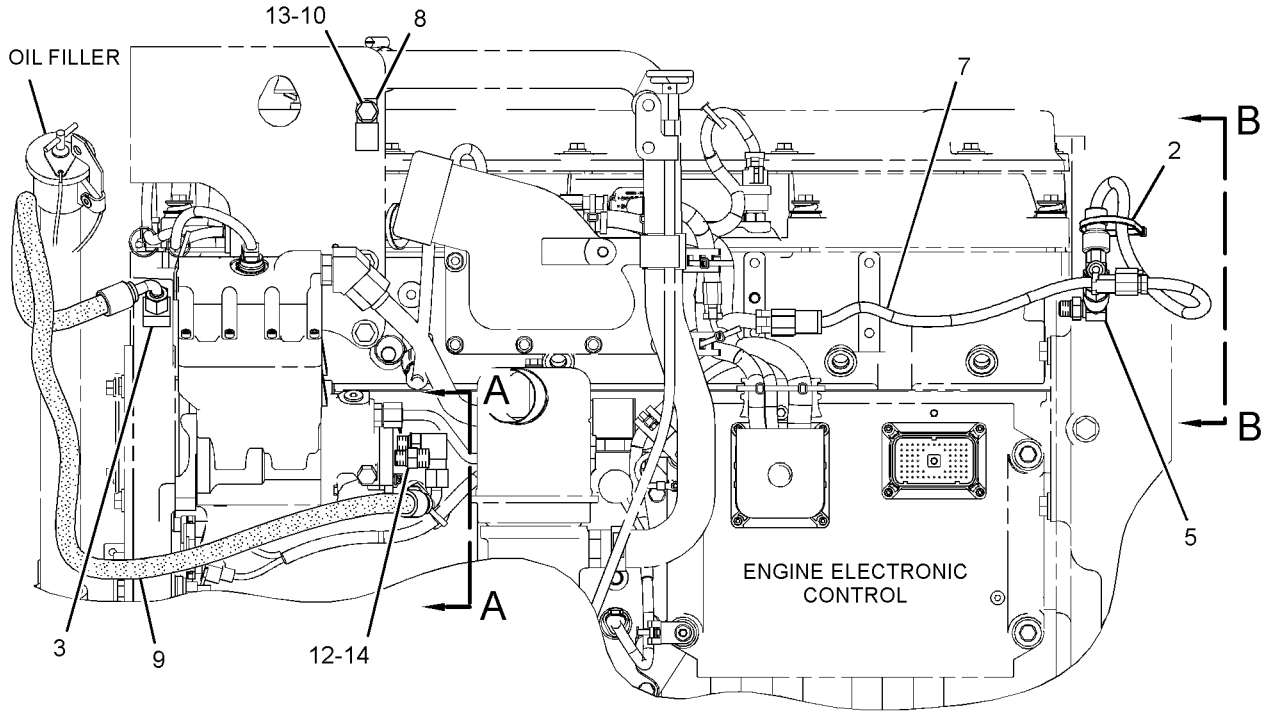

LEFT SIDE VIEW OF ENGINE

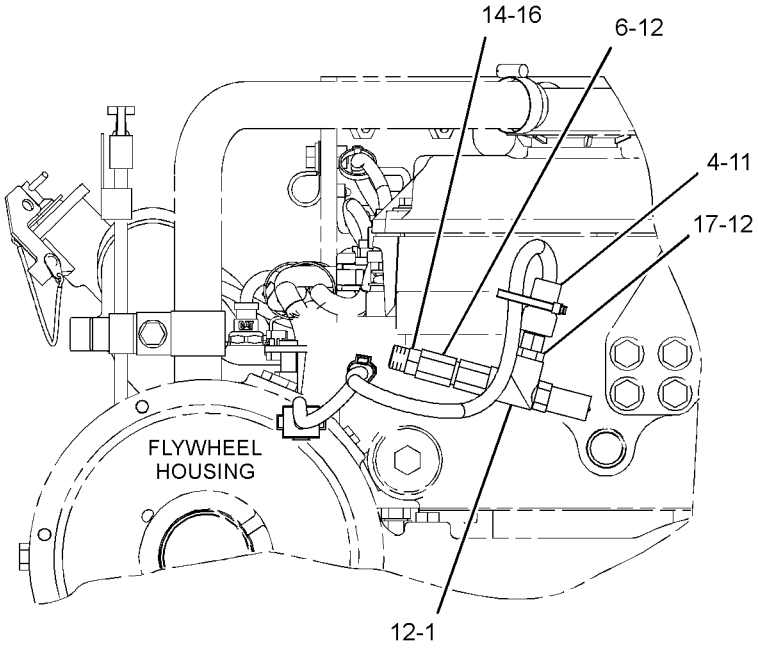

VIEW B-B

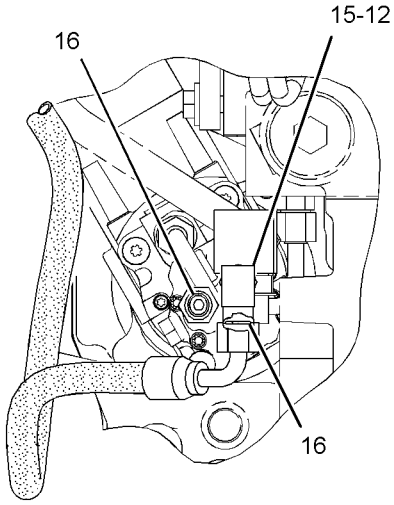

VIEW A-A

GRAPHIC #1 **<END>** g01384541

220-8233 PUMP & MTG GP-UNIT INJ HYD

S/N: THX8900-UP

PART OF 282-3827, 282-3828, 282-3829, 282-3830, 301-5769 ENGINE AR-CORE

ALSO AN ATTACHMENT

SMCS-1714 **i02747745**

NOTE	REF NO	GRAPHIC REF	PART NUMBER	QTY	PART NAME 1 2 3 4 5 6 (PRODUCT LEVEL)	SEE PAGE
	1	1	*183-3399*	2	CONNECTOR AS	
					(EACH INCLUDES)	
		1	**6V-8636**	1	CONNECTOR	
		1	**214-7568**	1	SEAL-O-RING	
		1	**221-3494**	1	SEAL-O-RING	
	2	1	*183-3407*	1	PLUG AS	
		1	**9S-8004**	1	PLUG-O-RING (STRAIGHT THREAD O-RING)	
		1	**153-4906**	1	SEAL-O-RING	
	3	1	**227-5904**	1	SEAL-O-RING (UNIT INJECTOR HYD PUMP)	
	4	1	**209-3171**	1	TUBE AS	
	5	1	**209-3172**	1	TUBE AS	
Y	6	1	**304-0678**	1	PUMP GP-UNIT INJECTOR HYD	144
	7	1	**030-7950**	1	ELBOW (90-DEG)	
	8	1	**5P-3264**	1	ELBOW (45-DEG)	
	9	1	**6V-4589**	1	SEAL-O-RING	
	10	1	**6V-5050**	1	SEAL-O-RING	
	11	1	**6V-5839**	2	WASHER (11X21X2.5-MM THK)	
M	12	1	**6V-7981**	2	BOLT (M10X1.5X70-MM)	
	13	1	**3E-9412**	1	DOWEL	

M-METRIC PART
Y-SEPARATE ILLUSTRATION

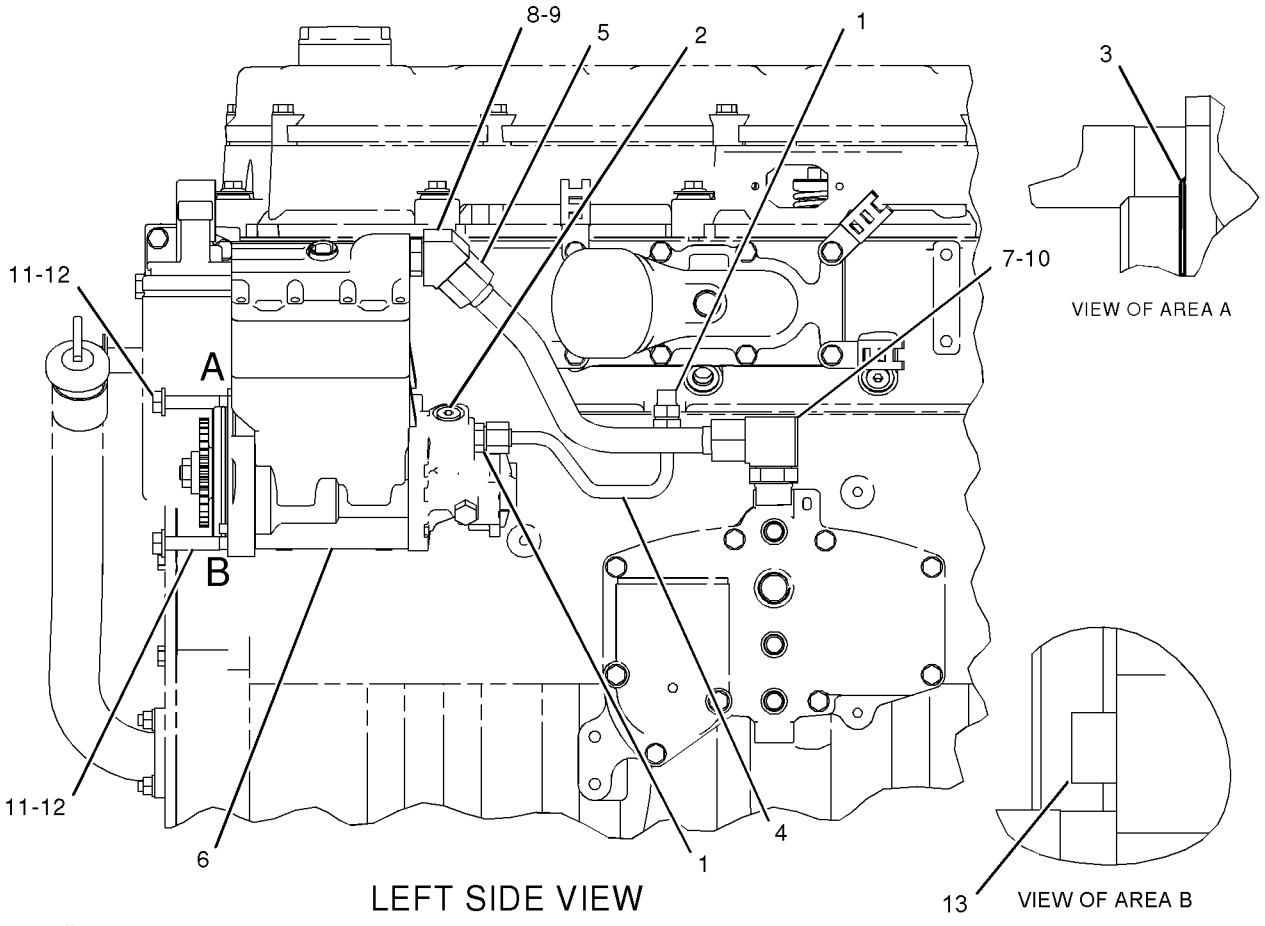

LEFT SIDE VIEW

GRAPHIC #1 **<END>** g01022226

267-9715 PUMP GP-FUEL INJECTION

S/N: THX8900-UP

PART OF 267-9720 PUMP GP-FUEL INJECTION

ALSO AN ATTACHMENT

SMCS-1251, 1290 **i02582967**

NOTE	REF NO	GRAPHIC REF	PART NUMBER	QTY	PART NAME 1 2 3 4 5 6 (PRODUCT LEVEL)	SEE PAGE
	1	1	**235-9651**	2	BOLT-SOCKET HEAD (M8X1.25X65-MM)	
CY	2	1	**293-4071**	1	INJECTOR GP-FUEL	135

C-CHANGE FROM PREVIOUS TYPE
Y-SEPARATE ILLUSTRATION

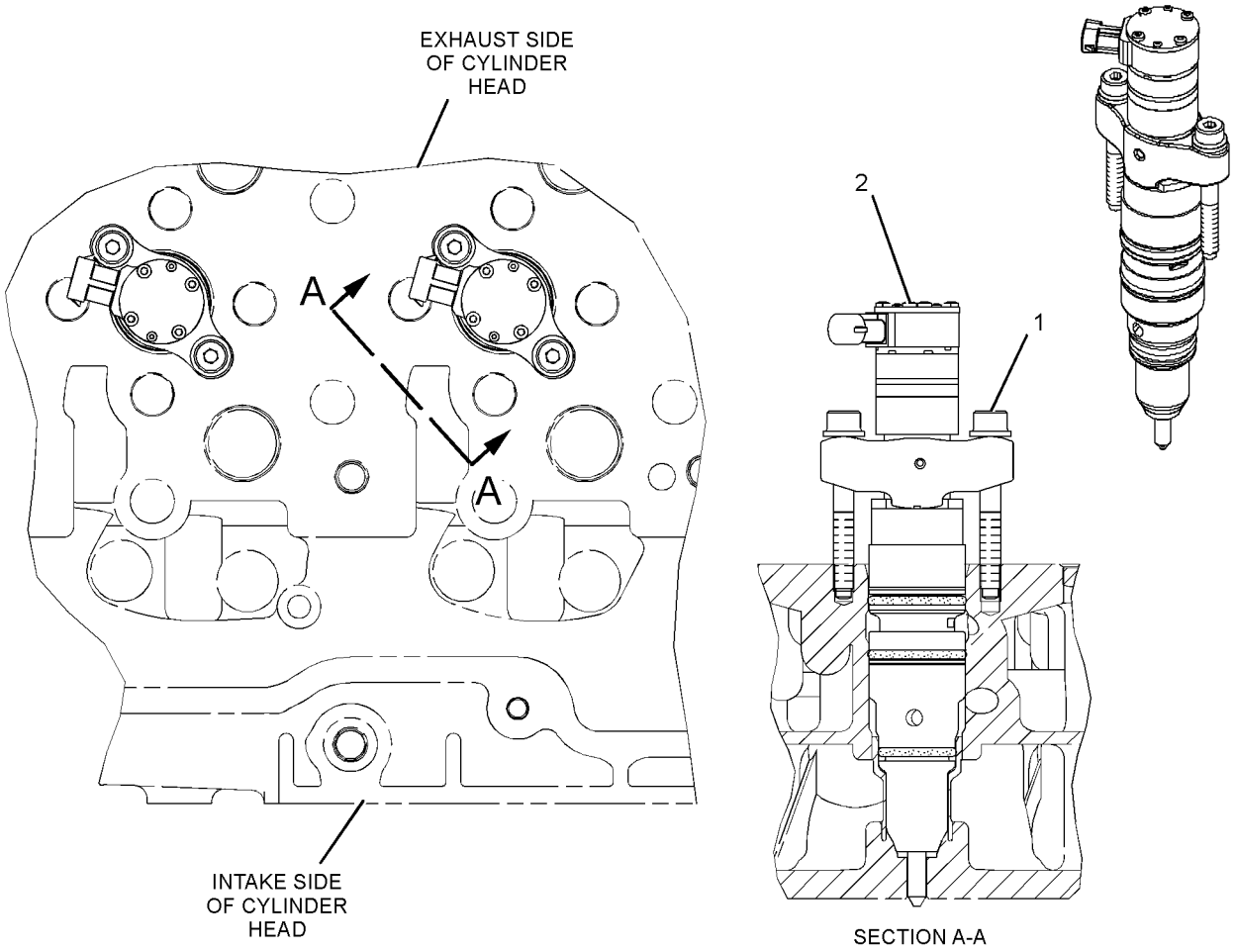

GRAPHIC #1 **<END>** g01221290

267-9720 PUMP GP-FUEL INJECTION

S/N: THX8900-UP

PART OF 282-3827, 282-3828, 282-3829, 282-3830, 301-5769 ENGINE AR-CORE

ALSO AN ATTACHMENT

SMCS-1251, 1290 **i02434206**

NOTE	PART NUMBER	QTY	PART NAME 1 2 3 4 5 6 (PRODUCT LEVEL)	SEE PAGE
Y	*267-9715*	6	PUMP GP-FUEL INJECTION	142

Y-SEPARATE ILLUSTRATION

<END>

304-0678 PUMP GP-UNIT INJECTOR HYD

S/N: THX8900-UP

PART OF 220-8233 PUMP & MTG GP-UNIT INJ HYD

ALSO AN ATTACHMENT

SMCS-1714 **i02748098**

NOTE	REF NO	GRAPHIC REF	PART NUMBER	QTY	PART NAME 1 2 3 4 5 6 (PRODUCT LEVEL)	SEE PAGE
	1	1	**178-2357**	1	PUMP GP-FUEL TRANSFER	
	2	1	**179-8128**	1	SEAL-O-RING (FUEL TRANSFER PUMP)	
	3	1	**228-5897**	4	BOLT	
	4	1	**227-5904**	1	SEAL-O-RING	

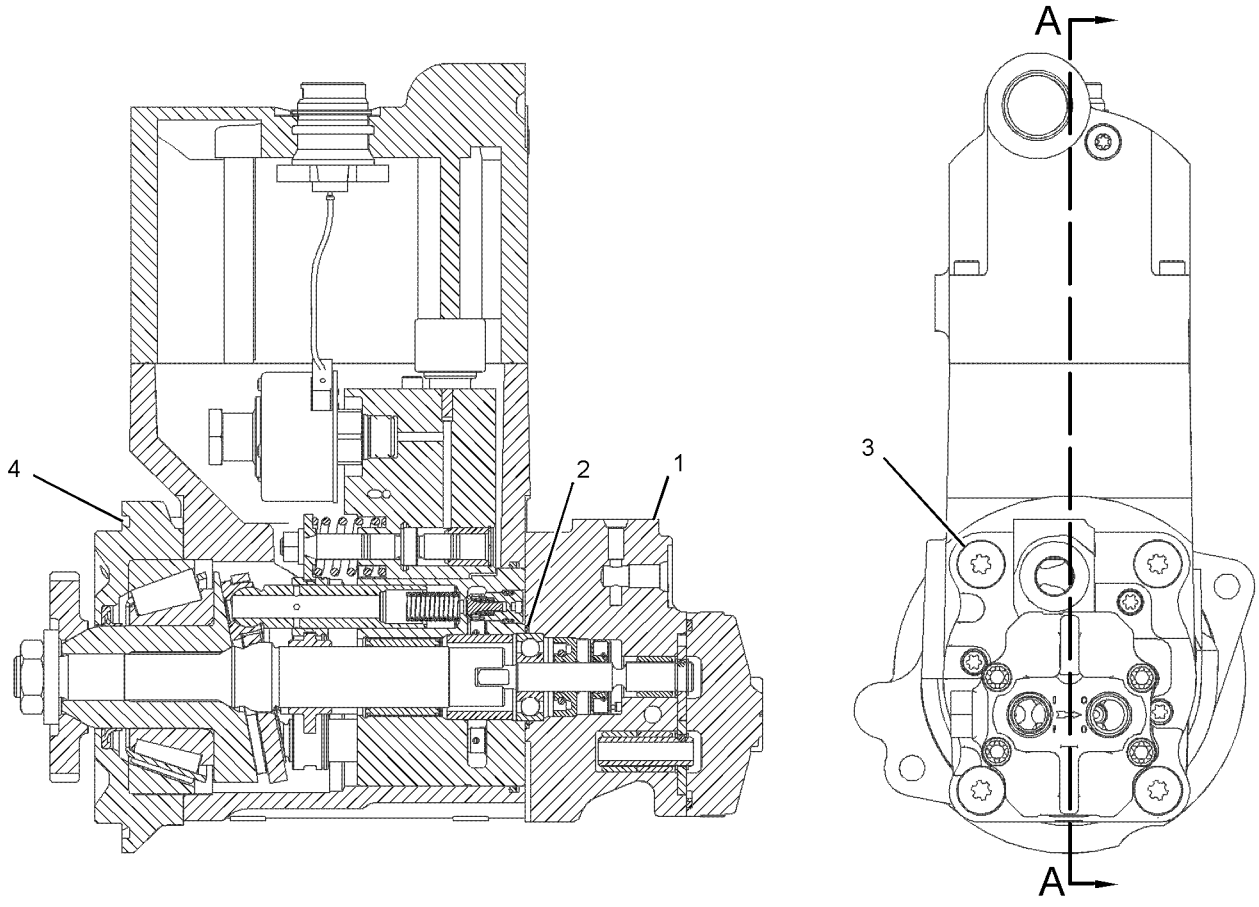

SECTION A-A

GRAPHIC #1 **<END>** g01380054

232-0343 REGULATOR GP-FUEL PRESSURE

S/N: THX8900-UP
PART OF 264-2014 LINES GP-FUEL
ALSO AN ATTACHMENT

SMCS-1270 **i02676270**

NOTE	REF NO	GRAPHIC REF	PART NUMBER	QTY	PART NAME 1 2 3 4 5 6 (PRODUCT LEVEL)	SEE PAGE
	1	1	**6V-5049**	1	SEAL-O-RING	
	2	1	**294-8620**	1	REGULATOR AS (FUEL PRESSURE)	

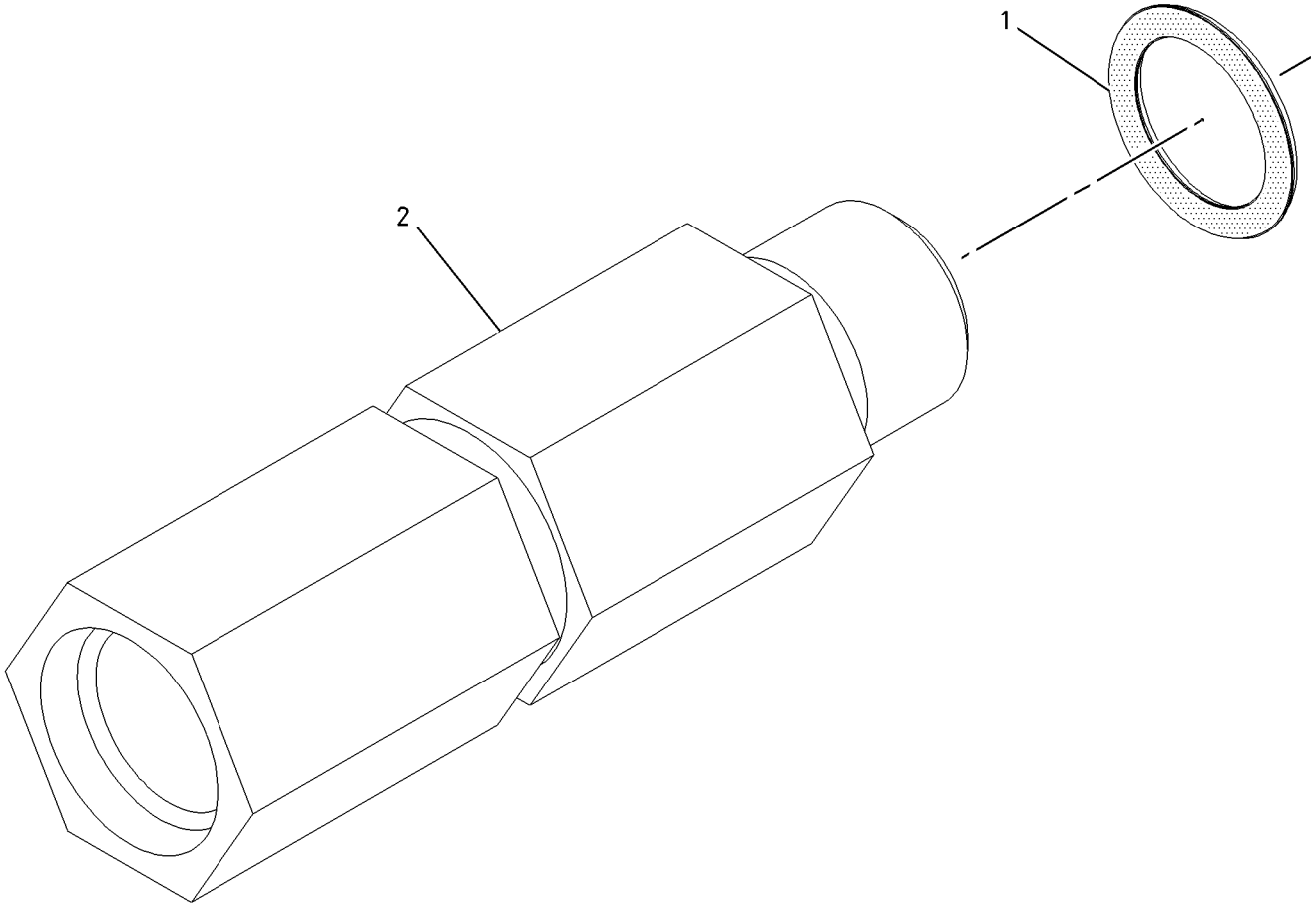

GRAPHIC #1 **<END>** g01004480

FUEL SYSTEM

218-1843 TANK GP-FUEL

S/N: SMC1-UP; GCT1-UP

PART OF 269-2044 CHASSIS AR

SMCS-1273 **i02798859**

NOTE	REF NO	GRAPHIC REF	PART NUMBER	QTY	PART NAME 1 2 3 4 5 6 (PRODUCT LEVEL)	SEE PAGE
	1	1	**246-2641**	1	PADLOCK GP	
		1	**5P-8500**	1	KEY	
	2	1	**6T-1698**	8	MOUNT	
	3	1	**223-5365**	1	TANK GP-FUEL	
		1	**7X-7700**	1	CAP AS-FILLER (FUEL TANK)	
		1	**9X-8600**	1	SEAL-O-RING	
		1	**9X-2205**	1	KIT-CAP FILTER (FUEL TANK)	
					(INCLUDES FILTER AS, SCREWS, GASKETS, & VALVE)	
		1	**9P-7121**	1	STRAINER-FUEL	
	4	1	**241-2501**	4	WASHER (22X82.55X11-MM THK)	
	5	1	**263-5792**	1	SENDER AS-FUEL LEVEL	
		1	**138-0444**	1	KIT-REPAIR (FUEL LEVEL GAUGE)	
					(INCLUDES SENSOR AS & SCREWS)	
		1	**186-3735**	2	PIN-CONNECTOR (16-GA TO 18-GA)	
		1	**102-8802**	1	KIT-RECEPTACLE (2-PIN)	
					(INCLUDES RECEPTACLE AS & WEDGE)	
M	6	1	**5C-9553**	6	BOLT (M6X1X16-MM)	
	7	1	**6C-3060**	1	GASKET	
	8	1	**6N-7523**	6	WASHER (6.48X11.9X1.57-MM THK)	
M	9	1	**7X-2565**	4	BOLT (M20X2.5X100-MM)	
	10	1	**8T-5439**	4	WASHER-HARD (21.5X45X6-MM THK)	

M-METRIC PART

218-1843 **TANK GP-FUEL** *(contd.)* **i02798859**

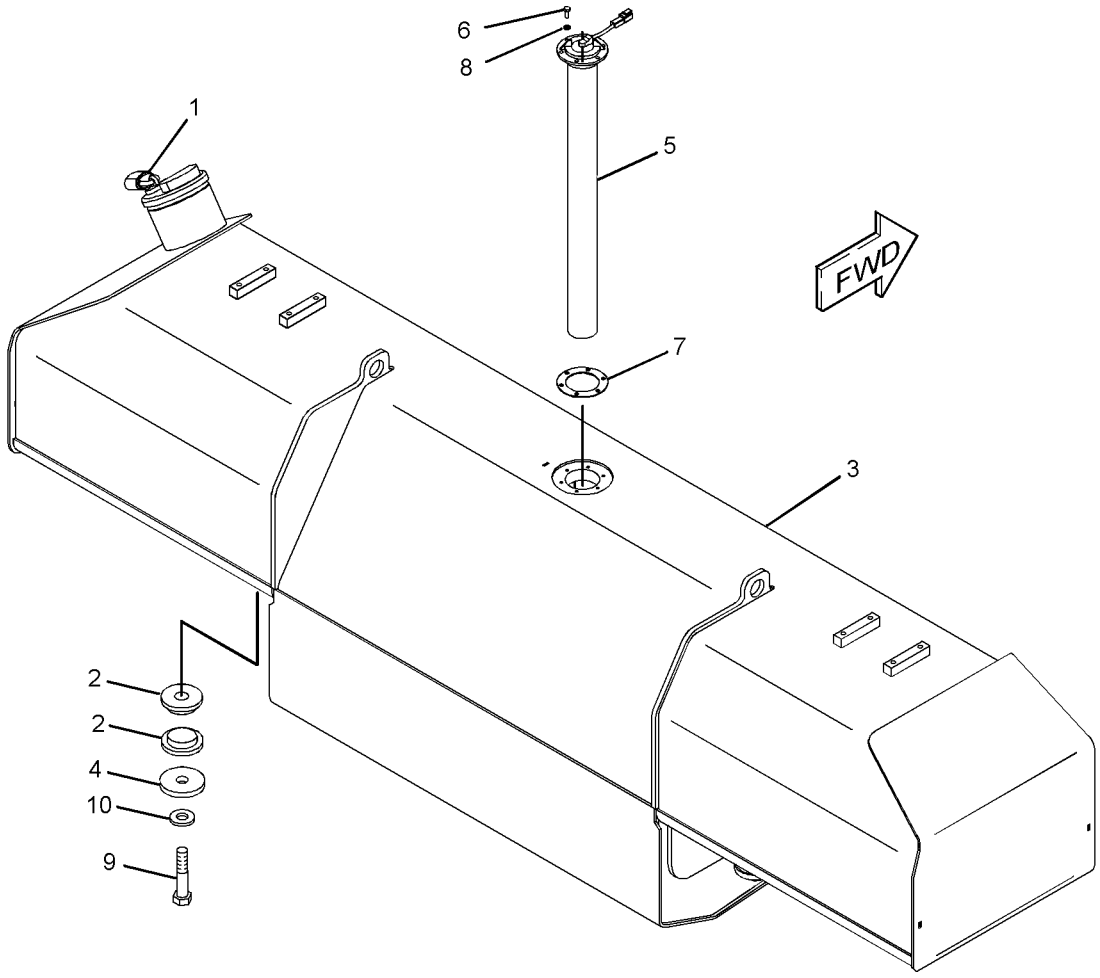

GRAPHIC #1 **<END>** g01205761

3E-6328 ALARM GP–FAULT INDICATOR

S/N: SMC1-UP; GCT1-UP
24 VOLT
PART OF 279-9547 WIRING GP-PLATFORM

SMCS-7400, 7402, 7407 **i02021590**

NOTE	REF NO	GRAPHIC REF	PART NUMBER	QTY	PART NAME 1 2 3 4 5 6 (PRODUCT LEVEL)	SEE PAGE
	1	1	**102-8802**	1	KIT-RECEPTACLE (2-PIN)	
					(INCLUDES RECEPTACLE AS & WEDGE)	
	2	1	**186-3735**	2	PIN-CONNECTOR (16-GA TO 18-GA)	

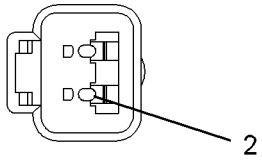

VIEW A–A

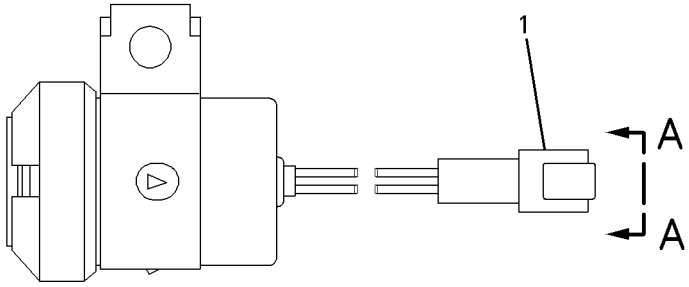

GRAPHIC #1 **<END>** g00697818

197-8820 ALTERNATOR GP-CHARGING*R

S/N: SMC1-UP; GCT1-UP
24 VOLT, 95 AMP
PART OF 280-2703 ALTERNATOR GP-CHARGING

SMCS-1405 **i02469493**

NOTE	REF NO	GRAPHIC REF	PART NUMBER	QTY	PART NAME 1 2 3 4 5 6 (PRODUCT LEVEL)	SEE PAGE
	1	1	**185-2653**	1	FRAME	
	2	1	**5S-7349**	1	BOLT (1/4-20X0.5-IN)	
	3	1	**185-2639**	1	FAN AS	
	4	1	**1H-3244**	1	LOCKWASHER	
	5	1	**185-2645**	1	FRAME	
	6	1	**2K-4821**	1	LOCKNUT (5/8-18-THD)	
	7	1	**5P-8247**	1	WASHER-HARD (17X32X3.5-MM THK)	
	8	1	**185-2651**	1	COVER	
	9	1	**8T-4205**	1	WASHER-HARD (7.2X14.5X2-MM THK)	
	10	1	**185-2647**	1	GROMMET	
	11	1	**9L-6770**	1	CAP (ALTERNATOR AC TAP)	
	12	1	**205-0626**	1	STATOR AS-ALTERNATOR	
	13	1	**185-2638**	2	COLLAR	
	14	1	**185-2654**	1	PLATE	
	15	1	**185-2650**	1	ROTOR AS	
	16	1	**185-2644**	1	COIL AS	
	17	1	**185-2648**	1	REGULATOR AS-VOLTAGE (24-VOLT)	
	18	1	**6V-8189**	1	NUT (5/16-18-THD)	
	19	1	**8T-4224**	1	WASHER-HARD (8.8X16X2-MM THK)	
	20	1	**3F-9556**	1	LOCKWASHER	
					AVAILABLE REPAIR KIT(S):	
			185-2655		KIT-BEARING (ALTERNATOR)	
					(INCLUDES 2 BEARINGS)	
			199-8436		KIT-TERMINAL (ALTERNATOR)	
					(INCLUDES HOLDER AS, PLATE, INSULATOR, PIN, BOLTS, GROMMET, & NUT	
			199-7891		KIT-TERMINAL (ALTERNATOR)	
					(INCLUDES INSULATORS, WASHERS, & NUTS)	
			185-2658		KIT-HARDWARE (ALTERNATOR)	
					(INCLUDES BOLTS)	

197-8820 **ALTERNATOR GP-CHARGING** *(contd.)* **i02469493**

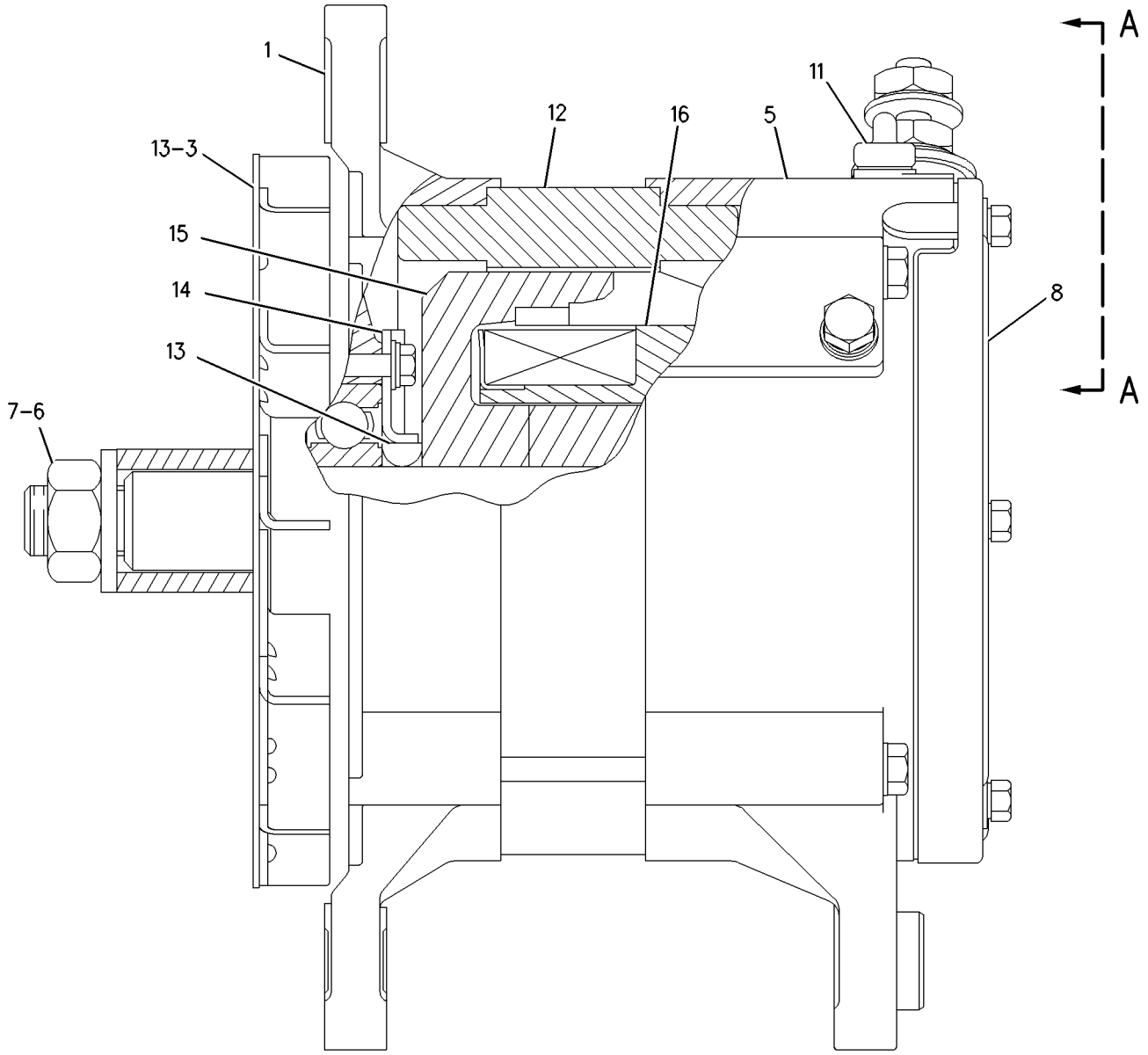

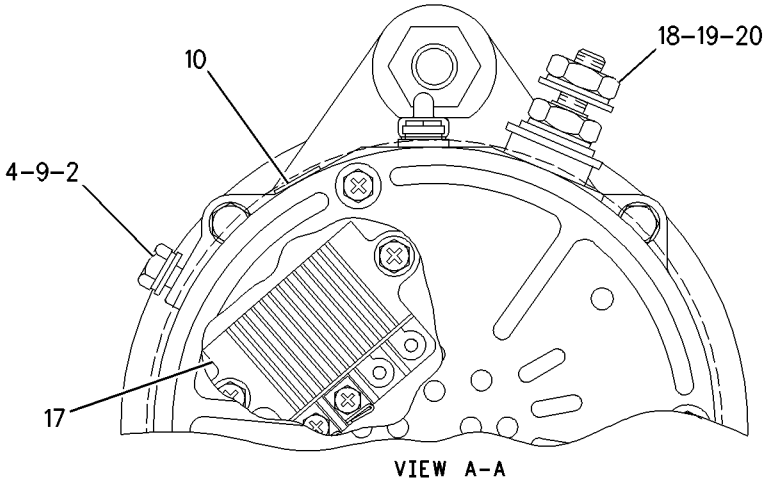

VIEW A-A

GRAPHIC #1 **<END>** g00873198

263-5030 ALTERNATOR GP-CHARGING

S/N: SMC1-UP; GCT1-UP
24- VOLT, 95-AMPERE. DUCTED
AN ATTACHMENT

SMCS-1405 **i02759218**

NOTE	REF NO	GRAPHIC REF	PART NUMBER	QTY	PART NAME 1 2 3 4 5 6 (PRODUCT LEVEL)	SEE PAGE
	1	1	**1W-4724**	2	CLAMP-HOSE	
	2	1	**5P-0597**	1	CLAMP-HOSE	
	3	1	**8P-5411**	1	BUTTON-PLUG	
	4	1	**164-5798**	1	CAP-RAIN	
	5	1	**226-4909**	1	SCREEN (ALTERNATOR)	
	6	1	**258-5035**	1	COVER AS (ALTERNATOR)	
		1	**232-1318**	1	COVER AS	
D		1	**8T-6936**		SEAL (0.5-M)	
	7	1	**263-5031**	1	DUCT AS	
	8	1	**267-4696**	1	HOOD AS	
M		1	**8T-3490**	26	NUT-WELD (M10X1.5-THD)	
M		1	**8T-5413**	2	STUD-WELD (M10X1.5X25-MM OAL)	
M		1	**9X-6269**	1	NUT-WELD (M16X2X13-MM OAL)	
		1	**126-7975**	2	HANDRAIL	
		1	**226-4911**	1	TUBE	
	9	1	**101-3625**	1	CLIP	
	10	1	**204-2281**	3	STRAP-TIE	
	11	1	**4P-7581**	2	CLIP	
	12	1	**8T-4121**	1	WASHER-HARD (11X21X2.5-MM THK)	
E	13	1	**231-0858**		SEAL (87-CM)	
	14	1	**184-5498**	1	BRACKET AS	

D-ORDER BY THE METER
E-ORDER BY THE CENTIMETER
M-METRIC PART

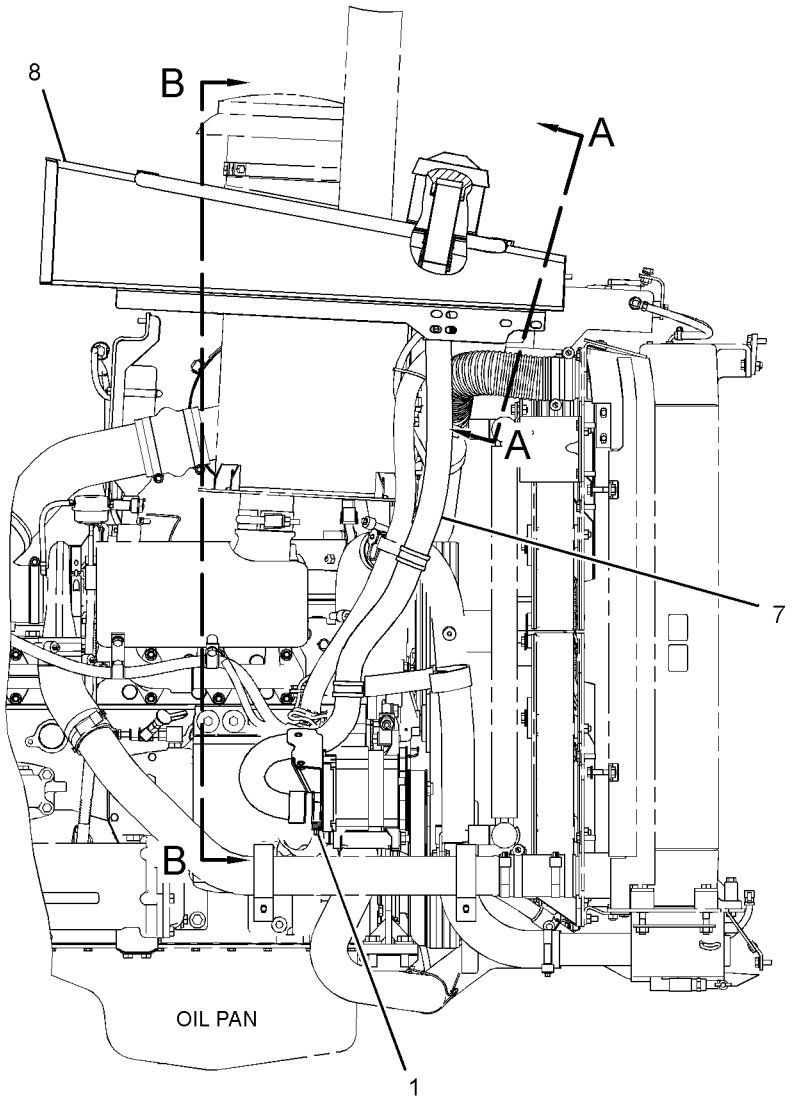

RIGHT SIDE VIEW

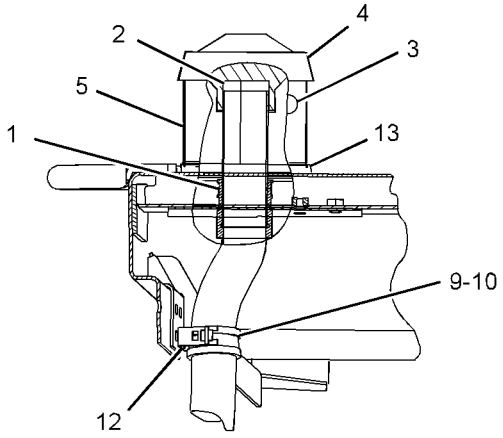

SECTION A-A

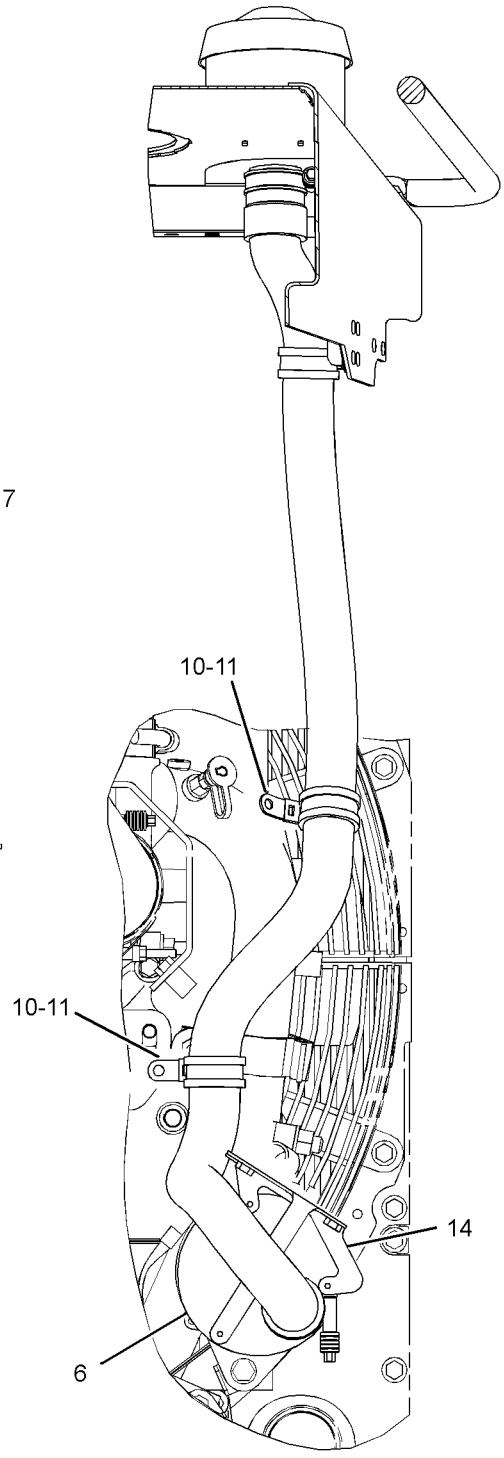

SECTION B-B

GRAPHIC #1 **<END>** g01360214

280-2703 ALTERNATOR GP-CHARGING

S/N: SMC1-UP; GCT1-UP
24-VOLT, 95-AMPERE
PART OF 279-9549 INSTALLATION AR-ENGINE

SMCS-1405 **i02757443**

NOTE	REF NO	GRAPHIC REF	PART NUMBER	QTY	PART NAME 1 2 3 4 5 6 (PRODUCT LEVEL)	SEE PAGE
	1	1	**7K-1181**	1	STRAP-CABLE	
	2	1	**9S-1240**	1	BRACKET AS	
		1	**1F-0748**	1	NUT-WELD (1/2-13-THD)	
	3	1	**305-9350**	1	BRACKET AS	
YR	4	1	**197-8820**	1	ALTERNATOR GP-CHARGING (24-VOLT, 95-AMPERE)	149
	5	1	**208-4622**	1	STRAP AS (GROUND)	
	6	1	**211-1044**	1	BLOCK	
	7	1	**214-9492**	1	ROD-ADJUSTING	
	8	1	**9X-8250**	1	CLIP	
	9	1	**4L-6454**	1	BOLT (3/8-16X1-IN)	
	10	1	**4P-7581**	1	CLIP	
	11	1	**5P-1075**	1	WASHER-HARD (10.2X22.5X3-MM THK)	
	12	1	**7X-0339**	1	BOLT (1/2-13X6.25-IN)	
	13	1	**8T-4121**	1	WASHER-HARD (11X21X2.5-MM THK)	
M	14	1	**8T-4132**	2	NUT (M16X2-THD)	
M	15	1	**8T-4137**	1	BOLT (M10X1.5X20-MM)	
M	16	1	**8T-4193**	1	BOLT (M16X2X50-MM)	
	17	1	**8T-4223**	2	WASHER-HARD (13.5X25.5X3-MM THK)	
	18	1	**8T-8919**	1	BOLT (1/2-13X1.75-IN)	
	19	1	**9X-8257**	3	WASHER (17.5X30X3.5-MM THK)	
	20	1	**239-7854**	1	GUARD-ALTERNATOR	
M	21	1	**8T-0638**	3	BOLT (M5X0.8X50-MM)	
	22	1	**9X-8256**	3	WASHER (6.6X12X2-MM THK)	

M-METRIC PART
R-REMFG PART MAY BE AVAILABLE
Y-SEPARATE ILLUSTRATION

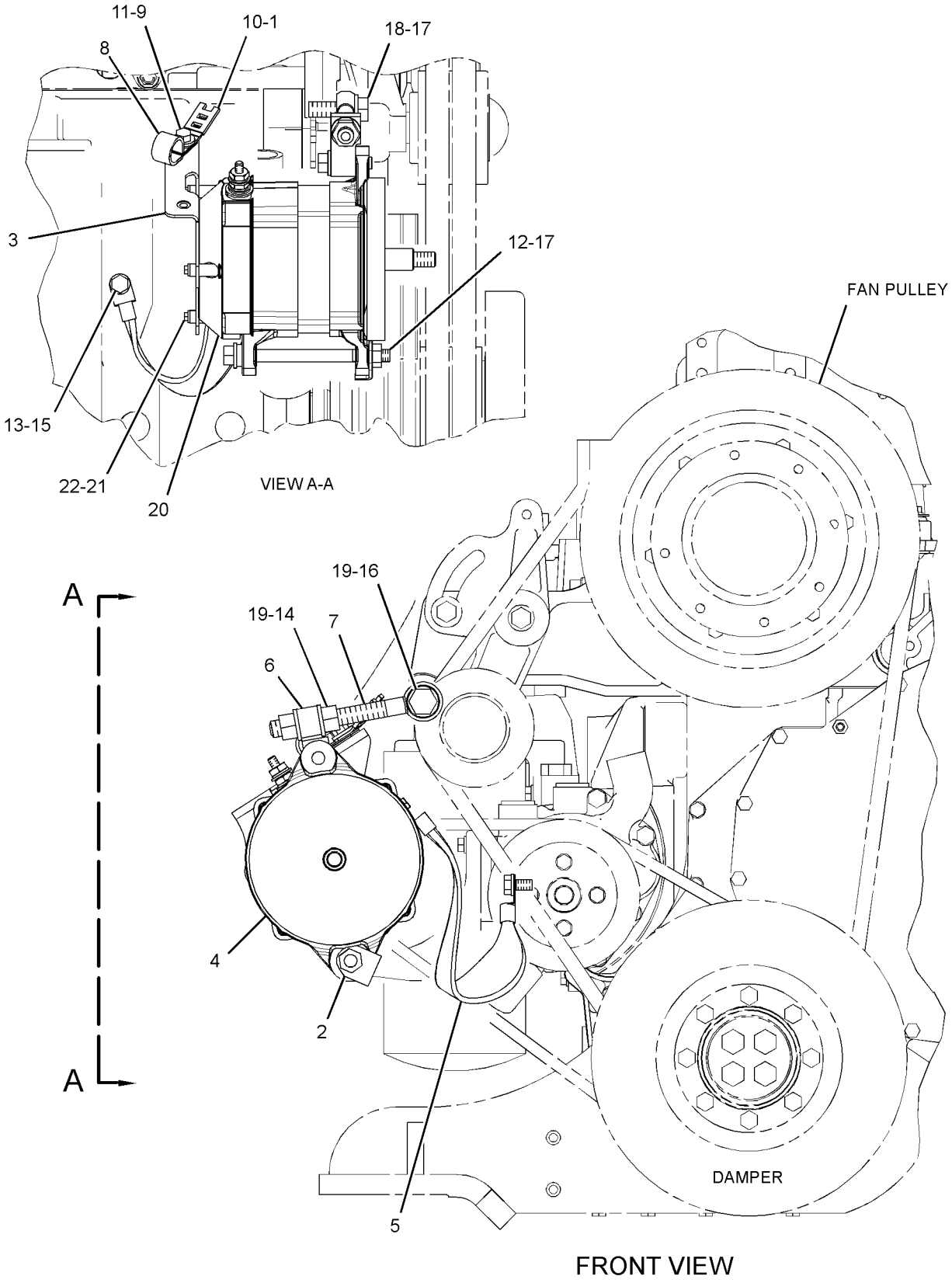

GRAPHIC #1 **<END>** g01358094

ELECTRICAL AND STARTING SYSTEM

279-9548 BATTERY & WIRING GP

S/N: SMC1-UP; GCT1-UP

PART OF 269-2044 CHASSIS AR

SMCS-1401, 1402, 1408 **i02748448**

NOTE	REF NO	GRAPHIC REF	PART NUMBER	QTY	PART NAME 1 2 3 4 5 6 (PRODUCT LEVEL)	SEE PAGE
	1	1,2,3	**7K-1181**	45	STRAP-CABLE	
Y	2	2	**7N-0718**	1	SWITCH GP-DISCONNECT (BATTERY)	239
	3	1	**7P-6682**	1	CABLE AS	
		1	**1S-7251**	2	TERMINAL-RING (FOR 1/2-IN BOLT)	
E		1	**5P-0747**		CABLE (00-GA, BLACK) (40-CM)	
	4	2	**091-9035**	1	SPACER (11X25X20-MM THK)	
	5	2	**111-7978**	1	HOLD-DOWN AS	
	6	2	**128-0314**	1	CABLE AS	
		2	**8C-5918**	1	TERMINAL AS (NEGATIVE)	
		2	**8T-9756**	1	TERMINAL AS (POSITIVE)	
					(EACH TERMINAL AS INCLUDES)	
		2	**1M-6119**	1	BOLT (5/16-18X1.375-IN)	
		2	**1M-6120**	1	NUT (5/16-18-THD)	
		2	**9G-0002**	1	COVER-TERMINAL (RED)	
		2	**9G-0005**	1	COVER-TERMINAL (BLACK)	
E		2	**5P-0761**		CABLE (00-GA, RED) (29-CM)	
Y	7	2	**145-7028**	1	SENSOR GP-TEMPERATURE (HYDRAULIC OIL)	227
Y	7A	3	**145-7028**	1	SENSOR GP-TEMPERATURE (TRANSMISSION LUBRICATION OIL)	227
Y	8	2	**158-6632**	1	SWITCH GP-PUSH BUTTON (PRIMING PUMP)	242
Y	9	2	**161-9926**	1	SENSOR GP-PRESSURE (TURBOCHARGER INLET)	218
	10	3	**172-4864**	1	GUARD AS	
	11	3	**174-7875**	1	HORN AS (24-VOLT, HIGH TONE)	
	12	2	**197-0668**	1	CABLE AS	
		2	**9X-5699**	1	BOOT	
		2	**8S-3020**	1	TERMINAL-CABLE	
		2	**8T-9757**	1	TERMINAL AS-BATTERY (NEGATIVE)	
		2	**1M-6119**	1	BOLT (5/16-18X1.375-IN)	
		2	**1M-6120**	1	NUT (5/16-18-THD)	
		2	**9G-0003**	1	COVER-TERMINAL (BLACK)	
		2	**1S-4915**	2	LINER (CONDUIT)	
E		2	**5P-0695**		CONDUIT (61-CM)	
E		2	**8T-2225**		TUBE-HEAT SHRINK (25.4-MM DIA) (16-CM)	
E		2	**5P-0747**		CABLE (00-GA, BLACK) (100-CM)	
	13	3	**226-9670**	1	HARNESS AS-CHASSIS	
		3	**102-8803**	1	KIT-RECEPTACLE (3-PIN)	
					(INCLUDES RECEPTACLE AS & WEDGE)	
		3	**155-2270**	4	KIT-CONNECTING PLUG (2-PIN)	
					(EACH INCLUDES PLUG AS, WEDGE, & INTERFACE SEAL)	
	14	2	**226-9671**	1	HARNESS AS-CHASSIS	
		2	**102-8802**	1	KIT-RECEPTACLE (2-PIN)	
		2	**102-8803**	1	KIT-RECEPTACLE (3-PIN)	
		2	**102-8806**	1	KIT-RECEPTACLE (8-PIN)	
					(EACH RECEPTACLE KIT INCLUDES RECEPTACLE AS & WEDGE)	
		2	**155-2270**	3	KIT-CONNECTING PLUG (2-PIN)	
					(EACH INCLUDES PLUG AS, WEDGE, & INTERFACE SEAL)	
	15	1	**237-4240**	1	CABLE AS	
		1	**170-3795**	1	RING-TERMINAL	
		1	**3S-6049**	1	TERMINAL AS-BATTERY (POSITIVE)	
		1	**1M-6119**	1	BOLT (5/16-18X1.375-IN)	
		1	**1M-6120**	1	NUT (5/16-18-THD)	
		1	**8N-1725**	1	COVER-TERMINAL (RED)	
		1	**8L-8413**	1	STRAP-CABLE	
		1	**1S-4915**	2	LINER (CONDUIT)	

279-9548 **BATTERY & WIRING GP** ***(contd.)*** **i02748448**

NOTE	REF NO	GRAPHIC REF	PART NUMBER	QTY	PART NAME 1 2 3 4 5 6 (PRODUCT LEVEL)	SEE PAGE
B		1	**1P-0810**		TAPE-ELECTRICAL	
E		1	**5P-0695**		CONDUIT (220-CM)	
E		1	**8T-2225**		TUBE-HEAT SHRINK (25.4-MM DIA) (32-CM)	
E		1	**5P-0761**		CABLE (00-GA, RED) (246-CM)	
	16	1	**239-8155**	1	HARNESS AS-TRANSMISSION	
		1	**154-3172**	1	PLUG AS (14-PIN)	
		1	**155-2255**	1	KIT-CONNECTING PLUG (12-PIN)	
		1	**155-2271**	1	KIT-CONNECTING PLUG (4-PIN)	
					(EACH INCLUDES PLUG AS, WEDGE, & INTERFACE SEAL)	
	17	2	**240-8317**	1	PLATE AS	
	18	1	**280-3554**	1	HARNESS AS-WIRING	
		1	**102-8802**	1	KIT-RECEPTACLE (2-PIN)	
					(INCLUDES RECEPTACLE AS & WEDGE)	
		1	**155-2270**	1	KIT-CONNECTING PLUG (2-PIN)	
					(INCLUDES PLUG AS, WEDGE, & INTERFACE SEAL)	
	19	2	**282-8485**	1	HARNESS AS-CHASSIS	
		2	**190-7613**	1	RECEPTACLE AS-CONNECTOR (12-PIN)	
		2	**102-8801**	1	KIT-RECEPTACLE (12-PIN)	
		2	**102-8803**	2	KIT-RECEPTACLE (3-PIN)	
		2	**102-8804**	3	KIT-RECEPTACLE (4-PIN)	
		2	**102-8805**	1	KIT-RECEPTACLE (6-PIN)	
					(EACH RECEPTACLE KIT INCLUDES RECEPTACLE AS & WEDGE)	
		2	**155-2255**	1	KIT-CONNECTING PLUG (12-PIN)	
		2	**155-2260**	2	KIT-CONNECTING PLUG (3-PIN)	
		2	**155-2270**	3	KIT-CONNECTING PLUG (2-PIN)	
		2	**155-2271**	2	KIT-CONNECTING PLUG (4-PIN)	
		2	**155-2274**	1	KIT-CONNECTING PLUG (6-PIN)	
					(EACH PLUG KIT INCLUDES PLUG AS, WEDGE, & INTERFACE SEAL)	
	20	2	**290-8745**	1	CABLE AS	
		2	**1S-7252**	1	TERMINAL-RING (FOR 3/8-IN BOLT)	
		2	**8S-3020**	1	TERMINAL-CABLE	
E		2	**5P-0747**		CABLE (00-GA, BLACK) (190-CM)	
	21	2	**291-9254**	1	HARNESS AS-SOLENOID	
		2	**102-8802**	1	KIT-RECEPTACLE (2-PIN)	
					(INCLUDES RECEPTACLE AS & WEDGE)	
		2	**155-2270**	1	KIT-CONNECTING PLUG (2-PIN)	
					(INCLUDES PLUG AS, WEDGE, & INTERFACE SEAL)	
	22	2	**115-2422**	2	BATTERY GP (12-VOLT, MAINTENANCE FREE, WET)	
					(EACH INCLUDES)	
		2	**123-1373**	6	PLUG AS	
	23	1,3	**130-5300**	4	CLIP	
	24	2	**132-5789**	1	CLIP	
M	25	1,3	**133-7810**	4	STUD-TAPERLOCK (M10X1.15-THD)	
	26	3	**174-7876**	1	HORN AS (24-VOLT, LOW TONE)	
	27	2,3	**193-3973**	10	TIE (WRAP)	
	28	2,3	**1S-0994**	3	CLIP	
	29	3	**220-0230**	1	ALARM AS (BACKUP)	
		3	**102-8802**	1	KIT-RECEPTACLE (2-PIN)	
					(INCLUDES RECEPTACLE AS & WEDGE)	
		3	**186-3735**	2	PIN-CONNECTOR (16-GA TO 18-GA)	
E		3	**9X-1813**		SLEEVE (31-CM)	
D		3	**5P-5623**		WIRE-ELECTRICAL (16-GA, BLACK) (0.4-M EACH)	
	30	2	**238-0303**	1	KNOB	
	31	2	**3J-7354**	1	SEAL-O-RING	
	32	1,2,3	**4P-7581**	5	CLIP	
	33	2	**4P-8134**	2	CLIP	
	34	1,3	**6D-4247**	3	CLIP	

279-9548 **BATTERY & WIRING GP** ***(contd.)*** **i02748448**

NOTE	REF NO	GRAPHIC REF	PART NUMBER	QTY	PART NAME 1 2 3 4 5 6 (PRODUCT LEVEL)	SEE PAGE
	35	2,3	**7J-0204**	2	SEAL-O-RING	
M	36	2,3	**8T-0722**	10	BOLT-LOCKING (M10X1.5X30-MM)	
	37	1,2,3	**8T-4121**	24	WASHER-HARD (11X21X2.5-MM THK)	
M	38	1,3	**8T-4133**	4	NUT (M10X1.5-THD)	
M	39	1,2,3	**8T-4137**	9	BOLT (M10X1.5X20-MM)	
M	40	2	**8T-4196**	1	BOLT (M10X1.5X35-MM)	

B-USE AS REQUIRED
D-ORDER BY THE METER
E-ORDER BY THE CENTIMETER
M-METRIC PART
Y-SEPARATE ILLUSTRATION

REFER TO ALL ILLUSTRATIONS OF
THIS GROUP FOR AUXILIARY VIEWS

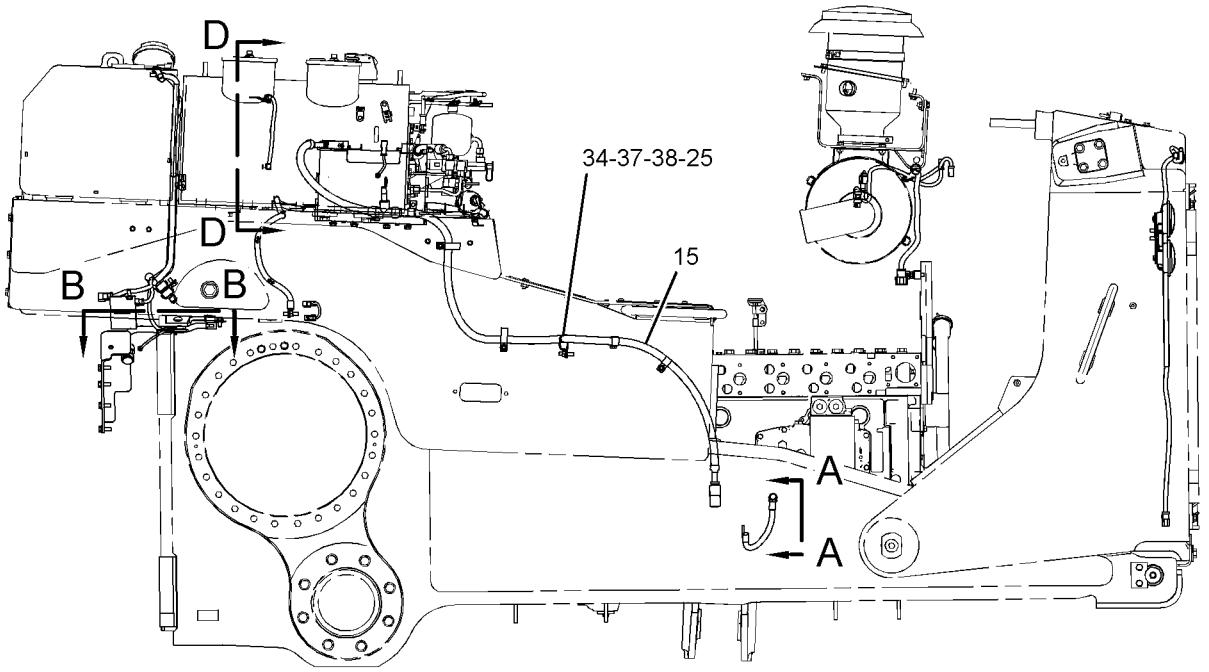

RIGHT SIDE VIEW

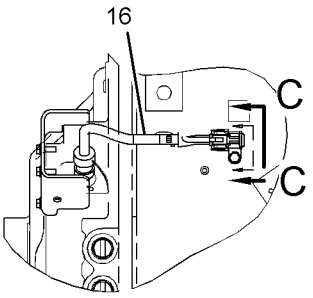

VIEW B-B

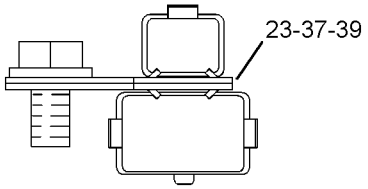

VIEW C-C

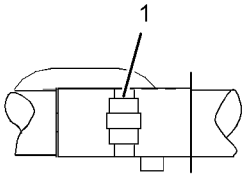

TYPICAL

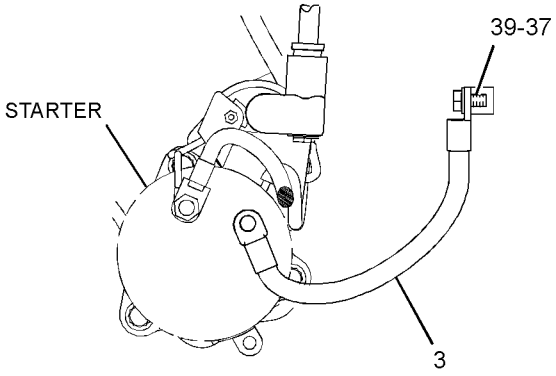

VIEW A-A

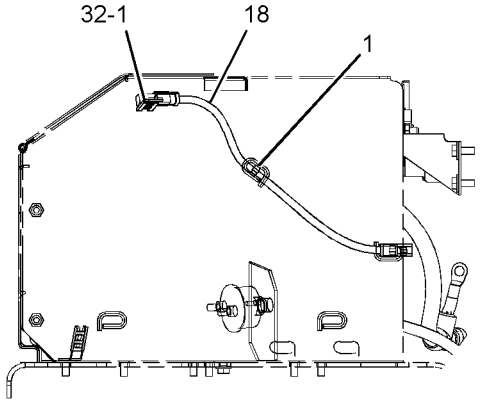

VIEW D-D

GRAPHIC #1

g01360789

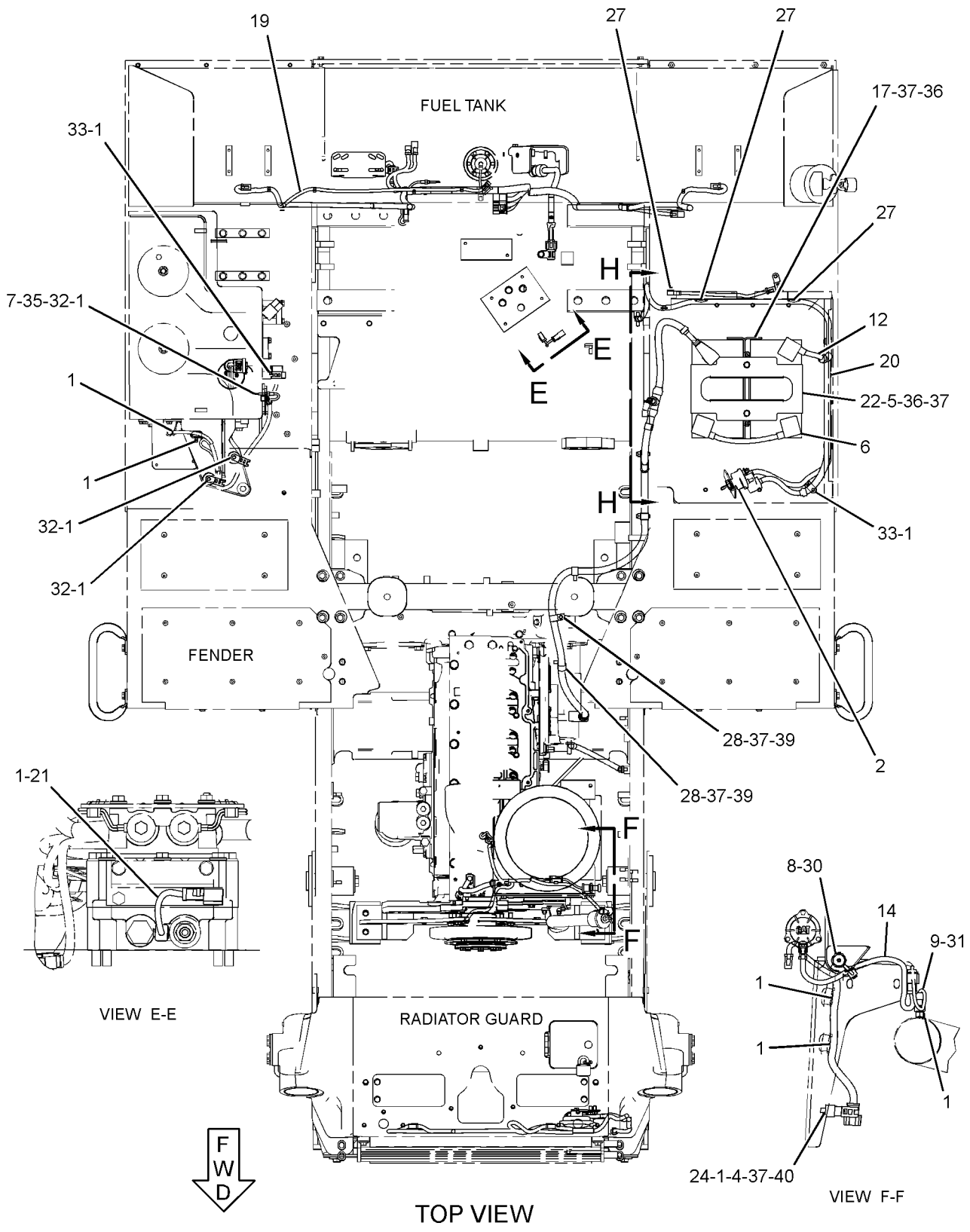

GRAPHIC #2

g01360792

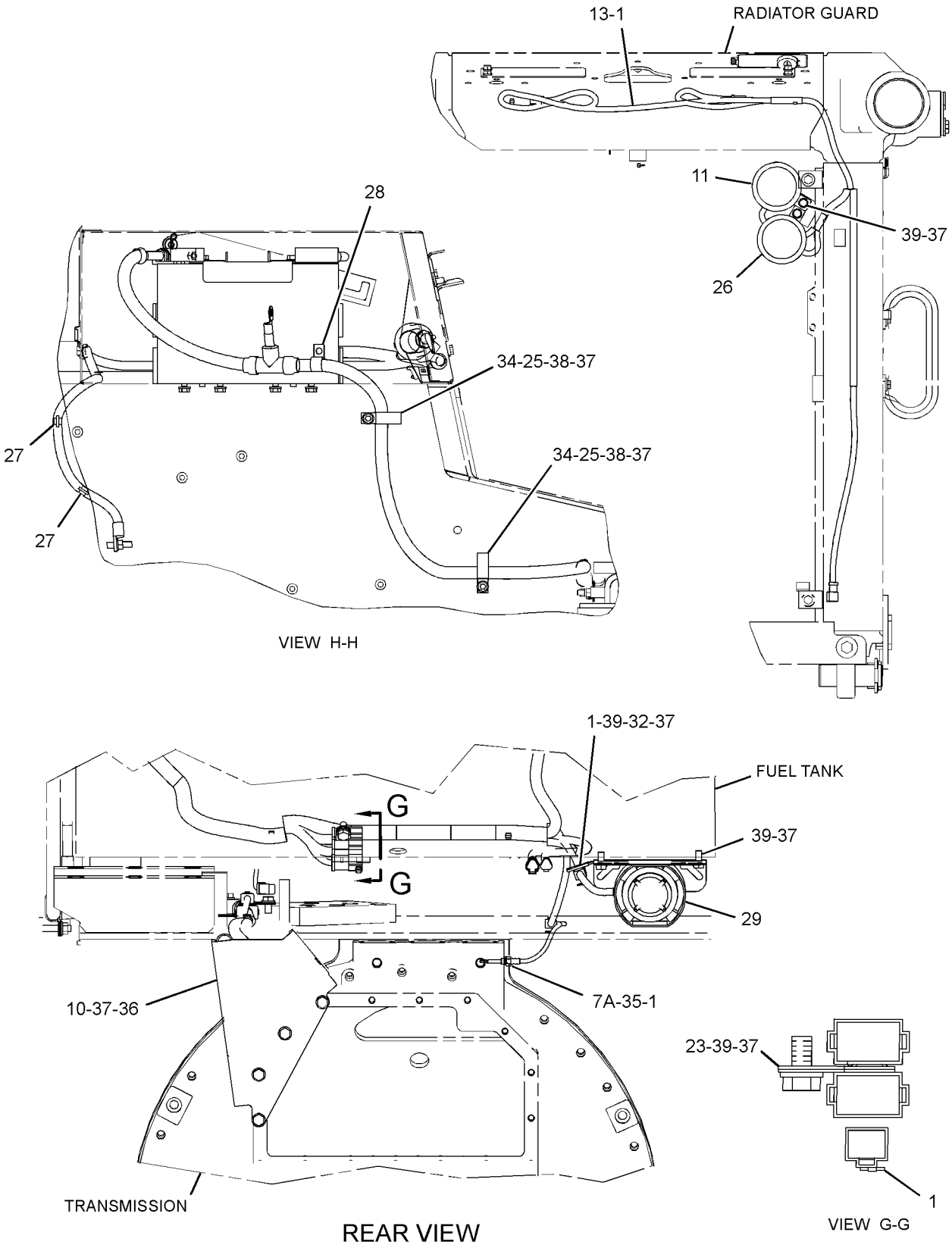

GRAPHIC #3 **<END>** g01360796

227-1229 BATTERY GP—HEAVY-DUTY

S/N: SMC1-UP; GCT1-UP
AN ATTACHMENT

SMCS-1401 **i02456048**

NOTE	REF NO	GRAPHIC REF	PART NUMBER	QTY	PART NAME 1 2 3 4 5 6 (PRODUCT LEVEL)	SEE PAGE
	1	1	**8V-0622**	1	CABLE AS	
		1	**8C-5917**	1	TERMINAL AS-BATTERY (POSITIVE)	
		1	**8T-9757**	1	TERMINAL AS-BATTERY (NEGATIVE)	
					(EACH TERMINAL AS INCLUDES)	
		1	**1M-6119**	2	BOLT (5/16-18X1.375-IN)	
		1	**1M-6120**	2	NUT (5/16-18-THD)	
E		1	**5P-0761**		CABLE (00-GA, RED) (14-CM)	
		1	**9G-0003**	1	COVER-TERMINAL (BLACK)	
		1	**9G-0004**	1	COVER-TERMINAL (RED)	
	2	1	**153-5710**	2	BATTERY (12-VOLT, MAINTENANCE FREE)	
	3	1	**153-6281**	1	HOLD-DOWN-BATTERY	
Y	4	1	*209-8423*	1	STARTING MOTOR GP-ELECTRIC	234
	5	1	**240-8321**	1	PLATE AS	

E-ORDER BY THE CENTIMETER
Y-SEPARATE ILLUSTRATION

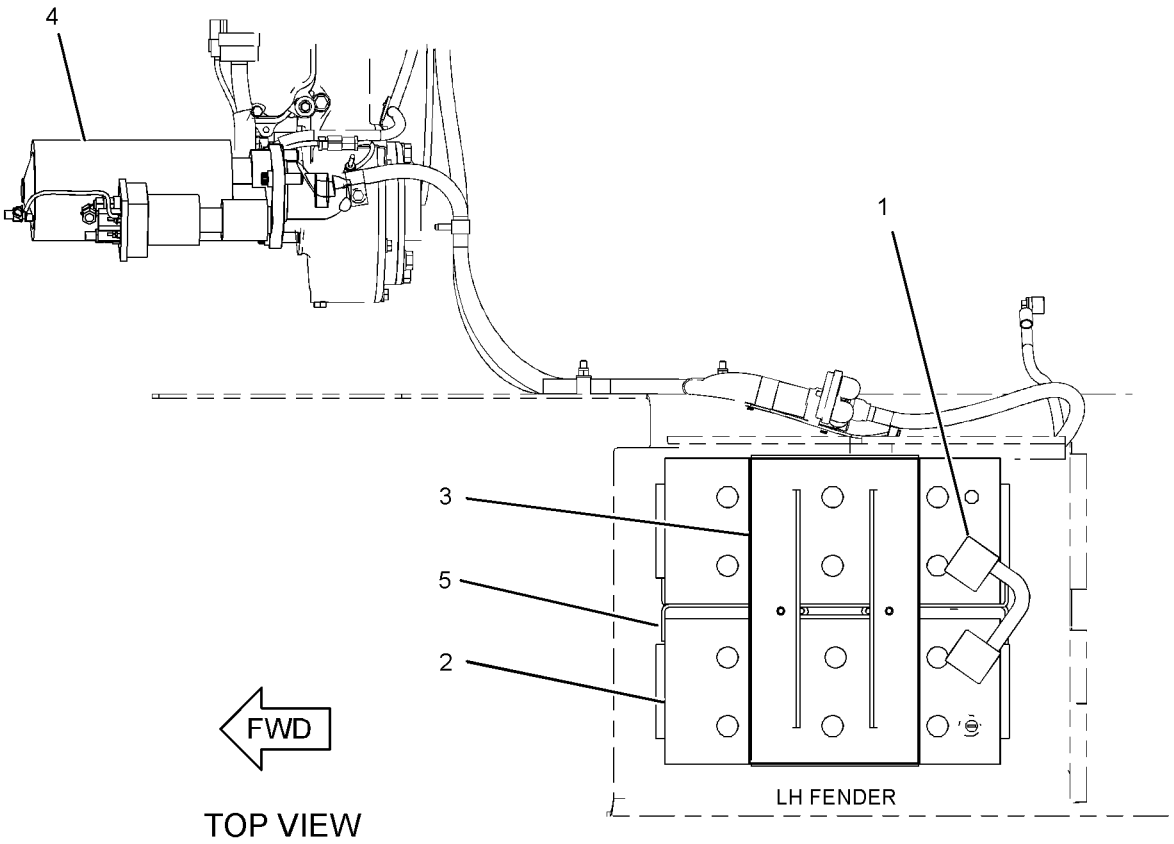

TOP VIEW

GRAPHIC #1 **<END>** g01207635

292-0294 CABLE AS-COILED–LASER RECEIVER

S/N: SMC1-UP; GCT1-UP
FIELD INSTALLATION

SMCS-1408 **i02768480**

NOTE	REF NO	GRAPHIC REF	PART NUMBER	QTY	PART NAME 1 2 3 4 5 6 (PRODUCT LEVEL)	SEE PAGE
	1	1	**240-0768**	1	CABLE-COILED (MAST)	

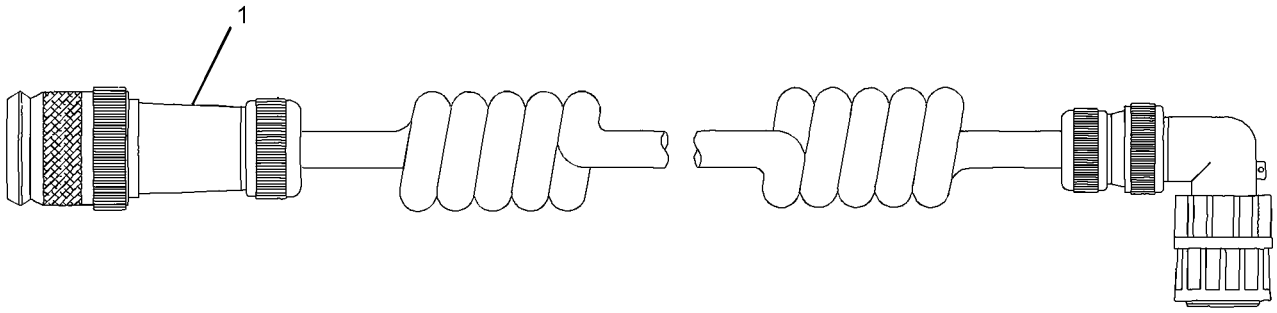

GRAPHIC #1 **<END>** g01332487

231-1972 CONTROL & MTG GP-ENGINE ELEK

S/N: THX8900-UP

PART OF 282-3828, 282-3829, 282-3830 ENGINE AR-CORE

ALSO AN ATTACHMENT

SMCS-1901, 7620 **i02433821**

NOTE	REF NO	GRAPHIC REF	PART NUMBER	QTY	PART NAME 1 2 3 4 5 6 (PRODUCT LEVEL)	SEE PAGE
	1	1	**8T-9655**	8	MOUNT-ISOLATION	
	2	1	**101-3128**	4	SPACER-SPECIAL	
M	3	1	**143-9392**	1	STUD (M8X1.25-THD)	
Y	4	1	*226-7473*	1	CONTROL GP-ENGINE ELECTRONIC	165
	6	1	**233-0891**	1	BRACKET AS	
M	7	1	**6V-9804**	3	BOLT (M8X1.25X75-MM)	
	8	1	**9M-1974**	4	WASHER-HARD (8.8X16X2-MM THK)	
	9	1	**9N-0869**	4	WASHER-HARD (8.8X25.5X2-MM THK)	

M-METRIC PART
Y-SEPARATE ILLUSTRATION

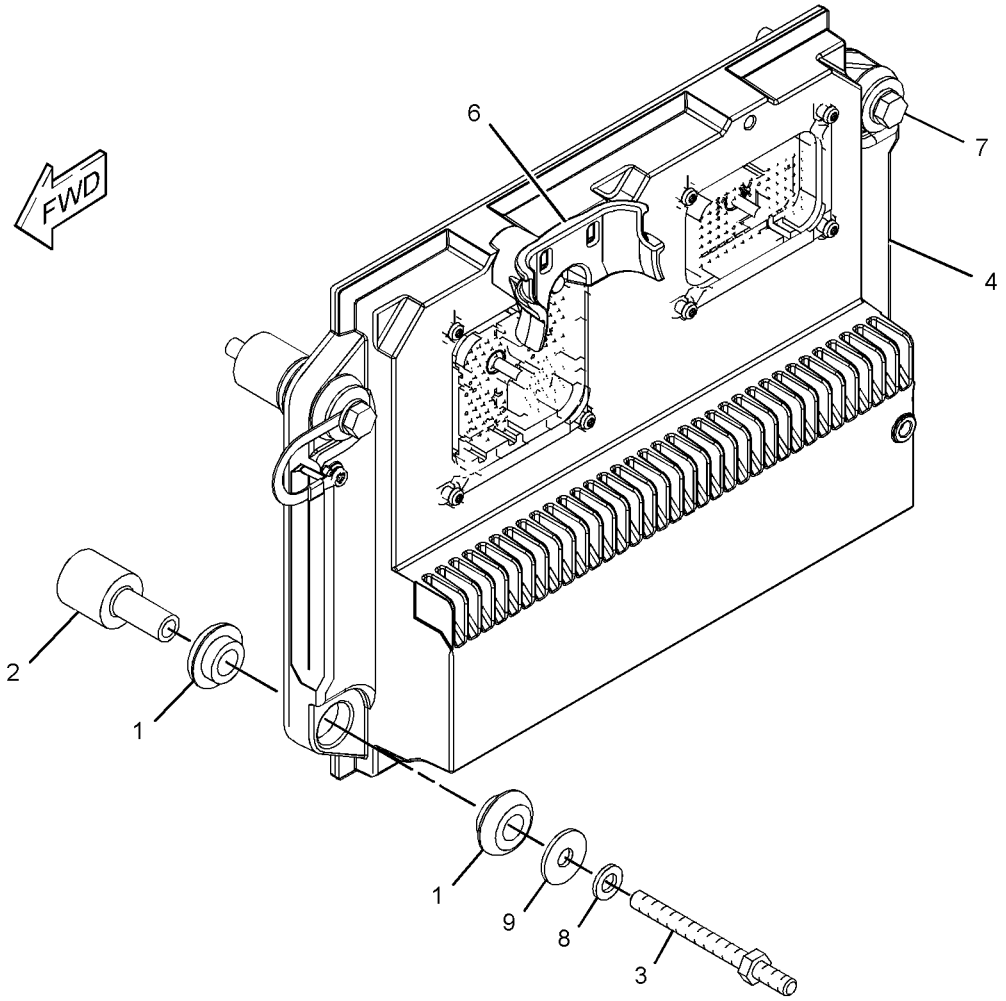

GRAPHIC #1 **<END>** g01173166

246-9365 CONTROL & MTG GP-ENGINE ELEK

S/N: THX8900-UP
PART OF 282-3827, 301-5769 ENGINE AR-CORE
ALSO AN ATTACHMENT

SMCS-1901, 7620 **i02704903**

NOTE	REF NO	GRAPHIC REF	PART NUMBER	QTY	PART NAME 1 2 3 4 5 6 (PRODUCT LEVEL)	SEE PAGE
	1	1	**8T-9655**	8	MOUNT-ISOLATION	
	2	1	**101-3128**	4	SPACER-SPECIAL	
M	3	1	**143-9392**	4	STUD (M8X1.25-THD)	
Y	4	1	*226-7473*	1	CONTROL GP-ENGINE ELECTRONIC	165
	6	1	**233-0891**	1	BRACKET AS	
	7	1	**9M-1974**	4	WASHER-HARD (8.8X16X2-MM THK)	
	8	1	**9N-0869**	4	WASHER-HARD (8.8X25.5X2-MM THK)	

M-METRIC PART
Y-SEPARATE ILLUSTRATION

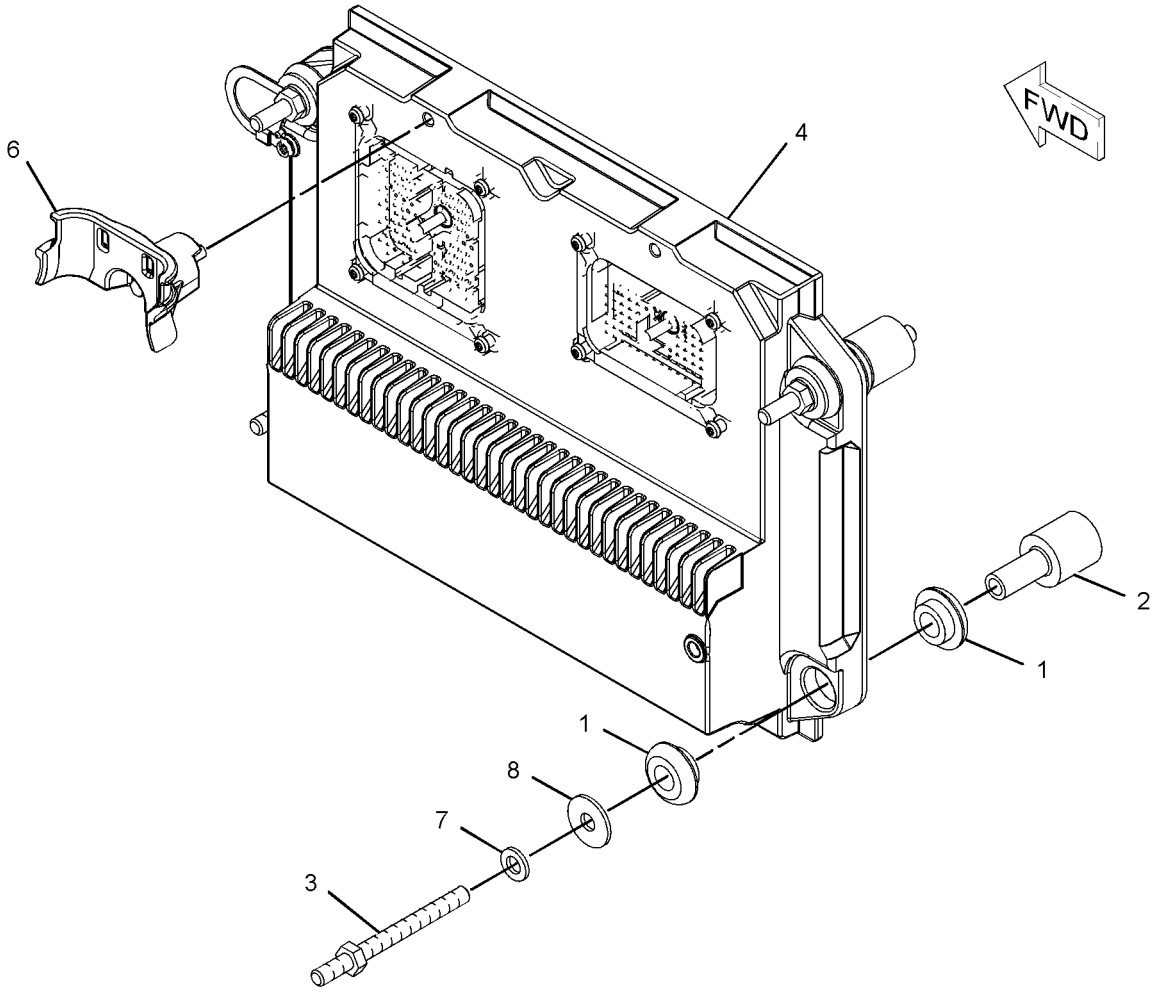

GRAPHIC #1 **<END>** g01131857

226-7473 CONTROL GP-ENGINE ELECTRONIC

S/N: THX8900-UP

PART OF 231-1972, 246-9365 CONTROL & MTG GP-ENGINE ELEK

ALSO AN ATTACHMENT

SMCS-1901 **i02433822**

NOTE	REF NO	GRAPHIC REF	PART NUMBER	QTY	PART NAME 1 2 3 4 5 6 (PRODUCT LEVEL)	SEE PAGE
	1	1	**262-2878**	1	CONTROL GP-MACHINE	

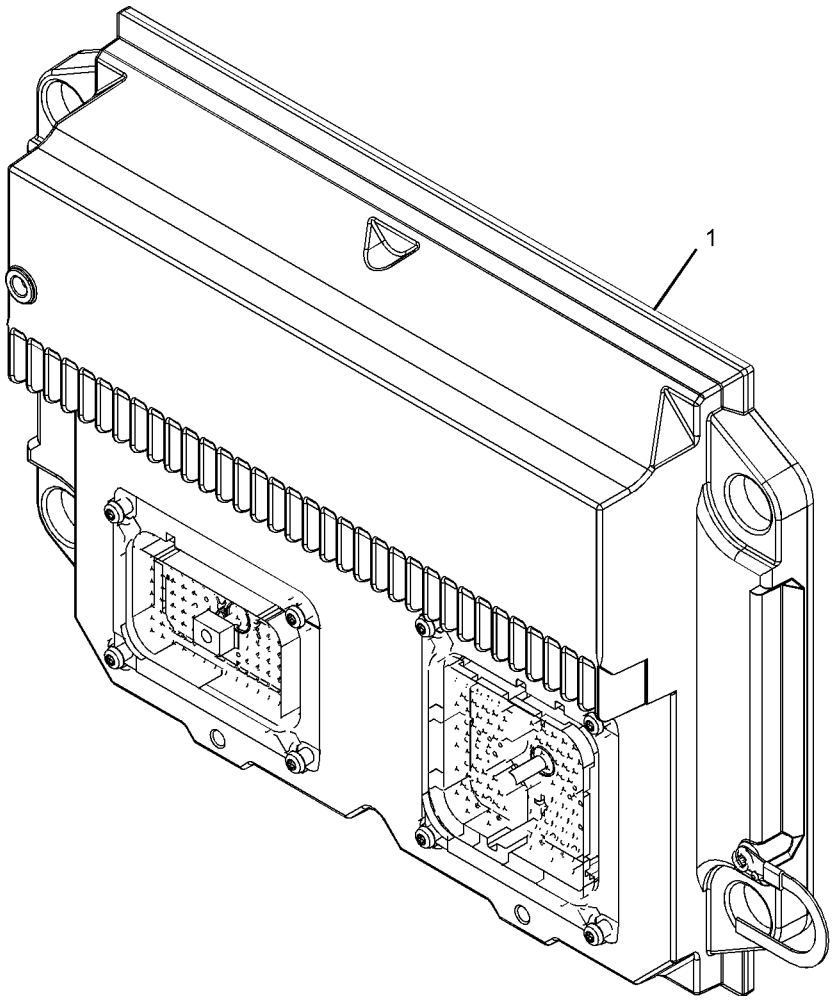

GRAPHIC #1 **<END>** g01101798

227-1226 CONVERTER GP-ELECTRICAL

S/N: SMC1-UP; GCT1-UP
20-AMP, 12-VOLT
AN ATTACHMENT

SMCS-1421 **i02456024**

NOTE	REF NO	GRAPHIC REF	PART NUMBER	QTY	PART NAME 1 2 3 4 5 6 (PRODUCT LEVEL)	SEE PAGE
	1	1	**239-3902**	1	CONVERTER-ELECTRICAL (24-VOLT TO 12-VOLT)	
	2	1	**242-1585**	1	HARNESS AS-POWER (ELECTRICAL CONVERTER)	
		1	**177-9653**	1	KIT-RECEPTACLE (4-PIN)	
					(INCLUDES RECEPTACLE AS & WEDGE)	
		1	**155-2274**	1	KIT-CONNECTING PLUG (6-PIN)	
					(INCLUDES PLUG AS, WEDGE, & INTERFACE SEAL)	
		1	**177-9656**	3	KIT-CONNECTING PLUG (4-PIN)	
					(EACH INCLUDES PLUG AS, WEDGE, & INTERFACE SEAL)	
	3	1	**7K-1181**	2	STRAP-CABLE	
M	4	1	**8T-0267**	4	BOLT-SOCKET HEAD (M6X1X12-MM)	
	5	1	**9X-8256**	4	WASHER (6.6X12X2-MM THK)	

M-METRIC PART

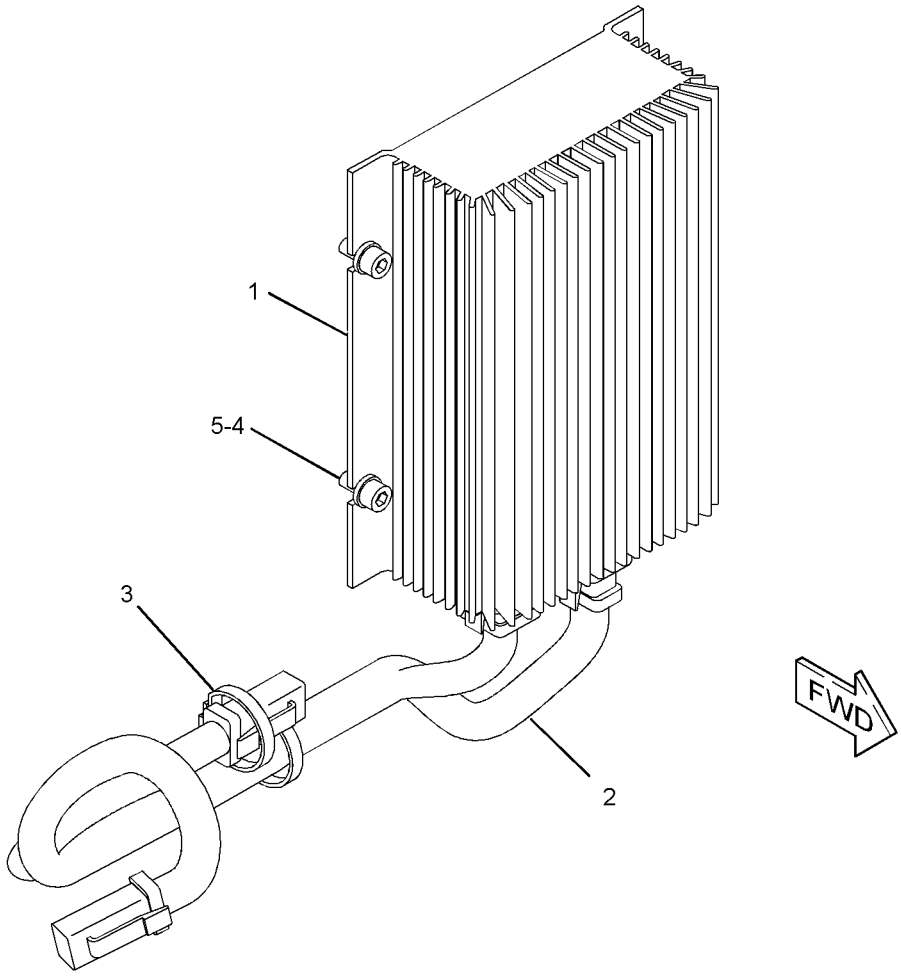

GRAPHIC #1 **<END>** g01214276

261-3226 DISPLAY GP-CAMERA–WORK AREA VISUAL SYSTEM

S/N: SMC1-UP; GCT1-UP
PART OF 281-3175 INSTALLATION GP-CAMERA
AN ATTACHMENT

SMCS-7347 **i02798860**

NOTE	REF NO	GRAPHIC REF	PART NUMBER	QTY	PART NAME 1 2 3 4 5 6 (PRODUCT LEVEL)	SEE PAGE
	1	1	**261-3222**	1	MOUNTING GP-CAMERA DISPLAY (WORK AREA VISUAL SYSTEM)	
		1	**259-4397**	1	CLAMP GP	
		1	**259-4399**	2	BASE	
	2	1	**261-3224**	1	MODULE GP-DISPLAY (WORK AREA VISUAL SYSTEM)	
	2A	1	**280-2691**	1	CABLE AS	
		1	**102-8805**	1	KIT-RECEPTACLE (6-PIN)	
					(INCLUDES RECEPTACLE AS & WEDGE)	
		1	**8T-8737**	1	PLUG-SEAL	
		1	**186-3735**	5	PIN-CONNECTOR (16-GA TO 18-GA)	
	3	1	**4B-4274**	4	WASHER (5.5X13X1.2-MM THK)	
M	4	1	**8T-0288**	4	BOLT (M5X0.8X12-MM)	

M-METRIC PART

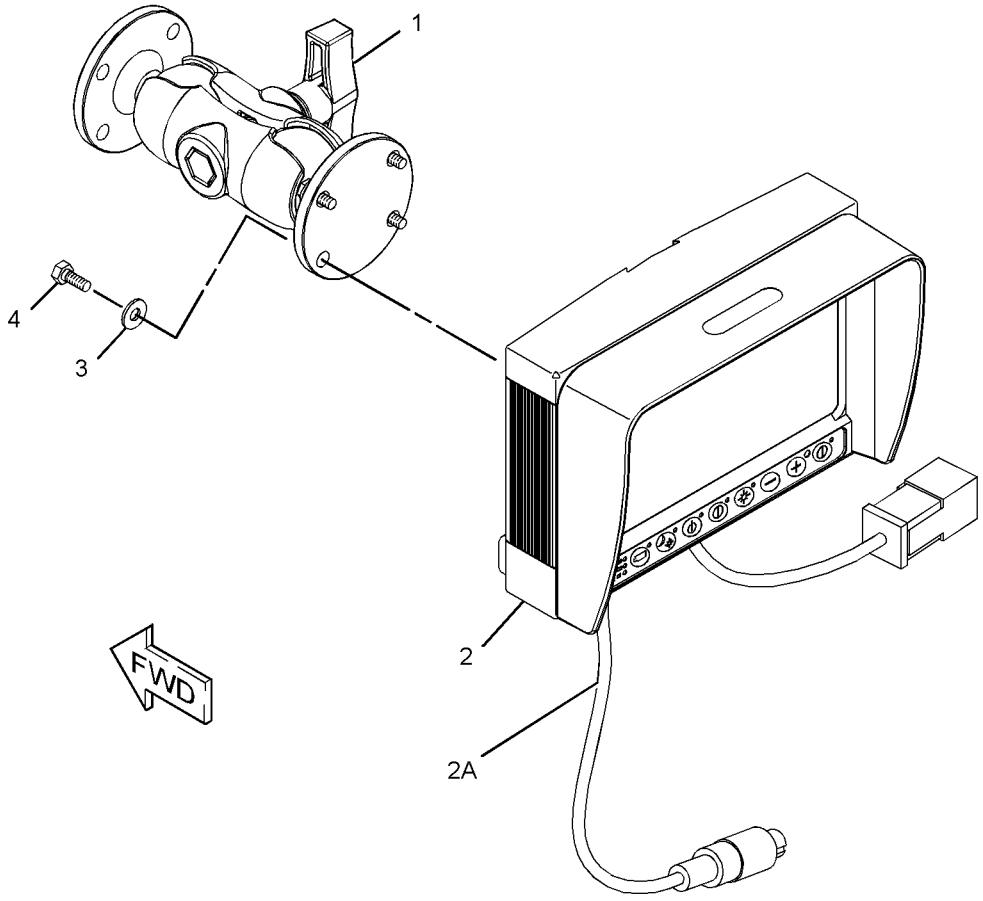

GRAPHIC #1 **<END>** g01383320

ELECTRICAL AND STARTING SYSTEM

279-8995 ELECTRONICS AR-MACHINE

S/N: SMC1-UP; GCT1-UP

PART OF 269-2037, 269-2038 GENERAL AR

SMCS-7610, 7620 **i02755535**

NOTE	PART NUMBER	QTY	PART NAME 1 2 3 4 5 6 (PRODUCT LEVEL)	SEE PAGE
Y	*288-2502*	1	ELECTRONICS GP-MONITOR	170
Y	*288-2501*	1	ELECTRONICS GP-POWER TRAIN	170

Y-SEPARATE ILLUSTRATION

<END>

262-1421 ELECTRONICS GP-COMMUNICATION–

PRODUCT LINK 300

S/N: SMC1-UP; GCT1-UP

PART OF 282-8483, 282-8484 INSTALLATION GP-COMMUNICATION

AN ATTACHMENT

SMCS-7606, 7610, 7620 **i02798862**

NOTE	REF NO	GRAPHIC REF	PART NUMBER	QTY	PART NAME 1 2 3 4 5 6 (PRODUCT LEVEL)	SEE PAGE
	1	1	**311-8375**	1	SOFTWARE GP-COMMUNICATION (PRODUCT LINK 300)	
					-OR-	
	2	1	**311-8376**	1	SERVICE GP-COMMUNICATION (PRODUCT LINK 300)	
					(OPTIONAL SERVICE REPLACEMENT)(INCLUDES CONTROL GP & SOFTWARE)	
	2A	1	**7X-6315**	1	STRAP AS-GROUND	
	2B	1	**126-7574**	1	SCREW-PAN HEAD (8-32X9.52-MM)	
	2C	1	**134-4126**	1	WASHER (4.52X8.28X0.76-MM THK)	

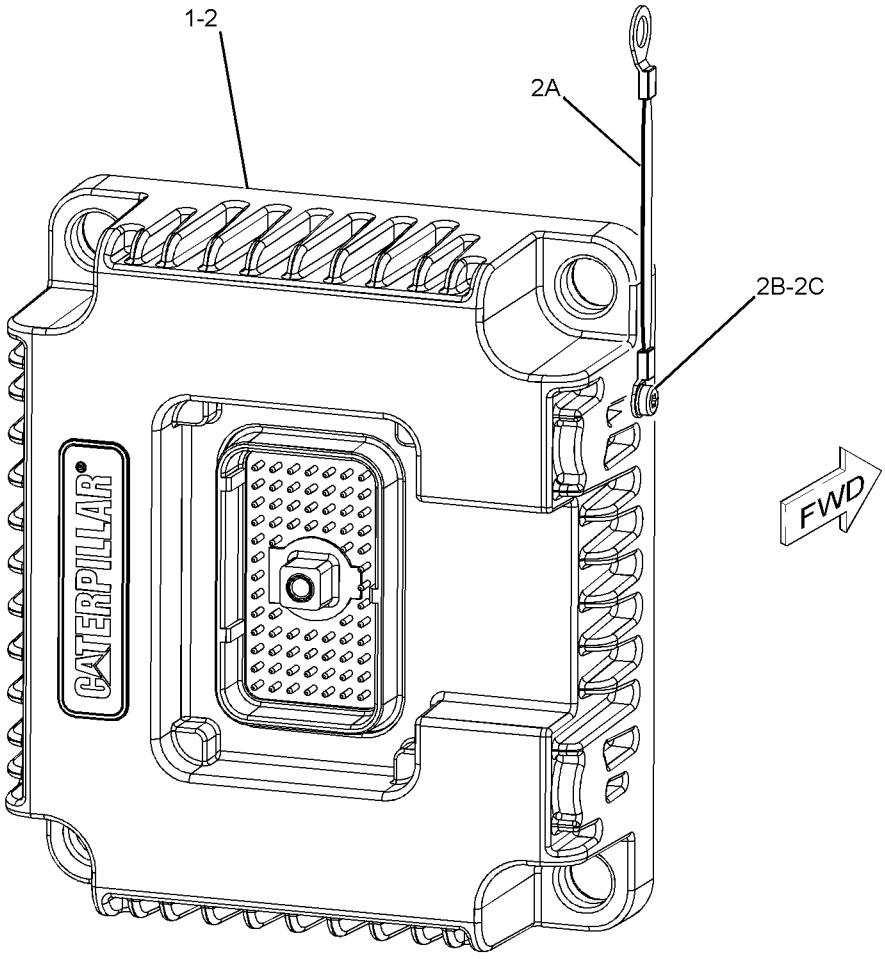

GRAPHIC #1 **<END>** g01357628

ELECTRICAL AND STARTING SYSTEM

307-1613 ELECTRONICS GP-IMPLEMENT

S/N: SMC1-UP; GCT1-UP

AN ATTACHMENT

SMCS-5701, 7610, 7620 **i02771679**

NOTE	PART NUMBER	QTY	PART NAME 1 2 3 4 5 6 (PRODUCT LEVEL)	SEE PAGE
	264-3177	1	CONFIGURATION-PREMIUM	
			(DLR INSTALL CONFIG: SEE IRM: EES03-01)	

<END>

288-2502 ELECTRONICS GP-MONITOR

S/N: SMC1-UP; GCT1-UP

PART OF 279-8995 ELECTRONICS AR-MACHINE

SMCS-7490, 7601, 7603, 7610, 7620 **i02798864**

NOTE	PART NUMBER	QTY	PART NAME 1 2 3 4 5 6 (PRODUCT LEVEL)	SEE PAGE
	287-7131	1	SOFTWARE GP-MONITOR	
			—OR—	
	287-7132	1	SERVICE GP-MONITOR	
			(OPTIONAL SERVICE REPLACEMENT)(INCLUDES CONTROL GP & SOFTWARE)	

<END>

288-2501 ELECTRONICS GP-POWER TRAIN

S/N: SMC1-UP; GCT1-UP

PART OF 279-8995 ELECTRONICS AR-MACHINE

SMCS-4800, 4808, 7610, 7620 **i02798866**

NOTE	PART NUMBER	QTY	PART NAME 1 2 3 4 5 6 (PRODUCT LEVEL)	SEE PAGE
	288-1596	1	SOFTWARE GP-POWER TRAIN	
			—OR—	
	288-1597	1	SERVICE GP-POWER TRAIN	
			(OPTIONAL SERVICE REPLACEMENT)(INCLUDES CONTROL GP & SOFTWARE)	

<END>

283-2442 GRADE CONTROL AR—ACCUGRADE LASER

S/N: SMC1-UP; GCT1-UP

FOR USE WITH TRACTORS WITH REAR HYDRUALICS, 277-8761—PAGE 467, TRACTORS WITHOUT REAR HYDRAULICS, 277-8760—PAGE 467, MOUNTING GP-KIT (BLADE SPECIFIC), CONTROL AR-HYDRAULIC. CANNOT BE USED WITH DISPOSAL AR, CANOPY AR AN ATTACHMENT

SMCS-7220 **i02765120**

NOTE	PART NUMBER	QTY	PART NAME 1 2 3 4 5 6 (PRODUCT LEVEL)	SEE PAGE
Y	*239-5120*	1	MOUNTING GP-GRADE CONTROL (CAB)	206
Y	*252-6945*	1	MOUNTING GP-MONITOR (GRADE CONTROL)	699
Y	*283-1231*	1	WIRING GP-GRADE CONTROL	251
	245-7725	1	FILM-IDENTIFICATION (JOYSTICK)	
			ON RAISED SURFACE TO RIGHT OF CONTROL AND DIRECTLY BELOW BULLDOZER CONTROL FILM	
	266-1586	1	PLUG AS-CODE (GRADE CONTROL)	
	102-8805	1	KIT-RECEPTACLE (6-PIN)	
			(INCLUDES RECEPTACLE AS & WEDGE)	
	8T-8737	3	PLUG-SEAL	
	9X-3401	3	PIN-CONNECTOR (16-GA TO 18-GA)	

Y-SEPARATE ILLUSTRATION

<END>

292-0293 GRADE CONTROL AR-LASER—ACCUGRADE, SINGLE

S/N: SMC1-UP; GCT1-UP

FIELD INSTALLATION

SMCS-7220 **i02649146**

NOTE	PART NUMBER	QTY	PART NAME 1 2 3 4 5 6 (PRODUCT LEVEL)	SEE PAGE
Y	**292-0309**	1	DISPLAY GP-MONITOR (CD610)	659
Y	*292-0281*	1	MAST GP (LASER RECEIVER) (GRADE CONTROL)	612
Y	*292-0285*	1	RECEIVER GP-LASER (GRADE CONTROL)	213
	235-4587	1	CASE-PLASTIC	

Y-SEPARATE ILLUSTRATION

<END>

292-0312 GRADE CONTROL AR-LASER—ACCUGRADE, DUAL

S/N: SMC1-UP; GCT1-UP

FIELD INSTALLATION

SMCS-7220 **i02649497**

NOTE	PART NUMBER	QTY	PART NAME 1 2 3 4 5 6 (PRODUCT LEVEL)	SEE PAGE
Y	**292-0309**	1	DISPLAY GP-MONITOR (CD610)	659
Y	*292-0281*	2	MAST GP (LASER RECEIVER) (GRADE CONTROL)	612
Y	*292-0285*	2	RECEIVER GP-LASER (GRADE CONTROL)	213
	235-4587	1	CASE-PLASTIC	

Y-SEPARATE ILLUSTRATION

<END>

290-5571 GRADE CONTROL AR-SATELLITE–
ACCUGRADE, DUAL GNSS
S/N: SMC1-UP; GCT1-UP
FIELD INSTALLATION

SMCS-7220 **i02625745**

NOTE	PART NUMBER	QTY	PART NAME 1 2 3 4 5 6 (PRODUCT LEVEL)	SEE PAGE
Y	*286-0134*	1	DISPLAY GP-MONITOR (CD700) (GRADE CONTROL)	659
Y	*292-0290*	2	MAST GP	612
Y	*286-9124*	3	MONITOR AS (LIGHT BAR) (GRADE CONTROL)	691
Y	*292-0296*	1	MOUNTING GP-GRADE CONTROL	208
Y	*292-0291*	1	RECEIVER GP-SATELLITE (DUAL GNSS, MS990)	213
	254-9136	2	CABLE-COILED (RECEIVER)	
Y-SEPARATE ILLUSTRATION				

<END>

292-0280 GRADE CONTROL AR-SATELLITE–
ACCUGRADE, SINGLE GNSS
S/N: SMC1-UP; GCT1-UP
FIELD INSTALLATION

SMCS-7220 **i02768427**

NOTE	PART NUMBER	QTY	PART NAME 1 2 3 4 5 6 (PRODUCT LEVEL)	SEE PAGE
Y	*286-0134*	1	DISPLAY GP-MONITOR (CD700)	659
Y	*292-0290*	1	MAST GP	612
Y	**286-9124**	3	MONITOR AS (LIGHT BAR)	691
Y	*292-0296*	1	MOUNTING GP-GRADE CONTROL	208
Y	*292-0292*	1	RECEIVER GP-SATELLITE (SINGLE GNSS, MS990)	214
	254-9136	1	CABLE-COILED (RECEIVER)	
	254-9951	1	CABLE-COILED (SENSOR)	
	276-6146	1	SENSOR AS-POSITION (ANGLE)	
	304-4231	1	SOFTWARE (ANGLE SENSOR)	
Y-SEPARATE ILLUSTRATION				

<END>

197-6280 HEATER GP-JACKET WATER

S/N: SMC1-UP; GCT1-UP
120 VOLT 15 AMPERE
AN ATTACHMENT

SMCS-1383 **i02430239**

NOTE	REF NO	GRAPHIC REF	PART NUMBER	QTY	PART NAME 1 2 3 4 5 6 (PRODUCT LEVEL)	SEE PAGE
C	1	1	**7K-1181**	11	STRAP-CABLE	
C	2	1	**9G-6655**	1	ELEMENT AS-JACKET WATER HEATER (120-VOLT, 1500-WATT)	
	3	1	**197-6281**	1	CORD AS	
	4	1	**7M-8485**	1	SEAL-O-RING	
C	5	1	**5P-0492**	1	ADAPTER	
C	6	1	**4P-7581**	1	CLIP	
	7	1	**214-9389**	1	FILM-IDENTIFICATION (WATER HEATER)	

C-CHANGE FROM PREVIOUS TYPE

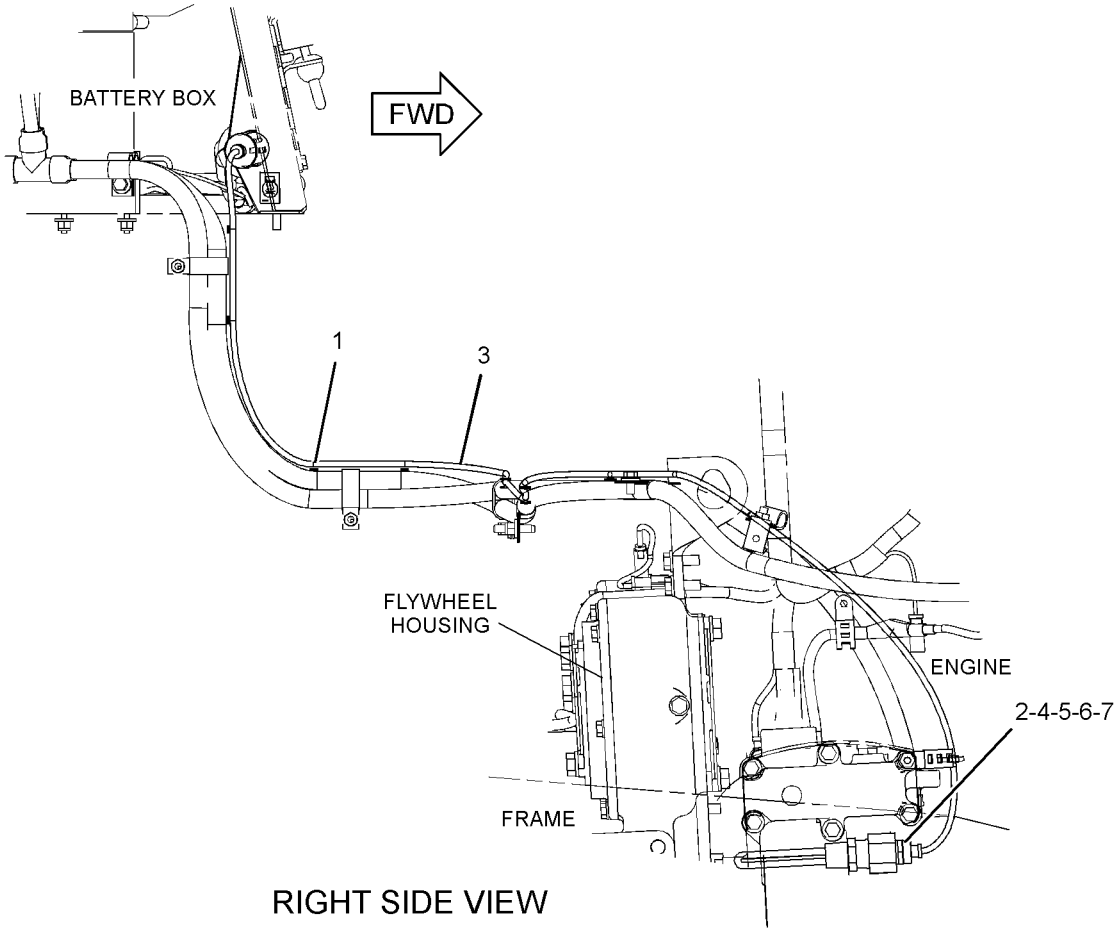

RIGHT SIDE VIEW

GRAPHIC #1 **<END>** g01195449

ELECTRICAL AND STARTING SYSTEM

281-3175 INSTALLATION GP-CAMERA

S/N: SMC1-UP; GCT1-UP

FOR USE WITH 235-6337—PAGE 189, 235-6338—PAGE 192, 235-6339—PAGE 195, 235-6340—PAGE 198, 263-7419—PAGE 202

AN ATTACHMENT

SMCS-1408, 7348 **i02748462**

NOTE	REF NO	GRAPHIC REF	PART NUMBER	QTY	PART NAME 1 2 3 4 5 6 (PRODUCT LEVEL)	SEE PAGE
	1	1	**248-6974**	1	PLATE AS	
	2	1	**248-6979**	1	BRACKET	
J	3	1	**251-4160**	1	CAMERA GP (115-DEG, COLOR)	
	4	1	**251-8248**	1	CABLE AS-COMMUNICATION (5-M)	
	5	1	**261-3223**	1	CABLE AS-COMMUNICATION (3-M)	
Y	6	1	**261-3226**	1	DISPLAY GP-CAMERA (WORK AREA VISUAL SYSTEM)	167
	7	1	**281-3174**	1	HARNESS AS-CONTROL	
		1	**102-8802**	2	KIT-RECEPTACLE (2-PIN)	
					(EACH INCLUDES RECEPTACLE AS & WEDGE)	
		1	**155-2270**	2	KIT-CONNECTING PLUG (2-PIN)	
		1	**155-2274**	1	KIT-CONNECTING PLUG (6-PIN)	
					(EACH INCLUDES PLUG AS, WEDGE, & INTERFACE SEAL)	
	8	1	**281-3176**	1	SHROUD AS-FRONT	
		1	**170-5849**	1	SHROUD AS	
B	9	1	**4H-2558**	1	GROMMET	
	10	1	**4P-8134**	1	CLIP	
	11	1	**5F-9757**	1	GROMMET	
	12	1	**7X-7729**	2	WASHER (11X25X3-MM THK)	
M	13	1	**8T-4136**	2	BOLT (M10X1.5X25-MM)	
M	14	1	**8T-4971**	4	BOLT (M6X1X30-MM)	
	15	1	**9X-8256**	4	WASHER (6.6X12X2-MM THK)	
B	16	1	**7K-1181**	22	STRAP-CABLE	
	17	1	**2M-3432**	1	GROMMET	
					AVAILABLE REPAIR KIT(S):	
J			**251-4162**	1	KIT-BRACKET (CAMERA)	
					(INCLUDES BRACKET, BOLTS, LOCKNUTS, GASKET, & ALLENKEY)	

B-USE AS REQUIRED
J-KIT MARKED J SERVICES PART(S) MARKED J
M-METRIC PART
Y-SEPARATE ILLUSTRATION

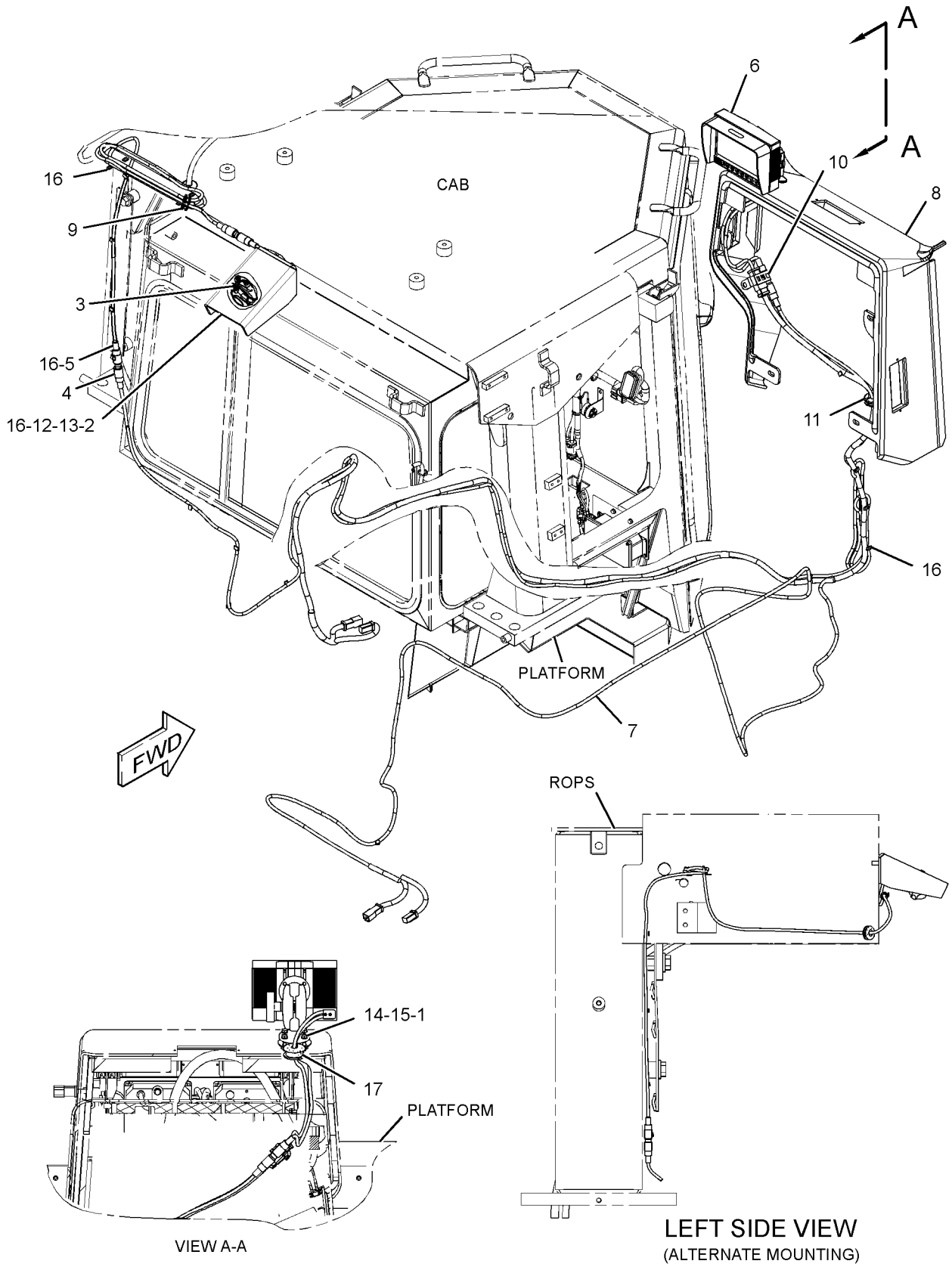

GRAPHIC #1 **<END>** g01313718

282-8483 INSTALLATION GP-COMMUNICATION–

PRODUCT LINK 321SR

S/N: SMC1-UP; GCT1-UP

CANNOT BE USED WITH 213-7064–PAGE 720, 226-3400–PAGE 721, 228-7854–PAGE 626

AN ATTACHMENT

SMCS-7606 **i02760696**

NOTE	REF NO	GRAPHIC REF	PART NUMBER	QTY	PART NAME 1 2 3 4 5 6 (PRODUCT LEVEL)	SEE PAGE
	1	1	**7K-1181**	11	STRAP-CABLE	
	2	1	**8C-5607**	8	MOUNT-ISOLATION	
	3	1	**8C-5608**	4	SPACER (6.5X9.5X25.4-MM THK)	
	4	1	**129-8331**	1	PLATE AS	
	5	1	**230-1340**	1	FILM-WARNING (PRODUCT LINK RADIO, U.S.)	
Y	6	1	**262-1421**	1	ELECTRONICS GP-COMMUNICATION (PRODUCT LINK 300)	169
Y	7	1	**263-9088**	1	RADIO GP-COMMUNICATION (PRODUCT LINK 121SR)	213
	8	1	**268-5986**	1	HARNESS AS-CONTROL (PRODUCT LINK)	
		1	**9X-6772**	1	STRAP-CABLE	
		1	**126-1774**	1	COVER-CONNECTOR	
		1	**160-7690**	1	PLUG AS-CONNECTOR (70-PIN)	
		1	**155-2255**	1	KIT-CONNECTING PLUG (12-PIN)	
		1	**155-2271**	1	KIT-CONNECTING PLUG (4-PIN)	
					(EACH INCLUDES PLUG AS, WEDGE, & INTERFACE SEAL)	
	9	1	**306-0177**	1	BRACKET	
	10	1	**284-8532**	1	ANTENNA AS	
		1	**301-0589**	1	ANTENNA	
M	11	1	**7X-2562**	2	BOLT (M20X2.5X45-MM)	
	12	1	**7X-7729**	2	WASHER (11X25X3-MM THK)	
M	13	1	**8T-2192**	4	BOLT (M6X1X45-MM)	
M	14	1	**8T-4136**	2	BOLT (M10X1.5X25-MM)	
M	15	1	**8T-4181**	4	BOLT (M6X1X20-MM)	
	16	1	**8T-5439**	2	WASHER-HARD (21.5X45X6-MM THK)	
	17	1	**9X-6165**	4	WASHER (6.5X22X2.5-MM THK)	
	18	1	**9X-8256**	4	WASHER (6.6X12X2-MM THK)	

M-METRIC PART
Y-SEPARATE ILLUSTRATION

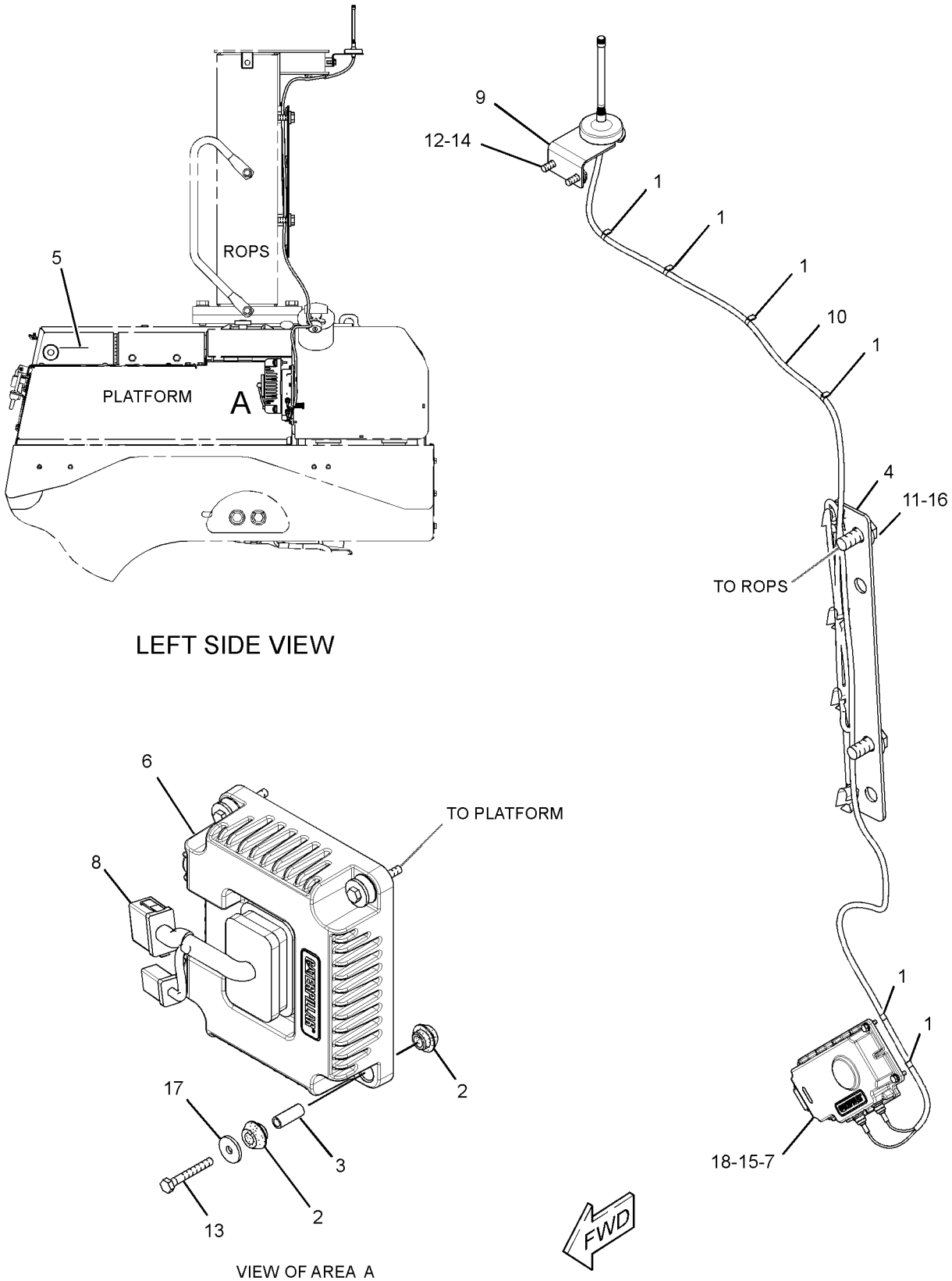

GRAPHIC #1 **<END>** g01359068

282-8484 INSTALLATION GP-COMMUNICATION–

PRODUCT LINK 321SR

S/N: SMC1-UP; GCT1-UP

FOR USE WITH 213-7064–PAGE 720, 226-3400–PAGE 721, 228-7854–PAGE 626

AN ATTACHMENT

SMCS-7606 **i02760737**

NOTE	REF NO	GRAPHIC REF	PART NUMBER	QTY	PART NAME 1 2 3 4 5 6 (PRODUCT LEVEL)	SEE PAGE
	1	1	**7K-1181**	10	STRAP-CABLE	
	2	1	**8C-5607**	8	MOUNT-ISOLATION	
	3	1	**8C-5608**	4	SPACER (6.5X9.5X25.4-MM THK)	
	4	1	**197-7447**	1	BRACKET	
	5	1	**230-1340**	1	FILM-WARNING (PRODUCT LINK RADIO, U.S.)	
Y	6	1	**262-1421**	1	ELECTRONICS GP-COMMUNICATION (PRODUCT LINK 300)	169
Y	7	1	**263-9088**	1	RADIO GP-COMMUNICATION (PRODUCT LINK 121SR)	213
	8	1	**268-5986**	1	HARNESS AS-CONTROL (PRODUCT LINK)	
		1	**9X-6772**	1	STRAP-CABLE	
		1	**126-1774**	1	COVER-CONNECTOR	
		1	**160-7690**	1	PLUG AS-CONNECTOR (70-PIN)	
		1	**155-2255**	1	KIT-CONNECTING PLUG (12-PIN)	
		1	**155-2271**	1	KIT-CONNECTING PLUG (4-PIN)	
					(EACH INCLUDES PLUG AS, WEDGE, & INTERFACE SEAL)	
	9	1	**268-5987**	1	HARNESS AS-RADIO (PRODUCT LINK)	
		1	**102-8806**	1	KIT-RECEPTACLE (8-PIN)	
					(INCLUDES RECEPTACLE AS & WEDGE)	
		1	**155-2255**	1	KIT-CONNECTING PLUG (12-PIN)	
					(INCLUDES PLUG AS, WEDGE, & INTERFACE SEAL)	
	10	1	**266-2861**	1	ANTENNA AS (PRODUCT LINK)	
		1	**223-4296**	1	ANTENNA (WHIP)	
	11	1	**6S-1066**	1	GROMMET (41.28-MM OD)	
M	12	1	**8T-2192**	4	BOLT (M6X1X45-MM)	
	13	1	**8T-4121**	4	WASHER-HARD (11X21X2.5-MM THK)	
	14	1	**8T-4123**	1	WASHER (22X35X3.5-MM THK)	
M	15	1	**8T-4133**	2	NUT (M10X1.5-THD)	
M	16	1	**8T-4136**	2	BOLT (M10X1.5X25-MM)	
M	17	1	**8T-4181**	4	BOLT (M6X1X20-MM)	
M	18	1	**8T-4780**	1	BOLT (M20X2.5X30-MM)	
	19	1	**9X-6165**	4	WASHER (6.5X22X2.5-MM THK)	
	20	1	**9X-8256**	4	WASHER (6.6X12X2-MM THK)	

M-METRIC PART
Y-SEPARATE ILLUSTRATION

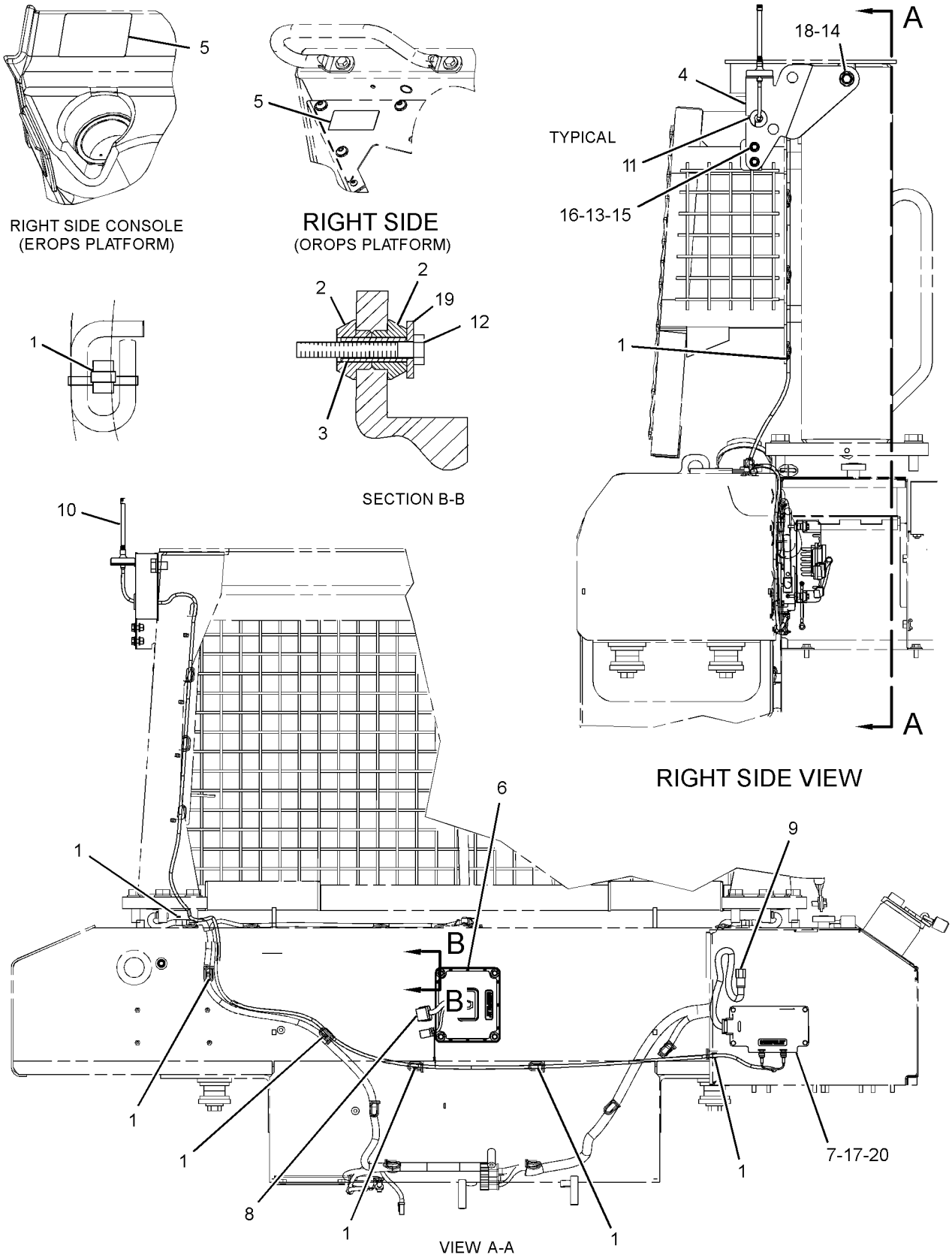

GRAPHIC #1 **<END>** g01360602

ELECTRICAL AND STARTING SYSTEM

227-1228 INSTALLATION GP-SECURITY

S/N: SMC1-UP; GCT1-UP
AN ATTACHMENT

SMCS-7631 **i02456033**

NOTE	REF NO	GRAPHIC REF	PART NUMBER	QTY	PART NAME 1 2 3 4 5 6 (PRODUCT LEVEL)	SEE PAGE
	1	1	**102-8802**	2	KIT-RECEPTACLE (2-PIN)	
					(EACH INCLUDES RECEPTACLE AS & WEDGE)	
	2	1	**8C-5607**	4	MOUNT-ISOLATION	
	3	1	**8C-5608**	2	SPACER (6.5X9.5X25.4-MM THK)	
	4	1	**192-9734**	1	FILM-IDENTIFICATION (SECURITY SYSTEM)	
	5	1	**206-5162**	2	KEY AS-ELECTRONIC (SECURITY) (YELLOW)	
					—OR—	
		1	**206-5165**	2	KEY AS-ELECTRONIC (SECURITY) (GRAY)	
	6	1	**205-8257**	1	COIL AS (EXCITER)	
D		1	**5P-5677**		WIRE (18-GA, BLACK) (0.4-M)	
		1	**186-3735**	2	PIN-CONNECTOR (16-GA TO 18-GA)	
	6A	1	**198-5389**	1	FILM-IDENTIFICATION (IGNITION SWITCH)	
	7	1	**218-0404**	1	MODULE GP-INTERFACE (KEY)	
	8	1	**219-6314**	2	KEY RING (IDENTIFICATION)	
	10	1	**242-1584**	1	HARNESS AS-WIRING (MACHINE SECURITY SYSTEM)	
		1	**102-8806**	1	KIT-RECEPTACLE (8-PIN)	
					(INCLUDES RECEPTACLE AS & WEDGE)	
		1	**155-2265**	1	KIT-CONNECTING PLUG (8-PIN)	
		1	**155-2270**	2	KIT-CONNECTING PLUG (2-PIN)	
					(EACH INCLUDES PLUG AS. WEDGE, & INTERFACE SEAL)	
	11	1	**242-3282**	1	LAMP-LED (RED, 24-VOLT) (MACHINE SECURITY SYSTEM)	
	13	1	**4P-7581**	1	CLIP	
	14	1	**7K-1181**	10	STRAP-CABLE	
M	15	1	**8C-8451**	1	BOLT (M6X1X40-MM)	
M	16	1	**9X-2480**	1	BOLT (M6X1X45-MM)	
	17	1	**9X-6165**	3	WASHER (6.5X22X2.5-MM THK)	
F			**238-5017**	1	CONFIGURATION-PREMIUM (SECURITY)	
					(DLR INSTALL CONFIG: SEE IRM: EES03-01)	

D-ORDER BY THE METER
F-NOT SHOWN
M-METRIC PART

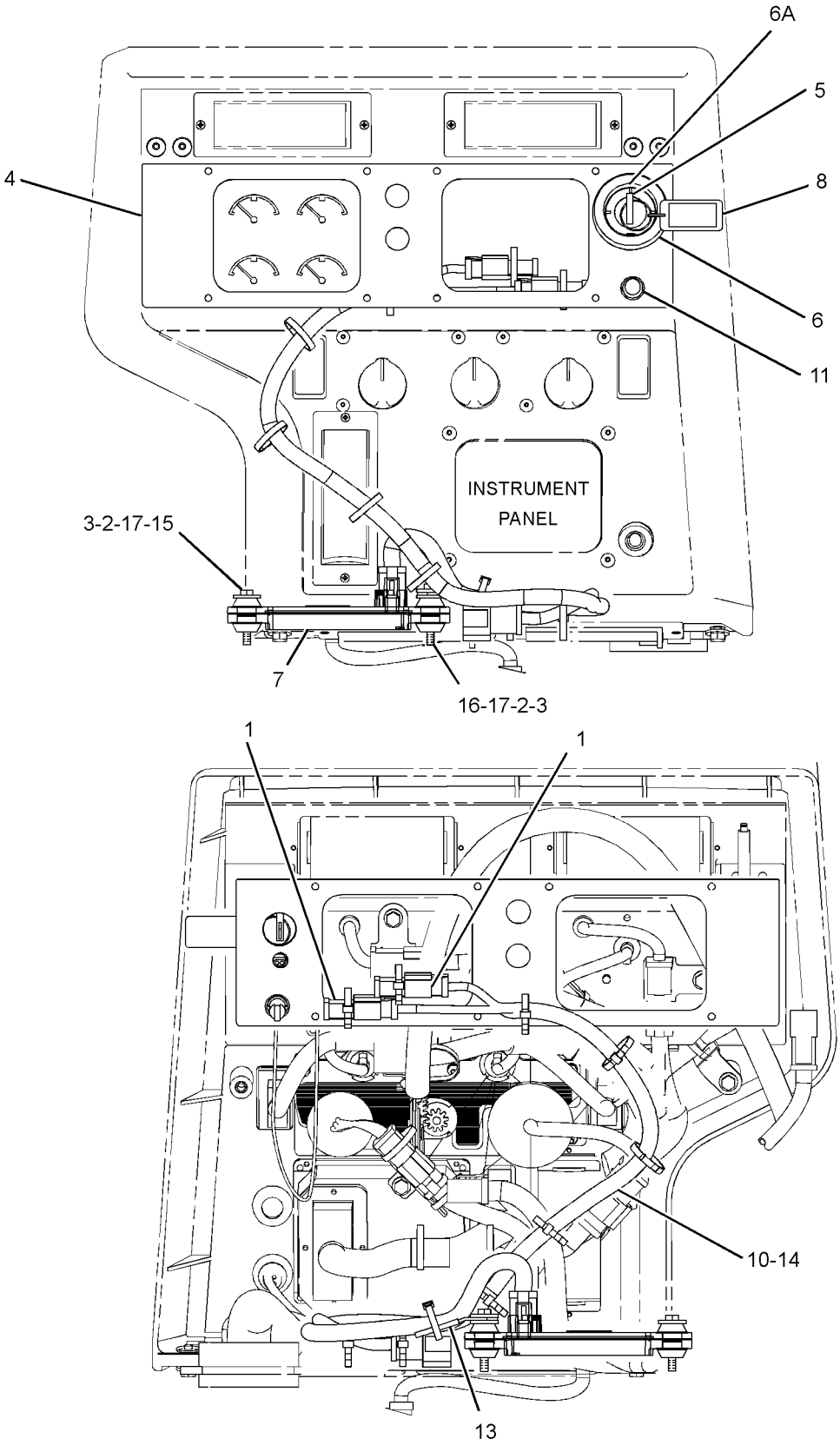

GRAPHIC #1 **<END>** g01215573

3E-6389 LAMP GP-DOME

S/N: SMC1-UP; GCT1-UP
24-VOLT, WITH SWITCH
PART OF 161-1096 LINER GP-CAB
ALSO AN ATTACHMENT

SMCS-1433 **i02561652**

NOTE	REF NO	GRAPHIC REF	PART NUMBER	QTY	PART NAME 1 2 3 4 5 6 (PRODUCT LEVEL)	SEE PAGE
	1	1	**7N-9943**	1	LAMP (24-VOLT)	
	2	1	**102-8803**	1	KIT-RECEPTACLE (3-PIN)	
					(INCLUDES RECEPTACLE AS & WEDGE)	
	3	1	**186-3735**	3	PIN-CONNECTOR (16-GA TO 18-GA)	
	4	1	**7T-0020**	1	LENS-DOME LAMP	

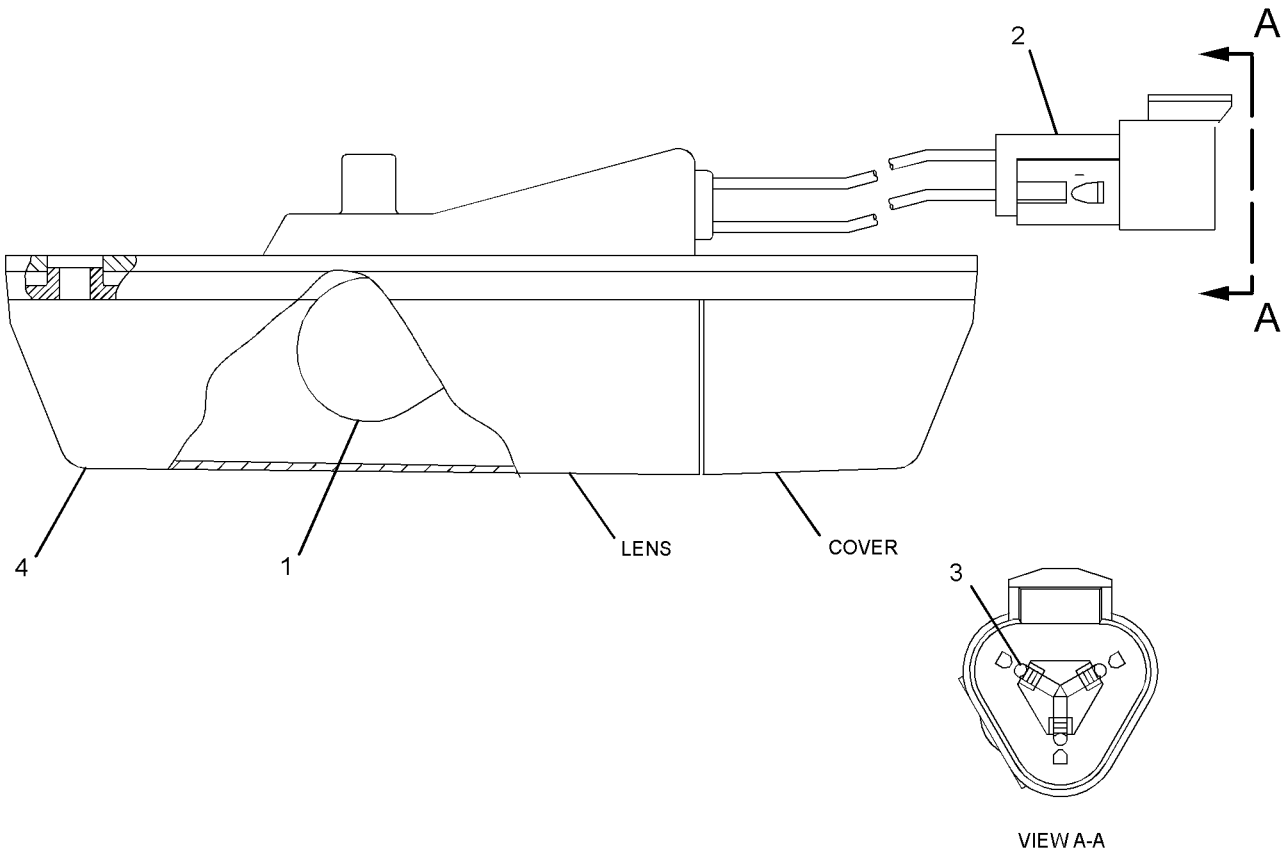

GRAPHIC #1 **<END>** g01270113

147-0319 LAMP GP-FLOOD

S/N: SMC1-UP; GCT1-UP
24-VOLT, 65-WATT
PART OF 152-8427, 235-6336, 235-6337, 235-6338, 235-6339, 235-6340, 263-7419
LIGHTING GP-FLOOD
AN ATTACHMENT

SMCS-1434 **i02798873**

NOTE	REF NO	GRAPHIC REF	PART NUMBER	QTY	PART NAME 1 2 3 4 5 6 (PRODUCT LEVEL)	SEE PAGE
	1	1	**9X-3463**	1	LAMP-HALOGEN (24-VOLT, 65-WATT)	
	2	1	**158-0250**	1	BODY AS-LAMP	
	3	1	**158-0248**	1	LENS AS (FLOOD)	
	4	1	**158-0252**	1	BEZEL	
	5	1	**188-8849**	2	CLAMP	

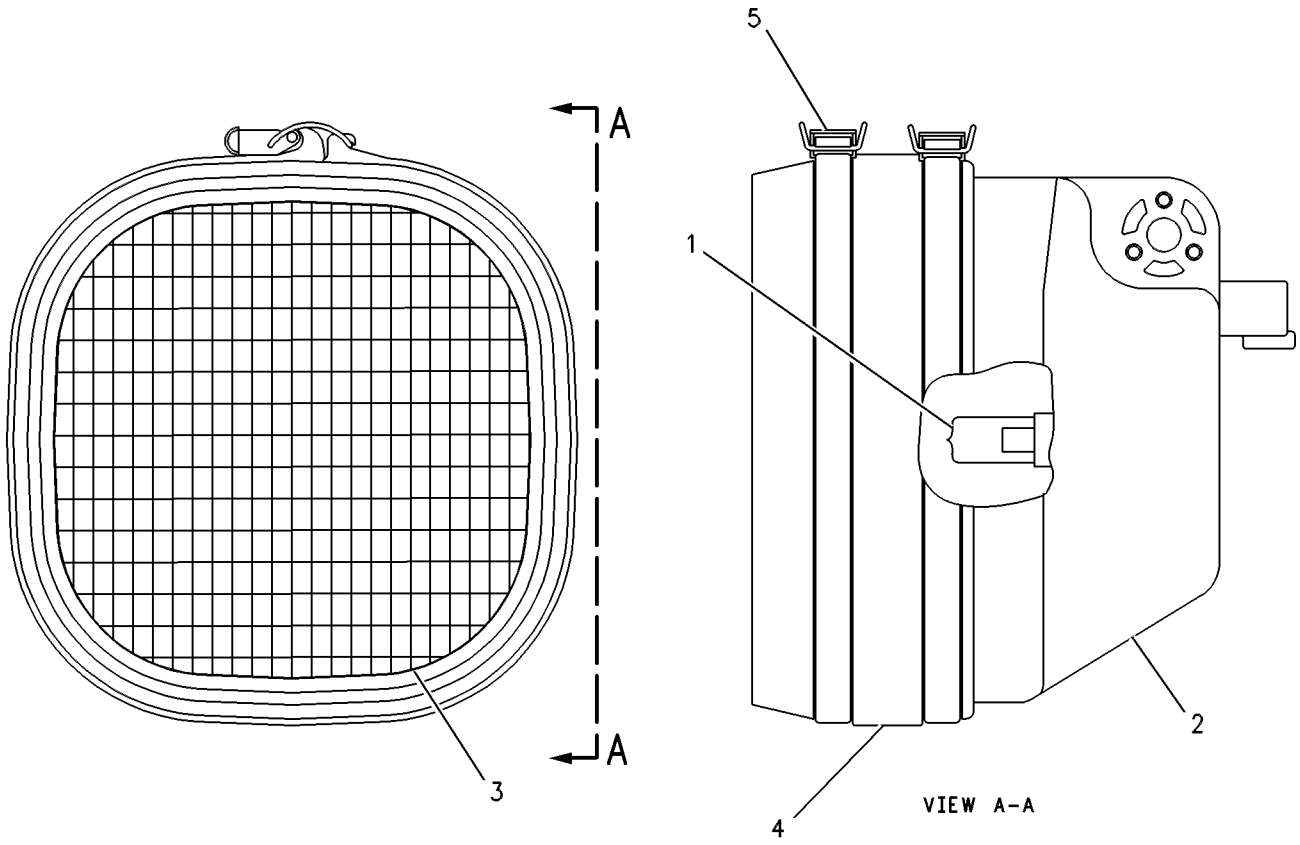

GRAPHIC #1 **<END>** g00458549

153-2073 LAMP GP-FLOOD

S/N: SMC1-UP; GCT1-UP
24-VOLT, 65-WATT
PART OF 235-6340 LIGHTING GP-FLOOD
AN ATTACHMENT

SMCS-1434 **i02207331**

NOTE	REF NO	GRAPHIC REF	PART NUMBER	QTY	PART NAME 1 2 3 4 5 6 (PRODUCT LEVEL)	SEE PAGE
	1	1	**9X-3463**	1	LAMP-HALOGEN (24-VOLT, 65-WATT)	
	2	1	**158-0250**	1	BODY AS-LAMP	
	3	1	**158-0248**	1	LENS AS	
	4	1	**158-0252**	1	BEZEL	
	5	1	**188-8849**	2	CLAMP	

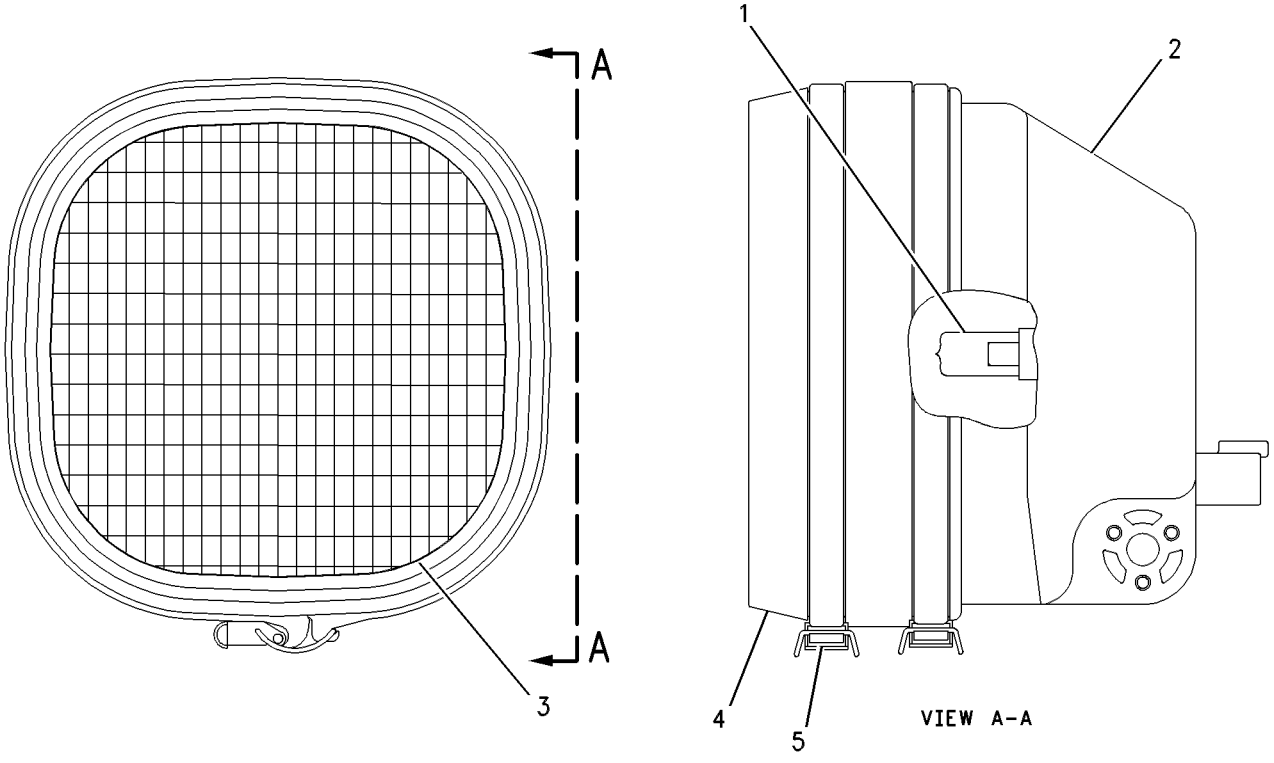

GRAPHIC #1 **<END>** g00449633

254-8155 LAMP GP-FLOOD

S/N: SMC1-UP; GCT1-UP
24-VOLT, 65-WATT
PART OF 235-6336, 235-6337, 235-6338, 235-6339, 235-6340, 263-7419 LIGHTING GP-FLOOD, 279-9544 WIRING GP-ENGINE
ALSO AN ATTACHMENT

SMCS-1434 **i02757297**

NOTE	REF NO	GRAPHIC REF	PART NUMBER	QTY	PART NAME 1 2 3 4 5 6 (PRODUCT LEVEL)	SEE PAGE
	1	1	**9X-3463**	1	LAMP-HALOGEN (24-VOLT, 65-WATT)	
M	2	1	**8T-4154**	1	BOLT (M8X1.25X35-MM)	
M	3	1	**5C-7261**	1	NUT (M8X1.25-THD)	
	4	1	**8T-4224**	2	WASHER-HARD (8.8X16X2-MM THK)	
	5	1	**9X-4244**	2	SCREW-SPECIAL	
	6	1	**202-6614**	1	LENS AS (FLOODLIGHT)	
	7	1	**175-4292**	1	BODY AS	
	8	1	**164-7556**	1	CLIP (LAMP RETAINING)	
	9	1	**175-4291**	1	BRACKET AS	

M-METRIC PART

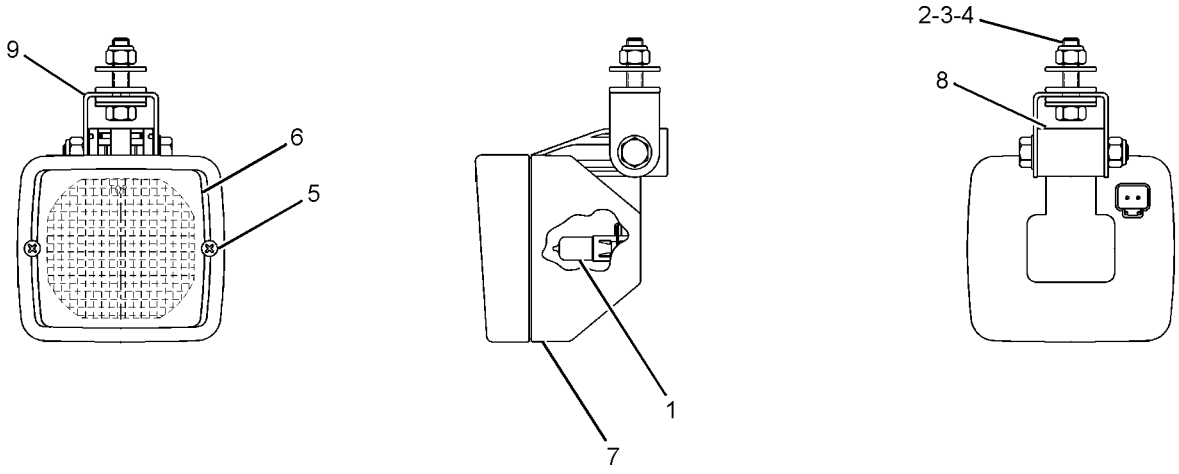

GRAPHIC #1 **<END>** g01205426

152-8427 LIGHTING GP-FLOOD

S/N: SMC1-UP; GCT1-UP
PART OF 235-6338, 235-6339 LIGHTING GP-FLOOD
AN ATTACHMENT

SMCS-1434 **i02243148**

NOTE	REF NO	GRAPHIC REF	PART NUMBER	QTY	PART NAME 1 2 3 4 5 6 (PRODUCT LEVEL)	SEE PAGE
	1	1	**9W-4361**	4	MOUNT-FLEXIBLE	
	2	1	**111-8314**	2	BRACKET AS	
	3	1	**8T-4224**	4	WASHER-HARD (8.8X16X2-MM THK)	
Y	4	1	**147-0319**	2	LAMP GP-FLOOD (24-VOLT, 65-WATT)	183
	5	1	**5M-3062**	2	BOLT (3/8-16X0.75-IN)	
	6	1	**5P-1075**	10	WASHER-HARD (10.2X22.5X3-MM THK)	
	7	1	**5P-2955**	2	BOLT (5/16-18X2.5-IN)	
	8	1	**6V-8189**	2	NUT (5/16-18-THD)	
	9	1	**6V-8801**	8	NUT (3/8-16-THD)	
	10	1	**114-9363**	1	GUARD AS	

Y-SEPARATE ILLUSTRATION

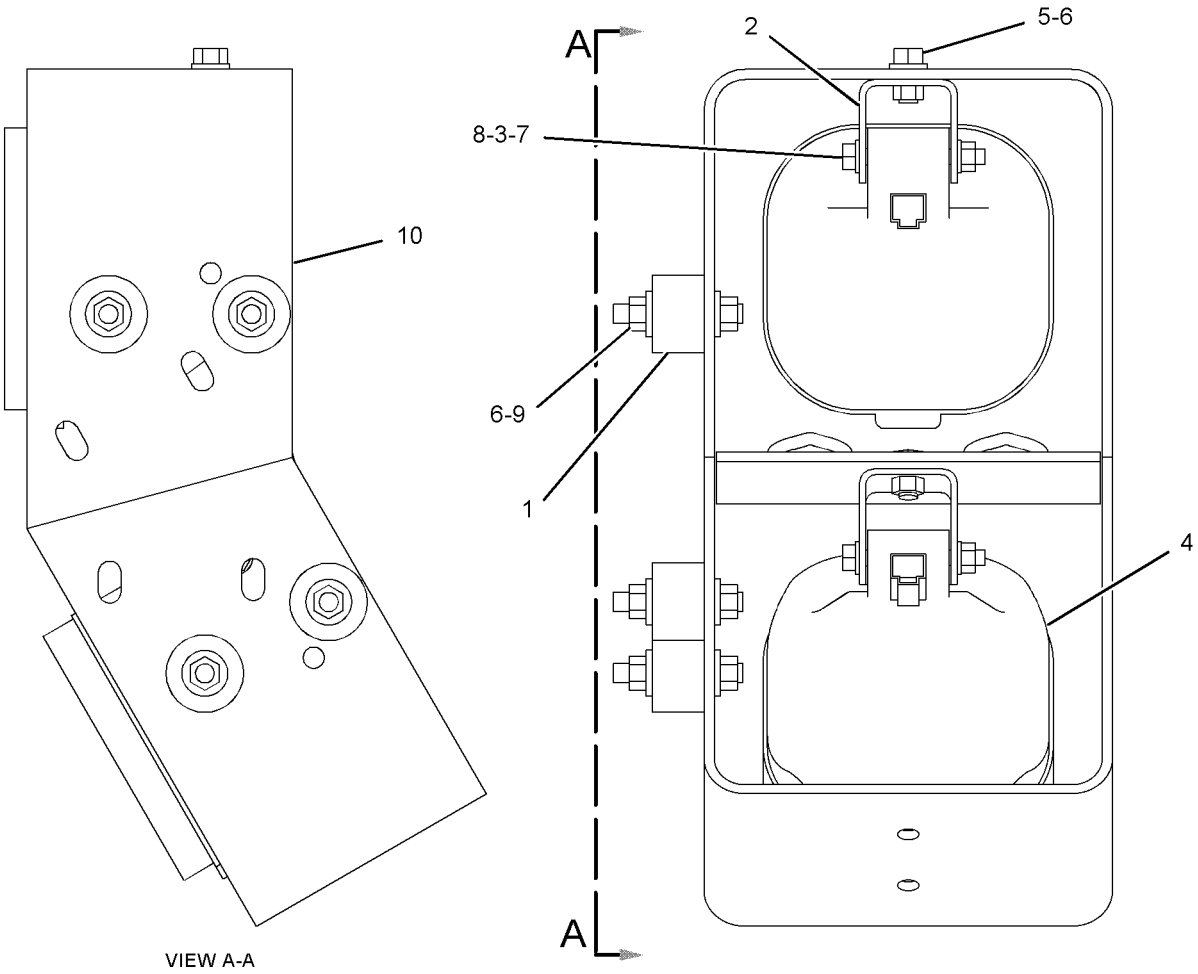

GRAPHIC #1 **<END>** g01130829

235-6336 LIGHTING GP-FLOOD—ENG COMP, FUEL TANK, RAD GUARD

S/N: SMC1-UP; GCT1-UP

AN ATTACHMENT

SMCS-1434 **i02798879**

NOTE	REF NO	GRAPHIC REF	PART NUMBER	QTY	PART NAME 1 2 3 4 5 6 (PRODUCT LEVEL)	SEE PAGE
	1	1	**111-8314**	4	BRACKET AS	
	2	1	**118-6299**	2	GUARD AS	
					(EACH INCLUDES)	
		1	**7T-1099**	1	LINK	
	3	1	**139-2116**	1	SWITCH AS-TOGGLE (UNDER HOOD SERVICE LIGHT)	
		1	**3E-3371**	1	WEDGE-RECEPTACLE LOCK (3-PIN)	
		1	**6T-3631**	2	NUT-HEX (15/32-32-THD)	
		1	**6T-3632**	1	LOCKWASHER	
		1	**6T-3633**	1	RING-LOCKING	
		1	**186-3735**	3	PIN-CONNECTOR (16-GA TO 18-GA)	
		1	**102-8803**	1	KIT-RECEPTACLE (3-PIN)	
					(INCLUDES RECEPTACLE AS & WEDGE)	
	4	1	**167-1884**	2	GUARD	
	5	1	**195-4989**	2	HARNESS AS-LIGHTING (FLOODLIGHT) (REAR)	
					(EACH INCLUDES)	
		1	**102-8804**	1	KIT-RECEPTACLE (4-PIN)	
					(INCLUDES RECEPTACLE AS & WEDGE)	
		1	**155-2270**	1	KIT-CONNECTING PLUG (2-PIN)	
					(INCLUDES PLUG AS, WEDGE, & INTERFACE SEAL)	
	6	1	**222-7885**	1	SWITCH AS-ROCKER (24-VOLT, ILLUMINATED) (REAR FLOODLIGHTS)	
	7	1	**237-7308**	1	BRACKET	
Y	8	1	**147-0319**	4	LAMP GP-FLOOD (24-VOLT, 65-WATT)	183
CY	9	1	**254-8155**	1	LAMP GP-FLOOD (24-VOLT, 65-WATT)	185
	10	1	**5M-3062**	4	BOLT (3/8-16X0.75-IN)	
	11	1	**5P-1075**	16	WASHER-HARD (10.2X22.5X3-MM THK)	
	12	1	**5P-2955**	4	BOLT (5/16-18X2.5-IN)	
	13	1	**6H-4005**	2	GROMMET	
	14	1	**6V-8189**	4	NUT (5/16-18-THD)	
B	15	1	**7K-1181**	8	STRAP-CABLE	
M	16	1	**8T-4136**	14	BOLT (M10X1.5X25-MM)	
	17	1	**8T-4224**	8	WASHER-HARD (8.8X16X2-MM THK)	
	18	1	**8T-4896**	2	WASHER-HARD (10.2X18.5X2.5-MM THK)	
	19	1	**8T-7934**	2	WASHER-HARD (11X21X5-MM THK)	
	20	1	**248-6862**	1	FILM-IDENTIFICATION (WORK LIGHT)	

B-USE AS REQUIRED
C-CHANGE FROM PREVIOUS TYPE
M-METRIC PART
Y-SEPARATE ILLUSTRATION

235-6336 **LIGHTING GP-FLOOD** *(contd.)* **i02798879**

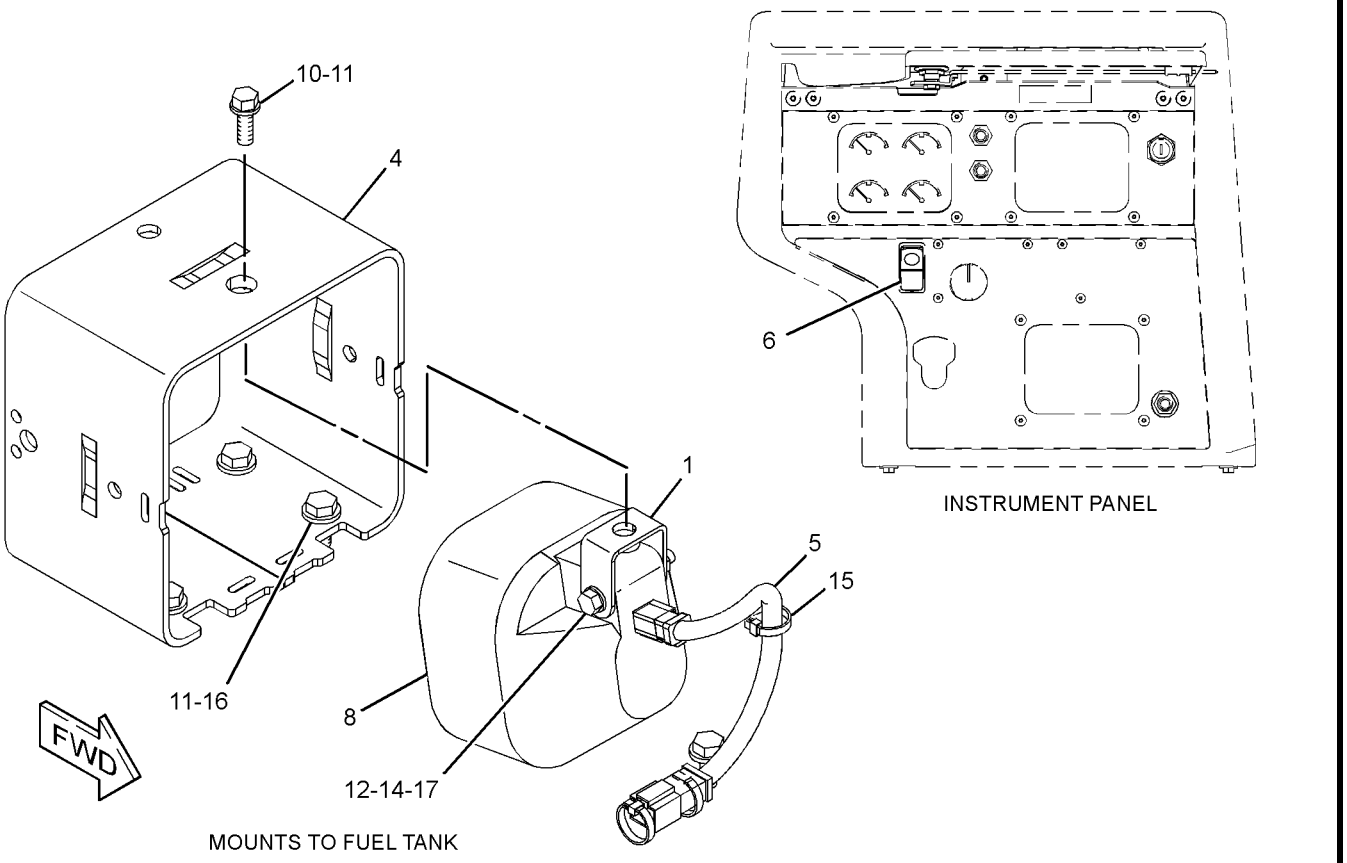

INSTRUMENT PANEL

MOUNTS TO FUEL TANK

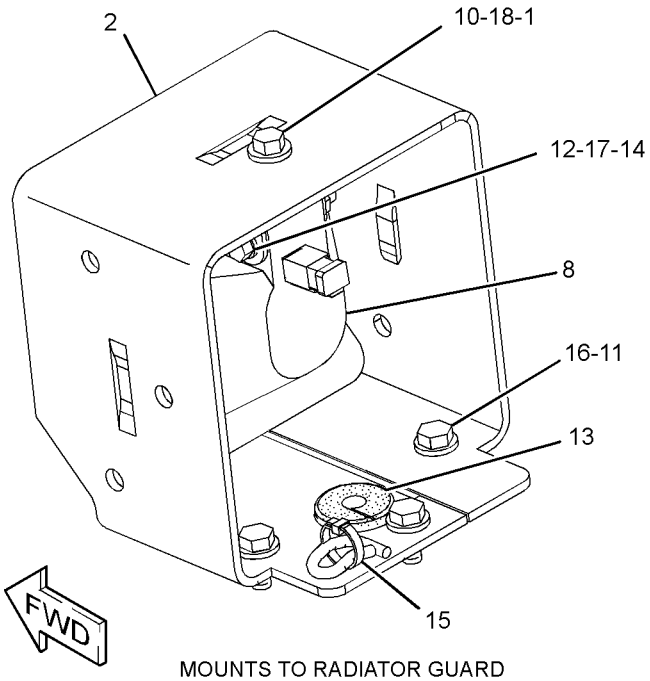

MOUNTS TO RADIATOR GUARD

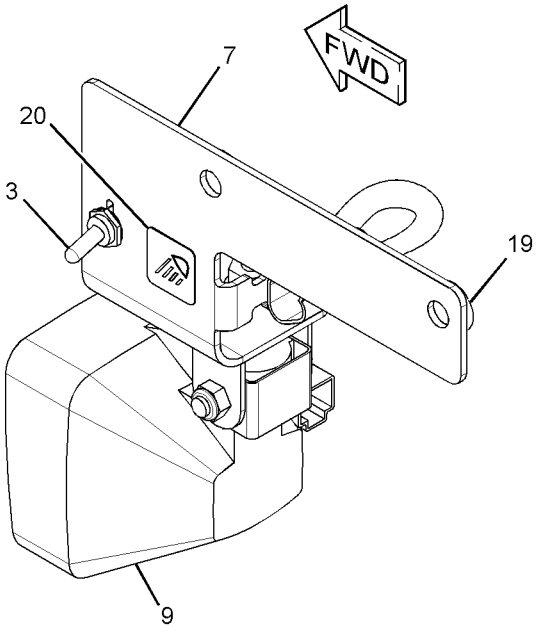

UNDERHOOD WORKLIGHT

GRAPHIC #1 **<END>** g01307804

235-6337 LIGHTING GP-FLOOD—CYL, ENG COMP, FUEL TANK, ROPS

S/N: SMC1-UP; GCT1-UP

AN ATTACHMENT

SMCS-1434 **i02798885**

NOTE	REF NO	GRAPHIC REF	PART NUMBER	QTY	PART NAME 1 2 3 4 5 6 (PRODUCT LEVEL)	SEE PAGE
B	1	1	**7K-1181**	26	STRAP-CABLE	
	2	1	**9W-4361**	16	MOUNT-FLEXIBLE	
	3	1	**111-8314**	6	BRACKET AS	
	4	1	**115-1024**	1	BRACKET AS (RH)	
	5	1	**115-1025**	1	BRACKET AS (LH)	
					(EACH BRACKET AS INCLUDES)	
		1	**1F-0750**	3	NUT-WELD (3/8-16-THD)	
	6	1	**129-8331**	2	PLATE AS	
	7	1	**139-2116**	1	SWITCH AS-TOGGLE (UNDER HOOD SERVICE LIGHT)	
		1	**3E-3371**	1	WEDGE-RECEPTACLE LOCK (3-PIN)	
		1	**6T-3631**	2	NUT-HEX (15/32-32-THD)	
		1	**6T-3632**	1	LOCKWASHER	
		1	**6T-3633**	1	RING-LOCKING	
		1	**186-3735**	3	PIN-CONNECTOR (16-GA TO 18-GA)	
		1	**102-8803**	1	KIT-RECEPTACLE (3-PIN)	
					(INCLUDES RECEPTACLE AS & WEDGE)	
	8	1	**167-1884**	6	GUARD	
	9	1	**167-2171**	2	HARNESS AS-FRONT LIGHTING (CYLINDER)	
					(EACH INCLUDES)	
		1	**102-8802**	1	KIT-RECEPTACLE (2-PIN)	
					(INCLUDES RECEPTCLE AS & WEDGE)	
		1	**155-2270**	1	KIT-CONNECTING PLUG (2-PIN)	
					(INCLUDES PLUG AS, WEDGE, & INTERFACE SEAL)	
	10	1	**172-4869**	2	BRACKET	
	11	1	**185-9607**	2	HARNESS AS-LIGHTING (ROPS)	
					(EACH INCLUDES)	
		1	**102-8804**	1	KIT-RECEPTACLE (4-PIN)	
					(INCLUDES RECEPTACLE AS & WEDGE)	
		1	**155-2270**	2	KIT-CONNECTING PLUG (2-PIN)	
					(EACH INCLUDES PLUG AS, WEDGE, & INTERFACE SEAL)	
B	12	1	**215-3662**	2	SPACER (22.2X50.8X31.8-MM THK)	
	13	1	**222-7885**	1	SWITCH AS-ROCKER (24-VOLT, ILLUMINATED) (REAR FLOODLIGHTS)	
	14	1	**237-7308**	1	BRACKET	
Y	15	1	**147-0319**	6	LAMP GP-FLOOD (24-VOLT, 65-WATT)	183
CY	16	1	**254-8155**	1	LAMP GP-FLOOD (24-VOLT, 65-WATT)	185
	17	1	**4D-7794**	4	CLIP	
	18	1	**5M-3062**	6	BOLT (3/8-16X0.75-IN)	
	19	1	**5P-1075**	56	WASHER-HARD (10.2X22.5X3-MM THK)	
	20	1	**5P-2955**	6	BOLT (5/16-18X2.5-IN)	
	21	1	**5P-9085**	2	CLIP	
	22	1	**5S-7379**	4	BOLT (3/8-16X0.875-IN)	
	23	1	**6H-4005**	4	GROMMET	
	24	1	**6K-4934**	4	CLIP (SLOT)	
	25	1	**6K-4935**	4	CLIP (TAB)	
	26	1	**6V-8189**	6	NUT (5/16-18-THD)	
	27	1	**6V-8801**	32	NUT (3/8-16-THD)	
M	28	1	**7X-2562**	4	BOLT (M20X2.5X45-MM)	
M	29	1	**7X-2564**	2	BOLT (M20X2.5X90-MM)	
	30	1	**8P-8540**	2	GROMMET	
	31	1	**8T-4123**	2	WASHER (22X35X3.5-MM THK)	
M	32	1	**8T-4133**	4	NUT (M10X1.5-THD)	
M	33	1	**8T-4136**	14	BOLT (M10X1.5X25-MM)	
	34	1	**8T-4224**	12	WASHER-HARD (8.8X16X2-MM THK)	
	35	1	**8T-4896**	4	WASHER-HARD (10.2X18.5X2.5-MM THK)	

235-6337 **LIGHTING GP-FLOOD** ***(contd.)*** **i02798885**

NOTE	REF NO	GRAPHIC REF	PART NUMBER	QTY	PART NAME 1 2 3 4 5 6 (PRODUCT LEVEL)	SEE PAGE
	36	1	**8T-5439**	4	WASHER-HARD (21.5X45X6-MM THK)	
	37	1	**8T-7934**	2	WASHER-HARD (11X21X5-MM THK)	
	38	1	**248-6862**	1	FILM-IDENTIFICATION (WORK LIGHT)	

B-USE AS REQUIRED
C-CHANGE FROM PREVIOUS TYPE
M-METRIC PART
Y-SEPARATE ILLUSTRATION

235-6337 **LIGHTING GP-FLOOD** *(contd.)* **i02798885**

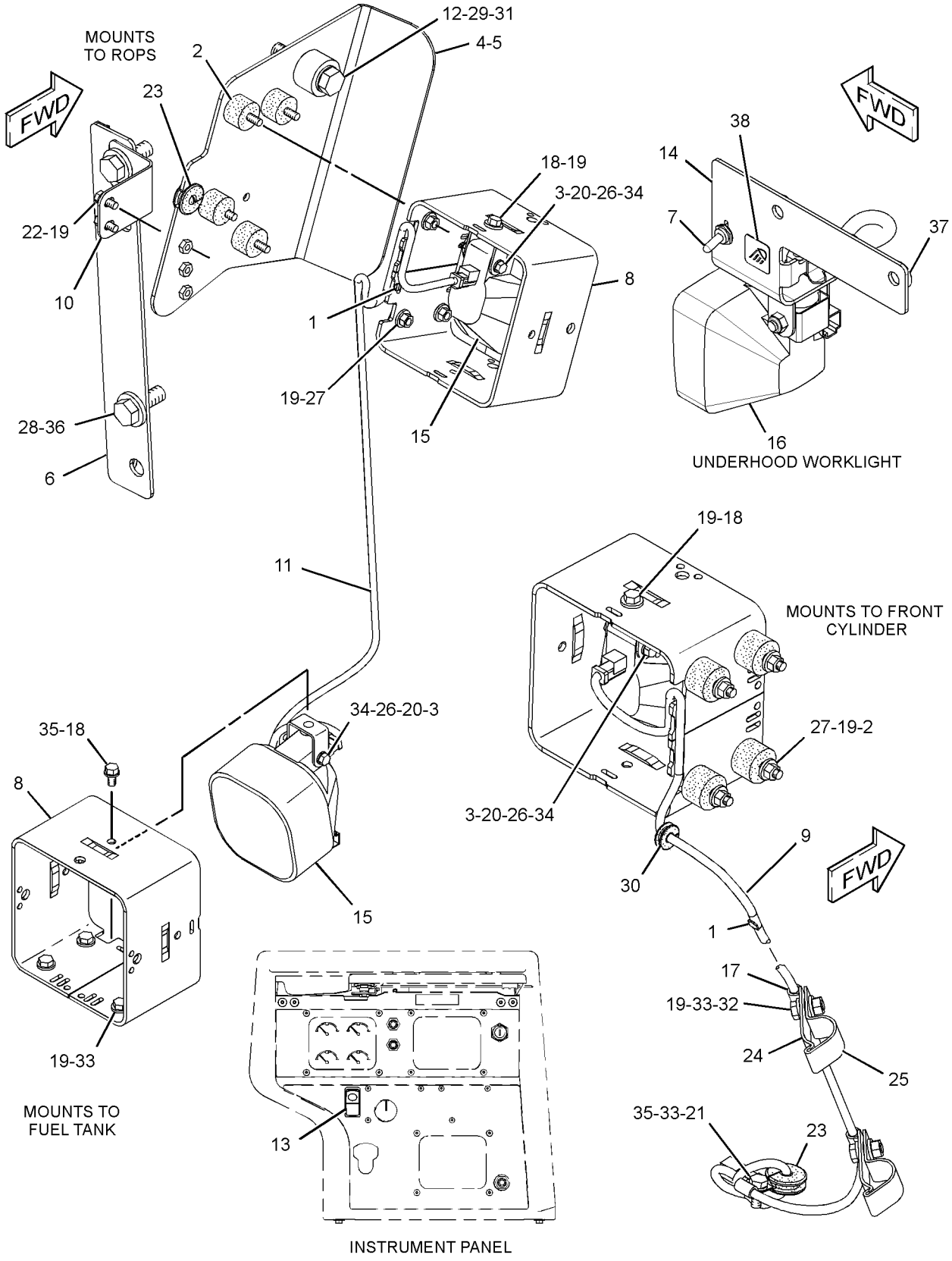

GRAPHIC #1 **<END>** g01307818

235-6338 LIGHTING GP-FLOOD—CYL, ENG COMP, FUEL TANK, ROPS

S/N: SMC1-UP; GCT1-UP

CANNOT BE USED WITH POWER ANGLE TILT BLADE

AN ATTACHMENT

SMCS-1434 **i02798893**

NOTE	REF NO	GRAPHIC REF	PART NUMBER	QTY	PART NAME 1 2 3 4 5 6 (PRODUCT LEVEL)	SEE PAGE
B	1	1	**7K-1181**	36	STRAP-CABLE	
	2	1	**9W-4361**	16	MOUNT-FLEXIBLE	
	3	1	**111-8314**	6	BRACKET AS	
	4	1	**115-1024**	1	BRACKET AS (RH)	
	5	1	**115-1025**	1	BRACKET AS (LH)	
					(EACH BRACKET AS INCLUDES)	
		1	**1F-0750**	3	NUT-WELD (3/8-16-THD)	
	6	1	**129-8331**	2	PLATE AS	
	7	1	**139-2116**	1	SWITCH AS-TOGGLE (UNDER HOOD SERVICE LIGHT)	
		1	**3E-3371**	1	WEDGE-RECEPTACLE LOCK (3-PIN)	
		1	**102-8803**	1	KIT-RECEPTACLE (3-PIN)	
					(INCLUDES RECEPTACLE AS & WEDGE)	
		1	**6T-3631**	2	NUT-HEX (15/32-32-THD)	
		1	**6T-3632**	1	LOCKWASHER	
		1	**6T-3633**	1	RING-LOCKING	
		1	**186-3735**	3	PIN-CONNECTOR (16-GA TO 18-GA)	
B	8	1	**151-6689**	2	SPACER (21X50X31.7-MM THK)	
Y	9	1	*152-8427*	2	LIGHTING GP-FLOOD (ROPS)	186
	10	1	**167-1884**	6	GUARD	
	11	1	**172-4869**	2	BRACKET	
	12	1	**175-0451**	2	HARNESS AS-LIGHTING (REAR) (ROPS)	
					(EACH INCLUDES)	
		1	**102-8804**	1	KIT-RECEPTACLE (4-PIN)	
					(INCLUDES RECEPTACLE AS & WEDGE)	
		1	**155-2270**	3	KIT-CONNECTING PLUG (2-PIN)	
					(EACH INCLUDES PLUG AS, WEDGE, & INTERFACE SEAL)	
	13	1	**175-0452**	2	HARNESS AS-LIGHTING (FRONT) (CYLINDER)	
					(EACH INCLUDES)	
		1	**102-8802**	1	KIT-RECEPTACLE (2-PIN)	
					(INCLUDES RECEPTACLE AS & WEDGE)	
		1	**155-2270**	2	KIT-CONNECTING PLUG (2-PIN)	
					(EACH INCLUDES PLUG AS, WEDGE, & INTERFACE SEAL)	
	14	1	**205-8900**	2	GUARD AS	
	15	1	**222-7885**	1	SWITCH AS-ROCKER (24-VOLT, ILLUMINATED) (REAR FLOODLIGHTS)	
	16	1	**237-7308**	1	BRACKET	
Y	17	1	**147-0319**	6	LAMP GP-FLOOD (24-VOLT, 65-WATT)	183
CY	18	1	**254-8155**	1	LAMP GP-FLOOD (24-VOLT, 65-WATT)	185
	19	1	**4D-7794**	4	CLIP	
	20	1	**4P-7581**	2	CLIP	
	21	1	**5M-3062**	6	BOLT (3/8-16X0.75-IN)	
	22	1	**5P-1075**	52	WASHER-HARD (10.2X22.5X3-MM THK)	
	23	1	**5P-2955**	6	BOLT (5/16-18X2.5-IN)	
	24	1	**5P-9085**	2	CLIP	
	25	1	**5S-7379**	4	BOLT (3/8-16X0.875-IN)	
	26	1	**6H-4005**	4	GROMMET	
	27	1	**6K-4934**	4	CLIP (SLOT)	
	28	1	**6K-4935**	4	CLIP (TAB)	
	29	1	**6V-8189**	6	NUT (5/16-18-THD)	
	30	1	**6V-8801**	32	NUT (3/8-16-THD)	
M	31	1	**7X-2562**	4	BOLT (M20X2.5X45-MM)	
M	32	1	**7X-2564**	2	BOLT (M20X2.5X90-MM)	
	33	1	**8P-8540**	4	GROMMET	

235-6338 **LIGHTING GP-FLOOD** ***(contd.)*** **i02798893**

NOTE	REF NO	GRAPHIC REF	PART NUMBER	QTY	PART NAME 1 2 3 4 5 6 (PRODUCT LEVEL)	SEE PAGE
	34	1	**8T-4123**	2	WASHER (22X35X3.5-MM THK)	
M	35	1	**8T-4133**	4	NUT (M10X1.5-THD)	
M	36	1	**8T-4136**	14	BOLT (M10X1.5X25-MM)	
	37	1	**8T-4224**	12	WASHER-HARD (8.8X16X2-MM THK)	
	38	1	**8T-4896**	8	WASHER-HARD (10.2X18.5X2.5-MM THK)	
	39	1	**8T-5439**	4	WASHER-HARD (21.5X45X6-MM THK)	
	40	1	**8T-7934**	2	WASHER-HARD (11X21X5-MM THK)	
	41	1	**248-6862**	1	FILM-IDENTIFICATION (WORK LIGHT)	

B-USE AS REQUIRED
C-CHANGE FROM PREVIOUS TYPE
M-METRIC PART
Y-SEPARATE ILLUSTRATION

235-6338 **LIGHTING GP-FLOOD** *(contd.)* **i02798893**

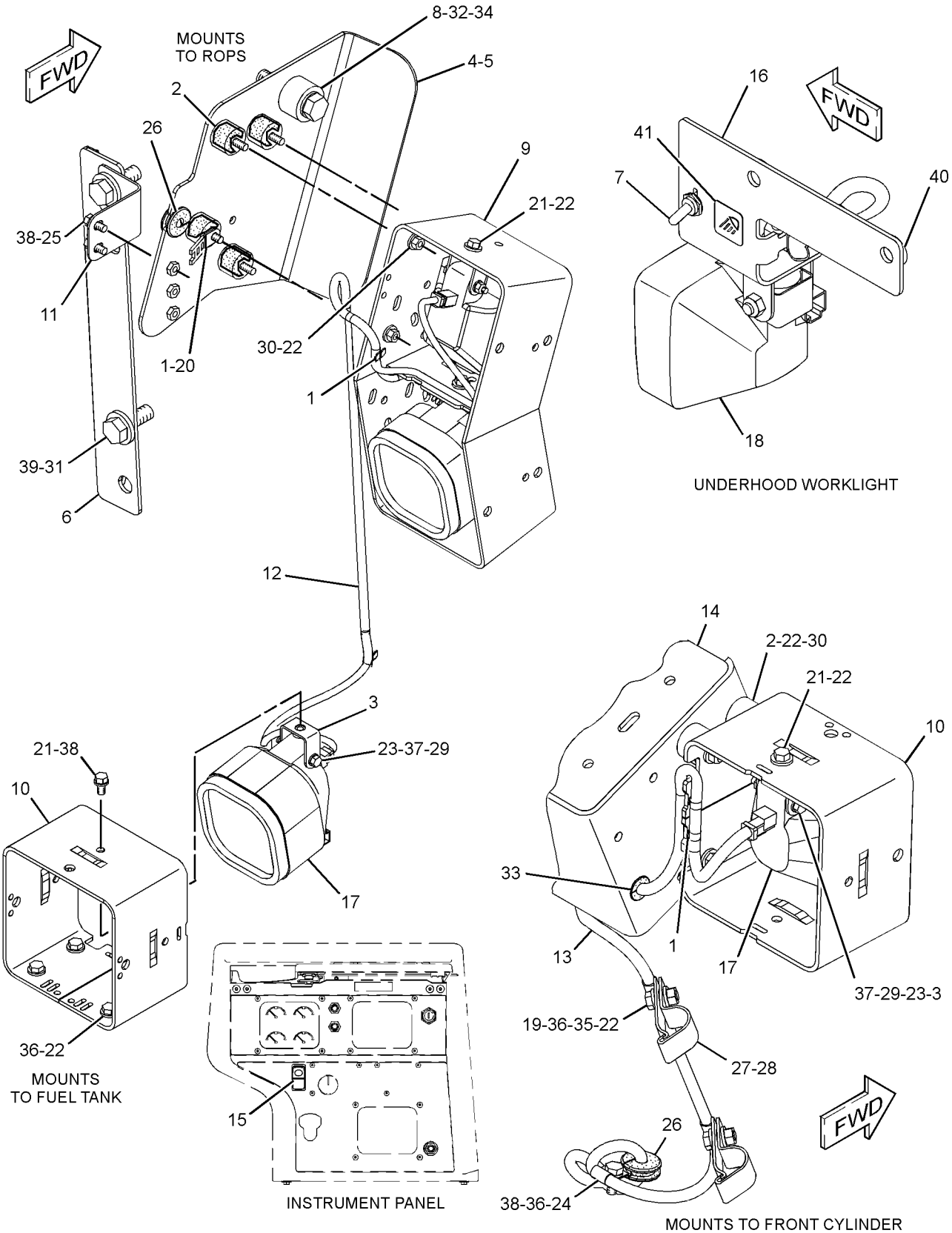

GRAPHIC #1 **<END>** g01307771

ELECTRICAL AND STARTING SYSTEM

235-6339 LIGHTING GP-FLOOD—CYL, ENG COMP, FUEL TANK, ROPS

S/N: SMC1-UP; GCT1-UP

FOR USE WITH WASTE DISPOSAL AR. CANNOT BE USED WITH 235-6336—PAGE 187, 235-6337—PAGE 189, 235-6338—PAGE 192 AN ATTACHMENT

SMCS-1434 **i02798897**

NOTE	REF NO	GRAPHIC REF	PART NUMBER	QTY	PART NAME 1 2 3 4 5 6 (PRODUCT LEVEL)	SEE PAGE
B	1	1	**7K-1181**	34	STRAP-CABLE	
	2	1	**111-8314**	2	BRACKET AS	
	3	1	**115-1024**	1	BRACKET AS (RH)	
	4	1	**115-1025**	1	BRACKET AS (LH)	
					(EACH BRACKET AS INCLUDES)	
		1	**1F-0750**	3	NUT-WELD (3/8-16-THD)	
	5	1	**129-8331**	2	PLATE AS	
	6	1	**139-2116**	1	SWITCH AS-TOGGLE (UNDER HOOD SERVICE LIGHT)	
		1	**3E-3371**	1	WEDGE-RECEPTACLE LOCK (3-PIN)	
		1	**6T-3631**	2	NUT-HEX (15/32-32-THD)	
		1	**6T-3632**	1	LOCKWASHER	
		1	**6T-3633**	1	RING-LOCKING	
		1	**186-3735**	3	PIN-CONNECTOR (16-GA TO 18-GA)	
		1	**102-8803**	1	KIT-RECEPTACLE (3-PIN)	
					(INCLUDES RECEPTACLE AS & WEDGE)	
	7	1	**151-6689**	2	SPACER (21X50X31.7-MM THK)	
	8	1	**167-1884**	2	GUARD	
	9	1	**172-4868**	2	BRACKET	
	10	1	**172-4869**	2	BRACKET	
	11	1	**175-0451**	2	HARNESS AS-LIGHTING (REAR)	
					(EACH INCLUDES)	
		1	**102-8804**	1	KIT-RECEPTACLE (4-PIN)	
					(INCLUDES RECEPTACLE AS & WEDGE)	
		1	**155-2270**	3	KIT-CONNECTING PLUG (2-PIN)	
					(EACH INCLUDES PLUG AS, WEDGE, & INTERFACE SEAL)	
	12	1	**183-1961**	2	BRACKET	
	13	1	**183-1982**	2	HARNESS AS-LIGHTING (FRONT)	
					(EACH INCLUDES)	
		1	**102-8802**	1	KIT-RECEPTACLE (2-PIN)	
					(INCLUDES RECEPTACLE AS & WEDGE)	
		1	**155-2270**	2	KIT-CONNECTING PLUG (2-PIN)	
					(EACH INCLUDES PLUG AS, WEDGE, & INTERFACE SEAL)	
Y	14	1	*152-8427*	4	LIGHTING GP-FLOOD (ROPS, CYLINDER MOUNTED)	186
	15	1	**222-7885**	1	SWITCH AS-ROCKER (24-VOLT, ILLUMINATED) (REAR FLOODLIGHTS)	
	16	1	**237-7308**	1	BRACKET	
Y	17	1	**147-0319**	2	LAMP GP-FLOOD (24-VOLT, 65-WATT)	183
CY	18	1	**254-8155**	1	LAMP GP-FLOOD (24-VOLT, 65-WATT)	185
	19	1	**4D-7794**	4	CLIP	
	20	1	**4P-7581**	2	CLIP	
	21	1	**5M-3062**	2	BOLT (3/8-16X0.75-IN)	
	22	1	**5P-1075**	32	WASHER-HARD (10.2X22.5X3-MM THK)	
	23	1	**5P-2955**	2	BOLT (5/16-18X2.5-IN)	
	24	1	**5P-9085**	2	CLIP	
	25	1	**5S-7379**	4	BOLT (3/8-16X0.875-IN)	
	26	1	**6H-4005**	4	GROMMET	
	27	1	**6K-4934**	4	CLIP (SLOT)	
	28	1	**6K-4935**	4	CLIP (TAB)	
	29	1	**6V-8189**	2	NUT (5/16-18-THD)	
M	30	1	**7X-2562**	4	BOLT (M20X2.5X45-MM)	
M	31	1	**7X-2564**	2	BOLT (M20X2.5X90-MM)	
	32	1	**8P-8540**	2	GROMMET	

235-6339 **LIGHTING GP-FLOOD** ***(contd.)*** **i02798897**

NOTE	REF NO	GRAPHIC REF	PART NUMBER	QTY	PART NAME 1 2 3 4 5 6 (PRODUCT LEVEL)	SEE PAGE
M	33	1	**8T-4133**	8	NUT (M10X1.5-THD)	
M	34	1	**8T-4136**	18	BOLT (M10X1.5X25-MM)	
M	35	1	**8T-4195**	8	BOLT (M10X1.5X30-MM)	
	36	1	**8T-4224**	4	WASHER-HARD (8.8X16X2-MM THK)	
	37	1	**8T-4896**	8	WASHER-HARD (10.2X18.5X2.5-MM THK)	
	38	1	**8T-5439**	6	WASHER-HARD (21.5X45X6-MM THK)	
	39	1	**8T-7934**	2	WASHER-HARD (11X21X5-MM THK)	
	40	1	**248-6862**	1	FILM-IDENTIFICATION (WORK LIGHT)	

B-USE AS REQUIRED
C-CHANGE FROM PREVIOUS TYPE
M-METRIC PART
Y-SEPARATE ILLUSTRATION

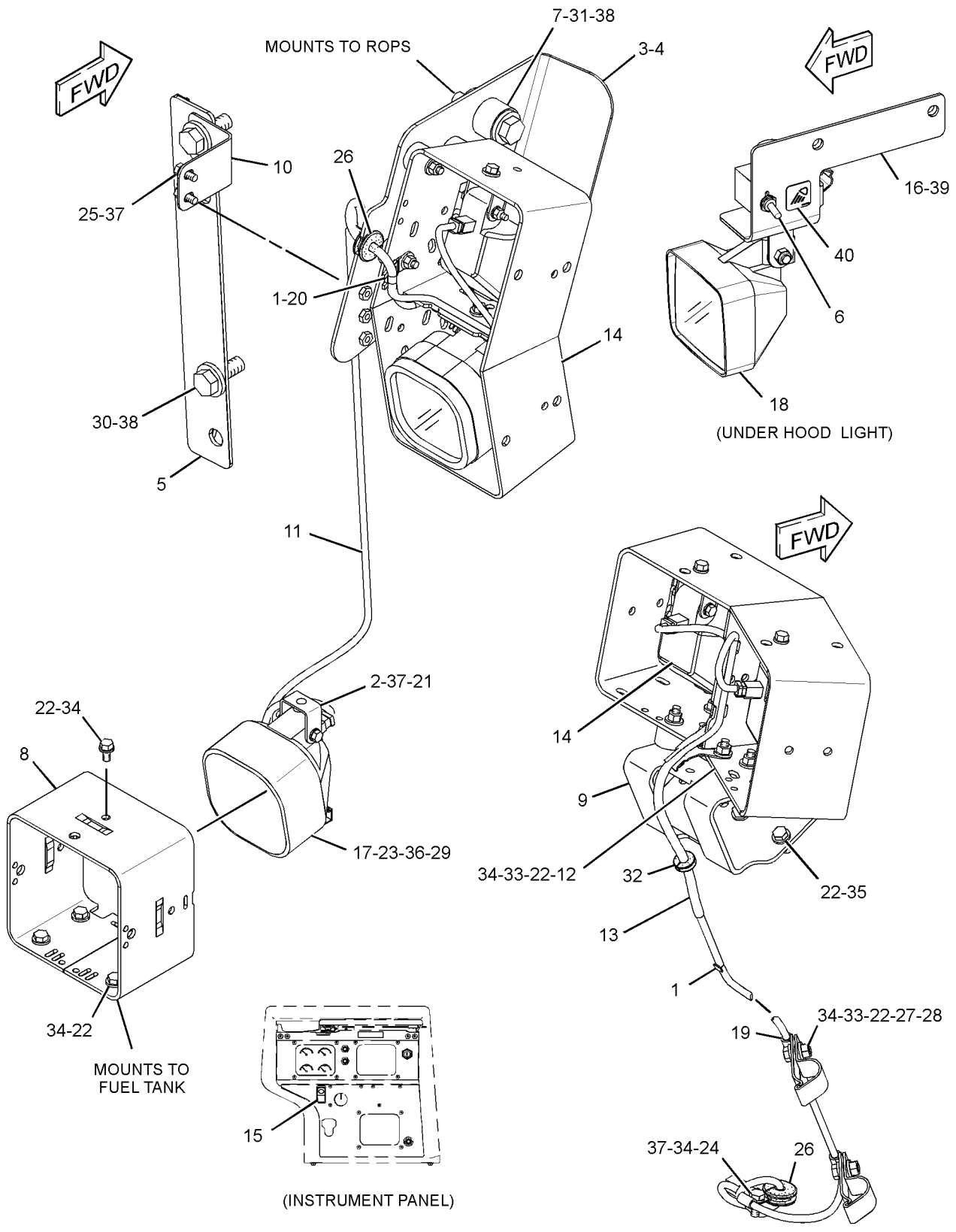

GRAPHIC #1 **<END>** g01307803

235-6340 LIGHTING GP-FLOOD—ENG COMP, FUEL TANK, SWEEP

S/N: SMC1-UP; GCT1-UP

AN ATTACHMENT

SMCS-1434 **i02798903**

NOTE	REF NO	GRAPHIC REF	PART NUMBER	QTY	PART NAME 1 2 3 4 5 6 (PRODUCT LEVEL)	SEE PAGE
B	1	2	**7K-1181**	42	STRAP-CABLE	
	2	2	**9W-4361**	24	MOUNT-FLEXIBLE	
	3	2	**111-8314**	8	BRACKET AS	
	4	2	**129-8331**	2	PLATE AS	
	5	1	**139-2116**	1	SWITCH AS-TOGGLE (UNDER HOOD SERVICE LIGHT)	
		1	**3E-3371**	1	WEDGE-RECEPTACLE LOCK (3-PIN)	
		1	**6T-3631**	2	NUT-HEX (15/32-32-THD)	
		1	**6T-3632**	1	LOCKWASHER	
		1	**6T-3633**	1	RING-LOCKING	
		1	**186-3735**	3	PIN-CONNECTOR (16-GA TO 18-GA)	
		1	**102-8803**	1	KIT-RECEPTACLE (3-PIN)	
					(INCLUDES RECEPTACLE AS & WEDGE)	
	6	2	**167-1884**	6	GUARD	
	7	2	**168-8656**	2	PLATE	
	8	2	**186-0636**	2	HARNESS AS-LIGHTING (REAR) (SIDE FLOODLIGHT)	
					(EACH HARNESS ASSEMBLY INCLUDES)	
		2	**102-8804**	1	KIT-RECEPTACLE (4-PIN)	
					(INCLUDES RECEPTACLE AS & WEDGE)	
		2	**155-2270**	2	KIT-CONNECTING PLUG (2-PIN)	
					(EACH INCLUDES PLUG AS, WEDGE, & INTERFACE SEAL)	
	9	2	**213-4502**	8	GUARD AS (WIRE)	
	10	2	**213-4504**	2	GUARD AS	
	11	1	**222-7885**	1	SWITCH AS-ROCKER (24-VOLT, ILLUMINATED) (REAR FLOODLIGHTS)	
	12	2	**234-5846**	2	PLATE	
	13	1	**237-7308**	1	BRACKET	
	14	1	**248-6862**	1	FILM-IDENTIFICATION (WORK LIGHT)	
	15	2	**308-9223**	2	HARNESS AS-LIGHTING (FRONT FLOODLIGHTS)	
					(EACH HARNESS ASSEMBLY INCLUDES)	
		2	**102-8802**	1	KIT-RECEPTACLE (2-PIN)	
					(INCLUDES RECEPTACLE AS & WEDGE)	
		2	**155-2270**	2	KIT-CONNECTING PLUG (2-PIN)	
					(EACH INCLUDES PLUG AS, WEDGE, & INTERFACE SEAL)	
Y	16	2	**147-0319**	6	LAMP GP-FLOOD (24-VOLT, 65-WATT)	183
Y	17	2	**153-2073**	2	LAMP GP-FLOOD (24-VOLT, 65-WATT)	184
CY	18	1	**254-8155**	1	LAMP GP-FLOOD (24-VOLT, 65-WATT)	185
	19	2	**4L-6454**	2	BOLT (3/8-16X1-IN)	
	20	2	**4P-7429**	4	CLIP	
	21	2	**5M-3062**	6	BOLT (3/8-16X0.75-IN)	
	22	2	**5P-1075**	72	WASHER-HARD (10.2X22.5X3-MM THK)	
	23	2	**5P-2228**	8	BOLT (1/2-13X1-IN)	
	24	2	**5P-2955**	8	BOLT (5/16-18X2.5-IN)	
	25	2	**6H-4005**	2	GROMMET	
	26	2	**6V-8188**	6	NUT (1/2-13-THD)	
	27	2	**6V-8189**	8	NUT (5/16-18-THD)	
	28	2	**6V-8801**	48	NUT (3/8-16-THD)	
M	29	2	**7X-2562**	4	BOLT (M20X2.5X45-MM)	
M	30	2	**8T-4136**	26	BOLT (M10X1.5X25-MM)	
	31	2	**8T-4223**	14	WASHER-HARD (13.5X25.5X3-MM THK)	
	32	2	**8T-4224**	16	WASHER-HARD (8.8X16X2-MM THK)	
	33	2	**8T-4896**	10	WASHER-HARD (10.2X18.5X2.5-MM THK)	
	34	2	**8T-5439**	4	WASHER-HARD (21.5X45X6-MM THK)	
	35	1	**8T-7934**	2	WASHER-HARD (11X21X5-MM THK)	

B-USE AS REQUIRED
C-CHANGE FROM PREVIOUS TYPE
M-METRIC PART
Y-SEPARATE ILLUSTRATION

REFER TO ALL ILLUSTRATIONS OF
THIS GROUP FOR AUXILIARY VIEWS

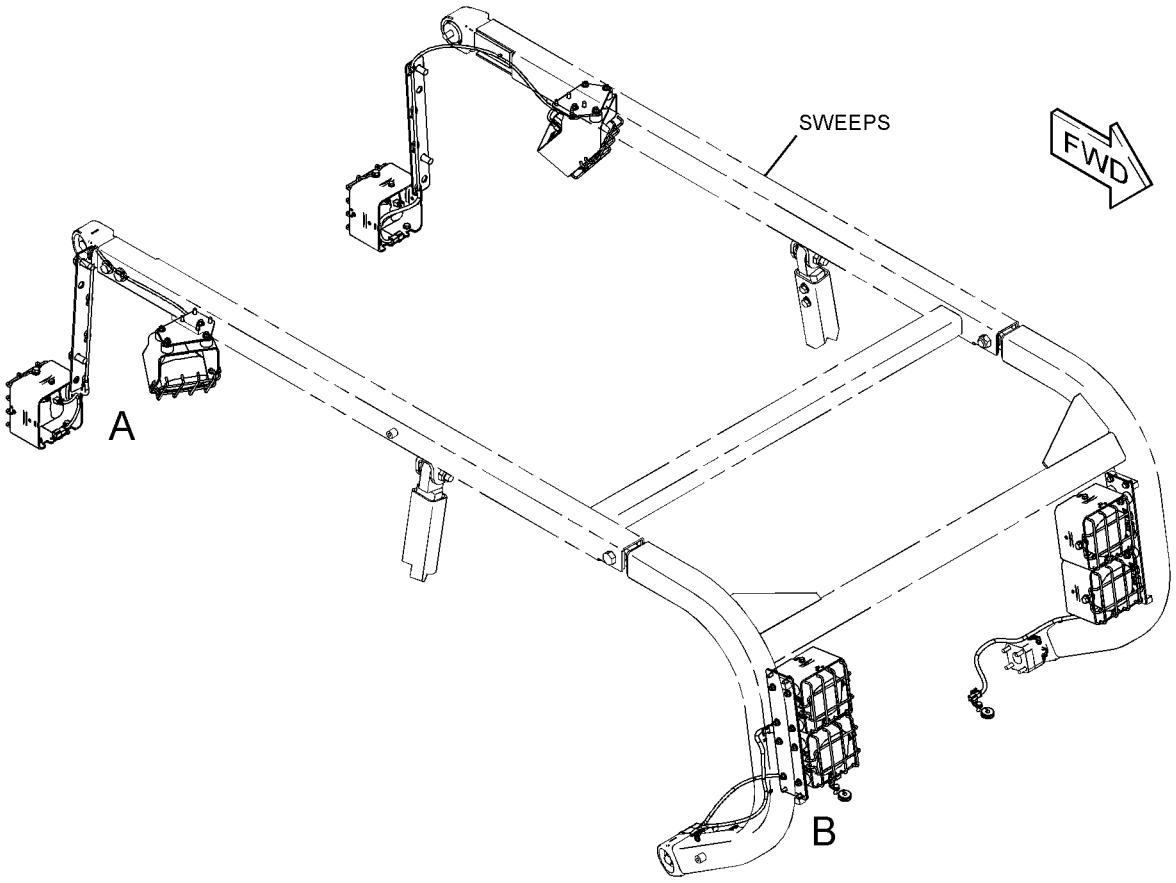

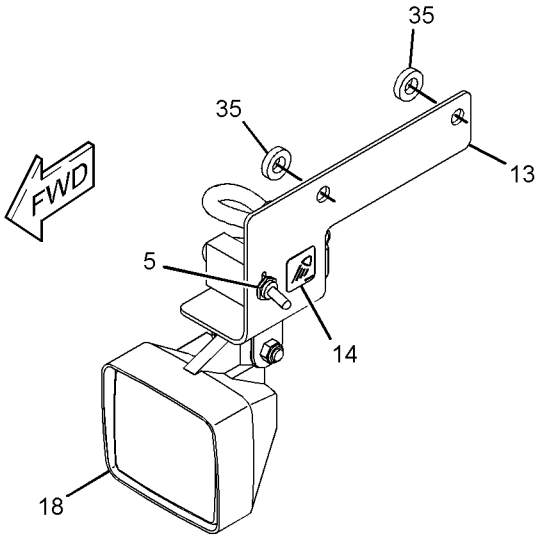

UNDERHOOD SERVICE LIGHT

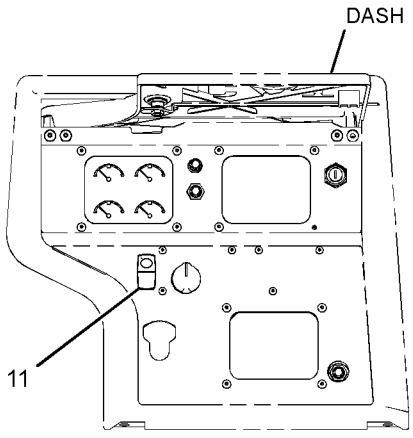

INSTRUMENT PANEL
(CAB VIEW)

GRAPHIC #1

g01362881

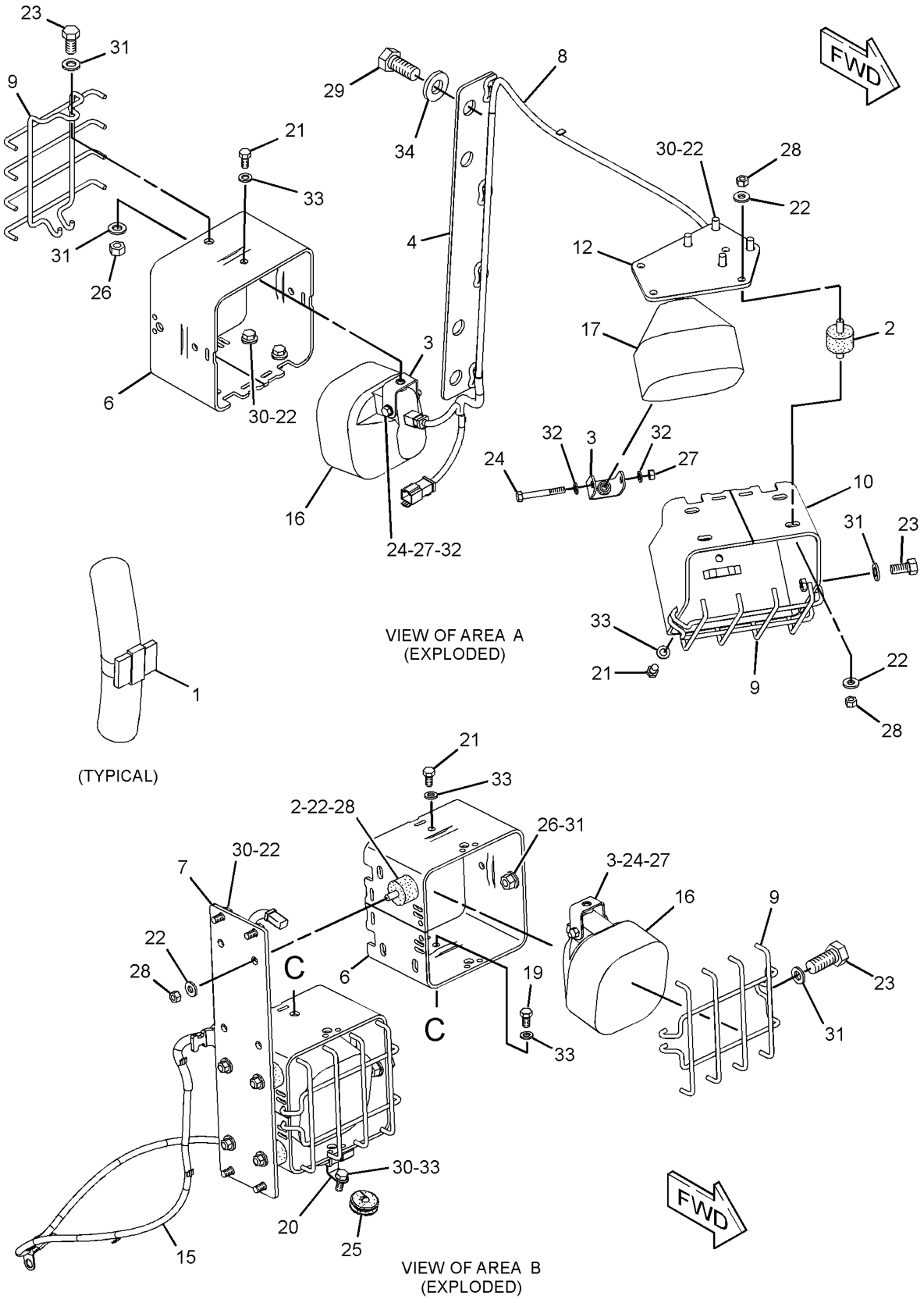

GRAPHIC #2 **<END>** g01362882

263-7419 LIGHTING GP-FLOOD—CYL, ENG COMP, FUEL TANK, ROPS

S/N: SMC1-UP; GCT1-UP

FOR USE WITH WASTE DISPOSAL ARRANGEMENT. CANNOT BE USED WITH 235-6336—PAGE 187, 235-6337—PAGE 189, 235-6338—PAGE 192

AN ATTACHMENT

SMCS-1434 **i02798908**

NOTE	REF NO	GRAPHIC REF	PART NUMBER	QTY	PART NAME 1 2 3 4 5 6 (PRODUCT LEVEL)	SEE PAGE
	1	1	**7K-1181**	26	STRAP-CABLE	
	2	1	**9W-4361**	16	MOUNT-FLEXIBLE	
	3	1	**111-8314**	6	BRACKET AS	
	4	1	**115-1024**	1	BRACKET AS (RH)	
		1	**1F-0750**	3	NUT-WELD (3/8-16-THD)	
	5	1	**115-1025**	1	BRACKET AS (LH)	
		1	**1F-0750**	3	NUT-WELD (3/8-16-THD)	
	6	1	**129-8331**	2	PLATE AS	
	7	1	**139-2116**	1	SWITCH AS-TOGGLE (UNDER HOOD SERVICE LIGHT)	
		1	**3E-3371**	1	WEDGE-RECEPTACLE LOCK (3-PIN)	
		1	**102-8803**	1	KIT-RECEPTACLE (3-PIN)	
		1	**6T-3631**	2	NUT-HEX (15/32-32-THD)	
		1	**6T-3632**	1	LOCKWASHER	
		1	**6T-3633**	1	RING-LOCKING	
		1	**186-3735**	3	PIN-CONNECTOR (16-GA TO 18-GA)	
	8	1	**151-6689**	2	SPACER (21X50X31.7-MM THK)	
	9	1	**167-1884**	6	GUARD	
	10	1	**167-2171**	2	HARNESS AS-FRONT LIGHTING	
					(EACH INCLUDES)	
		1	**102-8802**	1	KIT-RECEPTACLE (2-PIN)	
					(INCLUDES RECEPTACLE AS & WEDGE)	
		1	**155-2270**	1	KIT-CONNECTING PLUG (2-PIN)	
					(INCLUDES PLUG AS, WEDGE, & INTERFACE SEAL)	
	11	1	**172-4868**	2	BRACKET	
	12	1	**172-4869**	2	BRACKET	
	13	1	**185-9607**	2	HARNESS AS-LIGHTING	
					(EACH INCLUDES)	
		1	**102-8804**	1	KIT-RECEPTACLE (4-PIN)	
					(INCLUDES RECEPTACLE AS & WEDGE)	
		1	**155-2270**	2	KIT-CONNECTING PLUG (2-PIN)	
					(EACH INCLUDES PLUG AS, WEDGE, & INTERFACE SEAL)	
	14	1	**222-7885**	1	SWITCH AS-ROCKER (24-VOLT, ILLUMINATED) (REAR FLOODLIGHTS)	
	15	1	**237-7308**	1	BRACKET	
	16	1	**132-5789**	2	CLIP	
Y	17	1	**147-0319**	6	LAMP GP-FLOOD (24-VOLT, 65-WATT)	183
CY	18	1	**254-8155**	1	LAMP GP-FLOOD (24-VOLT, 65-WATT)	185
	19	1	**4D-7794**	4	CLIP	
	20	1	**5M-3062**	6	BOLT (3/8-16X0.75-IN)	
	21	1	**5P-1075**	56	WASHER-HARD (10.2X22.5X3-MM THK)	
	22	1	**5P-2955**	6	BOLT (5/16-18X2.5-IN)	
	23	1	**5P-9085**	2	CLIP	
	24	1	**5S-7379**	4	BOLT (3/8-16X0.875-IN)	
	25	1	**6H-4005**	4	GROMMET	
	26	1	**6K-4934**	4	CLIP (SLOT)	
	27	1	**6K-4935**	4	CLIP (TAB)	
	28	1	**6V-8189**	6	NUT (5/16-18-THD)	
	29	1	**6V-8801**	32	NUT (3/8-16-THD)	
M	30	1	**7X-2562**	4	BOLT (M20X2.5X45-MM)	
M	31	1	**7X-2564**	2	BOLT (M20X2.5X90-MM)	
	32	1	**8P-8540**	2	GROMMET	
M	33	1	**8T-4133**	6	NUT (M10X1.5-THD)	
M	34	1	**8T-4136**	16	BOLT (M10X1.5X25-MM)	

263-7419 **LIGHTING GP-FLOOD** ***(contd.)*** **i02798908**

NOTE	REF NO	GRAPHIC REF	PART NUMBER	QTY	PART NAME 1 2 3 4 5 6 (PRODUCT LEVEL)	SEE PAGE
M	35	1	**8T-4195**	8	BOLT (M10X1.5X30-MM)	
	36	1	**8T-4224**	12	WASHER-HARD (8.8X16X2-MM THK)	
	37	1	**8T-4896**	16	WASHER-HARD (10.2X18.5X2.5-MM THK)	
	38	1	**8T-5439**	6	WASHER-HARD (21.5X45X6-MM THK)	
	39	1	**8T-7934**	2	WASHER-HARD (11X21X5-MM THK)	
	40	1	**248-6862**	1	FILM-IDENTIFICATION (WORK LIGHT)	

C-CHANGE FROM PREVIOUS TYPE
M-METRIC PART
Y-SEPARATE ILLUSTRATION

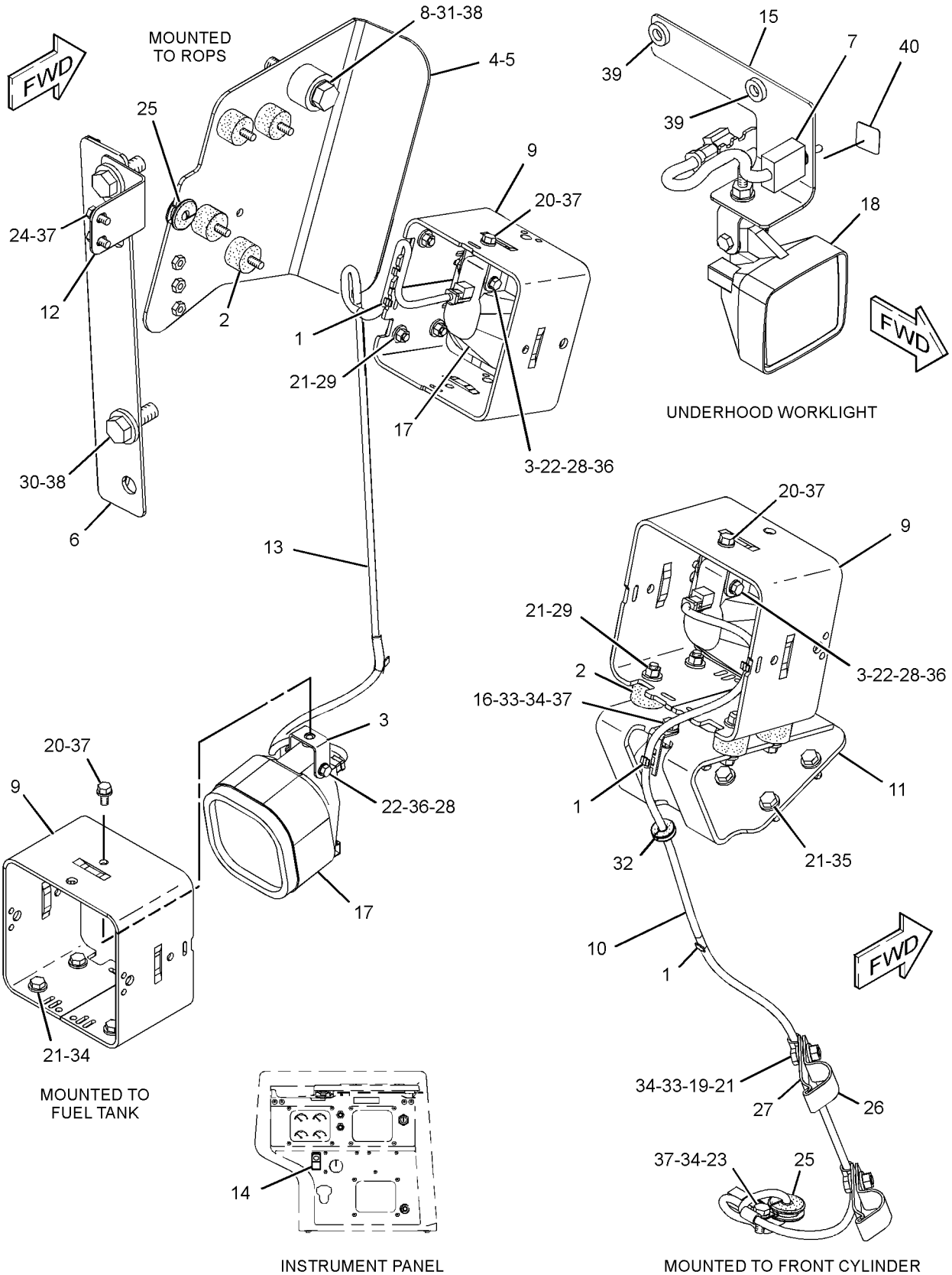

GRAPHIC #1 **<END>** g01306559

240-3464 MOUNTING GP-CONNECTOR

S/N: SMC1-UP; GCT1-UP
AN ATTACHMENT

SMCS-1408 **i02454118**

NOTE	REF NO	GRAPHIC REF	PART NUMBER	QTY	PART NAME 1 2 3 4 5 6 (PRODUCT LEVEL)	SEE PAGE
	1	1	**236-8826**	3	BOSS (1-1/8-18X0.708-IN)	
	2	1	**240-3469**	1	COVER AS (RH)	
	3	1	**240-3470**	1	COVER AS (LH)	
	4	1	**246-5960**	1	BOX AS (LH)	
	5	1	**246-5961**	1	BOX AS (RH)	
M	6	1	**188-9644**	3	SCREW-FLAT HEAD (M8X1.25X25-MM)	
	7	1	**7X-7729**	4	WASHER (11X25X3-MM THK)	
M	8	1	**8T-4136**	4	BOLT (M10X1.5X25-MM)	

M-METRIC PART

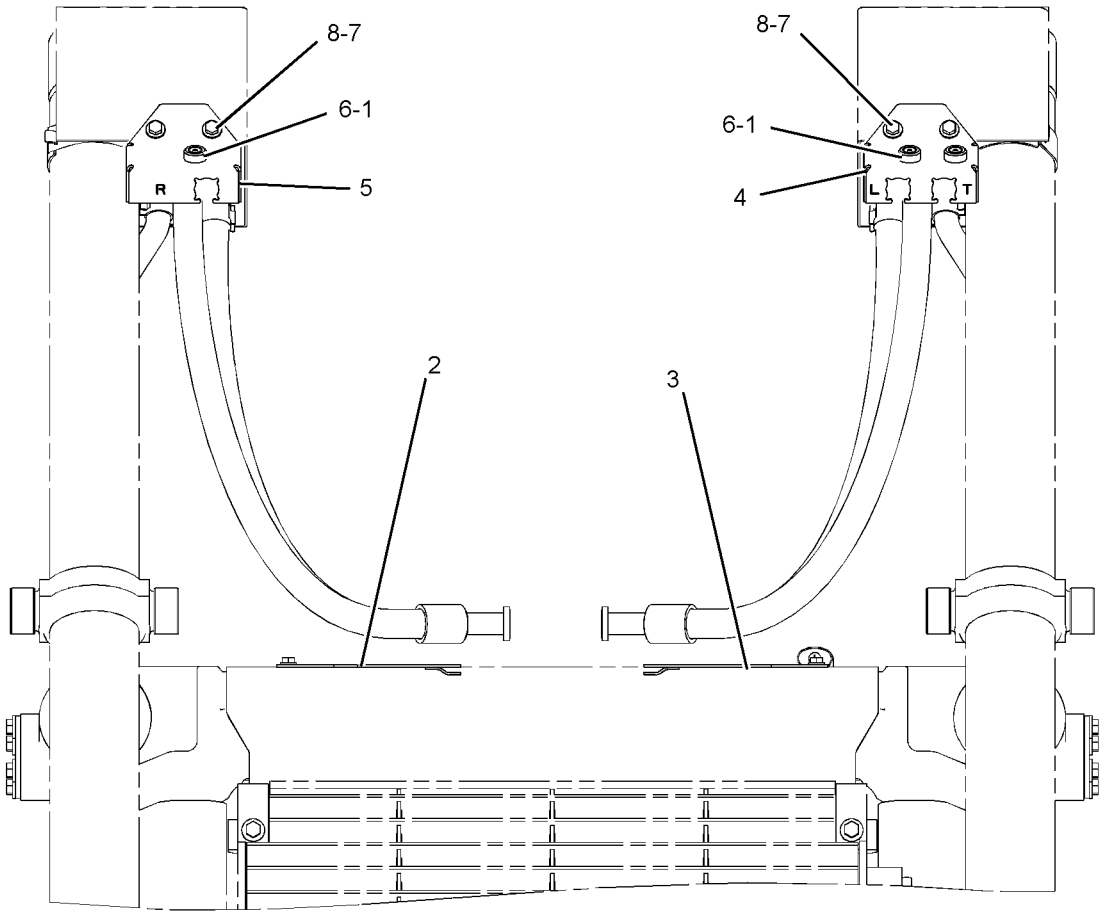

FRONT VIEW

GRAPHIC #1 **<END>** g01210766

239-5120 MOUNTING GP-GRADE CONTROL–CAB

S/N: SMC1-UP; GCT1-UP
PART OF 283-2442 GRADE CONTROL AR
AN ATTACHMENT

SMCS-7220 **i02765197**

NOTE	PART NUMBER	QTY	PART NAME 1 2 3 4 5 6 (PRODUCT LEVEL)	SEE PAGE
Y	*237-9140*	1	MOUNTING GP-ANTENNA (GRADE CONTROL)	696
Y	*242-8409*	1	MOUNTING GP-GRADE CONTROL (MODULE)	207

Y-SEPARATE ILLUSTRATION

<END>

242-8409 MOUNTING GP-GRADE CONTROL–MODULE

S/N: SMC1-UP; GCT1-UP
PART OF 239-5120 MOUNTING GP-GRADE CONTROL
AN ATTACHMENT

SMCS-7220 **i02789822**

NOTE	REF NO	GRAPHIC REF	PART NUMBER	QTY	PART NAME 1 2 3 4 5 6 (PRODUCT LEVEL)	SEE PAGE
	1	1	**226-9169**	1	MODULE AS-POWER SUPPLY	
	2	1	**242-8398**	1	COVER AS-ACCESS	
	3	1	**242-8399**	1	PANEL-ACOUSTICAL	
	4	1	**265-7316**	1	PANEL AS-INSTRUMENT	
	5	1	**269-3364**	6	PLUG	
M	6	1	**5C-9553**	4	BOLT (M6X1X16-MM)	
	7	1	**9X-8256**	4	WASHER (6.6X12X2-MM THK)	

M-METRIC PART

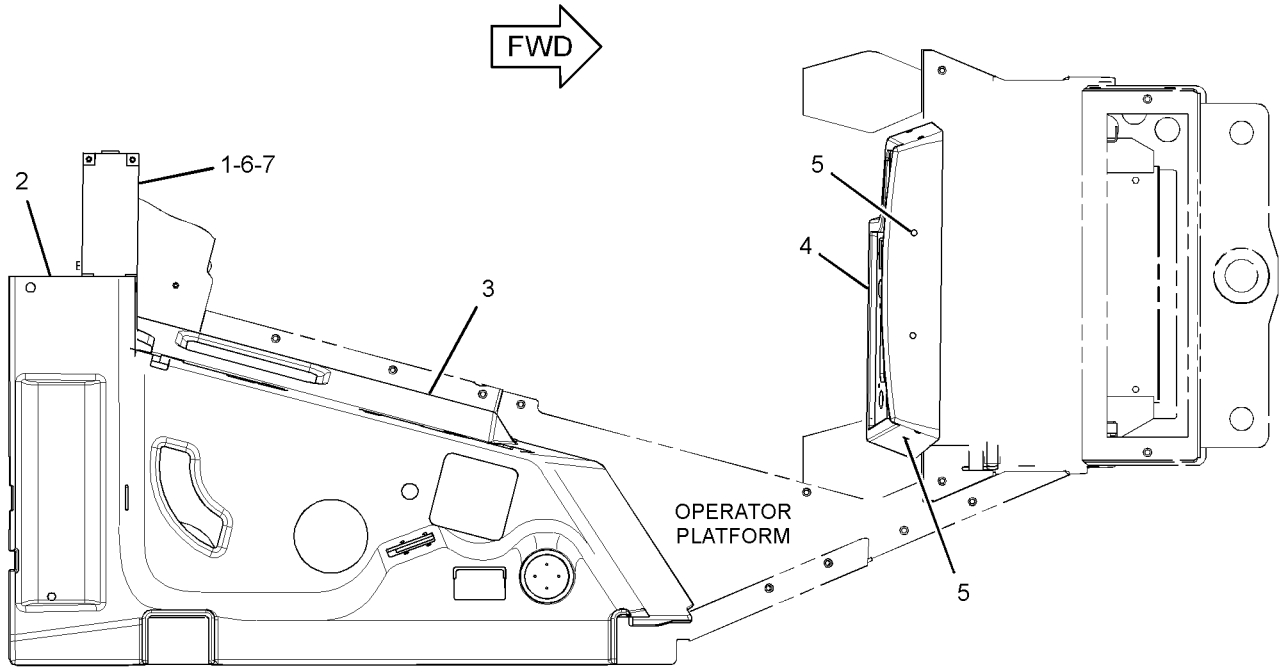

TOP VIEW

GRAPHIC #1 **<END>** g01376484

292-0296 MOUNTING GP-GRADE CONTROL

S/N: SMC1-UP; GCT1-UP

PART OF 290-5571, 292-0280 GRADE CONTROL AR-SATELLITE

SMCS-7220 **i02618863**

NOTE	PART NUMBER	QTY	PART NAME 1 2 3 4 5 6 (PRODUCT LEVEL)	SEE PAGE
Y	*259-4746*	1	MOUNTING GP-RADIO	703
M	**143-6020**	2	BOLT-SOCKET HEAD (M6X1X75-MM)	
	2V-8259	3	GROMMET	
	2Y-5429	3	GROMMET	
M	**8T-2659**	6	LOCKNUT (M4X0.7-THD)	
M	**5C-2890**	2	NUT (M6X1-THD)	
	230-5008	3	PLUG AS-CONNECTOR (4-PIN)	
	8T-8737	3	PLUG-SEAL	
M	**9X-1046**	8	SCREW (M4X0.7X18-MM)	
	104-2091	6	SCREW-FLAT HEAD (NO 6X0.5-IN)	
	9X-3402	9	SOCKET-CONNECTOR (16-GA TO 18-GA)	
	4B-4863	12	WASHER (4.7X11X1.2-MM THK)	
	9X-8256	2	WASHER (6.6X12X2-MM THK)	

M-METRIC PART
Y-SEPARATE ILLUSTRATION

<END>

234-9970 MOUNTING GP-RECEIVER–MAST

S/N: SMC1-UP; GCT1-UP

PART OF 292-0281 MAST GP

SMCS-7009, 7010 **i02649980**

NOTE	REF NO	GRAPHIC REF	PART NUMBER	QTY	PART NAME 1 2 3 4 5 6 (PRODUCT LEVEL)	SEE PAGE
	1	2	**253-8967**	1	ROD-THREADED	
	2	2	**253-8969**	1	BRACKET	
	3	2	**237-4132**	4	MOUNT-FLEXIBLE	
	4	1	**237-4133**	2	GASKET	
	5	1	**237-4134**	1	CLAMP	
	6	1	**237-4135**	1	MOUNT-FLEXIBLE	
	7	2	**237-7252**	1	BOLT (3/4-16X1.25-IN)	
	8	2	**3B-4508**	4	LOCKWASHER	
	9	2	**3B-4512**	1	LOCKWASHER	
	10	2	**4M-6425**	2	BOLT (5/16-18X1-IN)	
	11	2	**5W-1437**	2	LOCKWASHER	
	12	2	**8T-9383**	2	BOLT (1/2-13X0.75-IN)	
	13	2	**9B-0453**	2	LOCKWASHER	
	14	2	**253-8981**	4	ROD-THREADED	
	15	2	**6V-8188**	6	NUT (1/2-13-THD)	

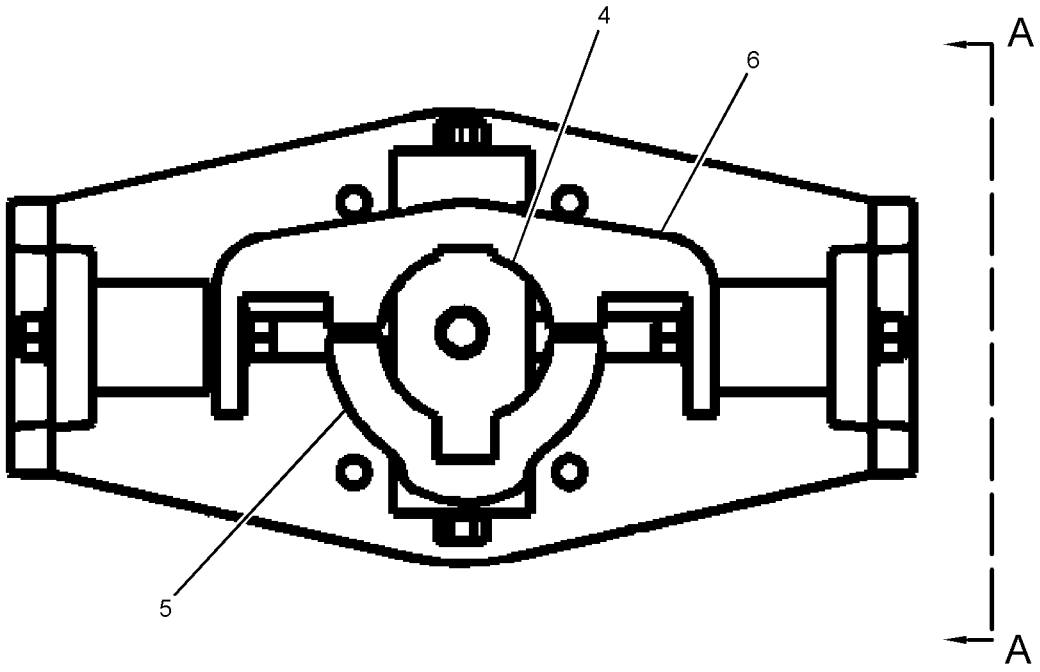

REFER TO ALL ILLUSTRATIONS OF
THIS GROUP FOR AUXILIARY VIEWS

GRAPHIC #1 g01186401

234-9970 **MOUNTING GP-RECEIVER** *(contd.)* **i02649980**

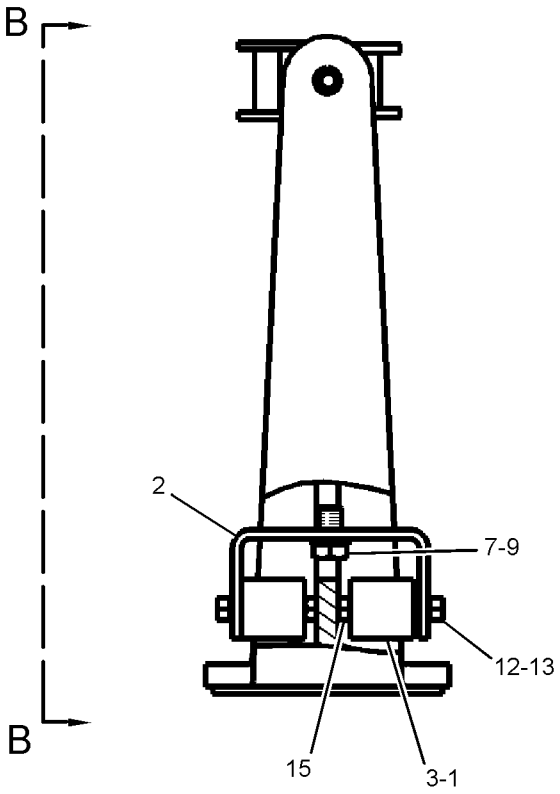

VIEW A-A

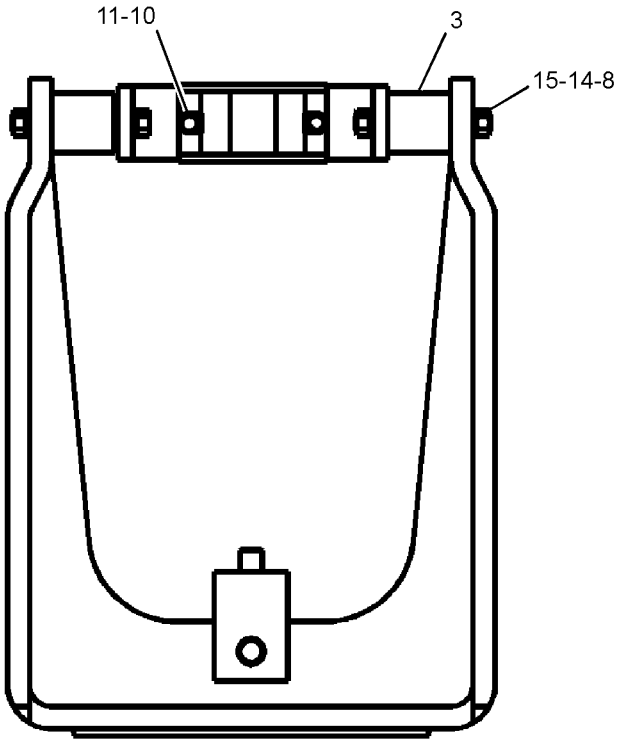

VIEW B-B

GRAPHIC #2 **<END>** g01186365

ELECTRICAL AND STARTING SYSTEM

226-9674 PANEL GP-FUSE

S/N: SMC1-UP; GCT1-UP

PART OF 279-9547 WIRING GP-PLATFORM

SMCS-1417 **i02590924**

NOTE	REF NO	GRAPHIC REF	PART NUMBER	QTY	PART NAME 1 2 3 4 5 6 (PRODUCT LEVEL)	SEE PAGE
	1	1	**7K-1181**	4	STRAP-CABLE	
	2	1	**9W-1441**	21	FUSE (15-AMPERE)	
	3	1	**9W-1442**	2	FUSE (10-AMPERE)	
	4	1	**9W-1446**	1	FUSE (20-AMPERE)	
Y	5	1	**125-1302**	1	SWITCH GP-MAGNETIC (24-VOLT) (START RELAY)	240
	6	1	**172-4863**	1	JUNCTION BLOCK	
	7	1	**223-8173**	1	HOLDER AS-FUSE	
	8	1	**226-9675**	1	BLOCK AS (FUSE)	
		1	**225-8553**	1	BLOCK AS-FUSE	
		1	**151-1398**	2	KIT-TERMINAL (LOCK)	
		1	**227-0912**	1	BLOCK AS-FUSE	
		1	**1H-3244**	2	LOCKWASHER	
		1	**6V-8185**	2	NUT (1/4-20-THD)	
		1	**8T-4205**	2	WASHER-HARD (7.2X14.5X2-MM THK)	
		1	**180-5737**	1	COVER (FUSE BLOCK)	
		1	**237-0049**	1	HARNESS AS-PANEL	
		1	**214-4208**	1	RECEPTACLE AS-CONNECTOR (70-PIN)	
		1	**102-8802**	2	KIT-RECEPTACLE (2-PIN)	
					(EACH INCLUDES RECEPTACLE AS & WEDGE)	
		1	**155-2270**	2	KIT-CONNECTING PLUG (2-PIN)	
					(EACH INCLUDES PLUG AS, WEDGE, & INTERFACE SEAL)	
	9	1	**237-0048**	1	PANEL AS	
	10	1	**237-0050**	1	STRAP	
	11	1	**237-0051**	1	STRAP	
	12	1	**237-0052**	1	STRAP	
	13	1	**237-0053**	1	STRAP	
	14	1	**237-0225**	1	STRAP	
	15	1	**238-2014**	1	WIRE AS	
	16	1	**239-3354**	1	CAP AS	
D		1	**5P-5677**		WIRE (18-GA, BLACK) (0.3-M)	
E		1	**125-7875**		TUBE-HEAT SHRINK (7.44-MM DIA) (3-CM)	
		1	**232-3402**	1	FILM-WARNING (ELECTRICAL SHOCK)	
	17	1	**239-8107**	1	FUSE (175-AMPERE)	
	18	1	**240-8917**	1	FILM-CIRCUIT BREAKER	
Y	19	1	**241-8368**	1	SWITCH GP-MAGNETIC (24-VOLT) (MAIN RELAY)	241
M	20	1	**5C-2890**	4	NUT (M6X1-THD)	
	21	1	**6T-3643**	1	CIRCUIT BREAKER AS (15-AMPERE) (FAN BLOWER MOTOR)	
		1	**6V-8376**	2	SCREW-MACHINE (8-32X0.25-IN)	
		1	**9B-7233**	2	LOCKWASHER	
	22	1	**6V-5645**	4	SCREW-MACHINE (10-32X0.87-IN)	
M	23	1	**5C-7883**	7	BOLT-SOCKET HEAD (M6X1X16-MM)	
	24	1	**7U-4892**	2	SCREW (8-32X0.75-IN)	
M	25	1	**7X-2548**	2	BOLT (M12X1.75X16-MM)	
M	26	1	**8T-3992**	4	SCREW (M6X1X12-MM)	
	27	1	**8T-4121**	2	WASHER-HARD (11X21X2.5-MM THK)	
M	28	1	**8T-4191**	2	BOLT (M10X1.5X16-MM)	
M	29	1	**8T-4199**	4	BOLT (M8X1.25X12-MM)	
	30	1	**8T-4223**	2	WASHER-HARD (13.5X25.5X3-MM THK)	
	31	1	**8T-4224**	4	WASHER-HARD (8.8X16X2-MM THK)	
	32	1	**9X-8256**	4	WASHER (6.6X12X2-MM THK)	

D-ORDER BY THE METER
E-ORDER BY THE CENTIMETER
M-METRIC PART
Y-SEPARATE ILLUSTRATION

226-9674 **PANEL GP-FUSE** *(contd.)* **i02590924**

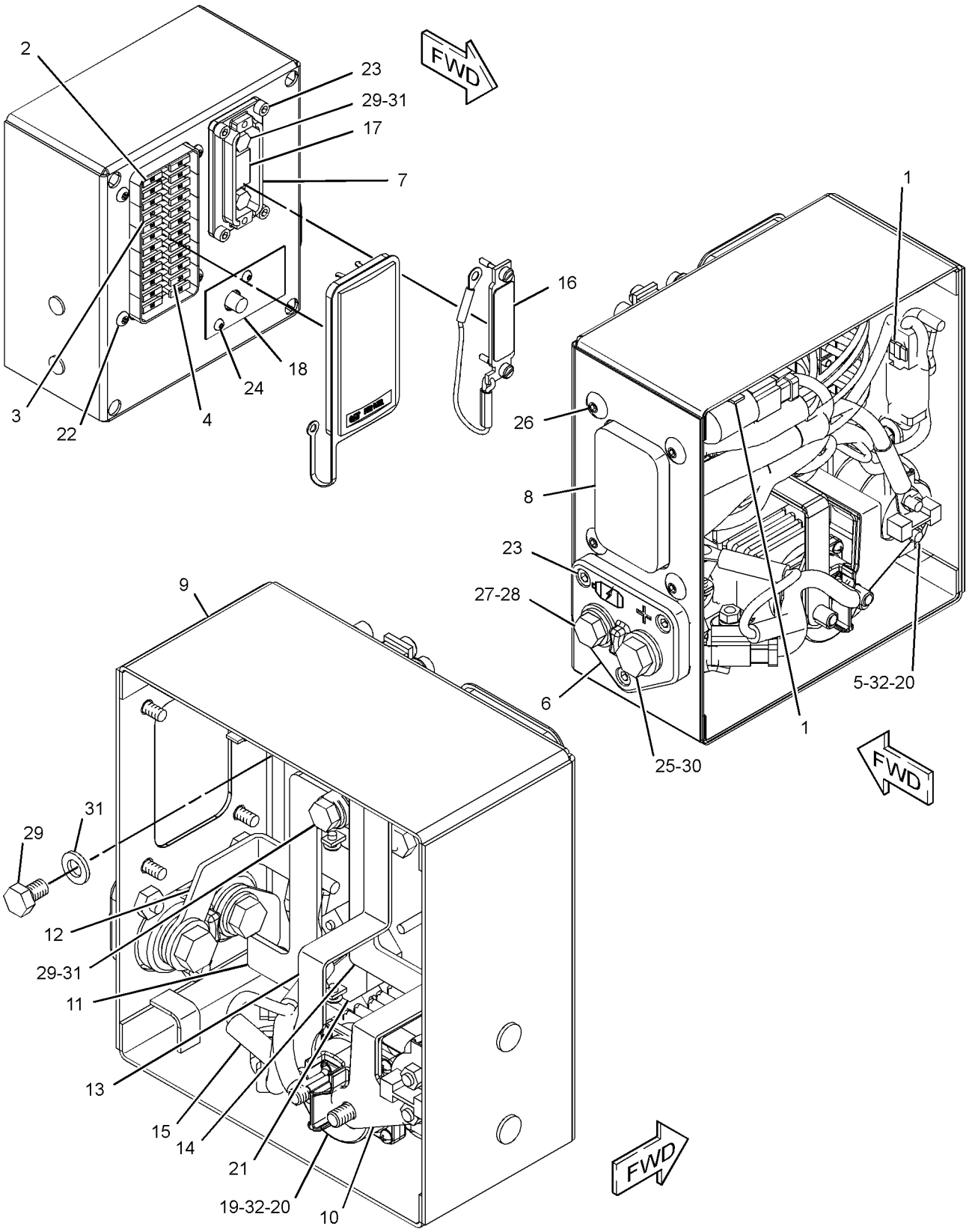

(HARNESS REMOVED FOR CLARITY)

GRAPHIC #1 **<END>** g01264625

263-9088 RADIO GP-COMMUNICATION—PRODUCT LINK 121SR

S/N: SMC1-UP; GCT1-UP
PART OF 282-8483, 282-8484 INSTALLATION GP-COMMUNICATION
AN ATTACHMENT

SMCS-733T **i02794877**

NOTE	PART NUMBER	QTY	PART NAME 1 2 3 4 5 6 (PRODUCT LEVEL)	SEE PAGE
	311-8377	1	SOFTWARE GP-COMMUNICATION (PRODUCT LINK 121SR)	

<END>

292-0285 RECEIVER GP-LASER—GRADE CONTROL

S/N: SMC1-UP; GCT1-UP
PART OF 292-0293, 292-0312 GRADE CONTROL AR-LASER

SMCS-7009 **i02649292**

NOTE	PART NUMBER	QTY	PART NAME 1 2 3 4 5 6 (PRODUCT LEVEL)	SEE PAGE
	276-0764	1	CABLE-COILED (LASER RECEIVER)	
	253-8329	1	RECEIVER GP-LASER (LR410)	
	292-1268	1	SOFTWARE GP-MONITOR	

<END>

292-0291 RECEIVER GP-SATELLITE—DUAL GNSS, MS990

S/N: SMC1-UP; GCT1-UP
PART OF 290-5571 GRADE CONTROL AR-SATELLITE

SMCS-7010 **i02627675**

NOTE	PART NUMBER	QTY	PART NAME 1 2 3 4 5 6 (PRODUCT LEVEL)	SEE PAGE
	252-9628	2	BRACKET AS (RECEIVER)	
			(EACH INCLUDES)	
	8R-1803	5	WASHER (10.5X18X1-MM THK)	
M	**8T-9388**	4	BOLT (M10X1.5X25-MM)	
	113-0693	5	LOCKWASHER	
	289-8449	1	HANDLE AS	
	255-0939	1	CASE-PLASTIC (RECEIVER)	
	291-1913	2	RECEIVER AS-SATELLITE (GNSS, MS990)	
			(EACH INCLUDES)	
	300-9517	1	SOFTWARE (RECEIVER)	
	301-4136	1	SOFTWARE (RECEIVER, LOADER)	

M-METRIC PART

<END>

292-0292 RECEIVER GP-SATELLITE—SINGLE GNSS, MS990

S/N: SMC1-UP; GCT1-UP

PART OF 292-0280 GRADE CONTROL AR-SATELLITE

SMCS-7010 **i02619929**

NOTE	PART NUMBER	QTY	PART NAME 1 2 3 4 5 6 (PRODUCT LEVEL)	SEE PAGE
	252-9628	1	BRACKET AS (RECEIVER)	
	8R-1803	5	WASHER (10.5X18X1-MM THK)	
M	**8T-9388**	4	BOLT (M10X1.5X25-MM)	
	113-0693	5	LOCKWASHER	
	289-8449	1	HANDLE AS	
	255-0939	1	CASE-PLASTIC (RECEIVER)	
	291-1913	1	RECEIVER AS-SATELLITE (GNSS, MS990)	
	300-9517	1	SOFTWARE (RECEIVER)	
	301-4136	1	SOFTWARE (RECEIVER, LOADER)	

M-METRIC PART

<END>

231-1978 SENSOR GP-ENGINE

S/N: THX8900-UP

PART OF 282-3823, 282-3824, 282-3825, 282-3826, 301-5768 ENGINE AR

ALSO AN ATTACHMENT

SMCS-1000, 1718, 1906, 1907, 1912, 1917, 1923, 1924, 1925, 1928, 1929, 7400, 7422 **i02431632**

NOTE	REF NO	GRAPHIC REF	PART NUMBER	QTY	PART NAME 1 2 3 4 5 6 (PRODUCT LEVEL)	SEE PAGE
	1	1	**9X-0262**	1	ADAPTER	
Y	2	1	*274-7395*	1	SENSOR GP-TEMPERATURE (AIR INLET MANIFOLD)	228
Y	3	1	*274-7396*	1	SENSOR GP-TEMPERATURE (WATER, COOLANT)	229
Y	4	1	*197-8393*	1	SENSOR GP-PRESSURE (ATMOSPHERIC AIR)	220
Y	5	1	*197-8394*	1	SENSOR GP-PRESSURE (ENGINE OIL)	221
Y	6	1	*210-1747*	1	SENSOR GP-PRESSURE (TURBOCHARGER OUTLET)	222
Y	7	1	*236-6220*	1	SENSOR GP-PRESSURE (INJECTION ACTUATION)	224
Y	8	1	*236-6221*	1	SENSOR GP-SPEED (ENGINE TIMING) (ENGINE SPEED, TIMING)	226
	9	1	**3E-4352**	1	WASHER-HARD (8.8X20.5X2.5-MM THK)	
M	10	1	**6V-3940**	1	BOLT (M8X1.25X25-MM)	
	11	1	**6V-5048**	1	SEAL-O-RING	
	12	1	**6V-5049**	1	SEAL-O-RING	
	13	1	**9X-0261**	1	ADAPTER	

M-METRIC PART
Y-SEPARATE ILLUSTRATION

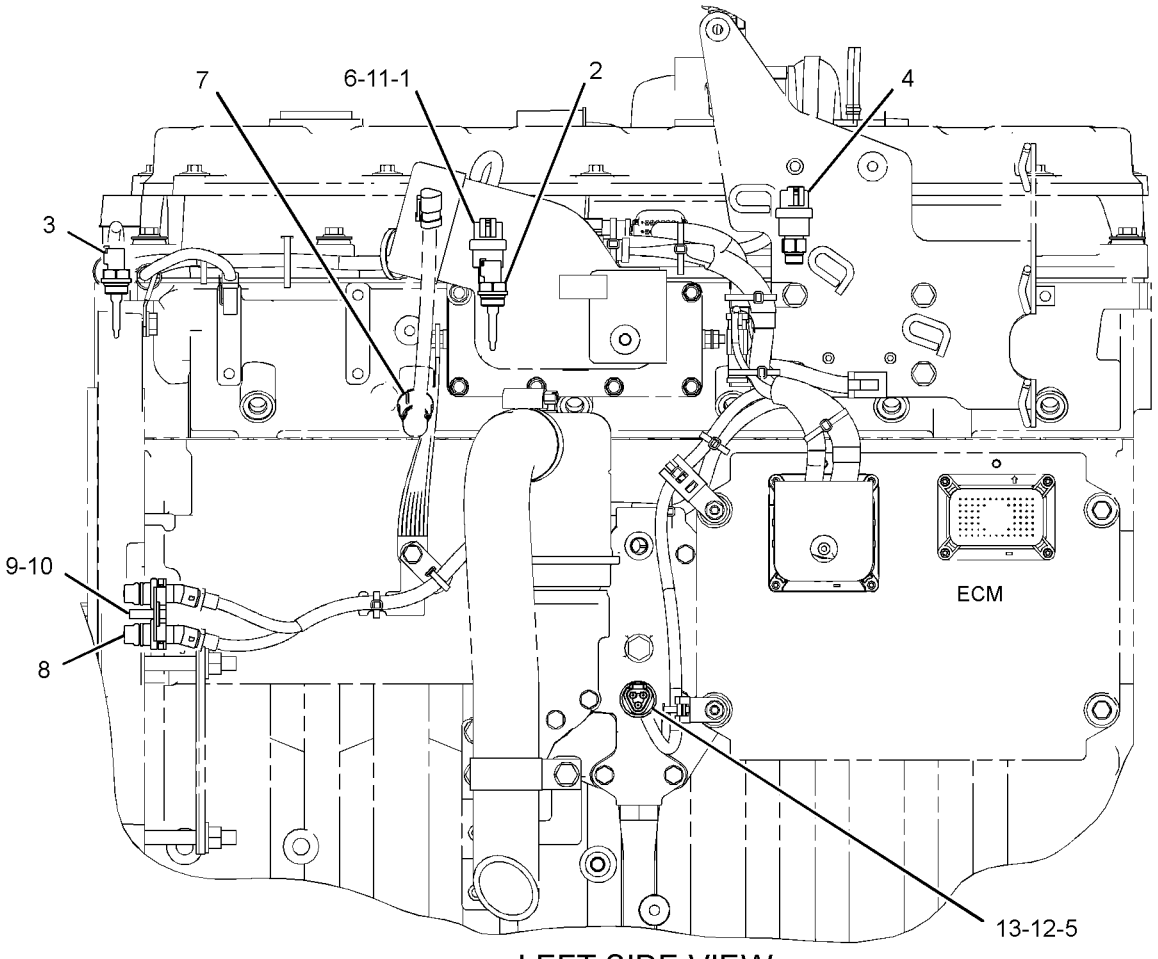

LEFT SIDE VIEW

GRAPHIC #1 **<END>** g01199708

160-2443 SENSOR GP-POSITION

S/N: SMC1-UP; GCT1-UP
ROTARY
PART OF 224-2791 PEDAL GP-GOVERNOR & BRAKE

SMCS-1905, 1911 **i01431988**

NOTE	REF NO	GRAPHIC REF	PART NUMBER	QTY	PART NAME 1 2 3 4 5 6 (PRODUCT LEVEL)	SEE PAGE
	1	1	**102-8803**	1	KIT-RECEPTACLE (3-PIN)	
					(INCLUDES RECEPTACLE AS & WEDGE)	
	2	1	**8T-8729**	3	PIN-CONNECTOR	
	3	1	**3E-3371**	1	WEDGE-RECEPTACLE LOCK (3-PIN)	

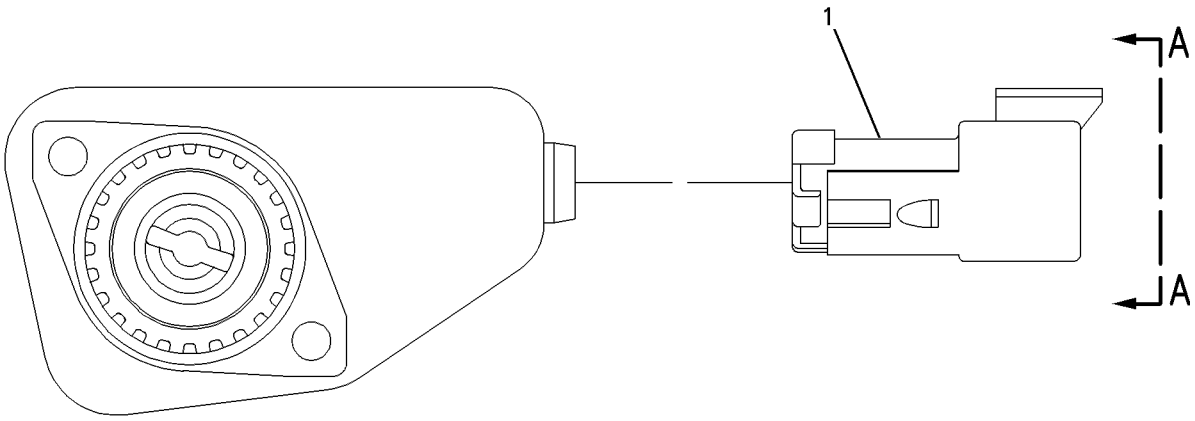

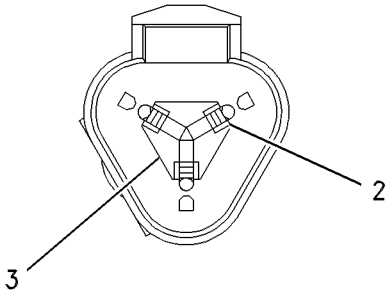

VIEW A-A

GRAPHIC #1 **<END>** g00637818

224-5530 SENSOR GP-POSITION

S/N: SMC1-UP; GCT1-UP

PART OF 224-2791 PEDAL GP-GOVERNOR & BRAKE

SMCS-1905, 1911 **i02239742**

NOTE	REF NO	GRAPHIC REF	PART NUMBER	QTY	PART NAME 1 2 3 4 5 6 (PRODUCT LEVEL)	SEE PAGE
	2	1	**102-8803**	1	KIT-RECEPTACLE (3-PIN)	
					(INCLUDES RECEPTACLE AS & WEDGE)	
	3	1	**186-3735**	3	PIN-CONNECTOR (16-GA TO 18-GA)	
	4	1	**3E-3371**	1	WEDGE-RECEPTACLE LOCK (3-PIN)	
E	5	1	**9X-1813**		SLEEVE (13-CM)	

E-ORDER BY THE CENTIMETER

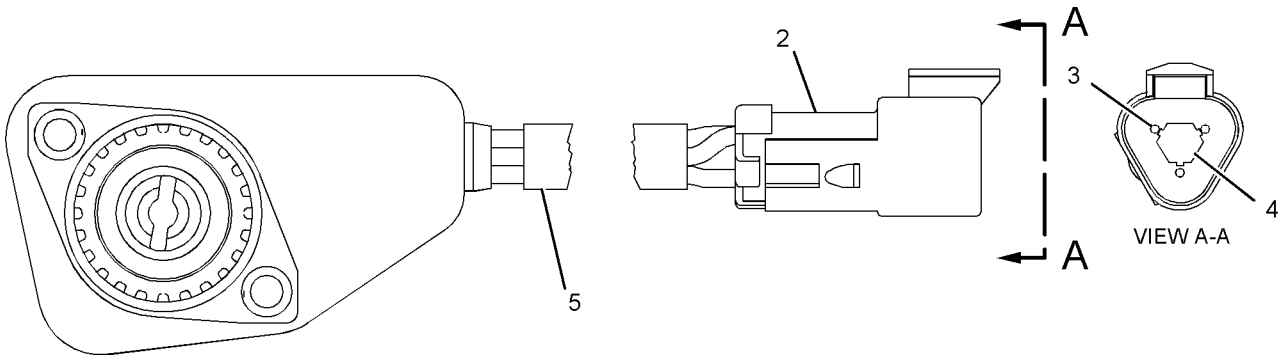

GRAPHIC #1 **<END>** g01107385

161-9926 SENSOR GP-PRESSURE

S/N: SMC1-UP; GCT1-UP

PART OF 279-9548 BATTERY & WIRING GP

SMCS-1718, 1916, 1917, 1923, 1924, 1925 **i01426986**

NOTE	REF NO	GRAPHIC REF	PART NUMBER	QTY	PART NAME 1 2 3 4 5 6 (PRODUCT LEVEL)	SEE PAGE
E	1	1	**9X-1813**		SLEEVE (34CM)	
	2	1	**155-2260**	1	KIT-CONNECTING PLUG (3-PIN)	
					(INCLUDES PLUG AS & WEDGE)	
	3	1	**9X-3402**	1	SOCKET-CONNECTOR (16-GA TO 18-GA)	
					(FOR 16-18 GA WIRE)	
					—OR—	
		1	**126-1768**	1	SOCKET-CONNECTOR (14-GA)	
					(FOR 14 GA WIRE)	
	4	1	**3E-3368**	1	WEDGE-PLUG LOCK (3-PIN)	

E-ORDER BY THE CENTIMETER

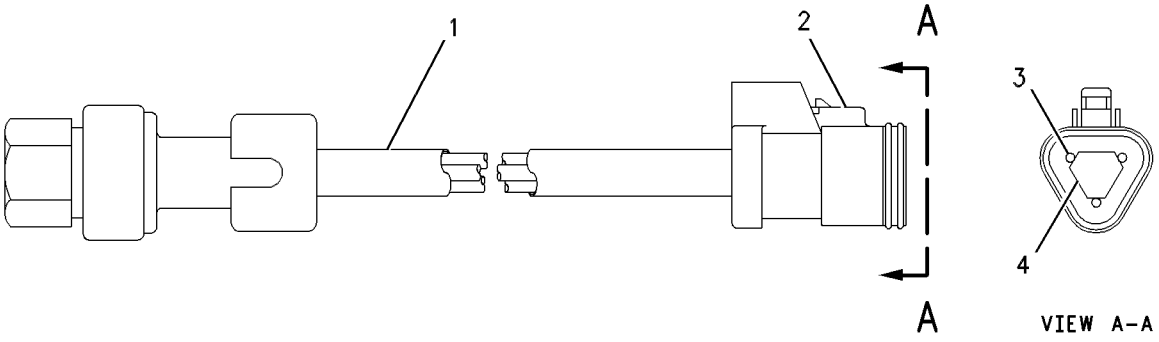

GRAPHIC #1 **<END>** g00513129

194-6725 SENSOR GP-PRESSURE

S/N: THX8900-UP
PART OF 264-2014 LINES GP-FUEL
ALSO AN ATTACHMENT

SMCS-1718, 1916, 1917, 1923, 1924, 1925 **i01681907**

NOTE	REF NO	GRAPHIC REF	PART NUMBER	QTY	PART NAME 1 2 3 4 5 6 (PRODUCT LEVEL)	SEE PAGE
BE	1	1	**9X-1813**		SLEEVE (34 CM)	
	2	1	**155-2260**	1	KIT-CONNECTING PLUG (3-PIN)	
					(INCLUDES PLUG AS AND WEDGE)	
	3	1	**180-9340**	3	SOCKET-CONNECTOR	
	4	1	**3E-3368**	1	WEDGE-PLUG LOCK (3-PIN)	

B-USE AS REQUIRED
E-ORDER BY THE CENTIMETER

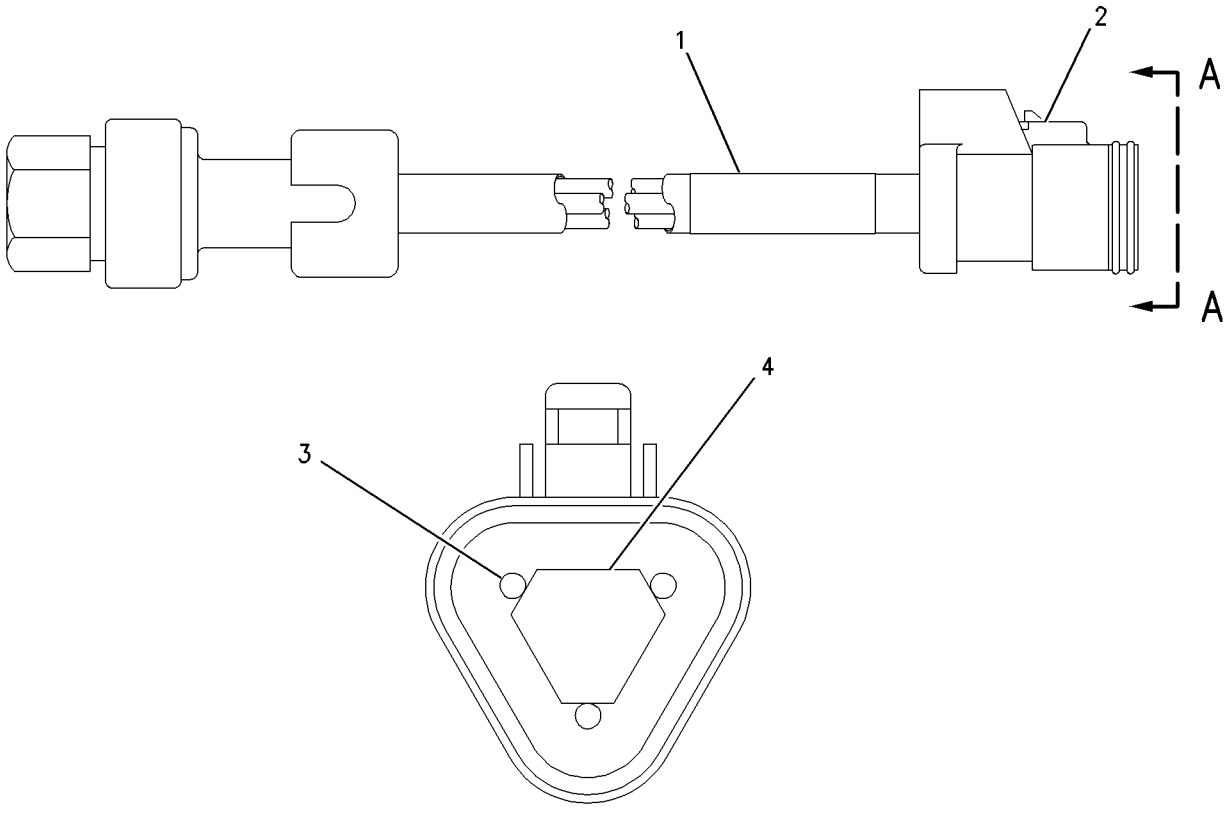

VIEW A-A

GRAPHIC #1 **<END>** g00851220

197-8393 SENSOR GP-PRESSURE

S/N: THX8900-UP

PART OF 231-1978 SENSOR GP-ENGINE

ALSO AN ATTACHMENT

SMCS-1718, 1916, 1917, 1923, 1924, 1925 **i01855744**

NOTE	REF NO	GRAPHIC REF	PART NUMBER	QTY	PART NAME 1 2 3 4 5 6 (PRODUCT LEVEL)	SEE PAGE
	1	1	**161-1703**	1	SENSOR GP-PRESSURE	
	2	1	**6V-5049**	1	SEAL-O-RING	

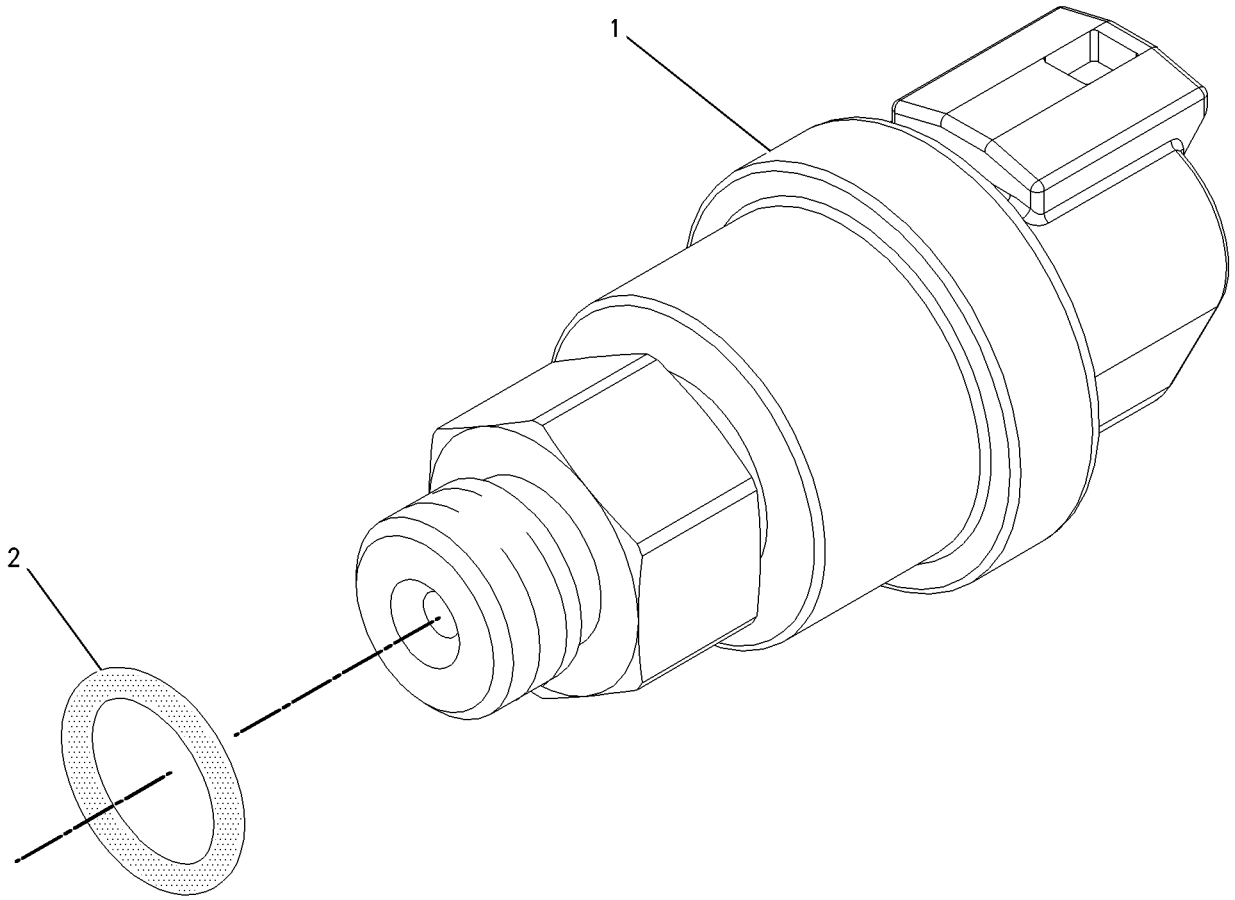

GRAPHIC #1 **<END>** g00855973

197-8394 SENSOR GP-PRESSURE

S/N: THX8900-UP
PART OF 231-1978 SENSOR GP-ENGINE
ALSO AN ATTACHMENT

SMCS-1718, 1916, 1917, 1923, 1924, 1925 **i01855745**

NOTE	REF NO	GRAPHIC REF	PART NUMBER	QTY	PART NAME 1 2 3 4 5 6 (PRODUCT LEVEL)	SEE PAGE
	1	1	**161-1705**	1	SENSOR AS-PRESSURE	
	2	1	**6V-5048**	1	SEAL-O-RING	

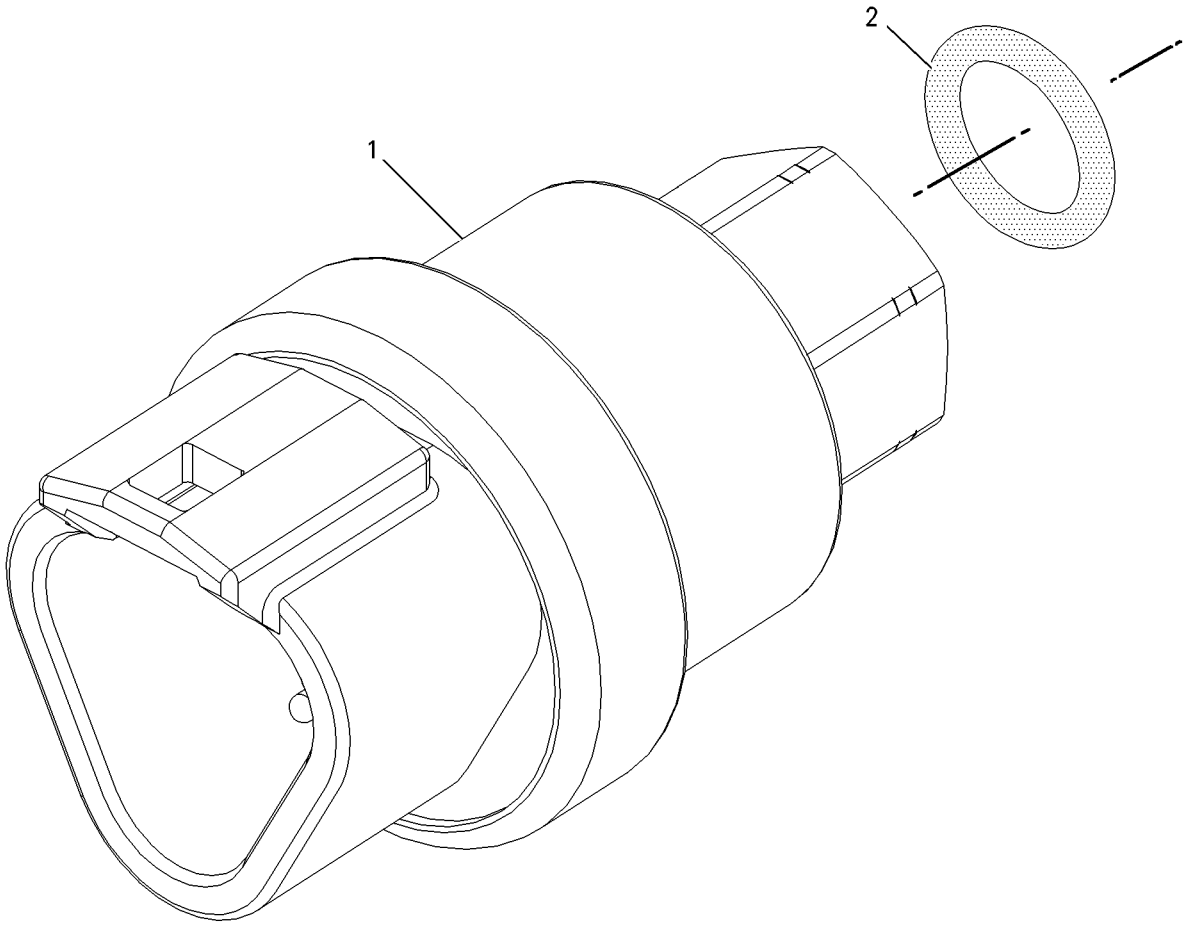

GRAPHIC #1 **<END>** g00856107

210-1747 SENSOR GP-PRESSURE

S/N: THX8900-UP
PART OF 231-1978 SENSOR GP-ENGINE
ALSO AN ATTACHMENT

SMCS-1718, 1916, 1917, 1923, 1924, 1925 **i02147083**

NOTE	REF NO	GRAPHIC REF	PART NUMBER	QTY	PART NAME 1 2 3 4 5 6 (PRODUCT LEVEL)	SEE PAGE
	1	1	**161-1704**	1	SENSOR GP-PRESSURE	
	2	1	**6V-5048**	1	SEAL-O-RING	

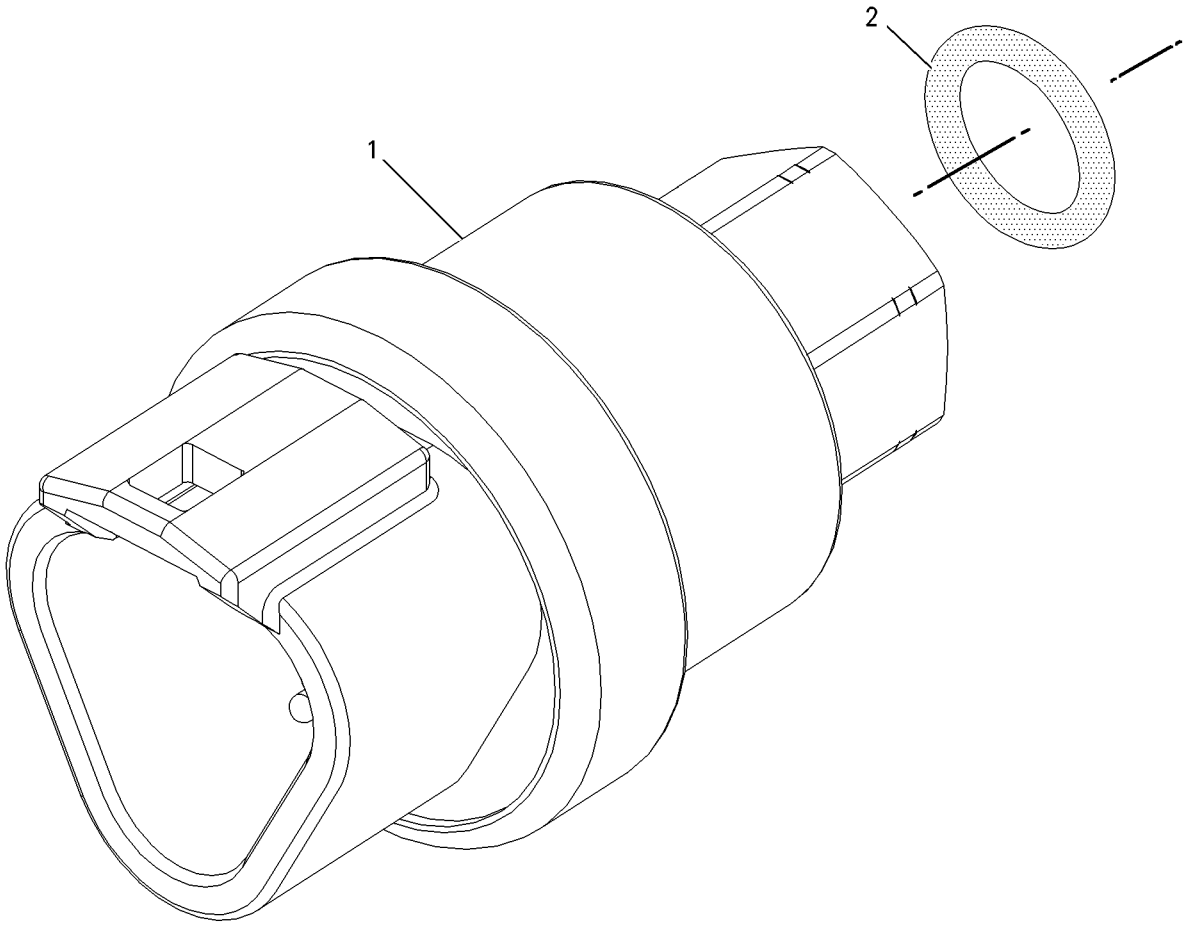

GRAPHIC #1 **<END>** g00856107

224-4536 SENSOR GP-PRESSURE

S/N: THX8900-UP
PART OF 236-6220 SENSOR GP-PRESSURE
ALSO AN ATTACHMENT

SMCS-1718, 1916, 1917, 1923, 1924, 1925 **i02154692**

NOTE	REF NO	GRAPHIC REF	PART NUMBER	QTY	PART NAME 1 2 3 4 5 6 (PRODUCT LEVEL)	SEE PAGE
E	1	1	**9X-1813**		SLEEVE (35-CM)	
	2	1	**155-2260**	1	KIT-CONNECTING PLUG (3-PIN)	
					(INCLUDES PLUG AS AND WEDGE)	
	3	1	**194-5226**	1	WIRE AS-HARNESS (16-GA TO 18-GA) (INJECTION ACTUATION)	
					—OR—	
		1	**194-5227**	1	WIRE AS-HARNESS (14-GA WIRE) (INJECTION ACTUATION)	
	4	1	**155-2276**	1	WEDGE-PLUG LOCK (3-PIN)	

E-ORDER BY THE CENTIMETER

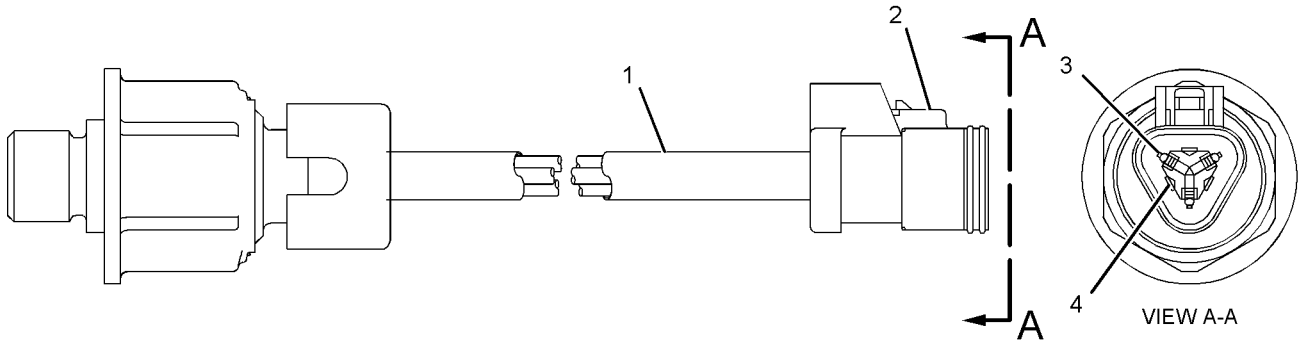

GRAPHIC #1 **<END>** g01040301

236-6220 SENSOR GP-PRESSURE

S/N: THX8900-UP
PART OF 231-1978 SENSOR GP-ENGINE
ALSO AN ATTACHMENT

SMCS-1718, 1916, 1917, 1923, 1924, 1925 **i02455849**

NOTE	REF NO	GRAPHIC REF	PART NUMBER	QTY	PART NAME 1 2 3 4 5 6 (PRODUCT LEVEL)	SEE PAGE
	1	1	**214-7567**	1	SEAL-O-RING	
Y	2	1	**224-4536**	1	SENSOR GP-PRESSURE (INJECTION ACTUATION)	223

Y-SEPARATE ILLUSTRATION

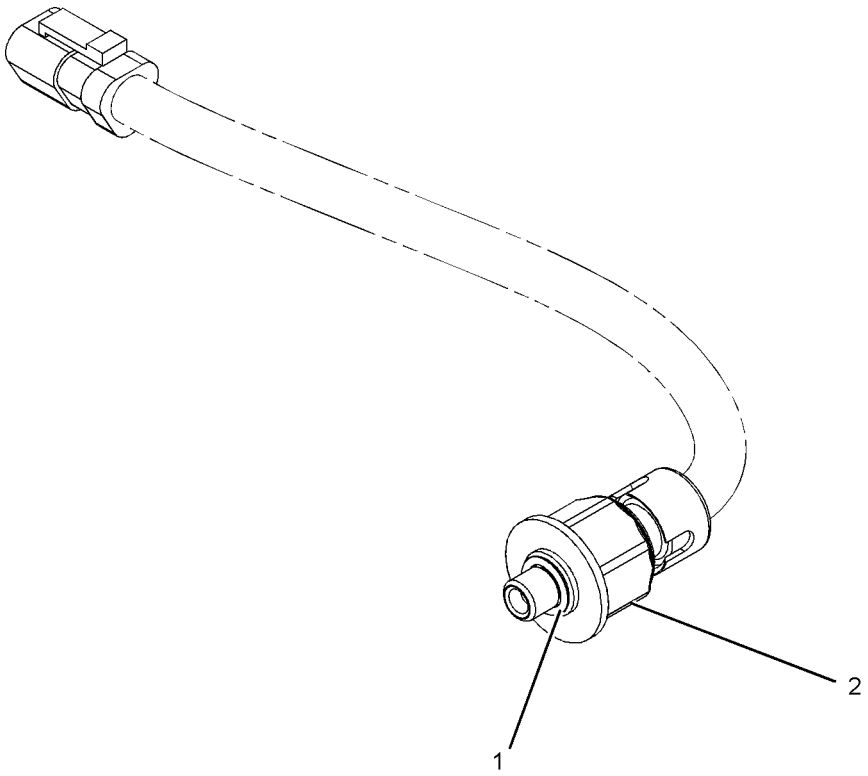

GRAPHIC #1 **<END>** g01054528

189-5746 SENSOR GP-SPEED

S/N: SMC1-UP; GCT1-UP

PART OF 279-9544 WIRING GP-ENGINE

SMCS-1907 **i01898173**

NOTE	REF NO	GRAPHIC REF	PART NUMBER	QTY	PART NAME 1 2 3 4 5 6 (PRODUCT LEVEL)	SEE PAGE
	1	1	**171-5349**	1	STRAP-MARKER	
	2	1	**102-8802**	1	KIT-RECEPTACLE (2-PIN)	
					(INCLUDES WEDGE AND RECEPTACLE ASSEMBLY)	
	3	1	**186-3735**	2	PIN-CONNECTOR (16-GA TO 18-GA)	
	4	1	**3E-3365**	1	WEDGE-RECEPTACLE LOCK (2-PIN)	
E	5	1	**9X-1386**		SLEEVE (14CM)	

E-ORDER BY THE CENTIMETER

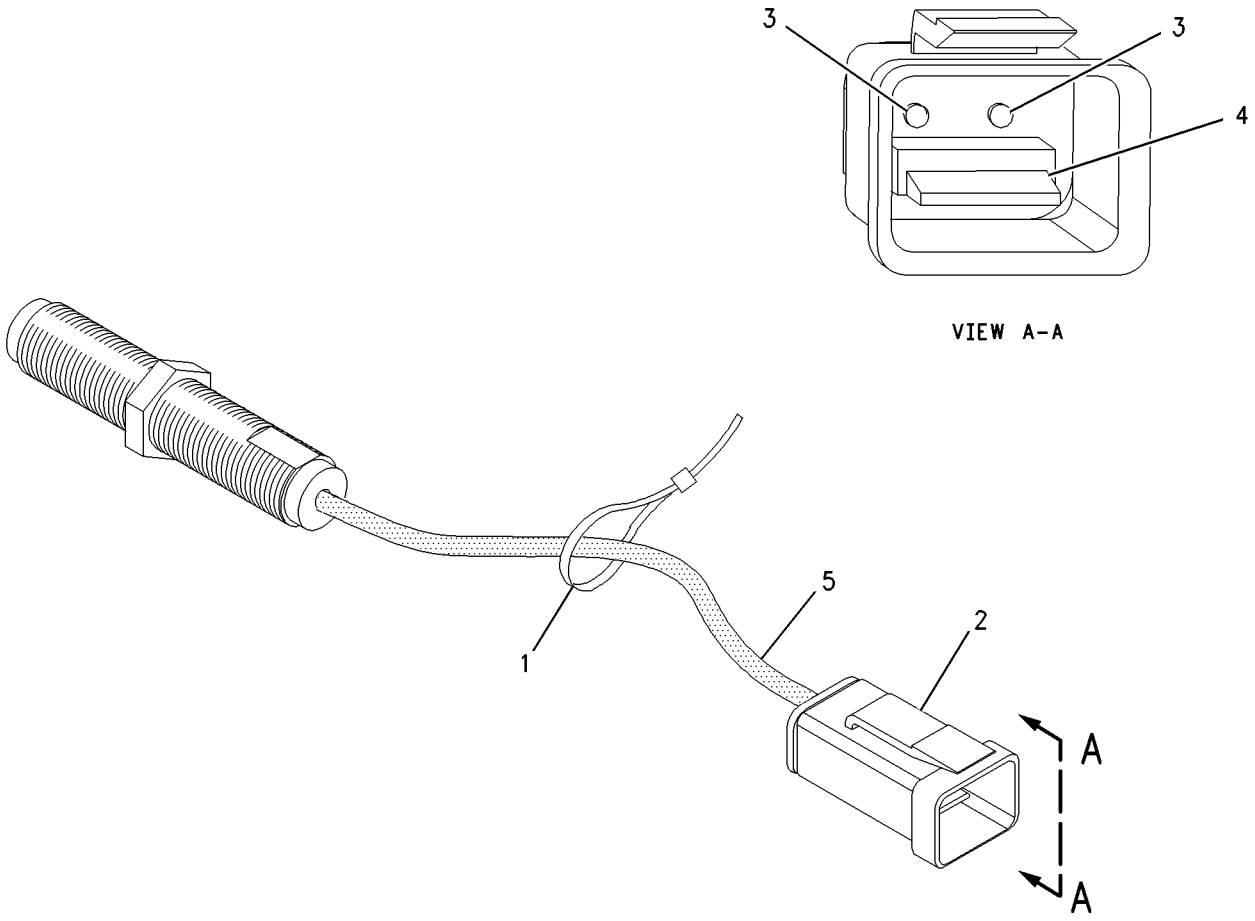

GRAPHIC #1 **<END>** g00837278

236-6221 SENSOR GP-SPEED

S/N: THX8900-UP
PART OF 231-1978 SENSOR GP-ENGINE
ALSO AN ATTACHMENT

SMCS-1907 **i02421726**

NOTE	REF NO	GRAPHIC REF	PART NUMBER	QTY	PART NAME 1 2 3 4 5 6 (PRODUCT LEVEL)	SEE PAGE
	1	1	**203-3940**	2	SEAL-O-RING	
	2	1	**245-4630**	1	SENSOR GP-SPEED	

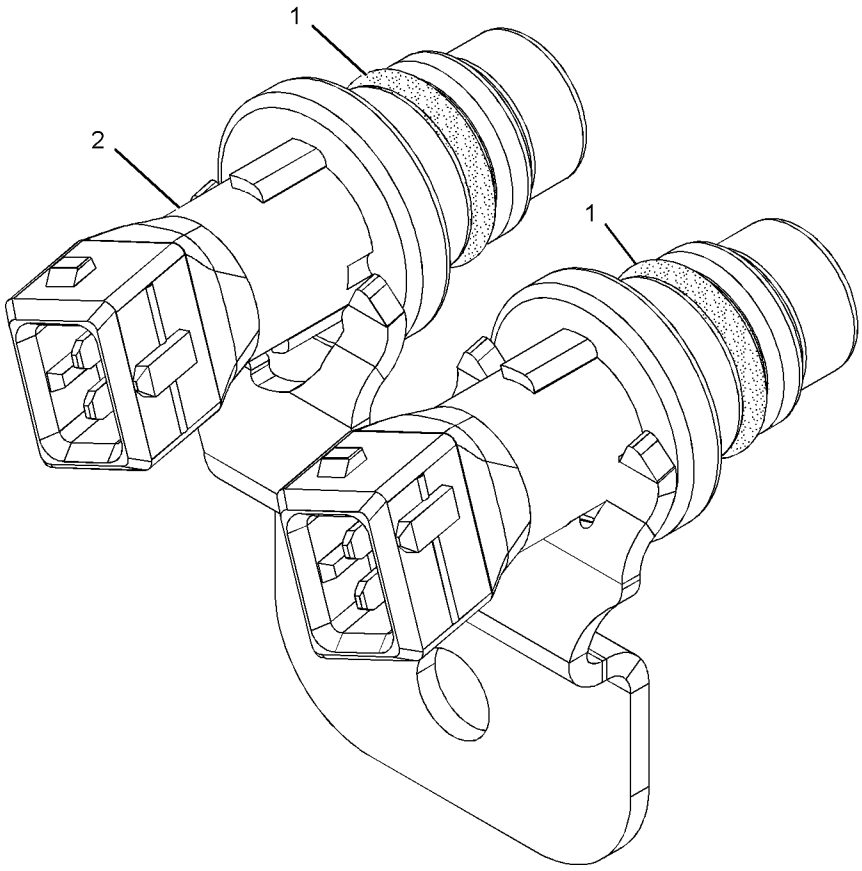

GRAPHIC #1 **<END>** g01013894

145-7028 SENSOR GP-TEMPERATURE

S/N: SMC1-UP; GCT1-UP

PART OF 279-9548 BATTERY & WIRING GP, 279-9544 WIRING GP-ENGINE

SMCS-1906, 1919, 1921, 1922, 1928, 1929 **i01828633**

NOTE	REF NO	GRAPHIC REF	PART NUMBER	QTY	PART NAME 1 2 3 4 5 6 (PRODUCT LEVEL)	SEE PAGE
	1	1	**102-8802**	1	KIT-RECEPTACLE (2-PIN)	
					(INCLUDES RECEPTACLE AS & WEDGE)	
BJ	2	1	**153-5043**		SLEEVE	
	3	1	**8T-8729**	2	PIN-CONNECTOR	
	4	1	**3E-3365**	1	WEDGE-RECEPTACLE LOCK (2-PIN)	

B-USE AS REQUIRED
J-ORDER BY THE DECIMETER

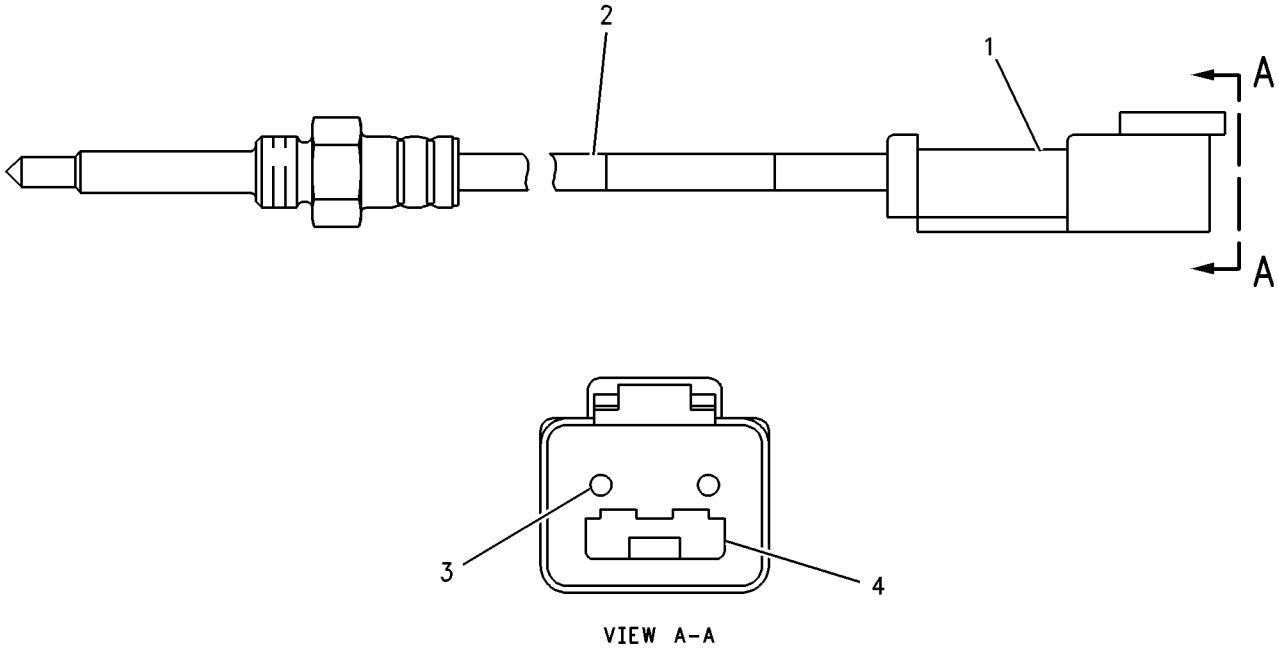

GRAPHIC #1 **<END>** g00917620

274-7395 SENSOR GP-TEMPERATURE

S/N: THX8900-UP

PART OF 231-1978 SENSOR GP-ENGINE

ALSO AN ATTACHMENT

SMCS-1906, 1919, 1921, 1922, 1928, 1929 **i02379156**

NOTE	REF NO	GRAPHIC REF	PART NUMBER	QTY	PART NAME 1 2 3 4 5 6 (PRODUCT LEVEL)	SEE PAGE
	1	1	**130-9811**	1	SENSOR GP-TEMPERATURE	
	2	1	**8L-2786**	1	SEAL-O-RING	

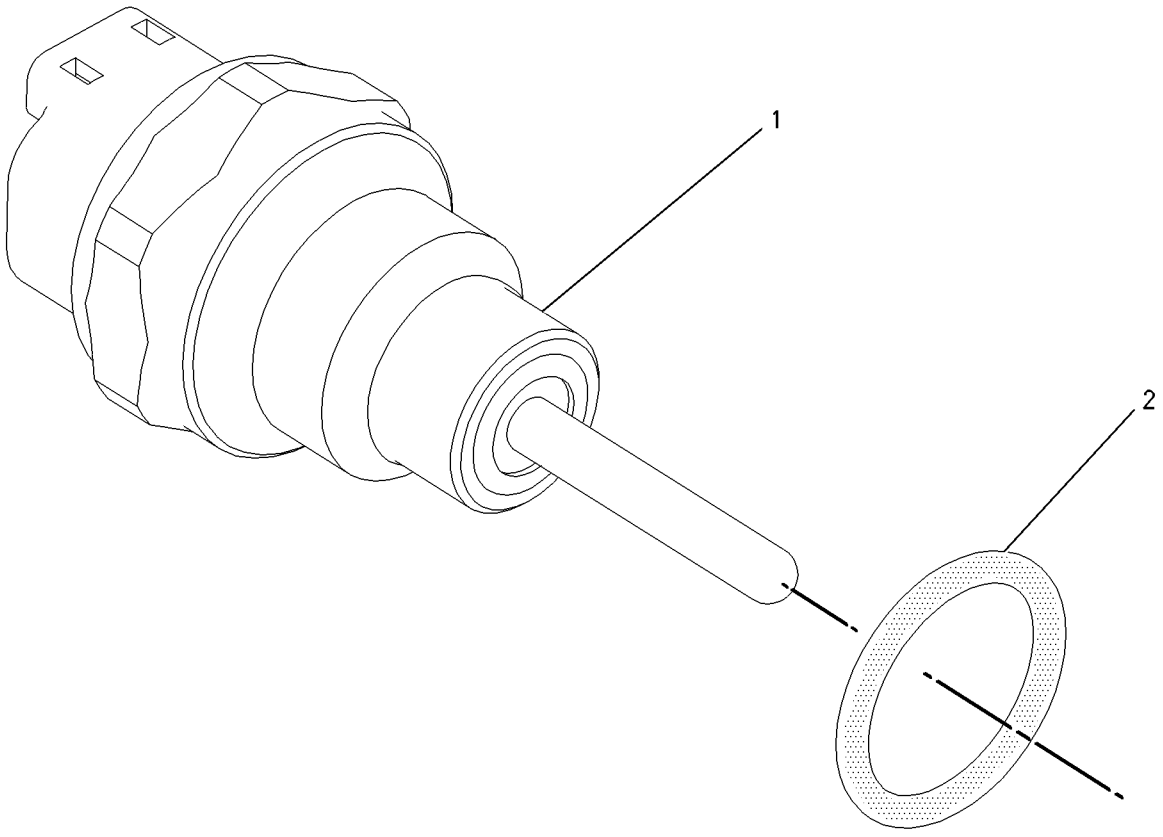

GRAPHIC #1 **<END>** g00856011

274-7396 SENSOR GP-TEMPERATURE

S/N: THX8900-UP
PART OF 231-1978 SENSOR GP-ENGINE
ALSO AN ATTACHMENT

SMCS-1906, 1919, 1921, 1922, 1928, 1929 **i02379018**

NOTE	REF NO	GRAPHIC REF	PART NUMBER	QTY	PART NAME 1 2 3 4 5 6 (PRODUCT LEVEL)	SEE PAGE
	1	1	**130-9811**	1	SENSOR GP-TEMPERATURE	
	2	1	**6V-6609**	1	SEAL-O-RING	

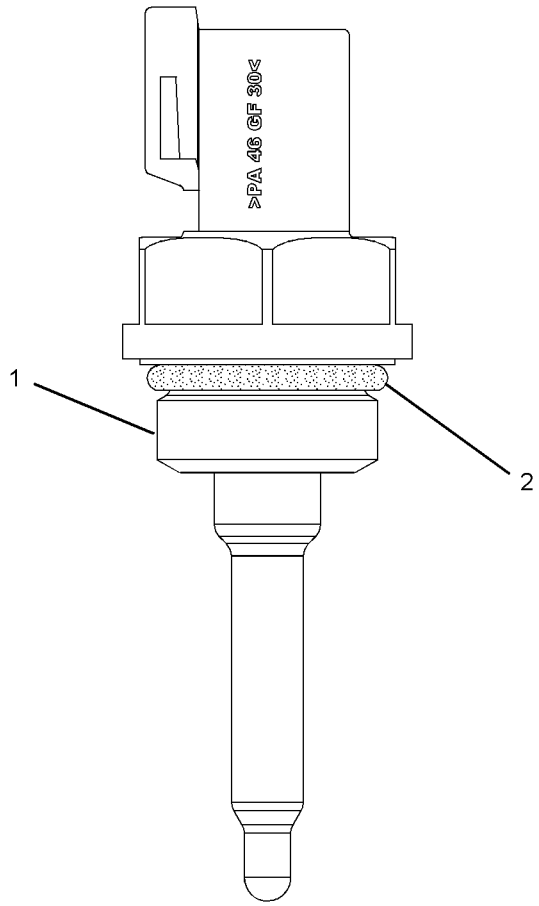

GRAPHIC #1 **<END>** g01193032

ELECTRICAL AND STARTING SYSTEM

263-9012 STARTING AID GP-ETHER

S/N: SMC1-UP; GCT1-UP

PART OF 279-9549 INSTALLATION AR-ENGINE

SMCS-1456 **i02751078**

NOTE	REF NO	GRAPHIC REF	PART NUMBER	QTY	PART NAME 1 2 3 4 5 6 (PRODUCT LEVEL)	SEE PAGE
	1	1	**3Y-2888**	1	CONNECTOR	
	2	1	**7N-2059**	1	CLAMP AS	
Y	3	1	**239-1134**	1	VALVE GP-ETHER STARTING (24-VOLT)	243
	4	1	**241-4194**	1	FITTING AS (CONTROL)	
	5	1	**251-4345**	1	ATOMIZER AS-ETHER	
	6	1	**260-3799**	1	BRACKET AS	
M		1	**8T-3612**	4	NUT-WELD (M8X1.25-THD)	
	7	1	**3J-1907**	1	SEAL-O-RING	
	8	1	**4P-8134**	1	CLIP	
	9	1	**5P-4116**	4	WASHER-HARD (8.8X20.5X2-MM THK)	
	10	1	**7X-7729**	2	WASHER (11X25X3-MM THK)	
M	11	1	**8T-4182**	2	BOLT (M10X1.5X45-MM)	
M	12	1	**8T-4189**	4	BOLT (M8X1.25X20-MM)	
E	13	1	**174-9169**		TUBE (35-CM)	
A		1	**7N-0296**	1	CYLINDER AS-ETHER	
					(MUST BE PROCURED LOCALLY FROM YOUR CATERPILLAR DEALER)	

A-NOT PART OF THIS GROUP
E-ORDER BY THE CENTIMETER
M-METRIC PART
Y-SEPARATE ILLUSTRATION

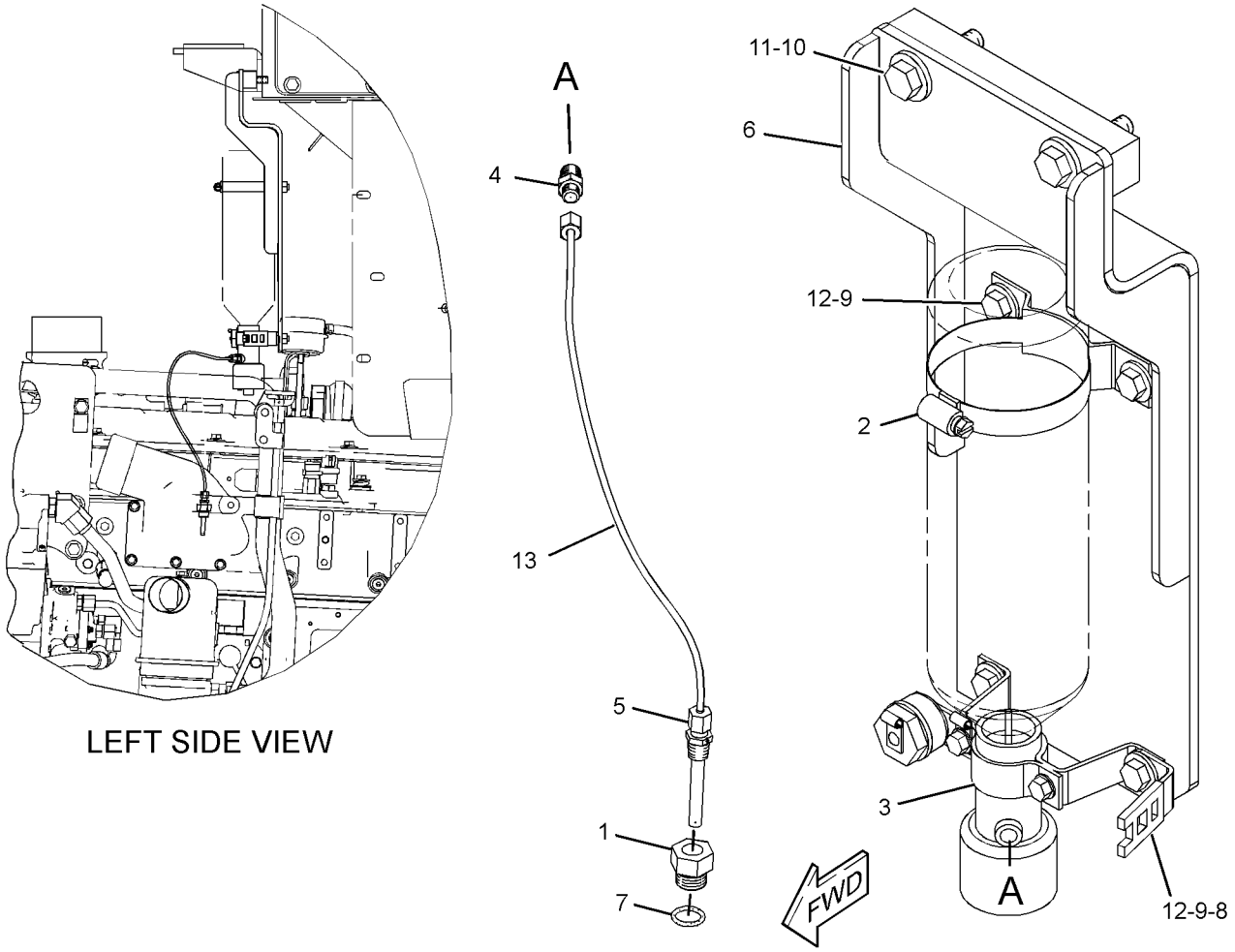

GRAPHIC #1

<END>

g01318337

207-1556 STARTING MOTOR GP-ELECTRIC*R

S/N: SMC1-UP; GCT1-UP

24-VOLT

PART OF 223-0558 STARTING MOTOR GP-ELECTRIC

SMCS-1453 **i02738904**

NOTE	REF NO	GRAPHIC REF	PART NUMBER	QTY	PART NAME 1 2 3 4 5 6 (PRODUCT LEVEL)	SEE PAGE
	1	1	**3T-3434**	6	PLUG	
	2	1	**7T-3279**	1	HOUSING AS	
	3	1	**8T-8566**	1	TERMINAL AS	
	4	1	**6V-8188**	4	NUT (1/2-13-THD)	
	5	1	**7X-0562**	4	WASHER-HARD (13.5X19X0.8-MM THK)	
	6	1	**3T-3422**	1	WIRE AS	
	7	1	**7T-3278**	1	HOLDER AS-BRUSH	
	8	1	**7T-3277**	1	COIL AS-FIELD	
	9	1	**7T-3454**	1	INSULATOR	
	10	1	**283-1107**	1	KIT-WIRING	
	11	1	**7T-3451**	1	INSULATOR-TERMINAL	
	12	1	**8T-8569**	1	INSULATOR-TERMINAL	
	13	1	**5S-7349**	4	BOLT (1/4-20X0.5-IN)	
	14	1	**8T-4205**	4	WASHER-HARD (7.2X14.5X2-MM THK)	
	15	1	**8H-1141**	4	SHOE-POLE	
	16	1	**3R-8797**	8	SCREW & WASHER AS	
	17	1	**7T-3276**	1	ARMATURE AS (24-VOLT)	
	18	1	**3E-7775**	1	HOUSING AS	
	19	1	**4M-1831**	1	PLUG-LEVER HOUSING	
	20	1	**7L-2894**	1	GASKET	
	21	1	**036-9823**	5	BOLT (1/4-28X1-IN)	
	22	1	**6N-3826**	1	DRIVE AS-MOTOR	
	23	1	**7T-3974**	1	HOUSING AS-DRIVE	
	24	1	**7X-3373**	6	BOLT (5/16-18X0.88-IN)	
	25	1	**193-8570**	1	SOLENOID AS (24-VOLT) (STARTING MOTOR)	
	26	1	**6V-8378**	3	NUT (10-32-THD)	
	27	1	**8F-1434**	2	LOCKWASHER	
	28	1	**8T-0328**	3	WASHER-HARD (5.5X10X1-MM THK)	
	29	1	**9X-4824**	1	COVER-STARTING MOTOR	
					AVAILABLE REPAIR KIT(S):	
			7T-3268	1	KIT-LEVER (STARTING MOTOR)	
					(INCLUDES LEVER ASSEMBLIES, SEALS, NUT, GASKET & RETAINER)	
			7T-3267	1	KIT-BUSHING (STARTING MOTOR)	
					(INCLUDES BUSHINGS, WICKS, CUPS, SEALS, GASKET, SCREW AS, WASHERS, SPACER & NUT)	
			8C-3655	1	KIT-BRUSH (STARTING MOTOR)	
					(INCLUDES BRUSHES, SPRINGS, SCREWS, SCREW AS & SEAL)	
			8T-9884	1	KIT-INSULATOR (STARTING MOTOR)	
					(INCLUDES INSULATORS & BUSHING)	

207-1556 STARTING MOTOR GP-ELECTRIC *(contd.)* **i02738904**

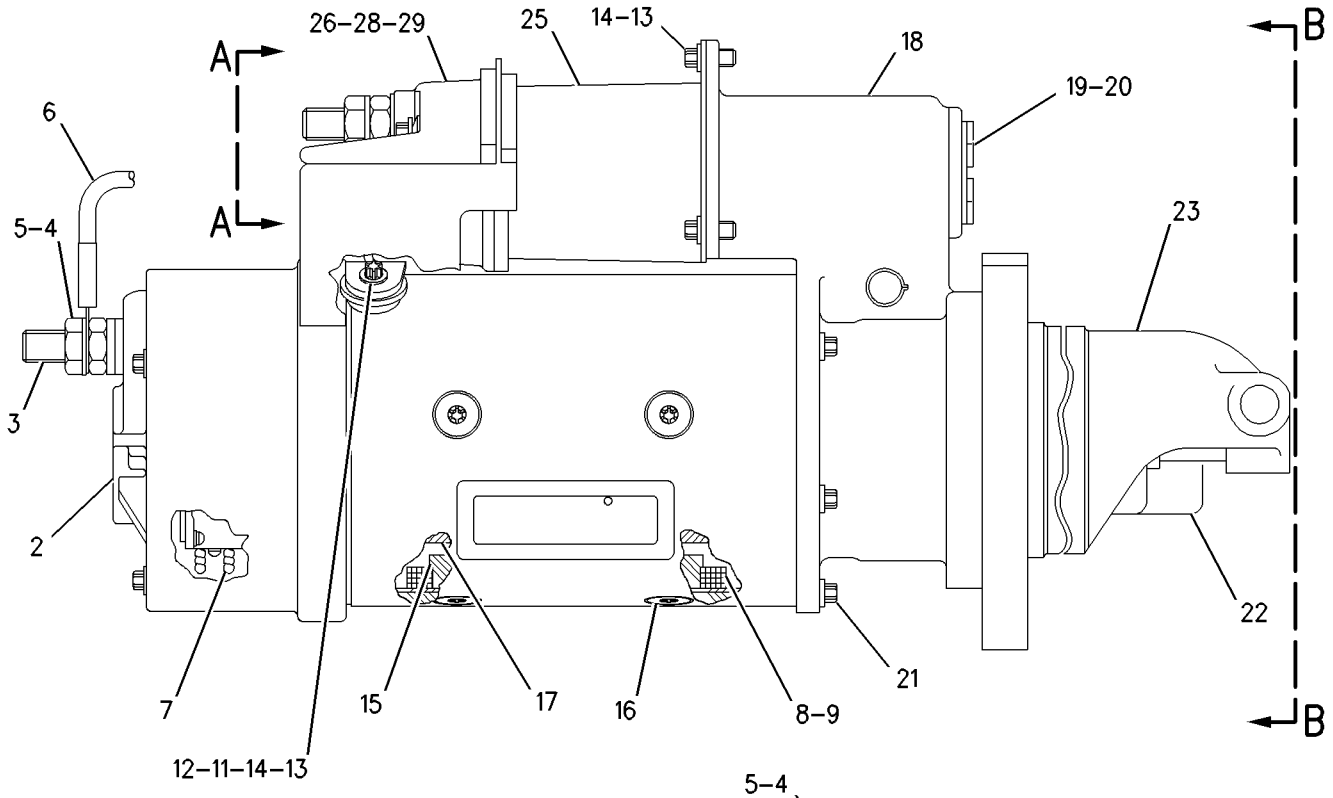

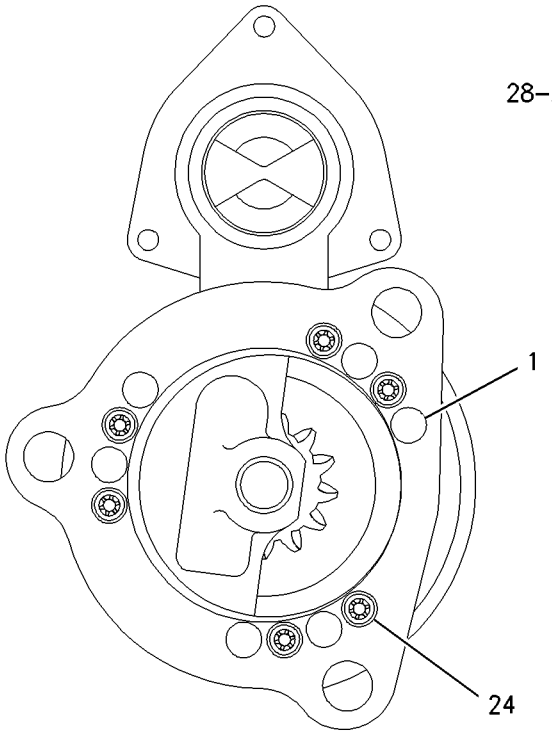

VIEW B-B

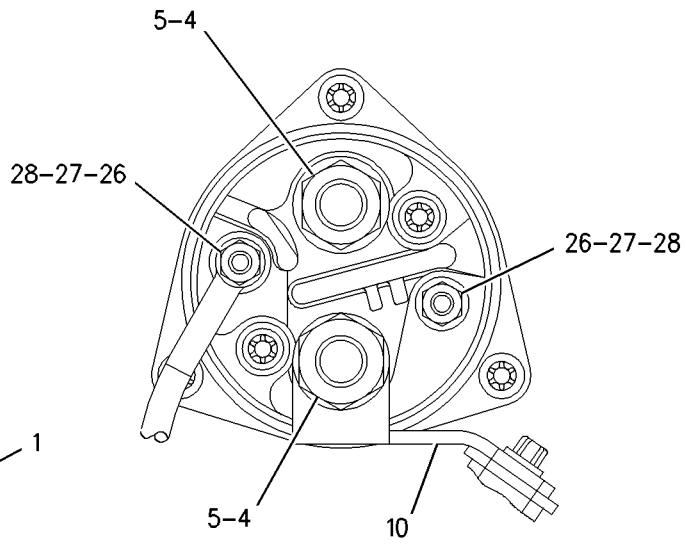

VIEW A-A

GRAPHIC #1 **<END>** g00826583

209-8423 STARTING MOTOR GP-ELECTRIC—HEAVY-DUTY

S/N: SMC1-UP; GCT1-UP
PART OF 227-1229 BATTERY GP
AN ATTACHMENT

SMCS-1453 **i02236267**

NOTE	REF NO	GRAPHIC REF	PART NUMBER	QTY	PART NAME 1 2 3 4 5 6 (PRODUCT LEVEL)	SEE PAGE
	1	1	**4N-1059**	1	GASKET	
	2	1	**185-6393**	1	CABLE AS-STARTING MOTOR	
E		1	**5P-0746**		CABLE (0-GA, BLACK) (30-CM)	
		1	**1M-4986**	1	TERMINAL-RING (0-GA, 1/2-IN)	
		1	**030-1707**	1	TERMINAL-RING (FOR 3/8-IN BOLT)	
YR	3	1	**237-1962**	1	STARTING MOTOR GP-ELECTRIC	236
	4	1	**220-0771**	3	BOLT-12 POINT HEAD (M16X2X45-MM) (MJ16X2 THD)	

E-ORDER BY THE CENTIMETER
R-REMFG PART MAY BE AVAILABLE
Y-SEPARATE ILLUSTRATION

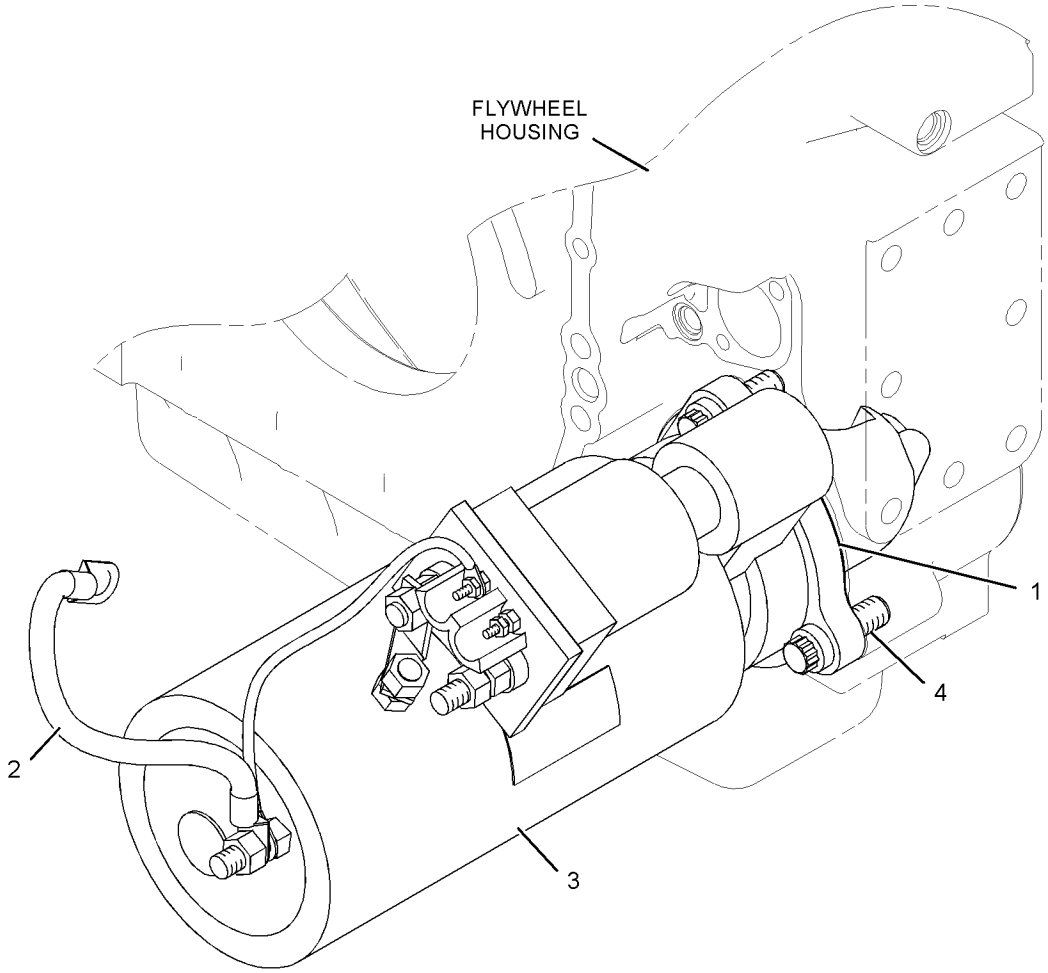

GRAPHIC #1 **<END>** g01023567

223-0558 STARTING MOTOR GP-ELECTRIC

S/N: SMC1-UP; GCT1-UP
24-VOLT
PART OF 279-9549 INSTALLATION AR-ENGINE

SMCS-1453 **i02432545**

NOTE	REF NO	GRAPHIC REF	PART NUMBER	QTY	PART NAME 1 2 3 4 5 6 (PRODUCT LEVEL)	SEE PAGE
	1	1	**4H-7869**	1	GASKET	
	2	1	**8Y-9603**	1	CABLE AS-STARTING MOTOR	
		1	**1S-7251**	1	TERMINAL-RING (FOR 1/2-IN BOLT)	
		1	**1S-7252**	1	TERMINAL-RING (FOR 3/8-IN BOLT)	
E		1	**5P-0747**		CABLE (00-GA, BLACK) (28-CM)	
YR	3	1	**207-1556**	1	STARTING MOTOR GP-ELECTRIC	232
	4	1	**220-0771**	3	BOLT-12 POINT HEAD (M16X2X45-MM)	
	5	1	**6V-5839**	1	WASHER (11X21X2.5-MM THK)	
M	6	1	**6V-8212**	1	BOLT (M10X1.5X16-MM)	

E-ORDER BY THE CENTIMETER
M-METRIC PART
R-REMFG PART MAY BE AVAILABLE
Y-SEPARATE ILLUSTRATION

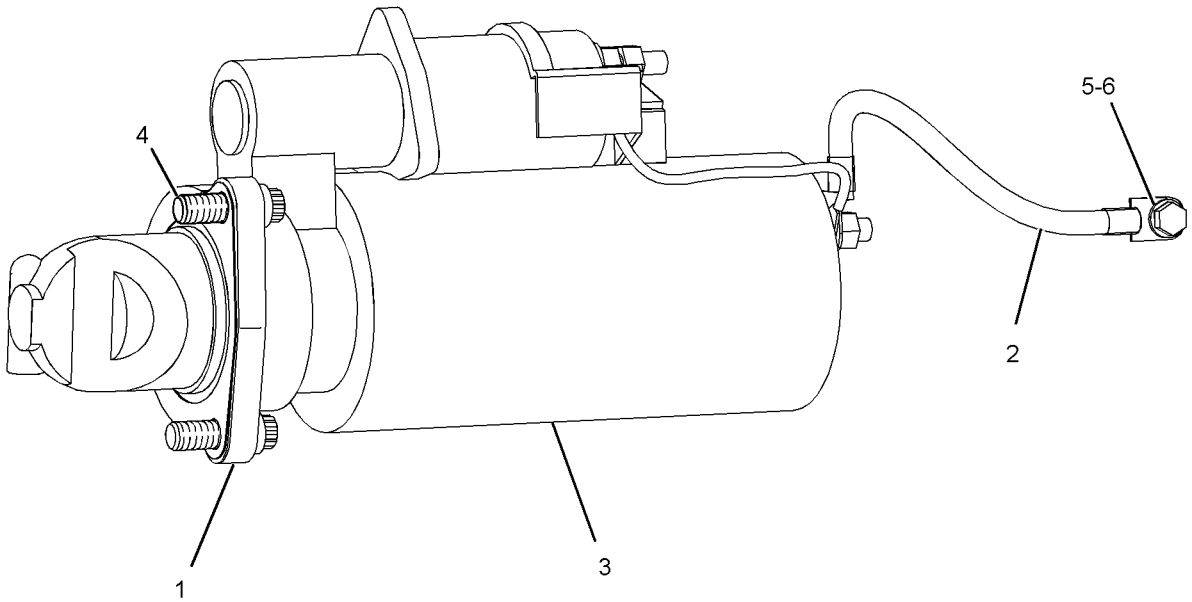

GRAPHIC #1 **<END>** g01206397

237-1962 STARTING MOTOR GP-ELECTRIC—HEAVY-DUTY*R

S/N: SMC1-UP; GCT1-UP

24-VOLT

PART OF 209-8423 STARTING MOTOR GP-ELECTRIC

AN ATTACHMENT

SMCS-1453 **i02003749**

NOTE	REF NO	GRAPHIC REF	PART NUMBER	QTY	PART NAME 1 2 3 4 5 6 (PRODUCT LEVEL)	SEE PAGE
	1	1	**7M-0326**	1	CONNECTOR	
	2	1	**9H-3757**	2	WASHER (0.516X1X0.094-IN THK)	
	3	1	**1S-7446**	3	SCREW-MACHINE (8-32X0.437-IN)	
	4	1	**8C-9660**	3	WASHER (4.6X7.9X0.8-MM THK)	
	5	1	**9S-2544**	9	SCREW-HEX HEAD (8-32X11.13-MM)	
	6	1	**7M-0327**	1	WASHER-THRUST (17.4X25.4X1.6-MM THK)	
	7	1	**3T-3418**	1	FRAME AS-END	
		1	**3T-3423**	1	CUP	
		1	**3T-3424**	1	PLUG-FELT	
		1	**9G-4101**	1	BUSHING-END	
	8	1	**3T-9525**	1	PLATE AS-BRUSH	
	8A	1	**6T-0371**	1	INSULATOR	
	8B	1	**5P-6298**	12	SCREW-MACHINE (10-32X0.5-IN)	
		1	**9F-5599**	12	LOCKWASHER	
	8C	1	**7F-3525**	6	WASHER-BUSHING (0.207X0.39X0.09-IN THK)	
	8D	1	**6T-0372**	1	PLATE	
	8E	1	**3T-4709**	3	PLATE	
	8F	1	**2L-6679**	3	PLATE-INSULATOR	
	8G	1	**3T-4710**	3	PLATE	
	8H	1	**6T-0363**	6	HOLDER AS-BRUSH (STARTING MOTOR)	
					(EACH INCLUDES)	
	8J	1	**3T-9494**	1	SPRING	
	9	1	**7F-3491**	2	WASHER (0.516X1X0.094-IN THK)	
	10	1	**3T-3422**	1	WIRE AS	
	11	1	**2J-8163**	2	SEAL-O-RING	
	12	1	**7X-3373**	1	BOLT (5/16-18X0.88-IN)	
	13	1	**3T-3434**	6	PLUG	
	14	1	**5J-5314**	5	BOLT (5/16-18X1.5-IN)	
	15	1	**3L-3380**	1	BUSHING-TERMINAL	
	16	1	**036-9821**	1	WASHER	
	17	1	**4M-1828**	1	RETAINER-SPRING	
	18	1	**4M-1829**	1	BOOT-RUBBER	
	19	1	**9M-7609**	1	SPRING (SHIFT LEVER)	
	20	1	**4M-1827**	1	RETAINER-SPRING	
	21	1	**8C-3089**	1	SEAL-O-RING	
	22	1	**4M-1853**	1	LEVER AS-SHIFT	
	23	1	**5M-3034**	1	LOCKNUT (5/16-24-THD)	
	24	1	**7L-2894**	4	GASKET	
	25	1	**4M-1831**	4	PLUG-LEVER HOUSING	
	26	1	**4M-1854**	1	SHAFT-LEVER	
	27	1	**1H-1023**	1	SEAL-O-RING	
	28	1	**2D-6392**	1	SEAL-O-RING	
	29	1	**7T-3974**	1	HOUSING AS-DRIVE	
	30	1	**6N-3826**	1	DRIVE AS-MOTOR	
	31	1	**2H-3429**	2	RING-RETAINING	
	32	1	**6V-1322**	4	BOLT (1/4-20X0.375-IN)	
	33	1	**8T-4205**	4	WASHER-HARD (7.2X14.5X2-MM THK)	
	34	1	**6N-3279**	1	INSULATOR	

237-1962 STARTING MOTOR GP-ELECTRIC *(contd.)* **i02003749**

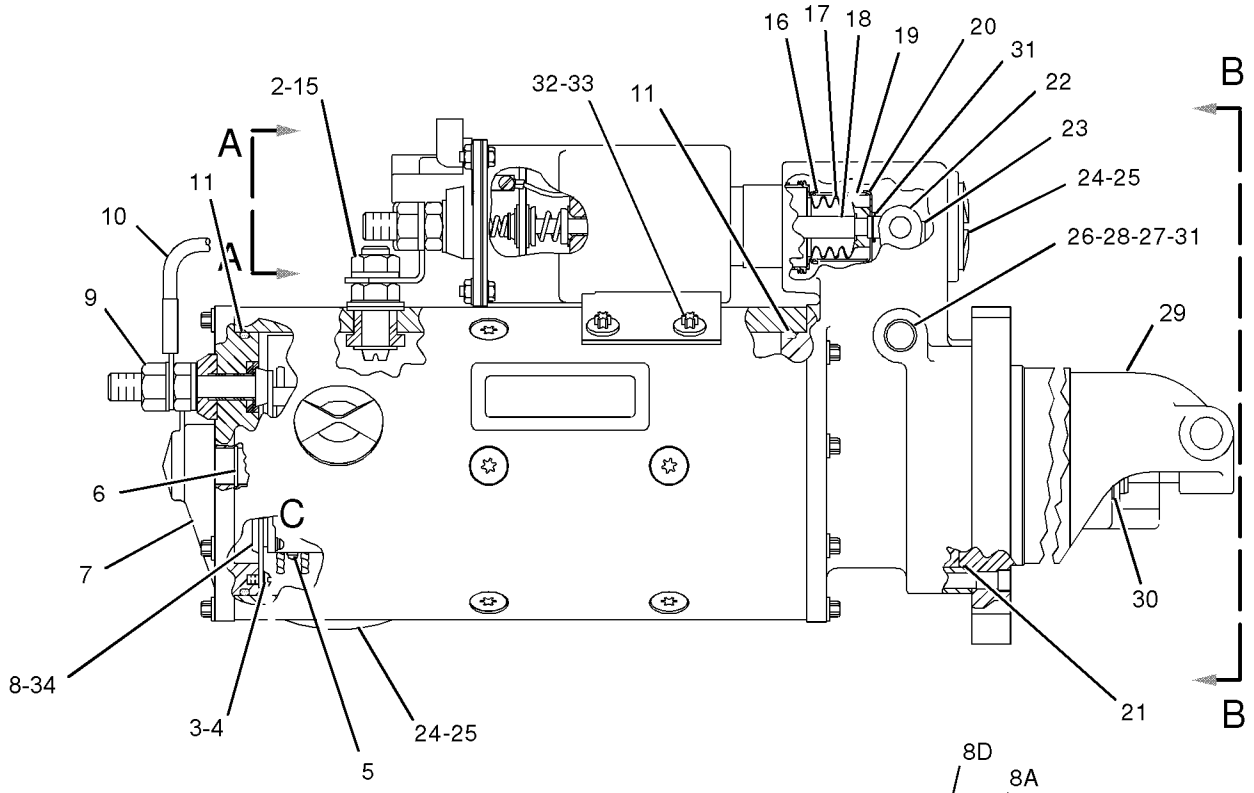

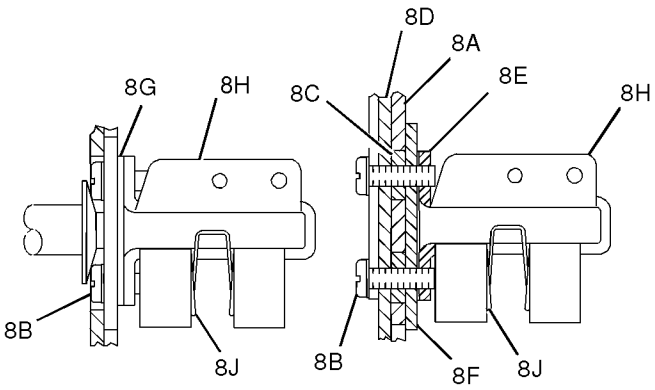

VIEW OF AREA C

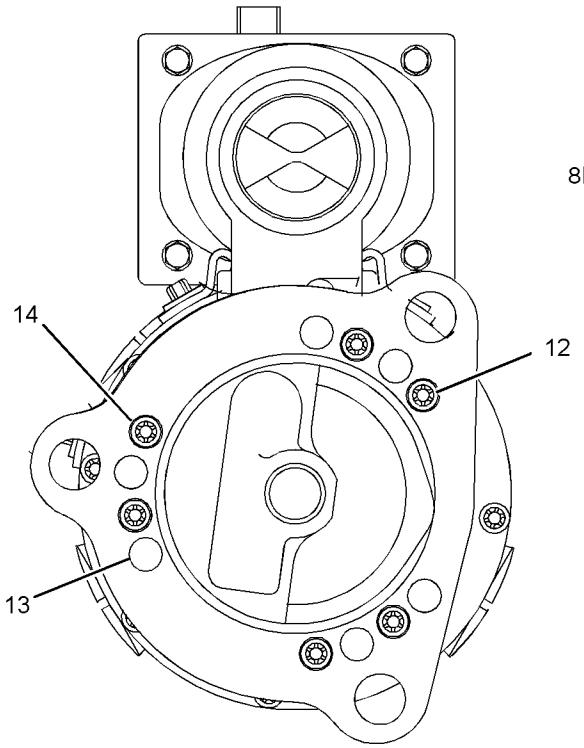

VIEW B-B

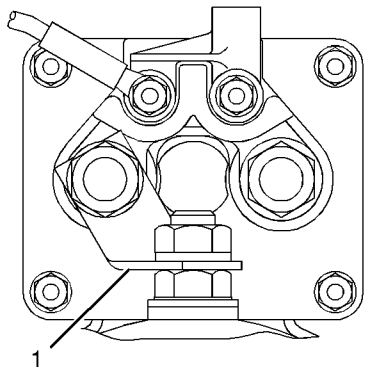

VIEW A-A

GRAPHIC #1 **<END>** g01026778

164-7577 SWITCH GP-BYPASS–POWER TRAIN OIL FILTER

S/N: SMC1-UP; GCT1-UP

PART OF 238-1029 BASE GP-OIL FILTER

SMCS-1408, 1435 **i02204195**

NOTE	REF NO	GRAPHIC REF	PART NUMBER	QTY	PART NAME 1 2 3 4 5 6 (PRODUCT LEVEL)	SEE PAGE
E	1	1	**9X-1813**		SLEEVE (19-CM)	
	2	1	**102-8802**	1	KIT-RECEPTACLE (2-PIN)	
					(INCLUDES RECEPTACLE AS & WEDGE)	
	3	1	**186-3735**	2	PIN-CONNECTOR (16-GA TO 18-GA)	
	4	1	**3E-3365**	1	WEDGE-RECEPTACLE LOCK (2-PIN)	
	5	1	**3D-2824**	1	SEAL-O-RING	
Z	6	1		1	SWITCH AS	

E-ORDER BY THE CENTIMETER
Z-NOT SERVICED SEPARATELY

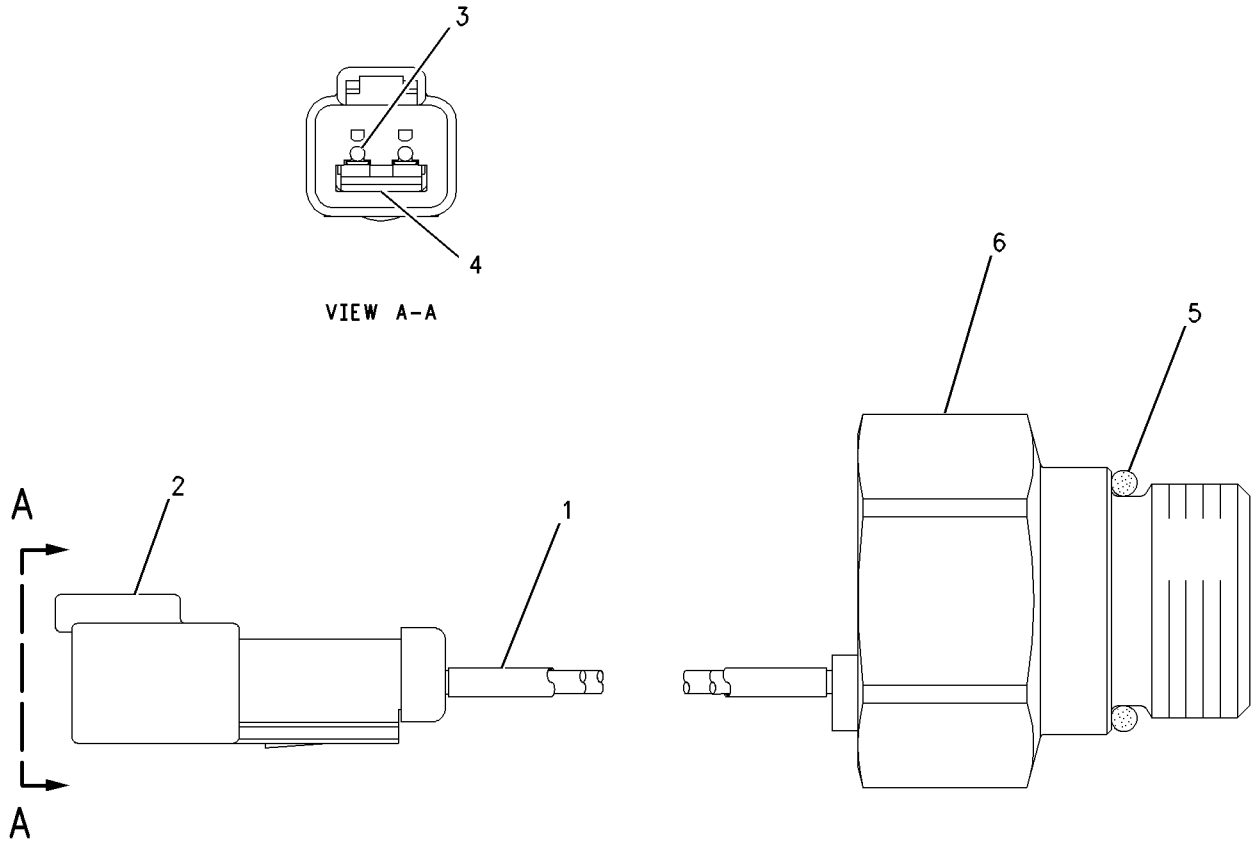

GRAPHIC #1 **<END>** g00750019

7N-0718 SWITCH GP-DISCONNECT–BATTERY

S/N: SMC1-UP; GCT1-UP

PART OF 279-9548 BATTERY & WIRING GP

SMCS-1411 **i02587657**

NOTE	REF NO	GRAPHIC REF	PART NUMBER	QTY	PART NAME 1 2 3 4 5 6 (PRODUCT LEVEL)	SEE PAGE
	1	1	**8H-5306**	1	KEY (BATTERY DISCONNECT)	
	2	1	**8H-5303**	1	NUT (3/4-16-THD)	
	3	1	**2H-3922**	2	LOCKWASHER	
	4	1	**9F-5644**	2	LOCKWASHER	
	5	1	**6F-7045**	2	NUT-FULL (3/8-24-THD)	

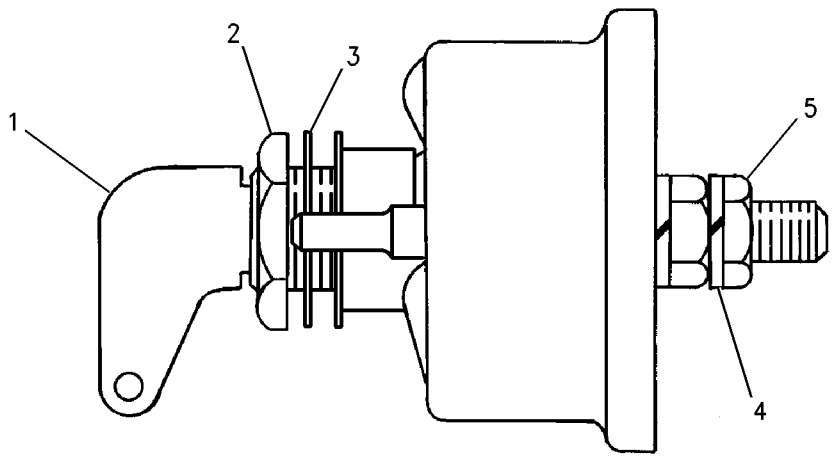

GRAPHIC #1 **<END>** g00715584

125-1302 SWITCH GP-MAGNETIC–START RELAY

S/N: SMC1-UP; GCT1-UP

PART OF 226-9674 PANEL GP-FUSE

SMCS-7499 **i01896616**

NOTE	REF NO	GRAPHIC REF	PART NUMBER	QTY	PART NAME 1 2 3 4 5 6 (PRODUCT LEVEL)	SEE PAGE
	1	1	**102-8802**	1	KIT-RECEPTACLE (2-PIN)	
					(INCLUDES RECEPTACLE AS & WEDGE)	
	2	1	**186-3735**	2	PIN-CONNECTOR (16-GA TO 18-GA)	
	3	1	**1H-3338**	2	LOCKWASHER	
	4	1	**012-0380**	2	LOCKWASHER	
M	5	1	**5C-2890**	2	NUT (M6X1-THD)	
E	6	1	**9X-1813**		SLEEVE (16CM)	

E-ORDER BY THE CENTIMETER
M-METRIC PART

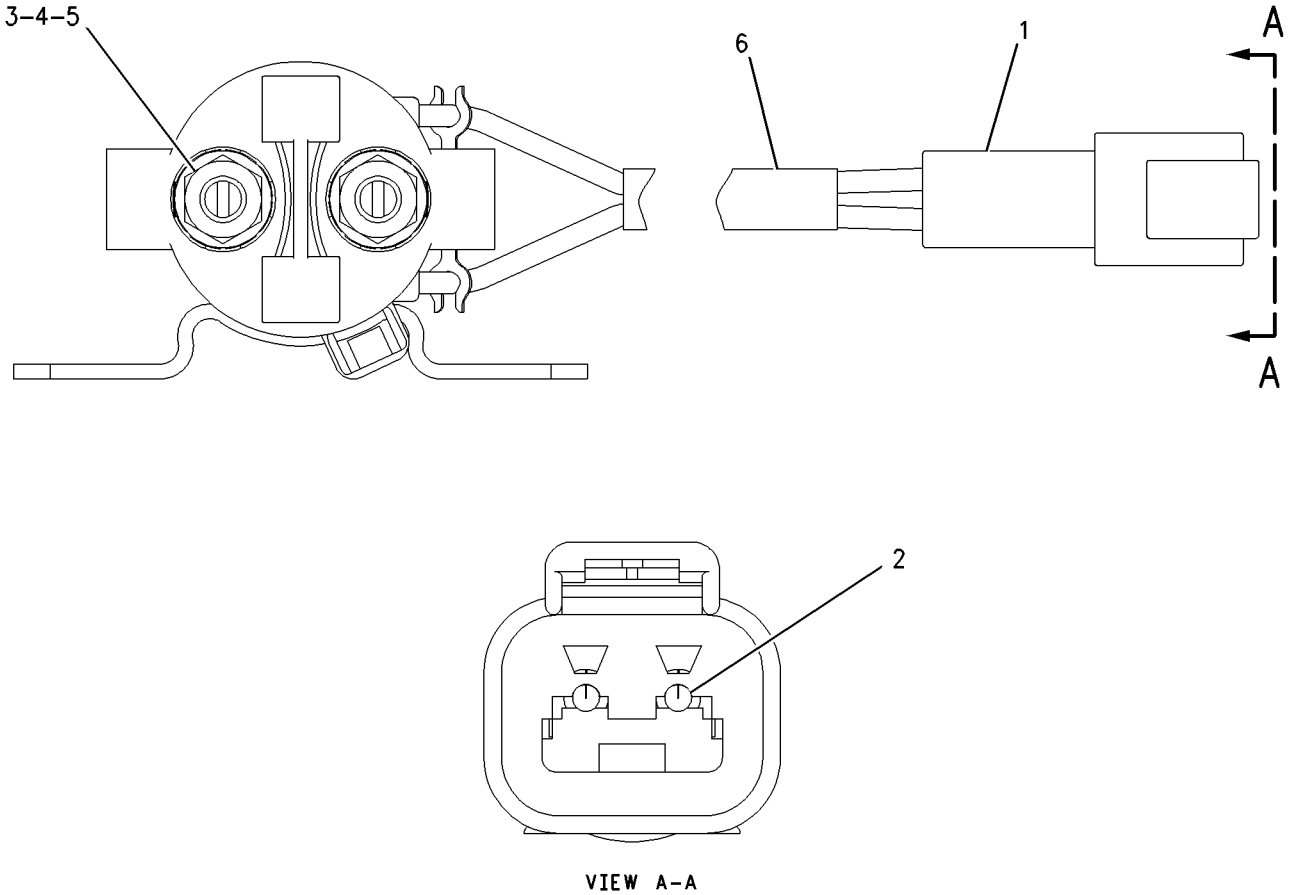

GRAPHIC #1 **<END>** g00987986

241-8368 SWITCH GP-MAGNETIC—MAIN RELAY

S/N: SMC1-UP; GCT1-UP

PART OF 226-9674 PANEL GP-FUSE

SMCS-7499 **i02290099**

NOTE	REF NO	GRAPHIC REF	PART NUMBER	QTY	PART NAME 1 2 3 4 5 6 (PRODUCT LEVEL)	SEE PAGE
	1	1	**155-2270**	1	KIT-CONNECTING PLUG (2-PIN)	
					(INCLUDES PLUG AS, WEDGE & INTERFACE SEAL)	
	2	1	**4F-2294**	2	NUT-JAM (5/16-24-THD)	
	3	1	**186-3736**	2	SOCKET-CONNECTOR (16-GA TO 18-GA)	

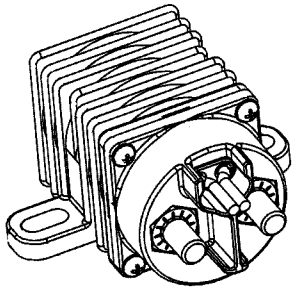

ISOMETRIC VIEW

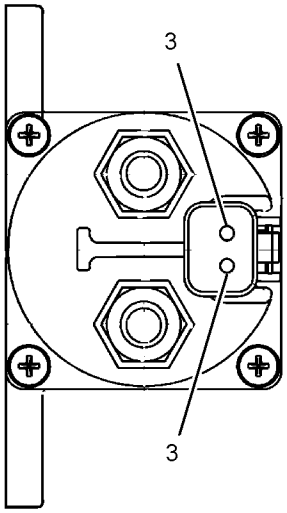

VIEW A-A

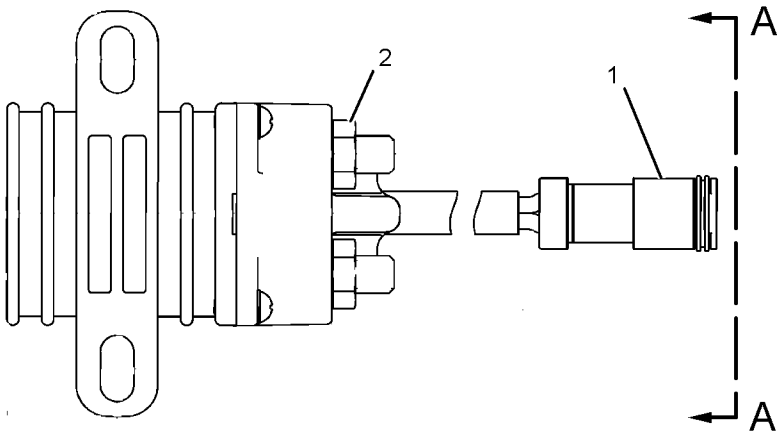

GRAPHIC #1 **<END>** g01077362

158-6632 SWITCH GP-PUSH BUTTON–HORN–PRIMING PUMP

S/N: SMC1-UP; GCT1-UP

PART OF 279-9548 BATTERY & WIRING GP, 279-9547 WIRING GP-PLATFORM

SMCS-1435, 7332 **i01837970**

NOTE	REF NO	GRAPHIC REF	PART NUMBER	QTY	PART NAME 1 2 3 4 5 6 (PRODUCT LEVEL)	SEE PAGE
	1	1	**9X-0199**	1	BOOT-SWITCH	
	2	1	**7T-9515**	1	KNOB-HORN	
	3	1	**5L-7200**	1	SCREW (8-32X0.375-IN)	
	4	1	**3B-4501**	1	LOCKWASHER	
	5	1	**6V-8370**	1	NUT-HEX (3/4-32-THD)	
	6	1	**2H-3922**	1	LOCKWASHER	
	7	1	**102-8802**	1	KIT-RECEPTACLE (2-PIN)	
					(INCLUDES RECEPTACLE AS & WEDGE)	
	8	1	**9X-3401**	2	PIN-CONNECTOR (16-GA TO 18-GA)	
	9	1	**3E-3365**	1	WEDGE-RECEPTACLE LOCK (2-PIN)	

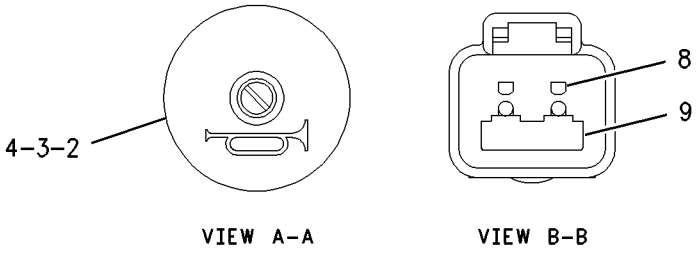

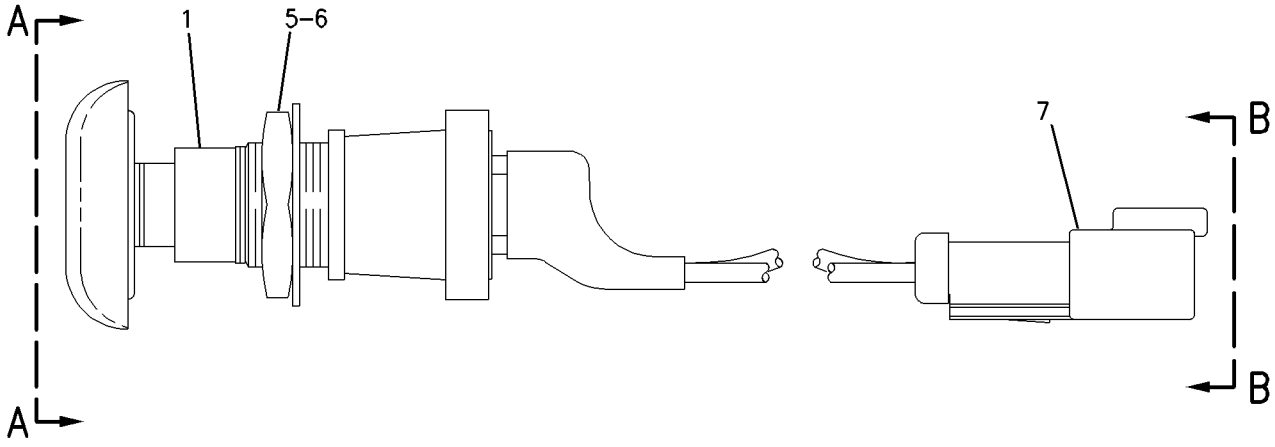

GRAPHIC #1 **<END>** g00942674

239-1134 VALVE GP-ETHER STARTING

S/N: SMC1-UP; GCT1-UP
24-VOLT
PART OF 263-9012 STARTING AID GP-ETHER

SMCS-1456 **i02743316**

NOTE	REF NO	GRAPHIC REF	PART NUMBER	QTY	PART NAME 1 2 3 4 5 6 (PRODUCT LEVEL)	SEE PAGE
	1	1	**7N-9801**	1	GASKET	
	2	1	**102-8802**	1	KIT-RECEPTACLE (2-PIN)	
					(INCLUDES RECEPTACLE AS & WEDGE)	
	3	1	**186-3735**	2	PIN-CONNECTOR (16-GA TO 18-GA)	

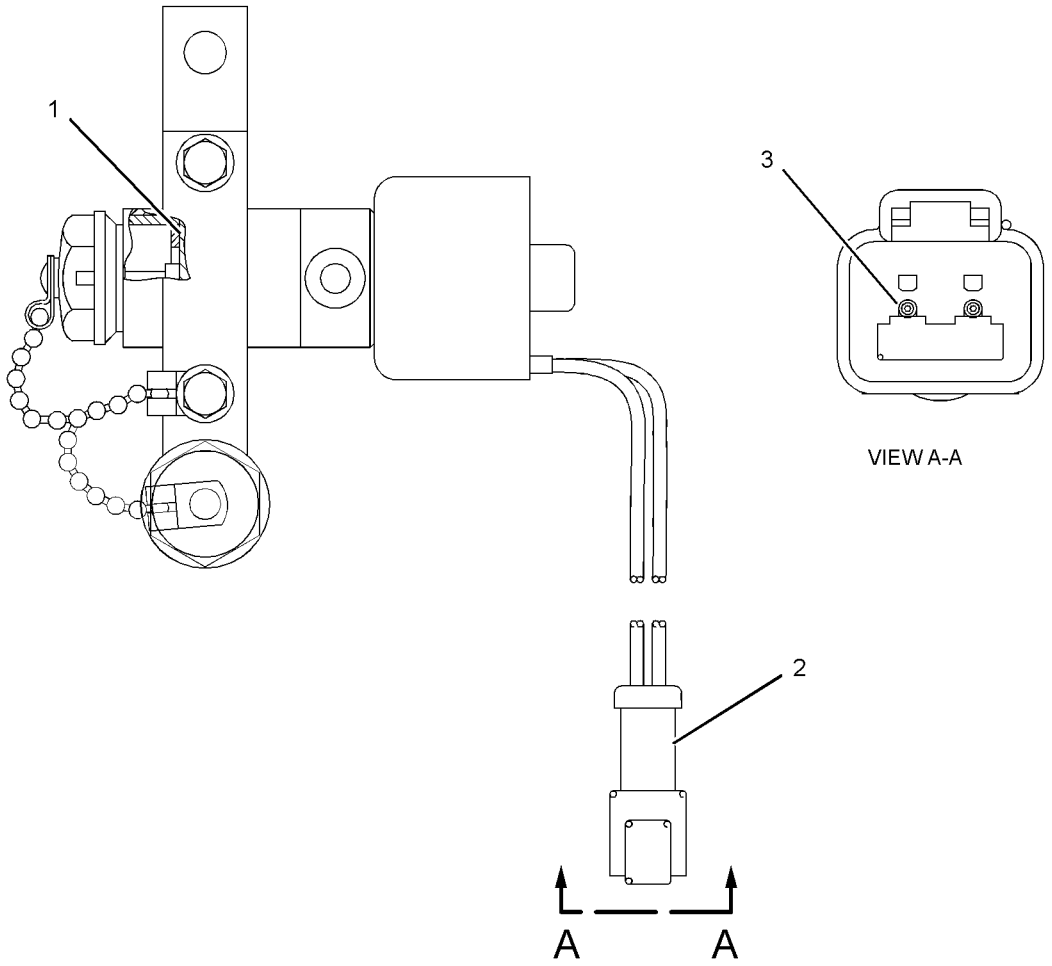

GRAPHIC #1 **<END>** g01375620

235-8203 WIRING GP-ELECTRONIC CONTROL

S/N: THX8900-UP

PART OF 282-3823, 282-3824, 282-3825, 282-3826, 301-5768 ENGINE AR

ALSO AN ATTACHMENT

SMCS-1408, 1900 **i02512367**

NOTE	REF NO	GRAPHIC REF	PART NUMBER	QTY	PART NAME 1 2 3 4 5 6 (PRODUCT LEVEL)	SEE PAGE
	1	1	**3S-2093**	20	STRAP-CABLE	
	3	1	**102-8802**	1	KIT-RECEPTACLE (2-PIN)	
					(INCLUDES RECEPTACLE AS. AND WEDGE)	
	4	1	**196-9654**	1	BRACKET AS	
	5	1	**215-3249**	1	HARNESS AS-ENGINE (UNIT INJECTOR)	
		1	**3S-2093**	5	STRAP-CABLE	
		1	**105-1797**	5	MOUNT	
		1	**191-7823**	1	RECEPTACLE AS	
	6	1	**235-8202**	1	HARNESS AS-ENGINE (ELECTRONIC CONTROL MODULE)	
		1	**227-4002**	1	PLUG AS-CONNECTOR (108-PIN)	
		1	**8T-8737**	12	PLUG-SEAL	
		1	**264-5732**	1	PLUG AS-CONNECTOR (120-PIN)	
		1	**155-2265**	1	KIT-CONNECTING PLUG (8-PIN)	
					(INCLUDES PLUG AS. AND WEDGE)	
		1	**155-2270**	5	KIT-CONNECTING PLUG (2-PIN)	
					(EACH INCLUDES PLUG AS. AND WEDGE)	
		1	**155-2260**	3	KIT-CONNECTING PLUG (3-PIN)	
					(EACH INCLUDES PLUG AS. AND WEDGE)	
		1	**119-3662**		TUBE-HEAT SHRINK (10.85-MM DIA) (33-CM)	
		1	**125-7874**		TUBE-HEAT SHRINK (5.72-MM DIA) (5-CM)	
		1	**125-7875**		TUBE-HEAT SHRINK (7.44-MM DIA) (10-CM)	
		1	**172-6062**	1	PLUG AS-CONNECTOR (18-PIN)	
		1	**211-6807**	1	COVER (CONNECTOR)	
		1	**102-8802**	1	KIT-RECEPTACLE (2-PIN)	
					(INCLUDES RECEPTACLE AS. AND WEDGE)	
		1	**102-8803**	1	KIT-RECEPTACLE (3-PIN)	
					(INCLUDES RECEPTACLE AS. AND WEDGE)	
		1	**100-3320**	1	PLUG AS-CONNECTOR (2-PIN)	
		1	**126-5011**	1	SEAL-CONNECTOR	
		1	**111-2416**	1	PLUG AS-CONNECTOR (2-PIN)	
		1	**126-5011**	1	SEAL-CONNECTOR	
	7	1	**4P-7581**	5	CLIP	
	8	1	**4P-8134**	2	CLIP	
M	9	1	**5P-7970**	2	NUT (M8X1.25-THD)	
	10	1	**6V-4369**	1	CLIP	
M	11	1	**6V-5217**	1	BOLT (M8X1.25X20-MM)	
	12	1	**6V-5839**	1	WASHER (11X21X2.5-MM THK)	
M	13	1	**6V-6317**	4	BOLT (M10X1.5X20-MM)	
M	14	1	**7I-2272**	2	BOLT (M5X0.8X12-MM)	
	15	1	**8T-0328**	2	WASHER-HARD (5.5X10X1-MM THK)	
M	16	1	**8T-4137**	1	BOLT (M10X1.5X20-MM)	
	17	1	**8T-4205**	1	WASHER-HARD (7.2X14.5X2-MM THK)	
M	18	1	**8T-5451**	1	BOLT (M6X1X12-MM)	
	19	1	**9M-1974**	3	WASHER-HARD (8.8X16X2-MM THK)	

M-METRIC PART

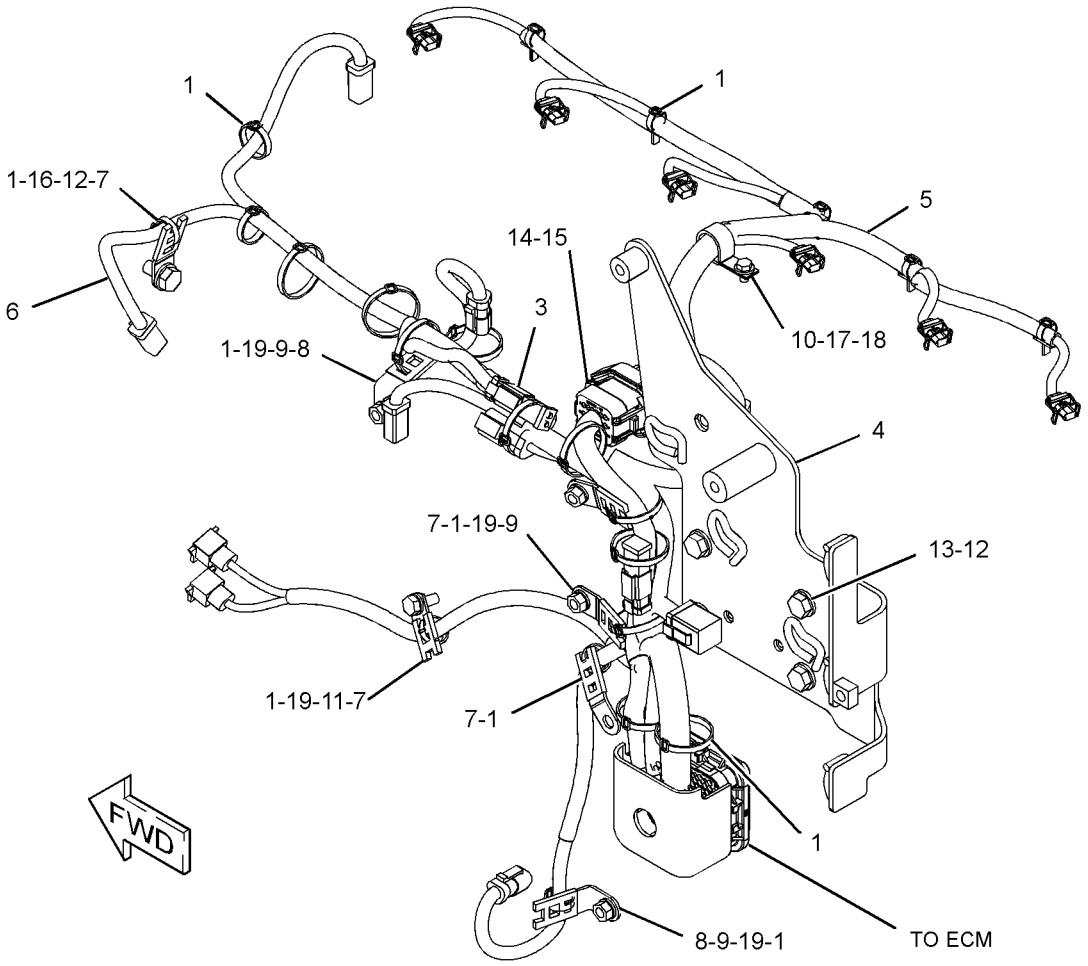

GRAPHIC #1 **<END>** g01306904

ELECTRICAL AND STARTING SYSTEM

279-9544 WIRING GP-ENGINE

S/N: SMC1-UP; GCT1-UP

PART OF 279-9549 INSTALLATION AR-ENGINE

SMCS-1000, 1408 **i02798924**

NOTE	REF NO	GRAPHIC REF	PART NUMBER	QTY	PART NAME 1 2 3 4 5 6 (PRODUCT LEVEL)	SEE PAGE
	1	1	**121-2844**	1	HARNESS AS-WIRING (CRANK WITHOUT INJECT)	
		1	**209-6630**	1	TAG-INFORMATION	
		1	**155-2260**	1	KIT-CONNECTING PLUG (3-PIN)	
					(INCLUDES PLUG AS, WEDGE, & INTERFACE SEAL)	
		1	**102-8803**	2	KIT-RECEPTACLE (3-PIN)	
					(EACH INCLUDES RECEPTACLE AS & WEDGE)	
	2	1	**139-2116**	1	SWITCH AS-TOGGLE (ENGINE SERVICE FLOODLAMP)	
	2A	1	**3E-3371**	1	WEDGE-RECEPTACLE LOCK (3-PIN)	
	2B	1	**6T-3631**	2	NUT-HEX (15/32-32-THD)	
	2C	1	**6T-3632**	1	LOCKWASHER	
	2D	1	**6T-3633**	1	RING-LOCKING	
	2E	1	**186-3735**	3	PIN-CONNECTOR (16-GA TO 18-GA)	
	2F	1	**102-8803**	1	KIT-RECEPTACLE (3-PIN)	
					(INCLUDES RECEPTACLE AS & WEDGE)	
Y	3	1	**145-7028**	1	SENSOR GP-TEMPERATURE (TRANSMISSION SUMP)	227
Y	3A	3	**145-7028**	1	SENSOR GP-TEMPERATURE (TORQUE CONVERTER OIL)	227
	4	1	**147-3150**	1	ANGLE AS	
	5	2	**183-4274**	1	BRACKET	
Y	6	3	**189-5746**	1	SENSOR GP-SPEED (TORQUE CONVERTER)	225
	7	1	**237-7308**	1	BRACKET	
	8	1	**240-6902**	1	CABLE AS	
		1	**1S-4915**	2	LINER (CONDUIT)	
E		1	**5P-0695**		CONDUIT (260-CM)	
		1	**8N-0869**	1	COVER-TERMINAL (RED)	
E		1	**8T-2225**		TUBE-HEAT SHRINK (25.4-MM DIA) (16-CM)	
E		1	**159-8047**		CABLE-ELECTRICAL (0-GA, RED) (276-CM)	
B		1	**1P-0810**		TAPE-ELECTRICAL	
		1	**170-3793**	2	RING-TERMINAL	
	9	1	**248-6862**	1	FILM-IDENTIFICATION (WORK LIGHT)	
	10	1	**266-2404**	1	BRACKET AS	
	11	1	**278-7691**	1	BRACKET	
	12	1	**304-4513**	1	HARNESS AS-ENGINE	
		1	**110-8769**	1	WIRE AS	
		1	**155-2265**	1	KIT-CONNECTING PLUG (8-PIN)	
		1	**155-2260**	4	KIT-CONNECTING PLUG (3-PIN)	
		1	**155-2270**	6	KIT-CONNECTING PLUG (2-PIN)	
		1	**174-0503**	1	KIT-CONNECTING PLUG (3-PIN)	
		1	**155-2274**	1	KIT-CONNECTING PLUG (6-PIN)	
					(EACH INCLUDES PLUG AS, WEDGE, & INTERFACE SEAL)	
		1	**160-7689**	1	PLUG AS-CONNECTOR (70-PIN)	
		1	**126-1774**	1	COVER-CONNECTOR	
		1	**102-8802**	2	KIT-RECEPTACLE (2-PIN)	
		1	**102-8803**	2	KIT-RECEPTACLE (3-PIN)	
		1	**102-8805**	1	KIT-RECEPTACLE (6-PIN)	
					(EACH INCLUDES RECEPTACLE AS & WEDGE)	
		1	**113-0580**	1	RECEPTACLE AS-CONNECTOR (40-PIN)	
		1	**127-5486**	1	RECEPTACLE AS-CONNECTOR (1-PIN)	
		1	**134-2540**	1	RECEPTACLE AS (3-PIN)	
	13	1	**104-6202**	1	CLIP	
	14	1,3	**132-5789**	4	CLIP	
	15	1,3	**1S-0994**	5	CLIP	
	16	1	**1S-1015**	1	CLIP	
Y	17	1	**254-8155**	1	LAMP GP-FLOOD (24-VOLT, 65-WATT)	185
	18	1,2	**4P-7429**	2	CLIP	
	19	1,2,3	**4P-7581**	7	CLIP	

279-9544 **WIRING GP-ENGINE** ***(contd.)*** **i02798924**

NOTE	REF NO	GRAPHIC REF	PART NUMBER	QTY	PART NAME 1 2 3 4 5 6 (PRODUCT LEVEL)	SEE PAGE
	20	1,2,3	**4P-8134**	6	CLIP	
M	21	1	**5C-7261**	2	NUT (M8X1.25-THD)	
	22	1,3	**7J-0204**	2	SEAL-O-RING	
	23	1,2,3	**7K-1181**	48	STRAP-CABLE	
	24	1,2,3	**8T-4121**	11	WASHER-HARD (11X21X2.5-MM THK)	
M	25	1,3	**8T-4136**	5	BOLT (M10X1.5X25-MM)	
M	26	1,2,3	**8T-4137**	6	BOLT (M10X1.5X20-MM)	
M	27	3	**8T-4191**	1	BOLT (M10X1.5X16-MM)	
	28	1	**8T-4224**	2	WASHER-HARD (8.8X16X2-MM THK)	
	29	3	**8T-4896**	1	WASHER-HARD (10.2X18.5X2.5-MM THK)	
	30	1	**8T-7934**	2	WASHER-HARD (11X21X5-MM THK)	

B-USE AS REQUIRED
E-ORDER BY THE CENTIMETER
M-METRIC PART
Y-SEPARATE ILLUSTRATION

279-9544 **WIRING GP-ENGINE** *(contd.)* **i02798924**

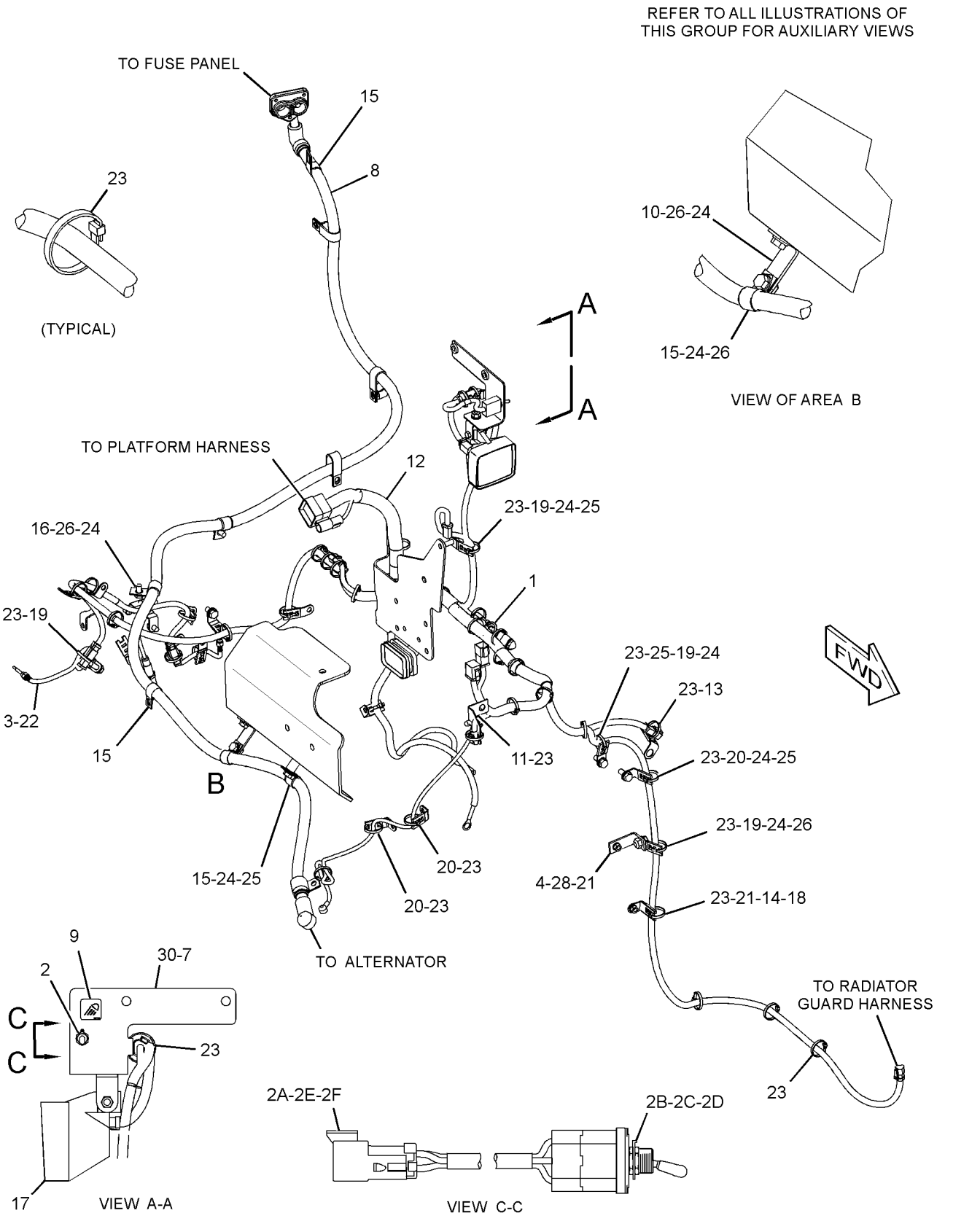

GRAPHIC #1 g01361760

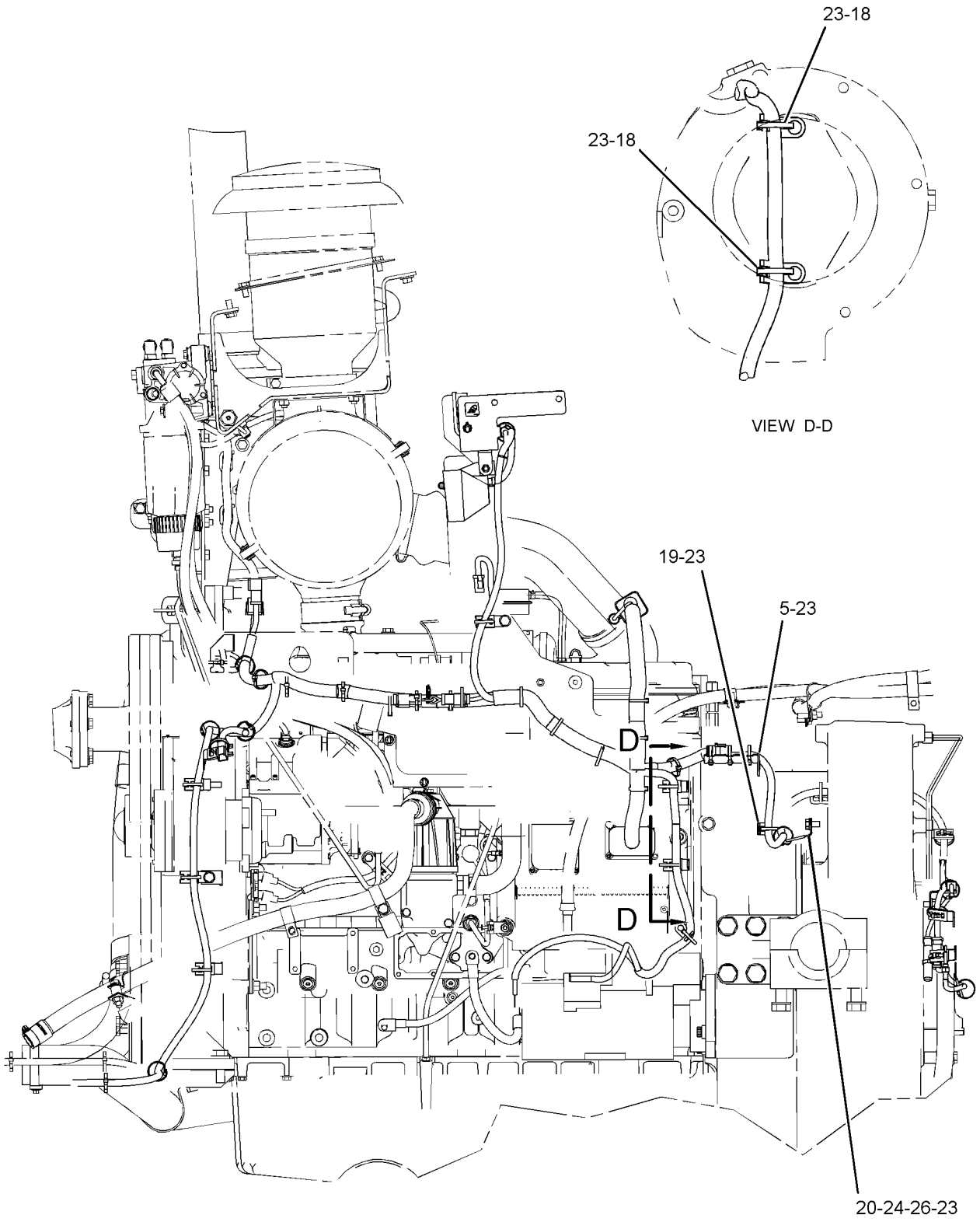

LEFT SIDE VIEW OF ENGINE

GRAPHIC #2 g01361761

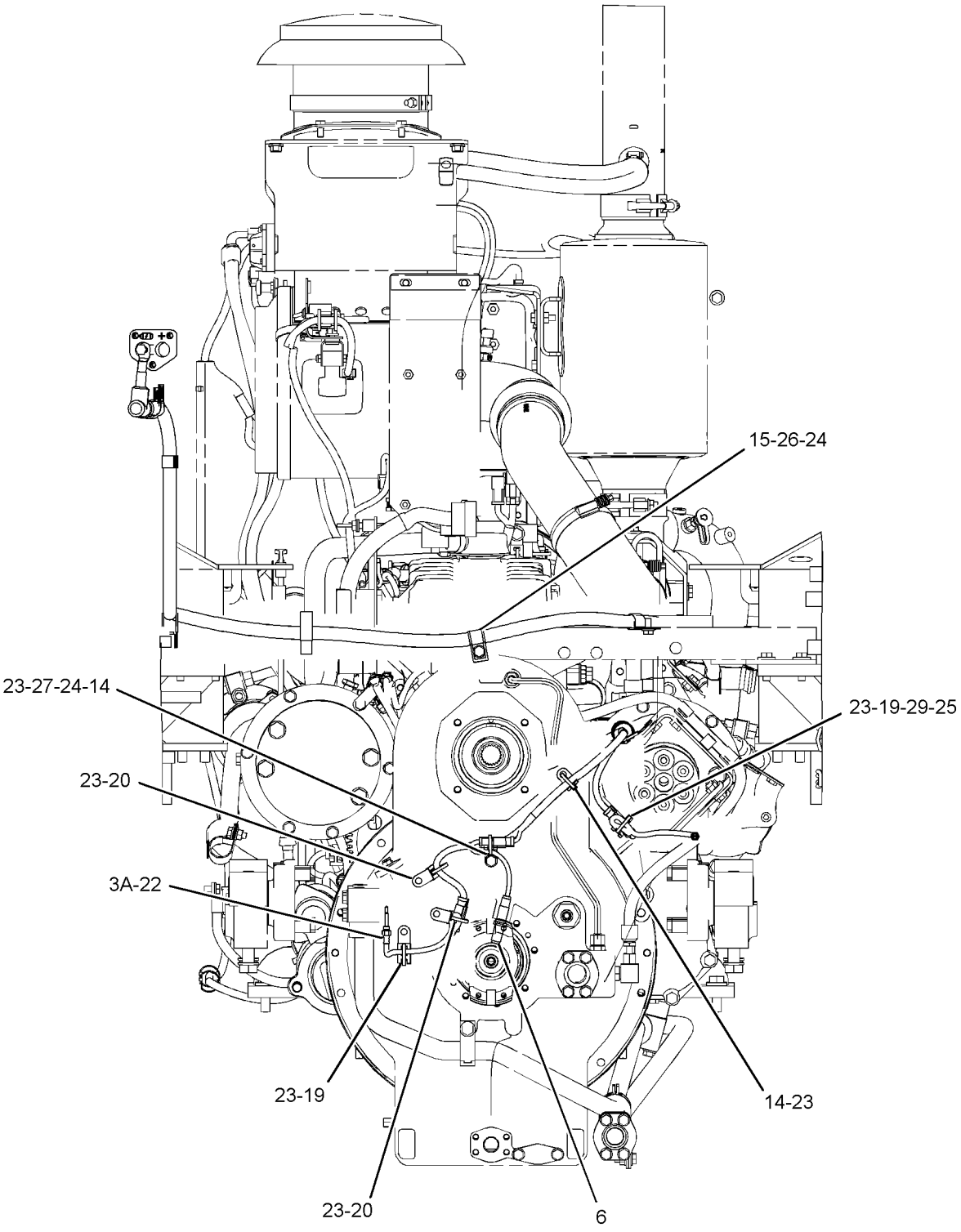

REAR VIEW OF ENGINE

GRAPHIC #3 **<END>** g01361763

ELECTRICAL AND STARTING SYSTEM

283-1231 WIRING GP-GRADE CONTROL

S/N: SMC1-UP; GCT1-UP
PART OF 283-2442 GRADE CONTROL AR
AN ATTACHMENT

SMCS-1408 **i02765262**

NOTE	REF NO	GRAPHIC REF	PART NUMBER	QTY	PART NAME 1 2 3 4 5 6 (PRODUCT LEVEL)	SEE PAGE
	1	1	**3E-5239**	1	RELAY AS (24-VOLT) (GRADE, SLOPE)	
	2	1	**6D-3033**	12	SCREW-SOCKET HEAD (4-40X0.5-IN)	
	3	1,2	**7K-1181**	50	STRAP-CABLE	
	4	1	**7R-3029**	3	CAP-DUST	
	5	2	**123-0304**	1	INDICATOR AS (ENGINE OIL PRESSURE)	
		2	**123-0306**	1	SOCKET AS	
		2	**115-1748**	1	LAMP (24-VOLT, 3-WATT)	
	6	1	**126-1773**	1	CAP-CONNECTOR	
	7	1	**129-8331**	1	PLATE AS	
	8	2	*150-4027*	1	TEE AS	
		2	**3E-2310**	1	TEE	
		2	**3J-1907**	1	SEAL-O-RING	
		2	**6V-8397**	1	SEAL-O-RING	
	9	1	**236-8826**	3	BOSS (1-1/8-18X0.708-IN)	
	10	2	**242-7090**	1	HARNESS AS-PLATFORM	
		2	**9X-0196**	2	TERMINAL AS	
		2	**8C-6354**	1	CAP-RECEPTACLE	
		2	**8T-8736**	1	RECEPTACLE-CONNECTOR (9-PIN)	
		2	**9W-1951**	1	RECEPTACLE-CONNECTOR (9-PIN)	
		2	**134-2540**	2	RECEPTACLE AS (3-PIN)	
		2	**190-7613**	1	RECEPTACLE AS-CONNECTOR (12-PIN)	
		2	**214-4208**	2	RECEPTACLE AS-CONNECTOR (70-PIN)	
		2	**102-8801**	2	KIT-RECEPTACLE (12-PIN)	
		2	**102-8802**	4	KIT-RECEPTACLE (2-PIN)	
		2	**102-8803**	1	KIT-RECEPTACLE (3-PIN)	
		2	**102-8804**	2	KIT-RECEPTACLE (4-PIN)	
		2	**102-8805**	2	KIT-RECEPTACLE (6-PIN)	
		2	**166-5229**	1	KIT-RECEPTACLE (12-PIN)	
		2	**197-7565**	2	KIT-RECEPTACLE (4-PIN)	
		2	**265-2106**	1	KIT-RECEPTACLE (4-PIN)	
					(EACH RECEPTACLE KIT INCLUDES RECEPTACLE AS & WEDGE)	
		2	**110-6845**	1	PLUG AS-CONNECTOR (40-PIN)	
		2	**127-5485**	1	PLUG AS-CONNECTOR (1-PIN)	
		2	**160-7689**	2	PLUG AS-CONNECTOR (70-PIN)	
		2	**155-2255**	7	KIT-CONNECTING PLUG (12-PIN)	
		2	**155-2257**	2	KIT-CONNECTING PLUG (12-PIN)	
		2	**155-2260**	1	KIT-CONNECTING PLUG (3-PIN)	
		2	**155-2270**	5	KIT-CONNECTING PLUG (2-PIN)	
		2	**155-2271**	6	KIT-CONNECTING PLUG (4-PIN)	
		2	**155-2274**	4	KIT-CONNECTING PLUG (6-PIN)	
		2	**174-0503**	2	KIT-CONNECTING PLUG (3-PIN)	
					(EACH PLUG KIT INCLUDES PLUG AS, WEDGE, & INTERFACE SEAL)	
		2	**177-9656**	1	KIT-CONNECTING PLUG (4-PIN)	
					(INCLUDES PLUG AS & WEDGE)	
	11	1	**256-7789**	1	HARNESS AS-RADIO (GRADE CONTROL)	
		1	**268-3371**	1	CAP AS	
		1	**102-8801**	1	KIT-RECEPTACLE (12-PIN)	
					(INCLUDES RECEPTACLE AS & WEDGE)	
		1	**167-8987**	1	PLUG AS-CONNECTOR (8-PIN)	
	12	2	**261-0420**	1	SENSOR GP-PRESSURE (BULLDOZER PILOT OIL)	
	13	2	**265-9040**	1	HARNESS AS-WIRING (JUMPER)	
		2	**102-8805**	1	KIT-RECEPTACLE (6-PIN)	
					(INCLUDES RECEPTACLE AS & WEDGE)	

283-1231 **WIRING GP-GRADE CONTROL** *(contd.)* **i02765262**

NOTE	REF NO	GRAPHIC REF	PART NUMBER	QTY	PART NAME 1 2 3 4 5 6 (PRODUCT LEVEL)	SEE PAGE
		2	**6D-5257**	1	PLUG AS-CONNECTOR (8-PIN)	
	14	2	**265-9042**	1	HARNESS AS-WIRING (JUMPER)	
		2	**3R-9965**	1	PLUG AS-CONNECTOR (8-PIN)	
		2	**155-2274**	1	KIT-CONNECTING PLUG (6-PIN)	
					(INCLUDES PLUG AS, WEDGE, & INTERFACE SEAL)	
	15	2	**283-1232**	1	HARNESS AS-CONTROL	
		2	**190-7613**	1	RECEPTACLE AS-CONNECTOR (12-PIN)	
		2	**102-8801**	1	KIT-RECEPTACLE (12-PIN)	
		2	**102-8804**	2	KIT-RECEPTACLE (4-PIN)	
		2	**102-8805**	1	KIT-RECEPTACLE (6-PIN)	
		2	**102-8806**	1	KIT-RECEPTACLE (8-PIN)	
					(EACH RECEPTACLE KIT INCLUDES RECEPTACLE AS & WEDGE)	
		2	**155-2260**	1	KIT-CONNECTING PLUG (3-PIN)	
		2	**155-2270**	5	KIT-CONNECTING PLUG (2-PIN)	
		2	**155-2271**	2	KIT-CONNECTING PLUG (4-PIN)	
					(EACH PLUG KIT INCLUDES PLUG AS, WEDGE, & INTERFACE SEAL)	
	16	2	**299-3432**	1	HARNESS AS-SENSOR	
		2	**102-8803**	1	KIT-RECEPTACLE (3-PIN)	
					(INCLUDES RECEPTACLE AS & WEDGE)	
		2	**230-4013**	1	PLUG AS-CONNECTOR (3-PIN)	
	17	2	**301-0076**	1	HARNESS AS-LIGHTING	
		2	**102-8804**	1	KIT-RECEPTACLE (4-PIN)	
					(INCLUDES RECEPTACLE AS & WEDGE)	
		2	**230-5008**	3	PLUG AS-CONNECTOR (4-PIN)	
	18	1	**308-1357**	1	HARNESS AS-CONTROL	
		1	**228-3323**	3	CLIP-SPRING	
		1	**190-7613**	1	RECEPTACLE AS-CONNECTOR (12-PIN)	
		1	**102-8801**	1	KIT-RECEPTACLE (12-PIN)	
		1	**102-8804**	1	KIT-RECEPTACLE (4-PIN)	
					(EACH RECEPTACLE KIT INCLUDES RECEPTACLE AS & WEDGE)	
		1	**155-2271**	1	KIT-CONNECTING PLUG (4-PIN)	
					(INCLUDES PLUG AS, WEDGE, & INTERFACE SEAL)	
	19	1	**308-1395**	3	PLATE	
	20	1	**308-1433**	1	BRACKET AS	
	21	1	**308-5806**	1	COVER AS	
	22	1	**308-6915**	1	HARNESS AS-CONTROL	
		1	**134-2540**	2	RECEPTACLE AS (3-PIN)	
		1	**155-2255**	1	KIT-CONNECTING PLUG (12-PIN)	
		1	**155-2257**	1	KIT-CONNECTING PLUG (12-PIN)	
		1	**155-2265**	1	KIT-CONNECTING PLUG (8-PIN)	
		1	**155-2274**	1	KIT-CONNECTING PLUG (6-PIN)	
		1	**174-0503**	2	KIT-CONNECTING PLUG (3-PIN)	
					(EACH PLUG KIT INCLUDES PLUG AS, WEDGE, & INTERFACE SEAL)	
	23	1	**130-5300**	2	CLIP	
	24	2	**132-5789**	1	CLIP	
M	25	1	**188-9644**	3	SCREW-FLAT HEAD (M8X1.25X25-MM)	
	26	2	**1J-9671**	1	SEAL-O-RING	
M	27	1	**3E-8020**	4	SCREW-TRUSS HEAD (M6X1X25-MM)	
	28	2	**4P-7581**	3	CLIP	
	29	1	**4P-8134**	2	CLIP	
	30	1	**5P-1075**	1	WASHER-HARD (10.2X22.5X3-MM THK)	
	31	1	**5P-7648**	3	GROMMET	
	32	1	**7M-3361**	1	GROMMET	
M	33	1	**7X-2562**	2	BOLT (M20X2.5X45-MM)	
M	34	1	**8T-4137**	1	BOLT (M10X1.5X20-MM)	
M	35	1	**8T-4171**	1	BOLT (M6X1X12-MM)	

283-1231 **WIRING GP-GRADE CONTROL** *(contd.)* **i02765262**

NOTE	REF NO	GRAPHIC REF	PART NUMBER	QTY	PART NAME 1 2 3 4 5 6 (PRODUCT LEVEL)	SEE PAGE
	36	1	**8T-5439**	2	WASHER-HARD (21.5X45X6-MM THK)	
	37	1	**9X-8267**	1	WASHER (6.6X12X2-MM THK)	

M-METRIC PART

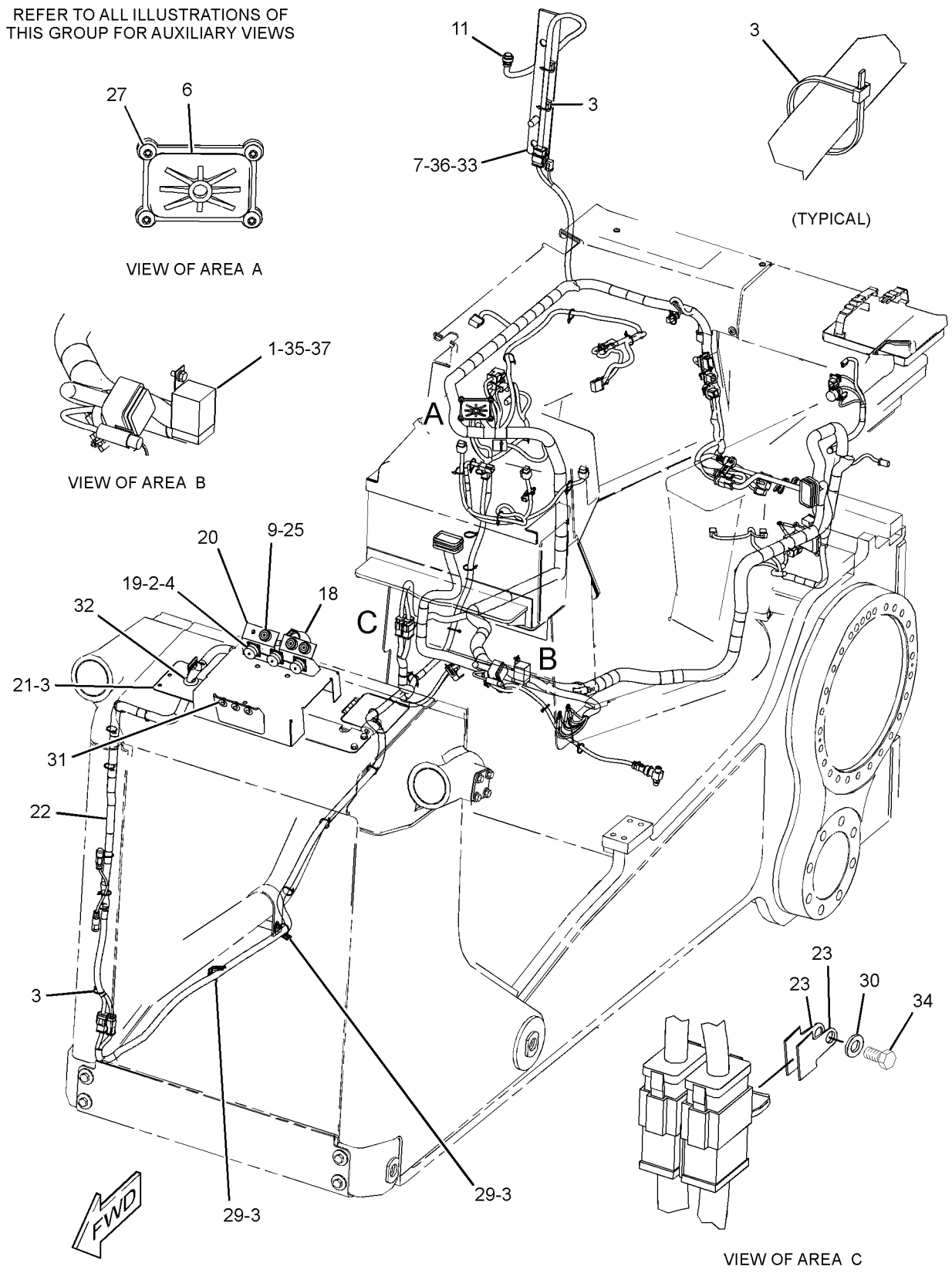

GRAPHIC #1 g01364402

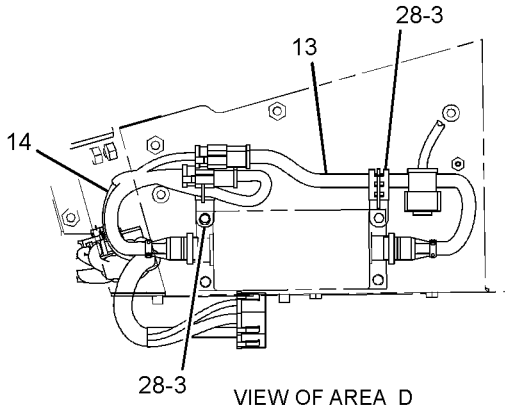

VIEW OF AREA D

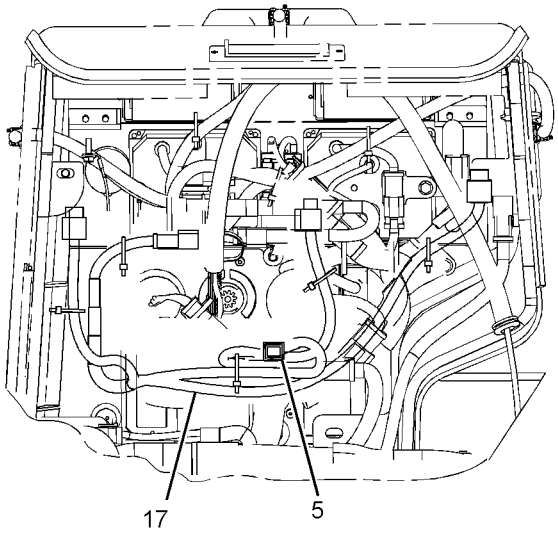

VIEW E-E

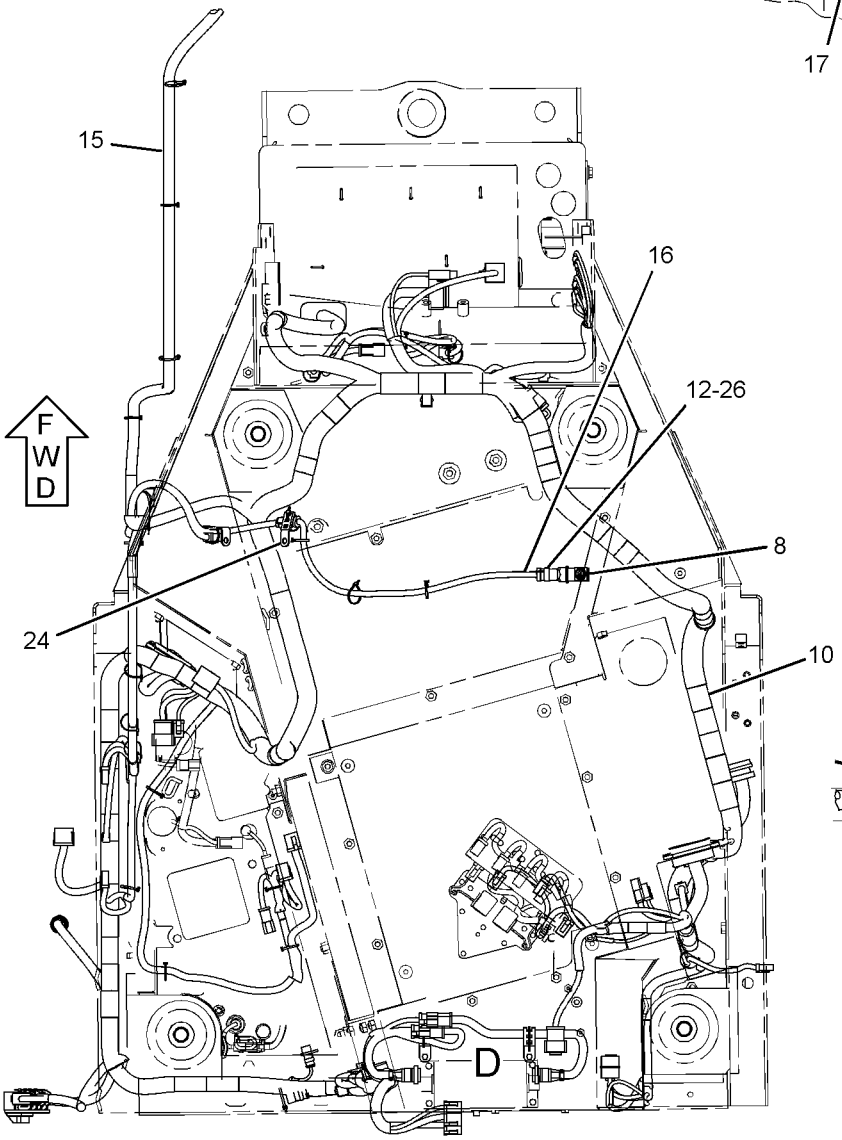

BOTTOM VIEW

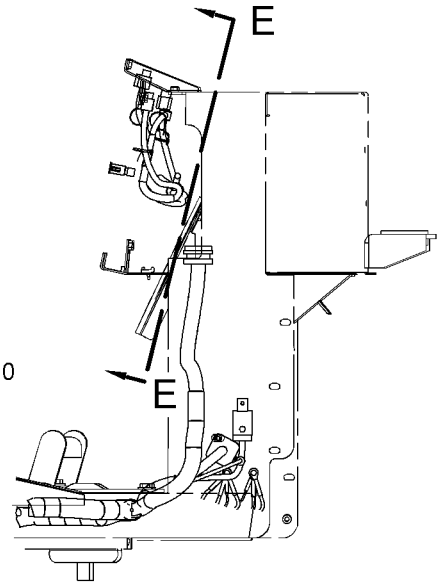

RIGHT SIDE VIEW
(REAR OF DASH)

GRAPHIC #2 **<END>** g01364600

ELECTRICAL AND STARTING SYSTEM

279-9547 WIRING GP-PLATFORM

S/N: SMC1-UP; GCT1-UP

PART OF 269-2044 CHASSIS AR

SMCS-1408 **i02748442**

NOTE	REF NO	GRAPHIC REF	PART NUMBER	QTY	PART NAME 1 2 3 4 5 6 (PRODUCT LEVEL)	SEE PAGE
Y	1	1	**3E-6328**	1	ALARM GP (24-VOLT) (FAULT INDICATOR)	148
	2	2	**6I-1418**	4	SPACER (8.2X12.7X28.7-MM THK)	
	3	1,2	**7K-1181**	33	STRAP-CABLE	
	4	1	**7N-1996**	1	LAMP (24-VOLT)	
	5	2	**8T-9655**	8	MOUNT-ISOLATION	
	6	1	**117-2311**	2	RECEPTACLE AS-POWER (12-VOLT)	
	7	1	**149-9818**	1	PLATE	
Y	8	1	**158-6632**	1	SWITCH GP-PUSH BUTTON (HORN)	242
	9	1	**170-3461**	1	LAMP AS-INDICATOR (ACTION LIGHT)	
		1	**102-8802**	1	KIT-RECEPTACLE (2-PIN)	
					(INCLUDES RECEPTACLE AS & WEDGE)	
		1	**3T-0304**	1	BASE AS-INDICATOR LIGHT	
		1	**6V-8374**	2	SCREW-MACHINE (6-32X0.25-IN)	
		1	**186-3735**	2	PIN-CONNECTOR (16-GA TO 18-GA)	
E		1	**9X-1813**		SLEEVE (8-CM)	
D		1	**6V-2689**		TUBE-HEAT SHRINK (6.35-MM DIA) (0.1-M)	
D		1	**5P-5623**		WIRE-ELECTRICAL (16-GA, BLACK) (0.3-M)	
	10	2	**172-4860**	1	WIRE AS	
	11	1	**173-1566**	1	CAP AS	
		1	**8C-6354**	1	CAP-RECEPTACLE	
		1	**2L-8077**	1	TERMINAL (14-GA TO 16-GA)	
		1	**155-2271**	1	KIT-CONNECTING PLUG (4-PIN)	
					(INCLUDES PLUG AS, WEDGE, & INTERFACE SEAL)	
E		1	**125-7875**		TUBE-HEAT SHRINK (7.44-MM DIA) (6-CM)	
D		1	**5P-5677**		WIRE (18-GA, BLACK) (0.6-M)	
	12	1	**196-9852**	1	PLATE AS	
	13	1	**202-4327**	1	PULLER-FUSE	
	14	1	**204-8000**	1	ANCHOR-TIE	
	15	2	**209-0381**	1	CONVERTER-POWER (24-VOLT TO 12-VOLT)	
	16	1	**222-7877**	1	SWITCH AS-ROCKER (24-VOLT, SEALED, ILLUMINATED) (THROTTLE)	
	17	1	**222-7883**	1	SWITCH AS-ROCKER (HYDRAULIC LOCKOUT)	
	18	1	**224-9222**	1	BRACKET	
	19	1	**226-9663**	1	HARNESS AS-CHASSIS	
		1	**9X-0196**	2	TERMINAL AS	
		1	**9W-1951**	1	RECEPTACLE-CONNECTOR (9-PIN)	
		1	**190-7613**	1	RECEPTACLE AS-CONNECTOR (12-PIN)	
		1	**214-4208**	1	RECEPTACLE AS-CONNECTOR (70-PIN)	
		1	**102-8801**	2	KIT-RECEPTACLE (12-PIN)	
		1	**102-8802**	4	KIT-RECEPTACLE (2-PIN)	
		1	**102-8803**	1	KIT-RECEPTACLE (3-PIN)	
		1	**102-8804**	1	KIT-RECEPTACLE (4-PIN)	
		1	**166-5229**	1	KIT-RECEPTACLE (12-PIN)	
		1	**197-7565**	2	KIT-RECEPTACLE (4-PIN)	
		1	**265-2106**	1	KIT-RECEPTACLE (4-PIN)	
					(EACH RECEPTACLE KIT INCLUDES RECEPTACLE AS & WEDGE)	
		1	**110-6845**	1	PLUG AS-CONNECTOR (40-PIN)	
		1	**127-5485**	1	PLUG AS-CONNECTOR (1-PIN)	
		1	**160-7689**	2	PLUG AS-CONNECTOR (70-PIN)	
		1	**155-2255**	3	KIT-CONNECTING PLUG (12-PIN)	
		1	**155-2257**	1	KIT-CONNECTING PLUG (12-PIN)	
		1	**155-2260**	1	KIT-CONNECTING PLUG (3-PIN)	
		1	**155-2270**	5	KIT-CONNECTING PLUG (2-PIN)	
		1	**155-2271**	5	KIT-CONNECTING PLUG (4-PIN)	

279-9547 **WIRING GP-PLATFORM** *(contd.)* **i02748442**

NOTE	REF NO	GRAPHIC REF	PART NUMBER	QTY	PART NAME 1 2 3 4 5 6 (PRODUCT LEVEL)	SEE PAGE
		1	**155-2274**	1	KIT-CONNECTING PLUG (6-PIN)	
					(EACH PLUG KIT INCLUDES PLUG AS, WEDGE, & INTERFACE SEAL)	
		1	**177-9656**	1	KIT-CONNECTING PLUG (4-PIN)	
					(INCLUDES PLUG AS & WEDGE)	
	20	1	**226-9665**	1	HARNESS AS-CONSOLE	
		1	**102-8802**	1	KIT-RECEPTACLE (2-PIN)	
		1	**102-8803**	1	KIT-RECEPTACLE (3-PIN)	
		1	**102-8804**	2	KIT-RECEPTACLE (4-PIN)	
					(EACH RECEPTACLE KIT INCLUDES RECEPTACLE AS & WEDGE)	
		1	**155-2255**	1	KIT-CONNECTING PLUG (12-PIN)	
		1	**155-2257**	1	KIT-CONNECTING PLUG (12-PIN)	
		1	**155-2260**	1	KIT-CONNECTING PLUG (3-PIN)	
		1	**155-2270**	3	KIT-CONNECTING PLUG (2-PIN)	
		1	**155-2271**	1	KIT-CONNECTING PLUG (4-PIN)	
					(EACH PLUG KIT INCLUDES PLUG AS, WEDGE, & INTERFACE SEAL)	
Y	21	2	*226-9674*	1	PANEL GP-FUSE	211
	22	2	**239-3355**	1	GASKET	
	23	2	**239-7392**	1	PLATE AS	
	24	1	**239-8107**	1	FUSE (175-AMPERE) (ALTERNATOR, MAIN)	
	25	1	**246-4311**	1	GUARD (SWITCH)	
	26	1	**259-2093**	1	LENS (RED)	
	27	1	**261-7990**	1	GROMMET	
R	28	2	**262-1408**	1	CONTROL GP-UNPROGRAMMED (MACHINE)	
	29	2	**281-3179**	1	BRACKET	
	30	1	**283-2382**	1	SWITCH AS-ROCKER (MULTIVELOCITY PROGRAM)	
M	31	2	**107-3786**	12	BOLT (M4X0.7X12-MM)	
	32	1	**130-5300**	2	CLIP	
	33	1	**141-4976**	4	SCREW-WASHER HEAD (NO 4X12.7-MM)	
M	34	1	**150-4086**	2	SCREW (M4X0.7X16-MM)	
	35	1,2	**204-2281**	31	STRAP-TIE	
	36	1	**4B-4863**	2	WASHER (4.7X11X1.2-MM THK)	
	37	2	**4P-8134**	1	CLIP	
	38	1	**5F-9757**	2	GROMMET	
	39	2	**5P-1075**	2	WASHER-HARD (10.2X22.5X3-MM THK)	
M	40	2	**7X-0818**	4	BOLT (M8X1.25X45-MM)	
M	41	2	**7X-2543**	2	BOLT (M10X1.5X120-MM)	
	42	2	**8T-0328**	6	WASHER-HARD (5.5X10X1-MM THK)	
M	43	2	**8T-0389**	2	LOCKNUT (M10X1.15-THD)	
M	44	1	**8T-2659**	2	LOCKNUT (M4X0.7-THD)	
	45	1,2	**8T-4121**	14	WASHER-HARD (11X21X2.5-MM THK)	
M	46	1,2	**8T-4137**	8	BOLT (M10X1.5X20-MM)	
M	47	1,2	**8T-4138**	8	BOLT (M6X1X20-MM)	
M	48	2	**8T-4191**	2	BOLT (M10X1.5X16-MM)	
M	49	1	**8T-4199**	1	BOLT (M8X1.25X12-MM)	
	50	1	**8T-4224**	1	WASHER-HARD (8.8X16X2-MM THK)	
M	51	2	**8T-6685**	2	BOLT (M10X1.5X110-MM)	
	52	2	**8T-7934**	1	WASHER-HARD (11X21X5-MM THK)	
	53	2	**9N-0869**	4	WASHER-HARD (8.8X25.5X2-MM THK)	
	54	1,2	**9X-8256**	8	WASHER (6.6X12X2-MM THK)	

D-ORDER BY THE METER
E-ORDER BY THE CENTIMETER
M-METRIC PART
R-REMFG PART MAY BE AVAILABLE
Y-SEPARATE ILLUSTRATION

279-9547 **WIRING GP-PLATFORM** *(contd.)* **i02748442**

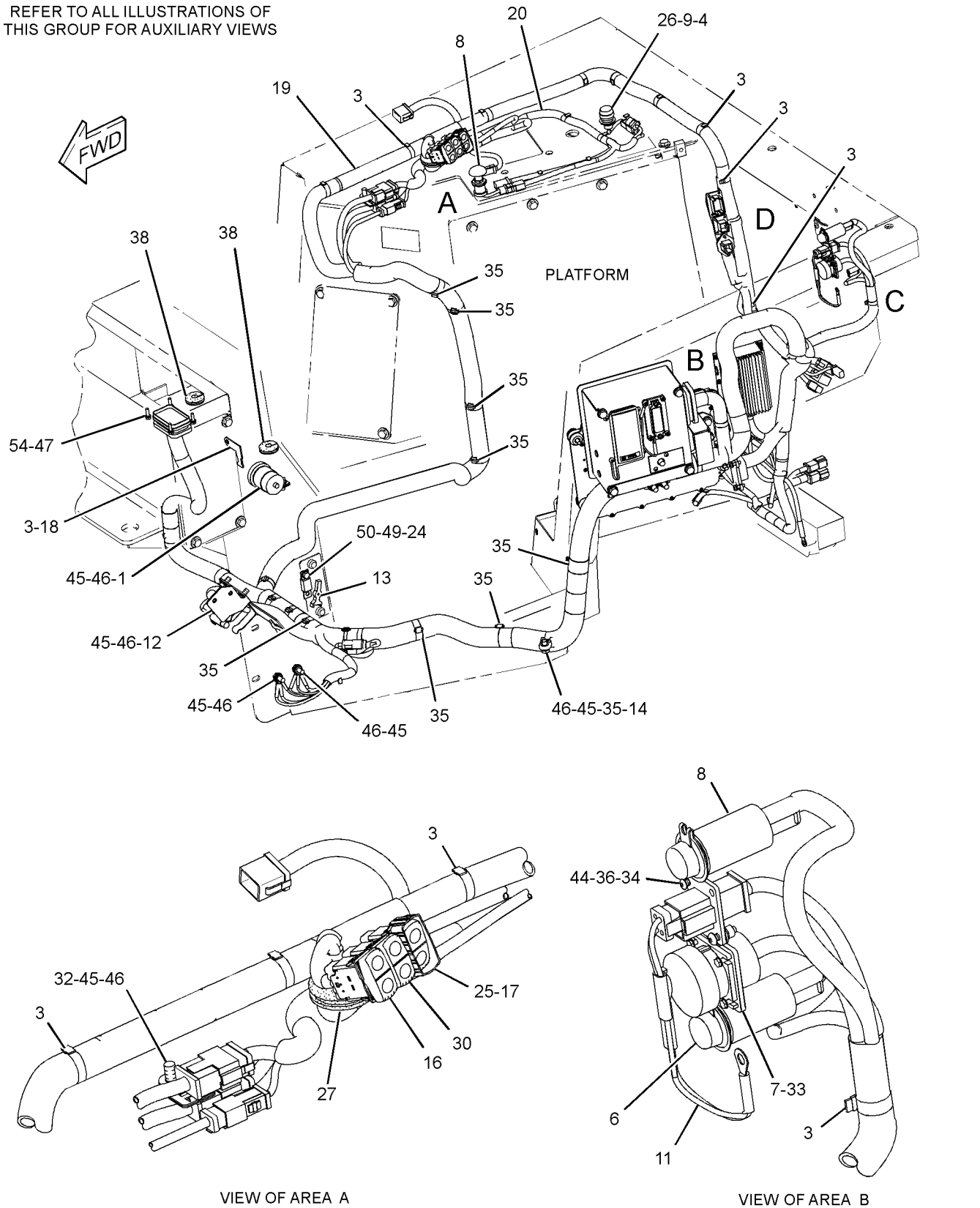

GRAPHIC #1 g01359575

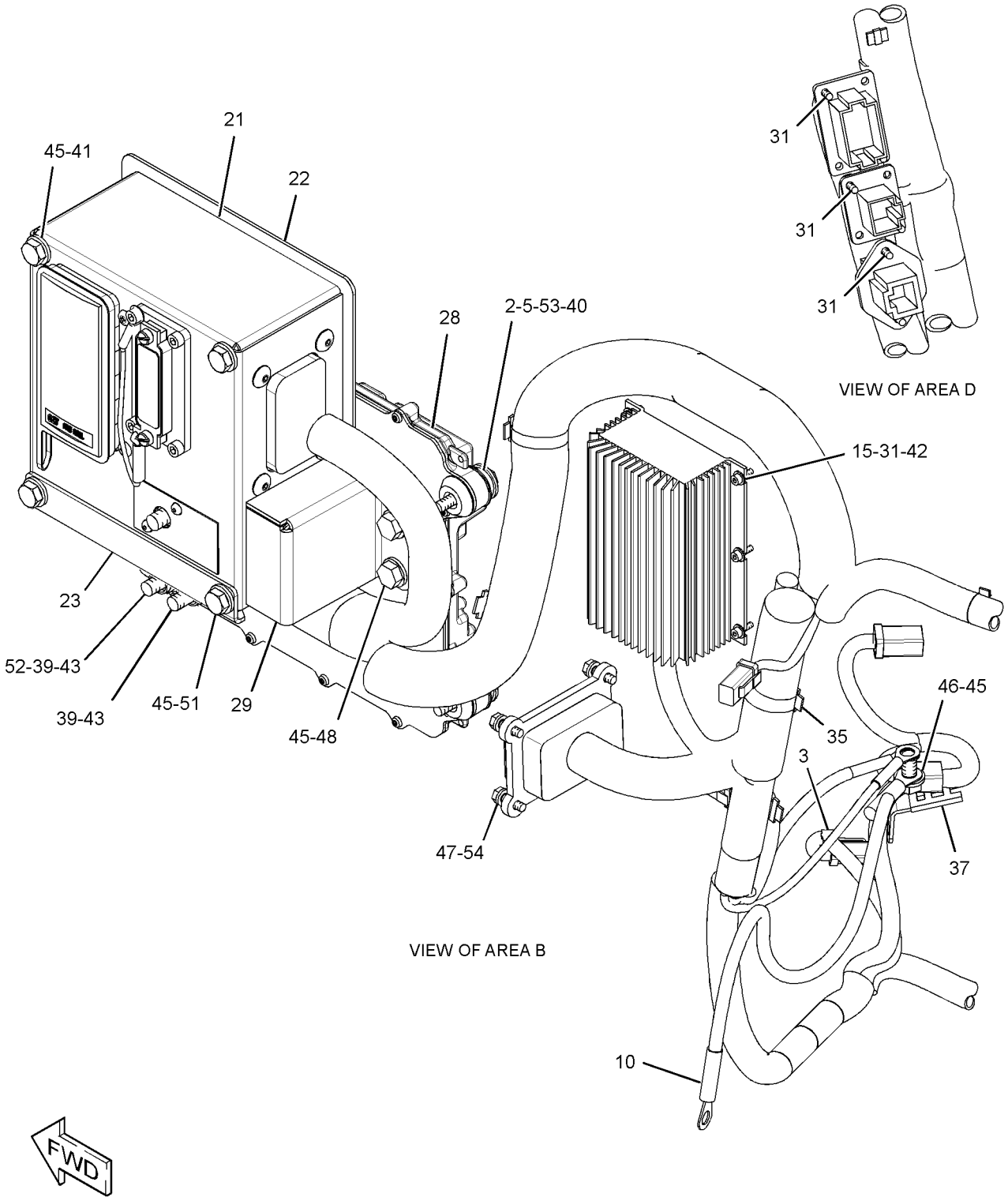

GRAPHIC #2 **<END>** g01359573

255-6934 ACCUMULATOR GP–CHARGED

S/N: SMC1-UP; GCT1-UP

PART OF 269-2072 LINES GP-POWER TRAIN OIL

FIELD REPLACEMENT ORDER 255-6936–PAGE 261

SMCS-5077 **i02450539**

NOTE	REF NO	GRAPHIC REF	PART NUMBER	QTY	PART NAME 1 2 3 4 5 6 (PRODUCT LEVEL)	SEE PAGE
	1	1	**241-0037**	1	FILM-WARNING (HIGH PRESSURE, READ OMM)	
	2	1	**158-2336**	1	VALVE-GAS	
	3	1	**069-2536**	1	PROTECTOR-GAS VALVE	
	4	1	**030-9613**	2	SCREW-FORMING (10-24XO.37-IN)	
					AVAILABLE REPAIR KIT(S):	
			160-0496	1	KIT-SEAL (ACCUMULATOR)	
					(INCLUDES SEALS)	

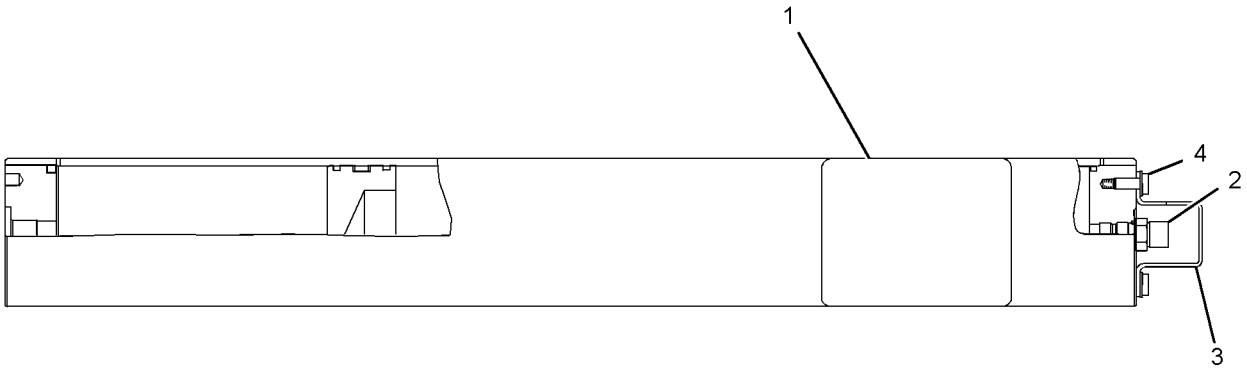

GRAPHIC #1 **<END>** g01209650

255-6936 ACCUMULATOR GP–UNCHARGED

S/N: SMC1-UP; GCT1-UP

FIELD REPLACEMENT FOR 255-6934–PAGE 260

SMCS-5077 **i02450547**

NOTE	REF NO	GRAPHIC REF	PART NUMBER	QTY	PART NAME 1 2 3 4 5 6 (PRODUCT LEVEL)	SEE PAGE
	1	1	**030-9613**	2	SCREW-FORMING (10-24X0.37-IN)	
	2	1	**158-2336**	1	VALVE-GAS	
	3	1	**069-2536**	1	PROTECTOR-GAS VALVE	
	4	1	**241-0037**	1	FILM-WARNING (HIGH PRESSURE, READ OMM)	
					AVAILABLE REPAIR KIT(S):	
			160-0496	1	KIT-SEAL (ACCUMULATOR)	

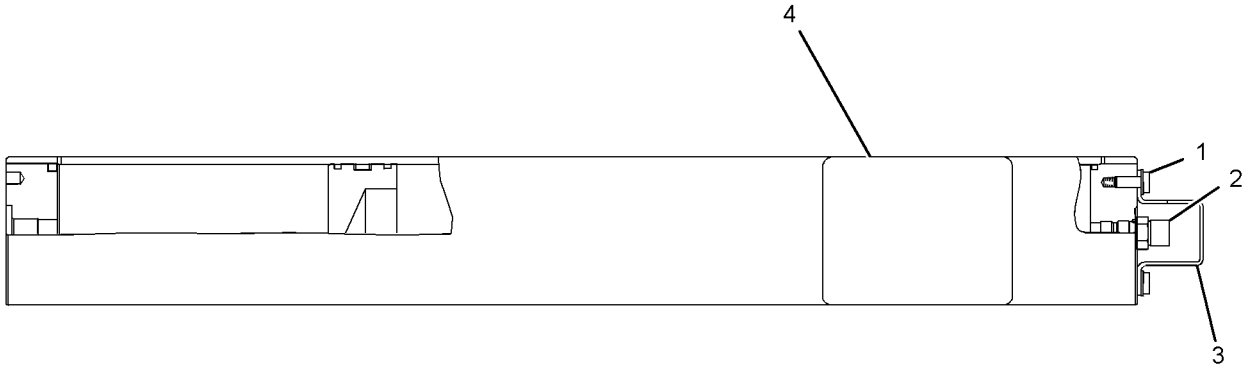

GRAPHIC #1 **<END>** g01209616

3W-6550 AXLE GP

S/N: SMC1-UP; GCT1-UP

PART OF 269-2046 POWER TRAIN AR

SMCS-3282 **i00599820**

NOTE	REF NO	GRAPHIC REF	PART NUMBER	QTY	PART NAME 1 2 3 4 5 6 (PRODUCT LEVEL)	SEE PAGE
	1	1	**3W-6551**	1	SHAFT	
	2	1	**3T-5851**	1	SHAFT	
C	3	1	**9G-8637**	1	GEAR-SUN (11-TEETH)	

C-CHANGE FROM PREVIOUS TYPE

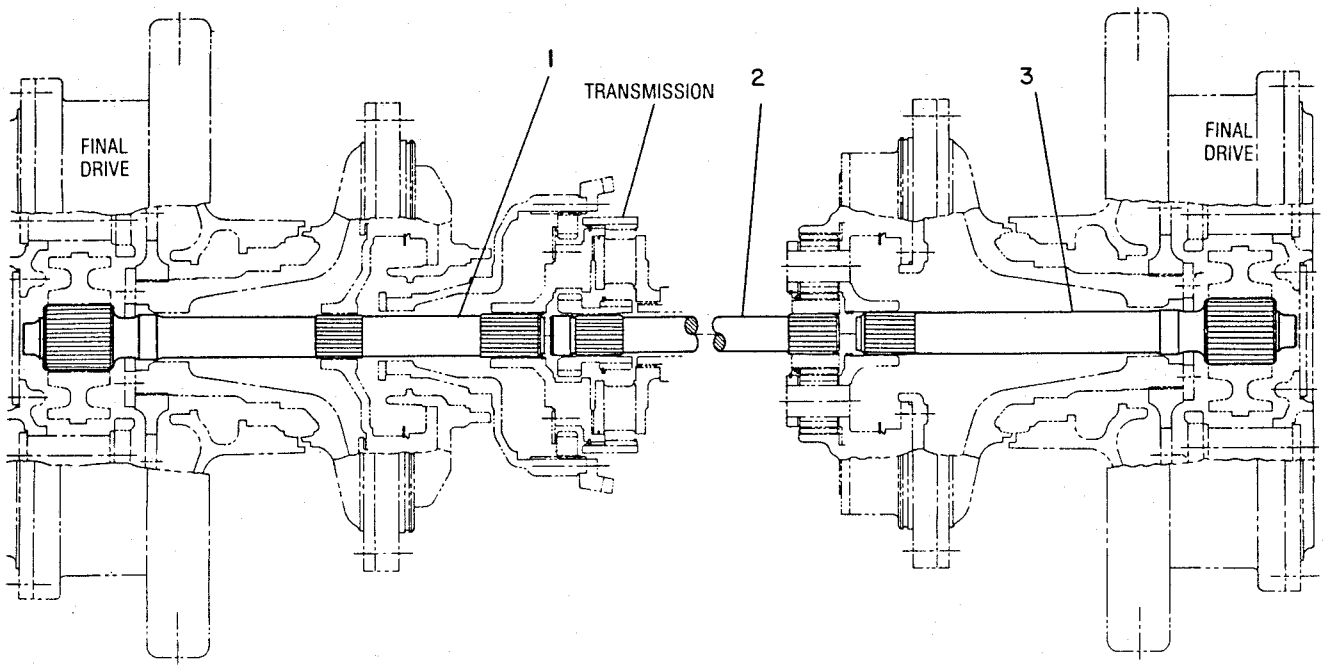

GRAPHIC #1 **<END>** g00188323

238-1029 BASE GP-OIL FILTER–POWER TRAIN

S/N: SMC1-UP; GCT1-UP

PART OF 235-5812 FILTER GP-OIL

SMCS-3004 **i02721527**

NOTE	REF NO	GRAPHIC REF	PART NUMBER	QTY	PART NAME 1 2 3 4 5 6 (PRODUCT LEVEL)	SEE PAGE
	1	1	**3T-9549**	1	ADAPTER	
	2	1	**7G-4998**	1	SPOOL-BYPASS	
	3	1	**7M-1297**	1	SPRING	
	4	1	**133-2198**	1	SPRING	
Y	5	1	**164-7577**	1	SWITCH GP-BYPASS (POWER TRAIN OIL FILTER)	238
	7	1	**2S-4078**	1	SEAL-O-RING	
	8	1	**3D-2824**	1	SEAL-O-RING	
	9	1	**9S-8008**	1	PLUG-O-RING	
					PARTS SHOWN IN GRAPHIC(S) WITHOUT A REFERENCE NUMBER ARE NOT SERVICED SEPARATELY	

Y-SEPARATE ILLUSTRATION

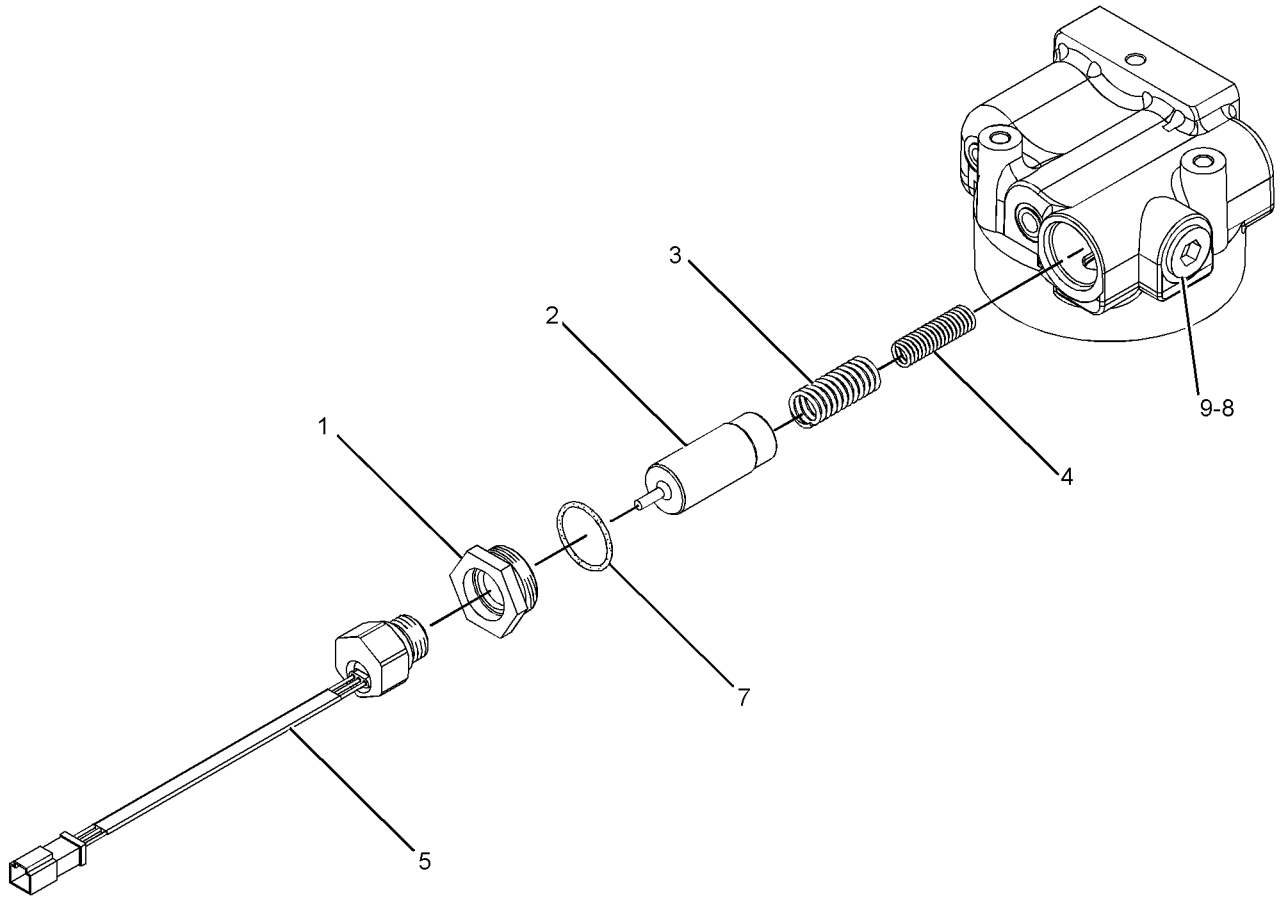

GRAPHIC #1 **<END>** g01366115

POWER TRAIN

231-5969 BRAKE & DIFFERENTIAL DRIVE GP

S/N: SMC1-UP; GCT1-UP

PART OF 269-2046 POWER TRAIN AR

SMCS-4131 **i02507270**

NOTE	REF NO	GRAPHIC REF	PART NUMBER	QTY	PART NAME 1 2 3 4 5 6 (PRODUCT LEVEL)	SEE PAGE
	1	1	**2K-5069**	1	CUP-BEARING (TAPERED ROLLER)	
	2	2	**2K-9295**	1	BEARING AS-TAPERED ROLLER	
	3	2	**3B-4124**	1	CUP-BEARING (TAPERED ROLLER)	
	4	1	**3S-2708**	7	PIN-SPRING	
	5	1	**3T-4568**	3	SHAFT-PLANETARY	
	6	1	**292-2016**	1	GEAR AS-SUN (30/24-TEETH)	
	6A	1	**290-9849**	1	RING-RETAINING	
	7	1	**3T-4824**	4	GEAR-PLANETARY (30-TEETH)	
	8	1	**3T-5021**	1	CARRIER-PLANETARY	
	9	1	**3T-5200**	1	CARRIER-PLANETARY	
	10	1	**3T-6963**	1	SEAL-RING	
B	11	2	**3T-9272**	1	SHIM PACK (INCLUDES 8-SHIMS)	
	12	1	**5M-0578**	3	BEARING AS-ROLLER	
	13	1	**5M-7925**	4	BEARING AS-ROLLER	
	14	1	**6I-8724**	1	RING-LOCK	
	15	2	**6P-1735**	1	LOCKWASHER	
	16	2	**6P-1736**	1	WASHER (55.17X76.2X2.67-MM THK)	
	17	1	**6T-0062**	1	PLATE	
	18	1	**6T-0064**	4	SHAFT-PLANETARY	
	19	2	**6T-0850**	2	WASHER-THRUST (255X287.25X2.75-MM THK)	
	20	1	**6V-0855**	1	BEARING AS-TAPERED ROLLER	
		1	**8T-0072**	1	CONE-BEARING	
	21	2	**6V-7646**	3	WASHER-HARD (7.2X25X2-MM THK)	
	22	1	**6Y-0926**	3	GEAR-PLANETARY (23-TEETH)	
	23	1	**6Y-0984**	1	GEAR-RING (75-TEETH)	
	24	2	**6Y-2704**	1	SPRING-DISC	
	25	2	**6Y-9373**	4	DISC-FRICTION	
	26	1	**7G-1596**	1	RING-RETAINING	
	27	2	**7H-4566**	2	CUP-BEARING (TAPERED ROLLER)	
	28	2	**7T-1885**	1	RING	
	29	2	**7T-6994**	3	PLATE-CLUTCH & BRAKE	
	30	1	**7T-8130**	1	RING-RETAINING	
	31	2	**7T-9788**	1	HUB	
	32	2	**7T-9832**	1	RETAINER	
	33	2	**7T-9837**	1	PLATE	
	34	1	**8E-8307**	6	DISC-THRUST	
	35	1	**8E-8310**	8	DISC-THRUST	
	36	2	**9B-0576**	1	LOCKNUT-BEARING	
	37	1	**9W-1571**	1	SLINGER	
B	38	2	**9W-2853**	1	SHIM PACK (INCLUDES 21-SHIMS)	
	41	1	**9W-6102**	1	GEAR-RING (84-TEETH)	
	42	1	**9W-6103**	1	RING-THRUST	
	43	2	**005-4834**	2	BEARING AS-TAPERED ROLLER	
	44	1	**136-1595**	1	HOUSING-ROTATING	
	45	2	**214-3573**	1	PISTON	
	46	2	**216-6371**	1	CARRIER	
	47	2	**217-2293**	1	RETAINER	
	48	1	**226-4462**	1	GEAR-BEVEL (74-TEETH)	
	49	2	**226-4464**	1	PINION-BEVEL (15-TEETH)	
	50	2	**227-2451**	1	HOUSING AS	
	50A	2	**1A-2223**	2	DOWEL	
	50B	2	**5P-8245**	12	WASHER-HARD (13.5X25.5X3-MM THK)	
	50C	2	**1A-1460**	12	BOLT (1/2-13X2-IN)	
	51	1	**030-2135**	4	BOLT-LOCKING (5/16-18X0.625-IN)	
	52	1	**0L-1143**	21	BOLT (3/8-16X2.5-IN)	
	53	2	**0S-1614**	3	BOLT (1/4-20X0.5-IN)	

231-5969 **BRAKE & DIFFERENTIAL DRIVE GP** *(contd.)* **i02507270**

NOTE	REF NO	GRAPHIC REF	PART NUMBER	QTY	PART NAME 1 2 3 4 5 6 (PRODUCT LEVEL)	SEE PAGE
	54	2	**1A-2029**	6	BOLT (3/8-16X1.125-IN)	
	55	2	**2A-4639**	1	BOLT (3/8-16X1.625-IN)	
	56	2	**1A-1460**	6	BOLT (1/2-13X2-IN)	
	57	2	**3K-0360**	2	SEAL-O-RING	
	58	1	**5K-9107**	3	BOLT-LOCKING (3/8-16X0.75-IN)	
	59	2	**5M-2894**	7	WASHER-HARD (10.2X18.5X2.5-MM THK)	
	60	2	**5P-8245**	6	WASHER-HARD (13.5X25.5X3-MM THK)	
	63	2	**6P-5317**	1	RING-SEAL (EXTERNAL)	
	64	2	**7W-6534**	4	PLUG-PIPE	
	66	2	**8M-4438**	1	SEAL-O-RING	
	67	2	**8P-8357**	1	RING-SEAL (INTERNAL)	
	69	1	**9L-9132**	3	WASHER (10.2X25.5X2.5-MM THK)	
	70	2	**9S-8005**	2	PLUG-O-RING	
B	71	1	**1U-8846**		SEALANT-GASKET	

B-USE AS REQUIRED

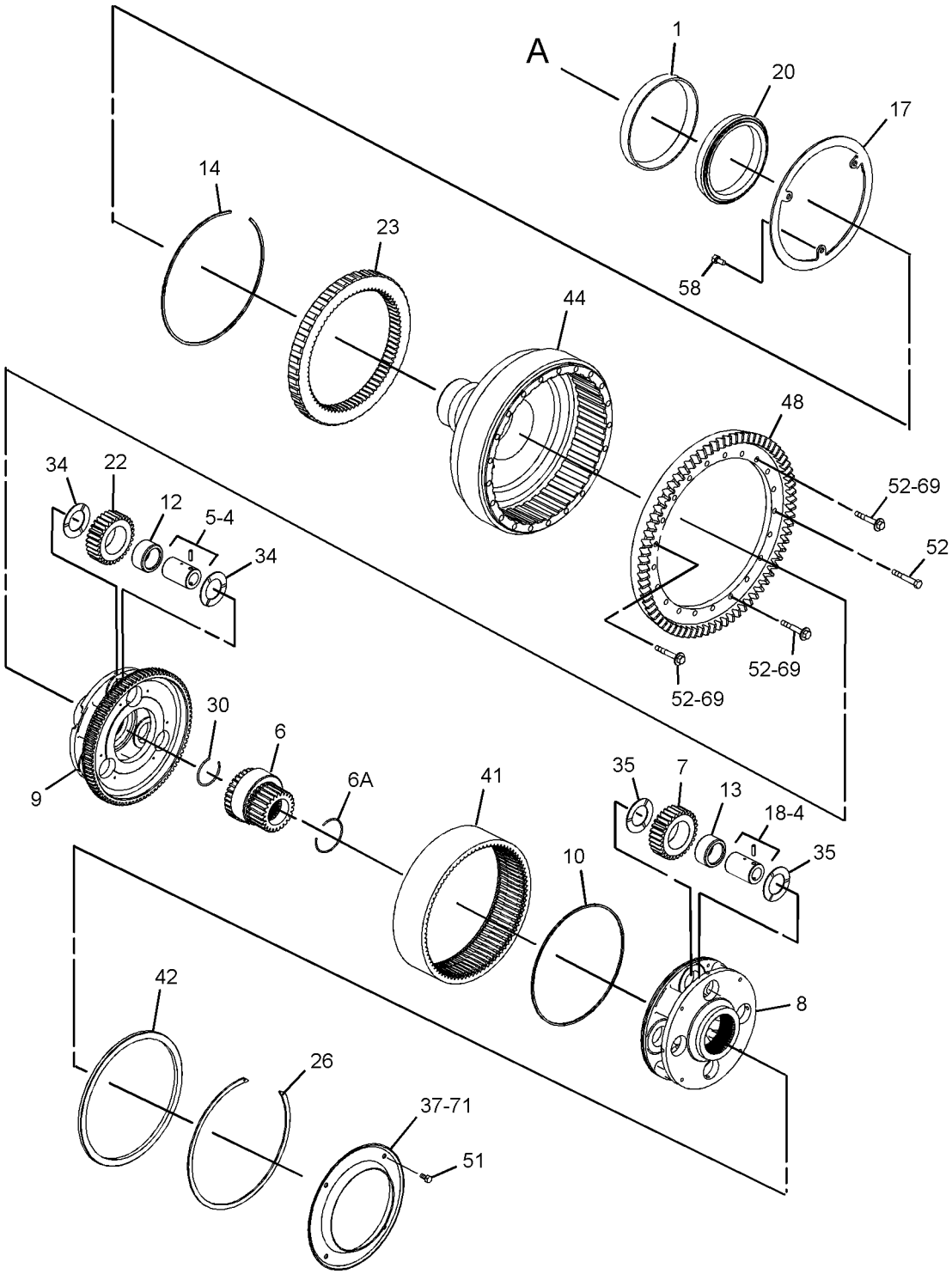

GRAPHIC #1

g01300998

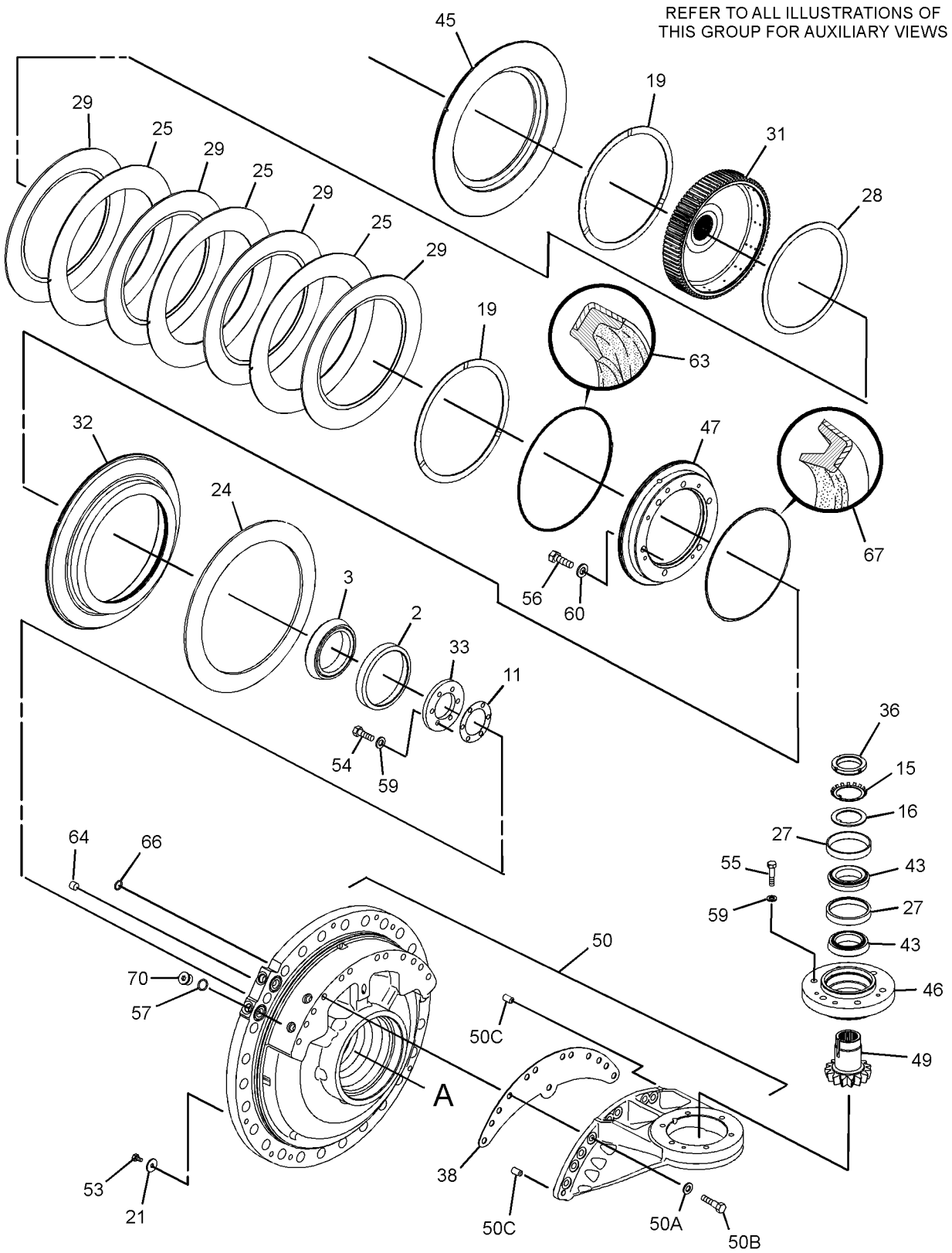

GRAPHIC #2 **<END>** g01301159

231-5990 BRAKE & PLANETARY GP

S/N: SMC1-UP; GCT1-UP

PART OF 269-2046 POWER TRAIN AR

SMCS-4011, 4255 **i02438194**

NOTE	REF NO	GRAPHIC REF	PART NUMBER	QTY	PART NAME 1 2 3 4 5 6 (PRODUCT LEVEL)	SEE PAGE
	1	1	**3S-2708**	3	PIN-SPRING	
	2	1	**3T-5807**	1	SLINGER	
	3	1	**5M-0578**	6	BEARING AS-ROLLER	
	4	1	**6Y-2704**	1	SPRING-DISC	
	5	1	**6Y-9373**	4	DISC-FRICTION	
	6	1	**7T-1885**	1	RING	
	7	1	**7T-6994**	3	PLATE-CLUTCH & BRAKE	
	8	1	**7T-8136**	3	SHAFT-PLANETARY	
	9	1	**7T-9031**	1	GEAR (75-TEETH)	
	10	1	**7T-9837**	1	PLATE	
	11	1	**8E-8307**	6	DISC-THRUST	
	12	1	**9W-7925**	2	BEARING AS-TAPERED ROLLER	
	13	1	**9W-7926**	2	CUP-BEARING	
	14	1	**175-2166**	3	GEAR-PLANETARY (23-TEETH)	
	15	1	**198-4410**	1	GEAR AS-SUN (30-TEETH)	
		1	**3E-4354**	2	BALL	
	16	1	**205-5314**	1	HOUSING	
	17	1	**209-7193**	1	CARRIER	
	18	1	**214-3573**	1	PISTON	
	19	1	**216-4591**	1	RETAINER AS	
		1	**8S-0527**	1	PLUG-CUP	
	20	1	**0S-1585**	12	BOLT (1/2-13X1.5-IN)	
	21	1	**1A-1460**	6	BOLT (1/2-13X2-IN)	
	22	1	**1A-2029**	6	BOLT (3/8-16X1.125-IN)	
	23	1	**1C-0569**	6	BOLT (5/16-18X0.5-IN)	
	24	1	**3K-0360**	2	SEAL-O-RING	
	25	1	**5M-2894**	6	WASHER-HARD (10.2X18.5X2.5-MM THK)	
	26	1	**5P-8245**	18	WASHER-HARD (13.5X25.5X3-MM THK)	
	27	1	**6F-6673**	2	SEAL-O-RING	
	28	1	**6P-5317**	1	RING-SEAL (EXTERNAL)	
	29	1	**8D-4771**	1	SEAL-O-RING	
	30	1	**8M-4438**	1	SEAL-O-RING	
	31	1	**8P-8357**	1	RING-SEAL (INTERNAL)	
	32	1	**9S-8005**	2	PLUG-O-RING	
B	33	1	**1U-8846**		SEALANT-GASKET	

B-USE AS REQUIRED

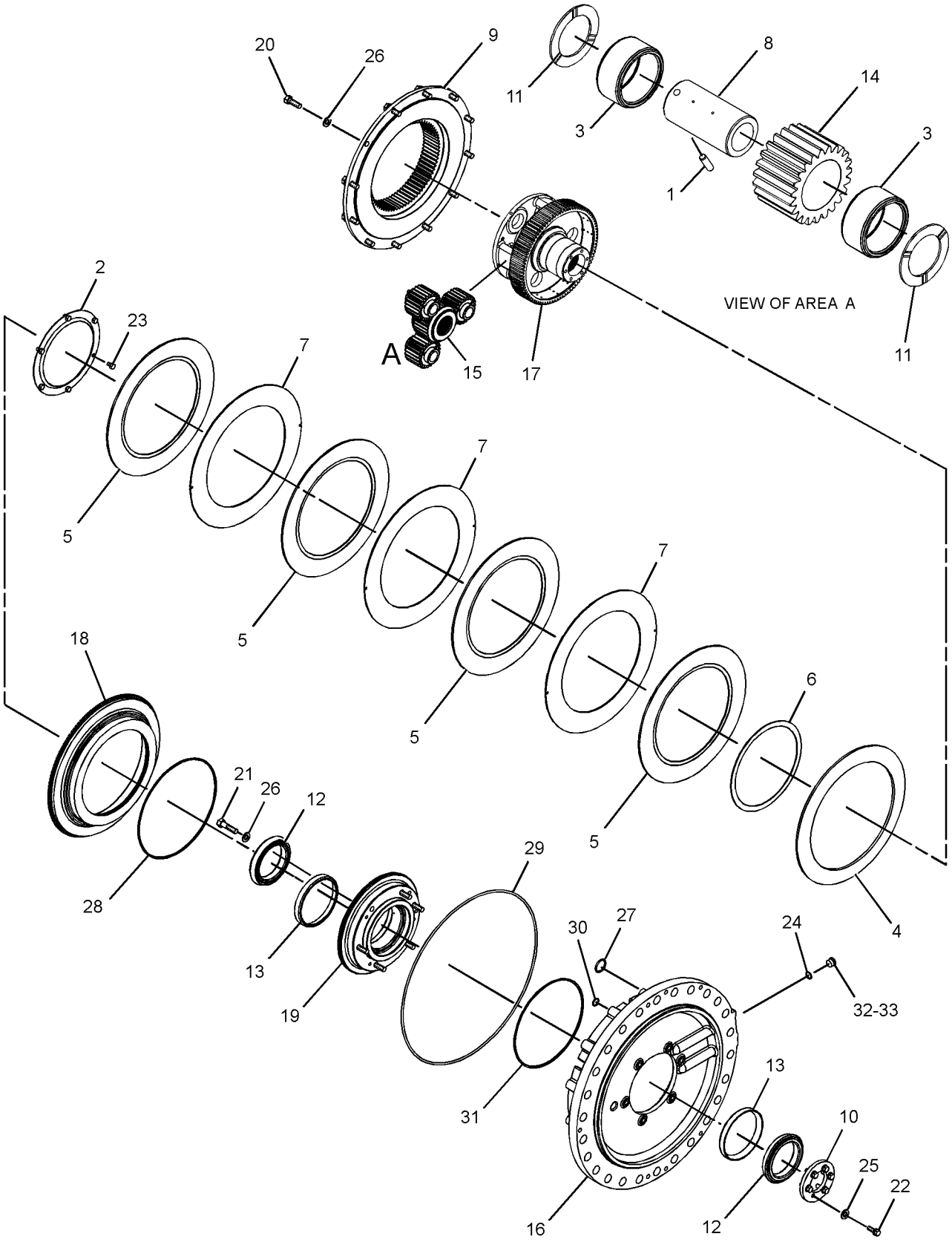

GRAPHIC #1 **<END>** g01214082

POWER TRAIN

221-3342 CASE & PARTS GP-PLANETARY

S/N: KKA1-UP

PART OF 220-1429 TRANSMISSION AR

SMCS-3030, 3064, 3160 **i02491712**

NOTE	REF NO	GRAPHIC REF	PART NUMBER	QTY	PART NAME 1 2 3 4 5 6 (PRODUCT LEVEL)	SEE PAGE
	1	1	**5K-5120**	1	STRIP	
	2	1	**5K-9246**	1	CONNECTOR	
	3	1	**5K-9988**	1	TEE-INVERTED FLARED	
	4	1	**6K-8498**	1	TEE-FLARED	
	5	1	**6V-0852**	7	CAP-DUST	
	6	1	**6V-1720**	1	PLATE-SERIAL NUMBER (TRANSMISSION)	
	7	1	**6V-3965**	7	FITTING-COUPLER	
	8	1	**7T-8875**	1	TUBE AS	
	9	1	**7T-8876**	1	TUBE AS	
	10	1	**8S-9130**	1	SCREEN-SUCTION (TRANSMISSION SCAVENGE)	
	11	1	**9G-8615**	1	COVER	
	12	1	**9P-1475**	1	SLEEVE	
	13	1	**9S-7710**	1	ELBOW-FLARED	
	14	1	**9W-4159**	1	TUBE AS	
	15	1	**9W-5334**	1	TUBE AS	
	16	1	**081-8353**	3	BOLT (3/8-16X0.625-IN)	
Y	17	1	**190-2278**	1	CASE GP-TRANSMISSION	272
	18	1	**203-2288**	1	GASKET-COVER	
	19	1	**204-6499**	1	COVER	
	20	1	**210-0091**	1	COVER	
	21	1	**214-9408**	1	MANIFOLD	
	22	1	**216-6202**	1	ADAPTER	
	23	1	**221-0877**	1	GUARD AS	
	24	1	**031-0218**	1	BOLT-LOCKING (3/8-16X0.5-IN)	
	25	1	**0S-1585**	21	BOLT (1/2-13X1.5-IN)	
	26	1	**0T-0102**	1	BOLT (3/8-16X0.625-IN)	
	27	1	**1N-5999**	1	PLUG	
	28	1	**2M-9780**	1	SEAL-O-RING	
	29	1	**2S-4071**	1	SEAL-O-RING	
	30	1	**2S-4078**	3	SEAL-O-RING	
	31	1	**3J-1907**	7	SEAL-O-RING	
	32	1	**3S-7781**	1	GASKET	
	33	1	**4H-5440**	1	COVER	
	34	1	**5M-2894**	1	WASHER-HARD (10.2X18.5X2.5-MM THK)	
	35	1	**5P-4057**	1	SEAL-O-RING	
	36	1	**5P-8245**	21	WASHER-HARD (13.5X25.5X3-MM THK)	
	37	1	**5P-8998**	1	FITTING	
	38	1	**7J-0204**	1	SEAL-O-RING	
	39	1	**7J-8611**	1	ELBOW-PIPE	
	40	1	**8H-1603**	1	CLIP	
	41	1	**8M-2530**	4	BOLT-12 POINT HEAD (1/2-13X1.25-IN)	
	42	1	**8M-4432**	2	SEAL-O-RING	
	43	1	**8M-5661**	1	SEAL-O-RING	
	44	1	**8P-0058**	1	GASKET-COVER	
	45	1	**9M-9647**	2	SEAL-O-RING	
	46	1	**9S-6130**	3	PLUG	
M	47	1	**9X-2125**	27	BOLT-LOCKING (M10X1.5X25-MM)	

M-METRIC PART
Y-SEPARATE ILLUSTRATION

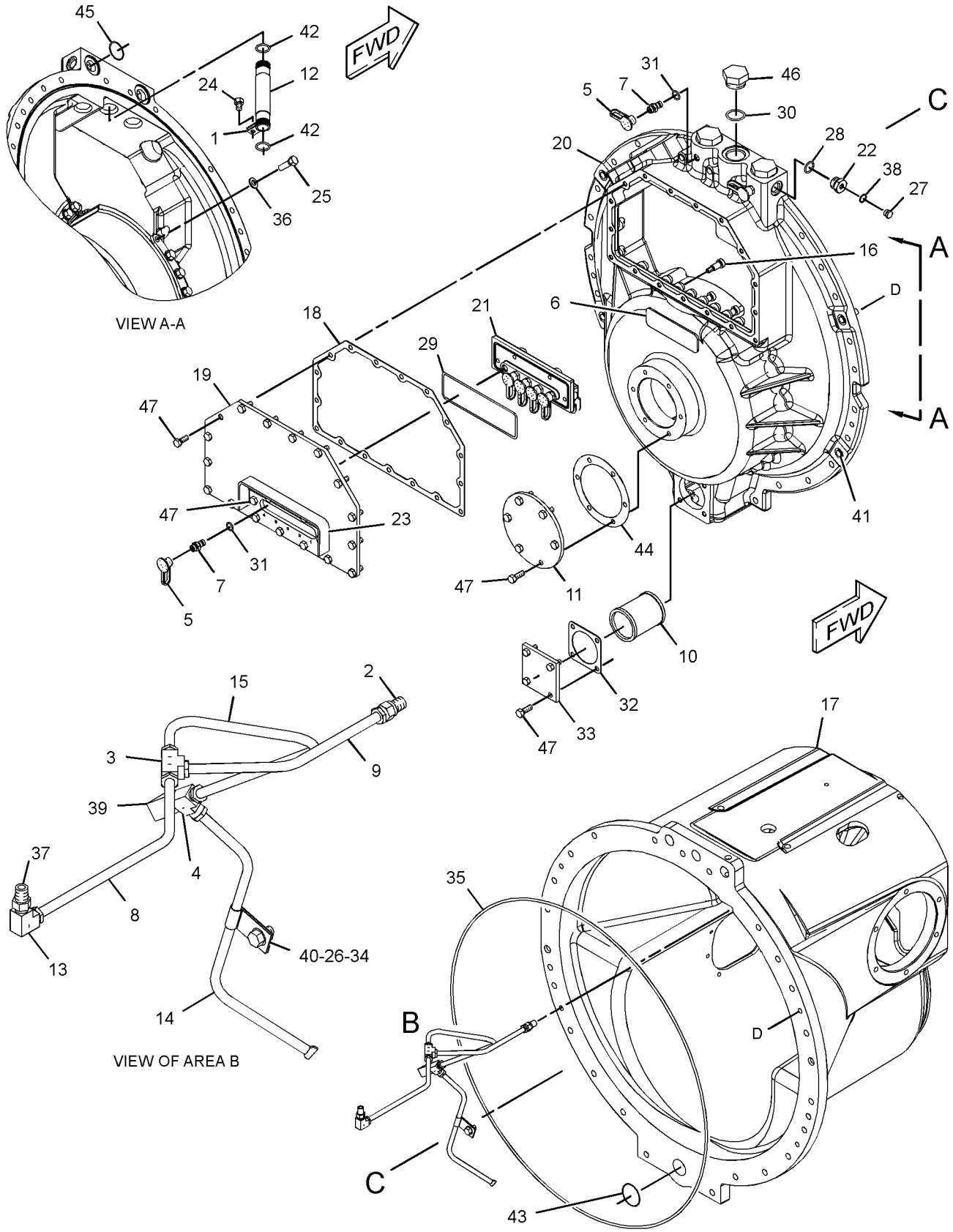

GRAPHIC #1 **<END>** g01209779

190-2278 CASE GP-TRANSMISSION

S/N: KKA1-UP

PART OF 221-3342 CASE & PARTS GP-PLANETARY

SMCS-3064 **i02491553**

NOTE	REF NO	GRAPHIC REF	PART NUMBER	QTY	PART NAME 1 2 3 4 5 6 (PRODUCT LEVEL)	SEE PAGE
	1	1	*188-8855*	1	CASE-TRANSMISSION	
	2	1	**4B-9785**	1	BALL	
	3	1	**1A-2610**	1	DOWEL	
	4	1	**7M-1201**	1	DOWEL	
	5	1	**3F-3442**	2	DOWEL	
	6	1	**4B-9782**	1	BALL	
	7	1	**146-6669**	1	GASKET	
	8	1	**146-6670**	1	COVER	
	9	1	**9X-6458**	6	WASHER-HARD (10.2X22.5X3-MM THK)	
	10	1	**0S-1594**	6	BOLT (3/8-16X1-IN)	

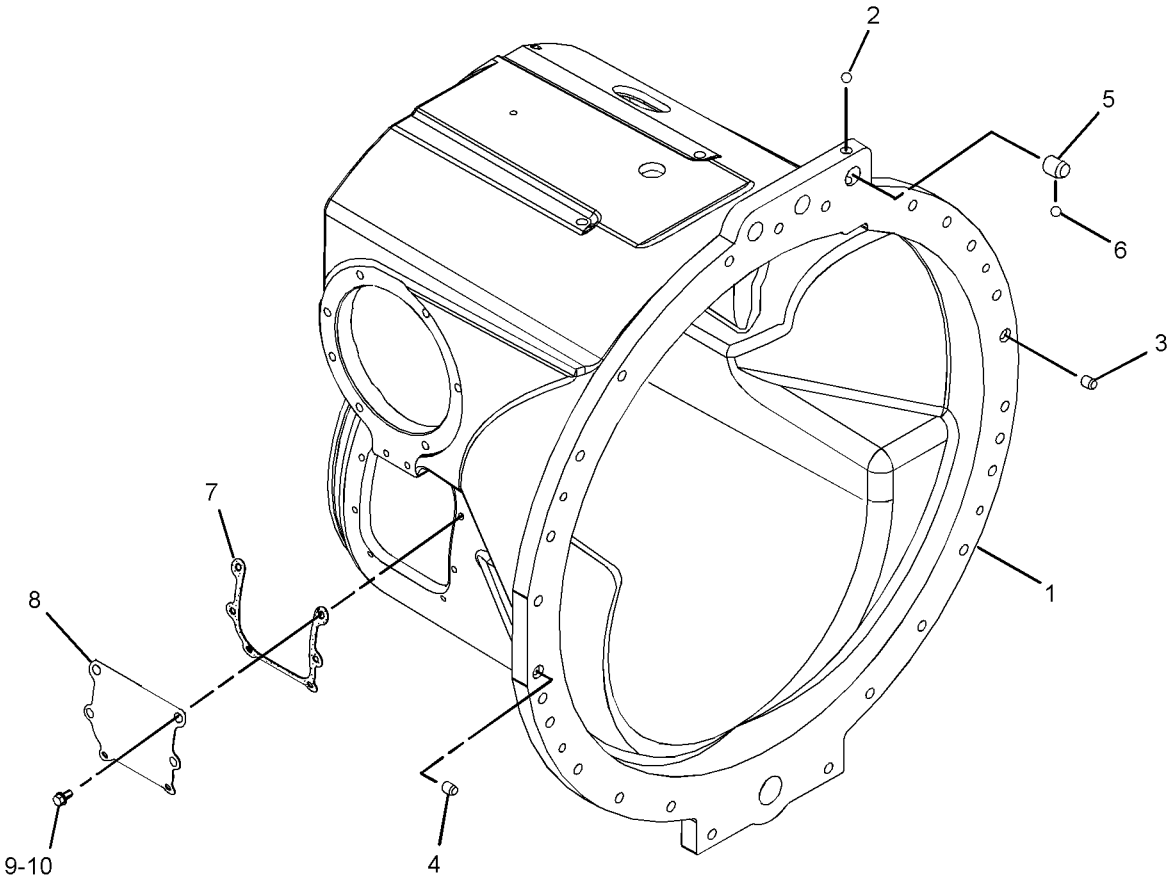

GRAPHIC #1 **<END>** g01242267

265-5278 CONTROL GP-TRANSMISSION HYD

S/N: KKA1-UP

PART OF 220-1429 TRANSMISSION AR

SMCS-3073, 3167 **i02451039**

NOTE	REF NO	GRAPHIC REF	PART NUMBER	QTY	PART NAME 1 2 3 4 5 6 (PRODUCT LEVEL)	SEE PAGE
	1	1	**5K-5120**	2	STRIP	
	2	1	**6P-4977**	2	SLEEVE	
	3	1	**104-6729**	1	RETAINER	
	4	1	**104-6730**	1	GASKET	
	5	1	**204-6501**	1	ELBOW	
	6	1	**205-7205**	5	SLEEVE	
Y	7	1	**213-4540**	1	VALVE GP-RELIEF (TRANSMISSION OIL PRESSURE)	324
Y	8	1	*220-4324*	5	VALVE GP-MODULATING (TRANSMISSION CLUTCH)	323
	9	1	**263-4081**	1	HARNESS AS-SENSOR	
		1	**3S-2093**	6	STRAP-CABLE	
		1	**4P-7581**	5	CLIP	
		1	**4P-8134**	1	CLIP	
		1	**6J-2419**	1	SEAL-O-RING	
		1	**155-2270**	7	KIT-CONNECTING PLUG (2-PIN)	
					(EACH INCLUDES PLUG AS, WEDGE, & INTERFACE SEAL)	
	10	1	**031-0218**	2	BOLT-LOCKING (3/8-16X0.5-IN)	
	11	1	**0L-1352**	3	BOLT (3/8-16X3.25-IN)	
	12	1	**0S-0509**	2	BOLT (3/8-16X0.75-IN)	
	13	1	**1D-4540**	10	BOLT (5/16-18X2.75-IN)	
	14	1	**2H-3932**	2	SEAL-O-RING	
	15	1	**5F-4899**	4	BOLT (3/8-16X5.5-IN)	
	16	1	**5M-2894**	9	WASHER-HARD (10.2X18.5X2.5-MM THK)	
	17	1	**8M-4432**	4	SEAL-O-RING	
	18	1	**8M-8157**	10	SEAL-O-RING	
	19	1	**9M-1974**	10	WASHER-HARD (8.8X16X2-MM THK)	
M	20	1	**9X-2125**	2	BOLT-LOCKING (M10X1.5X25-MM)	

M-METRIC PART
Y-SEPARATE ILLUSTRATION

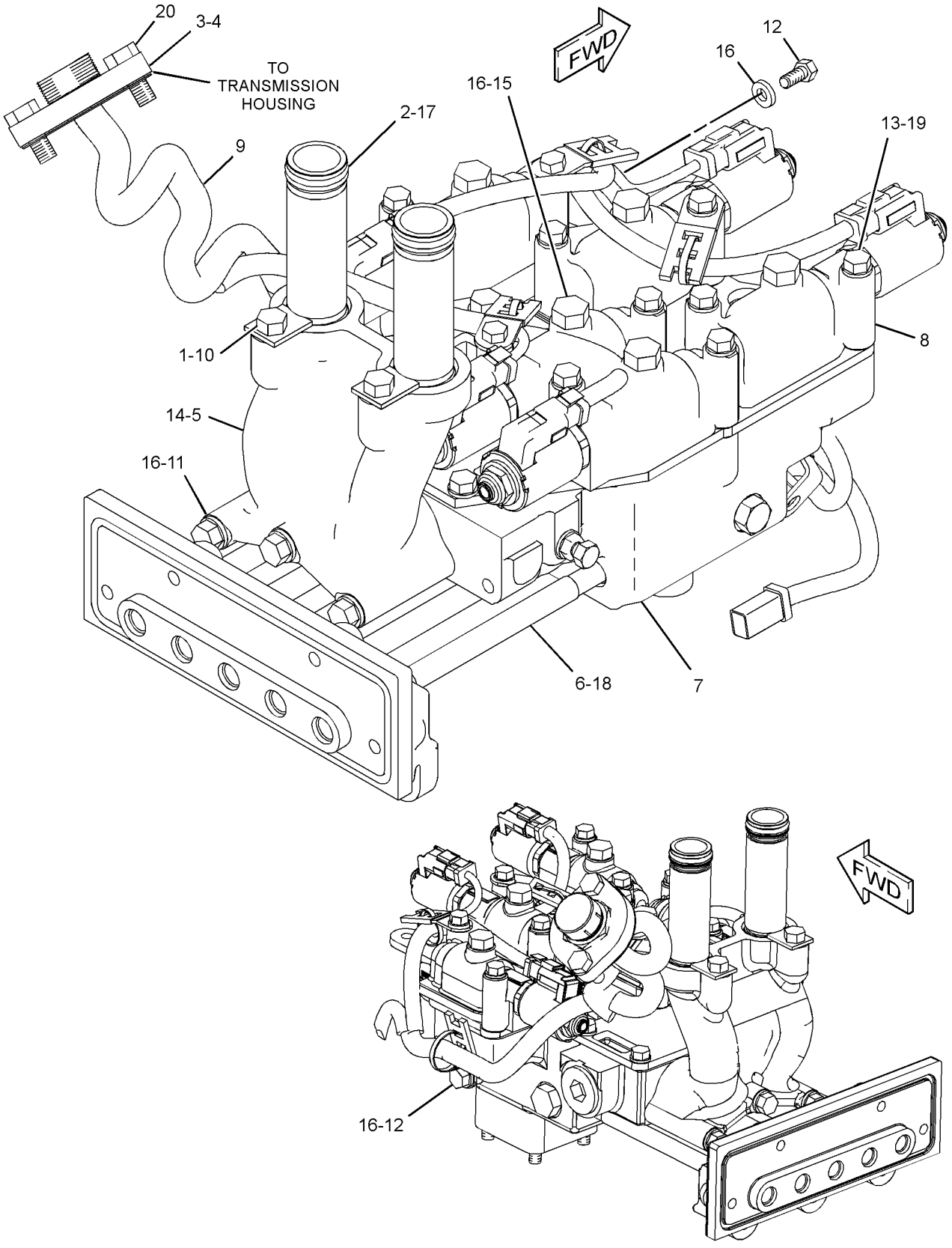

GRAPHIC #1 **<END>** g01209735

238-1116 COOLER GP-TRANSMISSION OIL

S/N: THX8900-UP

PART OF 282-3823, 282-3824, 282-3825, 282-3826, 301-5768 ENGINE AR

ALSO AN ATTACHMENT

SMCS-1375 **i02163241**

NOTE	REF NO	GRAPHIC REF	PART NUMBER	QTY	PART NAME 1 2 3 4 5 6 (PRODUCT LEVEL)	SEE PAGE
	1	1	**2S-0795**	2	GASKET	
	2	1	**6F-7062**	1	WASHER (12.7X19.05X1.83-MM THK)	
	3	1	**8M-9307**	1	PLUG-DRAIN (TRANSMISSION OIL COOLER)	
	4	1	**8S-4304**	1	BONNET-TMSN OIL COOLER	
	5	1	**180-3907**	1	SEAL-INTEGRAL	
R	6	1	**187-3523**	1	CORE AS-OIL COOLER (TRANSMISSION)	
	6A	1	**8T-6764**	1	PLUG-PIPE	
	7	1	**198-3462**	1	DIVERTER	
	8	1	**238-1117**	1	BONNET	
	9	1	**238-2840**	1	BRACKET	
	10	1	*148-8407*	1	PLUG AS	
		1	**3J-1907**	1	SEAL-O-RING	
		1	**9S-4191**	1	PLUG-O-RING	
	11	1	*148-8411*	1	PLUG AS	
		1	**3K-0360**	1	SEAL-O-RING	
		1	**9S-4185**	1	PLUG-O-RING	
	12	1	*164-4180*	1	PLUG AS	
		1	**7M-8485**	1	SEAL-O-RING	
		1	**9S-4181**	1	PLUG-O-RING	
M	13	1	**6V-3668**	6	BOLT (M12X1.75X30-MM)	
M	14	1	**6V-3823**	2	BOLT (M12X1.75X60-MM)	
M	15	1	**6V-5696**	6	BOLT (M12X1.75X80-MM)	
	16	1	**7D-1649**	4	WASHER-HARD (13.5X32X5-MM THK)	
M	17	1	**8T-5030**	2	BOLT (M10X1.5X120-MM)	
	18	1	**8T-6761**	1	PLUG-PIPE	
M	19	1	**8T-6854**	4	BOLT (M10X1.5X200-MM)	

M-METRIC PART
R-REMFG PART MAY BE AVAILABLE

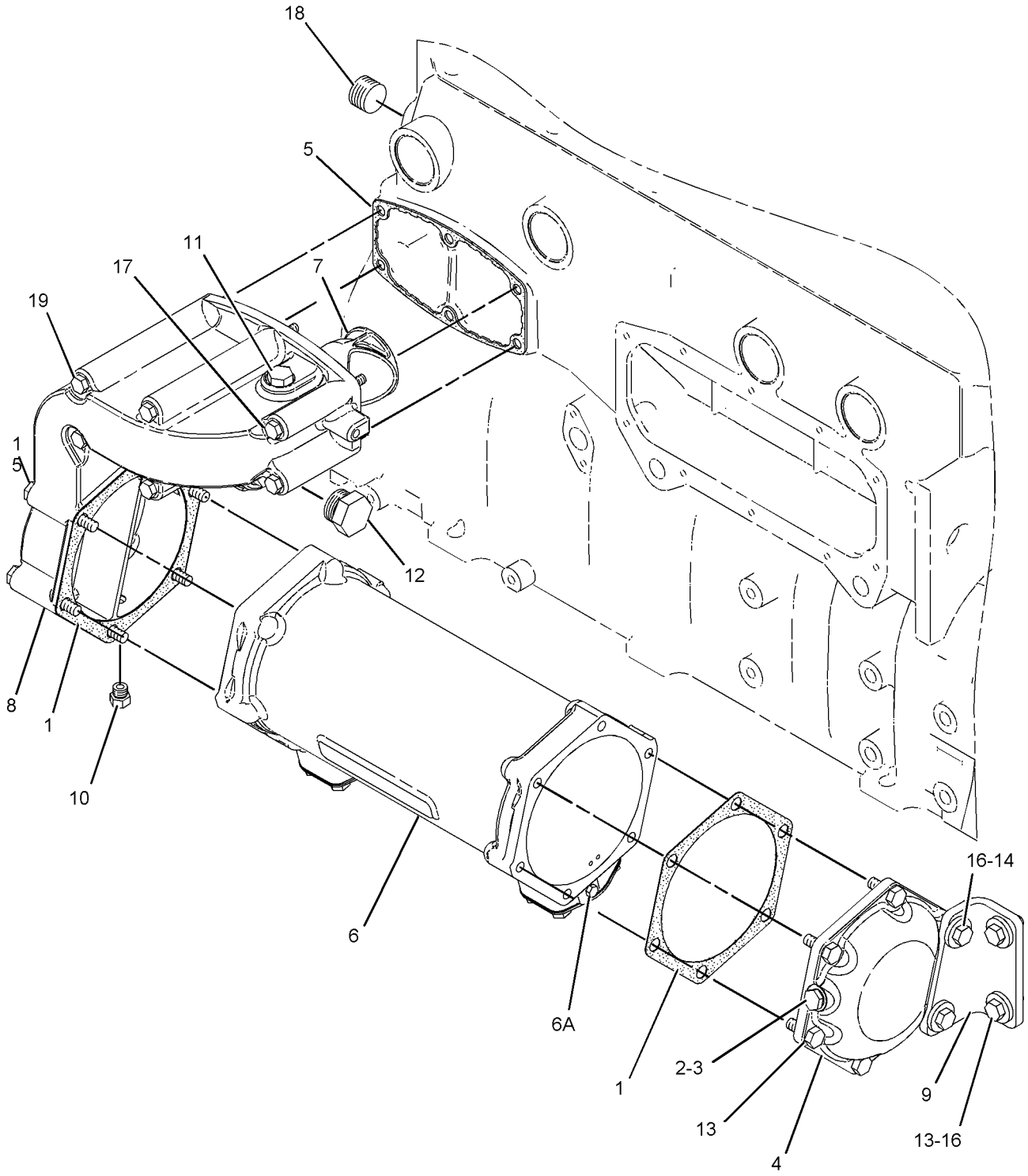

GRAPHIC #1 **<END>** g01097153

225-1506 COUPLING & GUARD GP

S/N: SMC1-UP; GCT1-UP

PART OF 269-2046 POWER TRAIN AR

SMCS-3279 **i02696390**

NOTE	REF NO	GRAPHIC REF	PART NUMBER	QTY	PART NAME 1 2 3 4 5 6 (PRODUCT LEVEL)	SEE PAGE
Y	1	1	*227-0924*	1	COUPLING GP-PUMP	278
	2	1	**284-0638**	1	GUARD AS	
	3	1	**284-0639**	1	BRACKET AS	
	4	1	**8T-4222**	4	WASHER-PLATED (11X32X2.5-MM THK)	
M	5	1	**8T-4195**	4	BOLT (M10X1.5X30-MM)	

M-METRIC PART
Y-SEPARATE ILLUSTRATION

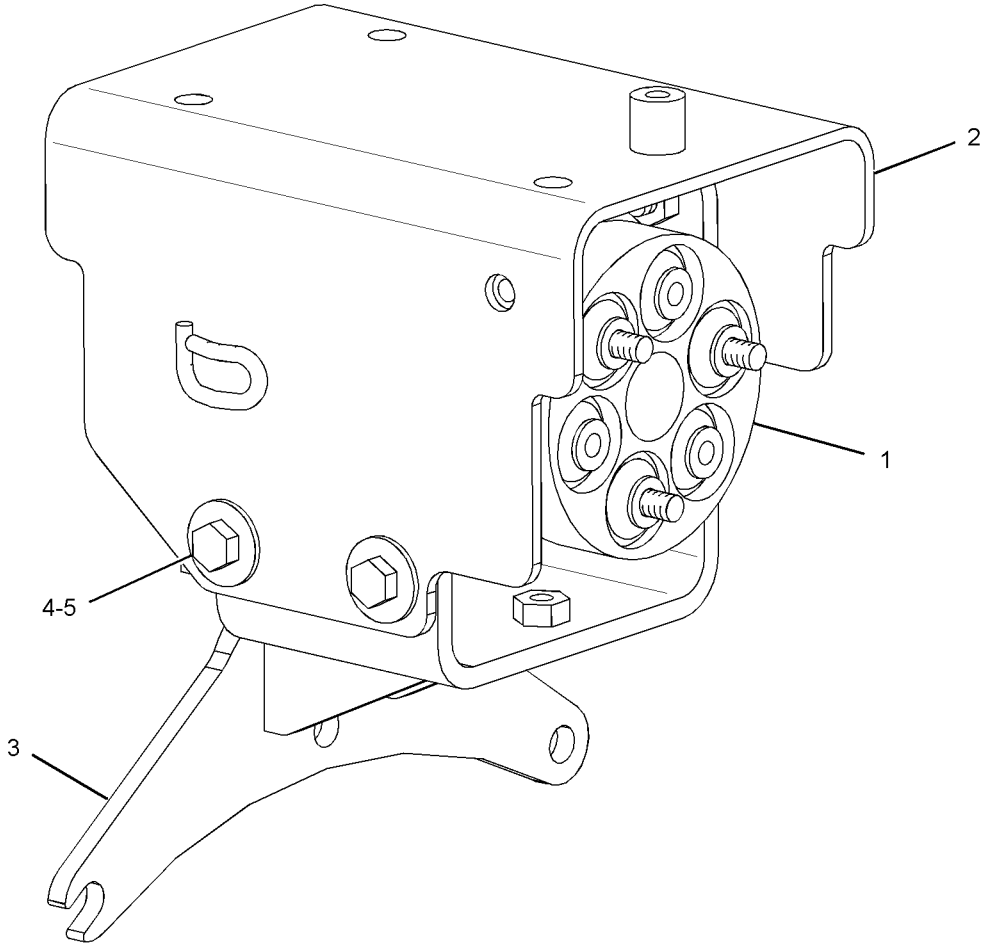

GRAPHIC #1 **<END>** g01362253

227-0924 COUPLING GP-PUMP

S/N: SMC1-UP; GCT1-UP

PART OF 225-1506 COUPLING & GUARD GP

SMCS-5062 **i02450605**

NOTE	REF NO	GRAPHIC REF	PART NUMBER	QTY	PART NAME 1 2 3 4 5 6 (PRODUCT LEVEL)	SEE PAGE
	1	1	**198-1883**	1	TUBE AS	
	2	1	**211-9087**	2	COUPLING AS	
					(EACH INCLUDES)	
		1	**6Y-2130**	3	BUSHING AS	
					(EACH INCLUDES)	
		1	**8E-5170**	1	SLEEVE	
		1	**211-9085**	3	BUSHING AS	
	3	1	**8T-4121**	12	WASHER-HARD (11X21X2.5-MM THK)	
M	4	1	**8T-4182**	6	BOLT (M10X1.5X45-MM)	
M	5	1	**8T-4185**	6	BOLT (M10X1.5X50-MM)	

M-METRIC PART

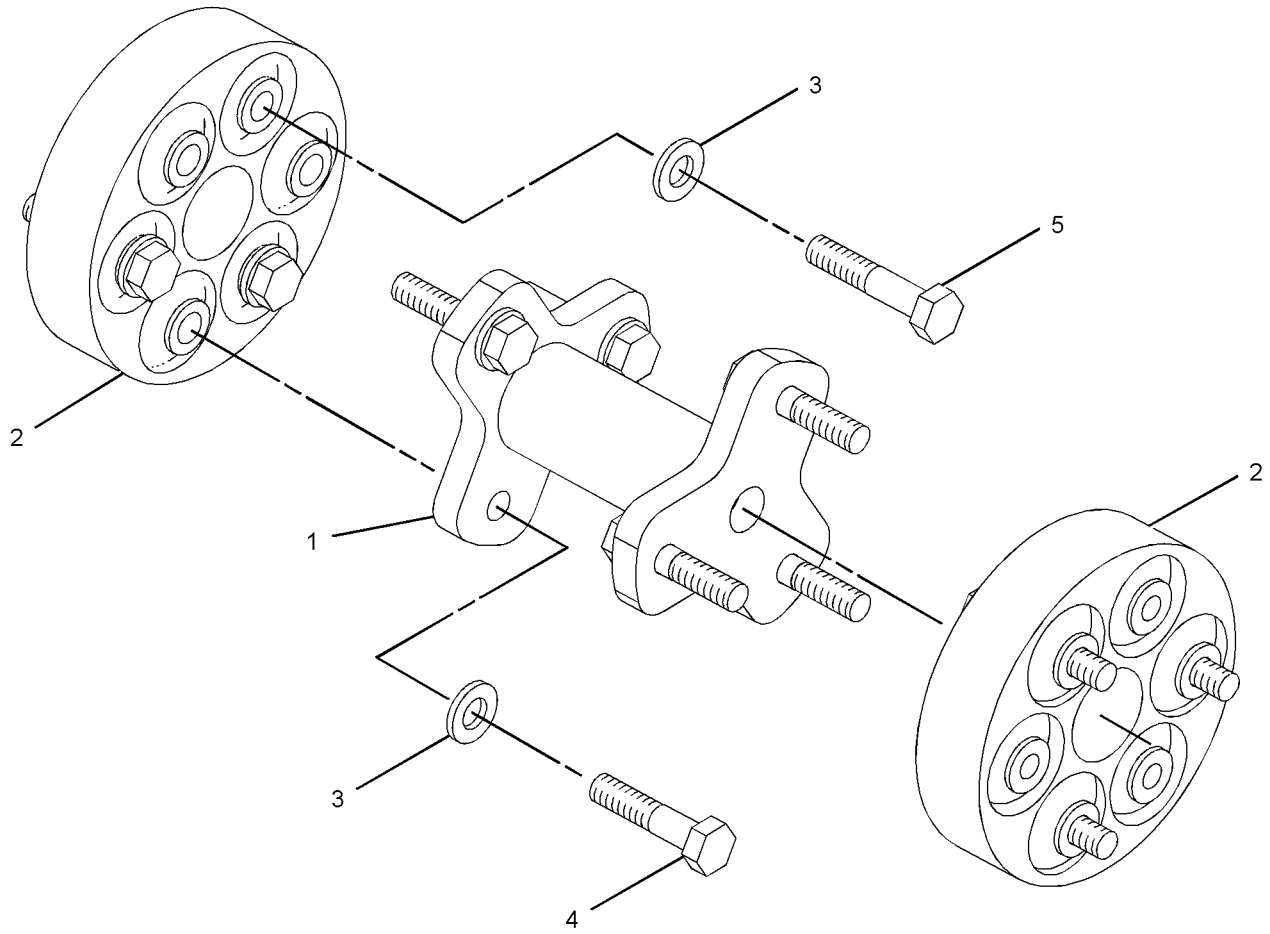

GRAPHIC #1 **<END>** g01208311

106-4150 DRAIN GP-ECOLOGY

S/N: SMC1-UP; GCT1-UP
PART OF 256-9988 DRAIN GP-ECOLOGY
AN ATTACHMENT

SMCS-3100 **i01065592**

NOTE	REF NO	GRAPHIC REF	PART NUMBER	QTY	PART NAME 1 2 3 4 5 6 (PRODUCT LEVEL)	SEE PAGE
	1	1	**4N-3808**	1	PIN-SPRING	
	2	1	**5P-9658**	1	SEAL-O-RING	
A	3	1	**2H-3931**	1	SEAL-O-RING (82.14MM ID)	

A-NOT PART OF THIS GROUP

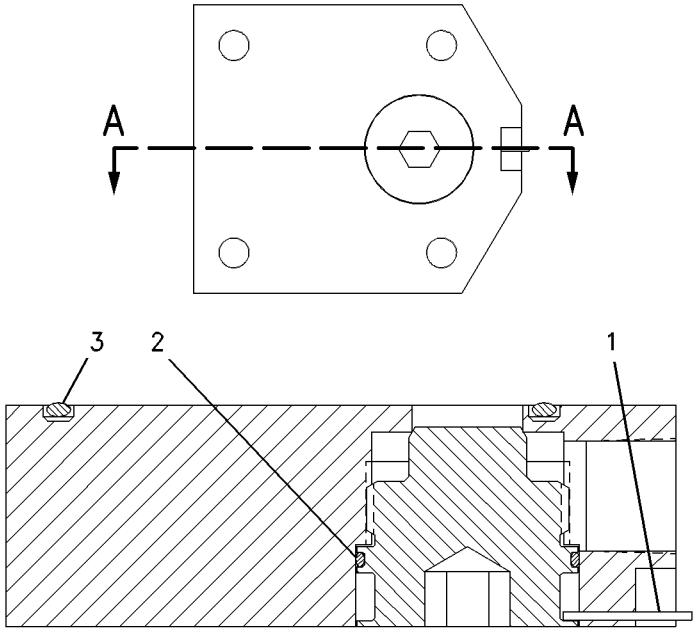

SECTION A-A

GRAPHIC #1 **<END>** g00543496

POWER TRAIN

256-9988 DRAIN GP-ECOLOGY

S/N: SMC1-UP; GCT1-UP

AN ATTACHMENT

SMCS-3100 **i02454291**

NOTE	REF NO	GRAPHIC REF	PART NUMBER	QTY	PART NAME 1 2 3 4 5 6 (PRODUCT LEVEL)	SEE PAGE
	1	1	**4B-7739**	1	PLUG-DRAIN (POWER TRAIN)	
	2	1	**8H-9819**	1	ADAPTER-PLUG	
Y	3	1	**106-4150**	1	DRAIN GP-ECOLOGY (POWER TRAIN)	279
	4	1	**2B-0858**	2	PLUG-PIPE	
	5	1	**2H-3931**	1	SEAL-O-RING	
	6	1	**8H-9818**	1	GASKET	
M	7	1	**8T-4136**	2	BOLT (M10X1.5X25-MM)	
M	8	1	**8T-4185**	4	BOLT (M10X1.5X50-MM)	

M-METRIC PART
Y-SEPARATE ILLUSTRATION

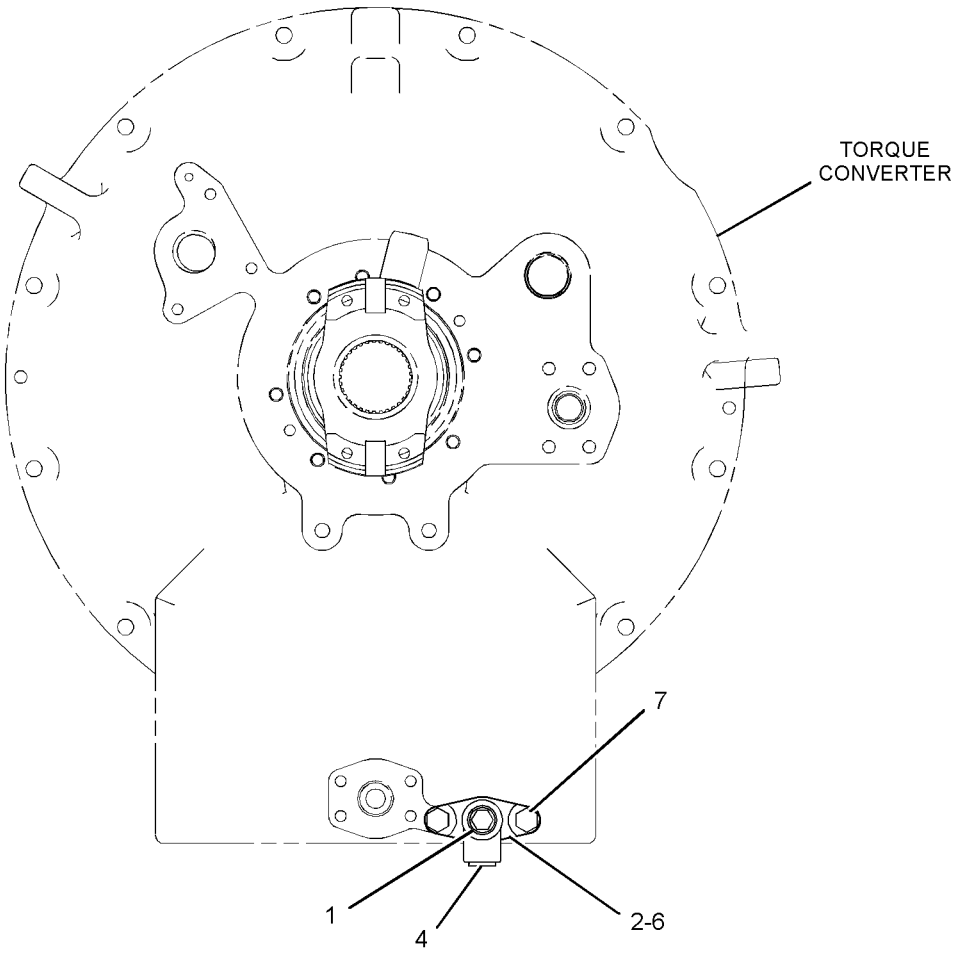

FRONT VIEW

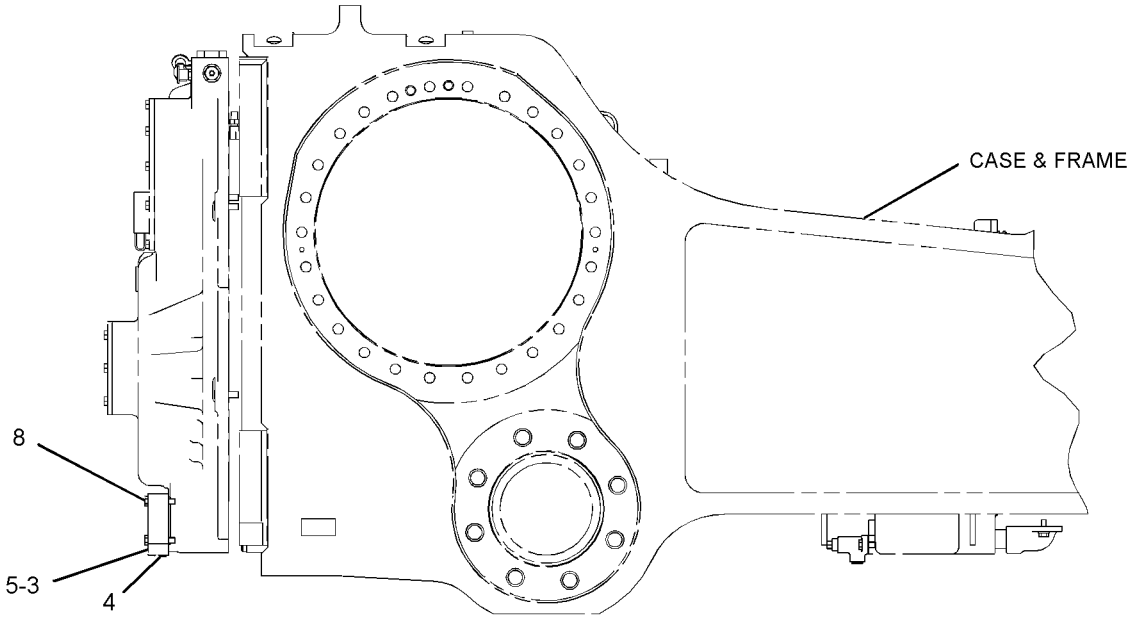

RIGHT SIDE VIEW

GRAPHIC #1 **<END>** g01209353

246-0599 DRIVE GP-PUMP–WATER

S/N: THX8900-UP

PART OF 282-3823, 282-3824, 282-3825, 282-3826, 301-5768 ENGINE AR

ALSO AN ATTACHMENT

SMCS-3108 **i02431510**

NOTE	REF NO	GRAPHIC REF	PART NUMBER	QTY	PART NAME 1 2 3 4 5 6 (PRODUCT LEVEL)	SEE PAGE
	1	1	**236-8240**	1	PULLEY	
M	2	1	**6V-2317**	4	BOLT (M8X1.25X30-MM)	
	3	1	**9M-1974**	4	WASHER-HARD (8.8X16X2-MM THK)	

M-METRIC PART

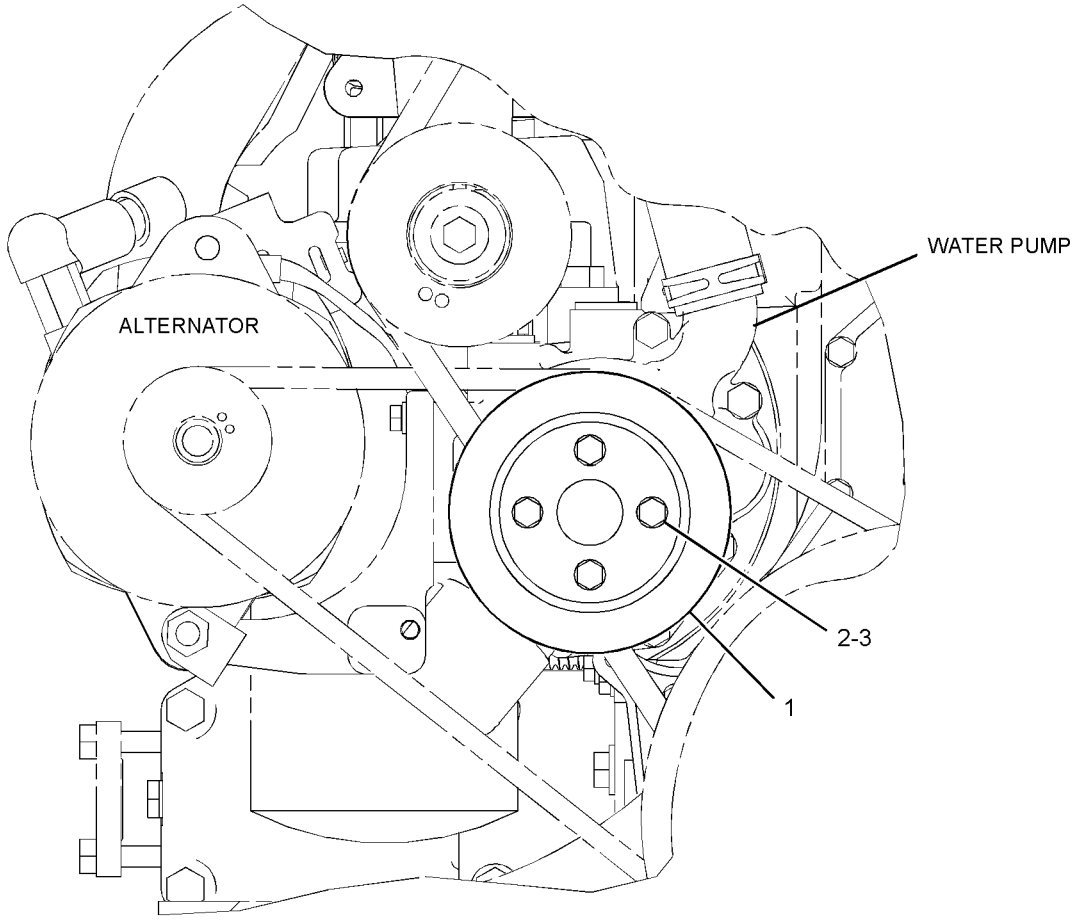

FRONT VIEW

GRAPHIC #1 **<END>** g01205602

235-5812 FILTER GP-OIL—BYPASS—POWER TRAIN

S/N: SMC1-UP; GCT1-UP

PART OF 269-2072 LINES GP-POWER TRAIN OIL

SMCS-3004, 3067 **i02588340**

NOTE	REF NO	GRAPHIC REF	PART NUMBER	QTY	PART NAME 1 2 3 4 5 6 (PRODUCT LEVEL)	SEE PAGE
	1	1	**1R-1809**	1	FILTER ELEMENT AS-OIL (ULTRA HIGH EFFICIENCY)	
		1	**130-0229**	1	SEAL-O-RING	
	2	1	**6V-0852**	1	CAP-DUST	
	3	1	**8C-3447**	1	CAP-DUST	
Y	4	1	*238-1029*	1	BASE GP-OIL FILTER	263
	5	1	**241-3352**	1	HOUSING AS (OIL FILTER)	
		1	**3J-1907**	1	SEAL-O-RING	
		1	**9S-8004**	1	PLUG-O-RING	
	6	1	**3J-1907**	1	SEAL-O-RING	
	7	1	**3J-7354**	1	SEAL-O-RING	
	8	1	**6V-3965**	1	FITTING-COUPLER	
	9	1	**8C-3446**	1	VALVE-FLUID SAMPLING	
	10	1	**130-0229**	1	SEAL-O-RING	

Y-SEPARATE ILLUSTRATION

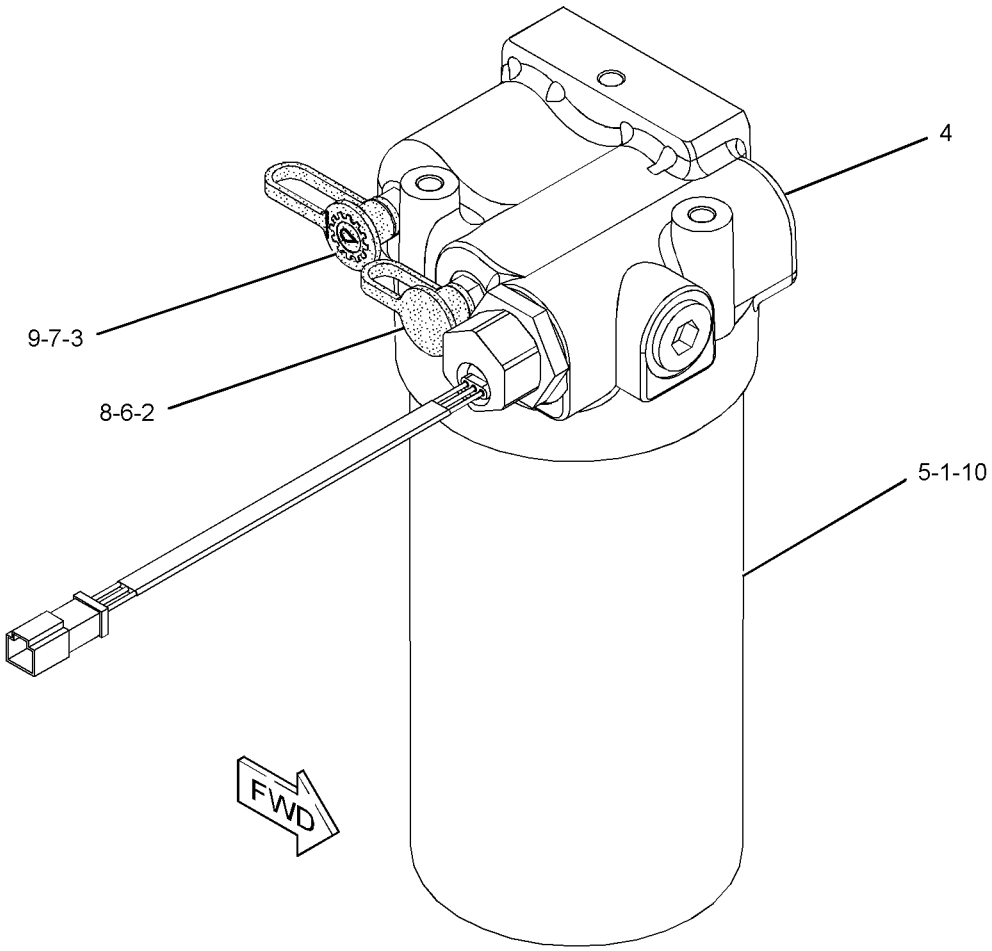

GRAPHIC #1 **<END>** g01217116

POWER TRAIN

260-6649 FINAL DRIVE GP

S/N: SMC1-UP; GCT1-UP

PART OF 269-2046 POWER TRAIN AR

SMCS-4050 **i02438200**

NOTE	REF NO	GRAPHIC REF	PART NUMBER	QTY	PART NAME 1 2 3 4 5 6 (PRODUCT LEVEL)	SEE PAGE
	1	1	**1B-3978**	6	CUP-BEARING (TAPERED ROLLER)	
	2	1	**1P-9005**	1	SEAL-O-RING	
	3	1	**2P-3696**	3	RETAINER	
	4	1	**2R-0098**	1	SEAL-O-RING	
	5	1	**2S-4078**	1	SEAL-O-RING	
	6	1	**3K-0360**	1	SEAL-O-RING	
	7	1	**6V-0327**	1	CUP-BEARING (TAPERED ROLLER)	
	8	1	**6V-0328**	1	CONE-BEARING (TAPERED ROLLER)	
	9	1	**6V-0329**	1	CONE-BEARING (TAPERED ROLLER)	
	10	1	**6V-0330**	1	CUP-BEARING (TAPERED ROLLER)	
	11	1	**6V-0439**	1	PLUG-MAGNETIC (FINAL DRIVE, OIL FILL)	
	12	1	**6Y-0859**	1	SEAL GP-DUO-CONE	
	12A	1	**1M-9011**	2	RING-TORIC	
Z	12B	1		2	SEAL-RING	
	13	1	**8E-2748**	1	HUB-REACTION	
	14	1	**8G-8844**	1	RING-LOCK	
	15	1	**8G-8845**	1	COVER	
	16	1	**9G-8638**	3	GEAR-PLANETARY (40-TEETH)	
	17	1	**9G-8639**	1	GEAR-RING (94-TEETH)	
	18	1	**9G-9175**	1	CARRIER	
	19	1	**9G-9180**	1	HUB-SPROCKET	
	20	1	**9G-9181**	1	RETAINER	
	21	1	**9G-9183**	3	SHAFT	
	22	1	**9H-3360**	1	SEAL-O-RING	
	23	1	**9X-7671**	1	SEAL-LIP TYPE	
	24	1	**156-4593**	6	CONE-BEARING (TAPERED ROLLER)	
Y	25	1	*188-0908*	1	SEGMENT GP-SPROCKET	313
	26	1	**260-6642**	1	SPINDLE	
	27	1	**2B-0947**	10	BOLT (1/2-13X2.25-IN)	
	28	1	**4L-6454**	3	BOLT (3/8-16X1-IN)	
	29	1	**7X-0346**	3	BOLT (5/8-11X2-IN)	
	30	1	**8T-4223**	2	WASHER-HARD (13.5X25.5X3-MM THK)	
	31	1	**8T-4896**	3	WASHER-HARD (10.2X18.5X2.5-MM THK)	
	32	1	**8T-4994**	33	WASHER-HARD (20X36.5X3.5-MM THK)	
	33	1	**8T-8919**	2	BOLT (1/2-13X1.75-IN)	
	34	1	**8T-9399**	33	BOLT (3/4-10X2.25-IN)	
	35	1	**9S-4185**	1	PLUG-O-RING (FINAL DRIVE, OIL DRAIN)	

Y-SEPARATE ILLUSTRATION
Z-NOT SERVICED SEPARATELY

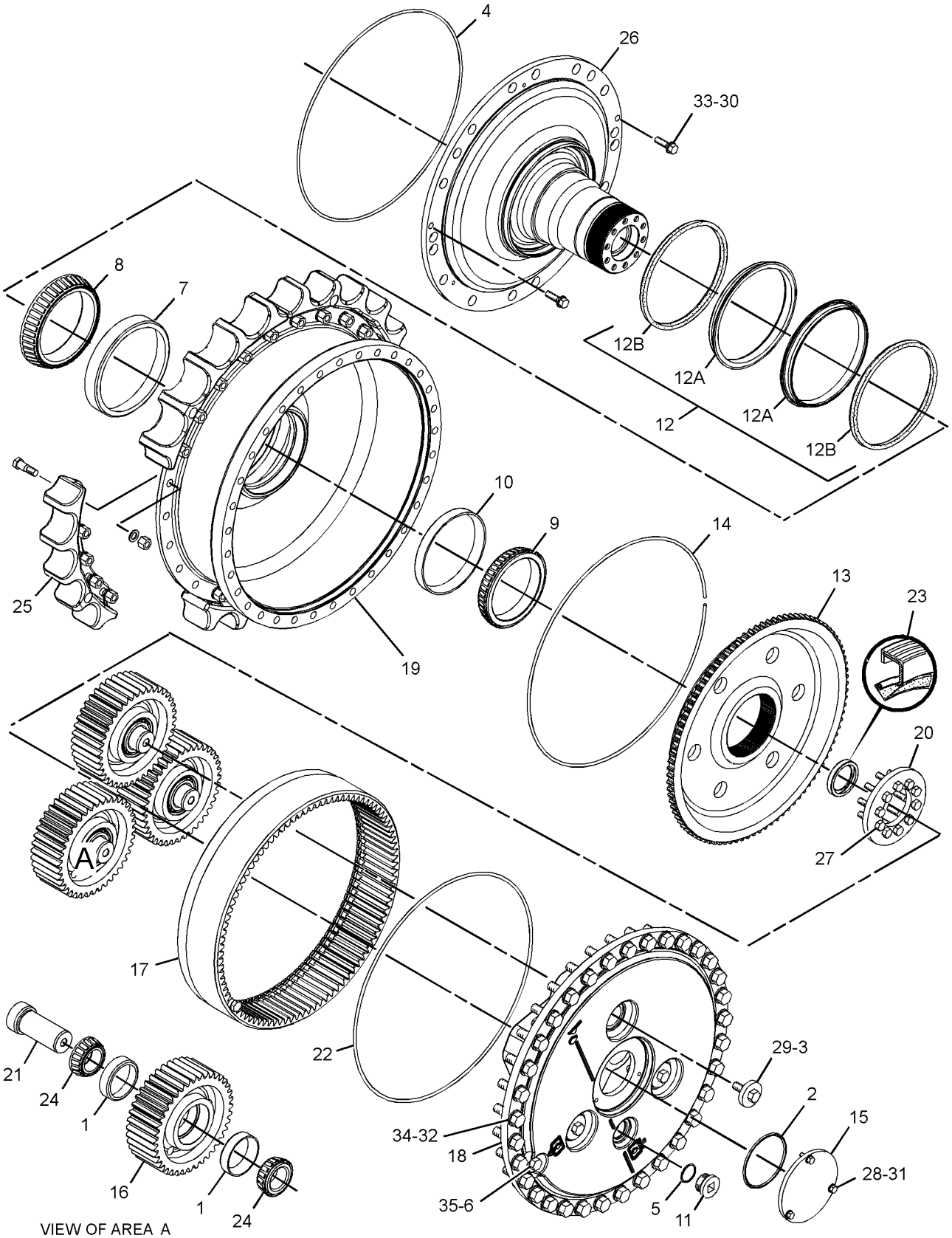

VIEW OF AREA A

GRAPHIC #1 **<END>** g01209832

260-6652 FINAL DRIVE GP—WASTE HANDLING

S/N: SMC1-UP; GCT1-UP
PART OF 262-0554 GUARD AR-FINAL DRIVE
AN ATTACHMENT

SMCS-4050 **i02456109**

NOTE	REF NO	GRAPHIC REF	PART NUMBER	QTY	PART NAME 1 2 3 4 5 6 (PRODUCT LEVEL)	SEE PAGE
	1	1	**1B-3978**	6	CUP-BEARING (TAPERED ROLLER)	
	2	1	**1P-9005**	1	SEAL-O-RING	
	3	1	**2P-3696**	3	RETAINER	
	4	1	**2R-0098**	1	SEAL-O-RING	
	5	1	**2S-4078**	1	SEAL-O-RING	
	6	1	**3K-0360**	1	SEAL-O-RING	
	7	1	**6V-0327**	1	CUP-BEARING (TAPERED ROLLER)	
	8	1	**6V-0328**	1	CONE-BEARING (TAPERED ROLLER)	
	9	1	**6V-0329**	1	CONE-BEARING (TAPERED ROLLER)	
	10	1	**6V-0330**	1	CUP-BEARING (TAPERED ROLLER)	
	11	1	**6V-0439**	1	PLUG-MAGNETIC (FINAL DRIVE, OIL FILL)	
	12	1	**6Y-0859**	1	SEAL GP-DUO-CONE	
Z	12A	1		2	SEAL-RING	
	12B	1	**1M-9011**	2	RING-TORIC	
	13	1	**8E-2748**	1	HUB-REACTION	
	14	1	**8G-8844**	1	RING-LOCK	
	15	1	**8G-8845**	1	COVER	
	16	1	**9G-8638**	3	GEAR-PLANETARY (40-TEETH)	
	17	1	**9G-8639**	1	GEAR-RING (94-TEETH)	
	18	1	**9G-9175**	1	CARRIER	
	19	1	**9G-9181**	1	RETAINER	
	20	1	**9G-9183**	3	SHAFT	
	21	1	**9H-3360**	1	SEAL-O-RING	
	22	1	**9X-7671**	1	SEAL-LIP TYPE	
	23	1	**137-4490**	2	RETAINER	
	24	1	**137-9810**	2	SEAL-PACKING	
	25	1	**156-4593**	6	CONE-BEARING (TAPERED ROLLER)	
	26	1	**180-7910**	1	HUB AS	
		1	**137-4488**	1	GUARD	
Y	27	1	*188-0908*	1	SEGMENT GP-SPROCKET	313
	28	1	**260-6644**	1	SPINDLE AS	
	29	1	**2B-0947**	10	BOLT (1/2-13X2.25-IN)	
	30	1	**4L-6454**	3	BOLT (3/8-16X1-IN)	
	31	1	**7X-0346**	3	BOLT (5/8-11X2-IN)	
	32	1	**8C-6561**	16	BOLT (5/16-18X1.375-IN)	
	33	1	**8T-4223**	2	WASHER-HARD (13.5X25.5X3-MM THK)	
	34	1	**8T-4224**	16	WASHER-HARD (8.8X16X2-MM THK)	
	35	1	**8T-4896**	3	WASHER-HARD (10.2X18.5X2.5-MM THK)	
	36	1	**8T-4994**	33	WASHER-HARD (20X36.5X3.5-MM THK)	
	37	1	**8T-8919**	2	BOLT (1/2-13X1.75-IN)	
	38	1	**8T-9399**	33	BOLT (3/4-10X2.25-IN)	
	39	1	**9S-4185**	1	PLUG-O-RING (FINAL DRIVE, OIL DRAIN)	

Y-SEPARATE ILLUSTRATION
Z-NOT SERVICED SEPARATELY

260-6652 FINAL DRIVE GP *(contd.)* **i02456109**

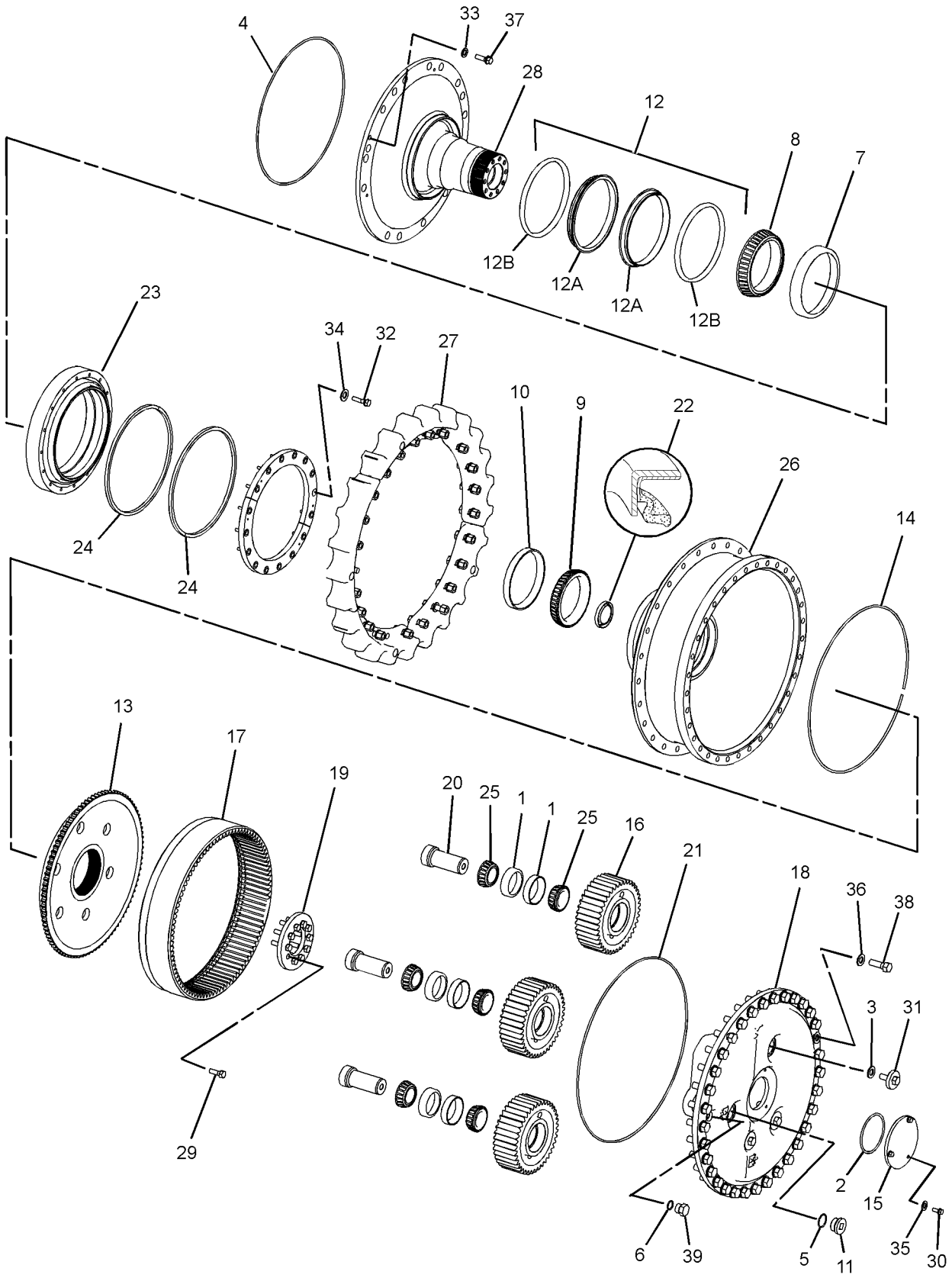

GRAPHIC #1 **<END>** g01210134

POWER TRAIN

244-2616 GEAR GP-BEVEL & TRANSFER

S/N: KKA1-UP

PART OF 220-1429 TRANSMISSION AR

SMCS-3011 **i02451035**

NOTE	REF NO	GRAPHIC REF	PART NUMBER	QTY	PART NAME 1 2 3 4 5 6 (PRODUCT LEVEL)	SEE PAGE
	1	1	**190-2277**	1	CASE AS	
		1	**2D-6642**	1	BALL	
B	2	1	**9P-1922**	1	SHIM PACK (INCLUDES 14-SHIMS)	
	3	1	**9W-2992**	1	CAGE-BEARING	
	4	1	**6S-2828**	2	CUP-BEARING	
	5	1	**6S-2829**	2	CONE-BEARING	
	6	1	**248-0849**	1	GEAR-TRANSFER (50-TEETH)	
	7	1	**9W-3660**	1	PINION-BEVEL (20-TEETH)	
B	8	1	**9P-1921**	1	SHIM PACK (INCLUDES 14-SHIMS)	
	9	1	**6I-8511**	1	CAGE-BEARING	
	10	1	**248-0848**	1	GEAR-TRANSFER (51-TEETH)	
	11	1	**7H-7628**	1	BEARING	
	12	1	**8D-1817**	2	CUP-BEARING	
	13	1	**8D-1819**	2	CONE-BEARING	
	14	1	**216-0273**	1	SEAL-LIP TYPE	
	15	1	**7T-1474**	1	BRACKET-ROLLER	
	16	1	**6T-3852**	2	ROLLER	
	17	1	**6T-3853**	2	SLEEVE	
	18	1	**6I-8507**	1	PLATE-RETAINER	
	19	1	**5M-2894**	4	WASHER-HARD (10.2X18.5X2.5-MM THK)	
	20	1	**0S-1591**	4	BOLT (3/8-16X1.5-IN)	
	21	1	**7D-1649**	2	WASHER-HARD (13.5X32X5-MM THK)	
	22	1	**1A-5822**	2	BOLT (1/2-13X2.75-IN)	
	23	1	**7T-1475**	1	BRACKET-ROLLER	
	24	1	**5P-8247**	16	WASHER-HARD (17X32X3.5-MM THK)	
	25	1	**1D-4601**	4	BOLT (5/8-11X8.5-IN)	
	26	1,2	**5P-8245**	24	WASHER-HARD (13.5X25.5X3-MM THK)	
	27	1,2	**7B-3235**	24	BOLT (1/2-13X1.375-IN)	
	28	1	**0L-1169**	12	BOLT (5/8-11X3.75-IN)	
	29	2	**9W-5150**	1	SHAFT-BEVEL GEAR	
	30	2	**9P-1925**	1	GEAR-BEVEL (35-TEETH)	
	31	2	**5P-7592**	1	RACE-ROLLER BEARING	
	32	2	**4H-0019**	1	RACE & ROLLER AS	
	33	2	**6J-3473**	1	RING-SNAP	
	34	2	**7T-9946**	1	CAGE-BEARING	
	35	2	**9G-0832**	1	DOWEL	
	36	2	**0S-1897**	12	BOLT (3/4-16X2.25-IN)	
	37	2	**1S-1860**	12	NUT-TRACK (3/4-16-THD)	
	38	2	**1P-3935**	2	CONE-BEARING	
	39	2	**9W-8612**	1	SPACER-BEARING	
	40	2	**6T-0364**	1	RING-RETAINING	
	41	2	**1P-3934**	2	CUP-BEARING	
	42	2	**9P-7072**	1	WASHER (90.6X115X2.5-MM THK)	
	43	2	**9W-1570**	1	CAGE AS-BEARING	
		2	**4B-9880**	1	BALL	
		2	**9W-1569**	1	PLUG-ORIFICE	
	44	2	**6V-2404**	1	LOCKWASHER-BEARING	
	45	2	**1L-6957**	1	LOCKNUT-BEARING	
B	46	2	**9P-1478**	2	SHIM PACK (INCLUDES 14-SHIMS)	
	47	1	**3T-6742**	1	RETAINER	
	48	1	**0S-1569**	1	BOLT (5/8-11X4-IN)	

B-USE AS REQUIRED

REFER TO ALL ILLUSTRATIONS OF
THIS GROUP FOR AUXILIARY VIEWS

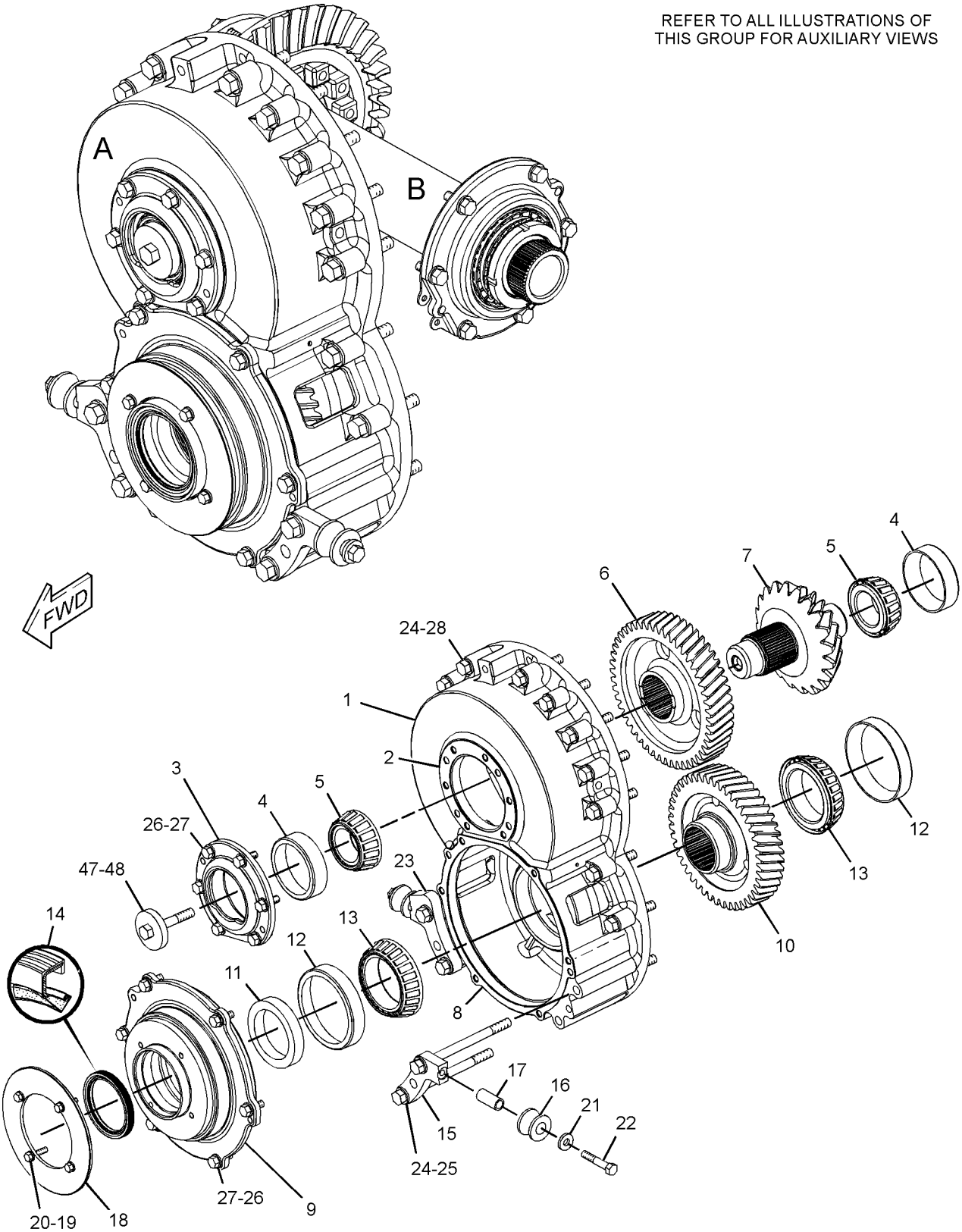

VIEW OF AREA A

GRAPHIC #1

g01210762

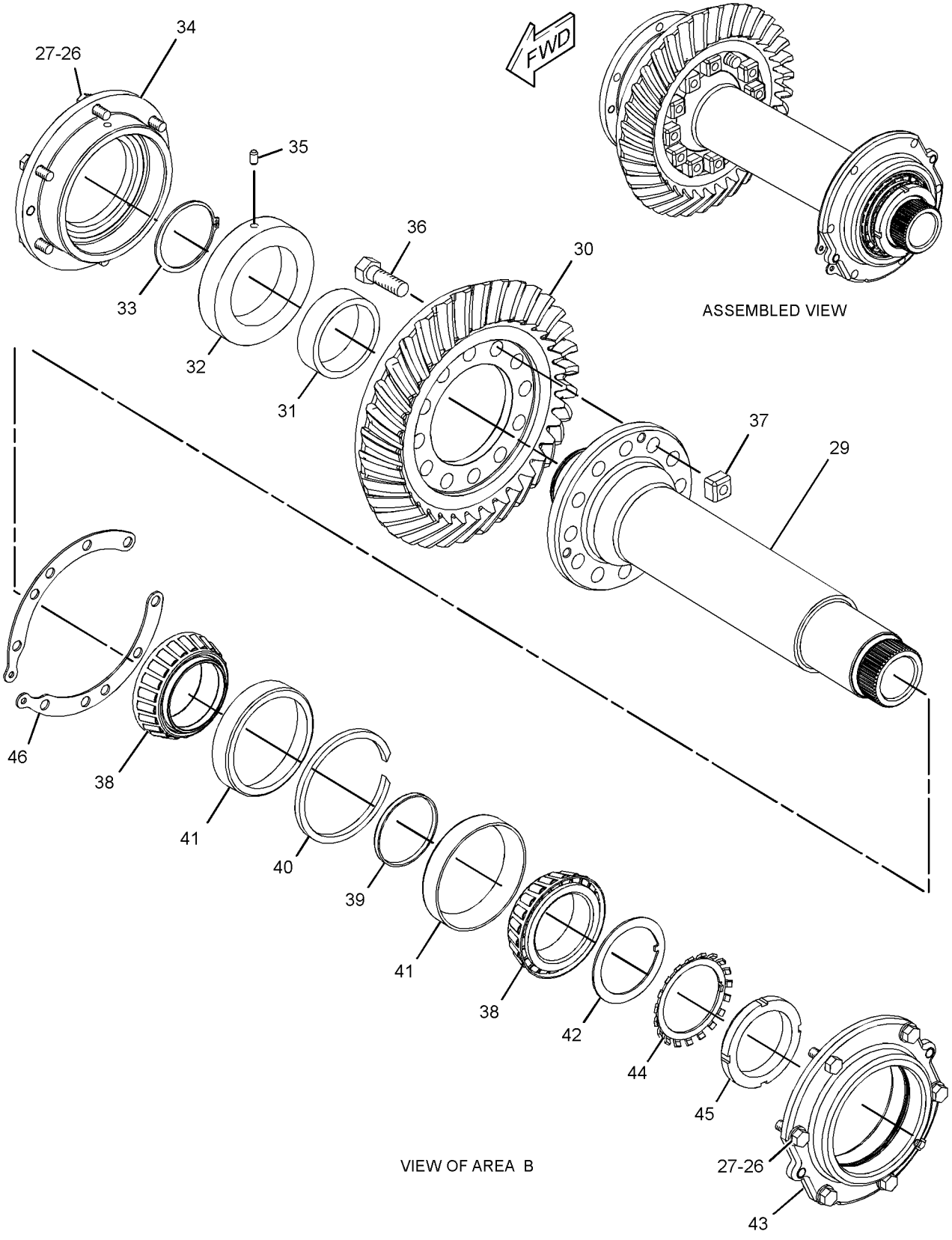

GRAPHIC #2 **<END>** g01210763

269-2072 LINES GP-POWER TRAIN OIL

S/N: SMC1-UP; GCT1-UP

PART OF 269-2046 POWER TRAIN AR

SMCS-3016 **i02752133**

NOTE	REF NO	GRAPHIC REF	PART NUMBER	QTY	PART NAME 1 2 3 4 5 6 (PRODUCT LEVEL)	SEE PAGE
	1	2	**1R-1809**	1	FILTER ELEMENT AS-OIL (ULTRA HIGH EFFICIENCY)	
		2	**130-0229**	1	SEAL-O-RING	
	2	4	**3T-5301**	1	TUBE	
	3	4	**3T-5302**	1	FLANGE	
	4	4	**3T-6471**	1	SCREEN AS (TORQUE CONVERTER SCAVENGE)	
		4	**3T-6469**	1	WASHER (19X26X1.6-MM THK)	
	5	1,3	**6V-0852**	3	CAP-DUST	
	6	4	**6V-5387**	2	PLATE-ORIFICE	
I	7	1	**8E-5502**	1	HOSE AS	
	8	4	**9D-7924**	3	MOUNTING	
	9	1	**9G-5127**	1	BREATHER AS (TRANSMISSION)	
	10	1	**106-2105**	1	ELBOW	
	11	2	**203-2789**	1	BRACKET AS	
Y	12	1	**220-1418**	1	VALVE GP-RELIEF (TORQUE CONVERTER OUTLET)	326
Y	13	4	*231-4166*	1	SCREEN GP-MAGNETIC (TRANSMISSION)	312
	14	1	**235-4511**	1	HOSE AS	
	15	1	**235-4513**	1	HOSE AS	
	16	1	**235-4514**	1	BRACKET	
	17	1	**235-4515**	1	TUBE AS	
	18	1	**235-4516**	1	TUBE AS	
	19	3	**235-4826**	1	BRACKET AS	
Y	20	1	**235-5812**	1	FILTER GP-OIL (POWER TRAIN)	283
	21	1	**241-5634**	1	TUBE AS	
	22	1	**241-5635**	1	GAUGE AS-OIL LEVEL (TRANSMISSION CASE)	
Y	23	1	*255-6934*	1	ACCUMULATOR GP (CHARGED)	260
	24	1	*260-9187*	3	CONNECTOR AS	
					(EACH INCLUDES)	
		1	**6V-8397**	1	SEAL-O-RING	
		1	**8T-9358**	1	CONNECTOR	
I	25	1	**263-3346**	1	HOSE AS	
I	26	1	**263-3348**	1	HOSE AS	
Y	27	4	**263-9949**	1	MANIFOLD GP-TRANSMISSION (LUBE DISTRIBUTION)	298
Y	28	2	*270-1762*	1	PUMP GP-GEAR (TRANSMISSION, TORQUE CONVERTER)	308
I	29	1	**270-3435**	1	HOSE AS	
I	30	1	**270-3438**	1	HOSE AS	
I	31	1	**287-0414**	1	HOSE AS	
I	32	1	**287-0415**	1	HOSE AS	
I	33	1	**294-3345**	1	HOSE AS	
I	34	1	**294-3346**	1	HOSE AS	
	35	1	**299-4008**	1	HOSE AS	
	36	4	**299-4040**	1	TUBE AS	
	37	4	**299-5660**	1	SPACER	
	38	2	**033-8248**	2	CLIP	
M	39	3	**109-3001**	1	STUD-TAPERLOCK (M10X1.5X65-MM)	
	40	4	*148-8318*	1	CONNECTOR AS	
		4	**6V-8634**	1	CONNECTOR	
		4	**6V-8397**	1	SEAL-O-RING	
		4	**3K-0360**	1	SEAL-O-RING	
	41	3	*148-8335*	2	CONNECTOR AS	
					(EACH INCLUDES)	
		3	**6V-8635**	1	CONNECTOR	
		3	**7M-8485**	1	SEAL-O-RING	
		3	**5K-9090**	1	SEAL-O-RING	
	42	1,4	*148-8336*	2	CONNECTOR AS	
					(EACH INCLUDES)	
		1,4	**3J-1907**	1	SEAL-O-RING	

269-2072 LINES GP-POWER TRAIN OIL *(contd.)* i02752133

NOTE	REF NO	GRAPHIC REF	PART NUMBER	QTY	PART NAME 1 2 3 4 5 6 (PRODUCT LEVEL)	SEE PAGE
		1,4	**6V-8397**	1	SEAL-O-RING	
		1,4	**6V-8636**	1	CONNECTOR	
	43	2	*148-8368*	2	ELBOW AS	
					(EACH INCLUDES)	
		2	**3J-1907**	1	SEAL-O-RING	
		2	**4J-5477**	1	SEAL-O-RING	
		2	**6V-8627**	1	ELBOW	
	44	4	*148-8374*	1	ELBOW AS	
		4	**3K-0360**	1	SEAL-O-RING	
		4	**6V-8397**	1	SEAL-O-RING	
		4	**6V-8723**	1	ELBOW	
	45	1	*148-8381*	1	ELBOW AS	
		1	**3D-2824**	1	SEAL-O-RING	
		1	**6V-8398**	1	SEAL-O-RING	
		1	**8T-5429**	1	ELBOW	
	46	1	*148-8426*	1	TEE GP	
		1	**3K-0360**	1	SEAL-O-RING	
		1	**6V-8397**	1	SEAL-O-RING	
		1	**6V-8398**	1	SEAL-O-RING	
		1	**8T-6696**	1	TEE-O-RING	
	47	3	*150-3065*	1	ADAPTER AS	
		3	**3J-1907**	1	SEAL-O-RING	
		3	**6V-0484**	1	ADAPTER-O-RING	
	48	1	*153-6243*	1	TEE AS	
		1	**2S-4078**	1	SEAL-O-RING	
		1	**5K-9090**	1	SEAL-O-RING	
		1	**6V-9746**	1	SEAL-O-RING	
		1	**8T-1120**	1	TEE-O-RING PORT	
	49	1	*153-6252*	1	CONNECTOR AS	
		1	**6V-8398**	1	SEAL-O-RING	
		1	**7M-8485**	1	SEAL-O-RING	
		1	**9X-8408**	1	CONNECTOR	
	50	4	**162-9523**	2	GROMMET	
	51	1,3	*164-5567*	3	FITTING AS (QUICK DISCONNECT, MALE)	
					(EACH INCLUDES)	
		1,3	**3J-1907**	1	SEAL-O-RING	
		1,3	**6V-3965**	1	FITTING-COUPLER	
	52	1	**180-4362**	2	SEAL-RECTANGULAR	
	53	4	**1F-7567**	1	CLIP	
	54	2	**1H-5728**	1	SEAL-O-RING	
	55	2,3,4	**1P-4578**	10	FLANGE-HALF	
	56	4	**1V-7753**	1	SPACER (0.546X0.841X1.75-IN THK)	
	57	2	**2K-8257**	1	SEAL-O-RING	
	58	2,4	**3G-4214**	4	CLIP (SLOT)	
	59	2,4	**3G-4218**	4	CLIP (TAB)	
	60	1	**3J-1907**	1	SEAL-O-RING	
	61	1,2,3	**4K-6177**	5	CLIP	
	62	1	**5P-7085**	1	SEAL-RECTANGULAR	
	63	3	**5P-7468**	2	CLIP (SLOT)	
	64	3	**5P-7469**	2	CLIP (TAB)	
	65	4	**6L-1649**	2	SEAL-O-RING	
	66	4	**6L-5359**	1	SEAL-O-RING	
	67	4	**6V-1572**	2	CLIP (SLOT)	
	68	4	**6V-1573**	2	CLIP (TAB)	
	69	1	**6V-9168**	3	NUT (11/16-16-THD)	
	70	1	**7D-1649**	2	WASHER-HARD (13.5X32X5-MM THK)	
	71	2	**7G-3832**	1	GROMMET	
	72	2	**7G-3833**	1	CLIP (TAB)	
	73	2	**7G-3834**	1	CLIP (SLOT)	

269-2072 LINES GP-POWER TRAIN OIL *(contd.)* i02752133

NOTE	REF NO	GRAPHIC REF	PART NUMBER	QTY	PART NAME 1 2 3 4 5 6 (PRODUCT LEVEL)	SEE PAGE
	74	3	**7S-8920**	1	CLIP (SLOT)	
	75	3	**7S-8921**	1	CLIP (TAB)	
	76	4	**7X-7729**	2	WASHER (11X25X3-MM THK)	
	77	2	**8C-3206**	2	FLANGE-HALF	
	78	1,4	**8M-4986**	9	SEAL-O-RING	
	79	1	**8M-4987**	3	SEAL-O-RING	
	80	2	**8M-5254**	4	SEAL-O-RING	
	81	1	**8M-8157**	1	SEAL-O-RING	
	82	4	**8S-0023**	1	CLIP (SLOT)	
	83	4	**8S-0024**	1	CLIP (TAB)	
	84	2,3	**8T-1893**	3	CLIP (SLOT)	
	85	2,3	**8T-1894**	3	CLIP (TAB)	
	86	1,2,3,4	**8T-4121**	58	WASHER-HARD (11X21X2.5-MM THK)	
M	87	2,3,4	**8T-4133**	6	NUT (M10X1.5-THD)	
M	88	1,2,3,4	**8T-4136**	13	BOLT (M10X1.5X25-MM)	
M	89	1	**8T-4137**	1	BOLT (M10X1.5X20-MM)	
M	90	1	**8T-4172**	3	BOLT (M10X1.5X80-MM)	
M	91	4	**8T-4176**	2	BOLT (M12X1.75X90-MM)	
M	92	4	**8T-4178**	4	BOLT (M10X1.5X90-MM)	
M	93	1	**8T-4184**	2	BOLT (M12X1.75X45-MM)	
M	94	2	**8T-4186**	4	BOLT (M10X1.5X40-MM)	
M	95	4	**8T-4191**	1	BOLT (M10X1.5X16-MM)	
M	96	2,3	**8T-4195**	5	BOLT (M10X1.5X30-MM)	
M	97	2,3,4	**8T-4196**	16	BOLT (M10X1.5X35-MM)	
	98	2,4	**8T-4223**	15	WASHER-HARD (13.5X25.5X3-MM THK)	
	99	4	**8T-4226**	6	WASHER-PLATED (10.5X45X3-MM THK)	
M	100	4	**8T-4648**	1	BOLT (M12X1.75X70-MM)	
	101	4	**8T-4896**	4	WASHER-HARD (10.2X18.5X2.5-MM THK)	
M	102	2	**8T-4956**	4	BOLT (M12X1.75X35-MM)	
M	103	1,2	**8T-5005**	8	BOLT (M10X1.5X70-MM)	
M	104	4	**8T-6466**	3	BOLT (M10X1.5X60-MM)	
M	105	2	**8T-6868**	8	BOLT (M12X1.75X80-MM)	
	106	3	**8T-7087**	2	GROMMET (34X60X62-MM)	
	107	1	**9X-8257**	6	WASHER (17.5X30X3.5-MM THK)	

I-REFER TO HYDRAULIC INFORMATION SYSTEM
M-METRIC PART
Y-SEPARATE ILLUSTRATION

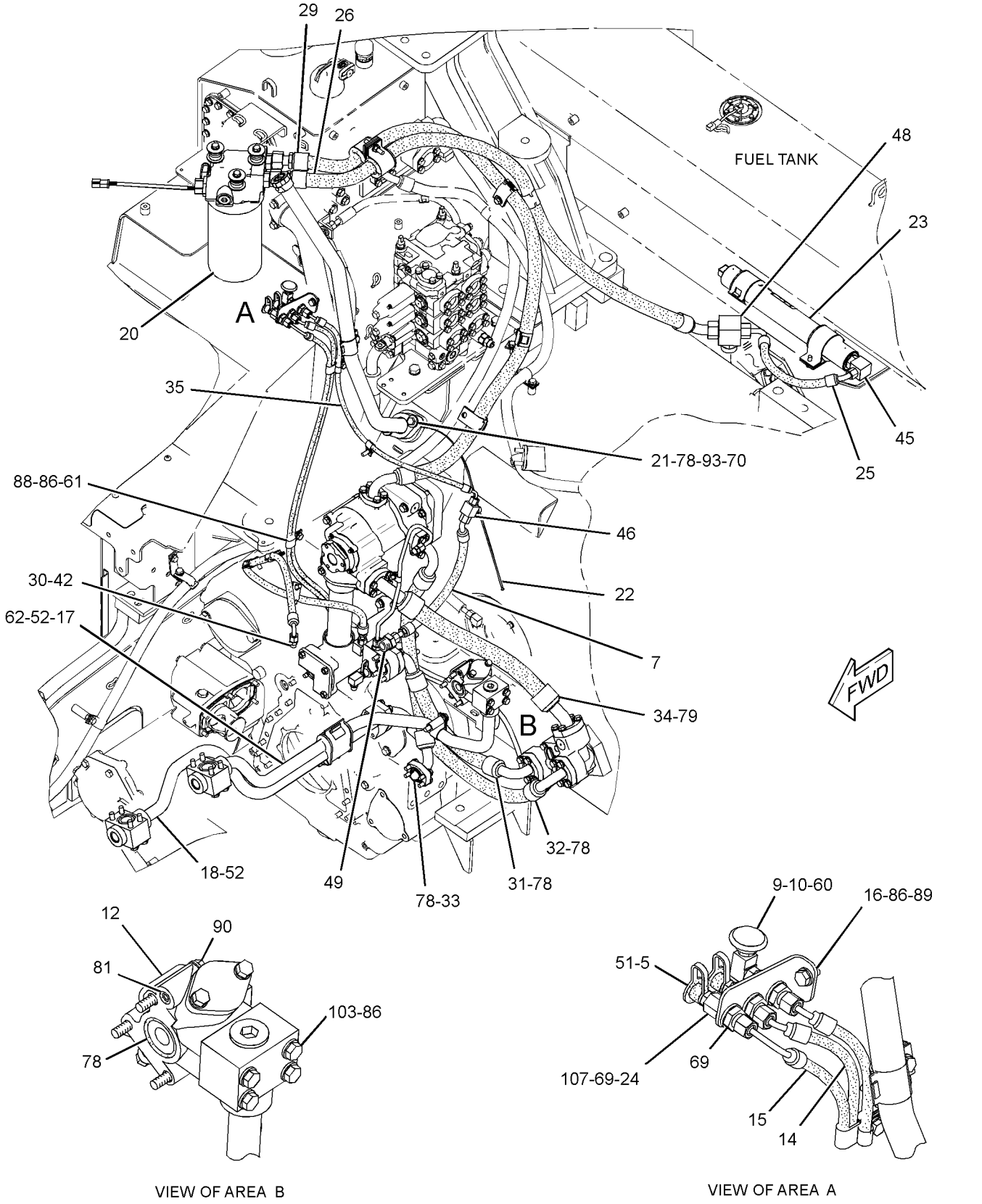

VIEW OF AREA B

VIEW OF AREA A

GRAPHIC #1

g01361026

REFER TO ALL ILLUSTRATIONS OF THIS GROUP FOR AUXILIARY VIEWS

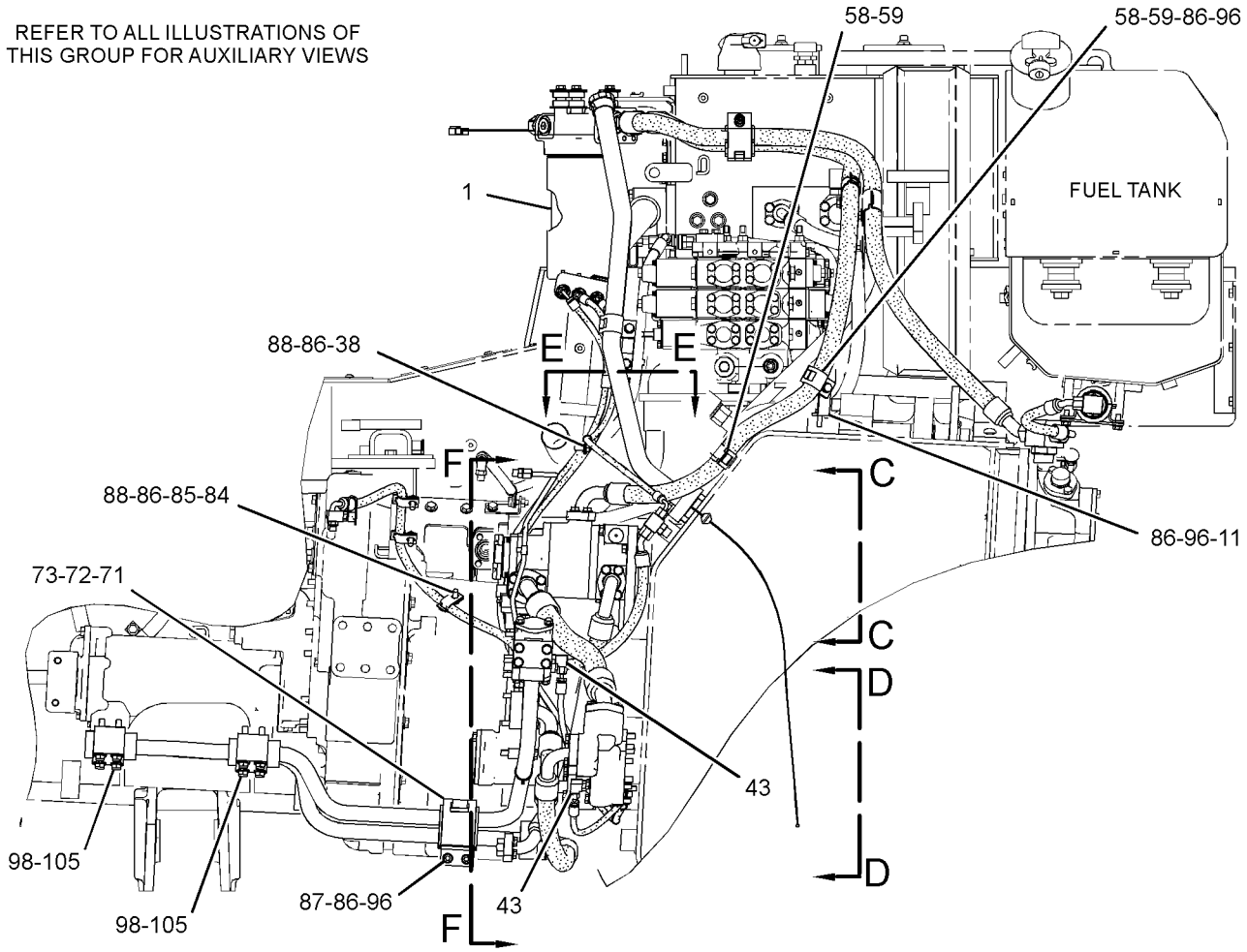

LEFT SIDE VIEW

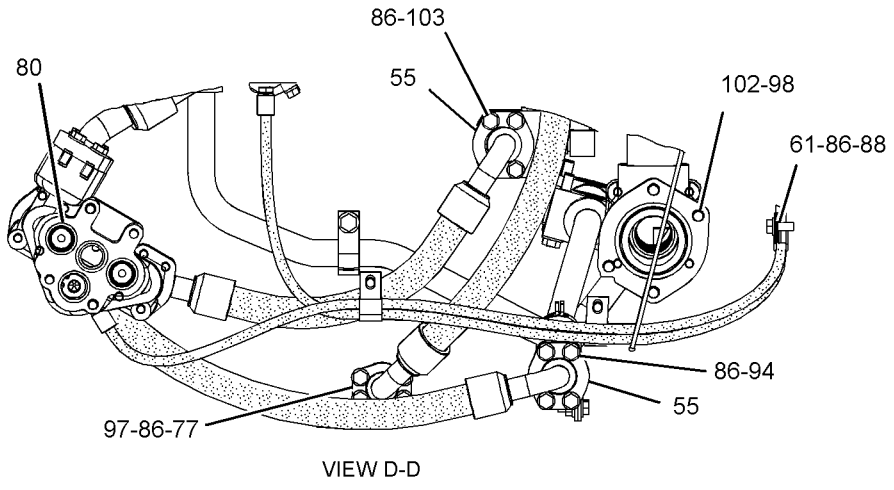

VIEW D-D

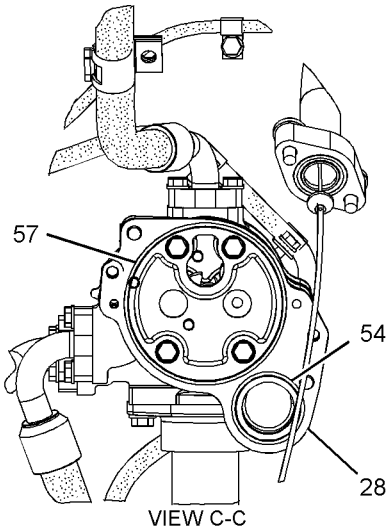

VIEW C-C

GRAPHIC #2

g01361036

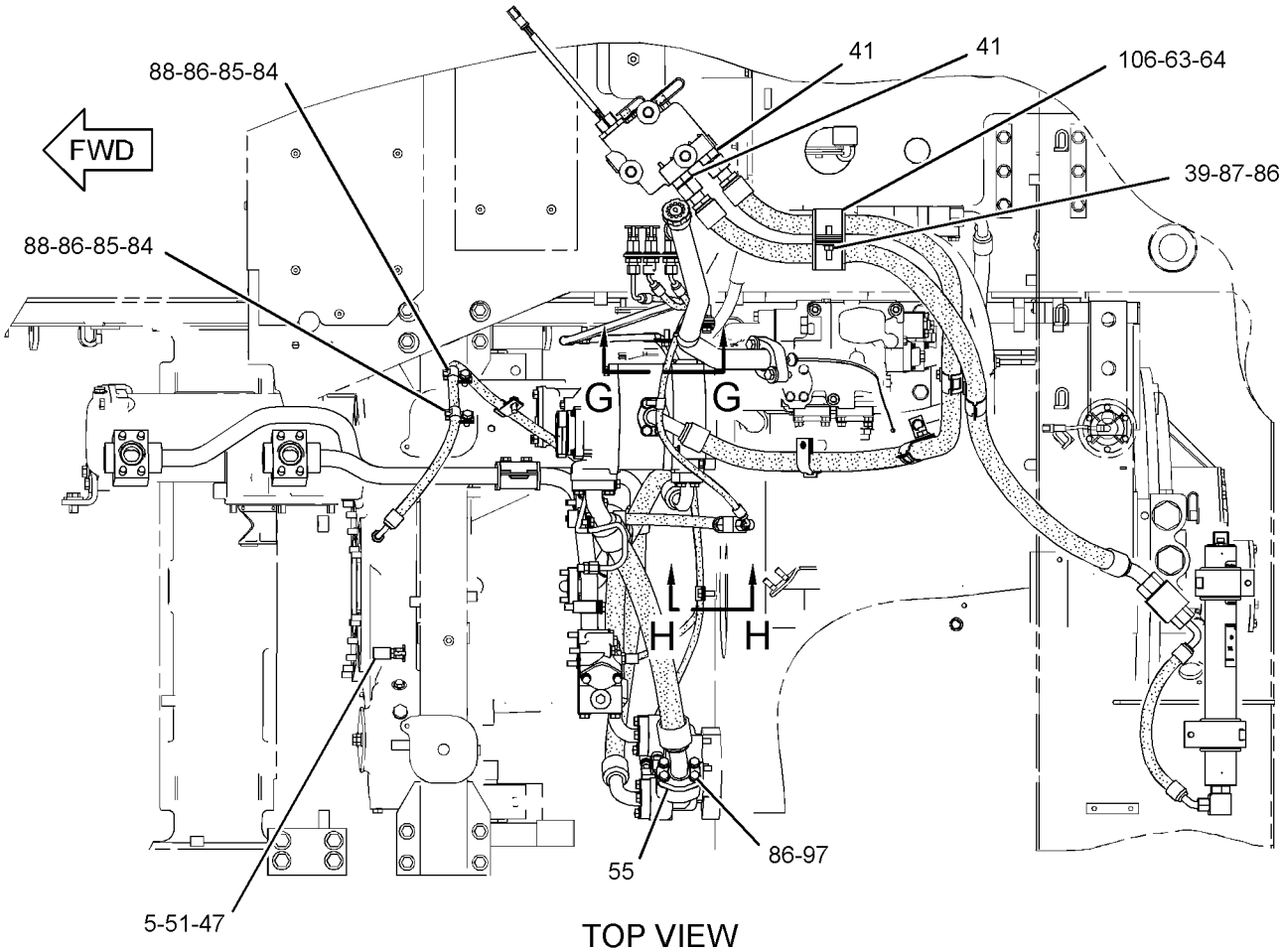

TOP VIEW

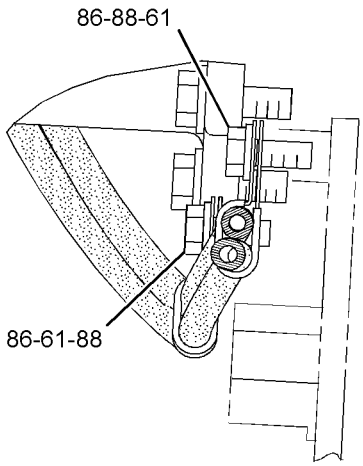

SECTION H-H

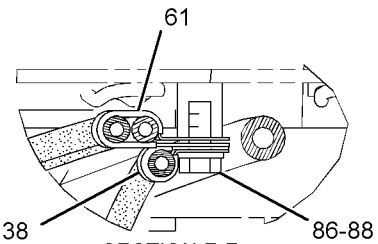

SECTION E-E

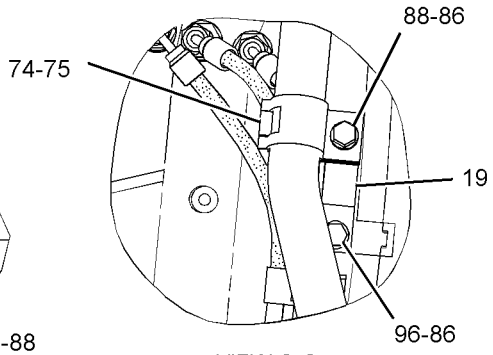

VIEW G-G

GRAPHIC #3

g01361028

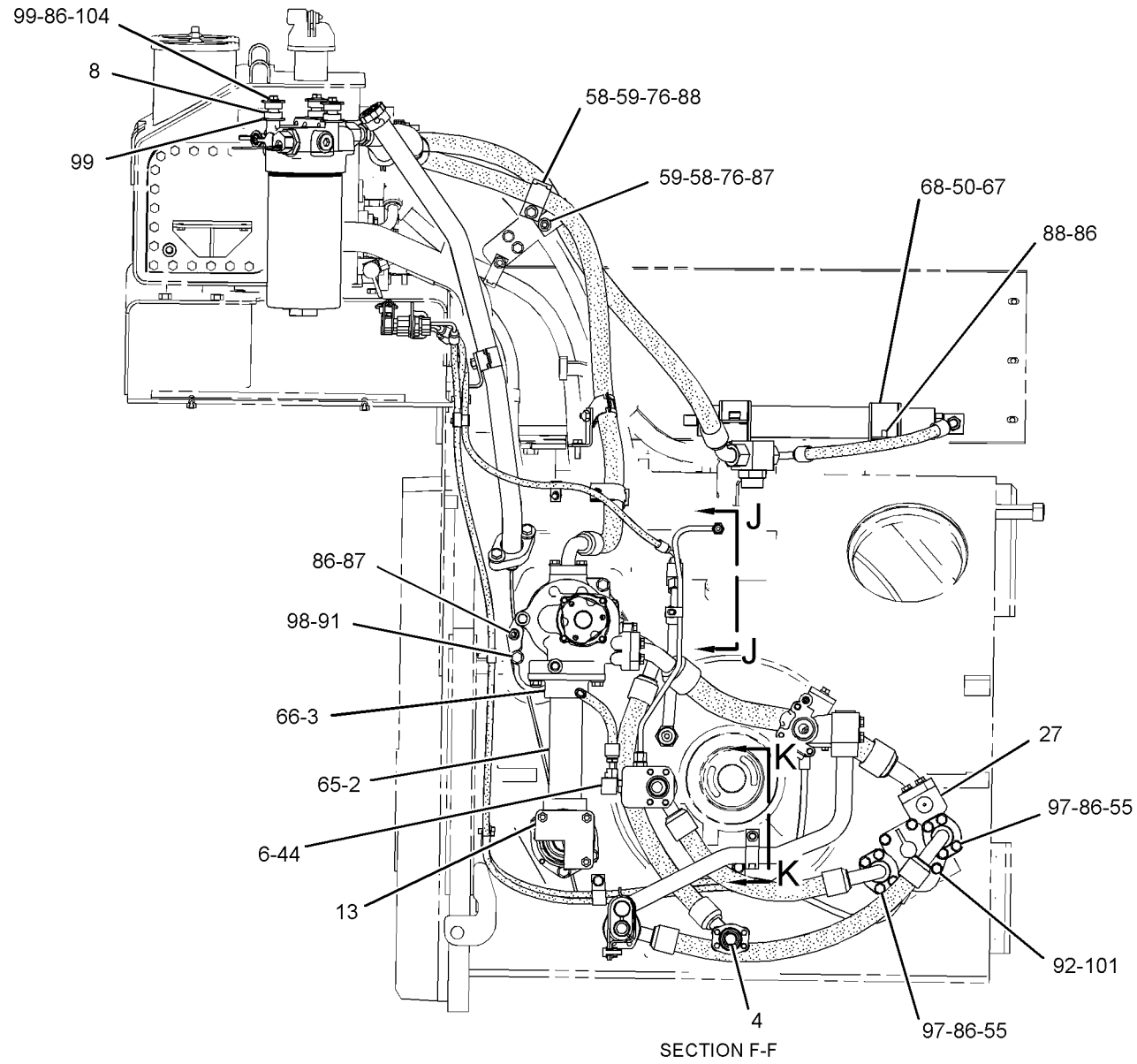

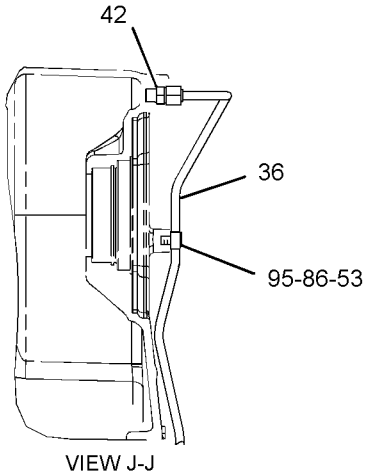

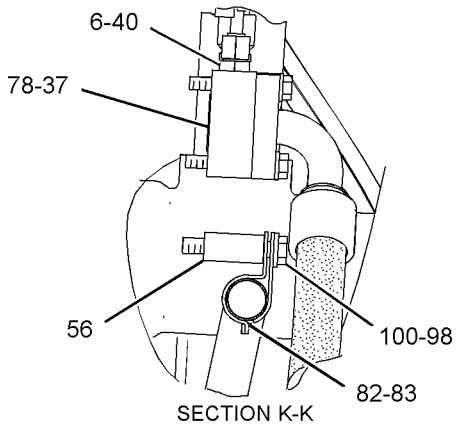

GRAPHIC #4 **<END>** g01360274

263-9949 MANIFOLD GP-TRANSMISSION

S/N: SMC1-UP; GCT1-UP

PART OF 269-2072 LINES GP-POWER TRAIN OIL

SMCS-5264 **i02438121**

NOTE	REF NO	GRAPHIC REF	PART NUMBER	QTY	PART NAME 1 2 3 4 5 6 (PRODUCT LEVEL)	SEE PAGE
	1	1	**6V-0852**	1	CAP-DUST	
	2	1	**8C-3428**	1	RING-RETAINING	
	3	1	**124-6655**	2	ORIFICE	
	4	1	**148-1928**	1	VALVE-RELIEF	
	5	1	**247-2959**	1	MANIFOLD	
	6	1	**250-8466**	1	ORIFICE	
	7	1	**263-9950**	1	RETAINER	
	8	1	**3J-1907**	1	SEAL-O-RING	
	9	1	**6V-3965**	1	FITTING-COUPLER	
	10	1	**9X-4609**	1	SEAL-O-RING	

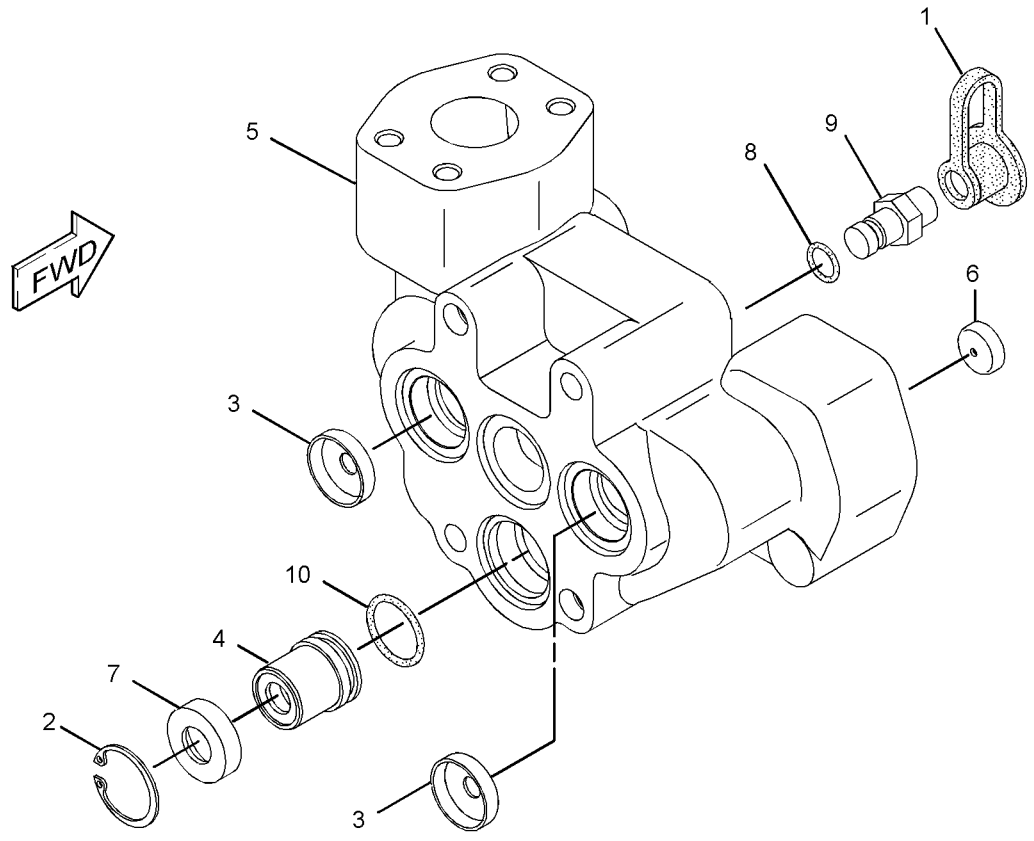

GRAPHIC #1 **<END>** g01208798

259-3119 MOUNTING GP-FINAL DRIVE

S/N: SMC1-UP; GCT1-UP

PART OF 269-2046 POWER TRAIN AR

SMCS-4050 **i02438205**

NOTE	REF NO	GRAPHIC REF	PART NUMBER	QTY	PART NAME 1 2 3 4 5 6 (PRODUCT LEVEL)	SEE PAGE
	1	1	**219-4481**	32	BOLT (M22X2.5X85-MM)	
	2	1	**6F-6673**	4	SEAL-O-RING	
	3	1	**8C-6913**	32	WASHER-HARD (24X41.5X4-MM THK)	
	4	1	**8D-4771**	2	SEAL-O-RING	
M	5	1	**8T-4182**	4	BOLT (M10X1.5X45-MM)	
	6	1	**9X-2027**	4	WASHER (11X18X2-MM THK)	

M-METRIC PART

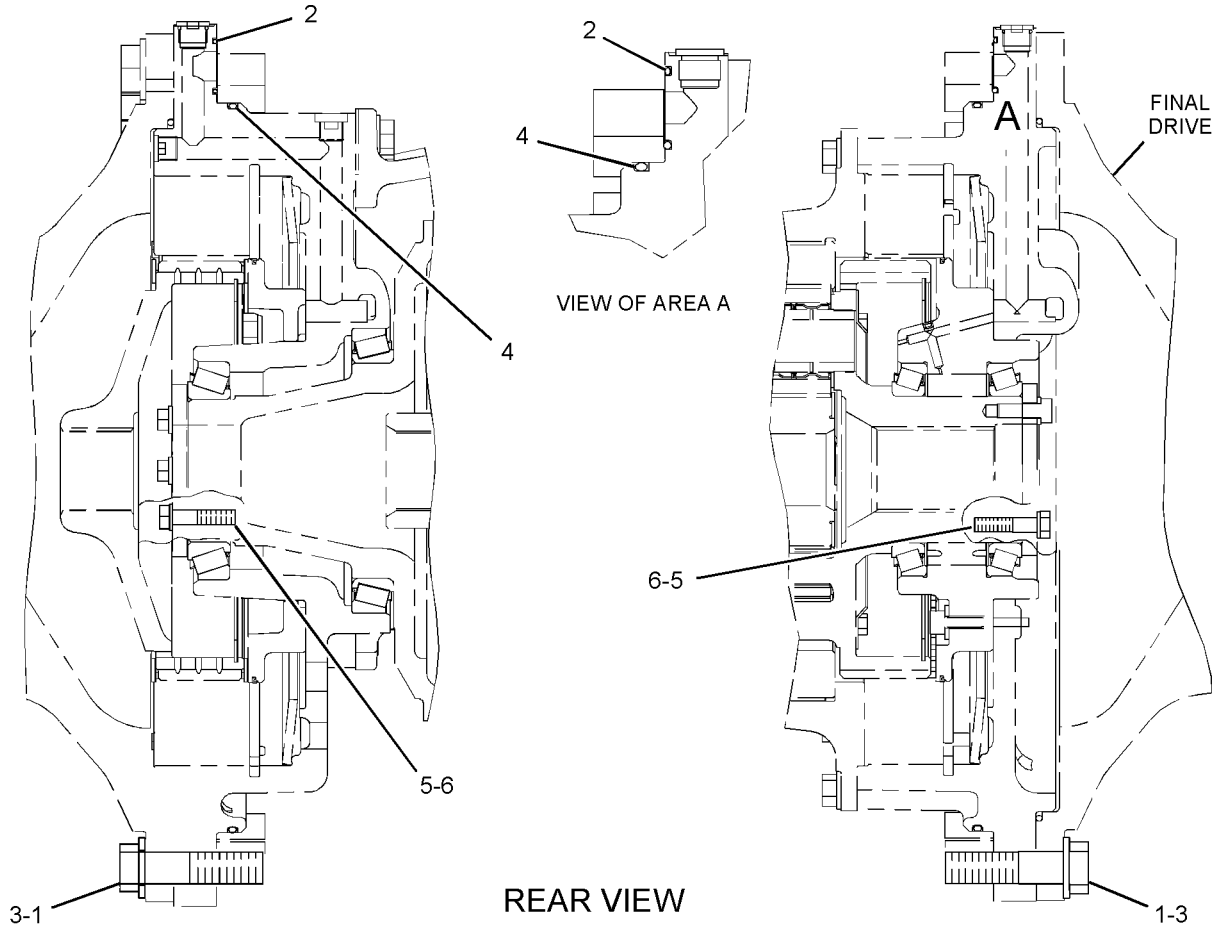

GRAPHIC #1

<END>

g01207792

227-0165 MOUNTING GP-TRANSMISSION

S/N: SMC1-UP; GCT1-UP

PART OF 269-2046 POWER TRAIN AR

SMCS-3082 **i02438193**

NOTE	REF NO	GRAPHIC REF	PART NUMBER	QTY	PART NAME 1 2 3 4 5 6 (PRODUCT LEVEL)	SEE PAGE
	1	1	**8G-9880**	2	TUBE AS	
	2	1	**1M-9011**	1	RING-TORIC	
	3	1	**2D-6506**	1	SEAL-O-RING	
	4	1	**8M-4390**	1	SEAL-O-RING	
	5	1	**8T-4121**	8	WASHER-HARD (11X21X2.5-MM THK)	
M	6	1	**6V-7744**	4	LOCKNUT (M10X1.15-THD)	
M	7	1	**8T-4196**	4	BOLT (M10X1.5X35-MM)	
	8	1	**8T-4223**	22	WASHER-HARD (13.5X25.5X3-MM THK)	
M	9	1	**8T-4648**	19	BOLT (M12X1.75X70-MM)	
M	10	1	**8T-5041**	3	BOLT (M12X1.75X120-MM)	
	11	1	**9M-7002**	2	SEAL-O-RING	

M-METRIC PART

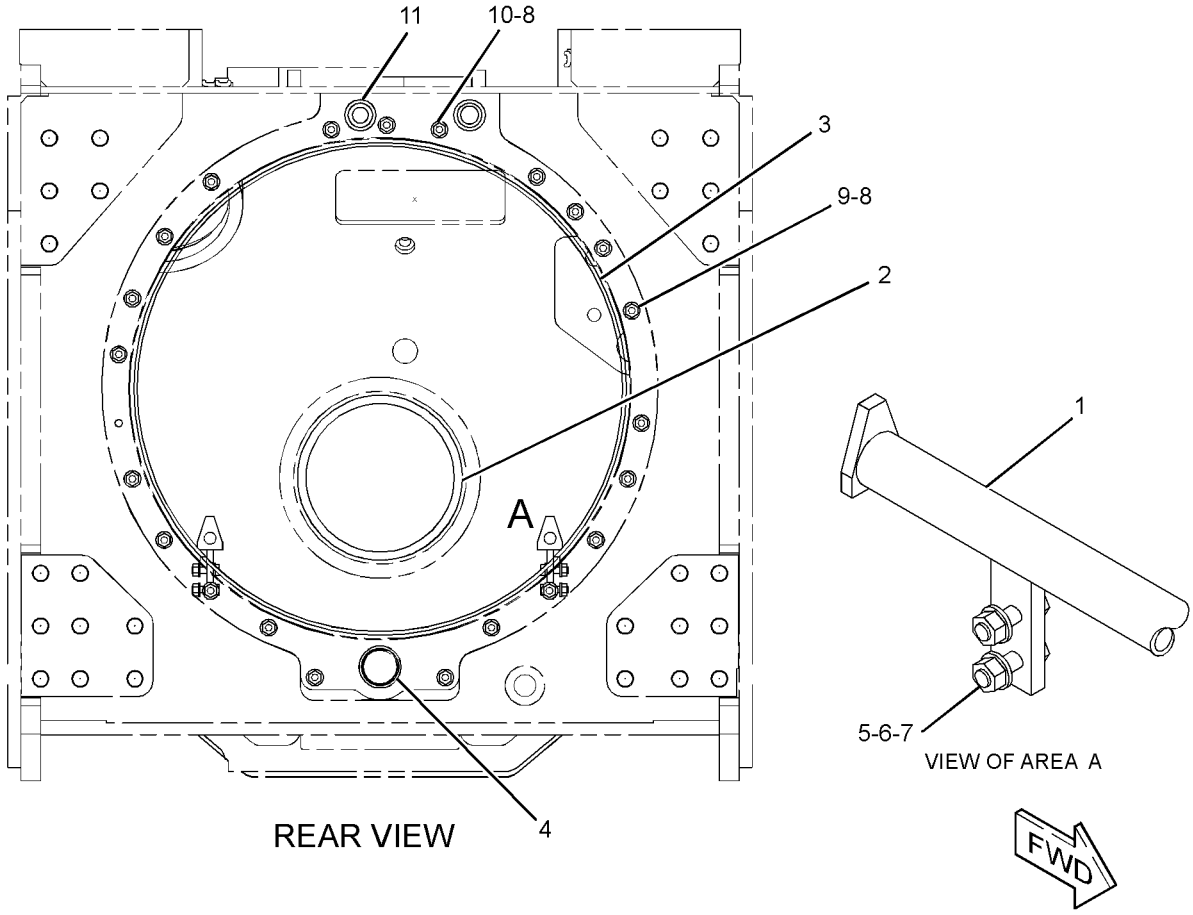

GRAPHIC #1 **<END>** g01206341

POWER TRAIN

220-1403 PLANETARY GP-TRANSMISSION

S/N: KKA1-UP

PART OF 220-1429 TRANSMISSION AR

SMCS-3160 **i02451017**

NOTE	REF NO	GRAPHIC REF	PART NUMBER	QTY	PART NAME 1 2 3 4 5 6 (PRODUCT LEVEL)	SEE PAGE
	1	4	**3T-4377**	2	SEAL-RING	
	2	2	**4M-9592**	20	SPRING	
	3	4	**5D-2989**	3	BEARING	
	4	3	**5M-6126**	6	BEARING AS-ROLLER	
	5	2	**5P-3930**	3	BEARING AS-ROLLER	
	6	1	**5P-8194**	1	RING-RETAINING	
	7	2	**6I-8500**	3	PLATE-CLUTCH	
	8	4	**6T-7882**	3	GEAR-PLANETARY (25-TEETH)	
	9	2,3	**6V-0473**	3	RING-RETAINING	
	10	1	**6V-2478**	1	RING-RETAINING	
	11	4	**6Y-1602**	1	COUPLING	
	12	4	**6Y-4819**	1	CARRIER-PLANETARY	
	13	4	**6Y-4831**	1	PLATE AS	
		4	**5H-6202**	2	PIN	
		4	**7M-5130**	1	PIN-SPRING	
	14	2	**6Y-5911**	5	DISC-FRICTION	
	15	1	**6Y-5912**	4	DISC-FRICTION	
	16	3	**7G-2516**	6	GEAR-PLANETARY (24-TEETH)	
	17	1	**7G-2830**	2	RING-SEAL	
	18	3	**7G-6355**	1	GEAR-RING (90-TEETH)	
	19	2	**7G-7218**	1	CARRIER-PLANETARY	
	20	1	**7G-7724**	1	PISTON-CLUTCH	
	21	4	**7H-7658**	10	SPRING	
	22	3	**7T-3950**	1	GEAR (83-TEETH)	
	23	4	**7T-9272**	1	GEAR-SUN (34-TEETH)	
	24	2	**7T-9370**	1	GEAR-SUN (51-TEETH)	
	25	2	**8E-8299**	6	DISC-THRUST	
	26	3	**8E-8304**	12	DISC-THRUST	
	27	4	**8E-8305**	6	DISC-THRUST	
	28	2	**8P-1892**	1	PISTON-CLUTCH	
	29	2	**8P-1916**	3	GEAR-PLANETARY (20-TEETH)	
	30	1	**8P-1964**	3	PLATE-CLUTCH	
R	31	3,4	**8P-2051**	6	PLATE-CLUTCH	
	32	3	**8P-2053**	1	SEAL-RING	
	33	2,4	**8P-9507**	2	PISTON-CLUTCH	
	34	3	**9G-0284**	1	HOUSING-CLUTCH	
	35	3	**9G-0285**	1	PISTON-CLUTCH	
	36	2	**9G-0289**	3	SHAFT-PLANETARY	
	37	1	**9G-0290**	1	HUB-CLUTCH	
	38	1	**9G-8020**	1	PLATE-RETAINER	
	39	3	**9M-4355**	10	DAMPER-BOLT	
	40	3,4	**9P-7390**	8	DISC AS-FRICTION	
	41	3	**9P-7757**	1	GEAR-SUN (42-TEETH)	
	42	2	**9P-8614**	1	GEAR-RING (90-TEETH)	
	43	4	**9P-8623**	3	SHAFT-PLANETARY	
	44	3	**9P-8626**	1	GEAR-SUN (42-TEETH)	
	45	4	**9W-0645**	1	TUBE AS	
	46	1	**9W-8269**	1	PLATE-REACTION	
	47	1	**9W-8270**	1	GEAR-RING (90-TEETH)	
	48	1	**105-8183**	1	HOUSING AS	
		1	**6B-6863**	1	PIN-SPRING	
		1	**6P-7704**	1	CARRIER-RING	
	49	3	**112-4511**	3	PIN-SPRING	
	50	3	**112-5585**	3	SHAFT-PLANETARY	
	51	3	**112-8041**	1	CARRIER-PLANETARY	
	52	2	**117-7826**	1	HOUSING AS-CLUTCH	

220-1403 **PLANETARY GP-TRANSMISSION** *(contd.)* **i02451017**

NOTE	REF NO	GRAPHIC REF	PART NUMBER	QTY	PART NAME 1 2 3 4 5 6 (PRODUCT LEVEL)	SEE PAGE
		2	**1A-2223**	4	DOWEL	
	53	4	**131-4091**	1	SEAL-RING	
	54	2,3,4	**144-4284**	3	RING-LOCK	
	55	1	**144-7878**	1	MANIFOLD	
	56	1	**191-8304**	1	SENSOR GP-SPEED (TRANSMISSION OUTPUT 1)	
	57	1	**191-8305**	1	SENSOR GP-SPEED (TRANSMISSION OUTPUT 2)	
	58	4	**220-1411**	1	HOUSING AS	
		4	**3F-5022**	1	PLUG-CUP	
	59	4	**231-8855**	1	SHAFT AS-INPUT	
		4	**156-4406**	1	PLUG-PIPE	
	60	3	**234-9994**	1	SHAFT AS-OUTPUT	
		3	**3T-8729**	1	BEARING-SLEEVE	
		3	**9G-6744**	1	BEARING-SLEEVE	
	61	1	**237-2209**	1	ROTOR	
	62	1	**237-9601**	1	BRACKET AS	
		1	**8M-8489**	2	DOWEL	
	63	4	**030-8538**	1	BOLT (1/2-13X1.25-IN)	
	64	3,4	**061-6711**	2	RING-RETAINING	
	65	4	**068-8093**	2	RING-RETAINING	
	66	1	**0S-1619**	2	BOLT (3/8-16X3-IN)	
	67	1	**117-1385**	2	SEAL-O-RING	
	68	3	**1A-5183**	2	BOLT (3/8-16X4.75-IN)	
	69	1	**1L-7388**	1	RING-RETAINING	
	70	1	**1M-8657**	2	BOLT (1/2-13X15.69-IN)	
	71	1	**2H-3755**	2	BOLT (5/16-18X0.43-IN)	
	72	1	**3E-4352**	2	WASHER-HARD (8.8X20.5X2.5-MM THK)	
	73	2,3	**3K-2511**	10	DOWEL-REACTION	
	74	2,4	**3S-2708**	6	PIN-SPRING	
	75	1	**4M-2442**	8	BOLT (1/2-13X12.32-IN)	
	76	1	**5M-2894**	2	WASHER-HARD (10.2X18.5X2.5-MM THK)	
	77	2,4	**5M-3038**	2	SEAL-O-RING	
	78	1	**5P-5045**	1	BALL BEARING	
	79	1,3	**5P-5296**	4	RING-RETAINING	
	80	1	**5P-5297**	1	RING-RETAINING (EXTERNAL)	
	81	1,4	**5P-8245**	11	WASHER-HARD (13.5X25.5X3-MM THK)	
	82	1	**7G-2343**	3	SPRING-DISC	
	83	2,3	**7T-8816**	3	BALL BEARING	
	84	1	**8D-9739**	1	SEAL-RING	
	85	4	**8H-5352**	2	BALL BEARING	
	86	4	**8M-5010**	2	SEAL-O-RING	
	87	1	**8M-5255**	1	SEAL-O-RING	
	88	4	**8M-5266**	1	SEAL-O-RING	
	89	2,4	**8P-2019**	3	RING-SEAL	
	90	2,3,4	**8P-2022**	4	RING-SEAL	
	91	1	**8P-2023**	1	RING-SEAL	
	92	3	**9G-0286**	1	RING-SEAL	

R-REMFG PART MAY BE AVAILABLE

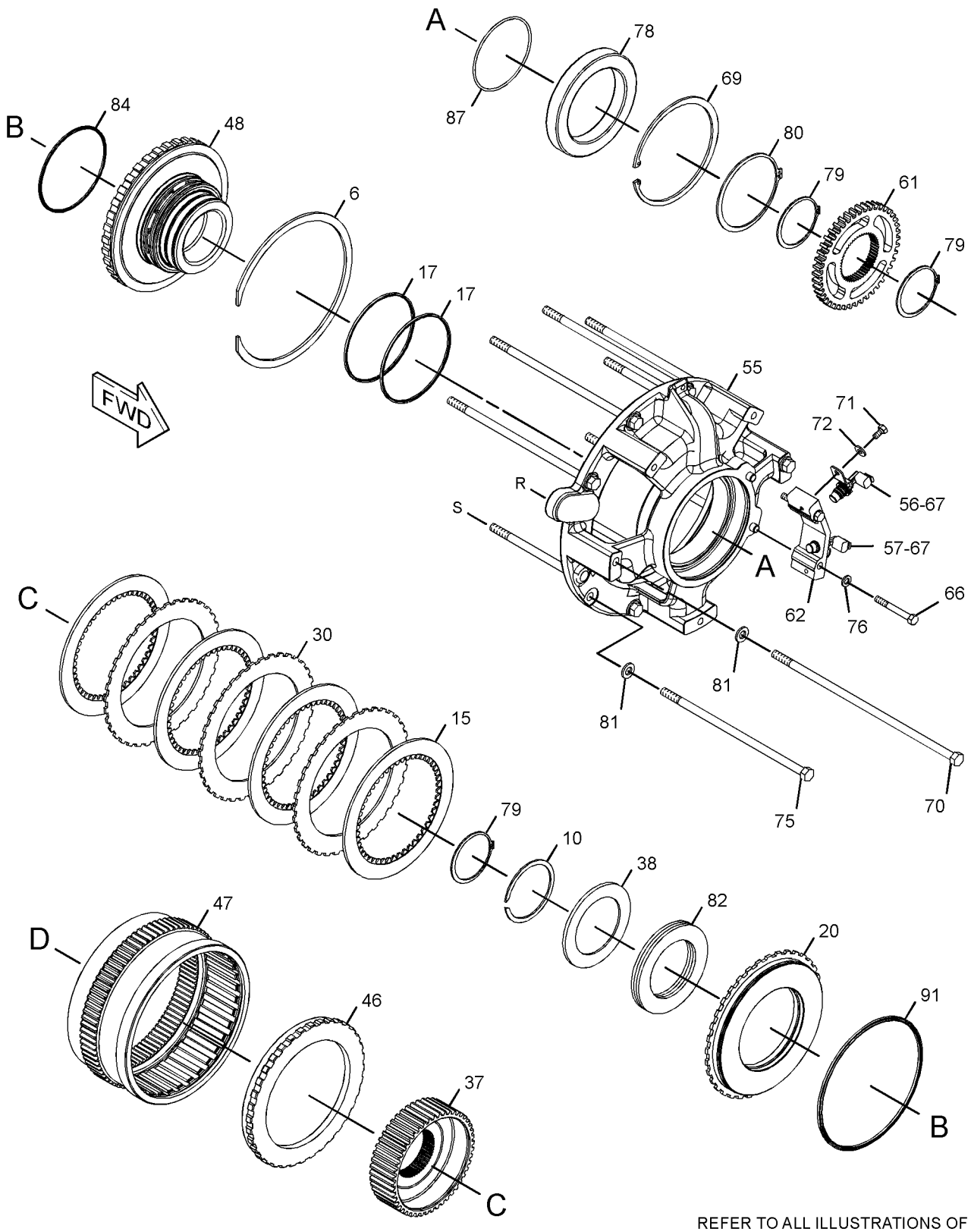

REFER TO ALL ILLUSTRATIONS OF
THIS GROUP FOR AUXILIARY VIEWS

GRAPHIC #1

g01211868

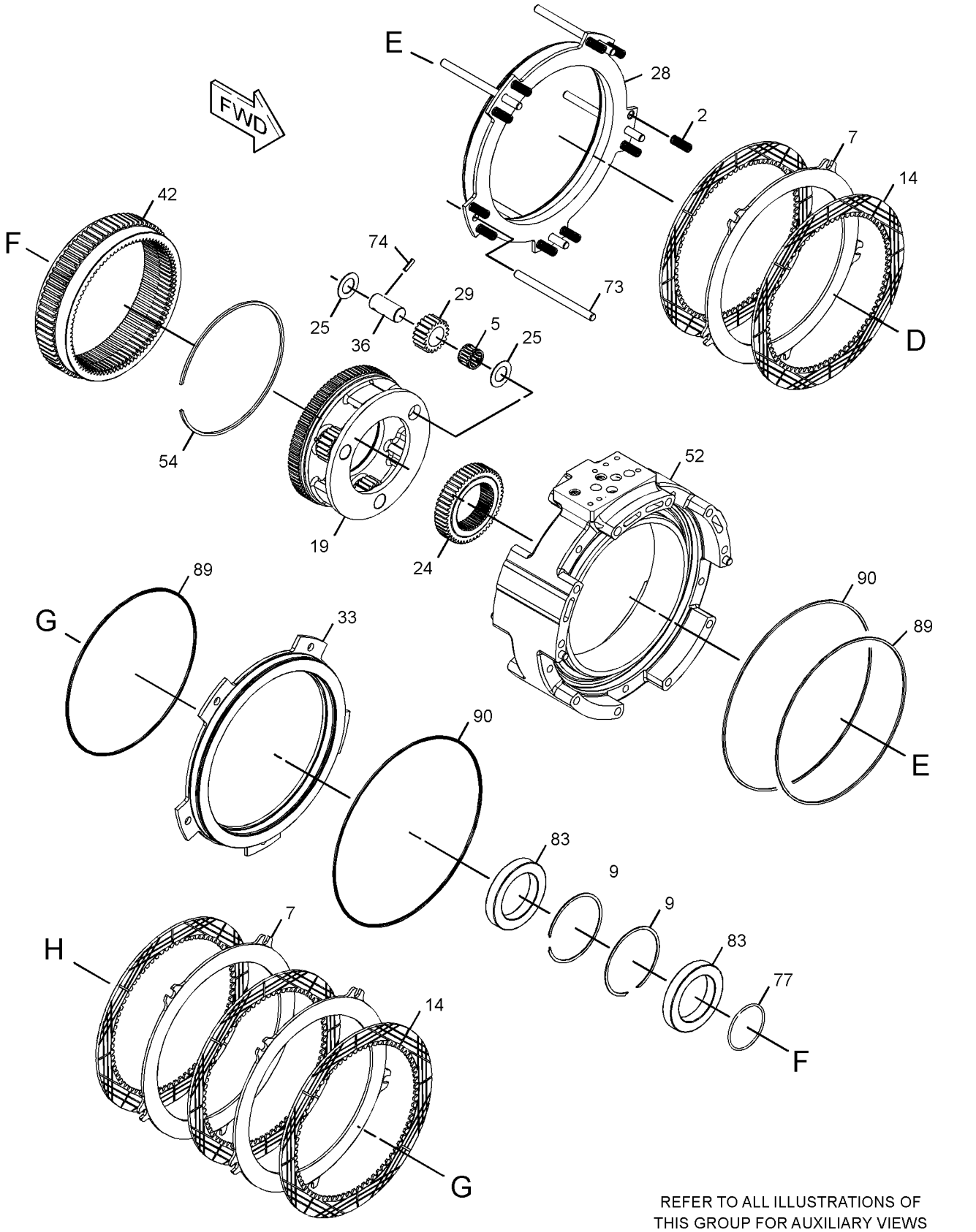

REFER TO ALL ILLUSTRATIONS OF
THIS GROUP FOR AUXILIARY VIEWS

GRAPHIC #2

g01210206

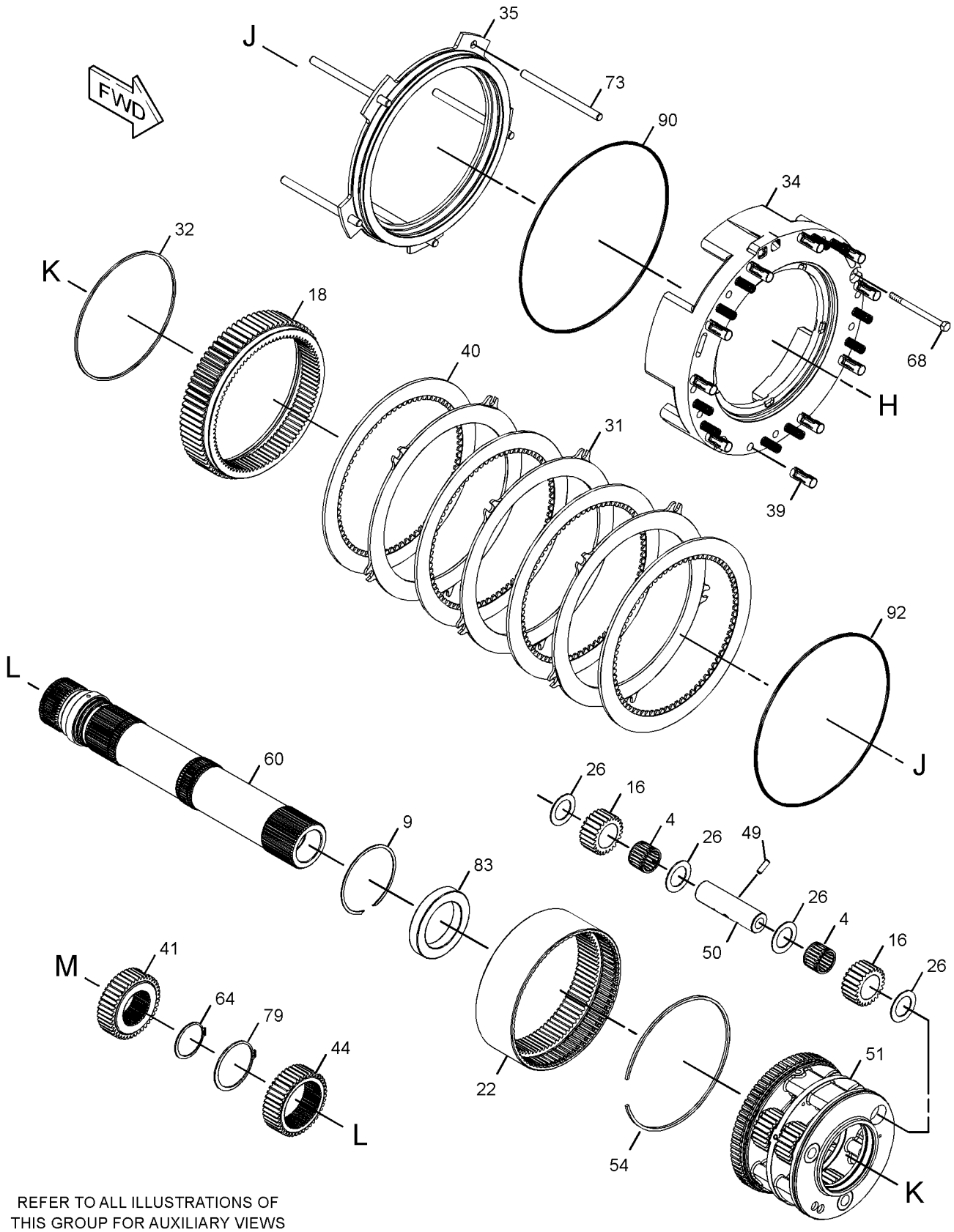

REFER TO ALL ILLUSTRATIONS OF
THIS GROUP FOR AUXILIARY VIEWS

GRAPHIC #3

g01210322

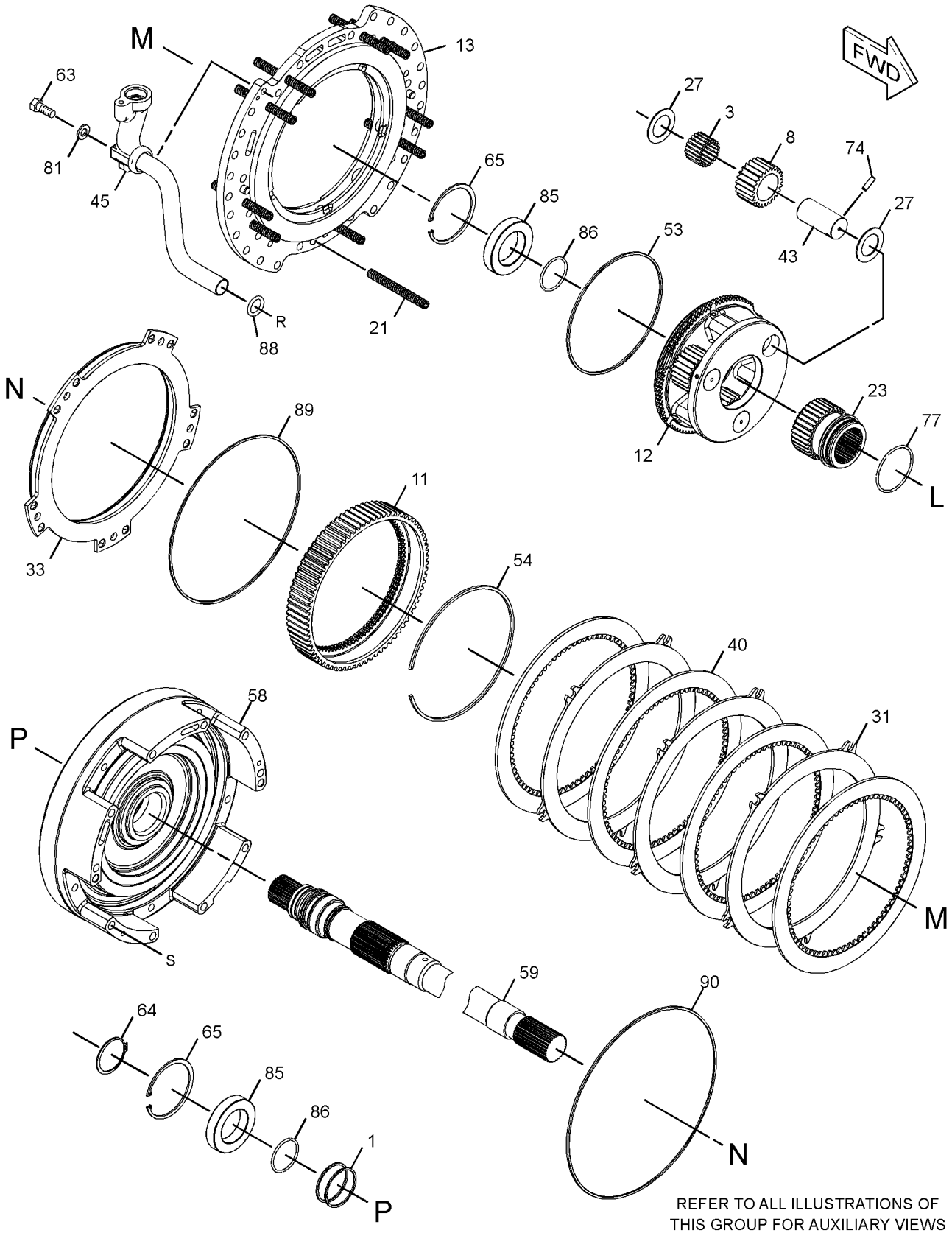

REFER TO ALL ILLUSTRATIONS OF THIS GROUP FOR AUXILIARY VIEWS

GRAPHIC #4 **<END>** g01211870

269-2046 POWER TRAIN AR

S/N: SMC1-UP; GCT1-UP

PART OF 269-2037, 269-2038 GENERAL AR

SMCS-3000, 4000 **i02752129**

NOTE	PART NUMBER	QTY	PART NAME 1 2 3 4 5 6 (PRODUCT LEVEL)	SEE PAGE
Y	*3W-6550*	1	AXLE GP	262
Y	*231-5969*	1	BRAKE & DIFFERENTIAL DRIVE GP	264
Y	*231-5990*	1	BRAKE & PLANETARY GP	268
Y	*224-2793*	1	CONTROL & MTG GP-PEDAL (GOVERNOR, BRAKE)	644
Y	*272-0016*	1	CONTROL GP-STEERING & TMSN	654
Y	*225-1506*	1	COUPLING & GUARD GP	277
Y	*260-6649*	2	FINAL DRIVE GP	284
Y	*269-2072*	1	LINES GP-POWER TRAIN OIL	291
Y	*303-4142*	1	MOUNTING GP-CONTROL (CONSOLE, LH)	698
Y	*259-3119*	1	MOUNTING GP-FINAL DRIVE	299
Y	*227-0165*	1	MOUNTING GP-TRANSMISSION	300
Y	*108-1696*	1	SHAFT GP-DRIVE	314
Y	*269-7635*	1	TORQUE CONVERTER GP	319
Y	**220-1429**	1	TRANSMISSION AR	321
Y	*213-1308*	1	VALVE & MTG GP-CONTROL (TRANSMISSION)	528

Y-SEPARATE ILLUSTRATION

<END>

270-1762 PUMP GP-GEAR–TRANSMISSION, TORQUE CONVERTER

S/N: SMC1-UP; GCT1-UP

PART OF 269-2072 LINES GP-POWER TRAIN OIL

SMCS-3066, 3115, 5073 **i02576149**

NOTE	REF NO	GRAPHIC REF	PART NUMBER	QTY	PART NAME 1 2 3 4 5 6 (PRODUCT LEVEL)	SEE PAGE
	1	1	**3T-5356**	1	CAGE-BEARING	
	2	1	**5H-4279**	1	PLUG-CUP	
	3	1	**212-2301**	1	FLANGE	
Y	4	1	**270-1763**	1	PUMP GP-GEAR (TRANSMISSION, TORQUE CONVERTER)	310
	5	1	**111-4919**	1	SEAL-LIP TYPE	
	6	1	**1P-4578**	2	FLANGE-HALF	
	7	1	**2M-3974**	1	RING-RETAINING	
	8	1	**5P-9439**	1	BALL BEARING	
	9	1	**6H-3977**	1	SEAL-O-RING	
	10	1	**6L-4783**	4	BOLT-12 POINT HEAD (5/16-18X1.25-IN)	
	11	1	**8C-3206**	4	FLANGE-HALF	
	12	1	**8T-4121**	12	WASHER-HARD (11X21X2.5-MM THK)	
M	13	1	**8T-4956**	2	BOLT (M12X1.75X35-MM)	
M	14	1	**8T-4196**	12	BOLT (M10X1.5X35-MM)	
	15	1	**8T-4223**	2	WASHER-HARD (13.5X25.5X3-MM THK)	

M-METRIC PART
Y-SEPARATE ILLUSTRATION

270-1762 **PUMP GP-GEAR** *(contd.)* **i02576149**

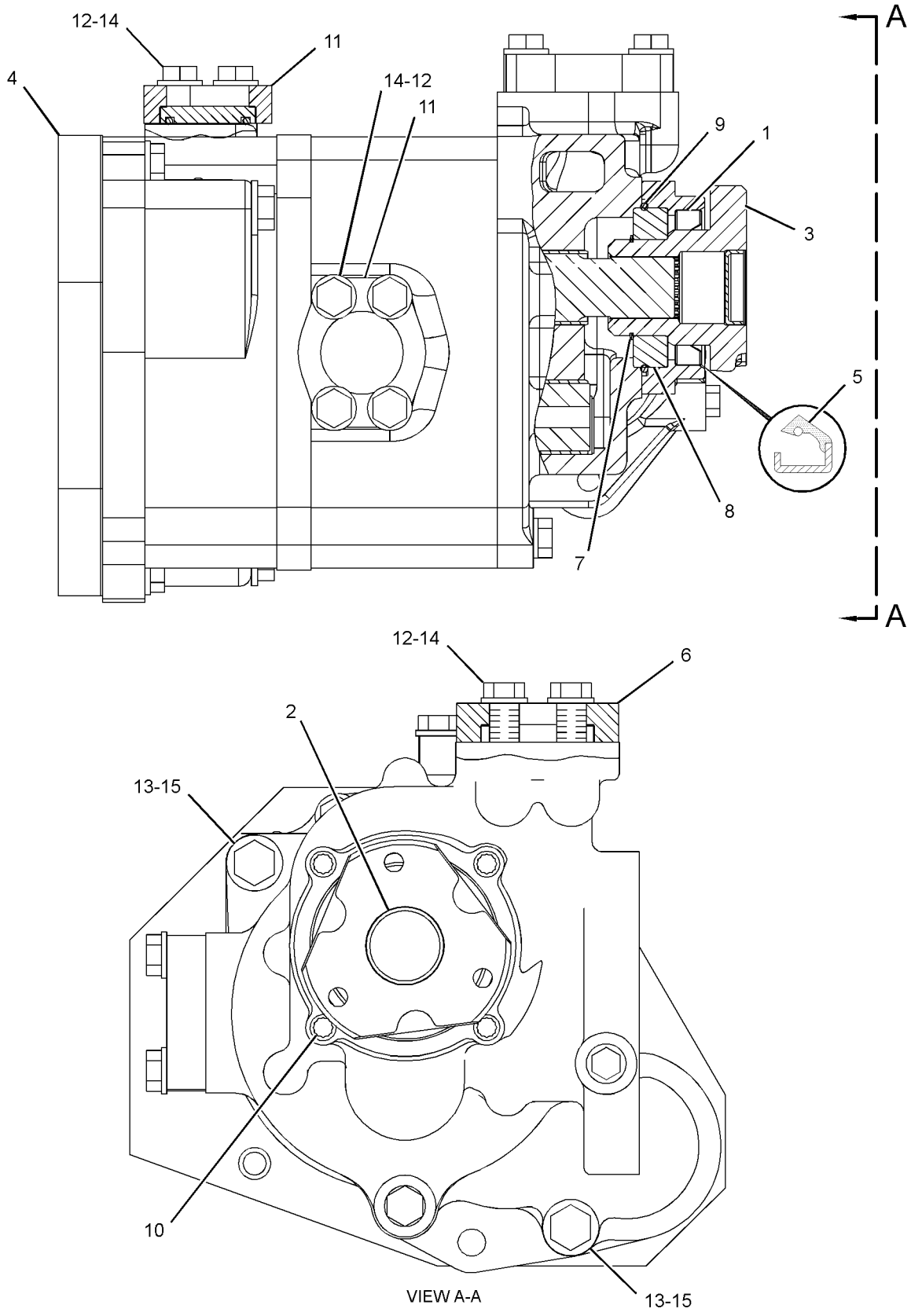

GRAPHIC #1 **<END>** g01208726

270-1763 PUMP GP-GEAR–TRANSMISSION, TORQUE CONVERTER

S/N: SMC1-UP; GCT1-UP

PART OF 270-1762 PUMP GP-GEAR

SMCS-3066, 3115, 5073 **i02752214**

NOTE	REF NO	GRAPHIC REF	PART NUMBER	QTY	PART NAME 1 2 3 4 5 6 (PRODUCT LEVEL)	SEE PAGE
	1	1	**3S-0004**	5	WASHER (0.406X0.728X0.09-IN THK)	
	2	1	**3T-1447**	2	GEAR (8-TEETH)	
	3	1	**304-5280**	2	GEAR-OIL PUMP (12-TEETH)	
	4	1	**5M-4987**	2	DOWEL	
	5	1	**131-3278**	1	BODY AS-OIL PUMP	
		1	**5M-3605**	2	DOWEL	
	6	1	**133-1400**	1	GEAR AS-OIL PUMP (12-TEETH)	
	7	1	**133-1401**	1	GEAR AS-OIL PUMP (12-TEETH)	
	8	1	**226-3908**	1	BODY AS-OIL PUMP	
	8A	1	**131-0825**	2	BEARING-SLEEVE	
	9	1	**226-3910**	1	COVER	
	10	1	**270-1764**	1	COVER AS-PUMP	
	10A	1	**1M-3909**	2	BEARING-SLEEVE (1.25X1.38X1.63-IN)	
	11	1	**270-1766**	1	BODY AS-OIL PUMP	
	11A	1	**1M-3909**	2	BEARING-SLEEVE (1.25X1.38X1.63-IN)	
		1	**8M-8489**	2	DOWEL	
	12	1	**1B-8705**	1	KEY-WOODRUFF	
	13	1	**061-9457**	1	SEAL-O-RING	
	14	1	**2B-9373**	1	KEY-WOODRUFF	
	15	1	**129-1609**	4	SEAL-O-RING	
M	16	1	**7X-2547**	5	BOLT (M10X1.5X200-MM)	

M-METRIC PART

270-1763 PUMP GP-GEAR *(contd.)* **i02752214**

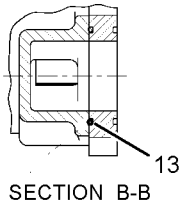

SECTION B-B

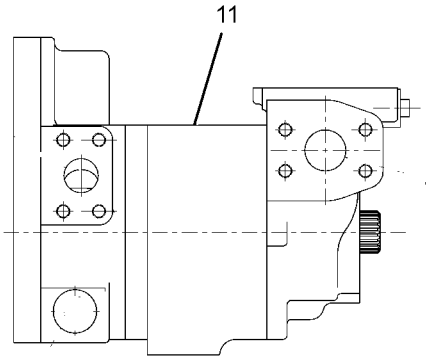

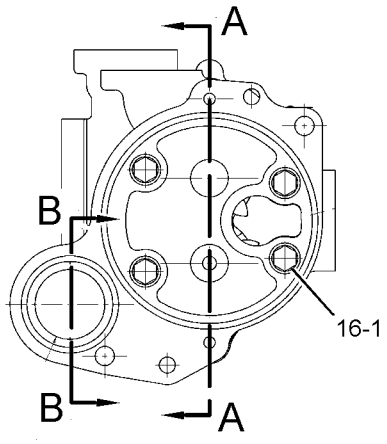

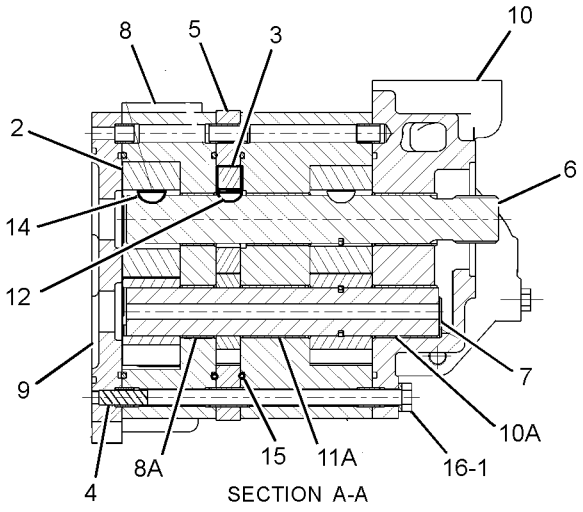

SECTION A-A

GRAPHIC #1 **<END>** g01228440

231-4166 SCREEN GP-MAGNETIC–TRANSMISSION

S/N: SMC1-UP; GCT1-UP

PART OF 269-2072 LINES GP-POWER TRAIN OIL

SMCS-3067 **i02438124**

NOTE	REF NO	GRAPHIC REF	PART NUMBER	QTY	PART NAME 1 2 3 4 5 6 (PRODUCT LEVEL)	SEE PAGE
	1	1	**3S-3440**	1	WASHER-WAVE (68.1X80.8X0.5-MM THK)	
	2	1	**4S-8598**	1	SCREEN-SUCTION (TRANSMISSION)	
	3	1	**4S-8603**	1	SCREEN GP-MAGNETIC (TRANSMISSION)	
		1	**8M-7160**	3	MAGNET	
	4	1	**231-4167**	1	HOUSING AS-SCREEN	
M		1	**8T-7044**	4	STUD-TAPERLOCK (M10X1.5X40-MM)	
	5	1	**3S-3439**	1	COVER-TOP	
	6	1	**6L-5359**	1	SEAL-O-RING	
	7	1	**6V-5188**	1	SEAL-O-RING	
M	8	1	**8T-4133**	4	NUT (M10X1.5-THD)	

M-METRIC PART

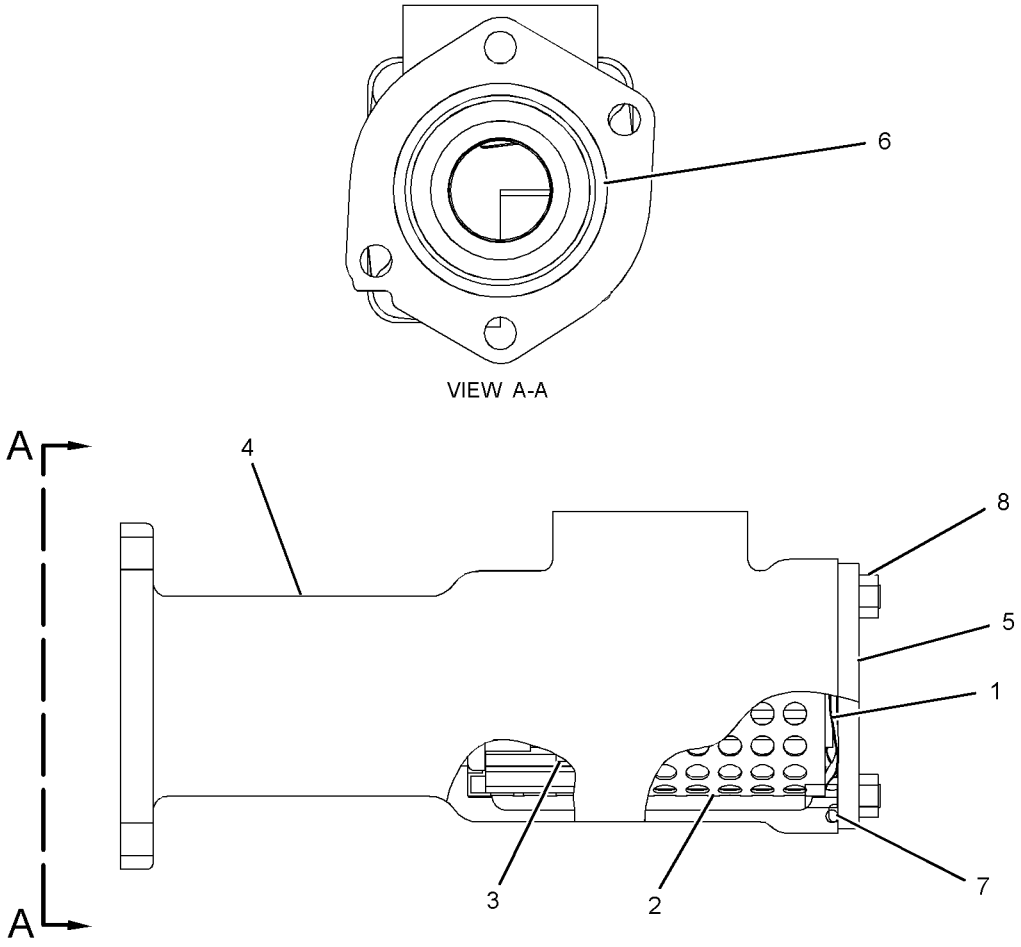

GRAPHIC #1 **<END>** g01209036

188-0908 SEGMENT GP-SPROCKET

S/N: SMC1-UP; GCT1-UP
PART OF 260-6649, 260-6652 FINAL DRIVE GP
ALSO AN ATTACHMENT

SMCS-4155 **i01796887**

NOTE	REF NO	GRAPHIC REF	PART NUMBER	QTY	PART NAME 1 2 3 4 5 6 (PRODUCT LEVEL)	SEE PAGE
	1	1	**173-0946**	5	SEGMENT-SPROCKET	
	2	1	**6V-0937**	25	BOLT-SPROCKET (5/8-18X2.1 IN)	
	3	1	**2S-5658**	25	WASHER-HARD (17X29X3MM THK)	
	4	1	**7H-3607**	25	NUT (5/8-18 THD)	

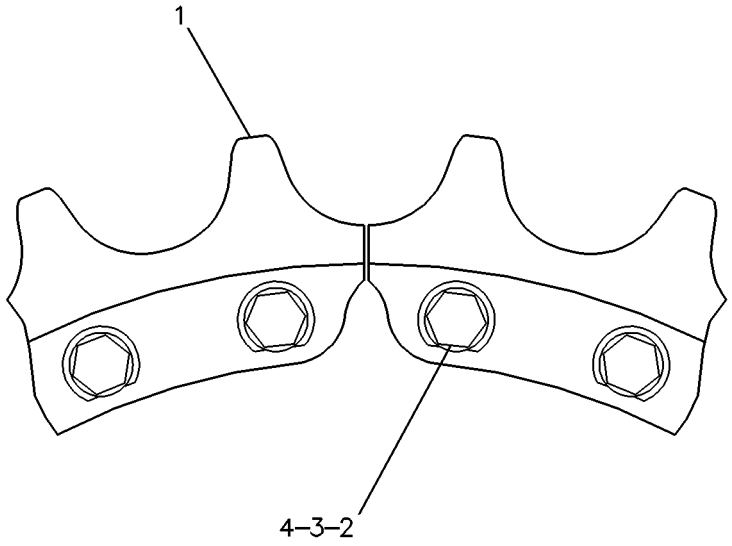

GRAPHIC #1 **<END>** g00223953

108-1696 SHAFT GP-DRIVE

S/N: SMC1-UP; GCT1-UP

PART OF 269-2046 POWER TRAIN AR

SMCS-3253 **i01854370**

NOTE	REF NO	GRAPHIC REF	PART NUMBER	QTY	PART NAME 1 2 3 4 5 6 (PRODUCT LEVEL)	SEE PAGE
Y	1	1	**108-2106**	1	UNIVERSAL JOINT GP	322
	2	1	**7X-7477**	8	BOLT (3/8 24 THD)	
	3	1	**7X-0608**	8	WASHER-HARD (10.2X16X2.0MM THK)	
	4	1	**3T-8305**	1	YOKE AS	
		1	**7D-1677**	1	RACE-BEARING INNER	
		1	**8H-2768**	1	PLUG-CUP	

Y-SEPARATE ILLUSTRATION

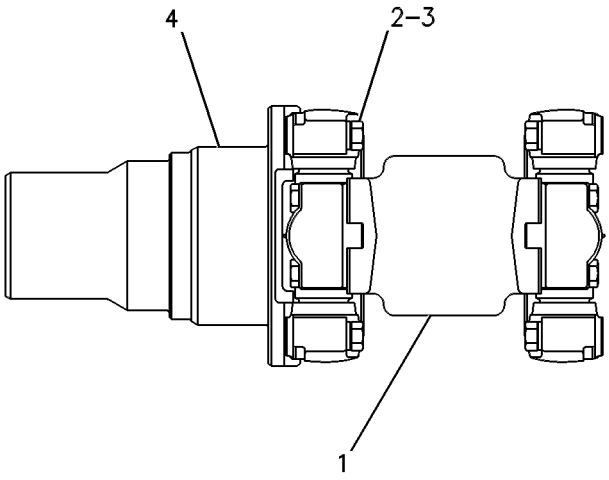

GRAPHIC #1 **<END>** g00254101

1T-2090 TORQUE CONVERTER GP

S/N: BZS1-UP

PART OF 269-7634 TORQUE CONVERTER GP

SMCS-3101 **i02754392**

NOTE	REF NO	GRAPHIC REF	PART NUMBER	QTY	PART NAME 1 2 3 4 5 6 (PRODUCT LEVEL)	SEE PAGE
	1	1	**1T-0097**	1	RING-METAL SEAL	
	2	1	**1T-0438**	1	RETAINER-BEARING	
	3	1	**1T-0446**	6	BOLT (3/8-16X0.75-IN)	
	4	1	**1T-0447**	1	CARRIER-RING	
	5	1	**1T-0599**	1	SPACER (65.1X85X9.52-MM THK)	
	6	1	**1T-1993**	1	WHEEL-TURBINE	
	7	1	**1T-2052**	1	STATOR AS	
	8	1	**1T-2069**	1	CARRIER-BEARING	
	9	1	**1T-2079**	1	IMPELLER-CONVERTER	
	10	1	**1T-2080**	1	HOUSING-ROTATING	
	11	1	**1T-2081**	1	CARRIER AS-STATOR	
		1	**4S-8537**	1	DOWEL	
	12	1	**1T-2086**	1	FLANGE AS-OUTPUT	
		1	**1T-0902**	2	BEARING-SLEEVE	
	13	1	**304-9651**	1	BALL BEARING	
	14	1	**279-9061**	1	RETAINER-BEARING	
	15	1	**142-8540**	1	RING-SEAL	
	16	1	**1A-2029**	24	BOLT (3/8-16X1.125-IN)	
	17	1	**1T-0131**	8	BOLT-SOCKET HEAD (3/8-24X1.25-IN)	
	18	1	**1T-0414**	8	BOLT-12 POINT HEAD (5/16-18X1-IN)	
	19	1	**1T-0441**	1	BALL BEARING	
	20	1	**3F-3727**	1	RING-SNAP	
	21	1	**4H-1440**	6	PIN-SPRING	
	22	1	**5B-0582**	1	DOWEL	
	23	1	**5M-2894**	24	WASHER-HARD (10.2X18.5X2.5-MM THK)	

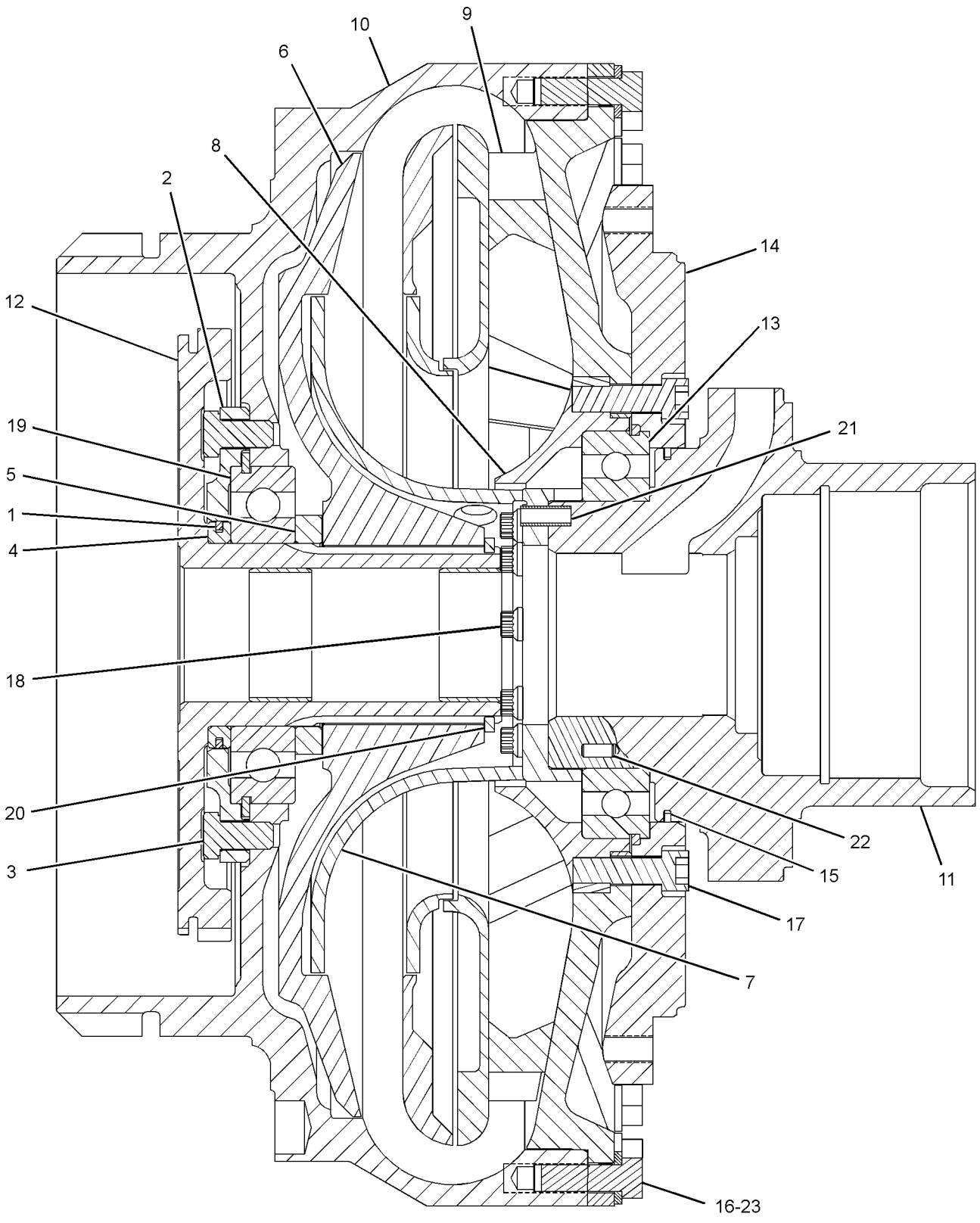

GRAPHIC #1 **<END>** g01381837

269-7634 TORQUE CONVERTER GP—WITH DIVIDER

S/N: BZS1-UP

PART OF 269-7635 TORQUE CONVERTER GP

SMCS-3101 **i02752138**

NOTE	REF NO	GRAPHIC REF	PART NUMBER	QTY	PART NAME 1 2 3 4 5 6 (PRODUCT LEVEL)	SEE PAGE
Y	1	1	*1T-2090*	1	TORQUE CONVERTER GP	315
	2	1	**3T-4007**	1	CARRIER-PLANETARY	
	3	1	**3T-4008**	3	GEAR-PLANETARY (23-TEETH)	
	4	1	**3T-4009**	1	GEAR-RING (82-TEETH)	
	5	1	**3T-4011**	3	SHAFT AS-PLANETARY	
					(EACH INCLUDES)	
		1	**2A-3746**	1	PLUG-CUP	
	6	1	**3T-4013**	1	RETAINER-CARRIER	
	7	1	**5M-7878**	1	RING-SNAP	
	8	1	**5P-3930**	3	BEARING AS-ROLLER	
	9	1	**8E-8300**	6	DISC-THRUST	
	10	1	**9M-2008**	1	RING-METAL SEAL	
	11	1	**233-0668**	1	SHAFT AS	
		1	**5J-7386**	1	PLUG-ORIFICE	
	12	1	**2D-5658**	1	BALL BEARING	
	13	1	**2K-5986**	2	PIN-SPRING	
	14	1	**3S-2708**	3	PIN-SPRING	
	15	1	**5J-3964**	1	RING-LOCK	
	16	1	**5P-7679**	1	RACE-SPECIAL ROLLER BEARING	
	17	1	**6K-3630**	1	RING	
	18	1	**6V-4583**	1	RING-RETAINING	

Y-SEPARATE ILLUSTRATION

269-7634 TORQUE CONVERTER GP *(contd.)* i02752138

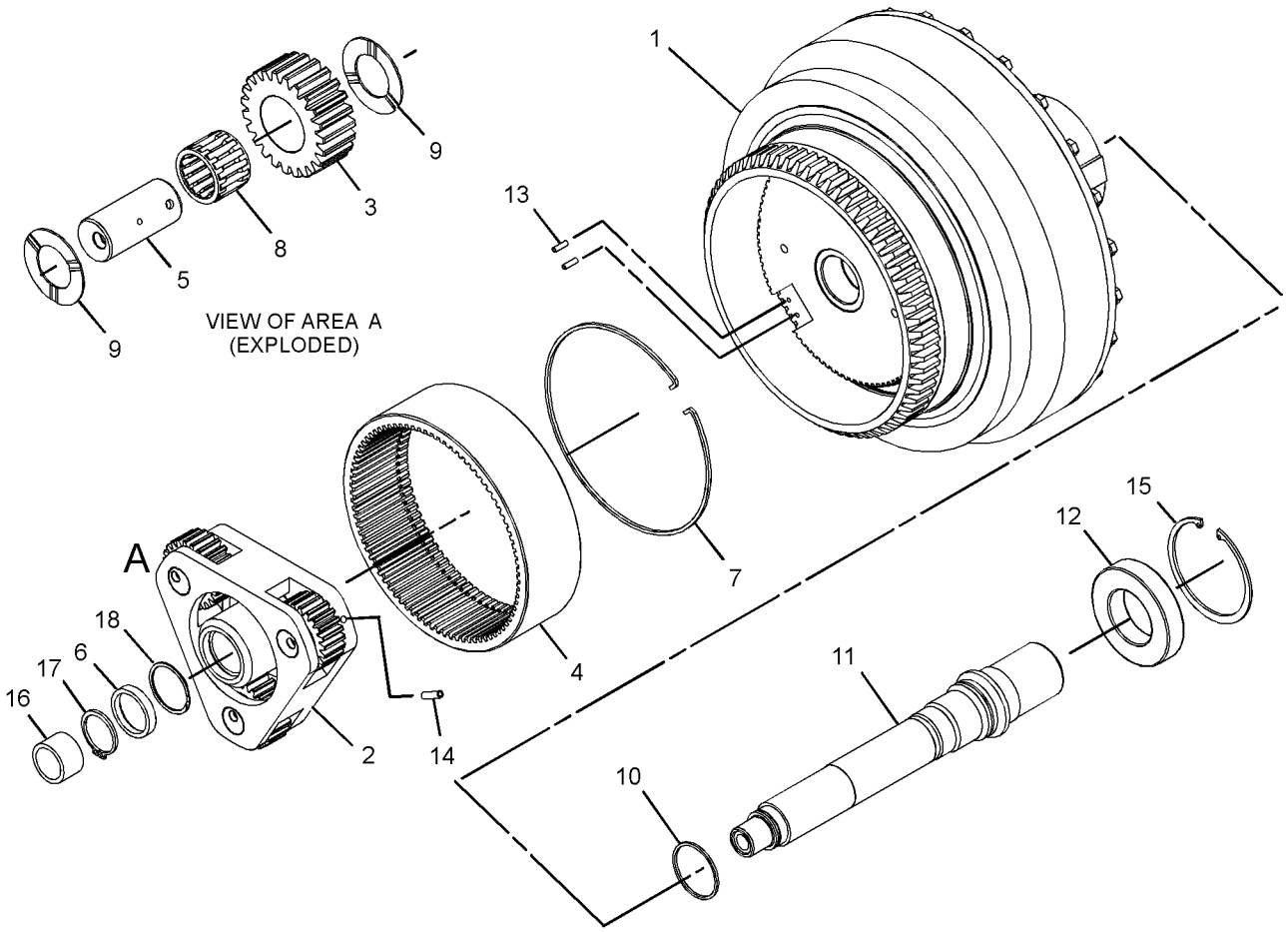

GRAPHIC #1 **<END>** g01359057

269-7635 TORQUE CONVERTER GP—WITH HOUSING

S/N: SMC1-UP; GCT1-UP

PART OF 269-2046 POWER TRAIN AR

SMCS-3101 **i02752147**

NOTE	REF NO	GRAPHIC REF	PART NUMBER	QTY	PART NAME 1 2 3 4 5 6 (PRODUCT LEVEL)	SEE PAGE
	1	1	**2D-1523**	1	RING-RETAINING	
	2	1	**2S-2251**	1	SEAL-O-RING	
	3	1	**8H-9818**	1	GASKET	
	4	1	**8S-9008**	1	SLEEVE	
	5	1	**9H-8712**	1	BEARING AS	
	6	1	**9M-1976**	1	RING-RETAINING	
	7	1	**9P-3709**	1	GEAR-SUN (35-TEETH)	
	8	1	**108-6954**	1	YOKE-UNIVERSAL JOINT	
	9	1	**155-5161**	1	SEAL-OIL	
	10	1	**210-4458**	1	ELBOW	
	11	1	**232-6411**	1	RETAINER-SHAFT	
	12	1	**268-7831**	1	GEAR-PUMP DRIVE (94-TEETH)	
	13	1	**268-7832**	1	GEAR-PUMP DRIVE (21-TEETH)	
	14	1	**269-7633**	1	HOUSING-TORQUE CONVERTER	
Y	15	1	**269-7634**	1	TORQUE CONVERTER GP	317
	16	1	**110-0510**	1	COVER	
	17	1	**136-2216**	1	SEAL-LIP TYPE	
	18	1	**165-4854**	2	SEAL-O-RING	
	19	1	**1F-2771**	1	BALL BEARING	
	20	1	**1S-9799**	1	SEAL-O-RING	
	21	1	**2K-5967**	1	RING-RETAINING	
	22	1	**5B-2208**	8	BOLT (3/8-24X1.125-IN)	
	23	1	**5M-4480**	1	RING-RETAINING	
	24	1	**6F-4718**	1	SEAL-O-RING	
	25	1	**8T-4121**	12	WASHER-HARD (11X21X2.5-MM THK)	
M	26	1	**8T-4136**	2	BOLT (M10X1.5X25-MM)	
M	27	1	**8T-4137**	2	BOLT (M10X1.5X20-MM)	
M	28	1	**8T-4139**	9	BOLT (M12X1.75X30-MM)	
M	29	1	**8T-4176**	1	BOLT (M12X1.75X90-MM)	
M	30	1	**8T-4956**	3	BOLT (M12X1.75X35-MM)	
M	31	1	**8T-4195**	8	BOLT (M10X1.5X30-MM)	
	32	1	**8T-4223**	12	WASHER-HARD (13.5X25.5X3-MM THK)	
	33	1	**9H-0846**	1	SEAL-O-RING	

M-METRIC PART
Y-SEPARATE ILLUSTRATION

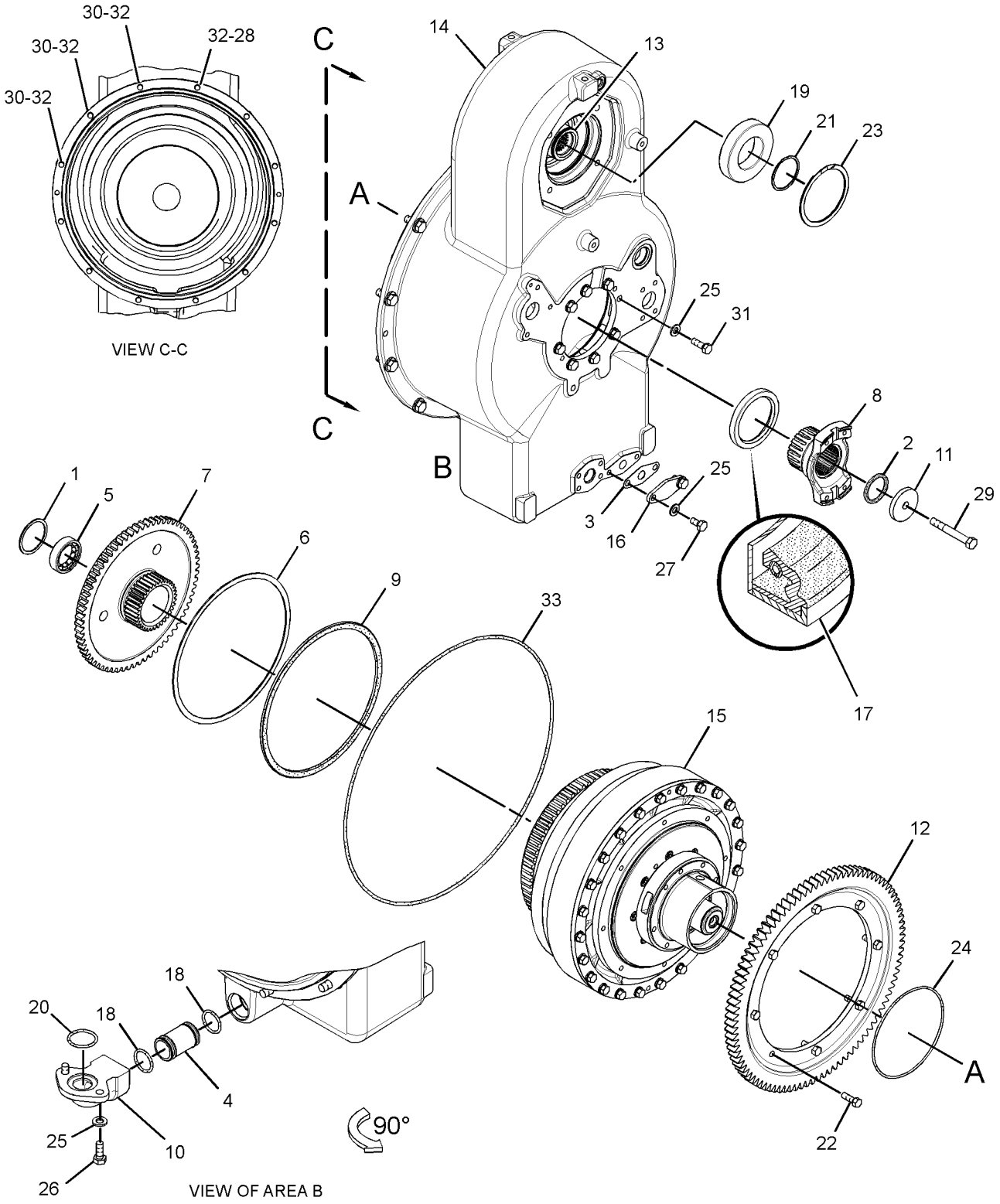

GRAPHIC #1 **<END>** g01359106

220-1429 TRANSMISSION AR

S/N: KKA1-UP

PART OF 269-2046 POWER TRAIN AR

SMCS-3030 **i02450715**

NOTE	REF NO	GRAPHIC REF	PART NUMBER	QTY	PART NAME 1 2 3 4 5 6 (PRODUCT LEVEL)	SEE PAGE
Y	1	1	*221-3342*	1	CASE & PARTS GP-PLANETARY	270
Y	2	1	*244-2616*	1	GEAR GP-BEVEL & TRANSFER	288
Y	3	1	*265-5278*	1	CONTROL GP-TRANSMISSION HYD	273
Y	4	1	*220-1403*	1	PLANETARY GP-TRANSMISSION	301

Y-SEPARATE ILLUSTRATION

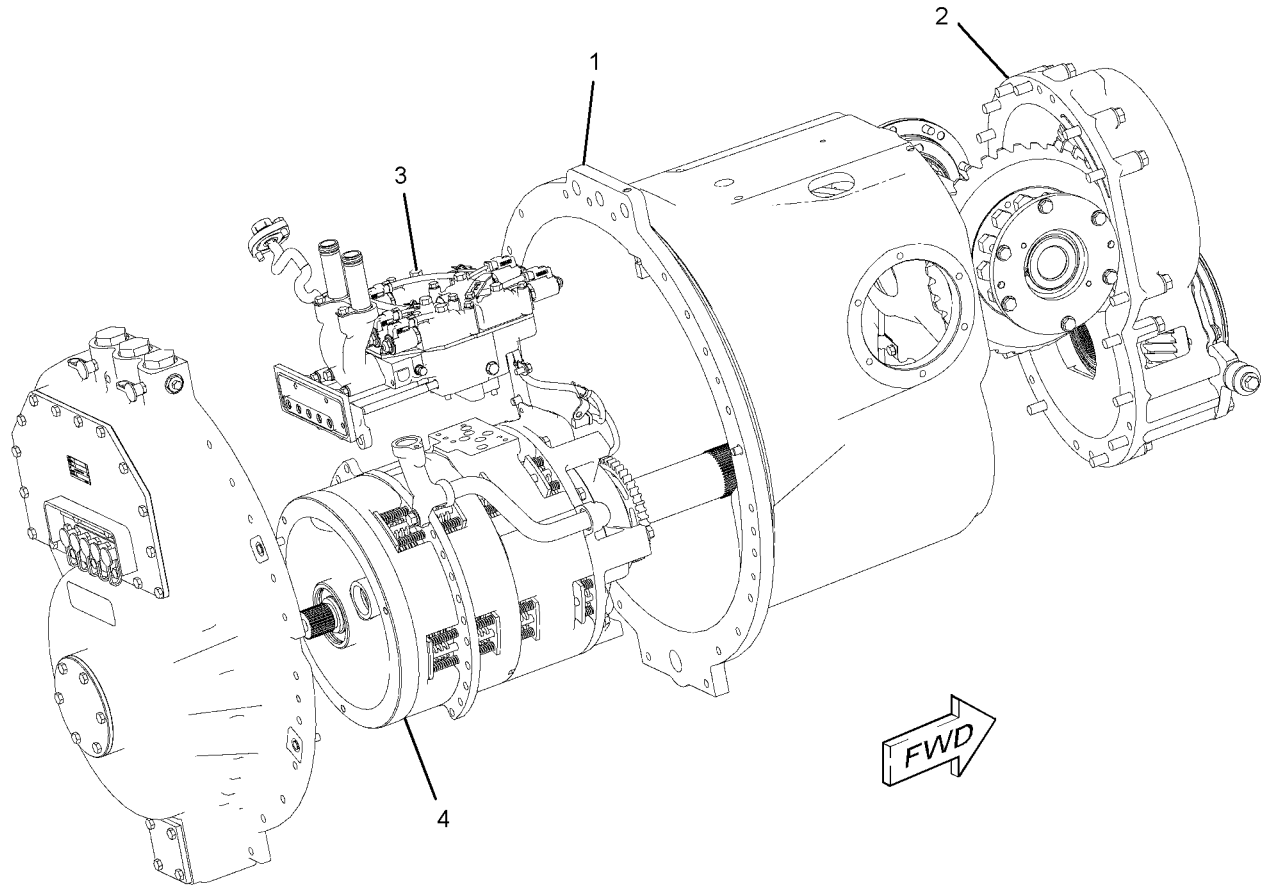

GRAPHIC #1 **<END>** g01210725

108-2106 UNIVERSAL JOINT GP

S/N: SMC1-UP; GCT1-UP

PART OF 108-1696 SHAFT GP-DRIVE

SMCS-3251, 3253 **i00599892**

NOTE	REF NO	GRAPHIC REF	PART NUMBER	QTY	PART NAME 1 2 3 4 5 6 (PRODUCT LEVEL)	SEE PAGE
	1	1	**3V-2431**	8	WASHER (2.0MM THK)	
	2	1	**7G-9555**	2	SPIDER & BEARING AS	
	3	1	**0L-0478**	8	BOLT (3/8-24X1.75IN)	

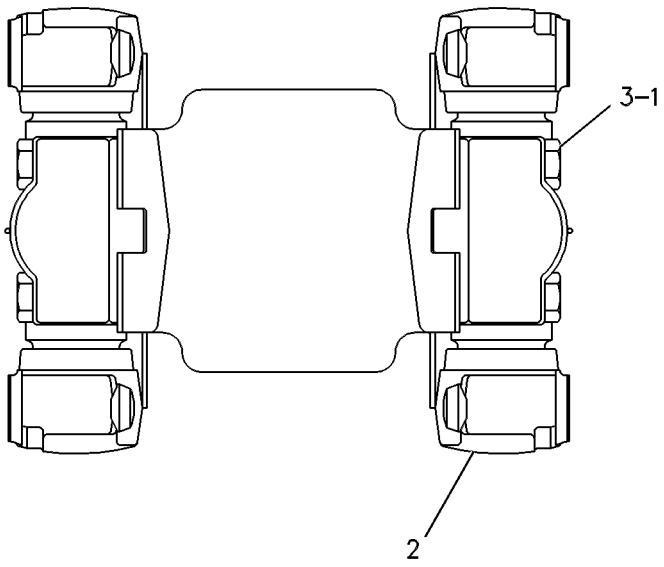

GRAPHIC #1 **<END>** g00254100

220-4324 VALVE GP-MODULATING–TRANSMISSION CLUTCH

S/N: KKA1-UP

PART OF 265-5278 CONTROL GP-TRANSMISSION HYD

SMCS-3139 **i02235386**

NOTE	REF NO	GRAPHIC REF	PART NUMBER	QTY	PART NAME 1 2 3 4 5 6 (PRODUCT LEVEL)	SEE PAGE
	1	1	**226-9622**	1	COIL AS (24 VOLT)	
	2	1	**164-2108**	1	WASHER (13.03X25.4X2.38-MM THK)	
	3	1	**167-9524**	1	NUT-SELF-LOCKING (1/2-28-THD)	
Z	4	1		1	VALVE AS	
	5	1	**3J-1907**	1	SEAL-O-RING	
	6	1	**9S-4191**	1	PLUG-O RING	

Z-NOT SERVICED SEPARATELY

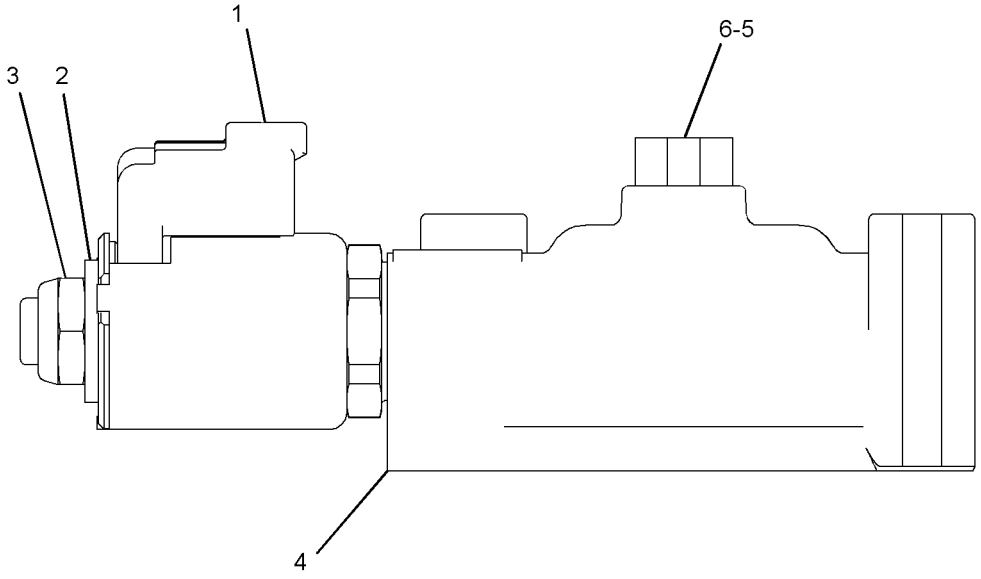

GRAPHIC #1 **<END>** g01127505

213-4540 VALVE GP-RELIEF—TRANSMISSION OIL PRESSURE

S/N: KKA1-UP

PART OF 265-5278 CONTROL GP-TRANSMISSION HYD

SMCS-3133, 3182 **i02235370**

NOTE	REF NO	GRAPHIC REF	PART NUMBER	QTY	PART NAME 1 2 3 4 5 6 (PRODUCT LEVEL)	SEE PAGE
	1	1	**2M-7041**	1	SLUG	
	2	1	**4M-5905**	1	SCREW-ADJUSTMENT (5/16-18X1-IN)	
	3	1	**5B-3180**	1	NUT (5/16-18-THD)	
	5	1	**9S-4191**	1	PLUG-O RING	
	6	1	**106-9212**	1	SPRING	
	7	1	**106-9214**	1	PLATE	
	8	1	**109-3968**	1	SPOOL AS-RELIEF	
	9	1	**153-4247**	1	STOP	
	10	1	**204-6502**	1	MANIFOLD	
	12	1	**0S-1617**	6	BOLT (5/16-18X0.75-IN)	
	13	1	**3J-1907**	1	SEAL-O-RING	
	14	1	**3K-0360**	1	SEAL-O-RING	
	15	1	**6Y-4638**	1	PLUG-HEX SOCKET (1-5/16-12-2A-THD)	
	16	1	**7M-8485**	1	SEAL-O-RING	
	17	1	**9M-1974**	7	WASHER-HARD (8.8X16X2-MM THK)	
	18	1	**9S-4185**	1	PLUG-O RING	

213-4540 **VALVE GP-RELIEF** *(contd.)* **i02235370**

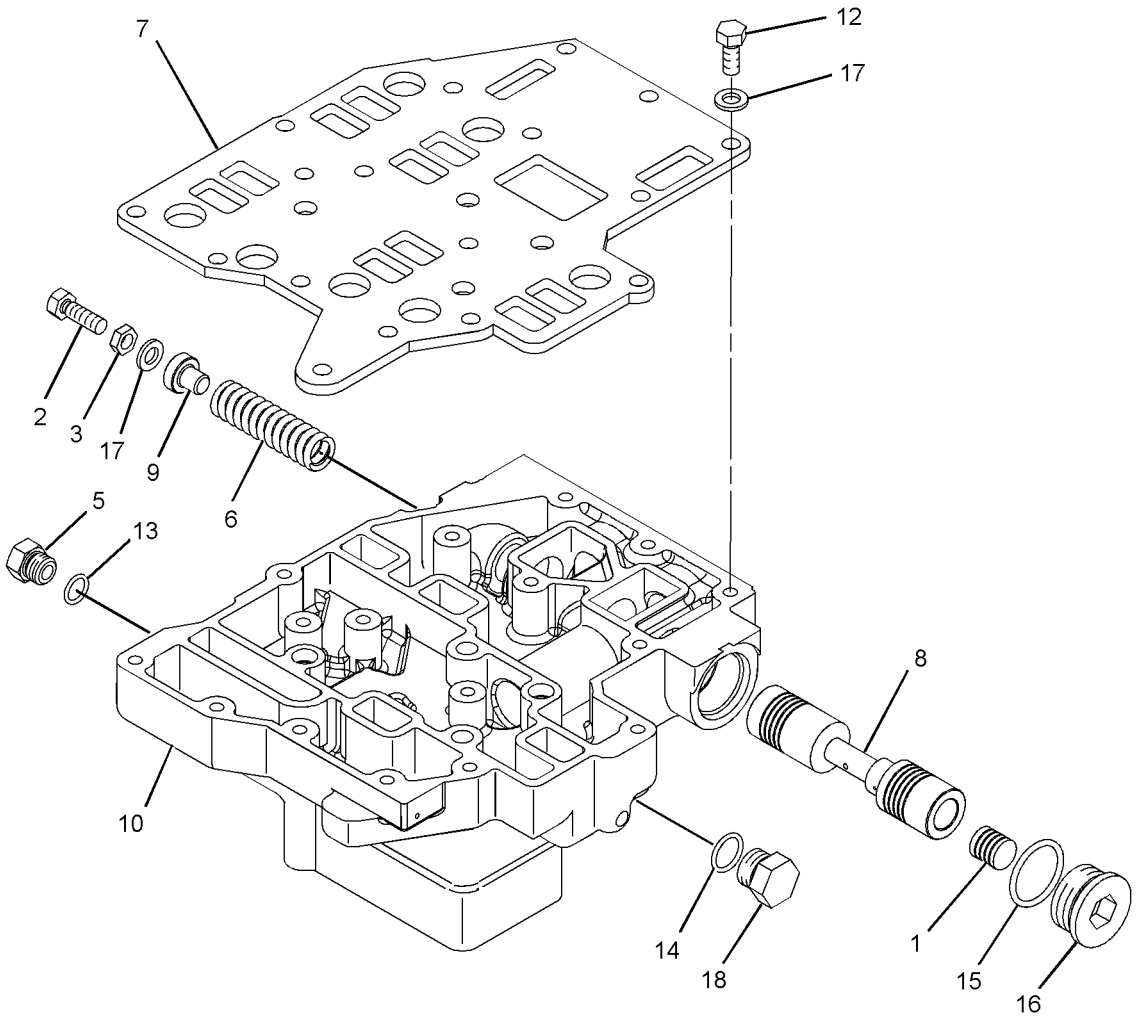

GRAPHIC #1 **<END>** g01127587

220-1418 VALVE GP-RELIEF–TORQUE CONVERTER OUTLET

S/N: SMC1-UP; GCT1-UP

PART OF 269-2072 LINES GP-POWER TRAIN OIL

SMCS-3133, 3182 **i02438117**

NOTE	REF NO	GRAPHIC REF	PART NUMBER	QTY	PART NAME 1 2 3 4 5 6 (PRODUCT LEVEL)	SEE PAGE
	1	1	**225-6363**	1	HOUSING AS-RELIEF VALVE	
		1	**7M-1377**	1	STOP-VALVE	
	2	1	**4M-8239**	2	COVER	
	3	1	**7M-1296**	1	VALVE-RELIEF	
B	4	1	**5M-9623**	5	SHIM (0.9-MM THK)	
M	5	1	**8T-4136**	4	BOLT (M10X1.5X25-MM)	
	6	1	**8T-4121**	7	WASHER-HARD (11X21X2.5-MM THK)	
	7	1	**7M-1297**	1	SPRING	
	8	1	**8M-4986**	2	SEAL-O-RING	
	11	1	**9W-5595**	1	SPRING	
M	12	1	**8T-4172**	3	BOLT (M10X1.5X80-MM)	

B-USE AS REQUIRED
M-METRIC PART

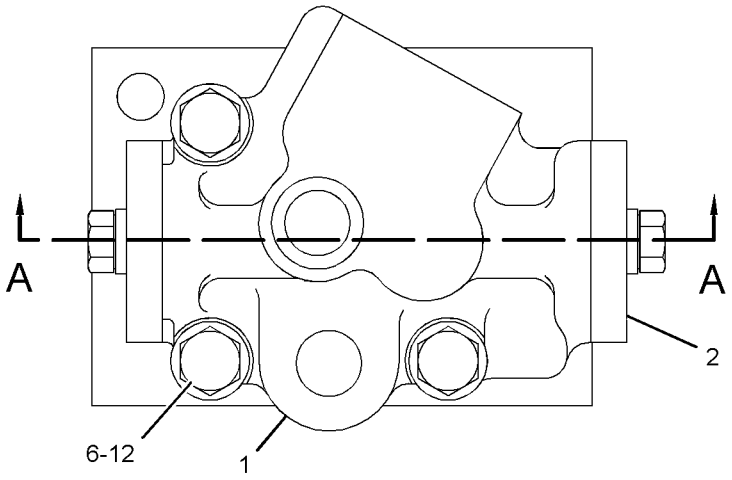

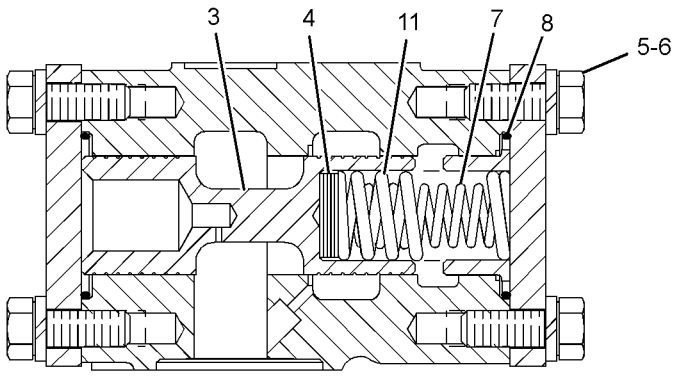

SECTION A-A

GRAPHIC #1 **<END>** g01206826

256-6021 BAR GP-STRIKER–REAR

S/N: SMC1-UP; GCT1-UP
PART OF 256-6020 STRIKER GP-REAR
AN ATTACHMENT

SMCS-7180 **i02624353**

NOTE	REF NO	GRAPHIC REF	PART NUMBER	QTY	PART NAME 1 2 3 4 5 6 (PRODUCT LEVEL)	SEE PAGE
	1	1	**1L-4418**	2	SPRING-SHUTOFF	
	2	1	**1P-2841**	2	SPACER (0.531X1X0.69-IN THK)	
	3	1	**1Z-9932**	2	HINGE AS	
	4	1	**8F-3556**	4	SPACER (0.75X1.25X1-IN THK)	
	6	1	**8T-1579**	1	PAWL	
	7	1	**8T-9496**	2	LOCKNUT (9/16-18-THD)	
Y	8	1	**8Y-6400**	1	LATCH GP (T-BAR, COMPARTMENT)	365
	9	1	**9Z-9211**	2	PLATE	
	10	1	**9Z-9214**	2	ROD AS	
	11	1	**197-7310**	1	PLATE AS	
	11A	1	**8T-4896**	4	WASHER-HARD (10.2X18.5X2.5-MM THK)	
	11B	1	**9B-7237**	4	BOLT (3/8-16X1.25-IN)	
	11C	1	**190-5149**	1	HINGE	
	12	1	**198-8858**	1	PLATE	
	15	1	**201-2557**	2	HINGE AS	
	16	1	**223-8076**	1	DOOR AS	
	17	1	**225-8558**	1	DOOR AS	
	24	1	**2K-4973**	2	LOCKNUT (3/8-16-THD)	
	25	1	**2K-8467**	4	PIN-SPRING	
	26	1	**5P-1076**	4	WASHER-HARD (13.5X30X4-MM THK)	
	27	1	**5S-7382**	2	BOLT (3/8-16X1.375-IN)	
	28	1	**8T-4223**	10	WASHER-HARD (13.5X25.5X3-MM THK)	
	29	1	**8T-8919**	8	BOLT (1/2-13X1.75-IN)	
	30	1	**8T-4896**	4	WASHER-HARD (10.2X18.5X2.5-MM THK)	
	31	1	**8T-2501**	4	BOLT (3/8-16X2-IN)	

Y-SEPARATE ILLUSTRATION

256-6021 BAR GP-STRIKER *(contd.)* **i02624353**

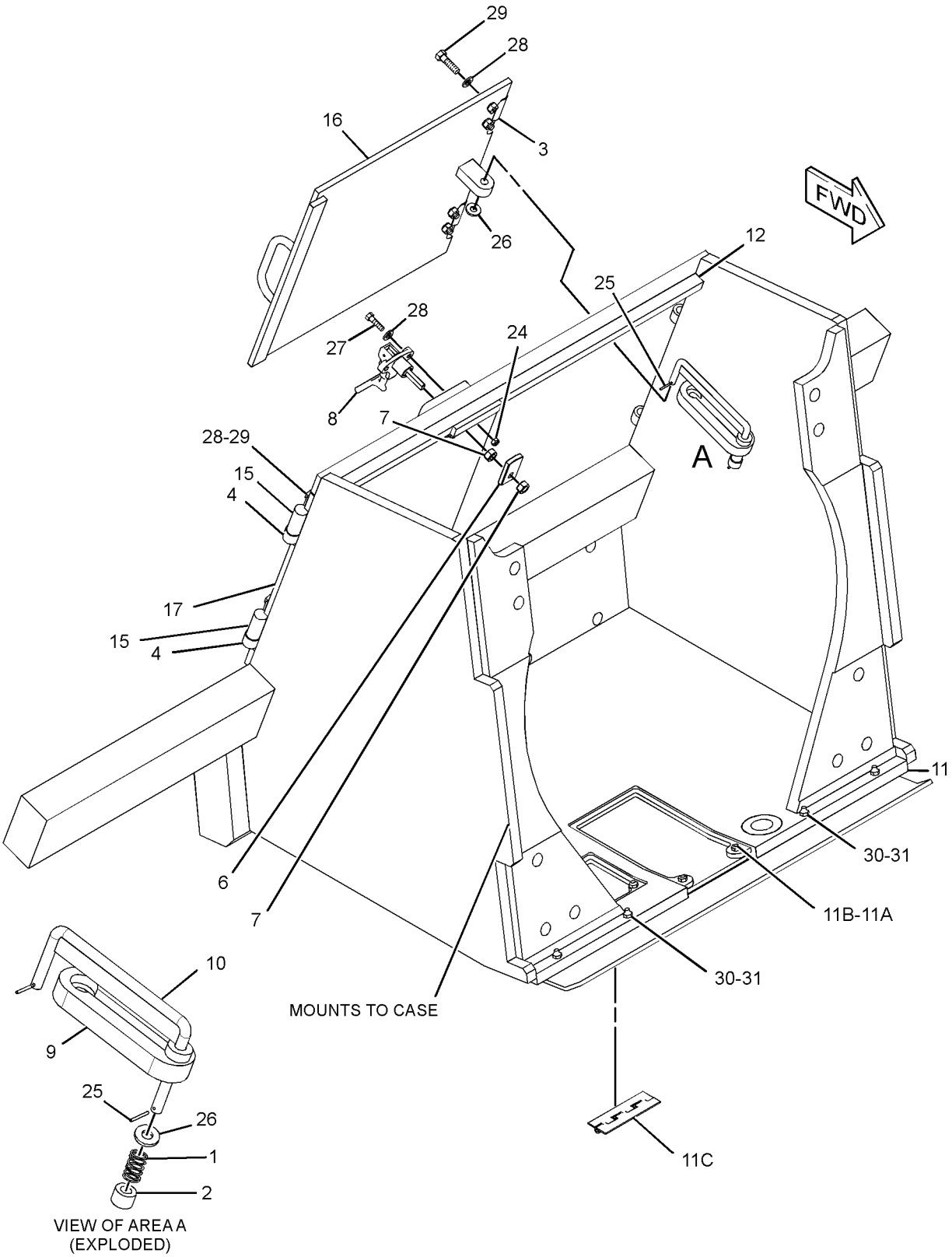

GRAPHIC #1 **<END>** g01322560

FRAME AND BODY

271-0461 BOX GP-BATTERY

S/N: SMC1-UP; GCT1-UP
PART OF 269-2044 CHASSIS AR

SMCS-7257 **i02799238**

NOTE	REF NO	GRAPHIC REF	PART NUMBER	QTY	PART NAME 1 2 3 4 5 6 (PRODUCT LEVEL)	SEE PAGE
	1	1	**246-2641**	2	PADLOCK GP	
					(EACH INCLUDES)	
		1	**5P-8500**	1	KEY	
	2	1	**231-4384**	2	BRACKET AS	
	3	1	**255-6387**	1	DOOR AS	
	3A	1	**4H-1641**	1	PIN-SPRING	
	3B	1	**8E-7561**	1	KNOB AS (BATTERY BOX)	
		1	**8E-1205**	1	KNOB	
		1	**7S-2042**	1	STUD (3/8-16X1.5-IN)	
		1	**8T-7566**	1	PIN-SPRING	
	3C	1	**9S-8230**	1	PLATE AS	
		1	**1F-0750**	1	NUT-WELD (3/8-16-THD)	
	4	1	**255-6406**	1	BRACKET	
Y	5	1	*271-0462*	1	BOX GP-BATTERY	330
	6	1	**7X-7729**	14	WASHER (11X25X3-MM THK)	
M	7	1	**8T-4136**	12	BOLT (M10X1.5X25-MM)	
M	8	1	**8T-4191**	2	BOLT (M10X1.5X16-MM)	
M	9	1	**8T-4192**	2	BOLT (M12X1.75X25-MM)	
	10	1	**8T-4223**	2	WASHER-HARD (13.5X25.5X3-MM THK)	

M-METRIC PART
Y-SEPARATE ILLUSTRATION

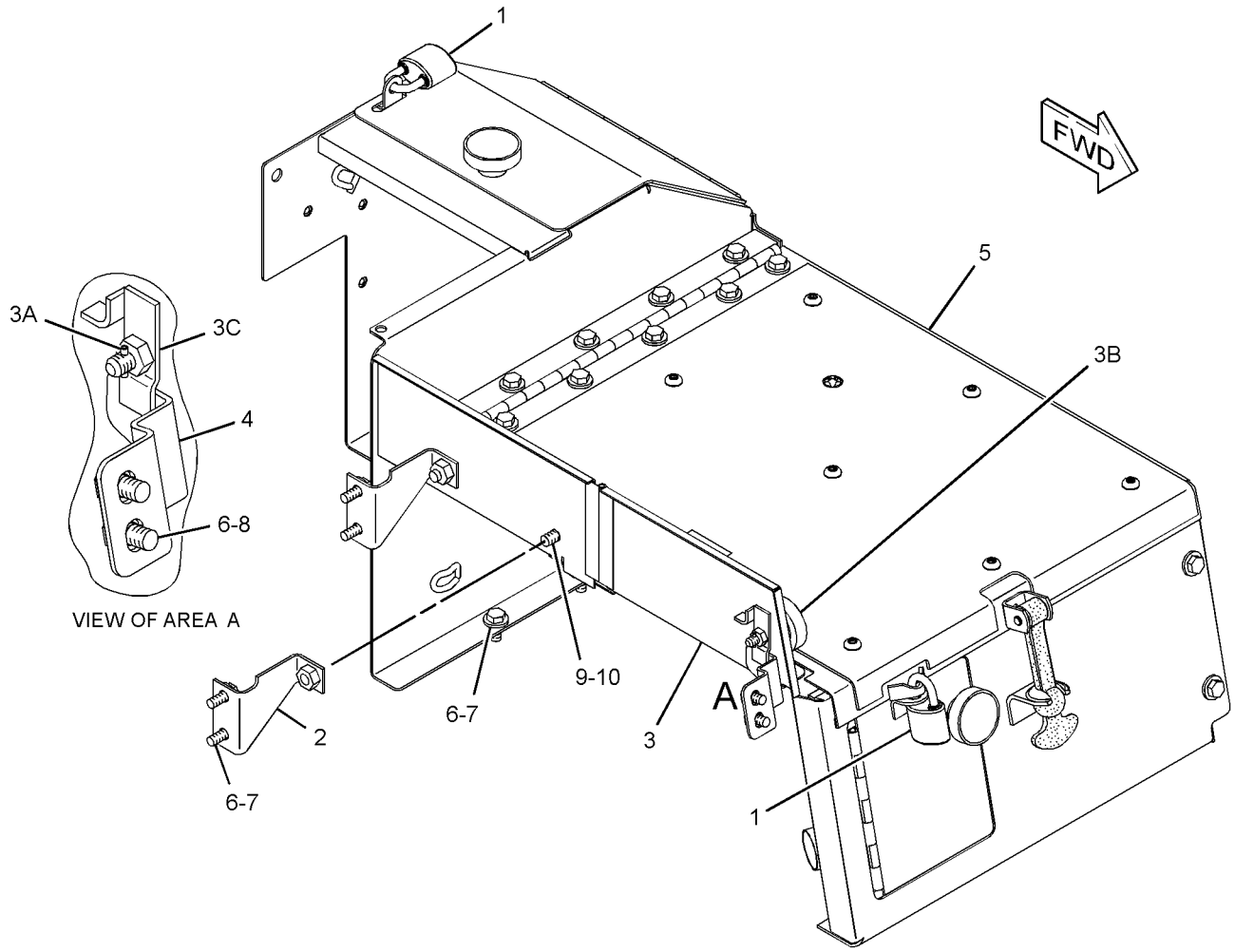

GRAPHIC #1 **<END>** g01361228

FRAME AND BODY

271-0462 BOX GP-BATTERY

S/N: SMC1-UP; GCT1-UP

PART OF 271-0461 BOX GP-BATTERY

SMCS-7257 **i02747657**

NOTE	REF NO	GRAPHIC REF	PART NUMBER	QTY	PART NAME 1 2 3 4 5 6 (PRODUCT LEVEL)	SEE PAGE
	1	1	**2M-5795**	1	PIN-CLEVIS	
	2	1	**5V-1496**	1	RETAINER	
	3	1	**6V-9197**	2	LOCK PIN	
	4	1	**6Y-3973**	1	LINK	
	5	1	**8E-7561**	2	KNOB AS (BATTERY BOX)	
					(EACH INCLUDES)	
		1	**8E-1205**	1	KNOB	
		1	**7S-2042**	1	STUD (3/8-16X1.5-IN)	
		1	**8T-7566**	1	PIN-SPRING	
	6	1	**9M-3835**	1	LATCH-RUBBER	
	7	1	**9S-8230**	2	PLATE AS	
					(EACH INCLUDES)	
		1	**1F-0750**	1	NUT-WELD (3/8-16-THD)	
	8	1	**231-4385**	1	COVER AS	
	9	1	**231-4386**	1	PLATE	
	10	1	**231-4387**	1	HINGE AS	
	11	1	**255-5210**	1	COVER AS	
	12	1	**271-0463**	1	COVER AS-BATTERY	
	13	1	**4H-1641**	2	PIN-SPRING	
	14	1	**7X-7729**	14	WASHER (11X25X3-MM THK)	
M	15	1	**8C-8585**	9	SCREW-BUTTON HEAD (M10X1.5X20-MM)	
M	16	1	**8T-4137**	13	BOLT (M10X1.5X20-MM)	
	17	1	**8T-4222**	2	WASHER-PLATED (11X32X2.5-MM THK)	

M-METRIC PART

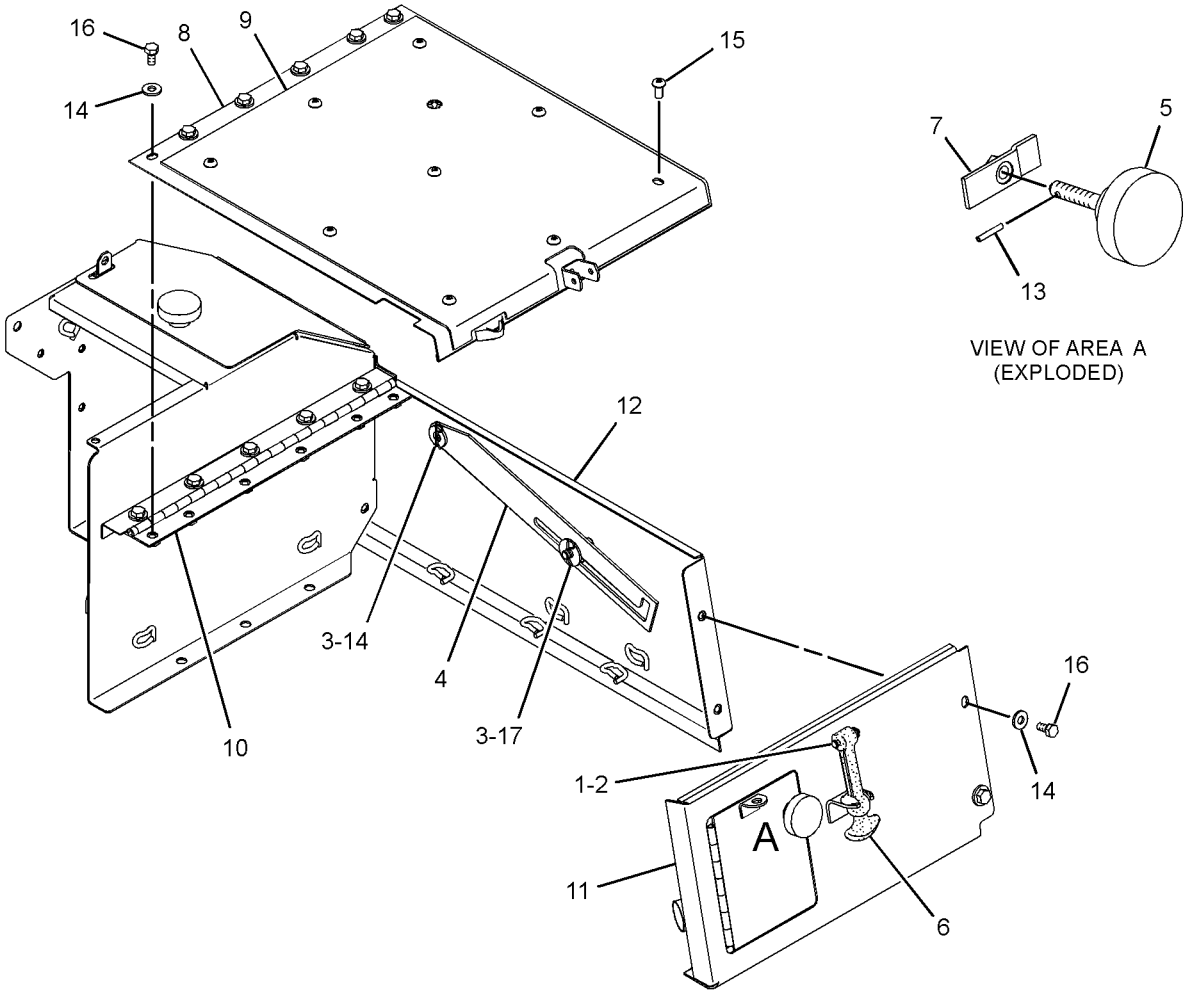

GRAPHIC #1 **<END>** g01358583

FRAME AND BODY

280-0942 CASE & FRAME GP

S/N: SMC1-UP; GCT1-UP

PART OF 269-2044 CHASSIS AR

SMCS-7051 **i02748452**

NOTE	REF NO	GRAPHIC REF	PART NUMBER	QTY	PART NAME 1 2 3 4 5 6 (PRODUCT LEVEL)	SEE PAGE
	1	1	**7X-1456**	26	PLUG	
	2	1	**106-8186**	1	VALVE AS-DRAIN (ECOLOGY)	
		1	**077-3241**	1	SEAL-O-RING	
	3	1	**106-8187**	1	PLUG-DRAIN (TRANSMISSION CASE)	
	4	1	**239-6986**	1	PLATE-IDENTIFICATION (MACHINE)	
M	5	1	**264-0168**	3	STUD-TAPERLOCK (M10X1.5X50-MM)	
	6	1	**280-0941**	1	CASE & FRAME AS	
M	7	1	**109-3001**	1	STUD-TAPERLOCK (M10X1.5X65-MM)	
	8	1	**3T-0996**	2	BEARING-SLEEVE	
	9	1	**6F-0711**	1	SEAL-O-RING	
	10	1	**7B-9665**	1	PLUG	
	11	1	**258-2305**	4	BEARING-SLEEVE	

M-METRIC PART

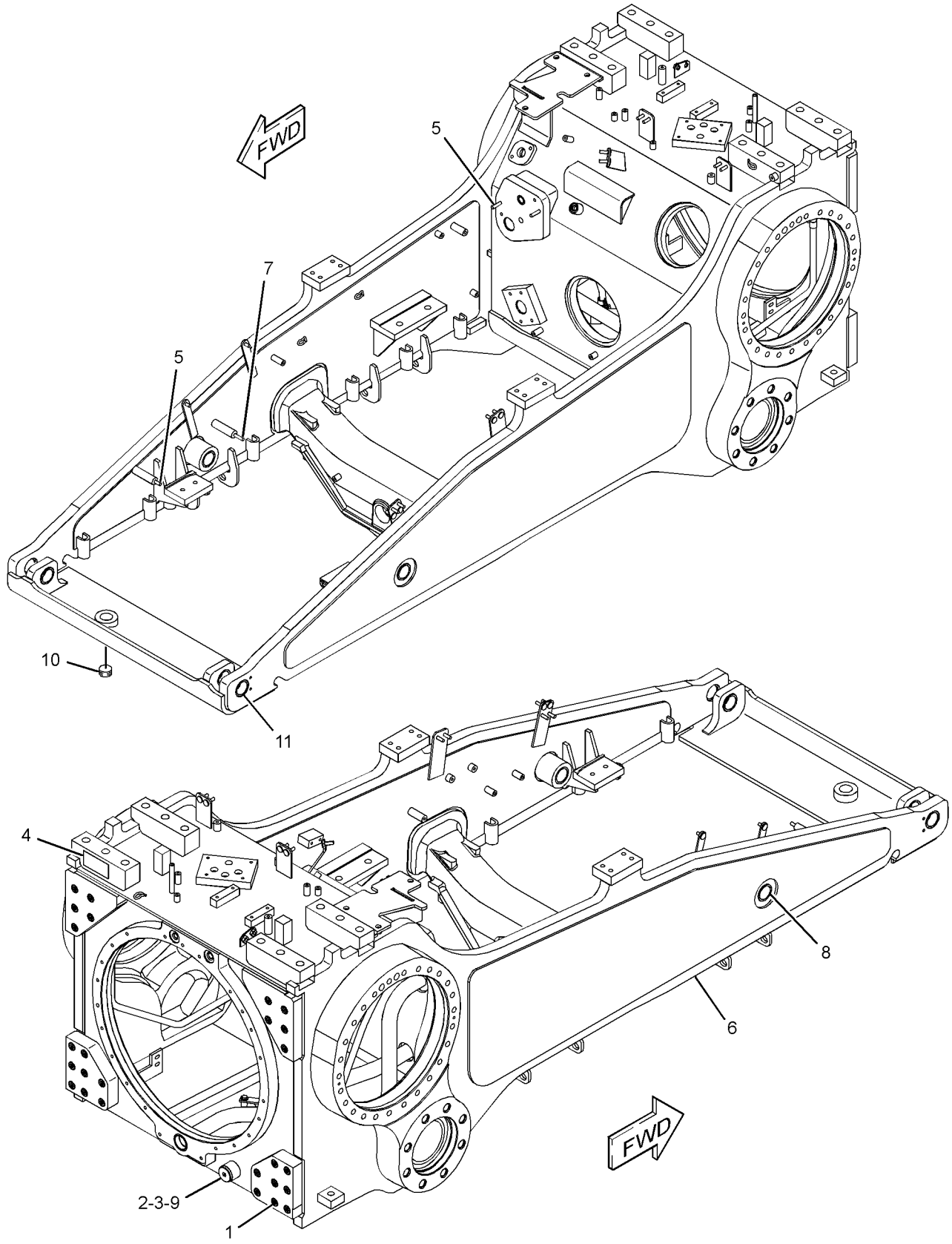

GRAPHIC #1 **<END>** g01361709

238-1177 COUNTERWEIGHT GP

S/N: SMC1-UP; GCT1-UP
305-KG
AN ATTACHMENT

SMCS-7056 **i02243704**

NOTE	REF NO	GRAPHIC REF	PART NUMBER	QTY	PART NAME 1 2 3 4 5 6 (PRODUCT LEVEL)	SEE PAGE
	1	1	**238-1178**	1	PLATE	
M	2	1	**7X-2584**	8	BOLT (M30X3.5X140-MM)	
	3	1	**9X-8258**	8	WASHER (33X56X6-MM THK)	

M-METRIC PART

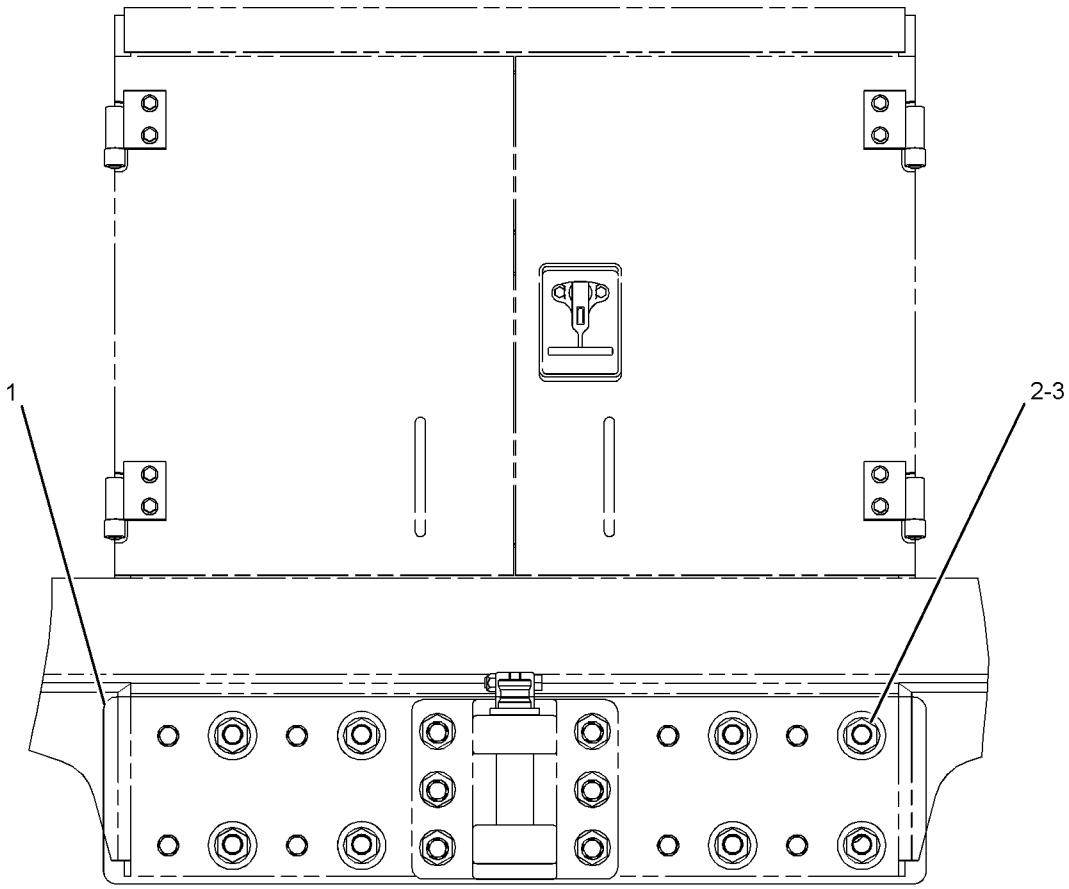

REAR VIEW

GRAPHIC #1

<END>

g01022370

3W-6866 DRAWBAR GP–LONG

S/N: SMC1-UP; GCT1-UP
AN ATTACHMENT

SMCS-7105, 7119 **i02453529**

NOTE	REF NO	GRAPHIC REF	PART NUMBER	QTY	PART NAME 1 2 3 4 5 6 (PRODUCT LEVEL)	SEE PAGE
	1	1	**3W-6867**	1	DRAWBAR AS	
	2	1	**7B-0863**	1	LATCH-PIN	
	3	1	**7F-9547**	1	PIN AS-DRAWBAR	
		1	**7F-9543**	1	COLLAR	
	4	1	**3K-2889**	1	LOCKNUT (5/8-11-THD)	
	5	1	**5D-3118**	10	STUD-TAPERLOCK (1-8-THD)	
	6	1	**6V-8190**	10	NUT (1-8-THD)	
	7	1	**7X-0347**	1	BOLT (5/8-11X2.25-IN)	
	8	1	**8T-5361**	10	WASHER-HARD (28X49X5-MM THK)	
F			**7X-7644**	1	FILM-INFORMATION (TIE-DOWN) ON DRAWBAR CLEVIS	

F-NOT SHOWN

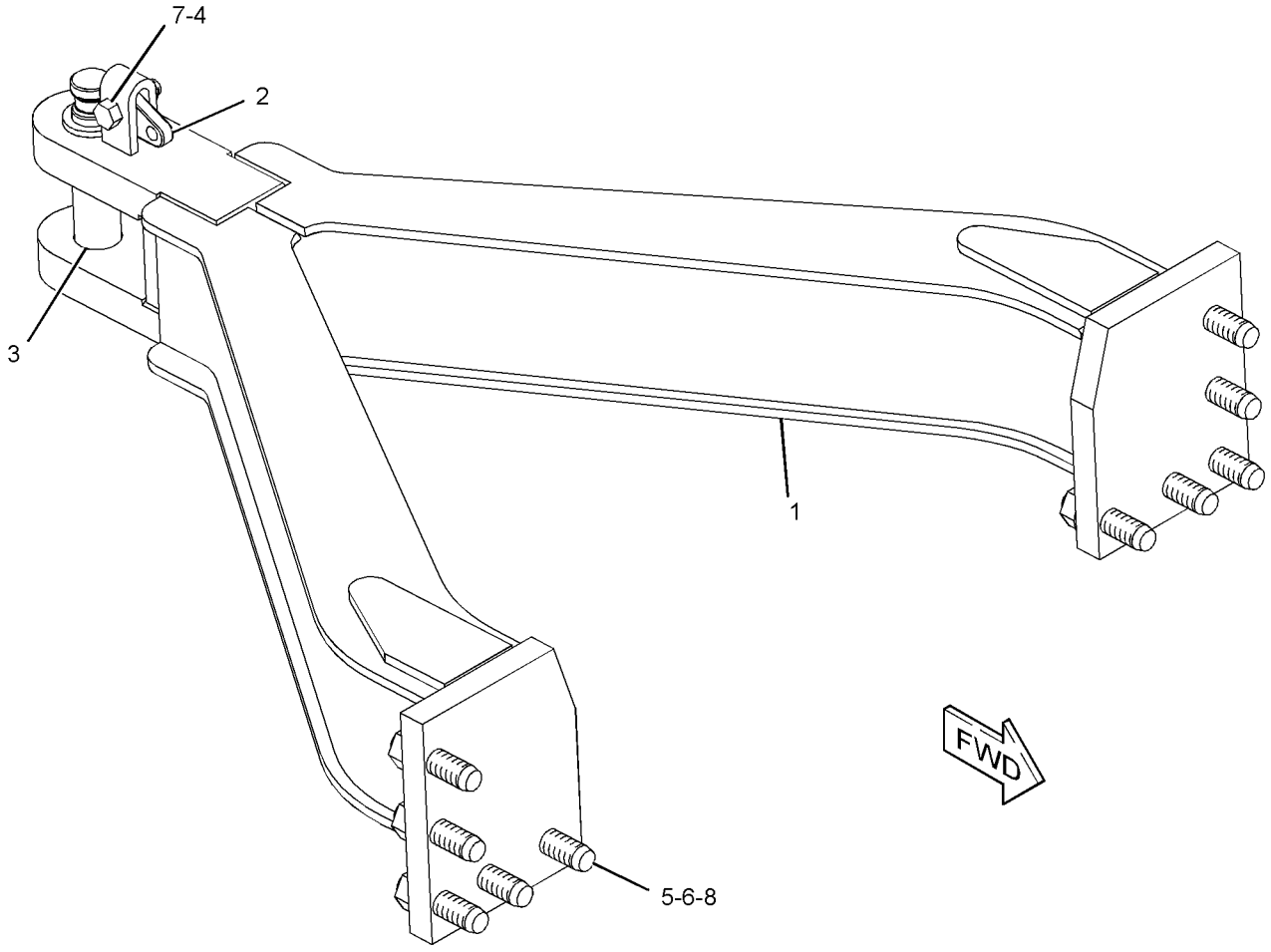

GRAPHIC #1 **<END>** g01214169

7G-8975 DRAWBAR GP

S/N: SMC1-UP; GCT1-UP

AN ATTACHMENT

SMCS-7105, 7119 **i02454210**

NOTE	REF NO	GRAPHIC REF	PART NUMBER	QTY	PART NAME 1 2 3 4 5 6 (PRODUCT LEVEL)	SEE PAGE
	1	1	**3W-2182**	1	DRAWBAR AS	
		1	**1P-1547**	1	PLATE-LOCK	
	2	1	**7B-0863**	1	LATCH-PIN	
	3	1	**7F-9547**	1	PIN AS-DRAWBAR	
		1	**7F-9543**	1	COLLAR	
	4	1	**3K-2889**	1	LOCKNUT (5/8-11-THD)	
	5	1	**5D-3118**	10	STUD-TAPERLOCK (1-8-THD)	
	6	1	**6V-8190**	10	NUT (1-8-THD)	
	7	1	**7X-0347**	1	BOLT (5/8-11X2.25-IN)	
	8	1	**8T-5361**	10	WASHER-HARD (28X49X5-MM THK)	
F			**7X-7644**	1	FILM-INFORMATION (TIE-DOWN)	
					ON DRAWBAR CLEVIS	

F-NOT SHOWN

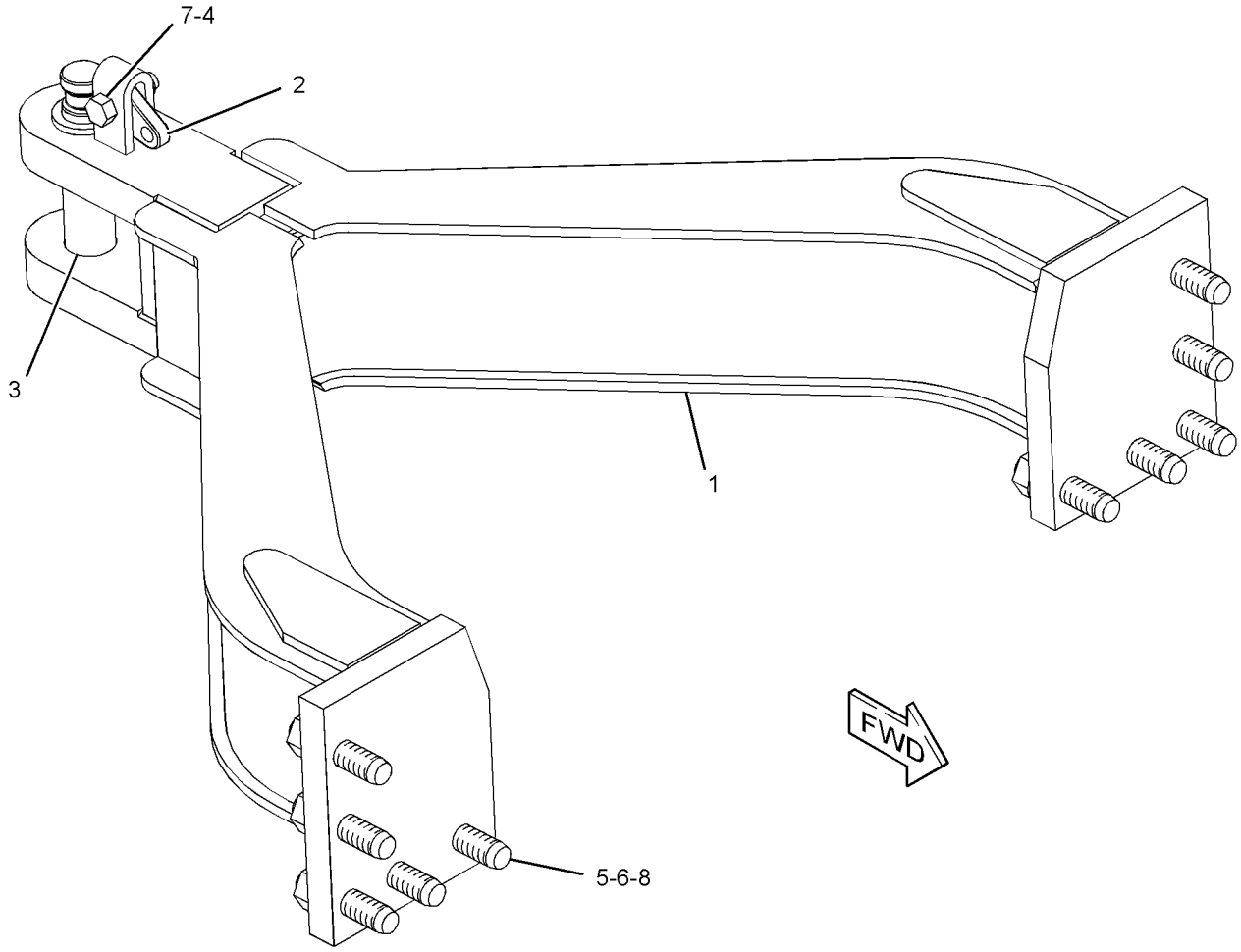

GRAPHIC #1 **<END>** g01214196

218-1835 ENCLOSURE GP-ENGINE

S/N: SMC1-UP; GCT1-UP
PART OF 269-2044 CHASSIS AR

SMCS-7263 **i02799248**

NOTE	REF NO	GRAPHIC REF	PART NUMBER	QTY	PART NAME 1 2 3 4 5 6 (PRODUCT LEVEL)	SEE PAGE
	1	2	**246-2641**	2	PADLOCK GP	
					(EACH INCLUDES)	
		2	**5P-8500**	1	KEY	
	2	2	**6T-9927**	2	SLIDE	
	3	2	**9P-3066**	2	MOUNTING	
	4	1	**227-9307**	1	DOOR AS (LH)	
	5	1	**231-4382**	1	HOOD AS	
	6	1	**261-3864**	1	TREAD	
Y	7	1	*263-7724*	1	ENCLOSURE GP-ENGINE (RH)	340
Y	8	1	*263-7725*	1	ENCLOSURE GP-ENGINE (LH)	342
	9	1	**279-1127**	1	PLATE AS	
	10	2	**3W-3819**	2	PLATE	
	11	2	**6P-8269**	1	WASHER (20.5X88X6-MM THK)	
M	12	1	**6V-7743**	3	LOCKNUT (M6X1-THD)	
M	13	2	**7X-2555**	1	BOLT (M16X2X80-MM)	
	14	2	**7X-3392**	2	WASHER-HARD (13.5X22.5X3-MM THK)	
	15	1,2	**7X-7729**	48	WASHER (11X25X3-MM THK)	
M	16	1	**8C-8585**	4	SCREW-BUTTON HEAD (M10X1.5X20-MM)	
	17	1	**8E-3070**	1	PLATE	
	18	2	**8G-4014**	2	RETAINER	
	19	2	**8T-2561**	4	WASHER-HARD (10.5X28.5X5-MM THK)	
M	20	1,2	**8T-4136**	26	BOLT (M10X1.5X25-MM)	
M	21	1,2	**8T-4137**	28	BOLT (M10X1.5X20-MM)	
M	22	1	**8T-4971**	2	BOLT (M6X1X30-MM)	
	23	1	**9X-8256**	5	WASHER (6.6X12X2-MM THK)	
	24	2	**9X-8257**	1	WASHER (17.5X30X3.5-MM THK)	
	25	2	**9X-8266**	2	WASHER (10.2X63.5X6-MM THK)	
D	26	1	**5P-7211**		SEAL (1.1-M)	
D	27	1	**5P-8309**		SEAL (5.3-M)	

D-ORDER BY THE METER
M-METRIC PART
Y-SEPARATE ILLUSTRATION

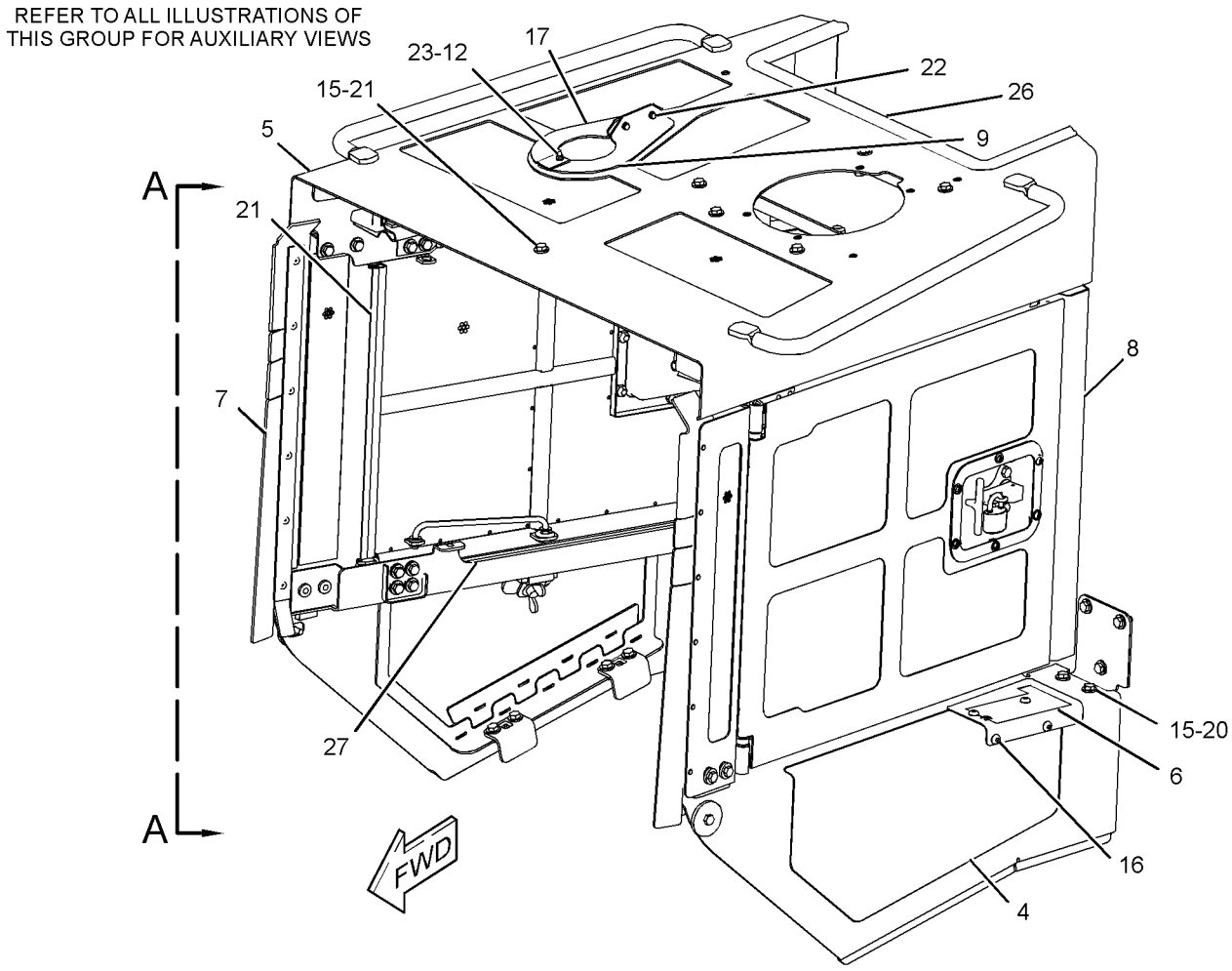

GRAPHIC #1 g01206987

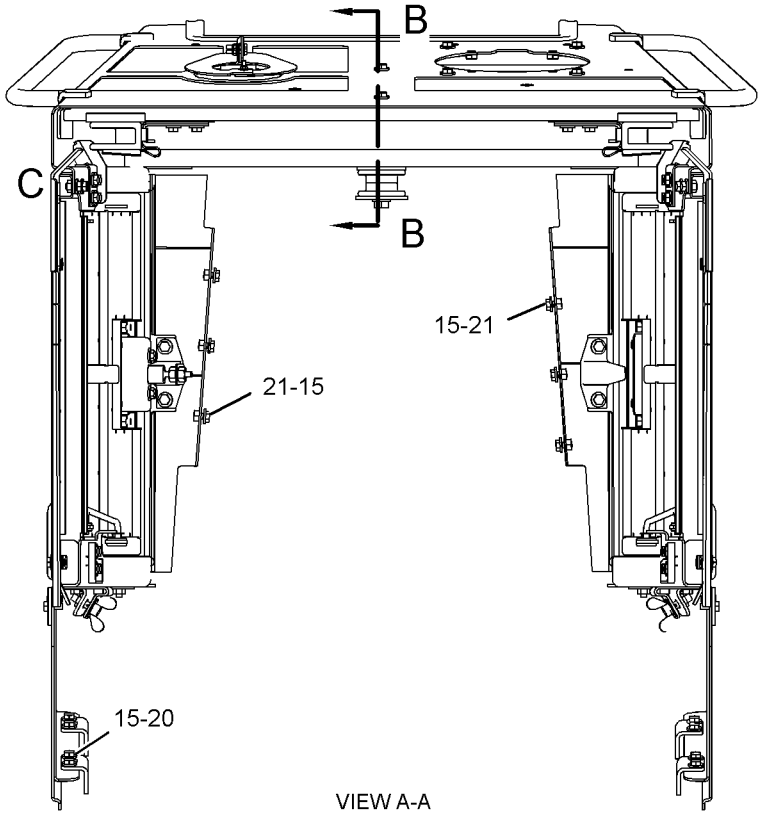

VIEW A-A

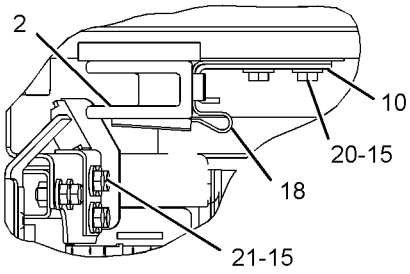

VIEW OF AREA C

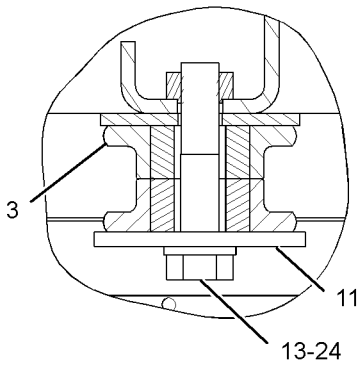

SECTION B-B

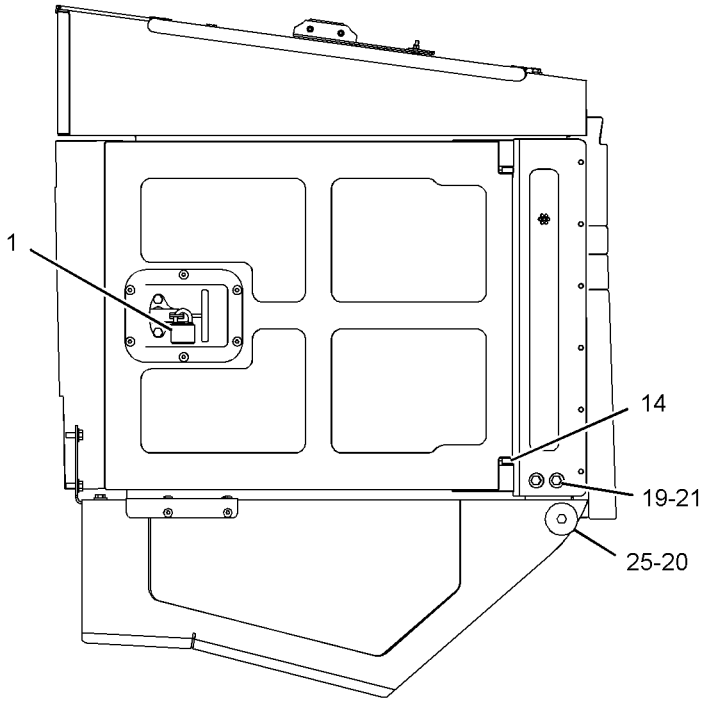

LEFT SIDE VIEW

GRAPHIC #2 **<END>** g01207102

263-7724 ENCLOSURE GP-ENGINE–RH

S/N: SMC1-UP; GCT1-UP

PART OF 218-1835 ENCLOSURE GP-ENGINE

SMCS-7263 **i02431045**

NOTE	REF NO	GRAPHIC REF	PART NUMBER	QTY	PART NAME 1 2 3 4 5 6 (PRODUCT LEVEL)	SEE PAGE
	1	1	**3B-4605**	1	PIN-COTTER	
	2	1	**3V-9399**	1	ROD AS	
		1	**4B-4278**	2	WASHER (10.2X20.5X1.6-MM THK)	
	3	1	**4B-4278**	1	WASHER (10.2X20.5X1.6-MM THK)	
	4	1	**8B-4624**	2	SHIM (0.032-IN THK)	
	5	1	**8T-9496**	2	LOCKNUT (9/16-18-THD)	
	6	1	**8Y-4000**	1	LATCH AS (T-BAR, COMPARTMENT)	
	7	1	**170-7694**	2	HINGE	
	8	1	**227-9304**	1	GUARD AS (RH)	
	9	1	**227-9305**	1	DOOR AS (RH)	
	10	1	**227-9310**	2	BRACKET	
	11	1	**237-2732**	1	PLATE AS (RH)	
	12	1	**261-3156**	1	DOOR AS	
	13	1	**261-3865**	1	TREAD	
	14	1	**262-7661**	1	SUPPORT AS (RH)	
	15	1	**264-6816**	1	BAFFLE AS (RH)	
	16	1	**275-4236**	1	SCREW-WING (M12X1.75X40-MM)	
	17	1	**3B-4610**	1	PIN-COTTER	
	18	1	**3W-9207**	1	GUIDE	
	19	1	**3W-9208**	1	PAWL	
	20	1	**4H-2558**	1	GROMMET	
	21	1	**4M-7470**	1	GROMMET	
M	22	1	**6V-7744**	2	LOCKNUT (M10X1.15-THD)	
	23	1	**7X-7729**	14	WASHER (11X25X3-MM THK)	
M	24	1	**8C-8585**	10	SCREW-BUTTON HEAD (M10X1.5X20-MM)	
	25	1	**8E-4832**	1	STRIKER	
M	26	1	**8T-4133**	2	NUT (M10X1.5-THD)	
M	27	1	**8T-4136**	2	BOLT (M10X1.5X25-MM)	
M	28	1	**8T-4137**	4	BOLT (M10X1.5X20-MM)	
M	29	1	**8T-4196**	2	BOLT (M10X1.5X35-MM)	
	30	1	**9W-8940**	1	PLATE	
D	31	1	**8T-5372**		SEAL (0.29-M)	
D	31A	1	**8T-5372**		SEAL (0.57-M)	
D	31B	1	**8T-5372**		SEAL (0.38-M)	

D-ORDER BY THE METER
M-METRIC PART

263-7724 **ENCLOSURE GP-ENGINE** *(contd.)* **i02431045**

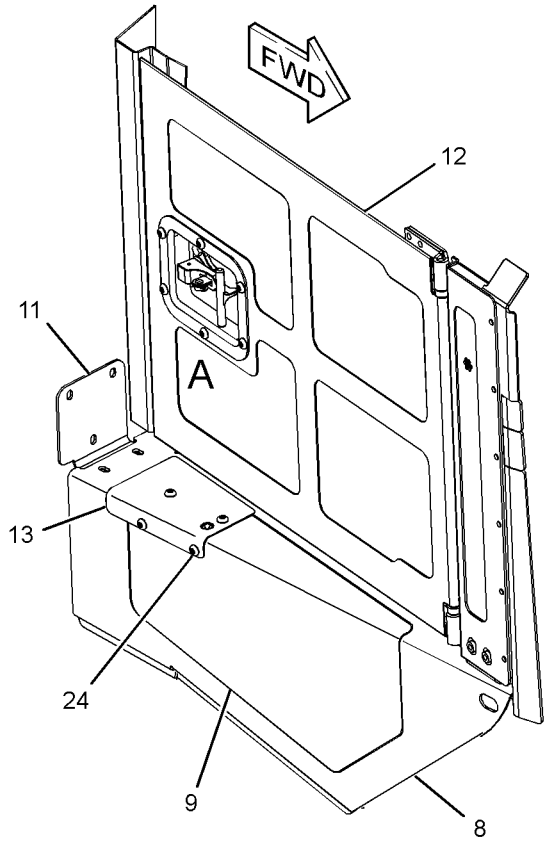

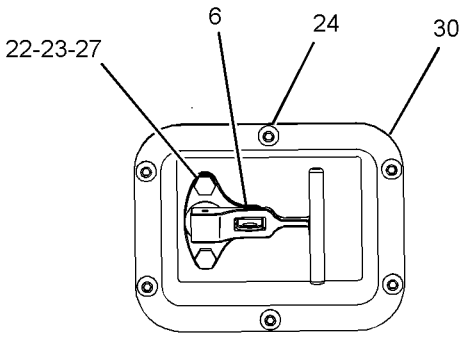

VIEW OF AREA A

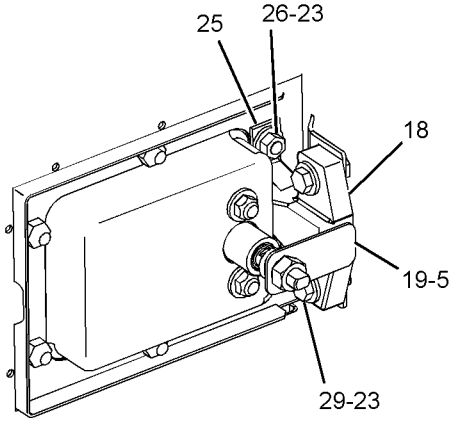

VIEW OF AREA B

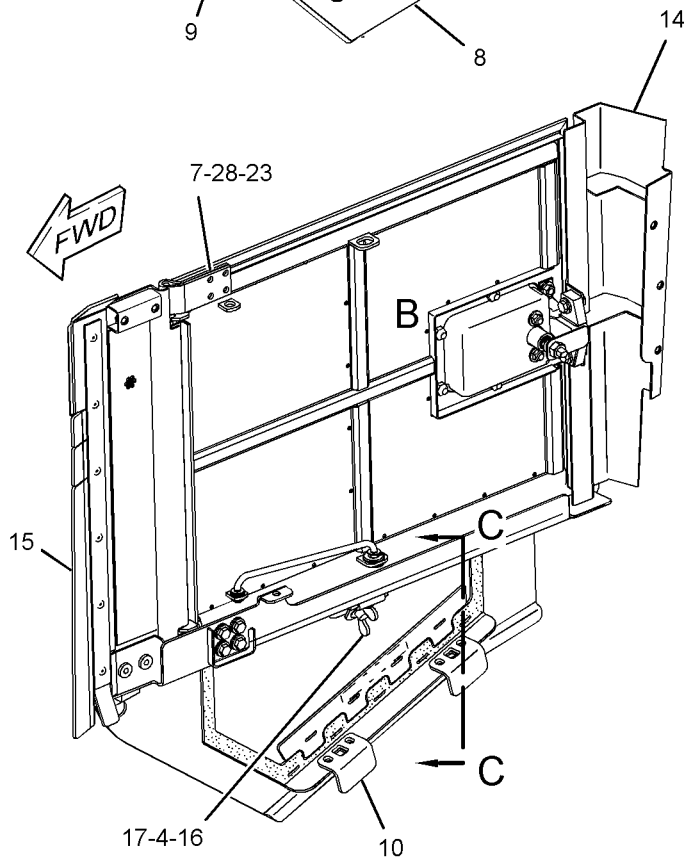

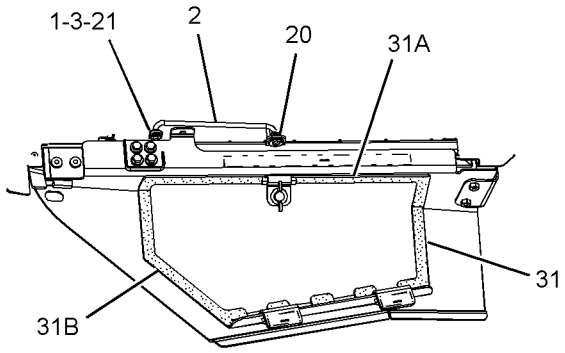

VIEW OF C-C

GRAPHIC #1 **<END>** g01212436

FRAME AND BODY

263-7725 ENCLOSURE GP-ENGINE–LH

S/N: SMC1-UP; GCT1-UP

PART OF 218-1835 ENCLOSURE GP-ENGINE

SMCS-7263 **i02431044**

NOTE	REF NO	GRAPHIC REF	PART NUMBER	QTY	PART NAME 1 2 3 4 5 6 (PRODUCT LEVEL)	SEE PAGE
	1	1	**3B-4605**	1	PIN-COTTER	
	2	1	**3V-9399**	1	ROD AS	
		1	**4B-4278**	2	WASHER (10.2X20.5X1.6-MM THK)	
	3	1	**4B-4278**	1	WASHER (10.2X20.5X1.6-MM THK)	
	4	1	**8B-4624**	1	SHIM (0.032-IN THK)	
	5	1	**8T-9496**	2	LOCKNUT (9/16-18-THD)	
J	6	1	**8Y-4000**	1	LATCH AS (T-BAR, COMPARTMENT)	
	7	1	**170-7694**	2	HINGE	
	8	1	**227-9306**	1	GUARD AS (LH)	
	9	1	**227-9310**	2	BRACKET	
	10	1	**237-2734**	1	PLATE AS (LH)	
	11	1	**261-3156**	1	DOOR AS	
	12	1	**262-7662**	1	SUPPORT AS (LH)	
	13	1	**264-6817**	1	BAFFLE AS (LH)	
	14	1	**275-4236**	1	SCREW-WING (M12X1.75X40-MM)	
	15	1	**3B-4610**	1	PIN-COTTER	
	16	1	**3W-9207**	1	GUIDE	
	17	1	**3W-9208**	1	PAWL	
	18	1	**4H-2558**	1	GROMMET	
	19	1	**4M-7470**	1	GROMMET	
M	20	1	**6V-7744**	2	LOCKNUT (M10X1.15-THD)	
	21	1	**7X-7729**	14	WASHER (11X25X3-MM THK)	
M	22	1	**8C-8585**	6	SCREW-BUTTON HEAD (M10X1.5X20-MM)	
	23	1	**8E-4832**	1	STRIKER	
M	24	1	**8T-4133**	2	NUT (M10X1.5-THD)	
M	25	1	**8T-4136**	2	BOLT (M10X1.5X25-MM)	
M	26	1	**8T-4137**	4	BOLT (M10X1.5X20-MM)	
M	27	1	**8T-4196**	2	BOLT (M10X1.5X35-MM)	
	28	1	**9W-8940**	1	PLATE	
D	29	1	**8T-5372**		SEAL (0.57-M)	
D	29A	1	**8T-5372**		SEAL (0.28-M)	
D	29B	1	**8T-5372**		SEAL (0.36-M)	

D-ORDER BY THE METER
J-REQUIRES 5P-8500 KEY
M-METRIC PART

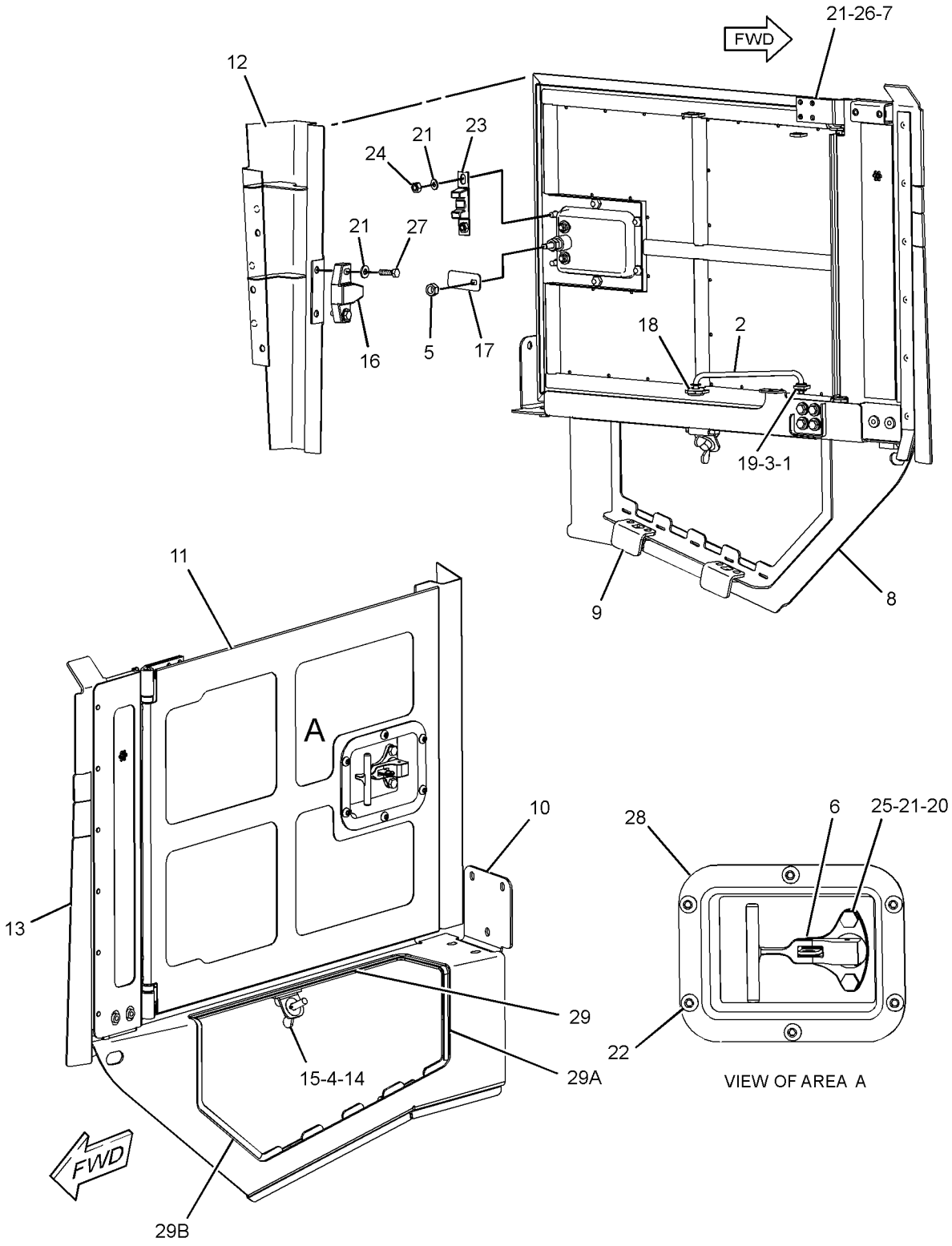

GRAPHIC #1 **<END>** g01209012

FRAME AND BODY

218-1839 ENCLOSURE GP-HYDRAULIC TANK

S/N: SMC1-UP; GCT1-UP
PART OF 269-2044 CHASSIS AR

SMCS-5056 **i02799255**

NOTE	REF NO	GRAPHIC REF	PART NUMBER	QTY	PART NAME 1 2 3 4 5 6 (PRODUCT LEVEL)	SEE PAGE
	1	1	**246-2641**	2	PADLOCK GP	
					(EACH INCLUDES)	
		1	**5P-8500**	1	KEY	
	2	1	**231-4390**	1	COVER AS	
		1	**4H-1641**	2	PIN-SPRING	
		1	**8E-7561**	2	KNOB AS	
					(EACH INCLUDES)	
		1	**8E-1205**	1	KNOB	
		1	**8T-7566**	1	PIN-SPRING	
		1	**7S-2042**	1	STUD (3/8-16X1.5-IN)	
		1	**9S-8230**	2	PLATE AS	
					(EACH INCLUDES)	
		1	**1F-0750**	1	NUT-WELD (3/8-16-THD)	
		1	**7T-0030**	1	HINGE	
	3	1	**241-6498**	1	BRACKET AS	
	4	1	**241-6499**	1	PLATE	
	5	1	**241-6919**	1	BRACKET AS	
	6	1	**7X-7729**	10	WASHER (11X25X3-MM THK)	
M	7	1	**8T-4136**	8	BOLT (M10X1.5X25-MM)	
M	8	1	**8T-4137**	2	BOLT (M10X1.5X20-MM)	

M-METRIC PART

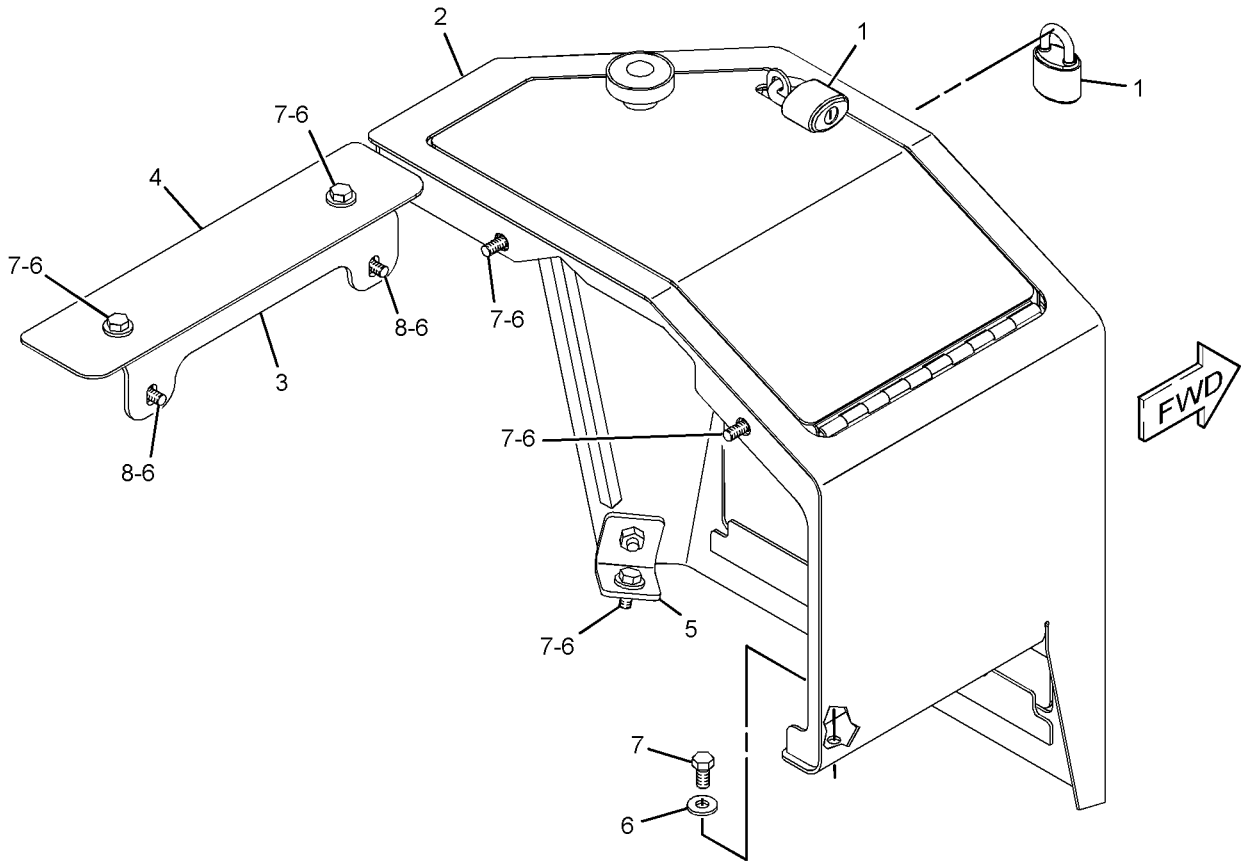

GRAPHIC #1 **<END>** g01306924

218-1841 FENDER GP

S/N: SMC1-UP; GCT1-UP
PART OF 269-2044 CHASSIS AR

SMCS-7252 **i02431201**

NOTE	REF NO	GRAPHIC REF	PART NUMBER	QTY	PART NAME 1 2 3 4 5 6 (PRODUCT LEVEL)	SEE PAGE
	1	1	**3W-3896**	2	HANDHOLD (GRAB)	
	2	1	**106-9361**	1	PLATE	
	3	1	**227-6656**	1	SUPPORT AS	
Y	4	1	*236-2218*	1	FENDER GP (RH)	346
Y	5	1	*236-2219*	1	FENDER GP (LH)	347
	6	1	**5P-1076**	8	WASHER-HARD (13.5X30X4-MM THK)	
M	7	1	**7X-2553**	8	BOLT (M16X2X40-MM)	
	8	1	**7X-3391**	12	WASHER-HARD (13.5X32X6-MM THK)	
	9	1	**8T-4121**	6	WASHER-HARD (11X21X2.5-MM THK)	
M	10	1	**8T-4136**	6	BOLT (M10X1.5X25-MM)	
M	11	1	**8T-4139**	4	BOLT (M12X1.75X30-MM)	
M	12	1	**8T-4183**	20	BOLT (M12X1.75X40-MM)	
M	13	1	**8T-4187**	4	BOLT (M20X2.5X80-MM)	
	14	1	**8T-4223**	4	WASHER-HARD (13.5X25.5X3-MM THK)	
	15	1	**8T-5439**	4	WASHER-HARD (21.5X45X6-MM THK)	
	16	1	**9X-8257**	8	WASHER (17.5X30X3.5-MM THK)	

M-METRIC PART
Y-SEPARATE ILLUSTRATION

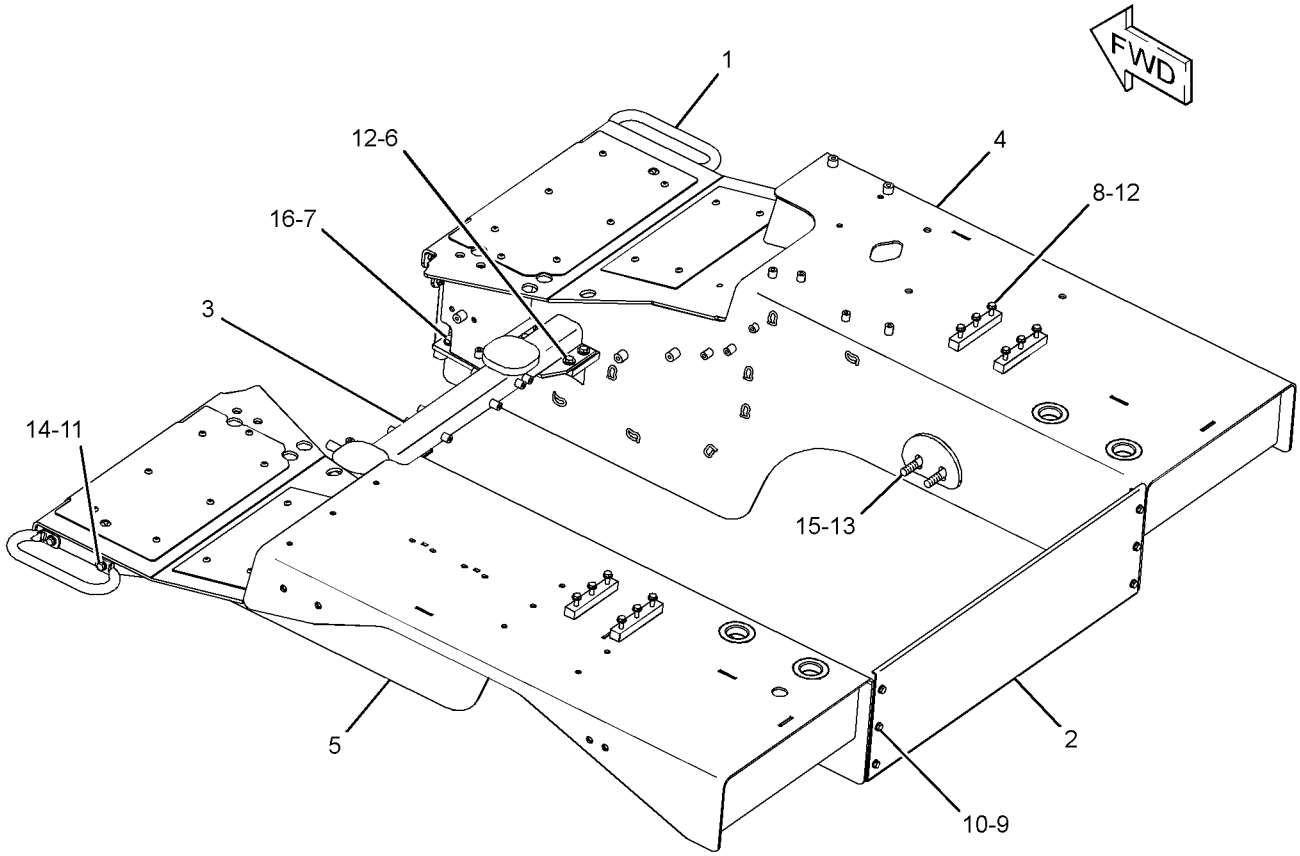

GRAPHIC #1 **<END>** g01206143

FRAME AND BODY

236-2218 FENDER GP–RH

S/N: SMC1-UP; GCT1-UP

PART OF 218-1841 FENDER GP

SMCS-7252 **i02431214**

NOTE	REF NO	GRAPHIC REF	PART NUMBER	QTY	PART NAME 1 2 3 4 5 6 (PRODUCT LEVEL)	SEE PAGE
	1	1	**8Y-0374**	1	PLATE	
	2	1	**226-5955**	1	FENDER AS (RH)	
	3	1	**236-2624**	1	PLATE	
	4	1	**238-0251**	13	SCREW-BUTTON HEAD (M10X1.5X25-MM)	

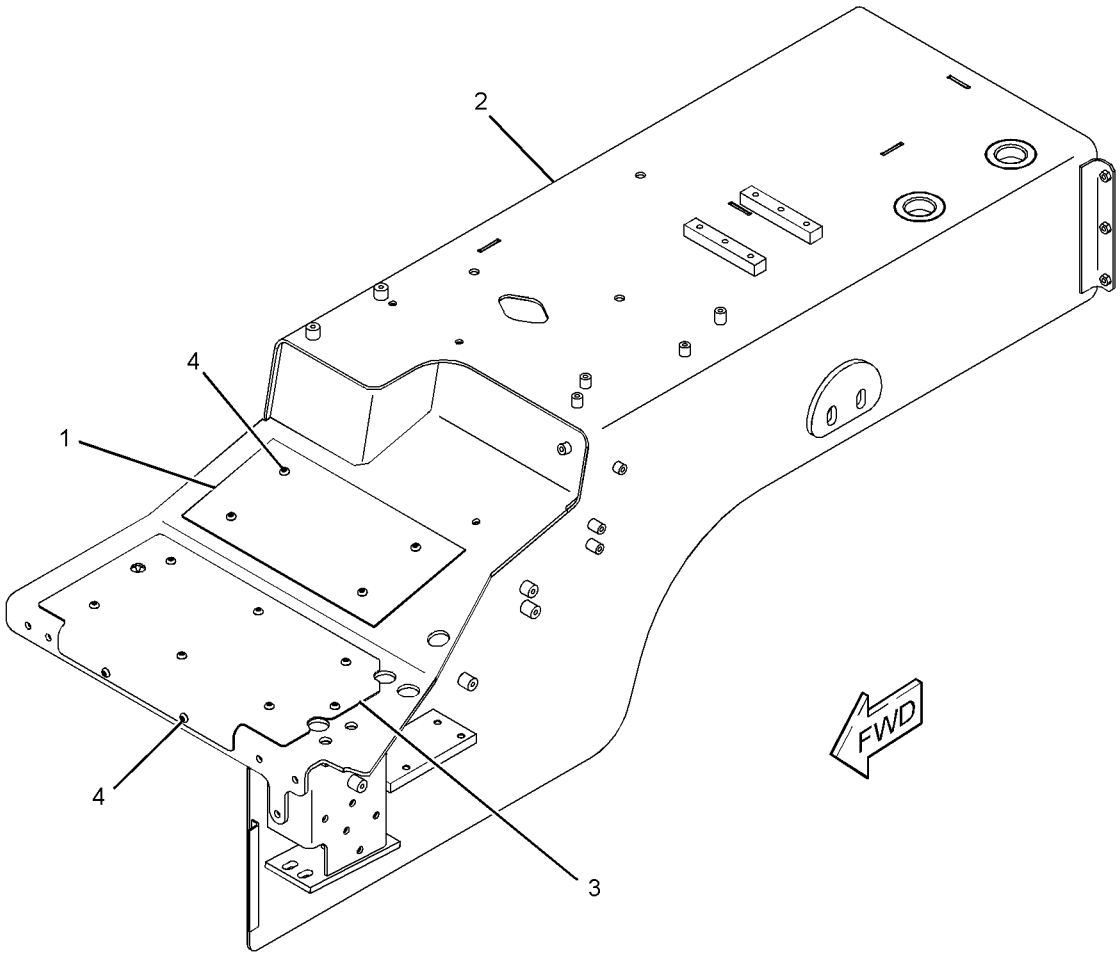

GRAPHIC #1 **<END>** g01205486

FRAME AND BODY

236-2219 FENDER GP–LH

S/N: SMC1-UP; GCT1-UP

PART OF 218-1841 FENDER GP

SMCS-7252 **i02431223**

NOTE	REF NO	GRAPHIC REF	PART NUMBER	QTY	PART NAME 1 2 3 4 5 6 (PRODUCT LEVEL)	SEE PAGE
	1	1	**8Y-0374**	1	PLATE	
	2	1	**226-5954**	1	FENDER AS (LH)	
	3	1	**236-5474**	1	PLATE	
	4	1	**238-0251**	13	SCREW-BUTTON HEAD (M10X1.5X25-MM)	

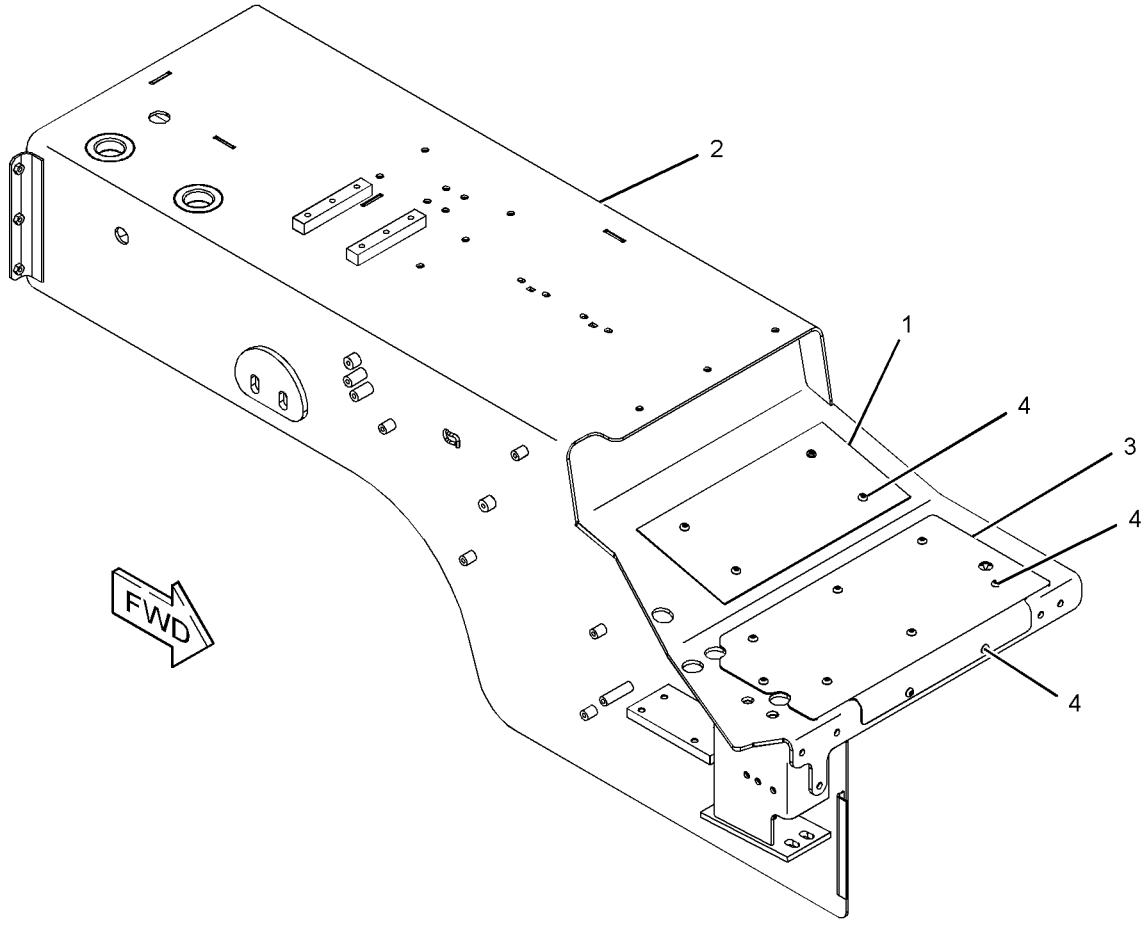

GRAPHIC #1 **<END>** g01210389

173-1852 GRID GP-SAND BLAST ERODING

S/N: SMC1-UP; GCT1-UP
CANNOT BE USED WITH REVERSIBLE FAN, FLEXXAIRE FAN
AN ATTACHMENT

SMCS-7179 **i01816402**

NOTE	REF NO	GRAPHIC REF	PART NUMBER	QTY	PART NAME 1 2 3 4 5 6 (PRODUCT LEVEL)	SEE PAGE
	1	1	**180-6693**	4	BRACKET	
	2	1	**180-6692**	1	GRID AS	
	3	1	**180-6694**	1	BRACKET AS	
M		1	**8T-3490**	4	NUT-WELD (M10X1.5-THD)	
	4	1	**7X-7729**	14	WASHER (11X25X3-MM THK)	
M	5	1	**8T-4133**	2	NUT (M10X1.5-THD)	
M	6	1	**8T-4136**	12	BOLT (M10X1.5X25-MM)	

M-METRIC PART

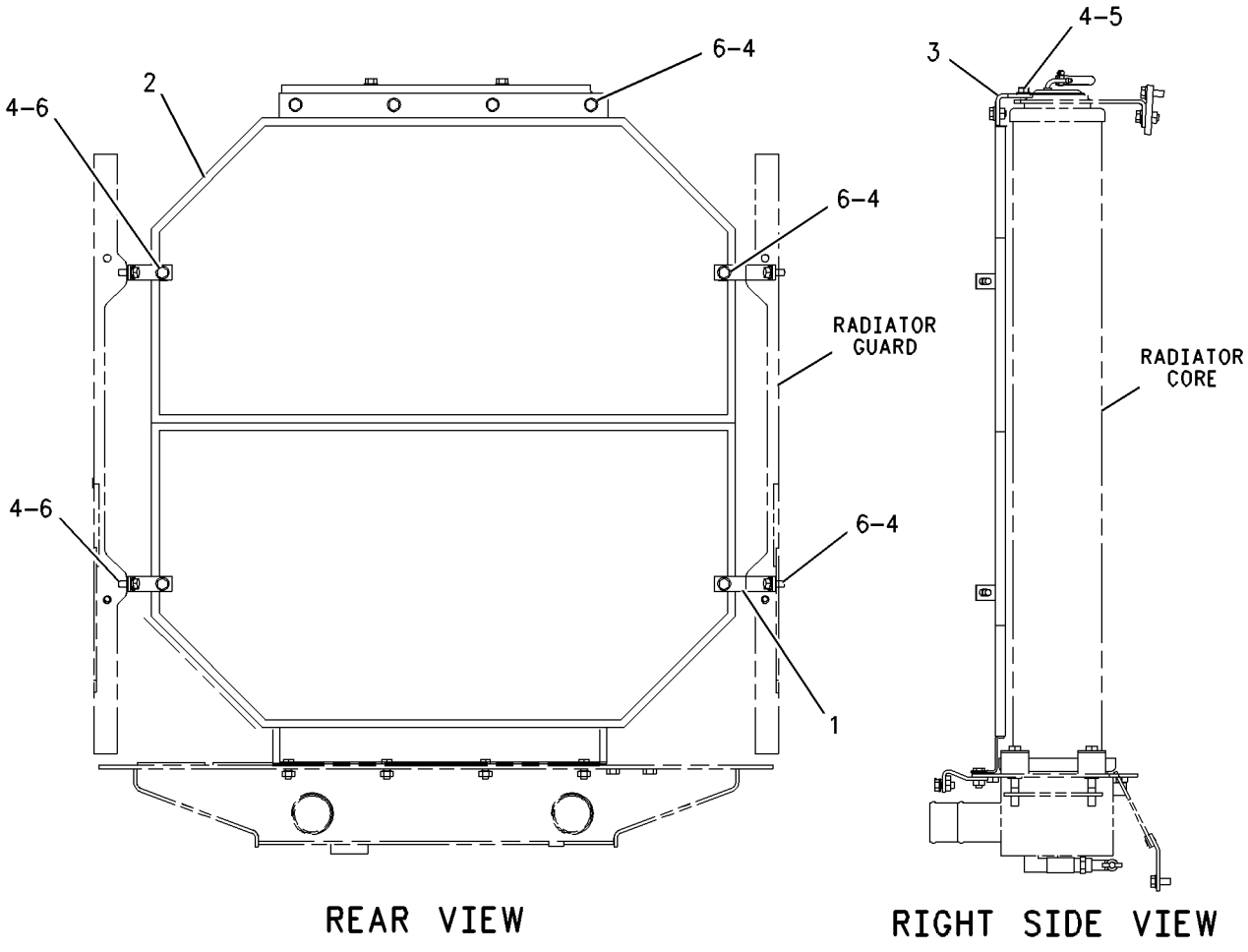

REAR VIEW

RIGHT SIDE VIEW

GRAPHIC #1 **<END>** g00742847

FRAME AND BODY

172-0964 GRILL GP-RADIATOR—HEAVY DUTY

S/N: SMC1-UP; GCT1-UP
LOUVERED
AN ATTACHMENT

SMCS-7170 **i02757684**

NOTE	REF NO	GRAPHIC REF	PART NUMBER	QTY	PART NAME 1 2 3 4 5 6 (PRODUCT LEVEL)	SEE PAGE
	1	1	**3W-1944**	1	GRILL AS (RH)	
	2	1	**9W-2822**	1	ROD	
	3	1	**172-0967**	1	GRILL AS (LH)	
	4	1	**3B-4615**	2	PIN-COTTER	
	5	1	**5P-1076**	8	WASHER-HARD (13.5X30X4-MM THK)	
	6	1	**8T-4121**	2	WASHER-HARD (11X21X2.5-MM THK)	
M	7	1	**8T-4194**	4	BOLT (M12X1.75X50-MM)	
M	8	1	**8T-6868**	4	BOLT (M12X1.75X80-MM)	

M-METRIC PART

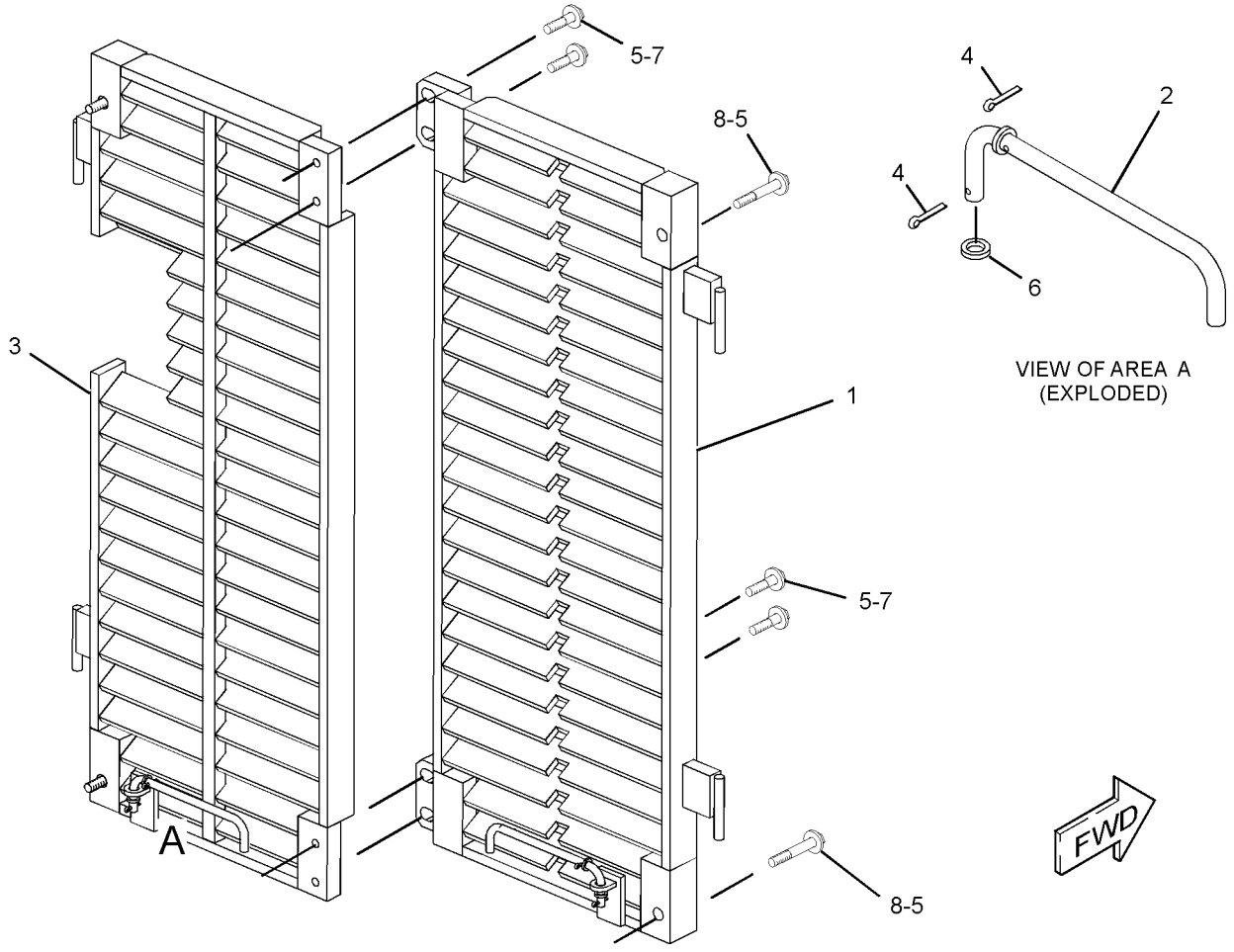

GRAPHIC #1

<END>

g01360749

293-4691 GUARD & SCRAPER GP-IDLER

S/N: SMC1-UP
FIELD INSTALLATION

SMCS-4159, 7169 **i02655351**

NOTE	PART NUMBER	QTY	PART NAME 1 2 3 4 5 6 (PRODUCT LEVEL)	SEE PAGE
Y	**279-6533**	1	GUARD GP-IDLER	383
Y	*238-0451*	2	SCRAPER GP-IDLER	422
	6K-1330	16	BOLT (3/4-10X5.75-IN)	
M	**8T-0656**	16	BOLT (M20X2.5X150-MM)	
	234-4319	4	PLATE	
	156-5342	8	SHIM (10-MM THK)	
	233-4846	8	SHIM (6-MM THK)	
	5P-8248	16	WASHER-HARD (20X36.5X3.5-MM THK)	
	153-5044	16	WASHER-HARD (21.5X45X6-MM THK)	

M-METRIC PART
Y-SEPARATE ILLUSTRATION

<END>

293-9344 GUARD & SCRAPER GP-IDLER

S/N: GCT1-UP
PART OF 293-9345 IDLER GP-FRONT

SMCS-4159, 7169 **i02655427**

NOTE	PART NUMBER	QTY	PART NAME 1 2 3 4 5 6 (PRODUCT LEVEL)	SEE PAGE
Y	**280-8738**	1	GUARD GP-IDLER	384
Y	*238-0451*	1	SCRAPER GP-IDLER	422
M	**8T-0656**	16	BOLT (M20X2.5X150-MM)	
	234-4319	4	PLATE	
	156-5342	8	SHIM (10-MM THK)	
	233-4846	8	SHIM (6-MM THK)	
	153-5044	16	WASHER-HARD (21.5X45X6-MM THK)	

M-METRIC PART
Y-SEPARATE ILLUSTRATION

<END>

262-0554 GUARD AR-FINAL DRIVE

S/N: SMC1-UP; GCT1-UP
FOR USE WITH WASTE DISPOSAL AR
AN ATTACHMENT

SMCS-7172 **i02456107**

NOTE	PART NUMBER	QTY	PART NAME 1 2 3 4 5 6 (PRODUCT LEVEL)	SEE PAGE
Y	**260-6652**	2	FINAL DRIVE GP	286

Y-SEPARATE ILLUSTRATION

<END>

FRAME AND BODY

218-1836 GUARD GP-BOTTOM

S/N: SMC1-UP; GCT1-UP
PART OF 269-2044 CHASSIS AR

SMCS-7153 **i02431070**

NOTE	REF NO	GRAPHIC REF	PART NUMBER	QTY	PART NAME 1 2 3 4 5 6 (PRODUCT LEVEL)	SEE PAGE
	1	1	**217-3655**	14	RETAINER	
	2	1	**227-8802**	1	GUARD AS	
	3	1	**230-7699**	1	GUARD AS	
	4	1	**230-7700**	1	GUARD AS	
	5	1	**240-4717**	1	COVER AS	
	6	1	**3B-4629**	4	PIN-COTTER	
	7	1	**4J-2036**	4	PIN	
	8	1	**7X-0594**	8	WASHER-HARD (20X38X3-MM THK)	
M	9	1	**8C-8478**	14	BOLT (M20X2.5X140-MM)	
	10	1	**8T-4121**	1	WASHER-HARD (11X21X2.5-MM THK)	
M	11	1	**8T-4131**	14	NUT (M20X2.5-THD)	
M	12	1	**8T-4196**	1	BOLT (M10X1.5X35-MM)	
	13	1	**8T-5439**	14	WASHER-HARD (21.5X45X6-MM THK)	

M-METRIC PART

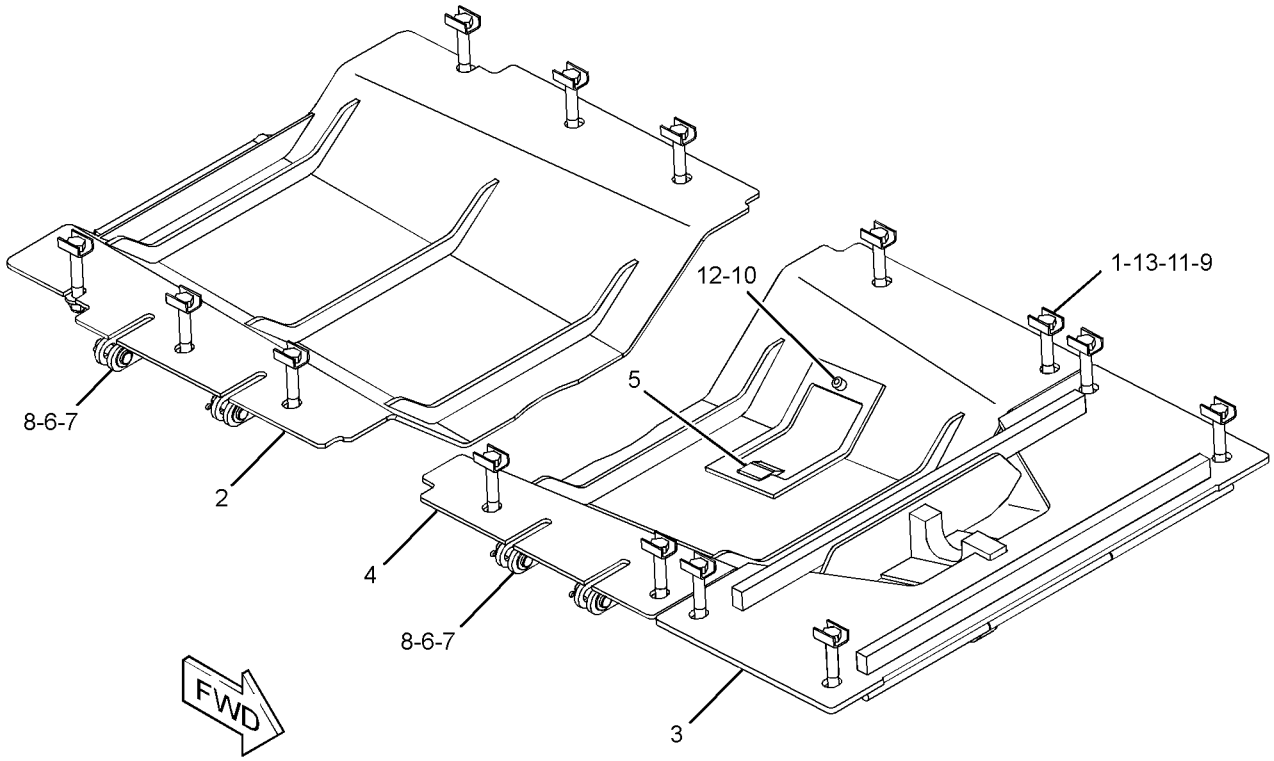

GRAPHIC #1 **<END>** g01206783

236-7241 GUARD GP-BOTTOM—EXTREME SERVICE, SEALED

S/N: SMC1-UP; GCT1-UP

AN ATTACHMENT

SMCS-7153 **i02587439**

NOTE	REF NO	GRAPHIC REF	PART NUMBER	QTY	PART NAME 1 2 3 4 5 6 (PRODUCT LEVEL)	SEE PAGE
E	1	1	**9X-8699**		SEAL (100-CM)	
	2	1	**217-3655**	14	RETAINER	
	3	1	**240-4717**	1	COVER AS	
	4	1	**258-6948**	1	GUARD AS	
	5	1	**258-6949**	1	GUARD AS	
	6	1	**260-3208**	1	GUARD AS	
	7	1	**3B-4629**	4	PIN-COTTER	
	8	1	**4J-2036**	4	PIN	
	9	1	**7X-0594**	8	WASHER-HARD (20X38X3-MM THK)	
M	10	1	**8C-8478**	14	BOLT (M20X2.5X140-MM)	
	11	1	**8T-4121**	1	WASHER-HARD (11X21X2.5-MM THK)	
M	12	1	**8T-4131**	14	NUT (M20X2.5-THD)	
M	13	1	**8T-4196**	1	BOLT (M10X1.5X35-MM)	
	14	1	**8T-5439**	14	WASHER-HARD (21.5X45X6-MM THK)	
D	15	1	**5P-7483**		SEAL (0.17-M)	
D	15A	1	**5P-7483**		SEAL (0.14-M)	
D	15B	1	**5P-7483**		SEAL (1.18-M)	
D	16	1	**5P-5755**		SEAL (1.1-M)	
D	17	1	**5P-7514**		SEAL (1.1-M EACH)	

D-ORDER BY THE METER
E-ORDER BY THE CENTIMETER
M-METRIC PART

236-7241 **GUARD GP-BOTTOM** *(contd.)* **i02587439**

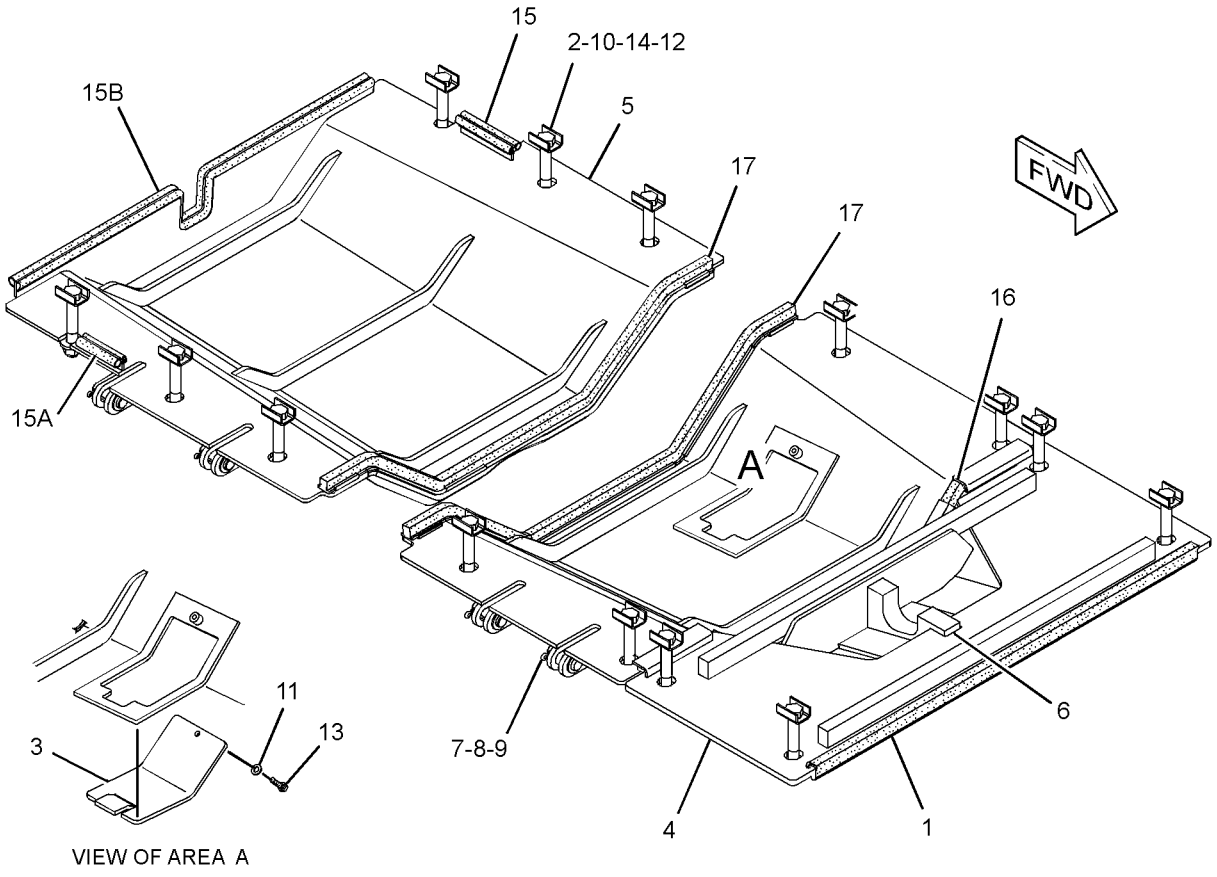

GRAPHIC #1 **<END>** g01301505

FRAME AND BODY

257-2696 GUARD GP-BOTTOM–HOOK

S/N: SMC1-UP; GCT1-UP

AN ATTACHMENT

SMCS-7153 **i02455949**

NOTE	REF NO	GRAPHIC REF	PART NUMBER	QTY	PART NAME 1 2 3 4 5 6 (PRODUCT LEVEL)	SEE PAGE
	1	1	**7S-6058**	1	HOOK-FRONT PULL	
	2	1	**217-3655**	14	RETAINER	
	3	1	**227-8802**	1	GUARD AS	
	4	1	**230-7700**	1	GUARD AS	
	5	1	**240-4717**	1	COVER AS	
	6	1	**258-7132**	1	GUARD AS	
	7	1	**3B-4629**	4	PIN-COTTER	
	8	1	**4J-2036**	4	PIN	
	9	1	**6V-8182**	6	NUT (3/4-10-THD)	
	10	1	**7X-0368**	6	BOLT (3/4-10X3-IN)	
	11	1	**7X-0594**	8	WASHER-HARD (20X38X3-MM THK)	
M	12	1	**8C-8478**	14	BOLT (M20X2.5X140-MM)	
	13	1	**8T-4121**	1	WASHER-HARD (11X21X2.5-MM THK)	
M	14	1	**8T-4131**	14	NUT (M20X2.5-THD)	
M	15	1	**8T-4196**	1	BOLT (M10X1.5X35-MM)	
	16	1	**8T-4994**	12	WASHER-HARD (20X36.5X3.5-MM THK)	
	17	1	**8T-5439**	14	WASHER-HARD (21.5X45X6-MM THK)	

M-METRIC PART

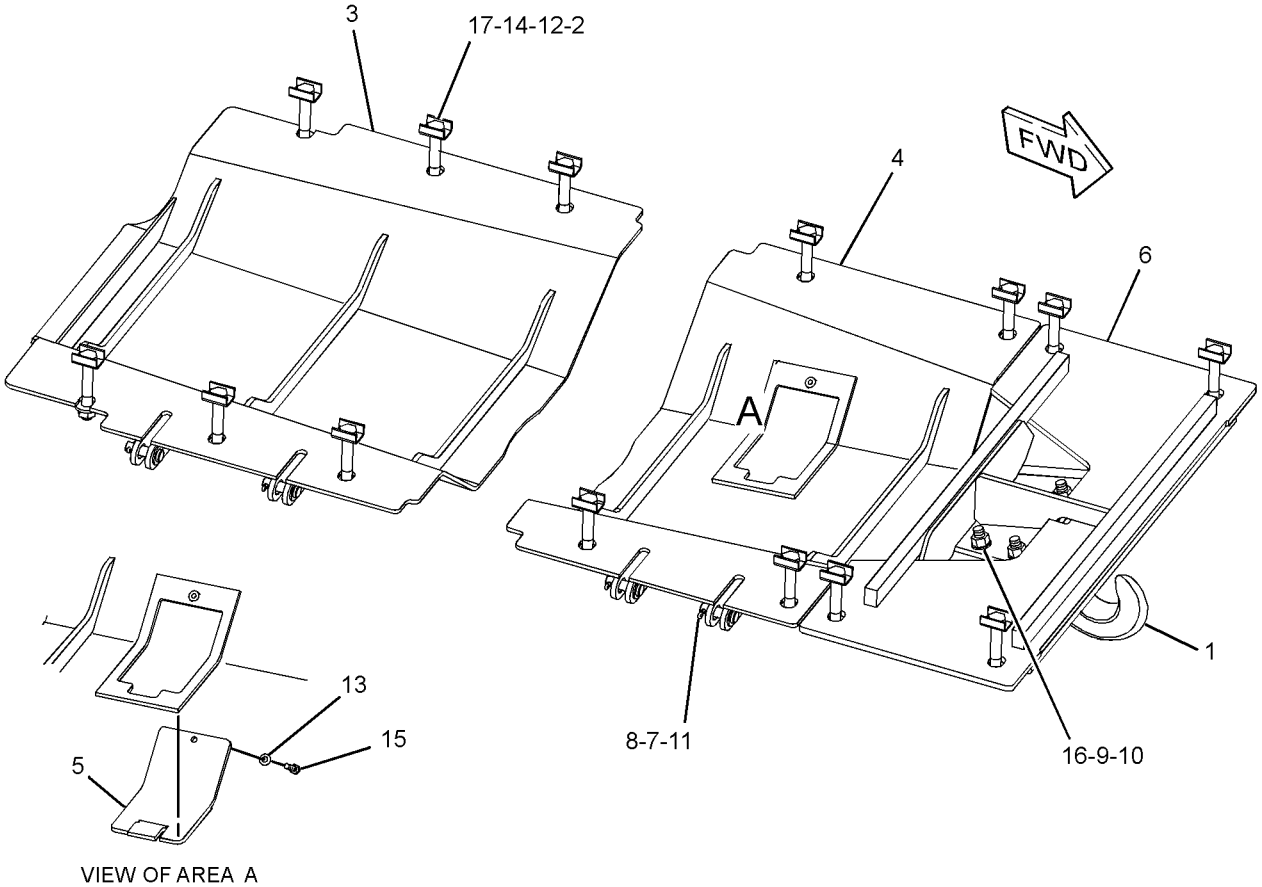

GRAPHIC #1 **<END>** g01226808

257-2698 GUARD GP-BOTTOM—HOOK

S/N: SMC1-UP; GCT1-UP
EXTREME SERVICE, SEALED, WITH TOWING HOOK
AN ATTACHMENT

SMCS-7153 **i02587468**

NOTE	REF NO	GRAPHIC REF	PART NUMBER	QTY	PART NAME 1 2 3 4 5 6 (PRODUCT LEVEL)	SEE PAGE
	1	1	**7S-6058**	1	HOOK-FRONT PULL	
	2	1	**217-3655**	14	RETAINER	
	3	1	**240-4717**	1	COVER AS	
	4	1	**258-6948**	1	GUARD AS	
	5	1	**258-6949**	1	GUARD AS	
	6	1	**262-6796**	1	GUARD AS	
	7	1	**3B-4629**	4	PIN-COTTER	
	8	1	**4J-2036**	4	PIN	
	9	1	**6V-8182**	6	NUT (3/4-10-THD)	
	10	1	**7X-0368**	6	BOLT (3/4-10X3-IN)	
	11	1	**7X-0594**	8	WASHER-HARD (20X38X3-MM THK)	
M	12	1	**8C-8478**	14	BOLT (M20X2.5X140-MM)	
	13	1	**8T-4121**	1	WASHER-HARD (11X21X2.5-MM THK)	
M	14	1	**8T-4131**	14	NUT (M20X2.5-THD)	
M	15	1	**8T-4196**	1	BOLT (M10X1.5X35-MM)	
	16	1	**8T-4994**	12	WASHER-HARD (20X36.5X3.5-MM THK)	
	17	1	**8T-5439**	14	WASHER-HARD (21.5X45X6-MM THK)	
E	18	1	**9X-8699**		SEAL (100-CM)	
D	19	1	**5P-5755**		SEAL (1.1-M)	
D	20	1	**5P-7514**		SEAL (1.1-M EACH)	
D	21	1	**5P-7483**		SEAL (1.2-M)	
D	21A	1	**5P-7483**		SEAL (0.15-M)	
D	21B	1	**5P-7483**		SEAL (0.2-M)	

D-ORDER BY THE METER
E-ORDER BY THE CENTIMETER
M-METRIC PART

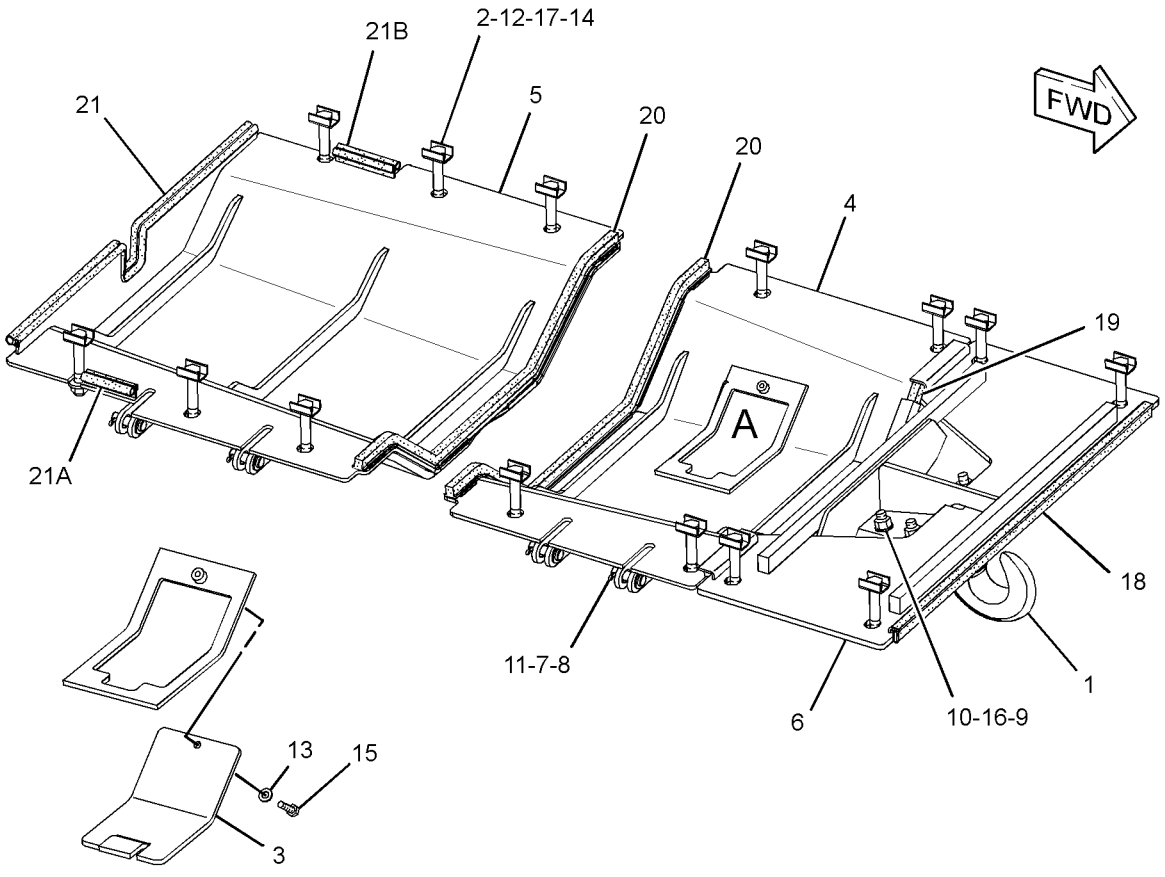

GRAPHIC #1 **<END>** g01309164

292-6053 GUARD GP-FUEL TANK

S/N: SMC1-UP; GCT1-UP
CANNOT BE USED WITH RIPPERS OR HYDRAULIC WINCHES
AN ATTACHMENT

SMCS-1273, 7150 **i02784080**

NOTE	REF NO	GRAPHIC REF	PART NUMBER	QTY	PART NAME 1 2 3 4 5 6 (PRODUCT LEVEL)	SEE PAGE
	1	1	**255-1137**	1	GUARD AS-REAR	
	2	1	**255-1138**	1	GUARD AS (LH)	
	3	1	**255-1139**	1	GUARD AS (RH)	
	4	1	**256-7780**	1	GUARD AS-REAR	
	5	1	**256-7782**	1	PLATE	
	6	1	**264-7384**	1	PLATE AS	
	7	1	**5P-1076**	26	WASHER-HARD (13.5X30X4-MM THK)	
	8	1	**7X-7729**	6	WASHER (11X25X3-MM THK)	
M	9	1	**8T-4139**	4	BOLT (M12X1.75X30-MM)	
M	10	1	**8T-4195**	6	BOLT (M10X1.5X30-MM)	
M	11	1	**8T-4956**	16	BOLT (M12X1.75X35-MM)	
M	12	1	**8T-6868**	6	BOLT (M12X1.75X80-MM)	

M-METRIC PART

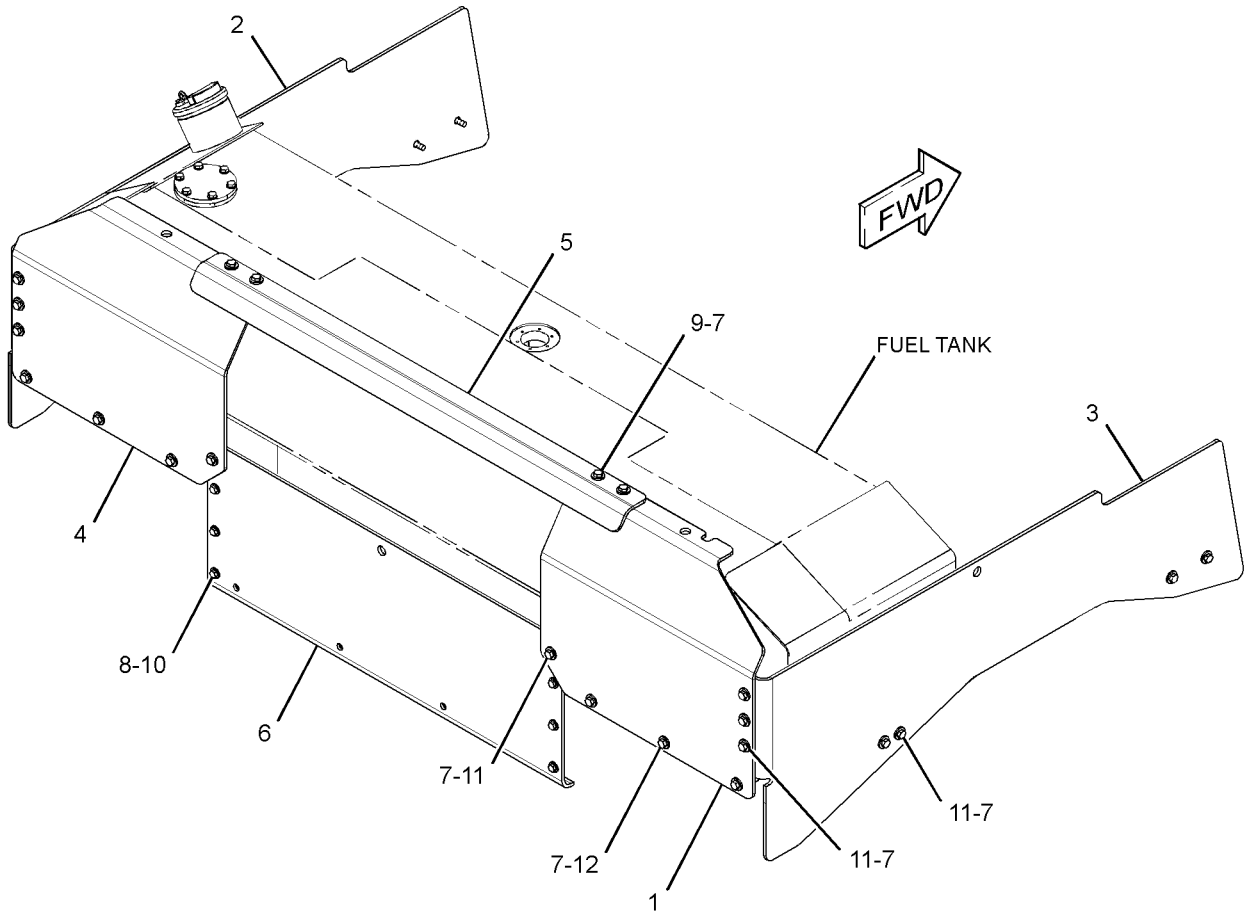

GRAPHIC #1 **<END>** g01364735

FRAME AND BODY

292-6054 GUARD GP-FUEL TANK

S/N: SMC1-UP; GCT1-UP
FOR USE WITH RIPPER
AN ATTACHMENT

SMCS-1273, 7150 **i02784086**

NOTE	REF NO	GRAPHIC REF	PART NUMBER	QTY	PART NAME 1 2 3 4 5 6 (PRODUCT LEVEL)	SEE PAGE
	1	1	**255-1137**	1	GUARD AS-REAR	
	2	1	**255-1138**	1	GUARD AS (LH)	
	3	1	**255-1139**	1	GUARD AS (RH)	
	4	1	**256-7780**	1	GUARD AS-REAR	
	5	1	**256-7781**	1	PLATE AS	
	6	1	**256-7782**	1	PLATE	
	7	1	**5P-1076**	26	WASHER-HARD (13.5X30X4-MM THK)	
	8	1	**7X-7729**	6	WASHER (11X25X3-MM THK)	
M	9	1	**8T-4139**	4	BOLT (M12X1.75X30-MM)	
M	10	1	**8T-4195**	6	BOLT (M10X1.5X30-MM)	
M	11	1	**8T-4956**	16	BOLT (M12X1.75X35-MM)	
M	12	1	**8T-6868**	6	BOLT (M12X1.75X80-MM)	

M-METRIC PART

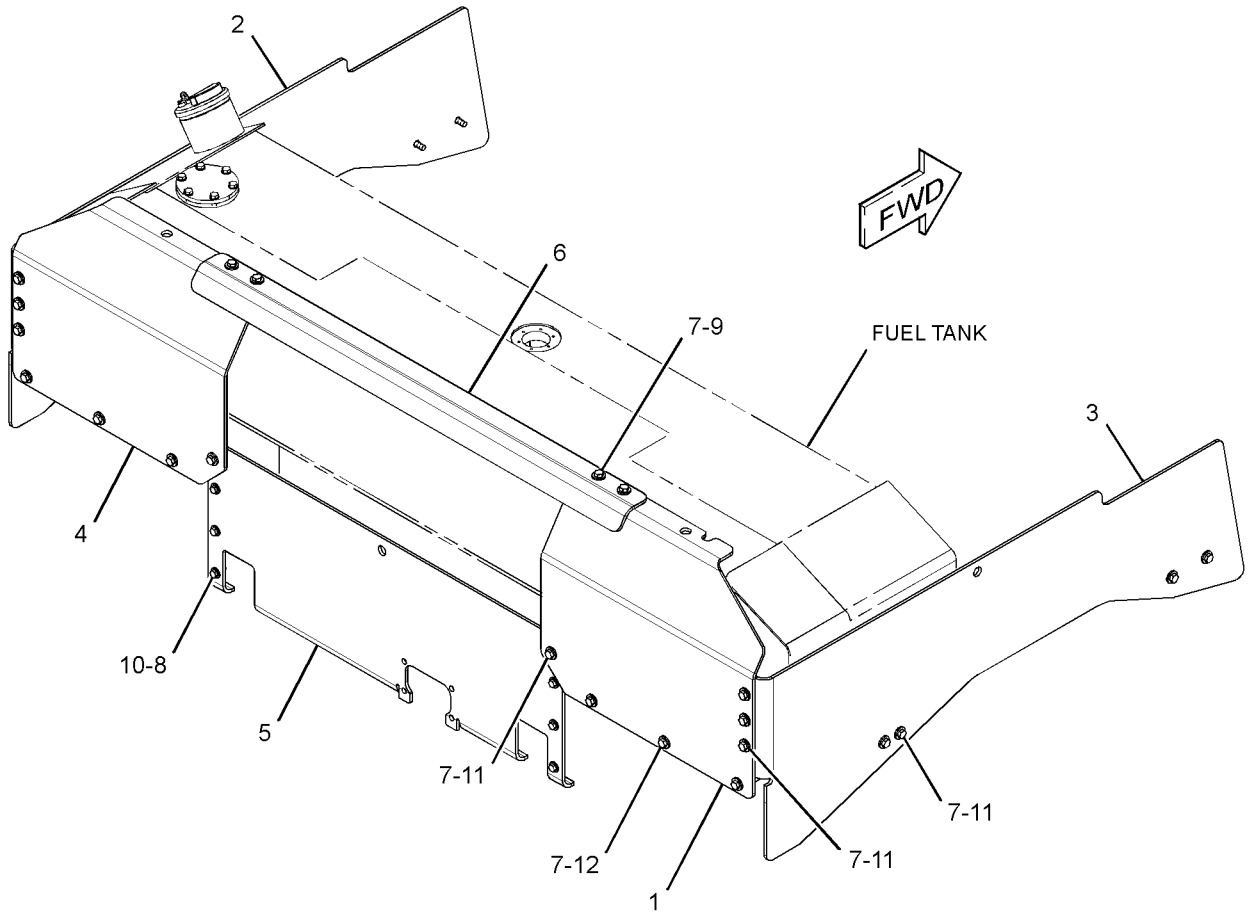

GRAPHIC #1 **<END>** g01364743

FRAME AND BODY

292-6055 GUARD GP-FUEL TANK

S/N: SMC1-UP; GCT1-UP
FOR USE WITH HYDRAULIC WINCHES
AN ATTACHMENT

SMCS-1273, 7150 **i02784090**

NOTE	REF NO	GRAPHIC REF	PART NUMBER	QTY	PART NAME 1 2 3 4 5 6 (PRODUCT LEVEL)	SEE PAGE
	1	1	**255-1137**	1	GUARD AS-REAR	
	2	1	**255-1138**	1	GUARD AS (LH)	
	3	1	**255-1139**	1	GUARD AS (RH)	
	4	1	**256-7780**	1	GUARD AS-REAR	
	5	1	**256-7782**	1	PLATE	
	6	1	**264-7386**	1	PLATE AS	
	7	1	**5P-1076**	26	WASHER-HARD (13.5X30X4-MM THK)	
	8	1	**7X-7729**	6	WASHER (11X25X3-MM THK)	
M	9	1	**8T-4139**	4	BOLT (M12X1.75X30-MM)	
M	10	1	**8T-4195**	6	BOLT (M10X1.5X30-MM)	
M	11	1	**8T-4956**	16	BOLT (M12X1.75X35-MM)	
M	12	1	**8T-6868**	6	BOLT (M12X1.75X80-MM)	

M-METRIC PART

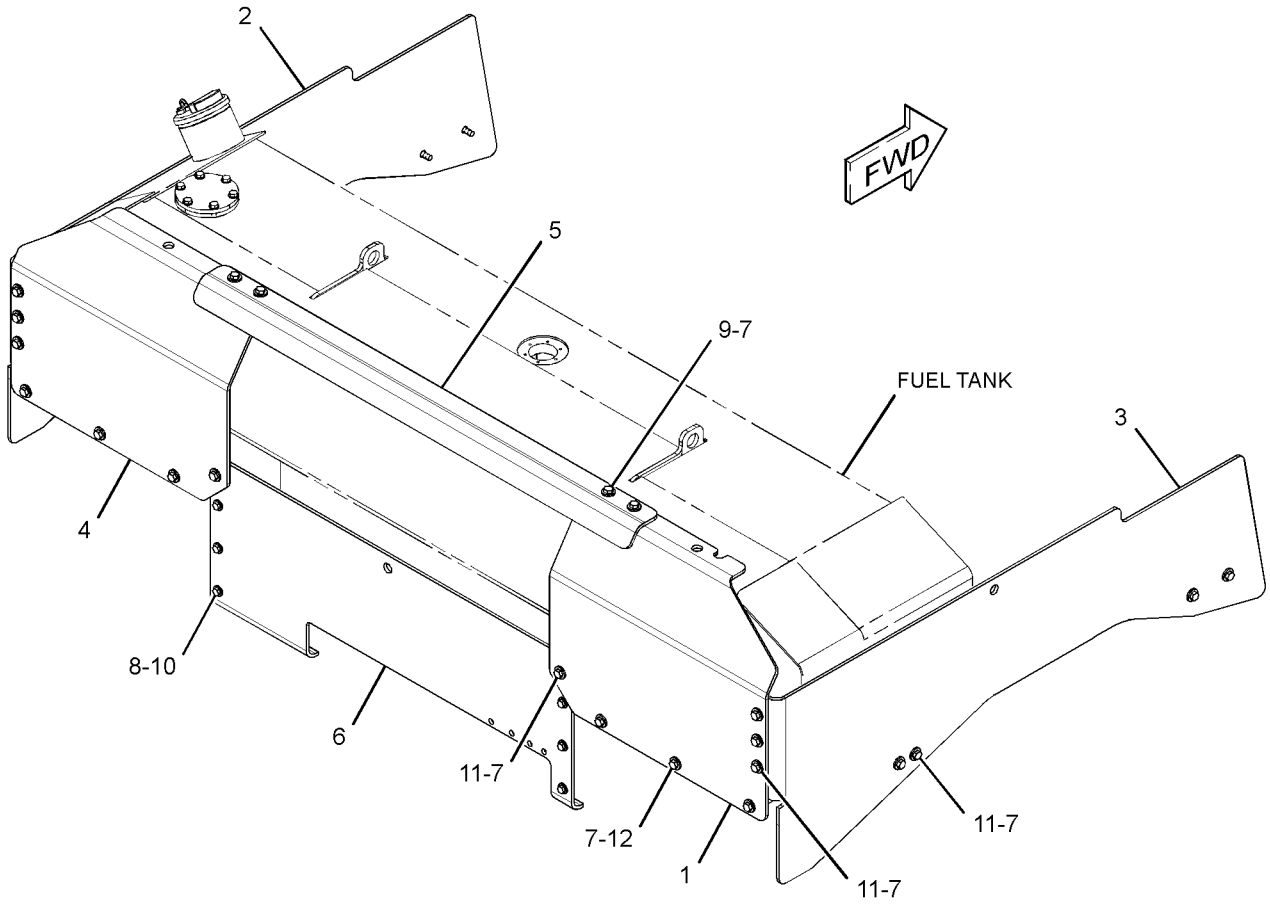

GRAPHIC #1 **<END>** g01364751

FRAME AND BODY

223-1540 GUARD GP-RADIATOR

S/N: SMC1-UP; GCT1-UP

PART OF 269-2044 CHASSIS AR

SMCS-7155 **i02799265**

NOTE	REF NO	GRAPHIC REF	PART NUMBER	QTY	PART NAME 1 2 3 4 5 6 (PRODUCT LEVEL)	SEE PAGE
	1	1	**3W-3742**	2	PLUG	
	2	1	**3W-3896**	2	HANDHOLD (GRAB)	
	3	1	**5G-9973**	2	COVER	
	4	1	**5G-9974**	2	GASKET	
	5	1	**246-2641**	1	PADLOCK GP	
		1	**5P-8500**	1	KEY	
	6	1	**9W-2822**	1	ROD	
	7	1	**109-4757**	1	GRILL AS	
	8	1	**155-8577**	2	COVER AS	
	9	1	**160-2351**	2	WASHER-HARD (22X76X6-MM THK)	
	10	1	**170-8592**	2	PIN	
	11	1	**223-1541**	1	GUARD AS-RADIATOR	
	11A	1	**3G-6372**	2	BEARING-SLEEVE	
	11B	1	**8E-9522**	2	BEARING-SLEEVE	
	11C	1	**258-2303**	2	BEARING-SLEEVE	
	11D	1	**258-2307**	2	BEARING-SLEEVE	
	12	1	**227-3149**	2	PIN	
	13	1	**227-3151**	1	PLATE AS	
	14	1	**2G-9245**	2	PLATE	
	15	1	**3B-4615**	2	PIN-COTTER	
	16	1	**3V-9244**	2	WASHER (16.5X50X5-MM THK)	
	17	1	**5M-6214**	2	PLUG-PIPE	
	18	1	**5P-1076**	16	WASHER-HARD (13.5X30X4-MM THK)	
M	20	1	**7X-2553**	2	BOLT (M16X2X40-MM)	
	22	1	**8T-4121**	10	WASHER-HARD (11X21X2.5-MM THK)	
	23	1	**8T-4122**	4	WASHER-HARD (17X32X3.5-MM THK)	
M	24	1	**8T-4136**	8	BOLT (M10X1.5X25-MM)	
M	25	1	**8T-4139**	12	BOLT (M12X1.75X30-MM)	
M	26	1	**7X-2488**	2	BOLT (M20X2.5X160-MM)	
M	27	1	**8T-4910**	4	BOLT (M12X1.75X60-MM)	

M-METRIC PART

223-1540 **GUARD GP-RADIATOR** *(contd.)* **i02799265**

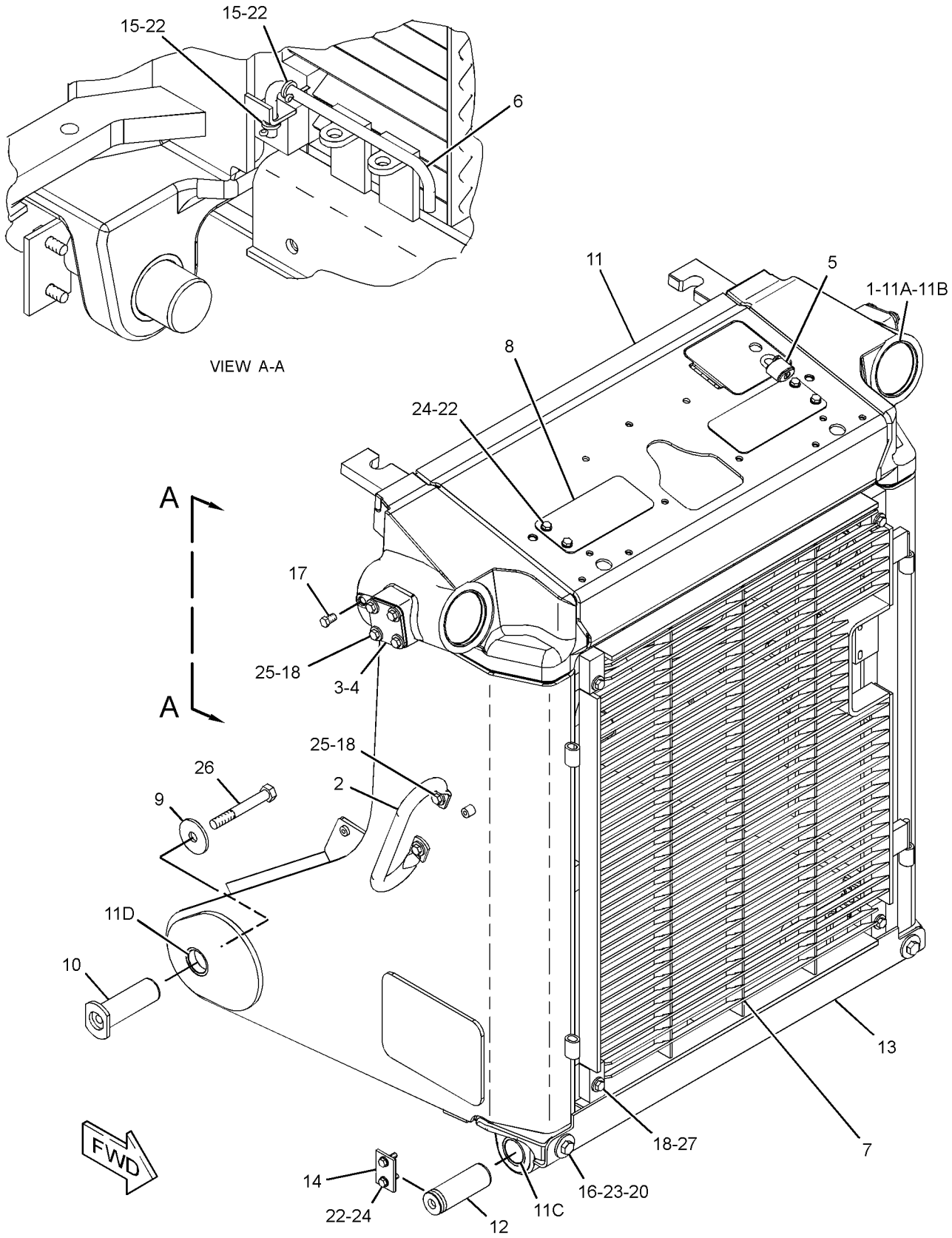

GRAPHIC #1 **<END>** g01356897

258-7597 GUARD GP-RADIATOR–BOTTOM

S/N: SMC1-UP; GCT1-UP

AN ATTACHMENT

SMCS-7155 **i02587034**

NOTE	REF NO	GRAPHIC REF	PART NUMBER	QTY	PART NAME 1 2 3 4 5 6 (PRODUCT LEVEL)	SEE PAGE
	1	1	**258-7607**	1	GUARD AS	
	2	1	**3V-9244**	2	WASHER (16.5X50X5-MM THK)	
M	3	1	**7X-2553**	2	BOLT (M16X2X40-MM)	
	4	1	**8T-4122**	6	WASHER-HARD (17X32X3.5-MM THK)	

M-METRIC PART

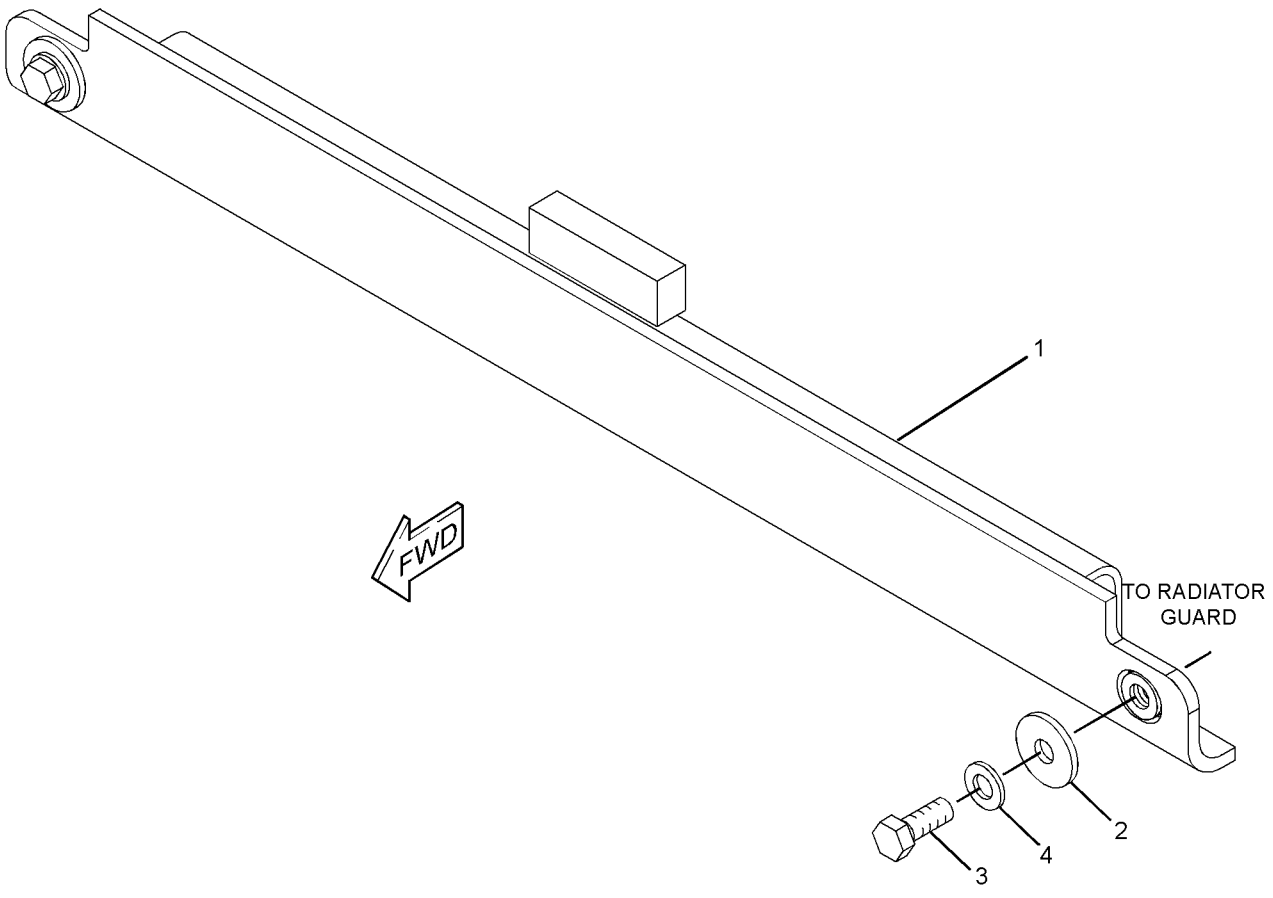

GRAPHIC #1 **<END>** g01329577

250-3413 GUARD GP-REAR

S/N: SMC1-UP; GCT1-UP
HEAVY-DUTY
AN ATTACHMENT

SMCS-7187 **i02455497**

NOTE	REF NO	GRAPHIC REF	PART NUMBER	QTY	PART NAME 1 2 3 4 5 6 (PRODUCT LEVEL)	SEE PAGE
	1	1	**1K-8850**	1	SPRING	
	2	1	**2P-8514**	4	SPACER (1.062X2X1-IN THK)	
	3	1	**5G-7183**	1	GUARD AS	
		1	**4K-7627**	1	BAR	
		1	**4K-8501**	2	CLIP	
		1	**7G-4262**	1	HINGE	
	4	1	**5D-3118**	4	STUD-TAPERLOCK (1-8-THD)	
	5	1	**6V-8190**	4	NUT (1-8-THD)	
	6	1	**8T-5361**	4	WASHER-HARD (28X49X5-MM THK)	
M	7	1	**9X-2125**	4	BOLT-LOCKING (M10X1.5X25-MM)	

M-METRIC PART

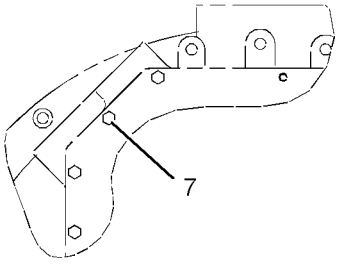

SECTION B-B

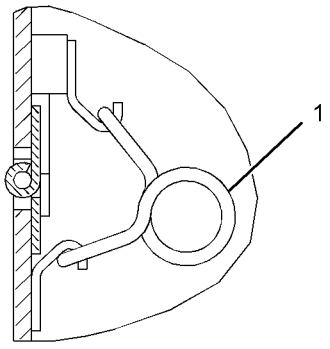

SECTION A-A

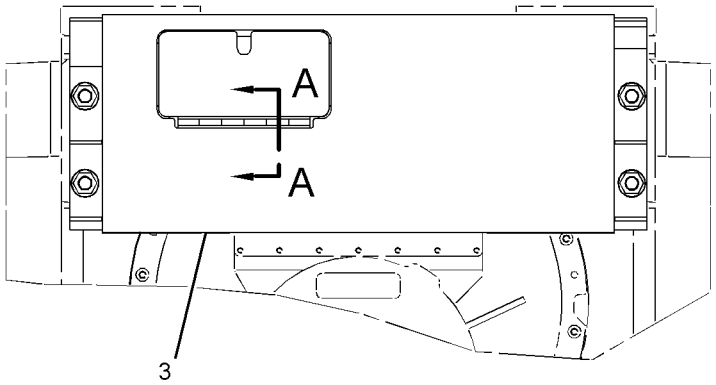

REAR VIEW

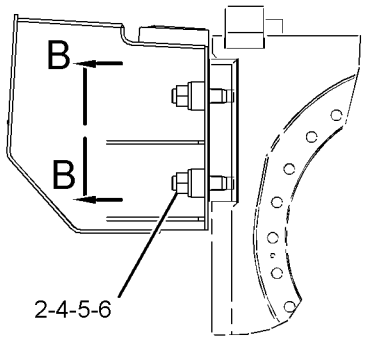

RIGHT SIDE VIEW

GRAPHIC #1 **<END>** g01225932

3W-1356 GUARD GP-TRANSMISSION

S/N: SMC1-UP; D6D1-UP; GCT1-UP
PART OF 280-1478 CONTROL AR-HYDRAULIC IMPLEMENT, 224-4449 RIPPER AR
AN ATTACHMENT

SMCS-7153 **i02069491**

NOTE	REF NO	GRAPHIC REF	PART NUMBER	QTY	PART NAME 1 2 3 4 5 6 (PRODUCT LEVEL)	SEE PAGE
	1	1	**3W-1357**	1	GUARD AS	
	2	1	**7X-0402**	4	BOLT (1-8X2-IN)	
	3	1	**8T-5361**	4	WASHER-HARD (28X49X5-MM THK)	

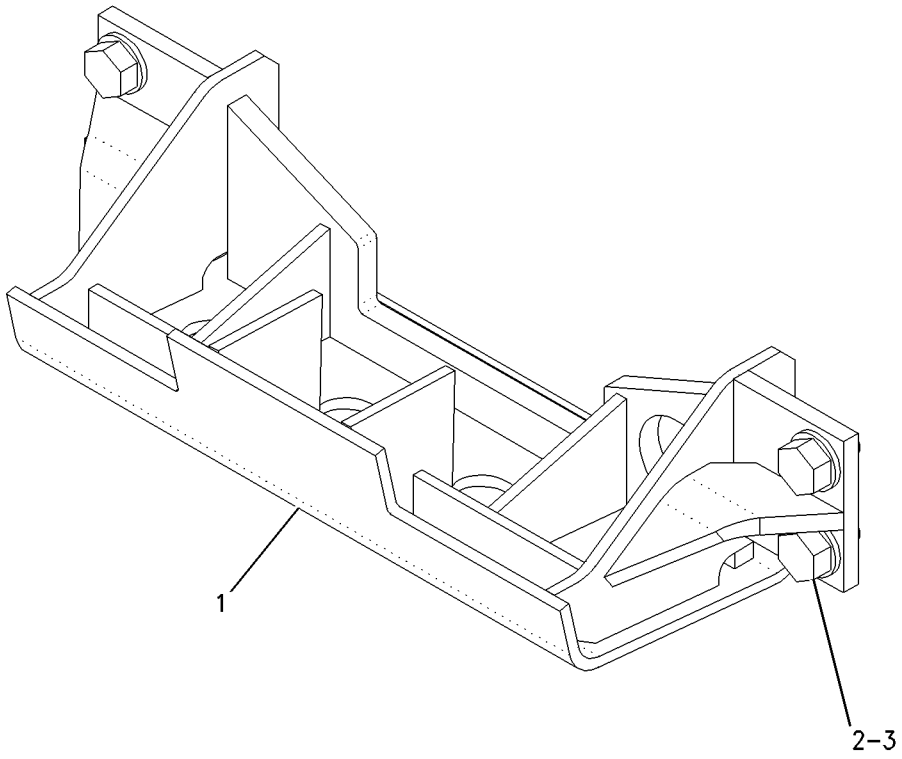

GRAPHIC #1 **<END>** g00862620

8Y-6400 LATCH GP–STRIKER BAR, REAR

S/N: SMC1-UP; GCT1-UP
PART OF 256-6021 BAR GP-STRIKER
AN ATTACHMENT

SMCS-7251 **i02160253**

NOTE	REF NO	GRAPHIC REF	PART NUMBER	QTY	PART NAME 1 2 3 4 5 6 (PRODUCT LEVEL)	SEE PAGE
	1	1	**7X-0766**	1	SPRING-LATCH	
	2	1	**8Y-5747**	1	BRACKET-MOUNTING	
	3	1	**8Y-3998**	1	HANDLE-LATCH	
	4	1	**8Y-3966**	1	WASHER (14.7X35X1.57-MM THK)	
	5	1	**8Y-8306**	1	SHAFT-LATCH	
	6	1	**6H-3956**	1	PIN	

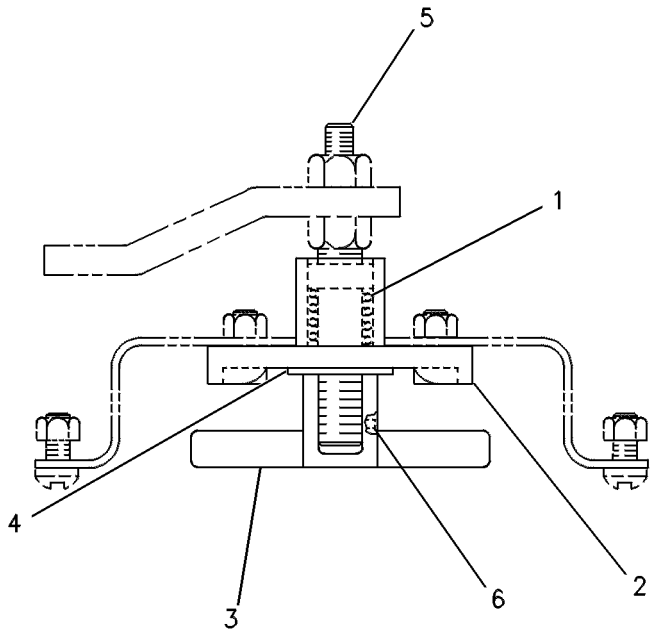

GRAPHIC #1 **<END>** g00236353

172-0962 PLATE GP-RADIATOR–HEAVY DUTY

S/N: SMC1-UP; GCT1-UP
PERFORATED
FOR USE WITH FORESTRY APPLICATION
AN ATTACHMENT

SMCS-7170 **i01816393**

NOTE	REF NO	GRAPHIC REF	PART NUMBER	QTY	PART NAME 1 2 3 4 5 6 (PRODUCT LEVEL)	SEE PAGE
	1	1	**8E-2014**	1	GRILL AS	
	2	1	**5P-1076**	4	WASHER-HARD (13.5X30X4-MM THK)	
M	3	1	**8T-6868**	4	BOLT (M12X1.75X80-MM)	

M-METRIC PART

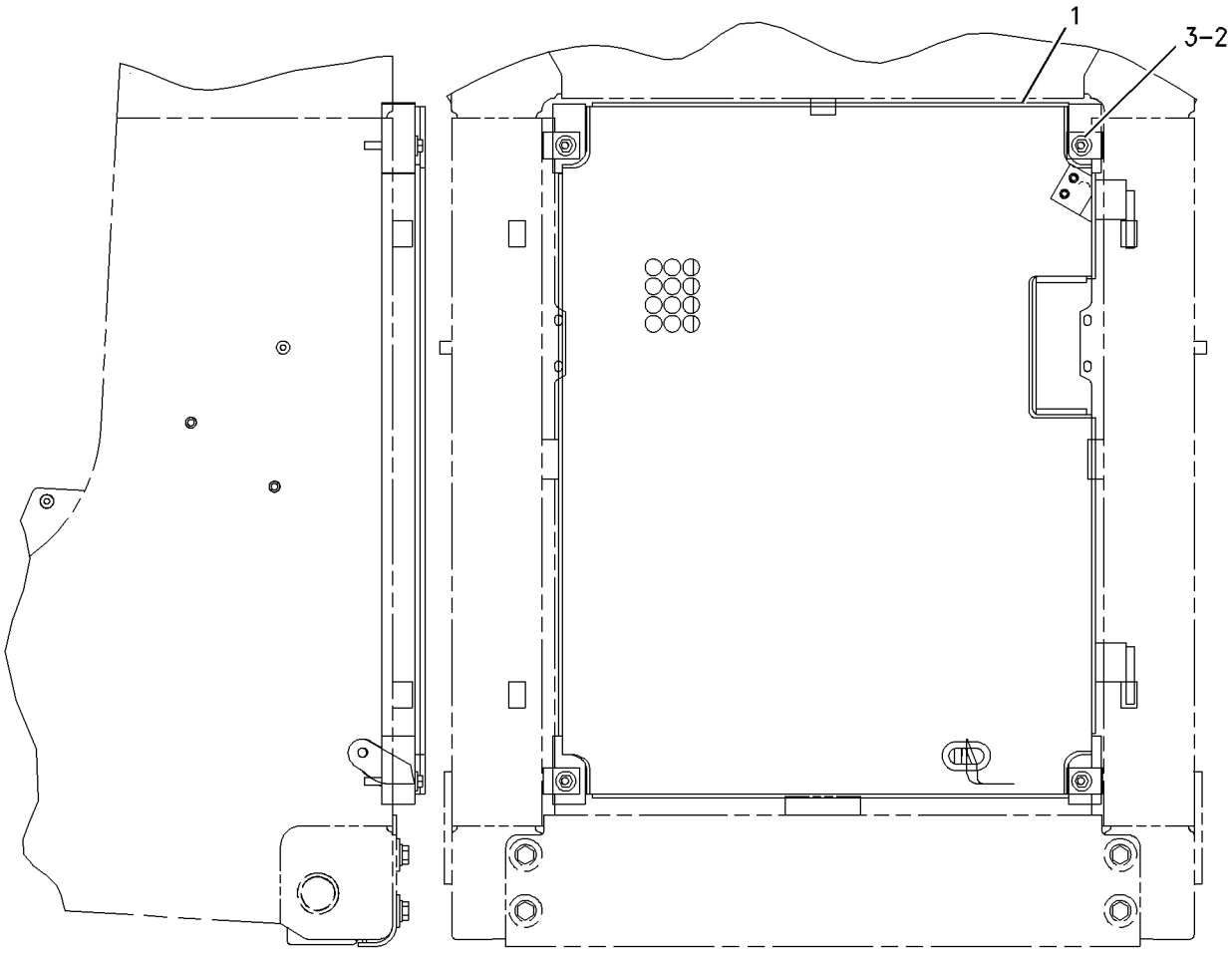

GRAPHIC #1 **<END>** g00741151

FRAME AND BODY

237-9318 SWEEP GP

S/N: SMC1-UP; GCT1-UP

AN ATTACHMENT

SMCS-7162 **i02743348**

NOTE	REF NO	GRAPHIC REF	PART NUMBER	QTY	PART NAME 1 2 3 4 5 6 (PRODUCT LEVEL)	SEE PAGE
	1	1	**1P-2772**	8	SPACER (1.031X1.219X0.75-IN THK)	
	2	1	**6T-1698**	8	MOUNT	
	3	1	**235-0541**	2	BLOCK AS	
	4	1	**235-0544**	8	PLATE	
	5	1	**235-0545**	2	SPACER	
	6	1	**256-7285**	1	BRACKET AS (LH)	
	7	1	**256-7286**	1	BRACKET AS (RH)	
	8	1	*271-3863*	1	SWEEP AS	
	8A	1	**1P-2772**	4	SPACER (1.031X1.219X0.75-IN THK)	
	8B	1	**3W-6528**	2	TUBE AS	
	8C	1	**9S-5187**	6	MOUNTING	
	8D	1	**259-1289**	2	PLATE AS	
	8E	1	**259-1291**	1	GUARD AS	
	8F	1	**259-1292**	1	GUARD AS	
	8G	1	**6K-3632**	2	LOCKNUT (1-8-THD)	
	8H	1	**8C-8844**	2	BOLT (1-8X5-IN)	
	8J	1	**8P-5244**	4	WASHER (33.3X69.8X6.35-MM THK)	
	9	1	**278-4696**	2	SPACER	
	10	1	**5P-1076**	12	WASHER-HARD (13.5X30X4-MM THK)	
M	11	1	**6V-7676**	4	NUT (M24X3-THD)	
M	12	1	**7X-2549**	8	BOLT (M12X1.75X100-MM)	
M	13	1	**7X-2563**	4	BOLT (M20X2.5X60-MM)	
M	14	1	**7X-2565**	2	BOLT (M20X2.5X100-MM)	
M	15	1	**7X-2566**	2	BOLT (M20X2.5X110-MM)	
	16	1	**7X-7729**	4	WASHER (11X25X3-MM THK)	
	17	1	**8P-5244**	8	WASHER (33.3X69.8X6.35-MM THK)	
M	18	1	**8T-0363**	4	BOLT (M24X3X120-MM)	
	19	1	**8T-4122**	4	WASHER-HARD (17X32X3.5-MM THK)	
	20	1	**8T-4123**	2	WASHER (22X35X3.5-MM THK)	
M	21	1	**8T-4193**	4	BOLT (M16X2X50-MM)	
M	22	1	**8T-4196**	4	BOLT (M10X1.5X35-MM)	
	23	1	**8T-5439**	6	WASHER-HARD (21.5X45X6-MM THK)	
M	24	1	**9X-8499**	4	BOLT (M12X1.75X60-MM)	

PARTS SHOWN IN GRAPHIC(S) WITHOUT A REFERENCE NUMBER ARE NOT SERVICED SEPARATELY

M-METRIC PART

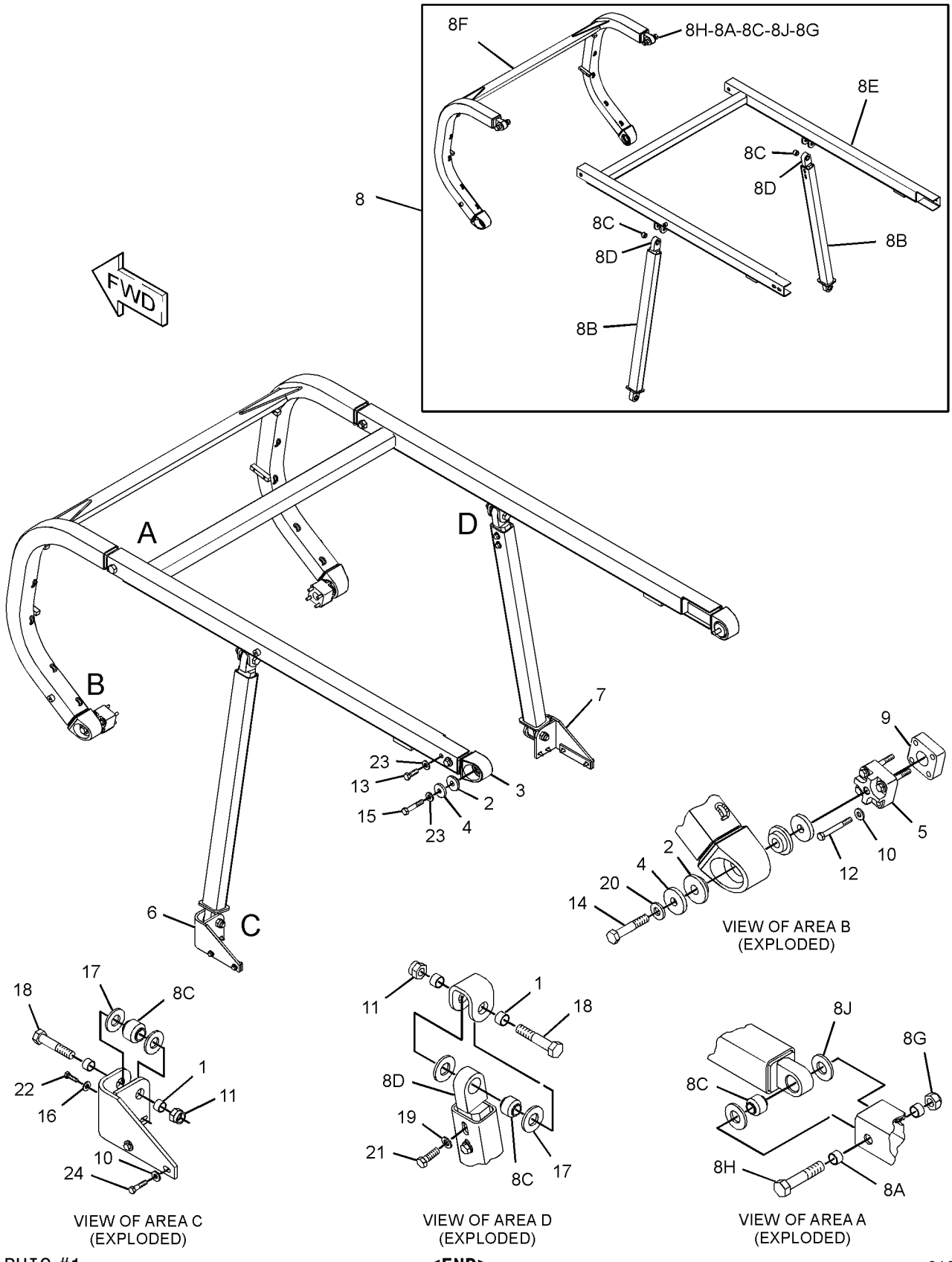

GRAPHIC #1

<END>

g01363167

UNDERCARRIAGE

229-7373 BAR GP-EQUALIZER

S/N: SMC1-UP; GCT1-UP

PART OF 218-4982, 222-8667, 278-6367, 278-6368 UNDERCARRIAGE AR

ALSO AN ATTACHMENT

SMCS-7206 **i02430381**

NOTE	REF NO	GRAPHIC REF	PART NUMBER	QTY	PART NAME 1 2 3 4 5 6 (PRODUCT LEVEL)	SEE PAGE
	1	1	**3B-8489**	1	FITTING-GREASE	
	2	1	**3W-9678**	1	SPACER (27.5X55X12-MM THK)	
I	3	1	**5T-4374**	1	HOSE AS	
	4	1	**228-4093**	1	PIN AS	
	5	1	**228-4678**	2	SPACER (71.4X94X7-MM THK)	
Y	6	1	**281-8488**	1	BAR GP-EQUALIZER	371
	7	1	**282-2898**	4	GUARD	
	8	1	**030-7946**	1	ELBOW	
	9	1	**124-0174**	1	CLIP	
	10	1	**3J-7354**	1	SEAL-O-RING	
	11	1	**6V-8237**	8	WASHER (26X44X4-MM THK)	
	12	1	**7V-3715**	1	WASHER (28X85X8-MM THK)	
M	13	1	**7X-0851**	4	NUT (M24X3-THD)	
M	14	1	**7X-2575**	1	BOLT (M24X3X60-MM)	
	15	1	**7X-7729**	1	WASHER (11X25X3-MM THK)	
	16	1	**8L-6557**	1	CONNECTOR	
M	17	1	**8T-0364**	4	BOLT (M24X3X220-MM)	
M	18	1	**8T-4136**	1	BOLT (M10X1.5X25-MM)	

I-REFER TO HYDRAULIC INFORMATION SYSTEM
M-METRIC PART
Y-SEPARATE ILLUSTRATION

229 - 7373 **BAR GP - EQUALIZER** *(contd.)* **i02430381**

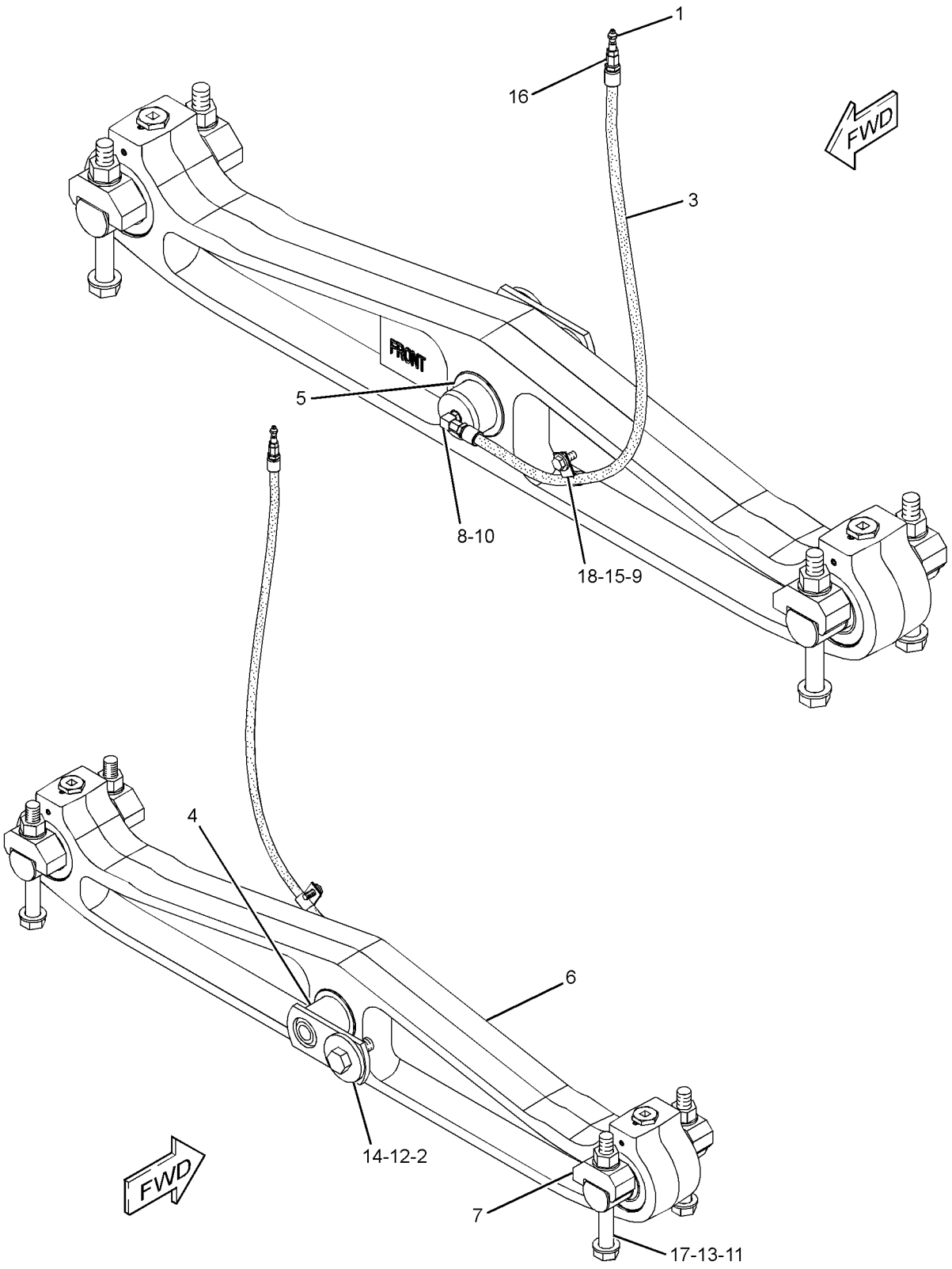

GRAPHIC #1 **<END>** g01210441

UNDERCARRIAGE

281-8488 BAR GP-EQUALIZER

S/N: SMC1-UP; GCT1-UP
PART OF 229-7373 BAR GP-EQUALIZER
ALSO AN ATTACHMENT

SMCS-7206 **i02430384**

NOTE	REF NO	GRAPHIC REF	PART NUMBER	QTY	PART NAME 1 2 3 4 5 6 (PRODUCT LEVEL)	SEE PAGE
	1	1	**3B-8489**	2	FITTING-GREASE	
	2	1	**8G-4189**	2	BEARING-SELF-ALIGNING	
	3	1	**133-5631**	2	PLUG	
	4	1	**139-0566**	4	SEAL AS	
					(EACH INCLUDES)	
		1	**139-0567**	1	RING-SEAL	
	5	1	**229-8352**	2	BEARING-SLEEVE	
	6	1	**229-9323**	2	SEAL-PIN	
Z	7	1		1	BAR-EQUALIZER	
	8	1	**1J-6472**	4	RING-RETAINING	
	9	1	**2F-5326**	8	SETSCREW (3/8-16X0.37-IN)	
	10	1	**5F-1678**	2	SEAL-O-RING	
	11	1	**281-4015**	2	PIN	

Z-NOT SERVICED SEPARATELY

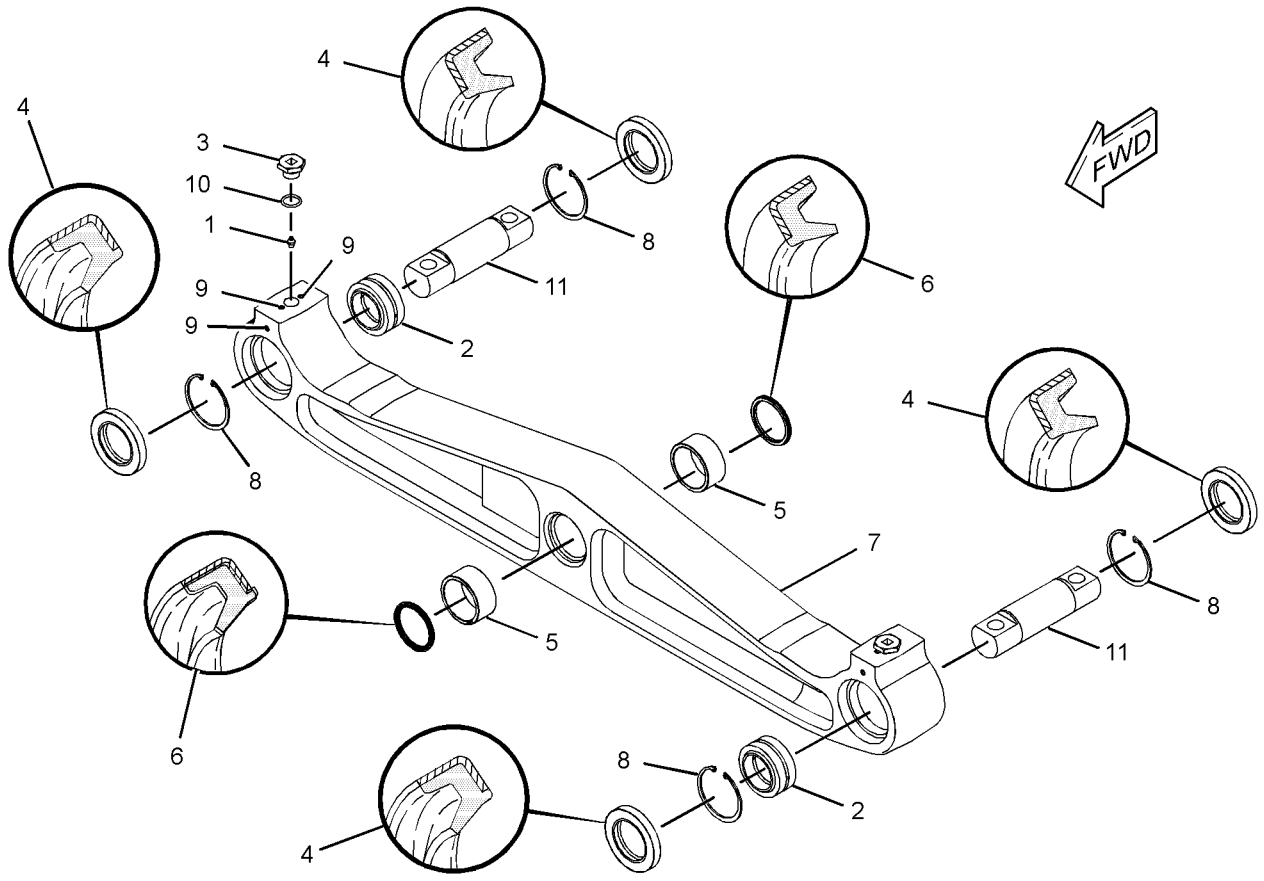

GRAPHIC #1 **<END>** g01210395

108-1091 CAP GP-TRACK IDLER–HEAVY-DUTY

S/N: SMC1-UP; GCT1-UP
PART OF 278-6367, 278-6368 UNDERCARRIAGE AR
AN ATTACHMENT

SMCS-4159 **i01349595**

NOTE	REF NO	GRAPHIC REF	PART NUMBER	QTY	PART NAME 1 2 3 4 5 6 (PRODUCT LEVEL)	SEE PAGE
	1	1	**165-6946**	1	BLOCK-TRACK IDLER	
	2	1	**152-3421**	1	CAP AS-TRACK IDLER	
	3	1	**1T-0068**	1	PIN-SPRING	
M	4	1	**6V-9167**	2	BOLT (M20X2.5X140MM)	
		1	**8T-3282**	2	WASHER-HARD (3.5MM THK)	

M-METRIC PART

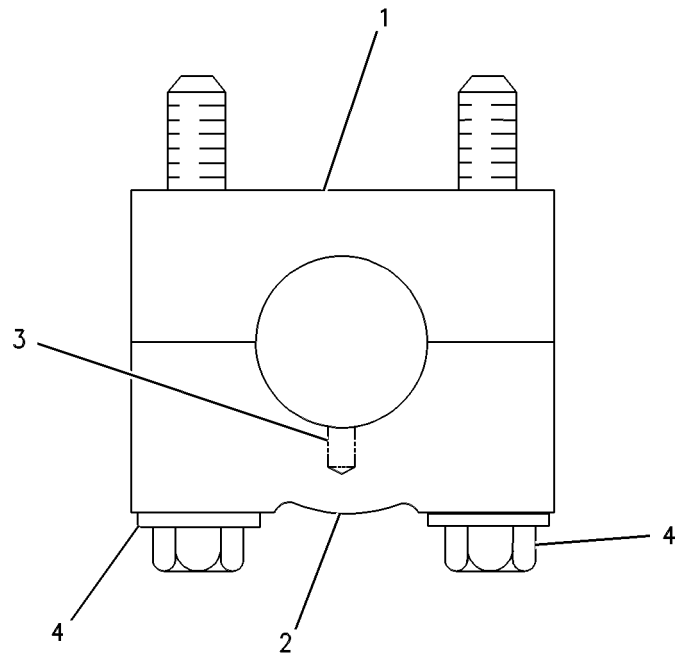

GRAPHIC #1 **<END>** g00254089

267-4746 CAP GP-TRACK IDLER

S/N: SMC1-UP; GCT1-UP

PART OF 218-4982, 222-8667 UNDERCARRIAGE AR

SMCS-4159 **i02654152**

NOTE	REF NO	GRAPHIC REF	PART NUMBER	QTY	PART NAME 1 2 3 4 5 6 (PRODUCT LEVEL)	SEE PAGE
	1	1	**152-3421**	1	CAP AS-TRACK IDLER	
		1	**1T-0068**	1	PIN-SPRING	
	2	1	**165-6946**	1	BLOCK-TRACK IDLER	
	3	1	**153-5044**	2	WASHER-HARD (21.5X45X6-MM THK)	
M	4	1	**8T-0656**	2	BOLT (M20X2.5X150-MM)	

M-METRIC PART

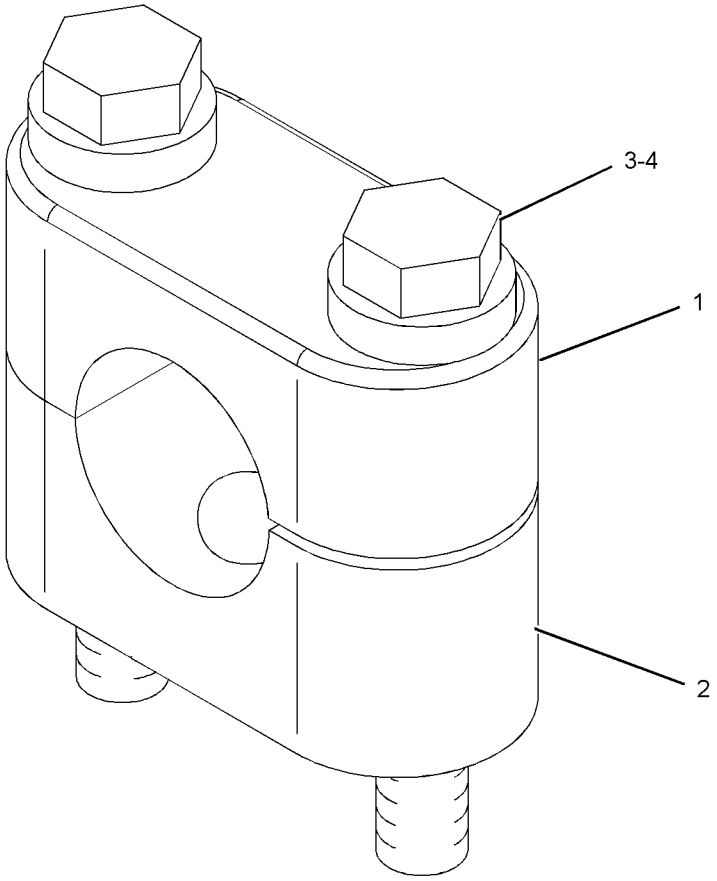

GRAPHIC #1 **<END>** g01145277

UNDERCARRIAGE

223-0652 FRAME GP-TELESCOPING RECOIL–RH, XL

S/N: GCT1-UP

PART OF 218-4982 UNDERCARRIAGE AR

SMCS-4151 **i02473268**

NOTE	REF NO	GRAPHIC REF	PART NUMBER	QTY	PART NAME 1 2 3 4 5 6 (PRODUCT LEVEL)	SEE PAGE
	1	1	**9X-4582**	1	SEAL AS	
Y	2	1	*223-0659*	1	TRACK ADJUSTER & RECOIL GP	424
	3	1	**224-4121**	1	FRAME AS (FRONT)	
	3A	1	**3T-1162**	1	BEARING-SLEEVE	
	3B	1	**4B-4158**	4	SCREW-DRIVE (3/16X0.25-IN)	
	3C	1	**254-1686**	1	PLATE-WARNING (RECOIL SPRING)	
	4	1	**224-4124**	1	FRAME AS (RH)	
	4A	1	**221-3197**	1	BEARING-SLEEVE	
	4B	1	**221-3200**	1	BEARING-SLEEVE	
	5	1	**260-7733**	2	STRIP	
	6	1	**261-3257**	2	STRIP	
	7	1	**268-9709**	2	GUIDE AS	
					(EACH INCLUDES)	
	7A	1	**241-3720**	1	FILM-WARNING (RECOIL SPRING)	
	8	1	**268-9710**	1	COVER AS	
	8A	1	**253-1346**	1	PLATE-WARNING (HIGH PRESSURE CYLINDER)	
	8B	1	**7B-3028**	4	SCREW-DRIVE (NO 4X3/16-IN)	
	8C	1	**8E-1211**	1	COVER	
	9	1	**1B-5174**	2	PLUG-PIPE	
	10	1	**3T-2077**	1	BEARING	
	11	1	**3W-1852**	1	RING-RETAINING	
	12	1	**5H-6734**	1	SEAL-O-RING	
	13	1	**8T-4121**	4	WASHER-HARD (11X21X2.5-MM THK)	
M	14	1	**8T-4136**	4	BOLT (M10X1.5X25-MM)	
M	15	1	**8T-4184**	12	BOLT (M12X1.75X45-MM)	
	16	1	**8T-4223**	26	WASHER-HARD (13.5X25.5X3-MM THK)	
M	17	1	**8T-4956**	14	BOLT (M12X1.75X35-MM)	
	18	1	**5P-1076**	12	WASHER-HARD (13.5X30X4-MM THK)	
M	19	1	**8T-4194**	12	BOLT (M12X1.75X50-MM)	
	20	1	**282-4017**	4	PLATE-SCRAPER	

M-METRIC PART
Y-SEPARATE ILLUSTRATION

223-0652 **FRAME GP-TELESCOPING RECOIL** *(contd.)* **i02473268**

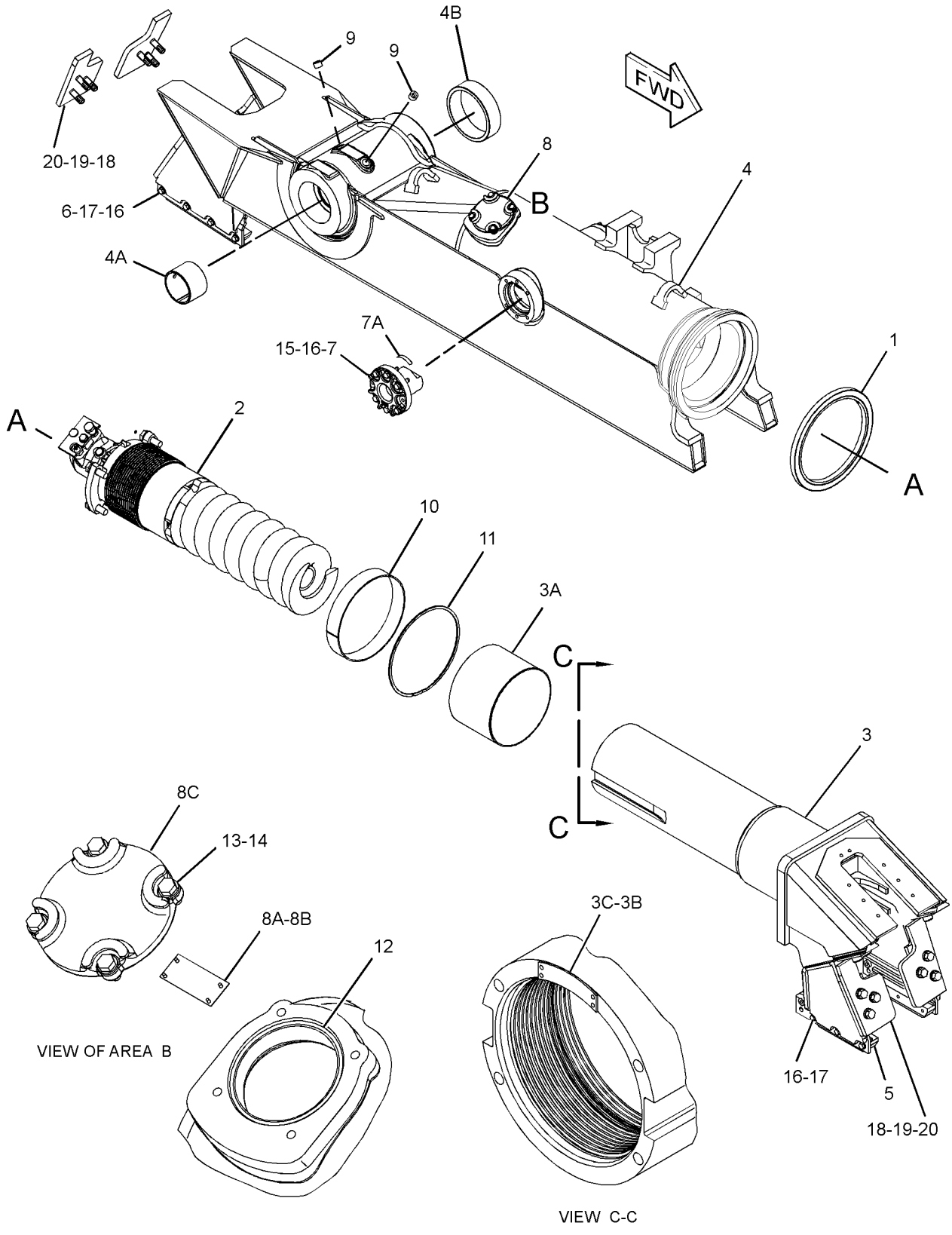

GRAPHIC #1 **<END>** g01236686

223-0656 FRAME GP-TELESCOPING RECOIL–LH, XL

S/N: GCT1-UP

PART OF 218-4982 UNDERCARRIAGE AR

SMCS-4151 **i02476991**

NOTE	REF NO	GRAPHIC REF	PART NUMBER	QTY	PART NAME 1 2 3 4 5 6 (PRODUCT LEVEL)	SEE PAGE
	1	1	**9X-4582**	1	SEAL AS	
Y	2	1	*223-0659*	1	TRACK ADJUSTER & RECOIL GP	424
	3	1	**224-4121**	1	FRAME AS (FRONT)	
	3A	1	**3T-1162**	1	BEARING-SLEEVE	
	3B	1	**4B-4158**	4	SCREW-DRIVE (3/16X0.25-IN)	
	3C	1	**254-1686**	1	PLATE-WARNING (RECOIL SPRING)	
	4	1	**226-1335**	1	FRAME AS (LH)	
	4A	1	**221-3197**	1	BEARING-SLEEVE	
	4B	1	**221-3200**	1	BEARING-SLEEVE	
	5	1	**260-7733**	2	STRIP	
	6	1	**261-3257**	2	STRIP	
	7	1	**268-9709**	2	GUIDE AS	
					(EACH INCLUDES)	
	7A	1	**241-3720**	1	FILM-WARNING (RECOIL SPRING)	
	8	1	**268-9710**	1	COVER AS	
	8A	1	**253-1346**	1	PLATE-WARNING (HIGH PRESSURE CYLINDER)	
	8B	1	**7B-3028**	4	SCREW-DRIVE (NO 4X3/16-IN)	
	8C	1	**8E-1211**	1	COVER	
	9	1	**1B-5174**	2	PLUG-PIPE	
	10	1	**3T-2077**	1	BEARING	
	11	1	**3W-1852**	1	RING-RETAINING	
	12	1	**5H-6734**	1	SEAL-O-RING	
	13	1	**8T-4121**	4	WASHER-HARD (11X21X2.5-MM THK)	
M	14	1	**8T-4136**	4	BOLT (M10X1.5X25-MM)	
M	15	1	**8T-4184**	12	BOLT (M12X1.75X45-MM)	
	16	1	**8T-4223**	26	WASHER-HARD (13.5X25.5X3-MM THK)	
M	17	1	**8T-4956**	14	BOLT (M12X1.75X35-MM)	
	18	1	**5P-1076**	12	WASHER-HARD (13.5X30X4-MM THK)	
M	19	1	**8T-4194**	12	BOLT (M12X1.75X50-MM)	
	20	1	**282-4017**	4	PLATE-SCRAPER	

M-METRIC PART
Y-SEPARATE ILLUSTRATION

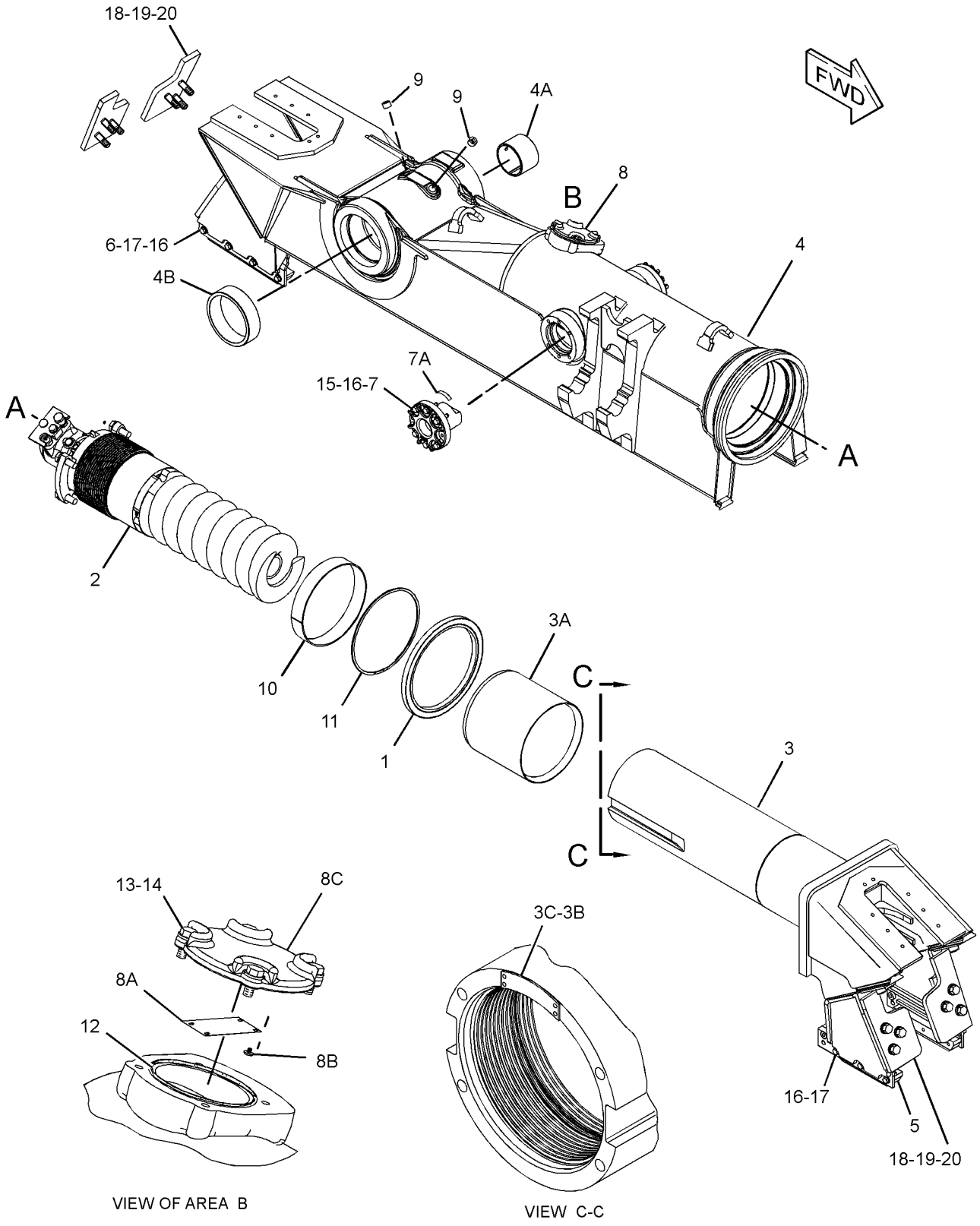

GRAPHIC #1 **<END>** g01236791

261-3077 FRAME GP-TELESCOPING RECOIL–RH

S/N: SMC1-UP

PART OF 222-8667 UNDERCARRIAGE AR

SMCS-4151 **i02581707**

NOTE	REF NO	GRAPHIC REF	PART NUMBER	QTY	PART NAME 1 2 3 4 5 6 (PRODUCT LEVEL)	SEE PAGE
	1	1	**268-9710**	1	COVER AS	
	1A	1	**8E-1211**	1	COVER	
	1B	1	**253-1346**	1	PLATE-WARNING (HIGH PRESSURE CYLINDER)	
	1C	1	**7B-3028**	4	SCREW-DRIVE (NO 4X3/16-IN)	
	2	1	**9X-4582**	1	SEAL AS	
	3	1	**268-9709**	2	GUIDE AS	
					(EACH INCLUDES)	
		1	**241-3720**	1	FILM-WARNING (RECOIL SPRING)	
Y	4	1	*223-0659*	1	TRACK ADJUSTER & RECOIL GP	424
	5	1	**244-6110**	1	FRAME AS (FRONT)	
	5A	1	**3T-1162**	1	BEARING-SLEEVE	
	5B	1	**4B-4158**	4	SCREW-DRIVE (3/16X0.25-IN)	
	5C	1	**254-1686**	1	PLATE-WARNING (RECOIL SPRING)	
	6	1	**261-3083**	1	FRAME AS (RH)	
	6A	1	**221-3197**	1	BEARING-SLEEVE	
	6B	1	**221-3200**	1	BEARING-SLEEVE	
	7	1	**1B-5174**	2	PLUG-PIPE	
	8	1	**3T-2077**	1	BEARING	
	9	1	**3W-1852**	1	RING-RETAINING	
	10	1	**5H-6734**	1	SEAL-O-RING	
	11	1	**8T-4121**	4	WASHER-HARD (11X21X2.5-MM THK)	
M	12	1	**8T-4136**	4	BOLT (M10X1.5X25-MM)	
M	13	1	**8T-4184**	28	BOLT (M12X1.75X45-MM)	
	14	1	**8T-4223**	28	WASHER-HARD (13.5X25.5X3-MM THK)	
	15	1	**261-3257**	4	STRIP	
	16	1	**282-4017**	4	PLATE-SCRAPER	
	17	1	**5P-1076**	12	WASHER-HARD (13.5X30X4-MM THK)	
M	18	1	**8T-4194**	12	BOLT (M12X1.75X50-MM)	

M-METRIC PART
Y-SEPARATE ILLUSTRATION

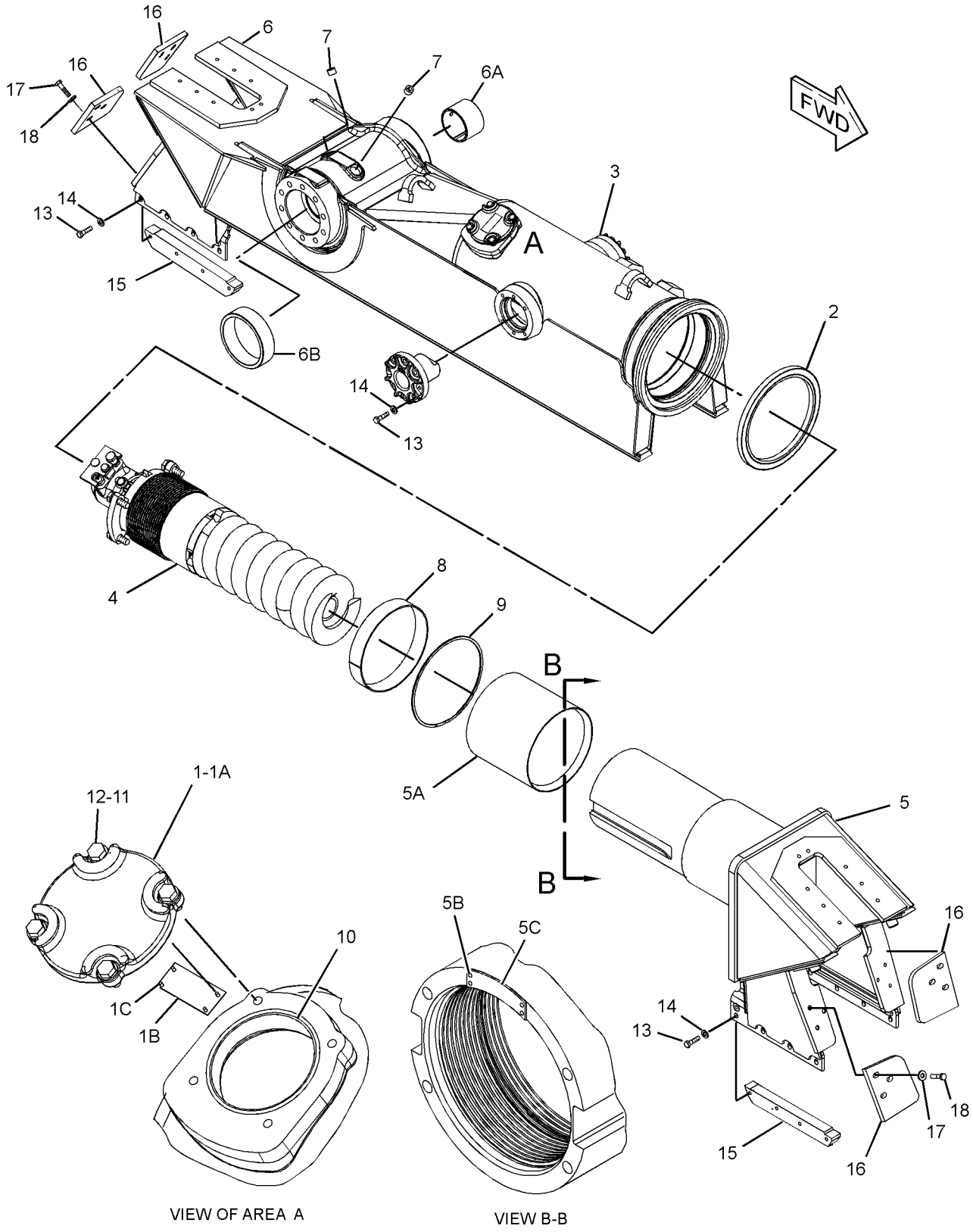

GRAPHIC #1 **<END>** g01245626

261-3080 FRAME GP-TELESCOPING RECOIL–LH

S/N: SMC1-UP

PART OF 222-8667 UNDERCARRIAGE AR

SMCS-4151 **i02799289**

NOTE	REF NO	GRAPHIC REF	PART NUMBER	QTY	PART NAME 1 2 3 4 5 6 (PRODUCT LEVEL)	SEE PAGE
	1	1	**268-9710**	1	COVER AS	
	1A	1	**8E-1211**	1	COVER	
	1B	1	**253-1346**	1	PLATE-WARNING (HIGH PRESSURE CYLINDER)	
	1C	1	**7B-3028**	4	SCREW-DRIVE (NO 4X3/16-IN)	
	2	1	**9X-4582**	1	SEAL AS	
	3	1	**268-9709**	2	GUIDE AS	
					(EACH INCLUDES)	
		1	**241-3720**	1	FILM-WARNING (RECOIL SPRING)	
Y	4	1	*223-0659*	1	TRACK ADJUSTER & RECOIL GP	424
	5	1	**244-6110**	1	FRAME AS (FRONT)	
	5A	1	**3T-1162**	1	BEARING-SLEEVE	
	5B	1	**4B-4158**	4	SCREW-DRIVE (3/16X0.25-IN)	
	5C	1	**6V-2226**	1	PLATE-WARNING (RECOIL SPRING)	
	6	1	**261-3087**	1	FRAME AS (LH)	
	6A	1	**221-3197**	1	BEARING-SLEEVE	
	6B	1	**221-3200**	1	BEARING-SLEEVE	
	7	1	**1B-5174**	2	PLUG-PIPE	
	8	1	**3T-2077**	1	BEARING	
	9	1	**3W-1852**	1	RING-RETAINING	
	10	1	**5H-6734**	1	SEAL-O-RING	
	11	1	**8T-4121**	4	WASHER-HARD (11X21X2.5-MM THK)	
M	12	1	**8T-4136**	4	BOLT (M10X1.5X25-MM)	
M	13	1	**8T-4184**	28	BOLT (M12X1.75X45-MM)	
	14	1	**8T-4223**	28	WASHER-HARD (13.5X25.5X3-MM THK)	
	15	1	**261-3257**	4	STRIP	
	16	1	**5P-1076**	12	WASHER-HARD (13.5X30X4-MM THK)	
M	17	1	**8T-4194**	12	BOLT (M12X1.75X50-MM)	
	18	1	**282-4017**	4	PLATE-SCRAPER	

M-METRIC PART
Y-SEPARATE ILLUSTRATION

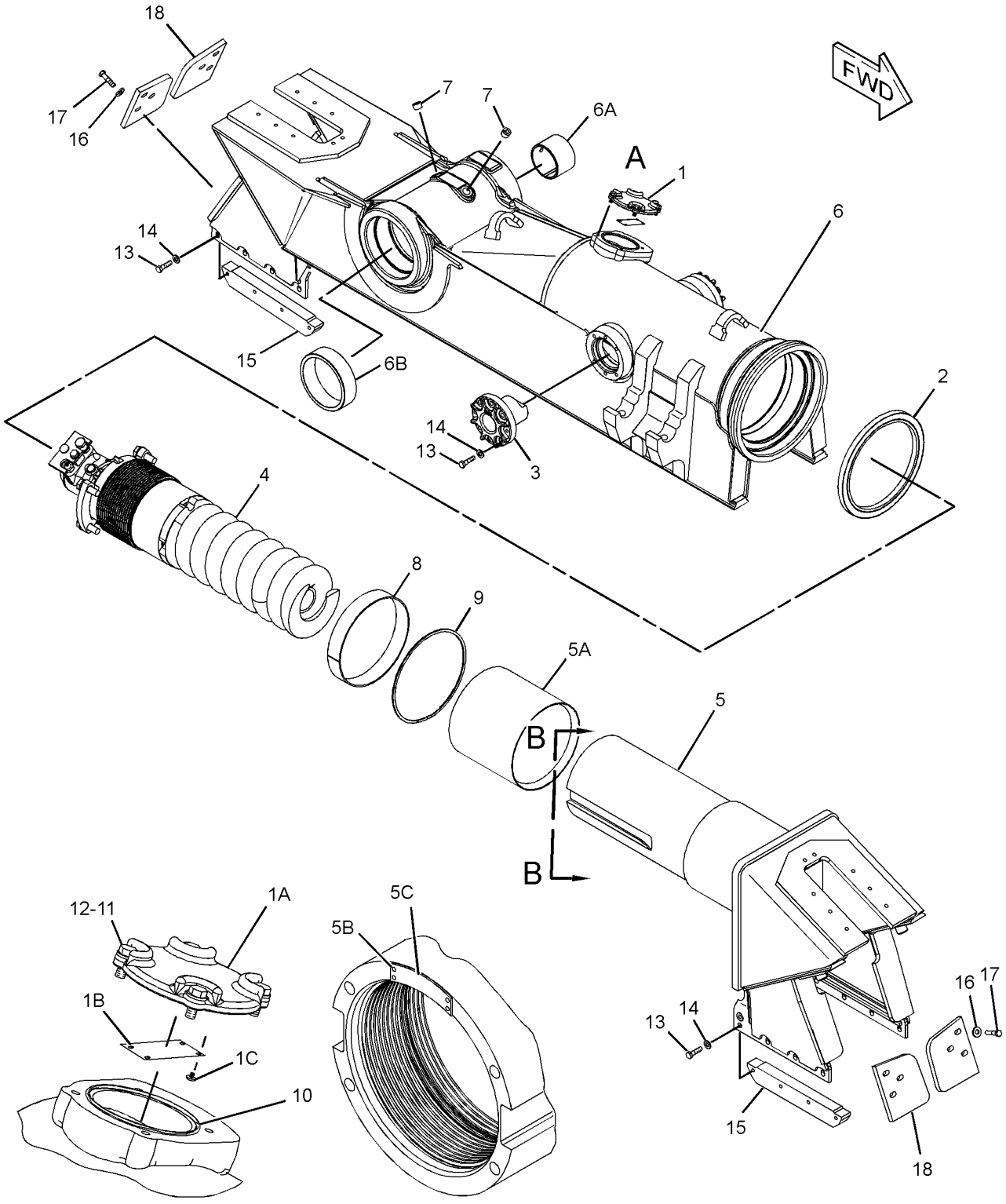

GRAPHIC #1 **<END>** g01241069

UNDERCARRIAGE

261-6769 GUARD AR-IDLER

S/N: SMC1-UP; GCT1-UP
FOR USE WITH SYSTEMONE UNDERCARRIAGE
AN ATTACHMENT

SMCS-7169 **i02456100**

NOTE	PART NUMBER	QTY	PART NAME 1 2 3 4 5 6 (PRODUCT LEVEL)	SEE PAGE
Y	**258-8798**	4	IDLER GP-FRONT (SYSTEMONE)	391

Y-SEPARATE ILLUSTRATION

<END>

279-6533 GUARD GP-IDLER

S/N: SMC1-UP

PART OF 293-4691 GUARD & SCRAPER GP-IDLER

SMCS-7169 **i02768606**

NOTE	REF NO	GRAPHIC REF	PART NUMBER	QTY	PART NAME 1 2 3 4 5 6 (PRODUCT LEVEL)	SEE PAGE
	1	1	**282-4017**	8	PLATE-SCRAPER	
	2	1	**283-5249**	2	PLATE AS	
	3	1	**283-5250**	2	PLATE AS	
	4	1	**283-5253**	2	PLATE AS	
	5	1	**283-5254**	2	PLATE AS	
					(EACH INCLUDES)	
M		1	**8T-3597**	3	NUT-WELD (M12X1.75-THD)	
	6	1	**5P-1076**	24	WASHER-HARD (13.5X30X4-MM THK)	
M	7	1	**8T-4194**	24	BOLT (M12X1.75X50-MM)	

M-METRIC PART

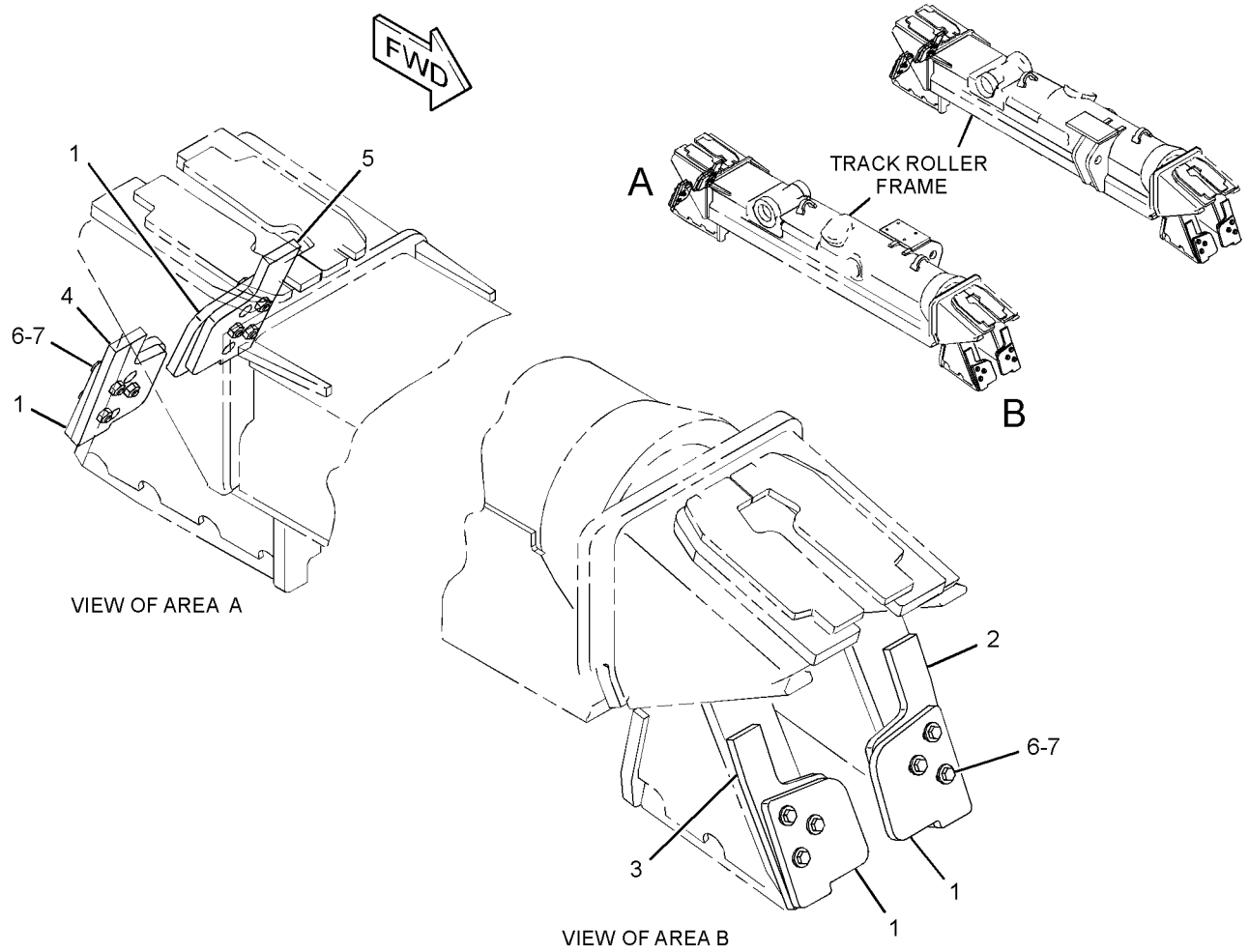

GRAPHIC #1

<END>

g01351877

280-8738 GUARD GP-IDLER–SYSTEMONE

S/N: GCT1-UP
ROCK
PART OF 293-9344 GUARD & SCRAPER GP-IDLER

SMCS-7169 **i02681170**

NOTE	REF NO	GRAPHIC REF	PART NUMBER	QTY	PART NAME 1 2 3 4 5 6 (PRODUCT LEVEL)	SEE PAGE
	1	1	**282-4017**	8	PLATE-SCRAPER	
	2	1	*283-5249*	2	PLATE AS	
	3	1	*283-5250*	2	PLATE AS	
	4	1	*283-5251*	2	PLATE AS	
	5	1	*283-5252*	2	PLATE AS	
					(EACH PLATE AS INCLUDES)	
M		1	**8T-3597**	3	NUT-WELD (M12X1.75-THD)	
	6	1	**5P-1076**	24	WASHER-HARD (13.5X30X4-MM THK)	
M	7	1	**8T-4194**	24	BOLT (M12X1.75X50-MM)	

M-METRIC PART

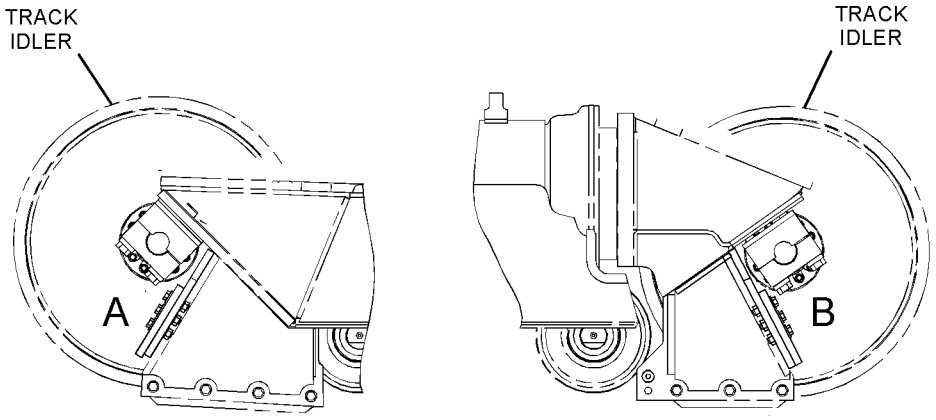

RIGHT SIDE VIEW

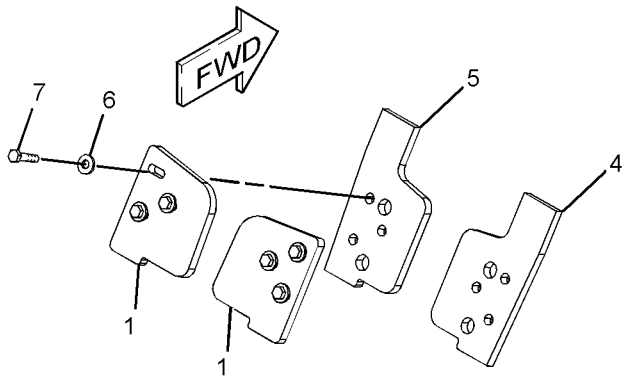

VIEW OF AREA A
(EXPLODED)

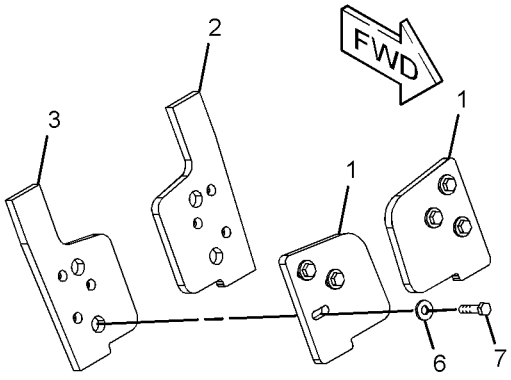

VIEW OF AREA B
(EXPLODED)

GRAPHIC #1 **<END>** g01305706

164-0406 GUARD GP-TRACK GUIDE

S/N: SMC1-UP; GCT1-UP
PART OF 203-6415, 203-6440 GUIDING AR-UNDERCARRIAGE
AN ATTACHMENT

SMCS-4177 **i02507778**

NOTE	REF NO	GRAPHIC REF	PART NUMBER	QTY	PART NAME 1 2 3 4 5 6 (PRODUCT LEVEL)	SEE PAGE
	1	1	**166-2287**	8	SPACER (22X40X20-MM THK)	
C	2	1	**268-5945**	2	GUARD AS	
					(EACH INCLUDES)	
		1	**164-0403**	1	GUARD	
		1	**164-4611**	1	GUARD	
M	3	1	**8T-4141**	8	BOLT (M20X2.5X70-MM)	

C-CHANGE FROM PREVIOUS TYPE
M-METRIC PART

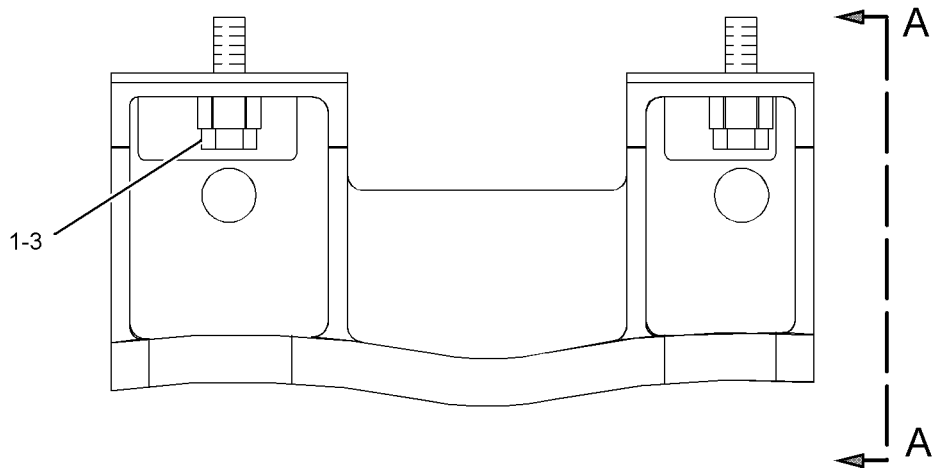

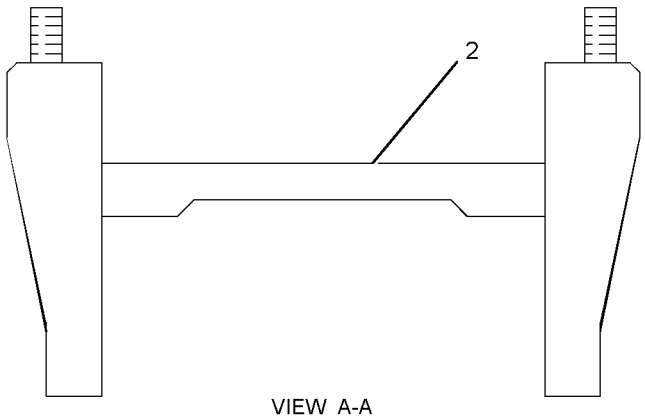

VIEW A-A

GRAPHIC #1 **<END>** g01210245

206-8836 GUARD GP-TRACK GUIDE–SYSTEMONE

S/N: SMC1-UP; GCT1-UP
PART OF 253-0395 GUIDING AR-UNDERCARRIAGE
AN ATTACHMENT

SMCS-4177 **i02317549**

NOTE	REF NO	GRAPHIC REF	PART NUMBER	QTY	PART NAME 1 2 3 4 5 6 (PRODUCT LEVEL)	SEE PAGE
	1	1	**166-2287**	8	SPACER (40X40X20-MM THK)	
	2	1	**206-8837**	2	GUARD AS-TRACK GUIDE	
M	3	1	**8T-4141**	8	BOLT (M20X2.5X70-MM)	

M-METRIC PART

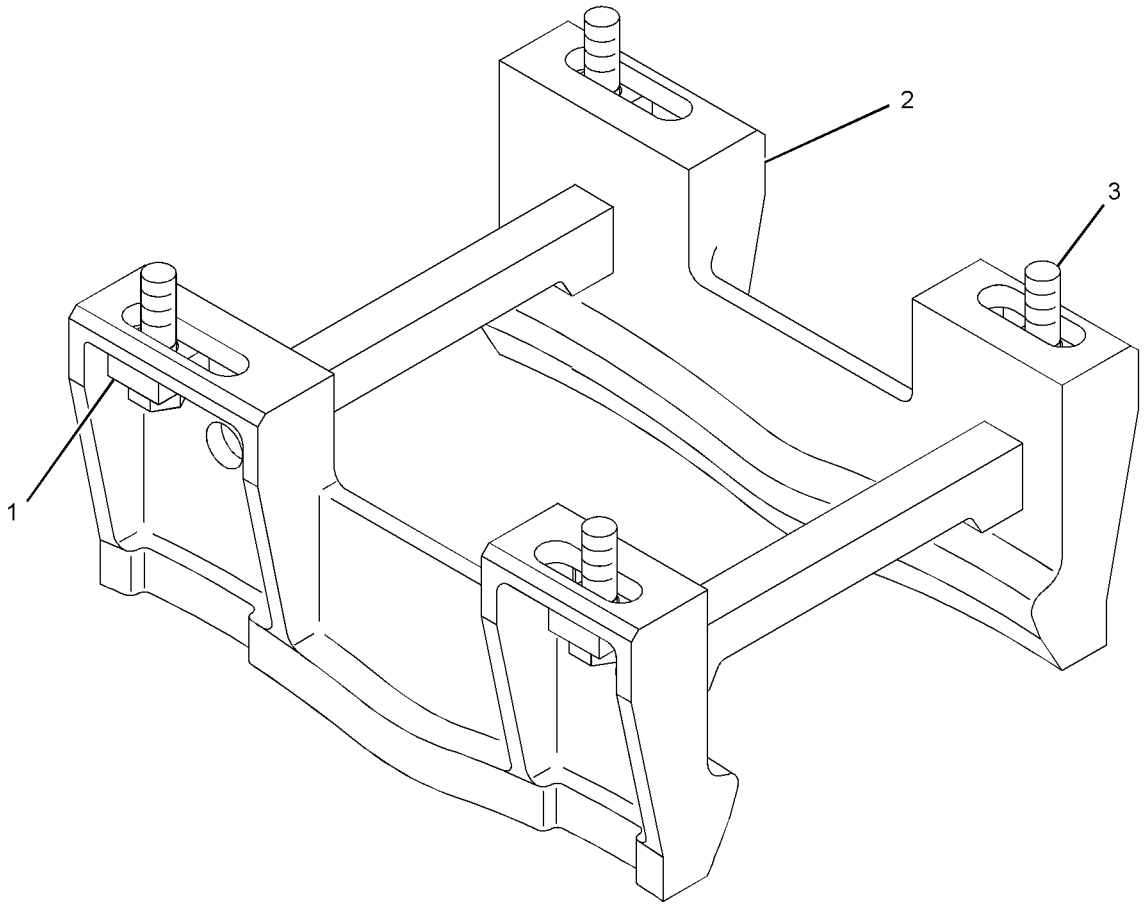

GRAPHIC #1 **<END>** g01152803

229-9560 GUARD GP-TRACK ROLLER–SYSTEMONE

S/N: SMC1-UP

CANNOT BE USED WITH HEAVY-DUTY UNDERCARRIAGE AR
AN ATTACHMENT

SMCS-7152 **i02758724**

NOTE	REF NO	GRAPHIC REF	PART NUMBER	QTY	PART NAME 1 2 3 4 5 6 (PRODUCT LEVEL)	SEE PAGE
	1	1	**8E-9932**	4	PLATE	
	2	1	**134-5366**	10	TUBE	
	3	1	**134-5368**	10	ROD	
	4	1	**166-2287**	20	SPACER (22X40X20-MM THK)	
	5	1	**229-9556**	4	GUARD	
	6	1	**229-9557**	4	GUARD	
M	7	1	**7Y-5233**	20	LOCKNUT (M24X3-THD)	
M	8	1	**8T-4139**	4	BOLT (M12X1.75X30-MM)	
M	9	1	**8T-4141**	20	BOLT (M20X2.5X70-MM)	
	10	1	**8T-4167**	20	WASHER-HARD (26X44X4-MM THK)	
	11	1	**8T-4223**	8	WASHER-HARD (13.5X25.5X3-MM THK)	
M	12	1	**8T-4184**	4	BOLT (M12X1.75X45-MM)	

M-METRIC PART

229-9560 **GUARD GP-TRACK ROLLER** *(contd.)* **i02758724**

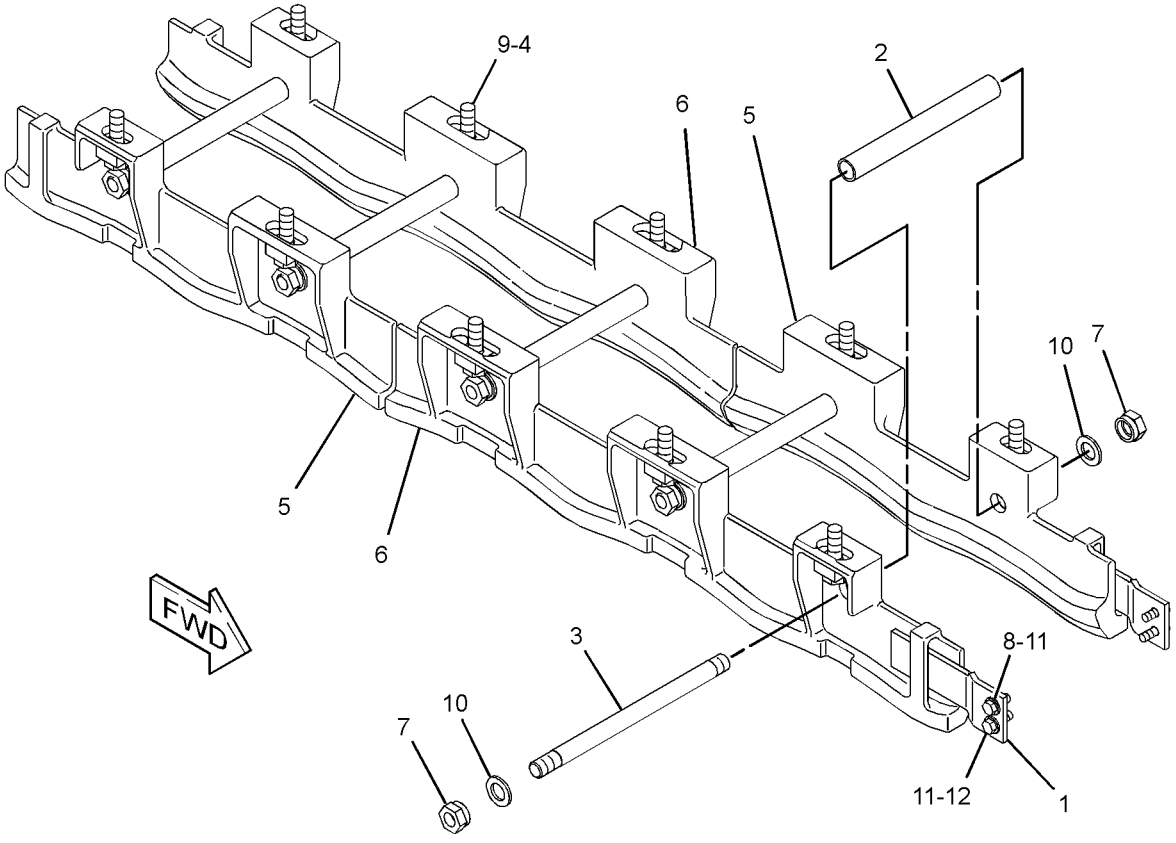

GRAPHIC #1 **<END>** g01360338

229-9570 GUARD GP-TRACK ROLLER–SYSTEMONE

S/N: GCT1-UP

CANNOT BE USED WITH HEAVY-DUTY UNDERCARRIAGE

AN ATTACHMENT

SMCS-7152 **i02456115**

NOTE	REF NO	GRAPHIC REF	PART NUMBER	QTY	PART NAME 1 2 3 4 5 6 (PRODUCT LEVEL)	SEE PAGE
	1	1	**134-5366**	12	TUBE	
	2	1	**134-5368**	12	ROD	
	3	1	**166-2287**	24	SPACER (22X40X20-MM THK)	
	4	1	**229-9558**	4	GUARD	
	5	1	**229-9559**	4	GUARD	
M	6	1	**7Y-5233**	24	LOCKNUT (M24X3-THD)	
M	7	1	**8T-4141**	24	BOLT (M20X2.5X70-MM)	
	8	1	**8T-4167**	24	WASHER-HARD (26X44X4-MM THK)	

M-METRIC PART

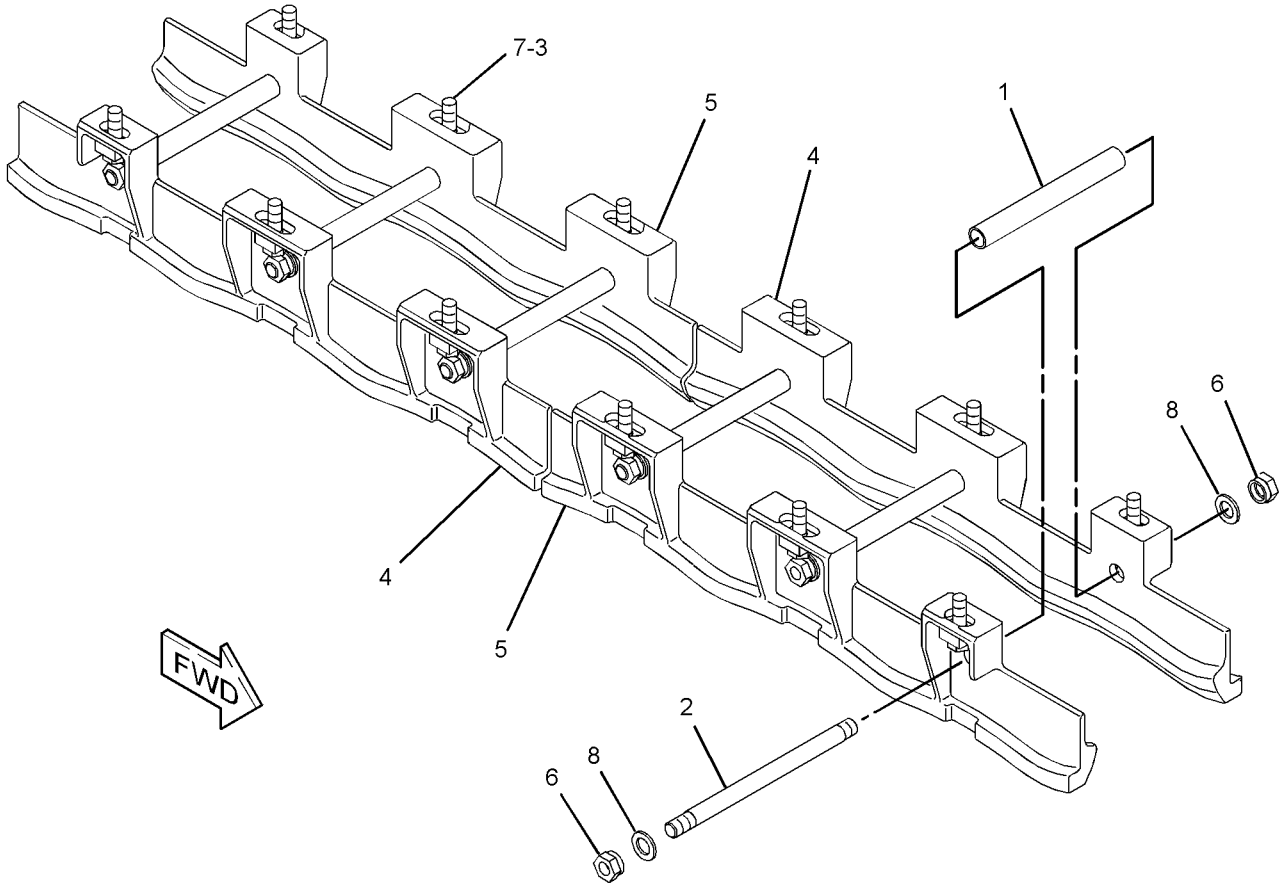

GRAPHIC #1 **<END>** g01165766

203-6415 GUIDING AR-UNDERCARRIAGE

S/N: SMC1-UP
MODERATE SERVICE
FOR USE WITH UNDERCARRIAGE AR-HEAVY DUTY
AN ATTACHMENT

SMCS-4150 **i01816568**

NOTE	PART NUMBER	QTY	PART NAME 1 2 3 4 5 6 (PRODUCT LEVEL)	SEE PAGE
Y	*164-0406*	2	GUARD GP-TRACK GUIDE	385
Y	*125-4177*	1	ROLLER AR-TRACK	409
Y-SEPARATE ILLUSTRATION				

<END>

203-6440 GUIDING AR-UNDERCARRIAGE

S/N: GCT1-UP
MODERATE SERVICE
FOR USE WITH UNDERCARRIAGE AR - HEAVY-DUTY
AN ATTACHMENT

SMCS-4150 **i01818850**

NOTE	PART NUMBER	QTY	PART NAME 1 2 3 4 5 6 (PRODUCT LEVEL)	SEE PAGE
Y	*164-0406*	2	GUARD GP-TRACK GUIDE	385
Y	*125-5533*	1	ROLLER AR-TRACK	409
Y-SEPARATE ILLUSTRATION				

<END>

253-0395 GUIDING AR-UNDERCARRIAGE—SYSTEMONE

S/N: SMC1-UP; GCT1-UP
AN ATTACHMENT

SMCS-4150 **i02317541**

NOTE	PART NUMBER	QTY	PART NAME 1 2 3 4 5 6 (PRODUCT LEVEL)	SEE PAGE
Y	*206-8836*	2	GUARD GP-TRACK GUIDE	386
Y-SEPARATE ILLUSTRATION				

<END>

227-8715 IDLER GP-FRONT—SYSTEMONE

S/N: SMC1-UP; GCT1-UP
REDUCED DIAMETER CENTER TREAD
PART OF 218-4982, 222-8667 UNDERCARRIAGE AR
FIELD REPLACEMENT ORDER 286-9305—PAGE 394

SMCS-4159 **i02624359**

NOTE	PART NUMBER	QTY	PART NAME 1 2 3 4 5 6 (PRODUCT LEVEL)	SEE PAGE
Y	**286-9305**	1	IDLER GP-TRACK	394
Y-SEPARATE ILLUSTRATION				

<END>

258-8798 IDLER GP-FRONT

S/N: SMC1-UP; GCT1-UP
PART OF 261-6769 GUARD AR-IDLER
FOR USE WITH SYSTEMONE UNDERCARRIAGE
AN ATTACHMENT

SMCS-4159 **i02586710**

NOTE	REF NO	GRAPHIC REF	PART NUMBER	QTY	PART NAME 1 2 3 4 5 6 (PRODUCT LEVEL)	SEE PAGE
	1	1	**2H-3928**	2	SEAL-O-RING	
	2	1	**7J-2036**	2	SEAL-O-RING	
	3	1	**6Y-0473**	1	PLUG-CLEAR	
	3A	1	**9G-5664**	1	STOPPER-RUBBER	
	4	1	**106-7691**	2	WASHER-THRUST (86X113.93X4.52-MM THK)	
	5	1	**149-2494**	1	SHAFT-TRACK IDLER	
	6	1	**162-7862**	2	SEAL GP-DUO-CONE	
					(EACH INCLUDES)	
Z	6A	1		2	SEAL-RING	
	6B	1	**162-2166**	2	RING-TORIC	
	7	1	**167-1950**	2	RETAINER	
	8	1	**167-1951**	2	COLLAR	
	9	1	**167-1952**	2	SEAL	
	10	1	**170-0792**	2	RING	
	11	1	**286-9306**	1	IDLER & BEARING AS	
	11A	1	**9P-2245**	2	BEARING-SLEEVE	
	12	1	**8T-4896**	24	WASHER-HARD (10.2X18.5X2.5-MM THK)	
	13	1	**9B-7237**	24	BOLT (3/8-16X1.25-IN)	

Z-NOT SERVICED SEPARATELY

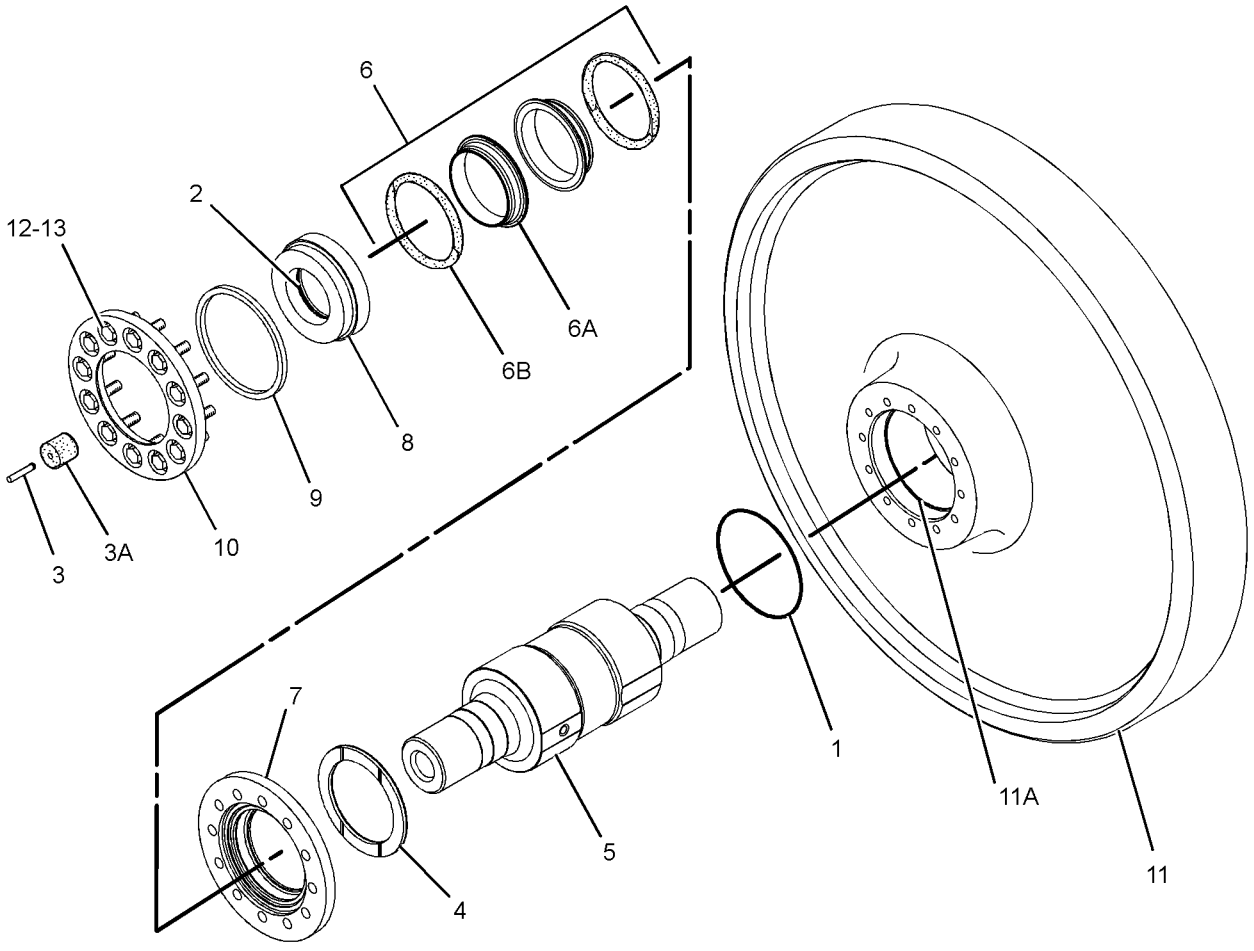

GRAPHIC #1 **<END>** g01225780

UNDERCARRIAGE

293-9345 IDLER GP-FRONT—RETROFIT KIT

S/N: GCT1-UP

FIELD INSTALLATION

SMCS-4159 **i02655426**

NOTE	PART NUMBER	QTY	PART NAME 1 2 3 4 5 6 (PRODUCT LEVEL)	SEE PAGE
Y	**293-9344**	1	GUARD & SCRAPER GP-IDLER	350
Y	**286-9305**	4	IDLER GP-TRACK	394

Y-SEPARATE ILLUSTRATION

<END>

202-4304 IDLER GP-TRACK–HEAVY-DUTY

S/N: SMC1-UP; GCT1-UP
PART OF 278-6367, 278-6368 UNDERCARRIAGE AR
AN ATTACHMENT

SMCS-4159 **i01770941**

NOTE	REF NO	GRAPHIC REF	PART NUMBER	QTY	PART NAME 1 2 3 4 5 6 (PRODUCT LEVEL)	SEE PAGE
	1	1	**2H-3928**	2	SEAL-O-RING	
	2	1	**202-4303**	1	IDLER & BEARING AS	
		1	**9P-2245**	2	BEARING-SLEEVE	
	3	1	**7J-2036**	2	SEAL-O-RING	
	4	1	**6Y-0473**	1	PLUG-CLEAR	
		1	**9G-5664**	1	STOPPER-RUBBER	
	5	1	**106-7691**	2	WASHER-THRUST (86X113.93X4.52-MM THK)	
	6	1	**107-3945**	2	COLLAR-SEAL	
	7	1	**149-2494**	1	SHAFT-TRACK IDLER	
	8	1	**149-2495**	2	RETAINER	
	9	1	**162-7862**	2	SEAL GP-DUO-CONE	
					(EACH INCLUDES)	
		1	**162-2166**	2	RING-TORIC	
	10	1	**1T-0765**	24	BOLT (3/8-16X1-IN)	
	11	1	**5M-2894**	24	WASHER-HARD (10.2X18.5X2.5-MM THK)	

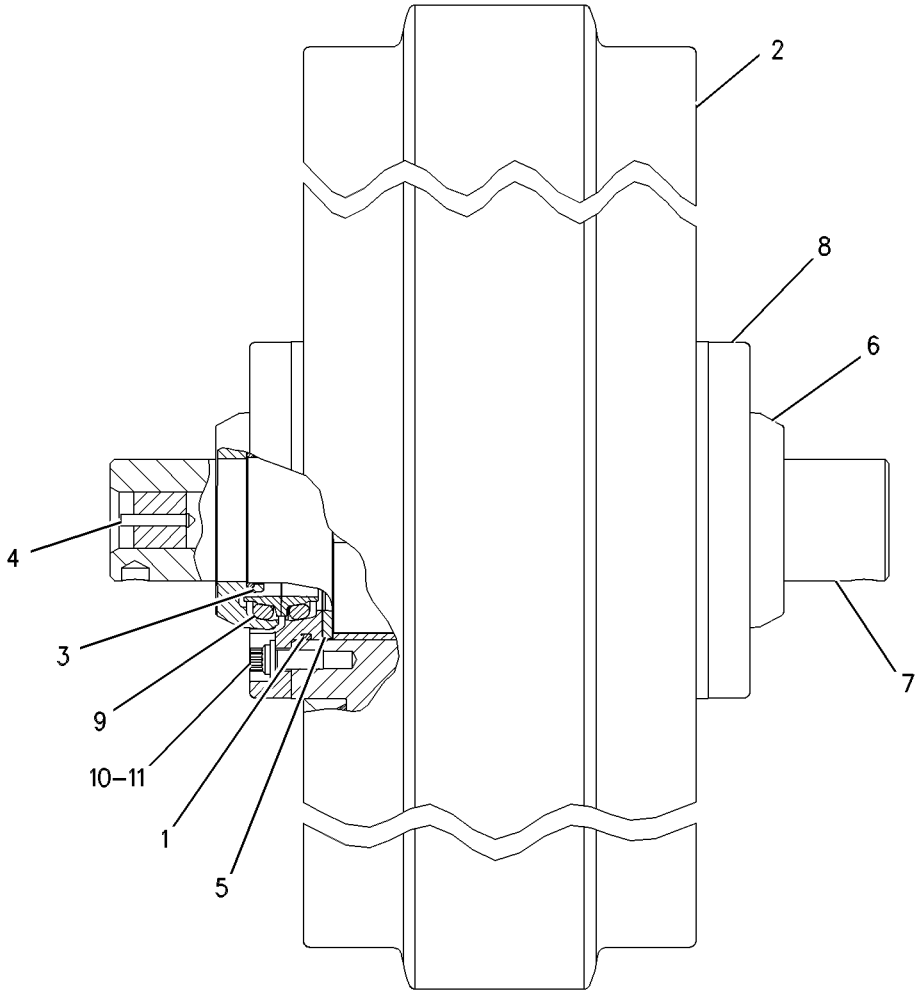

GRAPHIC #1 **<END>** g00579901

UNDERCARRIAGE

286-9305 IDLER GP-TRACK—SYSTEMONE

S/N: SMC1-UP; GCT1-UP

PART OF 227-8715, 293-9345 IDLER GP-FRONT

FIELD REPLACEMENT FOR 227-8715—PAGE 390

SMCS-4159 **i02624360**

NOTE	REF NO	GRAPHIC REF	PART NUMBER	QTY	PART NAME 1 2 3 4 5 6 (PRODUCT LEVEL)	SEE PAGE
	1	1	**2H-3928**	2	SEAL-O-RING	
	2	1	**7J-2036**	2	SEAL-O-RING	
	3	1	**6Y-0473**	1	PLUG-CLEAR	
	3A	1	**9G-5664**	1	STOPPER-RUBBER	
	4	1	**106-7691**	2	WASHER-THRUST (86X113.93X4.52-MM THK)	
	5	1	**107-3945**	2	COLLAR-SEAL	
	6	1	**149-2494**	1	SHAFT-TRACK IDLER	
	7	1	**149-2495**	2	RETAINER	
	8	1	**162-7862**	2	SEAL GP-DUO-CONE	
					(EACH INCLUDES)	
	8A	1	**162-2166**	2	RING-TORIC	
	9	1	**286-9306**	1	IDLER & BEARING AS	
	9A	1	**9P-2245**	2	BEARING-SLEEVE	
	10	1	**1T-0765**	24	BOLT (3/8-16X1-IN)	
	11	1	**5M-2894**	24	WASHER-HARD (10.2X18.5X2.5-MM THK)	
					PARTS SHOWN IN GRAPHIC(S) WITHOUT A REFERENCE NUMBER ARE NOT SERVICED SEPARATELY	

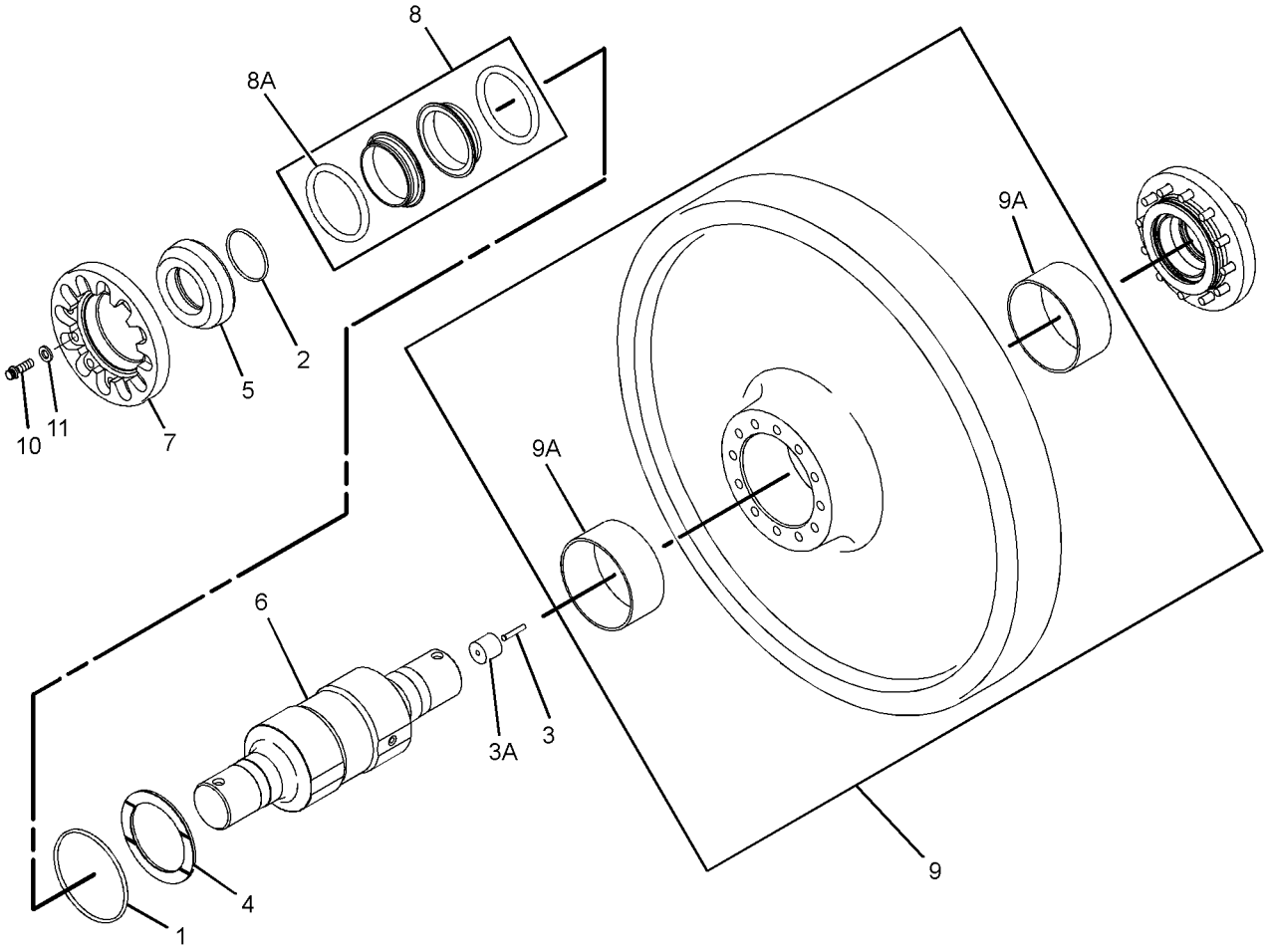

GRAPHIC #1 **<END>** g01364305

6I-9668 LINK AS-TRACK

S/N: SMC1-UP
SEALED, LUBRICATED, HEAVY DUTY
PART OF 6I-9641, 6I-9644 TRACK GP
AN ATTACHMENT

SMCS-4169, 4171 **i02489390**

NOTE	REF NO	GRAPHIC REF	PART NUMBER	QTY	PART NAME 1 2 3 4 5 6 (PRODUCT LEVEL)	SEE PAGE
	1	1	**8E-7406**	38	LINK-TRACK (LH)	
	2	1	**8E-7405**	38	LINK-TRACK (RH)	
	3	1	**8E-7410**	1	LINK-TRACK MASTER (BUSHING END, LH)	
	4	1	**8E-7409**	1	LINK-TRACK MASTER (BUSHING END, RH)	
	5	1	**8E-7407**	1	LINK-TRACK MASTER (PIN END, RH)	
	6	1	**8E-7408**	1	LINK-TRACK MASTER (PIN END, LH)	
	7	1	**152-8071**	78	RING-THRUST	
	8	1	**207-0544**	78	SEAL AS	
	9	1	**8E-7222**	39	BUSHING-TRACK	
	10	1	**160-7820**	39	PIN-TRACK	
	11	1	**5G-2247**	39	STOPPER-RUBBER	
			6Y-0473	39	PLUG-CLEAR	

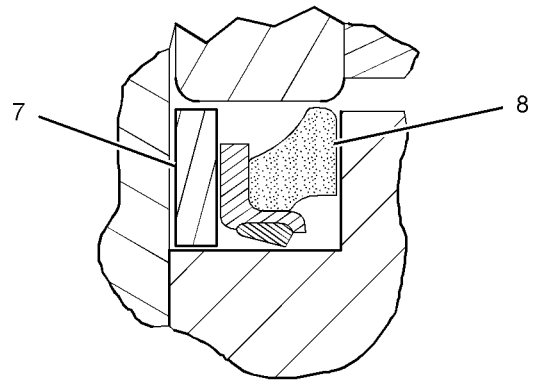

VIEW OF AREA A

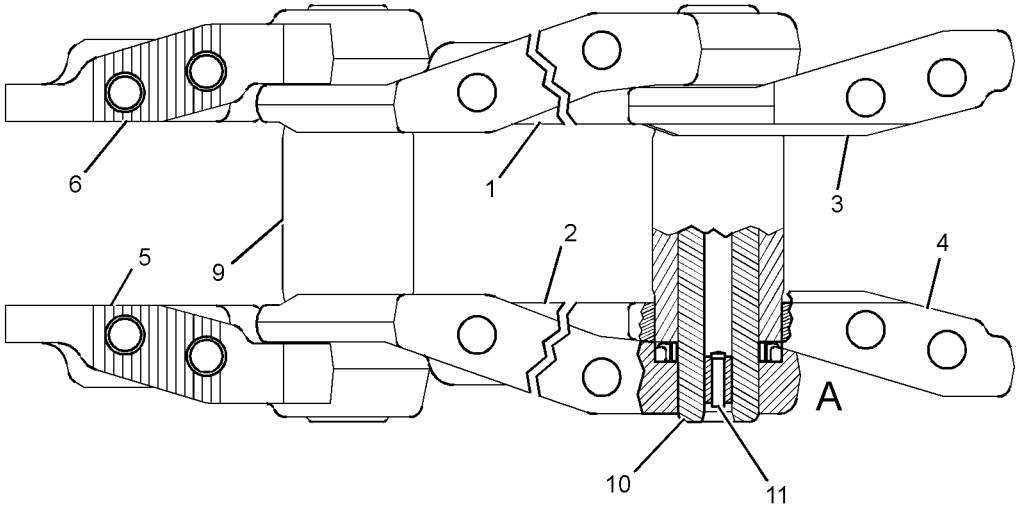

GRAPHIC #1 **<END>** g01184375

6I-9671 LINK AS-TRACK

S/N: GCT1-UP
SEALED, LUBRICATED, HEAVY DUTY
PART OF 1Q-4743, 6I-9653, 6I-9654, 6I-9656 TRACK GP
AN ATTACHMENT

SMCS-4169, 4171 **i02332731**

NOTE	REF NO	GRAPHIC REF	PART NUMBER	QTY	PART NAME 1 2 3 4 5 6 (PRODUCT LEVEL)	SEE PAGE
	1	1	**6Y-0473**	41	PLUG-CLEAR	
	2	1	**5G-2247**	41	STOPPER-RUBBER	
	3	1	**207-0544**	82	SEAL AS	
	4	1	**8E-7407**	1	LINK-TRACK MASTER (PIN END, RH)	
	5	1	**8E-7408**	1	LINK-TRACK MASTER (PIN END, LH)	
	6	1	**8E-7410**	1	LINK-TRACK MASTER (BUSHING END, LH)	
	7	1	**8E-7409**	1	LINK-TRACK MASTER (BUSHING END, RH)	
	8	1	**160-7820**	41	PIN-TRACK	
	9	1	**8E-7222**	41	BUSHING-TRACK	
	10	1	**8E-7406**	40	LINK-TRACK (LH)	
	11	1	**8E-7405**	40	LINK-TRACK (RH)	
	12	1	**152-8071**	82	RING-THRUST	

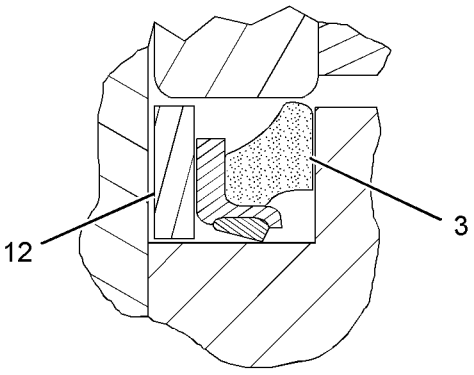

VIEW OF AREA A

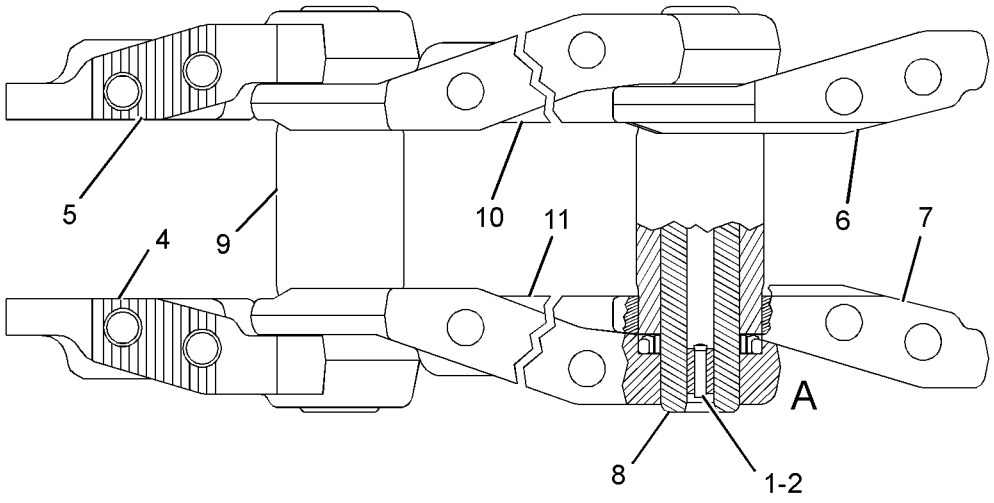

GRAPHIC #1 **<END>** g01184400

234-9679 LINK AS-TRACK BOX—LINK BOX

S/N: SMC1-UP; GCT1-UP

SEALED, LUBRICATED, FOR FIELD REPLACEMENT OF LINK BOX THAT IS MORE THAN 40% WORN, ORDER 264-9763 LINK AS, FOR FIELD REPLACEMENT OF LINK BOX THAT IS LESS THAN 40% WORN, ORDER 297-4786 LINK AS

PART OF 234-9681 LINK AS-TRACK BOX, 234-9672, 234-9678 LINK GP-TRACK

ALSO AN ATTACHMENT

SMCS-4169 **i02780611**

NOTE	REF NO	GRAPHIC REF	PART NUMBER	QTY	PART NAME 1 2 3 4 5 6 (PRODUCT LEVEL)	SEE PAGE
	1	1	**234-9699**	2	LINK-TRACK	

PARTS SHOWN IN GRAPHIC(S) WITHOUT A REFERENCE NUMBER ARE NOT SERVICED SEPARATELY

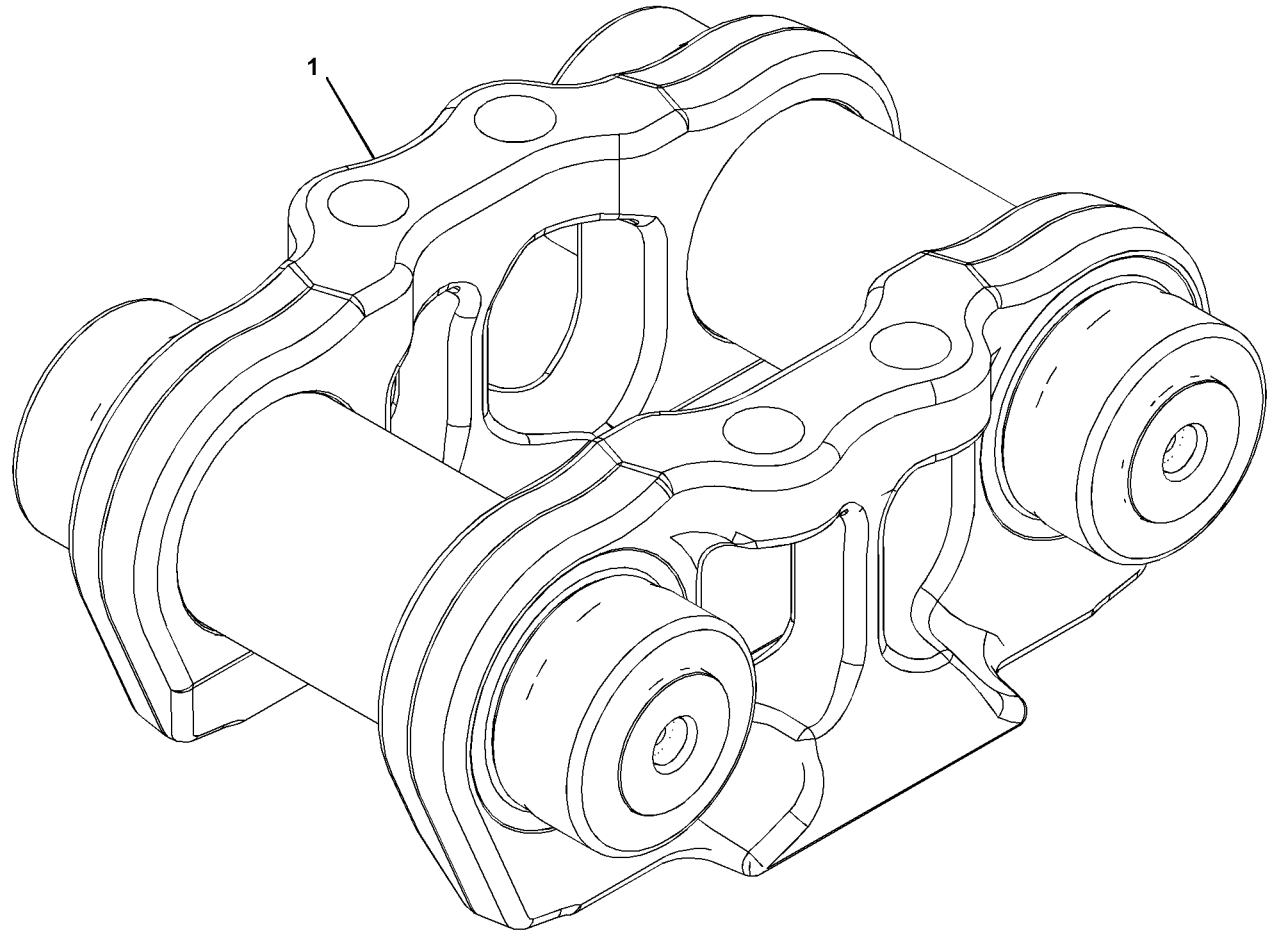

GRAPHIC #1 **<END>** g01354382

234-9681 LINK AS-TRACK BOX—LINK BOX, OFFSET

S/N: SMC1-UP; GCT1-UP

SEALED, LUBRICATED, FOR FIELD REPLACEMENT OF LINK BOX THAT IS MORE THAN 40% WORN, ORDER 264-9768 LINK AS, FOR FIELD REPLACEMENT OF LINK BOX THAT IS LESS THAN 40% WORN, ORDER 297-4787 LINK AS

PART OF 234-9672, 234-9678 LINK GP-TRACK

ALSO AN ATTACHMENT

SMCS-4169 **i02780607**

NOTE	REF NO	GRAPHIC REF	PART NUMBER	QTY	PART NAME 1 2 3 4 5 6 (PRODUCT LEVEL)	SEE PAGE
Y	1	1	**234-9679**	1	LINK AS-TRACK BOX (LINK BOX)	397

PARTS SHOWN IN GRAPHIC(S) WITHOUT A REFERENCE NUMBER ARE NOT SERVICED SEPARATELY

Y-SEPARATE ILLUSTRATION

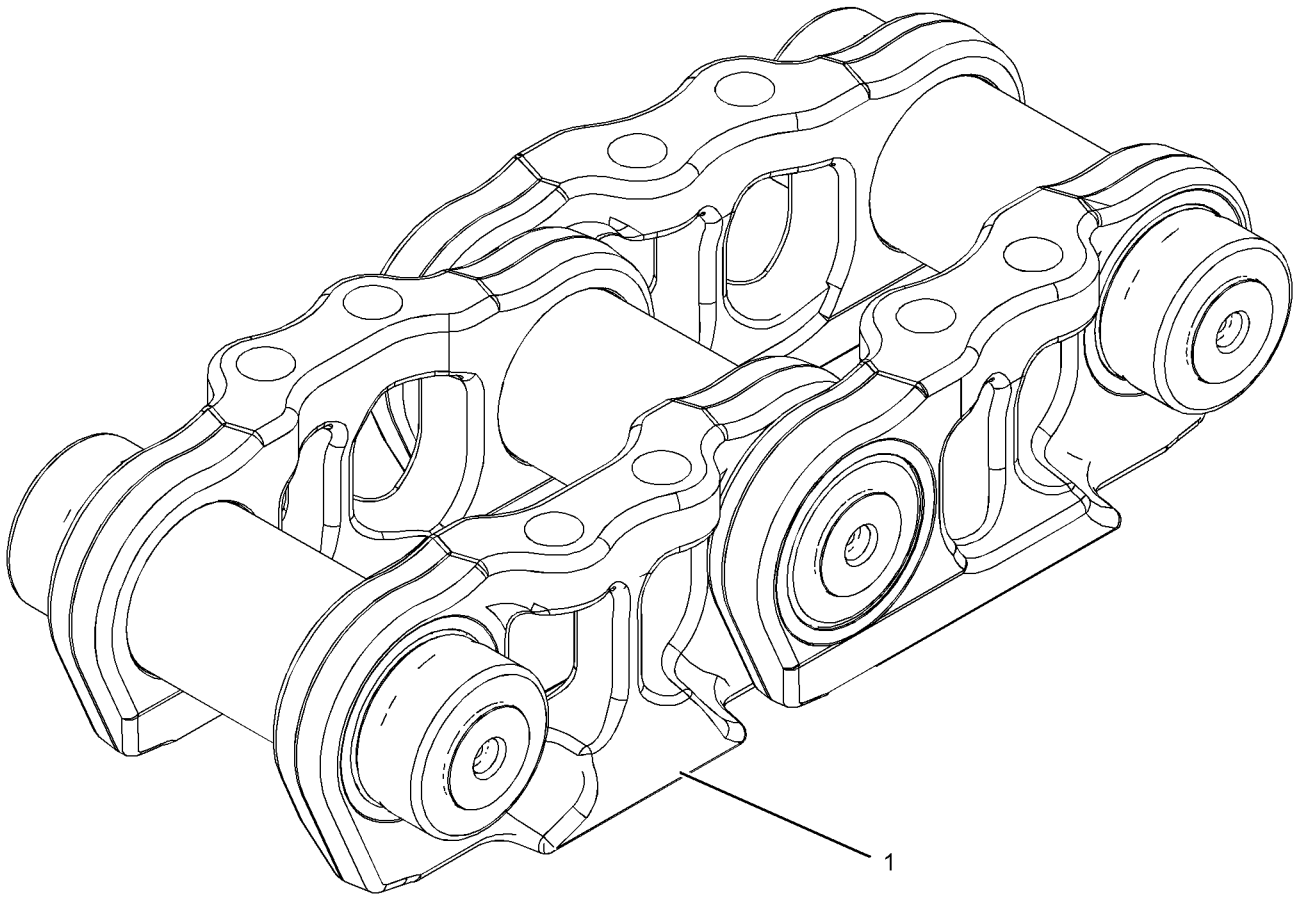

GRAPHIC #1 **<END>** g01388437

264-9763 LINK AS-TRACK BOX–LINK BOX

S/N: SMC1-UP; GCT1-UP
70% WORN. SEALED, LUBRICATED,
FIELD REPLACEMENT FOR 234-9679 LINK AS THAT IS MORE THAN 40% WORN
FIELD INSTALLATION

SMCS-4169 **i02613029**

NOTE	REF NO	GRAPHIC REF	PART NUMBER	QTY	PART NAME 1 2 3 4 5 6 (PRODUCT LEVEL)	SEE PAGE
					INDIVIDUAL PARTS ARE NOT SERVICED SEPARATELY	

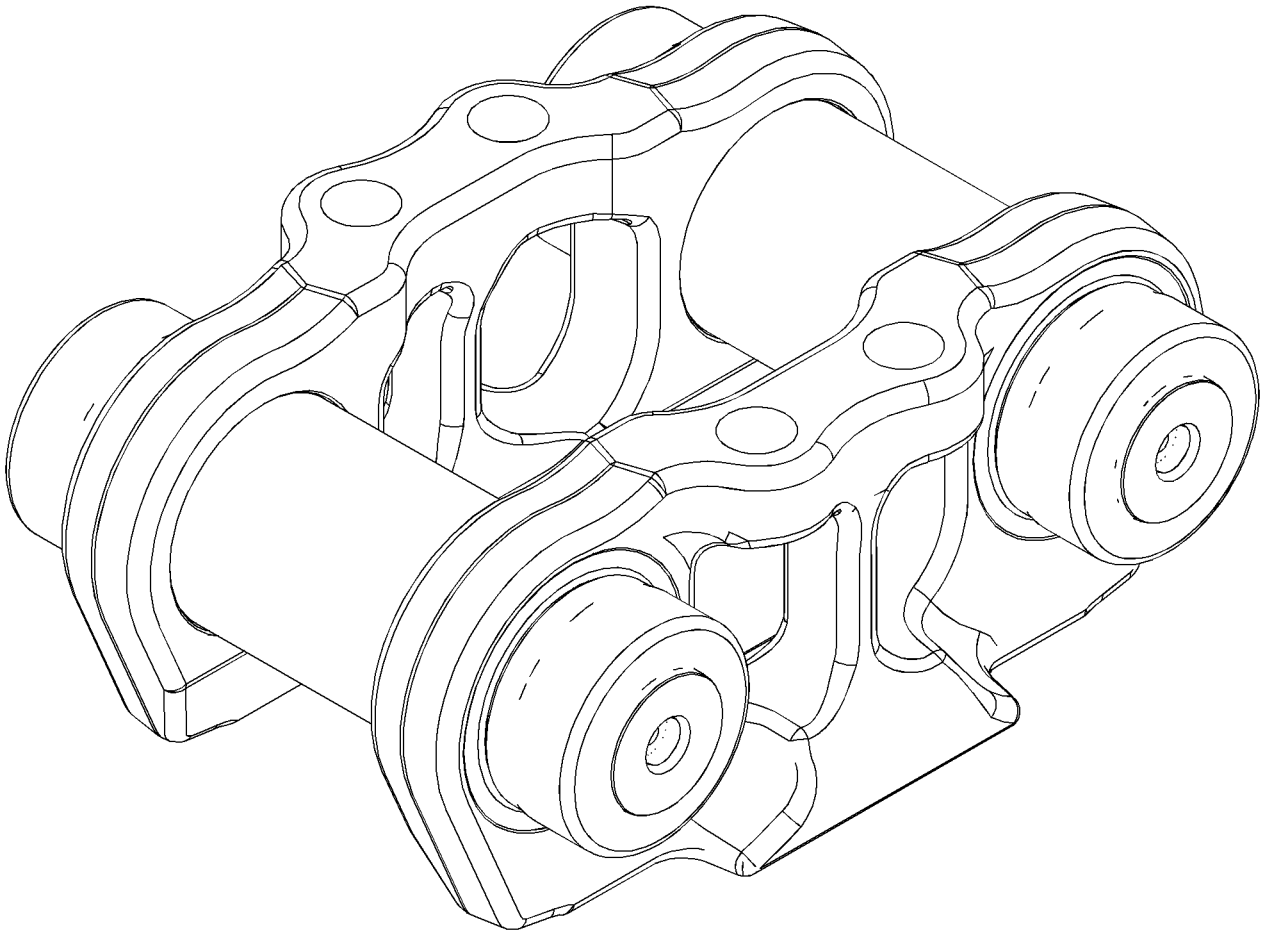

GRAPHIC #1 **<END>** g01193491

264-9768 LINK AS-TRACK BOX—LINK BOX, OFFSET

S/N: SMC1-UP; GCT1-UP
70% WORN. SEALED, LUBRICATED,
FIELD REPLACEMENT FOR 234-9681 LINK AS THAT IS MORE THAN 40% WORN,
FILED REPLACEMENT FOR 297-4787 LINK AS THAT IS MORE THAN 40% WORN
FIELD INSTALLATION

SMCS-4169 **i02454949**

NOTE	REF NO	GRAPHIC REF	PART NUMBER	QTY	PART NAME 1 2 3 4 5 6 (PRODUCT LEVEL)	SEE PAGE
					INDIVIDUAL PARTS ARE NOT SERVICED SEPARATELY	

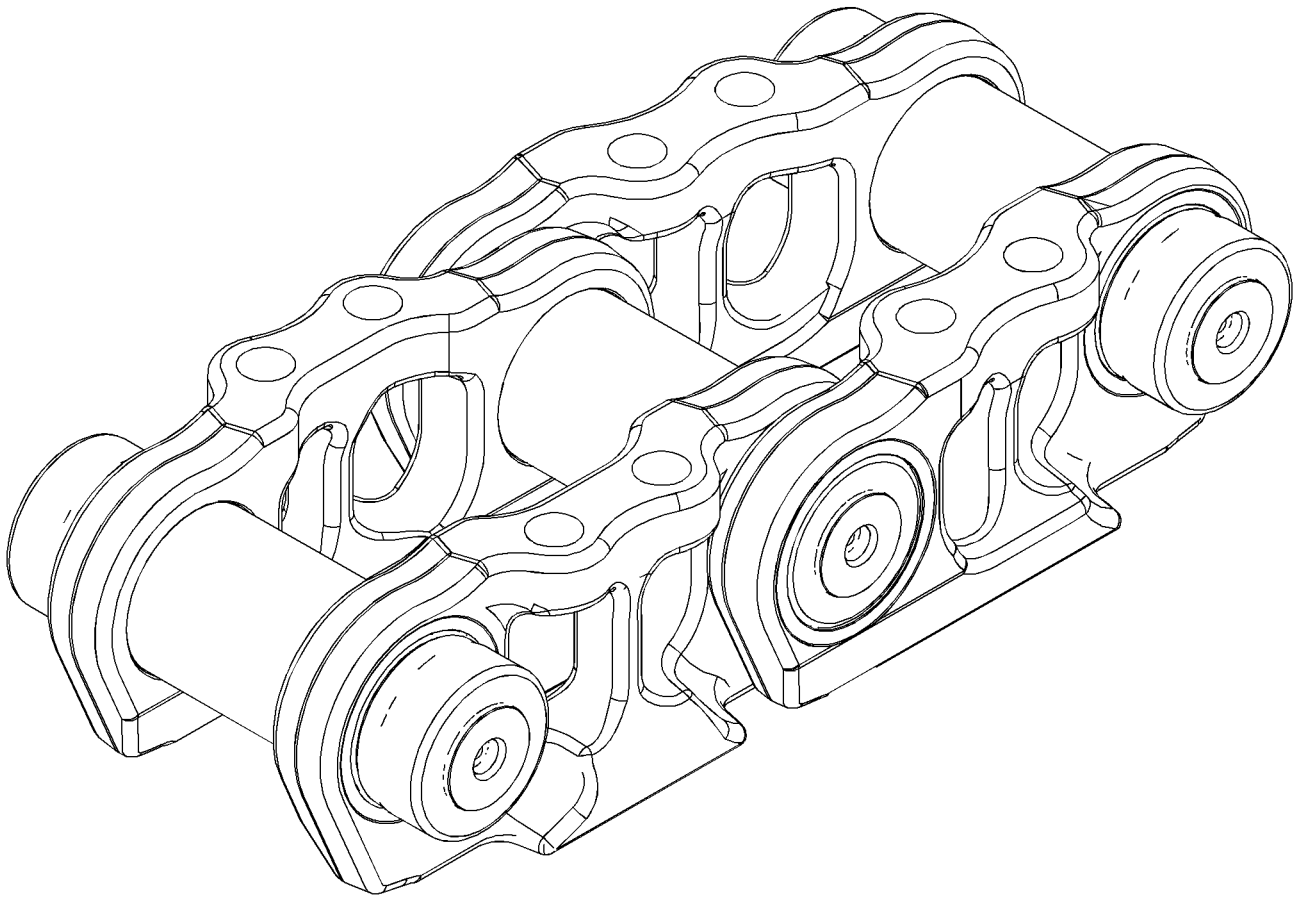

GRAPHIC #1 **<END>** g01197413

297-4786 LINK AS-TRACK BOX—LINK BOX

S/N: SMC1-UP; GCT1-UP
SEALED, LUBRICATED,
FIELD REPLACEMENT FOR 234-9679 LINK AS THAT IS LESS THAN 40% WORN
PART OF 297-4787 LINK AS-TRACK BOX, 297-4789 LINK GP-TRACK
FIELD INSTALLATION

SMCS-4169 **i02746975**

NOTE	REF NO	GRAPHIC REF	PART NUMBER	QTY	PART NAME 1 2 3 4 5 6 (PRODUCT LEVEL)	SEE PAGE
	1	1	**234-9699**	2	LINK-TRACK	
					PARTS SHOWN IN GRAPHIC(S) WITHOUT A REFERENCE NUMBER ARE NOT SERVICED SEPARATELY	

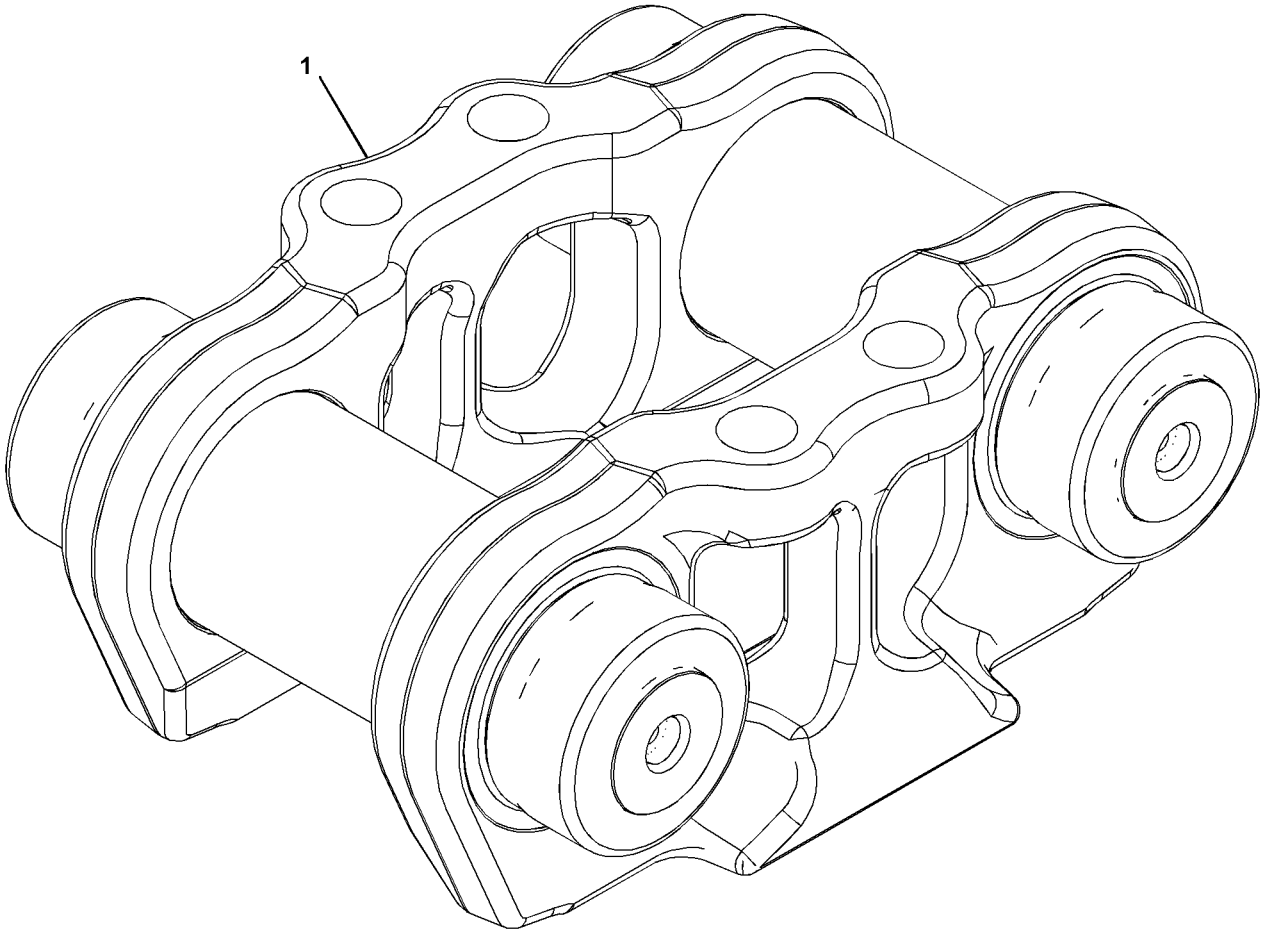

GRAPHIC #1 **<END>** g01354382

297-4787 LINK AS-TRACK BOX—LINK BOX, OFFSET

S/N: SMC1-UP; GCT1-UP
SEALED, LUBRICATED, FOR FIELD REPLACEMENT OF LINK BOX THAT IS MORE THAN 40% WORN,
ORDER 264-9768 LINK AS
PART OF 297-4789 LINK GP-TRACK
FIELD INSTALLATION

SMCS-4169 **i02747482**

NOTE	REF NO	GRAPHIC REF	PART NUMBER	QTY	PART NAME 1 2 3 4 5 6 (PRODUCT LEVEL)	SEE PAGE
Y	1	1	**297-4786**	1	LINK AS-TRACK BOX (LINK BOX)	401
					PARTS SHOWN IN GRAPHIC(S) WITHOUT A REFERENCE NUMBER ARE NOT SERVICED SEPARATELY	

Y-SEPARATE ILLUSTRATION

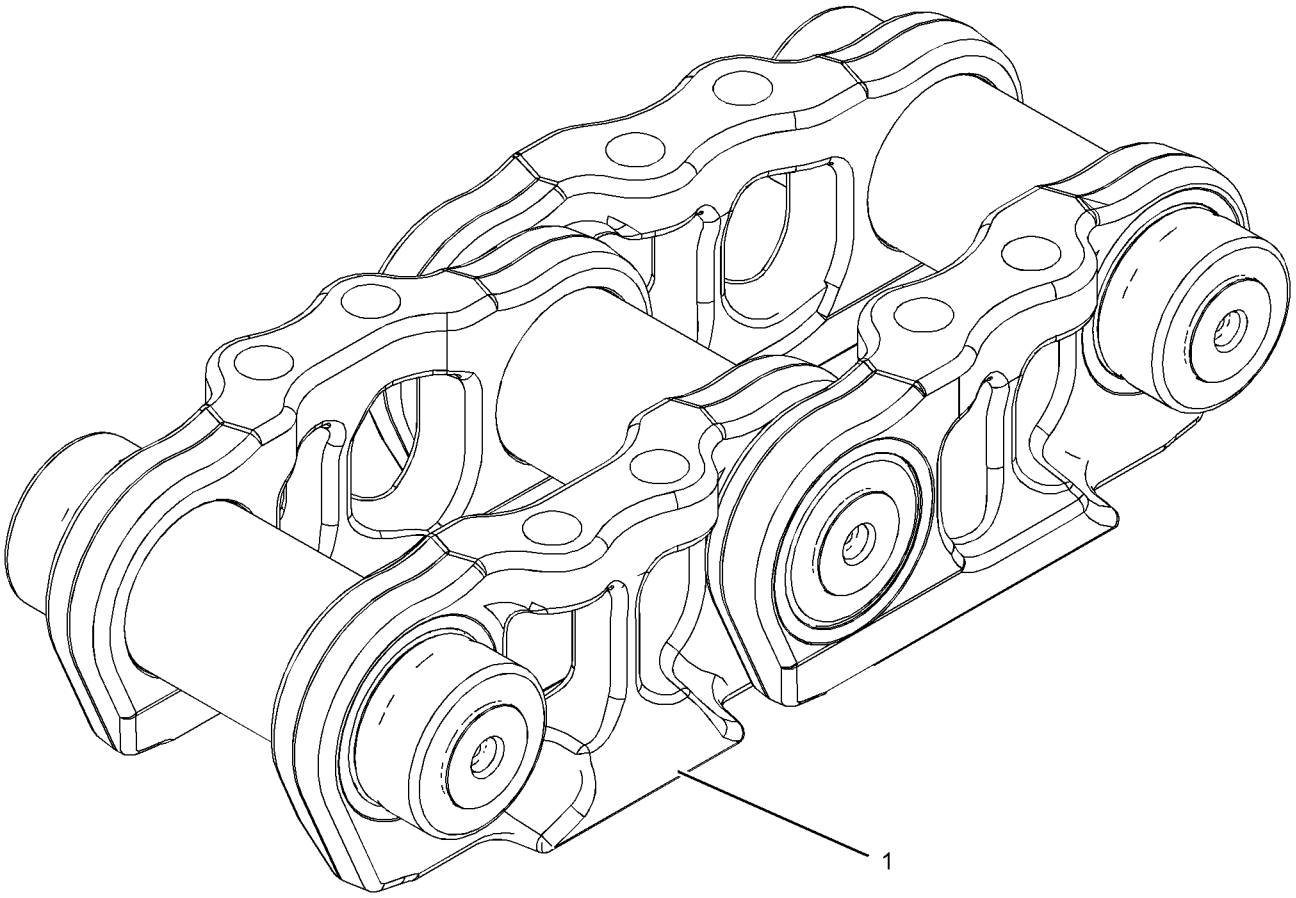

GRAPHIC #1 **<END>** g01357215

234-9672 LINK GP-TRACK–SYSTEMONE

S/N: SMC1-UP
39-JOINTS. SEALED, LUBRICATED
PART OF 234-9670, 234-9671, 246-5215, 246-5217 TRACK GP
FOR USE WITH SYSTEMONE ROLLERS, GUARDS, GUIDE STRIPS, SHOES
ALSO AN ATTACHMENT

SMCS-4169, 4171 **i02439146**

NOTE	REF NO	GRAPHIC REF	PART NUMBER	QTY	PART NAME 1 2 3 4 5 6 (PRODUCT LEVEL)	SEE PAGE
	1	1	**234-9699**	36	LINK-TRACK	
Y	2	1	**234-9679**	18	LINK AS-TRACK BOX (LINK BOX)	397
Y	3	1	**234-9681**	1	LINK AS-TRACK BOX (LINK BOX, OFFSET)	398

Y-SEPARATE ILLUSTRATION

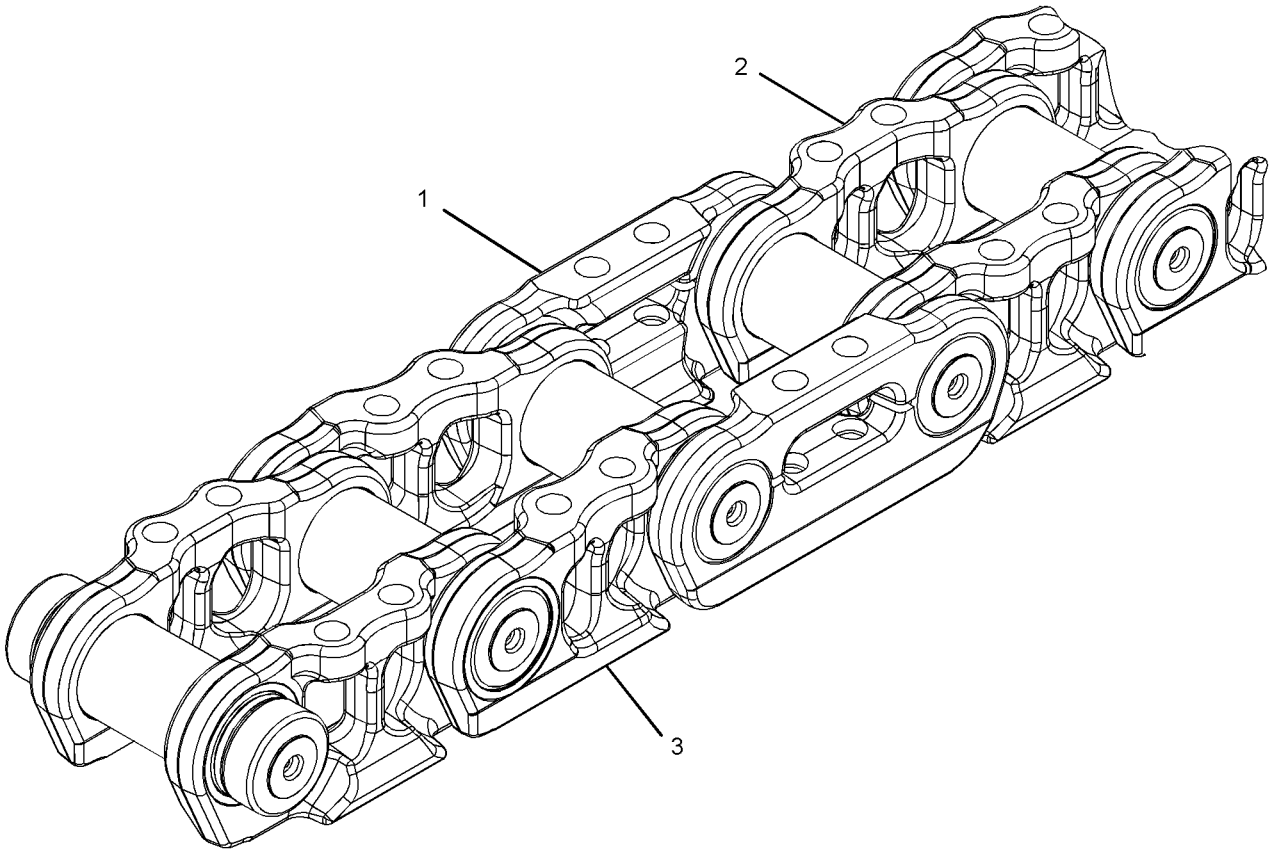

GRAPHIC #1 **<END>** g01197335

234-9678 LINK GP-TRACK–SYSTEMONE

S/N: GCT1-UP

41-JOINTS. SEALED, LUBRICATED, FOR FIELD REPLACEMENT OF LINK BOX THAT IS LESS THAN 40% WORN, ORDER 297-4789 LINK GP

PART OF 234-9675, 234-9676, 246-5216, 246-5218 TRACK GP

FOR USE WITH SYSTEMONE ROLLERS, GUARDS, GUIDESTRIPS, SHOES

ALSO AN ATTACHMENT

SMCS-4169, 4171 **i02432130**

NOTE	REF NO	GRAPHIC REF	PART NUMBER	QTY	PART NAME 1 2 3 4 5 6 (PRODUCT LEVEL)	SEE PAGE
	1	1	**234-9699**	38	LINK-TRACK	
Y	2	1	**234-9679**	19	LINK AS-TRACK BOX (LINK BOX)	397
Y	3	1	**234-9681**	1	LINK AS-TRACK BOX (LINK BOX, OFFSET)	398

Y-SEPARATE ILLUSTRATION

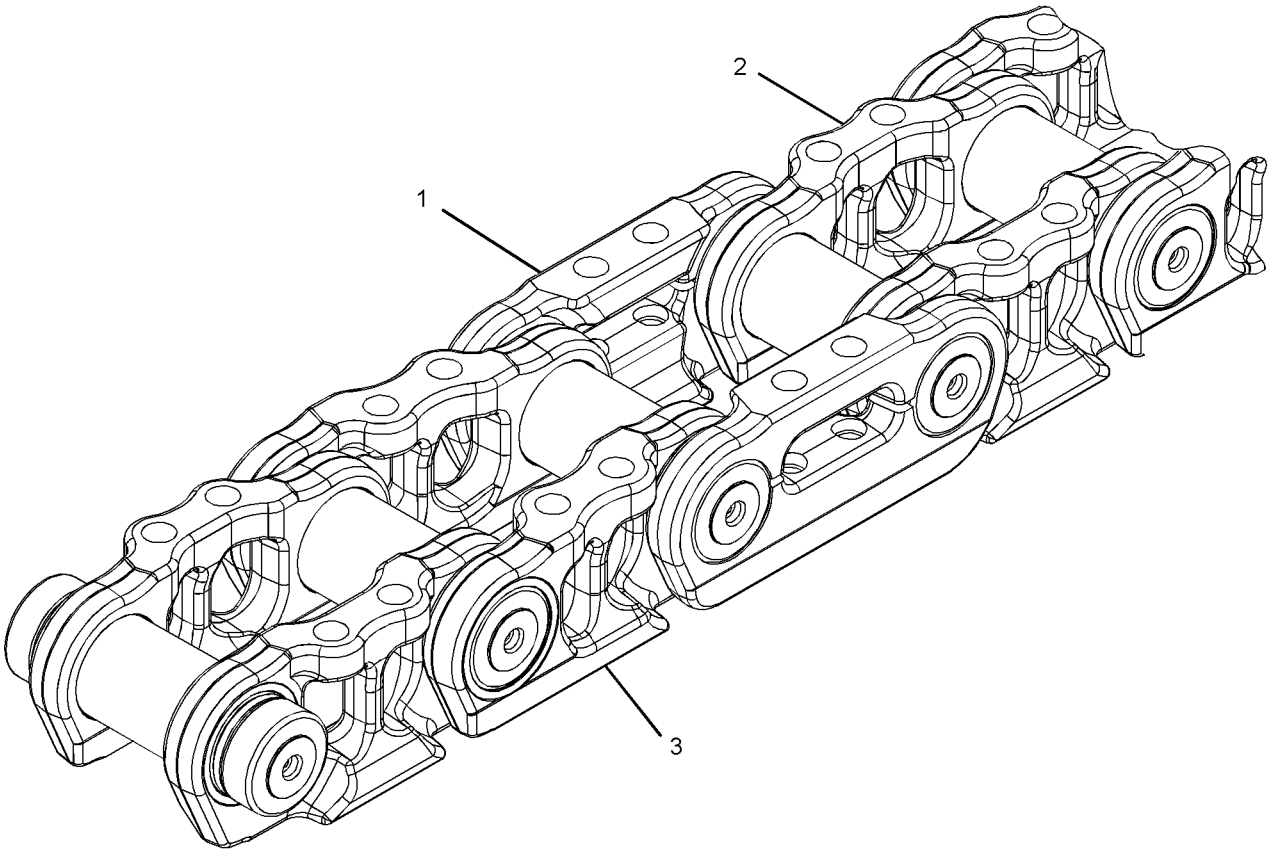

GRAPHIC #1 **<END>** g01197335

297-4789 LINK GP-TRACK–SYSTEMONE

S/N: GCT1-UP
41-JOINTS. SEALED, LUBRICATED,
FIELD REPLACEMENT FOR 234-9678 LINK AS THAT IS LESS THAN 40% WORN
FOR USE WITH SYSTEMONE ROLLERS, GUARDS, GUIDESTRIPS, SHOES
FIELD INSTALLATION

SMCS-4169, 4171 **i02746956**

NOTE	REF NO	GRAPHIC REF	PART NUMBER	QTY	PART NAME 1 2 3 4 5 6 (PRODUCT LEVEL)	SEE PAGE
	1	1	**234-9699**	38	LINK-TRACK	
Y	2	1	**297-4786**	19	LINK AS-TRACK BOX (LINK BOX)	401
Y	3	1	**297-4787**	1	LINK AS-TRACK BOX (LINK BOX, OFFSET)	402

Y-SEPARATE ILLUSTRATION

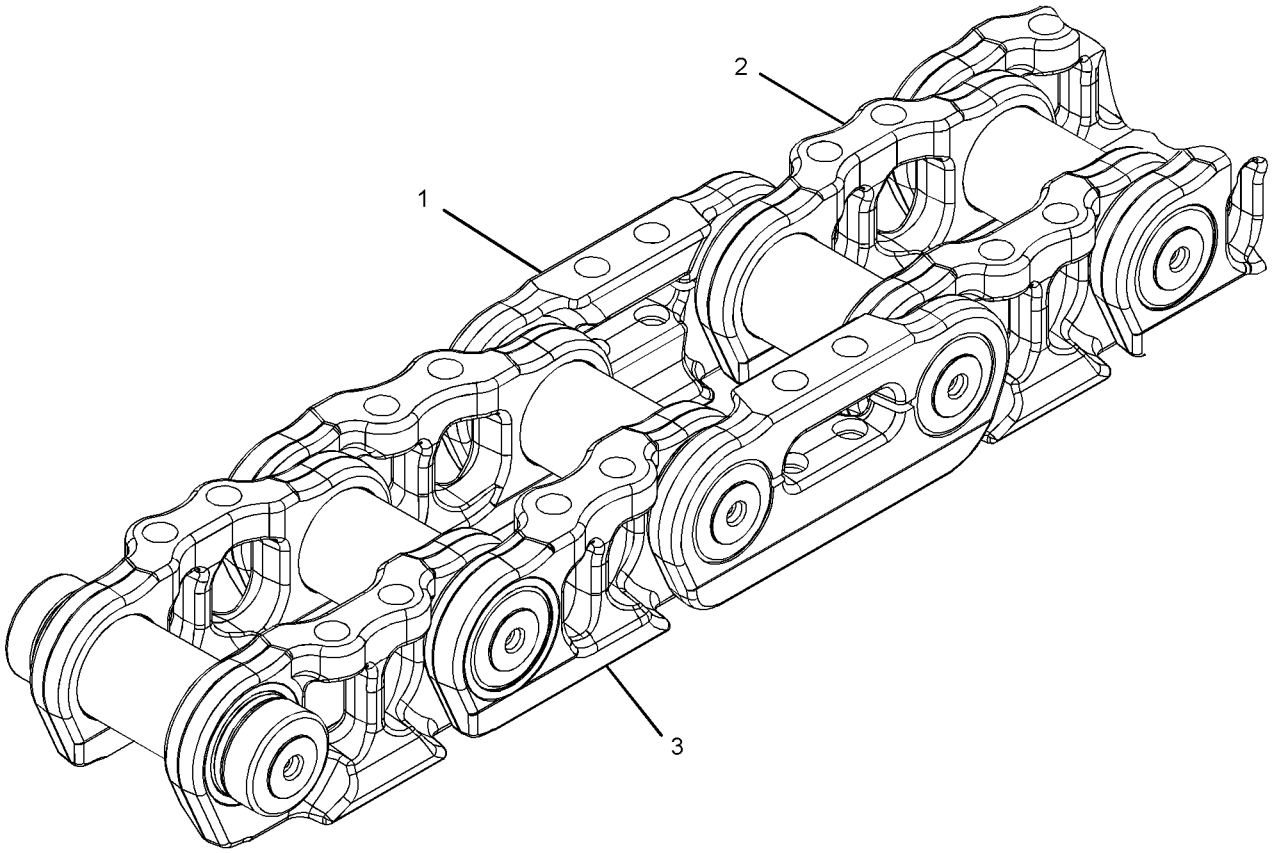

GRAPHIC #1 **<END>** g01197335

6Y-2940 MOUNTING GP-CARRIER ROLLER

S/N: SMC1-UP
PART OF 222-8667, 278-6367 UNDERCARRIAGE AR
ALSO AN ATTACHMENT

SMCS-4154 **i02757527**

NOTE	REF NO	GRAPHIC REF	PART NUMBER	QTY	PART NAME 1 2 3 4 5 6 (PRODUCT LEVEL)	SEE PAGE
	1	1	**7X-0371**	2	BOLT (3/4-10X3.75-IN)	
	2	1	**8T-4994**	2	WASHER-HARD (20X36.5X3.5-MM THK)	
	3	1	**8Y-1388**	1	BRACKET AS	
	4	1	**7X-0406**	4	BOLT (1-8X3-IN)	
	5	1	**8T-5361**	4	WASHER-HARD (28X49X5-MM THK)	

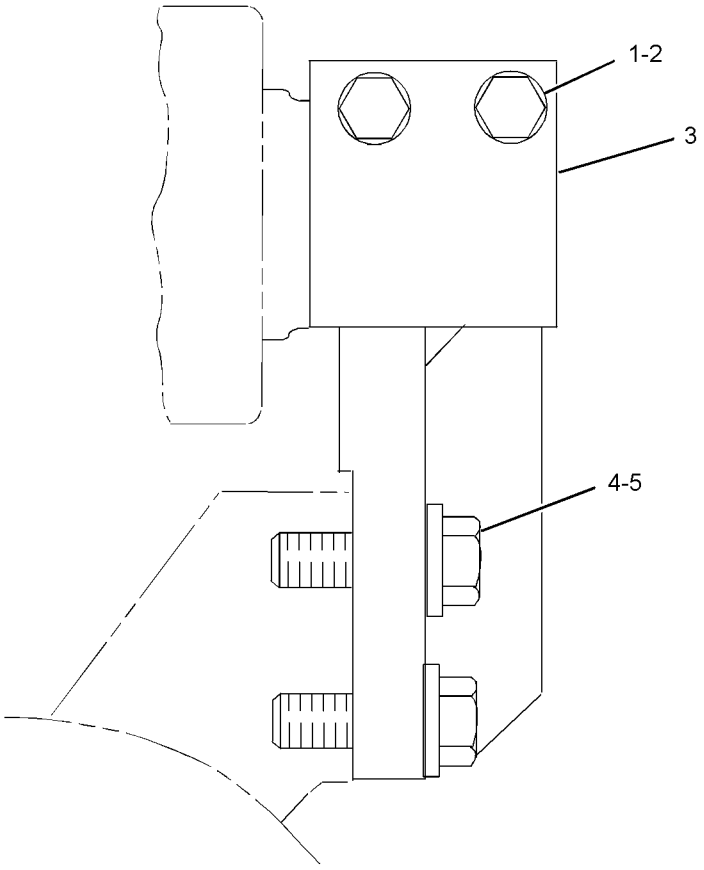

GRAPHIC #1 **<END>** g01382439

169-4368 MOUNTING GP-CARRIER ROLLER

S/N: GCT1-UP
PART OF 218-4982, 278-6368 UNDERCARRIAGE AR
ALSO AN ATTACHMENT

SMCS-4154 **i01349526**

NOTE	REF NO	GRAPHIC REF	PART NUMBER	QTY	PART NAME 1 2 3 4 5 6 (PRODUCT LEVEL)	SEE PAGE
M	1	1	**7X-2575**	4	BOLT (M24X3X60-MM)	
M	2	1	**8T-4187**	2	BOLT (M20X2.5X80-MM)	
	3	1	**8T-4123**	2	WASHER (22X35X3.5-MM THK)	
	4	1	**171-0808**	1	BRACKET	
	5	1	**8T-4167**	4	WASHER-HARD (26X44X4-MM THK)	

M-METRIC PART

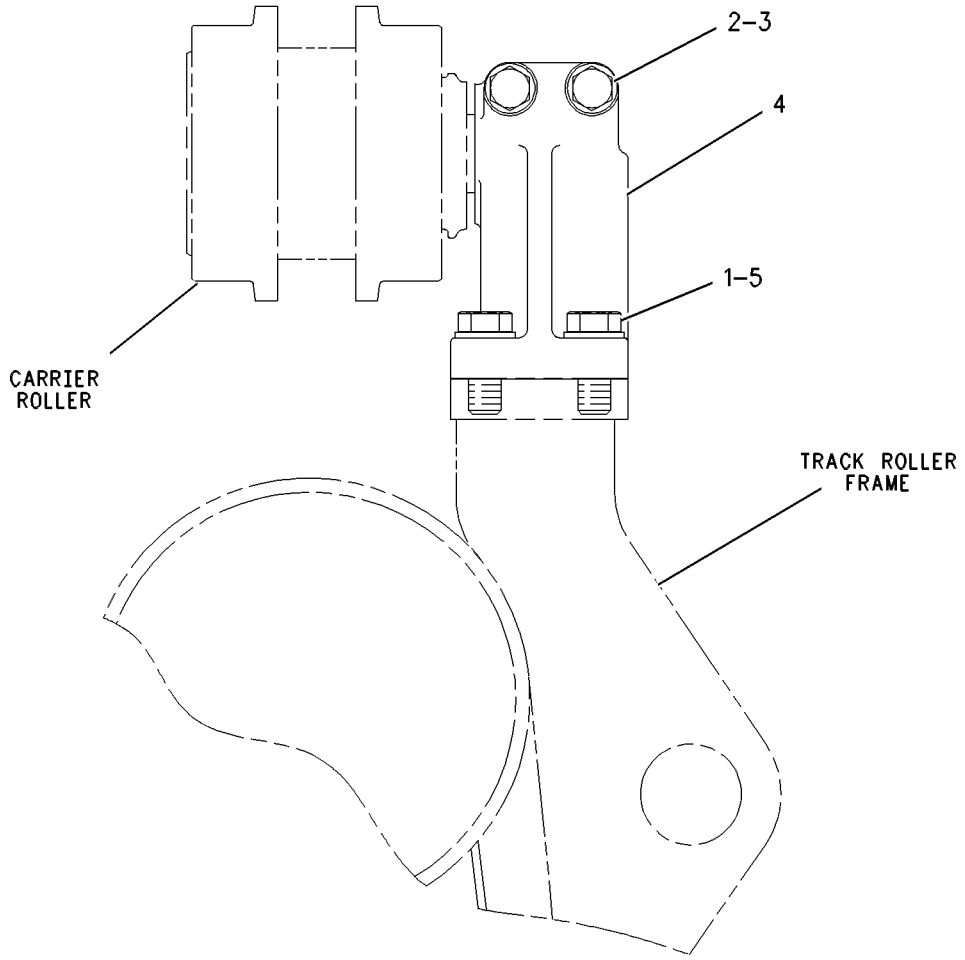

GRAPHIC #1 **<END>** g00607917

223-0647 PIVOT BAR GP

S/N: SMC1-UP; GCT1-UP
1880-MM (74-IN) GAUGE
PART OF 218-4982, 222-8667, 278-6367, 278-6368 UNDERCARRIAGE AR
ALSO AN ATTACHMENT

SMCS-4153 **i02429898**

NOTE	REF NO	GRAPHIC REF	PART NUMBER	QTY	PART NAME 1 2 3 4 5 6 (PRODUCT LEVEL)	SEE PAGE
	1	1	**5G-8993**	2	RETAINER	
	2	1	**5G-9842**	2	SEAL	
	3	1	**5G-9843**	2	PLATE	
	4	1	**224-0881**	2	SHAFT AS-PIVOT	
					(EACH INCLUDES)	
		1	**5G-9841**	1	RING	
	5	1	**238-4520**	2	PLATE AS	
M	6	1	**7X-2580**	16	BOLT (M30X3.5X90-MM)	
	7	1	**8E-1900**	2	WASHER-THRUST (112X150X6.35-MM THK)	
M	8	1	**8T-0375**	12	BOLT (M16X2X45-MM)	
	9	1	**8T-4123**	10	WASHER (22X35X3.5-MM THK)	
M	10	1	**8T-5460**	10	BOLT (M20X2.5X40-MM)	
	11	1	**9M-3786**	2	SEAL-O-RING	

M-METRIC PART

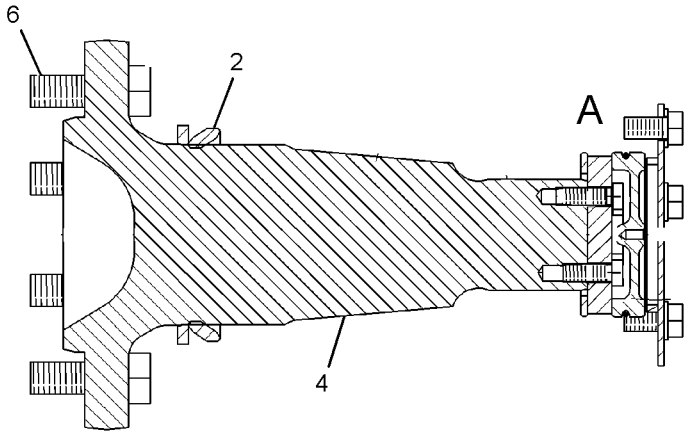

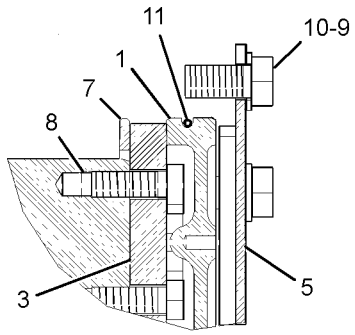

VIEW OF AREA A

GRAPHIC #1 **<END>** g01206580

125-4177 ROLLER AR-TRACK

S/N: SMC1-UP
PART OF 203-6415 GUIDING AR-UNDERCARRIAGE
AN ATTACHMENT

SMCS-4180 **i02803344**

NOTE	PART NUMBER	QTY	PART NAME 1 2 3 4 5 6 (PRODUCT LEVEL)	SEE PAGE
Y	**288-0936**	8	ROLLER GP-TRACK-DOUBLE FLANGE	413
Y-SEPARATE ILLUSTRATION				

<END>

125-5533 ROLLER AR-TRACK

S/N: GCT1-UP
PART OF 203-6440 GUIDING AR-UNDERCARRIAGE
AN ATTACHMENT

SMCS-4180 **i02803359**

NOTE	PART NUMBER	QTY	PART NAME 1 2 3 4 5 6 (PRODUCT LEVEL)	SEE PAGE
Y	**288-0936**	10	ROLLER GP-TRACK-DOUBLE FLANGE	413
Y-SEPARATE ILLUSTRATION				

<END>

235-5974 ROLLER GP-TRACK CARRIER—SYSTEMONE

S/N: SMC1-UP; GCT1-UP

PART OF 218-4982, 222-8667, 278-6367, 278-6368 UNDERCARRIAGE AR

ALSO AN ATTACHMENT

SMCS-4154 **i02794773**

NOTE	REF NO	GRAPHIC REF	PART NUMBER	QTY	PART NAME 1 2 3 4 5 6 (PRODUCT LEVEL)	SEE PAGE
					(INDIVIDUAL PARTS ARE NOT SERVICED SEPARATELY)	

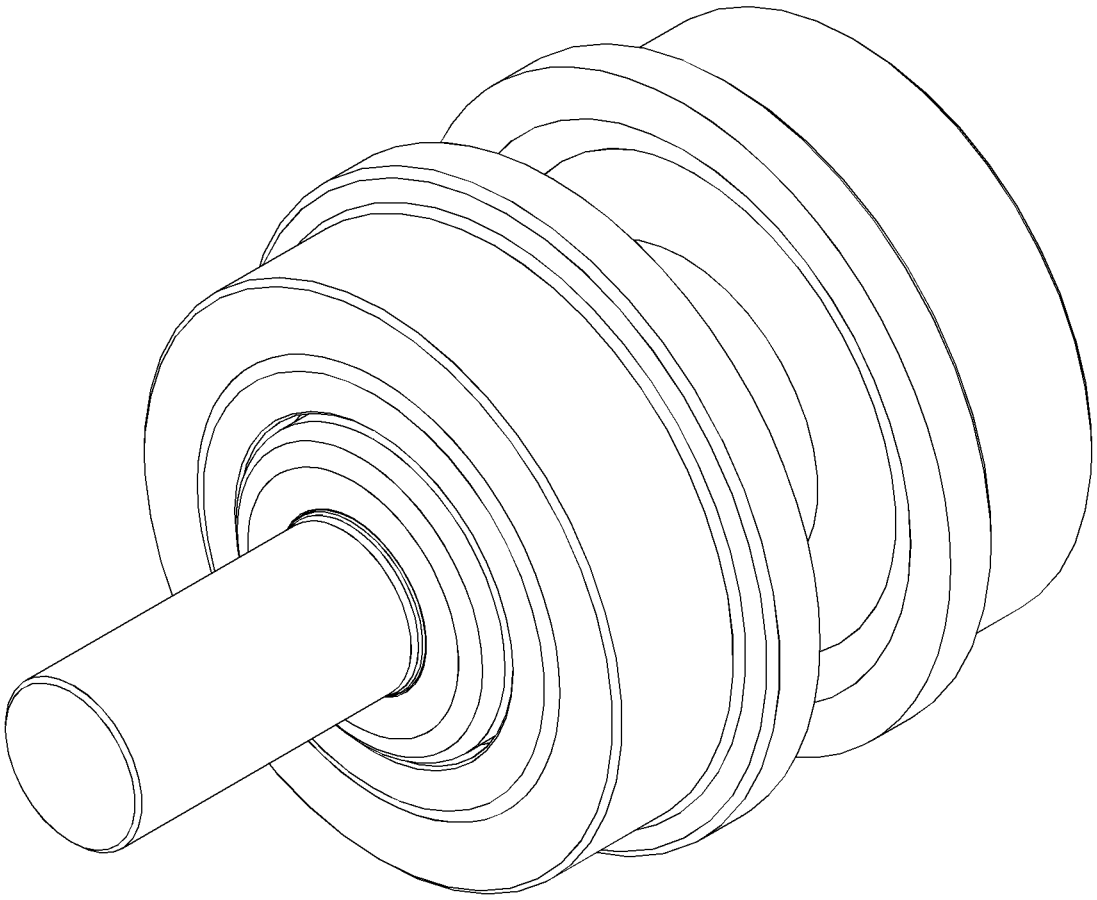

GRAPHIC #1 **<END>** g01395978

125-4176 ROLLER GP-TRACK-DOUBLE FLANGE—HEAVY-DUTY

S/N: SMC1-UP; GCT1-UP
PART OF 278-6367, 278-6368 UNDERCARRIAGE AR
AN ATTACHMENT

SMCS-4180 **i02763330**

NOTE	PART NUMBER	QTY	PART NAME 1 2 3 4 5 6 (PRODUCT LEVEL)	SEE PAGE
Y	**288-0935**	1	ROLLER GP-TRACK-DOUBLE FLANGE	412
M	**8T-0360**	4	BOLT (M20X2.5X90-MM)	
	214-1109	2	CAP	
	8T-3282	4	WASHER-HARD (22X35X3.5-MM THK)	

M-METRIC PART
R-REMFG PART MAY BE AVAILABLE
Y-SEPARATE ILLUSTRATION

<END>

288-0935 ROLLER GP-TRACK-DOUBLE FLANGE—HEAVY-DUTY

S/N: SMC1-UP; GCT1-UP

PART OF 125-4176 ROLLER GP-TRACK-DOUBLE FLANGE

FOR USE WITH SEALED, LUBRICATED, HEAVY-DUTY, HYBRID, ROTATING BUSHING TRACK.

CANNOT BE USED WITH SYSTEMONE TRACK

AN ATTACHMENT AND FIELD INSTALLATION

SMCS-4180 **i02794580**

NOTE	REF NO	GRAPHIC REF	PART NUMBER	QTY	PART NAME 1 2 3 4 5 6 (PRODUCT LEVEL)	SEE PAGE
					(INDIVIDUAL PARTS ARE NOT SERVICED SEPARATELY)	

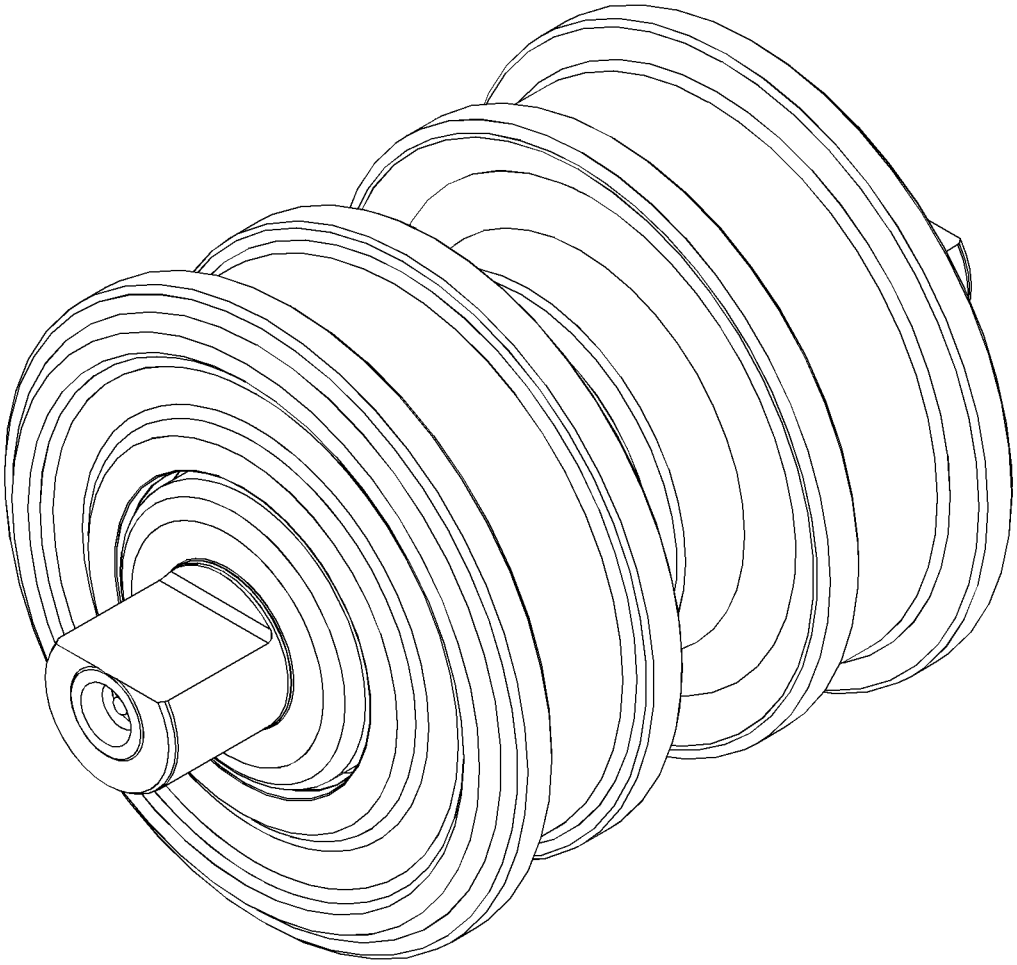

GRAPHIC #1 **<END>** g01395970

288-0936 ROLLER GP-TRACK-DOUBLE FLANGE–

TALL LINK, SLEEVE BEARING

S/N: SMC1-UP; GCT1-UP

PART OF 125-4177, 125-5533 ROLLER AR-TRACK

FOR USE WITH HEAVY-DUTY,HYBRID,ROTATING BUSHING,SEALED,LUBRICATED TRACK.

CANNOT BE USED WITH SYSTEMONE

AN ATTACHMENT AND FIELD INSTALLATION

SMCS-4180 **i02794583**

NOTE	REF NO	GRAPHIC REF	PART NUMBER	QTY	PART NAME 1 2 3 4 5 6 (PRODUCT LEVEL)	SEE PAGE
					(INDIVIDUAL PARTS ARE NOT SERVICED SEPARATELY)	

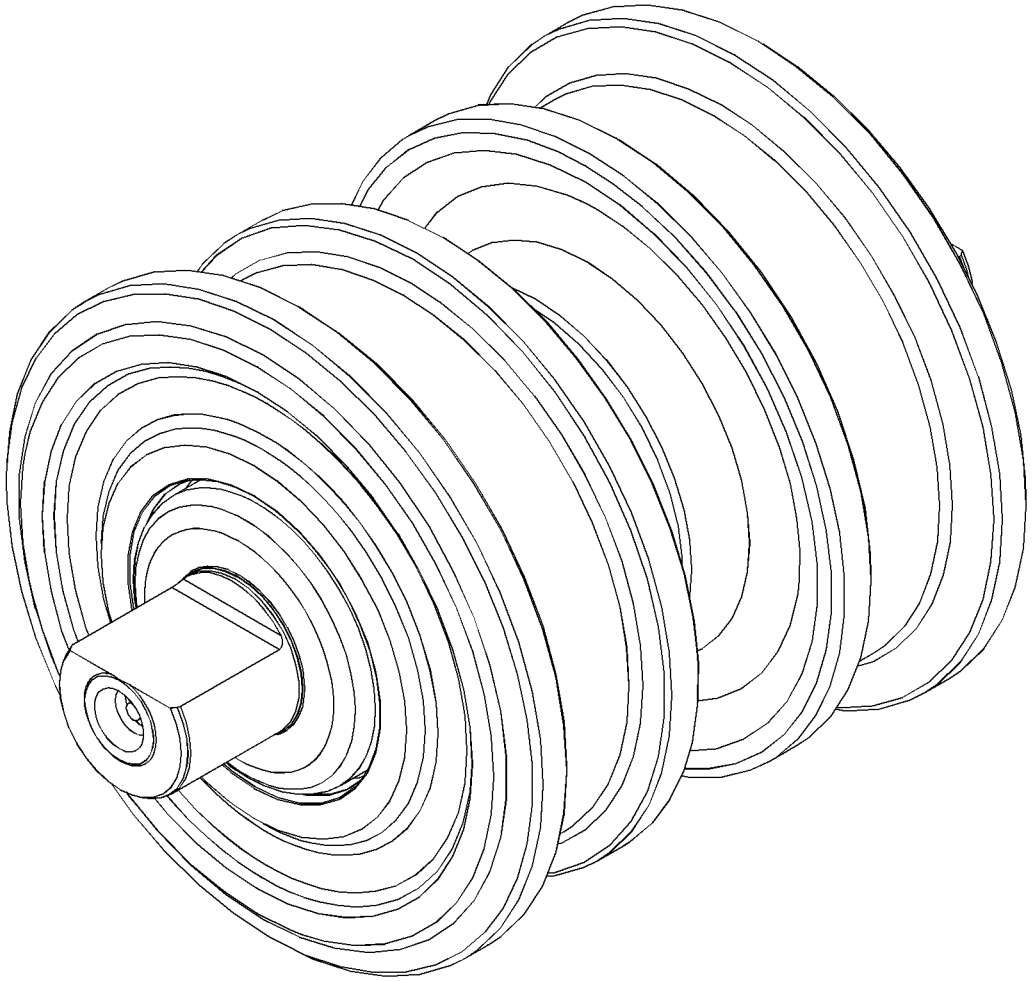

GRAPHIC #1 **<END>** g01395934

288-0946 ROLLER GP-TRACK-DOUBLE FLANGE–COLD WEATHER

S/N: SMC1-UP; GCT1-UP

FOR USE WITH SEALED, LUBRICATED, HEAVY-DUTY, HYBRID, & ROTATING BUSHING TRACK.

CANNOT BE USED WITH SYSTEMONE TRACK

FIELD INSTALLATION

SMCS-4180 **i02794740**

NOTE	REF NO	GRAPHIC REF	PART NUMBER	QTY	PART NAME 1 2 3 4 5 6 (PRODUCT LEVEL)	SEE PAGE
					(INDIVIDUAL PARTS ARE NOT SERVICED SEPARATELY)	

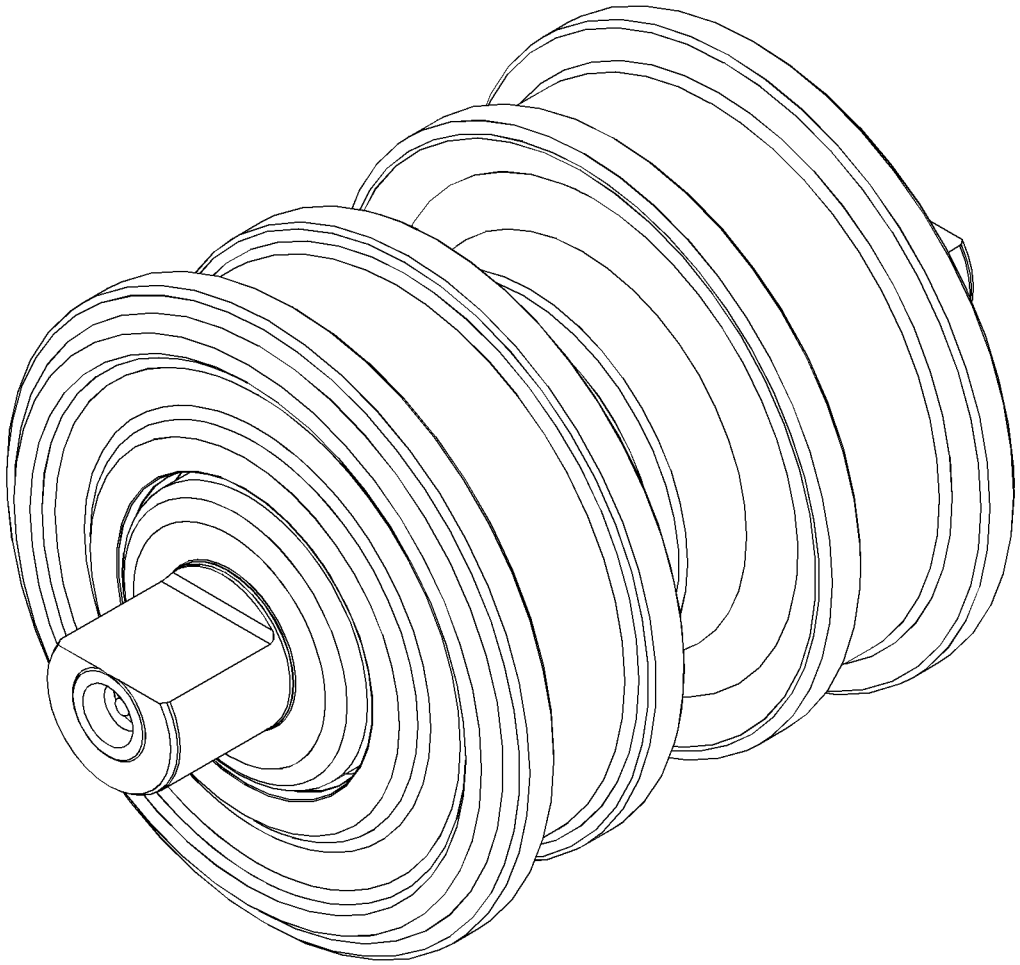

GRAPHIC #1 **<END>** g01395970

288-0948 ROLLER GP-TRACK-DOUBLE FLANGE—HIGH HEAT

S/N: SMC1-UP; GCT1-UP

FOR USE WITH SEALED, LUBRICATED, HEAVY-DUTY, HYBRID, & ROTATING BUSHING TRACK.

CANNOT BE USED WITH SYSTEMONE TRACK

FIELD INSTALLATION

SMCS-4180 **i02794755**

NOTE	REF NO	GRAPHIC REF	PART NUMBER	QTY	PART NAME 1 2 3 4 5 6 (PRODUCT LEVEL)	SEE PAGE
					(INDIVIDUAL PARTS ARE NOT SERVICED SEPARATELY)	

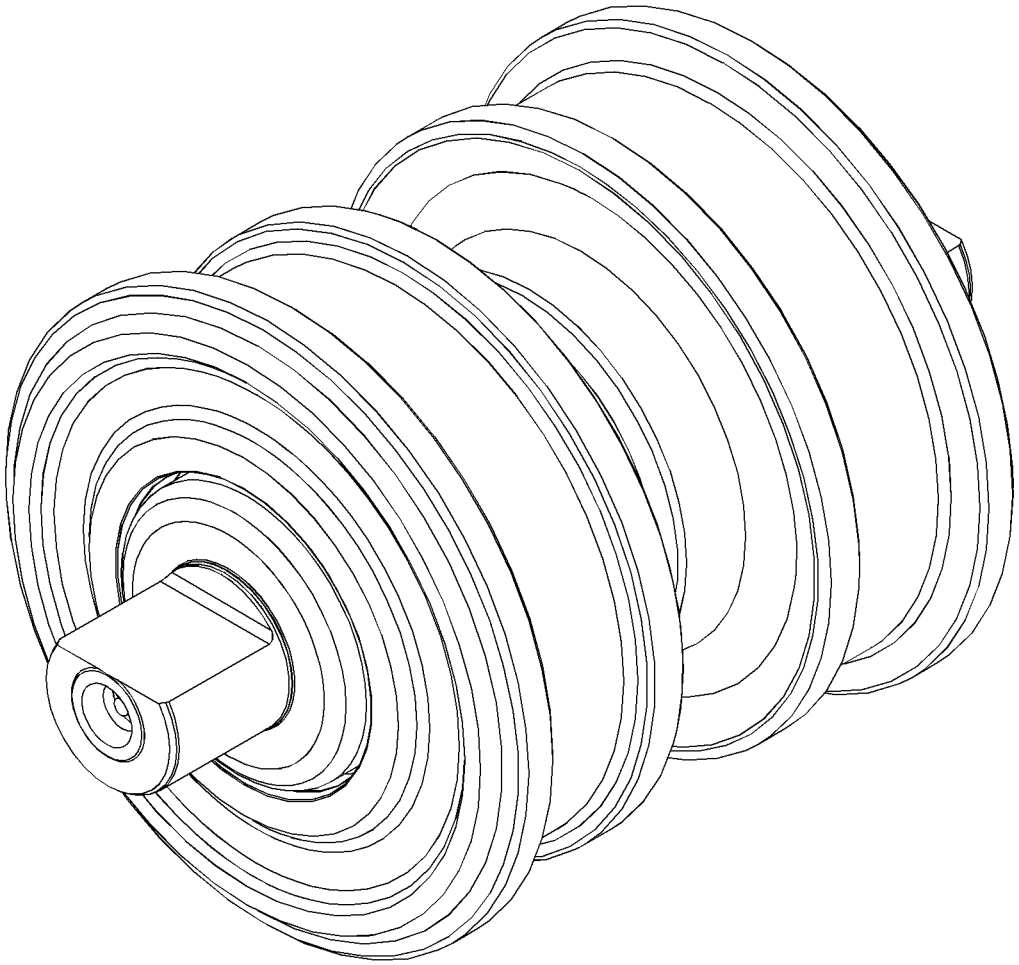

GRAPHIC #1 **<END>** g01395970

125-4175 ROLLER GP-TRACK-SINGLE FLANGE–HEAVY-DUTY

S/N: SMC1-UP; GCT1-UP
PART OF 278-6367, 278-6368 UNDERCARRIAGE AR
AN ATTACHMENT

SMCS-4180 **i02763280**

NOTE	PART NUMBER	QTY	PART NAME 1 2 3 4 5 6 (PRODUCT LEVEL)	SEE PAGE
Y	**288-0934**	1	ROLLER GP-TRACK-SINGLE FLANGE	418
M	**8T-0360**	4	BOLT (M20X2.5X90-MM)	
	214-1109	2	CAP	
	8T-3282	4	WASHER-HARD (22X35X3.5-MM THK)	

M-METRIC PART
R-REMFG PART MAY BE AVAILABLE
Y-SEPARATE ILLUSTRATION

<END>

235-4157 ROLLER GP-TRACK-SINGLE FLANGE–SYSTEMONE

S/N: SMC1-UP; GCT1-UP

PART OF 292-2175 ROLLER GP-TRACK-SINGLE FLANGE

SMCS-4180 **i02794800**

NOTE	REF NO	GRAPHIC REF	PART NUMBER	QTY	PART NAME 1 2 3 4 5 6 (PRODUCT LEVEL)	SEE PAGE
					(INDIVIDUAL PARTS ARE NOT SERVICED SEPARATELY)	

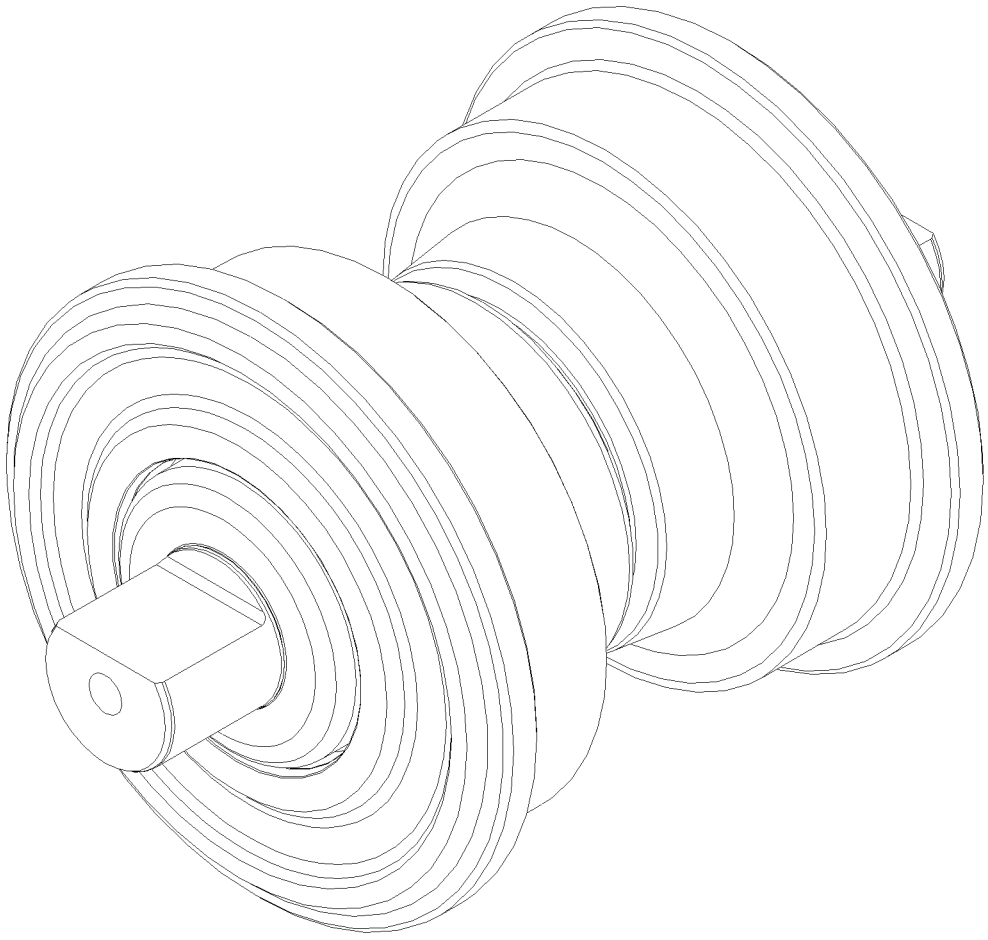

GRAPHIC #1 **<END>** g01395989

UNDERCARRIAGE

288-0934 ROLLER GP-TRACK-SINGLE FLANGE—HEAVY-DUTY

S/N: SMC1-UP; GCT1-UP
PART OF 125-4175 ROLLER GP-TRACK-SINGLE FLANGE
FOR USE WITH SEALED, LUBRICATED, HEAVY-DUTY, HYBRID, & ROTATING BUSHING TRACK.
CANNOT BE USED WITH SYSTEMONE TRACK
AN ATTACHMENT AND FIELD INSTALLATION

SMCS-4180 **i02794456**

NOTE	REF NO	GRAPHIC REF	PART NUMBER	QTY	PART NAME 1 2 3 4 5 6 (PRODUCT LEVEL)	SEE PAGE
					(INDIVIDUAL PARTS ARE NOT SERVICED SEPARATELY)	

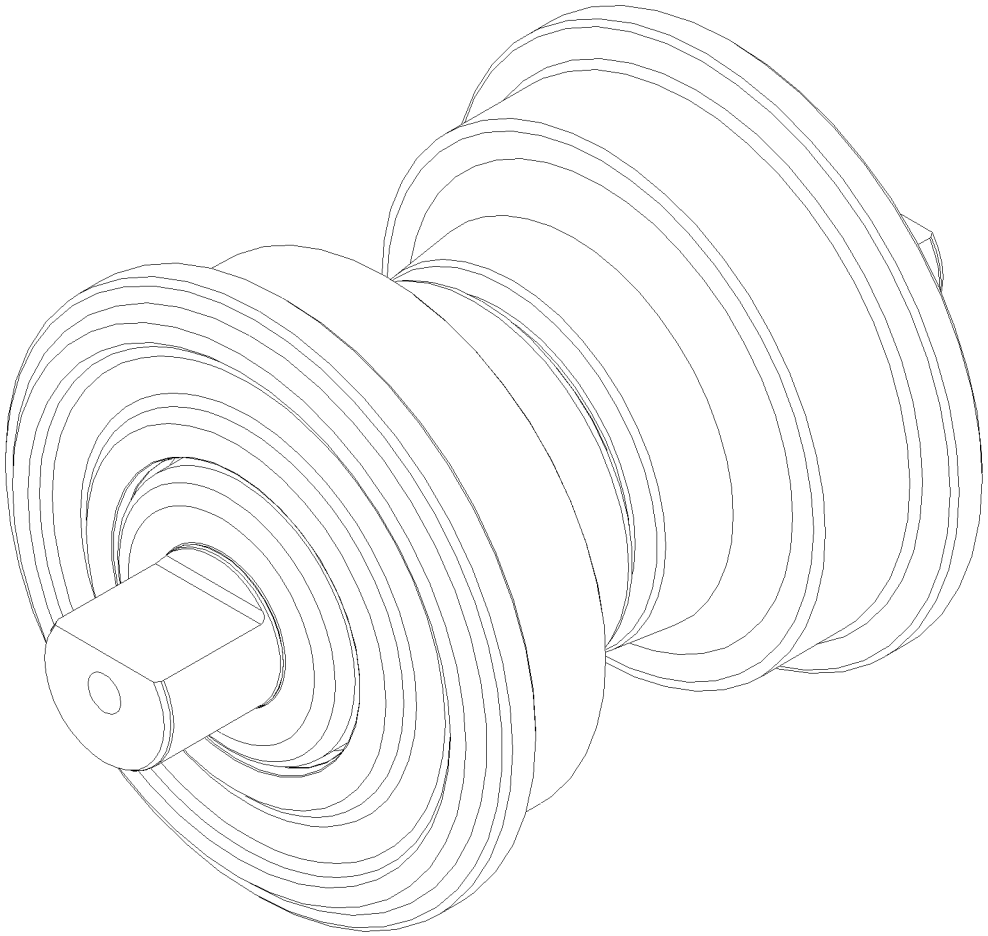

GRAPHIC #1 **<END>** g01395989

288-0945 ROLLER GP-TRACK-SINGLE FLANGE—COLD WEATHER

S/N: SMC1-UP; GCT1-UP

FOR USE WITH SEALED, LUBRICATED, HEAVY-DUTY, HYBRID, & ROTATING BUSHING TRACK.

CANNOT BE USED WITH SYSTEMONE TRACK

FIELD INSTALLATION

SMCS-4180 **i02794588**

NOTE	REF NO	GRAPHIC REF	PART NUMBER	QTY	PART NAME 1 2 3 4 5 6 (PRODUCT LEVEL)	SEE PAGE
					(INDIVIDUAL PARTS ARE NOT SERVICED SEPARATELY)	

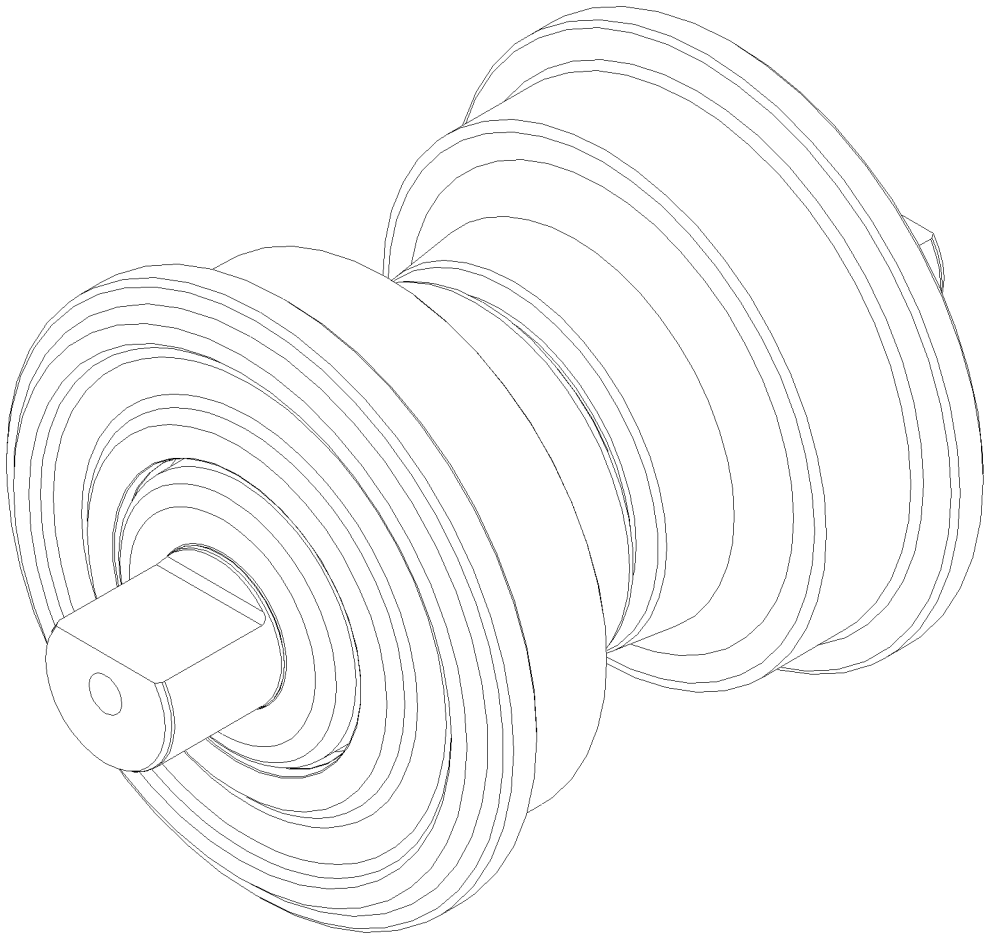

GRAPHIC #1 **<END>** g01395989

288-0947 ROLLER GP-TRACK-SINGLE FLANGE—HIGH HEAT

S/N: SMC1-UP; GCT1-UP

FOR USE WITH SEALED, LUBRICATED, HEAVY-DUTY, HYBRID, & ROTATING BUSHING TRACK.

CANNOT BE USED WITH SYSTEMONE TRACK

FIELD INSTALLATION

SMCS-4180 **i02794749**

NOTE	REF NO	GRAPHIC REF	PART NUMBER	QTY	PART NAME 1 2 3 4 5 6 (PRODUCT LEVEL)	SEE PAGE
					(INDIVIDUAL PARTS ARE NOT SERVICED SEPARATELY)	

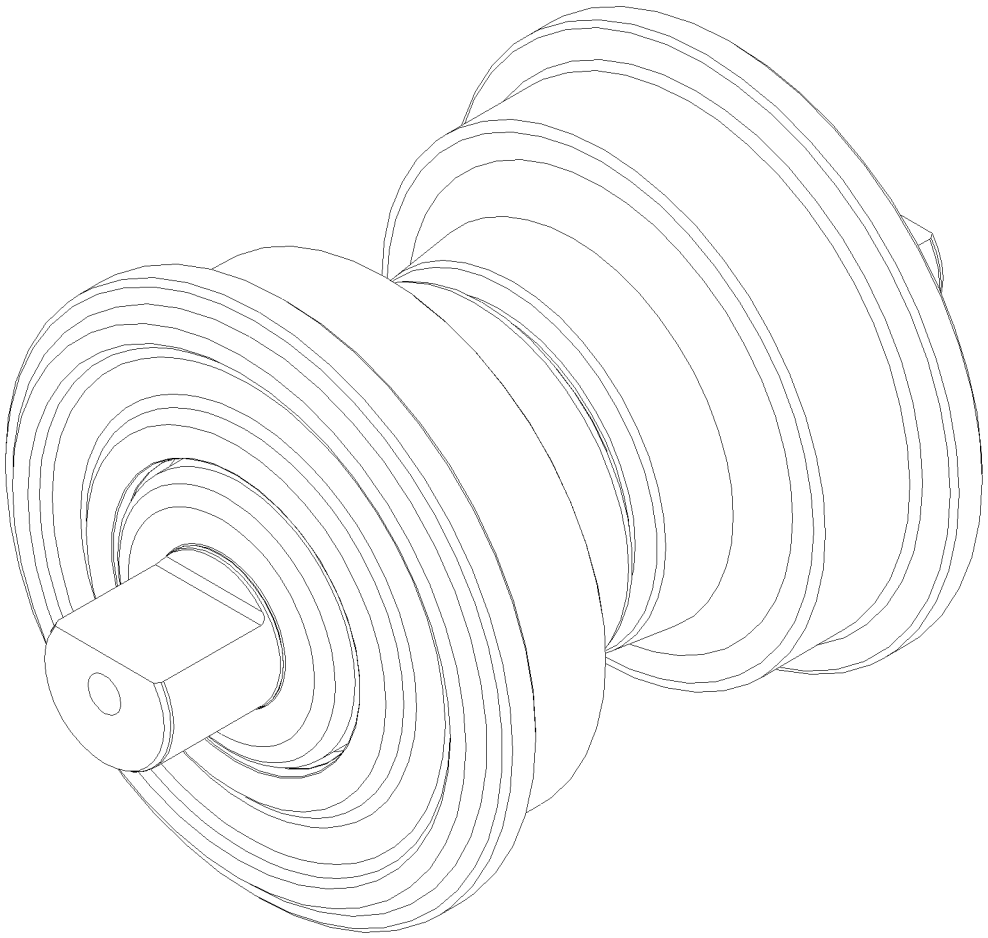

GRAPHIC #1 **<END>** g01395989

292-2175 ROLLER GP-TRACK-SINGLE FLANGE–SYSTEMONE

S/N: SMC1-UP; GCT1-UP

PART OF 218-4982, 222-8667 UNDERCARRIAGE AR

SMCS-4180 **i02744173**

NOTE	PART NUMBER	QTY	PART NAME 1 2 3 4 5 6 (PRODUCT LEVEL)	SEE PAGE
Y	**235-4157**	1	ROLLER GP-TRACK-SINGLE FLANGE (SYSTEMONE)	417
M	**8T-0360**	4	BOLT (M20X2.5X90-MM)	
	214-1109	2	CAP	
	8T-3282	4	WASHER-HARD (22X35X3.5-MM THK)	

M-METRIC PART
Y-SEPARATE ILLUSTRATION

<END>

UNDERCARRIAGE

238-0451 SCRAPER GP-IDLER

S/N: SMC1-UP; GCT1-UP

PART OF 293-4691, 293-9344 GUARD & SCRAPER GP-IDLER, 218-4982, 222-8667 UNDERCARRIAGE AR

SMCS-4152 **i02430389**

NOTE	REF NO	GRAPHIC REF	PART NUMBER	QTY	PART NAME 1 2 3 4 5 6 (PRODUCT LEVEL)	SEE PAGE
	1	1	**238-0452**	4	SCRAPER	
	2	1	**238-0453**	2	SCRAPER	
	3	1	**5P-1076**	16	WASHER-HARD (13.5X30X4-MM THK)	
M	4	1	**8T-4139**	16	BOLT (M12X1.75X30-MM)	

M-METRIC PART

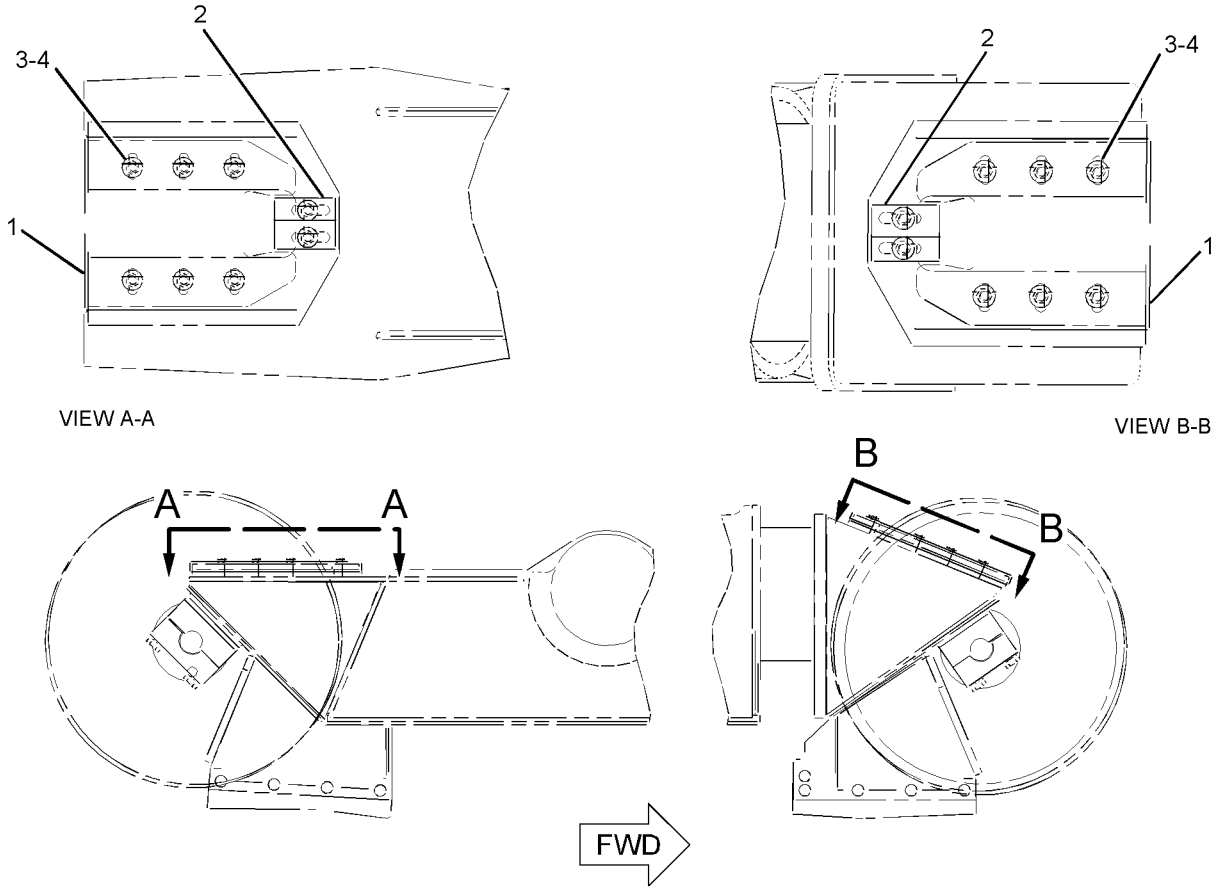

RIGHT SIDE VIEW

GRAPHIC #1 **<END>** g01122271

UNDERCARRIAGE

256-6020 STRIKER GP-REAR

S/N: SMC1-UP; GCT1-UP
CANNOT BE USED WITH RIPPER OR WINCH UNDERCARRIAGE AR
AN ATTACHMENT

SMCS-4150 **i02588666**

NOTE	REF NO	GRAPHIC REF	PART NUMBER	QTY	PART NAME 1 2 3 4 5 6 (PRODUCT LEVEL)	SEE PAGE
	1	1	**1H-4106**	1	PIN AS-DRAWBAR	
	2	1	**7G-6623**	1	HITCH	
	3	1	**8E-9289**	1	LATCH	
	4	1	**226-7269**	1	BAR	
Y	5	1	**256-6021**	1	BAR GP-STRIKER	327
	6	1	**256-6024**	2	BAR	
	7	1	**2J-3507**	10	NUT-FULL (1-8-THD)	
	8	1	**3K-2889**	1	LOCKNUT (5/8-11-THD)	
	9	1	**5D-3118**	10	STUD-TAPERLOCK (1-8-THD)	
	10	1	**5P-8250**	10	WASHER (28X49X5-MM THK)	
	11	1	**7B-9665**	1	PLUG (PIPE)	
	12	1	**7X-0349**	1	BOLT (5/8-11X3-IN)	
M	13	1	**7X-2585**	6	BOLT (M30X3.5X160-MM)	
	14	1	**9X-8258**	6	WASHER (33X56X6-MM THK)	
E	15	1	**149-5933**		SEAL (43-CM EACH)	
E	16	1	**238-9166**		SEAL (100-CM)	

E-ORDER BY THE CENTIMETER
M-METRIC PART
Y-SEPARATE ILLUSTRATION

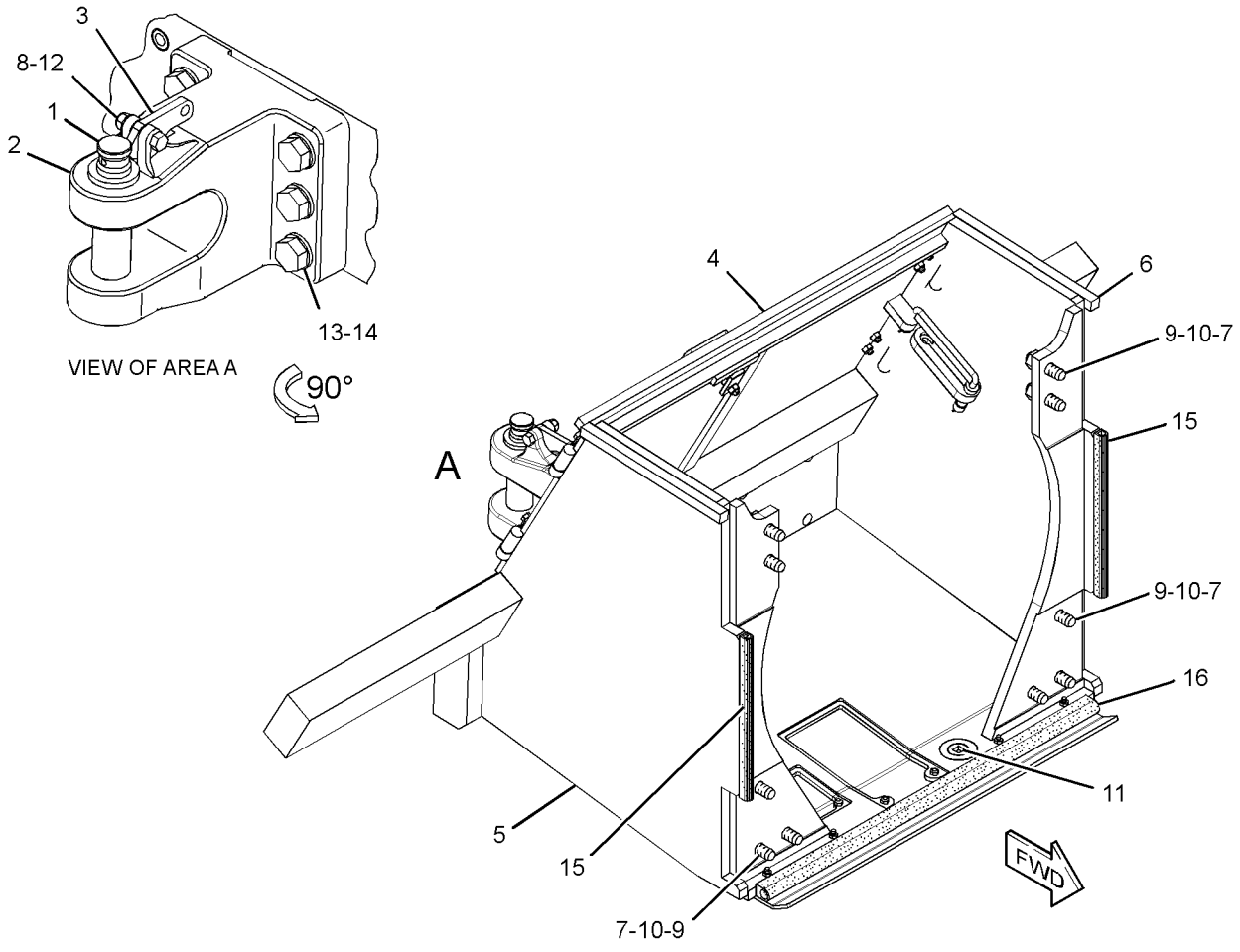

GRAPHIC #1 **<END>** g01308509

223-0659 TRACK ADJUSTER & RECOIL GP

S/N: SMC1-UP; GCT1-UP

PART OF 223-0652, 223-0656, 261-3077, 261-3080 FRAME GP-TELESCOPING RECOIL, 278-6367, 278-6368 UNDERCARRIAGE AR

ALSO AN ATTACHMENT

SMCS-4157, 4158 **i02429903**

NOTE	REF NO	GRAPHIC REF	PART NUMBER	QTY	PART NAME 1 2 3 4 5 6 (PRODUCT LEVEL)	SEE PAGE
	1	1	**2S-5926**	1	VALVE-RELIEF	
	2	1	**3T-0598**	1	TUBE	
	3	1	**3W-0640**	1	PISTON	
	4	1	**3W-2369**	1	PLATE AS	
	5	1	**6Y-5799**	2	LOCK	
	6	1	**108-0200**	1	CYLINDER	
	7	1	**190-8609**	1	VALVE-FILL	
	8	1	**214-9080**	1	PLATE AS	
		1	**3W-0329**	1	PLATE	
	9	1	**226-1340**	1	SPRING-RECOIL	
	10	1	**167-2323**	1	SEAL-U-CUP	
	11	1	**2J-6274**	1	SEAL-O-RING	
	12	1	**2S-4078**	1	SEAL-O-RING	
M	13	1	**7X-2553**	4	BOLT (M16X2X40-MM)	
	14	1	**8T-4121**	2	WASHER-HARD (11X21X2.5-MM THK)	
M	15	1	**8T-4182**	2	BOLT (M10X1.5X45-MM)	
	16	1	**9S-8010**	1	PLUG (STRAIGHT THREAD O-RING)	
	17	1	**9X-8257**	4	WASHER (17.5X30X3.5-MM THK)	

M-METRIC PART

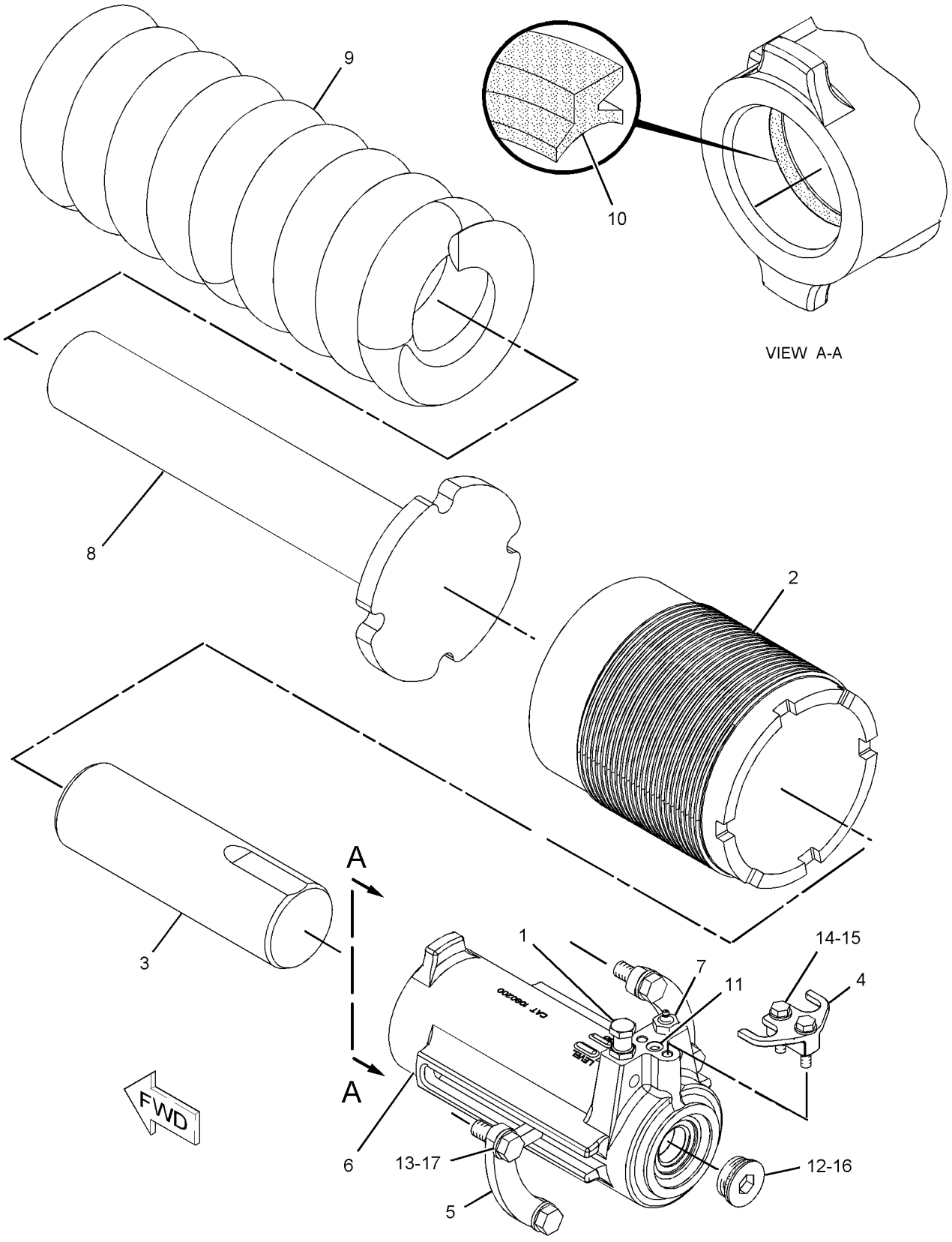

GRAPHIC #1 **<END>** g01145563

UNDERCARRIAGE

1Q-4743 TRACK GP—2-REQUIRED

S/N: GCT1-UP

610-MM (24-IN) GROUSER SHOE. SEALED, LUBRICATED, EXTREME SERVICE, HEAVY DUTY AN ATTACHMENT

SMCS-4170 **i01818064**

NOTE	PART NUMBER	QTY	PART NAME 1 2 3 4 5 6 (PRODUCT LEVEL)	SEE PAGE
Y	**6I-9671**	1	LINK AS-TRACK	396
	6V-1792	160	BOLT-TRACK (3/4-16X2.4-IN)	
	9S-1838	4	BOLT-TRACK MASTER (3/4-16X4.13-IN)	
	1S-1860	160	NUT-TRACK (3/4-16-THD)	
	6Y-6397	1	SHOE-MASTER TRACK	
	1Q-4930	40	SHOE-TRACK	
Y-SEPARATE ILLUSTRATION				

<END>

6I-9641 TRACK GP—2 REQUIRED

S/N: SMC1-UP

560MM (22 IN)GROUSER SHOE. SEALED, LUBRICATED, MODERATE SERVICE, HEAVY DUTY AN ATTACHMENT

SMCS-4170 **i01874003**

NOTE	PART NUMBER	QTY	PART NAME 1 2 3 4 5 6 (PRODUCT LEVEL)	SEE PAGE
Y	**6I-9668**	1	LINK AS-TRACK	395
	6V-1792	152	BOLT-TRACK (3/4-16X2.4 IN)	
	9S-1588	4	BOLT	
	1S-1860	152	NUT-TRACK (3/4-16 THD)	
	6Y-6294	1	SHOE-MASTER TRACK	
	6Y-6286	38	SHOE-TRACK	
Y-SEPARATE ILLUSTRATION				

<END>

6I-9644 TRACK GP—2-REQUIRED

S/N: SMC1-UP

560-MM (22-IN) GROUSER SHOE. SEALED, LUBRICATED, EXTREME SERVICE, HEAVY DUTY AN ATTACHMENT

SMCS-4170 **i01543713**

NOTE	PART NUMBER	QTY	PART NAME 1 2 3 4 5 6 (PRODUCT LEVEL)	SEE PAGE
Y	**6I-9668**	1	LINK AS-TRACK	395
	6V-1792	152	BOLT-TRACK (3/4-16X2.4-IN)	
	9S-1838	4	BOLT-TRACK MASTER (3/4-16X4.13-IN)	
	1S-1860	152	NUT-TRACK (3/4-16-THD)	
	6Y-6389	38	SHOE-TRACK	
	6Y-6412	1	SHOE-MASTER TRACK	
Y-SEPARATE ILLUSTRATION				

<END>

UNDERCARRIAGE

6I-9653 TRACK GP–2-REQUIRED

S/N: GCT1-UP

560-MM (22-IN) GROUSER SHOE. SEALED, LUBRICATED, MODERATE SERVICE, HEAVY DUTY AN ATTACHMENT

SMCS-4170 **i00599896**

NOTE	PART NUMBER	QTY	PART NAME 1 2 3 4 5 6 (PRODUCT LEVEL)	SEE PAGE
Y	**6I-9671**	1	LINK AS-TRACK	396
	9S-1838	4	BOLT-TRACK MASTER (3/4-16X4.13-IN)	
	6V-1792	160	BOLT-TRACK (3/4-16X2.4-IN)	
	1S-1860	160	NUT-TRACK (3/4-16-THD)	
	6Y-6294	1	SHOE-MASTER TRACK	
	6Y-6286	40	SHOE-TRACK	
Y-SEPARATE ILLUSTRATION				

<END>

6I-9654 TRACK GP–2-REQUIRED

S/N: GCT1-UP

610-MM (24-IN) GROUSER SHOE. SEALED, LUBRICATED, MODERATE SERVICE, HEAVY DUTY AN ATTACHMENT

SMCS-4170 **i01818443**

NOTE	PART NUMBER	QTY	PART NAME 1 2 3 4 5 6 (PRODUCT LEVEL)	SEE PAGE
Y	**6I-9671**	1	LINK AS-TRACK	396
	6V-1792	160	BOLT-TRACK (3/4-16X2.4-IN)	
	9S-1838	4	BOLT-TRACK MASTER (3/4-16X4.13-IN)	
	1S-1860	160	NUT-TRACK (3/4-16-THD)	
	6Y-6296	1	SHOE-MASTER TRACK	
	6Y-6287	40	SHOE-TRACK	
Y-SEPARATE ILLUSTRATION				

<END>

6I-9656 TRACK GP–2-REQUIRED

S/N: GCT1-UP

560-MM (22-IN) GROUSER SHOE. SEALED, LUBRICATED, EXTREME SERVICE, HEAVY DUTY AN ATTACHMENT

SMCS-4170 **i01851562**

NOTE	PART NUMBER	QTY	PART NAME 1 2 3 4 5 6 (PRODUCT LEVEL)	SEE PAGE
Y	**6I-9671**	1	LINK AS-TRACK	396
	6V-1792	160	BOLT-TRACK (3/4-16X2.4-IN)	
	9S-1838	4	BOLT-TRACK MASTER (3/4-16X4.13-IN)	
	1S-1860	160	NUT-TRACK (3/4-16-THD)	
	6Y-6389	40	SHOE-TRACK	
	6Y-6412	1	SHOE-MASTER TRACK	
Y-SEPARATE ILLUSTRATION				

<END>

234-9670 TRACK GP–2-REQUIRED, SYSTEMONE

S/N: SMC1-UP
560-MM (22-IN) GROUSER SHOE. SEALED, LUBRICATED, MODERATE SERVICE
PART OF 222-8667 UNDERCARRIAGE AR

SMCS-4170 **i02431965**

NOTE	PART NUMBER	QTY	PART NAME 1 2 3 4 5 6 (PRODUCT LEVEL)	SEE PAGE
Y	**234-9672**	1	LINK GP-TRACK (SYSTEMONE)	403
M	**6Y-9024**	156	BOLT-TRACK (M22X1.5X67-MM)	
	234-9699	2	LINK-TRACK	
M	**9W-4381**	156	NUT-TRACK (M22X1.5-THD)	
	234-9704	39	SHOE-TRACK	

M-METRIC PART
Y-SEPARATE ILLUSTRATION

<END>

234-9671 TRACK GP–2-REQUIRED, SYSTEMONE

S/N: SMC1-UP
610-MM (24-IN) GROUSER SHOE. SEALED, LUBRICATED, MODERATE SERVICE
FOR USE WITH SYSTEMONE ROLLERS, GUARDS, & GUIDESTRIPS
AN ATTACHMENT

SMCS-4170 **i02455069**

NOTE	PART NUMBER	QTY	PART NAME 1 2 3 4 5 6 (PRODUCT LEVEL)	SEE PAGE
Y	**234-9672**	1	LINK GP-TRACK (SYSTEMONE)	403
M	**6Y-9024**	156	BOLT-TRACK (M22X1.5X67-MM)	
	234-9699	2	LINK-TRACK	
M	**9W-4381**	156	NUT-TRACK (M22X1.5-THD)	
	234-9705	39	SHOE-TRACK	

M-METRIC PART
Y-SEPARATE ILLUSTRATION

<END>

234-9675 TRACK GP–2-REQUIRED, SYSTEMONE

S/N: GCT1-UP
560-MM (22-IN) GROUSER SHOE. SEALED, LUBRICATED, MODERATE SERVICE
PART OF 218-4982 UNDERCARRIAGE AR
FOR USE WITH SYSTEMONE ROLLERS, GUARDS, GUIDE STRIPS

SMCS-4170 **i02430439**

NOTE	PART NUMBER	QTY	PART NAME 1 2 3 4 5 6 (PRODUCT LEVEL)	SEE PAGE
Y	**234-9678**	1	LINK GP-TRACK (SYSTEMONE)	404
M	**6Y-9024**	164	BOLT-TRACK (M22X1.5X67-MM)	
	234-9699	2	LINK-TRACK	
M	**9W-4381**	164	NUT-TRACK (M22X1.5-THD)	
	234-9704	41	SHOE-TRACK	

M-METRIC PART
Y-SEPARATE ILLUSTRATION

<END>

234-9676 TRACK GP–2-REQUIRED, SYSTEMONE

S/N: GCT1-UP

610-MM (24-IN) GROUSER SHOE. SEALED, LUBRICATED, MODERATE SERVICE

FOR USE WITH SYSTEMONE ROLLERS, GUIDES, GUIDE STRIPS

AN ATTACHMENT

SMCS-4170 **i02456924**

NOTE	PART NUMBER	QTY	PART NAME 1 2 3 4 5 6 (PRODUCT LEVEL)	SEE PAGE
Y	**234-9678**	1	LINK GP-TRACK (SYSTEMONE)	404
M	**6Y-9024**	164	BOLT-TRACK (M22X1.5X67-MM)	
	234-9699	2	LINK-TRACK	
M	**9W-4381**	164	NUT-TRACK (M22X1.5-THD)	
	234-9705	41	SHOE-TRACK	

M-METRIC PART
Y-SEPARATE ILLUSTRATION

<END>

246-5215 TRACK GP–2-REQUIRED, SYSTEMONE

S/N: SMC1-UP

560-MM (22-IN) GROUSER SHOE. SEALED, LUBRICATED, EXTREME SERVICE

AN ATTACHMENT

SMCS-4170 **i02454229**

NOTE	PART NUMBER	QTY	PART NAME 1 2 3 4 5 6 (PRODUCT LEVEL)	SEE PAGE
Y	**234-9672**	1	LINK GP-TRACK (SYSTEMONE)	403
M	**6Y-9024**	156	BOLT-TRACK (M22X1.5X67-MM)	
	234-9699	2	LINK-TRACK	
M	**9W-4381**	156	NUT-TRACK (M22X1.5-THD)	
	246-5140	39	SHOE-TRACK	

M-METRIC PART
Y-SEPARATE ILLUSTRATION

<END>

246-5216 TRACK GP–2-REQUIRED, SYSTEMONE

S/N: GCT1-UP

560-MM (22-IN) GROUSER SHOE. SEALED, LUBRICATED, EXTREME SERVICE

FOR USE WITH SYSTEMONE ROLLERS, GUARDS, GUIDE STRIPS

AN ATTACHMENT

SMCS-4170 **i02350252**

NOTE	PART NUMBER	QTY	PART NAME 1 2 3 4 5 6 (PRODUCT LEVEL)	SEE PAGE
Y	**234-9678**	1	LINK GP-TRACK (SYSTEMONE)	404
M	**6Y-9024**	164	BOLT-TRACK (M22X1.5X67-MM)	
	234-9699	2	LINK-TRACK	
M	**9W-4381**	164	NUT-TRACK (M22X1.5-THD)	
	246-5140	41	SHOE-TRACK	

M-METRIC PART
Y-SEPARATE ILLUSTRATION

<END>

246-5217 TRACK GP–2-REQUIRED, SYSTEMONE

S/N: SMC1-UP

610-MM (24-IN) GROUSER SHOE. SEALED, LUBRICATED, EXTREME SERVICE
FOR USE WITH SYSTEMONE ROLLERS, GUARDS, & GUIDESTRIPS
AN ATTACHMENT

SMCS-4170 **i02455063**

NOTE	PART NUMBER	QTY	PART NAME 1 2 3 4 5 6 (PRODUCT LEVEL)	SEE PAGE
Y	**234-9672**	1	LINK GP-TRACK (SYSTEMONE)	403
M	**6Y-9024**	156	BOLT-TRACK (M22X1.5X67-MM)	
	234-9699	2	LINK-TRACK	
M	**9W-4381**	156	NUT-TRACK (M22X1.5-THD)	
	246-5203	39	SHOE-TRACK	

M-METRIC PART
Y-SEPARATE ILLUSTRATION

<END>

246-5218 TRACK GP–2-REQUIRED, SYSTEMONE

S/N: GCT1-UP

610-MM (24-IN) GROUSER SHOE. SEALED, LUBRICATED, EXTREME SERVICE
FOR USE WITH SYSTEMONE ROLLERS, GUARDS, GUIDE STRIPS
AN ATTACHMENT

SMCS-4170 **i02456897**

NOTE	PART NUMBER	QTY	PART NAME 1 2 3 4 5 6 (PRODUCT LEVEL)	SEE PAGE
Y	**234-9678**	1	LINK GP-TRACK (SYSTEMONE)	404
M	**6Y-9024**	164	BOLT-TRACK (M22X1.5X67-MM)	
	234-9699	2	LINK-TRACK	
M	**9W-4381**	164	NUT-TRACK (M22X1.5-THD)	
	246-5203	41	SHOE-TRACK	

M-METRIC PART
Y-SEPARATE ILLUSTRATION

<END>

UNDERCARRIAGE

218-4982 UNDERCARRIAGE AR–SYSTEMONE

S/N: GCT1-UP

PART OF 269-2038 GENERAL AR

SMCS-4150 **i02744083**

NOTE	PART NUMBER	QTY	PART NAME 1 2 3 4 5 6 (PRODUCT LEVEL)	SEE PAGE
Y	*229-7373*	1	BAR GP-EQUALIZER	369
Y	*267-4746*	8	CAP GP-TRACK IDLER (SYSTEMONE)	373
Y	*223-0652*	1	FRAME GP-TELESCOPING RECOIL (RH)	374
Y	*223-0656*	1	FRAME GP-TELESCOPING RECOIL (LH)	376
Y	**227-8715**	4	IDLER GP-FRONT	390
Y	*169-4368*	2	MOUNTING GP-CARRIER ROLLER (SYSTEMONE)	407
Y	*223-0647*	1	PIVOT BAR GP	408
Y	**235-5974**	2	ROLLER GP-TRACK CARRIER (SYSTEMONE)	410
Y	**292-2175**	14	ROLLER GP-TRACK-SINGLE FLANGE (SYSTEMONE)	421
Y	*238-0451*	2	SCRAPER GP-IDLER	422
Y	*234-9675*	2	TRACK GP	428
	156-5342	8	SHIM (10-MM THK)	
	233-4846	4	SHIM (6-MM THK)	

Y-SEPARATE ILLUSTRATION

<END>

222-8667 UNDERCARRIAGE AR–SYSTEMONE

S/N: SMC1-UP

PART OF 269-2037 GENERAL AR

SMCS-4150 **i02757512**

NOTE	PART NUMBER	QTY	PART NAME 1 2 3 4 5 6 (PRODUCT LEVEL)	SEE PAGE
Y	*229-7373*	1	BAR GP-EQUALIZER	369
Y	*267-4746*	8	CAP GP-TRACK IDLER (SYSTEMONE)	373
Y	*261-3077*	1	FRAME GP-TELESCOPING RECOIL (RH)	378
Y	*261-3080*	1	FRAME GP-TELESCOPING RECOIL (LH)	380
Y	**227-8715**	4	IDLER GP-FRONT	390
Y	*6Y-2940*	2	MOUNTING GP-CARRIER ROLLER	406
Y	*223-0647*	1	PIVOT BAR GP	408
Y	**235-5974**	2	ROLLER GP-TRACK CARRIER (SYSTEMONE)	410
Y	**292-2175**	12	ROLLER GP-TRACK-SINGLE FLANGE (SYSTEMONE)	421
Y	*238-0451*	2	SCRAPER GP-IDLER	422
Y	**234-9670**	2	TRACK GP (SYSTEMONE)	428
	156-5342	4	SHIM (10-MM THK)	
	233-4846	4	SHIM (6-MM THK)	

Y-SEPARATE ILLUSTRATION

<END>

UNDERCARRIAGE

278-6367 UNDERCARRIAGE AR—HEAVY-DUTY

S/N: SMC1-UP
FOR USE WITH HEAVY-DUTY TRACK GP
AN ATTACHMENT

SMCS-4150 **i02760096**

NOTE	PART NUMBER	QTY	PART NAME 1 2 3 4 5 6 (PRODUCT LEVEL)	SEE PAGE
Y	*229-7373*	1	BAR GP-EQUALIZER	369
Y	*108-1091*	8	CAP GP-TRACK IDLER	372
Y	**202-4304**	4	IDLER GP-TRACK	393
Y	*6Y-2940*	2	MOUNTING GP-CARRIER ROLLER	406
Y	*223-0647*	1	PIVOT BAR GP	408
Y	**235-5974**	2	ROLLER GP-TRACK CARRIER (SYSTEMONE)	410
Y	*125-4176*	4	ROLLER GP-TRACK-DOUBLE FLANGE	411
Y	*125-4175*	8	ROLLER GP-TRACK-SINGLE FLANGE	416
Y	*223-0659*	2	TRACK ADJUSTER & RECOIL GP	424
	3T-2077	2	BEARING	
M	**8T-4136**	8	BOLT (M10X1.5X25-MM)	
M	**8T-4139**	32	BOLT (M12X1.75X30-MM)	
M	**8T-4184**	24	BOLT (M12X1.75X45-MM)	
	268-9710	2	COVER AS	
			(EACH INCLUDES)	
	8E-1211	1	COVER	
	7B-3028	4	SCREW-DRIVE (NO 4X3/16-IN)	
	253-1346	1	PLATE-WARNING (HIGH PRESSURE CYLINDER)	
	224-4120	2	FRAME AS (FRONT)	
			(EACH INCLUDES)	
	3T-1162	1	BEARING-SLEEVE	
	4B-4158	4	SCREW-DRIVE (3/16X0.25-IN)	
	254-1686	1	PLATE-WARNING (RECOIL SPRING)	
	224-4123	1	FRAME AS (RH)	
	221-3197	1	BEARING-SLEEVE	
	221-3200	1	BEARING-SLEEVE	
	226-1292	1	FRAME AS (LH)	
	221-3197	1	BEARING-SLEEVE	
	221-3200	1	BEARING-SLEEVE	
	268-9709	4	GUIDE AS	
			(EACH INCLUDES)	
	144-5573	1	GUIDE	
	241-3720	1	FILM-WARNING (RECOIL SPRING)	
	1B-5174	4	PLUG-PIPE	
	3W-1852	2	RING-RETAINING	
	9X-4582	2	SEAL AS	
	5H-6734	2	SEAL-O-RING	
	8G-9530	4	SHIM (8-MM THK)	
	160-4103	4	STRIP	
	189-3032	4	STRIP	
	8T-4121	8	WASHER-HARD (11X21X2.5-MM THK)	
	8T-4223	56	WASHER-HARD (13.5X25.5X3-MM THK)	

M-METRIC PART
Y-SEPARATE ILLUSTRATION

<END>

UNDERCARRIAGE

278-6368 UNDERCARRIAGE AR—HEAVY-DUTY

S/N: GCT1-UP
AN ATTACHMENT

SMCS-4150 **i02456368**

NOTE	PART NUMBER	QTY	PART NAME 1 2 3 4 5 6 (PRODUCT LEVEL)	SEE PAGE
Y	*229-7373*	1	BAR GP-EQUALIZER	369
Y	*108-1091*	8	CAP GP-TRACK IDLER	372
Y	**202-4304**	4	IDLER GP-TRACK	393
Y	*169-4368*	2	MOUNTING GP-CARRIER ROLLER (SYSTEMONE)	407
Y	*223-0647*	1	PIVOT BAR GP	408
Y	**235-5974**	2	ROLLER GP-TRACK CARRIER (SYSTEMONE)	410
Y	*125-4176*	6	ROLLER GP-TRACK-DOUBLE FLANGE	411
Y	*125-4175*	8	ROLLER GP-TRACK-SINGLE FLANGE	416
Y	*223-0659*	2	TRACK ADJUSTER & RECOIL GP	424
	3T-2077	2	BEARING	
M	**8T-4136**	8	BOLT (M10X1.5X25-MM)	
M	**8T-4139**	28	BOLT (M12X1.75X30-MM)	
M	**8T-4184**	24	BOLT (M12X1.75X45-MM)	
	268-9710	2	COVER AS	
			(EACH INCLUDES)	
	8E-1211	1	COVER	
	7B-3028	4	SCREW-DRIVE (NO 4X3/16-IN)	
	253-1346	1	PLATE-WARNING (HIGH PRESSURE CYLINDER)	
	263-8976	1	FRAME AS (RH)	
	263-8977	1	FRAME AS (LH)	
			(EACH FRAME AS INCLUDES)	
	221-3197	1	BEARING-SLEEVE	
	221-3200	1	BEARING-SLEEVE	
	263-8978	2	FRAME AS	
			(EACH INCLUDES)	
	3T-1162	1	BEARING-SLEEVE	
	4B-4158	4	SCREW-DRIVE (3/16X0.25-IN)	
	254-1686	1	PLATE-WARNING (RECOIL SPRING)	
	268-9709	4	GUIDE AS	
			(EACH INCLUDES)	
	241-3720	1	FILM-WARNING (RECOIL SPRING)	
	1B-5174	4	PLUG-PIPE	
	3W-1852	2	RING-RETAINING	
	9X-4582	2	SEAL AS	
	5H-6734	2	SEAL-O-RING	
B	**8G-9530**	4	SHIM (8-MM THK)	
	189-3032	4	STRIP	
	279-2570	4	STRIP-WEAR	
	8T-4121	8	WASHER-HARD (11X21X2.5-MM THK)	
	8T-4223	52	WASHER-HARD (13.5X25.5X3-MM THK)	

B-USE AS REQUIRED
M-METRIC PART
Y-SEPARATE ILLUSTRATION

<END>

196-4233 ACTUATOR GP-PUMP–STEERING

S/N: SMC1-UP; GCT1-UP

PART OF 271-2114 PUMP GP-PISTON

SMCS-5078 **i02754674**

NOTE	REF NO	GRAPHIC REF	PART NUMBER	QTY	PART NAME 1 2 3 4 5 6 (PRODUCT LEVEL)	SEE PAGE
M	1	1	**8T-0269**	8	BOLT-SOCKET HEAD (M6X1X20-MM)	
	2	1	**287-4563**	1	ACTUATOR GP-PUMP	
		1	**095-0939**	2	RING-RETAINING	
		1	**161-6154**	1	SEAL-O-RING	
		1	**188-7800**	2	RING	
M	3	1	**160-8499**	1	NUT (M12X1.5-THD)	
	4	1	**004-1964**	2	SEAL-O-RING	
	5	1	**188-7790**	2	RING-GUIDE	
	6	1	**188-7569**	1	COVER	
	7	1	**188-7568**	1	COVER	
	8	1	**188-7791**	2	RING	

M-METRIC PART

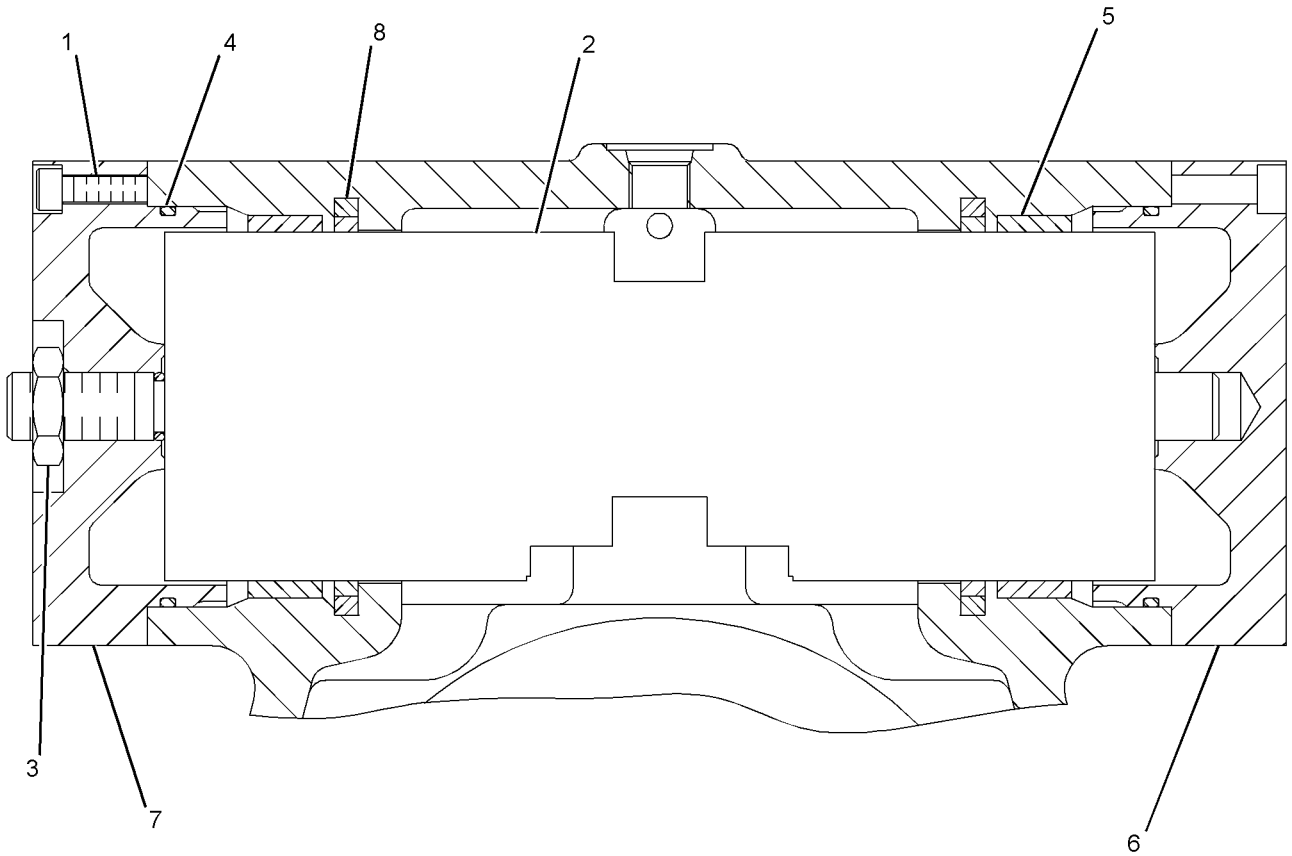

GRAPHIC #1 **<END>** g01353616

177-6979 FILTER GP-OIL—HYDRAULIC FAN, STEERING

S/N: SMC1-UP; GCT1-UP

PART OF 269-2075 LINES GP-STEERING

SMCS-5068 **i02750982**

NOTE	REF NO	GRAPHIC REF	PART NUMBER	QTY	PART NAME 1 2 3 4 5 6 (PRODUCT LEVEL)	SEE PAGE
	1	1	**3J-7354**	1	SEAL-O-RING	
	2	1	**6V-0484**	1	ADAPTER-O-RING	
	3	1	**6V-0852**	1	CAP-DUST	
	4	1	**6V-3965**	1	FITTING-COUPLER	
	5	1	**8C-3446**	1	VALVE-FLUID SAMPLING (STEERING OIL FILTER)	
	6	1	**8C-3451**	1	CAP-DUST	
	7	1	**102-2828**	1	FILTER AS-OIL (ULTRA HIGH EFFICIENCY)	
					—OR—	
		1	**156-0214**	1	FILTER AS-OIL (FIRE RESISTANT FLUID)	
	8	1	**253-2673**	1	SWITCH AS-PRESSURE (OIL FILTER BYPASS)	
		1	**102-8802**	1	KIT-RECEPTACLE (2-PIN)	
					(INCLUDES RECEPTACLE AS & WEDGE)	
		1	**186-3735**	2	PIN-CONNECTOR (16-GA TO 18-GA)	
E		1	**9X-1813**		SLEEVE (14-CM)	
	9	1	**3J-1907**	2	SEAL-O-RING	

E-ORDER BY THE CENTIMETER

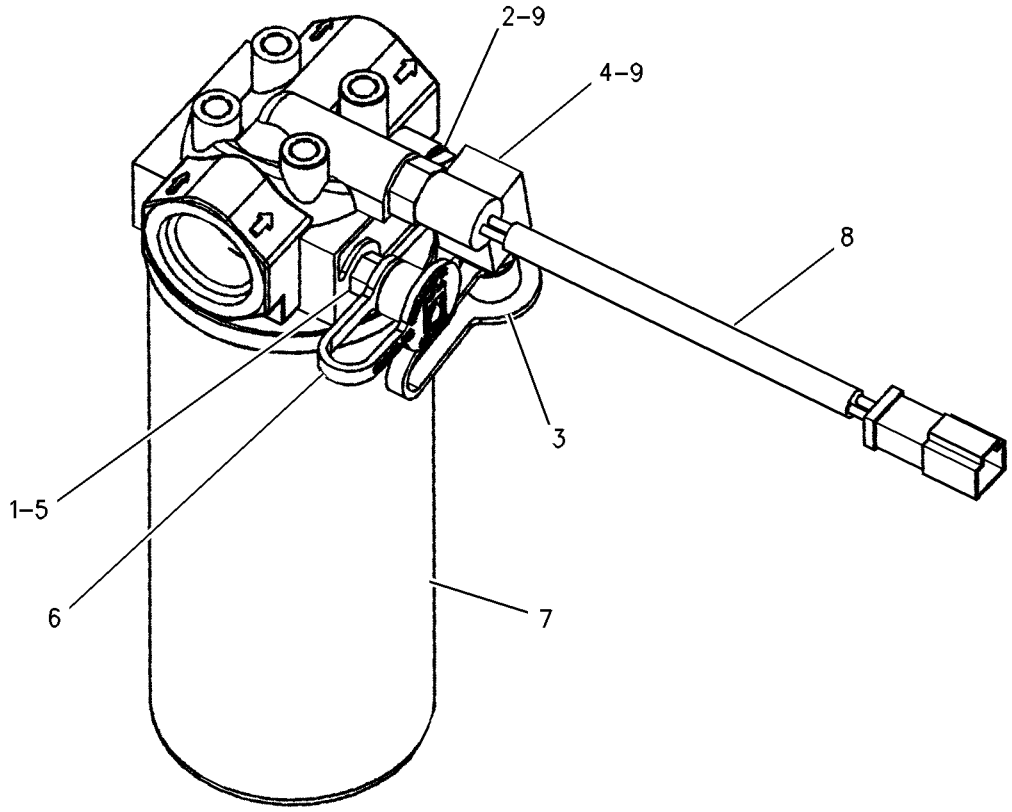

GRAPHIC #1 **<END>** g00798288

287-5855 HEAD GP-PUMP—STEERING PISTON PUMP

S/N: SMC1-UP; GCT1-UP

PART OF 271-2114 PUMP GP-PISTON

SMCS-5070 **i02800964**

NOTE	REF NO	GRAPHIC REF	PART NUMBER	QTY	PART NAME 1 2 3 4 5 6 (PRODUCT LEVEL)	SEE PAGE
	1	1	**202-2340**	1	HEAD	
	2	1	**1G-7407**	2	VALVE GP-RELIEF (PUMP HEAD)	
		1	**123-7556**	1	CAP	
		1	**145-0905**	1	KIT-SEAL (PUMP HEAD RELIEF VALVE)	
	3	1	**287-4596**	1	VALVE GP-PUMP CONTROL (PRESSURE COMPENSATOR) (PUMP HEAD)	
M		1	**6E-4401**	1	SETSCREW-ADJUSTMENT	
		1	**6V-5586**	1	SEAL-O-RING	
		1	**7Y-5219**	1	SEAL-O-RING	
		1	**204-1455**	1	LOCKNUT	
	4	1	**087-4772**	3	PLUG (HEX)	
	5	1	**120-4394**	2	PLUG-BREAK OFF	
	6	1	**123-7560**	1	BEARING-BUSHING	
	7	1	**123-7559**	1	BUSHING	
	8	1	**6V-8398**	2	SEAL-O-RING	
M	9	1	**123-2017**	1	PLUG	
	10	1	**9S-8002**	2	PLUG-O-RING	
	11	1	**3J-7354**	2	SEAL-O-RING	
	12	1	**6V-8397**	2	SEAL-O-RING	
Y	13	1	**6E-4402**	1	VALVE GP-RELIEF (CHARGE PRESSURE)	459
	14	1	**126-1477**	1	BUSHING-COUPLING	
	15	1	**6S-3002**	1	SEAL-O-RING	

M-METRIC PART
Y-SEPARATE ILLUSTRATION

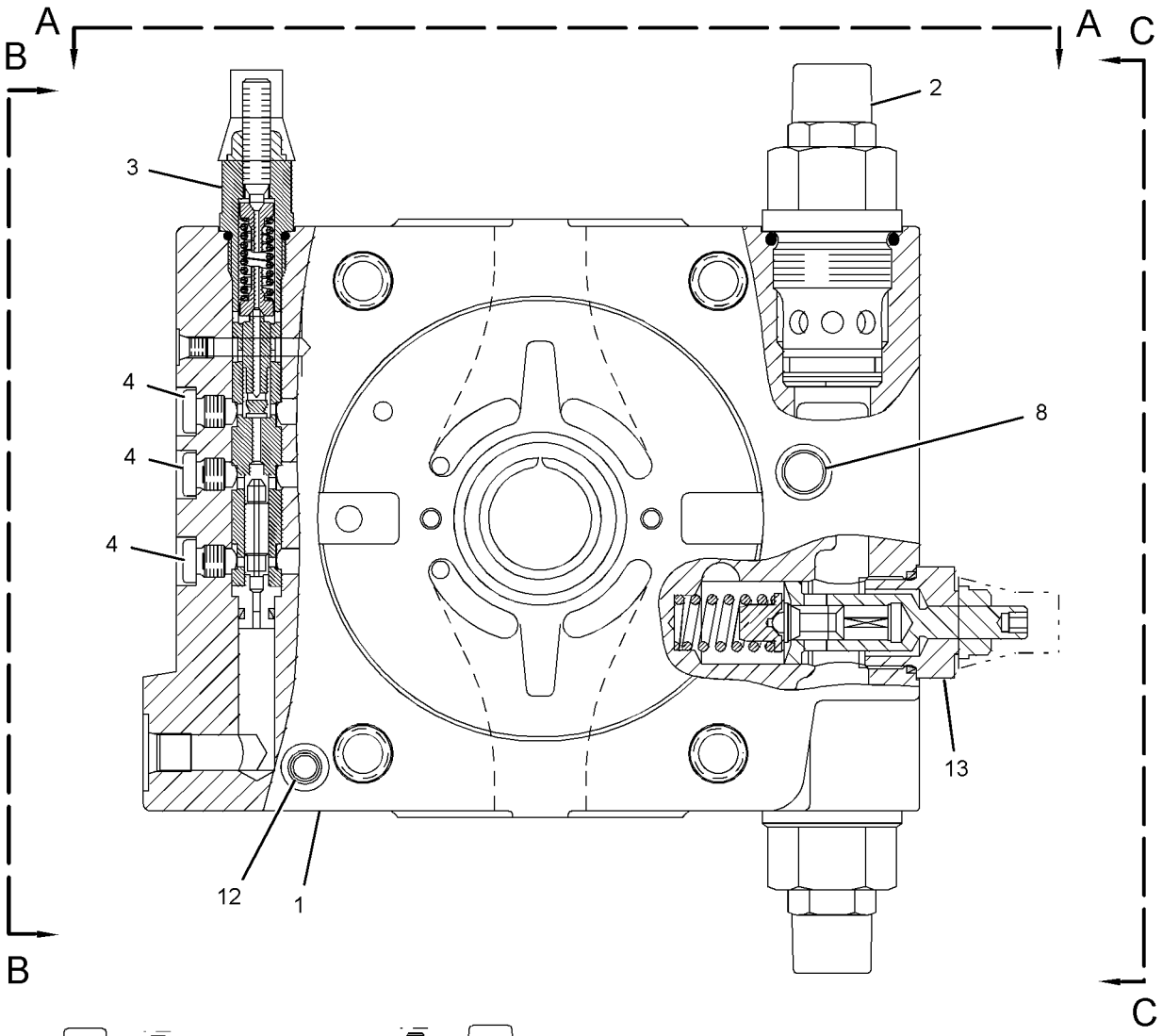

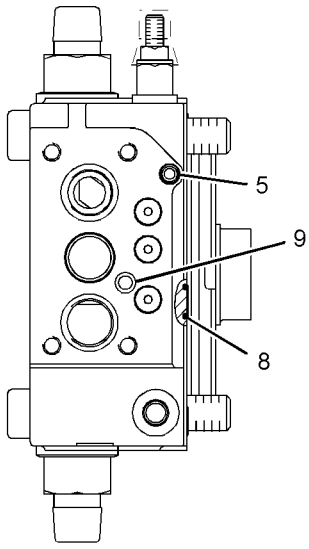

VIEW B-B

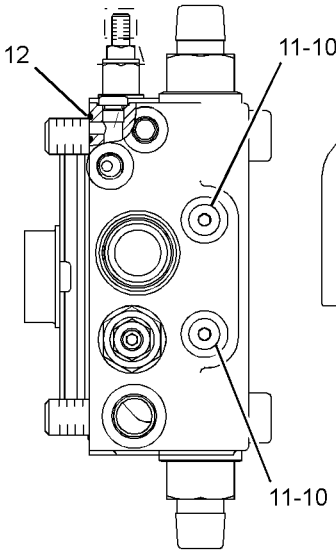

VIEW C-C

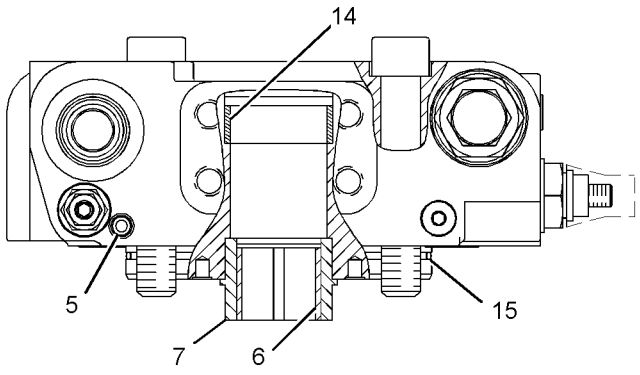

VIEW A-A

GRAPHIC #1 **<END>** g01355952

STEERING AND BRAKING SYSTEM

269-2075 LINES GP-STEERING

S/N: SMC1-UP; GCT1-UP

PART OF 269-2050 HYDRAULIC AR-2 VALVE

SMCS-4104, 4133, 4304 **i02754412**

NOTE	REF NO	GRAPHIC REF	PART NUMBER	QTY	PART NAME 1 2 3 4 5 6 (PRODUCT LEVEL)	SEE PAGE
I	1	1	**1G-9011**	1	HOSE AS	
	2	1,2	**6V-0852**	3	CAP-DUST	
I	3	2	**122-9033**	1	HOSE AS	
Y	4	2	**126-0747**	1	VALVE GP-BYPASS (STEERING LINES)	456
	5	2	**126-0814**	2	FITTING AS (SWIVEL)	
		2	**6V-0852**	1	CAP-DUST	
I	6	2	**159-0827**	1	HOSE AS	
I	7	2	**166-0211**	1	HOSE AS	
Y	8	2	**177-6979**	1	FILTER GP-OIL (HYDRAULIC FAN, STEERING)	435
I	9	2	**197-4640**	2	HOSE AS	
Y	10	1	**198-9219**	1	VALVE GP-RELIEF (STEERING LINES PRESSURE)	460
	11	1	*201-0782*	1	ELBOW AS	
		1	**201-0781**	1	ELBOW	
		1	**2M-9780**	1	SEAL-O-RING	
		1	**6V-9746**	1	SEAL-O-RING	
	12	2	**203-2789**	1	BRACKET AS	
I	13	1	**230-5974**	1	HOSE AS	
	14	2	*241-6215*	1	ELBOW AS	
		2	**6V-8076**	1	ELBOW	
		2	**3J-1907**	1	SEAL-O-RING	
I	15	1	**270-3444**	1	HOSE AS	
	16	1	**270-3449**	1	HOSE AS	
I	17	1	**270-3453**	1	HOSE AS	
I	18	1	**270-3454**	1	HOSE AS	
I	19	1	**270-3455**	1	HOSE AS	
	20	1	**270-3459**	1	TUBE AS	
	21	1	**270-3460**	1	TUBE AS	
I	22	1	**270-3461**	1	HOSE AS	
I	23	1	**270-3462**	1	HOSE AS	
I	24	1	**270-3463**	1	HOSE AS	
	25	2	**270-3482**	1	BRACKET	
	26	1	*287-7265*	1	TEE AS	
		1	**287-7264**	1	TEE	
		1	**2S-4078**	1	SEAL-O-RING	
		1	**6V-8400**	1	SEAL-O-RING	
		1	**6V-9746**	1	SEAL-O-RING	
	27	1	**289-9654**	1	HOSE AS	
	28	1	**289-9655**	1	HOSE AS	
	29	1	**289-9656**	1	HOSE AS	
	30	1	**108-7251**	1	COUPLING AS	
M	31	2	**116-3715**	1	STUD-TAPERLOCK (M10X1.5X85-MM)	
I	32	1	**129-5649**	1	HOSE AS	
	33	1	*148-8327*	2	CONNECTOR AS	
					(EACH INCLUDES)	
		1	**6V-8637**	1	CONNECTOR	
		1	**3D-2824**	1	SEAL-O-RING	
		1	**6V-9746**	1	SEAL-O-RING	
	34	1	*148-8328*	1	CONNECTOR AS	
		1	**6V-8633**	1	CONNECTOR	
		1	**3D-2824**	1	SEAL-O-RING	
		1	**6V-8398**	1	SEAL-O-RING	
	35	1	*148-8333*	1	CONNECTOR AS	
		1	**8T-7927**	1	CONNECTOR	
		1	**6V-8400**	1	SEAL-O-RING	
		1	**7M-8485**	1	SEAL-O-RING	

269-2075 **LINES GP-STEERING** *(contd.)* **i02754412**

NOTE	REF NO	GRAPHIC REF	PART NUMBER	QTY	PART NAME 1 2 3 4 5 6 (PRODUCT LEVEL)	SEE PAGE
	36	2	*148-8339*	3	CONNECTOR AS	
					(EACH INCLUDES)	
		2	**6V-8716**	1	CONNECTOR	
		2	**6V-9746**	1	SEAL-O-RING	
		2	**7M-8485**	1	SEAL-O-RING	
	37	1	*148-8342*	1	CONNECTOR AS	
		1	**6V-8632**	1	CONNECTOR	
		1	**3K-0360**	1	SEAL-O-RING	
		1	**7J-9108**	1	SEAL-O-RING	
	38	2	*148-8347*	2	ELBOW AS	
					(EACH INCLUDES)	
		2	**6V-9007**	1	ELBOW	
		2	**3D-2824**	1	SEAL-O-RING	
		2	**6V-9746**	1	SEAL-O-RING	
	39	1	*148-8353*	2	ELBOW AS	
					(EACH INCLUDES)	
		1	**6V-9001**	1	ELBOW	
		1	**3J-1907**	1	SEAL-O-RING	
		1	**6V-8397**	1	SEAL-O-RING	
	40	2	*148-8366*	2	ELBOW AS	
					(EACH INCLUDES)	
		2	**6V-8987**	1	ELBOW	
		2	**6V-8397**	2	SEAL-O-RING	
	41	1	*148-8372*	1	ELBOW AS	
		1	**6V-8721**	1	ELBOW	
		1	**2M-9780**	1	SEAL-O-RING	
		1	**6V-8398**	1	SEAL-O-RING	
	42	2	*148-8378*	4	ELBOW AS	
					(EACH INCLUDES)	
		2	**6V-8724**	1	ELBOW	
		2	**3J-1907**	1	SEAL-O-RING	
		2	**6V-8397**	1	SEAL-O-RING	
	43	1,2	*148-8417*	2	REDUCER AS	
					(EACH INCLUDES)	
		1,2	**6V-8941**	1	REDUCER	
		1,2	**6V-8397**	1	SEAL-O-RING	
	44	1	*148-8449*	1	TEE AS-SWIVEL	
		1	**6V-9839**	1	TEE-SWIVEL	
		1	**6V-9746**	2	SEAL-O-RING	
	45	2	*150-4033*	1	TEE AS	
		2	**6V-9846**	1	TEE-SWIVEL	
		2	**6V-9746**	2	SEAL-O-RING	
	46	2	*150-4049*	1	ELBOW AS	
		2	**8T-4149**	1	ELBOW	
		2	**6V-9746**	1	SEAL-O-RING	
		2	**7M-8485**	1	SEAL-O-RING	
	47	1	*153-6244*	1	ELBOW AS	
		1	**8T-5389**	1	ELBOW	
		1	**2M-9780**	1	SEAL-O-RING	
		1	**6V-9746**	1	SEAL-O-RING	
	48	2	*153-6246*	2	TEE AS	
					(EACH INCLUDES)	
		2	**7X-0820**	1	TEE-UNION	
		2	**6V-8397**	3	SEAL-O-RING	
	50	1,2	*164-5567*	3	FITTING AS (QUICK DISCONNECT, MALE)	
					(EACH INCLUDES)	
		1,2	**6V-3965**	1	FITTING-COUPLER	
		1,2	**3J-1907**	1	SEAL-O-RING	
	51	1	*168-1969*	1	ADAPTER AS	

269-2075 **LINES GP-STEERING** *(contd.)* **i02754412**

NOTE	REF NO	GRAPHIC REF	PART NUMBER	QTY	PART NAME 1 2 3 4 5 6 (PRODUCT LEVEL)	SEE PAGE
		1	**5P-1318**	1	ADAPTER	
		1	**1J-9671**	1	SEAL-O-RING	
	52	1	*212-1336*	1	TEE AS	
		1	**6V-8783**	1	TEE-FACE SEAL	
		1	**2M-9780**	1	SEAL-O-RING	
		1	**7J-9108**	2	SEAL-O-RING	
	53	2	**231-0336**	1	STUD-TAPERLOCK (M10X1.75X70-MM)	
	54	1	**1P-3703**	2	SEAL-RECTANGULAR	
	55	2	**1P-3704**	2	SEAL-RECTANGULAR	
	56	2	**1P-5767**	4	FLANGE-HALF	
	57	1	**3G-8054**	1	CLIP (TAB)	
	58	1	**3G-8057**	1	CLIP (SLOT)	
	59	1	**3K-0360**	1	SEAL-O-RING	
	60	1	**6V-0400**	4	FLANGE-HALF	
	61	1	**6V-0974**	1	GROMMET	
	62	1,2	**6V-8556**	1	NUT (1-3/16-12-THD)	
	63	2	**6V-9168**	4	NUT (11/16-16-THD)	
	64	1	**6V-9746**	2	SEAL-O-RING	
	65	1	**7X-7729**	2	WASHER (11X25X3-MM THK)	
	66	1,2	**8T-1895**	12	CLIP (SLOT)	
	67	1,2	**8T-1896**	12	CLIP (TAB)	
	68	1,2	**8T-4121**	21	WASHER-HARD (11X21X2.5-MM THK)	
M	69	1,2	**8T-4133**	4	NUT (M10X1.5-THD)	
M	70	1,2	**8T-4136**	6	BOLT (M10X1.5X25-MM)	
M	71	2	**8T-4178**	3	BOLT (M10X1.5X90-MM)	
M	72	1	**8T-4184**	8	BOLT (M12X1.75X45-MM)	
M	73	2	**8T-4194**	8	BOLT (M12X1.75X50-MM)	
M	74	1,2	**8T-4195**	10	BOLT (M10X1.5X30-MM)	
	75	1,2	**8T-4223**	16	WASHER-HARD (13.5X25.5X3-MM THK)	

I-REFER TO HYDRAULIC INFORMATION SYSTEM
M-METRIC PART
Y-SEPARATE ILLUSTRATION

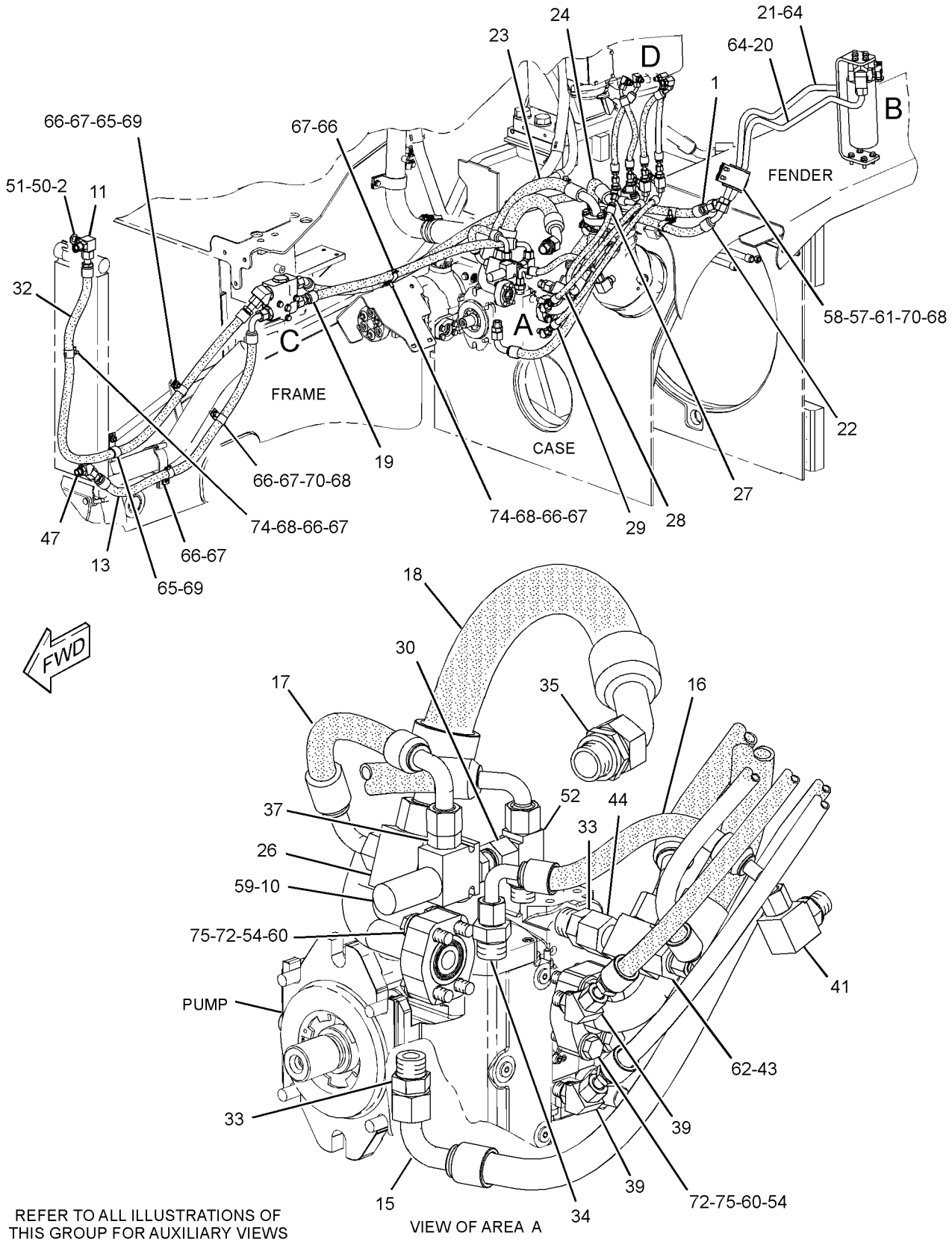

GRAPHIC #1 g01379561

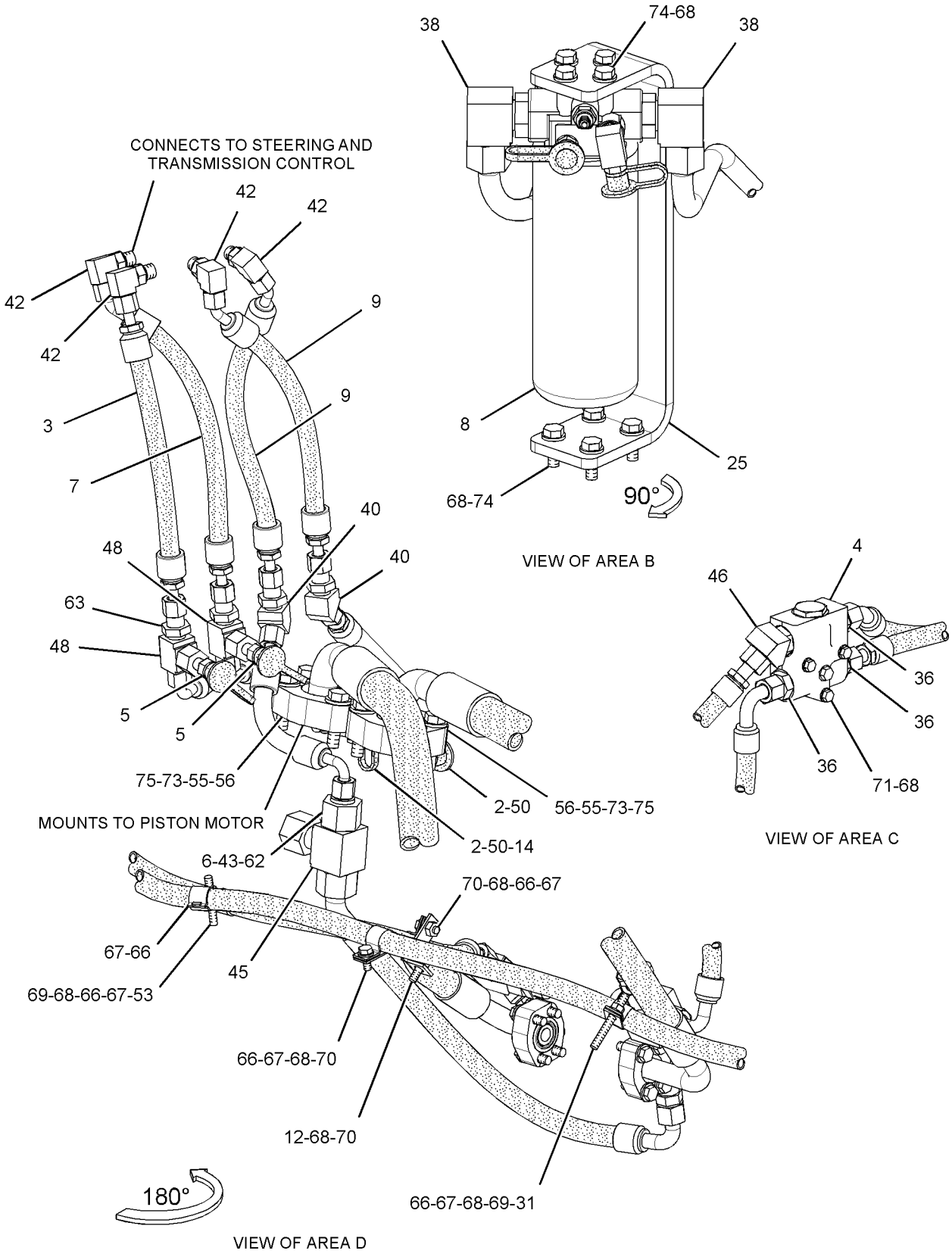

GRAPHIC #2 **<END>** g01356518

162-5357 MANIFOLD & VALVE GP–SECONDARY BRAKE

S/N: SMC1-UP; GCT1-UP

PART OF 201-7274 VALVE GP-BRAKE CONTROL

SMCS-3206, 5479 **i02800967**

NOTE	REF NO	GRAPHIC REF	PART NUMBER	QTY	PART NAME 1 2 3 4 5 6 (PRODUCT LEVEL)	SEE PAGE
	1	1	**137-8794**	1	SPOOL AS	
	1A	1	**5L-4758**	1	SEAL-O-RING	
	1B	1	**137-8793**	1	SPRING	
	1C	1	**3D-7943**	1	RING-RETAINING	
	2	1	**148-8410**	1	PLUG AS	
	3	1	**162-5358**	1	MANIFOLD	
Y	4	1	**174-4909**	1	VALVE GP-SOLENOID (SECONDARY BRAKE)	463
	5	1	**1P-1744**	1	DOWEL	

Y-SEPARATE ILLUSTRATION

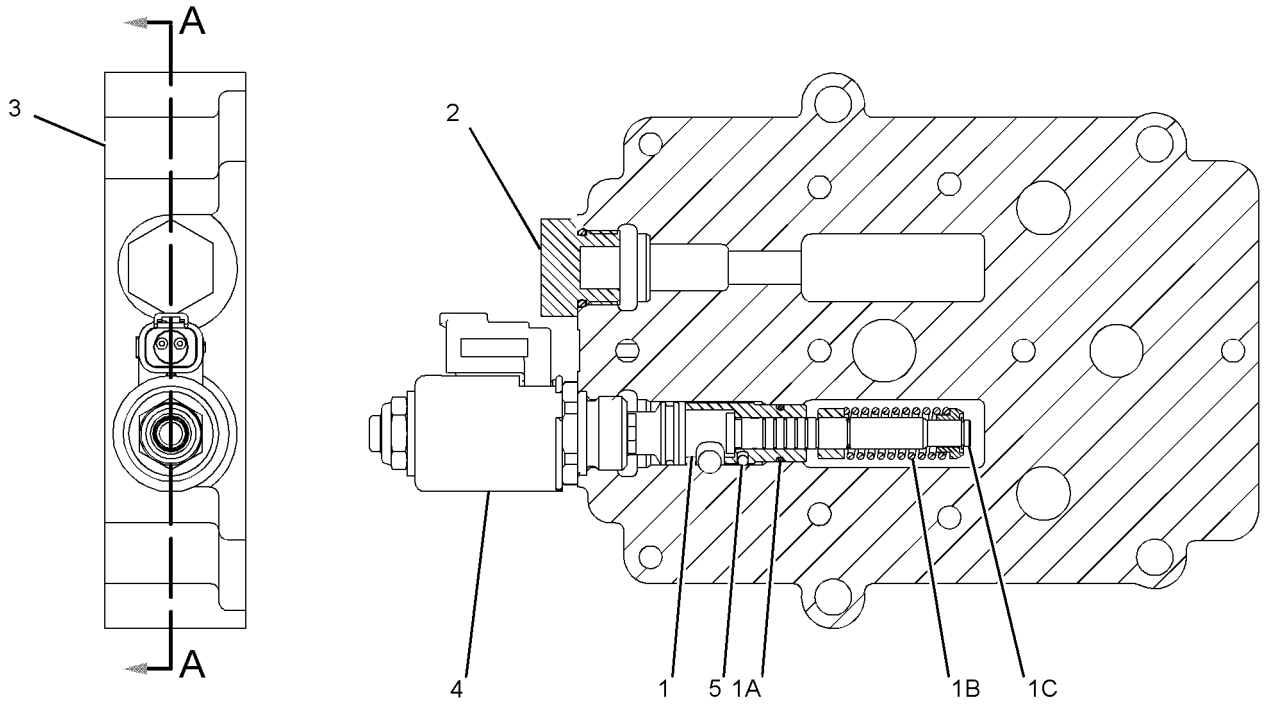

SECTION A-A

GRAPHIC #1 **<END>** g01129384

175-4972 MANIFOLD & VALVE GP—PARKING, SECONDARY BRAKE

S/N: SMC1-UP; GCT1-UP

PART OF 201-7274 VALVE GP-BRAKE CONTROL

SMCS-3206, 5479 **i02800968**

NOTE	REF NO	GRAPHIC REF	PART NUMBER	QTY	PART NAME 1 2 3 4 5 6 (PRODUCT LEVEL)	SEE PAGE
	1	1	**132-9455**	1	MANIFOLD	
Y	2	1	**172-2392**	2	VALVE GP-SOLENOID (PARKING, SECONDARY BRAKE)	462

Y-SEPARATE ILLUSTRATION

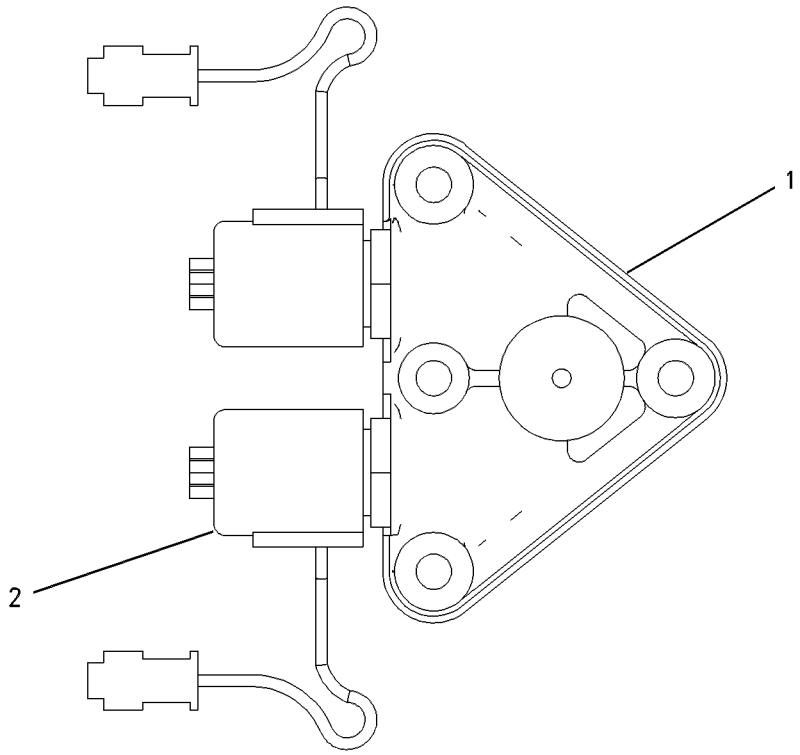

GRAPHIC #1 **<END>** g00653425

269-2091 PUMP & MTG GP-STEERING

S/N: SMC1-UP; GCT1-UP

PART OF 269-2050 HYDRAULIC AR-2 VALVE

SMCS-4306 **i02754625**

NOTE	REF NO	GRAPHIC REF	PART NUMBER	QTY	PART NAME 1 2 3 4 5 6 (PRODUCT LEVEL)	SEE PAGE
Y	1	1	**271-2114**	1	PUMP GP-PISTON (STEERING)	448
	2	1	**4S-5898**	1	SEAL-O-RING	
	3	1	**8T-4223**	4	WASHER-HARD (13.5X25.5X3-MM THK)	
M	4	1	**8T-4956**	4	BOLT (M12X1.75X35-MM)	

M-METRIC PART
Y-SEPARATE ILLUSTRATION

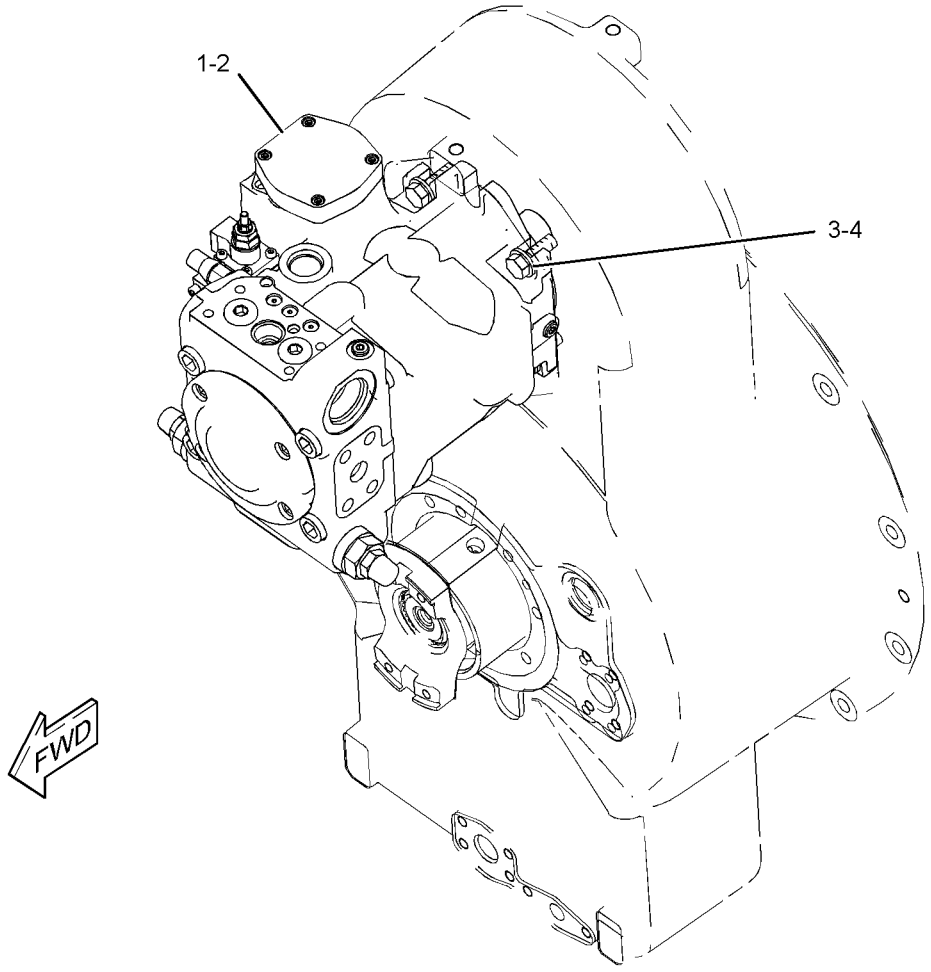

GRAPHIC #1 **<END>** g01355261

145-1077 PUMP GP-CHARGE–STEERING

S/N: SMC1-UP; GCT1-UP

PART OF 271-2114 PUMP GP-PISTON

SMCS-3204 **i02627480**

NOTE	REF NO	GRAPHIC REF	PART NUMBER	QTY	PART NAME 1 2 3 4 5 6 (PRODUCT LEVEL)	SEE PAGE
M	1	1	**8T-1159**	4	BOLT-SOCKET HEAD (M10X1.5X25-MM)	
	2	1	**126-1477**	1	BUSHING-COUPLING	
	3	1	**145-1833**	1	SHAFT	
	4	1	**117-7296**	1	KEY-SHAFT	
	5	1	**145-0909**	1	RING	
	6	1	**6V-2483**	2	SEAL-O-RING	
	7	1	**235-0588**	1	PLATE-WEAR	
	8	1	**246-5804**	2	PLUG	

M-METRIC PART

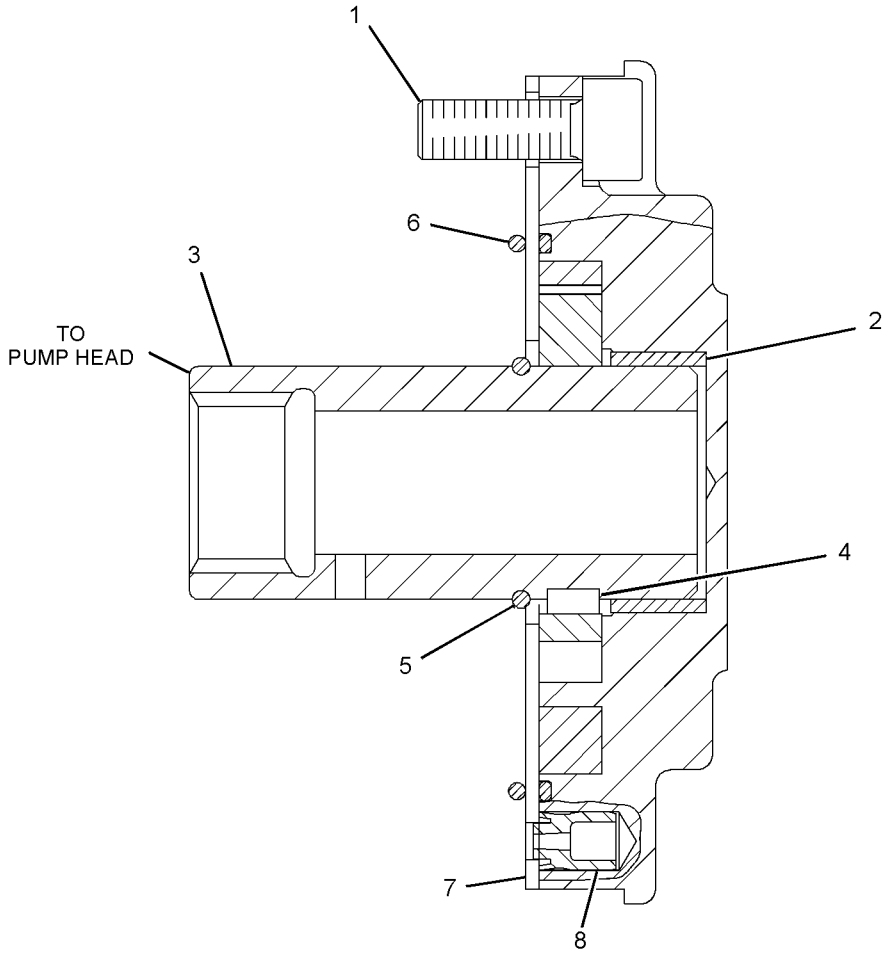

GRAPHIC #1 **<END>** g01321293

271-2114 PUMP GP-PISTON—STEERING

S/N: SMC1-UP; GCT1-UP

PART OF 269-2091 PUMP & MTG GP-STEERING

SMCS-5070 **i02801393**

NOTE	REF NO	GRAPHIC REF	PART NUMBER	QTY	PART NAME 1 2 3 4 5 6 (PRODUCT LEVEL)	SEE PAGE
Y	1	1	**287-3751**	1	ROTATING GP-PUMP (STEERING)	450
Y	2	1	**196-4233**	1	ACTUATOR GP-PUMP (STEERING)	434
Y	3	1	**287-5855**	1	HEAD GP-PUMP (STEERING)	436
Y	4	1	**145-1077**	1	PUMP GP-CHARGE (STEERING)	447
Y	5	1	**202-2333**	1	VALVE GP-PUMP CONTROL (PRESSURE, FLOW COMPENSATOR) (STEERING PUMP PILOT PRESSURE)	457
	6	1	**126-1638**	2	PIN-JOINT	
	7	1	**287-6354**	1	PIN-ECCENTRIC	
	8	1	**9S-8008**	1	PLUG-O-RING	
	9	1	**3D-2824**	1	SEAL-O-RING	
	10	1	**9S-8004**	1	PLUG-O-RING	
	11	1	**3J-1907**	1	SEAL-O-RING	
	12	1	**9S-8002**	5	PLUG-O-RING	
	13	1	**3J-7354**	5	SEAL-O-RING	
	14	1	**120-4394**	1	PLUG-BREAK OFF	
	15	1	**167-6805**	2	PIN	
M	16	1	**9T-3928**	3	PLUG AS	
					(EACH INCLUDES)	
		1	**187-8001**	1	SEAL	
	17	1	**081-3801**	2	PLUG AS	
					(EACH INCLUDES)	
		1	**126-9092**	1	SEAL	
	18	1	**126-1661**	1	PLUG	
	19	1	**9S-8005**	1	PLUG-O-RING	
	20	1	**3K-0360**	1	SEAL-O-RING	
	21	1	**123-7583**	1	ORIFICE	
M	22	1	**3E-8008**	4	BOLT-SOCKET HEAD (M16X2X90-MM)	
	23	1	**123-7575**	1	SCREW-LOCK	
	24	1	**6V-8978**	1	SEAL-O-RING	
M	25	1	**1G-3176**	1	SCREW-LOCK (M8-THD)	

M-METRIC PART
Y-SEPARATE ILLUSTRATION

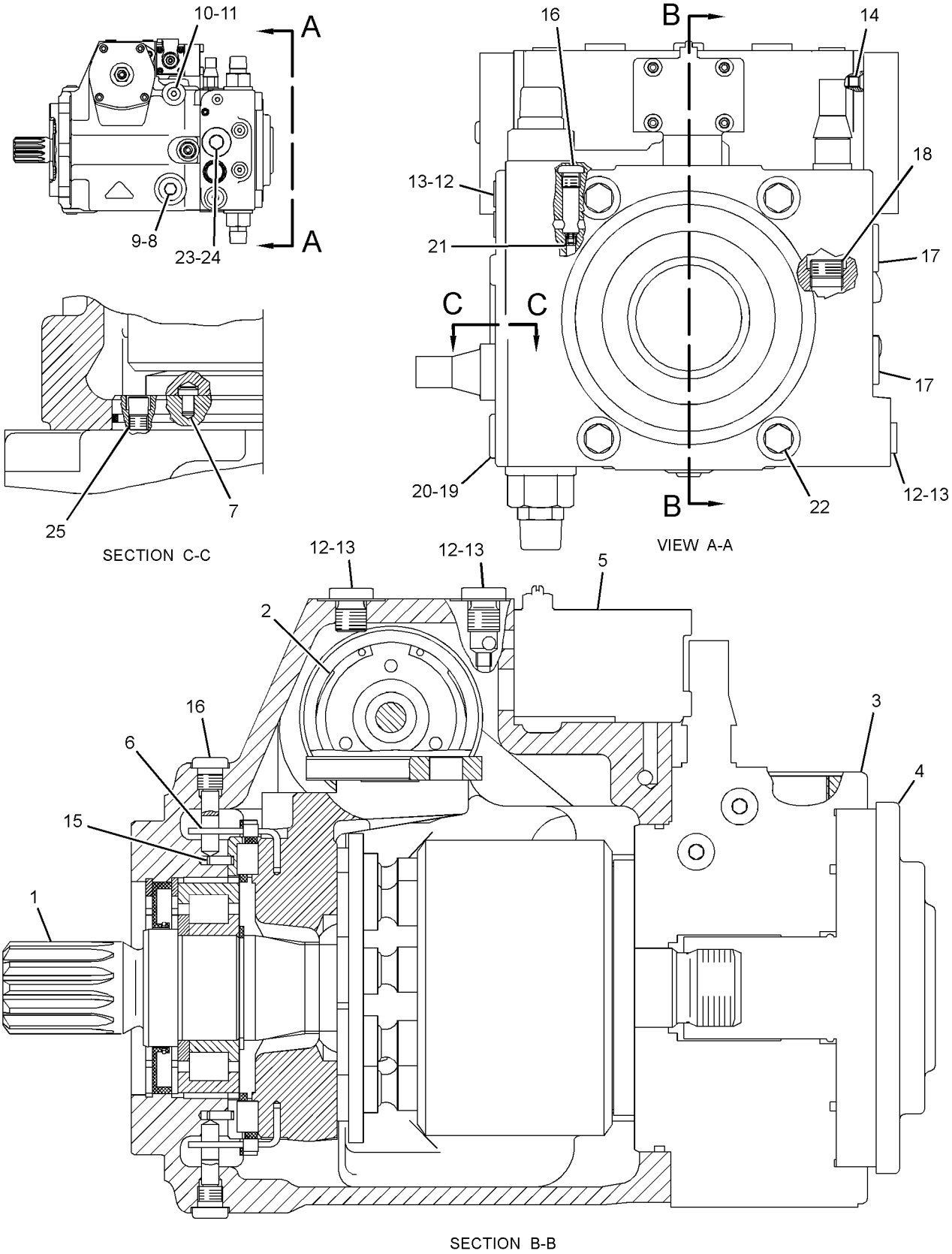

GRAPHIC #1 **<END>** g01380958

STEERING AND BRAKING SYSTEM

287-3751 ROTATING GP-PUMP—STEERING

S/N: SMC1-UP; GCT1-UP

PART OF 271-2114 PUMP GP-PISTON

SMCS-5070 **i02754677**

NOTE	REF NO	GRAPHIC REF	PART NUMBER	QTY	PART NAME 1 2 3 4 5 6 (PRODUCT LEVEL)	SEE PAGE
	1	1	**6V-5201**	1	RING-RETAINING	
M	2	1	**142-9437**	2	WASHER (30.7X44X3-MM THK)	
	3	1	**9X-2857**	1	RING-RETAINING	
	4	1	**142-9429**	1	SHAFT	
	5	1	**159-9854**	2	RING-RETAINING	
	6	1	**142-9435**	1	BALL	
	7	1	**142-9427**	1	SWASHPLATE	
	8	1	**142-9434**	1	PLATE-RETAINER	
	9	1	**142-9425**	9	PISTON AS	
	10	1	**287-3789**	1	BARREL AS	
B	11	1	**142-9430**	1	SHIM (1.2-MM THK)	
B	12	1	**142-9431**	1	SHIM (1-MM THK)	
B	13	1	**142-9432**	1	SHIM (0.8-MM THK)	
B	14	1	**142-9433**	1	SHIM (0.6-MM THK)	
	15	1	**142-9438**	1	SPRING-COIL	
	16	1	**142-9426**	1	SPRING AS	
	17	1	**130-7806**	2	ROD	
	18	1	**142-9436**	1	BEARING AS	
	19	1	**201-5382**	1	SEAL-SHAFT	
	20	1	**126-1403**	1	PLATE-ADJUSTMENT	
	21	1	**142-9440**	1	BEARING AS (SWASHPLATE)	
	22	1	**142-9439**	1	BEARING AS	
	23	1	**287-3791**	1	PLATE-PORT	

B-USE AS REQUIRED
M-METRIC PART

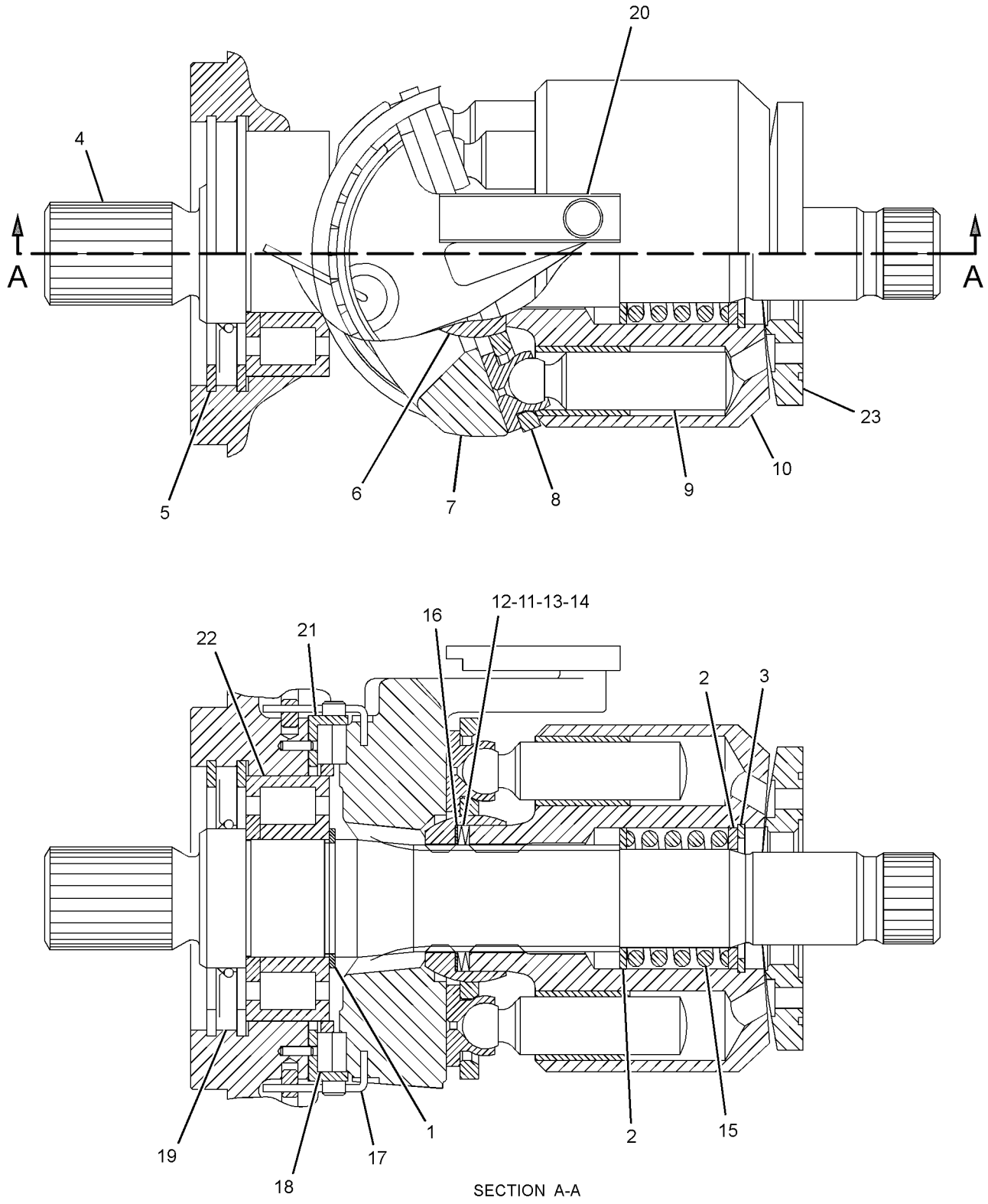

GRAPHIC #1 **<END>** g01356177

STEERING AND BRAKING SYSTEM

201-7269 VALVE GP-BRAKE CONTROL

S/N: SMC1-UP; GCT1-UP

PART OF 201-7274 VALVE GP-BRAKE CONTROL

SMCS-4265, 4282 **i02777465**

NOTE	REF NO	GRAPHIC REF	PART NUMBER	QTY	PART NAME 1 2 3 4 5 6 (PRODUCT LEVEL)	SEE PAGE
	1	1	**293-2851**	1	STOP	
	2	1	**188-7067**	2	SPRING	
	3	1	**188-7068**	2	RETAINER	
	4	1	**188-7069**	2	PISTON-LOAD	
	5	1	**108-4430**	2	SPRING	
	6	1	**110-2842**	1	PLATE-END	
	7	1	**137-6603**	2	SPOOL	
	8	1	*148-8410*	2	PLUG AS	
					(EACH INCLUDES)	
		1	**2M-9780**	1	SEAL-O-RING	
		1	**9S-4190**	1	PLUG-O-RING	
	9	1	*148-8409*	2	PLUG AS	
					(EACH INCLUDES)	
		1	**3D-2824**	1	SEAL-O-RING	
		1	**9S-8008**	1	PLUG-O-RING	
	10	1	**6J-2419**	2	SEAL-O-RING	
M	11	1	**7X-2537**	2	BOLT (M8X1.25X35-MM)	
	12	1	**8T-4224**	2	WASHER-HARD (8.8X16X2-MM THK)	
M	13	1	**8T-7547**	2	BOLT (M8X1.25X30-MM)	

PARTS SHOWN IN GRAPHIC(S) WITHOUT A REFERENCE NUMBER ARE NOT SERVICED SEPARATELY

M-METRIC PART

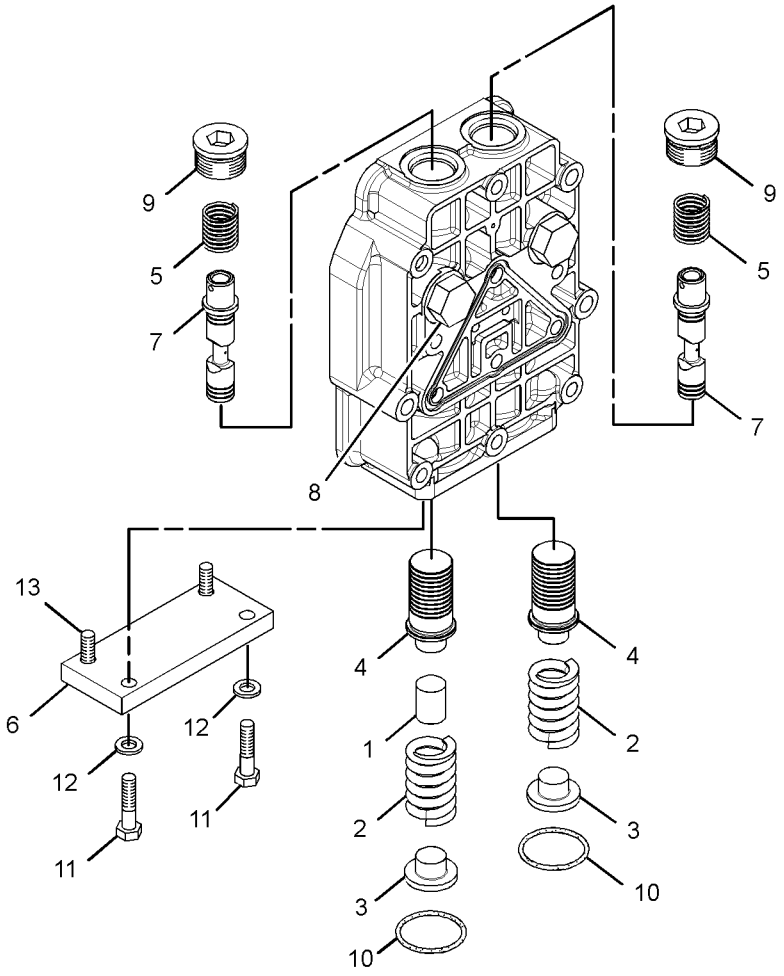

GRAPHIC #1 **<END>** g01393299

201-7274 VALVE GP-BRAKE CONTROL

S/N: SMC1-UP; GCT1-UP

PART OF 213-1308 VALVE & MTG GP-CONTROL

SMCS-4265, 4282 **i02272819**

NOTE	REF NO	GRAPHIC REF	PART NUMBER	QTY	PART NAME 1 2 3 4 5 6 (PRODUCT LEVEL)	SEE PAGE
	1	1	**9L-9068**	4	DOWEL	
Y	2	1	*162-5357*	1	MANIFOLD & VALVE GP (SECONDARY BRAKE)	443
Y	3	1	*175-4972*	1	MANIFOLD & VALVE GP (PARKING, SECONDARY BRAKE)	445
	4	1	**176-0259**	1	PLUG AS (ORIFICE SCREEN)	
M	5	1	**8T-4177**	2	BOLT (M8X1.25X90-MM)	
Y	6	1	**201-7269**	1	VALVE GP-BRAKE CONTROL	452
	7	1	**122-3771**	2	SEAL-O-RING	
	8	1	**132-9899**	1	PLATE	
	9	1	**132-9900**	1	PLATE	
	10	1	**134-1251**	1	PLATE-SEPARATOR	
	11	1	**185-3503**	2	SEAL-O-RING	
	12	1	**1T-0738**	10	WASHER (8.4X19X1.83-MM THK)	
	13	1	**3S-2093**	4	STRAP-CABLE	
	14	1	**4J-7533**	1	SEAL-O-RING	
M	15	1	**7X-2541**	4	BOLT (M8X1.25X140-MM)	
M	16	1	**8T-3647**	4	BOLT (M8X1.25X80-MM)	
	17	1	**9P-9150**	24	WASHER (8.25X18X0.84-MM THK)	

M-METRIC PART
Y-SEPARATE ILLUSTRATION

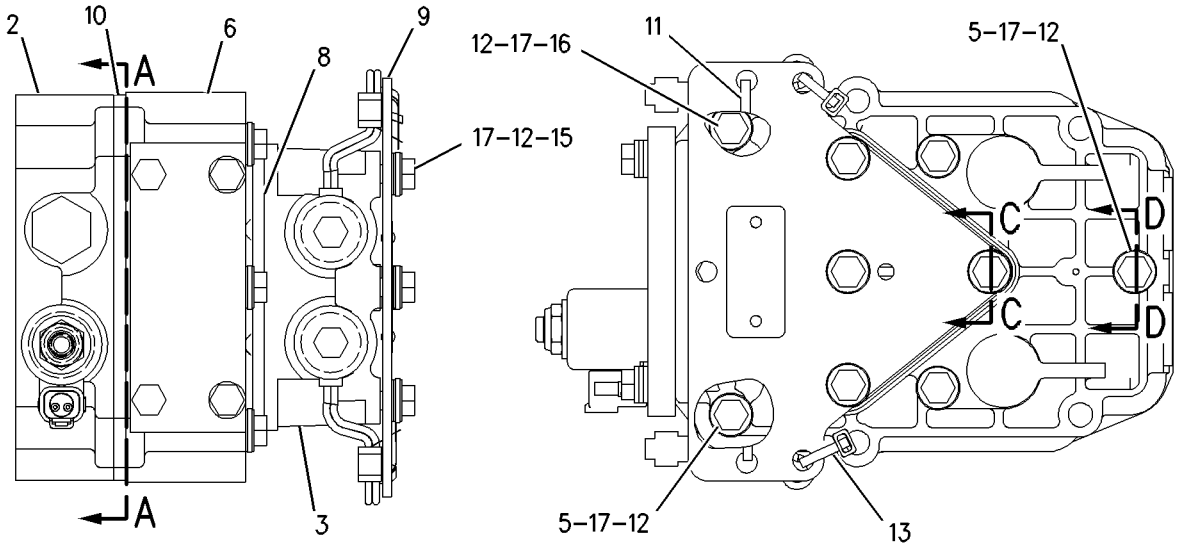

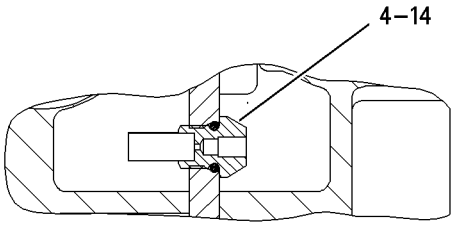

SECTION E-E

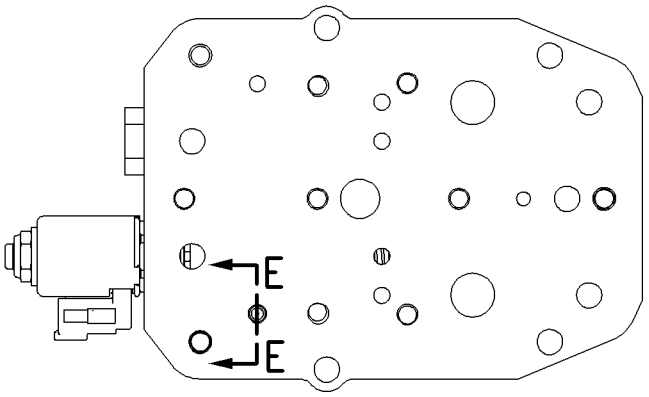

SECTION A-A

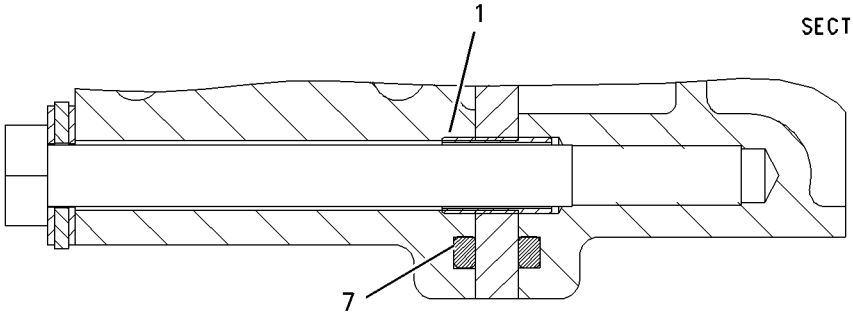

SECTION D-D

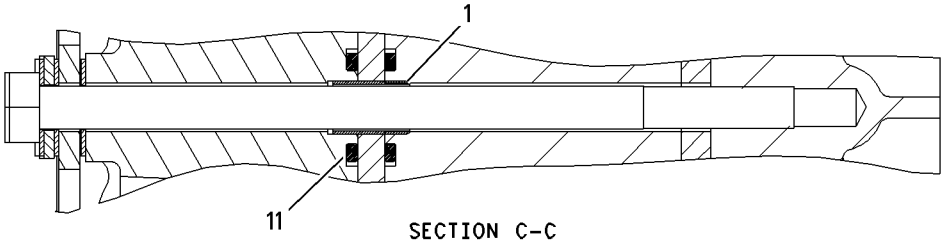

SECTION C-C

GRAPHIC #1 **<END>** g00936951

126-0747 VALVE GP-BYPASS—STEERING LINES

S/N: SMC1-UP; GCT1-UP

PART OF 269-2075 LINES GP-STEERING

SMCS-5093 **i02252561**

NOTE	REF NO	GRAPHIC REF	PART NUMBER	QTY	PART NAME 1 2 3 4 5 6 (PRODUCT LEVEL)	SEE PAGE
	1	1	**124-8335**	1	VALVE AS-CONTROL	
	2	1	**126-0748**	1	BODY	
	3	1	*148-8407*	1	PLUG AS	
		1	**9S-4191**	1	PLUG-O-RING	
		1	**3J-1907**	1	SEAL-O-RING	
	4	1	**6V-8218**	1	SEAL-O-RING	

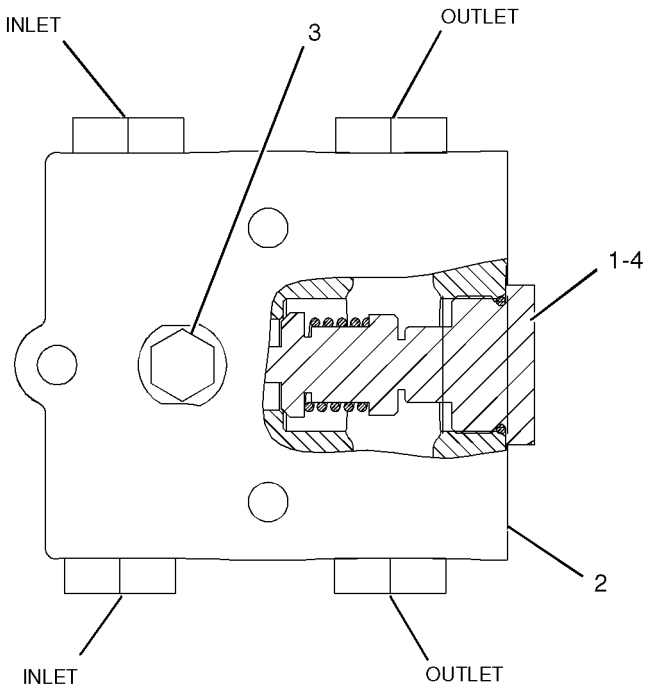

GRAPHIC #1 **<END>** g01044349

202-2333 VALVE GP-PUMP CONTROL–PRESSURE, FLOW COMPENSATOR–STEERING PUMP PILOT PRESSURE

S/N: SMC1-UP; GCT1-UP

PART OF 271-2114 PUMP GP-PISTON

SMCS-5455 **i02332700**

NOTE	REF NO	GRAPHIC REF	PART NUMBER	QTY	PART NAME 1 2 3 4 5 6 (PRODUCT LEVEL)	SEE PAGE
	1	1	**202-2343**	1	HOUSING AS	
	2	1	**202-2344**	2	HOUSING	
	3	1	**196-4251**	1	COVER	
	4	1	**202-0971**	1	SPRING	
	5	1	**196-4253**	1	GASKET	
	6	1	**202-2791**	2	SCREW (M12X1.5X48-MM)	
M	7	1	**6E-4385**	2	LOCKNUT (M12X1.5-THD)	
M	8	1	**8C-8580**	8	BOLT-SOCKET HEAD (M5X0.8X16-MM)	
M	9	1	**8T-2922**	4	BOLT-SOCKET HEAD (M6X1X65-MM)	
	10	1	**209-3565**	1	SEAL	
	11	1	**9T-3853**	2	LOCKNUT (M6-THD)	
M	12	1	**196-9445**	1	BOLT-SOCKET HEAD (M6X1X45-MM)	
	13	1	**202-2341**	2	PIN	
	14	1	**202-2339**	2	COLLAR	
	15	1	**5E-7045**	1	PIN-CYLINDER	
	16	1	**6J-3134**	1	SEAL-O-RING	
	17	1	**085-7539**	2	SEAL-O-RING	
	18	1	**196-4254**	2	SPRING	
	19	1	**183-8398**	2	SPRING	
	20	1	**183-8395**	2	RETAINER-SPRING	

M-METRIC PART

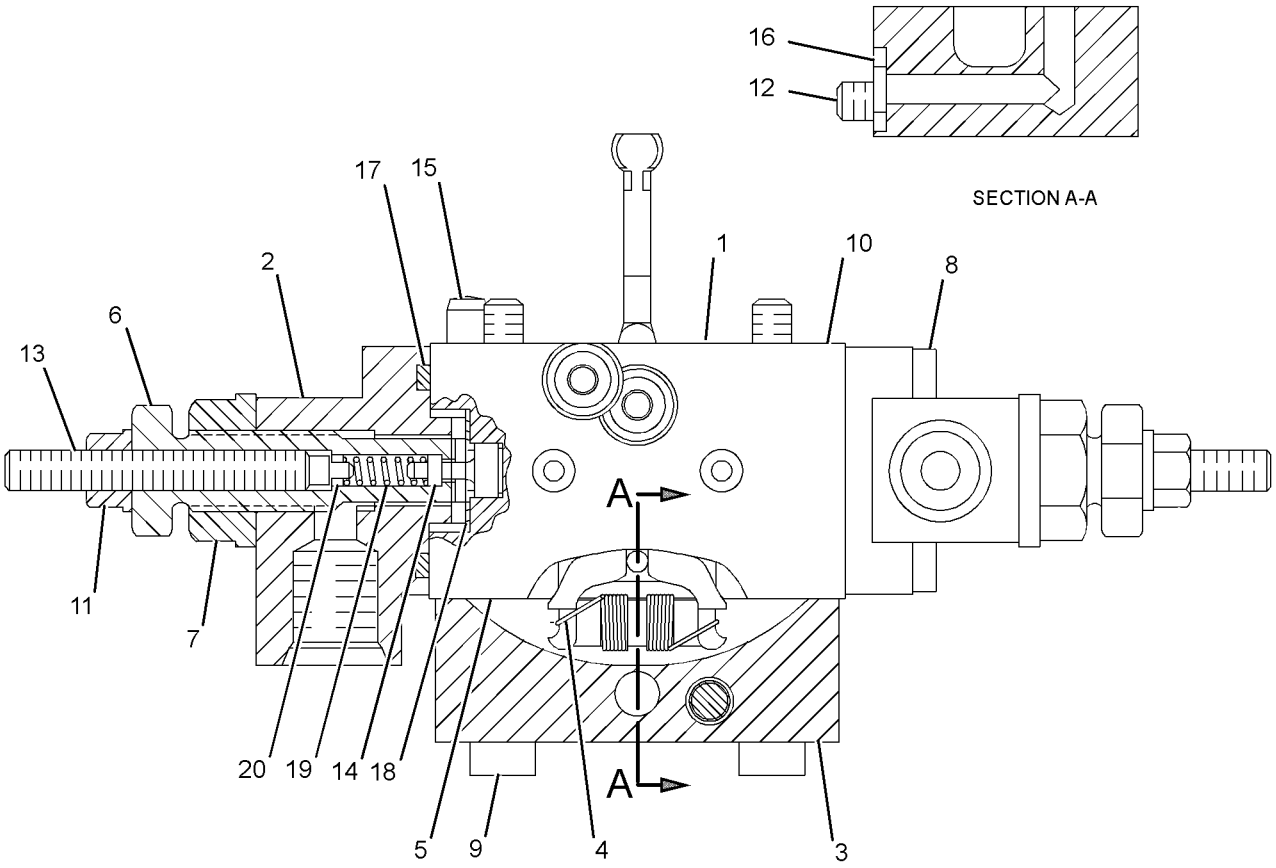

GRAPHIC #1 **<END>** g01279177

6E-4402 VALVE GP-RELIEF—STEERING PUMP

S/N: SMC1-UP; GCT1-UP

PART OF 287-5855 HEAD GP-PUMP

SMCS-4307 **i02591011**

NOTE	REF NO	GRAPHIC REF	PART NUMBER	QTY	PART NAME 1 2 3 4 5 6 (PRODUCT LEVEL)	SEE PAGE
	1	1	**202-2342**	1	SPRING	
	2	1	**6E-4404**	1	VALVE-POPPET	
	3	1	**183-8410**	1	SCREW	
	4	1	**6E-4403**	1	PLUG	
M	5	1	**6E-4240**	1	NUT-SEALING (M10X1-THD)	
	6	1	**6V-8352**	1	SEAL-O-RING	
	7	1	**167-7715**	1	RETAINER-SPRING	

M-METRIC PART

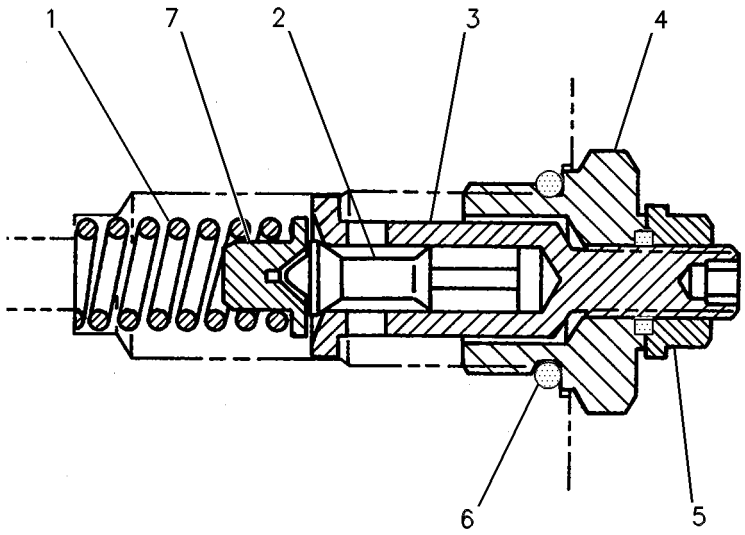

GRAPHIC #1 **<END>** g00252131

198-9219 VALVE GP-RELIEF—STEERING LINES PRESSURE

S/N: SMC1-UP; GCT1-UP

PART OF 269-2075 LINES GP-STEERING

SMCS-4307 **i01834289**

NOTE	PART NUMBER	QTY	PART NAME 1 2 3 4 5 6 (PRODUCT LEVEL)	SEE PAGE
Y	**198-9220**	1	VALVE GP-RELIEF	461

Y-SEPARATE ILLUSTRATION

<END>

198-9220 VALVE GP-RELIEF—STEERING LINES PRESSURE

S/N: SMC1-UP; GCT1-UP

PART OF 198-9219 VALVE GP-RELIEF

SMCS-4307 **i01834291**

NOTE	REF NO	GRAPHIC REF	PART NUMBER	QTY	PART NAME 1 2 3 4 5 6 (PRODUCT LEVEL)	SEE PAGE
J	1	1	**2M-9780**	1	SEAL-O-RING	
J	2	1	**161-6149**	1	SEAL-O-RING	
J	3	1	**161-6161**	2	RING-BACKUP	
					AVAILABLE REPAIR KIT(S):	
			133-5545	1	KIT-SEAL (RELIEF VALVE) (RELIEF VALVE)	
J-KIT MARKED J INCLUDE PARTS MARKED J						

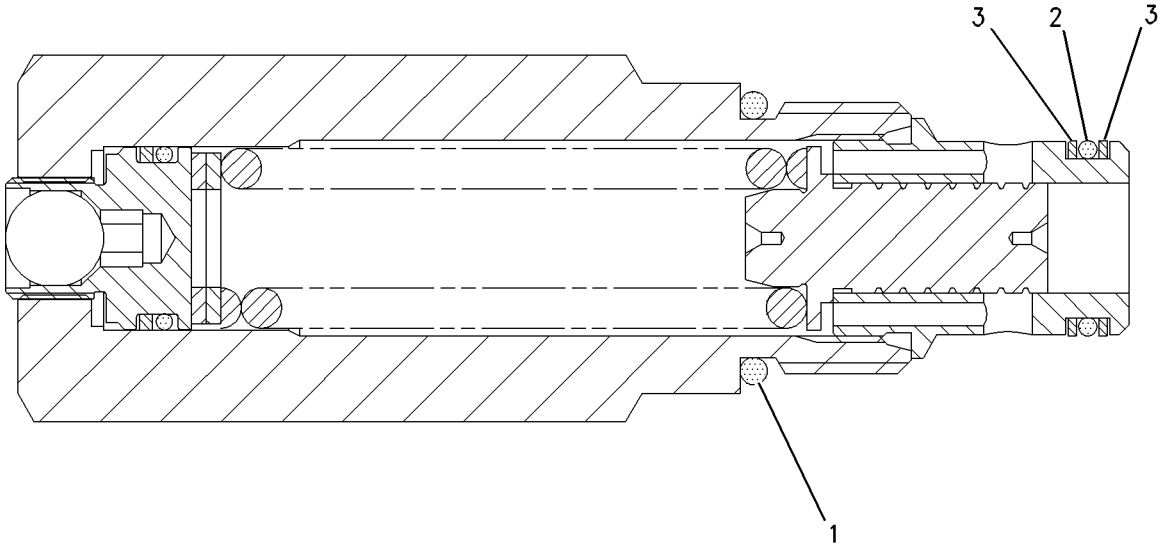

GRAPHIC #1 **<END>** g00938075

172-2392 VALVE GP-SOLENOID

S/N: SMC1-UP; GCT1-UP
24 VOLT
PART OF 175-4972 MANIFOLD & VALVE GP

SMCS-4804 **i01883348**

NOTE	REF NO	GRAPHIC REF	PART NUMBER	QTY	PART NAME 1 2 3 4 5 6 (PRODUCT LEVEL)	SEE PAGE
	1	1	**156-5970**	1	NUT (1/2-20-2B-THD)	
	2	1	**133-2249**	1	COIL AS	
		1	**1S-9593**	2	STRAP-CABLE	
		1	**8T-8729**	2	PIN-CONNECTOR	
		1	**8T-8737**	2	PLUG-SEAL	
		1	**102-8804**	1	KIT-RECEPTACLE (4-PIN)	
					(INCLUDES RECEPTACLE AS & WEDGE)	
	3	1	**172-2391**	1	SPOOL AS	
		1	**156-5970**	1	NUT (1/2-20-2B-THD)	
					AVAILABLE REPAIR KIT(S):	
			189-1839	1	KIT-SEAL (SOLENOID VALVE)	
					(INCLUDES SEALS & RING-BACK UP)	

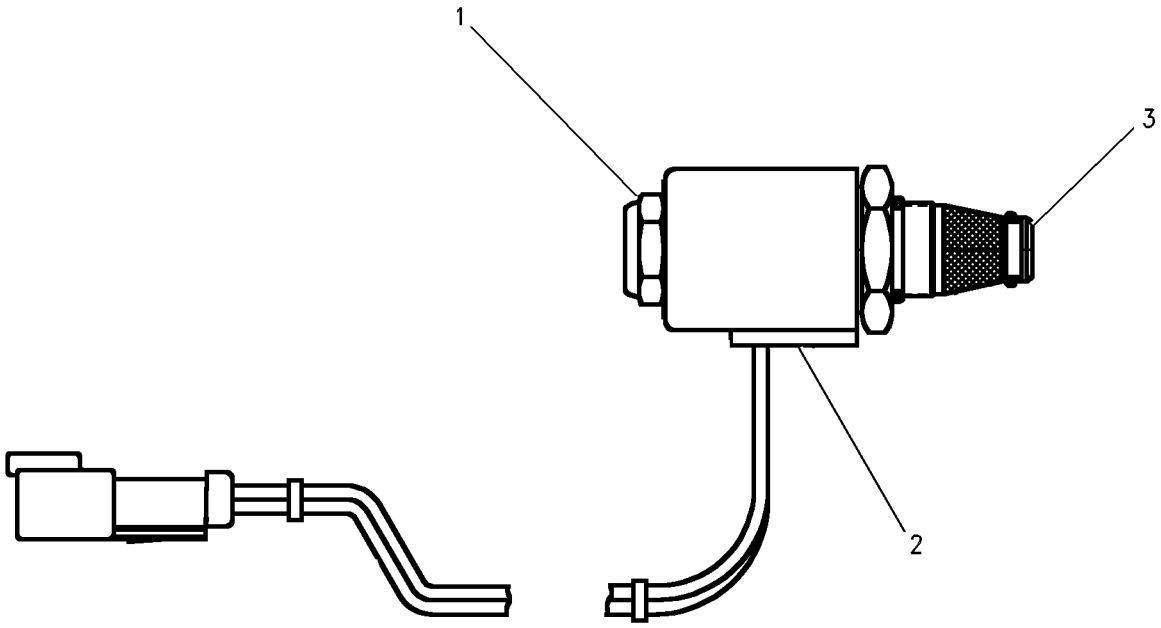

GRAPHIC #1 **<END>** g00653409

174-4909 VALVE GP-SOLENOID

S/N: SMC1-UP; GCT1-UP

PART OF 162-5357 MANIFOLD & VALVE GP

SMCS-4804 **i02426161**

NOTE	REF NO	GRAPHIC REF	PART NUMBER	QTY	PART NAME 1 2 3 4 5 6 (PRODUCT LEVEL)	SEE PAGE
	1	1	**226-9622**	1	COIL AS (24 VOLT)	
	2	1	**164-2108**	1	WASHER (13.03X25.4X2.38-MM THK)	
	3	1	**218-2373**	1	NUT (1/2-28-THD)	

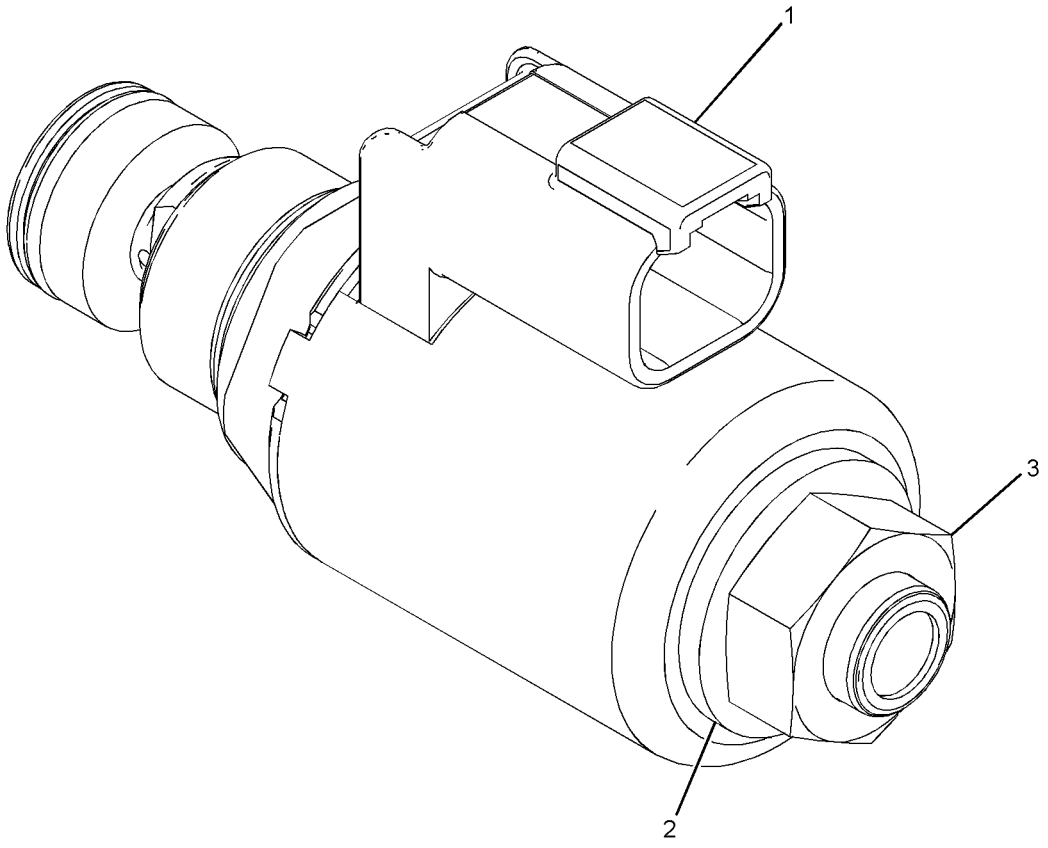

GRAPHIC #1 **<END>** g01139934

HYDRAULIC SYSTEM

179-9387 ACCUMULATOR GP-PILOT OIL—UNCHARGED

S/N: SMC1-UP; GCT1-UP

FIELD REPLACEMENT FOR 200-0750—PAGE 465

SMCS-5077 **i02232516**

NOTE	REF NO	GRAPHIC REF	PART NUMBER	QTY	PART NAME 1 2 3 4 5 6 (PRODUCT LEVEL)	SEE PAGE
	1	1	**204-8758**	2	FILM-WARNING (ACCUMULATOR)	

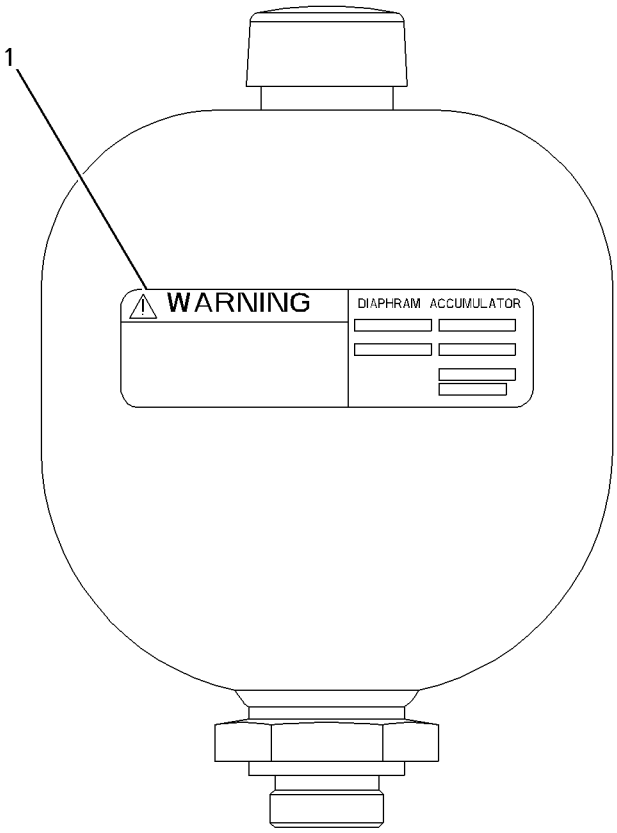

GRAPHIC #1 **<END>** g01004085

200-0750 ACCUMULATOR GP-PILOT OIL–CHARGED

S/N: SMC1-UP; GCT1-UP
PART OF 269-2078 LINES GP-PILOT
FIELD REPLACEMENT ORDER 179-9387–PAGE 464

SMCS-5077 **i02232482**

NOTE	REF NO	GRAPHIC REF	PART NUMBER	QTY	PART NAME 1 2 3 4 5 6 (PRODUCT LEVEL)	SEE PAGE
	1	1	**204-8758**	2	FILM-WARNING (ACCUMULATOR)	

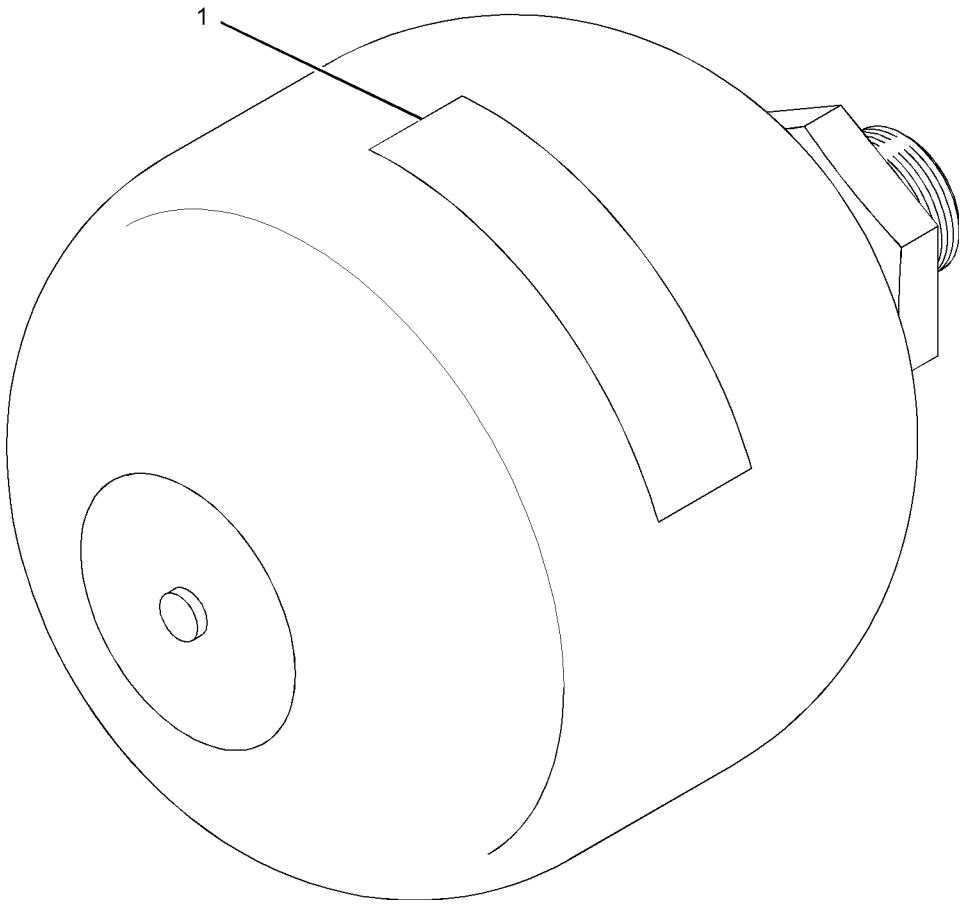

GRAPHIC #1 **<END>** g01034166

HYDRAULIC SYSTEM

229-5421 ADAPTER GP-MOTOR

S/N: SMC1-UP; GCT1-UP

PART OF 269-2050 HYDRAULIC AR-2 VALVE

SMCS-5058 **i02281849**

NOTE	REF NO	GRAPHIC REF	PART NUMBER	QTY	PART NAME 1 2 3 4 5 6 (PRODUCT LEVEL)	SEE PAGE
	1	1	**216-8585**	1	ADAPTER (MOTOR)	
	2	1	**3N-0759**	1	RING-SEALING	
	3	1	**7K-6058**	6	BOLT-12 POINT HEAD (1/2-13X2.5-IN)	
	4	1	**8C-6857**	2	BOLT (3/4-10X2.75-IN)	
	5	1	**8T-4994**	2	WASHER-HARD (20X36.5X3.5-MM THK)	
	6	1	**8T-7568**	1	SEAL-O-RING	

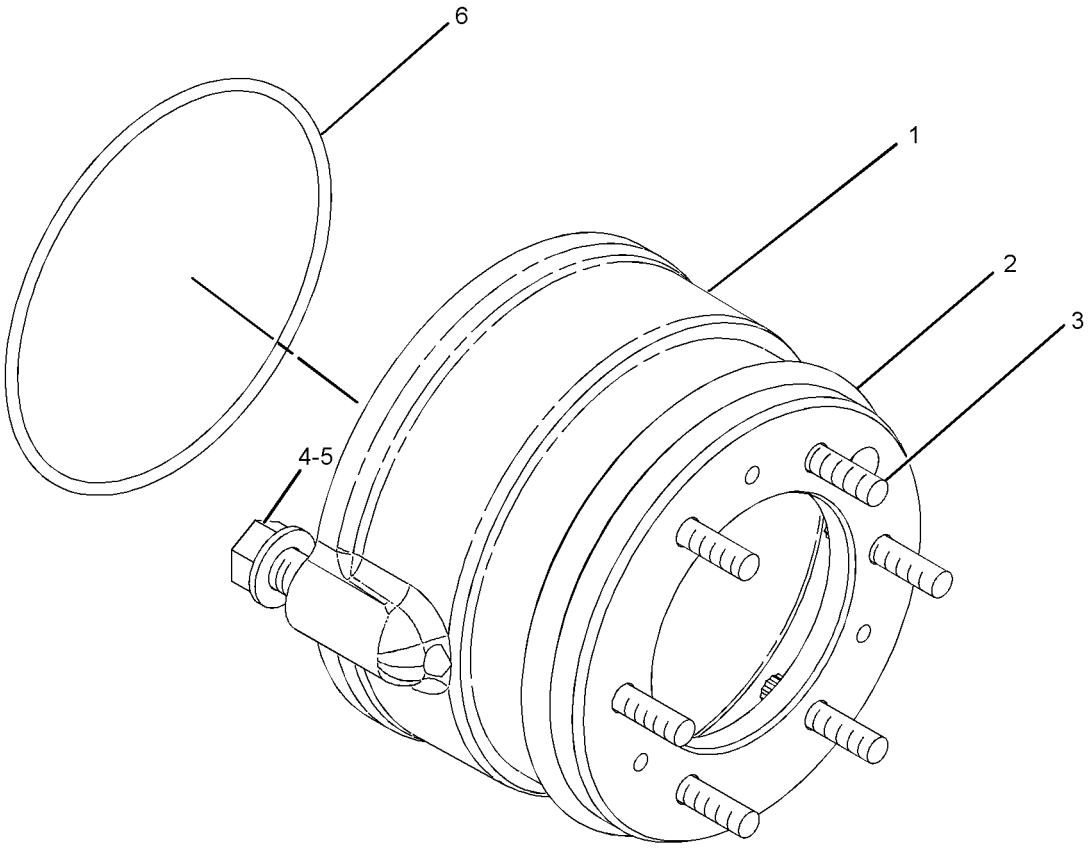

GRAPHIC #1 **<END>** g01126503

277-8760 CONTROL AR-HYDRAULIC IMPLEMENT–ACCUGRADE

S/N: SMC1-UP; GCT1-UP
WITHOUT REAR HYDRAULICS
AN ATTACHMENT

SMCS-5050 **i02759244**

NOTE	PART NUMBER	QTY	PART NAME 1 2 3 4 5 6 (PRODUCT LEVEL)	SEE PAGE
Y	*239-2385*	1	CONTROL & MTG GP-JOYSTICK (GRADE CONTROL)	643
Y	*269-2089*	1	LINES GP-PILOT (GRADE CONTROL)	493
M	**8T-4136**	2	BOLT (M10X1.5X25-MM)	
M	**8T-4192**	2	BOLT (M12X1.75X25-MM)	
	277-8350	1	BRACKET	
	8T-4121	2	WASHER-HARD (11X21X2.5-MM THK)	
	8T-4223	2	WASHER-HARD (13.5X25.5X3-MM THK)	

M-METRIC PART
Y-SEPARATE ILLUSTRATION

<END>

277-8761 CONTROL AR-HYDRAULIC IMPLEMENT–ACCUGRADE

S/N: SMC1-UP; GCT1-UP
WITH REAR HYDRAULICS
AN ATTACHMENT

SMCS-5050 **i02760081**

NOTE	PART NUMBER	QTY	PART NAME 1 2 3 4 5 6 (PRODUCT LEVEL)	SEE PAGE
Y	*239-2385*	1	CONTROL & MTG GP-JOYSTICK (GRADE CONTROL)	643
Y	*269-2089*	1	LINES GP-PILOT (GRADE CONTROL)	493
M	**8T-4136**	2	BOLT (M10X1.5X25-MM)	
M	**8T-4192**	2	BOLT (M12X1.75X25-MM)	
	277-8351	1	BRACKET	
	8T-4121	2	WASHER-HARD (11X21X2.5-MM THK)	
	8T-4223	2	WASHER-HARD (13.5X25.5X3-MM THK)	

M-METRIC PART
Y-SEPARATE ILLUSTRATION

<END>

280-1476 CONTROL AR-HYDRAULIC IMPLEMENT–BULLDOZER, RIPPER

S/N: SMC1-UP; GCT1-UP
AN ATTACHMENT

SMCS-5050 **i02760134**

NOTE	PART NUMBER	QTY	PART NAME 1 2 3 4 5 6 (PRODUCT LEVEL)	SEE PAGE
Y	*161-3616*	1	KNOB GP (RIPPER)	674
Y	*269-2080*	1	LINES GP-PILOT (RIPPER)	489
Y	*269-2079*	1	LINES GP-RIPPER	500
Y	**269-8160**	1	VALVE GP-BANK 3 (BULLDOZER LIFT, TILT, RIPPER)	535
Y	**167-1177**	1	VALVE GP-PILOT (RIPPER)	556
	102-9478	1	FILM-INSTRUCTION (RIPPER CONTROL)	
			(ON THE RAISED SURFACE TO THE RIGHT OF THE RIPPER CONTROL HANDLE)	

Y-SEPARATE ILLUSTRATION

<END>

HYDRAULIC SYSTEM

280-1478 CONTROL AR-HYDRAULIC IMPLEMENT–
BULLDOZER, WINCH
S/N: SMC1-UP; GCT1-UP
AN ATTACHMENT

SMCS-5050 **i02760292**

NOTE	PART NUMBER	QTY	PART NAME 1 2 3 4 5 6 (PRODUCT LEVEL)	SEE PAGE
Y	*3W-1356*	1	GUARD GP-TRANSMISSION	364
Y	*269-2082*	1	LINES GP-PILOT (WINCH)	491
Y	*269-2081*	1	LINES GP-WINCH	608
Y	**278-1445**	1	PUMP GP-PISTON (WINCH)	518
Y	**269-8157**	1	VALVE GP-BANK 3 (BULLDOZER LIFT, TILT, WINCH)	533
Y	**160-0766**	1	VALVE GP-PILOT (WINCH)	554
	164-9928	1	FILM-IDENTIFICATION (LOW SPEED, WINCH LIGHT)	
			INSTALL ON RAISED SURFACE TO RIGHT OF WINCH CONTROL	
	164-9930	1	FILM-IDENTIFICATION (WINCH CONTROL)	
			INSTALL NEXT TO LIGHT ON CONSOLE COVER	

Y-SEPARATE ILLUSTRATION

<END>

169-3806 COOLER GP-HYDRAULIC OIL

S/N: SMC1-UP; GCT1-UP

PART OF 279-9549 INSTALLATION AR-ENGINE

SMCS-1374 **i01830002**

NOTE	REF NO	GRAPHIC REF	PART NUMBER	QTY	PART NAME 1 2 3 4 5 6 (PRODUCT LEVEL)	SEE PAGE
	1	1	**143-7397**	1	CORE AS-HYDRAULIC OIL COOLER	
	2	1	**169-3821**	1	BRACKET AS	
	3	1	**169-3822**	1	BRACKET AS	
M		1	**8T-3490**	2	NUT-WELD (M10X1.5-THD)	
	4	1	**8T-2561**	4	WASHER-HARD (10.5X28.5X5-MM THK)	
M	5	1	**8T-4133**	2	NUT (M10X1.5-THD)	
M	6	1	**8T-4136**	2	BOLT (M10X1.5X25-MM)	

M-METRIC PART

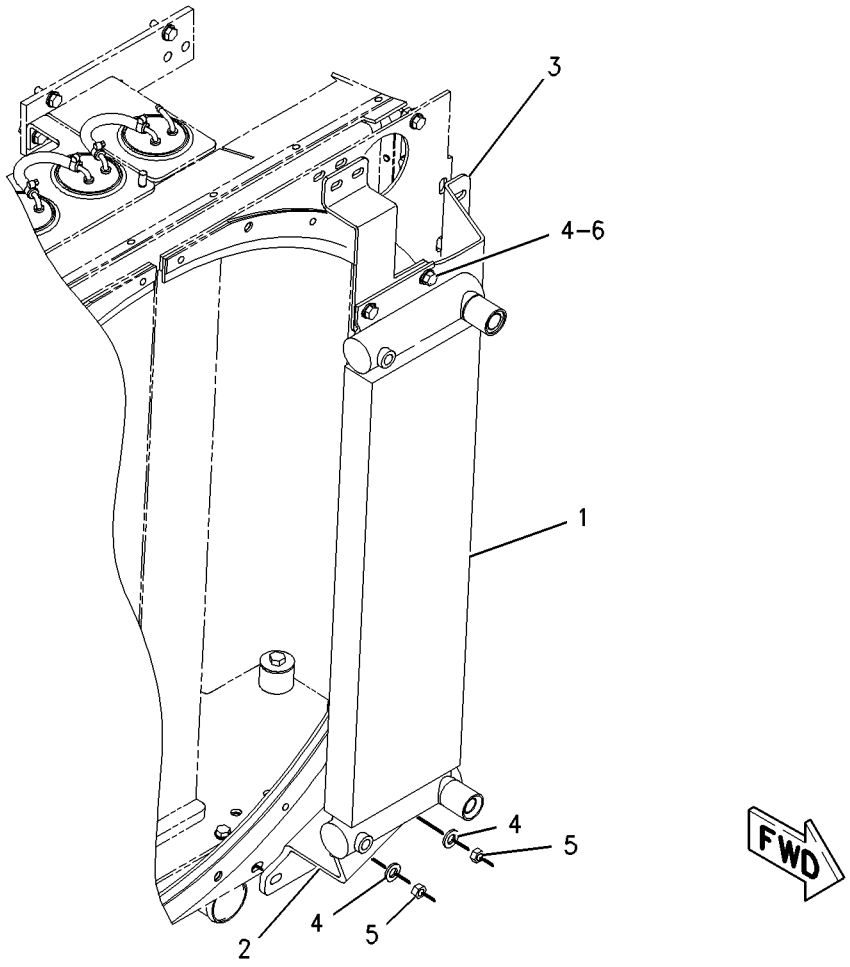

GRAPHIC #1 **<END>** g00805603

HYDRAULIC SYSTEM

227-4005 CYLINDER & LINES GP-LIFT–RH

S/N: C4C1-UP; D6C1-UP; SMC1-UP; C4R1-UP; GCT1-UP
PART OF 251-6112, 251-6128 BULLDOZER AR-ANGLING, 230-5553, 252-5854 BULLDOZER AR-SEMI-UNIVERSAL
AN ATTACHMENT

SMCS-5102 **i02454228**

NOTE	REF NO	GRAPHIC REF	PART NUMBER	QTY	PART NAME 1 2 3 4 5 6 (PRODUCT LEVEL)	SEE PAGE
	1	1	**9U-9121**	1	CLAMP	
	2	1	**9U-9122**	1	CLAMP	
I	3	1	**128-2569**	1	HOSE AS	
I	4	1	**128-2570**	1	HOSE AS	
	5	1	**129-3217**	1	GUARD AS	
	6	1	*153-6251*	1	CONNECTOR GP	
		1	**9X-8260**	1	CONNECTOR	
		1	**4K-1388**	1	SEAL-O-RING	
		1	**6V-8400**	1	SEAL-O-RING	
Y	7	1	**227-0844**	1	CYLINDER GP-BULLDOZER LIFT	474
	8	1	**227-4303**	1	TUBE AS	
	9	1	*148-8391*	1	ELBOW AS	
		1	**8T-8987**	1	ELBOW	
		1	**2S-4078**	1	SEAL-O-RING	
		1	**5K-9090**	1	SEAL-O-RING	
	10	1	**4J-0520**	3	SEAL-O-RING	
	11	1	**5P-1075**	12	WASHER-HARD (10.2X22.5X3-MM THK)	
	12	1	**7S-8920**	1	CLIP (SLOT)	
	13	1	**7S-8921**	1	CLIP (TAB)	
	14	1	**8C-3206**	2	FLANGE-HALF	
	15	1	**8S-0023**	1	CLIP (SLOT)	
	16	1	**8S-0024**	1	CLIP (TAB)	
M	17	1	**8T-4133**	2	NUT (M10X1.5-THD)	
M	18	1	**8T-4136**	4	BOLT (M10X1.5X25-MM)	
M	19	1	**8T-4196**	6	BOLT (M10X1.5X35-MM)	

I-REFER TO HYDRAULIC INFORMATION SYSTEM
M-METRIC PART
Y-SEPARATE ILLUSTRATION

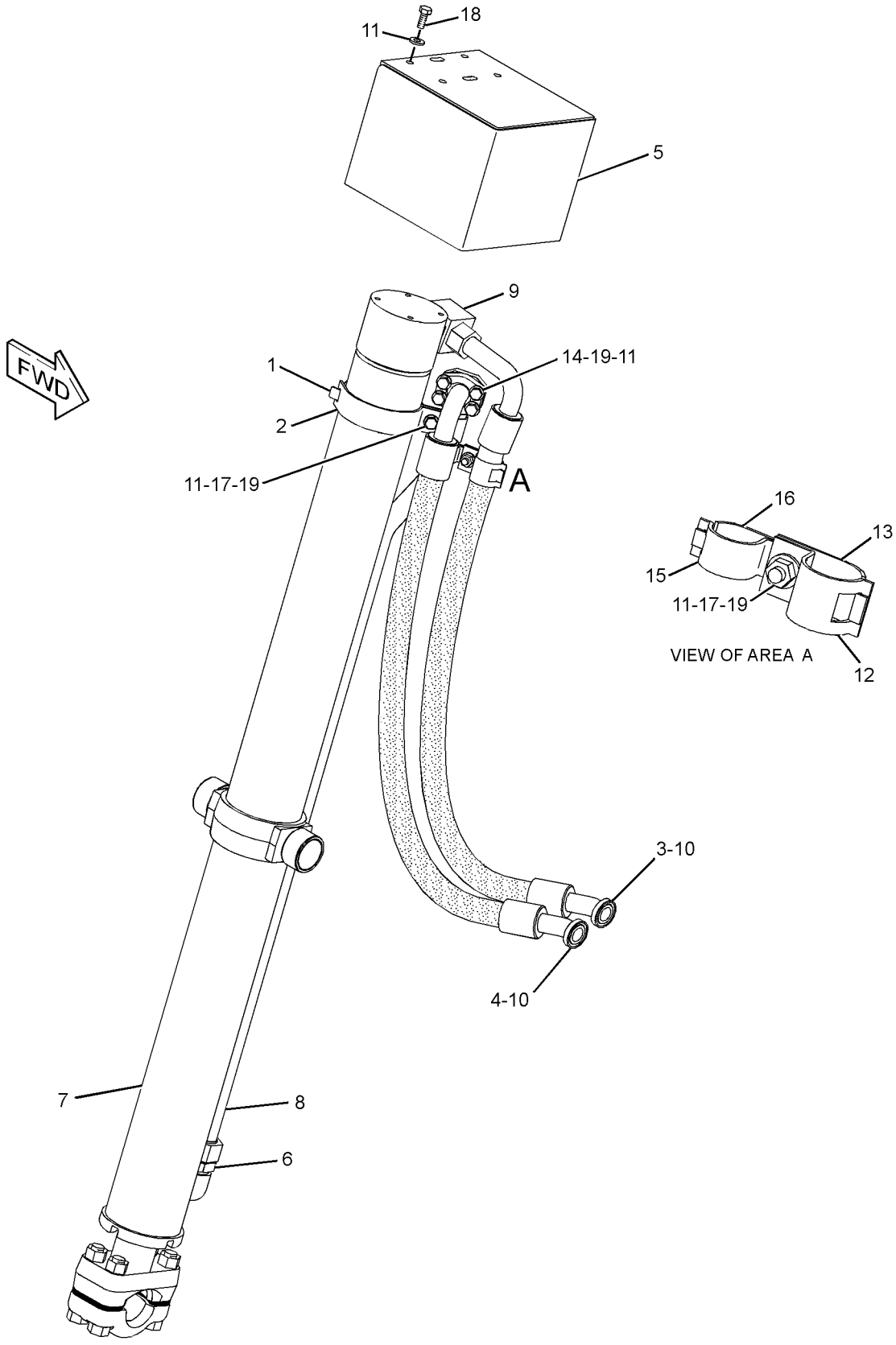

GRAPHIC #1 **<END>** g01209243

HYDRAULIC SYSTEM

227-4006 CYLINDER & LINES GP-LIFT—LH

S/N: C4C1-UP; D6C1-UP; SMC1-UP; C4R1-UP; GCT1-UP
PART OF 251-6112, 251-6128 BULLDOZER AR-ANGLING, 230-5553, 252-5854 BULLDOZER AR-SEMI-UNIVERSAL
FOR USE WITH 227-4005—PAGE 470 AN ATTACHMENT

SMCS-5102 **i02462127**

NOTE	REF NO	GRAPHIC REF	PART NUMBER	QTY	PART NAME 1 2 3 4 5 6 (PRODUCT LEVEL)	SEE PAGE
I	1	1	**128-2571**	1	HOSE AS	
	2	1	**9U-9121**	1	CLAMP	
	3	1	**9U-9122**	1	CLAMP	
I	4	1	**128-2572**	1	HOSE AS	
	5	1	**129-3217**	1	GUARD AS	
	6	1	*153-6251*	1	CONNECTOR GP	
		1	**9X-8260**	1	CONNECTOR	
		1	**4K-1388**	1	SEAL-O-RING	
		1	**6V-8400**	1	SEAL-O-RING	
Y	7	1	**227-0844**	1	CYLINDER GP-BULLDOZER LIFT	474
	8	1	**227-4304**	1	TUBE AS	
	9	1	*148-8391*	1	ELBOW AS	
		1	**8T-8987**	1	ELBOW	
		1	**2S-4078**	1	SEAL-O-RING	
		1	**5K-9090**	1	SEAL-O-RING	
	10	1	**4J-0520**	3	SEAL-O-RING	
	11	1	**5P-1075**	12	WASHER-HARD (10.2X22.5X3-MM THK)	
	12	1	**7S-8920**	1	CLIP (SLOT)	
	13	1	**7S-8921**	1	CLIP (TAB)	
	14	1	**8C-3206**	2	FLANGE-HALF	
	15	1	**8S-0023**	1	CLIP (SLOT)	
	16	1	**8S-0024**	1	CLIP (TAB)	
M	17	1	**8T-4133**	2	NUT (M10X1.5-THD)	
M	18	1	**8T-4136**	4	BOLT (M10X1.5X25-MM)	
M	19	1	**8T-4196**	6	BOLT (M10X1.5X35-MM)	

I-REFER TO HYDRAULIC INFORMATION SYSTEM
M-METRIC PART
Y-SEPARATE ILLUSTRATION

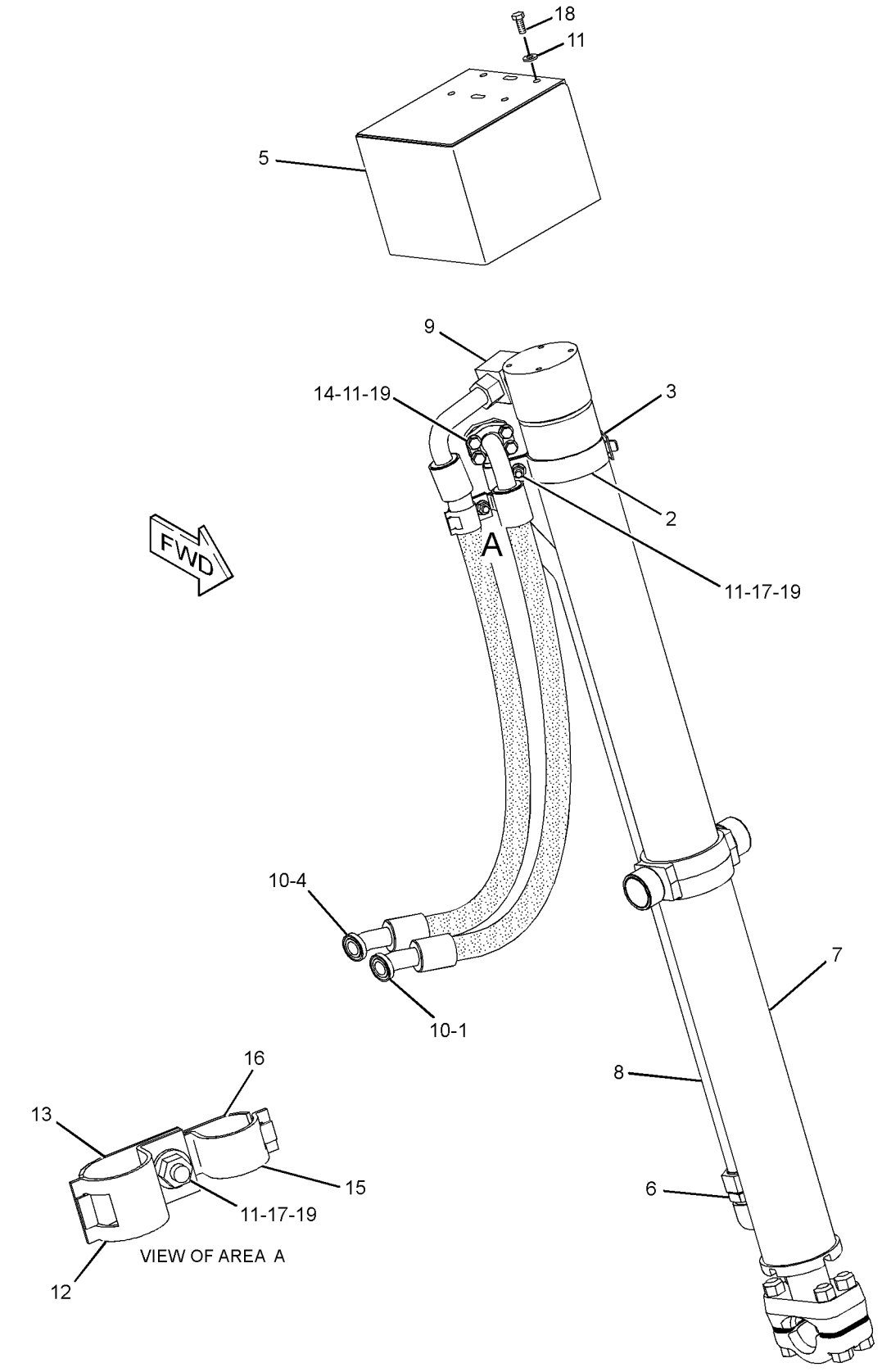

GRAPHIC #1 **<END>** g01209139

HYDRAULIC SYSTEM

227-0844 CYLINDER GP-BULLDOZER LIFT

S/N: C4C1-UP; D6C1-UP; SMC1-UP; C4R1-UP; GCT1-UP
102-MM (4-IN) BORE X 1262-MM (50 IN) STROKE
PART OF 227-4005, 227-4006 CYLINDER & LINES GP-LIFT
AN ATTACHMENT

SMCS-5102 **i02454230**

NOTE	REF NO	GRAPHIC REF	PART NUMBER	QTY	PART NAME 1 2 3 4 5 6 (PRODUCT LEVEL)	SEE PAGE
	1	1	**3G-8742**	1	WASHER (39.3X63.5X6-MM THK)	
	2	1	**9T-3885**	1	PISTON AS	
	2A	1	**8C-9160**	1	SEAL AS	
R	3	1	**114-4304**	1	ROD AS	
	4	1	**172-9981**	1	HEAD	
	5	1	**230-4876**	1	CYLINDER AS	
	5A	1	**4J-6374**	2	BEARING-SLEEVE	
	5B	1	**9T-8958**	1	TRUNNION	
	6	1	**167-2201**	1	SEAL AS-BUFFER	
	7	1	**167-2312**	1	SEAL-U-CUP	
	8	1	**175-7900**	1	SEAL-O-RING	
	9	1	**1F-6762**	1	BOLT (1-1/2-12X4.5-IN)	
	10	1	**1M-1571**	1	RING-WEAR	
	11	1	**225-3281**	1	SEAL-WIPER	
	12	1	**2K-6830**	1	RING-BACKUP	
	13	1	**4J-0121**	1	CAP AS-BEARING	
M	14	1	**6V-7742**	4	NUT-FULL (M20X2.5-THD)	
B	15	1	**8E-9212**	26	SHIM (0.8-MM THK)	
M	16	1	**8T-0362**	4	BOLT (M20X2.5X110-MM)	
	17	1	**8T-0785**	1	RING-WEAR	

B-USE AS REQUIRED
M-METRIC PART
R-REMFG PART MAY BE AVAILABLE

227-0844 CYLINDER GP-BULLDOZER LIFT *(contd.)* **i02454230**

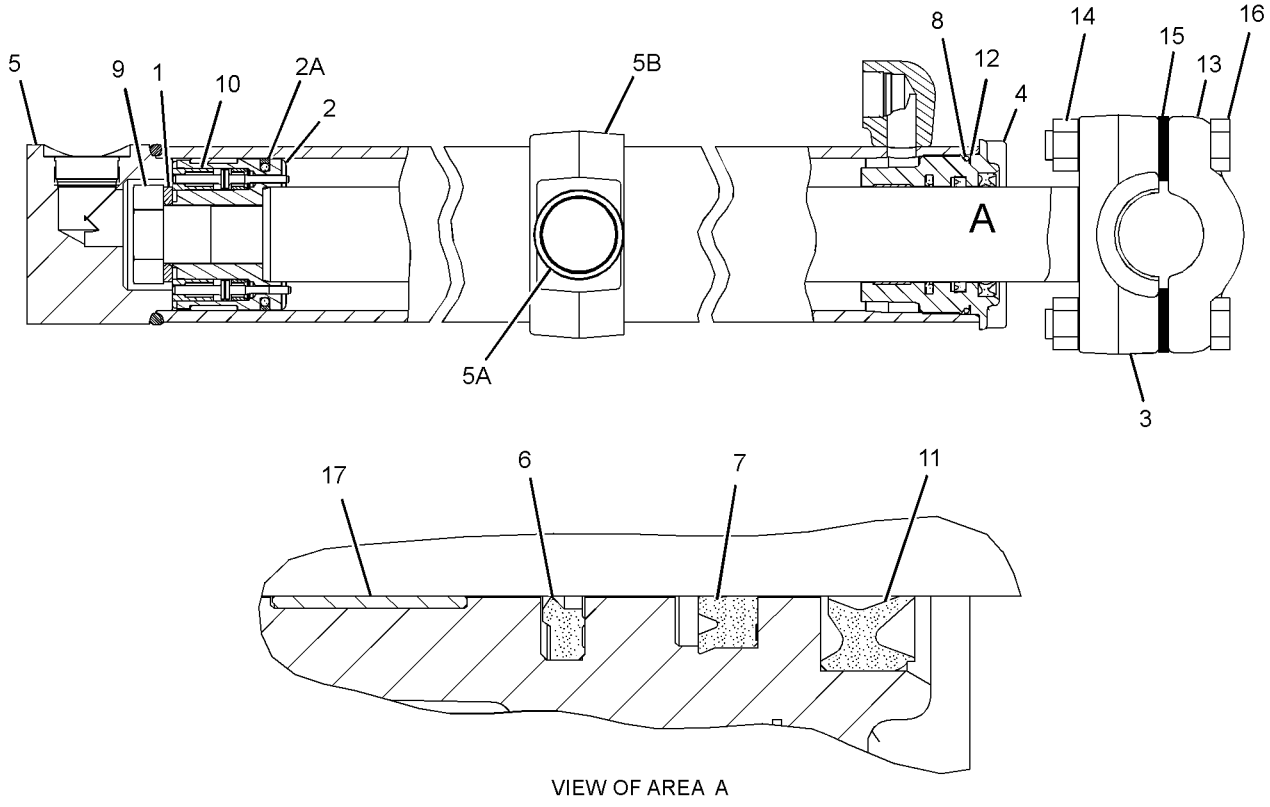

VIEW OF AREA A

GRAPHIC #1 **<END>** g01227064

HYDRAULIC SYSTEM

227-0842 CYLINDER GP-RIPPER LIFT

S/N: D6D1-UP
127-MM (5-IN) BORE X 362-MM (14.3-IN) STROKE
PART OF 224-4449 RIPPER AR
AN ATTACHMENT

SMCS-5352 **i02758042**

NOTE	REF NO	GRAPHIC REF	PART NUMBER	QTY	PART NAME 1 2 3 4 5 6 (PRODUCT LEVEL)	SEE PAGE
	1	1	**230-4873**	1	CYLINDER AS	
	1A	1	**4K-3128**	2	BEARING-SLEEVE	
	2	1	**2J-0564**	1	LOCKNUT (2-12-THD)	
	3	1	**3G-1753**	1	PISTON	
	4	1	**4J-3420**	1	RING-WEAR	
	5	1	**9X-7264**	1	SEAL AS	
	6	1	**3G-1757**	1	WASHER (50.95X82X12-MM THK)	
	7	1	**2K-4096**	1	RING-BACKUP	
	8	1	**5F-3144**	1	SEAL-O-RING	
	9	1	**230-4872**	1	HEAD	
	10	1	**9T-2714**	1	ROD AS	
	10A	1	**2K-4507**	1	BEARING-SLEEVE	
	11	1	**8T-5668**	1	RING-WEAR	
	12	1	**167-2201**	1	SEAL AS-BUFFER	
	13	1	**167-2312**	1	SEAL-U-CUP	
	14	1	**225-3281**	1	SEAL-WIPER	
	15	1	**6V-8237**	4	WASHER (26X44X4-MM THK)	
M	16	1	**173-9779**	4	BOLT (M24X3X80-MM)	
	17	1	**1P-4576**	4	FLANGE-HALF	
M	18	1	**8T-4186**	8	BOLT (M10X1.5X40-MM)	
	19	1	**8T-4121**	8	WASHER-HARD (11X21X2.5-MM THK)	

M-METRIC PART

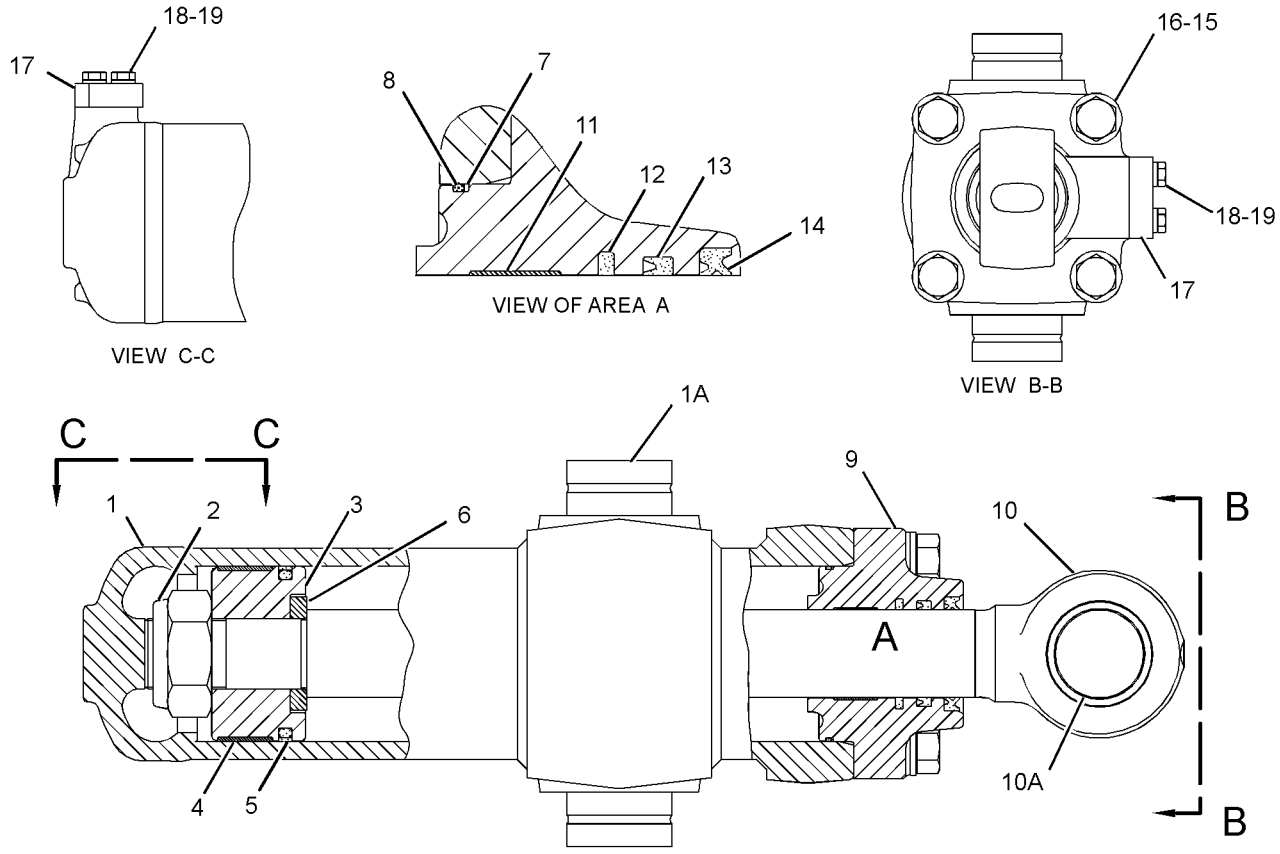

GRAPHIC #1 **<END>** g01224913

HYDRAULIC SYSTEM

227-0841 CYLINDER GP-TILT—ANGLING BULLDOZER

S/N: C4C1-UP; C4K1-UP; C4R1-UP; C4T1-UP
152-MM (6-IN) BORE X 105-MM (4-IN) STROKE
PART OF 251-9814 BRACE GP-BULLDOZER
AN ATTACHMENT

SMCS-5104 **i02454622**

NOTE	REF NO	GRAPHIC REF	PART NUMBER	QTY	PART NAME 1 2 3 4 5 6 (PRODUCT LEVEL)	SEE PAGE
	1	1	**1J-0708**	1	RING-WEAR	
	2	1	**5J-4989**	1	SEAL AS	
		1	**5J-4418**	1	SEAL	
R	3	1	**9T-6093**	1	ROD-PISTON	
	4	1	**118-1170**	1	PISTON AS	
		1	**1J-8569**	2	INSERT-PISTON	
	5	1	**132-1249**	2	WASHER (44X84X6.35-MM THK)	
	6	1	**230-7887**	1	HEAD	
		1	**225-3281**	1	SEAL-WIPER	
	7	1	**230-7892**	1	CYLINDER AS	
		1	**2J-8489**	1	BEARING	
	8	1	**167-2201**	1	SEAL AS-BUFFER	
	9	1	**167-2312**	1	SEAL-U-CUP	
M	10	1	**173-9779**	4	BOLT (M24X3X80-MM)	
	11	1	**225-3281**	1	SEAL-WIPER	
	12	1	**2K-3258**	1	RING-BACKUP	
	13	1	**5H-3252**	1	SEAL-O-RING	
	14	1	**5J-5731**	1	LOCKNUT (1-3/4-12-THD)	
	15	1	**6V-8237**	4	WASHER (26X44X4-MM THK)	
	16	1	**8T-5668**	1	RING-WEAR	

M-METRIC PART
R-REMFG PART MAY BE AVAILABLE

227-0841 CYLINDER GP-TILT *(contd.)* **i02454622**

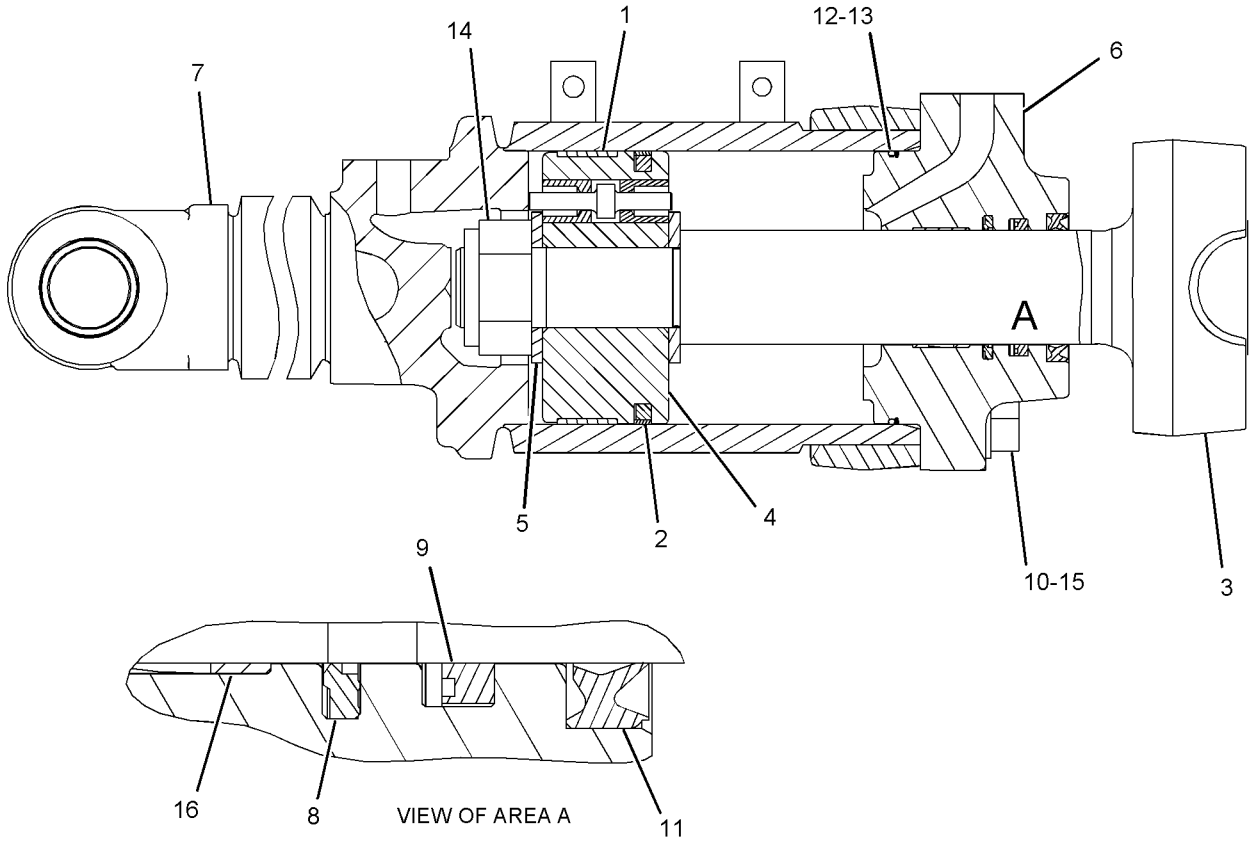

GRAPHIC #1 **<END>** g01207944

233-9134 CYLINDER GP-TILT—SEMI-UNIVERSAL BULLDOZER

S/N: D6C1-UP; SMC1-UP; C4L1-UP; C4W1-UP
165-MM (6.5-IN) BORE X 128-MM (5-IN) STROKE
PART OF 230-5554, 252-5853 PUSH ARM GP
AN ATTACHMENT

SMCS-5104 **i02454961**

NOTE	REF NO	GRAPHIC REF	PART NUMBER	QTY	PART NAME 1 2 3 4 5 6 (PRODUCT LEVEL)	SEE PAGE
R	1	1	**1U-4069**	1	ROD AS	
	2	1	**4T-0259**	1	PISTON	
B	3	1	**8E-5703**	24	SHIM (0.8-MM THK)	
	4	1	**8J-2880**	1	CAP-BEARING	
	5	1	**225-3284**	1	SEAL-WIPER	
	6	1	**233-9135**	1	CYLINDER AS	
	6A	1	**2J-8489**	1	BEARING	
	7	1	**233-9138**	1	HEAD-CYLINDER	
	8	1	**167-2208**	1	SEAL AS-BUFFER	
	9	1	**167-2319**	1	SEAL-U-CUP	
	10	1	**1J-2921**	1	BOLT (1-1/2-12X3.75-IN)	
	11	1	**3J-9703**	1	RING-WEAR	
	12	1	**3S-6162**	1	WASHER-HARD (40.5X67X6-MM THK)	
	13	1	**5J-4991**	1	SEAL AS	
M	14	1	**6V-7742**	4	NUT-FULL (M20X2.5-THD)	
M	15	1	**6V-8133**	4	BOLT (M24X3X80-MM)	
	16	1	**6V-8237**	4	WASHER (26X44X4-MM THK)	
M	17	1	**6V-9167**	4	BOLT (M20X2.5X140-MM)	
	18	1	**7J-8955**	1	RING-BACKUP	
	19	1	**7J-8956**	1	SEAL-O-RING	
	20	1	**8T-8379**	1	SEAL-HEAD	
	21	1	**9T-0094**	1	RING-WEAR	

B-USE AS REQUIRED
M-METRIC PART
R-REMFG PART MAY BE AVAILABLE

233-9134 CYLINDER GP-TILT *(contd.)* **i02454961**

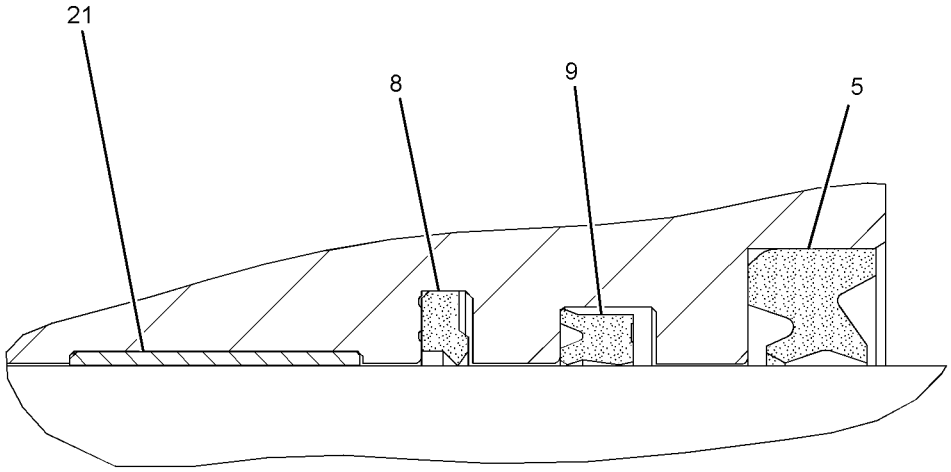

VIEW OF AREA A

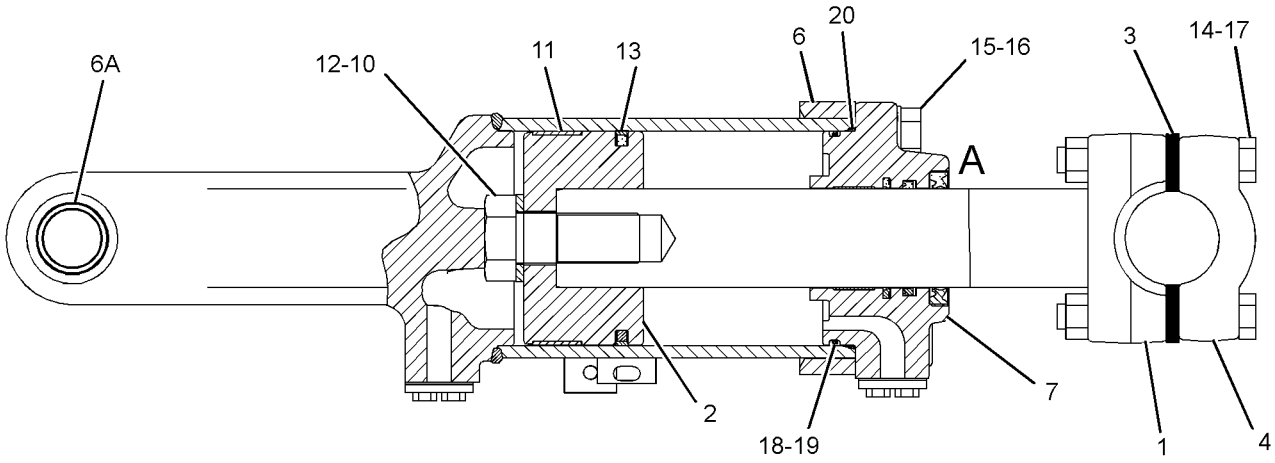

GRAPHIC #1 **<END>** g01209219

HYDRAULIC SYSTEM

269-2050 HYDRAULIC AR-2 VALVE

S/N: SMC1-UP; GCT1-UP

PART OF 269-2037, 269-2038 GENERAL AR

SMCS-5051 **i02801017**

NOTE	PART NUMBER	QTY	PART NAME 1 2 3 4 5 6 (PRODUCT LEVEL)	SEE PAGE
Y	*229-5421*	1	ADAPTER GP-MOTOR	466
Y	*222-1150*	1	CONTROL GP-PILOT OPERATED HYD (BULLDOZER)	653
Y	*269-2076*	1	LINES GP-LIFT CYLINDER	483
Y	*269-2078*	1	LINES GP-PILOT	485
Y	*269-2074*	1	LINES GP-PUMP (IMPLEMENT, STEERING)	495
Y	*269-2075*	1	LINES GP-STEERING	438
Y	*269-2077*	1	LINES GP-TILT CYLINDER	507
Y	**269-4749**	1	MOTOR GP-PISTON (IMPLEMENT, STEERING PUMP)	512
Y	*269-2090*	1	PUMP & MTG GP-IMPLEMENT	515
Y	*269-2091*	1	PUMP & MTG GP-STEERING	446
Y	*277-0700*	1	TANK & MTG GP-HYDRAULIC	526
Y	*269-2092*	1	VALVE & MTG GP-IMPLEMENT CONT	530
Y	*222-1160*	1	VALVE GP-QUICK-DROP	564

Y-SEPARATE ILLUSTRATION

<END>

269-2076 LINES GP-LIFT CYLINDER

S/N: SMC1-UP; GCT1-UP

PART OF 269-2050 HYDRAULIC AR-2 VALVE

SMCS-5057, 5102 **i02752242**

NOTE	REF NO	GRAPHIC REF	PART NUMBER	QTY	PART NAME 1 2 3 4 5 6 (PRODUCT LEVEL)	SEE PAGE
	1	1	**226-7298**	1	TUBE AS	
	2	1	**226-7299**	1	TUBE AS	
I	3	1	**270-3471**	1	HOSE AS	
I	4	1	**270-3472**	1	HOSE AS	
M	5	1	**116-3715**	2	STUD-TAPERLOCK (M10X1.5X85-MM)	
	6	1	**1P-3704**	2	SEAL-RECTANGULAR	
	7	1	**4J-0520**	4	SEAL-O-RING	
	8	1	**7G-5984**	4	CLIP (TAB)	
	9	1	**7G-5985**	4	CLIP (SLOT)	
	10	1	**7G-5986**	4	GROMMET	
	11	1	**7X-7729**	10	WASHER (11X25X3-MM THK)	
	12	1	**8C-3206**	4	FLANGE-HALF	
	13	1	**8S-0023**	2	CLIP (SLOT)	
	14	1	**8S-0024**	2	CLIP (TAB)	
	15	1	**8T-4121**	16	WASHER-HARD (11X21X2.5-MM THK)	
M	16	1	**8T-4133**	8	NUT (M10X1.5-THD)	
M	17	1	**8T-4136**	2	BOLT (M10X1.5X25-MM)	
M	18	1	**8T-4185**	8	BOLT (M10X1.5X50-MM)	
M	19	1	**8T-4196**	8	BOLT (M10X1.5X35-MM)	

I-REFER TO HYDRAULIC INFORMATION SYSTEM
M-METRIC PART

269-2076 **LINES GP-LIFT CYLINDER** *(contd.)* **i02752242**

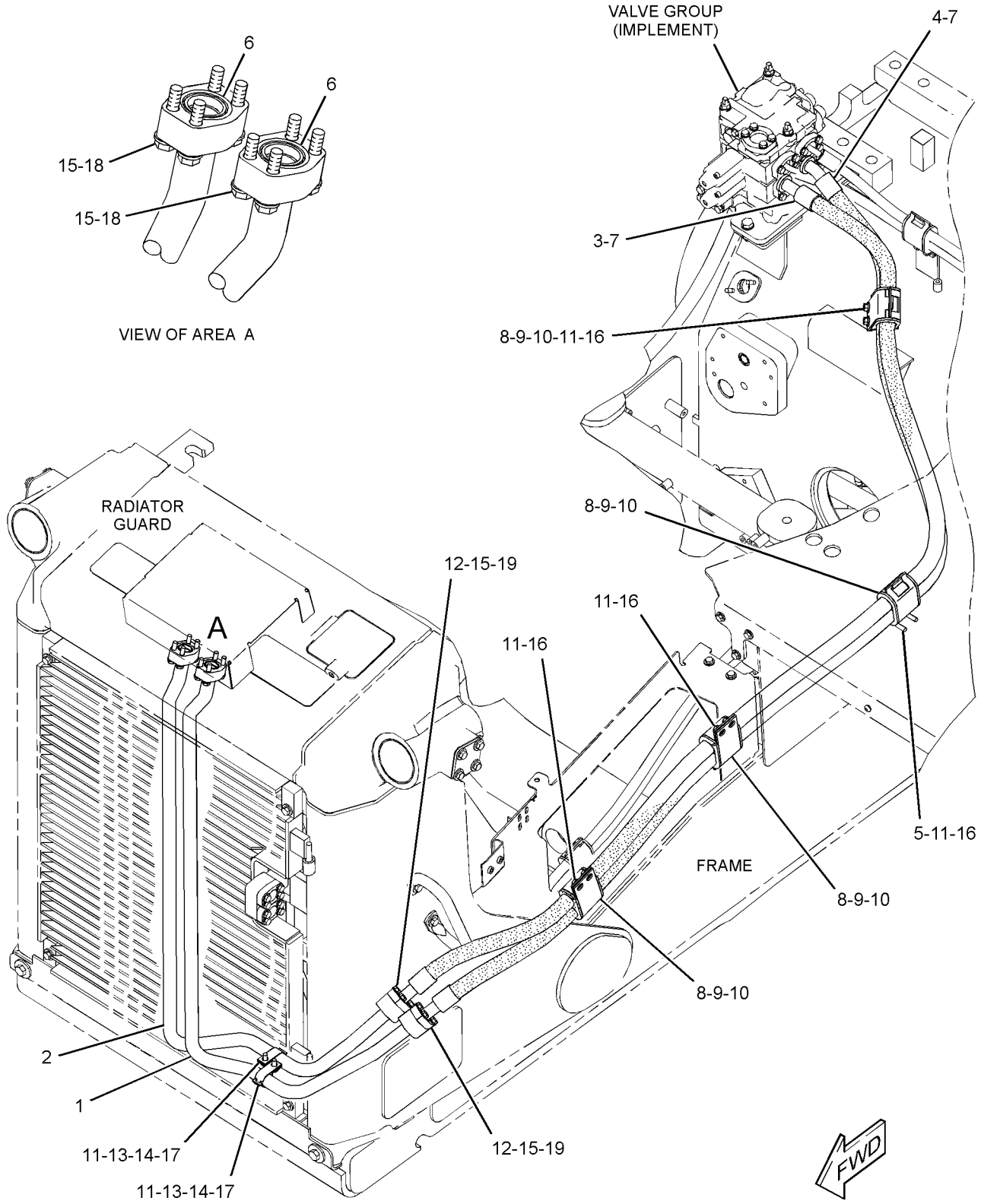

GRAPHIC #1 **<END>** g01354700

HYDRAULIC SYSTEM

269-2078 LINES GP-PILOT—BULLDOZER

S/N: SMC1-UP; GCT1-UP

PART OF 269-2050 HYDRAULIC AR-2 VALVE

SMCS-5057 **i02752260**

NOTE	REF NO	GRAPHIC REF	PART NUMBER	QTY	PART NAME 1 2 3 4 5 6 (PRODUCT LEVEL)	SEE PAGE
	1	2	**5I-4376**	2	FITTING	
	2	2	**6V-0852**	2	CAP-DUST	
	3	2	**8C-3451**	1	CAP-DUST	
	4	2	**8Y-7452**	1	TEE-O-RING	
	5	2	**126-0814**	1	FITTING AS (SWIVEL)	
		2	**6V-0852**	1	CAP-DUST	
Y	6	2	*200-0750*	1	ACCUMULATOR GP-PILOT OIL (CHARGED)	465
	7	2	**226-3493**	1	TUBE AS	
I	8	1	**226-3496**	1	HOSE AS	
I	9	1	**226-3497**	1	HOSE AS	
I	10	2	**226-3498**	1	HOSE AS	
	11	2	**226-3505**	1	HOSE AS	
Y	12	2	*226-4751*	1	MANIFOLD GP-CONTROL (IMPLEMENT PILOT PRESSURE)	509
	13	1	**226-9668**	1	HARNESS AS-SENSOR	
		1	**102-8801**	1	KIT-RECEPTACLE (12-PIN)	
					(INCLUDES RECEPTACLE AS & WEDGE)	
		1	**155-2270**	3	KIT-CONNECTING PLUG (2-PIN)	
					(EACH INCLUDES PLUG AS, WEDGE, & INTERFACE SEAL)	
	14	2	*241-6215*	1	ELBOW AS	
		2	**6V-8076**	1	ELBOW	
		2	**3J-1907**	1	SEAL-O-RING	
	15	1	**272-0248**	1	HOSE AS	
	16	2	**272-0249**	1	HOSE AS	
	17	1	**272-0250**	1	HOSE AS	
	18	2	**272-0251**	1	HOSE AS	
I	19	1	**272-0254**	1	HOSE AS	
I	20	1	**272-0256**	1	HOSE AS	
	21	2	*148-8305*	1	ADAPTER AS	
		2	**5P-9617**	1	ADAPTER	
		2	**3J-1907**	1	SEAL-O-RING	
	22	2	*148-8316*	1	CONNECTOR AS	
		2	**6V-8647**	1	CONNECTOR	
		2	**3J-7354**	1	SEAL-O-RING	
		2	**4J-5477**	1	SEAL-O-RING	
	23	2	*148-8318*	3	CONNECTOR AS	
					(EACH INCLUDES)	
		2	**6V-8634**	1	CONNECTOR	
		2	**3K-0360**	1	SEAL-O-RING	
		2	**6V-8397**	1	SEAL-O-RING	
	24	2	*148-8325*	3	CONNECTOR AS	
					(EACH INCLUDES)	
		2	**6V-8641**	1	CONNECTOR	
		2	**3J-1907**	1	SEAL-O-RING	
		2	**4J-5477**	1	SEAL-O-RING	
	25	2	*148-8326*	1	CONNECTOR AS	
		2	**6V-9872**	1	CONNECTOR	
		2	**3J-7354**	1	SEAL-O-RING	
		2	**6V-8397**	1	SEAL-O-RING	
	26	1	*148-8336*	2	CONNECTOR AS	
					(EACH INCLUDES)	
		1	**6V-8636**	1	CONNECTOR	
		1	**3J-1907**	1	SEAL-O-RING	
		1	**6V-8397**	1	SEAL-O-RING	
	27	2	*148-8351*	1	ELBOW AS	
		2	**6V-9849**	1	ELBOW	

269-2078 **LINES GP-PILOT** *(contd.)* **i02752260**

NOTE	REF NO	GRAPHIC REF	PART NUMBER	QTY	PART NAME 1 2 3 4 5 6 (PRODUCT LEVEL)	SEE PAGE
		2	**4J-5477**	1	SEAL-O-RING	
	28	2	**148-8367**	2	ELBOW AS	
					(EACH INCLUDES)	
		2	**6V-9850**	1	ELBOW	
		2	**6V-8397**	1	SEAL-O-RING	
	29	1,2	*148-8368*	4	ELBOW AS	
					(EACH INCLUDES)	
		1,2	**6V-8627**	1	ELBOW	
		1,2	**3J-1907**	1	SEAL-O-RING	
		1,2	**4J-5477**	1	SEAL-O-RING	
	30	2	*148-8369*	1	ELBOW AS	
		2	**6V-8628**	1	ELBOW	
		2	**3J-7354**	1	SEAL-O-RING	
		2	**4J-5477**	1	SEAL-O-RING	
	31	2	*148-8378*	3	ELBOW AS	
					(EACH INCLUDES)	
		2	**6V-8724**	1	ELBOW	
		2	**3J-1907**	1	SEAL-O-RING	
		2	**6V-8397**	1	SEAL-O-RING	
	32	2	*148-8434*	1	TEE AS	
		2	**6V-9843**	1	TEE-SWIVEL	
		2	**6V-8397**	2	SEAL-O-RING	
	33	2	*148-8435*	1	TEE AS	
		2	**6V-8781**	1	TEE-FACE SEAL	
		2	**3J-1907**	1	SEAL-O-RING	
		2	**6V-8397**	2	SEAL-O-RING	
	34	2	*153-6246*	1	TEE AS	
		2	**7X-0820**	1	TEE-UNION	
		2	**6V-8397**	3	SEAL-O-RING	
	35	2	*164-5567*	2	FITTING AS (QUICK DISCONNECT, MALE)	
					(EACH INCLUDES)	
		2	**6V-3965**	1	FITTING-COUPLER	
		2	**3J-1907**	1	SEAL-O-RING	
	36	2	*164-5590*	1	VALVE AS-FLUID SAMPLING	
		2	**8C-3446**	1	VALVE-FLUID SAMPLING	
		2	**3J-7354**	1	SEAL-O-RING	
	37	2	**3D-2824**	1	SEAL-O-RING	
	38	2	**3J-7354**	1	SEAL-O-RING	
	39	1	**4J-0520**	2	SEAL-O-RING	
	40	2	**4J-5477**	1	SEAL-O-RING	
	41	1	**5G-3676**	3	GROMMET	
	42	1	**5P-1075**	3	WASHER-HARD (10.2X22.5X3-MM THK)	
	43	2	**6V-9168**	1	NUT (11/16-16-THD)	
	44	2	**6V-9829**	2	CAP AS	
M	45	2	**7X-2535**	2	BOLT (M6X1X60-MM)	
	46	1	**8T-1889**	3	CLIP (SLOT)	
	47	1	**8T-1890**	3	CLIP (TAB)	
M	48	1	**8T-4136**	3	BOLT (M10X1.5X25-MM)	
	49	2	**9X-8256**	2	WASHER (6.6X12X2-MM THK)	
	50	2	**9X-8268**	2	WASHER (17.5X30X3.5-MM THK)	

I-REFER TO HYDRAULIC INFORMATION SYSTEM
M-METRIC PART
Y-SEPARATE ILLUSTRATION

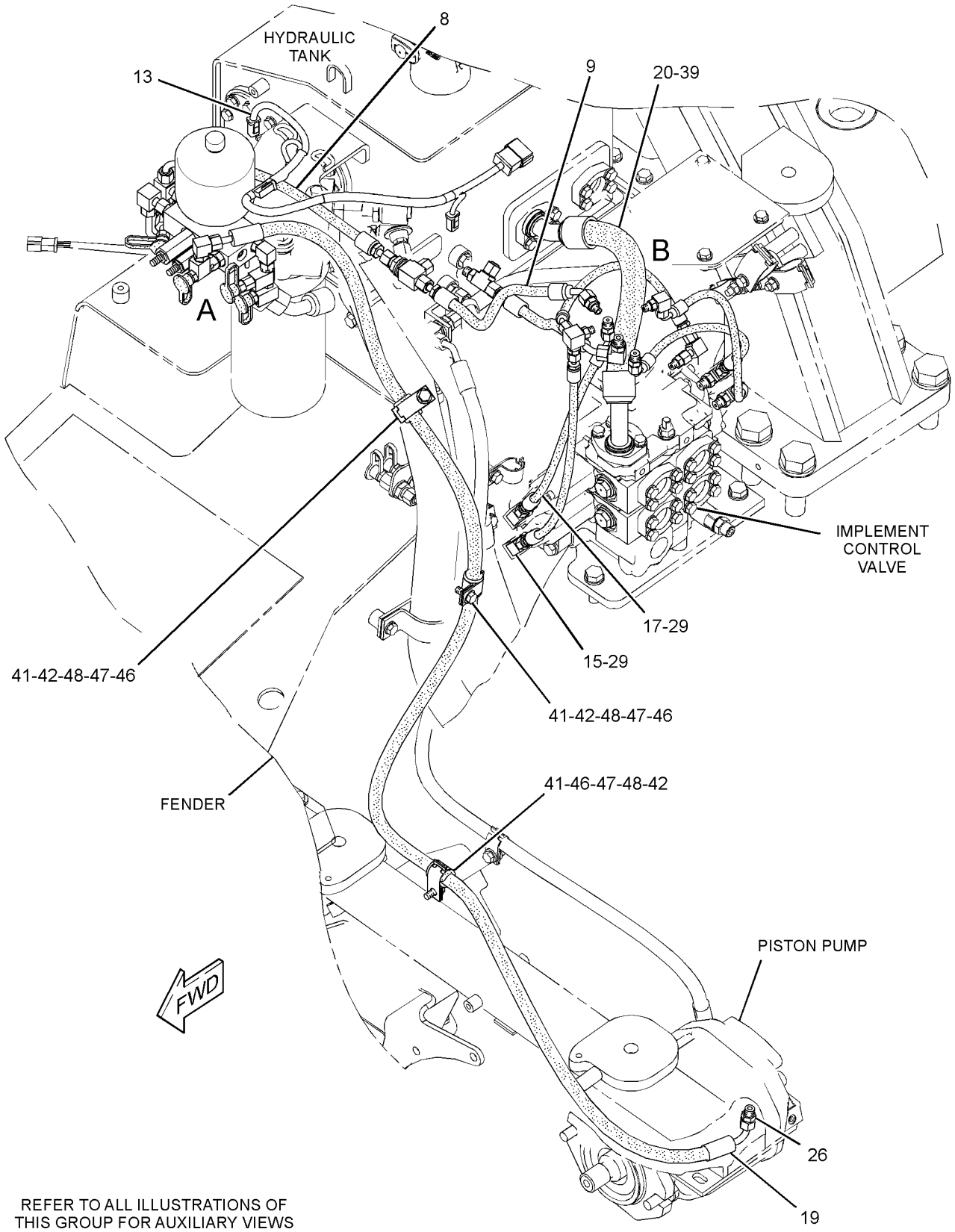

GRAPHIC #1 g01356138

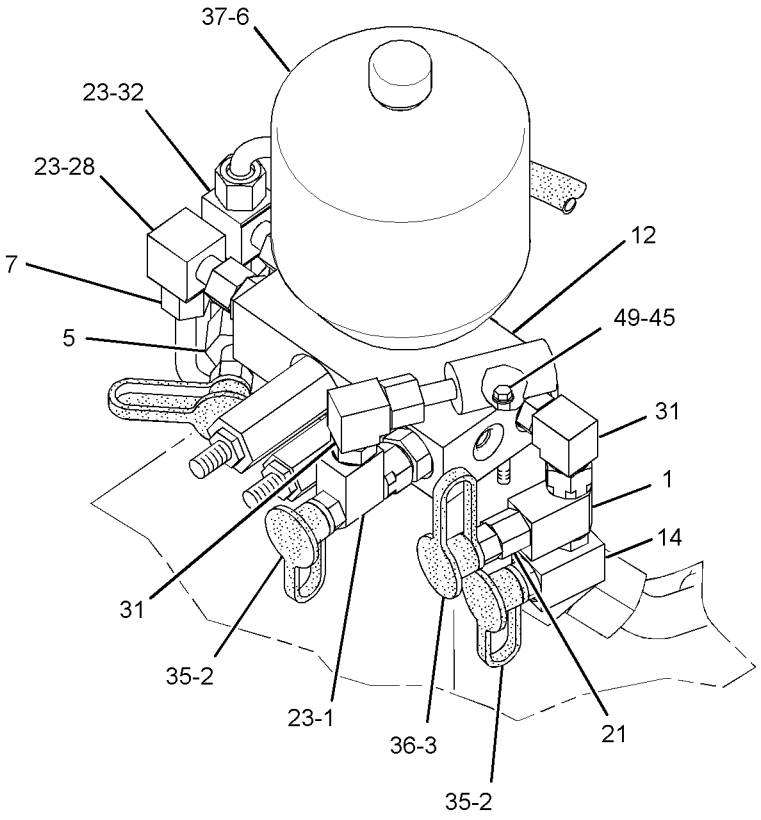

VIEW OF AREA A

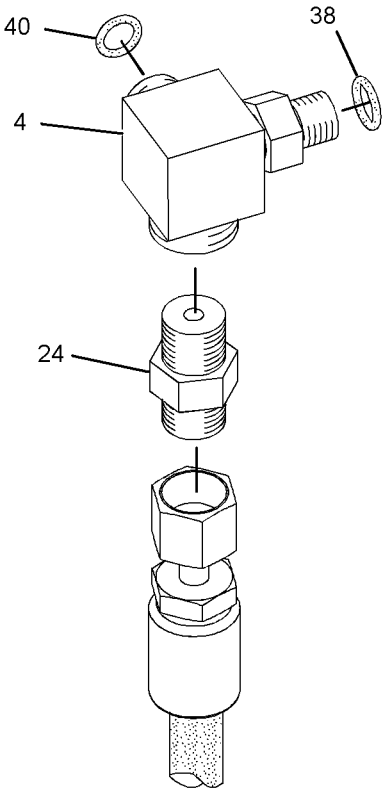

VIEW OF AREA C
(EXPLODED)

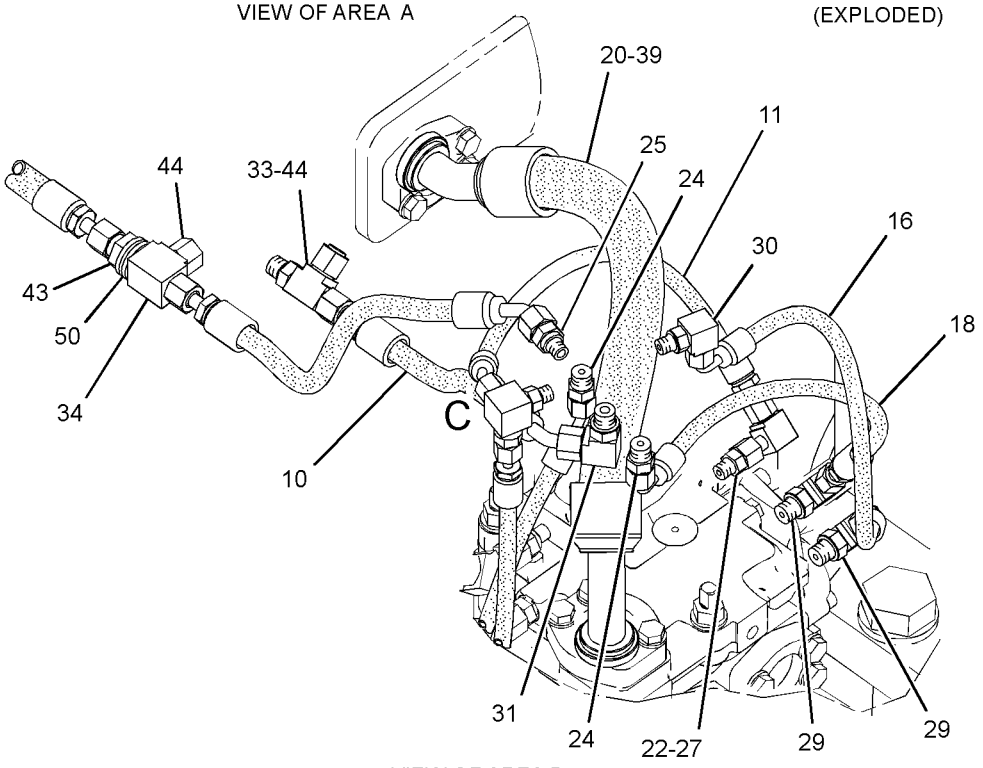

VIEW OF AREA B

GRAPHIC #2 **<END>** g01356141

HYDRAULIC SYSTEM

269-2080 LINES GP-PILOT–RIPPER

S/N: SMC1-UP; GCT1-UP

PART OF 280-1476 CONTROL AR-HYDRAULIC IMPLEMENT

AN ATTACHMENT

SMCS-5057 **i02760155**

NOTE	REF NO	GRAPHIC REF	PART NUMBER	QTY	PART NAME 1 2 3 4 5 6 (PRODUCT LEVEL)	SEE PAGE
I	1	1	**272-0255**	1	HOSE AS	
	2	1	**272-6240**	1	HOSE AS	
	3	1	**272-6241**	1	HOSE AS	
	4	1	*148-8325*	1	CONNECTOR AS	
		1	**6V-8641**	2	CONNECTOR	
		1	**3J-1907**	2	SEAL-O-RING	
		1	**4J-5477**	2	SEAL-O-RING	
	5	1	*148-8326*	1	CONNECTOR AS	
		1	**6V-9872**	1	CONNECTOR	
		1	**3J-7354**	1	SEAL-O-RING	
		1	**6V-8397**	1	SEAL-O-RING	
	6	1	*148-8368*	2	ELBOW AS	
					(EACH INCLUDES)	
		1	**6V-8627**	1	ELBOW	
		1	**3J-1907**	1	SEAL-O-RING	
		1	**4J-5477**	1	SEAL-O-RING	
	7	1	*148-8369*	1	ELBOW AS	
		1	**6V-8628**	1	ELBOW	
		1	**3J-7354**	1	SEAL-O-RING	
		1	**4J-5477**	1	SEAL-O-RING	
	8	1	*148-8378*	1	ELBOW AS	
		1	**6V-8724**	1	ELBOW	
		1	**3J-1907**	1	SEAL-O-RING	
		1	**6V-8397**	1	SEAL-O-RING	
I	9	1	**226-3510**	1	HOSE AS	
I	10	1	**226-3511**	1	HOSE AS	

I-REFER TO HYDRAULIC INFORMATION SYSTEM

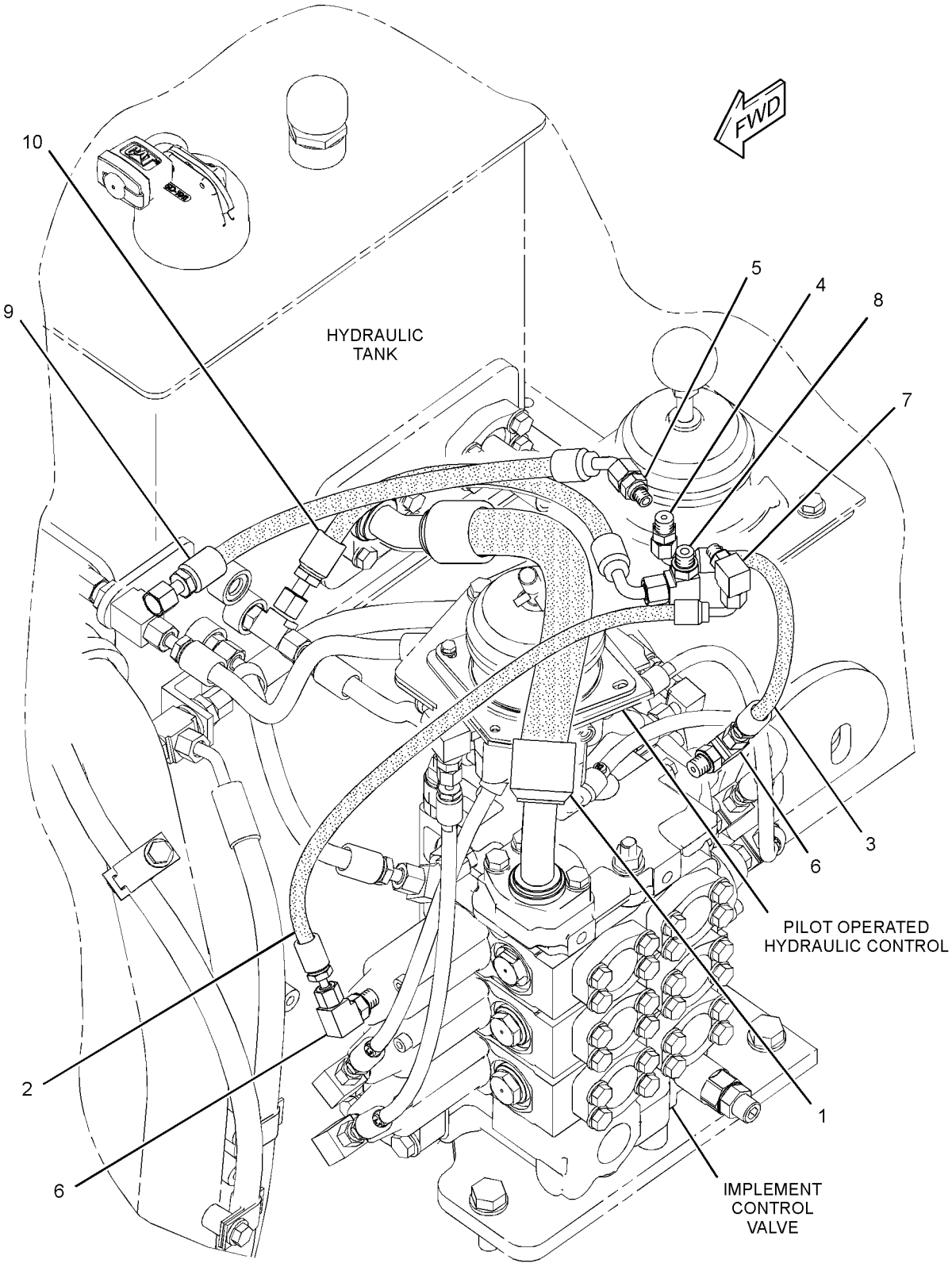

GRAPHIC #1 **<END>** g01357712

HYDRAULIC SYSTEM

269-2082 LINES GP-PILOT—WINCH

S/N: SMC1-UP; GCT1-UP
PART OF 280-1478 CONTROL AR-HYDRAULIC IMPLEMENT
AN ATTACHMENT

SMCS-5057 **i02760300**

NOTE	REF NO	GRAPHIC REF	PART NUMBER	QTY	PART NAME 1 2 3 4 5 6 (PRODUCT LEVEL)	SEE PAGE
	1	1	**3E-5239**	1	RELAY AS (24-VOLT) (WINCH)	
	2	1	**126-0810**	1	LAMP-LED (24-VOLT)	
I	3	1	**272-0255**	1	HOSE AS	
	4	1	**272-7864**	1	HOSE AS	
	5	1	**272-7865**	1	HOSE AS	
	6	1	**293-9927**	1	HOSE AS	
	7	1	**293-9928**	1	HOSE AS	
	8	1	**304-2729**	1	HARNESS AS-VALVE	
		1	**102-8802**	2	KIT-RECEPTACLE (2-PIN)	
		1	**102-8804**	2	KIT-RECEPTACLE (4-PIN)	
					(EACH INCLUDES RECEPTACLE AS & WEDGE)	
		1	**155-2255**	1	KIT-CONNECTING PLUG (12-PIN)	
		1	**155-2257**	1	KIT-CONNECTING PLUG (12-PIN)	
		1	**155-2270**	4	KIT-CONNECTING PLUG (2-PIN)	
		1	**155-2271**	1	KIT-CONNECTING PLUG (4-PIN)	
					(EACH INCLUDES PLUG AS, WEDGE, & INTERFACE SEAL)	
	9	1	*148-8326*	1	CONNECTOR AS	
		1	**6V-9872**	1	CONNECTOR	
		1	**3J-7354**	1	SEAL-O-RING	
		1	**6V-8397**	1	SEAL-O-RING	
	10	1	*148-8336*	2	CONNECTOR AS	
					(EACH INCLUDES)	
		1	**6V-8636**	1	CONNECTOR	
		1	**3J-1907**	1	SEAL-O-RING	
		1	**6V-8397**	1	SEAL-O-RING	
	11	1	**148-8367**	1	ELBOW AS	
		1	**6V-9850**	1	ELBOW	
		1	**6V-8397**	1	SEAL-O-RING	
	12	1	*148-8368*	2	ELBOW AS	
					(EACH INCLUDES)	
		1	**6V-8627**	1	ELBOW	
		1	**3J-1907**	1	SEAL-O-RING	
		1	**4J-5477**	1	SEAL-O-RING	
	13	1	*148-8369*	2	ELBOW AS	
					(EACH INCLUDES)	
		1	**6V-8628**	1	ELBOW	
		1	**3J-7354**	1	SEAL-O-RING	
		1	**4J-5477**	1	SEAL-O-RING	
	14	1	*148-8378*	1	ELBOW AS	
		1	**6V-8724**	1	ELBOW	
		1	**3J-1907**	1	SEAL-O-RING	
		1	**6V-8397**	1	SEAL-O-RING	
I	15	1	**226-3510**	1	HOSE AS	
I	16	1	**226-3511**	1	HOSE AS	
	17	1	**4D-6466**	1	CLIP	
	18	1	**4S-1936**	2	CLIP	
	19	1	**5P-1075**	1	WASHER-HARD (10.2X22.5X3-MM THK)	
M	20	1	**8T-4136**	1	BOLT (M10X1.5X25-MM)	

I-REFER TO HYDRAULIC INFORMATION SYSTEM
M-METRIC PART

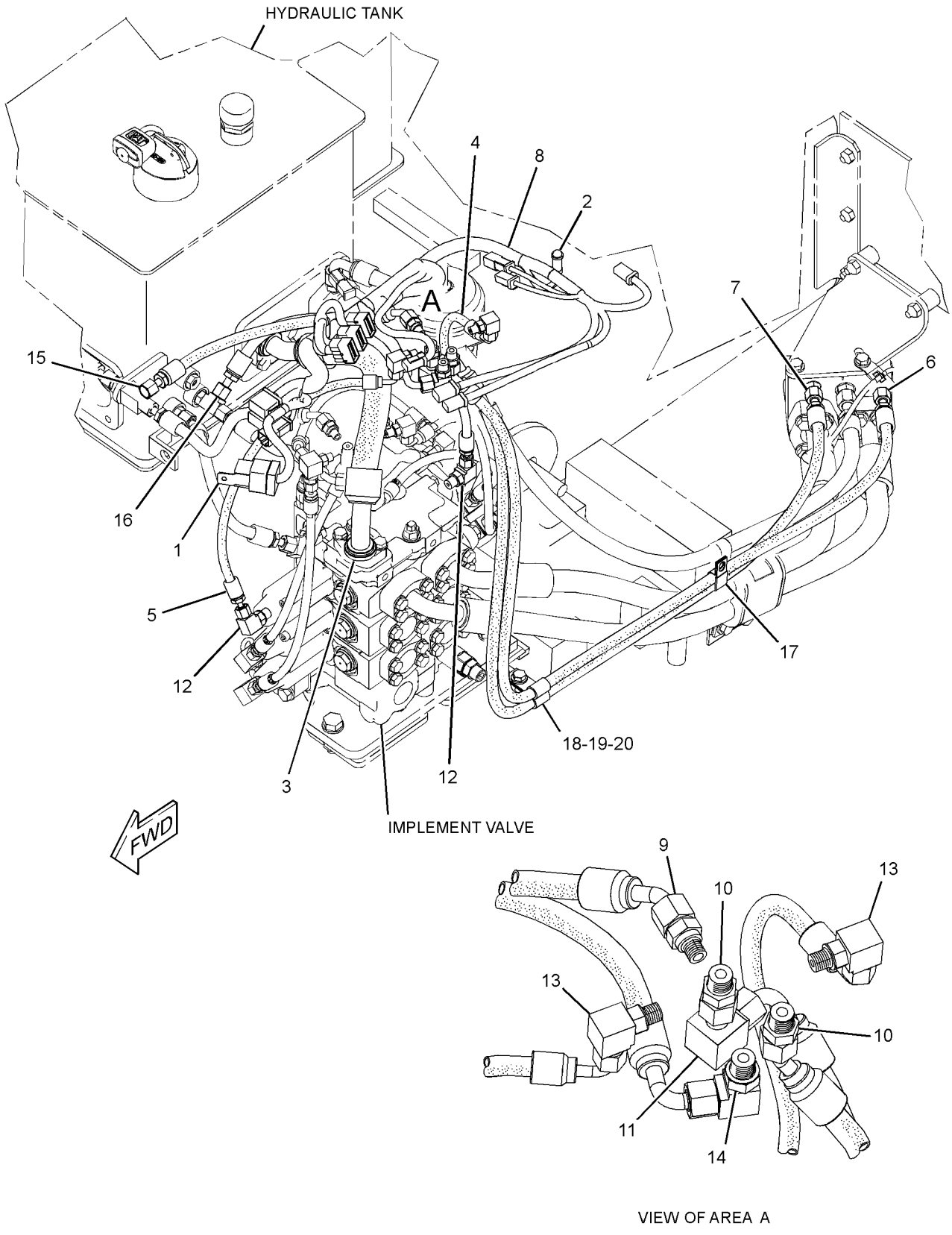

GRAPHIC #1 **<END>** g01364154

HYDRAULIC SYSTEM

269-2089 LINES GP-PILOT—GRADE CONTROL

S/N: SMC1-UP; GCT1-UP

PART OF 277-8760, 277-8761 CONTROL AR-HYDRAULIC IMPLEMENT

AN ATTACHMENT

SMCS-5057 **i02759278**

NOTE	REF NO	GRAPHIC REF	PART NUMBER	QTY	PART NAME 1 2 3 4 5 6 (PRODUCT LEVEL)	SEE PAGE
I	1	1	**226-3497**	1	HOSE AS	
I	2	1	**226-3511**	1	HOSE AS	
	3	1	**233-6942**	1	VALVE	
Y	4	1	**239-5317**	1	VALVE & MTG GP-BULLDOZER (GRADE CONTROL)	527
	5	1	**264-3883**	1	TUBE AS	
	6	1	**270-3468**	1	HOSE AS	
	7	1	**272-4887**	1	TUBE AS	
	8	1	**272-4888**	1	TUBE AS	
	9	1	**272-4889**	1	TUBE AS	
	10	1	**272-4890**	1	TUBE AS	
	11	1	*148-8305*	1	ADAPTER AS	
		1	**5P-9617**	1	ADAPTER	
		1	**3J-1907**	1	SEAL-O-RING	
	12	1	*148-8326*	2	CONNECTOR AS	
					(EACH INCLUDES)	
		1	**6V-9872**	1	CONNECTOR	
		1	**3J-7354**	1	SEAL-O-RING	
		1	**6V-8397**	1	SEAL-O-RING	
	13	1	*148-8336*	1	CONNECTOR AS	
		1	**6V-8636**	1	CONNECTOR	
		1	**3J-1907**	1	SEAL-O-RING	
		1	**6V-8397**	1	SEAL-O-RING	
	14	1	*148-8361*	1	ELBOW AS	
		1	**6V-9200**	1	ELBOW	
		1	**3J-7354**	1	SEAL-O-RING	
		1	**6V-8397**	1	SEAL-O-RING	
	15	1	*148-8367*	2	ELBOW AS	
					(EACH INCLUDES)	
		1	**6V-9850**	1	ELBOW	
		1	**6V-8397**	1	SEAL-O-RING	
	16	1	*148-8378*	5	ELBOW AS	
					(EACH INCLUDES)	
		1	**6V-8724**	1	ELBOW	
		1	**3J-1907**	1	SEAL-O-RING	
		1	**6V-8397**	1	SEAL-O-RING	
	17	1	*150-4047*	1	ADAPTER AS	
		1	**8T-2353**	1	ADAPTER	
		1	**3J-7354**	1	SEAL-O-RING	
	18	1	*173-7225*	1	TEE AS	
		1	**6V-9161**	1	TEE	
		1	**3J-7354**	1	SEAL-O-RING	
		1	**6V-8397**	2	SEAL-O-RING	
	19	1	**3J-7354**	1	SEAL-O-RING	
	20	1	**6V-8397**	2	SEAL-O-RING	

I-REFER TO HYDRAULIC INFORMATION SYSTEM
Y-SEPARATE ILLUSTRATION

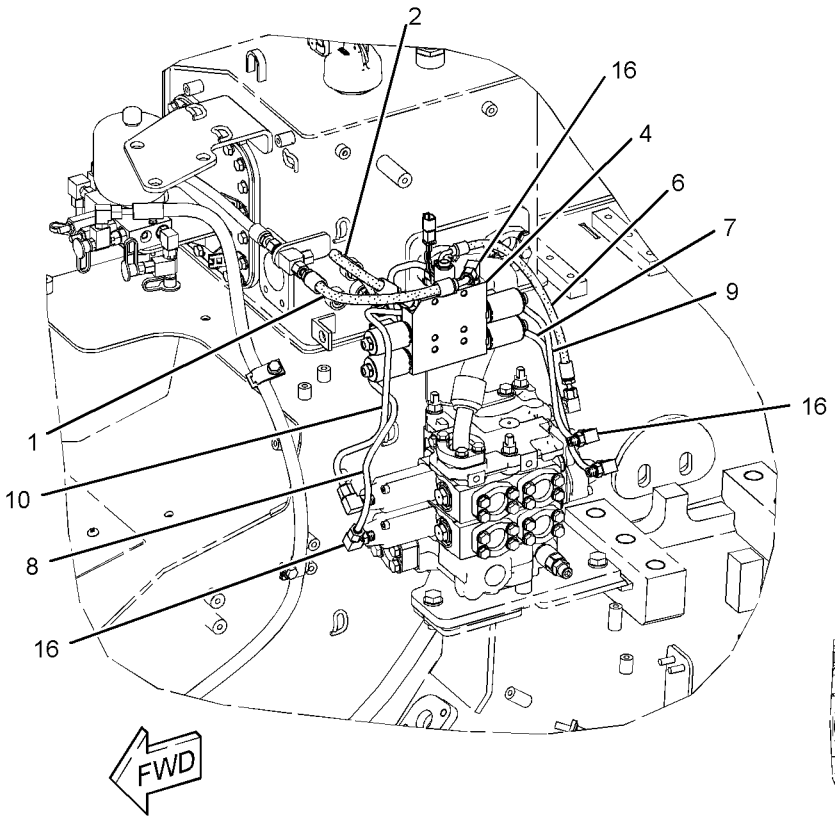

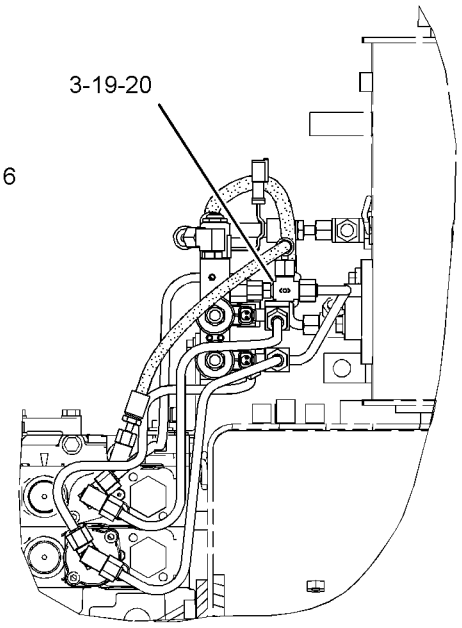

REAR VIEW

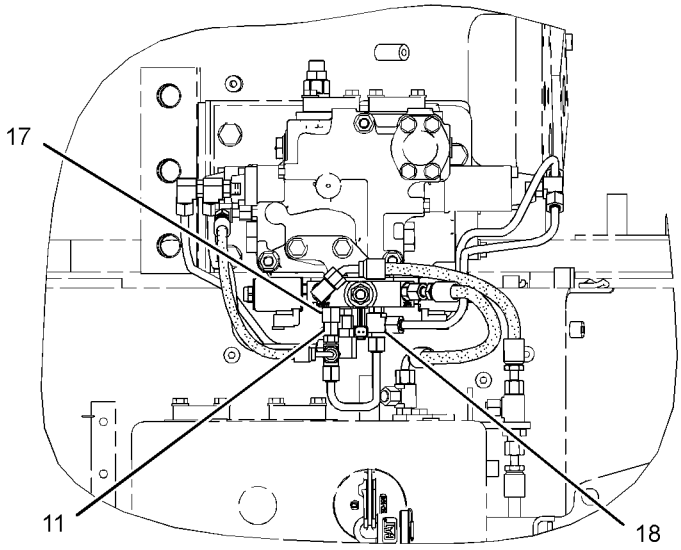

TOP VIEW FWD

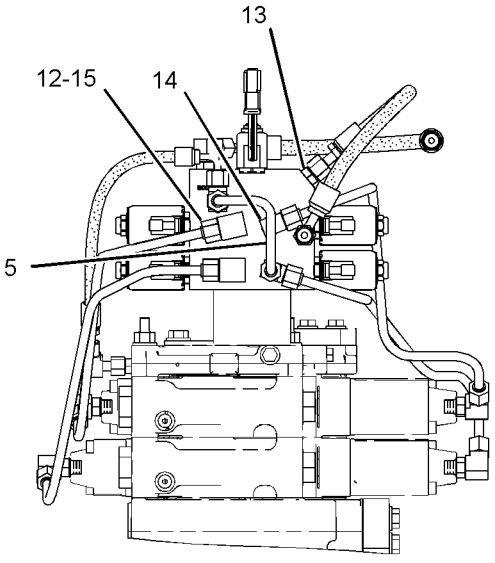

RIGHT SIDE VIEW

GRAPHIC #1 **<END>** g01361603

HYDRAULIC SYSTEM

269-2074 LINES GP-PUMP—IMPLEMENT, STEERING

S/N: SMC1-UP; GCT1-UP

PART OF 269-2050 HYDRAULIC AR-2 VALVE

SMCS-5057 **i02752225**

NOTE	REF NO	GRAPHIC REF	PART NUMBER	QTY	PART NAME 1 2 3 4 5 6 (PRODUCT LEVEL)	SEE PAGE
	1	2	**3P-6308**	1	ADAPTER	
	2	1	**8J-9990**	1	PLUG-ORIFICE	
	3	2	**124-3019**	1	BRACKET AS	
M		2	**8T-3490**	1	NUT-WELD (M10X1.5-THD)	
	4	1	**126-0814**	1	FITTING AS (SWIVEL)	
		1	**6V-0852**	1	CAP-DUST	
	5	2	**140-0864**	1	BRACKET AS	
M		2	**8T-3490**	1	NUT-WELD (M10X1.5-THD)	
	6	1	**144-0367**	4	CLAMP-HOSE	
	7	1	*145-8355*	1	CONNECTOR GP	
		1	**3E-7407**	1	TEE-SWIVEL ORIFICE	
		1	**5K-9090**	2	SEAL-O-RING	
	8	1	**226-6584**	1	PLATE AS	
	9	1	**270-3445**	1	TUBE AS	
	10	1	**270-3446**	1	TUBE AS	
I	11	1	**270-3447**	1	HOSE AS	
I	12	1	**270-3448**	1	HOSE AS	
I	13	1	**270-3450**	1	HOSE AS	
I	14	1	**270-3452**	1	HOSE AS	
I	15	1	**285-8884**	1	HOSE AS	
M	16	1	**109-3001**	1	STUD-TAPERLOCK (M10X1.5X65-MM)	
	17	1	*148-8347*	1	ELBOW AS	
		1	**6V-9007**	1	ELBOW	
		1	**3D-2824**	1	SEAL-O-RING	
		1	**6V-9746**	1	SEAL-O-RING	
	18	1	*148-8361*	1	ELBOW AS	
		1	**6V-9200**	1	ELBOW	
		1	**3J-7354**	1	SEAL-O-RING	
		1	**6V-8397**	1	SEAL-O-RING	
	19	1	*148-8378*	1	ELBOW AS	
		1	**6V-8724**	1	ELBOW	
		1	**3J-1907**	1	SEAL-O-RING	
		1	**6V-8397**	1	SEAL-O-RING	
	20	1	*153-6246*	1	TEE AS	
		1	**7X-0820**	1	TEE-UNION	
		1	**6V-8397**	3	SEAL-O-RING	
	21	1	*153-6260*	1	TEE AS	
		1	**8T-8984**	1	TEE-O-RING PORT	
		1	**2M-9780**	1	SEAL-O-RING	
		1	**6V-9746**	2	SEAL-O-RING	
	22	2	**1P-4578**	2	FLANGE-HALF	
	23	1	**3G-4214**	2	CLIP (SLOT)	
	24	1	**3G-4218**	2	CLIP (TAB)	
	25	1	**3J-1907**	1	SEAL-O-RING	
	26	1	**4J-0520**	2	SEAL-O-RING	
	27	1	**4J-0522**	2	SEAL-O-RING	
	28	1	**5F-7074**	2	SPRING	
	29	1,2	**5G-3676**	4	GROMMET	
	30	1,2	**5P-1075**	8	WASHER-HARD (10.2X22.5X3-MM THK)	
	31	1,2	**5P-7468**	2	CLIP (SLOT)	
	32	1,2	**5P-7469**	2	CLIP (TAB)	
	33	1,2	**5P-8444**	2	GROMMET	
	34	1,2	**6J-2680**	2	SEAL-O-RING	
	35	1	**6V-1581**	1	CLIP (SLOT)	
	36	1	**6V-1582**	1	CLIP (TAB)	
	37	1	**6V-9168**	1	NUT (11/16-16-THD)	

269-2074 **LINES GP-PUMP** *(contd.)* **i02752225**

NOTE	REF NO	GRAPHIC REF	PART NUMBER	QTY	PART NAME 1 2 3 4 5 6 (PRODUCT LEVEL)	SEE PAGE
M	38	1	**7X-2543**	2	BOLT (M10X1.5X120-MM)	
	39	1	**7X-7729**	1	WASHER (11X25X3-MM THK)	
	40	1,2	**8T-1889**	4	CLIP (SLOT)	
	41	1,2	**8T-1890**	4	CLIP (TAB)	
	42	1,2	**8T-4121**	5	WASHER-HARD (11X21X2.5-MM THK)	
M	43	1	**8T-4133**	2	NUT (M10X1.5-THD)	
M	44	2	**8T-4136**	2	BOLT (M10X1.5X25-MM)	
M	45	2	**8T-4139**	1	BOLT (M12X1.75X30-MM)	
M	46	1,2	**8T-4176**	4	BOLT (M12X1.75X90-MM)	
M	47	2	**8T-4179**	1	BOLT (M12X1.75X20-MM)	
M	48	1,2	**8T-4183**	4	BOLT (M12X1.75X40-MM)	
M	49	1,2	**8T-4195**	4	BOLT (M10X1.5X30-MM)	
	50	1,2	**8T-4223**	10	WASHER-HARD (13.5X25.5X3-MM THK)	
M	51	2	**8T-6466**	4	BOLT (M10X1.5X60-MM)	
	52	1	**9X-8268**	2	WASHER (17.5X30X3.5-MM THK)	
E	53	1	**5P-1295**		HOSE (48-CM)	

E-ORDER BY THE CENTIMETER
I-REFER TO HYDRAULIC INFORMATION SYSTEM
M-METRIC PART

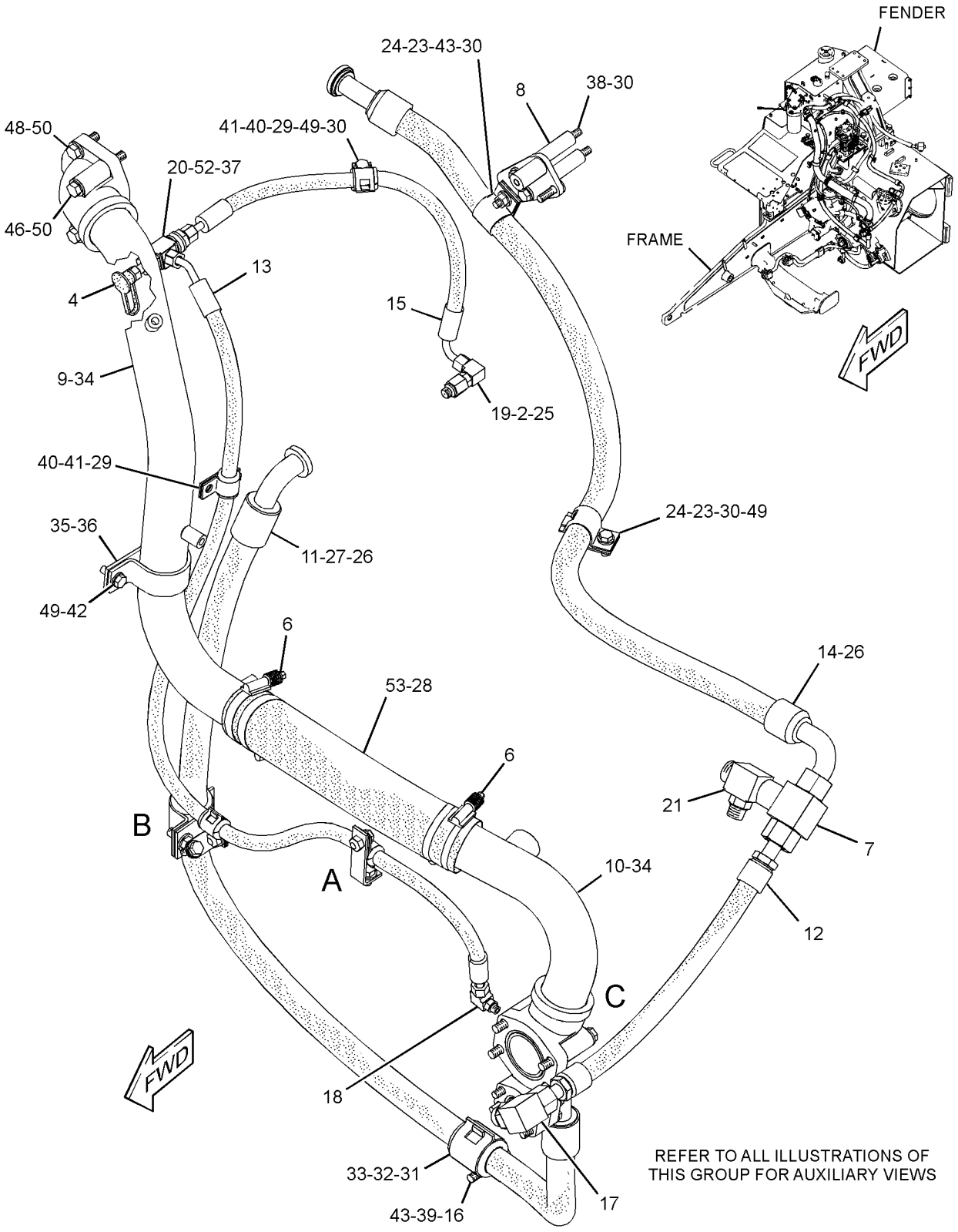

GRAPHIC #1

g01354390

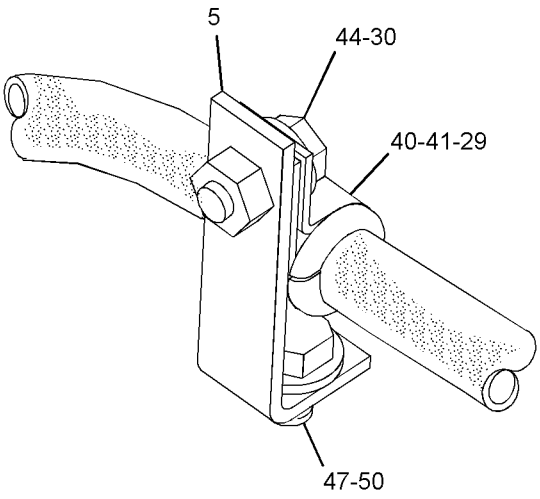

VIEW OF AREA A

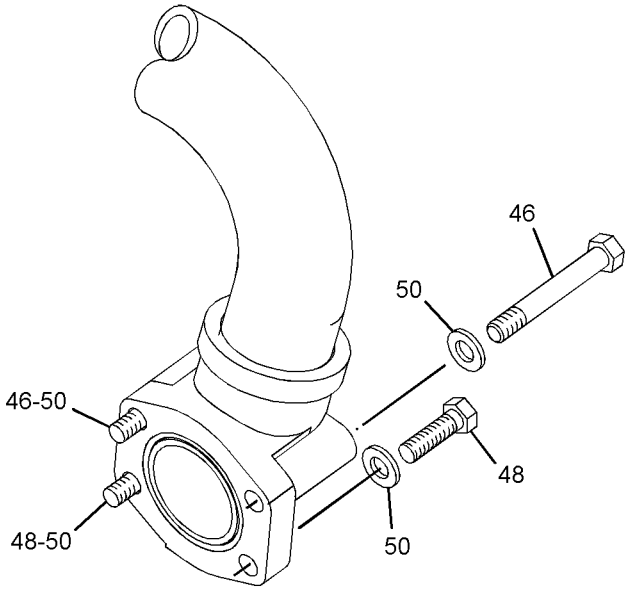

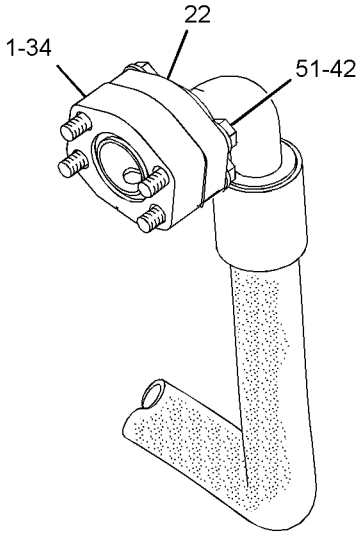

VIEW OF AREA C
(EXPLODED)

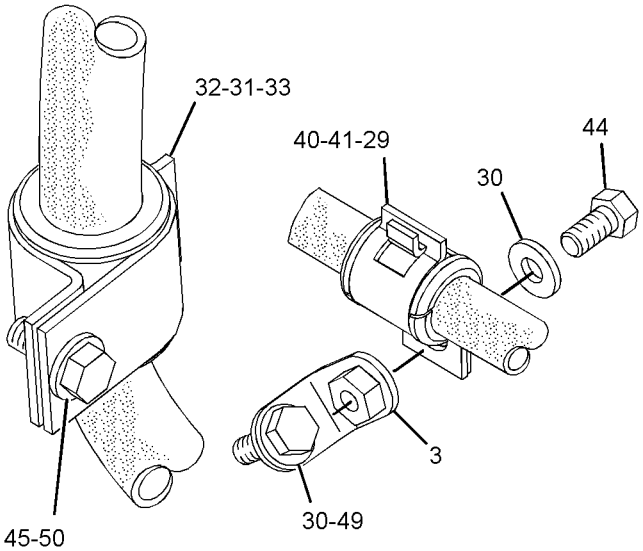

VIEW OF AREA B
(EXPLODED)

GRAPHIC #2 **<END>** g01354392

HYDRAULIC SYSTEM

235-8180 LINES GP-RIPPER

S/N: D6D1-UP
PART OF 224-4449 RIPPER AR
AN ATTACHMENT

SMCS-5057, 5352, 5356 **i02454065**

NOTE	REF NO	GRAPHIC REF	PART NUMBER	QTY	PART NAME 1 2 3 4 5 6 (PRODUCT LEVEL)	SEE PAGE
	1	1	**9M-2904**	8	CLAMP-HOSE	
I	2	1	**9W-2390**	2	HOSE AS	
	3	1	**112-4368**	4	SHIELD	
	4	1	**130-1977**	8	SHIELD	
B	5	1	**130-9192**	8	GROMMET	
	6	1	**4J-5267**	2	SEAL-O-RING	

B-USE AS REQUIRED
I-REFER TO HYDRAULIC INFORMATION SYSTEM

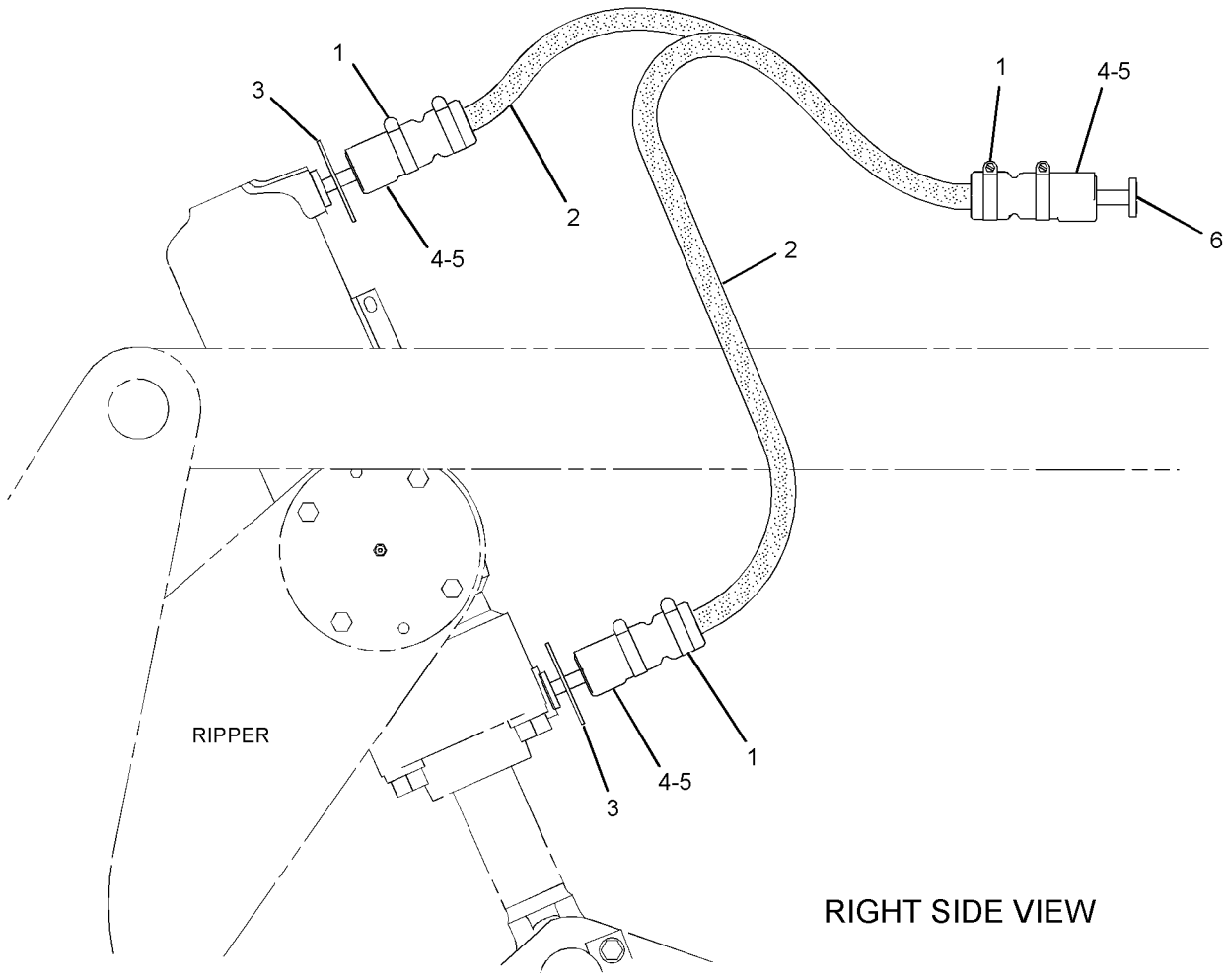

RIGHT SIDE VIEW

GRAPHIC #1 **<END>** g01227537

HYDRAULIC SYSTEM

269-2079 LINES GP-RIPPER

S/N: SMC1-UP; GCT1-UP

PART OF 280-1476 CONTROL AR-HYDRAULIC IMPLEMENT

AN ATTACHMENT

SMCS-5057, 5352, 5356 **i02760150**

NOTE	REF NO	GRAPHIC REF	PART NUMBER	QTY	PART NAME 1 2 3 4 5 6 (PRODUCT LEVEL)	SEE PAGE
	1	1	**217-6887**	1	MANIFOLD	
	2	1	**226-8206**	1	GUARD	
I	3	1	**270-3439**	1	HOSE AS	
I	4	1	**270-3440**	1	HOSE AS	
	5	1	**4J-0520**	2	SEAL-O-RING	
	6	1	**4J-5267**	2	SEAL-O-RING	
	7	1	**7G-3832**	1	GROMMET	
	8	1	**7G-3833**	1	CLIP (TAB)	
	9	1	**7G-3834**	1	CLIP (SLOT)	
	10	1	**8C-3205**	8	FLANGE-HALF	
	11	1	**8T-4121**	20	WASHER-HARD (11X21X2.5-MM THK)	
M	12	1	**8T-4136**	4	BOLT (M10X1.5X25-MM)	
M	13	1	**8T-4196**	16	BOLT (M10X1.5X35-MM)	
	14	1	**8T-4223**	2	WASHER-HARD (13.5X25.5X3-MM THK)	
M	15	1	**8T-4956**	2	BOLT (M12X1.75X35-MM)	

I-REFER TO HYDRAULIC INFORMATION SYSTEM
M-METRIC PART

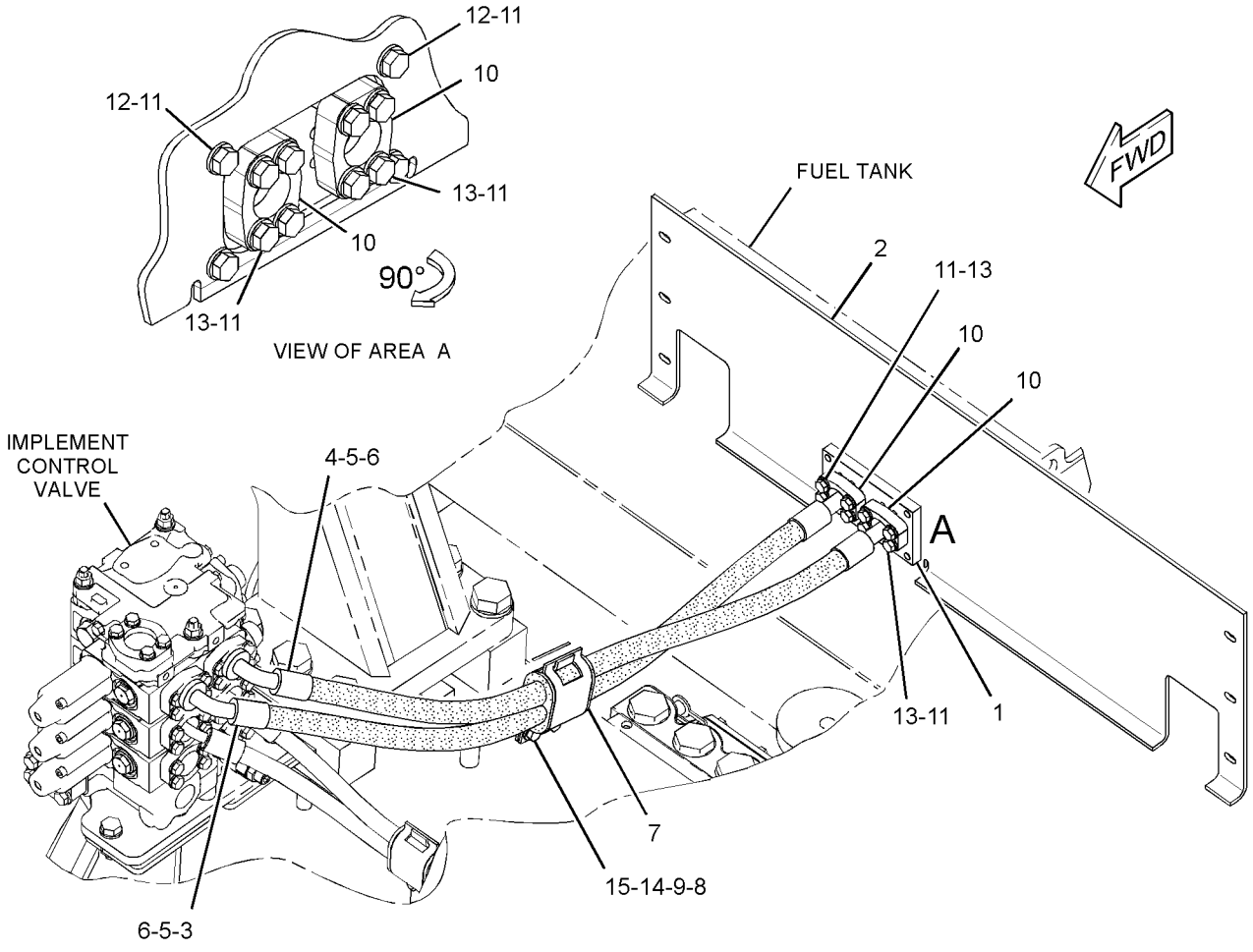

GRAPHIC #1 **<END>** g01357716

230-5555 LINES GP-TILT CYLINDER–

SEMI-UNIVERSAL BULLDOZER

S/N: D6C1-UP; C4W1-UP

PART OF 230-5553, 251-6120 BULLDOZER AR-SEMI-UNIVERSAL

AN ATTACHMENT

SMCS-5057, 5104 **i02743052**

NOTE	REF NO	GRAPHIC REF	PART NUMBER	QTY	PART NAME 1 2 3 4 5 6 (PRODUCT LEVEL)	SEE PAGE
	1	1	**3Y-5405**	2	RUBBER	
CI	2	1	**308-6022**	1	HOSE AS	
CI	3	1	**308-6023**	1	HOSE AS	
I	4	1	**7T-6934**	1	HOSE AS	
	5	1	**145-5181**	4	SPACER (13.5X25X12-MM THK)	
	6	1	**213-2282**	2	GUARD	
I	7	1	**168-2599**	1	HOSE AS	
	8	1	**4J-5267**	4	SEAL-O-RING	
	9	1	**4T-1563**	1	GUARD AS	
	10	1	**6V-8398**	4	SEAL-O-RING	
	11	1	**6V-8981**	2	ELBOW	
	12	1	**6V-9169**	2	NUT-BULKHEAD (13/16-16-THD)	
	13	1	**8C-3205**	4	FLANGE-HALF	
	14	1	**8T-4121**	8	WASHER-HARD (11X21X2.5-MM THK)	
M	15	1	**8T-4139**	4	BOLT (M12X1.75X30-MM)	
M	16	1	**8T-4196**	8	BOLT (M10X1.5X35-MM)	
	17	1	**8T-4223**	4	WASHER-HARD (13.5X25.5X3-MM THK)	
M	18	1	**8T-4956**	4	BOLT (M12X1.75X35-MM)	

C-CHANGE FROM PREVIOUS TYPE
I-REFER TO HYDRAULIC INFORMATION SYSTEM
M-METRIC PART

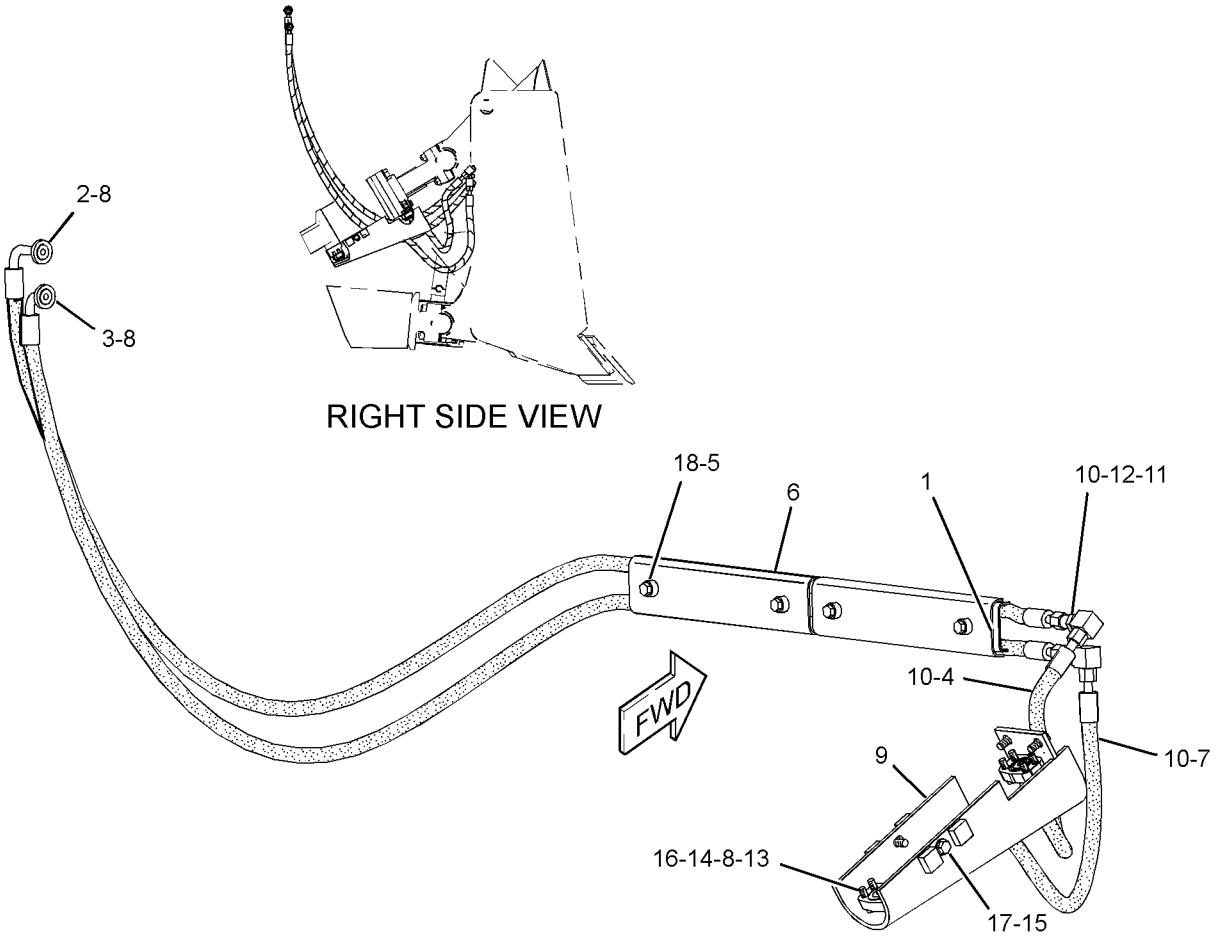

GRAPHIC #1 **<END>** g01207513

HYDRAULIC SYSTEM

252-5849 LINES GP-TILT CYLINDER

S/N: SMC1-UP; C4L1-UP

PART OF 252-5854, 252-5855 BULLDOZER AR-SEMI-UNIVERSAL

AN ATTACHMENT

SMCS-5057, 5104 **i02771804**

NOTE	REF NO	GRAPHIC REF	PART NUMBER	QTY	PART NAME 1 2 3 4 5 6 (PRODUCT LEVEL)	SEE PAGE
	1	1	**3Y-5405**	2	RUBBER	
	2	1	**145-5181**	4	SPACER (13.5X25X12-MM THK)	
	3	1	**213-2282**	2	GUARD	
I	4	1	**168-2599**	1	HOSE AS	
	5	1	**4J-5267**	4	SEAL-O-RING	
	6	1	**4T-1563**	1	GUARD AS	
	7	1	**6V-8398**	4	SEAL-O-RING	
	8	1	**6V-8981**	2	ELBOW	
	9	1	**6V-9169**	2	NUT-BULKHEAD (13/16-16-THD)	
CI	10	1	**308-6024**	1	HOSE AS	
CI	11	1	**308-6025**	1	HOSE AS	
I	12	1	**7T-6934**	1	HOSE AS	
	13	1	**8C-3205**	4	FLANGE-HALF	
	14	1	**8T-4121**	8	WASHER-HARD (11X21X2.5-MM THK)	
M	15	1	**8T-4139**	4	BOLT (M12X1.75X30-MM)	
M	16	1	**8T-4196**	8	BOLT (M10X1.5X35-MM)	
	17	1	**8T-4223**	4	WASHER-HARD (13.5X25.5X3-MM THK)	
M	18	1	**8T-4956**	4	BOLT (M12X1.75X35-MM)	

C-CHANGE FROM PREVIOUS TYPE
I-REFER TO HYDRAULIC INFORMATION SYSTEM
M-METRIC PART

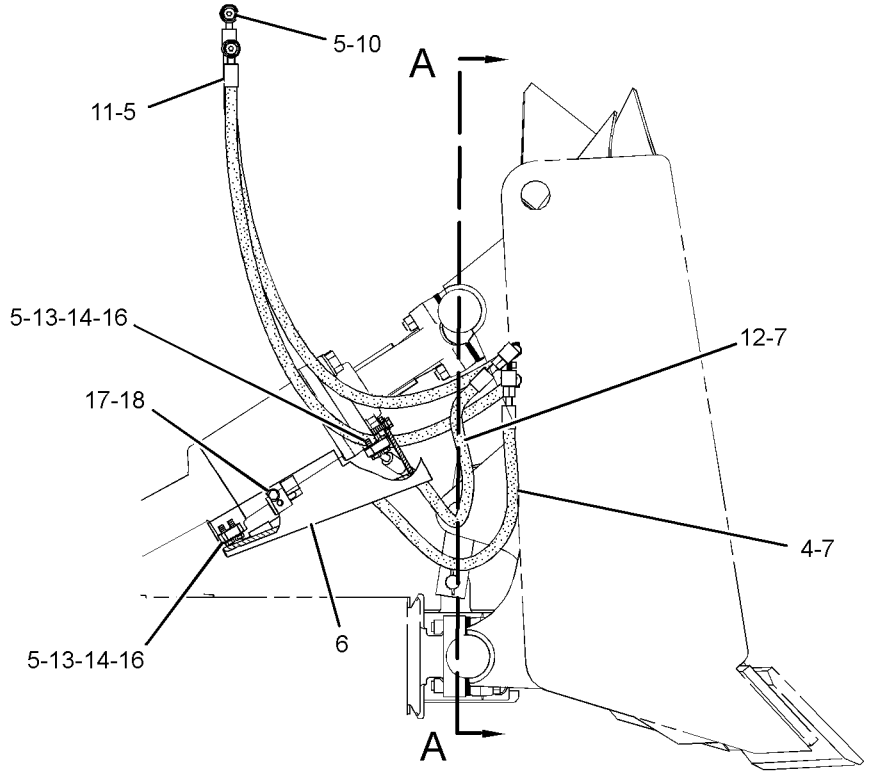

RIGHT SIDE VIEW

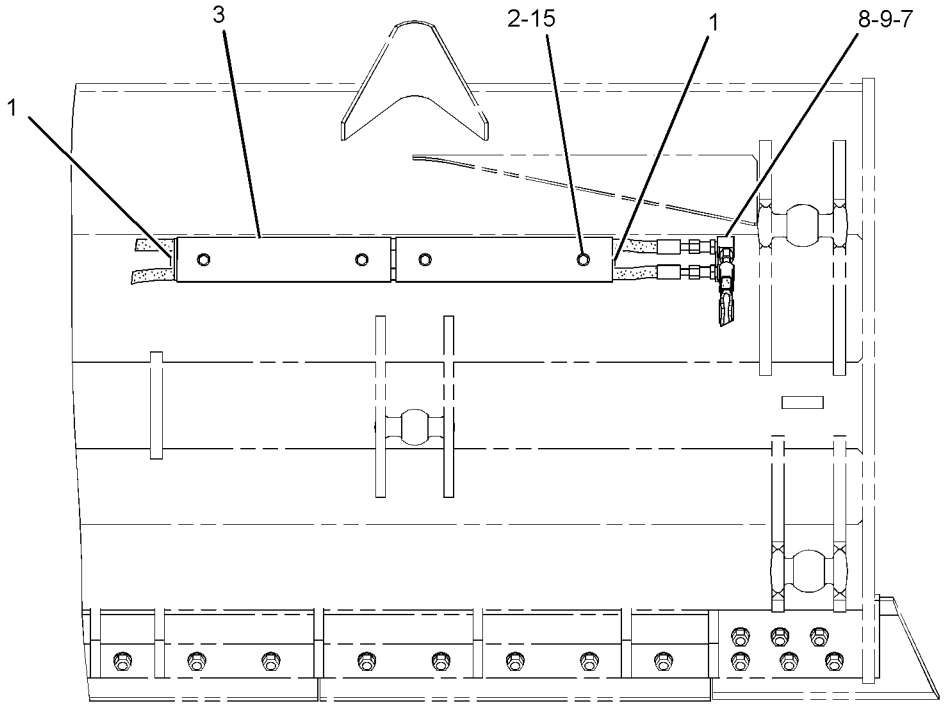

SECTION A-A

GRAPHIC #1

<END>

g01271393

HYDRAULIC SYSTEM

255-8954 LINES GP-TILT CYLINDER

S/N: C4C1-UP; C4K1-UP; C4R1-UP; C4T1-UP
PART OF 251-6112, 251-6113, 251-6128, 251-6129 BULLDOZER AR-ANGLING AN ATTACHMENT

SMCS-5057, 5104 **i02771753**

NOTE	REF NO	GRAPHIC REF	PART NUMBER	QTY	PART NAME 1 2 3 4 5 6 (PRODUCT LEVEL)	SEE PAGE
	1	1	**2P-6588**	2	HEAD-ADAPTER	
	2	1	**5S-8709**	1	GUARD-CENTER	
	3	1	**5S-8712**	6	BLOCK	
	4	1	**5S-8765**	1	GUARD (RH)	
	5	1	**5S-8766**	1	GUARD (LH)	
	6	1	**6Y-0596**	1	GUARD AS (LH)	
	7	1	**6Y-0597**	1	GUARD AS (RH)	
I	8	1	**9W-9082**	2	HOSE AS	
I	9	1	**9W-9083**	2	HOSE AS	
	10	1	**245-4230**	1	BRACKET AS (RH)	
	11	1	**245-4231**	1	BRACKET AS (LH)	
	12	1	**251-9840**	2	TUBE AS	
	13	1	**251-9841**	1	TUBE AS	
CI	14	1	**308-6026**	1	HOSE AS	
CI	15	1	**308-6027**	1	HOSE AS	
	16	1	**3G-8047**	1	GROMMET	
	17	1	**3G-8054**	1	CLIP (TAB)	
	18	1	**3G-8057**	1	CLIP (SLOT)	
	19	1	**3K-0360**	2	SEAL-O-RING	
	20	1	**4J-5267**	12	SEAL-O-RING	
	21	1	**5P-7464**	2	CLIP (SLOT)	
	22	1	**5P-7465**	2	CLIP (TAB)	
	23	1	**6V-1249**	2	GROMMET	
	24	1	**6V-8398**	2	SEAL-O-RING	
	25	1	**6V-8625**	2	ELBOW	
	26	1	**8C-3205**	20	FLANGE-HALF	
	27	1	**8T-4121**	48	WASHER-HARD (11X21X2.5-MM THK)	
M	28	1	**8T-4139**	10	BOLT (M12X1.75X30-MM)	
M	29	1	**8T-4182**	6	BOLT (M10X1.5X45-MM)	
M	30	1	**8T-4195**	42	BOLT (M10X1.5X30-MM)	
	31	1	**8T-4223**	16	WASHER-HARD (13.5X25.5X3-MM THK)	
M	32	1	**8T-4910**	6	BOLT (M12X1.75X60-MM)	

C-CHANGE FROM PREVIOUS TYPE
I-REFER TO HYDRAULIC INFORMATION SYSTEM
M-METRIC PART

255-8954 **LINES GP-TILT CYLINDER** *(contd.)* **i02771753**

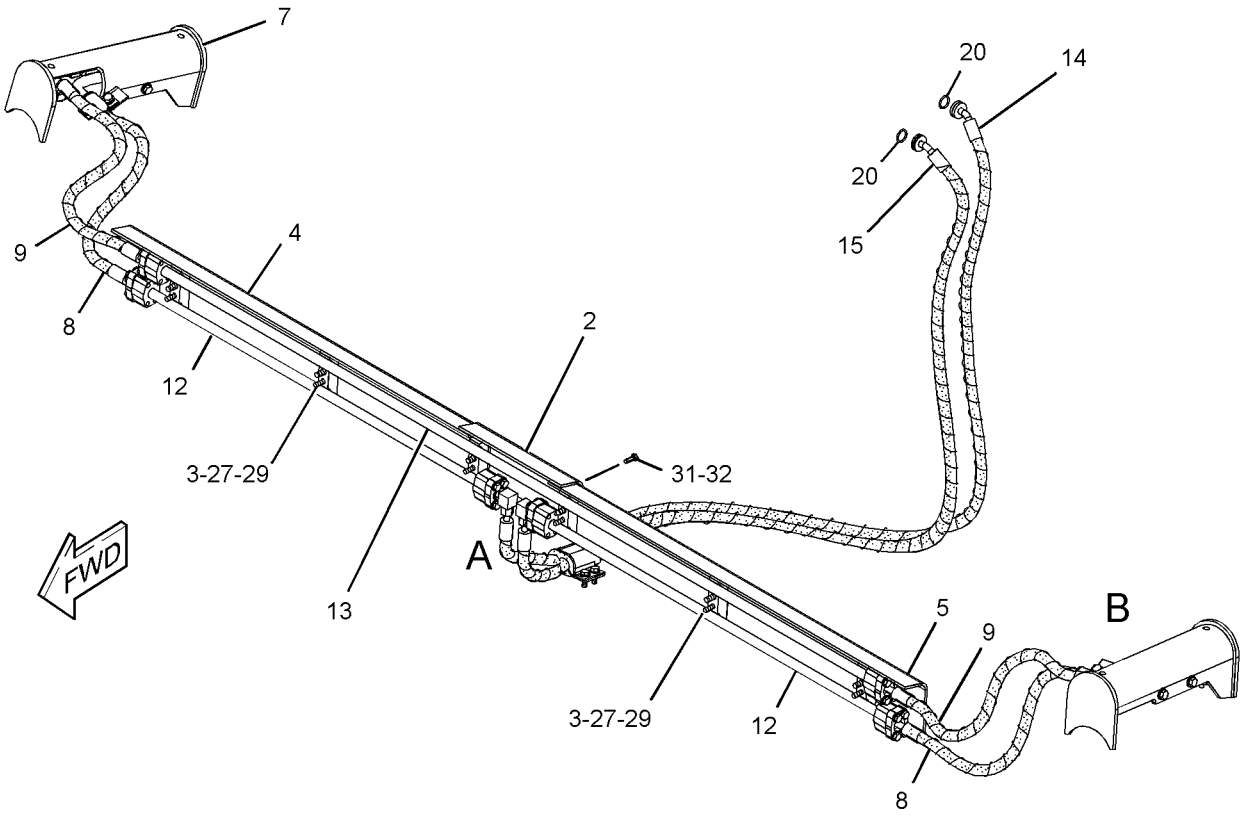

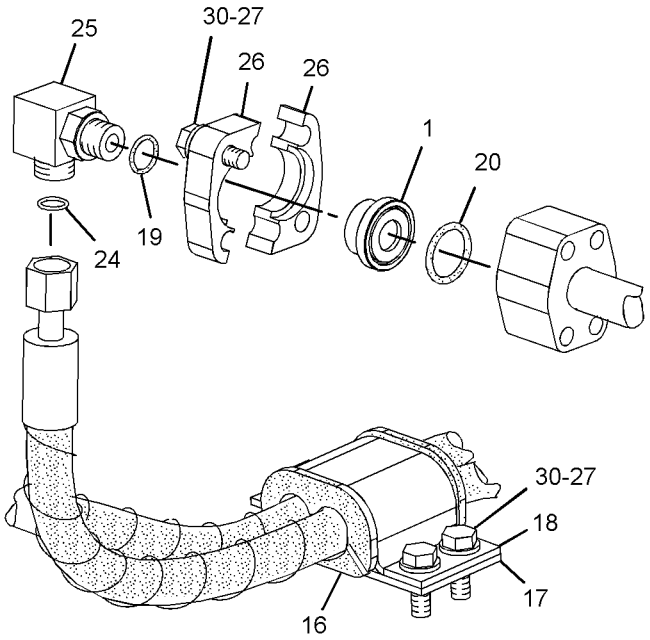

VIEW OF AREA A
(EXPLODED)

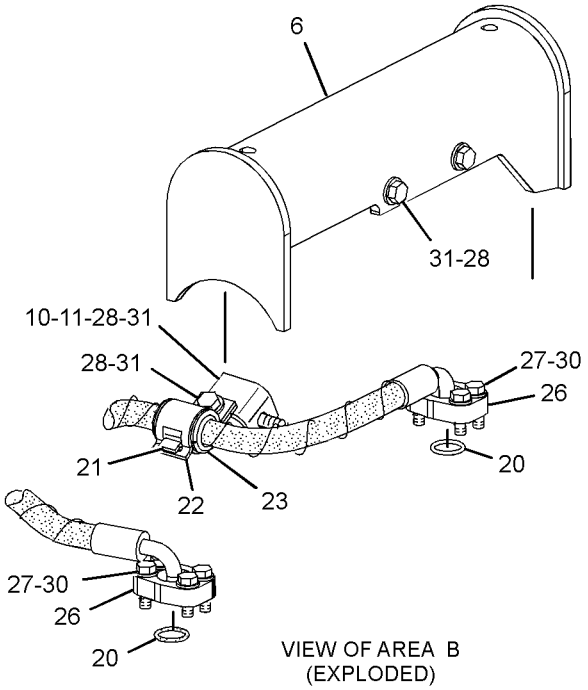

VIEW OF AREA B
(EXPLODED)

GRAPHIC #1 **<END>** g01393637

HYDRAULIC SYSTEM

269-2077 LINES GP-TILT CYLINDER

S/N: SMC1-UP; GCT1-UP

PART OF 269-2050 HYDRAULIC AR-2 VALVE

SMCS-5057, 5104 **i02752535**

NOTE	REF NO	GRAPHIC REF	PART NUMBER	QTY	PART NAME 1 2 3 4 5 6 (PRODUCT LEVEL)	SEE PAGE
	1	1	**1K-5888**	2	SPACER (0.42X0.67X0.63-IN THK)	
	2	1	**226-7810**	1	TUBE AS	
	3	1	**226-7906**	1	MANIFOLD	
	4	1	**226-7924**	1	TUBE AS	
I	5	1	**270-3473**	1	HOSE AS	
I	6	1	**270-3474**	1	HOSE AS	
	7	1	**1P-3703**	2	SEAL-RECTANGULAR	
	8	1	**3G-8047**	4	GROMMET	
	9	1	**3G-8054**	4	CLIP (TAB)	
	10	1	**3G-8057**	4	CLIP (SLOT)	
	11	1	**3H-8683**	4	CLIP	
	12	1	**4J-0520**	2	SEAL-O-RING	
	13	1	**4J-5267**	2	SEAL-O-RING	
	14	1	**5H-4018**	2	COVER	
	15	1	**5P-1075**	29	WASHER-HARD (10.2X22.5X3-MM THK)	
	16	1	**6V-8398**	2	SEAL-O-RING	
	17	1	**8C-3205**	4	FLANGE-HALF	
	18	1	**8T-1887**	2	CLIP (SLOT)	
	19	1	**8T-1888**	2	CLIP (TAB)	
M	20	1	**8T-4133**	6	NUT (M10X1.5-THD)	
M	21	1	**8T-4182**	10	BOLT (M10X1.5X45-MM)	
M	22	1	**8T-4186**	2	BOLT (M10X1.5X40-MM)	
M	23	1	**8T-4195**	2	BOLT (M10X1.5X30-MM)	
M	24	1	**8T-4196**	9	BOLT (M10X1.5X35-MM)	

I-REFER TO HYDRAULIC INFORMATION SYSTEM
M-METRIC PART

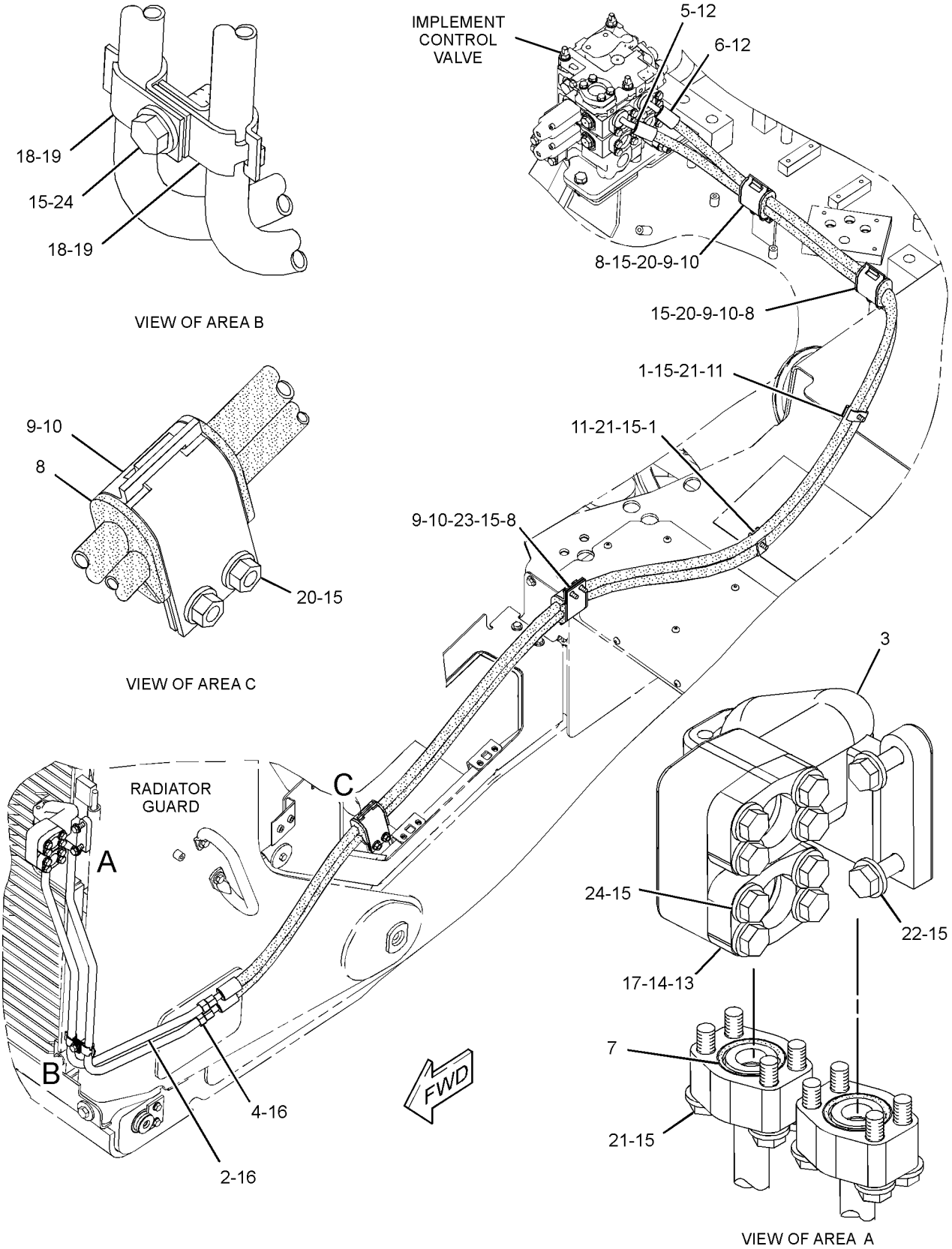

GRAPHIC #1 **<END>** g01356038

226-4751 MANIFOLD GP-CONTROL–IMPLEMENT PILOT PRESSURE

S/N: SMC1-UP; GCT1-UP

PART OF 269-2078 LINES GP-PILOT

SMCS-5264 **i02470704**

NOTE	REF NO	GRAPHIC REF	PART NUMBER	QTY	PART NAME 1 2 3 4 5 6 (PRODUCT LEVEL)	SEE PAGE
Y	1	1	**158-9956**	1	VALVE GP-CHECK (PILOT PRESSURE SUPPLY)	537
Y	2	1	**170-3357**	1	VALVE GP-PRESSURE REDUCING (IMPLEMENT PILOT OIL)	562
Y	3	1	**225-8026**	1	VALVE GP-RELIEF (IMPLEMENT PILOT OIL)	570
Y	4	1	**201-0950**	1	VALVE GP-SOLENOID (HYDRAULIC LOCKOUT)	573
	5	1	**6E-5066**	1	SCREEN (IMPLEMENT PILOT OIL)	
	6	1	**9S-8001**	1	PLUG	
	7	1	**9S-8004**	1	PLUG-O-RING	
	8	1	**4J-7533**	1	SEAL-O-RING	
	9	1	**3J-1907**	1	SEAL-O-RING	

Y-SEPARATE ILLUSTRATION

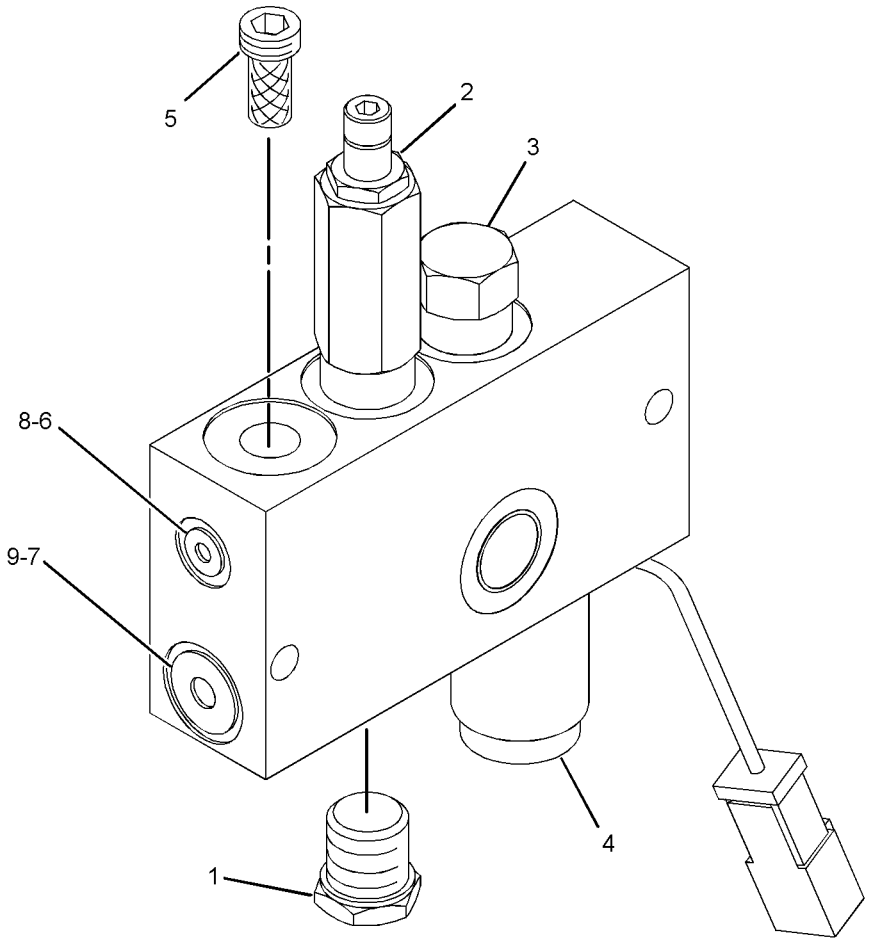

GRAPHIC #1 **<END>** g01205803

273-2155 MANIFOLD GP-VALVE–INLET

S/N: SMC1-UP; GCT1-UP
PART OF 269-8157 VALVE GP-BANK 3
AN ATTACHMENT

SMCS-5264 **i02760626**

NOTE	REF NO	GRAPHIC REF	PART NUMBER	QTY	PART NAME 1 2 3 4 5 6 (PRODUCT LEVEL)	SEE PAGE
Y	1	1	**6E-4139**	1	VALVE GP-RELIEF (MAIN)	568
	2	1	**8C-3206**	2	FLANGE-HALF	
	3	1	**8T-4121**	4	WASHER-HARD (11X21X2.5-MM THK)	
M	4	1	**8T-4196**	4	BOLT (M10X1.5X35-MM)	

M-METRIC PART
Y-SEPARATE ILLUSTRATION

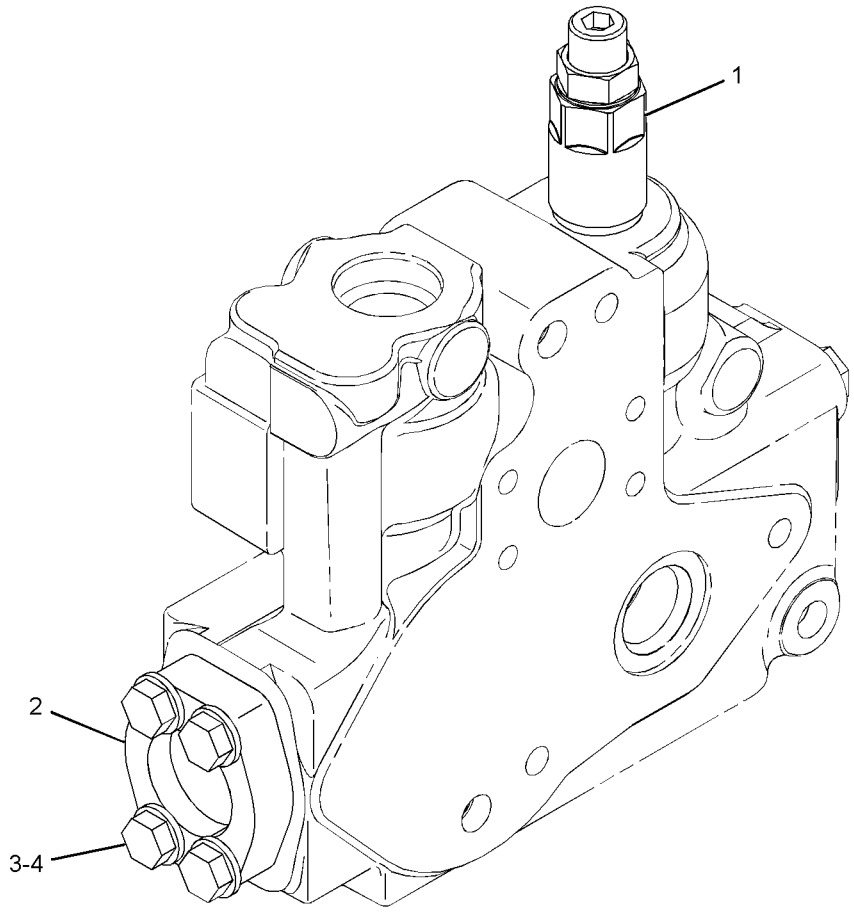

GRAPHIC #1 **<END>** g01364067

273-2156 MANIFOLD GP-VALVE–INLET

S/N: SMC1-UP; GCT1-UP
PART OF 269-8161 VALVE GP-BANK 2, 269-8160 VALVE GP-BANK 3
ALSO AN ATTACHMENT

SMCS-5264 **i02755501**

NOTE	REF NO	GRAPHIC REF	PART NUMBER	QTY	PART NAME 1 2 3 4 5 6 (PRODUCT LEVEL)	SEE PAGE
Y	1	1	**4T-4932**	1	VALVE GP-RELIEF (MAIN)	567
	3	1	**8C-3206**	2	FLANGE-HALF	
	4	1	**8T-4121**	4	WASHER-HARD (11X21X2.5-MM THK)	
M	5	1	**8T-4196**	4	BOLT (M10X1.5X35-MM)	
					PARTS SHOWN IN GRAPHIC(S) WITHOUT A REFERENCE NUMBER ARE NOT SERVICED SEPARATELY	

M-METRIC PART
Y-SEPARATE ILLUSTRATION

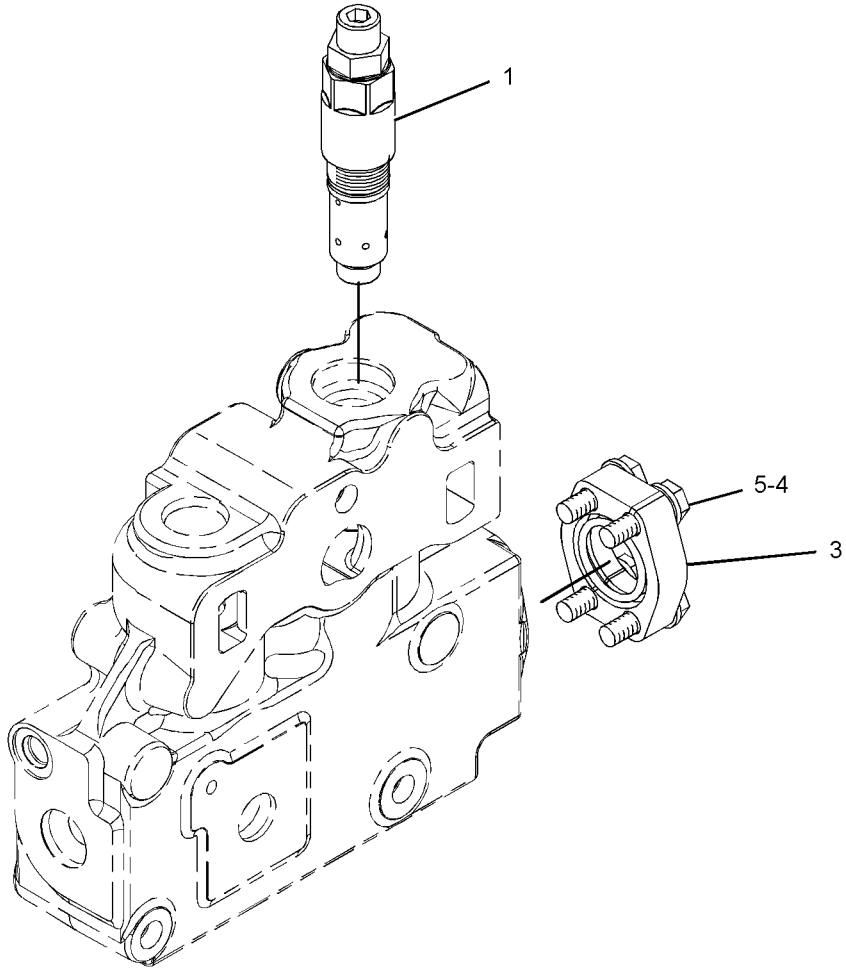

GRAPHIC #1 **<END>** g01357238

269-4749 MOTOR GP-PISTON—IMPLEMENT, STEERING PUMP—STEERING

S/N: SMC1-UP; GCT1-UP

PART OF 269-2050 HYDRAULIC AR-2 VALVE

SMCS-5058 **i02801026**

NOTE	REF NO	GRAPHIC REF	PART NUMBER	QTY	PART NAME 1 2 3 4 5 6 (PRODUCT LEVEL)	SEE PAGE
Y	1	1	**284-9696**	1	ROTATING GP-MOTOR (IMPLEMENT, STEERING PUMP)	520
	2	1	**106-1227**	1	HOUSING	
	3	1	**252-9203**	1	HEAD	
M	4	1	**8T-3957**	6	BOLT-SOCKET HEAD (M12X1.75X30-MM)	
	5	1	**8T-4231**	1	DOWEL	
	6	1	**2H-3934**	1	SEAL-O-RING	

M-METRIC PART
Y-SEPARATE ILLUSTRATION

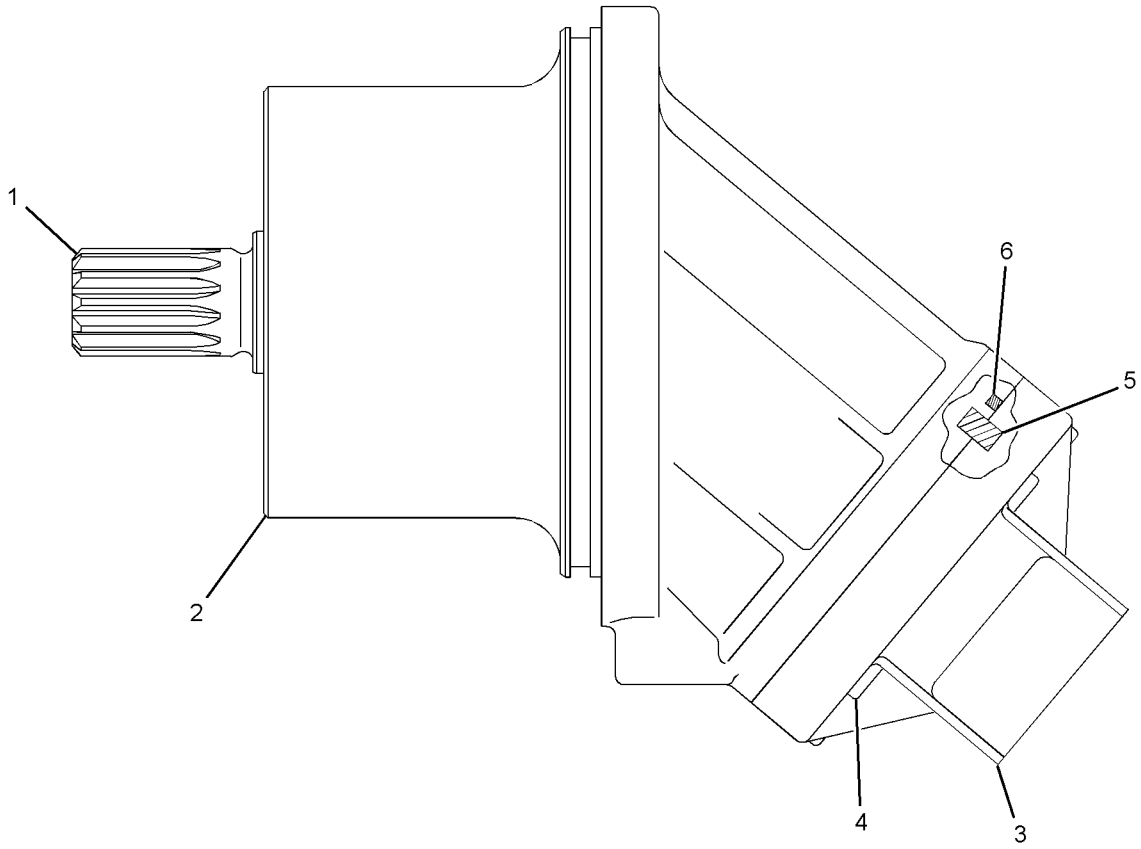

GRAPHIC #1 **<END>** g01381088

238-9559 MOUNTING GP-CYLINDER

S/N: C4C1-UP; D6C1-UP; SMC1-UP; C4R1-UP; GCT1-UP
PART OF 251-6112, 251-6128 BULLDOZER AR-ANGLING, 230-5553, 252-5854 BULLDOZER AR-SEMI-UNIVERSAL AN ATTACHMENT

SMCS-7562 **i02454573**

NOTE	REF NO	GRAPHIC REF	PART NUMBER	QTY	PART NAME 1 2 3 4 5 6 (PRODUCT LEVEL)	SEE PAGE
	1	1	**3B-8489**	2	FITTING-GREASE	
	2	1	**3G-9405**	4	CAP AS	
					(EACH INCLUDES)	
	2A	1	**3G-9402**	1	BEARING-SLEEVE	
	3	1	**4T-4875**	2	PIN	
	4	1	**5P-2671**	2	SEAL-LIP TYPE	
	5	1	**6Y-9280**	2	CLAMP (TAB)	
	6	1	**6Y-9281**	2	CLAMP (SLOT)	
	7	1	**9N-4233**	2	STRAP	
	8	1	**233-4656**	2	YOKE	
M	9	1	**7X-2557**	8	BOLT (M16X2X140-MM)	
	10	1	**8T-2561**	2	WASHER-HARD (10.5X28.5X5-MM THK)	
	11	1	**8T-4123**	2	WASHER (22X35X3.5-MM THK)	
M	12	1	**8T-4137**	2	BOLT (M10X1.5X20-MM)	
M	13	1	**8T-4183**	2	BOLT (M12X1.75X40-MM)	
	14	1	**8T-4223**	4	WASHER-HARD (13.5X25.5X3-MM THK)	
M	15	1	**8T-4244**	2	NUT (M12X1.75-THD)	

M-METRIC PART

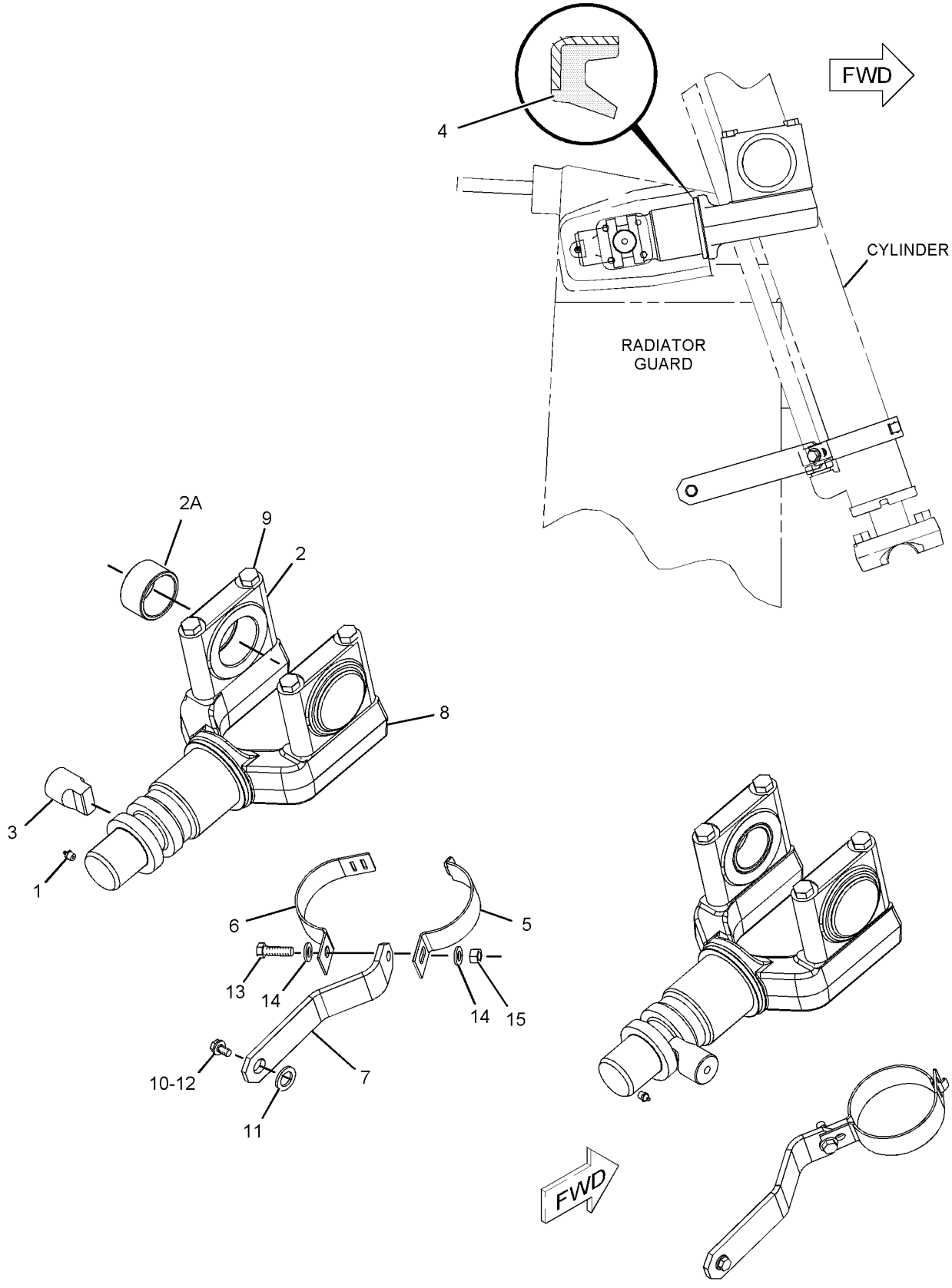

GRAPHIC #1 **<END>** g01150508

HYDRAULIC SYSTEM

269-2090 PUMP & MTG GP-IMPLEMENT

S/N: SMC1-UP; GCT1-UP

PART OF 269-2050 HYDRAULIC AR-2 VALVE

SMCS-5070, 5084 **i02754419**

NOTE	REF NO	GRAPHIC REF	PART NUMBER	QTY	PART NAME 1 2 3 4 5 6 (PRODUCT LEVEL)	SEE PAGE
Y	1	1	**271-2116**	1	PUMP GP-PISTON (IMPLEMENT)	516
	2	1	**4S-5898**	1	SEAL-O-RING	
M	3	1	**8T-7338**	2	BOLT (M16X2X45-MM)	
	4	1	**9X-8257**	2	WASHER (17.5X30X3.5-MM THK)	

M-METRIC PART
Y-SEPARATE ILLUSTRATION

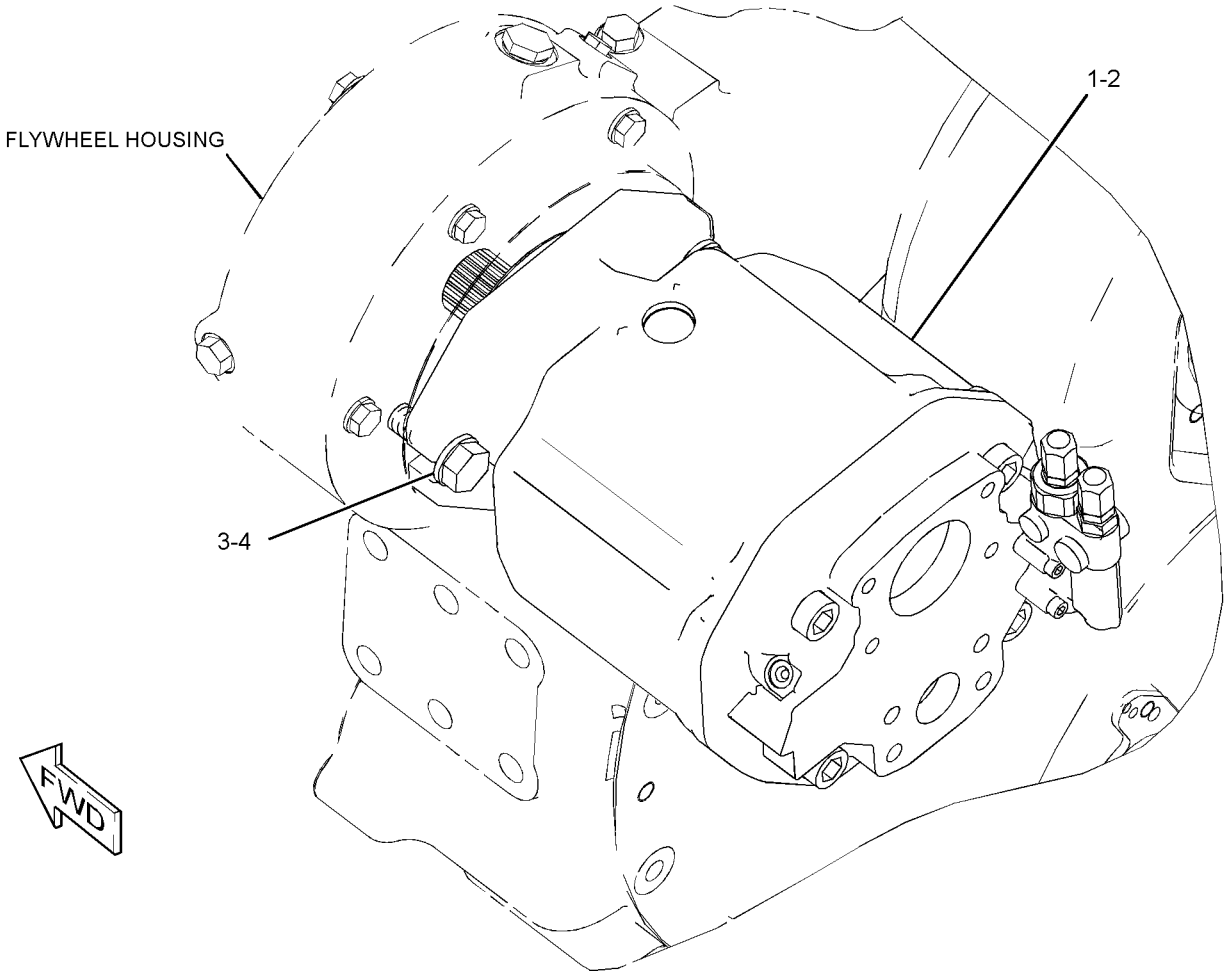

GRAPHIC #1 **<END>** g01354573

271-2116 PUMP GP-PISTON—IMPLEMENT

S/N: SMC1-UP; GCT1-UP

PART OF 269-2090 PUMP & MTG GP-IMPLEMENT

SMCS-5070 **i02754425**

NOTE	REF NO	GRAPHIC REF	PART NUMBER	QTY	PART NAME 1 2 3 4 5 6 (PRODUCT LEVEL)	SEE PAGE
	1	1	**8T-9598**	1	RING-RETAINING	
	2	1	**105-1642**	2	BEARING	
	3	1	**9S-8002**	1	PLUG-O-RING	
Y	4	1	**226-1224**	1	ROTATING GP-PUMP (IMPLEMENT)	522
	5	1	**8U-5951**	4	SEAL-O-RING	
M	6	1	**6V-8201**	4	BOLT-SOCKET HEAD (M16X2X45-MM)	
	7	1	**105-3033**	1	CUP-BEARING	
	8	1	**105-3032**	1	CONE-BEARING	
	9	1	**105-1638**	1	SPACER	
	10	1	**162-9997**	1	SEAL-O-RING	
	11	1	**105-1636**	1	CYLINDER-CONTROL	
	12	1	**105-1635**	1	SPRING	
	13	1	**105-1634**	1	PLUNGER	
	14	1	**9S-4183**	1	PLUG-O-RING	
	15	1	**3D-2824**	1	SEAL-O-RING	
	16	1	**200-6179**	1	SHAFT	
	17	1	**3B-2263**	1	CUP-BEARING	
	18	1	**105-3031**	1	CONE-BEARING	
	19	1	**7X-1553**	1	SEAL-LIP TYPE	
	20	1	**301-9279**	1	SWASHPLATE AS	
	21	1	**105-1640**	1	PISTON-CONTROL	
	22	1	**105-1639**	1	GUIDE-CONTROL	
	23	1	**3J-7354**	1	SEAL-O-RING	
	24	1	**120-4394**	1	PLUG-BREAK OFF	
	25	1	**9X-8979**	1	DOWEL	
	26	1	**143-7052**	1	SLEEVE-STOP	
M	27	1	**8T-8442**	4	BOLT-SOCKET HEAD (M6X1X30-MM)	
	28	1	**280-7870**	1	GASKET	
Y	29	1	**285-7612**	1	VALVE GP-PUMP CONTROL (PRESSURE, FLOW COMPENSATOR) (IMPLEMENT)	563

M-METRIC PART
Y-SEPARATE ILLUSTRATION

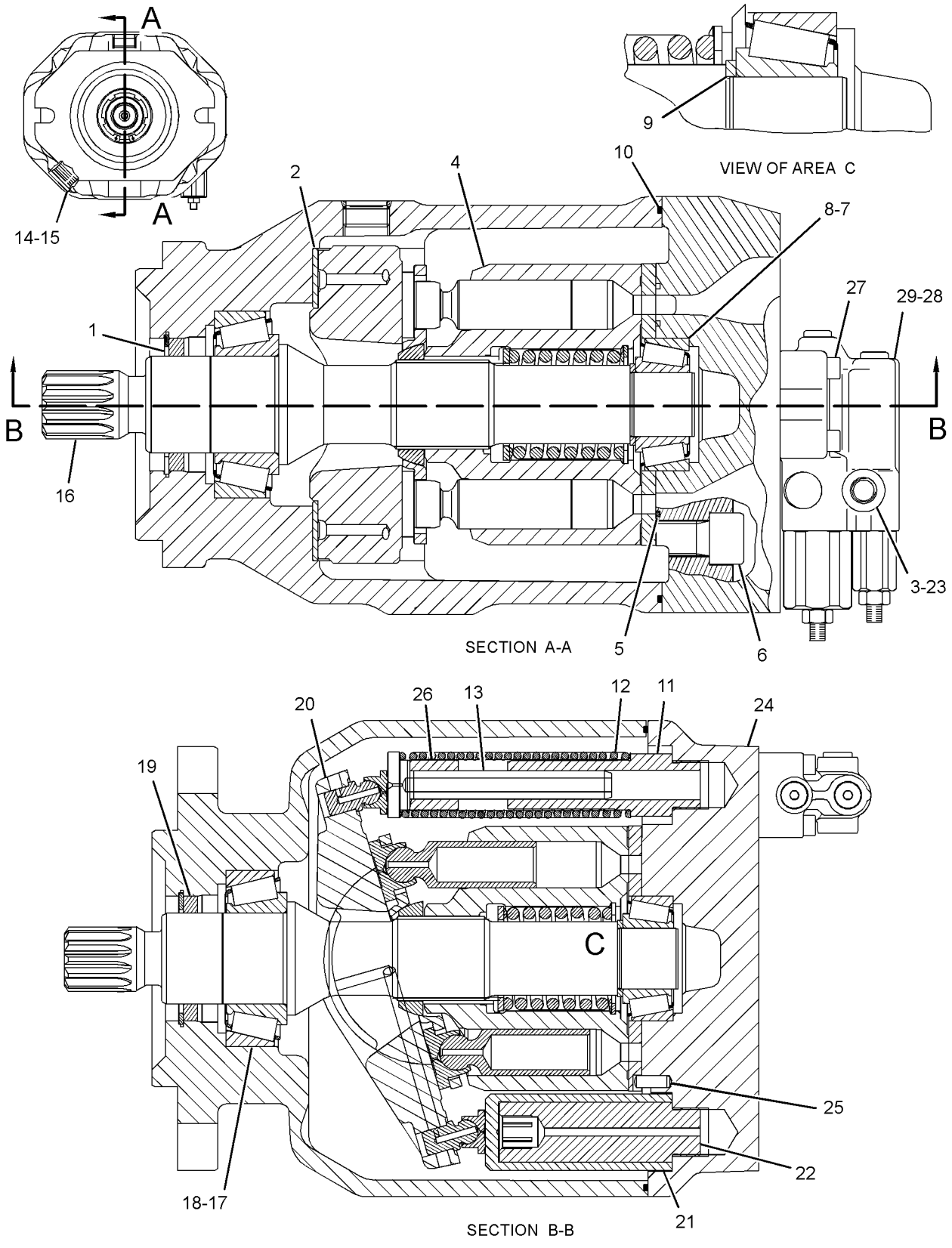

GRAPHIC #1 **<END>** g01380805

278-1445 PUMP GP-PISTON—IMPLEMENT, WINCH

S/N: SMC1-UP; GCT1-UP
PART OF 280-1478 CONTROL AR-HYDRAULIC IMPLEMENT
AN ATTACHMENT

SMCS-5070 **i02760635**

NOTE	REF NO	GRAPHIC REF	PART NUMBER	QTY	PART NAME 1 2 3 4 5 6 (PRODUCT LEVEL)	SEE PAGE
	1	1	**8T-9598**	1	RING-RETAINING	
	2	1	**105-1642**	2	BEARING	
	3	1	**9S-8002**	1	PLUG-O-RING	
Y	4	1	**226-1224**	1	ROTATING GP-PUMP (IMPLEMENT, WINCH)	522
	5	1	**8U-5951**	4	SEAL-O-RING	
M	6	1	**6V-8201**	4	BOLT-SOCKET HEAD (M16X2X45-MM)	
	7	1	**105-3033**	1	CUP-BEARING	
	8	1	**105-3032**	1	CONE-BEARING	
	9	1	**105-1638**	1	SPACER	
	10	1	**162-9997**	1	SEAL-O-RING	
	11	1	**105-1636**	1	CYLINDER-CONTROL	
	12	1	**105-1635**	1	SPRING	
	13	1	**105-1634**	1	PLUNGER	
	14	1	**9S-4183**	1	PLUG-O-RING	
	15	1	**3D-2824**	1	SEAL-O-RING	
	16	1	**200-6179**	1	SHAFT	
	17	1	**3B-2263**	1	CUP-BEARING	
	18	1	**105-3031**	1	CONE-BEARING	
	19	1	**7X-1553**	1	SEAL-LIP TYPE	
	20	1	**301-9279**	1	SWASHPLATE AS	
	21	1	**105-1640**	1	PISTON-CONTROL	
	22	1	**105-1639**	1	GUIDE-CONTROL	
	23	1	**3J-7354**	1	SEAL-O-RING	
	24	1	**120-4394**	1	PLUG-BREAK OFF	
	25	1	**9X-8979**	1	DOWEL	
	26	1	**143-7052**	1	SLEEVE-STOP	
M	27	1	**8T-8442**	4	BOLT-SOCKET HEAD (M6X1X30-MM)	
	28	1	**280-7870**	1	GASKET	
Y	29	1	**285-7612**	1	VALVE GP-PUMP CONTROL (PRESSURE, FLOW COMPENSATOR) (IMPLEMENT)	563

M-METRIC PART
Y-SEPARATE ILLUSTRATION

278-1445 PUMP GP-PISTON *(contd.)* **i02760635**

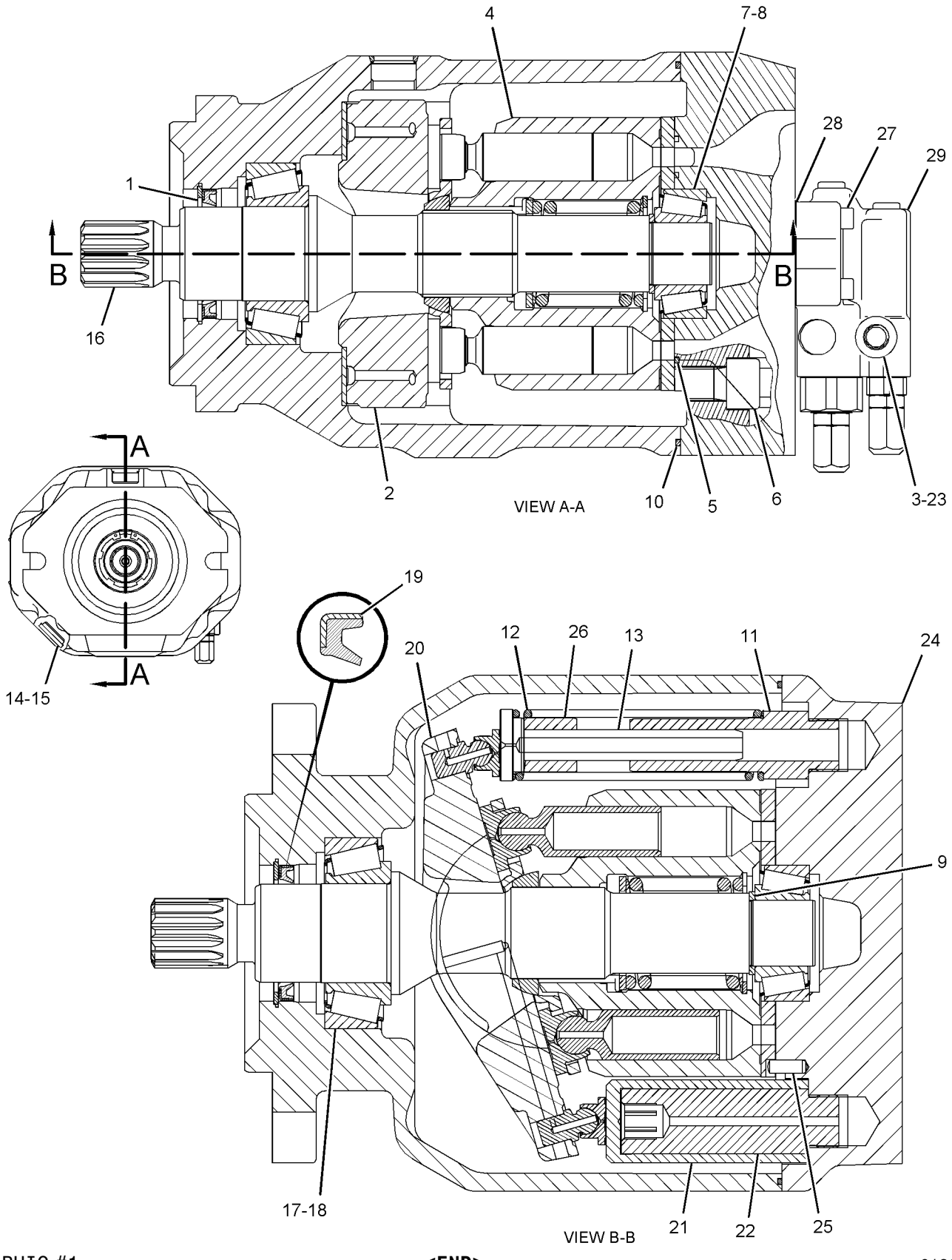

GRAPHIC #1 **<END>** g01364291

284-9696 ROTATING GP-MOTOR—IMPLEMENT, STEERING PUMP

S/N: SMC1-UP; GCT1-UP

PART OF 269-4749 MOTOR GP-PISTON

SMCS-5058 **i02755522**

NOTE	REF NO	GRAPHIC REF	PART NUMBER	QTY	PART NAME 1 2 3 4 5 6 (PRODUCT LEVEL)	SEE PAGE
	1	1	**171-3068**	1	SHAFT-MOTOR	
	2	1	**123-5748**	1	SEAL-SHAFT	
	3	1	**9T-1637**	1	COVER-FRONT	
	4	1	**6V-3326**	1	RING-RETAINING	
	5	1	**5D-5958**	1	SEAL-O-RING	
B	6	1	**9T-1576**	1	SHIM (0.1-MM THK)	
B	7	1	**9T-1579**	2	SHIM (0.3-MM THK)	
	8	1	**216-0029**	7	SCREW (M6X20-MM)	
	9	1	**9T-1687**	1	BARREL-CYLINDER	
	10	1	**171-3054**	1	PIN-CENTER	
	11	1	**171-3061**	1	SPRING	
B	12	1	**171-3055**	1	SHIM (4-MM THK)	
B	13	1	**171-3057**	1	SHIM (3.9-MM THK)	
B	14	1	**171-3058**	1	SHIM (3.8-MM THK)	
B	15	1	**171-3059**	1	SHIM (3.7-MM THK)	
B	16	1	**171-3060**	1	SHIM (3.6-MM THK)	
	17	1	**284-9697**	1	VALVE GP-FLUSHING	
	18	1	**165-6969**	7	PISTON AS	
					(EACH INCLUDES)	
	18A	1	**9T-1582**	2	RING	
	19	1	**9T-1642**	1	PLATE-RETAINING	
	20	1	**171-5989**	1	KIT-BEARING (MOTOR ROTATING GROUP)	
	21	1	**9T-1643**	1	DISC-RETAINING	
	22	1	**284-9698**	1	WASHER (1-MM THK)	

B-USE AS REQUIRED

284-9696 **ROTATING GP-MOTOR** *(contd.)* **i02755522**

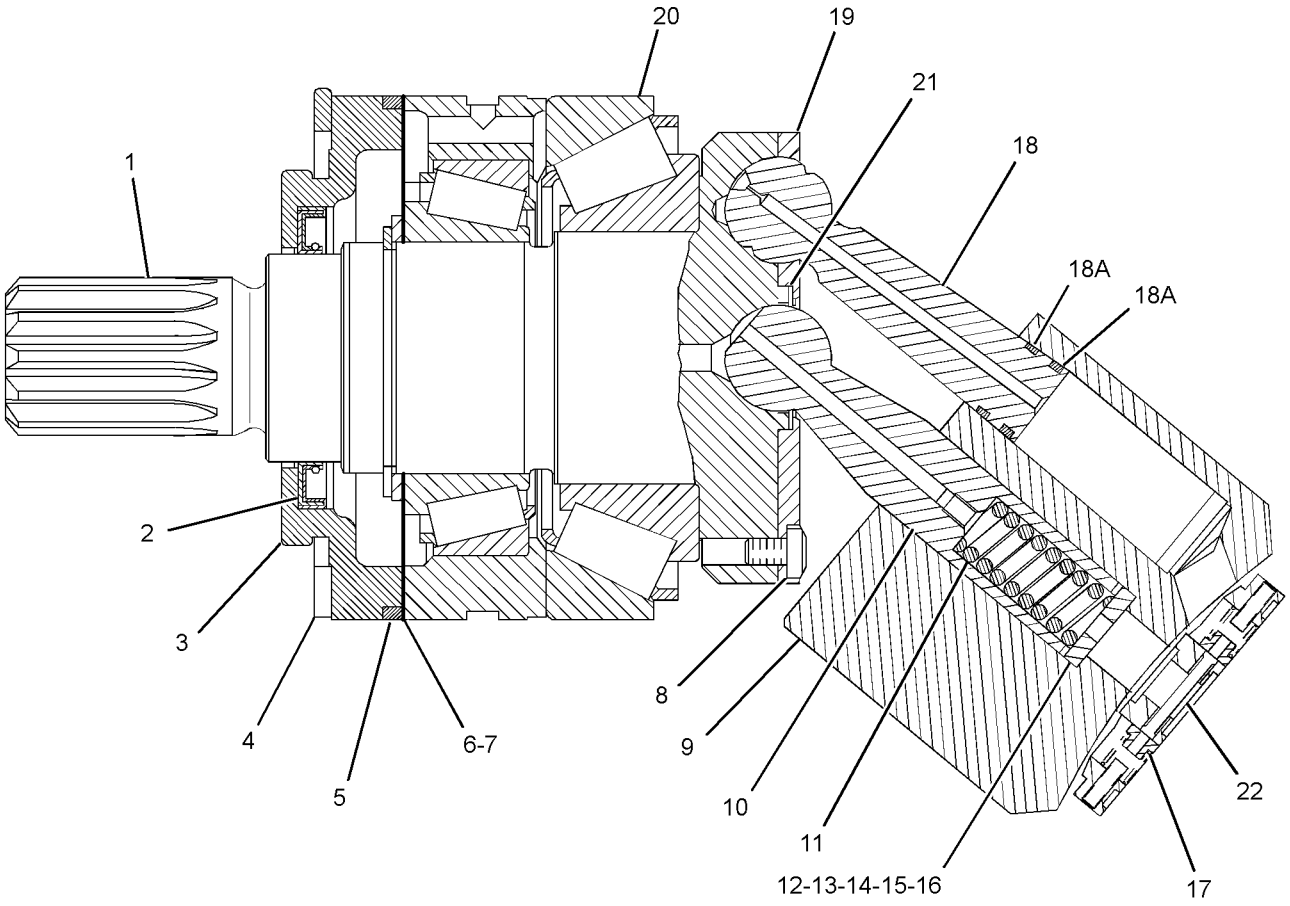

GRAPHIC #1 **<END>** g01357210

HYDRAULIC SYSTEM

226-1224 ROTATING GP-PUMP

S/N: SMC1-UP; GCT1-UP
PART OF 271-2116, 278-1445 PUMP GP-PISTON
ALSO AN ATTACHMENT

SMCS-5070 **i02754440**

NOTE	REF NO	GRAPHIC REF	PART NUMBER	QTY	PART NAME 1 2 3 4 5 6 (PRODUCT LEVEL)	SEE PAGE
	1	1	**105-1646**	9	PISTON AS-PUMP	
	2	1	**188-9637**	1	PLATE-RETRACTION	
	3	1	**105-1648**	1	BEARING	
	4	1	**105-1653**	3	PIN-RETRACTION	
	5	1	**226-1227**	1	BARREL	
	6	1	**105-1650**	1	SPACER	
	7	1	**105-1651**	1	SPRING	
	8	1	**180-6213**	1	RING-RETAINING	
	9	1	**245-7350**	1	PLATE	

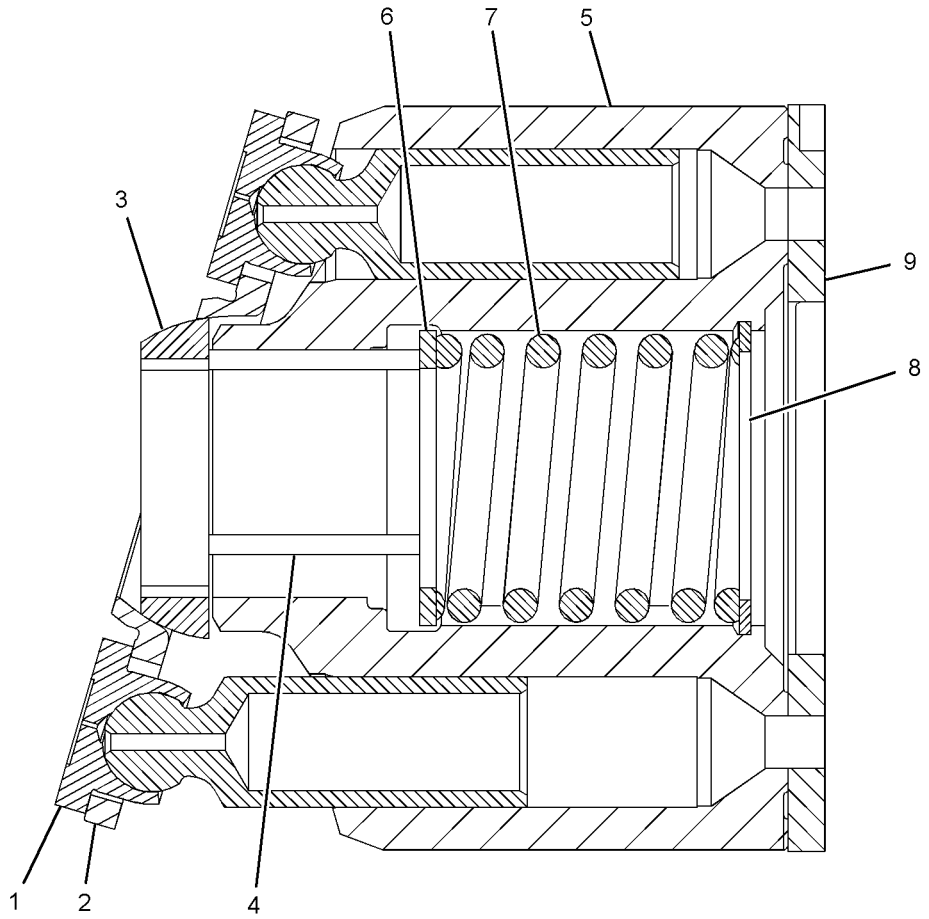

GRAPHIC #1 **<END>** g01136182

HYDRAULIC SYSTEM

273-6050 TANK & FILTER GP-HYDRAULIC

S/N: SMC1-UP; GCT1-UP

PART OF 277-0700 TANK & MTG GP-HYDRAULIC

SMCS-5056, 5068 **i02752298**

NOTE	REF NO	GRAPHIC REF	PART NUMBER	QTY	PART NAME 1 2 3 4 5 6 (PRODUCT LEVEL)	SEE PAGE
	1	1	**1U-2827**	1	GUIDE-VALVE	
	2	1	**4J-8251**	1	GROMMET	
	3	1	**4J-8252**	1	GAUGE-SIGHT (HYDRAULIC TANK)	
	4	1	**4T-0521**	1	BOLT (5/8-11X17.1-IN)	
	5	1	**5D-1911**	1	COVER-HYDRAULIC CAP	
	6	1	**5D-7927**	1	STRAINER AS-OIL (HYDRAULIC TANK FILL)	
	7	1	**6E-1752**	1	SCREEN (HYDRAULIC TANK)	
	8	1	**7B-3039**	1	SPRING	
	9	1	**7H-1447**	1	CAP-FILLER (HYDRAULIC TANK)	
	10	1	**8J-6913**	1	RETAINER-SIGHT GLASS	
	11	1	**8J-8468**	1	VALVE	
	12	1	**8J-8782**	1	BODY-DRAIN VALVE	
	13	1	**8J-8783**	1	VALVE	
	14	1	**8T-3298**	1	SEAL-RECTANGULAR	
	15	1	**9J-2914**	1	SPACER	
	16	1	**9J-7031**	1	PLUG-DRAIN (HYDRAULIC TANK)	
	17	1	**9M-7394**	1	LEVER	
	18	1	**9T-3264**	1	COVER	
	19	1	**187-9194**	1	PLATE (SIGHT GLASS)	
	20	1	**235-0892**	1	TUBE AS	
	21	1	**235-0895**	1	COVER AS	
	22	1	**235-0907**	1	BASE-FILTER	
	23	1	**257-9788**	1	GASKET	
	24	1	**273-6052**	1	TANK AS-HYDRAULIC	
	25	1	**275-2518**	1	TUBE AS	
	26	1	**285-8076**	1	SPRING	
	27	1	**1L-5072**	1	DOWEL	
	28	1	**1P-4584**	2	FLANGE-HALF	
	29	1	**1R-0777**	1	FILTER ELEMENT AS-OIL (ADVANCED EFFICIENCY)	
					—OR—	
		1	**139-1537**	1	FILTER ELEMENT AS-OIL (ULTRA HIGH EFFICIENCY)	
					—OR—	
		1	**104-6931**	1	FILTER ELEMENT AS-OIL (FIRE RESISTANT FLUID)	
	30	1	**2D-4202**	1	PLATE	
	31	1	**2J-7761**	1	RING-RETAINING	
	32	1	**3G-3267**	1	SCREEN AS (HYDRAULIC TANK)	
	33	1	**4F-7389**	1	SEAL-O-RING	
	34	1	**4K-0367**	1	NUT-FULL (5/8-11-THD)	
	35	1	**4P-7581**	1	CLIP	
	36	1	**4P-8134**	2	CLIP	
	37	1	**5F-1678**	2	SEAL-O-RING	
	38	1	**5M-2057**	1	SEAL-O-RING	
	39	1	**6H-9361**	1	RING-RETAINING	
	40	1	**6V-5839**	8	WASHER (11X21X2.5-MM THK)	
M	41	1	**6V-7732**	7	BOLT (M10X1.5X25-MM)	
M	42	1	**6V-7744**	6	LOCKNUT (M10X1.15-THD)	
	43	1	**6V-9633**	1	GASKET	
	44	1	**7F-8267**	2	SEAL-O-RING	
	45	1	**8C-3206**	4	FLANGE-HALF	
	46	1	**8F-9206**	1	SEAL-O-RING	
	47	1	**8J-8322**	1	RING-RETAINING	
	48	1	**8J-8436**	1	TUBE AS	
	49	1	**8T-2275**	1	BALL	
	50	1	**8T-4121**	32	WASHER-HARD (11X21X2.5-MM THK)	
M	51	1	**8T-4136**	20	BOLT (M10X1.5X25-MM)	
M	52	1	**8T-4184**	4	BOLT (M12X1.75X45-MM)	

273-6050 **TANK & FILTER GP-HYDRAULIC** *(contd.)* **i02752298**

NOTE	REF NO	GRAPHIC REF	PART NUMBER	QTY	PART NAME 1 2 3 4 5 6 (PRODUCT LEVEL)	SEE PAGE
M	53	1	**8T-4196**	8	BOLT (M10X1.5X35-MM)	
	54	1	**8T-4223**	4	WASHER-HARD (13.5X25.5X3-MM THK)	
	55	1	**9H-6454**	1	GASKET	
M	56	1	**9X-2125**	2	BOLT-LOCKING (M10X1.5X25-MM)	

M-METRIC PART

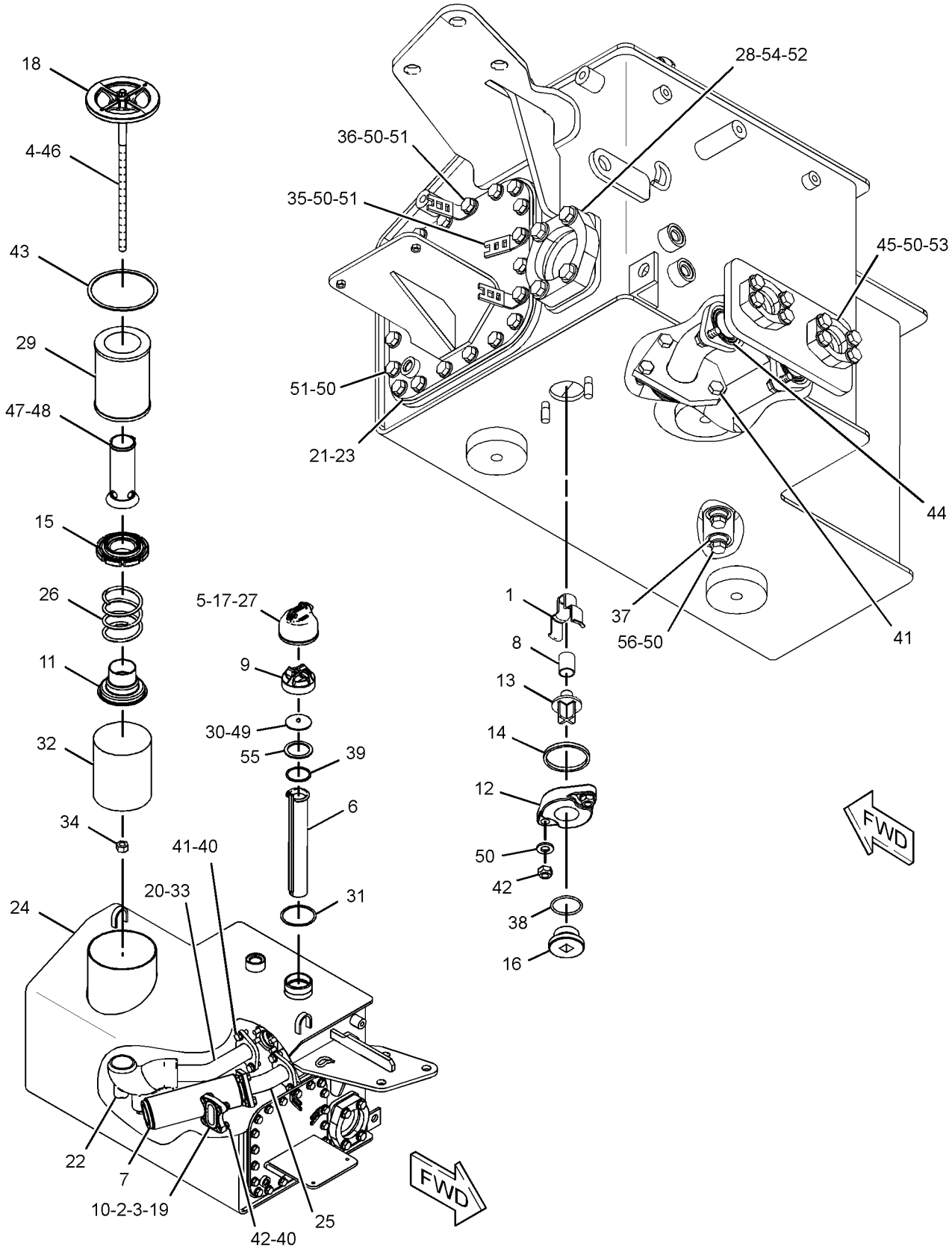

GRAPHIC #1

<END>

g01360314

HYDRAULIC SYSTEM

277-0700 TANK & MTG GP-HYDRAULIC

S/N: SMC1-UP; GCT1-UP

PART OF 269-2050 HYDRAULIC AR-2 VALVE

SMCS-5056 **i02752309**

NOTE	REF NO	GRAPHIC REF	PART NUMBER	QTY	PART NAME 1 2 3 4 5 6 (PRODUCT LEVEL)	SEE PAGE
	1	1	**246-2641**	1	PADLOCK GP	
		1	**5P-8500**	1	KEY	
	2	1	**164-3651**	1	ADAPTER	
	3	1	**191-5439**	1	VALVE-BREAKER RELIEF	
Y	4	1	*273-6050*	1	TANK & FILTER GP-HYDRAULIC	523
	5	1	**3D-2824**	1	SEAL-O-RING	
	6	1	**3J-1907**	1	SEAL-O-RING	
M	7	1	**8T-4779**	3	BOLT (M16X2X35-MM)	
	8	1	**9X-8257**	3	WASHER (17.5X30X3.5-MM THK)	

M-METRIC PART
Y-SEPARATE ILLUSTRATION

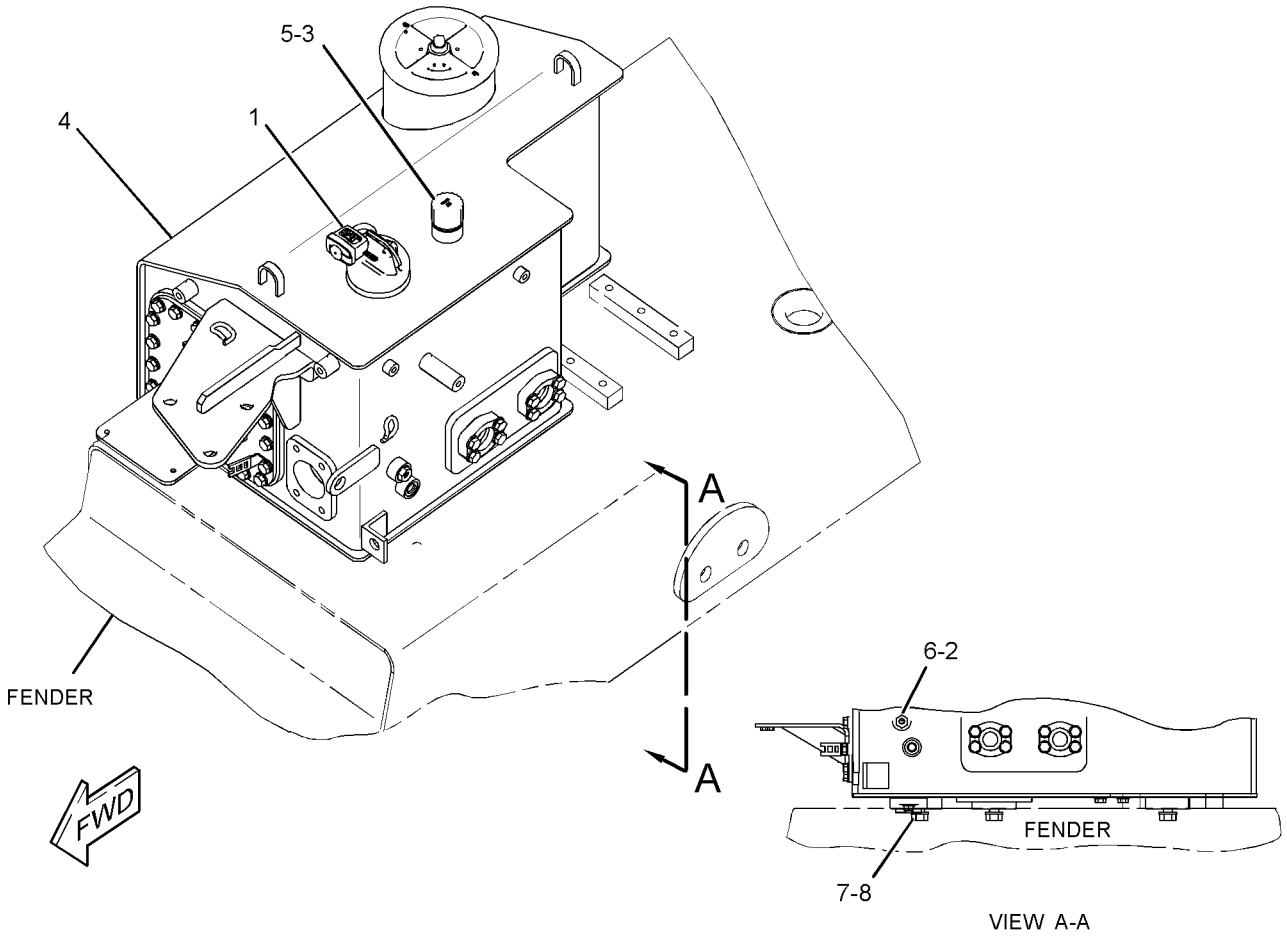

GRAPHIC #1 **<END>** g01358298

HYDRAULIC SYSTEM

239-5317 VALVE & MTG GP-BULLDOZER–GRADE CONTROL

S/N: SMC1-UP; GCT1-UP
PART OF 269-2089 LINES GP-PILOT
AN ATTACHMENT

SMCS-5051 **i02801214**

NOTE	REF NO	GRAPHIC REF	PART NUMBER	QTY	PART NAME 1 2 3 4 5 6 (PRODUCT LEVEL)	SEE PAGE
Y	1	1	**201-0950**	1	VALVE GP-SOLENOID (HYDRAULIC LOCKOUT)	573
Y	2	1	**235-4605**	4	VALVE GP-SOLENOID (BLADE CONTROL)	574
	3	1	**239-5318**	1	MANIFOLD AS	

Y-SEPARATE ILLUSTRATION

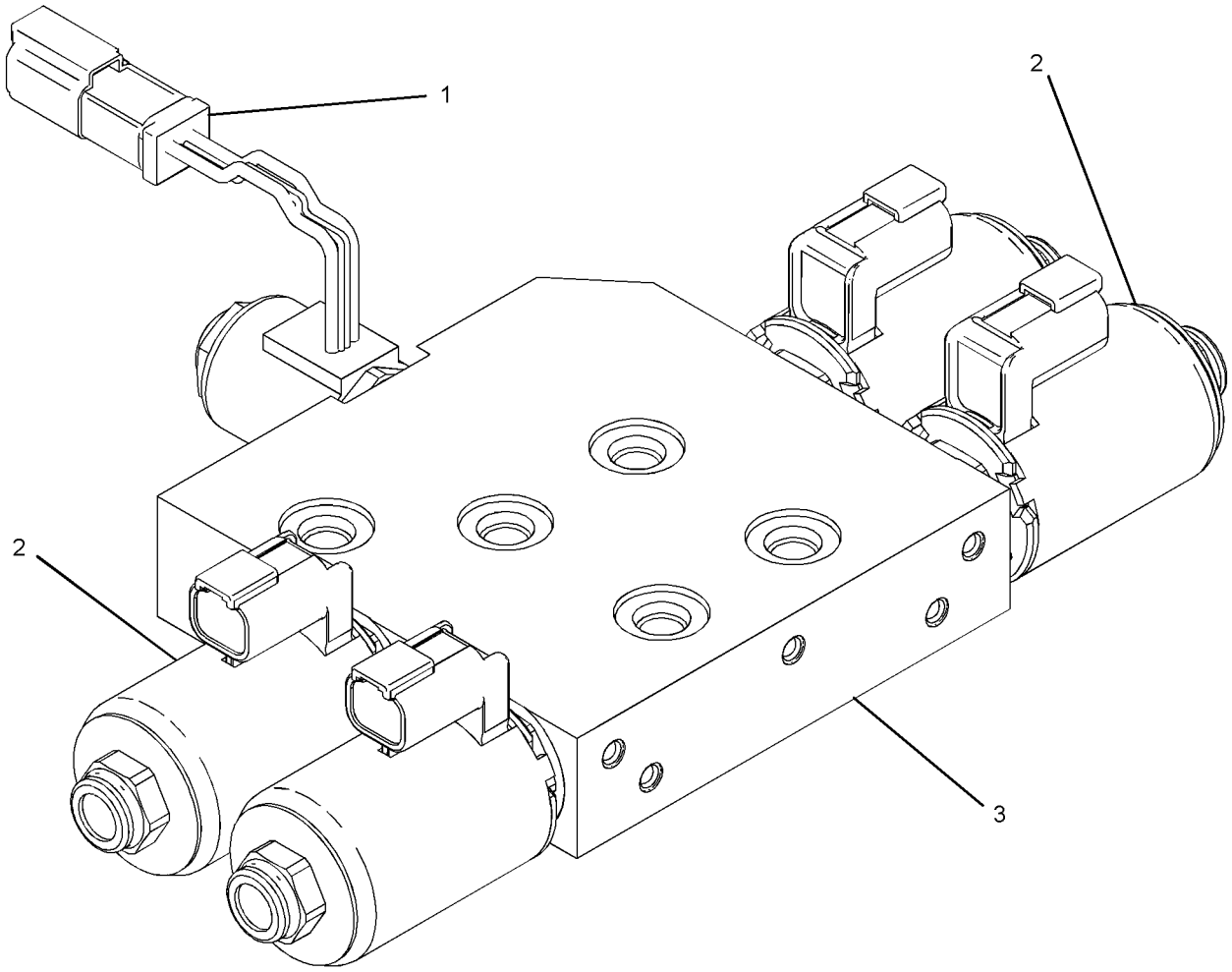

GRAPHIC #1 **<END>** g01210119

HYDRAULIC SYSTEM

213-1308 VALVE & MTG GP-CONTROL—TRANSMISSION

S/N: SMC1-UP; GCT1-UP

PART OF 269-2046 POWER TRAIN AR

SMCS-5051 **i02801217**

NOTE	REF NO	GRAPHIC REF	PART NUMBER	QTY	PART NAME 1 2 3 4 5 6 (PRODUCT LEVEL)	SEE PAGE
	1	1	**3S-0004**	4	WASHER (0.406X0.728X0.09-IN THK)	
	2	1	**6V-0852**	1	CAP-DUST	
	3	1	**8T-9358**	1	CONNECTOR	
I	4	1	**169-7451**	1	HOSE AS	
Y	5	1	**201-7274**	1	VALVE GP-BRAKE CONTROL	454
	6	1	**228-1850**	1	PLATE	
	7	1	**260-2017**	1	BRACKET AS	
	8	1	*148-8336*	1	CONNECTOR AS	
		1	**6V-8636**	1	CONNECTOR	
		1	**3J-1907**	1	SEAL-O-RING	
		1	**6V-8397**	1	SEAL-O-RING	
	9	1	**2M-9780**	1	SEAL-O-RING	
	10	1	**3J-1907**	2	SEAL-O-RING	
	11	1	**5P-1404**	1	ADAPTER-O-RING	
	12	1	**6V-0484**	1	ADAPTER-O-RING	
	13	1	**6V-3965**	1	FITTING-COUPLER	
	14	1	**6V-8397**	1	SEAL-O-RING	
	15	1	**6V-9168**	1	NUT (11/16-16-THD)	
	16	1	**8M-5254**	4	SEAL-O-RING	
M	17	1	**8T-5030**	4	BOLT (M10X1.5X120-MM)	

I-REFER TO HYDRAULIC INFORMATION SYSTEM
M-METRIC PART
Y-SEPARATE ILLUSTRATION

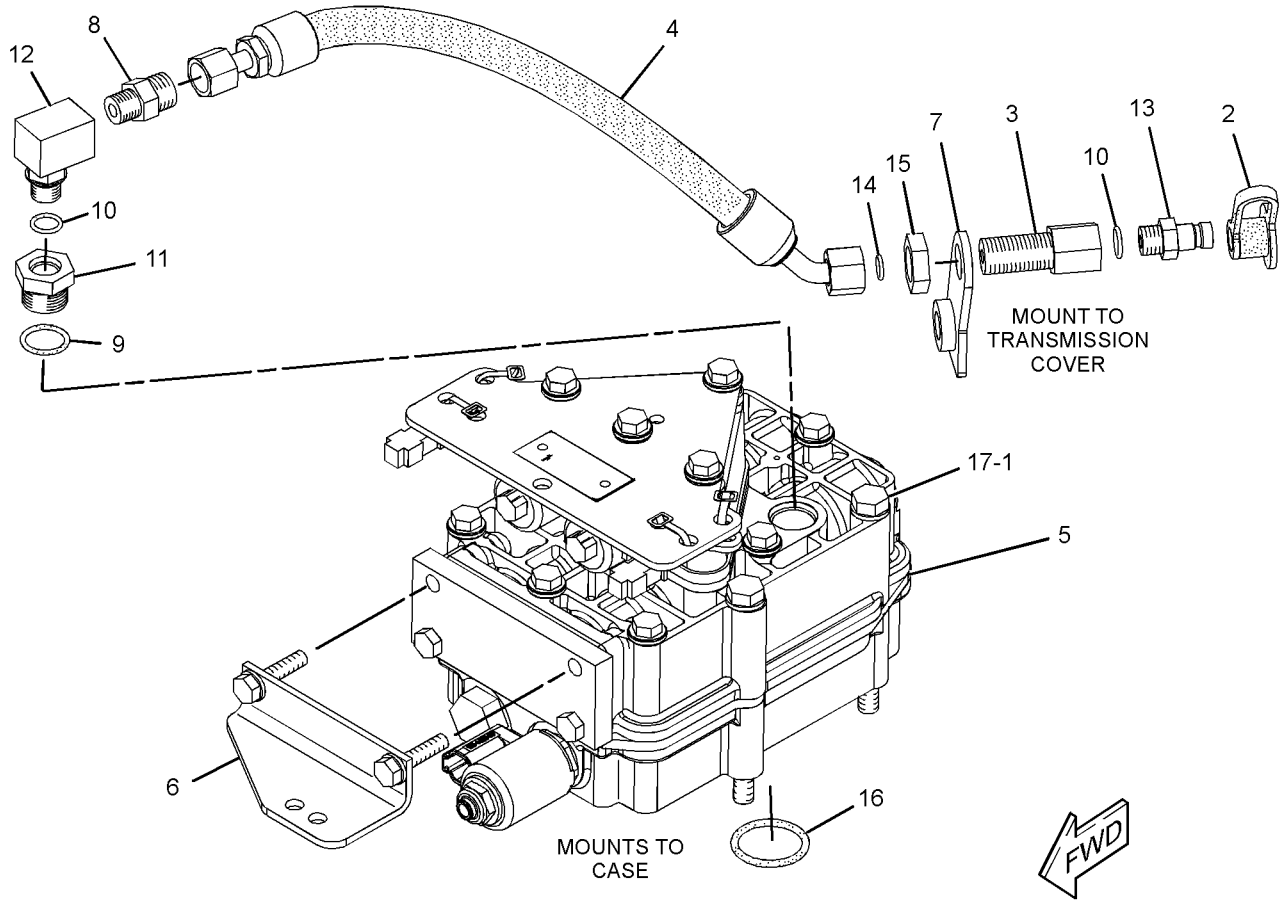

GRAPHIC #1 **<END>** g01364514

269-2092 VALVE & MTG GP-IMPLEMENT CONT

S/N: SMC1-UP; GCT1-UP

PART OF 269-2050 HYDRAULIC AR-2 VALVE

SMCS-5051 **i02755416**

NOTE	REF NO	GRAPHIC REF	PART NUMBER	QTY	PART NAME 1 2 3 4 5 6 (PRODUCT LEVEL)	SEE PAGE
Y	1	1	**269-8161**	1	VALVE GP-BANK 2 (BULLDOZER LIFT, TILT)	531
	2	1	**277-3578**	1	PLATE AS	
		1	**3F-4360**	3	SPACER (0.563X1X0.844-IN THK)	
M	3	1	**162-8284**	3	BOLT (M12X1.75X60-MM)	
	4	1	**8T-4223**	3	WASHER-HARD (13.5X25.5X3-MM THK)	
M	5	1	**8T-7338**	3	BOLT (M16X2X45-MM)	
	6	1	**9X-8257**	3	WASHER (17.5X30X3.5-MM THK)	

M-METRIC PART
Y-SEPARATE ILLUSTRATION

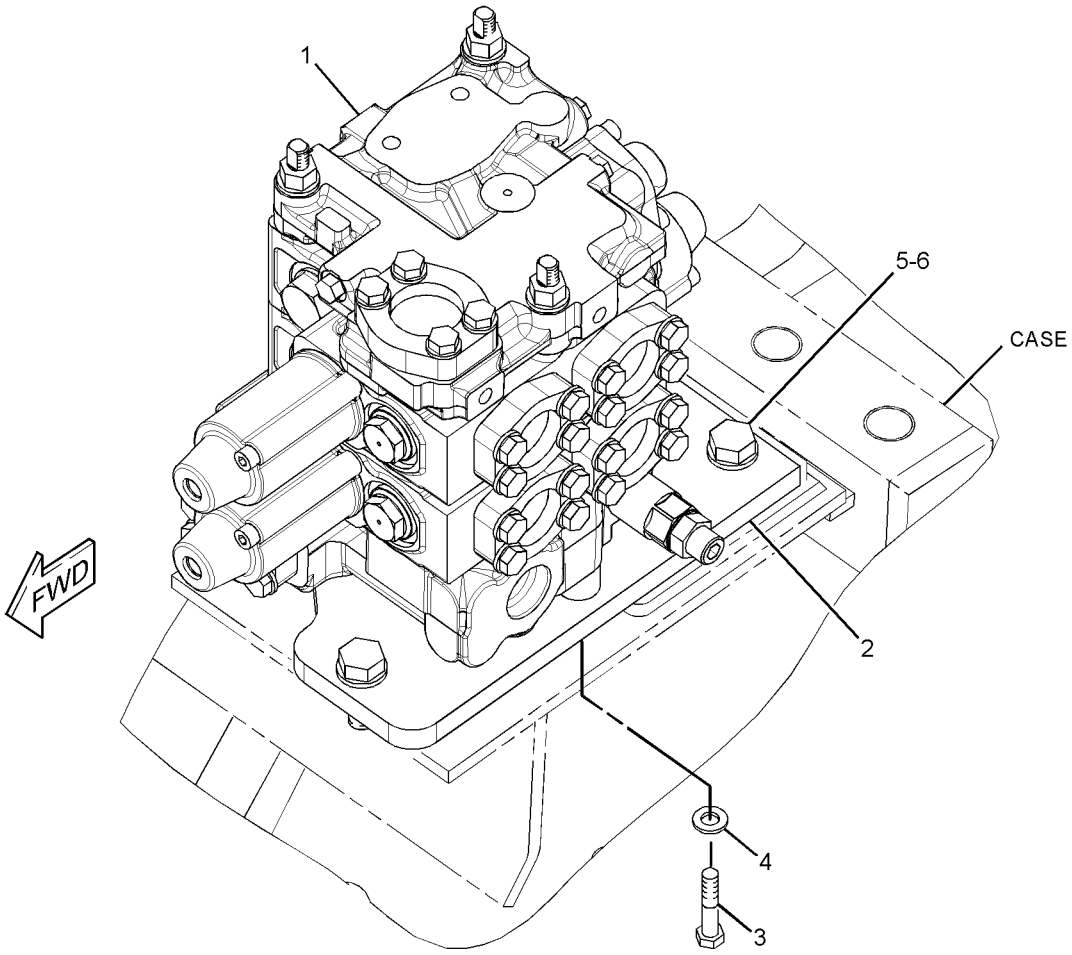

GRAPHIC #1 **<END>** g01357672

269-8161 VALVE GP-BANK 2—BULLDOZER LIFT, TILT

S/N: SMC1-UP; GCT1-UP

PART OF 269-2092 VALVE & MTG GP-IMPLEMENT CONT

SMCS-5051 **i02755452**

NOTE	REF NO	GRAPHIC REF	PART NUMBER	QTY	PART NAME 1 2 3 4 5 6 (PRODUCT LEVEL)	SEE PAGE
	2	1	**6V-8188**	3	NUT (1/2-13-THD)	
	3	1	**164-7678**	3	ROD	
	4	1	**235-0399**	1	COVER	
Y	5	1	**269-8154**	1	VALVE GP-CONTROL (BULLDOZER TILT)	547
Y	6	1	**269-8155**	1	VALVE GP-CONTROL (BULLDOZER LIFT)	549
Y	8	1	**273-2156**	1	MANIFOLD GP-VALVE (INLET)	511
	9	1	*155-3624*	2	PLUG AS	
					(EACH INCLUDES)	
		1	**9S-4182**	1	PLUG-O-RING	
		1	**3J-7354**	1	SEAL-O-RING	
	10	1	**1P-3702**	1	SEAL-RECTANGULAR	
	11	1	**1P-4578**	2	FLANGE-HALF	
	12	1	*207-7899*	1	PLUG AS	
		1	**9S-4188**	1	PLUG	
		1	**4K-1388**	1	SEAL-O-RING	
	13	1	**4J-0522**	9	SEAL-O-RING	
	14	1	**4J-8997**	2	SEAL-O-RING	
	15	1	**6V-5555**	9	SEAL-O-RING	
	16	1	**8C-3206**	10	FLANGE-HALF	
	17	1	**8T-4121**	24	WASHER-HARD (11X21X2.5-MM THK)	
M	18	1	**8T-4196**	24	BOLT (M10X1.5X35-MM)	
	19	1	**8T-4223**	3	WASHER-HARD (13.5X25.5X3-MM THK)	

M-METRIC PART
Y-SEPARATE ILLUSTRATION

269-8161 VALVE GP-BANK 2 *(contd.)* i02755452

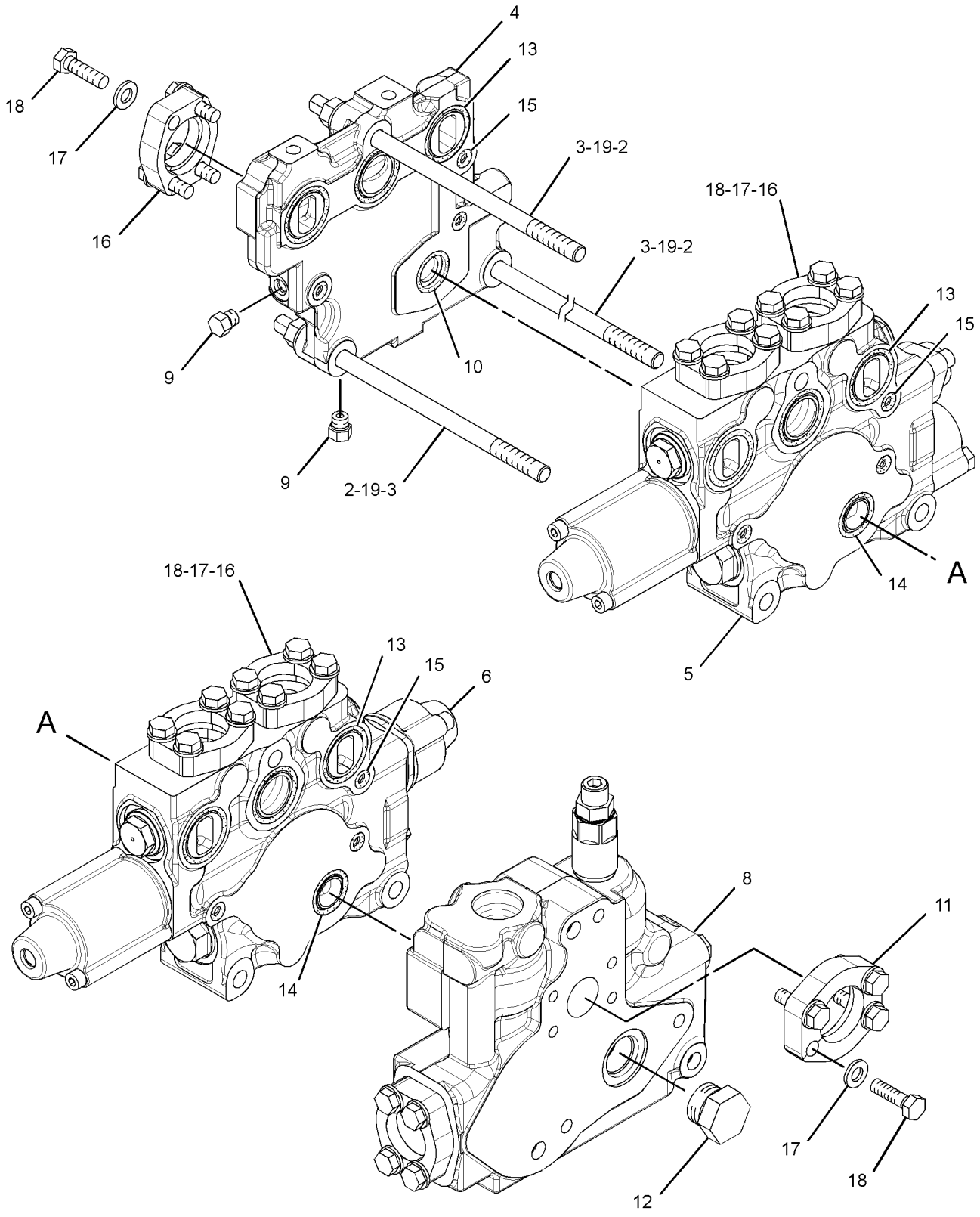

GRAPHIC #1 **<END>** g01357695

269-8157 VALVE GP-BANK 3—BULLDOZER LIFT, TILT, WINCH

S/N: SMC1-UP; GCT1-UP
PART OF 280-1478 CONTROL AR-HYDRAULIC IMPLEMENT
AN ATTACHMENT

SMCS-5051 **i02760619**

NOTE	REF NO	GRAPHIC REF	PART NUMBER	QTY	PART NAME 1 2 3 4 5 6 (PRODUCT LEVEL)	SEE PAGE
	1	1	**164-7677**	3	ROD	
	3	1	**235-0399**	1	COVER	
Y	4	1	**235-0403**	1	VALVE GP-CONTROL (BULLDOZER LIFT)	538
Y	5	1	**235-0404**	1	VALVE GP-CONTROL (BULLDOZER TILT)	541
Y	6	1	**239-6074**	1	VALVE GP-CONTROL (WINCH)	543
Y	8	1	**273-2155**	1	MANIFOLD GP-VALVE (INLET)	510
	9	1	*155-3624*	2	PLUG AS	
					(EACH INCLUDES)	
		1	**9S-4182**	1	PLUG-O-RING	
		1	**3J-7354**	1	SEAL-O-RING	
	10	1	**1P-3702**	1	SEAL-RECTANGULAR	
	11	1	**1P-4578**	2	FLANGE-HALF	
	12	1	*207-7899*	1	PLUG AS	
		1	**9S-4188**	1	PLUG	
		1	**4K-1388**	1	SEAL-O-RING	
	13	1	**4J-0522**	12	SEAL-O-RING	
	14	1	**4J-8997**	3	SEAL-O-RING	
	15	1	**6V-5555**	12	SEAL-O-RING	
	16	1	**6V-8188**	3	NUT (1/2-13-THD)	
	17	1	**8C-3206**	10	FLANGE-HALF	
	18	1	**8T-4121**	32	WASHER-HARD (11X21X2.5-MM THK)	
M	19	1	**8T-4182**	8	BOLT (M10X1.5X45-MM)	
M	20	1	**8T-4196**	24	BOLT (M10X1.5X35-MM)	
	21	1	**8T-4223**	3	WASHER-HARD (13.5X25.5X3-MM THK)	
	22	1	**8T-9403**	4	FLANGE-HALF	

M-METRIC PART
Y-SEPARATE ILLUSTRATION

269-8157 VALVE GP-BANK 3 *(contd.)* i02760619

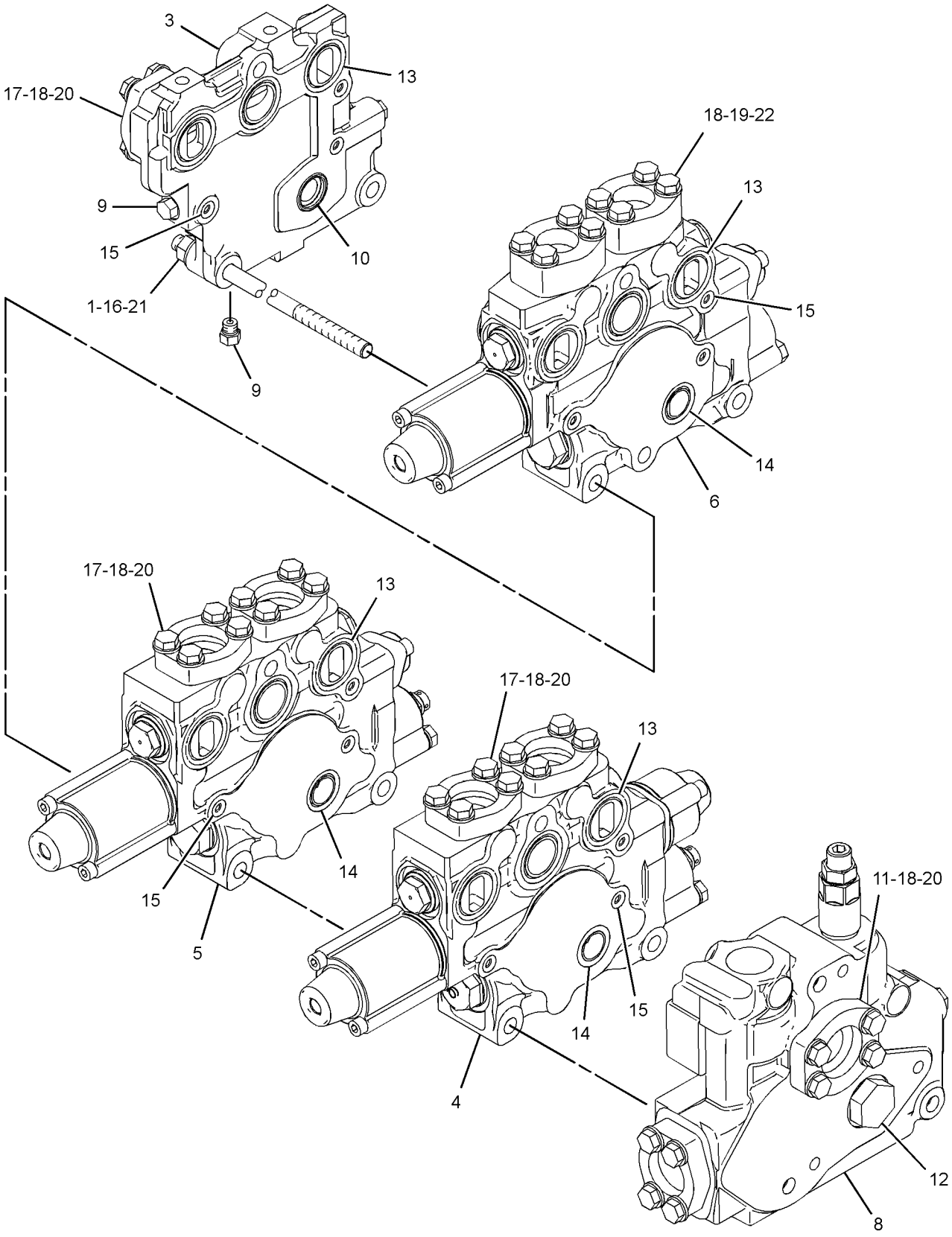

GRAPHIC #1 **<END>** g01393453

269-8160 VALVE GP-BANK 3—BULLDOZER LIFT, TILT, RIPPER

S/N: SMC1-UP; GCT1-UP

PART OF 280-1476 CONTROL AR-HYDRAULIC IMPLEMENT

AN ATTACHMENT

SMCS-5051 **i02760173**

NOTE	REF NO	GRAPHIC REF	PART NUMBER	QTY	PART NAME 1 2 3 4 5 6 (PRODUCT LEVEL)	SEE PAGE
	1	1	**164-7677**	3	ROD	
	3	1	**235-0399**	1	COVER	
Y	4	1	**269-8153**	1	VALVE GP-CONTROL (RIPPER LIFT)	545
Y	5	1	**269-8154**	1	VALVE GP-CONTROL (BULLDOZER TILT)	547
Y	6	1	**269-8155**	1	VALVE GP-CONTROL (BULLDOZER LIFT)	549
Y	8	1	**273-2156**	1	MANIFOLD GP-VALVE (INLET)	511
	9	1	*155-3624*	2	PLUG AS	
					(EACH INCLUDES)	
		1	**9S-4182**	1	PLUG-O-RING	
		1	**3J-7354**	1	SEAL-O-RING	
	10	1	**1P-3702**	1	SEAL-RECTANGULAR	
	11	1	**1P-4578**	2	FLANGE-HALF	
	12	1	*207-7899*	1	PLUG AS	
		1	**9S-4188**	1	PLUG	
		1	**4K-1388**	1	SEAL-O-RING	
	13	1	**4J-0522**	13	SEAL-O-RING	
	14	1	**4J-8997**	3	SEAL-O-RING	
	15	1	**5H-4020**	1	COVER	
	16	1	**6V-5555**	12	SEAL-O-RING	
	17	1	**6V-8188**	3	NUT (1/2-13-THD)	
	18	1	**8C-3206**	14	FLANGE-HALF	
	19	1	**8T-4121**	32	WASHER-HARD (11X21X2.5-MM THK)	
M	20	1	**8T-4196**	32	BOLT (M10X1.5X35-MM)	
	21	1	**8T-4223**	3	WASHER-HARD (13.5X25.5X3-MM THK)	

M-METRIC PART
Y-SEPARATE ILLUSTRATION

269-8160 VALVE GP-BANK 3 *(contd.)* i02760173

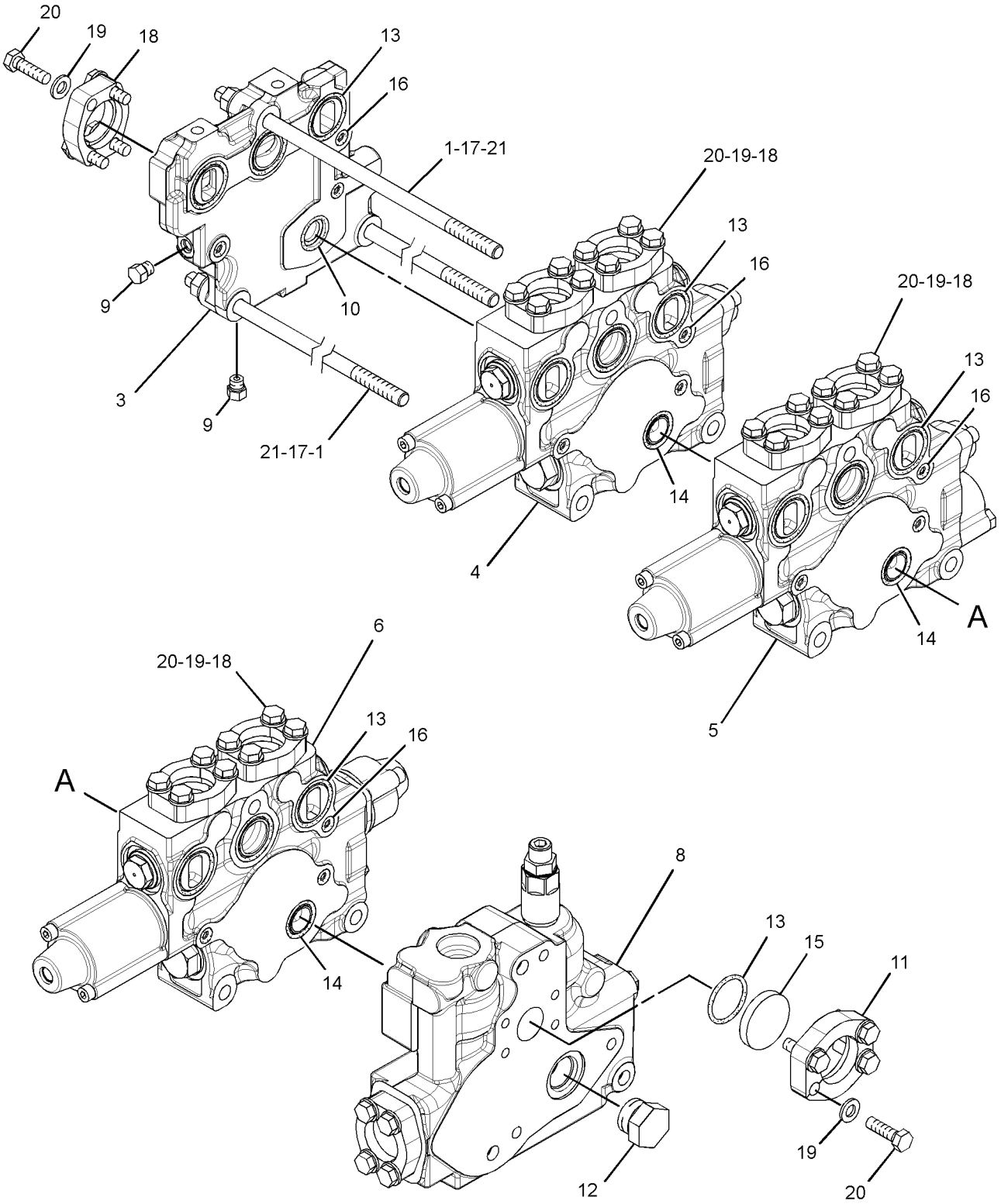

GRAPHIC #1 **<END>** g01393467

158-9956 VALVE GP-CHECK—PILOT PRESSURE SUPPLY

S/N: SMC1-UP; GCT1-UP

PART OF 226-4751 MANIFOLD GP-CONTROL

SMCS-5067 **i02106248**

NOTE	REF NO	GRAPHIC REF	PART NUMBER	QTY	PART NAME 1 2 3 4 5 6 (PRODUCT LEVEL)	SEE PAGE
	1	1	**3K-0360**	1	SEAL-O-RING	
	2	1	**161-6154**	1	SEAL-O-RING	
	3	1	**6E-0381**	1	RING-BACKUP	

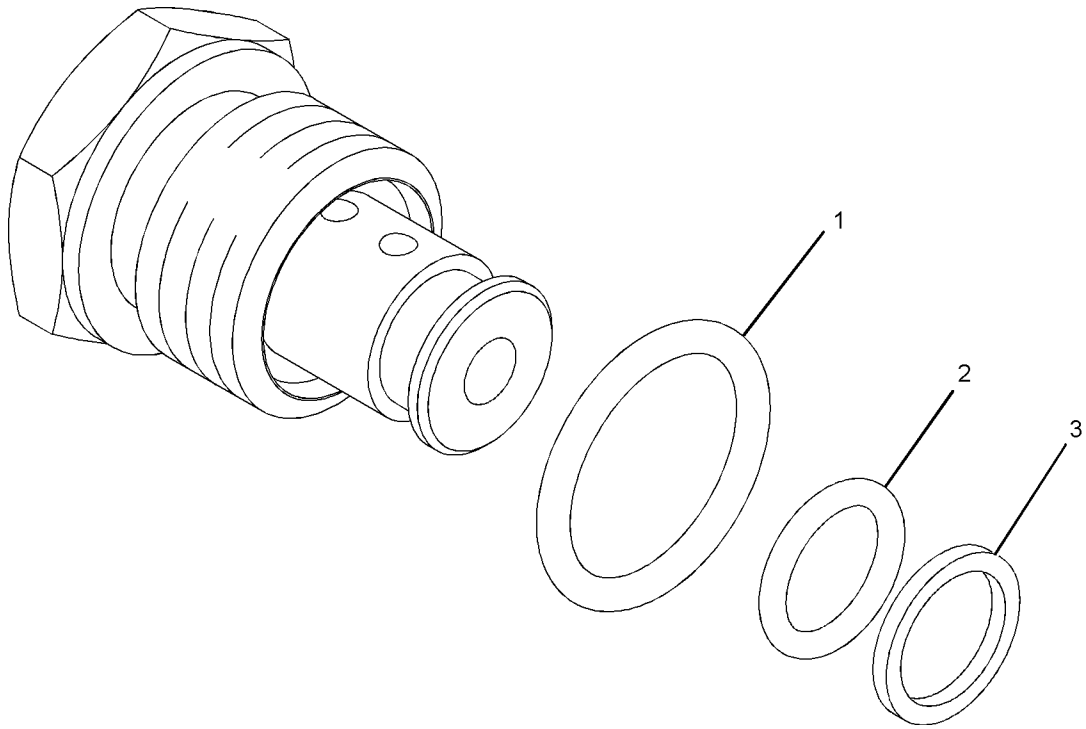

GRAPHIC #1 **<END>** g01016882

HYDRAULIC SYSTEM

235-0403 VALVE GP-CONTROL—BULLDOZER LIFT

S/N: SMC1-UP; GCT1-UP
PART OF 269-8157 VALVE GP-BANK 3
AN ATTACHMENT

SMCS-5051 **i02435786**

NOTE	REF NO	GRAPHIC REF	PART NUMBER	QTY	PART NAME 1 2 3 4 5 6 (PRODUCT LEVEL)	SEE PAGE
	1	1	**2S-2596**	2	SPRING	
	3	1	**4T-1108**	1	PLUG	
B	4	2	**4T-4628**	5	SHIM (0.5-MM THK)	
	5	1	**4T-5072**	1	RING-BACKUP	
	6	1	**100-8012**	1	BODY	
Y	7	1	**121-6649**	1	VALVE GP-RELIEF (PILOT OIL PRESSURE)	569
	9	2	**153-7067**	1	RETAINER	
	10	1	**153-7549**	1	RETAINER	
	11	2	**153-7550**	1	RETAINER	
	12	1	**153-7553**	1	SPRING	
	13	2	**161-2685**	1	SCREW (3/8-24-THD)	
	14	1	**163-5671**	1	WASHER (17X39X2-MM THK)	
	15	2	**164-0938**	1	SPRING	
	17	2	**170-4001**	1	SPRING	
	18	1	**173-0511**	1	HOUSING	
	19	1	**173-0512**	1	HOUSING	
	20	1	**173-0515**	1	SPACER	
M	23	2	**085-8091**	2	BOLT (M10X1.5X55-MM)	
	24	1	**100-8010**	2	VALVE-CHECK	
	25	1	**100-8011**	1	PLUG	
M	26	1	**102-7365**	2	BOLT-SOCKET HEAD (M8X1.25X100-MM)	
	27	1	**123-9624**	1	SPRING	
	28	1	*173-3993*	2	PLUG AS	
					(EACH INCLUDES)	
		1	**4J-7533**	1	SEAL-O-RING	
		1	**9S-8001**	1	PLUG	
	29	2	*183-7263*	1	PLUG AS	
		2	**3J-7354**	1	SEAL-O-RING	
		2	**9S-8002**	1	PLUG-O-RING	
B	30	2	**2J-2866**	3	SHIM (0.12-MM THK)	
	31	1	**4J-5351**	1	SEAL-O-RING	
	32	1	**4K-1388**	2	SEAL-O-RING	
Y	33	2	**4T-1860**	1	VALVE GP-SHUTTLE	571
	34	1	**4T-5073**	2	RING-BACKUP	
	35	1,2	**5K-0227**	2	SEAL-O-RING	
	36	1	**5M-2057**	2	SEAL-O-RING	
	37	1	**6E-1637**	3	SHIM (1-MM THK)	
	38	2	**7J-0204**	1	SEAL-O-RING	
	39	1	**7J-9933**	2	SEAL-O-RING	
	40	1	**7M-8485**	1	SEAL-O-RING	
	41	1	**8J-8462**	2	SHIM (0.254-MM THK)	
	42	2	**9J-8126**	1	PLUG-ORIFICE	
	43	2	**9X-2027**	2	WASHER (11X18X2-MM THK)	
M	44	1	**9X-6154**	2	BOLT-SOCKET HEAD (M8X1.25-THD)	

B-USE AS REQUIRED
M-METRIC PART
Y-SEPARATE ILLUSTRATION

235-0403 VALVE GP-CONTROL *(contd.)*

i02435786

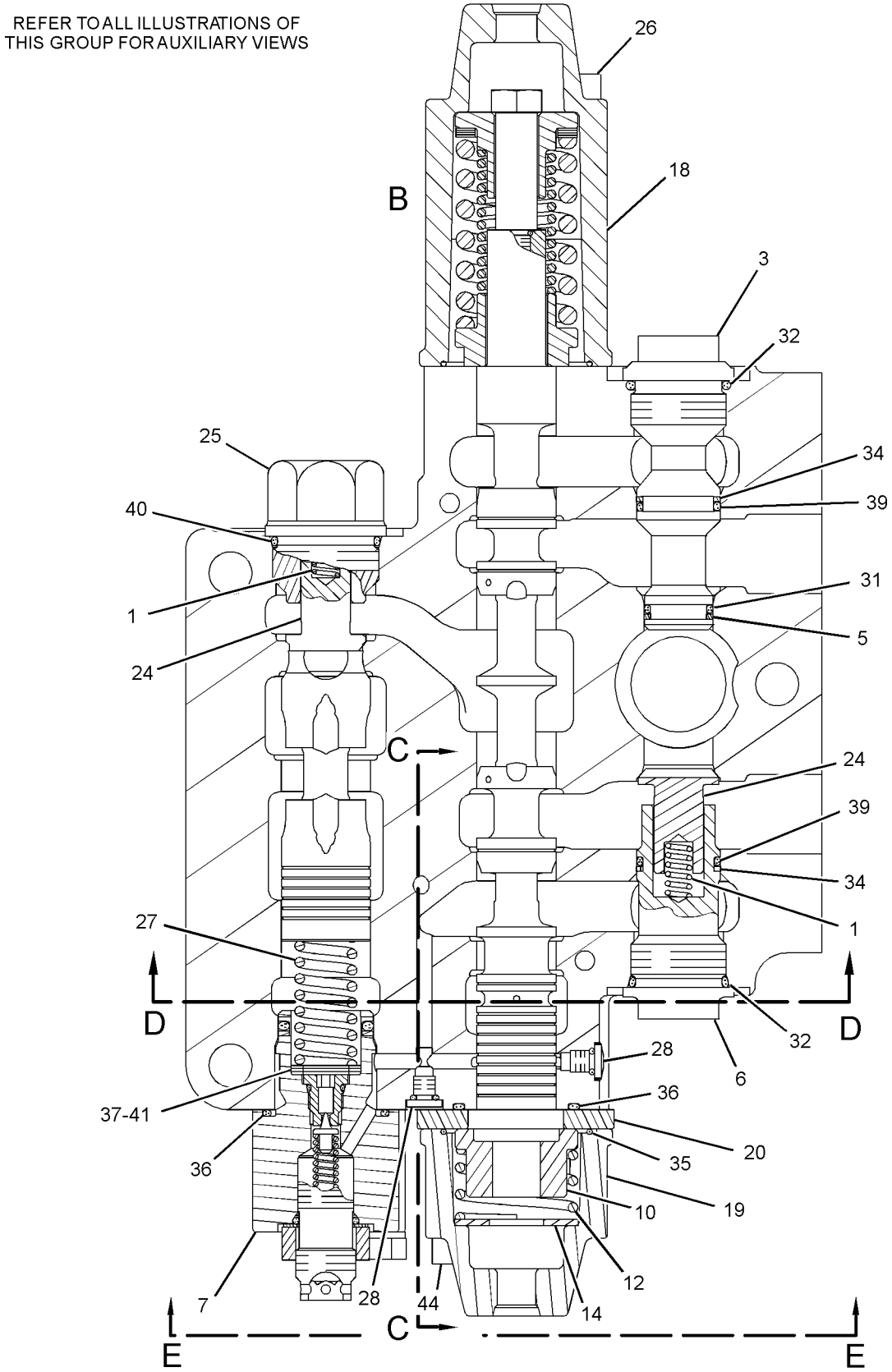

GRAPHIC #1

g01218394

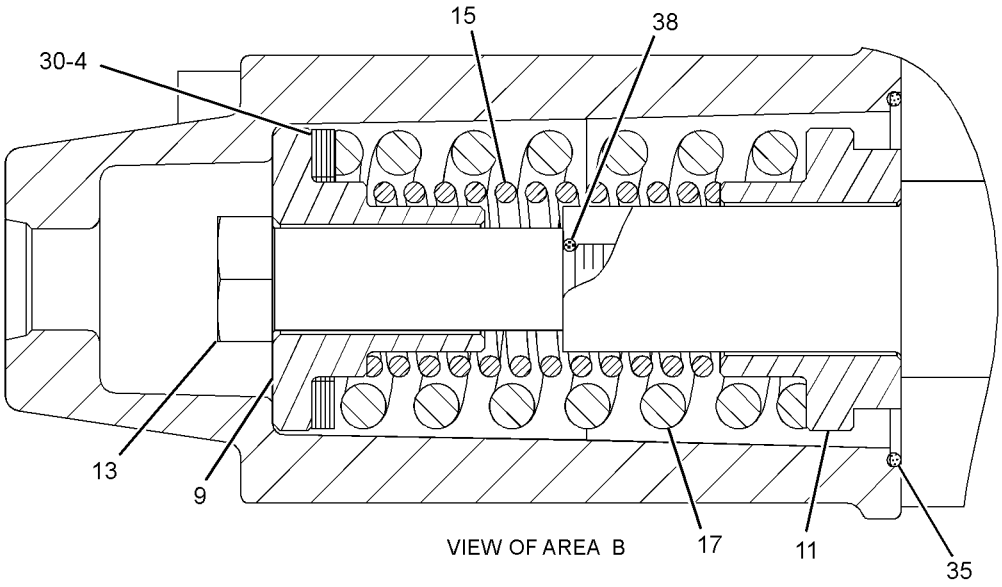

VIEW OF AREA B

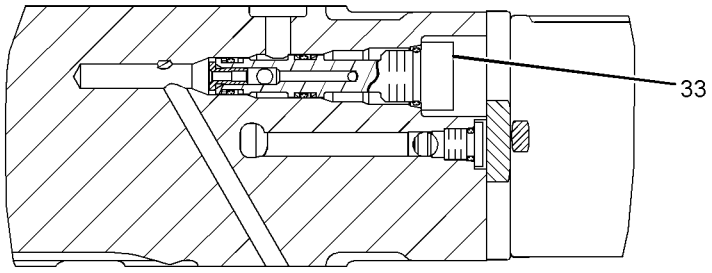

SECTION C-C

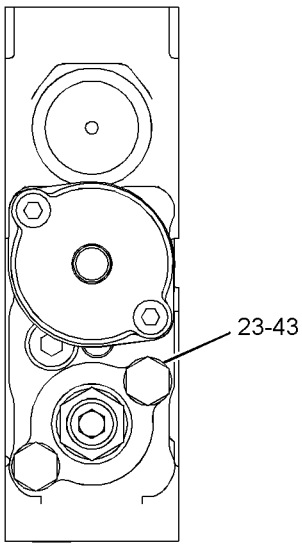

SECTION E-E

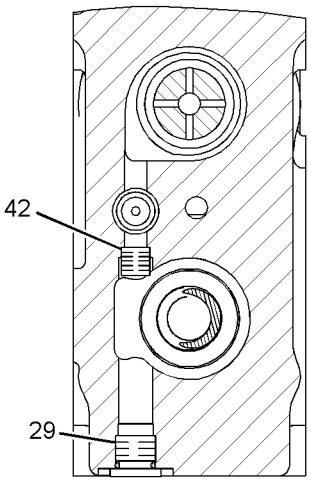

SECTION D-D

GRAPHIC #2 **<END>** g01209850

HYDRAULIC SYSTEM

235-0404 VALVE GP-CONTROL

S/N: SMC1-UP; GCT1-UP
PART OF 269-8157 VALVE GP-BANK 3
AN ATTACHMENT

SMCS-5051 **i02436160**

NOTE	REF NO	GRAPHIC REF	PART NUMBER	QTY	PART NAME 1 2 3 4 5 6 (PRODUCT LEVEL)	SEE PAGE
	1	1	**123-9624**	1	SPRING	
	2	1	**2S-2596**	1	SPRING	
	4	1	**4T-1108**	2	PLUG	
B	5	1	**4T-4628**	6	SHIM (0.5-MM THK)	
	6	1	**4T-4631**	1	SPRING	
Y	7	1	**121-6649**	1	VALVE GP-RELIEF (PILOT OIL PRESSURE)	569
	9	1	**153-6976**	1	SPRING	
	10	1	**153-7067**	1	RETAINER	
	11	1	**153-7551**	1	RETAINER	
	12	1	**161-2684**	1	SCREW (3/8-24X2.48-IN)	
	14	1	**173-0511**	1	HOUSING	
	15	1	**173-0514**	1	COVER	
M	18	1	**085-8091**	2	BOLT (M10X1.5X55-MM)	
	19	1	**100-8010**	1	VALVE-CHECK	
	20	1	**100-8011**	1	PLUG	
M	21	1	**102-7365**	2	BOLT-SOCKET HEAD (M8X1.25X100-MM)	
	22	1	*173-3993*	2	PLUG AS	
					(EACH INCLUDES)	
		1	**9S-8001**	1	PLUG	
		1	**4J-7533**	1	SEAL-O-RING	
	23	1	*183-7263*	1	PLUG AS	
		1	**9S-8002**	1	PLUG-O-RING	
		1	**3J-7354**	1	SEAL-O-RING	
B	24	1	**2J-2866**	2	SHIM (0.12-MM THK)	
	25	1	**4J-5351**	2	SEAL-O-RING	
	26	1	**4K-1388**	2	SEAL-O-RING	
Y	27	1	**4T-1860**	1	VALVE GP-SHUTTLE	571
	28	1	**4T-5072**	2	RING-BACKUP	
	29	1	**4T-5073**	2	RING-BACKUP	
	30	1	**5K-0227**	1	SEAL-O-RING	
	31	1	**5M-2057**	2	SEAL-O-RING	
M	32	1	**6V-5192**	2	BOLT-SOCKET HEAD (M8X1.25X30-MM)	
	33	1	**7J-0204**	1	SEAL-O-RING	
	34	1	**7J-9933**	2	SEAL-O-RING	
	35	1	**7M-8485**	1	SEAL-O-RING	
	36	1	**9J-8126**	1	PLUG-ORIFICE	
	37	1	**9X-2027**	2	WASHER (11X18X2-MM THK)	

B-USE AS REQUIRED
M-METRIC PART
Y-SEPARATE ILLUSTRATION

235-0404 VALVE GP-CONTROL *(contd.)* i02436160

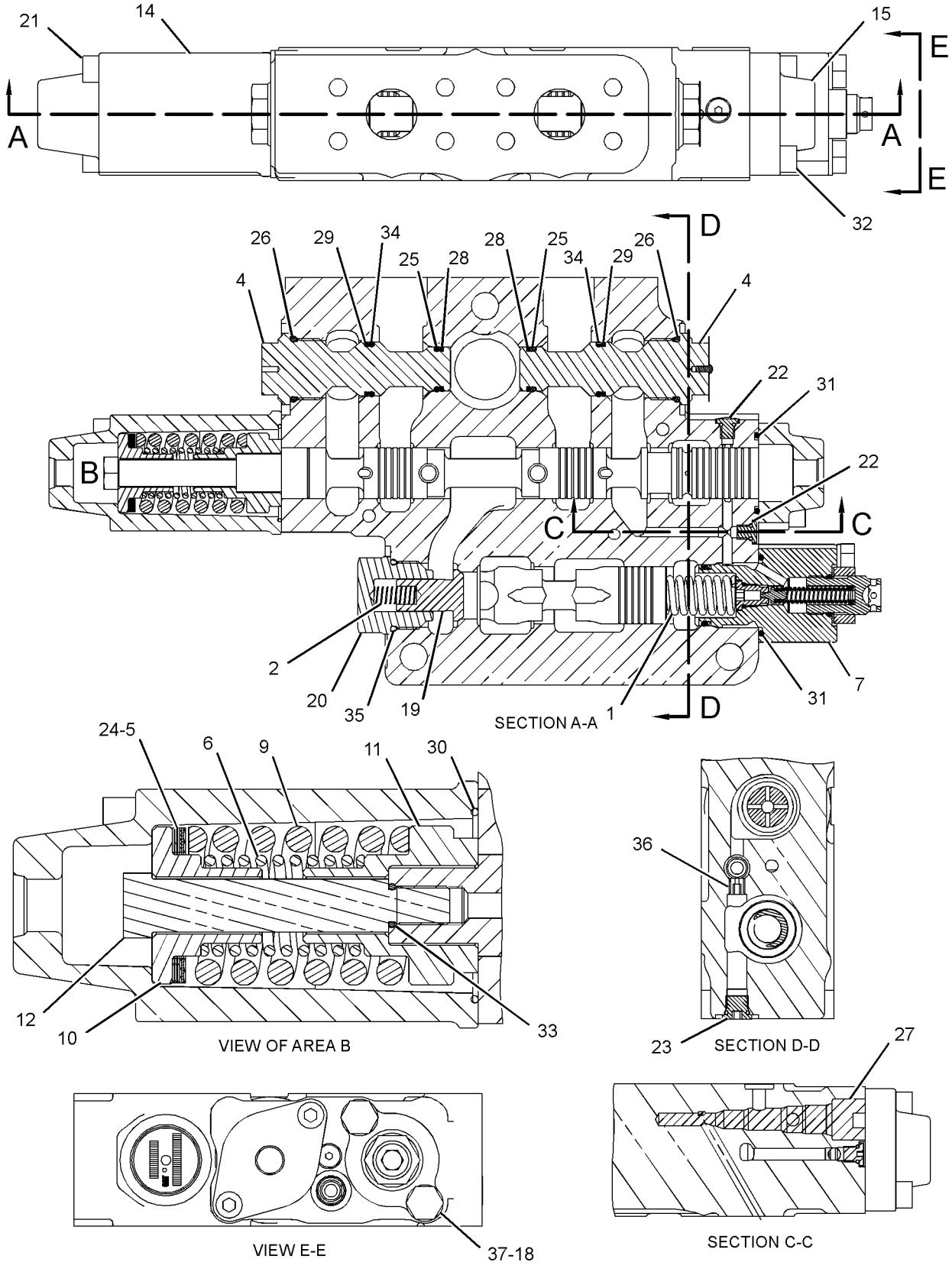

GRAPHIC #1 **<END>** g01218399

HYDRAULIC SYSTEM

239-6074 VALVE GP-CONTROL—WINCH

S/N: SMC1-UP; GCT1-UP
PART OF 269-8157 VALVE GP-BANK 3
AN ATTACHMENT

SMCS-5051 **i02763947**

NOTE	REF NO	GRAPHIC REF	PART NUMBER	QTY	PART NAME 1 2 3 4 5 6 (PRODUCT LEVEL)	SEE PAGE
	1	1	**2S-2596**	1	SPRING	
	2	1	*3J-3679*	1	PLUG AS	
		1	**1J-9671**	1	SEAL-O-RING	
		1	**9S-8003**	1	PLUG (HEX)	
	4	1	**4B-4278**	3	WASHER (10.2X20.5X1.6-MM THK)	
	5	1	**4T-1108**	2	PLUG	
	6	1	**4T-1649**	1	HOUSING	
	7	1	**4T-1701**	1	SPRING	
	8	1	**4T-4511**	1	SLEEVE	
B	9	1	**4T-4628**	5	SHIM (0.5-MM THK)	
	10	1	**4T-4629**	1	SCREW (3/8-24X0.57 IN)	
	11	1	**4T-4631**	1	SPRING	
	12	1	**4T-4635**	1	RETAINER	
	13	1	**7N-4333**	1	PLUG-ORIFICE	
	14	1	**7Y-4224**	1	ORIFICE	
	16	1	**173-0511**	1	HOUSING	
	17	1	**173-0514**	1	COVER	
	21	1	**100-8010**	1	VALVE-CHECK	
	22	1	**100-8011**	1	PLUG	
M	23	1	**102-7365**	2	BOLT-SOCKET HEAD (M8X1.25X100-MM)	
	24	1	*173-3993*	2	PLUG AS	
					(EACH INCLUDES)	
		1	**4J-7533**	1	SEAL-O-RING	
		1	**9S-8001**	1	PLUG (STRAIGHT THREAD O-RING)	
Y	25	1	**260-8590**	1	VALVE GP-SHUTTLE	572
B	26	1	**2J-2866**	2	SHIM (0.12-MM THK)	
	27	1	**4J-5351**	2	SEAL-O-RING	
	28	1	**4K-1388**	2	SEAL-O-RING	
	29	1	**4T-4630**	1	SPRING	
	30	1	**4T-4633**	1	RETAINER	
	31	1	**4T-5072**	2	RING-BACKUP	
	32	1	**4T-5073**	2	RING-BACKUP	
	33	1	**4T-5074**	1	RING-BACKUP	
	34	1	**5K-0227**	1	SEAL-O-RING	
	35	1	**5M-2057**	2	SEAL-O-RING	
B	36	1	**6E-1637**	2	SHIM (1-MM THK)	
M	37	1	**6V-5192**	2	BOLT-SOCKET HEAD (M8X1.25X30-MM)	
	38	1	**6V-5556**	1	SEAL-O-RING	
	39	1	**7J-0204**	1	SEAL-O-RING	
	40	1	**7J-9933**	2	SEAL-O-RING	
	41	1	**7M-8485**	1	SEAL-O-RING	
M	42	1	**8T-4185**	2	BOLT (M10X1.5X50-MM)	

B-USE AS REQUIRED
M-METRIC PART
Y-SEPARATE ILLUSTRATION

239-6074 **VALVE GP-CONTROL** *(contd.)* **i02763947**

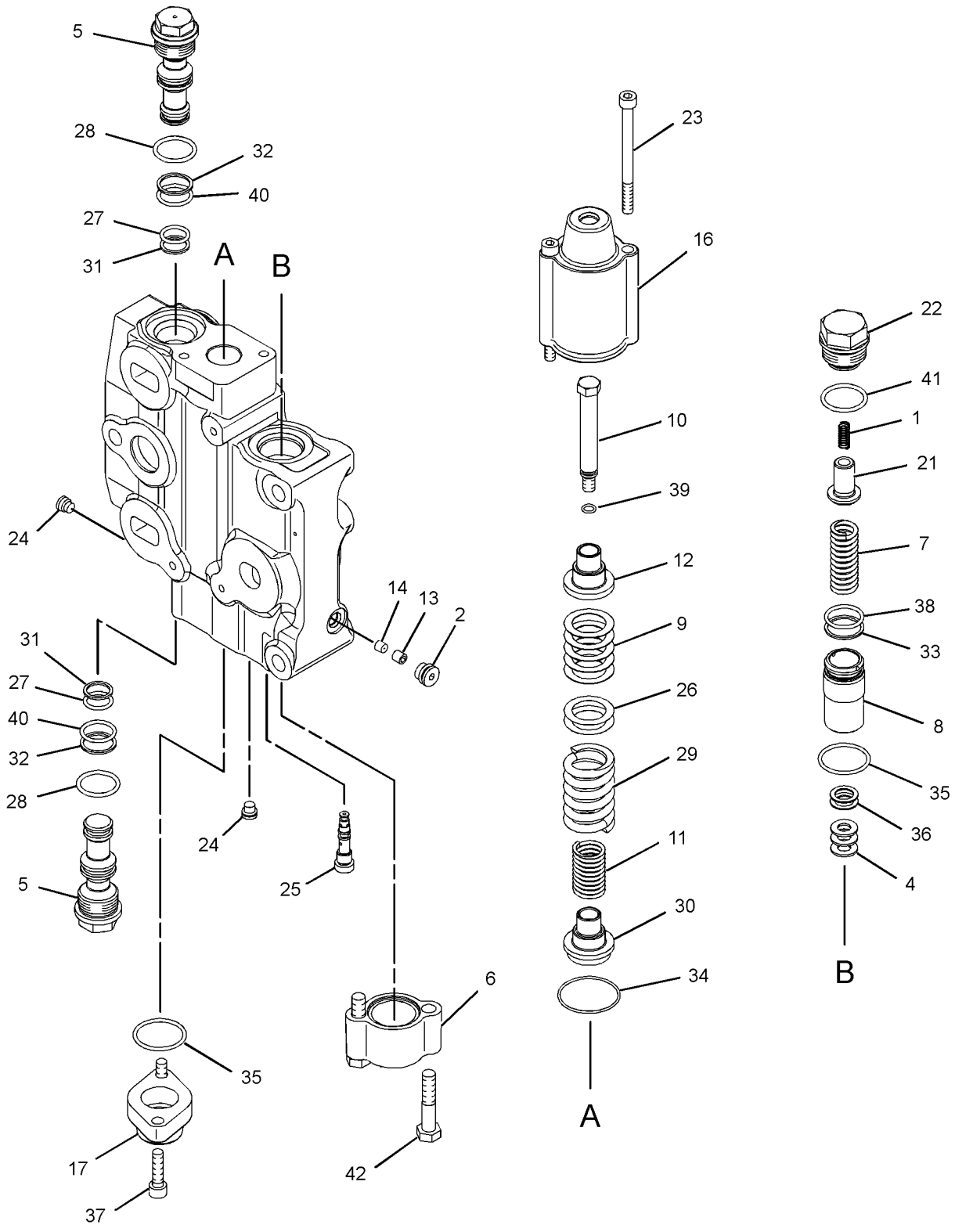

GRAPHIC #1 **<END>** g01217975

269-8153 VALVE GP-CONTROL–RIPPER LIFT

S/N: SMC1-UP; GCT1-UP
PART OF 269-8160 VALVE GP-BANK 3
AN ATTACHMENT

SMCS-5051 **i02760274**

NOTE	REF NO	GRAPHIC REF	PART NUMBER	QTY	PART NAME 1 2 3 4 5 6 (PRODUCT LEVEL)	SEE PAGE
	1	1	**2S-2596**	1	SPRING	
	3	1	**4T-1108**	2	PLUG	
Y	4	1	**4T-1860**	1	VALVE GP-SHUTTLE	571
B	5	1	**4T-4628**	5	SHIM (0.5-MM THK)	
	6	1	**4T-4631**	1	SPRING	
	7	1	**100-8010**	1	VALVE-CHECK	
	8	1	**100-8011**	1	PLUG	
	9	1	**153-6976**	1	SPRING	
	10	1	**153-7067**	1	RETAINER	
	11	1	**153-7551**	1	RETAINER	
	12	1	**161-2684**	1	SCREW (3/8-24X2.48-IN)	
	14	1	**173-0511**	1	HOUSING	
	15	1	**173-0514**	1	COVER	
M	18	1	**102-7365**	2	BOLT-SOCKET HEAD (M8X1.25X100-MM)	
	19	1	*164-4180*	1	PLUG AS	
		1	**9S-4181**	1	PLUG-O-RING	
		1	**7M-8485**	1	SEAL-O-RING	
	20	1	*173-3993*	2	PLUG AS	
					(EACH INCLUDES)	
		1	**9S-8001**	1	PLUG	
		1	**4J-7533**	1	SEAL-O-RING	
	21	1	*183-7263*	1	PLUG AS	
		1	**9S-8002**	1	PLUG-O-RING	
		1	**3J-7354**	1	SEAL-O-RING	
B	22	1	**2J-2866**	2	SHIM (0.12-MM THK)	
	23	1	**3D-4603**	1	PLUG-PIPE	
	24	1	**4J-5351**	2	SEAL-O-RING	
	25	1	**4K-1388**	2	SEAL-O-RING	
	26	1	**4T-5072**	2	RING-BACKUP	
	27	1	**4T-5073**	2	RING-BACKUP	
	28	1	**5K-0227**	1	SEAL-O-RING	
	29	1	**5M-2057**	1	SEAL-O-RING	
M	30	1	**6V-5192**	2	BOLT-SOCKET HEAD (M8X1.25X30-MM)	
	31	1	**7J-0204**	1	SEAL-O-RING	
	32	1	**7J-9933**	2	SEAL-O-RING	
	33	1	**7M-8485**	1	SEAL-O-RING	

PARTS SHOWN IN GRAPHIC(S) WITHOUT A REFERENCE NUMBER ARE NOT SERVICED SEPARATELY

B-USE AS REQUIRED
M-METRIC PART
Y-SEPARATE ILLUSTRATION

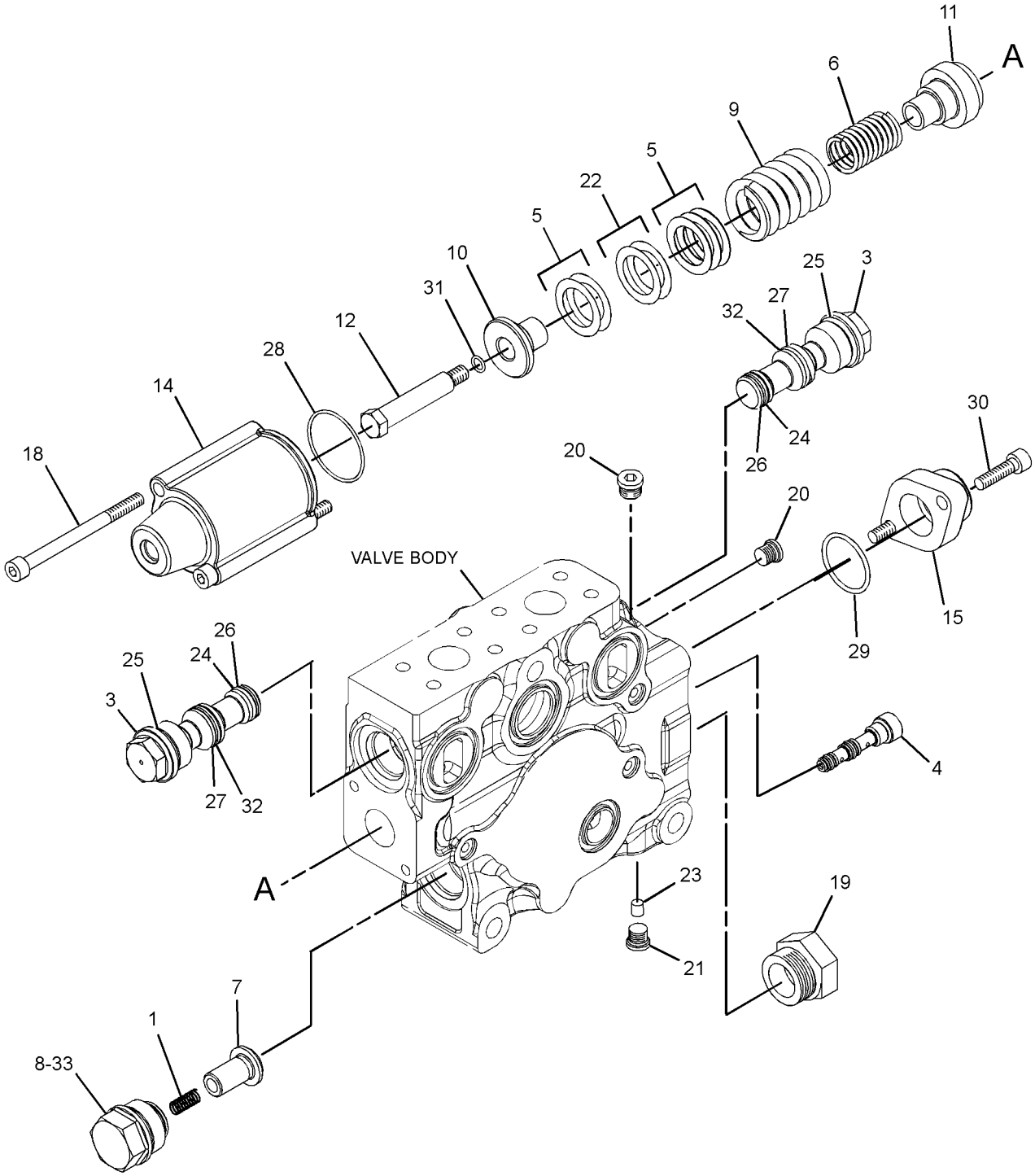

GRAPHIC #1 **<END>** g01363148

269-8154 VALVE GP-CONTROL—BULLDOZER TILT

S/N: SMC1-UP; GCT1-UP
PART OF 269-8161 VALVE GP-BANK 2, 269-8160 VALVE GP-BANK 3
ALSO AN ATTACHMENT

SMCS-5051 **i02755478**

NOTE	REF NO	GRAPHIC REF	PART NUMBER	QTY	PART NAME 1 2 3 4 5 6 (PRODUCT LEVEL)	SEE PAGE
	1	1	**2S-2596**	1	SPRING	
B	3	1	**4B-4278**	5	WASHER (10.2X20.5X1.6-MM THK)	
	4	1	**4T-1108**	2	PLUG	
	5	1	**4T-1649**	1	HOUSING	
	6	1	**4T-1701**	1	SPRING	
Y	7	1	**4T-1860**	1	VALVE GP-SHUTTLE	571
	8	1	**4T-4511**	1	SLEEVE	
B	9	1	**4T-4628**	6	SHIM (0.5-MM THK)	
	10	1	**4T-4631**	1	SPRING	
	12	1	**100-8010**	1	VALVE-CHECK	
	13	1	**100-8011**	1	PLUG	
	14	1	**153-6976**	1	SPRING	
	15	1	**153-7067**	1	RETAINER	
	16	1	**153-7551**	1	RETAINER	
	17	1	**161-2684**	1	SCREW (3/8-24X2.48-IN)	
	19	1	**173-0511**	1	HOUSING	
	20	1	**173-0514**	1	COVER	
M	23	1	**102-7365**	2	BOLT-SOCKET HEAD (M8X1.25X100-MM)	
	24	1	*173-3993*	2	PLUG AS	
					(EACH INCLUDES)	
		1	**9S-8001**	1	PLUG	
		1	**4J-7533**	1	SEAL-O-RING	
	25	1	*183-7263*	1	PLUG AS	
		1	**9S-8002**	1	PLUG-O-RING	
		1	**3J-7354**	1	SEAL-O-RING	
B	26	1	**2J-2866**	2	SHIM (0.12-MM THK)	
	27	1	**4J-5351**	2	SEAL-O-RING	
	28	1	**4K-1388**	2	SEAL-O-RING	
	29	1	**4T-5072**	2	RING-BACKUP	
	30	1	**4T-5073**	2	RING-BACKUP	
	31	1	**4T-5074**	1	RING-BACKUP	
	32	1	**5K-0227**	1	SEAL-O-RING	
	33	1	**5M-2057**	2	SEAL-O-RING	
M	34	1	**6V-5192**	2	BOLT-SOCKET HEAD (M8X1.25X30-MM)	
	35	1	**6V-5556**	1	SEAL-O-RING	
	36	1	**7J-0204**	1	SEAL-O-RING	
	37	1	**7J-9933**	2	SEAL-O-RING	
	38	1	**7M-8485**	1	SEAL-O-RING	
M	39	1	**8T-4185**	2	BOLT (M10X1.5X50-MM)	
	40	1	**9J-8126**	1	PLUG-ORIFICE	

B-USE AS REQUIRED
M-METRIC PART
Y-SEPARATE ILLUSTRATION

269-8154 VALVE GP-CONTROL *(contd.)* i02755478

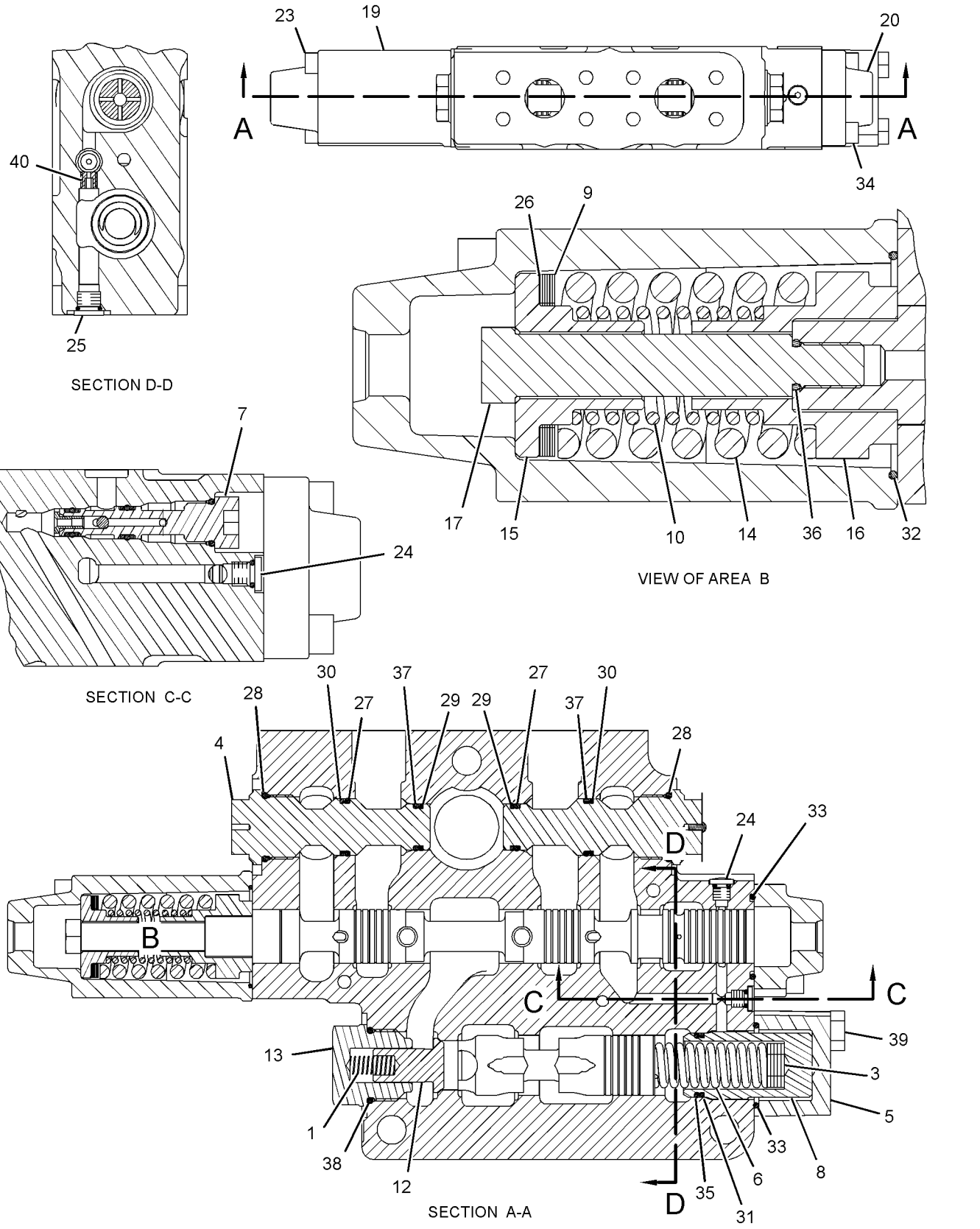

GRAPHIC #1 **<END>** g01357845

HYDRAULIC SYSTEM

269-8155 VALVE GP-CONTROL—BULLDOZER LIFT

S/N: SMC1-UP; GCT1-UP
PART OF 269-8161 VALVE GP-BANK 2, 269-8160 VALVE GP-BANK 3
ALSO AN ATTACHMENT

SMCS-5051 **i02755486**

NOTE	REF NO	GRAPHIC REF	PART NUMBER	QTY	PART NAME 1 2 3 4 5 6 (PRODUCT LEVEL)	SEE PAGE
	1	1,2	**2S-2596**	2	SPRING	
	3	1	**4T-1108**	1	PLUG	
Y	4	2	**4T-1860**	1	VALVE GP-SHUTTLE	571
B	5	1	**4T-4628**	5	SHIM (0.5-MM THK)	
	6	1	**4T-5072**	1	RING-BACKUP	
	7	1,2	**100-8010**	2	VALVE-CHECK	
	8	1	**100-8011**	1	PLUG	
	9	2	**100-8012**	1	BODY	
	10	1	**153-7067**	1	RETAINER	
	11	2	**153-7549**	1	RETAINER	
	12	1	**153-7550**	1	RETAINER	
	13	2	**153-7553**	1	SPRING	
	14	1	**161-2685**	1	SCREW (3/8-24-THD)	
	15	2	**163-5671**	1	WASHER (17X39X2-MM THK)	
	16	1	**164-0938**	1	SPRING	
	18	1	**170-4001**	1	SPRING	
	19	1	**173-0511**	1	HOUSING	
	20	2	**173-0512**	1	HOUSING	
	21	2	**173-0515**	1	SPACER	
M	24	1	**102-7365**	2	BOLT-SOCKET HEAD (M8X1.25X100-MM)	
	25	2	*164-4180*	1	PLUG AS	
		2	**9S-4181**	1	PLUG-O-RING	
		2	**7M-8485**	1	SEAL-O-RING	
	26	2	*173-3993*	2	PLUG AS	
					(EACH INCLUDES)	
		2	**9S-8001**	1	PLUG	
		2	**4J-7533**	1	SEAL-O-RING	
	27	2	*183-7263*	1	PLUG AS	
		2	**9S-8002**	1	PLUG-O-RING	
		2	**3J-7354**	1	SEAL-O-RING	
B	28	1	**2J-2866**	3	SHIM (0.12-MM THK)	
	29	2	**3D-4603**	1	PLUG-PIPE	
	30	1	**4J-5351**	1	SEAL-O-RING	
	31	1,2	**4K-1388**	2	SEAL-O-RING	
	32	1,2	**4T-5073**	2	RING-BACKUP	
	33	1,2	**5K-0227**	2	SEAL-O-RING	
	34	2	**5M-2057**	1	SEAL-O-RING	
	35	1	**7J-0204**	1	SEAL-O-RING	
	36	1,2	**7J-9933**	2	SEAL-O-RING	
	37	1	**7M-8485**	1	SEAL-O-RING	
M	38	2	**9X-6154**	2	BOLT-SOCKET HEAD (M8X1.25-THD)	

PARTS SHOWN IN GRAPHIC(S) WITHOUT A REFERENCE NUMBER ARE NOT SERVICED SEPARATELY

B-USE AS REQUIRED
M-METRIC PART
Y-SEPARATE ILLUSTRATION

269-8155 VALVE GP-CONTROL *(contd.)* **i02755486**

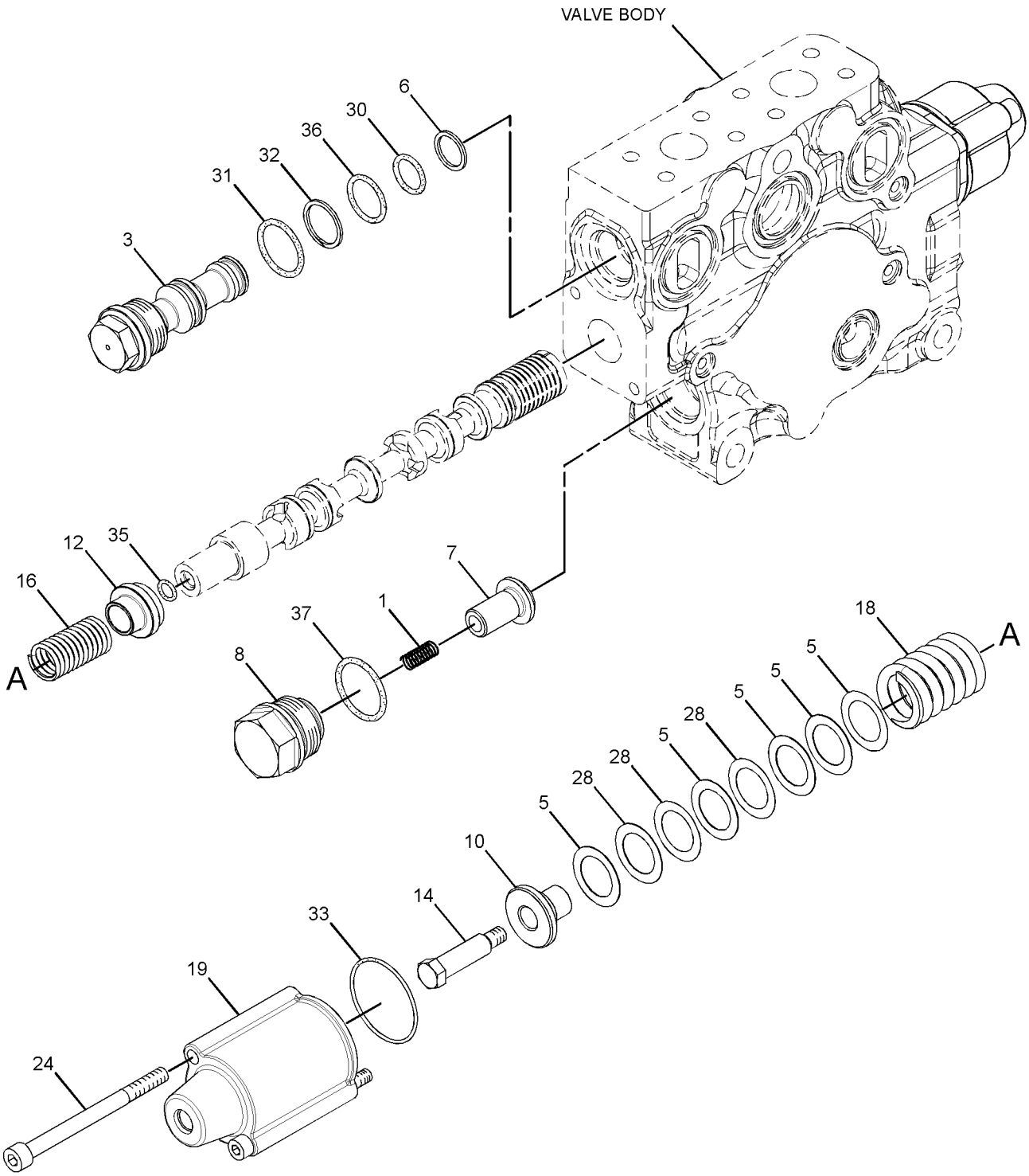

GRAPHIC #1 g01358558

269-8155 VALVE GP-CONTROL *(contd.)* **i02755486**

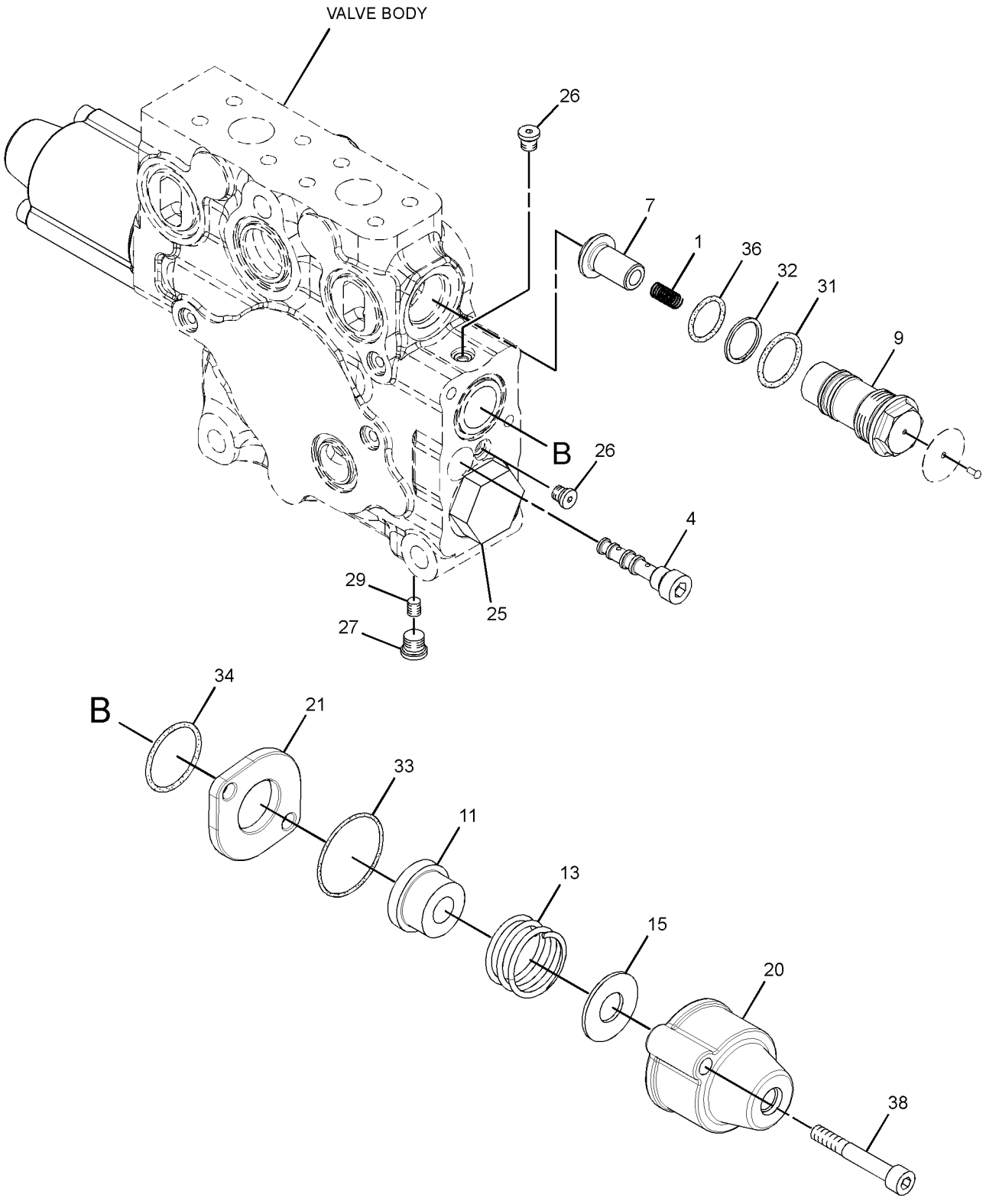

GRAPHIC #2 **<END>** g01358559

9T-8693 VALVE GP-PILOT—STEERING, TMSN CONTROL

S/N: SMC1-UP; GCT1-UP

PART OF 272-0016 CONTROL GP-STEERING & TMSN

SMCS-5059 **i02052104**

NOTE	REF NO	GRAPHIC REF	PART NUMBER	QTY	PART NAME 1 2 3 4 5 6 (PRODUCT LEVEL)	SEE PAGE
	1	1	**6E-1134**	1	LEVER	
	2	1	**1B-4427**	2	NUT-JAM (1/4-20-THD)	
	3	1	**114-5157**	2	ADJUSTER	
	4	1	**6E-1135**	1	PIN	
	5	1	**1U-3147**	4	SEAL-U-CUP	
	6	1	**033-6044**	2	SEAL-O-RING	
B	7	1	**5S-7018**	4	SPACER (7.54X14.15X0.25-MM THK)	
	8	1	**6E-1982**	2	SPRING (MIDDLE)	
	9	1	**1S-6250**	2	DOWEL	
	10	1	**3N-2818**	2	BEARING	
	11	1	**6E-1981**	2	SPRING (INNER)	
	12	1	**6E-1136**	2	RETAINER	
	13	1	**1U-2071**	2	RETAINER	
	14	1	**199-9102**	1	BRACKET	
	15	1	**8J-1622**	2	NUT (7/8-20-THD)	
	16	1	**9T-2378**	2	SLEEVE	
	17	1	**1U-2752**	2	PLUNGER	
	18	1	**202-1214**	1	BOOT	
	19	1	**1W-3963**	2	SPRING	
	20	1	**6E-2193**	2	RETAINER	

B-USE AS REQUIRED

9T-8693 **VALVE GP-PILOT** *(contd.)* **i02052104**

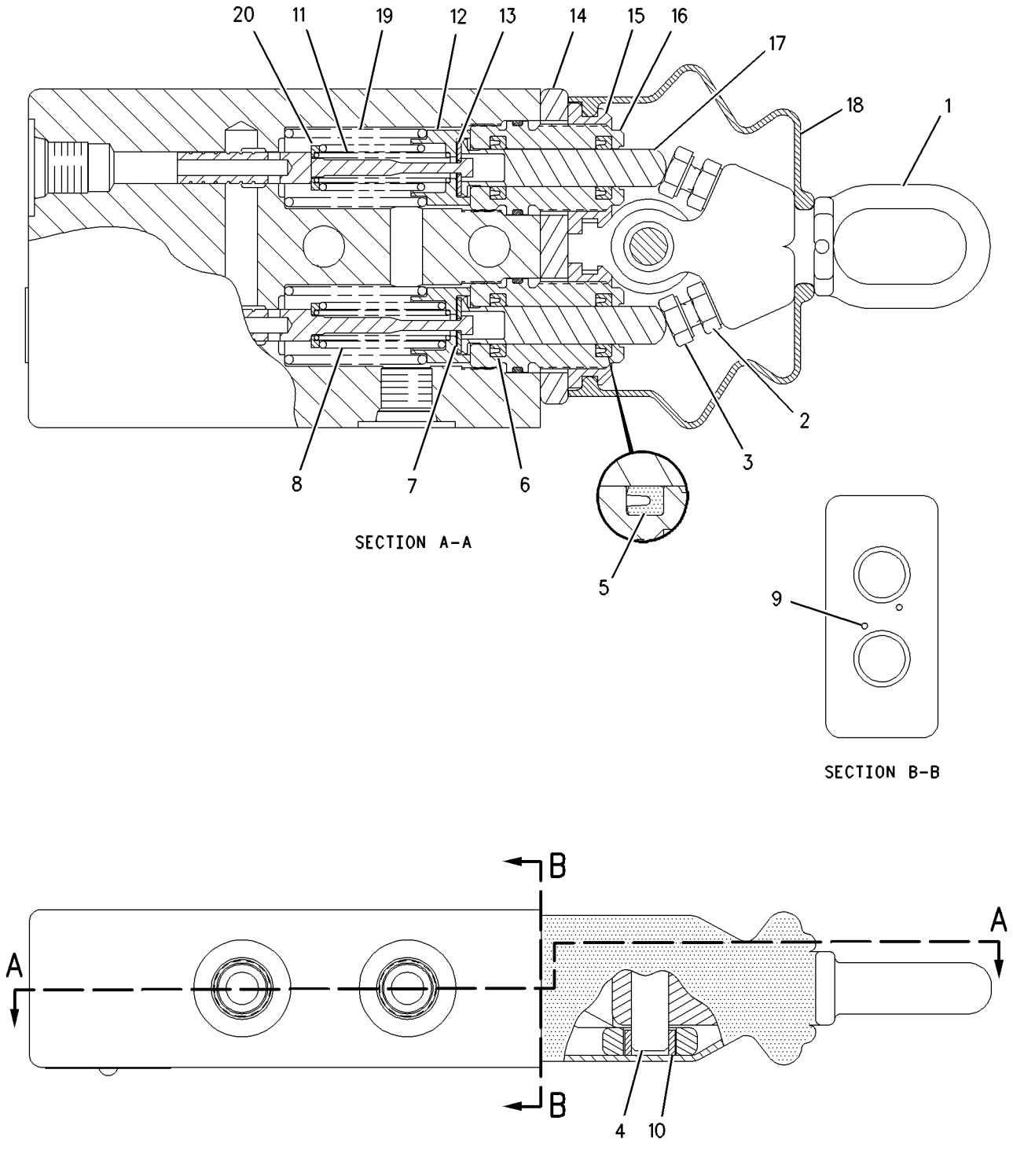

SECTION A-A

SECTION B-B

GRAPHIC #1 **<END>** g00940430

HYDRAULIC SYSTEM

160-0766 VALVE GP-PILOT—WINCH

S/N: SMC1-UP; GCT1-UP
PART OF 280-1478 CONTROL AR-HYDRAULIC IMPLEMENT
AN ATTACHMENT

SMCS-5059 **i01915986**

NOTE	REF NO	GRAPHIC REF	PART NUMBER	QTY	PART NAME 1 2 3 4 5 6 (PRODUCT LEVEL)	SEE PAGE
E	1	1	**201-3304**		CONDUIT (5CM)	
	2	1	**141-4852**	1	BOOT	
	3	1	**145-2334**	1	ADAPTER	
	4	1	**213-6658**	1	PLATE AS	
	5	1	**163-5512**	2	GROMMET	
	6	1	**164-9657**	1	CONTROL GP-HANDLE (WINCH)	
		1	**8T-8730**	2	SOCKET-CONNECTOR (16-GA TO 18-GA)	
		1	**155-2261**	2	WEDGE-PLUG LOCK (2-PIN)	
		1	**155-2270**	2	KIT-CONNECTING PLUG (2-PIN)	
					(EACH INCLUDES PLUG AS, WEDGE & INTERFACE SEAL)	
	7	1	**180-6152**	1	RETAINER	
	8	1	**188-2892**	1	LEVER AS-GATE	
M	8A	1	**5C-2890**	4	NUT (M6X1-THD)	
	8B	1	**146-6315**	4	PIN-ADJUSTMENT	
	8C	1	**146-6317**	1	RETAINER	
	8D	1	**159-3781**	1	SPRING	
	9	1	**194-5031**	1	PLUNGER AS	
	9A	1	**3K-0360**	1	SEAL-O-RING	
	9B	1	**4K-2039**	1	SEAL-O-RING	
	9C	1	**6M-5062**	1	SEAL-O-RING	
	10	1	**9S-8002**	5	PLUG-O-RING	
	11	1	**9S-8004**	4	PLUG-O-RING	
	12	1	**136-9297**	1	PLATE	
	13	1	**136-9298**	1	RETAINER	
	14	1	**137-9755**	1	COIL AS-DETENT (24-VDC)	
BD		1	**6V-2689**		TUBE-HEAT SHRINK (6.35-MM DIA)	
		1	**186-3735**	2	PIN-CONNECTOR (16-GA TO 18-GA)	
	15	1	**149-5470**	1	PLATE	
M	16	1	**150-1293**	2	SCREW-BUTTON HEAD (M4X0.7X12-MM)	
M	17	1	**191-8921**	4	BOLT-SOCKET HEAD (M6X1X25-MM)	
	18	1	**102-8802**	2	KIT-RECEPTACLE (2-PIN)	
					(EACH INCLUDES RECEPTACLE AS & WEDGE)	
	19	1	**3E-3365**	1	WEDGE-RECEPTACLE LOCK (2-PIN)	
	20	1	**3J-1907**	4	SEAL-O-RING	
	21	1	**3J-7354**	5	SEAL-O-RING	
	22	1	**8L-2786**	1	SEAL-O-RING	
Y	23	1	**194-5033**	1	VALVE GP-PILOT CARTRIDGE (WINCH-FREE SPOOL)	561
Y	24	1	**194-5033**	1	VALVE GP-PILOT CARTRIDGE (WINCH SPOOL-OUT)	561
Y	25	1	**194-5033**	1	VALVE GP-PILOT CARTRIDGE (WINCH SPOOL-IN)	561

B-USE AS REQUIRED
D-ORDER BY THE METER
E-ORDER BY THE CENTIMETER
M-METRIC PART
Y-SEPARATE ILLUSTRATION

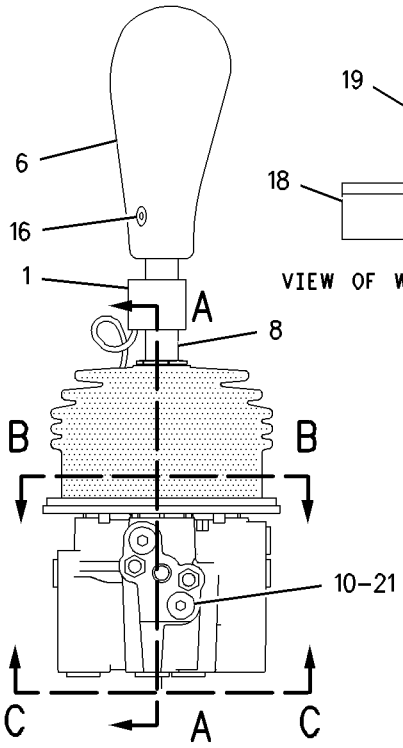

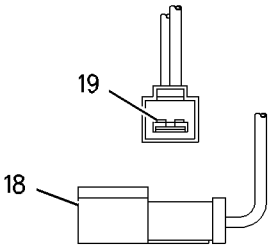

VIEW OF WIRE CONNECTOR

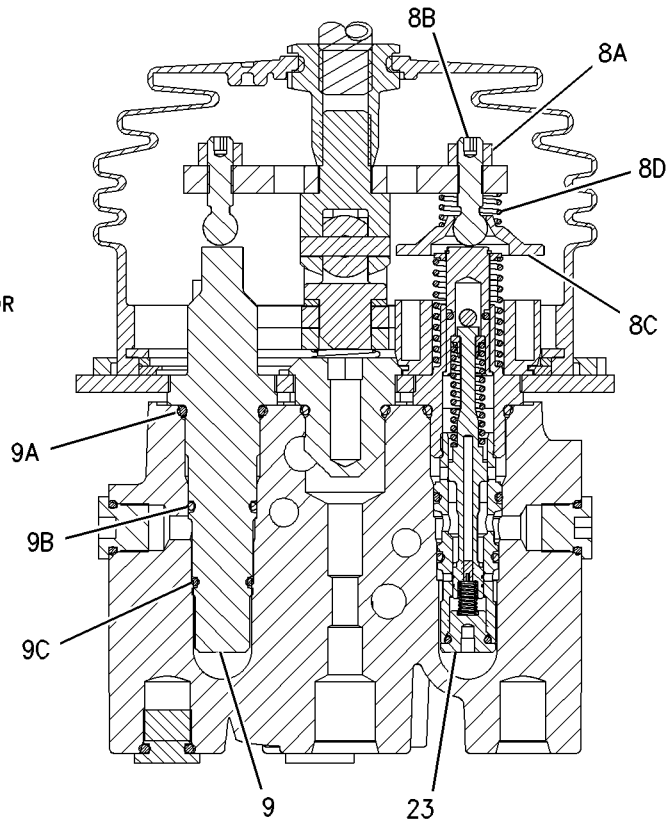

SECTION E-E

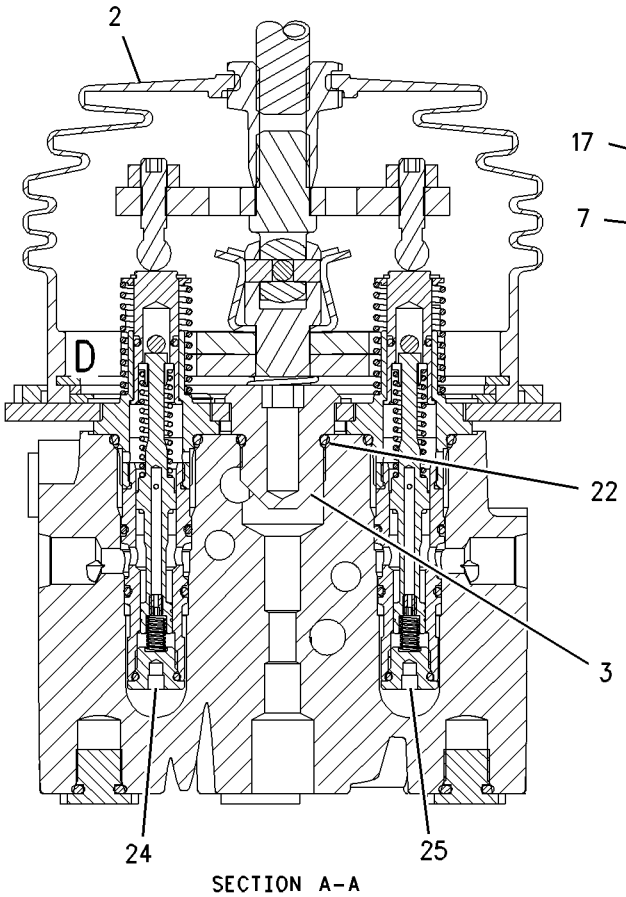

SECTION A-A

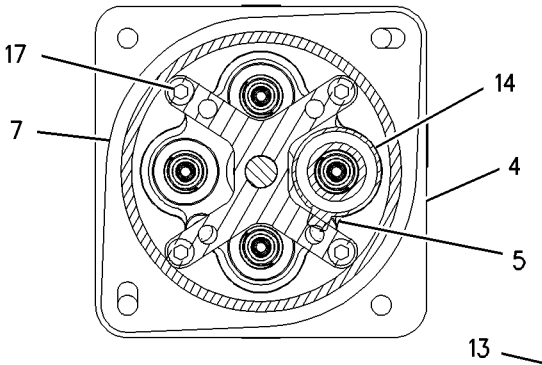

SECTION B-B

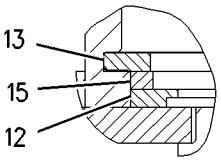

VIEW OF AREA D

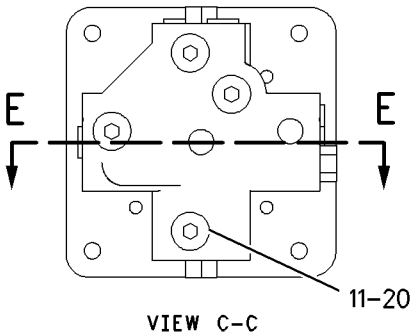

VIEW C-C

GRAPHIC #1 **<END>** g00936315

HYDRAULIC SYSTEM

167-1177 VALVE GP-PILOT–RIPPER

S/N: SMC1-UP; GCT1-UP

PART OF 280-1476 CONTROL AR-HYDRAULIC IMPLEMENT

AN ATTACHMENT

SMCS-5059 **i01851605**

NOTE	REF NO	GRAPHIC REF	PART NUMBER	QTY	PART NAME 1 2 3 4 5 6 (PRODUCT LEVEL)	SEE PAGE
	1	1	**9S-8004**	2	PLUG-O-RING	
	2	1	**141-4852**	1	BOOT	
	3	1	**145-2334**	1	ADAPTER	
	4	1	**146-8477**	1	BRACKET	
	5	1	**146-8981**	1	PIN	
	6	1	**9S-8002**	6	PLUG-O-RING	
Y	7	1	**194-5033**	1	VALVE GP-PILOT CARTRIDGE (RIPPER LOWER)	561
	8	1	**163-5512**	2	GROMMET	
	9	1	**213-6659**	1	PLATE AS	
M	10	1	**191-8920**	4	BOLT-SOCKET HEAD (M6X1X12-MM)	
	11	1	**033-9139**	2	RING-RETAINING	
M	12	1	**105-3481**	1	BOLT-SOCKET HEAD (M8X1.25X20-MM)	
	13	1	**136-9297**	1	PLATE	
	14	1	**136-9298**	1	RETAINER	
	15	1	**149-5470**	1	PLATE	
	16	1	**3J-1907**	2	SEAL-O-RING	
	17	1	**3J-7354**	6	SEAL-O-RING	
	18	1	**7W-2632**	1	WASHER (8.5X16.8X1.6-MM THK)	
	19	1	**8L-2786**	1	SEAL-O-RING	
	20	1	**201-9127**	1	LEVER AS	
	20A	1	**139-4189**	1	PLATE	
	20B	1	**199-6609**	1	SPACER	
	20C	1	**146-8479**	1	SWIVEL	
M	20D	1	**178-7877**	2	SETSCREW (M6X1X25-MM)	
M	20E	1	**5C-2890**	2	NUT (M6X1-THD)	
Y	21	1	**194-5033**	1	VALVE GP-PILOT CARTRIDGE (RIPPER LIFT)	561
	22	1	**180-6152**	1	RETAINER	

M-METRIC PART
Y-SEPARATE ILLUSTRATION

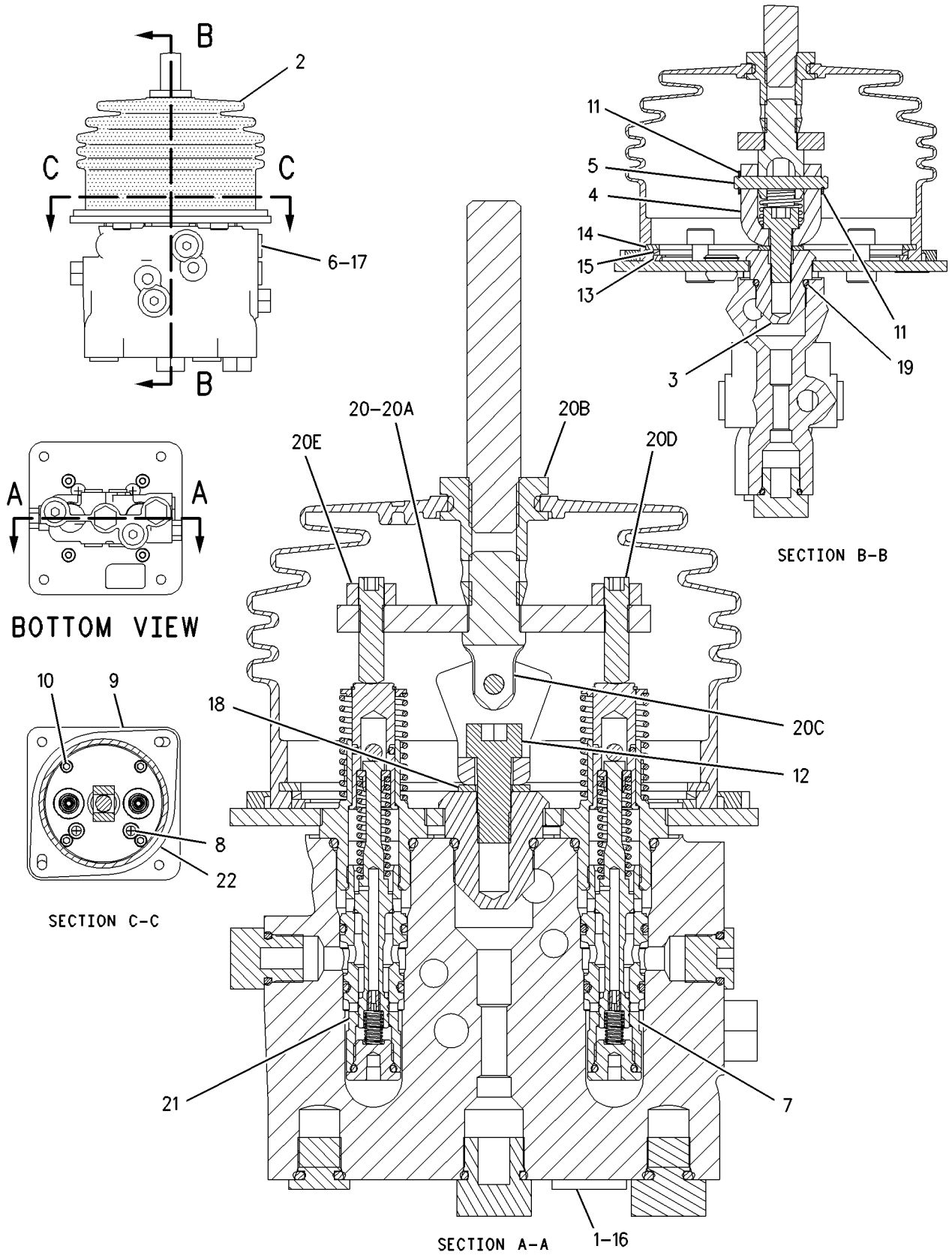

GRAPHIC #1 **<END>** g00907176

HYDRAULIC SYSTEM

200-0189 VALVE GP-PILOT—BULLDOZER CONTROL

S/N: SMC1-UP; GCT1-UP

PART OF 222-1150 CONTROL GP-PILOT OPERATED HYD

SMCS-5059 **i02801211**

NOTE	REF NO	GRAPHIC REF	PART NUMBER	QTY	PART NAME 1 2 3 4 5 6 (PRODUCT LEVEL)	SEE PAGE
Z	1	1		1	BODY	
	2	1	**141-4852**	1	BOOT	
	3	1	**145-2334**	1	ADAPTER	
	4	1	**163-5512**	2	GROMMET	
	5	1	**213-6657**	1	PLATE AS	
	6	1	**180-6152**	1	RETAINER	
Y	7	1	**194-5032**	1	VALVE GP-PILOT CARTRIDGE (BULLDOZER LIFT)	560
Y	8	1	**194-5033**	1	VALVE GP-PILOT CARTRIDGE (BLADE TILT LEFT)	561
	9	1	**196-5515**	1	LEVER AS	
	9A	1	**146-6315**	3	PIN-ADJUSTMENT	
	9B	1	**199-7834**	1	DETENT AS	
		1	**8S-7499**	2	PIN-SPRING	
		1	**202-0599**	1	SPRING	
	9C	1	**146-6317**	1	RETAINER	
	9D	1	**159-3781**	1	SPRING	
M	9E	1	**5C-2890**	3	NUT (M6X1-THD)	
M	9F	1	**191-8920**	2	BOLT-SOCKET HEAD (M6X1X12-MM)	
	10	1	**206-2800**	1	PLATE-DETENT	
	11	1	**9S-8004**	3	PLUG-O-RING	
	12	1	**200-5003**	8	SHIM (0.25-MM THK)	
	13	1	**136-9297**	1	PLATE	
	14	1	**136-9298**	1	RETAINER	
	15	1	**137-9755**	1	COIL AS-DETENT (24-VOLT DC)	
BD		1	**6V-2689**		TUBE-HEAT SHRINK (6.35-MM DIA)	
		1	**8T-8729**	2	PIN-CONNECTOR	
	16	1	**149-5470**	1	PLATE	
M	17	1	**191-8921**	4	BOLT-SOCKET HEAD (M6X1X25-MM)	
	18	1	**102-8802**	1	KIT-RECEPTACLE (2-PIN)	
					(INCLUDES RECEPTACLE AS & WEDGE)	
	19	1	**3E-3365**	1	WEDGE-RECEPTACLE LOCK (2-PIN)	
	20	1	**3J-1907**	3	SEAL-O-RING	
	21	1	**3J-7354**	5	SEAL-O-RING	
	22	1	**8L-2786**	1	SEAL-O-RING	
	23	1	**9S-8002**	5	PLUG-O-RING	
Y	24	1	**194-5032**	1	VALVE GP-PILOT CARTRIDGE (BULLDOZER LOWER)	560
Y	25	1	**194-5033**	1	VALVE GP-PILOT CARTRIDGE (BLADE TILT RIGHT)	561

B-USE AS REQUIRED
D-ORDER BY THE METER
M-METRIC PART
Y-SEPARATE ILLUSTRATION
Z-NOT SERVICED SEPARATELY

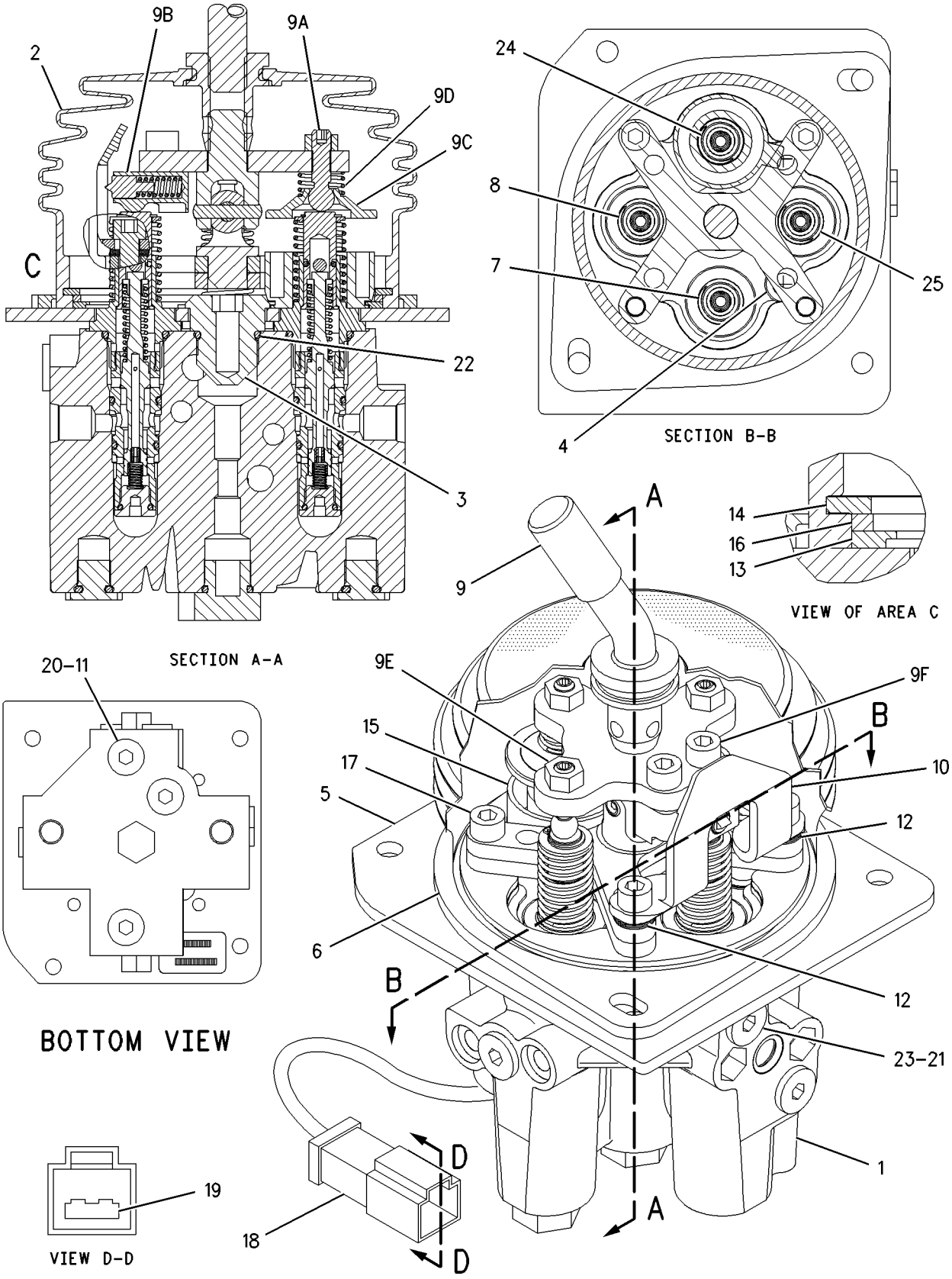

GRAPHIC #1 **<END>** g00767886

194-5032 VALVE GP-PILOT CARTRIDGE–BULLDOZER LIFT, LOWER

S/N: SMC1-UP; GCT1-UP

PART OF 200-0189 VALVE GP-PILOT

SMCS-5059 **i02439260**

NOTE	REF NO	GRAPHIC REF	PART NUMBER	QTY	PART NAME 1 2 3 4 5 6 (PRODUCT LEVEL)	SEE PAGE
	1	1	**3K-0360**	1	SEAL-O-RING	
	2	1	**4K-2039**	1	SEAL-O-RING	
	3	1	**6M-5062**	1	SEAL-O-RING	

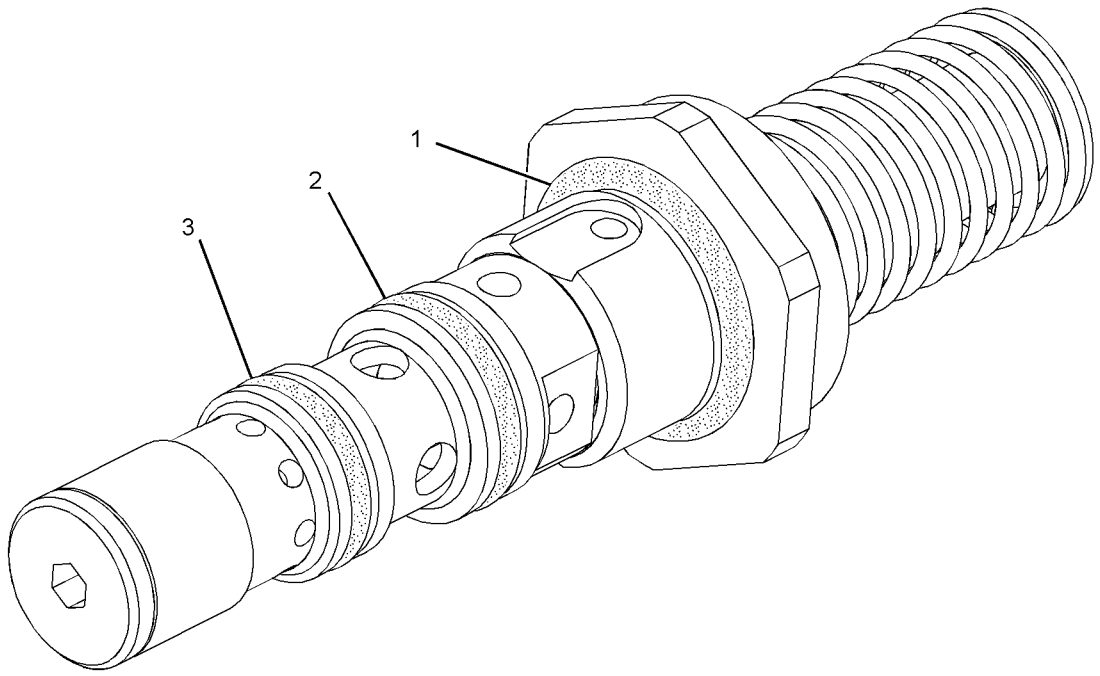

GRAPHIC #1 **<END>** g01218398

194-5033 VALVE GP-PILOT CARTRIDGE–IMPLEMENT

S/N: SMC1-UP; GCT1-UP

PART OF 160-0766, 167-1177, 200-0189 VALVE GP-PILOT

ALSO AN ATTACHMENT

SMCS-5059 **i02434809**

NOTE	REF NO	GRAPHIC REF	PART NUMBER	QTY	PART NAME 1 2 3 4 5 6 (PRODUCT LEVEL)	SEE PAGE
	1	1	**3K-0360**	1	SEAL-O-RING	
	2	1	**4K-2039**	1	SEAL-O-RING	
	3	1	**6M-5062**	1	SEAL-O-RING	

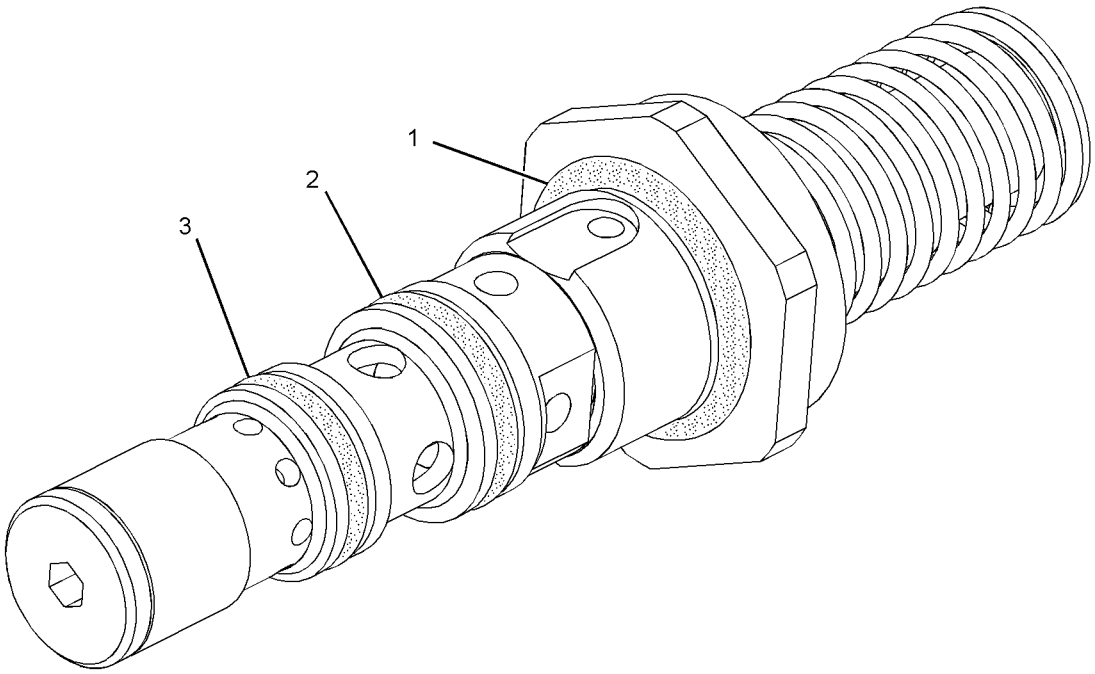

GRAPHIC #1 **<END>** g01218398

170-3357 VALVE GP-PRESSURE REDUCING–
IMPLEMENT PILOT OIL
S/N: SMC1-UP; GCT1-UP
PART OF 226-4751 MANIFOLD GP-CONTROL

SMCS-5117 **i01452696**

NOTE	REF NO	GRAPHIC REF	PART NUMBER	QTY	PART NAME 1 2 3 4 5 6 (PRODUCT LEVEL)	SEE PAGE
	1	1	**3K-0360**	1	SEAL-O-RING	
	2	1	**161-6149**	1	SEAL-O-RING	
	3	1	**095-1750**	1	SEAL-O-RING	
	4	1	**161-6161**	2	RING-BACKUP	
	5	1	**187-0541**	2	RING-BACKUP	

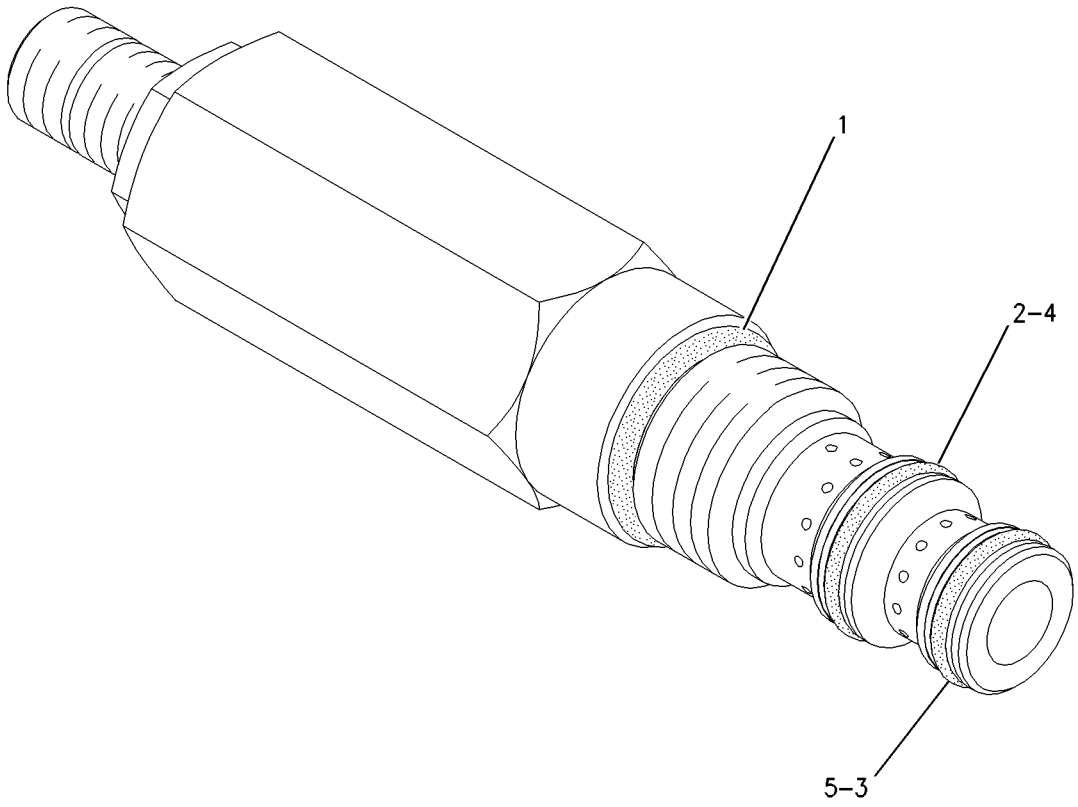

GRAPHIC #1 **<END>** g00777733

285-7612 VALVE GP-PUMP CONTROL–PRESSURE, FLOW COMPENSATOR–IMPLEMENT

S/N: SMC1-UP; GCT1-UP

PART OF 271-2116, 278-1445 PUMP GP-PISTON

ALSO AN ATTACHMENT

SMCS-5455 **i02754576**

NOTE	REF NO	GRAPHIC REF	PART NUMBER	QTY	PART NAME 1 2 3 4 5 6 (PRODUCT LEVEL)	SEE PAGE
M	1	1	**8T-8442**	4	BOLT-SOCKET HEAD (M6X1X30-MM)	
	2	1	**280-7870**	1	GASKET	
J	3	1	**6E-6528**	2	SEAL	
	4	1	**9S-8002**	1	PLUG-O-RING	
	5	1	**3J-7354**	1	SEAL-O-RING	
J	6	1	**033-6043**	1	SEAL-O-RING	
J	7	1	**6V-6339**	1	SEAL-O-RING	
					AVAILABLE REPAIR KIT(S):	
J			**293-8350**	1	KIT-SEAL (FLOW COMPENSATOR)	
					(INCLUDES O-RINGS & BACK-UP RINGS)	

J-KIT MARKED J SERVICES PART(S) MARKED J
M-METRIC PART

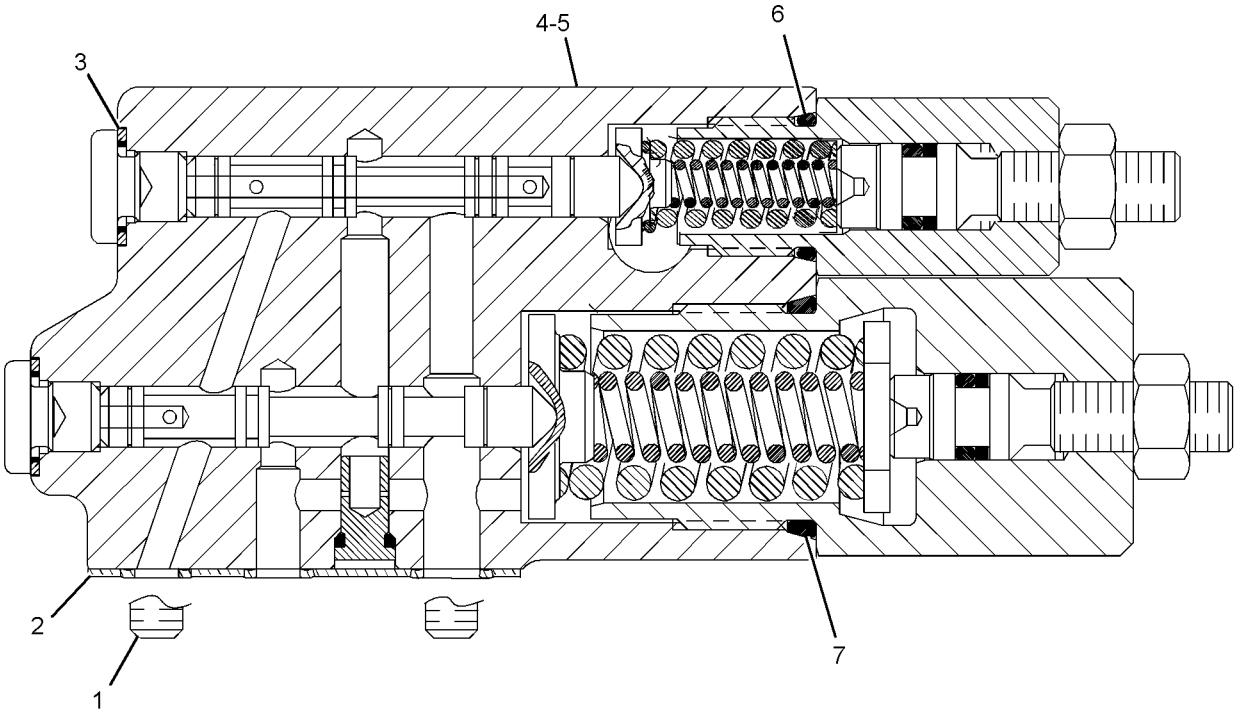

GRAPHIC #1 **<END>** g01341581

HYDRAULIC SYSTEM

222-1160 VALVE GP-QUICK-DROP

S/N: SMC1-UP; GCT1-UP

PART OF 269-2050 HYDRAULIC AR-2 VALVE

SMCS-5110 **i02436165**

NOTE	REF NO	GRAPHIC REF	PART NUMBER	QTY	PART NAME 1 2 3 4 5 6 (PRODUCT LEVEL)	SEE PAGE
	1	1	**8E-8434**	1	GUARD	
Y	2	1	**227-0831**	1	VALVE GP-QUICK-DROP	565
	3	1	**5P-1075**	6	WASHER-HARD (10.2X22.5X3-MM THK)	
M	4	1	**8T-4186**	3	BOLT (M10X1.5X40-MM)	
M	5	1	**8T-4191**	3	BOLT (M10X1.5X16-MM)	

M-METRIC PART
Y-SEPARATE ILLUSTRATION

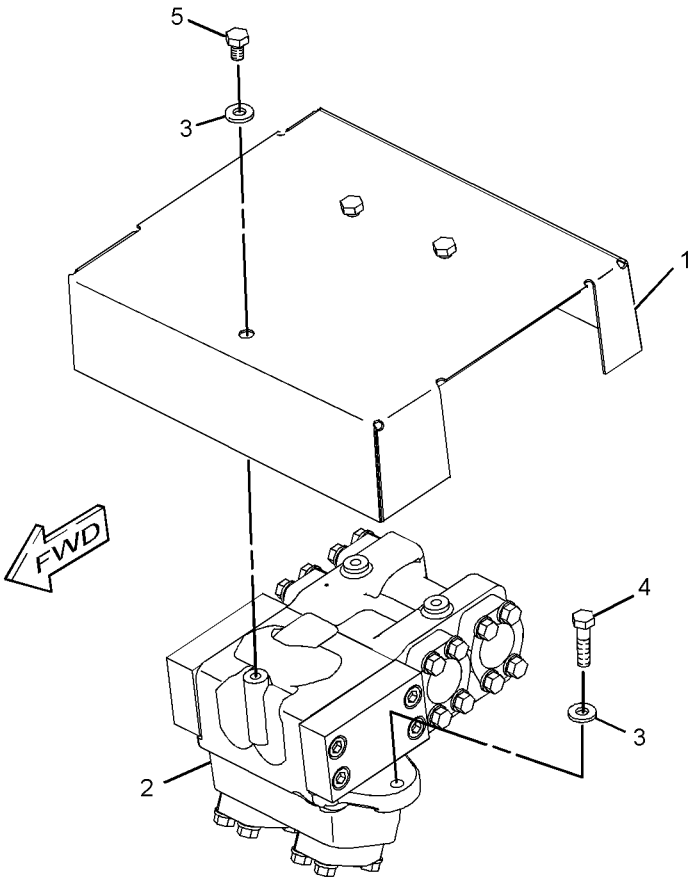

(MOUNTS TO TOP OF RADIATOR GUARD)

GRAPHIC #1 **<END>** g01206278

HYDRAULIC SYSTEM

227-0831 VALVE GP-QUICK-DROP

S/N: SMC1-UP; GCT1-UP

PART OF 222-1160 VALVE GP-QUICK-DROP

SMCS-5110 **i02436166**

NOTE	REF NO	GRAPHIC REF	PART NUMBER	QTY	PART NAME 1 2 3 4 5 6 (PRODUCT LEVEL)	SEE PAGE
	1	1	*3J-3679*	2	PLUG AS	
					(EACH INCLUDES)	
		1	**9S-8003**	1	PLUG (HEX)	
		1	**1J-9671**	1	SEAL-O-RING	
B	3	1	**4T-4659**	3	SHIM (0.8-MM THK)	
	4	1	**6E-4907**	1	STOP	
	5	1	**9T-9836**	1	SLEEVE-ORIFICE	
B	6	1	**083-7784**	2	SHIM (2-MM THK)	
	7	1	**100-6211**	1	PISTON	
	8	1	**108-1847**	1	SPRING	
Z	9	1		1	STEM AS	
	10	1	**234-3043**	1	COVER	
Z	11	1		1	BODY	
	12	1	**234-3451**	1	COVER	
	14	1	**164-5619**	1	PLUG AS	
		1	**9S-8006**	1	PLUG-O RING	
		1	**2M-9780**	1	SEAL-O-RING	
	15	1	**1P-3706**	2	SEAL-RECTANGULAR	
	16	1	**3L-3813**	1	PIN	
B	17	1	**4M-6980**	3	SHIM (0.25-MM THK)	
	18	1	**6K-8162**	1	RING-RETAINING	
M	19	1	**6V-8200**	8	BOLT-SOCKET HEAD (M12X1.75X35-MM)	
	20	1	**8C-3206**	12	FLANGE-HALF	
	21	1	**8T-4121**	24	WASHER-HARD (11X21X2.5-MM THK)	
M	22	1	**8T-4196**	24	BOLT (M10X1.5X35-MM)	

B-USE AS REQUIRED
M-METRIC PART
Z-NOT SERVICED SEPARATELY

227-0831 VALVE GP-QUICK-DROP *(contd.)* i02436166

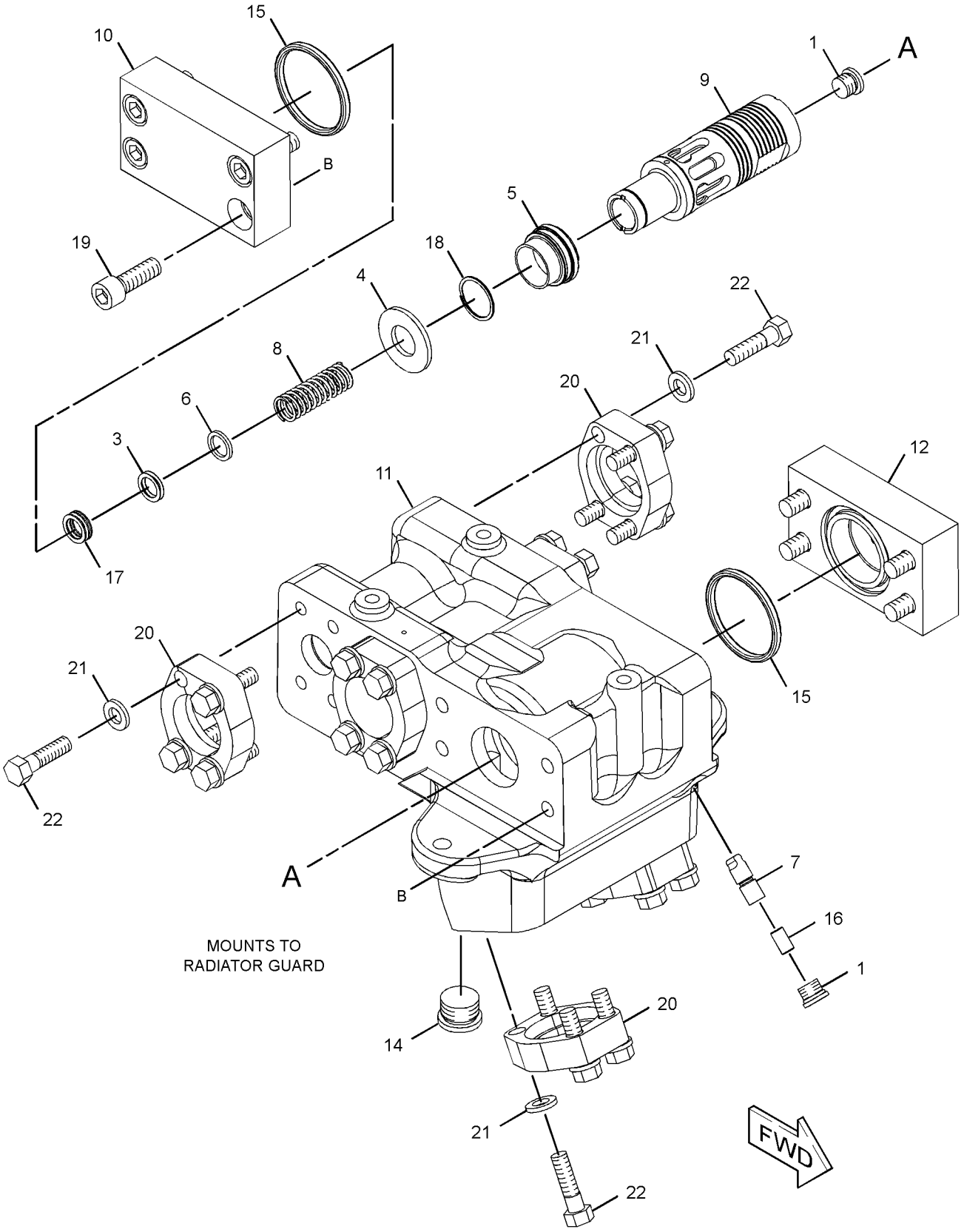

GRAPHIC #1 **<END>** g01210614

4T-4932 VALVE GP-RELIEF–MAIN

S/N: SMC1-UP; GCT1-UP
PART OF 273-2156 MANIFOLD GP-VALVE
ALSO AN ATTACHMENT

SMCS-5069, 5117 **i02755514**

NOTE	REF NO	GRAPHIC REF	PART NUMBER	QTY	PART NAME 1 2 3 4 5 6 (PRODUCT LEVEL)	SEE PAGE
	1	1	**6E-1835**	1	RETAINER AS	
	2	1	**9X-6395**	1	NUT (3/4-16-THD)	
	3	1	**4T-7571**	1	PLATE	
	4	1	**6J-6439**	1	VALVE-POPPET	
	5	1	**9M-1974**	2	WASHER-HARD (8.8X16X2-MM THK)	
	6	1	**3K-0360**	2	SEAL-O-RING	
	7	1	**4T-2741**	1	SPRING	
	8	1	**7J-9933**	1	SEAL-O-RING	

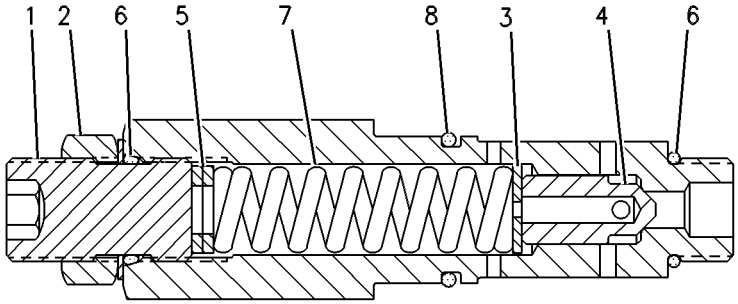

GRAPHIC #1 **<END>** g00122264

HYDRAULIC SYSTEM

6E-4139 VALVE GP-RELIEF–MAIN

S/N: SMC1-UP; GCT1-UP
PART OF 273-2155 MANIFOLD GP-VALVE
AN ATTACHMENT

SMCS-5069, 5117 **i02763960**

NOTE	REF NO	GRAPHIC REF	PART NUMBER	QTY	PART NAME 1 2 3 4 5 6 (PRODUCT LEVEL)	SEE PAGE
	1	1	**6E-1835**	1	RETAINER AS	
	2	1	**9X-6395**	1	NUT (3/4-16-THD)	
	3	1	**3K-0360**	2	SEAL-O-RING	
	4	1	**4T-4942**	1	SPRING	
	5	1	**7J-9933**	1	SEAL-O-RING	
	6	1	**4T-7571**	1	PLATE	
	7	1	**6J-6439**	1	VALVE-POPPET	

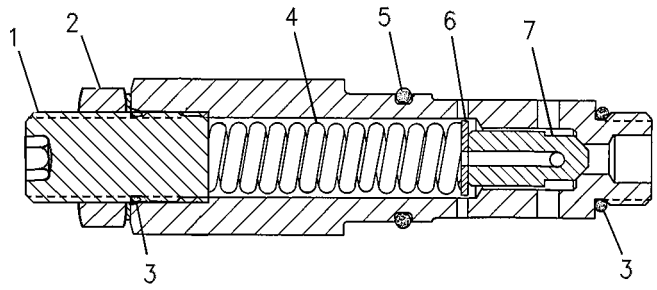

GRAPHIC #1 **<END>** g00239923

121-6649 VALVE GP-RELIEF

S/N: SMC1-UP; GCT1-UP
PART OF 235-0403, 235-0404 VALVE GP-CONTROL
AN ATTACHMENT

SMCS-5069, 5117 **i01819637**

NOTE	REF NO	GRAPHIC REF	PART NUMBER	QTY	PART NAME 1 2 3 4 5 6 (PRODUCT LEVEL)	SEE PAGE
	1	1	**3J-7354**	1	SEAL-O-RING	
	2	1	**4T-5074**	1	RING-BACKUP	
	3	1	**6V-5556**	1	SEAL-O-RING	
	4	1	**4T-4509**	1	SEAT	
	5	1	**108-5157**	1	VALVE	
	6	1	**4T-1700**	1	SPRING	
	7	1	**3K-0360**	1	SEAL-O-RING	
	8	1	**9X-6395**	1	NUT (3/4-16-THD)	
	9	1	**6E-5200**	1	RETAINER AS	
B	10	1	**096-6166**	3	WASHER-HARD (4.5X9X1-MM THK)	

B-USE AS REQUIRED

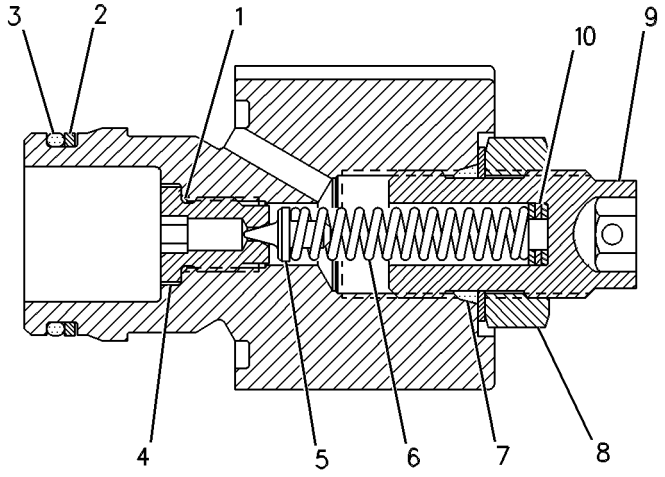

GRAPHIC #1 **<END>** g00263606

225-8026 VALVE GP-RELIEF–IMPLEMENT PILOT OIL

S/N: SMC1-UP; GCT1-UP

PART OF 226-4751 MANIFOLD GP-CONTROL

SMCS-5069, 5117 **i02071342**

NOTE	REF NO	GRAPHIC REF	PART NUMBER	QTY	PART NAME 1 2 3 4 5 6 (PRODUCT LEVEL)	SEE PAGE
J	1	1	**161-6149**	1	SEAL-O-RING	
J	2	1	**161-6161**	2	RING-BACKUP	
J	3	1	**2M-9780**	1	SEAL-O-RING	
					AVAILABLE REPAIR KIT(S):	
J			**133-5545**	1	KIT-SEAL (RELIEF VALVE)	
J-KIT MARKED J SERVICES PARTS MARKED J						

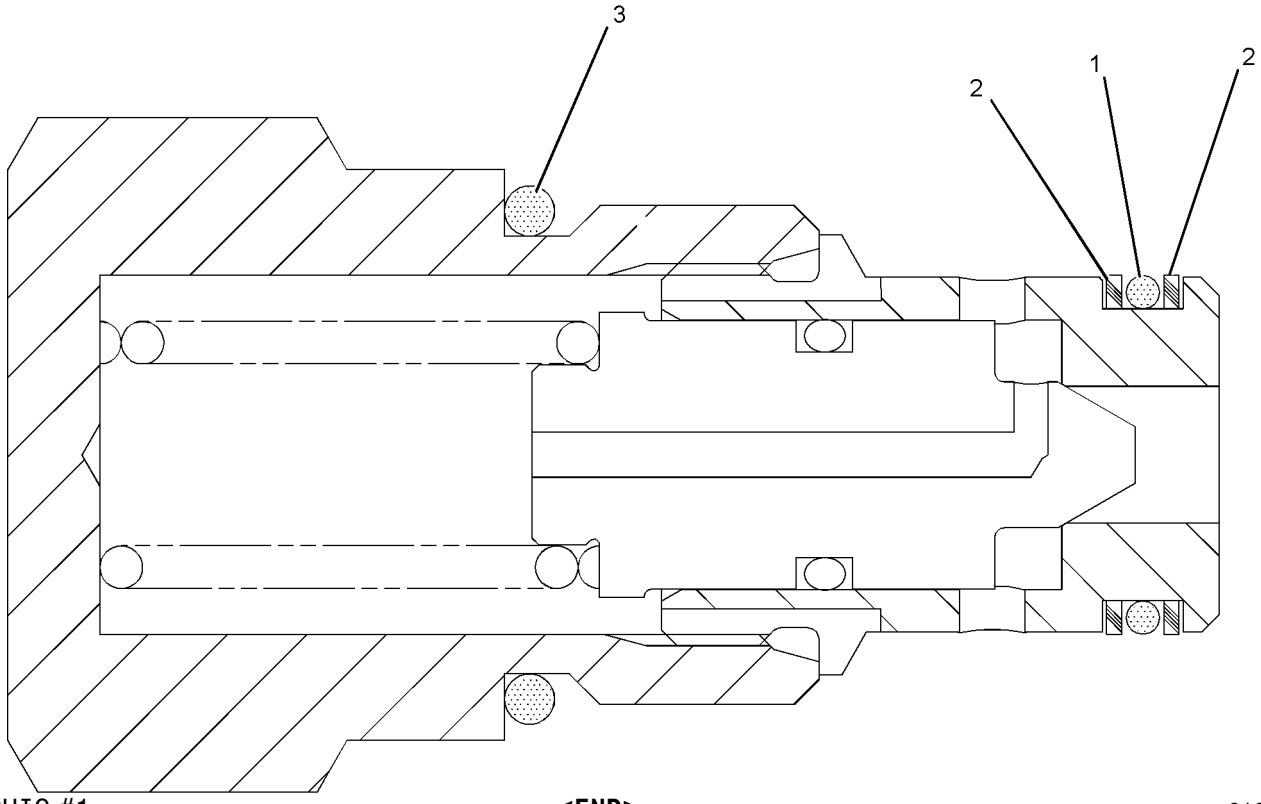

GRAPHIC #1 **<END>** g01019745

4T-1860 VALVE GP-SHUTTLE–SIGNAL–

BULLDOZER LIFT, TILT, RIPPER

S/N: SMC1-UP; GCT1-UP

PART OF 235-0403, 235-0404, 269-8153, 269-8154, 269-8155 VALVE GP-CONTROL

ALSO AN ATTACHMENT

SMCS-5079 **i02400665**

NOTE	REF NO	GRAPHIC REF	PART NUMBER	QTY	PART NAME 1 2 3 4 5 6 (PRODUCT LEVEL)	SEE PAGE
Z	1	1		1	SEAT	
	2	1	**1M-6718**	1	BALL	
Z	3	1		1	VALVE	
	4	1	**6V-5324**	1	SEAL-O-RING	
	5	1	**147-6603**	1	SEAL-O-RING	
	6	1	**3J-1907**	1	SEAL-O-RING	
	7	1	**147-6604**	2	RING-BACKUP	
	8	1	**147-6605**	2	RING-BACKUP	

Z-NOT SERVICED SEPARATELY

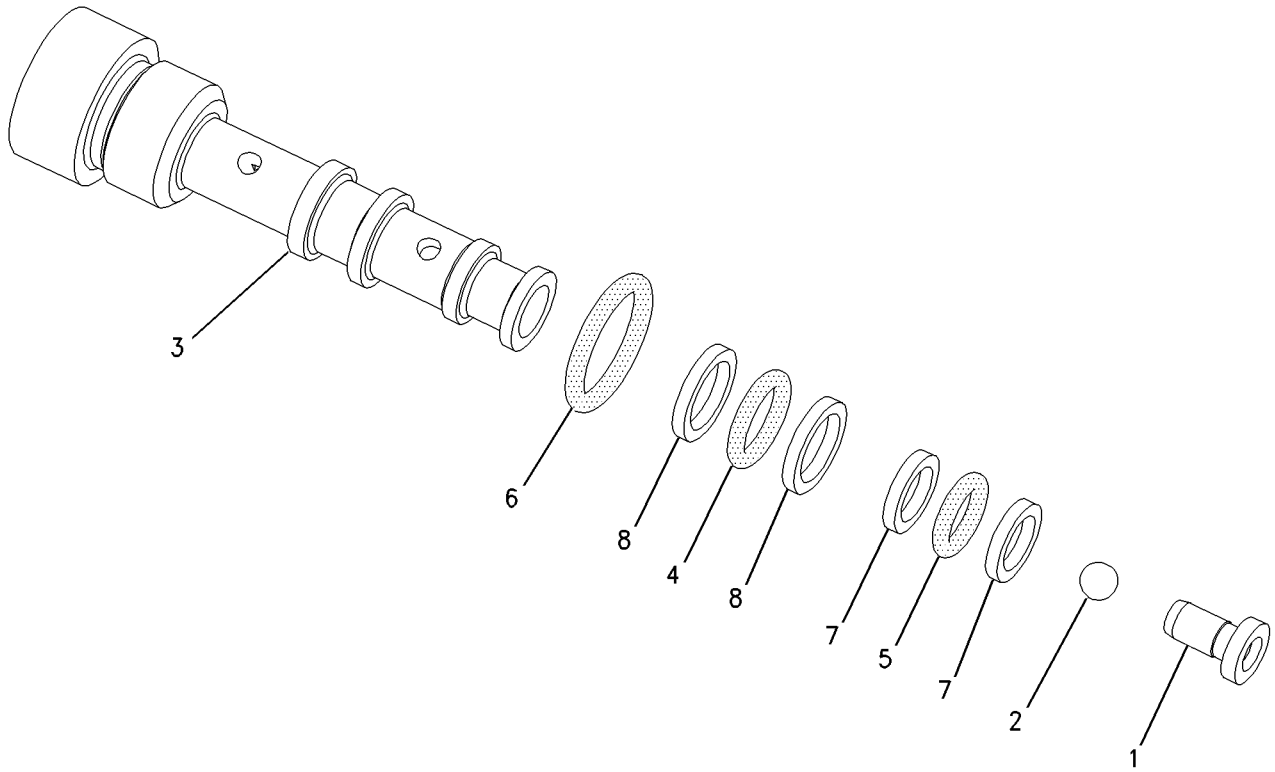

GRAPHIC #1 **<END>** g00775006

260-8590 VALVE GP-SHUTTLE–WINCH

S/N: SMC1-UP; GCT1-UP
PART OF 239-6074 VALVE GP-CONTROL
AN ATTACHMENT

SMCS-5079 **i02233009**

NOTE	REF NO	GRAPHIC REF	PART NUMBER	QTY	PART NAME 1 2 3 4 5 6 (PRODUCT LEVEL)	SEE PAGE
J	1	1	**3J-7354**	1	SEAL-O-RING	
J	2	1	**9N-1756**	1	SEAL-O-RING	
J	3	1	**3H-0442**	1	SEAL-O-RING	
					AVAILABLE REPAIR KIT(S):	
J			**240-7356**	1	KIT-SEAL (SHUTTLE VALVE) (IMPLEMENT CONTROL)	

J-(KIT MARKED J INCLUDES PARTS MARKED J)

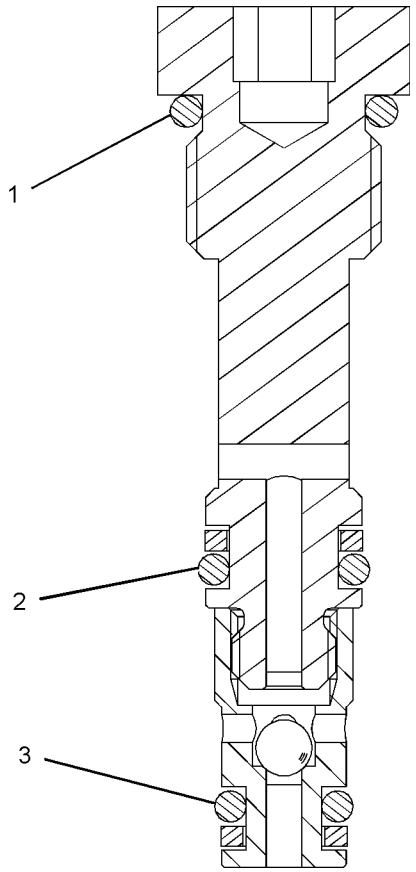

GRAPHIC #1 **<END>** g01018080

201-0950 VALVE GP-SOLENOID

S/N: SMC1-UP; GCT1-UP
PART OF 269-2081 LINES GP-WINCH, 226-4751 MANIFOLD GP-CONTROL, 239-5317 VALVE & MTG GP-BULLDOZER
ALSO AN ATTACHMENT

SMCS-5479 **i02470752**

NOTE	REF NO	GRAPHIC REF	PART NUMBER	QTY	PART NAME 1 2 3 4 5 6 (PRODUCT LEVEL)	SEE PAGE
	1	1	**122-1133**	1	COIL AS (24-VOLT)	
		1	**1S-9593**	2	STRAP-CABLE	
		1	**186-3735**	2	PIN-CONNECTOR (16-GA TO 18-GA)	
		1	**102-8802**	1	KIT-RECEPTACLE (2-PIN)	
	2	1	**156-5970**	1	NUT (1/2-20-2B-THD)	
	3	1	**171-8772**	1	VALVE AS-SOLENOID	
		1	**156-5970**	1	NUT (1/2-20-2B-THD)	
					AVAILABLE REPAIR KIT(S):	
			195-7430	1	KIT-SEAL (SOLENOID VALVE)	

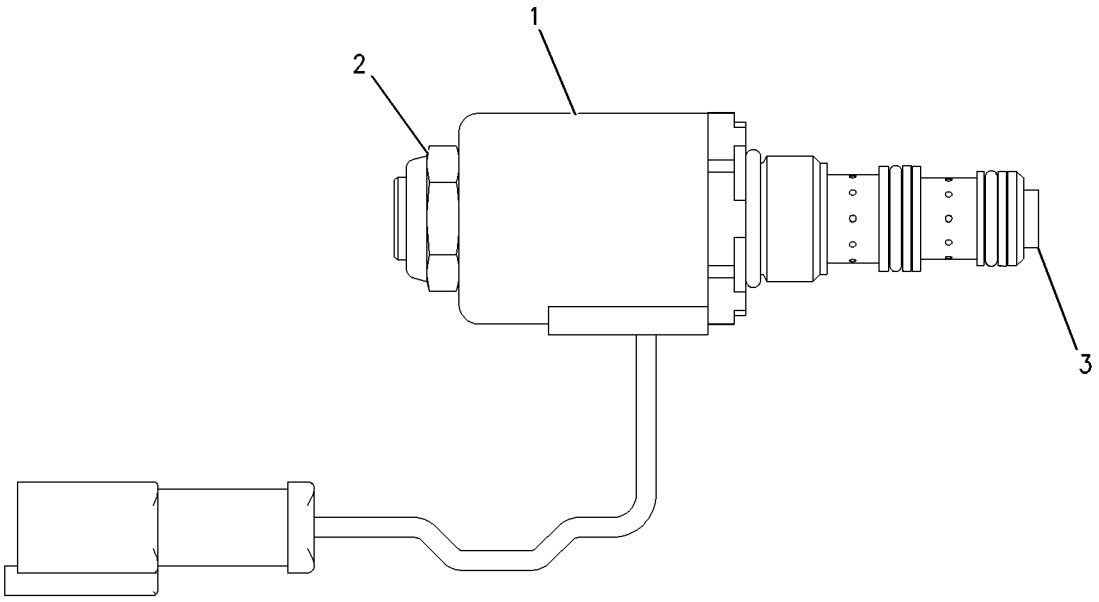

GRAPHIC #1 **<END>** g00888488

HYDRAULIC SYSTEM

235-4605 VALVE GP-SOLENOID

S/N: SMC1-UP; GCT1-UP
PART OF 239-5317 VALVE & MTG GP-BULLDOZER
AN ATTACHMENT

SMCS-5479 **i02598849**

NOTE	REF NO	GRAPHIC REF	PART NUMBER	QTY	PART NAME 1 2 3 4 5 6 (PRODUCT LEVEL)	SEE PAGE
	1	1	**187-8191**	1	COIL AS	
	2	1	**033-6043**	1	SEAL-O-RING	
	3	1	**6V-4589**	1	SEAL-O-RING	
	4	1	**8L-2746**	1	SEAL-O-RING	

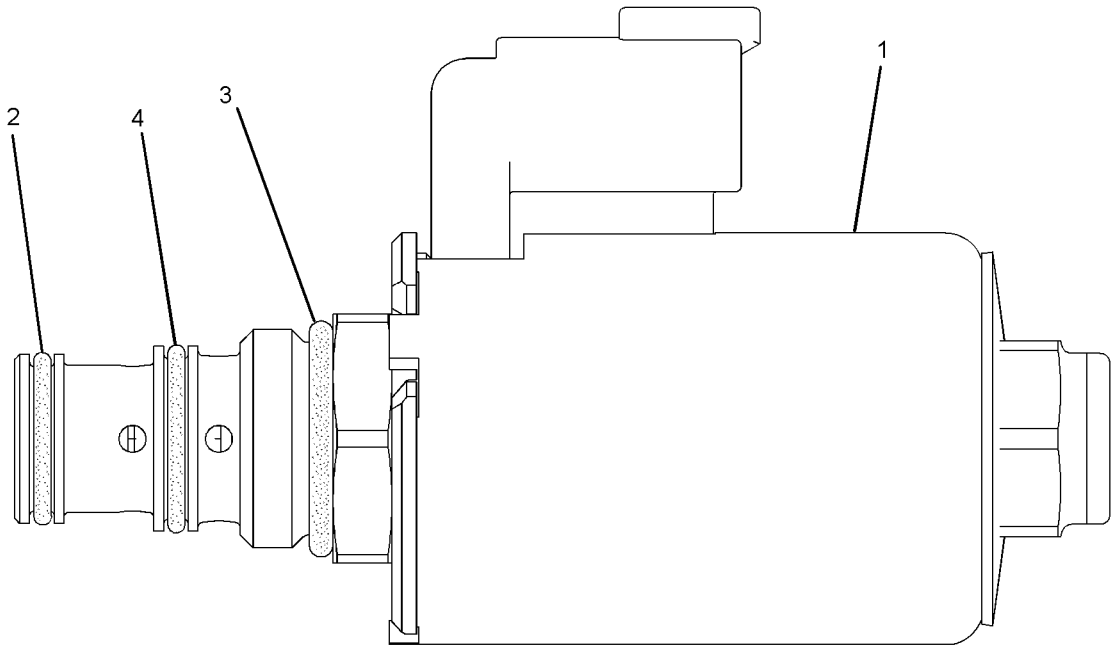

GRAPHIC #1 **<END>** g01303958

251-9814 BRACE GP-BULLDOZER

S/N: C4C1-UP; C4K1-UP; C4R1-UP; C4T1-UP
PART OF 251-6112, 251-6113, 251-6128, 251-6129 BULLDOZER AR-ANGLING
AN ATTACHMENT

SMCS-6074 **i02605122**

NOTE	REF NO	GRAPHIC REF	PART NUMBER	QTY	PART NAME 1 2 3 4 5 6 (PRODUCT LEVEL)	SEE PAGE
	1	1	**1U-1176**	2	PIN	
	2	1	**3B-4626**	2	PIN-COTTER	
	3	1	**3J-6573**	2	SCREW-ADJUSTMENT	
	4	1	**4F-0255**	2	PIN	
	5	1	**4F-1252**	2	PIN	
	6	1	**4T-5495**	2	STUD-BALL	
B	7	1	**8E-5701**	52	SHIM (0.8-MM THK)	
	8	1	**160-6306**	2	CAP-BEARING	
Y	9	1	**227-0841**	2	CYLINDER GP-TILT	478
	10	1	**251-9815**	1	ARM AS (LH)	
	11	1	**251-9816**	1	ARM AS (RH)	
					(EACH ARM ASSEMBLY INCLUDES)	
		1	**1U-1173**	1	BRACKET (RH)	
		1	**1U-1174**	1	BRACKET (LH)	
		1	**1U-1175**	2	PLATE	
		1	**3Y-3866**	1	NUT (2 3/4-8-THD)	
		1	**4B-4098**	1	PLUG-CUP	
		1	**251-9817**	1	BEARING	
	12	1	**251-9828**	4	CAP-BEARING	
B	13	1	**251-9834**	104	SHIM (0.8-MM THK)	
M	14	1	**7X-2564**	8	BOLT (M20X2.5X90-MM)	
	15	1	**8T-4123**	8	WASHER (22X35X3.5-MM THK)	
M	16	1	**8T-4187**	4	BOLT (M20X2.5X80-MM)	
M	17	1	**8T-6381**	8	BOLT (M20X2.5X120-MM)	
	18	1	**3J-1770**	2	LOCK PIN	

B-USE AS REQUIRED
M-METRIC PART
Y-SEPARATE ILLUSTRATION

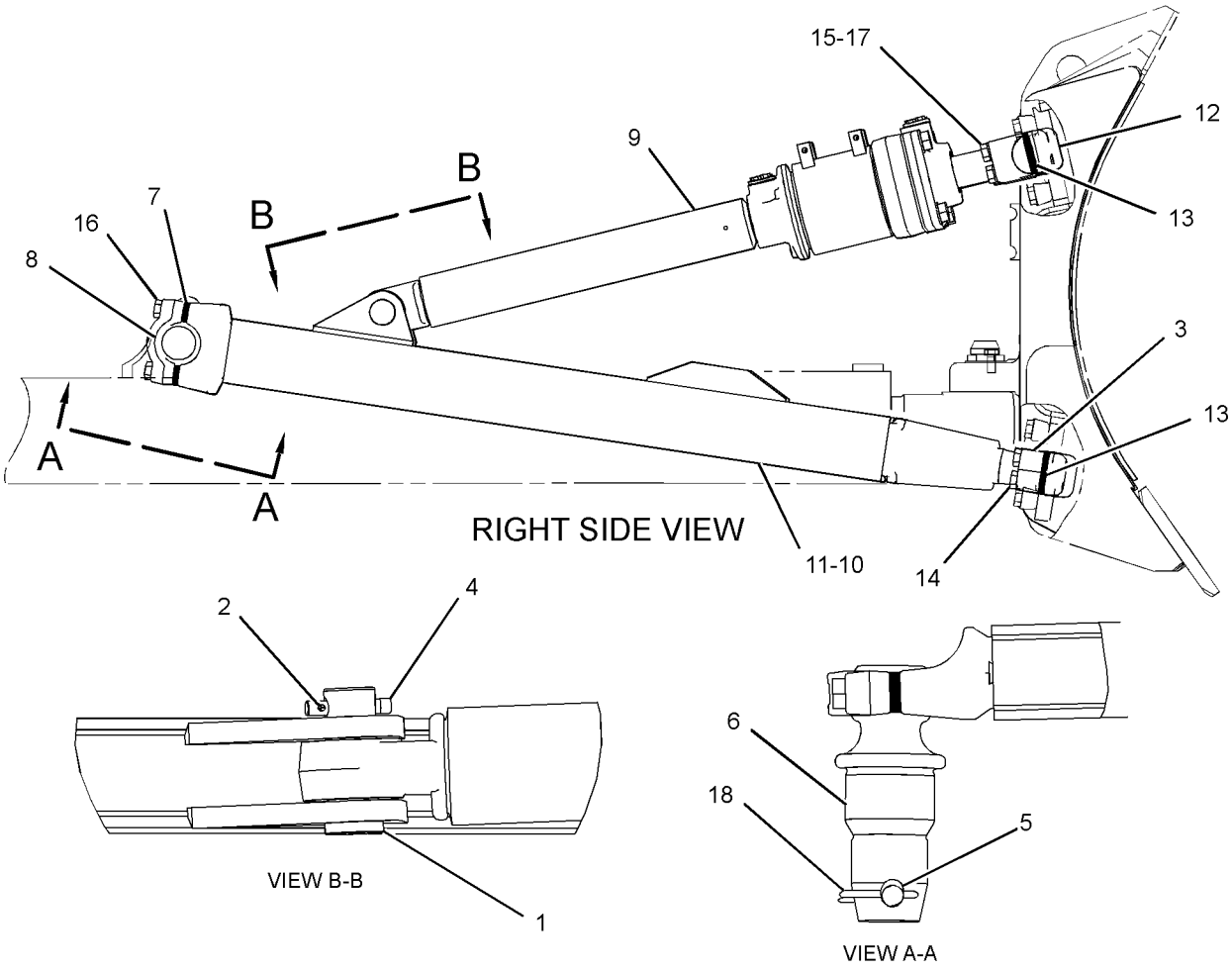

GRAPHIC #1 **<END>** g01262216

IMPLEMENTS

251-6112 BULLDOZER AR-ANGLING

S/N: C4R1-UP
AN ATTACHMENT

SMCS-6050, 6052 **i02454226**

NOTE	REF NO	GRAPHIC REF	PART NUMBER	QTY	PART NAME 1 2 3 4 5 6 (PRODUCT LEVEL)	SEE PAGE
Y	1	1	*109-1352*	1	TRUNNION GP-BULLDOZER	592
Y	2	1	*227-4005*	1	CYLINDER & LINES GP-LIFT (RH)	470
Y	3	1	*227-4006*	1	CYLINDER & LINES GP-LIFT (LH)	472
Y	4	1	*238-9559*	1	MOUNTING GP-CYLINDER	513
Y	5	1	*251-9814*	1	BRACE GP-BULLDOZER	575
Y	6	1	*251-9818*	1	BLADE GP-ANGLING	603
Y	7	1	*251-9830*	1	C-FRAME GP	586
Y	8	1	*255-8954*	1	LINES GP-TILT CYLINDER	505
F			**8T-7371**	1	PLATE-SERIAL NUMBER (BULLDOZER)	
F			**4B-4158**	2	SCREW-DRIVE (3/16X0.25-IN)	

F-NOT SHOWN
Y-SEPARATE ILLUSTRATION

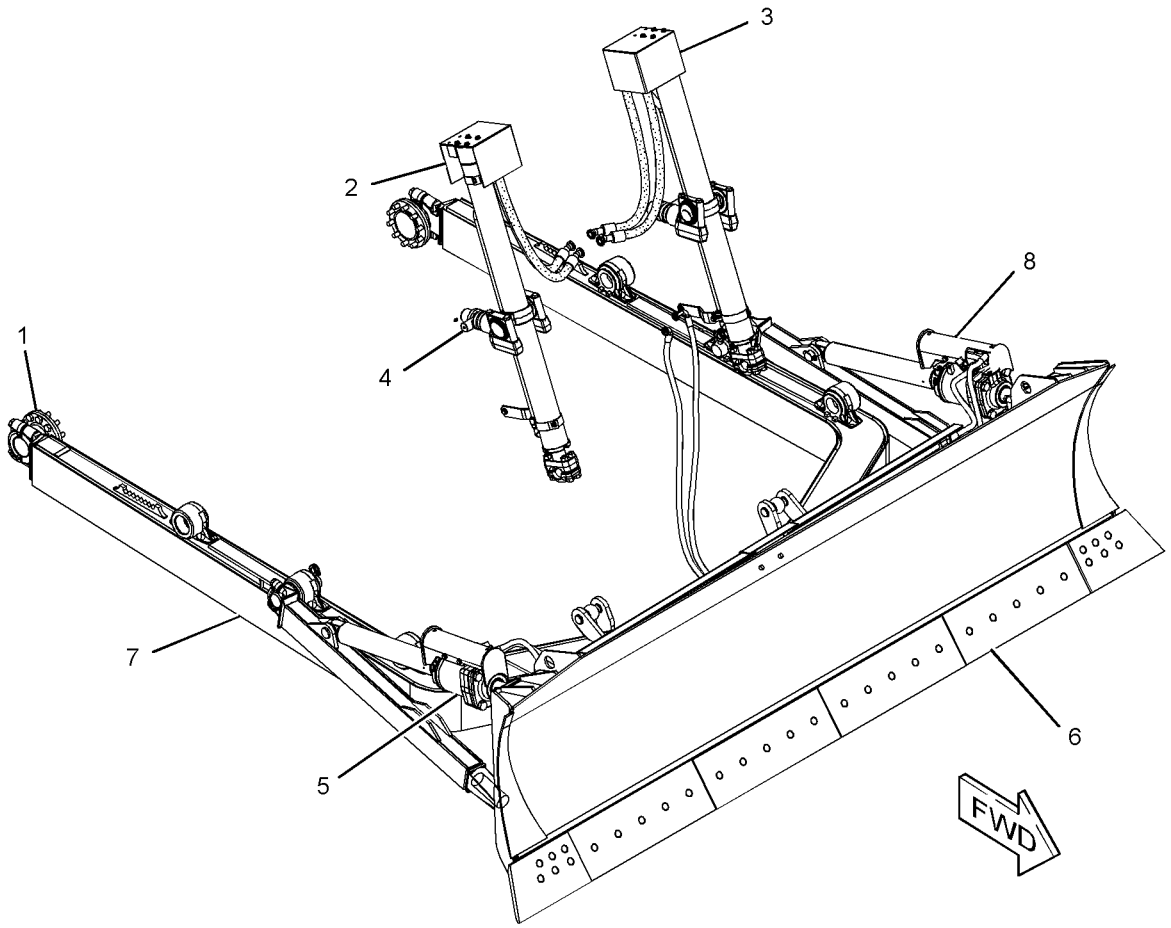

GRAPHIC #1 **<END>** g01210484

IMPLEMENTS

251-6113 BULLDOZER AR-ANGLING

S/N: C4T1-UP

FOR USE WITH 227-4005—PAGE 470, 227-4006—PAGE 472, 238-9559—PAGE 513

AN ATTACHMENT

SMCS-6050, 6052 **i02454874**

NOTE	REF NO	GRAPHIC REF	PART NUMBER	QTY	PART NAME 1 2 3 4 5 6 (PRODUCT LEVEL)	SEE PAGE
Y	1	1	*109-1352*	1	TRUNNION GP-BULLDOZER	592
Y	2	1	*251-9814*	1	BRACE GP-BULLDOZER	575
Y	3	1	*251-9818*	1	BLADE GP-ANGLING	603
Y	4	1	*251-9830*	1	C-FRAME GP	586
Y	5	1	*255-8954*	1	LINES GP-TILT CYLINDER	505
F			**8T-7371**	1	PLATE-SERIAL NUMBER (BULLDOZER)	
F			**4B-4158**	2	SCREW-DRIVE (3/16X0.25-IN)	

F-NOT SHOWN
Y-SEPARATE ILLUSTRATION

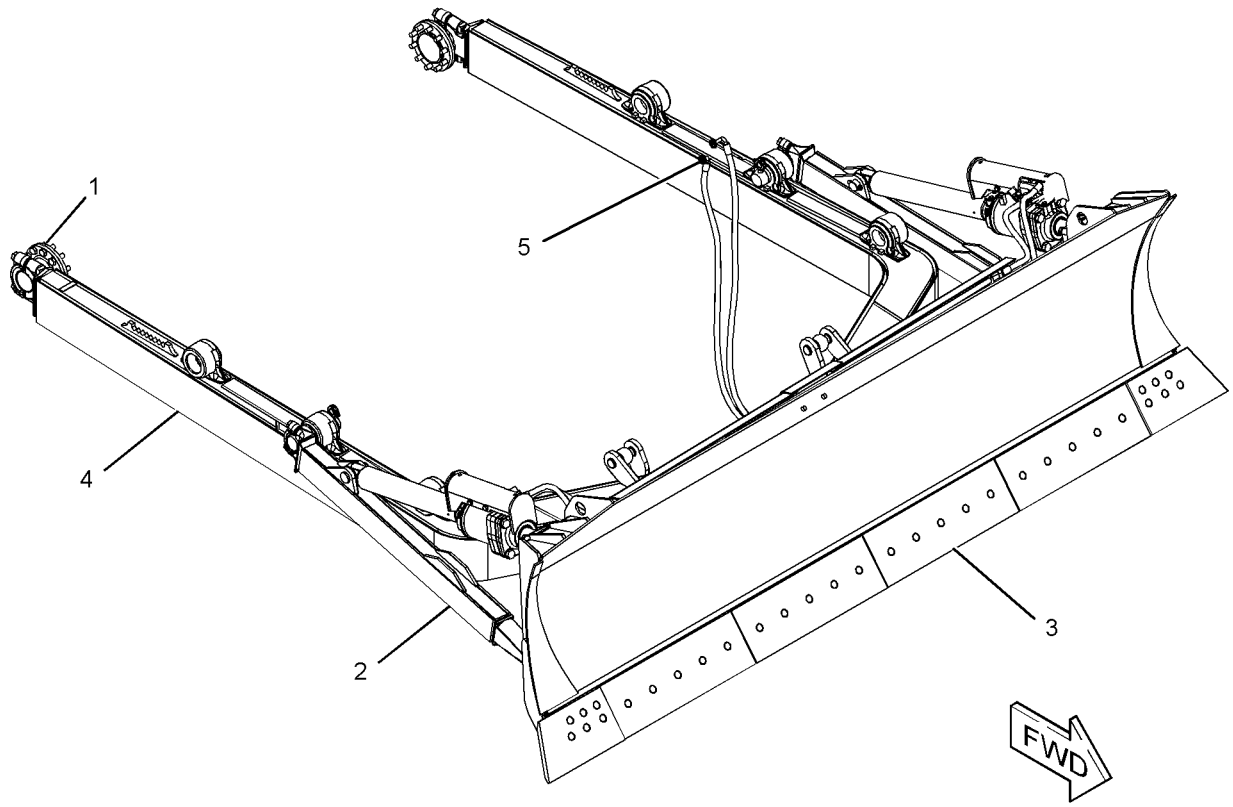

GRAPHIC #1 **<END>** g01210525

IMPLEMENTS

251-6128 BULLDOZER AR-ANGLING

S/N: C4C1-UP
AN ATTACHMENT

SMCS-6050, 6052 **i02454587**

NOTE	REF NO	GRAPHIC REF	PART NUMBER	QTY	PART NAME 1 2 3 4 5 6 (PRODUCT LEVEL)	SEE PAGE
Y	1	1	*109-1352*	1	TRUNNION GP-BULLDOZER	592
Y	2	1	*227-4005*	1	CYLINDER & LINES GP-LIFT (RH)	470
Y	3	1	*227-4006*	1	CYLINDER & LINES GP-LIFT (LH)	472
Y	4	1	*238-9559*	1	MOUNTING GP-CYLINDER	513
Y	5	1	*251-9814*	1	BRACE GP-BULLDOZER	575
Y	6	1	*251-9818*	1	BLADE GP-ANGLING	603
Y	7	1	*255-8951*	1	C-FRAME GP	587
Y	8	1	*255-8954*	1	LINES GP-TILT CYLINDER	505
F			**8T-7371**	1	PLATE-SERIAL NUMBER (BULLDOZER)	
F			**4B-4158**	2	SCREW-DRIVE (3/16X0.25-IN)	

F-NOT SHOWN
Y-SEPARATE ILLUSTRATION

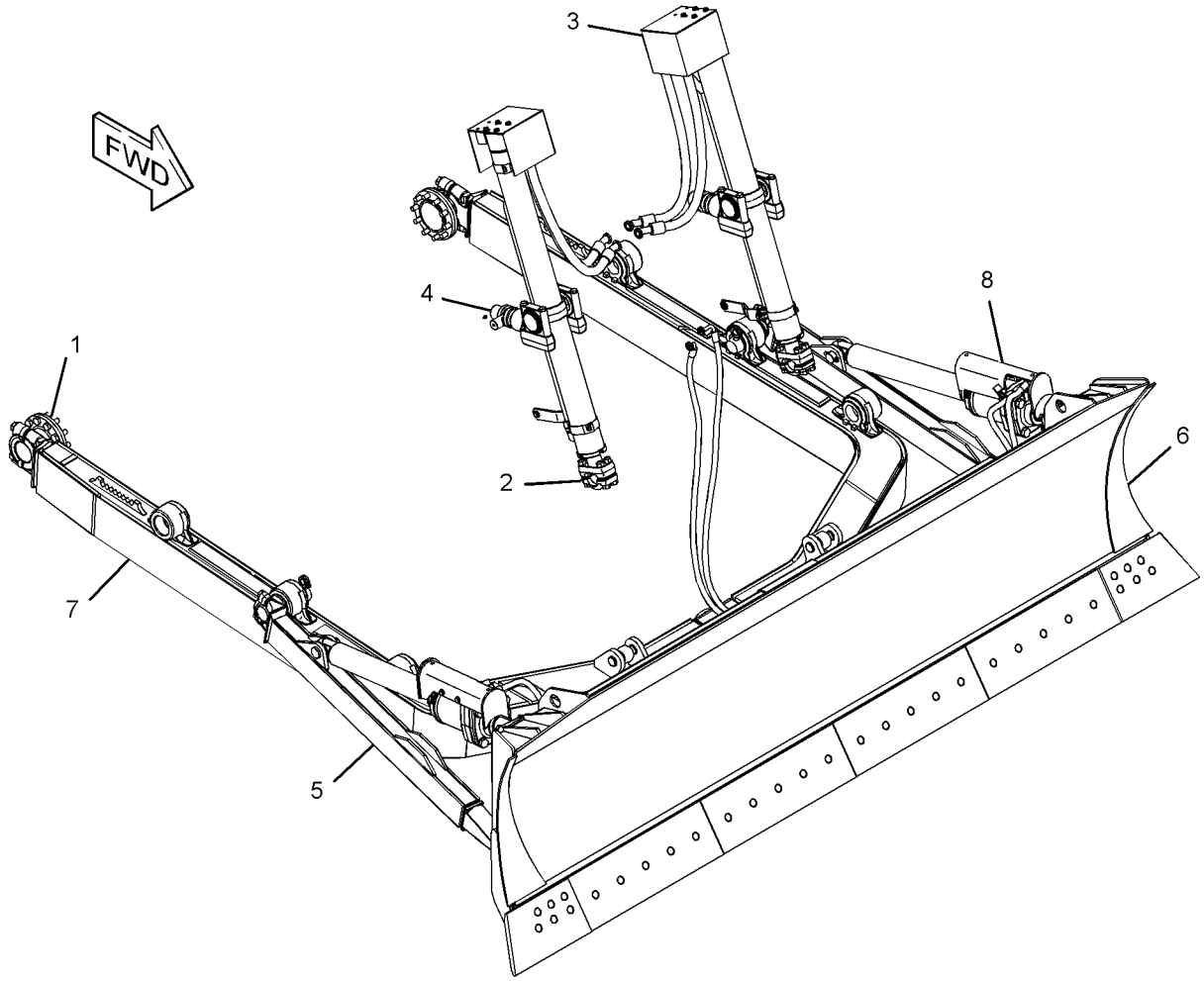

GRAPHIC #1 **<END>** g01225350

251-6129 BULLDOZER AR-ANGLING

S/N: C4K1-UP

FOR USE WITH 227-4005—PAGE 470, 227-4006—PAGE 472, 238-9559—PAGE 513

AN ATTACHMENT

SMCS-6050, 6052 **i02454741**

NOTE	REF NO	GRAPHIC REF	PART NUMBER	QTY	PART NAME 1 2 3 4 5 6 (PRODUCT LEVEL)	SEE PAGE
Y	1	1	*109-1352*	1	TRUNNION GP-BULLDOZER	592
Y	2	1	*251-9814*	1	BRACE GP-BULLDOZER	575
Y	3	1	*251-9818*	1	BLADE GP-ANGLING	603
Y	4	1	*255-8951*	1	C-FRAME GP	587
Y	5	1	*255-8954*	1	LINES GP-TILT CYLINDER	505
F			**8T-7371**	1	PLATE-SERIAL NUMBER (BULLDOZER)	
F			**4B-4158**	2	SCREW-DRIVE (3/16X0.25-IN)	

F-NOT SHOWN
Y-SEPARATE ILLUSTRATION

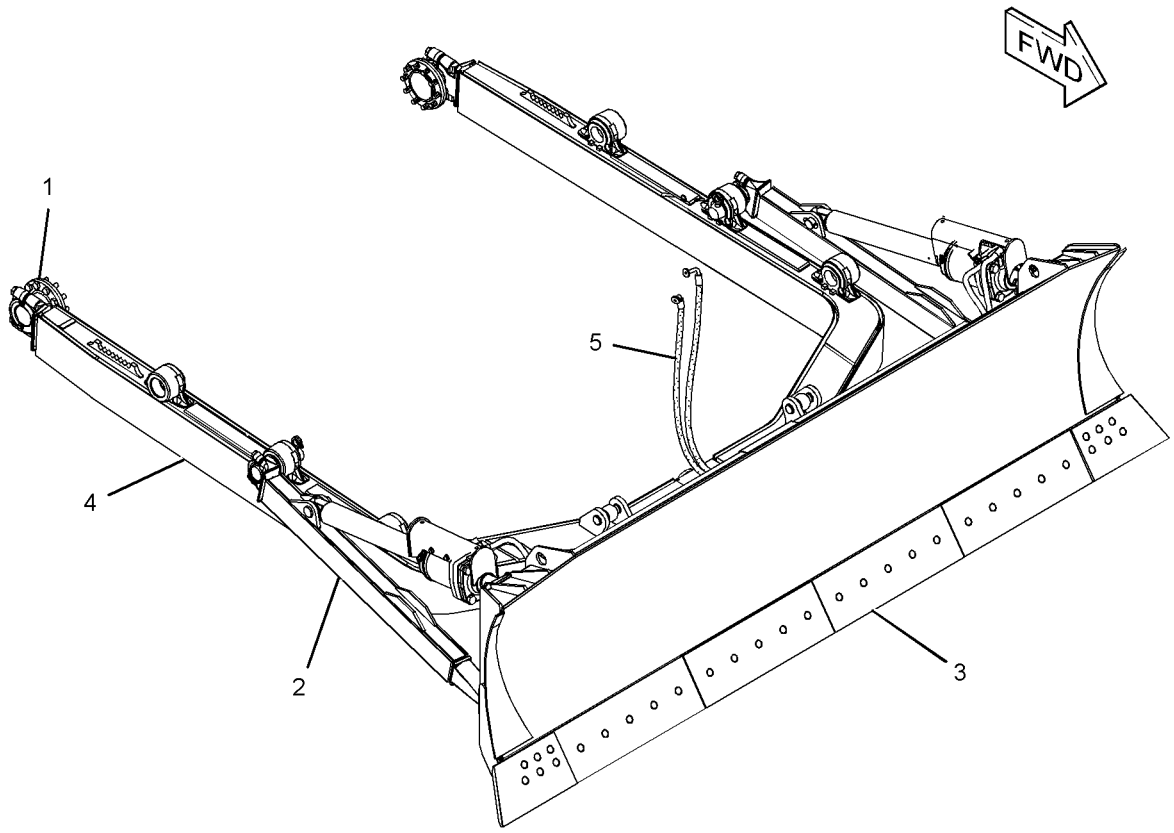

GRAPHIC #1 **<END>** g01225486

230-5553 BULLDOZER AR-SEMI-UNIVERSAL

S/N: D6C1-UP
AN ATTACHMENT

SMCS-6050, 6078 **i02455464**

NOTE	REF NO	GRAPHIC REF	PART NUMBER	QTY	PART NAME 1 2 3 4 5 6 (PRODUCT LEVEL)	SEE PAGE
Y	1	1	*109-1352*	1	TRUNNION GP-BULLDOZER	592
Y	2	1	*227-4005*	1	CYLINDER & LINES GP-LIFT (RH)	470
Y	3	1	*227-4006*	1	CYLINDER & LINES GP-LIFT (LH)	472
Y	4	1	*230-5554*	1	PUSH ARM GP	588
Y	5	1	*230-5555*	1	LINES GP-TILT CYLINDER	501
Y	6	1	*230-5558*	1	BLADE GP-SEMI-UNIVERSAL	604
Y	7	1	*238-9559*	1	MOUNTING GP-CYLINDER	513
F			**8T-7371**	1	PLATE-SERIAL NUMBER (BULLDOZER)	
					(ON UPPER RH CORNER OF BLADE)	
F			**4B-4158**	2	SCREW-DRIVE (3/16X0.25-IN)	

F-NOT SHOWN
Y-SEPARATE ILLUSTRATION

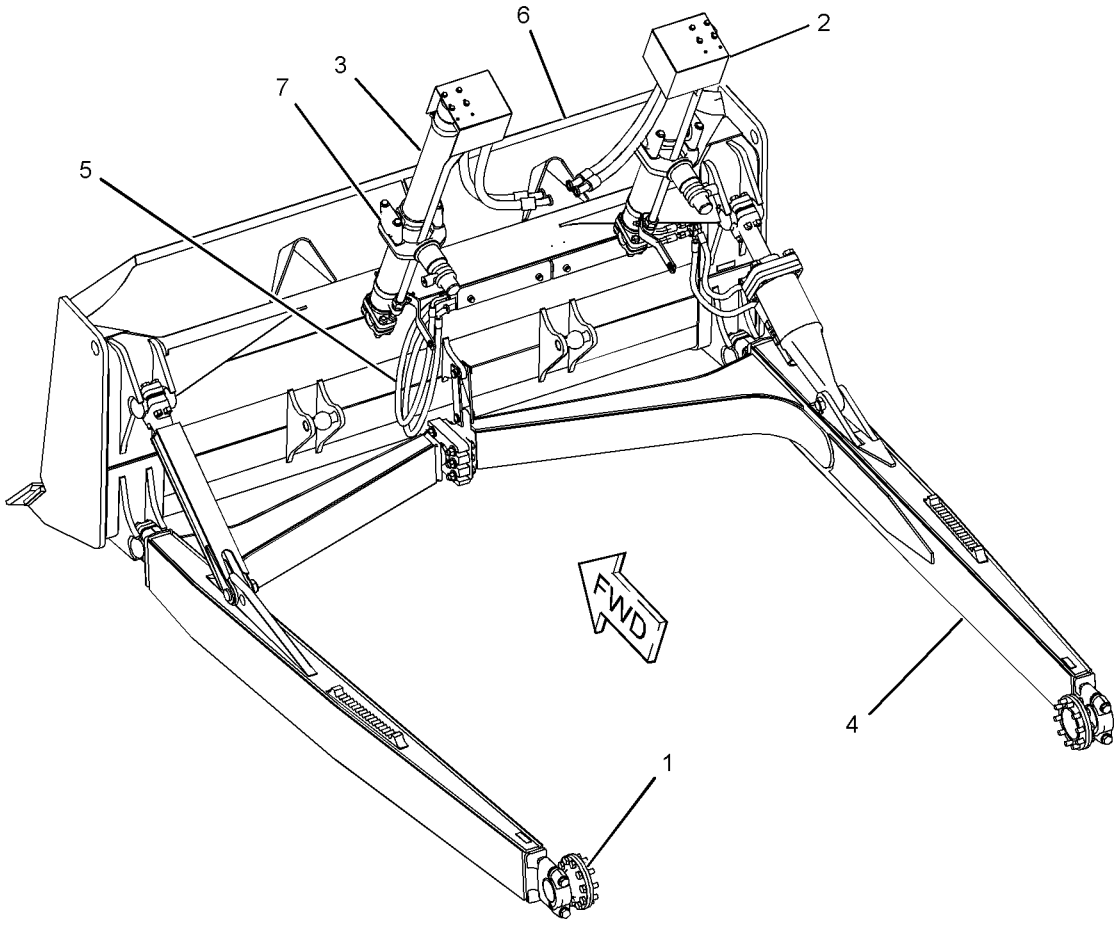

GRAPHIC #1 **<END>** g01207569

251-6120 BULLDOZER AR-SEMI-UNIVERSAL

S/N: C4W1-UP

FOR USE WITH 227-4005—PAGE 470, 227-4006—PAGE 472, 238-9559—PAGE 513

AN ATTACHMENT

SMCS-6050, 6078 **i02454926**

NOTE	REF NO	GRAPHIC REF	PART NUMBER	QTY	PART NAME 1 2 3 4 5 6 (PRODUCT LEVEL)	SEE PAGE
Y	1	1	*109-1352*	1	TRUNNION GP-BULLDOZER	592
Y	2	1	*230-5554*	1	PUSH ARM GP	588
Y	3	1	*230-5555*	1	LINES GP-TILT CYLINDER	501
Y	4	1	*230-5558*	1	BLADE GP-SEMI-UNIVERSAL	604
F			**8T-7371**	1	PLATE-SERIAL NUMBER (BULLDOZER)	
F			**4B-4158**	2	SCREW-DRIVE (3/16X0.25-IN)	

F-NOT SHOWN
Y-SEPARATE ILLUSTRATION

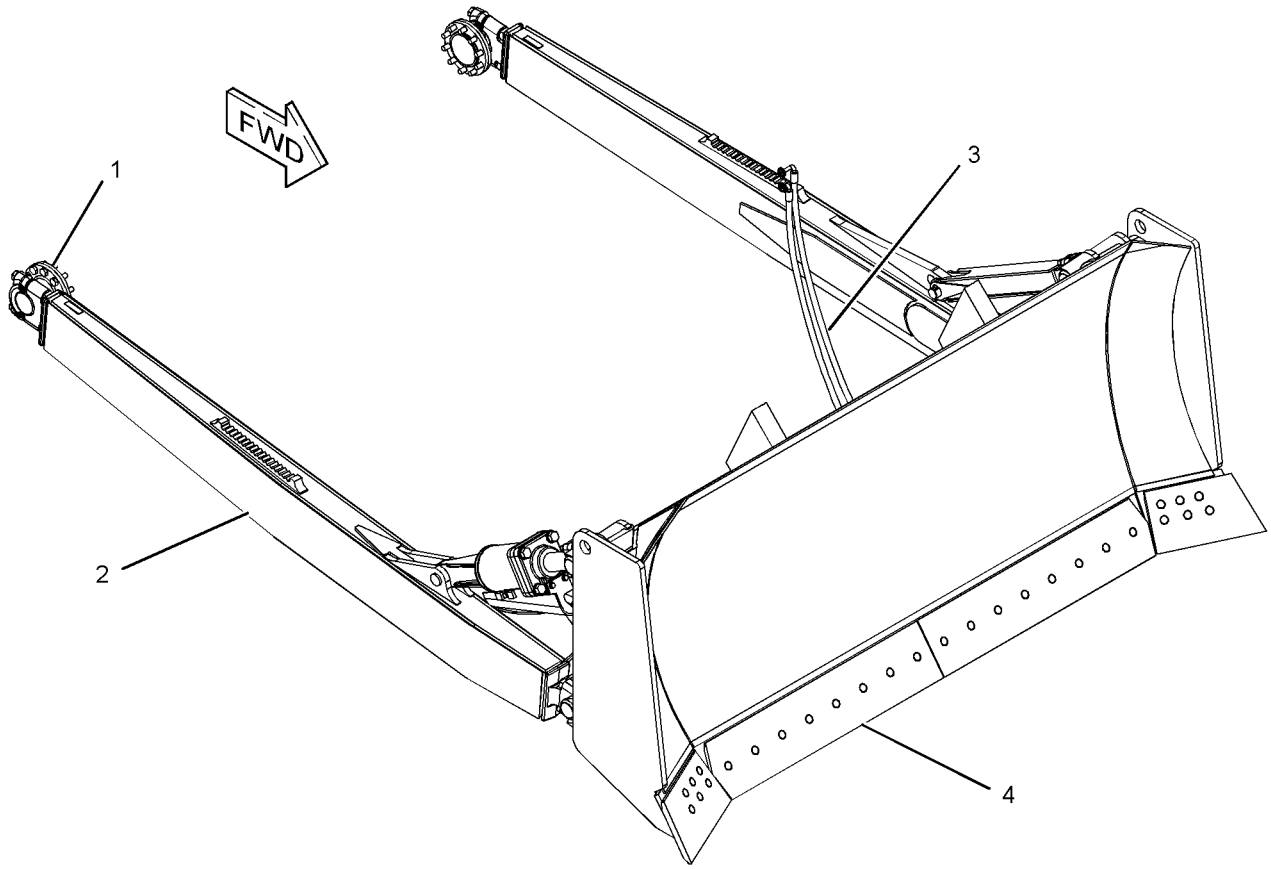

GRAPHIC #1 **<END>** g01209016

IMPLEMENTS

252-5854 BULLDOZER AR-SEMI-UNIVERSAL

S/N: SMC1-UP
AN ATTACHMENT

SMCS-6050, 6078 **i02454810**

NOTE	REF NO	GRAPHIC REF	PART NUMBER	QTY	PART NAME 1 2 3 4 5 6 (PRODUCT LEVEL)	SEE PAGE
Y	1	1	*109-1352*	1	TRUNNION GP-BULLDOZER	592
Y	2	1	*227-4005*	1	CYLINDER & LINES GP-LIFT (RH)	470
Y	3	1	*227-4006*	1	CYLINDER & LINES GP-LIFT (LH)	472
Y	4	1	*238-9559*	1	MOUNTING GP-CYLINDER	513
Y	5	1	*252-5849*	1	LINES GP-TILT CYLINDER	503
Y	6	1	*252-5853*	1	PUSH ARM GP	590
Y	7	1	*252-5856*	1	BLADE GP-SEMI-UNIVERSAL	605
F			**8T-7371**	1	PLATE-SERIAL NUMBER (BULLDOZER)	
					(ON UPPER RH CORNER OF BLADE)	
F			**4B-4158**	2	SCREW-DRIVE (3/16X0.25-IN)	

F-NOT SHOWN
Y-SEPARATE ILLUSTRATION

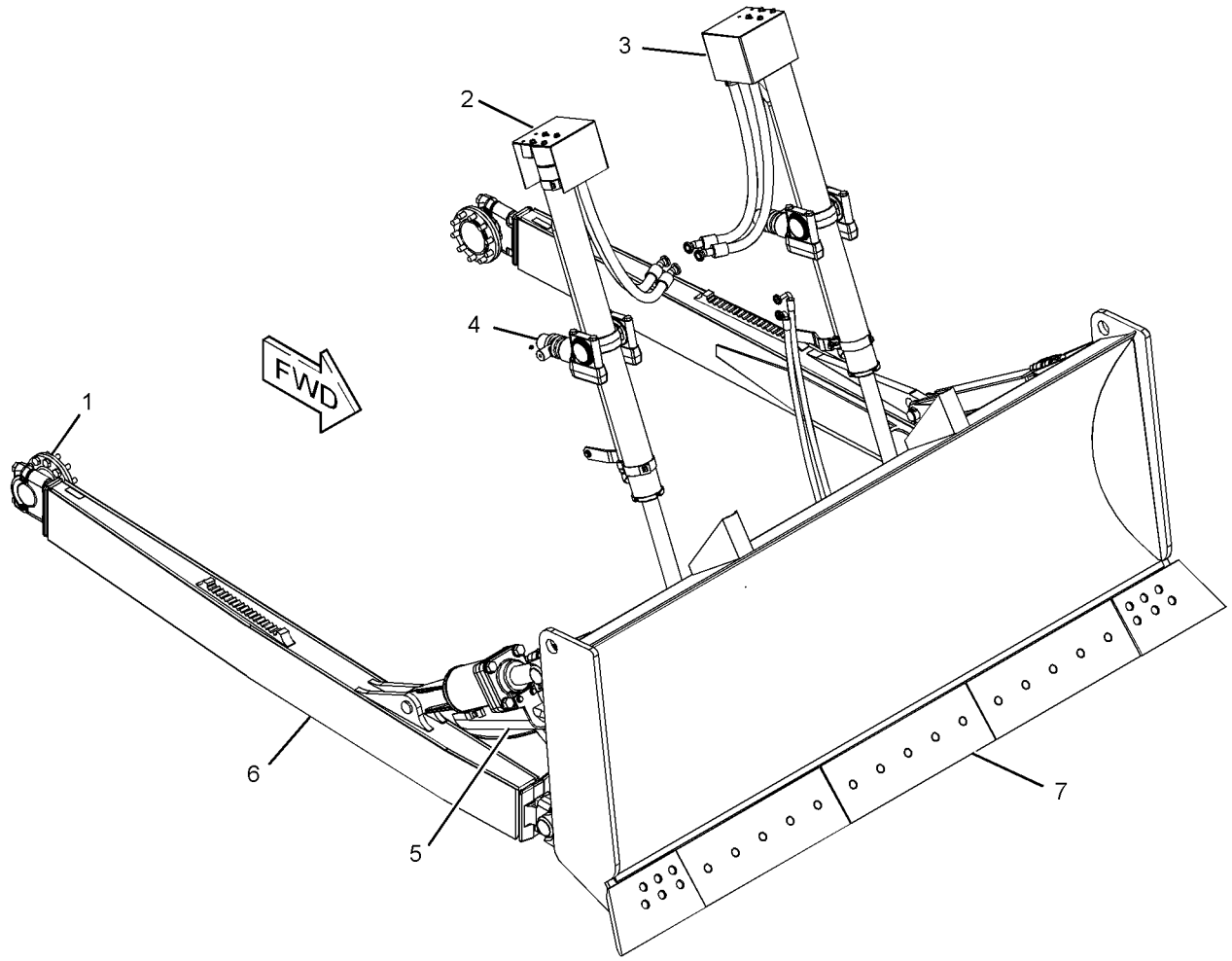

GRAPHIC #1 **<END>** g01206974

252-5855 BULLDOZER AR-SEMI-UNIVERSAL

S/N: C4L1-UP

FOR USE WITH 227-4005—PAGE 470, 227-4006—PAGE 472, 238-9559—PAGE 513

AN ATTACHMENT

SMCS-6050, 6078 **i02455229**

NOTE	REF NO	GRAPHIC REF	PART NUMBER	QTY	PART NAME 1 2 3 4 5 6 (PRODUCT LEVEL)	SEE PAGE
Y	1	1	*109-1352*	1	TRUNNION GP-BULLDOZER	592
Y	2	1	*252-5849*	1	LINES GP-TILT CYLINDER	503
Y	3	1	*252-5853*	1	PUSH ARM GP	590
Y	4	1	*252-5856*	1	BLADE GP-SEMI-UNIVERSAL	605
F			**8T-7371**	1	PLATE-SERIAL NUMBER	
					(ON UPPER RH CORNER OF BLADE)	
F			**4B-4158**	2	SCREW-DRIVE (3/16X0.25-IN)	

F-NOT SHOWN
Y-SEPARATE ILLUSTRATION

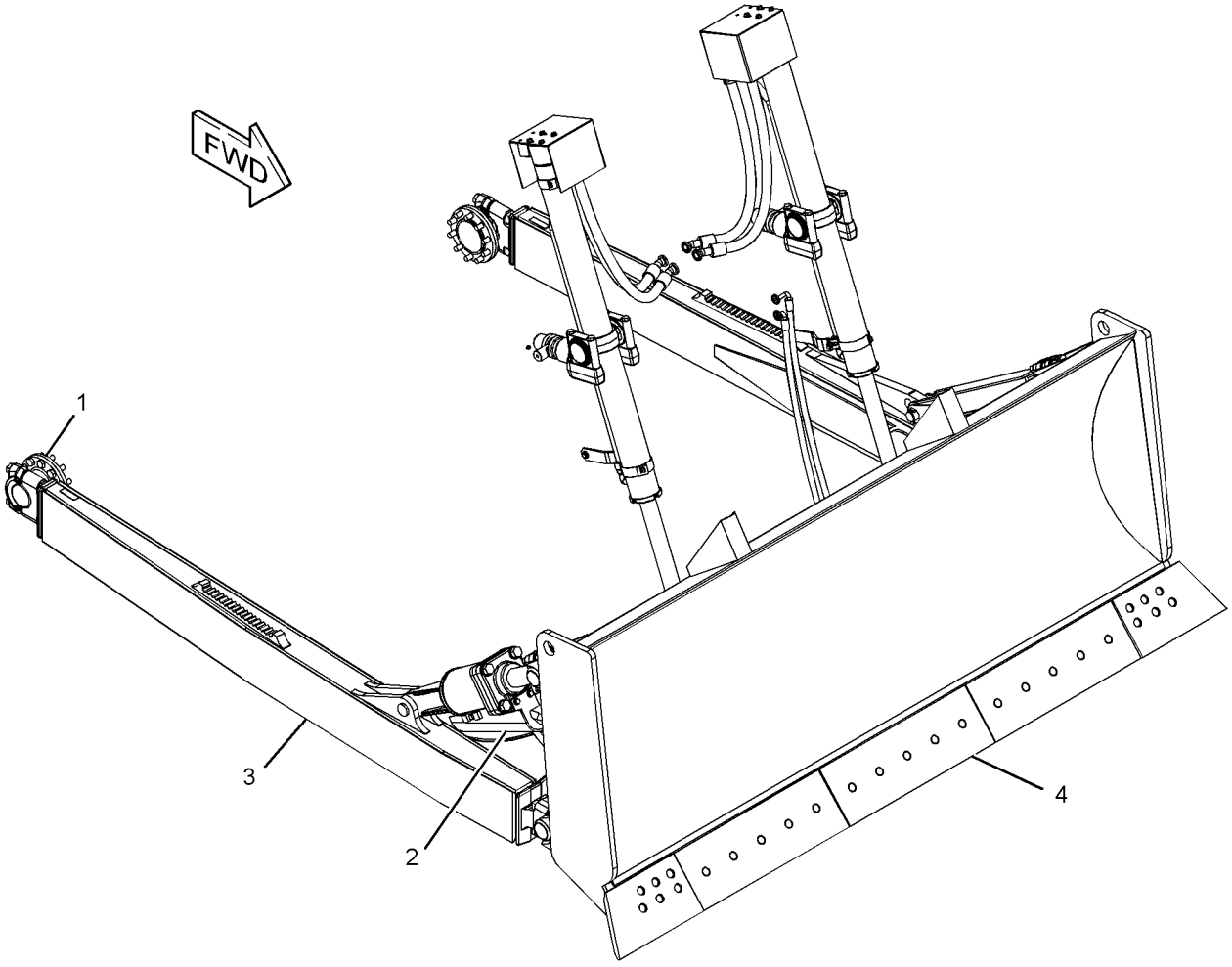

GRAPHIC #1 **<END>** g01206977

255-8952 C-FRAME AS—ANGLING BULLDOZER

S/N: C4C1-UP; C4K1-UP
PART OF 255-8951 C-FRAME GP
AN ATTACHMENT

SMCS-6063 **i02454782**

NOTE	REF NO	GRAPHIC REF	PART NUMBER	QTY	PART NAME 1 2 3 4 5 6 (PRODUCT LEVEL)	SEE PAGE
	1	1	**6J-9187**	1	BRACKET AS (RH)	
	2	1	**6J-9188**	1	BRACKET AS (LH)	
					(EACH BRACKET AS INCLUDES)	
		1	**7J-2595**	2	BRACKET	
		1	**4J-2414**	1	TRUNNION	
	3	1	**8P-9770**	1	PLATE-INFORMATION	
	4	1	**9W-4897**	6	BRACKET AS	
					(EACH INCLUDES)	
		1	**3J-2682**	1	BRACKET	
		1	**8F-4387**	2	PLATE	
	5	1	**9W-5375**	2	BAR	
	6	1	**9W-9000**	1	ADAPTER AS	
		1	**5M-6214**	1	PLUG-PIPE	
		1	**8E-5486**	2	BEARING-SLEEVE	
	7	1	**251-9835**	2	BEARING	

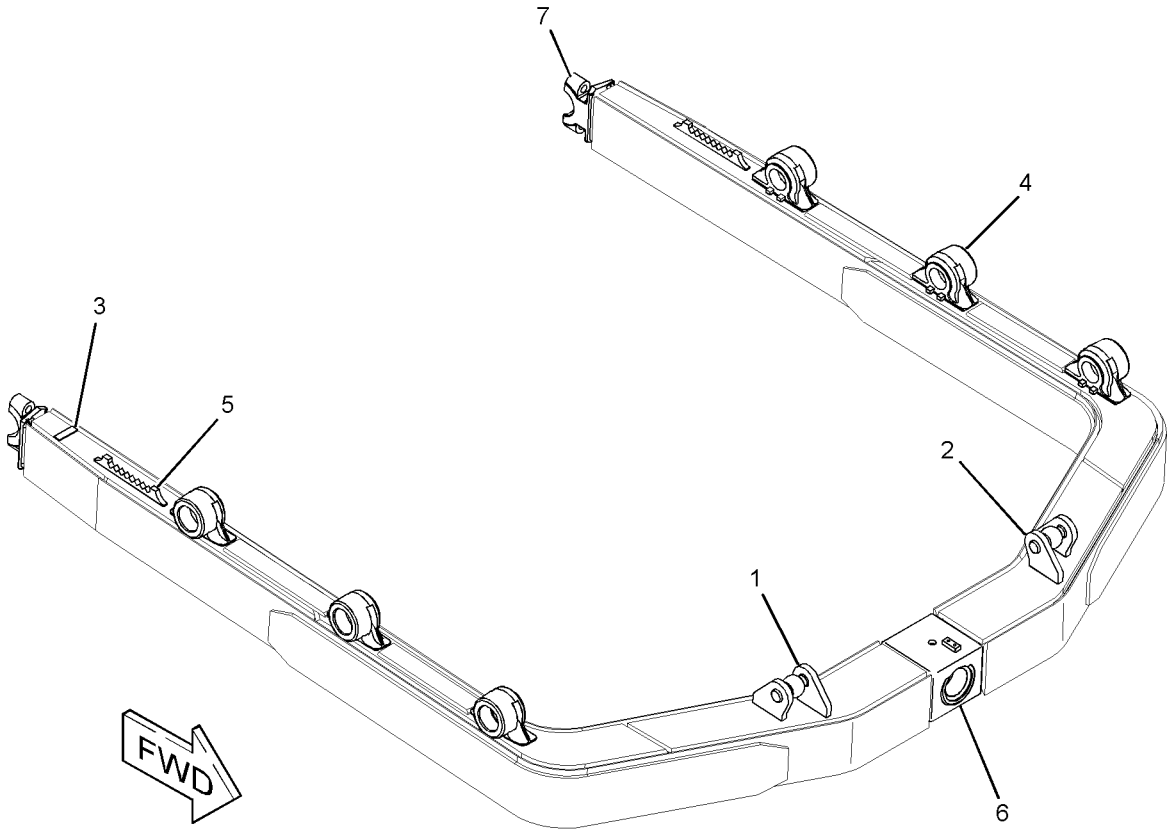

GRAPHIC #1 **<END>** g01207457

251-9830 C-FRAME GP–ANGLING BULLDOZER

S/N: C4R1-UP; C4T1-UP

PART OF 251-6112, 251-6113 BULLDOZER AR-ANGLING

AN ATTACHMENT

SMCS-6063 **i02454847**

NOTE	REF NO	GRAPHIC REF	PART NUMBER	QTY	PART NAME 1 2 3 4 5 6 (PRODUCT LEVEL)	SEE PAGE
	1	1	**1U-0725**	1	RETAINER	
B	2	1	**4T-4866**	52	SHIM (0.8-MM THK)	
M	3	1	**251-8203**	4	NUT-SQUARE (M24X3-THD)	
	4	1	**251-9831**	1	C-FRAME AS	
	4A	1	**4J-2414**	1	TRUNNION	
	4B	1	**8E-5486**	2	BEARING-SLEEVE	
	4C	1	**251-9835**	2	BEARING	
	5	1	**251-9832**	1	PIN-PIVOT	
	6	1	**251-9836**	2	CAP-BEARING	
M	7	1	**7X-2562**	2	BOLT (M20X2.5X45-MM)	
M	8	1	**7X-2567**	4	BOLT (M24X3X160-MM)	
	9	1	**8T-4167**	4	WASHER-HARD (26X44X4-MM THK)	

B-USE AS REQUIRED
M-METRIC PART

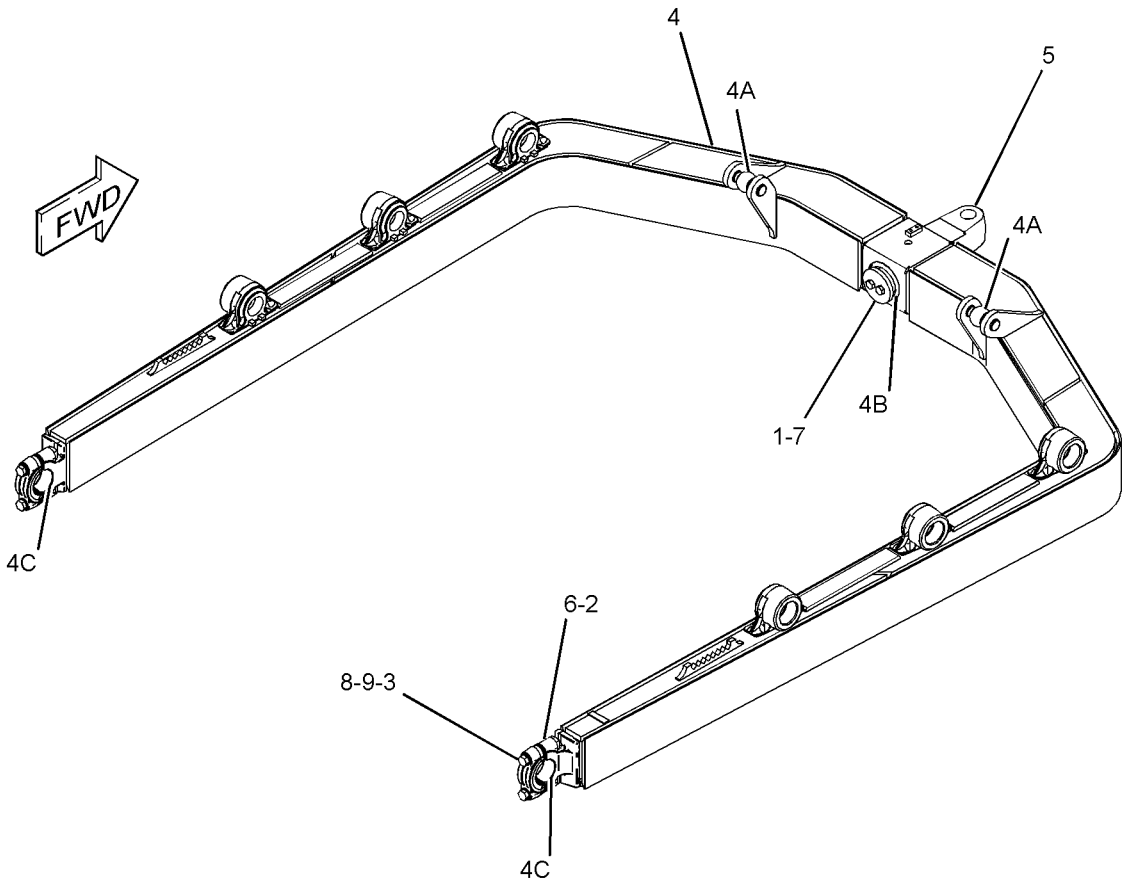

GRAPHIC #1 **<END>** g01225229

255-8951 C-FRAME GP—ANGLING BULLDOZER

S/N: C4C1-UP; C4K1-UP
PART OF 251-6128, 251-6129 BULLDOZER AR-ANGLING
AN ATTACHMENT

SMCS-6063 **i02454671**

NOTE	REF NO	GRAPHIC REF	PART NUMBER	QTY	PART NAME 1 2 3 4 5 6 (PRODUCT LEVEL)	SEE PAGE
	1	1	**1U-0725**	1	RETAINER	
M	2	1	**251-8203**	4	NUT-SQUARE (M24X3-THD)	
	3	1	**251-9832**	1	PIN-PIVOT	
	4	1	**251-9836**	2	CAP-BEARING	
Y	5	1	**255-8952**	1	C-FRAME AS	585
M	6	1	**7X-2562**	2	BOLT (M20X2.5X45-MM)	
M	7	1	**7X-2567**	4	BOLT (M24X3X160-MM)	
	8	1	**8T-4167**	4	WASHER-HARD (26X44X4-MM THK)	
B	9	1	**4T-4866**	52	SHIM (0.8-MM THK)	

B-USE AS REQUIRED
M-METRIC PART
Y-SEPARATE ILLUSTRATION

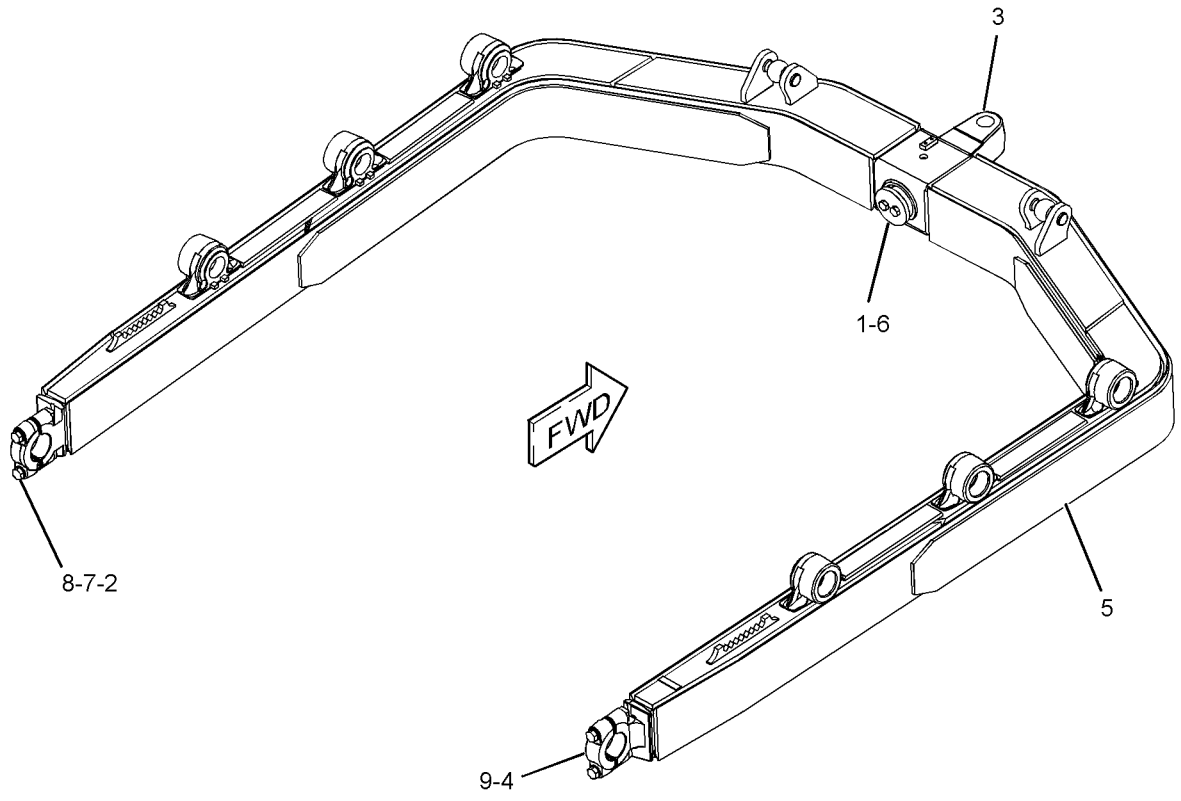

GRAPHIC #1 **<END>** g01207710

IMPLEMENTS

230-5554 PUSH ARM GP—SEMI-UNIVERSAL BULLDOZER

S/N: D6C1-UP; C4W1-UP

PART OF 230-5553, 251-6120 BULLDOZER AR-SEMI-UNIVERSAL

AN ATTACHMENT

SMCS-6061 **i02588544**

NOTE	REF NO	GRAPHIC REF	PART NUMBER	QTY	PART NAME 1 2 3 4 5 6 (PRODUCT LEVEL)	SEE PAGE
	1	1	**282-9090**	2	RETAINER	
	2	1	**4T-1520**	1	CAGE AS	
	2A	1	**6J-5383**	1	BEARING	
B	3	1	**4T-4866**	52	SHIM (0.8-MM THK)	
M	4	1	**7Y-5235**	4	BOLT (M24X3X190-MM)	
B	5	1	**8E-5703**	78	SHIM (0.8-MM THK)	
	6	1	**8J-2880**	3	CAP-BEARING	
	7	1	**124-9672**	1	BRACE AS-TILT	
	8	1	**160-6305**	2	CAP-BEARING	
	9	1	**194-0935**	1	PUSH ARM AS (LH)	
	9A	1	**4T-0780**	1	TRUNNION	
	9B	1	**8P-9770**	1	PLATE-INFORMATION	
	9C	1	**124-9666**	1	BRACKET	
	9D	1	**179-6152**	1	BEARING	
	9E	1	**179-6153**	1	BEARING	
	9F	1	**209-2152**	1	BAR	
	10	1	**194-0936**	1	PUSH ARM AS (RH)	
	10A	1	**4T-0732**	1	BRACKET	
	10B	1	**8P-9770**	1	PLATE-INFORMATION	
	10C	1	**9W-2579**	1	PLATE	
	10D	1	**179-6152**	1	BEARING	
	10E	1	**179-6153**	1	BEARING	
	10F	1	**209-2152**	1	BAR	
Y	11	1	**233-9134**	1	CYLINDER GP-TILT	480
M	12	1	**251-8202**	8	NUT-SQUARE (M20X2.5-THD)	
M	13	1	**251-8203**	4	NUT-SQUARE (M24X3-THD)	
M	14	1	**8T-4779**	2	BOLT (M16X2X35-MM)	
	15	1	**290-8226**	2	PIN	
M	16	1	**7X-2566**	6	BOLT (M20X2.5X110-MM)	
M	17	1	**8C-8478**	12	BOLT (M20X2.5X140-MM)	
	18	1	**8T-4123**	6	WASHER (22X35X3.5-MM THK)	
M	19	1	**8T-4131**	10	NUT (M20X2.5-THD)	
	20	1	**8T-4167**	4	WASHER-HARD (26X44X4-MM THK)	
	21	1	**8T-5439**	6	WASHER-HARD (21.5X45X6-MM THK)	
	22	1	**9X-8257**	1	WASHER (17.5X30X3.5-MM THK)	

B-USE AS REQUIRED
M-METRIC PART
Y-SEPARATE ILLUSTRATION

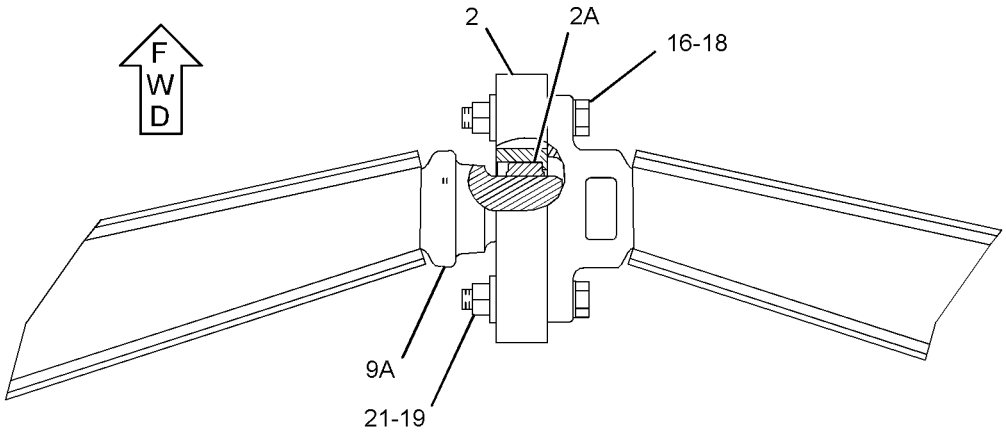

VIEW A-A

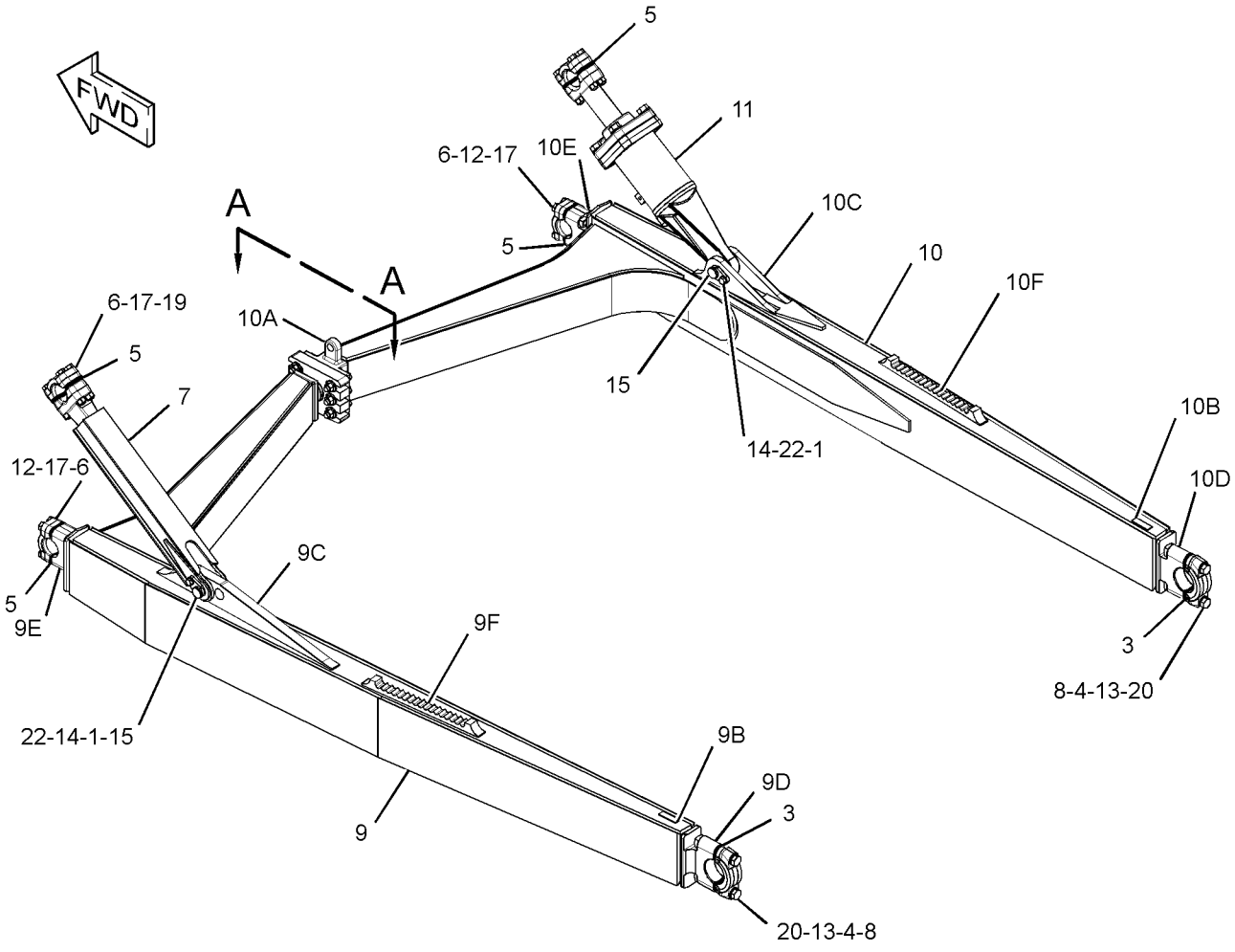

GRAPHIC #1 **<END>** g01304509

IMPLEMENTS

252-5853 PUSH ARM GP—SEMI-UNIVERSAL BULLDOZER

S/N: SMC1-UP; C4L1-UP

PART OF 252-5854, 252-5855 BULLDOZER AR-SEMI-UNIVERSAL

AN ATTACHMENT

SMCS-6061 **i02627199**

NOTE	REF NO	GRAPHIC REF	PART NUMBER	QTY	PART NAME 1 2 3 4 5 6 (PRODUCT LEVEL)	SEE PAGE
	1	1	**4T-1520**	1	CAGE AS	
	1A	1	**6J-5383**	1	BEARING	
B	2	1	**4T-4866**	52	SHIM (0.8-MM THK)	
M	3	1	**7Y-5235**	4	BOLT (M24X3X190-MM)	
B	4	1	**8E-5703**	78	SHIM (0.8-MM THK)	
	5	1	**8J-2880**	3	CAP-BEARING	
	6	1	**124-9672**	1	BRACE AS-TILT	
	7	1	**160-6305**	2	CAP-BEARING	
CY	8	1	**233-9134**	1	CYLINDER GP-TILT	480
	9	1	**179-6151**	1	PUSH ARM AS-LH	
	9A	1	**4T-0780**	1	TRUNNION	
	9B	1	**8P-9770**	1	PLATE-INFORMATION	
	9C	1	**124-9666**	1	BRACKET	
	9D	1	**179-6152**	1	BEARING	
	9E	1	**179-6153**	1	BEARING	
	9F	1	**209-2152**	1	BAR	
	10	1	**179-6162**	1	PUSH ARM AS-RH	
	10A	1	**4T-0732**	1	BRACKET	
	10B	1	**8P-9770**	1	PLATE-INFORMATION	
	10C	1	**9W-2579**	2	PLATE	
	10D	1	**179-6152**	1	BEARING	
	10E	1	**179-6153**	1	BEARING	
	10F	1	**209-2152**	1	BAR	
M	11	1	**251-8202**	8	NUT-SQUARE (M20X2.5-THD)	
M	12	1	**251-8203**	4	NUT-SQUARE (M24X3-THD)	
	13	1	**290-8226**	2	PIN	
	14	1	**282-9090**	2	RETAINER	
M	15	1	**7X-2566**	6	BOLT (M20X2.5X110-MM)	
M	16	1	**8C-8478**	12	BOLT (M20X2.5X140-MM)	
	17	1	**8T-4123**	6	WASHER (22X35X3.5-MM THK)	
M	18	1	**8T-4131**	10	NUT (M20X2.5-THD)	
	19	1	**8T-4167**	4	WASHER-HARD (26X44X4-MM THK)	
M	20	1	**8T-4779**	2	BOLT (M16X2X35-MM)	
	21	1	**8T-5439**	6	WASHER-HARD (21.5X45X6-MM THK)	
	22	1	**9X-8257**	2	WASHER (17.5X30X3.5-MM THK)	

B-USE AS REQUIRED
C-CHANGE FROM PREVIOUS TYPE
M-METRIC PART
Y-SEPARATE ILLUSTRATION

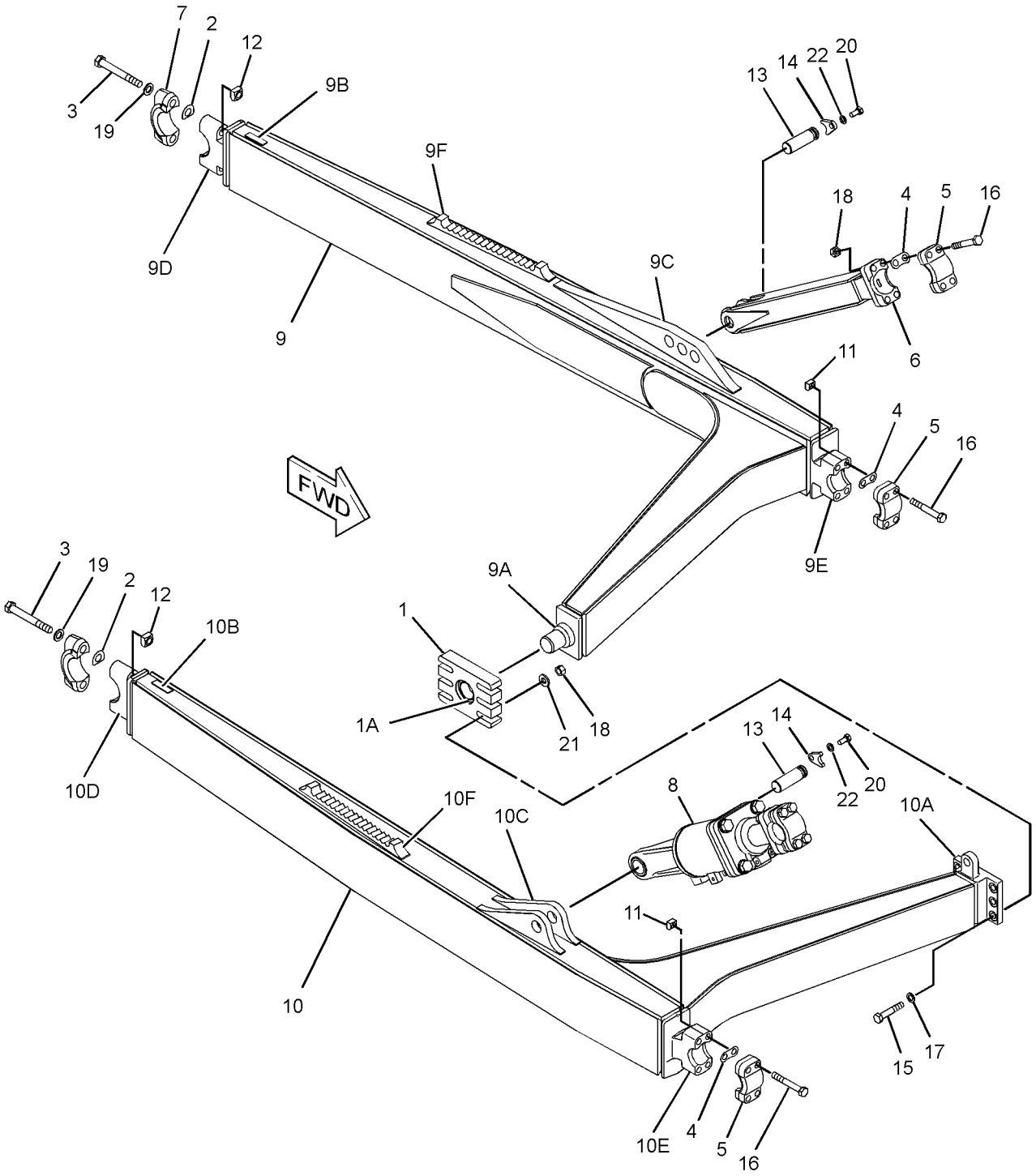

GRAPHIC #1 **<END>** g01225461

109-1352 TRUNNION GP-BULLDOZER

S/N: C4C1-UP; D6C1-UP; SMC1-UP; C4K1-UP; C4L1-UP; C4R1-UP; C4T1-UP; GCT1-UP; C4W1-UP

PART OF 251-6112, 251-6113, 251-6128, 251-6129 BULLDOZER AR-ANGLING, 230-5553, 251-6120, 252-5854, 252-5855 BULLDOZER AR-SEMI-UNIVERSAL AN ATTACHMENT

SMCS-6069 **i02708715**

NOTE	REF NO	GRAPHIC REF	PART NUMBER	QTY	PART NAME 1 2 3 4 5 6 (PRODUCT LEVEL)	SEE PAGE
	1	1	**285-0852**	2	TRUNNION	
M	2	1	**7X-2563**	20	BOLT (M20X2.5X60-MM)	

M-METRIC PART

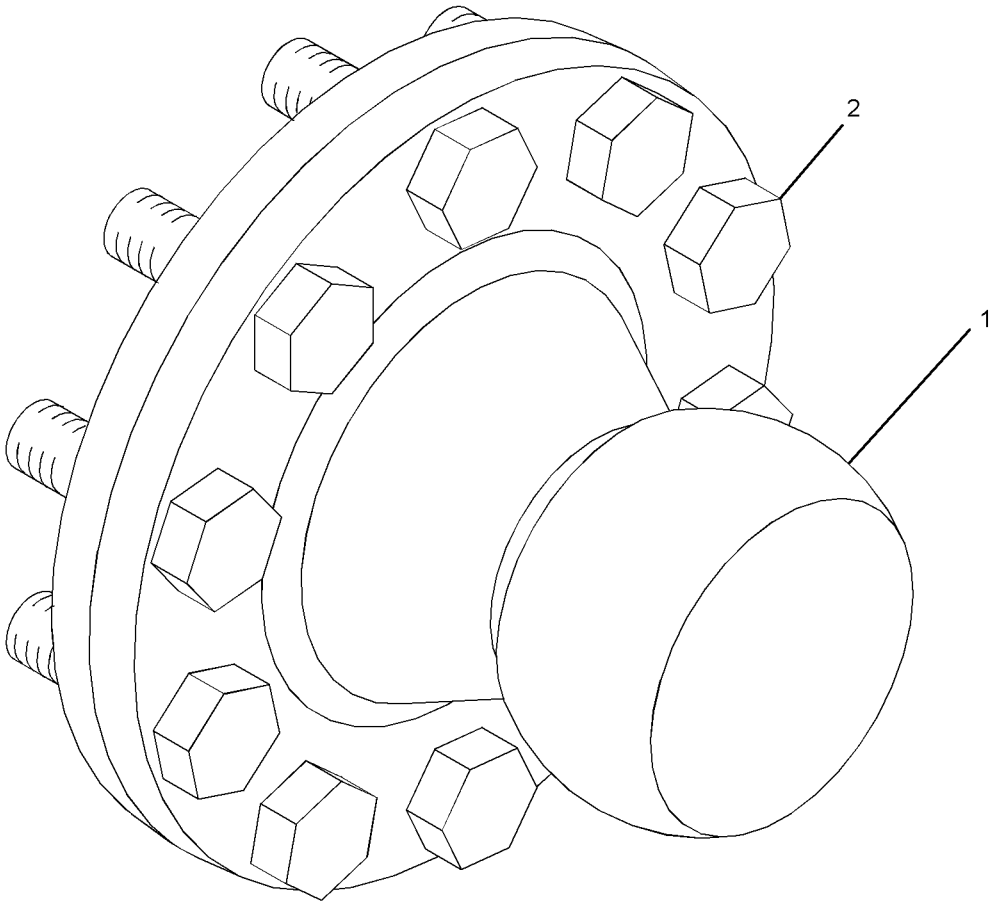

GRAPHIC #1 **<END>** g01360146

251-9819 BLADE & EDGE GP-ANGLING

S/N: C4C1-UP; C4K1-UP; C4R1-UP; C4T1-UP
PART OF 251-9818 BLADE GP-ANGLING
AN ATTACHMENT

SMCS-6060 **i02454659**

NOTE	REF NO	GRAPHIC REF	PART NUMBER	QTY	PART NAME 1 2 3 4 5 6 (PRODUCT LEVEL)	SEE PAGE
Y	1	1	*6Y-2039*	1	EDGE GP-BIT & CUTTING	606
	2	1	**251-9820**	1	BLADE AS	

Y-SEPARATE ILLUSTRATION

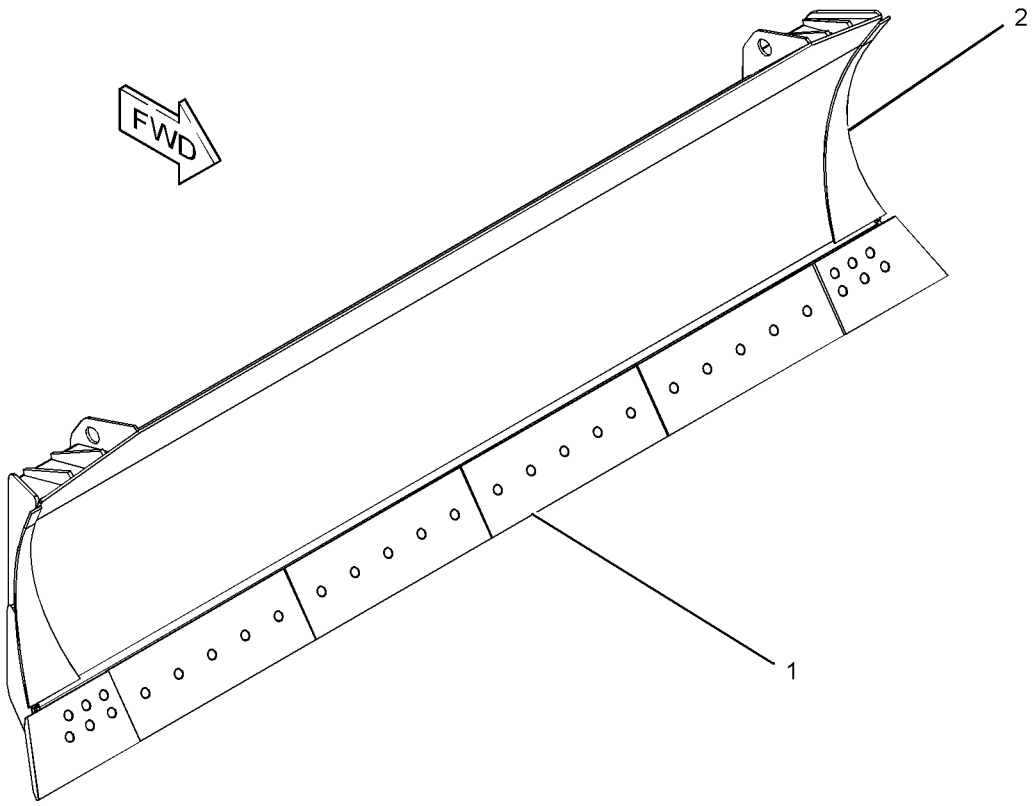

GRAPHIC #1 **<END>** g01209769

WORK TOOLS

230-5557 BLADE & EDGE GP-SEMI-UNIVERSAL

S/N: D6C1-UP; C4W1-UP
PART OF 230-5558 BLADE GP-SEMI-UNIVERSAL
AN ATTACHMENT

SMCS-6060 **i02455554**

NOTE	REF NO	GRAPHIC REF	PART NUMBER	QTY	PART NAME 1 2 3 4 5 6 (PRODUCT LEVEL)	SEE PAGE
Y	1	1	*9W-3762*	1	EDGE GP-BIT & CUTTING	607
Y	2	1	**230-5556**	1	BLADE AS-SEMI-UNIVERSAL	598

Y-SEPARATE ILLUSTRATION

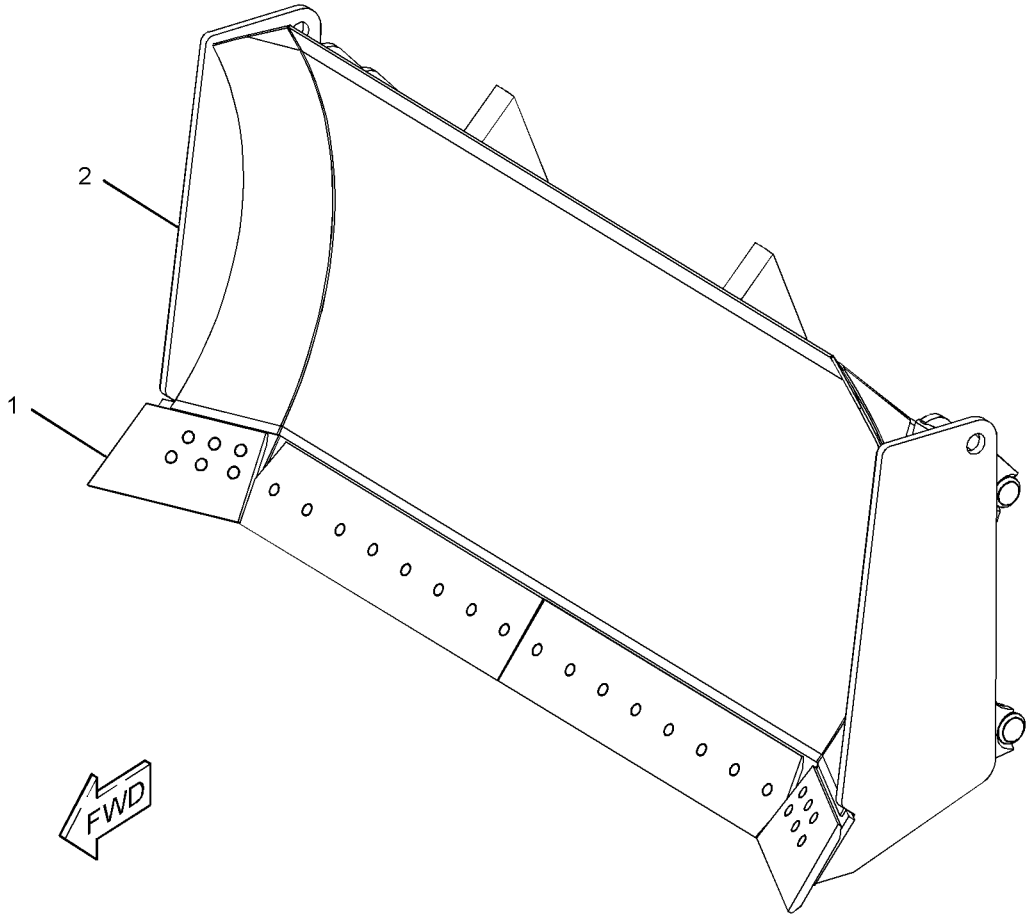

GRAPHIC #1 **<END>** g01209001

252-5857 BLADE & EDGE GP-SEMI-UNIVERSAL

S/N: SMC1-UP; C4L1-UP
PART OF 252-5856 BLADE GP-SEMI-UNIVERSAL
AN ATTACHMENT

SMCS-6060 **i02455195**

NOTE	REF NO	GRAPHIC REF	PART NUMBER	QTY	PART NAME 1 2 3 4 5 6 (PRODUCT LEVEL)	SEE PAGE
Y	1	1	*9W-3762*	1	EDGE GP-BIT & CUTTING	607
Y	2	1	**252-5858**	1	BLADE AS-SEMI-UNIVERSAL	600

Y-SEPARATE ILLUSTRATION

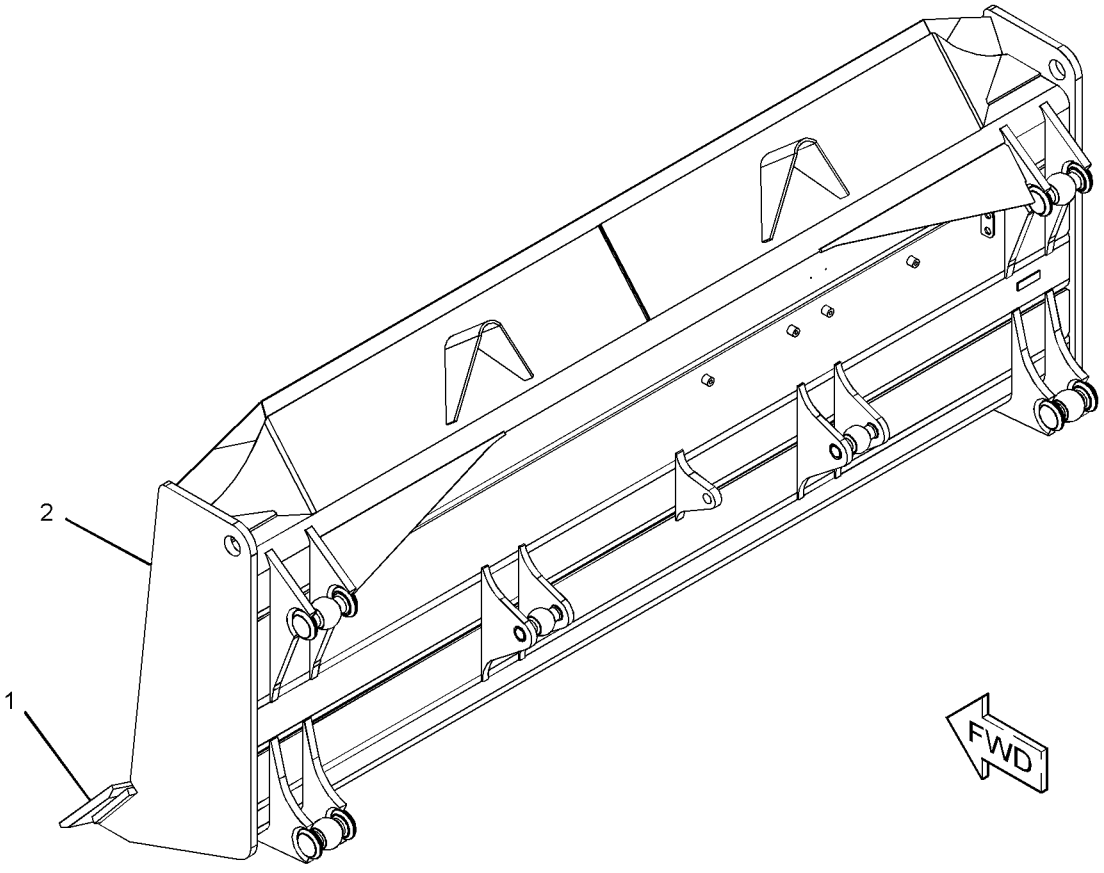

GRAPHIC #1 **<END>** g01208942

WORK TOOLS

294-0806 BLADE & EDGE GP-SEMI-UNIVERSAL

S/N: SMC1-UP

AN ATTACHMENT

SMCS-6060 **i02768655**

NOTE	REF NO	GRAPHIC REF	PART NUMBER	QTY	PART NAME 1 2 3 4 5 6 (PRODUCT LEVEL)	SEE PAGE
Y	1	1	*9W-3762*	1	EDGE GP-BIT & CUTTING	607
Y	2	1	**294-0817**	1	BLADE AS-SEMI-UNIVERSAL	601

Y-SEPARATE ILLUSTRATION

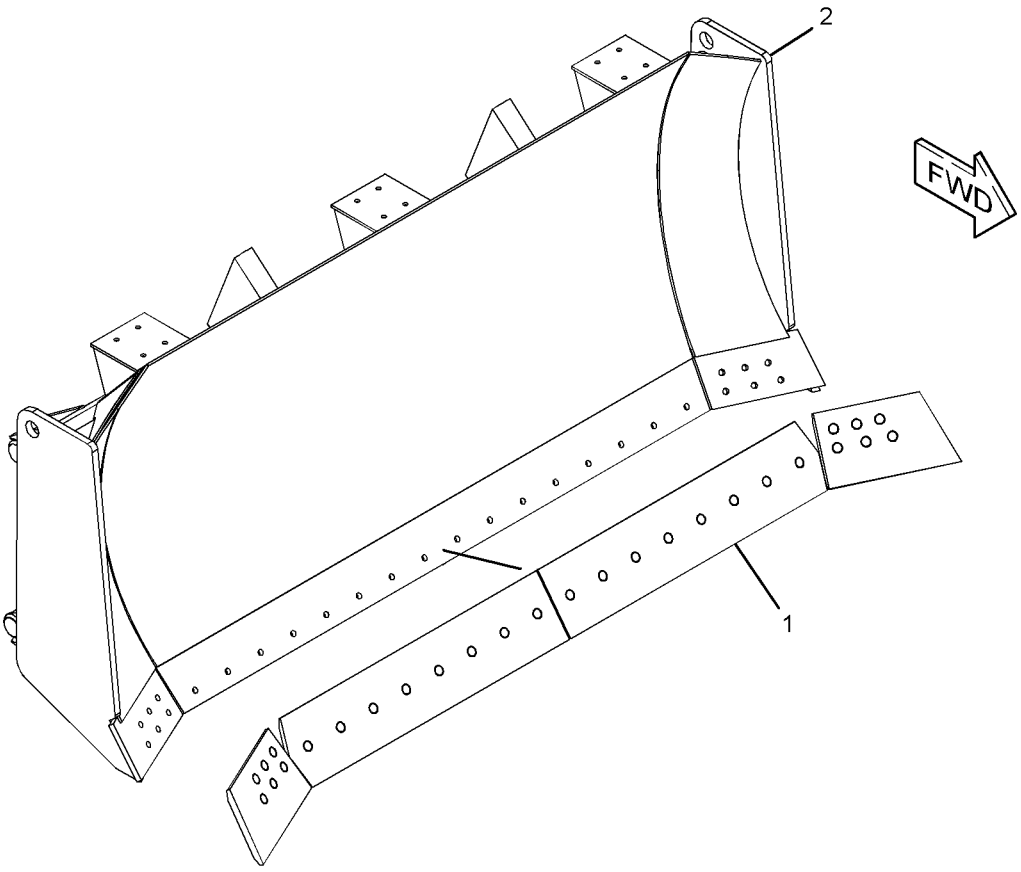

GRAPHIC #1 **<END>** g01362586

294-0808 BLADE & EDGE GP-SEMI-UNIVERSAL

S/N: GCT1-UP
AN ATTACHMENT

SMCS-6060 **i02775294**

NOTE	REF NO	GRAPHIC REF	PART NUMBER	QTY	PART NAME 1 2 3 4 5 6 (PRODUCT LEVEL)	SEE PAGE
Y	1	1	*9W-3762*	1	EDGE GP-BIT & CUTTING	607
Y	2	1	**294-0819**	1	BLADE AS-SEMI-UNIVERSAL	602

Y-SEPARATE ILLUSTRATION

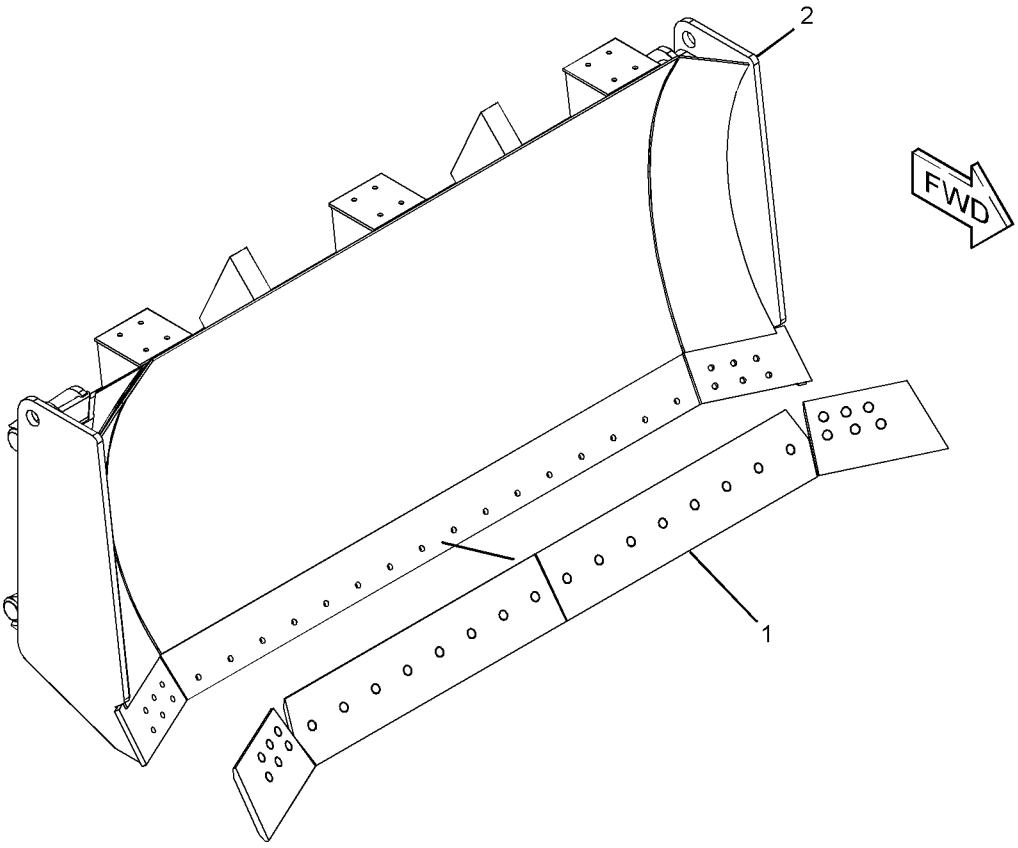

GRAPHIC #1 **<END>** g01362569

WORK TOOLS

230-5556 BLADE AS-SEMI-UNIVERSAL

S/N: D6C1-UP; GCT1-UP; C4W1-UP
PART OF 230-5557 BLADE & EDGE GP-SEMI-UNIVERSAL, 294-0819 BLADE AS-SEMI-UNIVERSAL
AN ATTACHMENT

SMCS-6060 **i02455516**

NOTE	REF NO	GRAPHIC REF	PART NUMBER	QTY	PART NAME 1 2 3 4 5 6 (PRODUCT LEVEL)	SEE PAGE
	1	1	**1U-0183**	2	DEFLECTOR	
	2	1	**6Y-1390**	1	SUPPORT	
	3	1	**8E-5205**	2	SUPPORT	
	4	1	**8P-9770**	1	PLATE-INFORMATION	
	5	1	**9W-6381**	1	PLATE	
	6	1	**135-2964**	1	BRACKET AS (LH)	
	6A	1	**7J-5131**	1	TRUNNION	
	7	1	**135-2966**	1	BRACKET AS (RH)	
	7A	1	**7J-5131**	1	TRUNNION	
	8	1	**135-3084**	2	BRACKET AS	
					(EACH INCLUDES)	
	8A	1	**4J-1641**	1	TRUNNION	
	9	1	**142-2328**	1	BRACKET	
	10	1	**142-9643**	2	BRACKET AS	
					(EACH INCLUDES)	
	10A	1	**4T-1504**	1	TRUNNION	

230-5556 BLADE AS-SEMI-UNIVERSAL *(contd.)* **i02455516**

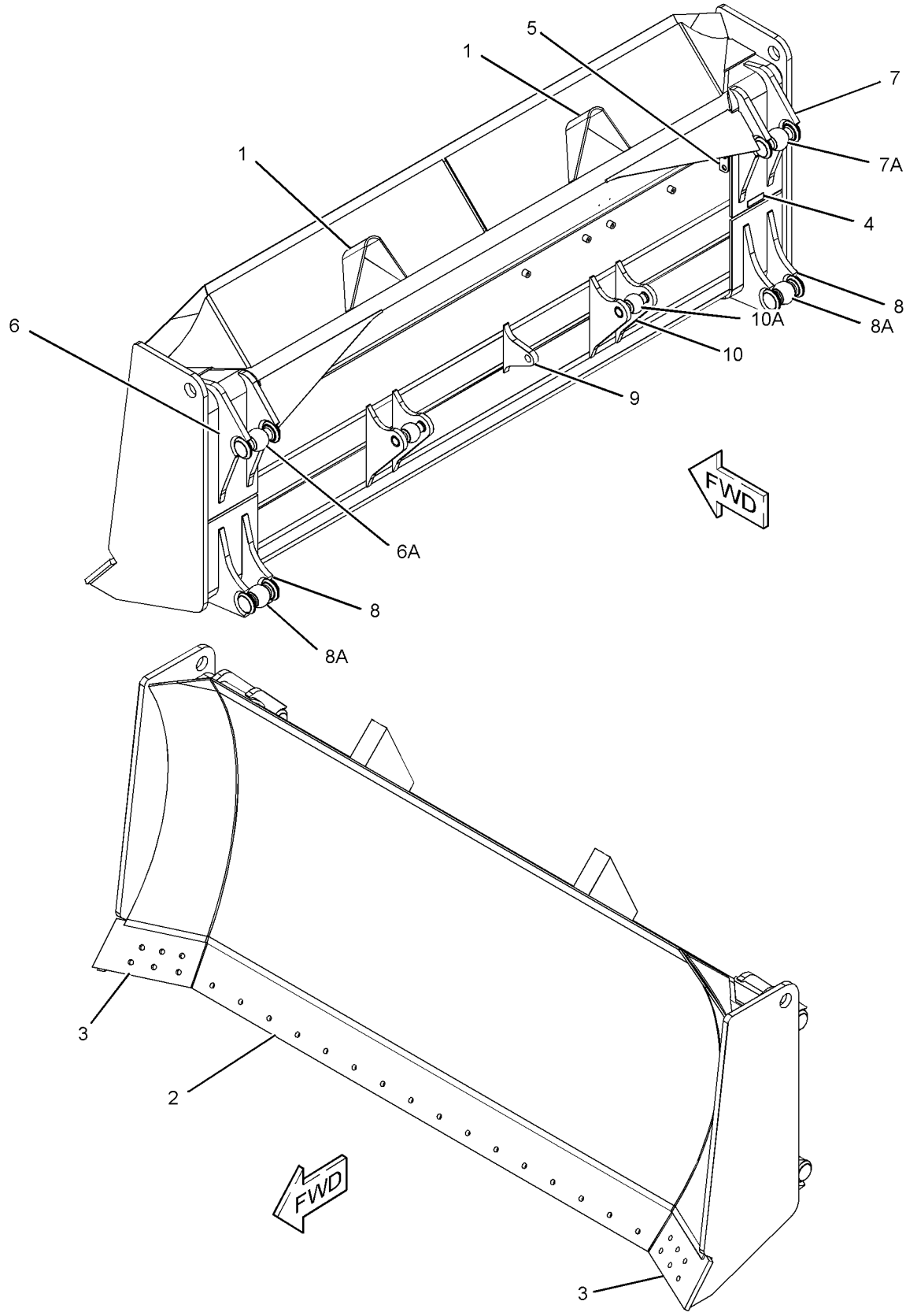

GRAPHIC #1 **<END>** g01213373

WORK TOOLS

252-5858 BLADE AS-SEMI-UNIVERSAL

S/N: SMC1-UP; C4L1-UP
PART OF 252-5857 BLADE & EDGE GP-SEMI-UNIVERSAL, 294-0817 BLADE AS-SEMI-UNIVERSAL
AN ATTACHMENT

SMCS-6060 **i02455217**

NOTE	REF NO	GRAPHIC REF	PART NUMBER	QTY	PART NAME 1 2 3 4 5 6 (PRODUCT LEVEL)	SEE PAGE
	1	1	**1U-0183**	2	DEFLECTOR	
	2	1	**8P-9770**	1	PLATE-INFORMATION	
	3	1	**9W-6381**	1	PLATE	
	4	1	**8E-5188**	2	BRACKET AS	
					(EACH INCLUDES)	
	4A	1	**7J-5131**	1	TRUNNION	
	5	1	**6Y-1387**	1	PLATE	
	6	1	**8E-5190**	2	BRACKET AS	
					(EACH INCLUDES)	
	6A	1	**4T-1504**	1	TRUNNION	
	7	1	**6Y-1390**	1	SUPPORT	
	8	1	**8E-5194**	1	BRACKET	
	9	1	**8E-5192**	2	BRACKET AS	
					(EACH INCLUDES)	
	9A	1	**4J-1641**	1	TRUNNION	
	10	1	**8E-5205**	2	SUPPORT	

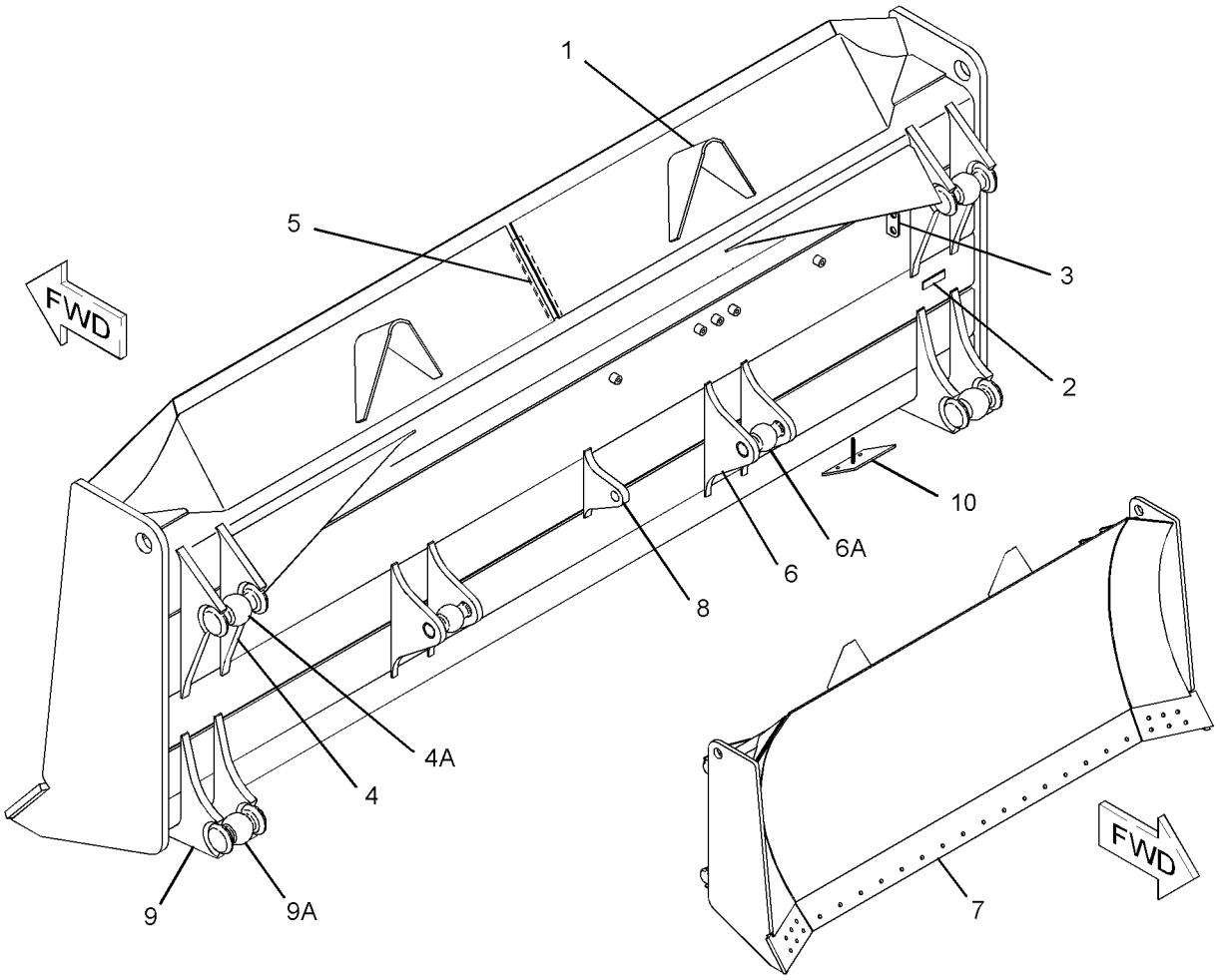

GRAPHIC #1 **<END>** g01205475

WORK TOOLS

294-0817 BLADE AS-SEMI-UNIVERSAL

S/N: SMC1-UP

PART OF 294-0806 BLADE & EDGE GP-SEMI-UNIVERSAL

AN ATTACHMENT

SMCS-6060 **i02768694**

NOTE	REF NO	GRAPHIC REF	PART NUMBER	QTY	PART NAME 1 2 3 4 5 6 (PRODUCT LEVEL)	SEE PAGE
	1	1	**248-2336**	1	PLATE AS	
Y	2	1	**252-5858**	1	BLADE AS-SEMI-UNIVERSAL	600

Y-SEPARATE ILLUSTRATION

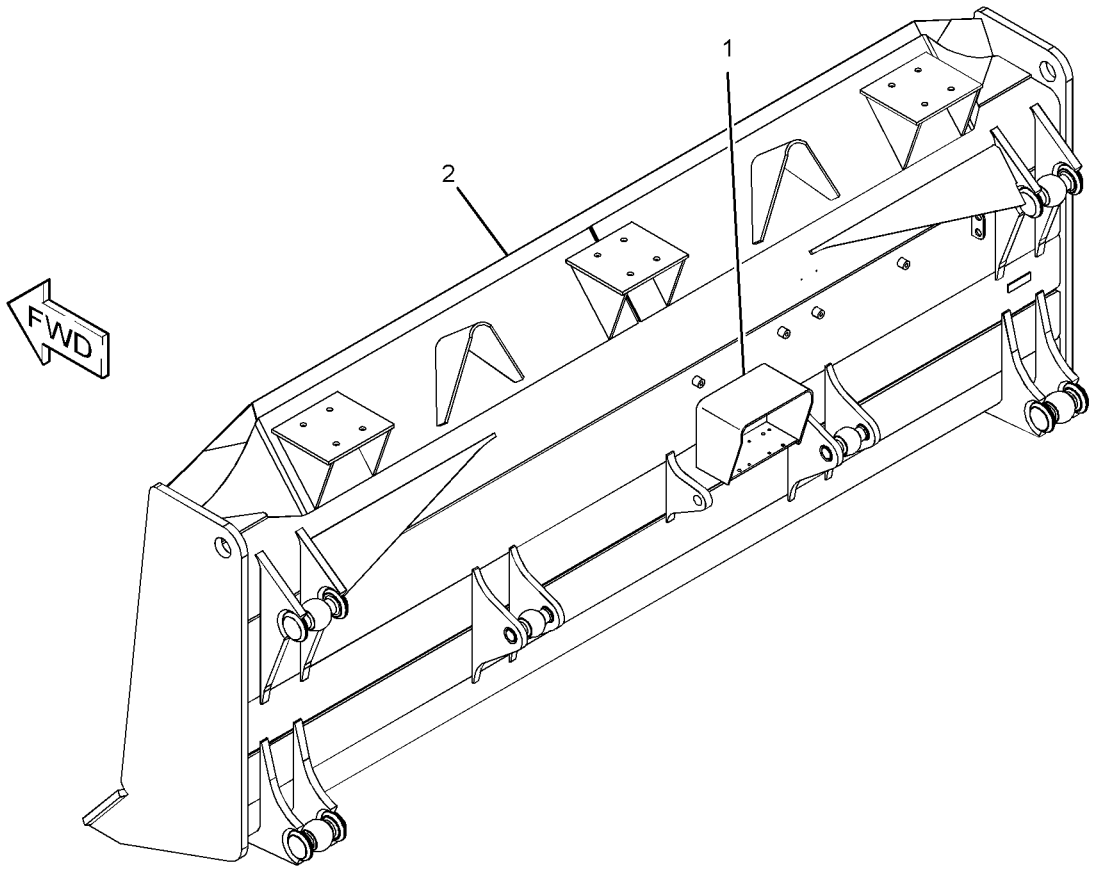

GRAPHIC #1 **<END>** g01362629

WORK TOOLS

294-0819 BLADE AS-SEMI-UNIVERSAL

S/N: GCT1-UP

PART OF 294-0808 BLADE & EDGE GP-SEMI-UNIVERSAL

AN ATTACHMENT

SMCS-6060 **i02775296**

NOTE	REF NO	GRAPHIC REF	PART NUMBER	QTY	PART NAME 1 2 3 4 5 6 (PRODUCT LEVEL)	SEE PAGE
Y	1	1	**230-5556**	1	BLADE AS-SEMI-UNIVERSAL	598
	2	1	**248-2336**	1	PLATE AS	

Y-SEPARATE ILLUSTRATION

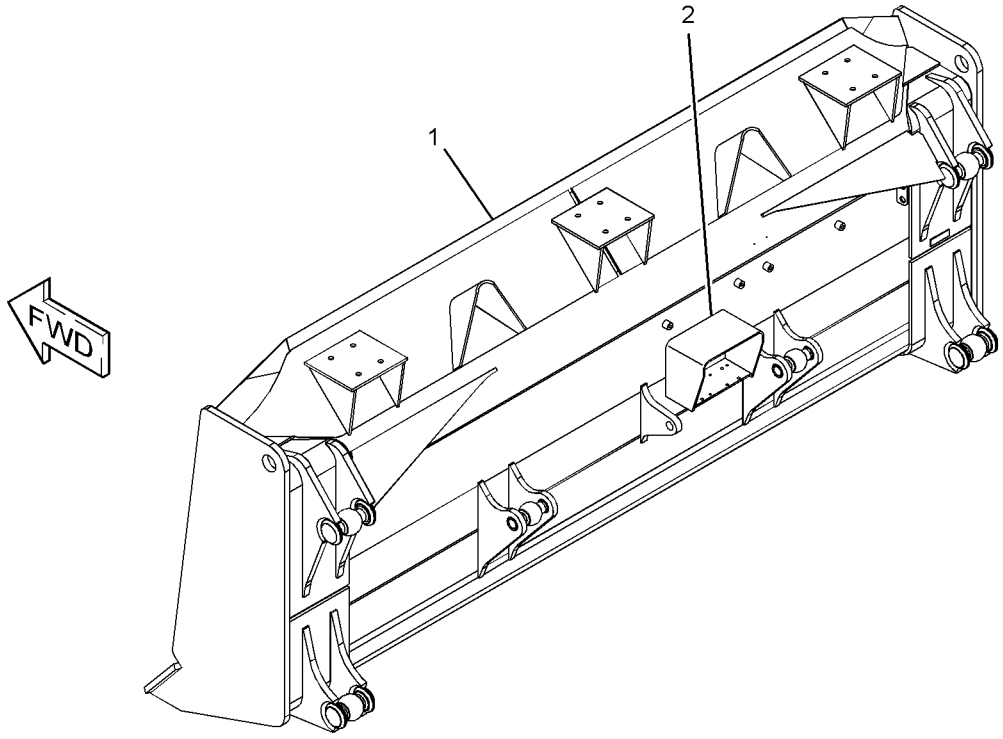

GRAPHIC #1 **<END>** g01362645

WORK TOOLS

251-9818 BLADE GP-ANGLING

S/N: C4C1-UP; C4K1-UP; C4R1-UP; C4T1-UP
PART OF 251-6112, 251-6113, 251-6128, 251-6129 BULLDOZER AR-ANGLING
AN ATTACHMENT

SMCS-6052, 6060 **i02454638**

NOTE	REF NO	GRAPHIC REF	PART NUMBER	QTY	PART NAME 1 2 3 4 5 6 (PRODUCT LEVEL)	SEE PAGE
	1	1	**6Y-6751**	1	PIN	
Y	2	1	*251-9819*	1	BLADE & EDGE GP-ANGLING	593
	3	1	**251-9827**	4	TRUNNION	
	4	1	**251-9829**	1	RETAINER	
M	5	1	**7X-2553**	1	BOLT (M16X2X40-MM)	
M	6	1	**7X-2563**	16	BOLT (M20X2.5X60-MM)	

M-METRIC PART
Y-SEPARATE ILLUSTRATION

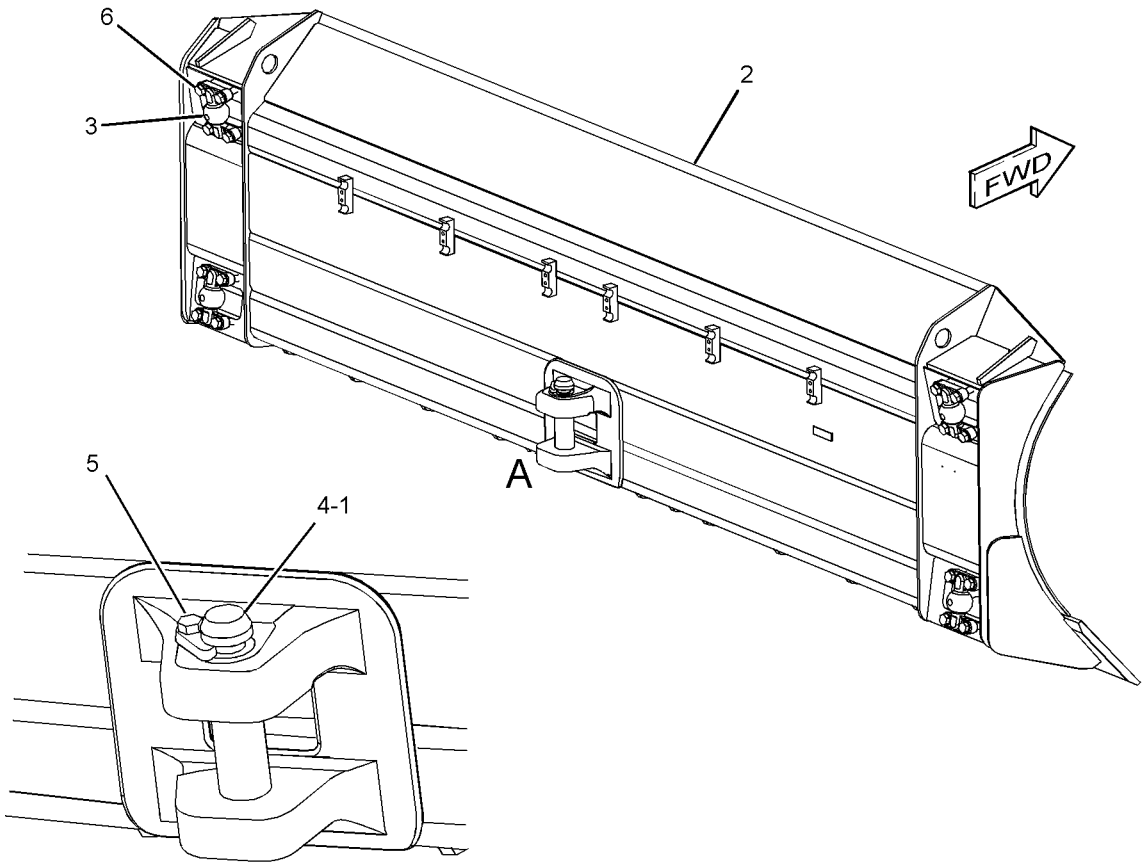

VIEW OF AREA A

GRAPHIC #1 **<END>** g01206822

WORK TOOLS

230-5558 BLADE GP-SEMI-UNIVERSAL

S/N: D6C1-UP; C4W1-UP

PART OF 230-5553, 251-6120 BULLDOZER AR-SEMI-UNIVERSAL

AN ATTACHMENT

SMCS-6060, 6078 **i02454968**

NOTE	REF NO	GRAPHIC REF	PART NUMBER	QTY	PART NAME 1 2 3 4 5 6 (PRODUCT LEVEL)	SEE PAGE
	1	1	**4T-1481**	1	LINK AS	
Y	2	1	*230-5557*	1	BLADE & EDGE GP-SEMI-UNIVERSAL	594
	3	1	**3B-4632**	2	PIN-COTTER	
	4	1	**8H-8898**	2	PIN	

Y-SEPARATE ILLUSTRATION

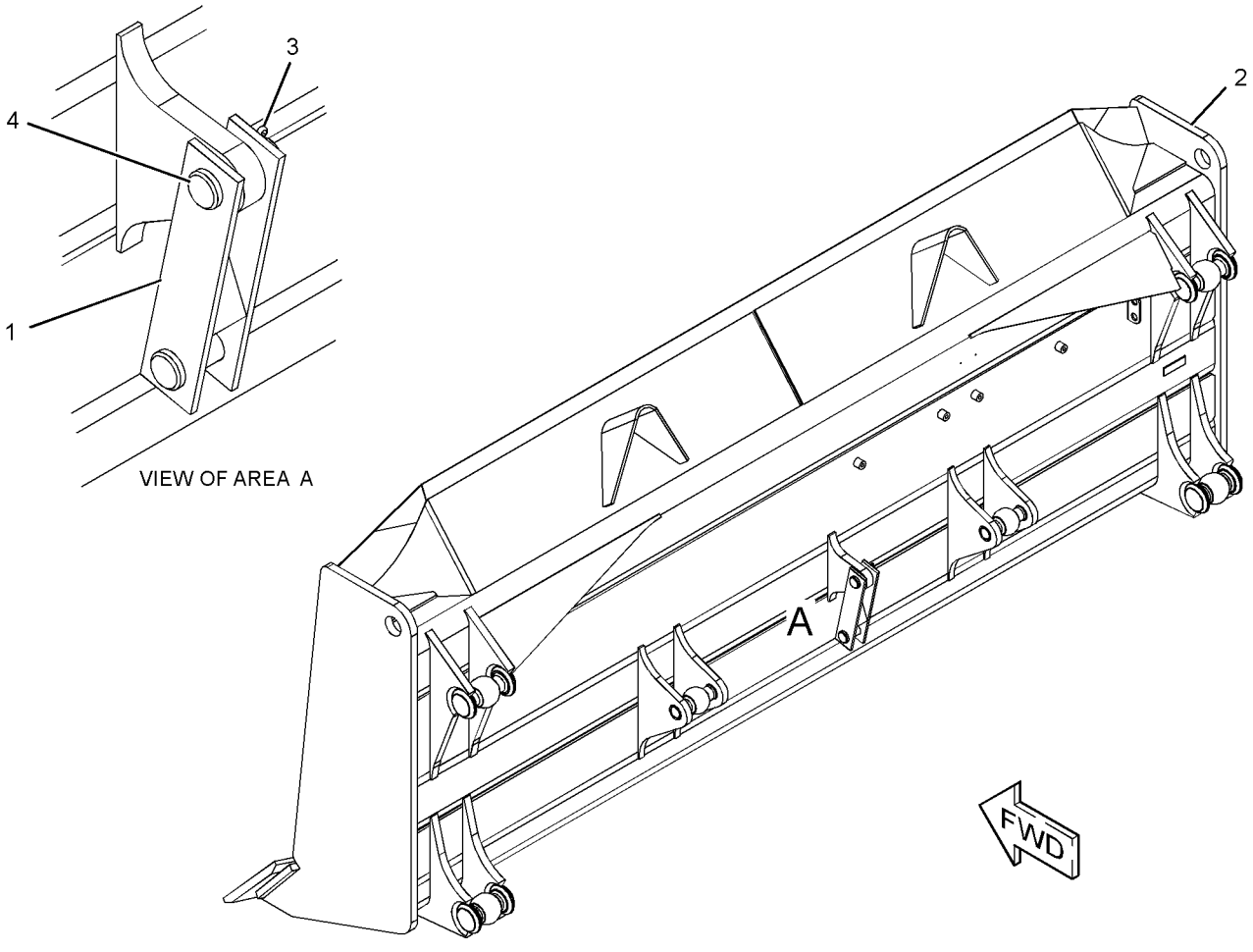

GRAPHIC #1 **<END>** g01208962

252-5856 BLADE GP-SEMI-UNIVERSAL

S/N: SMC1-UP; C4L1-UP

PART OF 252-5854, 252-5855 BULLDOZER AR-SEMI-UNIVERSAL

AN ATTACHMENT

SMCS-6060, 6078 **i02454886**

NOTE	REF NO	GRAPHIC REF	PART NUMBER	QTY	PART NAME 1 2 3 4 5 6 (PRODUCT LEVEL)	SEE PAGE
	1	1	**4T-1481**	1	LINK AS	
Y	2	1	*252-5857*	1	BLADE & EDGE GP-SEMI-UNIVERSAL	595
	3	1	**3B-4632**	2	PIN-COTTER	
	4	1	**8H-8898**	2	PIN	

Y-SEPARATE ILLUSTRATION

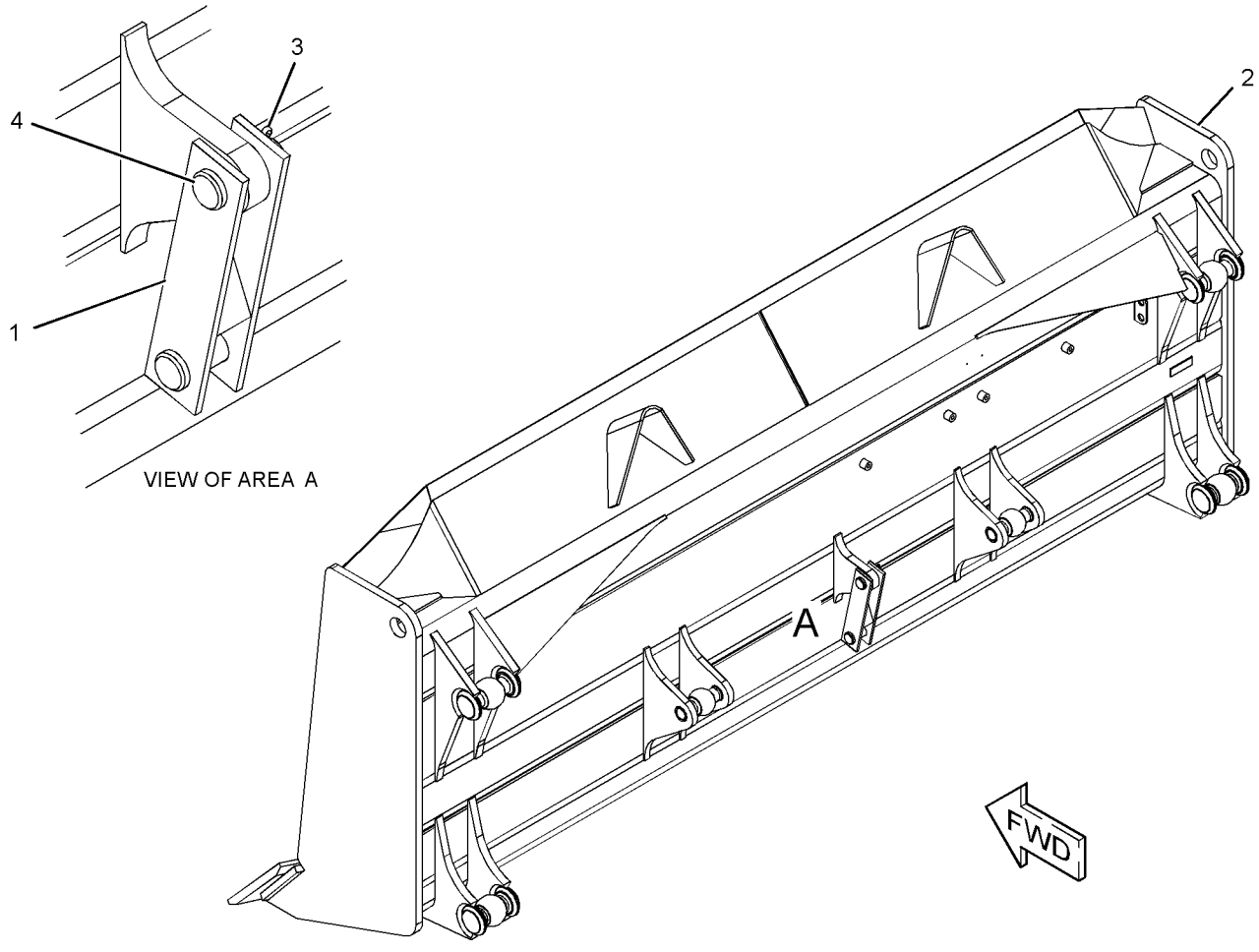

GRAPHIC #1 **<END>** g01208962

6Y-2039 EDGE GP-BIT & CUTTING—ANGLING BULLDOZER

S/N: C4C1-UP; C4K1-UP; C4R1-UP; C4T1-UP
PART OF 251-9819 BLADE & EDGE GP-ANGLING
AN ATTACHMENT

SMCS-6801, 6804 **i00601010**

NOTE	REF NO	GRAPHIC REF	PART NUMBER	QTY	PART NAME 1 2 3 4 5 6 (PRODUCT LEVEL)	SEE PAGE
	1	1	**9W-8874**	1	BIT-END-RH	
		1	**9W-8875**	1	BIT-END-LH	
	2	1	**5J-4773**	32	BOLT-PLOW (3/4-10X2.5IN)	
		1	**5P-8248**	32	WASHER-HARD (3.5MM THK)	
		1	**2J-3506**	32	NUT-FULL (3/4-10 THD)	
	3	1	**4T-2952**	4	EDGE-CUTTING	

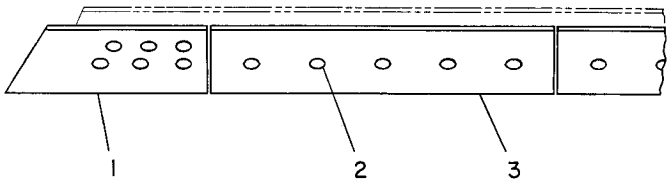

GRAPHIC #1 **<END>** g00195495

9W-3762 EDGE GP-BIT & CUTTING—SEMI-UNIVERSAL

S/N: D6C1-UP; SMC1-UP; C4L1-UP; GCT1-UP; C4W1-UP

PART OF 230-5557, 252-5857, 294-0806, 294-0808 BLADE & EDGE GP-SEMI-UNIVERSAL AN ATTACHMENT

SMCS-6801, 6804 **i02455657**

NOTE	REF NO	GRAPHIC REF	PART NUMBER	QTY	PART NAME 1 2 3 4 5 6 (PRODUCT LEVEL)	SEE PAGE
	1	1	**9W-8874**	1	BIT-END (RH)	
	2	1	**9W-8875**	1	BIT-END (LH)	
	3	1	**9W-1878**	2	EDGE-CUTTING	
	4	1	**5J-4773**	28	BOLT-PLOW (3/4-10X2.5-IN)	
	5	1	**5P-8248**	28	WASHER-HARD (20X36.5X3.5-MM THK)	
	6	1	**2J-3506**	28	NUT-FULL (3/4-10-THD)	

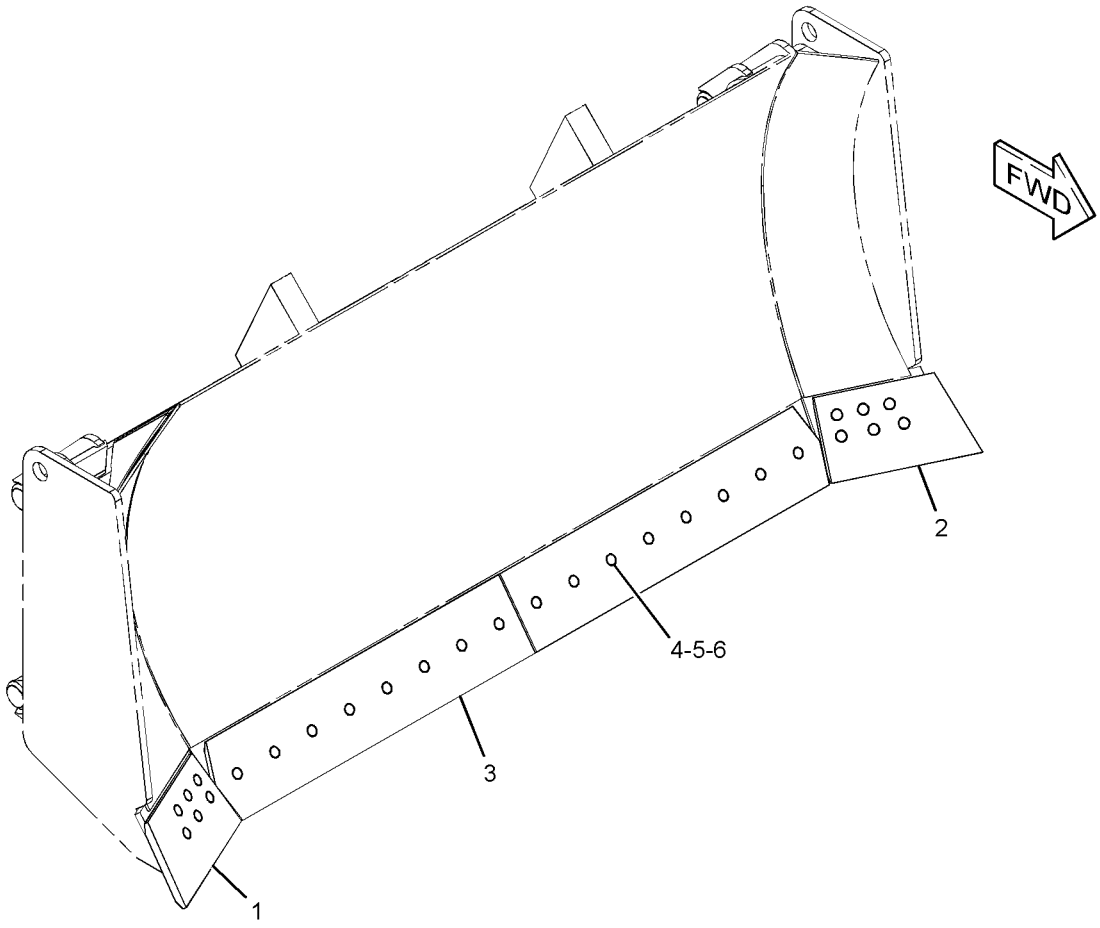

GRAPHIC #1 **<END>** g01225785

WORK TOOLS

269-2081 LINES GP-WINCH

S/N: SMC1-UP; GCT1-UP

PART OF 280-1478 CONTROL AR-HYDRAULIC IMPLEMENT

AN ATTACHMENT

SMCS-5179 **i02760296**

NOTE	REF NO	GRAPHIC REF	PART NUMBER	QTY	PART NAME 1 2 3 4 5 6 (PRODUCT LEVEL)	SEE PAGE
	1	2	**2H-9233**	2	SPACER (0.563X1X1-IN THK)	
	2	2	**7K-1181**	1	STRAP-CABLE	
	3	2	**170-4891**	1	HARNESS AS-SOLENOID (WINCH, REAR)	
		2	**155-2260**	1	KIT-CONNECTING PLUG (3-PIN)	
		2	**155-2270**	1	KIT-CONNECTING PLUG (2-PIN)	
					(EACH INCLUDES PLUG AS, WEDGE, & INTERFACE SEAL)	
	4	1	**175-3514**	1	SPACER	
Y	5	2	**201-0950**	1	VALVE GP-SOLENOID (WINCH)	573
I	6	1	**219-2893**	1	HOSE AS	
	7	2	**234-2869**	1	MANIFOLD	
	8	1	**234-3425**	1	GUARD	
	9	2	**239-5235**	1	BRACKET AS	
	10	1	**260-6479**	1	BRACKET AS	
I	11	1	**270-3451**	1	HOSE AS	
I	12	1	**270-3476**	1	HOSE AS	
I	13	1	**270-3481**	1	HOSE AS	
	14	2	*148-8336*	2	CONNECTOR AS	
					(EACH INCLUDES)	
		2	**6V-8636**	1	CONNECTOR	
		2	**3J-1907**	1	SEAL-O-RING	
		2	**6V-8397**	1	SEAL-O-RING	
	15	2	*148-8340*	1	CONNECTOR AS	
		2	**6V-8639**	1	CONNECTOR	
		2	**3K-0360**	1	SEAL-O-RING	
		2	**6V-8398**	1	SEAL-O-RING	
	16	2	*148-8411*	1	PLUG AS	
		2	**9S-4185**	1	PLUG-O-RING	
		2	**3K-0360**	1	SEAL-O-RING	
	17	1	*150-4043*	1	CONNECTOR AS	
		1	**6V-9873**	1	CONNECTOR	
		1	**3J-1907**	1	SEAL-O-RING	
		1	**6V-8398**	1	SEAL-O-RING	
	18	1,2	*155-3624*	2	PLUG AS	
					(EACH INCLUDES)	
		1,2	**9S-4182**	1	PLUG-O-RING	
		1,2	**3J-7354**	1	SEAL-O-RING	
	19	2	*173-3993*	1	PLUG AS	
		2	**9S-8001**	1	PLUG	
		2	**4J-7533**	1	SEAL-O-RING	
	20	2	*183-3406*	1	PLUG AS	
		2	**9S-4191**	1	PLUG-O-RING	
		2	**6V-5049**	1	SEAL-O-RING	
	21	1	**1P-3702**	2	SEAL-RECTANGULAR	
	22	1,2	**1P-3703**	4	SEAL-RECTANGULAR	
	23	1	**1S-0994**	2	CLIP	
	24	1	**4J-0520**	1	SEAL-O-RING	
	25	2	**4P-7581**	1	CLIP	
	26	2	**5P-0047**	2	COVER	
	27	2	**5P-1075**	4	WASHER-HARD (10.2X22.5X3-MM THK)	
	28	2	**6V-0400**	8	FLANGE-HALF	
	29	1	**7G-3832**	1	GROMMET	
	30	1	**7G-3834**	1	CLIP (SLOT)	
	31	1	**8T-4121**	1	WASHER-HARD (11X21X2.5-MM THK)	
M	32	1	**8T-4136**	1	BOLT (M10X1.5X25-MM)	

269-2081 **LINES GP-WINCH** ***(contd.)*** **i02760296**

NOTE	REF NO	GRAPHIC REF	PART NUMBER	QTY	PART NAME 1 2 3 4 5 6 (PRODUCT LEVEL)	SEE PAGE
M	33	2	**8T-4184**	16	BOLT (M12X1.75X45-MM)	
M	34	2	**8T-4195**	2	BOLT (M10X1.5X30-MM)	
	35	1,2	**8T-4223**	18	WASHER-HARD (13.5X25.5X3-MM THK)	
M	36	1	**8T-4956**	2	BOLT (M12X1.75X35-MM)	
M	37	1,2	**8T-6466**	6	BOLT (M10X1.5X60-MM)	

I-REFER TO HYDRAULIC INFORMATION SYSTEM
M-METRIC PART
Y-SEPARATE ILLUSTRATION

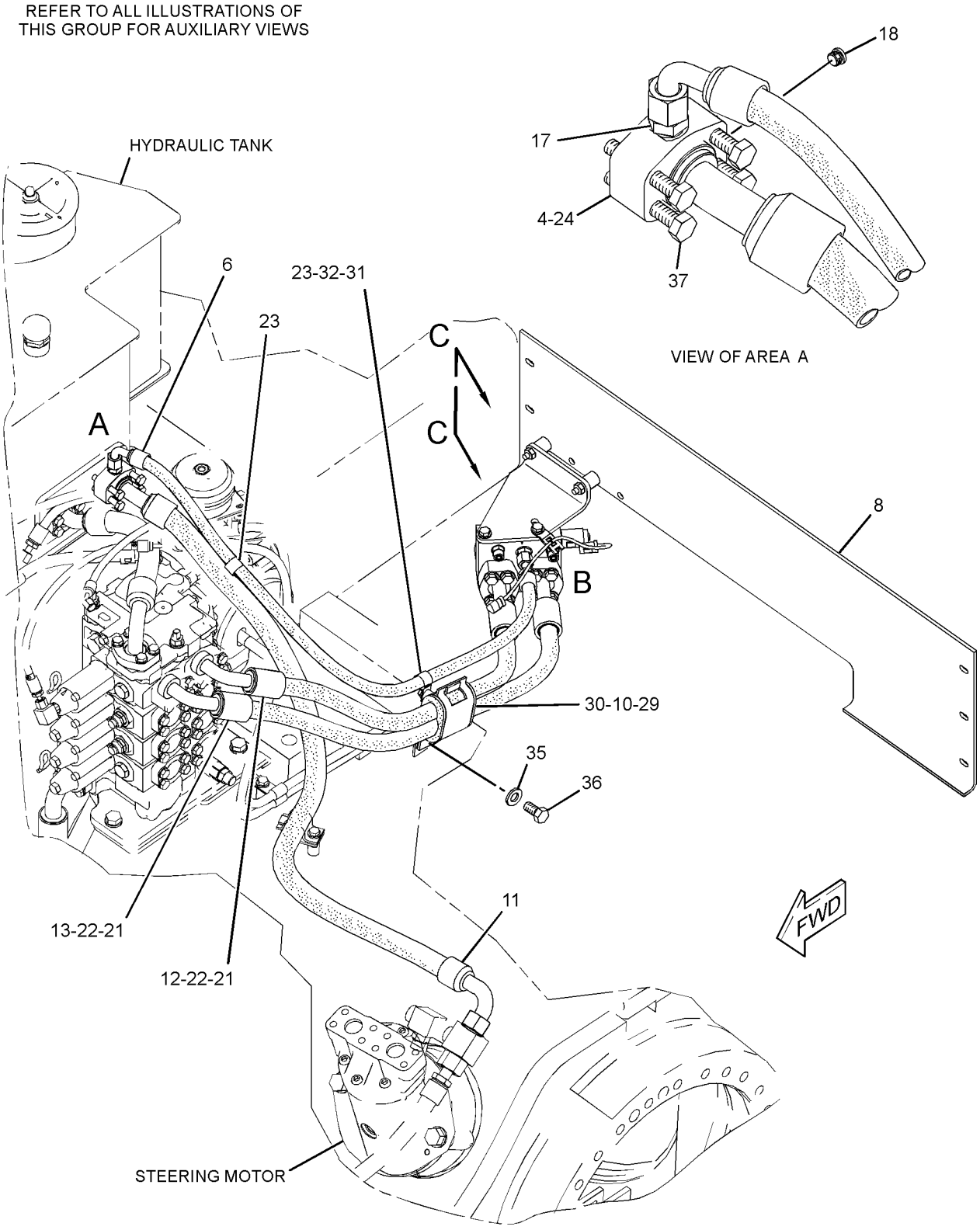

GRAPHIC #1

g01363749

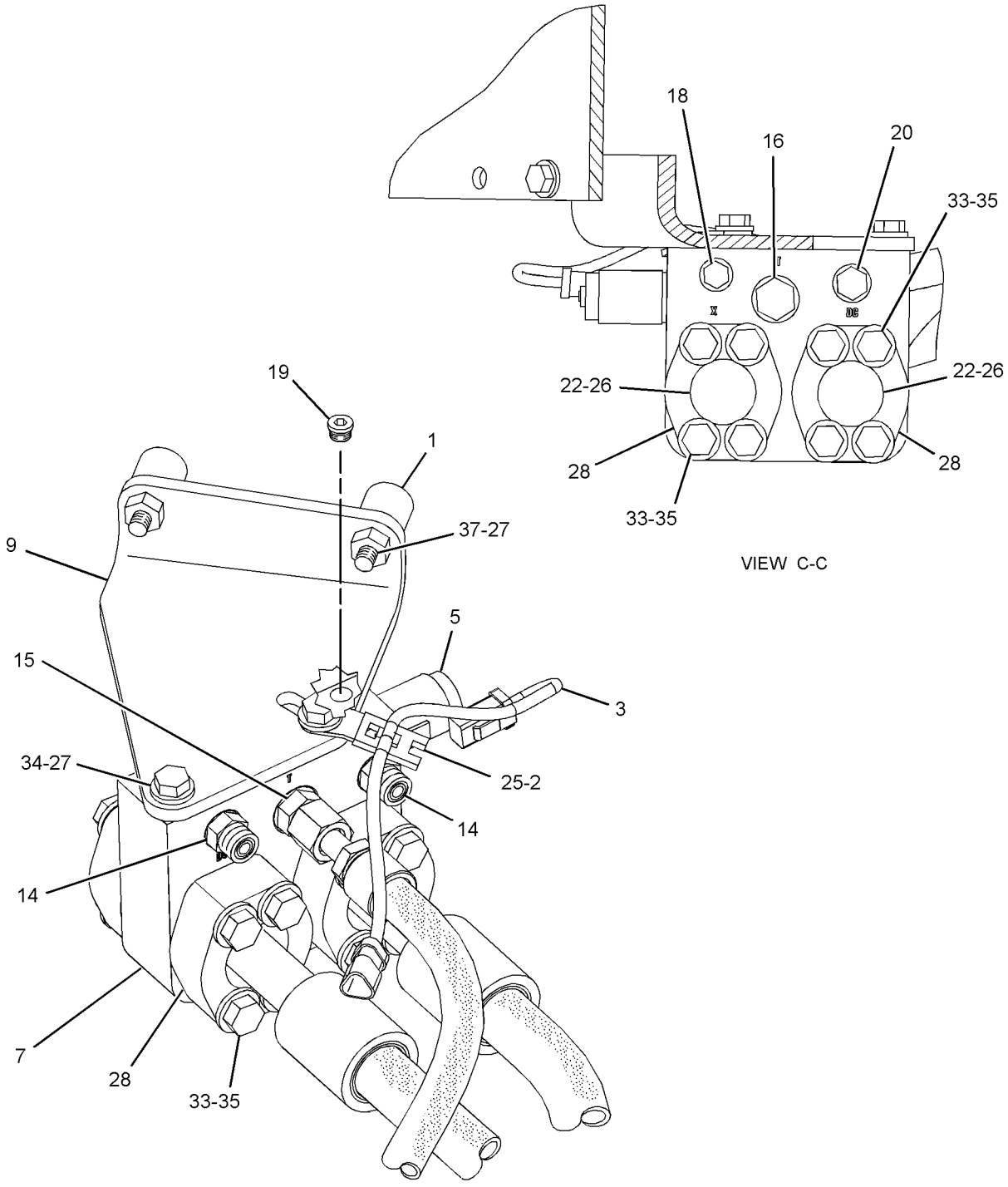

GRAPHIC #2 **<END>** g01363750

WORK TOOLS

292-0281 MAST GP—LASER RECEIVER

S/N: SMC1-UP; GCT1-UP

PART OF 292-0293, 292-0312 GRADE CONTROL AR-LASER

SMCS-79NS **i02649289**

NOTE	PART NUMBER	QTY	PART NAME 1 2 3 4 5 6 (PRODUCT LEVEL)	SEE PAGE
Y	*292-0302*	1	MOUNTING GP-MAST (LASER RECEIVER)	612
Y	**234-9970**	1	MOUNTING GP-RECEIVER (MAST)	209
	226-2333	1	MAST AS	
	245-4747	1	KIT-ADAPTER (MAST) (GRADE CONTROL)	
			(INCLUDES ADAPTER BLOCK, BOLTS, & WASHER)	
	239-9271	1	SOFTWARE GP (MAST)	

Y-SEPARATE ILLUSTRATION

<END>

292-0290 MAST GP—SATELLITE RECEIVER

S/N: SMC1-UP; GCT1-UP

SOLID

PART OF 290-5571, 292-0280 GRADE CONTROL AR-SATELLITE

SMCS-79NS **i02618806**

NOTE	PART NUMBER	QTY	PART NAME 1 2 3 4 5 6 (PRODUCT LEVEL)	SEE PAGE
Y	*292-0303*	1	MOUNTING GP-MAST (SATELLITE RECEIVER) (GRADE CONTROL)	613
	248-1500	1	MAST AS	

Y-SEPARATE ILLUSTRATION

<END>

292-0302 MOUNTING GP-MAST—LASER RECEIVER

S/N: SMC1-UP; GCT1-UP

PART OF 292-0281 MAST GP

SMCS-79NS **i02649290**

NOTE	PART NUMBER	QTY	PART NAME 1 2 3 4 5 6 (PRODUCT LEVEL)	SEE PAGE
M	**8T-4648**	4	BOLT (M12X1.75X70-MM)	
	237-7552	3	FILM-WARNING (LASER TRANSMITTER)	
	252-8744	1	FILM-WARNING (BLADE, DO NOT CLIMB, READ OMM)	
M	**8T-4244**	4	NUT (M12X1.75-THD)	
	8T-4223	8	WASHER-HARD (13.5X25.5X3-MM THK)	

M-METRIC PART

<END>

WORK TOOLS

292-0303 MOUNTING GP-MAST—SATELLITE RECEIVER

S/N: SMC1-UP; GCT1-UP

PART OF 292-0290 MAST GP

SMCS-79NS **i02618818**

NOTE	PART NUMBER	QTY	PART NAME 1 2 3 4 5 6 (PRODUCT LEVEL)	SEE PAGE
M	**8T-4648**	4	BOLT (M12X1.75X70-MM)	
	252-8744	1	FILM-WARNING (BLADE, DO NOT CLIMB, READ OMM)	
			ON THE REAR OF THE MAST AT EYE LEVEL	
M	**8T-4244**	4	NUT (M12X1.75-THD)	
	8T-4223	8	WASHER-HARD (13.5X25.5X3-MM THK)	

M-METRIC PART

<END>

WORK TOOLS

224-4454 MOUNTING GP-RIPPER

S/N: D6D1-UP
PART OF 224-4449 RIPPER AR
AN ATTACHMENT

SMCS-6165, 6310, 6324 **i02588138**

NOTE	REF NO	GRAPHIC REF	PART NUMBER	QTY	PART NAME 1 2 3 4 5 6 (PRODUCT LEVEL)	SEE PAGE
	1	1	**1U-0300**	1	BRACKET AS	
		1	**3G-9995**	2	PLATE	
	2	1	**1U-0301**	2	BRACKET AS	
					(EACH INCLUDES)	
		1	**2K-6279**	1	BOSS	
	3	1	**7T-1975**	1	BRACKET AS	
		1	**3G-9995**	2	PLATE	
B	4	1	**9N-4449**	12	SPACER (68X121X1.5-MM THK)	
B	5	1	**9N-4450**	4	SPACER (68X120X5-MM THK)	
	6	1	**9W-0609**	4	SPACER (53X100X35-MM THK)	
	7	1	**1U-0159**	2	PIN	
	8	1	**1U-0612**	2	PIN	
	9	1	**9M-5854**	20	STUD-TAPERLOCK (1-8-THD)	
M	10	1	**6V-7687**	2	LOCKNUT (M12X1.75-THD)	
M	11	1	**6V-7744**	2	LOCKNUT (M10X1.15-THD)	
	12	1	**6V-8190**	20	NUT (1-8-THD)	
M	13	1	**7X-2543**	2	BOLT (M10X1.5X120-MM)	
	14	1	**8T-5361**	20	WASHER-HARD (28X49X5-MM THK)	
M	15	1	**8T-5412**	2	BOLT (M12X1.75X140-MM)	

B-USE AS REQUIRED
M-METRIC PART

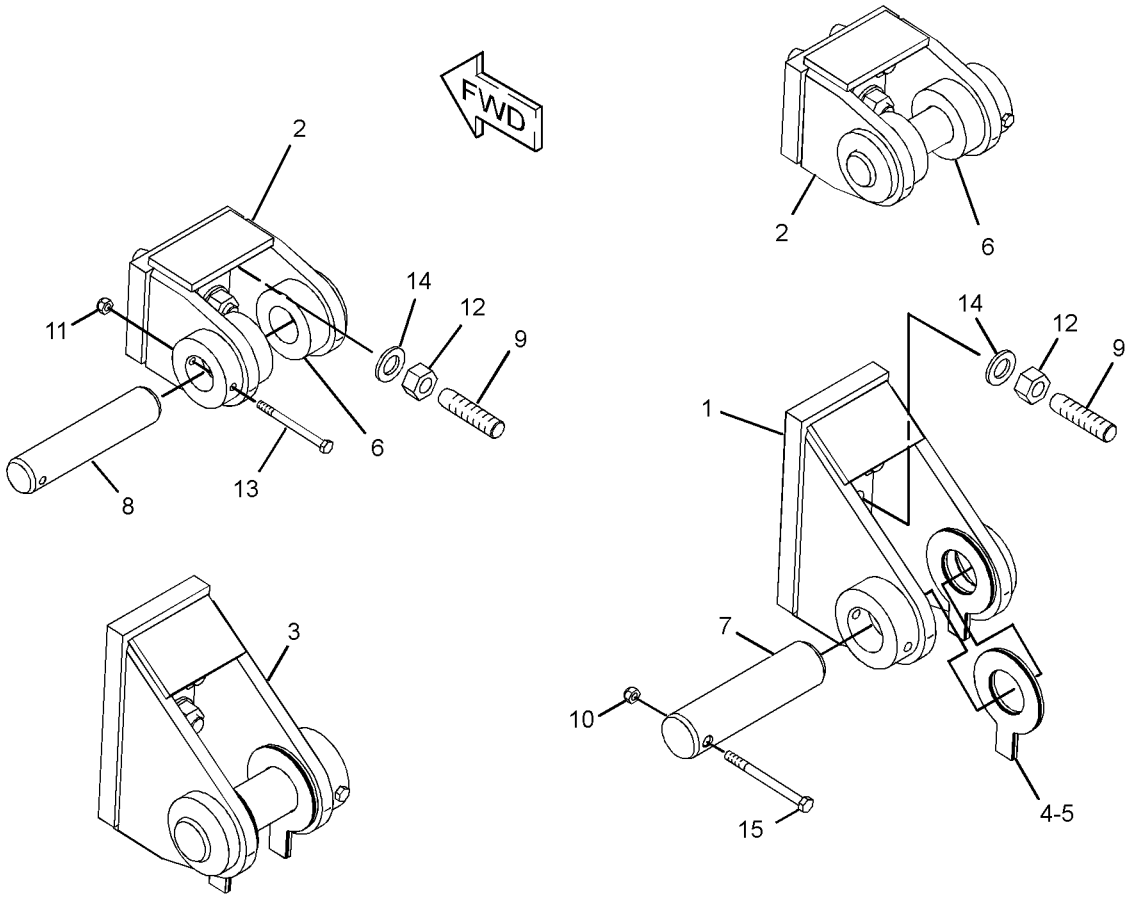

GRAPHIC #1 **<END>** g01208561

WORK TOOLS

224-4449 RIPPER AR

S/N: D6D1-UP
AN ATTACHMENT

SMCS-6310 **i02801372**

NOTE	REF NO	GRAPHIC REF	PART NUMBER	QTY	PART NAME 1 2 3 4 5 6 (PRODUCT LEVEL)	SEE PAGE
Y	1	1	*3W-1356*	1	GUARD GP-TRANSMISSION	364
Y	2	1	*224-4454*	1	MOUNTING GP-RIPPER	614
Y	3	1	**227-0842**	1	CYLINDER GP-RIPPER LIFT	476
Y	4	1	*235-8180*	1	LINES GP-RIPPER	499
Y	5	1	*235-8805*	1	RIPPER GP	617
F			**8M-3494**	1	PLATE-SERIAL NUMBER (RIPPER)	
					ON CARRIAGE ASSEMBLY ON RH SIDE OF RH TOWER	
F			**4B-4158**	2	SCREW-DRIVE (3/16X0.25-IN)	
F			**7X-7644**	2	FILM-INFORMATION (TIE-DOWN)	
					ON RH & LH SIDES OF TRACK ROLLER FRAME CENTERED BETWEEN FRONT ROLLER & REAR IDLER	

F-NOT SHOWN
Y-SEPARATE ILLUSTRATION

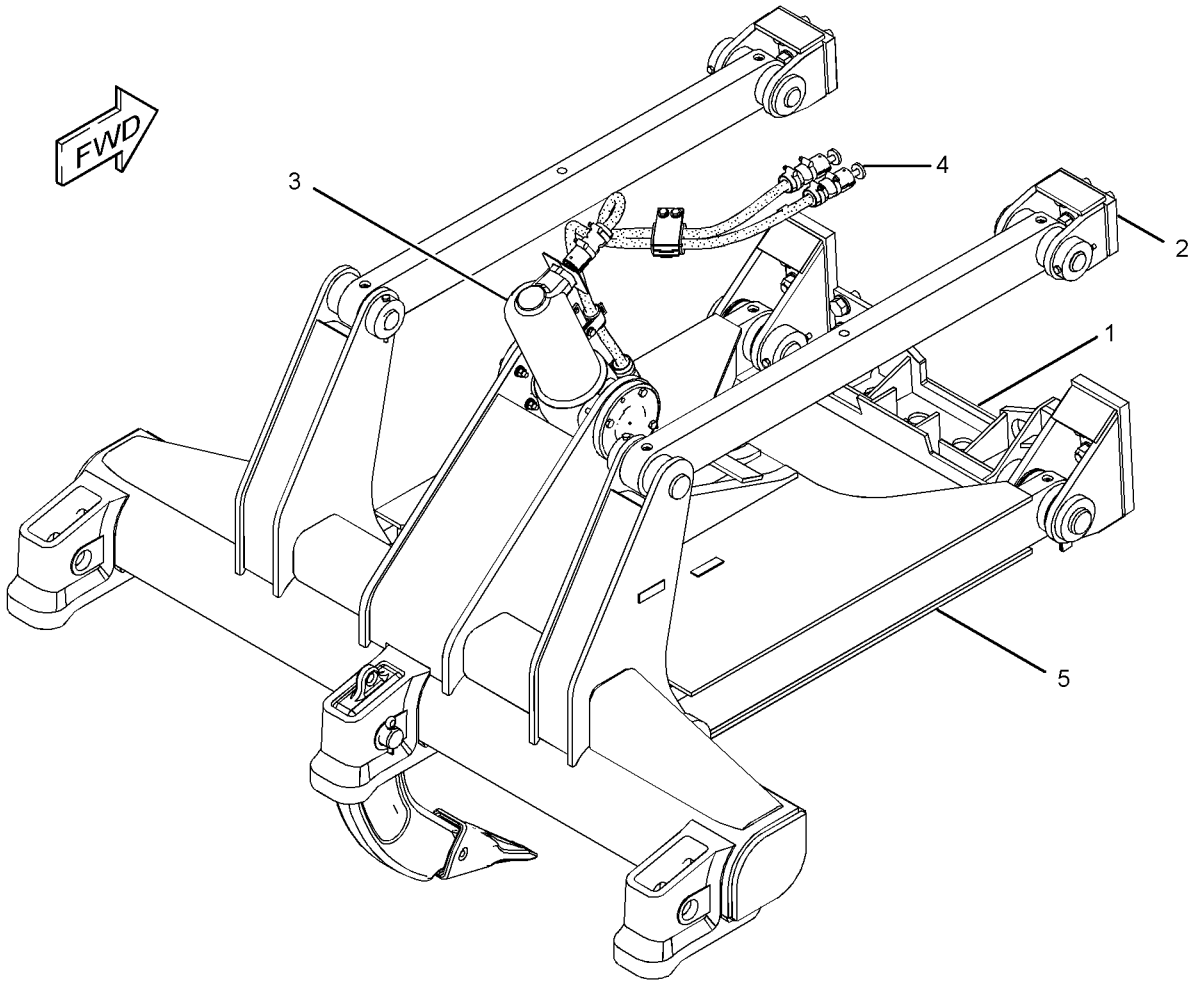

GRAPHIC #1 **<END>** g01208685

WORK TOOLS

235-8805 RIPPER GP

S/N: D6D1-UP
PART OF 224-4449 RIPPER AR
AN ATTACHMENT

SMCS-6310, 6325 **i02758559**

NOTE	REF NO	GRAPHIC REF	PART NUMBER	QTY	PART NAME 1 2 3 4 5 6 (PRODUCT LEVEL)	SEE PAGE
	1	1	**2K-0703**	1	BAR	
	2	1	**3B-8489**	3	FITTING-GREASE	
	3	1	**3K-8510**	1	PIN	
	4	1	**4K-3004**	2	BEARING-TRUNNION SUPPLEMENTARY	
Y	5	1	*9J-8926*	1	TOOTH GP-RIPPER	621
	6	1	**9J-9598**	2	PIN	
	7	1	**290-0862**	1	CARRIAGE AS	
	8	1	**9W-0873**	2	LINK AS	
					(EACH INCLUDES)	
		1	**3B-8489**	2	FITTING-GREASE	
		1	**9W-0876**	2	BEARING-SLEEVE	
	9	1	**189-0985**	1	FRAME & BEARING AS	
		1	**3B-8489**	4	FITTING-GREASE	
		1	**9W-0099**	4	BEARING-SLEEVE	
	10	1	**1U-0159**	2	PIN	
	11	1	**5C-6565**	2	BOLT (1/2-13X1.125-IN)	
M	12	1	**6V-7687**	2	LOCKNUT (M12X1.75-THD)	
M	13	1	**6V-7744**	2	LOCKNUT (M10X1.15-THD)	
M	14	1	**7X-2543**	2	BOLT (M10X1.5X120-MM)	
	15	1	**8T-4223**	18	WASHER-HARD (13.5X25.5X3-MM THK)	
M	16	1	**8T-4244**	8	NUT (M12X1.75-THD)	
M	17	1	**8T-4648**	8	BOLT (M12X1.75X70-MM)	
M	18	1	**8T-7930**	2	BOLT (M12X1.75X160-MM)	
B	19	1	**9N-4449**	2	SPACER (68X121X1.5-MM THK)	
B	20	1	**9N-4450**	4	SPACER (68X120X5-MM THK)	

B-USE AS REQUIRED
M-METRIC PART
Y-SEPARATE ILLUSTRATION

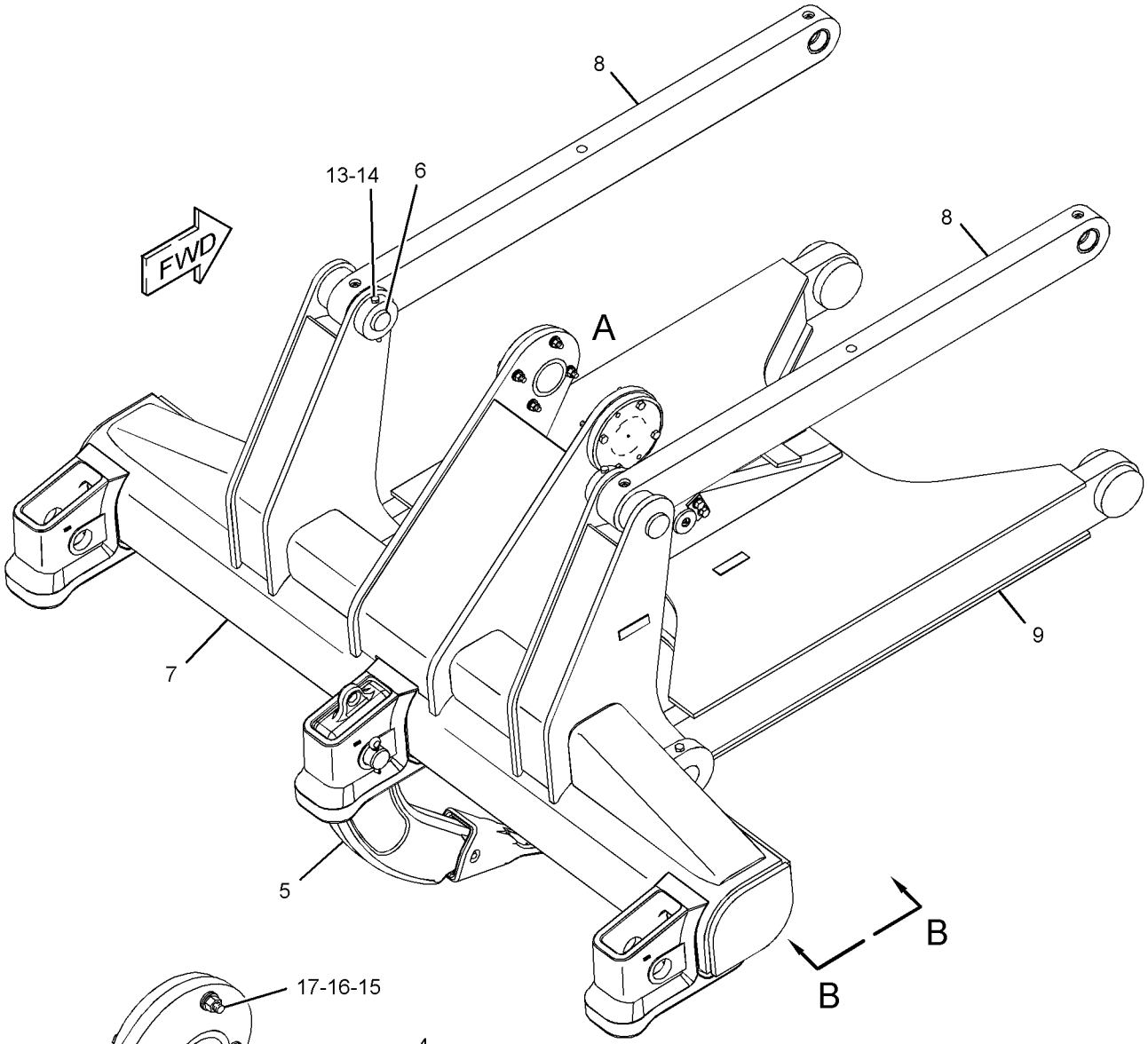

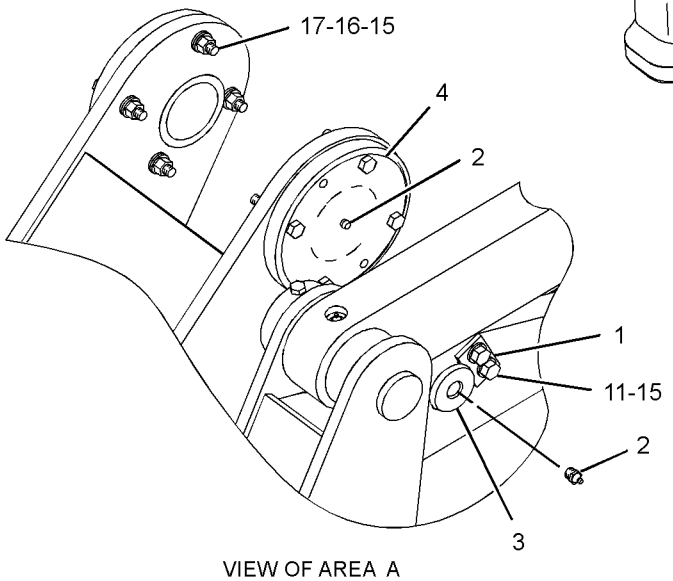

VIEW OF AREA A

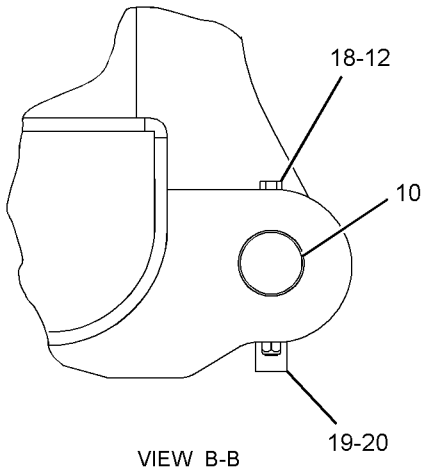

VIEW B-B

GRAPHIC #1 **<END>** g01306832

WORK TOOLS

3A-7880 TOOTH GP-RIPPER—STRAIGHT

S/N: SMC1-UP; GCT1-UP

AN ATTACHMENT

SMCS-6808, 6810 **i01814150**

NOTE	PART NUMBER	QTY	PART NAME 1 2 3 4 5 6 (PRODUCT LEVEL)	SEE PAGE
Y	*8J-2189*	3	TOOTH GP-RIPPER	620

Y-SEPARATE ILLUSTRATION

<END>

WORK TOOLS

8J-2189 TOOTH GP-RIPPER—STRAIGHT SHANK

S/N: SMC1-UP; GCT1-UP

PART OF 174-9198, 174-9199, 3A-7880 TOOTH GP-RIPPER

AN ATTACHMENT

SMCS-6808, 6810 **i01893140**

NOTE	REF NO	GRAPHIC REF	PART NUMBER	QTY	PART NAME 1 2 3 4 5 6 (PRODUCT LEVEL)	SEE PAGE
	1	1	**3B-5325**	2	PIN-COTTER	
	2	1	**8J-2190**	1	PIN	
	3	1	**9J-3139**	1	SHANK-RIPPER	
C	4	1	**114-0358**	1	PIN	
C		1	**114-0359**	1	RETAINER AS (G.E.T.)	
	5	1	**6Y-0359**	1	TIP-RIPPER	

C-CHANGE FROM PREVIOUS TYPE

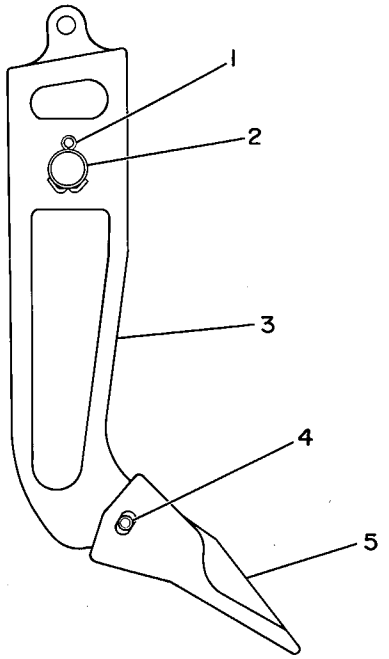

GRAPHIC #1 **<END>** g00081660

9J-8926 TOOTH GP-RIPPER—CURVED

S/N: SMC1-UP; D6D1-UP; GCT1-UP
PART OF 235-8805 RIPPER GP
AN ATTACHMENT

SMCS-6808, 6810 **i01095060**

NOTE	REF NO	GRAPHIC REF	PART NUMBER	QTY	PART NAME 1 2 3 4 5 6 (PRODUCT LEVEL)	SEE PAGE
	1	1	**3B-5325**	2	PIN-COTTER	
	2	1	**8J-2190**	1	PIN	
	3	1	**9J-8923**	1	SHANK-RIPPER	
	4	1	**114-0358**	1	PIN	
	5	1	**6Y-0352**	1	TIP-RIPPER	
	6	1	**114-0359**	1	RETAINER AS (G.E.T.)	

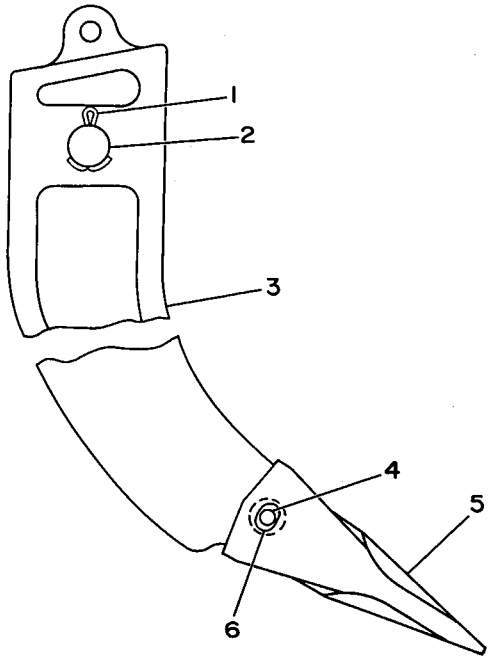

GRAPHIC #1 **<END>** g00174183

174-9198 TOOTH GP-RIPPER—STRAIGHT

S/N: SMC1-UP; GCT1-UP
1 SHANK
AN ATTACHMENT

SMCS-6808, 6810 **i01816428**

NOTE	PART NUMBER	QTY	PART NAME 1 2 3 4 5 6 (PRODUCT LEVEL)	SEE PAGE
Y	*8J-2189*	1	TOOTH GP-RIPPER	620
Y-SEPARATE ILLUSTRATION				

<END>

174-9199 TOOTH GP-RIPPER—STRAIGHT

S/N: SMC1-UP; GCT1-UP
2 SHANK
AN ATTACHMENT

SMCS-6808, 6810 **i01816437**

NOTE	PART NUMBER	QTY	PART NAME 1 2 3 4 5 6 (PRODUCT LEVEL)	SEE PAGE
Y	*8J-2189*	2	TOOTH GP-RIPPER	620
Y-SEPARATE ILLUSTRATION				

<END>

OPERATOR STATION

173-1028 ADJUSTER GP-SEAT

S/N: SMC1-UP; GCT1-UP
PART OF 178-0603, 180-7304 SEAT GP
ALSO AN ATTACHMENT

SMCS-7321 **i01582195**

NOTE	REF NO	GRAPHIC REF	PART NUMBER	QTY	PART NAME 1 2 3 4 5 6 (PRODUCT LEVEL)	SEE PAGE
	1	1	**4V-8256**	4	SPRING	
	2	1	**117-4492**	1	ROD	
	3	1	**136-1544**	1	LATCH AS-LH	
	4	1	**156-5545**	1	LATCH AS-RH	
	5	1	**164-4531**	1	ROD	
	6	1	**170-1112**	1	PLATE AS	
	7	1	**170-1114**	1	HANDLE (SLIDE ADJUSTMENT)	
	8	1	**170-1115**	1	HANDLE (TILT ADJUSTMENT)	
	9	1	**132-0338**	2	WASHER-PLASTIC (13X31.7X.8-MM THK)	
	10	1	**2K-4973**	2	LOCKNUT (3/8-16-THD)	
	11	1	**7X-0608**	2	WASHER-HARD (10.2X16X2-MM THK)	

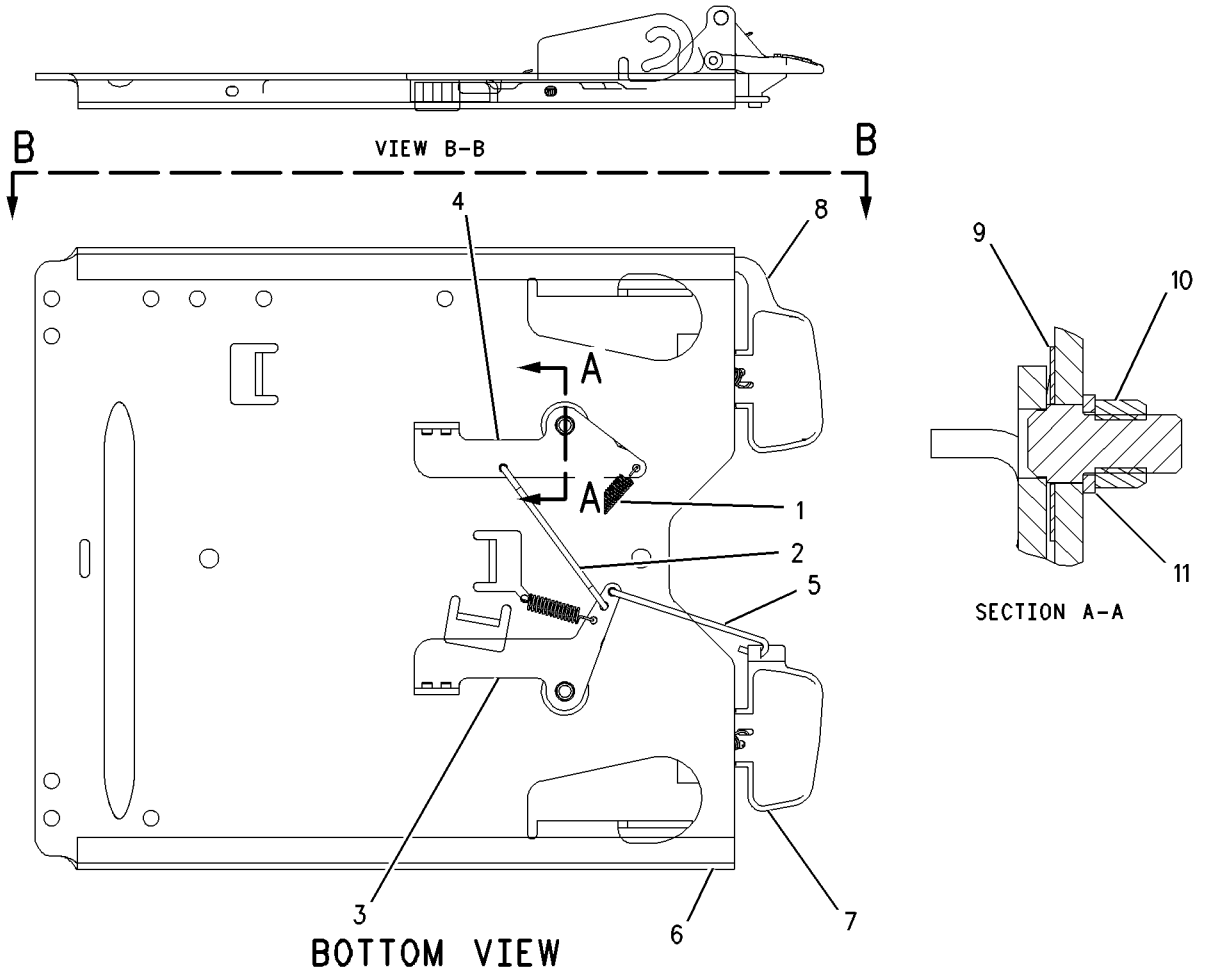

GRAPHIC #1 **<END>** g00816460

214-0783 AIR COMPRESSOR GP-SEAT–HEAVY-DUTY

S/N: SMC1-UP; GCT1-UP

OPTIONAL FIELD REPLACEMENT FOR 2373970 STANDARD DUTY COMPRESSOR

PART OF 191-2933 SUSPENSION GP-SEAT

SMCS-731S, 7324 **i02801038**

NOTE	REF NO	GRAPHIC REF	PART NUMBER	QTY	PART NAME 1 2 3 4 5 6 (PRODUCT LEVEL)	SEE PAGE
	1	1	**5P-4423**	1	ELBOW	
	2	1	**5P-4432**	1	ELBOW-AIR BRAKE	
	3	1	**175-5058**	1	MOUNT	
	4	1	**186-5107**	3	SCREW (NO 8X1.25-IN)	
	5	1	**214-0784**	1	COMPRESSOR AS	

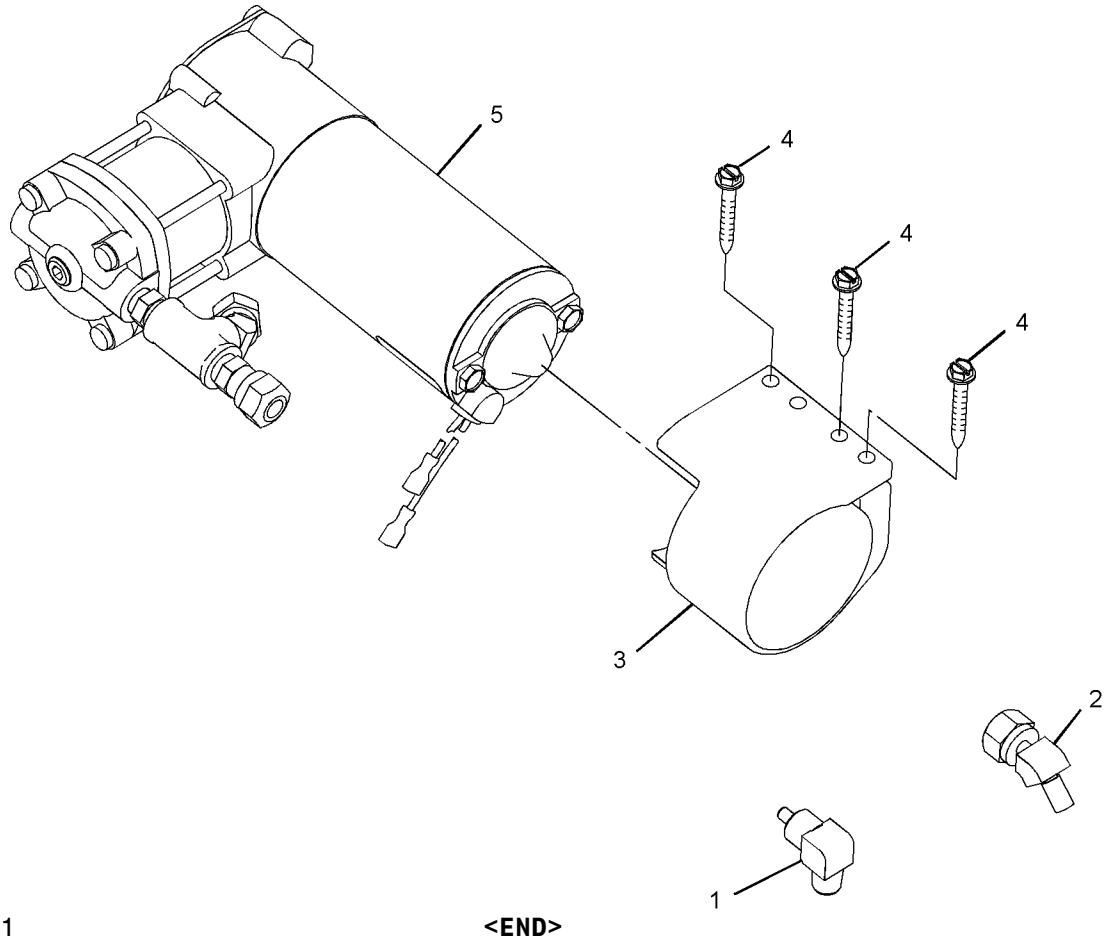

GRAPHIC #1 **<END>** g01040572

OPERATOR STATION

237-3970 AIR COMPRESSOR GP-SEAT

S/N: SMC1-UP; GCT1-UP
FOR OPTIONAL FIELD REPLACEMENT ORDER 214-0783 COMPRESSOR,211-5358 CONDUIT(100-CM) & 5P-6010 TUBE(1-M), PROVIDES HEAVY DUTY SEAT COMPRESSOR
PART OF 191-2933 SUSPENSION GP-SEAT
AN ATTACHMENT

SMCS-731S, 7324 **i02784170**

NOTE	REF NO	GRAPHIC REF	PART NUMBER	QTY	PART NAME 1 2 3 4 5 6 (PRODUCT LEVEL)	SEE PAGE
					(NO SERVICED PARTS)	

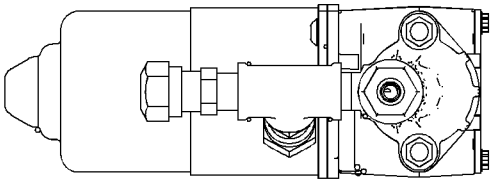

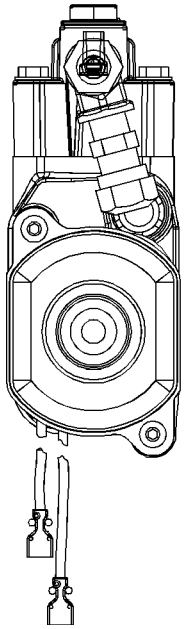

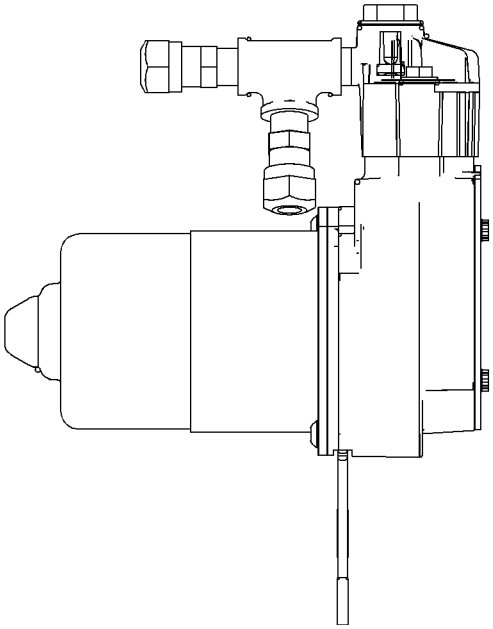

GRAPHIC #1 **<END>** g01040576

OPERATOR STATION

228-7854 AIR CONDITIONER AR—EEC

S/N: SMC1-UP; GCT1-UP
AN ATTACHMENT

SMCS-7320 **i02456068**

NOTE	PART NUMBER	QTY	PART NAME 1 2 3 4 5 6 (PRODUCT LEVEL)	SEE PAGE
Y	*237-1000*	1	CONDENSER & MTG GP-REFRIGERANT	639
Y	*223-1678*	1	LINES GP-AIR CONDITIONER	682
	110-6393	1	PLATE-INSTRUCTION (AIR CONDITIONER)	
			ON LH SIDE OF DASH TO BE READ THROUGH CAB DOOR	
	227-5055	1	ROPS AS	
M	**9R-2640**	1	BOSS (M12X1.75X25-MM)	
	227-5054	1	ROPS AS	

M-METRIC PART
Y-SEPARATE ILLUSTRATION

<END>

OPERATOR STATION

279-2591 AIR CONDITIONER GP

S/N: SMC1-UP; GCT1-UP
PART OF 272-3477 CAB AR

SMCS-7320 **i02433638**

NOTE	REF NO	GRAPHIC REF	PART NUMBER	QTY	PART NAME 1 2 3 4 5 6 (PRODUCT LEVEL)	SEE PAGE
	1	1	**3E-5464**	1	SWITCH AS-TEMPERATURE (REFRIGERANT)	
	2	1	**109-6406**	1	COIL AS	
	3	1	**2V-1937**	2	GROMMET	
	4	1	**5P-1075**	2	WASHER-HARD (10.2X22.5X3-MM THK)	
	5	1	**6L-7159**	2	SCREW-MACHINE (8-32X0.313-IN)	
	6	1	**8T-4121**	2	WASHER-HARD (11X21X2.5-MM THK)	
M	7	1	**8T-4137**	2	BOLT (M10X1.5X20-MM)	
M	8	1	**8T-4191**	2	BOLT (M10X1.5X16-MM)	
E	9	1	**144-0195**		HOSE (12-CM)	
D	10	1	**5P-5643**		SEAL (0.40-M EACH)	

D-ORDER BY THE METER
E-ORDER BY THE CENTIMETER
M-METRIC PART

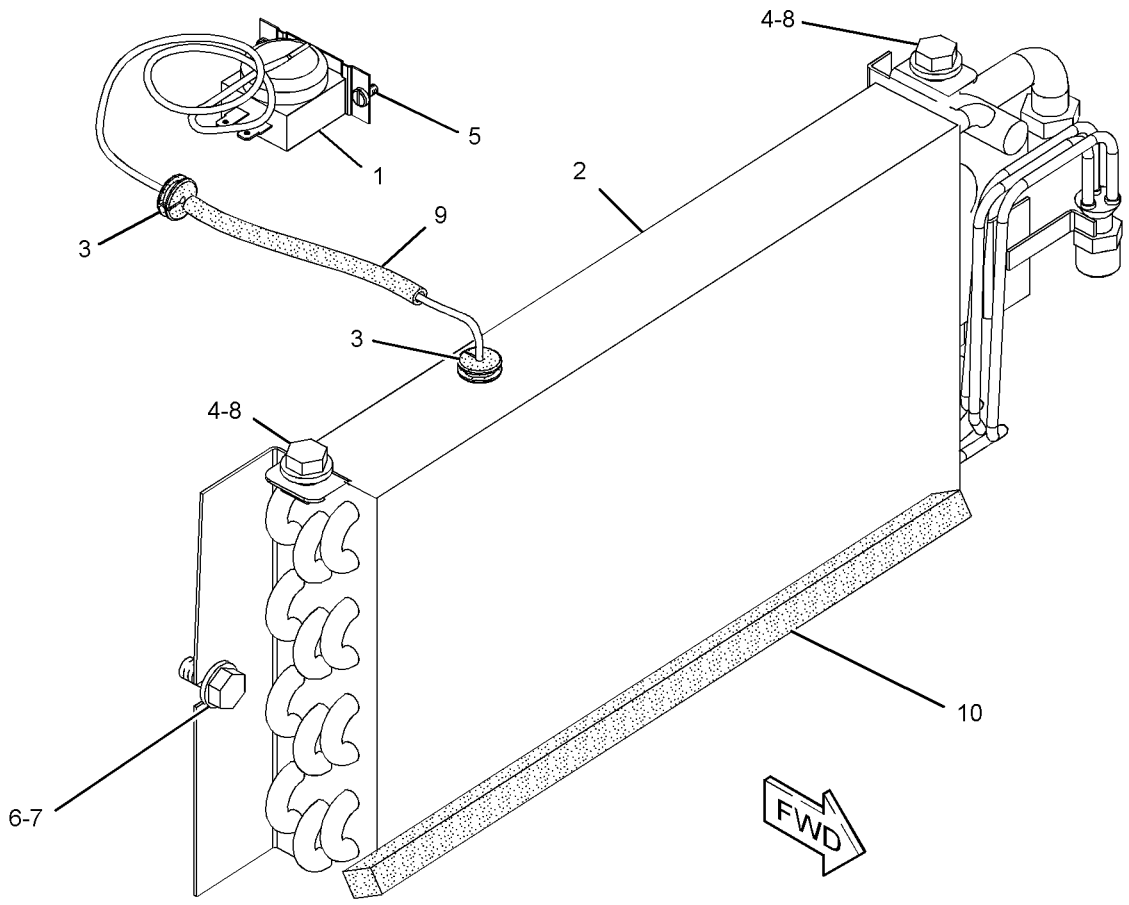

GRAPHIC #1 **<END>** g01210735

OPERATOR STATION

230-5388 BLOWER GP-CAB

S/N: SMC1-UP; GCT1-UP
PART OF 230-4700 PRESSURIZER GP-CAB
ALSO AN ATTACHMENT

SMCS-7316 **i02450628**

NOTE	REF NO	GRAPHIC REF	PART NUMBER	QTY	PART NAME 1 2 3 4 5 6 (PRODUCT LEVEL)	SEE PAGE
	1	1	**3S-2093**	1	STRAP-CABLE	
	2	1	**229-6635**	1	GASKET	
	3	1	**230-5385**	2	PLATE AS	
	4	1	**237-0934**	1	PLATE AS	
	5	1	**237-0956**	1	PLATE AS	
	6	1	**257-5029**	1	RESISTOR AS	
	7	1	**260-1914**	1	HARNESS AS-MOTOR	
		1	**102-8805**	1	KIT-RECEPTACLE (6-PIN)	
					(INCLUDES RECEPTACLE AS & WEDGE)	
		1	**155-2270**	1	KIT-CONNECTING PLUG (2-PIN)	
					(INCLUDES PLUG AS, WEDGE, & INTERFACE SEAL)	
	8	1	**275-6706**	1	BLOWER AS	
	9	1	**282-1951**	1	PLATE AS	
	10	1	**282-1952**	1	COVER AS-ACCESS	
	11	1	**282-1953**	1	GUARD (RESISTOR)	
	12	1	**2M-1444**	2	SCREW-TAPPING (NO 8-18X.299-IN)	
M	13	1	**5C-9553**	2	BOLT (M6X1X16-MM)	
	14	1	**6H-4005**	1	GROMMET	
M	15	1	**8T-0337**	8	SCREW-MACHINE (M4X0.7X12-MM)	

M-METRIC PART

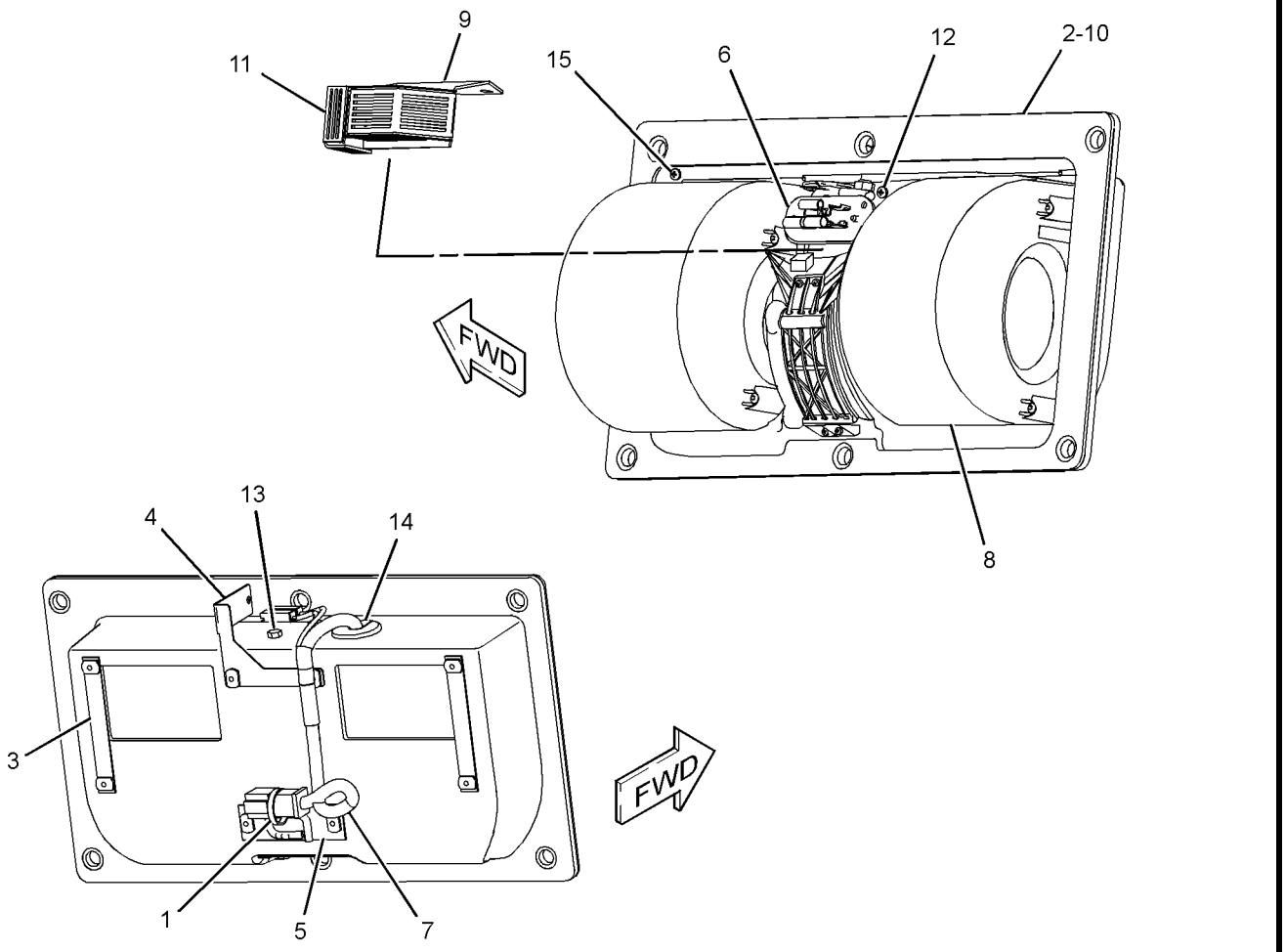

GRAPHIC #1 **<END>** g01212751

OPERATOR STATION

158-7694 CAB AR

S/N: SMC1-UP; GCT1-UP
PART OF 272-3477, 289-9878 CAB AR
ALSO AN ATTACHMENT

SMCS-7301 **i01815662**

NOTE	PART NUMBER	QTY	PART NAME 1 2 3 4 5 6 (PRODUCT LEVEL)	SEE PAGE
Y	*158-7696*	1	CAB GP	631
Y	*108-1335*	1	HANDHOLD GP	660
Y	*105-9657*	1	INSTALLATION GP-RADIO	666
Y	*158-7695*	1	LINER GP-CAB	675
Y	*105-9659*	1	MIRROR GP-REAR VIEW	689
Y	*158-7690*	1	WASHER GP-WINDOW	741
Y	*224-4357*	1	WIPER GP-WINDOW	758
Y-SEPARATE ILLUSTRATION				

<END>

272-3477 CAB AR

S/N: SMC1-UP; GCT1-UP
PART OF 269-2044 CHASSIS AR

SMCS-7301 **i02748393**

NOTE	PART NUMBER	QTY	PART NAME 1 2 3 4 5 6 (PRODUCT LEVEL)	SEE PAGE
Y	*279-2591*	1	AIR CONDITIONER GP	627
Y	**158-7694**	1	CAB AR	629
Y	*242-8397*	1	COVER GP-CONSOLE	657
Y	*279-2590*	1	HEATER GP-CAB	662
Y	*223-1677*	1	LINES GP-AIR CONDITIONER	679
Y	*223-1680*	1	LINES GP-HEATER	686
Y	*169-9637*	1	MOUNTING GP-CAB	697
Y	*230-4700*	1	PRESSURIZER GP-CAB	714
Y	*272-5171*	1	TANK GP-WINDOW WASHER	740
Y-SEPARATE ILLUSTRATION				

<END>

OPERATOR STATION

289-9878 CAB AR—WITHOUT AIR CONDITIONER

S/N: SMC1-UP; GCT1-UP

AN ATTACHMENT

SMCS-7301 **i02767056**

NOTE	PART NUMBER	QTY	PART NAME 1 2 3 4 5 6 (PRODUCT LEVEL)	SEE PAGE
Y	**158-7694**	1	CAB AR	629
Y	*242-8397*	1	COVER GP-CONSOLE	657
Y	*279-2590*	1	HEATER GP-CAB	662
Y	*223-1680*	1	LINES GP-HEATER	686
Y	*169-9637*	1	MOUNTING GP-CAB	697
Y	*230-4700*	1	PRESSURIZER GP-CAB	714
Y	*272-5171*	1	TANK GP-WINDOW WASHER	740
M	**8T-4137**	2	BOLT (M10X1.5X20-MM)	
M	**8T-4133**	1	NUT (M10X1.5-THD)	
	228-6089	1	PLUG (ROCKER SWITCH)	
	6V-1178	1	PLUG-BUTTON	
	6V-1790	3	PLUG-BUTTON	
	8T-4121	3	WASHER-HARD (11X21X2.5-MM THK)	

M-METRIC PART
Y-SEPARATE ILLUSTRATION

<END>

OPERATOR STATION

158-7696 CAB GP

S/N: SMC1-UP; GCT1-UP
PART OF 158-7694 CAB AR
ALSO AN ATTACHMENT

SMCS-7301 **i02748419**

NOTE	REF NO	GRAPHIC REF	PART NUMBER	QTY	PART NAME 1 2 3 4 5 6 (PRODUCT LEVEL)	SEE PAGE
	1	2	**5G-8655**	2	LEVER	
	2	2	**6I-9386**	2	BRACKET AS	
	3	1	**5P-1076**	1	WASHER-HARD (13.5X30X4-MM THK)	
	4	2	**6V-2375**	2	HANDLE AS-INSIDE	
	5	2	**6V-3260**	8	BOLT-SOCKET HEAD (1/4-20X0.75-IN)	
	6	2	**6V-7190**	2	LEVER AS	
					(EACH INCLUDES)	
		2	**6V-8129**	2	SETSCREW-SOCKET	
	7	2	**6V-7636**	4	PIN AS-SPRING	
	8	2	**6V-8073**	2	LINK-CONNECTING	
	9	1	**7G-2454**	1	GLASS (TINTED) (CAB FRONT)	
	10	2	**8C-3442**	2	SPRING-COIL	
Y	11	1	**8E-5112**	1	WINDOW GP-SLIDING (REAR)	757
Y	12	1	**8E-5113**	1	WINDOW GP-SLIDING (RH)	757
Y	13	1	**8E-5114**	1	WINDOW GP-SLIDING (LH)	757
B	14	2	**8T-0318**	8	SHIM (0.8-MM THK)	
	15	2	**8T-1979**	1	LINKAGE AS (RH)	
	16	2	**8T-1980**	1	LINKAGE AS (LH)	
					(EACH LINKAGE ASSEMBLY INCLUDES)	
J		2	**5P-8503**	1	LOCK AS-CYLINDER	
		2	**8T-8914**	1	SEAL-LINKAGE	
	17	2	**8T-3561**	1	PLATE-IDENTIFICATION (SEQUENCE) (CAB)	
	18	2	**296-7726**	2	STRIKER AS	
	19	1	**9G-1127**	2	GLASS (CAB REAR SIDE)	
	20	2	**109-9828**	1	LATCH AS-ROTARY (RH)	
	21	2	**109-9829**	1	LATCH AS-ROTARY (LH)	
	22	2	**118-0693**	2	ROD	
	23	1	**125-8254**	2	GLASS (TINTED) (DOOR, RH, LH)	
	24	1	**158-7697**	1	CAB AS	
	25	2	**170-5854**	1	BRACKET (RH)	
	26	2	**170-5855**	1	BRACKET (LH)	
	27	1	**224-4998**	1	DOOR AS (RH)	
	28	1	**224-5000**	1	DOOR AS (LH)	
	29	2	**1B-8735**	2	KEY-WOODRUFF	
	30	2	**4K-3533**	2	WASHER (9.7X17.5X1.6-MM THK)	
	31	2	**4M-6425**	2	BOLT (5/16-18X1-IN)	
	32	2	**5M-8500**	2	KNOB	
	33	2	**6V-2331**	2	HANDLE AS-OUTSIDE	
	34	2	**6V-8189**	2	NUT (5/16-18-THD)	
	35	2	**7X-0578**	12	WASHER-HARD (10.2X32X2.5-MM THK)	
	36	2	**7X-7729**	12	WASHER (11X25X3-MM THK)	
M	37	2	**8T-4136**	24	BOLT (M10X1.5X25-MM)	
M	38	2	**8T-4181**	8	BOLT (M6X1X20-MM)	
M	39	1	**8T-4192**	1	BOLT (M12X1.75X25-MM)	
	40	2	**8T-9043**	2	BOLT (5/16-18X0.875-IN)	
	41	2	**9D-9736**	2	BUMPER	
	42	2	**9N-1995**	2	RIVET-POP	
	43	2	**3E-6180**	5	NUT-CLINCH (M10X1.5-THD)	
	44	2	**8T-4121**	4	WASHER-HARD (11X21X2.5-MM THK)	
M	45	2	**8T-4195**	4	BOLT (M10X1.5X30-MM)	
D	46	1	**5P-6605**		SEAL (3.5-M EACH)	
D	46A	1	**5P-6605**		SEAL (1.7-M EACH)	
D	46B	1	**5P-6605**		SEAL (2.5-M EACH)	
D	46C	1	**5P-6605**		SEAL (2-M)	
D	46D	1	**5P-6605**		SEAL (3.5-M)	

OPERATOR STATION

158-7696 **CAB GP** *(contd.)* **i02748419**

NOTE	REF NO	GRAPHIC REF	PART NUMBER	QTY	PART NAME 1 2 3 4 5 6 (PRODUCT LEVEL)	SEE PAGE
D	47	2	**5P-5930**		SEAL (0.2-M EACH)	
D	47A	2	**5P-5930**		SEAL (0.8-M EACH)	
E	48	2	**103-2543**		SEAL (335-CM EACH)	
D	49	2	**5P-5643**		SEAL (0.1-M EACH)	
D	50	2	**5P-7483**		SEAL (1.4-M EACH)	
D	51	2	**8T-6936**		SEAL (0.1-M EACH)	

B-USE AS REQUIRED
D-ORDER BY THE METER
E-ORDER BY THE CENTIMETER
J-REQUIRES CORPORATE KEY
M-METRIC PART
Y-SEPARATE ILLUSTRATION

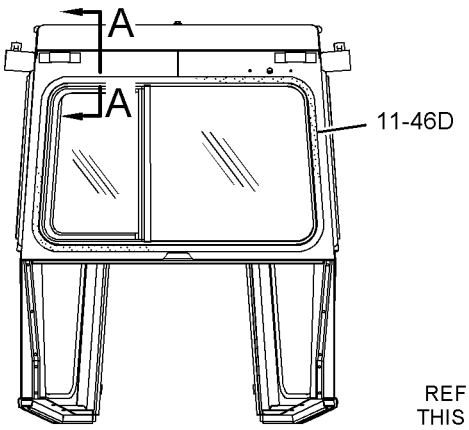

REAR VIEW

REFER TO ALL ILLUSTRATIONS OF THIS GROUP FOR AUXILIARY VIEWS

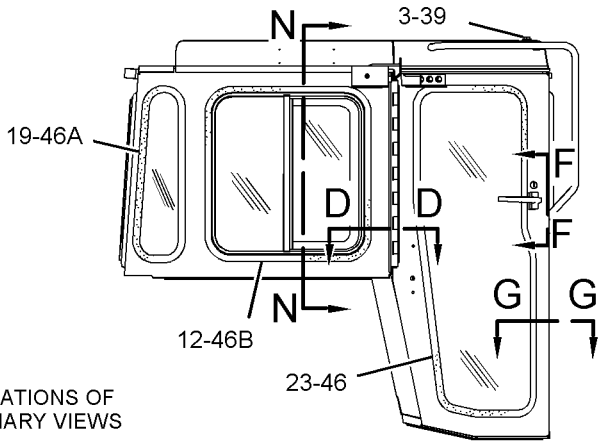

RIGHT SIDE VIEW

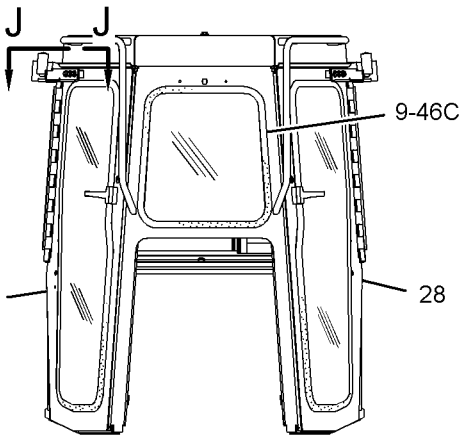

FRONT VIEW

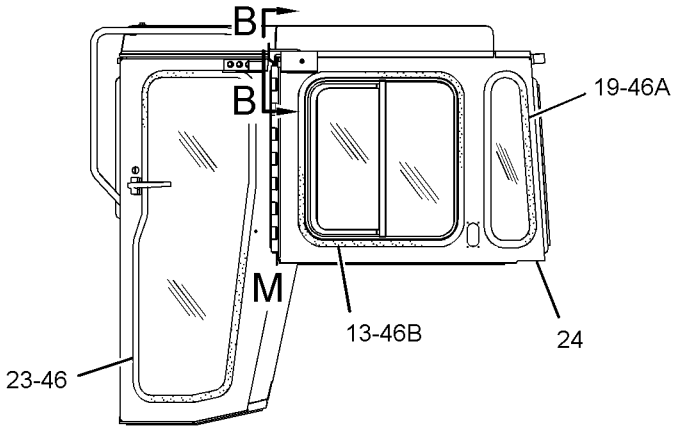

LEFT SIDE VIEW

GRAPHIC #1 g01356908

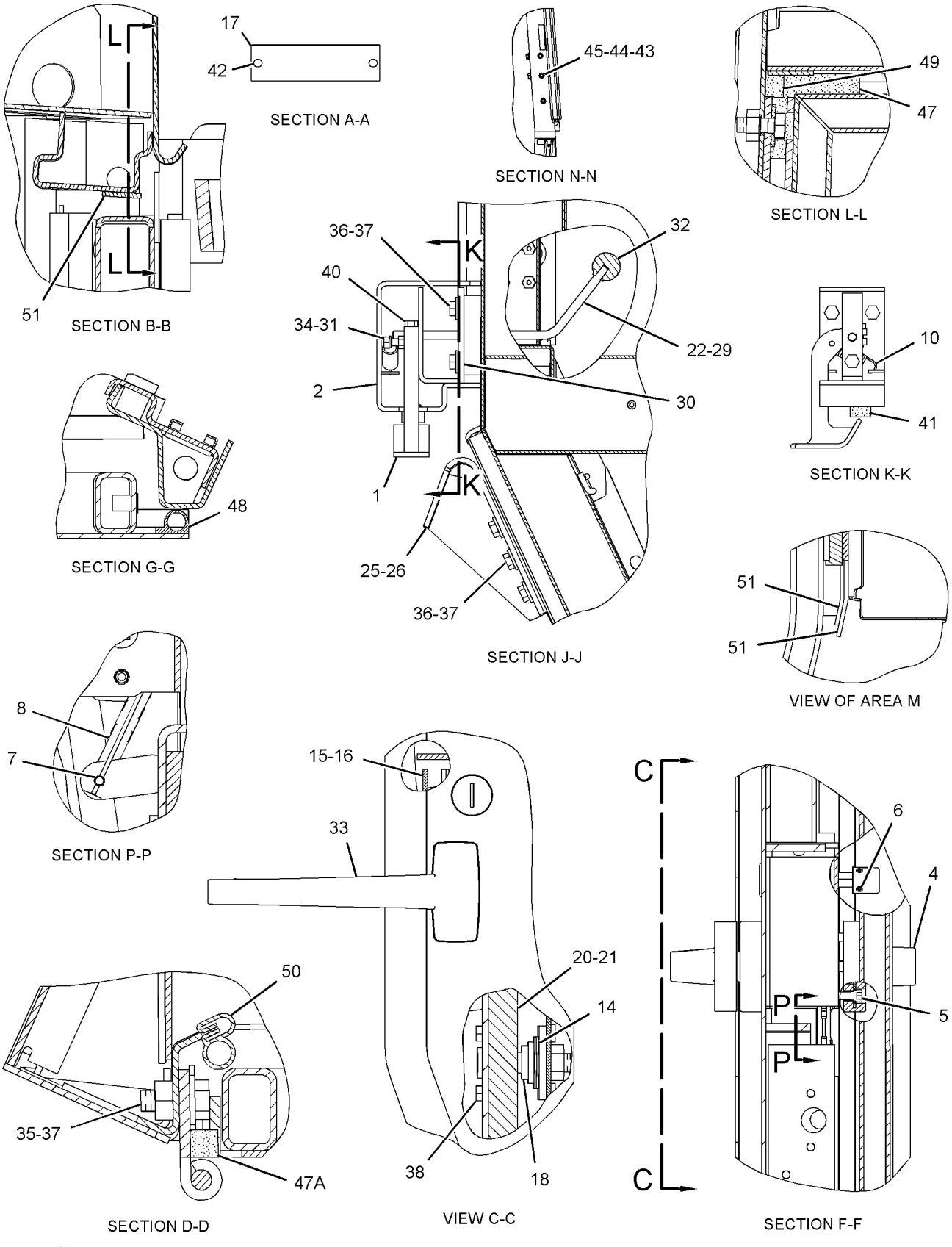

GRAPHIC #2 **<END>** g01381758

OPERATOR STATION

283-0581 CANOPY AR

S/N: SMC1-UP; GCT1-UP

AN ATTACHMENT

SMCS-7302 **i02763996**

NOTE	PART NUMBER	QTY	PART NAME 1 2 3 4 5 6 (PRODUCT LEVEL)	SEE PAGE
Y	*283-0656*	1	INSTRUMENT GP (OPEN ROPS)	670
Y	*220-2810*	1	MOUNTING GP-PLATFORM (OPEN ROPS)	701
Y	*208-8706*	1	ROPS GP-OPEN (CANOPY)	718
Y	*214-1197*	1	SEAT GP (VINYL)	729
	6V-1971	1	LITERATURE GP (MACHINE)	
	2Y-3209	1	SEAL-WIRE	
	246-2641	1	PADLOCK GP	
	5P-8500	1	KEY	
	148-8411	1	PLUG AS	
	9S-4185	1	PLUG-O-RING	
	3K-0360	1	SEAL-O-RING	
	219-0305	1	FILM-WARNING (NO WELD, NO DRILL, READ OMM)	
			ON LEFT HAND ROPS POST	
	259-9250	1	FILM-WARNING (ROPS, FOPS)	
			ON LEFT HAND ROPS POST	

Y-SEPARATE ILLUSTRATION

<END>

OPERATOR STATION

106-5122 COMPRESSOR GP-REFRIGERANT

S/N: SMC1-UP; GCT1-UP

PART OF 241-8240 COMPRESSOR GP-REFRIGERANT

SMCS-1802 **i01990787**

NOTE	REF NO	GRAPHIC REF	PART NUMBER	QTY	PART NAME 1 2 3 4 5 6 (PRODUCT LEVEL)	SEE PAGE
	1	1	**102-8802**	1	KIT-RECEPTACLE (2-PIN)	
					(INCLUDES RECEPTACLE AS & WEDGE)	
	2	1	**114-3469**	1	VALVE GP-RELIEF (REFRIGERANT COMPRESSOR)	
		1	**9X-7378**	1	SEAL-O-RING	
	3	1	**7T-4532**	1	PLUG AS	
	4	1	**9X-7385**	2	SEAL-O-RING	

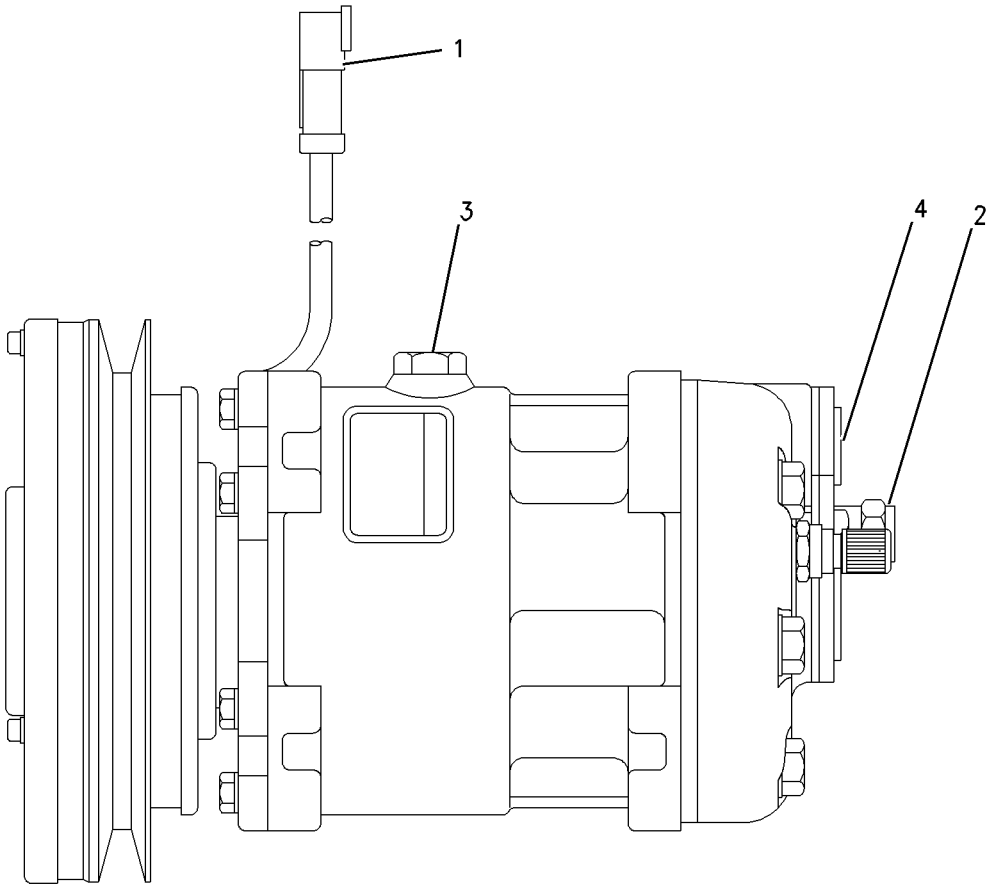

GRAPHIC #1 **<END>** g00979825

OPERATOR STATION

241-8240 COMPRESSOR GP-REFRIGERANT

S/N: SMC1-UP; GCT1-UP

PART OF 279-9549 INSTALLATION AR-ENGINE

SMCS-1802 **i02598814**

NOTE	REF NO	GRAPHIC REF	PART NUMBER	QTY	PART NAME 1 2 3 4 5 6 (PRODUCT LEVEL)	SEE PAGE
M	1	1	**4Y-6353**	1	BOLT-SPECIAL (M10X1.5X130-MM)	
	2	1	**8S-5383**	1	BLOCK	
Y	3	1	**106-5122**	1	COMPRESSOR GP-REFRIGERANT	635
	4	1	**188-1012**	1	BRACKET	
	5	1	**188-1013**	1	PLATE	
	6	1	**214-9492**	1	ROD-ADJUSTING	
	7	1	**216-0349**	1	V-BELT (REFRIGERANT COMPRESSOR)	
M	8	1	**8T-4910**	1	BOLT (M12X1.75X60-MM)	
	9	1	**8T-4121**	6	WASHER-HARD (11X21X2.5-MM THK)	
M	10	1	**8T-4132**	2	NUT (M16X2-THD)	
M	11	1	**8T-4133**	3	NUT (M10X1.5-THD)	
M	12	1	**8T-4182**	1	BOLT (M10X1.5X45-MM)	
M	13	1	**8T-4185**	3	BOLT (M10X1.5X50-MM)	
M	14	1	**8T-4186**	2	BOLT (M10X1.5X40-MM)	
M	15	1	**8T-4193**	1	BOLT (M16X2X50-MM)	
	16	1	**8T-4223**	2	WASHER-HARD (13.5X25.5X3-MM THK)	
M	17	1	**8T-4244**	1	NUT (M12X1.75-THD)	
	18	1	**9X-8257**	3	WASHER (17.5X30X3.5-MM THK)	

M-METRIC PART
Y-SEPARATE ILLUSTRATION

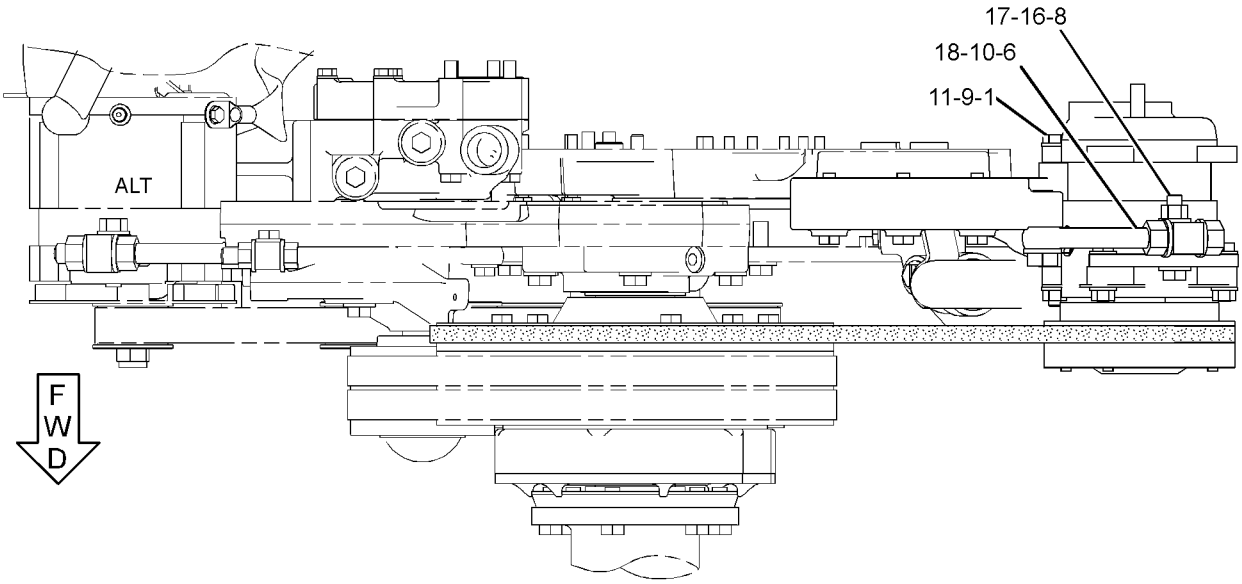

TOP VIEW

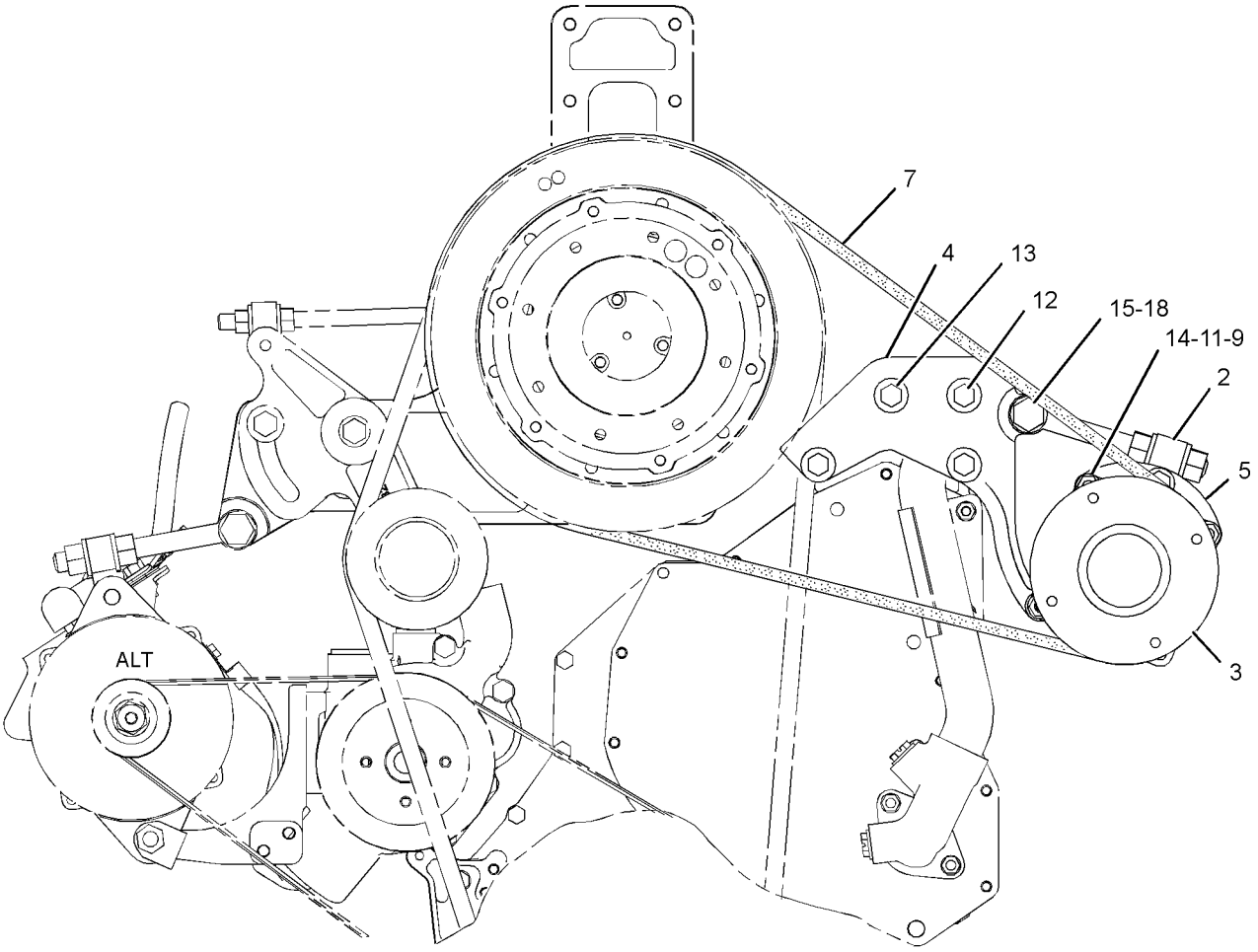

FRONT VIEW

GRAPHIC #1 **<END>** g01209678

OPERATOR STATION

168-8783 CONDENSER & MTG GP-REFRIGERANT

S/N: SMC1-UP; GCT1-UP

PART OF 279-9549 INSTALLATION AR-ENGINE

SMCS-1805 **i02450424**

NOTE	REF NO	GRAPHIC REF	PART NUMBER	QTY	PART NAME 1 2 3 4 5 6 (PRODUCT LEVEL)	SEE PAGE
	1	1	**6N-8744**	4	MOUNT	
	2	1	**110-3844**	2	BRACKET	
	3	1	**252-4915**	1	COIL AS (AIR CONDITIONER)	
C	4	1	**232-7583**	1	BRACKET AS	
C	5	1	**232-7586**	1	BRACKET AS	
M	6	1	**8T-4136**	8	BOLT (M10X1.5X25-MM)	
C	7	1	**7X-0632**	4	WASHER-HARD (11X36X6-MM THK)	
	8	1	**6K-0806**	1	STRAP-CABLE	
M	9	1	**8T-4133**	4	NUT (M10X1.5-THD)	
	10	1	**8T-4121**	8	WASHER-HARD (11X21X2.5-MM THK)	

C-CHANGE FROM PREVIOUS TYPE
M-METRIC PART

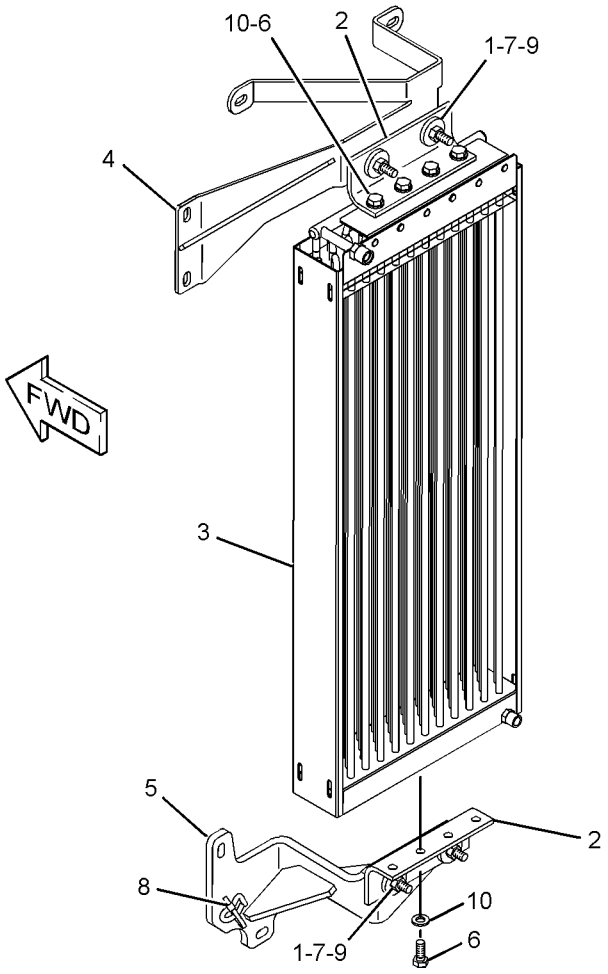

GRAPHIC #1 **<END>** g01206041

OPERATOR STATION

237-1000 CONDENSER & MTG GP-REFRIGERANT—ROPS MOUNTED

S/N: SMC1-UP; GCT1-UP
PART OF 228-7854 AIR CONDITIONER AR
AN ATTACHMENT

SMCS-1805 **i02624263**

NOTE	REF NO	GRAPHIC REF	PART NUMBER	QTY	PART NAME 1 2 3 4 5 6 (PRODUCT LEVEL)	SEE PAGE
	1	1	**8D-0983**	6	MOUNTING AS-VIBRATION ISOLATOR	
	2	1	**8D-7185**	6	WASHER (11.9X38.1X3-MM THK)	
Y	3	1	**103-9527**	1	CONDENSER GP-REFRIGERANT (WITH FANS) (AIR CONDITIONER)	641
	4	1	**109-5498**	1	SCREEN AS	
B	5	1	**170-3399**	2	BRACKET	
	6	1	**172-5989**	2	BRACKET	
	7	1	**263-7805**	1	SUPPORT AS	
	8	1	**277-5801**	1	PLATE AS	
	9	1	**277-5802**	1	PLATE AS	
	10	1	**1M-4543**	2	GROMMET	
M	11	1	**6V-7357**	6	BOLT (M6X1X25-MM)	
M	12	1	**7X-2562**	4	BOLT (M20X2.5X45-MM)	
M	13	1	**7X-2563**	2	BOLT (M20X2.5X60-MM)	
	14	1	**7X-7729**	16	WASHER (11X25X3-MM THK)	
	15	1	**7X-7742**	2	WASHER-PULLEY (20.6X63.5X14-MM THK)	
M	16	1	**8T-4133**	6	NUT (M10X1.5-THD)	
M	17	1	**8T-4137**	2	BOLT (M10X1.5X20-MM)	
M	18	1	**8T-4139**	4	BOLT (M12X1.75X30-MM)	
M	19	1	**8T-6466**	6	BOLT (M10X1.5X60-MM)	
M	20	1	**8T-4194**	3	BOLT (M12X1.75X50-MM)	
	21	1	**8T-4223**	7	WASHER-HARD (13.5X25.5X3-MM THK)	
	22	1	**8T-5439**	4	WASHER-HARD (21.5X45X6-MM THK)	
	23	1	**9X-8256**	6	WASHER (6.6X12X2-MM THK)	
M	24	1	**8T-4136**	2	BOLT (M10X1.5X25-MM)	

B-USE AS REQUIRED
M-METRIC PART
Y-SEPARATE ILLUSTRATION

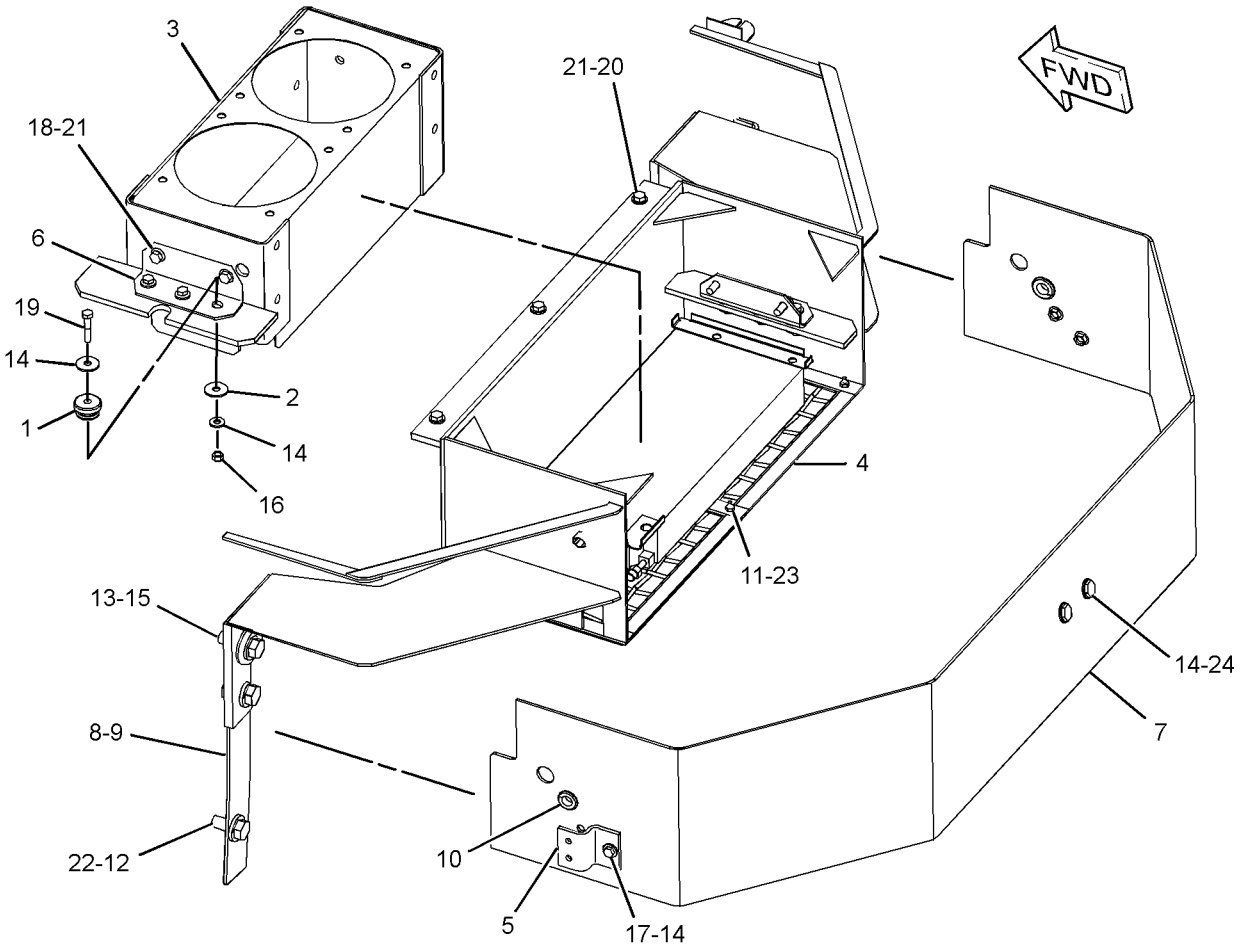

GRAPHIC #1 **<END>** g01285740

OPERATOR STATION

103-9527 CONDENSER GP-REFRIGERANT—WITH FANS

S/N: SMC1-UP; GCT1-UP
PART OF 237-1000 CONDENSER & MTG GP-REFRIGERANT
AN ATTACHMENT

SMCS-1805 **i02801406**

NOTE	REF NO	GRAPHIC REF	PART NUMBER	QTY	PART NAME 1 2 3 4 5 6 (PRODUCT LEVEL)	SEE PAGE
	1	1	**3E-5239**	1	RELAY AS (24-VOLT) (CONDENSER BLOWER MOTOR)	
	2	1	**3S-2093**	7	STRAP-CABLE	
C	3	1	**7K-1181**	2	STRAP-CABLE	
	4	1	**7T-5856**	4	CLAMP	
	5	1	**8C-3756**	1	FILM-IDENTIFICATION (GROUP NUMBER) (REFRIGERANT CONDENSER)	
	6	1	**8P-6363**	1	PLUG	
	7	1	**9X-3452**	2	GUARD AS-FAN	
C	8	1	**124-8490**	1	HARNESS AS-HEATER & AIR COND (A/C)	
		1	**155-2270**	1	KIT-CONNECTING PLUG (2-PIN)	
					(INCLUDES PLUG AS & WEDGE)	
		1	**102-8803**	1	KIT-RECEPTACLE (3-PIN)	
					(INCLUDES RECEPTACLE AS & WEDGE)	
		1	**9X-1054**	1	PLUG AS-CONNECTOR (4-PIN)	
	9	1	**142-8620**	2	FAN AS-CONDENSER (4 BLADE)	
J	10	1	**174-1495**	2	MOTOR GP-ELECTRIC (CONDENSER BLOWER)	
					(EACH INCLUDES)	
		1	**3E-3365**	1	WEDGE-RECEPTACLE LOCK (2-PIN)	
		1	**9W-0852**	2	PIN-CONNECTOR (14-GA)	
		1	**102-8802**	1	KIT-RECEPTACLE (2-PIN)	
					(INCLUDES WEDGE & RECEPTACLE AS)	
C	11	1	**203-2070**	8	MOUNT	
C	12	1	**204-9530**	4	TUBE	
C	13	1	**204-9531**	1	COIL-CONDENSER	
C	14	1	**204-9532**	1	CASE AS	
M		1	**8T-3490**	12	NUT-WELD (M10X1.5-THD)	
		1	**9G-9151**	2	CLIP	
		1	**7T-1099**	4	LINK	
M		1	**8T-3597**	12	NUT-WELD (M12X1.75-THD)	
C	15	1	**4P-8134**	2	CLIP	
M	16	1	**5C-2890**	1	NUT (M6X1-THD)	
	17	1	**5P-1075**	8	WASHER-HARD (10.2X22.5X3-MM THK)	
	18	1	**5P-8441**	1	GROMMET	
	19	1	**7X-0578**	4	WASHER-HARD (10.2X32X2.5-MM THK)	
C	20	1	**8T-4121**	4	WASHER-HARD (11X21X2.5-MM THK)	
M	21	1	**8T-4133**	4	NUT (M10X1.5-THD)	
M	22	1	**8T-4137**	8	BOLT (M10X1.5X20-MM)	
M	23	1	**8T-4192**	12	BOLT (M12X1.75X25-MM)	
	24	1	**8T-4205**	1	WASHER-HARD (7.2X14.5X2-MM THK)	
	25	1	**8T-4223**	12	WASHER-HARD (13.5X25.5X3-MM THK)	
CM	26	1	**8T-6685**	4	BOLT (M10X1.5X110-MM)	
	27	1	**9X-7373**	1	GROMMET	
BD	28	1	**5P-5924**		SEAL	
BCD	29	1	**5P-5672**		SEAL	
BD	30	1	**5P-5908**		SEAL	

B-USE AS REQUIRED
C-CHANGE FROM PREVIOUS TYPE
D-ORDER BY THE METER
J-REPAIR KIT(S) MARKED J AVAILABLE FOR PART MARKED J
M-METRIC PART

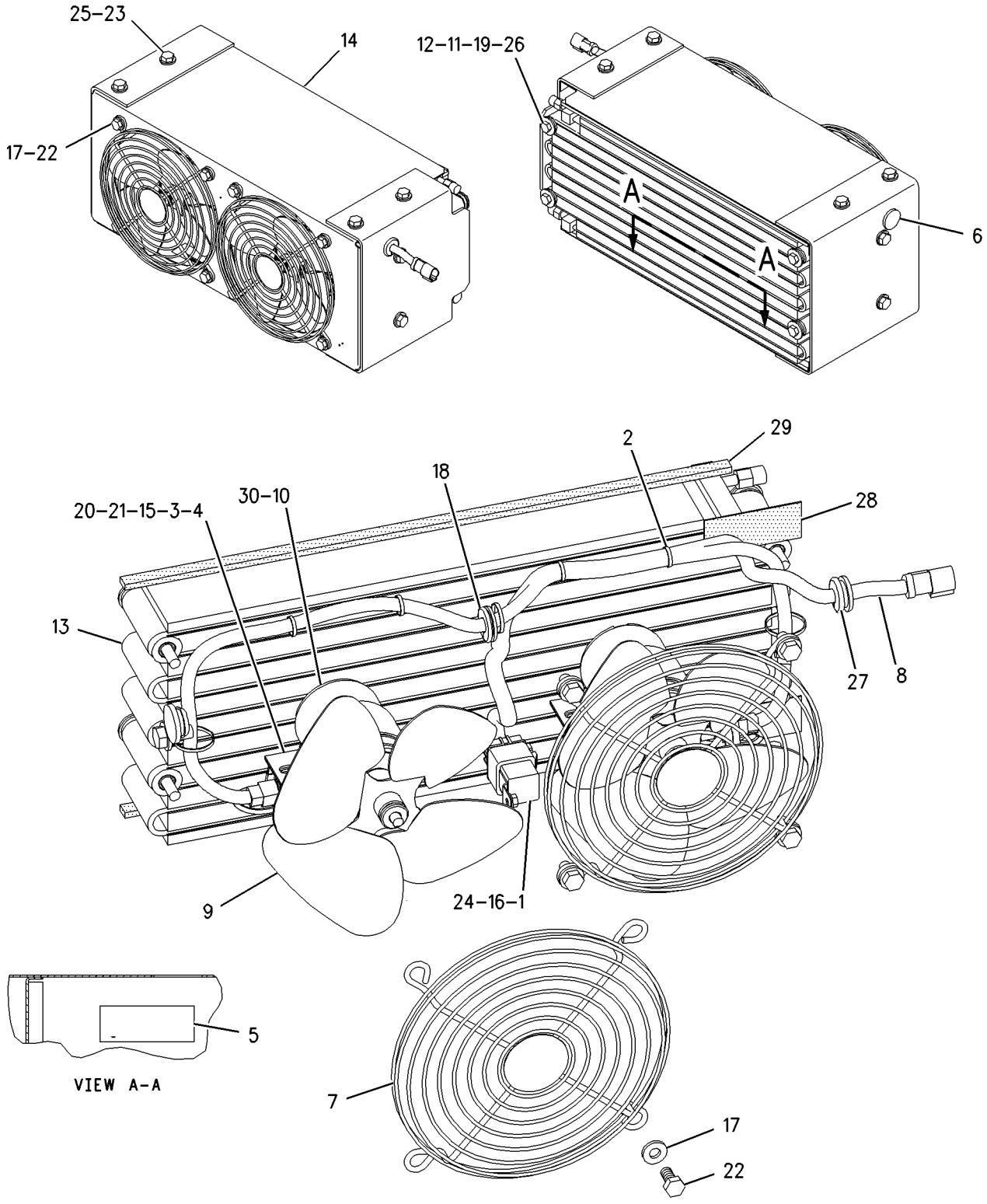

(COVER AND MTG HARDWARE REMOVED)

GRAPHIC #1 **<END>** g00938782

OPERATOR STATION

239-2385 CONTROL & MTG GP-JOYSTICK–GRADE CONTROL

S/N: SMC1-UP; GCT1-UP

PART OF 277-8760, 277-8761 CONTROL AR-HYDRAULIC IMPLEMENT

AN ATTACHMENT

SMCS-5063, 5705 **i02759260**

NOTE	REF NO	GRAPHIC REF	PART NUMBER	QTY	PART NAME 1 2 3 4 5 6 (PRODUCT LEVEL)	SEE PAGE
	1	1	**160-4702**	1	PLATE	
M	2	1	**172-5291**	3	SCREW (M10X1.5X30-MM)	
	3	1	**238-7793**	1	PLATE AS	
	4	1	**238-8270**	1	GASKET	
	5	1	**239-2247**	1	PLATE AS	
Y	6	1	**240-8613**	1	CONTROL GP-JOYSTICK (BULLDOZER)	650
	7	1	**242-5200**	1	GASKET	
M	8	1	**111-4627**	4	SCREW-MACHINE (M6X1X30-MM)	
M	9	1	**166-3777**	4	SCREW-BUTTON HEAD (M6X1X28-MM)	
	10	1	**7X-7729**	3	WASHER (11X25X3-MM THK)	
	11	1	**8T-4205**	4	WASHER-HARD (7.2X14.5X2-MM THK)	
	12	1	**9X-6381**	4	WASHER (6.5X12.5X1.6-MM THK)	

M-METRIC PART
Y-SEPARATE ILLUSTRATION

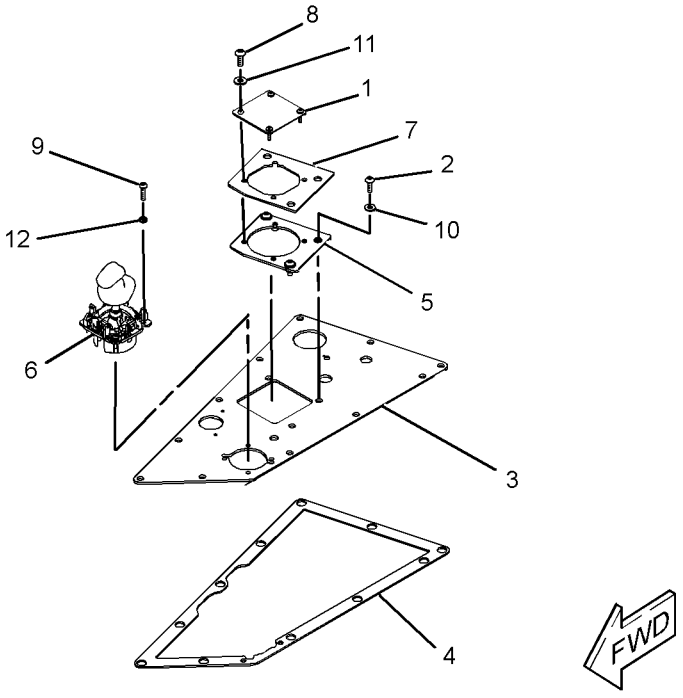

GRAPHIC #1 **<END>** g01357799

OPERATOR STATION

224-2793 CONTROL & MTG GP-PEDAL–GOVERNOR, BRAKE

S/N: SMC1-UP; GCT1-UP

PART OF 269-2046 POWER TRAIN AR

SMCS-5462 **i02438134**

NOTE	REF NO	GRAPHIC REF	PART NUMBER	QTY	PART NAME 1 2 3 4 5 6 (PRODUCT LEVEL)	SEE PAGE
	1	1	**171-7077**	2	ROD-THREADED	
Y	2	1	*224-2791*	1	PEDAL GP-GOVERNOR & BRAKE	708
	3	1	**8T-4121**	4	WASHER-HARD (11X21X2.5-MM THK)	
M	4	1	**8T-4133**	2	NUT (M10X1.5-THD)	
M	5	1	**8T-4195**	2	BOLT (M10X1.5X30-MM)	

M-METRIC PART
Y-SEPARATE ILLUSTRATION

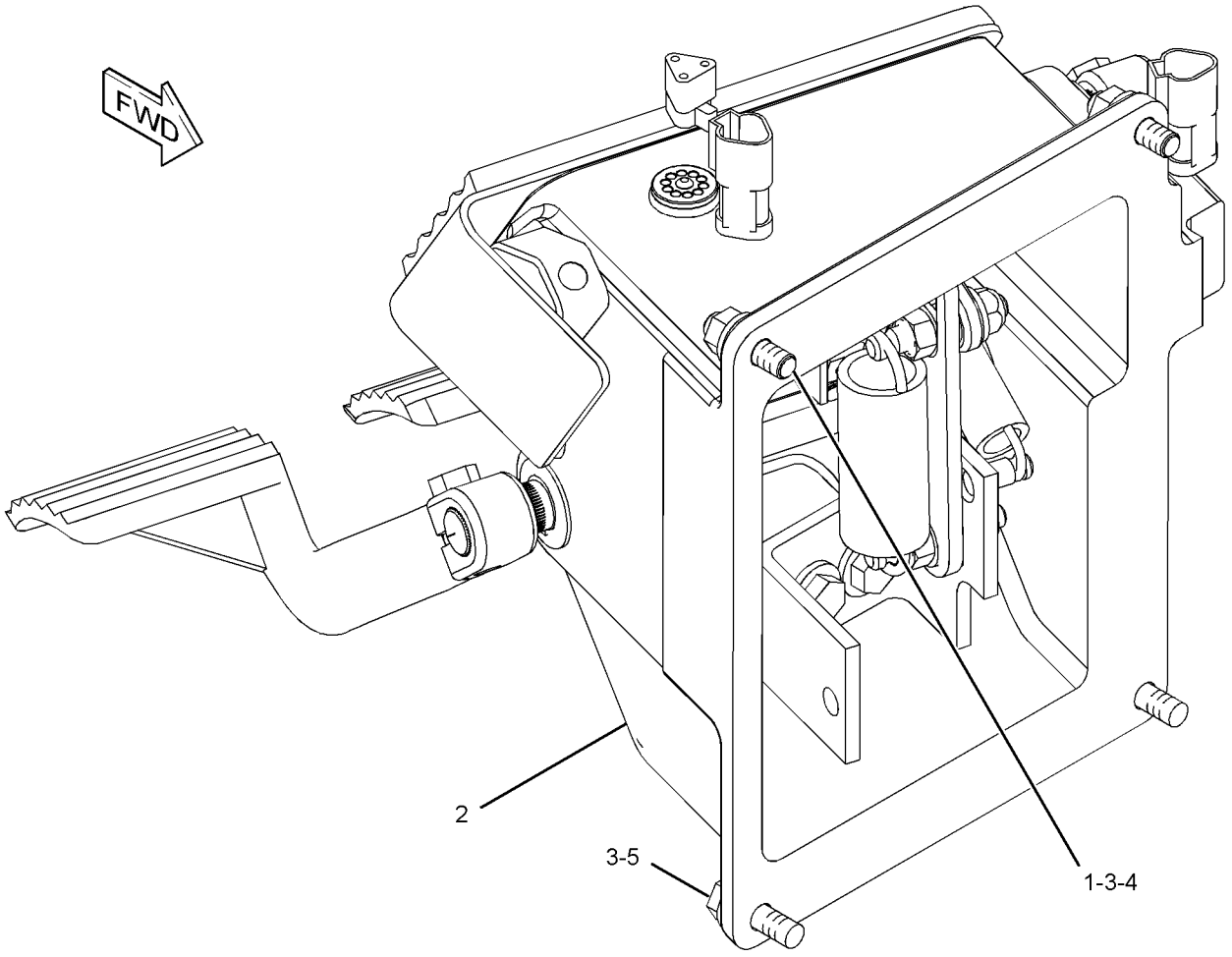

GRAPHIC #1 **<END>** g01208192

161-3615 CONTROL GP-HANDLE–BULLDOZER

S/N: SMC1-UP; GCT1-UP

PART OF 222-1150 CONTROL GP-PILOT OPERATED HYD

SMCS-5063, 5705 **i01811592**

NOTE	REF NO	GRAPHIC REF	PART NUMBER	QTY	PART NAME 1 2 3 4 5 6 (PRODUCT LEVEL)	SEE PAGE
Y	1	1	**188-1079**	1	CONTROL GP-HANDLE (DOZER)	646
	2	1	**4B-9808**	2	SETSCREW (1/4-20X0.5-IN)	

Y-SEPARATE ILLUSTRATION

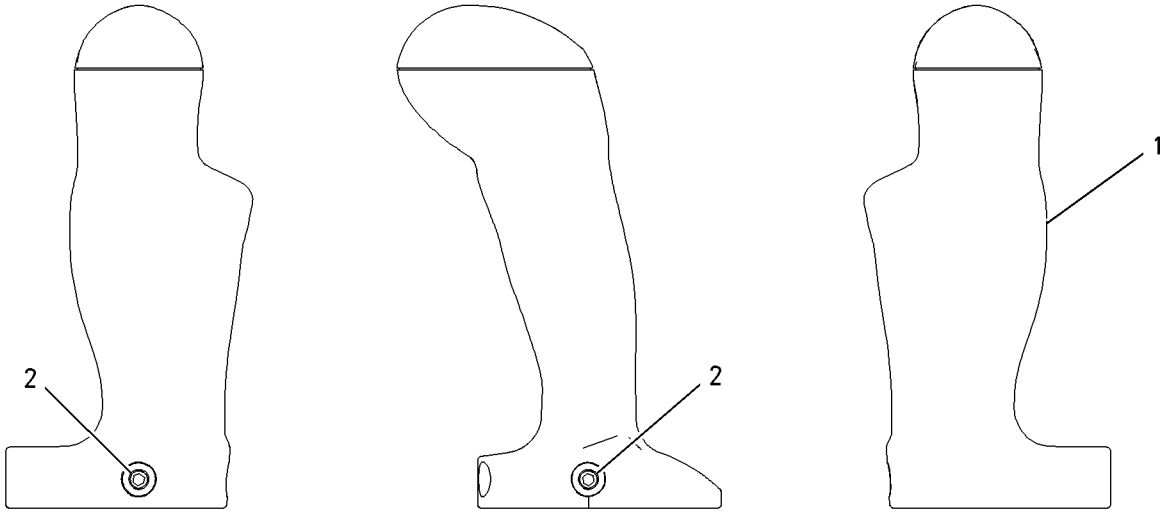

GRAPHIC #1 **<END>** g00763645

OPERATOR STATION

188-1079 CONTROL GP-HANDLE–BULLDOZER

S/N: SMC1-UP; GCT1-UP

PART OF 161-3615 CONTROL GP-HANDLE

SMCS-5063, 5705 **i01439692**

NOTE	REF NO	GRAPHIC REF	PART NUMBER	QTY	PART NAME 1 2 3 4 5 6 (PRODUCT LEVEL)	SEE PAGE
	1	1	**164-6963**	1	HANDGRIP AS	

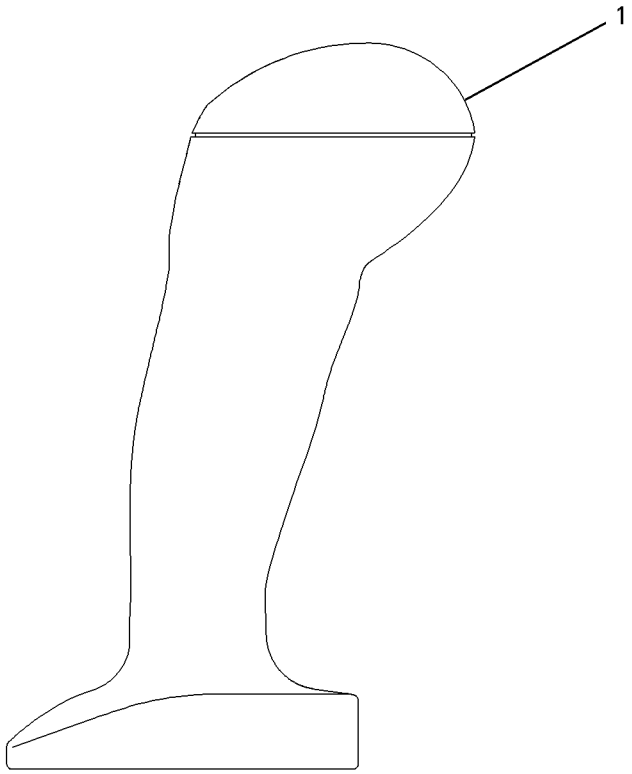

GRAPHIC #1 **<END>** g00721034

OPERATOR STATION

224-9450 CONTROL GP-HANDLE—STEERING, TRANSMISSION

S/N: SMC1-UP; GCT1-UP

PART OF 272-0016 CONTROL GP-STEERING & TMSN

SMCS-5063, 5705 **i02449878**

NOTE	REF NO	GRAPHIC REF	PART NUMBER	QTY	PART NAME 1 2 3 4 5 6 (PRODUCT LEVEL)	SEE PAGE
	1	1	**1H-3340**	1	BOLT (M10X24X25.4-MM)	
	2	1	**102-8805**	1	KIT-RECEPTACLE (6-PIN)	
					(INCLUDES RECEPTACLE AS & WEDGE)	
	3	1	**6V-3545**	1	BEARING-ROLLER	
	4	1	**7X-4771**	1	SEAL-V-RING	
	5	1	**186-3735**	6	PIN-CONNECTOR (16-GA TO 18-GA)	
	6	1	**9W-1464**	2	SCREW (1/4-20X1-IN)	
	7	1	**110-7882**	1	SWITCH AS-LIMIT (PARKING BRAKE)	
		1	**5S-4246**	3	LOCKWASHER	
		1	**6V-8818**	3	SCREW-MACHINE (4-40-THD)	
	8	1	**111-8642**	1	COVER-FRONT	
	9	1	**111-8950**	1	ANGLE	
	10	1	**112-4740**	1	HANDLE	
	11	1	**112-4757**	1	COVER	
	12	1	**131-0447**	2	NUT (15/32-32-THD)	
	13	1	**132-7419**	1	SWITCH AS-PUSH BUTTON (DOWNSHIFT)	
		1	**144-0331**	1	CAP-PUSH BUTTON	
	14	1	**132-7450**	1	SWITCH AS-PUSH BUTTON (UPSHIFT)	
		1	**144-0331**	1	CAP-PUSH BUTTON	
	15	1	**151-5803**	1	SHAFT AS-DETENT	
	16	1	**151-9275**	1	KIT-RECEPTACLE (6-PIN)	
					(INCLUDES RECEPTACLE AS & WEDGE)	
	17	1	**158-2734**	2	SPRING	
	18	1	**158-2735**	1	BASE	
	19	1	**226-9423**	2	SPRING	
	20	1	**229-5354**	1	WIRE AS	
	21	1	**103-6262**	2	SCREW-MACHINE (4-40X0.63-IN)	
	22	1	**110-2028**	2	SCREW-PAN HEAD (10-14X0.75-IN)	
	23	1	**219-2391**	1	SENSOR GP-POSITION (DIRECTION CONTROL)	
		1	**9G-3695**	1	PLUG (GROMMET SEALING)	
		1	**186-3735**	3	PIN-CONNECTOR (16-GA TO 18-GA)	
		1	**102-8804**	1	KIT-RECEPTACLE (4-PIN)	
					(INCLUDES RECEPTACLE AS & WEDGE)	
	24	1	**5H-9899**	1	RING-RETAINING (EXTERNAL)	
	25	1	**6V-1232**	2	SCREW-BUTTON HEAD (8-32X9.52-MM)	
M	26	1	**6V-2314**	2	BOLT (M5X0.8X35-MM)	
	27	1	**7X-0584**	1	WASHER-HARD (13.5X20.5X2-MM THK)	
M	28	1	**7Y-5226**	2	NUT (M5X0.8-THD)	
	29	1	**8M-2771**	1	CLIP	
	30	1	**8T-4205**	2	WASHER-HARD (7.2X14.5X2-MM THK)	
	31	1	**9X-8256**	3	WASHER (6.6X12X2-MM THK)	
D	32	1	**6V-2689**		TUBE-HEAT SHRINK (6.35-MM DIA) (0.3-M)	

D-ORDER BY THE METER
M-METRIC PART

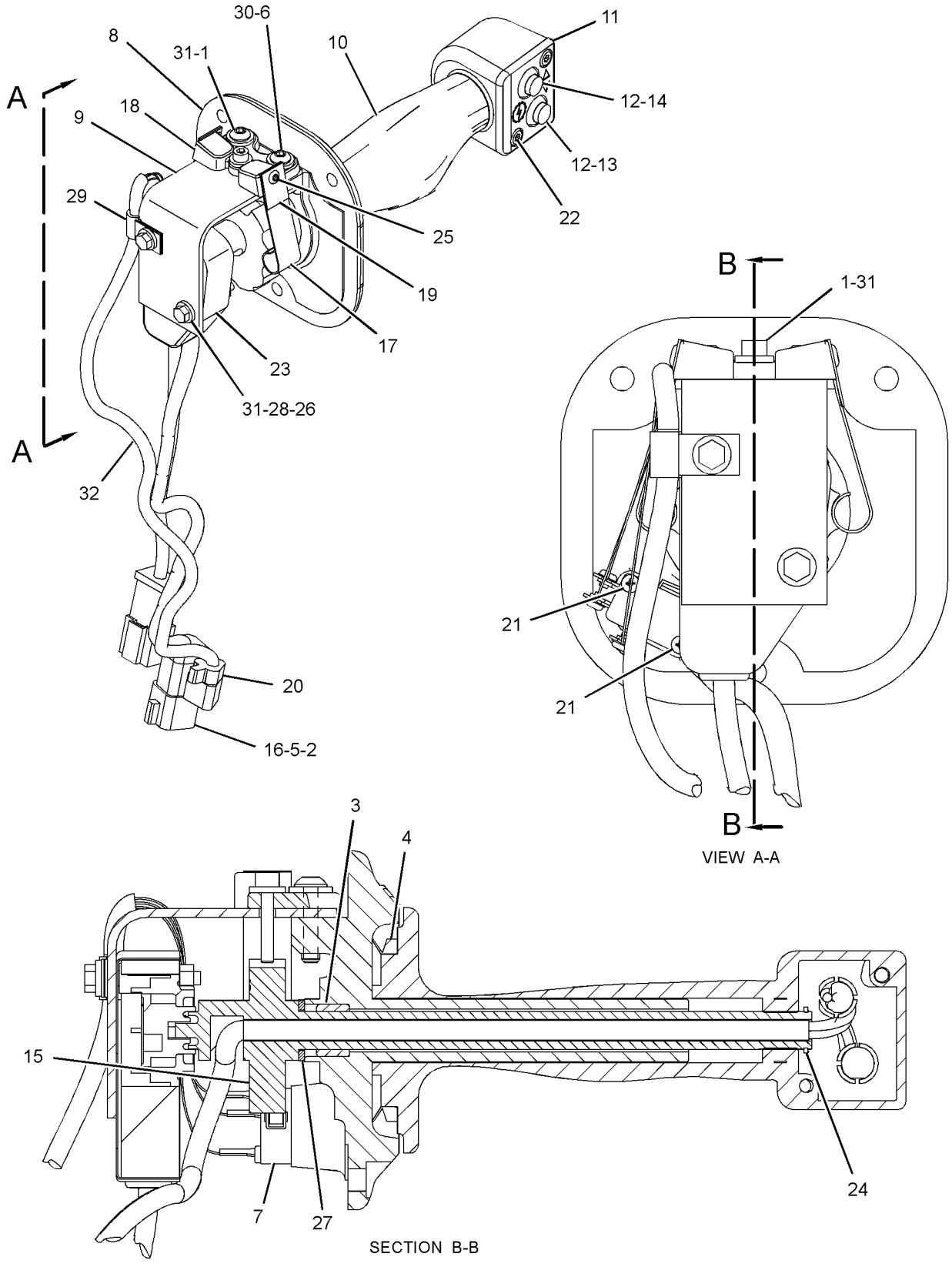

GRAPHIC #1 **<END>** g01210999

268-3293 CONTROL GP-HANDLE–BULLDOZER

S/N: SMC1-UP; GCT1-UP
PART OF 240-8613 CONTROL GP-JOYSTICK
AN ATTACHMENT

SMCS-5063, 5705 **i02455331**

NOTE	REF NO	GRAPHIC REF	PART NUMBER	QTY	PART NAME 1 2 3 4 5 6 (PRODUCT LEVEL)	SEE PAGE
	1	1	**1S-9593**	1	STRAP-CABLE	
E	2	1	**218-7136**		SLEEVE (63-CM)	
	3	1	**8T-8737**	5	PLUG-SEAL	
	4	1	**186-3735**	7	PIN-CONNECTOR (16-GA TO 18-GA)	
	5	1	**174-3091**	1	KIT-RECEPTACLE (12-PIN)	
					(INCLUDES RECEPTACLE AS & WEDGE)	
	6	1	**144-0331**	3	CAP-PUSH BUTTON	

E-ORDER BY THE CENTIMETER

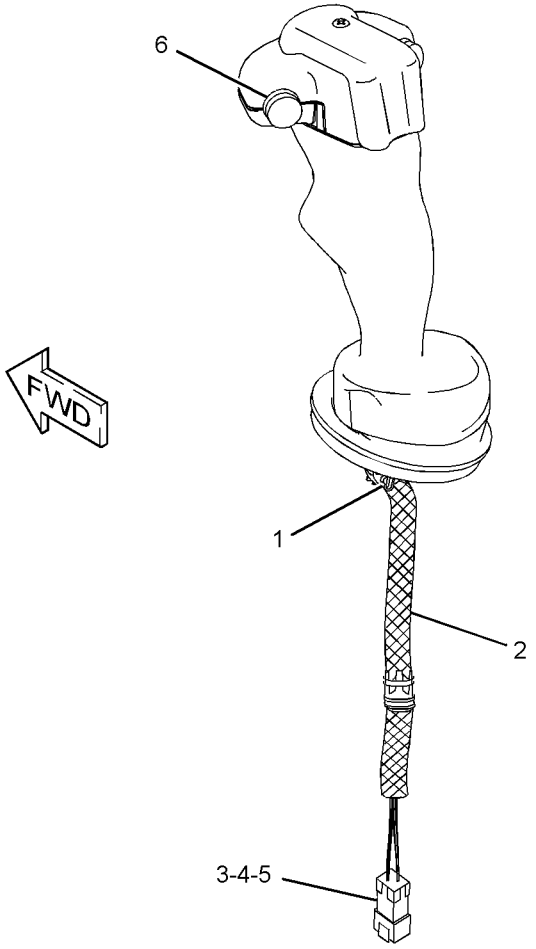

GRAPHIC #1 **<END>** g01212883

OPERATOR STATION

240-8613 CONTROL GP-JOYSTICK–BULLDOZER

S/N: SMC1-UP; GCT1-UP

PART OF 239-2385 CONTROL & MTG GP-JOYSTICK

AN ATTACHMENT

SMCS-5705 **i02647897**

NOTE	REF NO	GRAPHIC REF	PART NUMBER	QTY	PART NAME 1 2 3 4 5 6 (PRODUCT LEVEL)	SEE PAGE
Y	1	1	**268-3293**	1	CONTROL GP-HANDLE (BULLDOZER)	649
	2	1	**271-0475**	1	SENSOR AS-POSITION (JOYSTICK) (BULLDOZER CONTROL HANDLE)	
		1	**102-8805**	1	KIT-RECEPTACLE (6-PIN)	
					(INCLUDES RECEPTACLE AS & WEDGE)	
		1	**186-3735**	6	PIN-CONNECTOR (16-GA TO 18-GA)	
	3	1	**285-0150**	1	BOOT	
	4	1	**4B-9808**	2	SETSCREW (1/4-20X0.5-IN)	
	5	1	**174-3091**	1	KIT-RECEPTACLE (12-PIN)	
	6	1	**102-8805**	1	KIT-RECEPTACLE (6-PIN)	
					(EACH INCLUDES RECEPTACLE AS & WEDGE)	
	7	1	**186-3735**	17	PIN-CONNECTOR (16-GA TO 18-GA)	
	8	1	**8T-8737**	1	PLUG-SEAL	

Y-SEPARATE ILLUSTRATION

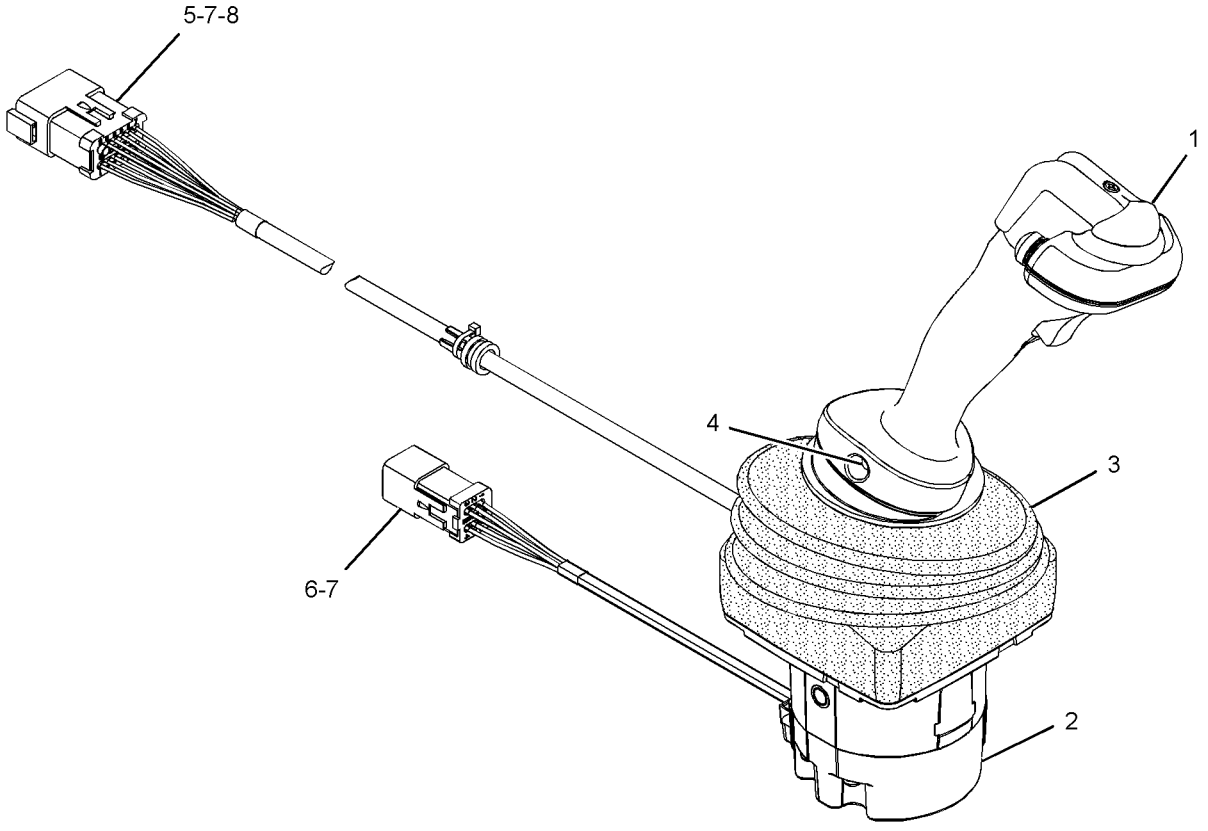

GRAPHIC #1 **<END>** g01212819

OPERATOR STATION

107-3881 CONTROL GP-PARKING BRAKE

S/N: SMC1-UP; GCT1-UP

PART OF 272-0016 CONTROL GP-STEERING & TMSN

SMCS-4269, 4284 **i02748407**

NOTE	REF NO	GRAPHIC REF	PART NUMBER	QTY	PART NAME 1 2 3 4 5 6 (PRODUCT LEVEL)	SEE PAGE
	1	1	**1N-5724**	2	BOLT (6-32X0.5-IN)	
	2	1	**2N-3680**	3	SCREW-HEAD (1/4-20X0.75-IN)	
	3	1	**2R-5001**	1	DOWEL	
	4	1	**3B-4605**	2	PIN-COTTER	
	5	1	**7H-9737**	1	PIN-COTTER	
	6	1	**8T-5410**	2	SEAL-LIP TYPE	
	7	1	**9S-1305**	2	PIN-CLEVIS	
	8	1	**107-3888**	1	BRACKET AS	
		1	**9F-6445**	2	NUT-WELD (1/4-24-THD)	
	9	1	**112-2660**	1	COVER	
	10	1	**118-0639**	1	SWITCH AS-ROCKER (PARKING BRAKE)	
		1	**102-8801**	1	KIT-RECEPTACLE (12-PIN)	
					(INCLUDES RECEPTACLE AS & WEDGE)	
		1	**9X-3401**	12	PIN-CONNECTOR (16-GA TO 18-GA)	
	11	1	**127-1596**	1	SHAFT (69-MM LG)	
	12	1	**127-1597**	1	SHAFT	
	13	1	**167-7751**	1	PLATE AS	
	14	1	**208-9647**	1	KNOB (PARKING BRAKE)	
	15	1	**4V-6981**	2	SCREW-BUTTON HEAD (1/4-20X0.75-IN)	
M	16	1	**5C-2890**	1	NUT (M6X1-THD)	
	17	1	**6V-8185**	3	NUT (1/4-20-THD)	
	18	1	**8T-0328**	2	WASHER-HARD (5.5X10X1-MM THK)	
	19	1	**8T-4205**	1	WASHER-HARD (7.2X14.5X2-MM THK)	
E	20	1	**8C-5063**		CONDUIT-FLEXIBLE (30-CM)	

E-ORDER BY THE CENTIMETER
M-METRIC PART

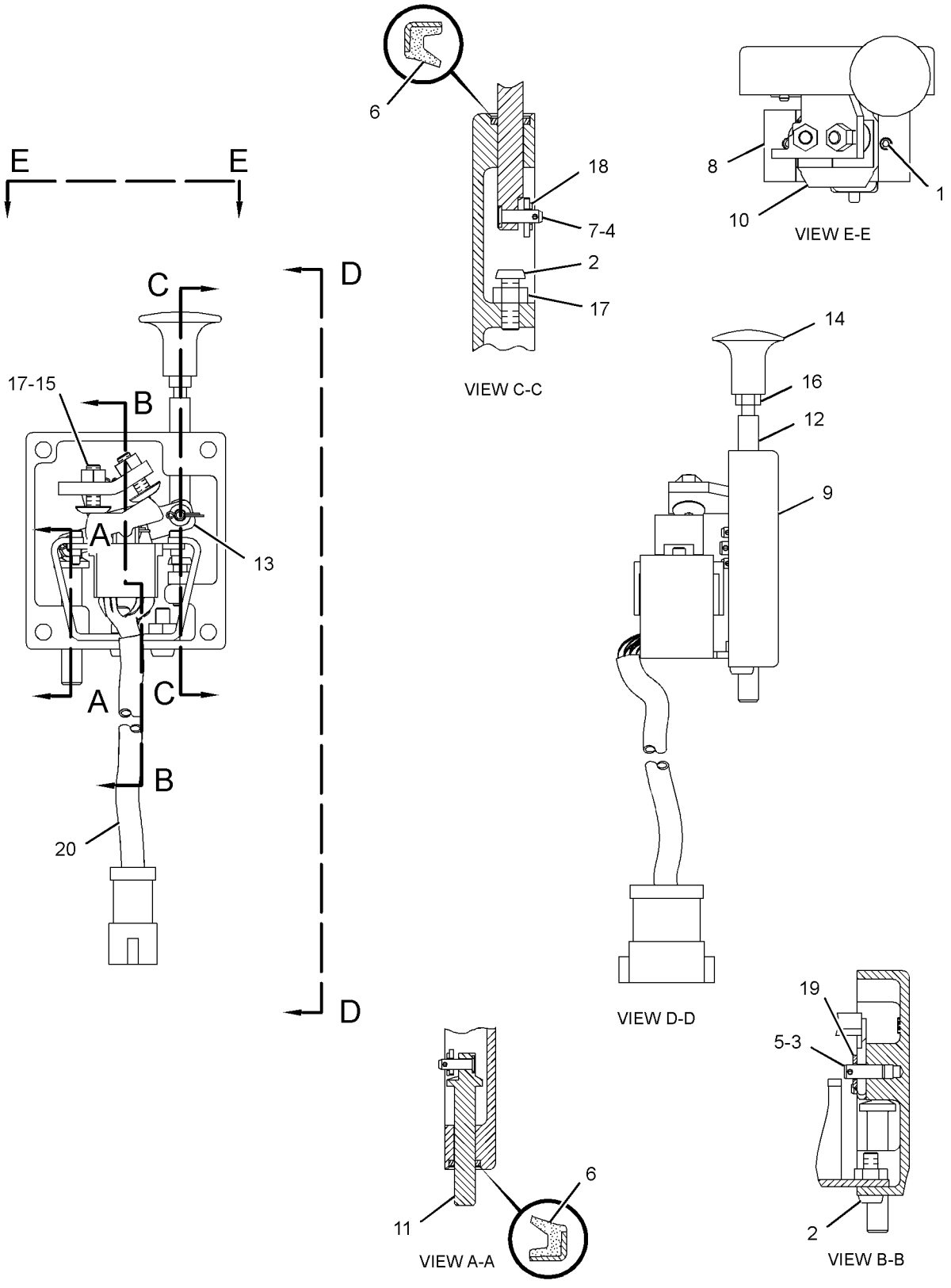

GRAPHIC #1 **<END>** g01385609

222-1150 CONTROL GP-PILOT OPERATED HYD

S/N: SMC1-UP; GCT1-UP

PART OF 269-2050 HYDRAULIC AR-2 VALVE

SMCS-5059, 5063, 5705 **i02568013**

NOTE	REF NO	GRAPHIC REF	PART NUMBER	QTY	PART NAME 1 2 3 4 5 6 (PRODUCT LEVEL)	SEE PAGE
	1	1	**160-4702**	1	PLATE	
Y	2	1	*161-3615*	1	CONTROL GP-HANDLE (BULLDOZER)	645
Y	3	1	**200-0189**	1	VALVE GP-PILOT (BULLDOZER CONTROL)	558
	4	1	**223-3313**	1	PLATE AS	
	5	1	**225-4134**	1	GASKET	
	6	1	**225-4135**	1	GASKET	
	7	1	**5P-1075**	4	WASHER-HARD (10.2X22.5X3-MM THK)	
M	8	1	**6V-7357**	6	BOLT (M6X1X25-MM)	
M	9	1	**8T-4195**	4	BOLT (M10X1.5X30-MM)	
	10	1	**9X-8256**	6	WASHER (6.6X12X2-MM THK)	

M-METRIC PART
Y-SEPARATE ILLUSTRATION

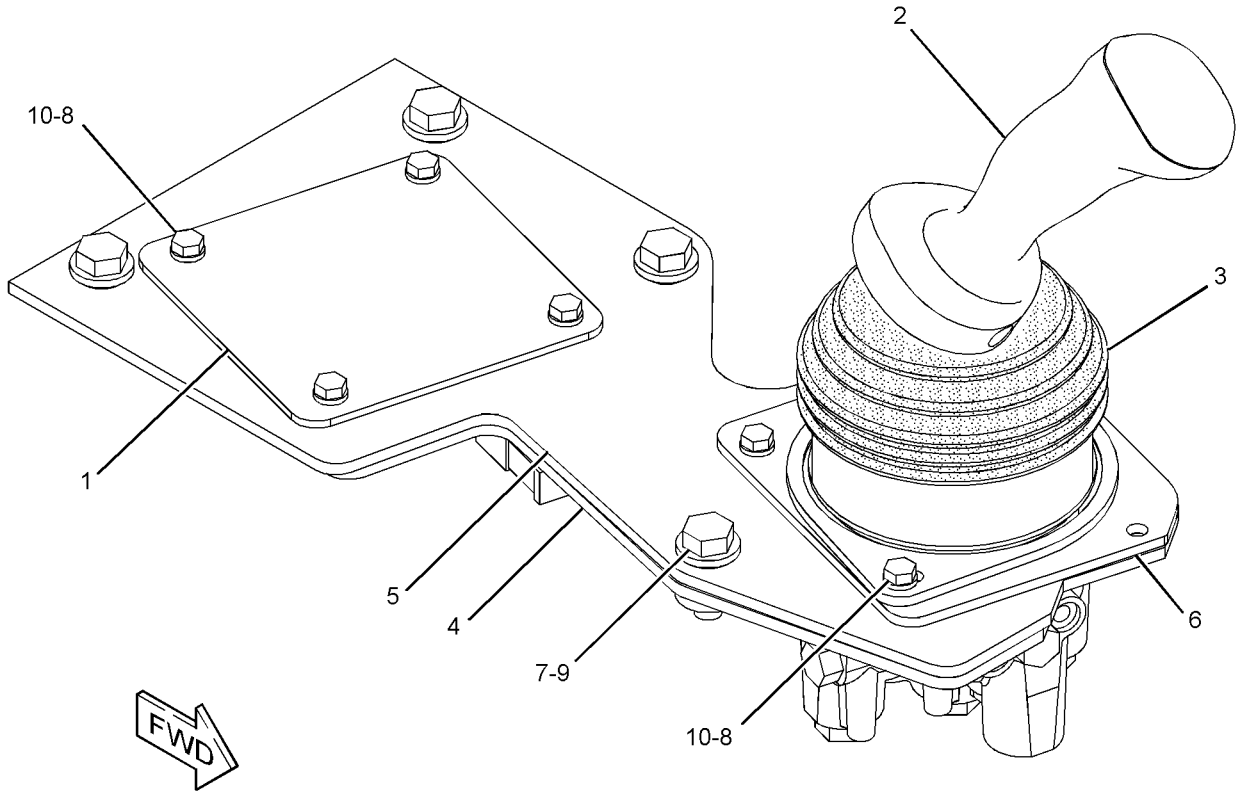

GRAPHIC #1 **<END>** g01298553

OPERATOR STATION

272-0016 CONTROL GP-STEERING & TMSN

S/N: SMC1-UP; GCT1-UP

PART OF 269-2046 POWER TRAIN AR

SMCS-4122 **i02752152**

NOTE	REF NO	GRAPHIC REF	PART NUMBER	QTY	PART NAME 1 2 3 4 5 6 (PRODUCT LEVEL)	SEE PAGE
	1	1	**2L-6267**	1	LOCKNUT (3/8-24-THD)	
	2	1	**8E-3131**	1	ROLLER-CAM	
	3	1	**8E-8242**	1	SPACER (71.4X88.9X11.5-MM THK)	
Y	4	1	**9T-8693**	1	VALVE GP-PILOT (STEERING, TMSN CONTROL)	552
Y	5	1	*107-3881*	1	CONTROL GP-PARKING BRAKE	651
	6	1	**112-4440**	1	HOUSING	
	7	1	**127-1598**	1	GASKET	
	8	1	**127-1599**	1	GASKET	
	9	1	**136-6093**	1	SEAL	
	10	1	*149-3137*	1	LOCK GP-CYLINDER	
T		1	**5P-9000**	1	LOCK AS-CYLINDER	
		1	**226-0336**	1	CAM	
	11	1	**160-1437**	1	HOUSING-BEARING	
	12	1	**161-3963**	1	SUPPORT AS	
	13	1	**161-3964**	1	COVER AS	
	14	1	**161-6041**	1	HOUSING	
	15	1	**201-9624**	1	HOUSING-MAIN	
Y	16	1	**224-9450**	1	CONTROL GP-HANDLE (STEERING, TRANSMISSION)	647
	17	1	**226-9673**	1	HARNESS AS-WIRING	
		1	**102-8803**	1	KIT-RECEPTACLE (3-PIN)	
		1	**166-5229**	1	KIT-RECEPTACLE (12-PIN)	
					(EACH RECEPTACLE KIT INCLUDES RECEPTACLE AS & WEDGE)	
		1	**134-2540**	1	RECEPTACLE AS (3-PIN)	
		1	**155-2255**	2	KIT-CONNECTING PLUG (12-PIN)	
		1	**155-2271**	1	KIT-CONNECTING PLUG (4-PIN)	
		1	**174-0503**	1	KIT-CONNECTING PLUG (3-PIN)	
		1	**155-2274**	2	KIT-CONNECTING PLUG (6-PIN)	
					(EACH PLUG KIT INCLUDES PLUG AS, WEDGE, & INTERFACE SEAL)	
		1	**147-1445**	1	PLUG AS-CONNECTOR (70-PIN)	
		1	**147-1446**	1	PLUG AS-CONNECTOR (70-PIN)	
		1	**160-7689**	1	PLUG AS-CONNECTOR (70-PIN)	
	18	1	**299-3923**	1	PLATE AS	
	19	1	**2N-3680**	3	SCREW-HEAD (1/4-20X0.75-IN)	
	20	1	**4H-9105**	1	SEAL-O-RING	
	21	1	**4M-5282**	4	BOLT (1/4-20X1.5-IN)	
	22	1	**5L-2029**	2	BALL BEARING	
	23	1	**5P-1075**	2	WASHER-HARD (10.2X22.5X3-MM THK)	
	24	1	**6V-8801**	2	NUT (3/8-16-THD)	
	25	1	**7K-1181**	10	STRAP-CABLE	
	26	1	**7V-0008**	1	BLOCK	
	27	1	**7X-0290**	2	BOLT (3/8-16X3.5-IN)	
	28	1	**7X-7729**	7	WASHER (11X25X3-MM THK)	
	29	1	**8T-2502**	3	BOLT (3/8-16X1.125-IN)	
M	30	1	**8T-4137**	7	BOLT (M10X1.5X20-MM)	
	31	1	**8T-4896**	7	WASHER-HARD (10.2X18.5X2.5-MM THK)	
	32	1	**8T-7008**	2	BOLT (3/8-16X3-IN)	
D	33	1	**6V-5817**		CONDUIT-FLEXIBLE (0.1-M)	

D-ORDER BY THE METER
M-METRIC PART
T-REQUIRES CORPORATE KEY
Y-SEPARATE ILLUSTRATION

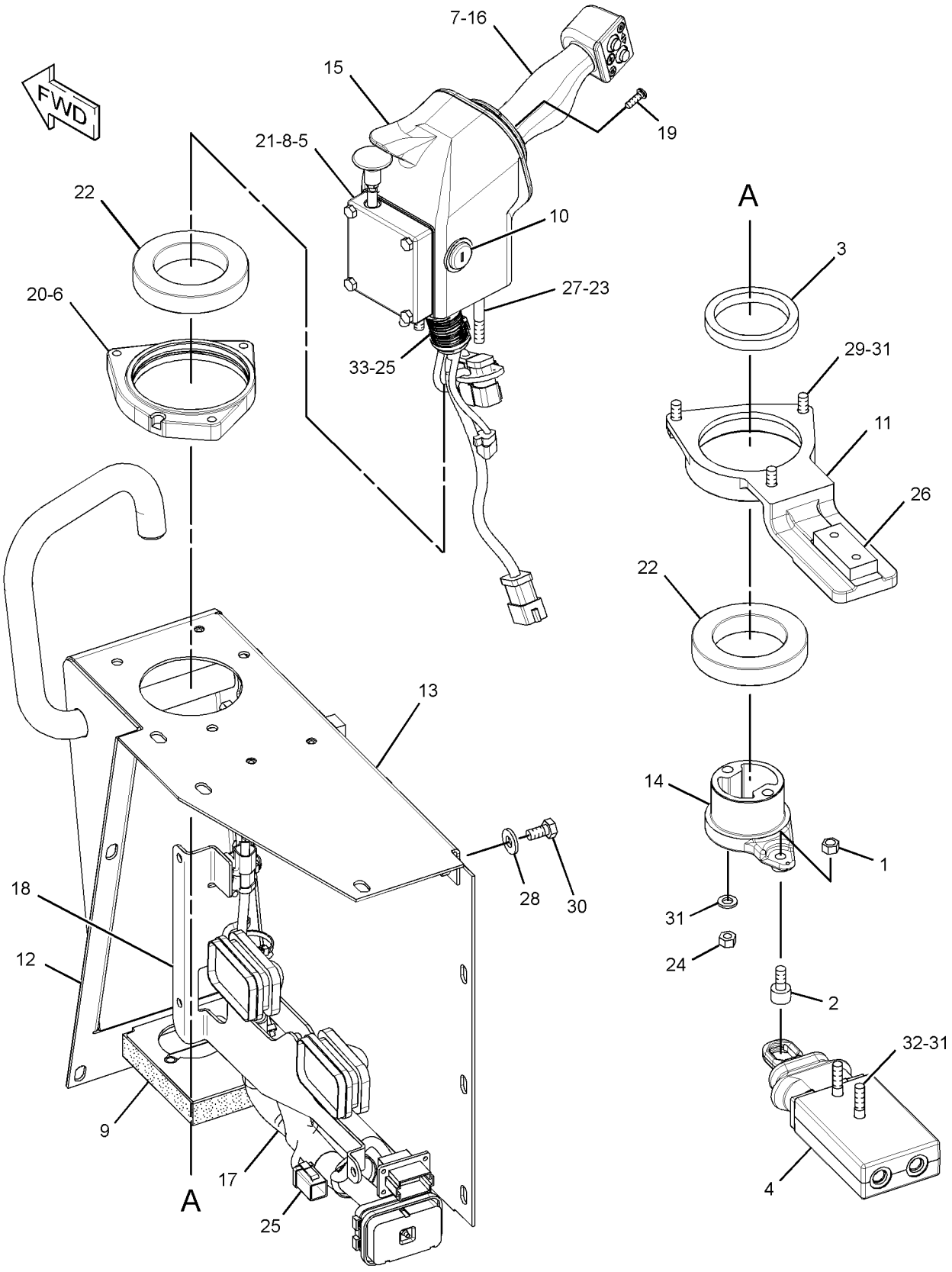

GRAPHIC #1 **<END>** g01359745

OPERATOR STATION

192-3016 COVER GP-CONSOLE—INSTRUMENT PANEL—OPEN ROPS

S/N: SMC1-UP; GCT1-UP
PART OF 220-2810 MOUNTING GP-PLATFORM
AN ATTACHMENT

SMCS-5258 **i01809884**

NOTE	REF NO	GRAPHIC REF	PART NUMBER	QTY	PART NAME 1 2 3 4 5 6 (PRODUCT LEVEL)	SEE PAGE
	1	1	**169-9639**	1	COVER AS	
	2	1	**192-3017**	2	ROLLER	
	3	1	**192-3018**	1	ROD	
	4	1	**193-7377**	2	PANEL	
	5	1	**5P-7177**	2	RETAINER	
BD	6	1	**6V-1359**		SEAL	
BD	7	1	**6V-2803**		SEAL	

B-USE AS REQUIRED
D-ORDER BY THE METER

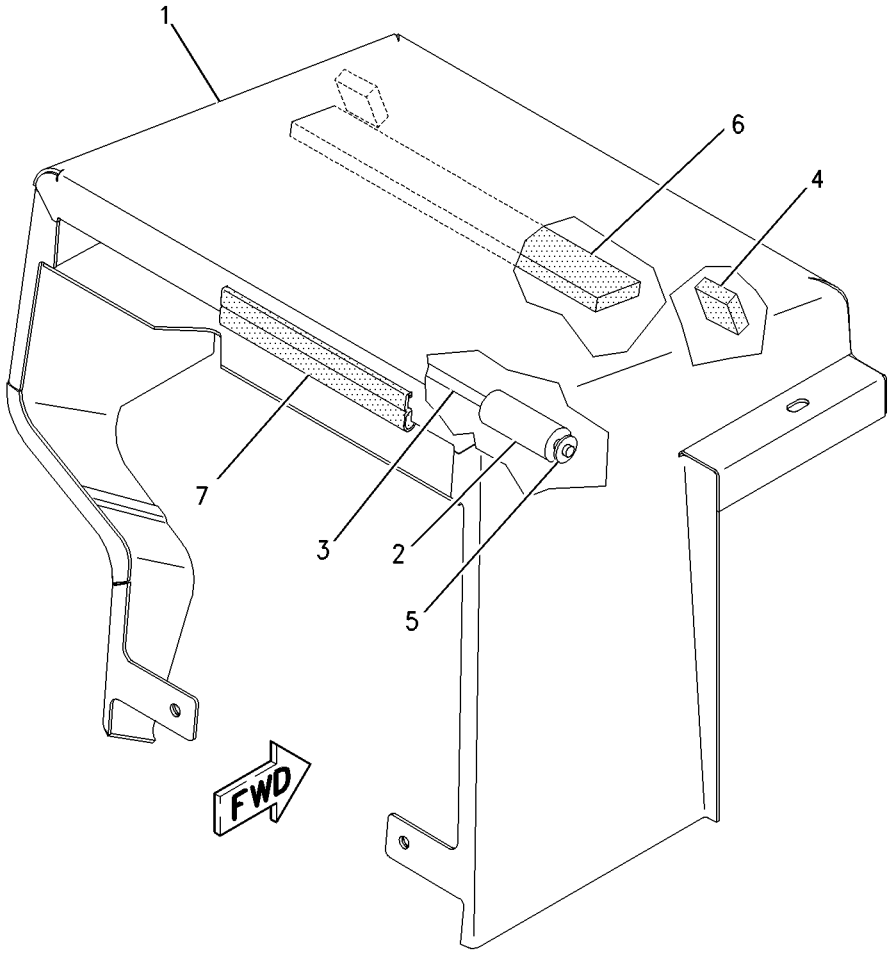

GRAPHIC #1 **<END>** g00764398

OPERATOR STATION

242-8397 COVER GP-CONSOLE–CAB

S/N: SMC1-UP; GCT1-UP
PART OF 272-3477, 289-9878 CAB AR
ALSO AN ATTACHMENT

SMCS-5258 **i02433641**

NOTE	REF NO	GRAPHIC REF	PART NUMBER	QTY	PART NAME 1 2 3 4 5 6 (PRODUCT LEVEL)	SEE PAGE
	1	1	**6Y-0206**	4	RETAINER	
	2	1	**7G-4824**	2	STRAP	
	3	1	**8E-7791**	2	STRAP	
	4	1	**8Y-6388**	3	LOUVER AS-VENT	
	5	1	**154-5629**	1	ASHTRAY AS	
	6	1	**156-7410**	1	COVER AS	
	7	1	**159-7943**	1	PANEL-ACOUSTICAL (LH)	
	8	1	**159-7946**	1	PANEL-ACOUSTICAL	
	9	1	**159-7948**	1	FLOOR MAT	
	10	1	**159-7949**	1	FLOOR MAT	
	11	1	**159-8108**	1	COVER	
	12	1	**159-8109**	1	COVER	
	13	1	**161-4024**	2	BOOT	
	14	1	**170-5849**	1	SHROUD AS	
	15	1	**211-0220**	1	COVER AS	
	16	1	**241-7913**	1	COVER AS-ACCESS	
	17	1	**241-7919**	1	PLATE	
	18	1	**242-8403**	1	PANEL AS-CONSOLE	
	19	1	**242-8404**	1	PANEL	
	20	1	**243-1171**	1	PANEL-ACOUSTICAL	
	21	1	**111-5147**	6	SCREW-MACHINE (6-32X0.625-IN)	
	22	1	**198-9706**	4	SCREW-TRUSS HEAD (M5X0.8X16-MM)	
	23	1	**5P-4116**	4	WASHER-HARD (8.8X20.5X2-MM THK)	
	24	1	**7D-6922**	6	LOCKNUT (6-32-THD)	
M	25	1	**8T-4189**	4	BOLT (M8X1.25X20-MM)	
	26	1	**9N-0869**	3	WASHER-HARD (8.8X25.5X2-MM THK)	
	27	1	**9X-2038**	5	WASHER (7X19X2-MM THK)	
M	28	1	**9X-2043**	9	SCREW-TRUSS HEAD (M6X1X14-MM)	
M	29	1	**9X-2045**	8	SCREW-TRUSS HEAD (M6X1X20-MM)	
E	30	1	**124-3243**		SEAL (56-CM)	

E-ORDER BY THE CENTIMETER
M-METRIC PART

242-8397 **COVER GP-CONSOLE** *(contd.)* **i02433641**

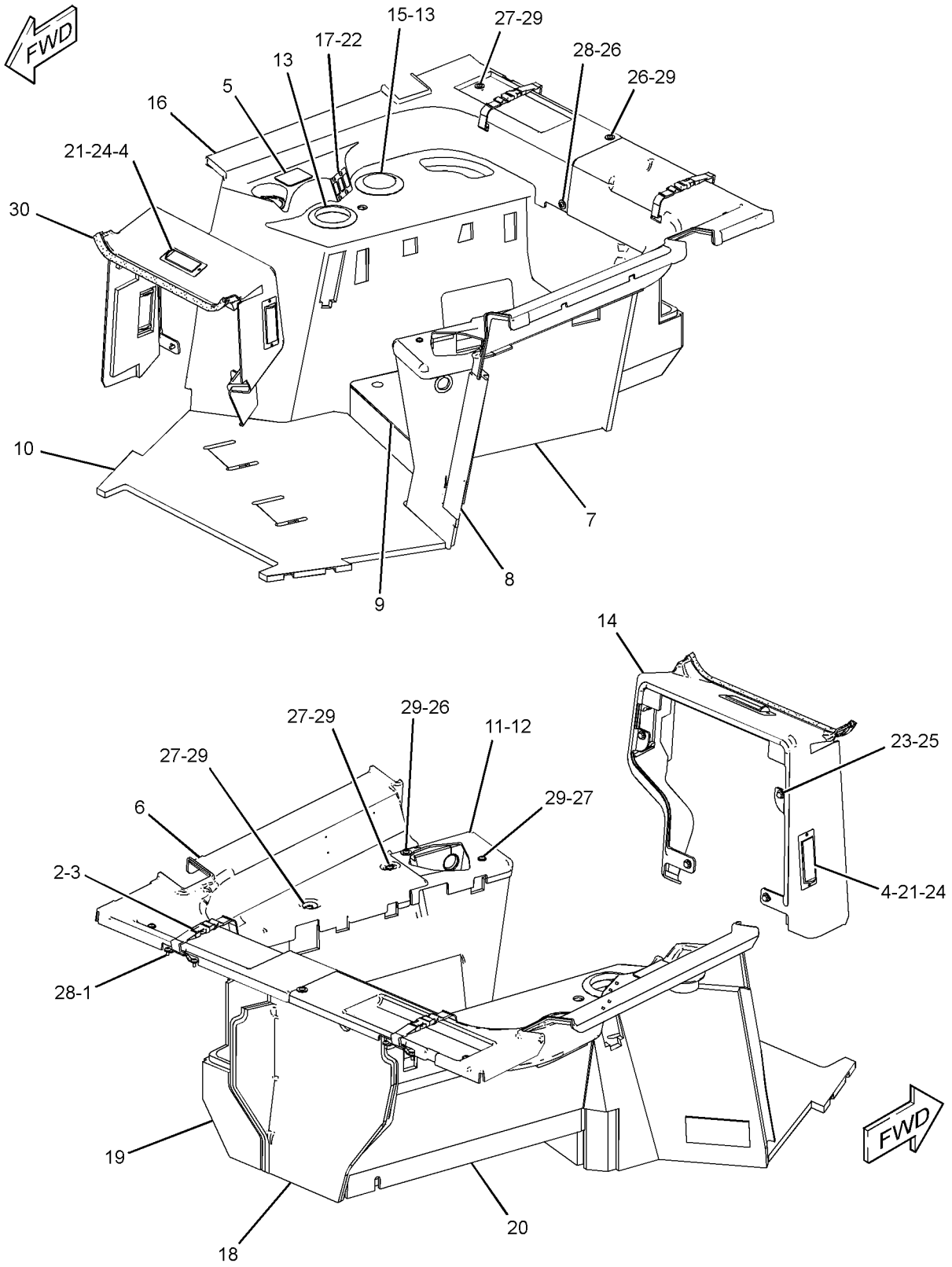

GRAPHIC #1 **<END>** g01209561

286-0134 DISPLAY GP-MONITOR—CD700

S/N: SMC1-UP; GCT1-UP

PART OF 290-5571, 292-0280 GRADE CONTROL AR-SATELLITE

SMCS-7490 **i02768374**

NOTE	PART NUMBER	QTY	PART NAME 1 2 3 4 5 6 (PRODUCT LEVEL)	SEE PAGE
	194-8031	1	ADAPTER (COMPACT)	
M	**8T-4171**	4	BOLT (M6X1X12-MM)	
	292-0311	1	CASE-CARRYING	
	291-3845	1	COMPACT DISC	
	283-4426	1	CARD AS-MEMORY (FLASH)	
	244-1716	1	DISPLAY GP-MONITOR (CD700)	
M	**8T-0285**	6	SCREW-MACHINE (M4X0.7X12-MM)	
	9X-8256	4	WASHER (6.6X12X2-MM THK)	
	096-6166	6	WASHER-HARD (4.5X9X1-MM THK)	

M-METRIC PART

<END>

292-0309 DISPLAY GP-MONITOR—CD610

S/N: SMC1-UP; GCT1-UP

PART OF 292-0293, 292-0312 GRADE CONTROL AR-LASER

SMCS-7490 **i02649296**

NOTE	PART NUMBER	QTY	PART NAME 1 2 3 4 5 6 (PRODUCT LEVEL)	SEE PAGE
M	**7X-2619**	6	BOLT (M6X1X10-MM)	
	292-0311	1	CASE-CARRYING	
	283-9530	1	DISPLAY GP-MONITOR (CD610)	
	290-6112	1	SOFTWARE GP-MONITOR	
	8T-4205	6	WASHER-HARD (7.2X14.5X2-MM THK)	

M-METRIC PART

<END>

OPERATOR STATION

108-1335 HANDHOLD GP

S/N: SMC1-UP; GCT1-UP
PART OF 158-7694 CAB AR
ALSO AN ATTACHMENT

SMCS-7256 **i02227444**

NOTE	REF NO	GRAPHIC REF	PART NUMBER	QTY	PART NAME 1 2 3 4 5 6 (PRODUCT LEVEL)	SEE PAGE
	1	1	**9W-5343**	2	HANDHOLD	

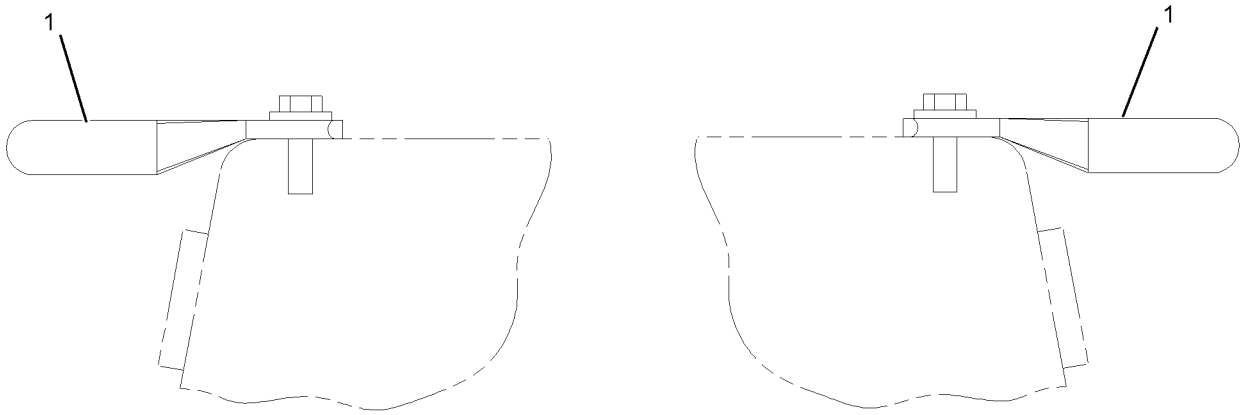

REAR VIEW

GRAPHIC #1 **<END>** g01107680

OPERATOR STATION

209-5113 HANDHOLD GP—HEAVY-DUTY

S/N: SMC1-UP; GCT1-UP
CANNOT BE USED WITH DISPOSAL AR
AN ATTACHMENT

SMCS-7256 **i02762422**

NOTE	REF NO	GRAPHIC REF	PART NUMBER	QTY	PART NAME 1 2 3 4 5 6 (PRODUCT LEVEL)	SEE PAGE
	1	1	**1Q-2423**	2	HANDLE AS	
	2	1	**288-2507**	1	HANDLE AS (LH)	
	3	1	**288-2508**	1	HANDLE AS (RH)	
M	4	1	**8T-4184**	4	BOLT (M12X1.75X45-MM)	
	5	1	**8T-4223**	8	WASHER-HARD (13.5X25.5X3-MM THK)	
M	6	1	**8T-4183**	4	BOLT (M12X1.75X40-MM)	

M-METRIC PART

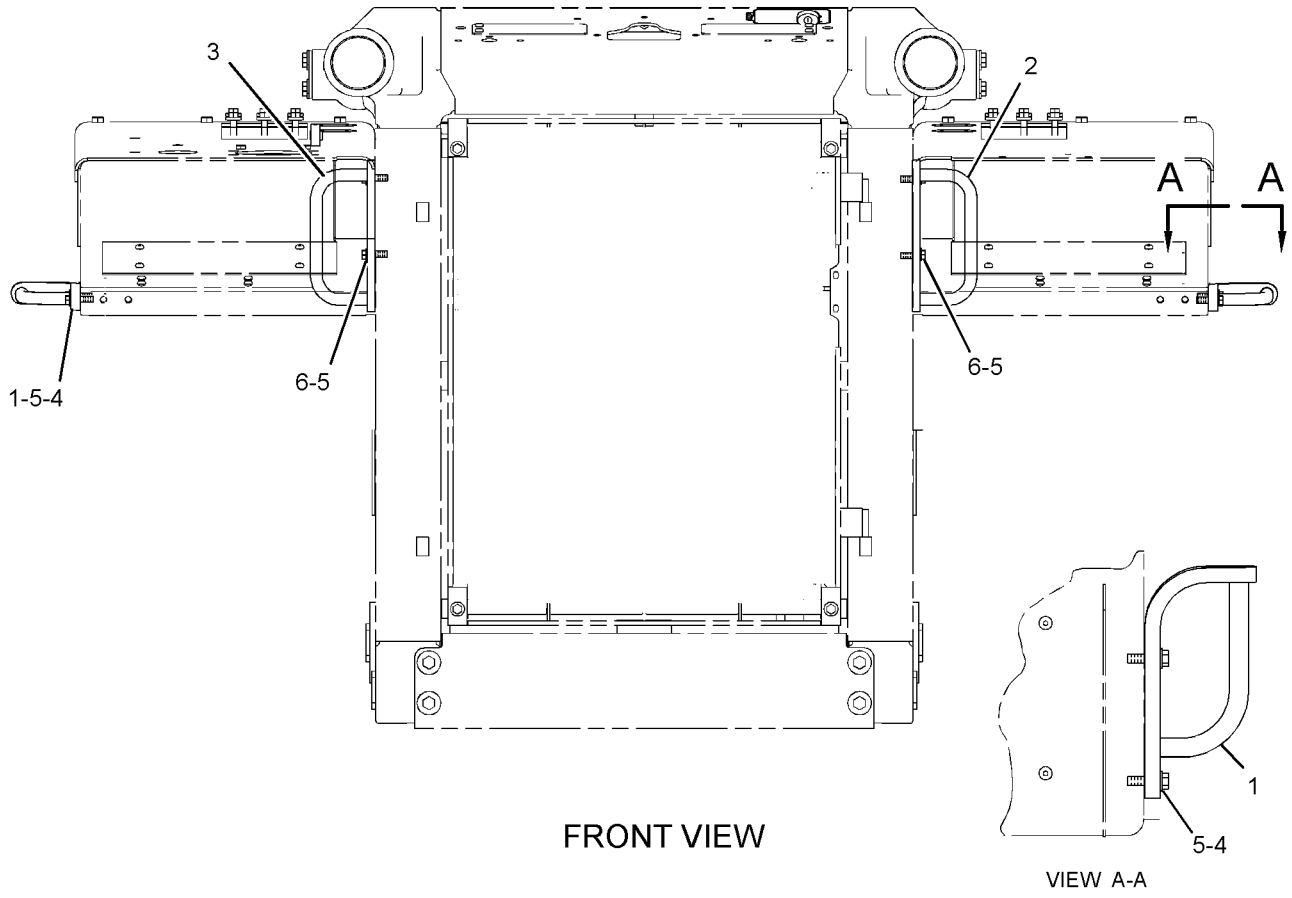

FRONT VIEW

VIEW A-A

GRAPHIC #1 **<END>** g01390231

OPERATOR STATION

279-2590 HEATER GP-CAB

S/N: SMC1-UP; GCT1-UP
PART OF 272-3477, 289-9878 CAB AR
ALSO AN ATTACHMENT

SMCS-7304 **i02433642**

NOTE	REF NO	GRAPHIC REF	PART NUMBER	QTY	PART NAME 1 2 3 4 5 6 (PRODUCT LEVEL)	SEE PAGE
	1	1	**5D-1026**	2	CLAMP-HOSE	
	2	1	**6T-5617**	1	PLATE	
	3	1	**7T-6299**	1	GROMMET	
	4	1	**9X-2185**	4	SCREW (8-15X11.11-MM)	
	5	1	**109-5761**	1	COIL AS-HEATER	
	6	1	**134-9602**	1	VALVE AS-WATER	
	6A	1	**3E-1841**	1	LEVER	
	6B	1	**6V-6717**	1	SCREW-WASHER HEAD (8-32X9.52-MM)	
	6C	1	**8Y-5737**	1	CLAMP	
	6D	1	**037-4426**	1	RETAINER	
	6E	1	**102-0341**	1	CLIP	
	7	1	**141-4123**	1	PLATE	
	8	1	**8T-4121**	2	WASHER-HARD (11X21X2.5-MM THK)	
M	9	1	**8T-4137**	2	BOLT (M10X1.5X20-MM)	
E	10	1	**5P-0767**		HOSE (12-CM)	
D	11	1	**5P-5639**		SEAL (0.25-M EACH)	
D	12	1	**5P-5643**		SEAL (0.4-M EACH)	

D-ORDER BY THE METER
E-ORDER BY THE CENTIMETER
M-METRIC PART

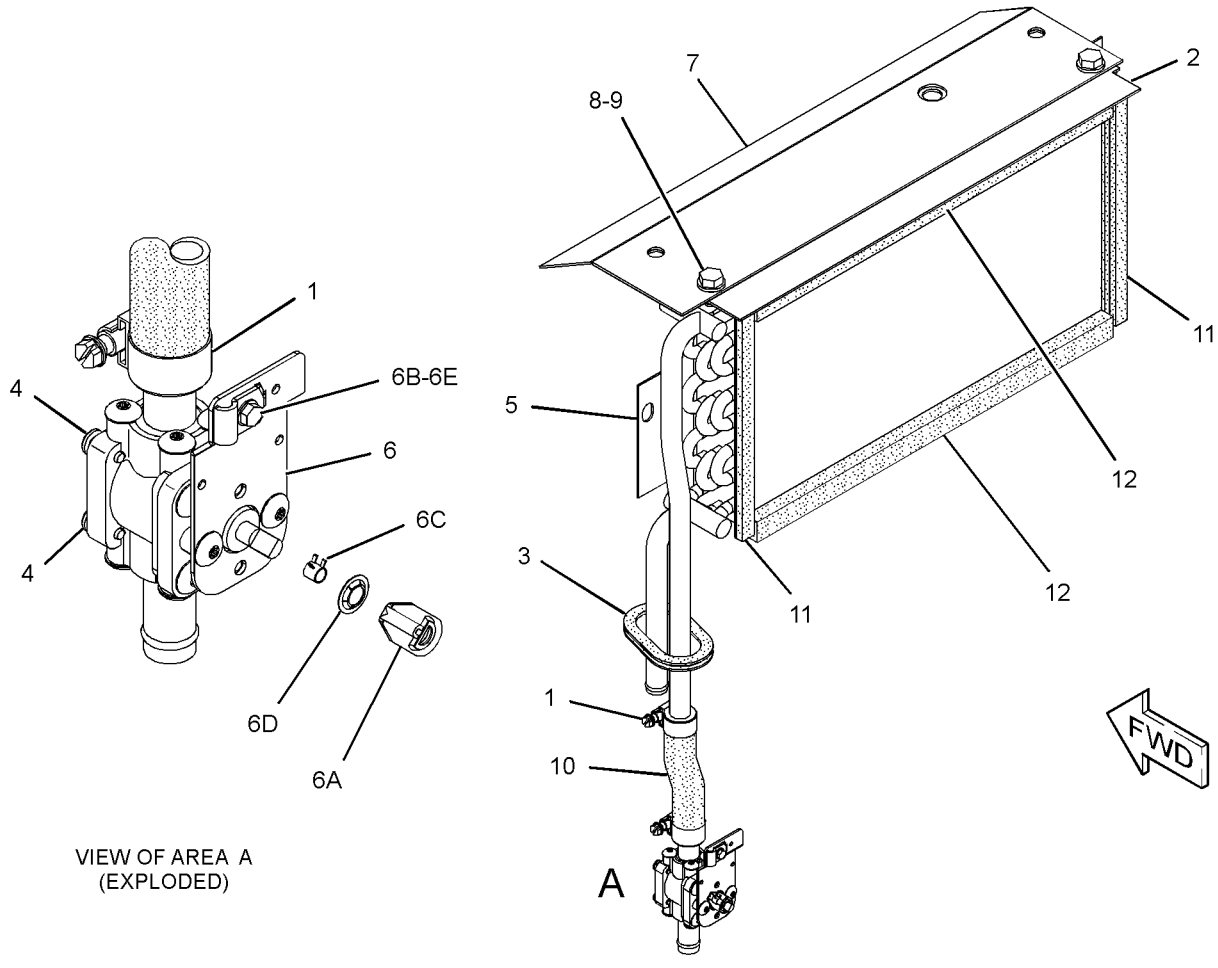

GRAPHIC #1 **<END>** g01220273

OPERATOR STATION

174-2231 HOUSING GP-SEAT SUSPENSION

S/N: SMC1-UP; GCT1-UP
PART OF 160-7165 SUSPENSION GP-SEAT
ALSO AN ATTACHMENT

SMCS-7321 **i01883773**

NOTE	REF NO	GRAPHIC REF	PART NUMBER	QTY	PART NAME 1 2 3 4 5 6 (PRODUCT LEVEL)	SEE PAGE
	1	1	**1Y-7927**	1	PIN	
	2	1	**2D-6235**	2	LOCKNUT (1/4-20-THD)	
	3	1	**2M-7819**	4	RING-RETAINING	
	4	1	**3D-2975**	2	RING-RETAINING	
	5	1	**4B-5059**	6	WASHER (15X29.5X2.5-MM THK)	
	6	1	**4N-2927**	2	RACE-THRUST BEARING	
	7	1	**5D-4822**	2	RING-RETAINING	
	8	1	**5P-8445**	4	RING-RETAINING	
	9	1	**5V-0770**	2	BOLT-CARRIAGE (1/4-20X0.74-IN)	
	10	1	**7M-7219**	1	BEARING-THRUST	
	11	1	**7V-5191**	2	SPACER (28X10X7.1-MM THK)	
	12	1	**8L-8413**	2	STRAP-CABLE	
	13	1	**8S-7803**	4	RING-RETAINING	
	14	1	**8Y-6041**	1	ARM AS	
	15	1	**8Y-6045**	1	CAM	
	16	1	**8Y-6046**	1	PIN	
	17	1	**8Y-6047**	2	PIN	
	18	1	**8Y-6060**	2	ROLLER	
	19	1	**8Y-6062**	1	LINK-ACTUATOR	
	20	1	**8Y-6063**	1	LINK-ACTUATOR	
	21	1	**8Y-6064**	2	ROLLER-SLIDER	
	22	1	**8Y-6066**	1	SPRING	
	23	1	**8Y-6067**	1	SPACER (10.54-MM THK)	
	24	1	**8Y-6068**	1	NUT (3/8X16-THD)	
	25	1	**8Y-6069**	1	ADJUSTER AS	
	26	1	**9X-8918**	3	SCREW-FLAT HEAD (8-32X0.5-IN)	
	27	1	**095-0878**	1	PIN-SPRING	
	28	1	**131-4242**	1	BOLT (3/8-16X5.18-IN)	
	29	1	**131-5167**	1	KNOB AS-ADJUSTMENT (SEAT SUSPENSION)	
	30	1	**161-5967**	1	SHAFT	
	31	1	**174-2237**	1	HOUSING AS-UPPER	
JZ	32	1		1	KNOB-HEIGHT (SEAT SUSPENSION)	
JZ	33	1		1	KNOB-HEIGHT (SEAT SUSPENSION)	
LZ	34	1		2	SPRING	
LZ	35	1		2	BUSHING	
VZ	36	1		2	SPRING	
VZ	37	1		2	SPACER	
VZ	38	1		2	BUSHING-GUIDE	
VZ	39	1		2	ROD	
PZ	40	1		1	TAPE-INDICATOR	
PZ	41	1		1	GUIDE	
SZ	42	1		1	PIN	
SZ	43	1		1	FOLLOWER-CAM	
TZ	44	1		1	PIN	
TZ	45	1		1	FOLLOWER-CAM	
UZ	46	1		2	ROLLER AS	
UZ	47	1		1	ROLLER AS	
QZ	48	1		3	BUMPER	
					AVAILABLE REPAIR KIT(S):	
J			**8Y-5945**	1	KIT-SUSPENSION KNOB (HEIGHT ADJUSTMENT) (SUSPENSION SEAT)	
L			**8Y-6859**	1	KIT-SPRING (SUSPENSION SEAT)	
V			**8Y-6860**	1	KIT-SPRING (HEIGHT ADJUSTMENT) (SUSPENSION SEAT)	

174-2231 **HOUSING GP-SEAT SUSPENSION** *(contd.)* **i01883773**

NOTE	REF NO	GRAPHIC REF	PART NUMBER	QTY	PART NAME 1 2 3 4 5 6 (PRODUCT LEVEL)	SEE PAGE
P			**100-3224**	1	KIT-INDICATOR (WEIGHT ADJUSTMENT) (SUSPENSION SEAT)	
Q			**100-5179**	1	KIT-BUMPER (WEIGHT ADJUSTMENT) (SUSPENSION SEAT)	
S			**108-4086**	1	KIT-FOLLOWER (SUSPENSION SEAT)	
T			**108-4087**	1	KIT-FOLLOWER (SUSPENSION SEAT)	
U			**108-4103**	1	KIT-BEARING (SUSPENSION SEAT)	

J-KIT MARKED J INCLUDES PARTS MARKED J
L-KIT MARKED L INCLUDES PARTS MARKED L AND RETAINING RING
P-KIT MARKED P INCLUDES PARTS MARKED P AND CABLE STRAP
Q-KIT MARKED Q INCLUDES PARTS MARKED Q
S-KIT MARKED S INCLUDES PARTS MARKED S
T-KIT MARKED T INCLUDES PARTS MARKED T
U-KIT MARKED U INCLUDES PARTS MARKED U
V-KIT MARKED V INCLUDES PARTS MARKED V
Z-NOT SERVICED SEPARATELY

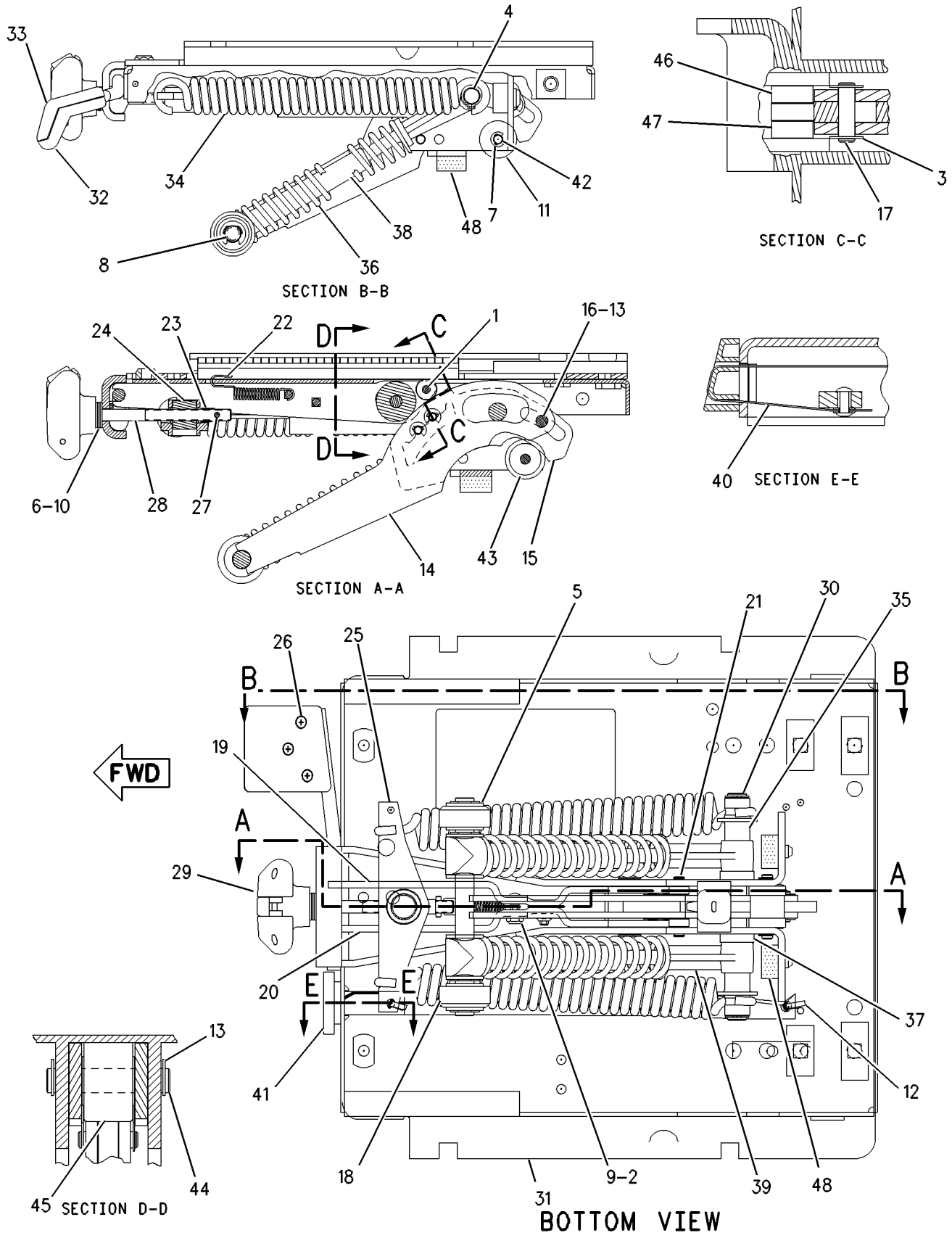

GRAPHIC #1 **<END>** g00608620

OPERATOR STATION

105-9657 INSTALLATION GP-RADIO

S/N: SMC1-UP; GCT1-UP
PART OF 158-7694 CAB AR
ALSO AN ATTACHMENT

SMCS-7338 **i01815841**

NOTE	REF NO	GRAPHIC REF	PART NUMBER	QTY	PART NAME 1 2 3 4 5 6 (PRODUCT LEVEL)	SEE PAGE
	1	1	**108-3138**	1	BRACKET AS	
M		1	**6V-9632**	1	NUT-WELD (M6X1-THD)	
	2	1	**6Y-7385**	1	BRACKET	
M	3	1	**8T-4171**	1	BOLT (M6X1X12-MM)	
	4	1	**9X-8256**	1	WASHER (6.6X12X2-MM THK)	
	5	1	**8E-1118**	1	ANTENNA AS	
	6	1	**9U-8263**	1	COVER	
	7	1	**9U-8746**	1	CABLE AS-COAXIAL	
	8	1	**6V-7646**	4	WASHER-HARD (7.2X25X2-MM THK)	
M	9	1	**5C-2890**	4	NUT (M6X1-THD)	
	10	1	**217-8433**	1	FILM-NOTICE (RADIO)	
	11	1	**8K-1433**	1	GROMMET	
	12	1	**4N-9915**	4	GROMMET AS	
	13	1	**3E-4356**	4	WASHER-HARD (17.5X30X6-MM THK)	

M-METRIC PART

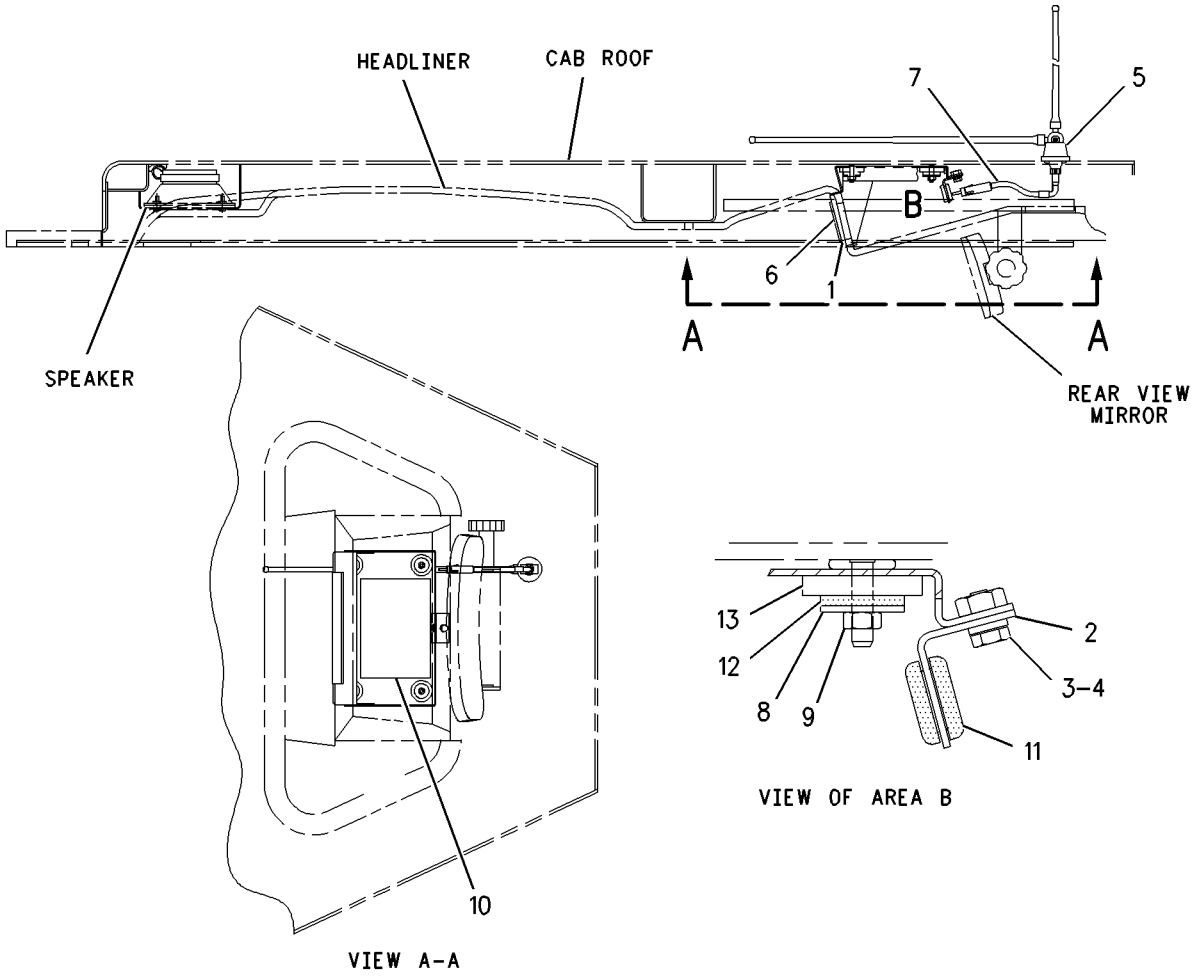

GRAPHIC #1 **<END>** g00906643

OPERATOR STATION

283-0655 INSTRUMENT GP

S/N: SMC1-UP; GCT1-UP

PART OF 269-2044 CHASSIS AR

SMCS-7450, 7451 **i02748456**

NOTE	REF NO	GRAPHIC REF	PART NUMBER	QTY	PART NAME 1 2 3 4 5 6 (PRODUCT LEVEL)	SEE PAGE
	1	1	**2P-4339**	1	NUT-JAM (7/16-28-THD)	
	2	1	**3S-2093**	18	STRAP-CABLE	
	3	1	**7F-6998**	1	LOCKWASHER	
	4	1	**8Y-6388**	5	LOUVER AS-VENT	
	5	1	**083-9527**	2	SPACER (13X20X1.5-MM THK)	
	6	1	**110-6109**	3	KNOB-CONTROL (CONTROL PANEL SWITCHES)	
	7	1	**116-6203**	1	RESISTOR AS	
		1	**102-8802**	1	KIT-RECEPTACLE (2-PIN)	
					(INCLUDES RECEPTACLE AS & WEDGE)	
		1	**186-3735**	2	PIN-CONNECTOR (16-GA TO 18-GA)	
	8	1	**122-7127**	6	NUT (NYLON)	
	9	1	**123-0304**	1	INDICATOR AS (ACTION LIGHT)	
		1	**123-0306**	1	SOCKET AS	
		1	**115-1748**	1	LAMP (24-VOLT, 3-WATT)	
	10	1	**123-9294**	4	LAMP (24-VOLT)	
	11	1	**133-9405**	1	SWITCH AS-PUSH BUTTON (OPERATOR SELECT)	
	11A	1	**133-9405**	1	SWITCH AS-PUSH BUTTON (AUTOMATIC KICKDOWN)	
	11B	1	**133-9405**	1	SWITCH AS-PUSH BUTTON (BIDIRECTIONAL MODE)	
					(EACH SWITCH AS-PUSH BUTTON INCLUDES)	
		1	**6F-0253**	1	LOCKWASHER	
		1	**3K-0835**	1	NUT (5/8-24-THD)	
		1	**102-8803**	1	KIT-RECEPTACLE (3-PIN)	
					(INCLUDES RECEPTACLE AS & WEDGE)	
		1	**3E-3371**	1	WEDGE-RECEPTACLE LOCK (3-PIN)	
		1	**186-3735**	3	PIN-CONNECTOR (16-GA TO 18-GA)	
J	12	1	**142-8858**	1	SWITCH AS-KEY START (IGNITION)	
		1	**167-1530**	1	NUT (1-32-THD)	
	13	1	**157-1361**	1	SWITCH AS-ROTARY (FAN SPEED)	
		1	**102-8805**	1	KIT-RECEPTACLE (6-PIN)	
					(INCLUDES RECEPTACLE AS & WEDGE)	
		1	**3E-3383**	1	WEDGE-RECEPTACLE LOCK (6-PIN)	
		1	**9W-0852**	6	PIN-CONNECTOR (14-GA)	
	14	1	**159-4712**	1	FILM-IDENTIFICATION (INSTRUMENT PANEL)	
	15	1	**159-9257**	1	PANEL-DASH (LIGHT)	
	16	1	**164-0847**	1	CABLE	
Y	17	1	**166-6928**	1	MODULE GP-QUAD GAUGE	690
	18	1	**170-0260**	1	PLATE	
	19	1	**175-1349**	1	PLATE	
	20	1	**175-3950**	1	SWITCH AS-ROTARY (LIGHTS)	
		1	**102-8806**	1	KIT-RECEPTACLE (8-PIN)	
					(INCLUDES RECEPTACLE AS & WEDGE)	
		1	**3E-3389**	1	WEDGE-RECEPTACLE LOCK	
		1	**9W-0852**	7	PIN-CONNECTOR (14-GA)	
	21	1	**175-4393**	1	SPACER (11.4X17.5X2-MM THK)	
	22	1	**185-3533**	7	CLIP	
	23	1	**193-3356**	1	CABLE AS	
	24	1	**193-3359**	1	CONTROL AS (TEMPERATURE)	
		1	**129-1831**	1	CLAMP	
	25	1	**213-7315**	6	SCREW-TRUSS HEAD (M4X0.7X25-MM)	
	26	1	**226-9666**	1	HARNESS AS-PANEL	
		1	**3T-3278**	4	BOOT	
		1	**3T-3159**	4	SPRING	
		1	**6D-4161**	4	CONTACT	
		1	**3T-3158**	4	SOCKET-LAMP	
		1	**214-4208**	1	RECEPTACLE AS-CONNECTOR (70-PIN)	
		1	**102-8804**	2	KIT-RECEPTACLE (4-PIN)	

OPERATOR STATION

283-0655 **INSTRUMENT GP** *(contd.)* **i02748456**

NOTE	REF NO	GRAPHIC REF	PART NUMBER	QTY	PART NAME 1 2 3 4 5 6 (PRODUCT LEVEL)	SEE PAGE
		1	**102-8805**	2	KIT-RECEPTACLE (6-PIN)	
		1	**102-8806**	2	KIT-RECEPTACLE (8-PIN)	
					(EACH INCLUDES RECEPTACLE AS & WEDGE)	
		1	**8T-9834**	1	PLUG AS-CONNECTOR (40-PIN)	
		1	**155-2260**	5	KIT-CONNECTING PLUG (3-PIN)	
		1	**155-2265**	2	KIT-CONNECTING PLUG (8-PIN)	
		1	**155-2270**	2	KIT-CONNECTING PLUG (2-PIN)	
		1	**155-2271**	4	KIT-CONNECTING PLUG (4-PIN)	
		1	**155-2274**	4	KIT-CONNECTING PLUG (6-PIN)	
					(EACH INCLUDES PLUG AS, WEDGE, & INTERFACE SEAL)	
	27	1	**228-6089**	1	PLUG (ROCKER SWITCH)	
	28	1	**252-0063**	1	PLUG AS-CODE (MONITOR)	
		1	**9G-3695**	4	PLUG (GROMMET SEALING)	
		1	**9X-3402**	4	SOCKET-CONNECTOR (16-GA TO 18-GA)	
		1	**155-2265**	1	KIT-CONNECTING PLUG (8-PIN)	
					(INCLUDES PLUG AS, WEDGE, & INTERFACE SEAL)	
R	29	1	**252-4501**	1	CONTROL GP-UNPRGMED MONITOR (CATERPILLAR MONITORING SYSTEM)	
	30	1	**265-7314**	1	PANEL AS-INSTRUMENT	
		1	**7T-7388**	2	GUIDE	
	31	1	**275-2124**	1	CONTROL AS	
		1	**7X-6085**	1	GROMMET AS-SEAL	
		1	**5S-7348**	1	SCREW-MACHINE (6-32X0.375-IN)	
		1	**179-6401**	4	SCREW-PAN HEAD (6-32X0.5-IN)	
		1	**281-2867**	1	FILM-IDENTIFICATION (MONITOR)	
	32	1	**130-5300**	3	CLIP	
	33	1	**132-5789**	1	CLIP	
	34	1	**198-9706**	12	SCREW-TRUSS HEAD (M5X0.8X16-MM)	
	35	1	**198-9707**	4	SCREW-TRUSS HEAD (M6X1X35-MM)	
	36	1	**204-6101**	12	WASHER-HARD (5.3X10X1-MM THK)	
	37	1	**204-6102**	6	WASHER-HARD (4.45X9.52X1-MM THK)	
	38	1	**251-1198**	1	SWITCH AS-ROCKER (AIR CONDITIONER)	
	39	1	**266-5851**	1	FILM-IDENTIFICATION (LIGHTS)	
	40	1	**3E-6922**	10	SCREW-RECESS FLAT HEAD (NO 6X19X12.7-MM)	
	41	1	**4M-5281**	2	BOLT (1/4-20X0.75-IN)	
	42	1	**4P-7581**	1	CLIP	
	43	1	**4P-8134**	1	CLIP	
	44	1	**5P-4115**	2	WASHER-HARD (7.2X19X2-MM THK)	
	45	1	**6P-6591**	1	GROMMET	
M	46	1	**8T-4138**	3	BOLT (M6X1X20-MM)	
	47	1	**8T-4205**	14	WASHER-HARD (7.2X14.5X2-MM THK)	
M	48	1	**8T-4970**	10	BOLT (M6X1X14-MM)	

J-REQUIRES CORPORATE KEY
M-METRIC PART
R-REMFG PART MAY BE AVAILABLE
Y-SEPARATE ILLUSTRATION

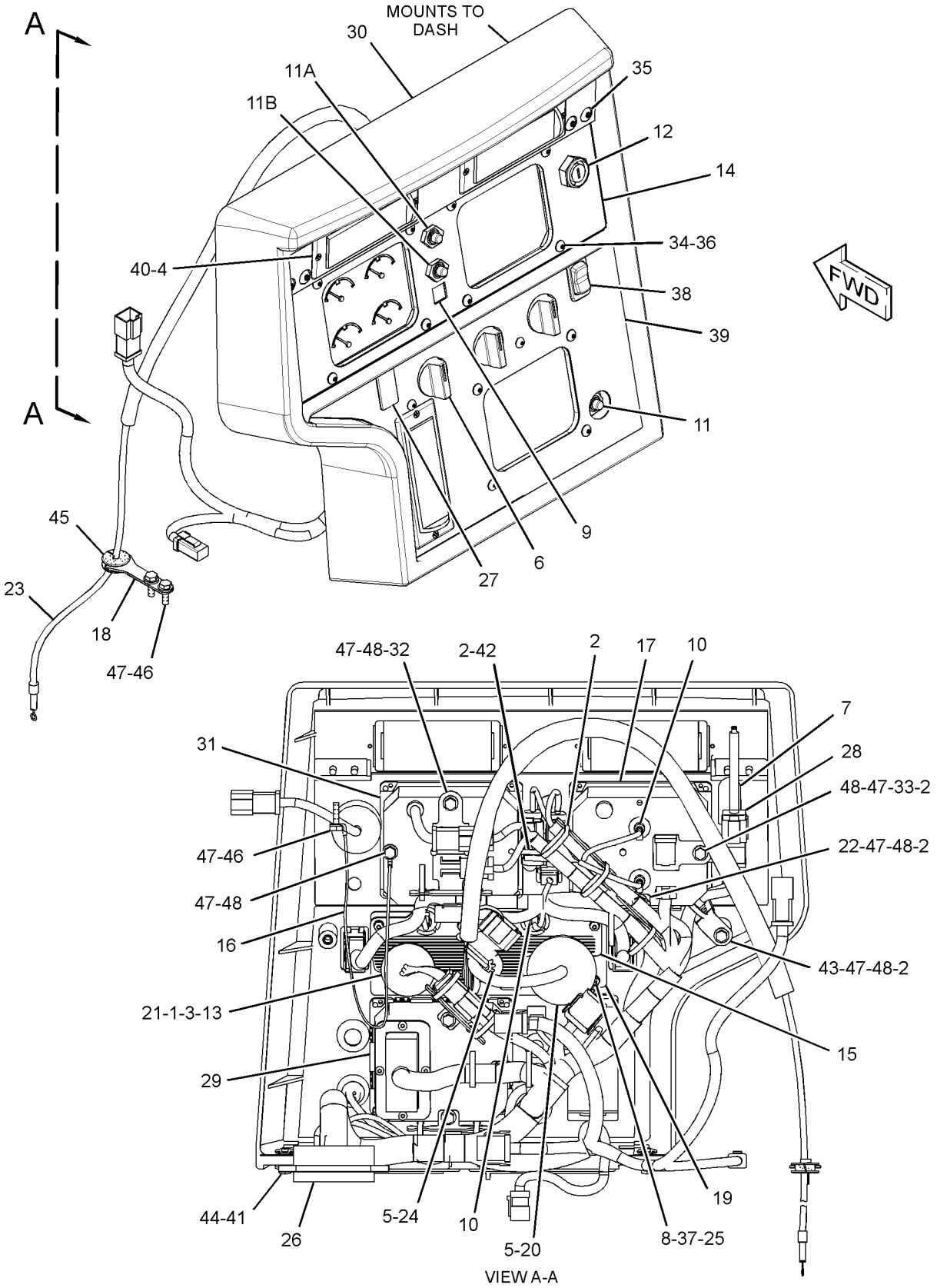

VIEW A-A

GRAPHIC #1 **<END>** g01359538

OPERATOR STATION

283-0656 INSTRUMENT GP—OPEN ROPS

S/N: SMC1-UP; GCT1-UP
PART OF 283-0581 CANOPY AR
AN ATTACHMENT

SMCS-7450, 7451 **i02801411**

NOTE	REF NO	GRAPHIC REF	PART NUMBER	QTY	PART NAME 1 2 3 4 5 6 (PRODUCT LEVEL)	SEE PAGE
	1	2	**3S-2093**	17	STRAP-CABLE	
	2	2	**083-9527**	1	SPACER (13X20X1.5-MM THK)	
	3	1	**110-6109**	1	KNOB-CONTROL (LIGHTS)	
	4	2	**116-6203**	1	RESISTOR AS	
	5	2	**122-7127**	6	NUT (NYLON)	
	6	1	**123-0304**	2	INDICATOR AS (ACTION LIGHT)	
		1	**115-1748**	1	LAMP (24-VOLT, 3-WATT)	
		1	**123-0306**	1	SOCKET AS	
	7	2	**123-9294**	4	LAMP (24-VOLT)	
	8	1	**133-9405**	1	SWITCH AS-PUSH BUTTON (AUTOMATIC KICKDOWN)	
	8A	1	**133-9405**	1	SWITCH AS-PUSH BUTTON (BIDIRECTIONAL MODE)	
	8B	1	**133-9405**	1	SWITCH AS-PUSH BUTTON (OPERATOR SELECT)	
					(EACH SWITCH AS INCLUDES)	
		1	**3E-3371**	1	WEDGE-RECEPTACLE LOCK (3-PIN)	
		1	**3K-0835**	1	NUT (5/8-24-THD)	
		1	**6F-0253**	1	LOCKWASHER	
		1	**186-3735**	1	PIN-CONNECTOR (16-GA TO 18-GA)	
		1	**102-8803**	1	KIT-RECEPTACLE (3-PIN)	
					(INCLUDES RECEPTACLE AS & WEDGE)	
J	9	1	**142-8858**	1	SWITCH AS-KEY START (IGNITION)	
R	10	1	**252-4501**	1	CONTROL GP-UNPRGMED MONITOR (CATERPILLAR MONITORING SYSTEM)	
	11	1	**157-2741**	1	GUARD-VANDALISM	
	12	2	**159-4712**	1	FILM-IDENTIFICATION (INSTRUMENT PANEL)	
	13	2	**159-9257**	1	PANEL-DASH (LIGHT)	
	14	1	**164-0847**	1	CABLE	
	15	2	**164-9929**	1	FILM-IDENTIFICATION (ACTION LIGHT) (MANUAL OPERATION LOCK)	
Y	16	2	**166-6928**	1	MODULE GP-QUAD GAUGE	690
	17	2	**175-1349**	1	PLATE	
	18	2	**175-3950**	1	SWITCH AS-ROTARY (LIGHTS)	
		2	**3E-3389**	1	WEDGE-RECEPTACLE LOCK	
		2	**9W-0852**	7	PIN-CONNECTOR (14-GA)	
		2	**102-8806**	1	KIT-RECEPTACLE (8-PIN)	
					(INCLUDES RECEPTACLE AS & WEDGE)	
	19	2	**178-3003**	1	COVER	
	20	1	**185-3533**	7	CLIP	
	21	1	**186-5097**	1	ROD	
	22	2	**186-5099**	1	LOCK AS-CYLINDER	
		2	**226-0293**	1	LOCK AS	
		2	**226-0337**	1	CAM	
M	23	2	**187-7719**	4	BOLT (M5X2.24X14-MM)	
	24	2	**194-1466**	1	CLIP	
	25	2	**213-7315**	6	SCREW-TRUSS HEAD (M4X0.7X25-MM)	
	26	1	**226-9666**	1	HARNESS AS-PANEL	
		1	**102-8804**	1	KIT-RECEPTACLE (4-PIN)	
		1	**102-8805**	1	KIT-RECEPTACLE (6-PIN)	
		1	**102-8806**	1	KIT-RECEPTACLE (8-PIN)	
					(EACH RECEPTACLE KIT INCLUDES RECEPTACLE AS & WEDGE)	
		1	**214-4208**	1	RECEPTACLE AS-CONNECTOR (70-PIN)	
		1	**3T-3158**	4	SOCKET-LAMP	
		1	**3T-3159**	4	SPRING	
		1	**3T-3278**	4	BOOT	
		1	**6D-4161**	4	CONTACT	

283-0656 **INSTRUMENT GP** ***(contd.)*** **i02801411**

NOTE	REF NO	GRAPHIC REF	PART NUMBER	QTY	PART NAME 1 2 3 4 5 6 (PRODUCT LEVEL)	SEE PAGE
		1	**155-2270**	1	KIT-CONNECTING PLUG (2-PIN)	
		1	**155-2271**	1	KIT-CONNECTING PLUG (4-PIN)	
		1	**155-2274**	1	KIT-CONNECTING PLUG (6-PIN)	
		1	**155-2265**	1	KIT-CONNECTING PLUG (8-PIN)	
		1	**155-2260**	1	KIT-CONNECTING PLUG (3-PIN)	
					(EACH PLUG KIT INCLUDES PLUG AS, WEDGE, & INTERFACE SEAL)	
		1	**8T-9834**	1	PLUG AS-CONNECTOR (40-PIN)	
	27	2	**228-6089**	1	PLUG (ROCKER SWITCH)	
	28	2	**252-0063**	1	PLUG AS-CODE (MONITOR)	
		1	**9G-3695**	4	PLUG (GROMMET SEALING)	
		1	**9X-3402**	4	SOCKET-CONNECTOR (16-GA TO 18-GA)	
		1	**155-2265**	1	KIT-CONNECTING PLUG (8-PIN)	
					(INCLUDES PLUG AS, WEDGE, & INTERFACE SEAL)	
	29	1	**265-7315**	1	PANEL AS-INSTRUMENT	
	30	2	**275-2124**	1	CONTROL AS	
		2	**281-2867**	1	FILM-IDENTIFICATION (MONITOR)	
		2	**7X-6085**	1	GROMMET AS-SEAL	
		2	**5S-7348**	1	SCREW-MACHINE (6-32X0.375-IN)	
		2	**179-6401**	4	SCREW-PAN HEAD (6-32X0.5-IN)	
	31	2	**130-5300**	3	CLIP	
	32	2	**132-5789**	1	CLIP	
	33	1	**198-9706**	12	SCREW-TRUSS HEAD (M5X0.8X16-MM)	
	34	1	**198-9707**	4	SCREW-TRUSS HEAD (M6X1X35-MM)	
	35	1	**204-6101**	12	WASHER-HARD (5.3X10X1-MM THK)	
	36	2	**204-6102**	6	WASHER-HARD (4.45X9.52X1-MM THK)	
	37	1	**268-1825**	1	FILM-IDENTIFICATION (INSTRUMENT PANEL)	
	38	2	**4M-5281**	2	BOLT (1/4-20X0.75-IN)	
	39	2	**4P-7581**	1	CLIP	
	40	2	**4P-8134**	1	CLIP	
	41	2	**5P-4115**	2	WASHER-HARD (7.2X19X2-MM THK)	
M	42	2	**8T-0337**	1	SCREW-MACHINE (M4X0.7X12-MM)	
M	43	2	**8T-2659**	1	LOCKNUT (M4X0.7-THD)	
M	44	2	**8T-4138**	1	BOLT (M6X1X20-MM)	
	45	2	**8T-4205**	12	WASHER-HARD (7.2X14.5X2-MM THK)	
M	46	2	**8T-4970**	10	BOLT (M6X1X14-MM)	

J-REQUIRES CORPORATE KEY
M-METRIC PART
R-REMFG PART MAY BE AVAILABLE
Y-SEPARATE ILLUSTRATION

REFER TO ALL ILLUSTRATIONS OF THIS GROUP FOR AUXILIARY VIEWS

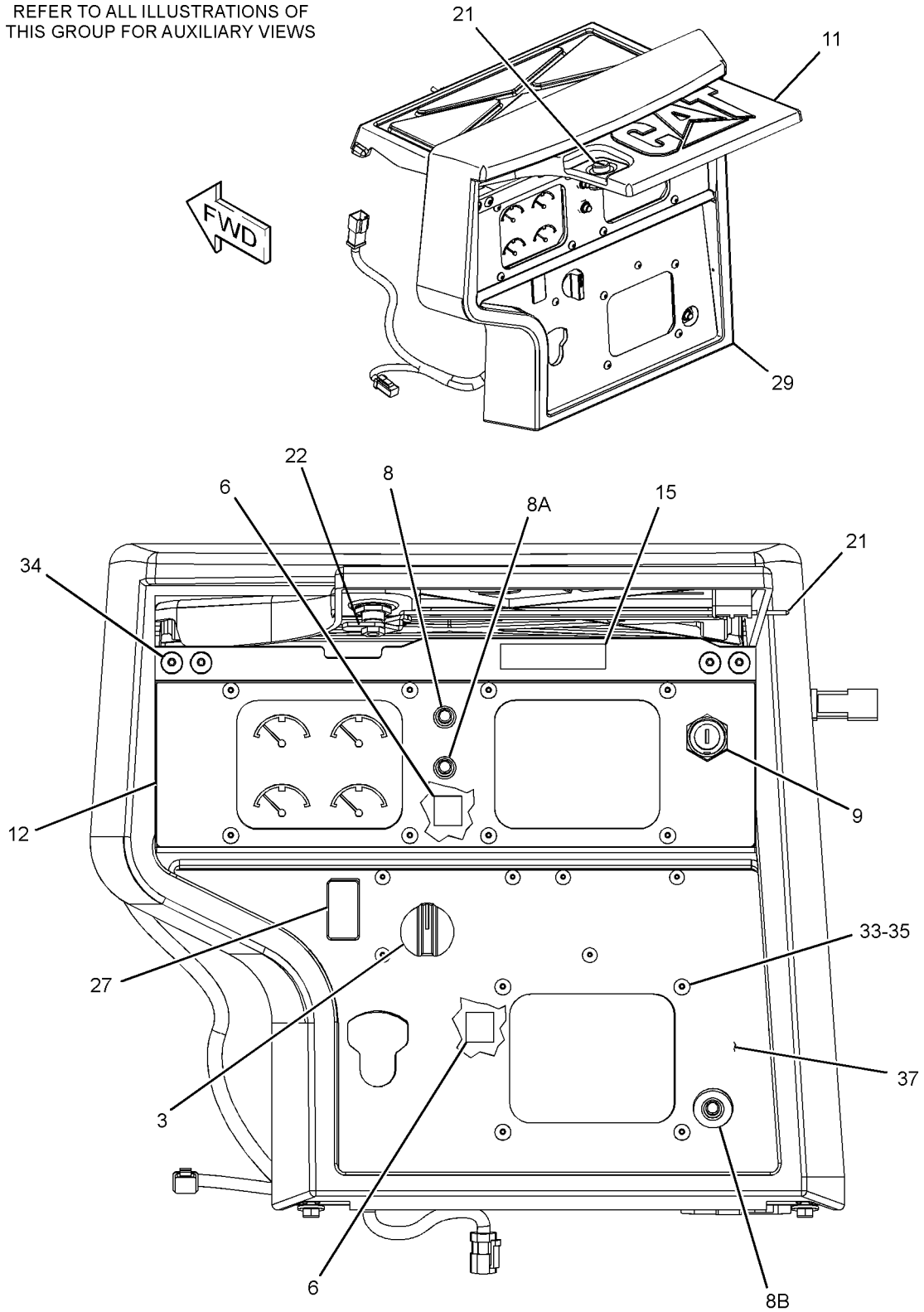

REAR VIEW

GRAPHIC #1 g01365151

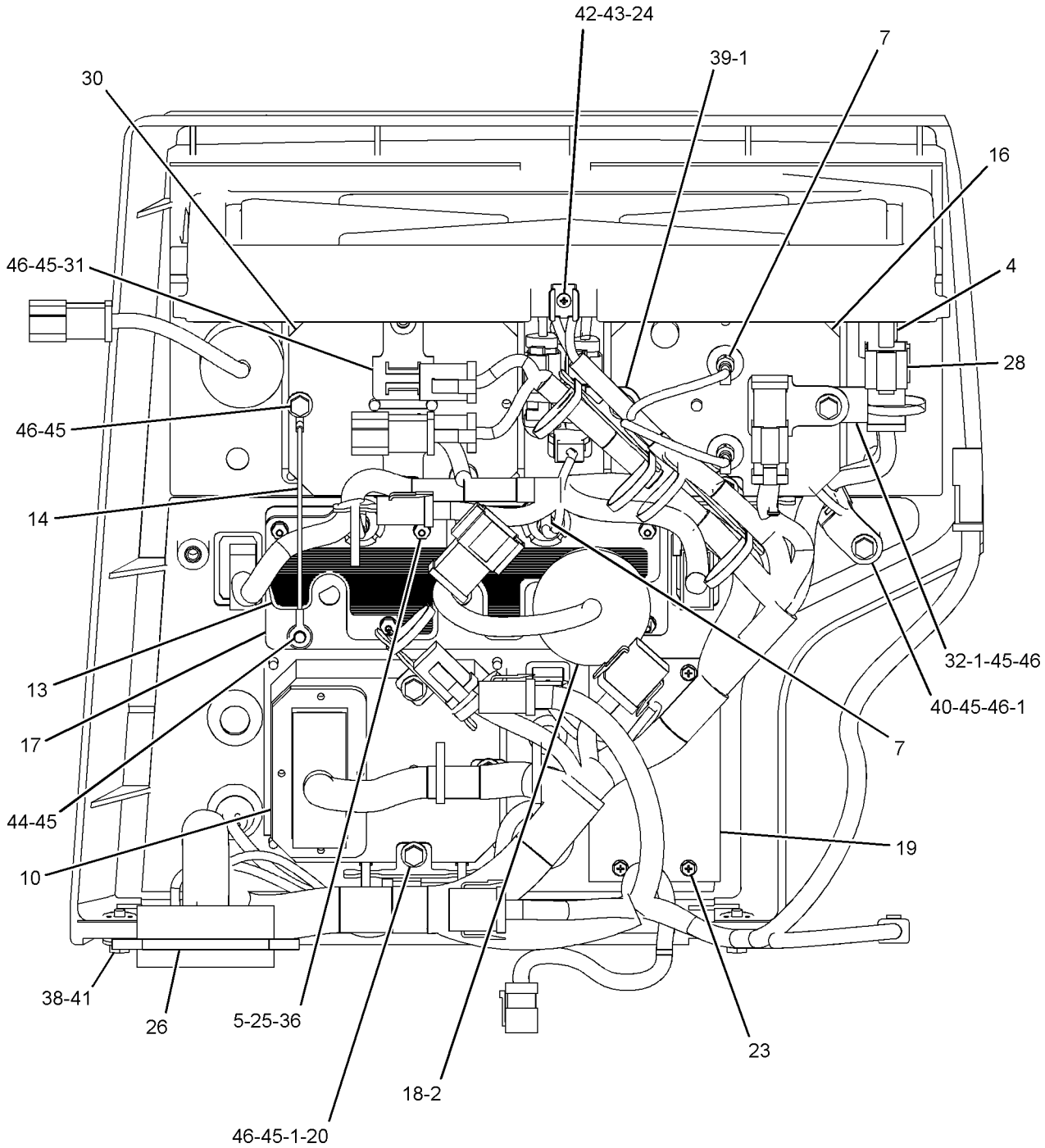

FRONT VIEW

GRAPHIC #2 **<END>** g01365110

OPERATOR STATION

161-3616 KNOB GP—RIPPER

S/N: SMC1-UP; GCT1-UP
PART OF 280-1476 CONTROL AR-HYDRAULIC IMPLEMENT
AN ATTACHMENT

SMCS-5800 **i01488877**

NOTE	REF NO	GRAPHIC REF	PART NUMBER	QTY	PART NAME 1 2 3 4 5 6 (PRODUCT LEVEL)	SEE PAGE
	1	1	**2A-1736**	1	HANDLE	
	2	1	**7X-3374**	1	NUT-FULL (1/2-20-THD)	

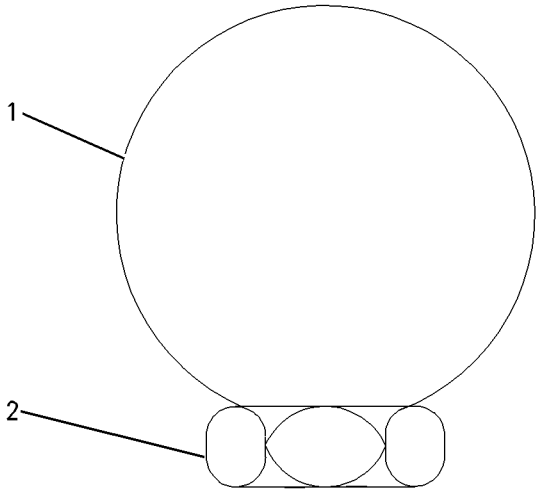

GRAPHIC #1 **<END>** g00763264

OPERATOR STATION

158-7695 LINER GP-CAB

S/N: SMC1-UP; GCT1-UP
PART OF 158-7694 CAB AR
ALSO AN ATTACHMENT

SMCS-7329 **i02148373**

NOTE	REF NO	GRAPHIC REF	PART NUMBER	QTY	PART NAME 1 2 3 4 5 6 (PRODUCT LEVEL)	SEE PAGE
	1	1	**6V-8928**	1	HOOK-COAT	
	2	1	**110-8152**	2	HANDLE AS-PULL (LH, RH)	
	3	1	**158-8906**	2	BLOCK-FOAM	
	4	1	**161-1083**	1	COVER-DOOR (RH)	
	5	1	**161-1084**	1	COVER-DOOR (LH)	
	6	1	**161-1085**	1	COVER-FRONT	
	7	1	**161-1091**	1	COVER-POST (RH)	
	8	1	**161-1092**	1	COVER-POST (LH)	
	9	1	**161-1093**	2	TRIM-POST	
	10	1	**161-1094**	1	LINER-CAB	
Y	11	1	*161-1096*	1	LINER GP-CAB	677
	12	1	**161-1098**	1	RETAINER	
C	13	1	**228-6787**	1	COVER (TOP)	
M	14	1	**3E-8020**	4	SCREW-TRUSS HEAD (M6X1X25-MM)	
M	15	1	**6V-5683**	4	BOLT (M6X1X16-MM)	
CM	16	1	**9X-2043**	18	SCREW-TRUSS HEAD (M6X1X14-MM)	
M	17	1	**9X-2045**	1	SCREW-TRUSS HEAD (M6X1X20-MM)	

C-CHANGE FROM PREVIOUS TYPE
M-METRIC PART
Y-SEPARATE ILLUSTRATION

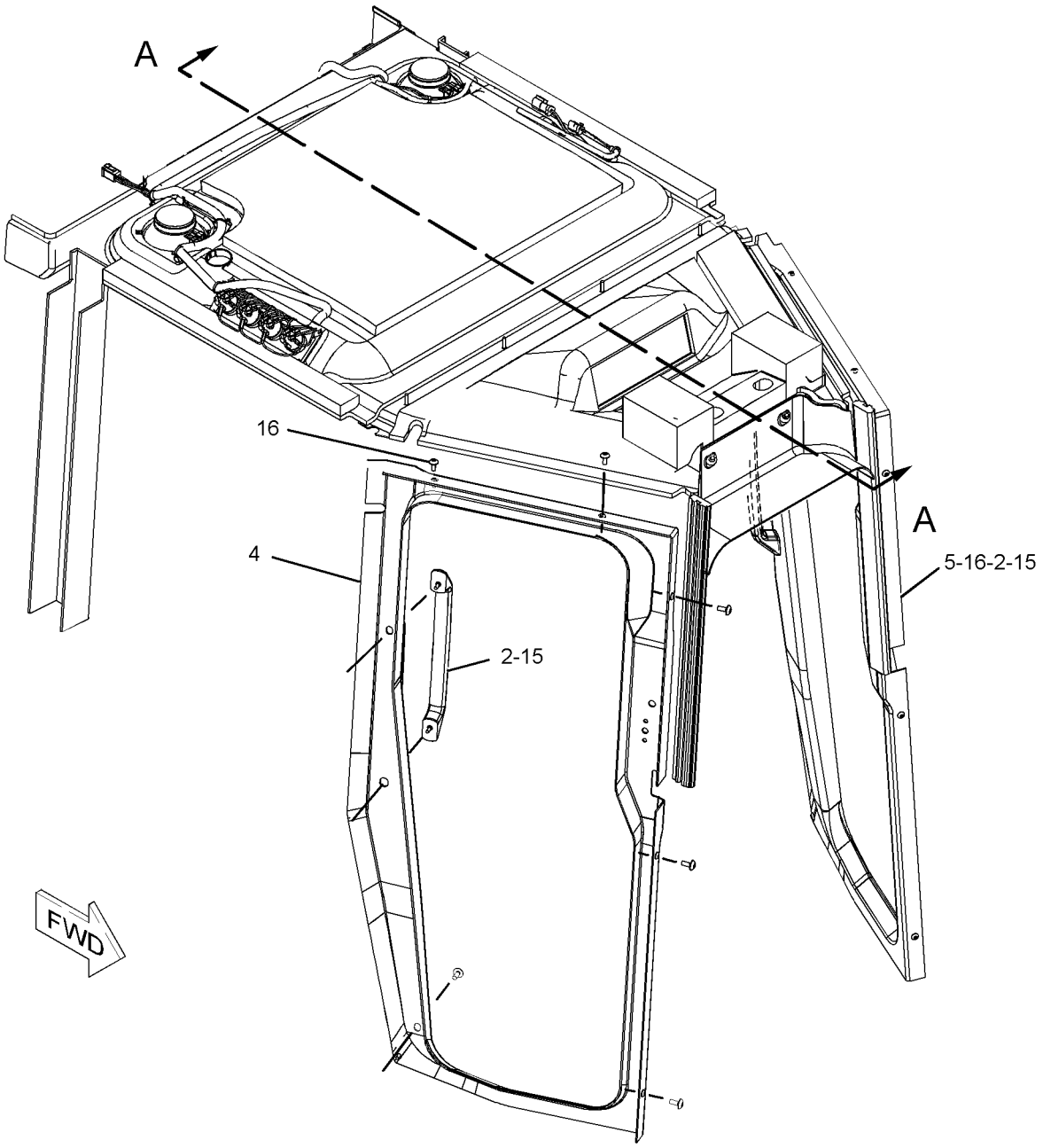

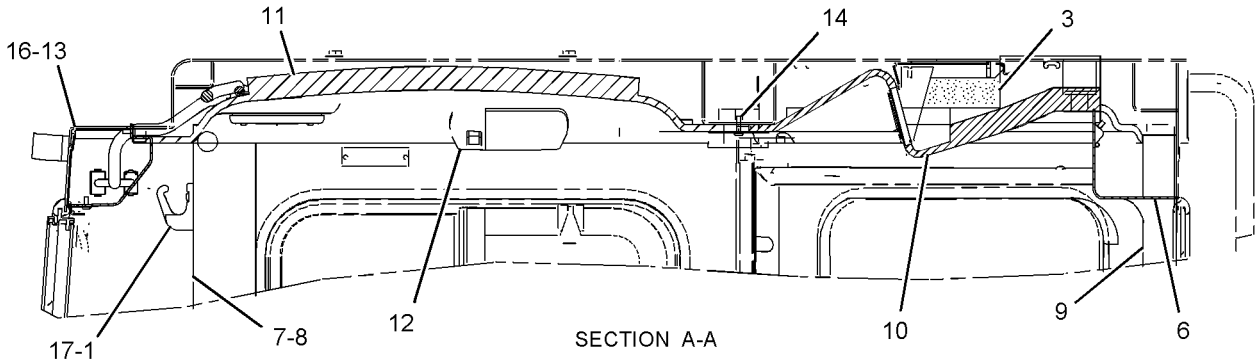

SECTION A-A

GRAPHIC #1

<END>

g01097790

OPERATOR STATION

161-1096 LINER GP-CAB

S/N: SMC1-UP; GCT1-UP
PART OF 158-7695 LINER GP-CAB
ALSO AN ATTACHMENT

SMCS-7329 **i02438821**

NOTE	REF NO	GRAPHIC REF	PART NUMBER	QTY	PART NAME 1 2 3 4 5 6 (PRODUCT LEVEL)	SEE PAGE
Y	1	1	**3E-6389**	1	LAMP GP-DOME (24-VOLT)	182
	2	1	**3S-2093**	11	STRAP-CABLE	
M	3	1	**7Y-7388**	4	SCREW-BUTTON HEAD (M5X0.8X12-MM)	
	4	1	**6T-7695**	2	SPEAKER AS-RADIO	
	5	1	**8T-4752**	4	NUT (M5X0.8-6H-THD)	
	6	1	**267-8685**	1	FILM-IDENTIFICATION (WINDOW WIPER CONTROLS)	
	7	1	**101-3055**	2	COVER-SPEAKER	
	8	1	**131-5137**	1	PLUG	
	9	1	**161-1097**	1	LINER-CAB	
	10	1	**161-1099**	1	PLATE	
	11	1	**166-3733**	11	NUT-SPEED (NO 8-32-MM)	
	12	1	**169-9636**	1	HARNESS AS-CAB (WIPER, SPEAKER)	
		1	**102-8801**	1	KIT-RECEPTACLE (12-PIN)	
					(INCLUDES RECEPTACLE AS, & WEDGE)	
		1	**155-2255**	1	KIT-CONNECTING PLUG (12-PIN)	
		1	**155-2260**	1	KIT-CONNECTING PLUG (3-PIN)	
		1	**155-2274**	1	KIT-CONNECTING PLUG (6-PIN)	
					(EACH INCLUDES PLUG AS, WEDGE, & INTERFACE SEAL)	
	13	1	**103-9425**	11	SCREW-MACHINE (8-32X1-IN)	
	14	1	**7T-9303**	1	SWITCH AS-ROTARY (RH DOOR)	
	14A	1	**7T-9303**	1	SWITCH AS-ROTARY (LH DOOR)	
	14B	1	**7T-9303**	1	SWITCH AS-ROTARY (FRONT)	
	14C	1	**7T-9303**	1	SWITCH AS-ROTARY (REAR)	
					(EACH SWITCH AS INCLUDES)	
		1	**2H-3920**	1	LOCKWASHER	
		1	**6V-8369**	1	NUT (7/16-28-THD)	
	15	1	**110-6109**	4	KNOB-CONTROL (AUTODIG SELECT SWITCH)	

M-METRIC PART
Y-SEPARATE ILLUSTRATION

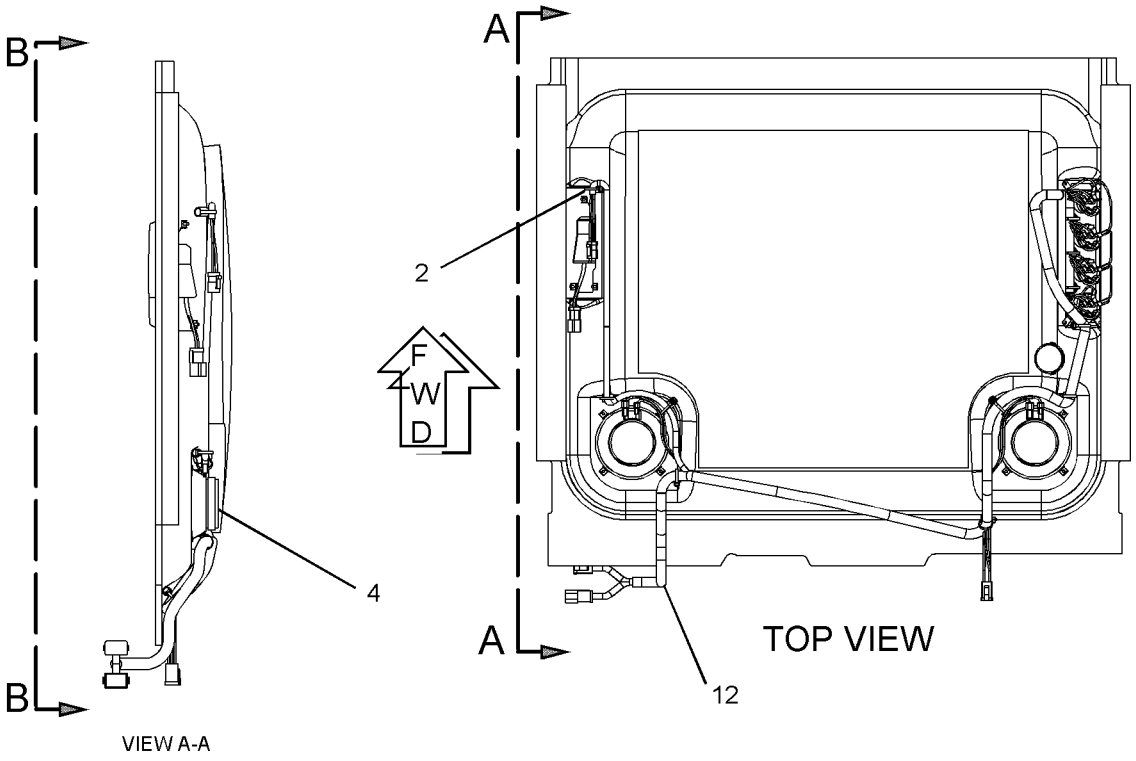

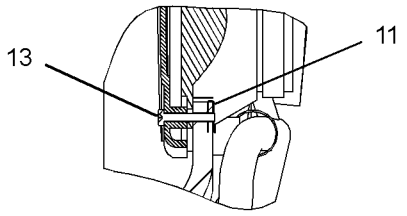

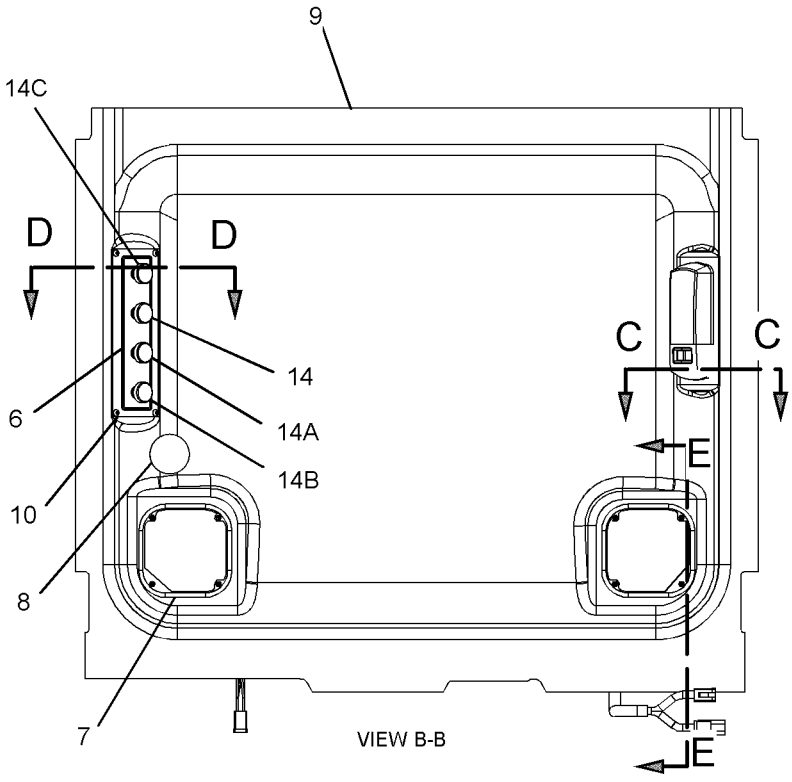

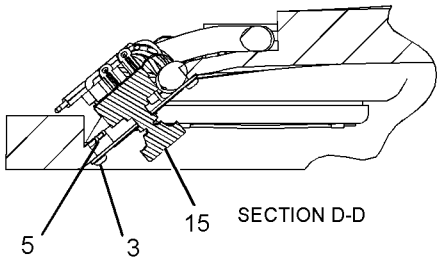

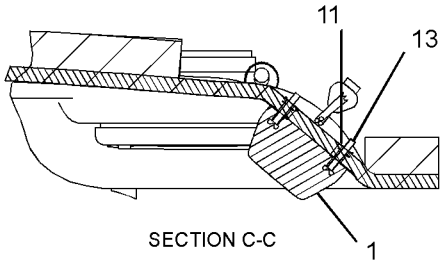

GRAPHIC #1 **<END>** g01208854

OPERATOR STATION

223-1677 LINES GP-AIR CONDITIONER

S/N: SMC1-UP; GCT1-UP

PART OF 272-3477 CAB AR

SMCS-1808 **i02696517**

NOTE	REF NO	GRAPHIC REF	PART NUMBER	QTY	PART NAME 1 2 3 4 5 6 (PRODUCT LEVEL)	SEE PAGE
	1	1	**1P-6356**	1	PLATE	
	2	1	**175-7162**	1	RECEIVER-DRYER GP (REFRIGERANT)	
		1	**7X-2049**	1	TUBE AS-REFRIGERANT ORIFICE	
	3	1	**5N-9204**	1	BRACKET AS	
D	4	1	**6V-2495**	1	SEAL (0.1-M)	
	5	1	**7T-9426**	1	GROMMET	
	6	1	**8C-5682**	1	TEE	
	7	1	**8R-3393**	1	STRAP	
	8	1	**103-6100**	2	FITTING AS-AIR CONDITIONER (QUICK DISCONNECT)	
					(EACH INCLUDES)	
		1	**9X-7382**	2	SEAL-O-RING	
	9	1	**114-5333**	1	SWITCH AS-PRESSURE (COMPRESSOR, HIGH SIDE)	
		1	**102-8802**	1	KIT-RECEPTACLE (2-PIN)	
					(INCLUDES RECEPTACLE AS & WEDGE)	
		1	**186-3735**	2	PIN-CONNECTOR (16-GA TO 18-GA)	
E		1	**9X-1386**		SLEEVE (25-CM)	
	10	1	**116-6202**	2	BOOT	
	11	1	**128-5924**	1	CLAMP	
	12	1	**287-0338**	1	BRACKET AS	
I	13	1	**173-9815**	1	HOSE AS	
I	14	1	**173-9816**	1	HOSE AS	
	15	1	**180-9236**	1	BRACKET AS	
	16	1	**183-4273**	1	HARNESS AS-WIRING (AIR CONDITIONER COMPRESSOR)	
		1	**155-2270**	4	KIT-CONNECTING PLUG (2-PIN)	
					(EACH INCLUDES PLUG AS, WEDGE, & INTERFACE SEAL)	
	17	1	**186-6189**	1	ACCUMULATOR-REFRIGERANT	
I	18	1	**230-5106**	1	HOSE AS	
I	19	1	**266-1961**	1	HOSE AS	
	20	1	**106-8704**	1	SUPPRESSOR AS-ARC	
		1	**102-8802**	1	KIT-RECEPTACLE (2-PIN)	
					(INCLUDES RECEPTACLE AS & WEDGE)	
		1	**186-3735**	2	PIN-CONNECTOR (16-GA TO 18-GA)	
	21	1	**109-1633**	1	CLIP (SLOT)	
	22	1	**109-1634**	1	CLIP (TAB)	
I	23	1	**236-5132**	1	HOSE AS	
	24	1	**3E-4067**	1	FITTING AS-COMPRESSOR	
		1	**3E-4052**	1	CAP-SEAL	
		1	**3E-4058**	1	VALVE AS	
	25	1	**3E-4087**	1	FITTING AS-AIR CONDITIONER	
		1	**3E-4051**	1	CAP-SEAL	
		1	**3E-4057**	1	VALVE AS	
	26	1	**3S-2093**	5	STRAP-CABLE	
	27	1	**3S-8664**	2	CLIP	
	28	1	**4P-8134**	2	CLIP	
M	29	1	**5C-7261**	1	NUT (M8X1.25-THD)	
	30	1	**6K-8178**	1	CLIP	
	31	1	**6V-1228**	1	CLIP	
	32	1	**6V-2372**	1	ELBOW	
	33	1	**7T-8894**	1	GROMMET	
	34	1	**7T-8895**	1	GROMMET	
	35	1	**7T-9793**	1	VALVE (CHECK)	
	36	1	**7X-7729**	2	WASHER (11X25X3-MM THK)	
	37	1	**8T-4121**	8	WASHER-HARD (11X21X2.5-MM THK)	
M	38	1	**8T-4133**	1	NUT (M10X1.5-THD)	
M	39	1	**8T-4136**	4	BOLT (M10X1.5X25-MM)	

OPERATOR STATION

223-1677 **LINES GP-AIR CONDITIONER** *(contd.)* **i02696517**

NOTE	REF NO	GRAPHIC REF	PART NUMBER	QTY	PART NAME 1 2 3 4 5 6 (PRODUCT LEVEL)	SEE PAGE
M	40	1	**8T-4137**	2	BOLT (M10X1.5X20-MM)	
M	41	1	**8T-4182**	1	BOLT (M10X1.5X45-MM)	
M	42	1	**8T-4196**	1	BOLT (M10X1.5X35-MM)	
	43	1	**8T-4224**	1	WASHER-HARD (8.8X16X2-MM THK)	
M	45	1	**8T-6466**	1	BOLT (M10X1.5X60-MM)	
	46	1	**9M-8406**	1	CLIP	
	47	1	**9X-7378**	1	SEAL-O-RING	
	48	1	**9X-7380**	3	SEAL-O-RING	
	49	1	**9X-7381**	3	SEAL-O-RING	
	50	1	**9X-7382**	2	SEAL-O-RING	
	51	1	**9X-7383**	2	SEAL-O-RING	
	52	1	**9X-7385**	2	SEAL-O-RING	
D	53	1	**5P-6129**		TUBE (0.4-M)	
D	53A	1	**5P-6129**		TUBE (0.2-M EACH)	
D	53B	1	**5P-6129**		TUBE (0.7-M)	
	54	1	**1P-7009**	1	CLIP	
	55	1	**4P-7429**	1	CLIP	
	56	1	**155-2270**	1	KIT-CONNECTING PLUG (2-PIN) (INCLUDES PLUG AS, WEDGE, & INTERFACE SEAL)	

D-ORDER BY THE METER
E-ORDER BY THE CENTIMETER
I-REFER TO HYDRAULIC INFORMATION SYSTEM
M-METRIC PART

223-1677 **LINES GP-AIR CONDITIONER** *(contd.)* **i02696517**

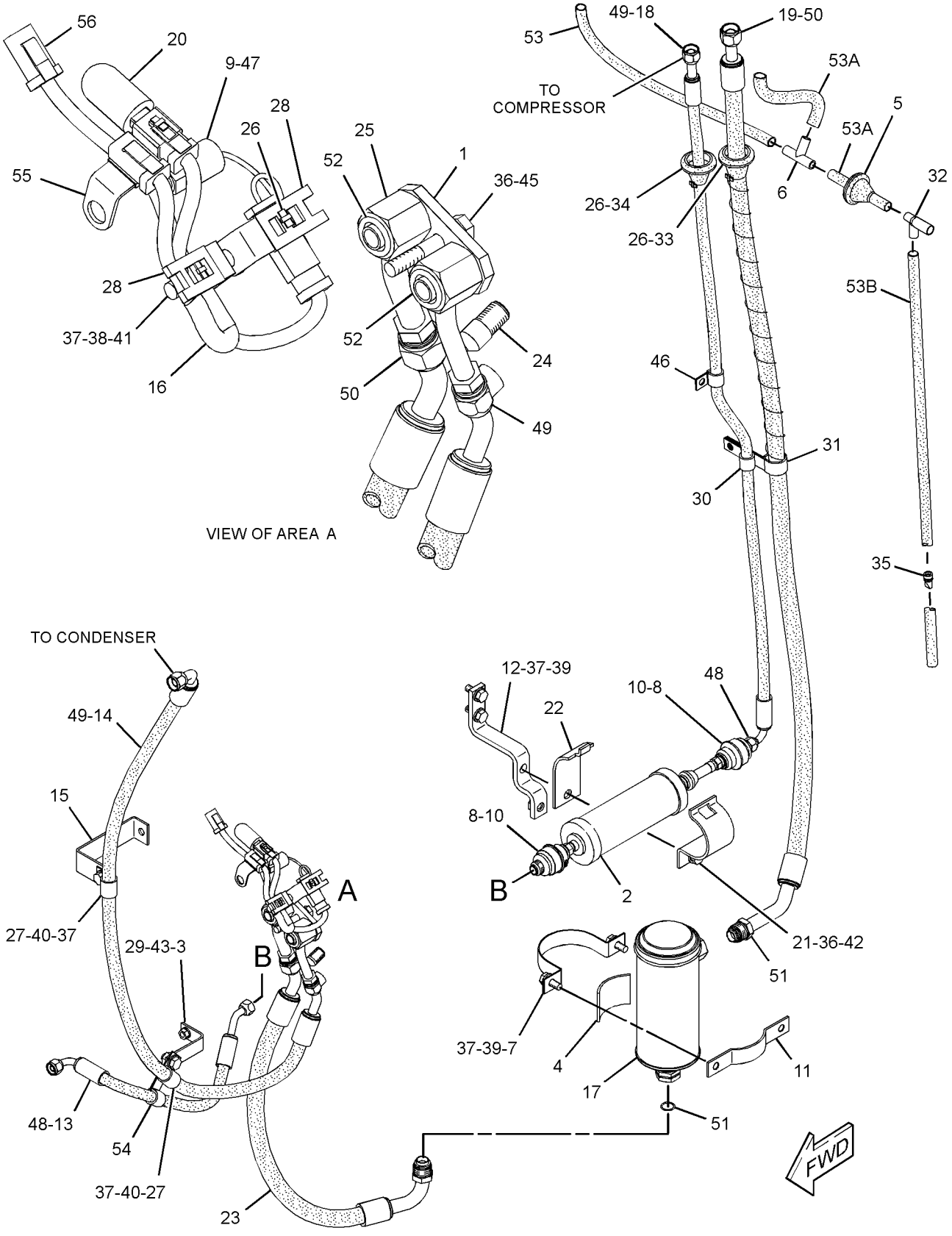

GRAPHIC #1 **<END>** g01361152

OPERATOR STATION

223-1678 LINES GP-AIR CONDITIONER—ROPS MOUNTED

S/N: SMC1-UP; GCT1-UP
PART OF 228-7854 AIR CONDITIONER AR
AN ATTACHMENT

SMCS-1808 **i02588540**

NOTE	REF NO	GRAPHIC REF	PART NUMBER	QTY	PART NAME 1 2 3 4 5 6 (PRODUCT LEVEL)	SEE PAGE
	1	2	**1P-6356**	1	PLATE	
	2	2	**175-7162**	1	RECEIVER-DRYER GP (REFRIGERANT)	
		2	**7X-2049**	1	TUBE AS-REFRIGERANT ORIFICE	
	3	1	**5P-3948**	2	COUPLING AS-REFRIGERANT	
					(EACH INCLUDES)	
		1	**7F-8607**	1	SEAL-O-RING	
		1	**107-4399**	1	VALVE AS	
D	4	2	**6V-2495**		SEAL (0.1-M)	
	5	1,2	**7K-1181**	4	STRAP-CABLE	
	6	1	**7K-3176**	2	COUPLING AS-REFRIGERANT	
					(EACH INCLUDES)	
		1	**107-4393**	1	VALVE AS	
		1	**107-4394**	1	GASKET	
	7	2	**7T-9426**	2	GROMMET	
	8	2	**8C-5682**	1	TEE	
	9	2	**8R-3393**	1	STRAP	
	10	2	**103-6100**	2	FITTING AS-AIR CONDITIONER (QUICK DISCONNECT)	
					(EACH INCLUDES)	
		2	**9X-7382**	2	SEAL-O-RING	
I	11	2	**109-4044**	1	HOSE AS	
I	12	2	**110-8834**	1	HOSE AS	
	13	2	**114-5333**	1	SWITCH AS-PRESSURE (COMPRESSOR, HIGH SIDE)	
		2	**102-8802**	1	KIT-RECEPTACLE (2-PIN)	
					(INCLUDES RECEPTACLE AS & WEDGE)	
		2	**186-3735**	2	PIN-CONNECTOR (16-GA TO 18-GA)	
E		2	**9X-1386**		SLEEVE (25-CM)	
	14	2	**116-6202**	2	BOOT	
	15	2	**128-5924**	1	CLAMP	
I	16	2	**160-5804**	1	HOSE AS	
	17	2	**287-0338**	1	BRACKET AS	
	18	2	**183-4273**	1	HARNESS AS-WIRING (AIR CONDITIONER COMPRESSOR)	
		2	**155-2270**	4	KIT-CONNECTING PLUG (2-PIN)	
					(EACH INCLUDES PLUG AS, WEDGE, & INTERFACE SEAL)	
	19	2	**186-6189**	1	ACCUMULATOR-REFRIGERANT	
I	20	2	**230-5106**	1	HOSE AS	
	21	1	**231-1271**	1	BRACKET AS	
I	22	2	**236-5131**	1	HOSE AS	
	23	2	**265-9718**	1	HARNESS AS-WIRING (ROPS)	
		2	**102-8805**	1	KIT-RECEPTACLE (6-PIN)	
					(INCLUDES RECEPTACLE AS & WEDGE)	
		2	**155-2260**	1	KIT-CONNECTING PLUG (3-PIN)	
					(INCLUDES PLUG AS, WEDGE, & INTERFACE SEAL)	
I	24	2	**266-1961**	1	HOSE AS	
	25	2	**106-8704**	1	SUPPRESSOR AS-ARC	
		2	**102-8802**	1	KIT-RECEPTACLE (2-PIN)	
					(INCLUDES RECEPTACLE AS & WEDGE)	
		2	**186-3735**	2	PIN-CONNECTOR (16-GA TO 18-GA)	
	26	2	**109-1633**	1	CLIP (SLOT)	
	27	2	**109-1634**	1	CLIP (TAB)	
I	28	2	**236-5132**	1	HOSE AS	
	29	2	**3E-4080**	1	FITTING AS-AIR CONDITIONER	
		2	**3E-4052**	1	CAP-SEAL	
		2	**3E-4058**	1	VALVE AS	
	30	2	**3E-4087**	1	FITTING AS-AIR CONDITIONER	

223-1678 **LINES GP-AIR CONDITIONER** *(contd.)* **i02588540**

NOTE	REF NO	GRAPHIC REF	PART NUMBER	QTY	PART NAME 1 2 3 4 5 6 (PRODUCT LEVEL)	SEE PAGE
		2	**3E-4051**	1	CAP-SEAL	
		2	**3E-4057**	1	VALVE AS	
	31	2	**3S-2093**	4	STRAP-CABLE	
	32	1	**4D-7733**	6	CLIP	
	33	1,2	**4H-2558**	1	GROMMET	
	34	1,2	**4K-8302**	2	CLIP	
	35	2	**4P-7428**	1	CLIP	
	36	2	**4P-7429**	3	CLIP	
	37	1	**4P-7581**	1	CLIP	
	38	2	**4P-8134**	2	CLIP	
	39	1,2	**5P-4295**	2	CLIP	
	40	1	**6D-1641**	1	CLIP	
	41	2	**6K-8178**	1	CLIP	
	42	2	**6V-1228**	1	CLIP	
	43	2	**6V-2372**	1	ELBOW	
	44	2	**7T-8894**	1	GROMMET	
	45	2	**7T-9793**	1	VALVE (CHECK)	
	46	1,2	**7X-7729**	3	WASHER (11X25X3-MM THK)	
	47	1,2	**8T-4121**	8	WASHER-HARD (11X21X2.5-MM THK)	
M	48	2	**8T-4133**	1	NUT (M10X1.5-THD)	
M	49	1,2	**8T-4136**	6	BOLT (M10X1.5X25-MM)	
M	50	1	**8T-4137**	2	BOLT (M10X1.5X20-MM)	
M	51	1,2	**8T-4139**	2	BOLT (M12X1.75X30-MM)	
M	52	2	**8T-4196**	2	BOLT (M10X1.5X35-MM)	
	53	2	**8T-4223**	2	WASHER-HARD (13.5X25.5X3-MM THK)	
	54	1	**8T-4896**	1	WASHER-HARD (10.2X18.5X2.5-MM THK)	
M	55	2	**8T-6466**	1	BOLT (M10X1.5X60-MM)	
	56	2	**9M-8406**	2	CLIP	
	57	2	**9X-7378**	1	SEAL-O-RING	
	58	2	**9X-7380**	3	SEAL-O-RING	
	59	2	**9X-7381**	3	SEAL-O-RING	
	60	2	**9X-7382**	2	SEAL-O-RING	
	61	1,2	**9X-7383**	6	SEAL-O-RING	
	62	2	**9X-7385**	2	SEAL-O-RING	
D	63	2	**5P-6129**		TUBE (0.7-M)	
D	63A	2	**5P-6129**		TUBE (0.2-M EACH)	
D	63B	2	**5P-6129**		TUBE (0.4-M)	
	64	1	**224-9222**	1	BRACKET	

D-ORDER BY THE METER
E-ORDER BY THE CENTIMETER
I-REFER TO HYDRAULIC INFORMATION SYSTEM
M-METRIC PART

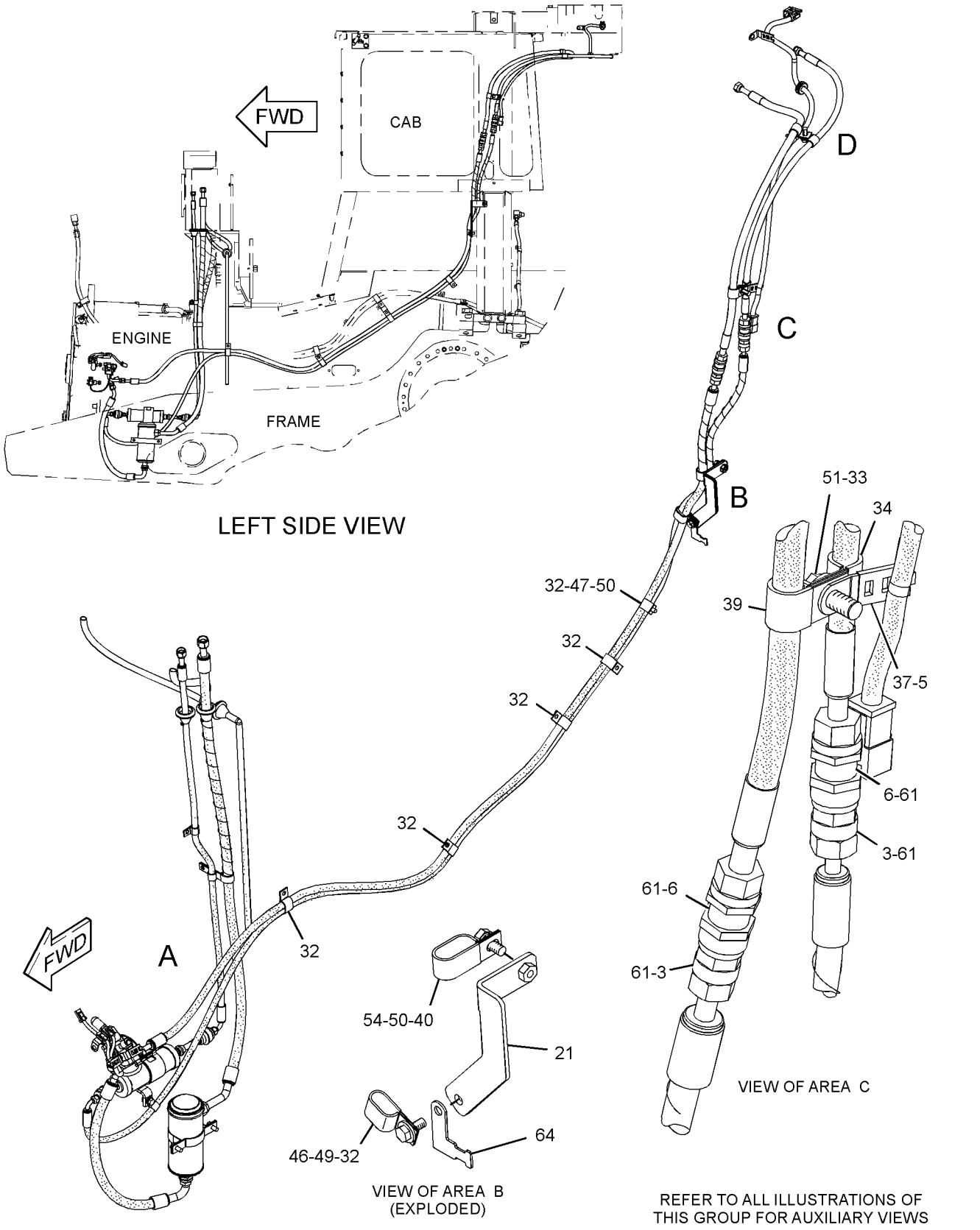

GRAPHIC #1

g01365223

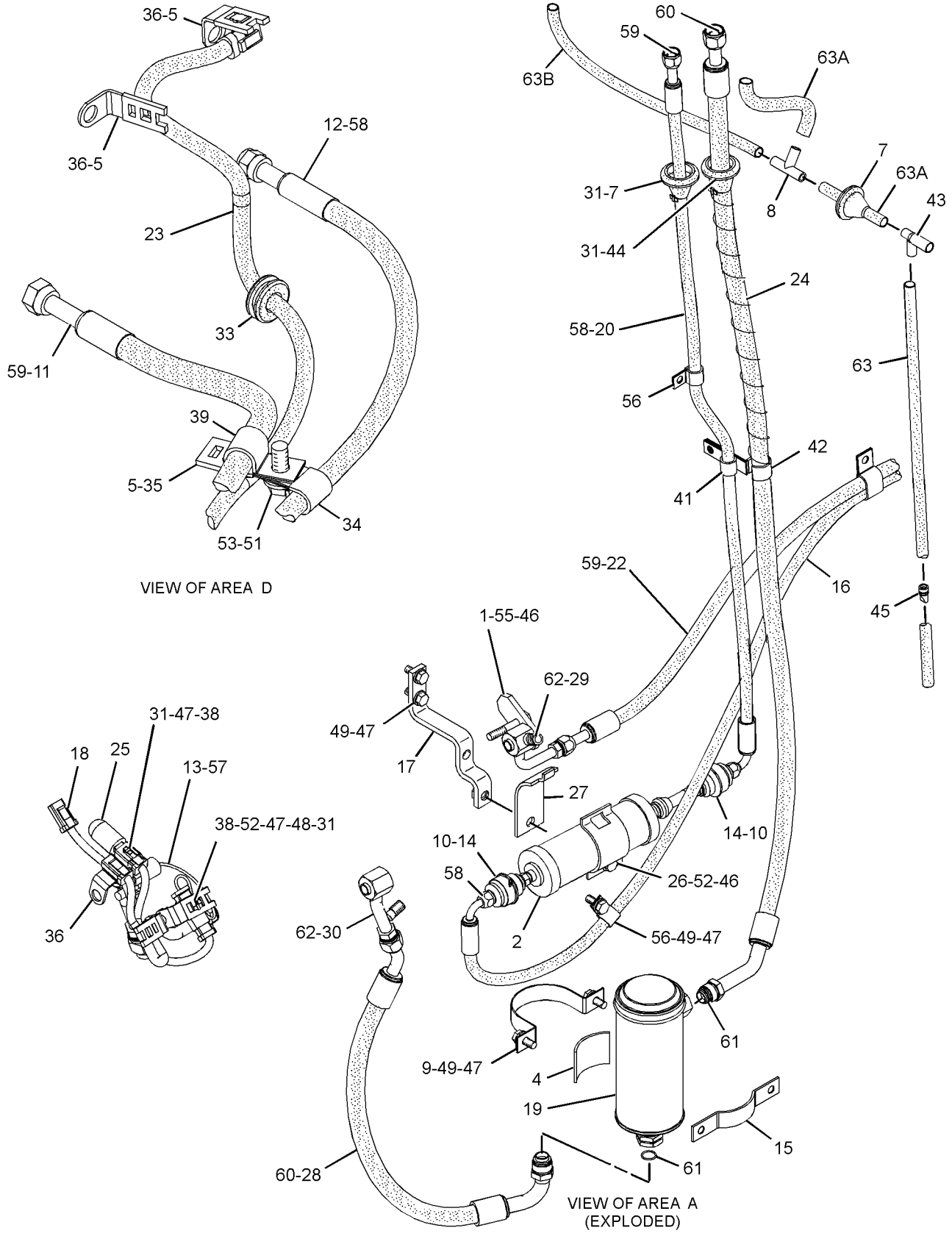

GRAPHIC #2

<END>

g01381880

OPERATOR STATION

223-1680 LINES GP-HEATER

S/N: SMC1-UP; GCT1-UP
PART OF 272-3477, 289-9878 CAB AR
ALSO AN ATTACHMENT

SMCS-7304 **i02748430**

NOTE	REF NO	GRAPHIC REF	PART NUMBER	QTY	PART NAME 1 2 3 4 5 6 (PRODUCT LEVEL)	SEE PAGE
	1	1	**1W-2860**	1	BRACKET	
	2	1	**7C-8246**	1	SPACER (10.5X20X24-MM THK)	
	3	1	**9G-7101**	1	SPACER (10.5X20X30-MM THK)	
	4	1	**165-2273**	2	VALVE AS-SHUTOFF	
					(EACH INCLUDES)	
		1	**6V-7238**	1	VALVE-SHUTOFF	
		1	**3K-0360**	1	SEAL-O-RING	
	5	1	**294-5076**	1	PLATE AS	
	6	1	**203-2789**	1	BRACKET AS	
	7	1	**039-8557**	1	WASHER (13X26X6-MM THK)	
	8	1	**137-6722**	1	CLIP	
	9	1	**159-1503**	4	CLAMP-HOSE	
	10	1	**8M-2769**	1	CLIP	
	11	1	**6D-4247**	4	CLIP	
	12	1	**6D-4636**	2	CLIP	
	13	1	**8S-0948**	1	CLIP	
	14	1	**8T-4121**	11	WASHER-HARD (11X21X2.5-MM THK)	
M	15	1	**8T-4133**	1	NUT (M10X1.5-THD)	
M	16	1	**8T-4136**	5	BOLT (M10X1.5X25-MM)	
M	17	1	**8T-4137**	1	BOLT (M10X1.5X20-MM)	
M	18	1	**8T-4182**	1	BOLT (M10X1.5X45-MM)	
M	19	1	**8T-4185**	1	BOLT (M10X1.5X50-MM)	
M	20	1	**8T-4195**	2	BOLT (M10X1.5X30-MM)	
	21	1	**8T-4223**	1	WASHER-HARD (13.5X25.5X3-MM THK)	
M	22	1	**8T-4779**	1	BOLT (M16X2X35-MM)	
M	23	1	**8T-4956**	1	BOLT (M12X1.75X35-MM)	
	24	1	**9X-8257**	1	WASHER (17.5X30X3.5-MM THK)	
E	25	1	**7X-7702**		CONDUIT-FLEXIBLE (48-CM)	
E	26	1	**5P-0767**		HOSE (300-CM)	
E	26A	1	**5P-0767**		HOSE (234-CM)	
C	27	1	*194-2903*	1	ELBOW AS	
		1	**8T-0119**	1	ELBOW	
		1	**3K-0360**	1	SEAL-O-RING	

C-CHANGE FROM PREVIOUS TYPE
E-ORDER BY THE CENTIMETER
M-METRIC PART

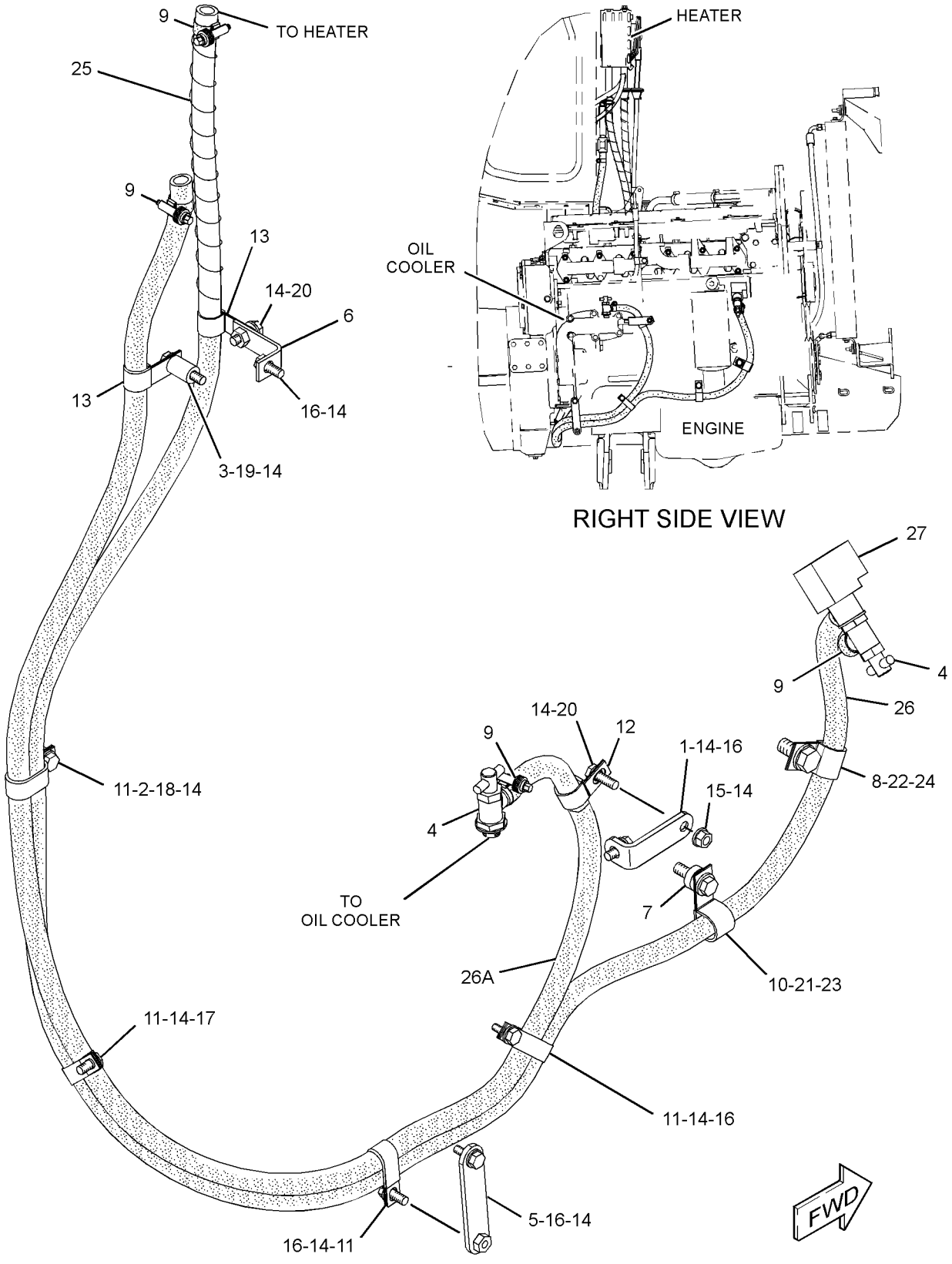

GRAPHIC #1 **<END>** g01323409

OPERATOR STATION

9P-9392 MIRROR GP-REAR VIEW–OPEN ROPS

S/N: SMC1-UP; GCT1-UP
PART OF 208-8706 ROPS GP-OPEN
AN ATTACHMENT

SMCS-7319 **i00568406**

NOTE	REF NO	GRAPHIC REF	PART NUMBER	QTY	PART NAME 1 2 3 4 5 6 (PRODUCT LEVEL)	SEE PAGE
	1	1	**5S-7379**	2	BOLT (3/8-16X0.875-IN)	
		1	**5P-1075**	2	WASHER-HARD (10.2X22.5X3-MM THK)	
	2	1	**9P-9390**	1	BRACKET	
	3	1	**9P-9388**	1	KNOB	
	4	1	**5P-6874**	1	MIRROR	
	5	1	**5K-9179**	1	BOLT-ROUND HEAD (3/8-16X11-IN)	

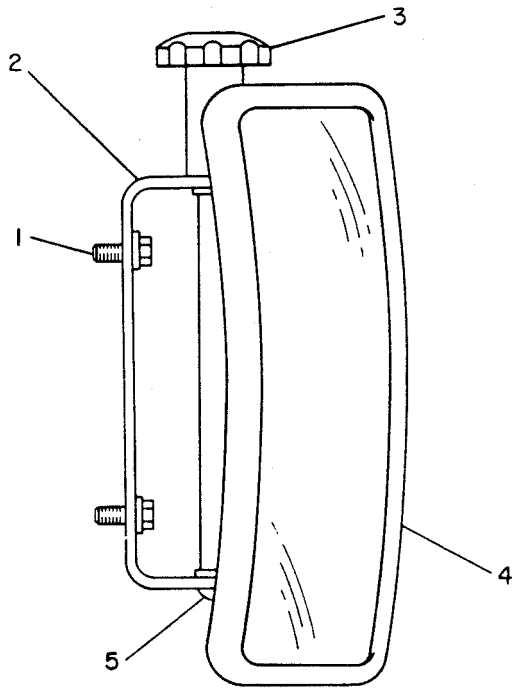

GRAPHIC #1 **<END>** g00143265

105-9659 MIRROR GP-REAR VIEW—CAB

S/N: SMC1-UP; GCT1-UP
PART OF 158-7694 CAB AR
ALSO AN ATTACHMENT

SMCS-7319 **i00599732**

NOTE	REF NO	GRAPHIC REF	PART NUMBER	QTY	PART NAME 1 2 3 4 5 6 (PRODUCT LEVEL)	SEE PAGE
	1	1	**9P-9388**	1	KNOB	
	2	1	**5P-6874**	1	MIRROR	
	3	1	**5K-9179**	1	BOLT-ROUND HEAD (3/8-16X11-IN)	
	4	1	**6Y-5113**	1	BRACKET	
	5	1	**8T-4121**	2	WASHER-HARD (11X21X2.5-MM THK)	
M	6	1	**8T-4195**	2	BOLT (M10X1.5X30-MM)	

M-METRIC PART

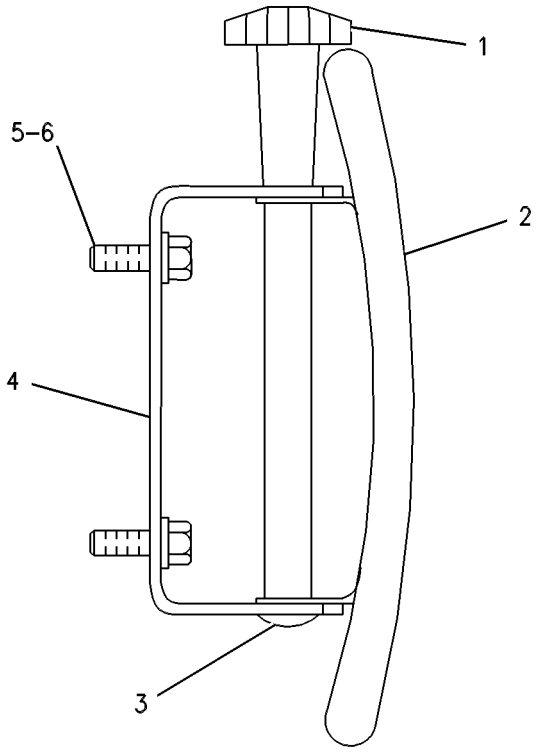

GRAPHIC #1 **<END>** g00254288

OPERATOR STATION

166-6928 MODULE GP-QUAD GAUGE

S/N: SMC1-UP; GCT1-UP
PART OF 283-0655, 283-0656 INSTRUMENT GP
ALSO AN ATTACHMENT

SMCS-7450, 7451, 7490 **i01883788**

NOTE	REF NO	GRAPHIC REF	PART NUMBER	QTY	PART NAME 1 2 3 4 5 6 (PRODUCT LEVEL)	SEE PAGE
	1	1	**102-8805**	1	KIT-RECEPTACLE (6-PIN)	
					(INCLUDES RECEPTACLE AS & WEDGE)	
	2	1	**8T-8729**	6	PIN-CONNECTOR	
	3	1	**3E-3383**	1	WEDGE-RECEPTACLE LOCK (6-PIN)	

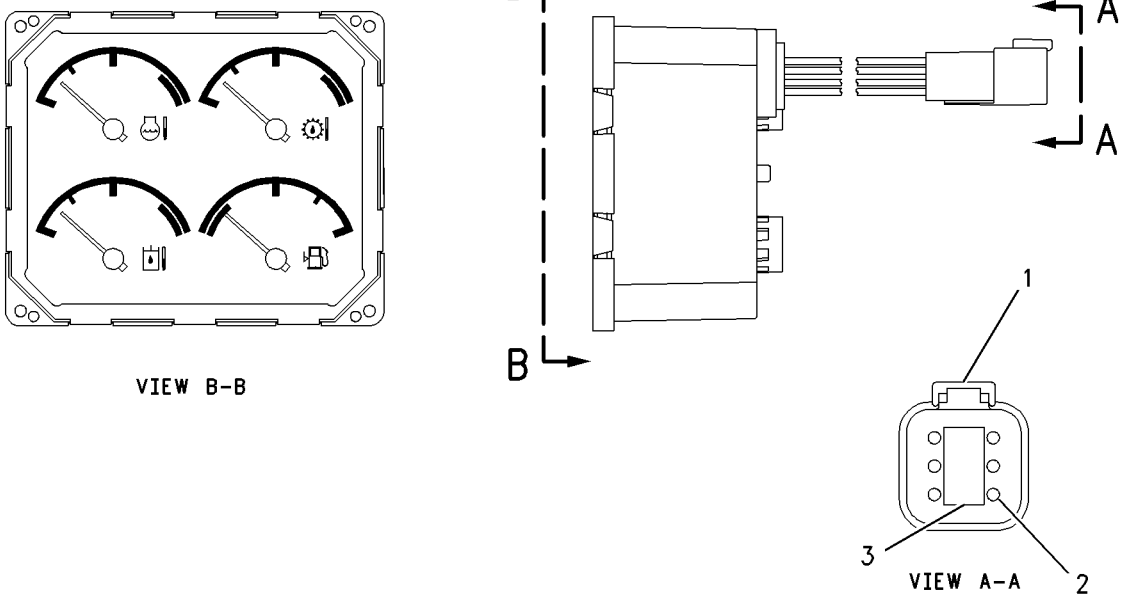

GRAPHIC #1 **<END>** g00690309

OPERATOR STATION

286-9124 MONITOR AS–LIGHT BAR

S/N: SMC1-UP; GCT1-UP

PART OF 290-5571, 292-0280 GRADE CONTROL AR-SATELLITE

SMCS-7431 **i02618799**

NOTE	REF NO	GRAPHIC REF	PART NUMBER	QTY	PART NAME 1 2 3 4 5 6 (PRODUCT LEVEL)	SEE PAGE
	1	1	**230-5009**	1	RECEPTACLE AS-CONNECTOR (4-PIN)	
	2	1	**9X-3402**	3	SOCKET-CONNECTOR (16-GA TO 18-GA)	
	3	1	**8T-8737**	1	PLUG-SEAL	

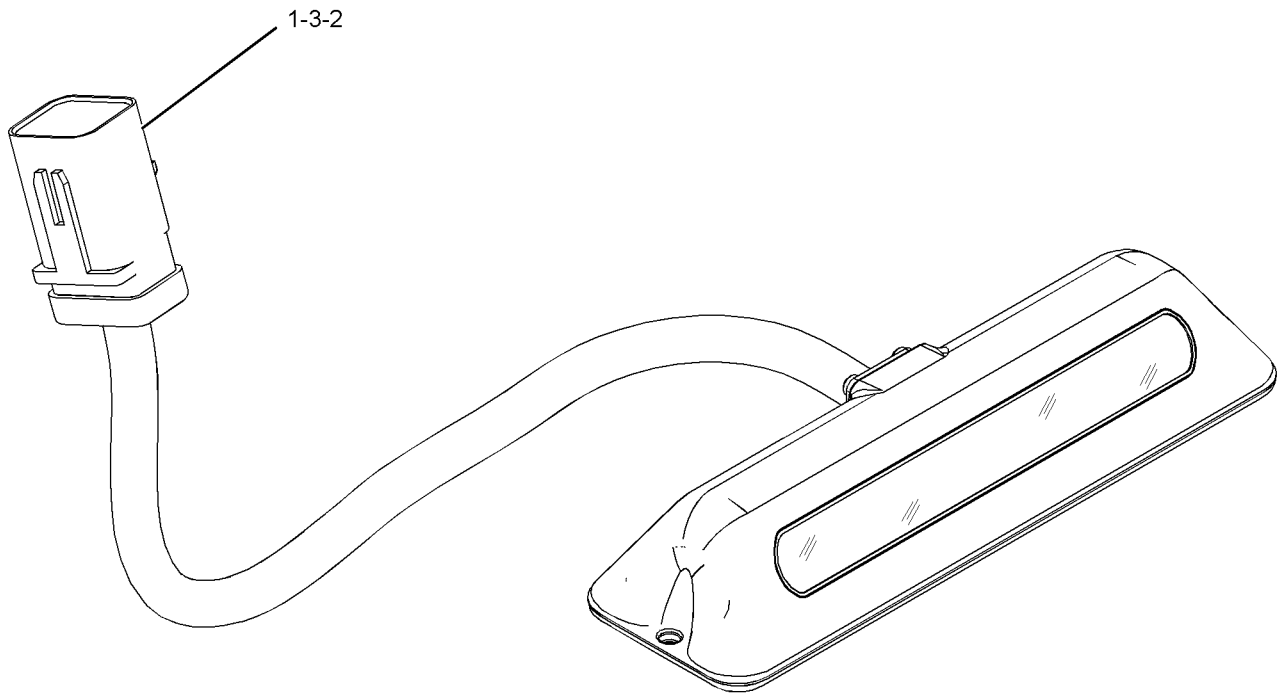

GRAPHIC #1 **<END>** g01313338

OPERATOR STATION

147-7976 MOTOR GP-WINDOW WIPER–FRONT

S/N: SMC1-UP; GCT1-UP
PART OF 224-4357 WIPER GP-WINDOW
ALSO AN ATTACHMENT

SMCS-7305 **i01871612**

NOTE	REF NO	GRAPHIC REF	PART NUMBER	QTY	PART NAME 1 2 3 4 5 6 (PRODUCT LEVEL)	SEE PAGE
M	1	1	**5C-7261**	1	NUT (M8X1.25-THD)	
	2	1	**3F-9556**	1	LOCKWASHER	
	3	1	**102-8805**	1	KIT-RECEPTACLE (6-PIN)	
					(INCLUDES RECEPTACLE AND WEDGE)	
	4	1	**9G-3695**	1	PLUG (GROMMET SEALING)	
	5	1	**8T-8729**	5	PIN-CONNECTOR	

M-METRIC PART

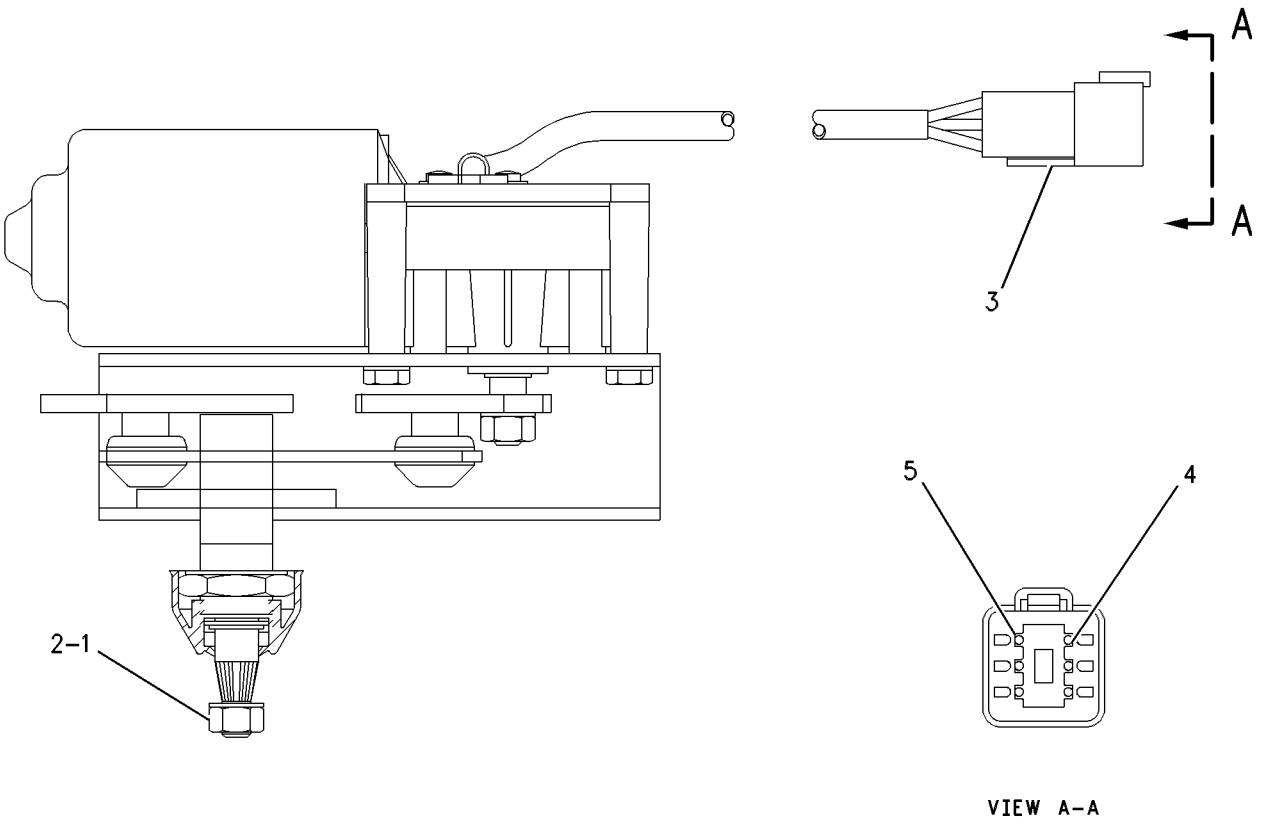

VIEW A–A

GRAPHIC #1 **<END>** g00464037

OPERATOR STATION

147-7979 MOTOR GP-WINDOW WIPER–REAR

S/N: SMC1-UP; GCT1-UP
24 VOLT
PART OF 224-4357 WIPER GP-WINDOW
ALSO AN ATTACHMENT

SMCS-7305 **i01082860**

NOTE	REF NO	GRAPHIC REF	PART NUMBER	QTY	PART NAME 1 2 3 4 5 6 (PRODUCT LEVEL)	SEE PAGE
M	1	1	**5C-7261**	1	NUT (M8X1.25-THD)	
	2	1	**3F-9556**	1	LOCKWASHER	
	3	1	**102-8805**	1	KIT-RECEPTACLE (6-PIN)	
					(INCLUDES RECEPTACLE AS & WEDGE)	
	4	1	**9G-3695**	1	PLUG (GROMMET SEALING)	
	5	1	**8T-8729**	5	PIN-CONNECTOR	

M-METRIC PART

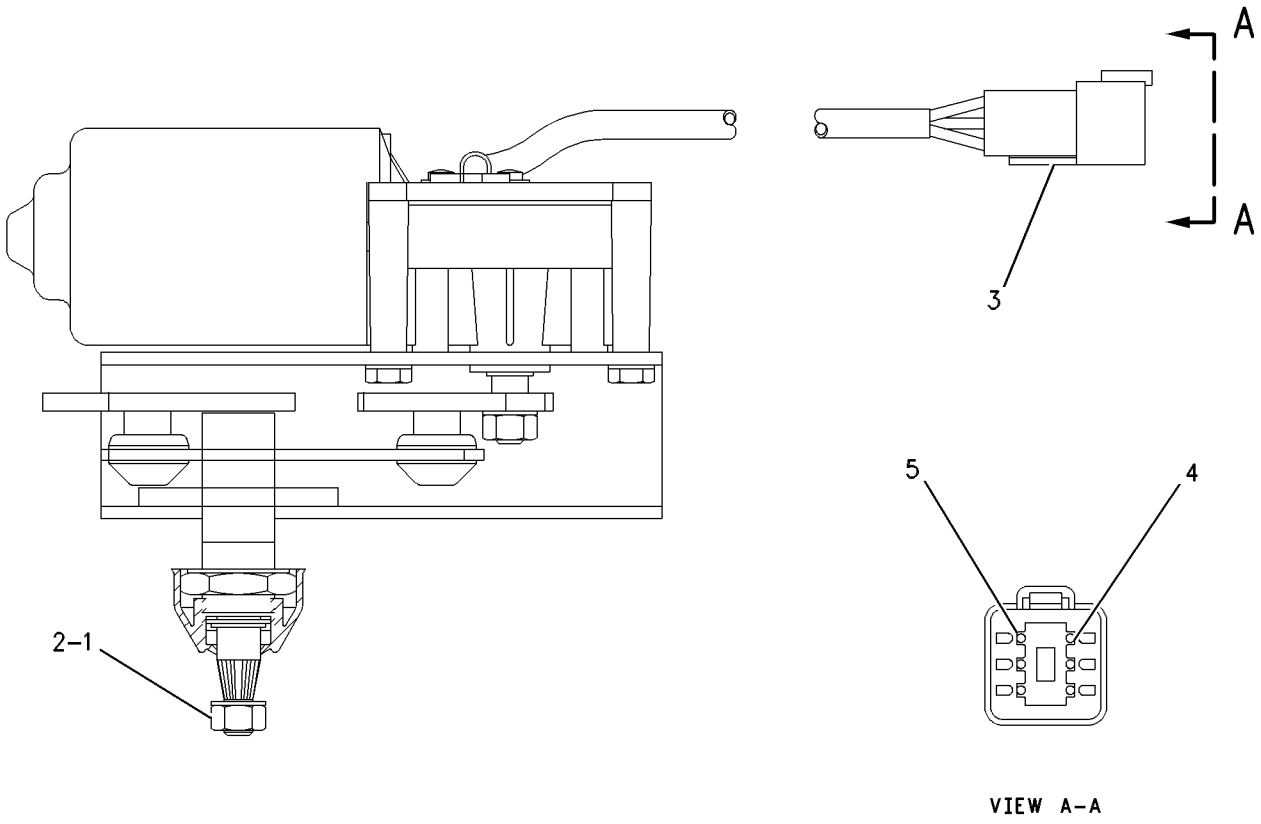

GRAPHIC #1 **<END>** g00464037

221-3450 MOTOR GP-WINDOW WIPER—DOOR, RH

S/N: SMC1-UP; GCT1-UP
24-VOLT. DOOR, RH
PART OF 224-4357 WIPER GP-WINDOW
ALSO AN ATTACHMENT

SMCS-7305 **i02624543**

NOTE	REF NO	GRAPHIC REF	PART NUMBER	QTY	PART NAME 1 2 3 4 5 6 (PRODUCT LEVEL)	SEE PAGE
	1	1	**3F-9556**	1	LOCKWASHER	
M	2	1	**5C-7261**	1	NUT (M8X1.25-THD)	
	3	1	**8T-8737**	1	PLUG-SEAL	
	4	1	**102-8805**	1	KIT-RECEPTACLE (6-PIN)	
					(INCLUDES RECEPTACLE AS & WEDGE)	
	5	1	**186-3735**	5	PIN-CONNECTOR (16-GA TO 18-GA)	

M-METRIC PART

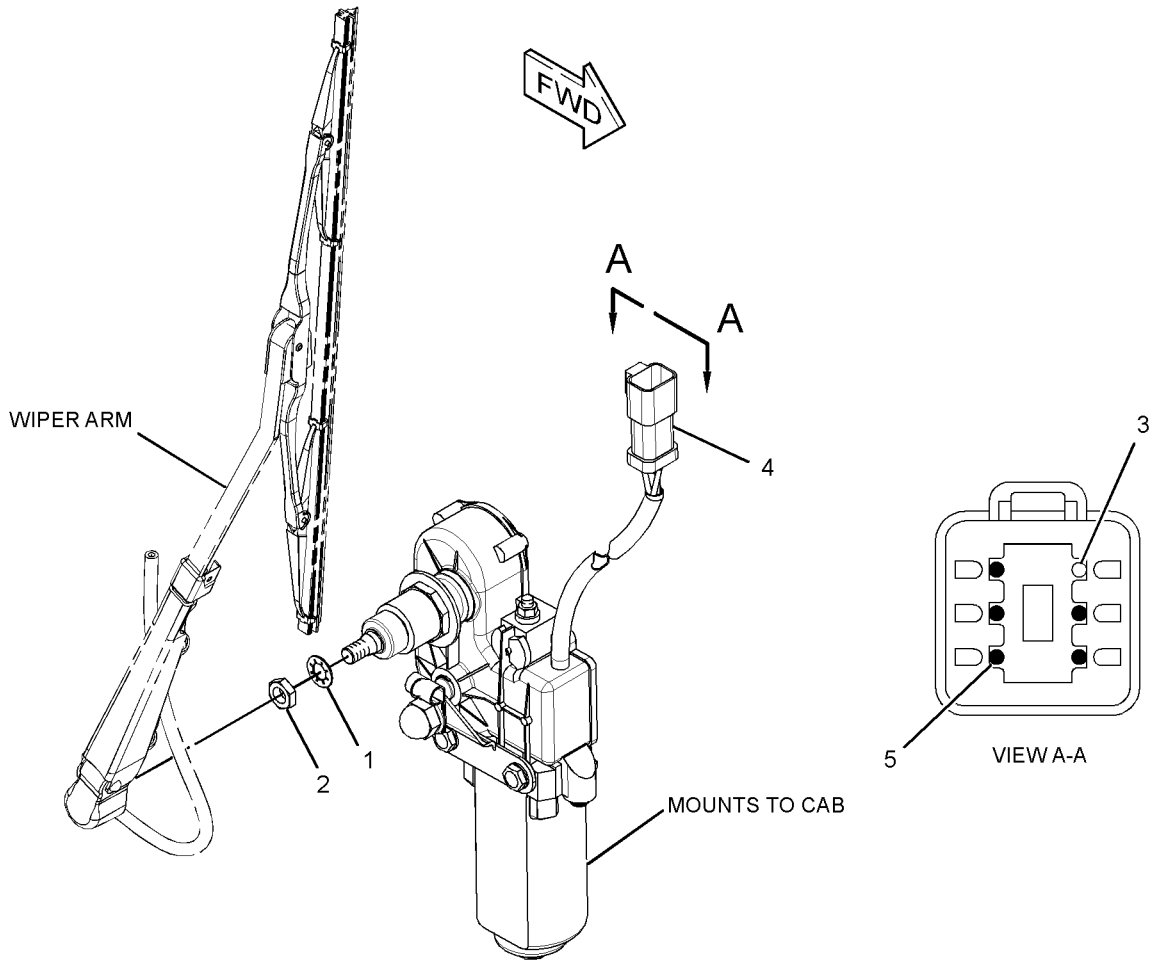

GRAPHIC #1 **<END>** g01326607

221-3451 MOTOR GP-WINDOW WIPER—DOOR, LH

S/N: SMC1-UP; GCT1-UP
24-VOLT. DOOR, LH
PART OF 224-4357 WIPER GP-WINDOW
ALSO AN ATTACHMENT

SMCS-7305 **i02624506**

NOTE	REF NO	GRAPHIC REF	PART NUMBER	QTY	PART NAME 1 2 3 4 5 6 (PRODUCT LEVEL)	SEE PAGE
	1	1	**102-8805**	1	KIT-RECEPTACLE (6-PIN)	
					(INCLUDES RECEPTACLE AS & WEDGE)	
	2	1	**186-3735**	5	PIN-CONNECTOR (16-GA TO 18-GA)	
	3	1	**8T-8737**	1	PLUG-SEAL	
M	4	1	**5C-7261**	1	NUT (M8X1.25-THD)	
	5	1	**3F-9556**	1	LOCKWASHER	

M-METRIC PART

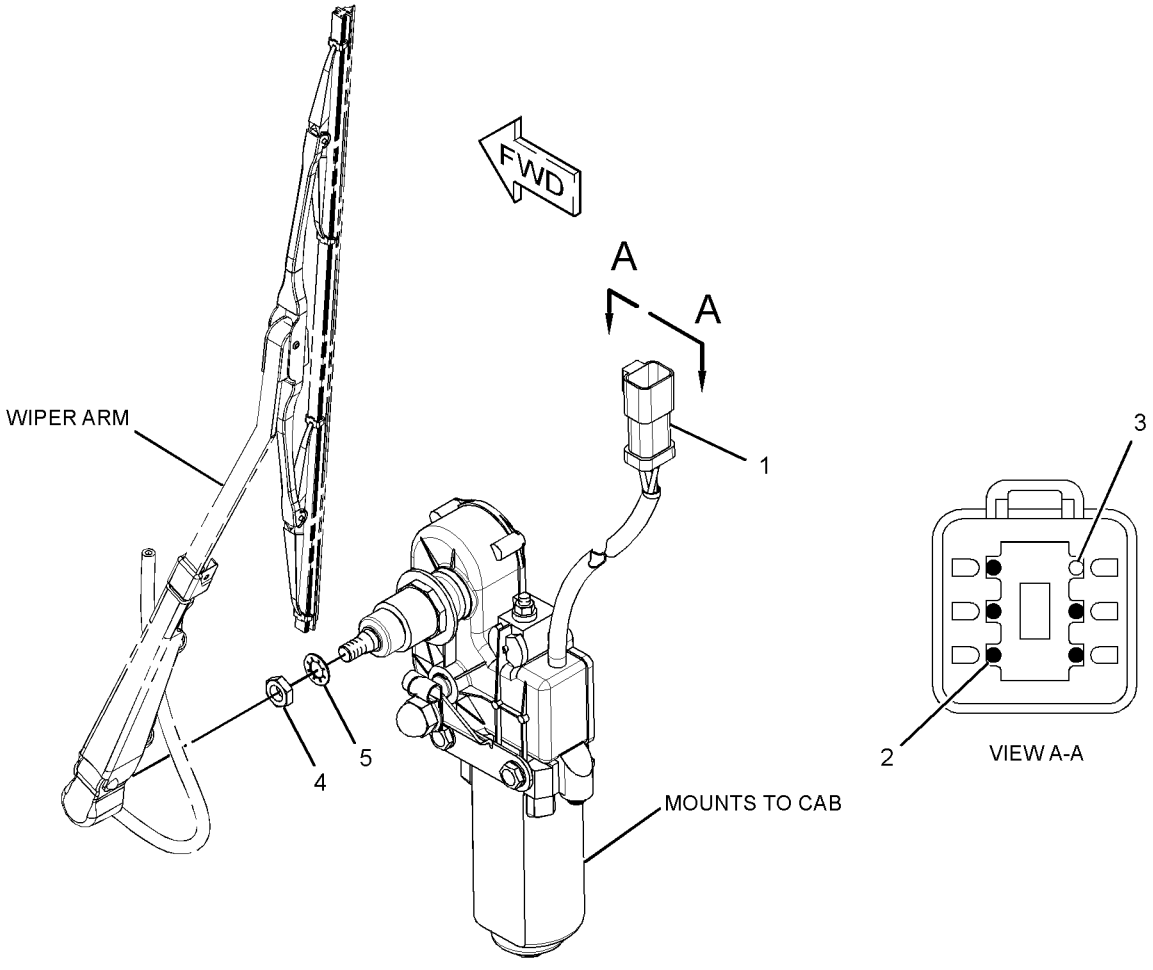

GRAPHIC #1 **<END>** g01326608

OPERATOR STATION

237-9140 MOUNTING GP-ANTENNA–GRADE CONTROL

S/N: SMC1-UP; GCT1-UP

PART OF 239-5120 MOUNTING GP-GRADE CONTROL

AN ATTACHMENT

SMCS-7606 **i02454131**

NOTE	REF NO	GRAPHIC REF	PART NUMBER	QTY	PART NAME 1 2 3 4 5 6 (PRODUCT LEVEL)	SEE PAGE
	1	1	**239-5103**	1	PLATE AS	
	2	1	**5P-1076**	2	WASHER-HARD (13.5X30X4-MM THK)	
M	3	1	**8T-4139**	2	BOLT (M12X1.75X30-MM)	

M-METRIC PART

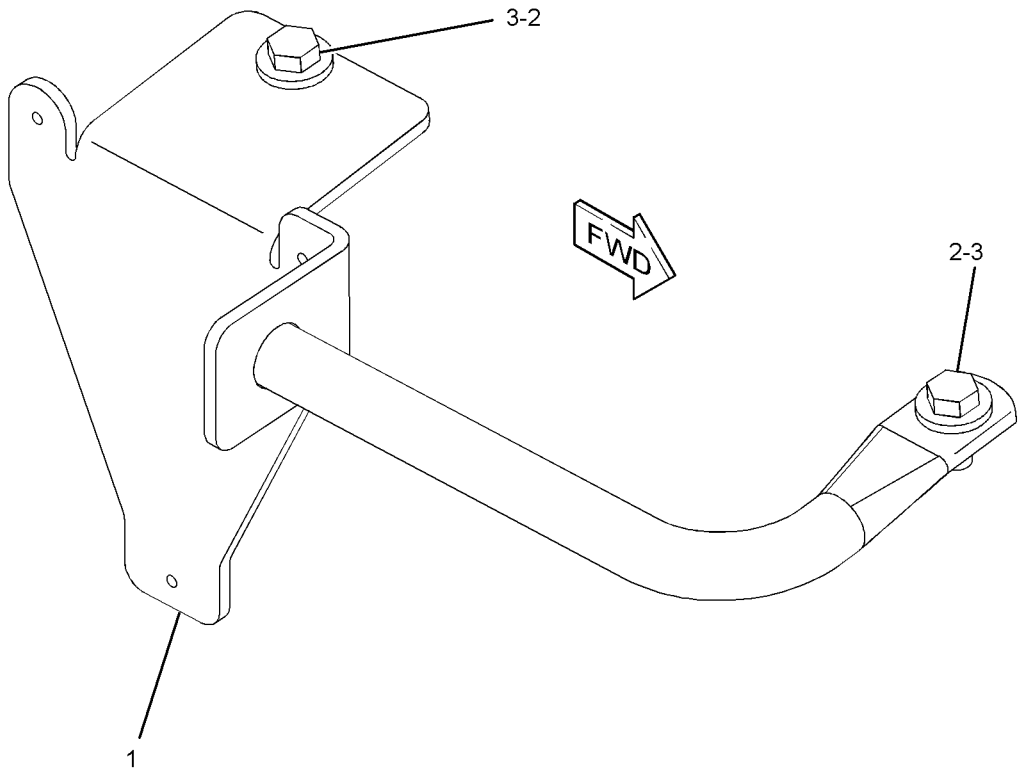

GRAPHIC #1 **<END>** g01164187

OPERATOR STATION

169-9637 MOUNTING GP-CAB

S/N: SMC1-UP; GCT1-UP
PART OF 272-3477, 289-9878 CAB AR
ALSO AN ATTACHMENT

SMCS-7266, 7301 **i02438814**

NOTE	REF NO	GRAPHIC REF	PART NUMBER	QTY	PART NAME 1 2 3 4 5 6 (PRODUCT LEVEL)	SEE PAGE
	1	1	**9G-0986**	1	SEAL	
	2	1	**9G-0983**	2	SEAL	
D	3	1	**5P-7514**		SEAL (2.1-M)	
	4	1	**9G-0990**	1	SEAL	
	5	1	**113-6033**	1	ANGLE	
M	6	1	**189-5358**	2	BOLT (M10X1.5X60-MM)	
	7	1	**7X-3392**	31	WASHER-HARD (13.5X22.5X3-MM THK)	
	8	1	**171-2438**	7	BOLT-12 POINT HEAD (M12X1.75X30-MM)	
M	9	1	**8T-4136**	8	BOLT (M10X1.5X25-MM)	
	10	1	**7X-7729**	8	WASHER (11X25X3-MM THK)	
D	11	1	**5P-7513**		SEAL (4.2-M)	
	12	1	**277-8990**	2	WASHER-HARD (11X25X3-MM THK)	
	13	1	**189-6123**	12	BOLT-12 POINT HEAD (M12X1.75X60-MM)	

D-ORDER BY THE METER
M-METRIC PART

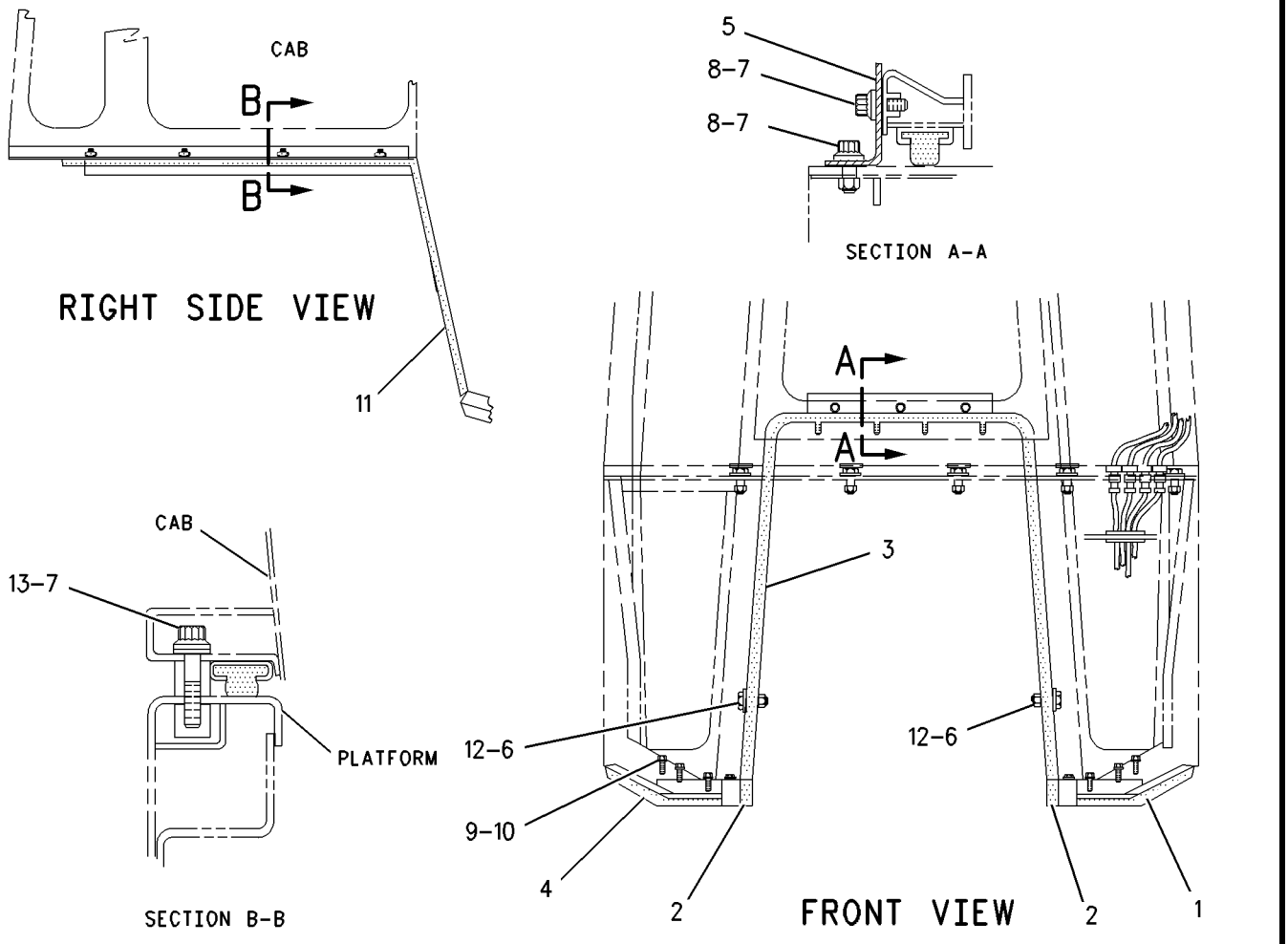

GRAPHIC #1 **<END>** g00722402

OPERATOR STATION

303-4142 MOUNTING GP-CONTROL–CONSOLE, LH

S/N: SMC1-UP; GCT1-UP

PART OF 269-2046 POWER TRAIN AR

SMCS-5063 **i02752167**

NOTE	REF NO	GRAPHIC REF	PART NUMBER	QTY	PART NAME 1 2 3 4 5 6 (PRODUCT LEVEL)	SEE PAGE
	1	1	**3E-4048**	1	CAP-PLUG	
	2	1	**266-1585**	1	PLUG AS-CODE (POWER TRAIN)	
		1	**102-8805**	1	KIT-RECEPTACLE (6-PIN)	
					(INCLUDES RECEPTACLE AS & WEDGE)	
		1	**9G-3695**	3	PLUG (GROMMET SEALING)	
		1	**9X-3401**	3	PIN-CONNECTOR (16-GA TO 18-GA)	
M	3	1	**150-4086**	2	SCREW (M4X0.7X16-MM)	
	4	1	**7X-7729**	8	WASHER (11X25X3-MM THK)	
M	5	1	**8T-4137**	8	BOLT (M10X1.5X20-MM)	

M-METRIC PART

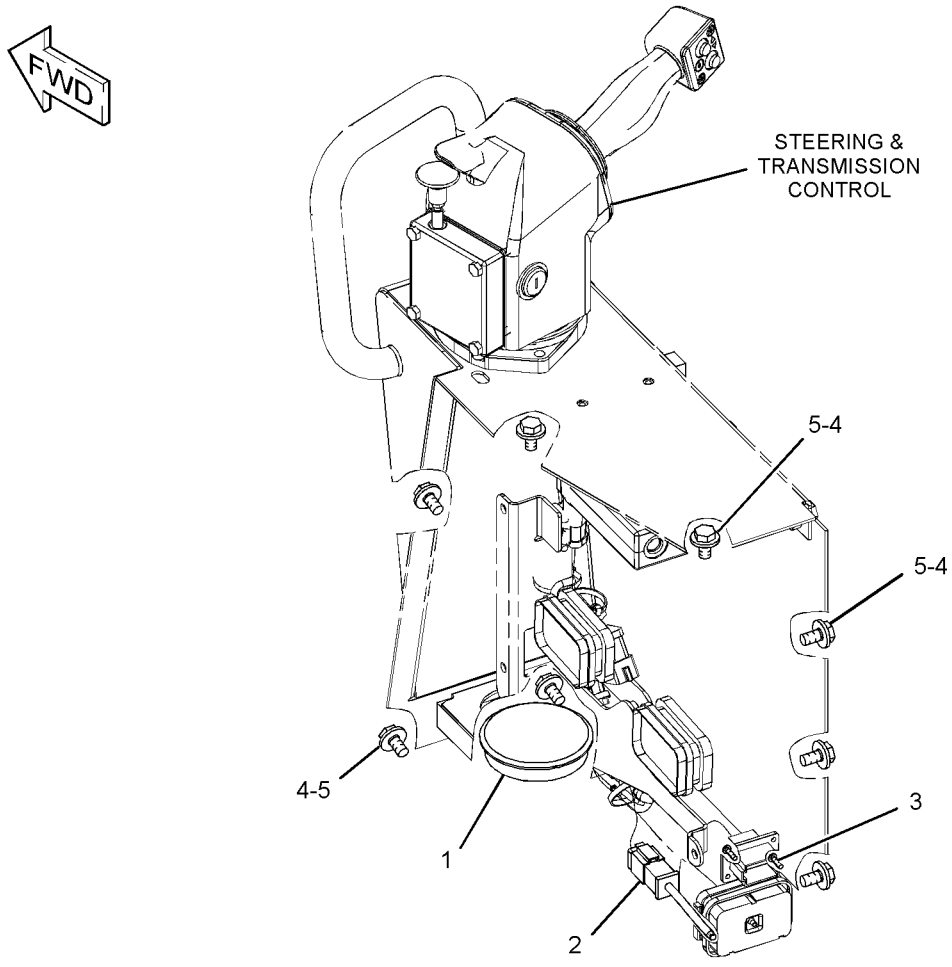

GRAPHIC #1 **<END>** g01359144

OPERATOR STATION

252-6945 MOUNTING GP-MONITOR—GRADE CONTROL

S/N: SMC1-UP; GCT1-UP
DISPLAY
PART OF 283-2442 GRADE CONTROL AR
AN ATTACHMENT

SMCS-7490 **i02765219**

NOTE	PART NUMBER	QTY	PART NAME 1 2 3 4 5 6 (PRODUCT LEVEL)	SEE PAGE
Y	*296-0612*	1	MOUNTING GP-MONITOR	700
	167-8712	1	ALARM	
	300-6142	1	BRACKET	
	298-6397	1	HARNESS AS-MONITOR (LASER)	
	237-0336	1	COVER	
	155-2260	1	KIT-CONNECTING PLUG (3-PIN)	
			(INCLUDES PLUG AS, WEDGE, & INTERFACE SEAL)	
	147-1444	1	PLUG AS-CONNECTOR (70-PIN)	
	160-7689	1	PLUG AS-CONNECTOR (70-PIN)	
	102-8803	1	KIT-RECEPTACLE (3-PIN)	
			(INCLUDES RECEPTACLE AS & WEDGE)	
	300-5501	1	HARNESS AS-MONITOR (GPS)	
	251-7591	1	WIRE AS	
	126-1774	1	COVER-CONNECTOR	
	155-2260	1	KIT-CONNECTING PLUG (3-PIN)	
			(INCLUDES PLUG AS, WEDGE, & INTERFACE SEAL)	
	160-7689	1	PLUG AS-CONNECTOR (70-PIN)	
	248-5358	1	PLUG AS-CONNECTOR (39-PIN)	
	9X-6772	2	STRAP-CABLE	
	7K-1181	1	STRAP-CABLE	

Y-SEPARATE ILLUSTRATION

<END>

OPERATOR STATION

296-0612 MOUNTING GP-MONITOR—GRADE CONTROL

S/N: SMC1-UP; GCT1-UP

PART OF 252-6945 MOUNTING GP-MONITOR

AN ATTACHMENT

SMCS-7490 **i02765236**

NOTE	REF NO	GRAPHIC REF	PART NUMBER	QTY	PART NAME 1 2 3 4 5 6 (PRODUCT LEVEL)	SEE PAGE
	1	1	**222-9151**	2	WASHER-HARD (11X32X5-MM THK)	
	2	1	**245-8334**	2	KNOB	
	3	1	**296-0614**	1	BRACKET AS	
	4	1	**296-2861**	1	BRACKET AS	
	5	1	**299-5417**	1	SWIVEL AS	
	6	1	**299-5418**	1	PIVOT AS-LOWER	
M	7	1	**5C-2890**	1	NUT (M6X1-THD)	
M	8	1	**7X-7888**	1	BOLT (M6X1X90-MM)	
M	9	1	**8T-0389**	1	LOCKNUT (M10X1.15-THD)	
M	10	1	**8T-0639**	4	BOLT (M6X1X12-MM)	
	11	1	**8T-4121**	3	WASHER-HARD (11X21X2.5-MM THK)	
M	12	1	**8T-4195**	2	BOLT (M10X1.5X30-MM)	
M	13	1	**8T-7852**	6	BOLT (M4X0.7X10-MM)	
	14	1	**9X-8256**	10	WASHER (6.6X12X2-MM THK)	
	15	1	**4P-7581**	1	CLIP	

M-METRIC PART

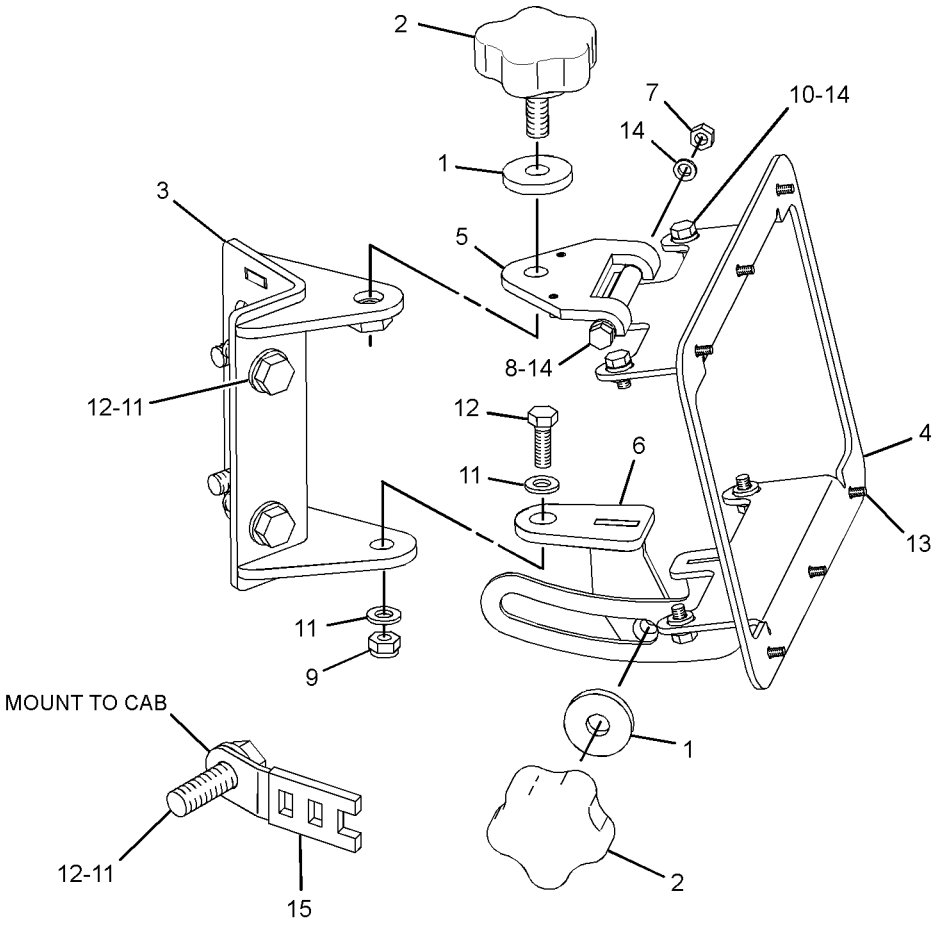

GRAPHIC #1 **<END>** g01389784

OPERATOR STATION

220-2810 MOUNTING GP-PLATFORM–OPEN ROPS

S/N: SMC1-UP; GCT1-UP
PART OF 283-0581 CANOPY AR
AN ATTACHMENT

SMCS-7253 **i02455543**

NOTE	REF NO	GRAPHIC REF	PART NUMBER	QTY	PART NAME 1 2 3 4 5 6 (PRODUCT LEVEL)	SEE PAGE
	1	1	**3T-3634**	1	HANDRAIL	
	2	1	**5P-0998**	3	PLUG-SEAL	
	3	1	**6I-9706**	1	RETAINER AS	
M		1	**6V-9632**	4	NUT-WELD (M6X1-THD)	
	4	1	**6Y-0206**	2	RETAINER	
	5	1	**6Y-8114**	2	SPACER (13.8X23.75X12.7-MM THK)	
	6	1	**7G-4824**	1	STRAP	
	7	1	**7T-6299**	1	GROMMET	
	8	1	**8E-7791**	1	STRAP	
	9	1	**127-3018**	1	HANDHOLD	
	10	1	**141-2240**	1	PLATE	
M	11	1	**184-0982**	4	SCREW-PAN HEAD (M6X1X16-MM)	
Y	12	1	*192-3016*	1	COVER GP-CONSOLE (INSTRUMENT PANEL)	656
	13	1	**237-0204**	1	FLOORPLATE AS	
	14	1	**237-0205**	1	FLOORPLATE AS	
	15	1	**241-4342**	1	GASKET	
	16	1	**241-4344**	1	GASKET	
	17	1	**241-7917**	1	HOUSING	
	18	1	**241-7919**	1	PLATE	
	19	1	**261-8619**	1	FLOOR MAT	
	20	1	**198-9706**	4	SCREW-TRUSS HEAD (M5X0.8X16-MM)	
	21	1	**5P-1076**	10	WASHER-HARD (13.5X30X4-MM THK)	
	22	1	**5P-4115**	2	WASHER-HARD (7.2X19X2-MM THK)	
	23	1	**5P-4116**	2	WASHER-HARD (8.8X20.5X2-MM THK)	
	24	1	**7X-7729**	10	WASHER (11X25X3-MM THK)	
M	25	1	**8T-4136**	8	BOLT (M10X1.5X25-MM)	
M	26	1	**8T-4137**	2	BOLT (M10X1.5X20-MM)	
M	27	1	**8T-4138**	2	BOLT (M6X1X20-MM)	
M	28	1	**8T-4139**	10	BOLT (M12X1.75X30-MM)	
M	29	1	**8T-4189**	2	BOLT (M8X1.25X20-MM)	
M	30	1	**8T-4194**	2	BOLT (M12X1.75X50-MM)	
	31	1	**8T-4223**	2	WASHER-HARD (13.5X25.5X3-MM THK)	
	32	1	**8T-8908**	2	BOLT (1/4-20X1-IN)	
	33	1	**9D-3769**	1	GROMMET	
	34	1	**9X-8256**	2	WASHER (6.6X12X2-MM THK)	

M-METRIC PART
Y-SEPARATE ILLUSTRATION

220-2810 **MOUNTING GP-PLATFORM** *(contd.)* **i02455543**

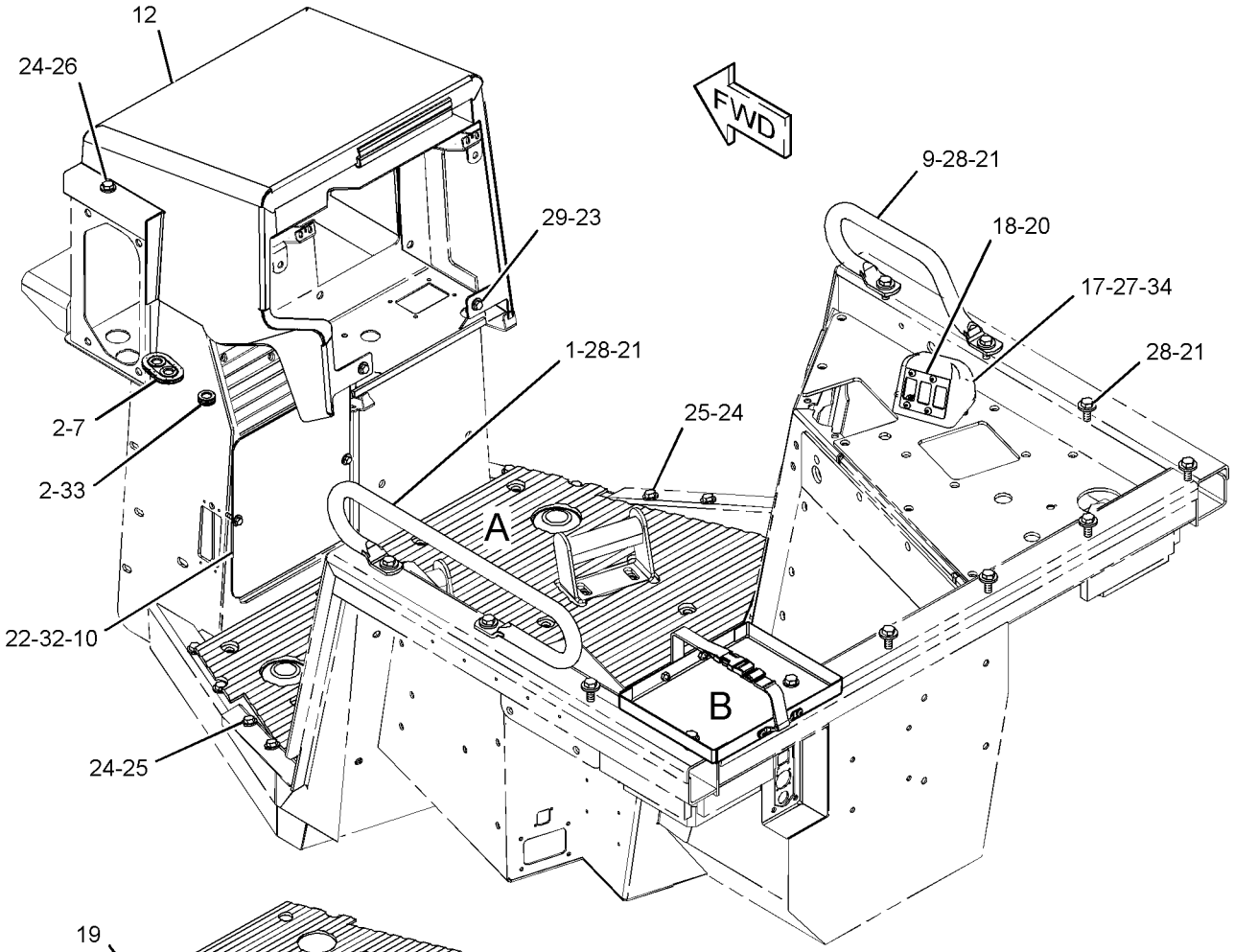

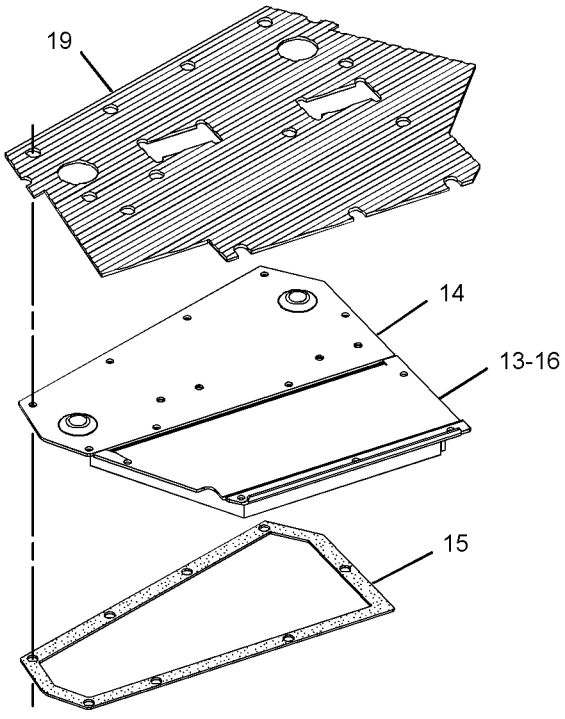

VIEW OF AREA A

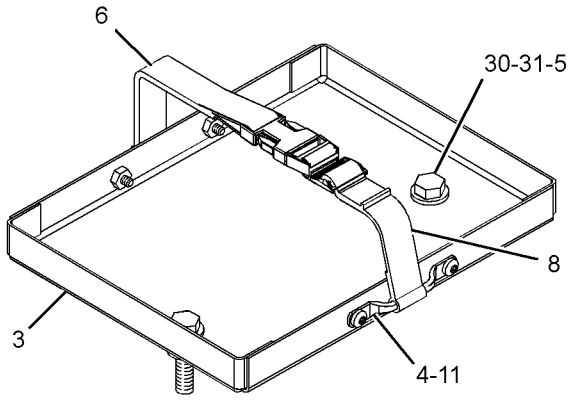

VIEW OF AREA B

GRAPHIC #1 **<END>** g01206550

259-4746 MOUNTING GP-RADIO—GRADE CONTROL

S/N: SMC1-UP; GCT1-UP
GLOBAL POSITIONING SYSTEM
PART OF 292-0296 MOUNTING GP-GRADE CONTROL

SMCS-7338 **i02618867**

NOTE	REF NO	GRAPHIC REF	PART NUMBER	QTY	PART NAME 1 2 3 4 5 6 (PRODUCT LEVEL)	SEE PAGE
	1	1	**8C-5607**	6	MOUNT-ISOLATION	
	2	1	**8C-5608**	3	SPACER (6.5X9.5X25.4-MM THK)	
	3	1	**140-7480**	1	BRACKET-MOUNTING	
	4	1	**167-8610**	1	BRACKET AS	
	5	1	**5S-7349**	2	BOLT (1/4-20X0.5-IN)	
	6	1	**8T-4205**	2	WASHER-HARD (7.2X14.5X2-MM THK)	
M	7	1	**9X-2480**	3	BOLT (M6X1X45-MM)	
	8	1	**9X-6165**	3	WASHER (6.5X22X2.5-MM THK)	
BJM	9	1	**7X-2533**	3	BOLT (M6X1X35-MM)	

B-USE AS REQUIRED
J-TO BE USED ON HYDRAULIC EXCAVATOR
M-METRIC PART

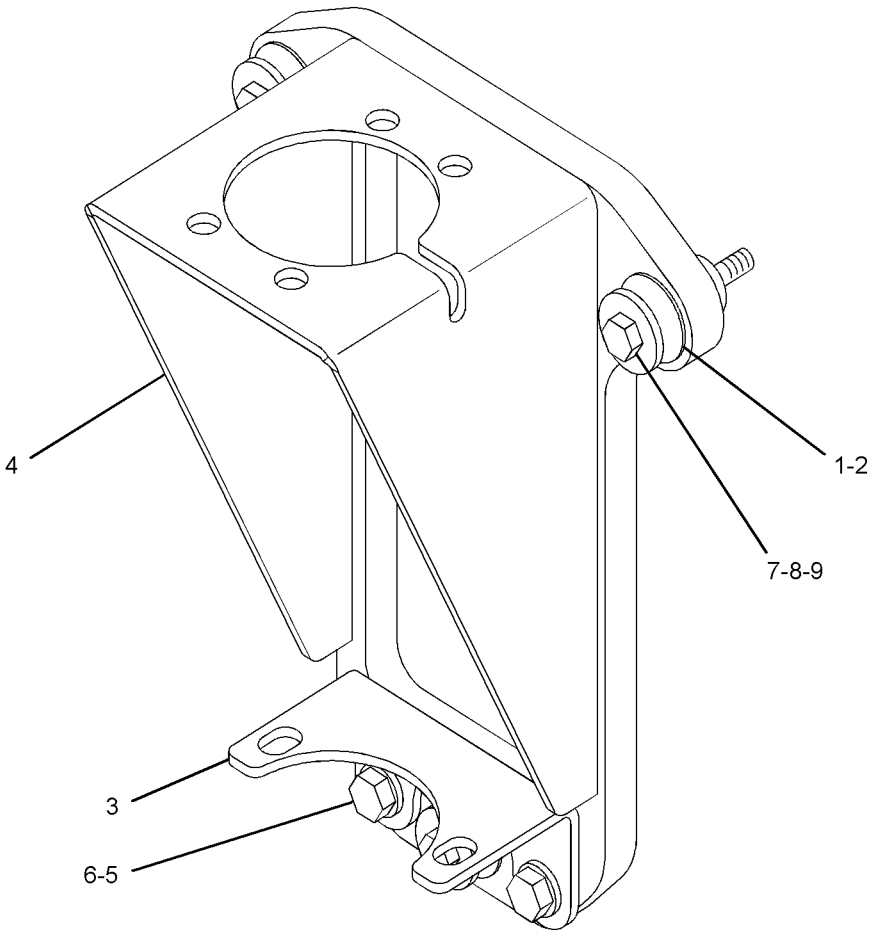

GRAPHIC #1 **<END>** g01259563

OPERATOR STATION

208-8699 MOUNTING GP-ROPS

S/N: SMC1-UP; GCT1-UP

PART OF 269-2044 CHASSIS AR

SMCS-7266 **i02443937**

NOTE	REF NO	GRAPHIC REF	PART NUMBER	QTY	PART NAME 1 2 3 4 5 6 (PRODUCT LEVEL)	SEE PAGE
	1	1	**227-5058**	1	SUPPORT AS-ROPS (LH)	
	2	1	**227-5059**	1	SUPPORT AS-ROPS (RH)	
M	3	1	**7X-2581**	12	BOLT (M30X3.5X100-MM)	
	4	1	**9X-8258**	12	WASHER (33X56X6-MM THK)	

M-METRIC PART

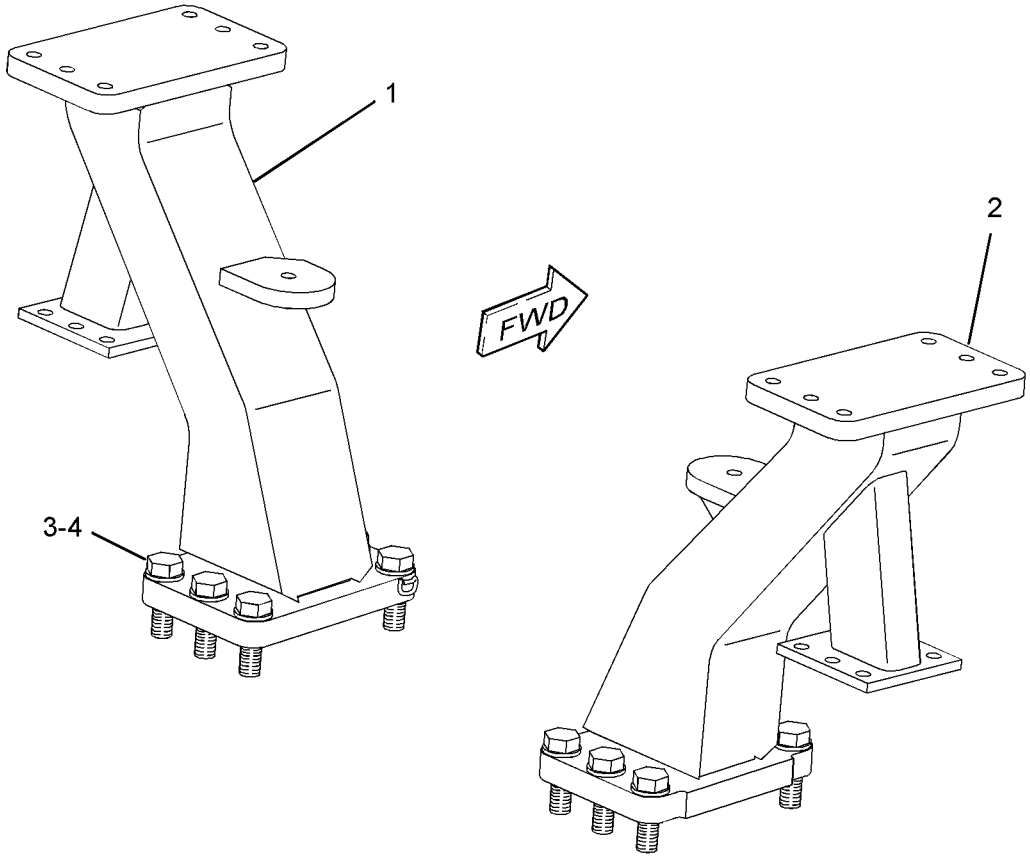

GRAPHIC #1 **<END>** g01205588

OPERATOR STATION

292-6402 PAN GP-BACKREST

S/N: SMC1-UP; GCT1-UP
PART OF 292-9237, 292-9238 PAN GP-BACKREST
ALSO AN ATTACHMENT

SMCS-7312 **i02679414**

NOTE	REF NO	GRAPHIC REF	PART NUMBER	QTY	PART NAME 1 2 3 4 5 6 (PRODUCT LEVEL)	SEE PAGE
	1	1	**4K-9429**	8	RIVET-POP	
	2	1	**5P-7957**	1	LANYARD	
	3	1	**136-1543**	1	PLATE AS-LUMBAR	
	4	1	**173-2052**	1	RETAINER	
	5	1	**178-7907**	1	HOLDER	
	6	1	**261-5694**	1	PAN AS-BACKREST	

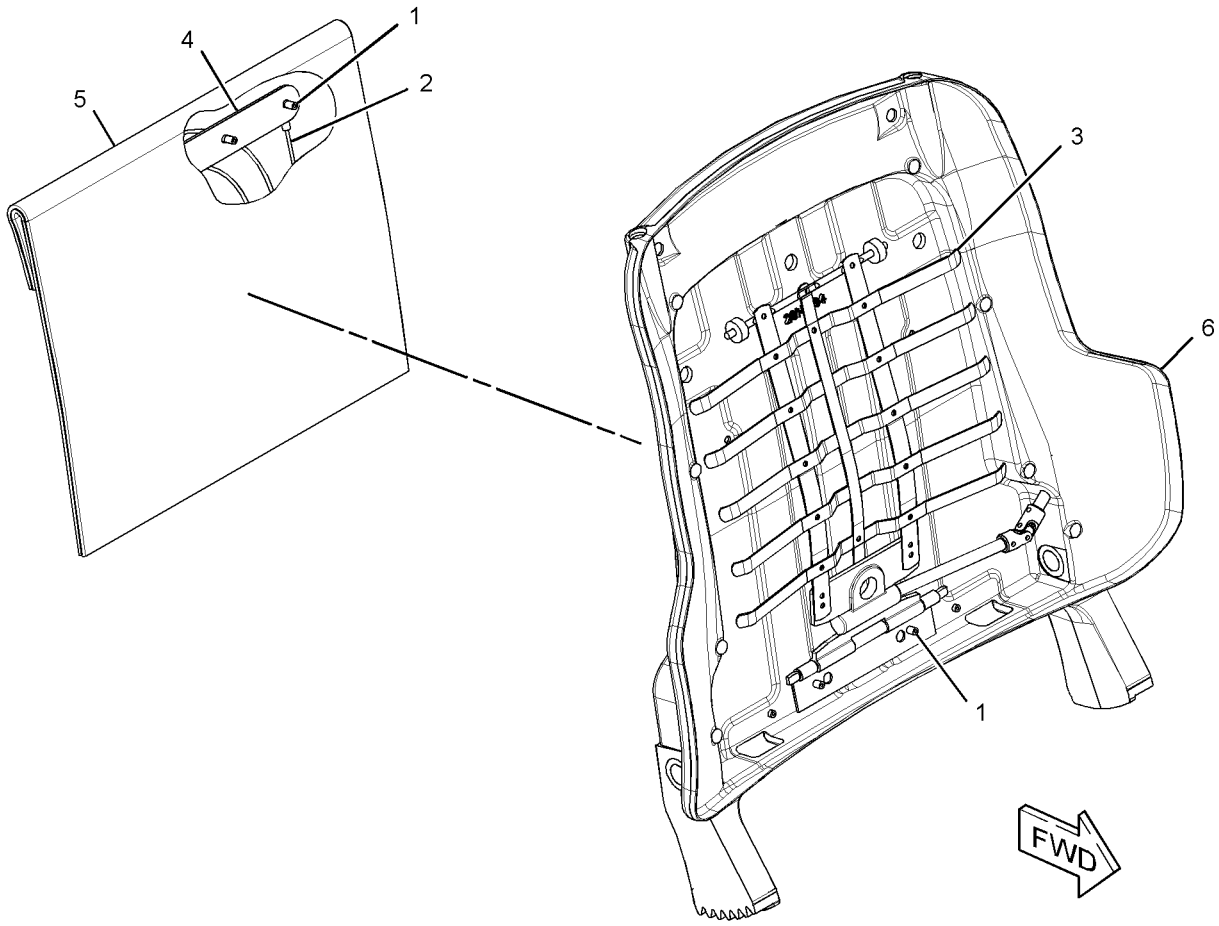

GRAPHIC #1 **<END>** g01304232

OPERATOR STATION

292-9237 PAN GP-BACKREST

S/N: SMC1-UP; GCT1-UP
PART OF 178-0603 SEAT GP
ALSO AN ATTACHMENT

SMCS-7312 **i02679251**

NOTE	REF NO	GRAPHIC REF	PART NUMBER	QTY	PART NAME 1 2 3 4 5 6 (PRODUCT LEVEL)	SEE PAGE
	1	1	**164-4883**	1	KNOB-LUMBAR	
	2	1	**250-4628**	3	PLUG	
	3	1	**292-6097**	1	CUSHION AS-BACK	
Y	4	1	**292-6402**	1	PAN GP-BACKREST	705
	5	1	**5P-0537**	2	WASHER-HARD (7.2X14.5X2-MM THK)	
	6	1	**6V-8969**	2	SCREW-BUTTON HEAD (1/4-20X0.5-IN)	
	7	1	**8T-7566**	1	PIN-SPRING	

Y-SEPARATE ILLUSTRATION

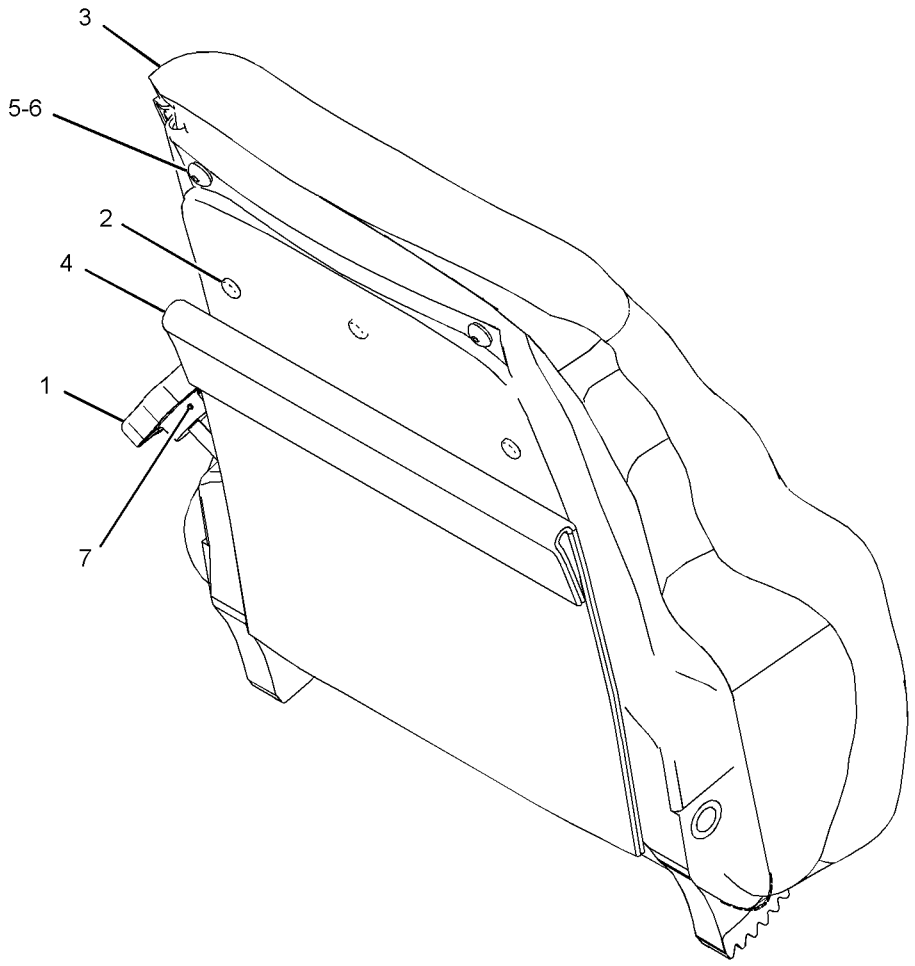

GRAPHIC #1 **<END>** g01336870

OPERATOR STATION

292-9238 PAN GP-BACKREST

S/N: SMC1-UP; GCT1-UP
PART OF 180-7304 SEAT GP
AN ATTACHMENT

SMCS-7312 **i02762455**

NOTE	REF NO	GRAPHIC REF	PART NUMBER	QTY	PART NAME 1 2 3 4 5 6 (PRODUCT LEVEL)	SEE PAGE
	1	1	**164-4883**	1	KNOB-LUMBAR	
	2	1	**250-4628**	3	PLUG	
	3	1	**292-6098**	1	CUSHION AS	
Y	4	1	*292-6402*	1	PAN GP-BACKREST	705
	5	1	**5P-0537**	2	WASHER-HARD (7.2X14.5X2-MM THK)	
	6	1	**6V-8969**	2	SCREW-BUTTON HEAD (1/4-20X0.5-IN)	
	7	1	**8T-7566**	1	PIN-SPRING	

Y-SEPARATE ILLUSTRATION

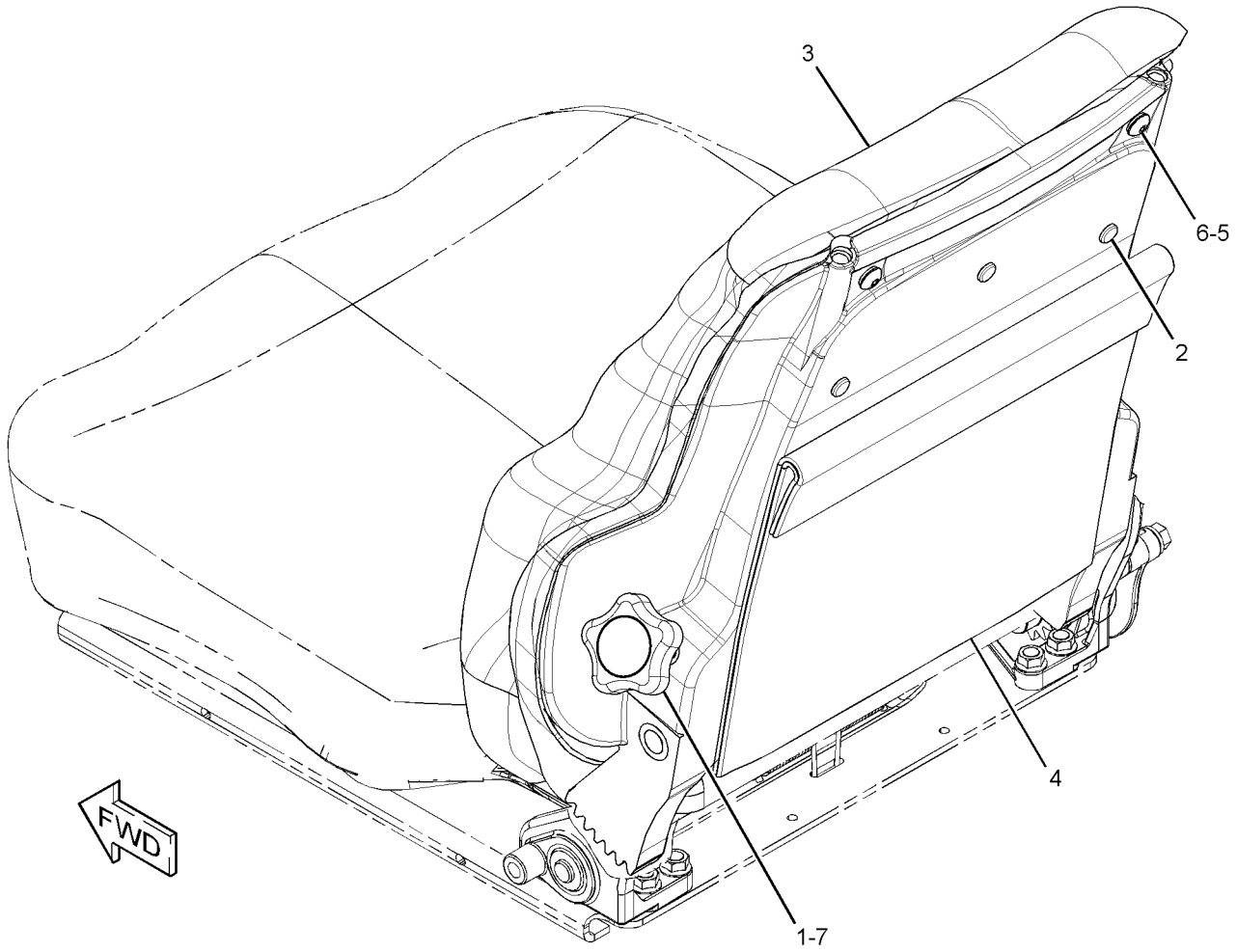

GRAPHIC #1 **<END>** g01341782

OPERATOR STATION

224-2791 PEDAL GP-GOVERNOR & BRAKE

S/N: SMC1-UP; GCT1-UP

PART OF 224-2793 CONTROL & MTG GP-PEDAL

SMCS-4122 **i02801425**

NOTE	REF NO	GRAPHIC REF	PART NUMBER	QTY	PART NAME 1 2 3 4 5 6 (PRODUCT LEVEL)	SEE PAGE
	1	1	**1B-8706**	1	KEY-WOODRUFF	
	2	1	**1B-8714**	1	KEY-WOODRUFF	
	3	1	**7P-4190**	4	BEARING-ROLLER	
	4	1	**9M-5731**	2	RIVET-POP	
M	5	1	**9X-6615**	4	BOLT (M5X0.8X30-MM)	
M	6	1	**105-3482**	6	BOLT-SOCKET HEAD (M8X1.25X16-MM)	
	7	1	**110-8379**	1	PEDAL (BRAKE)	
	8	1	**111-3780**	1	SPRING	
	9	1	**111-3781**	2	BOLT-ANCHOR (M10X1.5X23-MM)	
	10	1	**132-7077**	1	SWITCH AS-LIMIT (SERVICE BRAKE PEDAL)	
		1	**6V-8376**	3	SCREW-MACHINE (8-32X0.25-IN)	
		1	**9B-7233**	3	LOCKWASHER	
	11	1	**145-3405**	2	SPACER (10.3X16.7X8-MM THK)	
	12	1	**160-1431**	1	SHAFT	
	13	1	**160-1432**	1	SHAFT	
	14	1	**160-1433**	1	LEVER	
	15	1	**160-1434**	1	LEVER	
	16	1	**160-1435**	1	HOUSING	
Y	17	1	**160-2443**	1	SENSOR GP-POSITION (ROTARY) (SERVICE BRAKE PEDAL)	216
	18	1	**164-9541**	1	HARNESS AS-SWITCH (SERVICE BRAKE)	
		1	**102-8804**	1	KIT-RECEPTACLE (4-PIN)	
					(INCLUDES RECEPTACLE AS & WEDGE)	
	19	1	**165-6779**	1	GASKET	
	20	1	**165-9100**	1	LINK	
	21	1	**165-9102**	1	PLATE	
	22	1	**165-9103**	1	SPRING	
	23	1	**165-9104**	1	SPACER (6.5X9.5X10-MM THK)	
	24	1	**184-8060**	1	PEDAL (DECELERATOR)	
	25	1	**186-4998**	1	PAD AS-FOOT	
	26	1	**194-7034**	1	SPRING	
	27	1	**205-7331**	1	SPACER (20.32X28.01X0.41-MM THK)	
	28	1	**215-9801**	1	BRACKET AS	
Y	29	1	**224-5530**	1	SENSOR GP-POSITION (DECELERATOR PEDAL)	217
	30	1	**096-5962**	2	WASHER-HARD (3.4X7X0.8-MM THK)	
M	31	1	**106-5472**	1	SETSCREW-HEX SOCKET (M5X0.8X20-MM)	
	32	1	**111-9251**	4	WASHER-HARD (20X35X1.6-MM THK)	
	33	1	**1B-2578**	1	NUT (3/8-16-THD)	
	34	1	**2J-6356**	4	RING-RETAINING	
	35	1	**4B-3609**	1	SETSCREW-SQUARE HEAD (3/8-16X1.5-IN)	
	36	1	**6V-0894**	2	SEAL-O-RING	
M	37	1	**6V-7357**	1	BOLT (M6X1X25-MM)	
M	38	1	**6V-7744**	2	LOCKNUT (M10X1.15-THD)	
	39	1	**7X-7729**	2	WASHER (11X25X3-MM THK)	
	40	1	**8F-7702**	2	SEAL-LIP TYPE	
	41	1	**8T-4121**	4	WASHER-HARD (11X21X2.5-MM THK)	
M	42	1	**8T-4136**	2	BOLT (M10X1.5X25-MM)	
M	43	1	**8T-4186**	2	BOLT (M10X1.5X40-MM)	
M	44	1	**8T-4195**	2	BOLT (M10X1.5X30-MM)	
	45	1	**8T-4205**	2	WASHER-HARD (7.2X14.5X2-MM THK)	
M	46	1	**8T-4970**	2	BOLT (M6X1X14-MM)	
	47	1	**9X-6281**	2	SCREW-MACHINE (4-40X1-IN)	
	48	1	**9X-8256**	2	WASHER (6.6X12X2-MM THK)	

M-METRIC PART
Y-SEPARATE ILLUSTRATION

224-2791 **PEDAL GP-GOVERNOR & BRAKE** *(contd.)* **i02801425**

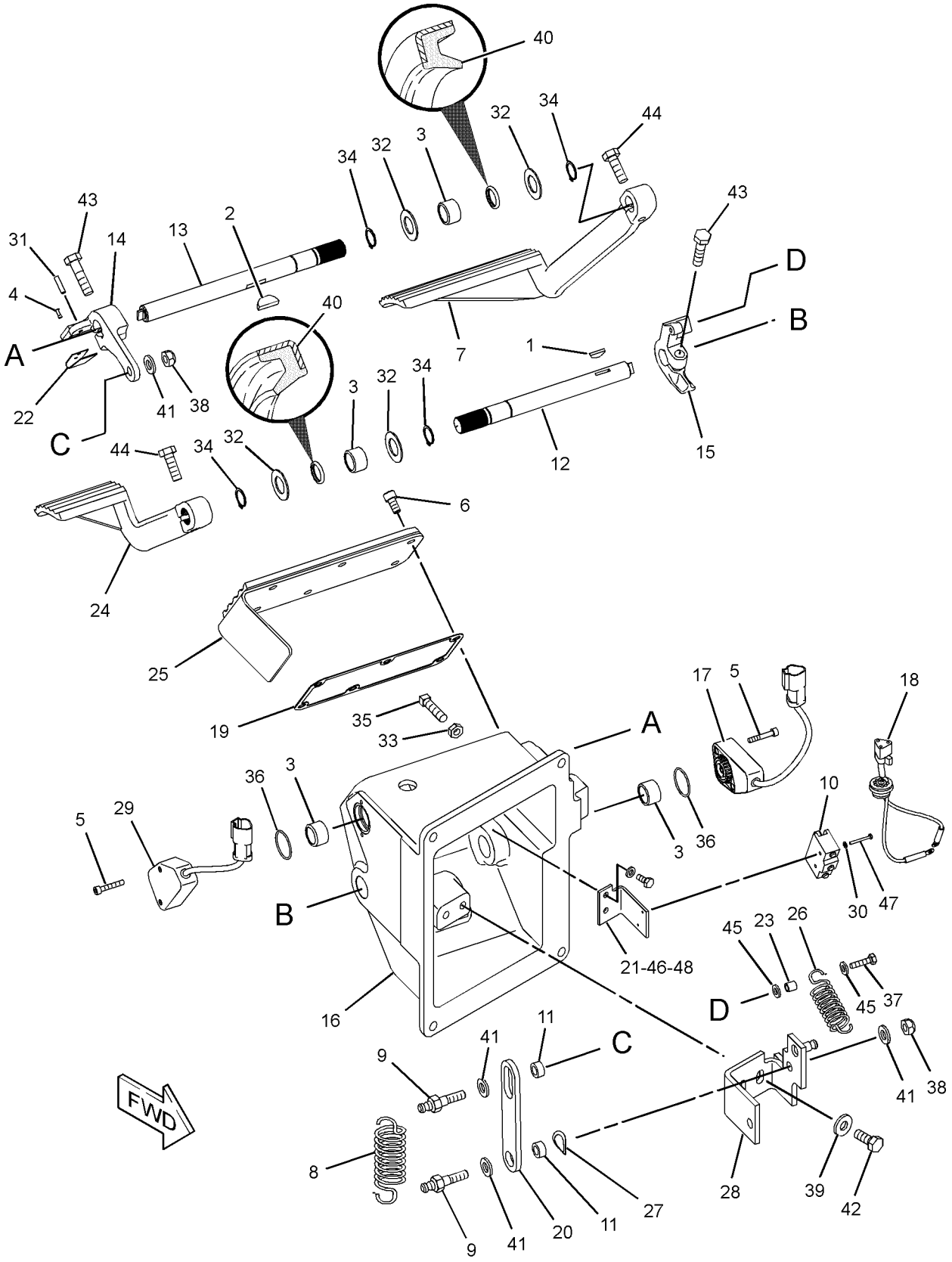

GRAPHIC #1 **<END>** g01211417

OPERATOR STATION

225-9480 PLATFORM GP

S/N: SMC1-UP; GCT1-UP

PART OF 220-2800 PLATFORM GP-OPERATOR

SMCS-7253, 7254 **i02747622**

NOTE	REF NO	GRAPHIC REF	PART NUMBER	QTY	PART NAME 1 2 3 4 5 6 (PRODUCT LEVEL)	SEE PAGE
	1	1	**169-6902**	1	BRACKET AS	
M		1	**8T-3490**	9	NUT-WELD (M10X1.5-THD)	
	2	1	**229-6640**	1	PLATFORM AS	
	3	1	**7X-7729**	2	WASHER (11X25X3-MM THK)	
M	4	1	**8T-4136**	2	BOLT (M10X1.5X25-MM)	

M-METRIC PART

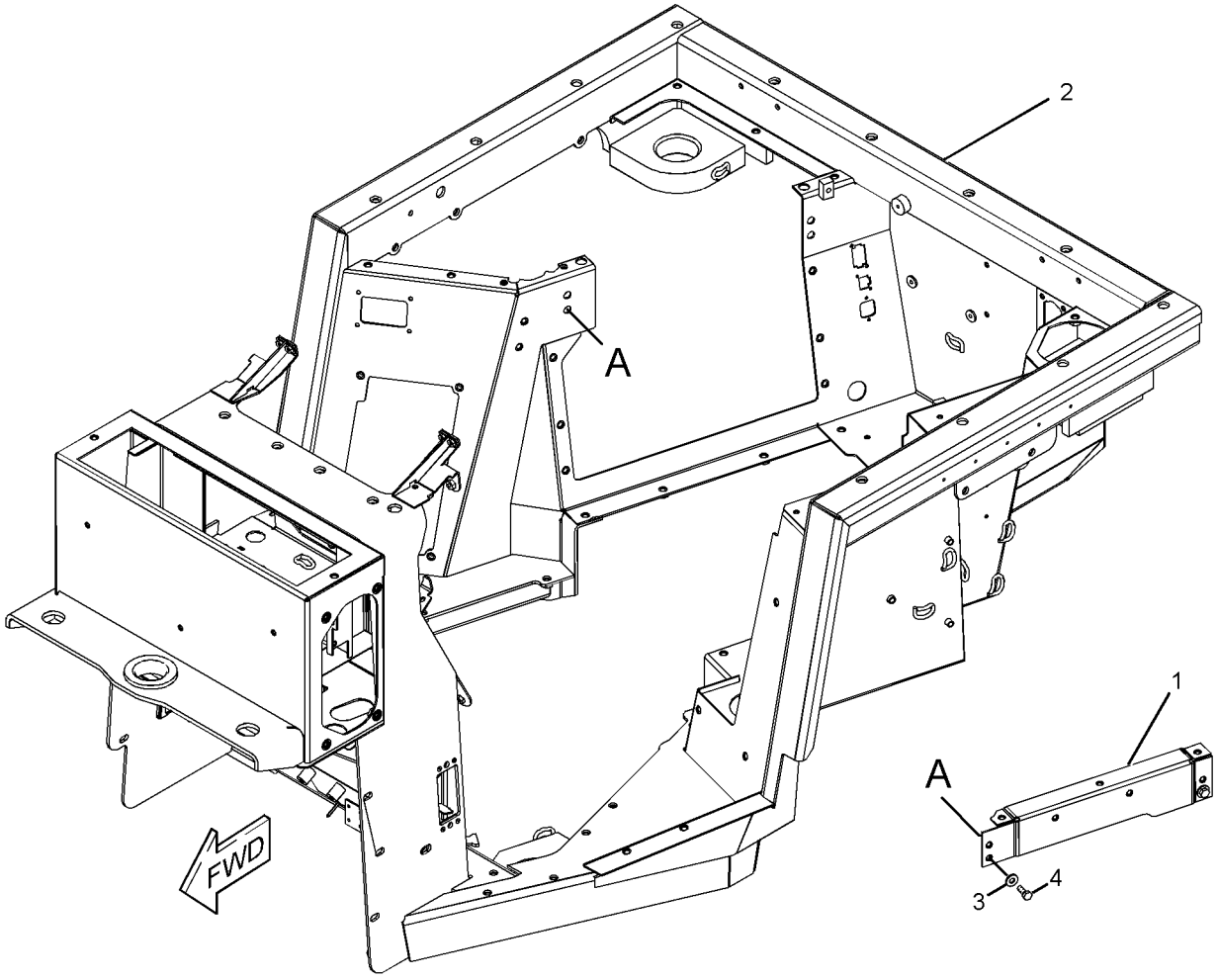

GRAPHIC #1 **<END>** g01208667

OPERATOR STATION

220-2800 PLATFORM GP-OPERATOR

S/N: SMC1-UP; GCT1-UP

PART OF 269-2044 CHASSIS AR

SMCS-7253 **i02747618**

NOTE	REF NO	GRAPHIC REF	PART NUMBER	QTY	PART NAME 1 2 3 4 5 6 (PRODUCT LEVEL)	SEE PAGE
	1	1	**4H-0407**	6	PLUG-PROTECTION	
	2	1	**5P-7509**	1	PLUG-BUTTON	
	3	1	**6T-4556**	1	COVER	
	4	1	**6T-4557**	1	GASKET	
	5	1	**6V-1790**	3	PLUG-BUTTON	
	6	1	**6V-8547**	1	PLUG-BUTTON	
	7	1	**6Y-0206**	2	RETAINER	
	8	1	**7G-4824**	1	STRAP	
	10	1	**8E-7791**	1	STRAP	
	11	1	**8T-4943**	1	PLUG	
	12	1	**117-8131**	8	MOUNT AS	
	13	1	**117-9966**	1	PLUG	
	14	1	**161-3958**	1	GASKET	
	15	1	**164-0758**	1	BOLT (9/16-18X2-IN)	
	16	1	**165-6857**	1	PAD AS-RUBBER	
	17	1	**170-0251**	2	STRIP	
M	18	1	**184-0982**	12	SCREW-PAN HEAD (M6X1X16-MM)	
	19	1	**185-2076**	2	SUPPORT AS	
	20	1	**185-3666**	4	SLEEVE	
	21	1	**205-2203**	1	PLATE	
	22	1	**208-0375**	2	SCREW-PAN HEAD (M6X1X35-MM)	
Y	23	1	*225-9480*	1	PLATFORM GP	710
	24	1	**237-4266**	1	PLATE AS	
	25	1	**237-4268**	1	COVER AS-PLATFORM	
	26	1	**237-4269**	1	PLATE AS	
	27	1	**237-4270**	1	PLATE AS	
	28	1	**239-5113**	1	COVER AS	
		1	**2G-0391**	2	SCREW	
		1	**131-5492**	2	RETAINER-CAPTIVE	
	29	1	**241-4343**	1	FLOORPLATE AS	
		1	**237-0205**	1	FLOORPLATE AS	
		1	**184-3289**	1	PANEL	
		1	**241-4342**	1	GASKET	
	30	1	**241-4345**	1	FLOORPLATE AS	
		1	**237-0204**	1	FLOORPLATE AS	
		1	**184-3285**	1	PANEL	
		1	**241-4344**	1	GASKET	
	31	1	**241-4346**	1	PLATE AS	
	32	1	**241-4348**	1	GASKET	
	33	1	**241-4349**	1	GASKET	
	34	1	**242-8405**	1	BRACKET AS	
	35	1	**242-8407**	1	GASKET	
	36	1	**243-5168**	1	GASKET	
	37	1	**243-5170**	1	COVER AS	
	38	1	**248-8866**	4	CAP	
M	39	1	**5C-2890**	4	NUT (M6X1-THD)	
	40	1	**5P-1076**	4	WASHER-HARD (13.5X30X4-MM THK)	
	41	1	**6T-8714**	4	WASHER-HARD (28X125X12-MM THK)	
M	42	1	**6V-7357**	4	BOLT (M6X1X25-MM)	
	43	1	**7X-7729**	58	WASHER (11X25X3-MM THK)	
M	45	1	**8T-4136**	38	BOLT (M10X1.5X25-MM)	
M	46	1	**8T-4137**	3	BOLT (M10X1.5X20-MM)	
M	47	1	**8T-4139**	4	BOLT (M12X1.75X30-MM)	
	48	1	**8T-4167**	4	WASHER-HARD (26X44X4-MM THK)	
M	49	1	**8T-4195**	11	BOLT (M10X1.5X30-MM)	
M	50	1	**8T-4196**	6	BOLT (M10X1.5X35-MM)	

OPERATOR STATION

220-2800 **PLATFORM GP-OPERATOR** *(contd.)* **i02747618**

NOTE	REF NO	GRAPHIC REF	PART NUMBER	QTY	PART NAME 1 2 3 4 5 6 (PRODUCT LEVEL)	SEE PAGE
M	51	1	**8T-4649**	4	BOLT (M24X3X140-MM)	
	52	1	**9D-3769**	1	GROMMET	
	53	1	**9X-8256**	10	WASHER (6.6X12X2-MM THK)	
D	54	1	**5P-9909**		SEAL (0.1-M)	
E	55	1	**3E-3892**		SEAL (31-CM)	
	57	1	**9P-6571**	1	PLUG	

D-ORDER BY THE METER
E-ORDER BY THE CENTIMETER
M-METRIC PART
Y-SEPARATE ILLUSTRATION

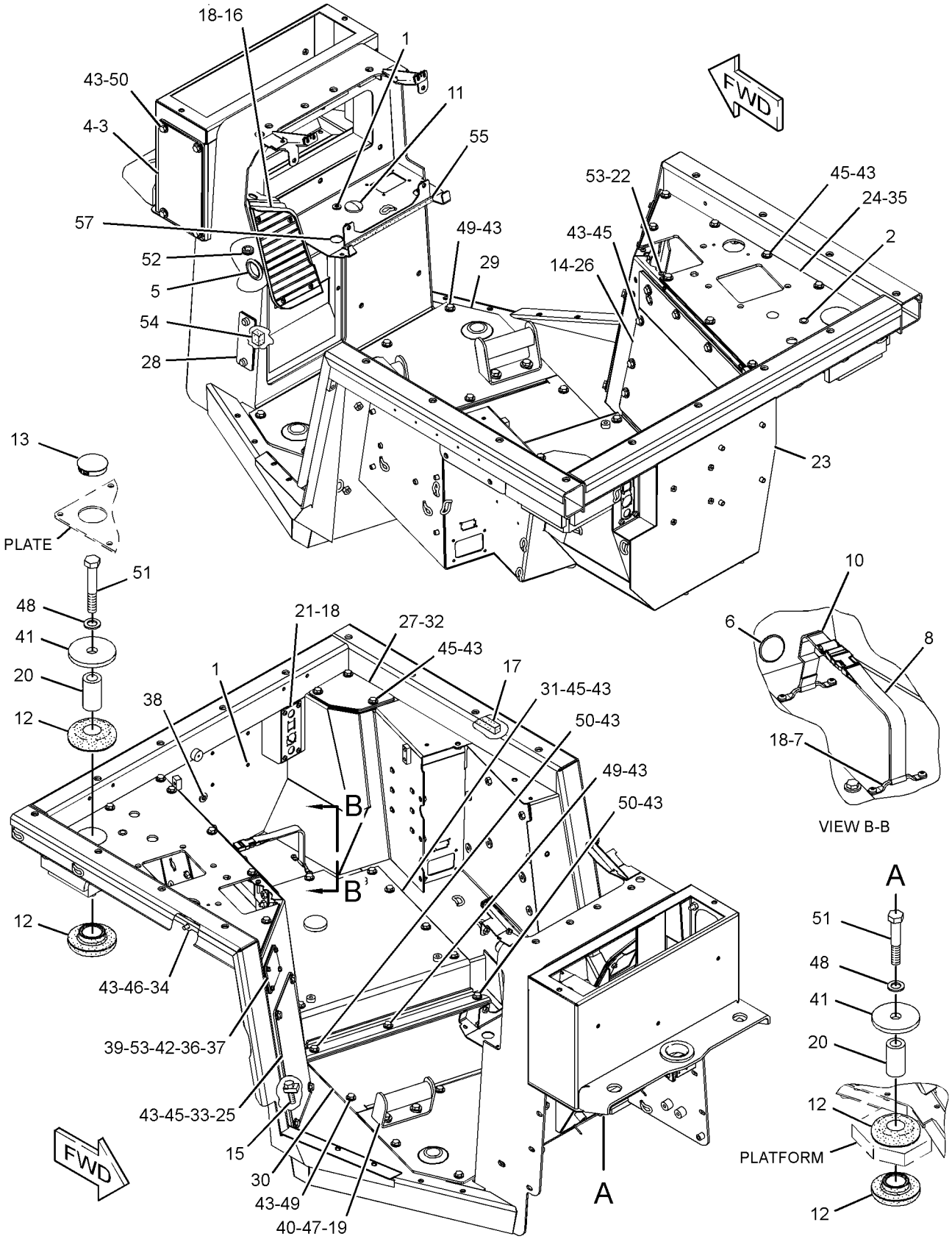

GRAPHIC #1 **<END>** g01377928

OPERATOR STATION

230-4700 PRESSURIZER GP-CAB

S/N: SMC1-UP; GCT1-UP
PART OF 272-3477, 289-9878 CAB AR
ALSO AN ATTACHMENT

SMCS-7311 **i02433635**

NOTE	REF NO	GRAPHIC REF	PART NUMBER	QTY	PART NAME 1 2 3 4 5 6 (PRODUCT LEVEL)	SEE PAGE
	1	1	**3L-0594**	3	SPACER (8.7X15.9X15.9-MM THK)	
	2	1	**3W-6756**	2	KNOB (AIR FILTER COVER)	
	3	1	**6P-2216**	7	CAP (PUSH ON)	
	4	1	**6T-0988**	1	FILTER-AIR (STANDARD) (FRESH AIR)	
	5	1	**6T-5067**	1	LINER	
	6	1	**6T-5068**	1	FILTER AS (AIR RECIRCULATION)	
	7	1	**7D-8431**	2	RING-RETAINING	
	8	1	**111-4482**	1	COVER AS	
	9	1	**117-8863**	1	LINER	
	10	1	**127-1043**	1	LINER	
	11	1	**127-1044**	1	LINER	
	12	1	**127-1045**	1	LINER	
	13	1	**127-1046**	1	LINER	
	14	1	**127-1048**	1	LINER	
	15	1	**141-4044**	1	PANEL	
	16	1	**224-9072**	2	KNOB (AIR FILTER COVER)	
Y	17	1	**230-5388**	1	BLOWER GP-CAB	628
	18	1	**7X-0603**	3	WASHER-HARD (9.9X35X2.5-MM THK)	
	19	1	**8T-4121**	6	WASHER-HARD (11X21X2.5-MM THK)	
M	20	1	**8T-4136**	6	BOLT (M10X1.5X25-MM)	
M	21	1	**8T-4971**	3	BOLT (M6X1X30-MM)	
	22	1	**9X-8256**	3	WASHER (6.6X12X2-MM THK)	
E	23	1	**7X-7877**		STRIP-EDGING (47-CM)	

E-ORDER BY THE CENTIMETER
M-METRIC PART
Y-SEPARATE ILLUSTRATION

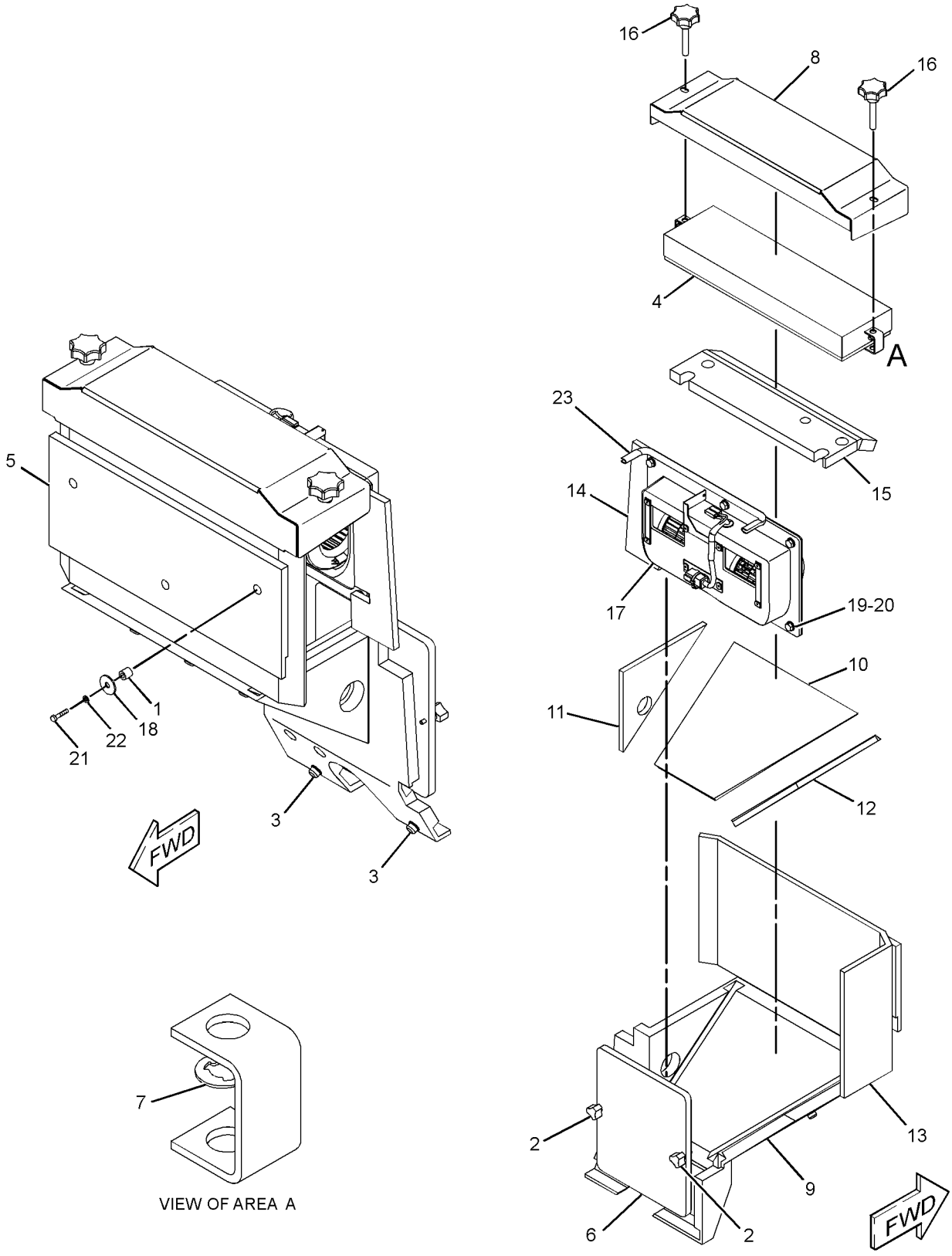

GRAPHIC #1 **<END>** g01209668

OPERATOR STATION

210-2270 RECLINER GP-SEAT

S/N: SMC1-UP; GCT1-UP
PART OF 178-0603, 180-7304 SEAT GP
ALSO AN ATTACHMENT

SMCS-7312 **i02733467**

NOTE	REF NO	GRAPHIC REF	PART NUMBER	QTY	PART NAME 1 2 3 4 5 6 (PRODUCT LEVEL)	SEE PAGE
	1	1	**177-1862**	1	BRACKET (SEAT BELT)	
	2	1	**210-2262**	1	BRACKET AS	
	3	1	**210-2263**	1	BRACKET AS	
	4	1	**210-2266**	1	GEAR-LOCK (14-TEETH)	
	5	1	**293-2911**	1	SHAFT AS	
		1	**2L-5893**	2	PIN-SPRING	
		1	**170-8590**	1	SPRING	
	6	1	**217-7933**	1	LATCH	
	7	1	**236-5197**	1	SPRING	
	8	1	**031-0214**	1	BOLT-LOCKING (1/4-20X0.5-IN)	
	9	1	**101-2867**	1	WASHER-HARD (7.2X25X2-MM THK)	
	10	1	**4M-6425**	1	BOLT (5/16-18X1-IN)	
	11	1	**5M-2894**	1	WASHER-HARD (10.2X18.5X2.5-MM THK)	
	12	1	**5S-7383**	1	BOLT (3/8-16X1.75-IN)	
	13	1	**8T-4224**	1	WASHER-HARD (8.8X16X2-MM THK)	

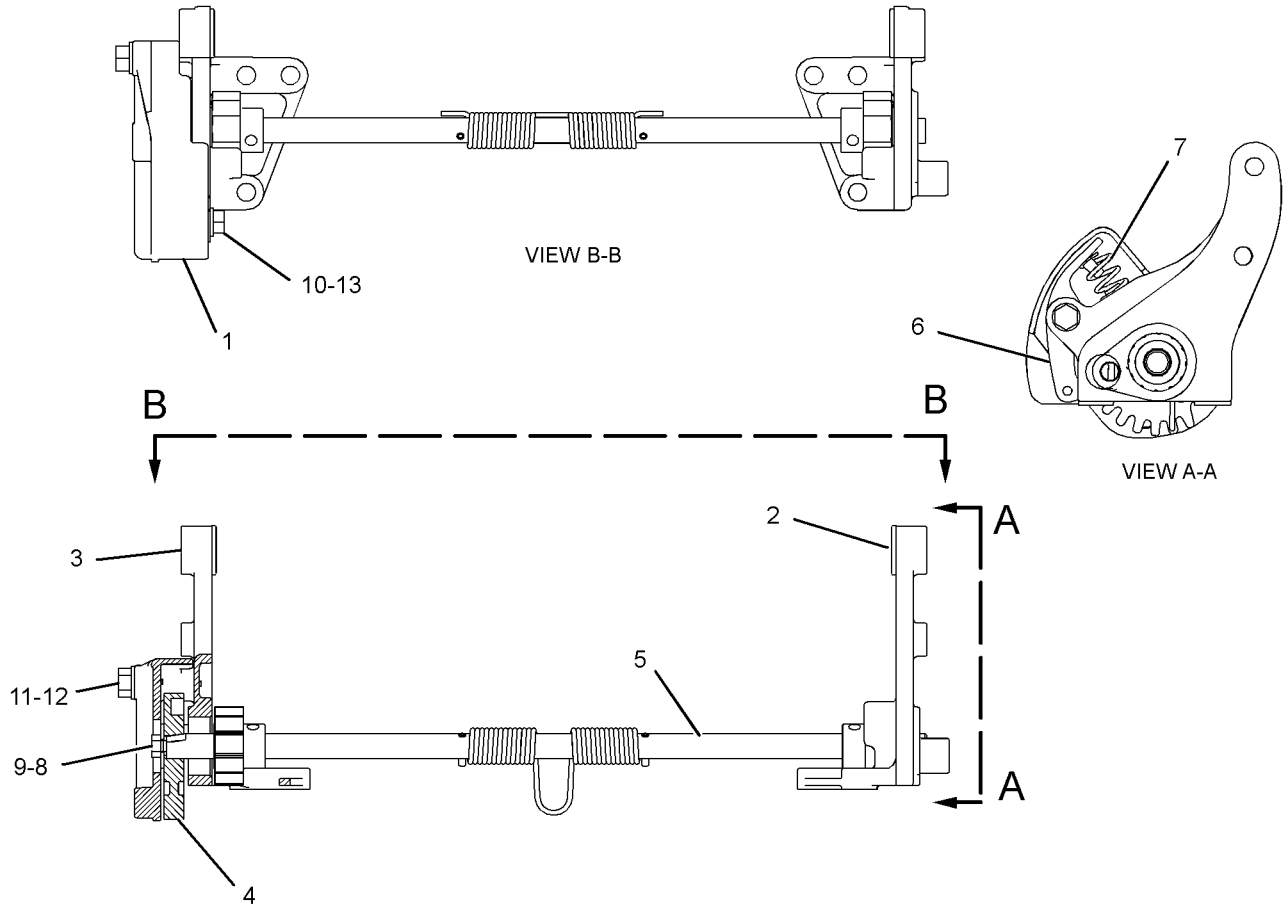

GRAPHIC #1 **<END>** g01296294

OPERATOR STATION

208-8705 ROPS GP

S/N: SMC1-UP; GCT1-UP

PART OF 269-2044 CHASSIS AR

SMCS-7177, 7301 **i02431000**

NOTE	REF NO	GRAPHIC REF	PART NUMBER	QTY	PART NAME 1 2 3 4 5 6 (PRODUCT LEVEL)	SEE PAGE
	1	1	**180-6600**	1	HANDRAIL	
	2	1	**227-5054**	1	ROPS AS	
	3	1	**5P-1076**	3	WASHER-HARD (13.5X30X4-MM THK)	
M	4	1	**7X-2576**	12	BOLT (M24X3X70-MM)	
M	5	1	**8T-4139**	2	BOLT (M12X1.75X30-MM)	
	6	1	**8T-4167**	12	WASHER-HARD (26X44X4-MM THK)	

M-METRIC PART

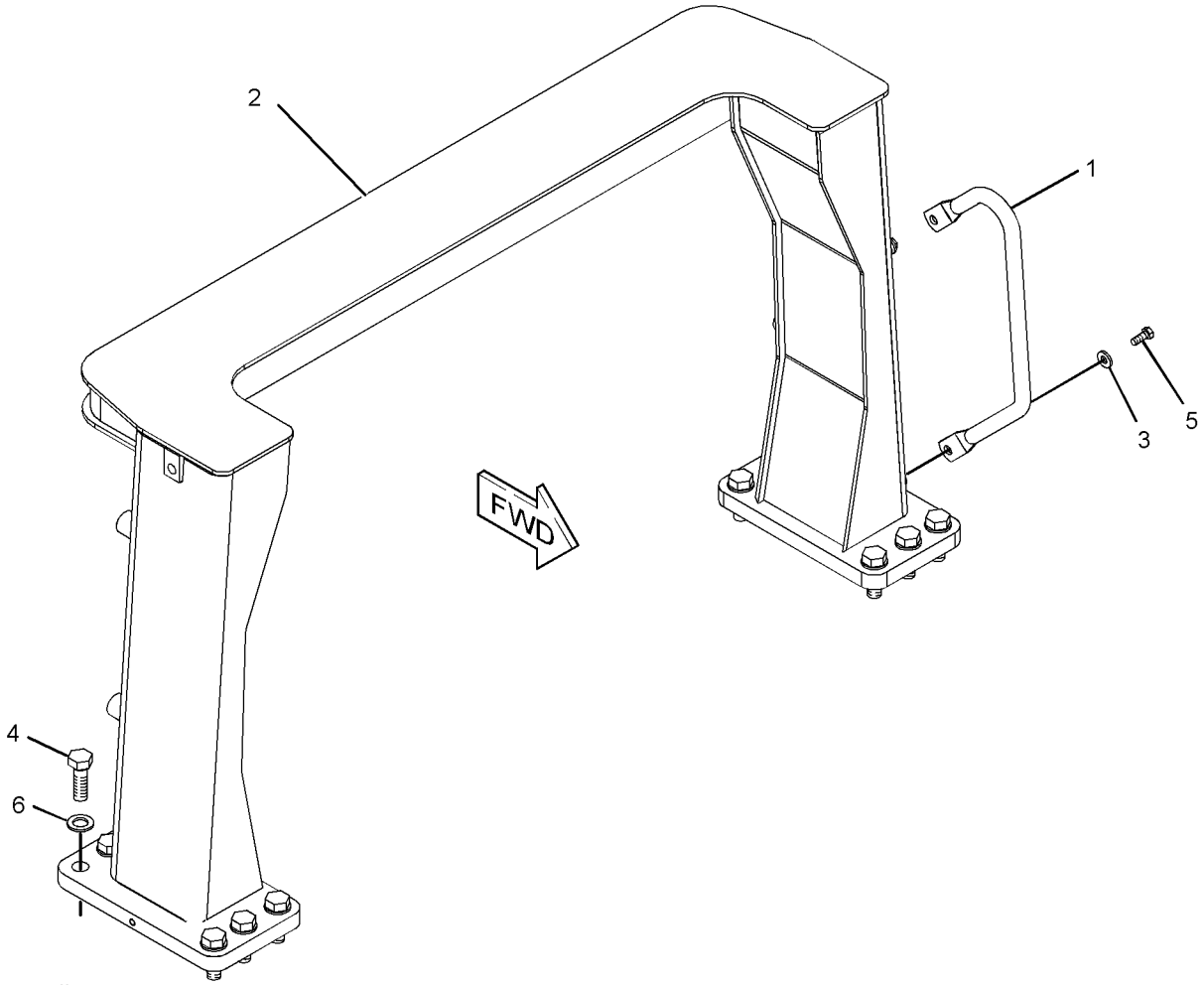

GRAPHIC #1 **<END>** g01205546

OPERATOR STATION

208-8706 ROPS GP-OPEN

S/N: SMC1-UP; GCT1-UP
PART OF 283-0581 CANOPY AR
AN ATTACHMENT

SMCS-7323 **i02455532**

NOTE	REF NO	GRAPHIC REF	PART NUMBER	QTY	PART NAME 1 2 3 4 5 6 (PRODUCT LEVEL)	SEE PAGE
	1	1	**1P-2772**	4	SPACER (1.031X1.219X0.75-IN THK)	
	2	1	**8P-9747**	1	HANDRAIL	
	3	1	**9G-0992**	2	HANDRAIL	
Y	4	1	*9P-9392*	1	MIRROR GP-REAR VIEW	688
	5	1	**9S-5187**	2	MOUNTING	
	6	1	**180-6600**	1	HANDRAIL	
	7	1	**198-6574**	14	WASHER (16X75X3.5-MM THK)	
	8	1	**198-6575**	14	BUTTON	
	9	1	**227-5056**	1	ROLLOVER AS	
	10	1	**228-4051**	1	TUBE AS	
	11	1	**228-4052**	1	TUBE AS	
	12	1	**263-2601**	1	HEADLINER	
	13	1	**5P-1076**	9	WASHER-HARD (13.5X30X4-MM THK)	
	14	1	**6K-3632**	2	LOCKNUT (1-8-THD)	
M	15	1	**7X-2563**	4	BOLT (M20X2.5X60-MM)	
M	16	1	**7X-2576**	12	BOLT (M24X3X70-MM)	
	17	1	**8C-8843**	2	BOLT (1-8X4.5-IN)	
	18	1	**8P-5244**	4	WASHER (33.3X69.8X6.35-MM THK)	
	19	1	**8T-4123**	4	WASHER (22X35X3.5-MM THK)	
M	20	1	**8T-4139**	8	BOLT (M12X1.75X30-MM)	
	21	1	**8T-4167**	12	WASHER-HARD (26X44X4-MM THK)	

M-METRIC PART
Y-SEPARATE ILLUSTRATION

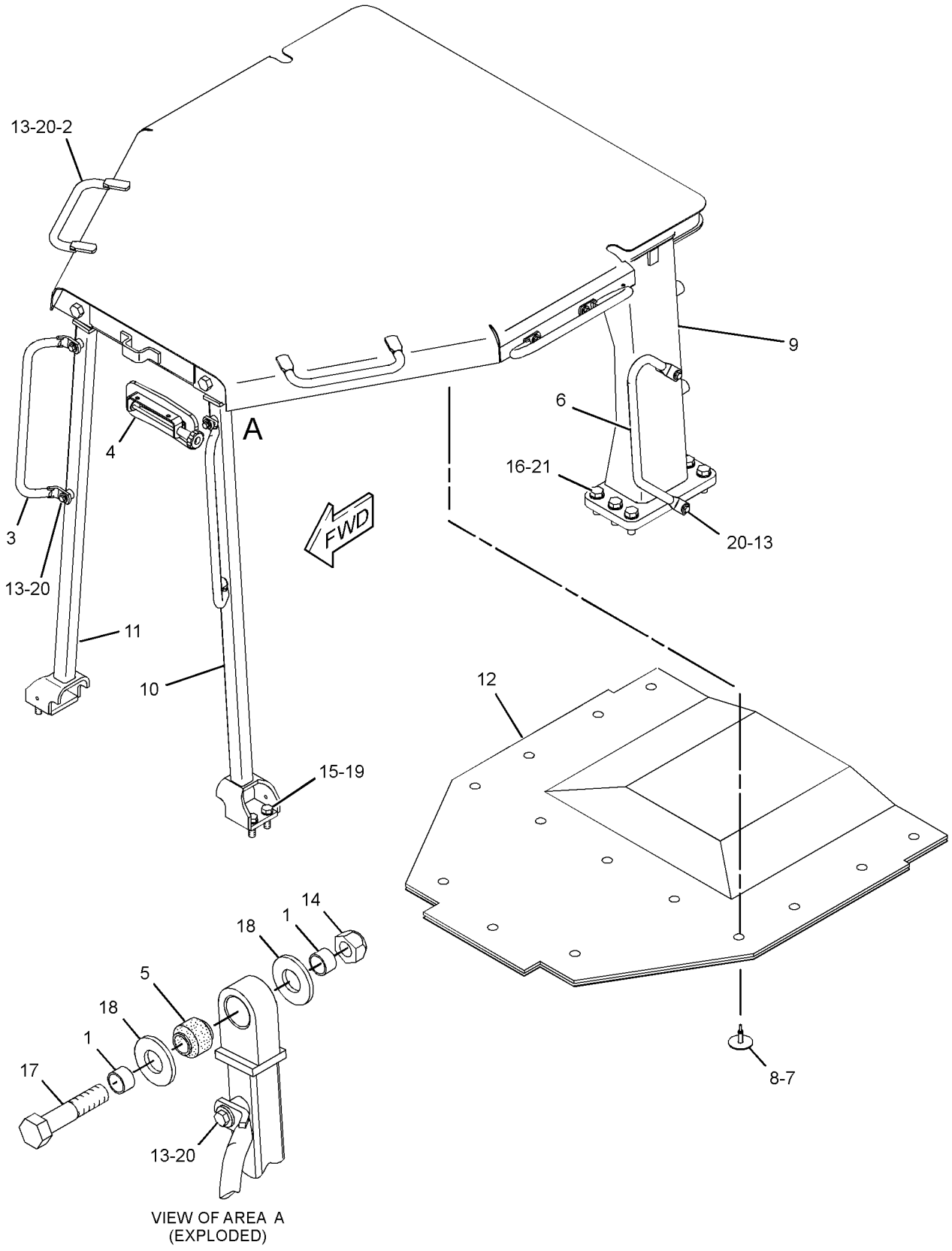

VIEW OF AREA A
(EXPLODED)

GRAPHIC #1 **<END>** g01205598

OPERATOR STATION

213-7064 SCREEN GP-PROTECTION—REAR

S/N: SMC1-UP; GCT1-UP
CANNOT BE USED WITH 226-3400—PAGE 721
AN ATTACHMENT

SMCS-7165 **i02470862**

NOTE	REF NO	GRAPHIC REF	PART NUMBER	QTY	PART NAME 1 2 3 4 5 6 (PRODUCT LEVEL)	SEE PAGE
	1	1	**165-2577**	1	SCREEN AS (PROTECTIVE)	
	2	1	**8T-5439**	4	WASHER-HARD (21.5X45X6-MM THK)	
M	3	1	**8T-6430**	4	BOLT (M20X2.5X50-MM)	

M-METRIC PART

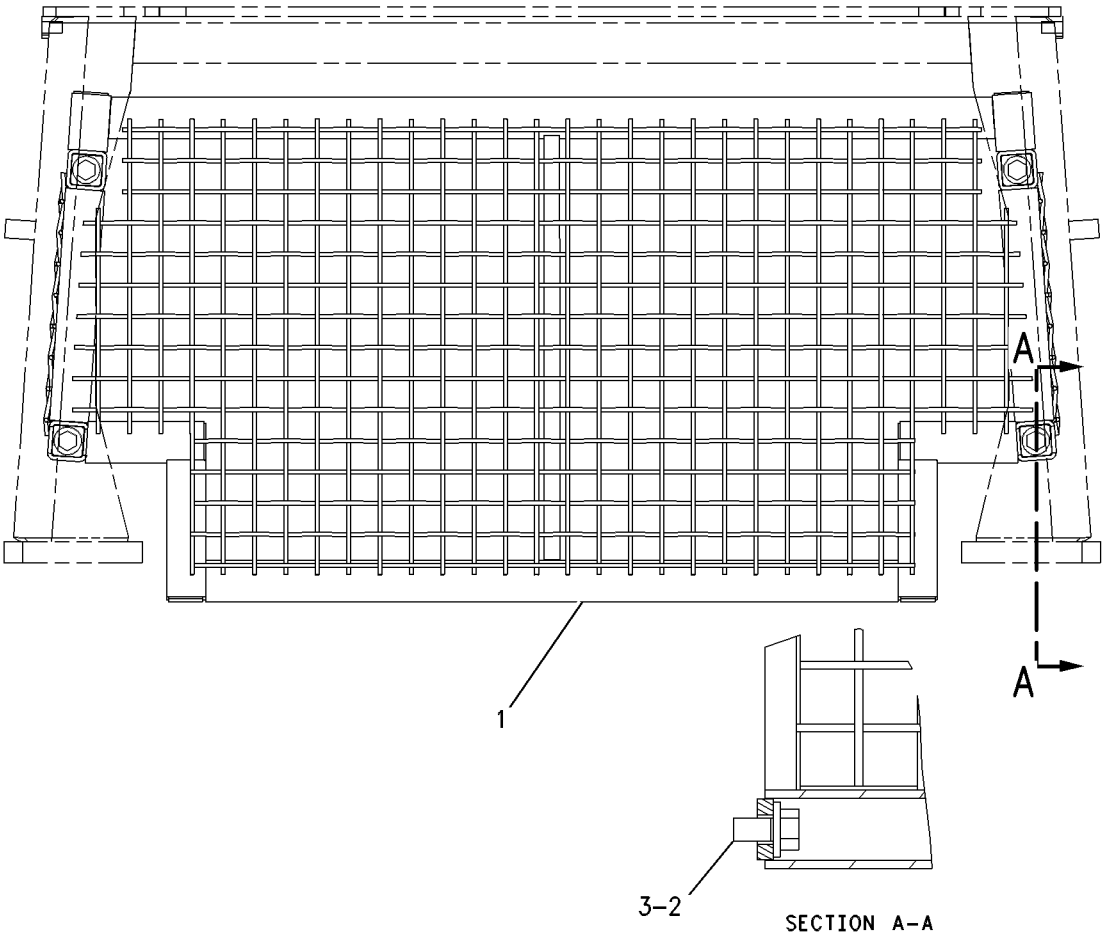

GRAPHIC #1 **<END>** g00569648

OPERATOR STATION

226-3400 SCREEN GP-PROTECTION–REAR

S/N: SMC1-UP; GCT1-UP
FOR USE WITH ROPS MOUNTED AIR CONDITIONER
AN ATTACHMENT

SMCS-7165 **i02454070**

NOTE	REF NO	GRAPHIC REF	PART NUMBER	QTY	PART NAME 1 2 3 4 5 6 (PRODUCT LEVEL)	SEE PAGE
	1	1	**166-2153**	1	SCREEN AS	
		1	**7T-1099**	6	LINK	
	2	1	**194-3708**	2	BOSS	
M	3	1	**7X-2566**	2	BOLT (M20X2.5X110-MM)	
M	4	1	**8T-4131**	2	NUT (M20X2.5-THD)	
	5	1	**8T-5439**	6	WASHER-HARD (21.5X45X6-MM THK)	
M	6	1	**8T-6430**	2	BOLT (M20X2.5X50-MM)	

M-METRIC PART

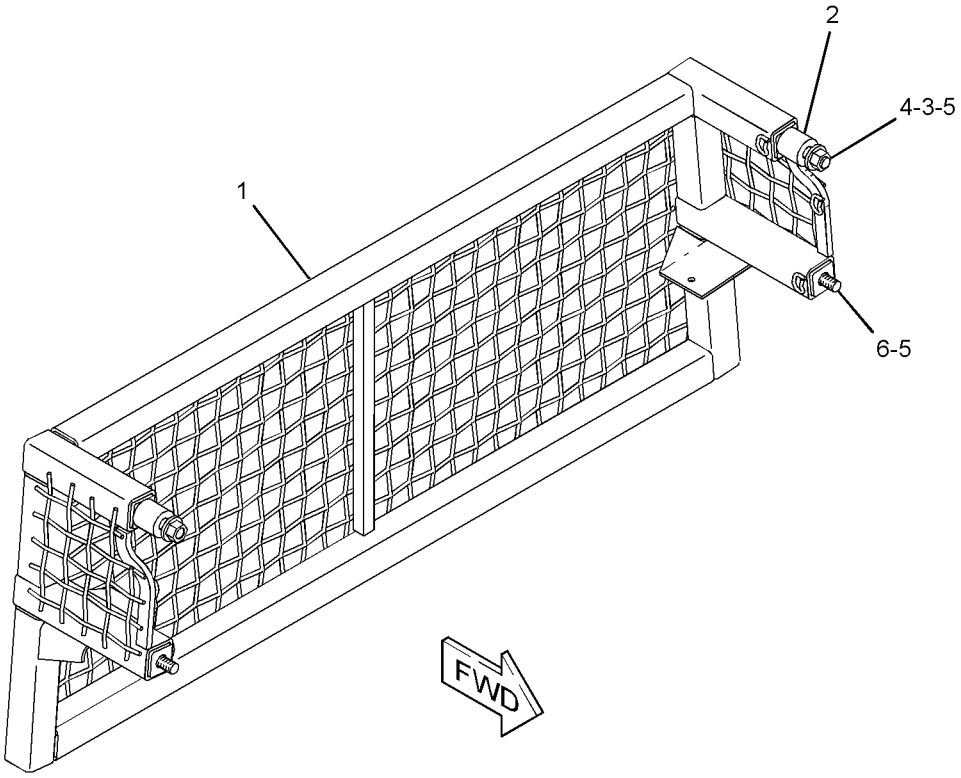

GRAPHIC #1 **<END>** g01214257

OPERATOR STATION

178-0603 SEAT GP–CLOTH

S/N: SMC1-UP; GCT1-UP
PART OF 178-0606 SEAT GP
ALSO AN ATTACHMENT

SMCS-7312 **i02679176**

NOTE	REF NO	GRAPHIC REF	PART NUMBER	QTY	PART NAME 1 2 3 4 5 6 (PRODUCT LEVEL)	SEE PAGE
	1	1	**218-0861**	1	PAN AS	
		1	**8T-9082**	5	RIVET-POP	
		1	**217-9049**	1	CUSHION AS	
	2	1	**143-1288**	8	LOCKNUT-FLANGE (3/8-16-THD)	
	3	1	**171-1230**	6	SCREW-BUTTON HEAD (3/8-16X1-IN)	
	4	1	**171-6682**	1	BAR	
	5	1	**172-2416**	2	PIN	
Y	6	1	*173-1028*	1	ADJUSTER GP-SEAT	623
	7	1	**177-1863**	2	BOLT-PIVOT (3/8-16X2.89-IN)	
Y	8	1	*210-2270*	1	RECLINER GP-SEAT	716
CY	9	1	*292-9237*	1	PAN GP-BACKREST	706
	10	1	**184-2298**	1	ROD	
	11	1	**184-2299**	4	WASHER (7X25.4X2.54-MM THK)	
	12	1	**095-0843**	2	PIN-COTTER	
	13	1	**5V-1496**	2	RETAINER	
	14	1	**6V-7646**	2	WASHER-HARD (7.2X25X2-MM THK)	
	15	1	**8T-0328**	1	WASHER-HARD (5.5X10X1-MM THK)	
	16	1	**8T-4205**	1	WASHER-HARD (7.2X14.5X2-MM THK)	
C	17	1	**294-5042**	2	SPACER (11.1X19.5X9.67-MM THK)	

C-CHANGE FROM PREVIOUS TYPE
Y-SEPARATE ILLUSTRATION

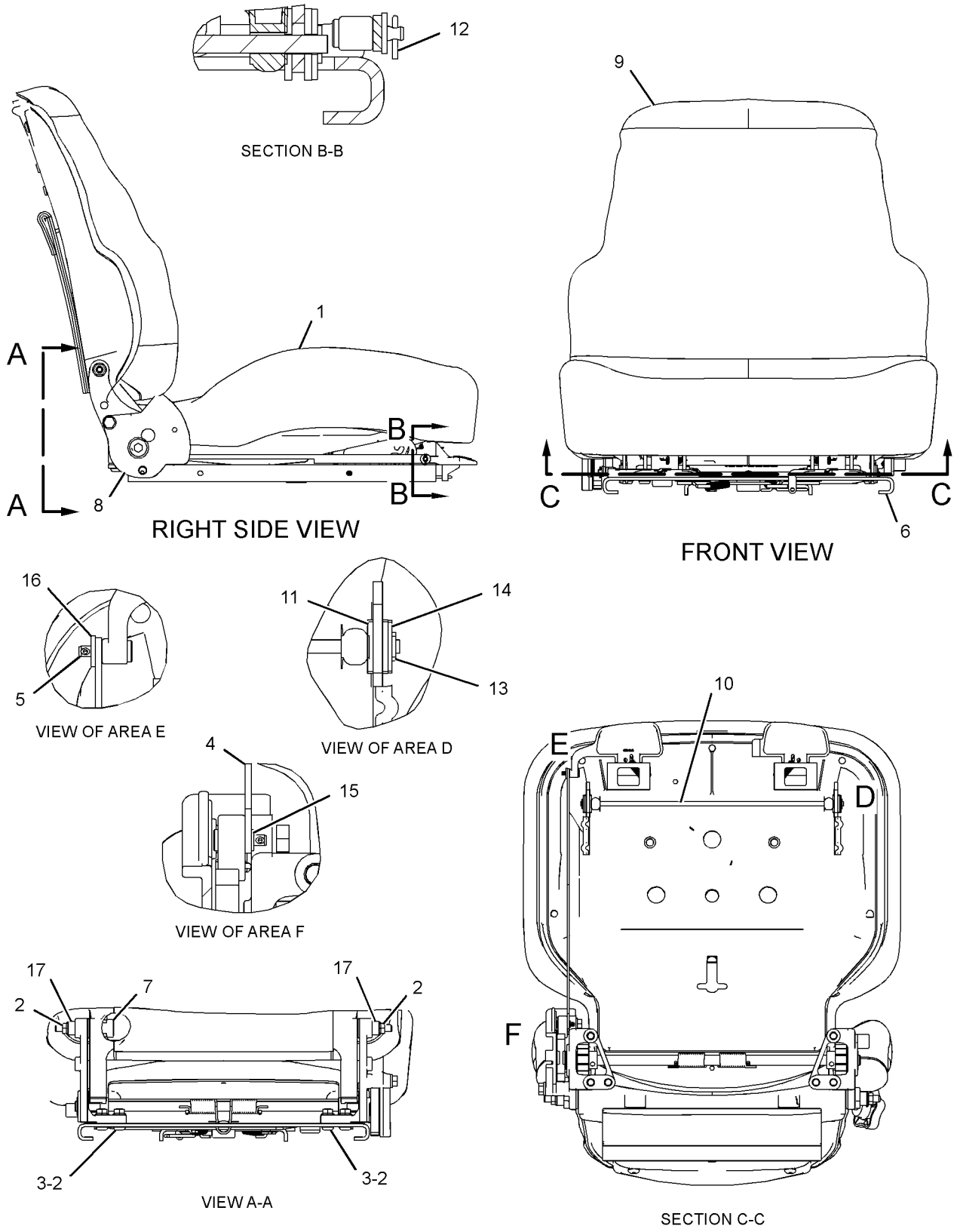

GRAPHIC #1 **<END>** g01336990

OPERATOR STATION

178-0606 SEAT GP–CLOTH

S/N: SMC1-UP; GCT1-UP
PART OF 160-7186, 200-3174 SEAT GP-SUSPENSION
ALSO AN ATTACHMENT

SMCS-7312 **i02123119**

NOTE	REF NO	GRAPHIC REF	PART NUMBER	QTY	PART NAME 1 2 3 4 5 6 (PRODUCT LEVEL)	SEE PAGE
	1	1	**177-4937**	1	SPACER (11.7X19.8X20.3-MM THK)	
Y	2	1	**178-0603**	1	SEAT GP (CLOTH)	722
	3	1	**222-0345**	1	SEAT BELT GP (RETRACTABLE)	
C	4	1	**229-1494**	1	EXTENSION GP-BACKREST (CLOTH)	
	5	1	**0T-0244**	1	BOLT (7/16-20X1.25-IN)	
	6	1	**205-6388**	1	BOLT (7/16-20X1.75-IN)	

C-CHANGE FROM PREVIOUS TYPE
Y-SEPARATE ILLUSTRATION

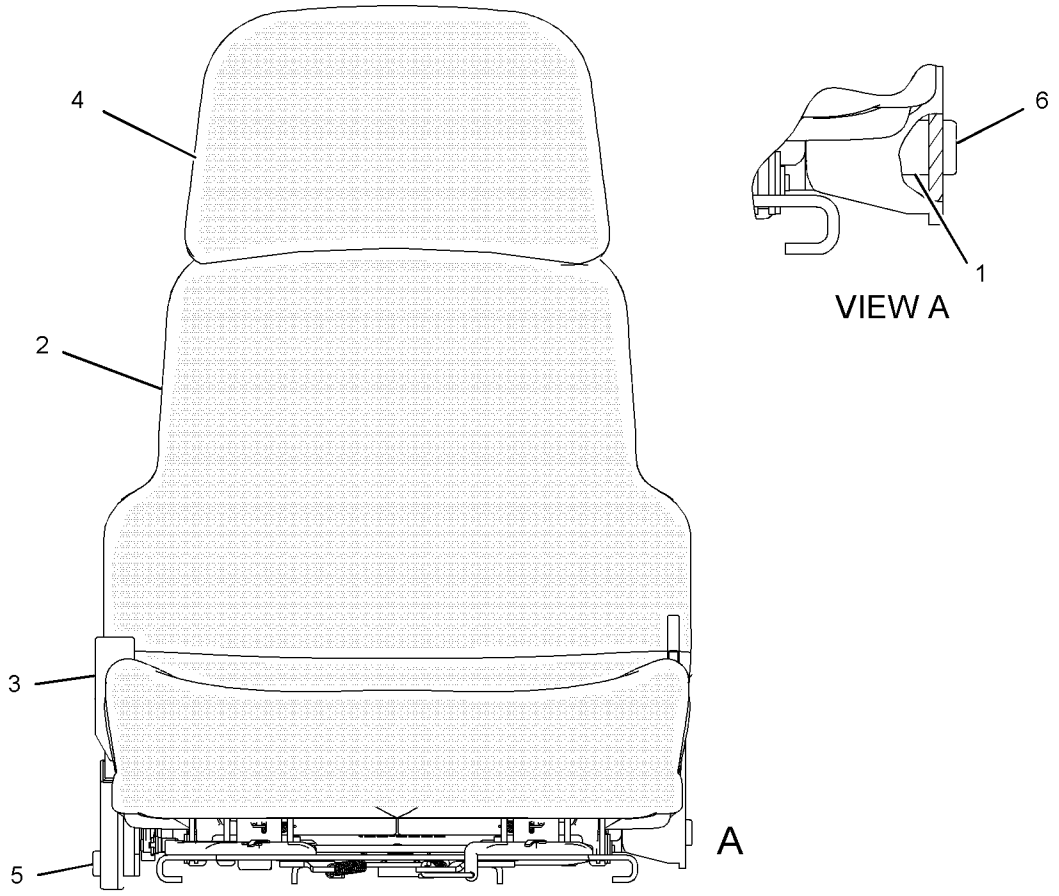

GRAPHIC #1

<END>

g01084230

OPERATOR STATION

180-7304 SEAT GP—VINYL

S/N: SMC1-UP; GCT1-UP
PART OF 184-6011 SEAT GP
AN ATTACHMENT

SMCS-7312 **i02762440**

NOTE	REF NO	GRAPHIC REF	PART NUMBER	QTY	PART NAME 1 2 3 4 5 6 (PRODUCT LEVEL)	SEE PAGE
	1	1	**143-1288**	8	LOCKNUT-FLANGE (3/8-16-THD)	
	2	1	**171-1230**	6	SCREW-BUTTON HEAD (3/8-16X1-IN)	
	3	1	**171-6682**	1	BAR	
	4	1	**172-2416**	2	PIN	
Y	5	1	*173-1028*	1	ADJUSTER GP-SEAT	623
	6	1	**173-3283**	1	PAN AS (VINYL)	
		1	**169-1026**	1	CUSHION AS	
		1	**6K-3273**	5	RIVET-POP	
	7	1	**177-1863**	2	BOLT-PIVOT (3/8-16X2.89-IN)	
	8	1	**184-2298**	1	ROD	
	9	1	**184-2299**	4	WASHER (7X25.4X2.54-MM THK)	
Y	10	1	*210-2270*	1	RECLINER GP-SEAT	716
CY	11	1	*292-9238*	1	PAN GP-BACKREST	707
C	12	1	**294-5042**	2	SPACER (11.1X19.5X9.67-MM THK)	
	13	1	**095-0843**	2	PIN-COTTER	
	14	1	**5V-1496**	2	RETAINER	
	15	1	**6V-7646**	2	WASHER-HARD (7.2X25X2-MM THK)	
	16	1	**8T-0328**	1	WASHER-HARD (5.5X10X1-MM THK)	
	17	1	**8T-4205**	1	WASHER-HARD (7.2X14.5X2-MM THK)	

C-CHANGE FROM PREVIOUS TYPE
Y-SEPARATE ILLUSTRATION

180-7304 SEAT GP *(contd.)* **i02762440**

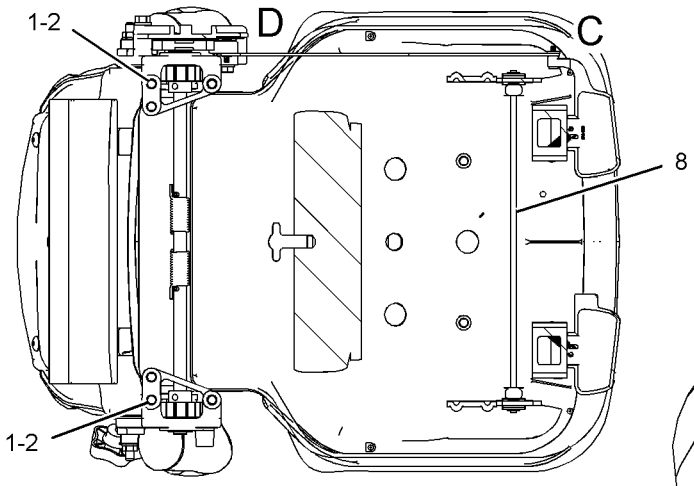

SECTION B-B

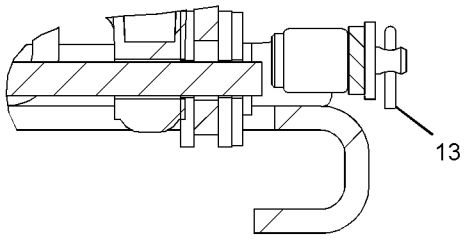

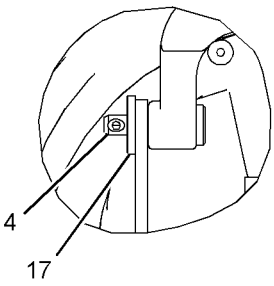

VIEW OF AREA C

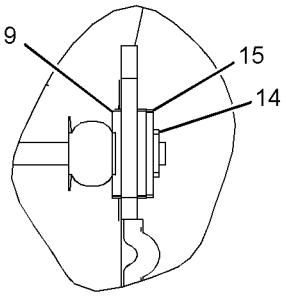

VIEW OF AREA B

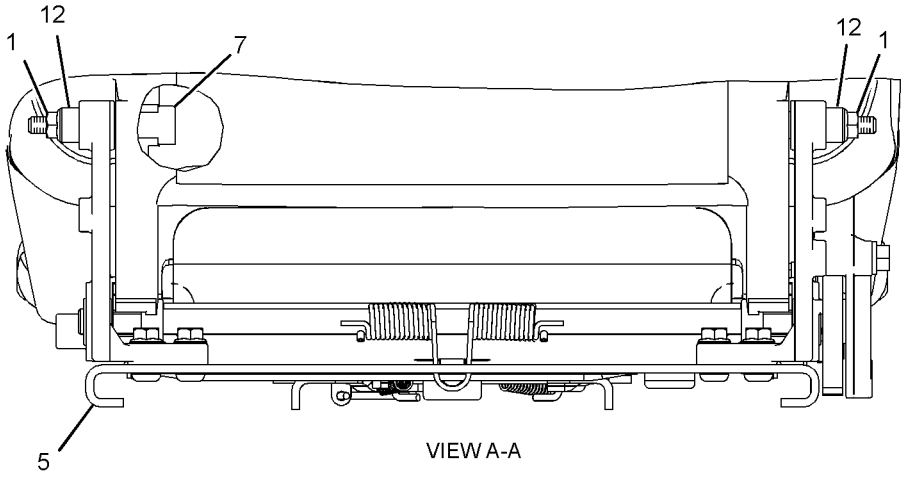

VIEW A-A

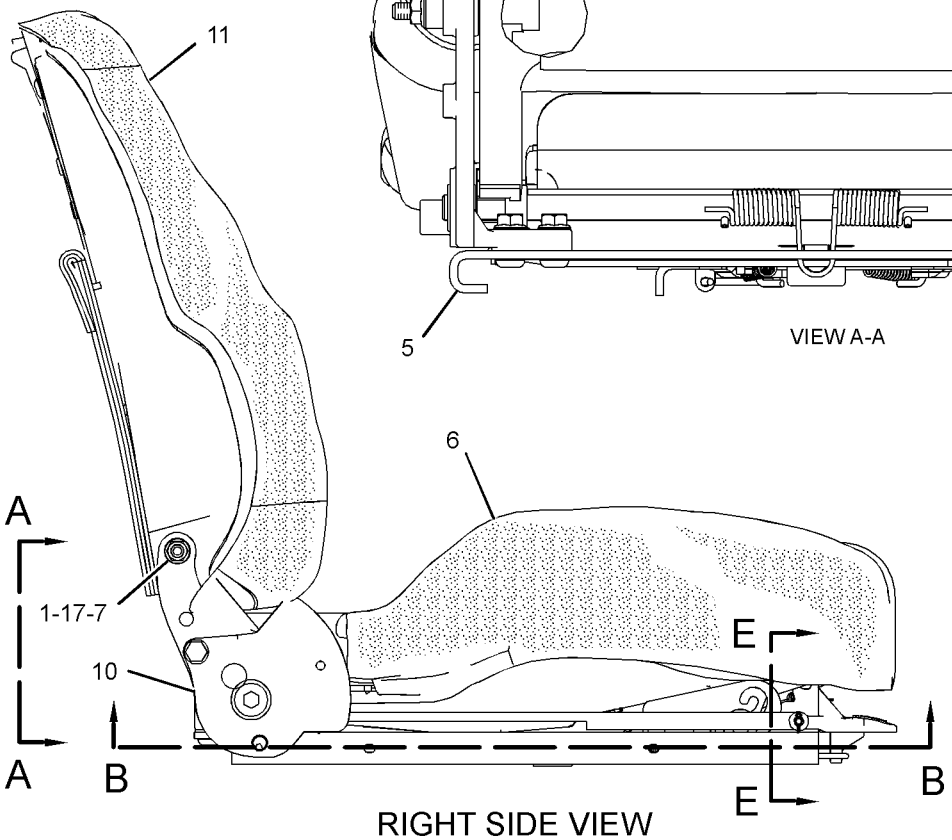

RIGHT SIDE VIEW

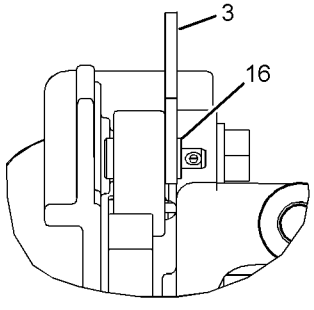

VIEW OF AREA D

GRAPHIC #1 **<END>** g01393648

OPERATOR STATION

184-6011 SEAT GP–VINYL

S/N: SMC1-UP; GCT1-UP
PART OF 159-2950 SEAT GP-SUSPENSION
AN ATTACHMENT

SMCS-7312 **i01899322**

NOTE	REF NO	GRAPHIC REF	PART NUMBER	QTY	PART NAME 1 2 3 4 5 6 (PRODUCT LEVEL)	SEE PAGE
	1	1	**173-3083**	1	EXTENSION GP-BACKREST (VINYL) (SEAT)	
		1	**117-4491**	1	ROD	
	2	1	**177-4937**	1	SPACER (11.7X19.8X20.3-MM THK)	
	3	1	**205-6388**	1	BOLT (7/16-20X1.75-IN)	
	4	1	**0T-0244**	1	BOLT (7/16-20X1.25-IN)	
Y	5	1	**180-7304**	1	SEAT GP (VINYL)	725
	6	1	**222-0345**	1	SEAT BELT GP (RETRACTABLE)	

Y-SEPARATE ILLUSTRATION

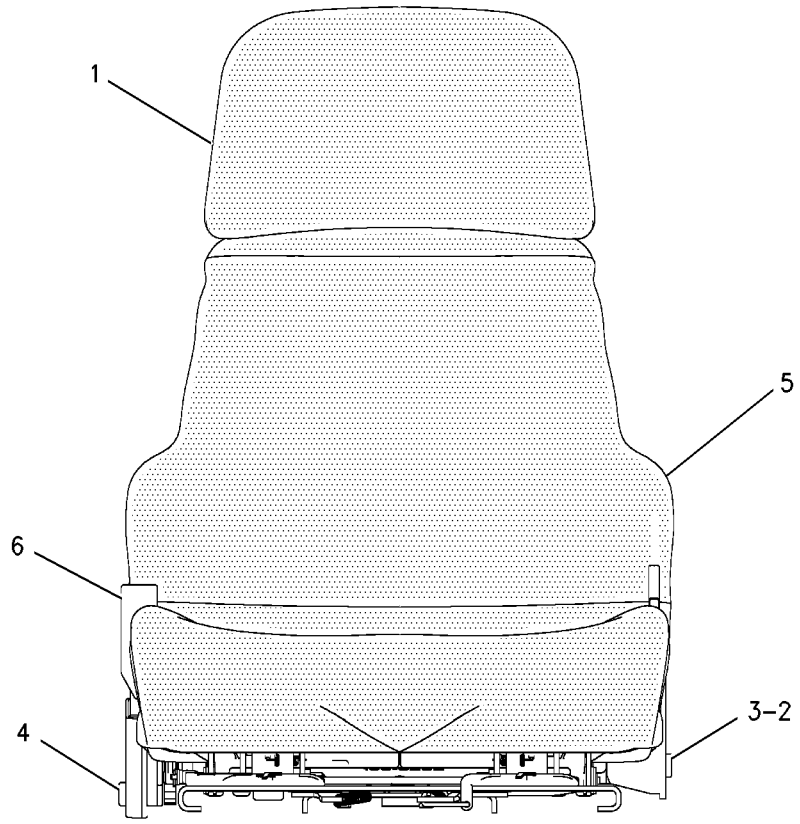

FRONT VIEW

GRAPHIC #1 **<END>** g00683843

OPERATOR STATION

214-1196 SEAT GP—AIR SUSPENSION, CLOTH

S/N: SMC1-UP; GCT1-UP

AN ATTACHMENT

SMCS-7312 **i02757804**

NOTE	REF NO	GRAPHIC REF	PART NUMBER	QTY	PART NAME 1 2 3 4 5 6 (PRODUCT LEVEL)	SEE PAGE
Y	1	1	**200-3174**	1	SEAT GP-SUSPENSION (AIR) (CLOTH)	733
B	2	1	**9V-2818**	1	GROMMET	

B-USE AS REQUIRED
Y-SEPARATE ILLUSTRATION

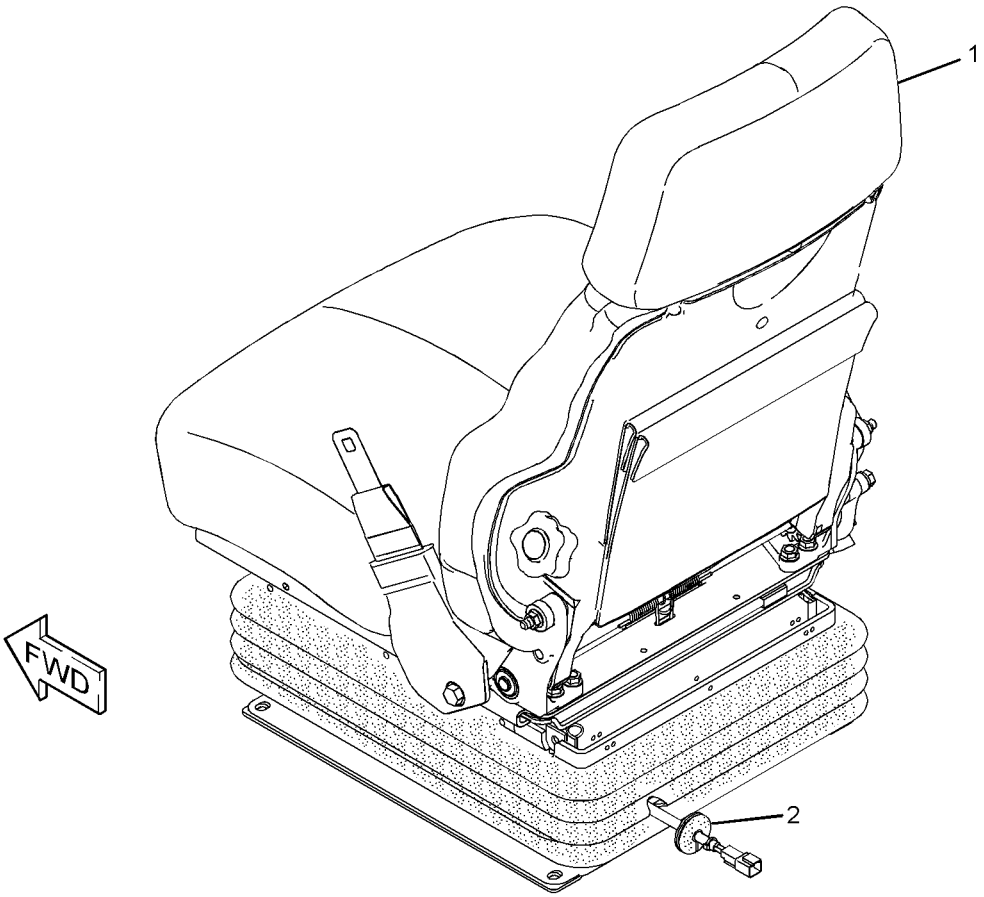

GRAPHIC #1 **<END>** g01391305

OPERATOR STATION

214-1197 SEAT GP—AIR SUSPENSION, VINYL

S/N: SMC1-UP; GCT1-UP
PART OF 283-0581 CANOPY AR
AN ATTACHMENT

SMCS-7312 **i02246066**

NOTE	REF NO	GRAPHIC REF	PART NUMBER	QTY	PART NAME 1 2 3 4 5 6 (PRODUCT LEVEL)	SEE PAGE
Y	1	1	**159-2950**	1	SEAT GP-SUSPENSION (AIR)	731

Y-SEPARATE ILLUSTRATION

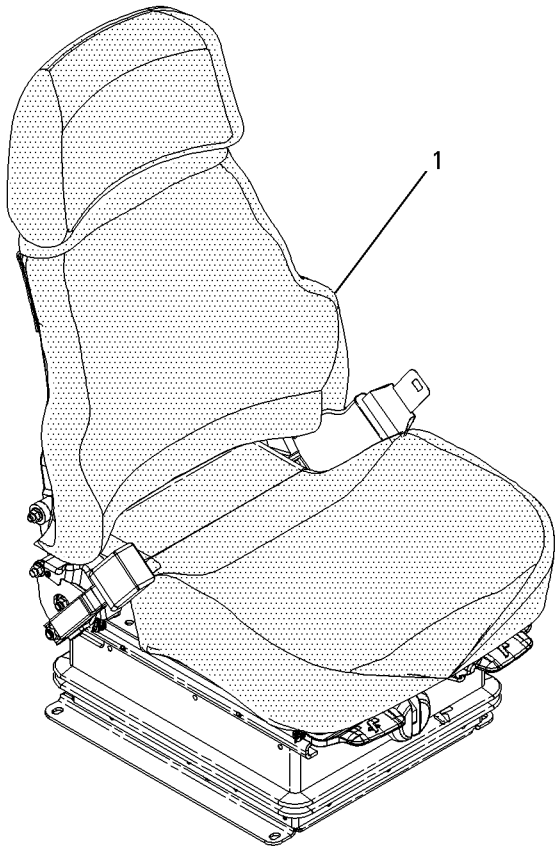

GRAPHIC #1 **<END>** g00695004

OPERATOR STATION

223-2205 SEAT GP–CLOTH

S/N: SMC1-UP; GCT1-UP
PART OF 269-2044 CHASSIS AR

SMCS-7312 **i02431486**

NOTE	REF NO	GRAPHIC REF	PART NUMBER	QTY	PART NAME 1 2 3 4 5 6 (PRODUCT LEVEL)	SEE PAGE
	1	1	**126-3700**	1	ARMREST AS (RH)	
	2	1	**126-3701**	1	ARMREST AS (LH)	
Y	3	1	**160-7186**	1	SEAT GP-SUSPENSION	732
	4	1	**184-1503**	2	KNOB	
	5	1	**184-3269**	1	PLATE AS	
		1	**1F-0750**	1	NUT-WELD (3/8-16-THD)	
	6	1	**184-3270**	1	PLATE AS	
M		1	**8T-3490**	2	NUT-WELD (M10X1.5-THD)	
	7	1	**5P-1075**	2	WASHER-HARD (10.2X22.5X3-MM THK)	
	8	1	**7X-7729**	6	WASHER (11X25X3-MM THK)	
	9	1	**8T-4121**	2	WASHER-HARD (11X21X2.5-MM THK)	
M	10	1	**8T-4137**	4	BOLT (M10X1.5X20-MM)	
M	11	1	**8T-4196**	2	BOLT (M10X1.5X35-MM)	
	12	1	**8T-7971**	2	WASHER-HARD (13.5X25.5X5-MM THK)	
M	13	1	**9X-2125**	4	BOLT-LOCKING (M10X1.5X25-MM)	

M-METRIC PART
Y-SEPARATE ILLUSTRATION

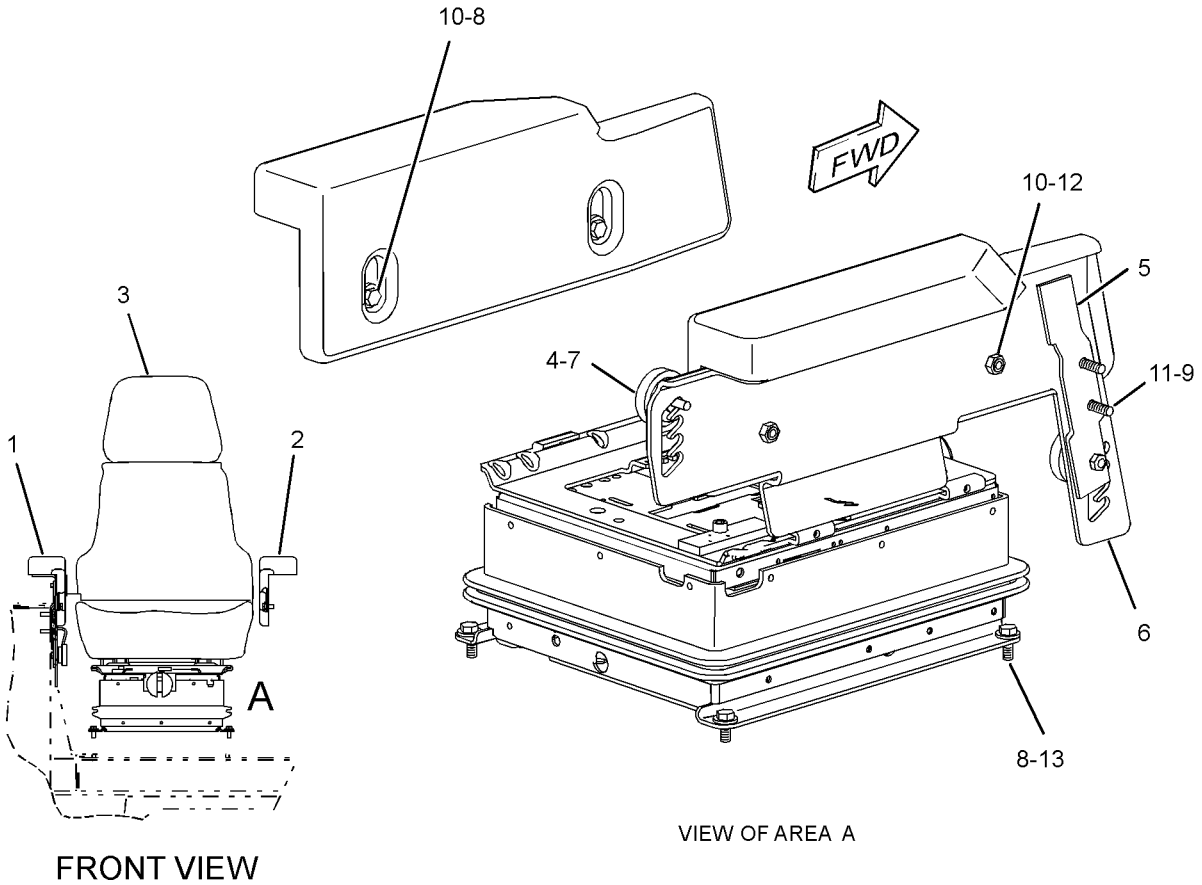

GRAPHIC #1 **<END>** g01206790

159-2950 SEAT GP-SUSPENSION–VINYL, AIR

S/N: SMC1-UP; GCT1-UP
PART OF 214-1197 SEAT GP
AN ATTACHMENT

SMCS-7321, 7324, 7336 **i01871053**

NOTE	REF NO	GRAPHIC REF	PART NUMBER	QTY	PART NAME 1 2 3 4 5 6 (PRODUCT LEVEL)	SEE PAGE
Y	1	1	**160-7165**	1	SUSPENSION GP-SEAT	734
Y	2	1	*184-6011*	1	SEAT GP	727
JZ	3	1		4	BLOCK-SLIDER	
	4	1	**4F-4879**	1	BOLT (3/8-16X0.5-IN)	
	5	1	**203-7703**	2	WASHER-HARD (10.2X22.22X2.38-MM THK)	
J	6	1	**173-5787**	4	SETSCREW (1/4-20-THD)	
					AVAILABLE REPAIR KIT(S):	
J			**173-7035**	1	KIT-SLIDER BLOCK (SUSPENSION SEAT)	

J-KIT MARKED J INCLUDES PART(S) MARKED J
Y-SEPARATE ILLUSTRATION
Z-NOT SERVICED SEPARATELY

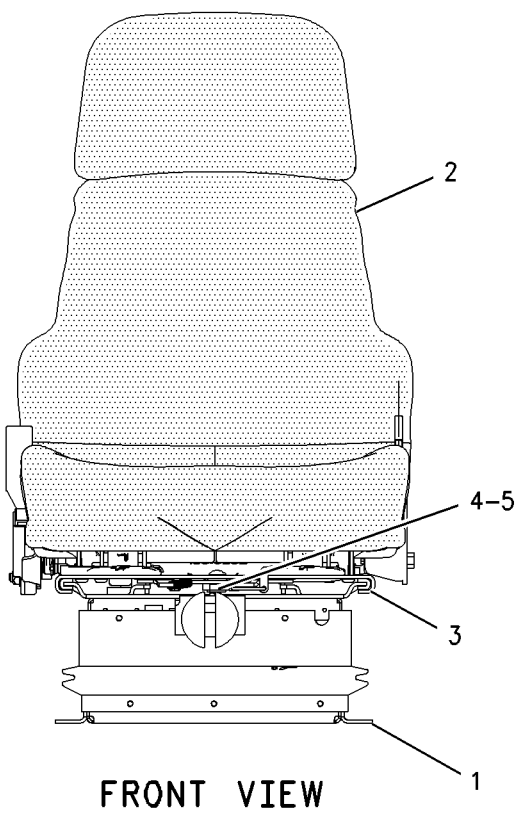

FRONT VIEW

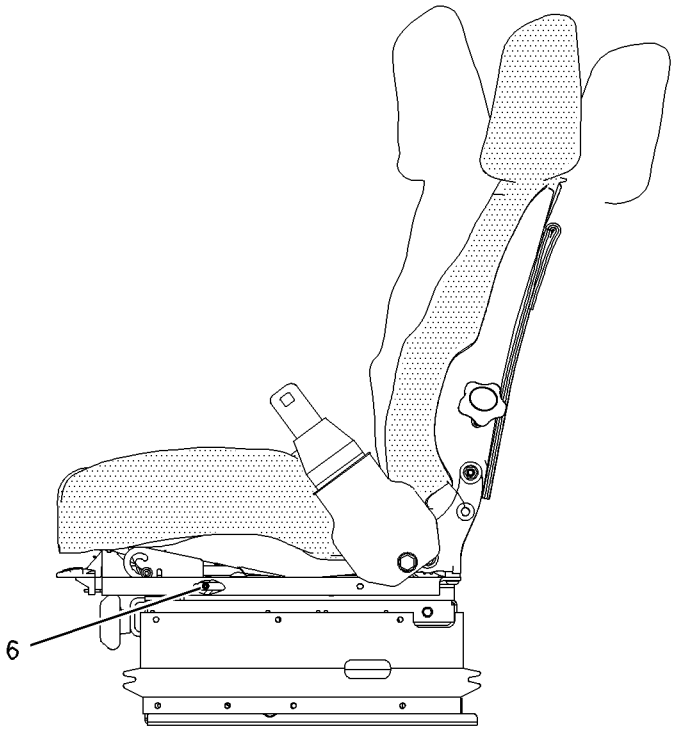

LEFT SIDE VIEW

GRAPHIC #1 **<END>** g00819547

OPERATOR STATION

160-7186 SEAT GP-SUSPENSION–CLOTH

S/N: SMC1-UP; GCT1-UP
PART OF 223-2205 SEAT GP

SMCS-7321, 7324, 7336 **i01871057**

NOTE	REF NO	GRAPHIC REF	PART NUMBER	QTY	PART NAME 1 2 3 4 5 6 (PRODUCT LEVEL)	SEE PAGE
Y	1	1	**160-7165**	1	SUSPENSION GP-SEAT	734
Y	2	1	**178-0606**	1	SEAT GP	724
	3	1	**173-5787**	4	SETSCREW (1/4-20-THD)	
	4	1	**4F-4879**	1	BOLT (3/8-16X0.5-IN)	
		1	**203-7703**	2	WASHER-HARD (10.2X22.22X2.38-MM THK)	
					AVAILABLE REPAIR KIT(S):	
			173-7035	1	KIT-SLIDER BLOCK (SUSPENSION SEAT)	

Y-SEPARATE ILLUSTRATION

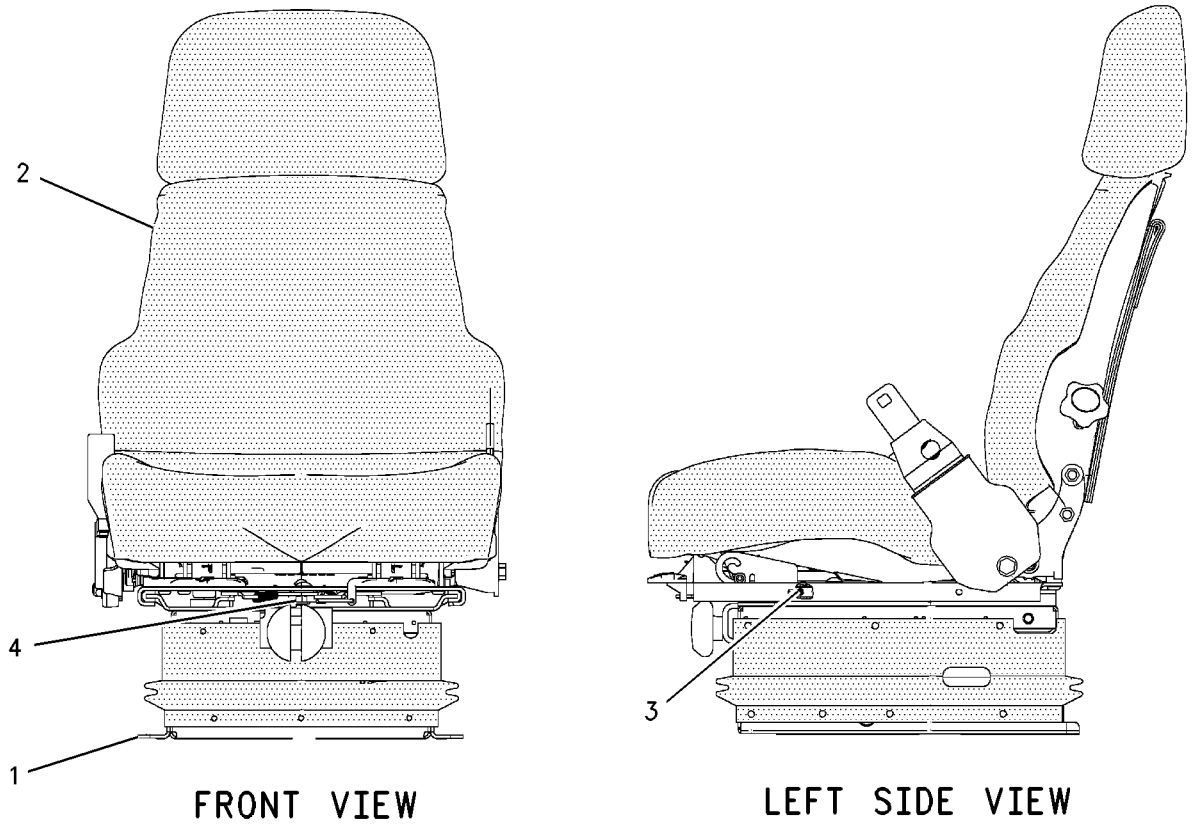

FRONT VIEW LEFT SIDE VIEW

GRAPHIC #1 **<END>** g00825453

200-3174 SEAT GP-SUSPENSION–CLOTH, AIR

S/N: SMC1-UP; GCT1-UP
PART OF 214-1196 SEAT GP
AN ATTACHMENT

SMCS-7321, 7324, 7336 **i01871059**

NOTE	REF NO	GRAPHIC REF	PART NUMBER	QTY	PART NAME 1 2 3 4 5 6 (PRODUCT LEVEL)	SEE PAGE
J	1	1	**161-9289**	4	BLOCK-SLIDER	
J	2	1	**173-5787**	4	SETSCREW (1/4-20-THD)	
Y	3	1	**178-0606**	1	SEAT GP	724
Y	4	1	**191-2933**	1	SUSPENSION GP-SEAT (AIR)	736
J	5	1	**203-7703**	2	WASHER-HARD (10.2X22.22X2.38-MM THK)	
J	6	1	**4F-4879**	1	BOLT (3/8-16X0.5-IN)	
					AVAILABLE REPAIR KIT(S):	
J			**173-7035**	1	KIT-SLIDER BLOCK (SUSPENSION SEAT)	

J-KIT MARKED J INCLUDES PARTS MARKED J
Y-SEPARATE ILLUSTRATION

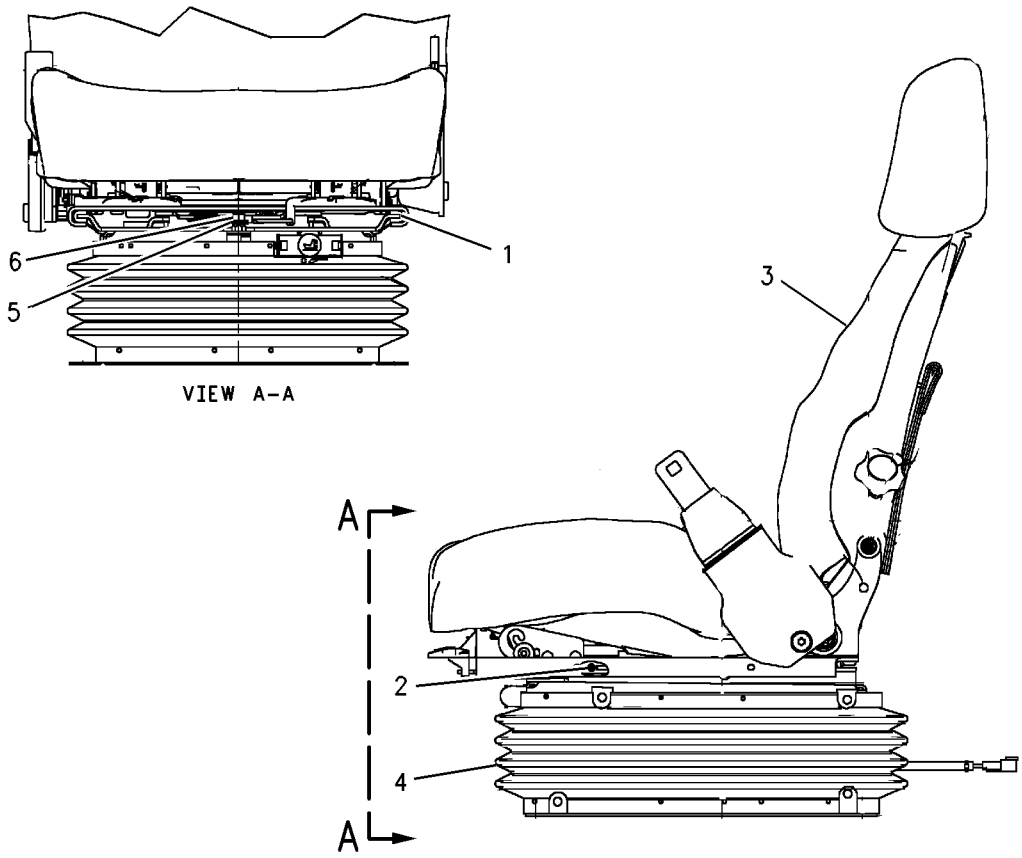

GRAPHIC #1 **<END>** g00933544

OPERATOR STATION

160-7165 SUSPENSION GP-SEAT

S/N: SMC1-UP; GCT1-UP
PART OF 159-2950, 160-7186 SEAT GP-SUSPENSION
ALSO AN ATTACHMENT

SMCS-7324 **i02238203**

NOTE	REF NO	GRAPHIC REF	PART NUMBER	QTY	PART NAME 1 2 3 4 5 6 (PRODUCT LEVEL)	SEE PAGE
	1	1	**2K-4973**	2	LOCKNUT (3/8-16-THD)	
	2	1	**4V-7884**	2	BEARING	
	3	1	**4V-8577**	4	BEARING	
	4	1	**5V-1497**	1	RETAINER	
	5	1	**8Y-5965**	1	ABSORBER AS-SHOCK	
	6	1	**8Y-6012**	1	ARM AS-SUSPENSION	
	7	1	**8Y-6014**	1	HOUSING AS-LOWER	
	8	1	**8Y-6024**	2	SHAFT AS	
J	9	1	**101-0003**	20	FASTENER	
J	10	1	**166-6781**	6	FASTENER	
J	11	1	**163-1146**	3	FASTENER	
	12	1	**145-0326**	1	FILM-INSTRUCTION (SEAT ADJUSTMENT)	
	13	1	**169-7380**	1	BOLT-SOCKET HEAD (3/8-16X0.375-IN)	
Y	14	1	**174-2231**	1	HOUSING GP-SEAT SUSPENSION	663
J	15	1	**197-7689**	3	FASTENER	
					AVAILABLE REPAIR KIT(S):	
J				1	KIT-SUSPENSION BOOT (SEAT)	
					(INCLUDES BOOT, RETAINER & FASTENERS)	
				1	KIT-BELT TETHER (SUSPENSION SEAT)	
					(INCLUDES BELTS)	
				1	KIT-SUSPENSION ROLLER (SUSPENSION SEAT)	
					(INCLUDES ROLLERS)	

J-KIT MARKED J INCLUDES PARTS MARKED J
Y-SEPARATE ILLUSTRATION

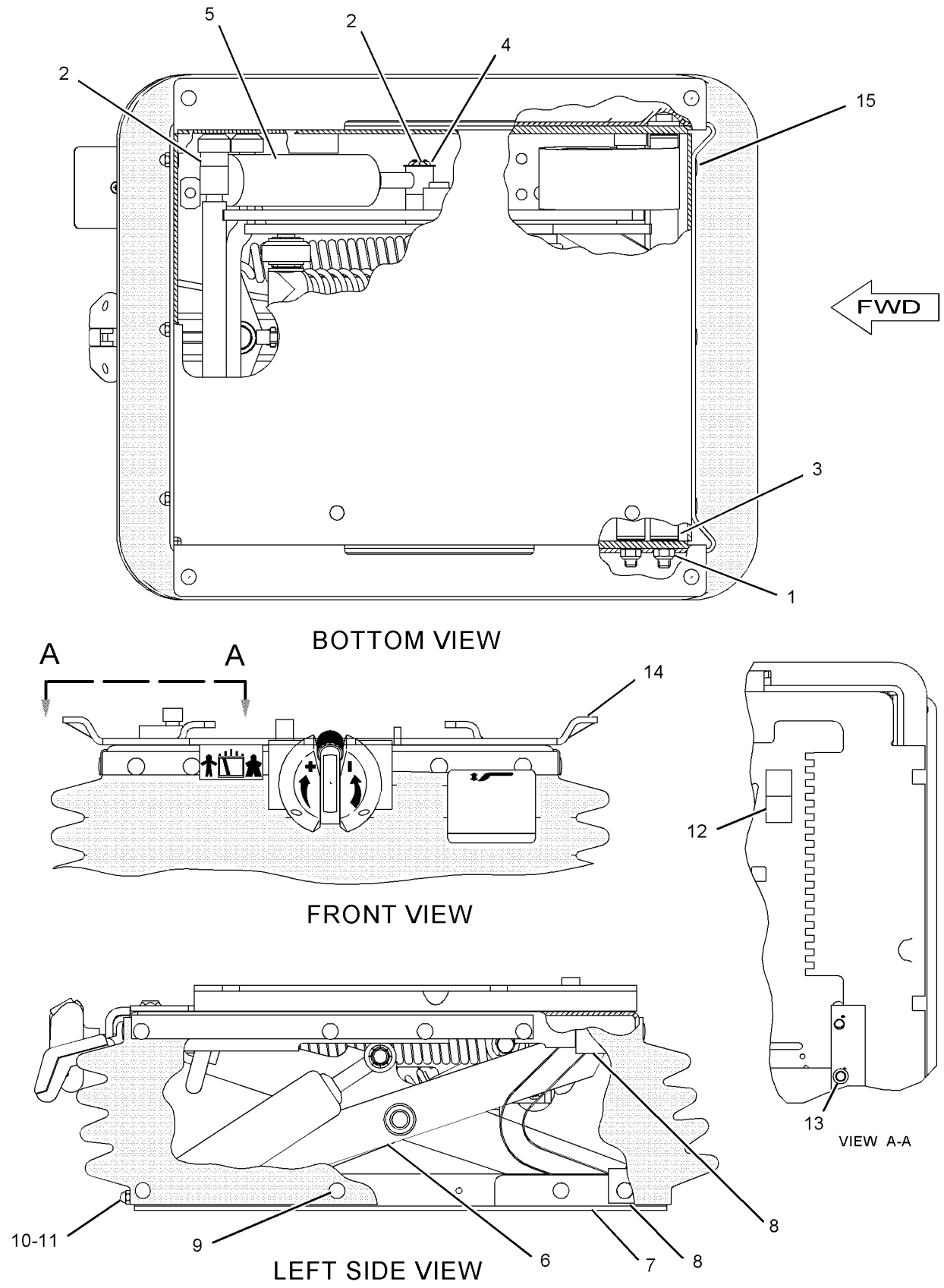

GRAPHIC #1 **<END>** g01129757

OPERATOR STATION

191-2933 SUSPENSION GP-SEAT—AIR

S/N: SMC1-UP; GCT1-UP
PART OF 200-3174 SEAT GP-SUSPENSION
AN ATTACHMENT

SMCS-7324 **i02801428**

NOTE	REF NO	GRAPHIC REF	PART NUMBER	QTY	PART NAME 1 2 3 4 5 6 (PRODUCT LEVEL)	SEE PAGE
	1	1	**3P-9900**	5	WASHER (10.5X30X3-MM THK)	
	2	1	**4B-4278**	2	WASHER (10.2X20.5X1.6-MM THK)	
	3	1	**4V-8577**	12	BEARING	
	4	1	**8L-8413**	1	STRAP-CABLE	
	5	1	**145-0326**	1	FILM-INSTRUCTION (SEAT ADJUSTMENT)	
	6	1	**164-1234**	1	PLATE	
	7	1	**101-0003**	33	FASTENER	
	8	1	**169-7380**	1	BOLT-SOCKET HEAD (3/8-16X0.375-IN)	
	9	1	**186-5107**	2	SCREW (NO 8X1.25-IN)	
	10	1	**192-7752**	4	SHAFT AS	
	11	1	**192-7755**	1	HOUSING AS	
	12	1	**192-7760**	1	SHAFT	
	13	1	**192-7767**	1	SCISSORS AS	
	14	1	**192-7783**	1	TOGGLE AS	
	15	1	**192-7787**	1	TOGGLE AS	
	16	1	**192-7790**	1	HOUSING AS	
	17	1	**192-7795**	1	BOOT	
	18	1	**192-7805**	1	HARNESS AS-VALVE (SEAT AIR COMPRESSOR)	
		1	**102-8802**	1	KIT-RECEPTACLE (2-PIN)	
					(INCLUDES RECEPTACLE AS & WEDGE)	
	19	1	**192-7810**	1	SPRING AS-AIR	
		1	**5P-4423**	1	ELBOW	
		1	**163-1135**	1	SPRING	
	20	1	**192-7812**	1	BOLT-SHOULDER (3/8-16X2-IN)	
	21	1	**192-7820**	3	BUMPER	
	22	1	**192-7822**	1	SHAFT	
	23	1	**237-3943**	1	BRACKET	
Y	24	1	**237-3970**	1	AIR COMPRESSOR GP-SEAT	625
	25	1	**1H-8296**	1	SCREW-MACHINE (3/8-16X0.52-IN)	
	26	1	**2K-4973**	8	LOCKNUT (3/8-16-THD)	
	27	1	**3J-4818**	1	LOCKWASHER	
M	28	1	**5C-2890**	3	NUT (M6X1-THD)	
	29	1	**8T-9371**	1	BOLT (3/8-16X0.5-IN)	
E	30	1	**211-5358**		CONDUIT-FLEXIBLE (100-CM)	
BD	31	1	**5P-6010**		TUBE	
					AVAILABLE REPAIR KIT(S):	
			192-7799	1	KIT-AIR VALVE (SUSPENSION SEAT)	
					(INCLUDES KNOB AS, NUT, VALVE, LOCKWASHER & FITTING)	
			192-7848	1	KIT-SHOCK ABSORBER (SUSPENSION SEAT)	
					(INCLUDES LOCKNUT, LOCKWASHER, SHOCK ABSORBER, BEARING, WASHER, & BOLTS)	
			211-9294	1	KIT-TETHER (SUSPENSION SEAT)	
					(INCLUDES TETHERS)	

B-USE AS REQUIRED
D-ORDER BY THE METER
E-ORDER BY THE CENTIMETER
M-METRIC PART
Y-SEPARATE ILLUSTRATION

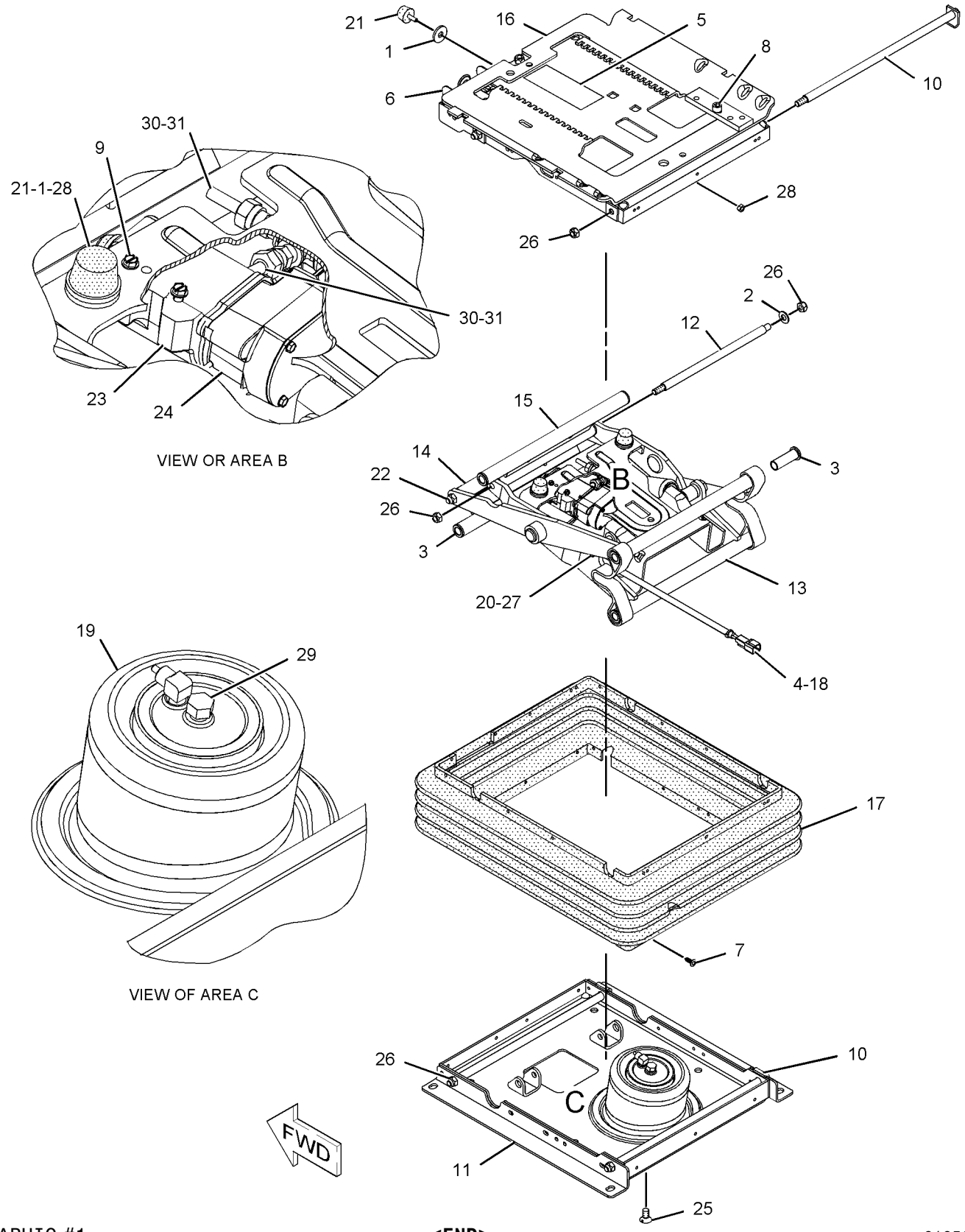

GRAPHIC #1 **<END>** g01056291

OPERATOR STATION

169-9649 TANK GP-WINDOW WASHER

S/N: SMC1-UP; GCT1-UP
PART OF 272-5171 TANK GP-WINDOW WASHER
ALSO AN ATTACHMENT

SMCS-7306 **i02375124**

NOTE	REF NO	GRAPHIC REF	PART NUMBER	QTY	PART NAME 1 2 3 4 5 6 (PRODUCT LEVEL)	SEE PAGE
	1	1	**169-9650**	1	TANK-WASHER	
	2	1	**8E-8292**	1	CAP-VENTED (WINDOW WASHER TANK)	
	3	1	**186-4857**	1	HARNESS AS-WIRING (WINDOW WASHER)	
		1	**9X-0194**	4	TERMINAL AS	
		1	**102-8805**	1	KIT-RECEPTACLE (6-PIN)	
					(INCLUDES RECEPTACLE AS & WEDGE)	
	4	1	**7T-8891**	4	PUMP AS-WASHER	
D	5	1	**6V-5817**		CONDUIT-FLEXIBLE (0.4-M)	
E	6	1	**144-0195**		HOSE (61-CM EACH)	
E	6A	1	**144-0195**		HOSE (15-CM EACH)	
E	6B	1	**144-0195**		HOSE (57-CM EACH)	
B	7	1	**3S-2093**	7	STRAP-CABLE	
BE	8	1	**7X-7927**		TAPE-IDENTIFICATION (LETTER A)	
BE	9	1	**7X-7928**		TAPE-IDENTIFICATION (LETTER B)	
BE	10	1	**7X-7929**		TAPE-IDENTIFICATION (LETTER C)	
BE	11	1	**7X-7930**		TAPE-IDENTIFICATION (LETTER D)	

B-USE AS REQUIRED
D-ORDER BY THE METER
E-ORDER BY THE CENTIMETER

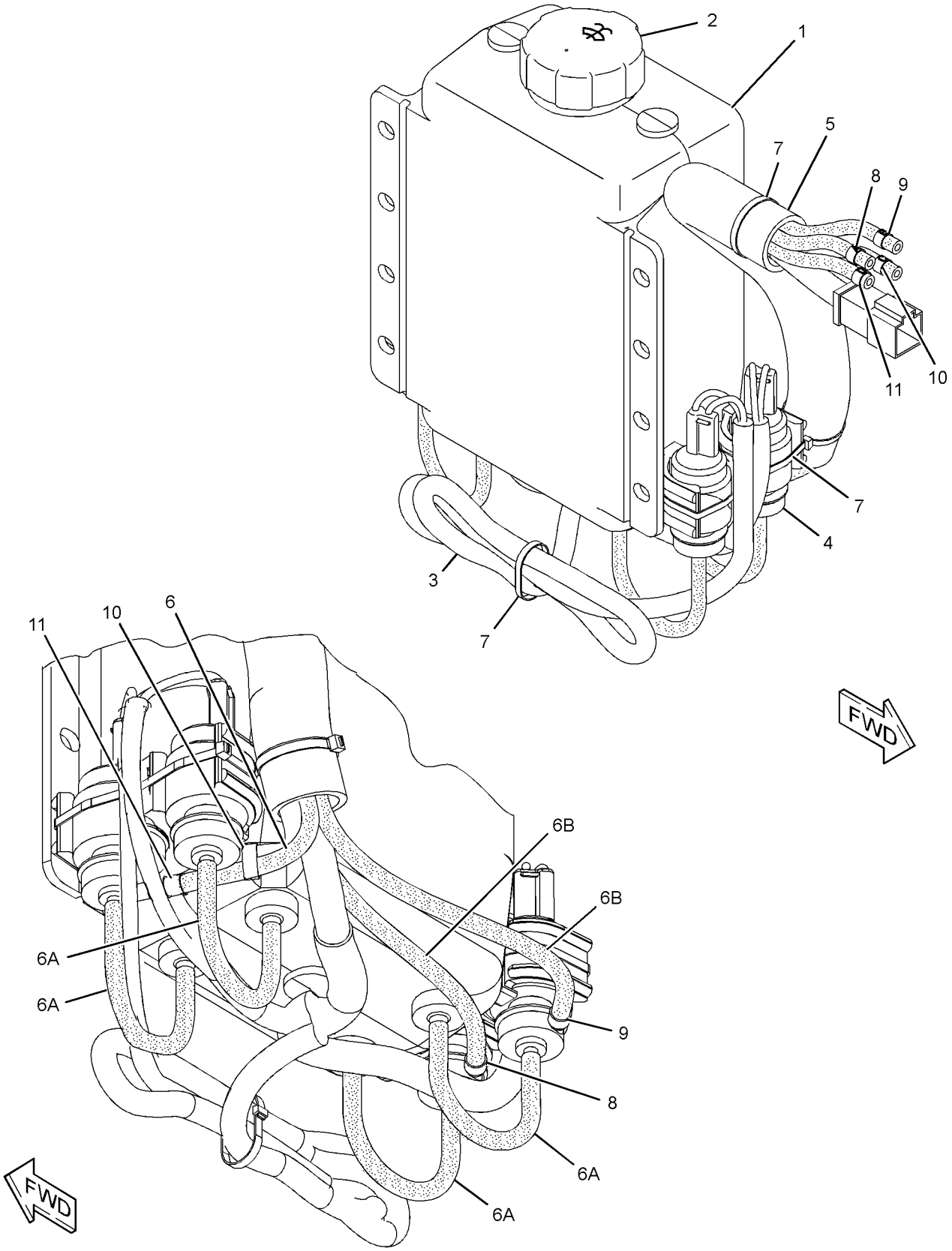

GRAPHIC #1 **<END>** g01191550

OPERATOR STATION

272-5171 TANK GP-WINDOW WASHER

S/N: SMC1-UP; GCT1-UP
PART OF 272-3477, 289-9878 CAB AR
ALSO AN ATTACHMENT

SMCS-7306 **i02748438**

NOTE	REF NO	GRAPHIC REF	PART NUMBER	QTY	PART NAME 1 2 3 4 5 6 (PRODUCT LEVEL)	SEE PAGE
	1	1	**3S-2093**	1	STRAP-CABLE	
Y	2	1	**169-9649**	1	TANK GP-WINDOW WASHER	738
	3	1	**204-2581**	4	VALVE AS-CHECK	
	4	1	**4P-8134**	1	CLIP	
M	5	1	**8T-4200**	5	BOLT (M8X1.25X16-MM)	
	6	1	**8T-4224**	5	WASHER-HARD (8.8X16X2-MM THK)	

M-METRIC PART
Y-SEPARATE ILLUSTRATION

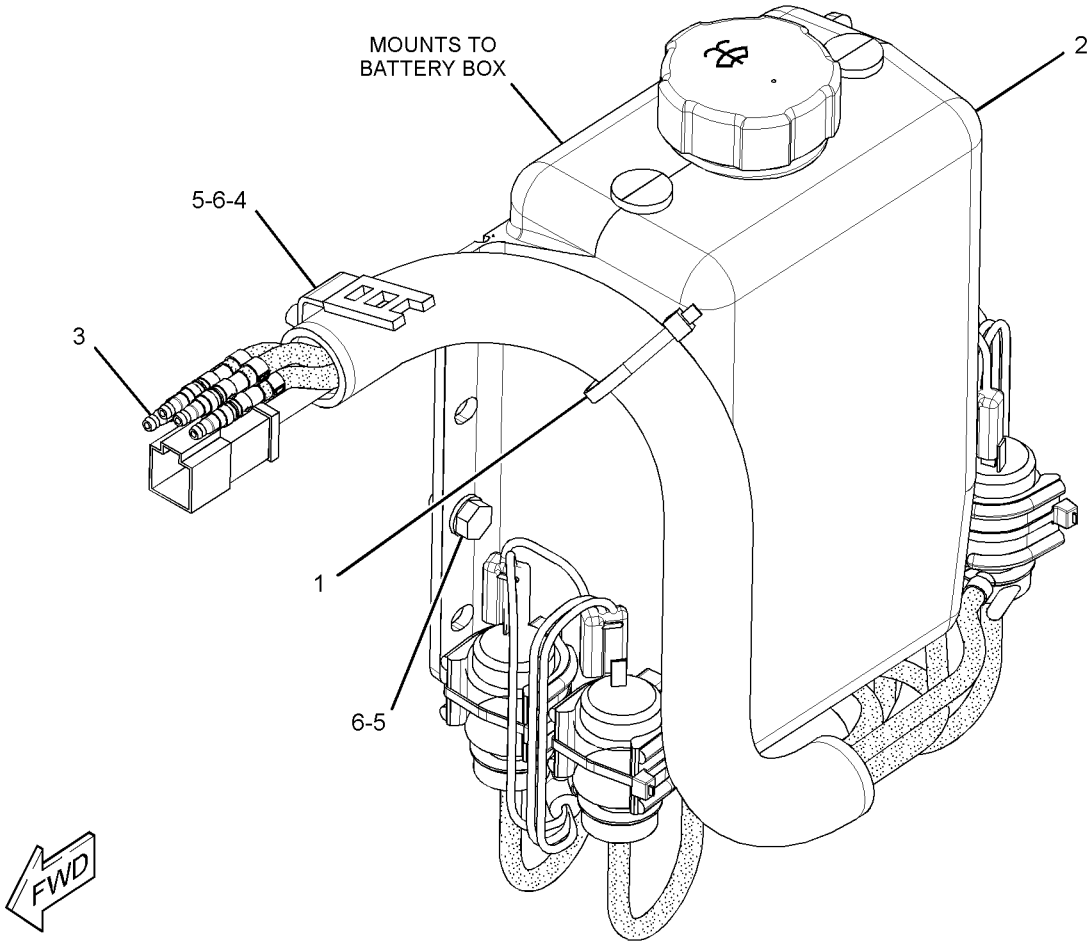

GRAPHIC #1 **<END>** g01359518

OPERATOR STATION

158-7690 WASHER GP-WINDOW

S/N: SMC1-UP; GCT1-UP
PART OF 158-7694 CAB AR
ALSO AN ATTACHMENT

SMCS-7306 **i02609011**

NOTE	REF NO	GRAPHIC REF	PART NUMBER	QTY	PART NAME 1 2 3 4 5 6 (PRODUCT LEVEL)	SEE PAGE
	1	1	**3S-2093**	19	STRAP-CABLE	
	2	1	**8T-5400**	4	CONNECTOR AS	
	3	1	**8T-8737**	1	PLUG-SEAL	
	4	1	**145-7328**	2	ELBOW-HOSE	
	5	1	**169-9635**	1	HARNESS AS-CAB	
		1	**102-8801**	1	KIT-RECEPTACLE (12-PIN)	
					(INCLUDES RECEPTACLE AS & WEDGE)	
		1	**155-2255**	1	KIT-CONNECTING PLUG (12-PIN)	
		1	**155-2265**	1	KIT-CONNECTING PLUG (8-PIN)	
		1	**155-2274**	3	KIT-CONNECTING PLUG (6-PIN)	
					(EACH PLUG KIT INCLUDES PLUG AS, WEDGE, & INTERFACE SEAL)	
		1	**3E-3373**	1	PLUG AS-CONNECTOR (4-PIN)	
	6	1	**155-2274**	1	KIT-CONNECTING PLUG (6-PIN)	
					(INCLUDES PLUG AS, WEDGE, & INTERFACE SEAL)	
	8	1	**4H-2558**	1	GROMMET	
	9	1	**8E-6856**	1	COVER	
M	10	1	**8T-4133**	1	NUT (M10X1.5-THD)	
	11	1	**8T-4896**	1	WASHER-HARD (10.2X18.5X2.5-MM THK)	
	12	1	**9N-1995**	4	RIVET-POP	
D	13	1	**6V-5818**		CONDUIT-FLEXIBLE (0.4-M EACH)	
E	14	1	**7X-7702**		CONDUIT-FLEXIBLE (83-CM)	
E	15	1	**144-0195**		HOSE (288-CM)	
E	15A	1	**144-0195**		HOSE (440-CM)	
E	15B	1	**144-0195**		HOSE (364-CM EACH)	
E	15C	1	**144-0195**		HOSE (3-CM EACH)	
E	16	1	**7X-7877**		STRIP-EDGING (5-CM)	
E	16A	1	**7X-7877**		STRIP-EDGING (10-CM EACH)	
BE	17	1	**7X-7927**		TAPE-IDENTIFICATION (LETTER A)	
BE	18	1	**7X-7928**		TAPE-IDENTIFICATION (LETTER B)	
BE	19	1	**7X-7929**		TAPE-IDENTIFICATION (LETTER C)	
BE	20	1	**7X-7930**		TAPE-IDENTIFICATION (LETTER D)	

B-USE AS REQUIRED
D-ORDER BY THE METER
E-ORDER BY THE CENTIMETER
M-METRIC PART

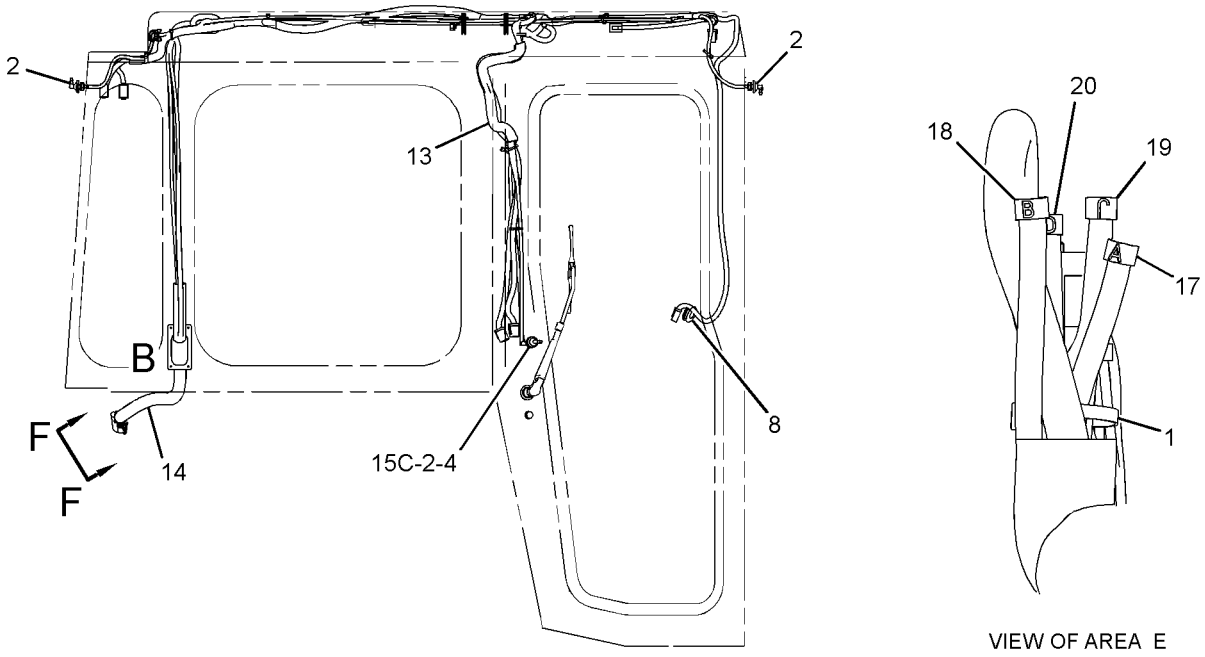

RIGHT SIDE VIEW

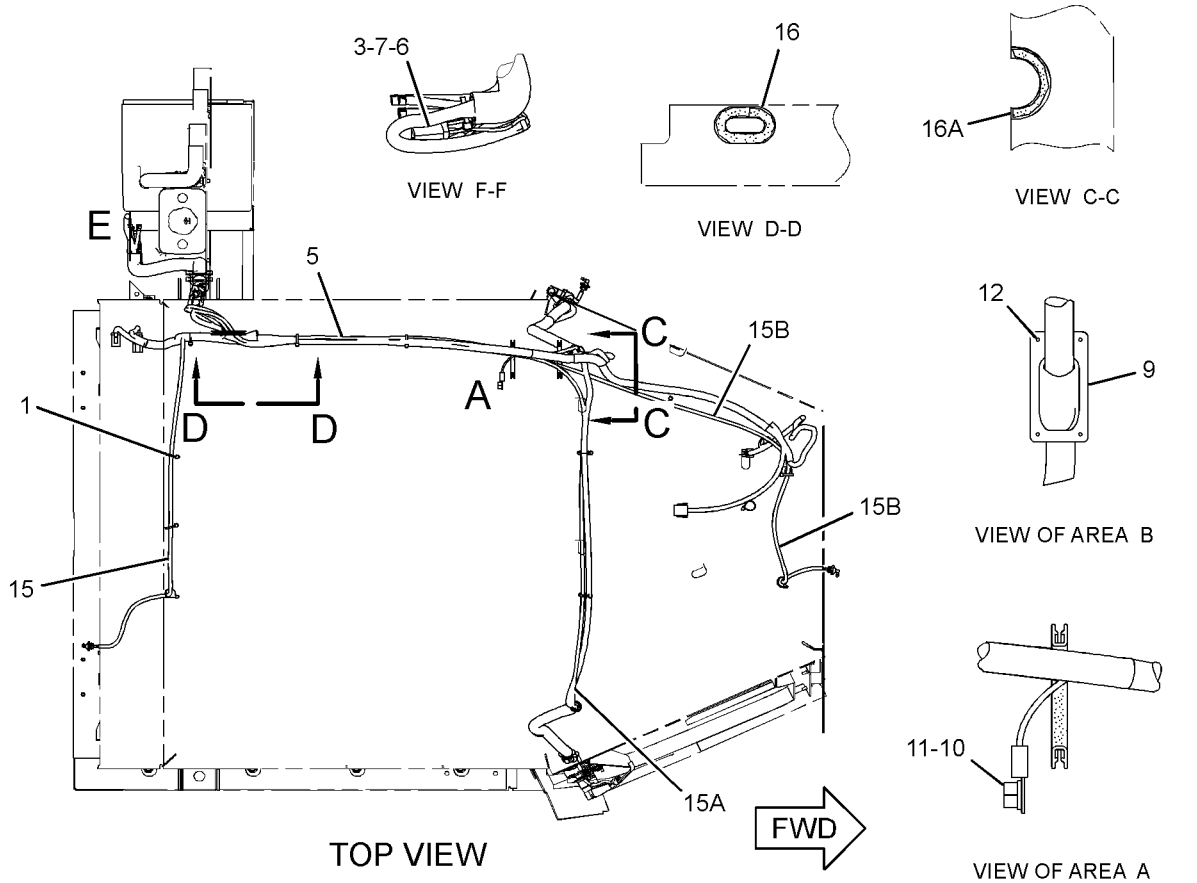

TOP VIEW

GRAPHIC #1 **<END>** g01307039

6T-5005 WINDOW GP-CAB–REAR

S/N: SMC1-UP; GCT1-UP
PART OF 6T-5008 WINDOW GP-CAB
ALSO AN ATTACHMENT

SMCS-7310 **i01815849**

NOTE	REF NO	GRAPHIC REF	PART NUMBER	QTY	PART NAME 1 2 3 4 5 6 (PRODUCT LEVEL)	SEE PAGE
	1	1	**3T-1121**	1	LOCK AS	
	2	1	**2H-6622**	2	SCREW-MACHINE	
	3	1	**9P-7860**	1	LOCK AS	
	4	1	**9P-7859**	2	SCREW	
BD	5	1	**5P-5680**		SEAL	
BD	6	1	**6V-5833**		SEAL	
BD	7	1	**5P-8918**		SEAL	
	8	1	**8Y-6447**	1	GLASS (TINTED)	
BE	9	1	**8Y-6839**		SEAL	

B-USE AS REQUIRED
D-ORDER BY THE METER
E-ORDER BY THE CENTIMETER

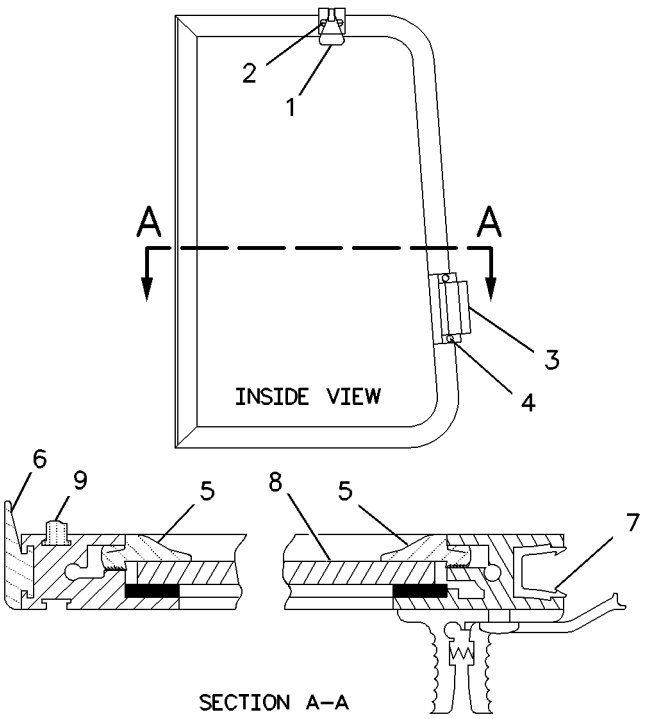

GRAPHIC #1 **<END>** g00834666

6T-5008 WINDOW GP-CAB—REAR, SLIDING

S/N: SMC1-UP; GCT1-UP
PART OF 8E-5112 WINDOW GP-SLIDING
ALSO AN ATTACHMENT

SMCS-7310 **i01815853**

NOTE	REF NO	GRAPHIC REF	PART NUMBER	QTY	PART NAME 1 2 3 4 5 6 (PRODUCT LEVEL)	SEE PAGE
Y	1	1	**6T-5005**	1	WINDOW GP-CAB (REAR)	743
	2	1	**9P-7855**	1	GLASS (TINTED)	
BD	3	1	**5P-5680**		SEAL	
BE	4	1	**8Y-6839**		SEAL	
BD	5	1	**6V-5833**		SEAL	
DB	6	1	**8T-0687**		FILLER	

B-USE AS REQUIRED
D-ORDER BY THE METER
E-ORDER BY THE CENTIMETER
Y-SEPARATE ILLUSTRATION

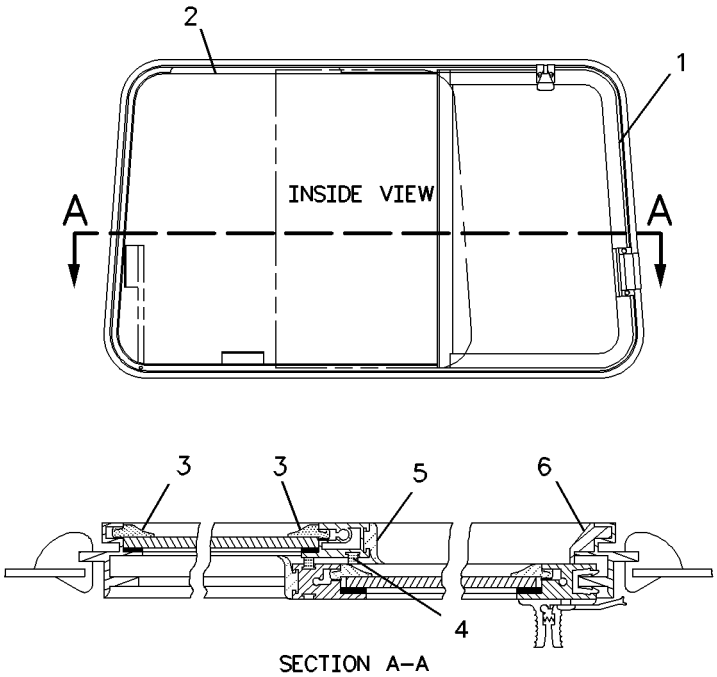

GRAPHIC #1 **<END>** g00853624

OPERATOR STATION

6T-8402 WINDOW GP-CAB—SLIDING, RH

S/N: SMC1-UP; GCT1-UP
PART OF 8E-5113 WINDOW GP-SLIDING
ALSO AN ATTACHMENT

SMCS-7310 **i01815990**

NOTE	REF NO	GRAPHIC REF	PART NUMBER	QTY	PART NAME 1 2 3 4 5 6 (PRODUCT LEVEL)	SEE PAGE
Y	1	1	**7T-1068**	1	WINDOW GP-CAB (RH)	747
	2	1	**7T-1330**	1	GLASS (TINTED)	
D	3	1	**5P-5680**		SEAL (1.14M)	
DB	4	1	**8T-0687**		FILLER	
D	5	1	**5P-5680**		SEAL (.66M)	
D	6	1	**6V-5833**		SEAL (.64M)	
E	7	1	**8Y-6839**		SEAL (64CM)	

B-USE AS REQUIRED
D-ORDER BY THE METER
E-ORDER BY THE CENTIMETER
Y-SEPARATE ILLUSTRATION

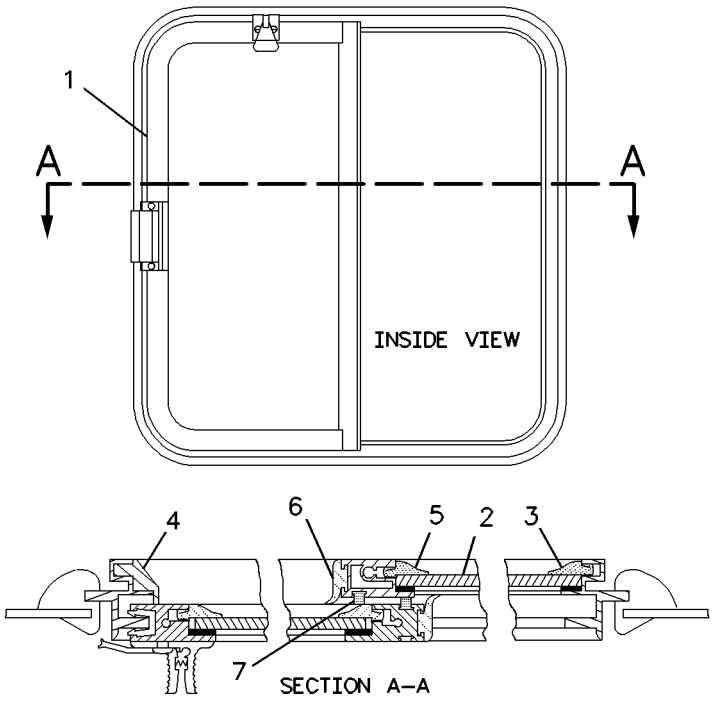

GRAPHIC #1 **<END>** g00844619

6T-8403 WINDOW GP-CAB—SLIDING, LH

S/N: SMC1-UP; GCT1-UP
PART OF 8E-5114 WINDOW GP-SLIDING
ALSO AN ATTACHMENT

SMCS-7310 **i01815970**

NOTE	REF NO	GRAPHIC REF	PART NUMBER	QTY	PART NAME 1 2 3 4 5 6 (PRODUCT LEVEL)	SEE PAGE
BD	1	1	**5P-5680**		SEAL	
BD	2	1	**8T-0687**		FILLER	
BD	3	1	**6V-5833**		SEAL	
Y	4	1	**7T-1069**	1	WINDOW GP-CAB (LH)	748
BE	5	1	**8Y-6839**		SEAL	
	6	1	**7T-1330**	1	GLASS (TINTED)	

B-USE AS REQUIRED
D-ORDER BY THE METER
E-ORDER BY THE CENTIMETER
Y-SEPARATE ILLUSTRATION

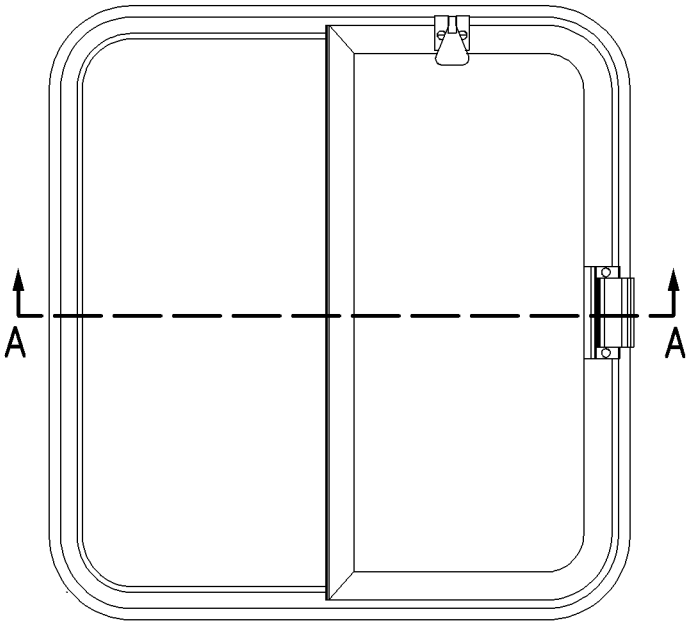

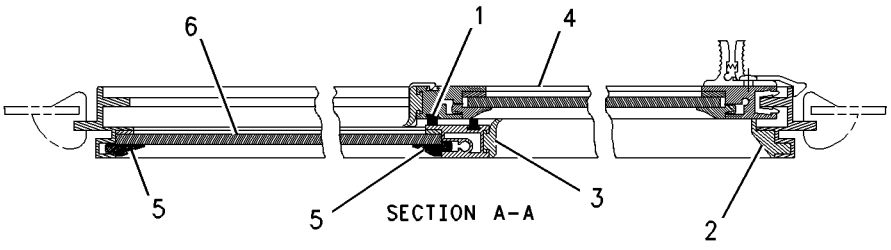

GRAPHIC #1 **<END>** g00842070

7T-1068 WINDOW GP-CAB—RH

S/N: SMC1-UP; GCT1-UP
PART OF 6T-8402 WINDOW GP-CAB
ALSO AN ATTACHMENT

SMCS-7310 **i01815997**

NOTE	REF NO	GRAPHIC REF	PART NUMBER	QTY	PART NAME 1 2 3 4 5 6 (PRODUCT LEVEL)	SEE PAGE
	1	1	**3T-1121**	1	LOCK AS	
	2	1	**2H-6622**	2	SCREW-MACHINE	
	3	1	**9P-7860**	1	LOCK AS	
	4	1	**9P-7859**	2	SCREW	
BD	5	1	**5P-5680**		SEAL	
BD	6	1	**6V-5833**		SEAL	
BD	7	1	**5P-8918**		SEAL	
BD	8	1	**8Y-6448**	1	GLASS	
BE	9	1	**8Y-6839**		SEAL	

B-USE AS REQUIRED
D-ORDER BY THE METER
E-ORDER BY THE CENTIMETER

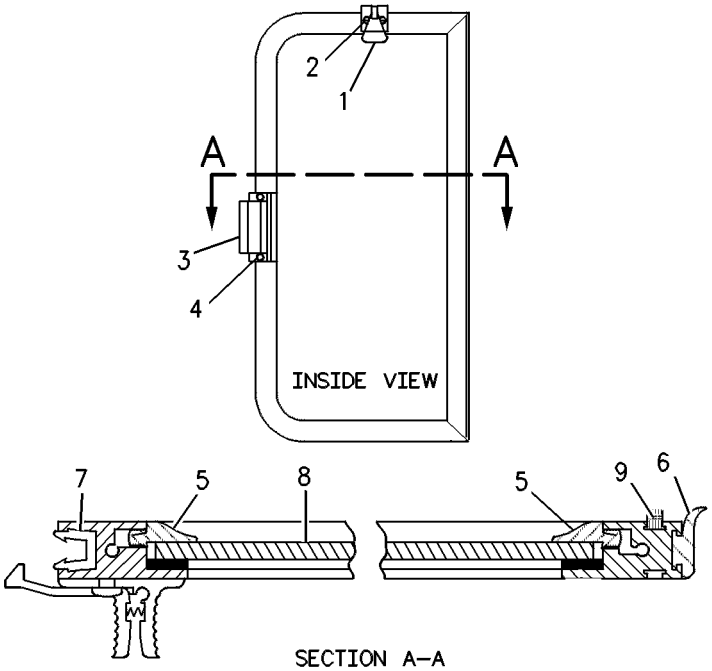

SECTION A—A

GRAPHIC #1 **<END>** g00834657

OPERATOR STATION

7T-1069 WINDOW GP-CAB—LH

S/N: SMC1-UP; GCT1-UP
PART OF 6T-8403 WINDOW GP-CAB
ALSO AN ATTACHMENT

SMCS-7310 **i01815972**

NOTE	REF NO	GRAPHIC REF	PART NUMBER	QTY	PART NAME 1 2 3 4 5 6 (PRODUCT LEVEL)	SEE PAGE
	1	1	**3T-1121**	1	LOCK AS	
	2	1	**2H-6622**	2	SCREW-MACHINE	
	3	1	**9P-7860**	1	LOCK AS	
	4	1	**9P-7859**	2	SCREW	
BD	5	1	**5P-5680**		SEAL	
BD	6	1	**6V-5833**		SEAL	
BD	7	1	**5P-8918**		SEAL	
	8	1	**8Y-6448**	1	GLASS	
BE	9	1	**8Y-6839**		SEAL	

B-USE AS REQUIRED
D-ORDER BY THE METER
E-ORDER BY THE CENTIMETER

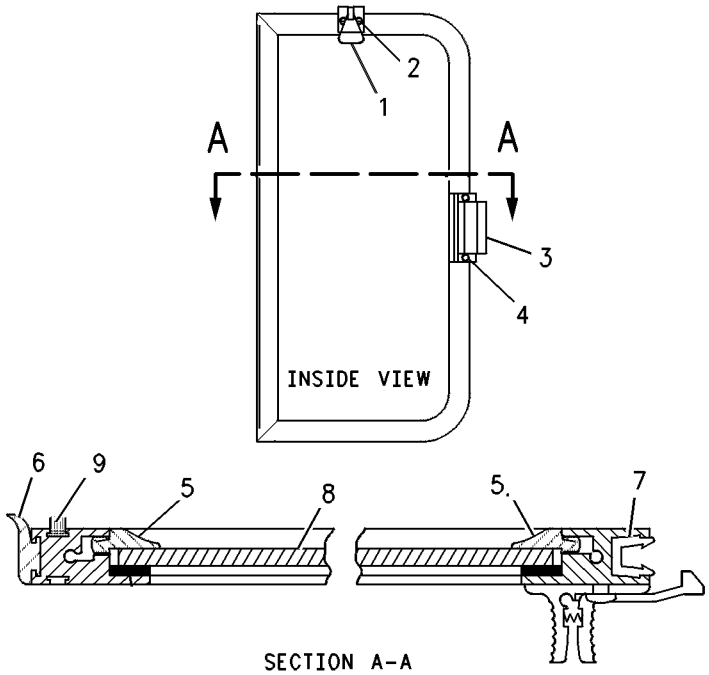

SECTION A-A

GRAPHIC #1 **<END>** g00834641

8E-3446 WINDOW GP-CAB—SLIDING, RH

S/N: SMC1-UP; GCT1-UP
PART OF 8E-5113 WINDOW GP-SLIDING
ALSO AN ATTACHMENT

SMCS-7310 **i02470867**

NOTE	REF NO	GRAPHIC REF	PART NUMBER	QTY	PART NAME 1 2 3 4 5 6 (PRODUCT LEVEL)	SEE PAGE
E	1	1	**8Y-6423**		SEAL (65-CM)	
E	1A	1	**8Y-6423**		SEAL (130-CM)	
B	2	1	**8Y-6459**		TAPE-BUTYL	
	3	1	**8Y-6430**	1	SEAL-WINDOW	
Y	4	1	**8Y-6433**	1	WINDOW GP-CAB (RH)	753
	5	1	**8Y-6462**	1	KIT-LEAF SPRING (CAB WINDOW)	
					(INCLUDES SPRING AS & RIVET)	
	6	1	**8Y-6432**	1	GLASS-CAB (FIXED) (TINTED)	
E	7	1	**8Y-6424**		SEAL (122-CM)	
E	8	1	**8Y-6910**		WEATHERSTRIP (68-CM)	

B-USE AS REQUIRED
E-ORDER BY THE CENTIMETER
Y-SEPARATE ILLUSTRATION

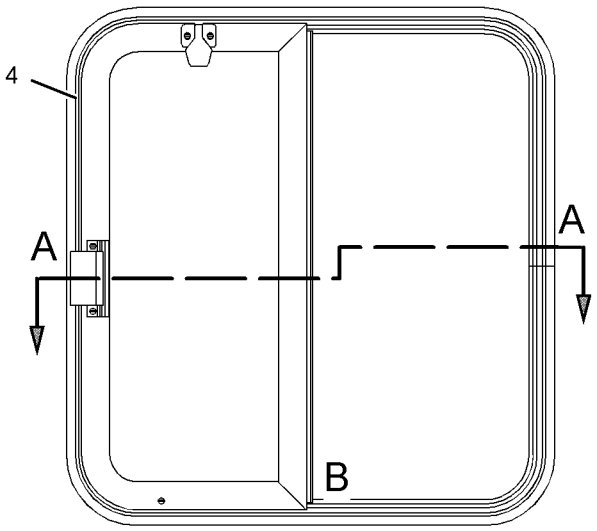

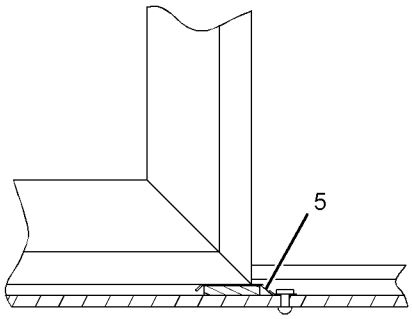

SECTION VIEW
OF AREA B

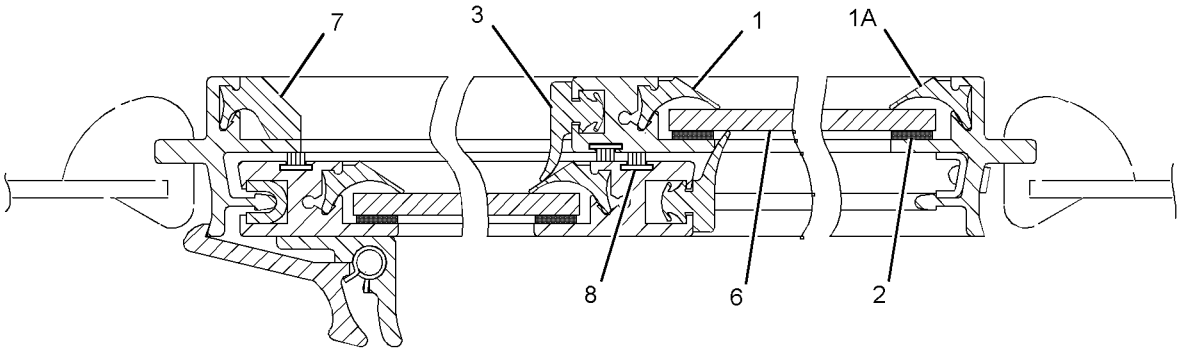

SECTION A-A

GRAPHIC #1 **<END>** g01232319

OPERATOR STATION

8E-3447 WINDOW GP-CAB—SLIDING, LH

S/N: SMC1-UP; GCT1-UP
PART OF 8E-5114 WINDOW GP-SLIDING
ALSO AN ATTACHMENT

SMCS-7310 **i02470866**

NOTE	REF NO	GRAPHIC REF	PART NUMBER	QTY	PART NAME 1 2 3 4 5 6 (PRODUCT LEVEL)	SEE PAGE
E	1	1	**8Y-6423**		SEAL (65-CM)	
E	1A	1	**8Y-6423**		SEAL (130-CM)	
B	2	1	**8Y-6459**		TAPE-BUTYL	
	3	1	**8Y-6430**	1	SEAL-WINDOW	
Y	4	1	**8Y-6420**	1	WINDOW GP-CAB (LH)	751
	5	1	**8Y-6462**	1	KIT-LEAF SPRING (CAB WINDOW)	
					(INCLUDES SPRING AS & RIVET)	
	6	1	**8Y-6419**	1	GLASS-CAB (FIXED) (TINTED)	
E	7	1	**8Y-6424**		SEAL (122-CM)	
E	8	1	**8Y-6910**		WEATHERSTRIP (68-CM)	

B-USE AS REQUIRED
E-ORDER BY THE CENTIMETER
Y-SEPARATE ILLUSTRATION

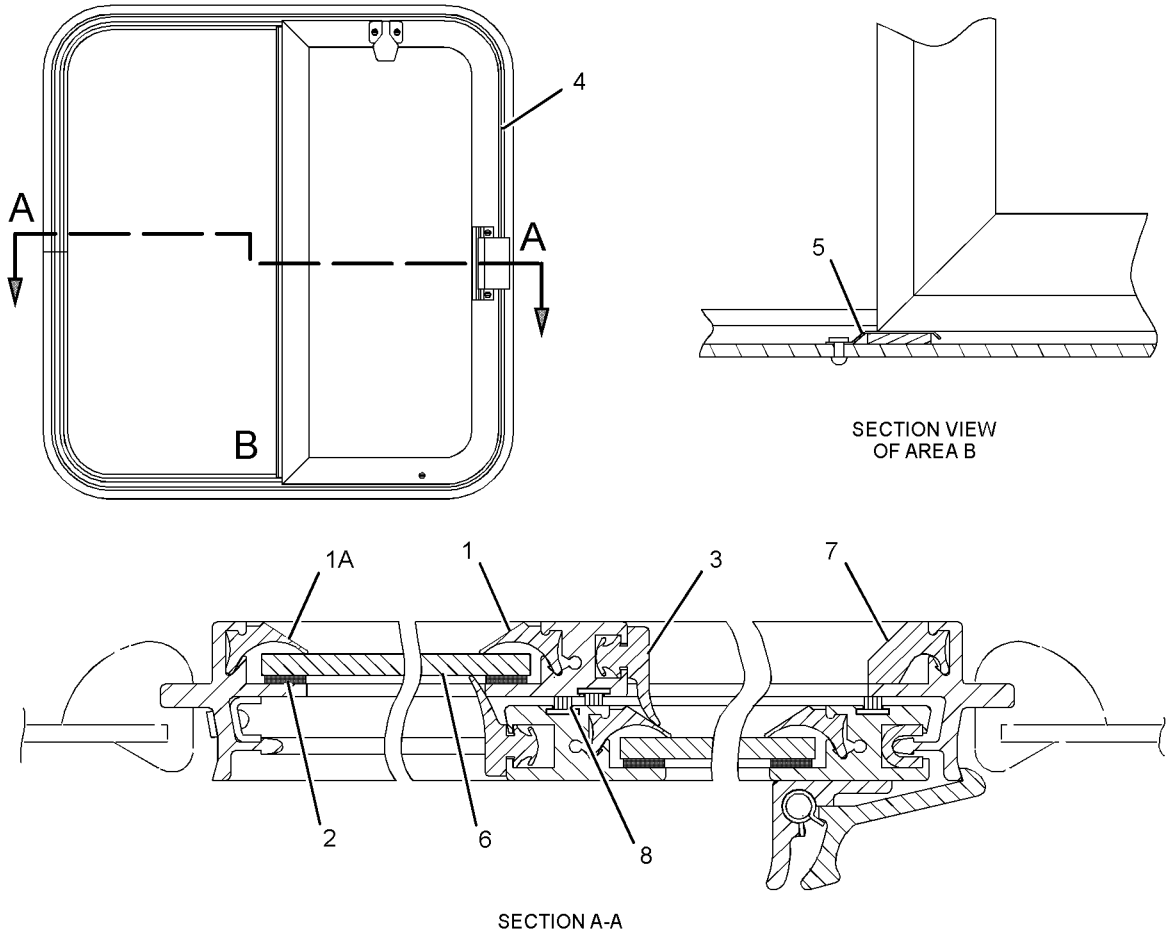

GRAPHIC #1 **<END>** g01232324

OPERATOR STATION

8Y-6420 WINDOW GP-CAB—LH

S/N: SMC1-UP; GCT1-UP
PART OF 8E-3447 WINDOW GP-CAB
ALSO AN ATTACHMENT

SMCS-7310 **i02470865**

NOTE	REF NO	GRAPHIC REF	PART NUMBER	QTY	PART NAME 1 2 3 4 5 6 (PRODUCT LEVEL)	SEE PAGE
	1	1	**8Y-6454**	1	KIT-CATCH (CAB WINDOW)	
					(INCLUDES CATCH AS & PARTS MARKED J)	
JM	2	1	**084-4111**	2	SCREW-PAN HEAD	
	3	1	**8Y-6455**	1	KIT-CATCH (CAB WINDOW)	
					(INCLUDES CATCH AS & 2 SCREWS)	
M	4	1	**8T-4777**	2	SCREW-MACHINE (M5X0.8X12-MM)	
	5	1	**8Y-6460**	1	KIT-RUNNER GUIDE (CAB WINDOW)	
					(INCLUDES GUIDE & SCREW)	
	6	1	**3S-9557**	2	SCREW-PAN HEAD (4-40X0.5-IN)	
	7	1	**8Y-6461**	1	KIT-RUNNER GUIDE (CAB WINDOW)	
					(INCLUDES GUIDE & PARTS MARKED L)	
LM	8	1	**6V-2312**	2	SCREW-MACHINE (M6X1X25-MM)	
E	9	1	**8Y-6423**		SEAL (59-CM)	
E	9A	1	**8Y-6423**		SEAL (125-CM)	
	10	1	**8Y-6430**	1	SEAL-WINDOW	
B	11	1	**8Y-6459**		TAPE-BUTYL	
	12	1	**8Y-6422**	1	GLASS-CAB (SLIDING, TINTED)	
E	13	1	**8Y-6910**		WEATHERSTRIP (165-CM)	

B-USE AS REQUIRED
E-ORDER BY THE CENTIMETER
J-KIT MARKED J SERVICES PART MARKED J
L-KIT MARKED L SERVICES PART MARKED L
M-METRIC PART

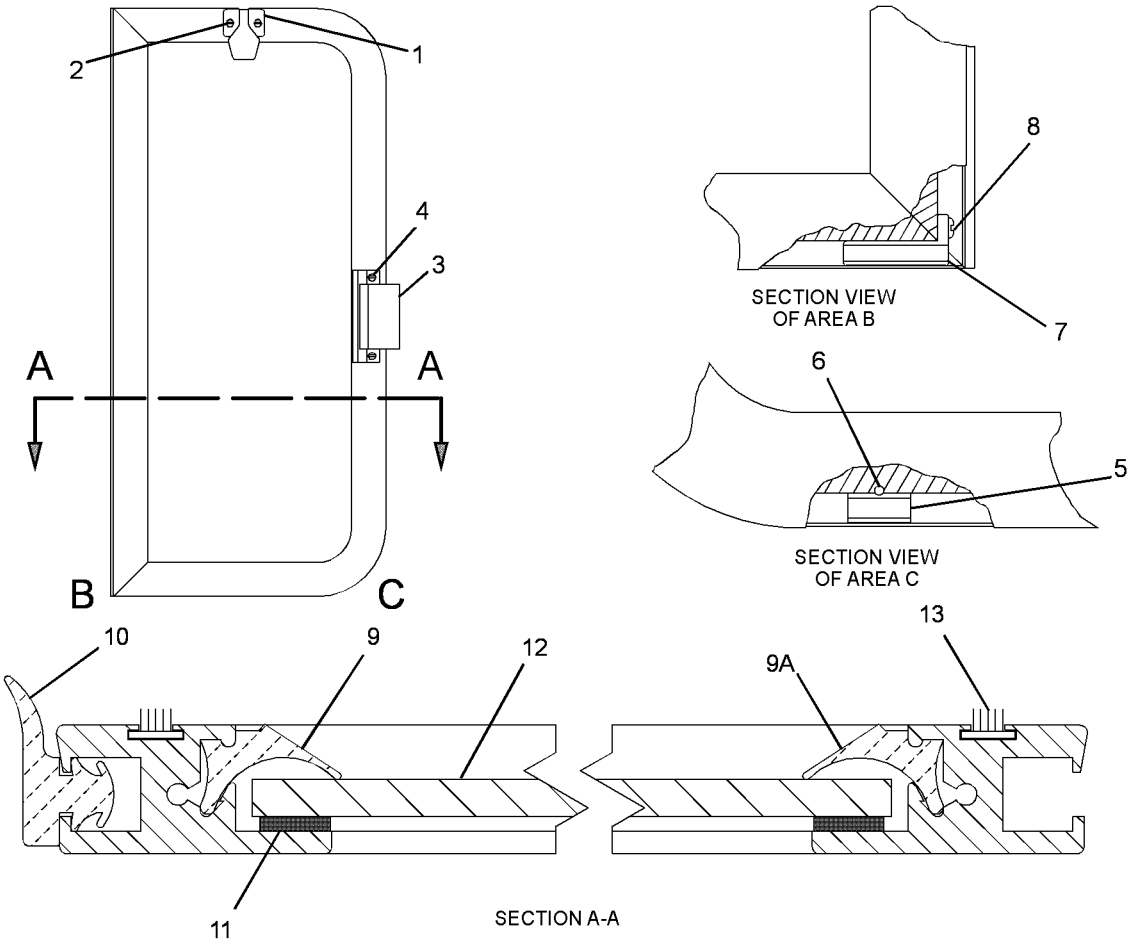

GRAPHIC #1 **<END>** g01232364

OPERATOR STATION

8Y-6433 WINDOW GP-CAB–RH

S/N: SMC1-UP; GCT1-UP
PART OF 8E-3446 WINDOW GP-CAB
ALSO AN ATTACHMENT

SMCS-7310 **i02801443**

NOTE	REF NO	GRAPHIC REF	PART NUMBER	QTY	PART NAME 1 2 3 4 5 6 (PRODUCT LEVEL)	SEE PAGE
	1	1	**8Y-6454**	1	KIT-CATCH (CAB WINDOW)	
					INCL CATCH AS & 2 SCREWS	
M	2	1	**084-4111**	2	SCREW-PAN HEAD	
	3	1	**8Y-6455**	1	KIT-CATCH (CAB WINDOW)	
					INCL CATCH AS & 2 SCREWS	
M	4	1	**8T-4777**	2	SCREW-MACHINE (M5X0.8X12-MM) (CAB WINDOW)	
	5	1	**8Y-6460**	1	KIT-RUNNER GUIDE (INCL GUIDE & SCREW)	
					INCL GUIDE & SCREW	
M	6	1	**6V-2312**	2	SCREW-MACHINE (M6X1X25-MM)	
	7	1	**8Y-6461**	1	KIT-RUNNER GUIDE (INCL GUIDE & SCREW)	
BE	8	1	**8Y-6423**		SEAL	
	9	1	**8Y-6430**	1	SEAL-WINDOW	
BE	10	1	**8Y-6459**		TAPE-BUTYL	
BE	11	1	**8Y-6423**		SEAL	
	12	1	**8Y-6431**	1	GLASS-CAB (SLIDING, TINTED)	
BE	13	1	**8Y-6910**		WEATHERSTRIP	

B-USE AS REQUIRED
E-ORDER BY THE CENTIMETER
M-METRIC PART

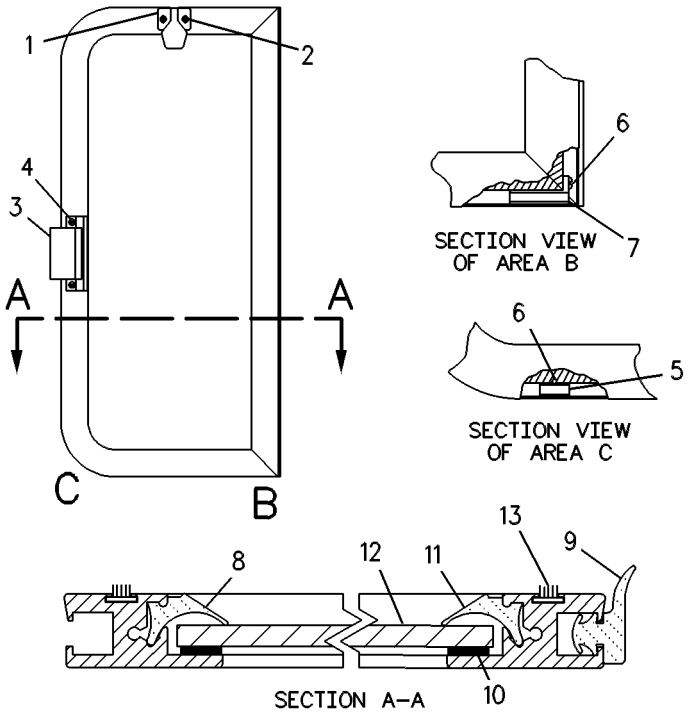

GRAPHIC #1 **<END>** g00326281

OPERATOR STATION

8Y-6446 WINDOW GP-CAB—REAR

S/N: SMC1-UP; GCT1-UP
PART OF 9N-4369 WINDOW GP-CAB
ALSO AN ATTACHMENT

SMCS-7310 **i01871080**

NOTE	REF NO	GRAPHIC REF	PART NUMBER	QTY	PART NAME 1 2 3 4 5 6 (PRODUCT LEVEL)	SEE PAGE
	1	1	**8Y-6454**	1	KIT-CATCH (CAB WINDOW)	
					(INCLUDES CATCH AS & 2 SCREWS)	
M	2	1	**084-4111**	2	SCREW-PAN HEAD	
	3	1	**8Y-6455**	1	KIT-CATCH (CAB WINDOW)	
					(INCLUDES CATCH AS & 2 SCREWS)	
M	4	1	**8T-4777**	2	SCREW-MACHINE (M5X0.8X12-MM)	
	5	1	**8Y-6460**	1	KIT-RUNNER GUIDE (CAB WINDOW)	
					(INCLUDES GUIDE & SCREW)	
M	6	1	**6V-2312**	1	SCREW-MACHINE (M6X1X25-MM)	
	7	1	**8Y-6461**	1	KIT-RUNNER GUIDE (CAB WINDOW)	
					(INCLUDES GUIDE & SCREW)	
M	8	1	**6V-2312**	1	SCREW-MACHINE (M6X1X25-MM)	
	9	1	**8Y-6430**	1	SEAL-WINDOW	
EB	10	1	**8Y-6459**		TAPE-BUTYL	
EB	11	1	**8Y-6423**		SEAL	
	12	1	**8Y-6443**	1	GLASS-CAB (SLIDING, TINTED)	
EB	13	1	**8Y-6910**		WEATHERSTRIP	

B-USE AS REQUIRED
E-ORDER BY THE CENTIMETER
M-METRIC PART

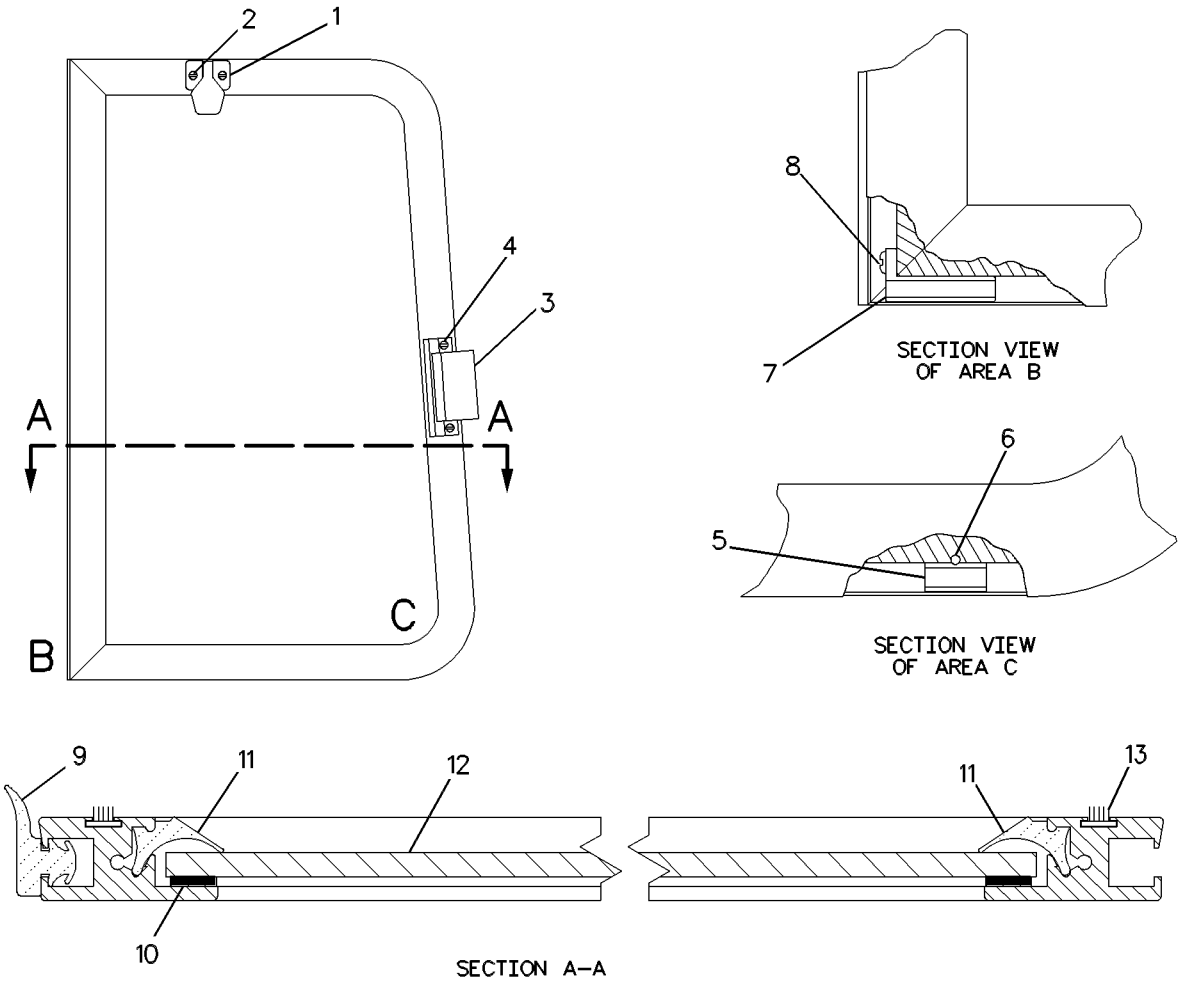

GRAPHIC #1 **<END>** g00544049

OPERATOR STATION

9N-4369 WINDOW GP-CAB—REAR, SLIDING

S/N: SMC1-UP; GCT1-UP
PART OF 8E-5112 WINDOW GP-SLIDING
ALSO AN ATTACHMENT

SMCS-7310 **i01871084**

NOTE	REF NO	GRAPHIC REF	PART NUMBER	QTY	PART NAME 1 2 3 4 5 6 (PRODUCT LEVEL)	SEE PAGE
BE	1	1	**8Y-6423**		SEAL	
BE	2	1	**8Y-6459**		TAPE-BUTYL	
	3	1	**8Y-6430**	1	SEAL-WINDOW	
Y	4	1	**8Y-6446**	1	WINDOW GP-CAB (REAR)	754
	5	1	**8Y-6463**	1	KIT-STOP RAIL (CAB WINDOW)	
JM	6	1	**8C-4982**	1	BOLT-SOCKET HEAD (M4X0.7X20-MM)	
J	7	1	**8Y-6428**	1	STOP-RUBBER	
J	8	1	**8Y-6429**	1	CLIP	
	9	1	**8Y-6462**	1	KIT-LEAF SPRING (CAB WINDOW)	
					(INCLUDES SPRING AS & RIVET)	
	10	1	**8Y-6445**	1	GLASS-CAB (FIXED, TINTED)	
BE	11	1	**8Y-6424**		SEAL	
BE	12	1	**8Y-6910**		WEATHERSTRIP	

B-USE AS REQUIRED
E-ORDER BY THE CENTIMETER
J-INCLUDED IN 8Y6463 STOP RAIL KIT
M-METRIC PART
Y-SEPARATE ILLUSTRATION

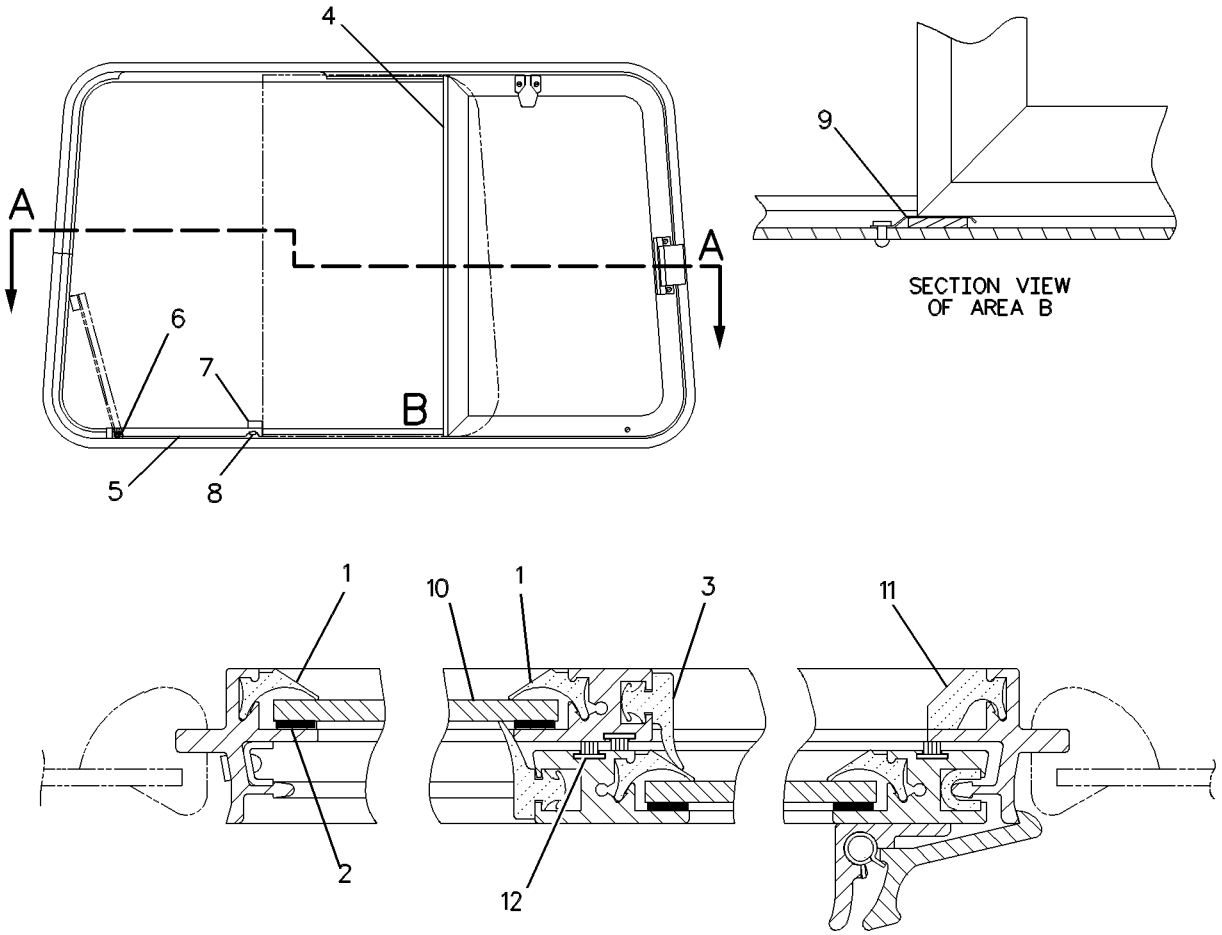

GRAPHIC #1 **<END>** g00544830

8E-5112 WINDOW GP-SLIDING—REAR

S/N: SMC1-UP; GCT1-UP
PART OF 158-7696 CAB GP
ALSO AN ATTACHMENT

SMCS-7310 **i02801445**

NOTE	PART NUMBER	QTY	PART NAME 1 2 3 4 5 6 (PRODUCT LEVEL)	SEE PAGE
Y	**6T-5008**	1	WINDOW GP-CAB (REAR)	744
			—OR—	
Y	*9N-4369*	1	WINDOW GP-CAB (REAR)	756
Y-SEPARATE ILLUSTRATION				

<END>

8E-5113 WINDOW GP-SLIDING—RH

S/N: SMC1-UP; GCT1-UP
PART OF 158-7696 CAB GP
ALSO AN ATTACHMENT

SMCS-7310 **i00569833**

NOTE	PART NUMBER	QTY	PART NAME 1 2 3 4 5 6 (PRODUCT LEVEL)	SEE PAGE
Y	*6T-8402*	1	WINDOW GP-CAB (RH)	745
			-OR-	
Y	*8E-3446*	1	WINDOW GP-CAB (RH)	749
Y-SEPARATE ILLUSTRATION				

<END>

8E-5114 WINDOW GP-SLIDING—LH

S/N: SMC1-UP; GCT1-UP
PART OF 158-7696 CAB GP
ALSO AN ATTACHMENT

SMCS-7310 **i00570466**

NOTE	PART NUMBER	QTY	PART NAME 1 2 3 4 5 6 (PRODUCT LEVEL)	SEE PAGE
Y	*6T-8403*	1	WINDOW GP-CAB (LH)	746
			-OR-	
Y	*8E-3447*	1	WINDOW GP-CAB (LH)	750
Y-SEPARATE ILLUSTRATION				

<END>

OPERATOR STATION

224-4357 WIPER GP-WINDOW

S/N: SMC1-UP; GCT1-UP
PART OF 158-7694 CAB AR
ALSO AN ATTACHMENT

SMCS-7305 **i02636404**

NOTE	REF NO	GRAPHIC REF	PART NUMBER	QTY	PART NAME 1 2 3 4 5 6 (PRODUCT LEVEL)	SEE PAGE
Y	1	1	**147-7976**	1	MOTOR GP-WINDOW WIPER (FRONT)	692
	2	1	**145-8741**	1	ARM AS-WIPER (FRONT)	
		1	**136-3188**	1	CLIP	
		1	**136-3191**	1	NOZZLE AS-WASHER	
E		1	**194-5171**		HOSE (53-CM)	
	3	1	**6V-5851**	2	BLADE AS-WIPER (400-MM) (FRONT, REAR WINDOW)	
J	4	1	**6V-5849**	2	BLADE AS-WIPER (350-MM) (DOOR, RH, LH)	
	5	1	**151-0254**	1	ARM AS-WIPER (DOOR, RH)	
		1	**136-3192**	1	NOZZLE AS-WASHER	
Y	6	1	**221-3451**	1	MOTOR GP-WINDOW WIPER (DOOR, LH)	695
Y	7	1	**221-3450**	1	MOTOR GP-WINDOW WIPER (DOOR, RH)	694
	8	1	**151-0255**	1	ARM AS-WIPER (DOOR, LH)	
		1	**136-3193**	1	NOZZLE AS-WASHER	
	9	1	**224-6829**	2	SPACER (17X24.5X17-MM THK)	
	10	1	**8V-5455**	1	BOSS	
	11	1	**6N-7523**	2	WASHER (6.48X11.9X1.57-MM THK)	
Y	12	1	**101-0742**	1	WIPER PIVOT GP	760
	13	1	**151-0256**	1	ARM AS-WIPER (WIPER, REAR)	
		1	**136-3192**	1	NOZZLE AS-WASHER	
M	14	1	**6V-7357**	2	BOLT (M6X1X25-MM)	
Y	15	1	**147-7979**	1	MOTOR GP-WINDOW WIPER (REAR)	693
	16	1	**222-2209**	2	CLIP	
					AVAILABLE REPAIR KIT(S):	
J			**8C-5060**	1	KIT-WIPER BLADE (WINDOW)	
					(INCLUDES TWO WIPER BLADES)	

E-ORDER BY THE CENTIMETER
J-KIT MARKED J SERVICES PART MARKED J
M-METRIC PART
Y-SEPARATE ILLUSTRATION

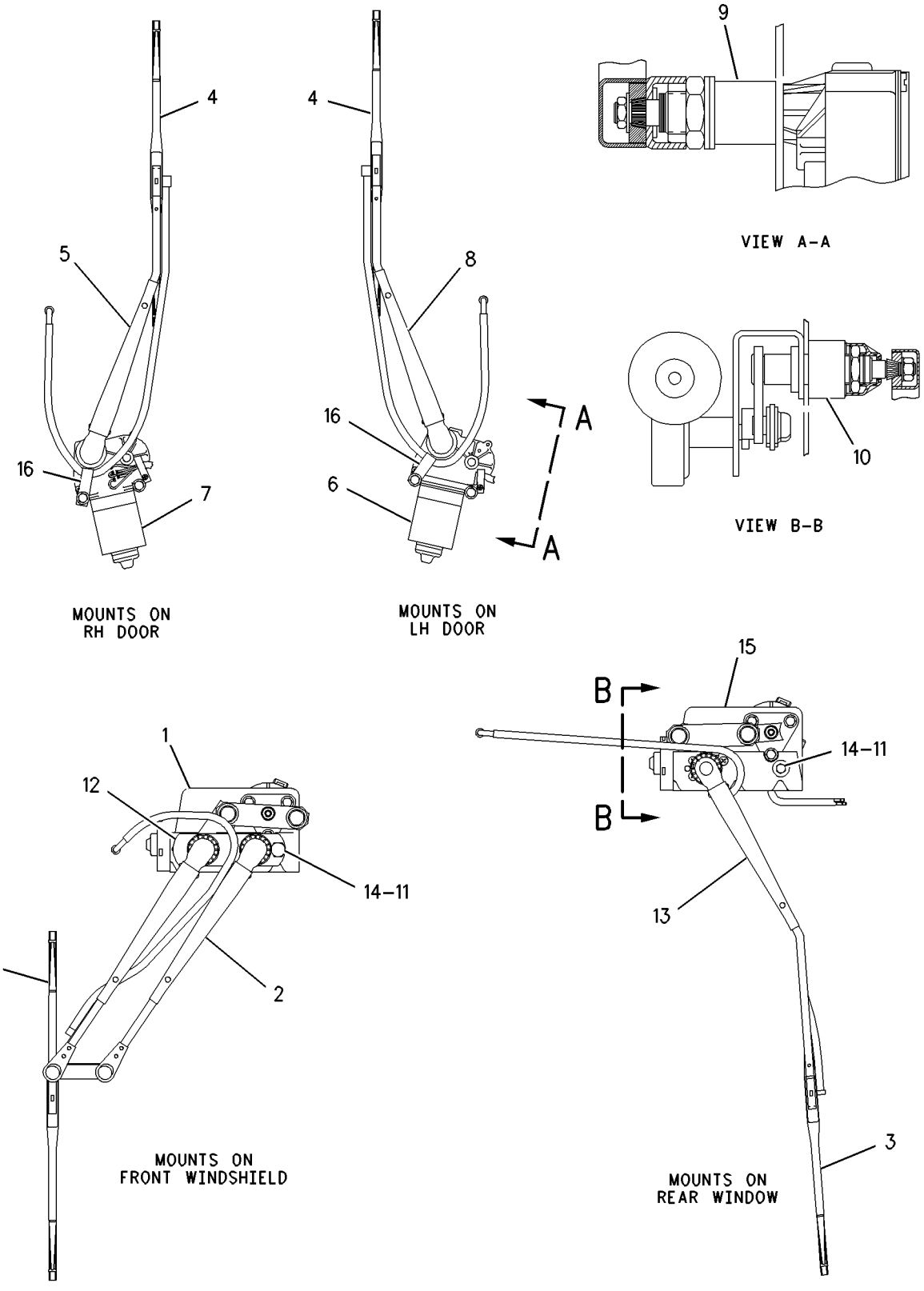

GRAPHIC #1 **<END>** g00908690

OPERATOR STATION

101-0742 WIPER PIVOT GP

S/N: SMC1-UP; GCT1-UP
PART OF 224-4357 WIPER GP-WINDOW
ALSO AN ATTACHMENT

SMCS-7305 **i00528010**

NOTE	REF NO	GRAPHIC REF	PART NUMBER	QTY	PART NAME 1 2 3 4 5 6 (PRODUCT LEVEL)	SEE PAGE
M	1	1	**6V-6889**	1	NUT (M8X1.25-THD)	
	2	1	**6A-9718**	1	WASHER (8.1X12.5X1-MM THK)	
	3	1	**6V-6209**	1	CAP-WIPER	

M-METRIC PART

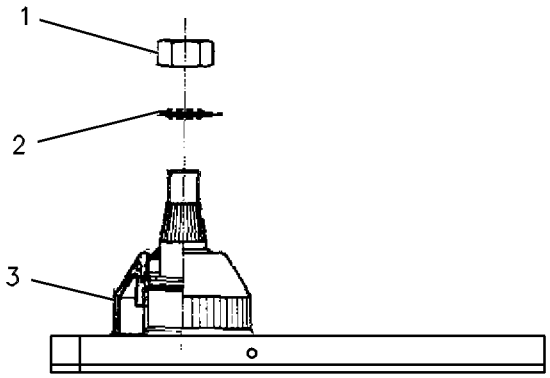

GRAPHIC #1 **<END>** g00084472

SERVICE EQUIPMENT AND SUPPLIES

290-6096 FILM GP

S/N: SMC1-UP

PART OF 269-2052 PLATE & FILM GP

SMCS-7000 **i02757539**

NOTE	REF NO	GRAPHIC REF	PART NUMBER	QTY	PART NAME 1 2 3 4 5 6 (PRODUCT LEVEL)	SEE PAGE
	1	1	**292-4400**	1	FILM-IDENTIFICATION (D6T, LH)	
	2	1	**292-4399**	1	FILM-IDENTIFICATION (D6T, RH)	
	3	1	**308-4558**	1	FILM-IDENTIFICATION (CAT, LH)	
	4	1	**308-4559**	1	FILM-IDENTIFICATION (CAT, RH)	
	5	1	**274-6978**	1	FILM-IDENTIFICATION (CATERPILLAR)	
	6	1	**292-4396**	1	FILM-IDENTIFICATION (CAT, REAR)	
	7	1	**253-0861**	2	FILM-INFORMATION (CAT POWER, ACERT TECHNOLOGY)	

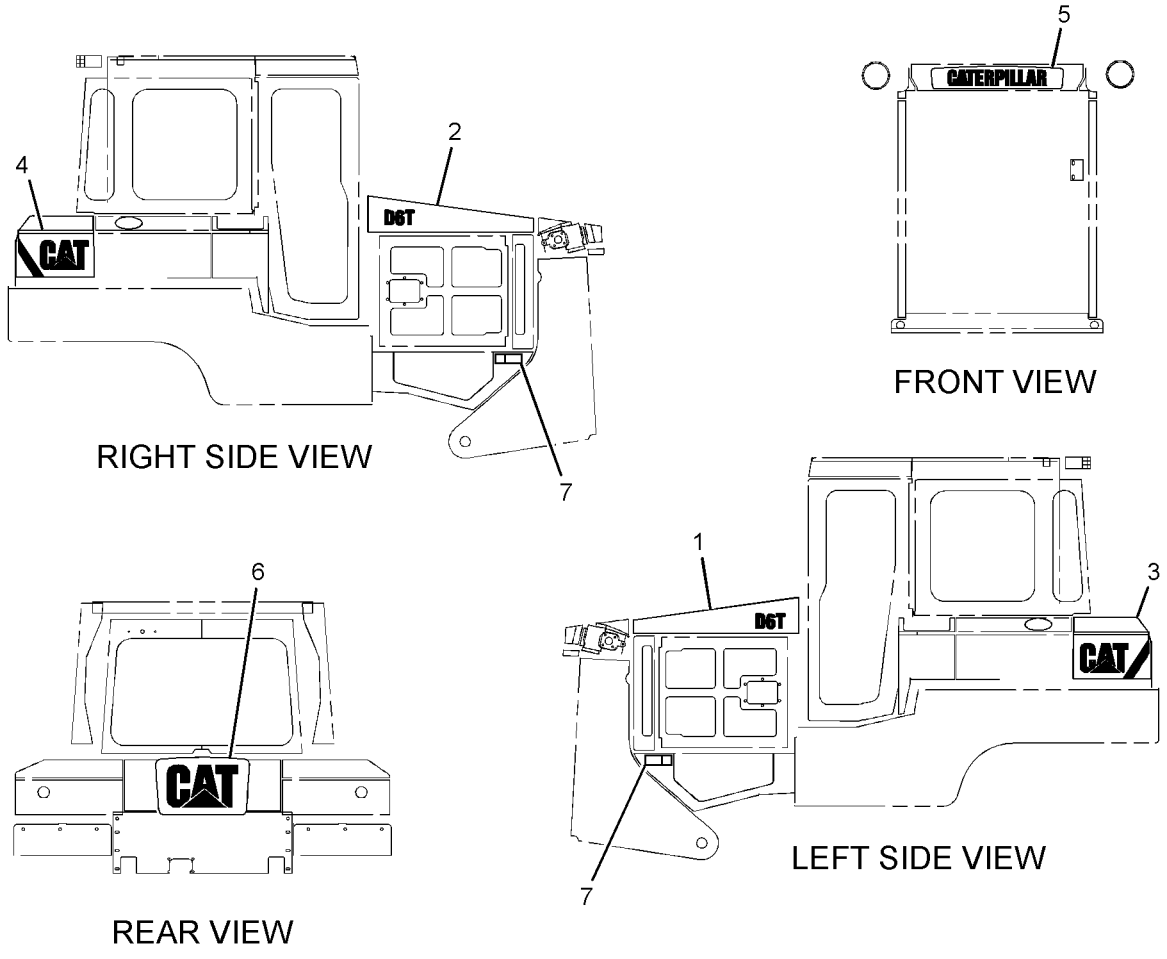

GRAPHIC #1 **<END>** g01383422

SERVICE EQUIPMENT AND SUPPLIES

290-6097 FILM GP

S/N: GCT1-UP

PART OF 269-2053 PLATE & FILM GP

SMCS-7000 **i02755592**

NOTE	REF NO	GRAPHIC REF	PART NUMBER	QTY	PART NAME 1 2 3 4 5 6 (PRODUCT LEVEL)	SEE PAGE
	1	1	**292-4402**	1	FILM-IDENTIFICATION (D6T XL, LH)	
	2	1	**292-4401**	1	FILM-IDENTIFICATION (D6T XL, RH)	
	3	1	**308-4558**	1	FILM-IDENTIFICATION (CAT, LH)	
	4	1	**308-4559**	1	FILM-IDENTIFICATION (CAT, RH)	
	5	1	**274-6978**	1	FILM-IDENTIFICATION (CATERPILLAR)	
	6	1	**292-4396**	1	FILM-IDENTIFICATION (CAT, REAR)	
	7	1	**253-0861**	2	FILM-INFORMATION (CAT POWER, ACERT TECHNOLOGY)	

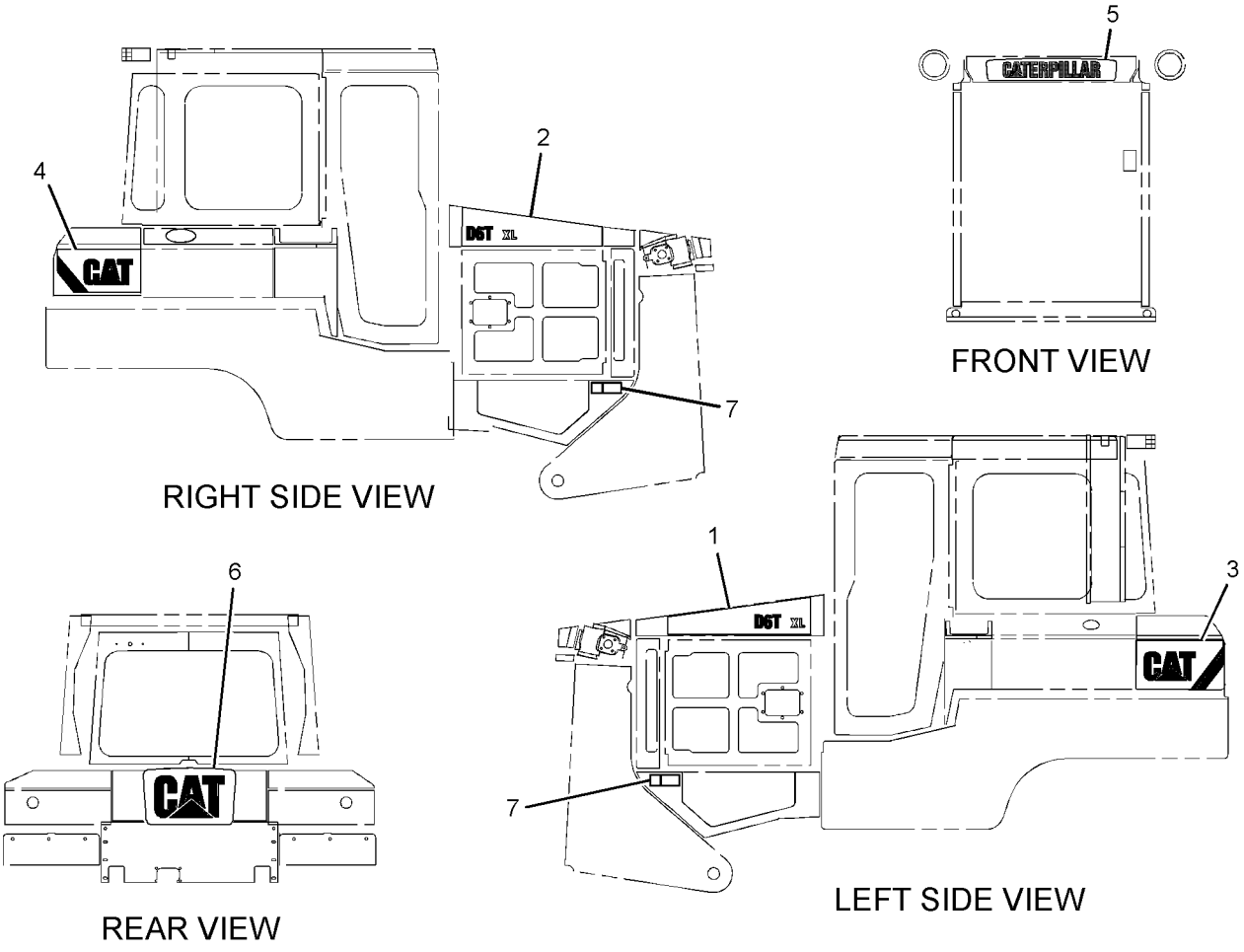

GRAPHIC #1 **<END>** g01381119

SERVICE EQUIPMENT AND SUPPLIES

253-1450 PLATE & FILM GP

S/N: SMC1-UP; GCT1-UP

AN ATTACHMENT

SMCS-7557, 7563 **i02455697**

NOTE	PART NUMBER	QTY	PART NAME 1 2 3 4 5 6 (PRODUCT LEVEL)	SEE PAGE
	247-6876	1	FILM-WARNING (DO NOT OPERATE, READ OMM)	
			ON UPPER LEDGE OF LH CONSOLE OF OPERATOR'S STATION	
	224-0672	1	FILM-WARNING (HIGH PRESSURE, READ OMM, INTL)	
			ON PLATFORM	
	225-4257	1	FILM-WARNING (HOT FLUID UNDER PRESS, INTL)	
			TO THE RIGHT OF RADIATOR FILL COVER	
	225-0312	1	FILM-WARNING (JUMP START, READ OMM, INTL)	
			ON BOTTOM OF BATTERY BOX COVER	
	230-1341	1	FILM-WARNING (PRODUCT LINK RADIO, NON NACD)	
			ON UPPER RH CONSOLE INSIDE CAB	
	247-6878	1	FILM-WARNING (SEAT BELT)	
			ON RH CONSOLE ON HORIZONTAL SURFACE TO THE RIGHT OF BULLDOZER CONTROL	

<END>

269-2052 PLATE & FILM GP

S/N: SMC1-UP

PART OF 269-2037 GENERAL AR

SMCS-7557, 7563 **i02757532**

NOTE	PART NUMBER	QTY	PART NAME 1 2 3 4 5 6 (PRODUCT LEVEL)	SEE PAGE
Y	*290-6096*	1	FILM GP	761
	214-8976	1	PLATE-IDENTIFICATION (FUEL DRAIN VALVE)	
			(ON FUEL TANK DRAIN VALVE)	
	174-4590	1	PLATE-INFORMATION (SERVICE INFORMATION NUMBERS)	
			(ON STEEL AREA OF LH DASH UPRIGHT WITH TACK FASTENERS)	
	110-6393	1	PLATE-INSTRUCTION (AIR CONDITIONER)	
			(ON LH SIDE OF DASH)	
A	**4W-1413**	1	PLATE-SERIAL NUMBER (ENGINE)	
			(ON LH SIDE OF CYLINDER BLOCK TOWARD TOP & REAR FLAT AREA)	
	9F-6656	1	RING-RETAINING	
			(ON FUEL TANK DRAIN VALVE)	
	8T-9530	4	TACK-FASTENER	
			(USE FASTENERS WHEN MOUNTING PLATES)	
	299-8067	1	FILM-CERTIFICATION (OPS CERTIFICATION, READ OMM)	
			(ON LH ROPS POST)	
	299-8151	1	FILM-CERTIFICATION (OPS CERTIFICATION, READ OMM)	
			(ON CAB)	
	169-2876	2	FILM-IDENTIFICATION (12-VOLT)	
			(2-ON REAR CONSOLE BEHIND OPERATOR'S SEAT)	
	190-5386	2	FILM-IDENTIFICATION (ROUND RED REFLECTIVE)	
			(ON THE REAR LH & RH SIDE OF MACHINE ON FILM STRIPE)	
	241-4287	1	FILM-IDENTIFICATION (FUSE PANEL)	
			(VERTICALLY ON REAR OF BATTERY BOX PANEL)	
	245-8456	1	FILM-IDENTIFICATION (FUEL PUMP)	

269-2052 **PLATE & FILM GP** *(contd.)* **i02757532**

NOTE	PART NUMBER	QTY	PART NAME 1 2 3 4 5 6 (PRODUCT LEVEL)	SEE PAGE
			(NEXT TO FUEL PRIMING PUMP SWITCH)	
	258-2355	1	FILM-IDENTIFICATION (FUSE)	
			(ON STEEL AREA OF LH DASH UPRIGHT)	
	281-3098	1	FILM-IDENTIFICATION (MONITOR)	
			(ON EMS MODULE INSTRUMENT PANEL)	
	127-8830	2	FILM-IDENTIFICATION (EQUALIZER BAR LUBRICATION)	
			(ON CASE & FRAME SIDE PLATE ABOVE EQUALIZER BAR (1-EACH SIDE))	
	7X-7644	3	FILM-INFORMATION (TIE-DOWN)	
			(1-ON FRONT TOWING EYE)	
			(2-ON SIDE OF TRACK ROLLER FRAME CENTERED BETWEEN FRONT & REAR IDLERS)	
	134-7258	1	FILM-INFORMATION (EXTENDED LIFE COOLANT-READ OMM)	
			(TO THE RIGHT OF RADIATOR FILL CAP)	
	146-6747	1	FILM-INFORMATION (24-VOLT)	
			(ON BOTTOM OF BATTERY BOX PANEL)	
	229-0887	1	FILM-INFORMATION (AIR CLEANER)	
			(CENTERED ON EXTERIOR OF AIR CLEANER COVER)	
	7X-3229	4	FILM-INSTRUCTION (LIFT EYE, TIE-DOWN LOCATION)	
			WITHOUT RIPPER	
			(2-ON SIDE OF TRACK ROLLER FRAME BETWEEN FRONT ROLLER & IDLER & ON SIDE OF LOWER RIPPER FRAME BY REAR PIN (2 EA SIDE))	
			WITH RIPPER	
			(2-ON SIDE OF TRACK ROLLER FRAME BETWEEN FRONT ROLLER & IDLER & ON SIDE OF LOWER RIPPER FRAME BY REAR PIN (2 EA SIDE))	
	8T-4999	1	FILM-INSTRUCTION (BATTERY DISCONNECT)	
			(ON FACE OF BATTERY DISCONNECT SWITCH)	
	9X-6340	1	FILM-INSTRUCTION (ENGINE OIL)	
			(ON ENGINE OIL FILL TUBE)	
	102-2913	1	FILM-INSTRUCTION (BULLDOZER CONTROL)	
			(ON RAISED SURFACE TO RIGHT OF BULLDOZER CONTROL)	
	241-4167	1	FILM-INSTRUCTION (READ OMM, STEERING)	
			(ON TOP OF DIFFERENTIAL STEERING CONTROL)	
	158-7864	1	FILM-INSTRUCTION (HYDRAULIC OIL)	
			(ADJACENT TO HYDRAULIC TANK FILL SPOUT)	
	219-0305	2	FILM-WARNING (NO WELD, NO DRILL, READ OMM)	
			(1-ON CAB FOPS BESIDE CERTIFICATION PLATE)	
			(1-ON LH ROPS POST)	
	224-7830	1	FILM-WARNING (HIGH PRESSURE, READ OMM, U.S.)	
			(APPLY TO PLATFORM AFTER PAINT BOOTH PRIOR TO INSTALLING PLASTIC LINERS)	
	225-0313	1	FILM-WARNING (JUMP START, READ OMM, U.S.)	
			(ON BOTTOM OF BATTERY BOX COVER)	
	225-4256	1	FILM-WARNING (HOT FLUID UNDER PRESSURE)	
			(ON THE RIGHT OF RADIATOR FILL COVER)	
	247-6875	1	FILM-WARNING (READ OMM)	
			(ON UPPER LEDGE OF LH CONSOLE OF OPERATOR'S STATION)	
	247-6877	1	FILM-WARNING (SEAT BELT)	
			(ON RH CONSOLE HORIZONTAL SURFACE RIGHT OF THE BULLDOZER CONTROL)	

A-NOT PART OF THIS GROUP
Y-SEPARATE ILLUSTRATION

<END>

SERVICE EQUIPMENT AND SUPPLIES

269-2053 PLATE & FILM GP

S/N: GCT1-UP

PART OF 269-2038 GENERAL AR

SMCS-7557, 7563 **i02755559**

NOTE	PART NUMBER	QTY	PART NAME 1 2 3 4 5 6 (PRODUCT LEVEL)	SEE PAGE
Y	*290-6097*	1	FILM GP (D6T XL)	762
	214-8976	1	PLATE-IDENTIFICATION (FUEL DRAIN VALVE)	
			(ON FUEL TANK DRAIN VALVE)	
	174-4590	1	PLATE-INFORMATION (SERVICE INFORMATION NUMBERS)	
			(ON STEEL AREA OF LH DASH UPRIGHT)	
	110-6393	1	PLATE-INSTRUCTION (AIR CONDITIONER)	
			(ON LH SIDE OF DASH)	
A	**4W-1413**	1	PLATE-SERIAL NUMBER (ENGINE)	
			(ON UPPER LH SIDE OF CYLINDER BLOCK)	
	9F-6656	1	RING-RETAINING	
			(ON FUEL TANK DRAIN VALVE)	
	8T-9530	4	TACK-FASTENER	
			(USE FASTENERS WHEN MOUNTING PLATES)	
	169-2876	2	FILM-IDENTIFICATION (12-VOLT)	
			(ON REAR CONSOLE BEHIND OPERATOR'S SEAT)	
	190-5386	2	FILM-IDENTIFICATION (ROUND RED REFLECTIVE)	
			(ON REAR RH & LH SIDES OF MACHINE ON FILM STRIPE)	
	241-4287	1	FILM-IDENTIFICATION (FUSE PANEL)	
			(ON REAR OF BATTERY BOX PANEL)	
	245-8456	1	FILM-IDENTIFICATION (FUEL PUMP)	
			(NEXT TO FUEL PRIMING PUMP SWITCH)	
	258-2355	1	FILM-IDENTIFICATION (FUSE)	
			(ON STEEL AREA ON LH DASH UPRIGHT)	
	281-3098	1	FILM-IDENTIFICATION (MONITOR)	
			(ON EMS MODULE INSTRUMENT PANEL)	
	127-8830	2	FILM-IDENTIFICATION (EQUALIZER BAR LUBRICATION)	
			(ON RH & LH CASE & FRAME SIDE PLATES ABOVE EQUALIZER BAR)	
	7X-7644	3	FILM-INFORMATION (TIE-DOWN)	
			1-(ON FRONT TOWING EYE)	
			2-(ON RH & LH SIDE OF TRACK ROLLER FRAME CENTERED BETWEEN FRONT & REAR IDLERS)	
	134-7258	1	FILM-INFORMATION (EXTENDED LIFE COOLANT-READ OMM)	
			(TO THE RIGHT OF RADIATOR FILL COVER)	
	146-6747	1	FILM-INFORMATION (24-VOLT)	
			(ON BOTTOM OF BATTERY BOX COVER)	
	229-0887	1	FILM-INFORMATION (AIR CLEANER)	
			(ON EXTERIOR OF AIR CLEANER COVER)	
	7X-3229	4	FILM-INSTRUCTION (LIFT EYE, TIE-DOWN LOCATION)	
			WITHOUT RIPPER	
			2-O(N RH & LH SIDE OF TRACK ROLLER FRAME BETWEEN FRONT ROLLER & IDLER & BETWEEN REAR ROLLER & IDLER)	
			WITH RIPPER	
			2-(ON RH & LH SIDE OF TRACK ROLLER FRAME BETWEEN FRONT ROLLER & IDLER & ON SIDES OF LOWER RIPPER FRAME BY REAR PIN)	
	8T-4999	1	FILM-INSTRUCTION (BATTERY DISCONNECT)	
			(ON FACE OF BATTERY DISCONNECT SWITCH)	
	9X-6340	1	FILM-INSTRUCTION (ENGINE OIL)	
			(ON ENGINE OIL FILL TUBE)	

269-2053 **PLATE & FILM GP** *(contd.)* **i02755559**

NOTE	PART NUMBER	QTY	PART NAME 1 2 3 4 5 6 (PRODUCT LEVEL)	SEE PAGE
	102-2913	1	FILM-INSTRUCTION (BULLDOZER CONTROL)	
			(ON RAISED SURFACE TO THE RIGHT OF BULLDOZER CONTROL)	
	158-7864	1	FILM-INSTRUCTION (HYDRAULIC OIL)	
			(ADJACENT TO HYDRAULIC TANK FILLER SPOUT)	
	241-4167	1	FILM-INSTRUCTION (READ OMM, STEERING)	
			(ON TOP OF DIFFERENTIAL STEERING CONTROL)	
	219-0305	2	FILM-WARNING (NO WELD, NO DRILL, READ OMM)	
			1-(ON CAB FOPS BESIDE FOPS CERTIFICATION PLATE)	
			1-(ON LH ROPS POST)	
	224-7830	1	FILM-WARNING (HIGH PRESSURE, READ OMM, U.S.)	
			(ON PLATFORM)	
	225-0313	1	FILM-WARNING (JUMP START, READ OMM, U.S.)	
			(ON BOTTOM OF BATTERY BOX COVER)	
	225-4256	1	FILM-WARNING (HOT FLUID UNDER PRESSURE)	
			(TO THE RIGHT OF RADIATOR FILL COVER)	
	247-6875	1	FILM-WARNING (READ OMM)	
			(ON UPPER LEDGE OF LH CONSOLE OF OPERATOR'S STATION)	
	247-6877	1	FILM-WARNING (SEAT BELT)	
			(ON RH CONSOLE ON HORIZONTAL SURFACE TO THE RIGHT OF BULLDOZER CONTROL)	

A-NOT PART OF THIS GROUP
Y-SEPARATE ILLUSTRATION

<END>

PART NUMBER INDEX

Part	Page
0	
0L-0478	322
0L-1026	21
0L-1143	264
0L-1169	288
0L-1352	273
0S-0509	273
0S-0519	23
0S-1569	288
0S-1585	268
	270
0S-1591	110
	125
	288
0S-1594	272
0S-1614	264
0S-1617	324
0S-1619	302
0S-1897	288
0T-0102	270
0T-0244	724
	727
1	
1A-1460	264
	265
	268
1A-2029	265
	268
	315
1A-2223	264
	302
1A-2610	272
1A-5183	302
1A-5822	288
1B-2578	708
1B-3978	284
	286
1B-4427	552
1B-5174	374
	376
	378
	380
	432
	433
1B-8705	15
	20
	310
1B-8706	708
1B-8714	708
1B-8735	631
1C-0569	268
1D-4540	273
1D-4601	288
1F-0748	153
1F-0750	189
	192
	195
	202
	329
	330
	344
1F-2771	319
1F-6762	474
1F-7567	292
1G-3176	448
1G-7407	436
1G-9011	438
1H-1023	236
1H-3244	149
	211
1H-3338	240
1H-3340	647
1H-4106	423
1H-5728	292
1H-8296	736
1J-0708	478
1J-2921	480
1J-6472	371
1J-8569	478
1J-9671	45
	252
	440
	543
	565
1K-4649	136
1K-5888	507
1K-8850	363
1L-4418	327
1L-4775	67
1L-5072	523
1L-6957	288
1L-7388	302
1L-8545	57
1M-1571	474
1M-3909	310
1M-4543	639
1M-4986	234
1M-6119	155
	161
1M-6120	155
	161
1M-6718	571
1M-8657	302
1M-9011	284
	286
	300
1N-4403	109
1N-5724	651
1N-5999	270
1P-0810	156
	246
1P-1547	336
1P-1744	443
1P-2772	367
	718
1P-2841	327
1P-3702	531
	533
	535
	608
1P-3703	440
	507
	608
1P-3704	440
	483
	730
1P-3706	565
1P-3934	288
1P-3935	288
1P-4278	101
	106
	132
1P-4576	476
1P-4578	292
	308
	495
	531
	533
	535
1P-4584	523
1P-5767	440
1P-6356	679
	682
1P-7009	680
1P-9005	284
	286
1P-9328	106
1Q-2423	661
1Q-4743	▶426
1Q-4930	426
1R-0762	132
1R-0770	134
1R-0777	523
1R-1808	69
1R-1809	283
	291
1S-0994	132
	139
	156
	246
	608
1S-0996	136
1S-1015	246
1S-1860	288
	426
	427
1S-4915	155
	246
1S-6250	552
1S-6420	76
1S-7251	155
	235
1S-7252	156
	235
1S-7446	236
1S-9593	462
	573
	649
1S-9799	319
1T-0068	372
	373
1T-0097	315
1T-0131	315
1T-0414	315
1T-0438	315
1T-0441	315
1T-0446	315
1T-0447	315
1T-0599	315
1T-0738	454
1T-0765	393
	394
1T-0902	315
1T-1993	315
1T-2052	315
1T-2069	315
1T-2079	315
1T-2080	315
1T-2081	315
1T-2086	315
1T-2090	▶315
	317
1U-0159	614
	617
1U-0183	598
	600
1U-0300	614
1U-0301	614
1U-0612	614
1U-0725	586
	587
1U-1173	575
1U-1174	575
1U-1175	575
1U-1176	575
1U-2071	552
1U-2752	552
1U-2827	523
1U-3147	552
1U-4069	480
1U-8846	46
	48
	53
	112
	265
	268
1V-3713	82
1V-5872	82
1V-7753	292
1W-2431	114
1W-2715	28
1W-2860	686
1W-3011	136
1W-3963	552
1W-4724	151
1W-4738	44
1W-4741	44
1W-4746	44
1W-4877	120
	121
1W-8407	23
1Y-7452	101
1Y-7927	663
1Z-9932	327
2	
2A-1162	45
2A-1736	674
2A-3746	27
	317
2A-4429	28
2A-4639	265
2B-0858	280
2B-0947	284

▶ **PRIMARY REFERENCE**

PART NUMBER INDEX

Part	Page
	286
2B-9373	310
2D-1523	319
2D-4202	523
2D-5658	317
2D-6235	663
2D-6392	236
2D-6506	300
2D-6642	288
2F-5326	371
2G-0391	711
2G-9245	360
2H-3429	236
2H-3755	302
2H-3920	677
2H-3922	239
	242
2H-3928	391
	393
	394
2H-3931	279
	280
2H-3932	273
2H-3934	512
2H-6622	743
	747
	748
2H-9233	608
2J-0564	476
2J-2866	538
	541
	543
	545
	547
	549
2J-3506	606
	607
2J-3507	423
2J-6274	424
2J-6356	708
2J-7761	523
2J-8163	236
2J-8489	478
	480
2K-0703	617
2K-3258	478
2K-4096	476
2K-4507	476
2K-4821	149
2K-4973	327
	623
	734
	736
2K-5069	264
2K-5967	319
2K-5986	317
2K-6279	614
2K-6830	474
2K-8257	292
2K-8467	327
2K-9295	264
2L-5893	716
2L-6267	654
2L-6679	236
2L-8077	256
2M-1444	628
2M-3432	174
2M-3974	308
2M-4453	99
2M-5795	330
2M-7041	324
2M-7819	663
2M-9780	132
	136
	270
	438
	439
	440
	452
	461
	495
	528
	565
	570
2N-3680	651
	654
2P-1286	82
2P-3696	284
	286
2P-4304	69
2P-4339	667
2P-6588	505
2P-8514	363
2R-0098	284
	286
2R-5001	651
2S-0795	275
2S-2251	319
2S-2596	538
	541
	543
	545
	547
	549
2S-3029	67
2S-3440	72
2S-4071	270
2S-4078	263
	270
	284
	286
	292
	424
	438
	470
	472
2S-5658	313
2S-5926	424
2V-1937	627
2V-2043	82
2V-4868	106
2V-8259	208
2W-5825	91
2W-7381	56
2W-8147	20
2Y-3209	634
2Y-5429	208
2Y-5829	59
	60
	79
	81

3

Part	Page
3A-7880	▶619
3B-0623	21
3B-2263	516
	518
3B-4124	264
3B-4501	242
3B-4508	209
3B-4512	209
3B-4605	340
	342
	651
3B-4610	340
	342
3B-4615	349
	360
3B-4626	575
3B-4629	351
	352
	354
	355
3B-4632	604
	605
3B-5325	620
	621
3B-8489	369
	371
	513
	617
3D-2824	55
	73
	82
	97
	106
	238
	263
	292
	438
	439
	448
	452
	486
	495
	516
	518
3D-2975	663
3D-4603	545
	549
3D-7943	443
3E-1841	662
3E-2310	251
3E-3365	225
	227
	238
	242
	554
	558
	641
3E-3368	218
	219
3E-3371	187
	189
	192
	195
	198
	202
	216
	217
	246
	667
	670
3E-3373	741
3E-3383	667
	690
3E-3389	667
	670
3E-3892	712
3E-4048	698
3E-4051	679
	683
3E-4052	679
	682
3E-4057	679
	683
3E-4058	679
	682
3E-4067	679
3E-4080	682
3E-4087	679
	682
3E-4352	112
	215
	302
3E-4353	49
	52
3E-4354	268
3E-4356	666
3E-4999	57
3E-5239	251
	491
	641
3E-5464	627
3E-6180	631
3E-6328	▶148
	256
3E-6389	▶182
	677
3E-6922	668
3E-7407	495
3E-7410	139
3E-7775	232
3E-8005	16
3E-8008	448
3E-8017	118
	129
	131
3E-8020	252
	675
3E-9412	141
3E-9867	93
3E-9868	93
3F-3442	272
3F-3727	315
3F-4360	530
3F-5022	302

▶ **PRIMARY REFERENCE**

PART NUMBER INDEX

Part	Page	Part	Page	Part	Page	Part	Page
3F-5792	46	3J-4818	736		686		380
3F-9556	149	3J-6573	575	3K-0835	667		432
	692	3J-7354	45		670		433
	693		76	3K-2511	302	3T-3158	667
	694		93	3K-2889	335		670
	695		106		336	3T-3159	667
3G-1753	476		156		423		670
3G-1757	476		283	3K-8460	45	3T-3278	667
3G-3267	523		369	3K-8510	617		670
3G-4214	292		435	3L-0594	714	3T-3418	236
	495		436	3L-3380	236	3T-3422	232
3G-4218	292		448	3L-3813	565		236
	495		485	3L-5893	104	3T-3423	236
3G-6372	360		486		105	3T-3424	236
3G-8047	505		489	3M-7045	82	3T-3434	232
	507		491	3N-0759	466		236
3G-8054	440		493	3N-2818	552	3T-3634	701
	505		495	3P-6308	495	3T-4007	317
	507		516	3P-9900	736	3T-4008	317
3G-8057	440		518	3R-8797	232	3T-4009	317
	505		531	3R-9965	252	3T-4011	317
	507		533	3S-0004	310	3T-4013	317
3G-8742	474		535		528	3T-4377	301
3G-9402	513		538	3S-2093	139	3T-4568	264
3G-9405	513		541		244	3T-4709	236
3G-9995	614		545		273	3T-4710	236
3H-0442	572		547		454	3T-4824	264
3H-8683	507		549		628	3T-5021	264
3J-1770	575		554		641	3T-5200	264
3J-1907	45		556		667	3T-5301	291
	76		558		670	3T-5302	291
	93		563		677	3T-5356	308
	132		569		679	3T-5807	268
	230		572		683	3T-5851	262
	251		608		738	3T-6469	291
	270	3J-9703	480		740	3T-6471	291
	275	3K-0360	28		741	3T-6742	288
	283		45	3S-2708	264	3T-6963	264
	291		76		268	3T-8305	314
	292		92		302	3T-8729	302
	298		97		317	3T-9272	264
	323		136	3S-3439	312	3T-9494	236
	324		265	3S-3440	312	3T-9525	236
	435		268	3S-6049	155	3T-9549	263
	438		275	3S-6162	480	3V-2431	322
	439		284	3S-7781	270	3V-9244	360
	448		286	3S-8664	679		362
	456		291	3S-9557	751	3V-9399	340
	485		292	3S-9643	92		342
	486		324	3T-0304	256	3W-0329	424
	489		439	3T-0598	424	3W-0640	424
	491		440	3T-0996	332	3W-1356	▶364
	493		448	3T-1121	743		468
	495		485		747		616
	509		505		748	3W-1357	364
	526		537	3T-1162	374	3W-1852	374
	528		554		376		376
	554		560		378		378
	556		561		380		380
	558		562		432		432
	571		567		433		433
	608		568	3T-1447	310	3W-1944	349
3J-2682	585		569	3T-2077	374	3W-2182	336
3J-3679	543		608		376	3W-2369	424
	565		634		378	3W-2647	82

▶ **PRIMARY REFERENCE**

PART NUMBER INDEX

Part	Page
	136
3W-3742	360
3W-3819	337
3W-3896	345
	360
3W-6528	367
3W-6550	▶262
	307
3W-6551	262
3W-6756	714
3W-6866	▶335
3W-6867	335
3W-9207	340
	342
3W-9208	340
	342
3W-9678	369
3Y-2888	230
3Y-3866	575
3Y-5405	501
	503
4	
4B-3609	708
4B-4098	36
	575
4B-4158	374
	376
	378
	380
	432
	433
	577
	578
	579
	580
	581
	582
	583
	584
	616
4B-4274	167
4B-4278	340
	342
	543
	547
	736
4B-4863	208
	257
4B-5059	663
4B-7739	280
4B-9782	272
4B-9785	272
4B-9808	645
	650
4B-9880	288
4C-9612	19
4D-6466	491
4D-6716	101
4D-7388	73
4D-7733	683
4D-7735	136
4D-7794	189
4F-0255	575
4F-1252	575
4F-2294	241
4F-4879	731
	732
	733
4F-5695	21
4F-6024	44
4F-7389	523
4G-4972	23
4H-0019	288
4H-0407	711
4H-1440	315
4H-1641	329
	330
	344
4H-2558	174
	340
	342
	683
	741
4H-5440	270
4H-7869	235
4H-9105	654
4J-0121	474
4J-0520	470
	472
	483
	486
	495
	500
	507
	608
4J-0522	495
	531
	533
	535
4J-0525	99
4J-1641	598
	600
4J-2036	351
	352
	354
	355
4J-2414	585
	586
4J-3420	476
4J-5267	499
	500
	501
	503
	505
	507
4J-5351	538
	541
	543
	545
	547
	549
4J-5477	76
	292
	485
4J-6374	474
4J-7533	454
	509
	538
	541
	543
	545
	547
	549
	608
4J-8251	523
4J-8252	523
4J-8997	531
	533
	535
4K-0367	523
4K-1388	470
	472
	531
	533
	535
	538
	541
	543
	545
	547
	549
4K-2039	554
	560
	561
4K-3004	617
4K-3128	476
4K-3533	631
4K-6177	292
4K-7627	363
4K-8302	683
4K-8501	363
4K-9429	705
4L-6454	153
	198
	284
	286
4M-0189	46
4M-1827	236
4M-1828	236
4M-1829	236
4M-1831	232
	236
4M-1853	236
4M-1854	236
4M-2442	302
4M-5281	668
	671
4M-5282	654
4M-5905	324
4M-6425	209
	631
	716
4M-6980	565
4M-7470	340
	342
4M-8239	326
4M-9592	301
4N-1059	234
4N-1230	44
4N-2514	42
4N-2927	663
4N-3808	279
4N-9915	666
4P-2102	4
	5
	6
	7
	8
	▶31
4P-4369	118
4P-5524	109
4P-7428	49
	127
	683
4P-7429	106
	198
	246
	680
	683
4P-7581	34
	151
	153
	156
	173
	180
	192
	195
	244
	246
	252
	273
	523
	608
	668
	671
	683
	700
4P-8087	57
4P-8134	156
	174
	230
	244
	247
	252
	257
	273
	523
	641
	668
	671
	679
	683
	740
4R-9999	61
4S-1936	491
4S-5898	446
	515
4S-8537	315
4S-8598	312
4S-8603	312
4S-9191	92

▶ **PRIMARY REFERENCE**

PART NUMBER INDEX

Part	Page
4T-0259	480
4T-0521	523
4T-0732	588
	590
4T-0780	588
	590
4T-1108	538
	541
	543
	545
	547
	549
4T-1481	604
	605
4T-1504	598
	600
4T-1520	588
	590
4T-1563	501
	503
4T-1649	543
	547
4T-1700	569
4T-1701	543
	547
4T-1860	538
	541
	545
	547
	549
	▶571
4T-2741	567
4T-2952	606
4T-4509	569
4T-4511	543
	547
4T-4628	538
	541
	543
	545
	547
	549
4T-4629	543
4T-4630	543
4T-4631	541
	543
	545
	547
4T-4633	543
4T-4635	543
4T-4659	565
4T-4866	586
	587
	588
	590
4T-4875	513
4T-4932	511
	▶567
4T-4942	568
4T-5072	538
	541
	543
	545
	547
	549
4T-5073	538
	541
	543
	545
	547
	549
4T-5074	543
	547
	569
4T-5495	575
4T-7571	567
	568
4V-6981	651
4V-7884	734
4V-8256	623
4V-8577	734
	736
4W-1203	36
4W-1204	36
4W-1413	763
	765
4W-2026	17
4Y-6353	636
5B-0582	315
5B-2208	319
5B-3180	324
5C-2890	208
	211
	240
	554
	556
	558
	641
	651
	666
	700
	711
	736
5C-6565	617
5C-7261	82
	95
	185
	247
	679
	692
	693
	694
	695
5C-7883	211
5C-9553	146
	207
	628
5D-1026	136
	662
5D-1911	523
5D-2989	301
5D-3118	335
	336
	363
	423
5D-4822	663
5D-5958	520
5D-7927	523
5E-7045	457
5F-0304	45
5F-1678	371
	523
5F-3144	476
5F-4899	273
5F-7074	495
5F-9757	174
	257
5G-2247	395
	396
5G-3676	486
	495
5G-7183	363
5G-8655	631
5G-8993	408
5G-9841	408
5G-9842	408
5G-9843	408
5G-9973	360
5G-9974	360
5H-3252	478
5H-4018	507
5H-4020	535
5H-4279	308
5H-6202	301
5H-6734	374
	376
	378
	380
	432
	433
5H-9899	647
5I-4376	485
5J-3964	317
5J-4418	478
5J-4773	606
	607
5J-4989	478
5J-4991	480
5J-5314	236
5J-5731	478
5J-7386	317
5K-0227	538
	541
	543
	545
	547
5K-5120	270
	273
5K-9090	291
	292
	470
	472
	495
5K-9107	265
5K-9179	688
	689
5K-9246	270
5K-9988	270
5L-2029	654
5L-4758	443
5L-7200	242
5M-0578	264
	268
5M-2057	523
	538
	541
	543
	545
	547
	549
5M-2894	265
	268
	270
	273
	288
	302
	315
	393
	394
	716
5M-3034	236
5M-3038	302
5M-3062	186
	187
	189
	192
	195
	198
	202
5M-3605	310
5M-4480	319
5M-4987	310
5M-5689	95
5M-6126	301
5M-6214	360
	585
5M-7878	317
5M-7925	264
5M-8500	631
5M-9623	326
5M-9735	57
5N-4185	16
5N-8780	31
5N-9204	679
5P-0047	608
5P-0492	173
5P-0537	706
	707
5P-0597	151
5P-0599	120
	121
5P-0695	155
	156
	246
5P-0746	234
5P-0747	155
	156
	235
5P-0761	155
	156
	161
5P-0767	662
	686
5P-0998	701
5P-1075	153

5

▶ **PRIMARY REFERENCE**

PART NUMBER INDEX

Part	Page
	186
	187
	189
	192
	195
	198
	202
	252
	257
	470
	472
	486
	491
	495
	507
	564
	608
	627
	641
	653
	654
	688
	730
5P-1076	57
	327
	345
	349
	357
	358
	359
	360
	366
	367
	374
	376
	378
	380
	383
	384
	422
	631
	696
	701
	711
	717
	718
5P-1251	106
5P-1295	496
5P-1318	440
5P-1404	528
5P-1465	106
5P-1505	136
5P-2228	198
5P-2671	513
5P-2817	111
	120
	121
5P-2937	106
5P-2955	186
	187
	189
	192
	195
	198
	202
5P-3264	141
5P-3860	120
	121
5P-3930	301
	317
5P-3948	682
5P-4057	270
5P-4115	668
	671
	701
5P-4116	31
	127
	230
	657
	701
5P-4295	76
	683
5P-4423	624
	736
5P-4432	624
5P-4536	128
5P-5045	302
5P-5296	302
5P-5297	302
5P-5623	156
	256
5P-5639	662
5P-5643	627
	632
	662
5P-5672	641
5P-5677	180
	211
	256
5P-5680	743
	744
	745
	746
	747
	748
5P-5755	352
	355
5P-5908	641
5P-5924	641
5P-5930	632
5P-5991	132
5P-6010	736
5P-6129	680
	683
5P-6298	236
5P-6605	631
5P-6874	688
	689
5P-7085	292
5P-7177	656
5P-7211	337
5P-7464	505
5P-7465	505
5P-7468	292
	495
5P-7469	292
	495
5P-7483	352
	355
	632
5P-7509	711
5P-7513	697
5P-7514	352
	355
	697
5P-7530	75
	79
	81
5P-7592	288
5P-7648	252
5P-7679	317
5P-7854	82
5P-7957	705
5P-7958	1
5P-7970	68
	244
5P-8194	301
5P-8196	69
5P-8245	17
	46
	49
	63
	64
	65
	264
	265
	268
	270
	288
	302
5P-8247	149
	288
5P-8248	350
	606
	607
5P-8250	423
5P-8309	337
5P-8441	641
5P-8444	495
5P-8445	663
5P-8500	1
	136
	146
	329
	337
	344
	360
	526
	634
5P-8503	631
5P-8918	743
	747
	748
5P-8998	270
5P-9000	654
5P-9085	189
	192
	195
	202
5P-9297	81
	132
5P-9439	308
5P-9617	69
	93
	485
	493
5P-9658	279
5P-9909	712
5S-4246	647
5S-7018	552
5S-7348	668
	671
5S-7349	149
	232
	703
5S-7379	189
	192
	195
	202
	688
5S-7382	327
5S-7383	716
5S-8709	505
5S-8712	505
5S-8765	505
5S-8766	505
5S-9062	36
5T-4374	369
5V-0770	663
5V-1496	330
	722
	725
5V-1497	734
5W-1437	209
	302
	6
	350
6A-5591	46
6A-9718	760
6B-1124	57
6B-4594	101
	106
6B-6863	301
6B-7246	103
6C-3060	146
6D-1641	683
6D-3033	251
6D-4161	667
	670
6D-4247	156
	686
6D-4636	686
6D-5257	252
6D-7128	95
6E-0381	537
6E-1134	552
6E-1135	552
6E-1136	552
6E-1637	538
	543
6E-1752	523
6E-1835	567
	568
6E-1981	552
6E-1982	552
6E-2193	552
6E-4139	510
	▶568
6E-4240	459

▶ **PRIMARY REFERENCE**

PART NUMBER INDEX

Part	Page	Part	Page	Part	Page	Part	Page
6E-4385	457	6K-3630	317		195		683
6E-4401	436	6K-3632	367		198	6V-1232	647
6E-4402	436		718		202	6V-1249	505
	▶459	6K-4934	189		246	6V-1322	236
6E-4403	459		192	6T-3633	187	6V-1355	106
6E-4404	459		195		189	6V-1359	656
6E-4907	565		202		192	6V-1572	292
6E-5066	509	6K-4935	189		195	6V-1573	292
6E-5200	569		192		198	6V-1581	93
6E-6528	563		195		202		495
6F-0253	667		202		246	6V-1582	93
	670	6K-8162	565	6T-3643	211		495
6F-0711	332	6K-8178	679	6T-3852	288	6V-1720	270
6F-4718	319		683	6T-3853	288	6V-1790	630
6F-6673	268	6K-8498	270	6T-4556	711		711
	299	6L-1649	292	6T-4557	711	6V-1792	426
6F-7045	239	6L-4783	308	6T-5005	▶743		427
6F-7062	275	6L-5359	292		744	6V-1819	84
6H-3956	365		312	6T-5008	▶744	6V-1820	44
6H-3977	308	6L-7159	627		757		49
6H-4005	187	6M-5062	554	6T-5067	714	6V-1889	72
	189		560	6T-5068	714	6V-1970	1
	192		561	6T-5617	662	6V-1971	634
	195	6N-1558	114	6T-7695	677	6V-2226	380
	198	6N-2985	68	6T-7882	301	6V-2312	751
	202	6N-3279	236	6T-8402	▶745		753
	628	6N-3826	232		757		754
6H-9361	523		236	6T-8403	▶746	6V-2314	647
6I-1418	256	6N-7523	34		757	6V-2317	39
6I-2431	103		146	6T-8714	711		50
6I-2435	103		758	6T-9927	337		282
6I-2501	109	6N-8744	638	6V-0327	284	6V-2331	631
6I-2502	109	6P-1735	264		286	6V-2372	679
6I-4464	109	6P-1736	264	6V-0328	284		683
6I-8500	301	6P-2216	714		286	6V-2375	631
6I-8507	288	6P-4977	273	6V-0329	284	6V-2404	288
6I-8511	288	6P-5317	265		286	6V-2478	301
6I-8724	264		268	6V-0330	284	6V-2483	447
6I-9386	631	6P-6591	668		286	6V-2495	679
6I-9641	▶426	6P-7704	301	6V-0400	440		682
6I-9644	▶426	6P-8269	337		608	6V-2689	256
6I-9653	▶427	6S-1066	178	6V-0439	284		554
6I-9654	▶427	6S-2828	288		286		558
6I-9656	▶427	6S-2829	288	6V-0473	301		647
6I-9668	▶395	6S-3002	436	6V-0484	292	6V-2803	656
	426	6T-0062	264		435	6V-3250	95
6I-9671	▶396	6T-0064	264		528	6V-3260	631
	426	6T-0363	236	6V-0852	85	6V-3326	520
	427	6T-0364	288		87	6V-3538	23
6I-9706	701	6T-0371	236		132	6V-3545	647
6J-2419	273	6T-0372	236		270	6V-3668	275
	452	6T-0850	264		283	6V-3823	275
6J-2680	495	6T-0988	714		291	6V-3918	16
6J-3134	457	6T-1698	146		298		48
6J-3473	288		367		435		53
6J-5383	588	6T-3631	187		438		97
	590		189		485	6V-3940	15
6J-6439	567		192		495		16
	568		195		528		54
6J-9187	585		198	6V-0855	264		75
6J-9188	585		202	6V-0894	708		79
6K-0806	106		246	6V-0937	313		81
	638	6T-3632	187	6V-0974	440		215
6K-1330	350		189	6V-1178	630	6V-3965	85
6K-3273	725		192	6V-1228	679		87

▶ **PRIMARY REFERENCE**

PART NUMBER INDEX

Part	Page
	132
	270
	283
	292
	298
	435
	439
	486
	528
6V-4248	57
	73
	81
	139
6V-4249	79
	114
6V-4292	136
6V-4369	244
6V-4583	317
6V-4589	69
	132
	141
	574
6V-5048	69
	139
	215
	221
	222
6V-5049	55
	69
	76
	85
	132
	139
	145
	215
	220
	608
6V-5050	141
6V-5188	312
6V-5192	541
	543
	545
	547
6V-5201	450
6V-5217	48
	75
	244
6V-5218	69
	79
	81
6V-5219	69
6V-5220	69
6V-5324	571
6V-5387	291
6V-5555	531
	533
	535
6V-5556	543
	547
	569
6V-5586	436
6V-5645	211
6V-5683	675
6V-5684	49
6V-5696	17
	64
	275
6V-5817	654
	738
6V-5818	741
6V-5833	743
	744
	745
	746
	747
	748
6V-5839	44
	73
	79
	81
	84
	114
	118
	139
	141
	235
	244
	523
6V-5843	43
	52
6V-5844	46
	67
6V-5849	758
6V-5851	758
6V-6209	760
6V-6317	244
6V-6339	563
6V-6609	229
6V-6717	662
6V-6889	760
6V-7190	631
6V-7238	686
6V-7357	639
	653
	708
	711
	758
6V-7535	106
6V-7604	25
6V-7636	631
6V-7646	264
	666
	722
	725
6V-7673	36
	44
6V-7676	367
6V-7687	614
	617
6V-7732	523
6V-7742	474
	480
6V-7743	337
6V-7744	300
	340
	342
	523
	614
	617
	708
6V-7981	141
6V-8073	631
6V-8076	132
	438
	485
6V-8077	69
6V-8129	631
6V-8133	480
6V-8149	17
6V-8182	354
	355
6V-8185	211
	651
6V-8188	198
	209
	232
	531
	533
	535
6V-8189	149
	186
	187
	189
	192
	195
	198
	202
	631
6V-8190	335
	336
	363
	614
6V-8197	46
	49
6V-8200	565
6V-8201	516
	518
6V-8212	235
6V-8218	456
6V-8237	369
	476
	478
	480
6V-8260	67
6V-8336	46
6V-8352	459
6V-8369	677
6V-8370	242
6V-8374	256
6V-8376	211
	708
6V-8378	232
6V-8397	76
	132
	136
	251
	291
	292
	436
	439
	485
	486
	489
	491
	493
	495
	528
	608
6V-8398	76
	136
	292
	436
	438
	439
	501
	503
	505
	507
	608
6V-8400	438
	470
	472
6V-8547	711
6V-8556	440
6V-8625	136
	505
6V-8627	292
	486
	489
	491
6V-8628	76
	486
	489
	491
6V-8632	439
6V-8633	438
6V-8634	76
	291
	485
6V-8635	291
6V-8636	76
	79
	81
	95
	139
	141
	292
	485
	491
	493
	528
	608
6V-8637	82
	438
6V-8639	76
	608
6V-8641	76
	485
	489
6V-8647	485
6V-8675	49
	63
6V-8715	132
6V-8716	82
	439
6V-8721	136
	439
6V-8723	69
	76
	136

► **PRIMARY REFERENCE**

PART NUMBER INDEX

Part	Page
	292
6V-8724	76
	95
	132
	139
	439
	486
	489
	491
	493
	495
6V-8730	136
6V-8781	76
	486
6V-8783	440
6V-8801	125
	186
	189
	192
	198
	202
	654
6V-8818	647
6V-8928	675
6V-8941	439
6V-8969	706
	707
6V-8978	448
6V-8981	501
	503
6V-8987	439
6V-9001	139
	439
6V-9002	76
6V-9007	106
	439
	495
6V-9161	493
6V-9167	372
	480
6V-9168	292
	440
	486
	495
	528
6V-9169	501
	503
6V-9197	330
6V-9200	493
	495
6V-9632	666
	701
6V-9633	523
6V-9746	82
	106
	292
	438
	439
	440
	495
6V-9748	36
6V-9804	163
6V-9829	486
6V-9839	439
6V-9843	486
6V-9846	439
6V-9849	485
6V-9850	486
	491
	493
6V-9872	485
	489
	491
	493
6V-9873	608
6Y-0206	657
	701
	711
6Y-0352	621
6Y-0359	620
6Y-0473	391
	393
	394
	395
	396
6Y-0596	505
6Y-0597	505
6Y-0859	284
	286
6Y-0926	264
6Y-0984	264
6Y-1387	600
6Y-1390	598
	600
6Y-1602	301
6Y-2039	593
	▶606
6Y-2130	278
6Y-2704	264
	268
6Y-2940	▶406
	431
	432
6Y-3973	330
6Y-4638	324
6Y-4819	301
6Y-4831	301
6Y-5113	689
6Y-5799	424
6Y-5911	301
6Y-5912	301
6Y-6286	426
	427
6Y-6287	427
6Y-6294	426
	427
6Y-6296	427
6Y-6389	426
	427
6Y-6397	426
6Y-6412	426
	427
6Y-6751	603
6Y-7385	666
6Y-8114	701
6Y-9024	428
	429
	430
6Y-9280	513
6Y-9281	513
6Y-9373	264
	268
	335
7B-0863	336
	374
7B-3028	376
	378
	380
	432
	433
7B-3039	523
7B-3235	288
7B-9665	332
	423
7C-1493	69
7C-2164	57
7C-3567	51
7C-4354	79
	81
7C-4355	82
7C-6670	128
7C-6672	128
7C-7431	129
	131
7C-8246	686
7C-8370	57
7C-8634	36
7D-1649	49
	275
	288
	292
7D-1677	314
7D-6922	657
7D-7233	106
7D-8431	714
7F-3491	236
7F-3525	236
7F-6998	667
7F-8267	523
7F-8607	682
7F-9543	335
	336
7F-9547	335
	336
7G-1596	264
7G-2343	302
7G-2454	631
7G-2516	301
7G-2830	301
7G-3832	292
	500
	608
7G-3833	292
	500
7G-3834	292
	500
	608
7G-4262	363
7G-4824	657
	701
	711
7G-4998	263
7G-5186	101
	106
7G-5984	483
7G-5985	483
7G-5986	483
7G-6355	301
7G-6623	423
7G-7218	301
7G-7724	301
7G-8975	▶336
7G-9555	322
7H-1447	523
7H-3607	313
7H-4566	264
7H-7628	288
7H-7658	301
7H-9737	651
7I-2272	244
7J-0204	157
	247
	270
	538
	541
	543
	545
	547
	549
7J-2036	391
	393
	394
7J-2595	585
7J-5131	598
	600
7J-8611	270
7J-8955	480
7J-8956	480
7J-9108	82
	439
	440
7J-9933	538
	541
	543
	545
	547
	549
	567
	568
7K-1181	34
	153
	155
	166
	173
	174
	176
	178
	180
	187
	189
	192
	195
	198
	202
	211
	247

7

▶ **PRIMARY REFERENCE**

PART NUMBER INDEX

Part	Page	Part	Page	Part	Page	Part	Page
	251		▶748	7X-0290	654		252
	256	7T-1099	104	7X-0339	153		586
	608		105	7X-0346	284		587
	641		119		286		639
	654		187	7X-0347	335	7X-2563	367
	682		641		336		592
	699		721	7X-0349	423		603
7K-3176	682	7T-1330	745	7X-0368	354		639
7K-6058	466		746		355		718
7L-2894	232	7T-1474	288	7X-0371	406	7X-2564	189
	236	7T-1475	288	7X-0402	364		192
7M-0326	236	7T-1885	264	7X-0406	406		195
7M-0327	236		268	7X-0515	51		202
7M-1201	272	7T-1975	614	7X-0562	232		575
7M-1296	326	7T-3267	232	7X-0578	631	7X-2565	146
7M-1297	263	7T-3268	232		641		367
	326	7T-3276	232	7X-0579	132	7X-2566	367
7M-1377	326	7T-3277	232	7X-0584	647		588
7M-3361	252	7T-3278	232	7X-0594	351		590
7M-5130	301	7T-3279	232		352		721
7M-7219	663	7T-3451	232		354	7X-2567	586
7M-8485	82	7T-3454	232		355		587
	106	7T-3950	301	7X-0603	714	7X-2575	369
	173	7T-3974	232	7X-0608	314		407
	275		236		623	7X-2576	717
	291	7T-4532	635	7X-0632	638		718
	292	7T-5856	641	7X-0766	365	7X-2580	408
	324	7T-6299	662	7X-0818	257	7X-2581	704
	438		701	7X-0820	439	7X-2584	334
	439	7T-6934	501		486	7X-2585	423
	538		503		495	7X-2619	659
	541	7T-6994	264	7X-0851	369	7X-2908	54
	543		268	7X-1456	332	7X-3229	764
	545	7T-7388	668	7X-1553	516		765
	547	7T-8130	264		518	7X-3373	232
	549	7T-8136	268	7X-2049	679		236
7N-0296	230	7T-8816	302		682	7X-3374	674
7N-0718	155	7T-8875	270	7X-2488	360	7X-3391	345
	▶239	7T-8876	270	7X-2533	703	7X-3392	337
7N-1996	256	7T-8891	738	7X-2535	486		697
7N-2059	230	7T-8894	679	7X-2537	31	7X-4771	647
7N-4333	543		683		452	7X-6085	668
7N-5683	23	7T-8895	679	7X-2539	132		671
7N-9801	243	7T-9031	268	7X-2541	454	7X-6315	169
7N-9943	182	7T-9272	301	7X-2543	257	7X-7477	314
7P-4190	708	7T-9303	677		496	7X-7644	335
7P-6682	155	7T-9370	301		614		336
7R-3029	251	7T-9426	679		617		616
7S-2042	329		682	7X-2547	310		764
	330	7T-9515	242	7X-2548	211		765
	344	7T-9788	264	7X-2549	367	7X-7700	146
7S-6058	354	7T-9793	679	7X-2552	82	7X-7702	686
	355		683	7X-2553	345		741
7S-8920	293	7T-9832	264		360	7X-7729	90
	470	7T-9837	264		362		91
	472		268		424		93
7S-8921	293	7T-9946	288		603		101
	470	7U-4892	211	7X-2555	337		108
	472	7V-0008	654	7X-2557	513		110
7S-9396	▶125	7V-3715	369	7X-2562	176		113
7T-0020	182	7V-5191	663		189		115
7T-0030	344	7W-2632	556		192		119
7T-1068	745	7W-3872	50		195		120
	▶747	7W-6534	265		198		121
7T-1069	746	7W-7381	76		202		126

▶ PRIMARY REFERENCE

PART NUMBER INDEX

Part	Page
	132
	136
	174
	176
	205
	230
	293
	329
	330
	337
	340
	342
	344
	348
	357
	358
	359
	367
	369
	440
	483
	496
	631
	639
	643
	654
	679
	683
	697
	698
	701
	708
	710
	711
	730
7X-7742	639
7X-7877	714
	741
7X-7888	700
7X-7927	738
	741
7X-7928	738
	741
7X-7929	738
	741
7X-7930	738
	741
7Y-4224	543
7Y-5219	436
7Y-5226	647
7Y-5233	387
	389
7Y-5235	588
	590
7Y-7388	677
8	
8B-4624	340
	342
8C-0563	25
8C-3089	236
8C-3205	500
	501
8C-3206	293
	308
	470
	472
	483
	510
	511
	523
	531
	533
	535
	565
8C-3428	298
8C-3442	631
8C-3445	69
8C-3446	69
	93
	283
	435
	486
8C-3447	283
8C-3451	435
	485
8C-3655	232
8C-3681	106
8C-3756	641
8C-4982	756
8C-4984	37
8C-5060	758
8C-5063	651
8C-5607	176
	178
	180
	703
8C-5608	176
	178
	180
	703
8C-5682	679
	682
8C-5917	161
8C-5918	155
8C-6354	251
	256
8C-6561	286
8C-6857	466
8C-6913	299
8C-8451	180
8C-8478	351
	352
	354
	355
	588
	590
8C-8580	457
8C-8585	330
	337
	340
	342
8C-8843	718
8C-8844	367
8C-9160	474
8C-9660	236
8D-0983	639
8D-1817	288
8D-1819	288
8D-4771	268
	299
8D-7185	639
8D-9739	302
8E-1118	666
8E-1205	329
	330
	344
8E-1211	374
	376
	378
	380
	432
	433
8E-1900	408
8E-2014	366
8E-2748	284
	286
8E-3070	337
8E-3131	654
8E-3446	▶749
	757
8E-3447	▶750
	757
8E-4832	340
	342
8E-5112	631
	▶757
8E-5113	631
	▶757
8E-5114	631
	▶757
8E-5170	278
8E-5188	600
8E-5190	600
8E-5192	600
8E-5194	600
8E-5205	598
	600
8E-5486	585
	586
8E-5502	291
8E-5701	575
8E-5703	480
	588
8E-6856	741
8E-7222	395
	396
8E-7405	395
	396
8E-7406	395
	396
8E-7407	395
	396
8E-7408	395
	396
8E-7409	395
	396
8E-7410	395
	396
8E-7561	329
	330
	344
8E-7791	657
	701
	711
8E-8242	654
8E-8292	738
8E-8299	301
8E-8300	317
8E-8304	301
8E-8305	301
8E-8307	264
	268
8E-8310	264
8E-8434	564
8E-9212	474
8E-9289	423
8E-9522	360
8E-9932	387
8F-1434	232
8F-3556	327
8F-4387	585
8F-6575	65
8F-7702	708
8F-8151	101
8F-9206	523
8G-4014	337
8G-4189	371
8G-8844	284
	286
8G-8845	284
	286
8G-9530	432
	433
8G-9880	300
8H-1141	232
8H-1603	270
8H-2768	314
8H-3127	34
8H-5303	239
8H-5306	239
8H-5352	302
8H-8898	604
	605
8H-9818	280
	319
8H-9819	280
8J-1622	552
8J-2189	619
	▶620
	622
8J-2190	620
	621
8J-2880	480
	588
	590
8J-6913	523
8J-8322	523
8J-8436	523
8J-8462	538
8J-8468	523
8J-8782	523
8J-8783	523
8J-9990	495

▶ **PRIMARY REFERENCE**

PART NUMBER INDEX

Part	Page
8K-1433	666
8K-8517	103
8L-2746	574
8L-2779	69
	139
8L-2786	55
	69
	228
	554
	556
	558
8L-5008	106
8L-6557	369
8L-8413	155
	663
	736
8M-2530	270
8M-2769	686
8M-2771	647
8M-2773	76
8M-3494	616
8M-4390	300
8M-4432	270
	273
8M-4438	265
	268
8M-4986	293
	326
8M-4987	293
8M-5010	302
8M-5254	293
	528
8M-5255	302
8M-5266	302
8M-5661	270
8M-5860	25
8M-7160	312
8M-8157	273
	293
8M-8489	302
	310
8M-9307	275
8M-9315	45
8N-0869	246
8N-1725	155
8N-4617	109
8N-6849	31
8N-6854	31
	82
8N-8846	104
	105
8P-0058	270
8P-1892	301
8P-1916	301
8P-1964	301
8P-2019	302
8P-2022	302
8P-2023	302
8P-2051	301
8P-2053	301
8P-4233	82
8P-5244	367
	718
8P-5411	151
8P-6363	641
8P-8357	265
	268
8P-8540	189
	192
	195
	202
8P-9507	301
8P-9747	718
8P-9770	585
	588
	590
	598
	600
8Q-1911	89
8R-1803	213
	214
8R-3393	679
	682
8S-0023	293
	470
	472
	483
8S-0024	293
	470
	472
	483
8S-0527	268
8S-0948	686
8S-3020	155
	156
8S-4304	275
8S-5383	636
8S-7499	558
8S-7803	663
8S-9008	319
8S-9130	270
8T-0072	264
8T-0100	39
	41
8T-0119	136
	686
8T-0193	114
8T-0267	166
8T-0269	434
8T-0285	659
8T-0288	167
8T-0292	75
8T-0318	631
8T-0328	232
	244
	257
	651
	722
	725
8T-0337	628
	671
8T-0360	411
	416
	421
8T-0362	474
8T-0363	367
8T-0364	369
8T-0375	408
8T-0389	257
	700
8T-0404	82
8T-0638	153
8T-0639	700
8T-0644	92
	99
8T-0646	65
8T-0656	350
	373
8T-0687	744
	745
	746
8T-0722	157
8T-0785	474
8T-1120	292
8T-1159	447
8T-1579	327
8T-1887	136
	507
8T-1888	136
	507
8T-1889	486
	496
8T-1890	486
	496
8T-1891	95
8T-1892	95
8T-1893	136
	293
8T-1894	136
	293
8T-1895	440
8T-1896	440
8T-1979	631
8T-1980	631
8T-2192	176
	178
8T-2225	155
	156
	246
8T-2275	523
8T-2353	493
8T-2501	327
8T-2502	654
8T-2561	337
	469
	513
8T-2659	208
	257
	671
8T-2922	457
8T-3282	372
	411
	416
	421
8T-3298	523
8T-3490	63
	93
	101
	106
	119
	151
	348
	469
	495
	641
	710
	730
8T-3561	631
8T-3597	103
	383
	384
	641
8T-3612	95
	230
8T-3647	454
8T-3666	56
8T-3957	512
8T-3992	211
8T-4121	34
	57
	72
	76
	82
	90
	93
	95
	101
	103
	106
	108
	110
	132
	136
	151
	153
	157
	178
	211
	247
	257
	278
	293
	300
	308
	319
	326
	345
	349
	351
	352
	354
	355
	360
	374
	376
	378
	380
	424
	432
	433
	440
	467
	476
	483
	496
	500
	501
	503
	505
	510

► PRIMARY REFERENCE

PART NUMBER INDEX

Part	Page	Part	Page	Part	Page	Part	Page
	511		469		491		432
	523		470		496		433
	531		472		500		496
	533		483		523		501
	535		496		608		503
	565		507		631		505
	608		630		638		639
	627		636		639		683
	630		638		679		696
	631		639		683		701
	636		641		686		711
	638		644		697		717
	641		679		701		718
	644		683		708	8T-4141	385
	662		686		710		386
	679		741		711		387
	683	8T-4136	72		714		389
	686		76	8T-4137	76	8T-4149	439
	689		82		82	8T-4154	185
	700		93		90	8T-4167	387
	708		95		91		389
	714		101		93		407
	730		106		95		586
8T-4122	82		110		110		587
	360		120		113		588
	362		121		136		590
	367		126		153		711
8T-4123	51		132		157		717
	178		174		244		718
	189		176		247	8T-4170	51
	193		178		252	8T-4171	252
	367		187		257		659
	407		189		293		666
	408		193		319	8T-4172	293
	513		196		330		326
	575		198		337	8T-4176	103
	588		202		340		293
	590		205		342		319
	718		247		344		496
8T-4131	351		280		513	8T-4177	454
	352		293		627	8T-4178	293
	354		319		630		440
	355		326		639	8T-4179	136
	588		329		641		496
	590		337		654	8T-4181	176
	721		340		662		178
8T-4132	153		342		680		631
	636		344		683	8T-4182	33
8T-4133	72		345		686		90
	82		348		698		136
	110		360		701		230
	115		369		711		278
	136		374		730		299
	157		376	8T-4138	257		424
	178		378		668		505
	189		380		671		507
	193		432		701		533
	196		433	8T-4139	319		636
	202		440		345		680
	293		467		357		686
	312		469		358	8T-4183	345
	340		470		359		496
	342		472		360		513
	348		483		387		661
	440		486		422	8T-4184	293

► **PRIMARY REFERENCE**

PART NUMBER INDEX

Part	Page
	374
	376
	378
	380
	387
	432
	433
	440
	523
	609
	661
8T-4185	82
	101
	278
	280
	483
	543
	547
	636
	686
8T-4186	57
	82
	115
	293
	476
	507
	564
	636
	708
8T-4187	345
	407
	575
8T-4189	95
	127
	230
	657
	701
8T-4191	211
	247
	257
	293
	329
	564
	627
8T-4192	329
	467
	631
	641
8T-4193	51
	153
	367
	636
8T-4194	34
	349
	374
	376
	378
	380
	383
	384
	440
	639
	701
8T-4195	34
	72
	76
	82
	93
	101
	103
	115
	132
	136
	196
	203
	277
	293
	319
	357
	358
	359
	440
	496
	505
	507
	609
	631
	644
	653
	686
	689
	700
	708
	711
8T-4196	57
	82
	90
	101
	106
	108
	115
	119
	136
	157
	293
	300
	308
	340
	342
	351
	352
	354
	355
	367
	470
	472
	483
	500
	501
	503
	507
	510
	511
	524
	531
	533
	535
	565
	680
	683
	711
	730
8T-4198	57
	136
8T-4199	211
	257
8T-4200	740
8T-4205	149
	211
	232
	236
	244
	641
	643
	647
	651
	659
	668
	671
	703
	708
	722
	725
8T-4222	90
	277
	330
8T-4223	34
	57
	136
	153
	198
	211
	284
	286
	293
	300
	308
	319
	327
	329
	345
	374
	376
	378
	380
	387
	432
	433
	440
	446
	467
	496
	500
	501
	503
	505
	513
	524
	530
	531
	533
	535
	609
	612
	613
	617
	636
	639
	641
	661
	683
	686
	701
8T-4224	40
	82
	95
	149
	185
	186
	187
	189
	193
	196
	198
	203
	211
	247
	257
	286
	452
	680
	716
	740
8T-4226	293
8T-4231	512
8T-4244	57
	513
	612
	613
	617
	636
8T-4648	293
	300
	612
	613
	617
8T-4649	712
8T-4752	677
8T-4777	751
	753
	754
8T-4779	526
	588
	590
	686
8T-4780	178
8T-4896	91
	132
	136
	187
	189
	193
	196
	198
	203
	247
	284
	286
	293
	327

PART NUMBER INDEX

Part	Page	Part	Page	Part	Page	Part	Page
	391		203		584	8T-9399	284
	654		253	8T-7547	95		286
	683		345		452	8T-9403	533
	741		351	8T-7566	329	8T-9496	327
8T-4910	57		352		330		340
	360		354		344		342
	505		355		706	8T-9530	763
	636		367		707		765
8T-4943	711		588	8T-7568	466	8T-9598	516
8T-4956	293		590	8T-7852	700		518
	308		639	8T-7927	438	8T-9655	132
	319		720	8T-7930	617		163
	357		721	8T-7934	187		164
	358	8T-5451	244		190		256
	359	8T-5460	408		193	8T-9756	155
	374	8T-5668	476		196	8T-9757	155
	376		478		198		161
	446	8T-6381	575		203	8T-9834	668
	500	8T-6430	51		247		671
	501		720		257	8T-9884	232
	503		721	8T-7971	730	8U-5951	516
	609	8T-6466	76	8T-8379	480		518
	686		91	8T-8442	516	8V-0622	161
8T-4970	668		95		518	8V-5455	758
	671		108		563	8W-0327	82
	708		293	8T-8566	232	8Y-0374	346
8T-4971	174		496	8T-8569	232		347
	337		609	8T-8729	216	8Y-1388	406
	714		639		227	8Y-3966	365
8T-4984	93		680		462	8Y-3998	365
8T-4986	114		683		558	8Y-4000	340
8T-4994	284	8T-6685	257		690		342
	286		641		692	8Y-5737	662
	354	8T-6696	292		693	8Y-5747	365
	355	8T-6703	93	8T-8730	554	8Y-5945	663
	406	8T-6723	136	8T-8736	251	8Y-5965	734
	466	8T-6724	136	8T-8737	167	8Y-6012	734
8T-4999	764	8T-6761	275		171	8Y-6014	734
	765	8T-6762	92		208	8Y-6024	734
8T-5005	293	8T-6764	28		244	8Y-6041	663
8T-5030	275		275		462	8Y-6045	663
	528	8T-6854	275		649	8Y-6046	663
8T-5041	300	8T-6868	57		650	8Y-6047	663
8T-5043	95		293		691	8Y-6060	663
8T-5361	335		349		694	8Y-6062	663
	336		357		695	8Y-6063	663
	363		358		741	8Y-6064	663
	364		359	8T-8902	69	8Y-6066	663
	406		366	8T-8908	701	8Y-6067	663
	614	8T-6869	132	8T-8914	631	8Y-6068	663
8T-5372	340	8T-6936	151	8T-8919	153	8Y-6069	663
	342		632		284	8Y-6388	657
8T-5389	439	8T-7008	654		286		667
8T-5400	741	8T-7044	118		327	8Y-6400	327
8T-5410	651		312	8T-8984	495		▶365
8T-5412	614	8T-7087	293	8T-8987	470	8Y-6419	750
8T-5413	103	8T-7338	515		472	8Y-6420	750
	151		530	8T-9043	631		▶751
8T-5429	292	8T-7371	577	8T-9082	722	8Y-6422	751
8T-5439	146		578	8T-9358	291	8Y-6423	749
	176		579		528		750
	190		580	8T-9371	736		751
	193		581	8T-9383	209		753
	196		582	8T-9388	213		754
	198		583		214		756

▶ **PRIMARY REFERENCE**

PART NUMBER INDEX

Part	Page
8Y-6424	749
	750
	756
8Y-6428	756
8Y-6429	756
8Y-6430	749
	750
	751
	753
	754
	756
8Y-6431	753
8Y-6432	749
8Y-6433	749
	▶753
8Y-6443	754
8Y-6445	756
8Y-6446	▶754
	756
8Y-6447	743
8Y-6448	747
	748
8Y-6454	751
	753
	754
8Y-6455	751
	753
	754
8Y-6459	749
	750
	751
	753
	754
	756
8Y-6460	751
	753
	754
8Y-6461	751
	753
	754
8Y-6462	749
	750
	756
8Y-6463	756
8Y-6839	743
	744
	745
	746
	747
	748
8Y-6859	663
8Y-6860	663
8Y-6910	749
	750
	751
	753
	754
	756
8Y-7452	485
8Y-8306	365
8Y-9603	235

9

Part	Page
9B-0453	209
9B-0576	264
9B-2596	109
9B-7233	211
	708
9B-7237	327
	391
9D-3769	701
	712
9D-7924	291
9D-9736	631
9F-4446	16
9F-5599	236
9F-5644	239
9F-6445	651
9F-6656	763
	765
9G-0002	155
9G-0003	155
	161
9G-0004	161
9G-0005	155
9G-0284	301
9G-0285	301
9G-0286	302
9G-0289	301
9G-0290	301
9G-0832	288
9G-0983	697
9G-0986	697
9G-0990	697
9G-0992	718
9G-1127	631
9G-3695	647
	668
	671
	692
	693
	698
9G-4101	236
9G-5127	291
9G-5664	391
	393
	394
9G-6655	173
9G-6744	302
9G-7101	686
9G-8020	301
9G-8615	270
9G-8637	262
9G-8638	284
	286
9G-8639	284
	286
9G-9151	641
9G-9175	284
	286
9G-9180	284
9G-9181	284
	286
9G-9183	284
	286
9H-0846	319

Part	Page
9H-3360	284
	286
9H-3757	236
9H-6454	524
9H-8712	319
9J-2914	523
9J-3139	620
9J-7031	523
9J-8126	538
	541
	547
9J-8923	621
9J-8926	617
	▶621
9J-9598	617
9L-6770	149
9L-9068	454
9L-9132	265
9M-0164	72
	120
	121
9M-1974	16
	37
	48
	50
	53
	68
	69
	75
	79
	81
	97
	112
	163
	164
	244
	273
	282
	324
	567
9M-1976	319
9M-2008	317
9M-2904	111
	499
9M-3786	408
9M-3835	330
9M-4355	301
9M-5731	708
9M-5854	614
9M-7002	300
9M-7394	523
9M-7609	236
9M-7958	73
9M-8406	680
	683
9M-9647	270
9N-0869	41
	163
	164
	257
	657
9N-1756	572
9N-1995	631
	741
9N-4233	513

Part	Page
9N-4369	▶756
	757
9N-4449	614
	617
9N-4450	614
	617
9N-4685	79
9P-1475	270
9P-1478	288
9P-1921	288
9P-1922	288
9P-1925	288
9P-2245	391
	393
	394
9P-3066	337
9P-3709	319
9P-6571	712
9P-7072	288
9P-7121	146
9P-7390	301
9P-7757	301
9P-7855	744
9P-7859	743
	747
	748
9P-7860	743
	747
	748
9P-8614	301
9P-8623	301
9P-8626	301
9P-9150	454
9P-9388	688
	689
9P-9390	688
9P-9392	▶688
	718
9R-2613	126
9R-2640	626
9S-1240	153
9S-1305	651
9S-1588	426
9S-1838	426
	427
9S-2544	236
9S-4167	132
9S-4181	275
	545
	549
9S-4182	45
	531
	533
	535
	608
9S-4183	55
	516
	518
9S-4185	69
	92
	275
	284
	286
	324
	608

▶ PRIMARY REFERENCE

PART NUMBER INDEX

Part	Page	Part	Page	Part	Page	Part	Page
	634	9S-8010	424		189		524
9S-4188	531	9S-8230	329		192		730
	533		330		198	9X-2185	662
	535		344		202	9X-2205	146
9S-4190	132	9S-8752	110	9W-4381	428	9X-2480	180
	452	9T-0094	480		429		703
9S-4191	45	9T-1576	520		430	9X-2646	115
	55	9T-1579	520	9W-4897	585	9X-2647	115
	132	9T-1582	520	9W-5150	288	9X-2857	450
	275	9T-1637	520	9W-5334	270	9X-3401	171
	323	9T-1642	520	9W-5343	660		242
	324	9T-1643	520	9W-5375	585		651
	456	9T-1687	520	9W-5595	326		698
	608	9T-2378	552	9W-6102	264	9X-3402	208
9S-4200	95	9T-2714	476	9W-6103	264		218
9S-4497	103	9T-3264	523	9W-6381	598		668
9S-5187	367	9T-3853	457		600		671
	718	9T-3885	474	9W-7925	268		691
9S-6130	270	9T-3928	448	9W-7926	268	9X-3452	641
9S-6758	110	9T-6093	478	9W-8269	301	9X-3463	183
9S-7710	270	9T-8693	▶552	9W-8270	301		184
9S-8001	509		654	9W-8612	288		185
	538	9T-8958	474	9W-8874	606	9X-4244	185
	541	9T-9836	565		607	9X-4582	374
	543	9U-6993	73	9W-8875	606		376
	545	9U-8263	666		607		378
	547	9U-8746	666	9W-8940	340		380
	549	9U-9121	470		342		432
	608		472	9W-9000	585		433
9S-8002	436	9U-9122	470	9W-9082	505	9X-4609	298
	448		472	9W-9083	505	9X-4824	232
	516	9V-2818	728	9X-0194	738	9X-5699	155
	518	9W-0099	617	9X-0196	251	9X-6154	538
	538	9W-0609	614		256		549
	541	9W-0645	301	9X-0199	242	9X-6165	176
	545	9W-0852	641	9X-0261	139		178
	547		667		215		180
	549		670	9X-0262	215		703
	554	9W-0873	617	9X-1046	208	9X-6269	151
	556	9W-0876	617	9X-1054	641	9X-6281	708
	558	9W-1441	211	9X-1386	225	9X-6340	764
	563	9W-1442	211		679		765
9S-8003	543	9W-1446	211		682	9X-6381	643
	565	9W-1464	647	9X-1813	156	9X-6395	567
9S-8004	28	9W-1569	288		217		568
	55	9W-1570	288		218		569
	141	9W-1571	264		219	9X-6458	272
	283	9W-1878	607		223	9X-6615	708
	448	9W-1951	251		238	9X-6772	176
	509		256		240		178
	554	9W-2390	499		256		699
	556	9W-2579	588		435	9X-7264	476
	558		590	9X-2027	299	9X-7373	641
9S-8005	28	9W-2822	349		538	9X-7378	635
	45		360		541		680
	55	9W-2853	264	9X-2038	657		683
	97	9W-2992	288	9X-2043	657	9X-7380	680
	265	9W-3660	288		675		683
	268	9W-3762	594	9X-2045	657	9X-7381	680
	448		595		675		683
9S-8006	565		596	9X-2053	42	9X-7382	679
9S-8008	97		597	9X-2099	39		680
	263		▶607	9X-2125	270		682
	448	9W-4159	270		273		683
	452	9W-4361	186		363	9X-7383	680

▶ **PRIMARY REFERENCE**

PART NUMBER INDEX

Part	Page
	683
9X-7385	635
	680
	683
9X-7671	284
	286
9X-8250	153
9X-8256	153
	166
	174
	176
	178
	207
	208
	211
	257
	337
	486
	639
	647
	653
	659
	666
	700
	701
	708
	712
	714
9X-8257	153
	293
	337
	345
	424
	515
	526
	530
	588
	590
	636
	686
9X-8258	334
	423
	704
9X-8260	470
	472
9X-8266	337
9X-8267	253
9X-8268	21
	37
	42
	46
	67
	486
	496
9X-8408	292
9X-8499	367
9X-8600	146
9X-8699	352
	355
9X-8918	663
9X-8979	516
	518
9Y-0810	20
9Y-9236	106
9Z-9211	327
9Z-9214	327

0

Part	Page
003-2143	101
003-9514	101
004-1964	434
005-4834	264
012-0380	240
030-1707	234
030-2135	264
030-7946	369
030-7950	141
030-8538	302
030-9613	260
	261
031-0214	716
031-0218	270
	273
031-1119	104
	105
033-6034	75
033-6043	563
	574
033-6044	552
033-8248	291
033-9139	556
036-9821	236
036-9823	232
037-4426	662
039-8557	686
061-6711	302
061-9455	68
061-9457	310
067-2551	136
068-8093	302
069-2536	260
	261
069-4269	106
077-3241	332
081-3801	448
081-8353	270
083-7784	565
083-9527	667
	670
084-4111	751
	753
	754
085-7539	457
085-8091	538
	541
087-4772	436
091-9035	155
095-0843	722
	725
095-0878	663
095-0939	434
095-1750	562
096-5962	708
096-6166	569
	659
099-3649	40

1

Part	Page
100-3224	664
100-3320	244
100-4336	132
	136
100-5179	664
100-6211	565
100-8010	538
	541
	543
	545
	547
	549
100-8011	538
	541
	543
	545
	547
	549
100-8012	538
	549
101-0003	734
	736
101-0742	758
	▶760
101-2850	109
101-2867	716
101-3055	677
101-3128	163
	164
101-3625	151
101-3934	46
102-0341	662
102-2828	435
102-2913	764
	766
102-7365	538
	541
	543
	545
	547
	549
102-8801	156
	251
	252
	256
	485
	651
	677
	741
102-8802	146
	148
	155
	156
	174
	180
	189
	192
	195
	198
	202
	211
	225
	227
	238
	240
	242
	243
	244
	246
	251
	256
	257
	435
	491
	554
	558
	573
	635
	641
	667
	679
	682
	736
102-8803	34
	139
	155
	156
	182
	187
	189
	192
	195
	198
	202
	216
	217
	244
	246
	251
	252
	256
	257
	641
	654
	667
	670
	699
102-8804	156
	187
	189
	192
	195
	198
	202
	251
	252
	256
	257
	462
	491
	647
	667
	670
	708
102-8805	156
	167
	171
	246

▶ PRIMARY REFERENCE

PART NUMBER INDEX

Part	Page	Part	Page	Part	Page	Part	Page
	251	105-8183	301	109-1634	679	113-0693	213
	252	105-9657	629		682		214
	628		▶666	109-3001	136	113-5336	31
	647	105-9659	629		291	113-6033	697
	650		▶689		332	113-6069	43
	667	106-1227	512		495	114-0358	620
	668	106-2105	291	109-3207	135		621
	670	106-4150	▶279	109-3968	324	114-0359	620
	682		280	109-4044	682		621
	690	106-4572	101	109-4757	360	114-3469	635
	692	106-5122	▶635	109-5498	639	114-4304	474
	693		636	109-5761	662	114-5157	552
	694	106-5472	708	109-6406	627	114-5333	679
	695	106-7691	391	109-9828	631		682
	698		393	109-9829	631	114-9363	186
	738		394	110-0510	319	115-1024	189
102-8806	139	106-8186	332	110-2028	647		192
	155	106-8187	332	110-2445	106		195
	178	106-8704	679	110-2842	452		202
	180		682	110-3844	638	115-1025	189
	252	106-9212	324	110-6109	667		192
	667	106-9214	324		670		195
	668	106-9361	345		677		202
	670	107-3786	257	110-6393	626	115-1748	251
102-9478	467	107-3881	▶651		763		667
103-2543	632		654		765		670
103-6100	679	107-3888	651	110-6845	251	115-2422	156
	682	107-3945	393		256	115-4072	43
103-6262	647		394	110-7882	647	115-4219	43
103-9425	677	107-4393	682	110-8152	675	116-3715	118
103-9527	639	107-4394	682	110-8318	82		438
	▶641	107-4399	682	110-8319	82		483
104-2091	208	107-6280	62	110-8379	708	116-6202	679
104-6202	246	107-7694	15	110-8769	246		682
104-6729	273	108-0200	424	110-8826	82	116-6203	667
104-6730	273	108-1091	▶372	110-8827	82		670
104-6931	523		432	110-8834	682	117-1385	302
105-1634	516		433	111-2416	244	117-2311	256
	518	108-1335	629	111-3203	86	117-4491	727
105-1635	516		▶660	111-3780	708	117-4492	623
	518	108-1696	307	111-3781	708	117-7296	447
105-1636	516		▶314	111-4482	714	117-7826	301
	518	108-1847	565	111-4627	643	117-8131	711
105-1638	516	108-2106	314	111-4919	308	117-8863	714
	518		▶322	111-5147	657	117-9966	711
105-1639	516	108-3138	666	111-7978	155	118-0639	651
	518	108-4086	664	111-8314	186	118-0693	631
105-1640	516	108-4087	664		187	118-1170	478
	518	108-4103	664		189	118-1727	4
105-1642	516	108-4430	452		192		5
	518	108-5157	569		195		6
105-1646	522	108-6954	319		198		7
105-1648	522	108-7251	438		202		8
105-1650	522	108-8089	82	111-8642	647		▶17
105-1651	522	109-1352	577	111-8950	647	118-6299	187
105-1653	522		578	111-9251	708	118-6878	82
105-1797	244		579	112-2660	651	119-3662	244
105-3031	516		580	112-4368	499	120-4394	436
	518		581	112-4440	654		448
105-3032	516		582	112-4511	301		516
	518		583	112-4740	647		518
105-3033	516		584	112-4757	647	121-2844	246
	518		▶592	112-5585	301	121-4344	95
105-3481	556	109-1633	679	112-8041	301	121-6649	538
105-3482	708		682	113-0580	246		541

▶ **PRIMARY REFERENCE**

PART NUMBER INDEX

Part	Page
	▶569
122-1133	573
122-3771	454
122-7127	667
	670
122-9033	438
123-0304	251
	667
	670
123-0306	251
	667
	670
123-0790	57
123-1373	156
123-2017	436
123-5748	520
123-7556	436
123-7559	436
123-7560	436
123-7575	448
123-7583	448
123-9294	667
	670
123-9624	538
	541
124-0174	79
	369
124-0506	19
124-3019	495
124-3243	657
124-6655	298
124-8335	456
124-8490	641
124-9666	588
	590
124-9672	588
	590
125-1302	211
	▶240
125-1362	91
125-4175	▶416
	432
	433
125-4176	▶411
	432
	433
125-4177	390
	▶409
125-5533	390
	▶409
125-7874	244
125-7875	211
	244
	256
125-8254	631
126-0747	438
	▶456
126-0748	456
126-0810	491
126-0814	438
	485
	495
126-1403	450
126-1477	436
	447
126-1638	448
126-1661	448
126-1757	18
126-1768	218
126-1773	251
126-1774	176
	178
	246
	699
126-3700	730
126-3701	730
126-5011	244
126-7574	169
126-7975	151
126-9092	448
127-1043	714
127-1044	714
127-1045	714
127-1046	714
127-1048	714
127-1596	651
127-1597	651
127-1598	654
127-1599	654
127-3018	701
127-5485	251
	256
127-5486	246
127-8178	120
	121
127-8830	764
	765
128-0314	155
128-2569	470
128-2570	470
128-2571	472
128-2572	472
128-3341	67
128-3813	67
128-5924	679
	682
129-1609	310
129-1831	667
129-3217	470
	472
129-5649	438
129-8331	176
	189
	192
	195
	198
	202
	251
130-0229	283
	291
130-1977	499
130-3280	122
	123
130-5300	156
	252
	257
	668
	671
130-7806	450
130-9192	499
130-9811	228
	229
131-0447	647
131-0825	310
131-3278	310
131-4091	302
131-4242	663
131-5137	677
131-5167	663
131-5492	711
132-0338	623
132-1249	478
132-5789	127
	156
	202
	246
	252
	668
	671
132-7077	708
132-7419	647
132-7450	647
132-9455	445
132-9899	454
132-9900	454
133-1400	310
133-1401	310
133-2198	263
133-2249	462
133-3260	95
133-5545	461
	570
133-5631	371
133-6934	108
133-7810	156
133-9405	667
	670
134-1251	454
134-2540	246
	251
	252
	654
134-4126	169
134-5366	387
	389
134-5368	387
	389
134-7258	764
	765
134-9602	662
135-2964	598
135-2966	598
135-3084	598
135-9819	17
136-0822	18
136-1122	76
136-1543	705
136-1544	623
136-1595	264
136-2216	319
136-3188	758
136-3191	758
136-3192	758
136-3193	758
136-4183	43
136-6093	654
136-9297	554
	556
	558
136-9298	554
	556
	558
137-1602	130
137-4488	286
137-4490	286
137-6603	452
137-6722	686
137-8793	443
137-8794	443
137-9755	554
	558
137-9810	286
138-0444	146
139-0566	371
139-0567	371
139-1537	523
139-2116	187
	189
	192
	195
	198
	202
	246
139-4189	556
140-0864	495
140-7480	703
141-2240	701
141-4044	714
141-4123	662
141-4852	554
	556
	558
141-4976	257
142-2328	598
142-8540	315
142-8620	641
142-8858	667
	670
142-9425	450
142-9426	450
142-9427	450
142-9429	450
142-9430	450
142-9431	450
142-9432	450
142-9433	450
142-9434	450
142-9435	450
142-9436	450
142-9437	450
142-9438	450
142-9439	450
142-9440	450
142-9643	598
143-1288	722
	725
143-6020	208
143-7052	516
	518
143-7397	469

▶ PRIMARY REFERENCE

PART NUMBER INDEX

Part	Page
143-9392	163
	164
144-0195	627
	738
	741
144-0331	647
	649
144-0367	115
	495
144-4284	302
144-5573	432
144-7878	302
145-0326	734
	736
145-0905	436
145-0909	447
145-1077	▶447
	448
145-1833	447
145-2334	554
	556
	558
145-3405	708
145-5181	501
	503
145-6669	123
145-7028	155
	▶227
	246
145-7328	741
145-8355	495
145-8741	758
146-6315	554
	558
146-6317	554
	558
146-6669	272
146-6670	272
146-6747	764
	765
146-8477	556
146-8479	556
146-8981	556
147-0319	▶183
	186
	187
	189
	192
	195
	198
	202
147-1444	699
147-1445	654
147-1446	654
147-3150	246
147-5088	98
147-6603	571
147-6604	571
147-6605	571
147-7976	▶692
	758
147-7979	▶693
	758
148-1928	298
148-2903	135
148-8305	485
	493
148-8316	485
148-8318	76
	291
	485
148-8325	76
	485
	489
148-8326	485
	489
	491
	493
148-8327	82
	438
148-8328	438
148-8333	438
148-8335	291
148-8336	76
	291
	485
	491
	493
	528
	608
148-8339	82
	439
148-8340	76
	608
148-8342	439
148-8347	106
	439
	495
148-8351	485
148-8353	439
148-8354	76
148-8361	493
	495
148-8364	136
148-8366	439
148-8367	486
	491
	493
148-8368	292
	486
	489
	491
148-8369	76
	486
	489
	491
148-8372	136
	439
148-8374	76
	136
	292
148-8378	76
	132
	439
	486
	489
	491
	493
	495
148-8381	292
148-8382	82
148-8391	470
	472
148-8395	28
	45
148-8405	45
148-8407	45
	275
	456
148-8408	55
148-8409	452
148-8410	443
	452
148-8411	92
	275
	608
	634
148-8417	439
148-8426	292
148-8434	486
148-8435	76
	486
148-8449	439
149-2494	391
	393
	394
149-2495	393
	394
149-3137	654
149-5240	135
149-5470	554
	556
	558
149-5933	423
149-9818	256
150-1293	554
150-3026	136
150-3065	292
150-4027	251
150-4033	439
150-4043	608
150-4047	493
150-4049	439
150-4086	257
	698
151-0254	758
151-0255	758
151-0256	758
151-1398	211
151-2939	20
151-5803	647
151-6689	192
	195
	202
151-9275	647
152-3421	372
	373
152-8071	395
	396
152-8427	▶186
	192
	195
153-1277	123
153-2073	▶184
	198
153-4247	324
153-4906	28
	141
153-5043	227
153-5044	350
	373
153-5710	161
153-6243	292
153-6244	439
153-6246	439
	486
	495
153-6251	470
	472
153-6252	292
153-6260	495
153-6281	161
153-6976	541
	545
	547
153-7067	538
	541
	545
	547
153-7549	538
	549
153-7550	538
	549
153-7551	541
	545
	547
153-7553	538
	549
154-3172	156
154-3358	44
154-5629	657
155-2255	156
	176
	178
	251
	252
	256
	257
	491
	654
	677
	741
155-2257	251
	252
	256
	257
	491
155-2260	34
	156
	218
	219
	223
	244
	246
	251
	252
	256
	257
	608

▶ **PRIMARY REFERENCE**

PART NUMBER INDEX

Part	Page	Part	Page	Part	Page	Part	Page
	668		677	159-8108	657	161-3398	118
	671		741	159-8109	657	161-3406	9
	677	155-2276	223	159-9257	667		10
	682	155-3624	45		670		11
	699		531	159-9854	450		12
155-2261	554		533	160-0496	260		13
155-2265	180		535		261		▶23
	244		608	160-0526	19	161-3411	118
	246	155-5161	319	160-0766	468	161-3424	54
	252	155-8577	360		▶554	161-3615	▶645
	668	156-0214	435	160-1431	708		653
	671	156-4406	302	160-1432	708	161-3616	467
	741	156-4593	284	160-1433	708		▶674
155-2270	34		286	160-1434	708	161-3958	711
	155	156-5342	350	160-1435	708	161-3963	654
	156		431	160-1437	654	161-3964	654
	174	156-5545	623	160-2351	360	161-4024	657
	180	156-5970	462	160-2443	▶216	161-5967	663
	187		573		708	161-6041	654
	189	156-7410	657	160-4103	432	161-6149	461
	192	157-0670	93	160-4702	643		562
	195	157-1361	667		653		570
	198	157-2741	670	160-5804	682	161-6154	434
	202	158-0248	183	160-6305	588		537
	211		184		590	161-6161	461
	241	158-0250	183	160-6306	575		562
	244		184	160-7165	731		570
	246	158-0252	183		732	161-6963	128
	251		184		▶734		130
	252	158-2336	260	160-7186	730	161-9289	733
	256		261		▶732	161-9926	155
	257	158-2734	647	160-7689	246		▶218
	273	158-2735	647		251	162-2166	391
	485	158-6072	128		256		393
	491		130		654		394
	554	158-6632	155		699	162-3148	112
	608		▶242	160-7690	176	162-5357	▶443
	628		256		178		454
	641	158-7690	629	160-7820	395	162-5358	443
	668		▶741		396	162-7862	391
	671	158-7694	▶629	160-8184	44		393
	679		630	160-8194	54		394
	680	158-7695	629	160-8197	54	162-8284	530
	682		▶675	160-8199	54	162-9523	292
155-2271	156	158-7696	629	160-8499	434	162-9997	516
	176		▶631	161-1083	675		518
	178	158-7697	631	161-1084	675	163-1135	736
	251	158-7864	764	161-1085	675	163-1146	734
	252		766	161-1091	675	163-2437	66
	256	158-8906	675	161-1092	675	163-2445	65
	257	158-9956	509	161-1093	675	163-2447	59
	491		▶537	161-1094	675	163-2459	65
	654	159-0827	438	161-1096	675	163-2478	28
	668	159-1503	686		▶677	163-5512	554
	671	159-2950	729	161-1097	677		556
155-2274	156		▶731	161-1098	675		558
	166	159-3781	554	161-1099	677	163-5671	538
	174		558	161-1703	220		549
	246	159-4712	667	161-1704	222	164-0403	385
	251		670	161-1705	221	164-0406	▶385
	252	159-7943	657	161-2684	541		390
	257	159-7946	657		545	164-0758	711
	654	159-7948	657		547	164-0847	667
	668	159-7949	657	161-2685	538		670
	671	159-8047	246		549	164-0938	538

▶ **PRIMARY REFERENCE**

PART NUMBER INDEX

Part	Page	Part	Page	Part	Page	Part	Page
	549	165-9100	708	167-7715	459	170-3399	639
164-1234	736	165-9102	708	167-7751	651	170-3461	256
164-2108	86	165-9103	708	167-8610	703	170-3793	246
	323	165-9104	708	167-8712	699	170-3795	155
	463	166-0211	438	167-8987	251	170-4001	538
164-3651	526	166-1784	4	167-9524	86		549
164-4180	275		5		323	170-4891	608
	545		6	168-1969	439	170-5849	174
	549		7	168-2599	501		657
164-4531	623		8		503	170-5854	631
164-4611	385		▶49	168-7211	54	170-5855	631
164-4883	706	166-1790	4	168-8376	14	170-7694	340
	707		5		▶90		342
164-5567	292		6	168-8377	14	170-8590	716
	439		7		▶114	170-8592	360
	486		8	168-8378	14	171-0808	407
164-5570	136		▶63		▶93	171-1230	722
164-5590	486	166-1792	4	168-8656	198		725
164-5619	565		5	168-8783	14	171-2438	697
164-5669	65		6		▶638	171-3054	520
164-5798	151		7	169-1026	725	171-3055	520
164-6148	9		8	169-1838	104	171-3057	520
	10		▶64	169-1840	▶104	171-3058	520
	11	166-2153	721		106	171-3059	520
	12	166-2287	385	169-2876	763	171-3060	520
	13		386		765	171-3061	520
	▶20		387	169-3796	103	171-3068	520
164-6963	646		389	169-3797	101	171-5349	225
164-7556	185	166-3648	54	169-3798	101	171-5989	520
164-7577	▶238	166-3733	677	169-3799	101	171-6682	722
	263	166-3777	643	169-3800	101		725
164-7677	533	166-5229	251	169-3801	101	171-7077	644
	535		256	169-3806	14	171-8772	573
164-7678	531		654		▶469	172-0962	▶366
164-9541	708	166-6781	734	169-3812	101	172-0964	▶349
164-9657	554	166-6928	667	169-3821	469	172-0967	349
164-9928	468		670	169-3822	469	172-2391	462
164-9929	670		▶690	169-3826	106	172-2392	445
164-9930	468	167-0024	24	169-3883	114		▶462
165-2273	686	167-0168	79	169-3895	64	172-2416	722
165-2577	720	167-0172	118	169-3899	63		725
165-4445	4	167-1177	467	169-4368	▶407	172-4860	256
	5		▶556		431	172-4863	211
	6	167-1530	667		433	172-4864	155
	7	167-1884	187	169-6902	710	172-4868	195
	8		189	169-7380	734		202
	▶118		192		736	172-4869	189
165-4459	4		195	169-7451	528		192
	5		198	169-9635	741		195
	6		202	169-9636	677		202
	7	167-1950	391	169-9637	629	172-5291	643
	8	167-1951	391		630	172-5989	639
	▶53	167-1952	391		▶697	172-6062	244
165-4461	4	167-2171	189	169-9639	656	172-9981	474
	5		202	169-9649	▶738	173-0511	538
	6	167-2201	474		740		541
	7		476	169-9650	738		543
	8		478	170-0251	711		545
	▶92	167-2208	480	170-0260	667		547
165-4854	319	167-2312	474	170-0792	391		549
165-6779	708		476	170-1112	623	173-0512	538
165-6857	711		478	170-1114	623		549
165-6946	372	167-2319	480	170-1115	623	173-0514	541
	373	167-2323	424	170-3357	509		543
165-6969	520	167-6805	448		▶562		545

▶ **PRIMARY REFERENCE**

PART NUMBER INDEX

Part	Page	Part	Page	Part	Page	Part	Page
	547	175-3616	87		718	185-2645	149
173-0515	538	175-3721	46	180-6692	348	185-2647	149
	549	175-3950	667	180-6693	348	185-2648	149
173-0946	313		670	180-6694	348	185-2650	149
173-1028	▶623	175-4291	185	180-6695	101	185-2651	149
	722	175-4292	185	180-6696	101	185-2653	149
	725	175-4393	667	180-7304	▶725	185-2654	149
173-1566	256	175-4972	▶445		727	185-2655	149
173-1852	▶348		454	180-7910	286	185-2658	149
173-2052	705	175-5058	624	180-9236	679	185-3159	19
173-3083	727	175-6260	4	180-9340	219	185-3503	454
173-3283	725		5	183-1961	195	185-3533	667
173-3993	538		6	183-1982	195		670
	541		7	183-2097	4	185-3666	711
	543		8		5	185-6393	234
	545		▶44		6	185-9607	189
	547	175-7162	679		7		202
	549		682		8	186-0636	198
	608	175-7900	474		▶69	186-3735	146
173-5787	731	176-0259	454	183-2317	28		148
	732	176-5321	▶86	183-3399	79		156
	733		87		81		167
173-7035	731	176-5913	65		141		180
	732	176-5914	65	183-3401	139		182
	733	177-1044	97	183-3406	55		187
173-7225	493	177-1050	98		132		189
173-9779	476	177-1056	98		608		192
	478	177-1862	716	183-3407	28		195
173-9815	679	177-1863	722		141		198
173-9816	679		725	183-3408	55		202
174-0503	246	177-4937	724	183-4273	679		217
	251		727		682		225
	252	177-6979	▶435	183-4274	246		238
	654		438	183-7263	538		240
174-1495	641	177-9653	166		541		243
174-2231	▶663	177-9656	166		545		246
	734		251		547		256
174-2237	663		257		549		435
174-3091	649	178-0603	▶722	183-8395	457		554
	650		724	183-8398	457		573
174-3847	53	178-0606	▶724	183-8410	459		647
174-4590	763		732	183-9374	51		649
	765		733	184-0982	701		650
174-4909	443	178-2357	144		711		667
	▶463	178-3003	670	184-1503	730		670
174-5415	122	178-7877	556	184-2298	722		679
	123	178-7907	705		725		682
174-7412	91	179-6151	590	184-2299	722		694
174-7414	▶91	179-6152	588		725		695
174-7599	132		590	184-3269	730	186-3736	241
174-7875	155	179-6153	588	184-3270	730	186-4857	738
174-7876	156		590	184-3285	711	186-4998	708
174-9169	230	179-6162	590	184-3289	711	186-5097	670
174-9198	▶622	179-6401	668	184-5498	151	186-5099	670
174-9199	▶622		671	184-6011	▶727	186-5107	624
174-9570	132	179-8128	144		731		736
	▶134	179-9387	▶464	184-7211	72	186-6189	679
175-0451	192	180-3907	275	184-8060	708		682
	195	180-4362	292	185-0838	57	187-0541	562
175-0452	192	180-5737	211	185-0844	93	187-1315	27
175-0454	21	180-6152	554	185-0845	93	187-3523	275
175-1349	667		556	185-2076	711	187-3961	93
	670		558	185-2638	149	187-3974	76
175-2166	268	180-6213	522	185-2639	149	187-7719	670
175-3514	608	180-6600	717	185-2644	149	187-8001	448

▶ **PRIMARY REFERENCE**

PART NUMBER INDEX

Part	Page
187-8191	574
187-8194	44
187-8195	44
187-8222	44
187-8971	62
187-8984	98
187-9194	523
188-0908	284
	286
	▶313
188-1012	636
188-1013	636
188-1017	49
188-1079	645
	▶646
188-2892	554
188-3034	106
188-3826	9
	10
	11
	12
	13
	▶88
188-7067	452
188-7068	452
188-7069	452
188-7568	434
188-7569	434
188-7790	434
188-7791	434
188-7800	434
188-8849	183
	184
188-8855	272
188-9637	522
188-9644	205
	252
189-0985	617
189-1839	462
189-3032	432
	433
189-5358	697
189-5576	76
189-5577	76
189-5586	103
189-5587	103
189-5588	103
189-5746	▶225
	246
189-6123	697
189-9306	4
	5
	6
	7
	8
	▶61
190-2277	288
190-2278	270
	▶272
190-3562	24
190-5149	327
190-5386	763
	765
190-6114	53
190-6115	28
190-6117	28
190-7515	93
190-7613	156
	251
	252
	256
190-8609	424
190-8970	132
191-1782	132
191-1783	132
191-2933	733
	▶736
191-4457	92
191-5439	526
191-7823	244
191-8304	302
191-8305	302
191-8920	556
	558
191-8921	554
	558
192-0729	76
	▶87
192-3016	▶656
	701
192-3017	656
192-3018	656
192-7752	736
192-7755	736
192-7760	736
192-7767	736
192-7783	736
192-7787	736
192-7790	736
192-7795	736
192-7799	736
192-7805	736
192-7810	736
192-7812	736
192-7820	736
192-7822	736
192-7848	736
192-9734	180
193-3356	667
193-3359	667
193-3973	156
193-5116	120
	121
193-7377	656
193-8570	232
194-0935	588
194-0936	588
194-1466	670
194-2903	686
194-3708	721
194-5031	554
194-5032	558
	▶560
194-5033	554
	556
	558
	▶561
194-5171	758
194-5226	223
194-5227	223
194-6725	139
	▶219
194-7034	708
194-8031	659
195-0452	75
195-4989	187
195-7430	573
195-7882	90
195-8098	9
	10
	11
	12
	13
	▶84
196-4233	▶434
	448
196-4251	457
196-4253	457
196-4254	457
196-5515	558
196-6838	139
196-9445	457
196-9654	244
196-9852	256
196-9858	106
197-0668	155
197-4640	438
197-6280	▶173
197-6281	173
197-7310	327
197-7447	178
197-7565	251
	256
197-7689	734
197-8393	215
	▶220
197-8394	215
	▶221
197-8419	79
	81
197-8820	▶149
	153
197-9367	54
197-9392	54
198-0921	4
	5
	6
	7
	8
	▶85
198-1319	4
	5
	6
	7
	8
	▶75
198-1883	278
198-3462	275
198-4410	268
198-5389	180
198-6574	718
198-6575	718
198-8858	327
198-9219	438
	▶460
198-9220	460
	▶461
198-9706	657
	668
	671
	701
198-9707	668
	671
199-6609	556
199-7834	558
199-7891	149
199-8436	149
199-9102	552
200-0189	▶558
	653
200-0750	▶465
	485
200-3174	728
	▶733
200-4495	43
200-5003	558
200-6179	516
	518
201-0781	438
201-0782	438
201-0950	509
	527
	▶573
	608
201-1260	115
201-2557	327
201-3304	554
201-5382	450
201-7269	▶452
	454
201-7274	▶454
	528
201-9127	556
201-9624	654
202-0599	558
202-0971	457
202-1214	552
202-2333	448
	▶457
202-2339	457
202-2340	436
202-2341	457
202-2342	459
202-2343	457
202-2344	457
202-2791	457
202-4303	393
202-4304	▶393
	432
	433
202-4327	256
202-6614	185
203-2070	641
203-2288	270
203-2789	291
	438

2

▶ **PRIMARY REFERENCE**

PART NUMBER INDEX

Part	Page	Part	Page	Part	Page	Part	Page
	686	208-0375	711	212-4936	127	215-3296	57
203-3940	226	208-4622	153	212-5839	36	215-3662	189
203-5805	21	208-8699	1	212-5844	36	215-4441	16
203-6090	21		▶704	212-7002	21	215-9801	708
203-6415	▶390	208-8705	1	212-8917	25	216-0029	520
203-6440	▶390		▶717	212-8926	▶65	216-0273	288
203-7703	731	208-8706	634		66	216-0349	636
	732		▶718	213-1308	307	216-4591	268
	733	208-9282	75		▶528	216-5586	21
203-7775	118	208-9619	30	213-1724	93	216-6202	270
204-1455	436	208-9647	651	213-2282	501	216-6371	264
204-2281	151	209-0381	256		503	216-7877	34
	257	209-0760	18	213-3190	54	216-8585	466
204-2581	740	209-0762	18	213-4363	9	217-0609	28
204-4444	19	209-2152	588		10	217-2293	264
204-6101	668		590		11	217-3655	351
	671	209-3171	141		12		352
204-6102	668	209-3172	141		13		354
	671	209-3565	457		▶37		355
204-6499	270	209-5113	▶661	213-4502	198	217-5199	92
204-6501	273	209-6630	246	213-4504	198	217-5200	92
204-6502	324	209-6692	98	213-4540	273	217-5701	19
204-8000	256	209-7193	268		▶324	217-6887	500
204-8758	464	209-7290	69	213-6657	558	217-7933	716
	465	209-7293	88	213-6658	554	217-8433	666
204-9530	641	209-8423	161	213-6659	556	217-8669	9
204-9531	641		▶234	213-7064	▶720		10
204-9532	641	210-0091	270	213-7315	667		11
205-0626	149	210-1747	215		670		12
205-1320	43		▶222	213-8516	75		13
205-1321	9	210-2262	716	213-9320	▶59		▶18
	10	210-2263	716		65	217-9049	722
	11	210-2266	716	214-0783	▶624	218-0404	180
	12	210-2270	▶716	214-0784	624	218-0861	722
	13		722	214-1109	411	218-1835	1
	▶43		725		416		▶337
205-2203	711	210-4458	319		421	218-1836	1
205-5285	16	210-5522	84	214-1196	▶728		▶351
205-5314	268	210-9096	▶97	214-1197	634	218-1839	1
205-6388	724		99		▶729		▶344
	727	210-9097	97	214-1645	114	218-1841	1
205-7205	273		▶98	214-3573	264		▶345
205-7331	708	211-0220	657		268	218-1843	1
205-8257	180	211-0546	84	214-4208	211		▶146
205-8674	▶109	211-1044	153		251	218-2373	463
	110	211-1812	4		256	218-4160	76
205-8681	110		5		667	218-4982	3
205-8900	192		6		670		▶431
206-2800	558		7	214-5705	57	218-7136	649
206-3719	61		8	214-7567	224	219-0305	634
206-5017	132		▶99	214-7568	79		764
206-5162	180	211-2134	28		81		766
206-5165	180	211-5358	736		141	219-2391	647
206-8836	▶386	211-6807	244	214-8976	763	219-2893	608
	390	211-8041	4		765	219-3305	93
206-8837	386		5	214-9080	424	219-4481	299
206-9000	14		6	214-9389	173	219-6314	180
	▶110		7	214-9408	270	219-8666	4
207-0544	395		8	214-9492	153		5
	396		▶30		636		6
207-1556	▶232	211-9085	278	215-1488	▶113		7
	235	211-9087	278	215-1490	113		8
207-7899	531	211-9294	736	215-3249	244		▶46
	533	212-1336	440	215-3251	14	219-8675	49
	535	212-2301	308		▶33	219-8681	4

PART NUMBER INDEX

Part	Page	Part	Page	Part	Page	Part	Page
	5		6	223-8173	211	226-0337	670
	6		7	224-0672	763	226-0936	34
	7		8	224-0821	32	226-1224	516
	8		▶19		▶76		518
	▶39	222-2209	758	224-0881	408		▶522
220-0230	156	222-2409	4	224-2228	139	226-1227	522
220-0771	234		5	224-2693	14	226-1292	432
	235		6		▶67	226-1335	376
220-1403	▶301		7	224-2694	67	226-1340	424
	321		8	224-2695	51	226-2333	612
220-1411	302		▶38	224-2791	644	226-3400	▶721
220-1418	291	222-3901	97		▶708	226-3492	136
	▶326	222-7094	89	224-2793	307	226-3493	485
220-1429	307	222-7095	89		▶644	226-3496	485
	▶321	222-7877	256	224-3247	15	226-3497	485
220-1952	23	222-7883	256	224-3981	101		493
	▶24	222-7885	187	224-4013	101	226-3498	485
220-2800	1		189	224-4120	432	226-3505	485
	▶711		192	224-4121	374	226-3510	489
220-2810	634		195		376		491
	▶701		198	224-4123	432	226-3511	489
220-4324	273		202	224-4124	374		491
	▶323	222-8667	3	224-4357	629		493
220-8233	9		▶431		▶758	226-3908	310
	10	222-9151	57	224-4449	▶616	226-3910	310
	11		700	224-4454	▶614	226-4462	264
	12	223-0556	14		616	226-4464	264
	13		▶51	224-4536	▶223	226-4751	485
	▶141	223-0558	14		224		▶509
220-8678	134		▶235	224-4998	631	226-4909	151
221-0144	84	223-0647	▶408	224-5000	631	226-4911	151
221-0877	270		431	224-5530	▶217	226-5954	347
221-3197	374		432		708	226-5955	346
	376		433	224-6829	758	226-6584	495
	378	223-0652	▶374	224-7830	764	226-7269	423
	380		431		766	226-7298	483
	432	223-0656	▶376	224-9072	714	226-7299	483
	433		431	224-9222	256	226-7473	163
221-3200	374	223-0659	374		683		164
	376		376	224-9450	▶647		▶165
	378		378		654	226-7810	507
	380		380	225-0312	763	226-7906	507
	432		▶424	225-0313	764	226-7924	507
	433		432		766	226-8206	500
221-3248	▶21		433	225-1506	▶277	226-9169	207
	24	223-1540	1		307	226-9423	647
221-3342	▶270		▶360	225-2412	82	226-9622	323
	321	223-1541	360	225-3281	474		463
221-3450	▶694	223-1677	629		476	226-9629	86
	758		▶679		478	226-9663	256
221-3451	▶695	223-1678	626	225-3284	480	226-9665	257
	758		▶682	225-4134	653	226-9666	667
221-3494	79	223-1679	1	225-4135	653		670
	81		▶136	225-4256	764	226-9668	485
	141	223-1680	629		766	226-9670	155
221-5461	▶45		630	225-4257	763	226-9671	155
	46		▶686	225-6363	326	226-9673	654
222-0345	724	223-2205	1	225-8026	509	226-9674	▶211
	727		▶730		▶570		257
222-1150	482	223-3313	653	225-8553	211	226-9675	211
	▶653	223-4296	178	225-8558	327	227-0165	▶300
222-1160	482	223-5098	100	225-9480	▶710		307
	▶564	223-5111	103		711	227-0831	564
222-1783	4	223-5365	146	226-0293	670		▶565
	5	223-8076	327	226-0336	654	227-0833	14

▶ **PRIMARY REFERENCE**

PART NUMBER INDEX

Part	Page	Part	Page	Part	Page	Part	Page
	▶101	229-0887	764		▶604		588
227-0835	101		765	230-5585	14		590
227-0836	101	229-1494	724		▶72	233-9135	480
227-0841	▶478	229-2913	▶128	230-5974	438	233-9138	480
	575		129	230-7699	351	234-0203	75
227-0842	▶476	229-2914	128	230-7700	351	234-1494	95
	616	229-5354	647		354	234-1496	95
227-0844	470	229-5421	▶466	230-7887	478	234-2869	608
	472		482	230-7892	478	234-3043	565
	▶474	229-6635	628	230-9796	72	234-3425	608
227-0912	211	229-6640	710	231-0336	440	234-3451	565
227-0924	277	229-7373	▶369	231-0858	151	234-4319	350
	▶278		431	231-1271	682	234-5846	198
227-1200	25		432	231-1345	136	234-7526	81
227-1226	▶166		433	231-1972	10	234-9670	▶428
227-1228	▶180	229-8352	371		11		431
227-1229	▶161	229-9281	45		12	234-9671	▶428
227-2451	264	229-9323	371		▶163	234-9672	▶403
227-3149	360	229-9556	387	231-1978	4		428
227-3151	360	229-9557	387		5		429
227-4002	244	229-9558	389		6		430
227-4005	▶470	229-9559	389		7	234-9675	▶428
	577	229-9560	▶387		8		431
	579	229-9570	▶389		▶215	234-9676	▶429
	581	229-9601	119	231-4166	291	234-9678	▶404
	583	230-1340	176		▶312		428
227-4006	▶472		178	231-4167	312		429
	577	230-1341	763	231-4382	337		430
	579	230-3615	136	231-4384	329	234-9679	▶397
	581	230-4013	252	231-4385	330		398
	583	230-4118	4	231-4386	330		403
227-4303	470		5	231-4387	330		404
227-4304	472		6	231-4390	344	234-9681	▶398
227-5054	626		7	231-5969	▶264		403
	717		8		307		404
227-5055	626		▶68	231-5990	▶268	234-9699	397
227-5056	718	230-4119	68		307		401
227-5058	704	230-4700	629	231-8855	302		403
227-5059	704		630	232-0343	139		404
227-5904	141		▶714		▶145		405
	144	230-4872	476	232-1133	95		428
227-6656	345	230-4873	476	232-1240	1		429
227-8715	▶390	230-4876	474		2		430
	431	230-5008	208		▶95	234-9704	428
227-8802	351		252	232-1318	151	234-9705	428
	354	230-5009	691	232-1398	95		429
227-9304	340	230-5106	679	232-3402	211	234-9970	▶209
227-9305	340		682	232-6411	319		612
227-9306	342	230-5385	628	232-7583	638	234-9994	302
227-9307	337	230-5388	▶628	232-7586	638	235-0399	531
227-9310	340		714	233-0423	4		533
	342	230-5553	▶581		5		535
228-1850	528	230-5554	581		6	235-0403	533
228-3323	252		582		7		▶538
228-3621	38		▶588		8	235-0404	533
228-4051	718	230-5555	▶501		▶41		▶541
228-4052	718		581	233-0668	317	235-0541	367
228-4093	369		582	233-0891	163	235-0544	367
228-4678	369	230-5556	594		164	235-0545	367
228-5897	144		▶598	233-4656	513	235-0588	447
228-6089	630		602	233-4846	350	235-0892	523
	668	230-5557	▶594		431	235-0895	523
	671		604	233-5216	95	235-0907	523
228-6787	675	230-5558	581	233-6942	493	235-4157	▶417
228-7854	▶626		582	233-9134	▶480		421

▶ PRIMARY REFERENCE

PART NUMBER INDEX

Part	Page	Part	Page	Part	Page	Part	Page
235-4511	291	237-0052	211	237-9254	122	240-0041	16
235-4513	291	237-0053	211		123	240-0768	162
235-4514	291	237-0204	701	237-9255	122	240-3464	▶205
235-4515	291		711		123	240-3469	205
235-4516	291	237-0205	701	237-9318	▶367	240-3470	205
235-4587	171		711	237-9601	302	240-4717	351
235-4605	527	237-0225	211	238-0251	346		352
	▶574	237-0229	42		347		354
235-4826	291	237-0336	699	238-0303	156		355
235-5812	▶283	237-0934	628	238-0451	350	240-6902	246
	291	237-0956	628		▶422	240-7356	572
235-5974	▶410	237-0984	136		431	240-8317	156
	431	237-0985	136	238-0452	422	240-8321	161
	432	237-1000	626	238-0453	422	240-8613	643
	433		▶639	238-1029	▶263		▶650
235-6336	▶187	237-1962	234		283	240-8917	211
235-6337	▶189		▶236	238-1116	4	240-9755	103
235-6338	▶192	237-2041	10		5	241-0037	260
235-6339	▶195		12		6		261
235-6340	▶198		▶129		7	241-0542	82
235-6529	76	237-2209	302		8	241-2501	146
235-8180	▶499	237-2568	1		▶275	241-2756	101
	616		2	238-1117	275		▶103
235-8202	244	237-2708	1	238-1177	▶334	241-3352	283
235-8203	4		2	238-1178	334	241-3718	4
	5	237-2732	340	238-2014	211		5
	6	237-2734	342	238-2709	54		6
	7	237-2737	14	238-2840	275		7
	8		▶126	238-4520	408		8
	▶244	237-2738	126	238-5017	180		▶42
235-8805	616	237-3943	736	238-7793	643	241-3719	4
	▶617	237-3970	▶625	238-8270	643		5
235-9651	142		736	238-9166	423		6
236-2218	345	237-4132	209	238-9559	▶513		7
	▶346	237-4133	209		577		8
236-2219	345	237-4134	209		579		▶73
	▶347	237-4135	209		581	241-3720	374
236-2624	346	237-4213	105		583		376
236-5131	682	237-4214	1	239-1134	230		378
236-5132	679		2		▶243		380
	682		▶105	239-2247	643		432
236-5197	716	237-4240	155	239-2385	467		433
236-5474	347	237-4266	711		▶643	241-4167	764
236-6220	215	237-4268	711	239-3354	211		766
	▶224	237-4269	711	239-3355	257	241-4194	230
236-6221	215	237-4270	711	239-3686	14	241-4287	763
	▶226	237-4956	88		▶119		765
236-6742	76	237-5176	92	239-3902	166	241-4342	701
236-6743	76	237-7252	209	239-5103	696		711
236-7241	▶352	237-7308	187	239-5113	711	241-4343	711
236-7315	4		189	239-5120	171	241-4344	701
	5		192		▶206		711
	6		195	239-5235	608	241-4345	711
	7		198	239-5317	493	241-4346	711
	8		202		▶527	241-4348	711
	▶40		246	239-5318	527	241-4349	711
236-8191	51	237-7552	612	239-6074	533	241-4353	14
236-8239	56	237-9140	206		▶543		▶111
236-8240	282		▶696	239-6986	332	241-4354	111
236-8826	205	237-9250	121	239-7392	257	241-4981	57
	251		▶122	239-7854	153	241-5634	291
237-0048	211	237-9251	120	239-8107	211	241-5635	291
237-0049	211		▶123		257	241-6215	132
237-0050	211	237-9252	122	239-8155	156		438
237-0051	211		123	239-9271	612		485

▶ **PRIMARY REFERENCE**

PART NUMBER INDEX

Part	Page
241-6498	344
241-6499	344
241-6919	344
241-7913	657
241-7917	701
241-7919	657
	701
241-8240	14
	▶636
241-8368	211
	▶241
241-8382	28
241-8383	28
241-8384	28
241-8385	28
241-8386	28
241-8387	28
241-8388	25
241-8390	28
241-8474	52
241-8475	50
242-0328	60
242-0329	▶60
	65
242-0447	9
	10
	11
	12
	13
	▶66
242-0672	9
	10
	11
	12
	13
	▶27
242-0673	15
242-0674	9
	10
	11
	12
	13
	▶15
242-1584	180
242-1585	166
242-3282	180
242-3360	128
	130
242-3864	69
242-5200	643
242-7090	251
242-8397	629
	630
	▶657
242-8398	207
242-8399	207
242-8403	657
242-8404	657
242-8405	711
242-8407	711
242-8409	206
	▶207
243-1171	657
243-1588	114
243-1589	114
243-1590	114
243-5168	711
243-5170	711
244-1716	659
244-2616	▶288
	321
244-4500	41
244-5891	66
244-6110	378
	380
245-3261	48
245-3262	9
	10
	11
	12
245-4230	505
245-4231	505
245-4630	226
245-4747	612
245-7339	61
245-7350	522
245-7725	171
245-8334	700
245-8456	763
	765
246-0596	4
	5
	6
	7
	8
	▶112
246-0597	112
246-0598	4
	5
	6
	7
	8
	▶52
246-0599	4
	5
	6
	7
	8
	▶282
246-0600	4
	5
	6
	7
	8
	▶50
246-0601	4
	5
	6
	7
	8
	▶74
246-0602	4
	5
	6
	7
	8
	▶56
246-0605	4
	5
	6
	7
	8
	▶16
246-2641	136
	146
	329
	337
	344
	360
	526
	634
246-3150	20
246-4311	257
246-5083	19
246-5140	429
246-5203	430
246-5215	▶429
246-5216	▶429
246-5217	▶430
246-5218	▶430
246-5804	447
246-5960	205
246-5961	205
246-6036	79
	81
246-7899	74
246-9365	9
	13
	▶164
247-2959	298
247-6875	764
	766
247-6876	763
247-6877	764
	766
247-6878	763
248-0848	288
248-0849	288
248-1500	612
248-2336	601
	602
248-5358	699
248-5513	92
248-6862	187
	190
	193
	196
	198
	203
	246
248-6974	174
248-6979	174
248-8866	711
249-0159	69
250-1911	90
250-3413	▶363
250-4628	706
	707
250-6052	115
250-6053	115
250-6054	115
250-6056	14
	▶108
250-7533	115
250-8466	298
250-9286	119
250-9290	110
251-0061	115
251-1198	668
251-3600	34
251-3626	34
251-4160	174
251-4162	174
251-4345	230
251-4553	14
	▶115
251-6112	▶577
251-6113	▶578
251-6120	▶582
251-6128	▶579
251-6129	▶580
251-7214	115
251-7591	699
251-8202	588
	590
251-8203	586
	587
	588
	590
251-8248	174
251-9814	▶575
	577
	578
	579
	580
251-9815	575
251-9816	575
251-9817	575
251-9818	577
	578
	579
	580
	▶603
251-9819	▶593
	603
251-9820	593
251-9827	603
251-9828	575
251-9829	603
251-9830	577
	578
	▶586
251-9831	586
251-9832	586
	587
251-9834	575
251-9835	585
	586
251-9836	586
	587
251-9840	505
251-9841	505
252-0063	668
	671
252-1567	4
	5
	6
	7

▶ PRIMARY REFERENCE

PART NUMBER INDEX

Part	Page	Part	Page	Part	Page	Part	Page
	8		246		355	262-0554	▶350
	▶55	254-9136	172	258-6949	352	262-1408	257
252-4501	668	254-9951	172		355	262-1421	▶169
	670	255-0939	213	258-7132	354		176
252-4915	638		214	258-7597	▶362		178
252-5165	▶130	255-1137	357	258-7607	362	262-2027	14
	131		358	258-8798	382		▶57
252-5849	▶503		359		▶391	262-2029	32
	583	255-1138	357	259-1289	367		▶34
	584		358	259-1291	367	262-2030	34
252-5853	583		359	259-1292	367	262-2031	34
	584	255-1139	357	259-2093	257	262-2870	130
	▶590		358	259-3119	▶299	262-2878	165
252-5854	▶583		359		307	262-5901	9
252-5855	▶584	255-5210	330	259-4397	167		11
252-5856	583	255-5232	14	259-4399	167		13
	584		▶106	259-4746	208		▶131
	▶605	255-6387	329		▶703	262-6796	355
252-5857	▶595	255-6406	329	259-5829	28	262-7661	340
	605	255-6934	▶260	259-9250	634	262-7662	342
252-5858	595		291	260-1914	628	263-0853	▶82
	▶600	255-6936	▶261	260-2017	528	263-2601	718
	601	255-8674	66	260-3208	352	263-2915	37
252-6945	171	255-8951	579	260-3799	230	263-3346	291
	▶699		580	260-4856	28	263-3348	291
252-8438	▶25		▶587	260-6479	608	263-3464	79
	28	255-8952	▶585	260-6642	284		81
252-8439	27		587	260-6644	286	263-4081	273
	▶28	255-8954	▶505	260-6649	▶284	263-5030	▶151
252-8744	612		577		307	263-5031	151
	613		578	260-6652	▶286	263-5792	146
252-9203	512		579		350	263-7419	▶202
252-9628	213		580	260-7524	59	263-7724	337
	214	256-2941	120		60		▶340
253-0395	▶390		121	260-7733	374	263-7725	337
253-0459	34	256-2942	▶120		376		▶342
253-0861	761	256-2943	▶121	260-8590	543	263-7731	139
	762	256-6020	▶423		▶572	263-7805	639
253-1346	374	256-6021	▶327	260-9187	291	263-7821	19
	376		423	261-0420	251	263-8976	433
	378	256-6024	423	261-1544	20	263-8977	433
	380	256-7285	367	261-3077	▶378	263-8978	433
	432	256-7286	367		431	263-9012	14
	433	256-7780	357	261-3080	▶380		▶230
253-1450	▶763		358		431	263-9088	176
253-2673	435		359	261-3083	378		178
253-5369	108	256-7781	358	261-3087	380		▶213
253-8329	213	256-7782	357	261-3156	340	263-9949	291
253-8967	209		358		342		▶298
253-8969	209		359	261-3162	74	263-9950	298
253-8981	209	256-7789	251	261-3222	167	264-0168	332
254-1686	374	256-9988	▶280	261-3223	174	264-2014	4
	376	257-2696	▶354	261-3224	167		5
	378	257-2698	▶355	261-3226	▶167		6
	432	257-5029	628		174		7
	433	257-5858	79	261-3257	374		8
254-5524	93		81		376		▶139
254-8108	82	257-9788	523		378	264-3177	170
254-8155	▶185	258-2303	360		380	264-3883	493
	187	258-2305	332	261-3864	337	264-5352	82
	189	258-2307	360	261-3865	340	264-5732	244
	192	258-2355	764	261-5694	705	264-6156	66
	195		765	261-6769	▶382	264-6816	340
	198	258-5035	151	261-7990	257	264-6817	342
	202	258-6948	352	261-8619	701	264-7384	357

▶ **PRIMARY REFERENCE**

PART NUMBER INDEX

Part	Page
264-7386	359
264-7963	1
	2
	▶127
264-7964	127
264-9763	▶399
264-9768	▶400
265-1400	9
	10
	11
	12
	13
	▶54
265-1401	54
265-2106	251
	256
265-5278	▶273
	321
265-7314	668
265-7315	671
265-7316	207
265-9040	251
265-9042	252
265-9718	682
266-1585	698
266-1586	171
266-1961	679
	682
266-2404	246
266-2861	178
266-5851	668
266-7559	1
	2
266-9418	▶100
266-9810	4
	6
	8
	▶79
266-9811	5
	7
	▶81
267-2186	106
267-4696	151
267-4746	▶373
	431
267-7507	57
267-7508	57
267-7509	57
267-8685	677
267-9715	▶142
	143
267-9720	9
	10
	11
	12
	13
	▶143
268-1825	671
268-3293	▶649
	650
268-3371	251
268-3490	19
268-5945	385
268-5986	176
	178
268-5987	178
268-7831	319
268-7832	319
268-9709	374
	376
	378
	380
	432
	433
268-9710	374
	376
	378
	380
	432
	433
269-2037	▶3
269-2038	▶3
269-2044	▶1
	3
269-2046	3
	▶307
269-2050	3
	▶482
269-2052	3
	▶763
269-2053	3
	▶765
269-2072	▶291
	307
269-2074	482
	▶495
269-2075	▶438
	482
269-2076	482
	▶483
269-2077	482
	▶507
269-2078	482
	▶485
269-2079	467
	▶500
269-2080	467
	▶489
269-2081	468
	▶608
269-2082	468
	▶491
269-2089	467
	▶493
269-2090	482
	▶515
269-2091	▶446
	482
269-2092	482
	▶530
269-3364	207
269-4749	482
	▶512
269-7633	319
269-7634	▶317
	319
269-7635	307
	▶319
269-8153	535
	▶545
269-8154	531
	535
	▶547
269-8155	531
	535
	▶549
269-8157	468
	▶533
269-8160	467
	▶535
269-8161	530
	▶531
269-8788	79
	81
270-1762	291
	▶308
270-1763	308
	▶310
270-1764	310
270-1766	310
270-3435	291
270-3438	291
270-3439	500
270-3440	500
270-3444	438
270-3445	495
270-3446	495
270-3447	495
270-3448	495
270-3449	438
270-3450	495
270-3451	608
270-3452	495
270-3453	438
270-3454	438
270-3455	438
270-3459	438
270-3460	438
270-3461	438
270-3462	438
270-3463	438
270-3468	493
270-3471	483
270-3472	483
270-3473	507
270-3474	507
270-3476	608
270-3481	608
270-3482	438
270-5320	134
271-0461	1
	▶329
271-0462	329
	▶330
271-0463	330
271-0475	650
271-2114	446
	▶448
271-2116	515
	▶516
271-2418	19
271-3863	367
271-7442	28
272-0016	307
	▶654
272-0248	485
272-0249	485
272-0250	485
272-0251	485
272-0254	485
272-0255	489
	491
272-0256	485
272-3477	1
	▶629
272-4887	493
272-4888	493
272-4889	493
272-4890	493
272-5171	629
	630
	▶740
272-6240	489
272-6241	489
272-7864	491
272-7865	491
273-2155	▶510
	533
273-2156	▶511
	531
	535
273-6050	▶523
	526
273-6052	523
274-6978	761
	762
274-7395	215
	▶228
274-7396	215
	▶229
275-2124	668
	671
275-2518	523
275-4236	340
	342
275-6706	628
276-0764	213
276-6146	172
277-0700	482
	▶526
277-3578	530
277-5801	639
277-5802	639
277-8350	467
277-8351	467
277-8760	▶467
277-8761	▶467
277-8990	697
278-1445	468
	▶518
278-4696	367
278-6367	▶432
278-6368	▶433
278-7691	246
279-1127	337
279-2570	433
279-2590	629
	630
	▶662
279-2591	▶627

▶ PRIMARY REFERENCE

PART NUMBER INDEX

Part	Page	Part	Page	Part	Page	Part	Page
	629		378		392		▶612
279-6533	350		380		▶394	292-0285	171
	▶383		383	286-9306	391		▶213
279-8995	3		384		394	292-0290	172
	▶168	282-8483	▶176	287-0338	679		▶612
279-9061	315	282-8484	▶178		682	292-0291	172
279-9544	14	282-8485	156	287-0414	291		▶213
	▶246	282-9090	588	287-0415	291	292-0292	172
279-9547	1		590	287-2083	34		▶214
	▶256	282-9553	▶1	287-3751	448	292-0293	▶171
279-9548	1	282-9554	▶2		▶450	292-0294	▶162
	▶155	282-9555	▶2	287-3789	450	292-0296	172
279-9549	3	282-9556	▶2	287-3791	450		▶208
	▶14	282-9934	9	287-4563	434	292-0302	▶612
280-0941	332	282-9935	12	287-4596	436	292-0303	612
280-0942	1	282-9936	10	287-5855	▶436		▶613
	▶332		11		448	292-0309	171
280-1476	▶467	283-0581	▶634	287-6354	448		▶659
280-1478	▶468	283-0655	1	287-7131	170	292-0311	659
280-2691	167		▶667	287-7132	170	292-0312	▶171
280-2703	14	283-0656	634	287-7264	438	292-1268	213
	▶153		▶670	287-7265	438	292-2016	264
280-3554	156	283-1107	232	288-0934	416	292-2175	▶421
280-6794	92	283-1231	171		▶418		431
280-7870	516		▶251	288-0935	411	292-4396	761
	518	283-1232	252		▶412		762
	563	283-2382	257	288-0936	409	292-4399	761
280-8738	350	283-2442	▶171		▶413	292-4400	761
	▶384	283-4426	659	288-0945	▶419	292-4401	762
281-2867	668	283-5249	383	288-0946	▶414	292-4402	762
	671		384	288-0947	▶420	292-6053	▶357
281-3098	764	283-5250	383	288-0948	▶415	292-6054	▶358
	765		384	288-1596	170	292-6055	▶359
281-3174	174	283-5251	384	288-1597	170	292-6097	706
281-3175	▶174	283-5252	384	288-2501	168	292-6098	707
281-3176	174	283-5253	383		▶170	292-6402	▶705
281-3179	257	283-5254	383	288-2502	168		706
281-4015	371	283-9530	659		▶170		707
281-7405	▶89	284-0638	277	288-2507	661	292-9237	▶706
281-8488	369	284-0639	277	288-2508	661		722
	▶371	284-7650	132	289-8449	213	292-9238	▶707
282-1951	628	284-8532	176		214		725
282-1952	628	284-9639	132	289-9654	438	293-0730	135
282-1953	628	284-9640	132	289-9655	438	293-2851	452
282-2870	▶32	284-9696	512	289-9656	438	293-2911	716
282-2871	▶32		▶520	289-9878	▶630	293-4071	▶135
282-2898	369	284-9697	520	290-0862	617		142
282-3823	▶4	284-9698	520	290-3970	93	293-4691	▶350
	32	285-0150	650	290-5571	▶172	293-8350	563
282-3824	1	285-0852	592	290-6096	▶761	293-9344	▶350
	▶5	285-4074	61		763		392
282-3825	3		▶62	290-6097	▶762	293-9345	▶392
	▶6	285-5093	36		765	293-9927	491
282-3826	2	285-6396	33	290-6112	659	293-9928	491
	▶7		▶36	290-6884	37	294-0806	▶596
282-3827	4	285-7612	516	290-8226	588	294-0808	▶597
	▶9		518		590	294-0817	596
282-3828	5		▶563	290-8745	156		▶601
	▶10	285-8076	523	290-9849	264	294-0819	597
282-3829	6	285-8884	495	291-1913	213		▶602
	▶11	286-0134	172		214	294-3345	291
282-3830	7		▶659	291-3845	659	294-3346	291
	▶12	286-9124	172	291-9254	156	294-5042	722
282-4017	374		▶691	292-0280	▶172		725
	376	286-9305	390	292-0281	171	294-5076	686

▶ **PRIMARY REFERENCE**

PART NUMBER INDEX

Part	Page
294-8620	145
295-1771	73
295-1803	139
295-7933	14
	▶132
296-0612	699
	▶700
296-0614	700
296-2861	700
296-7726	631
297-4786	▶401
	402
	405
297-4787	▶402
	405
297-4789	▶405
298-6397	699
299-3432	252
299-3923	654
299-4008	291
299-4040	291
299-5417	700
299-5418	700
299-5660	291
299-8067	763
299-8151	763

3

Part	Page
300-4939	82
300-5501	699
300-6142	699
300-8554	136
300-9517	213
	214
301-0076	252
301-0589	176
301-4136	213
	214
301-5768	3
	▶8
301-5769	8
	▶13
301-9279	516
	518
302-3904	13
303-4138	34
303-4142	307
	▶698
304-0678	141
	▶144
304-2729	491
304-4231	172
304-4513	246
304-5260	66
304-5280	310
304-9651	315
305-9350	153
306-0177	176
306-6621	34
306-9621	132
307-1613	▶170
308-1357	252
308-1395	252
308-1433	252
308-4558	761
	762
308-4559	761
	762
308-5806	252
308-6022	501
308-6023	501
308-6024	503
308-6025	503
308-6026	505
308-6027	505
308-6915	252
308-7112	111
	119
308-9223	198
311-8375	169
311-8376	169
311-8377	213

▶ PRIMARY REFERENCE



© 2007 Caterpillar
All Rights Reserved

Printed in U.S.A.