SEBP4963-21
June 2013

VOLUME I
Pages 1-640

RUTHZIL TRATOR COMERCIAL DE PEÇAS LTDA 11 97083-6812 ROLANDO CITRANGULO

Parts Manual

D6T TRACK-TYPE TRACTOR
STD, XL, and Differential Steering

GCT1-Up (Machine)
SMC1-Up (Machine)
THX8900-Up (Engine)
TXD1-Up (Engine)
K1T1-Up (Transmission)
KKA1-Up (Transmission)
C4C1-Up (Bulldozer)
C4K1-Up (Bulldozer)
C4L1-Up (Bulldozer)
C4N1-Up (Bulldozer)
C4R1-Up (Bulldozer)
C4T1-Up (Bulldozer)
C4W1-Up (Bulldozer)
CZ81-Up (Bulldozer)
D6C1-Up (Bulldozer)
EPZ1-Up (Bulldozer)
GDX1-Up (Bulldozer)
D6D1-Up (Ripper)
BZS1-Up (Torque Converter)
T1M1-Up (Torque Converter)

Powered By C9 Engine

Product and Dealer Information

Note: For product identification plate locations, see the section “Product Identification Information” in the Operation and Maintenance Manual.

Delivery Date: _____

Product Information

Model: _____

Product Identification Number: _____

Engine Serial Number: _____

Transmission Serial Number: _____

Generator Serial Number: _____

Attachment Serial Numbers: _____

Attachment Information: _____

Customer Equipment Number: _____

Dealer Equipment Number: _____

Dealer Information

Name: _____ Branch: _____

Address: _____

_____

_____

	Dealer Contact	Phone Number	Hours
Sales:	_____	_____	_____
Parts:	_____	_____	_____
Service:	_____	_____	_____

MEMORANDA

TABLE OF CONTENTS

NAME	PAGE
GENERAL INFORMATION	**A6**
REPAIR ALTERNATIVES	**A9**
SUPPLEMENTAL COOLANT ADDITIVES	A10
MAINTENANCE PARTS	**A11**
INDEX	**A16**
MACHINE ARRANGEMENT	**1**
CHASSIS AR	1
CONVERSION AR-HEAT SHIELD	1
FORESTRY AR	3
GENERAL AR	6
OPTION AR-COUNTERWEIGHT	6
OPTION AR-GUARD	7
OPTION AR-SERVICE	7
WASTE HANDLING AR	8
ENGINE ARRANGEMENT	**10**
ENGINE AR	10
ENGINE AR-COMPLETE	23
ENGINE AR-CORE	30
INSTALLATION AR-ENGINE	34
BASIC ENGINE	**36**
CAMSHAFT GP	36
CLUTCH GP-FAN	37
COVER GP-CYLINDER BLOCK	38
COVER GP-FRONT HOUSING	39
COVER GP-VALVE MECHANISM	41
CRANKSHAFT GP	42
CYLINDER BLOCK AS	43
CYLINDER BLOCK GP	45
CYLINDER HEAD AS	48
CYLINDER HEAD GP	52
DAMPER GP	61
DRAIN GP-ENGINE OIL	62
DRIVE AR-FAN	63
DRIVE GP-FAN	64
FASTENER GP-CYLINDER HEAD	68
FASTENER GP-DAMPER & PULLEY	71
FASTENER GP-FRONT COVER	72
FASTENER GP-VALVE COVER	73
FASTENER GP-VALVE COVER BASE	74
FLYWHEEL GP	75
GEAR GP-FRONT	76
GEAR GP-REAR	77
HOUSING AS-FLYWHEEL	78
HOUSING GP-FLYWHEEL	79
HOUSING GP-FRONT	81
KIT-ENGINE OVERHAUL	82
LIFTING GP-ENGINE	84
MOUNTING GP-ALTERNATOR	85
MOUNTING GP-ENGINE	86
MOUNTING GP-FAN DRIVE	87
PAN GP-OIL	88
PISTON & ROD GP	89
PLUG GP-ENGINE	91
PULLEY GP-CRANKSHAFT	92
PULLEY GP-FAN & ALT DRIVE	93
ROCKER ARM GP	97
SEAL GP-CRANKSHAFT	99
SUPPORT GP-ENGINE	101
TRUNNION GP-ENGINE	102
VALVE MECHANISM GP	103
YOKE GP	106
LUBRICATION SYSTEM	**107**
FILLER GP-ENGINE OIL	107
FILTER GP-ENGINE OIL	109
FUMES DISPOSAL GP	115
GAUGE GP-OIL LEVEL (DIPSTICK)	117
LINES GP-ENGINE OIL	118
LINES GP-OIL SUPPLY	119
LINES GP-TURBOCHARGER OIL	121
OIL CHANGE GP-HIGH SPEED	124
PUMP GP-ENGINE OIL	126
VALVE GP-FLUID SAMPLING	128
VALVE GP-MODULATING	129
COOLING SYSTEM	**130**
COOLER GP-ENGINE OIL	130
FAN AR-EJECTOR	131
FAN AR-REVERSIBLE	132
FAN GP-BLOWER	135
FAN GP-REVERSIBLE	136
HOUSING & REGULATOR GP	137
HUB GP	138
LINES GP-TURBOCHARGER WATER	139
LINES GP-WATER	141
PUMP GP-WATER	145
RADIATOR AR	151
RADIATOR GP	152
SUPPORT GP-RADIATOR	163
TANK GP-COOLANT	164
AIR INLET AND EXHAUST SYSTEM	**170**
AFTERCOOLER GP-AIR	170
AIR CLEANER GP	172
DUST EJECTOR GP	174
ELBOW GP-AIR INLET	175
GUARD GP-PRECLEANER	177
LINES GP-AIR	178
MANIFOLD GP-EXHAUST	182
MUFFLER GP	183
PRECLEANER AR	184
PRECLEANER GP	186

TABLE OF CONTENTS

NAME	PAGE
PRESCREENER AS	189
SHIELD GP-EXHAUST	190
SHIELD GP-HEAT	191
TURBOCHARGER GP	192
FUEL SYSTEM	**196**
FILTER & LINES GP-FUEL	196
FILTER GP-WATER SEP & FUEL	200
INJECTOR GP-FUEL	201
LINES GP-FUEL	204
PUMP & MTG GP-UNIT INJ HYD	210
PUMP GP-FUEL INJECTION	214
PUMP GP-FUEL PRIMING	218
PUMP GP-UNIT INJECTOR HYD	219
REGULATOR GP-FUEL PRESSURE	221
TANK GP-FUEL	222
ELECTRICAL AND STARTING SYSTEM	228
ALARM GP	228
ALTERNATOR GP-CHARGING	231
BATTERY & WIRING GP	239
CABLE AS-COILED	262
CAMERA AR	263
CONTROL & MTG GP-ENGINE ELEK	267
CONTROL GP-COMMUNICATION	269
CONTROL GP-ENGINE ELECTRONIC	270
CONTROL GP-UNPROGRAMMED	271
CONVERTER GP-ELECTRICAL	272
ELECTRONICS AR-MACHINE	275
ELECTRONICS GP-COMMUNICATION	275
ELECTRONICS GP-MACHINE	275
ELECTRONICS GP-MONITOR	275
ELECTRONICS GP-POWER TRAIN	276
GRADE CONTROL AR	276
GRADE CONTROL AR-LASER	279
GRADE CONTROL AR-SATELLITE	280
HARNESS AS-ENGINE	281
HEATER GP-JACKET WATER	282
INSTALLATION GP-COMMUNICATION	283
INSTALLATION GP-SECURITY	294
LAMP GP-DOME	296
LAMP GP-FLOOD	297
LAMP GP-WARNING BEACON	300
LIGHTING GP-FLOOD	305
LINES GP-ALTERNATOR AIR	335
MAST GP	339
MOUNTING GP-CONNECTOR	340
MOUNTING GP-GRADE CONTROL	341
MOUNTING GP-RECEIVER	345
PANEL GP-CIRCUIT BREAKER	347
PLATE AS-BRUSH	351
RADIO GP-COMMUNICATION	352
RECEIVER GP-LASER	352
RECEIVER GP-SATELLITE	353
SENSOR GP-ENGINE	354
SENSOR GP-POSITION	357
SENSOR GP-PRESSURE	361
SENSOR GP-SPEED	368
SENSOR GP-TEMPERATURE	371
SOFTWARE GP-MONITOR	376
STARTING AID GP-ETHER	377
STARTING MOTOR GP-ELECTRIC	378
SWITCH GP-BYPASS	389
SWITCH GP-DISCONNECT	390
SWITCH GP-MAGNETIC	393
SWITCH GP-PUSH BUTTON	395
SWITCH GP-TOGGLE	397
TARGET GP-LASER	398
VALVE GP-ETHER STARTING	400
WIRING GP-ELECTRONIC CONTROL	401
WIRING GP-ENGINE	408
WIRING GP-GRADE CONTROL	412
WIRING GP-MONITOR	427
WIRING GP-PLATFORM	429
POWER TRAIN	**443**
ACCUMULATOR GP	443
AXLE GP	445
BASE GP-OIL FILTER	446
BRAKE & DIFFERENTIAL DRIVE GP	448
BRAKE & PLANETARY GP	452
CASE & PARTS GP-PLANETARY	454
CASE GP-TRANSMISSION	459
CONTROL GP-STEERING & XMSN	460
CONTROL GP-TRANSMISSION HYD	464
COOLER GP-TRANSMISSION OIL	469
COUPLING & GUARD GP	471
COUPLING GP-PUMP	472
DRAIN GP-ECOLOGY	473
DRIVE GP-FINAL	476
DRIVE GP-PUMP	480
FILTER GP-OIL	481
GEAR GP-BEVEL & TRANSFER	483
KIT-TORQUE CONVERTER BEARING	486
KIT-TORQUE CONVERTER GASKET	487
KIT-TRANSMISSION BEARING	488
KIT-TRANSMISSION GASKET	489
LINES GP-POWER TRAIN OIL	490
MANIFOLD GP-CONTROL	526
MANIFOLD GP-TRANSMISSION	527
MOUNTING GP-FINAL DRIVE	528
MOUNTING GP-TRANSMISSION	529
PLANETARY GP-TRANSMISSION	530
POWER TRAIN AR	542

TABLE OF CONTENTS

NAME	PAGE
PUMP GP-GEAR	543
SCREEN GP-MAGNETIC	546
SEGMENT GP-SPROCKET	547
SHAFT GP-DRIVE	548
TORQUE CONVERTER & HOUSING GP	549
TORQUE CONVERTER GP	551
TRANSMISSION AR	560
UNIVERSAL JOINT GP	562
VALVE GP-MODULATING	563
VALVE GP-RELIEF	565
FRAME AND BODY	**569**
BAR AR-STRIKER	569
BAR GP-STRIKER	572
BOX GP-BATTERY	575
CASE & FRAME GP	578
COUNTERWEIGHT GP	580
DRAWBAR GP	584
ENCLOSURE GP-ENGINE	586
ENCLOSURE GP-HYDRAULIC TANK	600
FENDER GP	601
GRID GP-SAND BLAST ERODING	604
GRILL GP-RADIATOR	606
GUARD & SCRAPER GP-IDLER	607
GUARD AR-FINAL DRIVE	607
GUARD GP-BOTTOM	608
GUARD GP-FINAL DRIVE	614
GUARD GP-FRONT	615
GUARD GP-FUEL TANK	616
GUARD GP-RADIATOR	621
GUARD GP-REAR	626
GUARD GP-TRANSMISSION	631
LATCH GP	632
PLATE GP-RADIATOR	633
SEAL GP-WASTE HANDLING	634
SWEEP GP	636
UNDERCARRIAGE	**641**
BAR GP-EQUALIZER	641
CAP GP-TRACK IDLER	646
FRAME GP-TELESCOPING RECOIL	648
GUARD AR-IDLER	668
GUARD GP-IDLER	669
GUARD GP-TRACK GUIDE	670
GUARD GP-TRACK ROLLER	673
GUIDING AR-UNDERCARRIAGE	676
IDLER GP-FRONT	678
IDLER GP-TRACK	680
LINK AS-TRACK	686
LINK AS-TRACK BOX	693
MOUNTING GP-CARRIER ROLLER	703
PIVOT BAR GP	705
ROLLER AR-TRACK	707
ROLLER GP-TRACK CARRIER	708
ROLLER GP-TRACK-DOUBLE FLANGE	709
ROLLER GP-TRACK-SINGLE FLANGE	717
SCRAPER GP-IDLER	725
STRIKER GP-REAR	726
TRACK ADJUSTER & RECOIL GP	727
TRACK GP	731
UNDERCARRIAGE AR	747
STEERING AND BRAKING SYSTEM	**752**
ACTUATOR GP-PUMP	752
CONTROL GP-PARKING BRAKE	753
CONTROL GP-STEERING & XMSN	755
HEAD GP-PUMP	760
LINES GP-STEERING	762
MANIFOLD & VALVE GP	782
PUMP & MTG GP-STEERING	786
PUMP GP-CHARGE	787
PUMP GP-PISTON	788
ROTATING GP-MOTOR	794
ROTATING GP-PUMP	796
VALVE & MTG GP-CONTROL	800
VALVE GP-BRAKE CONTROL	804
VALVE GP-PILOT	808
VALVE GP-PUMP CONTROL	810
VALVE GP-RELIEF	814
VALVE GP-SOLENOID	817
HYDRAULIC SYSTEM	**820**
ACCUMULATOR GP-HYDRAULIC	820
ACCUMULATOR GP-PILOT OIL	822
ADAPTER GP-MOTOR	825
CONTROL AR-HYDRAULIC IMPLEMENT	826
COOLER GP-HYDRAULIC OIL	828
CYLINDER & LINES GP-LIFT	829
CYLINDER GP-BULLDOZER LIFT	837
CYLINDER GP-RIPPER	841
CYLINDER GP-TILT	845
FILTER GP-OIL	851
HYDRAULIC AR-2 VALVE	852
HYDRAULIC AR-4 VALVE	853
LINES GP-DIVERTER VALVE	854
LINES GP-HYDRAULIC	857
LINES GP-LIFT CYLINDER	858
LINES GP-PILOT	860
LINES GP-PUMP	870
LINES GP-REAR ATTACHMENT	873
LINES GP-RIPPER	877
LINES GP-TILT CYLINDER	880
LINES GP-WINCH	887
MANIFOLD GP-CONTROL	891
MANIFOLD GP-VALVE	892
MOTOR GP-PISTON	894
MOUNTING GP-CYLINDER	895

TABLE OF CONTENTS

NAME	PAGE
MOUNTING GP-VALVE	896
PUMP & MTG GP-IMPLEMENT	897
PUMP GP-PISTON	899
ROTATING GP-PUMP	905
TANK & FILTER GP-HYDRAULIC	906
TANK & MTG GP-HYDRAULIC	909
VALVE & MTG GP-BULLDOZER	910
VALVE & MTG GP-IMPLEMENT CONT	912
VALVE GP-BANK 2	913
VALVE GP-BANK 3	915
VALVE GP-BANK 4	919
VALVE GP-BYPASS	921
VALVE GP-CHECK	922
VALVE GP-CONTROL	923
VALVE GP-DIVERTER	937
VALVE GP-PILOT	938
VALVE GP-PILOT CARTRIDGE	946
VALVE GP-PRESSURE REDUCING	948
VALVE GP-PUMP CONTROL	949
VALVE GP-QUICK-DROP	951
VALVE GP-RELIEF	954
VALVE GP-SHUTTLE	958
VALVE GP-SOLENOID	960
IMPLEMENTS	**965**
BRACE GP-BULLDOZER	965
BULLDOZER AR-ANGLING	967
BULLDOZER AR-SEMI-UNIVERSAL	973
BULLDOZER AR-STRAIGHT	977
C-FRAME AS	978
C-FRAME GP	979
PUSH ARM GP	982
TRUNNION GP-BULLDOZER	992
OPERATOR STATION	**994**
ADJUSTER GP-SEAT	994
AIR CONDITIONER AR	995
AIR CONDITIONER GP	996
BLOWER GP-CAB	997
CAB AR	999
CAB GP	1005
CANOPY AR	1021
CANOPY GP	1022
COMPRESSOR GP-REFRIGERANT	1024
CONDENSER & MTG GP-REFRIGERANT	1028
CONDENSER GP-REFRIGERANT	1031
CONTROL & MTG GP-JOYSTICK	1035
CONTROL & MTG GP-PEDAL	1037
CONTROL GP-HANDLE	1038
CONTROL GP-JOYSTICK	1047
CONTROL GP-PILOT OPERATED HYD	1049
COVER GP-CONSOLE	1051
DISPLAY GP-CAMERA	1055
DISPLAY GP-MONITOR	1057
FAN GP-CIRCULATING	1060
FAN GP-DEFROSTER	1061
GUARD GP-CAB DOOR	1063
GUARD GP-WINDOW	1064
HANDHOLD GP	1065
HEATER GP-CAB	1067
HOUSING GP-SEAT SUSPENSION	1068
INSTALLATION GP-RADIO	1071
INSTRUMENT GP	1073
KNOB GP	1080
LINER GP-CAB	1081
LINES GP-AIR CONDITIONER	1085
LINES GP-HEATER	1106
MIRROR GP-REAR VIEW	1108
MODULE GP-QUAD GAUGE	1110
MOTOR GP-WINDOW WIPER	1111
MOUNTING GP-ANTENNA	1119
MOUNTING GP-BRACKET	1121
MOUNTING GP-CAB	1122
MOUNTING GP-CONTROL	1123
MOUNTING GP-MONITOR	1124
MOUNTING GP-PLATFORM	1128
MOUNTING GP-RADIO	1130
MOUNTING GP-ROPS	1132
PAN GP-BACKREST	1133
PEDAL GP-GOVERNOR & BRAKE	1136
PLATFORM GP	1142
PLATFORM GP-OPERATOR	1144
PRESSURIZER GP-CAB	1147
RECLINER GP-SEAT	1150
ROPS GP	1151
ROPS GP-OPEN	1152
SCREEN GP-PROTECTION	1154
SEAT GP	1157
SEAT GP-SUSPENSION	1165
SUSPENSION GP-SEAT	1169
TANK GP-WINDOW WASHER	1173
WASHER GP-WINDOW	1178
WINDOW GP-CAB	1180
WINDOW GP-SLIDING	1194
WIPER GP-WINDOW	1195
WIPER PIVOT GP	1203
WORK TOOLS	**1204**
BLADE & EDGE GP-ANGLING	1204
BLADE & EDGE GP-SEMI-UNIVERSAL	1205
BLADE & EDGE GP-STRAIGHT	1211
BLADE AS-SEMI-UNIVERSAL	1212
BLADE AS-STRAIGHT	1219
BLADE GP-ANGLING	1220
BLADE GP-SEMI-UNIVERSAL	1221
BLADE GP-STRAIGHT	1223
CONTROL GP-WINCH	1224
EDGE GP-BIT & CUTTING	1225

TABLE OF CONTENTS

NAME	PAGE
MOUNTING GP-MAST	1228
MOUNTING GP-RIPPER	1229
RIPPER AR	1231
RIPPER GP	1233
TOOTH GP-RIPPER	1235
SERVICE EQUIPMENT AND SUPPLIES	1239
FILM GP	1239
PLATE & FILM GP	1242
PART NUMBER INDEX	**B1**

1. MACHINE IDENTIFICATION

Cat machines are identified by Product Identification Numbers (PIN). Some components included in a machine may be identified by Serial Numbers (S/N). Typical components that will be serialized include engines, transmissions, bulldozers, and rippers. The machine and engine are further identified by arrangement numbers and in some cases modification numbers. These numbers are shown on the product identification plate(s) and on the master plate in the operator's compartment.

Cat dealers need all of these numbers to determine accurate parts identification.

Effective First Quarter 2001 the Cat Product Identification Number (PIN) changed from 8 to 17 characters. In an effort to provide uniform equipment identification, Caterpillar and other construction equipment manufacturers are moving to comply with the latest version of the product identification numbering standard. Non-road machine PINs are defined by ISO 10261. The new PIN format will apply to all Cat machines and generator sets. The PIN plates and frame marking will display the 17 character PIN. The new format will look like the following:

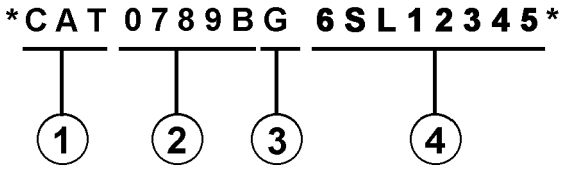

Where:

1. Caterpillar's World Manufacturing Code (characters 1-3)

2. Machine Descriptor (characters 4-8)

3. Check Character (character 9)

4. Machine Indicator Section (MIS) or Product Sequence Number (characters 10-17). These were previously referred to as the Serial Number.

Machines and generator sets produced before First Quarter 2001 will maintain their 8 character PIN format.

Components such as engines, transmissions, axles, etc. and work tools will continue to use an 8 character Serial Number (S/N).

2. ORDERING PARTS

⚠ WARNING

When replacement parts are required for this product Caterpillar recommends using Caterpillar replacement parts or parts with equivalent specifications including, but not limited to, physical dimensions, type, strength and material.

Failure to heed this warning can lead to premature failures, product damage, personal injury or death.

Quality Cat replacement parts are available from Cat dealers throughout the world. Their parts inventories are up to date and include all parts normally required to protect your investment in Cat machines. Dealers may offer repair kits or remanufactured parts to allow selection of the most effective repair alternative for a particular situation. When ordering parts, your order should specify the quantity, part number, part name, and the serial number/product identification number of the machine for which the parts are needed.

3. PARTS MANUAL ORGANIZATION

Product information in this manual is presented as "information elements" that represent all of the components for the specific model. Engine Arrangement and Seat Group are examples of information elements. The information elements are organized alphabetically by part name and secondarily by part number within each major section of the manual.

4. TABLE OF CONTENTS

A table of contents (TOC) is found at the beginning of the manual. The TOC lists each section of the manual with a complete list of all information elements organized as they appear in the manual. Page numbers are provided for quick reference to detailed parts identification illustrations and serviceable consist lists.

5. MAINTENANCE PARTS INDEX

The Maintenance Parts Index, located near the beginning of the manual, references most frequently used maintenance part numbers, providing description, quantity, usage and page number. This information is organized alphabetically by part description.

6. INDEX

The index located near the front of the manual is an alphabetical listing of all information elements included in the manual. Page numbers are provided for quick reference to detailed parts identification illustrations and serviceable consist lists.

7. PART NUMBER INDEX

A numerical index listing all part numbers and the corresponding page number(s) appears at the back of the manual.

8. CAPTIONS

Captions located at the beginning of each information element identify the part number and part name along with additional descriptive information. PIN and S/N information found in each caption should be used to select correct information for a specific machine. Field replacement options, identification of optional attachment components, and where used ("part of") information is also provided.

The first line of a caption is shown in larger type font to indicate the beginning of an information element. Captions for additional pages that may be required to illustrate an information element will be shown in standard type font and will include the term *(contd.)* .

9. NON-SERVICED PARTS

In some instances it is necessary to display non-serviced parts that are a link to a lower level serviceable consist lists. These non-serviced part numbers are shown in *italic* type indicating that they are not available.

10. PARTS LIST REFERENCE NUMBERS

Numbers shown in the Ref No column correspond to numbers used in the associated graphic(s). An alphabetic suffix may be added to a reference number to identify lower level consist items. Numbers shown in the Graphic Ref column refer to the graphic number identifier displayed in the lower left corner of each illustration. The Graphic Ref number may be used in combination with the item Ref No to determine the correct part number. There may be intentional omission of a Ref No in a consist list as information is updated to reflect the latest serviceable part numbers.

11. INDENTED PART NAMES

When a part name is indented in a parts list, it is part of (included in) the group or assembly under which it is indented.

12. ILLUSTRATION REFERENCE LETTERS

When necessary, illustrations contain reference letters (A, B, C etc.) that are intended to track lines and harnesses from one point to another. They are also used to show where to reconnect illustrations that have been separated.

13. ABBREVIATIONS AND SYMBOLS

O.D. – Outside Diameter
I.D. – Inside Diameter
A – Not Part Of This Group
B – Use As Required
C – Change From Previous Type
D – Order By The Meter
E – Order By The Centimeter
F – Not Shown
G – Order By The Inch
I – Refer To Hydraulic Information System
M – Metric Part
R – Remfg Part May Be Available
Y – Separate Illustration
Z – Not Serviced Separately

14. DESCRIPTION OF TYPE CHANGES

Type - A type is defined as any configuration change that requires an additional Information Element for an Arrangement, Group, or Assembly. If serial number breaks for types are not available, a type # (Type 1, Type 2, etc.) will be displayed in the caption. These "type" changes are identified with a "C" note (change from previous type) in the Parts List. Only the "types" that apply to this Parts Manual will be included. Additional types may exist causing "C" notes to appear on an Information Element when no other types are shown.

15.<END>

This symbol indicates the end of an information element.

NOTE:

Continuing improvement and advancement of product design may cause changes to your machine which may not be included in this publication. Whenever a question arises regarding your Cat product or this publication, please consult your Cat dealer for the latest available information.

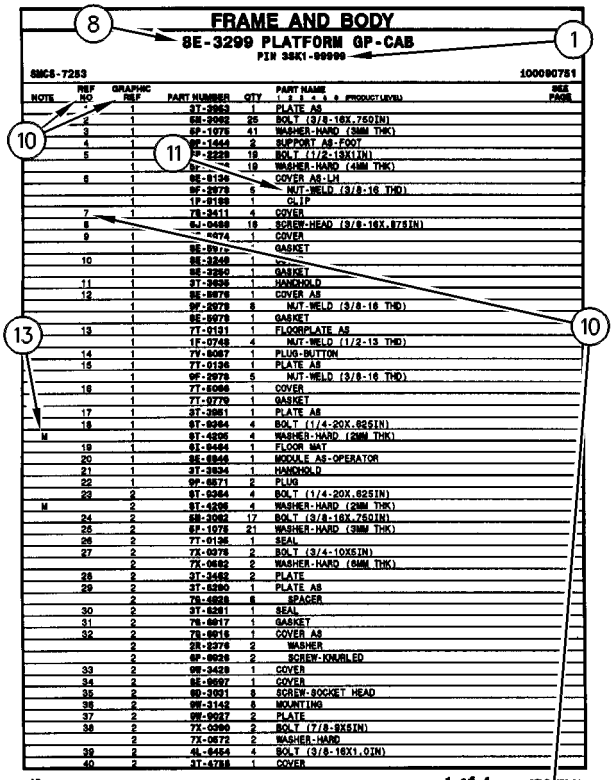

FRAME AND BODY

8E-3299 PLATFORM GP-CAB

PIN 3SK1-99999

SMCS-7283 100090751

NOTE	REF NO	GRAPHIC REF	PART NUMBER	QTY	PART NAME 1 2 3 4 5 6 (PRODUCT LEVEL)	SEE PAGE
	1	1	3T-3963	1	PLATE AS	
	2	1	6M-3982	25	BOLT (3/8-16X.75DIN)	
	3	1	5P-1078	41	WASHER-HARD (3MM THK)	
	4	1	9F-1444	2	SUPPORT AS-FOOT	
	5	1	7P-2229	19	BOLT (1/2-13X1IN)	
		1	9x-[illegible]	19	WASHER-HARD (4MM THK)	
	6	1	8E-8136	1	COVER AS-LH	
		1	9F-2979	6	NUT-WELD (3/8-16 THD)	
		1	1F-8188	1	CLIP	
	7	1	7S-3411	4	COVER	
	8		6J-0488	19	SCREW-HEAD (3/8-16X.875IN)	
	9	1	[illegible]-0474	1	COVER	
		1	8E-8976	1	GASKET	
	10	1	8E-3249	1	[illegible]	
		1	8E-3250	1	GASKET	
	11	1	3T-3935	1	HANDHOLD	
	12	1	8E-8978	1	COVER AS	
		1	9F-2979	8	NUT-WELD (3/8-16 THD)	
		1	8E-8979	1	GASKET	
	13	1	7T-0131	1	FLOORPLATE AS	
		1	1F-0748	4	NUT-WELD (1/2-13 THD)	
	14	1	7V-8067	1	PLUG-BUTTON	
	15	1	7T-0136	1	PLATE AS	
		1	9F-2979	5	NUT-WELD (3/8-16 THD)	
	16	1	7T-8066	1	COVER	
		1	7T-0779	1	GASKET	
	17	1	3T-3961	1	PLATE AS	
	18	1	6T-9364	4	BOLT (1/4-20X.625IN)	
M		1	6T-4236	4	WASHER-HARD (2MM THK)	
	19	1	6I-9494	1	FLOOR MAT	
	20	1	8E-8946	1	MODULE AS-OPERATOR	
	21	1	3T-3934	1	HANDHOLD	
	22	1	9F-8571	2	PLUG	
	23	2	6T-9364	4	BOLT (1/4-20X.625IN)	
M		2	6T-4236	4	WASHER-HARD (2MM THK)	
	24	2	6M-3982	17	BOLT (3/8-16X.75DIN)	
	25	2	5P-1078	21	WASHER-HARD (3MM THK)	
	26	2	7T-0136	1	SEAL	
	27	2	7X-0378	2	BOLT (3/4-10X5IN)	
		2	7X-0682	2	WASHER-HARD (6MM THK)	
	28	2	3T-3462	2	PLATE	
	29	2	3T-8280	1	PLATE AS	
		2	7S-4828	6	SPACER	
	30	2	3T-8281	1	SEAL	
	31	2	7S-8917	1	GASKET	
	32	2	7S-8916	1	COVER AS	
		2	2S-2376	2	WASHER	
		2	6F-8628	2	SCREW-KNURLED	
	33	2	9W-3429	1	COVER	
	34	2	8E-8697	1	COVER	
	35	2	9D-3931	8	SCREW-SOCKET HEAD	
	36	2	9W-3142	8	MOUNTING	
	37	2	9W-9927	2	PLATE	
	38	2	7X-0290	2	BOLT (7/8-9X5IN)	
		2	7X-0572	2	WASHER-HARD	
	39	2	4L-6454	4	BOLT (3/8-16X1.0IN)	
	40	2	3T-4788	1	COVER	

12 FRAME AND BODY 1 of 4 SELP4570-01

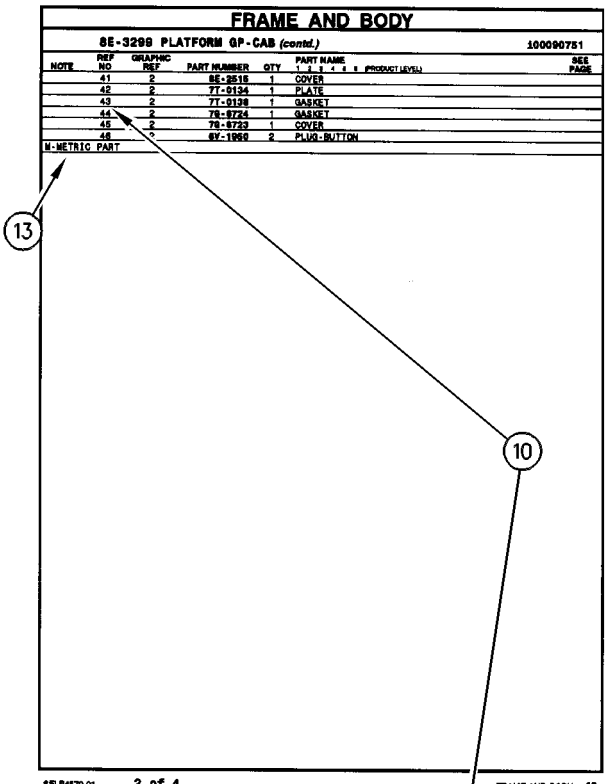

FRAME AND BODY

8E-3299 PLATFORM GP-CAB (contd.) 100090751

NOTE	REF NO	GRAPHIC REF	PART NUMBER	QTY	PART NAME 1 2 3 4 5 6 (PRODUCT LEVEL)	SEE PAGE
	41	2	8E-2516	1	COVER	
	42	2	7T-0134	1	PLATE	
	43	2	7T-0138	1	GASKET	
	44	2	7S-8724	1	GASKET	
	45	2	7S-8723	1	COVER	
	46	2	6V-1960	2	PLUG-BUTTON	

M-METRIC PART

SELP4570-01 2 of 4 FRAME AND BODY 13

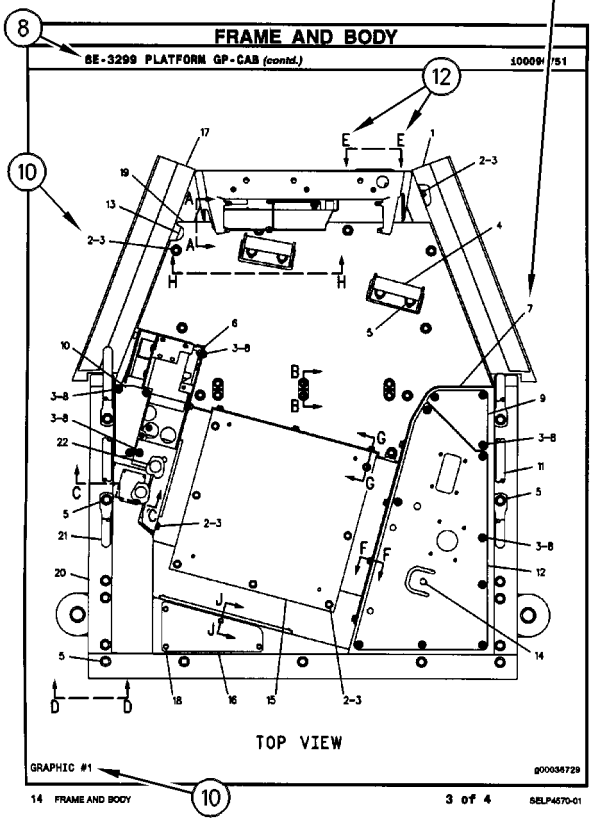

FRAME AND BODY

8E-3299 PLATFORM GP-CAB (contd.) 100090751

TOP VIEW

GRAPHIC #1 g00036729

14 FRAME AND BODY 3 of 4 SELP4570-01

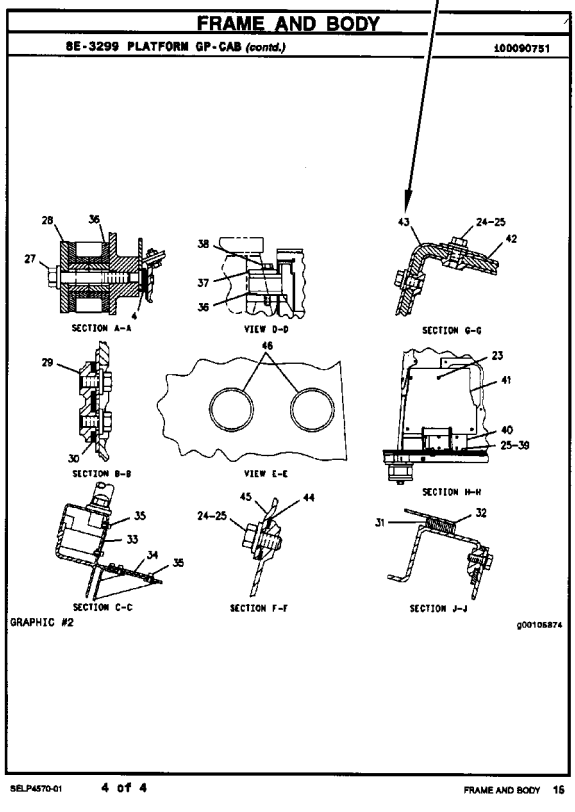

FRAME AND BODY

8E-3299 PLATFORM GP-CAB (contd.) 100090751

SECTION A-A

VIEW D-D

SECTION G-G

SECTION B-B

VIEW E-E

SECTION H-H

SECTION C-C

SECTION F-F

SECTION J-J

GRAPHIC #2 g00105874

SELP4570-01 4 of 4 FRAME AND BODY 15

REMANUFACTURED COMPONENTS

As an option when making repairs consider Cat Remanufactured Components. Components that are available through the Cat Remanufactured Program are identified three ways in the parts book:

- with the letter R in the note field of the parts list
- with an R* at the beginning of the first line of the caption
- with an *R at the end of the first line of the caption

Typical components included in the Remanufacturing Program include:

ALTERNATORS
CONNECTING RODS
CRANKSHAFTS - UNDERSIZE
CRANKSHAFTS - UPGRADE TO NEW
CYLINDER HEADS
ELECTRONIC CONTROL MODULES (ECM)
ELECTRONIC SENSORS
FUEL INJECTORS
FUEL NOZZLES
FUEL PUMPS
GOVERNORS
OIL PUMPS
PISTONS
SHORT BLOCKS
STARTERS
TURBOCHARGERS - COMPLETE
TURBOCHARGER CARTRIDGES
WATER PUMPS

Cat Remanufactured engines for many engine arrangements are also available.

SUPPLEMENTAL COOLANT ADDITIVES

CUSTOMER BENEFITS:

Protects against cavitation, foam, erosion, corrosion, and scale buildup in cooling systems.

- Provides measured coolant conditioner.

DESCRIPTION:

Additives deplete from the coolant with normal operation. For this reason, Supplemental Coolant Additives (SCA) must be added to all heavy duty coolants at regular intervals. In addition, when not using a fully formulated, pre-charged antifreeze, like Cat DEAC, an initial charge of SCA must be added to the cooling system. The amount of SCA added to the system is dependent on the capacity of the system.

The SCA for initial fill is provided as a liquid. SCA's for maintenance intervals are available in liquid form and as a spin-on element. (No Spin-on available for 3600 Family of Engines)

NOTE:

The amount of SCA added at initial fill is not the same as the amount added at maintenance intervals.

The coolant additive elements can be used with any ethylene or propylene glycol type antifreeze which meets ASTM D4985 or ASTM D5345 Specifications.

NOTE:

For use with standard heavy duty coolant only, not for use with Extended Life Coolant.

PARTS NEEDED:

Cooling System Capacity		Liquid SCA at Initial Fill	Liquid SCA at Maintenance*	Spin-on SCA Maintenance Element*
Liters	Gallons			
22-30	(6-8)	3P-2044 (1)	6V-3542 (1)	111-2370 (1)
30-38	(8-10)	3P-2044 (1) 6V-3542 (1)	111-2372 (1)	111-2369 (1)
38-49	(10-13)	3P-2044 (1) 8T-1589 (1)	111-2372 (1)	111-2369 (1)
49-64	(13-17)	3P-2044 (2)	8T-1589 (1)	9N-3368 (1)
64-83	(17-22)	3P-2044 (2) 8T-1589 (1)	111-2372 (1) 6V-3542 (1)	111-2371 (1)
83-114	(22-30)	3P-2044 (3) 8T-1589 (1)	3P-2044 (1)	9N-3718 (1)
114-163	(30-43)	3P-2044 (5)	3P-2044 (1) 6V-3542 (1)	111-2371 (2)
163-242	(43-64)	3P-2044 (8)	3P-2044 (2)	9N-3718 (2)

** Normal maintenance period is 250 hrs. See your Operation and Maintenance Manual for complete coolant maintenance instructions.*

( ) Indicates quantity required.

MAINTENANCE PARTS

DESCRIPTION	PART NUMBER	QTY	WHERE USED	PAGE
AIR INLET AND EXHAUST SYSTEM				
FILTER ELEMENT AS-AIR (PRIMARY, STANDARD EFFICIENCY)	6I-2501	1	AIR CLEANER GP	172
FILTER ELEMENT AS-AIR (SECONDARY)	6I-2502	1	AIR CLEANER GP	172
BASIC ENGINE				
BELT-SERPENTINE	241-4981	1	PULLEY GP-FAN & ALT DRIVE	95
BELT-SERPENTINE (ALTERNATOR)	241-4981	1	PULLEY GP-FAN & ALT DRIVE	93
BREATHER AS (CRANKCASE)	204-4444	1	COVER GP-VALVE MECHANISM	41
		1	KIT-ENGINE OVERHAUL	82
	240-0041	1	COVER GP-CYLINDER BLOCK	38
FILTER AS-WATER SEP & FUEL (PRIMARY)	326-1644	1	KIT-ENGINE OVERHAUL	82
FILTER ELEMENT-BREATHER (CRANKCASE)	185-3159	1	COVER GP-VALVE MECHANISM	41
		1	KIT-ENGINE OVERHAUL	82
FILTER-ENGINE OIL (ADVANCED EFFICIENCY)	1R-1808	1	KIT-ENGINE OVERHAUL	82
GASKET (WATER REGULATOR HOUSING)	191-4457	1	KIT-ENGINE OVERHAUL	82
PLUG-DRAIN (ENGINE OIL)	5N-8780	1	DRAIN GP-ENGINE OIL	62
REGULATOR-TEMPERATURE (92-DEG C) (WATER, COOLANT)	248-5513	1	KIT-ENGINE OVERHAUL	82
SEAL-LIP TYPE (WATER TEMPERATURE REGULATOR)	3S-9643	1	KIT-ENGINE OVERHAUL	82
V-BELT SET (INCLUDES 3-BELTS)	4P-8087	1	PULLEY GP-FAN & ALT DRIVE	95
V-BELT SET (INCLUDES 3-BELTS) (FAN DRIVE)	216-7877	1	DRIVE GP-FAN	65
	4P-8087	1	PULLEY GP-FAN & ALT DRIVE	93
COOLING SYSTEM				
CAP AS-RADIATOR	031-1119	1	TANK GP-COOLANT	165
	294-3342	1	TANK GP-COOLANT	164
GASKET (WATER REGULATOR HOUSING)	191-4457	1	HOUSING & REGULATOR GP	137
HOSE-RADIATOR	187-3961	1	LINES GP-WATER	141
		1	LINES GP-WATER	143
REGULATOR-TEMPERATURE (92-DEG C) (WATER, COOLANT)	248-5513	1	HOUSING & REGULATOR GP	137
V-BELT (BANDED) (FLEXXAIRE FAN)	269-1974	1	FAN AR-REVERSIBLE	132
ELECTRICAL AND STARTING SYSTEM				
BATTERY (12-VOLT, MAINTENANCE FREE, WET)	153-5710	2	BATTERY & WIRING GP	239
CAP AS-FILLER (BATTERY)	123-1373	6	BATTERY & WIRING GP	241
		6	BATTERY & WIRING GP	247
		6	BATTERY & WIRING GP	253

MAINTENANCE PARTS

DESCRIPTION	PART NUMBER	QTY	WHERE USED	PAGE
		6	BATTERY & WIRING GP	259
CIRCUIT BREAKER AS (15-AMPERE) (FAN BLOWER MOTOR)	6T-3643	1	PANEL GP-CIRCUIT BREAKER	347
CIRCUIT BREAKER AS (15-AMPERE) (FAN BLOWER SPEED)	6T-3643	1	PANEL GP-CIRCUIT BREAKER	349
FILTER (ETHER START)	358-4889	1	VALVE GP-ETHER STARTING	400
FUSE (10-AMPERE)	9W-1442	2	PANEL GP-CIRCUIT BREAKER	347
		2	PANEL GP-CIRCUIT BREAKER	349
FUSE (15-AMPERE)	9W-1441	19	PANEL GP-CIRCUIT BREAKER	347
		19	PANEL GP-CIRCUIT BREAKER	349
FUSE (175-AMPERE) (ALTERNATOR)	239-8107	1	PANEL GP-CIRCUIT BREAKER	347
		1	WIRING GP-PLATFORM	430
		1	WIRING GP-PLATFORM	434
FUSE (20-AMPERE)	9W-1446	3	PANEL GP-CIRCUIT BREAKER	347
		3	PANEL GP-CIRCUIT BREAKER	349
KEY (BATTERY DISCONNECT)	8H-5306	1	SWITCH GP-DISCONNECT	390
KEY AS-ELECTRONIC (SECURITY) (GRAY)	206-5165	2	INSTALLATION GP-SECURITY	294
KEY AS-ELECTRONIC (SECURITY) (YELLOW)	206-5162	2	INSTALLATION GP-SECURITY	294
LAMP (24-VOLT, 3-WATT)	115-1748	1	WIRING GP-GRADE CONTROL	412
		1	WIRING GP-GRADE CONTROL	415
		1	WIRING GP-GRADE CONTROL	420
LAMP (24-VOLT)	7N-1996	1	WIRING GP-PLATFORM	429
		1	WIRING GP-PLATFORM	433
LAMP (24-VOLT) (DOME LIGHT)	7N-9943	1	LAMP GP-DOME	296
LAMP (24-VOLT) (WARNING BEACON)	249-5592	1	LAMP GP-WARNING BEACON	300
LAMP AS-INDICATOR (ACTION LIGHT)	170-3461	1	WIRING GP-PLATFORM	429
		1	WIRING GP-PLATFORM	433
LAMP AS-LED (24-VOLT, RED) (MACHINE SECURITY SYSTEM)	242-3282	1	INSTALLATION GP-SECURITY	294
LAMP-HALOGEN (24-VOLT, 70-WATT)	351-9918	1	LAMP GP-FLOOD	297
		1	LAMP GP-FLOOD	298
		1	LAMP GP-FLOOD	299
SCREEN (ALTERNATOR)	226-4909	1	LINES GP-ALTERNATOR AIR	335
SCREEN (DUCTED ALTERNATOR)	226-4909	1	LINES GP-ALTERNATOR AIR	337
FRAME AND BODY				
PLUG-DRAIN (TRANSMISSION CASE)	106-8187	1	CASE & FRAME GP	578
FUEL SYSTEM				
CAP AS-FUEL (LOCKABLE, VENTED)	7X-7700	1	TANK GP-FUEL	222
		1	TANK GP-FUEL	224
		1	TANK GP-FUEL	226
FILTER AS-WATER SEP & FUEL (PRIMARY)	326-1644	1	FILTER GP-WATER SEP & FUEL	200
FILTER-FUEL (ADVANCED EFFICIENCY)	1R-0762	1	FILTER & LINES GP-FUEL	196
		1	FILTER & LINES GP-FUEL	198

DESCRIPTION	PART NUMBER	QTY	WHERE USED	PAGE
STRAINER-FUEL (TANK)	9P-7121	1	TANK GP-FUEL	222
		1	TANK GP-FUEL	226
STRAINER-FUEL (TANK) (FUEL TANK)	9P-7121	1	TANK GP-FUEL	224
HYDRAULIC SYSTEM				
CAP AS	6V-9829	2	LINES GP-PILOT	861
CAP-FILLER (HYDRAULIC TANK)	7H-1447	1	TANK & FILTER GP-HYDRAULIC	906
FILTER ELEMENT AS-OIL (ADVANCED EFFICIENCY)	1R-0777	1	TANK & FILTER GP-HYDRAULIC	906
FILTER ELEMENT AS-OIL (FIRE RESISTANT FLUID)	104-6931	1	TANK & FILTER GP-HYDRAULIC	906
FILTER-OIL (FIRE RESISTANT FLUID)	156-0214	1	FILTER GP-OIL	851
FILTER-OIL (ULTRA HIGH EFFICIENCY)	332-1871	1	FILTER GP-OIL	851
LAMP-LED (24-VOLT)	126-0810	1	LINES GP-PILOT	865
PLUG-DRAIN (HYDRAULIC TANK)	9J-7031	1	TANK & FILTER GP-HYDRAULIC	906
SCREEN (HYDRAULIC TANK)	6E-1752	1	TANK & FILTER GP-HYDRAULIC	906
SCREEN (IMPLEMENT PILOT OIL)	6E-5066	1	MANIFOLD GP-CONTROL	891
SCREEN AS (HYDRAULIC TANK)	3G-3267	1	TANK & FILTER GP-HYDRAULIC	906
STRAINER AS-OIL (HYDRAULIC TANK FILL)	5D-7927	1	TANK & FILTER GP-HYDRAULIC	906
LUBRICATION SYSTEM				
CAP AS-FILLER (ENGINE OIL)	6N-2985	1	FILLER GP-ENGINE OIL	108
CAP AS-FILLER (ENGINE)	6N-2985	1	FILLER GP-ENGINE OIL	107
CAP-DUST	8C-3445	1	FILTER GP-ENGINE OIL	112
FILTER-ENGINE OIL (ADVANCED EFFICIENCY)	1R-1808	1	FILTER GP-ENGINE OIL	109
		1	FILTER GP-ENGINE OIL	112
OPERATOR STATION				
BLADE AS-WIPER (350-MM) (DOOR, RH, LH)	6V-5849	2	WIPER GP-WINDOW	1195
		2	WIPER GP-WINDOW	1197
		2	WIPER GP-WINDOW	1199
		2	WIPER GP-WINDOW	1201
BLADE AS-WIPER (400-MM) (FRONT, REAR WINDOW)	6V-5851	2	WIPER GP-WINDOW	1195
		2	WIPER GP-WINDOW	1197
BLADE AS-WIPER (400-MM) (FRONT)	6V-5851	1	WIPER GP-WINDOW	1199
		1	WIPER GP-WINDOW	1201
BLADE AS-WIPER (500-MM) (REAR)	146-6433	1	WIPER GP-WINDOW	1199
		1	WIPER GP-WINDOW	1201
CAP-VENTED (WINDOW WASHER RESERVOIR)	8E-8292	1	TANK GP-WINDOW WASHER	1173
CAP-VENTED (WINDOW WASHER TANK)	322-4964	1	TANK GP-WINDOW WASHER	1175
DRYER AS-REFRIGERANT	257-3227	1	LINES GP-AIR CONDITIONER	1091
DRYER AS-REFRIGERANT (AIR DRYER)	257-3227	1	LINES GP-AIR CONDITIONER	1102

MAINTENANCE PARTS

DESCRIPTION	PART NUMBER	QTY	WHERE USED	PAGE
DRYER AS-REFRIGERANT (IN-LINE)	175-7162	1	LINES GP-AIR CONDITIONER	1094
		1	LINES GP-AIR CONDITIONER	1098
FILTER ELEMENT-CAB AIR (AIR RECIRCULATION)	6T-5068	1	PRESSURIZER GP-CAB	1148
FILTER ELEMENT-CAB AIR (PRESSURIZER)	231-3781	1	PRESSURIZER GP-CAB	1147
FILTER ELEMENT-CAB AIR (STANDARD EFFICIENCY) (FRESH AIR)	6T-0988	1	PRESSURIZER GP-CAB	1148
LAMP (24-VOLT, 3-WATT)	115-1748	1	INSTRUMENT GP	1073
		1	INSTRUMENT GP	1076
LAMP (24-VOLT)	123-9294	4	INSTRUMENT GP	1073
		4	INSTRUMENT GP	1076
SEAT BELT GP (RETRACTABLE, 3-IN)	222-0345	1	SEAT GP	1159
		1	SEAT GP	1162
V-BELT (AIR COMPRESSOR)	174-9030	1	COMPRESSOR GP-REFRIGERANT	1027
V-BELT (REFRIGERANT COMPRESSOR)	216-0349	1	COMPRESSOR GP-REFRIGERANT	1025
POWER TRAIN				
BREATHER AS (TRANSMISSION)	9G-5127	1	LINES GP-POWER TRAIN OIL	490
		1	LINES GP-POWER TRAIN OIL	497
		1	LINES GP-POWER TRAIN OIL	503
		1	LINES GP-POWER TRAIN OIL	509
		1	LINES GP-POWER TRAIN OIL	515
		1	LINES GP-POWER TRAIN OIL	521
FILTER ELEMENT AS-OIL (ADVANCED EFFICIENCY)	328-3655	1	FILTER GP-OIL	482
FILTER ELEMENT AS-OIL (ULTRA HIGH EFFICIENCY)	1R-1809	1	FILTER GP-OIL	481
GASKET-COVER	8P-0058	1	CASE & PARTS GP-PLANETARY	454
		1	CASE & PARTS GP-PLANETARY	456
PLUG-DRAIN (POWER TRAIN)	4B-7739	1	DRAIN GP-ECOLOGY	474
PLUG-MAGNETIC (FINAL DRIVE, OIL CHECK, FILL)	6V-0439	1	DRIVE GP-FINAL	476
PLUG-MAGNETIC (FINAL DRIVE, OIL FILL)	6V-0439	1	DRIVE GP-FINAL	478
SCREEN AS (TORQUE CONVERTER SCAVENGE)	3T-6471	1	LINES GP-POWER TRAIN OIL	490
		1	LINES GP-POWER TRAIN OIL	497
		1	LINES GP-POWER TRAIN OIL	503
		1	LINES GP-POWER TRAIN OIL	509
		1	LINES GP-POWER TRAIN OIL	515
		1	LINES GP-POWER TRAIN OIL	521
SCREEN GP-MAGNETIC (POWER TRAIN)	240-8259	1	SCREEN GP-MAGNETIC	546
SCREEN-SUCTION (POWER TRAIN)	4S-8598	1	SCREEN GP-MAGNETIC	546
SCREEN-SUCTION (TRANSMISSION CASE)	8S-9130	1	CASE & PARTS GP-PLANETARY	456
SCREEN-SUCTION (TRANSMISSION SCAVENGE)	8S-9130	1	CASE & PARTS GP-PLANETARY	454
SEAL-INTEGRAL	180-3907	1	COOLER GP-TRANSMISSION OIL	469

MAINTENANCE PARTS

DESCRIPTION	PART NUMBER	QTY	WHERE USED	PAGE
WORK TOOLS				
LAMP (24-VOLT)	138-2434	2	CONTROL GP-WINCH	1224

INDEX

NAME PAGE

A

ACCUMULATOR GP-HYDRAULIC–CHARGED . . . 820
ACCUMULATOR GP-HYDRAULIC–UNCHARGED . . . 821
ACCUMULATOR GP-PILOT OIL–CHARGED 823
ACCUMULATOR GP-PILOT OIL–UNCHARGED . . . 822 824
ACCUMULATOR GP–CHARGED . . . 443
ACCUMULATOR GP–UNCHARGED . . . 444
ACCUMULATOR-REFRIGERANT . . . 1085 1088 1091 1094 1098 1102
ACTUATOR GP-PUMP–STEERING . . . 752
ADAPTER GP . . . 498 504 510 516
ADAPTER GP-MOTOR . . . 825
ADJUSTER GP-SEAT . . . 994
AFTERCOOLER GP-AIR . . . 170 171
AIR CLEANER GP . . . 172 173
AIR CONDITIONER AR–EEC . . . 995
AIR CONDITIONER GP . . . 996
ALARM GP–BACKUP . . . 229
ALARM GP–WARNING . . . 228
ALTERNATOR GP-CHARGING . . . 231 233 235 237
ALTERNATOR GP-CHARGING (24-VOLT, 150-AMPERE) . . . 235 237
ATOMIZER GP-ETHER . . . 377
AXLE GP . . . 445

B

BAR AR-STRIKER–FRONT . . . 569 570
BAR AR-STRIKER–REAR . . . 571
BAR GP-EQUALIZER . . . 641 642 644 645
BAR GP-STRIKER–REAR . . . 572 573
BASE GP-OIL FILTER–POWER TRAIN . . . 446 447
BASE GP-VALVE COVER . . . 41
BATTERY (12-VOLT, MAINTENANCE FREE, WET) . . . 239
BATTERY & WIRING GP . . . 240 245 251 257
BATTERY & WIRING GP–HEAVY-DUTY . . . 239
BATTERY GP (12-VOLT, MAINTENANCE FREE, WET) . . . 241 247 253 259
BELT-SERPENTINE . . . 95
BELT-SERPENTINE (ALTERNATOR) . . . 93
BLADE & EDGE GP-ANGLING . . . 1204
BLADE & EDGE GP-SEMI-UNIVERSAL . . . 1205 1206 1209 1210
BLADE & EDGE GP-SEMI-UNIVERSAL–WASTE HANDLING . . . 1207 1208
BLADE & EDGE GP-STRAIGHT . . . 1211
BLADE AS-SEMI-UNIVERSAL . . . 1212 1214 1217 1218
BLADE AS-SEMI-UNIVERSAL–WASTE HANDLING . . . 1215 1216
BLADE AS-STRAIGHT . . . 1219
BLADE AS-WIPER (350-MM) (DOOR, RH, LH) . . . 1195 1197 1199 1201
BLADE AS-WIPER (400-MM) (FRONT, REAR WINDOW) . . . 1195 1197
BLADE AS-WIPER (400-MM) (FRONT) . . . 1199 1201
BLADE AS-WIPER (500-MM) (REAR) . . . 1199 1201
BLADE GP-ANGLING . . . 1220
BLADE GP-SEMI-UNIVERSAL . . . 1221 1222
BLADE GP-STRAIGHT . . . 1223
BLOWER GP-CAB . . . 997
BOX GP-BATTERY . . . 575 576
BRACE GP-BULLDOZER . . . 965
BRAKE & DIFFERENTIAL DRIVE GP . . . 448
BRAKE & PLANETARY GP . . . 452
BREATHER AS (CRANKCASE) . . . 38 41 82
BREATHER AS (TRANSMISSION) . . . 490 497 503 509 515 521

INDEX

NAME	PAGE
BULLDOZER AR-ANGLING	967, 968, 969, 970, 971, 972
BULLDOZER AR-SEMI-UNIVERSAL	973, 974, 975, 976
BULLDOZER AR-STRAIGHT	977
C	
C-FRAME AS	978
C-FRAME GP	979, 980, 981
CAB AR	999, 1002, 1003, 1004
CAB AR–DUAL PANE GLASS	999, 1000
CAB AR–FORESTRY	1002, 1003
CAB GP	1005, 1009, 1017
CAB GP–DUAL PANE GLASS	1013
CABLE AS-COILED–LASER RECEIVER	262
CAMERA AR–REAR	263, 265
CAMERA GP (115-DEG, COLOR)	263, 265
CAMSHAFT GP	36
CANOPY AR	1021
CANOPY GP	1022
CAP AS	861
CAP AS-FILLER (BATTERY)	241, 247, 253, 259
CAP AS-FILLER (ENGINE OIL)	108
CAP AS-FILLER (ENGINE)	107
CAP AS-FUEL (LOCKABLE, VENTED)	222, 224, 226
CAP AS-RADIATOR	164, 165
CAP GP-TRACK IDLER–HEAVY-DUTY	646
CAP GP-TRACK IDLER–SYSTEMONE	647
CAP-DUST	112
CAP-FILLER (HYDRAULIC TANK)	906
CAP-SEAL (HIGH SIDE CHARGE PORT)	1085, 1088, 1094, 1098
CAP-SEAL (LOW SIDE CHARGE PORT)	1085, 1088
CAP-VENTED (WINDOW WASHER RESERVOIR)	1173
CAP-VENTED (WINDOW WASHER TANK)	1175
CASE & FRAME GP	578
CASE & PARTS GP-PLANETARY	454, 456
CASE GP-TRANSMISSION	459
CHASSIS AR	1
CIRCUIT BREAKER AS (15-AMPERE) (FAN BLOWER MOTOR)	347
CIRCUIT BREAKER AS (15-AMPERE) (FAN BLOWER SPEED)	349
CLAMP GP	1055, 1056
CLUTCH GP-FAN	37
COMPRESSOR GP-REFRIGERANT	1024, 1025, 1027
CONDENSER & MTG GP-REFRIGERANT	1028
CONDENSER & MTG GP-REFRIGERANT–ROPS MOUNTED	1029
CONDENSER GP-REFRIGERANT–WITH FANS	1031, 1033
CONTROL & MTG GP-ENGINE ELEK	267, 268
CONTROL & MTG GP-JOYSTICK–BULLDOZER	1035, 1036
CONTROL & MTG GP-PEDAL–GOVERNOR, BRAKE	1037
CONTROL AR-HYDRAULIC IMPLEMENT–BULLDOZER, RIPPER	826
CONTROL AR-HYDRAULIC IMPLEMENT–BULLDOZER, WINCH	827
CONTROL AR-HYDRAULIC IMPLEMENT–GRADE CONTROL	826
CONTROL AS (CATERPILLAR MONITORING SYSTEM)	1074, 1076
CONTROL GP-COMMUNICATION–PRODUCT LINK 321SR	269
CONTROL GP-ENGINE ELECTRONIC	270
CONTROL GP-HANDLE (WINCH)	938
CONTROL GP-HANDLE–BULLDOZER	1038, 1044, 1045
CONTROL GP-HANDLE–STEERING, TRANSMISSION	1039, 1041
CONTROL GP-HANDLE–WINCH	1043
CONTROL GP-JOYSTICK–BULLDOZER	1047, 1048
CONTROL GP-PARKING BRAKE	753
CONTROL GP-PILOT OPERATED HYD–BULLDOZER	1049
CONTROL GP-PILOT OPERATED HYD–IMPLEMENT	1050

INDEX

NAME PAGE

CONTROL GP-STEERING & XMSN. 460
462
755
757
CONTROL GP-TRANSMISSION HYD 464
467
CONTROL GP-UNPRGMED MONITOR (CATERPILLAR MONITORING SYSTEM) 1074
1076
CONTROL GP-UNPROGRAMMED 438
CONTROL GP-UNPROGRAMMED (MACHINE). 430
434
CONTROL GP-UNPROGRAMMED (PRODUCT LINK 522) (COMMUNICATION RADIO) 289
CONTROL GP-UNPROGRAMMED–PRODUCT LINK 522. 271
CONTROL GP-WINCH 1224
CONVERSION AR-HEAT SHIELD–LAMINATE. 1
2
CONVERTER GP-ELECTRICAL. 272
273
COOLER GP-ENGINE OIL 130
COOLER GP-HYDRAULIC OIL 828
COOLER GP-TRANSMISSION OIL. 469
CORE AS-AFTERCOOLER 170
171
CORE AS-OIL COOLER (ENGINE) 130
CORE AS-OIL COOLER (TRANSMISSION) 469
CORE AS-RADIATOR. 151
154
159
161
COUNTERWEIGHT GP 580
582
583
COUPLING & GUARD GP 471
COUPLING GP-PUMP 472
COVER GP-CONSOLE. 1052
COVER GP-CONSOLE–GRADE CONTROL. . . . 1054
COVER GP-CONSOLE–INSTRUMENT PANEL. 1051
COVER GP-CYLINDER BLOCK. 38
COVER GP-FRONT HOUSING 39
40
COVER GP-VALVE MECHANISM. 41
CRANKSHAFT GP. 42
CYLINDER & LINES GP-LIFT–LH. 831
835
CYLINDER & LINES GP-LIFT–RH 829
833
CYLINDER BLOCK AS. 43
CYLINDER BLOCK GP 45
47
CYLINDER GP-BULLDOZER LIFT 837
839
CYLINDER GP-RIPPER–LIFT. 841
843
CYLINDER GP-TILT–ANGLING BULLDOZER . . . 845
CYLINDER GP-TILT–BULLDOZER 847

NAME PAGE

CYLINDER GP-TILT–SEMI-UNIVERSAL BULLDOZER 849
CYLINDER HEAD AS. 48
50
CYLINDER HEAD GP. 52
53
55
57
59
60

D

DAMPER GP. 61
DISPLAY GP-CAMERA–WORK AREA VISUAL SYSTEM. 1055
1056
DISPLAY GP-MONITOR (CD610) 1059
DISPLAY GP-MONITOR (CD700C). 1057
DISPLAY GP-MONITOR–CD610. 1059
DISPLAY GP-MONITOR–CD700. 1057
DISPLAY GP-MONITOR–LIGHT BAR. 1058
DRAIN GP-ECOLOGY. 473
474
DRAIN GP-ENGINE OIL. 62
DRAWBAR GP 585
DRAWBAR GP–LONG 584
DRIVE AR-FAN–MODULATING 63
DRIVE GP-FAN 64
67
DRIVE GP-FAN–MODULATING 65
DRIVE GP-FINAL. 476
DRIVE GP-FINAL–WASTE HANDLING 478
DRIVE GP-PUMP–WATER 480
DRYER AS-REFRIGERANT 1091
DRYER AS-REFRIGERANT (AIR DRYER). 1102
DRYER AS-REFRIGERANT (IN-LINE) 1094
1098
DUST EJECTOR GP 174

E

EDGE GP-BIT & CUTTING. 1225
1226
1227
ELBOW GP-AIR INLET 175
ELECTRONICS AR-MACHINE 275
ELECTRONICS GP-COMMUNICATION–PRODUCT LINK 300 275
ELECTRONICS GP-ENGINE RATINGS. 20
21
30
32
ELECTRONICS GP-MACHINE–GRADE CONTROL 275
ELECTRONICS GP-MONITOR 275
ELECTRONICS GP-POWER TRAIN. 276
ENCLOSURE GP-ENGINE 586
589

INDEX

NAME PAGE

ENCLOSURE GP-ENGINE–LH 594
598
ENCLOSURE GP-ENGINE–RH. 592
596
ENCLOSURE GP-HYDRAULIC TANK 600
ENGINE AR. 11
12
14
16
18
20
21
22
ENGINE AR-COMPLETE 23
24
25
26
27
28
29
ENGINE AR-CORE 30
31
32
33
ENGINE AR–MODULATING 10
EXTENSION GP-BACKREST (CLOTH) 1159
EXTENSION GP-BACKREST (VINYL) 1162

F

FAN AR-EJECTOR 131
FAN AR-REVERSIBLE 132
FAN GP-BLOWER 135
FAN GP-CIRCULATING 1060
FAN GP-DEFROSTER 1061
FAN GP-REVERSIBLE 136
FASTENER GP-CYLINDER HEAD 68
69
70
FASTENER GP-DAMPER & PULLEY 71
FASTENER GP-FRONT COVER 72
FASTENER GP-VALVE COVER 73
FASTENER GP-VALVE COVER BASE 74
FENDER GP 601
FENDER GP–LH 603
FENDER GP–RH 602
FILLER GP-ENGINE OIL 107
108
FILM GP. 1239
1240
FILM GP (FUEL TANK) (FAST FILL). 224
FILM GP–TANK GUARD 1241
FILM-CERTIFICATION (OPS, READ OMM) 1243
1245
FILM-CIRCUIT BREAKER 347
FILM-IDENTIFICATION (CIRCUIT BREAKER) . . . 349
FILM-IDENTIFICATION (CONTROL PANEL). 132
FILM-IDENTIFICATION (D6T LGP, LH) 751
FILM-IDENTIFICATION (D6T LGP, RH). 751
FILM-IDENTIFICATION (IGNITION SWITCH) 294
FILM-IDENTIFICATION (IMPLEMENT CONTROL). 853
FILM-IDENTIFICATION (INSTRUMENT PANEL) 1073
1076
1077
FILM-IDENTIFICATION (JOYSTICK) (BULLDOZER CONTROL). 276
FILM-IDENTIFICATION (JOYSTICK) (BULLDOZER). 277
FILM-IDENTIFICATION (LIGHTS). 1074
FILM-IDENTIFICATION (LOW SPEED, WINCH LIGHT). 827
FILM-IDENTIFICATION (MANUAL OPERATION LOCK) 1076
FILM-IDENTIFICATION (MONITOR) 1074
1076
FILM-IDENTIFICATION (POWER RECEPTACLE, 12-VOLT) 1243
1245
FILM-IDENTIFICATION (SECURITY SYSTEM). . . 294
FILM-IDENTIFICATION (WASTE HANDLER) 8
FILM-IDENTIFICATION (WATER HEATER). 282
FILM-IDENTIFICATION (WINCH CONTROL) 827
1224
FILM-IDENTIFICATION (WINCH OIL) 1224
FILM-IDENTIFICATION (WINDOW WIPER CONTROLS) 1083
FILM-IDENTIFICATION (WORK LIGHT). 306
308
310
314
316
321
323
327
331
408
FILM-INFORMATION (24-VOLT HEATER). 1031
FILM-INFORMATION (AIR CLEANER) 172
FILM-INFORMATION (DRAWBAR, READ OMM). 584
585
FILM-INFORMATION (PRODUCT LINK, READ OMM). 283
285
289
291
FILM-INFORMATION (TIE-DOWN). 584
FILM-INSTRUCTION (BATTERY DISCONNECT) 391
1244
1246
FILM-INSTRUCTION (BULLDOZER CONTROL). 1244
1246
FILM-INSTRUCTION (RIPPER CONTROL). 826
FILM-INSTRUCTION (SEAT ADJUSTMENT) . . . 1169
1171
FILM-NOTICE (RADIO). 1071
1072

INDEX

NAME	PAGE
FILM-STRIPE (LH)	224
FILM-STRIPE (RH)	224
FILM-STRIPE (ROUND RED REFLECTIVE)	1243, 1245
FILM-WARNING (BLADE, DO NOT CLIMB, READ OMM)	399, 1228
FILM-WARNING (DO NOT OPERATE, READ OMM)	1242
FILM-WARNING (ELECTRICAL SHOCK HAZARD)	347
FILM-WARNING (HIGH PRESSURE CYLINDER)	822, 823, 824
FILM-WARNING (HIGH PRESSURE, READ OMM, INTL)	1242
FILM-WARNING (HIGH PRESSURE, READ OMM)	443, 444, 820, 821
FILM-WARNING (HOT FLUID UNDER PRESSURE, U.S.)	1244, 1246
FILM-WARNING (LASER TRANSMITTER)	1228
FILM-WARNING (NO WELD, NO DRILL, READ OMM)	1021
FILM-WARNING (PRODUCT LINK RADIO, INTL)	1242
FILM-WARNING (PRODUCT LINK RADIO, U. S.)	283, 287, 289, 291
FILM-WARNING (RECOIL SPRING)	648, 650, 652, 654, 660, 662, 664, 666, 749, 750
FILM-WARNING (SEAT BELT)	1242
FILTER (ETHER START)	400
FILTER & LINES GP-FUEL	196, 198
FILTER AS-WATER SEP & FUEL (PRIMARY)	82, 200
FILTER ELEMENT AS-AIR (PRIMARY, STANDARD EFFICIENCY)	172
FILTER ELEMENT AS-AIR (SECONDARY)	172
FILTER ELEMENT AS-OIL (ADVANCED EFFICIENCY)	482, 906
FILTER ELEMENT AS-OIL (FIRE RESISTANT FLUID)	906
FILTER ELEMENT AS-OIL (ULTRA HIGH EFFICIENCY)	481
FILTER ELEMENT-BREATHER (CRANKCASE)	41, 82
FILTER ELEMENT-CAB AIR (AIR RECIRCULATION)	1148
FILTER ELEMENT-CAB AIR (PRESSURIZER)	1147
FILTER ELEMENT-CAB AIR (STANDARD EFFICIENCY) (FRESH AIR)	1148
FILTER GP-ENGINE OIL	109, 112
FILTER GP-OIL (HYDRAULIC FAN, STEERING)	762, 767, 772
FILTER GP-OIL (STEERING)	777
FILTER GP-OIL–HYDRAULIC FAN, STEERING	851
FILTER GP-OIL–POWER TRAIN	481, 482
FILTER GP-WATER SEP & FUEL	200
FILTER-ENGINE OIL (ADVANCED EFFICIENCY)	82, 109, 112
FILTER-FUEL (ADVANCED EFFICIENCY)	196, 198
FILTER-OIL (FIRE RESISTANT FLUID)	851
FILTER-OIL (ULTRA HIGH EFFICIENCY)	851
FILTER-SECONDARY	196
FINAL DRIVE GP	476, 478
FLOOR MAT	4, 1052, 1128
FLYWHEEL GP	75
FORESTRY AR	3, 4
FRAME GP-TELESCOPING RECOIL–LH	650, 654, 658, 660
FRAME GP-TELESCOPING RECOIL–LH, HEAVY DUTY	666
FRAME GP-TELESCOPING RECOIL–RH	648, 652, 656, 662
FRAME GP-TELESCOPING RECOIL–RH, HEAVY DUTY	664
FRAME GP-TRACK ROLLER (LH)	750
FRAME GP-TRACK ROLLER (RH)	750
FUMES DISPOSAL GP	116
FUMES DISPOSAL GP–CRANKCASE	115
FUSE (10-AMPERE)	347, 349
FUSE (15-AMPERE)	347, 349

INDEX

NAME	PAGE
FUSE (175-AMPERE) (ALTERNATOR)	347, 430, 434
FUSE (20-AMPERE)	347, 349

G

NAME	PAGE
GASKET (WATER REGULATOR HOUSING)	82, 137
GASKET-COVER	454, 456
GAUGE AS-OIL LEVEL (TRANSMISSION CASE)	490, 497, 503, 509, 515, 521
GAUGE GP-OIL LEVEL (DIPSTICK)–ENGINE	117
GAUGE-SIGHT (COOLANT)	168
GAUGE-SIGHT (HYDRAULIC TANK)	906
GAUGE-SIGHT (WATER TANK)	166
GEAR GP-BEVEL & TRANSFER	483
GEAR GP-FRONT	76
GEAR GP-REAR	77
GENERAL AR	6
GLASS (TINTED)	1180
GLASS (TINTED)	1181
GLASS-CAB (SLIDING, TINTED)	1191
GRADE CONTROL AR-LASER–DUAL	279
GRADE CONTROL AR-LASER–SINGLE	279
GRADE CONTROL AR-SATELLITE–DUAL GPS	280
GRADE CONTROL AR-SATELLITE–SINGLE GPS	280
GRADE CONTROL AR–ADVANCED TRACKING SYSTEM	279
GRADE CONTROL AR–GRADE CONTROL	277
GRADE CONTROL AR–GRADE CONTROL LASER	276
GRID GP-SAND BLAST ERODING	604, 605
GRILL GP-RADIATOR–HEAVY DUTY	606
GUARD & SCRAPER GP-IDLER	607
GUARD AR-FINAL DRIVE	607
GUARD AR-IDLER–HEAVY-DUTY	668
GUARD AR-IDLER–SYSTEMONE	668
GUARD GP-BOTTOM	608, 609, 611
GUARD GP-BOTTOM–HEAVY-DUTY	612
GUARD GP-CAB DOOR	1063
GUARD GP-FINAL DRIVE	614
GUARD GP-FRONT	615
GUARD GP-FUEL TANK	616, 618, 619, 620
GUARD GP-IDLER–SYSTEMONE	669
GUARD GP-PRECLEANER	177
GUARD GP-RADIATOR	621, 624
GUARD GP-RADIATOR–BOTTOM	623
GUARD GP-REAR–FORESTRY	627, 628, 629, 630
GUARD GP-REAR–HEAVY-DUTY	626
GUARD GP-TRACK GUIDE	670
GUARD GP-TRACK GUIDE–SYSTEMONE	671, 672
GUARD GP-TRACK ROLLER–SYSTEMONE	673, 675
GUARD GP-TRANSMISSION	631
GUARD GP-WINDOW	1064
GUIDING AR-UNDERCARRIAGE	676
GUIDING AR-UNDERCARRIAGE–SYSTEMONE	676, 677

H

NAME	PAGE
HANDHOLD GP	1065
HANDHOLD GP–HEAVY-DUTY	1066
HARNESS AS-ALARM	229
HARNESS AS-CAB	1000, 1178
HARNESS AS-CAB (BEACON, PRECLEANER)	1000
HARNESS AS-CAB (WIPER, SPEAKER)	1083
HARNESS AS-CHASSIS	412, 416, 420, 429, 433
HARNESS AS-CHASSIS (RADIATOR GUARD)	240, 245, 251, 257
HARNESS AS-CONSOLE	430, 434
HARNESS AS-CONTROL	263, 265
HARNESS AS-CONTROL (PRODUCT LINK)	283, 285, 287
HARNESS AS-DASH (PRECLEANER)	1000
HARNESS AS-ENGINE	281, 408
HARNESS AS-ENGINE (ELECTRONIC CONTROL MODULE)	401
HARNESS AS-ENGINE (SPEED SENSOR)	404
HARNESS AS-ENGINE (UNIT INJECTOR)	404
HARNESS AS-FRONT	412, 417, 421

INDEX

NAME	PAGE
HARNESS AS-FUEL TANK	240, 246, 252
HARNESS AS-HEATER & AIR COND	1031, 1033
HARNESS AS-HOOD	240, 245, 251, 257
HARNESS AS-LIGHTING	320, 323, 327, 331, 333
HARNESS AS-LIGHTING (BEACON)	300, 302
HARNESS AS-LIGHTING (FLOODLIGHT) (REAR)	306
HARNESS AS-LIGHTING (FRONT FLOOD, RH, LH)	323
HARNESS AS-LIGHTING (FRONT FLOODLIGHTS)	316
HARNESS AS-LIGHTING (FRONT)	313
HARNESS AS-LIGHTING (FRONT) (CYLINDER)	310
HARNESS AS-LIGHTING (REAR FLOODLIGHTS)	316
HARNESS AS-LIGHTING (REAR)	313
HARNESS AS-LIGHTING (REAR) (ROPS)	310
HARNESS AS-LIGHTING (ROPS)	308
HARNESS AS-MONITOR	289, 291, 427
HARNESS AS-MONITOR (GPS)	1124
HARNESS AS-MONITOR (LASER)	1124
HARNESS AS-MOTOR	997
HARNESS AS-OPERATOR CONTROLS	1224
HARNESS AS-PANEL	347, 349, 1073, 1076
HARNESS AS-PLATFORM	412, 415, 421
HARNESS AS-POWER	300, 302
HARNESS AS-POWER (ELECTRICAL CONVERTER)	272
HARNESS AS-RADIO	277
HARNESS AS-RADIO (GRADE CONTROL)	412, 416, 420
HARNESS AS-RADIO (PRODUCT LINK)	287
HARNESS AS-SENSOR	65, 412, 416, 420, 464, 467, 860
HARNESS AS-SOLENOID	241, 247, 253
HARNESS AS-SOLENOID (PITCH)	873
HARNESS AS-SOLENOID (WINCH, REAR)	887
HARNESS AS-SWITCH (SERVICE BRAKE)	1136, 1138, 1140
HARNESS AS-TRANSMISSION	240, 246, 252, 258
HARNESS AS-VALVE	865
HARNESS AS-VALVE (SEAT AIR COMPRESSOR)	1171
HARNESS AS-WIRING	65, 132, 320, 422, 460, 462, 755, 757
HARNESS AS-WIRING (AIR CONDITIONER COMPRESSOR)	1085, 1088, 1091, 1094, 1098, 1102
HARNESS AS-WIRING (CRANK WITHOUT INJECT)	408
HARNESS AS-WIRING (CYLINDER)	308
HARNESS AS-WIRING (FENDER, LH)	240, 246, 252, 258
HARNESS AS-WIRING (FUEL PRESSURE)	206, 208
HARNESS AS-WIRING (LIGHT BAR)	412, 417, 420
HARNESS AS-WIRING (MACHINE SECURITY SYSTEM)	294
HARNESS AS-WIRING (MAST)	339
HARNESS AS-WIRING (POWER SUPPLY MODULE)	412, 416
HARNESS AS-WIRING (RECEIVER)	412, 417, 421
HARNESS AS-WIRING (ROPS)	1094, 1098, 1102
HARNESS AS-WIRING (WINDOW WASHER)	1173, 1175
HEAD GP-PUMP–STEERING	760
HEATER GP-CAB	1067
HEATER GP-JACKET WATER	282

INDEX

NAME PAGE

HOSE-RADIATOR 141
143
HOUSING & REGULATOR GP–REGULATOR . . . 137
HOUSING AS-FLYWHEEL 78
HOUSING GP-FILTER 481
482
HOUSING GP-FLYWHEEL 79
HOUSING GP-FRONT 81
HOUSING GP-SEAT SUSPENSION 1068
HUB GP 138
HYDRAULIC AR-2 VALVE 852
HYDRAULIC AR-4 VALVE 853

I

IDLER GP-FRONT–SYSTEMONE 678
IDLER GP-FRONT–SYSTEMONE–WASTE HANDLING 679
IDLER GP-TRACK 680
681
682
IDLER GP-TRACK–SYSTEMONE 683
684
IDLER GP-TRACK–SYSTEMONE–WASTE HANDLING 685
INDICATOR AS (ACTION LIGHT) 415
1073
1076
INDICATOR AS (BLADE FLOAT) 420
INDICATOR AS (ENGINE OIL PRESSURE) 412
INJECTOR GP-FUEL 201
202
203
INSTALLATION AR-ENGINE 34
35
INSTALLATION GP-COMMUNICATION–PRODUCT LINK 321SR 283
285
287
291
INSTALLATION GP-COMMUNICATION–PRODUCT LINK 522 289
INSTALLATION GP-RADIO 1071
1072
INSTALLATION GP-SECURITY 294
INSTRUMENT GP 1073
INSTRUMENT GP–OPEN ROPS 1076

K

KEY (BATTERY DISCONNECT) 390
KEY AS-ELECTRONIC (SECURITY) (GRAY) 294
KEY AS-ELECTRONIC (SECURITY) (YELLOW) 294
KIT-ENGINE OVERHAUL–BRONZE 82
KIT-RECEPTACLE (12-PIN) 1048
KIT-SEAL (RELIEF VALVE) 957
KIT-TORQUE CONVERTER BEARING 486

NAME PAGE

KIT-TORQUE CONVERTER GASKET–OVERHAUL 487
KIT-TRANSMISSION BEARING–OVERHAUL 488
KIT-TRANSMISSION GASKET–OVERHAUL 489
KNOB GP–RIPPER 1080

L

LAMP (24-VOLT, 3-WATT) 412
415
420
1073
1076
LAMP (24-VOLT) 429
433
1073
1076
1224
LAMP (24-VOLT) (DOME LIGHT) 296
LAMP (24-VOLT) (WARNING BEACON) 300
LAMP AS-INDICATOR (ACTION LIGHT) 429
433
LAMP AS-LED (24-VOLT, RED) (MACHINE SECURITY SYSTEM) 294
LAMP GP-DOME 296
LAMP GP-FLOOD 297
298
299
LAMP GP-WARNING BEACON 300
302
304
LAMP GP-WARNING BEACON (24-VOLT) 300
LAMP-HALOGEN (24-VOLT, 70-WATT) 297
298
299
LAMP-LED (24-VOLT) 865
LATCH GP 632
LIFTING GP-ENGINE 84
LIGHTING GP-FLOOD 305
LIGHTING GP-FLOOD–CYL, ENG COMP, FUEL TANK, ROPS 308
310
313
320
LIGHTING GP-FLOOD–ENG COMP, FUEL TANK, RAD GUARD 306
LIGHTING GP-FLOOD–ENG COMP, FUEL TANK, SWEEP 316
LIGHTING GP-FLOOD–FRONT, FUEL TANK, RADIATOR 333
LIGHTING GP-FLOOD–REAR GUARD, SWEEP, UNDER HOOD 323
327
331
LINER GP-CAB 1081
1083
LINES GP-AIR 178
LINES GP-AIR CONDITIONER 1085
1088
1091

INDEX

NAME PAGE

LINES GP-AIR CONDITIONER–ROPS MOUNTED 1094
1098
1102
LINES GP-AIR–ATAAC 179
LINES GP-ALTERNATOR AIR–DUCTED 335
337
LINES GP-DIVERTER VALVE 854
LINES GP-ENGINE OIL 118
LINES GP-FUEL 204
206
208
LINES GP-HEATER 1106
LINES GP-HYDRAULIC 857
LINES GP-LIFT CYLINDER 858
LINES GP-OIL SUPPLY 119
LINES GP-PILOT 860
863
865
868
LINES GP-POWER TRAIN OIL 490
497
503
509
515
521
LINES GP-PUMP 870
LINES GP-REAR ATTACHMENT 873
LINES GP-RIPPER 877
879
LINES GP-STEERING 762
767
772
777
LINES GP-TILT CYLINDER 880
881
882
883
885
LINES GP-TURBOCHARGER OIL 121
123
LINES GP-TURBOCHARGER WATER 139
LINES GP-WATER 141
143
LINES GP-WINCH 887
LINK AS-TRACK BOX 695
701
LINK AS-TRACK BOX–OFFSET 696
702
LINK AS-TRACK BOX–SYSTEMONE 693
697
699
LINK AS-TRACK BOX–SYSTEMONE, OFFSET 694
698
700
LINK AS-TRACK–HEAVY-DUTY 686
687
691
692

NAME PAGE

LINK AS-TRACK–SYSTEMONE, OFFSET 688
689
690
LITERATURE GP 1
4
1021
LOCK GP 1077
LOCK GP-CYLINDER 460
462
755
757

M

MANIFOLD & VALVE GP–BRAKE 782
MANIFOLD & VALVE GP–PARKING, SERVICE BRAKES 784
785
MANIFOLD GP-CONTROL–DEMAND FAN 526
MANIFOLD GP-CONTROL–IMPLEMENT PILOT PRESSURE 891
MANIFOLD GP-EXHAUST 182
MANIFOLD GP-TRANSMISSION 527
MANIFOLD GP-VALVE 892
893
MAST GP–LASER RECEIVER 339
MIRROR GP-REAR VIEW–INTERIOR 1109
MIRROR GP-REAR VIEW–OPEN ROPS 1108
MODULE GP-DISPLAY (WORK AREA VISUAL SYSTEM) 1055
1056
MODULE GP-INTERFACE (KEY) 294
MODULE GP-QUAD GAUGE 1110
MOTOR GP-ELECTRIC (CONDENSER FAN) 1031
MOTOR GP-PISTON–STEERING 894
MOTOR GP-WINDOW WIPER (24-VOLT, 2-SPEED) 1114
MOTOR GP-WINDOW WIPER–DOOR, LH 1116
1117
MOTOR GP-WINDOW WIPER–DOOR, RH 1115
1118
MOTOR GP-WINDOW WIPER–FRONT 1111
MOTOR GP-WINDOW WIPER–REAR 1112
1113
1114
MOUNTING GP-ALTERNATOR 85
MOUNTING GP-ANTENNA–GRADE CONTROL 1119
1120
MOUNTING GP-BRACKET 1121
MOUNTING GP-CAB 1122
MOUNTING GP-CARRIER ROLLER 703
704
MOUNTING GP-CONNECTOR–GRADE CONTROL 340
MOUNTING GP-CONTROL–CONSOLE, LH 1123
MOUNTING GP-CYLINDER 895

INDEX

NAME PAGE

MOUNTING GP-DISPLAY (WORK AREA VISUAL SYSTEM) 1055
1056
MOUNTING GP-ENGINE 86
MOUNTING GP-FAN DRIVE 87
MOUNTING GP-FINAL DRIVE 528
MOUNTING GP-GRADE CONTROL 344
MOUNTING GP-GRADE CONTROL–CAB 341
MOUNTING GP-GRADE CONTROL–MODULE . . 342
MOUNTING GP-GRADE CONTROL–OPEN ROPS 343
MOUNTING GP-MAST–LASER RECEIVER 1228
MOUNTING GP-MAST–SATELLITE RECEIVER 1228
MOUNTING GP-MONITOR–GRADE CONTROL 1124
1125
1126
1127
MOUNTING GP-PLATFORM–OPEN ROPS 1128
MOUNTING GP-RADIO 1130
MOUNTING GP-RADIO–GRADE CONTROL 1131
MOUNTING GP-RECEIVER (TARGET) 353
MOUNTING GP-RECEIVER–MAST 345
MOUNTING GP-RIPPER 1229
MOUNTING GP-ROPS 1132
MOUNTING GP-TRANSMISSION 529
MOUNTING GP-VALVE 896
MUFFLER GP 183

N

NUT (M10X1.5-THD) 287

O

OIL CHANGE GP-HIGH SPEED 124
OPTION AR-COUNTERWEIGHT 6
OPTION AR-GUARD–HEAVY-DUTY 7
OPTION AR-SERVICE–FUEL TANK, HS OIL CHANGE 7
ORIFICE AS-AIR CONDITIONER 1091
1102

P

PADLOCK GP 4
586
1021
1243
PAN GP-BACKREST–CLOTH 1134
PAN GP-BACKREST–LUMBAR 1133
PAN GP-BACKREST–VINYL 1135
PAN GP-OIL 88
PANEL GP-CIRCUIT BREAKER 347
349

NAME PAGE

PEDAL GP-GOVERNOR & BRAKE 1136
1138
1140
PISTON & ROD GP 89
PIVOT BAR GP 705
706
PLANETARY GP-TRANSMISSION 530
536
PLATE & FILM GP 1243
1245
1247
PLATE & FILM GP–INTERNATIONAL 1242
PLATE AS-BRUSH 351
PLATE GP-RADIATOR–HEAVY-DUTY 633
PLATE-IDENTIFICATION (SEQUENCE) (CAB) 1013
1017
PLATE-SERIAL NUMBER (BULLDOZER) 967
968
969
970
971
972
973
974
975
976
977
PLATE-SERIAL NUMBER (TRANSMISSION) 454
456
PLATE-WARNING (FAN, FLYING DEBRIS) 132
PLATE-WARNING (HIGH PRESSURE CYLINDER) 648
650
652
654
656
658
660
662
664
666
749
750
PLATE-WARNING (RECOIL SPRING) 648
650
652
654
656
660
662
664
666
749
750
PLATFORM GP 1142
1143
PLATFORM GP-OPERATOR 1144
PLUG GP-ENGINE 91
PLUG-DRAIN (ENGINE OIL) 62

INDEX

NAME PAGE

PLUG-DRAIN (HYDRAULIC TANK) 906
PLUG-DRAIN (POWER TRAIN) 474
PLUG-DRAIN (TRANSMISSION CASE) 578
PLUG-MAGNETIC (FINAL DRIVE, OIL CHECK, FILL) 476
PLUG-MAGNETIC (FINAL DRIVE, OIL FILL) 478
POWER TRAIN AR 542
PRECLEANER AR–WITH PRESCREEN 184
PRECLEANER AR–WITHOUT PRESCREEN 185
PRECLEANER GP–WITH PRESCREEN 187
PRECLEANER GP–WITHOUT SCREEN 186
PRESCREENER AS 189
PRESSURIZER GP-CAB 1148
PRESSURIZER GP-CAB–DEBRIS RESISTANT 1147
PULLEY GP-CRANKSHAFT 92
PULLEY GP-FAN & ALT DRIVE 93
95
PUMP & MTG GP-IMPLEMENT 897
898
PUMP & MTG GP-STEERING 786
PUMP & MTG GP-UNIT INJ HYD 210
212
PUMP GP-CHARGE–STEERING 787
PUMP GP-ENGINE OIL 126
127
PUMP GP-FUEL INJECTION 214
215
216
217
PUMP GP-FUEL PRIMING 218
PUMP GP-FUEL TRANSFER 219
PUMP GP-GEAR–POWER TRAIN 545
PUMP GP-GEAR–POWER TRAIN OIL 543
PUMP GP-PISTON–IMPLEMENT 899
901
PUMP GP-PISTON–STEERING 788
790
792
PUMP GP-PISTON–WINCH 903
PUMP GP-UNIT INJECTOR HYD 212
219
PUMP GP-WATER 145
146
147
148
149
150
PUSH ARM GP 982
984
986
988
990

R

RADIATOR AR–WASTE HANDLING 151
RADIATOR GP 152
154
155
157
159
161
RADIO GP-COMMUNICATION–PRODUCT LINK 121SR 352
RECEIVER GP-LASER–DUAL 352
RECEIVER GP-LASER–SINGLE 352
RECEIVER GP-SATELLITE–DUAL GNSS, MS992 353
RECEIVER GP-SATELLITE–SINGLE GNSS, MS992 353
RECLINER GP-SEAT 1150
REGULATOR AS-VOLTAGE (24-VOLT) (ALTERNATOR) 231
REGULATOR GP-FUEL PRESSURE 221
REGULATOR-TEMPERATURE (92-DEG C) (WATER, COOLANT) 82
137
RELAY AS (24-VOLT) (CONDENSER FAN MOTOR) 1031
1033
RELAY AS (24-VOLT) (GRADE, SLOPE) 412
415
420
RELAY AS (24-VOLT) (PRECLEANER) 1000
RELAY AS (24-VOLT) (WINCH) 865
RIM AS-DOUBLE FLANGE 709
RIM AS-SINGLE FLANGE 717
RIPPER AR 1231
1232
RIPPER GP 1233
ROCKER ARM GP–EXHAUST 97
ROCKER ARM GP–INLET 98
ROLLER AR-TRACK–TALL 707
ROLLER GP-TRACK CARRIER 708
ROLLER GP-TRACK-DOUBLE FLANGE 709
711
ROLLER GP-TRACK-DOUBLE FLANGE–COLD WEATHER 715
ROLLER GP-TRACK-DOUBLE FLANGE–HEAVY-DUTY 710
713
ROLLER GP-TRACK-DOUBLE FLANGE–HIGH HEAT 716
ROLLER GP-TRACK-DOUBLE FLANGE–TALL 714
ROLLER GP-TRACK-SINGLE FLANGE 717
719
ROLLER GP-TRACK-SINGLE FLANGE–COLD WEATHER 722
ROLLER GP-TRACK-SINGLE FLANGE–HEAVY-DUTY 718
721
ROLLER GP-TRACK-SINGLE FLANGE–HIGH HEAT 723
ROLLER GP-TRACK-SINGLE FLANGE–SYSTEMONE 720
724

INDEX

NAME PAGE

ROPS GP. 1151
ROPS GP-OPEN 1152
ROTATING GP-MOTOR–STEERING. 794
ROTATING GP-PUMP–IMPLEMENT 905
ROTATING GP-PUMP–STEERING 796
798

S

SCRAPER GP-IDLER 725
SCREEN (ALTERNATOR) 335
SCREEN (DUCTED ALTERNATOR). 337
SCREEN (HYDRAULIC TANK). 906
SCREEN (IMPLEMENT PILOT OIL) 891
SCREEN AS (HYDRAULIC TANK) 906
SCREEN AS (TORQUE CONVERTER SCAVENGE) 490
497
503
509
515
521
SCREEN GP-MAGNETIC (POWER TRAIN) 546
SCREEN GP-MAGNETIC–TRANSMISSION. 546
SCREEN GP-PROTECTION 1156
SCREEN GP-PROTECTION–REAR. 1154
1155
SCREEN-SUCTION (POWER TRAIN) 546
SCREEN-SUCTION (TRANSMISSION CASE) . . . 456
SCREEN-SUCTION (TRANSMISSION SCAVENGE) 454
SEAL GP-CRANKSHAFT 99
100
SEAL GP-DUO-CONE. 476
478
680
681
684
685
SEAL GP-WASTE HANDLING 634
SEAL-CRANKSHAFT (FRONT). 82
99
SEAL-INTEGRAL 469
SEAL-LIP TYPE (WATER TEMPERATURE REGULATOR) 82
SEAT BELT GP (RETRACTABLE, 3-IN). 1159
1162
SEAT GP-SUSPENSION–CLOTH. 1166
SEAT GP-SUSPENSION–CLOTH, AIR. 1167
SEAT GP-SUSPENSION–VINYL 1165
1168
SEAT GP–CLOTH 1157
1159
1164
SEAT GP–CLOTH, AIR 1163
SEAT GP–VINYL 1160
1162
SEGMENT GP-SPROCKET. 547
SENDER AS-FUEL LEVEL 222
SENSOR AS-ANGLE (AS400TC). 279
SENSOR AS-ANGLE (AS400TC) (ANGLE). 280
SENSOR AS-POSITION (JOYSTICK) (BULLDOZER CONTROL HANDLE). 1047
1048
SENSOR AS-PRESSURE (ENGINE OIL) 354
SENSOR AS-TEMPERATURE 374
375
SENSOR GP-ENGINE 11
12
14
16
18
23
32
33
354
355
SENSOR GP-ENGINE (ELECTRONIC) 24
33
SENSOR GP-POSITION. 357
358
359
360
SENSOR GP-POSITION (DECELERATOR) 1136
SENSOR GP-POSITION (DIRECTION CONTROL). 1039
1041
SENSOR GP-POSITION (ROTARY) (DECELERATOR PEDAL) 1138
1140
SENSOR GP-POSITION (SERVICE BRAKE PEDAL) 1136
1138
1140
SENSOR GP-PRESSURE 208
361
362
363
364
365
366
367
SENSOR GP-PRESSURE (AIR INLET MANIFOLD) 354
SENSOR GP-PRESSURE (ATMOSPHERIC) 354
355
SENSOR GP-PRESSURE (BULLDOZER PILOT OIL) 416
SENSOR GP-PRESSURE (ENGINE OIL) 355
SENSOR GP-PRESSURE (FUEL). 206
SENSOR GP-PRESSURE (HYDRAULIC OIL) . . . 421
SENSOR GP-PRESSURE (IMPLEMENT PUMP). 412
SENSOR GP-PRESSURE (INJECTION ACTUATION) 354
355
SENSOR GP-PRESSURE (OUTLET AIR). 355

INDEX

NAME PAGE

SENSOR GP-PRESSURE (TURBOCHARGER INLET) . . . 240, 245, 251, 257
SENSOR GP-SPEED . . . 368, 369, 370
SENSOR GP-SPEED (ENGINE TIMING) . . . 354
SENSOR GP-SPEED (ENGINE TIMING) (ENGINE TIMING) . . . 355
SENSOR GP-SPEED (TORQUE CONVERTER OUTPUT) . . . 408
SENSOR GP-SPEED (TRANSMISSION OUTPUT 1) . . . 531, 536
SENSOR GP-SPEED (TRANSMISSION OUTPUT 2) . . . 531, 536
SENSOR GP-TEMPERATURE . . . 371, 372, 373, 374, 375
SENSOR GP-TEMPERATURE (COOLANT) . . . 355
SENSOR GP-TEMPERATURE (HYDRAULIC OIL) . . . 240, 245, 251, 257
SENSOR GP-TEMPERATURE (INTAKE AIR TEMPERATURE) . . . 355
SENSOR GP-TEMPERATURE (TORQUE CONVERTER OIL) . . . 408
SENSOR GP-TEMPERATURE (TRANSMISSION LUBRICATION OIL) . . . 240, 245
SENSOR GP-TEMPERATURE (TRANSMISSION SUMP) . . . 408
SENSOR-TEMPERATURE . . . 372, 373
SERVICE GP-COMMUNICATION (PRODUCT LINK 300) . . . 275
SERVICE GP-MONITOR . . . 275
SHAFT GP-DRIVE . . . 548
SHIELD GP-EXHAUST . . . 190
SHIELD GP-HEAT . . . 191
SOFTWARE GP (MAST) . . . 339
SOFTWARE GP-COMMUNICATION (PRODUCT LINK 121SR) . . . 352
SOFTWARE GP-COMMUNICATION (PRODUCT LINK 300) . . . 275
SOFTWARE GP-ELECTRONIC . . . 271
SOFTWARE GP-MONITOR . . . 275, 376, 1059
SOFTWARE GP-MONITOR (PRODUCT LINK 121SR) . . . 352
SOFTWARE GP-POWER TRAIN . . . 276
SOLENOID AS-STARTING MOTOR (24-VOLT) . . . 384, 386
STARTING AID GP-ETHER . . . 377
STARTING MOTOR GP-ELECTRIC . . . 378, 382
STARTING MOTOR GP-ELECTRIC–HEAVY-DUTY . . . 380, 381, 383, 386
STRAINER AS-OIL (HYDRAULIC TANK FILL) . . . 906
STRAINER-FUEL (TANK) . . . 222, 226
STRAINER-FUEL (TANK) (FUEL TANK) . . . 224
STRIKER GP-REAR . . . 726
SUPPORT GP-ENGINE . . . 101
SUPPORT GP-RADIATOR . . . 163
SUSPENSION GP-SEAT . . . 1169
SUSPENSION GP-SEAT–AIR . . . 1171
SWEEP GP . . . 636
SWEEP GP–FORESTRY . . . 638
SWITCH (WINCH CONTROL) . . . 1043
SWITCH AS (LOW LOCK) . . . 942
SWITCH AS (LOWER LIMIT) . . . 339
SWITCH AS (UPPER LIMIT) . . . 339
SWITCH AS-DISCONNECT (BATTERY) . . . 391
SWITCH AS-LIMIT (REVERSE) . . . 1039, 1041
SWITCH AS-LIMIT (SERVICE BRAKE PEDAL) . . . 1136, 1138, 1140
SWITCH AS-PRESSURE (COMPRESSOR, HIGH SIDE) . . . 1091
SWITCH AS-PRESSURE (REFRIGERANT) . . . 1085, 1088, 1094, 1098, 1102
SWITCH AS-PUSH BUTTON . . . 1045
SWITCH AS-PUSH BUTTON (AUTOMATIC KICKDOWN) . . . 1073, 1076
SWITCH AS-PUSH BUTTON (BIDIRECTIONAL MODE) . . . 1073, 1076
SWITCH AS-PUSH BUTTON (DOWNSHIFT) . . . 1039, 1041
SWITCH AS-PUSH BUTTON (FLEXXAIRE FAN) . . . 132
SWITCH AS-PUSH BUTTON (OPERATOR SELECT) . . . 1073, 1076
SWITCH AS-PUSH BUTTON (PITCH FORWARD) . . . 1045
SWITCH AS-PUSH BUTTON (UPSHIFT) . . . 1039, 1041
SWITCH AS-ROCKER . . . 438

INDEX

NAME PAGE

SWITCH AS-ROCKER (24-VOLT) (AIR CONDITIONER). 1074
SWITCH AS-ROCKER (24-VOLT) (HYDRAULIC LOCKOUT) 429 433
SWITCH AS-ROCKER (24-VOLT) (REAR FLOODLIGHTS) 306 308 310 313 316 320 323 333
SWITCH AS-ROCKER (24-VOLT) (REAR LIGHT). 327 331
SWITCH AS-ROCKER (24-VOLT) (THROTTLE) 429 433
SWITCH AS-ROCKER (IMPLEMENT LOCKOUT) 438
SWITCH AS-ROCKER (MULTIVELOCITY PROGRAM) 430 434
SWITCH AS-ROCKER (PARKING BRAKE) 753
SWITCH AS-ROCKER (THROTTLE). 438
SWITCH AS-ROTARY (FAN SPEED). 1073
SWITCH AS-ROTARY (FRONT) 1083
SWITCH AS-ROTARY (LH DOOR). 1083
SWITCH AS-ROTARY (LIGHT SWITCH). 1076
SWITCH AS-ROTARY (LIGHTS) 1073
SWITCH AS-ROTARY (REAR). 1083
SWITCH AS-ROTARY (RH DOOR) 1083
SWITCH AS-START (KEY) (IGNITION) 1073 1076
SWITCH GP-BYPASS–POWER TRAIN OIL FILTER 389
SWITCH GP-DISCONNECT (BATTERY) 240 245 251 257
SWITCH GP-DISCONNECT–AUXILIARY 391
SWITCH GP-DISCONNECT–BATTERY 390
SWITCH GP-MAGNETIC–MAIN RELAY. 394
SWITCH GP-MAGNETIC–START RELAY 393
SWITCH GP-PRESSURE (FILTER BYPASS). . . . 851
SWITCH GP-PUSH BUTTON (FUEL PRIMING PUMP). 240
SWITCH GP-PUSH BUTTON (HORN). 429 433 438
SWITCH GP-PUSH BUTTON–FUEL PRIMING PUMP 396
SWITCH GP-PUSH BUTTON–HORN–FUEL PRIMING PUMP 395
SWITCH GP-TOGGLE 397
SWITCH GP-TOGGLE (DEFROSTER FAN CONTROL). 1061
SWITCH GP-TOGGLE (UNDER HOOD SERVICE LIGHT). 408

T

TANK & FILTER GP-HYDRAULIC. 906
TANK & MTG GP-HYDRAULIC 909
TANK GP-COOLANT. 164 166 168
TANK GP-COOLANT–WITH HEAT SHIELDING 165
TANK GP-FUEL 222
TANK GP-FUEL (FAST FILL). 224 226
TANK GP-FUEL–FAST FILL 224 226
TANK GP-WINDOW WASHER. 1173 1175 1177
TARGET GP-LASER 279 398 399
TOOTH GP-RIPPER–CURVED. 1237
TOOTH GP-RIPPER–STRAIGHT 1235 1236 1238
TORQUE CONVERTER & HOUSING GP. 549
TORQUE CONVERTER GP 551 556 558
TORQUE CONVERTER GP–WITH DIVIDER 553
TORQUE CONVERTER GP–WITH HOUSING. . . 554
TRACK ADJUSTER & RECOIL GP 727 729
TRACK GP–2-REQUIRED, HEAVY-DUTY. 731 732 733 741 742 743 744 745 746
TRACK GP–2-REQUIRED, SYSTEMONE 734 735 736 737 738 739 740
TRANSMISSION AR 560 561
TRUNNION GP-BULLDOZER 992 993
TRUNNION GP-ENGINE 102
TURBOCHARGER GP 192 193 194 195

INDEX

NAME PAGE

U

UNDERCARRIAGE AR 751
UNDERCARRIAGE AR–HEAVY-DUTY 749 750
UNDERCARRIAGE AR–SYSTEMONE 747 748
UNIVERSAL JOINT GP 562

V

V-BELT (AIR COMPRESSOR) 1027
V-BELT (BANDED) (FLEXXAIRE FAN) 132
V-BELT (REFRIGERANT COMPRESSOR) 1025
V-BELT SET (INCLUDES 3-BELTS) 95
V-BELT SET (INCLUDES 3-BELTS) (FAN DRIVE) 65 93
VALVE & MTG GP-BULLDOZER–GRADE CONTROL 910 911
VALVE & MTG GP-CONTROL–BRAKE 800 802
VALVE & MTG GP-IMPLEMENT CONT 912
VALVE AS (REFRIGERANT, HIGH SIDE) 1085 1088
VALVE AS (REFRIGERANT, LOW SIDE) 1085 1088
VALVE GP-BANK 2–BULLDOZER LIFT, TILT . . . 913
VALVE GP-BANK 3–BULLDOZER, RIPPER 917
VALVE GP-BANK 3–BULLDOZER, WINCH 915
VALVE GP-BANK 4–BULLDOZER, RIPPER 919
VALVE GP-BRAKE CONTROL 804 806
VALVE GP-BYPASS–HYDRAULIC OIL COOLER 921
VALVE GP-CHECK–PILOT PRESSURE SUPPLY 922
VALVE GP-CONTROL–BULLDOZER LIFT 923 934
VALVE GP-CONTROL–BULLDOZER TILT 926 932
VALVE GP-CONTROL–RIPPER LIFT 930
VALVE GP-CONTROL–WINCH 928
VALVE GP-DIVERTER–IMPLEMENT PILOT OIL 937
VALVE GP-ETHER STARTING 400
VALVE GP-FLUID SAMPLING–ENGINE OIL 128
VALVE GP-MODULATING 129
VALVE GP-MODULATING (DEMAND FAN) 526
VALVE GP-MODULATING (TRANSMISSION CLUTCH) 464
VALVE GP-MODULATING–TRANSMISSION CLUTCH 563 564
VALVE GP-PILOT CARTRIDGE–BULLDOZER LIFT, LOWER 946
VALVE GP-PILOT CARTRIDGE–IMPLEMENT . . . 947
VALVE GP-PILOT–BULLDOZER CONTROL 944
VALVE GP-PILOT–IMPLEMENT, REAR 942

NAME PAGE

VALVE GP-PILOT–RIPPER 940
VALVE GP-PILOT–STEERING 808
VALVE GP-PILOT–WINCH 938
VALVE GP-PRESSURE REDUCING–IMPLEMENT PILOT OIL 948
VALVE GP-PUMP CONTROL (PRESSURE COMPENSATOR) (PUMP HEAD) 760
VALVE GP-PUMP CONTROL–FLOW COMPENSATOR 950
VALVE GP-PUMP CONTROL–PRESSURE, FLOW COMPENSATOR 812 813
VALVE GP-PUMP CONTROL–PRESSURE, FLOW COMPENSATOR–IMPLEMENT 949
VALVE GP-PUMP CONTROL–PRESSURE, FLOW COMPENSATOR–STEERING PUMP PILOT PRESSURE 810
VALVE GP-QUICK-DROP 951 952
VALVE GP-RELIEF 568
VALVE GP-RELIEF (IMPLEMENT PILOT OIL) . . 923 926
VALVE GP-RELIEF (PUMP HEAD) 760
VALVE GP-RELIEF (STEERING LINES PRESSURE) 762 767 772 777
VALVE GP-RELIEF–CHARGE PRESSURE–STEERING PUMP 814
VALVE GP-RELIEF–IMPLEMENT PILOT OIL 957
VALVE GP-RELIEF–MAIN 565 954 955
VALVE GP-RELIEF–PILOT OIL PRESSURE 956
VALVE GP-RELIEF–STEERING LINES PRESSURE 815 816
VALVE GP-RELIEF–TORQUE CONVERTER OUTLET 567
VALVE GP-SHUTOFF 1106
VALVE GP-SHUTTLE 923 926 930 934 958 959
VALVE GP-SHUTTLE (BULLDOZER TILT) 932
VALVE GP-SOLENOID 817 818 819 960 962 963 964
VALVE GP-SOLENOID (24-VOLT) (FLEXXAIRE FAN) 132
VALVE GP-SOLENOID (BLADE CONTROL) 910
VALVE GP-SOLENOID (BOOST) 910 911

INDEX

NAME PAGE

VALVE GP-SOLENOID (BRAKE) 782
VALVE GP-SOLENOID (GRADE CONTROL) 911
VALVE GP-SOLENOID (HYDRAULIC LOCKOUT) 891
VALVE GP-SOLENOID (IMPLEMENT PILOT OIL) 937
VALVE GP-SOLENOID (MANUAL LOW SPEED LOCK) 887
VALVE GP-SOLENOID (PARKING, SECONDARY BRAKE) 784
VALVE GP-SOLENOID–IMPLEMENT PILOT OIL 961
VALVE MECHANISM GP 103 104 105
VALVE-BREAKER RELIEF 909
VALVE-RELIEF 523 527

W

WASHER GP-WINDOW 1178
WASTE HANDLING AR 8 9
WINDOW GP-CAB (REAR) 1181 1194
WINDOW GP-CAB–LH 1185 1188
WINDOW GP-CAB–REAR 1180 1191
WINDOW GP-CAB–REAR, SLIDING 1181 1193
WINDOW GP-CAB–RH 1184 1190
WINDOW GP-CAB–SLIDING, LH 1183 1187
WINDOW GP-CAB–SLIDING, RH 1182 1186
WINDOW GP-SLIDING–LH 1194
WINDOW GP-SLIDING–REAR 1194
WINDOW GP-SLIDING–RH 1194
WIPER GP-WINDOW 1195 1197 1199 1201
WIPER PIVOT GP 1203
WIRING GP-ELECTRONIC CONTROL 401 404 406
WIRING GP-ENGINE 408
WIRING GP-GRADE CONTROL 412 415 420
WIRING GP-MONITOR 427
WIRING GP-PLATFORM 429 433 438

NAME PAGE

Y

YOKE GP 106

MEMORANDA

MACHINE ARRANGEMENT

269-2044 CHASSIS AR

S/N: SMC1-UP; GCT1-UP
PART OF 269-2037, 269-2038 GENERAL AR

SMCS-7000 **i05322734**

NOTE	PART NUMBER	QTY	PART NAME 1 2 3 4 5 6 (PRODUCT LEVEL)	SEE PAGE
Y	*279-9548*	1	BATTERY & WIRING GP	240
			S/N: SMC1-1499 ; GCT1-1999	
Y	*368-4241*	1	BATTERY & WIRING GP	257
			S/N: SMC1500-UP ; GCT2000-UP	
Y	*271-0461*	1	BOX GP-BATTERY	575
Y	*272-3477*	1	CAB AR	1002
Y	*280-0942*	1	CASE & FRAME GP	578
Y	*218-1835*	1	ENCLOSURE GP-ENGINE	586
Y	*218-1839*	1	ENCLOSURE GP-HYDRAULIC TANK	600
Y	*218-1841*	1	FENDER GP	601
Y	*218-1836*	1	GUARD GP-BOTTOM	608
Y	*223-1540*	1	GUARD GP-RADIATOR	621
Y	*283-0655*	1	INSTRUMENT GP	1073
Y	*223-1679*	1	LINES GP-FUEL	204
Y	*208-8699*	1	MOUNTING GP-ROPS	1132
Y	*220-2800*	1	PLATFORM GP-OPERATOR	1144
Y	*208-8705*	1	ROPS GP	1151
Y	*223-2205*	1	SEAT GP	1164
Y	*218-1843*	1	TANK GP-FUEL	222
Y	*279-9547*	1	WIRING GP-PLATFORM	429
			S/N: SMC1-1499 ; GCT1-1999	
Y	*368-4242*	1	WIRING GP-PLATFORM	438
			S/N: SMC1500-UP ; GCT2000-UP	
	6V-1970	1	LITERATURE GP	
			(IN OPERATOR'S COMPARTMENT)	
	5P-7958	1	SLEEVE-CABLE SPLICE	
	5P-8500	2	KEY	

Y - SEPARATE ILLUSTRATION

<END>

282-9553 CONVERSION AR-HEAT SHIELD—LAMINATE

S/N: SMC1-UP
FOR USE WITH DEMAND FAN, SOUND SUPPRESSION
AN ATTACHMENT

SMCS-1067 **i05350429**

NOTE	PART NUMBER	QTY	PART NAME 1 2 3 4 5 6 (PRODUCT LEVEL)	SEE PAGE
Y	**282-3824**	1	ENGINE AR	12
			—OR—	
Y	*387-8574*	1	ENGINE AR-COMPLETE	25
Y	*232-1240*	1	LINES GP-TURBOCHARGER WATER	139
Y	*264-7963*	1	SHIELD GP-HEAT (ENGINE)	191
Y	*237-4214*	1	TANK GP-COOLANT (WITH HEAT SHIELDING)	165
	237-2568	1	TUBE AS	
	237-2708	1	ELBOW-EXHAUST	

Y - SEPARATE ILLUSTRATION

<END>

MACHINE ARRANGEMENT

282-9554 CONVERSION AR-HEAT SHIELD—LAMINATE

S/N: GCT1-UP
FOR USE WITH DEMAND FAN, 282-2871—PAGE: 10
AN ATTACHMENT

SMCS-1067 **i05335518**

NOTE	PART NUMBER	QTY	PART NAME 1 2 3 4 5 6 (PRODUCT LEVEL)	SEE PAGE
Y	**282-3826**	1	ENGINE AR	16
			—OR—	
Y	**387-8576**	1	ENGINE AR-COMPLETE	27
Y	*232-1240*	1	LINES GP-TURBOCHARGER WATER	139
Y	*264-7963*	1	SHIELD GP-HEAT (ENGINE)	191
Y	*237-4214*	1	TANK GP-COOLANT (WITH HEAT SHIELDING)	165
	237-2708	1	ELBOW-EXHAUST	
	237-2568	1	TUBE AS	

Y - SEPARATE ILLUSTRATION

<END>

282-9555 CONVERSION AR-HEAT SHIELD—LAMINATE

S/N: GCT1-UP
FOR USE WITH DIRECT DRIVE FAN
AN ATTACHMENT

SMCS-1067 **i05350426**

NOTE	PART NUMBER	QTY	PART NAME 1 2 3 4 5 6 (PRODUCT LEVEL)	SEE PAGE
Y	**282-3826**	1	ENGINE AR	16
			—OR—	
Y	**387-8576**	1	ENGINE AR-COMPLETE	27
Y	*232-1240*	1	LINES GP-TURBOCHARGER WATER	139
Y	*264-7963*	1	SHIELD GP-HEAT (ENGINE)	191
Y	*237-4214*	1	TANK GP-COOLANT (WITH HEAT SHIELDING)	165
	237-2708	1	ELBOW-EXHAUST	
	237-2568	1	TUBE AS	

Y - SEPARATE ILLUSTRATION

<END>

287-4670 FORESTRY AR

S/N: SMC1-UP; GCT1-UP
PART OF 288-4668 FORESTRY AR
AN ATTACHMENT

SMCS-7000 **i04030064**

NOTE	REF NO	GRAPHIC REF	PART NUMBER	QTY	PART NAME 1 2 3 4 5 6 (PRODUCT LEVEL)	SEE PAGE
Y	1	1	*172-0964*	1	GRILL GP-RADIATOR (LOUVERED)	606
Y	2	1	*215-1488*	1	GUARD GP-PRECLEANER	177
Y	3	1	*236-7241*	1	GUARD GP-BOTTOM	609
Y	4	1	*287-2428*	1	GUARD GP-FUEL TANK	616
Y	5	1	*287-3902*	1	CANOPY GP	1022
Y	6	1	*287-4656*	1	SWEEP GP	638
Y	7	1	*287-4665*	1	GUARD GP-FRONT	615

Y - SEPARATE ILLUSTRATION

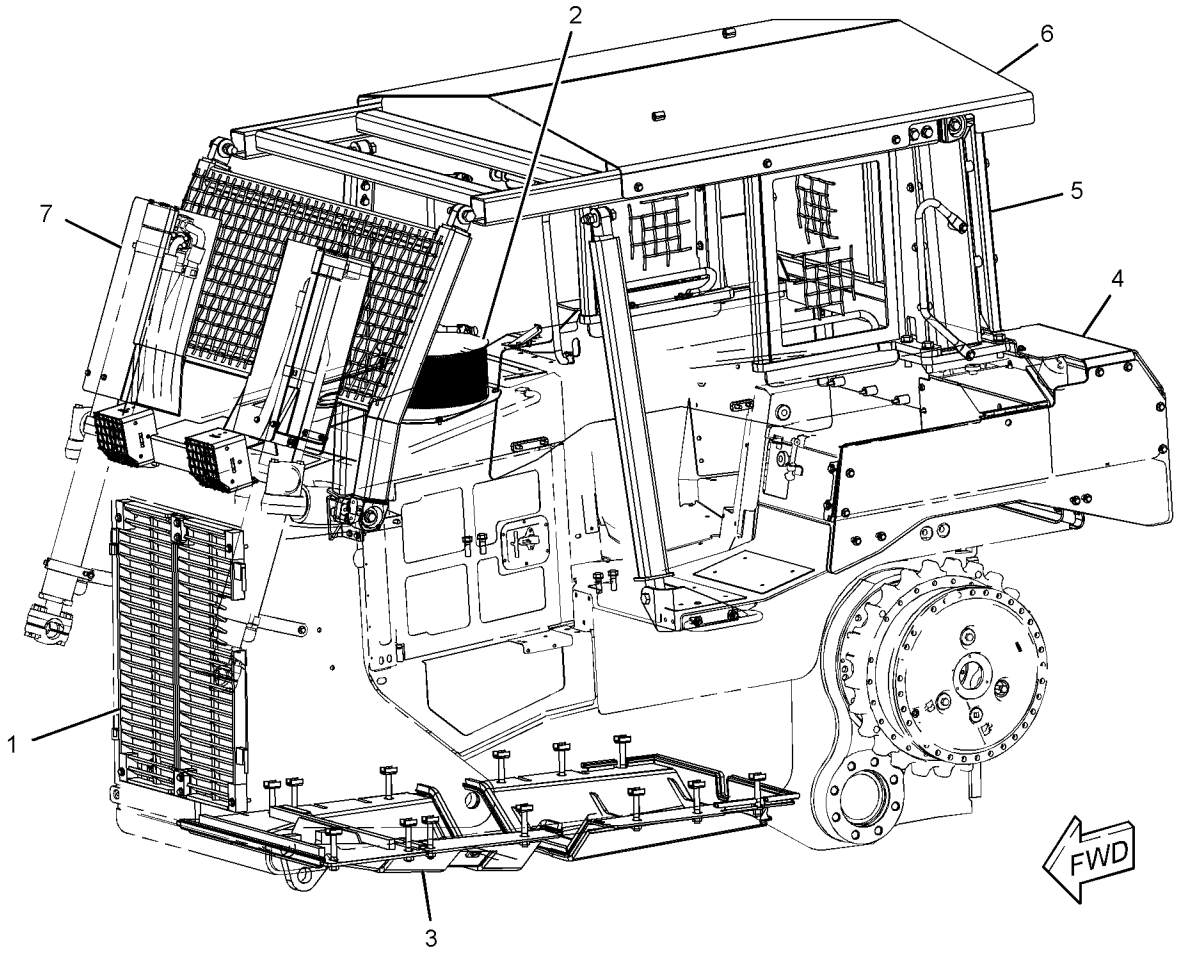

GRAPHIC #1 **<END>** g02224556

MACHINE ARRANGEMENT

288-4668 FORESTRY AR

S/N: SMC1-UP; GCT1-UP

CANNOT BE USED WITH 235-6336–PAGE: 306, 237-9318–PAGE: 636, 257-2696–PAGE: 611, 257-2698–PAGE: 612, 228-7854–PAGE: 995, 172-0962–PAGE: 633, 283-0581–PAGE: 1021, 281-3175–PAGE: 263, 270-8497–PAGE: 224, CANOPY ROPS

AN ATTACHMENT

SMCS-7000 **i04026854**

NOTE	REF NO	GRAPHIC REF	PART NUMBER	QTY	PART NAME 1 2 3 4 5 6 (PRODUCT LEVEL)	SEE PAGE
	1	1	**5P-0998**	3	PLUG-SEAL	
	2	1	**6V-1790**	3	PLUG-BUTTON	
	4	1	**7T-6299**	1	GROMMET	
	5	1	**141-2240**	1	PLATE	
Y	6	1	*192-3016*	1	COVER GP-CONSOLE (INSTRUMENT PANEL)	1051
	7	1	**241-7917**	1	HOUSING	
	8	1	**241-7919**	1	PLATE	
	9	1	**261-8619**	1	FLOOR MAT	
Y	10	1	*283-0656*	1	INSTRUMENT GP (OPEN ROPS)	1076
Y	11	1	*287-4670*	1	FORESTRY AR	3
Y	12	1	*290-5826*	1	LIGHTING GP-FLOOD (FRONT, FUEL TANK, RADIATOR)	333
Y	13	1	*292-4407*	1	FILM GP	1241
	14	1	*148-8411*	1	PLUG AS	
		1	**9S-4185**	1	PLUG-O-RING	
		1	**3K-0360**	1	SEAL-O-RING	
	15	1	**198-9706**	4	SCREW-TRUSS HEAD (M5X0.8X16-MM)	
	16	1	**5P-4115**	2	WASHER-HARD (7.2X19X2-MM THK)	
	17	1	**5P-4116**	2	WASHER-HARD (8.8X20.5X2-MM THK)	
	18	1	**7X-7729**	2	WASHER (11X25X3-MM THK)	
M	19	1	**8T-4137**	2	BOLT (M10X1.5X20-MM)	
M	20	1	**8T-4189**	2	BOLT (M8X1.25X20-MM)	
	21	1	**8T-8908**	2	BOLT (1/4-20X1-IN)	
F			*6V-1971*	1	LITERATURE GP	
			246-2641	1	PADLOCK GP	
			5P-8500	1	KEY	
			5P-7958	1	SLEEVE-CABLE SPLICE	

F - NOT SHOWN
M - METRIC PART
Y - SEPARATE ILLUSTRATION

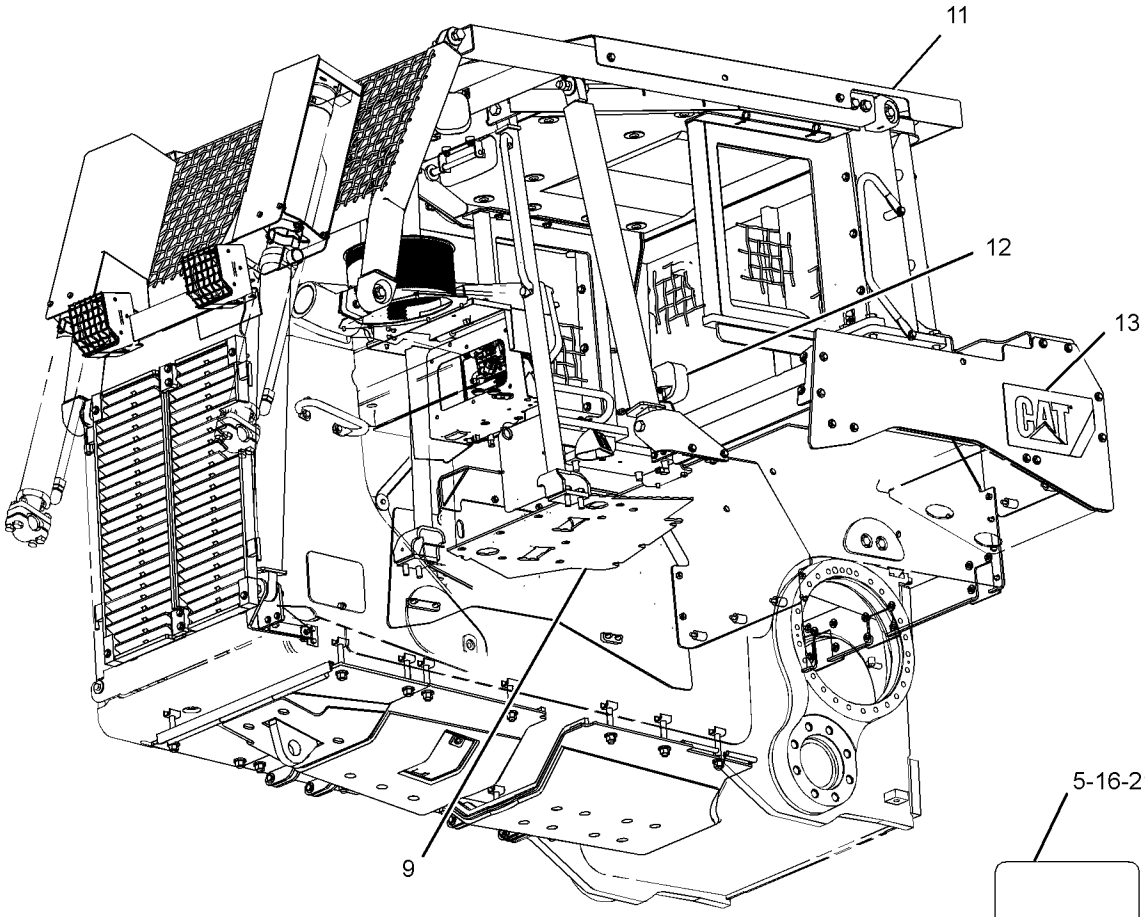

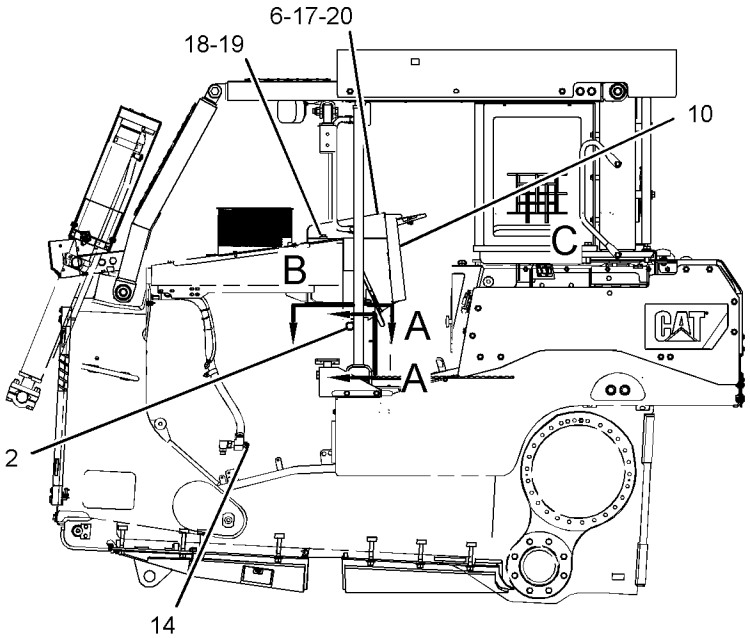

LEFT SIDE VIEW

SECTION A-A

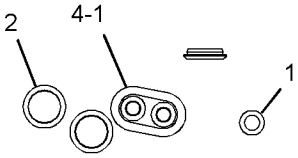

SECTION B-B

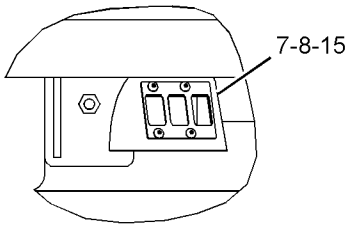

VIEW OF AREA C

GRAPHIC #1 **<END>** g02224213

MACHINE ARRANGEMENT

269-2037 GENERAL AR

S/N: SMC1-UP

SMCS-7000 **i05350401**

NOTE	PART NUMBER	QTY	PART NAME 1 2 3 4 5 6 (PRODUCT LEVEL)	SEE PAGE
Y	*269-2044*	1	CHASSIS AR	1
Y	*279-8995*	1	ELECTRONICS AR-MACHINE	275
YR	**282-3825**	1	ENGINE AR	14
			—OR—	
Y	**387-8575**	1	ENGINE AR-COMPLETE	26
Y	*269-2050*	1	HYDRAULIC AR-2 VALVE	852
Y	*279-9549*	1	INSTALLATION AR-ENGINE	34
			S/N: SMC1-497	
Y	*372-6406*	1	INSTALLATION AR-ENGINE	35
			S/N: SMC498-UP	
Y	*269-2052*	1	PLATE & FILM GP	1243
Y	*269-2046*	1	POWER TRAIN AR	542
Y	*222-8667*	1	UNDERCARRIAGE AR	748

R - REMFG PART MAY BE AVAILABLE
Y - SEPARATE ILLUSTRATION

<END>

269-2038 GENERAL AR

S/N: GCT1-UP

SMCS-7000 **i05259094**

NOTE	PART NUMBER	QTY	PART NAME 1 2 3 4 5 6 (PRODUCT LEVEL)	SEE PAGE
Y	*269-2044*	1	CHASSIS AR	1
Y	*279-8995*	1	ELECTRONICS AR-MACHINE	275
YR	**301-5768**	1	ENGINE AR	18
			—OR—	
Y	**387-8580**	1	ENGINE AR-COMPLETE	28
Y	*269-2050*	1	HYDRAULIC AR-2 VALVE	852
Y	*279-9549*	1	INSTALLATION AR-ENGINE	34
			S/N: GCT1-963	
Y	*372-6406*	1	INSTALLATION AR-ENGINE	35
			S/N: GCT964-UP	
Y	*269-2053*	1	PLATE & FILM GP	1245
Y	*269-2046*	1	POWER TRAIN AR	542
Y	*218-4982*	1	UNDERCARRIAGE AR	747

R - REMFG PART MAY BE AVAILABLE
Y - SEPARATE ILLUSTRATION

<END>

354-3552 OPTION AR-COUNTERWEIGHT

S/N: SMC1-UP; GCT1-UP
AN ATTACHMENT

SMCS-7000 **i04029684**

NOTE	PART NUMBER	QTY	PART NAME 1 2 3 4 5 6 (PRODUCT LEVEL)	SEE PAGE
Y	*1Q-4324*	1	COUNTERWEIGHT GP	580
Y	*3W-6866*	1	DRAWBAR GP	584

Y - SEPARATE ILLUSTRATION

<END>

354-3554 OPTION AR-GUARD—HEAVY-DUTY

S/N: SMC1-UP; GCT1-UP
AN ATTACHMENT

SMCS-7000 **i05350402**

NOTE	PART NUMBER	QTY	PART NAME 1 2 3 4 5 6 (PRODUCT LEVEL)	SEE PAGE
Y	*172-0964*	1	GRILL GP-RADIATOR (LOUVERED)	606
Y	*236-7241*	1	GUARD GP-BOTTOM	609

Y - SEPARATE ILLUSTRATION

<END>

354-3550 OPTION AR-SERVICE—FUEL TANK, HS OIL CHANGE

S/N: SMC1-UP; GCT1-UP
AN ATTACHMENT

SMCS-7000 **i04006870**

NOTE	PART NUMBER	QTY	PART NAME 1 2 3 4 5 6 (PRODUCT LEVEL)	SEE PAGE
Y	*263-0853*	1	OIL CHANGE GP-HIGH SPEED	124
Y	*270-8497*	1	TANK GP-FUEL	224

Y - SEPARATE ILLUSTRATION

<END>

MACHINE ARRANGEMENT

247-2838 WASTE HANDLING AR

S/N: SMC1-UP; GCT1-UP
PART OF 247-2839, 247-2840 WASTE HANDLING AR
AN ATTACHMENT

SMCS-7000 **i05335101**

NOTE	REF NO	GRAPHIC REF	PART NUMBER	QTY	PART NAME 1 2 3 4 5 6 (PRODUCT LEVEL)	SEE PAGE
	1	1	**198-8858**	1	PLATE	
Y	2	1	*209-5113*	1	HANDHOLD GP	1066
	3	1	**233-7526**	2	BAR	
Y	4	1	*236-7241*	1	GUARD GP-BOTTOM	609
Y	5	1	*263-5030*	1	LINES GP-ALTERNATOR AIR	335
Y	6	1	*263-7726*	1	ENCLOSURE GP-ENGINE (RH)	596
Y	7	1	*263-7727*	1	ENCLOSURE GP-ENGINE (LH)	598
	8	1	**307-6264**	2	FILM-IDENTIFICATION (WASTE HANDLER)	
Y	9	1	*265-7424*	1	SEAL GP-WASTE HANDLING	634
	10	1	**277-6951**	2	PLATE	
Y	11	1	*281-0777*	1	GUARD GP-RADIATOR	624
	12	1	**119-7903**	2	BAR	
	13	1	**9Z-9377**	2	BAR	
FY			*261-6769*	1	GUARD AR-IDLER	668

F - NOT SHOWN
Y - SEPARATE ILLUSTRATION

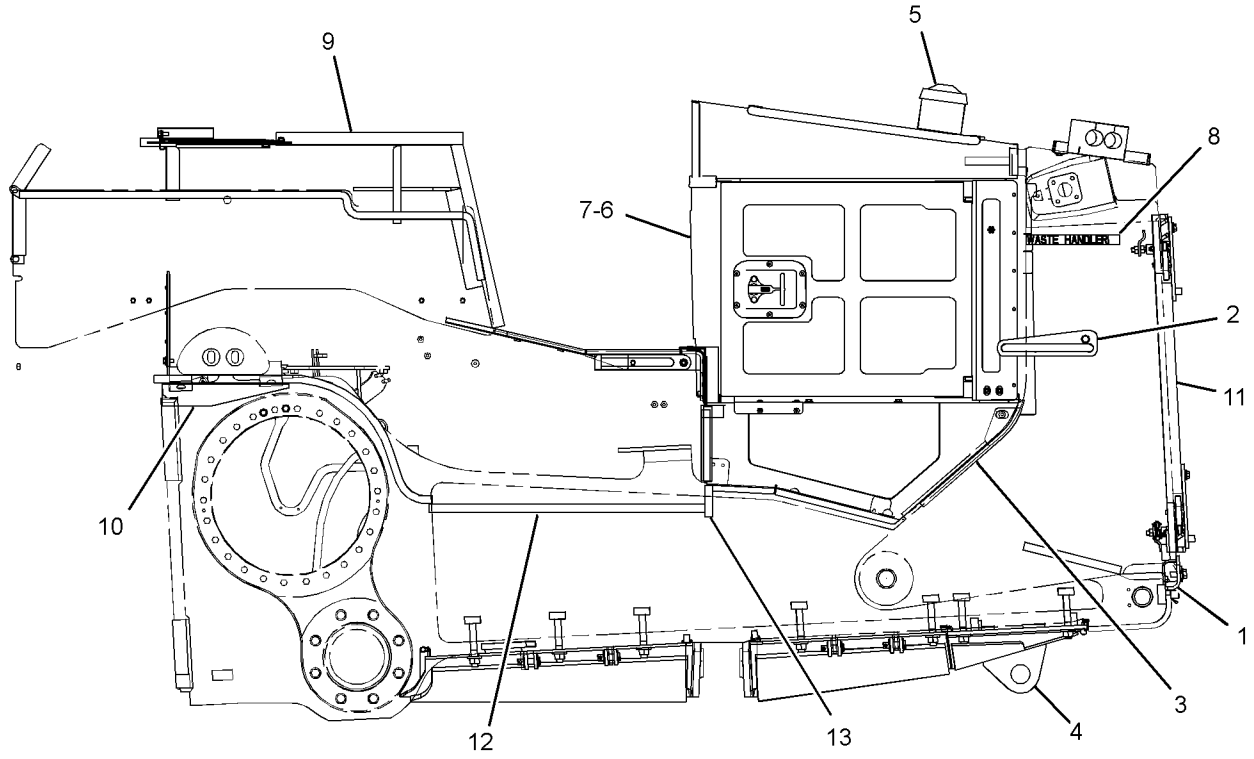

RIGHT SIDE VIEW

GRAPHIC #1 **<END>** g01371774

247-2839 WASTE HANDLING AR

S/N: SMC1-UP

FOR USE WITH LIGHTING GP, , GUARD GP-FUEL TANK, WHEN USED WITH 278-6367 UNDERCARRIAGE

AR170-0795–PAGE: 668

CANNOT BE USED WITH 262-0554–PAGE: 607, 261-6769–PAGE: 668, ALTERNATOR GP

AN ATTACHMENT

SMCS-7000 **i04015490**

NOTE	PART NUMBER	QTY	PART NAME 1 2 3 4 5 6 (PRODUCT LEVEL)	SEE PAGE
Y	*262-0554*	1	GUARD AR-FINAL DRIVE	607
Y	*247-2838*	1	WASTE HANDLING AR	8
I	**308-6034**	1	HOSE AS	
I	**308-6035**	1	HOSE AS	
I	**9Z-8212**	1	HOSE AS	
I	**177-7983**	1	HOSE AS	

I - REFER TO HYDRAULIC INFORMATION SYSTEM
Y - SEPARATE ILLUSTRATION

<END>

247-2840 WASTE HANDLING AR

S/N: GCT1-UP

FOR USE WITH LIGHTING GP, , GAURD GP-FUEL TANK, WHEN USED WITH 278-6368 UNDERCARRIAGE

AR170-0795–PAGE: 668

CANNOT BE USED WITH 262-0554–PAGE: 607, 261-6769–PAGE: 668, ALTERNATOR GP

AN ATTACHMENT

SMCS-7000 **i04026477**

NOTE	PART NUMBER	QTY	PART NAME 1 2 3 4 5 6 (PRODUCT LEVEL)	SEE PAGE
Y	*262-0554*	1	GUARD AR-FINAL DRIVE	607
Y	*247-2838*	1	WASTE HANDLING AR	8
I	**9Z-8212**	1	HOSE AS	
I	**308-6038**	1	HOSE AS	
I	**308-6039**	1	HOSE AS	
I	**177-7983**	1	HOSE AS	

I - REFER TO HYDRAULIC INFORMATION SYSTEM
Y - SEPARATE ILLUSTRATION

<END>

ENGINE ARRANGEMENT

282-2871 ENGINE AR–MODULATING

S/N: GCT1-UP

AN ATTACHMENT

SMCS-1000 **i05350408**

NOTE	PART NUMBER	QTY	PART NAME 1 2 3 4 5 6 (PRODUCT LEVEL)	SEE PAGE
Y	*262-2029*	1	DRIVE GP-FAN (MODULATING)	65
Y	**282-3823**	1	ENGINE AR	11
			–OR–	
Y	**398-6424**	1	ENGINE AR-COMPLETE	29
Y	*224-0821*	1	LINES GP-OIL SUPPLY (DEMAND FAN)	119

Y - SEPARATE ILLUSTRATION

<END>

ENGINE ARRANGEMENT

282-3823 ENGINE AR

S/N: THX8900-UP
149 BRAKE KW (200 BHP) AT 1850 RPM
FIELD REPLACEMENT FOR 349-3564—PAGE: 23
PART OF 282-2871 ENGINE AR
AN ATTACHMENT

SMCS-1000 **i05031420**

NOTE	PART NUMBER	QTY	PART NAME 1 2 3 4 5 6 (PRODUCT LEVEL)	SEE PAGE
Y	*238-1116*	1	COOLER GP-TRANSMISSION OIL	469
Y	*246-0605*	1	COVER GP-CYLINDER BLOCK	38
Y	*118-1727*	1	COVER GP-FRONT HOUSING (ACCESSORY DRIVE)	39
Y	*222-1783*	1	COVER GP-VALVE MECHANISM	41
Y	*211-8041*	1	DAMPER GP	61
Y	*4P-2102*	1	DRAIN GP-ENGINE OIL	62
Y	*246-0599*	1	DRIVE GP-PUMP	480
Y	*246-0596*	1	ELBOW GP-AIR INLET	175
Y	*282-3827*	1	ENGINE AR-CORE	30
Y	*222-2409*	1	FASTENER GP-DAMPER & PULLEY	71
Y	*219-8681*	1	FASTENER GP-FRONT COVER	72
Y	*236-7315*	1	FASTENER GP-VALVE COVER	73
Y	*233-0423*	1	FASTENER GP-VALVE COVER BASE	74
Y	*230-4118*	1	FILLER GP-ENGINE OIL	107
Y	*183-2097*	1	FILTER GP-ENGINE OIL	109
Y	*241-3718*	1	FLYWHEEL GP	75
Y	*241-3719*	1	FUMES DISPOSAL GP	116
Y	*246-0601*	1	GAUGE GP-OIL LEVEL (DIPSTICK) (ENGINE)	117
Y	*175-6260*	1	GEAR GP-REAR	77
Y	*165-4461*	1	HOUSING & REGULATOR GP	137
Y	*219-8666*	1	HOUSING GP-FLYWHEEL	79
Y	*166-1784*	1	LIFTING GP-ENGINE	84
Y	*198-1319*	1	LINES GP-ENGINE OIL	118
Y	*264-2014*	1	LINES GP-FUEL	206
Y	*266-9810*	1	LINES GP-TURBOCHARGER OIL	121
Y	*165-4445*	1	MANIFOLD GP-EXHAUST	182
Y	*246-0600*	1	MOUNTING GP-ALTERNATOR	85
Y	*246-0598*	1	MOUNTING GP-FAN DRIVE	87
Y	*165-4459*	1	PAN GP-OIL	88
Y	*252-1567*	1	PLUG GP-ENGINE	91
Y	*246-0602*	1	PULLEY GP-CRANKSHAFT	92
Y	*211-1812*	1	PUMP GP-WATER	147
Y	*189-9306*	1	SEAL GP-CRANKSHAFT	99
Y	*231-1978*	1	SENSOR GP-ENGINE	354
			S/N: THX8900-22179	
Y	*330-6034*	1	SENSOR GP-ENGINE	355
			S/N: THX22180-UP	
Y	*166-1790*	1	SUPPORT GP-ENGINE	101
Y	*166-1792*	1	TRUNNION GP-ENGINE	102
Y	*198-0921*	1	VALVE GP-FLUID SAMPLING	128
Y	*235-8203*	1	WIRING GP-ELECTRONIC CONTROL	401
			S/N: THX8900-22179	
Y	*330-6019*	1	WIRING GP-ELECTRONIC CONTROL	404
			S/N: THX22180-UP	
			PLEASE USE THE GASKET KIT LINK IN SIS OR CONTACT YOUR LOCAL DEALER FOR THE LATEST GASKET KIT INFORMATION	

Y - SEPARATE ILLUSTRATION

<END>

ENGINE ARRANGEMENT

282-3824 ENGINE AR

S/N: THX8900-UP

PART OF 282-9553 CONVERSION AR-HEAT SHIELD AN ATTACHMENT

SMCS-1000 **i05319867**

NOTE	PART NUMBER	QTY	PART NAME 1 2 3 4 5 6 (PRODUCT LEVEL)	SEE PAGE
Y	*238-1116*	1	COOLER GP-TRANSMISSION OIL	469
Y	*188-3826*	1	COOLER GP-ENGINE OIL	130
			S/N: THX44214-UP	
Y	*246-0605*	1	COVER GP-CYLINDER BLOCK	38
Y	*118-1727*	1	COVER GP-FRONT HOUSING (ACCESSORY DRIVE)	39
Y	*222-1783*	1	COVER GP-VALVE MECHANISM	41
Y	*211-8041*	1	DAMPER GP	61
Y	*4P-2102*	1	DRAIN GP-ENGINE OIL	62
Y	*246-0599*	1	DRIVE GP-PUMP	480
Y	*246-0596*	1	ELBOW GP-AIR INLET	175
Y	*282-3828*	1	ENGINE AR-CORE	30
			S/N: THX8900-44213	
Y	*398-0728*	1	ENGINE AR	21
			S/N: THX44214-UP	
Y	*222-2409*	1	FASTENER GP-DAMPER & PULLEY	71
Y	*219-8681*	1	FASTENER GP-FRONT COVER	72
Y	*236-7315*	1	FASTENER GP-VALVE COVER	73
Y	*233-0423*	1	FASTENER GP-VALVE COVER BASE (BASE)	74
Y	*230-4118*	1	FILLER GP-ENGINE OIL	107
			S/N: THX8900-41357	
Y	*389-8270*	1	FILLER GP-ENGINE OIL	108
			S/N: THX41358-UP	
Y	*183-2097*	1	FILTER GP-ENGINE OIL	109
Y	*241-3718*	1	FLYWHEEL GP	75
Y	*241-3719*	1	FUMES DISPOSAL GP	116
Y	*246-0601*	1	GAUGE GP-OIL LEVEL (DIPSTICK) (ENGINE)	117
Y	*175-6260*	1	GEAR GP-REAR	77
Y	*219-8666*	1	HOUSING GP-FLYWHEEL	79
Y	*166-1784*	1	LIFTING GP-ENGINE	84
Y	*198-1319*	1	LINES GP-ENGINE OIL	118
Y	*264-2014*	1	LINES GP-FUEL	206
Y	*266-9811*	1	LINES GP-TURBOCHARGER OIL	123
Y	*165-4461*	1	HOUSING & REGULATOR GP (WATER TEMPERATURE REGULATOR)	137
Y	*165-4445*	1	MANIFOLD GP-EXHAUST	182
Y	*246-0600*	1	MOUNTING GP-ALTERNATOR	85
Y	*246-0598*	1	MOUNTING GP-FAN DRIVE	87
Y	*165-4459*	1	PAN GP-OIL	88
Y	*252-1567*	1	PLUG GP-ENGINE	91
Y	*246-0602*	1	PULLEY GP-CRANKSHAFT	92
Y	*211-1812*	1	PUMP GP-WATER	147
			S/N: THX8900-44213	
Y	*189-9306*	1	SEAL GP-CRANKSHAFT	99
Y	*231-1978*	1	SENSOR GP-ENGINE	354
			S/N: THX8900-22179	
Y	*330-6034*	1	SENSOR GP-ENGINE	355
			S/N: THX22180-44213	
Y	*166-1790*	1	SUPPORT GP-ENGINE	101
Y	*166-1792*	1	TRUNNION GP-ENGINE	102
Y	*198-0921*	1	VALVE GP-FLUID SAMPLING	128
Y	*235-8203*	1	WIRING GP-ELECTRONIC CONTROL	401
			S/N: THX8900-22179	
Y	*330-6019*	1	WIRING GP-ELECTRONIC CONTROL	404
			S/N: THX22180-UP	
			PLEASE USE THE GASKET KIT LINK IN SIS OR CONTACT YOUR LOCAL DEALER FOR THE LATEST GASKET KIT INFORMATION	

ENGINE ARRANGEMENT

282-3824 **ENGINE AR (*contd.*)** **i05319867**

NOTE	PART NUMBER	QTY	PART NAME 1 2 3 4 5 6 (PRODUCT LEVEL)	SEE PAGE
Y - SEPARATE ILLUSTRATION				

<END>

ENGINE ARRANGEMENT

282-3825 ENGINE AR*R

S/N: THX8900-UP

PART OF 269-2037 GENERAL AR

SMCS-1000 **i05271108**

NOTE	PART NUMBER	QTY	PART NAME 1 2 3 4 5 6 (PRODUCT LEVEL)	SEE PAGE
Y	*238-1116*	1	COOLER GP-TRANSMISSION OIL	469
Y	*246-0605*	1	COVER GP-CYLINDER BLOCK	38
Y	*118-1727*	1	COVER GP-FRONT HOUSING (ACCESSORY DRIVE)	39
Y	*217-8669*	1	COVER GP-FRONT HOUSING	40
			S/N: THX41213-UP	
Y	*222-1783*	1	COVER GP-VALVE MECHANISM	41
Y	*246-9365*	1	CONTROL & MTG GP-ENGINE ELEK	268
			S/N: THX41213-UP	
Y	*211-8041*	1	DAMPER GP	61
Y	*4P-2102*	1	DRAIN GP-ENGINE OIL	62
Y	*246-0599*	1	DRIVE GP-PUMP	480
Y	*246-0596*	1	ELBOW GP-AIR INLET	175
Y	*282-3829*	1	ENGINE AR-CORE	31
			S/N: THX8900-41212	
Y	*384-8433*	1	ENGINE AR	20
			S/N: THX41213-UP	
Y	*222-2409*	1	FASTENER GP-DAMPER & PULLEY	71
Y	*219-8681*	1	FASTENER GP-FRONT COVER	72
Y	*236-7315*	1	FASTENER GP-VALVE COVER	73
Y	*233-0423*	1	FASTENER GP-VALVE COVER BASE	74
Y	*230-4118*	1	FILLER GP-ENGINE OIL	107
Y	*183-2097*	1	FILTER GP-ENGINE OIL	109
Y	*241-3718*	1	FLYWHEEL GP	75
Y	*241-3719*	1	FUMES DISPOSAL GP	116
Y	*246-0601*	1	GAUGE GP-OIL LEVEL (DIPSTICK) (ENGINE)	117
Y	*175-6260*	1	GEAR GP-REAR	77
Y	*219-8666*	1	HOUSING GP-FLYWHEEL	79
Y	*245-3262*	1	HOUSING GP-FRONT	81
			S/N: THX41213-UP	
Y	*166-1784*	1	LIFTING GP-ENGINE	84
Y	*198-1319*	1	LINES GP-ENGINE OIL	118
Y	*264-2014*	1	LINES GP-FUEL	206
Y	*266-9810*	1	LINES GP-TURBOCHARGER OIL	121
Y	*165-4461*	1	HOUSING & REGULATOR GP (WATER TEMPERATURE REGULATOR)	137
Y	*165-4445*	1	MANIFOLD GP-EXHAUST	182
Y	*246-0600*	1	MOUNTING GP-ALTERNATOR	85
Y	*246-0598*	1	MOUNTING GP-FAN DRIVE	87
Y	*165-4459*	1	PAN GP-OIL	88
Y	*252-1567*	1	PLUG GP-ENGINE	91
Y	*246-0602*	1	PULLEY GP-CRANKSHAFT	92
Y	*211-1812*	1	PUMP GP-WATER	147
			S/N: THX8900-41212	
Y	*189-9306*	1	SEAL GP-CRANKSHAFT	99
Y	*231-1978*	1	SENSOR GP-ENGINE	354
			S/N: THX8900-22179	
Y	*330-6034*	1	SENSOR GP-ENGINE	355
			S/N: THX22180-41212	
Y	*166-1790*	1	SUPPORT GP-ENGINE	101
Y	*166-1792*	1	TRUNNION GP-ENGINE	102
Y	*262-5901*	1	TURBOCHARGER GP	195
			S/N: THX41213-UP	
Y	*198-0921*	1	VALVE GP-FLUID SAMPLING	128
Y	*235-8203*	1	WIRING GP-ELECTRONIC CONTROL	401
			S/N: THX8900-22179	
Y	*330-6019*	1	WIRING GP-ELECTRONIC CONTROL	404
			S/N: THX22180-UP	

282-3825 **ENGINE AR (*contd.*)** **i05271108**

NOTE	PART NUMBER	QTY	PART NAME 1 2 3 4 5 6 (PRODUCT LEVEL)	SEE PAGE
			PLEASE USE THE GASKET KIT LINK IN SIS OR CONTACT YOUR LOCAL DEALER FOR THE LATEST GASKET KIT INFORMATION	
Y - SEPARATE ILLUSTRATION				

<END>

ENGINE ARRANGEMENT

282-3826 ENGINE AR

S/N: THX8900-UP

PART OF 282-9554, 282-9555 CONVERSION AR-HEAT SHIELD AN ATTACHMENT

SMCS-1000 **i05271161**

NOTE	PART NUMBER	QTY	PART NAME 1 2 3 4 5 6 (PRODUCT LEVEL)	SEE PAGE
Y	*238-1116*	1	COOLER GP-TRANSMISSION OIL	469
Y	*246-9365*	1	CONTROL & MTG GP-ENGINE ELEK	268
			S/N: THX39131-UP	
Y	*246-0605*	1	COVER GP-CYLINDER BLOCK	38
Y	*118-1727*	1	COVER GP-FRONT HOUSING (ACCESSORY DRIVE)	39
Y	*217-8669*	1	COVER GP-FRONT HOUSING	40
			S/N: THX39131-UP	
Y	*222-1783*	1	COVER GP-VALVE MECHANISM	41
Y	*211-8041*	1	DAMPER GP	61
Y	*4P-2102*	1	DRAIN GP-ENGINE OIL	62
Y	*246-0599*	1	DRIVE GP-PUMP	480
Y	*246-0596*	1	ELBOW GP-AIR INLET	175
Y	*282-3830*	1	ENGINE AR-CORE	31
			S/N: THX8946-39130	
Y	*384-8434*	1	ENGINE AR	20
			S/N: THX39131-UP	
Y	*222-2409*	1	FASTENER GP-DAMPER & PULLEY	71
Y	*219-8681*	1	FASTENER GP-FRONT COVER	72
Y	*236-7315*	1	FASTENER GP-VALVE COVER	73
Y	*233-0423*	1	FASTENER GP-VALVE COVER BASE	74
Y	*230-4118*	1	FILLER GP-ENGINE OIL	107
Y	*183-2097*	1	FILTER GP-ENGINE OIL	109
Y	*241-3718*	1	FLYWHEEL GP	75
Y	*241-3719*	1	FUMES DISPOSAL GP	116
Y	*246-0601*	1	GAUGE GP-OIL LEVEL (DIPSTICK) (ENGINE)	117
Y	*175-6260*	1	GEAR GP-REAR	77
Y	*219-8666*	1	HOUSING GP-FLYWHEEL	79
Y	*245-3262*	1	HOUSING GP-FRONT	81
			S/N: THX39131-UP	
Y	*166-1784*	1	LIFTING GP-ENGINE	84
Y	*198-1319*	1	LINES GP-ENGINE OIL	118
Y	*264-2014*	1	LINES GP-FUEL	206
Y	*266-9811*	1	LINES GP-TURBOCHARGER OIL	123
Y	*165-4461*	1	HOUSING & REGULATOR GP (WATER TEMPERATURE REGULATOR)	137
Y	*165-4445*	1	MANIFOLD GP-EXHAUST	182
Y	*246-0600*	1	MOUNTING GP-ALTERNATOR	85
Y	*246-0598*	1	MOUNTING GP-FAN DRIVE	87
Y	*165-4459*	1	PAN GP-OIL	88
Y	*252-1567*	1	PLUG GP-ENGINE	91
Y	*246-0602*	1	PULLEY GP-CRANKSHAFT	92
Y	*211-1812*	1	PUMP GP-WATER	147
			S/N: THX8946-39130	
Y	*189-9306*	1	SEAL GP-CRANKSHAFT	99
Y	*231-1978*	1	SENSOR GP-ENGINE	354
			S/N: THX8946-22179	
Y	*330-6034*	1	SENSOR GP-ENGINE	355
			S/N: THX22180-39130	
Y	*166-1790*	1	SUPPORT GP-ENGINE	101
Y	*166-1792*	1	TRUNNION GP-ENGINE	102
Y	*237-2041*	1	TURBOCHARGER GP	193
			S/N: THX39131-UP	
Y	*198-0921*	1	VALVE GP-FLUID SAMPLING	128
Y	*235-8203*	1	WIRING GP-ELECTRONIC CONTROL	401
			S/N: THX8946-22179	
Y	*330-6019*	1	WIRING GP-ELECTRONIC CONTROL	404
			S/N: THX22180-UP	

282-3826 **ENGINE AR (*contd.*)** **i05271161**

NOTE	PART NUMBER	QTY	PART NAME 1 2 3 4 5 6 (PRODUCT LEVEL)	SEE PAGE
			PLEASE USE THE GASKET KIT LINK IN SIS OR CONTACT YOUR LOCAL DEALER FOR THE LATEST GASKET KIT INFORMATION	
Y - SEPARATE ILLUSTRATION				

<END>

ENGINE ARRANGEMENT

301-5768 ENGINE AR*R

S/N: TXD1-UP; THX8900-UP

PART OF 269-2038 GENERAL AR

SMCS-1000 **i05272395**

NOTE	PART NUMBER	QTY	PART NAME 1 2 3 4 5 6 (PRODUCT LEVEL)	SEE PAGE
Y	*238-1116*	1	COOLER GP-TRANSMISSION OIL	469
Y	*246-0605*	1	COVER GP-CYLINDER BLOCK	38
Y	*118-1727*	1	COVER GP-FRONT HOUSING (ACCESSORY DRIVE)	39
Y	*217-8669*	1	COVER GP-FRONT HOUSING	40
			S/N: THX41210-UP	
Y	*222-1783*	1	COVER GP-VALVE MECHANISM	41
Y	*246-9365*	1	CONTROL & MTG GP-ENGINE ELEK	268
			S/N: THX41210-UP	
Y	*211-8041*	1	DAMPER GP	61
Y	*4P-2102*	1	DRAIN GP-ENGINE OIL	62
Y	*246-0599*	1	DRIVE GP-PUMP	480
Y	*246-0596*	1	ELBOW GP-AIR INLET	175
Y	*301-5769*	1	ENGINE AR-CORE	32
			S/N: THX8971-41209	
Y	*384-8435*	1	ENGINE AR	20
			S/N: THX41210-UP	
Y	*222-2409*	1	FASTENER GP-DAMPER & PULLEY	71
Y	*219-8681*	1	FASTENER GP-FRONT COVER	72
Y	*236-7315*	1	FASTENER GP-VALVE COVER	73
Y	*233-0423*	1	FASTENER GP-VALVE COVER BASE	74
Y	*230-4118*	1	FILLER GP-ENGINE OIL	107
			S/N: THX41210-41338	
Y	*389-8270*	1	FILLER GP-ENGINE OIL	108
			S/N: THX41339-UP	
Y	*183-2097*	1	FILTER GP-ENGINE OIL	109
Y	*241-3718*	1	FLYWHEEL GP	75
Y	*241-3719*	1	FUMES DISPOSAL GP	116
Y	*246-0601*	1	GAUGE GP-OIL LEVEL (DIPSTICK) (ENGINE)	117
Y	*175-6260*	1	GEAR GP-REAR	77
Y	*219-8666*	1	HOUSING GP-FLYWHEEL	79
Y	*245-3262*	1	HOUSING GP-FRONT	81
			S/N: THX41210-UP	
Y	*166-1784*	1	LIFTING GP-ENGINE	84
Y	*198-1319*	1	LINES GP-ENGINE OIL	118
Y	*264-2014*	1	LINES GP-FUEL	206
Y	*266-9810*	1	LINES GP-TURBOCHARGER OIL	121
Y	*165-4461*	1	HOUSING & REGULATOR GP (WATER TEMPERATURE REGULATOR)	137
Y	*165-4445*	1	MANIFOLD GP-EXHAUST	182
Y	*246-0600*	1	MOUNTING GP-ALTERNATOR	85
Y	*246-0598*	1	MOUNTING GP-FAN DRIVE	87
Y	*165-4459*	1	PAN GP-OIL	88
Y	*252-1567*	1	PLUG GP-ENGINE	91
Y	*246-0602*	1	PULLEY GP-CRANKSHAFT	92
Y	*211-1812*	1	PUMP GP-WATER	147
			S/N: THX8971-41209	
Y	*189-9306*	1	SEAL GP-CRANKSHAFT	99
Y	*231-1978*	1	SENSOR GP-ENGINE	354
			S/N: THX8971-22178	
Y	*330-6034*	1	SENSOR GP-ENGINE	355
			S/N: THX22179-41209	
Y	*166-1790*	1	SUPPORT GP-ENGINE	101
Y	*262-5901*	1	TURBOCHARGER GP	195
			S/N: THX41210-UP	
Y	*166-1792*	1	TRUNNION GP-ENGINE	102
Y	*198-0921*	1	VALVE GP-FLUID SAMPLING	128
Y	*235-8203*	1	WIRING GP-ELECTRONIC CONTROL	401
			S/N: THX8971-22178	
Y	*330-6019*	1	WIRING GP-ELECTRONIC CONTROL	404
			S/N: THX22179-UP	

NOTE	PART NUMBER	QTY	PART NAME 1 2 3 4 5 6 (PRODUCT LEVEL)	SEE PAGE
			PLEASE USE THE GASKET KIT LINK IN SIS OR CONTACT YOUR LOCAL DEALER FOR THE LATEST GASKET KIT INFORMATION	
Y - SEPARATE ILLUSTRATION				

<END>

ENGINE ARRANGEMENT

384-8433 ENGINE AR

S/N: THX41213-UP
PART OF 282-3825 ENGINE AR

SMCS-1000 **i05271135**

NOTE	PART NUMBER	QTY	PART NAME 1 2 3 4 5 6 (PRODUCT LEVEL)	SEE PAGE
Y	*384-8428*	1	ENGINE AR-CORE	32
Y	*385-1747*	1	PLATE & FILM GP	1247
	285-0228	1	ELECTRONICS GP-ENGINE RATINGS	

Y - SEPARATE ILLUSTRATION

<END>

384-8434 ENGINE AR

S/N: THX39131-UP
PART OF 282-3826 ENGINE AR
AN ATTACHMENT

SMCS-1000 **i05271220**

NOTE	PART NUMBER	QTY	PART NAME 1 2 3 4 5 6 (PRODUCT LEVEL)	SEE PAGE
Y	*384-8428*	1	ENGINE AR-CORE	32
Y	*385-1747*	1	PLATE & FILM GP	1247
	282-9935	1	ELECTRONICS GP-ENGINE RATINGS	

Y - SEPARATE ILLUSTRATION

<END>

384-8435 ENGINE AR

S/N: TXD1-UP; THX41210-UP
PART OF 301-5768 ENGINE AR

SMCS-1000 **i05271314**

NOTE	PART NUMBER	QTY	PART NAME 1 2 3 4 5 6 (PRODUCT LEVEL)	SEE PAGE
Y	*384-8428*	1	ENGINE AR-CORE	32
Y	*385-1747*	1	PLATE & FILM GP	1247
	302-3904	1	ELECTRONICS GP-ENGINE RATINGS	

Y - SEPARATE ILLUSTRATION

<END>

387-8596 ENGINE AR

S/N: TXD631-UP; THX8900-UP
PART OF 398-6424 ENGINE AR-COMPLETE
AN ATTACHMENT

SMCS-1000 **i04908764**

NOTE	PART NUMBER	QTY	PART NAME 1 2 3 4 5 6 (PRODUCT LEVEL)	SEE PAGE
Y	*387-8618*	1	ENGINE AR-CORE	33
Y	*385-1747*	1	PLATE & FILM GP	1247
	282-9934	1	ELECTRONICS GP-ENGINE RATINGS	

Y - SEPARATE ILLUSTRATION

<END>

ENGINE ARRANGEMENT

387-8597 ENGINE AR

S/N: TXD2485-UP; THX8900-UP
PART OF 387-8575 ENGINE AR-COMPLETE

SMCS-1000 **i04912278**

NOTE	PART NUMBER	QTY	PART NAME 1 2 3 4 5 6 (PRODUCT LEVEL)	SEE PAGE
Y	*387-8618*	1	ENGINE AR-CORE	33
Y	*385-1747*	1	PLATE & FILM GP	1247
	285-0228	1	ELECTRONICS GP-ENGINE RATINGS	

Y - SEPARATE ILLUSTRATION

<END>

387-8598 ENGINE AR

S/N: TXD1-UP; THX8900-UP
PART OF 387-8576 ENGINE AR-COMPLETE
AN ATTACHMENT

SMCS-1000 **i05225337**

NOTE	PART NUMBER	QTY	PART NAME 1 2 3 4 5 6 (PRODUCT LEVEL)	SEE PAGE
Y	*387-8618*	1	ENGINE AR-CORE	33
Y	*385-1747*	1	PLATE & FILM GP	1247
	282-9935	1	ELECTRONICS GP-ENGINE RATINGS	

Y - SEPARATE ILLUSTRATION

<END>

387-8599 ENGINE AR

S/N: TXD1-UP; THX8900-UP
PART OF 387-8580 ENGINE AR-COMPLETE

SMCS-1000 **i04912287**

NOTE	PART NUMBER	QTY	PART NAME 1 2 3 4 5 6 (PRODUCT LEVEL)	SEE PAGE
Y	*387-8618*	1	ENGINE AR-CORE	33
Y	*385-1747*	1	PLATE & FILM GP	1247
	302-3904	1	ELECTRONICS GP-ENGINE RATINGS	

Y - SEPARATE ILLUSTRATION

<END>

398-0728 ENGINE AR

S/N: THX44214-UP
4 VALVES
PART OF 282-3824 ENGINE AR
AN ATTACHMENT

SMCS-1000 **i05319974**

NOTE	PART NUMBER	QTY	PART NAME 1 2 3 4 5 6 (PRODUCT LEVEL)	SEE PAGE
Y	*399-3904*	1	ENGINE AR-CORE	33
Y	*385-1747*	1	PLATE & FILM GP	1247
	282-9936	1	ELECTRONICS GP-ENGINE RATINGS	

Y - SEPARATE ILLUSTRATION

<END>

ENGINE ARRANGEMENT

399-5830 ENGINE AR

S/N: TXD1-UP; THX8900-UP
PART OF 387-8574 ENGINE AR-COMPLETE
AN ATTACHMENT

SMCS-1000 **i04909939**

NOTE	PART NUMBER	QTY	PART NAME 1 2 3 4 5 6 (PRODUCT LEVEL)	SEE PAGE
Y	*387-8618*	1	ENGINE AR-CORE	33
Y	*385-1747*	1	PLATE & FILM GP	1247
	282-9936	1	ELECTRONICS GP-ENGINE RATINGS	

Y - SEPARATE ILLUSTRATION

<END>

ENGINE ARRANGEMENT

349-3564 ENGINE AR-COMPLETE

S/N: THX26452-UP
170 BRAKE KW (228 BHP) AT 1850 RPM
FIELD REPLACEMENT ORDER 398-6424—PAGE: 29
AN ATTACHMENT

SMCS-1000 **i03892390**

NOTE	PART NUMBER	QTY	PART NAME 1 2 3 4 5 6 (PRODUCT LEVEL)	SEE PAGE
Y	*238-1116*	1	COOLER GP-TRANSMISSION OIL	469
Y	*246-0605*	1	COVER GP-CYLINDER BLOCK	38
Y	*118-1727*	1	COVER GP-FRONT HOUSING (ACCESSORY DRIVE)	39
Y	*222-1783*	1	COVER GP-VALVE MECHANISM	41
Y	*211-8041*	1	DAMPER GP	61
Y	*4P-2102*	1	DRAIN GP-ENGINE OIL	62
Y	*246-0599*	1	DRIVE GP-PUMP	480
Y	*246-0596*	1	ELBOW GP-AIR INLET	175
Y	*282-3827*	1	ENGINE AR-CORE	30
Y	*222-2409*	1	FASTENER GP-DAMPER & PULLEY	71
Y	*219-8681*	1	FASTENER GP-FRONT COVER	72
Y	*236-7315*	1	FASTENER GP-VALVE COVER	73
Y	*233-0423*	1	FASTENER GP-VALVE COVER BASE	74
Y	*230-4118*	1	FILLER GP-ENGINE OIL	107
Y	*183-2097*	1	FILTER GP-ENGINE OIL	109
Y	*241-3718*	1	FLYWHEEL GP	75
Y	*241-3719*	1	FUMES DISPOSAL GP	116
Y	*246-0601*	1	GAUGE GP-OIL LEVEL (DIPSTICK) (ENGINE)	117
Y	*175-6260*	1	GEAR GP-REAR	77
Y	*219-8666*	1	HOUSING GP-FLYWHEEL	79
Y	*166-1784*	1	LIFTING GP-ENGINE	84
Y	*198-1319*	1	LINES GP-ENGINE OIL	118
Y	*264-2014*	1	LINES GP-FUEL	206
Y	*266-9810*	1	LINES GP-TURBOCHARGER OIL	121
Y	*165-4461*	1	HOUSING & REGULATOR GP	137
Y	*165-4445*	1	MANIFOLD GP-EXHAUST	182
Y	*246-0600*	1	MOUNTING GP-ALTERNATOR	85
Y	*246-0598*	1	MOUNTING GP-FAN DRIVE	87
Y	*165-4459*	1	PAN GP-OIL	88
Y	*252-1567*	1	PLUG GP-ENGINE	91
Y	*246-0602*	1	PULLEY GP-CRANKSHAFT	92
Y	*211-1812*	1	PUMP GP-WATER	147
Y	*189-9306*	1	SEAL GP-CRANKSHAFT	99
Y	*330-6034*	1	SENSOR GP-ENGINE	355
Y	*166-1790*	1	SUPPORT GP-ENGINE	101
Y	*166-1792*	1	TRUNNION GP-ENGINE	102
Y	*198-0921*	1	VALVE GP-FLUID SAMPLING	128
Y	*330-6019*	1	WIRING GP-ELECTRONIC CONTROL	404
			PLEASE USE THE GASKET KIT LINK IN SIS OR CONTACT YOUR LOCAL DEALER FOR THE LATEST GASKET KIT INFORMATION	

Y - SEPARATE ILLUSTRATION

<END>

ENGINE ARRANGEMENT

349-3565 ENGINE AR-COMPLETE

S/N: THX8900-32433
159 BRAKE KW (213 BHP) AT 1850 RPM
AN ATTACHMENT

SMCS-1000 **i03889785**

NOTE	PART NUMBER	QTY	PART NAME 1 2 3 4 5 6 (PRODUCT LEVEL)	SEE PAGE
Y	*238-1116*	1	COOLER GP-TRANSMISSION OIL	469
Y	*246-0605*	1	COVER GP-CYLINDER BLOCK	38
Y	*118-1727*	1	COVER GP-FRONT HOUSING (ACCESSORY DRIVE)	39
Y	*222-1783*	1	COVER GP-VALVE MECHANISM	41
Y	*211-8041*	1	DAMPER GP	61
Y	*4P-2102*	1	DRAIN GP-ENGINE OIL	62
Y	*246-0599*	1	DRIVE GP-PUMP	480
Y	*246-0596*	1	ELBOW GP-AIR INLET	175
Y	*282-3829*	1	ENGINE AR-CORE	31
Y	*222-2409*	1	FASTENER GP-DAMPER & PULLEY	71
Y	*219-8681*	1	FASTENER GP-FRONT COVER	72
Y	*236-7315*	1	FASTENER GP-VALVE COVER	73
Y	*233-0423*	1	FASTENER GP-VALVE COVER BASE	74
Y	*230-4118*	1	FILLER GP-ENGINE OIL	107
Y	*183-2097*	1	FILTER GP-ENGINE OIL	109
Y	*241-3718*	1	FLYWHEEL GP	75
Y	*241-3719*	1	FUMES DISPOSAL GP	116
Y	*246-0601*	1	GAUGE GP-OIL LEVEL (DIPSTICK) (ENGINE)	117
Y	*175-6260*	1	GEAR GP-REAR	77
Y	*219-8666*	1	HOUSING GP-FLYWHEEL	79
Y	*166-1784*	1	LIFTING GP-ENGINE	84
Y	*198-1319*	1	LINES GP-ENGINE OIL	118
Y	*264-2014*	1	LINES GP-FUEL	206
Y	*266-9810*	1	LINES GP-TURBOCHARGER OIL	121
Y	*165-4461*	1	HOUSING & REGULATOR GP	137
Y	*165-4445*	1	MANIFOLD GP-EXHAUST	182
Y	*246-0600*	1	MOUNTING GP-ALTERNATOR	85
Y	*246-0598*	1	MOUNTING GP-FAN DRIVE	87
Y	*165-4459*	1	PAN GP-OIL	88
Y	*252-1567*	1	PLUG GP-ENGINE	91
Y	*246-0602*	1	PULLEY GP-CRANKSHAFT	92
Y	*211-1812*	1	PUMP GP-WATER	147
Y	*189-9306*	1	SEAL GP-CRANKSHAFT	99
Y	*330-6034*	1	SENSOR GP-ENGINE (ELECTRONIC)	355
Y	*166-1790*	1	SUPPORT GP-ENGINE	101
Y	*166-1792*	1	TRUNNION GP-ENGINE	102
Y	*198-0921*	1	VALVE GP-FLUID SAMPLING	128
Y	*330-6019*	1	WIRING GP-ELECTRONIC CONTROL	404
			PLEASE USE THE GASKET KIT LINK IN SIS OR CONTACT YOUR LOCAL DEALER FOR THE LATEST GASKET KIT INFORMATION	

Y - SEPARATE ILLUSTRATION

<END>

387-8574 ENGINE AR-COMPLETE

S/N: TXD1-UP; THX44214-UP
PART OF 282-9553 CONVERSION AR-HEAT SHIELD
AN ATTACHMENT

SMCS-1000 **i05296354**

NOTE	PART NUMBER	QTY	PART NAME 1 2 3 4 5 6 (PRODUCT LEVEL)	SEE PAGE
Y	*246-9365*	1	CONTROL & MTG GP-ENGINE ELEK	268
Y	*188-3826*	1	COOLER GP-ENGINE OIL	130
Y	*238-1116*	1	COOLER GP-TRANSMISSION OIL	469
Y	*246-0605*	1	COVER GP-CYLINDER BLOCK	38
Y	*118-1727*	1	COVER GP-FRONT HOUSING (ACCESSORY DRIVE)	39
Y	*217-8669*	1	COVER GP-FRONT HOUSING	40
Y	*222-1783*	1	COVER GP-VALVE MECHANISM	41
Y	*211-8041*	1	DAMPER GP	61
Y	*4P-2102*	1	DRAIN GP-ENGINE OIL	62
Y	*246-0599*	1	DRIVE GP-PUMP	480
Y	*246-0596*	1	ELBOW GP-AIR INLET	175
Y	*399-5830*	1	ENGINE AR	22
Y	*222-2409*	1	FASTENER GP-DAMPER & PULLEY	71
Y	*219-8681*	1	FASTENER GP-FRONT COVER	72
Y	*236-7315*	1	FASTENER GP-VALVE COVER	73
Y	*233-0423*	1	FASTENER GP-VALVE COVER BASE	74
Y	*389-8270*	1	FILLER GP-ENGINE OIL	108
Y	*183-2097*	1	FILTER GP-ENGINE OIL	109
Y	*241-3718*	1	FLYWHEEL GP	75
Y	*241-3719*	1	FUMES DISPOSAL GP	116
Y	*246-0601*	1	GAUGE GP-OIL LEVEL (DIPSTICK) (ENGINE)	117
Y	*175-6260*	1	GEAR GP-REAR	77
Y	*165-4461*	1	HOUSING & REGULATOR GP (WATER TEMPERATURE REGULATOR)	137
Y	*219-8666*	1	HOUSING GP-FLYWHEEL	79
Y	*245-3262*	1	HOUSING GP-FRONT	81
Y	*166-1784*	1	LIFTING GP-ENGINE	84
Y	*198-1319*	1	LINES GP-ENGINE OIL	118
Y	*397-5040*	1	LINES GP-FUEL	208
Y	*266-9811*	1	LINES GP-TURBOCHARGER OIL	123
Y	*165-4445*	1	MANIFOLD GP-EXHAUST	182
Y	*246-0600*	1	MOUNTING GP-ALTERNATOR	85
Y	*246-0598*	1	MOUNTING GP-FAN DRIVE	87
Y	*165-4459*	1	PAN GP-OIL	88
Y	*252-1567*	1	PLUG GP-ENGINE	91
Y	*246-0602*	1	PULLEY GP-CRANKSHAFT	92
Y	*189-9306*	1	SEAL GP-CRANKSHAFT	99
Y	*166-1790*	1	SUPPORT GP-ENGINE	101
Y	*166-1792*	1	TRUNNION GP-ENGINE	102
Y	*237-2041*	1	TURBOCHARGER GP	193
Y	*198-0921*	1	VALVE GP-FLUID SAMPLING	128
Y	*330-6019*	1	WIRING GP-ELECTRONIC CONTROL	404
			PLEASE USE THE GASKET KIT LINK IN SIS OR CONTACT YOUR LOCAL DEALER FOR THE LATEST GASKET KIT INFORMATION	

Y - SEPARATE ILLUSTRATION

<END>

ENGINE ARRANGEMENT

387-8575 ENGINE AR-COMPLETE

S/N: TXD2485-UP; THX8900-UP

PART OF 269-2037 GENERAL AR

SMCS-1000 **i04912275**

NOTE	PART NUMBER	QTY	PART NAME 1 2 3 4 5 6 (PRODUCT LEVEL)	SEE PAGE
Y	*246-9365*	1	CONTROL & MTG GP-ENGINE ELEK	268
Y	*188-3826*	1	COOLER GP-ENGINE OIL	130
Y	*238-1116*	1	COOLER GP-TRANSMISSION OIL	469
Y	*246-0605*	1	COVER GP-CYLINDER BLOCK	38
Y	*118-1727*	1	COVER GP-FRONT HOUSING (ACCESSORY DRIVE)	39
Y	*217-8669*	1	COVER GP-FRONT HOUSING	40
Y	*222-1783*	1	COVER GP-VALVE MECHANISM	41
Y	*211-8041*	1	DAMPER GP	61
Y	*4P-2102*	1	DRAIN GP-ENGINE OIL	62
Y	*246-0599*	1	DRIVE GP-PUMP	480
Y	*246-0596*	1	ELBOW GP-AIR INLET	175
Y	*387-8597*	1	ENGINE AR	21
Y	*222-2409*	1	FASTENER GP-DAMPER & PULLEY	71
Y	*219-8681*	1	FASTENER GP-FRONT COVER	72
Y	*236-7315*	1	FASTENER GP-VALVE COVER	73
Y	*233-0423*	1	FASTENER GP-VALVE COVER BASE	74
Y	*230-4118*	1	FILLER GP-ENGINE OIL	107
Y	*183-2097*	1	FILTER GP-ENGINE OIL	109
Y	*241-3718*	1	FLYWHEEL GP	75
Y	*241-3719*	1	FUMES DISPOSAL GP	116
Y	*246-0601*	1	GAUGE GP-OIL LEVEL (DIPSTICK)	117
Y	*175-6260*	1	GEAR GP-REAR	77
Y	*165-4461*	1	HOUSING & REGULATOR GP	137
Y	*219-8666*	1	HOUSING GP-FLYWHEEL	79
Y	*245-3262*	1	HOUSING GP-FRONT	81
Y	*166-1784*	1	LIFTING GP-ENGINE	84
Y	*198-1319*	1	LINES GP-ENGINE OIL	118
Y	*397-5040*	1	LINES GP-FUEL	208
Y	*266-9810*	1	LINES GP-TURBOCHARGER OIL	121
Y	*165-4445*	1	MANIFOLD GP-EXHAUST	182
Y	*246-0600*	1	MOUNTING GP-ALTERNATOR	85
Y	*246-0598*	1	MOUNTING GP-FAN DRIVE	87
Y	*165-4459*	1	PAN GP-OIL	88
Y	*252-1567*	1	PLUG GP-ENGINE	91
Y	*246-0602*	1	PULLEY GP-CRANKSHAFT	92
Y	*189-9306*	1	SEAL GP-CRANKSHAFT	99
Y	*166-1790*	1	SUPPORT GP-ENGINE	101
Y	*166-1792*	1	TRUNNION GP-ENGINE	102
Y	*262-5901*	1	TURBOCHARGER GP	195
Y	*198-0921*	1	VALVE GP-FLUID SAMPLING	128
Y	*330-6019*	1	WIRING GP-ELECTRONIC CONTROL	404
			PLEASE USE THE GASKET KIT LINK IN SIS OR CONTACT YOUR LOCAL DEALER FOR THE LATEST GASKET KIT INFORMATION	

Y - SEPARATE ILLUSTRATION

<END>

ENGINE ARRANGEMENT

387-8576 ENGINE AR-COMPLETE

S/N: TXD1-UP; THX8900-UP

PART OF 282-9554, 282-9555 CONVERSION AR-HEAT SHIELD AN ATTACHMENT

SMCS-1000 **i05225246**

NOTE	PART NUMBER	QTY	PART NAME 1 2 3 4 5 6 (PRODUCT LEVEL)	SEE PAGE
Y	*246-9365*	1	CONTROL & MTG GP-ENGINE ELEK	268
Y	*188-3826*	1	COOLER GP-ENGINE OIL	130
Y	*238-1116*	1	COOLER GP-TRANSMISSION OIL	469
Y	*246-0605*	1	COVER GP-CYLINDER BLOCK	38
Y	*118-1727*	1	COVER GP-FRONT HOUSING (ACCESSORY DRIVE)	39
Y	*217-8669*	1	COVER GP-FRONT HOUSING	40
Y	*222-1783*	1	COVER GP-VALVE MECHANISM	41
Y	*211-8041*	1	DAMPER GP	61
Y	*4P-2102*	1	DRAIN GP-ENGINE OIL	62
Y	*246-0599*	1	DRIVE GP-PUMP	480
Y	*246-0596*	1	ELBOW GP-AIR INLET	175
Y	*387-8598*	1	ENGINE AR	21
Y	*222-2409*	1	FASTENER GP-DAMPER & PULLEY	71
Y	*219-8681*	1	FASTENER GP-FRONT COVER	72
Y	*236-7315*	1	FASTENER GP-VALVE COVER	73
Y	*233-0423*	1	FASTENER GP-VALVE COVER BASE	74
Y	*230-4118*	1	FILLER GP-ENGINE OIL	107
Y	*183-2097*	1	FILTER GP-ENGINE OIL	109
Y	*241-3718*	1	FLYWHEEL GP	75
Y	*241-3719*	1	FUMES DISPOSAL GP	116
Y	*246-0601*	1	GAUGE GP-OIL LEVEL (DIPSTICK)	117
Y	*175-6260*	1	GEAR GP-REAR	77
Y	*165-4461*	1	HOUSING & REGULATOR GP (WATER TEMPERATURE REGULATOR)	137
Y	*219-8666*	1	HOUSING GP-FLYWHEEL	79
Y	*245-3262*	1	HOUSING GP-FRONT	81
Y	*166-1784*	1	LIFTING GP-ENGINE	84
Y	*198-1319*	1	LINES GP-ENGINE OIL	118
Y	*397-5040*	1	LINES GP-FUEL	208
Y	*266-9811*	1	LINES GP-TURBOCHARGER OIL	123
Y	*165-4445*	1	MANIFOLD GP-EXHAUST	182
Y	*246-0600*	1	MOUNTING GP-ALTERNATOR	85
Y	*246-0598*	1	MOUNTING GP-FAN DRIVE	87
Y	*165-4459*	1	PAN GP-OIL	88
Y	*252-1567*	1	PLUG GP-ENGINE	91
Y	*246-0602*	1	PULLEY GP-CRANKSHAFT	92
Y	*189-9306*	1	SEAL GP-CRANKSHAFT	99
Y	*166-1790*	1	SUPPORT GP-ENGINE	101
Y	*166-1792*	1	TRUNNION GP-ENGINE	102
Y	*237-2041*	1	TURBOCHARGER GP	193
Y	*198-0921*	1	VALVE GP-FLUID SAMPLING	128
Y	*330-6019*	1	WIRING GP-ELECTRONIC CONTROL	404
			PLEASE USE THE GASKET KIT LINK IN SIS OR CONTACT YOUR LOCAL DEALER FOR THE LATEST GASKET KIT INFORMATION	

Y - SEPARATE ILLUSTRATION

<END>

ENGINE ARRANGEMENT

387-8580 ENGINE AR-COMPLETE

S/N: TXD1-UP; THX8900-UP

PART OF 269-2038 GENERAL AR

SMCS-1000 **i04912283**

NOTE	PART NUMBER	QTY	PART NAME 1 2 3 4 5 6 (PRODUCT LEVEL)	SEE PAGE
Y	*246-9365*	1	CONTROL & MTG GP-ENGINE ELEK	268
Y	*188-3826*	1	COOLER GP-ENGINE OIL	130
Y	*238-1116*	1	COOLER GP-TRANSMISSION OIL	469
Y	*246-0605*	1	COVER GP-CYLINDER BLOCK	38
Y	*118-1727*	1	COVER GP-FRONT HOUSING (ACCESSORY DRIVE)	39
Y	*217-8669*	1	COVER GP-FRONT HOUSING	40
Y	*222-1783*	1	COVER GP-VALVE MECHANISM	41
Y	*211-8041*	1	DAMPER GP	61
Y	*4P-2102*	1	DRAIN GP-ENGINE OIL	62
Y	*246-0599*	1	DRIVE GP-PUMP	480
Y	*246-0596*	1	ELBOW GP-AIR INLET	175
Y	*387-8599*	1	ENGINE AR	21
Y	*222-2409*	1	FASTENER GP-DAMPER & PULLEY	71
Y	*219-8681*	1	FASTENER GP-FRONT COVER	72
Y	*236-7315*	1	FASTENER GP-VALVE COVER	73
Y	*233-0423*	1	FASTENER GP-VALVE COVER BASE	74
Y	*389-8270*	1	FILLER GP-ENGINE OIL	108
Y	*183-2097*	1	FILTER GP-ENGINE OIL	109
Y	*241-3718*	1	FLYWHEEL GP	75
Y	*241-3719*	1	FUMES DISPOSAL GP	116
Y	*246-0601*	1	GAUGE GP-OIL LEVEL (DIPSTICK)	117
Y	*175-6260*	1	GEAR GP-REAR	77
Y	*165-4461*	1	HOUSING & REGULATOR GP	137
Y	*219-8666*	1	HOUSING GP-FLYWHEEL	79
Y	*245-3262*	1	HOUSING GP-FRONT	81
Y	*166-1784*	1	LIFTING GP-ENGINE	84
Y	*198-1319*	1	LINES GP-ENGINE OIL	118
Y	*397-5040*	1	LINES GP-FUEL	208
Y	*266-9810*	1	LINES GP-TURBOCHARGER OIL	121
Y	*165-4445*	1	MANIFOLD GP-EXHAUST	182
Y	*246-0600*	1	MOUNTING GP-ALTERNATOR	85
Y	*246-0598*	1	MOUNTING GP-FAN DRIVE	87
Y	*165-4459*	1	PAN GP-OIL	88
Y	*252-1567*	1	PLUG GP-ENGINE	91
Y	*246-0602*	1	PULLEY GP-CRANKSHAFT	92
Y	*189-9306*	1	SEAL GP-CRANKSHAFT	99
Y	*166-1790*	1	SUPPORT GP-ENGINE	101
Y	*166-1792*	1	TRUNNION GP-ENGINE	102
Y	*262-5901*	1	TURBOCHARGER GP	195
Y	*198-0921*	1	VALVE GP-FLUID SAMPLING	128
Y	*330-6019*	1	WIRING GP-ELECTRONIC CONTROL	404
			PLEASE USE THE GASKET KIT LINK IN SIS OR CONTACT YOUR LOCAL DEALER FOR THE LATEST GASKET KIT INFORMATION	

Y - SEPARATE ILLUSTRATION

<END>

398-6424 ENGINE AR-COMPLETE

S/N: TXD631-UP; THX8900-UP
FIELD REPLACEMENT FOR 349-3564—PAGE: 23
PART OF 282-2871 ENGINE AR
AN ATTACHMENT

SMCS-1000 **i04908762**

NOTE	PART NUMBER	QTY	PART NAME 1 2 3 4 5 6 (PRODUCT LEVEL)	SEE PAGE
Y	*246-9365*	1	CONTROL & MTG GP-ENGINE ELEK	268
Y	*188-3826*	1	COOLER GP-ENGINE OIL	130
Y	*238-1116*	1	COOLER GP-TRANSMISSION OIL	469
Y	*246-0605*	1	COVER GP-CYLINDER BLOCK	38
Y	*118-1727*	1	COVER GP-FRONT HOUSING (ACCESSORY DRIVE)	39
Y	*217-8669*	1	COVER GP-FRONT HOUSING	40
Y	*222-1783*	1	COVER GP-VALVE MECHANISM	41
Y	*211-8041*	1	DAMPER GP	61
Y	*4P-2102*	1	DRAIN GP-ENGINE OIL	62
Y	*246-0599*	1	DRIVE GP-PUMP	480
Y	*246-0596*	1	ELBOW GP-AIR INLET	175
Y	*387-8596*	1	ENGINE AR	20
Y	*222-2409*	1	FASTENER GP-DAMPER & PULLEY	71
Y	*219-8681*	1	FASTENER GP-FRONT COVER	72
Y	*236-7315*	1	FASTENER GP-VALVE COVER	73
Y	*233-0423*	1	FASTENER GP-VALVE COVER BASE	74
Y	*230-4118*	1	FILLER GP-ENGINE OIL	107
Y	*183-2097*	1	FILTER GP-ENGINE OIL	109
Y	*241-3718*	1	FLYWHEEL GP	75
Y	*241-3719*	1	FUMES DISPOSAL GP	116
Y	*246-0601*	1	GAUGE GP-OIL LEVEL (DIPSTICK)	117
Y	*175-6260*	1	GEAR GP-REAR	77
Y	*165-4461*	1	HOUSING & REGULATOR GP	137
Y	*219-8666*	1	HOUSING GP-FLYWHEEL	79
Y	*245-3262*	1	HOUSING GP-FRONT	81
Y	*166-1784*	1	LIFTING GP-ENGINE	84
Y	*198-1319*	1	LINES GP-ENGINE OIL	118
Y	*397-5040*	1	LINES GP-FUEL	208
Y	*266-9810*	1	LINES GP-TURBOCHARGER OIL	121
Y	*165-4445*	1	MANIFOLD GP-EXHAUST	182
Y	*246-0600*	1	MOUNTING GP-ALTERNATOR	85
Y	*246-0598*	1	MOUNTING GP-FAN DRIVE	87
Y	*165-4459*	1	PAN GP-OIL	88
Y	*252-1567*	1	PLUG GP-ENGINE	91
Y	*246-0602*	1	PULLEY GP-CRANKSHAFT	92
Y	*189-9306*	1	SEAL GP-CRANKSHAFT	99
Y	*166-1790*	1	SUPPORT GP-ENGINE	101
Y	*166-1792*	1	TRUNNION GP-ENGINE	102
Y	*262-5901*	1	TURBOCHARGER GP	195
Y	*198-0921*	1	VALVE GP-FLUID SAMPLING	128
Y	*330-6019*	1	WIRING GP-ELECTRONIC CONTROL	404
			PLEASE USE THE GASKET KIT LINK IN SIS OR CONTACT YOUR LOCAL DEALER FOR THE LATEST GASKET KIT INFORMATION	

Y - SEPARATE ILLUSTRATION

<END>

ENGINE ARRANGEMENT

282-3827 ENGINE AR-CORE

S/N: THX8900-UP
PART OF 282-3823 ENGINE AR, 349-3564 ENGINE AR-COMPLETE
AN ATTACHMENT

SMCS-1000 **i03801550**

NOTE	PART NUMBER	QTY	PART NAME 1 2 3 4 5 6 (PRODUCT LEVEL)	SEE PAGE
Y	*242-0674*	1	CAMSHAFT GP	36
Y	*246-9365*	1	CONTROL & MTG GP-ENGINE ELEK	268
Y	*188-3826*	1	COOLER GP-ENGINE OIL	130
Y	*217-8669*	1	COVER GP-FRONT HOUSING	40
Y	*164-6148*	1	CRANKSHAFT GP	42
Y	*161-3406*	1	CYLINDER BLOCK GP	45
Y	*242-0672*	1	CYLINDER HEAD GP	52
			S/N: THX8900-23114	
Y	*345-8414*	1	CYLINDER HEAD GP	59
			S/N: THX23115-UP	
Y	*213-4363*	1	FASTENER GP-CYLINDER HEAD	69
Y	*205-1321*	1	GEAR GP-FRONT	76
Y	*245-3262*	1	HOUSING GP-FRONT	81
Y	*265-1400*	6	PISTON & ROD GP	89
Y	*220-8233*	1	PUMP & MTG GP-UNIT INJ HYD	210
Y	*195-8098*	1	PUMP GP-ENGINE OIL	126
Y	*267-9720*	1	PUMP GP-FUEL INJECTION	217
Y	*262-5901*	1	TURBOCHARGER GP	195
Y	*242-0447*	1	VALVE MECHANISM GP	104
	282-9934	1	ELECTRONICS GP-ENGINE RATINGS	

Y - SEPARATE ILLUSTRATION

<END>

282-3828 ENGINE AR-CORE

S/N: THX8900-44213
PART OF 282-3824 ENGINE AR
AN ATTACHMENT

SMCS-1000 **i03774231**

NOTE	PART NUMBER	QTY	PART NAME 1 2 3 4 5 6 (PRODUCT LEVEL)	SEE PAGE
Y	*242-0674*	1	CAMSHAFT GP	36
Y	*246-9365*	1	CONTROL & MTG GP-ENGINE ELEK	268
Y	*188-3826*	1	COOLER GP-ENGINE OIL	130
Y	*217-8669*	1	COVER GP-FRONT HOUSING	40
Y	*164-6148*	1	CRANKSHAFT GP	42
Y	*161-3406*	1	CYLINDER BLOCK GP	45
Y	*242-0672*	1	CYLINDER HEAD GP	52
			S/N: THX8900-23114	
Y	*345-8414*	1	CYLINDER HEAD GP	59
			S/N: THX23115-44213	
Y	*213-4363*	1	FASTENER GP-CYLINDER HEAD	69
Y	*205-1321*	1	GEAR GP-FRONT	76
Y	*245-3262*	1	HOUSING GP-FRONT	81
Y	*265-1400*	6	PISTON & ROD GP	89
Y	*220-8233*	1	PUMP & MTG GP-UNIT INJ HYD	210
Y	*195-8098*	1	PUMP GP-ENGINE OIL	126
Y	*267-9720*	1	PUMP GP-FUEL INJECTION	217
Y	*237-2041*	1	TURBOCHARGER GP	193
Y	*242-0447*	1	VALVE MECHANISM GP	104
	282-9936	1	ELECTRONICS GP-ENGINE RATINGS	

Y - SEPARATE ILLUSTRATION

<END>

282-3829 ENGINE AR-CORE

S/N: THX8900-41212
PART OF 282-3825 ENGINE AR, 349-3565 ENGINE AR-COMPLETE
ALSO AN ATTACHMENT

SMCS-1000 **i03771666**

NOTE	PART NUMBER	QTY	PART NAME 1 2 3 4 5 6 (PRODUCT LEVEL)	SEE PAGE
Y	*242-0674*	1	CAMSHAFT GP	36
Y	*246-9365*	1	CONTROL & MTG GP-ENGINE ELEK	268
Y	*188-3826*	1	COOLER GP-ENGINE OIL	130
Y	*217-8669*	1	COVER GP-FRONT HOUSING	40
Y	*164-6148*	1	CRANKSHAFT GP	42
Y	*161-3406*	1	CYLINDER BLOCK GP	45
Y	*242-0672*	1	CYLINDER HEAD GP	52
			S/N: THX8900-23114	
Y	*345-8414*	1	CYLINDER HEAD GP	59
			S/N: THX23115-UP	
Y	*213-4363*	1	FASTENER GP-CYLINDER HEAD	69
Y	*205-1321*	1	GEAR GP-FRONT	76
Y	*245-3262*	1	HOUSING GP-FRONT	81
Y	*265-1400*	6	PISTON & ROD GP	89
Y	*220-8233*	1	PUMP & MTG GP-UNIT INJ HYD	210
Y	*195-8098*	1	PUMP GP-ENGINE OIL	126
Y	*267-9720*	1	PUMP GP-FUEL INJECTION	217
Y	*262-5901*	1	TURBOCHARGER GP	195
Y	*242-0447*	1	VALVE MECHANISM GP	104
	285-0228	1	ELECTRONICS GP-ENGINE RATINGS	

Y - SEPARATE ILLUSTRATION

<END>

282-3830 ENGINE AR-CORE

S/N: THX8900-39130
PART OF 282-3826 ENGINE AR
AN ATTACHMENT

SMCS-1000 **i03774232**

NOTE	PART NUMBER	QTY	PART NAME 1 2 3 4 5 6 (PRODUCT LEVEL)	SEE PAGE
Y	*242-0674*	1	CAMSHAFT GP	36
Y	*246-9365*	1	CONTROL & MTG GP-ENGINE ELEK	268
Y	*188-3826*	1	COOLER GP-ENGINE OIL	130
Y	*217-8669*	1	COVER GP-FRONT HOUSING	40
Y	*164-6148*	1	CRANKSHAFT GP	42
Y	*161-3406*	1	CYLINDER BLOCK GP	45
Y	*242-0672*	1	CYLINDER HEAD GP	52
			S/N: THX8900-23114	
Y	*345-8414*	1	CYLINDER HEAD GP	59
			S/N: THX23115-39130	
Y	*213-4363*	1	FASTENER GP-CYLINDER HEAD	69
Y	*205-1321*	1	GEAR GP-FRONT	76
Y	*245-3262*	1	HOUSING GP-FRONT	81
Y	*265-1400*	6	PISTON & ROD GP	89
Y	*220-8233*	1	PUMP & MTG GP-UNIT INJ HYD	210
Y	*195-8098*	1	PUMP GP-ENGINE OIL	126
Y	*267-9720*	1	PUMP GP-FUEL INJECTION	217
Y	*237-2041*	1	TURBOCHARGER GP	193
Y	*242-0447*	1	VALVE MECHANISM GP	104
	282-9935	1	ELECTRONICS GP-ENGINE RATINGS	

Y - SEPARATE ILLUSTRATION

<END>

ENGINE ARRANGEMENT

301-5769 ENGINE AR-CORE

S/N: THX8900-41209

PART OF 301-5768 ENGINE AR

SMCS-1000 **i03814359**

NOTE	PART NUMBER	QTY	PART NAME 1 2 3 4 5 6 (PRODUCT LEVEL)	SEE PAGE
Y	*242-0674*	1	CAMSHAFT GP	36
Y	*246-9365*	1	CONTROL & MTG GP-ENGINE ELEK	268
Y	*188-3826*	1	COOLER GP-ENGINE OIL	130
Y	*217-8669*	1	COVER GP-FRONT HOUSING	40
Y	*164-6148*	1	CRANKSHAFT GP	42
Y	*161-3406*	1	CYLINDER BLOCK GP	45
Y	*242-0672*	1	CYLINDER HEAD GP	52
			S/N: THX8900-23114	
Y	*345-8414*	1	CYLINDER HEAD GP	59
			S/N: THX23115-41209	
Y	*213-4363*	1	FASTENER GP-CYLINDER HEAD	69
Y	*205-1321*	1	GEAR GP-FRONT	76
Y	*245-3262*	1	HOUSING GP-FRONT	81
Y	*265-1400*	6	PISTON & ROD GP	89
Y	*220-8233*	1	PUMP & MTG GP-UNIT INJ HYD	210
Y	*195-8098*	1	PUMP GP-ENGINE OIL	126
Y	*267-9720*	1	PUMP GP-FUEL INJECTION	217
Y	*262-5901*	1	TURBOCHARGER GP	195
Y	*242-0447*	1	VALVE MECHANISM GP	104
	302-3904	1	ELECTRONICS GP-ENGINE RATINGS	

Y - SEPARATE ILLUSTRATION

<END>

384-8428 ENGINE AR-CORE

S/N: TXD1-UP; THX41210-UP

PART OF 384-8433, 384-8434, 384-8435 ENGINE AR

ALSO AN ATTACHMENT

SMCS-1000 **i05025229**

NOTE	PART NUMBER	QTY	PART NAME 1 2 3 4 5 6 (PRODUCT LEVEL)	SEE PAGE
Y	*242-0674*	1	CAMSHAFT GP	36
Y	*188-3826*	1	COOLER GP-ENGINE OIL	130
Y	*164-6148*	1	CRANKSHAFT GP	42
Y	*161-3406*	1	CYLINDER BLOCK GP	45
Y	*384-5590*	1	CYLINDER HEAD GP	60
Y	*205-1321*	1	GEAR GP-FRONT	76
YR	*265-1400*	6	PISTON & ROD GP	89
Y	*220-8233*	1	PUMP & MTG GP-UNIT INJ HYD	210
Y	*195-8098*	1	PUMP GP-ENGINE OIL	126
Y	*267-9715*	6	PUMP GP-FUEL INJECTION	214
Y	*211-1812*	1	PUMP GP-WATER	147
Y	*330-6034*	1	SENSOR GP-ENGINE	355
Y	*242-0447*	1	VALVE MECHANISM GP	104

R - REMFG PART MAY BE AVAILABLE
Y - SEPARATE ILLUSTRATION

<END>

387-8618 ENGINE AR-CORE

S/N: TXD1-UP; THX8900-UP
PART OF 387-8596, 387-8597, 387-8598, 387-8599, 399-5830 ENGINE AR
ALSO AN ATTACHMENT

SMCS-1000 **i04895611**

NOTE	PART NUMBER	QTY	PART NAME 1 2 3 4 5 6 (PRODUCT LEVEL)	SEE PAGE
Y	*242-0674*	1	CAMSHAFT GP	36
Y	*164-6148*	1	CRANKSHAFT GP	42
Y	*161-3406*	1	CYLINDER BLOCK GP	45
Y	*384-5590*	1	CYLINDER HEAD GP	60
Y	*205-1321*	1	GEAR GP-FRONT	76
YR	*265-1400*	6	PISTON & ROD GP	89
Y	*387-8622*	1	PUMP & MTG GP-UNIT INJ HYD	212
Y	*195-8098*	1	PUMP GP-ENGINE OIL	126
Y	*267-9715*	6	PUMP GP-FUEL INJECTION	214
Y	*211-1812*	1	PUMP GP-WATER	147
Y	*330-6034*	1	SENSOR GP-ENGINE	355
Y	*242-0447*	1	VALVE MECHANISM GP	104

R - REMFG PART MAY BE AVAILABLE
Y - SEPARATE ILLUSTRATION

<END>

399-3904 ENGINE AR-CORE

S/N: THX44214-UP
PART OF 398-0728 ENGINE AR
AN ATTACHMENT

SMCS-1000 **i05336852**

NOTE	PART NUMBER	QTY	PART NAME 1 2 3 4 5 6 (PRODUCT LEVEL)	SEE PAGE
Y	*242-0674*	1	CAMSHAFT GP	36
Y	*164-6148*	1	CRANKSHAFT GP	42
Y	*161-3406*	1	CYLINDER BLOCK GP	45
Y	*384-5590*	1	CYLINDER HEAD GP	60
Y	*205-1321*	1	GEAR GP-FRONT	76
YR	*265-1400*	6	PISTON & ROD GP	89
Y	*220-8233*	1	PUMP & MTG GP-UNIT INJ HYD	210
Y	*195-8098*	1	PUMP GP-ENGINE OIL	126
Y	*267-9715*	6	PUMP GP-FUEL INJECTION	214
Y	*211-1812*	1	PUMP GP-WATER	147
Y	*330-6034*	1	SENSOR GP-ENGINE (ELECTRONIC)	355
Y	*242-0447*	1	VALVE MECHANISM GP	104

R - REMFG PART MAY BE AVAILABLE
Y - SEPARATE ILLUSTRATION

<END>

ENGINE ARRANGEMENT

279-9549 INSTALLATION AR-ENGINE

S/N: SMC1-497; GCT1-963

PART OF 269-2037, 269-2038 GENERAL AR

SMCS-1000 **i04547009**

NOTE	PART NUMBER	QTY	PART NAME 1 2 3 4 5 6 (PRODUCT LEVEL)	SEE PAGE
Y	*250-6056*	1	AFTERCOOLER GP-AIR	170
Y	*206-9000*	1	AIR CLEANER GP	173
Y	*280-2703*	1	ALTERNATOR GP-CHARGING	233
Y	*241-8240*	1	COMPRESSOR GP-REFRIGERANT	1025
Y	*168-8783*	1	CONDENSER & MTG GP-REFRIGERANT	1028
Y	*169-3806*	1	COOLER GP-HYDRAULIC OIL	828
Y	*215-3251*	1	DRIVE GP-FAN	64
Y	*241-4353*	1	DUST EJECTOR GP	174
Y	*168-8376*	1	FAN GP-BLOWER	135
Y	*295-7933*	1	FILTER & LINES GP-FUEL	196
Y	*230-5585*	1	FUMES DISPOSAL GP	115
Y	*168-8377*	1	LINES GP-AIR	178
Y	*251-4553*	1	LINES GP-AIR (ATAAC)	179
Y	*168-8378*	1	LINES GP-WATER	141
Y	*223-0556*	1	MOUNTING GP-ENGINE	86
Y	*239-3686*	1	MUFFLER GP	183
Y	*262-2027*	1	PULLEY GP-FAN & ALT DRIVE	93
Y	*227-0833*	1	RADIATOR GP	152
			S/N: GCT1-855 ; SMC1-458	
Y	*358-2851*	1	RADIATOR GP	155
			S/N: GCT856-963 ; SMC459-497	
Y	*237-2737*	1	SHIELD GP-EXHAUST	190
Y	*263-9012*	1	STARTING AID GP-ETHER	377
Y	*223-0558*	1	STARTING MOTOR GP-ELECTRIC	382
Y	*255-5232*	1	TANK GP-COOLANT	166
Y	*279-9544*	1	WIRING GP-ENGINE	408
Y	*224-2693*	1	YOKE GP	106

Y - SEPARATE ILLUSTRATION

<END>

372-6406 INSTALLATION AR-ENGINE

S/N: SMC498-UP; GCT964-UP

PART OF 269-2037, 269-2038 GENERAL AR

SMCS-1000 **i05335209**

NOTE	PART NUMBER	QTY	PART NAME 1 2 3 4 5 6 (PRODUCT LEVEL)	SEE PAGE
Y	*331-4938*	1	AFTERCOOLER GP-AIR (ATAAC)	171
Y	*206-9000*	1	AIR CLEANER GP	173
Y	*280-2703*	1	ALTERNATOR GP-CHARGING	233
Y	*390-8427*	1	COMPRESSOR GP-REFRIGERANT	1027
Y	*168-8783*	1	CONDENSER & MTG GP-REFRIGERANT	1028
Y	*169-3806*	1	COOLER GP-HYDRAULIC OIL	828
Y	*215-3251*	1	DRIVE GP-FAN	64
Y	*241-4353*	1	DUST EJECTOR GP	174
Y	*168-8376*	1	FAN GP-BLOWER	135
Y	*295-7933*	1	FILTER & LINES GP-FUEL	196
			S/N: SMC498-604 ; GCT964-1098	
Y	*393-7367*	1	FILTER & LINES GP-FUEL	198
			S/N: SMC605-UP ; GCT1099-UP	
Y	*230-5585*	1	FUMES DISPOSAL GP (CRANKCASE)	115
Y	*168-8377*	1	LINES GP-AIR	178
Y	*251-4553*	1	LINES GP-AIR (ATAAC)	179
Y	*372-6363*	1	LINES GP-WATER	143
Y	*223-0556*	1	MOUNTING GP-ENGINE	86
Y	*239-3686*	1	MUFFLER GP	183
Y	*372-6366*	1	PULLEY GP-FAN & ALT DRIVE	95
Y	*372-6368*	1	RADIATOR GP	157
Y	*237-2737*	1	SHIELD GP-EXHAUST	190
Y	*263-9012*	1	STARTING AID GP-ETHER	377
Y	*223-0558*	1	STARTING MOTOR GP-ELECTRIC	382
Y	*372-6364*	1	TANK GP-COOLANT	168
Y	*279-9544*	1	WIRING GP-ENGINE	408
Y	*224-2693*	1	YOKE GP	106

Y - SEPARATE ILLUSTRATION

<END>

242-0674 CAMSHAFT GP

S/N: TXD1-UP; THX8900-UP

PART OF 282-3827, 282-3828, 282-3829, 282-3830, 301-5769, 384-8428, 387-8618, 399-3904 ENGINE AR-CORE

ALSO AN ATTACHMENT

SMCS-1210 **i02433943**

NOTE	REF NO	GRAPHIC REF	PART NUMBER	QTY	PART NAME 1 2 3 4 5 6 (PRODUCT LEVEL)	SEE PAGE
	1	1	**107-7694**	1	PLATE-THRUST	
R	2	1	**242-0673**	1	CAMSHAFT AS	
	2A	1	**1B-8705**	1	KEY-WOODRUFF	
	2B	1	**224-3247**	1	GEAR (100-TEETH)	
M	3		**6V-3940**	2	BOLT (M8X1.25X25-MM)	

M - METRIC PART
R - REMFG PART MAY BE AVAILABLE

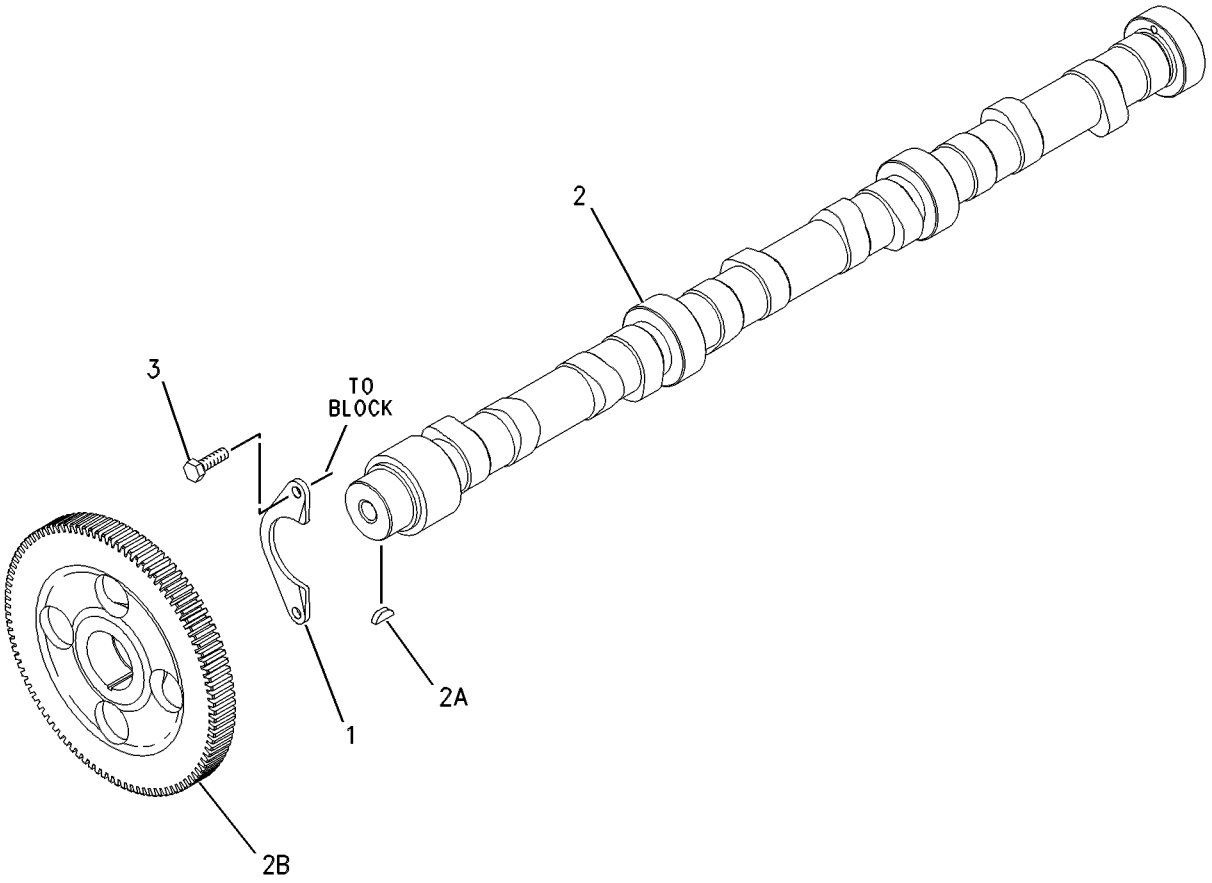

GRAPHIC #1 **<END>** g00626400

251-3600 CLUTCH GP-FAN

S/N: SMC1-UP; GCT1-UP
PART OF 262-2029 DRIVE GP-FAN
AN ATTACHMENT

SMCS-1359 **i04886611**

NOTE	PART NUMBER	QTY	PART NAME 1 2 3 4 5 6 (PRODUCT LEVEL)	SEE PAGE
Y	**351-6987**	1	SENSOR GP-SPEED	370
	2D-5658	1	BALL BEARING	
	7F-2742	1	BALL BEARING	
M	**6V-5217**	8	BOLT (M8X1.25X20-MM)	
M	**099-0822**	2	BOLT-SOCKET HEAD (M5X0.8X10-MM)	
	251-3601	1	CASE	
	251-3602	1	COVER	
	251-3618	6	DISC-FRICTION	
	300-8547	1	FLANGE AS-DRIVE	
	251-3611	1	PISTON	
	251-3612	1	PISTON	
	6Y-8043	6	PLATE	
	9S-4182	1	PLUG-O-RING	
	9S-4191	1	PLUG-O-RING	
	251-3613	1	RETAINER	
	251-3617	1	RETAINER	
	6Y-0040	1	RING	
	095-7949	1	RING-RETAINING	
	1K-6984	1	RING-RETAINING	
	6V-5203	1	RING-RETAINING	
	8T-0707	1	RING-RETAINING (INTERNAL)	
	8T-1742	1	RING-RETAINING	
	9U-8886	2	RING-SEAL	
	9W-9436	1	RING-SEAL	
	251-3623	2	SEAL	
	251-3624	1	SEAL	
	276-4391	2	SEAL-LIP TYPE	
	032-9882	1	SEAL-O-RING	
	2K-2939	1	SEAL-O-RING	
	3J-1907	1	SEAL-O-RING	
	3J-7354	1	SEAL-O-RING	
	3K-0360	1	SEAL-O-RING	
	251-3619	1	SHAFT AS	
	251-3620	1	SLEEVE AS	
	251-3625	1	SPRING-WAVE	
	251-3614	1	TUBE AS	

M - METRIC PART
Y - SEPARATE ILLUSTRATION

<END>

246-0605 COVER GP-CYLINDER BLOCK

S/N: TXD1-UP; THX8900-UP

PART OF 282-3823, 282-3824, 282-3825, 282-3826, 301-5768 ENGINE AR, 349-3564, 349-3565, 387-8574, 387-8575, 387-8576, 387-8580, 398-6424 ENGINE AR-COMPLETE

ALSO AN ATTACHMENT

SMCS-1201 **i04890987**

NOTE	REF NO	GRAPHIC REF	PART NUMBER	QTY	PART NAME 1 2 3 4 5 6 (PRODUCT LEVEL)	SEE PAGE
	1	1	**205-5285**	1	GASKET	
	2	1	**215-4441**	1	COVER	
	3	1	**240-0041**	1	BREATHER AS (CRANKCASE)	
M	4	1	**3E-8005**	1	BOLT (M8X1.25X160-MM)	
M	5	1	**6V-3918**	2	BOLT (M8X1.25X50-MM)	
M	6	1	**6V-3940**	9	BOLT (M8X1.25X25-MM)	
	7	1	**9F-4446**	1	SEAL-O-RING (CRANKCASE BREATHER)	
	8	1	**9M-1974**	11	WASHER-HARD (8.8X16X2-MM THK)	
	9	1	**5N-4185**	1	WASHER-SPECIAL	
	10	1	**9N-6377**	1	CAP	

M - METRIC PART

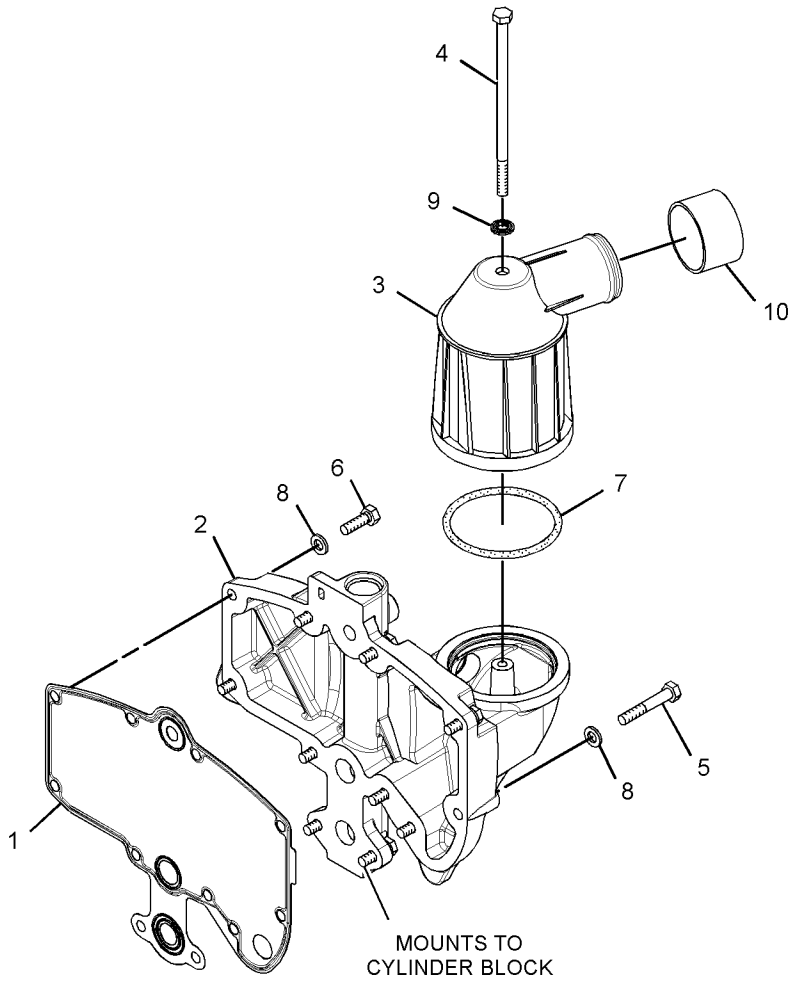

GRAPHIC #1 **<END>** g03027936

118-1727 COVER GP-FRONT HOUSING

S/N: TXD1-UP; THX8900-UP

PART OF 282-3823, 282-3824, 282-3825, 282-3826, 301-5768 ENGINE AR, 349-3564, 349-3565, 387-8574, 387-8575, 387-8576, 387-8580, 398-6424 ENGINE AR-COMPLETE

ALSO AN ATTACHMENT

SMCS-1151, 1166

i01671188

NOTE	REF NO	GRAPHIC REF	PART NUMBER	QTY	PART NAME 1 2 3 4 5 6 (PRODUCT LEVEL)	SEE PAGE
	1	1	**5P-8245**	4	WASHER-HARD (13.5X25.5X3-MM THK)	
M	2	1	**6V-5696**	2	BOLT (M12X1.75X80-MM)	
	3	1	**4W-2026**	1	COVER	
	4	1	**135-9819**	1	SEAL-INTEGRAL	
M	5	1	**6V-8149**	2	NUT (M12X1.75-THD)	

M - METRIC PART

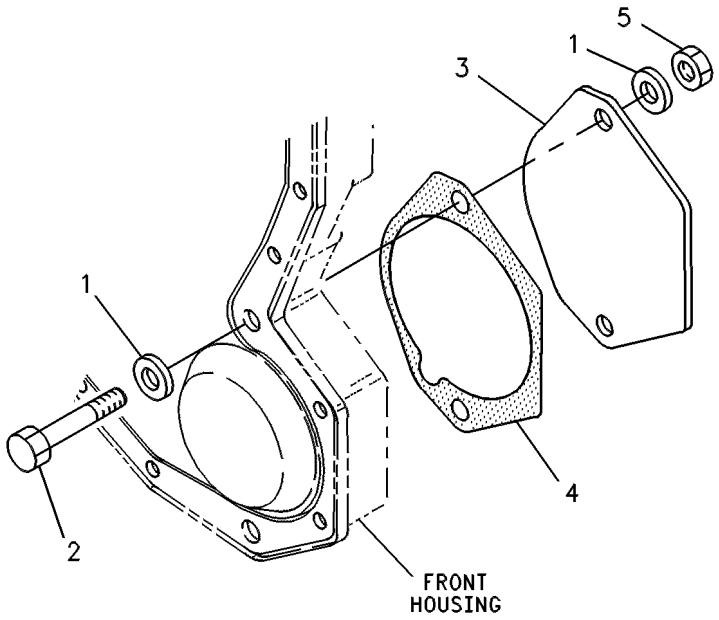

GRAPHIC #1

<END>

g00245495

217-8669 COVER GP-FRONT HOUSING

S/N: TXD1-UP; THX8900-UP

PART OF 282-3825, 282-3826, 301-5768 ENGINE AR, 387-8574, 387-8575, 387-8576, 387-8580, 398-6424 ENGINE AR-COMPLETE, 282-3827, 282-3828, 282-3829, 282-3830, 301-5769 ENGINE AR-CORE

ALSO AN ATTACHMENT

SMCS-1151, 1166 **i02433730**

NOTE	REF NO	GRAPHIC REF	PART NUMBER	QTY	PART NAME 1 2 3 4 5 6 (PRODUCT LEVEL)	SEE PAGE
	1	1	**209-0760**	1	COVER AS-FRONT	
	1A	1	**126-1757**	2	WASHER (10.85X19.3X1.27-MM THK)	
	1B	1	**136-0822**	2	STUD	
	2	1	**209-0762**	1	GASKET AS	

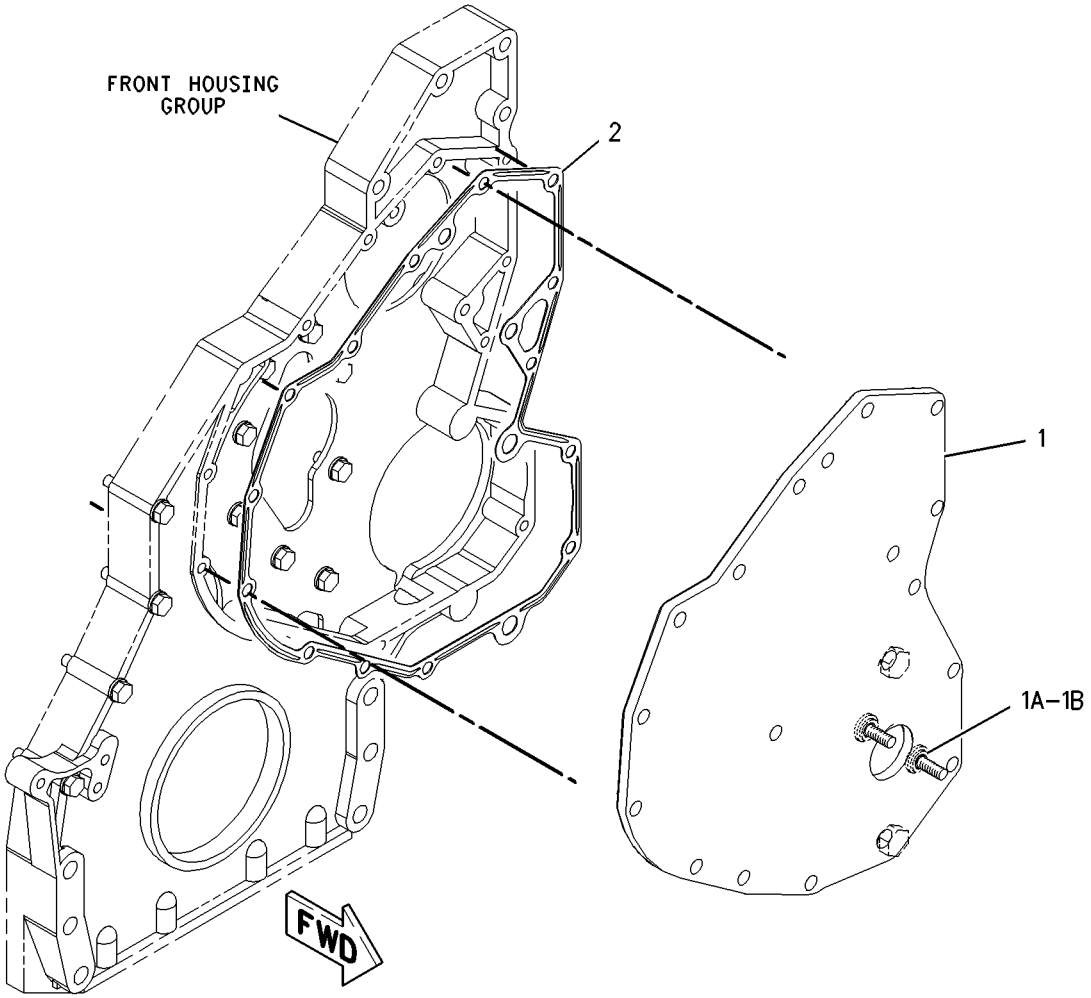

GRAPHIC #1 **<END>** g00849279

222-1783 COVER GP-VALVE MECHANISM

S/N: TXD1-UP; THX8900-UP

PART OF 282-3823, 282-3824, 282-3825, 282-3826, 301-5768 ENGINE AR, 349-3564, 349-3565, 387-8574, 387-8575, 387-8576, 387-8580, 398-6424 ENGINE AR-COMPLETE

ALSO AN ATTACHMENT

SMCS-1107 **i04019312**

NOTE	REF NO	GRAPHIC REF	PART NUMBER	QTY	PART NAME 1 2 3 4 5 6 (PRODUCT LEVEL)	SEE PAGE
	1	1	**358-7876**	11	SLEEVE-SPACER	
	2	1	**358-7872**	1	COVER GP-VALVE MECHANISM	
	2A	1	**285-4106**	1	SEAL-VALVE COVER	
	3	1	**353-6988**	1	BASE GP-VALVE COVER	
	3A	1	**268-3490**	1	SEAL-VALVE COVER	
	4	1	**204-4444**	1	BREATHER AS (CRANKCASE)	
		1	**160-0526**	1	SEAL-O-RING	
		1	**185-3159**	1	FILTER ELEMENT-BREATHER (CRANKCASE)	
		1	**341-0979**	1	SEAL-O-RING	

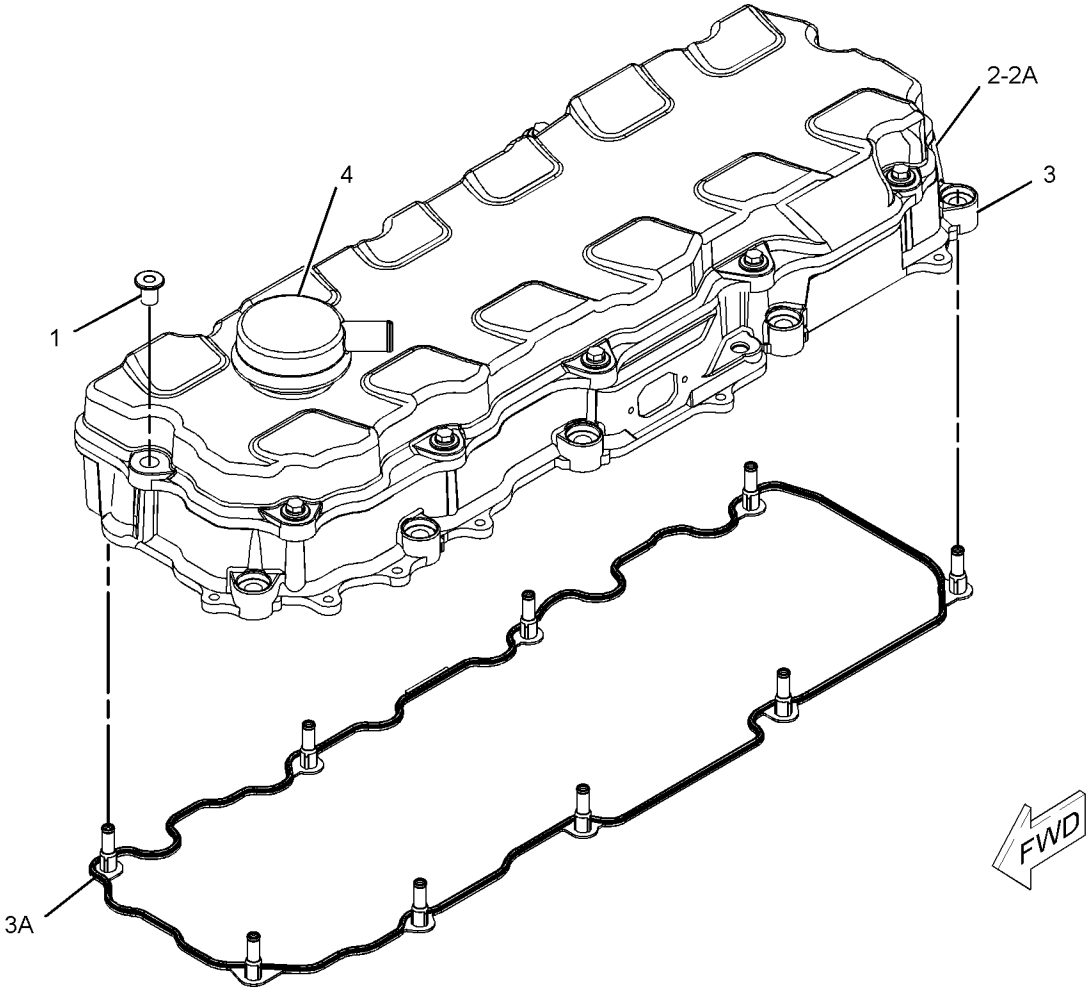

GRAPHIC #1 **<END>** g01304662

164-6148 CRANKSHAFT GP

S/N: TXD1-UP; THX8900-UP

PART OF 282-3827, 282-3828, 282-3829, 282-3830, 301-5769, 384-8428, 387-8618, 399-3904 ENGINE AR-CORE

ALSO AN ATTACHMENT

SMCS-1202 **i04720949**

NOTE	REF NO	GRAPHIC REF	PART NUMBER	QTY	PART NAME 1 2 3 4 5 6 (PRODUCT LEVEL)	SEE PAGE
J	1	1	**151-2939**	7	BEARING-MAIN (STANDARD)	
AB			**282-1771**	7	BEARING-MAIN (0.25-MM US)	
AB			**282-1772**	7	BEARING-MAIN (0.51-MM US)	
R	2	1	**261-1544**	1	CRANKSHAFT AS	
	2A	1	**1B-8705**	1	KEY-WOODRUFF	
	2B	1	**2W-8147**	1	GEAR (50-TEETH)	
	2C	1	**9Y-0810**	1	SLEEVE-WEAR	
J	3	1	**246-3150**	2	PLATE-THRUST	
					AVAILABLE REPAIR KIT(S):	
AJ			**243-6716**		KIT-BEARING (STANDARD)	
					(INCLUDES A COMPLETE SET OF MAIN BEARINGS AND THRUST PLATES)	

A - NOT PART OF THIS GROUP
B - USE AS REQUIRED
J - KIT MARKED J INCLUDES PARTS MARKED J
R - REMFG PART MAY BE AVAILABLE

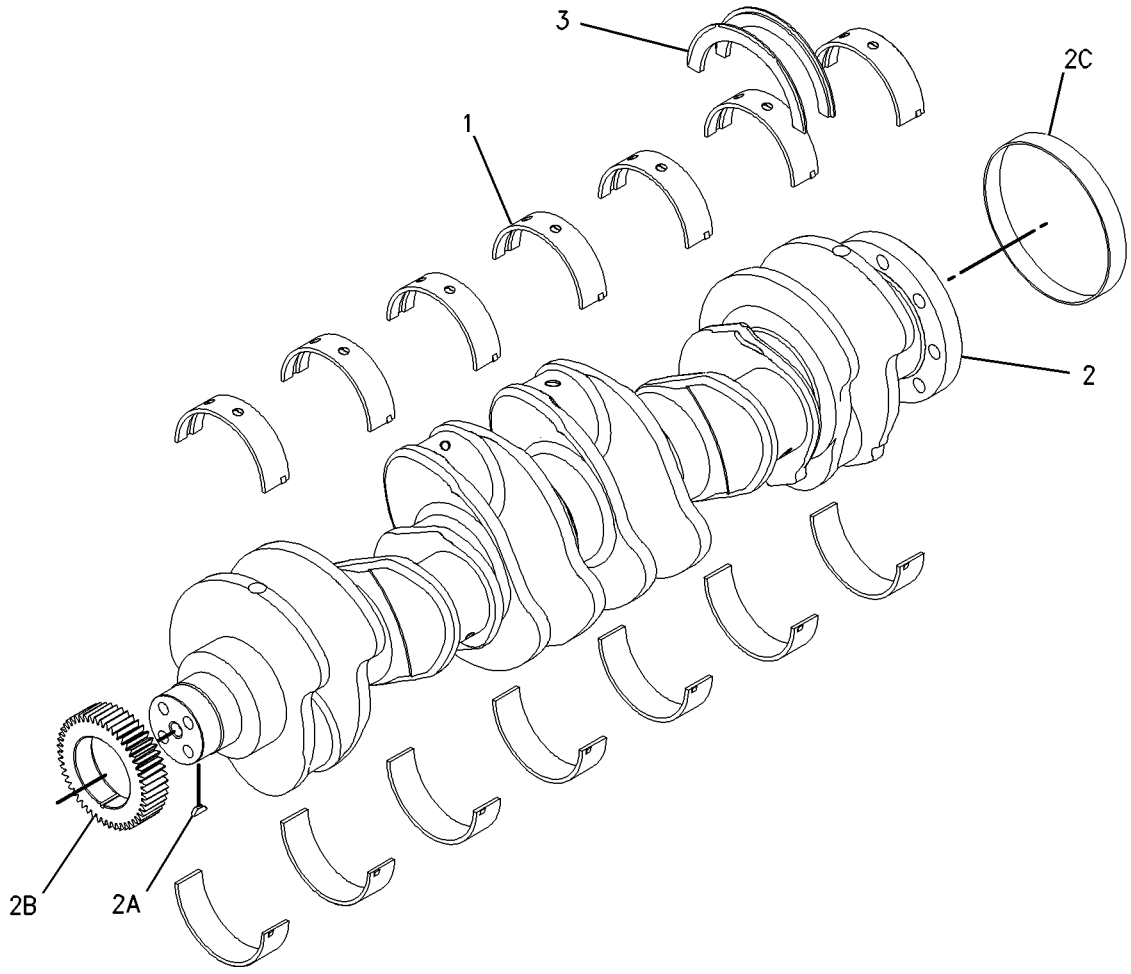

GRAPHIC #1 **<END>** g00789955

325-3915 CYLINDER BLOCK AS*R

S/N: TXD1-UP; THX8900-UP
PART OF 220-1952 CYLINDER BLOCK GP
ALSO AN ATTACHMENT

SMCS-1201 **i03819461**

NOTE	REF NO	GRAPHIC REF	PART NUMBER	QTY	PART NAME 1 2 3 4 5 6 (PRODUCT LEVEL)	SEE PAGE
	1	1	**0L-1026**	2	PLUG-CUP	
	2	1	**3B-0623**	2	PLUG-CUP	
	3	1	**4F-5695**	4	PLUG-CUP	
M	4	1	**175-0454**	14	BOLT (M16X2X160-MM)	
	5	1	**203-5805**	2	BEARING-SLEEVE	
	6	1	**203-6090**	1	BEARING-SLEEVE	
	7	1	**212-7002**	7	CAP-BEARING	
	8	1	**216-5586**	1	BEARING-SLEEVE (CAMSHAFT)	
	9	1	**9X-8268**	14	WASHER (17.5X30X3.5-MM THK)	

M - METRIC PART

325-3915 **CYLINDER BLOCK AS (*contd.*)** **i03819461**

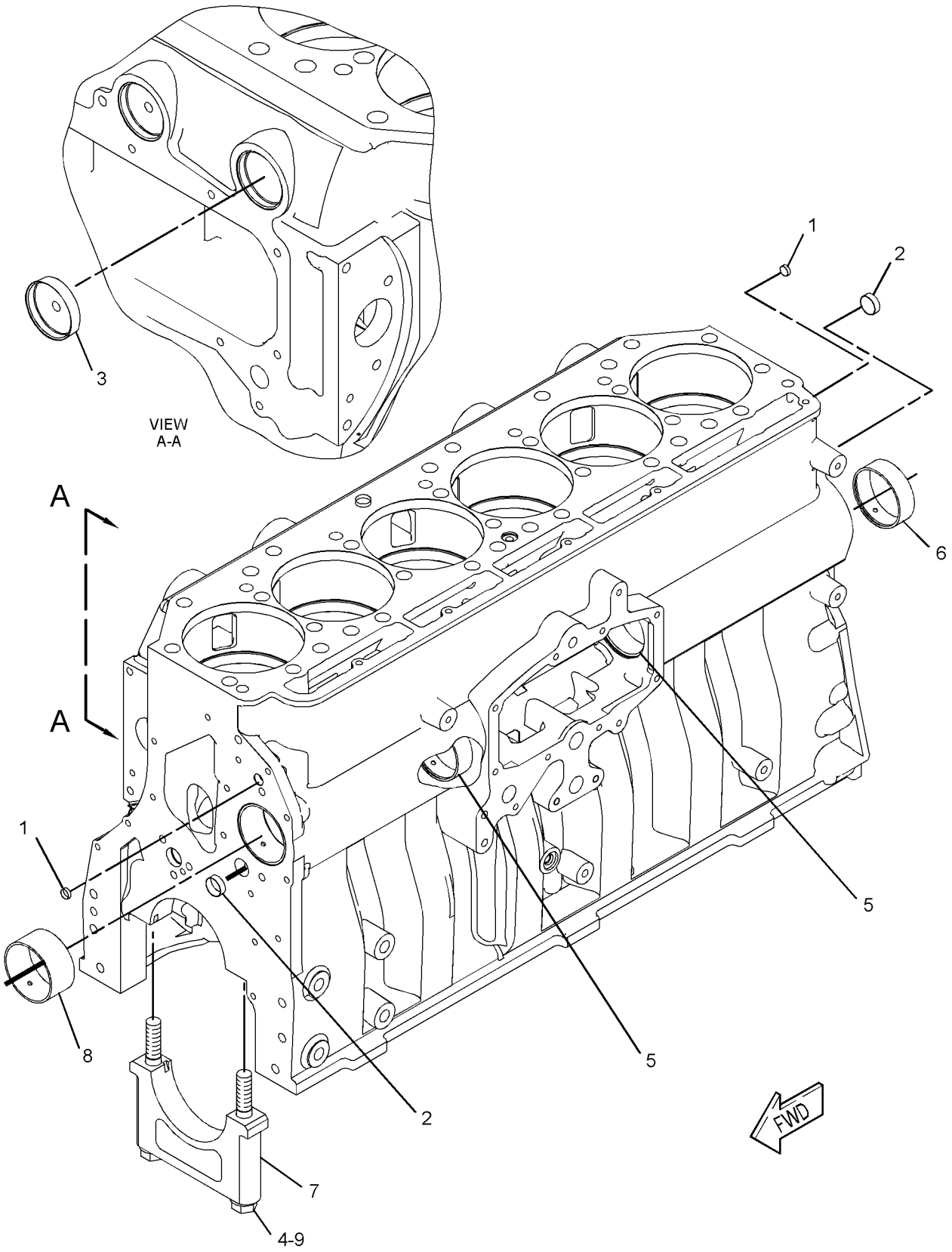

GRAPHIC #1 **<END>** g02073913

161-3406 CYLINDER BLOCK GP

S/N: TXD1-UP; THX8900-UP

PART OF 282-3827, 282-3828, 282-3829, 282-3830, 301-5769, 384-8428, 387-8618, 399-3904 ENGINE AR-CORE

ALSO AN ATTACHMENT

SMCS-1201 **i04556493**

NOTE	REF NO	GRAPHIC REF	PART NUMBER	QTY	PART NAME 1 2 3 4 5 6 (PRODUCT LEVEL)	SEE PAGE
	1	1	**0S-0519**	1	PLUG-CUP	
CY	2	1	*220-1952*	1	CYLINDER BLOCK GP	47
	3	1	**1W-8407**	2	SLEEVE	
	4	1	*307-2671*	1	PLUG AS	
		1	**9S-8002**	1	PLUG-O-RING	
		1	**214-7566**	1	SEAL-O-RING	
	5	1	**4G-4972**	1	SEAL-O-RING	
	6	1	**6V-3538**	2	DOWEL	
	7	1	**7N-5683**	2	DOWEL	

C - CHANGE FROM PREVIOUS TYPE
Y - SEPARATE ILLUSTRATION

161-3406 **CYLINDER BLOCK GP (*contd.*)** **i04556493**

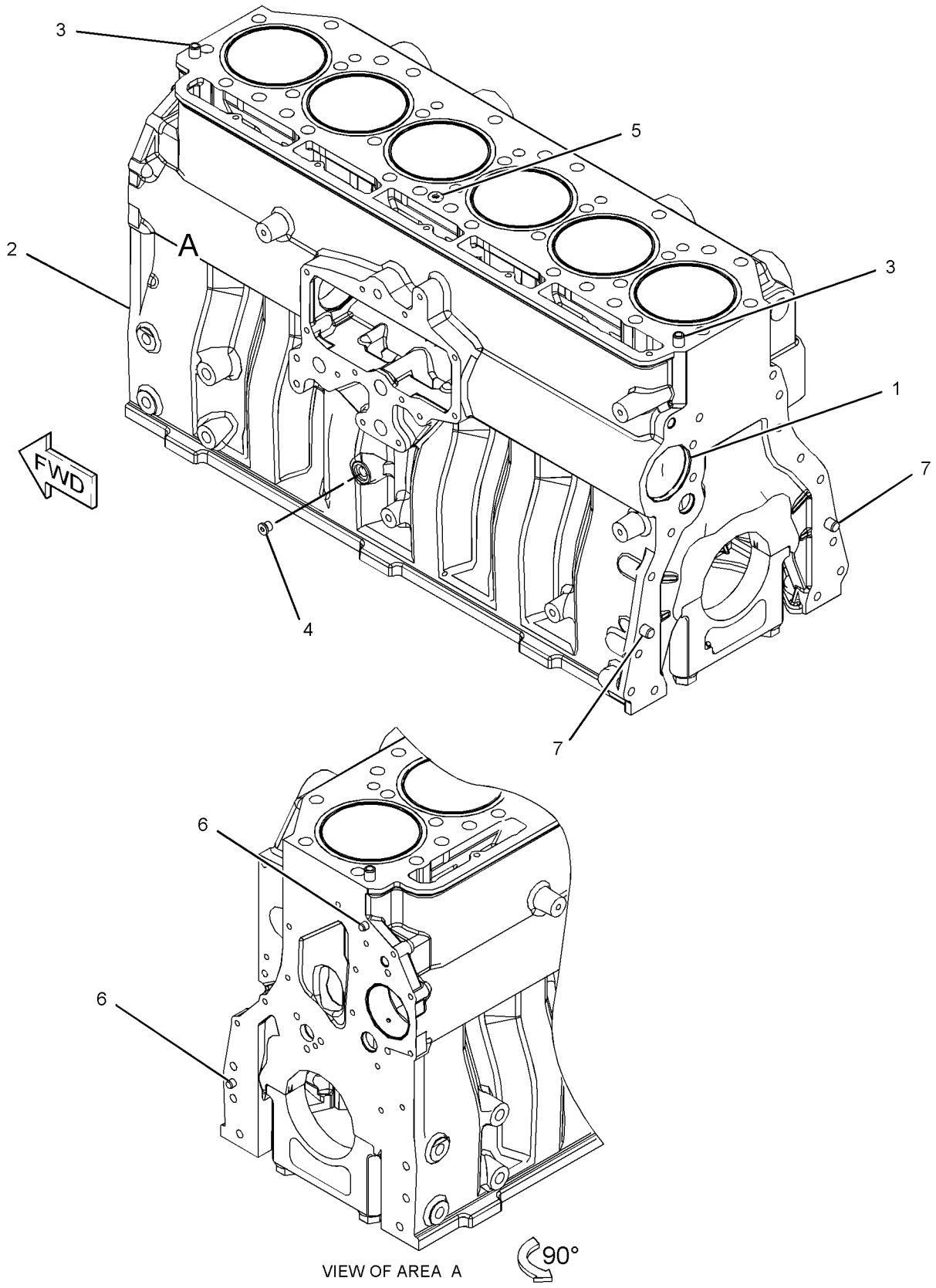

VIEW OF AREA A

GRAPHIC #1

<END>

g02727107

220-1952 CYLINDER BLOCK GP

S/N: TXD1-UP; THX8900-UP
PART OF 161-3406 CYLINDER BLOCK GP
ALSO AN ATTACHMENT

SMCS-1201 **i04712791**

NOTE	REF NO	GRAPHIC REF	PART NUMBER	QTY	PART NAME 1 2 3 4 5 6 (PRODUCT LEVEL)	SEE PAGE
	1	1	**167-0024**	6	SEAL-LINER	
	2	1	**190-3562**	6	LINER-CYLINDER BLOCK	
YR	3	1	**325-3915**	1	CYLINDER BLOCK AS	43

R - REMFG PART MAY BE AVAILABLE
Y - SEPARATE ILLUSTRATION

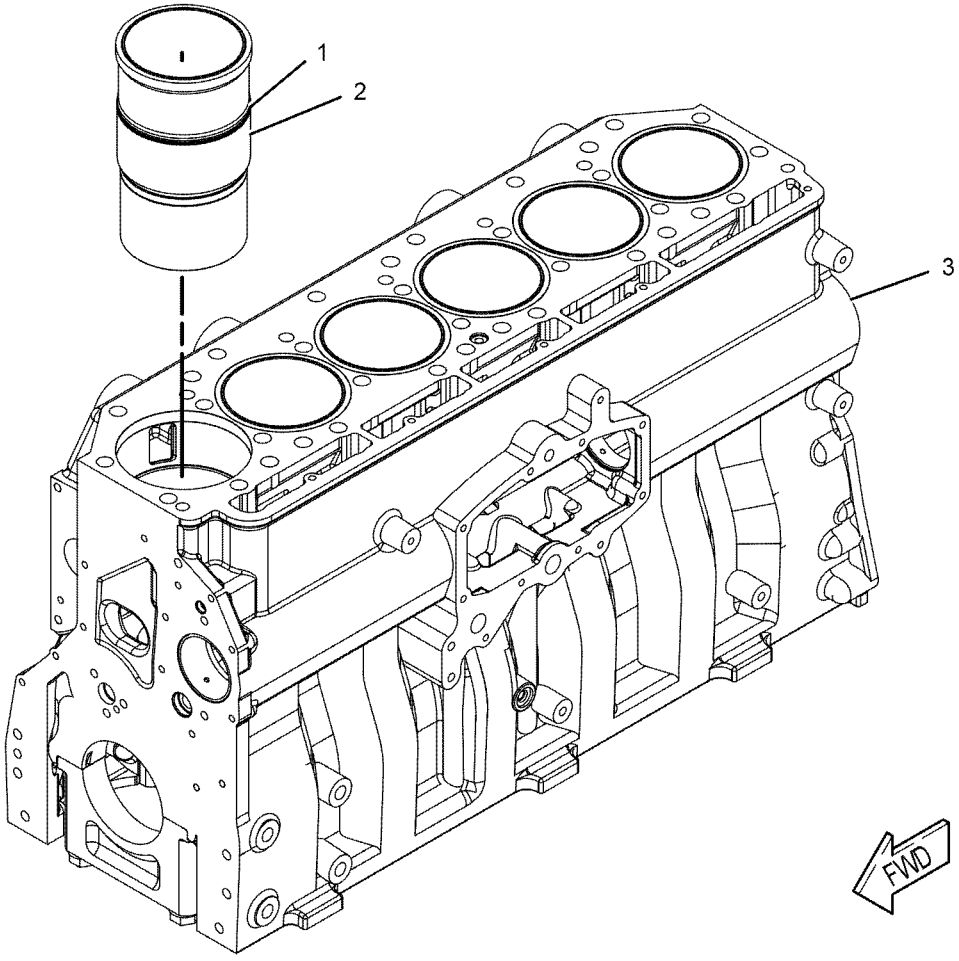

GRAPHIC #1 **<END>** g01032547

311-7229 CYLINDER HEAD AS

S/N: THX8900-UP

PART OF 252-8439 CYLINDER HEAD GP

ALSO AN ATTACHMENT

SMCS-1100, 1101

i04034875

NOTE	REF NO	GRAPHIC REF	PART NUMBER	QTY	PART NAME 1 2 3 4 5 6 (PRODUCT LEVEL)	SEE PAGE
	1	1	**6V-7604**	6	PLUG-CUP	
	2	1	**8M-5860**	18	PLUG-CUP	
	3	1	**212-8917**	12	INSERT-VALVE SEAT (EXHAUST) (STANDARD)	
		1	**317-7210**		INSERT-VALVE SEAT (0.127-MM OS, EXHAUST)	
		1	**317-7211**		INSERT-VALVE SEAT (0.25-MM OS, EXHAUST)	
AB		1	**254-3947**		INSERT-VALVE SEAT (0.508-MM OS, EXHAUST)	
	4	1	**227-1200**	6	SLEEVE-INJECTOR	
	5	1	**241-8388**	12	INSERT-VALVE SEAT (INLET) (STANDARD)	
		1	**317-7212**		INSERT-VALVE SEAT (0.127-MM OS, INLET)	
		1	**317-7213**		INSERT-VALVE SEAT (0.25-MM OS, INLET)	
AB		1	**254-3946**		INSERT-VALVE SEAT (0.508-MM OS, INLET)	
	6	1	**310-7255**	6	SEAL-O-RING	
	7	1	**310-7257**	6	SEAL-O-RING	

A - NOT PART OF THIS GROUP
B - USE AS REQUIRED

311-7229 **CYLINDER HEAD AS (*contd.*)** **i04034875**

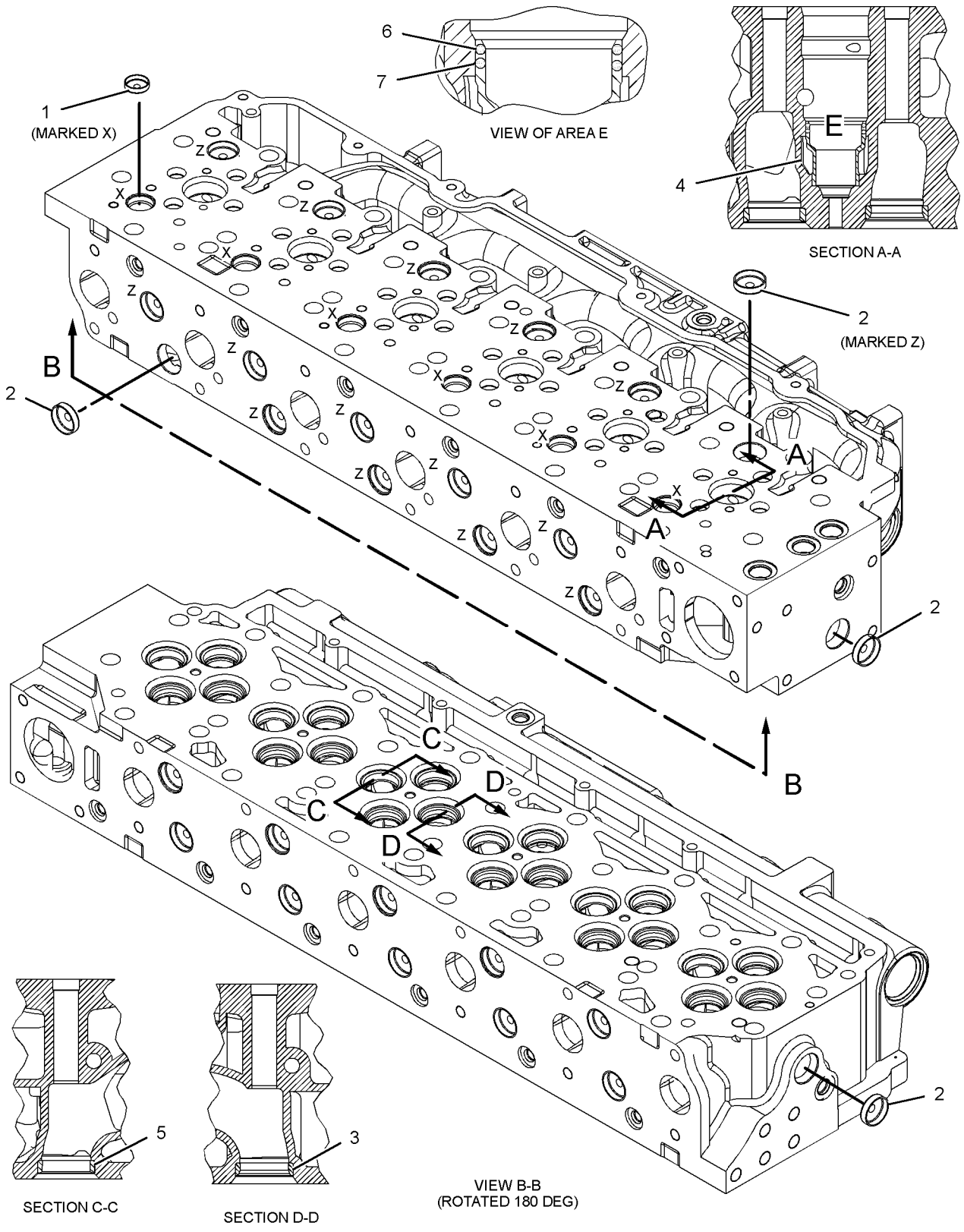

GRAPHIC #1 **<END>** g01414571

332-3619 CYLINDER HEAD AS

S/N: TXD1-UP; THX8900-UP

PART OF 252-8439, 344-2149 CYLINDER HEAD GP

ALSO AN ATTACHMENT

SMCS-1100, 1101

i04453665

NOTE	REF NO	GRAPHIC REF	PART NUMBER	QTY	PART NAME 1 2 3 4 5 6 (PRODUCT LEVEL)	SEE PAGE
	1	1	**6V-7604**	7	PLUG-CUP	
	2	1	**8M-5860**	18	PLUG-CUP	
	3	1	**212-8917**	12	INSERT-VALVE SEAT (EXHAUST) (STANDARD)	
AB		1	**317-7210**		INSERT-VALVE SEAT (0.127-MM OS, EXHAUST)	
AB		1	**317-7211**		INSERT-VALVE SEAT (0.25-MM OS, EXHAUST)	
AB		1	**254-3947**		INSERT-VALVE SEAT (0.508-MM OS, EXHAUST)	
	4	1	**227-1200**	6	SLEEVE-INJECTOR	
	5	1	**241-8388**	12	INSERT-VALVE SEAT (INLET) (STANDARD)	
AB		1	**317-7212**		INSERT-VALVE SEAT (0.127-MM OS, INLET)	
AB		1	**317-7213**		INSERT-VALVE SEAT (0.25-MM OS, INLET)	
AB		1	**254-3946**		INSERT-VALVE SEAT (0.508-MM OS, INLET)	
	6	1	**310-7255**	6	SEAL-O-RING	
	7	1	**310-7257**	6	SEAL-O-RING	

A - NOT PART OF THIS GROUP
B - USE AS REQUIRED

332-3619 **CYLINDER HEAD AS (*contd.*)** **i04453665**

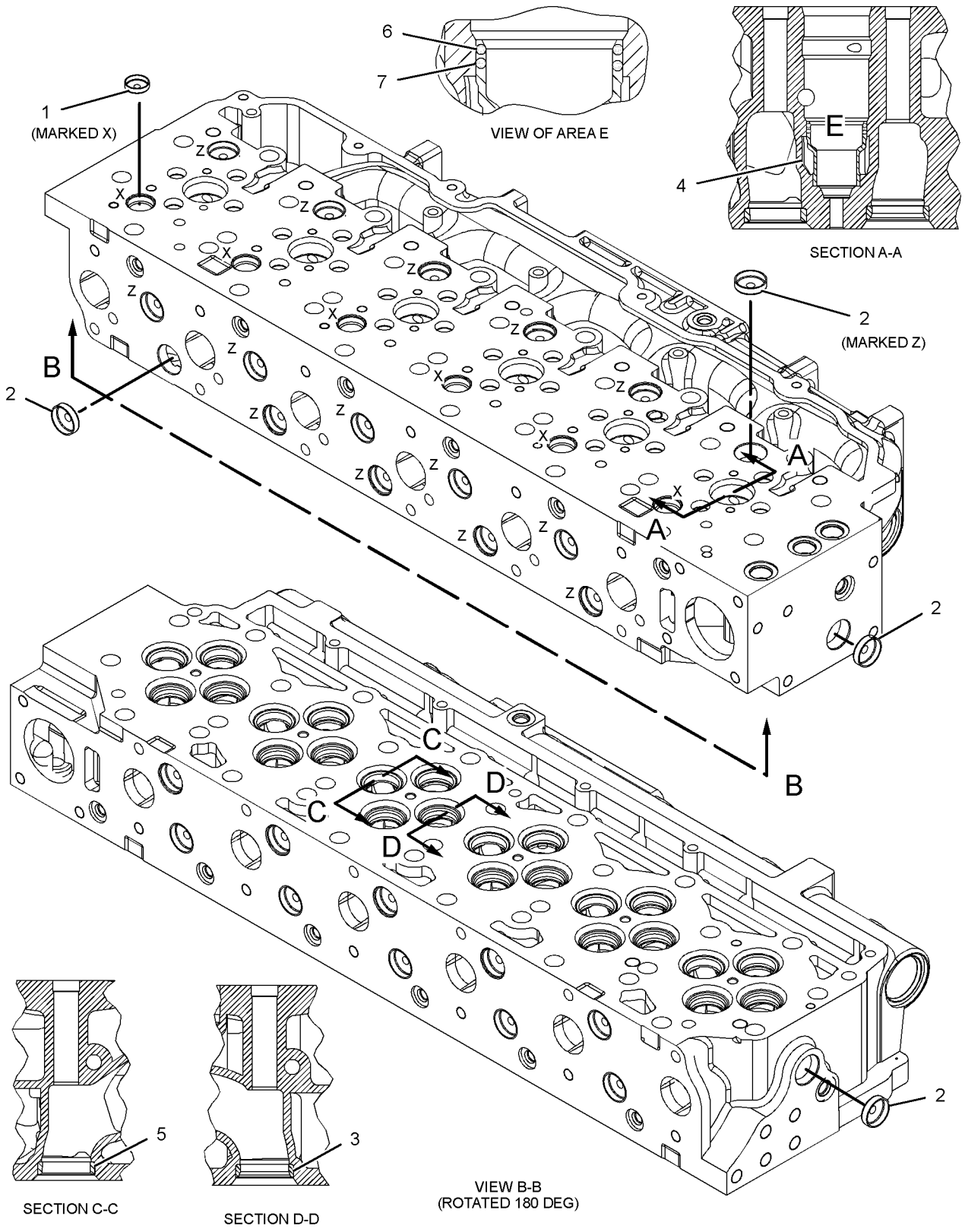

GRAPHIC #1 **<END>** g01414571

242-0672 CYLINDER HEAD GP

S/N: THX8900-23114

PART OF 282-3827, 282-3828, 282-3829, 282-3830, 301-5769 ENGINE AR-CORE

ALSO AN ATTACHMENT

SMCS-1100 **i02721753**

NOTE	REF NO	GRAPHIC REF	PART NUMBER	QTY	PART NAME 1 2 3 4 5 6 (PRODUCT LEVEL)	SEE PAGE
	1	1	**2A-3746**	1	PLUG-CUP	
	2	1	**187-1315**	1	GASKET AS	
Y	3	1	**252-8439**	1	CYLINDER HEAD GP	53

Y - SEPARATE ILLUSTRATION

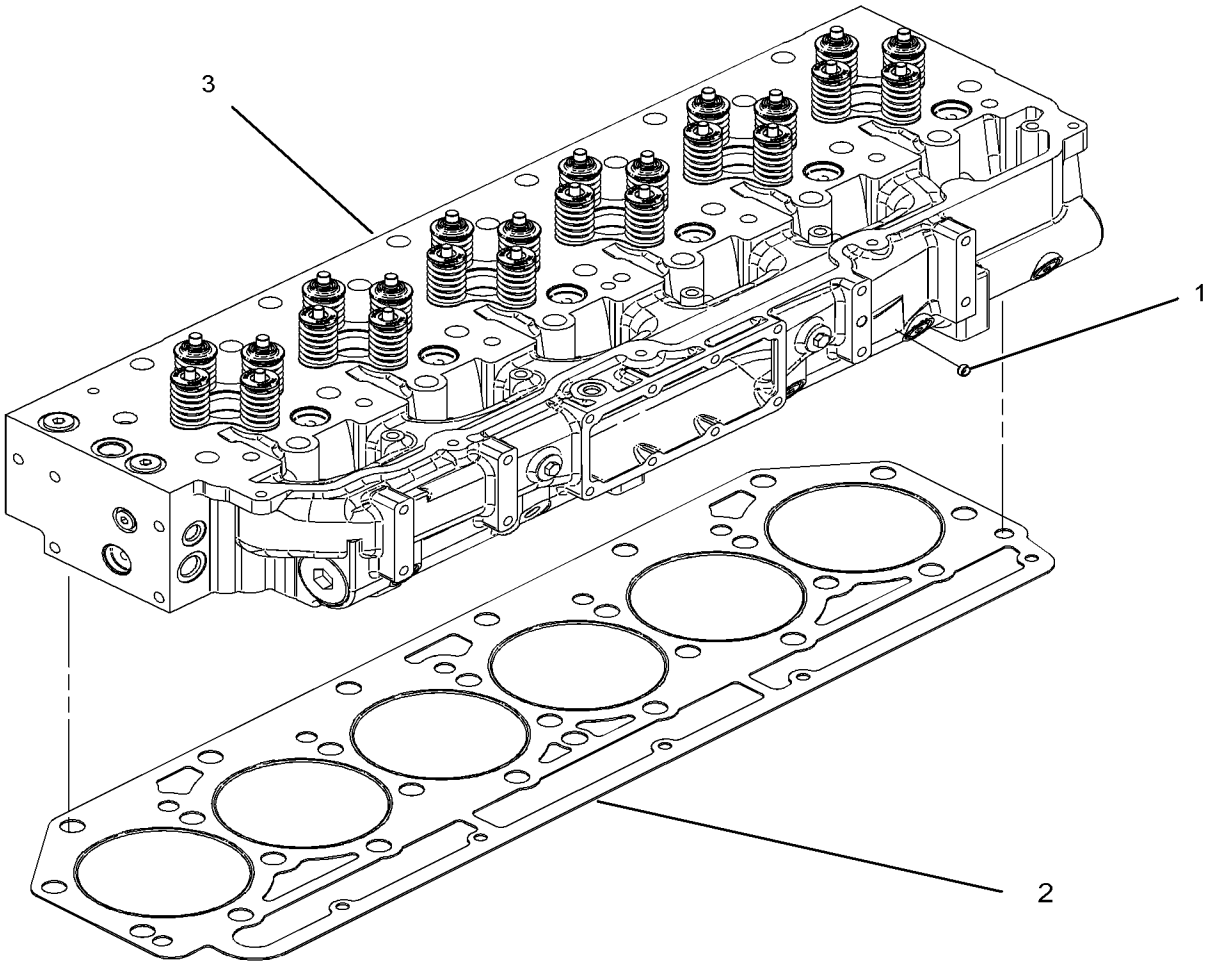

GRAPHIC #1 **<END>** g01305570

252-8439 CYLINDER HEAD GP*R

S/N: THX8900-UP
PART OF 242-0672 CYLINDER HEAD GP
ALSO AN ATTACHMENT
TYPE 1

SMCS-1100 **i04101696**

NOTE	REF NO	GRAPHIC REF	PART NUMBER	QTY	PART NAME 1 2 3 4 5 6 (PRODUCT LEVEL)	SEE PAGE
	1	1	**1W-2715**	24	LOCK-RETAINER	
	2	1	**2A-4429**	24	LOCK-RETAINER	
	3	1	**260-4856**	12	GUIDE-VALVE (STANDARD, EXHAUST)	
AB		1	**203-3237**	12	GUIDE-VALVE (0.13-MM OS, EXHAUST)	
AB		1	**203-3238**	12	GUIDE-VALVE (0.5-MM OS, EXHAUST)	
	4	1	**163-2478**	12	SEAL-VALVE STEM	
	5	1	*321-8638*	6	PLUG AS (MARKED Y)	
					(EACH INCLUDES)	
		1	**321-8635**	1	PLUG	
		1	**214-7568**	1	SEAL-O-RING	
	6	1	*319-6237*	2	PLUG AS (HEX HEAD)	
					(EACH INCLUDES)	
		1	**271-7442**	1	PLUG	
	6A	1	**228-7096**	1	SEAL-O-RING	
	8	1	**190-6115**	12	SPRING-VALVE (INNER)	
	9	1	**190-6117**	12	SPRING-VALVE (OUTER)	
	10	1	**211-2134**	12	RETAINER (VALVE SPRING)	
	11	1	**217-0609**	6	SEAT-VALVE SPRING	
	12	1	**241-8382**	12	VALVE-INLET	
	13	1	**241-8383**	12	VALVE-EXHAUST	
	14	1	**241-8384**	12	RETAINER (VALVE SPRING)	
	15	1	**241-8385**	12	SPRING-VALVE (OUTER)	
	16	1	**241-8386**	12	SPRING-VALVE (INNER)	
	17	1	**241-8387**	6	SEAT	
	18	1	**259-5829**	12	GUIDE-VALVE (STANDARD, INTAKE)	
AB		1	**254-3941**		GUIDE-VALVE (0.13-MM OS)	
AB		1	**254-3942**		GUIDE-VALVE (0.5-MM OS)	
	19	1	**241-8390**	12	SEAL-VALVE STEM	
Y	20	1	*311-7229*	1	CYLINDER HEAD AS	48
	21	1	*148-8395*	2	PLUG AS	
					(EACH INCLUDES)	
		1	**3K-0360**	1	SEAL-O-RING	
		1	**9S-8005**	1	PLUG-O-RING (HEX HEAD)	
	22	1	**8T-6764**	2	PLUG-PIPE (1/8-27-THD)	

A - NOT PART OF THIS GROUP
B - USE AS REQUIRED
Y - SEPARATE ILLUSTRATION

252-8439 **CYLINDER HEAD GP (*contd.*)** **i04101696**

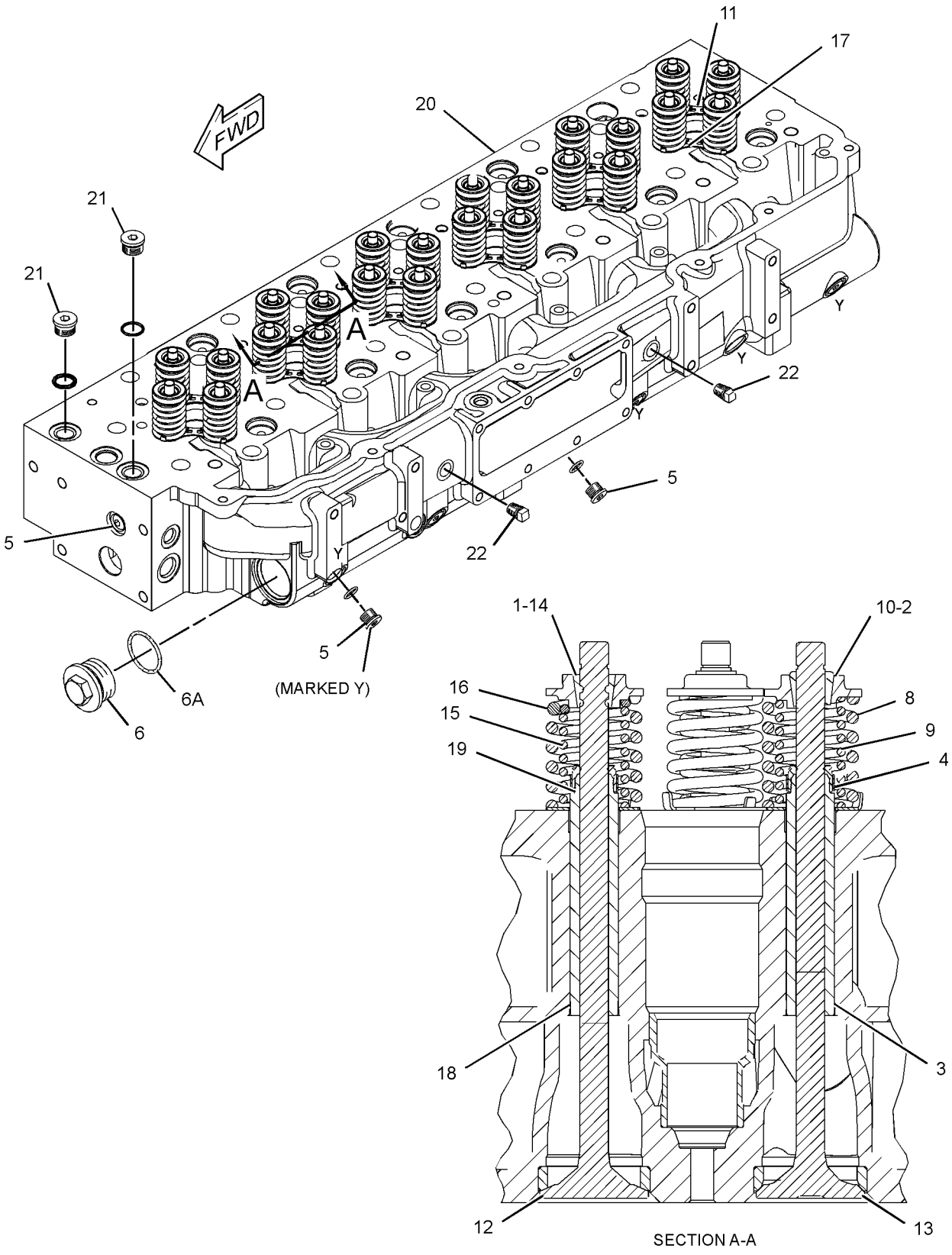

GRAPHIC #1 **<END>** g01988815

252-8439 CYLINDER HEAD GP*R

S/N: THX8900-UP
PART OF 242-0672 CYLINDER HEAD GP
ALSO AN ATTACHMENT
TYPE 2

SMCS-1100 **i04727712**

NOTE	REF NO	GRAPHIC REF	PART NUMBER	QTY	PART NAME 1 2 3 4 5 6 (PRODUCT LEVEL)	SEE PAGE
	1	1	**1W-2715**	24	LOCK-RETAINER	
	2	1	**2A-4429**	24	LOCK-RETAINER	
	3	1	**260-4856**	12	GUIDE-VALVE (STANDARD, EXHAUST)	
AB		1	**203-3237**		GUIDE-VALVE (0.13-MM OS, EXHAUST)	
AB		1	**203-3238**		GUIDE-VALVE (0.5-MM OS, EXHAUST)	
	4	1	**163-2478**	12	SEAL-VALVE STEM	
	5	1	*321-8638*	6	PLUG AS (MARKED Y)	
					(EACH INCLUDES)	
		1	**321-8635**	1	PLUG	
		1	**214-7568**	1	SEAL-O-RING	
	6	1	*319-6237*	2	PLUG AS (HEX HEAD)	
					(EACH INCLUDES)	
		1	**271-7442**	1	PLUG	
	6A	1	**228-7096**	1	SEAL-O-RING	
	8	1	**190-6115**	12	SPRING-VALVE (INNER)	
	9	1	**190-6117**	12	SPRING-VALVE (OUTER)	
	10	1	**211-2134**	12	RETAINER (VALVE SPRING)	
	11	1	**217-0609**	6	SEAT-VALVE SPRING	
	12	1	**241-8382**	12	VALVE-INLET	
	13	1	**241-8383**	12	VALVE-EXHAUST	
	14	1	**241-8384**	12	RETAINER (VALVE SPRING)	
	15	1	**241-8385**	12	SPRING-VALVE (OUTER)	
	16	1	**241-8386**	12	SPRING-VALVE (INNER)	
	17	1	**241-8387**	6	SEAT	
	18	1	**259-5829**	12	GUIDE-VALVE (STANDARD, INTAKE)	
AB		1	**254-3941**		GUIDE-VALVE (0.13-MM OS) (INTAKE)	
AB		1	**254-3942**		GUIDE-VALVE (0.5-MM OS) (INTAKE)	
	19	1	**241-8390**	12	SEAL-VALVE STEM	
Y	20	1	*332-3619*	1	CYLINDER HEAD AS	50
	21	1	*307-2673*	2	PLUG AS	
					(EACH INCLUDES)	
		1	**238-5080**	1	SEAL-O-RING	
		1	**9S-8005**	1	PLUG-O-RING (HEX HEAD)	
	22	1	**8T-6757**	2	PLUG-PIPE	

A - NOT PART OF THIS GROUP
B - USE AS REQUIRED
Y - SEPARATE ILLUSTRATION

252-8439 **CYLINDER HEAD GP (*contd.*)** **i04727712**

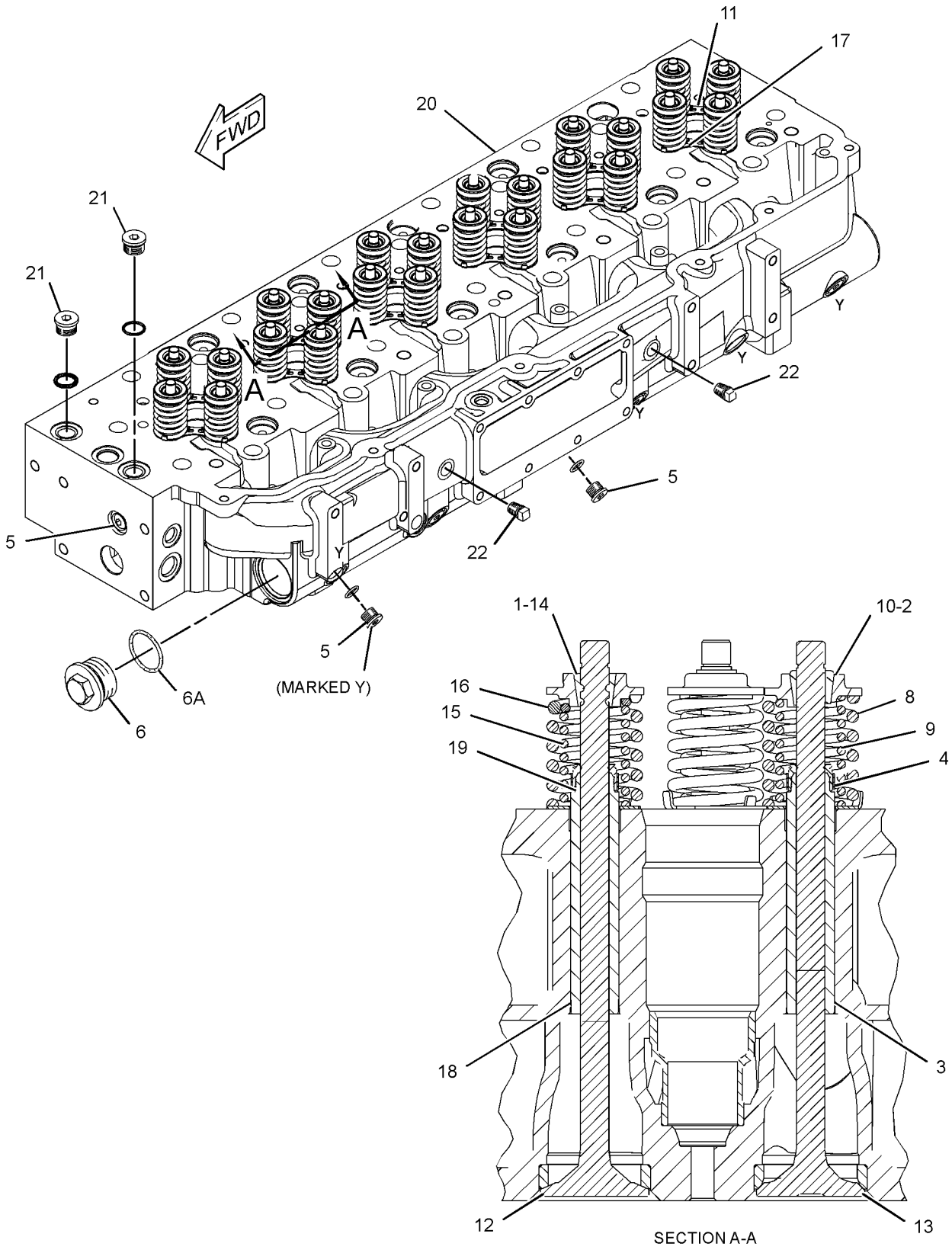

GRAPHIC #1 **<END>** g01988815

344-2149 CYLINDER HEAD GP*R

S/N: TXD1-UP; THX23115-UP
PART OF 345-8414, 384-5590 CYLINDER HEAD GP
ALSO AN ATTACHMENT

SMCS-1100 **i05298909**

NOTE	REF NO	GRAPHIC REF	PART NUMBER	QTY	PART NAME 1 2 3 4 5 6 (PRODUCT LEVEL)	SEE PAGE
	1	1	**1W-2715**	24	LOCK-RETAINER (INLET)	
	2	1	**2A-4429**	24	LOCK-RETAINER (EXHAUST)	
	3	1	**163-2478**	12	SEAL-VALVE STEM (EXHAUST)	
	4	1	**190-6115**	12	SPRING-VALVE (INNER)	
	5	1	**190-6117**	12	SPRING-VALVE (OUTER)	
	6	1	**211-2134**	12	RETAINER (VALVE SPRING)	
	7	1	**217-0609**	6	SEAT-VALVE SPRING	
	8	1	**241-8383**	12	VALVE-EXHAUST	
	9	1	**241-8384**	12	RETAINER (VALVE SPRING)	
	10	1	**241-8386**	12	SPRING-VALVE (INNER)	
	11	1	**241-8385**	12	SPRING-VALVE (OUTER)	
	12	1	**241-8387**	6	SEAT	
	13	1	**241-8390**	12	SEAL-VALVE STEM	
	14	1	**252-7803**	12	VALVE-INLET	
	15	1	**259-5829**	12	GUIDE-VALVE (STANDARD, INTAKE)	
AB		1	**254-3941**		GUIDE-VALVE (0.13-MM OS)	
AB		1	**254-3942**		GUIDE-VALVE (0.5-MM OS)	
	16	1	**260-4856**	12	GUIDE-VALVE (STANDARD, EXHAUST)	
AB		1	**203-3237**		GUIDE-VALVE (0.13-MM OS, EXHAUST)	
AB		1	**203-3238**		GUIDE-VALVE (0.5-MM OS, EXHAUST)	
Y	17	1	*332-3619*	1	CYLINDER HEAD AS	50
	18	1	*319-6237*	2	PLUG AS	
					(EACH INCLUDES)	
		1	**228-7096**	1	SEAL-O-RING	
		1	**271-7442**	1	PLUG	
	19	1	*389-3708*	6	PLUG AS	
					(EACH INCLUDES)	
		1	**214-7568**	1	SEAL-O-RING	
		1	**360-3679**	1	PLUG-CONNECTOR	
	20	1	*396-0405*	2	PLUG AS	
					(EACH INCLUDES)	
		1	**6V-6609**	1	SEAL-O-RING	
		1	**360-3680**	1	PLUG	
	21	1	**8T-6757**	2	PLUG-PIPE	

A - NOT PART OF THIS GROUP
B - USE AS REQUIRED
Y - SEPARATE ILLUSTRATION

344-2149 **CYLINDER HEAD GP (*contd.*)** **i05298909**

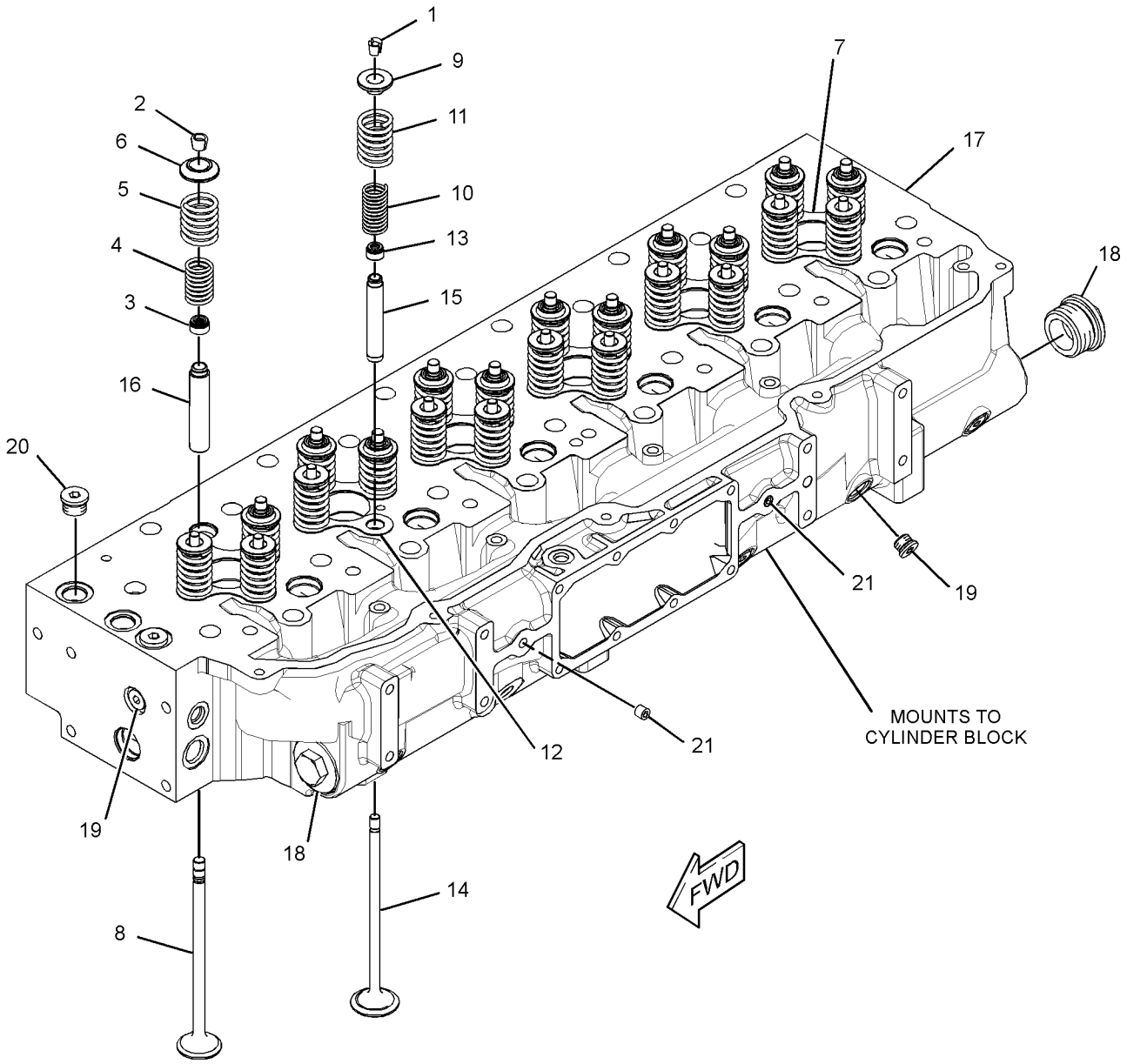

GRAPHIC #1 **<END>** g02236094

345-8414 CYLINDER HEAD GP

S/N: THX23115-UP

PART OF 282-3827, 282-3828, 282-3829, 282-3830, 301-5769 ENGINE AR-CORE

ALSO AN ATTACHMENT

SMCS-1100 **i03688610**

NOTE	REF NO	GRAPHIC REF	PART NUMBER	QTY	PART NAME 1 2 3 4 5 6 (PRODUCT LEVEL)	SEE PAGE
	1	1	**2A-3746**	1	PLUG-CUP	
	2	1	**187-1315**	1	GASKET AS	
Y	3	1	**344-2149**	1	CYLINDER HEAD GP	57

Y - SEPARATE ILLUSTRATION

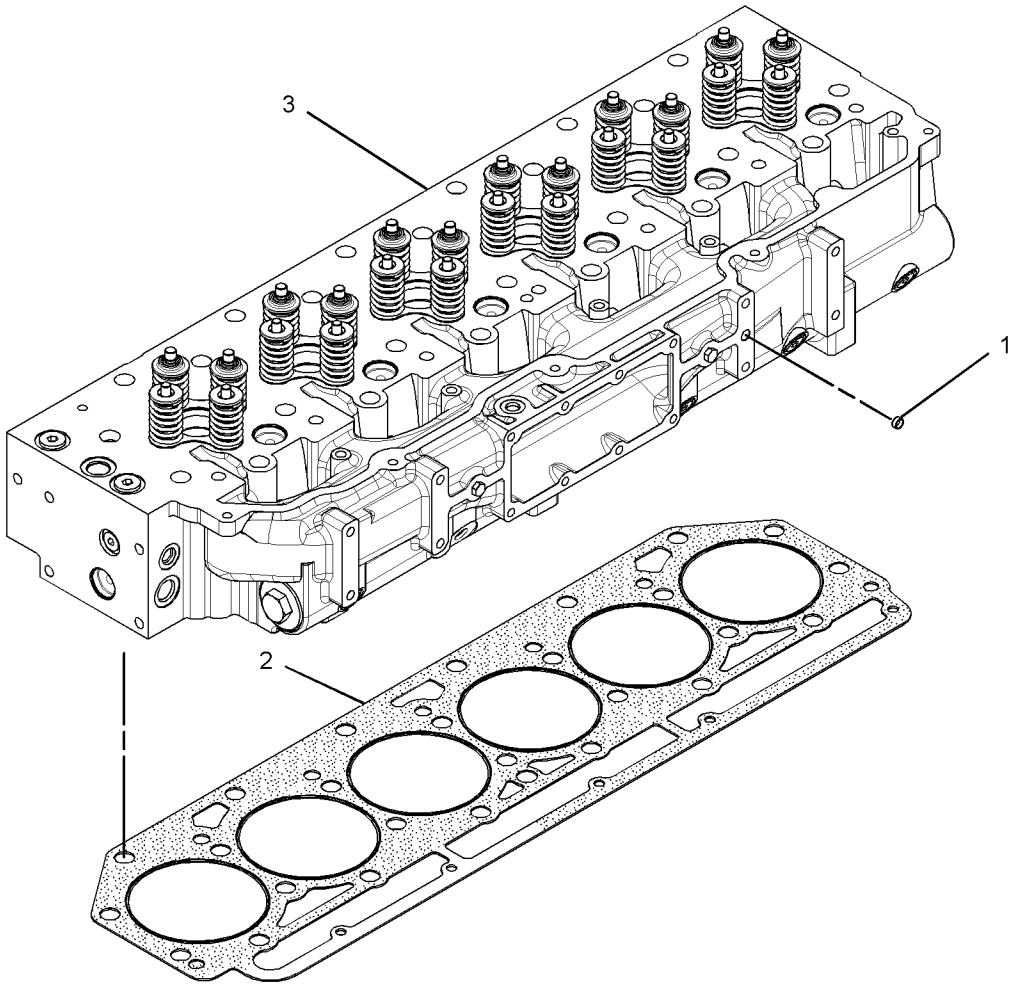

GRAPHIC #1 **<END>** g01979813

384-5590 CYLINDER HEAD GP

S/N: TXD1-UP; THX8900-UP
PART OF 384-8428, 387-8618, 399-3904 ENGINE AR-CORE
ALSO AN ATTACHMENT

SMCS-1100 **i04776483**

NOTE	REF NO	GRAPHIC REF	PART NUMBER	QTY	PART NAME 1 2 3 4 5 6 (PRODUCT LEVEL)	SEE PAGE
	1	1	**2A-3746**	1	PLUG-CUP	
	2	1	**187-1315**	1	GASKET AS	
Y	3	1	*213-4363*	1	FASTENER GP-CYLINDER HEAD	69
YR	4	1	**344-2149**	1	CYLINDER HEAD GP	57

R - REMFG PART MAY BE AVAILABLE
Y - SEPARATE ILLUSTRATION

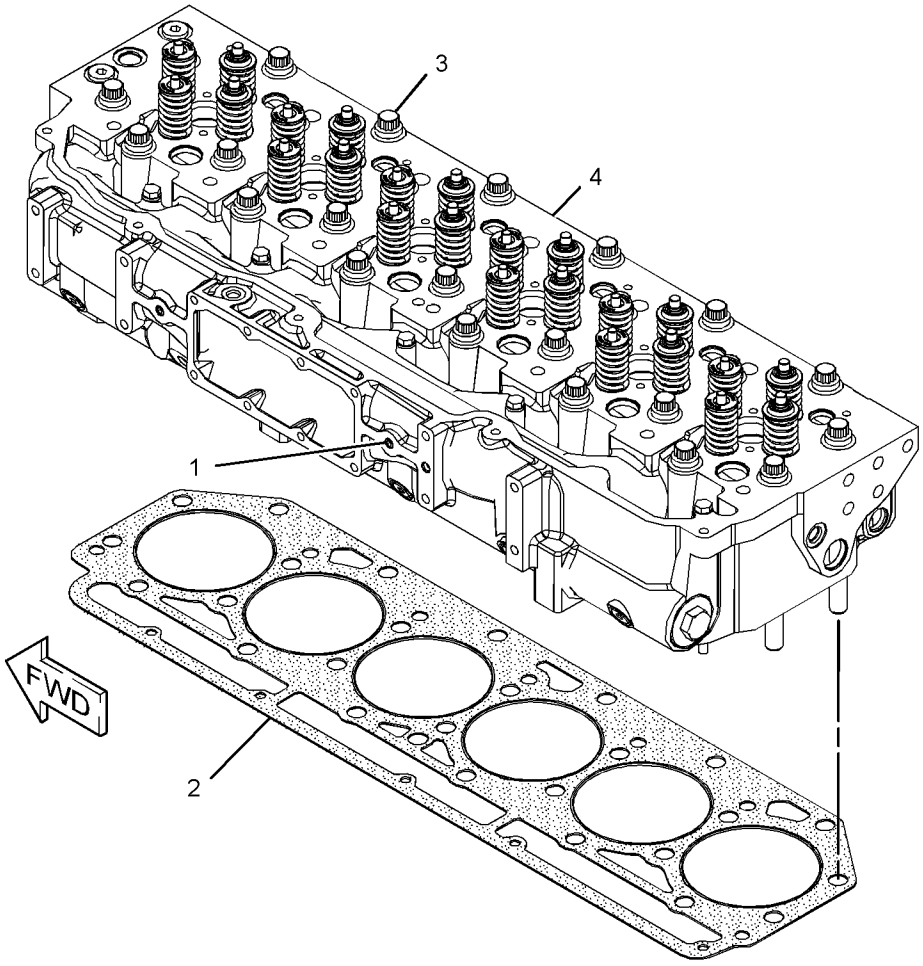

GRAPHIC #1 **<END>** g02802637

211-8041 DAMPER GP

S/N: TXD1-UP; THX8900-UP
13 INCH
FOR USE WITH CRANK PULLEY GP
PART OF 282-3823, 282-3824, 282-3825, 282-3826, 301-5768 ENGINE AR, 349-3564, 349-3565, 387-8574, 387-8575, 387-8576, 387-8580, 398-6424 ENGINE AR-COMPLETE
ALSO AN ATTACHMENT

SMCS-1205 **i01830638**

NOTE	REF NO	GRAPHIC REF	PART NUMBER	QTY	PART NAME 1 2 3 4 5 6 (PRODUCT LEVEL)	SEE PAGE
	1	1	**208-9619**	1	DAMPER AS-VIBRATION	

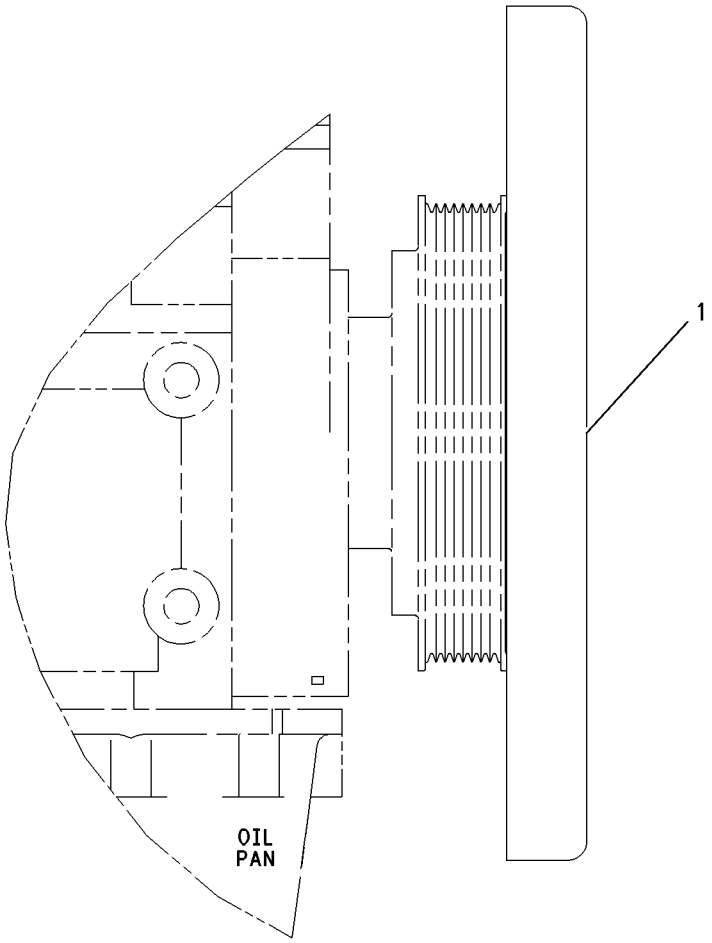

RIGHT SIDE VIEW

GRAPHIC #1 **<END>** g00919128

4P-2102 DRAIN GP-ENGINE OIL

S/N: TXD1-UP; THX8900-UP

PART OF 282-3823, 282-3824, 282-3825, 282-3826, 301-5768 ENGINE AR, 349-3564, 349-3565, 387-8574, 387-8575, 387-8576, 387-8580, 398-6424 ENGINE AR-COMPLETE

ALSO AN ATTACHMENT

SMCS-1302 **i04729454**

NOTE	REF NO	GRAPHIC REF	PART NUMBER	QTY	PART NAME 1 2 3 4 5 6 (PRODUCT LEVEL)	SEE PAGE
	1	1	**8N-6854**	1	GASKET	
	2	1	**113-5336**	1	ADAPTER AS-DRAIN	
	2A	1	**5N-8780**	1	PLUG-DRAIN (ENGINE OIL)	
		1	**8N-6849**	1	ADAPTER-PLUG	
	3	1	**3E-4352**	2	WASHER-HARD (8.8X20.5X2.5-MM THK)	
M	4	1	**6V-5218**	2	BOLT (M8X1.25X35-MM)	

M - METRIC PART

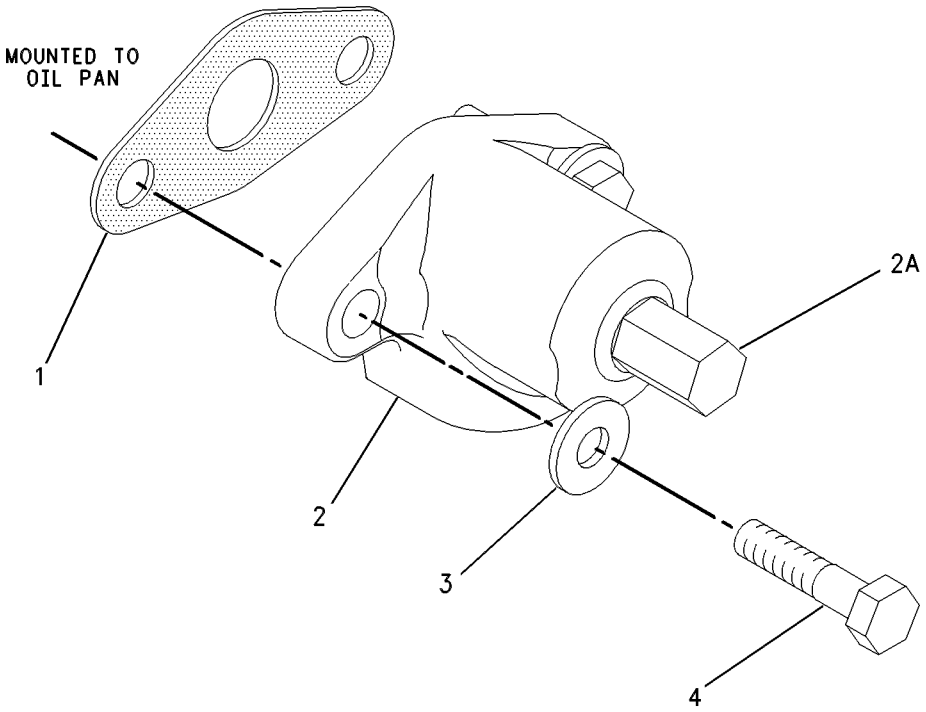

GRAPHIC #1 **<END>** g00659483

282-2870 DRIVE AR-FAN–MODULATING

S/N: SMC1-UP

AN ATTACHMENT

SMCS-1359 **i02760675**

NOTE	PART NUMBER	QTY	PART NAME 1 2 3 4 5 6 (PRODUCT LEVEL)	SEE PAGE
Y	*262-2029*	1	DRIVE GP-FAN (MODULATING)	65
Y	*224-0821*	1	LINES GP-OIL SUPPLY (DEMAND FAN)	119

Y - SEPARATE ILLUSTRATION

<END>

215-3251 DRIVE GP-FAN

S/N: SMC1-UP; GCT1-UP

PART OF 279-9549, 372-6406 INSTALLATION AR-ENGINE

SMCS-1359 **i03385220**

NOTE	REF NO	GRAPHIC REF	PART NUMBER	QTY	PART NAME 1 2 3 4 5 6 (PRODUCT LEVEL)	SEE PAGE
CY	1	1	**285-6396**	1	DRIVE GP-FAN	67
M	2	1	**8T-4182**	4	BOLT (M10X1.5X45-MM)	
	3	1	**8T-4121**	4	WASHER-HARD (11X21X2.5-MM THK)	

C - CHANGE FROM PREVIOUS TYPE
M - METRIC PART
Y - SEPARATE ILLUSTRATION

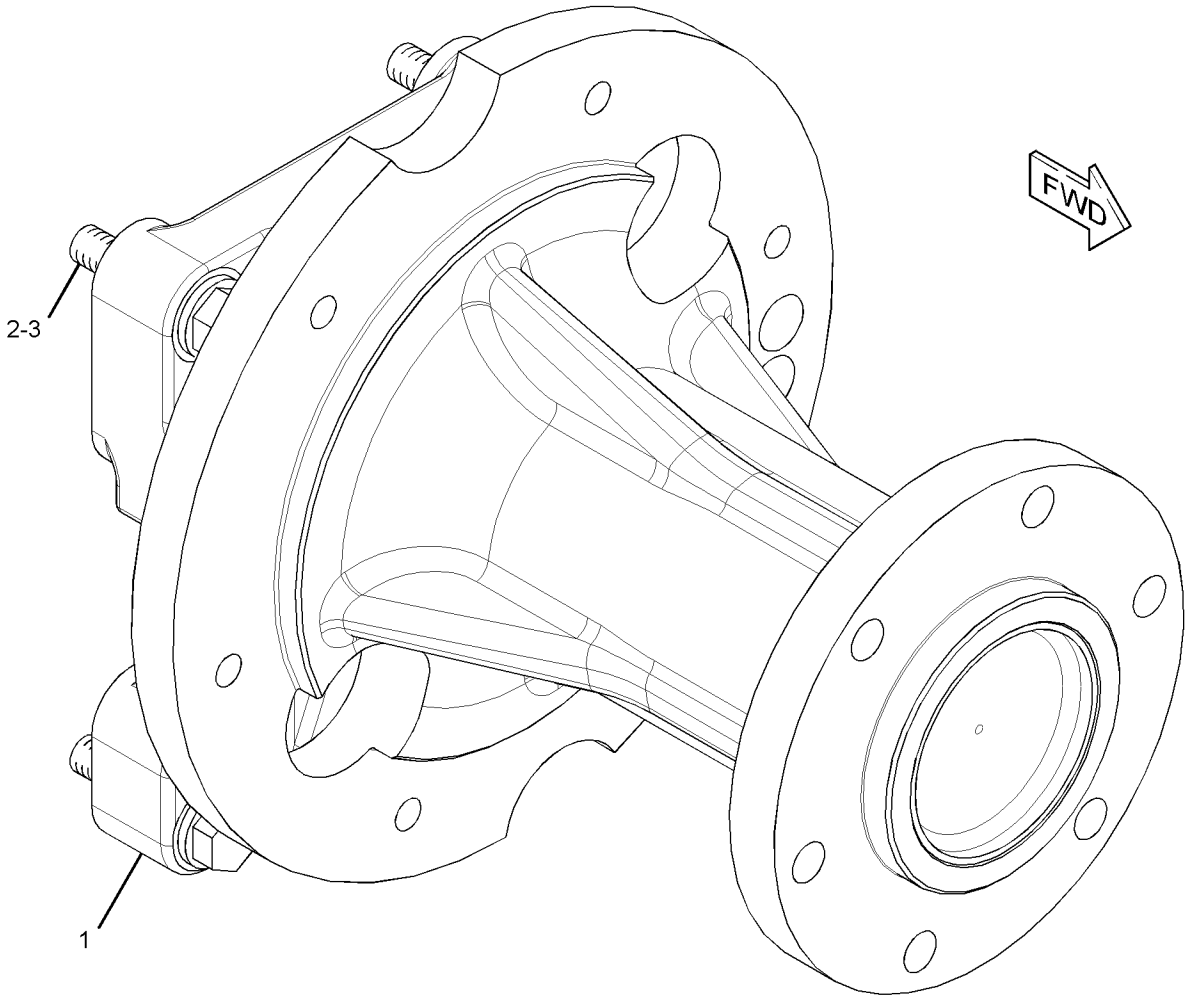

GRAPHIC #1 **<END>** g01659373

262-2029 DRIVE GP-FAN—MODULATING

S/N: SMC1-UP; GCT1-UP

PART OF 282-2870 DRIVE AR-FAN, 282-2871 ENGINE AR

AN ATTACHMENT

SMCS-1359 **i04041854**

NOTE	REF NO	GRAPHIC REF	PART NUMBER	QTY	PART NAME 1 2 3 4 5 6 (PRODUCT LEVEL)	SEE PAGE
	1	1	**216-7877**	1	V-BELT SET (INCLUDES 3-BELTS) (FAN DRIVE)	
JY	2	1	**251-3600**	1	CLUTCH GP-FAN	37
	3	1	**253-0459**	1	ADAPTER-FAN	
	4	1	**262-2030**	1	PULLEY-FAN	
	5	1	**262-2031**	1	PULLEY	
	6	1	**4P-7581**	1	CLIP	
	7	1	**7K-1181**	1	STRAP-CABLE	
	8	1	**8T-4121**	12	WASHER-HARD (11X21X2.5-MM THK)	
M	9	1	**8T-4194**	4	BOLT (M12X1.75X50-MM)	
M	10	1	**8T-4195**	12	BOLT (M10X1.5X30-MM)	
	11	1	**8T-4223**	4	WASHER-HARD (13.5X25.5X3-MM THK)	
	12	1	**303-4138**	1	HARNESS AS-SENSOR	
	13	1	**315-1487**	1	HARNESS AS-WIRING	
					AVAILABLE REPAIR KIT(S):	
J			**287-2083**	1	KIT-SEAL & RING (FAN CLUTCH)	
					(INCLUDES RETAINING RINGS, O-RING SEALS, SEAL RINGS, TUBE AS, RETAINER, SEALS, LIP SEALS, & SLEEVES)	
J			**306-6621**	1	KIT-OVERHAUL (FAN CLUTCH)	
					(INCLUDES BALL BEARINGS, TUBE AS, PLATES, RETAINERS, FRICTION DISCS, MAGNET, SPRING, & SEAL & RING KIT)	

J - KIT(S) MARKED J SERVICE(S) PART(S) MARKED J
M - METRIC PART
Y - SEPARATE ILLUSTRATION

262-2029 **DRIVE GP-FAN (*contd.*)** **i04041854**

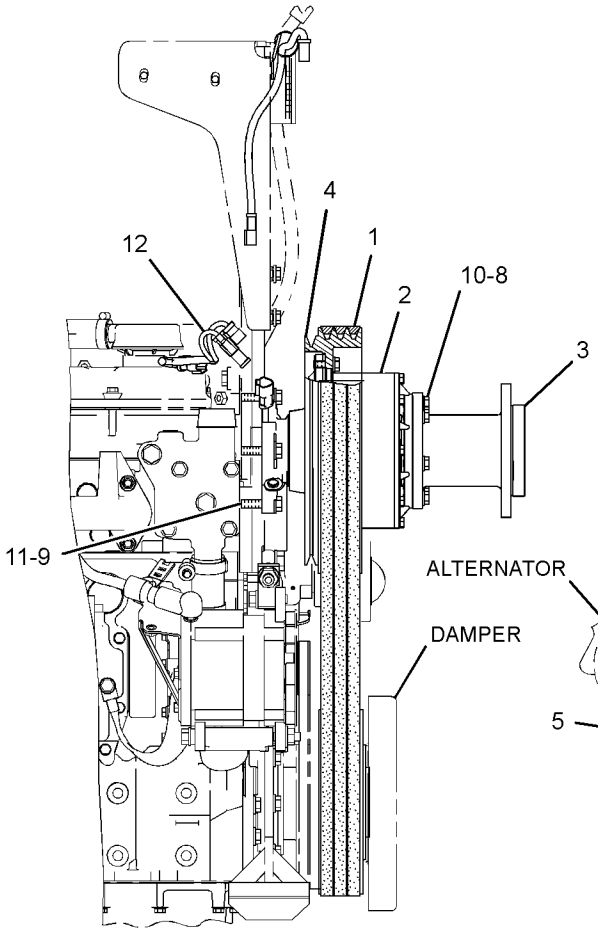

RIGHT SIDE VIEW OF ENGINE

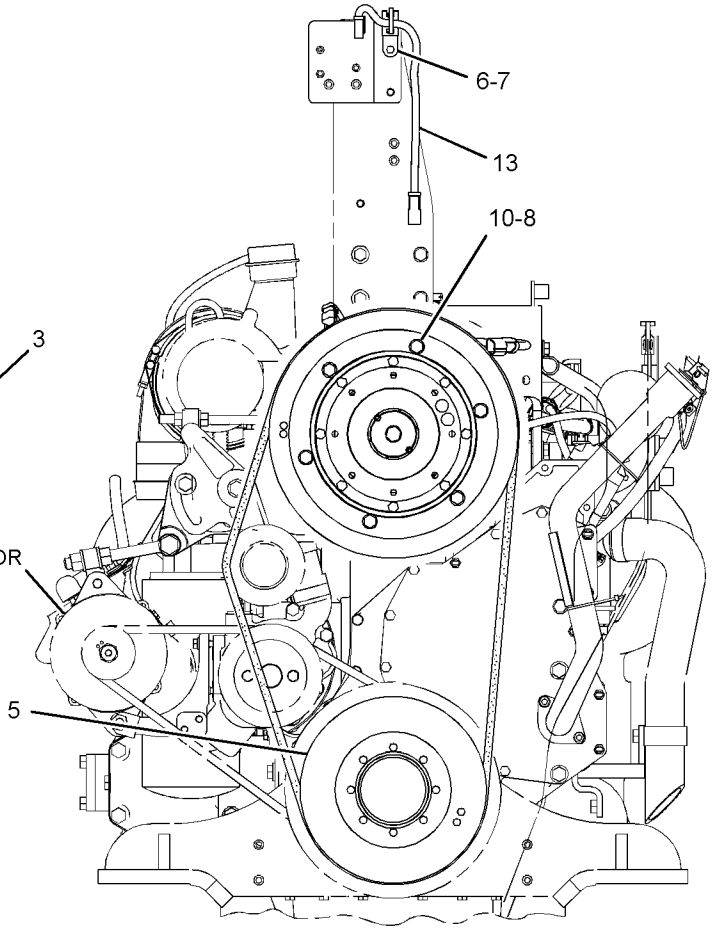

FRONT VIEW OF ENGINE

GRAPHIC #1 **<END>** g01468757

285-6396 DRIVE GP-FAN

S/N: SMC1-UP; GCT1-UP

PART OF 215-3251 DRIVE GP-FAN

SMCS-1359 **i02612404**

NOTE	REF NO	GRAPHIC REF	PART NUMBER	QTY	PART NAME 1 2 3 4 5 6 (PRODUCT LEVEL)	SEE PAGE
	1	1	**4B-4098**	1	PLUG-CUP	
	2	1	**4W-1203**	2	CUP-BEARING	
	3	1	**4W-1204**	2	CONE-BEARING	
	4	1	**7C-8634**	1	PLATE	
	5	1	**212-5839**	1	HUB	
	6	1	**212-5844**	1	SPACER (35.3X45.5X93-MM THK)	
	7	1	**285-5093**	1	BRACKET AS	
	8	1	**5S-9062**	1	SPACER (35.032X50.8X15.88-MM THK)	
M	9	1	**6V-7673**	1	BOLT (M12X1.75X50-MM)	
	10	1	**6V-9748**	1	SEAL-LIP TYPE	

M - METRIC PART

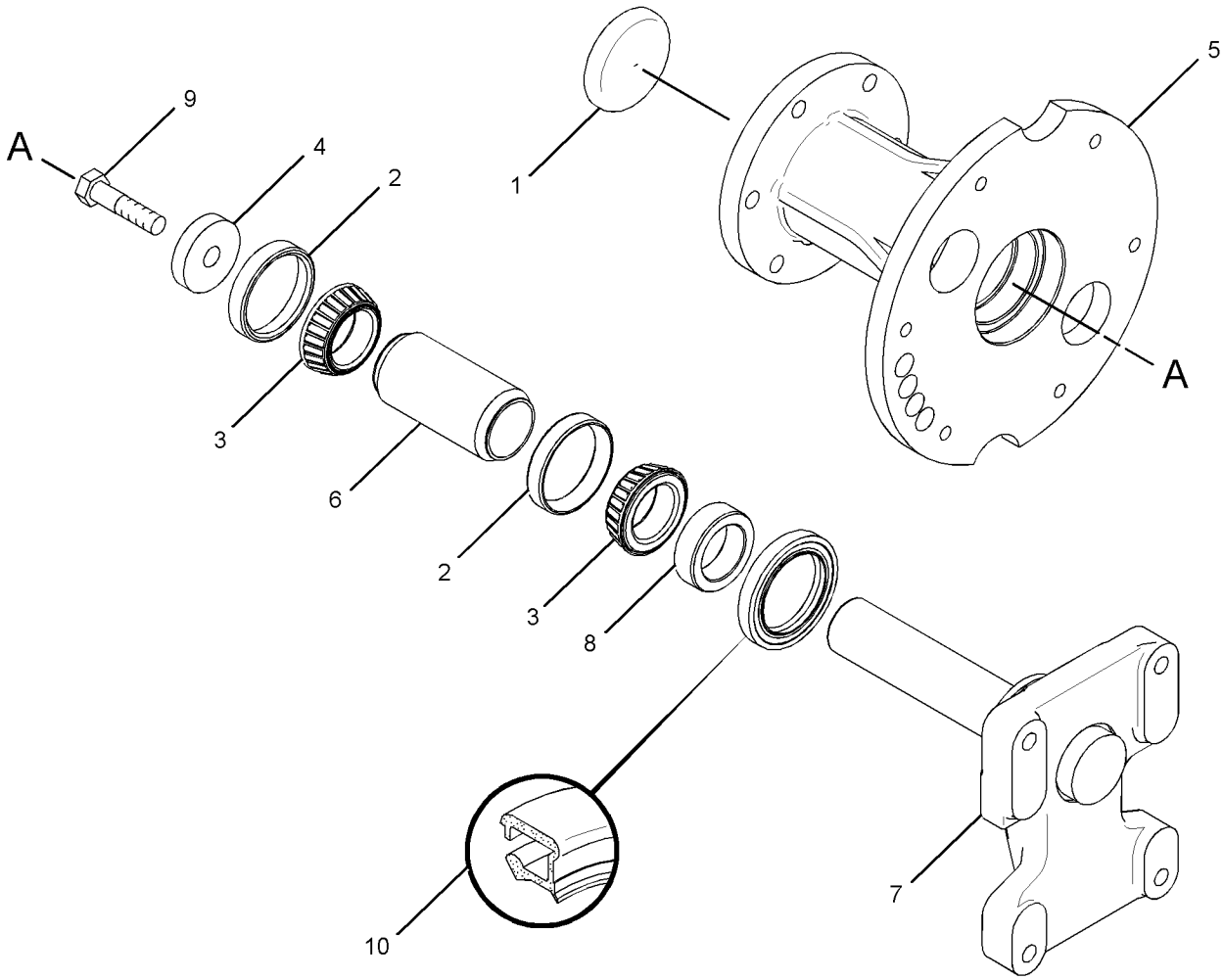

GRAPHIC #1 **<END>** g01314722

167-0171 FASTENER GP-CYLINDER HEAD

S/N: THX8900-16676

PART OF 213-4363 FASTENER GP-CYLINDER HEAD

AN ATTACHMENT

SMCS-1100 **i01682539**

NOTE	REF NO	GRAPHIC REF	PART NUMBER	QTY	PART NAME 1 2 3 4 5 6 (PRODUCT LEVEL)	SEE PAGE
M	1	1	**183-5163**	1	BOLT	
	2	1	**9X-8268**	1	WASHER (17.5X30X3.5MM THK)	

M - METRIC PART

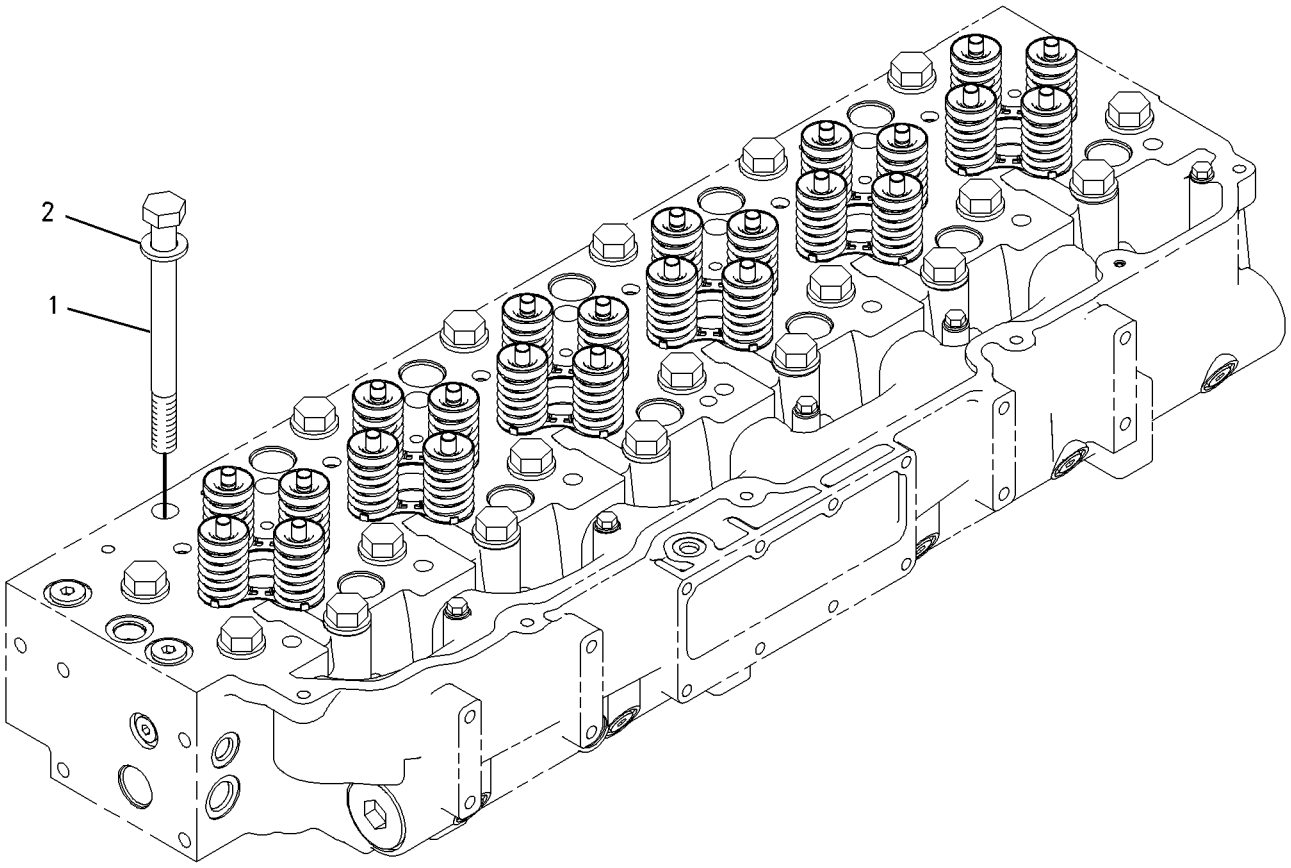

GRAPHIC #1 **<END>** g00792849

213-4363 FASTENER GP-CYLINDER HEAD

S/N: THX8900-16676
PART OF 282-3827, 282-3829, 282-3830 ENGINE AR-CORE
AN ATTACHMENT

SMCS-1100 **i02433678**

NOTE	REF NO	GRAPHIC REF	PART NUMBER	QTY	PART NAME 1 2 3 4 5 6 (PRODUCT LEVEL)	SEE PAGE
Y	1	1	*167-0171*	26	FASTENER GP-CYLINDER HEAD	68
M	2	1	**8C-4984**	5	BOLT (M8X1.25X150-MM)	
	3	1	**9M-1974**	5	WASHER-HARD (8.8X16X2-MM THK)	

M - METRIC PART
Y - SEPARATE ILLUSTRATION

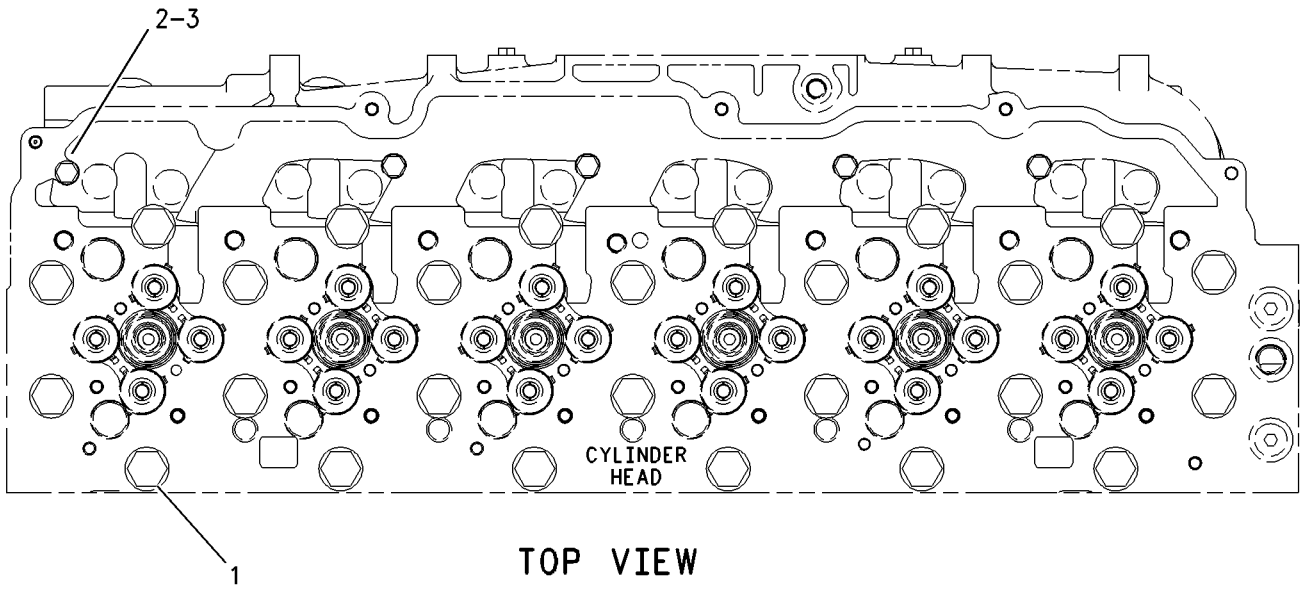

TOP VIEW

GRAPHIC #1 **<END>** g00919169

213-4363 FASTENER GP-CYLINDER HEAD

S/N: TXD1-UP; THX16677-UP

PART OF 384-5590 CYLINDER HEAD GP, 282-3827, 282-3828, 282-3829, 282-3830, 301-5769 ENGINE AR-CORE

ALSO AN ATTACHMENT

SMCS-1100 **i03787196**

NOTE	REF NO	GRAPHIC REF	PART NUMBER	QTY	PART NAME 1 2 3 4 5 6 (PRODUCT LEVEL)	SEE PAGE
C	1	1	*290-6884*	26	FASTENER GP-CYLINDER HEAD	
					(EACH INCLUDES)	
		1	**9X-8268**	1	WASHER (17.5X30X3.5-MM THK)	
M		1	**263-2915**	1	BOLT-12 POINT HEAD (M16X2X180-MM)	
M	2	1	**8C-4984**	5	BOLT (M8X1.25X150-MM)	
	3	1	**9M-1974**	5	WASHER-HARD (8.8X16X2-MM THK)	

C - CHANGE FROM PREVIOUS TYPE
M - METRIC PART

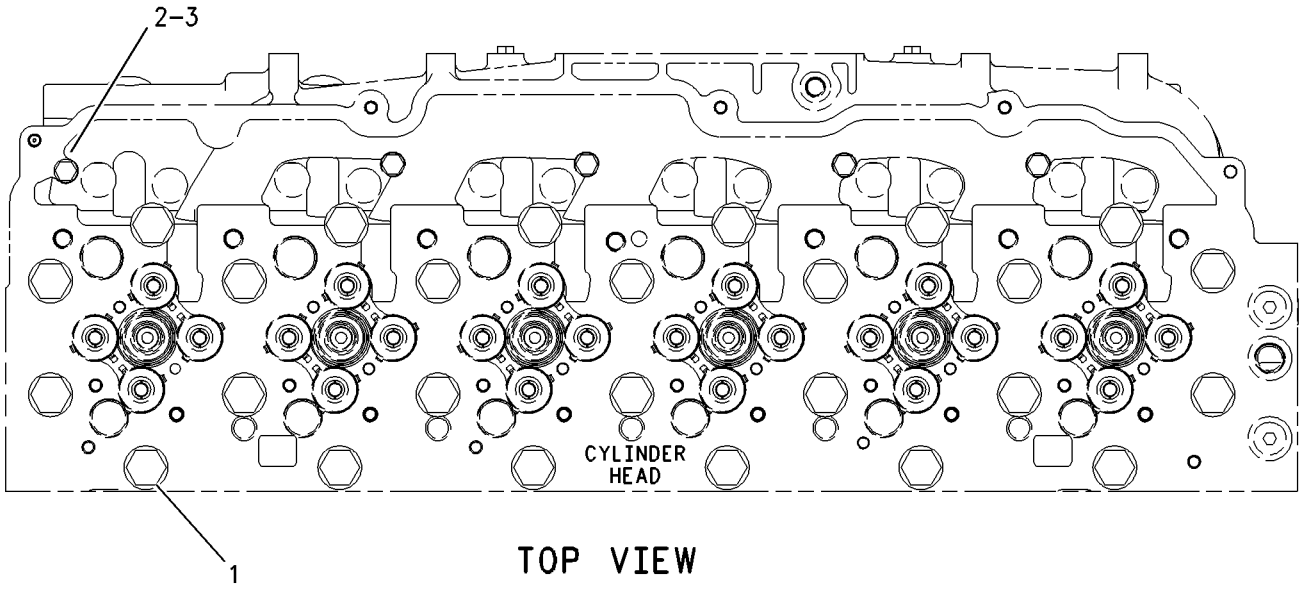

TOP VIEW

GRAPHIC #1 **<END>** g00919169

222-2409 FASTENER GP-DAMPER & PULLEY

S/N: TXD1-UP; THX8900-UP

PART OF 282-3823, 282-3824, 282-3825, 282-3826, 301-5768 ENGINE AR, 349-3564, 349-3565, 387-8574, 387-8575, 387-8576, 387-8580, 398-6424 ENGINE AR-COMPLETE

ALSO AN ATTACHMENT

SMCS-1205, 7553 **i04534522**

NOTE	REF NO	GRAPHIC REF	PART NUMBER	QTY	PART NAME 1 2 3 4 5 6 (PRODUCT LEVEL)	SEE PAGE
C	1	1	**228-3621**	1	SPACER (101.5X167X8-MM THK)	
	2	1	**121-3917**	1	SPACER-SPECIAL	
M	3	1	**6V-3822**	8	BOLT (M10X1.5X35-MM)	

C - CHANGE FROM PREVIOUS TYPE
M - METRIC PART

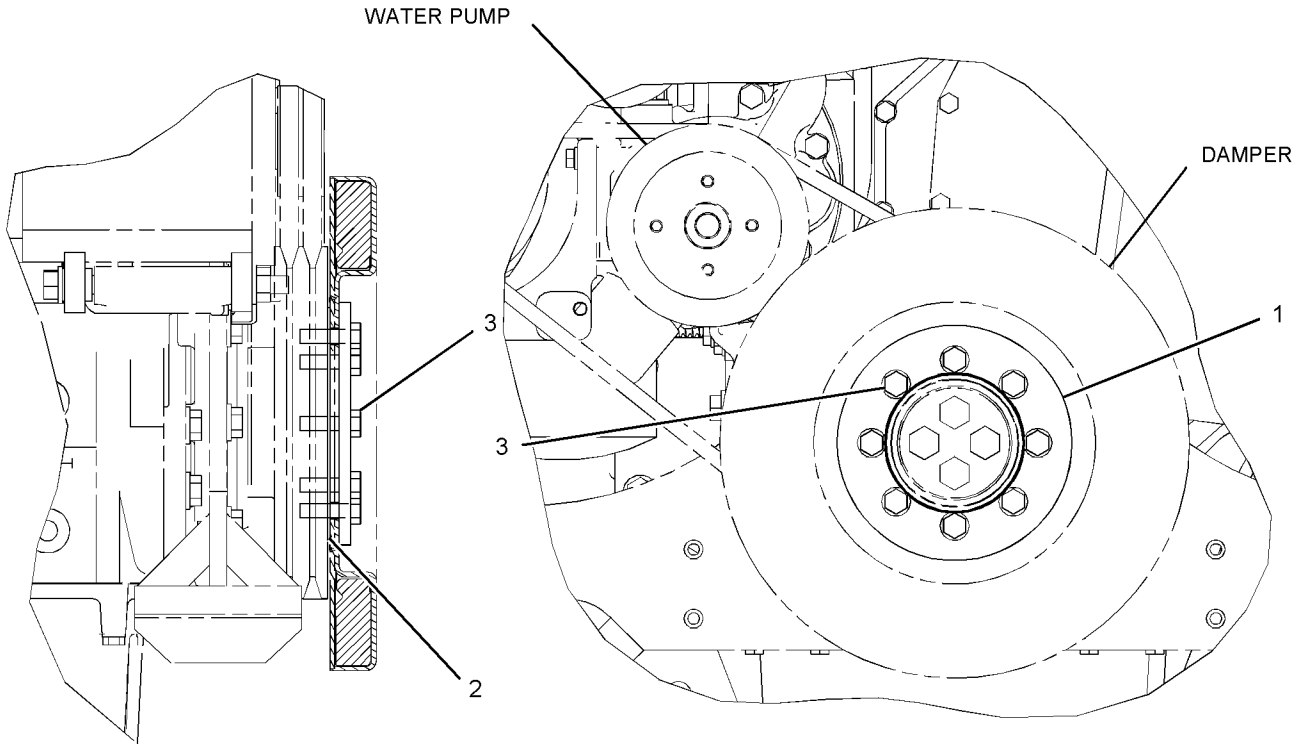

RIGHT SIDE VIEW OF ENGINE FRONT VIEW OF ENGINE

GRAPHIC #1 **<END>** g02728132

219-8681 FASTENER GP-FRONT COVER

S/N: TXD1-UP; THX8900-UP

PART OF 282-3823, 282-3824, 282-3825, 282-3826, 301-5768 ENGINE AR, 349-3564, 349-3565, 387-8574, 387-8575, 387-8576, 387-8580, 398-6424 ENGINE AR-COMPLETE

ALSO AN ATTACHMENT

SMCS-1151, 1166 **i02431537**

NOTE	REF NO	GRAPHIC REF	PART NUMBER	QTY	PART NAME 1 2 3 4 5 6 (PRODUCT LEVEL)	SEE PAGE
M	1	1	**9X-2099**	6	STUD (M8X1.25X52.75-MM)	
M	2	1	**6V-2317**	6	BOLT (M8X1.25X30-MM)	
M	3	1	**8T-0100**	2	BOLT (M8X1.25X60-MM)	

M - METRIC PART

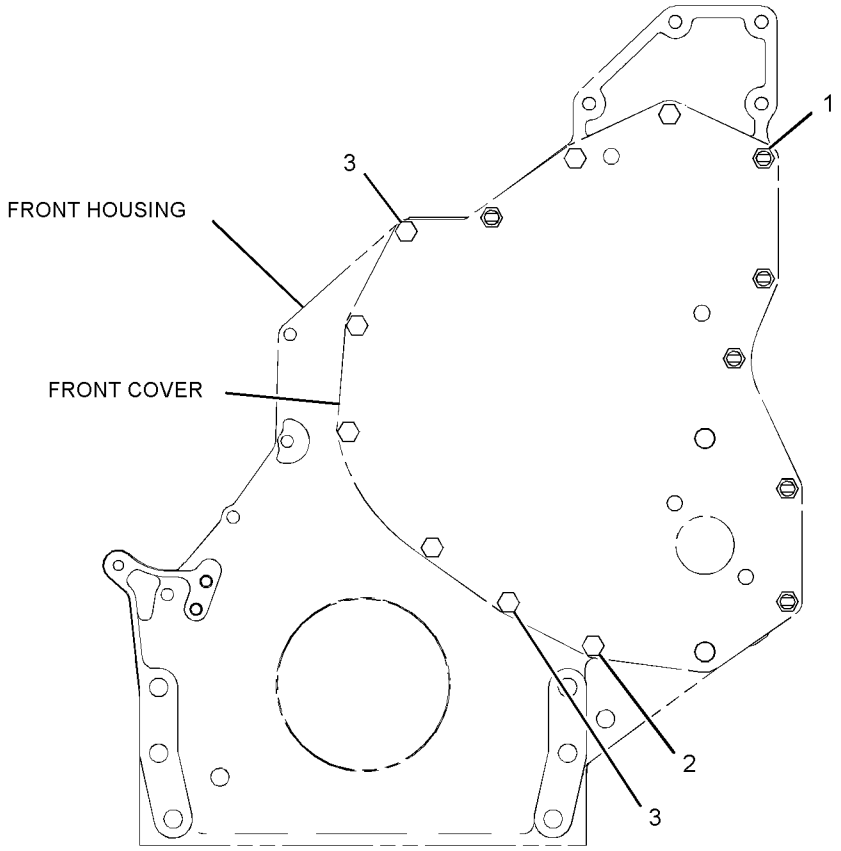

FRONT VIEW

GRAPHIC #1 **<END>** g01146786

236-7315 FASTENER GP-VALVE COVER

S/N: TXD1-UP; THX8900-UP

PART OF 282-3823, 282-3824, 282-3825, 282-3826, 301-5768 ENGINE AR, 349-3564, 349-3565, 387-8574, 387-8575, 387-8576, 387-8580, 398-6424 ENGINE AR-COMPLETE

ALSO AN ATTACHMENT

SMCS-1107 **i03888250**

NOTE	REF NO	GRAPHIC REF	PART NUMBER	QTY	PART NAME 1 2 3 4 5 6 (PRODUCT LEVEL)	SEE PAGE
M	1	1	**8T-6912**	11	BOLT (M8X1.25X50-MM)	
	2	1	**8T-4224**	11	WASHER-HARD (8.8X16X2-MM THK)	

M - METRIC PART

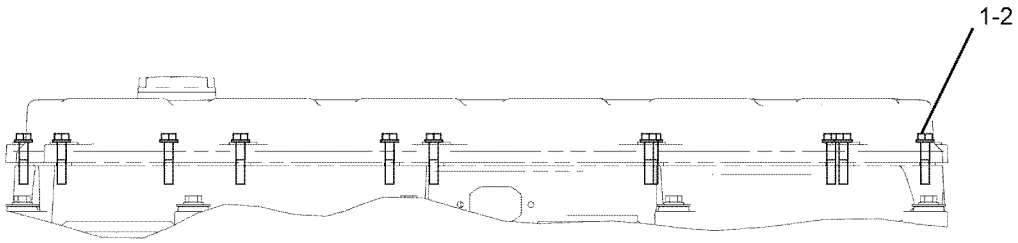

GRAPHIC #1 **<END>** g01013698

233-0423 FASTENER GP-VALVE COVER BASE

S/N: TXD1-UP; THX8900-UP

PART OF 282-3823, 282-3824, 282-3825, 282-3826, 301-5768 ENGINE AR, 349-3564, 349-3565, 387-8574, 387-8575, 387-8576, 387-8580, 398-6424 ENGINE AR-COMPLETE ALSO AN ATTACHMENT

SMCS-1120 **i02637720**

NOTE	REF NO	GRAPHIC REF	PART NUMBER	QTY	PART NAME 1 2 3 4 5 6 (PRODUCT LEVEL)	SEE PAGE
	1	1	**244-4500**	9	SPRING	
M	2	1	**8T-0100**	9	BOLT (M8X1.25X60-MM)	
	3	1	**9N-0869**	9	WASHER-HARD (8.8X25.5X2-MM THK)	

M - METRIC PART

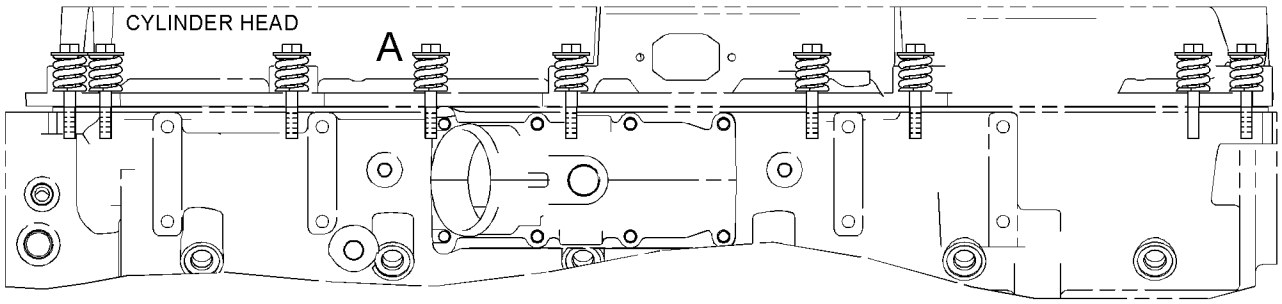

LEFT SIDE VIEW

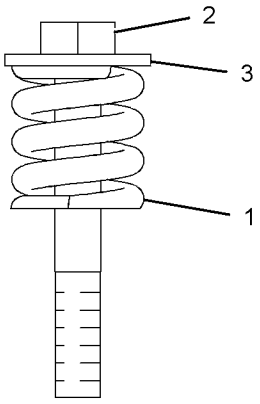

VIEW OF AREA A

GRAPHIC #1 **<END>** g01207018

241-3718 FLYWHEEL GP

S/N: TXD1-UP; THX8900-UP

PART OF 282-3823, 282-3824, 282-3825, 282-3826, 301-5768 ENGINE AR, 349-3564, 349-3565, 387-8574, 387-8575, 387-8576, 387-8580, 398-6424 ENGINE AR-COMPLETE

ALSO AN ATTACHMENT

SMCS-1156 **i02431564**

NOTE	REF NO	GRAPHIC REF	PART NUMBER	QTY	PART NAME 1 2 3 4 5 6 (PRODUCT LEVEL)	SEE PAGE
M	1	1	**9X-2053**	8	BOLT	
	2	1	**237-0229**	1	FLYWHEEL AS	
		1	**4N-2514**	1	GEAR (113-TEETH)	
	3	1	**9X-8268**	8	WASHER (17.5X30X3.5-MM THK)	

M - METRIC PART

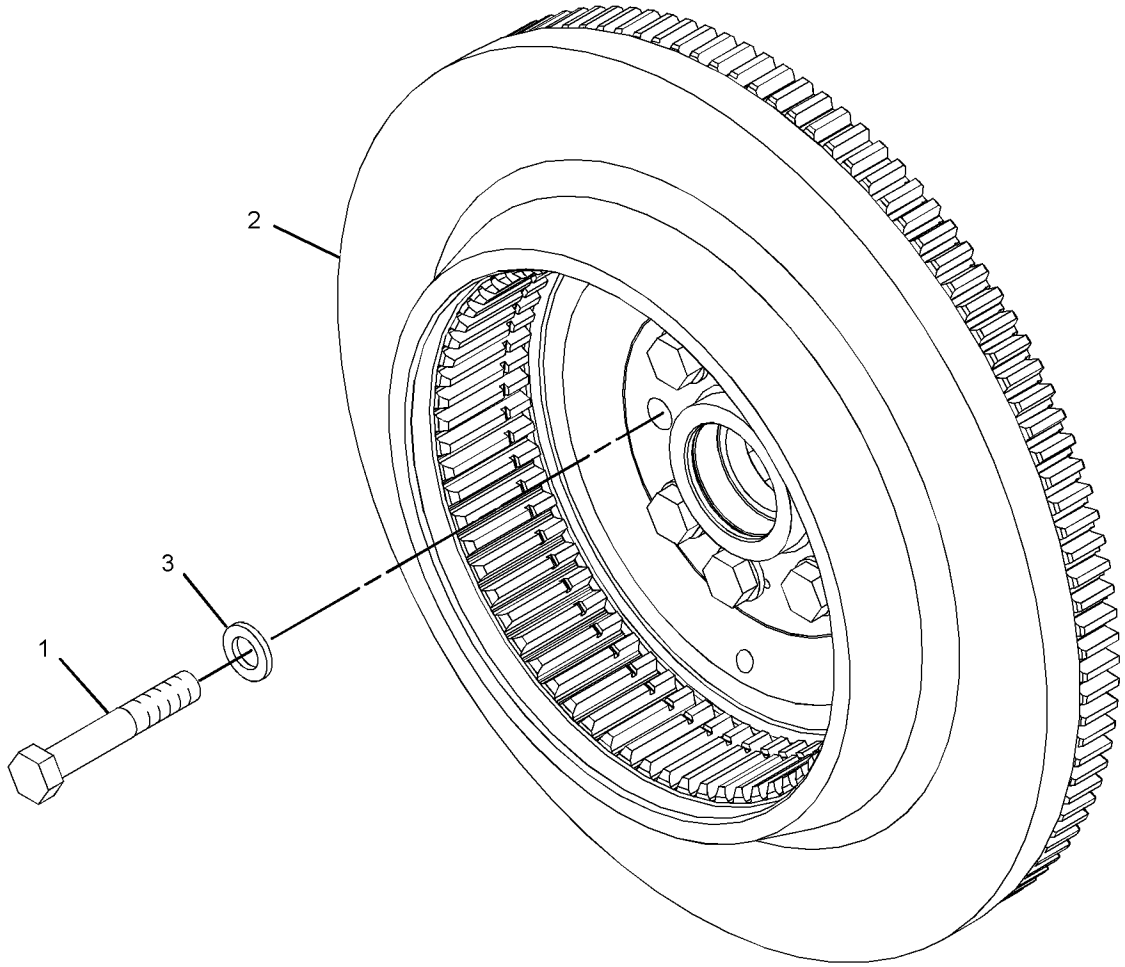

GRAPHIC #1 **<END>** g01205624

205-1321 GEAR GP-FRONT

S/N: TXD1-UP; THX8900-UP
PART OF 282-3827, 282-3828, 282-3829, 282-3830, 301-5769, 384-8428, 387-8618, 399-3904 ENGINE AR-CORE
ALSO AN ATTACHMENT

SMCS-1151, 1162, 1206 **i01696307**

NOTE	REF NO	GRAPHIC REF	PART NUMBER	QTY	PART NAME 1 2 3 4 5 6 (PRODUCT LEVEL)	SEE PAGE
	1	1	**113-6069**	1	PLATE-THRUST	
	2	1	**115-4219**	1	PLATE-RETAINING	
	3	1	**200-4495**	1	SHAFT-IDLER	
	4	1	**205-1320**	1	GEAR AS-IDLER (50 TEETH)	
	4A	1	**115-4072**	1	BEARING	
M	5	1	**136-4183**	1	BOLT-12 POINT HEAD (M10X1.5X30MM)	
M	6	1	**6V-5843**	2	BOLT (M10X1.50X45MM)	

M - METRIC PART

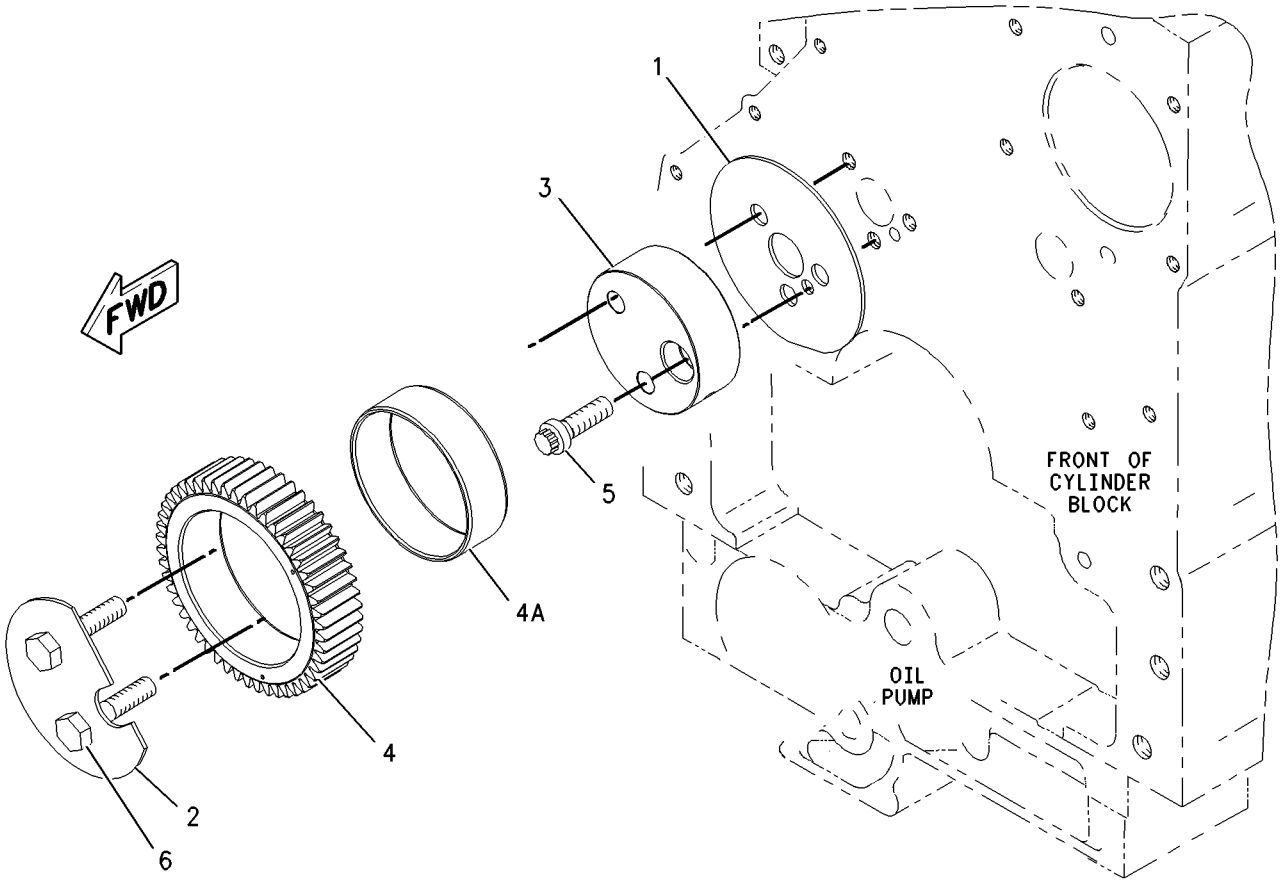

GRAPHIC #1 **<END>** g00873940

175-6260 GEAR GP-REAR

S/N: TXD1-UP; THX8900-UP

PART OF 282-3823, 282-3824, 282-3825, 282-3826, 301-5768 ENGINE AR, 349-3564, 349-3565, 387-8574, 387-8575, 387-8576, 387-8580, 398-6424 ENGINE AR-COMPLETE

ALSO AN ATTACHMENT

SMCS-1204 **i01830860**

NOTE	REF NO	GRAPHIC REF	PART NUMBER	QTY	PART NAME 1 2 3 4 5 6 (PRODUCT LEVEL)	SEE PAGE
	1	1	**187-8194**	1	GEAR AS-DRIVE (64-TEETH)	
		1	**4F-6024**	1	PIN	
	2	1	**1W-4741**	2	GEAR AS-IDLER (70-TEETH)	
					(EACH INCLUDES)	
		1	**1W-4738**	1	BUSHING	
	3	1	**1W-4746**	2	RETAINER-GEAR	
	4	1	**187-8195**	1	GEAR AS-DRIVE (64-TEETH)	
	4A	1	**4F-6024**	1	PIN	
	5	1	**154-3358**	1	GEAR-ADAPTER (68-TEETH)	
	6	1	**187-8222**	2	ADAPTER AS-PUMP	
					(EACH INCLUDES)	
		1	**160-8184**	1	BUSHING	
	7	1	**4N-1230**	2	SEAL-O-RING	
M	8	1	**6V-1820**	12	BOLT (M10X1.5X30-MM)	
	9	1	**6V-5839**	12	WASHER (11X21X2.5-MM THK)	
M	10	1	**6V-7673**	6	BOLT (M12X1.75X50-MM)	

M - METRIC PART

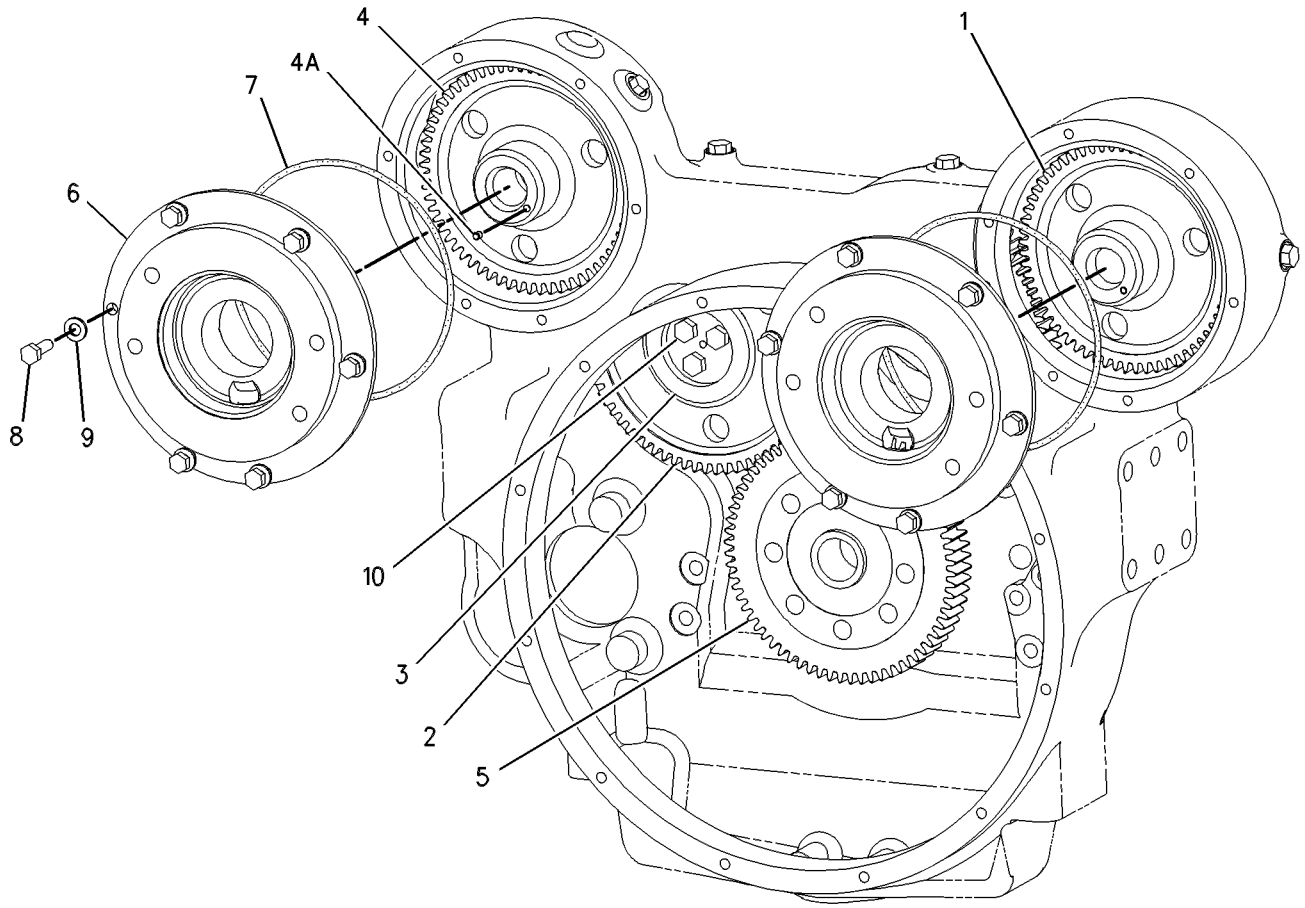

GRAPHIC #1 **<END>** g00639229

221-5461 HOUSING AS-FLYWHEEL

S/N: TXD1-UP; THX8900-UP
PART OF 219-8666 HOUSING GP-FLYWHEEL
ALSO AN ATTACHMENT

SMCS-1157 **i05318420**

NOTE	REF NO	GRAPHIC REF	PART NUMBER	QTY	PART NAME 1 2 3 4 5 6 (PRODUCT LEVEL)	SEE PAGE
	1	1	**2A-1162**	1	GASKET	
	2	1	**5F-0304**	1	PLUG	
	3	1	**316-8663**	1	HOUSING AS-FLYWHEEL	
		1	**229-9281**	1	HOUSING-FLYWHEEL	
	3A	1	**8M-9315**	2	BUSHING	
	4	1	*398-5596*	2	PLUG AS	
					(EACH INCLUDES)	
		1	**360-3680**	1	PLUG	
	4A	1	**238-5080**	1	SEAL-O-RING	
	5	1	*396-0393*	1	PLUG AS	
		1	**360-3677**	1	PLUG	
	5A	1	**214-7566**	1	SEAL-O-RING	
	6	1	*389-3708*	4	PLUG AS	
					(EACH INCLUDES)	
		1	**360-3679**	1	PLUG-CONNECTOR	
	6A	1	**214-7568**	1	SEAL-O-RING	
	7	1	*371-7186*	1	PLUG AS	
		1	**360-3678**	1	PLUG-O-RING	
	7A	1	**214-7567**	1	SEAL-O-RING	

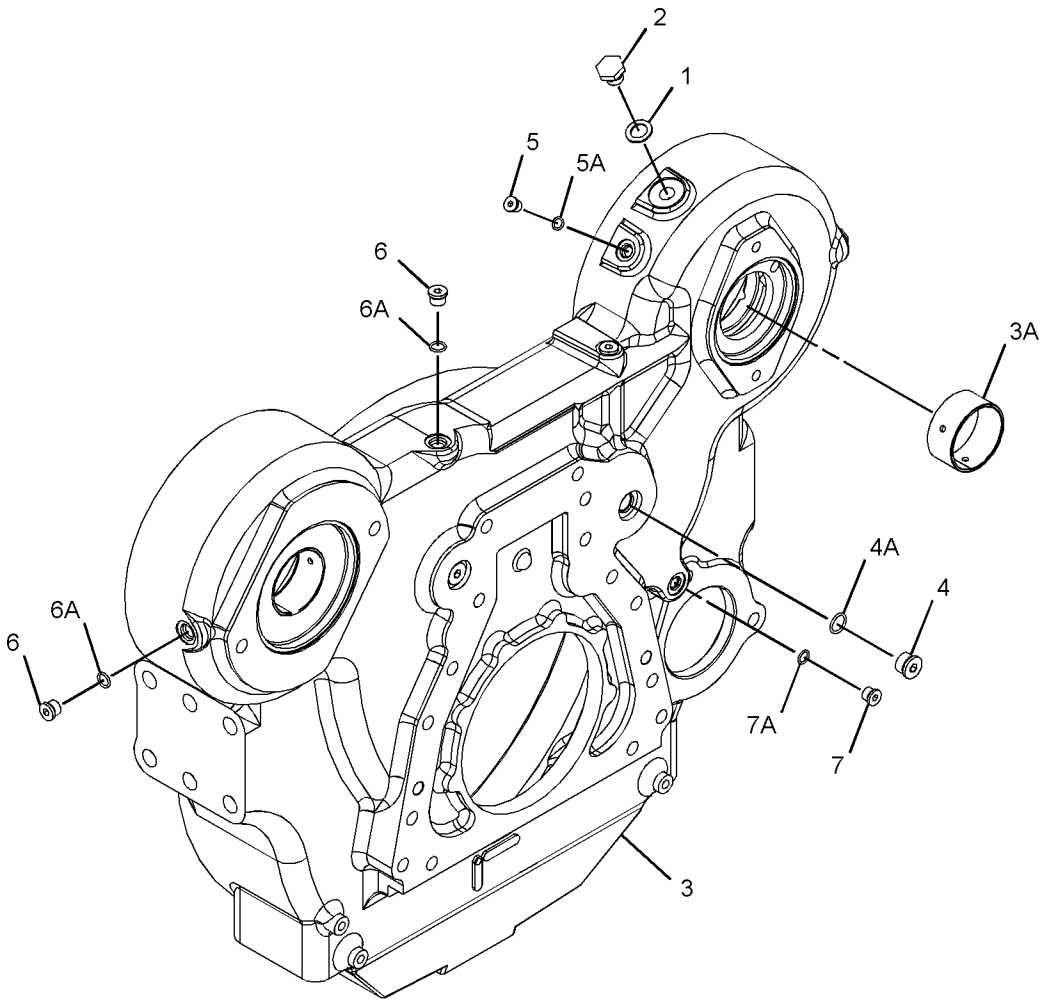

GRAPHIC #1 **<END>** g03368758

219-8666 HOUSING GP-FLYWHEEL

S/N: TXD1-UP; THX8900-UP

PART OF 282-3823, 282-3824, 282-3825, 282-3826, 301-5768 ENGINE AR, 349-3564, 349-3565, 387-8574, 387-8575, 387-8576, 387-8580, 398-6424 ENGINE AR-COMPLETE

ALSO AN ATTACHMENT

SMCS-1157 **i02431592**

NOTE	REF NO	GRAPHIC REF	PART NUMBER	QTY	PART NAME 1 2 3 4 5 6 (PRODUCT LEVEL)	SEE PAGE
	1	1	**9X-8268**	2	WASHER (17.5X30X3.5-MM THK)	
	2	1	**175-3721**	1	COVER	
Y	3	1	**221-5461**	1	HOUSING AS-FLYWHEEL	78
	4	1	**101-3934**	1	COVER	
	5	1	**3F-5792**	1	SEAL-O-RING	
	6	1	**4M-0189**	1	SEAL-O-RING	
	7	1	**5P-8245**	17	WASHER-HARD (13.5X25.5X3-MM THK)	
M	8	1	**6A-5591**	2	BOLT (M12X1.75X25-MM)	
M	9	1	**6V-5844**	2	BOLT (M16X2X35-MM)	
M	10	1	**6V-8197**	9	BOLT (M12X1.75X40-MM)	
M	11	1	**6V-8336**	6	BOLT (M12X1.75X70-MM)	
BF			**1U-8846**		SEALANT-GASKET (10-ML)	

B - USE AS REQUIRED
F - NOT SHOWN
M - METRIC PART
Y - SEPARATE ILLUSTRATION

219-8666 **HOUSING GP-FLYWHEEL (*contd.*)** **i02431592**

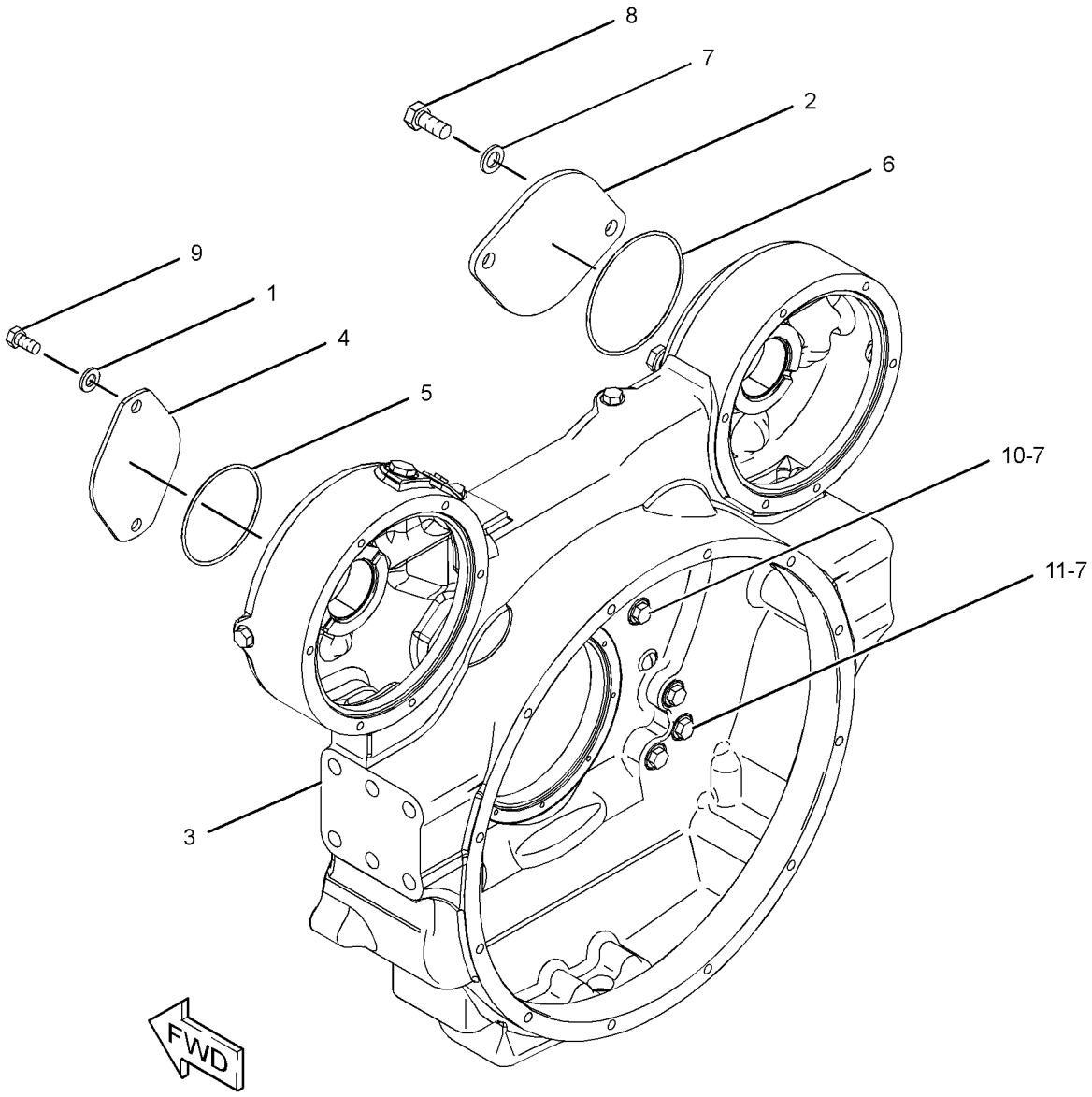

GRAPHIC #1 **<END>** g01208984

245-3262 HOUSING GP-FRONT

S/N: TXD1-UP; THX8900-UP

PART OF 282-3825, 282-3826, 301-5768 ENGINE AR, 387-8574, 387-8575, 387-8576, 387-8580, 398-6424 ENGINE AR-COMPLETE, 282-3827, 282-3828, 282-3829, 282-3830, 301-5769 ENGINE AR-CORE

ALSO AN ATTACHMENT

SMCS-1151, 1162, 1206 **i02433945**

NOTE	REF NO	GRAPHIC REF	PART NUMBER	QTY	PART NAME 1 2 3 4 5 6 (PRODUCT LEVEL)	SEE PAGE
	1	1	**245-3261**	1	HOUSING-FRONT	
M	2	1	**6V-3918**	4	BOLT (M8X1.25X50-MM)	
M	3	1	**6V-5217**	8	BOLT (M8X1.25X20-MM)	
	4	1	**9M-1974**	12	WASHER-HARD (8.8X16X2-MM THK)	
BF			**1U-8846**		SEALANT-GASKET	

B - USE AS REQUIRED
F - NOT SHOWN
M - METRIC PART

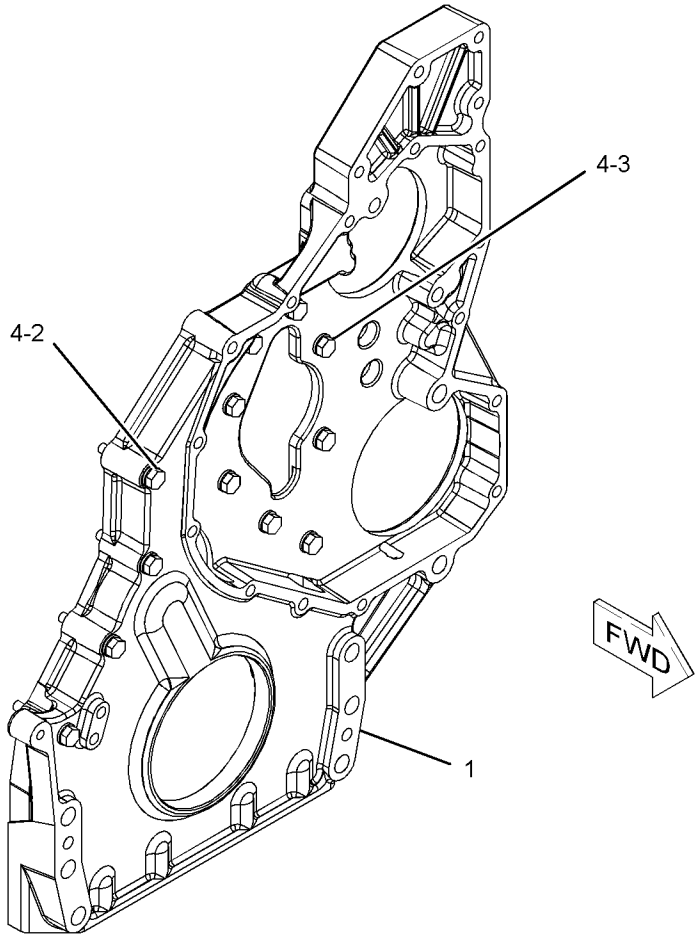

GRAPHIC #1 **<END>** g01216556

440-0598 KIT-ENGINE OVERHAUL—BRONZE

S/N: SMC1-UP

FOR USE WITH 336D MACHINE ENGINE, 282-3825—PAGE: 14

FIELD INSTALLATION

SMCS-1000 **i05350449**

NOTE	PART NUMBER	QTY	PART NAME 1 2 3 4 5 6 (PRODUCT LEVEL)	SEE PAGE
NY	**285-4074**	1	SEAL GP-CRANKSHAFT (REAR)	100
U	**115-4072**	1	BEARING	
N	**213-3190**	6	BEARING	
AB	**282-2478**		BEARING-CONNECTING ROD (0.25-MM US)	
AB	**282-2479**		BEARING-CONNECTING ROD (0.51-MM US)	
W	**204-4444**	1	BREATHER AS (CRANKCASE)	
	160-0526	1	SEAL-O-RING	
	185-3159	1	FILTER ELEMENT-BREATHER (CRANKCASE)	
	341-0979	1	SEAL-O-RING	
L	**1W-4738**	1	BUSHING	
L	**8M-9315**	2	BUSHING	
L	**160-8184**	1	BUSHING	
N	**203-5805**	2	BUSHING	
N	**203-6090**	1	BUSHING	
N	**216-5586**	1	BUSHING (CAMSHAFT)	
X	**8C-3445**	1	CAP-DUST	
N	**4R-9999**	1	EXCLUDER-CRANKSHAFT SEAL	
T	**326-1644**	1	FILTER AS-WATER SEP & FUEL (PRIMARY)	
	220-8678	1	SEAL-RING	
X	**1R-1808**	1	FILTER-ENGINE OIL (ADVANCED EFFICIENCY)	
L	**2A-1162**	1	GASKET	
S	**7C-7431**	1	GASKET	
N	**8N-6854**	1	GASKET	
S	**161-3411**	6	GASKET	
V	**191-4457**	1	GASKET (WATER REGULATOR HOUSING)	
X	**195-0452**	1	GASKET	
X	**197-8419**	1	GASKET	
J	**205-5285**	1	GASKET	
X	**209-7290**	1	GASKET	
V	**209-7293**	1	GASKET	
V	**222-3901**	1	GASKET	
W	**187-1315**	1	GASKET AS	
U	**209-0762**	1	GASKET AS	
J	**190-6114**	1	GASKET-OIL PAN	
SM	**3E-8017**	16	LOCKNUT (M10X1.5-THD)	
WM	**2Y-5829**	12	NUT (M10X1.5-THD)	
W	**2A-3746**	1	PLUG-CUP	
V	**248-5513**	1	REGULATOR-TEMPERATURE (92-DEG C) (WATER, COOLANT)	
WM	**260-7524**	12	SCREW-VALVE ADJUSTMENT (M10X1.5-THD)	
N	**245-7339**	1	SEAL-CRANKSHAFT (FRONT)	
U	**135-9819**	1	SEAL-INTEGRAL	
V	**3S-9643**	1	SEAL-LIP TYPE (WATER TEMPERATURE REGULATOR)	
V	**2M-4453**	1	SEAL-O-RING	
V	**3D-2824**	1	SEAL-O-RING	
L	**3F-5792**	1	SEAL-O-RING	
V	**3K-0360**	1	SEAL-O-RING	
W	**4G-4972**	1	SEAL-O-RING	
V	**4J-0525**	1	SEAL-O-RING	
L	**4M-0189**	1	SEAL-O-RING	
L	**4N-1230**	2	SEAL-O-RING	
X	**5P-7530**	2	SEAL-O-RING	
T	**6V-5048**	1	SEAL-O-RING	
V	**6V-6609**	2	SEAL-O-RING	
T	**8L-2779**	4	SEAL-O-RING	
J	**9F-4446**	1	SEAL-O-RING	
X	**033-6034**	1	SEAL-O-RING	

440-0598 **KIT-ENGINE OVERHAUL (*contd.*)** **i05350449**

NOTE	PART NUMBER	QTY	PART NAME 1 2 3 4 5 6 (PRODUCT LEVEL)	SEE PAGE
X	**061-9455**	1	SEAL-O-RING	
T	**109-3207**	6	SEAL-O-RING	
T	**148-2903**	12	SEAL-O-RING	
W	**214-7566**	1	SEAL-O-RING	
X	**214-7566**	1	SEAL-O-RING	
L	**214-7567**	1	SEAL-O-RING	
W	**214-7568**	7	SEAL-O-RING	
L	**214-7568**	5	SEAL-O-RING	
S	**214-7568**	1	SEAL-O-RING	
T	**214-7568**	7	SEAL-O-RING	
X	**214-7568**	3	SEAL-O-RING	
X	**228-7089**	2	SEAL-O-RING	
T	**228-7090**	1	SEAL-O-RING	
W	**228-7096**	2	SEAL-O-RING	
W	**238-5080**	3	SEAL-O-RING	
L	**238-5080**	1	SEAL-O-RING	
X	**238-5080**	2	SEAL-O-RING	
T	**238-5081**	1	SEAL-O-RING	
X	**238-5081**	1	SEAL-O-RING	
W	**238-5082**	1	SEAL-O-RING	
T	**238-5082**	1	SEAL-O-RING	
X	**238-5082**	1	SEAL-O-RING	
X	**238-5085**	1	SEAL-O-RING	
T	**220-8678**	1	SEAL-RING	
W	**268-3490**	1	SEAL-VALVE COVER	
W	**285-4106**	1	SEAL-VALVE COVER	
S	**4P-4369**	6	SPACER (12X19X23.5-MM THK)	
SM	**116-3715**	12	STUD-TAPERLOCK (M10X1.5X85-MM)	
S	**418-6781**	4	STUD-TAPERLOCK (M10X1.5X40-MM)	
S	**6V-5839**	12	WASHER (11X21X2.5-MM THK)	
J	**5N-4185**	1	WASHER-SPECIAL	

FOR A LIST OR RELATED PARTS THAT MAY BE REQUIRED FOR THE ENGINE REBUILD IN ADDITION TO THE KIT CONSIST, PLEASE VISIT:

HTTPS://DEALER.CAT.COM/RELATED

A - NOT PART OF THIS GROUP
B - USE AS REQUIRED
J - PARTS MARKED J ARE PACKAGED TOGETHER AS PART OF THE BLOCK-OIL PAN
L - PARTS MARKED L ARE PACKAGED TOGETHER FOR THE REAR
M - METRIC PART
N - PARTS MARKED N ARE PACKAGED TOGETHER FOR THE CYLINDER BLOCK
S - PARTS MARKED S ARE PACKAGED TOGETHER FOR THE INTAKE SYSTEM
T - PARTS MARKED T ARE PACKAGED TOGETHER FOR THE FUEL SYSTEM
U - PARTS MARKED U ARE PACKAGED TOGETHER FOR THE FRONT
V - PARTS MARKED V ARE PACKAGED TOGETHER FOR THE COOLING SYSTEM
W - PARTS MARKED W ARE PACKAGED TOGETHER FOR THE CYLINDER HEAD
X - PARTS MARKED X ARE PACKAGED TOGETHER FOR THE LUBRICATION SYSTEM
Y - SEPARATE ILLUSTRATION

<END>

166-1784 LIFTING GP-ENGINE

S/N: TXD1-UP; THX8900-UP

PART OF 282-3823, 282-3824, 282-3825, 282-3826, 301-5768 ENGINE AR, 349-3564, 349-3565, 387-8574, 387-8575, 387-8576, 387-8580, 398-6424 ENGINE AR-COMPLETE ALSO AN ATTACHMENT

SMCS-1122 **i04148395**

NOTE	REF NO	GRAPHIC REF	PART NUMBER	QTY	PART NAME 1 2 3 4 5 6 (PRODUCT LEVEL)	SEE PAGE
C	1	1	**188-1017**	1	PLATE-LIFTING	
	2	1	**219-8675**	1	BRACKET AS	
		1	**7T-1099**	3	LINK	
M		1	**159-3042**	5	NUT-WELD (M10X1.5-THD)	
	3	1	**3E-4353**	2	WASHER-HARD (11X25X3-MM THK)	
C	4	1	**4P-7428**	2	CLIP	
C	5	1	**5P-8245**	6	WASHER-HARD (13.5X25.5X3-MM THK)	
M	6	1	**6V-1820**	2	BOLT (M10X1.5X30-MM)	
CM	7	1	**6V-5684**	2	BOLT (M12X1.75X45-MM)	
CM	8	1	**6V-8197**	2	BOLT (M12X1.75X40-MM)	
CM	9	1	**6V-8675**	4	BOLT (M12X1.75X35-MM)	
	10	1	**7D-1649**	4	WASHER-HARD (13.5X32X5-MM THK)	

C - CHANGE FROM PREVIOUS TYPE
M - METRIC PART

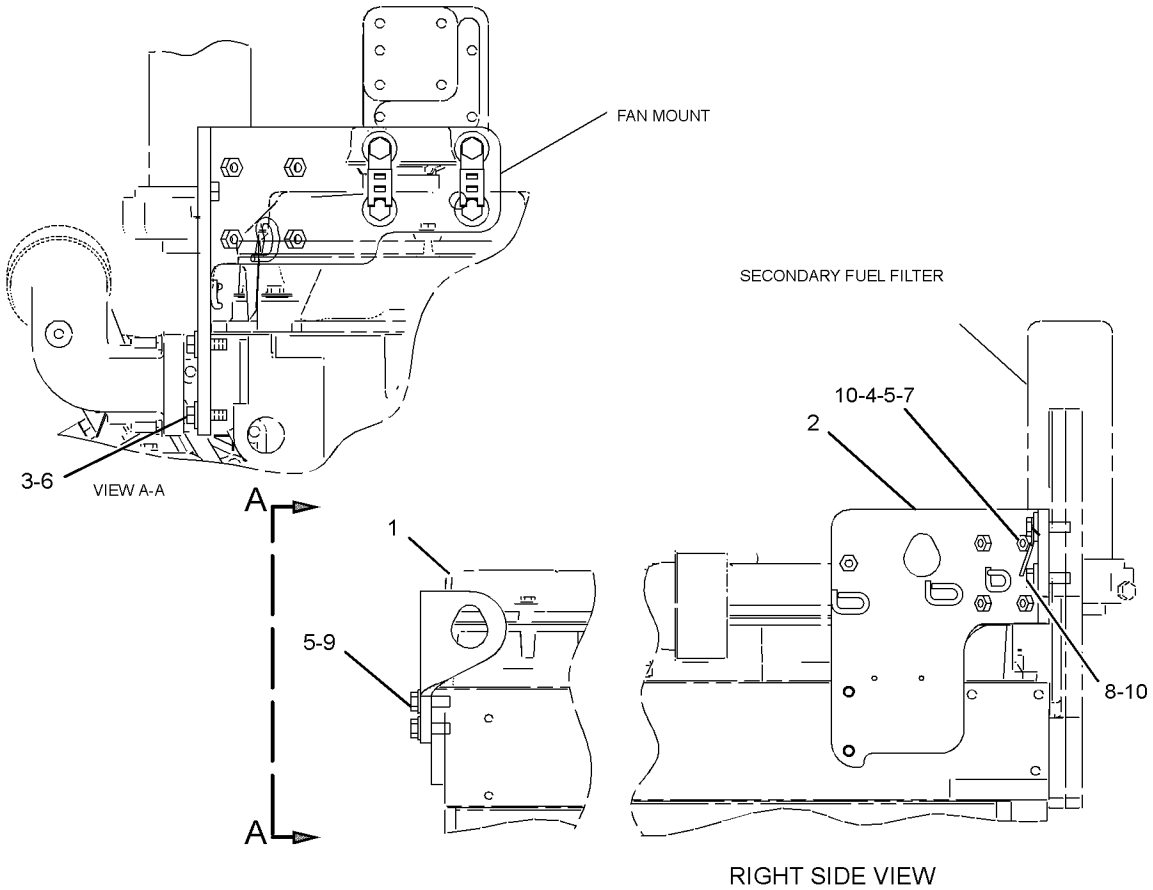

GRAPHIC #1 **<END>** g01304624

246-0600 MOUNTING GP-ALTERNATOR

S/N: TXD1-UP; THX8900-UP

PART OF 282-3823, 282-3824, 282-3825, 282-3826, 301-5768 ENGINE AR, 349-3564, 349-3565, 387-8574, 387-8575, 387-8576, 387-8580, 398-6424 ENGINE AR-COMPLETE

ALSO AN ATTACHMENT

SMCS-1405 **i02431616**

NOTE	REF NO	GRAPHIC REF	PART NUMBER	QTY	PART NAME 1 2 3 4 5 6 (PRODUCT LEVEL)	SEE PAGE
	1	1	**7W-3872**	2	SLEEVE	
	2	1	**241-8475**	1	BRACKET	
M	3	1	**6V-2317**	4	BOLT (M8X1.25X30-MM)	
	4	1	**9M-1974**	4	WASHER-HARD (8.8X16X2-MM THK)	

M - METRIC PART

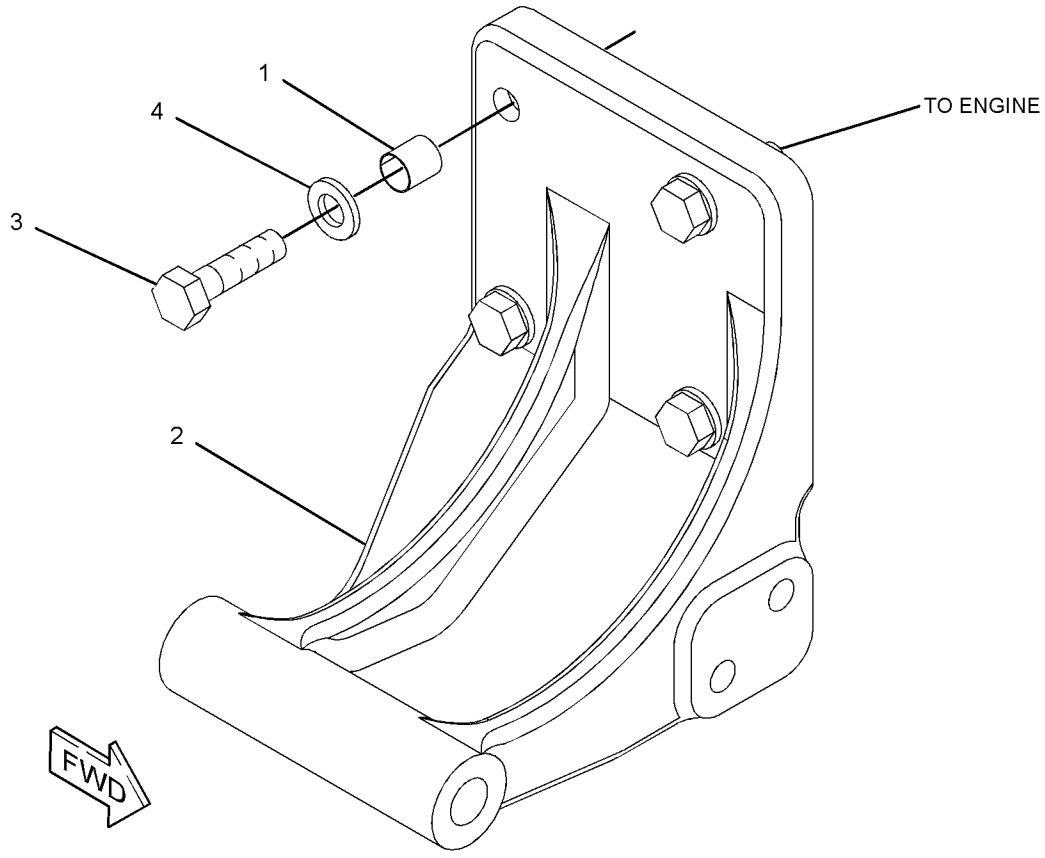

GRAPHIC #1 **<END>** g01206788

223-0556 MOUNTING GP-ENGINE

S/N: SMC1-UP; GCT1-UP

PART OF 279-9549, 372-6406 INSTALLATION AR-ENGINE

SMCS-1152, 1153, 1154 **i02432536**

NOTE	REF NO	GRAPHIC REF	PART NUMBER	QTY	PART NAME 1 2 3 4 5 6 (PRODUCT LEVEL)	SEE PAGE
	1	1	**7C-3567**	2	MOUNT AS	
	2	1	**183-9374**	2	BLOCK	
	3	1	**224-2695**	2	SUPPORT-ENGINE	
	4	1	**236-8191**	2	CAP-MOUNT	
	5	1	**7X-0515**	4	WASHER-HARD (17X35X5-MM THK)	
	6	1	**8T-4123**	16	WASHER (22X35X3.5-MM THK)	
M	7	1	**8T-4170**	4	BOLT (M20X2.5X150-MM)	
M	8	1	**8T-4193**	4	BOLT (M16X2X50-MM)	
M	9	1	**8T-6430**	12	BOLT (M20X2.5X50-MM)	

M - METRIC PART

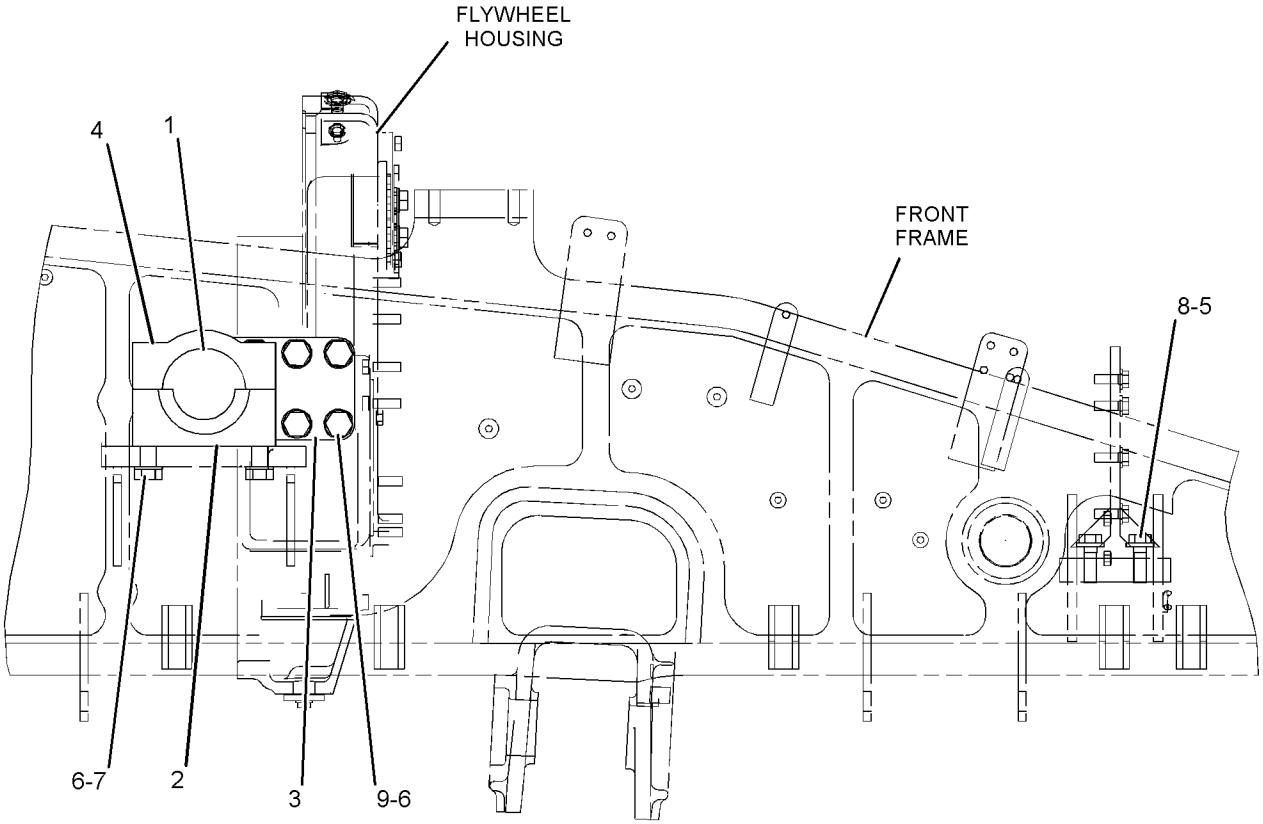

RIGHT SIDE VIEW

GRAPHIC #1 **<END>** g01209988

246-0598 MOUNTING GP-FAN DRIVE

S/N: TXD1-UP; THX8900-UP

PART OF 282-3823, 282-3824, 282-3825, 282-3826, 301-5768 ENGINE AR, 349-3564, 349-3565, 387-8574, 387-8575, 387-8576, 387-8580, 398-6424 ENGINE AR-COMPLETE

ALSO AN ATTACHMENT

SMCS-1359 **i02431621**

NOTE	REF NO	GRAPHIC REF	PART NUMBER	QTY	PART NAME 1 2 3 4 5 6 (PRODUCT LEVEL)	SEE PAGE
	1	1	**241-8474**	1	SUPPORT	
	2	1	**3E-4353**	5	WASHER-HARD (11X25X3-MM THK)	
M	3	1	**6V-5843**	5	BOLT (M10X1.5X45-MM)	

M - METRIC PART

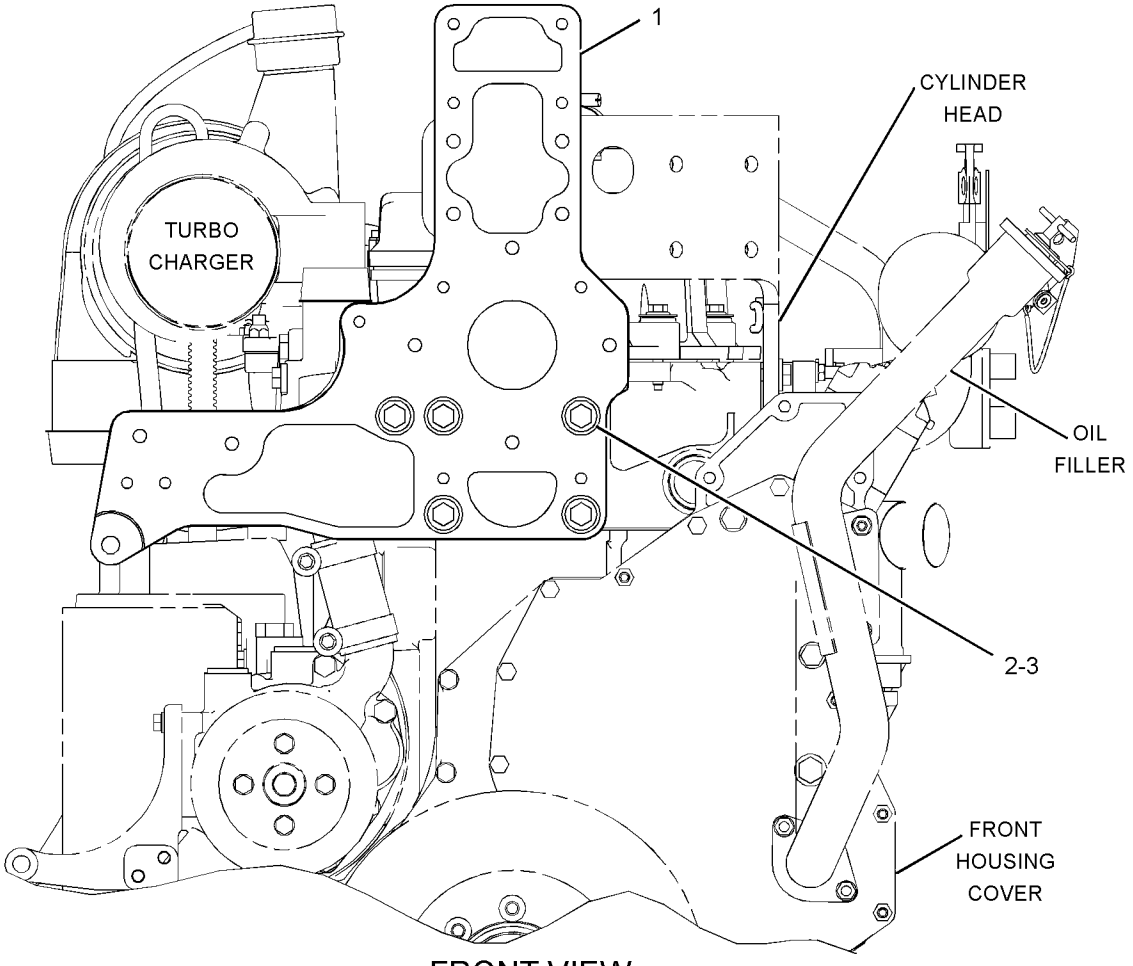

FRONT VIEW

GRAPHIC #1 **<END>** g01206764

165-4459 PAN GP-OIL

S/N: TXD1-UP; THX8900-UP

PART OF 282-3823, 282-3824, 282-3825, 282-3826, 301-5768 ENGINE AR, 349-3564, 349-3565, 387-8574, 387-8575, 387-8576, 387-8580, 398-6424 ENGINE AR-COMPLETE

ALSO AN ATTACHMENT

SMCS-1302 **i04035018**

NOTE	REF NO	GRAPHIC REF	PART NUMBER	QTY	PART NAME 1 2 3 4 5 6 (PRODUCT LEVEL)	SEE PAGE
B	1	1	**4C-9612**		SEALANT-SILICONE	
	2	1	**190-6114**	1	GASKET-OIL PAN	
	3	1	**174-3847**	1	PAN-OIL	
M	4	1	**6V-3918**	32	BOLT (M8X1.25X50-MM)	
	5	1	**9M-1974**	32	WASHER-HARD (8.8X16X2-MM THK)	

B - USE AS REQUIRED
M - METRIC PART

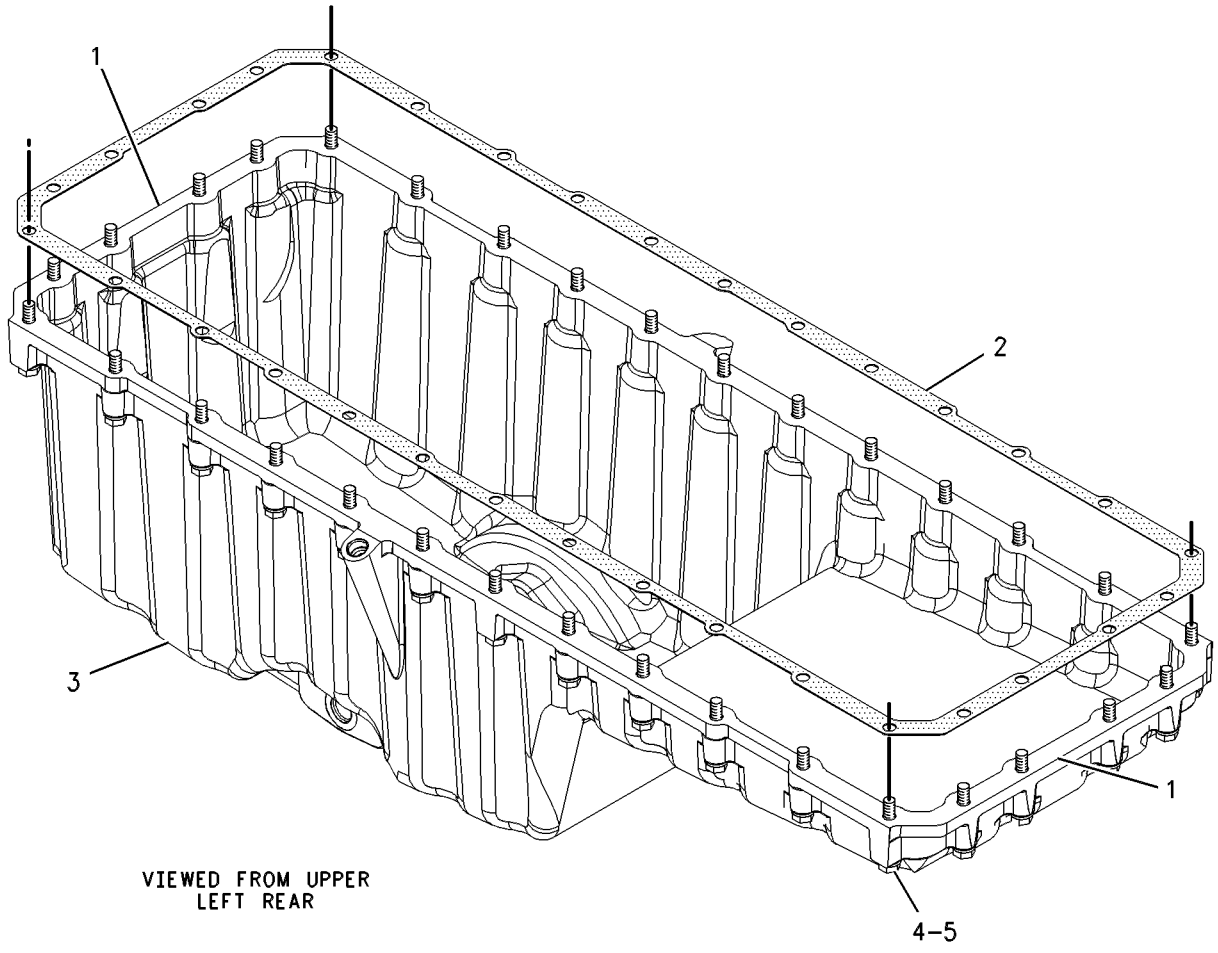

GRAPHIC #1 **<END>** g00637845

265-1400 PISTON & ROD GP

S/N: TXD1-UP; THX8900-UP
16.1:1 COMPRESSION RATIO
PART OF 282-3827, 282-3828, 282-3829, 282-3830, 301-5769, 384-8428, 387-8618, 399-3904 ENGINE AR-CORE
ALSO AN ATTACHMENT

SMCS-1225 **i03770654**

NOTE	REF NO	GRAPHIC REF	PART NUMBER	QTY	PART NAME 1 2 3 4 5 6 (PRODUCT LEVEL)	SEE PAGE
	1	1	**213-3190**	1	BEARING (STANDARD)	
AB		1	**282-2478**		BEARING-CONNECTING ROD (0.25-MM US)	
AB		1	**282-2479**		BEARING-CONNECTING ROD (0.51-MM US)	
R	2	1	**160-8199**	1	ROD AS	
	2A	1	**160-8194**	1	BEARING (CONNECTING ROD)	
M	2B	1	**160-8197**	2	BOLT	
	3	1	**166-3648**	1	PIN-PISTON	
	4	1	**168-7211**	1	RING-PISTON (OIL CONTROL)	
R	5	1	**265-1401**	1	CROWN AS-PISTON	
	6	1	**161-3424**	1	RING-PISTON (INTERMEDIATE)	
	7	1	**197-9367**	1	TUBE AS (PISTON COOLING JET)	
	8	1	**197-9392**	1	RING-PISTON (TOP)	
	9	1	**324-7380**	1	SKIRT-PISTON	
M	10	1	**6V-3940**	1	BOLT (M8X1.25X25-MM)	
	11	1	**7X-2908**	2	RING-RETAINING	

A - NOT PART OF THIS GROUP
B - USE AS REQUIRED
M - METRIC PART
R - REMFG PART MAY BE AVAILABLE

265-1400 **PISTON & ROD GP (*contd.*)** **i03770654**

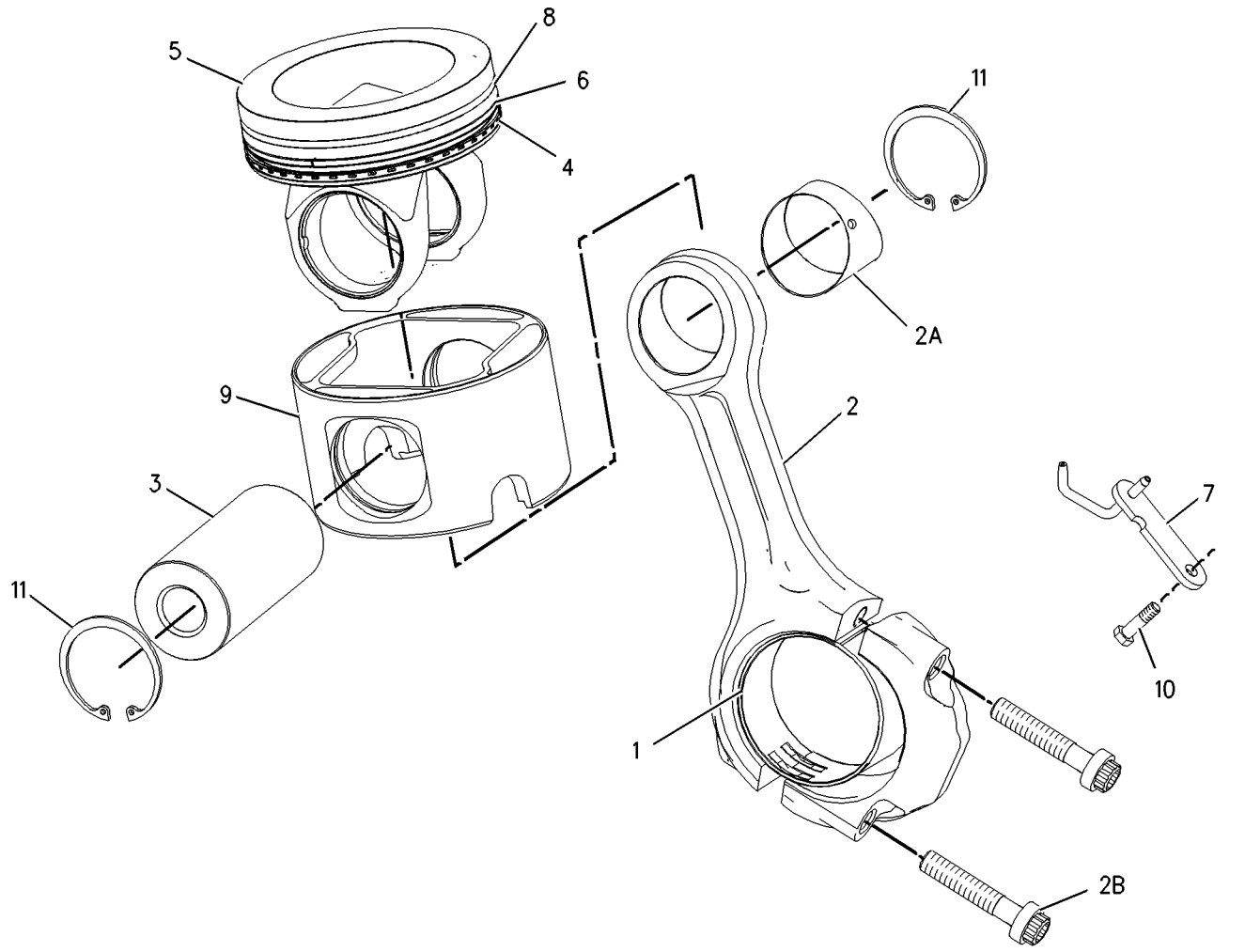

GRAPHIC #1 **<END>** g00922644

252-1567 PLUG GP-ENGINE

S/N: TXD1-UP; THX8900-UP

PART OF 282-3823, 282-3824, 282-3825, 282-3826, 301-5768 ENGINE AR, 349-3564, 349-3565, 387-8574, 387-8575, 387-8576, 387-8580, 398-6424 ENGINE AR-COMPLETE

ALSO AN ATTACHMENT

SMCS-1000 **i05014937**

NOTE	REF NO	GRAPHIC REF	PART NUMBER	QTY	PART NAME 1 2 3 4 5 6 (PRODUCT LEVEL)	SEE PAGE
	1	1	*389-3709*	1	PLUG AS	
		1	**238-5082**	1	SEAL-O-RING	
		1	**360-3682**	1	PLUG-O-RING	
	2	1	*389-3708*	1	PLUG AS	
		1	**214-7568**	1	SEAL-O-RING	
		1	**360-3679**	1	PLUG-CONNECTOR	
	3	1	*398-5596*	1	PLUG AS	
		1	**238-5080**	1	SEAL-O-RING	
		1	**360-3680**	1	PLUG	

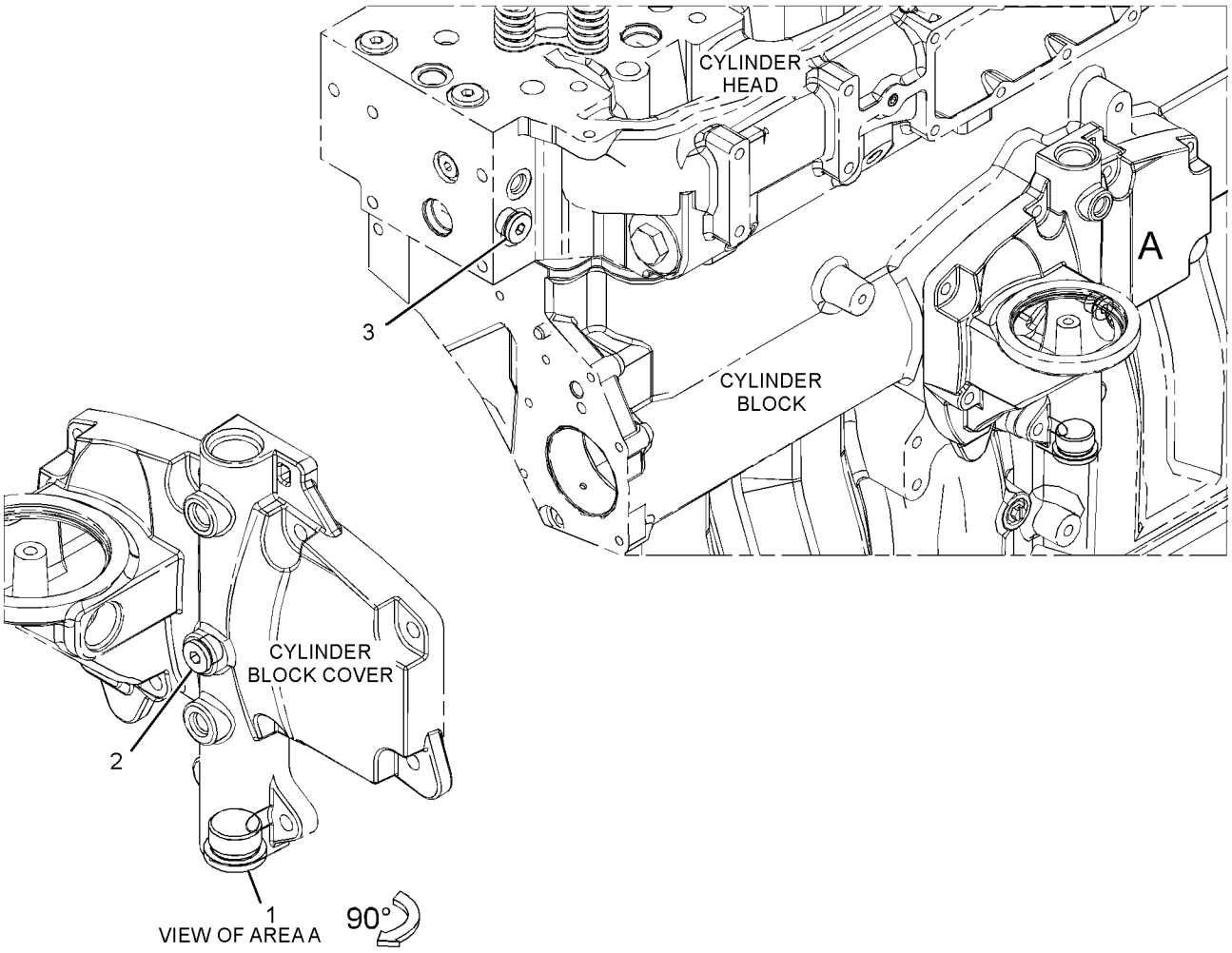

GRAPHIC #1 **<END>** g02163416

246-0602 PULLEY GP-CRANKSHAFT

S/N: TXD1-UP; THX8900-UP

PART OF 282-3823, 282-3824, 282-3825, 282-3826, 301-5768 ENGINE AR, 349-3564, 349-3565, 387-8574, 387-8575, 387-8576, 387-8580, 398-6424 ENGINE AR-COMPLETE

ALSO AN ATTACHMENT

SMCS-1205 **i04148398**

NOTE	REF NO	GRAPHIC REF	PART NUMBER	QTY	PART NAME 1 2 3 4 5 6 (PRODUCT LEVEL)	SEE PAGE
	1	1	**2W-7381**	1	PLATE-CLAMP	
	2	1	**236-8239**	1	PULLEY-CRANKSHAFT (8-GROOVE)	
M	3	1	**8T-3666**	4	BOLT (M14X2X60-MM)	

M - METRIC PART

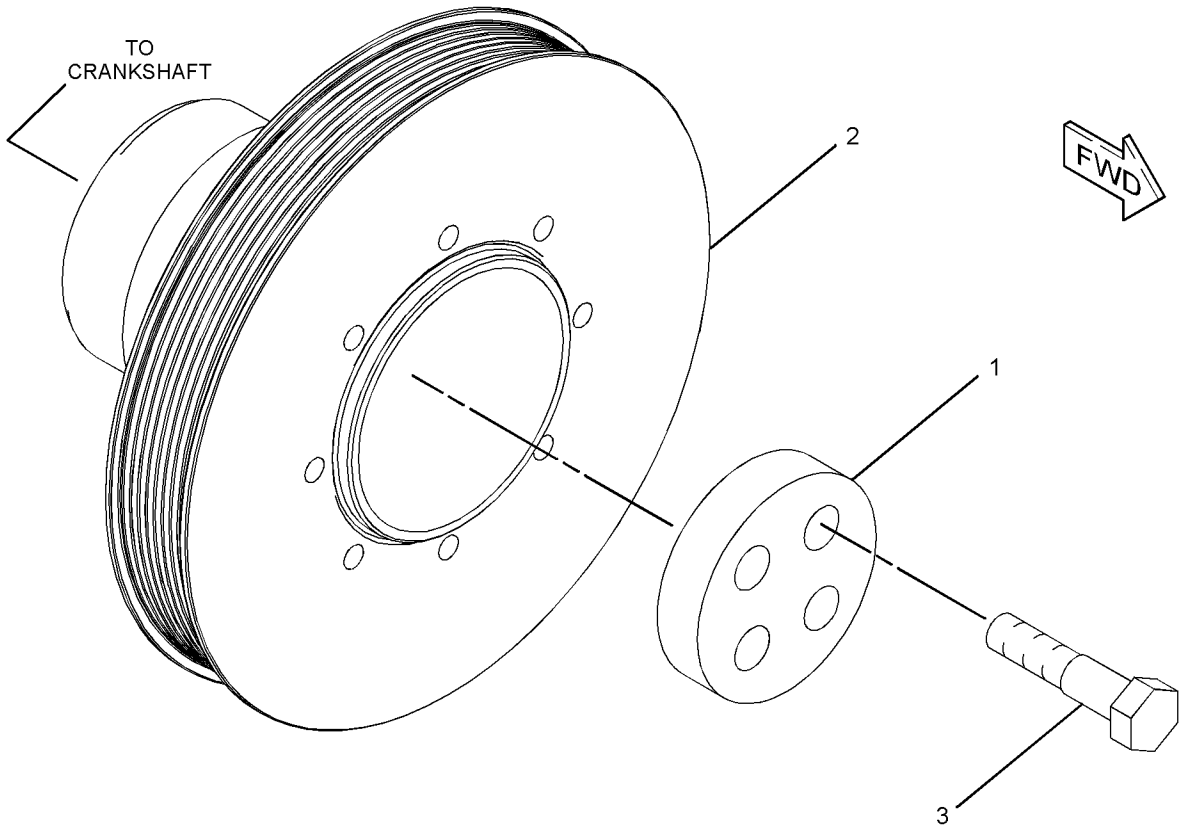

GRAPHIC #1 **<END>** g01206786

262-2027 PULLEY GP-FAN & ALT DRIVE

S/N: SMC1-497; GCT1-963

PART OF 279-9549 INSTALLATION AR-ENGINE

SMCS-1359, 1425

i04141342

NOTE	REF NO	GRAPHIC REF	PART NUMBER	QTY	PART NAME 1 2 3 4 5 6 (PRODUCT LEVEL)	SEE PAGE
	1	1	**1L-8545**	1	SPACER (1X1.25X0.99-IN THK)	
	2	1	**4P-8087**	1	V-BELT SET (INCLUDES 3-BELTS) (FAN DRIVE)	
	3	1	**5M-9735**	1	SEAL-LIP TYPE	
	4	1	**6B-1124**	2	BALL BEARING	
	5	1	**7C-8370**	1	CAP-DUST	
	6	1	**123-0790**	1	PULLEY (8-GROOVE)	
	7	1	**185-0838**	1	ROD-ADJUSTING	
	8	1	**214-5705**	1	ADAPTER	
	9	1	**215-3296**	1	ARM AS	
	10	1	**222-9151**	1	WASHER-HARD (11X32X5-MM THK)	
	11	1	**241-4981**	1	BELT-SERPENTINE (ALTERNATOR)	
	12	1	**267-7507**	1	PULLEY-FAN	
	13	1	**267-7508**	1	PULLEY	
	14	1	**267-7509**	1	PULLEY	
	15	1	**5P-1076**	1	WASHER-HARD (13.5X30X4-MM THK)	
M	16	1	**6V-4248**	1	BOLT (M10X1.5X25-MM)	
	17	1	**7C-2164**	1	BLOCK	
	18	1	**8T-4121**	14	WASHER-HARD (11X21X2.5-MM THK)	
M	19	1	**8T-4186**	7	BOLT (M10X1.5X40-MM)	
M	20	1	**8T-4196**	7	BOLT (M10X1.5X35-MM)	
M	21	1	**8T-4198**	8	BOLT (M10X1.5X100-MM)	
	22	1	**8T-4223**	3	WASHER-HARD (13.5X25.5X3-MM THK)	
M	23	1	**8T-4244**	2	NUT (M12X1.75-THD)	
M	24	1	**8T-4910**	1	BOLT (M12X1.75X60-MM)	
M	25	1	**8T-6868**	1	BOLT (M12X1.75X80-MM)	

M - METRIC PART

262-2027 **PULLEY GP-FAN & ALT DRIVE (*contd.*)** **i04141342**

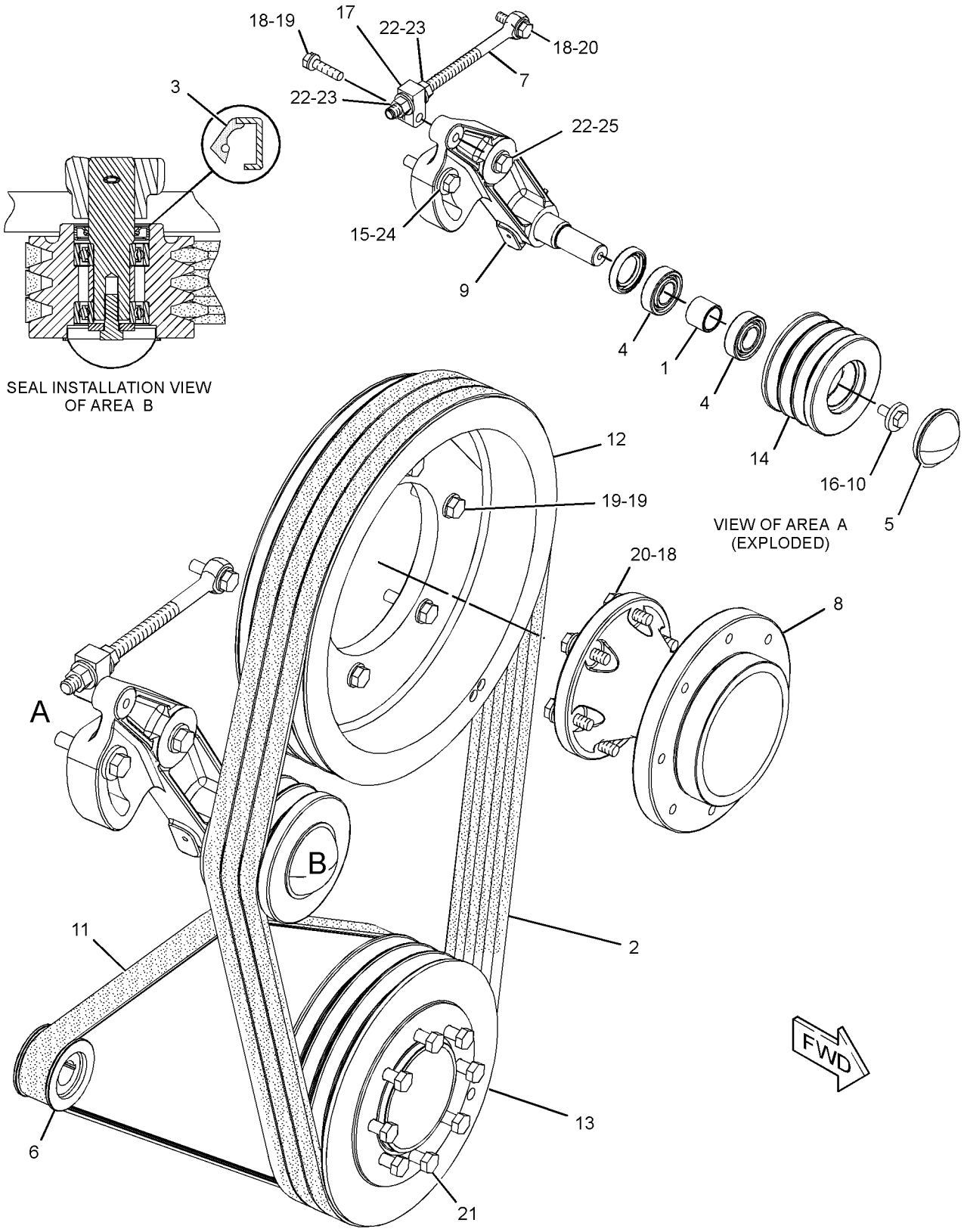

GRAPHIC #1 **<END>** g02284874

372-6366 PULLEY GP-FAN & ALT DRIVE

S/N: SMC498-UP; GCT964-UP

PART OF 372-6406 INSTALLATION AR-ENGINE

SMCS-1359, 1425

i05179130

NOTE	REF NO	GRAPHIC REF	PART NUMBER	QTY	PART NAME 1 2 3 4 5 6 (PRODUCT LEVEL)	SEE PAGE
	1	1	**1L-8545**	1	SPACER (1X1.25X0.99-IN THK)	
	2	1	**4P-8087**	1	V-BELT SET (INCLUDES 3-BELTS)	
	3	1	**5M-9735**	1	SEAL-LIP TYPE	
	4	1	**6B-1124**	2	BALL BEARING	
	5	1	**7C-8370**	1	CAP-DUST	
	6	1	**123-0790**	1	PULLEY (8-GROOVE)	
	7	1	**185-0838**	1	ROD-ADJUSTING	
	8	1	**214-5705**	1	ADAPTER	
	9	1	**215-3296**	1	ARM AS	
		1	**3E-4999**	1	PIN-SPRING	
	10	1	**222-9151**	1	WASHER-HARD (11X32X5-MM THK)	
	11	1	**241-4981**	1	BELT-SERPENTINE	
	12	1	**267-7508**	1	PULLEY (3-GROOVE)	
	13	1	**267-7509**	1	PULLEY (3-GROOVE)	
	14	1	**390-9265**	1	PULLEY-FAN (4-GROOVE)	
	15	1	**5P-1076**	1	WASHER-HARD (13.5X30X4-MM THK)	
M	16	1	**6V-4248**	1	BOLT (M10X1.5X25-MM)	
	17	1	**7C-2164**	1	BLOCK	
	18	1	**8T-4121**	14	WASHER-HARD (11X21X2.5-MM THK)	
M	19	1	**8T-4186**	7	BOLT (M10X1.5X40-MM)	
M	20	1	**8T-4196**	7	BOLT (M10X1.5X35-MM)	
M	21	1	**8T-4198**	8	BOLT (M10X1.5X100-MM)	
	22	1	**8T-4223**	3	WASHER-HARD (13.5X25.5X3-MM THK)	
M	23	1	**8T-4244**	2	NUT (M12X1.75-THD)	
M	24	1	**8T-4910**	1	BOLT (M12X1.75X60-MM)	
M	25	1	**8T-6868**	1	BOLT (M12X1.75X80-MM)	

M - METRIC PART

372-6366 **PULLEY GP-FAN & ALT DRIVE (*contd.*)** **i05179130**

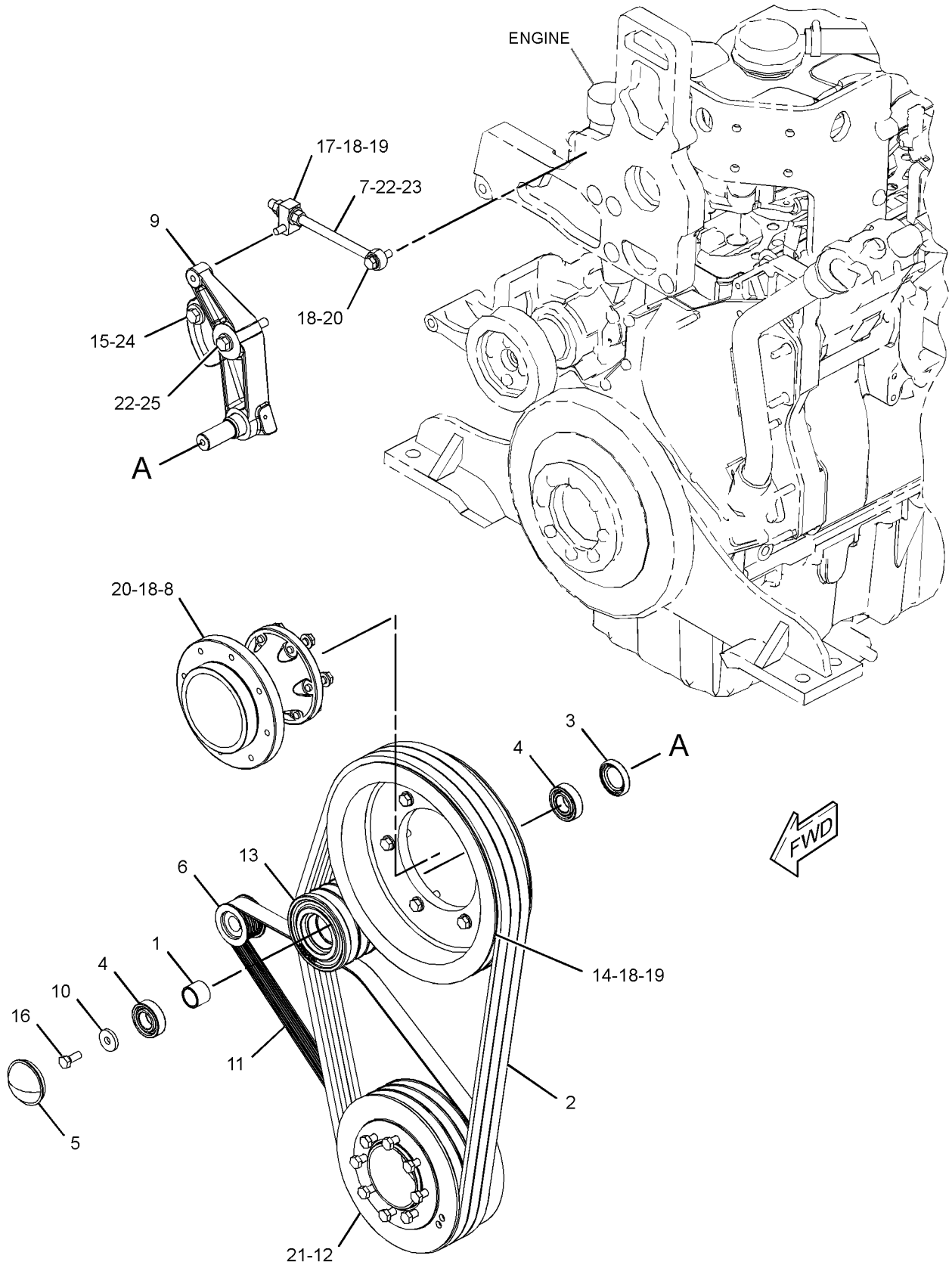

GRAPHIC #1 **<END>** g03323888

213-9320 ROCKER ARM GP–EXHAUST

S/N: TXD1-UP; THX8900-UP
PART OF 212-8926 VALVE MECHANISM GP
ALSO AN ATTACHMENT

SMCS-1123 **i02585214**

NOTE	REF NO	GRAPHIC REF	PART NUMBER	QTY	PART NAME 1 2 3 4 5 6 (PRODUCT LEVEL)	SEE PAGE
R	1	1	**163-2447**	1	ROCKER ARM AS	
M	2	1	**260-7524**	1	SCREW-VALVE ADJUSTMENT (M10X1.5-THD)	
M	3	1	**2Y-5829**	1	NUT (M10X1.5-THD)	

M - METRIC PART
R - REMFG PART MAY BE AVAILABLE

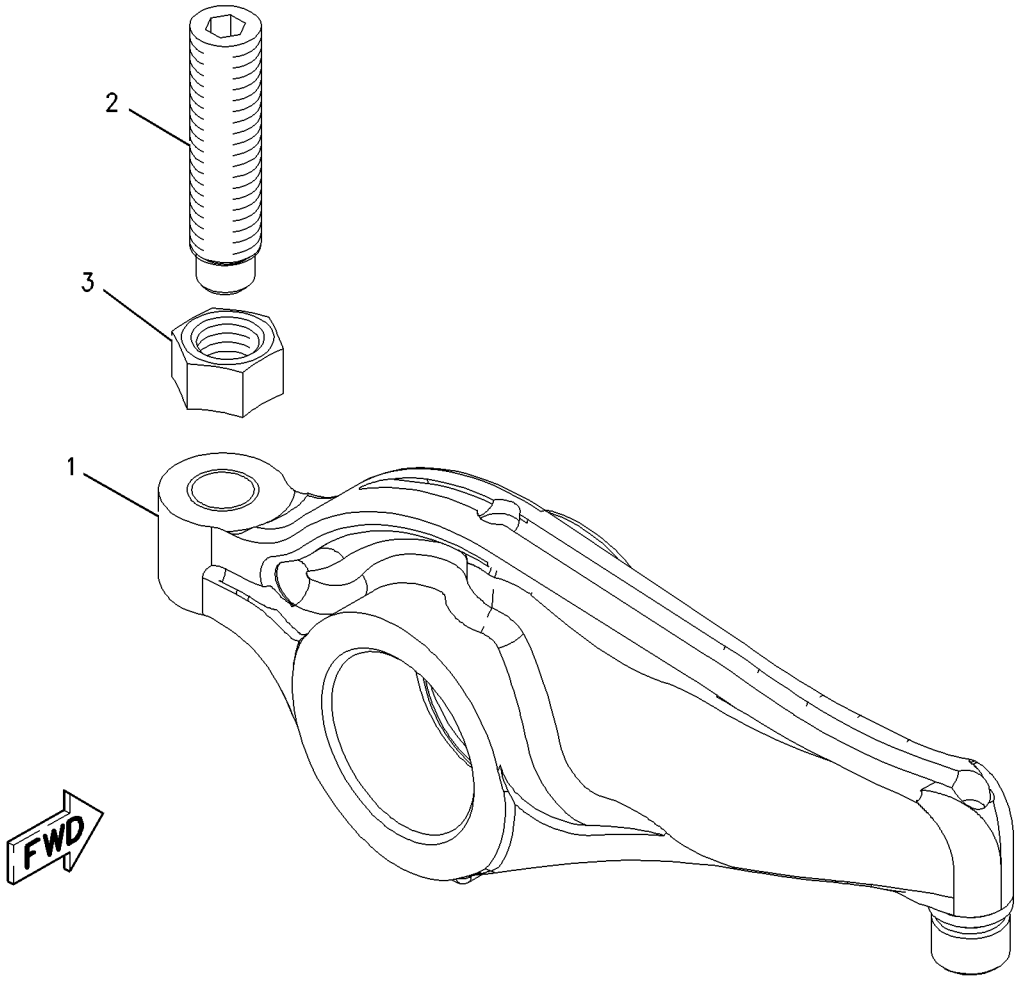

GRAPHIC #1 **<END>** g00979393

242-0329 ROCKER ARM GP–INLET

S/N: TXD1-UP; THX8900-UP
PART OF 212-8926 VALVE MECHANISM GP
ALSO AN ATTACHMENT

SMCS-1123 **i02585530**

NOTE	REF NO	GRAPHIC REF	PART NUMBER	QTY	PART NAME 1 2 3 4 5 6 (PRODUCT LEVEL)	SEE PAGE
M	1	1	**260-7524**	1	SCREW-VALVE ADJUSTMENT (M10X1.5-THD)	
R	2	1	**242-0328**	1	ROCKER ARM AS	
M	3	1	**2Y-5829**	1	NUT (M10X1.5-THD)	

M - METRIC PART
R - REMFG PART MAY BE AVAILABLE

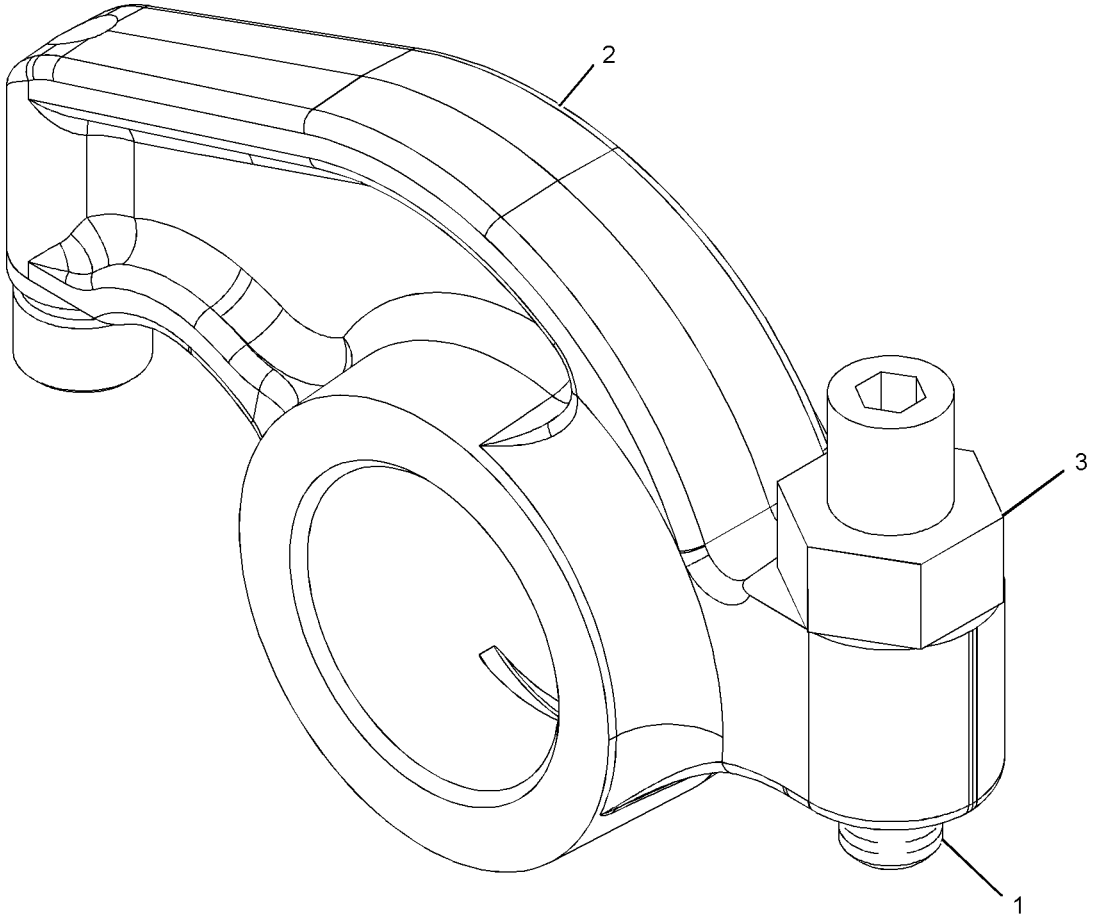

GRAPHIC #1 **<END>** g01056688

189-9306 SEAL GP-CRANKSHAFT

S/N: TXD1-UP; THX8900-UP
FRONT AND REAR
FOR USE WITH WET FLYWHEEL HSG AND FRONT DUST EXCLUDER
PART OF 282-3823, 282-3824, 282-3825, 282-3826, 301-5768 ENGINE AR, 349-3564, 349-3565, 387-8574, 387-8575, 387-8576, 387-8580, 398-6424 ENGINE AR-COMPLETE
ALSO AN ATTACHMENT

SMCS-1160, 1161 **i03755192**

NOTE	REF NO	GRAPHIC REF	PART NUMBER	QTY	PART NAME 1 2 3 4 5 6 (PRODUCT LEVEL)	SEE PAGE
	1	1	**4R-9999**	1	EXCLUDER-CRANKSHAFT SEAL	
M	2	1	**206-3719**	9	BOLT AS	
	3	1	**245-7339**	1	SEAL-CRANKSHAFT (FRONT)	
Y	4	1	**285-4074**	1	SEAL GP-CRANKSHAFT (REAR)	100

M - METRIC PART
Y - SEPARATE ILLUSTRATION

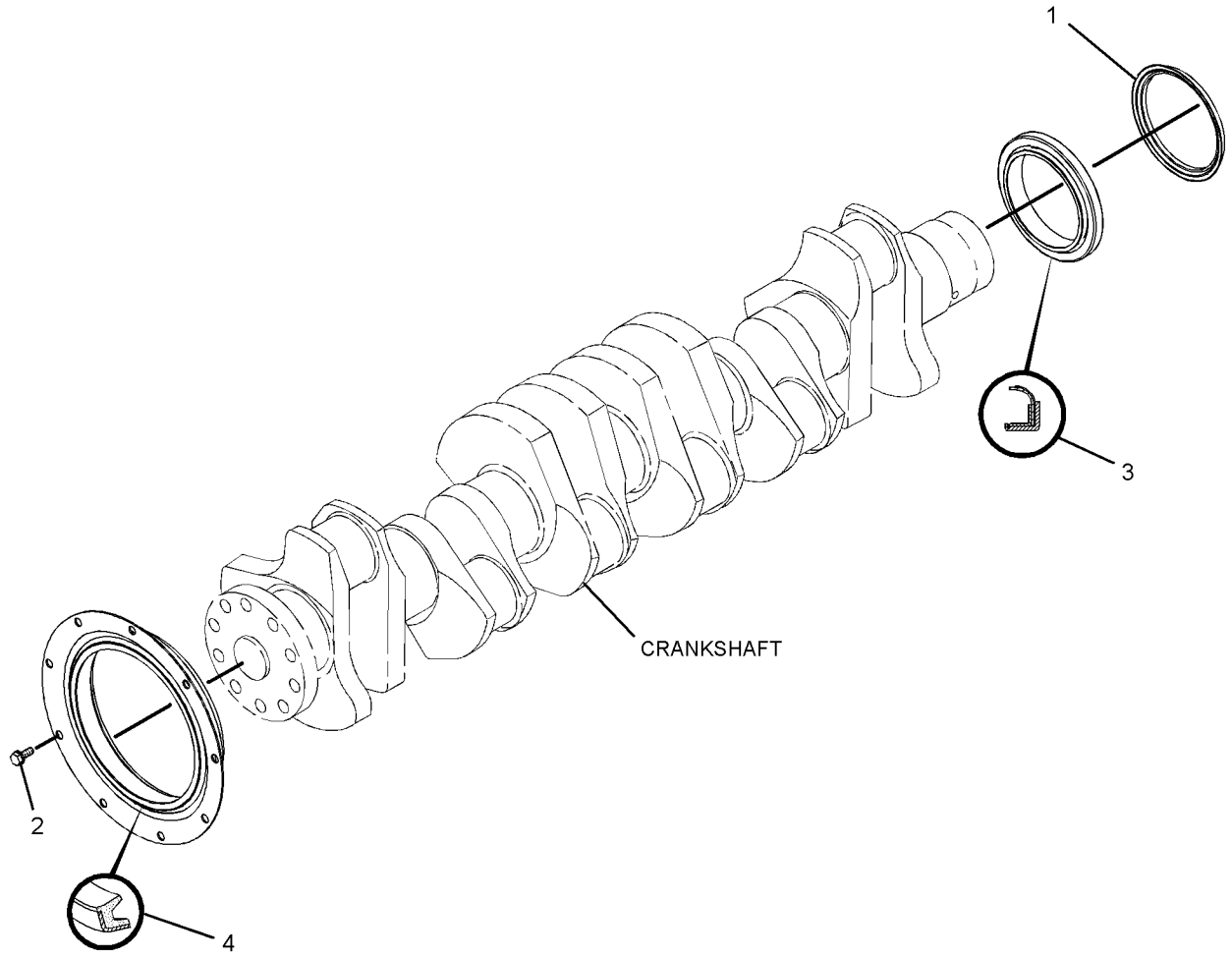

GRAPHIC #1 **<END>** g01439940

285-4074 SEAL GP-CRANKSHAFT

S/N: SMC1-UP; TXD1-UP; THX8900-UP
PART OF 440-0598 KIT-ENGINE OVERHAUL, 189-9306 SEAL GP-CRANKSHAFT
ALSO AN ATTACHMENT

SMCS-1160, 1161 **i04023103**

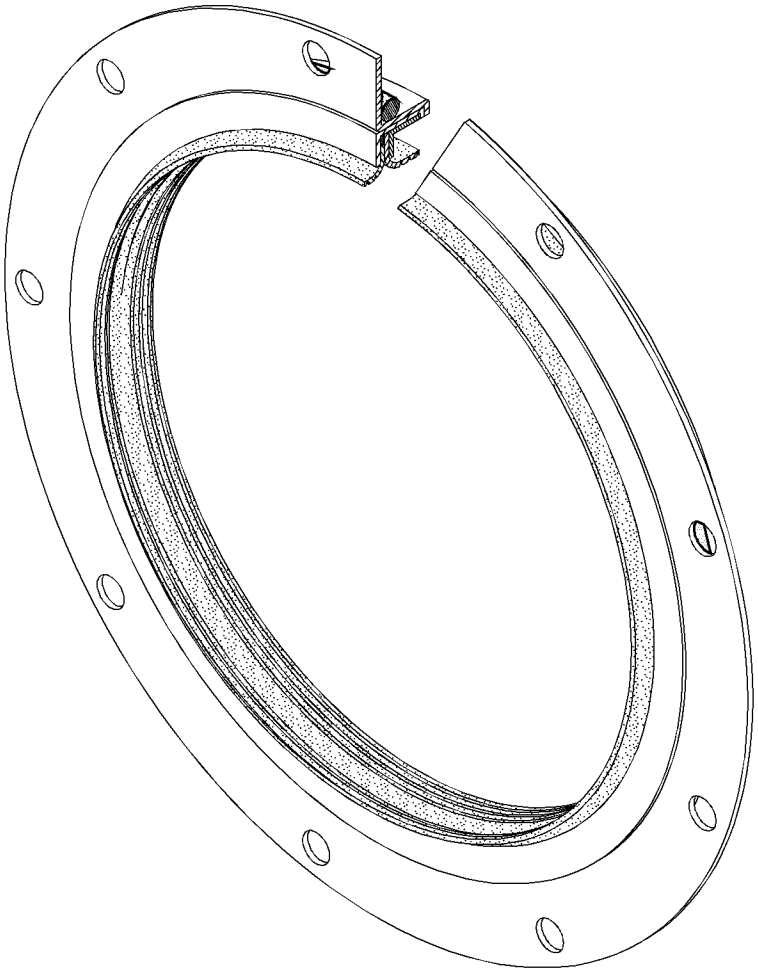

GRAPHIC #1 **<END>** g02202493

166-1790 SUPPORT GP-ENGINE

S/N: TXD1-UP; THX8900-UP
FOR USE WITH FRONT TRUNNION ENGINE SUPPORT
PART OF 282-3823, 282-3824, 282-3825, 282-3826, 301-5768 ENGINE AR, 349-3564, 349-3565, 387-8574, 387-8575, 387-8576, 387-8580, 398-6424 ENGINE AR-COMPLETE
ALSO AN ATTACHMENT

SMCS-1152, 1153, 1154

i01827674

NOTE	REF NO	GRAPHIC REF	PART NUMBER	QTY	PART NAME 1 2 3 4 5 6 (PRODUCT LEVEL)	SEE PAGE
	1	1	**169-3899**	1	SUPPORT AS-ENGINE	
M	1A	1	**8T-3490**	4	NUT-WELD (M10X1.5 THD)	
	2	1	**5P-8245**	6	WASHER-HARD (13.5X25.5X3-MM THK)	
M	3	1	**6V-8675**	6	BOLT (M12X1.75X35-MM)	

M - METRIC PART

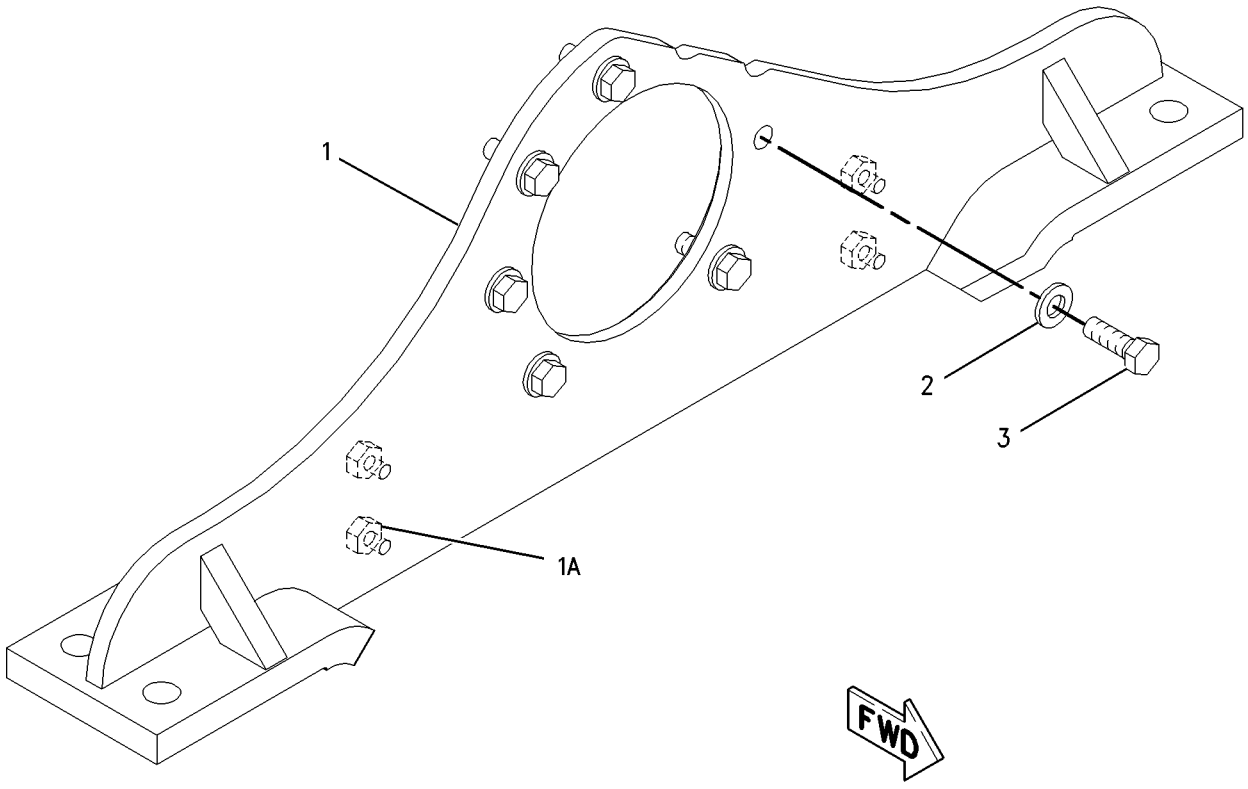

GRAPHIC #1

<END>

g00852403

166-1792 TRUNNION GP-ENGINE

S/N: TXD1-UP; THX8900-UP

PART OF 282-3823, 282-3824, 282-3825, 282-3826, 301-5768 ENGINE AR, 349-3564, 349-3565, 387-8574, 387-8575, 387-8576, 387-8580, 398-6424 ENGINE AR-COMPLETE

ALSO AN ATTACHMENT

SMCS-1153 **i01827686**

NOTE	REF NO	GRAPHIC REF	PART NUMBER	QTY	PART NAME 1 2 3 4 5 6 (PRODUCT LEVEL)	SEE PAGE
	1	1	**169-3895**	1	TRUNNION AS	
	2	1	**5P-8245**	6	WASHER-HARD (13.5X25.5X3-MM THK)	
M	3	1	**6V-5696**	6	BOLT (M12X1.75X80-MM)	

M - METRIC PART

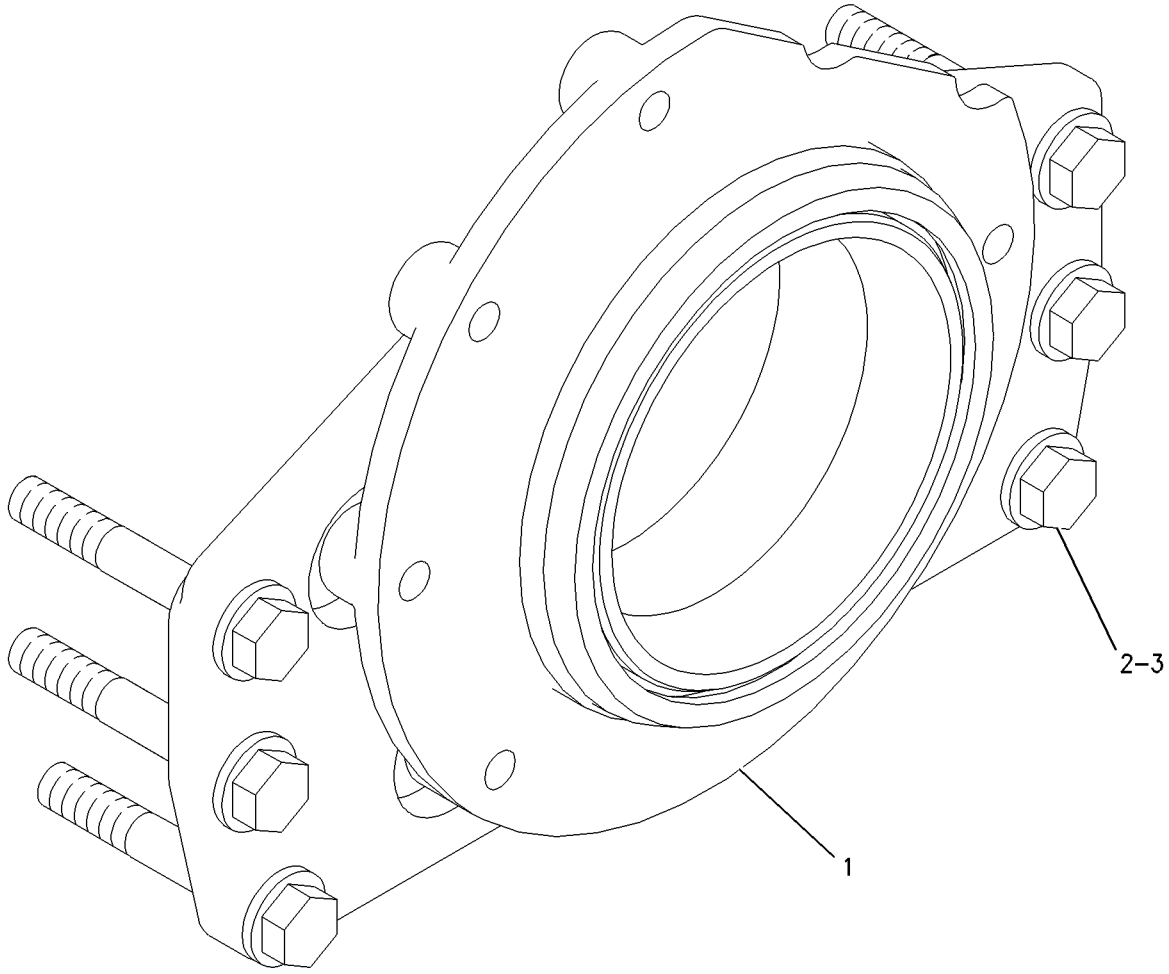

GRAPHIC #1 **<END>** g00935295

212-8926 VALVE MECHANISM GP

S/N: TXD1-UP; THX8900-UP
PART OF 242-0447 VALVE MECHANISM GP
ALSO AN ATTACHMENT

SMCS-1102, 1121, 1123

i02433895

NOTE	REF NO	GRAPHIC REF	PART NUMBER	QTY	PART NAME 1 2 3 4 5 6 (PRODUCT LEVEL)	SEE PAGE
	1	1	**163-2445**	1	SHAFT AS-ROCKER ARM	
		1	**8F-6575**	2	PLUG-CUP	
	2	1	**163-2459**	6	SPRING	
	3	1	**164-5669**	2	STAND (END)	
	4	1	**176-5913**	4	STAND (MIDDLE)	
	5	1	**176-5914**	1	STAND (OIL)	
Y	6	1	*213-9320*	6	ROCKER ARM GP (EXHAUST)	97
Y	7	1	*242-0329*	6	ROCKER ARM GP (INLET)	98
	8	1	**5P-8245**	7	WASHER-HARD (13.5X25.5X3-MM THK)	
M	9	1	**8T-0646**	7	BOLT (M12X1.75X110-MM)	

M - METRIC PART
Y - SEPARATE ILLUSTRATION

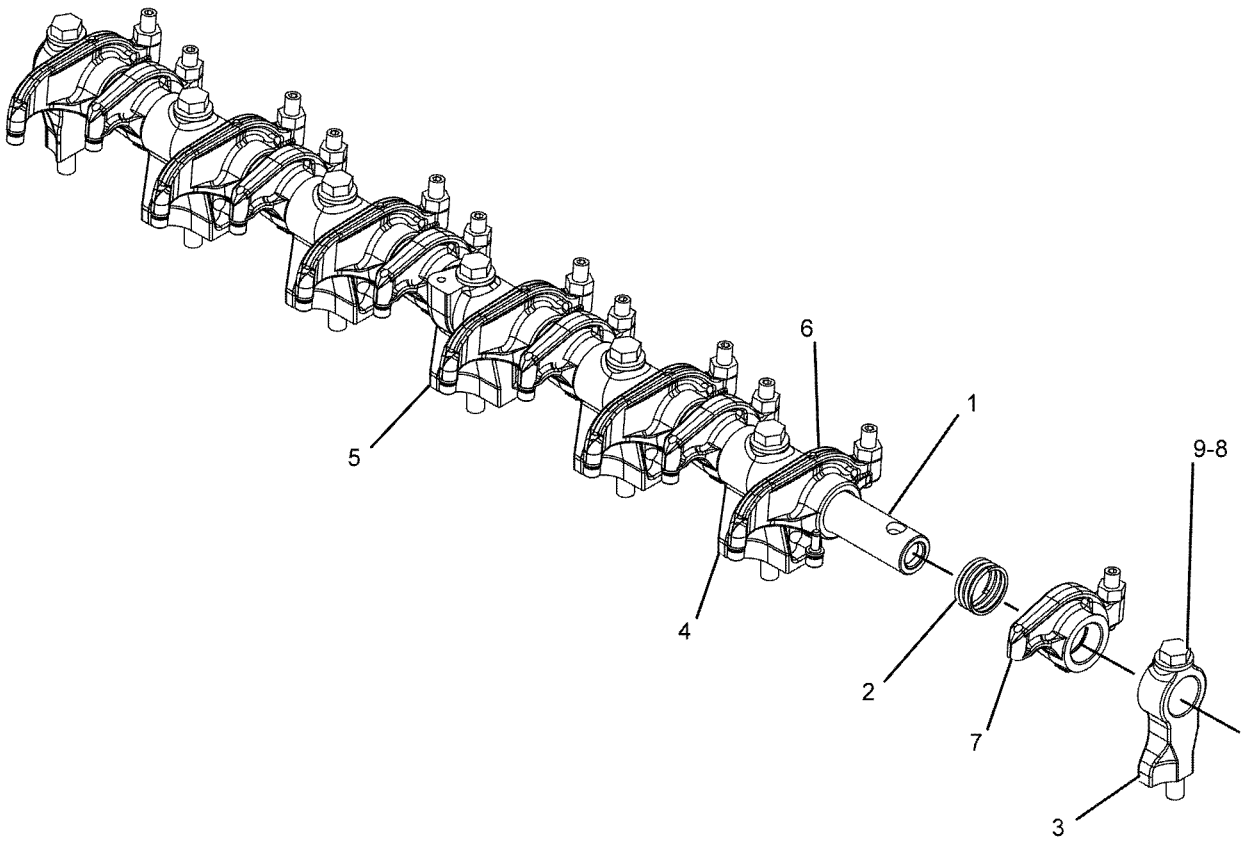

GRAPHIC #1

<END>

g01069313

242-0447 VALVE MECHANISM GP

S/N: THX8900-UP

PART OF 282-3827, 282-3828, 282-3829, 282-3830, 301-5769 ENGINE AR-CORE

ALSO AN ATTACHMENT

SMCS-1102, 1121, 1123 **i05258012**

NOTE	REF NO	GRAPHIC REF	PART NUMBER	QTY	PART NAME 1 2 3 4 5 6 (PRODUCT LEVEL)	SEE PAGE
	1	1	**304-5260**	12	SPRING-GUIDE	
	2	1	**264-6156**	12	ROD-VALVE PUSH	
	3	1	**163-2437**	12	LIFTER AS-VALVE	
Y	4	1	*212-8926*	1	VALVE MECHANISM GP	103
	5	1	**244-5891**	6	BRIDGE-VALVE	
	6	1	**255-8674**	6	BRIDGE-VALVE	

Y - SEPARATE ILLUSTRATION

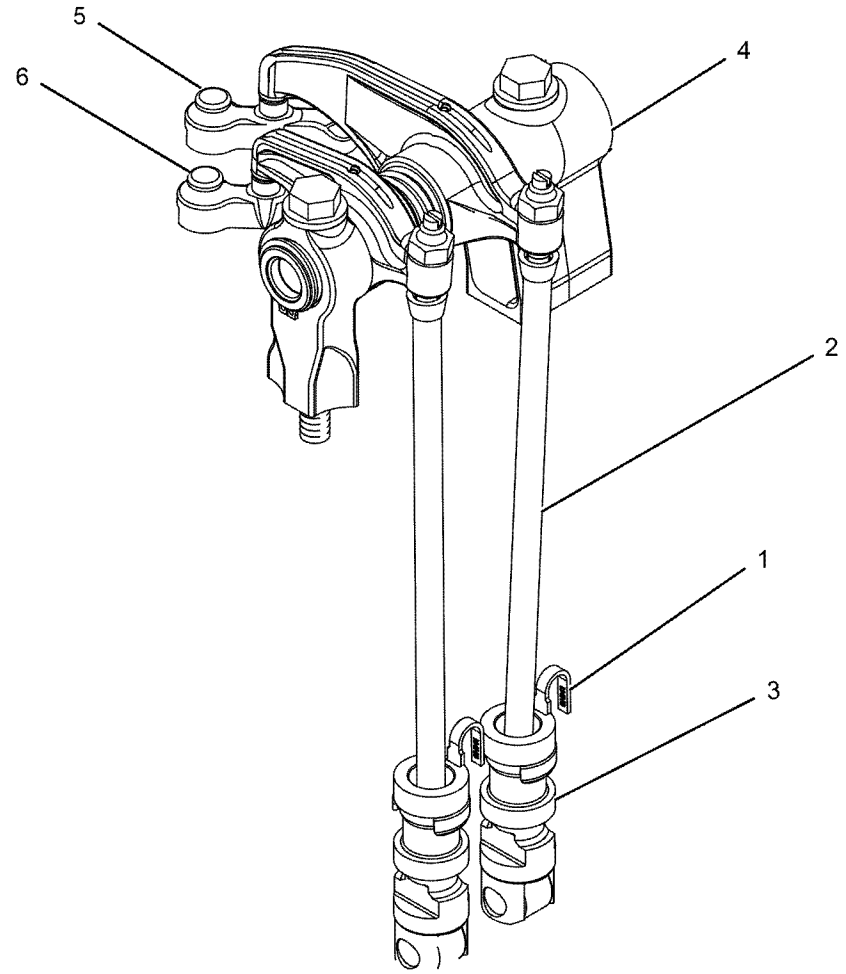

GRAPHIC #1 **<END>** g01043825

242-0447 VALVE MECHANISM GP

S/N: TXD1-UP; THX8900-UP

PART OF 282-3827, 282-3828, 282-3829, 384-8428, 387-8618, 399-3904 ENGINE AR-CORE

ALSO AN ATTACHMENT

SMCS-1102, 1121, 1123

i05258749

NOTE	REF NO	GRAPHIC REF	PART NUMBER	QTY	PART NAME 1 2 3 4 5 6 (PRODUCT LEVEL)	SEE PAGE
C	1	1	**384-4171**	12	SPRING-GUIDE	
	2	1	**264-6156**	12	ROD-VALVE PUSH	
C	3	1	**384-4172**	12	LIFTER AS-VALVE	
Y	4	1	*212-8926*	1	VALVE MECHANISM GP	103
	5	1	**244-5891**	6	BRIDGE-VALVE	
	6	1	**255-8674**	6	BRIDGE-VALVE	

C - CHANGE FROM PREVIOUS TYPE
Y - SEPARATE ILLUSTRATION

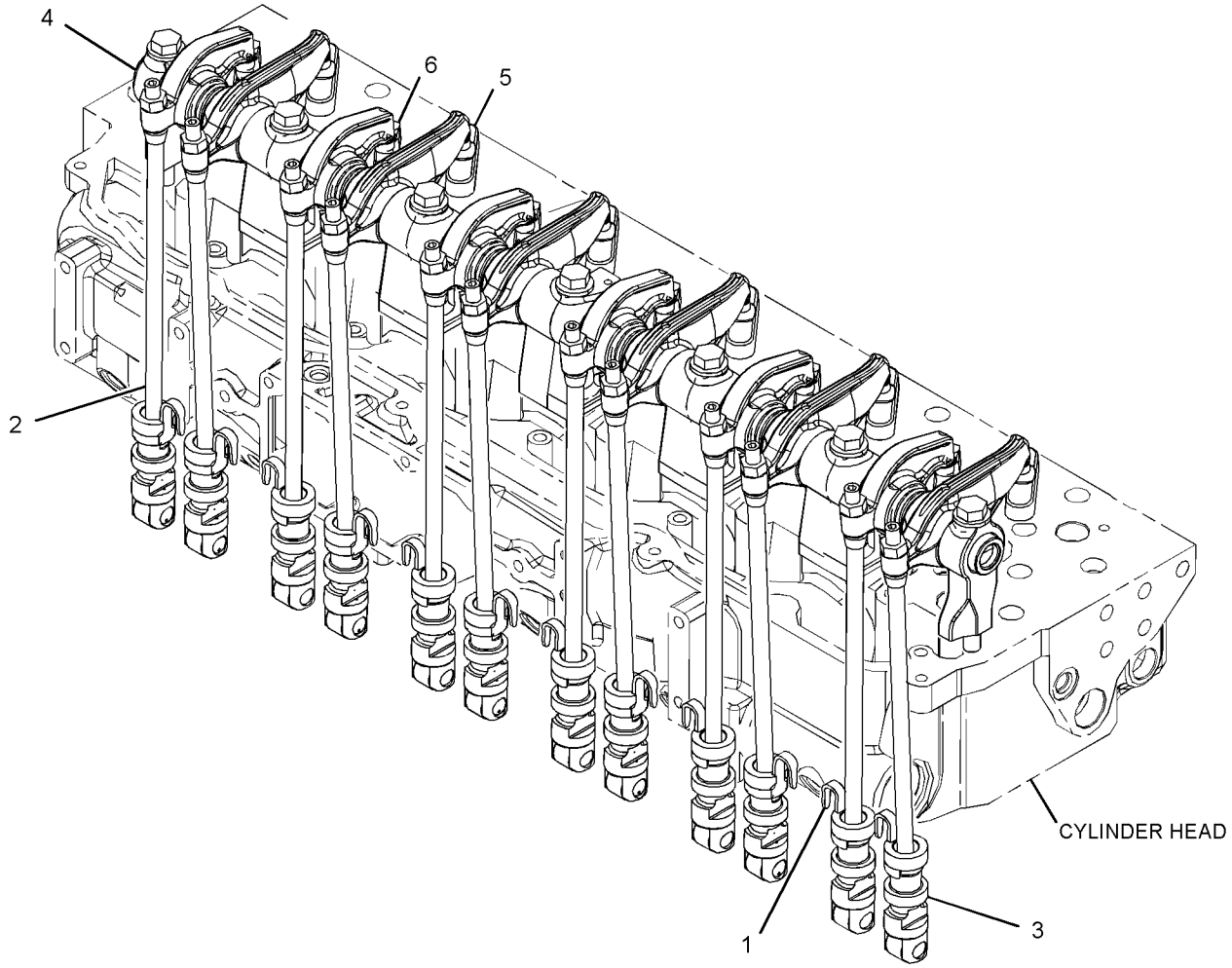

GRAPHIC #1

<END>

g03348904

224-2693 YOKE GP

S/N: SMC1-UP; GCT1-UP

PART OF 279-9549, 372-6406 INSTALLATION AR-ENGINE

SMCS-3108 **i02432576**

NOTE	REF NO	GRAPHIC REF	PART NUMBER	QTY	PART NAME 1 2 3 4 5 6 (PRODUCT LEVEL)	SEE PAGE
	1	1	**128-3341**	1	COVER	
	2	1	**224-2694**	1	FLANGE	
	3	1	**128-3813**	1	SEAL-LIP TYPE	
	4	1	**1L-4775**	1	RING-RETAINING	
	5	1	**2S-3029**	1	BALL BEARING	
M	6	1	**6V-5844**	2	BOLT (M16X2X35-MM)	
	7	1	**6V-8260**	1	SEAL-O-RING	
	8	1	**9X-8268**	2	WASHER (17.5X30X3.5-MM THK)	

M - METRIC PART

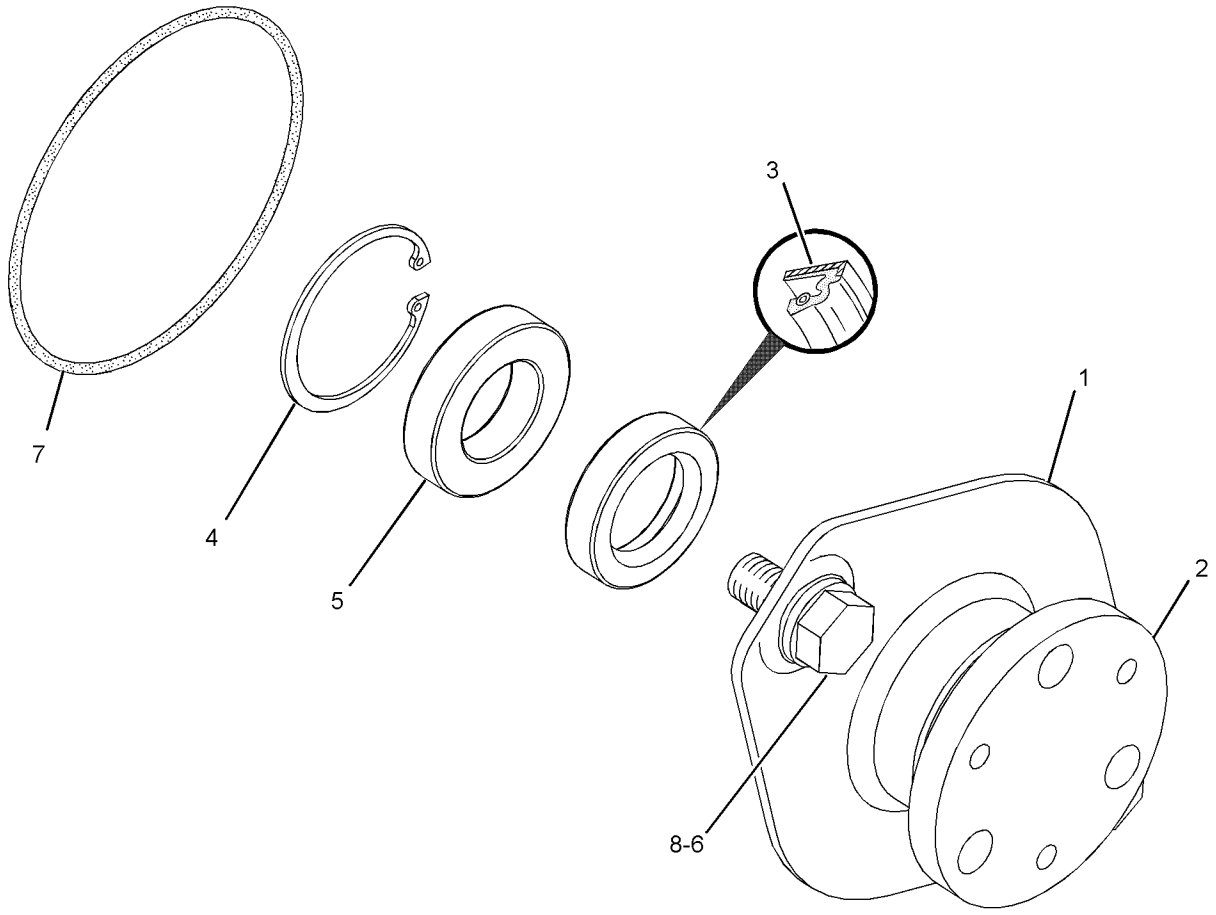

GRAPHIC #1 **<END>** g01210810

230-4118 FILLER GP-ENGINE OIL

S/N: TXD2485-UP; THX8900-UP

PART OF 282-3823, 282-3824, 282-3825, 282-3826, 301-5768 ENGINE AR, 349-3564, 349-3565, 387-8575, 387-8576, 398-6424 ENGINE AR-COMPLETE

ALSO AN ATTACHMENT

SMCS-1316 **i02090568**

NOTE	REF NO	GRAPHIC REF	PART NUMBER	QTY	PART NAME 1 2 3 4 5 6 (PRODUCT LEVEL)	SEE PAGE
	1	1	**230-4119**	1	TUBE AS	
		1	**6N-2985**	1	CAP AS-FILLER (ENGINE)	
	2	1	**061-9455**	1	SEAL-O-RING	
M	3	1	**5P-7970**	4	NUT (M8X1.25-THD)	
	4	1	**9M-1974**	4	WASHER-HARD (8.8X16X2-MM THK)	

M - METRIC PART

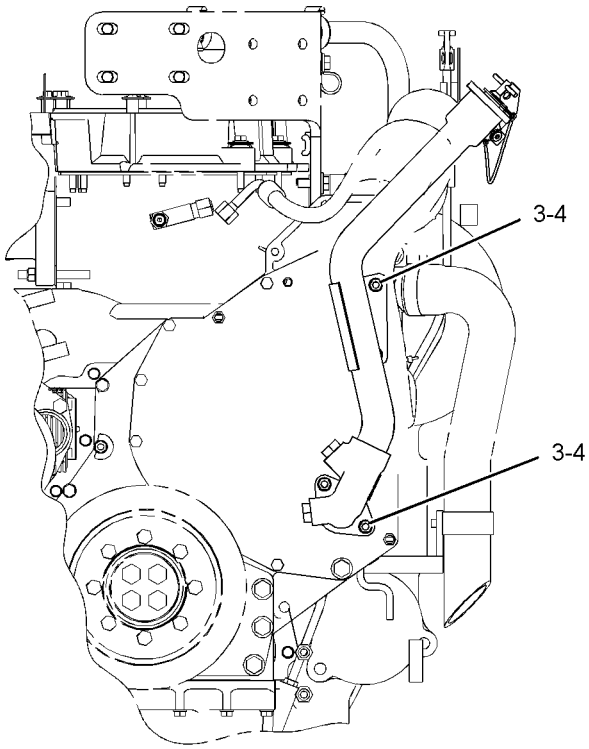

FRONT VIEW

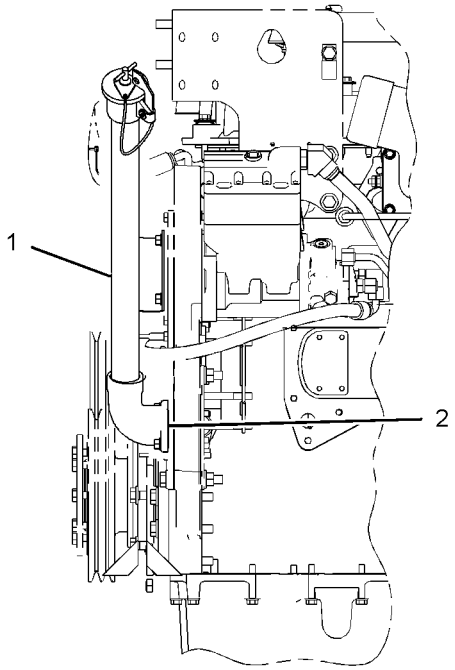

LEFT SIDE VIEW

GRAPHIC #1 **<END>** g01072234

389-8270 FILLER GP-ENGINE OIL

S/N: TXD1-UP; THX8900-UP

PART OF 282-3824, 301-5768 ENGINE AR, 387-8574, 387-8580 ENGINE AR-COMPLETE

ALSO AN ATTACHMENT

SMCS-1316 **i04909943**

NOTE	REF NO	GRAPHIC REF	PART NUMBER	QTY	PART NAME 1 2 3 4 5 6 (PRODUCT LEVEL)	SEE PAGE
	1	1	**206-5887**	1	TUBE AS	
		1	**2P-2717**	1	HASP	
		1	**4N-6045**	1	LUG	
		1	**6N-2985**	1	CAP AS-FILLER (ENGINE OIL)	
	2	1	**061-9455**	1	SEAL-O-RING	
M	3	1	**5P-7970**	4	NUT (M8X1.25-THD)	
	4	1	**9M-1974**	4	WASHER-HARD (8.8X16X2-MM THK)	

M - METRIC PART

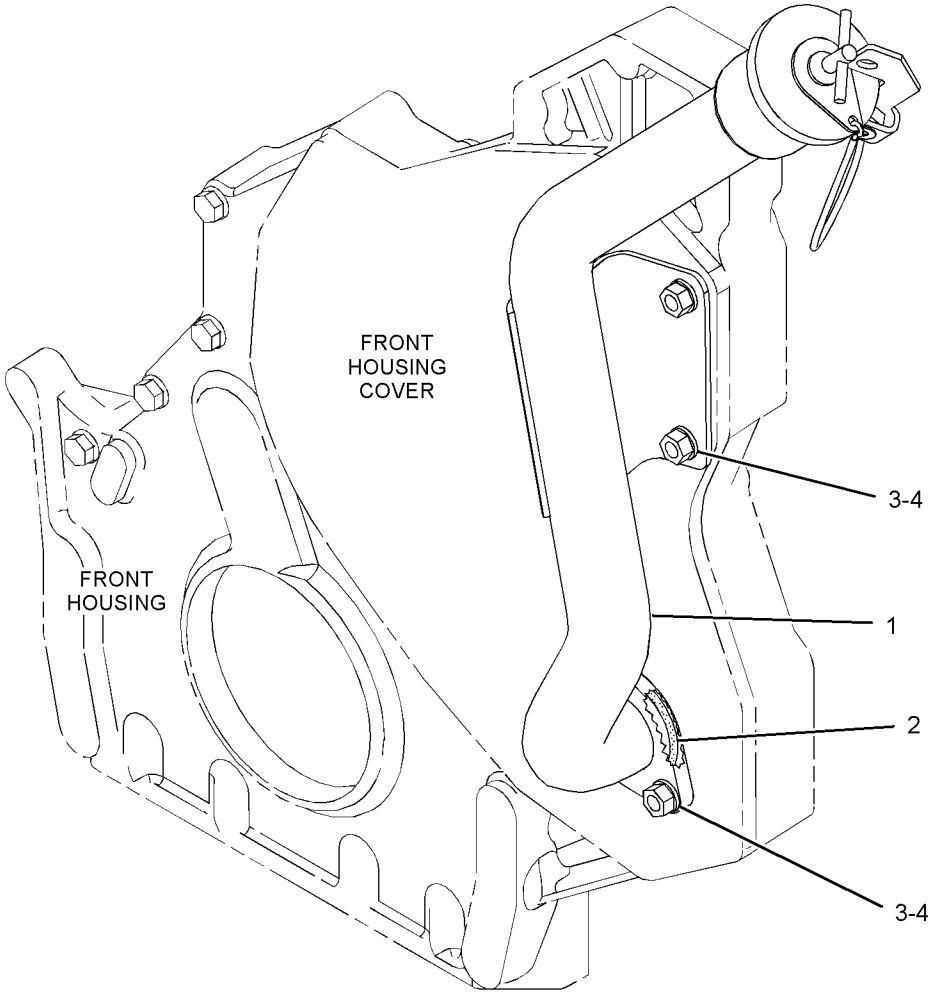

GRAPHIC #1 **<END>** g02841557

183-2097 FILTER GP-ENGINE OIL

S/N: TXD1-UP; THX8900-UP

PART OF 282-3823, 282-3824, 282-3825, 282-3826, 301-5768 ENGINE AR, 387-8574, 387-8575, 387-8576, 387-8580, 398-6424 ENGINE AR-COMPLETE

ALSO AN ATTACHMENT

SMCS-1306, 1308 **i03584124**

NOTE	REF NO	GRAPHIC REF	PART NUMBER	QTY	PART NAME 1 2 3 4 5 6 (PRODUCT LEVEL)	SEE PAGE
C	1	2	**1R-1808**	1	FILTER-ENGINE OIL (ADVANCED EFFICIENCY)	
	2	2	**7C-1493**	2	VALVE AS-BYPASS (ENGINE OIL FILTER)	
	3	2	**8C-3445**	1	CAP-DUST	
	4	2	**8T-8902**	1	TEE	
C	5	2	**209-7290**	1	GASKET	
C	6	2	**249-0159**	1	BASE AS-OIL FILTER	
C	6A	1	**2P-4304**	1	STUD-HOLLOW	
	6B	1	**230-5040**	4	PLUG	
	6C	1	**230-5935**	4	SEAL-O-RING	
	7	2	**242-3864**	2	SPRING	
M	8	2	**5P-8196**	3	PLUG	
	9	2	**5P-9617**	1	ADAPTER	
	10	2	**6V-4589**	3	SEAL-O-RING	
	11	2	**6V-5048**	1	SEAL-O-RING	
	12	2	**6V-5049**	2	SEAL-O-RING	
M	13	1	**6V-5218**	2	BOLT (M8X1.25X35-MM)	
M	14	1	**6V-5219**	8	BOLT (M8X1.25X40-MM)	
M	15	1	**6V-5220**	2	BOLT (M8X1.25X65-MM)	
	16	2	**6V-8077**	1	ELBOW	
	17	2	**6V-8723**	1	ELBOW	
	18	2	**8C-3446**	1	VALVE-FLUID SAMPLING (ENGINE OIL)	
	19	2	**8L-2779**	2	SEAL-O-RING	
	20	2	**8L-2786**	2	SEAL-O-RING	
	21	1	**9M-1974**	12	WASHER-HARD (8.8X16X2-MM THK)	
	22	2	**9S-4185**	1	PLUG-O-RING	

C - CHANGE FROM PREVIOUS TYPE
M - METRIC PART

183-2097 **FILTER GP-ENGINE OIL (*contd.*)** **i03584124**

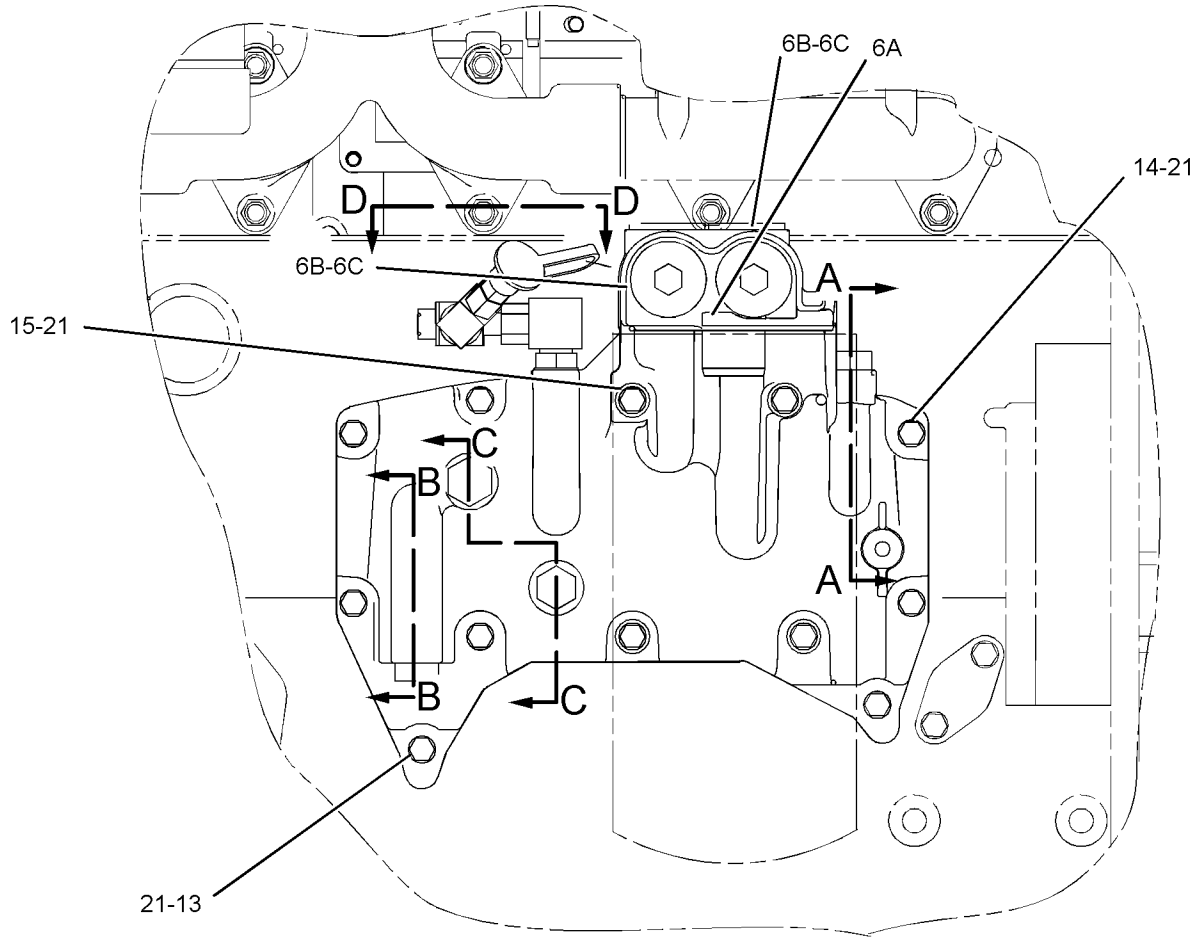

RIGHT SIDE VIEW

GRAPHIC #1 g01912556

183-2097 **FILTER GP-ENGINE OIL (*contd.*)** **i03584124**

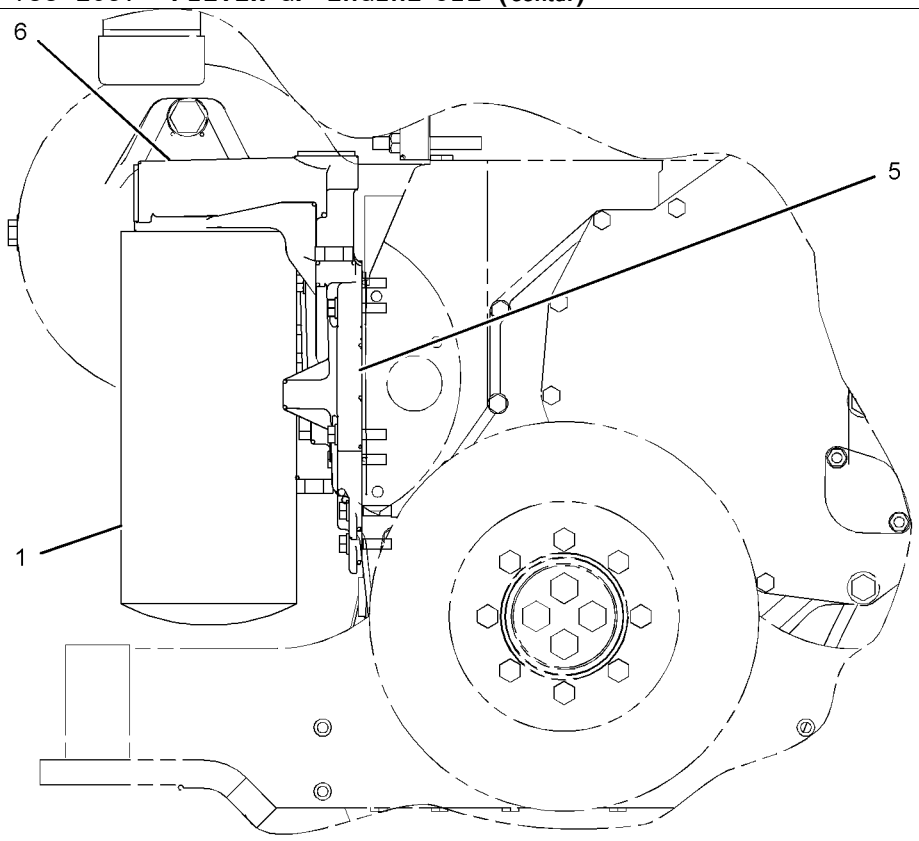

FRONT VIEW

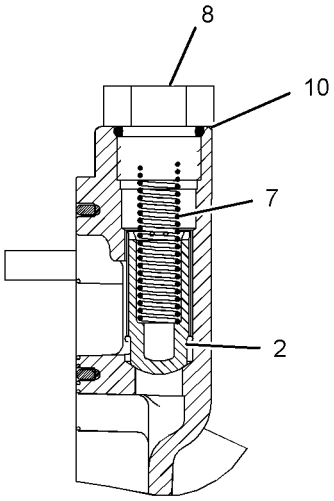

SECTION A-A

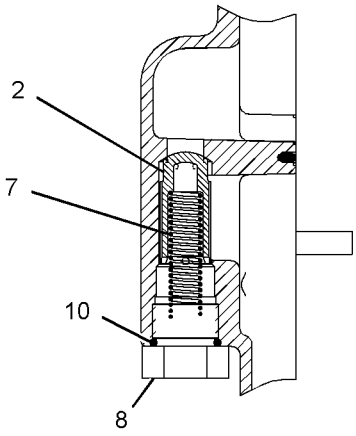

SECTION B-B

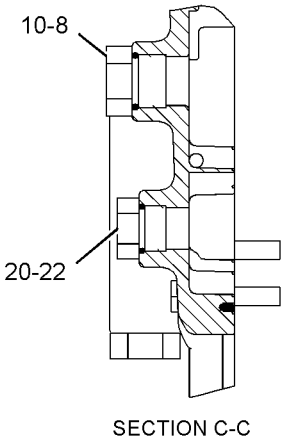

SECTION C-C

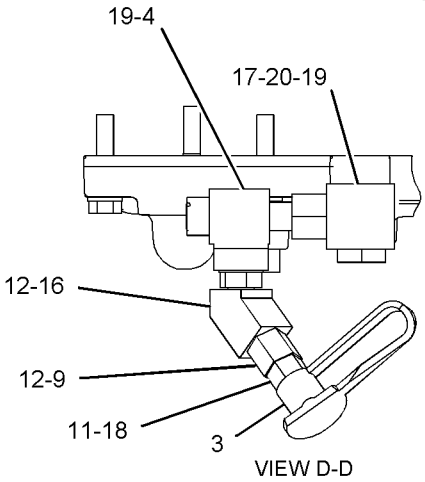

VIEW D-D

GRAPHIC #2 **<END>** g01062704

183-2097 FILTER GP-ENGINE OIL

S/N: THX8900-UP

PART OF 282-3823, 282-3824, 282-3825, 282-3826, 301-5768 ENGINE AR, 349-3564, 349-3565, 387-8575 ENGINE AR-COMPLETE

ALSO AN ATTACHMENT

SMCS-1306, 1308 **i04908730**

NOTE	REF NO	GRAPHIC REF	PART NUMBER	QTY	PART NAME 1 2 3 4 5 6 (PRODUCT LEVEL)	SEE PAGE
	1	2	**7C-1493**	2	VALVE AS-BYPASS (ENGINE OIL FILTER)	
	2	2	**209-7290**	1	GASKET	
	3	2	*352-6498*	1	TEE AS	
		2	**8T-8902**	1	TEE	
		2	**228-7089**	1	SEAL-O-RING	
C	4	2	**352-8839**	1	BASE AS-OIL FILTER (ENGINE)	
		2	**2P-4304**	1	STUD-HOLLOW	
		2	*347-4428*	4	PLUG AS	
					(EACH INCLUDES)	
		2	**230-5040**	1	PLUG	
		2	**238-5085**	1	SEAL-O-RING	
	5	2	**1R-1808**	1	FILTER-ENGINE OIL (ADVANCED EFFICIENCY)	
	6	2	**242-3864**	2	SPRING	
C	7	2	*398-5596*	1	PLUG AS	
		2	**360-3680**	1	PLUG	
		2	**238-5080**	1	SEAL-O-RING	
C	8	2	*398-5601*	3	PLUG AS	
					(EACH INCLUDES)	
		2	**360-3681**	1	PLUG-O-RING	
		2	**238-5081**	1	SEAL-O-RING	
	9	2	*315-9840*	1	ELBOW AS	
		2	**6V-8077**	1	ELBOW	
		2	**214-7568**	1	SEAL-O-RING	
	10	2	*319-6208*	1	ADAPTER AS	
		2	**5P-9617**	1	ADAPTER	
		2	**214-7568**	1	SEAL-O-RING	
	11	2	**321-8649**	1	VALVE AS-FLUID SAMPLING (ENGINE OIL)	
		2	**8C-3446**	1	VALVE-FLUID SAMPLING (ENGINE OIL)	
		2	**214-7566**	1	SEAL-O-RING	
C	12	2	*329-5511*	1	ELBOW AS	
		2	**6V-8723**	1	ELBOW	
		2	**228-7089**	1	SEAL-O-RING	
		2	**238-5080**	1	SEAL-O-RING	
M	13	1	**6V-5218**	2	BOLT (M8X1.25X35-MM)	
M	14	1	**6V-5219**	8	BOLT (M8X1.25X40-MM)	
M	15	1	**6V-5220**	2	BOLT (M8X1.25X65-MM)	
	16	2	**8C-3445**	1	CAP-DUST	
	17	1	**9M-1974**	12	WASHER-HARD (8.8X16X2-MM THK)	

C - CHANGE FROM PREVIOUS TYPE
M - METRIC PART

183-2097 **FILTER GP-ENGINE OIL (*contd.*)** **i04908730**

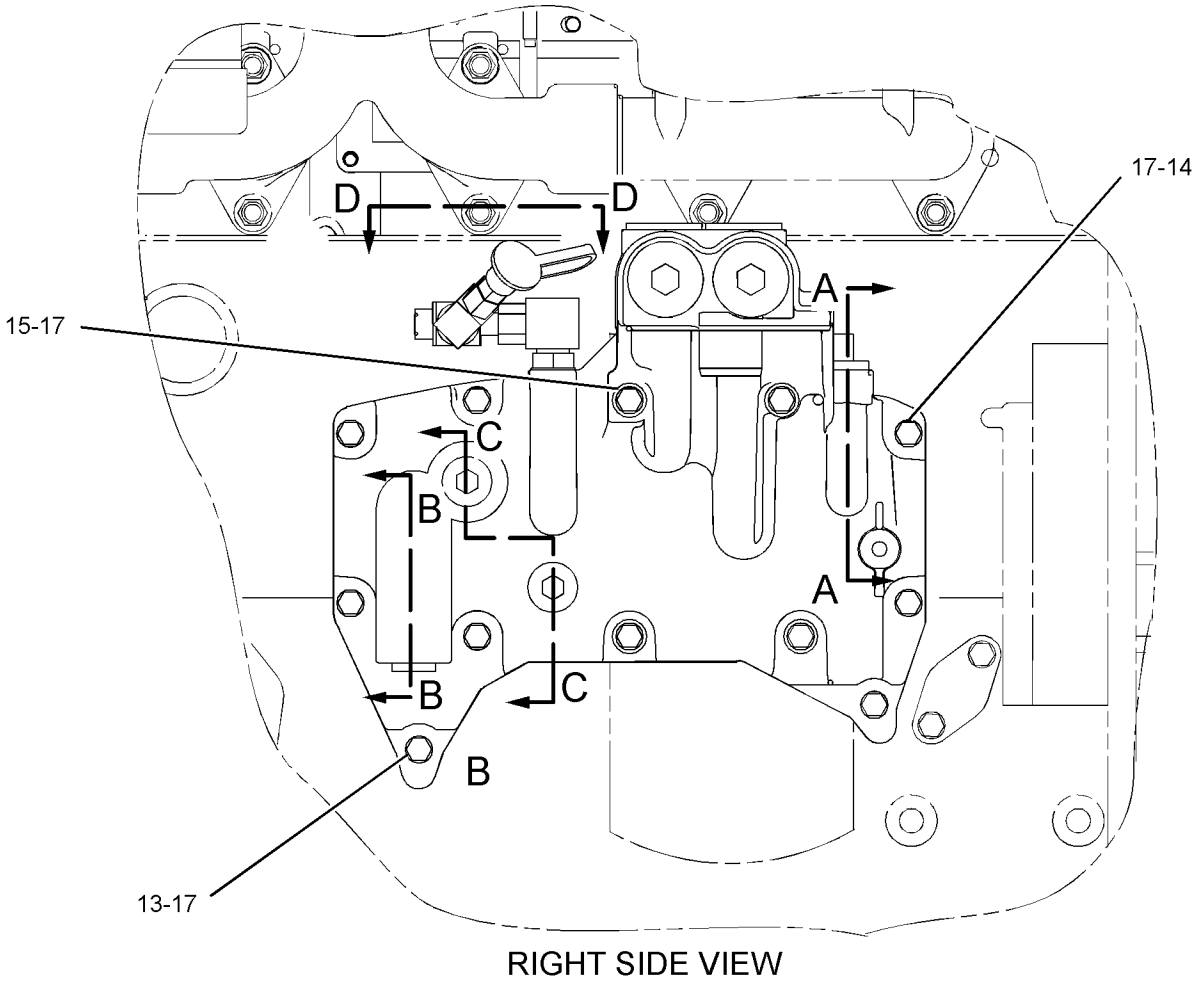

RIGHT SIDE VIEW

GRAPHIC #1 g02750116

183-2097 **FILTER GP-ENGINE OIL (*contd.*)** **i04908730**

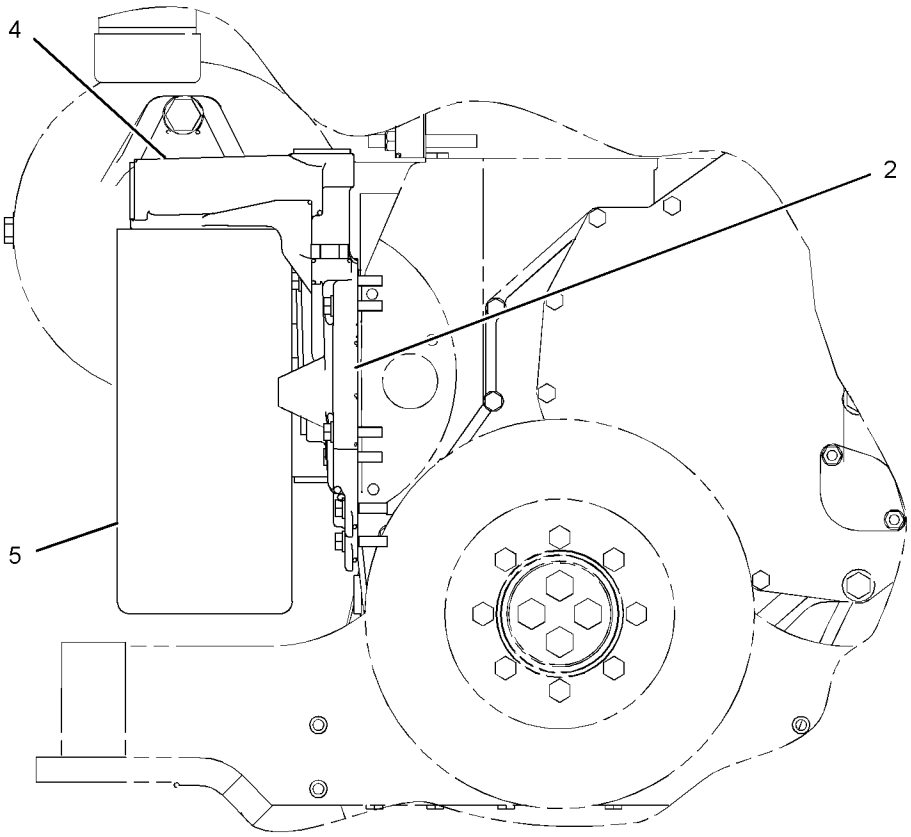

FRONT VIEW

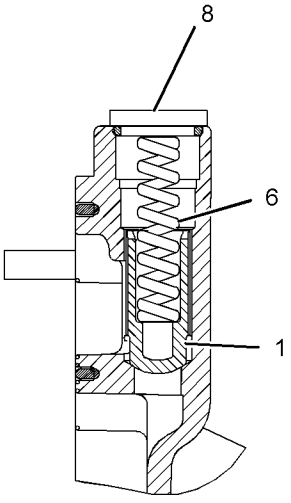

SECTION A-A

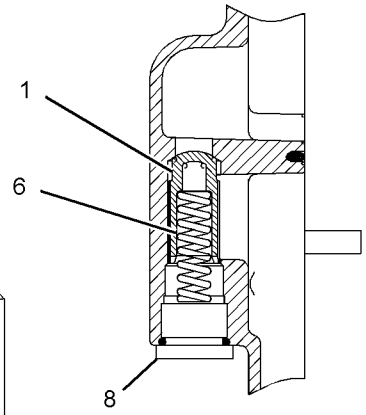

SECTION B-B

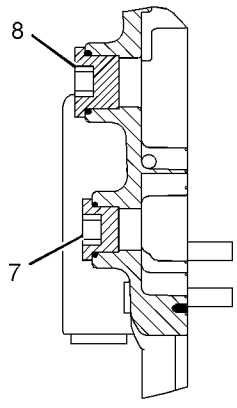

SECTION C-C

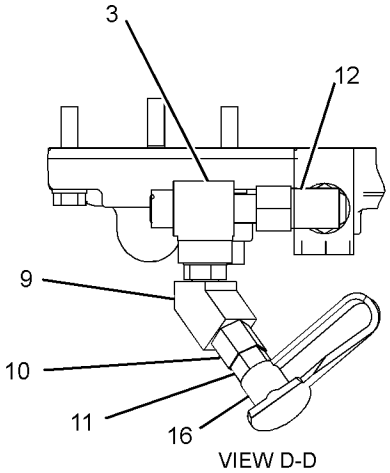

VIEW D-D

GRAPHIC #2 **<END>** g02750118

230-5585 FUMES DISPOSAL GP–CRANKCASE

S/N: SMC1-UP; GCT1-UP

PART OF 279-9549, 372-6406 INSTALLATION AR-ENGINE

SMCS-1317 **i02750861**

NOTE	REF NO	GRAPHIC REF	PART NUMBER	QTY	PART NAME 1 2 3 4 5 6 (PRODUCT LEVEL)	SEE PAGE
	1	1	**2S-3440**	1	CLAMP-HOSE	
	2	1	**9M-0164**	1	CLAMP-HOSE	
	3	1	**184-7211**	2	CLIP	
	4	1	**230-9796**	1	DUCT AS	
	5	1	**6V-1889**	3	CLIP	
	6	1	**8T-4121**	5	WASHER-HARD (11X21X2.5-MM THK)	
M	7	1	**8T-4133**	2	NUT (M10X1.5-THD)	
M	8	1	**8T-4136**	1	BOLT (M10X1.5X25-MM)	
M	9	1	**8T-4195**	1	BOLT (M10X1.5X30-MM)	

M - METRIC PART

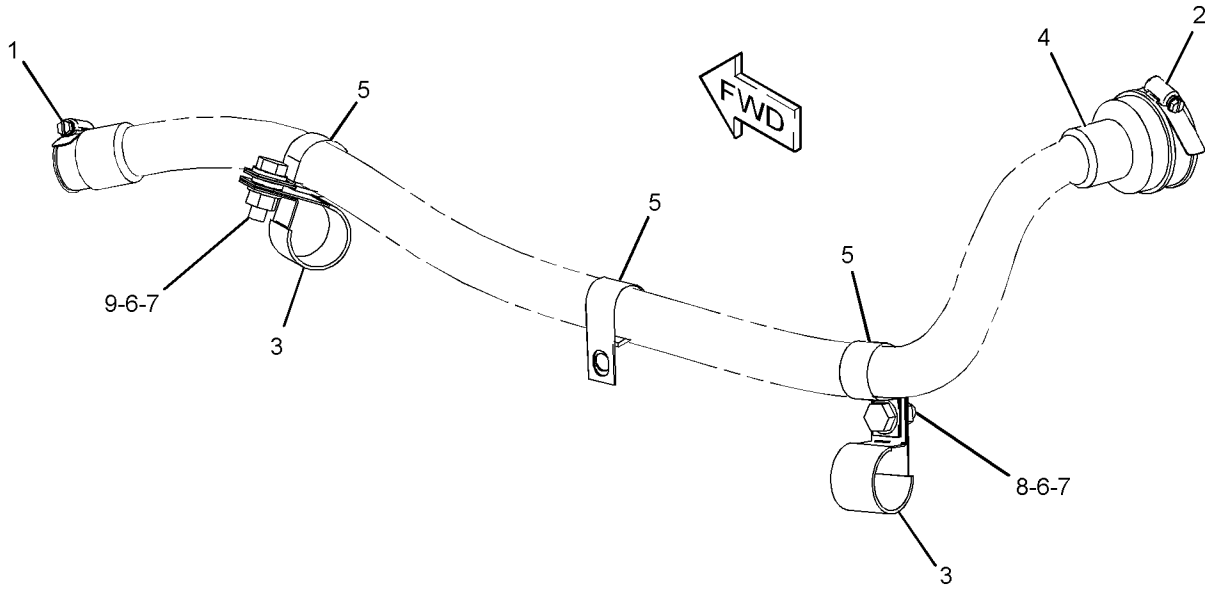

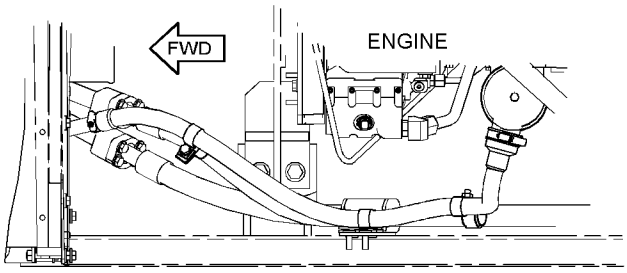

TOP VIEW

GRAPHIC #1 **<END>** g01353930

241-3719 FUMES DISPOSAL GP

S/N: TXD1-UP; THX8900-UP

PART OF 282-3823, 282-3824, 282-3825, 282-3826, 301-5768 ENGINE AR, 349-3564, 349-3565, 387-8574, 387-8575, 387-8576, 387-8580, 398-6424 ENGINE AR-COMPLETE

ALSO AN ATTACHMENT

SMCS-1317 **i04561149**

NOTE	REF NO	GRAPHIC REF	PART NUMBER	QTY	PART NAME 1 2 3 4 5 6 (PRODUCT LEVEL)	SEE PAGE
	1	1	**9M-7958**	2	CLAMP-HOSE	
	2	1	*384-9220*	1	CONNECTOR AS	
		1	**069-4269**	1	ADAPTER	
		1	**238-5082**	1	SEAL-O-RING	
C	3	1	**295-1771**	1	HOSE-FUMES DISPOSAL (CRANKCASE)	
	4	1	**4D-7388**	1	CLIP	
M	5	1	**6V-4248**	1	BOLT (M10X1.5X25-MM)	
	6	1	**6V-5839**	1	WASHER (11X21X2.5-MM THK)	

C - CHANGE FROM PREVIOUS TYPE
M - METRIC PART

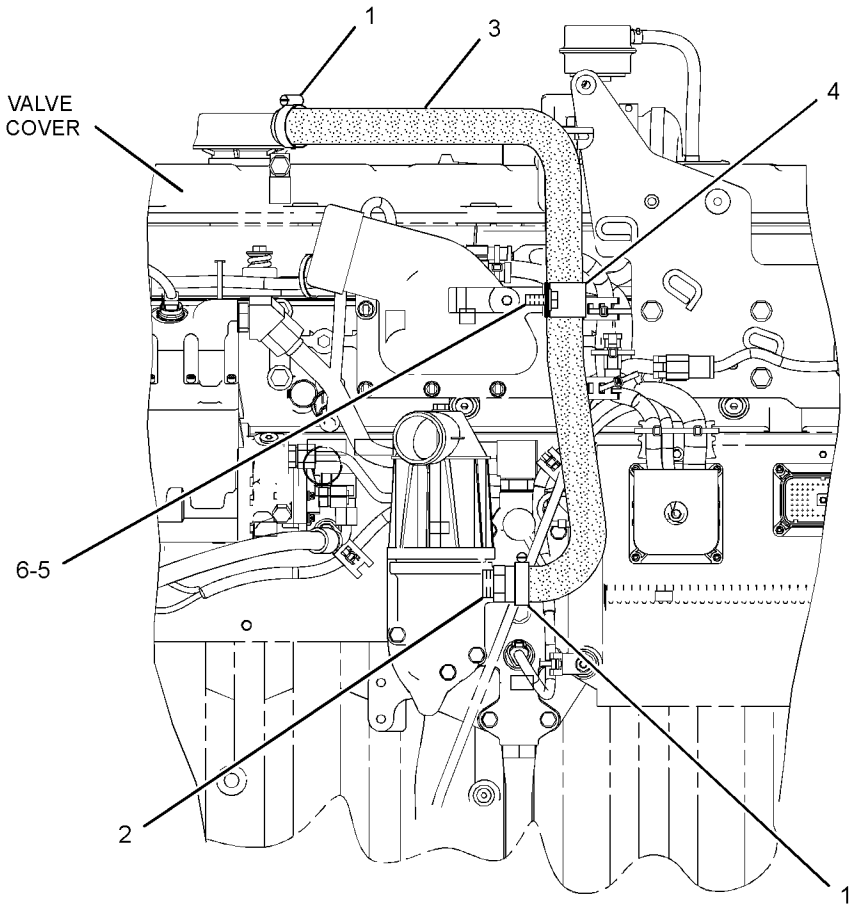

LEFT SIDE VIEW OF ENGINE

GRAPHIC #1 **<END>** g02084753

246-0601 GAUGE GP-OIL LEVEL (DIPSTICK)—ENGINE

S/N: TXD1-UP; THX8900-UP

PART OF 282-3823, 282-3824, 282-3825, 282-3826, 301-5768 ENGINE AR, 349-3564, 349-3565, 387-8574, 387-8575, 387-8576, 387-8580, 398-6424 ENGINE AR-COMPLETE

ALSO AN ATTACHMENT

SMCS-1326 **i02241489**

NOTE	REF NO	GRAPHIC REF	PART NUMBER	QTY	PART NAME 1 2 3 4 5 6 (PRODUCT LEVEL)	SEE PAGE
	1	1	**261-3162**	1	GAUGE-OIL LEVEL (DIPSTICK) (ENGINE)	
	2	1	**246-7899**	1	TUBE AS	

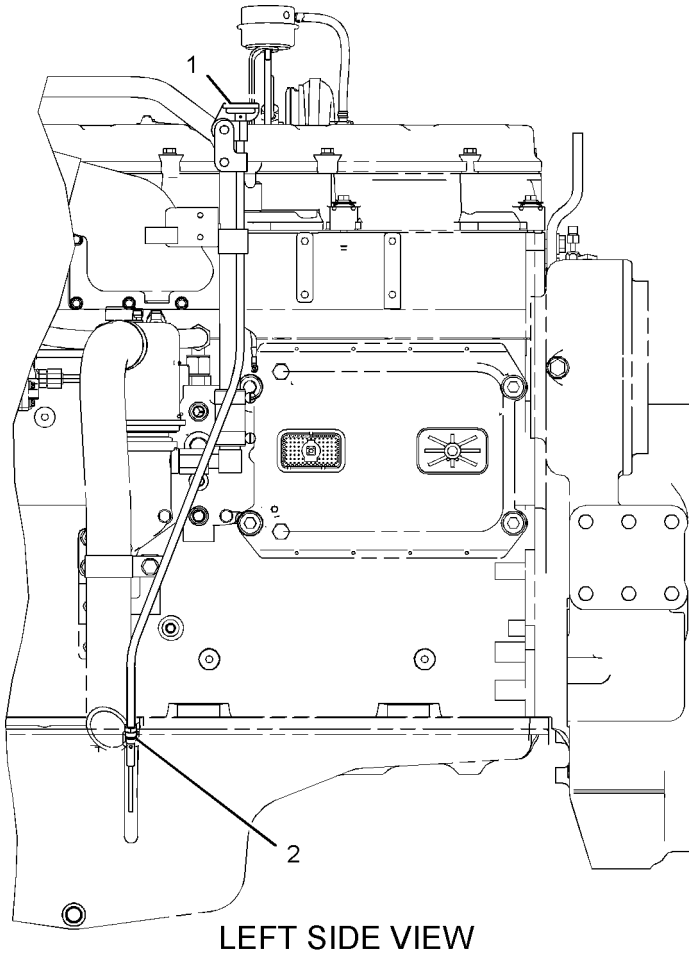

LEFT SIDE VIEW

GRAPHIC #1 **<END>** g01101373

198-1319 LINES GP-ENGINE OIL

S/N: TXD1-UP; THX8900-UP
FRONT SUMP
PART OF 282-3823, 282-3824, 282-3825, 282-3826, 301-5768 ENGINE AR, 349-3564, 349-3565, 387-8574, 387-8575, 387-8576, 387-8580, 398-6424 ENGINE AR-COMPLETE
ALSO AN ATTACHMENT

SMCS-1307 **i04897730**

NOTE	REF NO	GRAPHIC REF	PART NUMBER	QTY	PART NAME 1 2 3 4 5 6 (PRODUCT LEVEL)	SEE PAGE
	1	1	**9M-1974**	6	WASHER-HARD (8.8X16X2-MM THK)	
C	2	1	**234-0203**	1	ELBOW-OUTLET	
	3	1	**195-0452**	1	GASKET	
	4	1	**213-8516**	1	TUBE AS	
C	5	1	**033-6034**	1	SEAL-O-RING	
M	6	1	**6V-3940**	3	BOLT (M8X1.25X25-MM)	
M	7	1	**8T-0292**	1	BOLT (M8X1.25X90-MM)	
C	8	1	**5P-7530**	1	SEAL-O-RING	
M	9	1	**6V-5217**	2	BOLT (M8X1.25X20-MM)	

C - CHANGE FROM PREVIOUS TYPE
M - METRIC PART

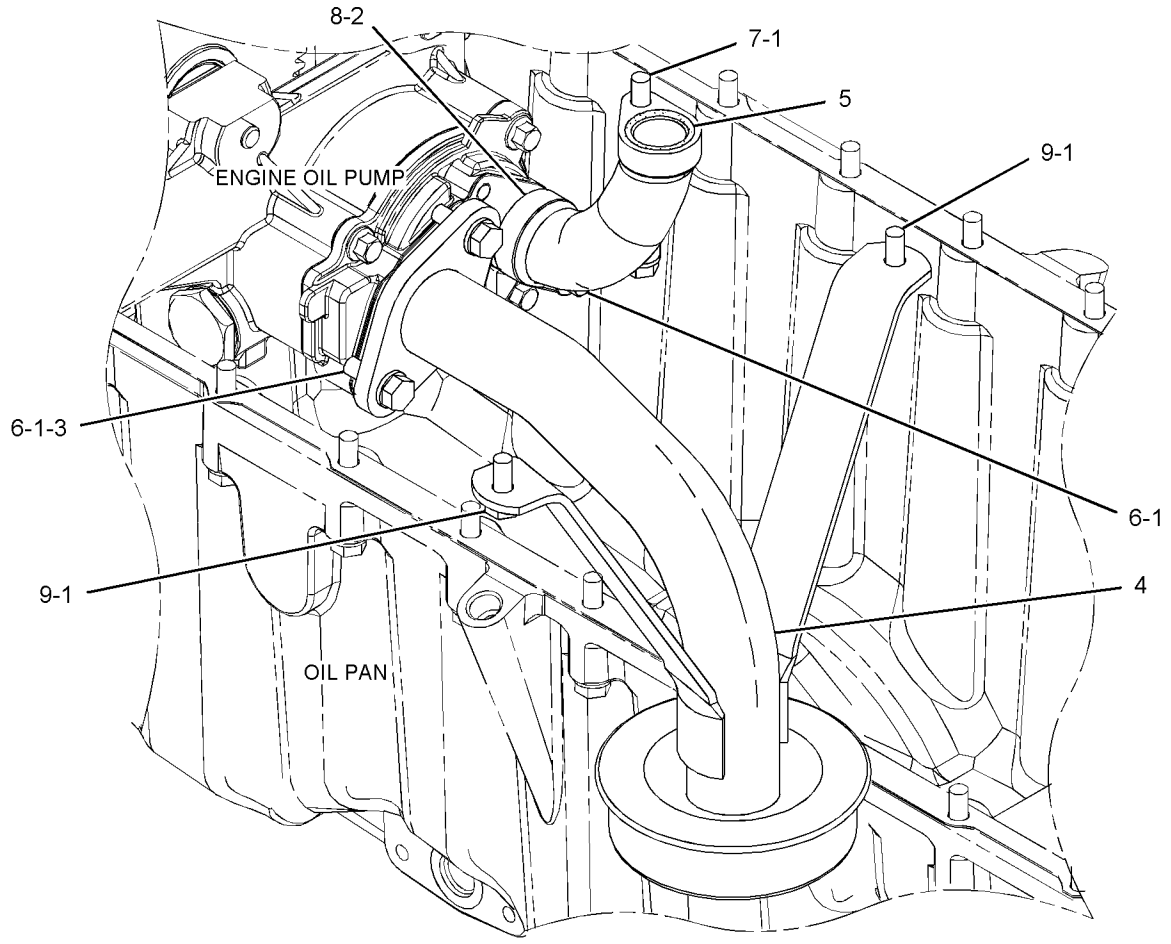

GRAPHIC #1 **<END>** g03048956

224-0821 LINES GP-OIL SUPPLY

S/N: SMC1-UP; GCT1-UP
PART OF 282-2870 DRIVE AR-FAN, 282-2871 ENGINE AR
AN ATTACHMENT

SMCS-1307 **i04041858**

NOTE	REF NO	GRAPHIC REF	PART NUMBER	QTY	PART NAME 1 2 3 4 5 6 (PRODUCT LEVEL)	SEE PAGE
	2	1	**218-4160**	1	BRACKET AS	
	3	1	*148-8369*	1	ELBOW AS	
		1	**6V-8628**	1	ELBOW	
		1	**3J-7354**	1	SEAL-O-RING	
		1	**4J-5477**	1	SEAL-O-RING	
C	4	1	*148-8378*	1	ELBOW AS	
		1	**6V-8724**	1	ELBOW	
		1	**3J-1907**	1	SEAL-O-RING	
		1	**6V-8397**	1	SEAL-O-RING	
	5	1	*148-8435*	1	TEE AS	
		1	**6V-8781**	1	TEE	
		1	**3J-1907**	1	SEAL-O-RING	
		1	**6V-8397**	2	SEAL-O-RING	
	7	1	**187-3974**	1	TUBE AS	
	8	1	**189-5576**	1	TUBE AS	
	9	1	**189-5577**	1	TUBE AS	
Y	10	1	**192-0729**	1	MANIFOLD GP-CONTROL (DEMAND FAN)	526
	11	1	**235-6529**	1	BRACKET AS	
I	12	1	**236-6742**	1	HOSE AS	
I	13	1	**236-6743**	1	HOSE AS	
C	14	1	*148-8318*	1	CONNECTOR AS	
		1	**6V-8634**	1	CONNECTOR	
		1	**3K-0360**	1	SEAL-O-RING	
		1	**6V-8397**	1	SEAL-O-RING	
	15	1	*148-8325*	1	CONNECTOR AS	
		1	**6V-8641**	1	CONNECTOR	
		1	**3J-1907**	1	SEAL-O-RING	
		1	**4J-5477**	1	SEAL-O-RING	
	16	1	*148-8336*	1	CONNECTOR AS	
		1	**6V-8636**	1	CONNECTOR	
		1	**3J-1907**	1	SEAL-O-RING	
		1	**6V-8397**	1	SEAL-O-RING	
	17	1	*148-8340*	1	CONNECTOR AS	
		1	**6V-8639**	1	CONNECTOR	
		1	**3K-0360**	1	SEAL-O-RING	
		1	**6V-8398**	1	SEAL-O-RING	
	18	1	*148-8354*	1	ELBOW AS	
		1	**6V-9002**	1	ELBOW	
		1	**6V-8398**	1	SEAL-O-RING	
		1	**3K-0360**	1	SEAL-O-RING	
M	20	1	**8T-4137**	1	BOLT (M10X1.5X20-MM)	
	22	1	**5P-4295**	1	CLIP	
	23	1	**6V-5049**	1	SEAL-O-RING	
	24	1	**7W-7381**	1	FITTING-OUTLET	
	25	1	**8M-2773**	3	CLIP	
C	26	1	**8T-4121**	6	WASHER-HARD (11X21X2.5-MM THK)	
	27	1	*148-8374*	1	ELBOW AS	
		1	**6V-8723**	1	ELBOW	
		1	**3K-0360**	1	SEAL-O-RING	
		1	**6V-8397**	1	SEAL-O-RING	
	28	1	**1S-6420**	1	CLIP	
M	30	1	**8T-4195**	2	BOLT (M10X1.5X30-MM)	
M	33	1	**8T-6466**	2	BOLT (M10X1.5X60-MM)	
	34	1	**136-1122**	1	BUSHING	
CM	35	1	**8T-4136**	1	BOLT (M10X1.5X25-MM)	

C - CHANGE FROM PREVIOUS TYPE
I - REFER TO HYDRAULIC INFORMATION SYSTEM
M - METRIC PART
Y - SEPARATE ILLUSTRATION

224-0821 **LINES GP-OIL SUPPLY (*contd.*)** **i04041858**

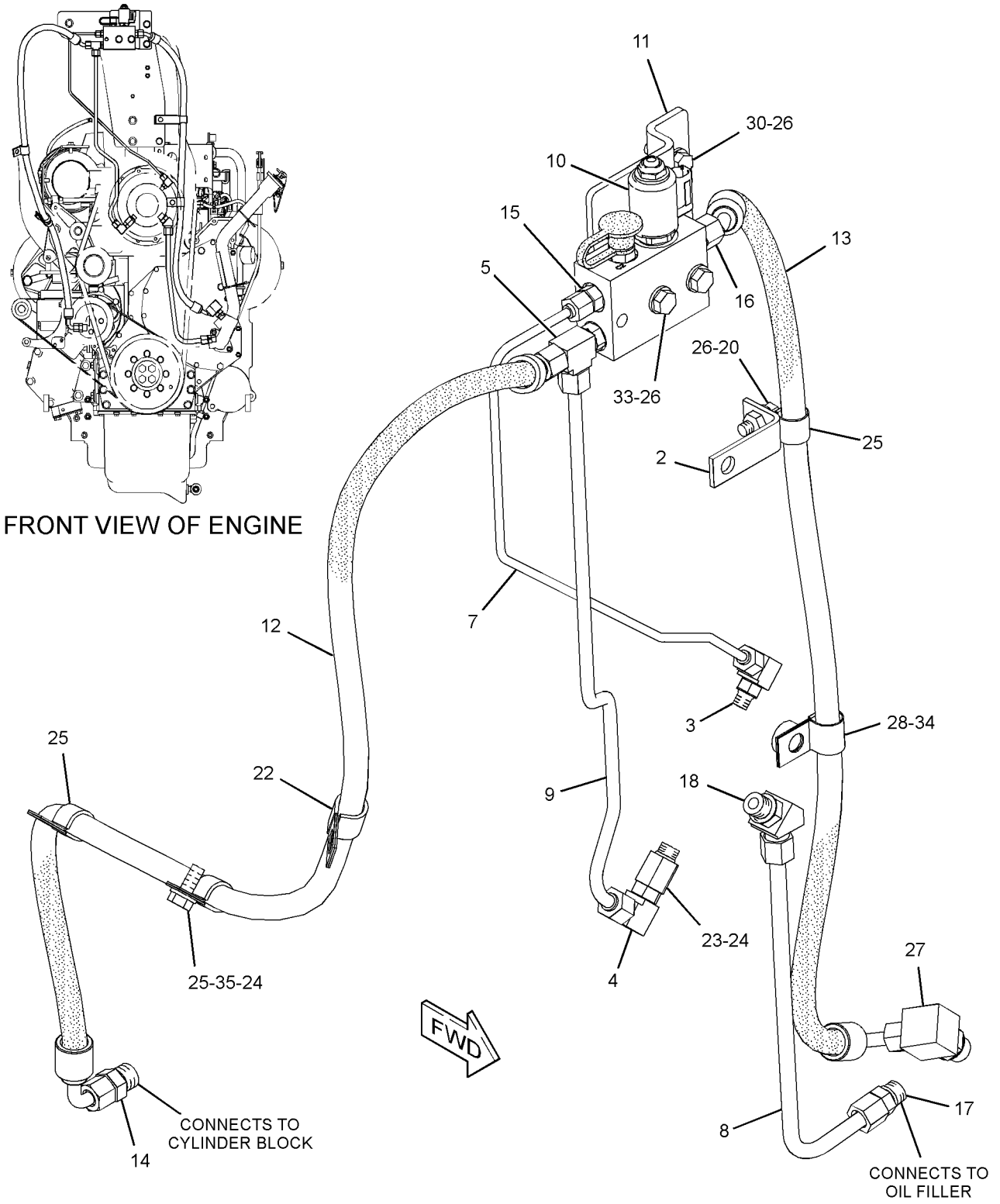

GRAPHIC #1 **<END>** g01359176

266-9810 LINES GP-TURBOCHARGER OIL

S/N: TXD1-UP; THX8900-UP

PART OF 282-3823, 282-3825, 301-5768 ENGINE AR, 349-3564, 349-3565, 387-8575, 387-8580, 398-6424 ENGINE AR-COMPLETE

ALSO AN ATTACHMENT

SMCS-1052, 1307 **i05080604**

NOTE	REF NO	GRAPHIC REF	PART NUMBER	QTY	PART NAME 1 2 3 4 5 6 (PRODUCT LEVEL)	SEE PAGE
	1	1	**9N-4685**	1	BLOCK	
	2	1	**167-0168**	1	HOSE AS-OIL SUPPLY	
	3	1	*183-3399*	1	CONNECTOR AS	
		1	**214-7568**	1	SEAL-O-RING	
		1	**6V-8636**	1	CONNECTOR	
		1	**228-7089**	1	SEAL-O-RING	
	4	1	**197-8419**	1	GASKET	
	5	1	**246-6036**	1	HOSE	
	6	1	**257-5858**	1	TUBE AS	
	7	1	**263-3464**	1	TUBE AS	
	8	1	**284-3502**	2	CLAMP-BAND	
	9	1	**124-0174**	1	CLIP	
M	10	1	**2Y-5829**	1	NUT (M10X1.5-THD)	
	11	1	**5P-7530**	1	SEAL-O-RING	
M	12	1	**6V-3940**	2	BOLT (M8X1.25X25-MM)	
M	13	1	**6V-5230**	1	BOLT (M10X1.5X60-MM)	
M	14	1	**6V-5218**	2	BOLT (M8X1.25X35-MM)	
	15	1	**6V-5839**	2	WASHER (11X21X2.5-MM THK)	
	16	1	**1S-0724**	1	CLIP	
	17	1	**9M-1974**	4	WASHER-HARD (8.8X16X2-MM THK)	

M - METRIC PART

266-9810 **LINES GP-TURBOCHARGER OIL (*contd.*)** **i05080604**

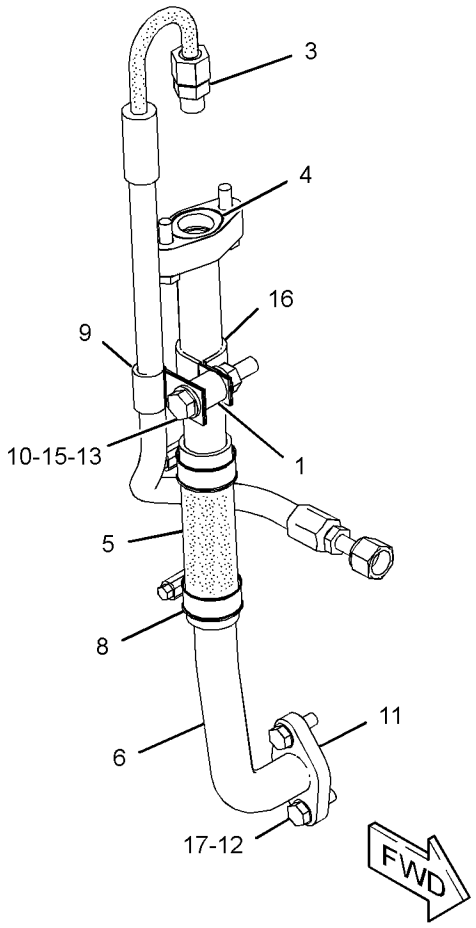

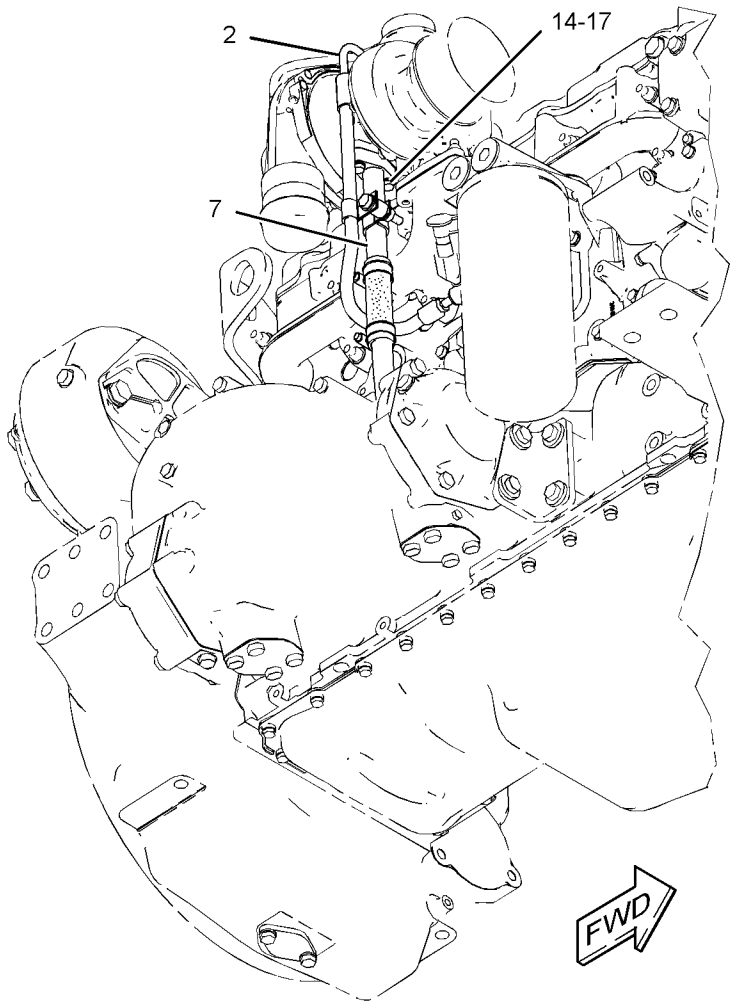

GRAPHIC #1 **<END>** g03254917

266-9811 LINES GP-TURBOCHARGER OIL

S/N: TXD1-UP; THX8900-UP

PART OF 282-3824, 282-3826 ENGINE AR, 387-8574, 387-8576 ENGINE AR-COMPLETE AN ATTACHMENT

SMCS-1052, 1307

i03880971

NOTE	REF NO	GRAPHIC REF	PART NUMBER	QTY	PART NAME 1 2 3 4 5 6 (PRODUCT LEVEL)	SEE PAGE
	1	1	*183-3399*	1	CONNECTOR AS	
		1	**6V-8636**	1	CONNECTOR	
		1	**214-7568**	1	SEAL-O-RING	
		1	**228-7089**	1	SEAL-O-RING	
	2	1	**197-8419**	1	GASKET	
	3	1	**234-7526**	1	TUBE AS	
	4	1	**246-6036**	1	HOSE	
	5	1	**257-5858**	1	TUBE AS	
	6	1	**263-3464**	1	TUBE AS	
	7	1	**284-3502**	2	CLAMP-BAND	
M	8	1	**2Y-5829**	1	NUT (M10X1.5-THD)	
	9	1	**5P-7530**	1	SEAL-O-RING	
	10	1	**5P-9297**	1	CLIP	
M	11	1	**6V-3940**	2	BOLT (M8X1.25X25-MM)	
M	12	1	**6V-4248**	1	BOLT (M10X1.5X25-MM)	
M	13	1	**6V-5218**	2	BOLT (M8X1.25X35-MM)	
	14	1	**6V-5839**	2	WASHER (11X21X2.5-MM THK)	
	15	1	**7C-4354**	1	CLIP	
	16	1	**9M-1974**	4	WASHER-HARD (8.8X16X2-MM THK)	

M - METRIC PART

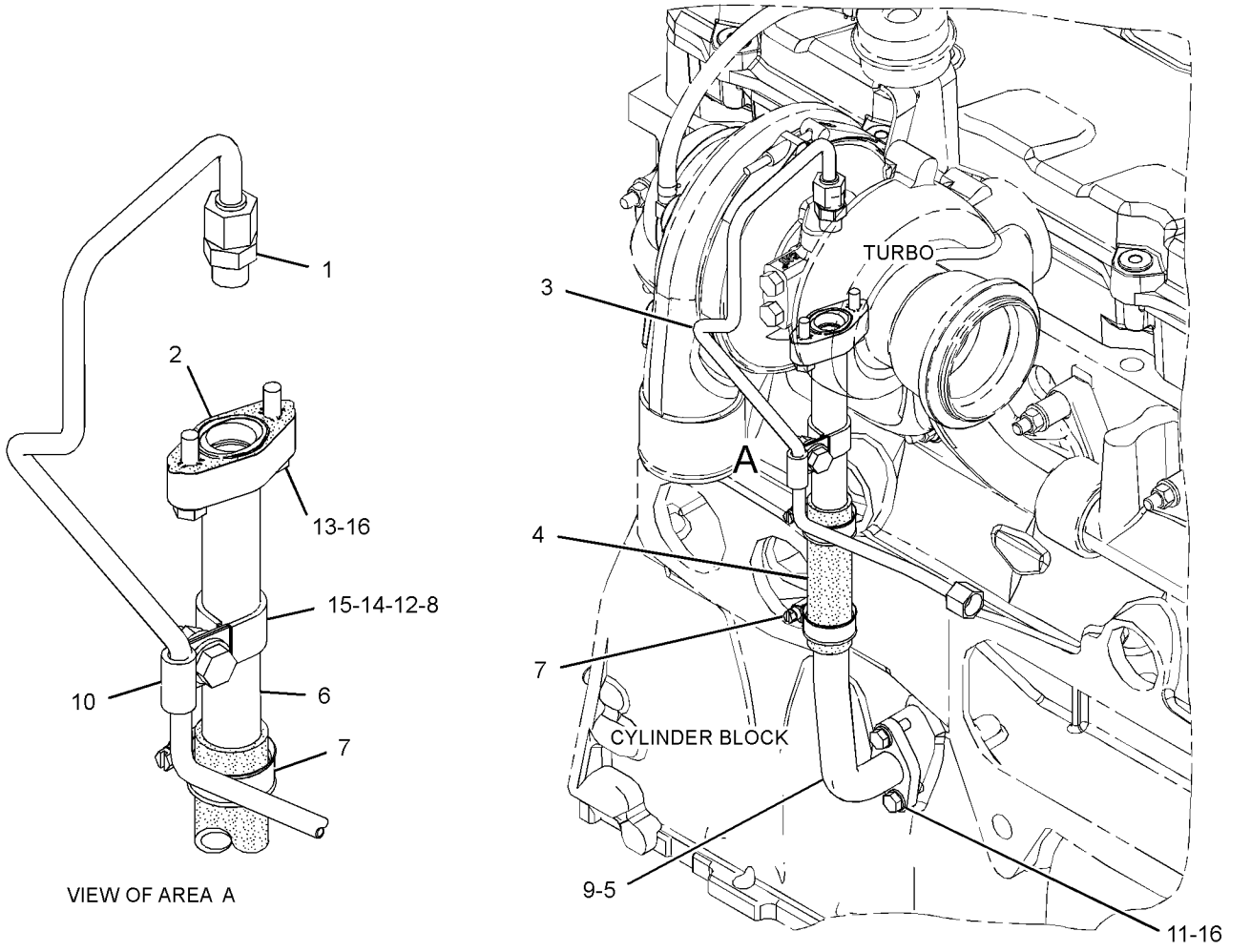

GRAPHIC #1

<END>

g02179893

263-0853 OIL CHANGE GP-HIGH SPEED

S/N: SMC1-UP; GCT1-UP
PART OF 354-3550 OPTION AR-SERVICE
AN ATTACHMENT

SMCS-1325 **i04041859**

NOTE	REF NO	GRAPHIC REF	PART NUMBER	QTY	PART NAME 1 2 3 4 5 6 (PRODUCT LEVEL)	SEE PAGE
	1	1	**1V-3713**	1	ANGLE	
	2	1	**2P-1286**	1	LOCKNUT-BULKHEAD (1-5/16-12-THD)	
	3	1	**2V-2043**	1	NUT-BULKHEAD (1-5/8-12-THD)	
	4	1	**3W-2647**	1	SPACER (13.5X30X10-MM THK)	
	5	1	**8N-6854**	1	GASKET	
	6	1	**8W-0327**	1	ADAPTER	
	8	1	**110-8319**	1	FITTING AS (QUICK DISCONNECT)	
	9	1	**110-8827**	1	FITTING (QUICK DISCONNECT, MALE)	
	10	1	**300-4939**	3	PLATE AS	
	11	1	**225-2412**	1	BRACKET	
I	12	1	**254-8108**	1	HOSE AS	
I	14	1	**264-5352**	1	HOSE AS	
	15	1	**108-8089**	1	COVER-TOP	
	16	1	**118-6878**	1	BRACKET AS	
	17	1	*148-8327*	2	CONNECTOR AS	
					(EACH INCLUDES)	
		1	**6V-8637**	1	CONNECTOR	
		1	**3D-2824**	1	SEAL-O-RING	
		1	**6V-9746**	1	SEAL-O-RING	
	18	1	*148-8339*	1	CONNECTOR AS	
		1	**6V-8716**	1	CONNECTOR	
		1	**6V-9746**	1	SEAL-O-RING	
		1	**7M-8485**	1	SEAL-O-RING	
	19	1	*148-8382*	1	ELBOW AS	
		1	**8T-0404**	1	ELBOW	
		1	**3D-2824**	1	SEAL-O-RING	
		1	**7J-9108**	1	SEAL-O-RING	
	20	1	**1V-5872**	1	SPACER (0.493X0.675X0.95-IN THK)	
	21	1	**3M-7045**	1	PLUG	
	22	1	**5P-7854**	7	CLIP	
	23	1	**7C-4355**	2	CLIP	
M	24	1	**7X-2552**	1	BOLT (M16X2X30-MM)	
	26	1	**8T-4121**	10	WASHER-HARD (11X21X2.5-MM THK)	
	27	1	**8T-4122**	1	WASHER-HARD (17X32X3.5-MM THK)	
M	28	1	**8T-4133**	1	NUT (M10X1.5-THD)	
M	29	1	**8T-4136**	3	BOLT (M10X1.5X25-MM)	
M	30	1	**8T-4137**	2	BOLT (M10X1.5X20-MM)	
M	31	1	**8T-4185**	1	BOLT (M10X1.5X50-MM)	
M	32	1	**8T-4186**	1	BOLT (M10X1.5X40-MM)	
M	33	1	**8T-4195**	1	BOLT (M10X1.5X30-MM)	
M	34	1	**8T-4196**	2	BOLT (M10X1.5X35-MM)	
M	35	1	**5C-7261**	1	NUT (M8X1.25-THD)	
	36	1	**8T-4224**	4	WASHER-HARD (8.8X16X2-MM THK)	
M	37	1	**241-0542**	1	STUD (M8X1.25X30-MM)	

I - REFER TO HYDRAULIC INFORMATION SYSTEM
M - METRIC PART

263-0853 **OIL CHANGE GP-HIGH SPEED (*contd.*)** **i04041859**

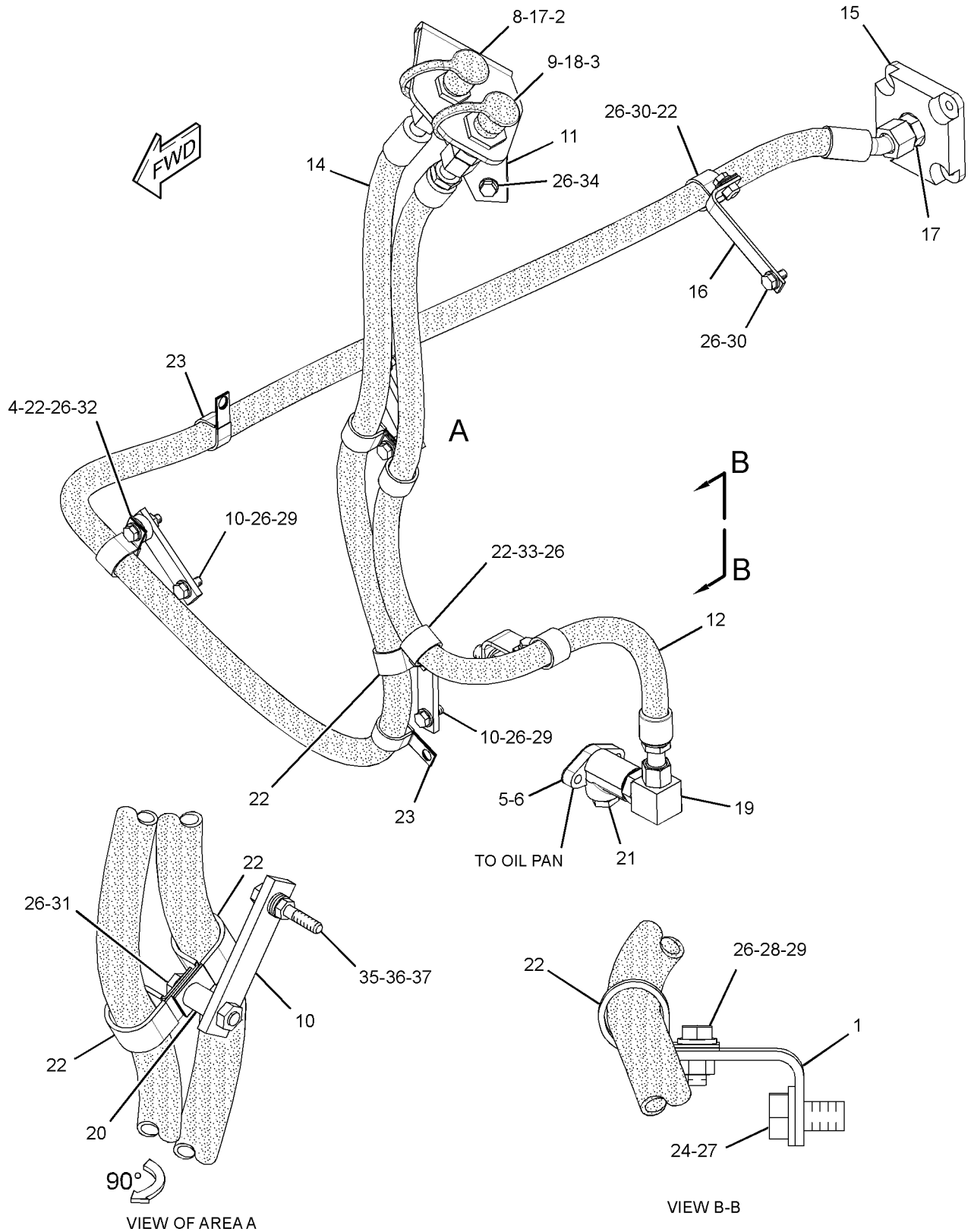

GRAPHIC #1 **<END>** g01460107

195-8098 PUMP GP-ENGINE OIL

S/N: THX8900-UP

PART OF 282-3827, 282-3828, 282-3829, 282-3830, 301-5769 ENGINE AR-CORE

ALSO AN ATTACHMENT

SMCS-1304, 1315

i03979021

NOTE	REF NO	GRAPHIC REF	PART NUMBER	QTY	PART NAME 1 2 3 4 5 6 (PRODUCT LEVEL)	SEE PAGE
	1	1	**211-0546**	1	PUMP GP-ENGINE OIL	
R		1	**210-5522**	1	PUMP AS-ENGINE OIL	
	1A	1	**221-0144**	1	GEAR AS (60-TEETH)	
M	2	1	**6V-1819**	2	BOLT (M10X1.5X100-MM)	
	3	1	**6V-5839**	2	WASHER (11X21X2.5-MM THK)	

M - METRIC PART
R - REMFG PART MAY BE AVAILABLE

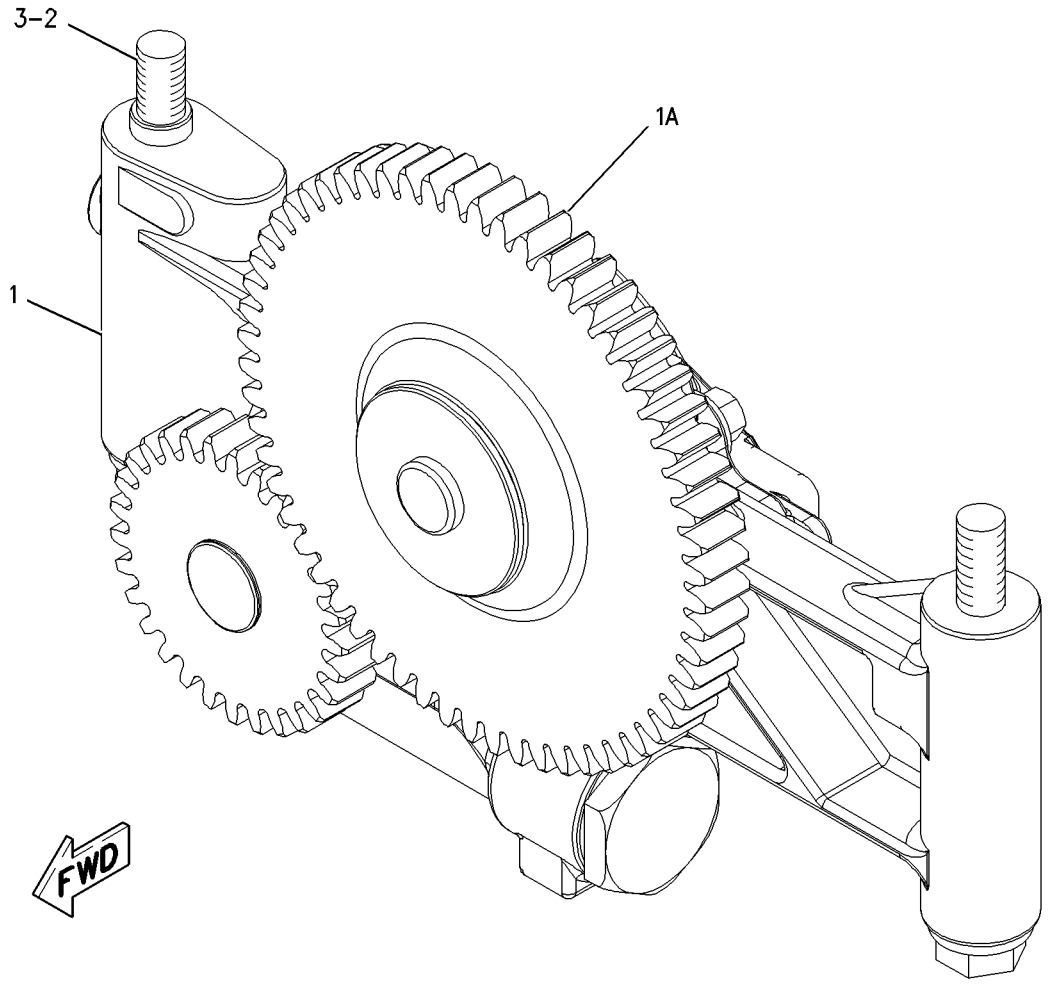

GRAPHIC #1 **<END>** g00909910

195-8098 PUMP GP-ENGINE OIL

S/N: TXD1-UP; THX8900-UP

PART OF 282-3827, 282-3828, 282-3829, 282-3830, 301-5769, 384-8428, 387-8618, 399-3904 ENGINE AR-CORE

ALSO AN ATTACHMENT

SMCS-1304, 1315 **i03979016**

NOTE	REF NO	GRAPHIC REF	PART NUMBER	QTY	PART NAME 1 2 3 4 5 6 (PRODUCT LEVEL)	SEE PAGE
C	1	1	*331-8906*	1	PUMP GP-ENGINE OIL	
	1A	1	**221-0144**	1	GEAR AS (60-TEETH)	
		1	**331-8905**	1	PUMP AS-ENGINE OIL	
M	2	1	**6V-1819**	2	BOLT (M10X1.5X100-MM)	
	3	1	**6V-5839**	2	WASHER (11X21X2.5-MM THK)	

C - CHANGE FROM PREVIOUS TYPE
M - METRIC PART

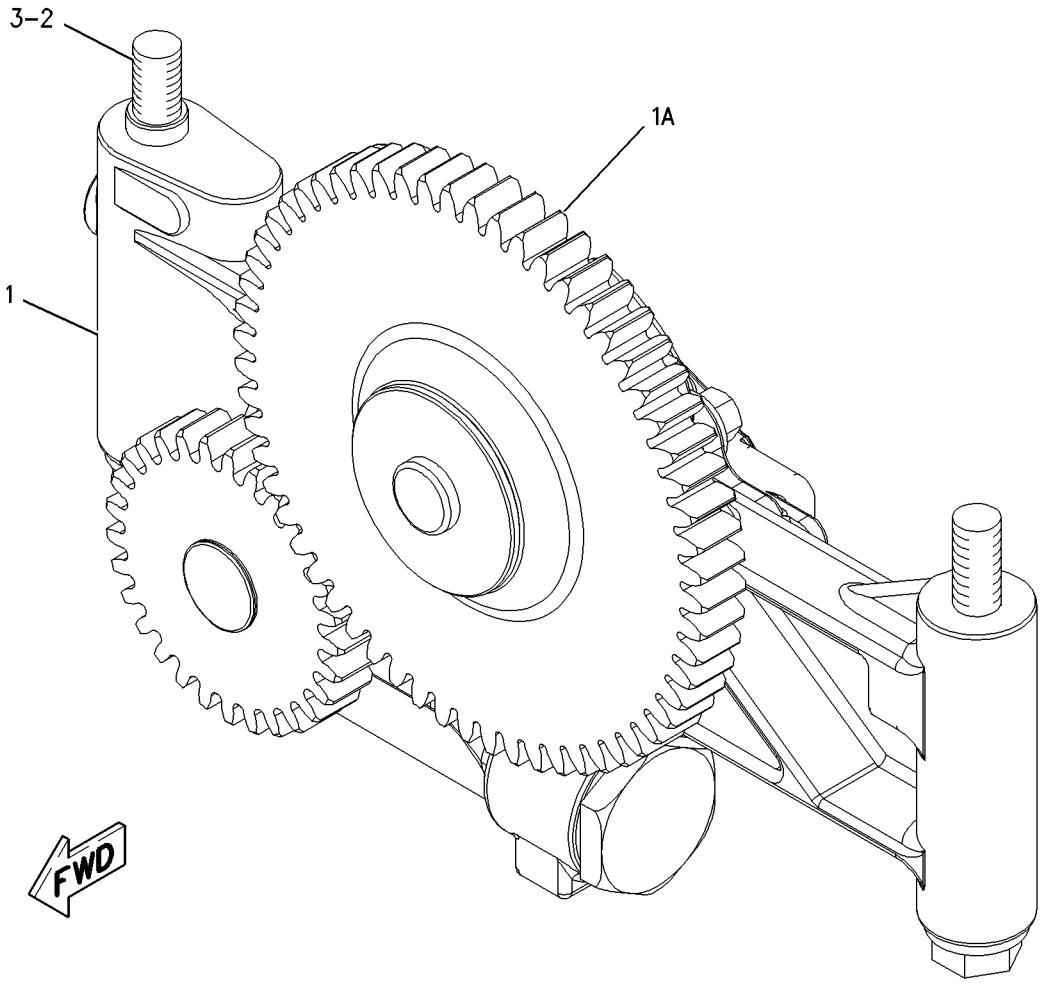

GRAPHIC #1 **<END>** g00909910

198-0921 VALVE GP-FLUID SAMPLING—ENGINE OIL

S/N: TXD1-UP; THX8900-UP

PART OF 282-3823, 282-3824, 282-3825, 282-3826, 301-5768 ENGINE AR, 349-3564, 349-3565, 387-8574, 387-8575, 387-8576, 387-8580, 398-6424 ENGINE AR-COMPLETE

ALSO AN ATTACHMENT

SMCS-7542 **i04880833**

NOTE	REF NO	GRAPHIC REF	PART NUMBER	QTY	PART NAME 1 2 3 4 5 6 (PRODUCT LEVEL)	SEE PAGE
	1	1	**6V-0852**	1	CAP-DUST	
	2	1	*164-5567*	1	COUPLER AS-QUICK DISCONNECT (MALE)	
		1	**6V-3965**	1	FITTING (QUICK DISCONNECT)	
		1	**214-7568**	1	SEAL-O-RING	

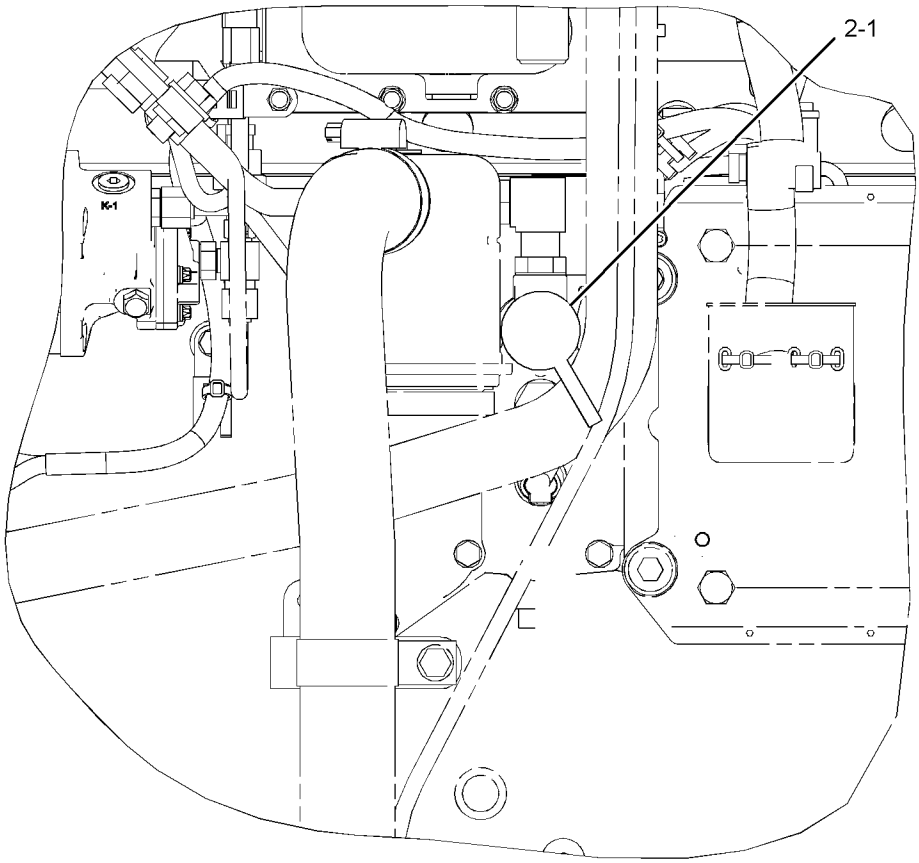

LEFT SIDE VIEW

GRAPHIC #1 **<END>** g03005496

176-5321 VALVE GP-MODULATING

S/N: SMC1-UP; GCT1-UP
PART OF 192-0729 MANIFOLD GP-CONTROL
AN ATTACHMENT

SMCS-1359, 3139, 5479

i04041862

NOTE	REF NO	GRAPHIC REF	PART NUMBER	QTY	PART NAME 1 2 3 4 5 6 (PRODUCT LEVEL)	SEE PAGE
	1	1	**226-9629**	1	COIL AS-SOLENOID (12-VOLT)	
	2	1	**167-9524**	1	NUT-SELF-LOCKING (1/2-28-THD)	
	3	1	**164-2108**	1	WASHER (13.03X25.4X2.38-MM THK)	
					AVAILABLE REPAIR KIT(S):	
			111-3203	1	KIT-SEAL	
					(INCLUDES SEALS)	

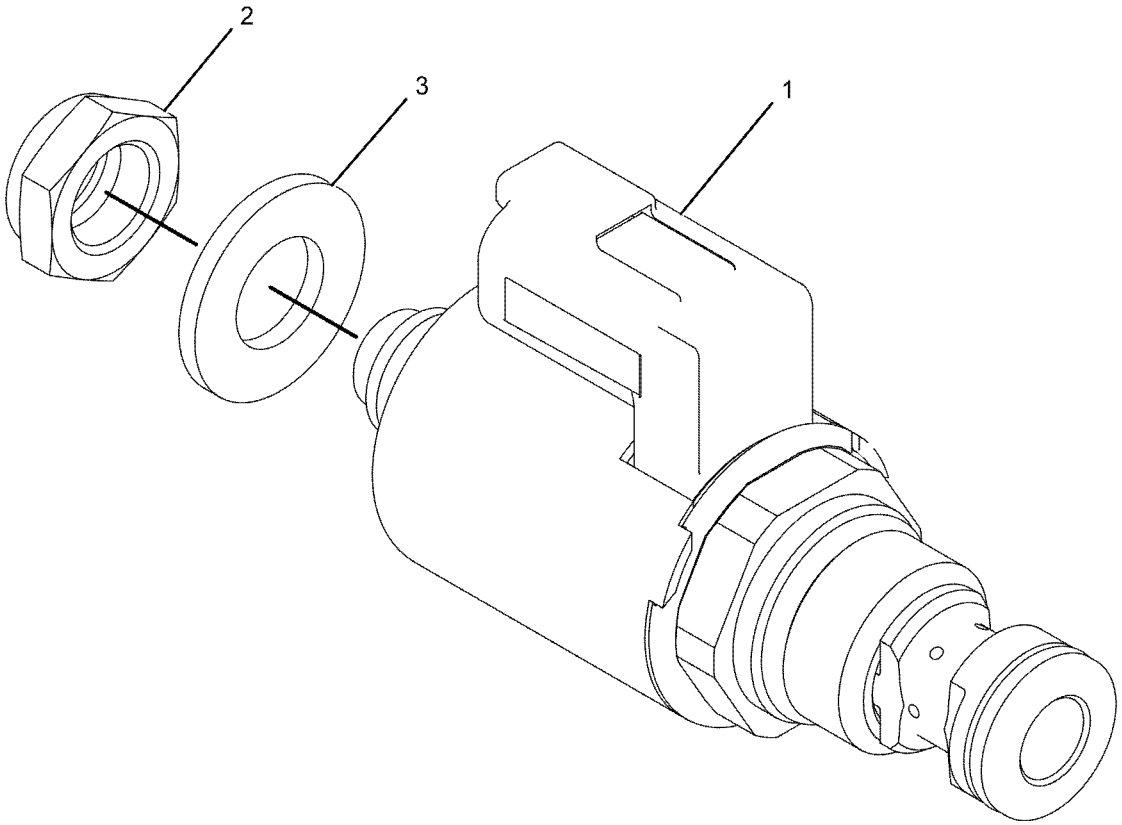

GRAPHIC #1

<END>

g01113002

188-3826 COOLER GP-ENGINE OIL

S/N: TXD1-UP; THX8900-UP

PART OF 282-3824 ENGINE AR, 387-8574, 387-8575, 387-8576, 387-8580, 398-6424 ENGINE AR-COMPLETE, 282-3827, 282-3828, 282-3829, 282-3830, 301-5769, 384-8428 ENGINE AR-CORE

ALSO AN ATTACHMENT

SMCS-1378 **i02946218**

NOTE	REF NO	GRAPHIC REF	PART NUMBER	QTY	PART NAME 1 2 3 4 5 6 (PRODUCT LEVEL)	SEE PAGE
	1	1	**209-7293**	1	GASKET	
	2	1	**293-9367**	1	CORE AS-OIL COOLER (ENGINE)	

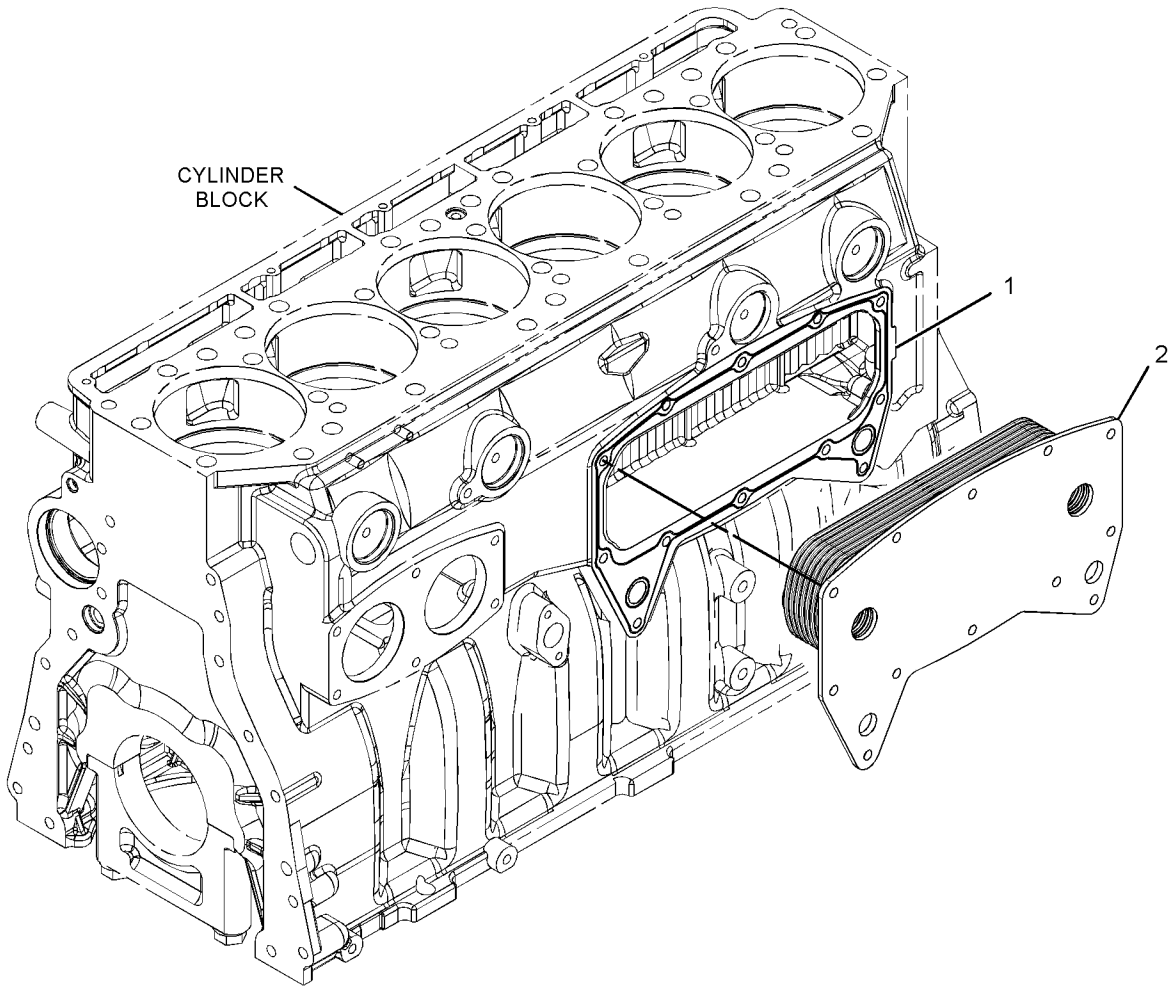

GRAPHIC #1 **<END>** g01419332

281-7405 FAN AR-EJECTOR

S/N: SMC1-UP
FOR USE WITH WASTE HANDLING APPLICATIONS
AN ATTACHMENT

SMCS-1356 **i05350412**

NOTE	REF NO	GRAPHIC REF	PART NUMBER	QTY	PART NAME 1 2 3 4 5 6 (PRODUCT LEVEL)	SEE PAGE
	1	1	**8Q-1911**	1	SPIDER AS-FAN (8-BLADE)	
	2	1	**222-7094**	1	BAFFLE AS-RADIATOR (LEFT SIDE)	
	3	1	**222-7095**	1	BAFFLE AS-RADIATOR (RIGHT SIDE)	

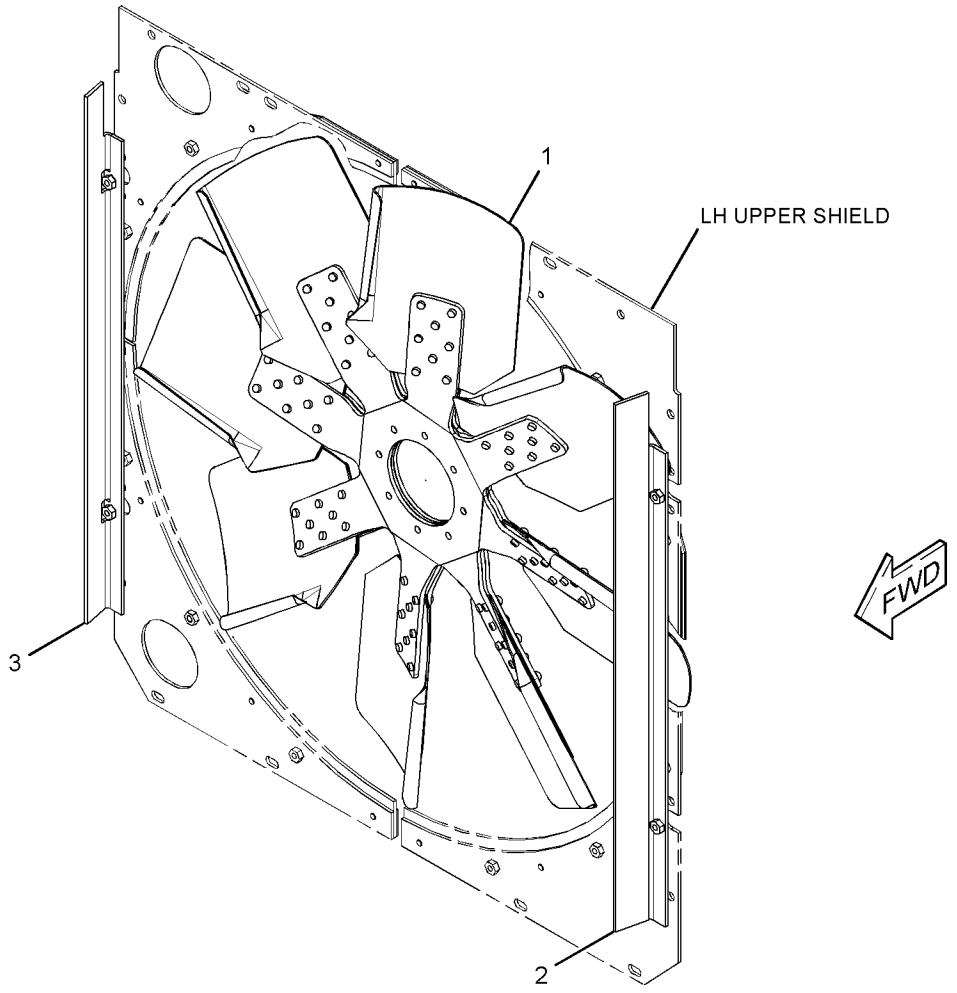

GRAPHIC #1 **<END>** g01343568

314-2690 FAN AR-REVERSIBLE

S/N: SMC1-UP; GCT1-UP
12-BLADE, FLEXXAIRE
FOR USE WITH SHIELD AR-THERMO
CANNOT BE USED WITH 358-3217—PAGE: 605, UNDERHOOD AIR CONDITIONING, SOUND SUPPRESSION
AN ATTACHMENT

SMCS-1356, 1360 **i05303070**

NOTE	REF NO	GRAPHIC REF	PART NUMBER	QTY	PART NAME 1 2 3 4 5 6 (PRODUCT LEVEL)	SEE PAGE
	1	1	**1Q-3613**	2	PLATE-WARNING (FAN, FLYING DEBRIS)	
Y	2	1	**3E-9205**	1	VALVE GP-SOLENOID (24-VOLT) (FLEXXAIRE FAN)	960
	3	1	**6T-9559**	1	MANIFOLD	
	4	1	**8T-9530**	8	TACK-FASTENER	
	5	1	**133-9405**	1	SWITCH AS-PUSH BUTTON (FLEXXAIRE FAN)	
		1	**3E-3371**	1	WEDGE-RECEPTACLE LOCK (3-PIN)	
		1	**102-8803**	1	KIT-RECEPTACLE (3-PIN)	
					(INCLUDES RECEPTACLE AS & WEDGE)	
		1	**3K-0835**	1	NUT (5/8-24-THD)	
		1	**6F-0253**	1	LOCKWASHER	
		1	**8T-8729**	3	PIN-CONNECTOR (16-GA TO 18-GA)	
	6	1	**173-3208**	1	WIRE AS	
	7	1	**192-9742**	1	FILM-IDENTIFICATION (CONTROL PANEL)	
	8	1	**206-5575**	1	BRACKET AS	
	9	1	**206-5584**	1	BRACKET AS	
	10	1	**235-2542**	1	TUBE AS	
	11	1	**235-2543**	1	TUBE AS	
	12	1	**235-6529**	1	BRACKET AS	
	13	1	**237-0129**	6	BLADE AS (12-BLADE)	
					(EACH INCLUDES)	
		1	**7X-0268**	2	BOLT (1/4-20X3.5-IN)	
		1	**8T-4205**	2	WASHER-HARD (7.2X14.5X2-MM THK)	
		1	**211-0089**	6	NUT (1/4-20-THD)	
Y	14	1	**262-2032**	1	HUB GP	138
	15	1	*268-1621*	1	FITTING AS	
		1	**3D-2824**	1	SEAL-O-RING	
		1	**6V-9746**	1	SEAL-O-RING	
	16	1	**269-1974**	1	V-BELT (BANDED) (FLEXXAIRE FAN)	
I	17	1	**275-9639**	1	HOSE AS	
	18	1	**278-3529**	1	HARNESS AS-WIRING	
		1	**102-8802**	1	KIT-RECEPTACLE (2-PIN)	
					(INCLUDES RECEPTACLE AS & WEDGE)	
		1	**155-2271**	1	KIT-CONNECTING PLUG (4-PIN)	
		1	**155-2274**	1	KIT-CONNECTING PLUG (6-PIN)	
					(EACH PLUG KIT INCLUDES PLUG AS, WEDGE & INTERFACE SEAL)	
	19	1	**313-2205**	1	BRACKET AS	
I	20	1	**313-9342**	1	HOSE AS	
M	21	1	**109-3001**	4	STUD-TAPERLOCK (M10X1.5X65-MM)	
	22	1	*148-8318*	1	CONNECTOR AS	
		1	**3K-0360**	1	SEAL-O-RING	
		1	**6V-8397**	1	SEAL-O-RING	
		1	**6V-8634**	1	CONNECTOR	
	23	1	*148-8326*	2	CONNECTOR AS	
					(EACH INCLUDES)	
		1	**3J-7354**	1	SEAL-O-RING	
		1	**6V-8397**	1	SEAL-O-RING	
		1	**6V-9872**	1	CONNECTOR	
	24	1	*148-8336*	2	CONNECTOR AS	
					(EACH INCLUDES)	
		1	**3J-1907**	1	SEAL-O-RING	
		1	**6V-8397**	1	SEAL-O-RING	
		1	**6V-8636**	1	CONNECTOR	

314-2690 **FAN AR-REVERSIBLE (*contd.*)** **i05303070**

NOTE	REF NO	GRAPHIC REF	PART NUMBER	QTY	PART NAME 1 2 3 4 5 6 (PRODUCT LEVEL)	SEE PAGE
	25	1	*148-8353*	1	ELBOW AS	
		1	**3J-1907**	1	SEAL-O-RING	
		1	**6V-8397**	1	SEAL-O-RING	
		1	**6V-9001**	1	ELBOW	
	26	1	*148-8367*	1	ELBOW AS	
		1	**6V-8397**	1	SEAL-O-RING	
		1	**6V-9850**	1	ELBOW	
	27	1	*148-8378*	1	ELBOW AS	
		1	**3J-1907**	1	SEAL-O-RING	
		1	**6V-8397**	1	SEAL-O-RING	
		1	**6V-8724**	1	ELBOW	
	28	1	*148-8433*	1	TEE AS	
		1	**6V-8397**	2	SEAL-O-RING	
		1	**6V-9836**	1	TEE-SWIVEL	
	29	1	*148-8439*	1	TEE AS	
		1	**3J-1907**	1	SEAL-O-RING	
		1	**6V-8397**	2	SEAL-O-RING	
		1	**6V-8774**	1	TEE	
	30	1	*150-3036*	1	ELBOW AS	
		1	**3J-1907**	1	SEAL-O-RING	
		1	**6V-8397**	1	SEAL-O-RING	
		1	**8T-1905**	1	ELBOW	
	31	1	**4P-7581**	1	CLIP	
	32	1	**6D-3479**	18	CLIP	
	33	1	**7E-7547**	1	SPACER (13.9X21.3X42-MM THK)	
	34	1	**7X-7729**	5	WASHER (11X25X3-MM THK)	
	35	1	**8T-4121**	2	WASHER-HARD (11X21X2.5-MM THK)	
M	36	1	**8T-4133**	4	NUT (M10X1.5-THD)	
M	37	1	**8T-4136**	7	BOLT (M10X1.5X25-MM)	
M	38	1	**8T-4195**	2	BOLT (M10X1.5X30-MM)	
	39	1	**8T-4223**	2	WASHER-HARD (13.5X25.5X3-MM THK)	
	40	1	**8T-4224**	4	WASHER-HARD (8.8X16X2-MM THK)	
	41	1	**8T-4896**	5	WASHER-HARD (10.2X18.5X2.5-MM THK)	
M	42	1	**8T-6466**	1	BOLT (M10X1.5X60-MM)	
M	43	1	**8T-6870**	4	BOLT (M8X1.25X70-MM)	
	44	1	**9G-2673**	1	GROMMET	

I - REFER TO HYDRAULIC INFORMATION SYSTEM
M - METRIC PART
Y - SEPARATE ILLUSTRATION

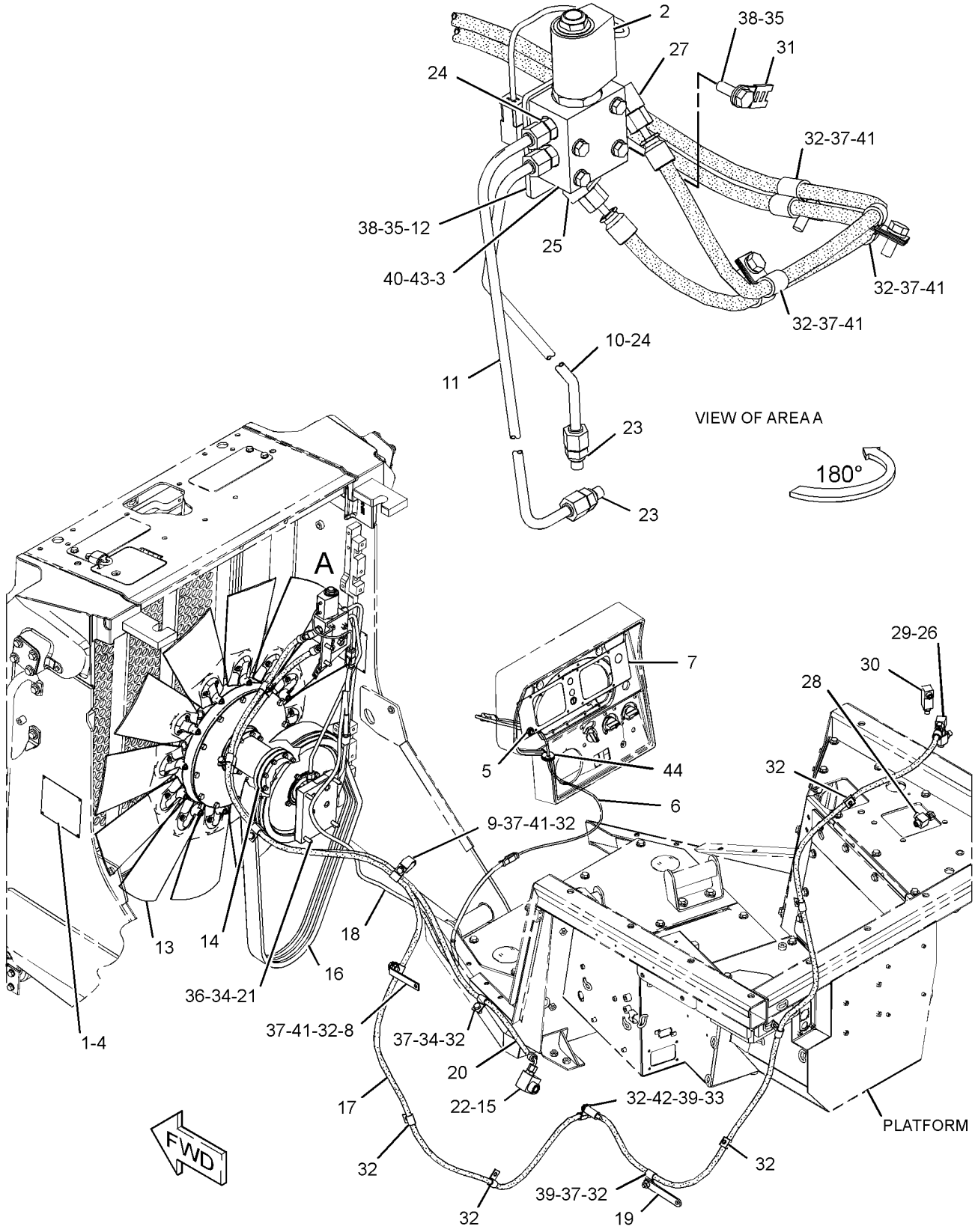

GRAPHIC #1 **<END>** g02209793

168-8376 FAN GP-BLOWER

S/N: SMC1-UP; GCT1-UP

PART OF 279-9549, 372-6406 INSTALLATION AR-ENGINE

SMCS-1356, 1360 **i05335091**

NOTE	REF NO	GRAPHIC REF	PART NUMBER	QTY	PART NAME 1 2 3 4 5 6 (PRODUCT LEVEL)	SEE PAGE
	1	1	**250-1911**	1	SPIDER AS-FAN (8-BLADE)	
	2	1	**387-8405**	4	GUARD AS-FAN	
					(EACH INCLUDES)	
M		1	**8T-3490**	2	NUT-WELD (M10X1.5-THD)	
M	3	1	**8T-4136**	8	BOLT (M10X1.5X25-MM)	
	4	1	**7X-7729**	12	WASHER (11X25X3-MM THK)	
	5	1	**8T-4121**	16	WASHER-HARD (11X21X2.5-MM THK)	
M	6	1	**8T-4182**	2	BOLT (M10X1.5X45-MM)	
M	7	1	**8T-4196**	18	BOLT (M10X1.5X35-MM)	

M - METRIC PART

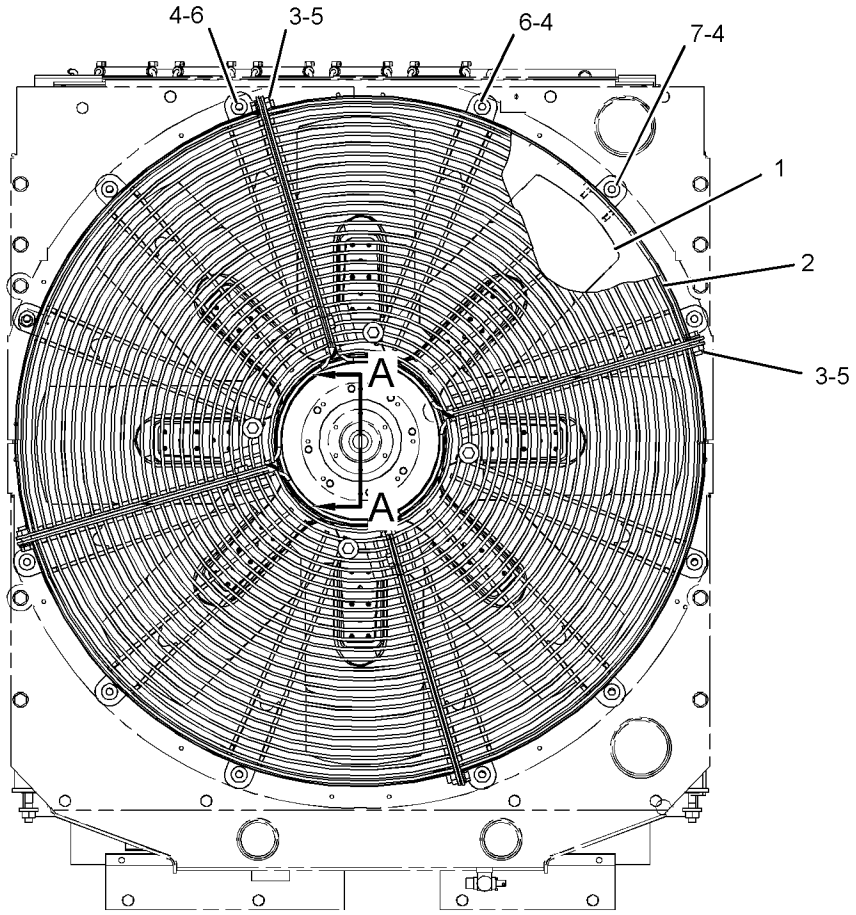

FRONT VIEW

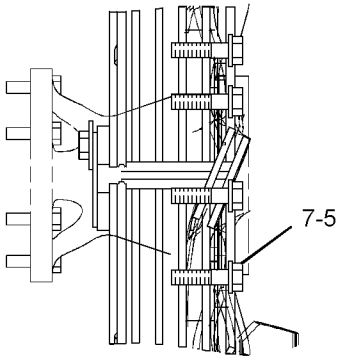

SECTION A-A

GRAPHIC #1 **<END>** g03368149

174-7414 FAN GP-REVERSIBLE

S/N: SMC1-UP; GCT1-UP

CANNOT BE USED WITH UNDERHOOD AIR CONDITIONING CONDENSER, SAND BLAST GRID, EJECTOR FAN, WASTE HANDLING AR, FLEXXAIRE FAN AN ATTACHMENT

SMCS-1356, 1360 **i05335090**

NOTE	REF NO	GRAPHIC REF	PART NUMBER	QTY	PART NAME 1 2 3 4 5 6 (PRODUCT LEVEL)	SEE PAGE
	1	1	**125-1362**	1	FAN AS-REVERSIBLE (8-BLADE)	
	2	1	**392-9788**	1	GUARD AS-FAN	
	3	1	**2W-5825**	1	PLATE	
	4	1	**7X-7729**	2	WASHER (11X25X3-MM THK)	
M	5	1	**8T-4137**	2	BOLT (M10X1.5X20-MM)	
	6	1	**8T-4896**	8	WASHER-HARD (10.2X18.5X2.5-MM THK)	
M	7	1	**8T-6466**	8	BOLT (M10X1.5X60-MM)	

M - METRIC PART

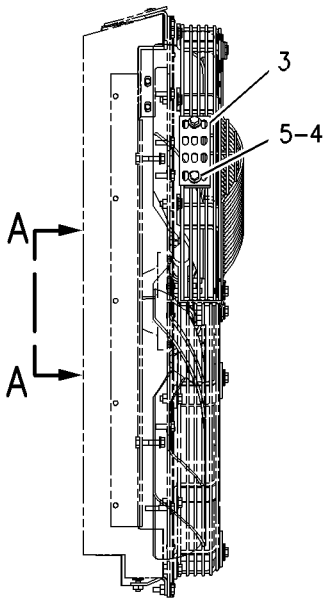

LEFT SIDE VIEW

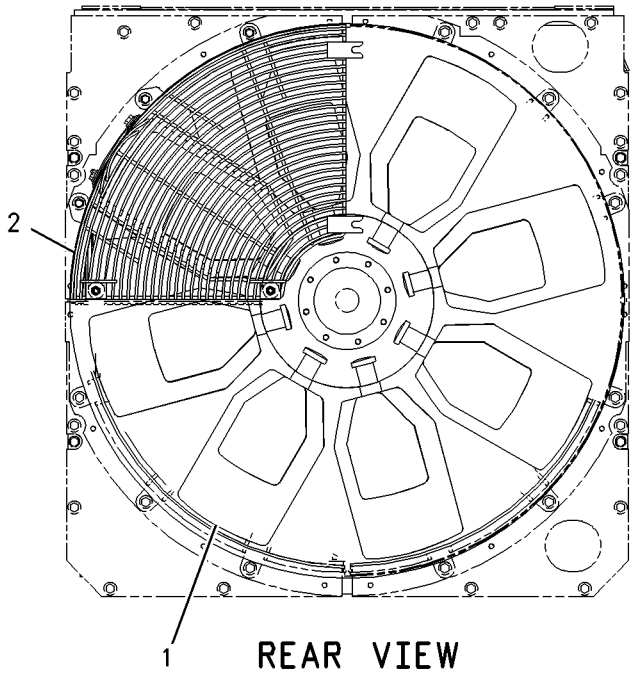

REAR VIEW

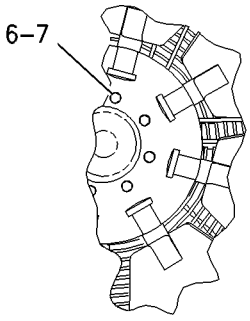

VIEW A-A

GRAPHIC #1 **<END>** g00859207

165-4461 HOUSING & REGULATOR GP–REGULATOR

S/N: TXD1-UP; THX8900-UP
TEMPERATURE
PART OF 282-3823, 282-3824, 282-3825, 282-3826, 301-5768 ENGINE AR, 349-3564, 349-3565, 387-8574, 387-8575, 387-8576, 387-8580, 398-6424 ENGINE AR-COMPLETE
ALSO AN ATTACHMENT

SMCS-1355, 1393 **i05061293**

NOTE	REF NO	GRAPHIC REF	PART NUMBER	QTY	PART NAME 1 2 3 4 5 6 (PRODUCT LEVEL)	SEE PAGE
	1	1	**248-5513**	1	REGULATOR-TEMPERATURE (92-DEG C) (WATER, COOLANT)	
	2	1	**347-3148**	2	CLAMP-BAND	
	3	1	**280-6794**	1	HOSE	
	4	1	**191-4457**	1	GASKET (WATER REGULATOR HOUSING)	
	5	1	**217-5200**	1	HOUSING AS	
	5A	1	**3S-9643**	1	SEAL-LIP TYPE (WATER TEMPERATURE REGULATOR)	
	6	1	*392-0818*	2	PLUG AS	
					(EACH INCLUDES)	
		1	**360-3693**	1	PLUG	
	6A	1	**6V-6609**	1	SEAL-O-RING	
	7	1	**4S-9191**	4	WASHER (12X22.5X5-MM THK)	
M	8	1	**8T-0644**	4	BOLT (M10X1.5X90-MM)	
	9	1	**8T-6762**	1	PLUG-PIPE (1/2-14-THD)	

M - METRIC PART

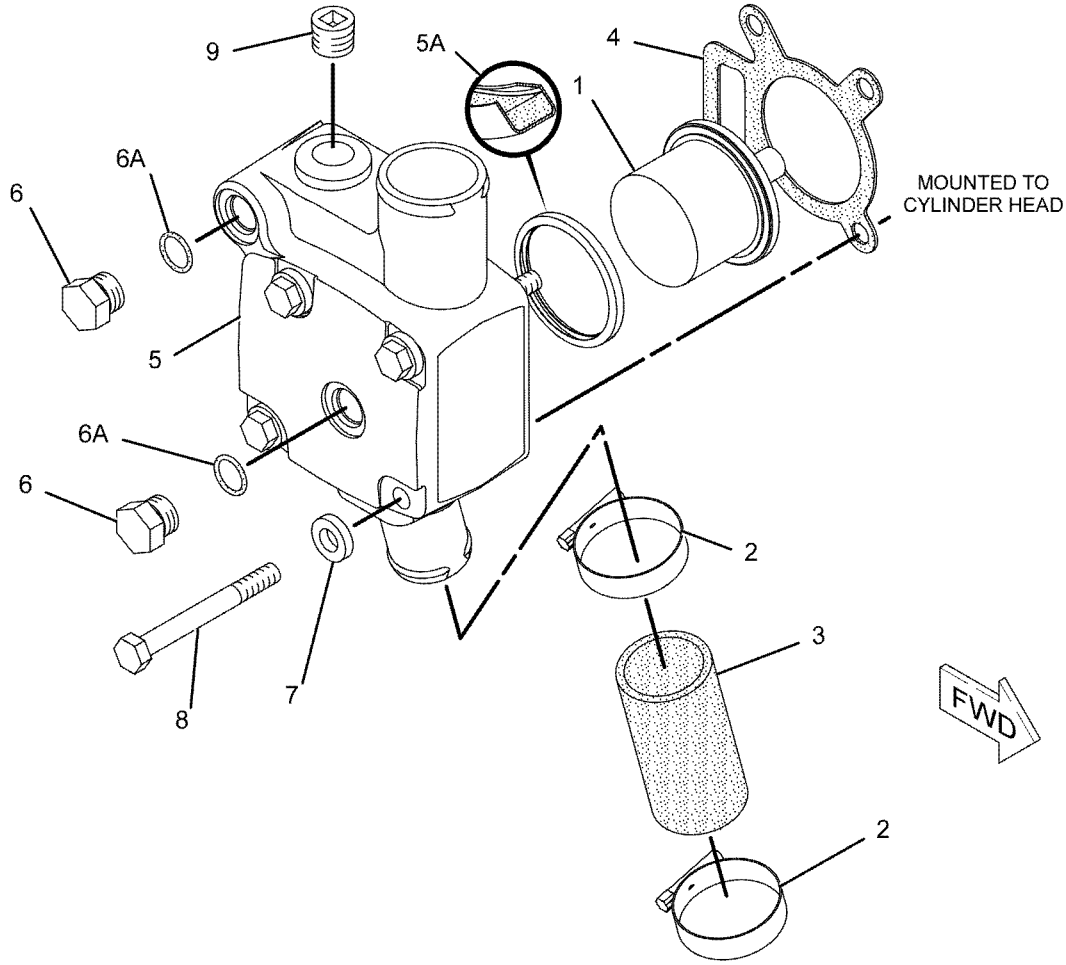

GRAPHIC #1 **<END>** g01142330

262-2032 HUB GP

S/N: SMC1-UP; GCT1-UP
PART OF 314-2690 FAN AR-REVERSIBLE
AN ATTACHMENT

SMCS-1356 **i05303084**

NOTE	PART NUMBER	QTY	PART NAME 1 2 3 4 5 6 (PRODUCT LEVEL)	SEE PAGE
	419-7889	1	SHAFT AS	
			AVAILABLE REPAIR KIT(S):	
	419-7879	1	KIT-SEAL (FAN)	
			(KIT INCLUDES LIP SEAL, O-RING SEALS, RETAINER SEAL AND NUT)	
	419-7881	1	KIT-FAN (PIVOT BLOCK, SHIFTER)	
			(KIT INCLUDES BLOCK, BEARING, PLATE, WASHERS, NUT, SHIM, SPACER AND SHAFT)	
	419-7883	1	KIT-BEARING (FAN)	
			(KIT INCLUDES BEARINGS, NUTS, WASHERS, SHIM PACK AND SPACER)	

<END>

232-1240 LINES GP-TURBOCHARGER WATER

S/N: SMC1-UP; GCT1-UP

PART OF 282-9553, 282-9554, 282-9555 CONVERSION AR-HEAT SHIELD AN ATTACHMENT

SMCS-1052, 1380

i02455126

NOTE	REF NO	GRAPHIC REF	PART NUMBER	QTY	PART NAME 1 2 3 4 5 6 (PRODUCT LEVEL)	SEE PAGE
	1	1	**121-4344**	3	SEAL-O-RING	
	2	1	**133-3260**	2	SPACER (11X19X10-MM THK)	
	3	1	**232-1133**	1	TUBE AS	
I	4	1	**232-1398**	1	HOSE AS	
	5	1	**233-5216**	1	TUBE AS	
	6	1	**234-1494**	1	BRACKET AS	
M		1	**8T-3612**	1	NUT-WELD (M8X1.25-THD)	
	7	1	**234-1496**	1	BRACKET AS	
M	8	1	**5C-7261**	2	NUT (M8X1.25-THD)	
	9	1	**5M-5689**	2	CLAMP	
	10	1	**6D-7128**	5	SEAL-O-RING	
	11	1	**6V-3250**	1	SEAL-O-RING	
	12	1	**6V-8636**	1	CONNECTOR	
	13	1	**6V-8724**	1	ELBOW	
	14	1	**8T-1891**	1	CLIP (SLOT)	
	15	1	**8T-1892**	1	CLIP (TAB)	
	16	1	**8T-4121**	5	WASHER-HARD (11X21X2.5-MM THK)	
M	17	1	**8T-4136**	1	BOLT (M10X1.5X25-MM)	
M	18	1	**8T-4137**	2	BOLT (M10X1.5X20-MM)	
M	19	1	**8T-4189**	2	BOLT (M8X1.25X20-MM)	
	20	1	**8T-4224**	5	WASHER-HARD (8.8X16X2-MM THK)	
	21	1	**8T-5043**	2	CONNECTOR	
M	22	1	**8T-6466**	2	BOLT (M10X1.5X60-MM)	
M	23	1	**8T-7547**	1	BOLT (M8X1.25X30-MM)	
	24	1	**9S-4200**	2	CLIP	

I - REFER TO HYDRAULIC INFORMATION SYSTEM
M - METRIC PART

232-1240 **LINES GP-TURBOCHARGER WATER (*contd.*)** **i02455126**

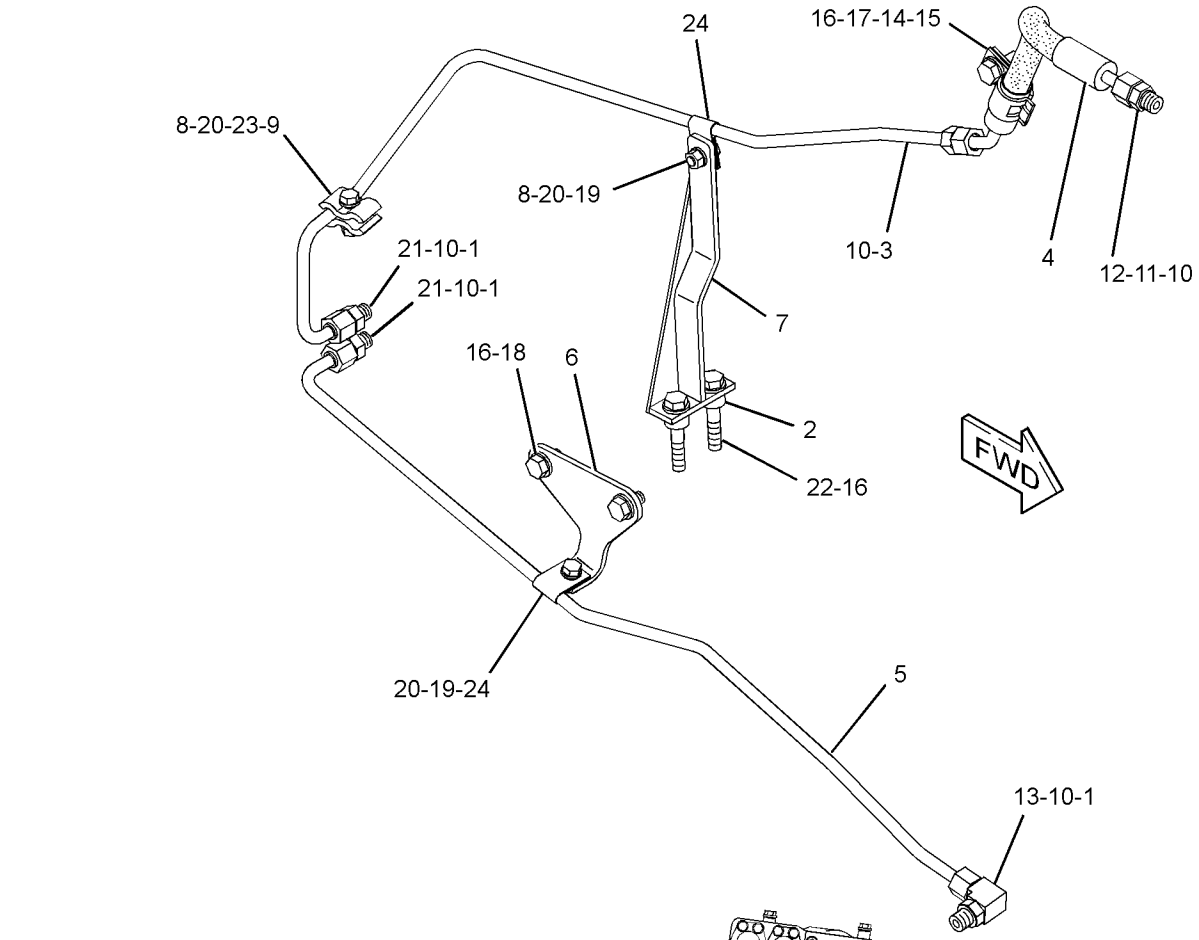

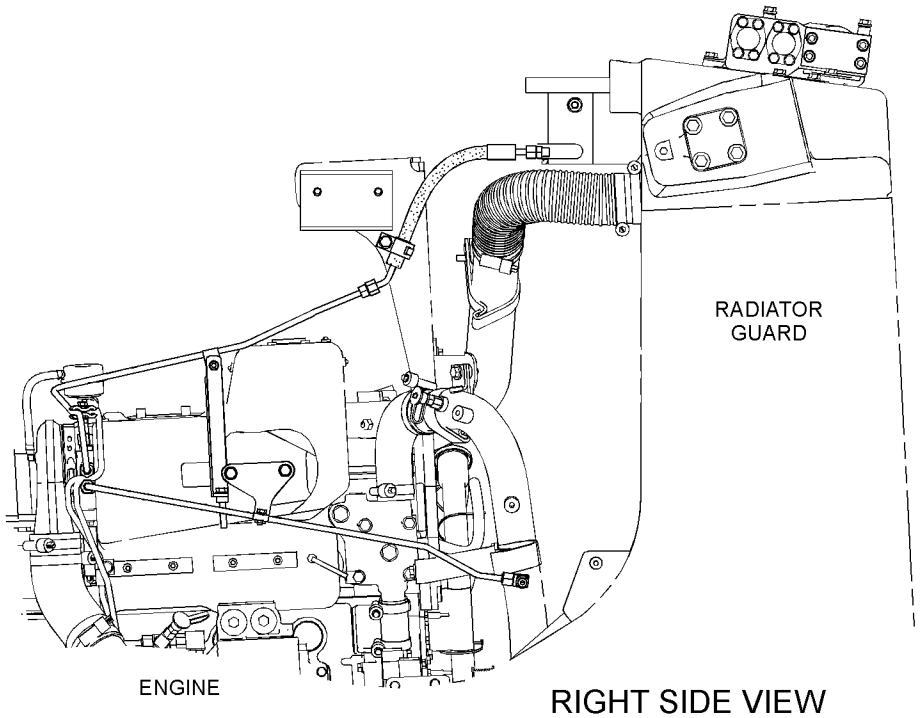

RIGHT SIDE VIEW

GRAPHIC #1 **<END>** g01217685

168-8378 LINES GP-WATER

S/N: SMC1-497; GCT1-963

PART OF 279-9549 INSTALLATION AR-ENGINE

SMCS-1380 **i04783116**

NOTE	REF NO	GRAPHIC REF	PART NUMBER	QTY	PART NAME 1 2 3 4 5 6 (PRODUCT LEVEL)	SEE PAGE
	1	1	**8T-4984**	6	CLAMP-HOSE	
	2	1	**157-0670**	1	CAP-DUST	
	3	1	**185-0844**	1	HOSE	
	4	1	**185-0845**	1	TUBE AS	
	5	1	**187-3961**	1	HOSE-RADIATOR	
	6	1	**190-7515**	1	BRACKET AS	
M		1	**8T-3490**	1	NUT-WELD (M10X1.5-THD)	
	7	1	**213-1724**	1	HOSE	
	8	1	**219-3305**	1	BRACKET AS	
M		1	**8T-3490**	1	NUT-WELD (M10X1.5-THD)	
	9	1	**254-5524**	1	BRACKET AS	
M		1	**8T-3490**	1	NUT-WELD (M10X1.5-THD)	
C	10	1	**290-3970**	1	BRACKET AS	
M		1	**8T-3490**	2	NUT-WELD (M10X1.5-THD)	
	11	1	**3E-9867**	2	CLIP (SLOT)	
	12	1	**3E-9868**	2	CLIP (TAB)	
	13	1	**3J-1907**	1	SEAL-O-RING	
	14	1	**3J-7354**	1	SEAL-O-RING	
	15	1	**5P-9617**	1	ADAPTER	
	16	1	**6V-1581**	3	CLIP (SLOT)	
	17	1	**6V-1582**	3	CLIP (TAB)	
	18	1	**7X-7729**	5	WASHER (11X25X3-MM THK)	
	19	1	**8C-3446**	1	VALVE-FLUID SAMPLING (COOLANT)	
C	20	1	**8T-4121**	6	WASHER-HARD (11X21X2.5-MM THK)	
M	21	1	**8T-4136**	2	BOLT (M10X1.5X25-MM)	
CM	22	1	**8T-4137**	4	BOLT (M10X1.5X20-MM)	
M	23	1	**8T-4195**	5	BOLT (M10X1.5X30-MM)	

C - CHANGE FROM PREVIOUS TYPE
M - METRIC PART

168-8378 **LINES GP-WATER (*contd.*)** **i04783116**

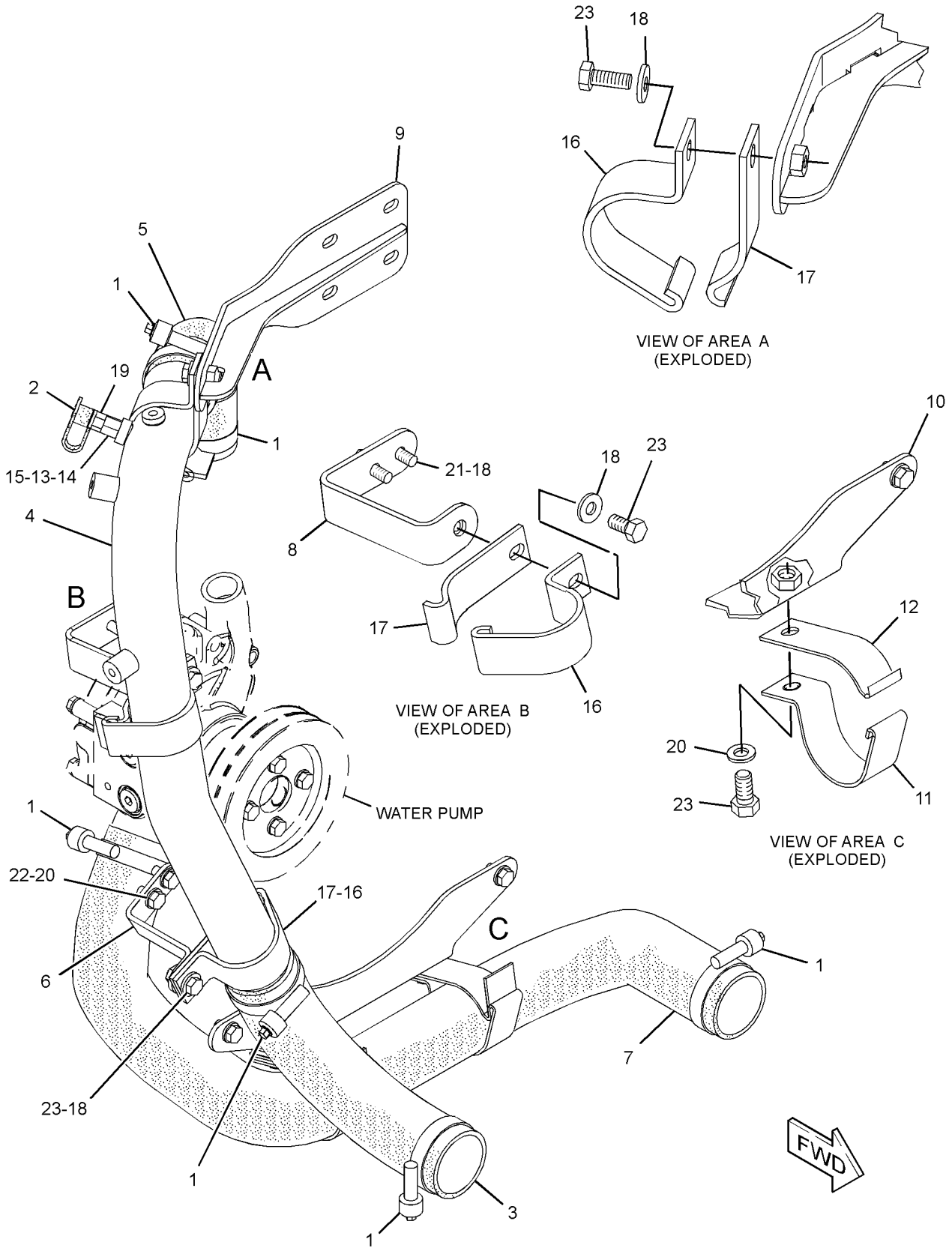

GRAPHIC #1 **<END>** g02946939

372-6363 LINES GP-WATER

S/N: SMC498-UP; GCT964-UP

PART OF 372-6406 INSTALLATION AR-ENGINE

SMCS-1380 **i05179113**

NOTE	REF NO	GRAPHIC REF	PART NUMBER	QTY	PART NAME 1 2 3 4 5 6 (PRODUCT LEVEL)	SEE PAGE
	1	1	**8T-4984**	6	CLAMP-HOSE	
	2	1	**157-0670**	1	CAP-DUST	
	3	1	**372-6362**	1	HOSE	
	4	1	**185-0845**	1	TUBE AS	
	5	1	**187-3961**	1	HOSE-RADIATOR	
	6	1	**190-7515**	1	BRACKET AS	
M		1	**8T-3490**	1	NUT-WELD (M10X1.5-THD)	
	7	1	**372-6361**	1	HOSE	
	8	1	**219-3305**	1	BRACKET AS	
M		1	**8T-3490**	1	NUT-WELD (M10X1.5-THD)	
	9	1	**254-5524**	1	BRACKET AS	
	10	1	**290-3970**	1	BRACKET AS	
M		1	**8T-3490**	2	NUT-WELD (M10X1.5-THD)	
	11	1	**3E-9867**	2	CLIP (SLOT)	
	12	1	**3E-9868**	2	CLIP (TAB)	
	13	1	**3J-1907**	1	SEAL-O-RING	
	14	1	**3J-7354**	1	SEAL-O-RING	
	15	1	**5P-9617**	1	ADAPTER	
	16	1	**6V-1581**	3	CLIP (SLOT)	
	17	1	**6V-1582**	3	CLIP (TAB)	
	18	1	**7X-7729**	5	WASHER (11X25X3-MM THK)	
	19	1	**8C-3446**	1	VALVE-FLUID SAMPLING (COOLANT)	
	20	1	**8T-4121**	6	WASHER-HARD (11X21X2.5-MM THK)	
M	21	1	**8T-4136**	2	BOLT (M10X1.5X25-MM)	
M	22	1	**8T-4137**	4	BOLT (M10X1.5X20-MM)	
M	23	1	**8T-4195**	5	BOLT (M10X1.5X30-MM)	

M - METRIC PART

372-6363 **LINES GP-WATER (*contd.*)** **i05179113**

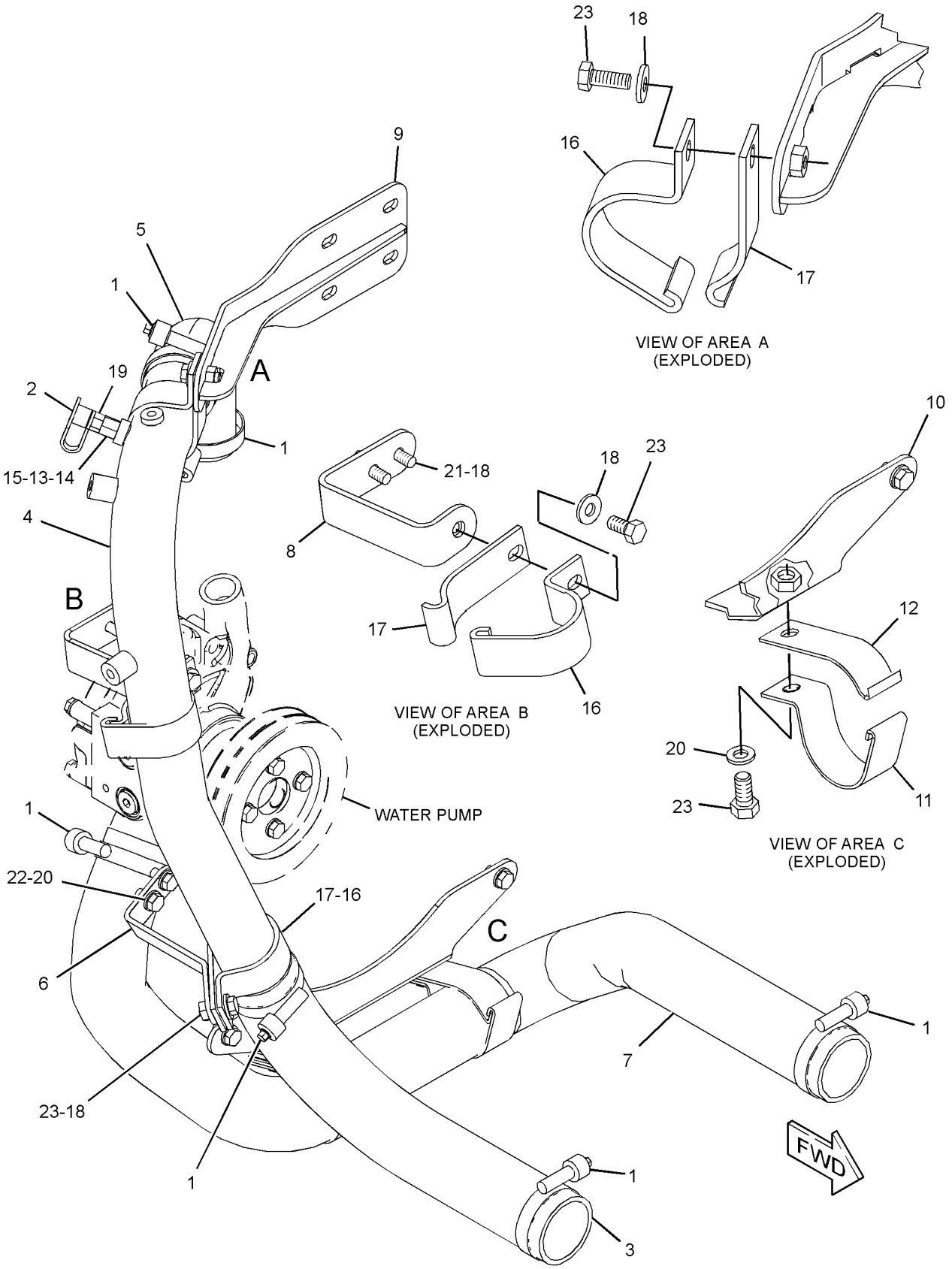

GRAPHIC #1 **<END>** g03259536

210-9096 PUMP GP-WATER

S/N: THX8900-24073
PART OF 211-1812 PUMP GP-WATER
ALSO AN ATTACHMENT

SMCS-1361 **i01833056**

NOTE	REF NO	GRAPHIC REF	PART NUMBER	QTY	PART NAME 1 2 3 4 5 6 (PRODUCT LEVEL)	SEE PAGE
	1	1	**222-3901**	1	GASKET	
	2	1	**177-1044**	1	COVER	
M	3	1	**6V-3918**	4	BOLT (M8X1.25X50-MM)	
	4	1	**9M-1974**	4	WASHER-HARD (8.8X16X2-MM THK)	
YR	5	1	**210-9097**	1	PUMP GP-WATER	146
	6	1	**3D-2824**	1	SEAL-O-RING	
	7	1	**3K-0360**	2	SEAL-O-RING	
	8	1	**9S-8005**	2	PLUG-O-RING	
	9	1	**9S-8008**	1	PLUG-O-RING	

M - METRIC PART
R - REMFG PART MAY BE AVAILABLE
Y - SEPARATE ILLUSTRATION

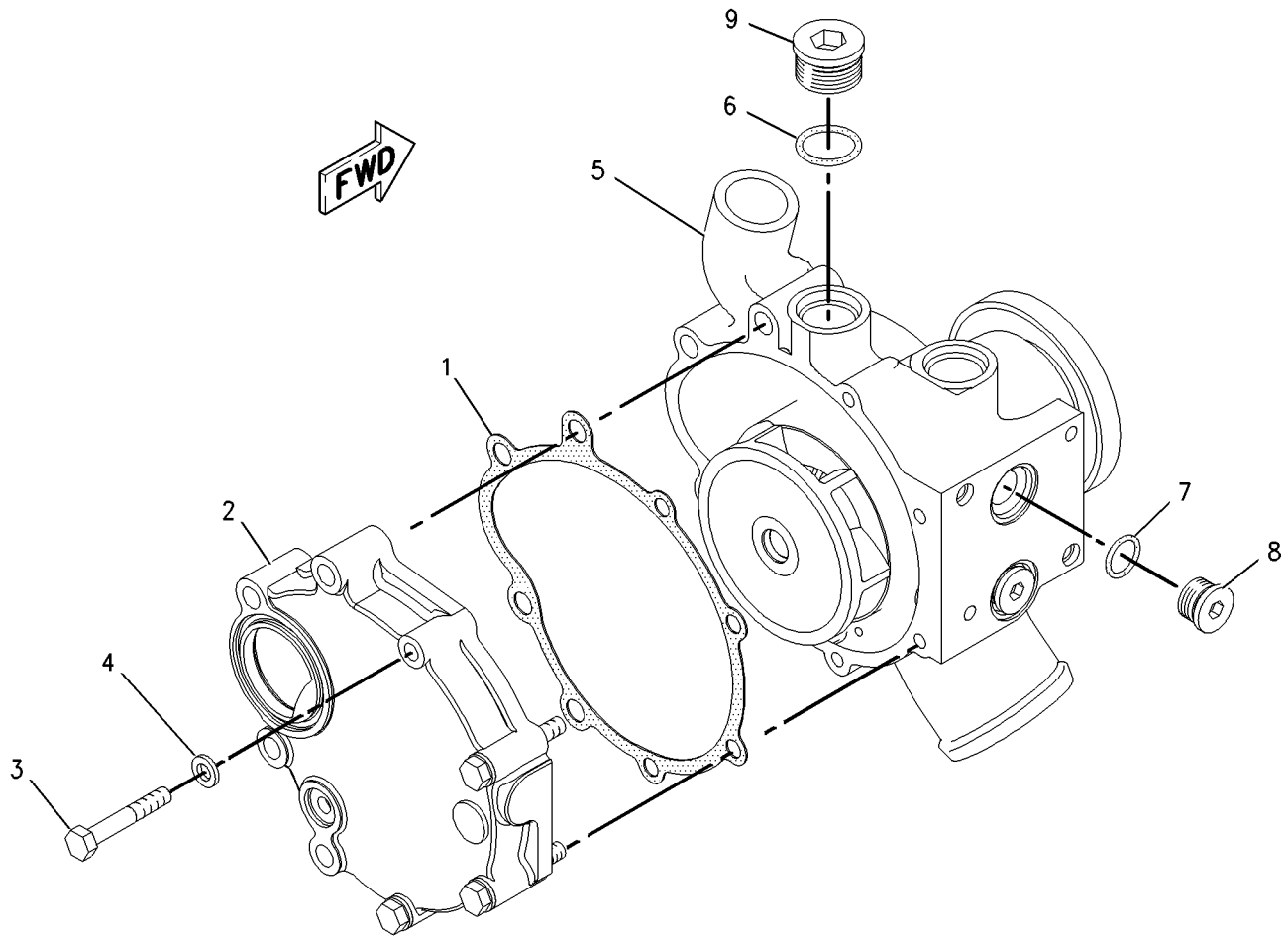

GRAPHIC #1 **<END>** g00864166

210-9097 PUMP GP-WATER*R

S/N: THX8900-24073
PART OF 210-9096 PUMP GP-WATER
ALSO AN ATTACHMENT

SMCS-1361 **i04034850**

NOTE	REF NO	GRAPHIC REF	PART NUMBER	QTY	PART NAME 1 2 3 4 5 6 (PRODUCT LEVEL)	SEE PAGE
	1	1	**147-5088**	1	SEAL AS-WATER PUMP	
	2	1	**177-1050**	1	SHAFT AS	
	3	1	**177-1056**	1	IMPELLER-PUMP	
	4	1	**187-8984**	1	HOUSING-PUMP	
	5	1	**209-6692**	1	HUB	

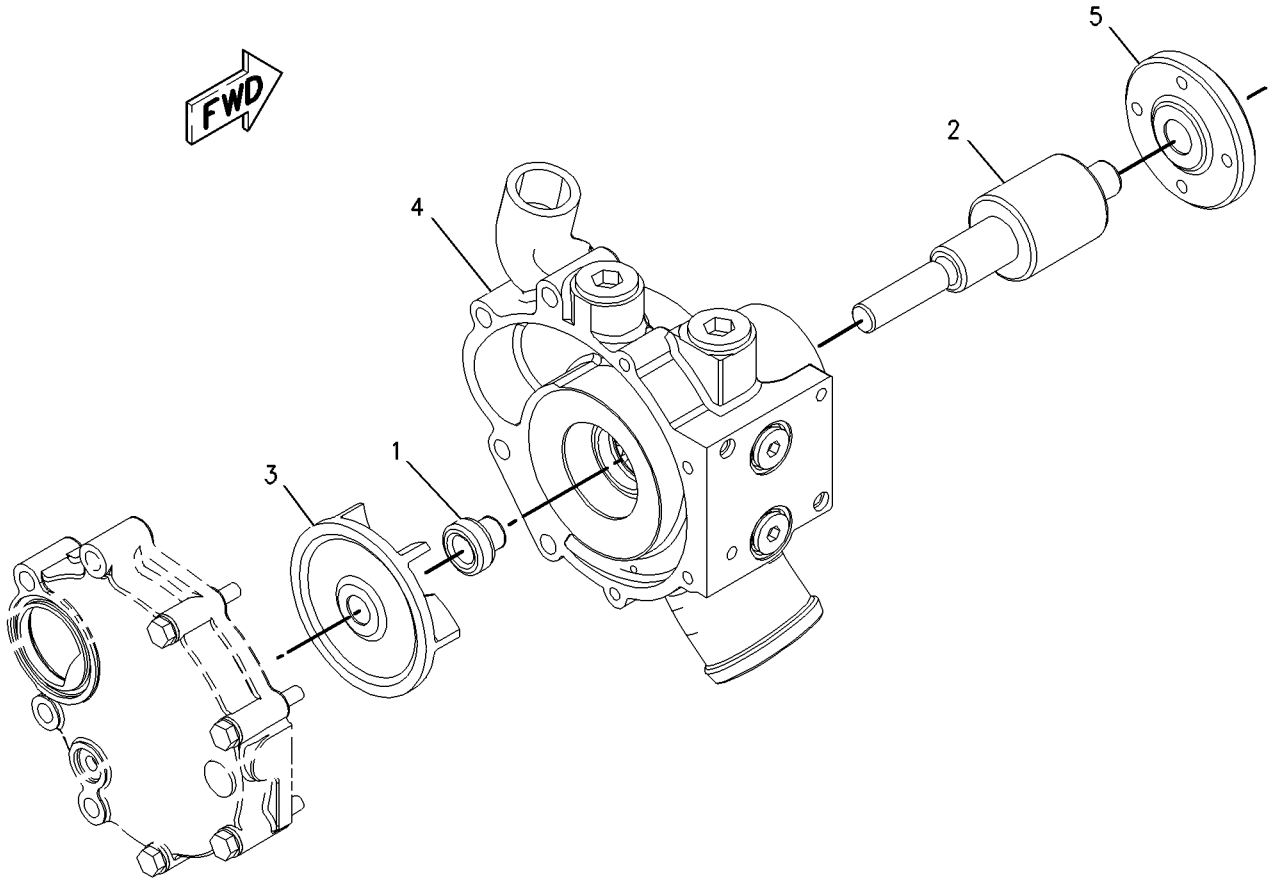

GRAPHIC #1 **<END>** g00864201

211-1812 PUMP GP-WATER

S/N: THX8900-24073

PART OF 282-3823, 282-3824, 282-3825, 282-3826, 301-5768 ENGINE AR, 384-8428 ENGINE AR-CORE

ALSO AN ATTACHMENT

SMCS-1361 **i01998538**

NOTE	REF NO	GRAPHIC REF	PART NUMBER	QTY	PART NAME 1 2 3 4 5 6 (PRODUCT LEVEL)	SEE PAGE
Y	1	1	*210-9096*	1	PUMP GP-WATER	145
	2	1	**2M-4453**	1	SEAL-O-RING	
	3	1	**4J-0525**	1	SEAL-O-RING	
M	4	1	**8T-0644**	4	BOLT (M10X1.5X90-MM)	

M - METRIC PART
Y - SEPARATE ILLUSTRATION

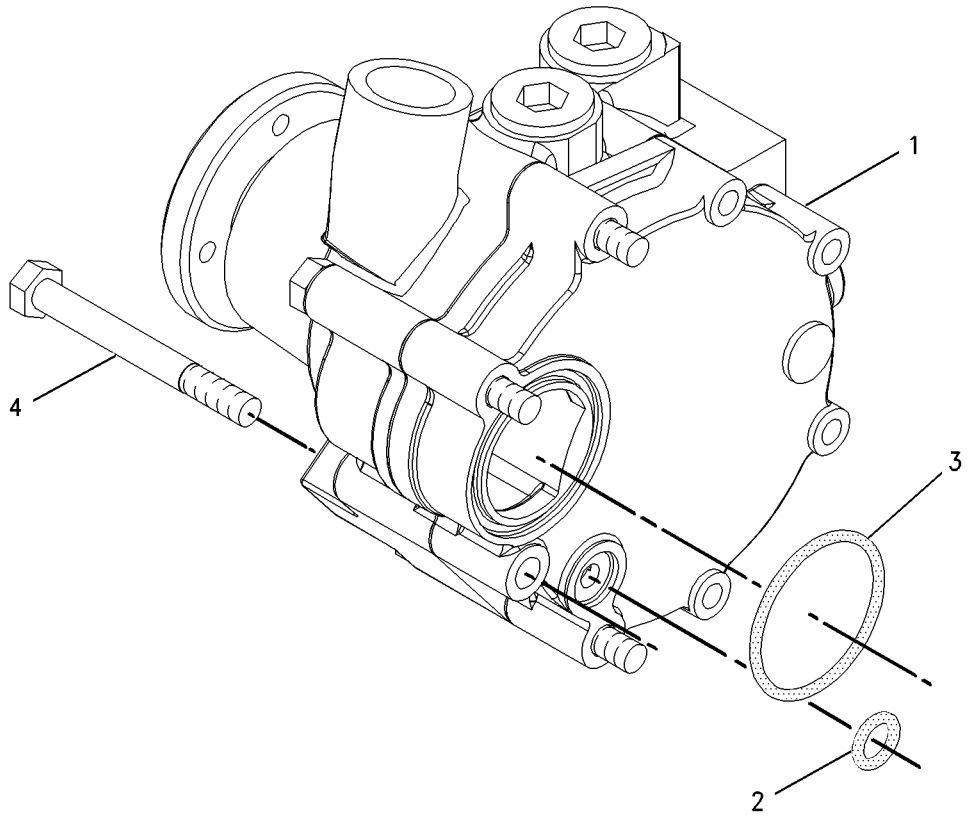

GRAPHIC #1 **<END>** g00924138

211-1812 PUMP GP-WATER

S/N: TXD1-UP; THX8900-UP

PART OF 282-3823, 282-3824, 282-3825, 282-3826, 301-5768 ENGINE AR, 349-3564, 349-3565 ENGINE AR-COMPLETE, 384-8428, 387-8618, 399-3904 ENGINE AR-CORE

ALSO AN ATTACHMENT

SMCS-1361 **i05194279**

NOTE	REF NO	GRAPHIC REF	PART NUMBER	QTY	PART NAME 1 2 3 4 5 6 (PRODUCT LEVEL)	SEE PAGE
CYR	1	1	*350-2536*	1	PUMP GP-WATER	150
	2	1	**147-0182**	1	SEAL-O-RING	
	3	1	**384-9992**	1	SEAL-O-RING	
M	4	1	**8T-0644**	4	BOLT (M10X1.5X90-MM)	

C - CHANGE FROM PREVIOUS TYPE
M - METRIC PART
R - REMFG PART MAY BE AVAILABLE
Y - SEPARATE ILLUSTRATION

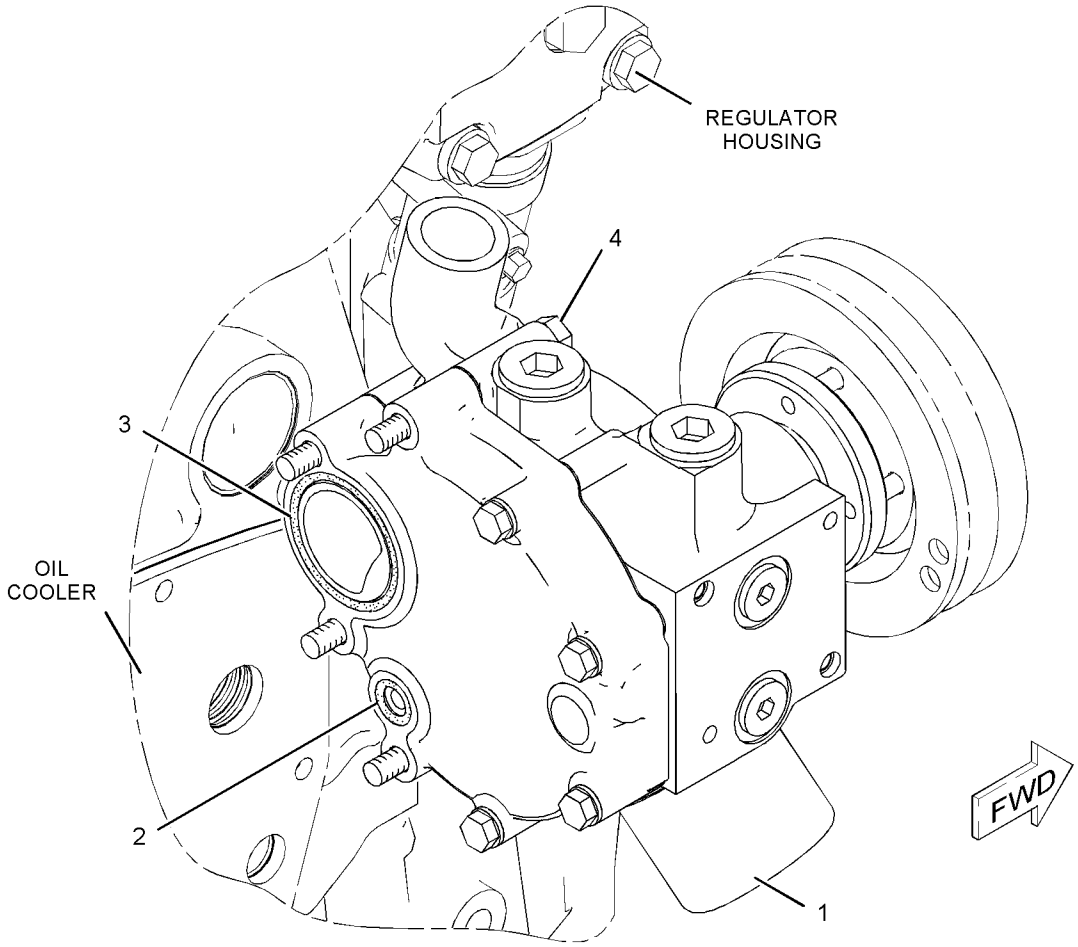

GRAPHIC #1 **<END>** g01038761

349-6123 PUMP GP-WATER

S/N: TXD1-UP; THX24074-UP
PART OF 350-2536 PUMP GP-WATER
ALSO AN ATTACHMENT

SMCS-1361 **i04437375**

NOTE	REF NO	GRAPHIC REF	PART NUMBER	QTY	PART NAME 1 2 3 4 5 6 (PRODUCT LEVEL)	SEE PAGE
	1	1	**350-5417**	1	SEAL-WATER PUMP	
	2	1	**177-1050**	1	SHAFT AS	
	3	1	**177-1056**	1	IMPELLER-PUMP	
	4	1	**209-6692**	1	HUB	
	5	1	**347-3110**	1	HOUSING AS-WATER PUMP	
		1	**177-1058**	1	PLUG	

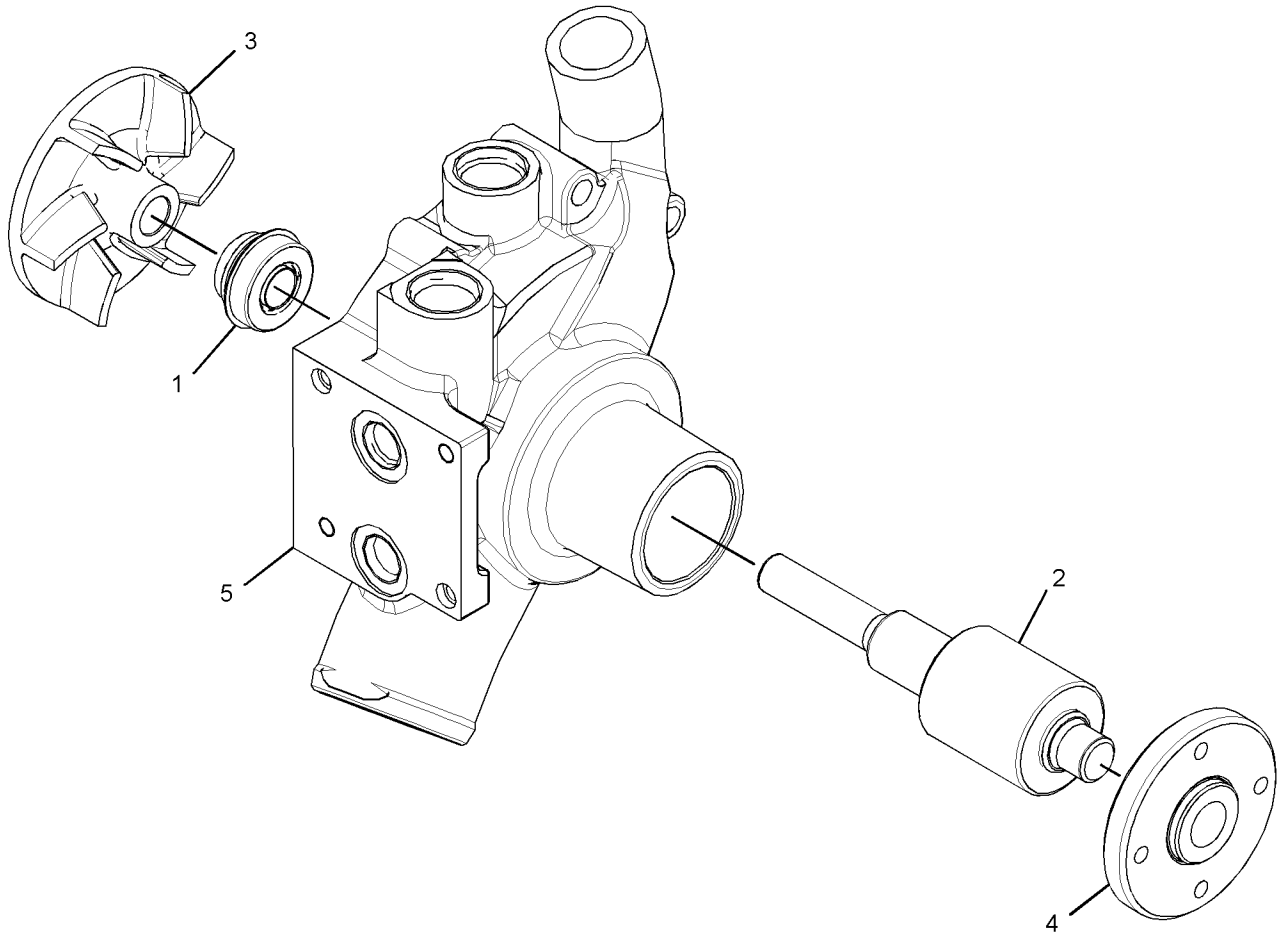

GRAPHIC #1 **<END>** g02064913

350-2536 PUMP GP-WATER

S/N: TXD1-UP; THX24074-UP
PART OF 211-1812 PUMP GP-WATER
ALSO AN ATTACHMENT

SMCS-1361 **i03811820**

NOTE	REF NO	GRAPHIC REF	PART NUMBER	QTY	PART NAME 1 2 3 4 5 6 (PRODUCT LEVEL)	SEE PAGE
	1	1	**177-1044**	1	COVER	
	2	1	**183-2931**	4	BOLT AS	
	3	1	**222-3901**	1	GASKET	
Y	4	1	*349-6123*	1	PUMP AS-WATER	149
	5	1	**3D-2824**	1	SEAL-O-RING	
	6	1	**3K-0360**	2	SEAL-O-RING	
	7	1	**9S-8005**	2	PLUG-O-RING	
	8	1	**9S-8008**	1	PLUG-O-RING	

Y - SEPARATE ILLUSTRATION

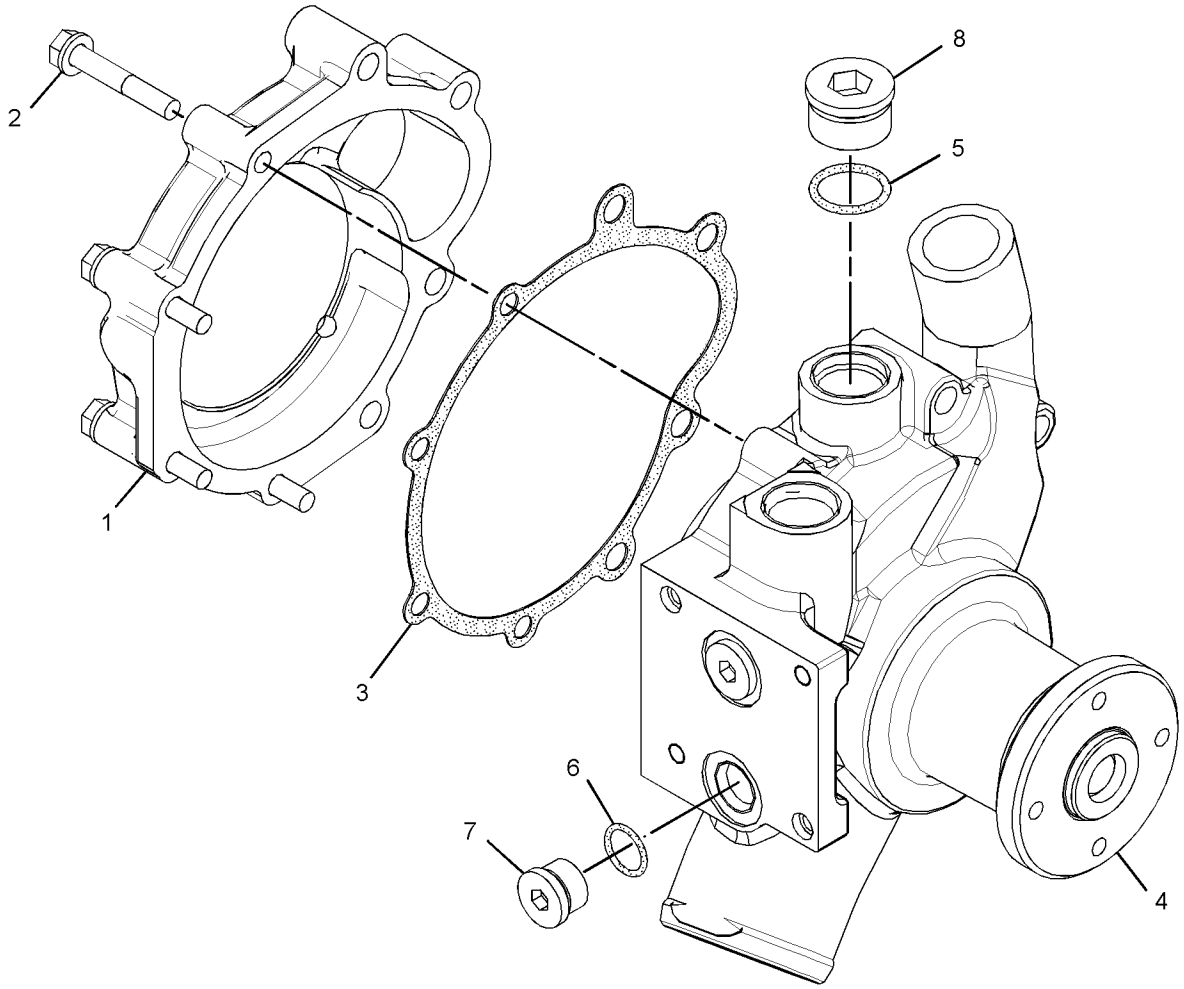

GRAPHIC #1 **<END>** g02064914

266-9418 RADIATOR AR—WASTE HANDLING

S/N: SMC1-UP; GCT1-UP
6-FINS PER INCH
AN ATTACHMENT

SMCS-1353 **i05341793**

NOTE	PART NUMBER	QTY	PART NAME 1 2 3 4 5 6 (PRODUCT LEVEL)	SEE PAGE
	223-5098	6	CORE AS-RADIATOR	

<END>

383-6921 RADIATOR AR—WASTE HANDLING

S/N: SMC1-UP; GCT1-UP
6-FINS PER INCH
AN ATTACHMENT

SMCS-1353 **i05350417**

NOTE	PART NUMBER	QTY	PART NAME 1 2 3 4 5 6 (PRODUCT LEVEL)	SEE PAGE
	372-4484	1	CORE AS-RADIATOR	
	372-4485	1	CORE AS-RADIATOR	

<END>

227-0833 RADIATOR GP

S/N: SMC1-458; GCT1-855

PART OF 279-9549 INSTALLATION AR-ENGINE

SMCS-1353 **i02742898**

NOTE	REF NO	GRAPHIC REF	PART NUMBER	QTY	PART NAME 1 2 3 4 5 6 (PRODUCT LEVEL)	SEE PAGE
	1	1	**1P-4278**	10	CLAMP-HOSE	
	2	1	**1Y-7452**	1	FITTING	
	3	1	**8F-8151**	1	VALVE-SHUTOFF (ENGINE COOLANT)	
	4	1	**106-4572**	5	HOSE	
	5	1	**169-3797**	1	BRACKET AS (BOTTOM)	
		1	**6B-4594**	4	RIVET	
M		1	**8T-3490**	8	NUT-WELD (M10X1.5-THD)	
	6	1	**169-3798**	1	SHIELD AS-BOTTOM (LH)	
		1	**4D-6716**	4	RIVET-POP	
		1	**7G-5186**	3	SPACER (13X19X4.5-MM THK)	
M		1	**8T-3490**	3	NUT-WELD (M10X1.5-THD)	
	7	1	**169-3799**	1	SHIELD AS-UPPER (LH)	
		1	**4D-6716**	4	RIVET-POP	
		1	**7G-5186**	3	SPACER (13X19X4.5-MM THK)	
M		1	**8T-3490**	2	NUT-WELD (M10X1.5-THD)	
	8	1	**169-3800**	1	SHIELD AS-BOTTOM (RH)	
		1	**4D-6716**	4	RIVET-POP	
		1	**7G-5186**	3	SPACER (13X19X4.5-MM THK)	
M		1	**8T-3490**	3	NUT-WELD (M10X1.5-THD)	
	9	1	**169-3801**	1	SHIELD AS-UPPER (RH)	
		1	**4D-6716**	4	RIVET-POP	
		1	**7G-5186**	3	SPACER (13X19X4.5-MM THK)	
M		1	**8T-3490**	2	NUT-WELD (M10X1.5-THD)	
	10	1	**169-3812**	1	BRACKET AS (RH)	
M		1	**8T-3490**	1	NUT-WELD (M10X1.5-THD)	
	11	1	**180-6695**	1	BAFFLE AS-RADIATOR	
		1	**6B-4594**	5	RIVET	
M		1	**8T-3490**	2	NUT-WELD (M10X1.5-THD)	
	12	1	**180-6696**	1	BAFFLE AS-RADIATOR	
		1	**6B-4594**	6	RIVET	
M		1	**8T-3490**	2	NUT-WELD (M10X1.5-THD)	
	13	1	**224-3981**	1	BRACKET AS (LH)	
	14	1	**224-4013**	1	BAFFLE AS (TOP)	
	15	1	**227-0835**	1	BAFFLE AS-RADIATOR (BOTTOM)	
		1	**6B-4594**	4	RIVET	
	16	1	**227-0836**	1	BAFFLE AS-RADIATOR (BOTTOM)	
		1	**6B-4594**	3	RIVET	
Y	17	1	*241-2756*	1	RADIATOR GP	154
	18	1	**003-2143**	1	ELBOW	
	19	1	**003-9514**	1	COUPLING-PIPE	
	20	1	**7X-7729**	23	WASHER (11X25X3-MM THK)	
	21	1	**8T-4121**	12	WASHER-HARD (11X21X2.5-MM THK)	
M	22	1	**8T-4136**	12	BOLT (M10X1.5X25-MM)	
M	23	1	**8T-4185**	4	BOLT (M10X1.5X50-MM)	
M	24	1	**8T-4195**	9	BOLT (M10X1.5X30-MM)	
M	25	1	**8T-4196**	10	BOLT (M10X1.5X35-MM)	

M - METRIC PART
Y - SEPARATE ILLUSTRATION

227-0833 **RADIATOR GP (*contd.*)** **i02742898**

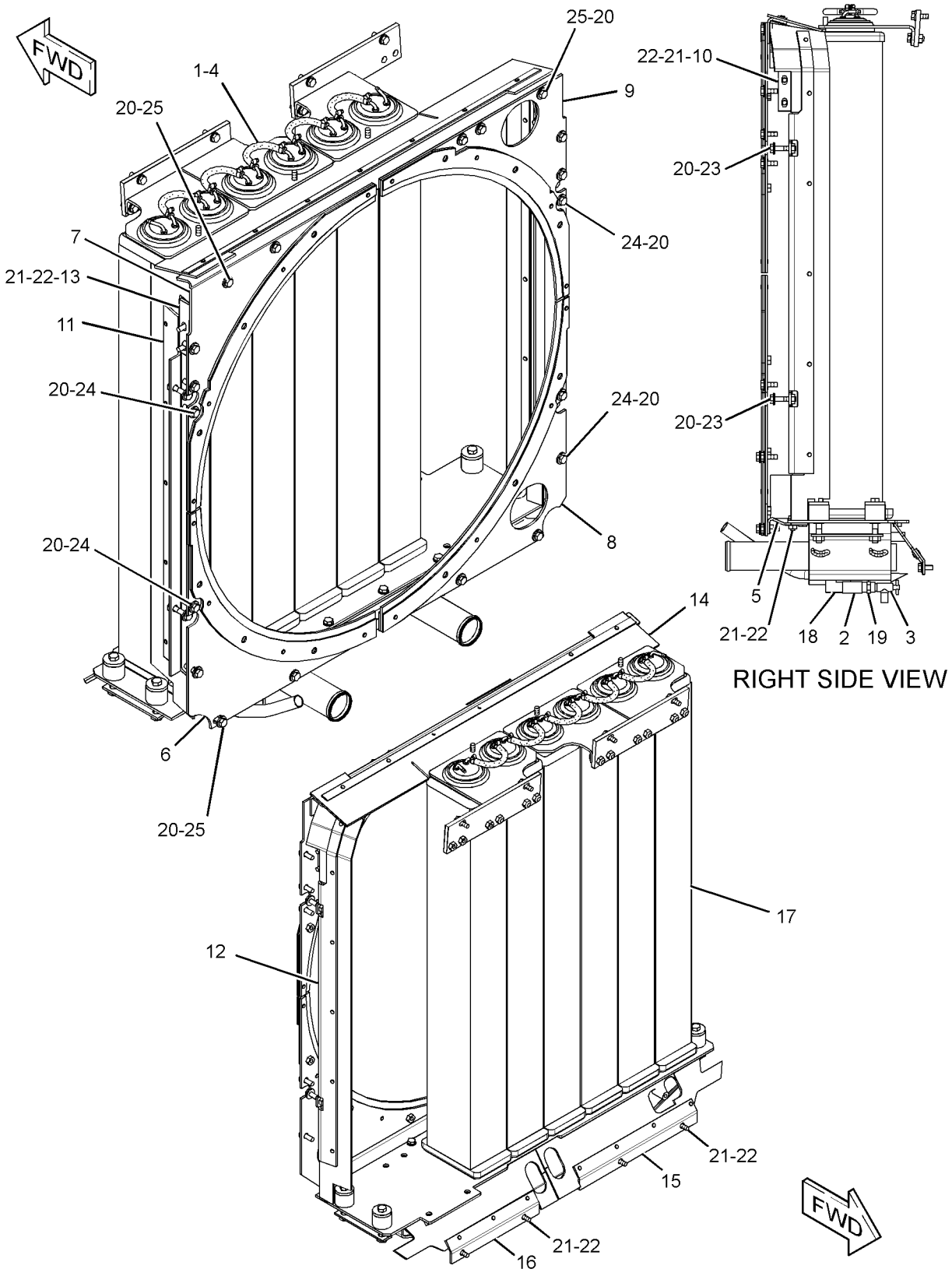

GRAPHIC #1 **<END>** g01379120

241-2756 RADIATOR GP

S/N: SMC1-497; GCT1-963

PART OF 227-0833, 358-2851 RADIATOR GP

SMCS-1353 **i02441322**

NOTE	REF NO	GRAPHIC REF	PART NUMBER	QTY	PART NAME 1 2 3 4 5 6 (PRODUCT LEVEL)	SEE PAGE
	1	1	**6I-2431**	6	SEAL	
	2	1	**6I-2435**	6	SPACER (80X108X25-MM THK)	
	3	1	**8K-8517**	4	WASHER (0.531X1.75X0.25-IN THK)	
	4	1	**9S-4497**	4	BLOCK-MOUNTING	
	5	1	**169-3796**	2	PLATE AS	
					(EACH INCLUDES)	
M		1	**8T-3597**	2	NUT-WELD (M12X1.75-THD)	
	6	1	**189-5586**	1	BRACKET AS	
	7	1	**189-5587**	2	BRACKET AS	
					(EACH INCLUDES)	
M		1	**8T-5413**	1	STUD-WELD (M10X1.5X25-MM)	
	8	1	**189-5588**	2	PLATE AS	
	9	1	**223-5111**	6	CORE AS-RADIATOR	
	10	1	**240-9755**	1	TANK AS-BOTTOM	
		1	**6B-7246**	1	BOSS (3/8 NPTX0.5-IN)	
	11	1	**8T-4121**	13	WASHER-HARD (11X21X2.5-MM THK)	
M	12	1	**8T-4176**	4	BOLT (M12X1.75X90-MM)	
M	13	1	**8T-4195**	13	BOLT (M10X1.5X30-MM)	

M - METRIC PART

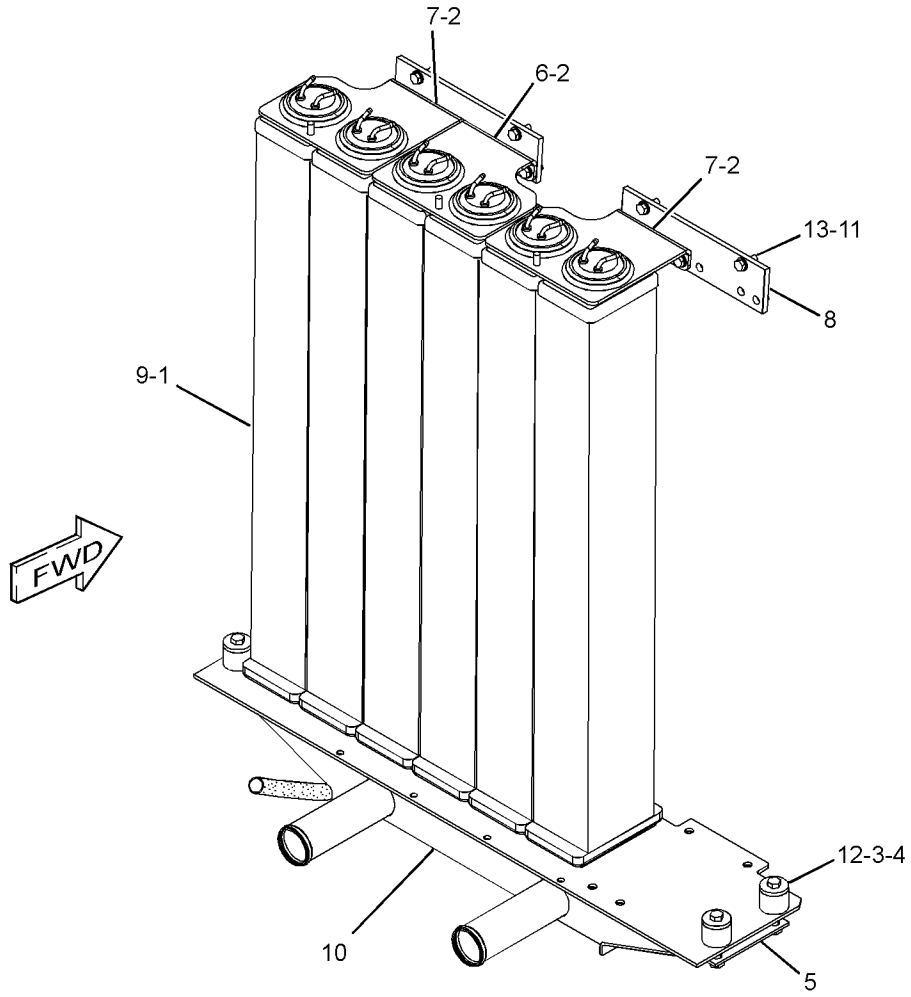

GRAPHIC #1 **<END>** g01209184

358-2851 RADIATOR GP

S/N: SMC459-497; GCT856-963

PART OF 279-9549 INSTALLATION AR-ENGINE

SMCS-1353 **i04544141**

NOTE	REF NO	GRAPHIC REF	PART NUMBER	QTY	PART NAME 1 2 3 4 5 6 (PRODUCT LEVEL)	SEE PAGE
	1	1	**1P-4278**	10	CLAMP-HOSE	
	2	1	**1Y-7452**	1	FITTING	
	3	1	**8F-8151**	1	VALVE-SHUTOFF	
	4	1	**106-4572**	5	HOSE	
	5	1	**169-3797**	1	BRACKET AS	
		1	**6B-4594**	4	RIVET	
	6	1	**169-3798**	1	SHIELD AS-BOTTOM (LH)	
		1	**4D-6716**	4	RIVET-POP	
		1	**7G-5186**	3	SPACER (13X19X4.5-MM THK)	
M		1	**8T-3490**	3	NUT-WELD (M10X1.5-THD)	
	7	1	**169-3800**	1	SHIELD AS-BOTTOM (RH)	
		1	**4D-6716**	4	RIVET-POP	
		1	**7G-5186**	3	SPACER (13X19X4.5-MM THK)	
M		1	**8T-3490**	3	NUT-WELD (M10X1.5-THD)	
	8	1	**180-6695**	1	BAFFLE AS-RADIATOR	
		1	**6B-4594**	5	RIVET	
M		1	**8T-3490**	2	NUT-WELD (M10X1.5-THD)	
	9	1	**180-6696**	1	BAFFLE AS-RADIATOR	
		1	**6B-4594**	6	RIVET	
M		1	**8T-3490**	2	NUT-WELD (M10X1.5-THD)	
	10	1	**227-0835**	1	BAFFLE AS-RADIATOR (BOTTOM)	
		1	**6B-4594**	4	RIVET	
	11	1	**227-0836**	1	BAFFLE AS-RADIATOR (BOTTOM)	
		1	**6B-4594**	3	RIVET	
Y	12	1	*241-2756*	1	RADIATOR GP	154
	13	1	**358-2852**	1	BAFFLE AS-RADIATOR	
		1	**6B-4594**	7	RIVET	
M		1	**8T-3490**	5	NUT-WELD (M10X1.5-THD)	
	14	1	**358-9384**	1	BRACKET AS	
	15	1	**358-9385**	1	BRACKET AS	
	16	1	**362-2187**	1	SHIELD AS-UPPER (LH)	
		1	**4D-6716**	4	RIVET-POP	
		1	**7G-5186**	3	SPACER (13X19X4.5-MM THK)	
M		1	**8T-3490**	2	NUT-WELD (M10X1.5-THD)	
	17	1	**362-2188**	1	SHIELD AS-UPPER (RH)	
		1	**4D-6716**	4	RIVET-POP	
		1	**7G-5186**	3	SPACER (13X19X4.5-MM THK)	
M		1	**8T-3490**	2	NUT-WELD (M10X1.5-THD)	
	18	1	**003-2143**	1	ELBOW	
	19	1	**003-9514**	1	COUPLING-PIPE	
	20	1	**7X-7729**	25	WASHER (11X25X3-MM THK)	
	21	1	**8T-4121**	12	WASHER-HARD (11X21X2.5-MM THK)	
M	22	1	**8T-4136**	12	BOLT (M10X1.5X25-MM)	
M	23	1	**8T-4185**	4	BOLT (M10X1.5X50-MM)	
M	24	1	**8T-4195**	9	BOLT (M10X1.5X30-MM)	
M	25	1	**8T-4196**	12	BOLT (M10X1.5X35-MM)	

M - METRIC PART
Y - SEPARATE ILLUSTRATION

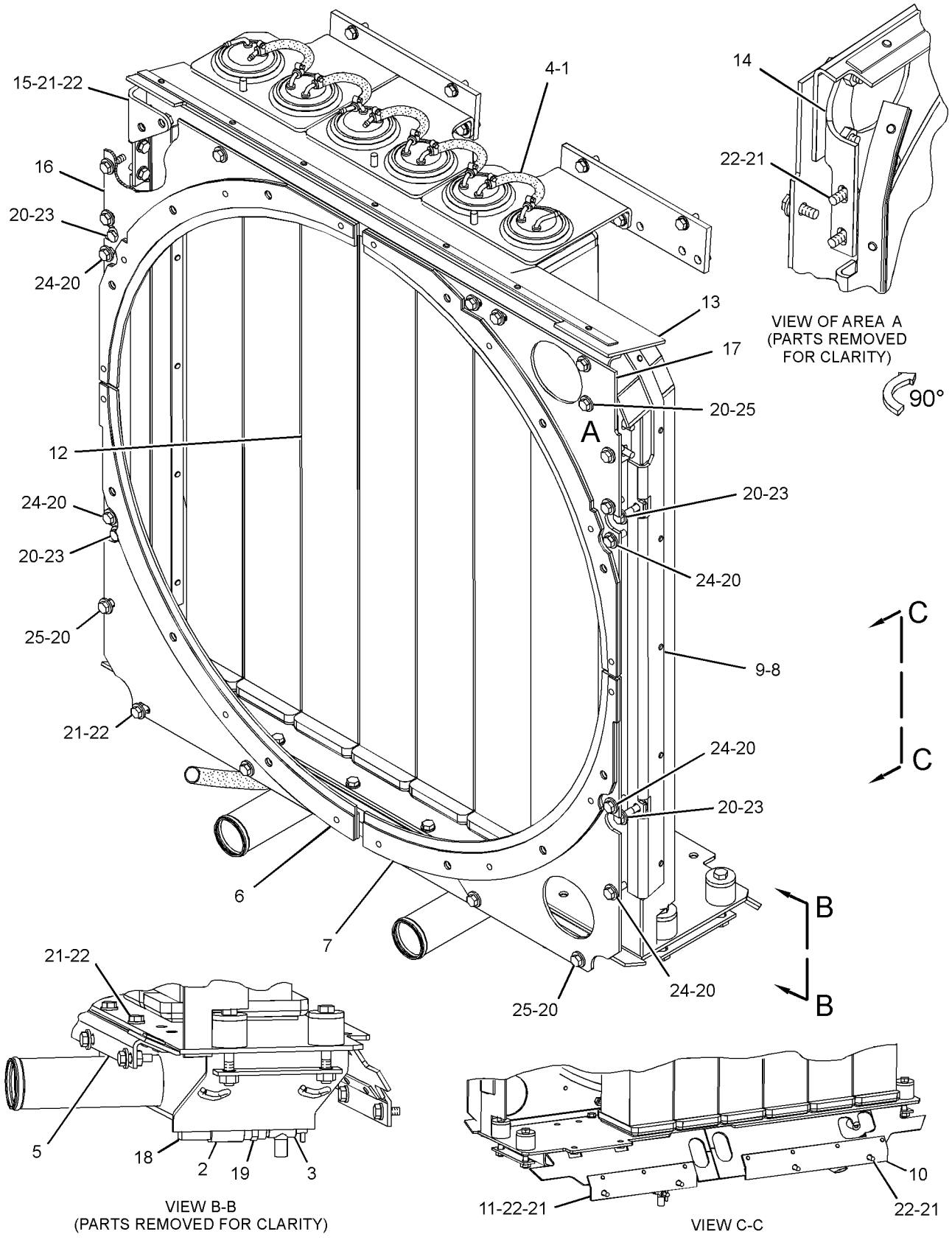

VIEW OF AREA A
(PARTS REMOVED
FOR CLARITY)

90°

VIEW B-B
(PARTS REMOVED FOR CLARITY)

VIEW C-C

GRAPHIC #1 **<END>** g02251816

372-6368 RADIATOR GP

S/N: SMC498-UP; GCT964-UP

PART OF 372-6406 INSTALLATION AR-ENGINE

SMCS-1353 **i05178911**

NOTE	REF NO	GRAPHIC REF	PART NUMBER	QTY	PART NAME 1 2 3 4 5 6 (PRODUCT LEVEL)	SEE PAGE
	1	1	**169-3797**	1	BRACKET AS	
M		1	**8T-3490**	8	NUT-WELD (M10X1.5-THD)	
		1	**107-2207**	4	RIVET-POP	
	2	1	**169-3798**	1	SHIELD AS-BOTTOM (LH)	
	3	1	**169-3800**	1	SHIELD AS-BOTTOM (RH)	
					(EACH SHIELD AS INCLUDES)	
		1	**4D-6716**	4	RIVET-POP	
		1	**7G-5186**	3	SPACER (13X19X4.5-MM THK)	
M		1	**8T-3490**	3	NUT-WELD (M10X1.5-THD)	
	4	1	**180-6695**	1	BAFFLE AS-RADIATOR	
		1	**6B-4594**	5	RIVET	
M		1	**8T-3490**	2	NUT-WELD (M10X1.5-THD)	
	5	1	**180-6696**	1	BAFFLE AS-RADIATOR	
		1	**6B-4594**	6	RIVET	
M		1	**8T-3490**	2	NUT-WELD (M10X1.5-THD)	
	6	1	**185-1047**	2	ADAPTER	
	7	1	**227-0835**	1	BAFFLE AS-RADIATOR (BOTTOM)	
		1	**6B-4594**	4	RIVET	
	8	1	**227-0836**	1	BAFFLE AS-RADIATOR (BOTTOM)	
		1	**6B-4594**	3	RIVET	
	9	1	**358-9384**	1	BRACKET AS (RH)	
	10	1	**358-9385**	1	BRACKET AS (LH)	
	11	1	**362-2187**	1	SHIELD AS-UPPER (LH)	
	12	1	**362-2188**	1	SHIELD AS-UPPER (RH)	
					(EACH SHIELD AS INCLUDES)	
		1	**4D-6716**	4	RIVET-POP	
		1	**7G-5186**	3	SPACER (13X19X4.5-MM THK)	
M		1	**8T-3490**	2	NUT-WELD (M10X1.5-THD)	
	13	1	**372-6369**	1	BAFFLE AS-RADIATOR	
	14	1	**372-6370**	1	DRAIN AS	
		1	**3K-0360**	1	SEAL-O-RING	
		1	**8F-8151**	1	VALVE-SHUTOFF	
		1	**8T-4238**	1	ADAPTER	
		1	**003-9514**	2	COUPLING-PIPE	
		1	**309-5140**	1	CONNECTOR	
	15	1	**372-6371**	1	HOSE	
	16	1	**372-6372**	1	HOSE	
	17	1	**372-6378**	2	CLIP	
Y	18	1	*372-6381*	1	RADIATOR GP	159
	19	1	**159-1503**	4	CLAMP-HOSE	
	20	1	**219-0669**	2	SEAL-O-RING	
	21	1	**7X-7729**	25	WASHER (11X25X3-MM THK)	
	22	1	**8T-4121**	12	WASHER-HARD (11X21X2.5-MM THK)	
M	23	1	**8T-4136**	12	BOLT (M10X1.5X25-MM)	
M	24	1	**8T-4185**	4	BOLT (M10X1.5X50-MM)	
M	25	1	**8T-4195**	9	BOLT (M10X1.5X30-MM)	
M	26	1	**8T-4196**	12	BOLT (M10X1.5X35-MM)	
	27	1	**8T-4224**	4	WASHER-HARD (8.8X16X2-MM THK)	
M	28	1	**8T-4908**	4	BOLT (M8X1.25X25-MM)	

M - METRIC PART
Y - SEPARATE ILLUSTRATION

372-6368 **RADIATOR GP** (*contd.*) **i05178911**

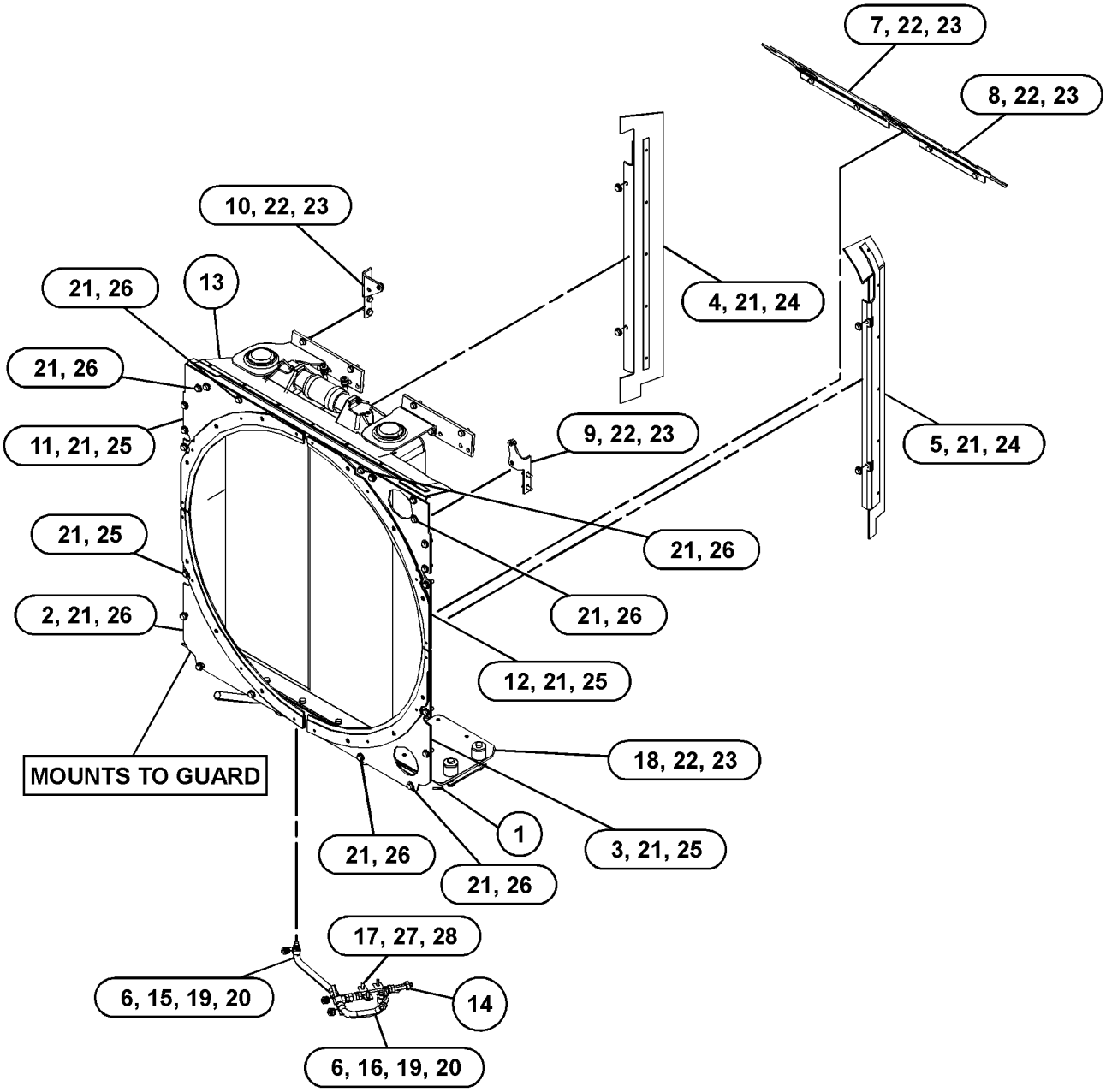

GRAPHIC #1 **<END>** g03171076

372-6381 RADIATOR GP

S/N: SMC498-UP; GCT964-UP
PART OF 372-6368 RADIATOR GP
TYPE 1

SMCS-1353 **i05317254**

NOTE	REF NO	GRAPHIC REF	PART NUMBER	QTY	PART NAME 1 2 3 4 5 6 (PRODUCT LEVEL)	SEE PAGE
	1	1	**6I-2435**	2	SPACER (80X108X25-MM THK)	
	2	1	**8K-8517**	4	WASHER (0.531X1.75X0.25-IN THK)	
	3	1	**9S-4497**	4	BLOCK-MOUNTING	
	4	1	**169-3796**	2	PLATE AS	
					(EACH INCLUDES)	
M		1	**8T-3597**	2	NUT-WELD (M12X1.75-THD)	
	5	1	**189-5588**	2	PLATE AS	
	6	1	**243-2076**	4	WASHER-HARD (12.2X45.5X4.4-MM THK)	
	7	1	**371-2442**	1	CORE AS-RADIATOR	
	8	1	**371-2443**	1	CORE AS-RADIATOR	
	9	1	**372-6383**	1	RETAINER	
	10	1	**372-6384**	1	RETAINER	
Y	11	1	*372-6385*	1	SUPPORT GP-RADIATOR	163
	12	1	**372-6387**	1	HOSE	
	13	1	*337-8767*	2	CONNECTOR AS	
					(EACH INCLUDES)	
		1	**238-5079**	1	SEAL-O-RING	
		1	**337-8766**	1	CONNECTOR	
	14	1	**8T-4121**	10	WASHER-HARD (11X21X2.5-MM THK)	
M	15	1	**8T-4176**	4	BOLT (M12X1.75X90-MM)	
M	16	1	**8T-4195**	10	BOLT (M10X1.5X30-MM)	
M	17	1	**8T-4910**	4	BOLT (M12X1.75X60-MM)	
	18	1	**8T-4984**	2	CLAMP-HOSE	
J	19	1	**241-3048**		SEAL (10.5-DM)	

J - ORDER BY THE DECIMETER
M - METRIC PART
Y - SEPARATE ILLUSTRATION

372-6381 **RADIATOR GP (*contd.*)** **i05317254**

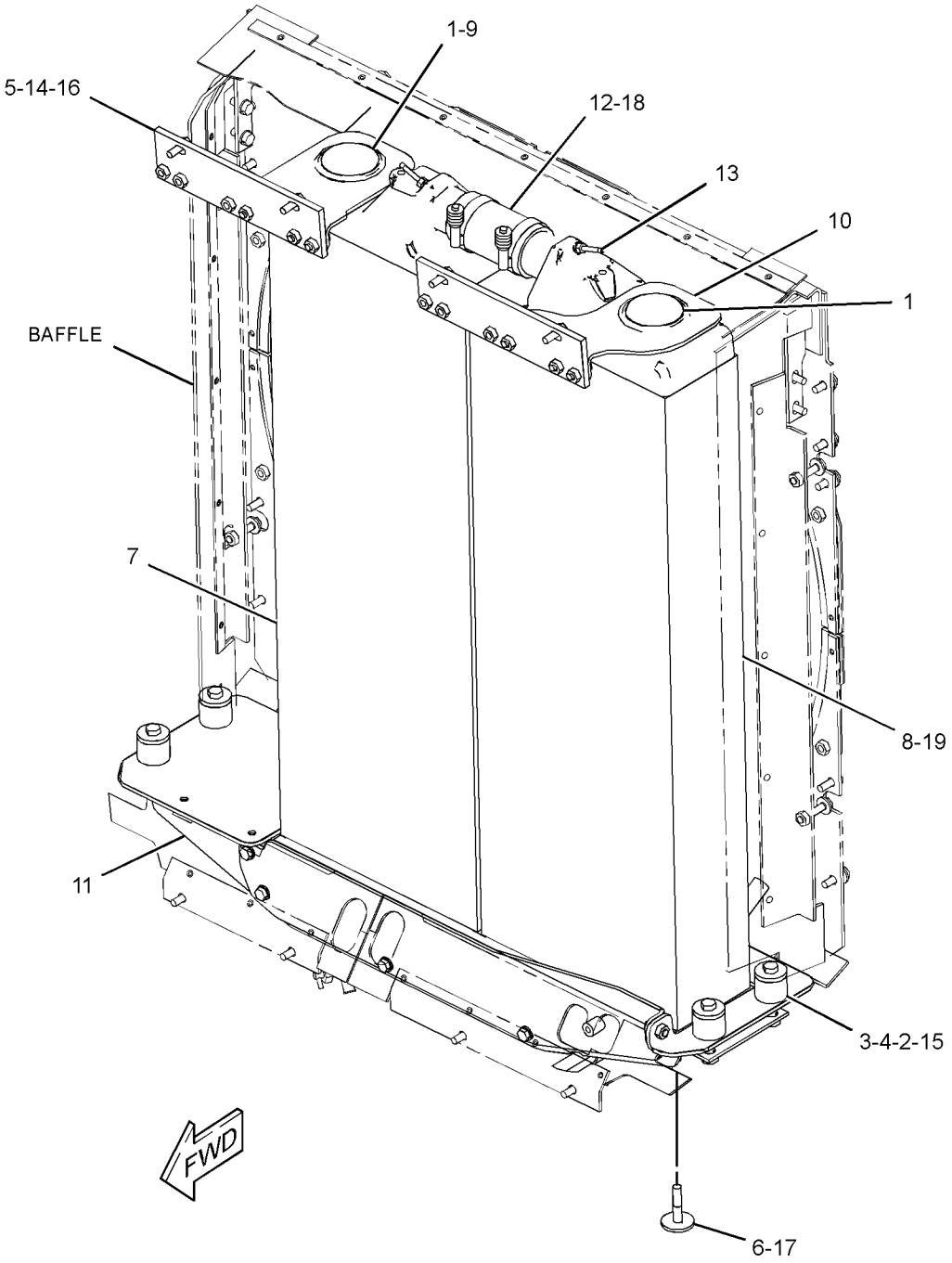

GRAPHIC #1 **<END>** g03369870

372-6381 RADIATOR GP

S/N: SMC498-UP; GCT964-UP
PART OF 372-6368 RADIATOR GP
TYPE 2

SMCS-1353 **i05317108**

NOTE	REF NO	GRAPHIC REF	PART NUMBER	QTY	PART NAME 1 2 3 4 5 6 (PRODUCT LEVEL)	SEE PAGE
	1	1	**6I-2435**	2	SPACER (80X108X25-MM THK)	
	2	1	**8K-8517**	4	WASHER (0.531X1.75X0.25-IN THK)	
	3	1	**9S-4497**	4	BLOCK-MOUNTING	
	4	1	**169-3796**	2	PLATE AS	
					(EACH INCLUDES)	
M		1	**8T-3597**	2	NUT-WELD (M12X1.75-THD)	
	5	1	**189-5588**	2	PLATE AS	
	6	1	**243-2076**	4	WASHER-HARD (12.2X45.5X4.4-MM THK)	
	7	1	**371-2442**	1	CORE AS-RADIATOR	
	8	1	**371-2443**	1	CORE AS-RADIATOR	
	9	1	**372-6383**	1	RETAINER	
	10	1	**372-6384**	1	RETAINER	
Y	11	1	*372-6385*	1	SUPPORT GP-RADIATOR	163
	12	1	**372-6387**	1	HOSE	
	13	1	*337-8767*	2	CONNECTOR AS	
					(EACH INCLUDES)	
		1	**238-5079**	1	SEAL-O-RING	
		1	**337-8766**	1	CONNECTOR	
	14	1	**8T-4121**	10	WASHER-HARD (11X21X2.5-MM THK)	
M	15	1	**8T-4176**	4	BOLT (M12X1.75X90-MM)	
M	16	1	**8T-4195**	10	BOLT (M10X1.5X30-MM)	
M	17	1	**8T-4910**	4	BOLT (M12X1.75X60-MM)	
	18	1	**8T-4984**	2	CLAMP-HOSE	

M - METRIC PART
Y - SEPARATE ILLUSTRATION

372-6381 **RADIATOR GP (*contd.*)** **i05317108**

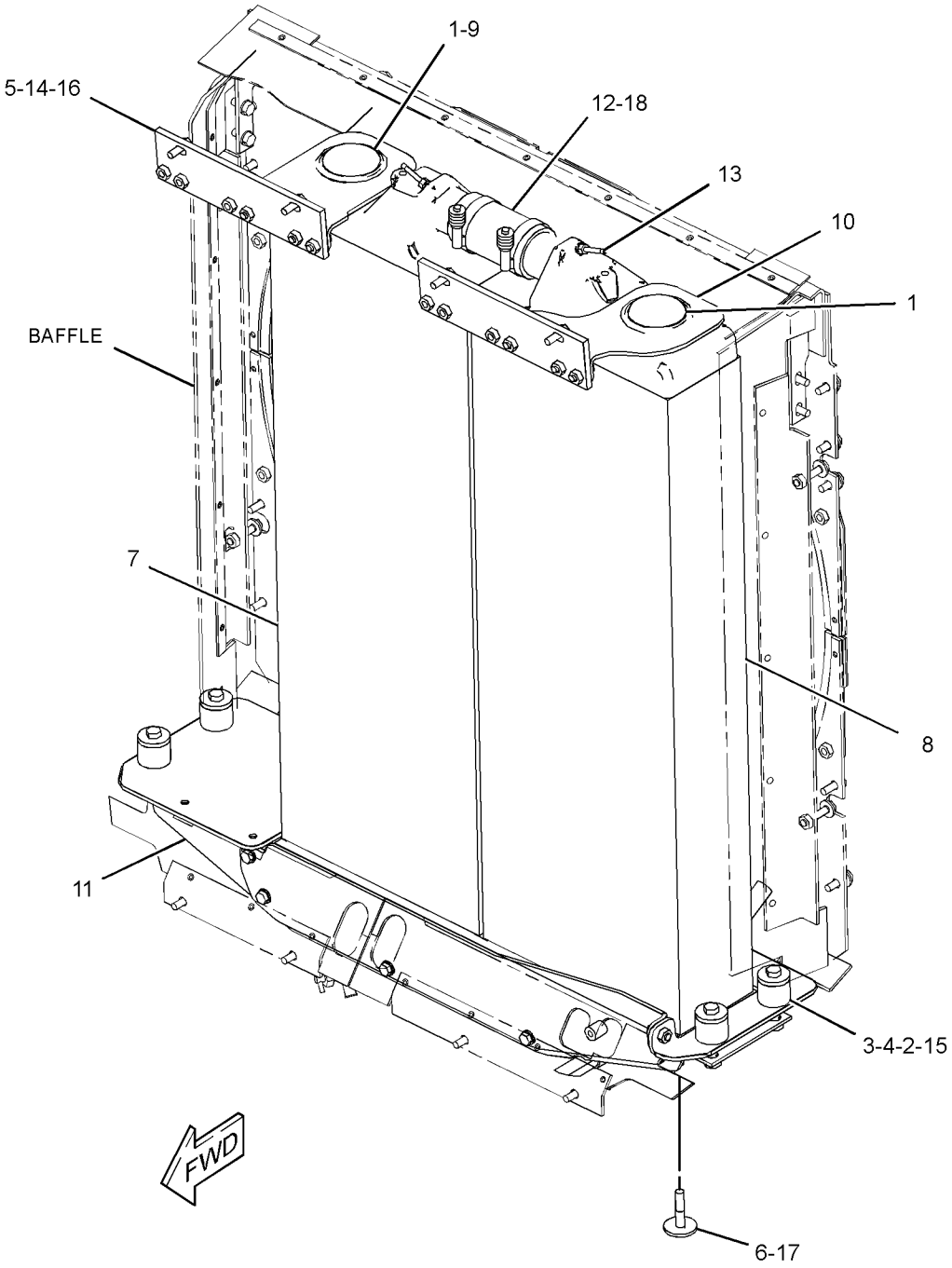

GRAPHIC #1 **<END>** g03369957

372-6385 SUPPORT GP-RADIATOR

S/N: SMC498-UP; GCT964-UP

PART OF 372-6381 RADIATOR GP

SMCS-1351, 1353

i05178917

NOTE	REF NO	GRAPHIC REF	PART NUMBER	QTY	PART NAME 1 2 3 4 5 6 (PRODUCT LEVEL)	SEE PAGE
	1	1	**3W-2568**	4	MOUNTING	
	2	1	**245-9941**	4	WASHER-HARD (12.2X55.1X3.2-MM THK)	
	3	1	**372-6386**	1	SUPPORT AS	
	4	1	**372-6388**	1	PLATE AS	
	5	1	**372-6389**	1	TUBE	
	6	1	**4S-1962**	2	CLIP	
	7	1	**8T-4121**	5	WASHER-HARD (11X21X2.5-MM THK)	
M	8	1	**8T-4136**	7	BOLT (M10X1.5X25-MM)	
	9	1	**8T-7934**	2	WASHER-HARD (11X21X5-MM THK)	
E	10	1	**122-2358**		SEAL (73-CM)	

E - ORDER BY THE CENTIMETER
M - METRIC PART

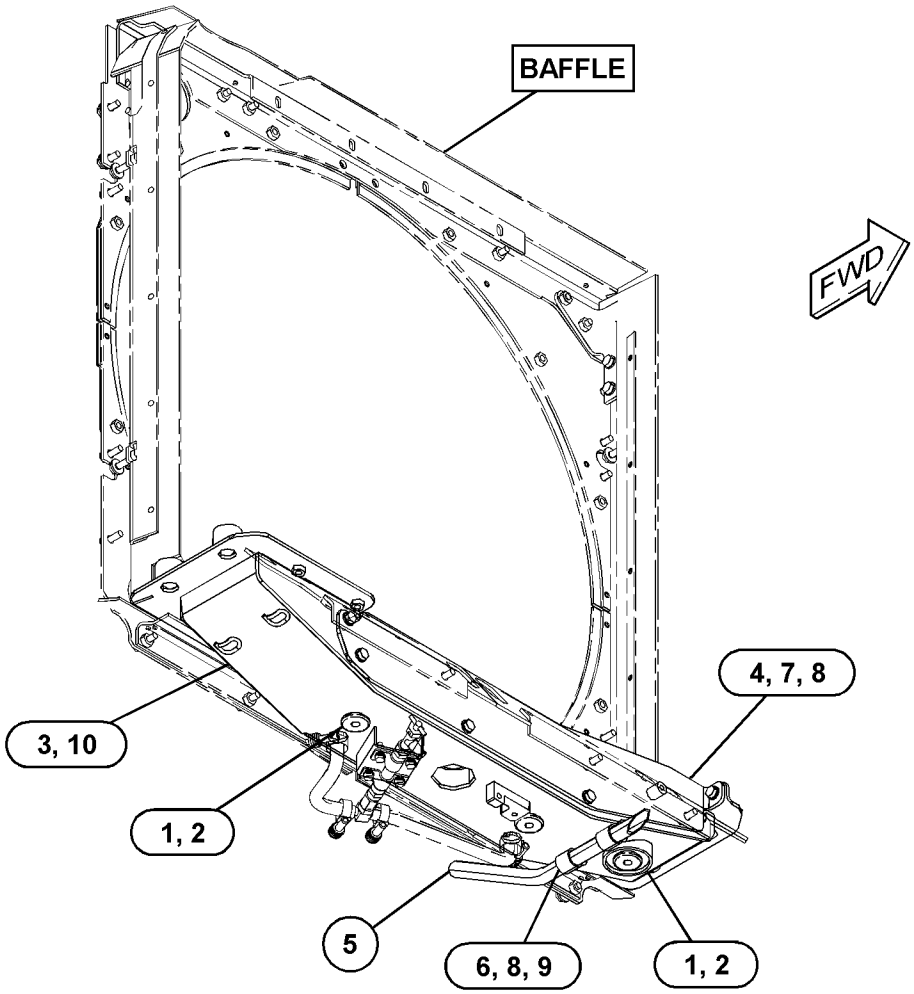

GRAPHIC #1

<END>

g03173363

169-1840 TANK GP-COOLANT

S/N: SMC1-UP; GCT1-UP

PART OF 255-5232, 372-6364 TANK GP-COOLANT

SMCS-1377 **i04892864**

NOTE	REF NO	GRAPHIC REF	PART NUMBER	QTY	PART NAME 1 2 3 4 5 6 (PRODUCT LEVEL)	SEE PAGE
	1	1	**294-3342**	1	CAP AS-RADIATOR	
	2	1	**169-1838**	1	TANK AS-EXPANSION	
	2A	1	**3L-5893**	1	TUBE-OVERFLOW	
	2B	1	**8N-8846**	1	NECK-FILLER	

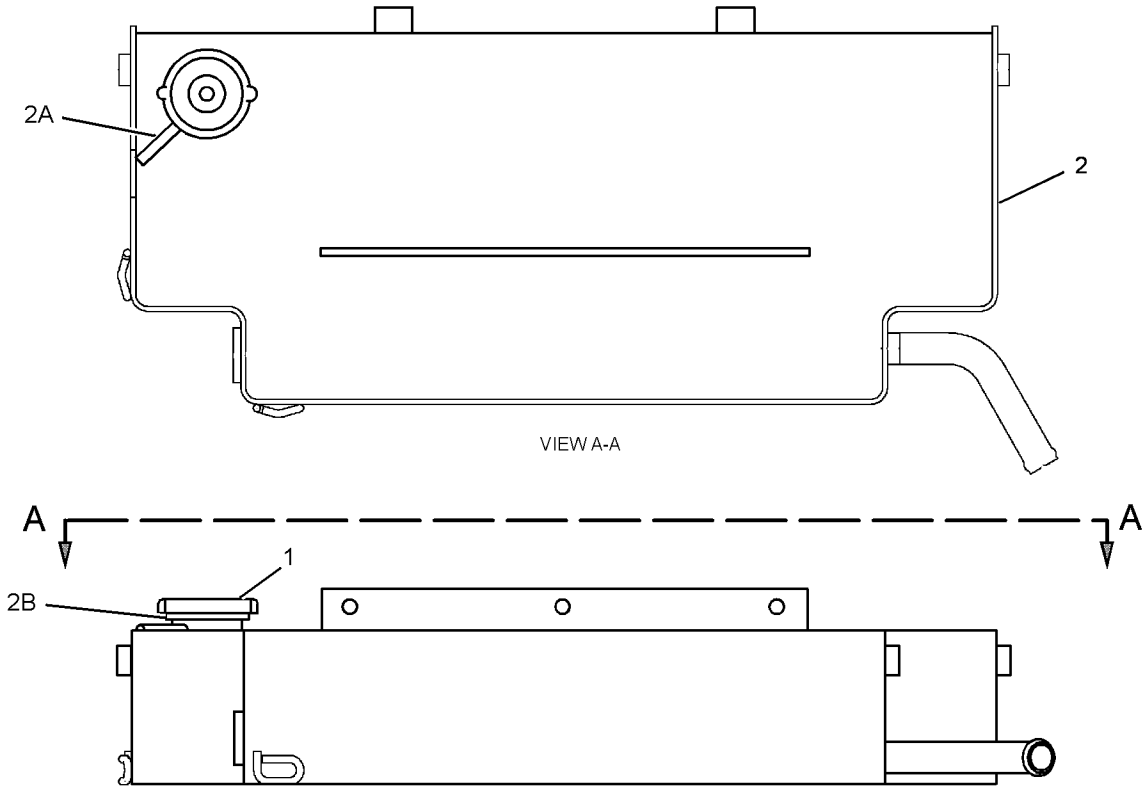

GRAPHIC #1 **<END>** g01676976

237-4214 TANK GP-COOLANT–WITH HEAT SHIELDING

S/N: SMC1-UP; GCT1-UP

PART OF 282-9553, 282-9554, 282-9555 CONVERSION AR-HEAT SHIELD AN ATTACHMENT

SMCS-1377 **i02455306**

NOTE	REF NO	GRAPHIC REF	PART NUMBER	QTY	PART NAME 1 2 3 4 5 6 (PRODUCT LEVEL)	SEE PAGE
	1	1	**031-1119**	1	CAP AS-RADIATOR	
	2	1	**237-4213**	1	TANK AS-EXPANSION	
	2A	1	**3L-5893**	1	TUBE-OVERFLOW	
	2B	1	**7T-1099**	2	LINK	
	2C	1	**8N-8846**	1	NECK-FILLER	

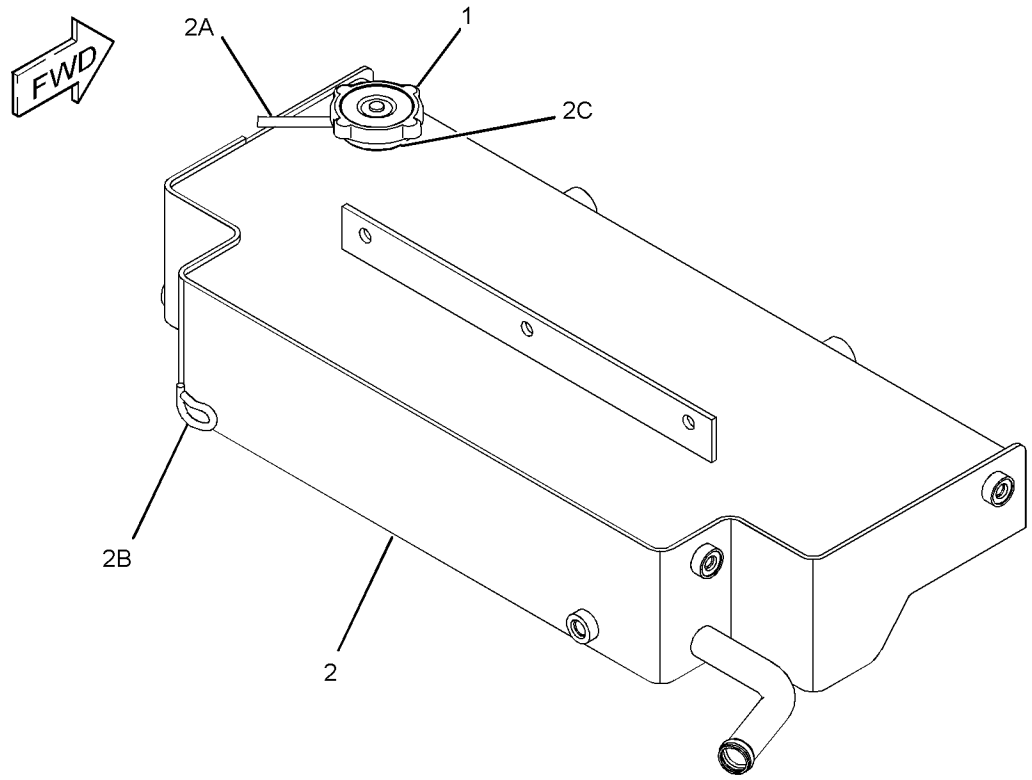

GRAPHIC #1 **<END>** g01215354

255-5232 TANK GP-COOLANT

S/N: SMC1-497; GCT1-963

PART OF 279-9549 INSTALLATION AR-ENGINE

SMCS-1377 **i02858048**

NOTE	REF NO	GRAPHIC REF	PART NUMBER	QTY	PART NAME 1 2 3 4 5 6 (PRODUCT LEVEL)	SEE PAGE
	1	1	**2V-4868**	1	FITTING	
	2	1	**6V-8245**	1	ELBOW	
	3	1	**110-2445**	2	CLAMP-HOSE	
Y	4	1	*169-1840*	1	TANK GP-COOLANT	164
	5	1	**169-3826**	1	BRACKET AS	
M		1	**8T-3490**	2	NUT-WELD (M10X1.5-THD)	
	6	1	*188-3034*	2	ELBOW AS	
					(EACH INCLUDES)	
		1	**6V-1355**	1	ELBOW	
		1	**3J-7354**	1	SEAL-O-RING	
	7	1	**196-9858**	1	TEE-SWIVEL	
	8	1	**267-2186**	1	BAFFLE AS-RADIATOR	
		1	**6B-4594**	16	RIVET	
		1	**7G-5186**	2	SPACER (13X19X4.5-MM THK)	
	9	1	**069-4269**	1	ADAPTER	
	10	1	*148-8347*	1	ELBOW AS	
		1	**6V-9007**	1	ELBOW	
		1	**3D-2824**	1	SEAL-O-RING	
		1	**6V-9746**	1	SEAL-O-RING	
	11	1	**1P-4278**	6	CLAMP-HOSE	
	12	1	**3D-2824**	1	SEAL-O-RING	
	13	1	**3J-7354**	1	SEAL-O-RING	
	14	1	**4P-7429**	2	CLIP	
	15	1	**6K-0806**	7	STRAP-CABLE	
	16	1	**7D-7233**	1	CLIP	
	17	1	**7M-8485**	1	SEAL-O-RING	
	18	1	**8L-5008**	1	ELBOW-PIPE	
	19	1	**8T-4121**	8	WASHER-HARD (11X21X2.5-MM THK)	
M	20	1	**8T-4136**	6	BOLT (M10X1.5X25-MM)	
M	21	1	**8T-4196**	2	BOLT (M10X1.5X35-MM)	
	22	1	**9Y-9236**	1	GAUGE-SIGHT (WATER TANK)	
E	23	1	**5P-1251**		HOSE (99-CM)	
E	24	1	**5P-1465**		HOSE (62.5-CM)	
E	24A	1	**5P-1465**		HOSE (31.5-CM)	
E	24B	1	**5P-1465**		HOSE (29.6-CM)	
E	25	1	**8C-3681**		HOSE (142-CM)	

E - ORDER BY THE CENTIMETER
M - METRIC PART
Y - SEPARATE ILLUSTRATION

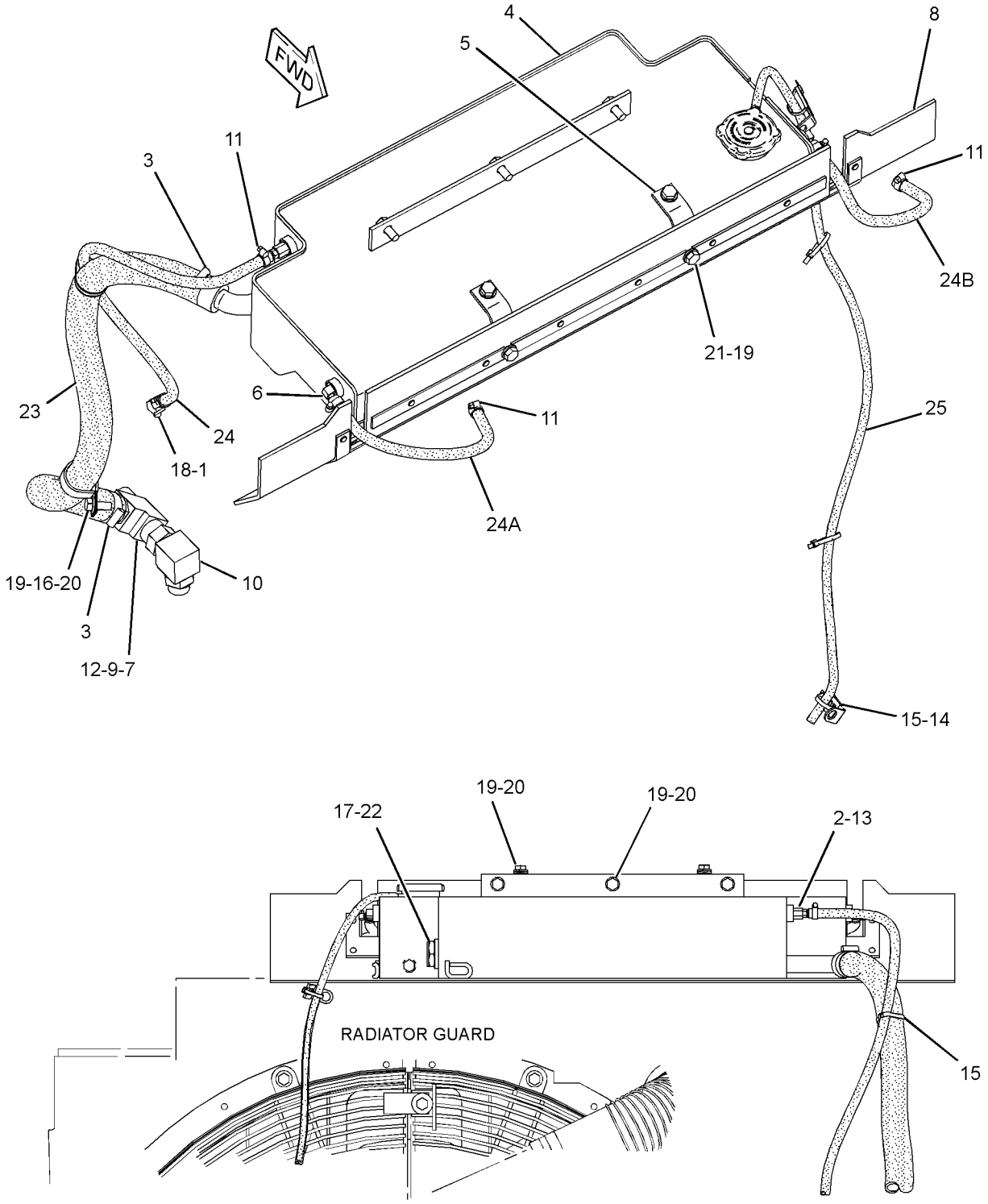

REAR VIEW

GRAPHIC #1 **<END>** g01425098

372-6364 TANK GP-COOLANT

S/N: SMC498-UP; GCT964-UP

PART OF 372-6406 INSTALLATION AR-ENGINE

SMCS-1377 **i05178851**

NOTE	REF NO	GRAPHIC REF	PART NUMBER	QTY	PART NAME 1 2 3 4 5 6 (PRODUCT LEVEL)	SEE PAGE
	1	1	**2V-4868**	1	FITTING	
	2	1	**6V-8245**	1	ELBOW	
	3	1	**110-2445**	2	CLAMP-HOSE	
Y	4	1	*169-1840*	1	TANK GP-COOLANT	164
	5	1	**169-3826**	1	BRACKET AS	
M		1	**8T-3490**	2	NUT-WELD (M10X1.5-THD)	
	6	1	*188-3034*	2	ELBOW AS	
					(EACH INCLUDES)	
		1	**6V-1355**	1	ELBOW	
		1	**3J-7354**	1	SEAL-O-RING	
	7	1	**196-9858**	1	TEE-SWIVEL	
	8	1	**372-6365**	1	BAFFLE AS-RADIATOR	
		1	**4D-6716**	15	RIVET-POP	
		1	**7G-5186**	2	SPACER (13X19X4.5-MM THK)	
	9	1	**069-4269**	1	ADAPTER	
	10	1	*148-8347*	1	ELBOW AS	
		1	**6V-9007**	1	ELBOW	
		1	**3D-2824**	1	SEAL-O-RING	
		1	**6V-9746**	1	SEAL-O-RING	
	11	1	**1P-4278**	6	CLAMP-HOSE	
	12	1	**3D-2824**	1	SEAL-O-RING	
	13	1	**3J-7354**	1	SEAL-O-RING	
	14	1	**4P-7429**	2	CLIP	
	15	1	**6K-0806**	7	STRAP-CABLE	
	16	1	**7D-7233**	1	CLIP	
	17	1	**7M-8485**	1	SEAL-O-RING	
	18	1	**8L-5008**	1	ELBOW-PIPE	
	19	1	**8T-4121**	8	WASHER-HARD (11X21X2.5-MM THK)	
M	20	1	**8T-4136**	6	BOLT (M10X1.5X25-MM)	
M	21	1	**8T-4196**	2	BOLT (M10X1.5X35-MM)	
	22	1	**9Y-9236**	1	GAUGE-SIGHT (COOLANT)	
E	23	1	**5P-1251**		HOSE (99-CM)	
E	24	1	**5P-1465**		HOSE (21-CM)	
E	24A	1	**5P-1465**		HOSE (45-CM)	
E	24B	1	**5P-1465**		HOSE (63-CM)	
E	25	1	**8C-3681**		HOSE (142-CM)	

E - ORDER BY THE CENTIMETER
M - METRIC PART
Y - SEPARATE ILLUSTRATION

372-6364 **TANK GP-COOLANT (*contd.*)** **i05178851**

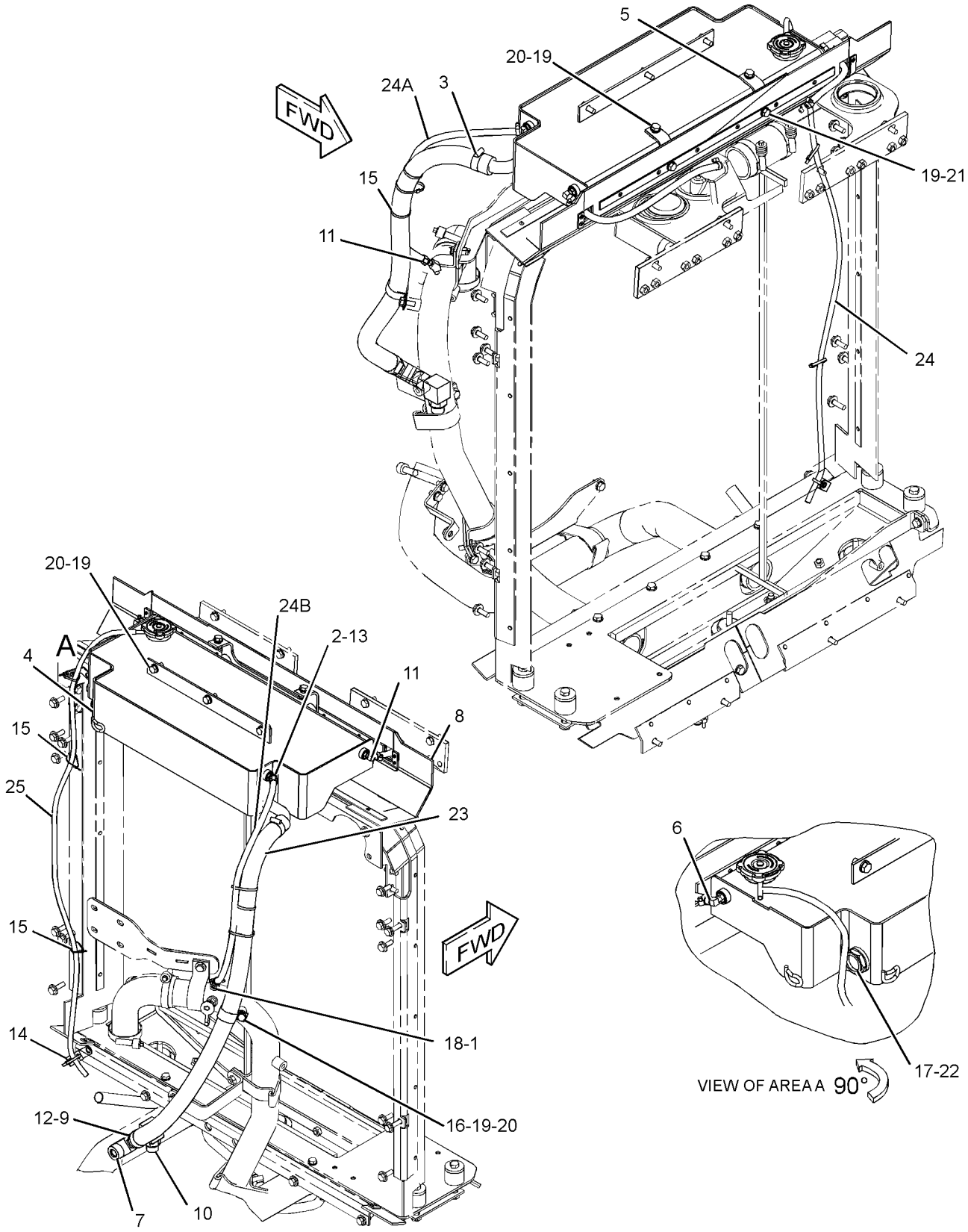

GRAPHIC #1 **<END>** g03345142

250-6056 AFTERCOOLER GP-AIR

S/N: SMC1-497; GCT1-963

PART OF 279-9549 INSTALLATION AR-ENGINE

SMCS-1063 **i02757419**

NOTE	REF NO	GRAPHIC REF	PART NUMBER	QTY	PART NAME 1 2 3 4 5 6 (PRODUCT LEVEL)	SEE PAGE
	1	1	**133-6934**	4	SPACER (11X20X25-MM THK)	
	2	1	**253-5369**	1	CORE AS-AFTERCOOLER	
	3	1	**7X-7729**	3	WASHER (11X25X3-MM THK)	
	4	1	**8T-4121**	4	WASHER-HARD (11X21X2.5-MM THK)	
M	5	1	**8T-4196**	3	BOLT (M10X1.5X35-MM)	
M	6	1	**8T-6466**	4	BOLT (M10X1.5X60-MM)	

M - METRIC PART

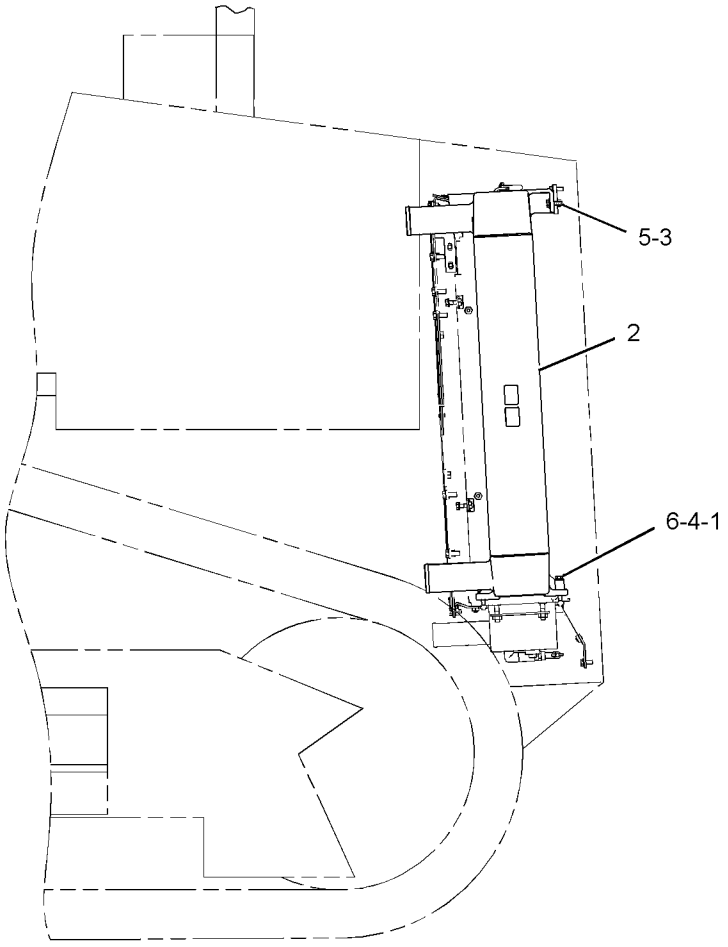

RIGHT SIDE VIEW

GRAPHIC #1 **<END>** g01209278

AIR INLET AND EXHAUST SYSTEM

331-4938 AFTERCOOLER GP-AIR

S/N: SMC498-UP; GCT964-UP

PART OF 372-6406 INSTALLATION AR-ENGINE

SMCS-1063 **i05178809**

NOTE	REF NO	GRAPHIC REF	PART NUMBER	QTY	PART NAME 1 2 3 4 5 6 (PRODUCT LEVEL)	SEE PAGE
	1	1	**6I-2435**	1	SPACER (80X108X25-MM THK)	
	2	1	**331-9864**	1	CORE AS-AFTERCOOLER	
	3	1	**331-9865**	1	BRACKET	
	4	1	**331-9866**	1	MOUNT AS	
	5	1	**361-5188**	1	MOUNT-RUBBER	
	6	1	**8T-4121**	7	WASHER-HARD (11X21X2.5-MM THK)	
M	7	1	**8T-4185**	4	BOLT (M10X1.5X50-MM)	
M	8	1	**8T-4195**	3	BOLT (M10X1.5X30-MM)	
E	9	1	**9X-6383**		SEAL (110-CM)	

E - ORDER BY THE CENTIMETER
M - METRIC PART

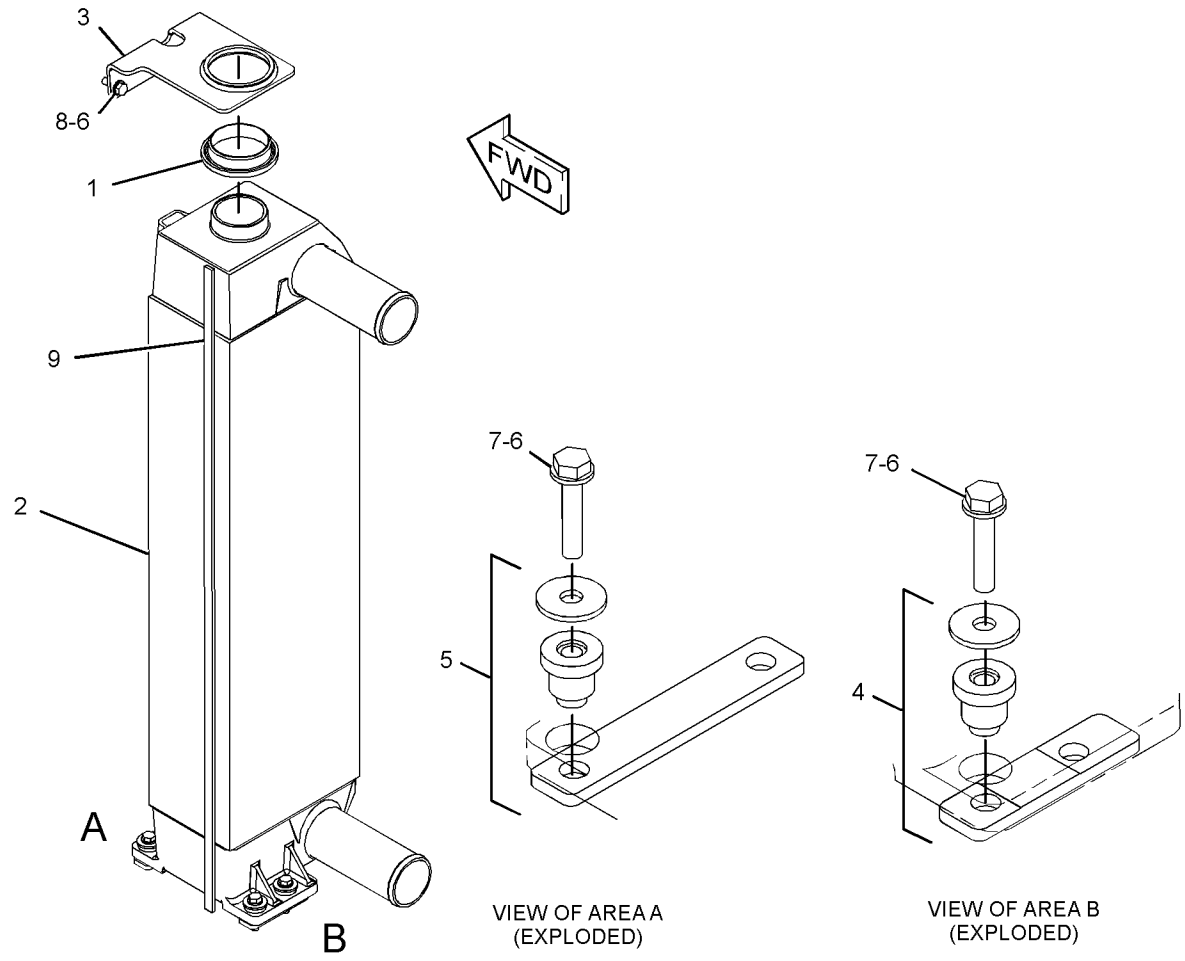

GRAPHIC #1

<END>

g03336780

205-8674 AIR CLEANER GP

S/N: SMC1-UP; GCT1-UP

PART OF 206-9000 AIR CLEANER GP

SMCS-1051, 1054

i04466529

NOTE	REF NO	GRAPHIC REF	PART NUMBER	QTY	PART NAME 1 2 3 4 5 6 (PRODUCT LEVEL)	SEE PAGE
	1	1	**6I-2501**	1	FILTER ELEMENT AS-AIR (PRIMARY, STANDARD EFFICIENCY)	
	2	1	**6I-2502**	1	FILTER ELEMENT AS-AIR (SECONDARY)	
	3	1	**6I-4464**	1	COVER AS-AIR CLEANER	
		1	**4P-5524**	1	SEAL-O-RING	
		1	**101-2850**	1	FILM-INFORMATION (AIR CLEANER)	
	4	1	**8N-4617**	2	KIT-AIR CLEANER CLAMP	
					(EACH INCLUDES CLIP AS & RIVET)	

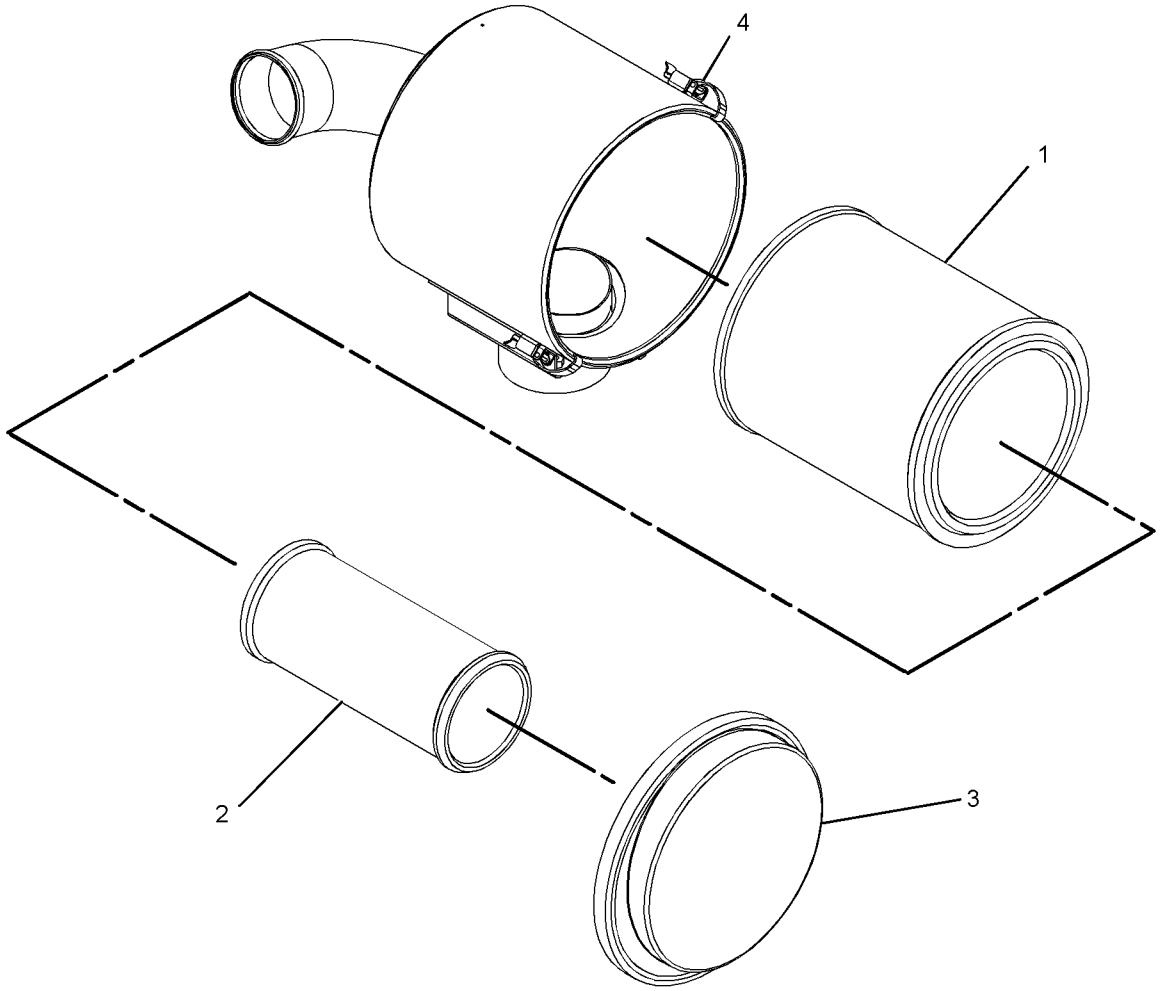

GRAPHIC #1

<END>

g01123031

206-9000 AIR CLEANER GP

S/N: SMC1-UP; GCT1-UP

PART OF 279-9549, 372-6406 INSTALLATION AR-ENGINE

SMCS-1051, 1054 **i02432498**

NOTE	REF NO	GRAPHIC REF	PART NUMBER	QTY	PART NAME 1 2 3 4 5 6 (PRODUCT LEVEL)	SEE PAGE
	1	1	**9S-6758**	1	PRECLEANER AS	
		1	**0S-1591**	1	BOLT (3/8-16X1.5-IN)	
		1	**9S-8752**	1	NUT-FULL (3/8-16-THD)	
Y	2	1	**205-8674**	1	AIR CLEANER GP	172
	3	1	**205-8681**	1	BODY AS (PRECLEANER)	
C	4	1	**250-9290**	1	BRACKET AS	
C	5	1	**7X-7729**	7	WASHER (11X25X3-MM THK)	
	6	1	**8T-4121**	8	WASHER-HARD (11X21X2.5-MM THK)	
M	7	1	**8T-4133**	2	NUT (M10X1.5-THD)	
M	8	1	**8T-4136**	9	BOLT (M10X1.5X25-MM)	
M	9	1	**8T-4137**	4	BOLT (M10X1.5X20-MM)	

C - CHANGE FROM PREVIOUS TYPE
M - METRIC PART
Y - SEPARATE ILLUSTRATION

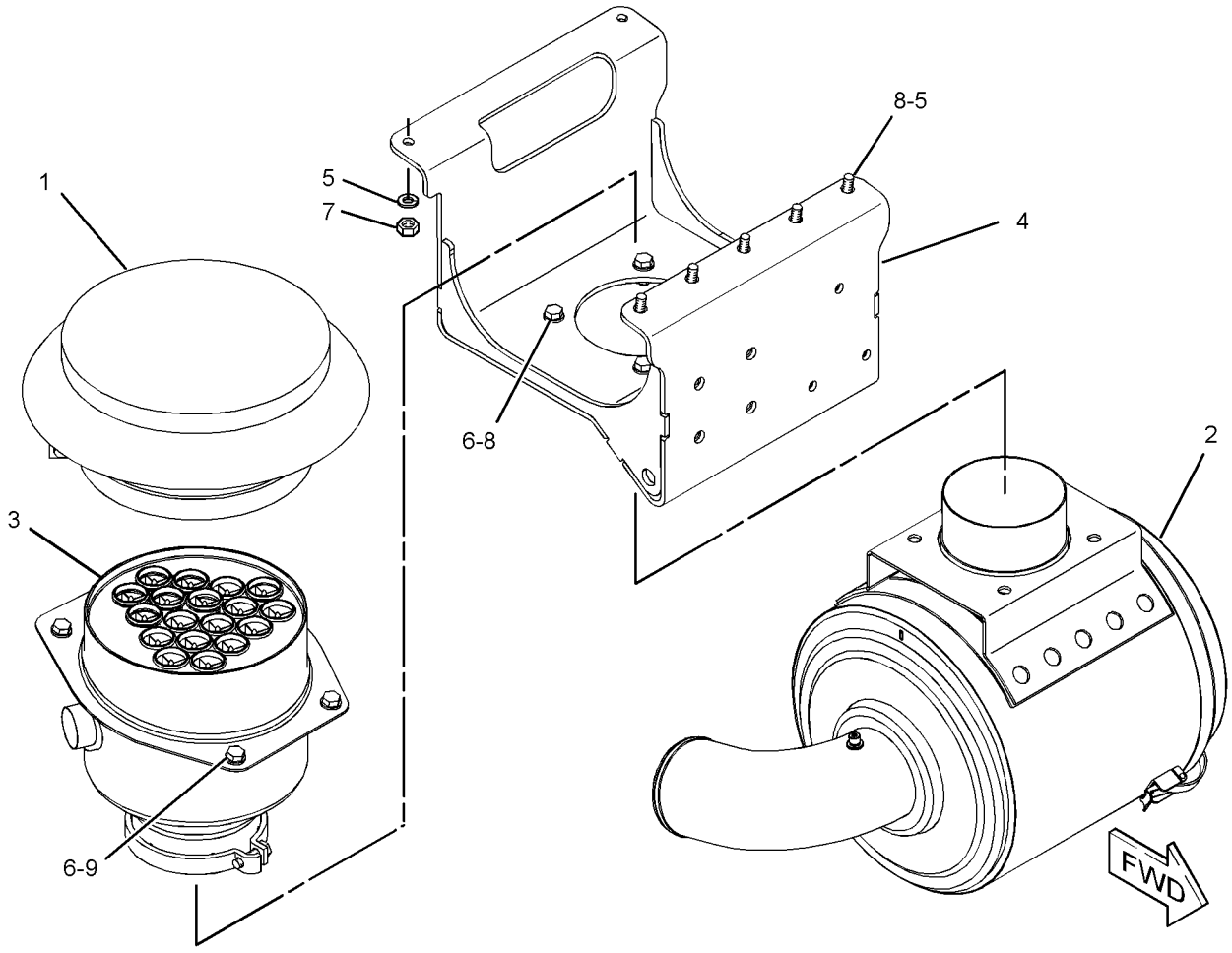

GRAPHIC #1 **<END>** g01181353

AIR INLET AND EXHAUST SYSTEM

241-4353 DUST EJECTOR GP

S/N: SMC1-UP; GCT1-UP

PART OF 279-9549, 372-6406 INSTALLATION AR-ENGINE

SMCS-1068 **i02726252**

NOTE	REF NO	GRAPHIC REF	PART NUMBER	QTY	PART NAME 1 2 3 4 5 6 (PRODUCT LEVEL)	SEE PAGE
	1	1	**308-7112**	1	CLAMP-WIRE	
	2	1	**9M-2904**	2	CLAMP-HOSE	
	3	1	**241-4354**	1	EJECTOR AS-EXHAUST	
E	4	1	**5P-2817**		HOSE (48-CM)	

E - ORDER BY THE CENTIMETER

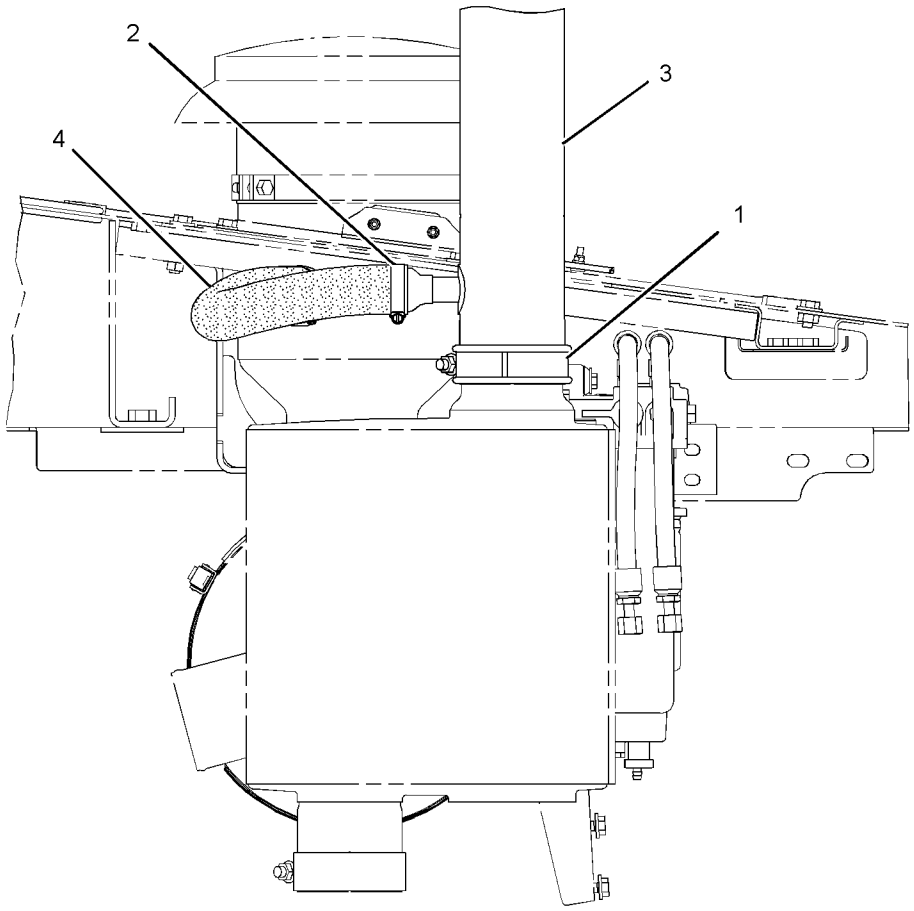

RIGHT SIDE VIEW

GRAPHIC #1 **<END>** g01380979

246-0596 ELBOW GP-AIR INLET

S/N: TXD1-UP; THX8900-UP

PART OF 282-3823, 282-3824, 282-3825, 282-3826, 301-5768 ENGINE AR, 349-3564, 349-3565, 387-8574, 387-8575, 387-8576, 387-8580, 398-6424 ENGINE AR-COMPLETE

ALSO AN ATTACHMENT

SMCS-1087 **i05119213**

NOTE	REF NO	GRAPHIC REF	PART NUMBER	QTY	PART NAME 1 2 3 4 5 6 (PRODUCT LEVEL)	SEE PAGE
	1	1	**246-0597**	1	ELBOW-AIR INLET	
	2	1	**162-3148**	8	STUD (M8X1.25X40-MM)	
	3	1	**3E-4352**	2	WASHER-HARD (8.8X20.5X2.5-MM THK)	
	4	1	**9M-1974**	6	WASHER-HARD (8.8X16X2-MM THK)	
	5	1	*389-3708*	1	PLUG AS	
		1	**360-3679**	1	PLUG-CONNECTOR	
		1	**214-7568**	1	SEAL-O-RING	
BF			**1U-8846**		SEALANT-GASKET	

B - USE AS REQUIRED
F - NOT SHOWN

246-0596 **ELBOW GP-AIR INLET (*contd.*)** **i05119213**

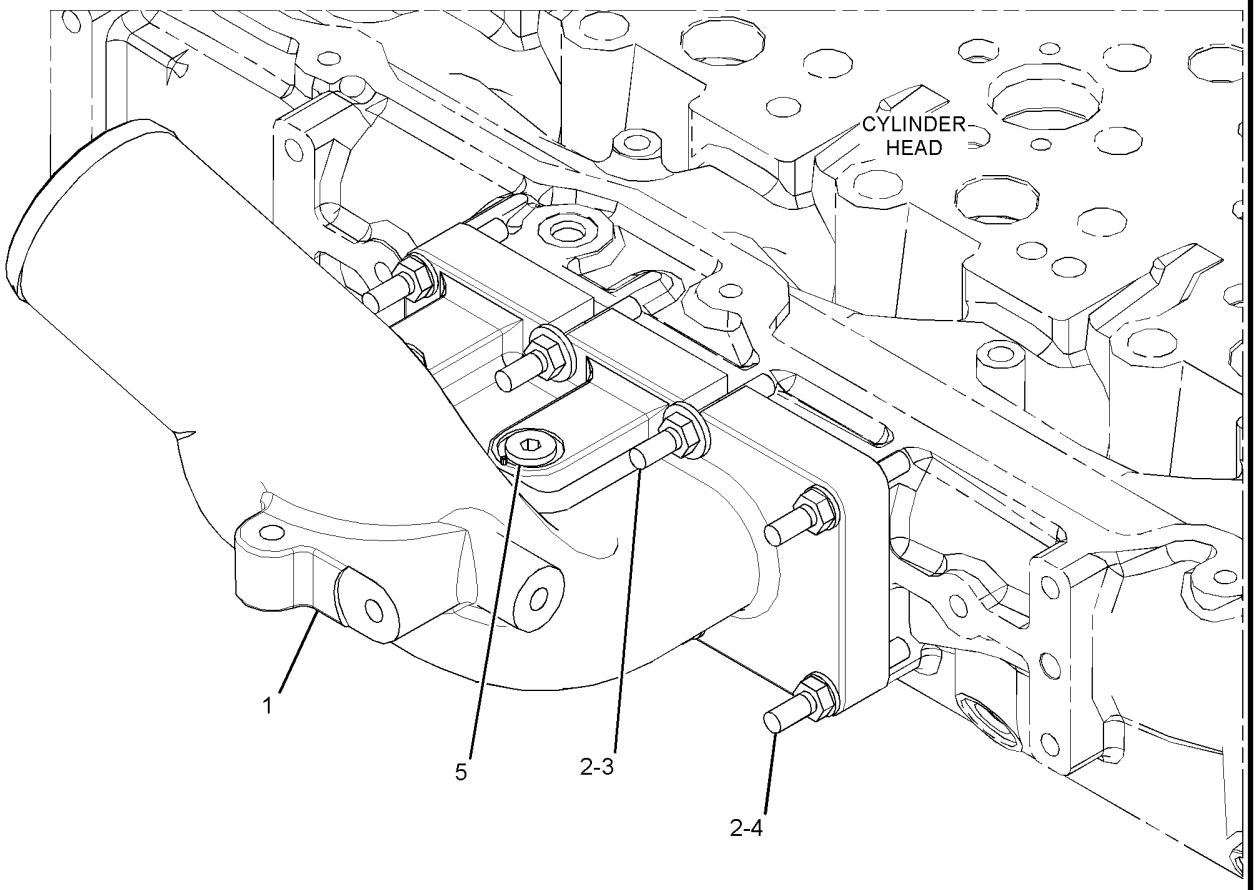

GRAPHIC #1 **<END>** g03282798

215-1488 GUARD GP-PRECLEANER

S/N: SMC1-UP; GCT1-UP
PART OF 287-4670 FORESTRY AR
AN ATTACHMENT

SMCS-1055 **i02148357**

NOTE	REF NO	GRAPHIC REF	PART NUMBER	QTY	PART NAME 1 2 3 4 5 6 (PRODUCT LEVEL)	SEE PAGE
	1	1	**215-1490**	1	GUARD AS	
	2	1	**7X-7729**	3	WASHER (11X25X3-MM THK)	
M	3	1	**8T-4137**	3	BOLT (M10X1.5X20-MM)	

M - METRIC PART

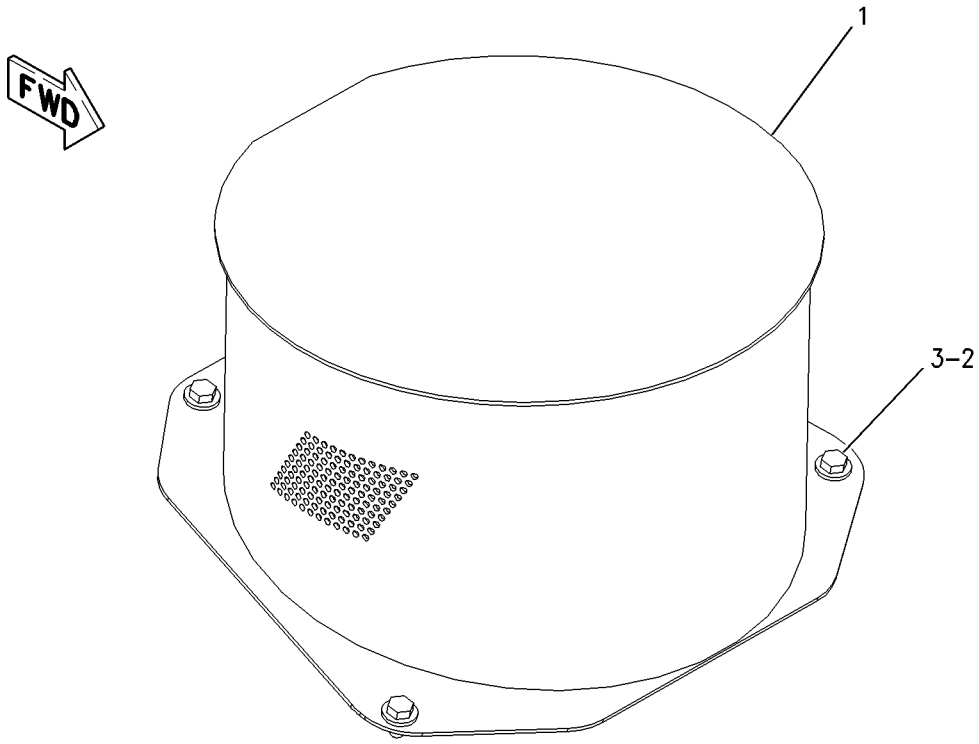

GRAPHIC #1 **<END>** g00909307

AIR INLET AND EXHAUST SYSTEM

168-8377 LINES GP-AIR

S/N: SMC1-UP; GCT1-UP

PART OF 279-9549, 372-6406 INSTALLATION AR-ENGINE

SMCS-1071 **i04041868**

NOTE	REF NO	GRAPHIC REF	PART NUMBER	QTY	PART NAME 1 2 3 4 5 6 (PRODUCT LEVEL)	SEE PAGE
	1	1	**1W-2431**	1	CLAMP-BAND	
	2	1	**6N-1558**	1	RING-SEAL	
	3	1	**8T-4986**	4	CLAMP-HOSE	
	4	1	**169-3883**	1	COUPLING	
	5	1	**214-1645**	1	ELBOW-EXHAUST	
C	6	1	**243-1588**	1	HOSE	
C	7	1	**243-1589**	1	HOSE	
C	8	1	**243-1590**	1	TUBE	
M	9	1	**6V-4249**	3	BOLT (M10X1.5X50-MM)	
	10	1	**6V-5839**	3	WASHER (11X21X2.5-MM THK)	

C - CHANGE FROM PREVIOUS TYPE
M - METRIC PART

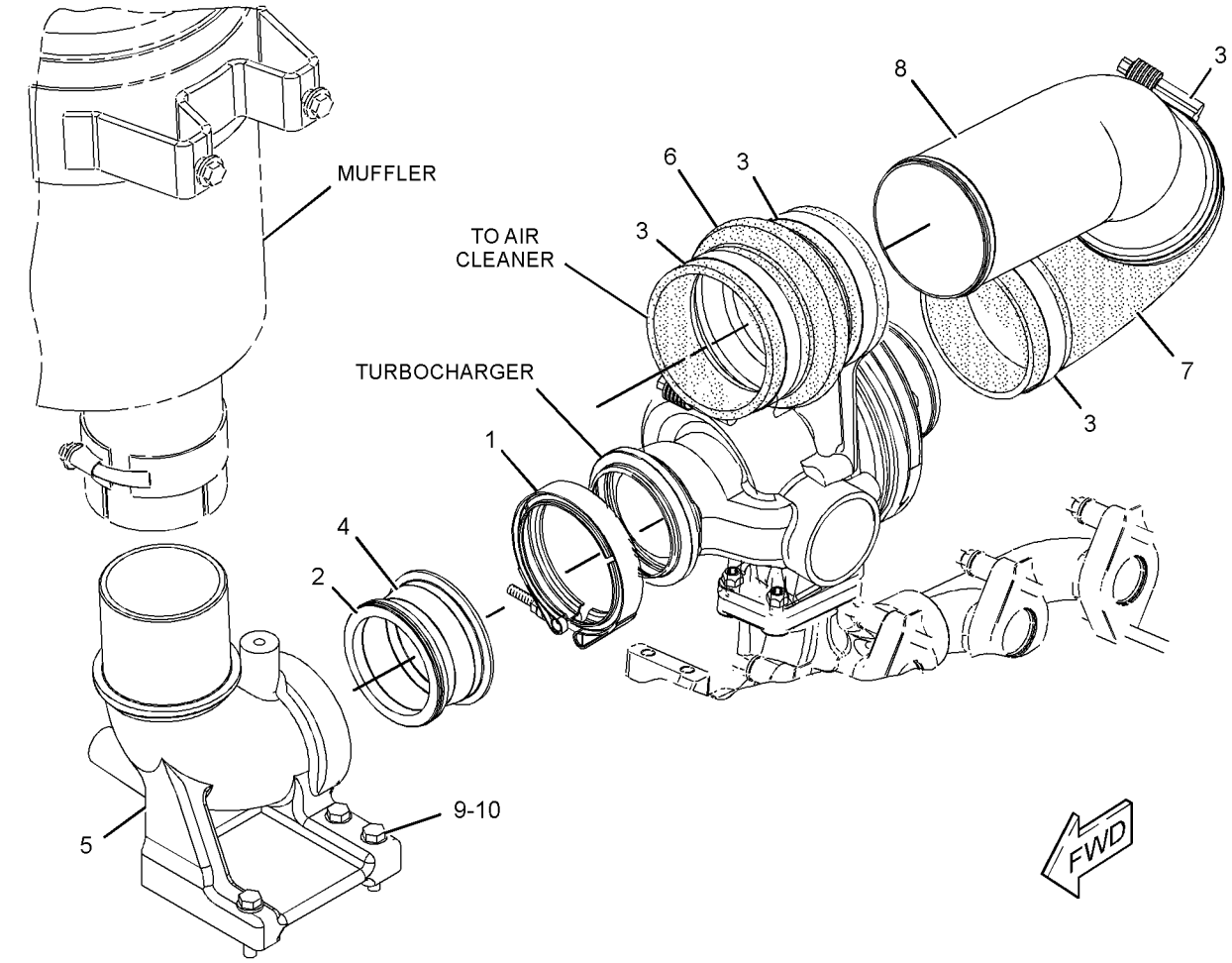

GRAPHIC #1 **<END>** g01151750

251-4553 LINES GP-AIR–ATAAC

S/N: SMC1-UP; GCT1-UP

PART OF 279-9549, 372-6406 INSTALLATION AR-ENGINE

SMCS-1071 **i05343645**

NOTE	REF NO	GRAPHIC REF	PART NUMBER	QTY	PART NAME 1 2 3 4 5 6 (PRODUCT LEVEL)	SEE PAGE
	1	1,2	**144-0367**	16	CLAMP-HOSE	
	2	2	**201-1260**	1	HOSE	
	3	1	**250-6052**	1	HOSE	
	4	1	**250-6053**	1	TUBE AS	
	5	2	**250-6054**	1	TUBE AS	
	6	1	**250-7533**	1	HOSE	
	7	2	**251-0061**	1	BRACKET AS	
	8	1	**251-7214**	2	HOSE	
	9	1,2	**7X-7729**	6	WASHER (11X25X3-MM THK)	
M	10	1	**8T-4133**	2	NUT (M10X1.5-THD)	
M	11	2	**8T-4195**	1	BOLT (M10X1.5X30-MM)	
M	12	2	**8T-4196**	2	BOLT (M10X1.5X35-MM)	
	13	1,2	**9X-2646**	4	CLIP (SLOT)	
	14	1,2	**9X-2647**	4	CLIP (TAB)	
M	15	2	**8T-4186**	1	BOLT (M10X1.5X40-MM)	
	16	1	**177-0581**	1	HOSE	

M - METRIC PART

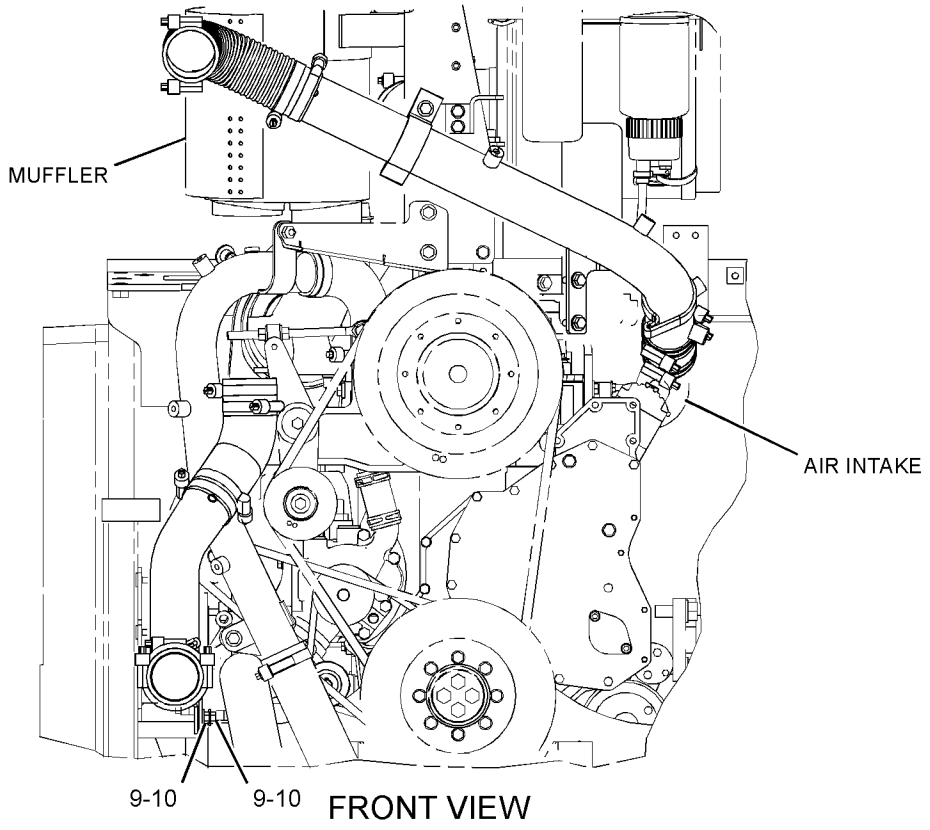

FRONT VIEW

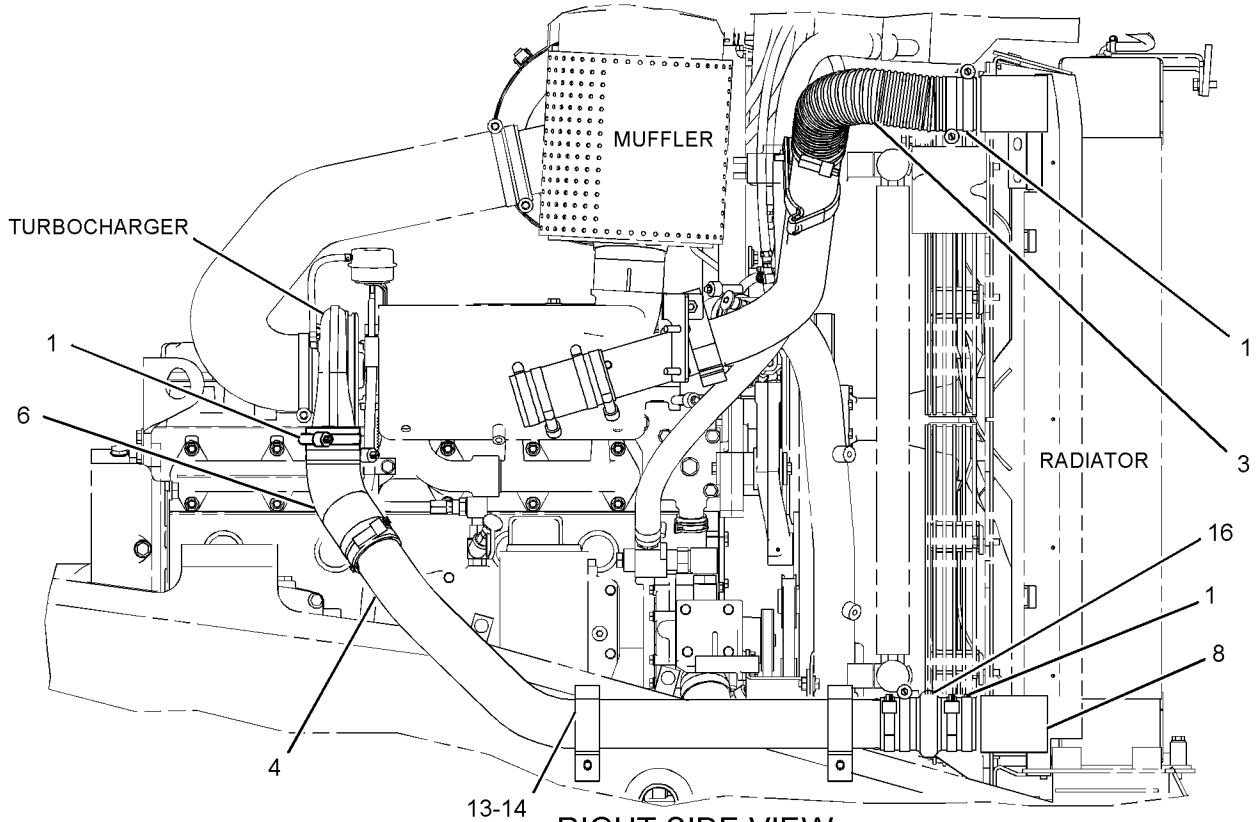

RIGHT SIDE VIEW

GRAPHIC #1 g03353655

251-4553 **LINES GP-AIR (*contd.*)** **i05343645**

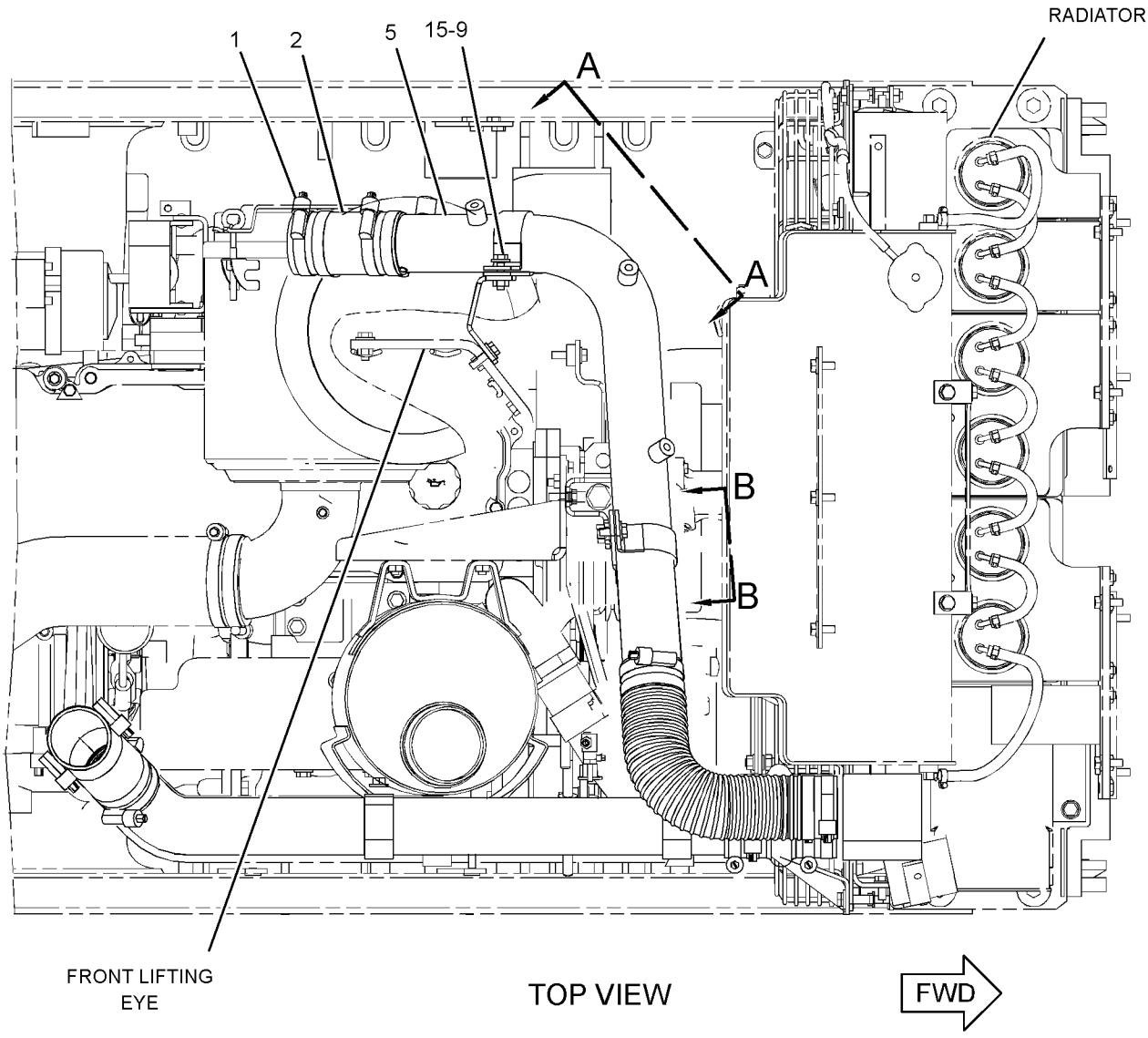

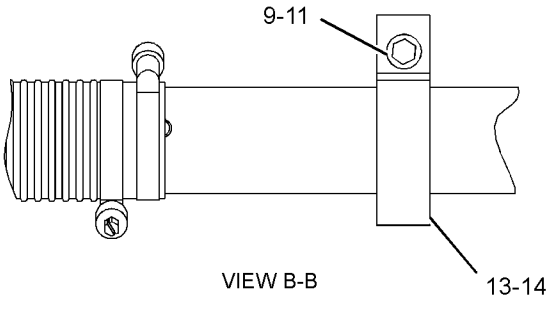

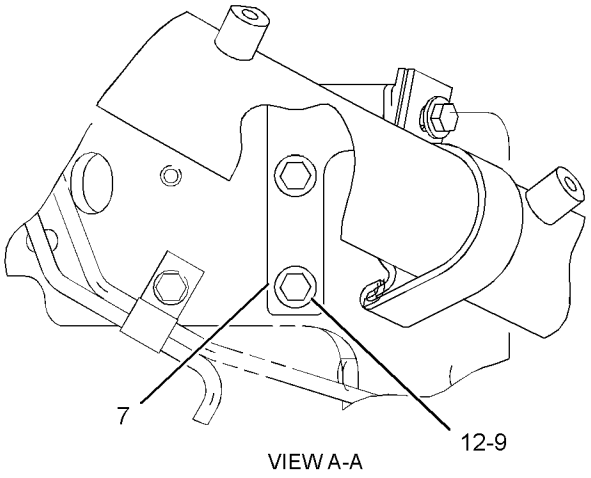

GRAPHIC #2 **<END>** g03353656

165-4445 MANIFOLD GP-EXHAUST

S/N: TXD1-UP; THX8900-UP

PART OF 282-3823, 282-3824, 282-3825, 282-3826, 301-5768 ENGINE AR, 349-3564, 349-3565, 387-8574, 387-8575, 387-8576, 387-8580, 398-6424 ENGINE AR-COMPLETE

ALSO AN ATTACHMENT

SMCS-1059 **i01830356**

NOTE	REF NO	GRAPHIC REF	PART NUMBER	QTY	PART NAME 1 2 3 4 5 6 (PRODUCT LEVEL)	SEE PAGE
M	1	1	**3E-8017**	12	LOCKNUT (M10X1.5-MM THD)	
	2	1	**161-3398**	1	MANIFOLD-EXHAUST	
	3	1	**161-3411**	6	GASKET	
	4	1	**167-0172**	1	MANIFOLD-EXHAUST	
	5	1	**203-7775**	1	MANIFOLD-EXHAUST	
M	6	1	**116-3715**	12	STUD-TAPERLOCK (M10X1.5X85-MM)	
	7	1	**4P-4369**	6	SPACER (12X19X23.5-MM THK)	
	8	1	**6V-5839**	12	WASHER (11X21X2.5-MM THK)	
M	9	1	**8T-7044**	4	STUD-TAPERLOCK (M10X1.5X40-MM)	

M - METRIC PART

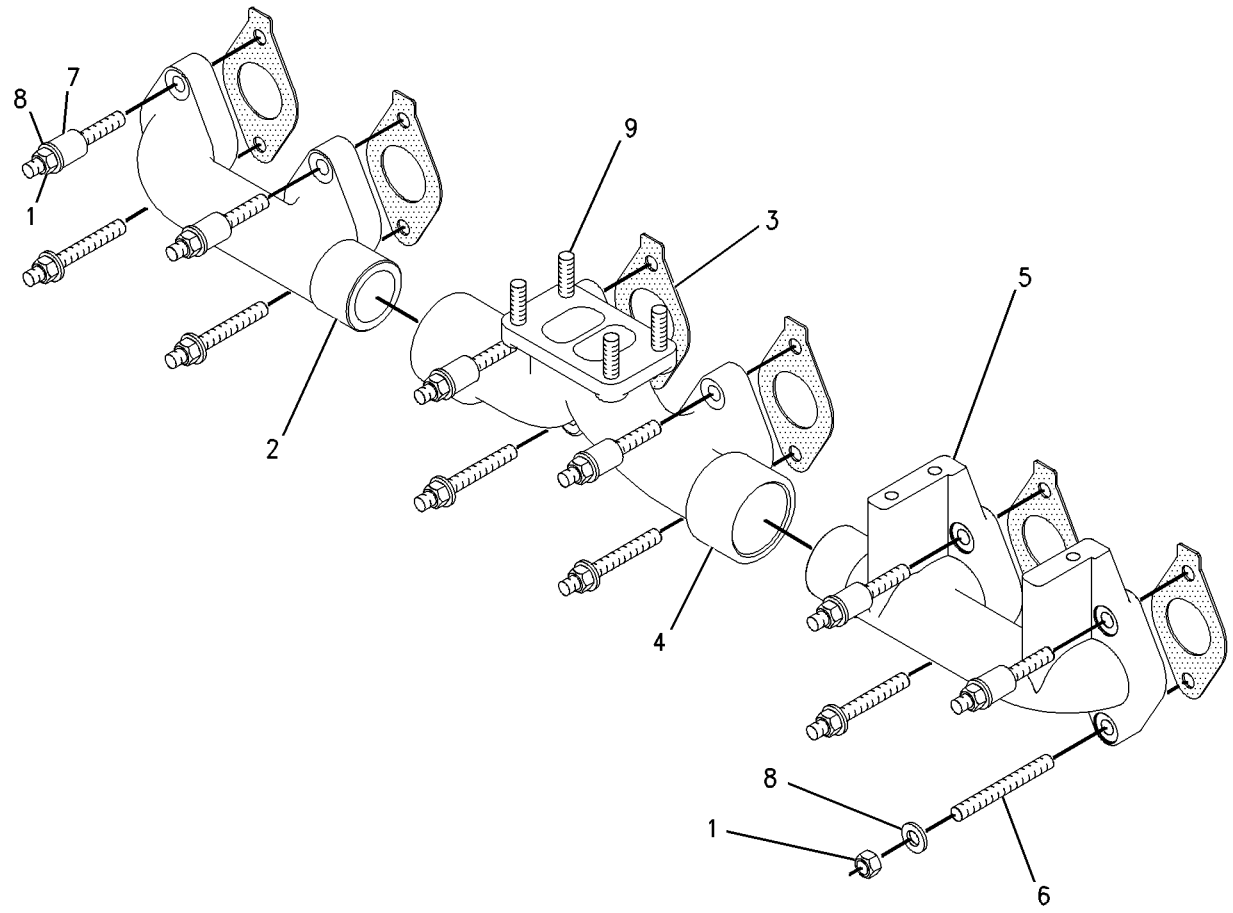

GRAPHIC #1 **<END>** g00741421

AIR INLET AND EXHAUST SYSTEM

239-3686 MUFFLER GP

S/N: SMC1-UP; GCT1-UP

PART OF 279-9549, 372-6406 INSTALLATION AR-ENGINE

SMCS-1062 **i05197003**

NOTE	REF NO	GRAPHIC REF	PART NUMBER	QTY	PART NAME 1 2 3 4 5 6 (PRODUCT LEVEL)	SEE PAGE
	1	1	**308-7112**	1	CLAMP-WIRE	
	2	1	**229-9601**	1	MUFFLER AS	
M		1	**8T-3490**	2	NUT-WELD (M10X1.5-THD)	
	3	1	**186-5120**	1	BRACKET AS	
	4	1	**7X-7729**	6	WASHER (11X25X3-MM THK)	
M	5	1	**8T-4196**	2	BOLT (M10X1.5X35-MM)	
M	6	1	**8T-4185**	4	BOLT (M10X1.5X50-MM)	

M - METRIC PART

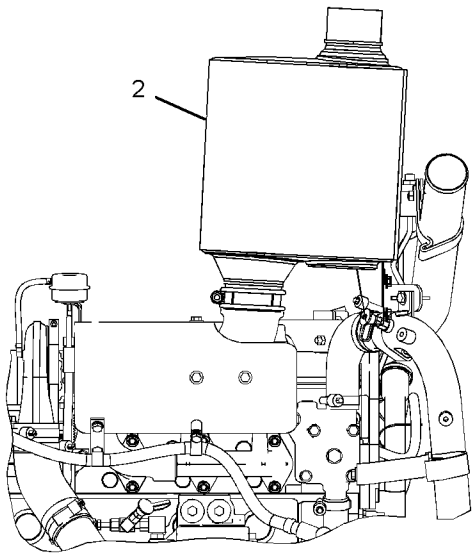

RIGHT SIDE VIEW OF ENGINE

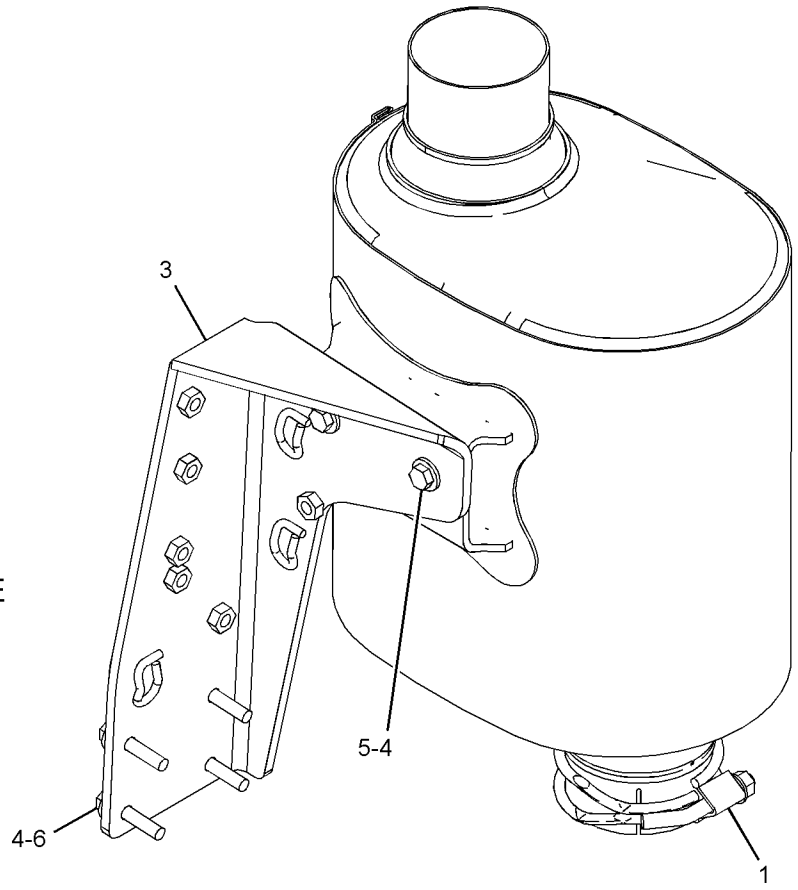

GRAPHIC #1 **<END>** g03349621

256-2942 PRECLEANER AR—WITH PRESCREEN

S/N: SMC1-UP; GCT1-UP

CANNOT BE USED WITH 7S-9396—PAGE: 189, 215-1488—PAGE: 177

AN ATTACHMENT

SMCS-1055 **i02758981**

NOTE	REF NO	GRAPHIC REF	PART NUMBER	QTY	PART NAME 1 2 3 4 5 6 (PRODUCT LEVEL)	SEE PAGE
	1	1	**1W-4877**	1	HOSE-REDUCER	
	2	1	**5P-0599**	1	CLAMP-BAND	
	3	1	**9M-0164**	4	CLAMP-HOSE	
	4	1	**127-8178**	1	VALVE AS-CHECK (EXHAUST)	
	5	1	**193-5116**	1	HOSE	
Y	6	1	*237-9251*	1	PRECLEANER GP (TURBINE)	187
	7	1	**256-2941**	1	BASE AS	
	8	1	**5P-3860**	1	CLAMP-HOSE	
	9	1	**7X-7729**	9	WASHER (11X25X3-MM THK)	
M	10	1	**8T-4136**	9	BOLT (M10X1.5X25-MM)	
E	11	1	**5P-2817**		HOSE (24-CM)	

E - ORDER BY THE CENTIMETER
M - METRIC PART
Y - SEPARATE ILLUSTRATION

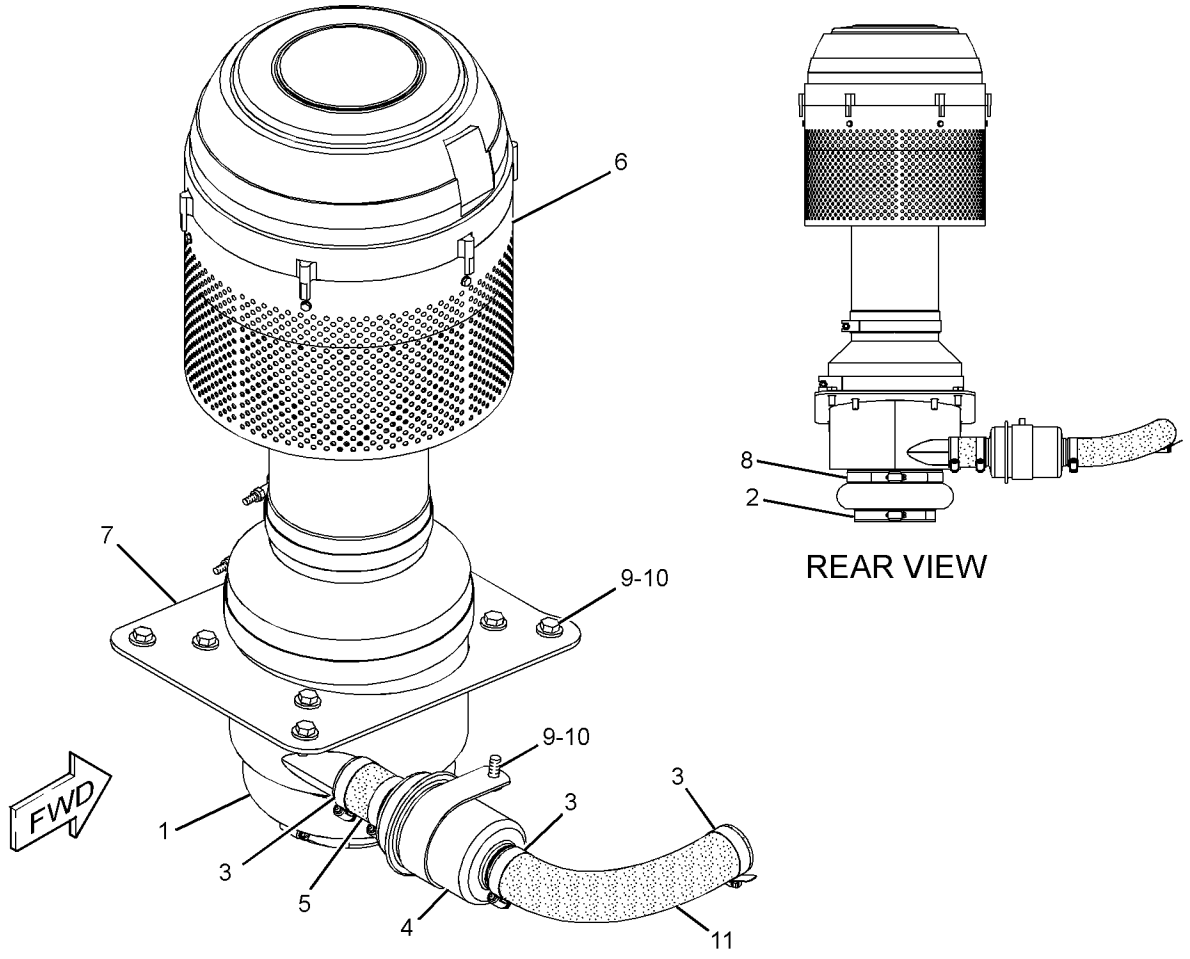

GRAPHIC #1 **<END>** g01208725

256-2943 PRECLEANER AR—WITHOUT PRESCREEN

S/N: SMC1-UP; GCT1-UP
CANNOT BE USED WITH 7S-9396—PAGE: 189, 215-1488—PAGE: 177
AN ATTACHMENT

SMCS-1055 **i02759057**

NOTE	REF NO	GRAPHIC REF	PART NUMBER	QTY	PART NAME 1 2 3 4 5 6 (PRODUCT LEVEL)	SEE PAGE
	1	1	**1W-4877**	1	HOSE-REDUCER	
	2	1	**5P-0599**	1	CLAMP-BAND (BAND)	
	3	1	**9M-0164**	4	CLAMP-HOSE	
	4	1	**127-8178**	1	VALVE AS-CHECK (EXHAUST)	
	5	1	**193-5116**	1	HOSE	
Y	6	1	*237-9250*	1	PRECLEANER GP (TURBINE)	186
	7	1	**256-2941**	1	BASE AS (PRECLEANER)	
	8	1	**5P-3860**	1	CLAMP-HOSE	
	9	1	**7X-7729**	9	WASHER (11X25X3-MM THK)	
M	10	1	**8T-4136**	9	BOLT (M10X1.5X25-MM)	
E	11	1	**5P-2817**		HOSE (24-CM)	

E - ORDER BY THE CENTIMETER
M - METRIC PART
Y - SEPARATE ILLUSTRATION

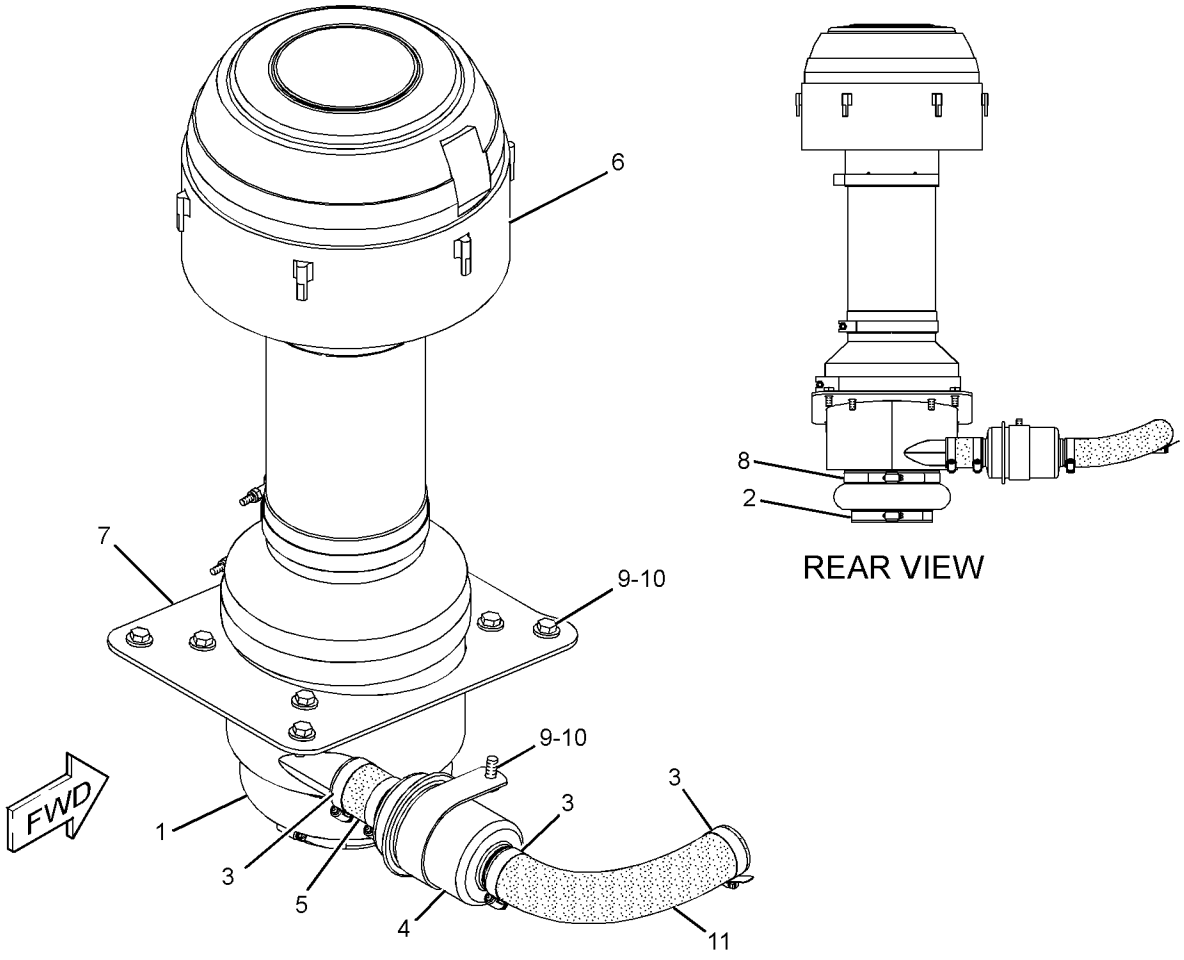

GRAPHIC #1 **<END>** g01208744

237-9250 PRECLEANER GP—WITHOUT SCREEN

S/N: SMC1-UP; GCT1-UP
PART OF 256-2943 PRECLEANER AR
AN ATTACHMENT

SMCS-1055 **i02456143**

NOTE	REF NO	GRAPHIC REF	PART NUMBER	QTY	PART NAME 1 2 3 4 5 6 (PRODUCT LEVEL)	SEE PAGE
	1	1	**130-3280**	1	PRECLEANER AS	
		1	**174-5415**	1	CLAMP	
J	2	1	**237-9252**	1	TUBE AS	
J	3	1	**237-9255**	1	TUBE AS	
					AVAILABLE REPAIR KIT(S):	
J			**237-9254**	1	KIT-PRECLEANER (TURBINE)	
					(INCLUDES VALVE AS, TUBE, CLAMPS, HOSES, WASHERS, BOLTS, & TUBE AS)	

J - KIT MARKED J SERVICES PARTS MARKED J

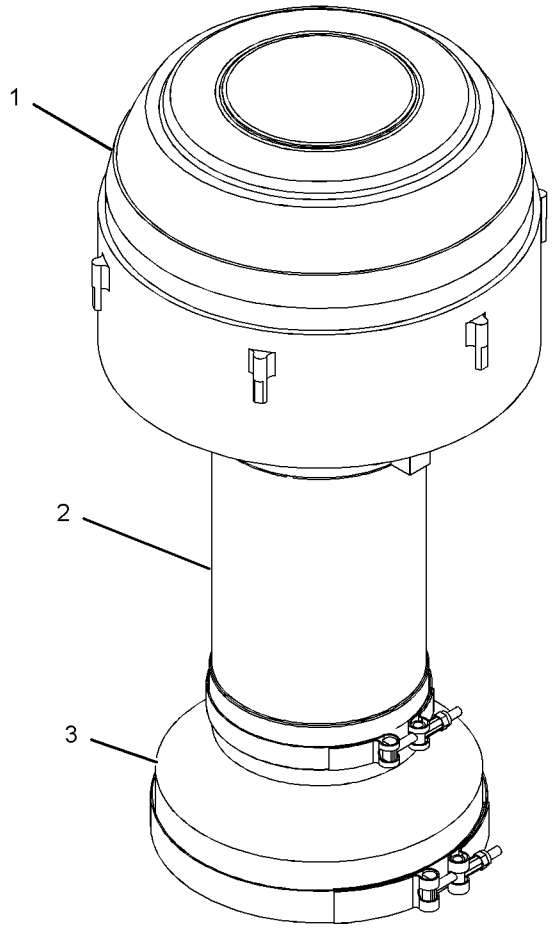

GRAPHIC #1 **<END>** g01149394

237-9251 PRECLEANER GP—WITH PRESCREEN

S/N: SMC1-UP; GCT1-UP
PART OF 256-2942 PRECLEANER AR
AN ATTACHMENT

SMCS-1055 **i02455735**

NOTE	REF NO	GRAPHIC REF	PART NUMBER	QTY	PART NAME 1 2 3 4 5 6 (PRODUCT LEVEL)	SEE PAGE
	1	1	**130-3280**	1	PRECLEANER AS	
	1A	1	**174-5415**	1	CLAMP	
HZ	2	1		1	PRESCREEN	
	3	1	**145-6669**	6	SCREW-SELF-TAPPING (10X0.75-IN)	
J	4	1	**237-9252**	1	TUBE AS	
J	5	1	**237-9255**	1	TUBE AS	
					AVAILABLE REPAIR KIT(S):	
H			**153-1277**	1	KIT-SCREEN (PRECLEANER)	
					(INCLUDES PRESCREEN, DAMPER, CLAMP, SCREWS, & TUBE)	
J			**237-9254**	1	KIT-PRECLEANER (TURBINE)	
					(INCLUDES VALVE AS, TUBE, CLAMPS, HOSE, TUBE ASSEMBLIES, WASHERS, & BOLTS)	

H - PART MARKED H INCLUDED IN KIT MARKED H
J - PART MARKED J INCLUDED IN KIT MARKED J
Z - NOT SERVICED SEPARATELY

237-9251 **PRECLEANER GP (*contd.*)** **i02455735**

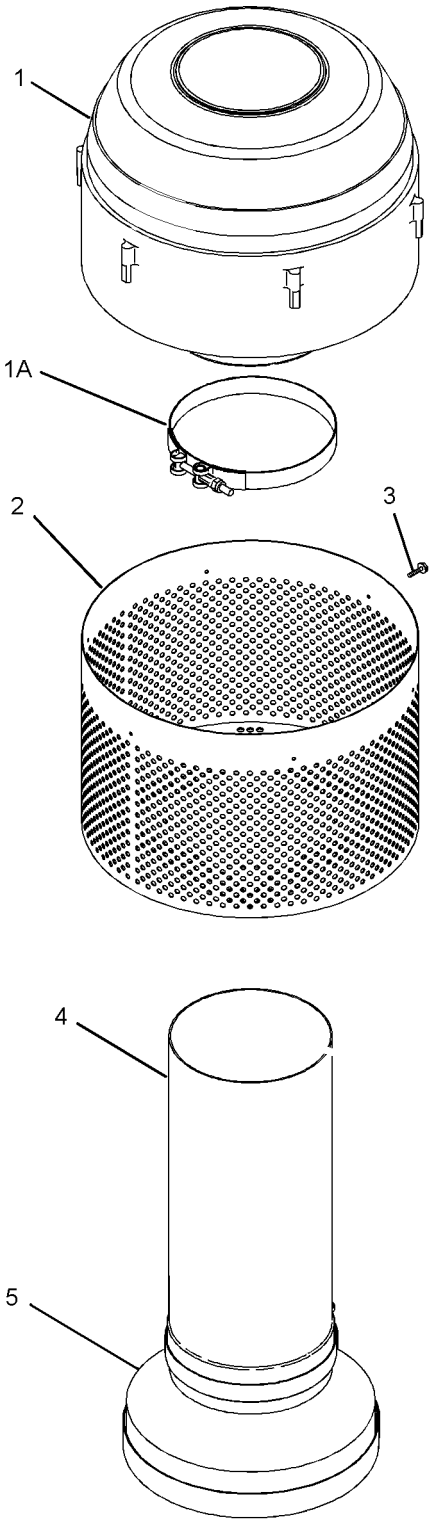

GRAPHIC #1 **<END>** g01146470

7S-9396 PRESCREENER AS

S/N: SMC1-UP; GCT1-UP

CANNOT BE USED WITH 215-1488–PAGE: 177, 256-2942–PAGE: 184, 256-2943–PAGE: 185 AN ATTACHMENT

SMCS-1055 **i02453693**

NOTE	REF NO	GRAPHIC REF	PART NUMBER	QTY	PART NAME 1 2 3 4 5 6 (PRODUCT LEVEL)	SEE PAGE
	1	1	**0S-1591**	1	BOLT (3/8-16X1.5-IN)	
	2	1	**6V-8801**	1	NUT (3/8-16-THD)	

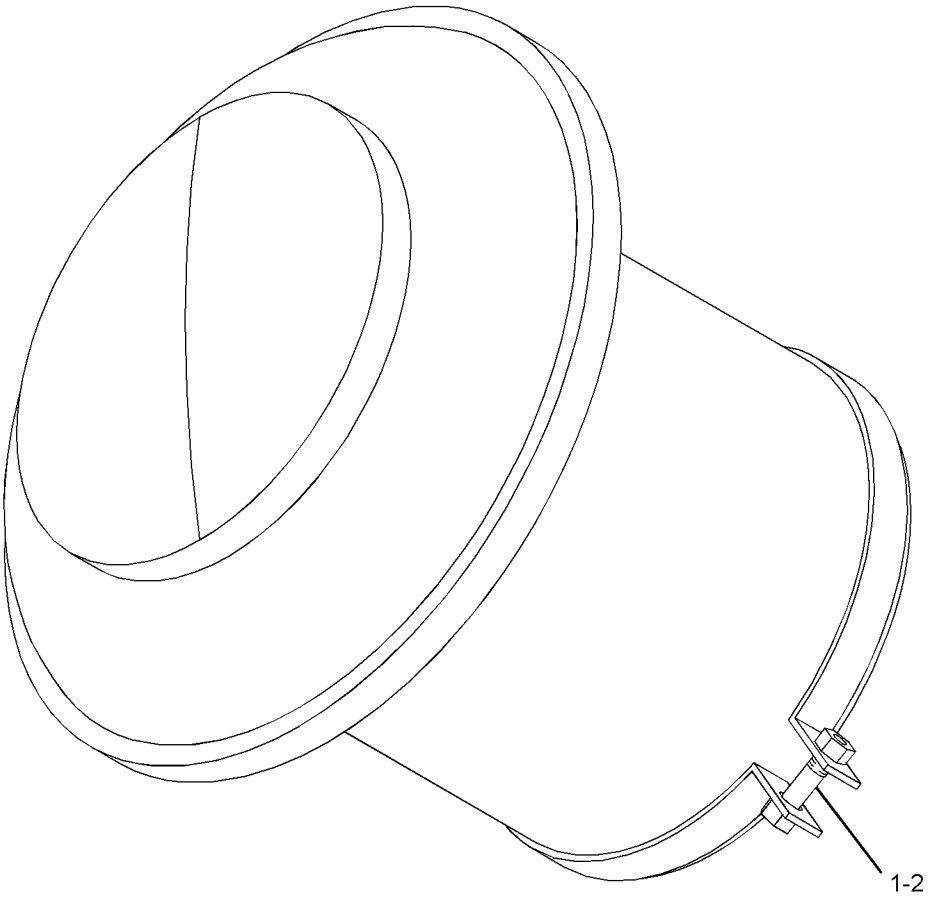

GRAPHIC #1 **<END>** g01208937

AIR INLET AND EXHAUST SYSTEM

237-2737 SHIELD GP-EXHAUST

S/N: SMC1-UP; GCT1-UP

PART OF 279-9549, 372-6406 INSTALLATION AR-ENGINE

SMCS-1067 **i02698747**

NOTE	REF NO	GRAPHIC REF	PART NUMBER	QTY	PART NAME 1 2 3 4 5 6 (PRODUCT LEVEL)	SEE PAGE
	1	1	**237-2738**	1	SHIELD AS-EXHAUST	
M		1	**9R-2613**	2	BOSS-WELD (M10X1.5X25-MM)	
	2	1	**7X-7729**	3	WASHER (11X25X3-MM THK)	
M	3	1	**8T-4136**	3	BOLT (M10X1.5X25-MM)	

M - METRIC PART

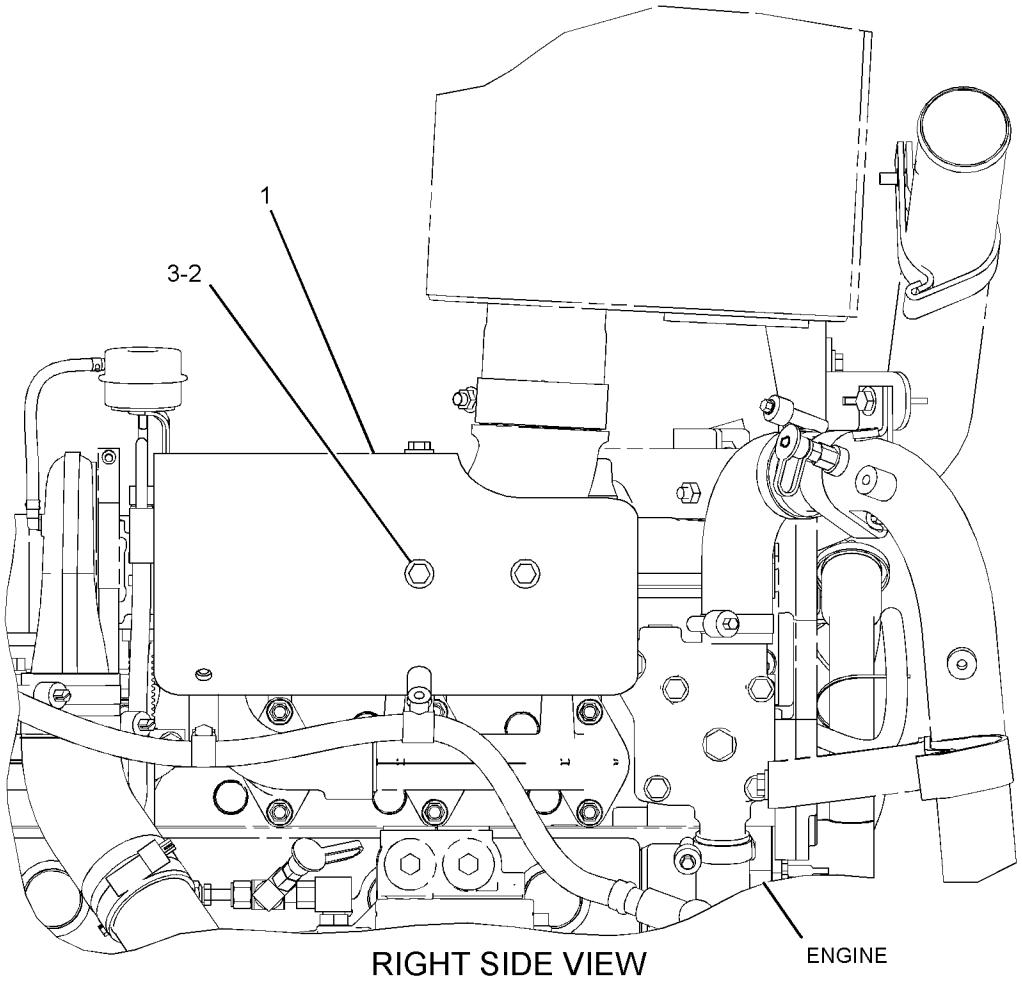

RIGHT SIDE VIEW

GRAPHIC #1 **<END>** g01209236

264-7963 SHIELD GP-HEAT

S/N: SMC1-UP; GCT1-UP

PART OF 282-9553, 282-9554, 282-9555 CONVERSION AR-HEAT SHIELD AN ATTACHMENT

SMCS-1067 **i02455450**

NOTE	REF NO	GRAPHIC REF	PART NUMBER	QTY	PART NAME 1 2 3 4 5 6 (PRODUCT LEVEL)	SEE PAGE
	1	1	**212-4936**	1	SHIELD (MANIFOLD)	
	2	1	**264-7964**	1	SHIELD (TURBO)	
	3	1	**132-5789**	1	CLIP	
	4	1	**4P-7428**	1	CLIP	
	5	1	**5P-4116**	4	WASHER-HARD (8.8X20.5X2-MM THK)	
M	6	1	**8T-4189**	2	BOLT (M8X1.25X20-MM)	

M - METRIC PART

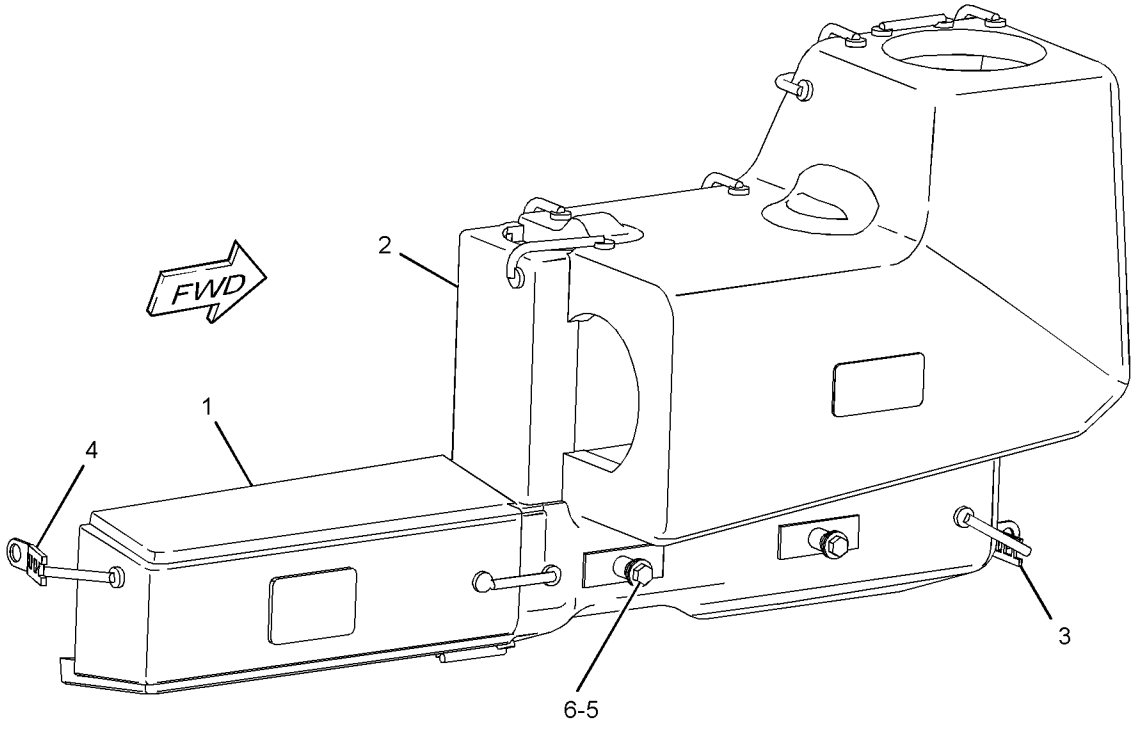

GRAPHIC #1 **<END>** g01215394

AIR INLET AND EXHAUST SYSTEM

229-2913 TURBOCHARGER GP*R

S/N: TXD1-UP; THX8900-UP
PART OF 237-2041 TURBOCHARGER GP
AN ATTACHMENT

SMCS-1052, 1053 **i02710350**

NOTE	REF NO	GRAPHIC REF	PART NUMBER	QTY	PART NAME 1 2 3 4 5 6 (PRODUCT LEVEL)	SEE PAGE
	1	1	**5P-4536**	1	ELBOW	
M	2	1	**7C-6670**	4	BOLT (M8X1.25X12.5-MM)	
	3	1	**7C-6672**	2	PLATE-CLAMP (TURBINE)	
	4	1	**158-6072**	1	CLAMP AS (COMPRESSOR)	
	5	1	**161-6963**	2	CLAMP	
E	6	1	**242-3360**		HOSE (25-CM)	
	7	1	**229-2914**	1	CARTRIDGE GP-TURBOCHARGER	
					PARTS SHOWN IN GRAPHIC(S) WITHOUT A REFERENCE NUMBER ARE NOT SERVICED SEPARATELY	

E - ORDER BY THE CENTIMETER
M - METRIC PART

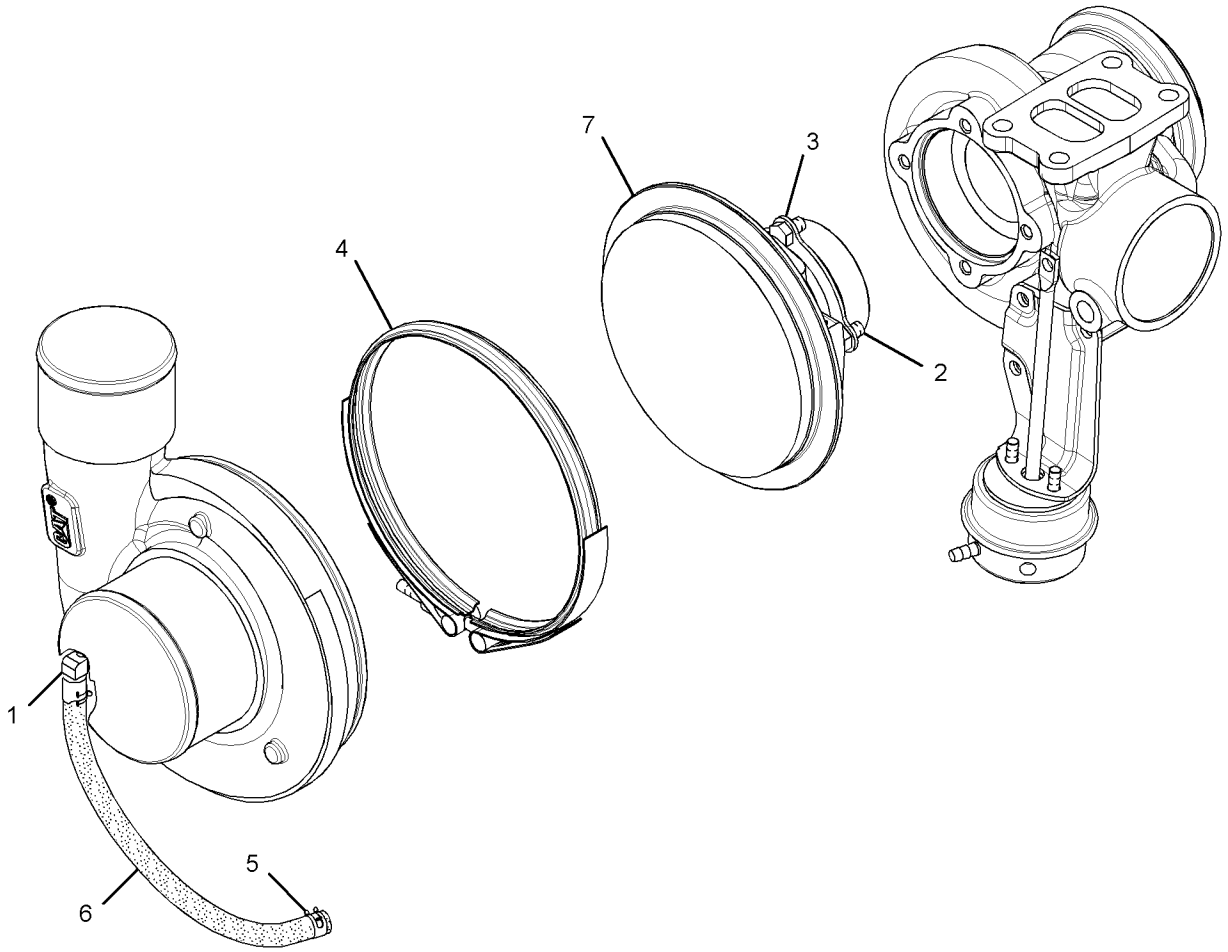

GRAPHIC #1 **<END>** g01382175

237-2041 TURBOCHARGER GP

S/N: TXD1-UP; THX8900-UP

PART OF 282-3826 ENGINE AR, 387-8574, 387-8576 ENGINE AR-COMPLETE, 282-3828, 282-3830 ENGINE AR-CORE

AN ATTACHMENT

SMCS-1052, 1053 **i04557103**

NOTE	REF NO	GRAPHIC REF	PART NUMBER	QTY	PART NAME 1 2 3 4 5 6 (PRODUCT LEVEL)	SEE PAGE
YR	1	1	**229-2913**	1	TURBOCHARGER GP	192
M	2	1	**3E-8017**	4	LOCKNUT (M10X1.5-THD)	
	3	1	**7C-7431**	1	GASKET	

M - METRIC PART
R - REMFG PART MAY BE AVAILABLE
Y - SEPARATE ILLUSTRATION

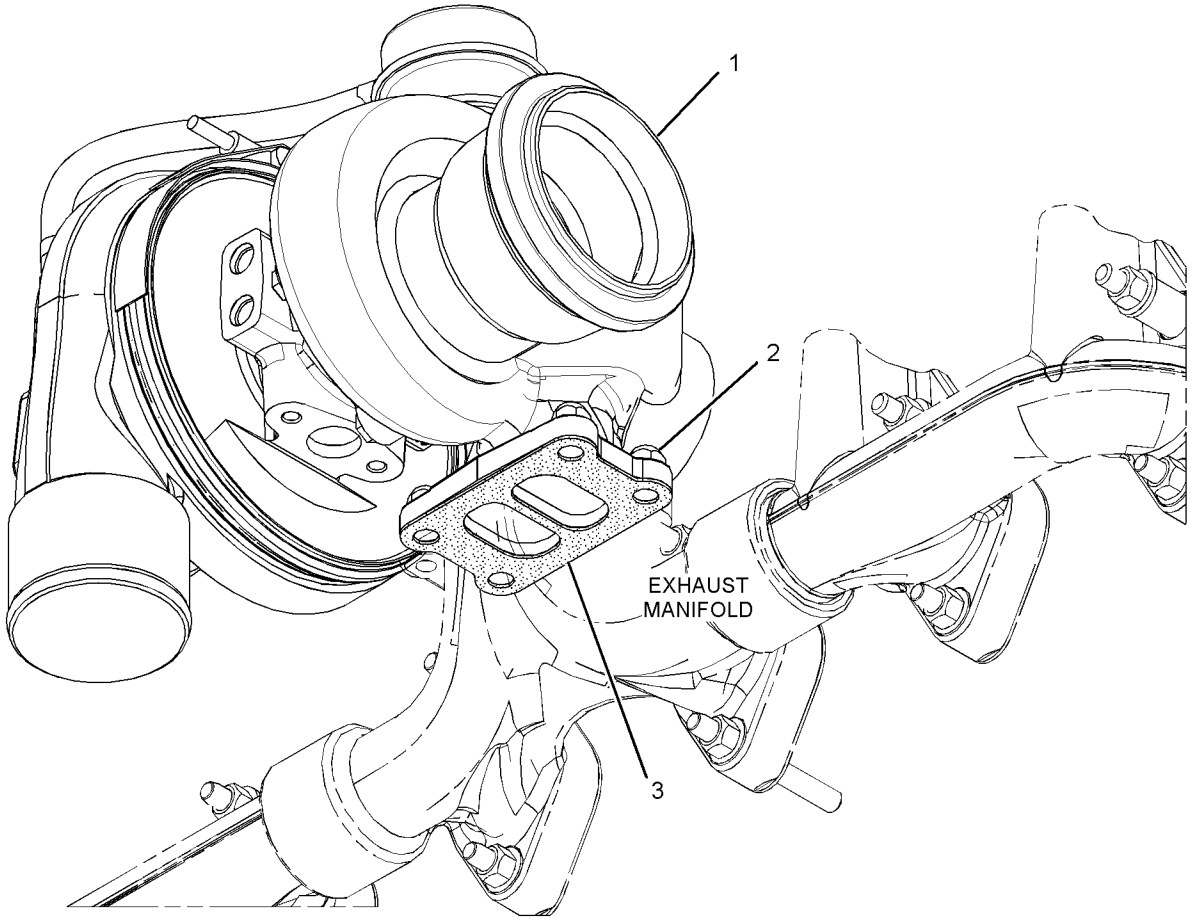

GRAPHIC #1 **<END>** g02797320

252-5165 TURBOCHARGER GP*R

S/N: TXD1-UP; THX8900-UP
PART OF 262-5901 TURBOCHARGER GP
ALSO AN ATTACHMENT

SMCS-1052, 1053

i04034877

NOTE	REF NO	GRAPHIC REF	PART NUMBER	QTY	PART NAME 1 2 3 4 5 6 (PRODUCT LEVEL)	SEE PAGE
	1	1	**137-1602**	1	CLAMP AS (TURBINE)	
	2	1	**158-6072**	1	CLAMP AS (COMPRESSOR)	
	3	1	**161-6963**	2	CLAMP	
	4	1	**262-2870**	1	CARTRIDGE GP-TURBOCHARGER	
E	5	1	**242-3360**		HOSE (25-CM)	

E - ORDER BY THE CENTIMETER

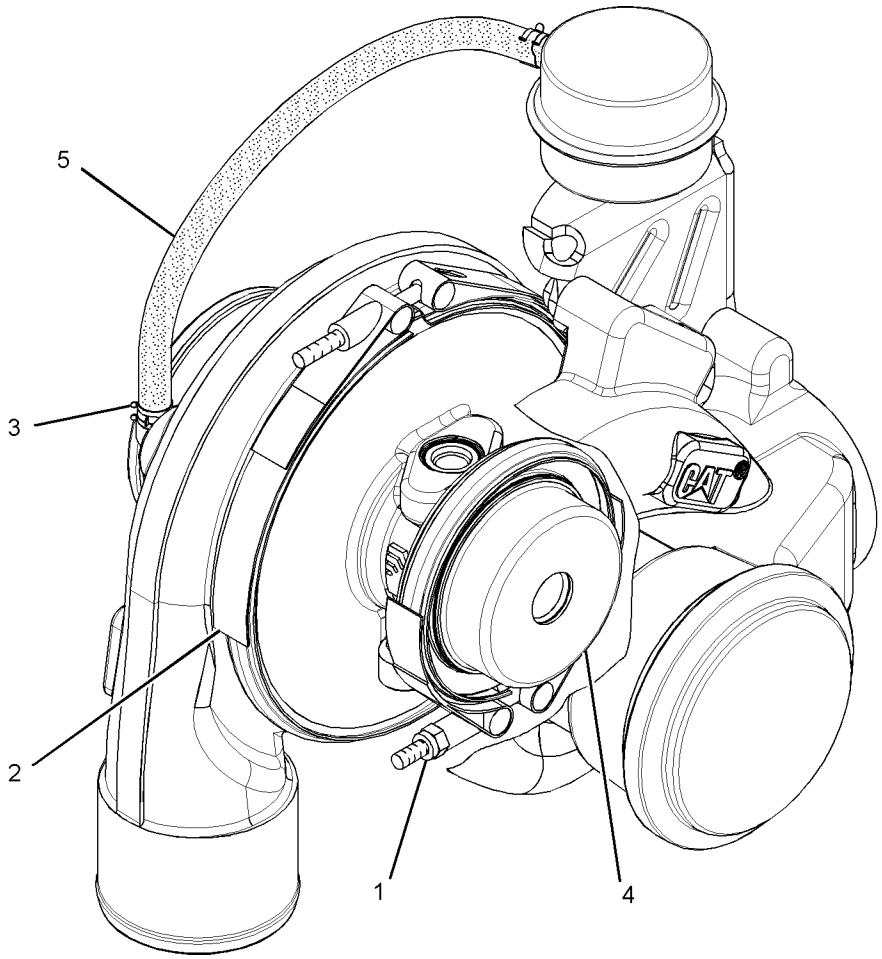

GRAPHIC #1

<END>

g01526440

262-5901 TURBOCHARGER GP

S/N: TXD1-UP; THX8900-UP

PART OF 282-3825, 301-5768 ENGINE AR, 387-8575, 387-8580, 398-6424 ENGINE AR-COMPLETE, 282-3827, 282-3829, 301-5769 ENGINE AR-CORE

ALSO AN ATTACHMENT

SMCS-1052, 1053

i02433947

NOTE	REF NO	GRAPHIC REF	PART NUMBER	QTY	PART NAME 1 2 3 4 5 6 (PRODUCT LEVEL)	SEE PAGE
	1	1	**7C-7431**	1	GASKET	
Y	2	1	**252-5165**	1	TURBOCHARGER GP	194
M	3	1	**3E-8017**	4	LOCKNUT (M10X1.5-MM-THD)	

M - METRIC PART
Y - SEPARATE ILLUSTRATION

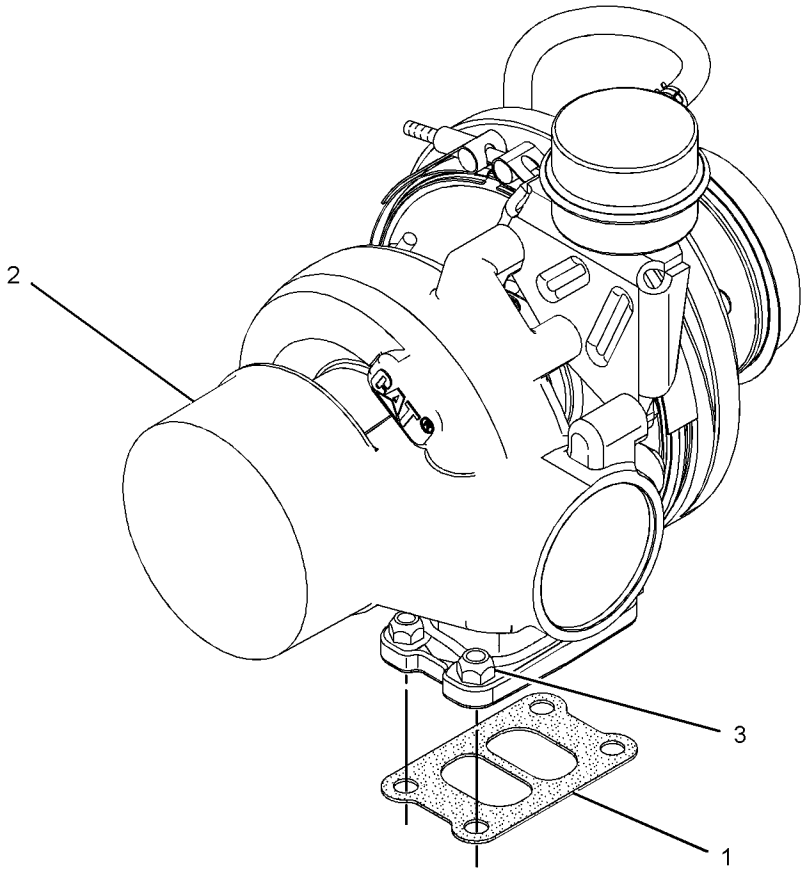

GRAPHIC #1

<END>

g01205748

295-7933 FILTER & LINES GP-FUEL

S/N: SMC1-604; GCT1-1098

PART OF 279-9549, 372-6406 INSTALLATION AR-ENGINE

SMCS-1261, 1274 **i04468631**

NOTE	REF NO	GRAPHIC REF	PART NUMBER	QTY	PART NAME 1 2 3 4 5 6 (PRODUCT LEVEL)	SEE PAGE
	1	1	**1P-4278**	1	CLAMP-HOSE	
	2	1	**1R-0762**	1	FILTER-FUEL (ADVANCED EFFICIENCY)	
	3	1	**6V-0852**	1	CAP-DUST	
	4	1	**8T-9655**	6	MOUNT-ISOLATION	
	5	1	**174-7599**	1	BASE AS-FUEL FILTER	
		1	**9S-4167**	1	STUD-HOLLOW (1-14X1.47-IN)	
Y	6	1	*174-9570*	1	FILTER GP-WATER SEP & FUEL	200
	7	1	*244-3712*	4	PLUG AS	
					(EACH INCLUDES)	
		1	**9S-4191**	1	PLUG-O-RING	
		1	**214-7568**	1	SEAL-O-RING	
	8	1	**190-8970**	1	PUMP GP-FUEL PRIMING	
	9	1	**191-1782**	1	SPACER (8.5X12.7X38.2-MM THK)	
	10	1	**191-1783**	2	SPACER (8.5X12.7X87.3-MM THK)	
	11	1	**206-5017**	1	SPACER (11X20X5-MM THK)	
	12	1	*241-6215*	1	ELBOW AS	
		1	**6V-8076**	1	ELBOW	
		1	**3J-1907**	1	SEAL-O-RING	
	13	1	**284-7650**	1	BRACKET AS	
	14	1	**284-9639**	1	HOSE & TUBE AS	
	15	1	**284-9640**	1	HOSE & TUBE AS	
	16	1	**306-9621**	1	BRACKET AS	
	17	1	**314-2911**	1	BRACKET AS	
M		1	**8T-3490**	1	NUT-WELD (M10X1.5-THD)	
	18	1	**100-4336**	2	CLIP	
	19	1	*148-8378*	2	ELBOW AS	
					(EACH INCLUDES)	
		1	**6V-8724**	1	ELBOW	
		1	**3J-1907**	1	SEAL-O-RING	
		1	**6V-8397**	1	SEAL-O-RING	
	20	1	**1S-0994**	2	CLIP	
	22	1	**5P-9297**	2	CLIP	
	28	1	**7X-0579**	6	WASHER-HARD (8.8X25.5X2-MM THK)	
M	29	1	**7X-2539**	2	BOLT (M8X1.25X110-MM)	
	30	1	**7X-7729**	4	WASHER (11X25X3-MM THK)	
	31	1	**8T-4121**	6	WASHER-HARD (11X21X2.5-MM THK)	
M	32	1	**8T-4136**	3	BOLT (M10X1.5X25-MM)	
M	33	1	**8T-4195**	9	BOLT (M10X1.5X30-MM)	
	34	1	**8T-4896**	2	WASHER-HARD (10.2X18.5X2.5-MM THK)	
M	35	1	**8T-6869**	1	BOLT (M8X1.25X60-MM)	
D	37	1	**5P-5991**		HOSE (0.7-M)	
	38	1	*313-3492*	2	PLUG AS	
					(EACH INCLUDES)	
		1	**238-5081**	1	SEAL-O-RING	
		1	**9S-4190**	1	PLUG-O-RING	
	39	1	*164-5567*	1	COUPLER AS-QUICK DISCONNECT (MALE)	
		1	**214-7568**	1	SEAL-O-RING	
		1	**6V-3965**	1	FITTING (QUICK DISCONNECT)	
	40	1	*148-8319*	1	CONNECTOR AS	
		1	**6V-8715**	1	CONNECTOR	
		1	**2M-9780**	1	SEAL-O-RING	
		1	**6V-8397**	1	SEAL-O-RING	

D - ORDER BY THE METER
M - METRIC PART
Y - SEPARATE ILLUSTRATION

295-7933 **FILTER & LINES GP-FUEL (*contd.*)** **i04468631**

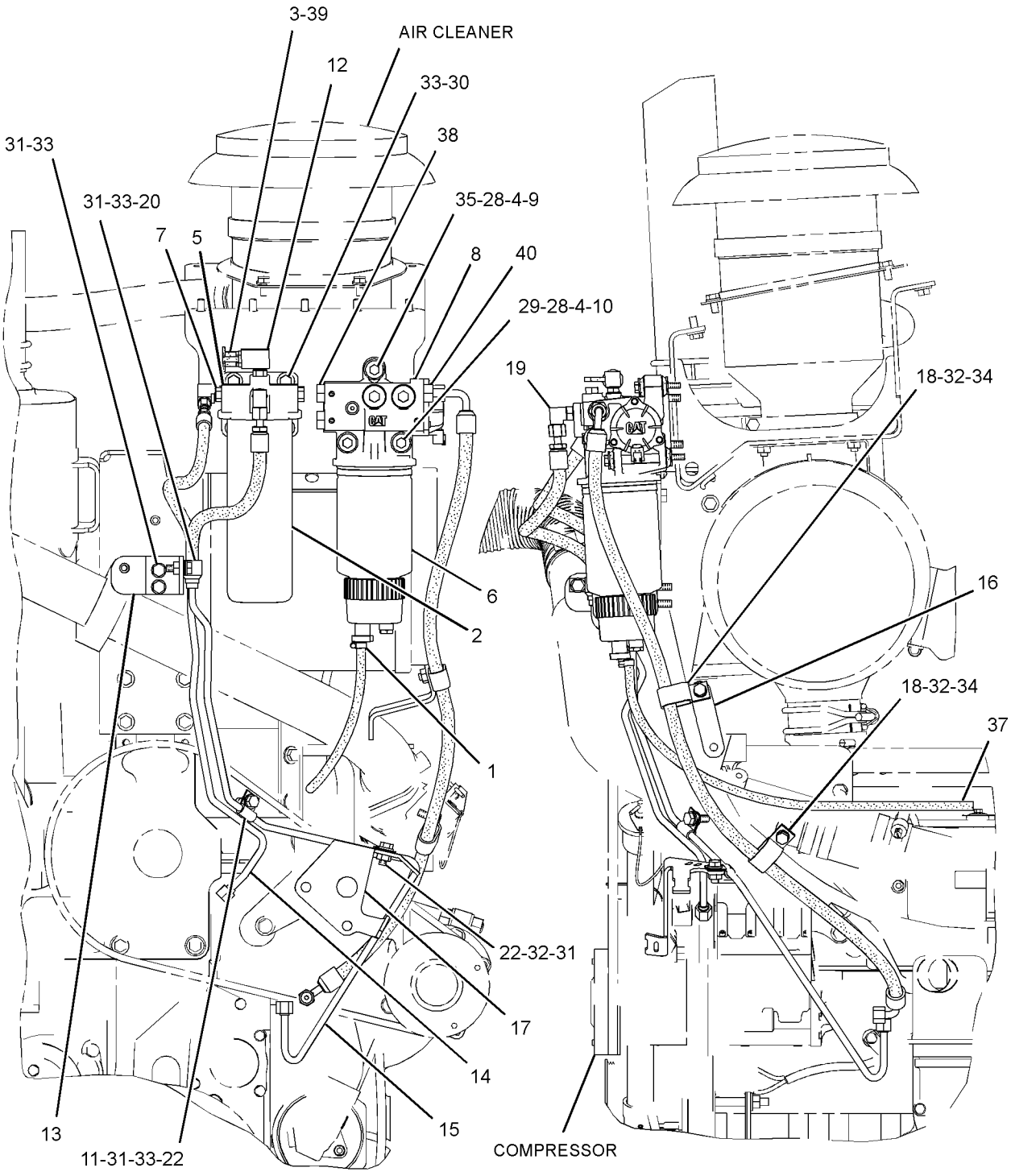

FRONT VIEW OF ENGINE

LEFT SIDE VIEW OF ENGINE

GRAPHIC #1 **<END>** g01640914

393-7367 FILTER & LINES GP-FUEL

S/N: SMC605-UP; GCT1099-UP

PART OF 372-6406 INSTALLATION AR-ENGINE

SMCS-1261, 1274 **i05335218**

NOTE	REF NO	GRAPHIC REF	PART NUMBER	QTY	PART NAME 1 2 3 4 5 6 (PRODUCT LEVEL)	SEE PAGE
	1	1	**1P-4278**	1	CLAMP-HOSE	
	2	1	**1R-0762**	1	FILTER-FUEL (ADVANCED EFFICIENCY)	
	3	1	**6V-0852**	1	CAP-DUST	
	4	1	**8T-9655**	6	MOUNT-ISOLATION	
	5	1	**174-7599**	1	BASE AS-FUEL FILTER	
		1	**9S-4167**	1	STUD-HOLLOW (1-14X1.47-IN)	
Y	6	1	*174-9570*	1	FILTER GP-WATER SEP & FUEL	200
	7	1	*244-3712*	4	PLUG AS	
					(EACH INCLUDES)	
		1	**9S-4191**	1	PLUG-O-RING	
		1	**214-7568**	1	SEAL-O-RING	
Y	8	1	**190-8970**	1	PUMP GP-FUEL PRIMING	218
	9	1	**191-1782**	1	SPACER (8.5X12.7X38.2-MM THK)	
	10	1	**191-1783**	2	SPACER (8.5X12.7X87.3-MM THK)	
	11	1	**206-5017**	1	SPACER (11X20X5-MM THK)	
	12	1	*241-6215*	1	ELBOW AS	
		1	**6V-8076**	1	ELBOW	
		1	**3J-1907**	1	SEAL-O-RING	
	13	1	**284-7650**	1	BRACKET AS	
M		1	**8T-3490**	3	NUT-WELD (M10X1.5-THD)	
	14	1	**284-9639**	1	HOSE & TUBE AS	
	15	1	**394-1514**	1	HOSE & TUBE AS	
	16	1	**306-9621**	1	BRACKET AS	
	17	1	**314-2911**	1	BRACKET AS	
	18	1	**100-4336**	2	CLIP	
	19	1	*148-8378*	2	ELBOW AS	
					(EACH INCLUDES)	
		1	**6V-8724**	1	ELBOW	
		1	**3J-1907**	1	SEAL-O-RING	
		1	**6V-8397**	1	SEAL-O-RING	
	20	1	**1S-0994**	2	CLIP	
	22	1	**5P-9297**	2	CLIP	
	23	1	*164-5567*	1	COUPLER AS-QUICK DISCONNECT (MALE)	
		1	**6V-3965**	1	FITTING (QUICK DISCONNECT)	
		1	**214-7568**	1	SEAL-O-RING	
	27	1	*148-8319*	1	CONNECTOR AS	
		1	**6V-8715**	1	CONNECTOR	
		1	**2M-9780**	1	SEAL-O-RING	
		1	**6V-8397**	1	SEAL-O-RING	
	28	1	**7X-0579**	6	WASHER-HARD (8.8X25.5X2-MM THK)	
M	29	1	**7X-2539**	2	BOLT (M8X1.25X110-MM)	
	30	1	**7X-7729**	4	WASHER (11X25X3-MM THK)	
	31	1	**8T-4121**	6	WASHER-HARD (11X21X2.5-MM THK)	
M	32	1	**8T-4136**	3	BOLT (M10X1.5X25-MM)	
M	33	1	**8T-4195**	9	BOLT (M10X1.5X30-MM)	
	34	1	**8T-4896**	2	WASHER-HARD (10.2X18.5X2.5-MM THK)	
M	35	1	**8T-6869**	1	BOLT (M8X1.25X60-MM)	
	36	1	*313-3492*	2	PLUG AS	
		1	**9S-4190**	1	PLUG-O-RING	
		1	**238-5081**	1	SEAL-O-RING	
D	37	1	**5P-5991**		HOSE (0.7-M)	

D - ORDER BY THE METER
M - METRIC PART
Y - SEPARATE ILLUSTRATION

393-7367 **FILTER & LINES GP-FUEL (*contd.*)** **i05335218**

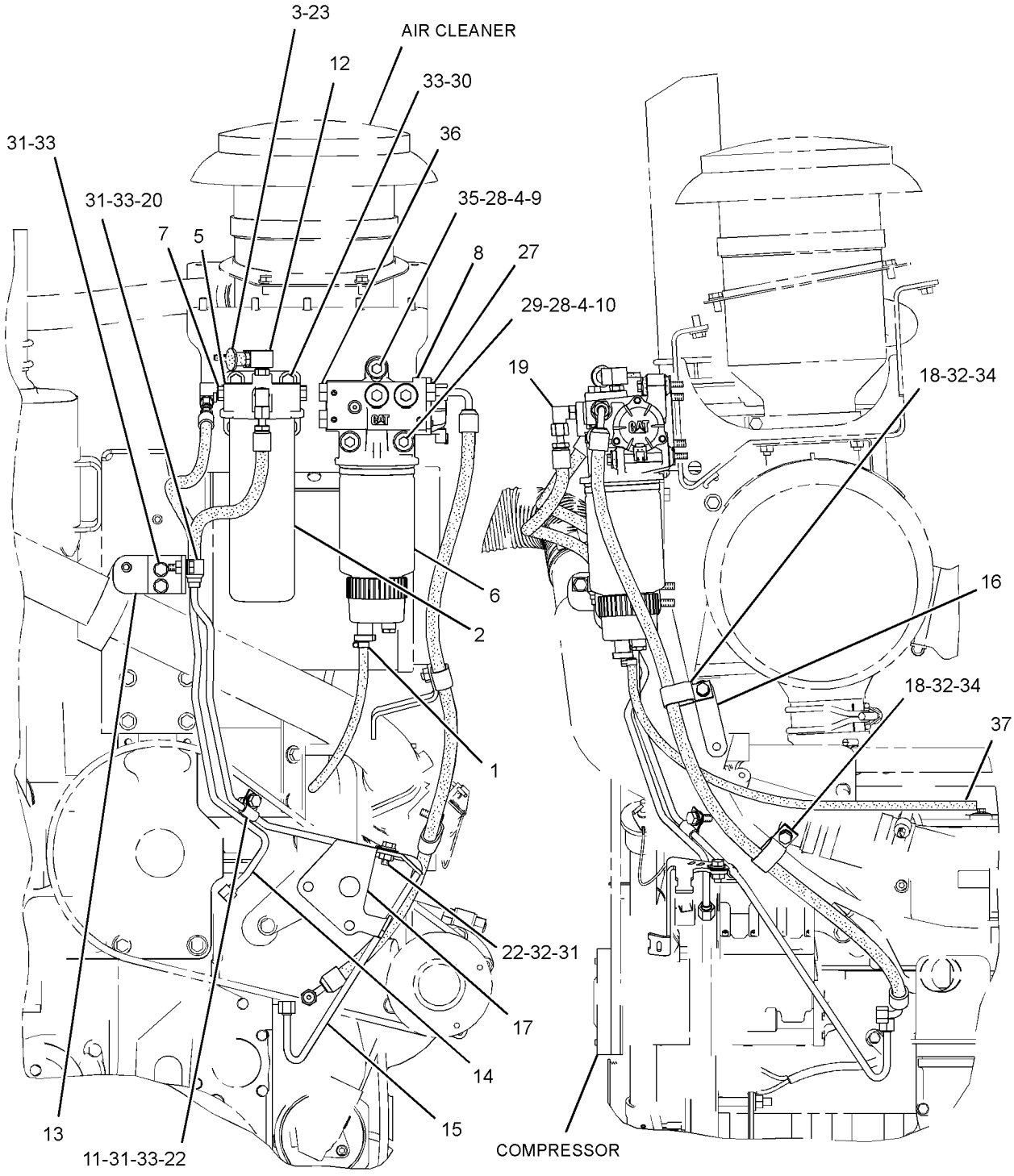

FRONT VIEW OF ENGINE

LEFT SIDE VIEW OF ENGINE

GRAPHIC #1 **<END>** g03255076

174-9570 FILTER GP-WATER SEP & FUEL

S/N: SMC1-UP; GCT1-UP

PART OF 295-7933, 393-7367 FILTER & LINES GP-FUEL

SMCS-1261, 1263

i05323837

NOTE	REF NO	GRAPHIC REF	PART NUMBER	QTY	PART NAME 1 2 3 4 5 6 (PRODUCT LEVEL)	SEE PAGE
	1	1	**326-1644**	1	FILTER AS-WATER SEP & FUEL (PRIMARY)	
	1A	1	**220-8678**	1	SEAL-RING (FUEL, WATER SEPARATOR)	
	2	1	**343-5527**	1	BOWL AS	
BJ	2A	1	**3J-1907**	1	SEAL-O-RING	
	2B	1	**5F-9144**	1	SEAL-O-RING	
	2C	1	**8F-7219**	1	SEAL-O-RING	
BJ	2D	1	**9S-8004**	1	PLUG-O-RING (DRAIN)	

B - USE AS REQUIRED
J - PARTS MARKED J ARE USED WITH BOWL ASSEMBLY THAT IS NOT ONE PIECE.

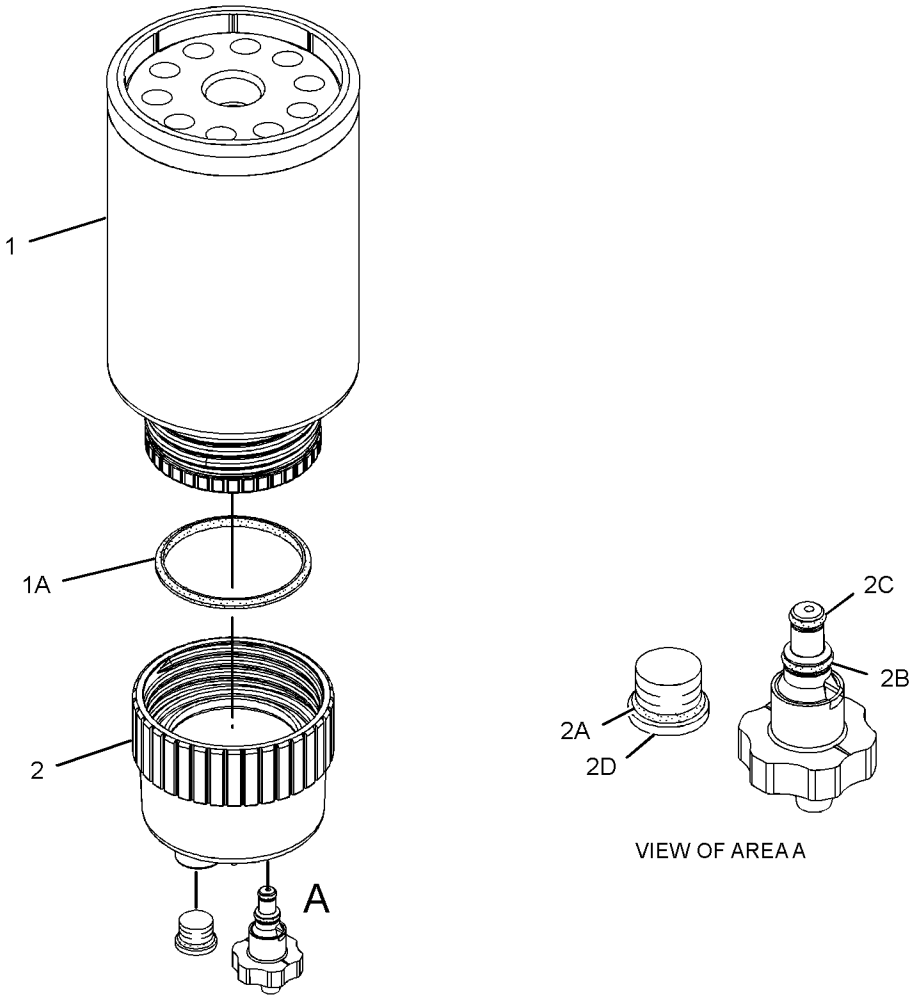

GRAPHIC #1

<END>

g01960053

293-4071 INJECTOR GP-FUEL

S/N: THX8900-17753
PART OF 267-9715 PUMP GP-FUEL INJECTION
ALSO AN ATTACHMENT

SMCS-1251, 1254, 1290

i02583007

NOTE	REF NO	GRAPHIC REF	PART NUMBER	QTY	PART NAME 1 2 3 4 5 6 (PRODUCT LEVEL)	SEE PAGE
	1	1	**149-5240**	1	RING-BACKUP	
	2	1	**293-0730**	1	RING-BACKUP	
	3	1	**109-3207**	1	SEAL-O-RING	
	4	1	**148-2903**	2	SEAL-O-RING	

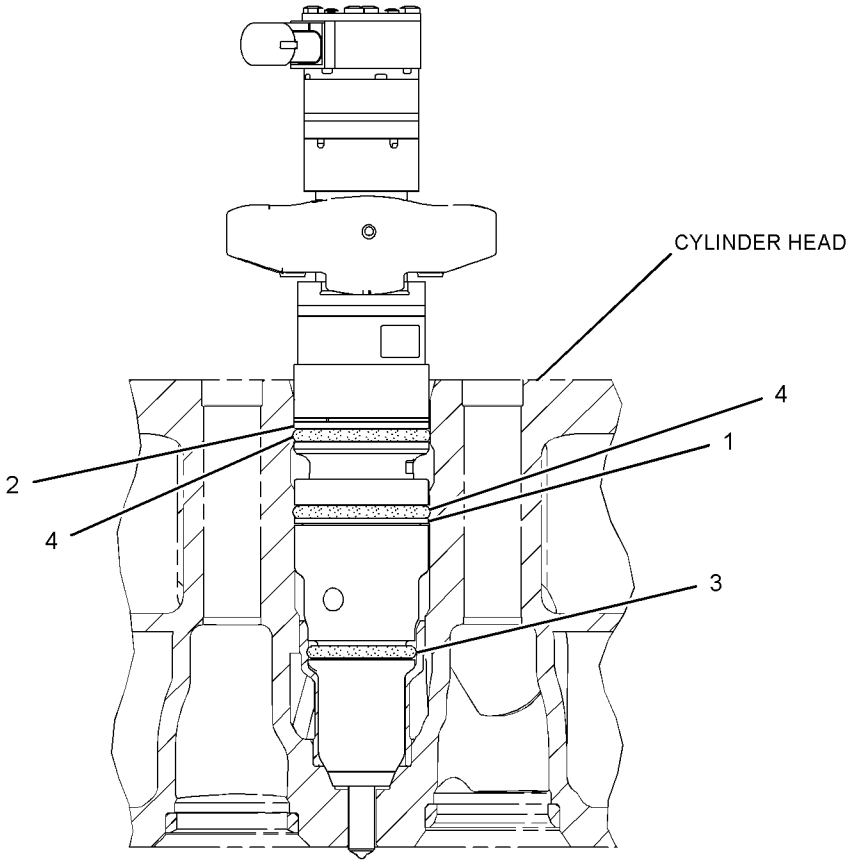

GRAPHIC #1

<END>

g01294201

328-2573 INJECTOR GP-FUEL*R

S/N: THX17754-UP
PART OF 267-9715 PUMP GP-FUEL INJECTION
ALSO AN ATTACHMENT

SMCS-1251, 1254, 1290

i03169204

NOTE	REF NO	GRAPHIC REF	PART NUMBER	QTY	PART NAME 1 2 3 4 5 6 (PRODUCT LEVEL)	SEE PAGE
	1	1	**149-5240**	1	RING-BACKUP	
	2	1	**293-0730**	1	RING-BACKUP	
	3	1	**109-3207**	1	SEAL-O-RING	
	4	1	**148-2903**	2	SEAL-O-RING (FUEL SYSTEM)	

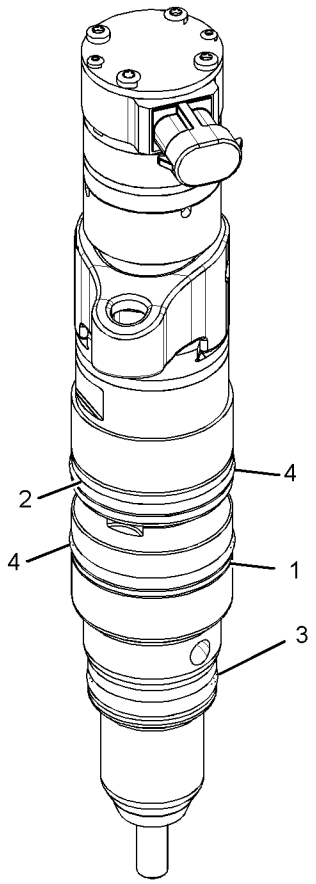

GRAPHIC #1

<END>

g01623404

387-9434 INJECTOR GP-FUEL*R

S/N: TXD1-UP; THX17754-UP
PART OF 267-9715 PUMP GP-FUEL INJECTION
ALSO AN ATTACHMENT

SMCS-1251, 1254, 1290

i05241312

NOTE	REF NO	GRAPHIC REF	PART NUMBER	QTY	PART NAME 1 2 3 4 5 6 (PRODUCT LEVEL)	SEE PAGE
	1	1	**148-2903**	2	SEAL-O-RING	
	2	1	**109-3207**	1	SEAL-O-RING	
	3	1	**149-5240**	1	RING-BACKUP	
	4	1	**293-0730**	1	RING-BACKUP	

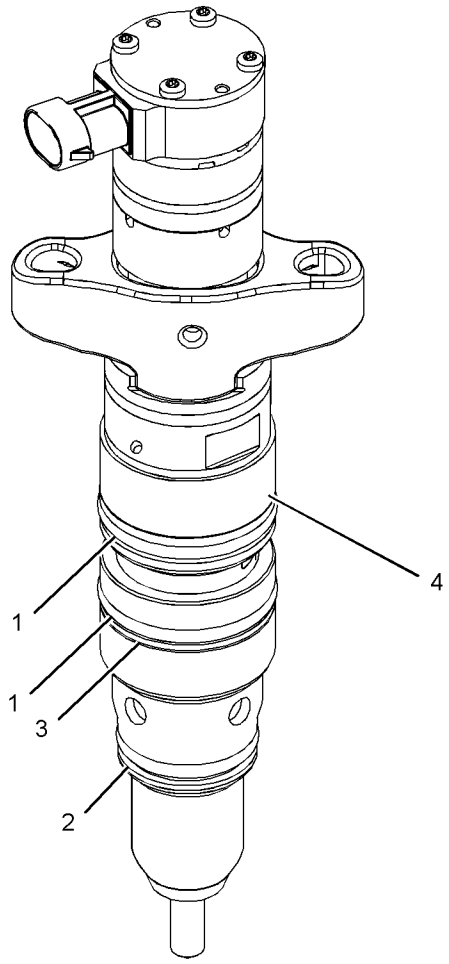

GRAPHIC #1

<END>

g03341832

223-1679 LINES GP-FUEL

S/N: SMC1-UP; GCT1-UP
PART OF 269-2044 CHASSIS AR

SMCS-1274 **i04793569**

NOTE	REF NO	GRAPHIC REF	PART NUMBER	QTY	PART NAME 1 2 3 4 5 6 (PRODUCT LEVEL)	SEE PAGE
	1	1	**1W-3011**	1	SPACER (10.5X22X73.5-MM THK)	
	2	1	**3W-2647**	1	SPACER (13.5X30X10-MM THK)	
	3	1	**5D-1026**	1	CLAMP-BAND	
	5	1	**8T-0119**	2	ELBOW	
	6	1	**8T-6723**	1	VALVE-BALL	
	7	1	**8T-6724**	1	VALVE-BALL	
	8	1	*150-3026*	1	ELBOW AS	
		1	**6V-4292**	1	ELBOW	
		1	**3K-0360**	1	SEAL-O-RING	
	9	1	**226-3492**	1	BRACKET AS	
I	10	1	**230-3615**	1	HOSE AS	
	11	1	**231-1345**	1	BRACKET AS	
I	12	1	**237-0984**	1	HOSE AS	
I	13	1	**237-0985**	1	HOSE AS	
C	14	1	**300-8554**	1	BRACKET AS	
	15	1	**067-2551**	3	CLIP	
C	16	1	**100-4336**	5	CLIP	
M	17	1	**109-3001**	1	STUD-TAPERLOCK (M10X1.5X65-MM)	
	18	1	*148-8364*	1	ELBOW AS	
		1	**6V-8625**	1	ELBOW	
		1	**3K-0360**	1	SEAL-O-RING	
		1	**6V-8398**	1	SEAL-O-RING	
	19	1	*148-8372*	1	ELBOW AS	
		1	**6V-8721**	1	ELBOW	
		1	**2M-9780**	1	SEAL-O-RING	
		1	**6V-8398**	1	SEAL-O-RING	
	20	1	*148-8374*	1	ELBOW AS	
		1	**6V-8723**	1	ELBOW	
		1	**3K-0360**	1	SEAL-O-RING	
		1	**6V-8397**	1	SEAL-O-RING	
	21	1	*164-5570*	1	UNION AS	
		1	**6V-8730**	1	UNION (FACE SEAL)	
		1	**6V-8397**	2	SEAL-O-RING	
	22	1	**1K-4649**	1	SPACER (0.516X1X1-IN THK)	
	23	1	**1S-0996**	1	CLIP	
	24	1	**3K-0360**	4	SEAL-O-RING	
	25	1	**4D-7735**	1	CLIP	
	26	1	**7X-7729**	1	WASHER (11X25X3-MM THK)	
	27	1	**8T-1887**	1	CLIP (SLOT)	
	28	1	**8T-1888**	1	CLIP (TAB)	
	29	1	**8T-1893**	1	CLIP (SLOT)	
	30	1	**8T-1894**	1	CLIP (TAB)	
C	31	1	**8T-4121**	12	WASHER-HARD (11X21X2.5-MM THK)	
M	32	1	**8T-4133**	2	NUT (M10X1.5-THD)	
M	33	1	**8T-4137**	7	BOLT (M10X1.5X20-MM)	
	34	1	**8T-9383**	1	BOLT (1/2-13X0.75-IN)	
M	35	1	**8T-4182**	1	BOLT (M10X1.5X45-MM)	
M	36	1	**8T-4195**	1	BOLT (M10X1.5X30-MM)	
M	37	1	**8T-4196**	1	BOLT (M10X1.5X35-MM)	
M	38	1	**8T-4198**	1	BOLT (M10X1.5X100-MM)	
	39	1	**8T-4223**	1	WASHER-HARD (13.5X25.5X3-MM THK)	
	40	1	**8T-4896**	1	WASHER-HARD (10.2X18.5X2.5-MM THK)	
E	41	1	**5P-1505**		HOSE (104-CM)	

C - CHANGE FROM PREVIOUS TYPE
E - ORDER BY THE CENTIMETER
I - REFER TO HYDRAULIC INFORMATION SYSTEM
M - METRIC PART

223-1679 **LINES GP-FUEL (*contd.*)** **i04793569**

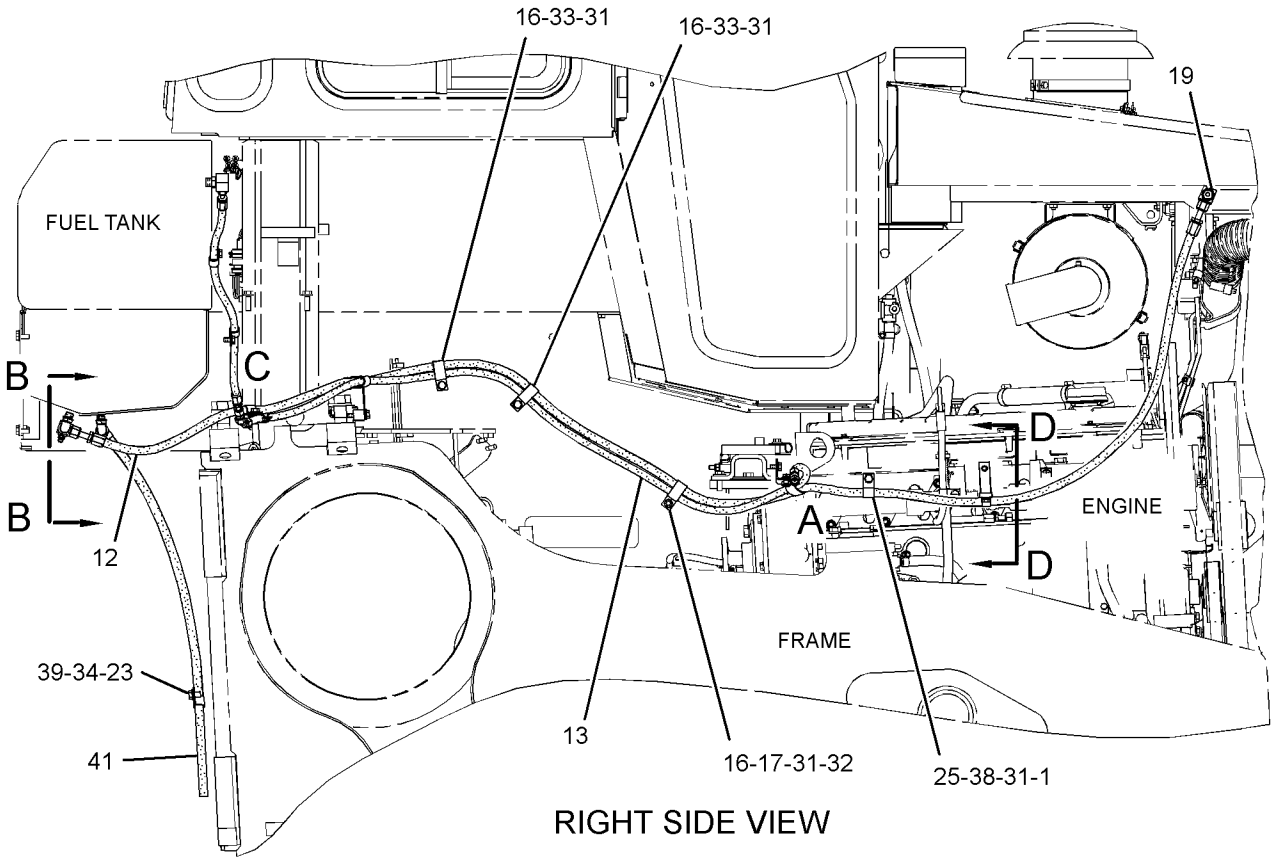

RIGHT SIDE VIEW

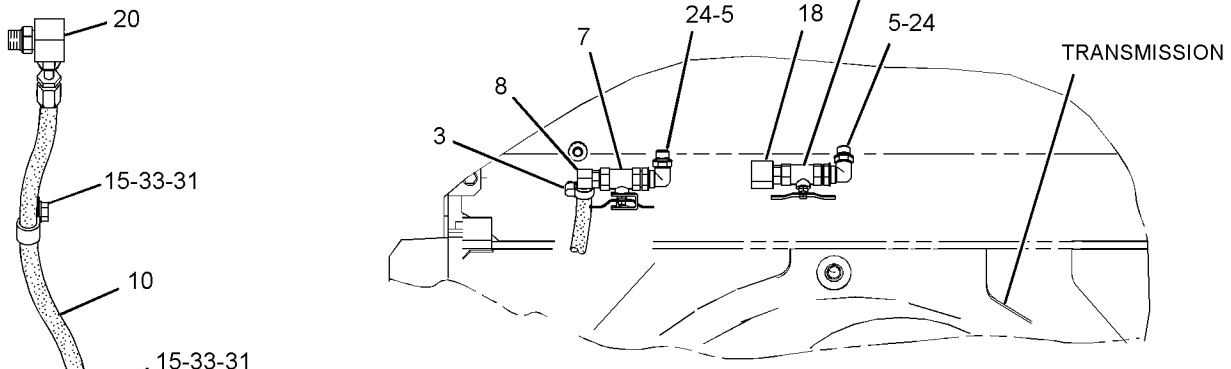

VIEW B-B

VIEW OF AREA C

VIEW OF AREA A

SECTION D-D

GRAPHIC #1 **<END>** g02994858

264-2014 LINES GP-FUEL

S/N: TXD1-UP; THX8900-UP

PART OF 282-3823, 282-3824, 282-3825, 282-3826, 301-5768 ENGINE AR, 349-3564, 349-3565 ENGINE AR-COMPLETE

ALSO AN ATTACHMENT

SMCS-1274 **i05194257**

NOTE	REF NO	GRAPHIC REF	PART NUMBER	QTY	PART NAME 1 2 3 4 5 6 (PRODUCT LEVEL)	SEE PAGE
	1	1	*330-9750*	1	TEE AS	
		1	**3E-7410**	1	TEE-O-RING	
		1	**214-7568**	1	SEAL-O-RING	
	2	1	**3S-2093**	1	STRAP-CABLE	
	3	1	*175-9106*	1	ELBOW AS	
		1	**6V-9001**	1	ELBOW	
		1	**214-7568**	1	SEAL-O-RING	
		1	**228-7089**	1	SEAL-O-RING	
Y	4	1	**194-6725**	1	SENSOR GP-PRESSURE (FUEL)	362
Y	5	1	*232-0343*	1	REGULATOR GP-FUEL PRESSURE	221
	6	1	**263-7731**	1	HARNESS AS-WIRING (FUEL PRESSURE)	
		1	**9X-3401**	6	PIN-CONNECTOR (16-GA TO 18-GA)	
					—OR—	
		1	**126-1767**	6	PIN-CONNECTOR (14-GA TO 16-GA)	
		1	**8T-8737**	5	PLUG-SEAL	
		1	**102-8803**	1	KIT-RECEPTACLE (3-PIN)	
		1	**102-8806**		KIT-RECEPTACLE (8-PIN)	
					(EACH RECEPTACLE KIT INCLUDES RECEPTACLE AS & WEDGE)	
	7	1	*295-1803*	1	ELBOW AS	
		1	**214-7568**	1	SEAL-O-RING	
	8	1	**1S-0994**	1	CLIP	
I	9	1	**224-2228**	1	HOSE AS	
M	10	1	**6V-4248**	1	BOLT (M10X1.5X25-MM)	
	11	1	**6V-5839**	1	WASHER (11X21X2.5-MM THK)	
	12	1	*183-3399*	2	CONNECTOR AS	
					(EACH INCLUDES)	
		1	**6V-8636**	1	CONNECTOR	
		1	**214-7568**	1	SEAL-O-RING	
		1	**228-7089**	1	SEAL-O-RING	
	13	1	*250-1424*	1	ELBOW AS	
		1	**6V-8724**	1	ELBOW	
		1	**214-7568**	1	SEAL-O-RING	
		1	**228-7089**	1	SEAL-O-RING	
	14	1	*329-5451*	1	ADAPTER AS	
		1	**9X-0261**	1	ADAPTER	
		1	**214-7566**	1	SEAL-O-RING	
		1	**214-7568**	1	SEAL-O-RING	

I - REFER TO HYDRAULIC INFORMATION SYSTEM
M - METRIC PART
Y - SEPARATE ILLUSTRATION

264-2014 **LINES GP-FUEL (*contd.*)** **i05194257**

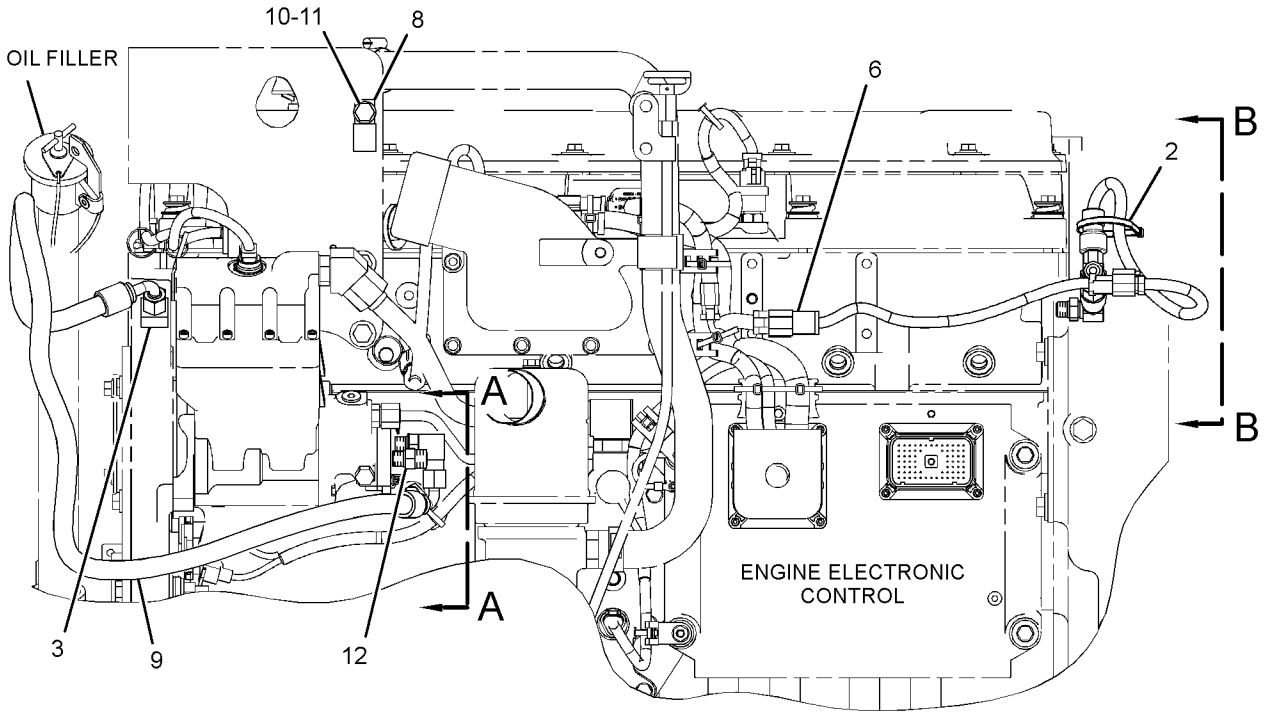

LEFT SIDE VIEW OF ENGINE

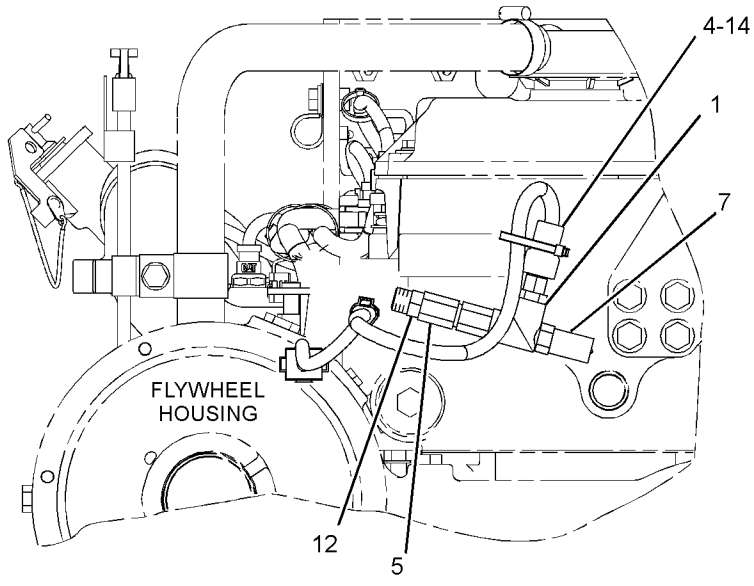

VIEW B-B

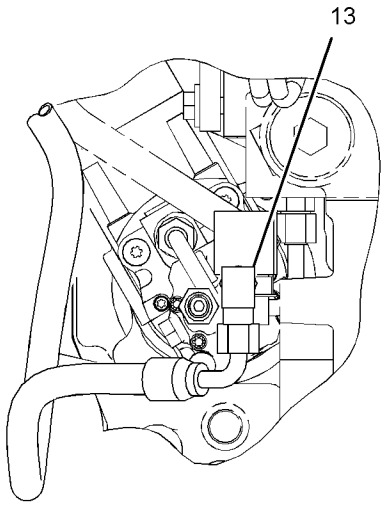

VIEW A-A

GRAPHIC #1 **<END>** g03333225

397-5040 LINES GP-FUEL

S/N: TXD1-UP; THX8900-UP

PART OF 387-8574, 387-8575, 387-8576, 387-8580, 398-6424 ENGINE AR-COMPLETE

ALSO AN ATTACHMENT

SMCS-1274 **i04895602**

NOTE	REF NO	GRAPHIC REF	PART NUMBER	QTY	PART NAME 1 2 3 4 5 6 (PRODUCT LEVEL)	SEE PAGE
	1	1	**3S-2093**	3	STRAP-CABLE	
	2	1	*175-9106*	1	ELBOW AS	
		1	**6V-9001**	1	ELBOW	
		1	**214-7568**	1	SEAL-O-RING	
		1	**228-7089**	1	SEAL-O-RING	
Y	3	1	**194-6725**	1	SENSOR GP-PRESSURE	362
I	4	1	**224-2228**	1	HOSE AS	
Y	5	1	*232-0343*	1	REGULATOR GP-FUEL PRESSURE	221
	6	1	**263-7731**	1	HARNESS AS-WIRING (FUEL PRESSURE)	
		1	**9X-3401**	6	PIN-CONNECTOR (16-GA TO 18-GA)	
					—OR—	
		1	**126-1767**	6	PIN-CONNECTOR (14-GA TO 16-GA)	
		1	**8T-8737**	5	PLUG-SEAL	
		1	**102-8803**	1	KIT-RECEPTACLE (3-PIN)	
		1	**102-8806**	1	KIT-RECEPTACLE (8-PIN)	
					(EACH RECEPTACLE KIT INCLUDES RECEPTACLE AS & WEDGE)	
	7	1	*295-1803*	1	ELBOW AS	
		1	**214-7568**	1	SEAL-O-RING	
	8	1	*396-0386*	1	CONNECTOR AS	
		1	**214-7568**	1	SEAL-O-RING	
		1	**228-7089**	1	SEAL-O-RING	
		1	**396-0385**	1	CONNECTOR	
	9	1	*183-3399*	1	CONNECTOR AS	
		1	**6V-8636**	1	CONNECTOR	
		1	**214-7568**	1	SEAL-O-RING	
		1	**228-7089**	1	SEAL-O-RING	
	10	1	**1S-0994**	1	CLIP	
	11	1	*250-1424*	1	ELBOW AS	
		1	**6V-8724**	1	ELBOW	
		1	**214-7568**	1	SEAL-O-RING	
		1	**228-7089**	1	SEAL-O-RING	
	12	1	*329-5451*	1	ADAPTER AS	
		1	**9X-0261**	1	ADAPTER	
		1	**214-7566**	1	SEAL-O-RING	
		1	**214-7568**	1	SEAL-O-RING	
	13	1	*330-9750*	1	TEE AS	
		1	**3E-7410**	1	TEE-O-RING	
		1	**214-7568**	1	SEAL-O-RING	
M	14	1	**6V-4248**	1	BOLT (M10X1.5X25-MM)	
	15	1	**6V-5839**	1	WASHER (11X21X2.5-MM THK)	
	16	1	**7K-1181**	1	STRAP-CABLE	
	17	1	**304-9465**	2	STRAP-CABLE	

I - REFER TO HYDRAULIC INFORMATION SYSTEM
M - METRIC PART
Y - SEPARATE ILLUSTRATION

397-5040 **LINES GP-FUEL (*contd.*)** **i04895602**

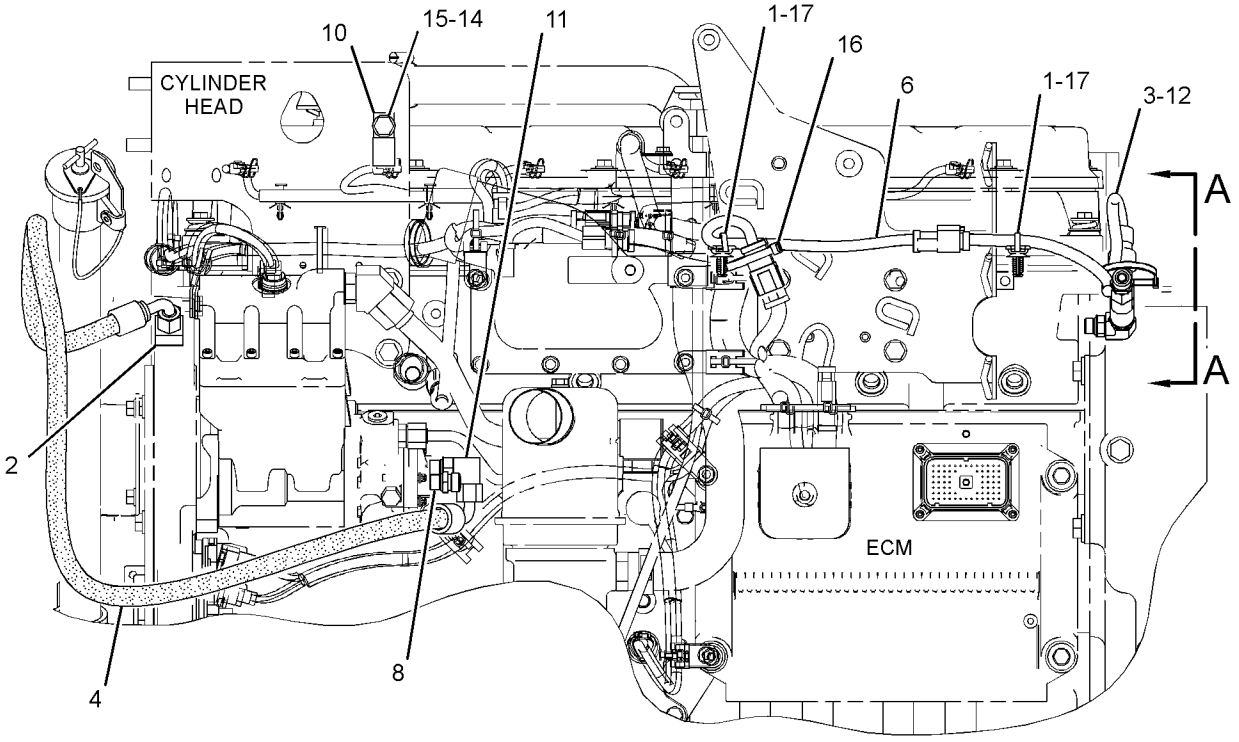

LEFT SIDE VIEW OF ENGINE

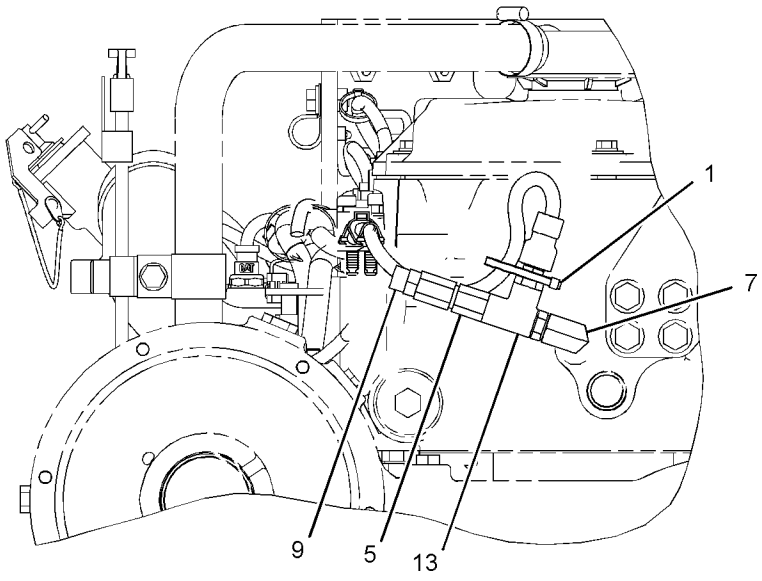

VIEW A-A

GRAPHIC #1 **<END>** g03177466

220-8233 PUMP & MTG GP-UNIT INJ HYD

S/N: TXD1-UP; THX8900-UP

PART OF 282-3827, 282-3828, 282-3829, 282-3830, 301-5769, 384-8428, 399-3904 ENGINE

AR-CORE

ALSO AN ATTACHMENT

SMCS-1714 **i04987244**

NOTE	REF NO	GRAPHIC REF	PART NUMBER	QTY	PART NAME 1 2 3 4 5 6 (PRODUCT LEVEL)	SEE PAGE
	1	1	*371-7191*	1	ELBOW AS	
		1	**228-7090**	1	SEAL-O-RING	
		1	**214-7568**	1	SEAL-O-RING	
		1	**371-7190**	1	ADAPTER-ELBOW	
	2	1	*389-3708*	1	PLUG AS	
		1	**360-3679**	1	PLUG-CONNECTOR	
		1	**214-7568**	1	SEAL-O-RING	
	3	1	**227-5904**	1	SEAL-O-RING	
	4	1	**376-7673**	1	TUBE AS	
	5	1	**209-3172**	1	TUBE AS	
CYR	6	1	**319-0678**	1	PUMP GP-UNIT INJECTOR HYD	219
	7	1	*357-4619*	1	ELBOW AS	
		1	**030-7950**	1	ELBOW	
		1	**238-5082**	1	SEAL-O-RING	
	8	1	*377-9623*	1	ELBOW AS	
		1	**5P-3264**	1	ELBOW	
		1	**238-5081**	1	SEAL-O-RING	
	10	1	*319-6240*	1	CONNECTOR AS	
		1	**6V-9873**	1	CONNECTOR	
		1	**214-7568**	1	SEAL-O-RING	
		1	**228-7090**	1	SEAL-O-RING	
	11	1	**6V-5839**	2	WASHER (11X21X2.5-MM THK)	
M	12	1	**6V-7981**	2	BOLT (M10X1.5X70-MM)	
	13	1	**3E-9412**	1	DOWEL	

C - CHANGE FROM PREVIOUS TYPE
M - METRIC PART
R - REMFG PART MAY BE AVAILABLE
Y - SEPARATE ILLUSTRATION

220-8233 **PUMP & MTG GP-UNIT INJ HYD (*contd.*)** **i04987244**

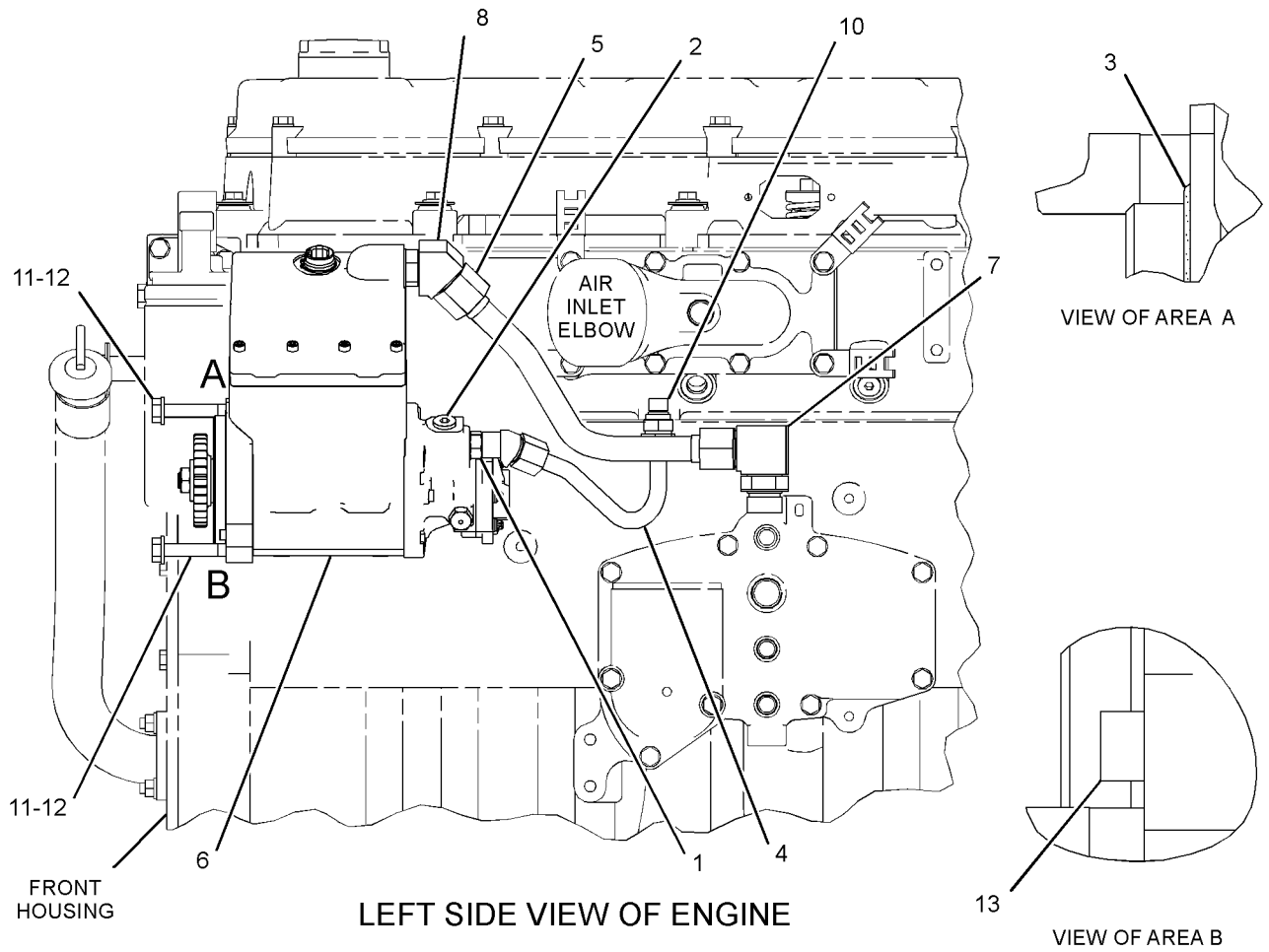

LEFT SIDE VIEW OF ENGINE

GRAPHIC #1 **<END>** g03163316

387-8622 PUMP & MTG GP-UNIT INJ HYD

S/N: TXD1-UP; THX8900-UP
1.61 GEAR RATIO
FOR USE WITH REHS7902
PART OF 387-8618 ENGINE AR-CORE
ALSO AN ATTACHMENT

SMCS-1714 **i04895630**

NOTE	REF NO	GRAPHIC REF	PART NUMBER	QTY	PART NAME 1 2 3 4 5 6 (PRODUCT LEVEL)	SEE PAGE
R	1	1	**384-0678**	1	PUMP GP-UNIT INJECTOR HYD	
	2	1	**387-7154**	1	TUBE AS	
	3	1	**387-7159**	1	TUBE AS	
	4	1	*389-3708*	1	PLUG AS	
		1	**214-7568**	1	SEAL-O-RING	
		1	**360-3679**	1	PLUG-CONNECTOR	
	5	1	*396-0390*	1	ELBOW AS	
		1	**128-6841**	1	ELBOW	
		1	**228-7092**	1	SEAL-O-RING	
		1	**238-5082**	1	SEAL-O-RING	
	6	1	*183-3399*	2	CONNECTOR AS	
					(EACH INCLUDES)	
		1	**6V-8636**	1	CONNECTOR	
		1	**214-7568**	1	SEAL-O-RING	
		1	**228-7089**	1	SEAL-O-RING	
	7	1	**227-5904**	1	SEAL-O-RING	
	8	1	*281-5984*	1	ELBOW AS	
		1	**8T-5389**	1	ELBOW	
		1	**228-7092**	1	SEAL-O-RING	
		1	**238-5081**	1	SEAL-O-RING	
	9	1	**6V-5839**	2	WASHER (11X21X2.5-MM THK)	
M	10	1	**6V-7981**	2	BOLT (M10X1.5X70-MM)	

M - METRIC PART
R - REMFG PART MAY BE AVAILABLE

387-8622 **PUMP & MTG GP-UNIT INJ HYD (*contd.*)** **i04895630**

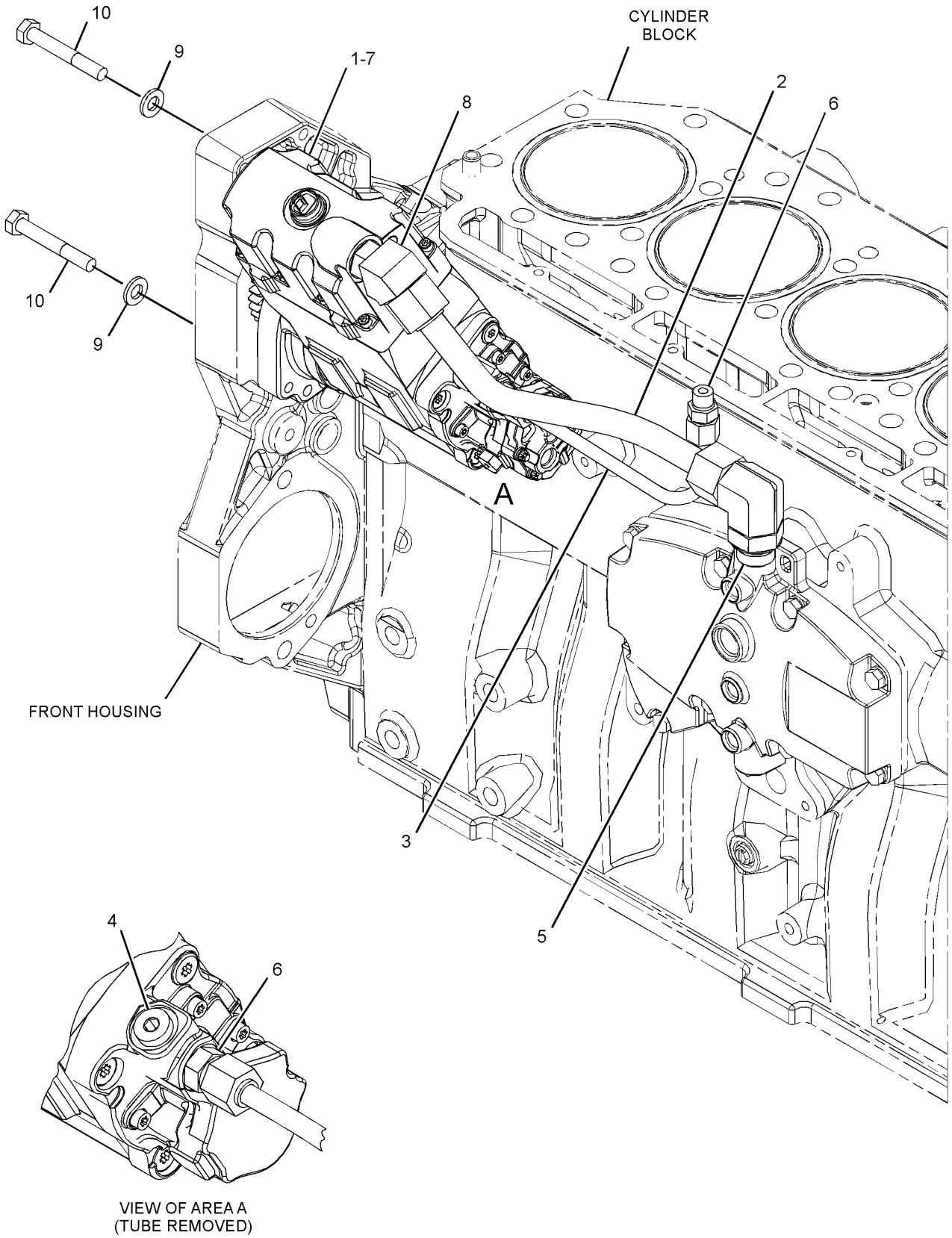

VIEW OF AREA A
(TUBE REMOVED)

GRAPHIC #1 **<END>** g03119658

267-9715 PUMP GP-FUEL INJECTION

S/N: THX8900-17753
PART OF 267-9720 PUMP GP-FUEL INJECTION
ALSO AN ATTACHMENT

SMCS-1251, 1290

i02582967

NOTE	REF NO	GRAPHIC REF	PART NUMBER	QTY	PART NAME 1 2 3 4 5 6 (PRODUCT LEVEL)	SEE PAGE
	1	1	**235-9651**	2	BOLT-SOCKET HEAD (M8X1.25X65-MM)	
CY	2	1	**293-4071**	1	INJECTOR GP-FUEL	201

C - CHANGE FROM PREVIOUS TYPE
Y - SEPARATE ILLUSTRATION

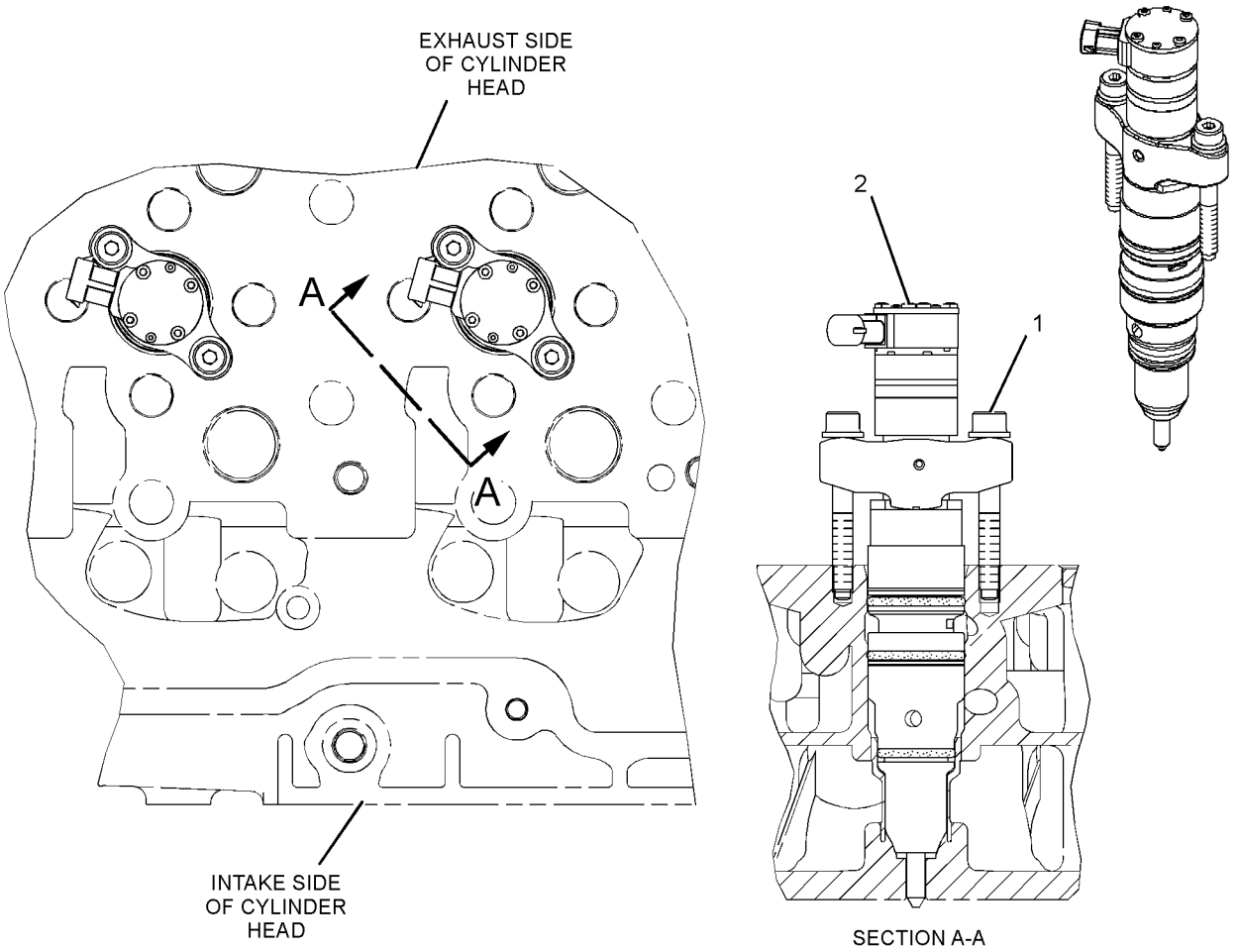

GRAPHIC #1

<END>

g01221290

267-9715 PUMP GP-FUEL INJECTION

S/N: THX17754-UP

PART OF 384-8428 ENGINE AR-CORE, 267-9720 PUMP GP-FUEL INJECTION

ALSO AN ATTACHMENT

SMCS-1251, 1290 **i03169202**

NOTE	REF NO	GRAPHIC REF	PART NUMBER	QTY	PART NAME 1 2 3 4 5 6 (PRODUCT LEVEL)	SEE PAGE
	1	1	**235-9651**	2	BOLT-SOCKET HEAD (M8X1.25X65-MM)	
CYR	2	1	**328-2573**	1	INJECTOR GP-FUEL	202

C - CHANGE FROM PREVIOUS TYPE
R - REMFG PART MAY BE AVAILABLE
Y - SEPARATE ILLUSTRATION

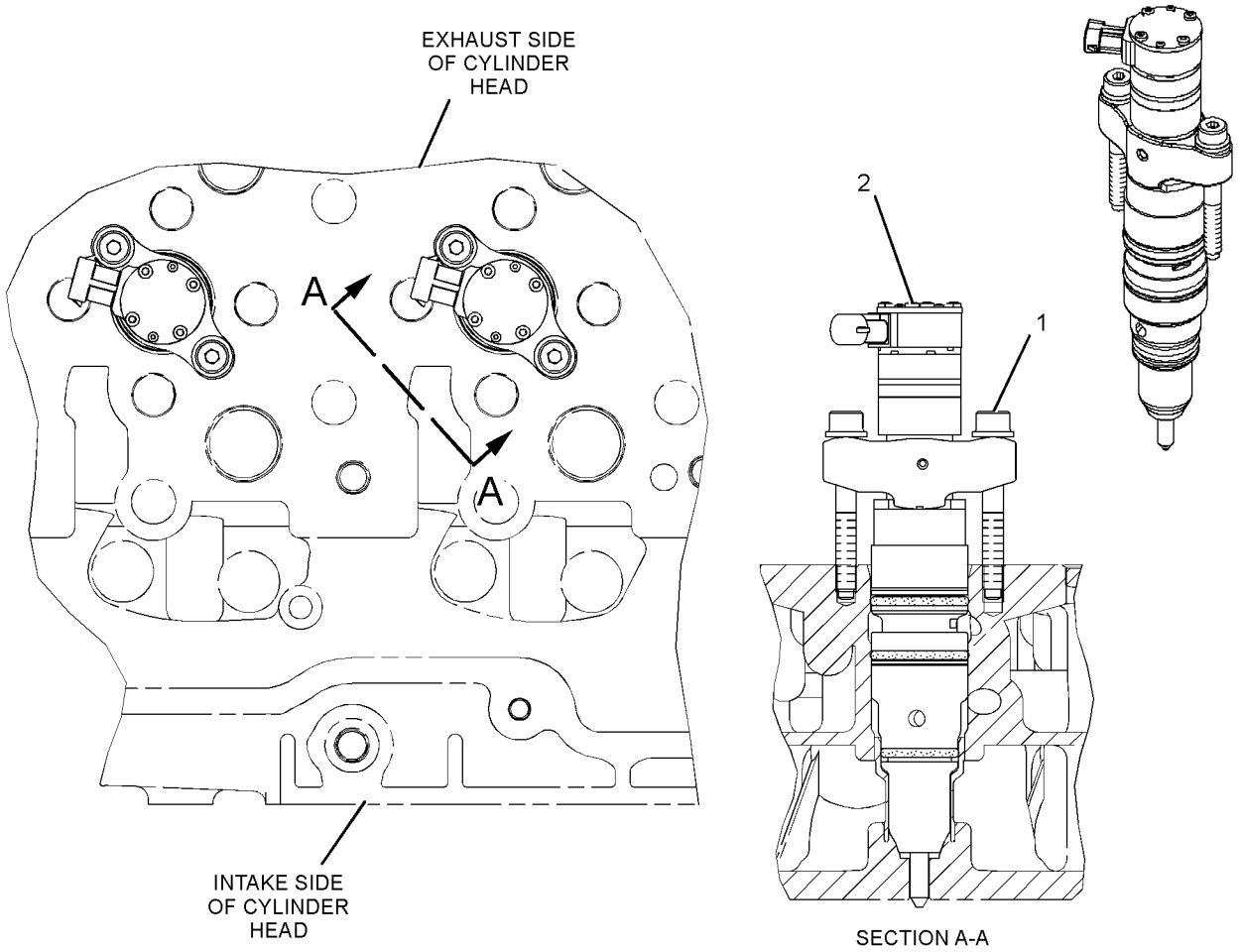

GRAPHIC #1 **<END>** g01221290

267-9715 PUMP GP-FUEL INJECTION

S/N: TXD1-UP; THX8900-UP

PART OF 384-8428, 387-8618, 399-3904 ENGINE AR-CORE, 267-9720 PUMP GP-FUEL INJECTION

ALSO AN ATTACHMENT

SMCS-1251, 1290

i05241068

NOTE	REF NO	GRAPHIC REF	PART NUMBER	QTY	PART NAME 1 2 3 4 5 6 (PRODUCT LEVEL)	SEE PAGE
	1	1	**235-9651**	2	BOLT-SOCKET HEAD (M8X1.25X65-MM)	
CYR	2	1	**387-9434**	1	INJECTOR GP-FUEL	203

C - CHANGE FROM PREVIOUS TYPE
R - REMFG PART MAY BE AVAILABLE
Y - SEPARATE ILLUSTRATION

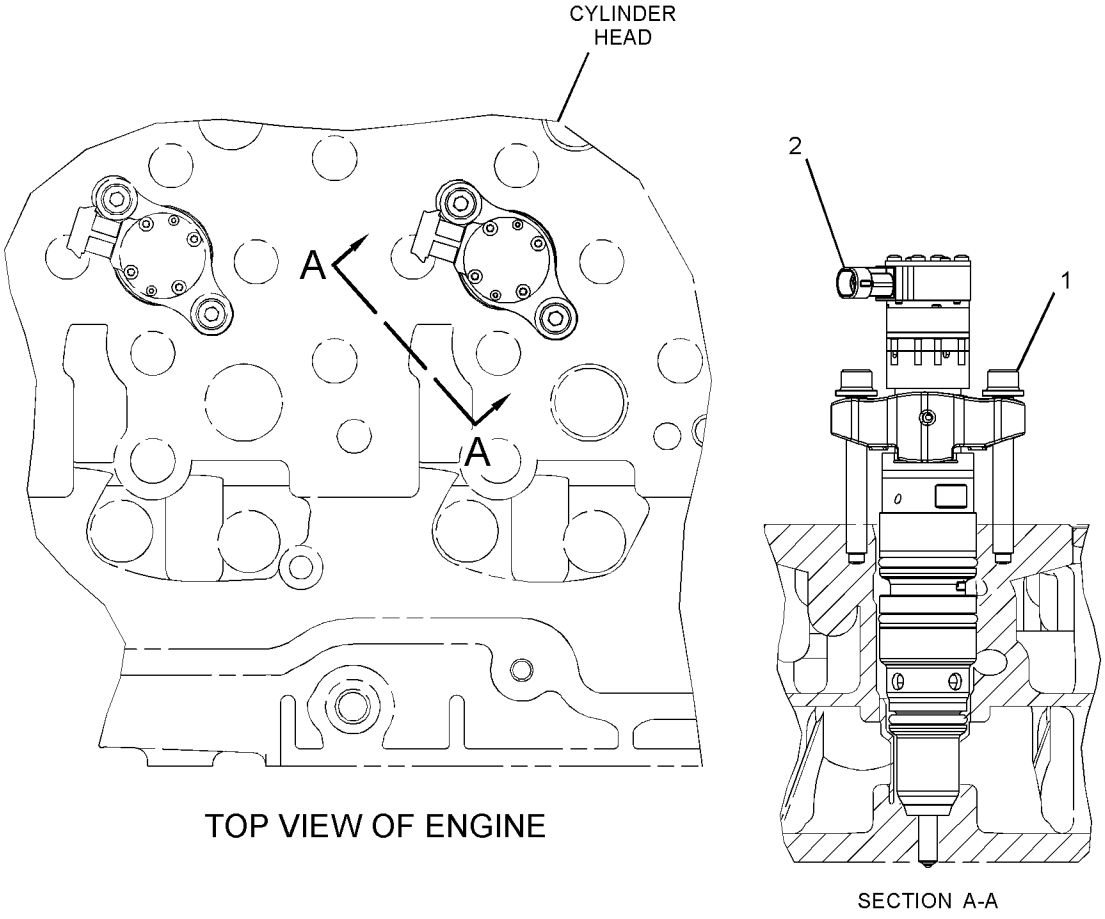

TOP VIEW OF ENGINE

SECTION A-A

GRAPHIC #1

<END>

g03349097

267-9720 PUMP GP-FUEL INJECTION

S/N: THX8900-UP

PART OF 282-3827, 282-3828, 282-3829, 282-3830, 301-5769 ENGINE AR-CORE

ALSO AN ATTACHMENT

SMCS-1251, 1290

i02434206

NOTE	PART NUMBER	QTY	PART NAME 1 2 3 4 5 6 (PRODUCT LEVEL)	SEE PAGE
Y	*267-9715*	6	PUMP GP-FUEL INJECTION	214

Y - SEPARATE ILLUSTRATION

<END>

190-8970 PUMP GP-FUEL PRIMING

S/N: SMC605-UP; GCT1099-UP

PART OF 393-7367 FILTER & LINES GP-FUEL

SMCS-1258 **i05335239**

NOTE	REF NO	GRAPHIC REF	PART NUMBER	QTY	PART NAME 1 2 3 4 5 6 (PRODUCT LEVEL)	SEE PAGE
	1	1	**9S-4167**	1	STUD-HOLLOW (1-14X1.47-IN)	
	2	1	**9X-8267**	3	WASHER (6.6X12X2-MM THK)	
	3	1	**162-2220**	2	VALVE-CHECK	
	4	1	**162-2222**	2	SPRING	
	5	1	**165-0187**	2	PIN	
	6	1	**9S-8002**	1	PLUG-O-RING	
M	7	1	**8T-4138**	3	BOLT (M6X1X20-MM)	
	8	1	**6V-4368**	1	SEAL-O-RING	
	9	1	**6D-5801**	2	LOCKNUT (8-32-THD)	
	10	1	**373-4098**	1	CAP-PRIMING PUMP	
	11	1	**173-1016**	2	RING-BACKUP	
	12	1	**179-7400**	2	SEAL (FUEL)	
	13	1	**188-7535**	1	SEAL	
	14	1	**188-7536**	1	SEAL	
	15	1	**188-7537**	2	SEAL	
	16	1	**188-7541**	1	SEAL	
	17	1	**236-6717**	2	SEAL-O-RING	

PARTS SHOWN IN GRAPHIC(S) WITHOUT A REFERENCE NUMBER ARE NOT SERVICED SEPARATELY

M - METRIC PART

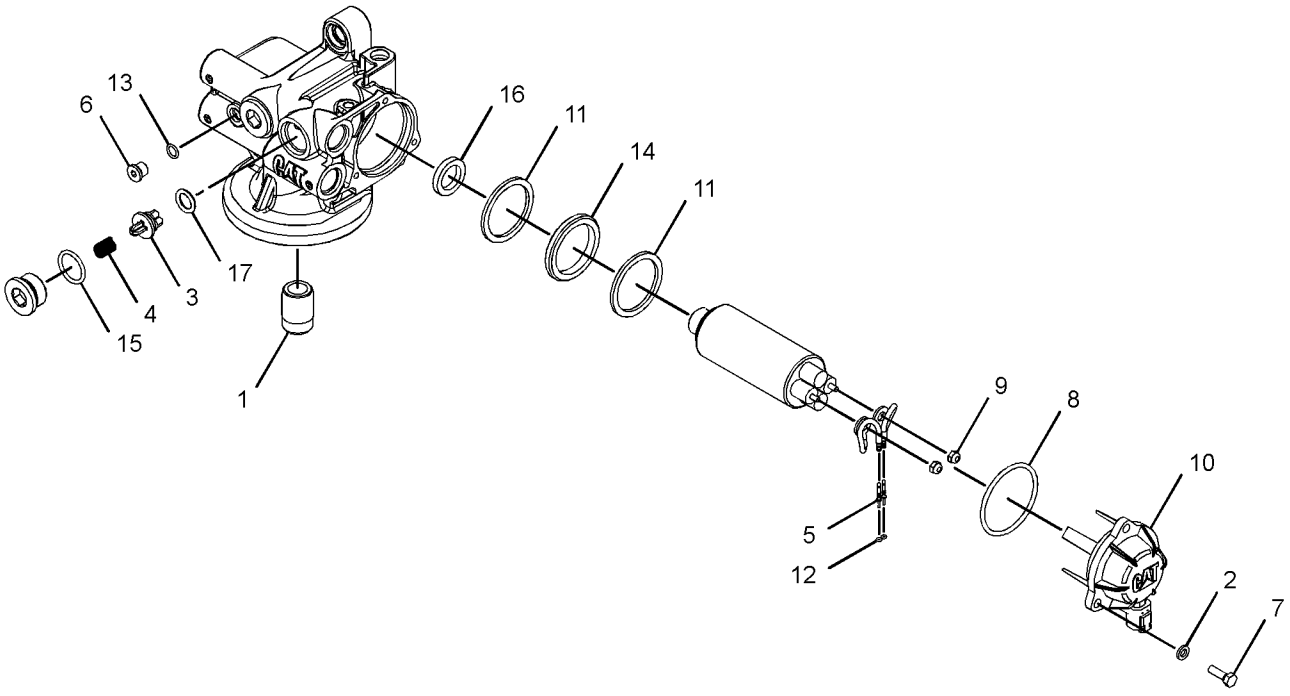

GRAPHIC #1 **<END>** g03040356

319-0678 PUMP GP-UNIT INJECTOR HYD*R

S/N: TXD1-UP; THX8900-UP

PART OF 220-8233 PUMP & MTG GP-UNIT INJ HYD

ALSO AN ATTACHMENT

SMCS-1714 **i03362461**

NOTE	REF NO	GRAPHIC REF	PART NUMBER	QTY	PART NAME 1 2 3 4 5 6 (PRODUCT LEVEL)	SEE PAGE
	1	1	**153-7036**	1	SPOOL	
	2	1	**318-6357**	1	PUMP GP-FUEL TRANSFER	
	3	1	**179-8128**	1	SEAL-O-RING	
M	4	1	**228-5897**	4	BOLT-TORX (M8X1.25X136.7-MM)	
	5	1	**1F-7960**	1	WASHER (13.5X32X6-MM THK)	
	6	1	**239-2402**	3	SEAL-O-RING	
	7	1	**260-5716**	1	SPOOL	
	8	1	**262-0284**	1	RING-RETAINING	
	9	1	**1N-8062**	1	BEARING AS-NEEDLE	
M	10	1	**5C-2890**	1	NUT (M6X1-THD)	
	11	1	**8C-6711**	1	NUT-RETAINER (1/2-20-THD)	
	12	1	**9X-8267**	1	WASHER (6.6X12X2-MM THK)	

M - METRIC PART

319-0678 **PUMP GP-UNIT INJECTOR HYD (*contd.*)** **i03362461**

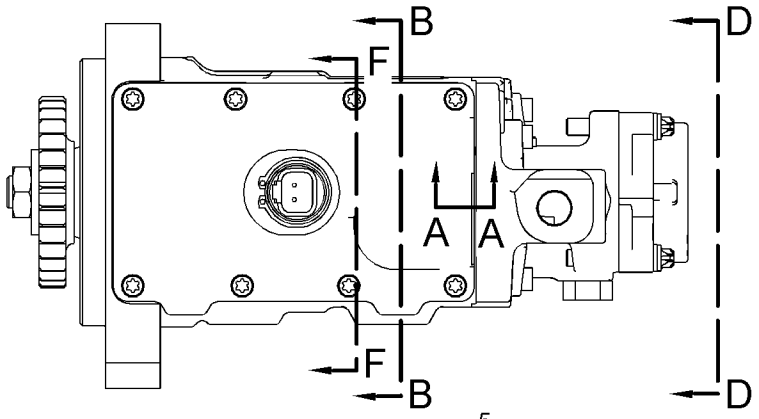

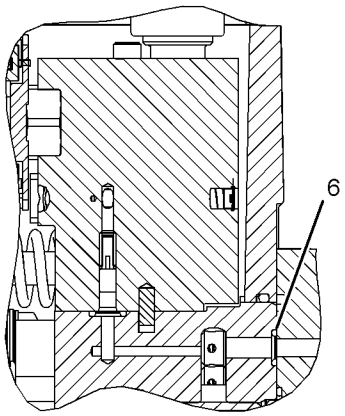

SECTION E-E

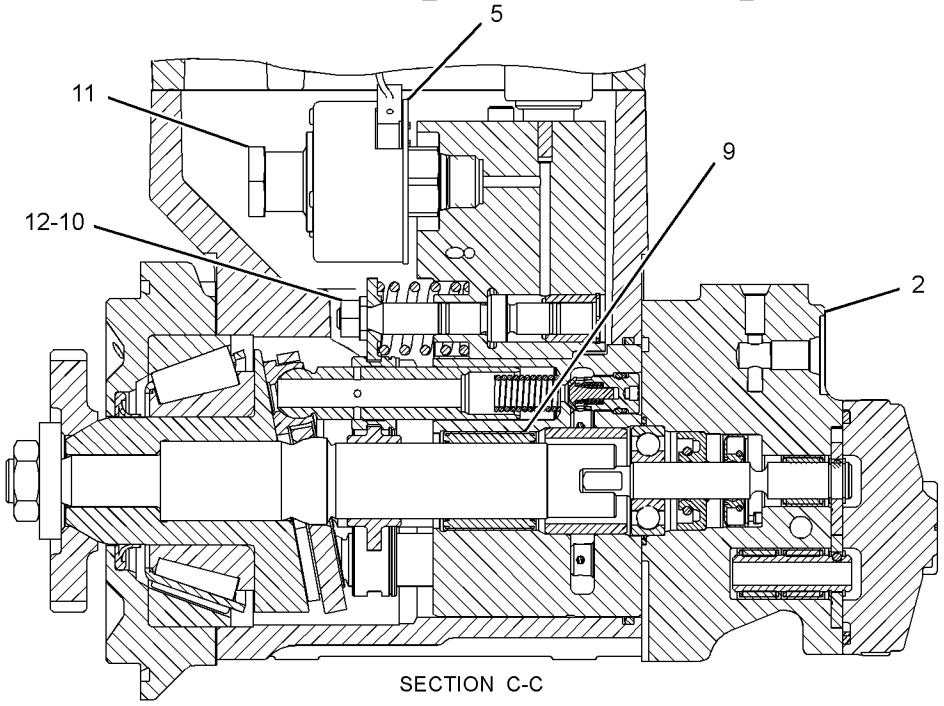

SECTION C-C

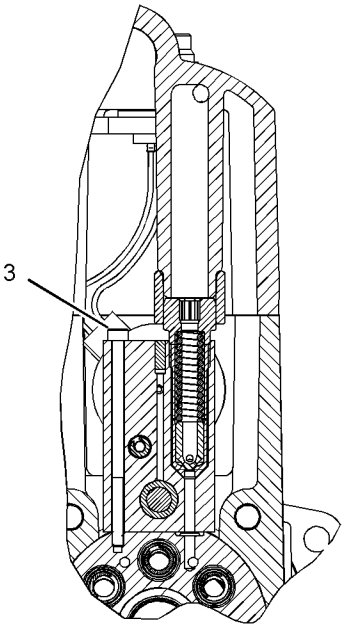

SECTION B-B

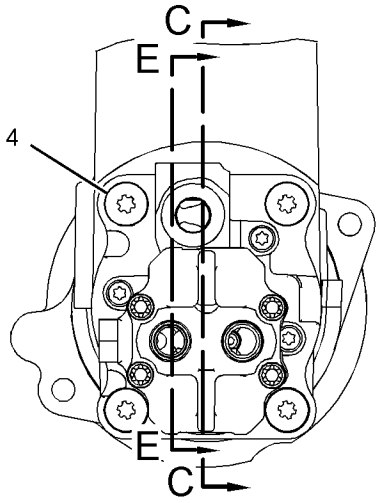

VIEW D-D

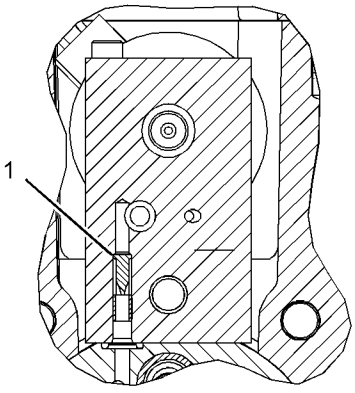

SECTION F-F

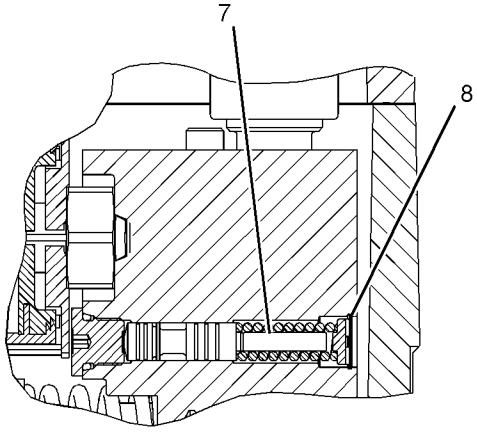

SECTION A-A

GRAPHIC #1 **<END>** g01775274

232-0343 REGULATOR GP-FUEL PRESSURE

S/N: TXD1-UP; THX8900-UP
PART OF 264-2014, 397-5040 LINES GP-FUEL
ALSO AN ATTACHMENT

SMCS-1270 **i04482870**

NOTE	REF NO	GRAPHIC REF	PART NUMBER	QTY	PART NAME 1 2 3 4 5 6 (PRODUCT LEVEL)	SEE PAGE
	1	1	**214-7568**	1	SEAL-O-RING	
	2	1	**369-6662**	1	REGULATOR AS (FUEL PRESSURE)	

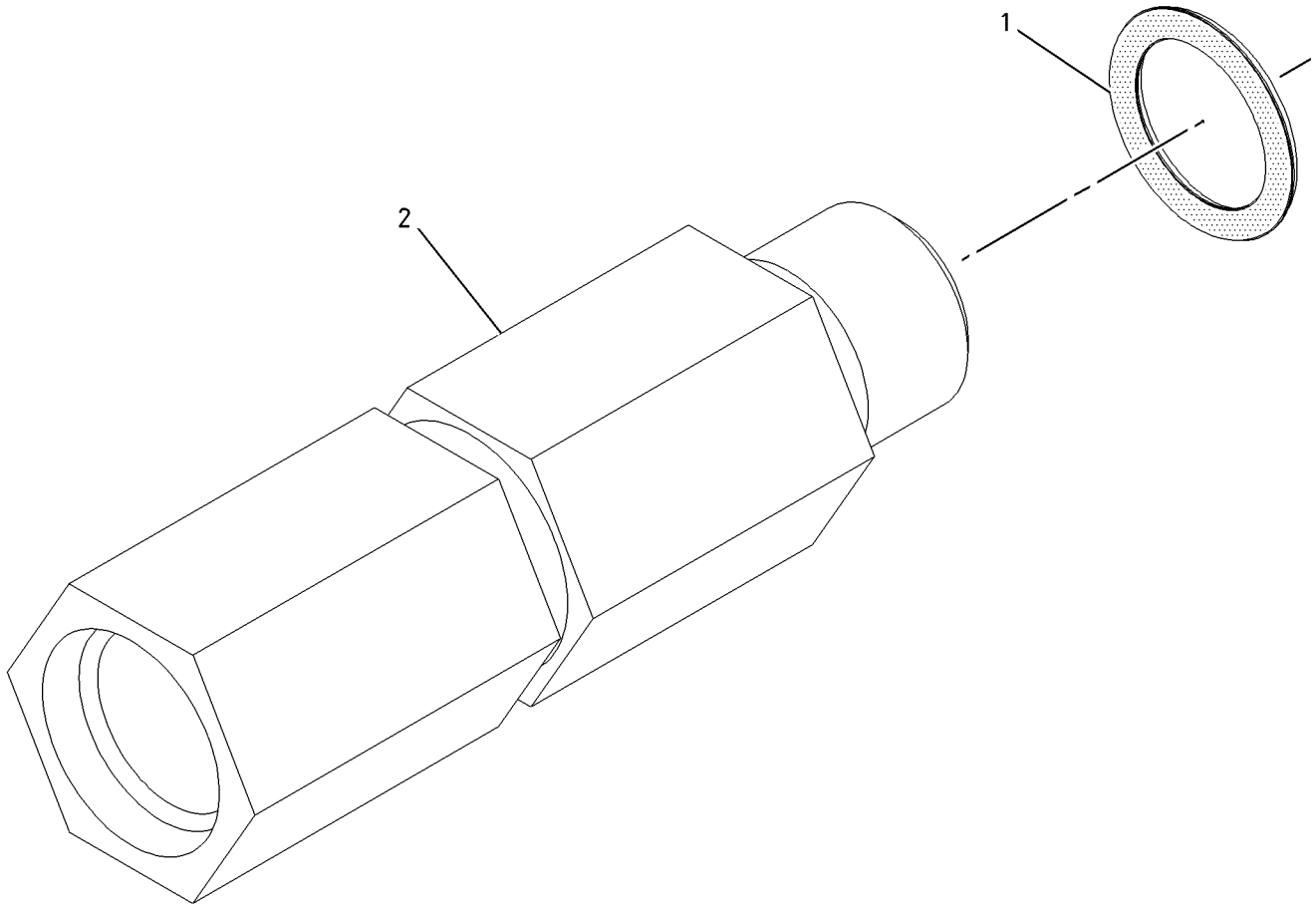

GRAPHIC #1 **<END>** g01004480

218-1843 TANK GP-FUEL

S/N: SMC1-UP; GCT1-UP
425-L (112.3-US GAL)
PART OF 269-2044 CHASSIS AR

SMCS-1273 **i04764287**

NOTE	REF NO	GRAPHIC REF	PART NUMBER	QTY	PART NAME 1 2 3 4 5 6 (PRODUCT LEVEL)	SEE PAGE
	1	1	**8T-5439**	4	WASHER-HARD (21.5X45X6-MM THK)	
	2	1	**6T-1698**	8	MOUNT	
	3	1	**223-5365**	1	TANK GP-FUEL	
		1	**7X-7700**	1	CAP AS-FUEL (LOCKABLE, VENTED)	
		1	**9X-8600**	1	SEAL-O-RING	
		1	**9X-2205**	1	KIT-CAP FILTER (FUEL TANK)	
					(INCLUDES FILTER AS, SCREWS, GASKETS, & VALVE)	
		1	**9P-7121**	1	STRAINER-FUEL (TANK)	
	4	1	**241-2501**	4	WASHER (22X82.55X11-MM THK)	
	5	1	**263-5792**	1	SENDER AS-FUEL LEVEL	
		1	**138-0444**	1	KIT-REPAIR (FUEL LEVEL GAUGE)	
					(INCLUDES SENSOR AS & SCREWS)	
		1	**186-3735**	2	PIN-CONNECTOR (16-GA TO 18-GA)	
		1	**102-8802**	1	KIT-RECEPTACLE (2-PIN)	
					(INCLUDES RECEPTACLE AS & WEDGE)	
M	6	1	**5C-9553**	6	BOLT (M6X1X16-MM)	
	7	1	**6C-3060**	1	GASKET	
	8	1	**6N-7523**	6	WASHER (6.48X11.9X1.57-MM THK)	
M	9	1	**7X-2565**	4	BOLT (M20X2.5X100-MM)	

M - METRIC PART

218-1843 **TANK GP-FUEL (*contd.*)** **i04764287**

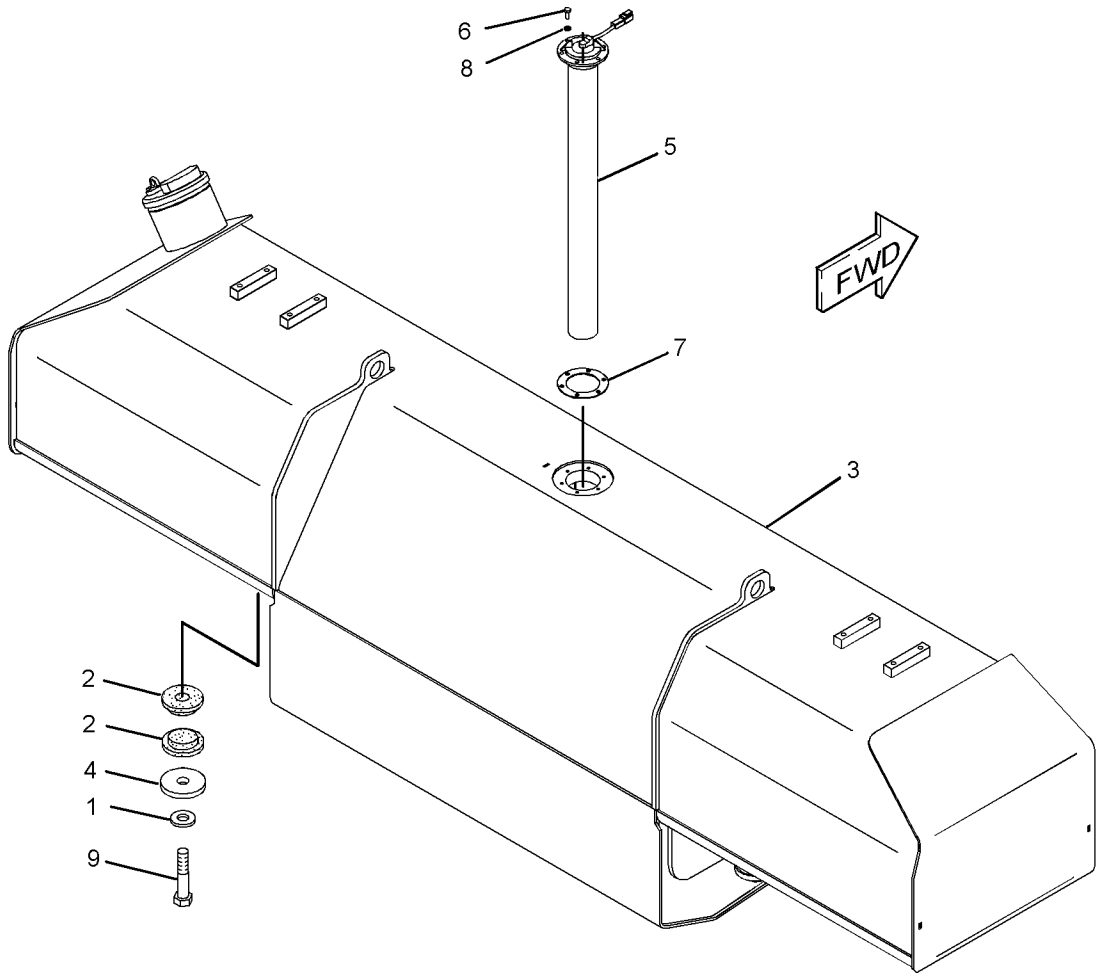

GRAPHIC #1 **<END>** g02357001

270-8497 TANK GP-FUEL—FAST FILL

S/N: SMC1-UP; GCT1-UP
425-L (112.3-US GAL)
PART OF 354-3550 OPTION AR-SERVICE
AN ATTACHMENT
TYPE 1

SMCS-1273 **i04006931**

NOTE	REF NO	GRAPHIC REF	PART NUMBER	QTY	PART NAME 1 2 3 4 5 6 (PRODUCT LEVEL)	SEE PAGE
	1	1	**9D-0630**	1	CAP-DUST	
	2	1	**124-2463**	1	ADAPTER-FAST FILL FUEL	
	3	1	**308-0416**	1	VALVE AS (567-L/MIN (150-US GPM)) (FAST FILL FUEL)	
	4	1	**193-1598**	1	ELBOW	
	5	1	**308-0415**	1	VENT AS	
	6	1	**223-4869**	1	HOSE AS	
	7	1	**277-6947**	1	TANK GP-FUEL (FAST FILL)	
J		1	**7X-7700**	1	CAP AS-FUEL (LOCKABLE, VENTED)	
		1	**9X-8600**	1	SEAL-O-RING	
		1	**9X-2205**	1	KIT-CAP FILTER (FUEL TANK)	
					(INCLUDES FILTER AS, SCREWS, GASKETS, & VALVE)	
		1	**9P-7121**	1	STRAINER-FUEL (TANK) (FUEL TANK)	
	8	1	**3E-6773**	1	SEAL-O-RING	
	9	1	**1J-9671**	2	SEAL-O-RING	
M	10	1	**105-3484**	6	BOLT-SOCKET HEAD (M10X1.5X25-MM)	
	11	1	**4J-0527**	1	SEAL-O-RING	
	12	1	**9X-7287**	1	SEAL-O-RING	
	14	1	**5P-2618**	2	CONNECTOR	
	15	1	**8T-4121**	12	WASHER-HARD (11X21X2.5-MM THK)	
M	16	1	**8T-4136**	6	BOLT (M10X1.5X25-MM)	
	17	1	**8T-4223**	4	WASHER-HARD (13.5X25.5X3-MM THK)	
M	18	1	**8T-4648**	4	BOLT (M12X1.75X70-MM)	
	19	1	*285-9116*	1	FILM GP (FUEL TANK) (FAST FILL)	
		1	**285-9118**	1	FILM-STRIPE (LH)	
		1	**285-9119**	1	FILM-STRIPE (RH)	

J - REQUIRES CORPORATE KEY
M - METRIC PART

270-8497 **TANK GP-FUEL (*contd.*)** **i04006931**

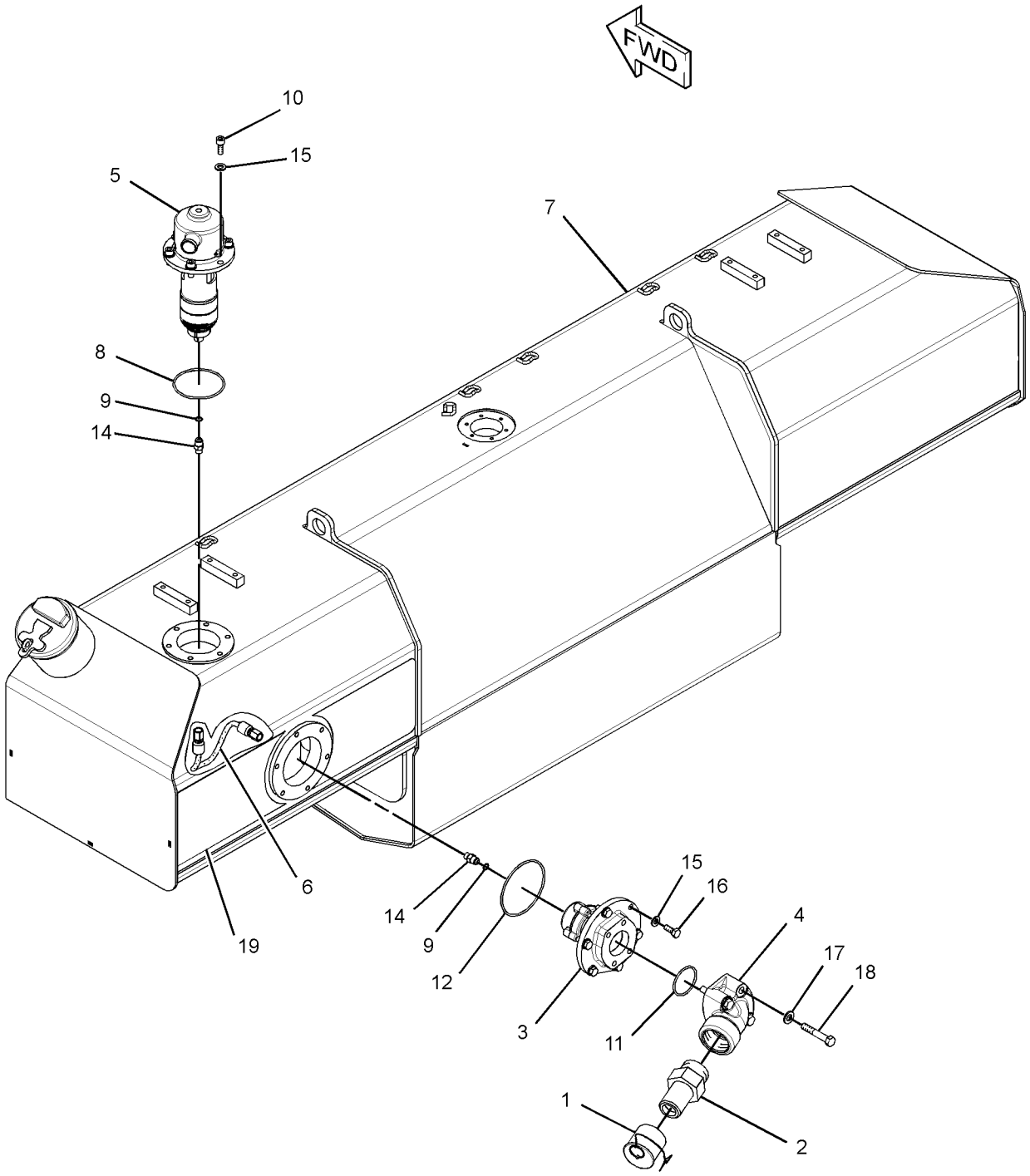

GRAPHIC #1 **<END>** g01459104

270-8497 TANK GP-FUEL—FAST FILL

S/N: SMC1-UP; GCT1-UP
425-L (112.3-US GAL)
PART OF 354-3550 OPTION AR-SERVICE
AN ATTACHMENT
TYPE 2

SMCS-1273 **i05210649**

NOTE	REF NO	GRAPHIC REF	PART NUMBER	QTY	PART NAME 1 2 3 4 5 6 (PRODUCT LEVEL)	SEE PAGE
	1	1	**9D-0630**	1	CAP-DUST	
	2	1	**376-0929**	1	ADAPTER-FAST FILL FUEL	
	3	1	**308-0416**	1	VALVE AS (567-L/MIN (150-US GPM)) (FAST FILL FUEL)	
	4	1	**193-1598**	1	ELBOW	
	5	1	**308-0415**	1	VENT AS	
	6	1	**223-4869**	1	HOSE AS	
	7	1	**277-6947**	1	TANK GP-FUEL (FAST FILL)	
J		1	**7X-7700**	1	CAP AS-FUEL (LOCKABLE, VENTED)	
		1	**9X-8600**	1	SEAL-O-RING	
		1	**9X-2205**	1	KIT-CAP FILTER (FUEL TANK)	
					(INCLUDES FILTER AS, SCREWS, GASKETS, & VALVE)	
		1	**9P-7121**	1	STRAINER-FUEL (TANK)	
	8	1	**3E-6773**	1	SEAL-O-RING	
	9	1	**1J-9671**	2	SEAL-O-RING	
M	10	1	**105-3484**	6	BOLT-SOCKET HEAD (M10X1.5X25-MM)	
	11	1	**4J-0527**	1	SEAL-O-RING	
	12	1	**9X-7287**	1	SEAL-O-RING	
	14	1	**5P-2618**	2	CONNECTOR	
	15	1	**8T-4121**	12	WASHER-HARD (11X21X2.5-MM THK)	
M	16	1	**8T-4136**	6	BOLT (M10X1.5X25-MM)	
	17	1	**8T-4223**	4	WASHER-HARD (13.5X25.5X3-MM THK)	
M	18	1	**8T-4648**	4	BOLT (M12X1.75X70-MM)	

J - REQUIRES CORPORATE KEY
M - METRIC PART

270-8497 **TANK GP-FUEL (*contd.*)** **i05210649**

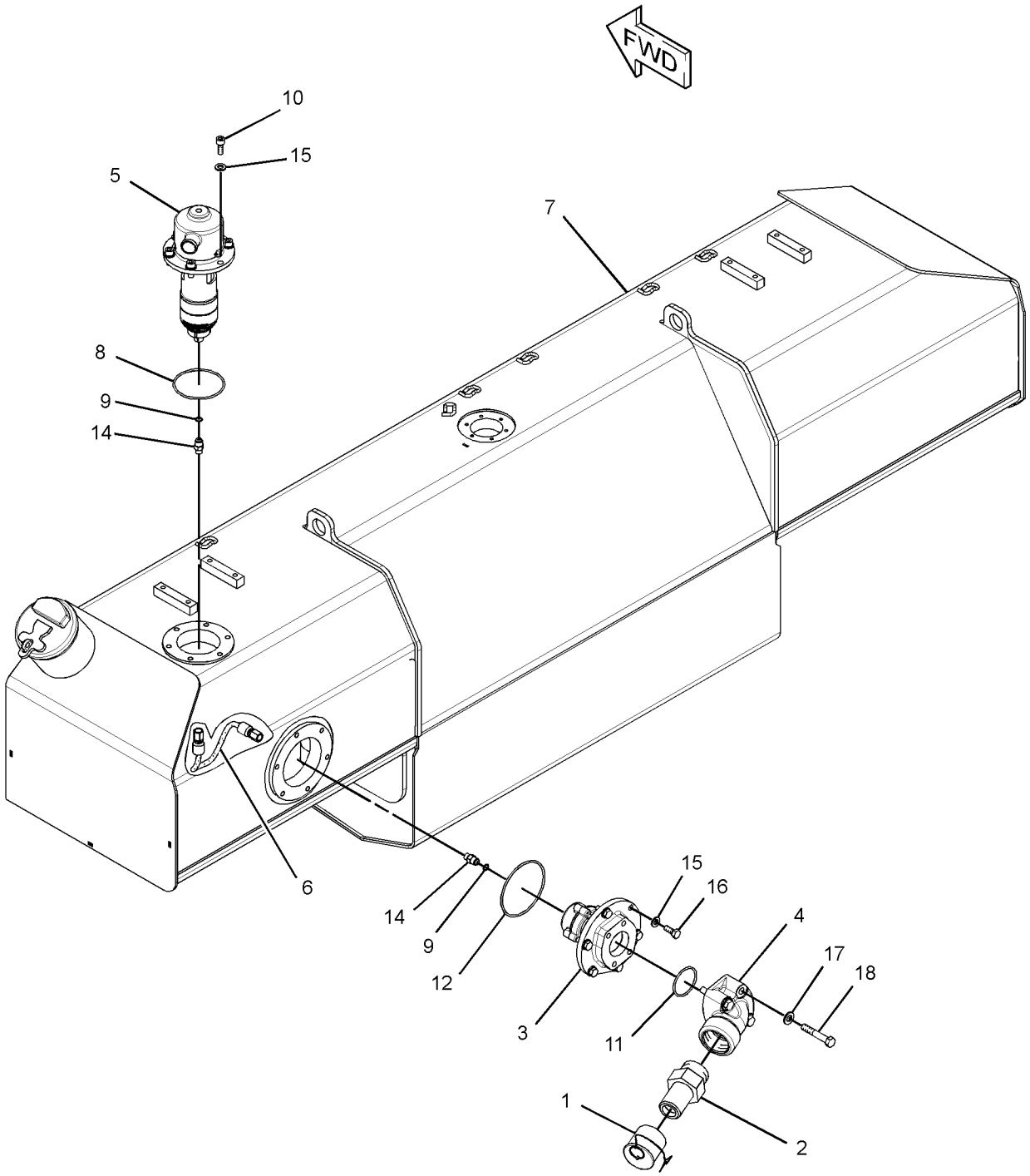

GRAPHIC #1 **<END>** g03080201

3E-6328 ALARM GP–WARNING

S/N: SMC1-UP; GCT1-UP
24-VOLT
PART OF 279-9547, 368-4242 WIRING GP-PLATFORM

SMCS-7400, 7402, 7407 **i02942905**

NOTE	REF NO	GRAPHIC REF	PART NUMBER	QTY	PART NAME 1 2 3 4 5 6 (PRODUCT LEVEL)	SEE PAGE
	1	1	**102-8802**	1	KIT-RECEPTACLE (2-PIN)	
					(INCLUDES RECEPTACLE AS & WEDGE)	
	2	1	**186-3735**	2	PIN-CONNECTOR (16-GA TO 18-GA)	

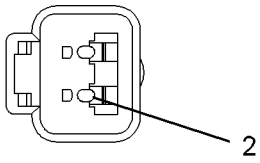

VIEW A–A

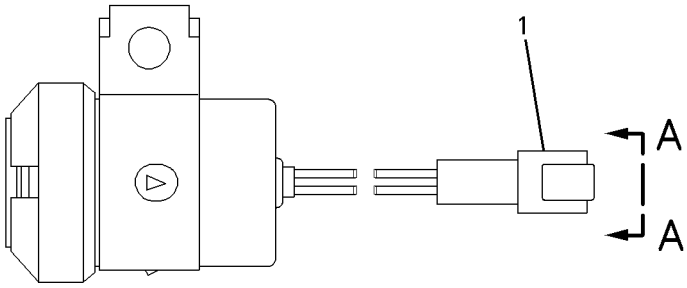

GRAPHIC #1 **<END>** g00697818

374-7144 ALARM GP–BACKUP

S/N: SMC1-UP; GCT1-UP
PART OF 380-9633 BAR AR-STRIKER
AN ATTACHMENT

SMCS-7400, 7402, 7407

i05326369

NOTE	REF NO	GRAPHIC REF	PART NUMBER	QTY	PART NAME 1 2 3 4 5 6 (PRODUCT LEVEL)	SEE PAGE
	1	1	**131-3981**	1	GUARD	
	2	1	**220-7167**	1	GUARD AS	
	3	1	**375-0254**	1	BRACKET AS	
	4	1	**398-1972**	1	HARNESS AS-ALARM	
		1	**102-8802**	1	KIT-RECEPTACLE (2-PIN)	
					(INCLUDES RECEPTACLE AS & WEDGE)	
		1	**9X-3401**	2	PIN-CONNECTOR (16-GA TO 18-GA)	
		1	**9X-3402**	2	SOCKET-CONNECTOR (16-GA TO 18-GA)	
		1	**155-2270**	1	KIT-CONNECTING PLUG (2-PIN)	
					(INCLUDES PLUG AS, WEDGE, & INTERFACE SEAL)	
	5	1	**220-0230**	1	ALARM AS (BACKUP)	
		1	**102-8802**	1	KIT-RECEPTACLE (2-PIN)	
					(INCLUDES RECEPTACLE AS & WEDGE)	
J		1	**5P-5623**		WIRE-ELECTRICAL (16-GA, BLACK) (8-DM)	
		1	**8T-8729**	2	PIN-CONNECTOR (16-GA TO 18-GA)	
E		1	**9X-1813**		SLEEVE (29-CM)	
	6	1	**4P-7581**	1	CLIP	
	7	1	**130-5300**	1	CLIP	
	8	1	**5P-1076**	2	WASHER-HARD (13.5X30X4-MM THK)	
	9	1	**7X-7729**	1	WASHER (11X25X3-MM THK)	
	10	1	**7K-1181**	12	STRAP-CABLE	
	11	1	**8T-4121**	7	WASHER-HARD (11X21X2.5-MM THK)	
M	12	1	**8T-4195**	7	BOLT (M10X1.5X30-MM)	
M	13	1	**8T-4137**	1	BOLT (M10X1.5X20-MM)	
M	14	1	**8T-4139**	2	BOLT (M12X1.75X30-MM)	

E - ORDER BY THE CENTIMETER
J - ORDER BY THE DECIMETER
M - METRIC PART

374-7144 **ALARM GP (*contd.*)** **i05326369**

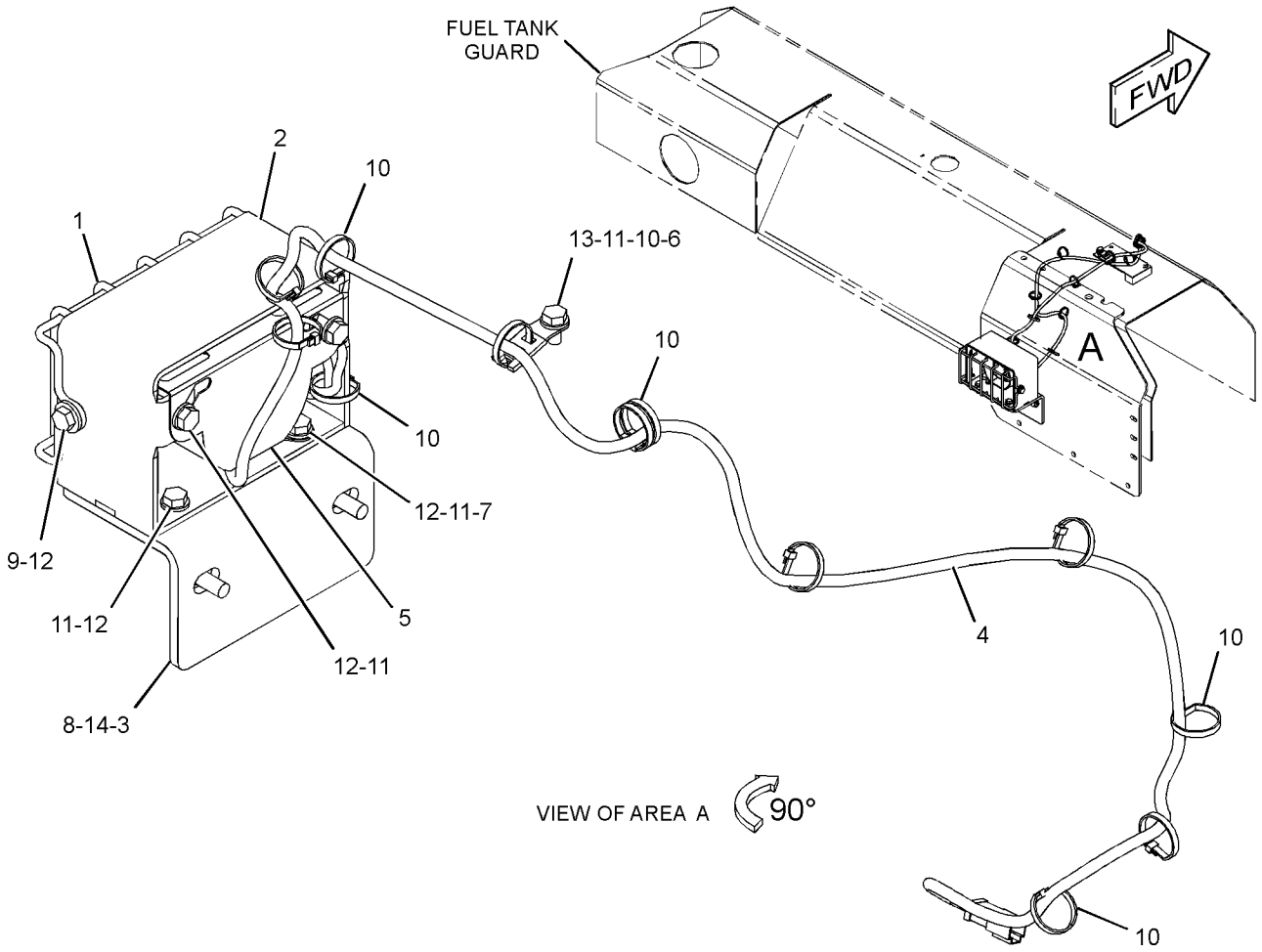

GRAPHIC #1 **<END>** g03326307

197-8820 ALTERNATOR GP-CHARGING*R

S/N: SMC1-UP; GCT1-UP
24-VOLT, 95-AMPERE
PART OF 280-2703 ALTERNATOR GP-CHARGING

SMCS-1405 **i05337933**

NOTE	REF NO	GRAPHIC REF	PART NUMBER	QTY	PART NAME 1 2 3 4 5 6 (PRODUCT LEVEL)	SEE PAGE
	1	1	**185-2653**	1	FRAME	
	2	1	**5S-7349**	1	BOLT (1/4-20X0.5-IN)	
	3	1	**185-2639**	1	FAN AS	
	4	1	**1H-3244**	1	LOCKWASHER	
	5	1	**185-2645**	1	FRAME	
	6	1	**2K-4821**	1	LOCKNUT (5/8-18-THD)	
	7	1	**5P-8247**	1	WASHER-HARD (17X32X3.5-MM THK)	
	8	1	**228-9657**	1	COVER AS	
	9	1	**8T-4205**	1	WASHER-HARD (7.2X14.5X2-MM THK)	
	10	1	**185-2647**	1	GROMMET	
	11	1	**9L-6770**	1	CAP-DUST	
	12	1	**205-0626**	1	STATOR AS-ALTERNATOR	
	13	1	**185-2638**	2	COLLAR	
	14	1	**185-2654**	1	PLATE	
	15	1	**185-2650**	1	ROTOR AS	
	16	1	**185-2644**	1	COIL AS	
	17	1	**185-2648**	1	REGULATOR AS-VOLTAGE (24-VOLT) (ALTERNATOR)	
	18	1	**6V-8189**	1	NUT (5/16-18-THD)	
	19	1	**8T-4224**	1	WASHER-HARD (8.8X16X2-MM THK)	
	20	1	**3F-9556**	1	LOCKWASHER	
	21	1	**185-2655**	1	KIT-BEARING (ALTERNATOR)	
					(INCLUDES BEARINGS)	
	22	1	**199-8436**	1	KIT-TERMINAL (ALTERNATOR AIR)	
					(INCLUDES HOLDER AS, PLATE, INSULATOR, PIN, BOLTS, GROMMET & NUTS)	
	23	1	**199-7891**	1	KIT-TERMINAL (ALTERNATOR AIR)	
					(INCLUDES INSULATORS, WASHERS & NUTS)	
	24	1	**185-2658**	1	KIT-HARDWARE (ALTERNATOR AIR)	
					(INCLUDES BOLTS)	

197-8820 **ALTERNATOR GP-CHARGING (*contd.*)** **i05337933**

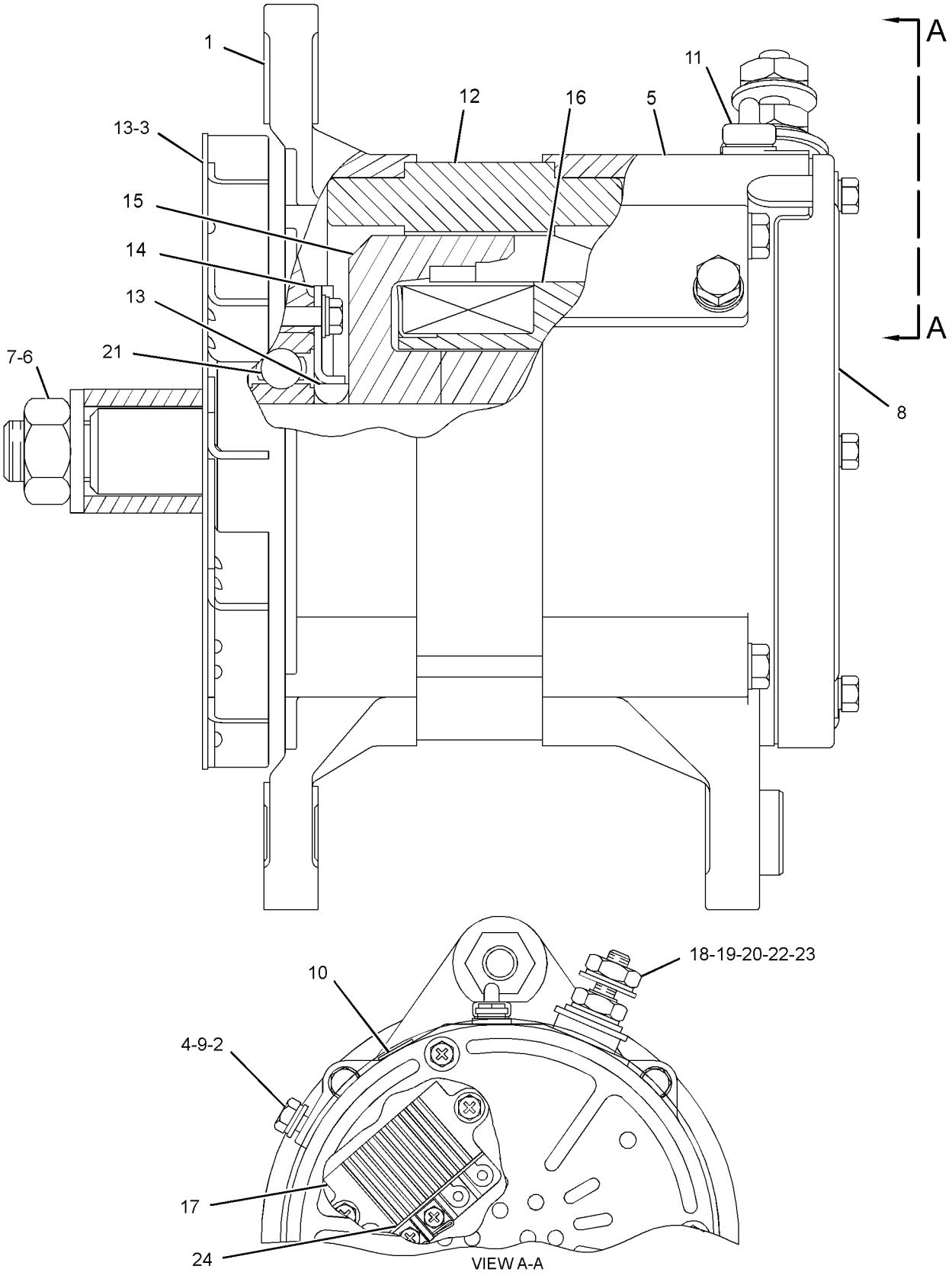

GRAPHIC #1 **<END>** g03117736

280-2703 ALTERNATOR GP-CHARGING

S/N: SMC1-UP; GCT1-UP
24-VOLT, 95-AMPERE
PART OF 279-9549, 372-6406 INSTALLATION AR-ENGINE

SMCS-1405 **i05105534**

NOTE	REF NO	GRAPHIC REF	PART NUMBER	QTY	PART NAME 1 2 3 4 5 6 (PRODUCT LEVEL)	SEE PAGE
	1	1	**9S-1240**	1	BRACKET AS	
YR	2	1	**197-8820**	1	ALTERNATOR GP-CHARGING (24-VOLT, 95-AMPERE)	231
C	3	1	**208-4622**	1	STRAP AS (GROUND)	
	4	1	**211-1044**	1	BLOCK	
	5	1	**214-9492**	1	ROD-ADJUSTING	
C	6	1	**239-7854**	1	GUARD-ALTERNATOR	
C	7	1	**329-5070**	1	BRACKET AS	
	8	1	**7X-0339**	1	BOLT (1/2-13X6.25-IN)	
CM	9	1	**8T-0638**	3	BOLT (M5X0.8X50-MM)	
	10	1	**8T-1887**	1	CLIP (SLOT)	
	11	1	**8T-1888**	1	CLIP (TAB)	
	12	1	**8T-4121**	2	WASHER-HARD (11X21X2.5-MM THK)	
M	13	1	**8T-4132**	2	NUT (M16X2-THD)	
M	14	1	**8T-4137**	1	BOLT (M10X1.5X20-MM)	
M	15	1	**8T-4186**	1	BOLT (M10X1.5X40-MM)	
M	16	1	**8T-4193**	1	BOLT (M16X2X50-MM)	
	17	1	**8T-4223**	2	WASHER-HARD (13.5X25.5X3-MM THK)	
	18	1	**8T-8919**	1	BOLT (1/2-13X1.75-IN)	
	19	1	**8X-5489**	1	SLEEVE	
	20	1	**4P-7581**	1	CLIP	
C	21	1	**9X-8256**	3	WASHER (6.6X12X2-MM THK)	
	22	1	**9X-8257**	3	WASHER (17.5X30X3.5-MM THK)	
	23	1	**7K-1181**	1	STRAP-CABLE	

C - CHANGE FROM PREVIOUS TYPE
M - METRIC PART
R - REMFG PART MAY BE AVAILABLE
Y - SEPARATE ILLUSTRATION

280-2703 **ALTERNATOR GP-CHARGING (*contd.*)** **i05105534**

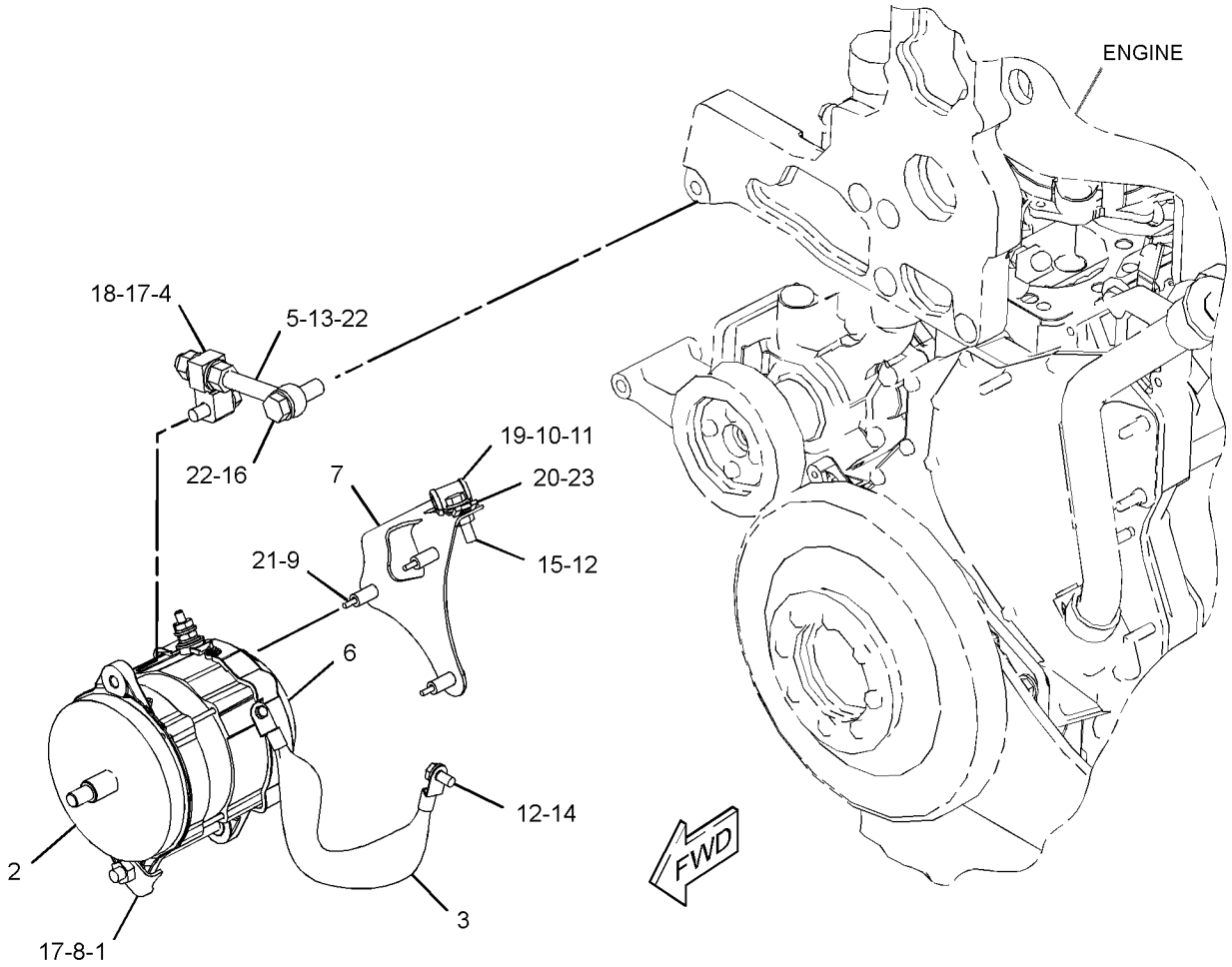

GRAPHIC #1 **<END>** g03324535

306-7402 ALTERNATOR GP-CHARGING

S/N: SMC1-280; GCT1-416
24-VOLT, 150-AMPERE
CANNOT BE USED WITH DUCTED ALTERNATOR, DISPOSAL AR
AN ATTACHMENT

SMCS-1405 **i02877079**

NOTE	REF NO	GRAPHIC REF	PART NUMBER	QTY	PART NAME 1 2 3 4 5 6 (PRODUCT LEVEL)	SEE PAGE
	1	1	**7K-1181**	1	STRAP-CABLE	
	2	1	**9S-1240**	1	BRACKET AS	
		1	**1F-0748**	1	NUT-WELD (1/2-13-THD)	
	3	1	**208-4622**	1	STRAP AS	
	4	1	**211-1044**	1	BLOCK	
	5	1	**214-9492**	1	ROD-ADJUSTING	
R	6	1	**249-0313**	1	ALTERNATOR GP-CHARGING (24-VOLT, 150-AMPERE)	
	7	1	**292-4906**	1	GUARD AS-ALTERNATOR	
	8	1	**306-8040**	1	BRACKET AS	
M	9	1	**160-8497**	2	BOLT (M5X0.8X65-MM)	
	10	1	**4L-6454**	1	BOLT (3/8-16X1-IN)	
	11	1	**4P-7581**	1	CLIP	
	12	1	**5P-1075**	1	WASHER-HARD (10.2X22.5X3-MM THK)	
	13	1	**7X-0339**	1	BOLT (1/2-13X6.25-IN)	
M	14	1	**8T-0638**	1	BOLT (M5X0.8X50-MM)	
	15	1	**8T-4121**	1	WASHER-HARD (11X21X2.5-MM THK)	
M	16	1	**8T-4132**	2	NUT (M16X2-THD)	
M	17	1	**8T-4137**	1	BOLT (M10X1.5X20-MM)	
M	18	1	**8T-4193**	1	BOLT (M16X2X50-MM)	
	19	1	**8T-4223**	2	WASHER-HARD (13.5X25.5X3-MM THK)	
	20	1	**8T-8919**	1	BOLT (1/2-13X1.75-IN)	
	21	1	**9X-8250**	1	CLIP	
	22	1	**9X-8256**	3	WASHER (6.6X12X2-MM THK)	
	23	1	**9X-8257**	3	WASHER (17.5X30X3.5-MM THK)	

M - METRIC PART
R - REMFG PART MAY BE AVAILABLE

306-7402 **ALTERNATOR GP-CHARGING (*contd.*)** **i02877079**

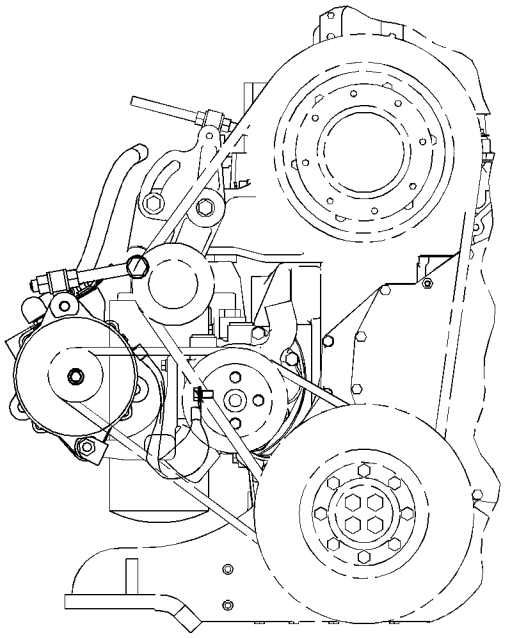

FRONT VIEW OF ENGINE

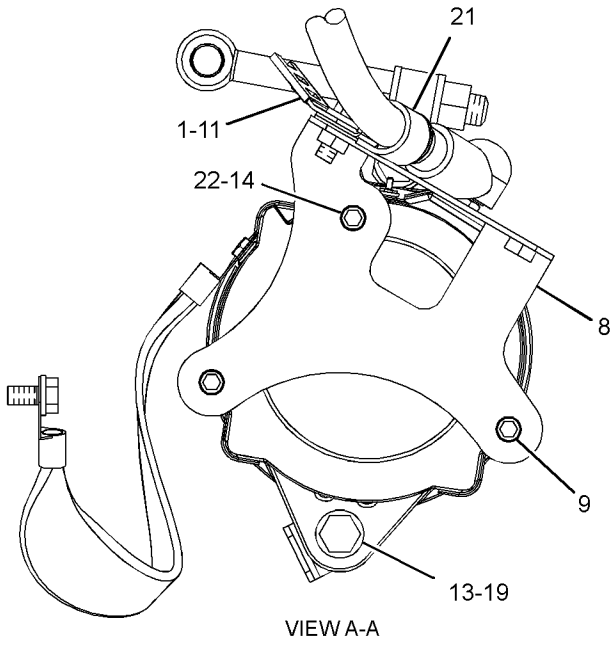

VIEW A-A

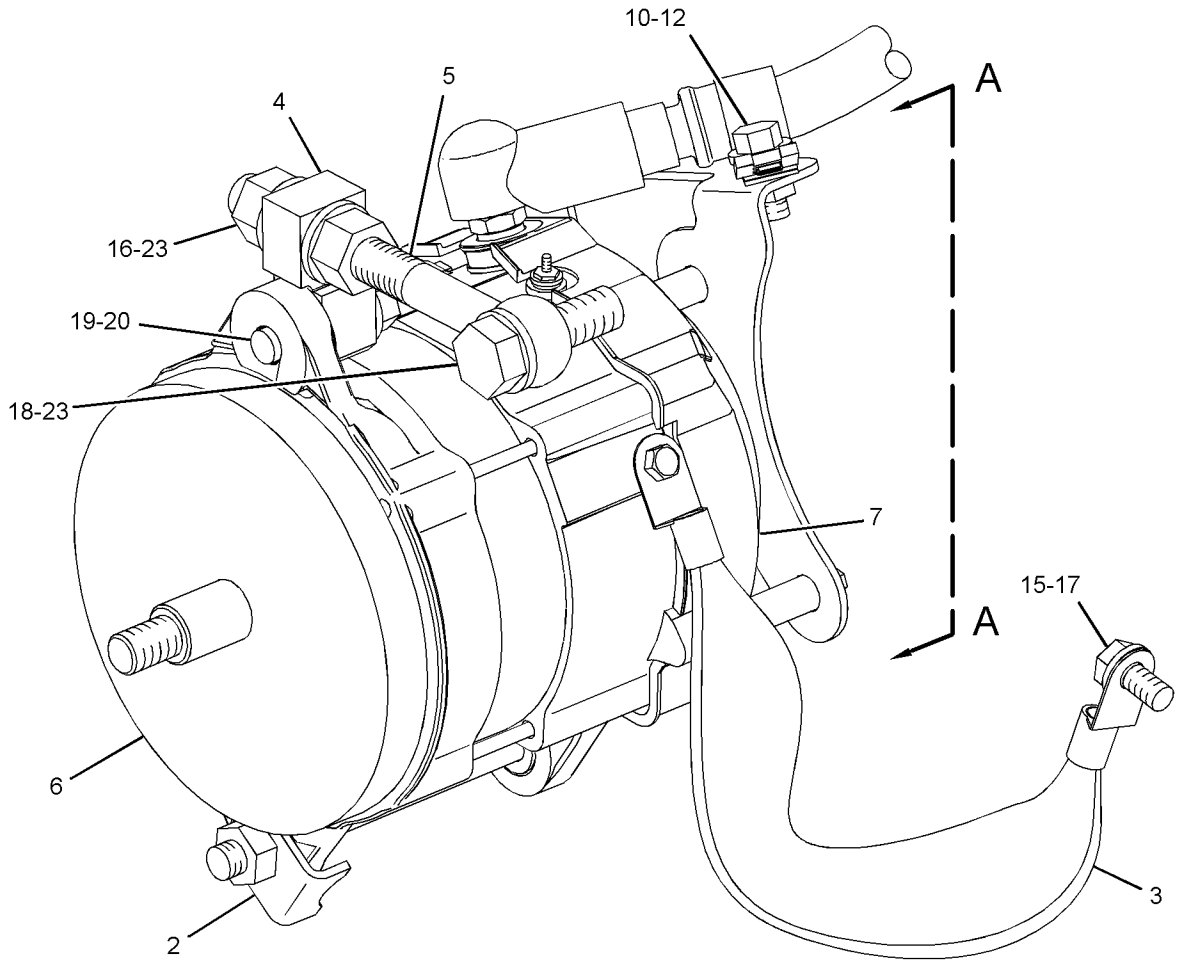

GRAPHIC #1 **<END>** g01360289

306-7402 ALTERNATOR GP-CHARGING

S/N: SMC281-UP; GCT417-UP
24-VOLT, 150-AMPERE
CANNOT BE USED WITH DUCTED ALTERNATOR, DISPOSAL AR
AN ATTACHMENT

SMCS-1405 **i04588514**

NOTE	REF NO	GRAPHIC REF	PART NUMBER	QTY	PART NAME 1 2 3 4 5 6 (PRODUCT LEVEL)	SEE PAGE
	1	1	**7K-1181**	1	STRAP-CABLE	
	2	1	**9S-1240**	1	BRACKET AS	
M		1	**8T-3490**	2	NUT-WELD (M10X1.5-THD)	
	3	1	**208-4622**	1	STRAP AS	
	4	1	**211-1044**	1	BLOCK	
	5	1	**214-9492**	1	ROD-ADJUSTING	
R	6	1	**249-0313**	1	ALTERNATOR GP-CHARGING (24-VOLT, 150-AMPERE)	
	7	1	**292-4906**	1	GUARD AS-ALTERNATOR	
C	8	1	**329-5071**	1	BRACKET AS	
M	9	1	**160-8497**	2	BOLT (M5X0.8X65-MM)	
C	10	1	**4P-7581**	1	CLIP	
	11	1	**7X-0339**	1	BOLT (1/2-13X6.25-IN)	
M	12	1	**8T-0638**	1	BOLT (M5X0.8X50-MM)	
	13	1	**8T-1887**	1	CLIP (SLOT)	
	14	1	**8T-1888**	1	CLIP (TAB)	
C	15	1	**8T-4121**	2	WASHER-HARD (11X21X2.5-MM THK)	
M	16	1	**8T-4132**	2	NUT (M16X2-THD)	
M	17	1	**8T-4137**	1	BOLT (M10X1.5X20-MM)	
M	18	1	**8T-4186**	1	BOLT (M10X1.5X40-MM)	
M	19	1	**8T-4193**	1	BOLT (M16X2X50-MM)	
	20	1	**8T-4223**	2	WASHER-HARD (13.5X25.5X3-MM THK)	
	21	1	**8T-8919**	1	BOLT (1/2-13X1.75-IN)	
	22	1	**8X-5489**	1	SLEEVE	
	23	1	**9X-8256**	3	WASHER (6.6X12X2-MM THK)	
	24	1	**9X-8257**	1	WASHER (17.5X30X3.5-MM THK)	

C - CHANGE FROM PREVIOUS TYPE
M - METRIC PART
R - REMFG PART MAY BE AVAILABLE

306-7402 **ALTERNATOR GP-CHARGING (*contd.*)** **i04588514**

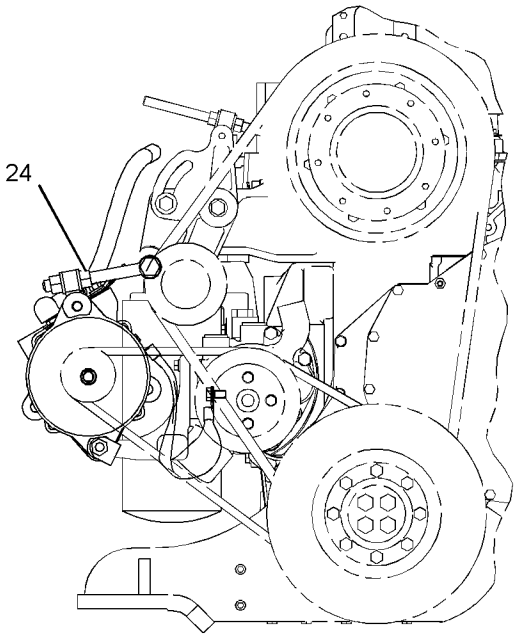

FRONT VIEW OF ENGINE

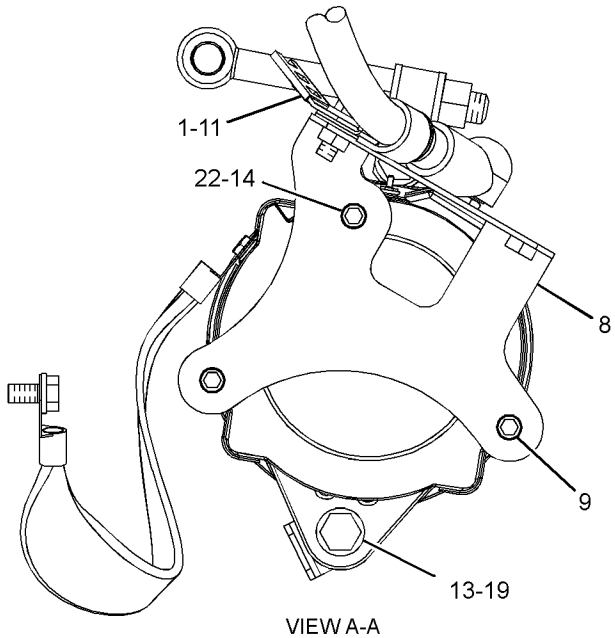

VIEW A-A

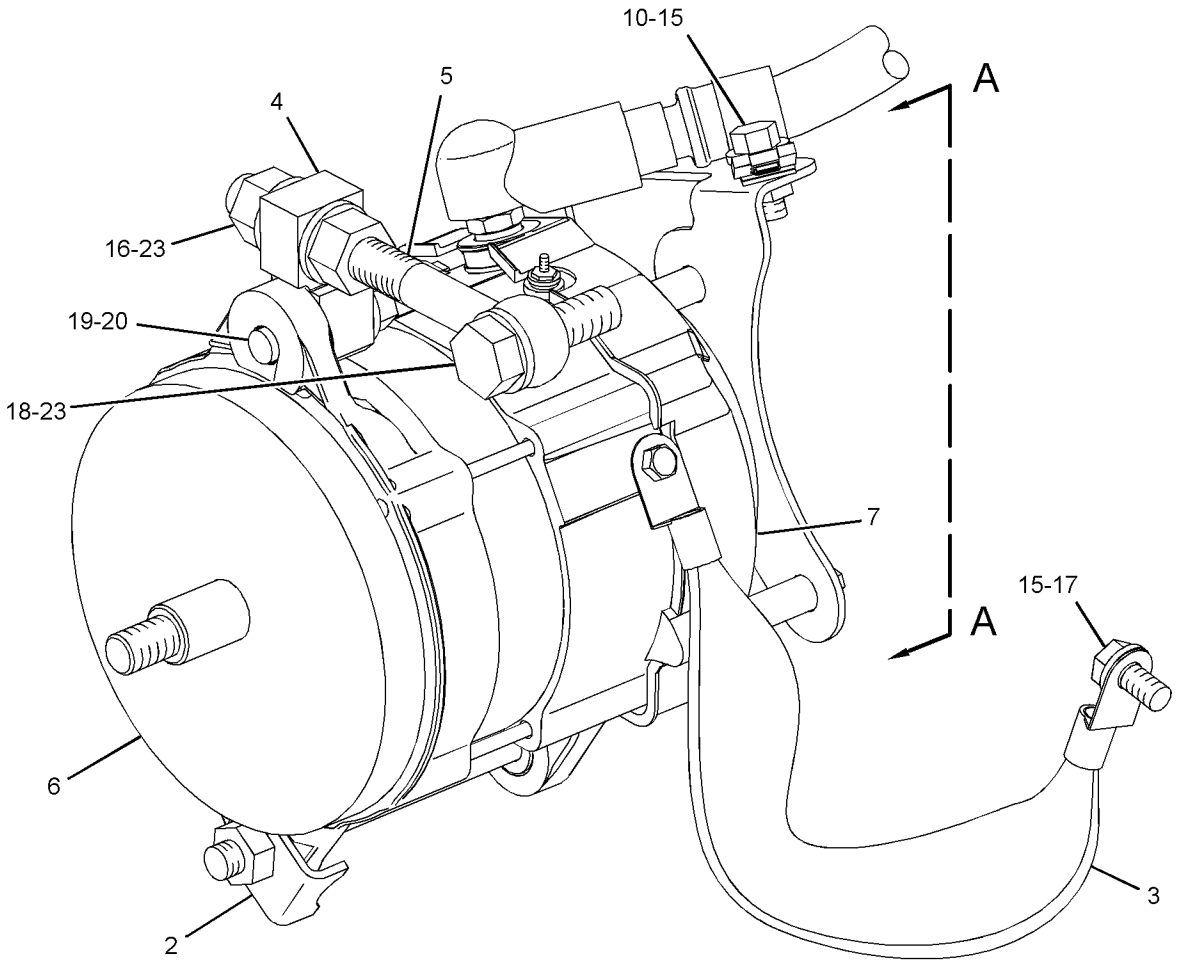

GRAPHIC #1 **<END>** g02797859

227-1229 BATTERY & WIRING GP–HEAVY-DUTY

S/N: SMC1-UP; GCT1-UP

AN ATTACHMENT

SMCS-1401, 1402, 1408 **i02456048**

NOTE	REF NO	GRAPHIC REF	PART NUMBER	QTY	PART NAME 1 2 3 4 5 6 (PRODUCT LEVEL)	SEE PAGE
	1	1	**8V-0622**	1	CABLE AS-BATTERY	
		1	**8C-5917**	1	TERMINAL AS-BATTERY (POSITIVE)	
		1	**8T-9757**	1	TERMINAL AS-BATTERY (NEGATIVE)	
					(EACH TERMINAL AS INCLUDES)	
		1	**1M-6119**	2	BOLT (5/16-18X1.375-IN)	
		1	**1M-6120**	2	NUT (5/16-18-THD)	
E		1	**5P-0761**		CABLE (00-GA, RED) (14-CM)	
		1	**9G-0003**	1	COVER AS-TERMINAL (BLACK)	
		1	**9G-0004**	1	COVER AS-TERMINAL (RED)	
	2	1	**153-5710**	2	BATTERY (12-VOLT, MAINTENANCE FREE, WET)	
	3	1	**153-6281**	1	HOLD-DOWN-BATTERY	
Y	4	1	*209-8423*	1	STARTING MOTOR GP-ELECTRIC	380
	5	1	**240-8321**	1	PLATE AS	

E - ORDER BY THE CENTIMETER
Y - SEPARATE ILLUSTRATION

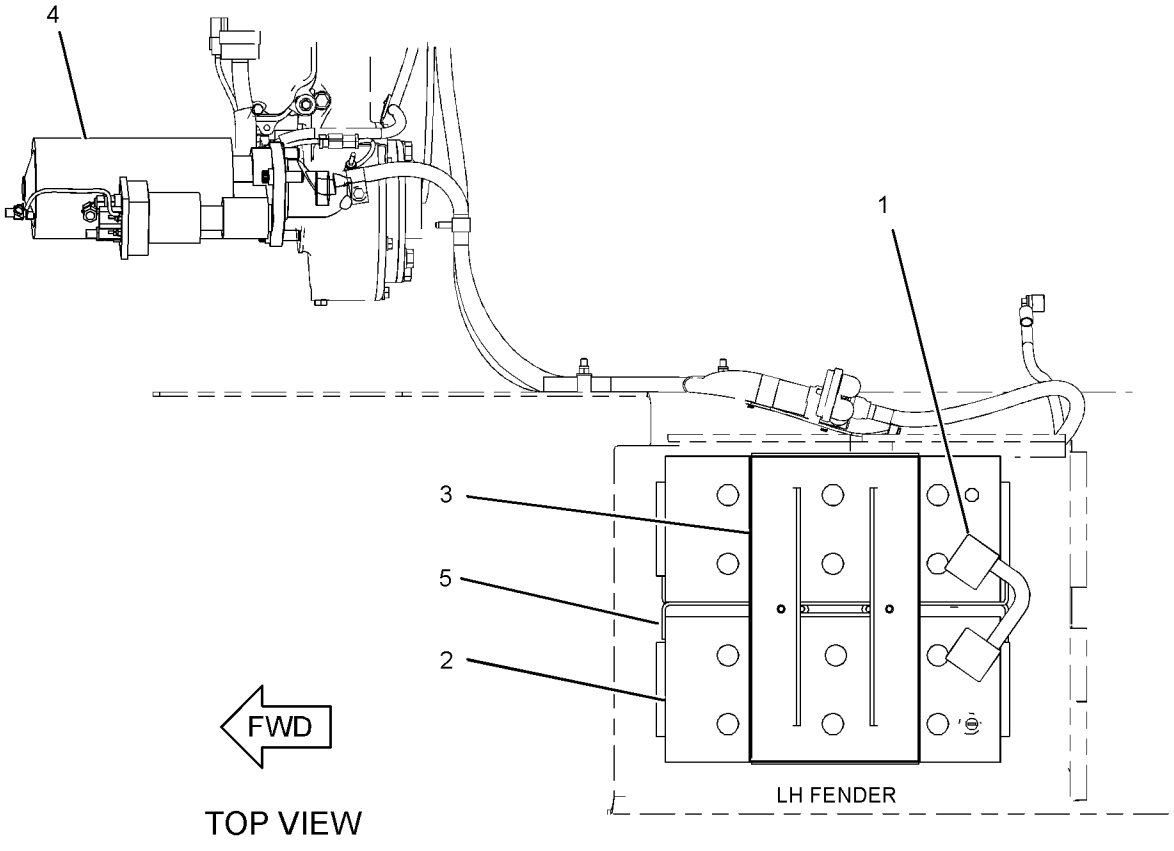

TOP VIEW

GRAPHIC #1 **<END>** g01207635

279-9548 BATTERY & WIRING GP

S/N: SMC1-237; GCT1-352

PART OF 269-2044 CHASSIS AR

SMCS-1401, 1402, 1408 **i04041892**

NOTE	REF NO	GRAPHIC REF	PART NUMBER	QTY	PART NAME 1 2 3 4 5 6 (PRODUCT LEVEL)	SEE PAGE
	1	3	**1K-4129**	1	SPACER (0.423X0.675X0.375-MM THK)	
	2	1,2,3	**7K-1181**	45	STRAP-CABLE	
Y	3	3	**7N-0718**	1	SWITCH GP-DISCONNECT (BATTERY)	390
	4	1	**7P-6682**	1	CABLE AS	
		1	**1S-7251**	2	TERMINAL-CABLE (00-GA, 1/2-IN SCREW)	
E		1	**5P-0747**		CABLE (00-GA, BLACK) (40-CM)	
	5	3	**091-9035**	1	SPACER (11X25X20-MM THK)	
	6	3	**111-7978**	1	HOLD-DOWN AS	
	7	3	**128-0314**	1	CABLE AS	
		3	**8C-5918**	1	TERMINAL AS (NEGATIVE)	
		3	**8T-9756**	1	TERMINAL AS (POSITIVE)	
					(EACH TERMINAL AS INCLUDES)	
		3	**1M-6119**	1	BOLT (5/16-18X1.375-IN)	
		3	**1M-6120**	1	NUT (5/16-18-THD)	
E		3	**5P-0761**		CABLE (00-GA, RED) (29-CM)	
		3	**9G-0002**	1	COVER AS-TERMINAL (RED)	
		3	**9G-0005**	1	COVER AS-TERMINAL (BLACK)	
Y	8	3	**145-7028**	1	SENSOR GP-TEMPERATURE (HYDRAULIC OIL)	371
Y	8A	2	**145-7028**	1	SENSOR GP-TEMPERATURE (TRANSMISSION LUBRICATION OIL)	371
Y	9	1	**158-6632**	1	SWITCH GP-PUSH BUTTON (FUEL PRIMING PUMP)	395
Y	10	3	**161-9926**	1	SENSOR GP-PRESSURE (TURBOCHARGER INLET)	361
	11	2	**172-4864**	1	GUARD AS	
	12	2	**174-7875**	1	HORN AS (24-VOLT, HIGH TONE)	
	13	3	**197-0668**	1	CABLE AS	
		3	**1S-4915**	2	LINER (CONDUIT)	
E		3	**5P-0695**		CONDUIT (61-CM)	
E		3	**5P-0747**		CABLE (00-GA, BLACK) (100-CM)	
		3	**8S-3020**	1	TERMINAL-CABLE (00-GA, 3/8-IN SCREW)	
E		3	**8T-2225**		TUBE-HEAT SHRINK (25.4-MM DIA) (16-CM)	
		3	**9G-0003**	1	COVER AS-TERMINAL (BLACK)	
		3	**9X-5699**	1	BOOT	
		3	**8T-9757**	1	TERMINAL AS-BATTERY (NEGATIVE)	
		3	**1M-6119**	1	BOLT (5/16-18X1.375-IN)	
		3	**1M-6120**	1	NUT (5/16-18-THD)	
	14	2	**226-9670**	1	HARNESS AS-CHASSIS (RADIATOR GUARD)	
	15	3	**226-9671**	1	HARNESS AS-HOOD	
	16	1	**237-4240**	1	CABLE AS	
		1	**1S-4915**	2	LINER (CONDUIT)	
E		1	**5P-0695**		CONDUIT (220-CM)	
E		1	**5P-0761**		CABLE (00-GA, RED) (246-CM)	
		1	**8N-1725**	1	COVER AS-TERMINAL (RED)	
E		1	**8T-2225**		TUBE-HEAT SHRINK (25.4-MM DIA) (32-CM)	
		1	**170-3795**	1	RING-TERMINAL	
B		1	**1P-0810**	1	TAPE-ELECTRICAL	
		1	**3S-6049**	1	TERMINAL AS-BATTERY (POSITIVE)	
		1	**1M-6119**	1	BOLT (5/16-18X1.375-IN)	
		1	**1M-6120**	1	NUT (5/16-18-THD)	
	17	1	**239-8155**	1	HARNESS AS-TRANSMISSION	
	18	3	**240-8317**	1	PLATE AS	
	19	1	**280-3554**	1	HARNESS AS-WIRING (FENDER, LH)	
	20	2	**282-8485**	1	HARNESS AS-FUEL TANK	
	21	3	**290-8745**	1	CABLE AS	
		3	**1S-7252**	1	TERMINAL-CABLE (00-GA, 3/8-IN SCREW)	
E		3	**5P-0747**		CABLE (00-GA, BLACK) (190-CM)	
		3	**8S-3020**	1	TERMINAL-CABLE (00-GA, 3/8-IN SCREW)	

279-9548 **BATTERY & WIRING GP (*contd.*)** **i04041892**

NOTE	REF NO	GRAPHIC REF	PART NUMBER	QTY	PART NAME 1 2 3 4 5 6 (PRODUCT LEVEL)	SEE PAGE
	22	3	**291-9254**	1	HARNESS AS-SOLENOID	
	23	3	**115-2422**	2	BATTERY GP (12-VOLT, MAINTENANCE FREE, WET)	
					(EACH INCLUDES)	
		3	**123-1373**	6	CAP AS-FILLER (BATTERY)	
	24	1,2	**130-5300**	4	CLIP	
	25	3	**132-5789**	1	CLIP	
M	26	1,3	**133-7810**	4	STUD-TAPERLOCK (M10X1.5X45-MM)	
	27	2	**174-7876**	1	HORN AS (24-VOLT, LOW TONE)	
	28	3	**193-3973**	10	STRAP-CABLE	
	29	3	**1S-0994**	3	CLIP	
	30	2	**220-0230**	1	ALARM AS (BACKUP) (BACKUP)	
	31	1	**238-0303**	1	KNOB	
	32	3	**3J-7354**	1	SEAL-O-RING	
	33	1,2,3	**4P-7581**	5	CLIP	
	34	3	**4P-8134**	2	CLIP	
	35	3	**6D-4247**	3	CLIP	
	36	2,3	**7J-0204**	2	SEAL-O-RING	
M	37	2,3	**8T-0722**	10	BOLT-LOCKING (M10X1.5X30-MM)	
	38	1,2,3	**8T-4121**	24	WASHER-HARD (11X21X2.5-MM THK)	
M	39	1,3	**8T-4133**	4	NUT (M10X1.5-THD)	
M	40	1,2,3	**8T-4137**	8	BOLT (M10X1.5X20-MM)	
M	41	3	**8T-4195**	1	BOLT (M10X1.5X30-MM)	
M	42	3	**8T-4196**	1	BOLT (M10X1.5X35-MM)	

B - USE AS REQUIRED
E - ORDER BY THE CENTIMETER
M - METRIC PART
Y - SEPARATE ILLUSTRATION

279-9548 **BATTERY & WIRING GP (*contd.*)** **i04041892**

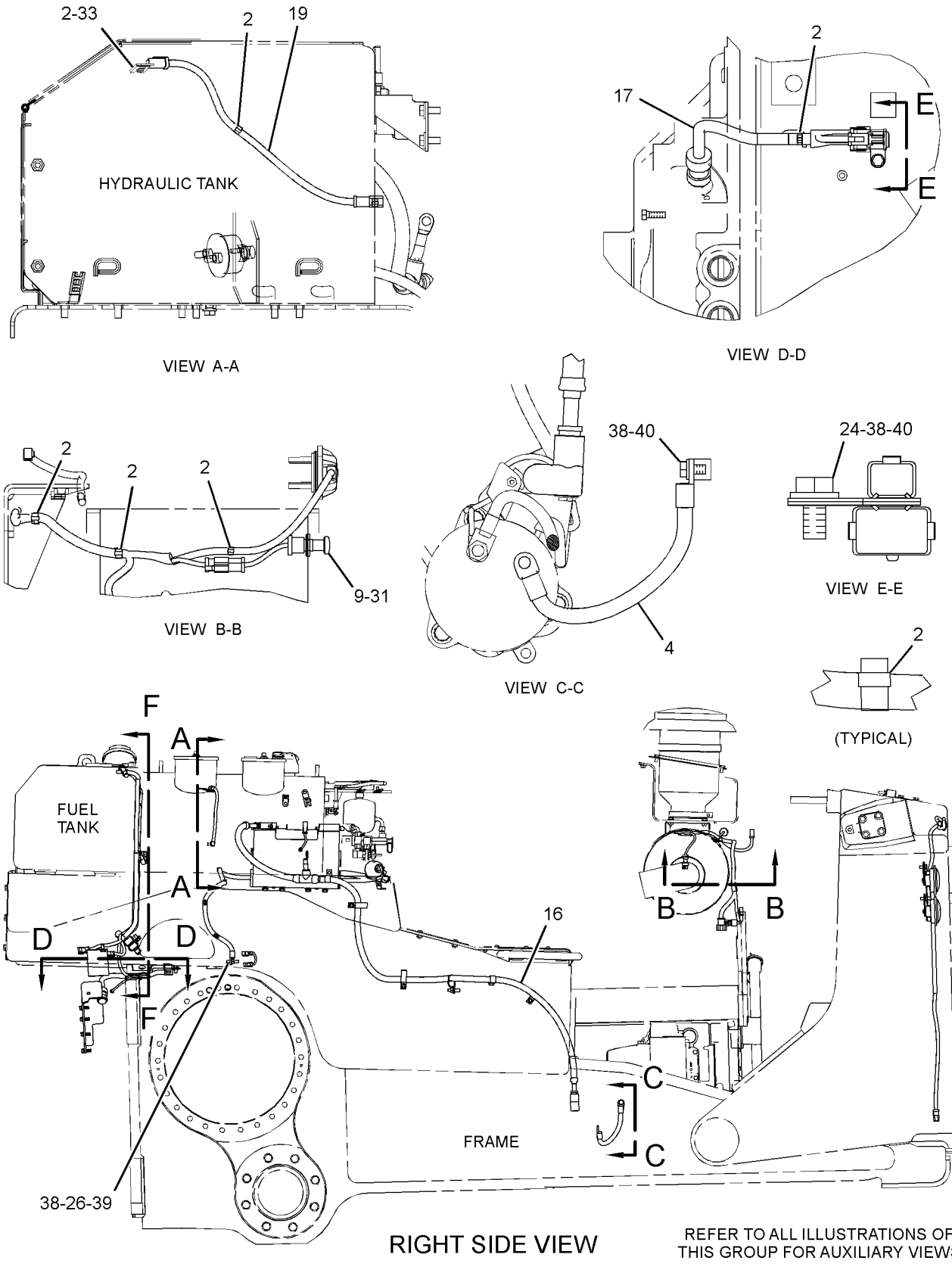

GRAPHIC #1 g01426367

279-9548 **BATTERY & WIRING GP (*contd.*)** **i04041892**

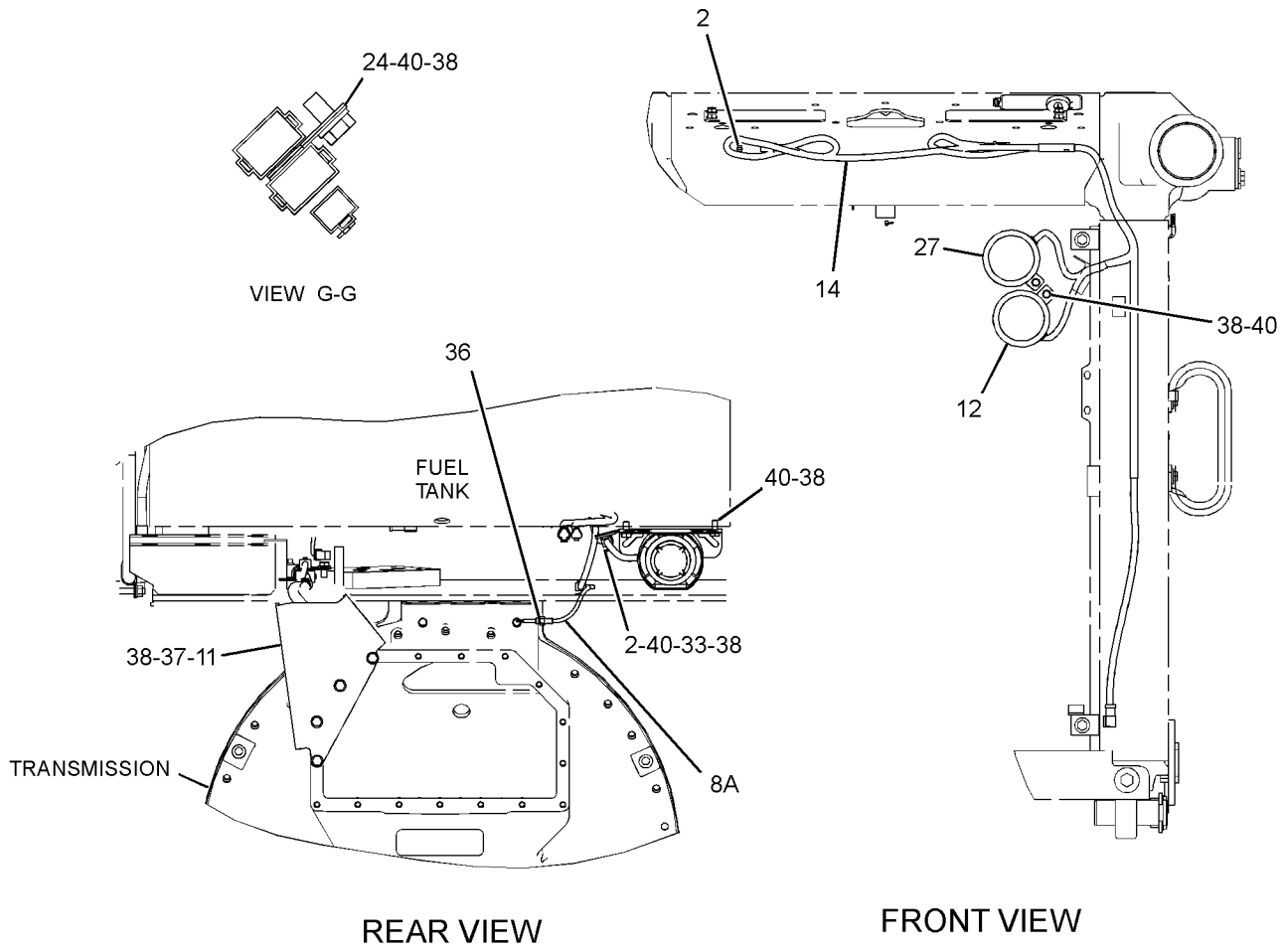

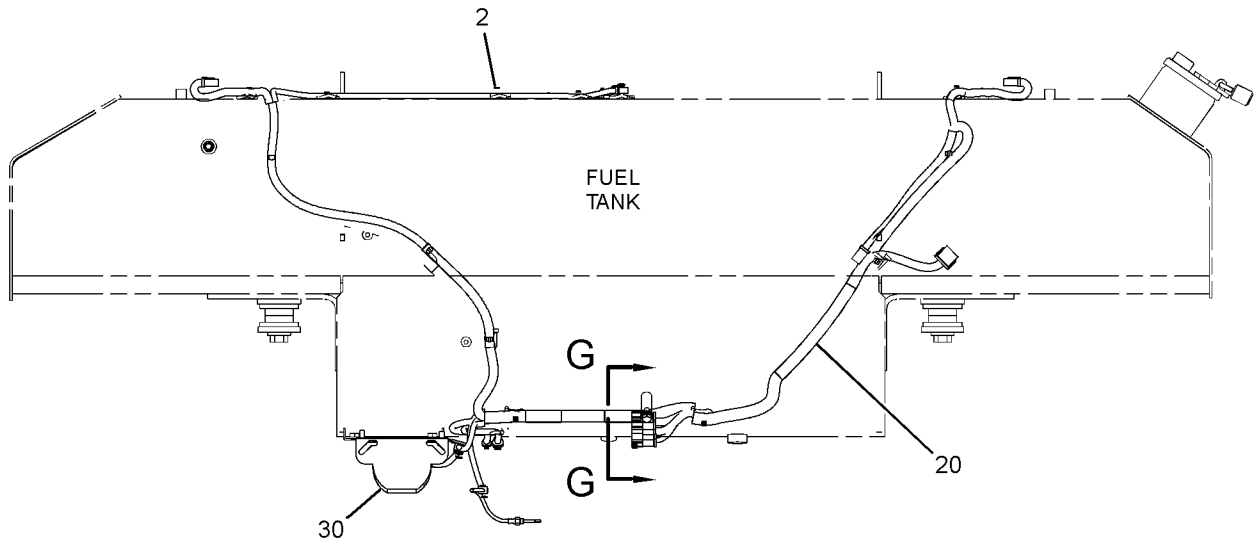

GRAPHIC #2 g01426369

279-9548 **BATTERY & WIRING GP (*contd.*)** **i04041892**

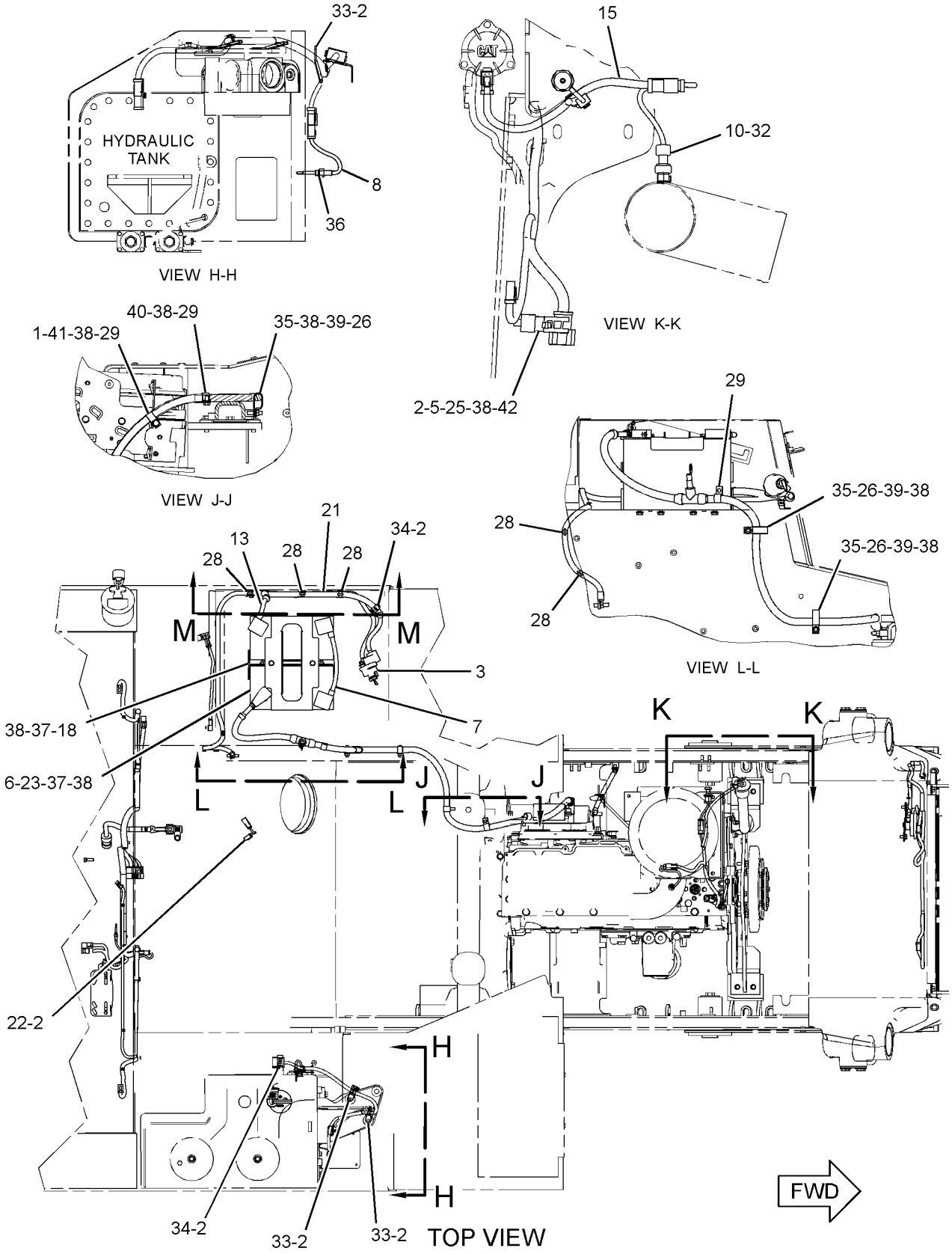

GRAPHIC #3 **<END>** g01426370

279-9548 BATTERY & WIRING GP

S/N: SMC238-1499; GCT353-1999
PART OF 269-2044 CHASSIS AR
TYPE 1

SMCS-1401, 1402, 1408 **i04130452**

NOTE	REF NO	GRAPHIC REF	PART NUMBER	QTY	PART NAME 1 2 3 4 5 6 (PRODUCT LEVEL)	SEE PAGE
	1	3	**1K-4129**	1	SPACER (0.423X0.675X0.375-MM THK)	
C	2	1,2,3	**7K-1181**	48	STRAP-CABLE	
Y	3	3	**7N-0718**	1	SWITCH GP-DISCONNECT (BATTERY)	390
	4	1	**7P-6682**	1	CABLE AS	
		1	**1S-7251**	2	TERMINAL-CABLE (00-GA, 1/2-IN SCREW)	
E		1	**5P-0747**		CABLE (00-GA, BLACK) (40-CM)	
	5	3	**091-9035**	1	SPACER (11X25X20-MM THK)	
	6	3	**111-7978**	1	HOLD-DOWN AS	
	7	3	**128-0314**	1	CABLE AS	
		3	**8C-5918**	1	TERMINAL AS (NEGATIVE)	
		3	**8T-9756**	1	TERMINAL AS (POSITIVE)	
					(EACH TERMINAL AS INCLUDES)	
		3	**1M-6119**	1	BOLT (5/16-18X1.375-IN)	
		3	**1M-6120**	1	NUT (5/16-18-THD)	
E		3	**5P-0761**		CABLE (00-GA, RED) (29-CM)	
		3	**9G-0002**	1	COVER AS-TERMINAL (RED)	
		3	**9G-0005**	1	COVER AS-TERMINAL (BLACK)	
Y	8	3	**145-7028**	1	SENSOR GP-TEMPERATURE (HYDRAULIC OIL)	371
Y	8A	2	**145-7028**	1	SENSOR GP-TEMPERATURE (TRANSMISSION LUBRICATION OIL)	371
CY	9	1	**282-2586**	1	SWITCH GP-PUSH BUTTON (FUEL PRIMING PUMP)	396
Y	10	3	**161-9926**	1	SENSOR GP-PRESSURE (TURBOCHARGER INLET)	361
	11	2	**172-4864**	1	GUARD AS	
	12	2	**174-7875**	1	HORN AS (24-VOLT, HIGH TONE)	
	13	3	**197-0668**	1	CABLE AS	
		3	**9G-0003**	1	COVER AS-TERMINAL (BLACK)	
		3	**1S-4915**	2	LINER (CONDUIT)	
E		3	**5P-0695**		CONDUIT (61-CM)	
E		3	**5P-0747**		CABLE (00-GA, BLACK) (95-CM)	
		3	**8S-3020**	1	TERMINAL-CABLE (00-GA, 3/8-IN SCREW)	
E		3	**8T-2225**		TUBE-HEAT SHRINK (25.4-MM DIA) (16-CM)	
		3	**299-9092**	1	COVER-TERMINAL (BLACK)	
		3	**8T-9757**	1	TERMINAL AS-BATTERY (NEGATIVE)	
		3	**1M-6119**	1	BOLT (5/16-18X1.375-IN)	
		3	**1M-6120**	1	NUT (5/16-18-THD)	
	14	2	**226-9670**	1	HARNESS AS-CHASSIS (RADIATOR GUARD)	
		2	**102-8803**	1	KIT-RECEPTACLE (3-PIN)	
					(INCLUDES RECEPTACLE AS & WEDGE)	
		2	**9W-0844**	8	SOCKET-CONNECTOR (14-GA TO 16-GA)	
		2	**9W-0852**	3	PIN-CONNECTOR (14-GA TO 16-GA)	
E		2	**119-3662**		TUBE-HEAT SHRINK (10.85-MM DIA) (7-CM)	
E		2	**125-7874**		TUBE-HEAT SHRINK (5.72-MM DIA) (5-CM)	
E		2	**125-7875**		TUBE-HEAT SHRINK (7.44-MM DIA) (5-CM)	
		2	**155-2270**	4	KIT-CONNECTING PLUG (2-PIN)	
					(EACH INCLUDES PLUG AS, WEDGE & INTERFACE SEAL)	
		2	**274-3774**	2	CAP-CONNECTOR	
	15	3	**226-9671**	1	HARNESS AS-HOOD	
		3	**102-8803**	1	KIT-RECEPTACLE (3-PIN)	
		3	**102-8806**	1	KIT-RECEPTACLE (8-PIN)	
					(EACH KIT INCLUDES RECEPTACLE AS & WEDGE)	
		3	**8T-8737**	1	PLUG-SEAL	
		3	**9X-3401**	10	PIN-CONNECTOR (16-GA TO 18-GA)	
		3	**9X-3402**	6	SOCKET-CONNECTOR (16-GA TO 18-GA)	
		3	**155-2270**	3	KIT-CONNECTING PLUG (2-PIN)	

279-9548 **BATTERY & WIRING GP (*contd.*)** **i04130452**

NOTE	REF NO	GRAPHIC REF	PART NUMBER	QTY	PART NAME 1 2 3 4 5 6 (PRODUCT LEVEL)	SEE PAGE
					(EACH INCLUDES PLUG AS, WEDGE & INTERFACE SEAL)	
		3	**274-3774**	1	CAP-CONNECTOR	
	16	1	**237-4240**	1	CABLE AS	
		1	**1S-4915**	2	LINER (CONDUIT)	
E		1	**5P-0695**		CONDUIT (220-CM)	
E		1	**5P-0761**		CABLE (00-GA, RED) (246-CM)	
		1	**8N-1725**	1	COVER AS-TERMINAL (RED)	
E		1	**8T-2225**		TUBE-HEAT SHRINK (25.4-MM DIA) (32-CM)	
		1	**170-3795**	1	RING-TERMINAL	
B		1	**1P-0810**	1	TAPE-ELECTRICAL	
		1	**3S-6049**	1	TERMINAL AS-BATTERY (POSITIVE)	
		1	**1M-6119**	1	BOLT (5/16-18X1.375-IN)	
		1	**1M-6120**	1	NUT (5/16-18-THD)	
	17	1	**239-8155**	1	HARNESS AS-TRANSMISSION	
		1	**8T-8737**	3	PLUG-SEAL	
E		1	**114-8843**		SLEEVE-PLASTIC (20-CM)	
E		1	**114-8844**		SLEEVE-PLASTIC (40-CM)	
E		1	**125-7874**		TUBE-HEAT SHRINK (5.72-MM DIA) (10-CM)	
		1	**126-1766**	13	SOCKET-CONNECTOR (14-GA TO 18-GA)	
		1	**154-3172**	1	PLUG AS (14-PIN)	
		1	**155-2255**	1	KIT-CONNECTING PLUG (12-PIN)	
		1	**155-2271**	1	KIT-CONNECTING PLUG (4-PIN)	
					(EACH KIT INCLUDES PLUG AS, WEDGE & INTERFACE SEAL)	
	18	3	**240-8317**	1	PLATE AS	
	19	1	**280-3554**	1	HARNESS AS-WIRING (FENDER, LH)	
		1	**102-8802**	1	KIT-RECEPTACLE (2-PIN)	
					(INCLUDES RECEPTACLE AS & WEDGE)	
E		1	**114-8843**		SLEEVE-PLASTIC (20-CM)	
E		1	**114-8845**		SLEEVE-PLASTIC (20-CM)	
		1	**126-1766**	2	SOCKET-CONNECTOR (14-GA TO 18-GA)	
		1	**144-1636**	2	PIN-CONNECTOR (14-GA TO 18-GA)	
		1	**155-2270**	1	KIT-CONNECTING PLUG (2-PIN)	
					(INCLUDES PLUG AS, WEDGE & INTERFACE SEAL)	
	20	2	**282-8485**	1	HARNESS AS-FUEL TANK	
		2	**102-8803**	1	KIT-RECEPTACLE (3-PIN)	
		2	**102-8804**	1	KIT-RECEPTACLE (4-PIN)	
		2	**102-8801**	1	KIT-RECEPTACLE (12-PIN)	
		2	**190-7615**	1	KIT-RECEPTACLE (12-PIN)	
					(EACH KIT INCLUDES RECEPTACLE AS & WEDGE)	
		2	**8T-8737**	9	PLUG-SEAL	
		2	**9W-0844**	15	SOCKET-CONNECTOR (14-GA TO 16-GA)	
		2	**9W-0852**	12	PIN-CONNECTOR (14-GA TO 16-GA)	
		2	**9X-3401**	18	PIN-CONNECTOR (16-GA TO 18-GA)	
		2	**9X-3402**	15	SOCKET-CONNECTOR (16-GA TO 18-GA)	
E		2	**114-8845**		SLEEVE-PLASTIC (100-CM)	
E		2	**125-7874**		TUBE-HEAT SHRINK (5.72-MM DIA) (30-CM)	
		2	**155-2255**	1	KIT-CONNECTING PLUG (12-PIN)	
		2	**155-2260**	2	KIT-CONNECTING PLUG (3-PIN)	
		2	**155-2270**	3	KIT-CONNECTING PLUG (2-PIN)	
		2	**155-2271**	2	KIT-CONNECTING PLUG (4-PIN)	
		2	**155-2274**	1	KIT-CONNECTING PLUG (6-PIN)	
					(EACH KIT INCLUDES PLUG AS, WEDGE & INTERFACE SEAL)	
		2	**274-3775**	1	CAP-CONNECTOR	
		2	**274-3776**	2	CAP-SEAL	
		2	**274-3777**	1	CAP-CONNECTOR	
		2	**274-3779**	1	CAP-SEAL	
	21	3	**290-8745**	1	CABLE AS	
		3	**1S-7252**	1	TERMINAL-CABLE (00-GA, 3/8-IN SCREW)	

279-9548 **BATTERY & WIRING GP (*contd.*)** **i04130452**

NOTE	REF NO	GRAPHIC REF	PART NUMBER	QTY	PART NAME 1 2 3 4 5 6 (PRODUCT LEVEL)	SEE PAGE
E		3	**5P-0747**		CABLE (00-GA, BLACK) (190-CM)	
		3	**8S-3020**	1	TERMINAL-CABLE (00-GA, 3/8-IN SCREW)	
	22	3	**291-9254**	1	HARNESS AS-SOLENOID	
		3	**102-8802**	1	KIT-RECEPTACLE (2-PIN)	
					(INCLUDES RECEPTACLE AS & WEDGE)	
		3	**126-1766**	2	SOCKET-CONNECTOR (14-GA TO 18-GA)	
		3	**144-1636**	2	PIN-CONNECTOR (14-GA TO 18-GA)	
		3	**155-2270**	1	KIT-CONNECTING PLUG (2-PIN)	
					(INCLUDES PLUG AS, WEDGE & INTERFACE SEAL)	
	23	3	**115-2422**	2	BATTERY GP (12-VOLT, MAINTENANCE FREE, WET)	
					(EACH INCLUDES)	
		3	**123-1373**	6	CAP AS-FILLER (BATTERY)	
C	24	1	**130-5300**	2	CLIP	
	25	3	**132-5789**	1	CLIP	
M	26	1,3	**133-7810**	4	STUD-TAPERLOCK (M10X1.5X45-MM)	
	27	2	**174-7876**	1	HORN AS (24-VOLT, LOW TONE)	
	28	3	**193-3973**	10	STRAP-CABLE	
C	29	3	**1S-0994**	2	CLIP	
	30	2	**220-0230**	1	ALARM AS (BACKUP) (BACKUP)	
	31	1	**238-0303**	1	KNOB	
	32	3	**3J-7354**	1	SEAL-O-RING	
	33	1,2,3	**4P-7581**	4	CLIP	
	34	3	**4P-8134**	3	CLIP	
	35	3	**6D-4247**	3	CLIP	
	36	2,3	**7J-0204**	2	SEAL-O-RING	
M	37	2,3	**8T-0722**	10	BOLT-LOCKING (M10X1.5X30-MM)	
C	38	1,2,3	**8T-4121**	23	WASHER-HARD (11X21X2.5-MM THK)	
M	39	1,3	**8T-4133**	4	NUT (M10X1.5-THD)	
CM	40	1,2	**8T-4137**	6	BOLT (M10X1.5X20-MM)	
M	41	3	**8T-4195**	1	BOLT (M10X1.5X30-MM)	
M	42	3	**8T-4196**	1	BOLT (M10X1.5X35-MM)	
CM	43	3	**8T-4136**	1	BOLT (M10X1.5X25-MM)	
C	44	3	**1S-1015**	1	CLIP	

B - USE AS REQUIRED
C - CHANGE FROM PREVIOUS TYPE
E - ORDER BY THE CENTIMETER
M - METRIC PART
Y - SEPARATE ILLUSTRATION

279-9548 **BATTERY & WIRING GP (*contd.*)** **i04130452**

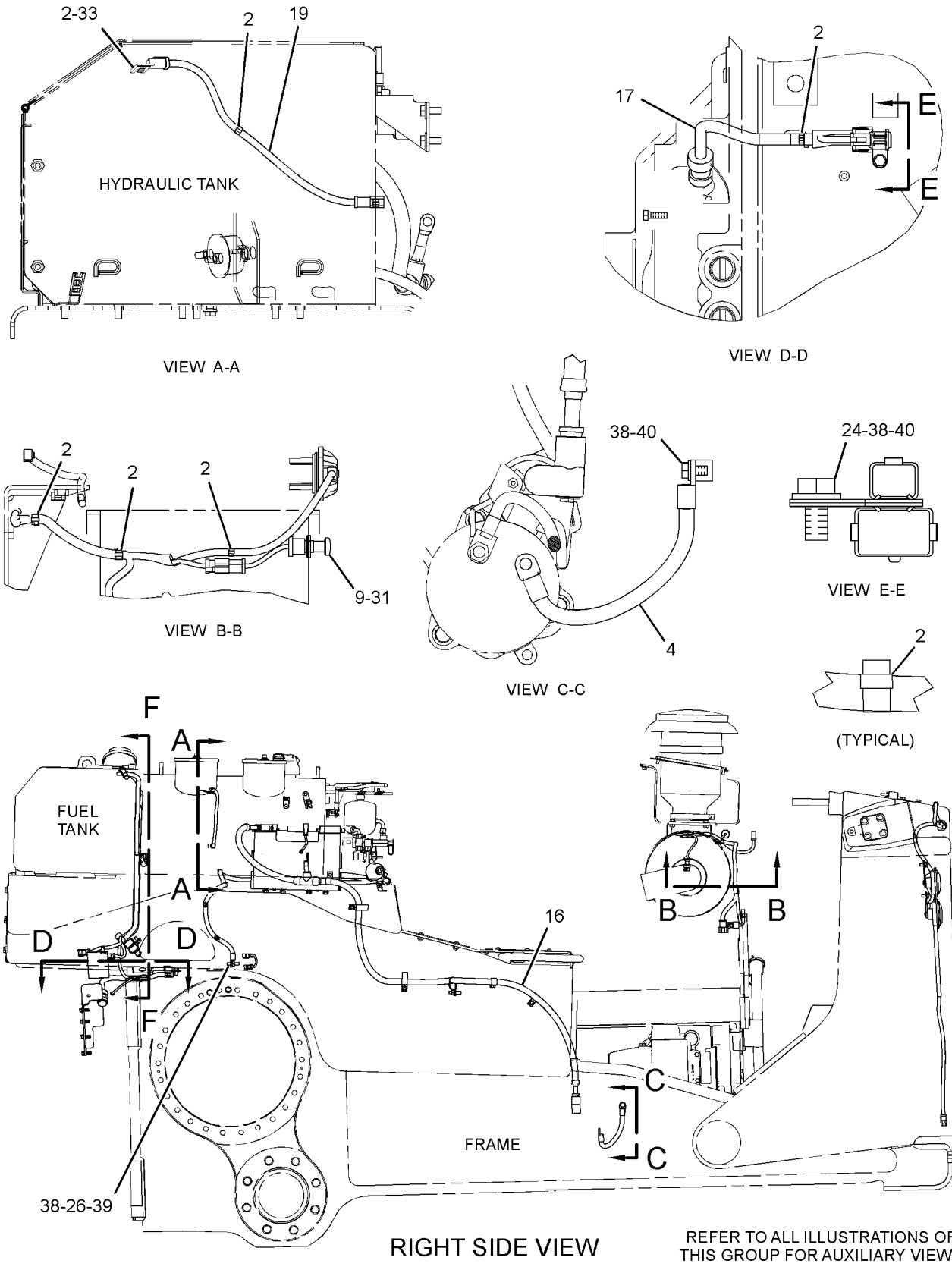

GRAPHIC #1 g02149464

279-9548 **BATTERY & WIRING GP (*contd.*)** **i04130452**

REFER TO ALL ILLUSTRATIONS OF
THIS GROUP FOR AUXILIARY VIEWS

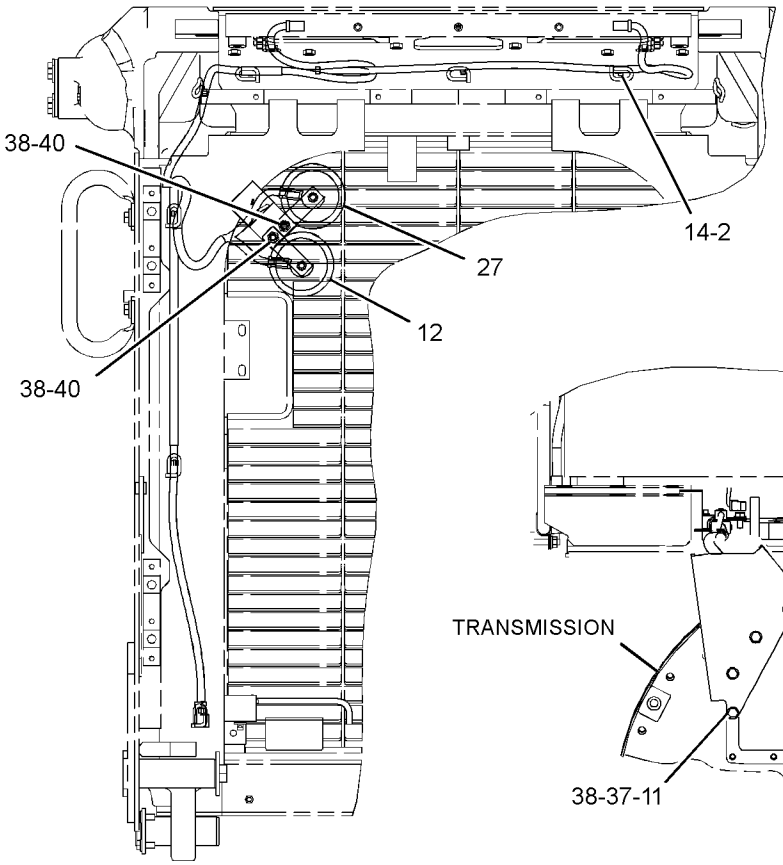

SECTION G-G

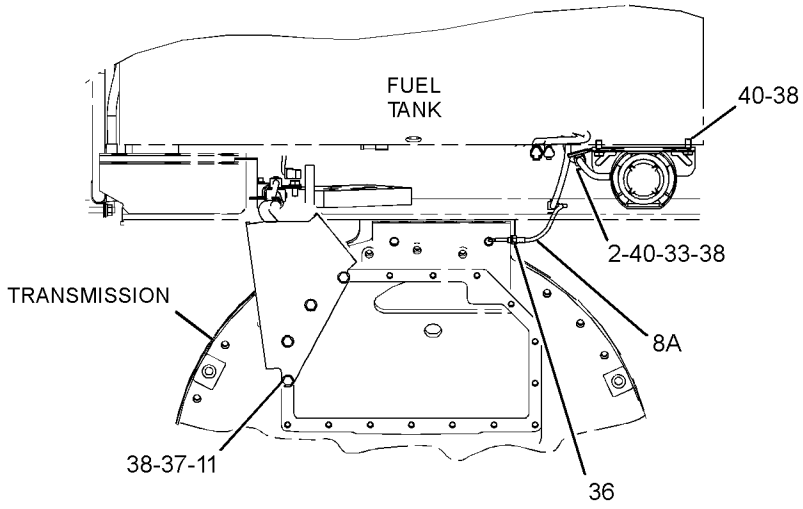

REAR VIEW

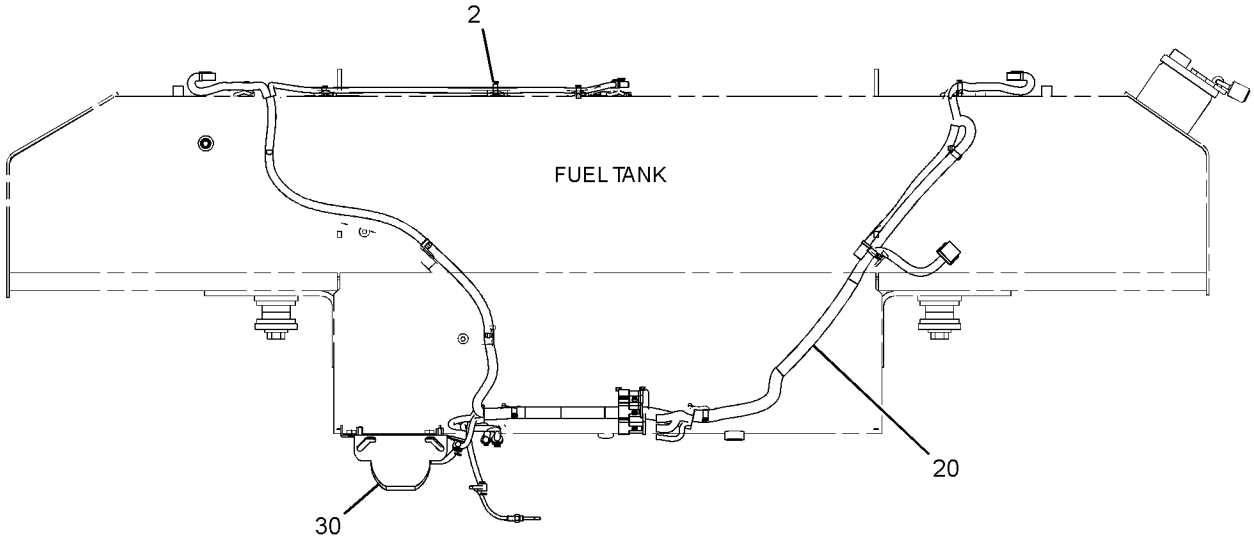

VIEW F-F

GRAPHIC #2 g02149465

279-9548 **BATTERY & WIRING GP (*contd.*)** **i04130452**

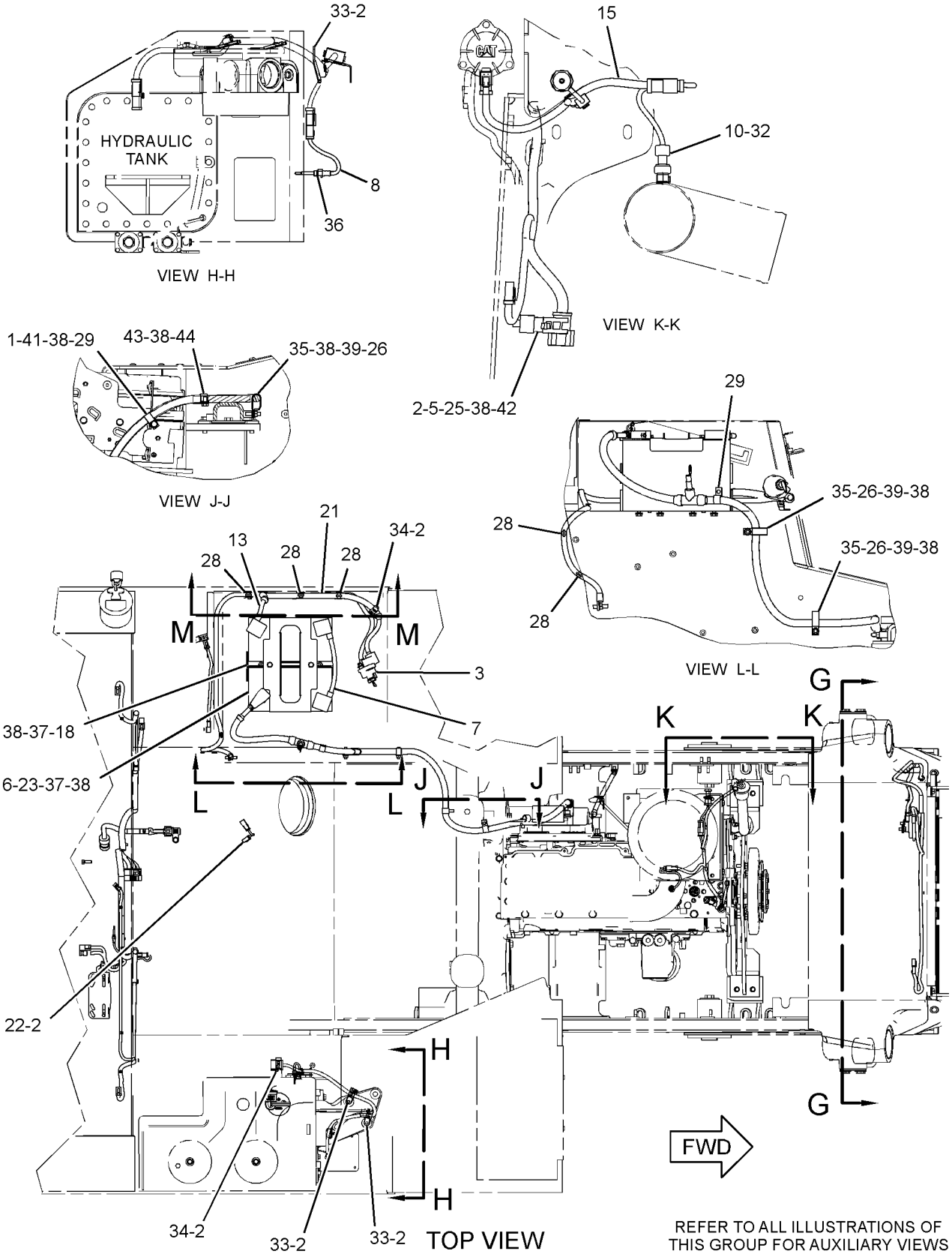

REFER TO ALL ILLUSTRATIONS OF THIS GROUP FOR AUXILIARY VIEWS

GRAPHIC #3 **<END>** g02149466

279-9548 BATTERY & WIRING GP

S/N: SMC238-1499; GCT353-1999
PART OF 269-2044 CHASSIS AR
TYPE 2

SMCS-1401, 1402, 1408 **i04764537**

NOTE	REF NO	GRAPHIC REF	PART NUMBER	QTY	PART NAME 1 2 3 4 5 6 (PRODUCT LEVEL)	SEE PAGE
	1	3	**1K-4129**	1	SPACER (0.423X0.675X0.375-MM THK)	
C	2	1,2,3	**7K-1181**	47	STRAP-CABLE	
Y	3	3	**7N-0718**	1	SWITCH GP-DISCONNECT (BATTERY)	390
	4	1	**7P-6682**	1	CABLE AS	
		1	**1S-7251**	2	TERMINAL-CABLE (00-GA, 1/2-IN SCREW)	
E		1	**159-8050**		CABLE (00-GA, BLACK) (40-CM)	
	5	3	**091-9035**	1	SPACER (11X25X20-MM THK)	
	6	3	**111-7978**	1	HOLD-DOWN AS	
	7	3	**128-0314**	1	CABLE AS	
		3	**8C-5918**	1	TERMINAL AS (NEGATIVE)	
		3	**8T-9756**	1	TERMINAL AS (POSITIVE)	
					(EACH TERMINAL AS INCLUDES)	
		3	**1M-6119**	1	BOLT (5/16-18X1.375-IN)	
		3	**1M-6120**	1	NUT (5/16-18-THD)	
E		3	**159-8049**		CABLE (00-GA, RED) (29-CM)	
		3	**9G-0002**	1	COVER AS-TERMINAL (RED)	
		3	**9G-0005**	1	COVER AS-TERMINAL (BLACK)	
CY	8	3	**145-7028**	1	SENSOR GP-TEMPERATURE (HYDRAULIC OIL)	371
Y	9	1	**282-2586**	1	SWITCH GP-PUSH BUTTON (FUEL PRIMING PUMP)	396
Y	10	3	**161-9926**	1	SENSOR GP-PRESSURE (TURBOCHARGER INLET)	361
	11	2	**172-4864**	1	GUARD AS	
M		2	**8T-3490**	1	NUT-WELD (M10X1.5-THD)	
	12	2	**174-7875**	1	HORN AS (24-VOLT, HIGH TONE)	
	13	3	**197-0668**	1	CABLE AS	
		3	**1S-4915**	2	LINER (CONDUIT)	
E		3	**5P-0695**		CONDUIT (61-CM)	
E		3	**159-8050**		CABLE (00-GA, BLACK) (100-CM)	
		3	**8S-3020**	1	TERMINAL-CABLE (00-GA, 3/8-IN SCREW)	
E		3	**8T-2225**		TUBE-HEAT SHRINK (25.4-MM DIA) (16-CM)	
		3	**9G-0003**	1	COVER AS-TERMINAL (BLACK)	
		3	**299-9092**	1	COVER-TERMINAL (BLACK)	
		3	**8T-9757**	1	TERMINAL AS-BATTERY (NEGATIVE)	
		3	**1M-6119**	1	BOLT (5/16-18X1.375-IN)	
		3	**1M-6120**	1	NUT (5/16-18-THD)	
	14	2	**226-9670**	1	HARNESS AS-CHASSIS (RADIATOR GUARD)	
		2	**102-8803**	1	KIT-RECEPTACLE (3-PIN)	
					(INCLUDES RECEPTACLE AS & WEDGE)	
		2	**9W-0844**	8	SOCKET-CONNECTOR (14-GA TO 16-GA)	
		2	**9W-0852**	3	PIN-CONNECTOR (14-GA TO 16-GA)	
E		2	**119-3662**		TUBE-HEAT SHRINK (10.85-MM DIA) (7-CM)	
E		2	**125-7874**		TUBE-HEAT SHRINK (5.72-MM DIA) (5-CM)	
E		2	**125-7875**		TUBE-HEAT SHRINK (7.44-MM DIA) (5-CM)	
		2	**155-2270**	4	KIT-CONNECTING PLUG (2-PIN)	
					(EACH INCLUDES PLUG AS, WEDGE & INTERFACE SEAL)	
		2	**274-3774**	2	CAP-CONNECTOR	
	15	3	**226-9671**	1	HARNESS AS-HOOD	
		3	**102-8803**	1	KIT-RECEPTACLE (3-PIN)	
		3	**102-8806**	1	KIT-RECEPTACLE (8-PIN)	
					(EACH KIT INCLUDES RECEPTACLE AS & WEDGE)	
		3	**8T-8737**	1	PLUG-SEAL	
		3	**9X-3401**	10	PIN-CONNECTOR (16-GA TO 18-GA)	
		3	**9X-3402**	6	SOCKET-CONNECTOR (16-GA TO 18-GA)	
		3	**155-2270**	3	KIT-CONNECTING PLUG (2-PIN)	
					(EACH INCLUDES PLUG AS, WEDGE & INTERFACE SEAL)	

279-9548 **BATTERY & WIRING GP (*contd.*)** **i04764537**

NOTE	REF NO	GRAPHIC REF	PART NUMBER	QTY	PART NAME 1 2 3 4 5 6 (PRODUCT LEVEL)	SEE PAGE
		3	**274-3774**	1	CAP-CONNECTOR	
	16	1	**237-4240**	1	CABLE AS	
		1	**1S-4915**	2	LINER (CONDUIT)	
E		1	**5P-0695**		CONDUIT (213-CM)	
E		1	**159-8049**		CABLE (00-GA, RED) (249-CM)	
		1	**8N-1725**	1	COVER AS-TERMINAL (RED)	
E		1	**8T-2225**		TUBE-HEAT SHRINK (25.4-MM DIA) (16-CM)	
		1	**170-3795**	1	RING-TERMINAL	
BD		1	**1P-0810**	1	TAPE-ELECTRICAL (0.3-M)	
		1	**3S-6049**	1	TERMINAL AS-BATTERY (POSITIVE)	
		1	**1M-6119**	1	BOLT (5/16-18X1.375-IN)	
		1	**1M-6120**	1	NUT (5/16-18-THD)	
	17	1	**239-8155**	1	HARNESS AS-TRANSMISSION	
		1	**8T-8737**	3	PLUG-SEAL	
E		1	**114-8843**		SLEEVE-PLASTIC (20-CM)	
E		1	**125-7874**		TUBE-HEAT SHRINK (5.72-MM DIA) (10-CM)	
		1	**9X-3402**	13	SOCKET-CONNECTOR (16-GA TO 18-GA)	
		1	**154-3172**	1	PLUG AS (14-PIN)	
		1	**155-2255**	1	KIT-CONNECTING PLUG (12-PIN)	
		1	**155-2271**	1	KIT-CONNECTING PLUG (4-PIN)	
					(EACH KIT INCLUDES PLUG AS, WEDGE & INTERFACE SEAL)	
	18	3	**240-8317**	1	PLATE AS	
	19	1	**280-3554**	1	HARNESS AS-WIRING (FENDER, LH)	
		1	**102-8802**	1	KIT-RECEPTACLE (2-PIN)	
					(INCLUDES RECEPTACLE AS & WEDGE)	
E		1	**114-8843**		SLEEVE-PLASTIC (20-CM)	
E		1	**114-8845**		SLEEVE-PLASTIC (20-CM)	
		1	**9X-3402**	2	SOCKET-CONNECTOR (16-GA TO 18-GA)	
		1	**9X-3401**	2	PIN-CONNECTOR (16-GA TO 18-GA)	
					—OR—	
		1	**126-1767**	2	PIN-CONNECTOR (14-GA TO 16-GA)	
		1	**155-2270**	1	KIT-CONNECTING PLUG (2-PIN)	
					(INCLUDES PLUG AS, WEDGE & INTERFACE SEAL)	
	20	2	**282-8485**	1	HARNESS AS-FUEL TANK	
		2	**8T-8729**	2	PIN-CONNECTOR (16-GA TO 18-GA)	
		2	**8T-8730**	2	SOCKET-CONNECTOR (16-GA TO 18-GA)	
		2	**102-8803**	1	KIT-RECEPTACLE (3-PIN)	
		2	**102-8804**	1	KIT-RECEPTACLE (4-PIN)	
		2	**102-8801**	1	KIT-RECEPTACLE (12-PIN)	
		2	**190-7615**	1	KIT-RECEPTACLE (12-PIN)	
					(EACH KIT INCLUDES RECEPTACLE AS & WEDGE)	
		2	**8T-8737**	9	PLUG-SEAL	
		2	**9W-0844**	15	SOCKET-CONNECTOR (14-GA TO 16-GA)	
		2	**9W-0852**	12	PIN-CONNECTOR (14-GA TO 16-GA)	
		2	**9X-3401**	14	PIN-CONNECTOR (16-GA TO 18-GA)	
		2	**9X-3402**	11	SOCKET-CONNECTOR (16-GA TO 18-GA)	
E		2	**114-8845**		SLEEVE-PLASTIC (100-CM)	
E		2	**125-7874**		TUBE-HEAT SHRINK (5.72-MM DIA) (30-CM)	
		2	**155-2255**	1	KIT-CONNECTING PLUG (12-PIN)	
		2	**155-2260**	2	KIT-CONNECTING PLUG (3-PIN)	
		2	**155-2270**	2	KIT-CONNECTING PLUG (2-PIN)	
		2	**155-2271**	2	KIT-CONNECTING PLUG (4-PIN)	
		2	**155-2274**	1	KIT-CONNECTING PLUG (6-PIN)	
					(EACH KIT INCLUDES PLUG AS, WEDGE & INTERFACE SEAL)	
		2	**274-3775**	1	CAP-CONNECTOR	
		2	**274-3776**	2	CAP-SEAL	
		2	**274-3777**	1	CAP-CONNECTOR	
		2	**274-3779**	1	CAP-SEAL	
	21	3	**290-8745**	1	CABLE AS	

279-9548 **BATTERY & WIRING GP (*contd.*)** **i04764537**

NOTE	REF NO	GRAPHIC REF	PART NUMBER	QTY	PART NAME 1 2 3 4 5 6 (PRODUCT LEVEL)	SEE PAGE
		3	**1S-7252**	1	TERMINAL-CABLE (00-GA, 3/8-IN SCREW)	
E		3	**159-8050**		CABLE (00-GA, BLACK) (190-CM)	
		3	**8S-3020**	1	TERMINAL-CABLE (00-GA, 3/8-IN SCREW)	
	22	3	**291-9254**	1	HARNESS AS-SOLENOID	
		3	**102-8802**	1	KIT-RECEPTACLE (2-PIN)	
					(INCLUDES RECEPTACLE AS & WEDGE)	
		3	**9X-3402**	2	SOCKET-CONNECTOR (16-GA TO 18-GA)	
		3	**9X-3401**	2	PIN-CONNECTOR (16-GA TO 18-GA)	
					—OR—	
		3	**126-1767**	2	PIN-CONNECTOR (14-GA TO 16-GA)	
		3	**155-2270**	1	KIT-CONNECTING PLUG (2-PIN)	
					(INCLUDES PLUG AS, WEDGE & INTERFACE SEAL)	
	23	3	**115-2422**	2	BATTERY GP (12-VOLT, MAINTENANCE FREE, WET)	
					(EACH INCLUDES)	
		3	**123-1373**	6	CAP AS-FILLER (BATTERY)	
	24	1	**130-5300**	2	CLIP	
	25	3	**132-5789**	1	CLIP	
M	26	1,3	**133-7810**	4	STUD-TAPERLOCK (M10X1.5X45-MM)	
	27	2	**174-7876**	1	HORN AS (24-VOLT, LOW TONE)	
	28	3	**193-3973**	10	STRAP-CABLE	
	29	3	**1S-0994**	2	CLIP	
	30	2	**220-0230**	1	ALARM AS (BACKUP) (BACKUP)	
	31	1	**238-0303**	1	KNOB	
	32	3	**3J-7354**	1	SEAL-O-RING	
	33	1,2,3	**4P-7581**	4	CLIP	
	34	3	**4P-8134**	3	CLIP	
	35	3	**6D-4247**	3	CLIP	
C	36	3	**7J-0204**	1	SEAL-O-RING	
M	37	2,3	**8T-0722**	10	BOLT-LOCKING (M10X1.5X30-MM)	
	38	1,2,3	**8T-4121**	23	WASHER-HARD (11X21X2.5-MM THK)	
M	39	1,3	**8T-4133**	4	NUT (M10X1.5-THD)	
M	40	1,2	**8T-4137**	6	BOLT (M10X1.5X20-MM)	
M	41	3	**8T-4195**	1	BOLT (M10X1.5X30-MM)	
M	42	3	**8T-4196**	1	BOLT (M10X1.5X35-MM)	
M	43	3	**8T-4136**	1	BOLT (M10X1.5X25-MM)	
	44	3	**1S-1015**	1	CLIP	

B - USE AS REQUIRED
C - CHANGE FROM PREVIOUS TYPE
D - ORDER BY THE METER
E - ORDER BY THE CENTIMETER
M - METRIC PART
Y - SEPARATE ILLUSTRATION

279-9548 **BATTERY & WIRING GP (*contd.*)** **i04764537**

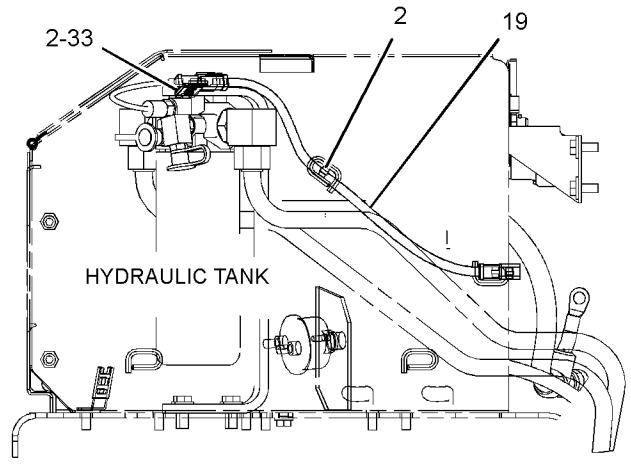

VIEW A-A

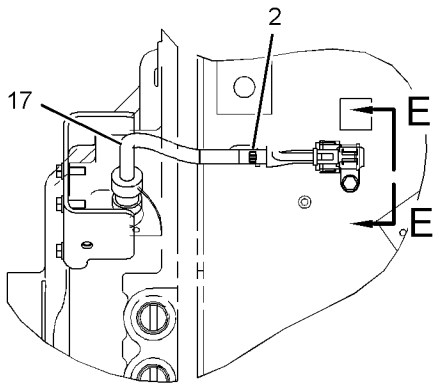

VIEW D-D

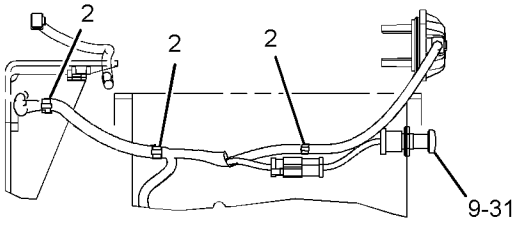

VIEW B-B

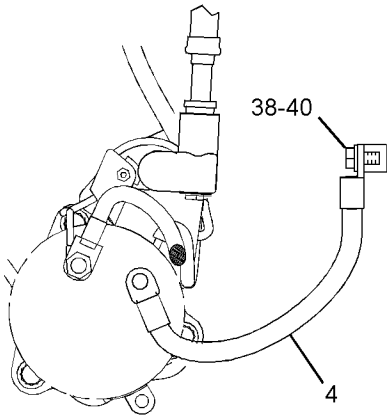

VIEW C-C

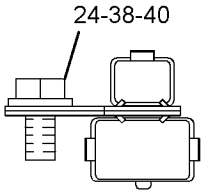

VIEW E-E

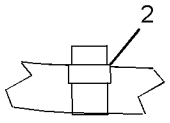

(TYPICAL)

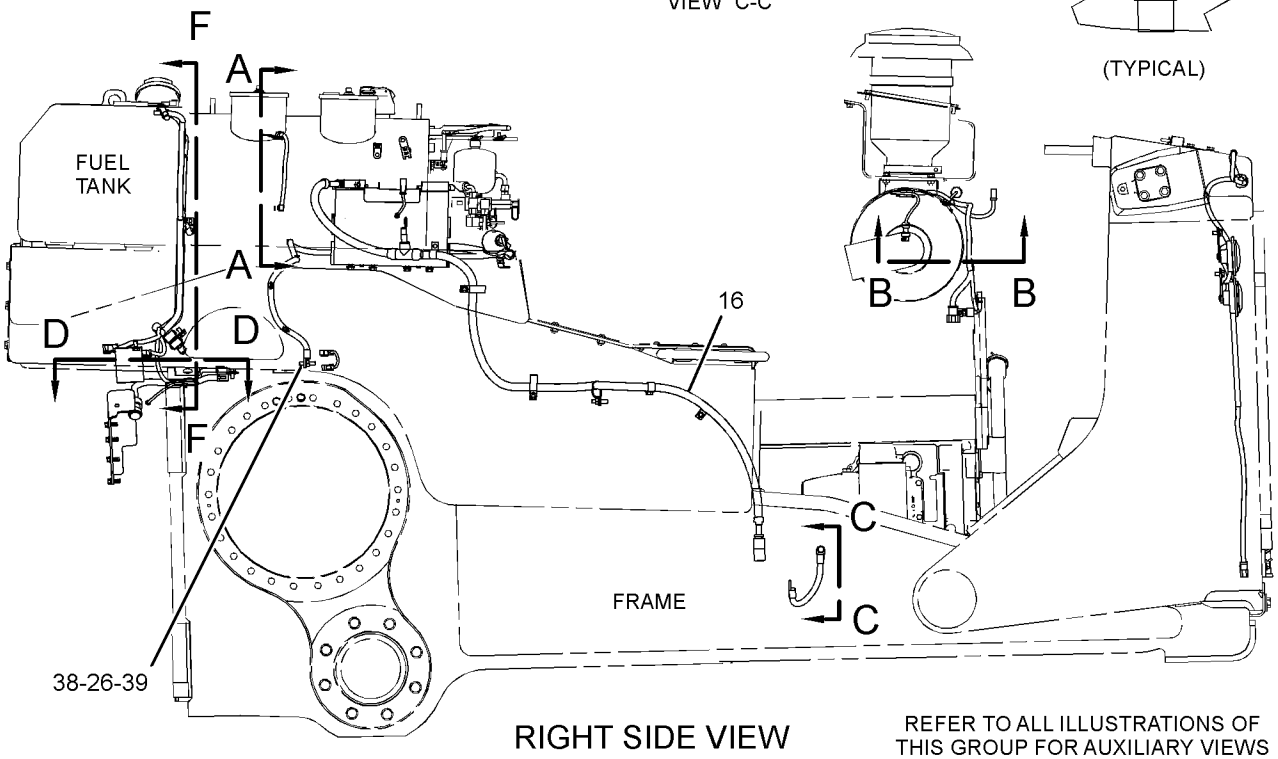

RIGHT SIDE VIEW

REFER TO ALL ILLUSTRATIONS OF THIS GROUP FOR AUXILIARY VIEWS

GRAPHIC #1

g02345428

279-9548 **BATTERY & WIRING GP (*contd.*)** **i04764537**

REFER TO ALL ILLUSTRATIONS OF
THIS GROUP FOR AUXILIARY VIEWS

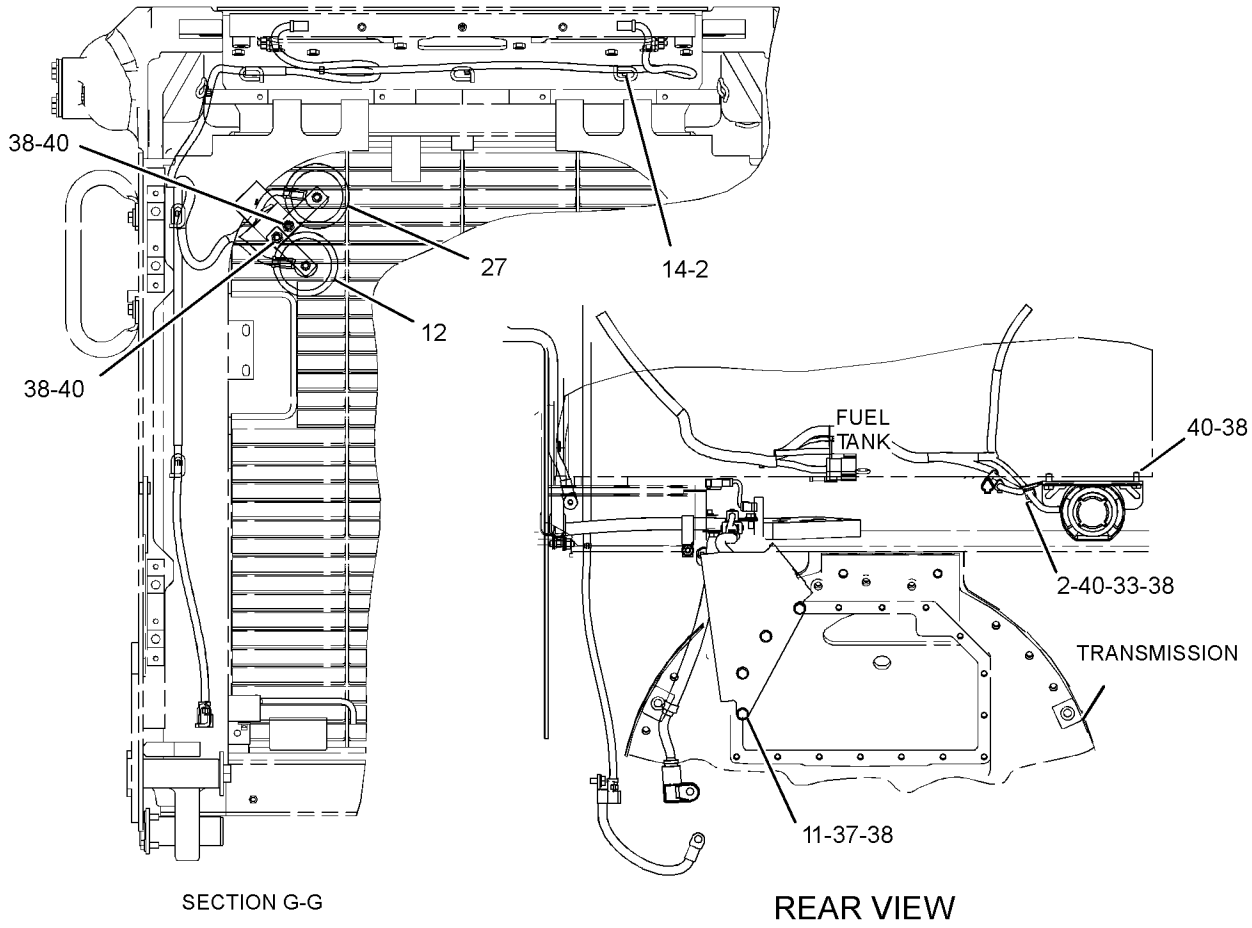

SECTION G-G

REAR VIEW

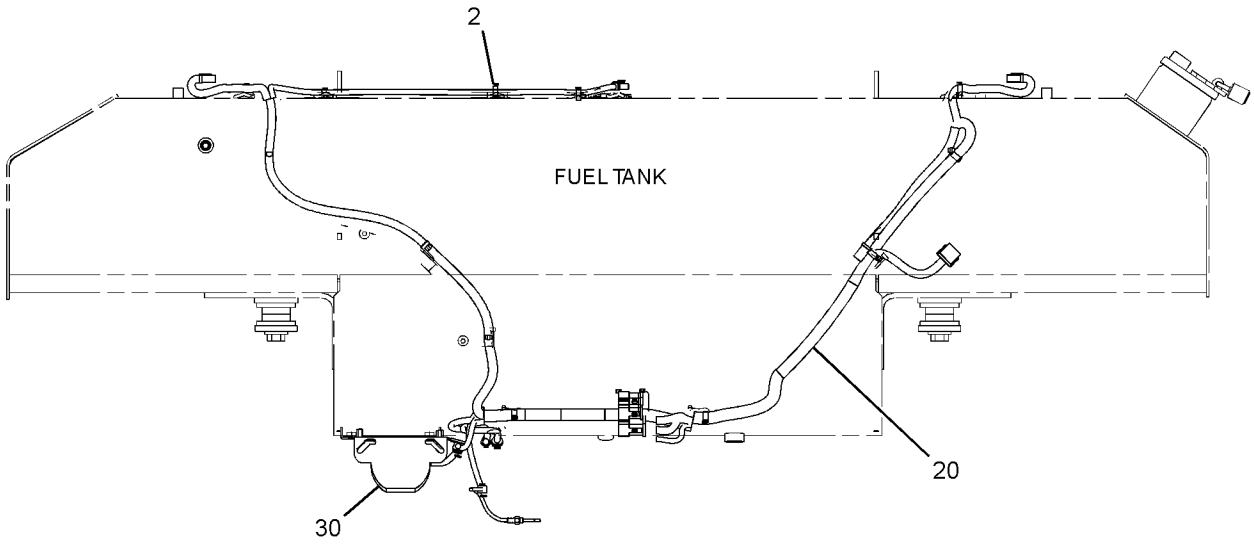

VIEW F-F

GRAPHIC #2

g02345429

279-9548 **BATTERY & WIRING GP (*contd.*)** **i04764537**

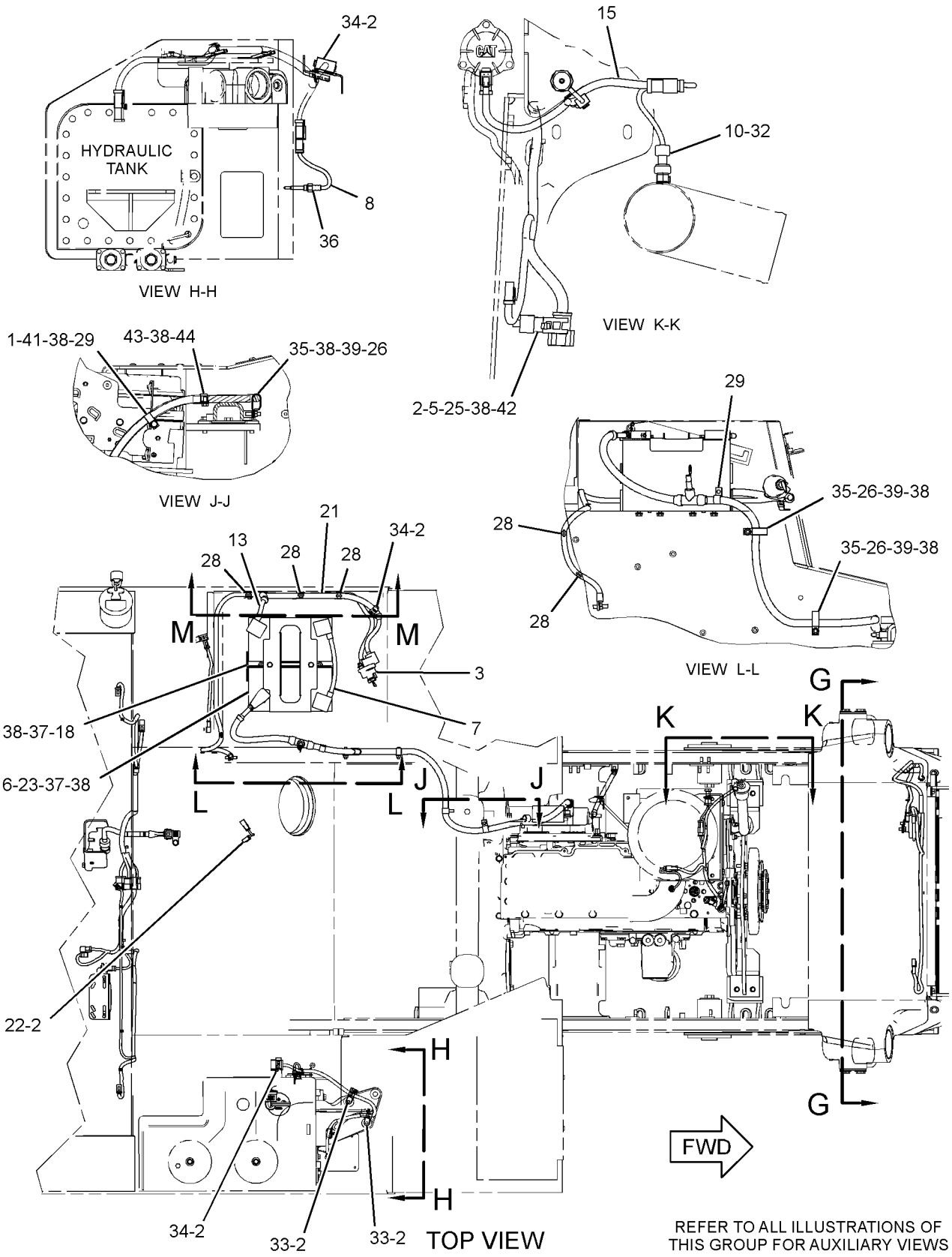

REFER TO ALL ILLUSTRATIONS OF THIS GROUP FOR AUXILIARY VIEWS

GRAPHIC #3 **<END>** g02345430

368-4241 BATTERY & WIRING GP

S/N: SMC1500-UP; GCT2000-UP
PART OF 269-2044 CHASSIS AR

SMCS-1401, 1402, 1408 **i05322974**

NOTE	REF NO	GRAPHIC REF	PART NUMBER	QTY	PART NAME 1 2 3 4 5 6 (PRODUCT LEVEL)	SEE PAGE
	1	2	**1K-4129**	1	SPACER (0.423X0.675X0.375-MM THK)	
Y	2	2	**7N-0718**	1	SWITCH GP-DISCONNECT (BATTERY)	390
	3	1	**7P-6682**	1	CABLE AS	
		1	**1S-7251**	2	TERMINAL-CABLE (00-GA, 1/2-IN SCREW)	
E		1	**5P-0747**		CABLE (00-GA, BLACK) (40-CM)	
	4	2	**8T-3518**	6	NUT-FULL (1/2-13-THD)	
	5	1	**091-9035**	1	SPACER (11X25X20-MM THK)	
	6	2	**111-7978**	1	HOLD-DOWN AS	
	7	2	**128-0314**	1	CABLE AS	
E		2	**5P-0761**		CABLE (00-GA, RED) (29-CM)	
		2	**9G-0002**	1	COVER AS-TERMINAL (RED)	
		2	**8L-8413**	1	STRAP-CABLE	
		2	**9G-0005**	1	COVER AS-TERMINAL (BLACK)	
		2	**8L-8413**	1	STRAP-CABLE	
		2	**8C-5918**	1	TERMINAL AS (NEGATIVE)	
		2	**1M-6119**	1	BOLT (5/16-18X1.375-IN)	
		2	**1M-6120**	1	NUT (5/16-18-THD)	
		2	**8T-9756**	1	TERMINAL AS (POSITIVE)	
		2	**1M-6119**	1	BOLT (5/16-18X1.375-IN)	
		2	**1M-6120**	1	NUT (5/16-18-THD)	
Y	8	1	**145-7028**	1	SENSOR GP-TEMPERATURE (HYDRAULIC OIL)	371
Y	9	1	**161-9926**	1	SENSOR GP-PRESSURE (TURBOCHARGER INLET)	361
	10	2	**172-4864**	1	GUARD AS	
	11	1	**174-7875**	1	HORN AS (24-VOLT, HIGH TONE)	
	12	1	**174-7876**	1	HORN AS (24-VOLT, LOW TONE)	
	13	2	**197-0668**	1	CABLE AS	
		2	**1S-4915**	2	LINER (CONDUIT)	
E		2	**5P-0695**		CONDUIT (61-CM)	
E		2	**5P-0747**		CABLE (00-GA, BLACK) (95-CM)	
		2	**8S-3020**	1	TERMINAL-CABLE (00-GA, 3/8-IN SCREW)	
E		2	**8T-2225**		TUBE-HEAT SHRINK (25.4-MM DIA) (16-CM)	
		2	**9G-0003**	1	COVER AS-TERMINAL (BLACK)	
		2	**8L-8413**	1	STRAP-CABLE	
		2	**8T-9757**	1	TERMINAL AS-BATTERY (NEGATIVE)	
		2	**1M-6119**	1	BOLT (5/16-18X1.375-IN)	
		2	**1M-6120**	1	NUT (5/16-18-THD)	
		2	**299-9092**	1	COVER-TERMINAL (BLACK)	
	14	2	**220-0230**	1	ALARM AS (BACKUP)	
		2	**102-8802**	1	KIT-RECEPTACLE (2-PIN)	
					(INCLUDES RECEPTACLE AS & WEDGE)	
		2	**8T-8729**	2	PIN-CONNECTOR (16-GA TO 18-GA)	
E		2	**9X-1813**		SLEEVE (29-CM)	
	15	1	**226-9670**	1	HARNESS AS-CHASSIS (RADIATOR GUARD)	
		1	**102-8803**	1	KIT-RECEPTACLE (3-PIN)	
					(INCLUDES RECEPTACLE AS & WEDGE)	
		1	**9W-0844**	8	SOCKET-CONNECTOR (14-GA TO 16-GA)	
		1	**9W-0852**	3	PIN-CONNECTOR (14-GA TO 16-GA)	
E		1	**119-3662**		TUBE-HEAT SHRINK (10.85-MM DIA) (7-CM)	
E		1	**125-7874**		TUBE-HEAT SHRINK (5.72-MM DIA) (5-CM)	
E		1	**125-7875**		TUBE-HEAT SHRINK (7.44-MM DIA) (5-CM)	
		1	**155-2270**	4	KIT-CONNECTING PLUG (2-PIN)	
					(EACH INCLUDES PLUG AS, WEDGE & INTERFACE SEAL)	
		1	**274-3774**	2	CAP-CONNECTOR	
	16	1	**226-9671**	1	HARNESS AS-HOOD	
		1	**102-8803**	1	KIT-RECEPTACLE (3-PIN)	

368-4241 **BATTERY & WIRING GP (*contd.*)** **i05322974**

NOTE	REF NO	GRAPHIC REF	PART NUMBER	QTY	PART NAME 1 2 3 4 5 6 (PRODUCT LEVEL)	SEE PAGE
		1	**102-8806**	1	KIT-RECEPTACLE (8-PIN)	
					(EACH KIT INCLUDES RECEPTACLE AS & WEDGE)	
		1	**8T-8737**	1	PLUG-SEAL	
		1	**9X-3401**	10	PIN-CONNECTOR (16-GA TO 18-GA)	
		1	**9X-3402**	6	SOCKET-CONNECTOR (16-GA TO 18-GA)	
		1	**155-2270**	3	KIT-CONNECTING PLUG (2-PIN)	
					(EACH INCLUDES PLUG AS, WEDGE & INTERFACE SEAL)	
		1	**274-3774**	1	CAP-CONNECTOR	
	17	2	**239-8155**	1	HARNESS AS-TRANSMISSION	
		2	**8T-8737**	3	PLUG-SEAL	
E		2	**114-8843**		SLEEVE-PLASTIC (20-CM)	
E		2	**125-7874**		TUBE-HEAT SHRINK (5.72-MM DIA) (10-CM)	
		2	**9X-3402**	13	SOCKET-CONNECTOR (16-GA TO 18-GA)	
		2	**154-3172**	1	PLUG AS (14-PIN)	
		2	**155-2255**	1	KIT-CONNECTING PLUG (12-PIN)	
		2	**155-2271**	1	KIT-CONNECTING PLUG (4-PIN)	
					(EACH KIT INCLUDES PLUG AS, WEDGE & INTERFACE SEAL)	
	18	2	**240-8317**	1	PLATE AS	
	19	2	**280-3554**	1	HARNESS AS-WIRING (FENDER, LH)	
		2	**102-8802**	1	KIT-RECEPTACLE (2-PIN)	
					(INCLUDES RECEPTACLE AS & WEDGE)	
E		2	**114-8843**		SLEEVE-PLASTIC (20-CM)	
E		2	**114-8845**		SLEEVE-PLASTIC (20-CM)	
		2	**9X-3402**	2	SOCKET-CONNECTOR (16-GA TO 18-GA)	
		2	**9X-3401**	2	PIN-CONNECTOR (16-GA TO 18-GA)	
					—OR—	
		2	**126-1767**	2	PIN-CONNECTOR (14-GA TO 16-GA)	
		2	**155-2270**	1	KIT-CONNECTING PLUG (2-PIN)	
					(INCLUDES PLUG AS, WEDGE & INTERFACE SEAL)	
	20	2	**290-8745**	1	CABLE AS	
		2	**1S-7252**	1	TERMINAL-CABLE (00-GA, 3/8-IN SCREW)	
E		2	**5P-0747**		CABLE (00-GA, BLACK) (190-CM)	
		2	**8S-3020**	1	TERMINAL-CABLE (00-GA, 3/8-IN SCREW)	
	21	1	**367-9066**	1	HARNESS AS-CHASSIS (FUEL TANK)	
		1	**102-8801**	1	KIT-RECEPTACLE (12-PIN)	
					(INCLUDES RECEPTACLE AS & WEDGE)	
		1	**8T-8737**	4	PLUG-SEAL	
		1	**9W-0844**	11	SOCKET-CONNECTOR (14-GA TO 16-GA)	
		1	**9W-0852**	7	PIN-CONNECTOR (14-GA TO 16-GA)	
		1	**9X-3401**	4	PIN-CONNECTOR (16-GA TO 18-GA)	
		1	**9X-3402**	4	SOCKET-CONNECTOR (16-GA TO 18-GA)	
E		1	**114-8845**		SLEEVE-PLASTIC (100-CM)	
E		1	**125-7874**		TUBE-HEAT SHRINK (5.72-MM DIA) (10-CM)	
		1	**155-2270**	2	KIT-CONNECTING PLUG (2-PIN)	
		1	**155-2271**	2	KIT-CONNECTING PLUG (4-PIN)	
		1	**155-2274**	1	KIT-CONNECTING PLUG (6-PIN)	
					(EACH KIT INCLUDES PLUG AS, WEDGE & INTERFACE SEAL)	
		1	**274-3776**	2	CAP-SEAL	
		1	**274-3777**	1	CAP-CONNECTOR	
	22	2	**368-8597**	1	CABLE AS	
		2	**1S-4915**	4	LINER (CONDUIT)	
		2	**1S-7251**	1	TERMINAL-CABLE (00-GA, 1/2-IN SCREW)	
		2	**1S-7252**	1	TERMINAL-CABLE (00-GA, 3/8-IN SCREW)	
E		2	**5P-0695**		CONDUIT (100-CM)	
E		2	**5P-0761**		CABLE (00-GA, RED) (132-CM)	
		2	**8N-0869**	2	COVER-TERMINAL (RED)	
		2	**8N-1725**	1	COVER AS-TERMINAL (RED)	
		2	**8L-8413**	1	STRAP-CABLE	

368-4241 **BATTERY & WIRING GP (*contd.*)** **i05322974**

NOTE	REF NO	GRAPHIC REF	PART NUMBER	QTY	PART NAME 1 2 3 4 5 6 (PRODUCT LEVEL)	SEE PAGE
E		2	**8T-2225**		TUBE-HEAT SHRINK (25.4-MM DIA) (16-CM)	
		2	**3S-6049**	1	TERMINAL AS-BATTERY (POSITIVE)	
		2	**1M-6119**	1	BOLT (5/16-18X1.375-IN)	
		2	**1M-6120**	1	NUT (5/16-18-THD)	
	23	2	**368-8598**	1	CABLE AS	
		2	**1S-4915**	2	LINER (CONDUIT)	
E		2	**5P-0695**		CONDUIT (79-CM)	
E		2	**8T-2225**		TUBE-HEAT SHRINK (25.4-MM DIA) (16-CM)	
		2	**9X-9825**	1	TERMINAL-CABLE (00-GA, 1/2-IN SCREW)	
E		2	**159-8049**		CABLE (00-GA, RED) (111-CM)	
	24	2	**115-2422**	2	BATTERY GP (12-VOLT, MAINTENANCE FREE, WET)	
					(EACH INCLUDES)	
		2	**123-1373**	6	CAP AS-FILLER (BATTERY)	
	25	2	**130-5300**	2	CLIP	
	26	1	**132-5789**	1	CLIP	
M	27	2	**133-7810**	4	STUD-TAPERLOCK (M10X1.5X45-MM)	
	28	2	**193-3973**	10	STRAP-CABLE	
	29	2	**1S-0994**	2	CLIP	
	30	2	**1S-1015**	3	CLIP	
Y	31	1	**282-2586**	1	SWITCH GP-PUSH BUTTON (FUEL PRIMING PUMP)	396
	32	1	**3J-7354**	1	SEAL-O-RING	
	33	1,2	**4P-7581**	4	CLIP	
	34	1,2	**4P-8134**	3	CLIP	
	35	2	**6D-4247**	1	CLIP	
	36	2	**7F-0560**	6	WASHER (0.516X0.938X0.101-IN THK)	
	37	1	**7J-0204**	1	SEAL-O-RING	
	38	1,2	**7K-1181**	66	STRAP-CABLE	
	39	2	**8C-6358**	1	BLOCK AS-JUNCTION (BATTERY)	
		2	**1D-5117**	3	NUT-JAM (1/2-13-THD)	
		2	**8T-3519**	3	BOLT-BRONZE (1/2-13X2-IN)	
M	40	2	**8T-0722**	10	BOLT-LOCKING (M10X1.5X30-MM)	
	41	1,2	**8T-4121**	23	WASHER-HARD (11X21X2.5-MM THK)	
M	42	2	**8T-4133**	4	NUT (M10X1.5-THD)	
M	43	2	**8T-4136**	1	BOLT (M10X1.5X25-MM)	
M	44	1,2	**8T-4137**	6	BOLT (M10X1.5X20-MM)	
M	45	2	**8T-4139**	2	BOLT (M12X1.75X30-MM)	
M	46	2	**8T-4195**	1	BOLT (M10X1.5X30-MM)	
M	47	1	**8T-4196**	1	BOLT (M10X1.5X35-MM)	
	48	2	**8T-4223**	2	WASHER-HARD (13.5X25.5X3-MM THK)	

E - ORDER BY THE CENTIMETER
M - METRIC PART
Y - SEPARATE ILLUSTRATION

368-4241 **BATTERY & WIRING GP (*contd.*)** **i05322974**

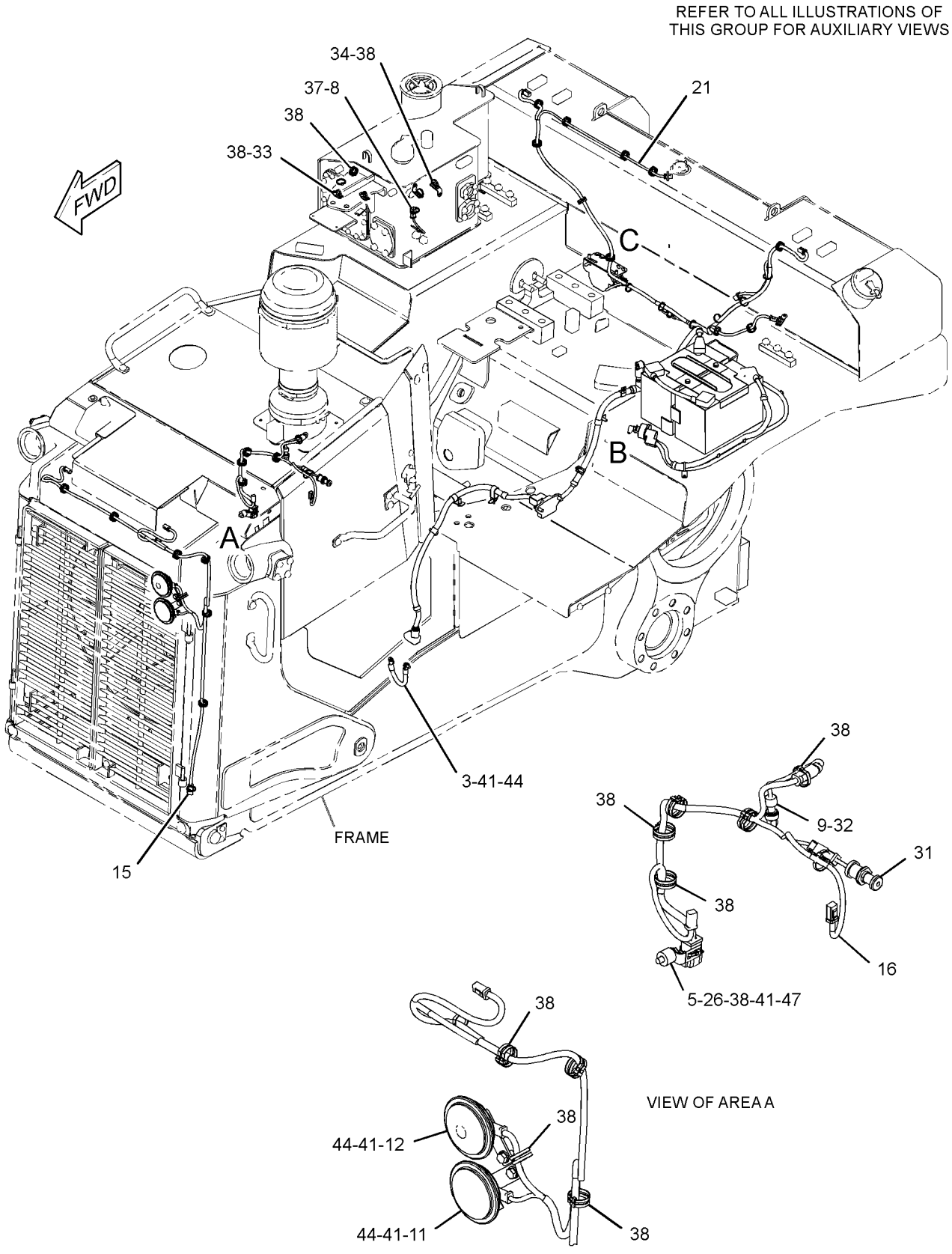

GRAPHIC #1

g03340063

368-4241 **BATTERY & WIRING GP (*contd.*)** **i05322974**

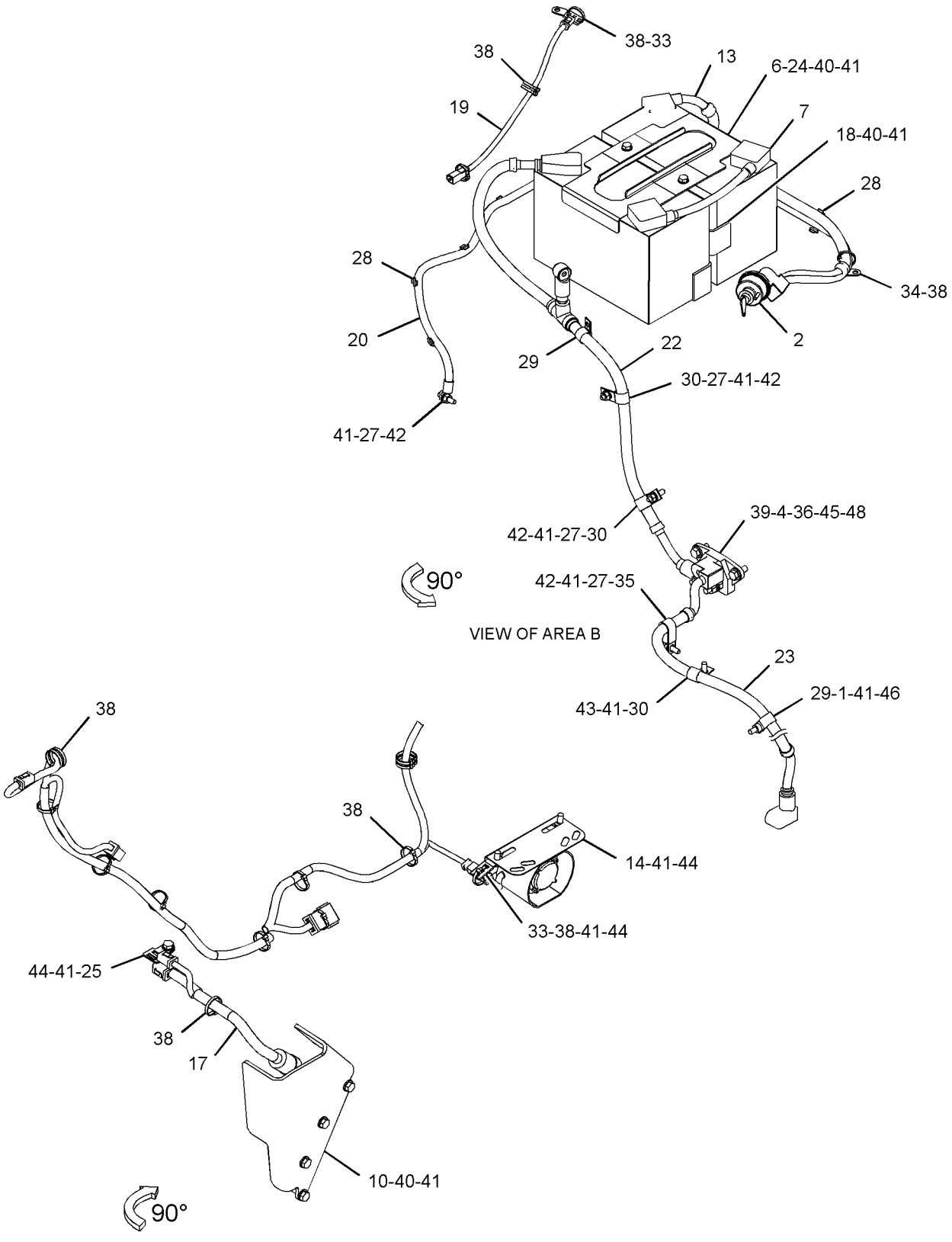

GRAPHIC #2 **<END>** g03340069

292-0294 CABLE AS-COILED—LASER RECEIVER

S/N: SMC1-UP; GCT1-UP
FOR USE WITH GRADE CONTROL
FIELD INSTALLATION

SMCS-1408 **i05350418**

NOTE	REF NO	GRAPHIC REF	PART NUMBER	QTY	PART NAME 1 2 3 4 5 6 (PRODUCT LEVEL)	SEE PAGE
	1	1	**311-4863**	1	CABLE AS-COILED (MAST)	

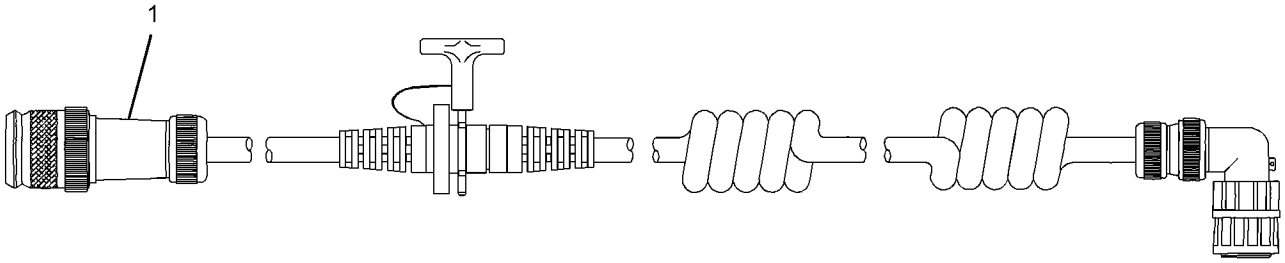

GRAPHIC #1 **<END>** g01458178

281-3175 CAMERA AR–REAR

S/N: SMC1-UP; GCT1-UP

FOR USE WITH 235-6338–PAGE: 310, 235-6339–PAGE: 313, 235-6340–PAGE: 316, 263-7419–PAGE: 320

CANNOT BE USED WITH 283-0581–PAGE: 1021, 283-2442–PAGE: 276, 213-7064–PAGE: 1154

AN ATTACHMENT

TYPE 1

SMCS-7348 **i04041895**

NOTE	REF NO	GRAPHIC REF	PART NUMBER	QTY	PART NAME 1 2 3 4 5 6 (PRODUCT LEVEL)	SEE PAGE
	1	1	**248-6974**	1	PLATE AS	
	2	1	**248-6979**	1	BRACKET AS	
J	3	1	**347-1668**	1	CAMERA GP (115-DEG, COLOR)	
	4	1	**251-8248**	1	CABLE AS-COMMUNICATION (5-M)	
	5	1	**261-3223**	1	CABLE AS-COMMUNICATION (3-M)	
Y	6	1	**261-3226**	1	DISPLAY GP-CAMERA (WORK AREA VISUAL SYSTEM)	1055
	7	1	**281-3174**	1	HARNESS AS-CONTROL	
		1	**102-8802**	2	KIT-RECEPTACLE (2-PIN)	
					(EACH INCLUDES RECEPTACLE AS & WEDGE)	
		1	**155-2270**	2	KIT-CONNECTING PLUG (2-PIN)	
		1	**155-2274**	1	KIT-CONNECTING PLUG (6-PIN)	
					(EACH INCLUDES PLUG AS, WEDGE, & INTERFACE SEAL)	
	8	1	**281-3176**	1	SHROUD AS-FRONT	
		1	**170-5849**	1	SHROUD AS	
B	9	1	**4H-2558**	1	GROMMET	
	10	1	**4P-8134**	1	CLIP	
	11	1	**5F-9757**	1	GROMMET	
	12	1	**7X-7729**	2	WASHER (11X25X3-MM THK)	
M	13	1	**8T-4136**	2	BOLT (M10X1.5X25-MM)	
M	14	1	**8T-4971**	4	BOLT (M6X1X30-MM)	
	15	1	**9X-8256**	4	WASHER (6.6X12X2-MM THK)	
B	16	1	**7K-1181**	22	STRAP-CABLE	
	17	1	**2M-3432**	1	GROMMET	
					AVAILABLE REPAIR KIT(S):	
J			**251-4162**	1	KIT-BRACKET (CAMERA)	
					(INCLUDES BRACKET, BOLTS, LOCKNUTS, GASKET, & ALLENKEY)	

B - USE AS REQUIRED
J - KIT MARKED J SERVICES PART(S) MARKED J
M - METRIC PART
Y - SEPARATE ILLUSTRATION

281-3175 **CAMERA AR (*contd.*)** **i04041895**

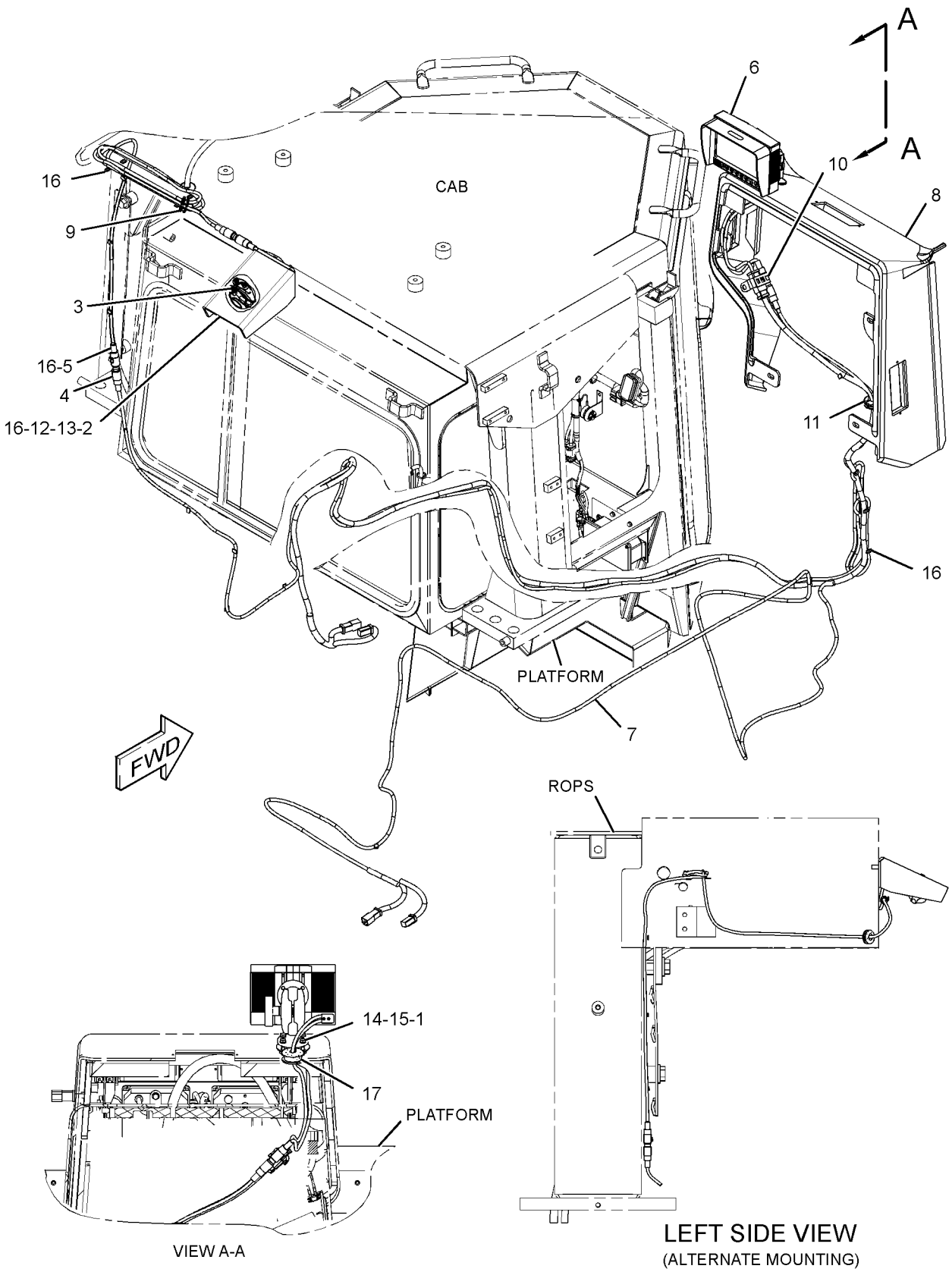

GRAPHIC #1 **<END>** g01313718

281-3175 CAMERA AR–REAR

S/N: SMC1-UP; GCT1-UP

FOR USE WITH 235-6338–PAGE: 310, 235-6339–PAGE: 313, 235-6340–PAGE: 316, 263-7419–PAGE: 320

CANNOT BE USED WITH 283-0581–PAGE: 1021, 283-2442–PAGE: 276, 213-7064–PAGE: 1154

AN ATTACHMENT

TYPE 2

SMCS-7348 **i05223534**

NOTE	REF NO	GRAPHIC REF	PART NUMBER	QTY	PART NAME 1 2 3 4 5 6 (PRODUCT LEVEL)	SEE PAGE
	1	1	**248-6974**	1	PLATE AS	
	2	1	**248-6979**	1	BRACKET AS	
J	3	1	**347-1668**	1	CAMERA GP (115-DEG, COLOR)	
	4	1	**251-8248**	1	CABLE AS-COMMUNICATION (5-M)	
	5	1	**261-3223**	1	CABLE AS-COMMUNICATION (3-M)	
CY	6	1	**344-2732**	1	DISPLAY GP-CAMERA (WORK AREA VISUAL SYSTEM)	1056
	7	1	**281-3174**	1	HARNESS AS-CONTROL	
		1	**102-8802**	2	KIT-RECEPTACLE (2-PIN)	
					(EACH INCLUDES RECEPTACLE AS & WEDGE)	
		1	**8T-8729**	4	PIN-CONNECTOR (16-GA TO 18-GA)	
		1	**8T-8730**	7	SOCKET-CONNECTOR (16-GA TO 18-GA)	
		1	**8T-8737**	3	PLUG-SEAL	
E		1	**125-7875**		TUBE-HEAT SHRINK (7.44-MM DIA) (15-CM)	
		1	**155-2270**	2	KIT-CONNECTING PLUG (2-PIN)	
		1	**155-2274**	1	KIT-CONNECTING PLUG (6-PIN)	
					(EACH PLUG KIT INCLUDES PLUG AS, WEDGE & INTERFACE SEAL)	
	8	1	**281-3176**	1	SHROUD AS-FRONT	
		1	**170-5849**	1	SHROUD AS	
B	9	1	**4H-2558**	1	GROMMET	
	10	1	**4P-8134**	1	CLIP	
	11	1	**5F-9757**	1	GROMMET	
	12	1	**7X-7729**	2	WASHER (11X25X3-MM THK)	
M	13	1	**8T-4136**	2	BOLT (M10X1.5X25-MM)	
M	14	1	**8T-4971**	4	BOLT (M6X1X30-MM)	
	15	1	**9X-8256**	4	WASHER (6.6X12X2-MM THK)	
B	16	1	**7K-1181**	22	STRAP-CABLE	
	17	1	**2M-3432**	1	GROMMET	
					AVAILABLE REPAIR KIT(S):	
J			**251-4162**	1	KIT-BRACKET (CAMERA)	
					(INCLUDES BRACKET, BOLTS, LOCKNUTS, GASKET, & ALLEN KEY)	

B - USE AS REQUIRED
C - CHANGE FROM PREVIOUS TYPE
E - ORDER BY THE CENTIMETER
J - KIT MARKED J SERVICES PART(S) MARKED J
M - METRIC PART
Y - SEPARATE ILLUSTRATION

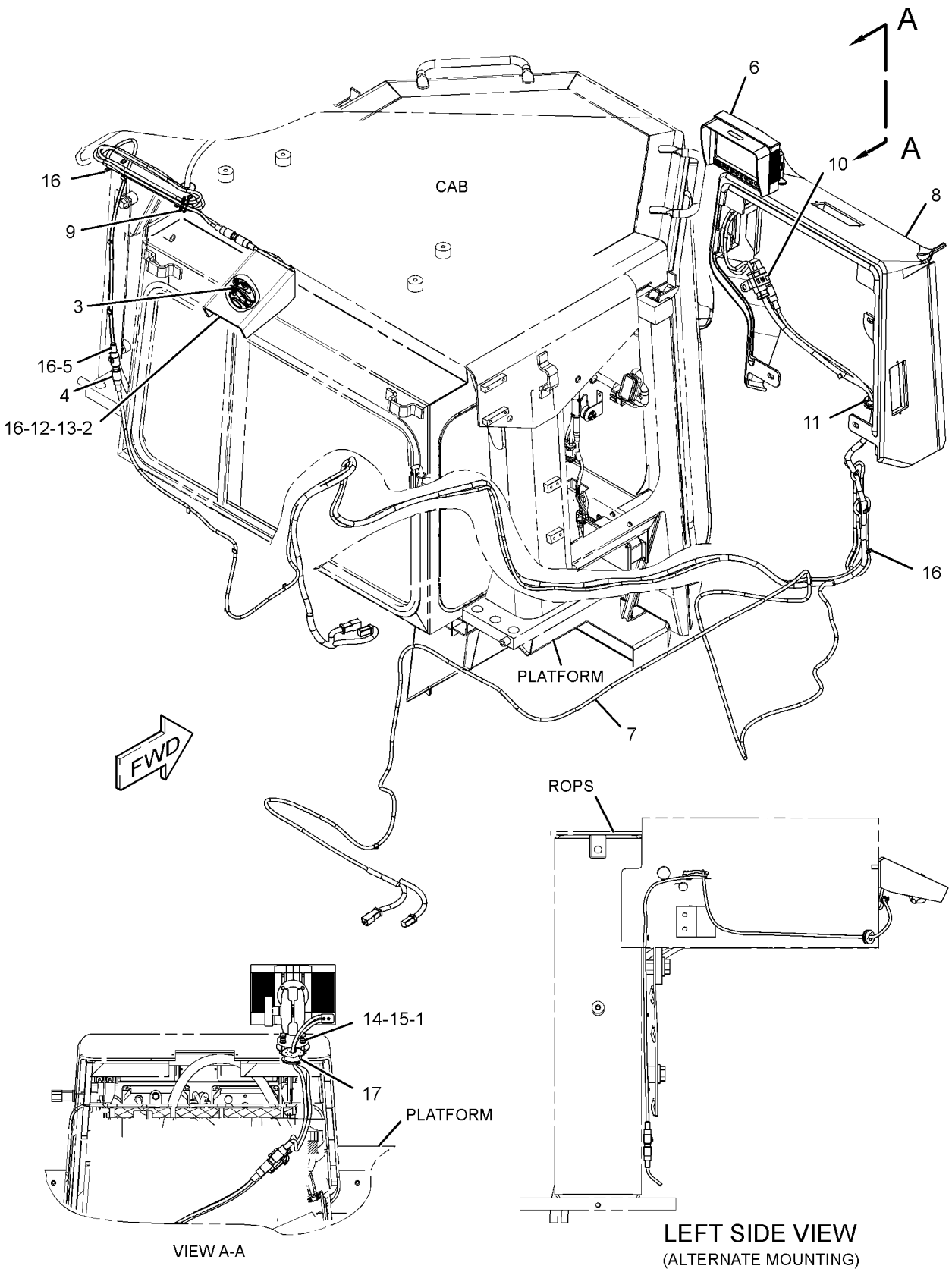

GRAPHIC #1 **<END>** g02346062

231-1972 CONTROL & MTG GP-ENGINE ELEK

S/N: THX8900-UP

PART OF 282-3828, 282-3829, 282-3830 ENGINE AR-CORE

ALSO AN ATTACHMENT

SMCS-1901, 7620

i04034856

NOTE	REF NO	GRAPHIC REF	PART NUMBER	QTY	PART NAME 1 2 3 4 5 6 (PRODUCT LEVEL)	SEE PAGE
	1	1	**8T-9655**	8	MOUNT-ISOLATION	
	2	1	**101-3128**	4	SPACER-SPECIAL	
M	3	1	**143-9392**	1	STUD (M8X1.25-THD)	
Y	4	1	*226-7473*	1	CONTROL GP-ENGINE ELECTRONIC	270
	6	1	**233-0891**	1	BRACKET AS	
M		1	**232-1693**	1	BOLT-FLANGE HEAD (M6X1X35-MM)	
M	7	1	**6V-9804**	3	BOLT (M8X1.25X75-MM)	
	8	1	**9M-1974**	4	WASHER-HARD (8.8X16X2-MM THK)	
	9	1	**9N-0869**	4	WASHER-HARD (8.8X25.5X2-MM THK)	

M - METRIC PART
Y - SEPARATE ILLUSTRATION

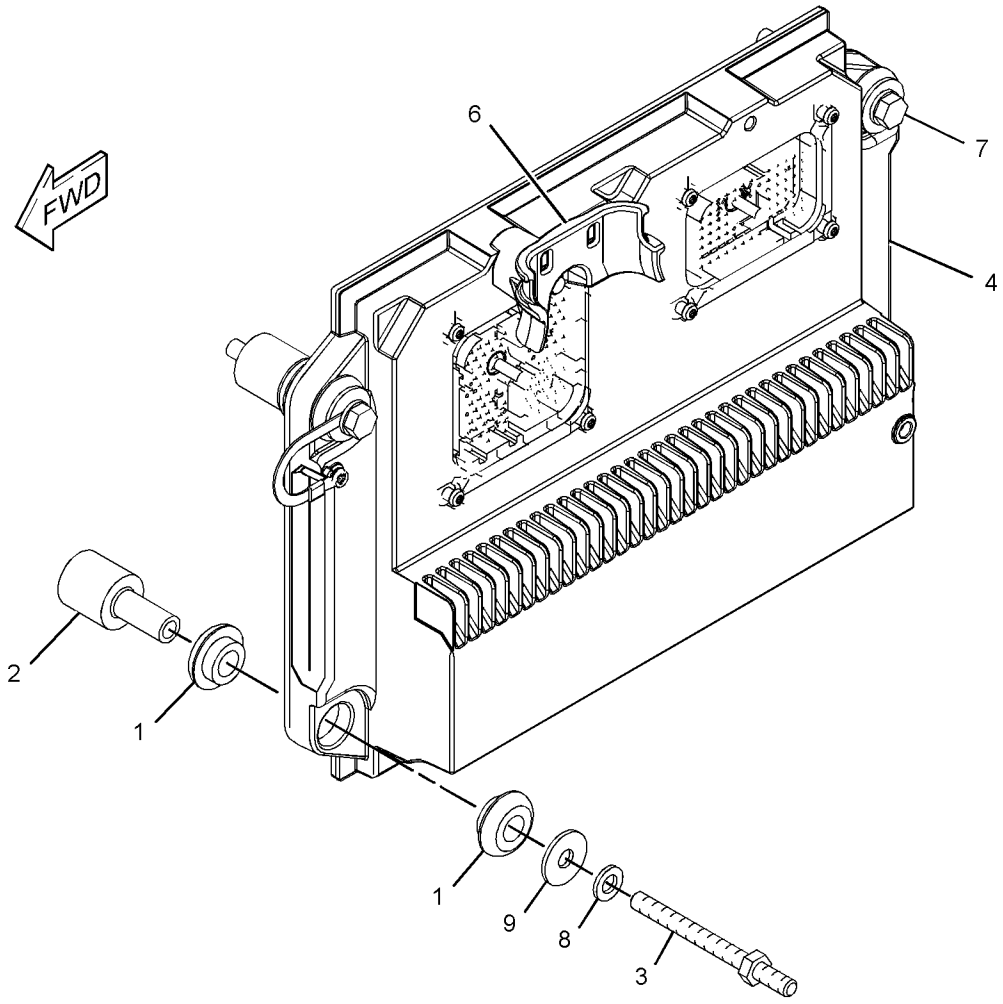

GRAPHIC #1

<END>

g01173166

246-9365 CONTROL & MTG GP-ENGINE ELEK

S/N: TXD1-UP; THX8900-UP

PART OF 282-3825, 282-3826, 301-5768 ENGINE AR, 387-8574, 387-8575, 387-8576, 387-8580, 398-6424 ENGINE AR-COMPLETE, 282-3827, 282-3828, 282-3829, 282-3830, 301-5769 ENGINE AR-CORE

ALSO AN ATTACHMENT

SMCS-1901, 7620 **i04148491**

NOTE	REF NO	GRAPHIC REF	PART NUMBER	QTY	PART NAME 1 2 3 4 5 6 (PRODUCT LEVEL)	SEE PAGE
	1	1	**8T-9655**	8	MOUNT-ISOLATION	
	2	1	**101-3128**	4	SPACER-SPECIAL	
M	3	1	**143-9392**	4	STUD (M8X1.25-THD)	
Y	4	1	*226-7473*	1	CONTROL GP-ENGINE ELECTRONIC	270
	6	1	**233-0891**	1	BRACKET AS	
M		1	**232-1693**	1	BOLT-FLANGE HEAD (M6X1X35-MM)	
	7	1	**9M-1974**	4	WASHER-HARD (8.8X16X2-MM THK)	
	8	1	**9N-0869**	4	WASHER-HARD (8.8X25.5X2-MM THK)	

M - METRIC PART
Y - SEPARATE ILLUSTRATION

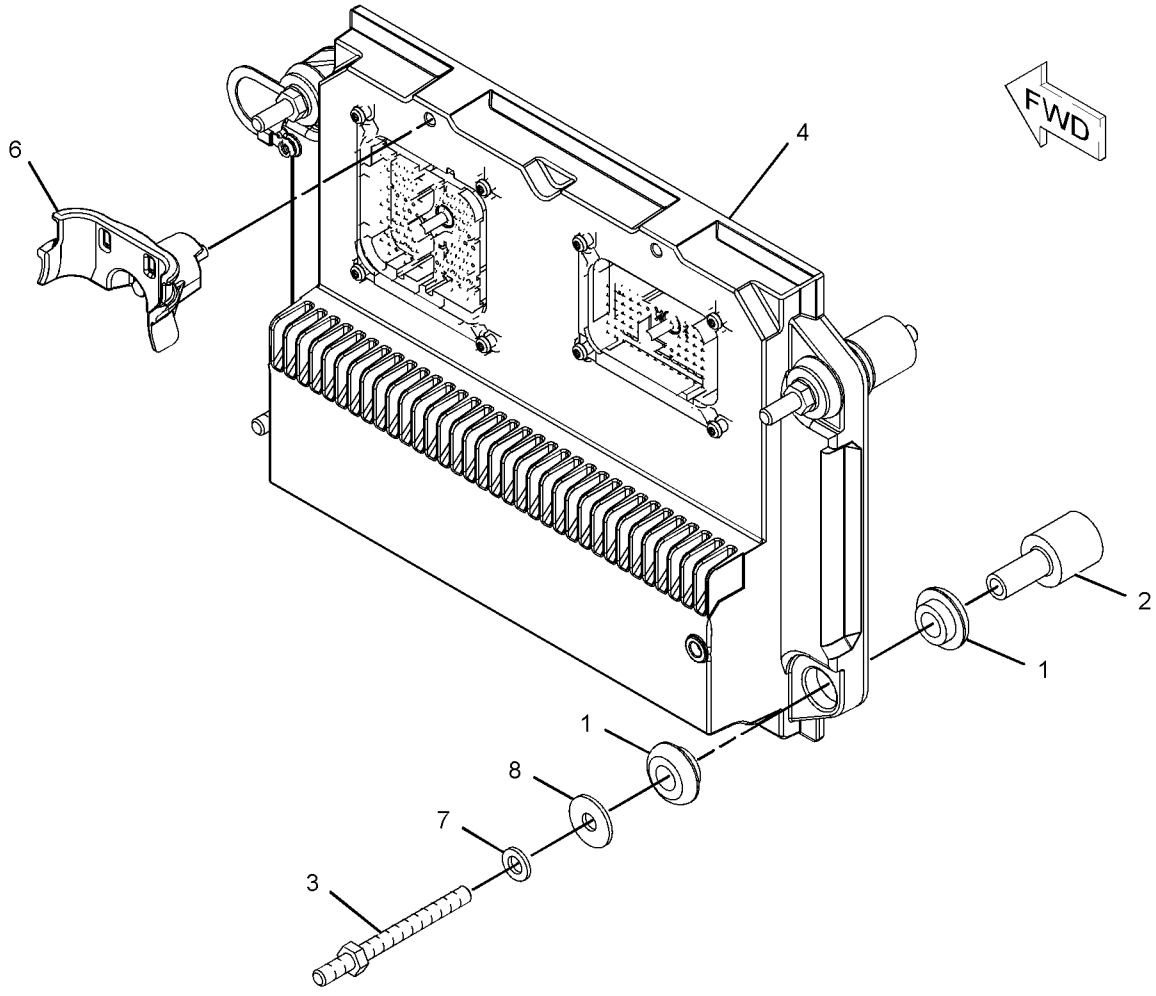

GRAPHIC #1 **<END>** g01131857

344-3393 CONTROL GP-COMMUNICATION–PRODUCT LINK 321SR

S/N: SMC226-UP; GCT322-UP

PART OF 282-8483, 368-4237 INSTALLATION GP-COMMUNICATION

AN ATTACHMENT

SMCS-7610, 7620

i03982409

NOTE	PART NUMBER	QTY	PART NAME 1 2 3 4 5 6 (PRODUCT LEVEL)	SEE PAGE
Y	*262-1421*	1	ELECTRONICS GP-COMMUNICATION (PRODUCT LINK 300)	275
Y	**336-3545**	1	RADIO GP-COMMUNICATION (PRODUCT LINK 121SR)	352

Y - SEPARATE ILLUSTRATION

<END>

226-7473 CONTROL GP-ENGINE ELECTRONIC

S/N: TXD1-UP; THX8900-UP

PART OF 231-1972, 246-9365 CONTROL & MTG GP-ENGINE ELEK

ALSO AN ATTACHMENT

SMCS-1901 **i04453658**

NOTE	REF NO	GRAPHIC REF	PART NUMBER	QTY	PART NAME 1 2 3 4 5 6 (PRODUCT LEVEL)	SEE PAGE
	1	1	**372-2905**	1	CONTROL GP-ELECTRONIC (ENGINE)	

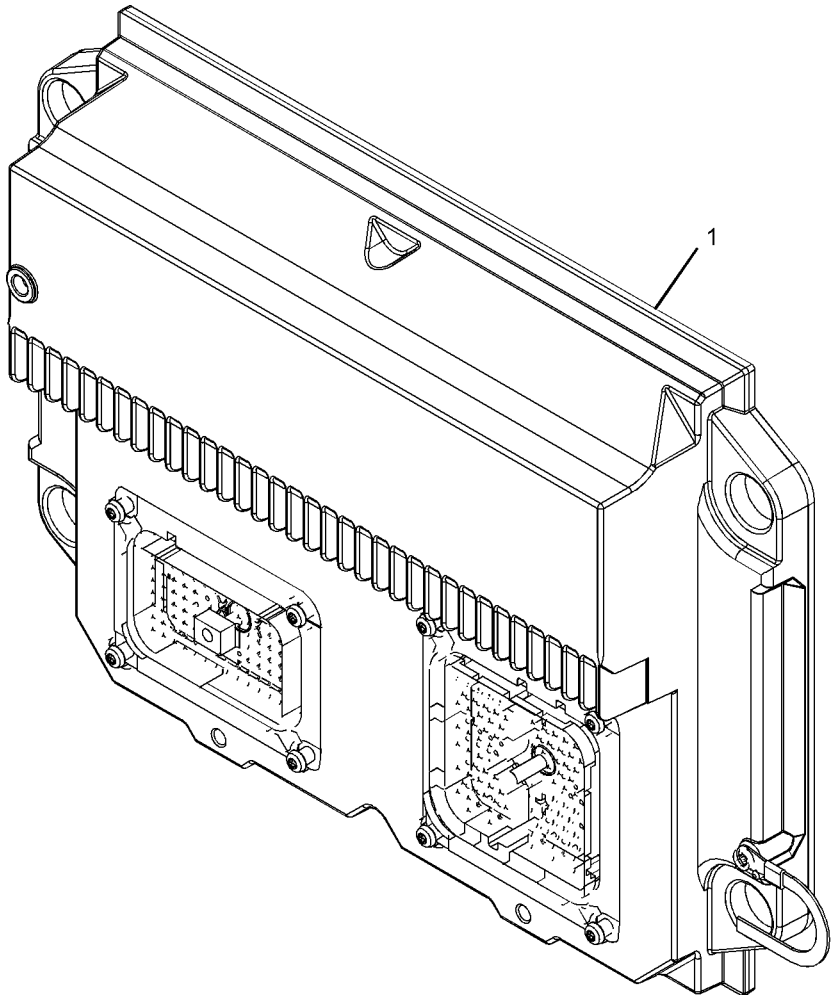

GRAPHIC #1 **<END>** g01101798

351-8490 CONTROL GP-UNPROGRAMMED–PRODUCT LINK 522

S/N: SMC1500-UP; GCT2000-UP

PART OF 368-4236 INSTALLATION GP-COMMUNICATION

AN ATTACHMENT

SMCS-7610 **i04925968**

NOTE	REF NO	GRAPHIC REF	PART NUMBER	QTY	PART NAME 1 2 3 4 5 6 (PRODUCT LEVEL)	SEE PAGE
	1	1	**346-7763**	1	COVER AS	
	2	1	**351-8488**	1	CARD-MEMORY (SUBSCRIBER IDENTITY MODULE)	
	3	1	**7X-6315**	1	STRAP AS-GROUND	
	4	1	**342-9022**	4	SCREW-PAN HEAD (M2.5X0.45-THD)	
	5	1	**342-9290**	1	SCREW-PAN HEAD (M4X0.7-THD)	
	6	1	**134-4126**	1	WASHER (4.52X8.28X0.76-MM THK)	
F			**382-5982**	1	SOFTWARE GP-ELECTRONIC	

F - NOT SHOWN

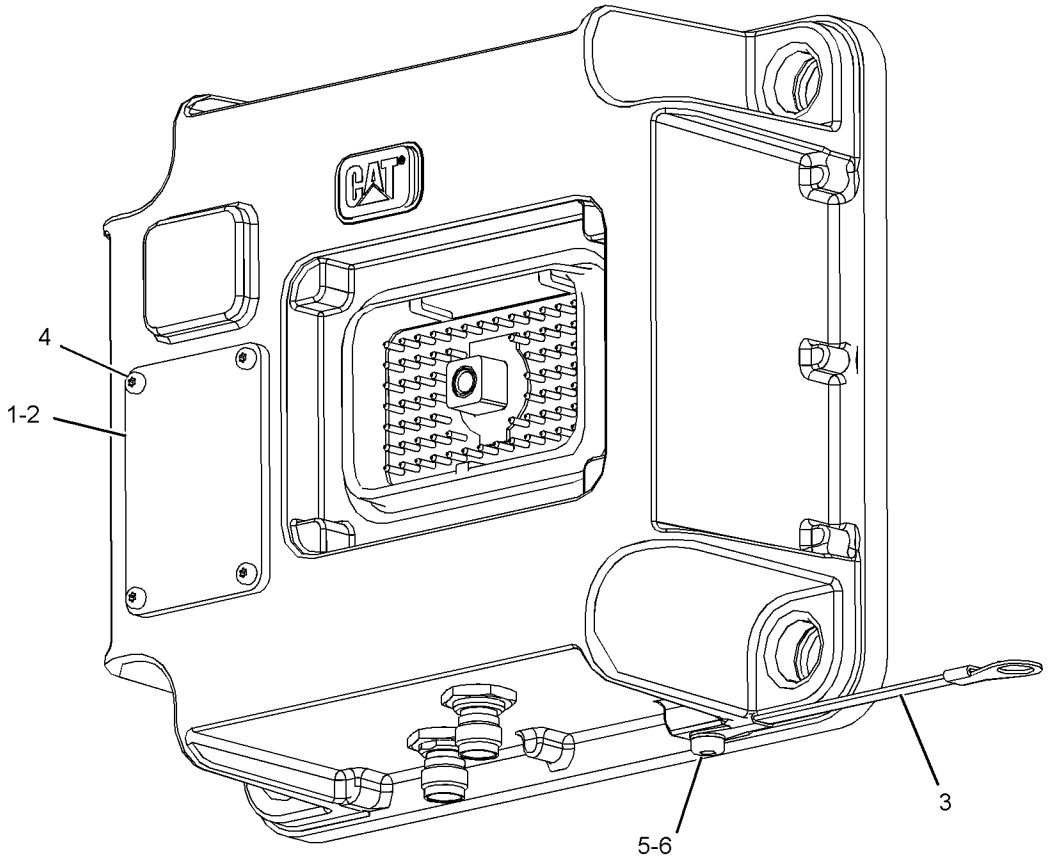

GRAPHIC #1 **<END>** g02330133

227-1226 CONVERTER GP-ELECTRICAL

S/N: SMC1-UP; GCT1-UP
20-AMP, 12-VOLT
PART OF 354-3551 CAB AR
AN ATTACHMENT

SMCS-1421 **i02456024**

NOTE	REF NO	GRAPHIC REF	PART NUMBER	QTY	PART NAME 1 2 3 4 5 6 (PRODUCT LEVEL)	SEE PAGE
	1	1	**239-3902**	1	CONVERTER-ELECTRICAL (24-VOLT TO 12-VOLT)	
	2	1	**242-1585**	1	HARNESS AS-POWER (ELECTRICAL CONVERTER)	
		1	**177-9653**	1	KIT-RECEPTACLE (4-PIN)	
					(INCLUDES RECEPTACLE AS & WEDGE)	
		1	**155-2274**	1	KIT-CONNECTING PLUG (6-PIN)	
					(INCLUDES PLUG AS, WEDGE, & INTERFACE SEAL)	
		1	**177-9656**	3	KIT-CONNECTING PLUG (4-PIN)	
					(EACH INCLUDES PLUG AS, WEDGE, & INTERFACE SEAL)	
	3	1	**7K-1181**	2	STRAP-CABLE	
M	4	1	**8T-0267**	4	BOLT-SOCKET HEAD (M6X1X12-MM)	
	5	1	**9X-8256**	4	WASHER (6.6X12X2-MM THK)	

M - METRIC PART

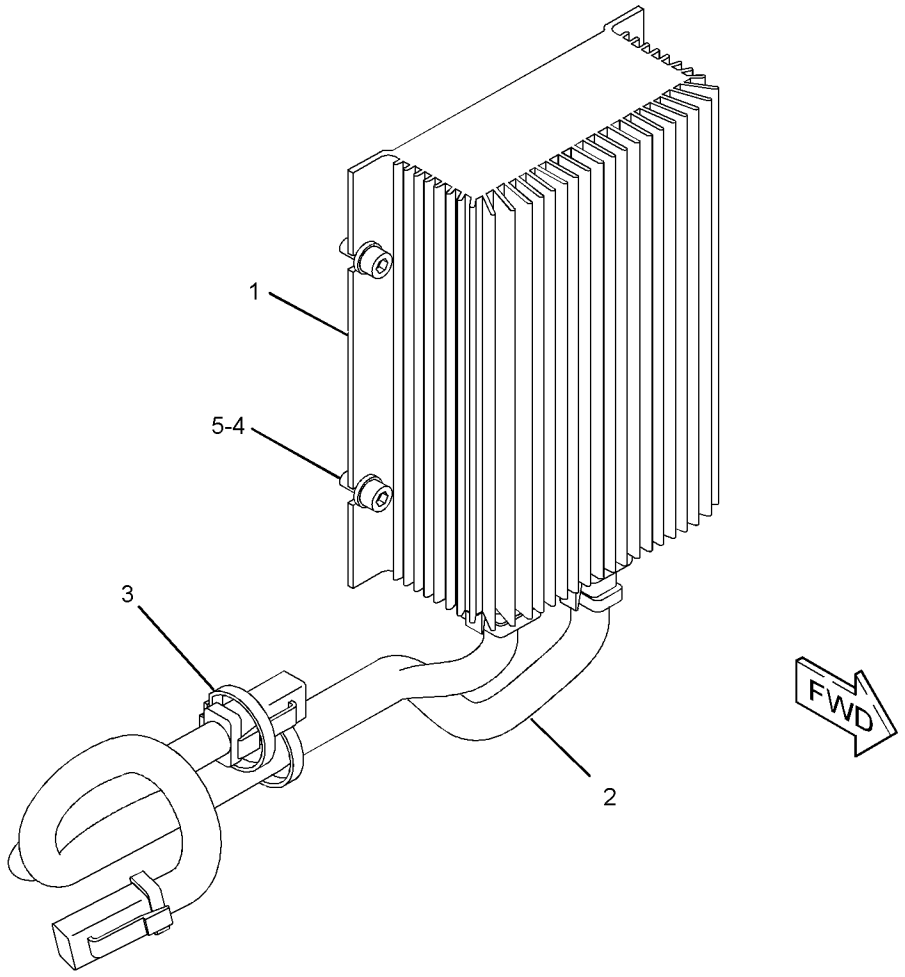

GRAPHIC #1 **<END>** g01214276

380-9866 CONVERTER GP-ELECTRICAL

S/N: SMC1500-UP; GCT2000-UP
10-AMP, 12-VOLT
PART OF 354-3551 CAB AR
AN ATTACHMENT

SMCS-1421 **i05308087**

NOTE	REF NO	GRAPHIC REF	PART NUMBER	QTY	PART NAME 1 2 3 4 5 6 (PRODUCT LEVEL)	SEE PAGE
	1	1	**380-9867**	1	HARNESS AS-POWER (CONVERTER)	
		1	**155-2271**	1	KIT-CONNECTING PLUG (4-PIN)	
		1	**155-2274**	1	KIT-CONNECTING PLUG (6-PIN)	
					(EACH PLUG KIT INCLUDES PLUG AS, WEDGE & INTERFACE SEAL)	
		1	**102-8803**	1	KIT-RECEPTACLE (3-PIN)	
		1	**197-7565**	1	KIT-RECEPTACLE (4-PIN)	
					(EACH RECEPTACLE KIT INCLUDES RECEPTACLE AS & WEDGE)	
		1	**9W-0852**	5	PIN-CONNECTOR (14-GA TO 16-GA)	
		1	**9X-3401**	1	PIN-CONNECTOR (16-GA TO 18-GA)	
		1	**8T-8737**	5	PLUG-SEAL	
		1	**9W-0844**	5	SOCKET-CONNECTOR (14-GA TO 16-GA)	
		1	**9X-3402**	1	SOCKET-CONNECTOR (16-GA TO 18-GA)	
	2	1	**380-9869**	1	PLATE AS	
	3	1	**340-7161**	1	CONVERTER-POWER (24-VOLT TO 12-VOLT)	
M	4	1	**8C-4982**	2	BOLT-SOCKET HEAD (M4X0.7X20-MM)	
	5	1	**8T-0328**	2	WASHER-HARD (5.5X10X1-MM THK)	
	6	1	**8T-4121**	2	WASHER-HARD (11X21X2.5-MM THK)	
M	7	1	**8T-4137**	2	BOLT (M10X1.5X20-MM)	

M - METRIC PART

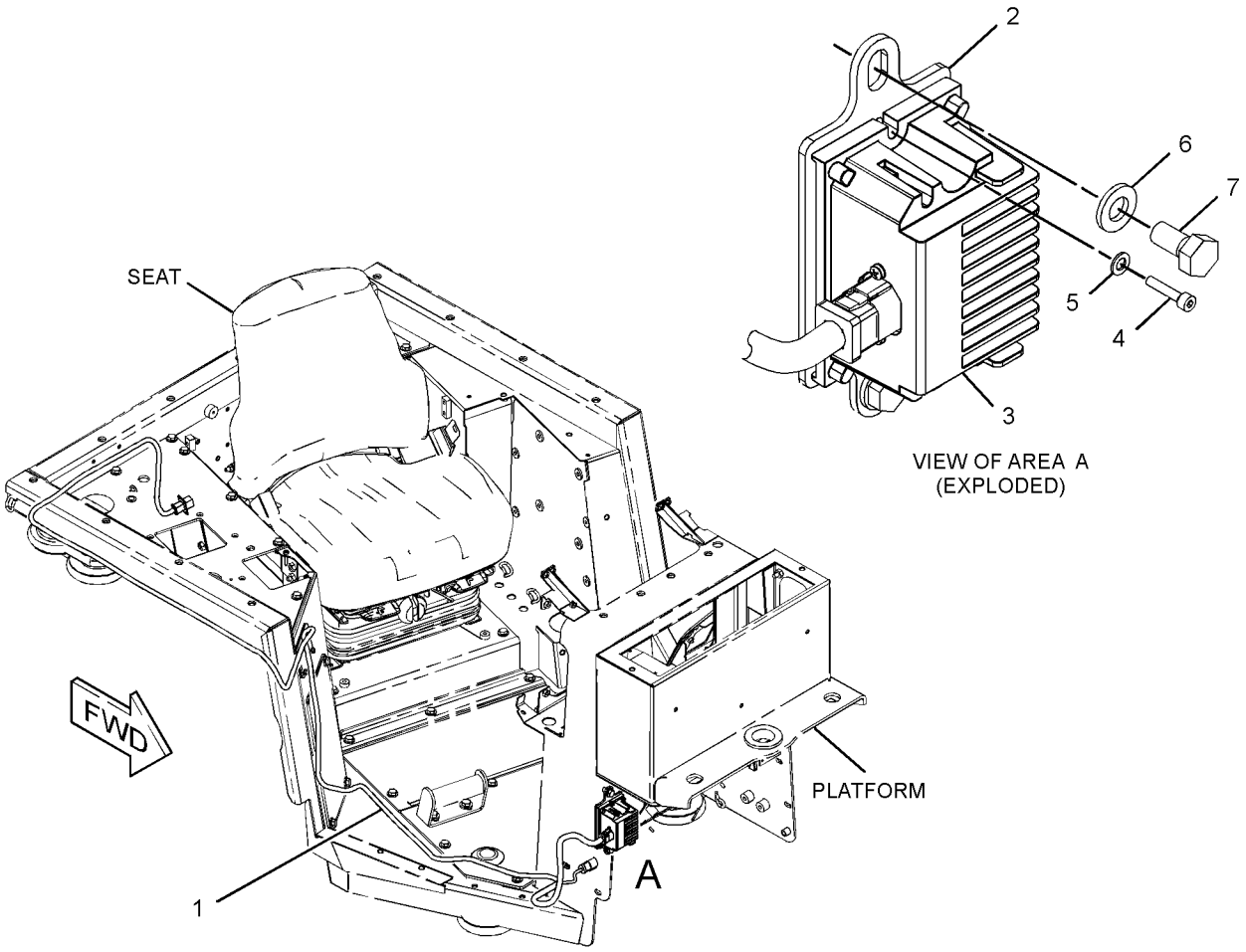

GRAPHIC #1 **<END>** g03368803

279-8995 ELECTRONICS AR-MACHINE

S/N: SMC1-UP; GCT1-UP
PART OF 269-2037, 269-2038 GENERAL AR

SMCS-7610, 7620 **i02755535**

NOTE	PART NUMBER	QTY	PART NAME 1 2 3 4 5 6 (PRODUCT LEVEL)	SEE PAGE
Y	*288-2502*	1	ELECTRONICS GP-MONITOR	275
Y	*288-2501*	1	ELECTRONICS GP-POWER TRAIN	276

Y - SEPARATE ILLUSTRATION

<END>

262-1421 ELECTRONICS GP-COMMUNICATION—PRODUCT LINK 300

S/N: SMC1-UP; GCT1-UP
PART OF 344-3393 CONTROL GP-COMMUNICATION, 282-8483, 282-8484 INSTALLATION GP-COMMUNICATION
AN ATTACHMENT

SMCS-7606, 7610, 7620 **i04660830**

NOTE	PART NUMBER	QTY	PART NAME 1 2 3 4 5 6 (PRODUCT LEVEL)	SEE PAGE
	384-6463	1	SOFTWARE GP-COMMUNICATION (PRODUCT LINK 300)	
			-OR-	
	386-3993	1	SERVICE GP-COMMUNICATION (PRODUCT LINK 300)	
			(OPTIONAL SERVICE REPLACEMENT)(INCLUDES CONTROL GP & SOFTWARE)	
	7X-6315	1	STRAP AS-GROUND	
	126-7574	1	SCREW-PAN HEAD (8-32X9.52-MM)	
	134-4126	1	WASHER (4.52X8.28X0.76-MM THK)	

<END>

307-1613 ELECTRONICS GP-MACHINE—GRADE CONTROL

S/N: GCT1-UP
FIELD INSTALLATION

SMCS-7610, 7620 **i02864296**

NOTE	PART NUMBER	QTY	PART NAME 1 2 3 4 5 6 (PRODUCT LEVEL)	SEE PAGE
	264-3177	1	CONFIGURATION-PREMIUM	
			(DLR INSTALL CONFIG: SEE IRM: EES03-01)	

<END>

288-2502 ELECTRONICS GP-MONITOR

S/N: SMC1-UP; GCT1-UP
PART OF 279-8995 ELECTRONICS AR-MACHINE

SMCS-7490, 7601, 7603, 7610, 7620 **i05215164**

NOTE	PART NUMBER	QTY	PART NAME 1 2 3 4 5 6 (PRODUCT LEVEL)	SEE PAGE
	323-1271	1	SOFTWARE GP-MONITOR	
			-OR-	
	323-1272	1	SERVICE GP-MONITOR	
			(OPTIONAL SERVICE REPLACEMENT)(INCLUDES CONTROL GP & SOFTWARE)	

<END>

288-2501 ELECTRONICS GP-POWER TRAIN

S/N: SMC1-UP; GCT1-UP

PART OF 279-8995 ELECTRONICS AR-MACHINE

SMCS-4800, 4808, 7610, 7620 **i05221189**

NOTE	PART NUMBER	QTY	PART NAME 1 2 3 4 5 6 (PRODUCT LEVEL)	SEE PAGE
	380-2369	1	SOFTWARE GP-POWER TRAIN	

<END>

283-2442 GRADE CONTROL AR—GRADE CONTROL LASER

S/N: SMC1-UP; GCT1-UP

FOR USE WITH 277-8761—PAGE: 826, 277-8760—PAGE: 826, TRACTORS WITH REAR HYDRAULICS, TRACTORS WITHOUT REAR HYDRAULICS, MOUNTING GP-KIT (BLADE SPECIFIC), CONTROL AR-HYDRAULIC

CANNOT BE USED WITH DISPOSAL AR, CANOPY AR

AN ATTACHMENT

SMCS-7220 **i05191667**

NOTE	PART NUMBER	QTY	PART NAME 1 2 3 4 5 6 (PRODUCT LEVEL)	SEE PAGE
Y	*239-5120*	1	MOUNTING GP-GRADE CONTROL (CAB)	341
Y	*252-6945*	1	MOUNTING GP-MONITOR (GRADE CONTROL)	1124
Y	*283-1231*	1	WIRING GP-GRADE CONTROL	412
			S/N: SMC1-643 ; GCT1-1163	
Y	*368-4249*	1	WIRING GP-GRADE CONTROL	420
			S/N: SMC644-UP ; GCT1164-UP	
	382-3459	1	PLUG AS	
	102-8805	1	KIT-RECEPTACLE (6-PIN)	
			(INCLUDES RECEPTACLE AS & WEDGE)	
	8T-8737	1	PLUG-SEAL	
E	**119-3662**		TUBE-HEAT SHRINK (10.85-MM DIA) (7-CM)	
	9X-3401	3	PIN-CONNECTOR (16-GA TO 18-GA)	
	297-0693	1	FILM-IDENTIFICATION (JOYSTICK) (BULLDOZER CONTROL)	
			(ON RAISED SURFACE TO RIGHT OF CONTROL & DIRECTLY BELOW DOZER CONTROL FILM)	

E - ORDER BY THE CENTIMETER
Y - SEPARATE ILLUSTRATION

<END>

295-0080 GRADE CONTROL AR—GRADE CONTROL

S/N: SMC1-UP; GCT1-UP
FOR USE WITH OPEN ROPS
AN ATTACHMENT

SMCS-7220 **i05350435**

NOTE	REF NO	GRAPHIC REF	PART NUMBER	QTY	PART NAME 1 2 3 4 5 6 (PRODUCT LEVEL)	SEE PAGE
	1	1	**7K-1181**	4	STRAP-CABLE	
	2	1	**7T-1099**	4	LINK	
	3	1	**297-0693**	1	FILM-IDENTIFICATION (JOYSTICK) (BULLDOZER)	
	4	1	**266-1586**	1	PLUG AS-CODE (GRADE CONTROL)	
		1	**102-8805**	1	KIT-RECEPTACLE (6-PIN)	
					(INCLUDES RECEPTACLE AS & WEDGE)	
		1	**8T-8737**	3	PLUG-SEAL	
		1	**9X-3401**	3	PIN-CONNECTOR (16-GA TO 18-GA)	
Y	5	1	*283-1231*	1	WIRING GP-GRADE CONTROL	412
Y	6	1	*285-5893*	1	MOUNTING GP-GRADE CONTROL (MODULE)	343
Y	7	1	*285-8252*	1	MOUNTING GP-MONITOR	1125
Y	8	1	*285-8253*	1	MOUNTING GP-RADIO	1131
Y	9	1	*285-9392*	1	WIRING GP-MONITOR	427
	10	1	**289-6011**	1	HARNESS AS-RADIO	
		1	**102-8801**	1	KIT-RECEPTACLE (12-PIN)	
					(INCLUDES RECEPTACLE AS & WEDGE)	
		1	**155-2255**	1	KIT-CONNECTING PLUG (12-PIN)	
					(INCLUDES PLUG AS, WEDGE, & INTERFACE SEAL)	

Y - SEPARATE ILLUSTRATION

295-0080 **GRADE CONTROL AR (*contd.*)** **i05350435**

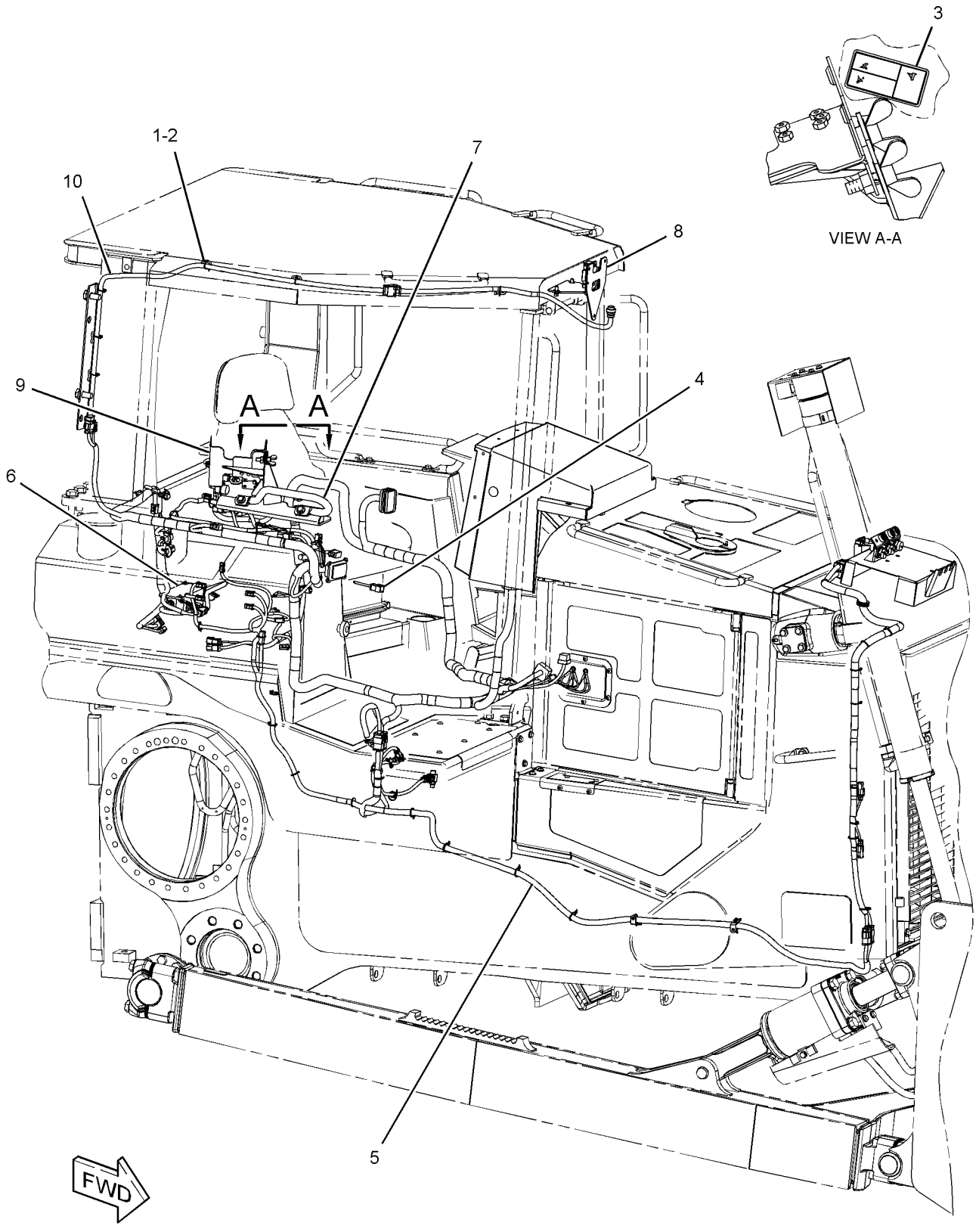

GRAPHIC #1 **<END>** g01363376

317-6527 GRADE CONTROL AR—ADVANCED TRACKING SYSTEM

S/N: SMC1-UP; GCT1-UP
FIELD INSTALLATION

SMCS-7220 **i05350440**

NOTE	PART NUMBER	QTY	PART NAME 1 2 3 4 5 6 (PRODUCT LEVEL)	SEE PAGE
Y	**286-0134**	1	DISPLAY GP-MONITOR (CD700)	1057
Y	**286-9124**	3	DISPLAY GP-MONITOR (LIGHT BAR)	1058
Y	**226-2333**	1	MAST GP (LASER RECEIVER)	339
Y	*292-0296*	1	MOUNTING GP-GRADE CONTROL	344
Y	*292-0302*	1	MOUNTING GP-MAST (LASER RECEIVER)	1228
Y	**234-9970**	1	MOUNTING GP-RECEIVER (MAST) (MAST)	345
Y	**295-9880**	1	TARGET GP-LASER	399
	276-6146	1	SENSOR AS-ANGLE (AS400TC)	
	311-4864	1	CABLE-COILED (ANGLE SENSOR)	

Y - SEPARATE ILLUSTRATION

<END>

292-0293 GRADE CONTROL AR-LASER—SINGLE

S/N: SMC1-UP; GCT1-UP
FIELD INSTALLATION

SMCS-7220 **i02987725**

NOTE	PART NUMBER	QTY	PART NAME 1 2 3 4 5 6 (PRODUCT LEVEL)	SEE PAGE
Y	**292-0309**	1	DISPLAY GP-MONITOR (CD610)	1059
Y	**292-0281**	1	MAST GP (LASER RECEIVER)	339
Y	**239-9950**	1	RECEIVER GP-LASER (SINGLE)	352

Y - SEPARATE ILLUSTRATION

<END>

292-0312 GRADE CONTROL AR-LASER—DUAL

S/N: SMC1-UP; GCT1-UP
FIELD INSTALLATION

SMCS-7220 **i05350444**

NOTE	PART NUMBER	QTY	PART NAME 1 2 3 4 5 6 (PRODUCT LEVEL)	SEE PAGE
Y	*292-0309*	1	DISPLAY GP-MONITOR (CD610)	1059
Y	**226-2333**	2	MAST GP (LASER RECEIVER)	339
Y	*292-0302*	2	MOUNTING GP-MAST (LASER RECEIVER)	1228
Y	**234-9970**	2	MOUNTING GP-RECEIVER (MAST)	345
Y	*292-0285*	2	RECEIVER GP-LASER (DUAL)	352
	235-4587	1	CASE-PLASTIC	

Y - SEPARATE ILLUSTRATION

<END>

290-5571 GRADE CONTROL AR-SATELLITE—DUAL GPS

S/N: SMC1-UP; GCT1-UP
FIELD INSTALLATION

SMCS-7220 **i05350458**

NOTE	PART NUMBER	QTY	PART NAME 1 2 3 4 5 6 (PRODUCT LEVEL)	SEE PAGE
Y	*286-0134*	1	DISPLAY GP-MONITOR (CD700)	1057
Y	**286-9124**	3	DISPLAY GP-MONITOR (LIGHT BAR)	1058
Y	*292-0296*	1	MOUNTING GP-GRADE CONTROL	344
Y	*292-0303*	2	MOUNTING GP-MAST (SATELLITE RECEIVER)	1228
Y	*292-0291*	1	RECEIVER GP-SATELLITE (DUAL GNSS, MS992)	353
	248-1500	2	MAST AS (SATELLITE RECEIVER)	
	311-4862	2	CABLE-COILED (RECEIVER)	

Y - SEPARATE ILLUSTRATION

<END>

292-0280 GRADE CONTROL AR-SATELLITE—SINGLE GPS

S/N: SMC1-UP; GCT1-UP
FIELD INSTALLATION

SMCS-7220 **i05350459**

NOTE	PART NUMBER	QTY	PART NAME 1 2 3 4 5 6 (PRODUCT LEVEL)	SEE PAGE
Y	*286-0134*	1	DISPLAY GP-MONITOR (CD700)	1057
Y	**286-9124**	3	DISPLAY GP-MONITOR (LIGHT BAR)	1058
Y	*292-0296*	1	MOUNTING GP-GRADE CONTROL	344
Y	*292-0303*	1	MOUNTING GP-MAST (SATELLITE RECEIVER)	1228
Y	*292-0292*	1	RECEIVER GP-SATELLITE (SINGLE GNSS, MS992)	353
	248-1500	1	MAST AS	
	276-6146	1	SENSOR AS-ANGLE (AS400TC) (ANGLE)	
	311-4862	1	CABLE-COILED (RECEIVER)	
	311-4864	1	CABLE-COILED (ANGLE SENSOR)	

Y - SEPARATE ILLUSTRATION

<END>

323-9140 HARNESS AS-ENGINE

S/N: TXD1-UP; THX22179-UP
PART OF 330-6019 WIRING GP-ELECTRONIC CONTROL
ALSO AN ATTACHMENT

SMCS-1408 **i05277066**

NOTE	PART NUMBER	QTY	PART NAME 1 2 3 4 5 6 (PRODUCT LEVEL)	SEE PAGE
	211-6807	1	COVER-CONNECTOR	
	111-2416	1	PLUG AS-CONNECTOR (2-PIN)	
	100-3320	1	PLUG AS-CONNECTOR (2-PIN)	
			(EACH PLUG AS-CONNECTOR INCLUDES)	
	126-5011	1	SEAL-CONNECTOR	
	155-2265	1	KIT-CONNECTING PLUG (8-PIN)	
	155-2270	3	KIT-CONNECTING PLUG (2-PIN)	
			(EACH PLUG KIT INCLUDES PLUG AS, WEDGE & INTERFACE SEAL)	
	172-6062	1	PLUG AS-CONNECTOR (18-PIN)	
	230-4011	2	PLUG AS-CONNECTOR (2-PIN)	
			(EACH INCLUDES)	
	264-7029	1	SEAL-CONNECTOR	
	237-0227	3	PLUG AS-CONNECTOR (3-PIN)	
	230-4013	1	PLUG AS-CONNECTOR (3-PIN)	
			(EACH PLUG AS INCLUDES)	
	264-7030	1	SEAL-CONNECTOR	
	264-5732	1	PLUG AS-CONNECTOR (120-PIN)	
	288-7324	1	SEAL-CONNECTOR	
	160-8124	1	PLUG AS (2-PIN)	
	8T-8737	2	PLUG-SEAL	
	8T-8737	93	PLUG-SEAL	
E	**317-1204**		SLEEVE (8-CM)	
E	**289-5150**		SLEEVE (112-CM)	
E	**289-5151**		SLEEVE (12-CM)	
	9X-3402	75	SOCKET-CONNECTOR (16-GA TO 18-GA)	
			—OR—	
	126-1768	75	SOCKET-CONNECTOR (14-GA TO 16-GA)	
	305-5362	4	TERMINAL AS (18-GA)	
	1S-9593	2	STRAP-CABLE	
E	**125-7874**		TUBE-HEAT SHRINK (5.72-MM DIA) (40-CM)	

E - ORDER BY THE CENTIMETER

<END>

419-0841 HARNESS AS-ENGINE

S/N: TXD1-UP; THX22179-UP
PART OF 330-6019 WIRING GP-ELECTRONIC CONTROL
ALSO AN ATTACHMENT

SMCS-1408 **i05323667**

NOTE	PART NUMBER	QTY	PART NAME 1 2 3 4 5 6 (PRODUCT LEVEL)	SEE PAGE
	9X-3401	12	PIN-CONNECTOR (16-GA TO 18-GA)	
			—OR—	
	126-1767	12	PIN-CONNECTOR (14-GA TO 16-GA)	
	172-6064	1	WEDGE-RECEPTACLE LOCK	
	191-7823	1	RECEPTACLE AS	
	307-8428	1	GASKET	

<END>

197-6280 HEATER GP-JACKET WATER

S/N: SMC1-UP; GCT1-UP
120-VOLT 15-AMPERE
AN ATTACHMENT

SMCS-1383 **i02430239**

NOTE	REF NO	GRAPHIC REF	PART NUMBER	QTY	PART NAME 1 2 3 4 5 6 (PRODUCT LEVEL)	SEE PAGE
C	1	1	**7K-1181**	11	STRAP-CABLE	
C	2	1	**9G-6655**	1	ELEMENT AS-JACKET WATER HEATER (120-VOLT, 1500-WATT)	
	3	1	**197-6281**	1	CORD AS (120-VOLT, 15-AMPERE)	
	4	1	**7M-8485**	1	SEAL-O-RING	
C	5	1	**5P-0492**	1	ADAPTER	
C	6	1	**4P-7581**	1	CLIP	
	7	1	**214-9389**	1	FILM-IDENTIFICATION (WATER HEATER)	

C - CHANGE FROM PREVIOUS TYPE

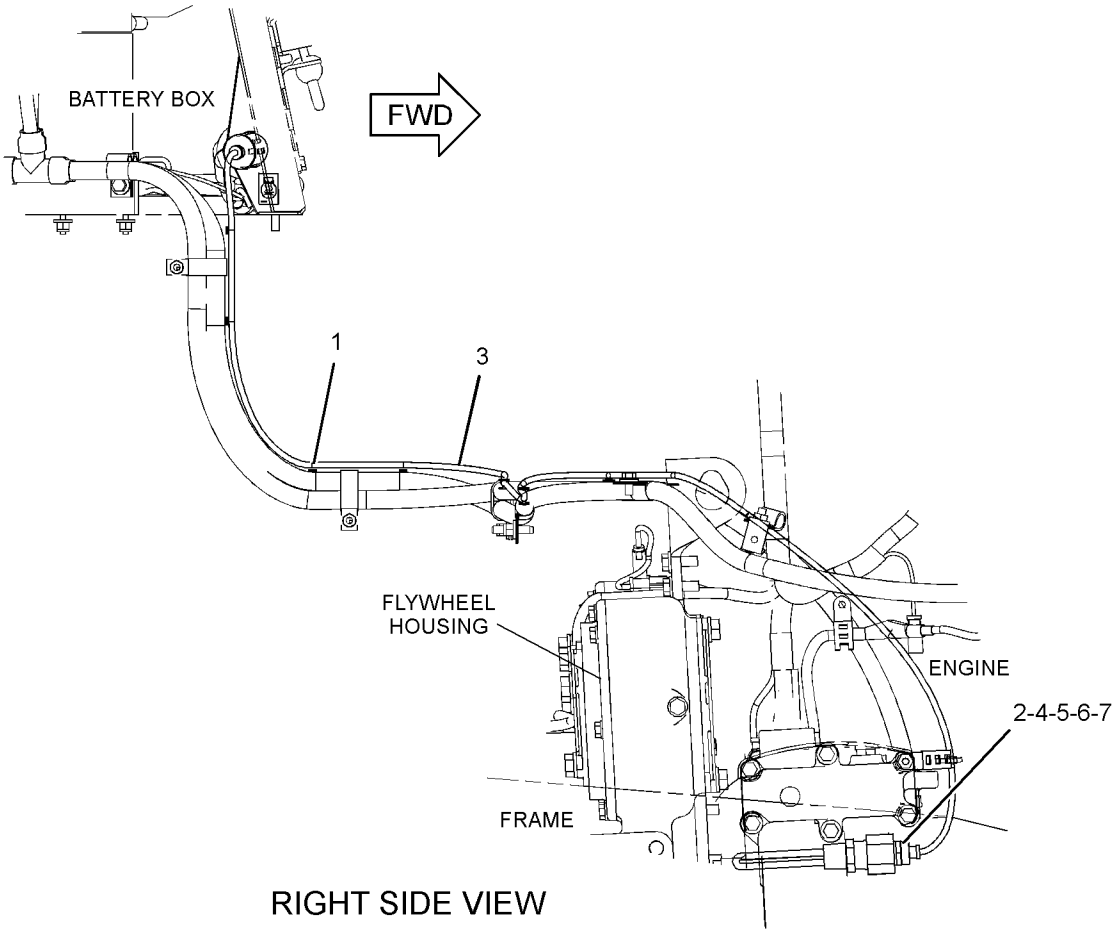

RIGHT SIDE VIEW

GRAPHIC #1 **<END>** g01195449

282-8483 INSTALLATION GP-COMMUNICATION–PRODUCT LINK 321SR

S/N: SMC1-225; GCT1-321

CANNOT BE USED WITH 213-7064–PAGE: 1154, 226-3400–PAGE: 1155, 228-7854–PAGE: 995 AN ATTACHMENT

SMCS-7606 **i02994040**

NOTE	REF NO	GRAPHIC REF	PART NUMBER	QTY	PART NAME 1 2 3 4 5 6 (PRODUCT LEVEL)	SEE PAGE
	1	1	**7K-1181**	11	STRAP-CABLE	
	2	1	**8C-5607**	8	MOUNT-ISOLATION	
	3	1	**8C-5608**	4	SPACER (6.5X9.5X25.4-MM THK)	
	4	1	**129-8331**	1	PLATE AS	
	5	1	**230-1340**	1	FILM-WARNING (PRODUCT LINK RADIO, U.S.)	
Y	6	1	**262-1421**	1	ELECTRONICS GP-COMMUNICATION (PRODUCT LINK 300)	275
Y	7	1	**263-9088**	1	RADIO GP-COMMUNICATION (PRODUCT LINK 121SR)	352
	8	1	**268-5986**	1	HARNESS AS-CONTROL (PRODUCT LINK)	
		1	**9X-6772**	1	STRAP-CABLE	
		1	**126-1774**	1	COVER-CONNECTOR	
		1	**160-7690**	1	PLUG AS-CONNECTOR (70-PIN)	
		1	**155-2255**	1	KIT-CONNECTING PLUG (12-PIN)	
		1	**155-2271**	1	KIT-CONNECTING PLUG (4-PIN)	
					(EACH INCLUDES PLUG AS, WEDGE, & INTERFACE SEAL)	
	9	1	**306-0177**	1	BRACKET	
	10	1	**284-8532**	1	ANTENNA AS (ROOF)	
		1	**301-0589**	1	ANTENNA (FLEXIBLE)	
M	11	1	**7X-2562**	2	BOLT (M20X2.5X45-MM)	
	12	1	**7X-7729**	2	WASHER (11X25X3-MM THK)	
M	13	1	**8T-2192**	4	BOLT (M6X1X45-MM)	
M	14	1	**8T-4136**	2	BOLT (M10X1.5X25-MM)	
M	15	1	**8T-4181**	4	BOLT (M6X1X20-MM)	
	16	1	**8T-5439**	2	WASHER-HARD (21.5X45X6-MM THK)	
	17	1	**9X-6165**	4	WASHER (6.5X22X2.5-MM THK)	
	18	1	**9X-8256**	4	WASHER (6.6X12X2-MM THK)	
	19	1	**307-0047**	1	FILM-INFORMATION (PRODUCT LINK, READ OMM)	

M - METRIC PART
Y - SEPARATE ILLUSTRATION

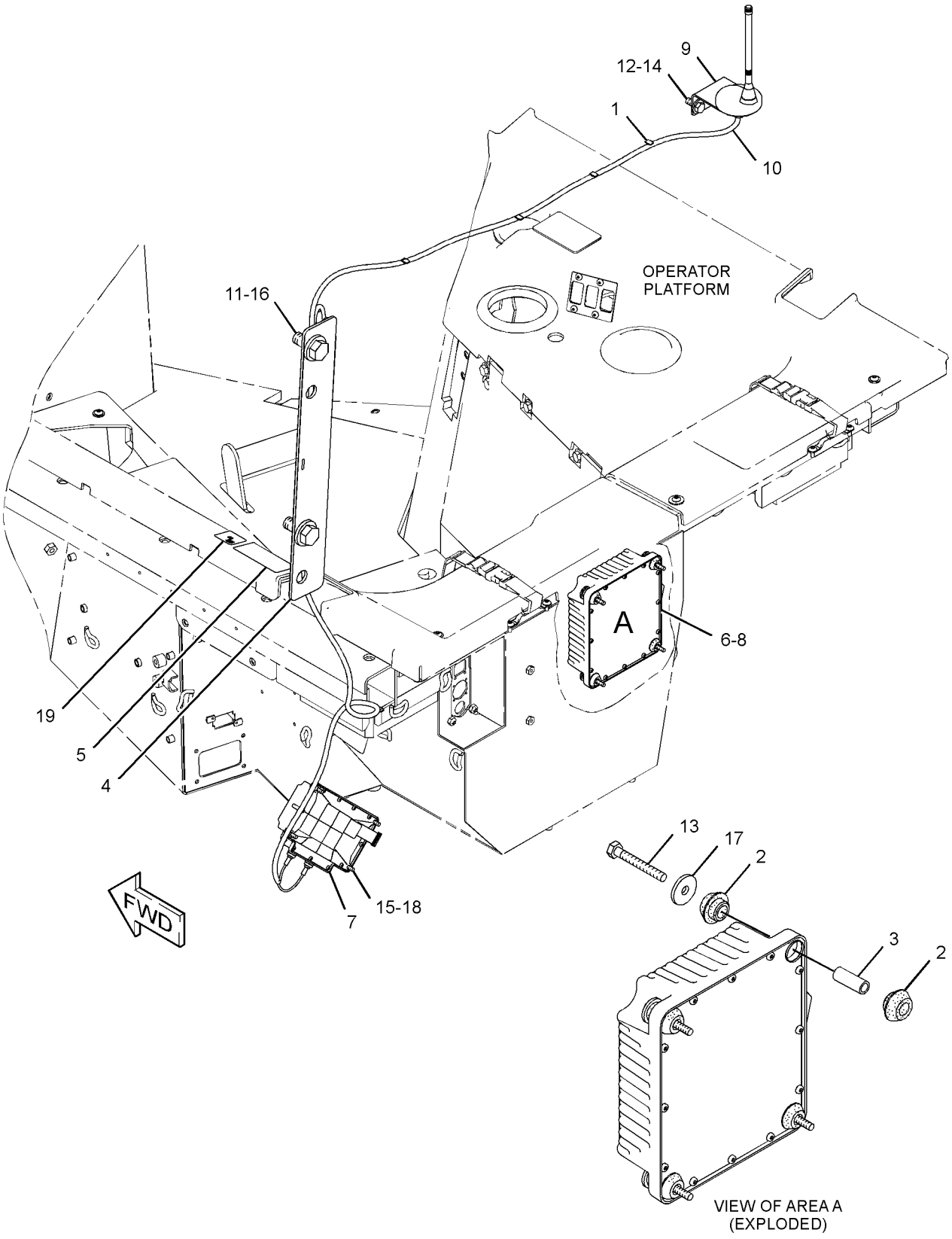

GRAPHIC #1 **<END>** g01475054

282-8483 INSTALLATION GP-COMMUNICATION–PRODUCT LINK 321SR

S/N: SMC226-1499; GCT322-1999

CANNOT BE USED WITH 213-7064–PAGE: 1154, 226-3400–PAGE: 1155, 228-7854–PAGE: 995 AN ATTACHMENT

SMCS-7606 **i03899326**

NOTE	REF NO	GRAPHIC REF	PART NUMBER	QTY	PART NAME 1 2 3 4 5 6 (PRODUCT LEVEL)	SEE PAGE
	1	1	**7K-1181**	11	STRAP-CABLE	
	2	1	**8C-5607**	8	MOUNT-ISOLATION	
	3	1	**8C-5608**	4	SPACER (6.5X9.5X25.4-MM THK)	
	4	1	**129-8331**	1	PLATE AS	
	5	1	**230-1340**	1	FILM-WARNING (PRODUCT LINK RADIO, U.S.)	
CY	6	1	*344-3393*	1	CONTROL GP-COMMUNICATION (PRODUCT LINK 321SR)	269
	8	1	**268-5986**	1	HARNESS AS-CONTROL (PRODUCT LINK)	
		1	**8T-8737**	60	PLUG-SEAL	
		1	**9X-6772**	1	STRAP-CABLE	
		1	**9X-3402**	26	SOCKET-CONNECTOR (16-GA TO 18-GA)	
		1	**126-1774**	1	COVER-CONNECTOR	
		1	**155-2255**	1	KIT-CONNECTING PLUG (12-PIN)	
		1	**155-2271**	1	KIT-CONNECTING PLUG (4-PIN)	
		1	**160-7690**	1	PLUG AS-CONNECTOR (70-PIN)	
		1	**159-9322**	1	SEAL-O-RING	
	9	1	**306-0177**	1	BRACKET	
	10	1	**284-8532**	1	ANTENNA AS (ROOF)	
		1	**301-0589**	1	ANTENNA (FLEXIBLE)	
M	11	1	**7X-2562**	2	BOLT (M20X2.5X45-MM)	
	12	1	**7X-7729**	2	WASHER (11X25X3-MM THK)	
M	13	1	**8T-2192**	4	BOLT (M6X1X45-MM)	
M	14	1	**8T-4136**	2	BOLT (M10X1.5X25-MM)	
M	15	1	**8T-4181**	4	BOLT (M6X1X20-MM)	
	16	1	**8T-5439**	2	WASHER-HARD (21.5X45X6-MM THK)	
	17	1	**9X-6165**	4	WASHER (6.5X22X2.5-MM THK)	
	18	1	**9X-8256**	4	WASHER (6.6X12X2-MM THK)	
	19	1	**307-0047**	1	FILM-INFORMATION (PRODUCT LINK, READ OMM)	

C - CHANGE FROM PREVIOUS TYPE
M - METRIC PART
Y - SEPARATE ILLUSTRATION

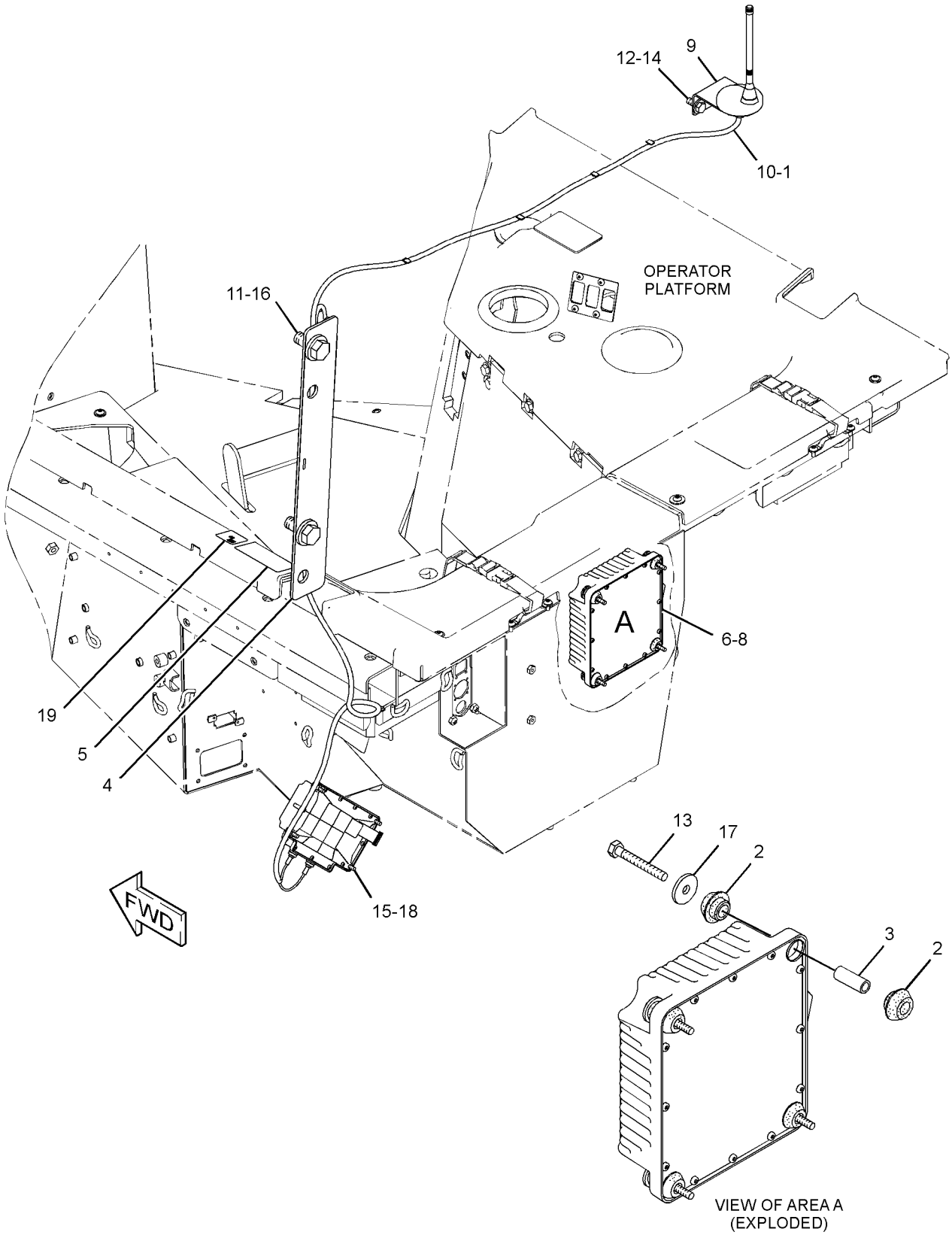

GRAPHIC #1 **<END>** g02177678

282-8484 INSTALLATION GP-COMMUNICATION—PRODUCT LINK

321SR

S/N: SMC1-UP; GCT1-UP

FOR USE WITH 213-7064—PAGE: 1154, 226-3400—PAGE: 1155, 228-7854—PAGE: 995

AN ATTACHMENT

SMCS-7606 **i02760737**

NOTE	REF NO	GRAPHIC REF	PART NUMBER	QTY	PART NAME 1 2 3 4 5 6 (PRODUCT LEVEL)	SEE PAGE
	1	1	**7K-1181**	10	STRAP-CABLE	
	2	1	**8C-5607**	8	MOUNT-ISOLATION	
	3	1	**8C-5608**	4	SPACER (6.5X9.5X25.4-MM THK)	
	4	1	**197-7447**	1	BRACKET	
	5	1	**230-1340**	1	FILM-WARNING (PRODUCT LINK RADIO, U.S.)	
Y	6	1	**262-1421**	1	ELECTRONICS GP-COMMUNICATION (PRODUCT LINK 300)	275
Y	7	1	**263-9088**	1	RADIO GP-COMMUNICATION (PRODUCT LINK 121SR)	352
	8	1	**268-5986**	1	HARNESS AS-CONTROL (PRODUCT LINK)	
		1	**9X-6772**	1	STRAP-CABLE	
		1	**126-1774**	1	COVER-CONNECTOR	
		1	**160-7690**	1	PLUG AS-CONNECTOR (70-PIN)	
		1	**155-2255**	1	KIT-CONNECTING PLUG (12-PIN)	
		1	**155-2271**	1	KIT-CONNECTING PLUG (4-PIN)	
					(EACH INCLUDES PLUG AS, WEDGE, & INTERFACE SEAL)	
	9	1	**268-5987**	1	HARNESS AS-RADIO (PRODUCT LINK)	
		1	**102-8806**	1	KIT-RECEPTACLE (8-PIN)	
					(INCLUDES RECEPTACLE AS & WEDGE)	
		1	**155-2255**	1	KIT-CONNECTING PLUG (12-PIN)	
					(INCLUDES PLUG AS, WEDGE, & INTERFACE SEAL)	
	10	1	**266-2861**	1	ANTENNA AS (PRODUCT LINK)	
		1	**223-4296**	1	ANTENNA (FLEXIBLE)	
	11	1	**6S-1066**	1	GROMMET	
M	12	1	**8T-2192**	4	BOLT (M6X1X45-MM)	
	13	1	**8T-4121**	4	WASHER-HARD (11X21X2.5-MM THK)	
	14	1	**8T-4123**	1	WASHER (22X35X3.5-MM THK)	
M	15	1	**8T-4133**	2	NUT (M10X1.5-THD)	
M	16	1	**8T-4136**	2	BOLT (M10X1.5X25-MM)	
M	17	1	**8T-4181**	4	BOLT (M6X1X20-MM)	
M	18	1	**8T-4780**	1	BOLT (M20X2.5X30-MM)	
	19	1	**9X-6165**	4	WASHER (6.5X22X2.5-MM THK)	
	20	1	**9X-8256**	4	WASHER (6.6X12X2-MM THK)	

M - METRIC PART
Y - SEPARATE ILLUSTRATION

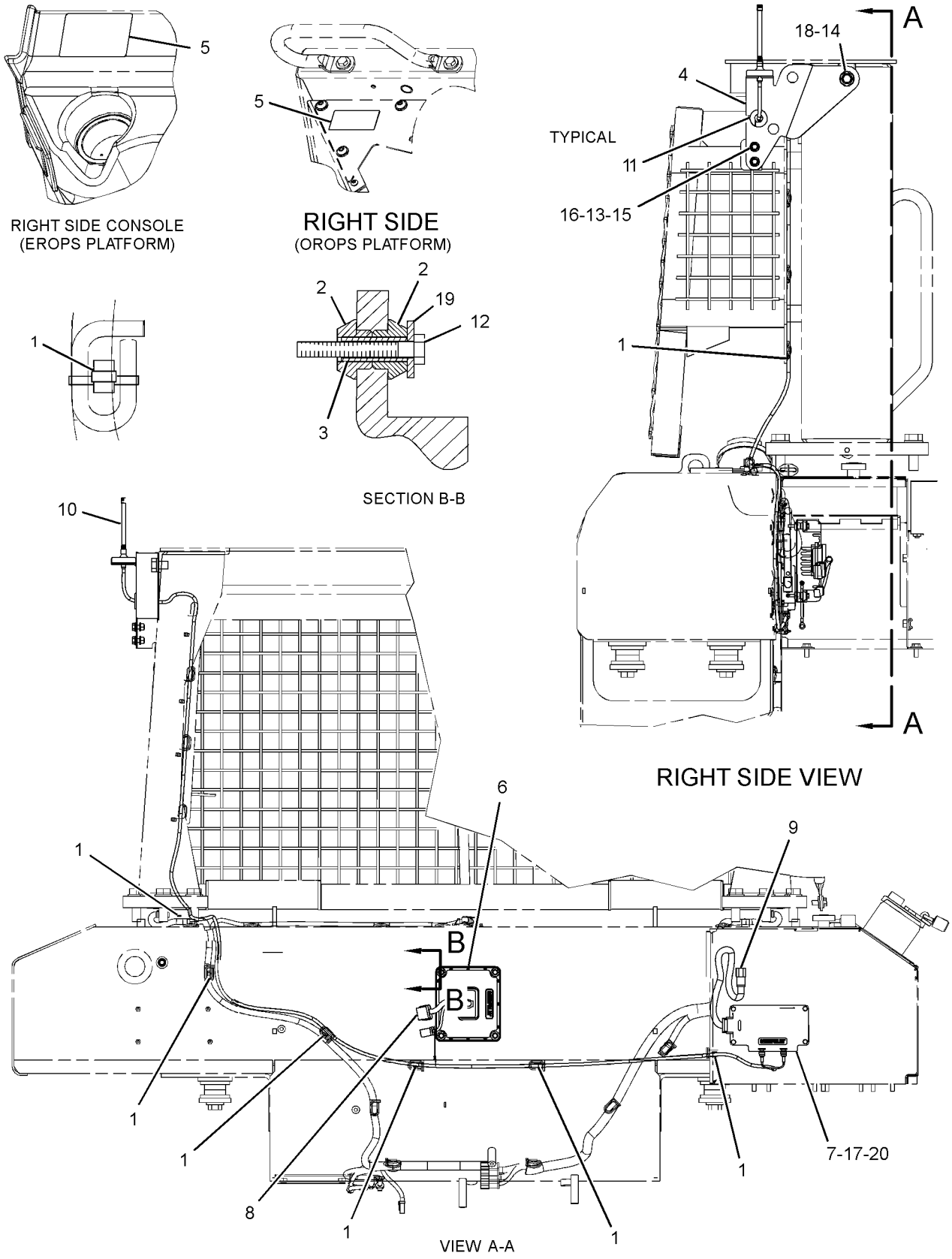

GRAPHIC #1

<END>

g01360602

368-4236 INSTALLATION GP-COMMUNICATION—PRODUCT LINK 522

S/N: SMC1500-UP; GCT2000-UP

AN ATTACHMENT

SMCS-7606 **i05259952**

NOTE	REF NO	GRAPHIC REF	PART NUMBER	QTY	PART NAME 1 2 3 4 5 6 (PRODUCT LEVEL)	SEE PAGE
	1	1	**8C-5607**	8	MOUNT-ISOLATION	
	2	1	**8C-5608**	4	SPACER (6.5X9.5X25.4-MM THK)	
	3	1	**230-1340**	1	FILM-WARNING (PRODUCT LINK RADIO, U.S.)	
	4	1	**307-0047**	1	FILM-INFORMATION (PRODUCT LINK, READ OMM)	
	5	1	**346-9376**	1	ANTENNA AS	
		1	**355-1213**	1	PLUG	
		1	**361-1045**	1	NUT-SPECIAL (5/8-18-THD)	
	6	1	**349-2479**	1	PLATE	
Y	7	1	**351-8490**	1	CONTROL GP-UNPROGRAMMED (PRODUCT LINK 522) (COMMUNICATION RADIO)	271
	8	1	**354-0703**	1	CABLE AS-COAXIAL	
	9	1	**368-6474**	1	PLATE AS	
	10	1	**369-4564**	1	HARNESS AS-MONITOR	
		1	**8T-8737**	64	PLUG-SEAL	
		1	**9X-3402**	30	SOCKET-CONNECTOR (16-GA TO 18-GA)	
E		1	**125-7874**		TUBE-HEAT SHRINK (5.72-MM DIA) (20-CM)	
		1	**155-2255**	2	KIT-CONNECTING PLUG (12-PIN)	
					(EACH PLUG KIT INCLUDES PLUG AS, WEDGE & INTERFACE SEAL)	
		1	**155-2258**	2	WEDGE-PLUG LOCK (12-PIN)	
		1	**160-7690**	1	PLUG AS-CONNECTOR (70-PIN)	
		1	**159-9322**	1	SEAL-O-RING	
		1	**237-0336**	1	COVER (CONNECTOR)	
	11	1	**385-8681**	1	BRACKET	
	12	1	**156-6175**	2	CLIP	
	13	1	**4P-8134**	2	CLIP	
	14	1	**7K-1181**	22	STRAP-CABLE	
M	15	1	**8T-2192**	4	BOLT (M6X1X45-MM)	
	16	1	**8T-4121**	6	WASHER-HARD (11X21X2.5-MM THK)	
	17	1	**8T-4123**	2	WASHER (22X35X3.5-MM THK)	
M	18	1	**8T-4136**	2	BOLT (M10X1.5X25-MM)	
M	19	1	**8T-4137**	4	BOLT (M10X1.5X20-MM)	
M	20	1	**8T-5460**	2	BOLT (M20X2.5X40-MM)	
	21	1	**9X-6165**	4	WASHER (6.5X22X2.5-MM THK)	

E - ORDER BY THE CENTIMETER
M - METRIC PART
Y - SEPARATE ILLUSTRATION

368-4236 **INSTALLATION GP-COMMUNICATION (*contd.*)** **i05259952**

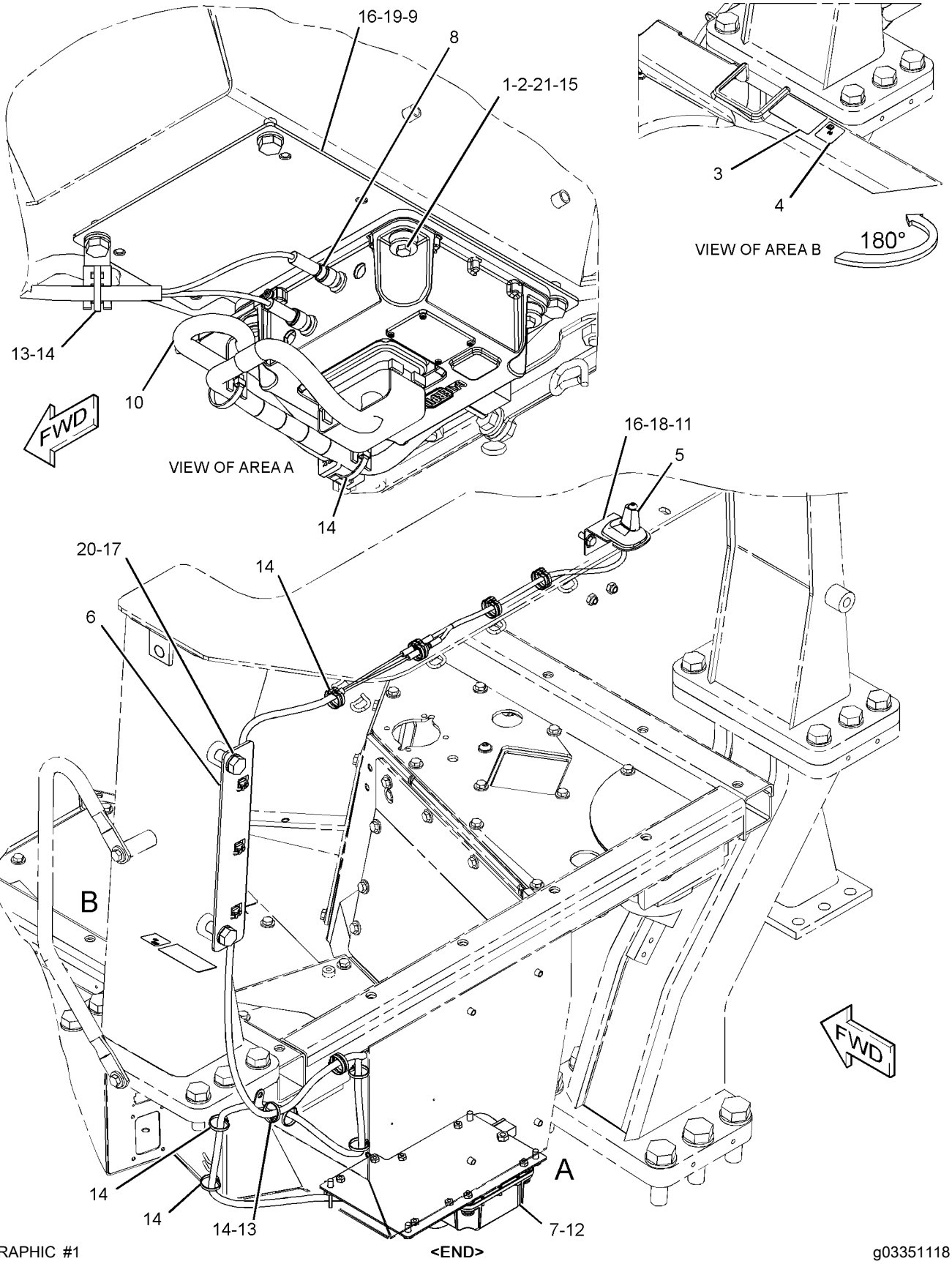

GRAPHIC #1

<END>

g03351118

368-4237 INSTALLATION GP-COMMUNICATION–PRODUCT LINK

321SR

S/N: SMC1500-UP; GCT2000-UP

AN ATTACHMENT

SMCS-7606 **i05326710**

NOTE	REF NO	GRAPHIC REF	PART NUMBER	QTY	PART NAME 1 2 3 4 5 6 (PRODUCT LEVEL)	SEE PAGE
	1	2	**8C-5607**	8	MOUNT-ISOLATION	
	2	2	**8C-5608**	4	SPACER (6.5X9.5X25.4-MM THK)	
	3	2	**230-1340**	1	FILM-WARNING (PRODUCT LINK RADIO, U.S.)	
	4	2	**307-0047**	1	FILM-INFORMATION (PRODUCT LINK, READ OMM)	
Y	5	2	*344-3393*	1	CONTROL GP-COMMUNICATION (PRODUCT LINK 321SR)	269
	6	1	**346-9376**	1	ANTENNA AS	
		1	**355-1213**	1	PLUG	
		1	**361-1045**	1	NUT-SPECIAL (5/8-18-THD)	
	7	2	**349-2479**	1	PLATE	
	8	1	**354-0703**	1	CABLE AS-COAXIAL	
	9	1	**355-1205**	1	ANTENNA (FLEXIBLE)	
	10	2	**368-6474**	1	PLATE AS	
	11	1	**369-4564**	1	HARNESS AS-MONITOR	
		1	**155-2255**	2	KIT-CONNECTING PLUG (12-PIN)	
					(EACH KIT INCLUDES PLUG AS, WEDGE & INTERFACE SEAL)	
		1	**160-7690**	1	PLUG AS-CONNECTOR (70-PIN)	
		1	**159-9322**	1	SEAL-O-RING	
		1	**8T-8737**	64	PLUG-SEAL	
		1	**9X-3402**	30	SOCKET-CONNECTOR (16-GA TO 18-GA)	
E		1	**125-7874**		TUBE-HEAT SHRINK (5.72-MM DIA) (20-CM)	
		1	**237-0336**	1	COVER (CONNECTOR)	
	12	2	**385-8681**	1	BRACKET	
	13	2	**156-6175**	3	CLIP	
	14	2	**4P-8134**	2	CLIP	
	15	1,2	**7K-1181**	23	STRAP-CABLE	
M	16	2	**8T-2192**	4	BOLT (M6X1X45-MM)	
	17	2	**8T-4121**	6	WASHER-HARD (11X21X2.5-MM THK)	
	18	2	**8T-4123**	2	WASHER (22X35X3.5-MM THK)	
M	19	2	**8T-4136**	2	BOLT (M10X1.5X25-MM)	
M	20	2	**8T-4137**	4	BOLT (M10X1.5X20-MM)	
M	21	2	**8T-4181**	4	BOLT (M6X1X20-MM)	
M	23	2	**8T-5460**	2	BOLT (M20X2.5X40-MM)	
	24	2	**9X-6165**	4	WASHER (6.5X22X2.5-MM THK)	
	25	2	**9X-8256**	4	WASHER (6.6X12X2-MM THK)	

E - ORDER BY THE CENTIMETER
M - METRIC PART
Y - SEPARATE ILLUSTRATION

368-4237 **INSTALLATION GP-COMMUNICATION (*contd.*)** **i05326710**

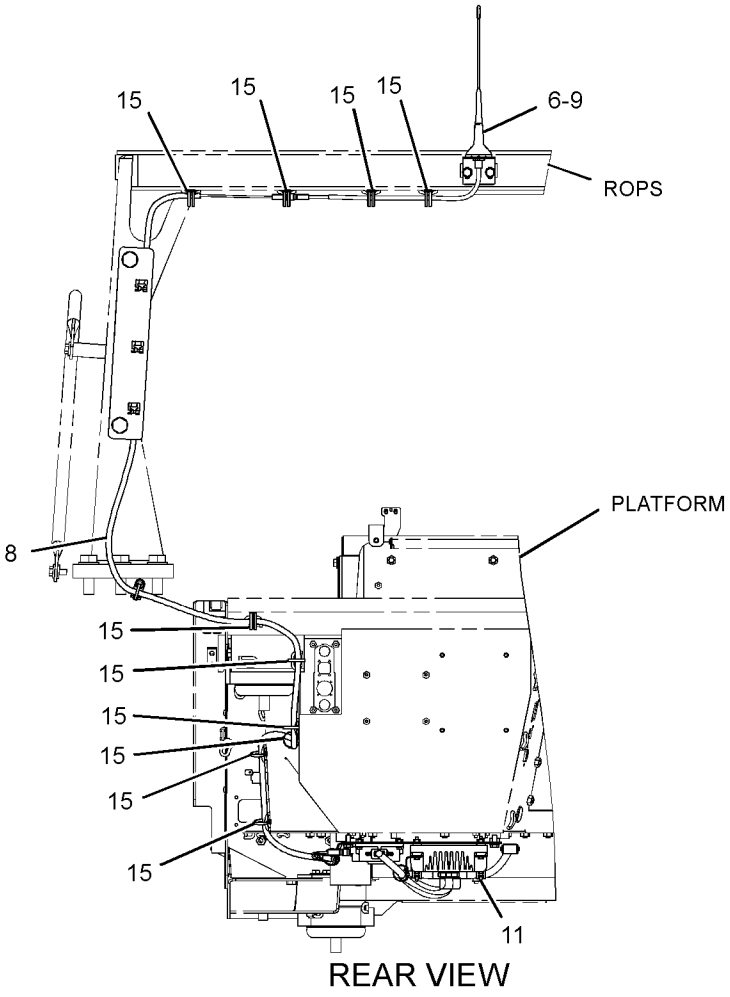

GRAPHIC #1 g03378473

368-4237 **INSTALLATION GP-COMMUNICATION (*contd.*)** **i05326710**

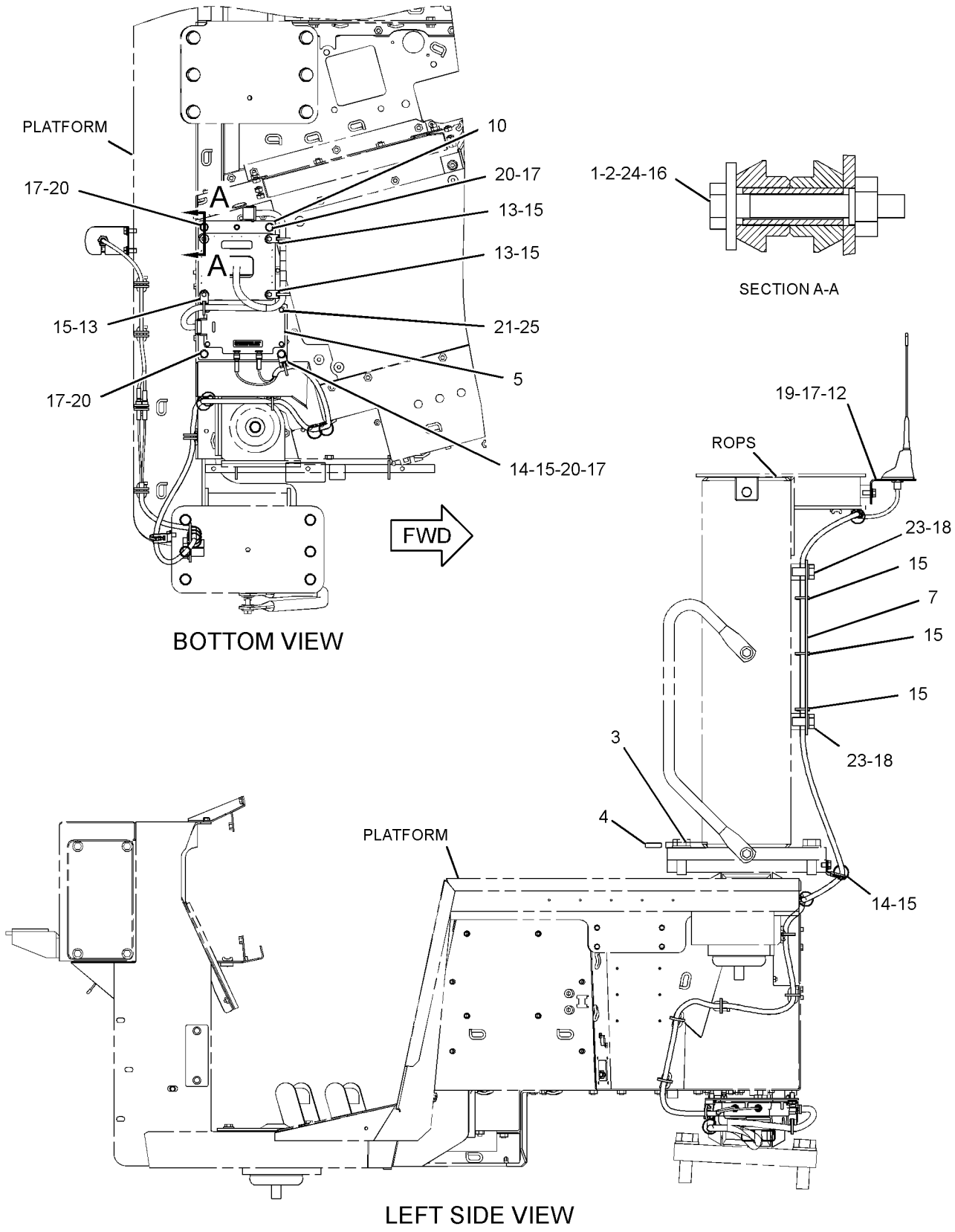

GRAPHIC #2 **<END>** g03381462

227-1228 INSTALLATION GP-SECURITY

S/N: SMC1-UP; GCT1-UP

AN ATTACHMENT

SMCS-7631 **i04041919**

NOTE	REF NO	GRAPHIC REF	PART NUMBER	QTY	PART NAME 1 2 3 4 5 6 (PRODUCT LEVEL)	SEE PAGE
	1	1	**102-8802**	2	KIT-RECEPTACLE (2-PIN)	
					(EACH INCLUDES RECEPTACLE AS & WEDGE)	
	2	1	**8C-5607**	4	MOUNT-ISOLATION	
	3	1	**8C-5608**	2	SPACER (6.5X9.5X25.4-MM THK)	
	4	1	**192-9734**	1	FILM-IDENTIFICATION (SECURITY SYSTEM)	
	5	1	**206-5162**	2	KEY AS-ELECTRONIC (SECURITY) (YELLOW)	
					—OR—	
		1	**206-5165**	2	KEY AS-ELECTRONIC (SECURITY) (GRAY)	
	6	1	**205-8257**	1	COIL AS (EXCITER)	
D		1	**5P-5677**		WIRE (18-GA, BLACK) (0.4-M)	
		1	**186-3735**	2	PIN-CONNECTOR (16-GA TO 18-GA)	
	6A	1	**198-5389**	1	FILM-IDENTIFICATION (IGNITION SWITCH)	
	7	1	**218-0404**	1	MODULE GP-INTERFACE (KEY)	
	8	1	**219-6314**	2	KEY RING (IDENTIFICATION)	
	10	1	**242-1584**	1	HARNESS AS-WIRING (MACHINE SECURITY SYSTEM)	
		1	**102-8806**	1	KIT-RECEPTACLE (8-PIN)	
					(INCLUDES RECEPTACLE AS & WEDGE)	
		1	**155-2265**	1	KIT-CONNECTING PLUG (8-PIN)	
		1	**155-2270**	2	KIT-CONNECTING PLUG (2-PIN)	
					(EACH INCLUDES PLUG AS. WEDGE, & INTERFACE SEAL)	
	11	1	**242-3282**	1	LAMP AS-LED (24-VOLT, RED) (MACHINE SECURITY SYSTEM)	
	13	1	**4P-7581**	1	CLIP	
	14	1	**7K-1181**	10	STRAP-CABLE	
M	15	1	**8C-8451**	1	BOLT (M6X1X40-MM)	
M	16	1	**9X-2480**	1	BOLT (M6X1X45-MM)	
	17	1	**9X-6165**	3	WASHER (6.5X22X2.5-MM THK)	
F			*238-5017*	1	CONFIGURATION-PREMIUM (SECURITY)	
					(DLR INSTALL CONFIG: SEE IRM: EES03-01)	

D - ORDER BY THE METER
F - NOT SHOWN
M - METRIC PART

227-1228 **INSTALLATION GP-SECURITY (*contd.*)** **i04041919**

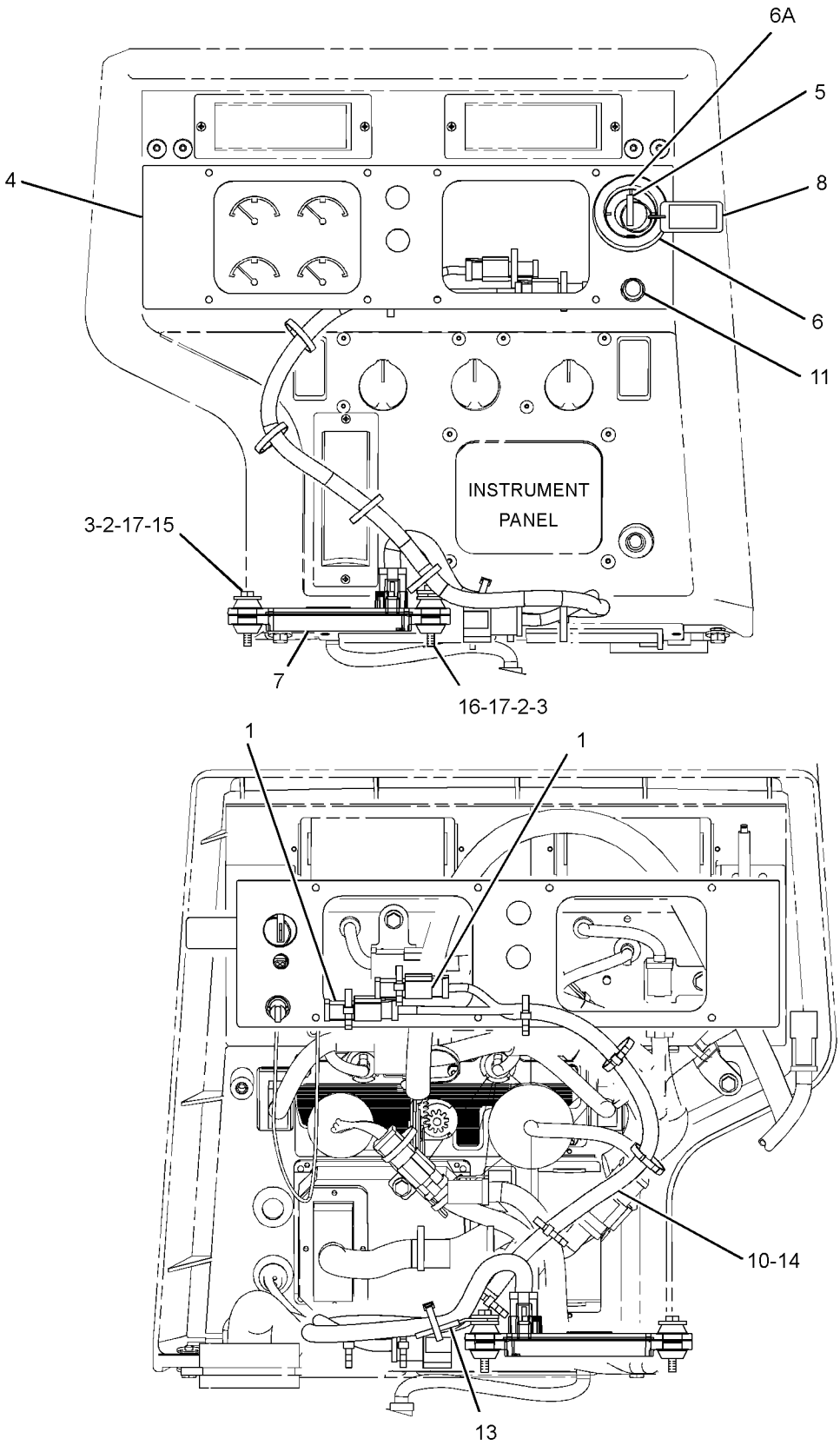

GRAPHIC #1 **<END>** g01215573

3E-6389 LAMP GP-DOME

S/N: SMC1-UP; GCT1-UP
24-VOLT, WITH SWITCH
PART OF 161-1096 LINER GP-CAB
ALSO AN ATTACHMENT

SMCS-1433 **i04953733**

NOTE	REF NO	GRAPHIC REF	PART NUMBER	QTY	PART NAME 1 2 3 4 5 6 (PRODUCT LEVEL)	SEE PAGE
	1	1	**7N-9943**	1	LAMP (24-VOLT) (DOME LIGHT)	
	2	1	**102-8803**	1	KIT-RECEPTACLE (3-PIN)	
					(INCLUDES RECEPTACLE AS & WEDGE)	
	3	1	**8T-8729**	3	PIN-CONNECTOR (16-GA TO 18-GA)	
	4	1	**7T-0020**	1	LENS-DOME LAMP	

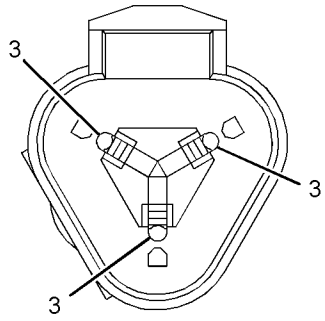

VIEW A-A

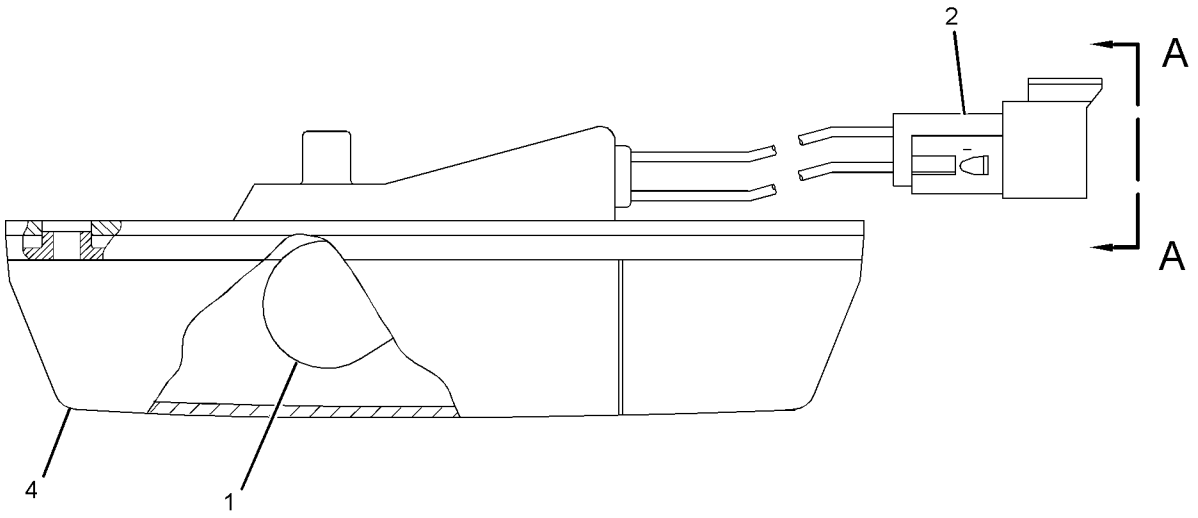

GRAPHIC #1 **<END>** g02646562

147-0319 LAMP GP-FLOOD

S/N: SMC1-UP; GCT1-UP
24-VOLT, 70-WATT
PART OF 152-8427, 235-6336, 235-6337, 235-6338, 235-6339, 235-6340, 263-7419, 284-9064, 290-5826 LIGHTING GP-FLOOD
AN ATTACHMENT

SMCS-1434 **i04451171**

NOTE	REF NO	GRAPHIC REF	PART NUMBER	QTY	PART NAME 1 2 3 4 5 6 (PRODUCT LEVEL)	SEE PAGE
	1	1	**351-9918**	1	LAMP-HALOGEN (24-VOLT, 70-WATT)	
	2	1	**158-0250**	1	BODY AS-LAMP	
	3	1	**375-0352**	1	LENS AS (FLOODLIGHT)	
	4	1	**158-0252**	1	BEZEL	
	5	1	**188-8849**	2	CLAMP	

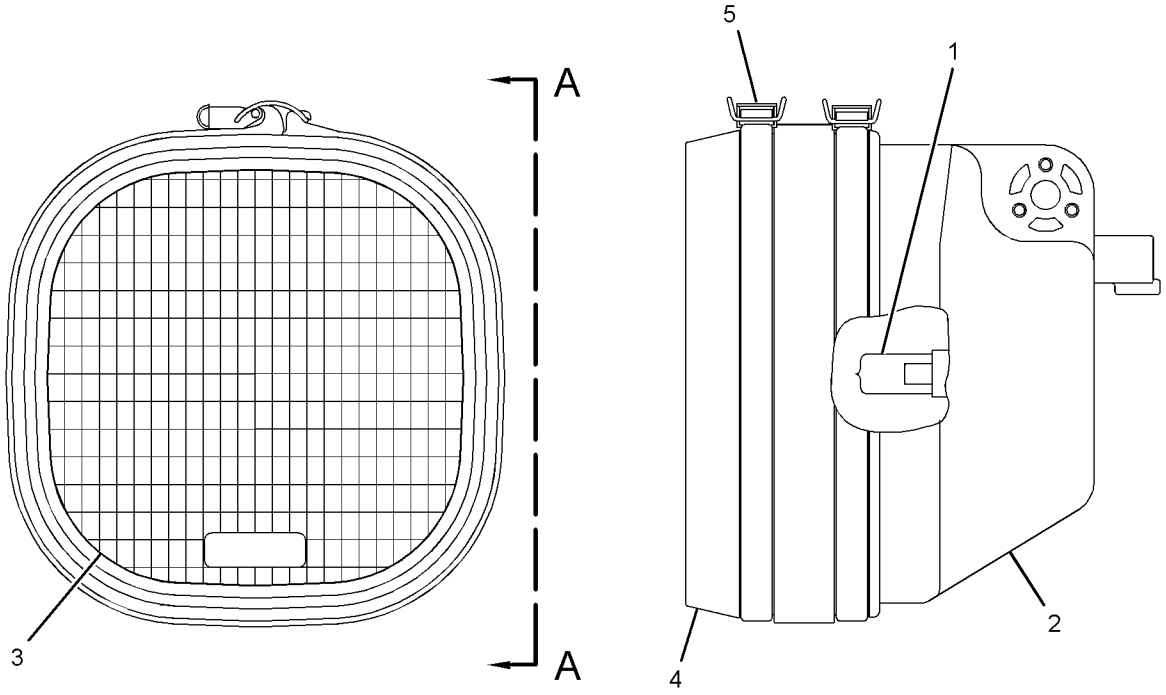

VIEW A-A

GRAPHIC #1 **<END>** g02622156

153-2073 LAMP GP-FLOOD

S/N: SMC1-UP; GCT1-UP
24-VOLT, 70-WATT
PART OF 235-6340 LIGHTING GP-FLOOD
AN ATTACHMENT

SMCS-1434 **i04726531**

NOTE	REF NO	GRAPHIC REF	PART NUMBER	QTY	PART NAME 1 2 3 4 5 6 (PRODUCT LEVEL)	SEE PAGE
	1	1	**351-9918**	1	LAMP-HALOGEN (24-VOLT, 70-WATT)	
	2	1	**158-0250**	1	BODY AS-LAMP	
	3	1	**375-0352**	1	LENS AS (FLOODLIGHT)	
	4	1	**158-0252**	1	BEZEL	
	5	1	**188-8849**	2	CLAMP	

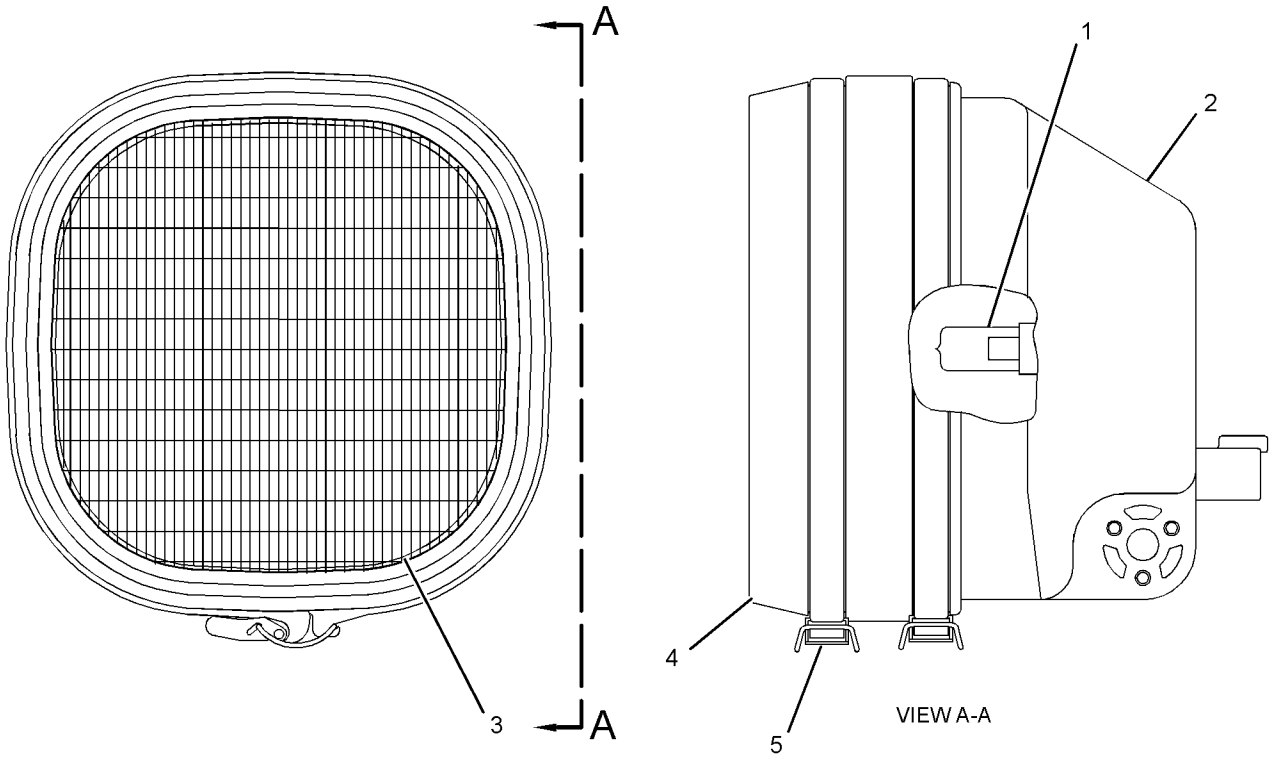

GRAPHIC #1 **<END>** g02864738

254-8155 LAMP GP-FLOOD

S/N: SMC1-UP; GCT1-UP
24-VOLT, 70-WATT
PART OF 235-6336, 235-6337, 235-6338, 235-6339, 235-6340, 263-7419, 284-9064 LIGHTING GP-FLOOD, 279-9544 WIRING GP-ENGINE
ALSO AN ATTACHMENT

SMCS-1434 **i04197471**

NOTE	REF NO	GRAPHIC REF	PART NUMBER	QTY	PART NAME 1 2 3 4 5 6 (PRODUCT LEVEL)	SEE PAGE
	1	1	**351-9918**	1	LAMP-HALOGEN (24-VOLT, 70-WATT)	
M	2	1	**8T-4154**	1	BOLT (M8X1.25X35-MM)	
M	3	1	**5C-7261**	1	NUT (M8X1.25-THD)	
	4	1	**8T-4224**	2	WASHER-HARD (8.8X16X2-MM THK)	
	5	1	**9X-4244**	2	SCREW-SPECIAL (M4X1.79X25-MM)	
	6	1	**202-6614**	1	LENS AS	
	7	1	**175-4292**	1	BODY AS	
	8	1	**164-7556**	1	BRACKET (LAMP RETAINING)	
	9	1	**175-4291**	1	BRACKET AS	

M - METRIC PART

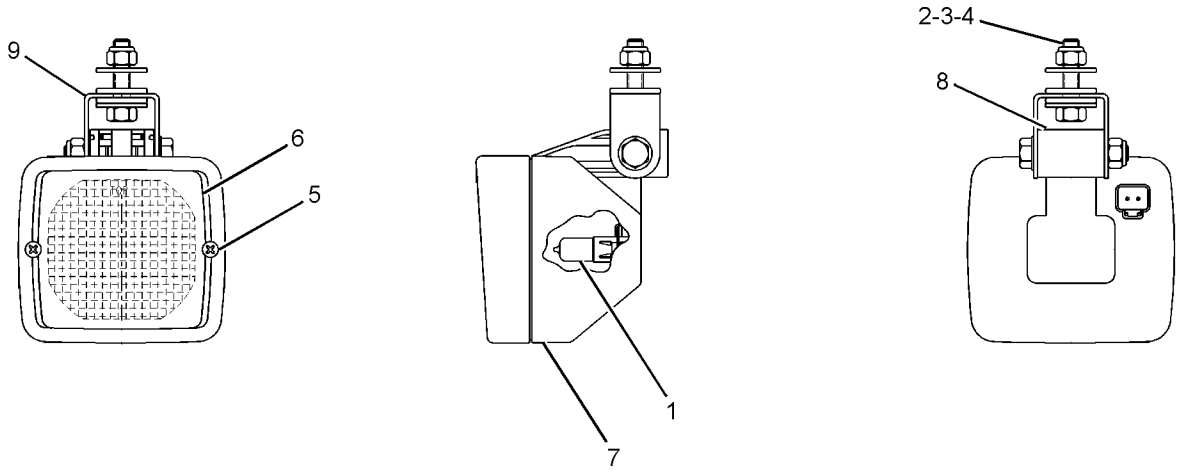

GRAPHIC #1 **<END>** g01205426

243-5296 LAMP GP-WARNING BEACON

S/N: SMC1-UP; GCT1-UP
CANNOT BE USED WITH 283-0581—PAGE: 1021
AN ATTACHMENT
TYPE 1

SMCS-1431 **i04026241**

NOTE	REF NO	GRAPHIC REF	PART NUMBER	QTY	PART NAME 1 2 3 4 5 6 (PRODUCT LEVEL)	SEE PAGE
	1	1	**8D-3932**	4	MOUNTING	
	2	1	**9X-6772**	12	STRAP-CABLE	
	3	1	**134-0165**	4	WASHER (13.8X45X3-MM THK)	
M	4	1	**179-4324**	3	LOCKNUT (M5X0.8-THD)	
	5	1	**248-2985**	1	LAMP GP-WARNING BEACON (24-VOLT)	
		1	**5F-3144**	1	SEAL-O-RING	
		1	**6V-6789**	1	SCREW-WASHER HEAD (6-19X0.37-IN)	
		1	**248-2986**	1	LENS (AMBER, WARNING BEACON)	
		1	**249-5592**	1	LAMP (24-VOLT) (WARNING BEACON)	
	6	1	**248-6955**	1	PLATE AS	
		1	**1F-0748**	4	NUT-WELD (1/2-13-THD)	
		1	**5D-9629**	1	ROD	
M		1	**8T-3490**	6	NUT-WELD (M10X1.5-THD)	
	7	1	**248-6965**	1	HARNESS AS-POWER	
		1	**102-8802**	2	KIT-RECEPTACLE (2-PIN)	
					(EACH INCLUDES RECEPTACLE AS & WEDGE)	
		1	**155-2270**	2	KIT-CONNECTING PLUG (2-PIN)	
					(EACH INCLUDES PLUG AS, WEDGE, & INTERFACE SEAL)	
	8	1	**248-6966**	1	SUPPORT AS	
		1	**5D-9629**	2	ROD	
	9	1	**253-8324**	1	HARNESS AS-LIGHTING (BEACON)	
		1	**102-8802**	1	KIT-RECEPTACLE (2-PIN)	
					(INCLUDES RECEPTACLE AS & WEDGE)	
		1	**155-2270**	1	KIT-CONNECTING PLUG (2-PIN)	
					(INCLUDES PLUG AS, WEDGE, & INTERFACE SEAL)	
	10	1	**253-8326**	1	HARNESS AS-LIGHTING (BEACON)	
		1	**102-8802**	1	KIT-RECEPTACLE (2-PIN)	
					(INCLUDES RECEPTACLE AS & WEDGE)	
	11	1	**130-5300**	1	CLIP	
	12	1	**1W-5040**	8	WASHER-RETAINING (13.8X45.5X12-MM THK)	
	13	1	**4P-7428**	1	CLIP	
	14	1	**4P-7581**	1	CLIP	
	15	1	**4P-8134**	2	CLIP	
	16	1	**5P-8167**	2	BOLT (3/8-16X0.625-IN)	
M	17	1	**6V-4298**	3	BOLT (M5X0.8X16-MM)	
	18	1	**7G-7053**	1	GROMMET	
	19	1	**8T-0328**	6	WASHER-HARD (5.5X10X1-MM THK)	
	20	1	**8T-4121**	6	WASHER-HARD (11X21X2.5-MM THK)	
M	21	1	**8T-4176**	4	BOLT (M12X1.75X90-MM)	
M	22	1	**8T-4195**	4	BOLT (M10X1.5X30-MM)	
	23	1	**8T-4223**	1	WASHER-HARD (13.5X25.5X3-MM THK)	

M - METRIC PART

243-5296 **LAMP GP-WARNING BEACON (*contd.*)** **i04026241**

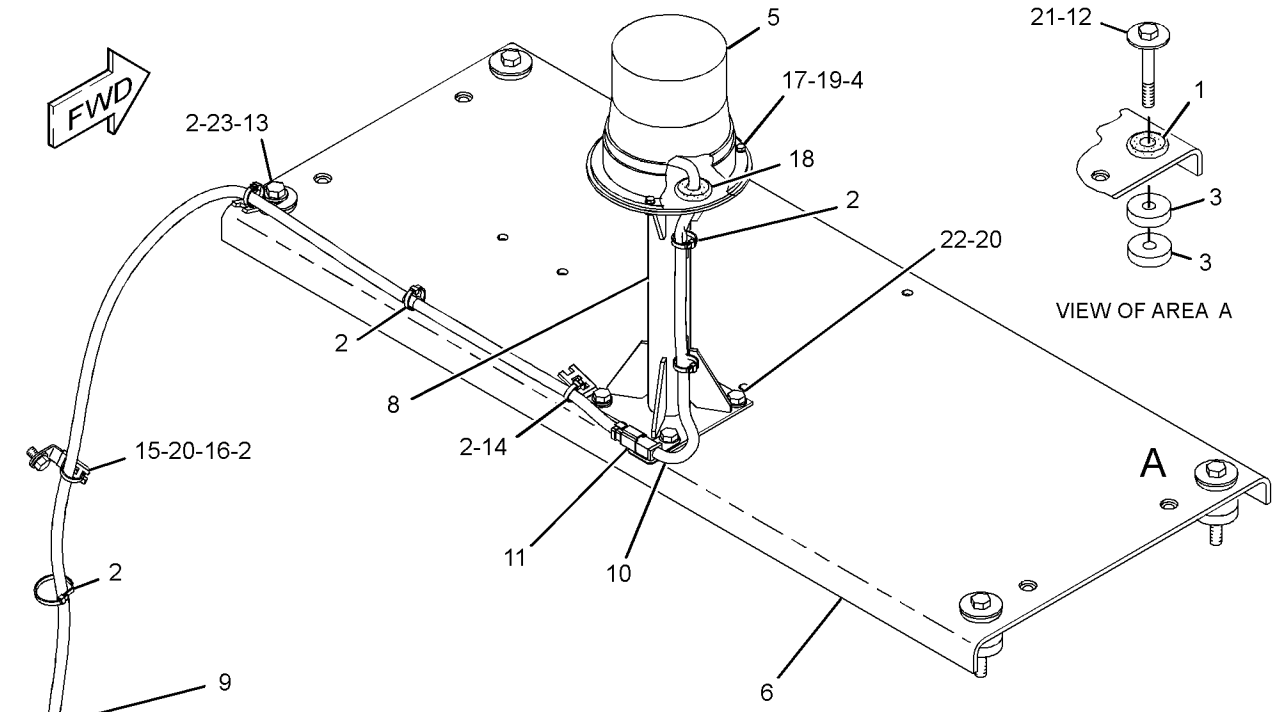

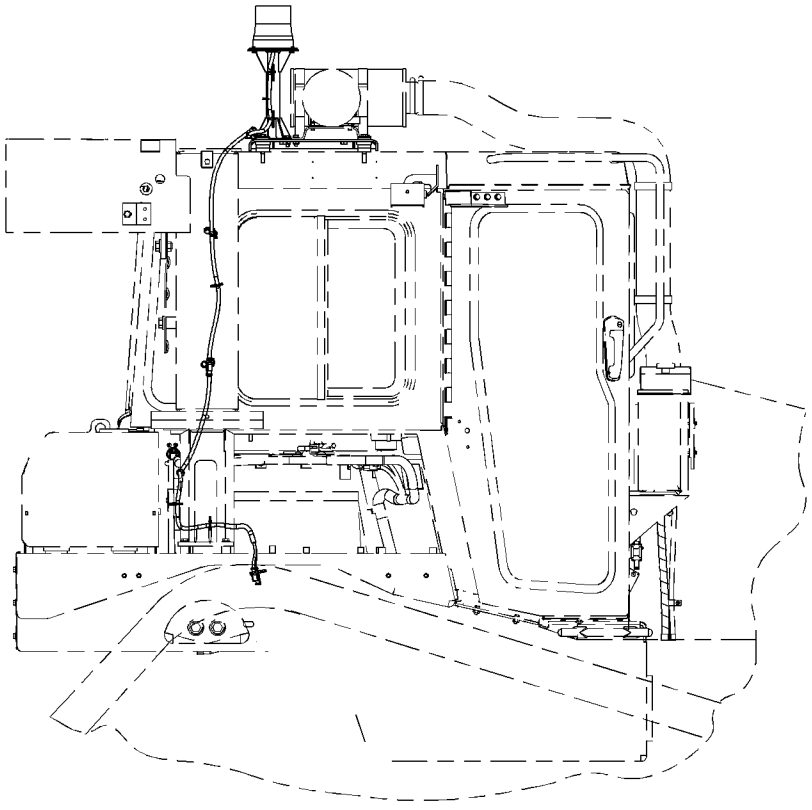

RIGHT SIDE VIEW

GRAPHIC #1 **<END>** g01208326

243-5296 LAMP GP-WARNING BEACON

S/N: SMC1-UP; GCT1-UP
CANNOT BE USED WITH 283-0581—PAGE: 1021
AN ATTACHMENT
TYPE 2

SMCS-1431 **i04776253**

NOTE	REF NO	GRAPHIC REF	PART NUMBER	QTY	PART NAME 1 2 3 4 5 6 (PRODUCT LEVEL)	SEE PAGE
	1	1	**8D-3932**	4	MOUNTING	
	2	1	**9X-6772**	12	STRAP-CABLE	
	3	1	**134-0165**	4	WASHER (13.8X45X3-MM THK)	
M	4	1	**179-4324**	3	LOCKNUT (M5X0.8-THD)	
CY	5	1	**338-1132**	1	LAMP GP-WARNING BEACON (AMBER, STROBE)	304
	6	1	**248-6955**	1	PLATE AS	
		1	**1F-0748**	4	NUT-WELD (1/2-13-THD)	
		1	**5D-9629**	1	ROD	
M		1	**8T-3490**	10	NUT-WELD (M10X1.5-THD)	
	7	1	**248-6965**	1	HARNESS AS-POWER	
E		1	**114-8843**		SLEEVE-PLASTIC (60-CM)	
E		1	**119-3662**		TUBE-HEAT SHRINK (10.85-MM DIA) (13-CM)	
		1	**126-1767**	2	PIN-CONNECTOR (14-GA TO 16-GA)	
		1	**126-1768**	4	SOCKET-CONNECTOR (14-GA TO 16-GA)	
		1	**102-8802**	2	KIT-RECEPTACLE (2-PIN)	
					(EACH INCLUDES RECEPTACLE AS & WEDGE)	
		1	**155-2270**	2	KIT-CONNECTING PLUG (2-PIN)	
					(EACH INCLUDES PLUG AS, WEDGE & INTERFACE SEAL)	
	8	1	**248-6966**	1	SUPPORT AS	
		1	**5D-9629**	2	ROD	
	9	1	**253-8324**	1	HARNESS AS-LIGHTING (BEACON)	
		1	**9W-0852**	2	PIN-CONNECTOR (14-GA TO 16-GA)	
E		1	**114-8843**		SLEEVE-PLASTIC (40-CM)	
		1	**126-1768**	2	SOCKET-CONNECTOR (14-GA TO 16-GA)	
		1	**102-8802**	1	KIT-RECEPTACLE (2-PIN)	
					(INCLUDES RECEPTACLE AS & WEDGE)	
		1	**155-2270**	1	KIT-CONNECTING PLUG (2-PIN)	
					(INCLUDES PLUG AS, WEDGE & INTERFACE SEAL)	
	11	1	**130-5300**	1	CLIP	
	12	1	**1W-5040**	8	WASHER-RETAINING (13.8X45.5X12-MM THK)	
	13	1	**4P-7428**	1	CLIP	
	14	1	**4P-7581**	1	CLIP	
	15	1	**4P-8134**	2	CLIP	
	16	1	**5P-8167**	2	BOLT (3/8-16X0.625-IN)	
CM	17	1	**6V-2313**	3	BOLT (M5X0.8X30-MM)	
	18	1	**7G-7053**	1	GROMMET	
C	19	1	**8T-0328**	3	WASHER-HARD (5.5X10X1-MM THK)	
	20	1	**8T-4121**	6	WASHER-HARD (11X21X2.5-MM THK)	
M	21	1	**8T-4176**	4	BOLT (M12X1.75X90-MM)	
M	22	1	**8T-4195**	4	BOLT (M10X1.5X30-MM)	
	23	1	**8T-4223**	1	WASHER-HARD (13.5X25.5X3-MM THK)	
C	24	1	**4B-4274**	3	WASHER (5.5X13X1.2-MM THK)	
	25	1	**367-7878**	1	SPACER-RUBBER	

C - CHANGE FROM PREVIOUS TYPE
E - ORDER BY THE CENTIMETER
M - METRIC PART
Y - SEPARATE ILLUSTRATION

243-5296 **LAMP GP-WARNING BEACON (*contd.*)** **i04776253**

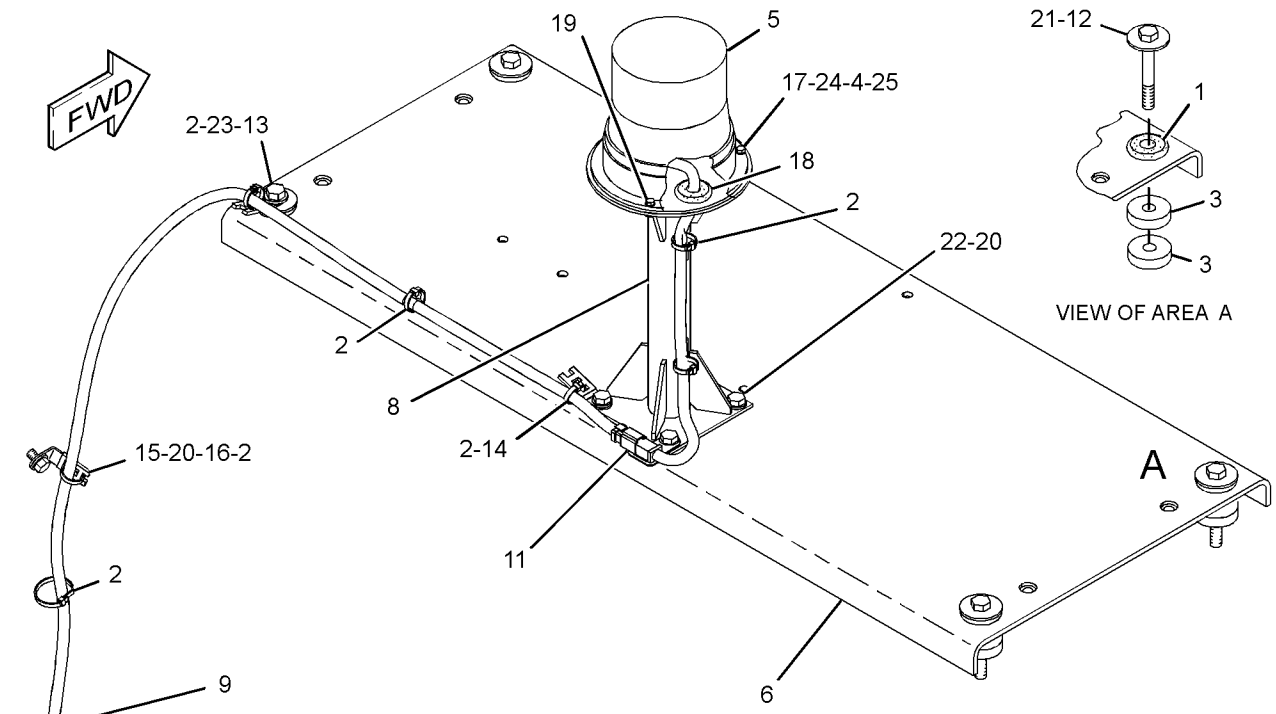

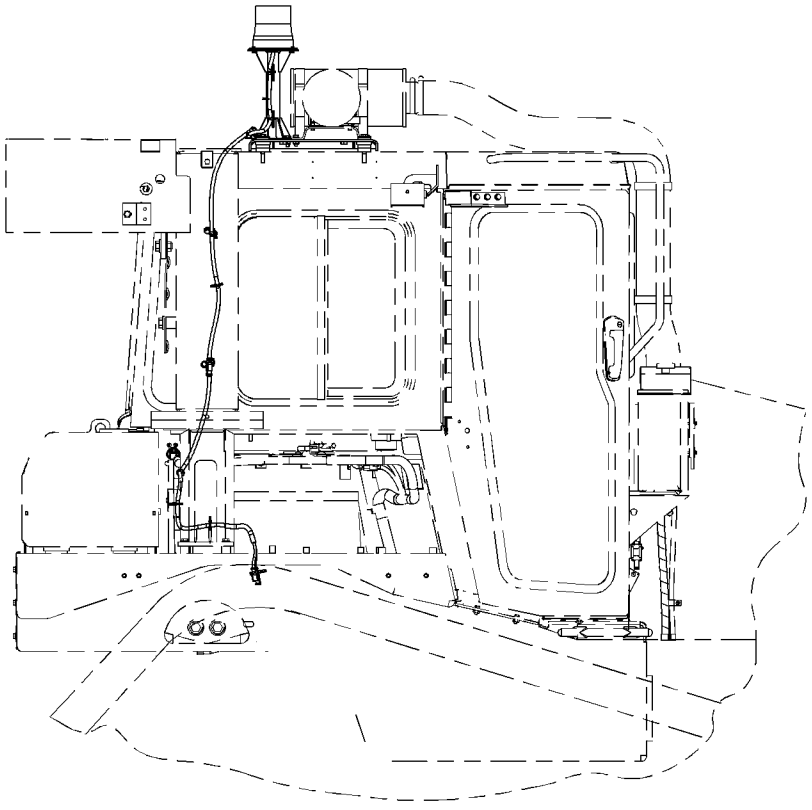

RIGHT SIDE VIEW

GRAPHIC #1 **<END>** g02308375

338-1132 LAMP GP-WARNING BEACON

S/N: SMC1-UP; GCT1-UP
12/24-VOLT
PART OF 243-5296 LAMP GP-WARNING BEACON
AN ATTACHMENT

SMCS-1431 **i05162352**

NOTE	REF NO	GRAPHIC REF	PART NUMBER	QTY	PART NAME 1 2 3 4 5 6 (PRODUCT LEVEL)	SEE PAGE
	1	1	**102-8802**	1	KIT-RECEPTACLE (2-PIN)	
					(INCLUDES RECEPTACLE AS & WEDGE)	
	2	1	**8T-8729**	2	PIN-CONNECTOR (16-GA TO 18-GA)	
	3	1	**356-7515**	1	LENS (AMBER)	
					–OR–	
		1	**421-5583**	1	LENS (RED)	
					–OR–	
		1	**421-5584**	1	LENS (CLEAR)	
					–OR–	
		1	**421-5585**	1	LENS (GREEN)	
E	4	1	**9X-1386**		SLEEVE (44-CM)	

E - ORDER BY THE CENTIMETER

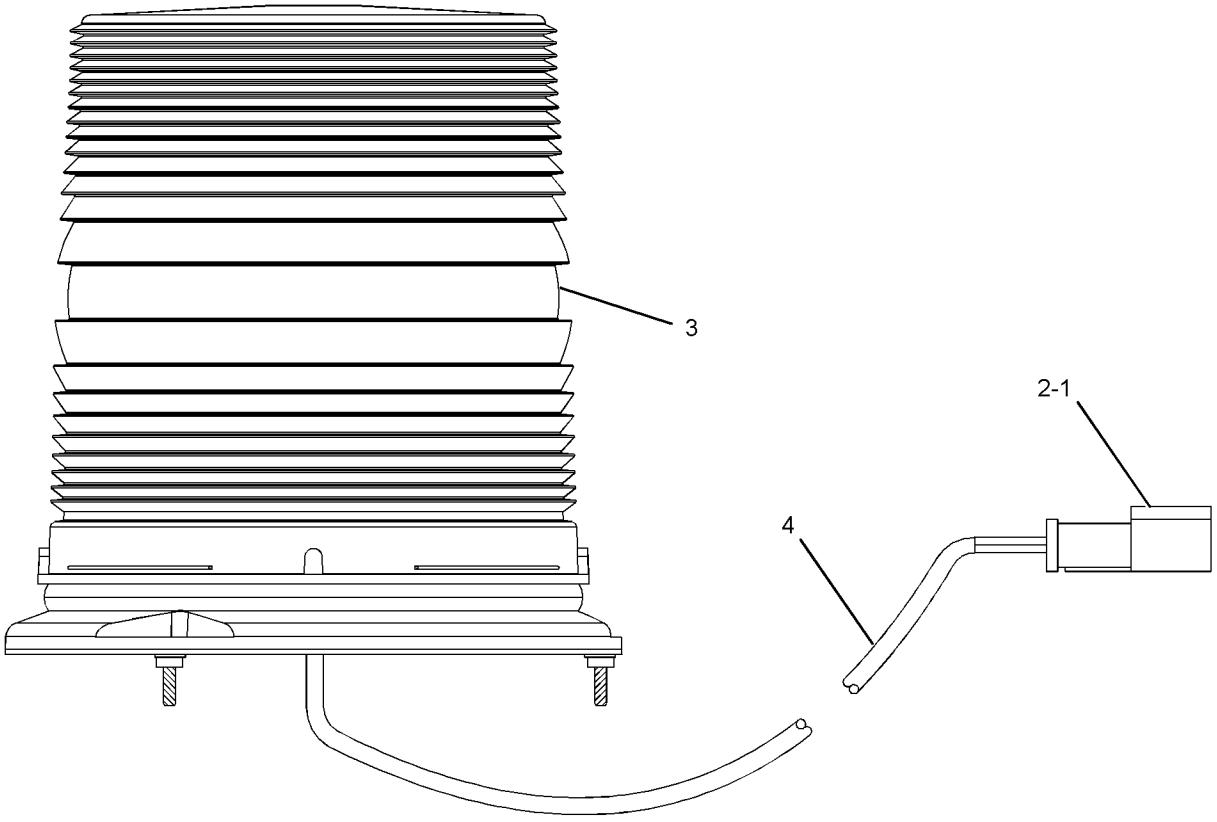

GRAPHIC #1 **<END>** g02193876

152-8427 LIGHTING GP-FLOOD

S/N: SMC1-UP; GCT1-UP
PART OF 235-6338, 235-6339 LIGHTING GP-FLOOD
AN ATTACHMENT

SMCS-1434 **i04742158**

NOTE	REF NO	GRAPHIC REF	PART NUMBER	QTY	PART NAME 1 2 3 4 5 6 (PRODUCT LEVEL)	SEE PAGE
	1	1	**9W-4361**	4	MOUNT-FLEXIBLE	
	2	1	**111-8314**	2	BRACKET AS	
	3	1	**8T-4224**	4	WASHER-HARD (8.8X16X2-MM THK)	
Y	4	1	**147-0319**	2	LAMP GP-FLOOD (24-VOLT, 70-WATT)	297
	5	1	**5M-3062**	2	BOLT (3/8-16X0.75-IN)	
	6	1	**5P-1075**	10	WASHER-HARD (10.2X22.5X3-MM THK)	
	7	1	**5P-2955**	2	BOLT (5/16-18X2.5-IN)	
	8	1	**3E-9860**	2	LOCKNUT (5/16-18-THD)	
	9	1	**6V-8801**	8	NUT (3/8-16-THD)	
	10	1	**114-9363**	1	GUARD AS	
	11	1	**7T-1099**	2	LINK	

Y - SEPARATE ILLUSTRATION

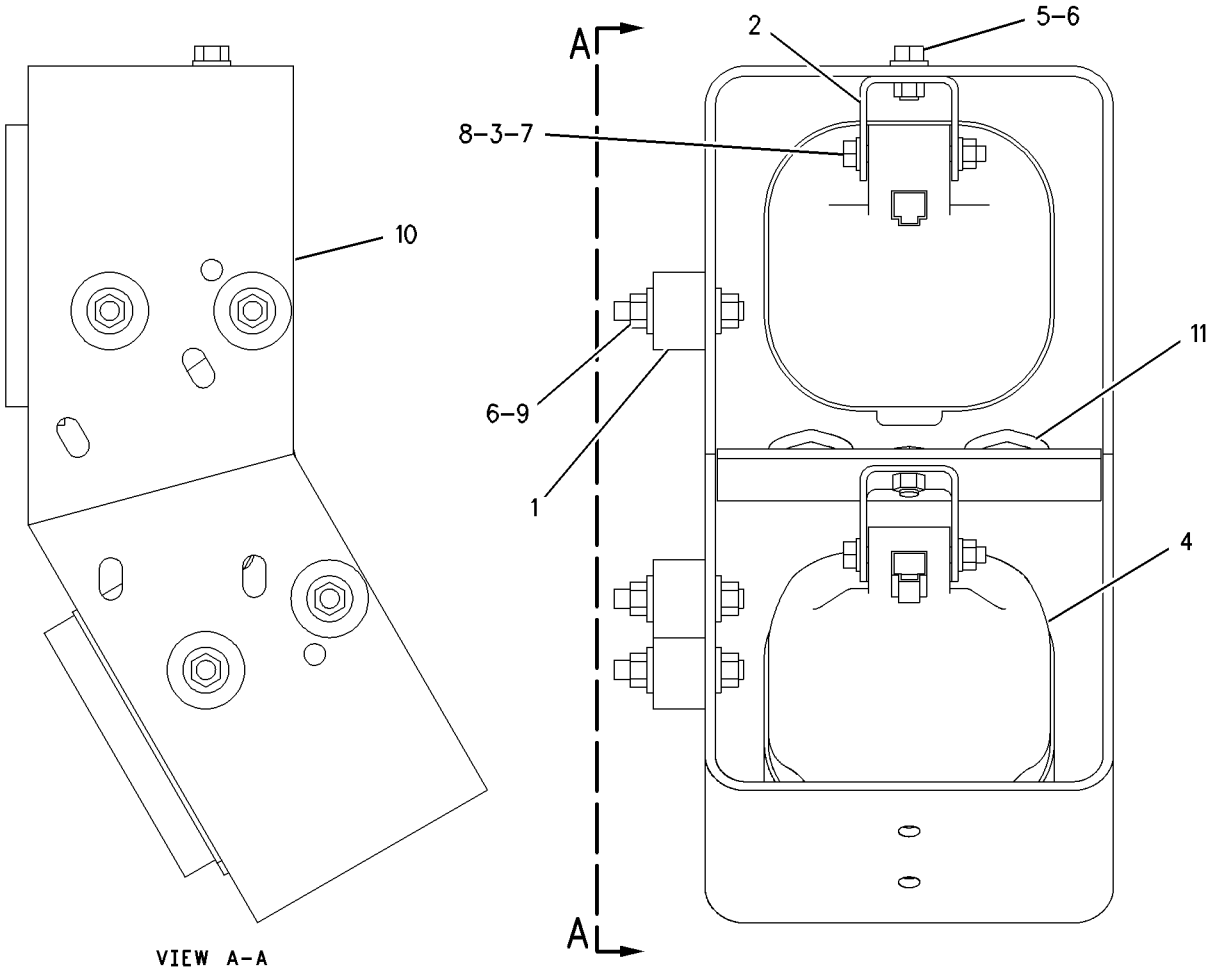

GRAPHIC #1 **<END>** g00916220

235-6336 LIGHTING GP-FLOOD—ENG COMP, FUEL TANK, RAD GUARD

S/N: SMC1-UP; GCT1-UP

AN ATTACHMENT

SMCS-1434 **i04142924**

NOTE	REF NO	GRAPHIC REF	PART NUMBER	QTY	PART NAME 1 2 3 4 5 6 (PRODUCT LEVEL)	SEE PAGE
	1	1	**111-8314**	4	BRACKET AS	
	2	1	**118-6299**	2	GUARD AS	
					(EACH INCLUDES)	
		1	**7T-1099**	1	LINK	
Y	3	1	**139-2116**	1	SWITCH GP-TOGGLE (UNDERHOOD SERVICE LIGHT)	397
	4	1	**167-1884**	2	GUARD	
	5	1	**195-4989**	2	HARNESS AS-LIGHTING (FLOODLIGHT) (REAR)	
					(EACH INCLUDES)	
		1	**102-8804**	1	KIT-RECEPTACLE (4-PIN)	
					(INCLUDES RECEPTACLE AS & WEDGE)	
		1	**155-2270**	1	KIT-CONNECTING PLUG (2-PIN)	
					(INCLUDES PLUG AS, WEDGE, & INTERFACE SEAL)	
	6	1	**222-7885**	1	SWITCH AS-ROCKER (24-VOLT) (REAR FLOODLIGHTS)	
	7	1	**237-7308**	1	BRACKET	
Y	8	1	**147-0319**	4	LAMP GP-FLOOD (24-VOLT, 70-WATT) (FUEL TANK, RADIATOR GUARD)	297
CY	9	1	**254-8155**	1	LAMP GP-FLOOD (24-VOLT) (ENGINE COMPARTMENT)	299
	10	1	**5M-3062**	4	BOLT (3/8-16X0.75-IN)	
	11	1	**5P-1075**	16	WASHER-HARD (10.2X22.5X3-MM THK)	
	12	1	**5P-2955**	4	BOLT (5/16-18X2.5-IN)	
	13	1	**6H-4005**	2	GROMMET	
	14	1	**6V-8189**	4	NUT (5/16-18-THD)	
B	15	1	**7K-1181**	8	STRAP-CABLE	
M	16	1	**8T-4136**	14	BOLT (M10X1.5X25-MM)	
	17	1	**8T-4224**	8	WASHER-HARD (8.8X16X2-MM THK)	
	18	1	**8T-4896**	2	WASHER-HARD (10.2X18.5X2.5-MM THK)	
	19	1	**8T-7934**	2	WASHER-HARD (11X21X5-MM THK)	
	20	1	**248-6862**	1	FILM-IDENTIFICATION (WORK LIGHT)	

B - USE AS REQUIRED
C - CHANGE FROM PREVIOUS TYPE
M - METRIC PART
Y - SEPARATE ILLUSTRATION

235-6336 **LIGHTING GP-FLOOD (*contd.*)** **i04142924**

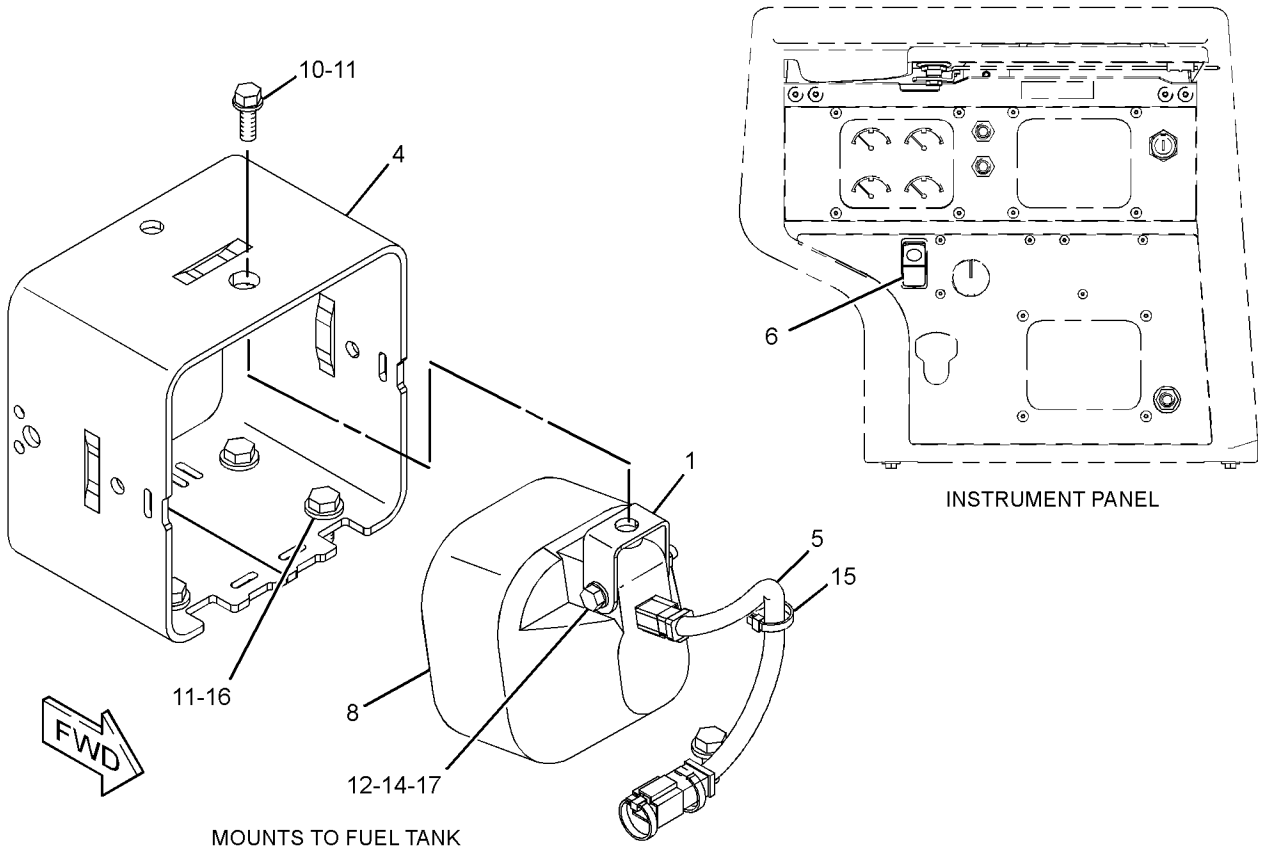

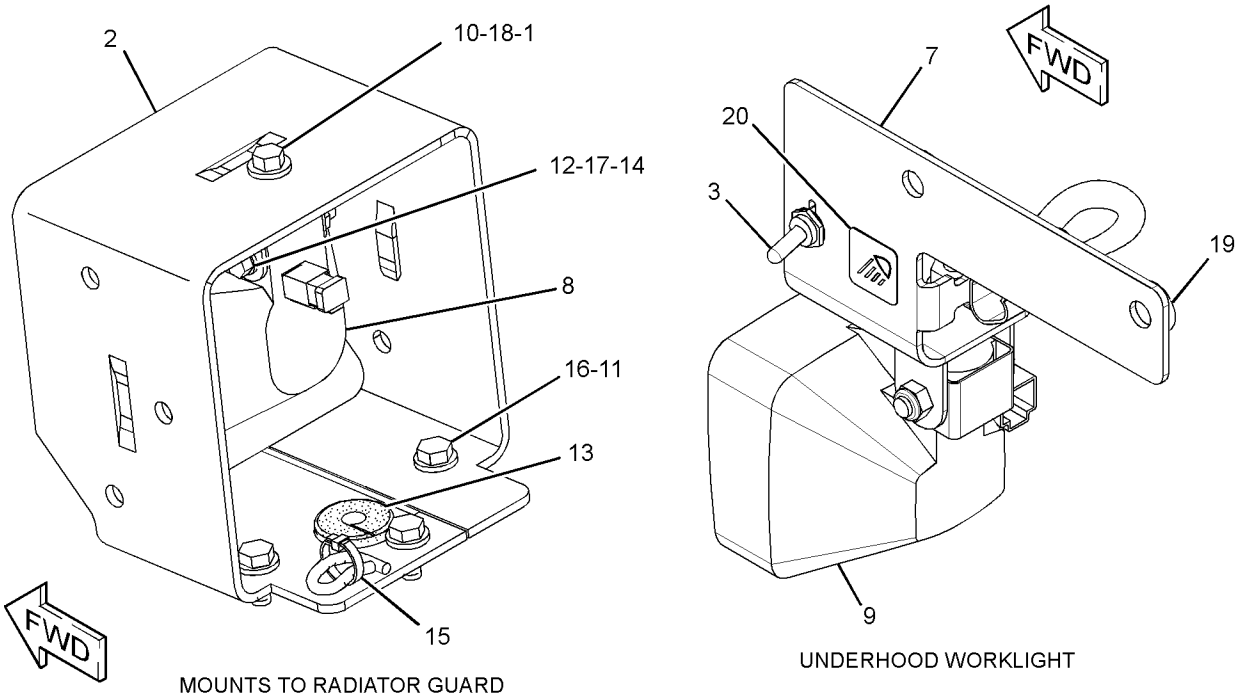

GRAPHIC #1 **<END>** g01307804

235-6337 LIGHTING GP-FLOOD—CYL, ENG COMP, FUEL TANK, ROPS

S/N: SMC1-UP; GCT1-UP

AN ATTACHMENT

SMCS-1434 **i04146050**

NOTE	REF NO	GRAPHIC REF	PART NUMBER	QTY	PART NAME 1 2 3 4 5 6 (PRODUCT LEVEL)	SEE PAGE
B	1	1	**7K-1181**	26	STRAP-CABLE	
	2	1	**9W-4361**	16	MOUNT-FLEXIBLE	
	3	1	**111-8314**	6	BRACKET AS	
	4	1	**115-1024**	1	BRACKET AS (RH)	
	5	1	**115-1025**	1	BRACKET AS (LH)	
					(EACH BRACKET AS INCLUDES)	
		1	**1F-0750**	3	NUT-WELD (3/8-16-THD)	
	6	1	**129-8331**	2	PLATE AS	
Y	7	1	**139-2116**	1	SWITCH GP-TOGGLE (UNDERHOOD SERVICE LIGHT)	397
	8	1	**167-1884**	6	GUARD	
	9	1	**167-2171**	2	HARNESS AS-WIRING (CYLINDER)	
					(EACH INCLUDES)	
		1	**102-8802**	1	KIT-RECEPTACLE (2-PIN)	
					(INCLUDES RECEPTCLE AS & WEDGE)	
		1	**155-2270**	1	KIT-CONNECTING PLUG (2-PIN)	
					(INCLUDES PLUG AS, WEDGE, & INTERFACE SEAL)	
	10	1	**172-4869**	2	BRACKET	
	11	1	**185-9607**	2	HARNESS AS-LIGHTING (ROPS)	
					(EACH INCLUDES)	
		1	**102-8804**	1	KIT-RECEPTACLE (4-PIN)	
					(INCLUDES RECEPTACLE AS & WEDGE)	
		1	**155-2270**	2	KIT-CONNECTING PLUG (2-PIN)	
					(EACH INCLUDES PLUG AS, WEDGE, & INTERFACE SEAL)	
B	12	1	**215-3662**	2	SPACER (22.2X50.8X31.8-MM THK)	
	13	1	**222-7885**	1	SWITCH AS-ROCKER (24-VOLT) (REAR FLOODLIGHTS)	
	14	1	**237-7308**	1	BRACKET	
Y	15	1	**147-0319**	6	LAMP GP-FLOOD (24-VOLT, 70-WATT) (ROPS, FUEL TANK, CYLINDER)	297
CY	16	1	**254-8155**	1	LAMP GP-FLOOD (24-VOLT) (ENGINE COMPARTMENT)	299
	17	1	**4D-7794**	4	CLIP	
	18	1	**5M-3062**	6	BOLT (3/8-16X0.75-IN)	
	19	1	**5P-1075**	56	WASHER-HARD (10.2X22.5X3-MM THK)	
	20	1	**5P-2955**	6	BOLT (5/16-18X2.5-IN)	
	21	1	**5P-9085**	2	CLIP	
	22	1	**5S-7379**	4	BOLT (3/8-16X0.875-IN)	
	23	1	**6H-4005**	4	GROMMET	
	24	1	**6K-4934**	4	CLIP (SLOT)	
	25	1	**6K-4935**	4	CLIP (TAB)	
	26	1	**6V-8189**	6	NUT (5/16-18-THD)	
	27	1	**6V-8801**	32	NUT (3/8-16-THD)	
M	28	1	**7X-2562**	4	BOLT (M20X2.5X45-MM)	
M	29	1	**7X-2564**	2	BOLT (M20X2.5X90-MM)	
	30	1	**8P-8540**	2	GROMMET	
	31	1	**8T-4123**	2	WASHER (22X35X3.5-MM THK)	
M	32	1	**8T-4133**	4	NUT (M10X1.5-THD)	
M	33	1	**8T-4136**	14	BOLT (M10X1.5X25-MM)	
	34	1	**8T-4224**	12	WASHER-HARD (8.8X16X2-MM THK)	
	35	1	**8T-4896**	4	WASHER-HARD (10.2X18.5X2.5-MM THK)	
	36	1	**8T-5439**	4	WASHER-HARD (21.5X45X6-MM THK)	
	37	1	**8T-7934**	2	WASHER-HARD (11X21X5-MM THK)	
	38	1	**248-6862**	1	FILM-IDENTIFICATION (WORK LIGHT)	

B - USE AS REQUIRED
C - CHANGE FROM PREVIOUS TYPE
M - METRIC PART
Y - SEPARATE ILLUSTRATION

235-6337 **LIGHTING GP-FLOOD (*contd.*)** **i04146050**

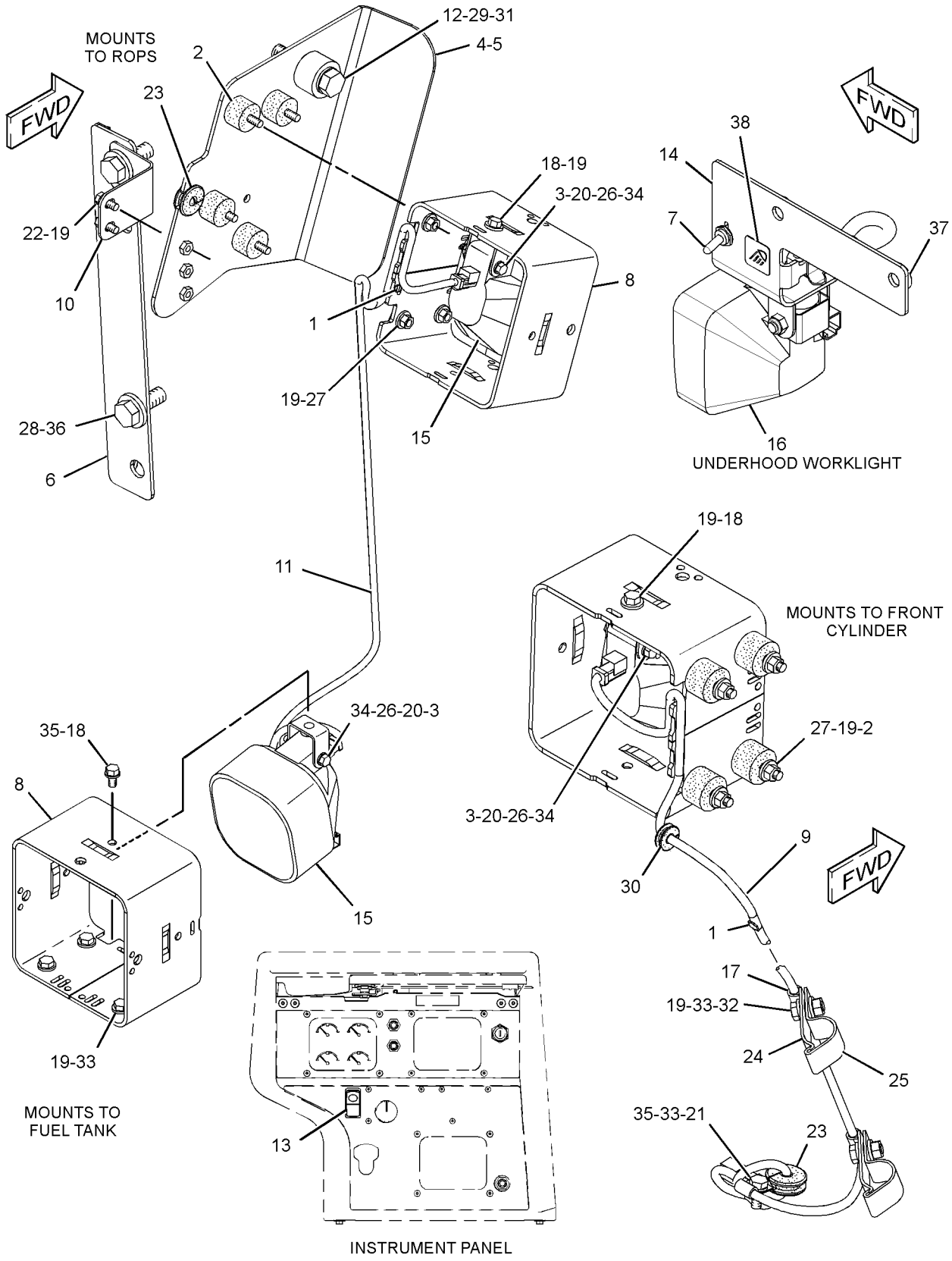

GRAPHIC #1 **<END>** g01307818

235-6338 LIGHTING GP-FLOOD—CYL, ENG COMP, FUEL TANK, ROPS

S/N: SMC1-UP; GCT1-UP

AN ATTACHMENT

SMCS-1434 **i04146052**

NOTE	REF NO	GRAPHIC REF	PART NUMBER	QTY	PART NAME 1 2 3 4 5 6 (PRODUCT LEVEL)	SEE PAGE
B	1	1	**7K-1181**	36	STRAP-CABLE	
	2	1	**9W-4361**	16	MOUNT-FLEXIBLE	
	3	1	**111-8314**	6	BRACKET AS	
	4	1	**115-1024**	1	BRACKET AS (RH)	
	5	1	**115-1025**	1	BRACKET AS (LH)	
					(EACH BRACKET AS INCLUDES)	
		1	**1F-0750**	3	NUT-WELD (3/8-16-THD)	
	6	1	**129-8331**	2	PLATE AS	
Y	7	1	**139-2116**	1	SWITCH GP-TOGGLE (UNDERHOOD SERVICE LIGHT)	397
B	8	1	**151-6689**	2	SPACER (21X50X31.7-MM THK)	
Y	9	1	*152-8427*	2	LIGHTING GP-FLOOD (ROPS)	305
	10	1	**167-1884**	6	GUARD	
	11	1	**172-4869**	2	BRACKET	
	12	1	**175-0451**	2	HARNESS AS-LIGHTING (REAR) (ROPS)	
					(EACH INCLUDES)	
		1	**102-8804**	1	KIT-RECEPTACLE (4-PIN)	
					(INCLUDES RECEPTACLE AS & WEDGE)	
		1	**155-2270**	3	KIT-CONNECTING PLUG (2-PIN)	
					(EACH INCLUDES PLUG AS, WEDGE, & INTERFACE SEAL)	
	13	1	**175-0452**	2	HARNESS AS-LIGHTING (FRONT) (CYLINDER)	
					(EACH INCLUDES)	
		1	**102-8802**	1	KIT-RECEPTACLE (2-PIN)	
					(INCLUDES RECEPTACLE AS & WEDGE)	
		1	**155-2270**	2	KIT-CONNECTING PLUG (2-PIN)	
					(EACH INCLUDES PLUG AS, WEDGE, & INTERFACE SEAL)	
	14	1	**205-8900**	2	GUARD AS	
	15	1	**222-7885**	1	SWITCH AS-ROCKER (24-VOLT) (REAR FLOODLIGHTS)	
	16	1	**237-7308**	1	BRACKET	
Y	17	1	**147-0319**	6	LAMP GP-FLOOD (24-VOLT, 70-WATT) (FUEL TANK, CYLINDER)	297
CY	18	1	**254-8155**	1	LAMP GP-FLOOD (24-VOLT) (ENGINE COMPARTMENT)	299
	19	1	**4D-7794**	4	CLIP	
	20	1	**4P-7581**	2	CLIP	
	21	1	**5M-3062**	6	BOLT (3/8-16X0.75-IN)	
	22	1	**5P-1075**	52	WASHER-HARD (10.2X22.5X3-MM THK)	
	23	1	**5P-2955**	6	BOLT (5/16-18X2.5-IN)	
	24	1	**5P-9085**	2	CLIP	
	25	1	**5S-7379**	4	BOLT (3/8-16X0.875-IN)	
	26	1	**6H-4005**	4	GROMMET	
	27	1	**6K-4934**	4	CLIP (SLOT)	
	28	1	**6K-4935**	4	CLIP (TAB)	
	29	1	**6V-8189**	6	NUT (5/16-18-THD)	
	30	1	**6V-8801**	32	NUT (3/8-16-THD)	
M	31	1	**7X-2562**	4	BOLT (M20X2.5X45-MM)	
M	32	1	**7X-2564**	2	BOLT (M20X2.5X90-MM)	
	33	1	**8P-8540**	4	GROMMET	
	34	1	**8T-4123**	2	WASHER (22X35X3.5-MM THK)	
M	35	1	**8T-4133**	4	NUT (M10X1.5-THD)	
M	36	1	**8T-4136**	14	BOLT (M10X1.5X25-MM)	
	37	1	**8T-4224**	12	WASHER-HARD (8.8X16X2-MM THK)	
	38	1	**8T-4896**	8	WASHER-HARD (10.2X18.5X2.5-MM THK)	
	39	1	**8T-5439**	4	WASHER-HARD (21.5X45X6-MM THK)	
	40	1	**8T-7934**	2	WASHER-HARD (11X21X5-MM THK)	
	41	1	**248-6862**	1	FILM-IDENTIFICATION (WORK LIGHT)	

235-6338 **LIGHTING GP-FLOOD (*contd.*)** **i04146052**

NOTE	REF NO	GRAPHIC REF	PART NUMBER	QTY	PART NAME 1 2 3 4 5 6 (PRODUCT LEVEL)	SEE PAGE

B - USE AS REQUIRED
C - CHANGE FROM PREVIOUS TYPE
M - METRIC PART
Y - SEPARATE ILLUSTRATION

235-6338 **LIGHTING GP-FLOOD (*contd.*)** **i04146052**

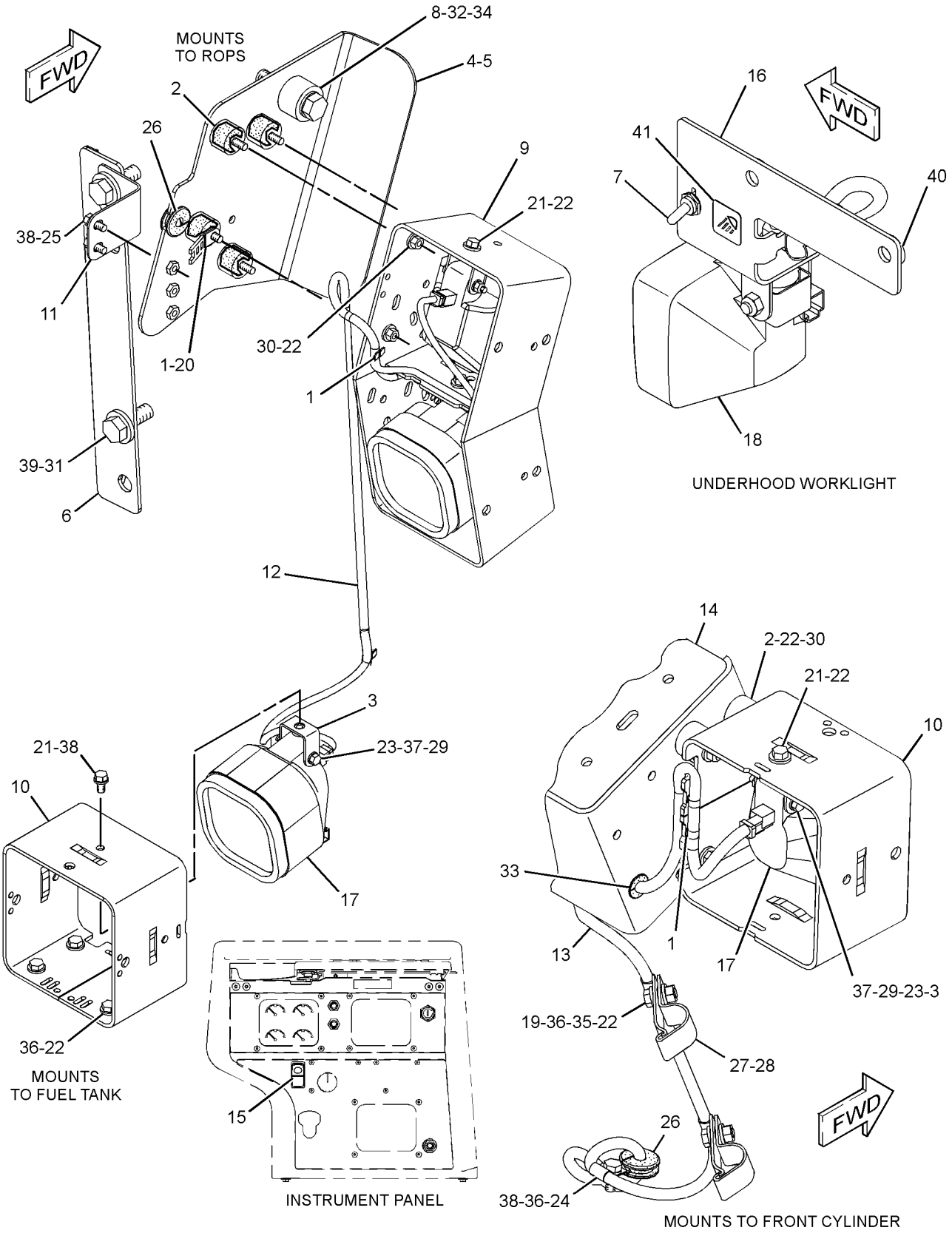

GRAPHIC #1 **<END>** g01307771

235-6339 LIGHTING GP-FLOOD—CYL, ENG COMP, FUEL TANK, ROPS

S/N: SMC1-UP; GCT1-UP

FOR USE WITH WASTE DISPOSAL AR

CANNOT BE USED WITH 235-6336—PAGE: 306, 235-6337—PAGE: 308, 235-6338—PAGE: 310, 263-7419—PAGE: 320, 284-9064—PAGE: 323

AN ATTACHMENT

SMCS-1434 **i04042292**

NOTE	REF NO	GRAPHIC REF	PART NUMBER	QTY	PART NAME 1 2 3 4 5 6 (PRODUCT LEVEL)	SEE PAGE
B	1	1	**7K-1181**	34	STRAP-CABLE	
	2	1	**111-8314**	2	BRACKET AS	
	3	1	**115-1024**	1	BRACKET AS (RH)	
	4	1	**115-1025**	1	BRACKET AS (LH)	
					(EACH BRACKET AS INCLUDES)	
		1	**1F-0750**	3	NUT-WELD (3/8-16-THD)	
	5	1	**129-8331**	2	PLATE AS	
	6	1	**139-2116**	1	SWITCH GP-TOGGLE (UNDER HOOD SERVICE LIGHT)	
		1	**3E-3371**	1	WEDGE-RECEPTACLE LOCK (3-PIN)	
		1	**6T-3631**	2	NUT-HEX (15/32-32-THD)	
		1	**6T-3632**	1	LOCKWASHER	
		1	**6T-3633**	1	RING-LOCKING	
		1	**186-3735**	3	PIN-CONNECTOR (16-GA TO 18-GA)	
		1	**102-8803**	1	KIT-RECEPTACLE (3-PIN)	
					(INCLUDES RECEPTACLE AS & WEDGE)	
	7	1	**151-6689**	2	SPACER (21X50X31.7-MM THK)	
	8	1	**167-1884**	2	GUARD	
	9	1	**172-4868**	2	BRACKET	
	10	1	**172-4869**	2	BRACKET	
	11	1	**175-0451**	2	HARNESS AS-LIGHTING (REAR)	
					(EACH INCLUDES)	
		1	**102-8804**	1	KIT-RECEPTACLE (4-PIN)	
					(INCLUDES RECEPTACLE AS & WEDGE)	
		1	**155-2270**	3	KIT-CONNECTING PLUG (2-PIN)	
					(EACH INCLUDES PLUG AS, WEDGE, & INTERFACE SEAL)	
	12	1	**183-1961**	2	BRACKET	
	13	1	**183-1982**	2	HARNESS AS-LIGHTING (FRONT)	
					(EACH INCLUDES)	
		1	**102-8802**	1	KIT-RECEPTACLE (2-PIN)	
					(INCLUDES RECEPTACLE AS & WEDGE)	
		1	**155-2270**	2	KIT-CONNECTING PLUG (2-PIN)	
					(EACH INCLUDES PLUG AS, WEDGE, & INTERFACE SEAL)	
Y	14	1	*152-8427*	4	LIGHTING GP-FLOOD (ROPS, CYLINDER MOUNTED)	305
	15	1	**222-7885**	1	SWITCH AS-ROCKER (24-VOLT) (REAR FLOODLIGHTS)	
	16	1	**237-7308**	1	BRACKET	
Y	17	1	**147-0319**	2	LAMP GP-FLOOD (24-VOLT, 70-WATT) (FUEL TANK)	297
CY	18	1	**254-8155**	1	LAMP GP-FLOOD (24-VOLT) (UNDER HOOD SERVICE LIGHT)	299
	19	1	**4D-7794**	4	CLIP	
	20	1	**4P-7581**	2	CLIP	
	21	1	**5M-3062**	2	BOLT (3/8-16X0.75-IN)	
	22	1	**5P-1075**	32	WASHER-HARD (10.2X22.5X3-MM THK)	
	23	1	**5P-2955**	2	BOLT (5/16-18X2.5-IN)	
	24	1	**5P-9085**	2	CLIP	
	25	1	**5S-7379**	4	BOLT (3/8-16X0.875-IN)	
	26	1	**6H-4005**	4	GROMMET	
	27	1	**6K-4934**	4	CLIP (SLOT)	
	28	1	**6K-4935**	4	CLIP (TAB)	
	29	1	**6V-8189**	2	NUT (5/16-18-THD)	
M	30	1	**7X-2562**	4	BOLT (M20X2.5X45-MM)	
M	31	1	**7X-2564**	2	BOLT (M20X2.5X90-MM)	
	32	1	**8P-8540**	2	GROMMET	

235-6339 **LIGHTING GP-FLOOD (*contd.*)** **i04042292**

NOTE	REF NO	GRAPHIC REF	PART NUMBER	QTY	PART NAME 1 2 3 4 5 6 (PRODUCT LEVEL)	SEE PAGE
M	33	1	**8T-4133**	8	NUT (M10X1.5-THD)	
M	34	1	**8T-4136**	18	BOLT (M10X1.5X25-MM)	
M	35	1	**8T-4195**	8	BOLT (M10X1.5X30-MM)	
	36	1	**8T-4224**	4	WASHER-HARD (8.8X16X2-MM THK)	
	37	1	**8T-4896**	8	WASHER-HARD (10.2X18.5X2.5-MM THK)	
	38	1	**8T-5439**	6	WASHER-HARD (21.5X45X6-MM THK)	
	39	1	**8T-7934**	2	WASHER-HARD (11X21X5-MM THK)	
	40	1	**248-6862**	1	FILM-IDENTIFICATION (WORK LIGHT)	

B - USE AS REQUIRED
C - CHANGE FROM PREVIOUS TYPE
M - METRIC PART
Y - SEPARATE ILLUSTRATION

235-6339 **LIGHTING GP-FLOOD (*contd.*)** **i04042292**

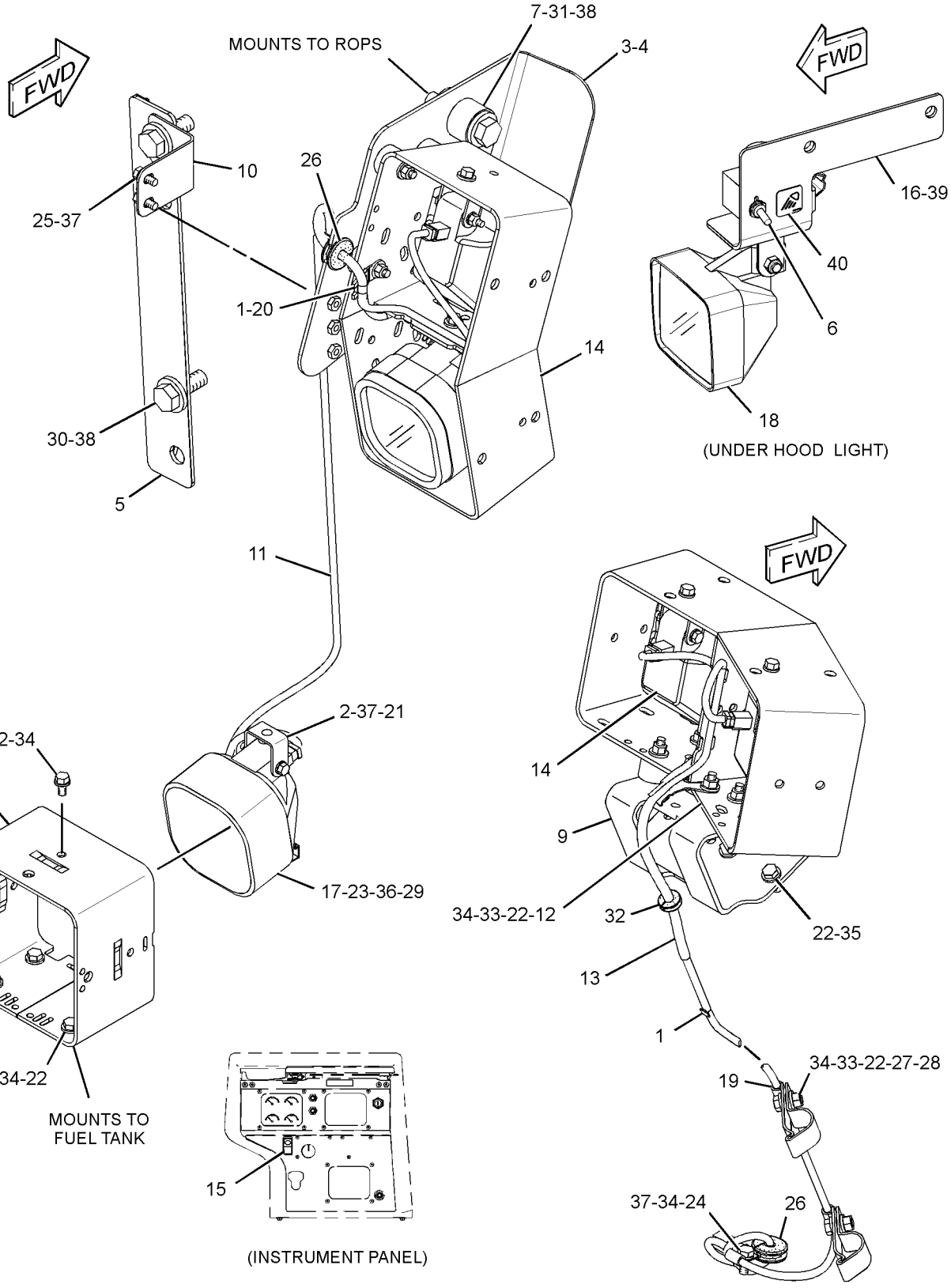

GRAPHIC #1 **<END>** g01307803

235-6340 LIGHTING GP-FLOOD—ENG COMP, FUEL TANK, SWEEP

S/N: SMC1-UP; GCT1-UP
FOR USE WITH 237-9318—PAGE: 636
CANNOT BE USED WITH 323-2871—PAGE: 1004
AN ATTACHMENT

SMCS-1434 **i04042289**

NOTE	REF NO	GRAPHIC REF	PART NUMBER	QTY	PART NAME 1 2 3 4 5 6 (PRODUCT LEVEL)	SEE PAGE
B	1	2	**7K-1181**	42	STRAP-CABLE	
	2	2	**9W-4361**	24	MOUNT-FLEXIBLE	
	3	2	**111-8314**	8	BRACKET AS	
	4	2	**129-8331**	2	PLATE AS	
	5	1	**139-2116**	1	SWITCH GP-TOGGLE (UNDERHOOD SERVICE LIGHT)	
		1	**6T-3631**	2	NUT-HEX (15/32-32-THD)	
		1	**6T-3632**	1	LOCKWASHER	
		1	**6T-3633**	1	RING-LOCKING	
		1	**186-3735**	3	PIN-CONNECTOR (16-GA TO 18-GA)	
		1	**102-8803**	1	KIT-RECEPTACLE (3-PIN)	
					(INCLUDES RECEPTACLE AS & WEDGE)	
	6	2	**167-1884**	6	GUARD	
	7	2	**168-8656**	2	PLATE	
	8	2	**186-0636**	2	HARNESS AS-LIGHTING (REAR FLOODLIGHTS)	
					(EACH INCLUDES)	
		2	**102-8804**	1	KIT-RECEPTACLE (4-PIN)	
					(INCLUDES RECEPTACLE AS & WEDGE)	
		2	**155-2270**	2	KIT-CONNECTING PLUG (2-PIN)	
					(EACH INCLUDES PLUG AS, WEDGE & INTERFACE SEAL)	
	9	2	**213-4502**	8	GUARD AS-LAMP	
	10	2	**213-4504**	2	GUARD AS	
	11	1	**222-7885**	1	SWITCH AS-ROCKER (24-VOLT) (REAR FLOODLIGHTS)	
	12	2	**234-5846**	2	PLATE	
	13	1	**237-7308**	1	BRACKET	
	14	1	**248-6862**	1	FILM-IDENTIFICATION (WORK LIGHT)	
	15	2	**308-9223**	2	HARNESS AS-LIGHTING (FRONT FLOODLIGHTS)	
					(EACH INCLUDES)	
		2	**102-8802**	1	KIT-RECEPTACLE (2-PIN)	
					(INCLUDES RECEPTACLE AS & WEDGE)	
		2	**155-2270**	2	KIT-CONNECTING PLUG (2-PIN)	
					(EACH INCLUDES PLUG AS, WEDGE & INTERFACE SEAL)	
Y	16	2	**147-0319**	2	LAMP GP-FLOOD (24-VOLT, 70-WATT) (REAR FLOODLIGHTS)	297
Y	16A	2	**147-0319**	4	LAMP GP-FLOOD (24-VOLT, 70-WATT) (SWEEP, FRONT)	297
Y	17	2	**153-2073**	2	LAMP GP-FLOOD (24-VOLT) (SWEEP, SIDE, RH)	298
CY	18	1	**254-8155**	1	LAMP GP-FLOOD (24-VOLT) (UNDER HOOD SERVICE LIGHT)	299
	19	2	**4L-6454**	2	BOLT (3/8-16X1-IN)	
	20	2	**4P-7429**	2	CLIP	
	21	2	**5M-3062**	6	BOLT (3/8-16X0.75-IN)	
	22	2	**5P-1075**	72	WASHER-HARD (10.2X22.5X3-MM THK)	
	23	2	**5P-2228**	8	BOLT (1/2-13X1-IN)	
	24	2	**5P-2955**	8	BOLT (5/16-18X2.5-IN)	
	25	2	**6H-4005**	2	GROMMET	
	26	2	**6V-8188**	6	NUT (1/2-13-THD)	
	27	2	**6V-8189**	8	NUT (5/16-18-THD)	
	28	2	**6V-8801**	48	NUT (3/8-16-THD)	
M	29	2	**7X-2562**	4	BOLT (M20X2.5X45-MM)	
M	30	2	**8T-4136**	26	BOLT (M10X1.5X25-MM)	
	31	2	**8T-4223**	14	WASHER-HARD (13.5X25.5X3-MM THK)	
	32	2	**8T-4224**	16	WASHER-HARD (8.8X16X2-MM THK)	
	33	2	**8T-4896**	10	WASHER-HARD (10.2X18.5X2.5-MM THK)	

235-6340 **LIGHTING GP-FLOOD (*contd.*)** **i04042289**

NOTE	REF NO	GRAPHIC REF	PART NUMBER	QTY	PART NAME 1 2 3 4 5 6 (PRODUCT LEVEL)	SEE PAGE
	34	2	**8T-5439**	4	WASHER-HARD (21.5X45X6-MM THK)	
	35	1	**8T-7934**	2	WASHER-HARD (11X21X5-MM THK)	
	37	1	**4P-7581**	2	CLIP	

B - USE AS REQUIRED
C - CHANGE FROM PREVIOUS TYPE
M - METRIC PART
Y - SEPARATE ILLUSTRATION

235-6340 **LIGHTING GP-FLOOD (*contd.*)** **i04042289**

REFER TO ALL ILLUSTRATIONS OF
THIS GROUP FOR AUXILIARY VIEWS

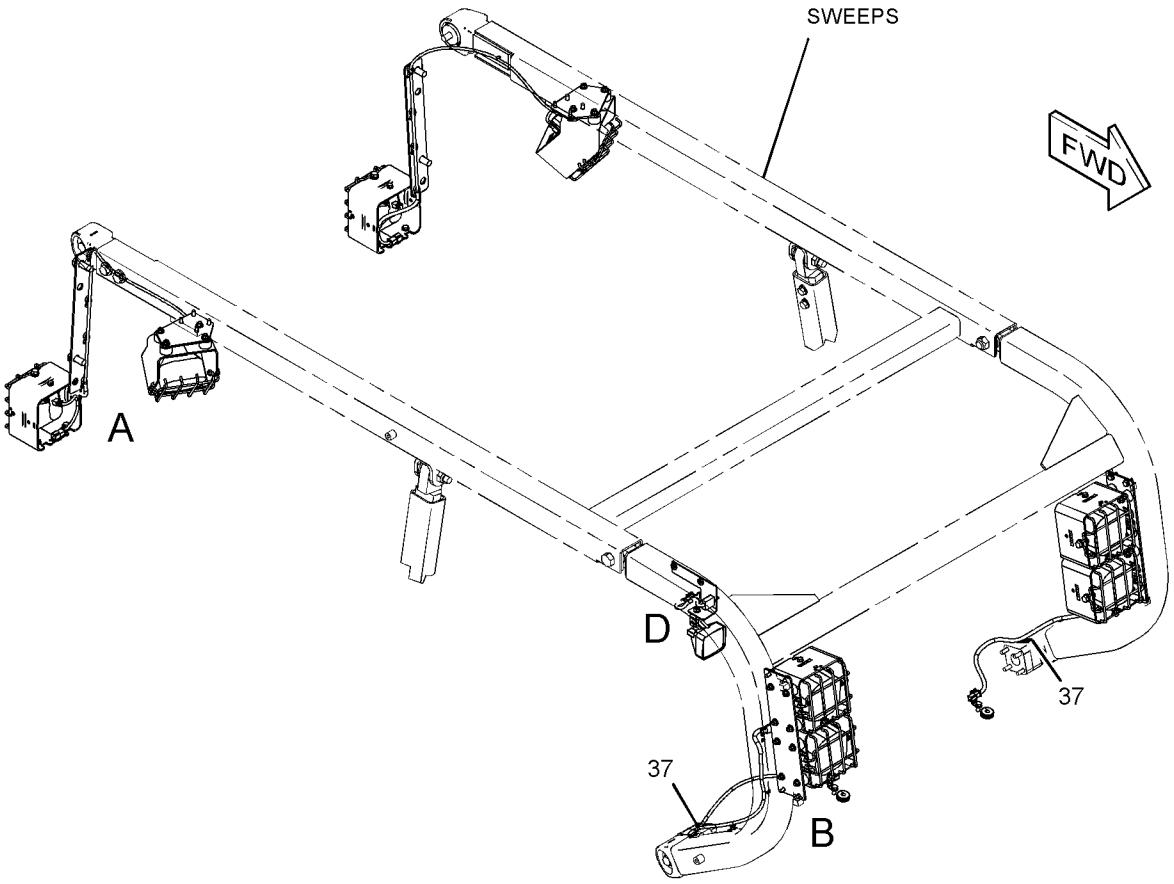

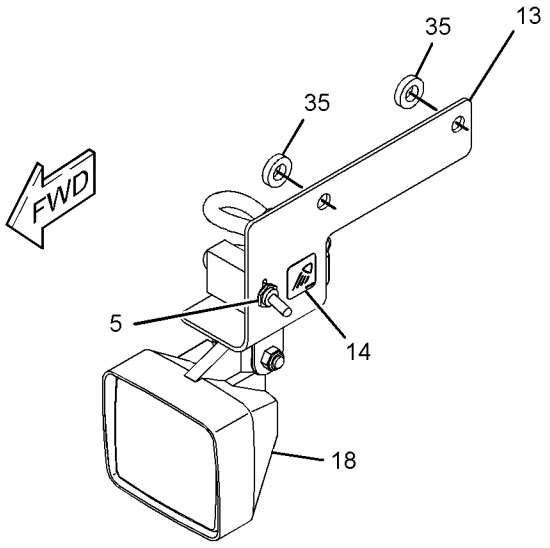

VIEW OF AREA D
UNDERHOOD SERVICE LIGHT

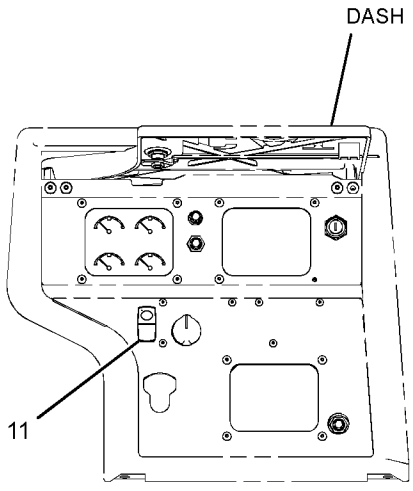

INSTRUMENT PANEL
(CAB VIEW)

GRAPHIC #1 g01540393

235-6340 **LIGHTING GP-FLOOD (*contd.*)** **i04042289**

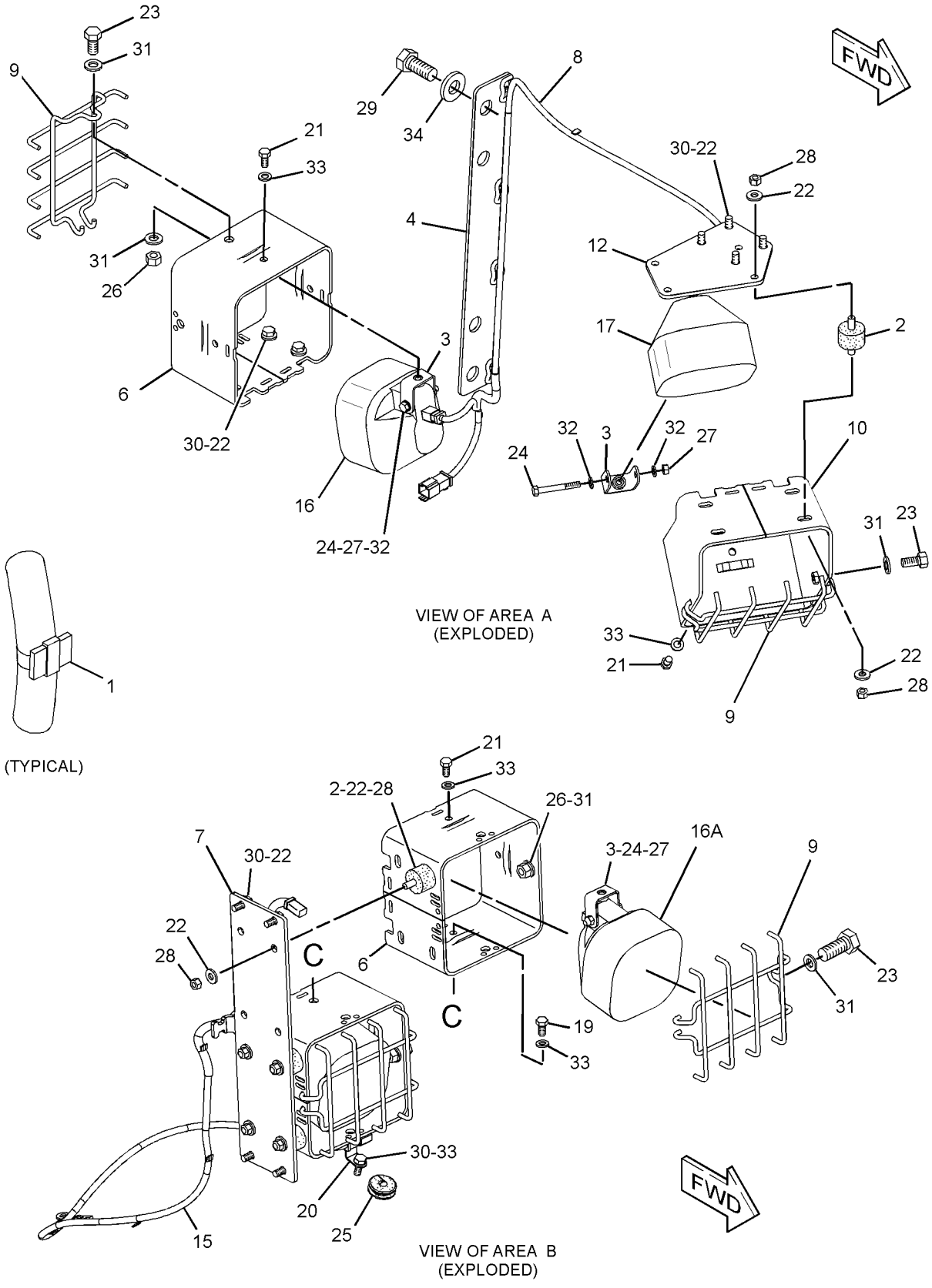

GRAPHIC #2 **<END>** g02278533

263-7419 LIGHTING GP-FLOOD—CYL, ENG COMP, FUEL TANK, ROPS

S/N: SMC1-UP; GCT1-UP

FOR USE WITH WASTE DISPOSAL ARRANGEMENT

CANNOT BE USED WITH 235-6336—PAGE: 306, 235-6337—PAGE: 308, 235-6338—PAGE: 310, 235-6339—PAGE: 313

AN ATTACHMENT

SMCS-1434 **i04045497**

NOTE	REF NO	GRAPHIC REF	PART NUMBER	QTY	PART NAME 1 2 3 4 5 6 (PRODUCT LEVEL)	SEE PAGE
	1	1	**7K-1181**	26	STRAP-CABLE	
	2	1	**9W-4361**	16	MOUNT-FLEXIBLE	
	3	1	**111-8314**	6	BRACKET AS	
	4	1	**115-1024**	1	BRACKET AS (RH)	
		1	**1F-0750**	3	NUT-WELD (3/8-16-THD)	
	5	1	**115-1025**	1	BRACKET AS (LH)	
		1	**1F-0750**	3	NUT-WELD (3/8-16-THD)	
	6	1	**129-8331**	2	PLATE AS	
	7	1	**139-2116**	1	SWITCH GP-TOGGLE (UNDER HOOD SERVICE LIGHT)	
		1	**3E-3371**	1	WEDGE-RECEPTACLE LOCK (3-PIN)	
		1	**102-8803**	1	KIT-RECEPTACLE (3-PIN)	
		1	**6T-3631**	2	NUT-HEX (15/32-32-THD)	
		1	**6T-3632**	1	LOCKWASHER	
		1	**6T-3633**	1	RING-LOCKING	
		1	**186-3735**	3	PIN-CONNECTOR (16-GA TO 18-GA)	
	8	1	**151-6689**	2	SPACER (21X50X31.7-MM THK)	
	9	1	**167-1884**	6	GUARD	
	10	1	**167-2171**	2	HARNESS AS-WIRING	
					(EACH INCLUDES)	
		1	**102-8802**	1	KIT-RECEPTACLE (2-PIN)	
					(INCLUDES RECEPTACLE AS & WEDGE)	
		1	**155-2270**	1	KIT-CONNECTING PLUG (2-PIN)	
					(INCLUDES PLUG AS, WEDGE, & INTERFACE SEAL)	
	11	1	**172-4868**	2	BRACKET	
	12	1	**172-4869**	2	BRACKET	
	13	1	**185-9607**	2	HARNESS AS-LIGHTING	
					(EACH INCLUDES)	
		1	**102-8804**	1	KIT-RECEPTACLE (4-PIN)	
					(INCLUDES RECEPTACLE AS & WEDGE)	
		1	**155-2270**	2	KIT-CONNECTING PLUG (2-PIN)	
					(EACH INCLUDES PLUG AS, WEDGE, & INTERFACE SEAL)	
	14	1	**222-7885**	1	SWITCH AS-ROCKER (24-VOLT) (REAR FLOODLIGHTS)	
	15	1	**237-7308**	1	BRACKET	
	16	1	**132-5789**	2	CLIP	
Y	17	1	**147-0319**	6	LAMP GP-FLOOD (24-VOLT, 70-WATT) (ROPS, FUEL TANK, CYLINDER)	297
CY	18	1	**254-8155**	1	LAMP GP-FLOOD (24-VOLT) (UNDER HOOD SERVICE LIGHT)	299
	19	1	**4D-7794**	4	CLIP	
	20	1	**5M-3062**	6	BOLT (3/8-16X0.75-IN)	
	21	1	**5P-1075**	56	WASHER-HARD (10.2X22.5X3-MM THK)	
	22	1	**5P-2955**	6	BOLT (5/16-18X2.5-IN)	
	23	1	**5P-9085**	2	CLIP	
	24	1	**5S-7379**	4	BOLT (3/8-16X0.875-IN)	
	25	1	**6H-4005**	4	GROMMET	
	26	1	**6K-4934**	4	CLIP (SLOT)	
	27	1	**6K-4935**	4	CLIP (TAB)	
	28	1	**6V-8189**	6	NUT (5/16-18-THD)	
	29	1	**6V-8801**	32	NUT (3/8-16-THD)	
M	30	1	**7X-2562**	4	BOLT (M20X2.5X45-MM)	
M	31	1	**7X-2564**	2	BOLT (M20X2.5X90-MM)	
	32	1	**8P-8540**	2	GROMMET	
M	33	1	**8T-4133**	6	NUT (M10X1.5-THD)	

263-7419 **LIGHTING GP-FLOOD (*contd.*)** **i04045497**

NOTE	REF NO	GRAPHIC REF	PART NUMBER	QTY	PART NAME 1 2 3 4 5 6 (PRODUCT LEVEL)	SEE PAGE
M	34	1	**8T-4136**	16	BOLT (M10X1.5X25-MM)	
M	35	1	**8T-4195**	8	BOLT (M10X1.5X30-MM)	
	36	1	**8T-4224**	12	WASHER-HARD (8.8X16X2-MM THK)	
	37	1	**8T-4896**	16	WASHER-HARD (10.2X18.5X2.5-MM THK)	
	38	1	**8T-5439**	6	WASHER-HARD (21.5X45X6-MM THK)	
	39	1	**8T-7934**	2	WASHER-HARD (11X21X5-MM THK)	
	40	1	**248-6862**	1	FILM-IDENTIFICATION (WORK LIGHT)	

C - CHANGE FROM PREVIOUS TYPE
M - METRIC PART
Y - SEPARATE ILLUSTRATION

263-7419 **LIGHTING GP-FLOOD (*contd.*)** **i04045497**

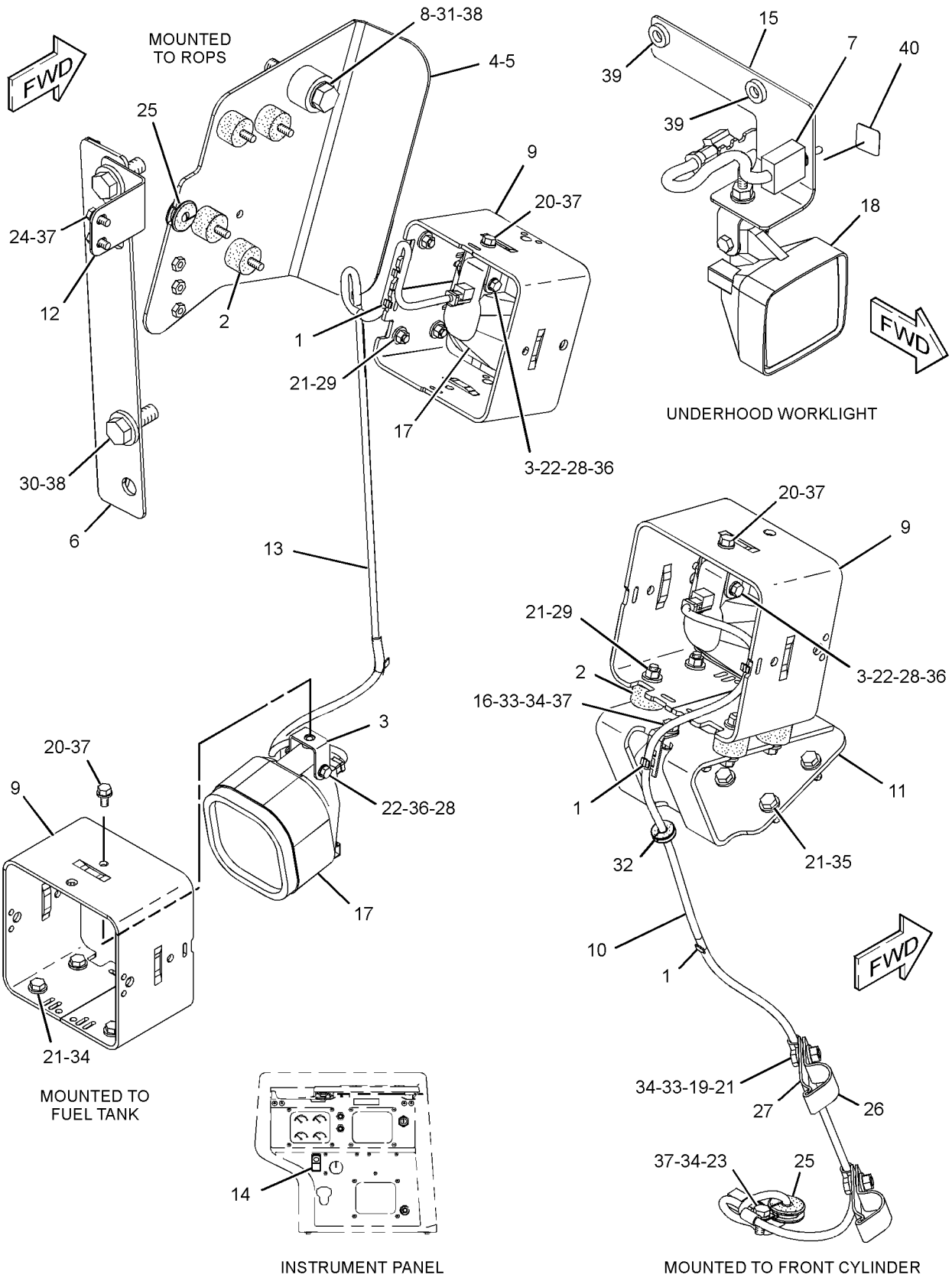

GRAPHIC #1 **<END>** g01306559

284-9064 LIGHTING GP-FLOOD—REAR GUARD, SWEEP, UNDER HOOD

S/N: SMC1-304; GCT1-455

FOR USE WITH 323-2871—PAGE: 1004, 237-9318—PAGE: 636

AN ATTACHMENT

SMCS-1434 **i03148221**

NOTE	REF NO	GRAPHIC REF	PART NUMBER	QTY	PART NAME 1 2 3 4 5 6 (PRODUCT LEVEL)	SEE PAGE
B	1	1,2	**7K-1181**	50	STRAP-CABLE	
	2	2	**9W-4361**	20	MOUNT-FLEXIBLE	
	3	2	**111-8314**	8	BRACKET AS	
	4	1	**139-2116**	1	SWITCH GP-TOGGLE (UNDERHOOD SERVICE LIGHT)	
		1	**6T-3631**	2	NUT-HEX (15/32-32-THD)	
		1	**6T-3632**	1	LOCKWASHER	
		1	**6T-3633**	1	RING-LOCKING	
		1	**186-3735**	3	PIN-CONNECTOR (16-GA TO 18-GA)	
		1	**102-8803**	1	KIT-RECEPTACLE (3-PIN)	
					(INCLUDES RECEPTACLE AS & WEDGE)	
	5	2	**168-8655**	2	HARNESS AS-LIGHTING (FRONT FLOOD, RH, LH)	
					(EACH INCLUDES)	
		2	**102-8802**	1	KIT-RECEPTACLE (2-PIN)	
					(INCLUDES RECEPTACLE AS & WEDGE)	
		2	**155-2270**	2	KIT-CONNECTING PLUG (2-PIN)	
					(EACH INCLUDES PLUG AS, WEDGE, & INTERFACE SEAL)	
	6	2	**213-4502**	6	GUARD AS-LAMP	
	7	1	**222-7885**	1	SWITCH AS-ROCKER (24-VOLT) (REAR FLOODLIGHTS)	
	8	1	**237-7308**	1	BRACKET	
	9	1	**248-6862**	1	FILM-IDENTIFICATION (WORK LIGHT)	
	10	2	**279-7243**	2	PLATE	
	11	2	**291-4018**	2	PLATE	
	12	2	**291-4020**	4	GUARD AS	
	13	1	**296-8114**	2	HARNESS AS-LIGHTING	
					(EACH INCLUDES)	
		1	**102-8802**	1	KIT-RECEPTACLE (2-PIN)	
					(INCLUDES RECEPTACLE AS & WEDGE)	
		1	**155-2270**	1	KIT-CONNECTING PLUG (2-PIN)	
					(INCLUDES PLUG AS, WEDGE, & INTERFACE SEAL)	
	14	1,2	**297-6418**	2	HARNESS AS-LIGHTING	
					(EACH INCLUDES)	
		1,2	**102-8804**	1	KIT-RECEPTACLE (4-PIN)	
					(INCLUDES RECEPTACLE AS & WEDGE)	
		1,2	**155-2270**	2	KIT-CONNECTING PLUG (2-PIN)	
					(EACH INCLUDES PLUG AS, WEDGE, & INTERFACE SEAL)	
Y	15	2	**147-0319**	2	LAMP GP-FLOOD (24-VOLT, 70-WATT) (REAR FLOODLIGHTS)	297
Y	15A	2	**147-0319**	2	LAMP GP-FLOOD (24-VOLT, 70-WATT) (SWEEP, SIDE)	297
Y	15B	2	**147-0319**	4	LAMP GP-FLOOD (24-VOLT, 70-WATT) (SWEEP, FRONT)	297
Y	16	1	**254-8155**	1	LAMP GP-FLOOD (24-VOLT) (UNDERHOOD SERVICE LIGHT)	299
	17	2	**4L-6454**	10	BOLT (3/8-16X1-IN)	
	18	1	**4P-7428**	2	CLIP	
	19	2	**4P-7429**	2	CLIP	
	20	2	**5M-3062**	4	BOLT (3/8-16X0.75-IN)	
	21	2	**5P-1075**	50	WASHER-HARD (10.2X22.5X3-MM THK)	
	22	2	**5P-2955**	8	BOLT (5/16-18X2.5-IN)	
	23	2	**6H-4005**	2	GROMMET	
	24	2	**6V-8189**	8	NUT (5/16-18-THD)	
	25	2	**6V-8801**	40	NUT (3/8-16-THD)	
M	26	2	**8T-4136**	2	BOLT (M10X1.5X25-MM)	
M	28	2	**8T-4195**	8	BOLT (M10X1.5X30-MM)	
	29	2	**8T-4224**	16	WASHER-HARD (8.8X16X2-MM THK)	

284-9064 **LIGHTING GP-FLOOD (*contd.*)** **i03148221**

NOTE	REF NO	GRAPHIC REF	PART NUMBER	QTY	PART NAME 1 2 3 4 5 6 (PRODUCT LEVEL)	SEE PAGE
	30	2	**8T-4896**	10	WASHER-HARD (10.2X18.5X2.5-MM THK)	
	31	1	**8T-7934**	2	WASHER-HARD (11X21X5-MM THK)	
	32	2	**4P-7581**	2	CLIP	

B - USE AS REQUIRED
M - METRIC PART
Y - SEPARATE ILLUSTRATION

284-9064 **LIGHTING GP-FLOOD (*contd.*)** **i03148221**

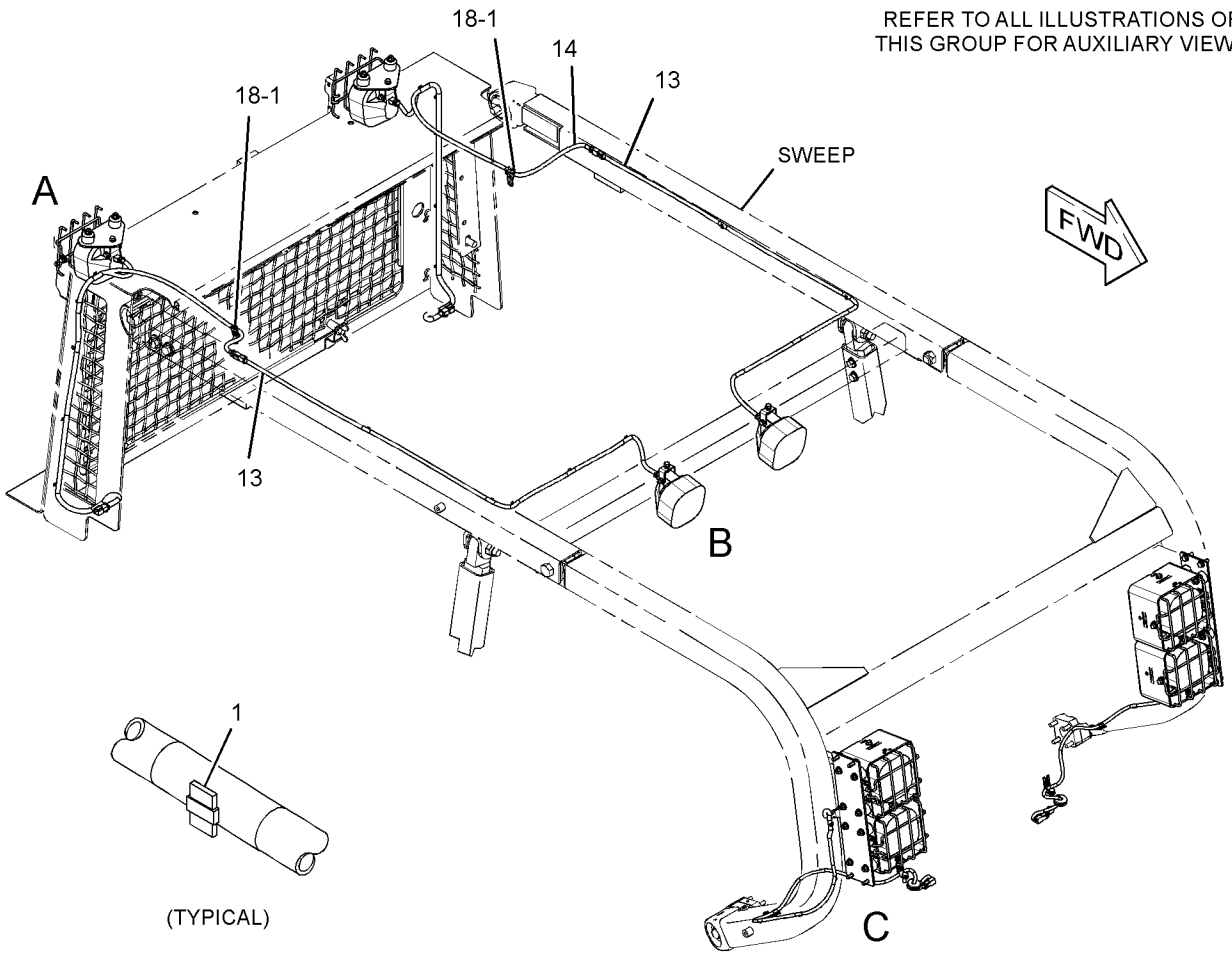

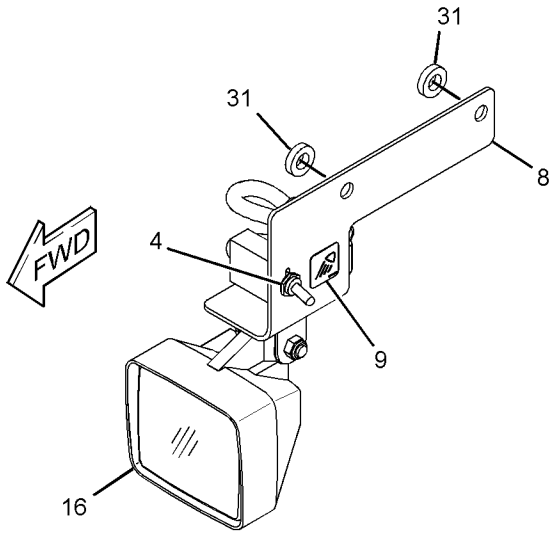

(UNDERHOOD SERVICE LIGHT)

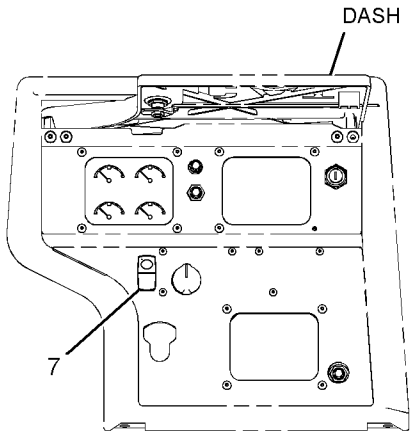

INSTRUMENT PANEL
(CAB VIEW)

GRAPHIC #1 g01535657

284-9064 **LIGHTING GP-FLOOD (*contd.*)** **i03148221**

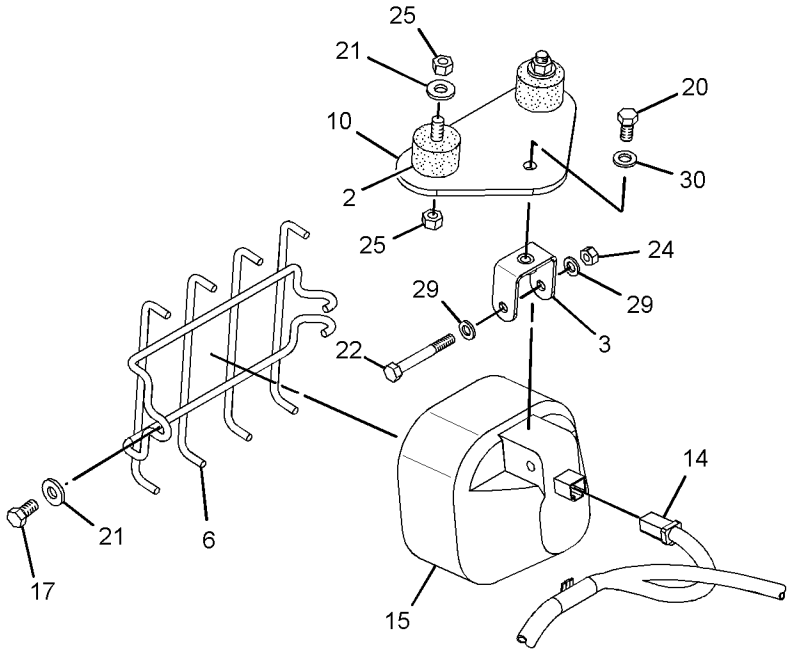

VIEW OF AREA A
(EXPLODED)

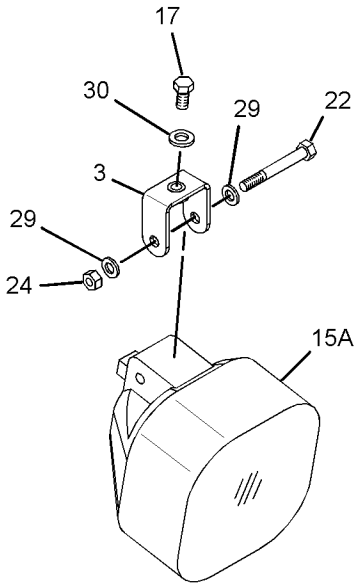

VIEW OF AREA B
(EXPLODED)

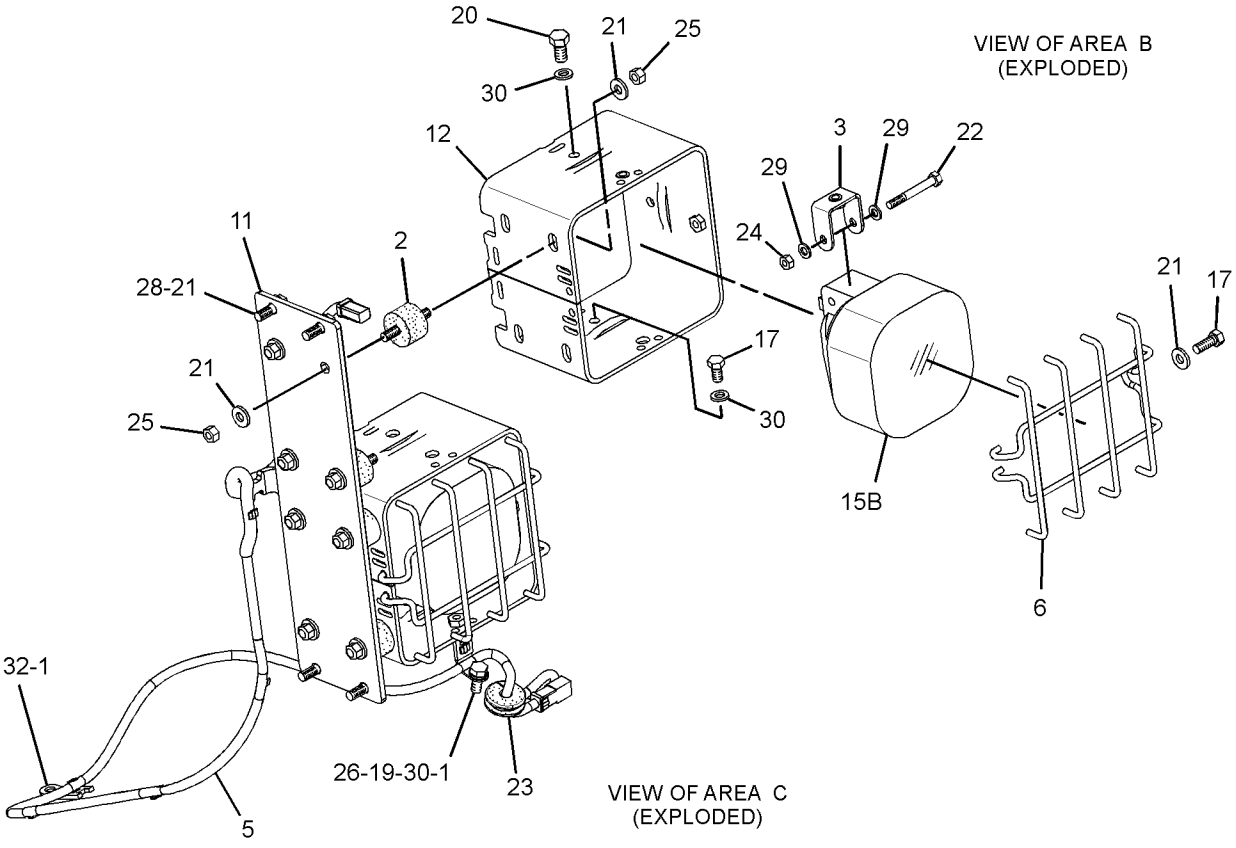

VIEW OF AREA C
(EXPLODED)

GRAPHIC #2 **<END>** g01535659

284-9064 LIGHTING GP-FLOOD—REAR GUARD, SWEEP, UNDER HOOD

S/N: SMC305-354; GCT456-601

FOR USE WITH 323-2871—PAGE: 1004, 237-9318—PAGE: 636

AN ATTACHMENT

SMCS-1434 **i03743140**

NOTE	REF NO	GRAPHIC REF	PART NUMBER	QTY	PART NAME 1 2 3 4 5 6 (PRODUCT LEVEL)	SEE PAGE
C	1	1,2	**7K-1181**	38	STRAP-CABLE	
C	2	1,2	**9W-4361**	28	MOUNT-FLEXIBLE	
	3	1	**111-8314**	8	BRACKET AS	
	4	1	**139-2116**	1	SWITCH GP-TOGGLE (UNDERHOOD LIGHT)	
	5	1	**168-8655**	2	HARNESS AS-LIGHTING	
					(EACH INCLUDES)	
		1	**102-8802**	1	KIT-RECEPTACLE (2-PIN)	
					(INCLUDES RECEPTACEL AS & WEDGE)	
E		1	**114-8843**		SLEEVE-PLASTIC (60-CM)	
E		1	**119-3662**		TUBE-HEAT SHRINK (10.85-MM DIA) (13-CM)	
		1	**126-1767**	2	PIN-CONNECTOR (14-GA TO 16-GA)	
		1	**126-1768**	4	SOCKET-CONNECTOR (14-GA TO 16-GA)	
		1	**155-2270**	2	KIT-CONNECTING PLUG (2-PIN)	
					(EACH INCLUDES PLUG AS & WEDGE)	
C	6	1,2	**213-4502**	8	GUARD AS-LAMP	
C	7	2	**213-4504**	2	GUARD AS	
		2	**1F-0750**	1	NUT-WELD (3/8-16-THD)	
	8	2	**222-7885**	1	SWITCH AS-ROCKER (24-VOLT) (REAR LIGHT)	
C	9	2	**234-5846**	2	PLATE	
	10	1	**237-7308**	1	BRACKET	
	11	1	**248-6862**	1	FILM-IDENTIFICATION (WORK LIGHT)	
	12	2	**279-7243**	2	PLATE	
	13	1	**291-4018**	2	PLATE	
	14	1	**291-4020**	4	GUARD AS	
C	15	2	**342-2723**	2	HARNESS AS-LIGHTING	
					(EACH INCLUDES)	
		2	**102-8804**	1	KIT-RECEPTACLE (4-PIN)	
					(INCLUDES RECEPTACLE AS & WEDGE)	
E		2	**114-8843**		SLEEVE-PLASTIC (60-CM)	
		2	**126-1766**	4	SOCKET-CONNECTOR (14-GA TO 18-GA)	
		2	**144-1636**	4	PIN-CONNECTOR (14-GA TO 18-GA)	
		2	**155-2270**	2	KIT-CONNECTING PLUG (2-PIN)	
					(EACH INCLUDES PLUG AS & WEDGE)	
Y	16	1	**147-0319**	4	LAMP GP-FLOOD (24-VOLT, 70-WATT) (SWEEP, FRONT)	297
Y	16A	2	**147-0319**	2	LAMP GP-FLOOD (24-VOLT, 70-WATT) (SWEEP, SIDE)	297
Y	16B	2	**147-0319**	2	LAMP GP-FLOOD (24-VOLT, 70-WATT) (SWEEP, REAR)	297
Y	17	1	**254-8155**	1	LAMP GP-FLOOD (24-VOLT) (UNDERHOOD)	299
	18	1,2	**4L-6454**	10	BOLT (3/8-16X1-IN)	
	19	2	**4P-7428**	2	CLIP	
C	20	1	**4P-7581**	4	CLIP	
	21	1	**5M-3062**	4	BOLT (3/8-16X0.75-IN)	
C	22	1,2	**5P-1075**	74	WASHER-HARD (10.2X22.5X3-MM THK)	
C	23	2	**5P-2228**	2	BOLT (1/2-13X1-IN)	
	24	1	**5P-2955**	8	BOLT (5/16-18X2.5-IN)	
	25	1	**6H-4005**	2	GROMMET	
	26	1	**6V-8189**	8	NUT (5/16-18-THD)	
C	27	1,2	**6V-8801**	56	NUT (3/8-16-THD)	
CM	28	1,2	**8T-4136**	10	BOLT (M10X1.5X25-MM)	
M	29	1	**8T-4195**	8	BOLT (M10X1.5X30-MM)	
C	30	2	**8T-4223**	2	WASHER-HARD (13.5X25.5X3-MM THK)	
	31	1	**8T-4224**	16	WASHER-HARD (8.8X16X2-MM THK)	
	32	1,2	**8T-4896**	10	WASHER-HARD (10.2X18.5X2.5-MM THK)	
	33	1	**8T-7934**	2	WASHER-HARD (11X21X5-MM THK)	

284-9064 **LIGHTING GP-FLOOD (*contd.*)** **i03743140**

NOTE	REF NO	GRAPHIC REF	PART NUMBER	QTY	PART NAME 1 2 3 4 5 6 (PRODUCT LEVEL)	SEE PAGE

C - CHANGE FROM PREVIOUS TYPE
E - ORDER BY THE CENTIMETER
M - METRIC PART
Y - SEPARATE ILLUSTRATION

284-9064 **LIGHTING GP-FLOOD (*contd.*)** **i03743140**

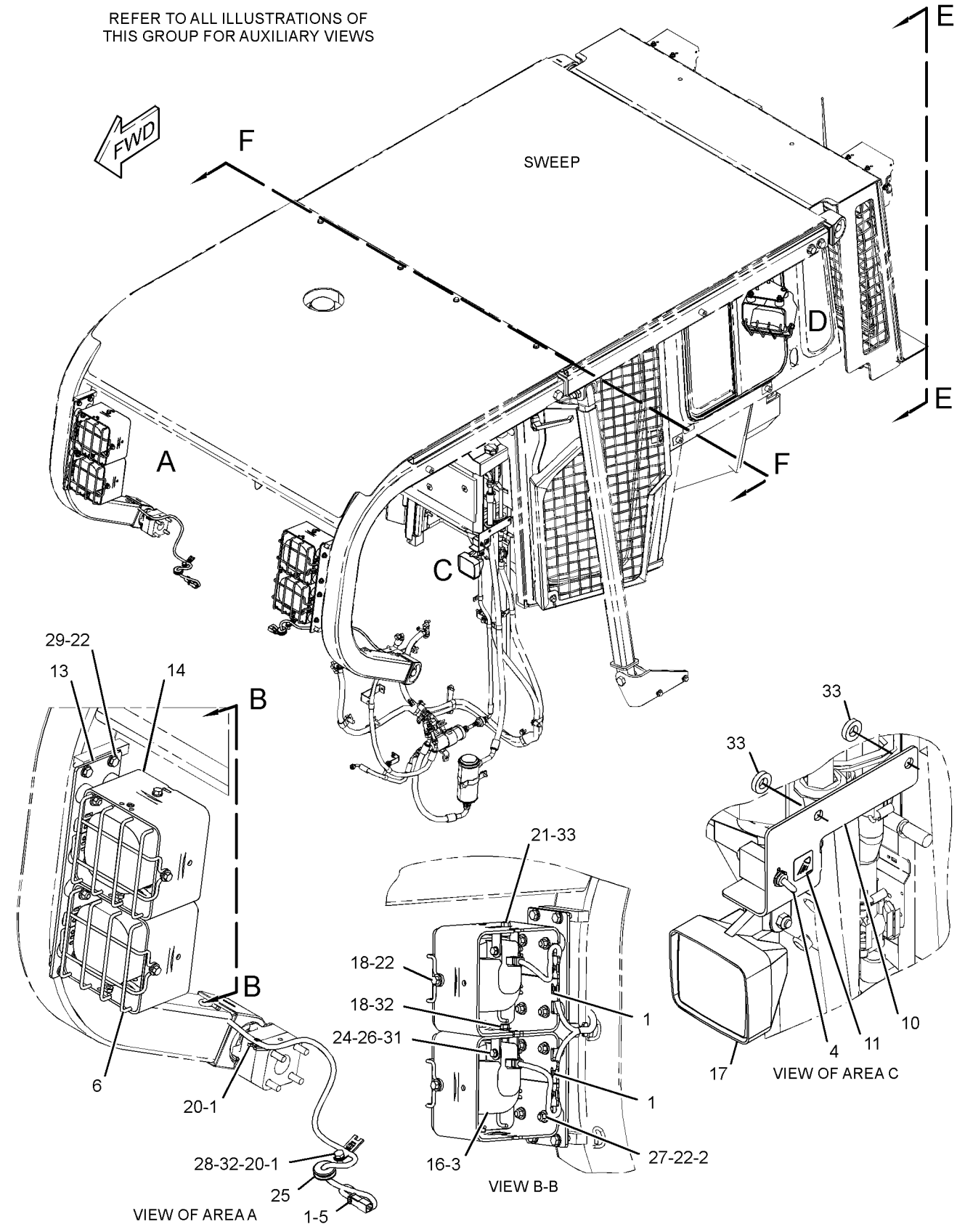

GRAPHIC #1

g01948881

284-9064 **LIGHTING GP-FLOOD (*contd.*)** **i03743140**

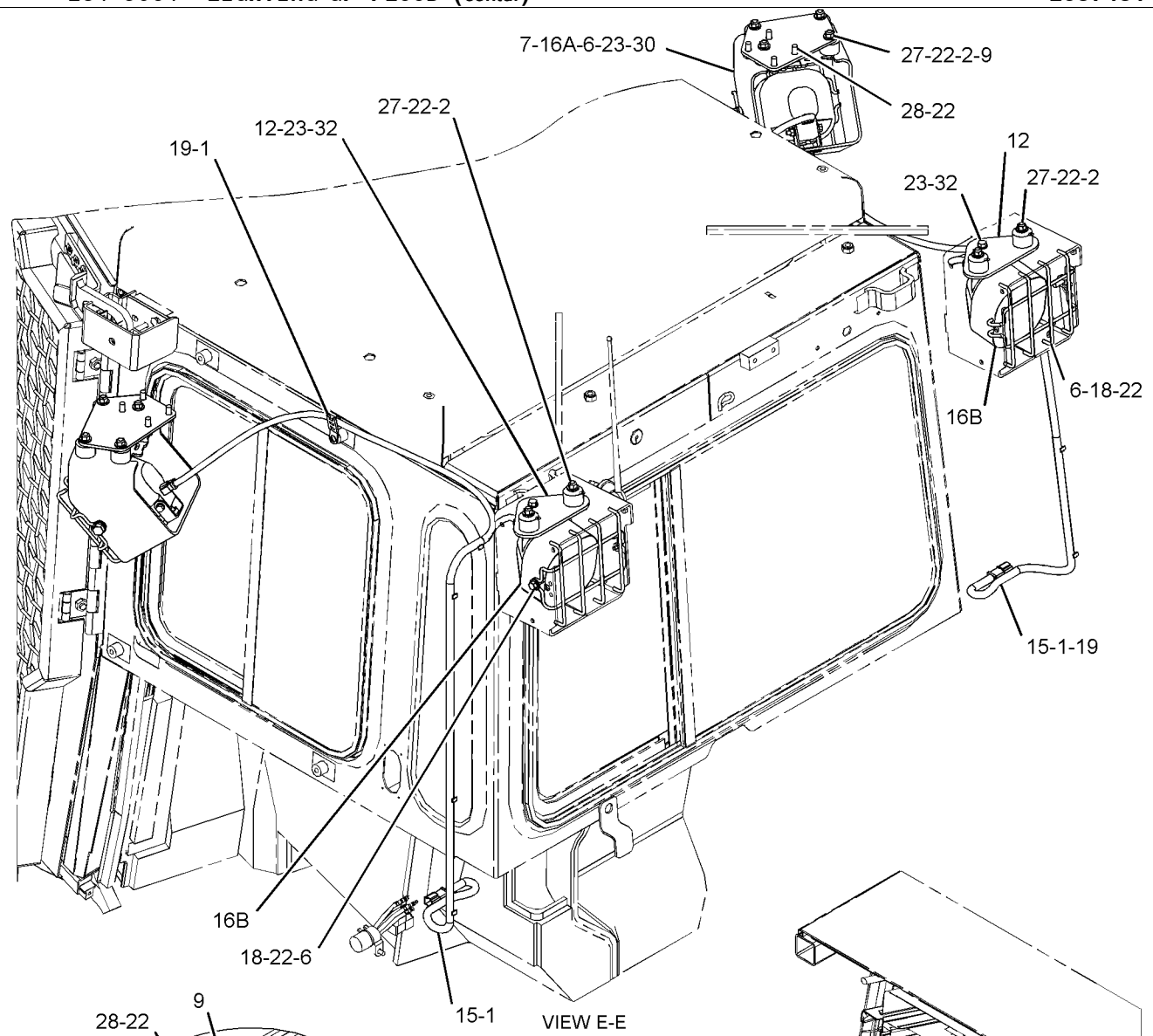

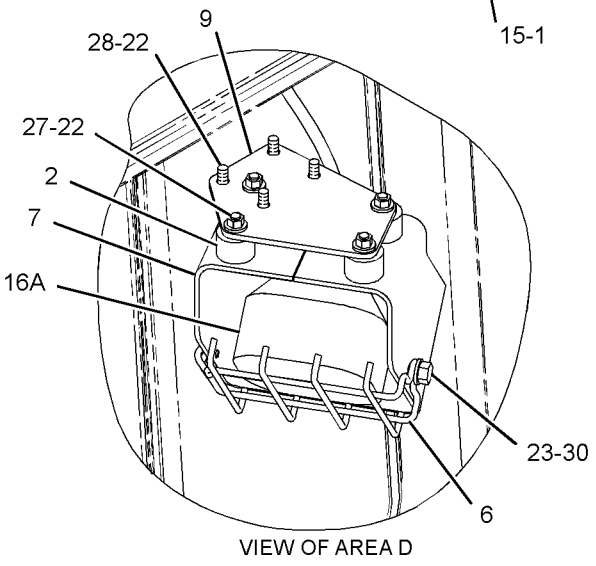

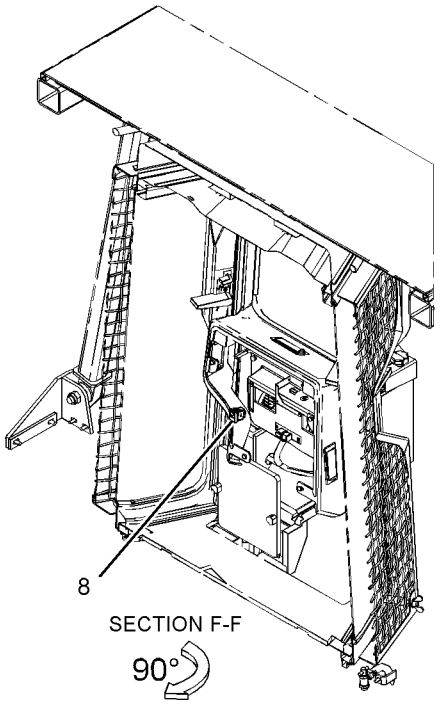

GRAPHIC #2 **<END>** g01948882

284-9064 LIGHTING GP-FLOOD—REAR GUARD, SWEEP, UNDER HOOD

S/N: SMC355-UP; GCT602-UP

FOR USE WITH 323-2871—PAGE: 1004, 237-9318—PAGE: 636

AN ATTACHMENT

SMCS-1434 **i04018914**

NOTE	REF NO	GRAPHIC REF	PART NUMBER	QTY	PART NAME 1 2 3 4 5 6 (PRODUCT LEVEL)	SEE PAGE
	1	1	**7K-1181**	38	STRAP-CABLE	
C	2	1	**9W-4361**	20	MOUNT-FLEXIBLE	
C	3	1	**111-8314**	6	BRACKET AS	
Y	4	1	**139-2116**	1	SWITCH GP-TOGGLE (UNDERHOOD LIGHT)	397
	5	1	**168-8655**	2	HARNESS AS-LIGHTING	
					(EACH INCLUDES)	
		1	**102-8802**	1	KIT-RECEPTACLE (2-PIN)	
					(INCLUDES RECEPTACEL AS & WEDGE)	
E		1	**114-8843**		SLEEVE-PLASTIC (60-CM)	
E		1	**119-3662**		TUBE-HEAT SHRINK (10.85-MM DIA) (13-CM)	
		1	**126-1767**	2	PIN-CONNECTOR (14-GA TO 16-GA)	
		1	**126-1768**	4	SOCKET-CONNECTOR (14-GA TO 16-GA)	
		1	**155-2270**	2	KIT-CONNECTING PLUG (2-PIN)	
					(EACH INCLUDES PLUG AS & WEDGE)	
C	6	1	**213-4502**	6	GUARD AS-LAMP	
	7	1	**222-7885**	1	SWITCH AS-ROCKER (24-VOLT) (REAR LIGHT)	
	8	1	**237-7308**	1	BRACKET	
	9	1	**248-6862**	1	FILM-IDENTIFICATION (WORK LIGHT)	
	10	1	**279-7243**	2	PLATE	
	11	1	**291-4018**	2	PLATE	
	12	1	**291-4020**	4	GUARD AS	
C	13	1	**337-6811**	2	BRACKET	
	14	1	**342-2723**	2	HARNESS AS-LIGHTING	
					(EACH INCLUDES)	
		1	**102-8804**	1	KIT-RECEPTACLE (4-PIN)	
					(INCLUDES RECEPTACLE AS & WEDGE)	
E		1	**114-8843**		SLEEVE-PLASTIC (60-CM)	
		1	**126-1766**	4	SOCKET-CONNECTOR (14-GA TO 18-GA)	
		1	**144-1636**	4	PIN-CONNECTOR (14-GA TO 18-GA)	
		1	**155-2270**	2	KIT-CONNECTING PLUG (2-PIN)	
					(EACH INCLUDES PLUG AS & WEDGE)	
CY	15	1	**147-0319**	4	LAMP GP-FLOOD (24-VOLT, 70-WATT) (SWEEP, FRONT)	297
Y	15A	1	**147-0319**	2	LAMP GP-FLOOD (24-VOLT, 70-WATT) (SWEEP, REAR)	297
Y	16	1	**254-8155**	1	LAMP GP-FLOOD (24-VOLT) (UNDERHOOD)	299
CY	16A	1	**254-8155**	2	LAMP GP-FLOOD (24-VOLT) (SWEEP, SIDE)	299
C	17	1	**4L-6454**	8	BOLT (3/8-16X1-IN)	
	18	1	**4P-7428**	2	CLIP	
	19	1	**4P-7581**	4	CLIP	
	20	1	**5M-3062**	4	BOLT (3/8-16X0.75-IN)	
C	21	1	**5P-1075**	50	WASHER-HARD (10.2X22.5X3-MM THK)	
C	22	1	**5P-1076**	4	WASHER-HARD (13.5X30X4-MM THK)	
C	23	1	**5P-2955**	6	BOLT (5/16-18X2.5-IN)	
	24	1	**6H-4005**	2	GROMMET	
C	25	1	**6V-8189**	6	NUT (5/16-18-THD)	
C	26	1	**6V-8801**	40	NUT (3/8-16-THD)	
CM	27	1	**8T-4136**	2	BOLT (M10X1.5X25-MM)	
CM	28	1	**8T-4183**	4	BOLT (M12X1.75X40-MM)	
M	29	1	**8T-4195**	8	BOLT (M10X1.5X30-MM)	
C	30	1	**8T-4224**	12	WASHER-HARD (8.8X16X2-MM THK)	
C	31	1	**8T-4896**	8	WASHER-HARD (10.2X18.5X2.5-MM THK)	
	32	1	**8T-7934**	2	WASHER-HARD (11X21X5-MM THK)	

C - CHANGE FROM PREVIOUS TYPE
E - ORDER BY THE CENTIMETER
M - METRIC PART
Y - SEPARATE ILLUSTRATION

284-9064 **LIGHTING GP-FLOOD (*contd.*)** **i04018914**

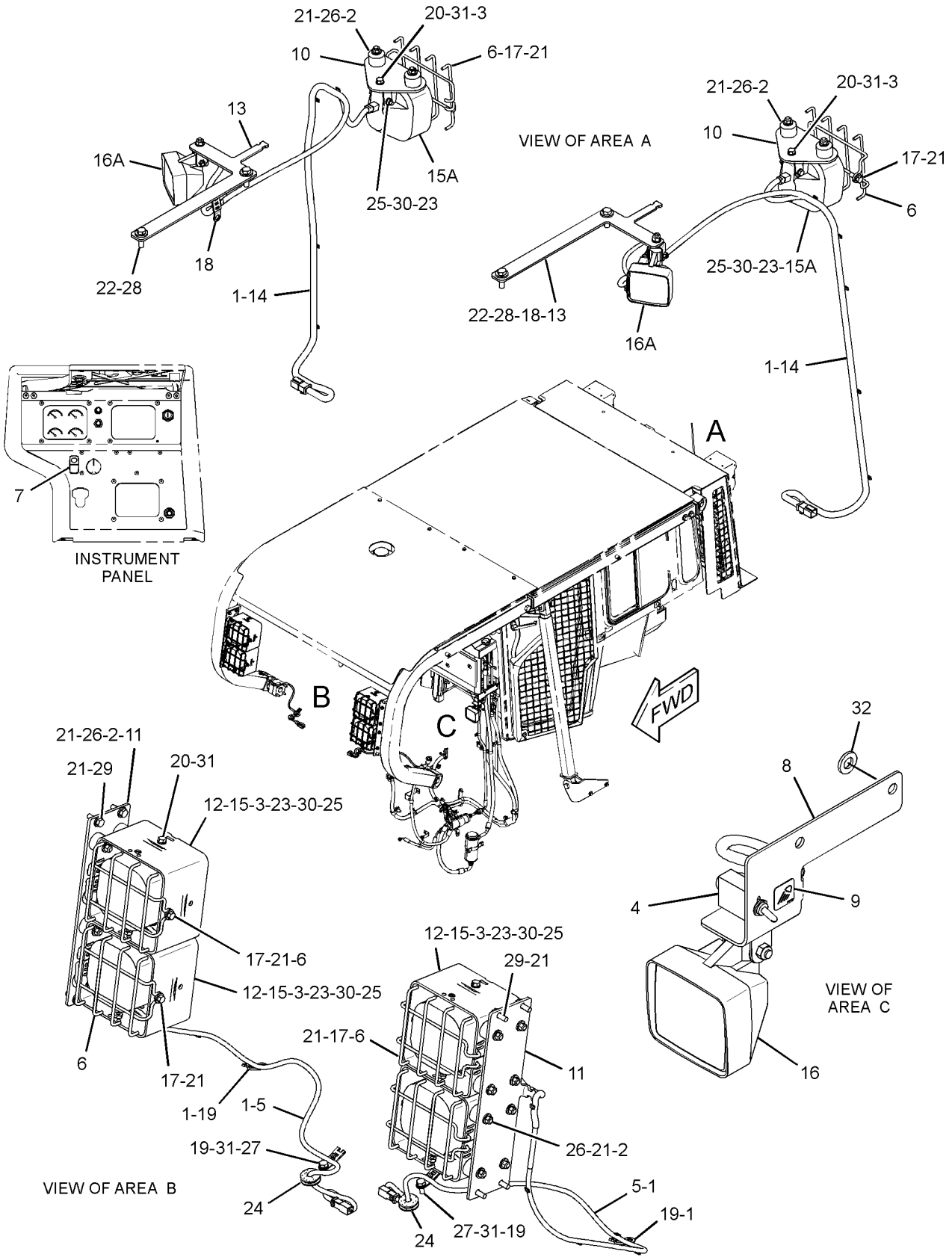

GRAPHIC #1 **<END>** g02177753

290-5826 LIGHTING GP-FLOOD—FRONT, FUEL TANK, RADIATOR

S/N: SMC1-UP; GCT1-UP
PART OF 288-4668 FORESTRY AR
AN ATTACHMENT

SMCS-1434 **i04045498**

NOTE	REF NO	GRAPHIC REF	PART NUMBER	QTY	PART NAME 1 2 3 4 5 6 (PRODUCT LEVEL)	SEE PAGE
B	1	1	**7K-1181**	20	STRAP-CABLE	
	2	1	**9X-9365**	2	BRACKET	
	3	1	**111-8314**	6	BRACKET AS	
	4	1	**222-7885**	1	SWITCH AS-ROCKER (24-VOLT) (REAR FLOODLIGHTS)	
Y	5	1	**147-0319**	6	LAMP GP-FLOOD (24-VOLT, 70-WATT)	297
	6	1	**5M-3062**	8	BOLT (3/8-16X0.75-IN)	
	7	1	**5P-2955**	6	BOLT (5/16-18X2.5-IN)	
	8	1	**6V-8189**	6	NUT (5/16-18-THD)	
	9	1	**8T-4121**	8	WASHER-HARD (11X21X2.5-MM THK)	
	10	1	**8T-4224**	12	WASHER-HARD (8.8X16X2-MM THK)	
	11	1	**356-7203**	2	HARNESS AS-LIGHTING	
					(EACH INCLUDES)	
		1	**102-8804**	1	KIT-RECEPTACLE (4-PIN)	
					(INCLUDES RECEPTACLE AS & WEDGE)	
E		1	**114-8843**		SLEEVE-PLASTIC (60-CM)	
		1	**126-1768**	4	SOCKET-CONNECTOR (14-GA TO 16-GA)	
					—OR—	
		1	**9X-3402**	4	SOCKET-CONNECTOR (16-GA TO 18-GA)	
		1	**126-1767**	4	PIN-CONNECTOR (14-GA TO 16-GA)	
		1	**155-2270**	2	KIT-CONNECTING PLUG (2-PIN)	
					(EACH INCLUDES PLUG AS, WEDGE & INTERFACE SEAL)	

B - USE AS REQUIRED
E - ORDER BY THE CENTIMETER
Y - SEPARATE ILLUSTRATION

290-5826 **LIGHTING GP-FLOOD (*contd.*)** **i04045498**

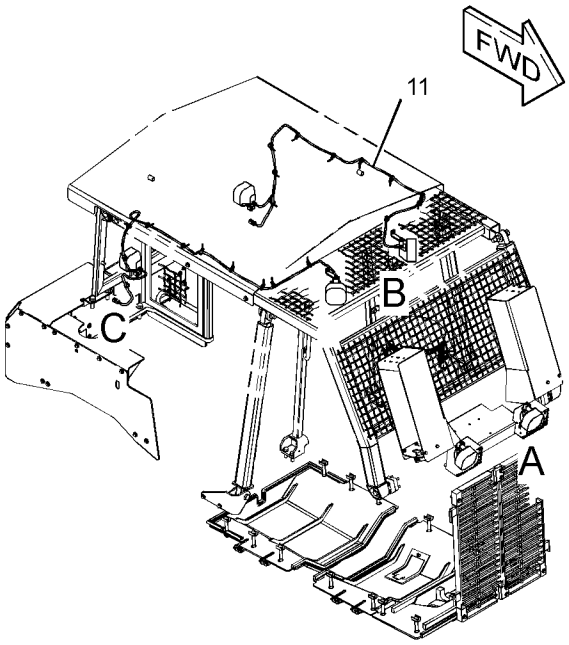

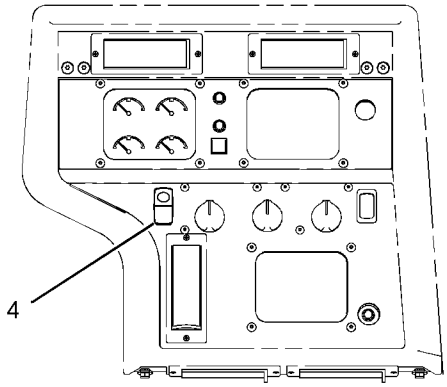

VIEW OF INSTRUMENT PANEL
(REAR LIGHT SHUTOFF SWITCH)

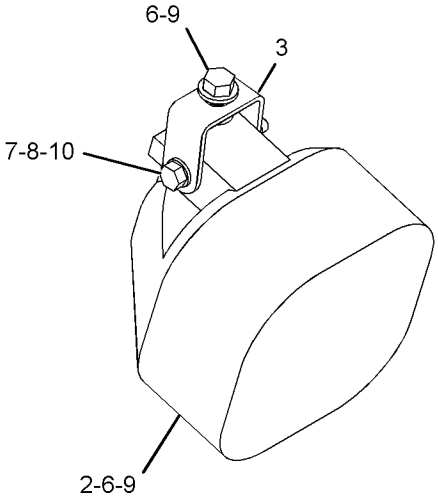

VIEW AREA A

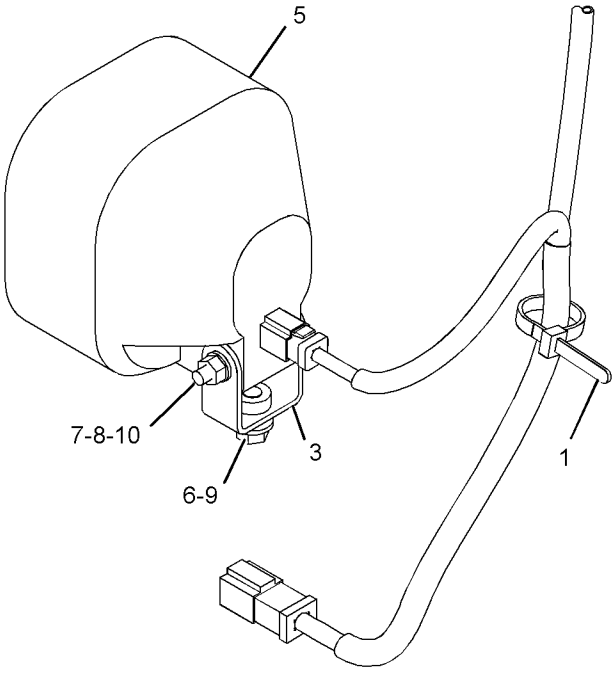

VIEW AREA C

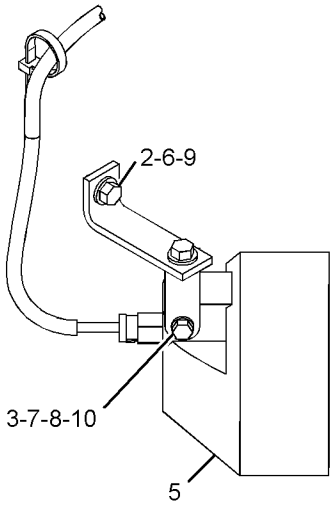

VIEW AREA B

GRAPHIC #1 **<END>** g02279037

263-5030 LINES GP-ALTERNATOR AIR—DUCTED

S/N: SMC1-226; GCT1-322
PART OF 247-2838 WASTE HANDLING AR
AN ATTACHMENT

SMCS-1405 **i04046800**

NOTE	REF NO	GRAPHIC REF	PART NUMBER	QTY	PART NAME 1 2 3 4 5 6 (PRODUCT LEVEL)	SEE PAGE
	1	1	**1W-4724**	2	CLAMP-HOSE	
	2	1	**5P-0597**	1	CLAMP-HOSE	
	3	1	**8P-5411**	1	BUTTON-PLUG	
	4	1	**164-5798**	1	CAP AS-RAIN	
	5	1	**226-4909**	1	SCREEN (ALTERNATOR)	
	6	1	**258-5035**	1	COVER AS-ALTERNATOR (ALTERNATOR)	
		1	**232-1318**	1	COVER AS	
D		1	**8T-6936**		SEAL (0.5-M)	
	7	1	**263-5031**	1	DUCT AS	
	8	1	**267-4696**	1	HOOD AS	
M		1	**8T-3490**	26	NUT-WELD (M10X1.5-THD)	
M		1	**8T-5413**	2	STUD-WELD (M10X1.5X25-MM OAL)	
M		1	**9X-6269**	1	NUT-WELD (M16X2-THD)	
		1	**126-7975**	2	HANDRAIL	
		1	**226-4911**	1	TUBE	
	9	1	**101-3625**	1	CLIP	
	10	1	**204-2281**	3	STRAP-CABLE	
	11	1	**4P-7581**	2	CLIP	
	12	1	**8T-4121**	1	WASHER-HARD (11X21X2.5-MM THK)	
E	13	1	**231-0858**		SEAL (87-CM)	
	14	1	**184-5498**	1	BRACKET AS	

D - ORDER BY THE METER
E - ORDER BY THE CENTIMETER
M - METRIC PART

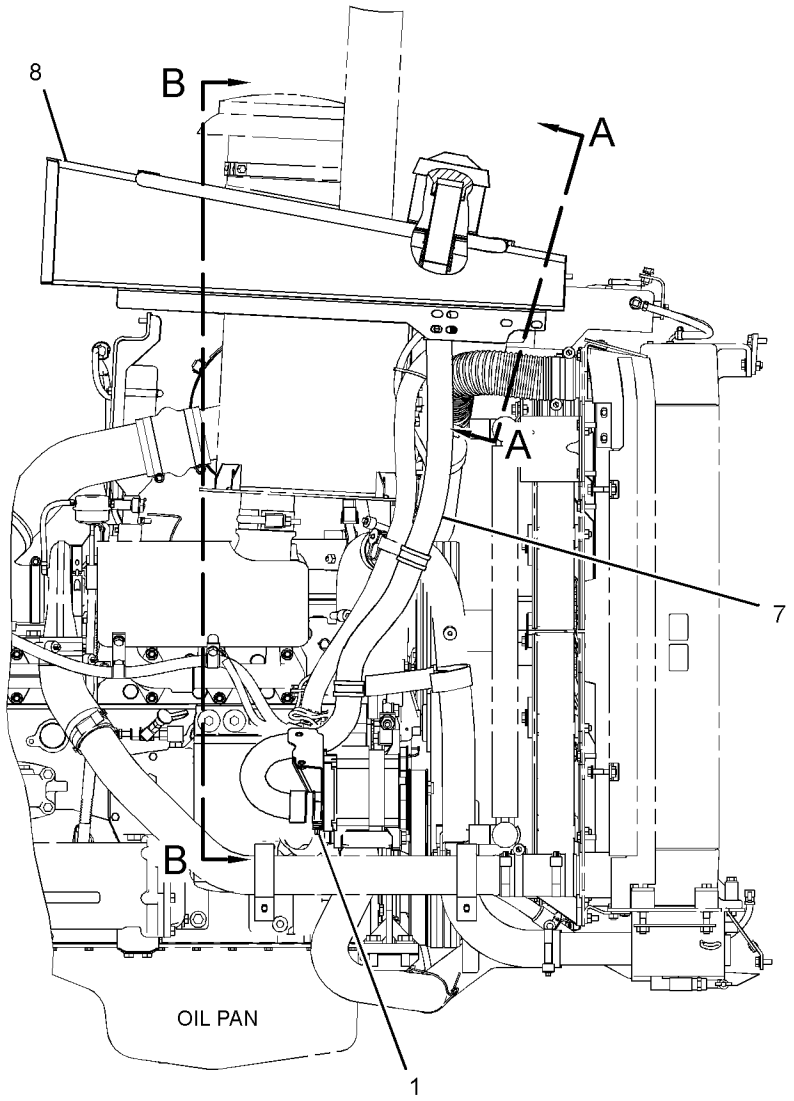

RIGHT SIDE VIEW

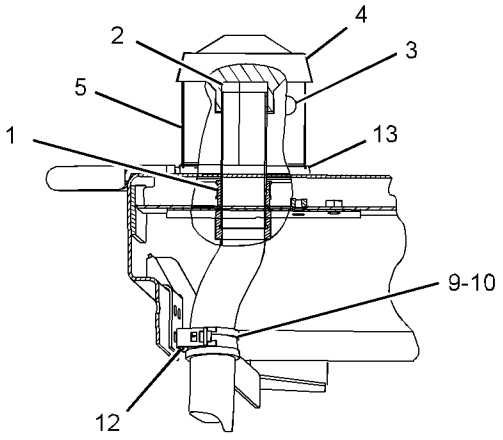

SECTION A-A

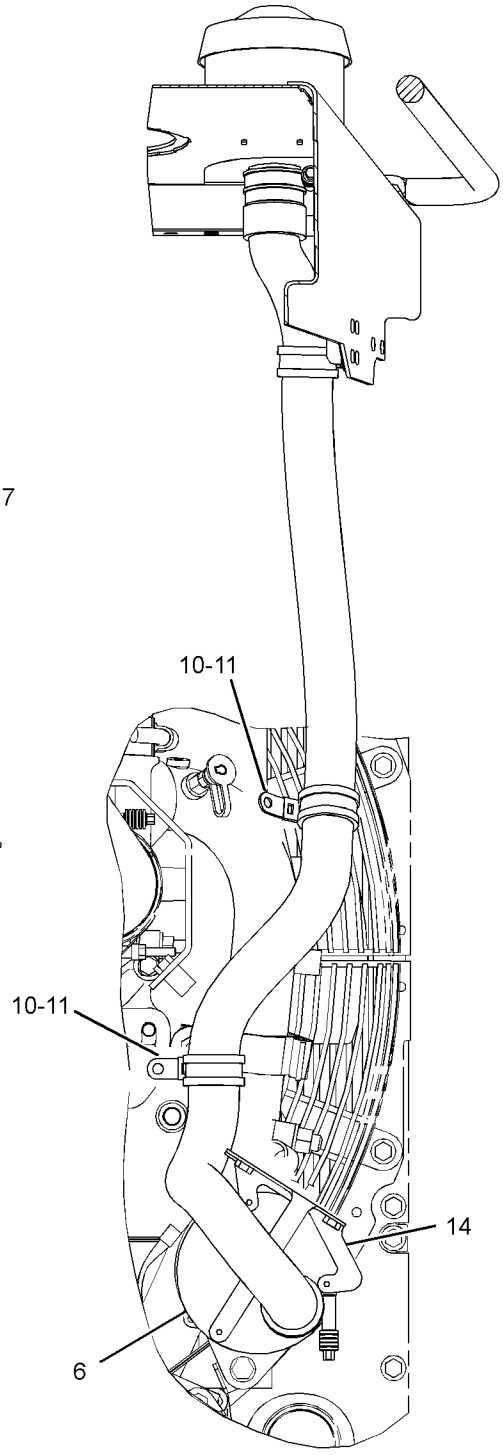

SECTION B-B

GRAPHIC #1 **<END>** g01360214

263-5030 LINES GP-ALTERNATOR AIR—DUCTED

S/N: SMC227-UP; GCT323-UP
PART OF 247-2838 WASTE HANDLING AR
AN ATTACHMENT

SMCS-1405 **i03099769**

NOTE	REF NO	GRAPHIC REF	PART NUMBER	QTY	PART NAME 1 2 3 4 5 6 (PRODUCT LEVEL)	SEE PAGE
	1	1	**1W-4724**	2	CLAMP-HOSE	
	2	1	**5P-0597**	1	CLAMP-HOSE	
C	3	1	**7K-1181**	4	STRAP-CABLE	
	4	1	**8P-5411**	1	BUTTON-PLUG	
	5	1	**164-5798**	1	CAP AS-RAIN	
	6	1	**184-5498**	1	BRACKET AS	
		1	**1F-0750**	2	NUT-WELD (3/8-16-THD)	
	7	1	**226-4909**	1	SCREEN (DUCTED ALTERNATOR)	
	8	1	**258-5035**	1	COVER AS-ALTERNATOR	
		1	**232-1318**	1	COVER AS	
	9	1	**267-4696**	1	HOOD AS	
M		1	**8T-3490**	26	NUT-WELD (M10X1.5-THD)	
M		1	**8T-5413**	2	STUD-WELD (M10X1.5X25-MM OAL)	
M		1	**9X-6269**	1	NUT-WELD (M16X2-THD)	
		1	**126-7975**	2	HANDRAIL	
		1	**226-4911**	1	TUBE	
C	10	1	**281-7377**	1	DUCT	
C	11	1	**321-6730**	1	PLATE AS	
M		1	**8T-3490**	1	NUT-WELD (M10X1.5-THD)	
	12	1	**101-3625**	1	CLIP	
C	13	1	**277-1873**	1	CLIP	
C	14	1	**4L-6454**	1	BOLT (3/8-16X1-IN)	
	15	1	**4P-7581**	2	CLIP	
C	16	1	**8T-4121**	3	WASHER-HARD (11X21X2.5-MM THK)	
CM	17	1	**8T-4136**	1	BOLT (M10X1.5X25-MM)	
E	18	1	**231-0858**		SEAL (87-CM)	

C - CHANGE FROM PREVIOUS TYPE
E - ORDER BY THE CENTIMETER
M - METRIC PART

263-5030 **LINES GP-ALTERNATOR AIR (*contd.*)** **i03099769**

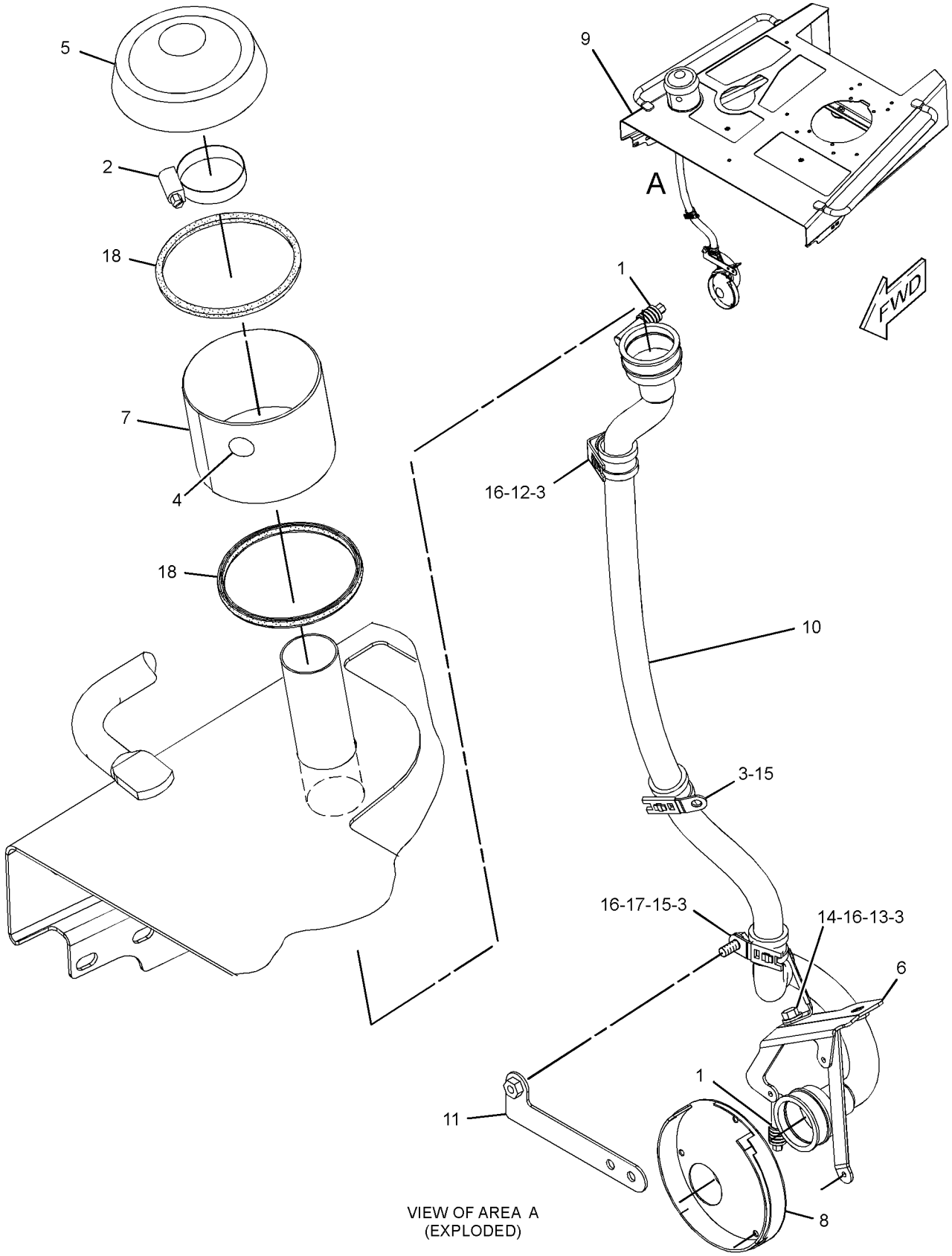

VIEW OF AREA A
(EXPLODED)

GRAPHIC #1

<END>

g01538159

226-2333 MAST GP–LASER RECEIVER

S/N: SMC1-UP; GCT1-UP

PART OF 317-6527 GRADE CONTROL AR, 292-0312 GRADE CONTROL AR-LASER

SMCS-79NS **i03792832**

NOTE	PART NUMBER	QTY	PART NAME 1 2 3 4 5 6 (PRODUCT LEVEL)	SEE PAGE
	256-5732	1	HARNESS AS-WIRING (MAST)	
	256-4580	1	MOTOR AS	
	256-4579	1	SCREW AS	
	256-5720	1	SWITCH AS (UPPER LIMIT)	
	256-5721	1	SWITCH AS (LOWER LIMIT)	
	256-4581	1	BUSHING	
	256-4582	1	GEAR (141-TEETH)	
	256-5722	1	GEAR (15-TEETH)	
	260-6480	1	RING-SNAP	
	260-6478	1	SEAL-O-RING	
	256-5719	1	SEAL-WIPER	
			AVAILABLE REPAIR KIT(S):	
	295-8930	1	KIT-CIRCUIT BOARD	
			(INCLUDES BOARD AS, SCREWS, LOCKWASHERS, LOCTITE & GREASE)	
A	**245-4747**	1	KIT-ADAPTER (MAST)	
			(INCLUDES ADAPTER, BOLTS & WASHER)	
			(FOR USE WITH LR400 RECEIVER)	

A - NOT PART OF THIS GROUP

<END>

292-0281 MAST GP–LASER RECEIVER

S/N: SMC1-UP; GCT1-UP

PART OF 292-0293 GRADE CONTROL AR-LASER

SMCS-79NS **i02649289**

NOTE	PART NUMBER	QTY	PART NAME 1 2 3 4 5 6 (PRODUCT LEVEL)	SEE PAGE
Y	*292-0302*	1	MOUNTING GP-MAST (LASER RECEIVER)	1228
Y	**234-9970**	1	MOUNTING GP-RECEIVER (MAST)	345
	226-2333	1	MAST GP	
	245-4747	1	KIT-ADAPTER (MAST) (GRADE CONTROL)	
			(INCLUDES ADAPTER BLOCK, BOLTS, & WASHER)	
	239-9271	1	SOFTWARE GP (MAST)	

Y - SEPARATE ILLUSTRATION

<END>

240-3464 MOUNTING GP-CONNECTOR—GRADE CONTROL

S/N: SMC1-UP; GCT1-UP

AN ATTACHMENT

SMCS-1408 **i05350499**

NOTE	REF NO	GRAPHIC REF	PART NUMBER	QTY	PART NAME 1 2 3 4 5 6 (PRODUCT LEVEL)	SEE PAGE
	1	1	**236-8826**	3	BOSS (1-1/8-18X0.708-IN)	
	2	1	**240-3469**	1	COVER AS (RH)	
	3	1	**240-3470**	1	COVER AS (LH)	
	4	1	**246-5960**	1	BOX AS (LH)	
	5	1	**246-5961**	1	BOX AS (RH)	
M	6	1	**188-9644**	3	SCREW-FLAT HEAD (M8X1.25X25-MM)	
	7	1	**7X-7729**	4	WASHER (11X25X3-MM THK)	
M	8	1	**8T-4136**	4	BOLT (M10X1.5X25-MM)	

M - METRIC PART

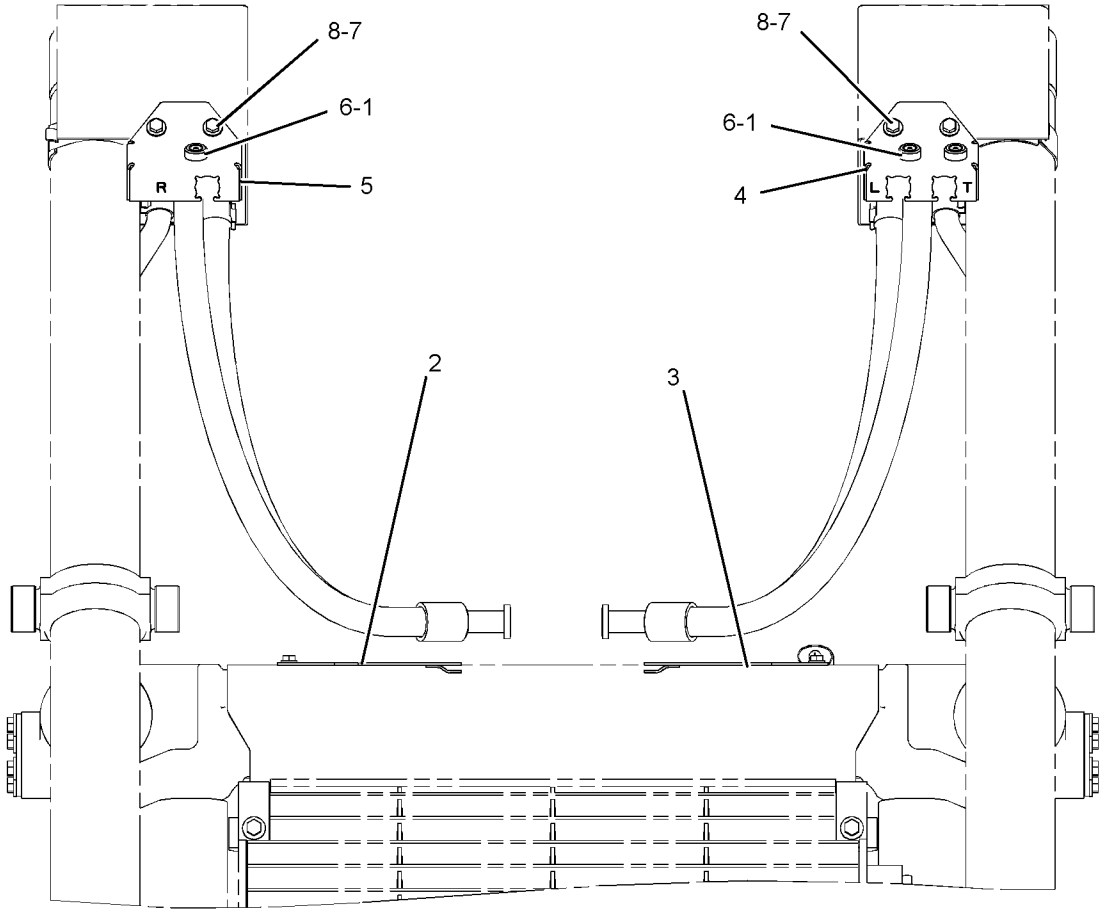

FRONT VIEW

GRAPHIC #1 **<END>** g01210766

239-5120 MOUNTING GP-GRADE CONTROL–CAB

S/N: SMC1-UP; GCT1-UP
PART OF 283-2442 GRADE CONTROL AR
AN ATTACHMENT

SMCS-7220 **i02765197**

NOTE	PART NUMBER	QTY	PART NAME 1 2 3 4 5 6 (PRODUCT LEVEL)	SEE PAGE
Y	*237-9140*	1	MOUNTING GP-ANTENNA (GRADE CONTROL)	1119
Y	*242-8409*	1	MOUNTING GP-GRADE CONTROL (MODULE)	342

Y - SEPARATE ILLUSTRATION

<END>

242-8409 MOUNTING GP-GRADE CONTROL–MODULE

S/N: SMC1-UP; GCT1-UP
PART OF 239-5120 MOUNTING GP-GRADE CONTROL
AN ATTACHMENT

SMCS-7220 **i04789713**

NOTE	REF NO	GRAPHIC REF	PART NUMBER	QTY	PART NAME 1 2 3 4 5 6 (PRODUCT LEVEL)	SEE PAGE
	1	1	**226-9169**	1	MODULE AS-POWER SUPPLY (ELECTRICAL ENCLOSURE)	
	2	1	**372-7318**	1	COVER AS-ACCESS	
	3	1	**242-8399**	1	PANEL-ACOUSTICAL	
	4	1	**265-7316**	1	PANEL AS-INSTRUMENT	
	5	1	**269-3364**	6	PLUG	
M	6	1	**5C-9553**	4	BOLT (M6X1X16-MM)	
	7	1	**9X-8256**	4	WASHER (6.6X12X2-MM THK)	

M - METRIC PART

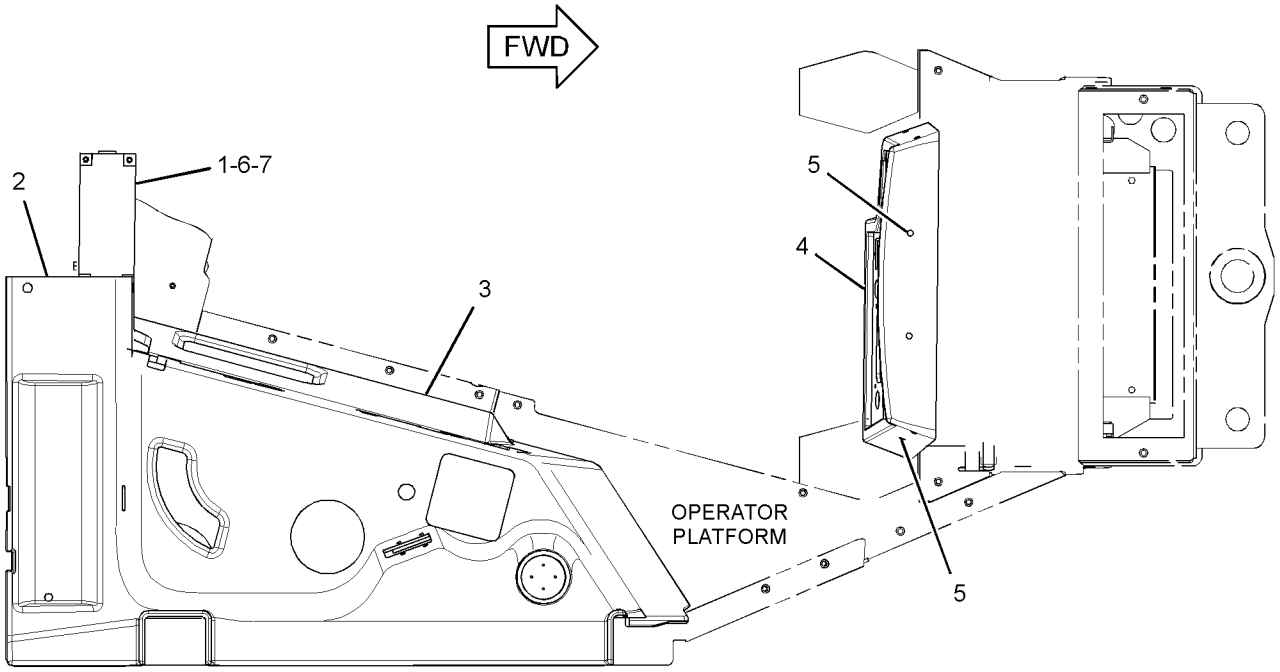

TOP VIEW

GRAPHIC #1 **<END>** g02948840

285-5893 MOUNTING GP-GRADE CONTROL–OPEN ROPS

S/N: SMC1-UP; GCT1-UP
PART OF 295-0080 GRADE CONTROL AR
AN ATTACHMENT

SMCS-7220 **i04030306**

NOTE	REF NO	GRAPHIC REF	PART NUMBER	QTY	PART NAME 1 2 3 4 5 6 (PRODUCT LEVEL)	SEE PAGE
	1	1	**226-9169**	1	MODULE AS-POWER SUPPLY (ELECTRICAL ENCLOSURE)	
	2	1	**269-3364**	6	PLUG	
Y	3	1	*285-5886*	1	COVER GP-ACCESS	1054
	4	1	**285-5891**	1	PANEL AS-INSTRUMENT	
		1	**7T-7388**	2	GUIDE	
M	5	1	**5C-9553**	4	BOLT (M6X1X16-MM)	
	6	1	**6V-6467**	2	PLUG	
	7	1	**9X-8256**	4	WASHER (6.6X12X2-MM THK)	

M - METRIC PART
Y - SEPARATE ILLUSTRATION

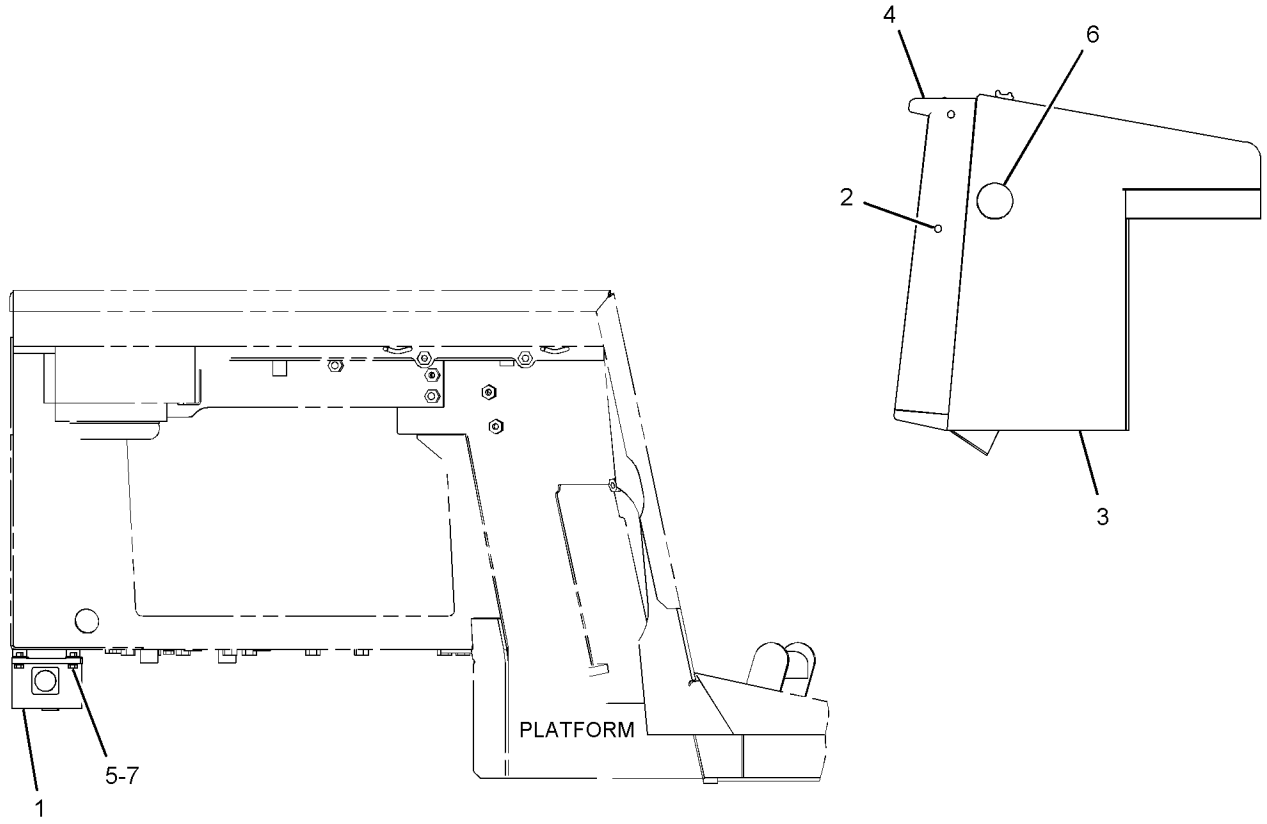

RIGHT SIDE VIEW

GRAPHIC #1 **<END>** g01362922

292-0296 MOUNTING GP-GRADE CONTROL

S/N: SMC1-UP; GCT1-UP

PART OF 317-6527 GRADE CONTROL AR, 290-5571, 292-0280 GRADE CONTROL AR-SATELLITE

SMCS-7220 **i02618863**

NOTE	PART NUMBER	QTY	PART NAME 1 2 3 4 5 6 (PRODUCT LEVEL)	SEE PAGE
Y	*259-4746*	1	MOUNTING GP-RADIO (GRADE CONTROL)	1130
M	**143-6020**	2	BOLT-SOCKET HEAD (M6X1X75-MM)	
	2V-8259	3	GROMMET	
	2Y-5429	3	GROMMET	
M	**8T-2659**	6	LOCKNUT (M4X0.7-THD)	
M	**5C-2890**	2	NUT (M6X1-THD)	
	230-5008	3	PLUG AS-CONNECTOR (4-PIN)	
	8T-8737	3	PLUG-SEAL	
M	**9X-1046**	8	SCREW (M4X0.7X18-MM)	
	104-2091	6	SCREW-FLAT HEAD (6-20X0.5-IN)	
	9X-3402	9	SOCKET-CONNECTOR (16-GA TO 18-GA)	
	4B-4863	12	WASHER (4.7X11X1.2-MM THK)	
	9X-8256	2	WASHER (6.6X12X2-MM THK)	

M - METRIC PART
Y - SEPARATE ILLUSTRATION

<END>

234-9970 MOUNTING GP-RECEIVER–MAST

S/N: SMC1-UP; GCT1-UP

PART OF 317-6527 GRADE CONTROL AR, 292-0312 GRADE CONTROL AR-LASER, 292-0281 MAST GP

SMCS-7009, 7010 **i02649980**

NOTE	REF NO	GRAPHIC REF	PART NUMBER	QTY	PART NAME 1 2 3 4 5 6 (PRODUCT LEVEL)	SEE PAGE
	1	2	**253-8967**	1	ROD-THREADED	
	2	2	**253-8969**	1	BRACKET	
	3	2	**237-4132**	4	MOUNT-FLEXIBLE	
	4	1	**237-4133**	2	GASKET	
	5	1	**237-4134**	1	CLAMP	
	6	1	**237-4135**	1	MOUNT-FLEXIBLE	
	7	2	**237-7252**	1	BOLT (3/4-16X1.25-IN)	
	8	2	**3B-4508**	4	LOCKWASHER	
	9	2	**3B-4512**	1	LOCKWASHER	
	10	2	**4M-6425**	2	BOLT (5/16-18X1-IN)	
	11	2	**5W-1437**	2	LOCKWASHER	
	12	2	**8T-9383**	2	BOLT (1/2-13X0.75-IN)	
	13	2	**9B-0453**	2	LOCKWASHER	
	14	2	**253-8981**	4	ROD-THREADED	
	15	2	**6V-8188**	6	NUT (1/2-13-THD)	

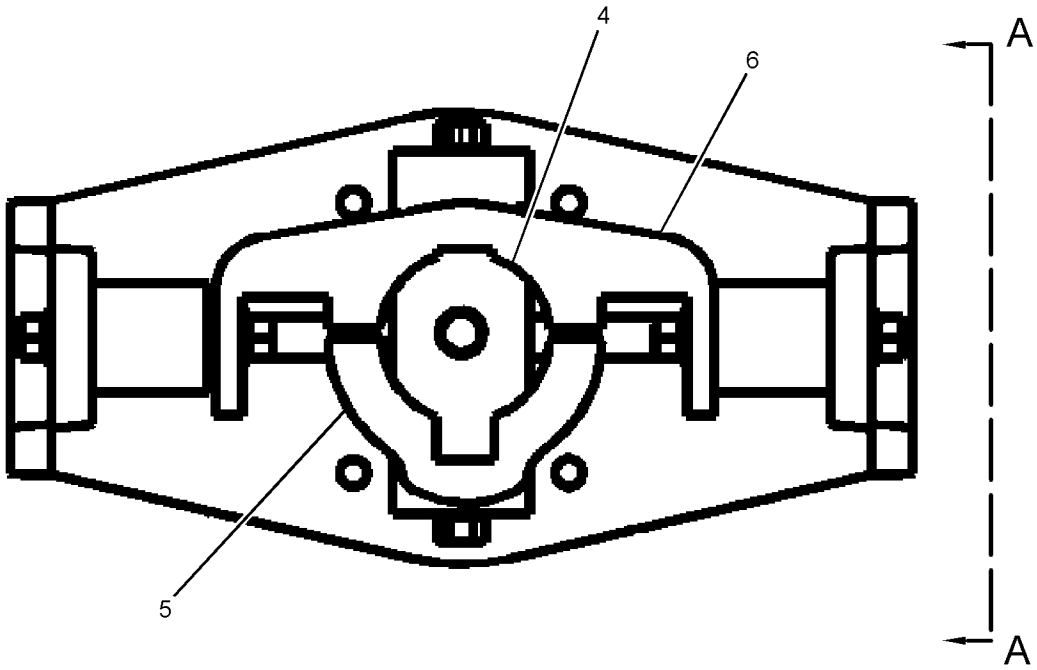

REFER TO ALL ILLUSTRATIONS OF
THIS GROUP FOR AUXILIARY VIEWS

GRAPHIC #1 g01186401

234-9970 **MOUNTING GP-RECEIVER (*contd.*)** **i02649980**

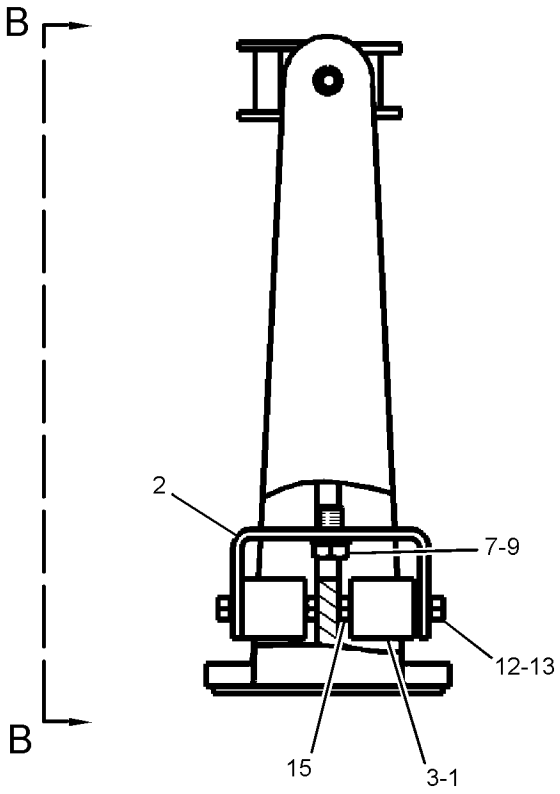

VIEW A-A

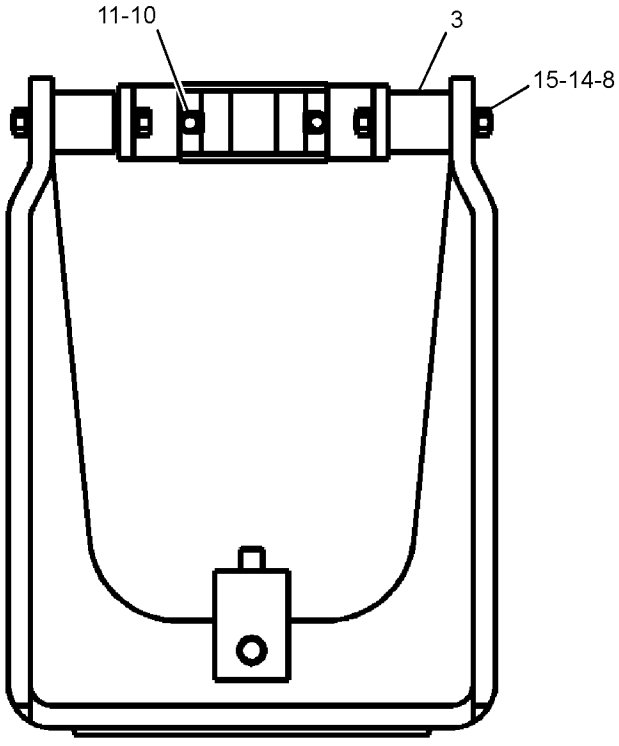

VIEW B-B

GRAPHIC #2 **<END>** g01186365

226-9674 PANEL GP-CIRCUIT BREAKER

S/N: SMC1-1499; GCT1-1999

PART OF 279-9547 WIRING GP-PLATFORM

SMCS-1417, 1420

i05350582

NOTE	REF NO	GRAPHIC REF	PART NUMBER	QTY	PART NAME 1 2 3 4 5 6 (PRODUCT LEVEL)	SEE PAGE
	1	1	**7K-1181**	4	STRAP-CABLE	
	2	1	**9W-1441**	19	FUSE (15-AMPERE)	
	3	1	**9W-1442**	2	FUSE (10-AMPERE)	
	4	1	**9W-1446**	3	FUSE (20-AMPERE)	
Y	5	1	**125-1302**	1	SWITCH GP-MAGNETIC (24-VOLT) (START RELAY)	393
	6	1	**172-4863**	1	JUNCTION BLOCK	
	7	1	**223-8173**	1	HOLDER AS-FUSE	
	8	1	**226-9675**	1	BLOCK AS (FUSE)	
		1	**225-8553**	1	BLOCK AS-FUSE	
		1	**151-1398**	2	KIT-TERMINAL (LOCK)	
		1	**227-0912**	1	BLOCK AS-FUSE	
		1	**1H-3244**	2	LOCKWASHER	
		1	**6V-8185**	2	NUT (1/4-20-THD)	
		1	**8T-4205**	2	WASHER-HARD (7.2X14.5X2-MM THK)	
		1	**180-5737**	1	COVER (FUSE BLOCK)	
		1	**237-0049**	1	HARNESS AS-PANEL	
		1	**214-4208**	1	RECEPTACLE AS-CONNECTOR (70-PIN)	
		1	**102-8802**	2	KIT-RECEPTACLE (2-PIN)	
					(EACH INCLUDES RECEPTACLE AS & WEDGE)	
		1	**155-2270**	2	KIT-CONNECTING PLUG (2-PIN)	
					(EACH INCLUDES PLUG AS, WEDGE, & INTERFACE SEAL)	
	9	1	**237-0048**	1	PANEL AS	
	10	1	**237-0050**	1	STRAP	
	11	1	**237-0051**	1	STRAP	
	12	1	**237-0052**	1	STRAP	
	13	1	**237-0053**	1	STRAP	
	14	1	**237-0225**	1	STRAP	
	15	1	**238-2014**	1	WIRE AS	
	16	1	**239-3354**	1	CAP AS	
D		1	**5P-5677**		WIRE (18-GA, BLACK) (0.3-M)	
E		1	**125-7875**		TUBE-HEAT SHRINK (7.44-MM DIA) (3-CM)	
		1	**232-3402**	1	FILM-WARNING (ELECTRICAL SHOCK HAZARD)	
	17	1	**239-8107**	1	FUSE (175-AMPERE) (ALTERNATOR)	
	18	1	**240-8917**	1	FILM-CIRCUIT BREAKER	
Y	19	1	**241-8368**	1	SWITCH GP-MAGNETIC (24-VOLT) (MAIN RELAY)	394
M	20	1	**5C-2890**	4	NUT (M6X1-THD)	
	21	1	**6T-3643**	1	CIRCUIT BREAKER AS (15-AMPERE) (FAN BLOWER MOTOR)	
		1	**6V-8376**	2	SCREW-MACHINE (8-32X0.25-IN)	
		1	**9B-7233**	2	LOCKWASHER	
	22	1	**6V-5645**	4	SCREW-MACHINE (10-32X0.87-IN)	
M	23	1	**5C-7883**	7	BOLT-SOCKET HEAD (M6X1X16-MM)	
	24	1	**7U-4892**	2	SCREW (8-32X0.75-IN)	
M	25	1	**7X-2548**	2	BOLT (M12X1.75X16-MM)	
M	26	1	**8T-3992**	4	SCREW (M6X1X12-MM)	
	27	1	**8T-4121**	2	WASHER-HARD (11X21X2.5-MM THK)	
M	28	1	**8T-4191**	2	BOLT (M10X1.5X16-MM)	
M	29	1	**8T-4199**	4	BOLT (M8X1.25X12-MM)	
	30	1	**8T-4223**	2	WASHER-HARD (13.5X25.5X3-MM THK)	
	31	1	**8T-4224**	4	WASHER-HARD (8.8X16X2-MM THK)	
	32	1	**9X-8256**	4	WASHER (6.6X12X2-MM THK)	

D - ORDER BY THE METER
E - ORDER BY THE CENTIMETER
M - METRIC PART
Y - SEPARATE ILLUSTRATION

226-9674 **PANEL GP-CIRCUIT BREAKER (*contd.*)** **i05350582**

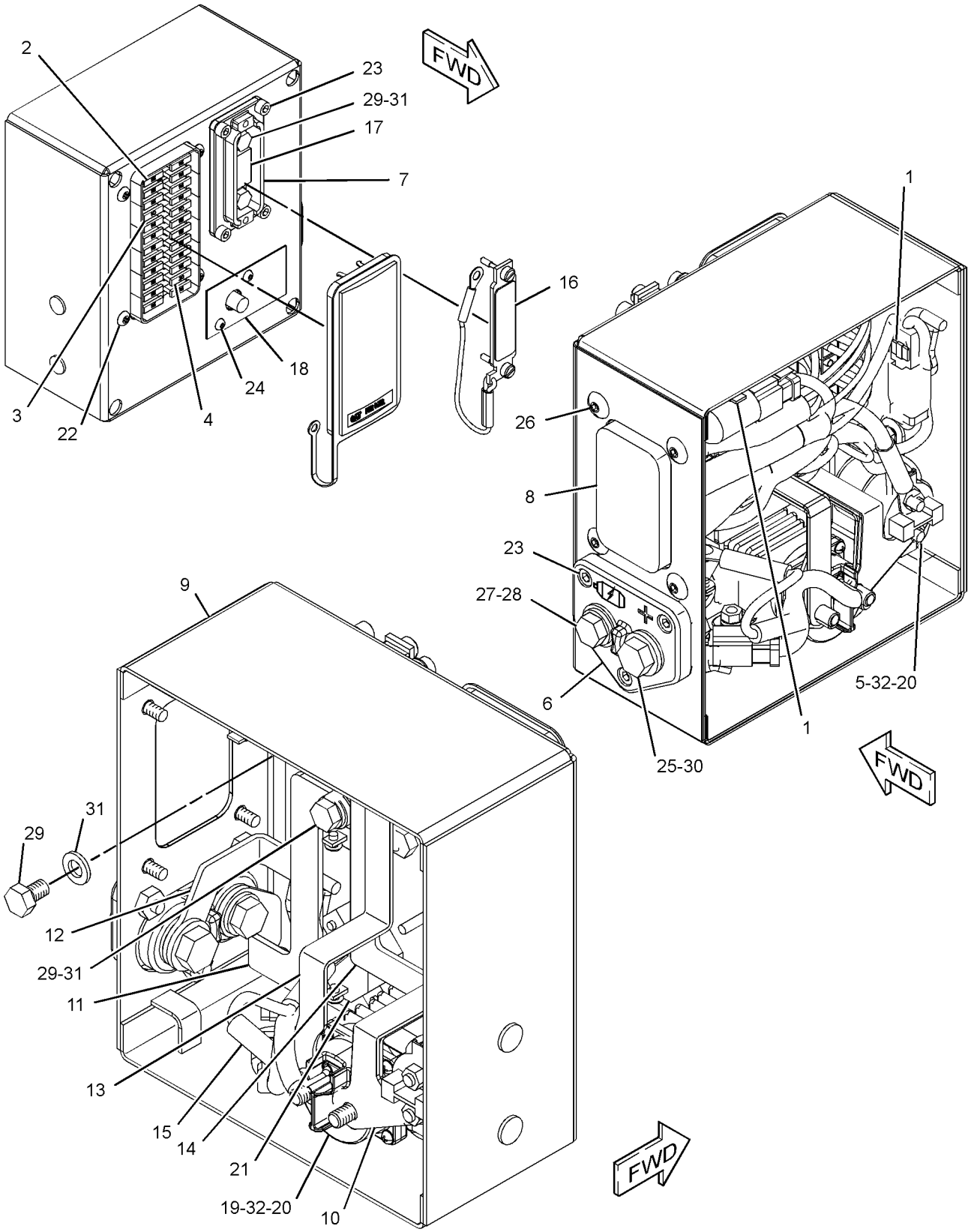

(HARNESS REMOVED FOR CLARITY)

GRAPHIC #1 **<END>** g01264625

365-7841 PANEL GP-CIRCUIT BREAKER

S/N: SMC1500-UP; GCT2000-UP

PART OF 368-4242 WIRING GP-PLATFORM

SMCS-1417, 1420

i05322983

NOTE	REF NO	GRAPHIC REF	PART NUMBER	QTY	PART NAME 1 2 3 4 5 6 (PRODUCT LEVEL)	SEE PAGE
	1	1	**7K-1181**	2	STRAP-CABLE	
	2	1	**9W-1441**	19	FUSE (15-AMPERE)	
	3	1	**9W-1442**	2	FUSE (10-AMPERE)	
	4	1	**9W-1446**	3	FUSE (20-AMPERE)	
Y	5	1	**125-1302**	1	SWITCH GP-MAGNETIC (24-VOLT) (START RELAY)	393
	6	1	**226-9675**	1	BLOCK AS (FUSE)	
		1	**225-8553**	1	BLOCK AS-FUSE	
		1	**151-1398**	2	KIT-TERMINAL (LOCK)	
		1	**227-0912**	1	BLOCK AS-FUSE	
		1	**1H-3244**	2	LOCKWASHER	
		1	**6V-8185**	2	NUT (1/4-20-THD)	
		1	**8T-4205**	2	WASHER-HARD (7.2X14.5X2-MM THK)	
		1	**180-5737**	1	COVER (FUSE BLOCK)	
		1	**237-0049**	1	HARNESS AS-PANEL	
		1	**102-8802**	2	KIT-RECEPTACLE (2-PIN)	
					(EACH KIT INCLUDES RECEPTACLE AS & WEDGE)	
		1	**8T-8737**	35	PLUG-SEAL	
		1	**9W-0852**	23	PIN-CONNECTOR (14-GA TO 16-GA)	
		1	**9W-2032**	3	TERMINAL-BLADE (10-GA TO 12-GA)	
		1	**9W-2033**	14	TERMINAL-BLADE (14-GA TO 16-GA)	
		1	**9X-3401**	14	PIN-CONNECTOR (16-GA TO 18-GA)	
		1	**9X-3402**	4	SOCKET-CONNECTOR (16-GA TO 18-GA)	
E		1	**125-7874**		TUBE-HEAT SHRINK (5.72-MM DIA) (20-CM)	
		1	**131-1488**	1	TERMINAL AS-RING (6-GA TO 8-GA)	
		1	**155-2270**	2	KIT-CONNECTING PLUG (2-PIN)	
					(EACH KIT INCLUDES PLUG AS, WEDGE & INTERFACE SEAL)	
		1	**214-4208**	1	RECEPTACLE AS-CONNECTOR (70-PIN)	
		1	**230-8792**	7	TERMINAL	
		1	**274-3774**	1	CAP-CONNECTOR	
	7	1	**237-0050**	1	STRAP	
	8	1	**237-0053**	1	STRAP	
	9	1	**238-2014**	1	WIRE AS	
Y	10	1	**241-8368**	1	SWITCH GP-MAGNETIC (24-VOLT) (MAIN RELAY)	394
	11	1	**248-7959**	1	TERMINAL	
	12	1	**365-7843**	1	PANEL AS	
	13	1	**365-7844**	1	CABLE AS	
		1	**283-6447**	1	TERMINAL-RING	
	14	1	**381-3642**	1	FILM-IDENTIFICATION (CIRCUIT BREAKER)	
	15	1	**260-6686**	2	BOLT-SOCKET HEAD (M5X0.8X16-MM)	
M	16	1	**5C-2874**	2	NUT (M5X0.8-THD)	
M	17	1	**5C-2890**	4	NUT (M6X1-THD)	
	18	1	**5P-1075**	2	WASHER-HARD (10.2X22.5X3-MM THK)	
	19	1	**6T-3643**	1	CIRCUIT BREAKER AS (15-AMPERE) (FAN BLOWER SPEED)	
		1	**6V-8376**	2	SCREW-MACHINE (8-32X0.25-IN)	
		1	**9B-7233**	2	LOCKWASHER	
	20	1	**6V-5645**	4	SCREW-MACHINE (10-32X0.87-IN)	
	21	1	**6V-8801**	2	NUT (3/8-16-THD)	
	22	1	**7U-4892**	2	SCREW (8-32X0.75-IN)	
	23	1	**8F-1434**	2	LOCKWASHER	
M	24	1	**9X-2042**	4	SCREW-TRUSS HEAD (M6X1X12-MM)	
	25	1	**9X-8256**	4	WASHER (6.6X12X2-MM THK)	

E - ORDER BY THE CENTIMETER
M - METRIC PART
Y - SEPARATE ILLUSTRATION

365-7841 **PANEL GP-CIRCUIT BREAKER (*contd.*)** **i05322983**

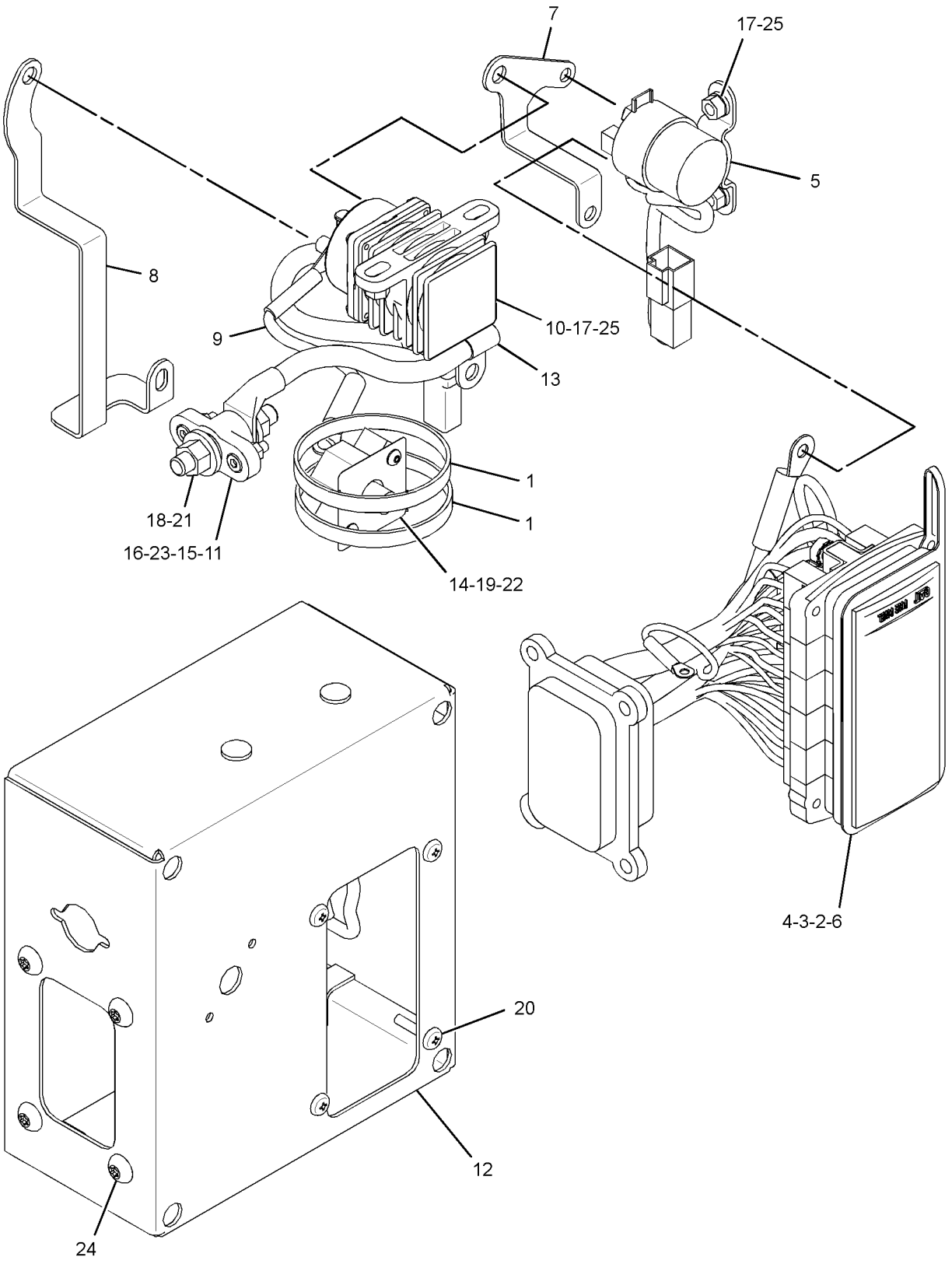

GRAPHIC #1 **<END>** g03344093

3T-9525 PLATE AS-BRUSH

S/N: SMC1-UP; GCT1-UP
PART OF 338-3454 STARTING MOTOR GP-ELECTRIC
AN ATTACHMENT

SMCS-1453, 4463

i04924049

NOTE	REF NO	GRAPHIC REF	PART NUMBER	QTY	PART NAME 1 2 3 4 5 6 (PRODUCT LEVEL)	SEE PAGE
	1	1	**6T-0372**	1	PLATE	
	2	1	**6T-0371**	1	INSULATOR	
	3	1	**9F-5599**	12	LOCKWASHER	
	4	1	**6T-0363**	6	HOLDER AS-BRUSH	
					(EACH INCLUDES)	
		1	**3T-9494**	1	SPRING	
	5	1	**3T-4709**	3	PLATE	
	6	1	**3T-4710**	3	PLATE	
	7	1	**2L-6679**	3	PLATE-INSULATOR	
	8	1	**7F-3525**	6	WASHER-BUSHING (0.207X0.39X0.09-IN THK)	
	9	1	**5P-6298**	12	SCREW-MACHINE (10-32X0.5-IN)	

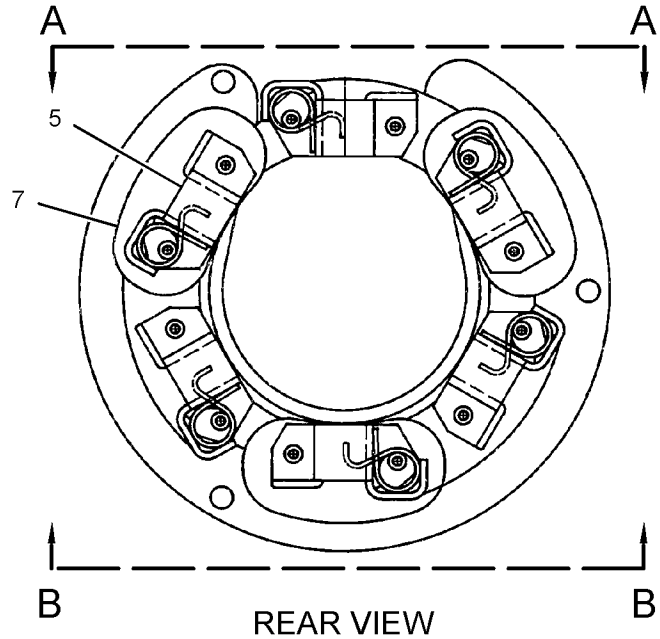

REAR VIEW

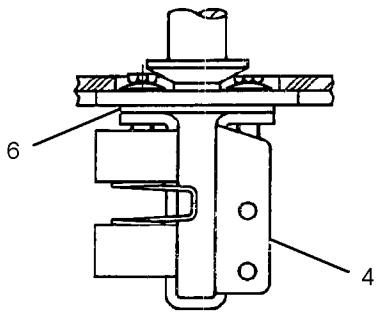

VIEW A-A

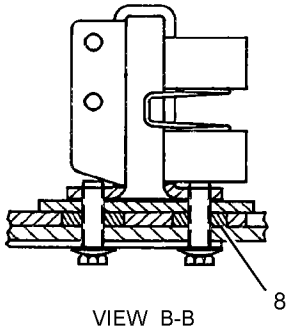

VIEW B-B

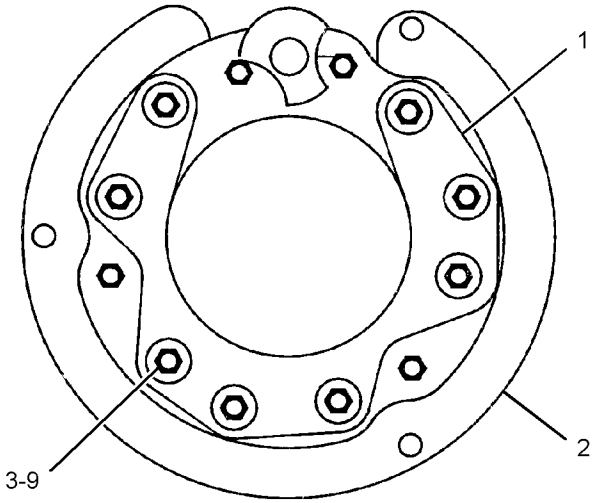

FRONT VIEW

GRAPHIC #1

<END>

g02294074

263-9088 RADIO GP-COMMUNICATION—PRODUCT LINK 121SR

S/N: SMC1-UP; GCT1-UP
PART OF 282-8483, 282-8484 INSTALLATION GP-COMMUNICATION
AN ATTACHMENT

SMCS-733T **i03954672**

NOTE	PART NUMBER	QTY	PART NAME 1 2 3 4 5 6 (PRODUCT LEVEL)	SEE PAGE
	336-3566	1	SOFTWARE GP-COMMUNICATION (PRODUCT LINK 121SR)	

<END>

336-3545 RADIO GP-COMMUNICATION—PRODUCT LINK 121SR

S/N: SMC226-UP; GCT322-UP
PART OF 344-3393 CONTROL GP-COMMUNICATION
AN ATTACHMENT

SMCS-733T **i05317637**

NOTE	PART NUMBER	QTY	PART NAME 1 2 3 4 5 6 (PRODUCT LEVEL)	SEE PAGE
	434-1356	1	SOFTWARE GP-MONITOR (PRODUCT LINK 121SR)	

<END>

239-9950 RECEIVER GP-LASER—SINGLE

S/N: SMC1-UP; GCT1-UP
PART OF 292-0293 GRADE CONTROL AR-LASER

SMCS-7009 **i04001463**

NOTE	PART NUMBER	QTY	PART NAME 1 2 3 4 5 6 (PRODUCT LEVEL)	SEE PAGE
	342-9559	1	RECEIVER AS-LASER	
	276-0764	1	CABLE-COILED (LASER RECEIVER)	
	257-1729	1	CASE-CARRYING	

<END>

292-0285 RECEIVER GP-LASER—DUAL

S/N: SMC1-UP; GCT1-UP
PART OF 292-0312 GRADE CONTROL AR-LASER

SMCS-7009 **i04071549**

NOTE	PART NUMBER	QTY	PART NAME 1 2 3 4 5 6 (PRODUCT LEVEL)	SEE PAGE
	342-9559	1	RECEIVER AS-LASER	
	276-0764	1	CABLE-COILED (LASER RECEIVER)	

<END>

292-0291 RECEIVER GP-SATELLITE—DUAL GNSS, MS992

S/N: SMC1-UP; GCT1-UP

PART OF 290-5571 GRADE CONTROL AR-SATELLITE

SMCS-7010 **i04002110**

NOTE	PART NUMBER	QTY	PART NAME 1 2 3 4 5 6 (PRODUCT LEVEL)	SEE PAGE
	252-9628	2	MOUNTING GP-RECEIVER (TARGET)	
			(EACH INCLUDES)	
	8R-1803	5	WASHER (10.5X18X1-MM THK)	
M	**8T-9388**	4	BOLT (M10X1.5X25-MM)	
	113-0693	5	LOCKWASHER	
	289-8449	1	HANDLE AS	
	353-2794	2	RECEIVER AS-SATELLITE (GNSS, MS992)	
	255-0939	1	CASE-PLASTIC (RECEIVER)	
	286-3017	2	HANDLE (RECEIVER)	

M - METRIC PART

<END>

292-0292 RECEIVER GP-SATELLITE—SINGLE GNSS, MS992

S/N: SMC1-UP; GCT1-UP

PART OF 292-0280 GRADE CONTROL AR-SATELLITE

SMCS-7010 **i04001471**

NOTE	PART NUMBER	QTY	PART NAME 1 2 3 4 5 6 (PRODUCT LEVEL)	SEE PAGE
	252-9628	1	MOUNTING GP-RECEIVER (TARGET)	
	8R-1803	5	WASHER (10.5X18X1-MM THK)	
M	**8T-9388**	4	BOLT (M10X1.5X25-MM)	
	113-0693	5	LOCKWASHER	
	289-8449	1	HANDLE AS	
	353-2794	1	RECEIVER AS-SATELLITE (GNSS, MS992)	
	255-0939	1	CASE-PLASTIC (RECEIVER)	
	286-3017	1	HANDLE (RECEIVER)	

M - METRIC PART

<END>

231-1978 SENSOR GP-ENGINE

S/N: THX8900-22179

PART OF 282-3823, 282-3824, 282-3825, 282-3826, 301-5768 ENGINE AR

ALSO AN ATTACHMENT

SMCS-1000, 1718, 1906, 1907, 1912, 1917, 1923, 1924, 1925, 1928, 1929, 7400, 7422

i04726113

NOTE	REF NO	GRAPHIC REF	PART NUMBER	QTY	PART NAME 1 2 3 4 5 6 (PRODUCT LEVEL)	SEE PAGE
	1	1	*353-5112*	1	ADAPTER AS	
		1	**9X-0262**	1	ADAPTER	
		1	**214-7566**	2	SEAL-O-RING	
Y	2	1	*274-7395*	1	SENSOR GP-TEMPERATURE (AIR INLET MANIFOLD)	374
Y	3	1	*274-7396*	1	SENSOR GP-TEMPERATURE (WATER, COOLANT)	375
Y	4	1	*197-8393*	1	SENSOR GP-PRESSURE (ATMOSPHERIC)	363
	5	1	**161-1705**	1	SENSOR AS-PRESSURE (ENGINE OIL)	
	6	1	**161-1704**	1	SENSOR GP-PRESSURE (AIR INLET MANIFOLD)	
Y	7	1	*236-6220*	1	SENSOR GP-PRESSURE (INJECTION ACTUATION)	365
Y	8	1	*236-6221*	1	SENSOR GP-SPEED (ENGINE TIMING)	368
	9	1	**3E-4352**	1	WASHER-HARD (8.8X20.5X2.5-MM THK)	
M	10	1	**6V-3940**	1	BOLT (M8X1.25X25-MM)	
	11	1	*329-5451*	1	ADAPTER AS	
		1	**9X-0261**	1	ADAPTER	
		1	**214-7566**	1	SEAL-O-RING	
		1	**214-7568**	1	SEAL-O-RING	

M - METRIC PART
Y - SEPARATE ILLUSTRATION

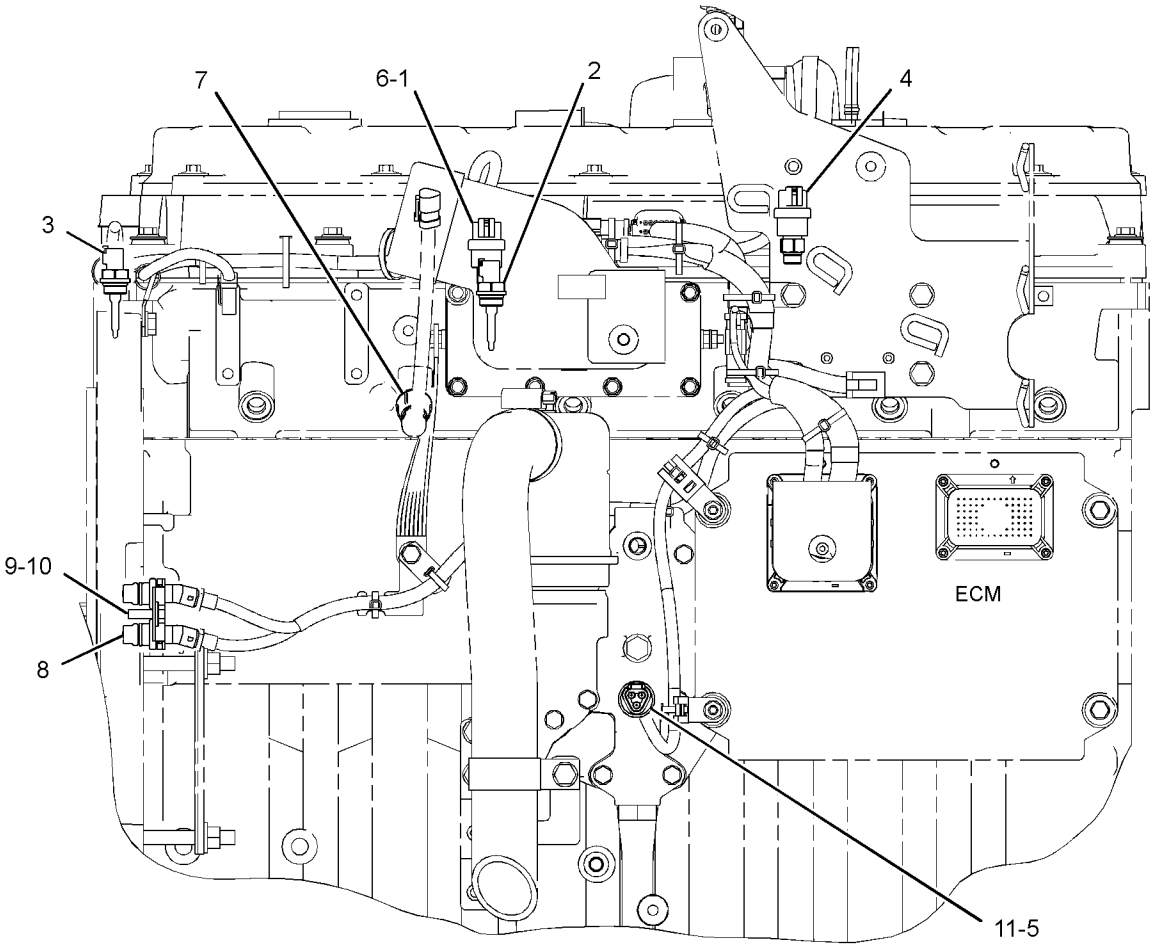

LEFT SIDE VIEW

GRAPHIC #1

<END>

g02847276

330-6034 SENSOR GP-ENGINE

S/N: TXD1-UP; THX8900-UP

PART OF 282-3823, 282-3824, 282-3825, 282-3826, 301-5768 ENGINE AR, 349-3564, 349-3565 ENGINE AR-COMPLETE, 384-8428, 387-8618, 399-3904 ENGINE AR-CORE

ALSO AN ATTACHMENT

SMCS-1000, 1718, 1906, 1907, 1912, 1917, 1923, 1924, 1925, 1928, 1929, 7400, 7422

i04724059

NOTE	REF NO	GRAPHIC REF	PART NUMBER	QTY	PART NAME 1 2 3 4 5 6 (PRODUCT LEVEL)	SEE PAGE
Y	1	1	*234-5012*	1	SENSOR GP-TEMPERATURE (COOLANT)	372
Y	2	1	*234-5013*	1	SENSOR GP-TEMPERATURE (INTAKE AIR TEMPERATURE)	373
Y	3	1	*236-6221*	1	SENSOR GP-SPEED (ENGINE TIMING) (ENGINE TIMING)	368
	4	1	**276-6793**	1	SENSOR GP-PRESSURE (OUTLET AIR)	
Y	5	1	*267-1402*	1	SENSOR GP-PRESSURE (INJECTION ACTUATION)	366
	6	1	**274-6719**	1	SENSOR GP-PRESSURE (ENGINE OIL)	
Y	7	1	*303-3357*	1	SENSOR GP-PRESSURE (ATMOSPHERIC)	367
	8	1	*329-5451*	1	ADAPTER AS	
		1	**9X-0261**	1	ADAPTER	
		1	**214-7566**	1	SEAL-O-RING	
		1	**214-7568**	1	SEAL-O-RING	
	9	1	**3E-4352**	1	WASHER-HARD (8.8X20.5X2.5-MM THK)	
M	10	1	**6V-3940**	1	BOLT (M8X1.25X25-MM)	
	11	1	*353-5112*	1	ADAPTER AS	
		1	**9X-0262**	1	ADAPTER	
		1	**214-7566**	2	SEAL-O-RING	

M - METRIC PART
Y - SEPARATE ILLUSTRATION

330-6034 **SENSOR GP-ENGINE (*contd.*)** **i04724059**

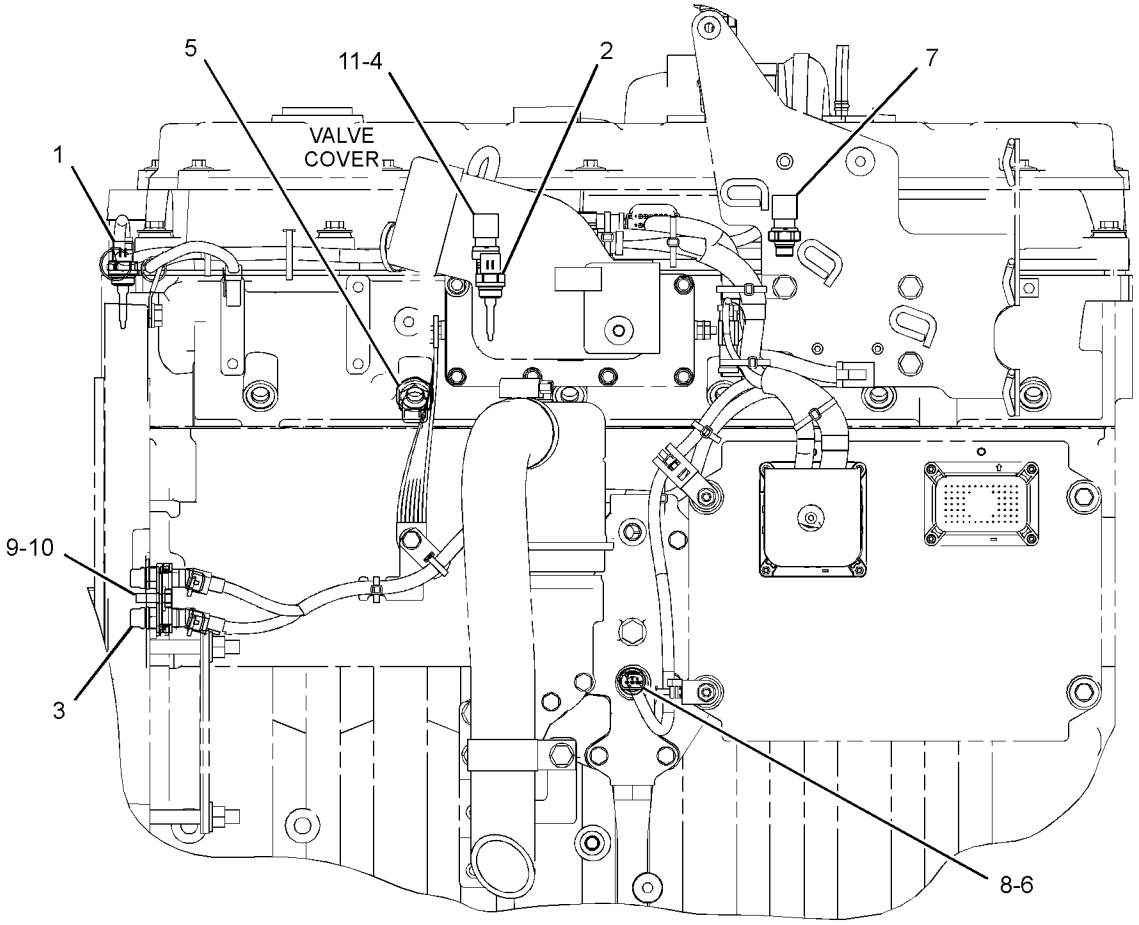

LEFT SIDE VIEW OF ENGINE

GRAPHIC #1 **<END>** g02844399

160-2443 SENSOR GP-POSITION

S/N: SMC1-197; GCT1-267
FIELD REPLACEMENT ORDER 266-1467—PAGE: 359
PART OF 224-2791 PEDAL GP-GOVERNOR & BRAKE

SMCS-1905, 1911, 430S

i04946995

NOTE	REF NO	GRAPHIC REF	PART NUMBER	QTY	PART NAME 1 2 3 4 5 6 (PRODUCT LEVEL)	SEE PAGE
	1	1	**102-8803**	1	KIT-RECEPTACLE (3-PIN)	
					(INCLUDES RECEPTACLE AS & WEDGE)	
	2	1	**8T-8729**	3	PIN-CONNECTOR (16-GA TO 18-GA)	

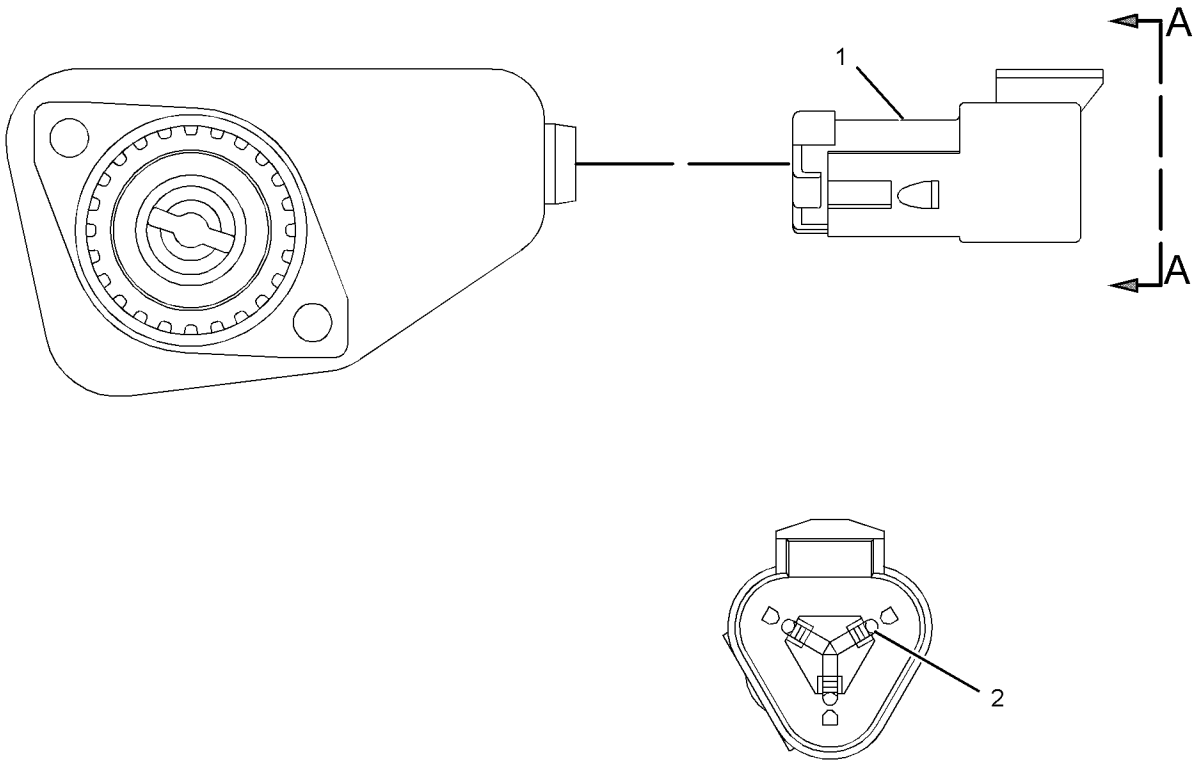

VIEW A-A

GRAPHIC #1 **<END>** g03132757

224-5530 SENSOR GP-POSITION

S/N: SMC1-316; GCT1-529
FIELD REPLACEMENT ORDER 266-1470—PAGE: 360
PART OF 224-2791 PEDAL GP-GOVERNOR & BRAKE

SMCS-1905, 1911, 430S

i02239742

NOTE	REF NO	GRAPHIC REF	PART NUMBER	QTY	PART NAME 1 2 3 4 5 6 (PRODUCT LEVEL)	SEE PAGE
	2	1	**102-8803**	1	KIT-RECEPTACLE (3-PIN)	
					(INCLUDES RECEPTACLE AS & WEDGE)	
	3	1	**186-3735**	3	PIN-CONNECTOR (16-GA TO 18-GA)	
	4	1	**3E-3371**	1	WEDGE-RECEPTACLE LOCK (3-PIN)	
E	5	1	**9X-1813**		SLEEVE (13-CM)	

E - ORDER BY THE CENTIMETER

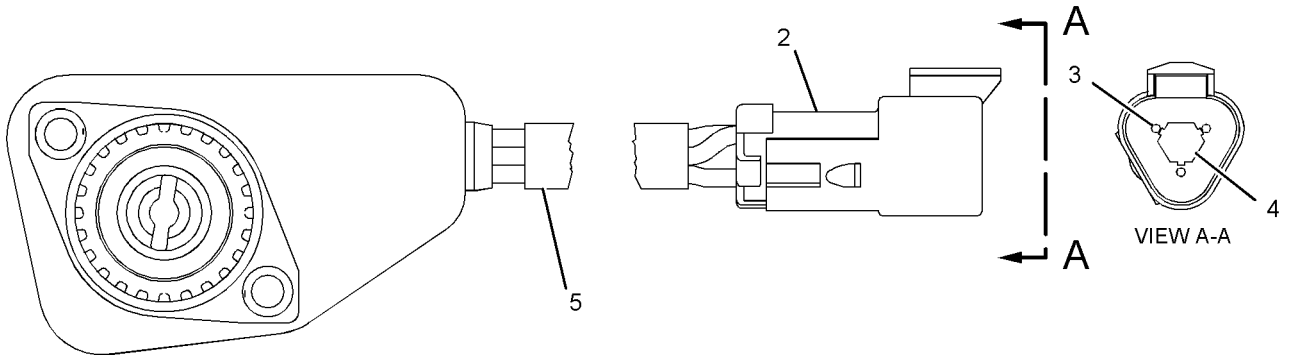

GRAPHIC #1

<END>

g01107385

266-1467 SENSOR GP-POSITION

S/N: SMC198-UP; GCT268-UP
FIELD REPLACEMENT FOR 160-2443—PAGE: 357
PART OF 224-2791 PEDAL GP-GOVERNOR & BRAKE

SMCS-1905, 1911, 430S **i04947036**

NOTE	REF NO	GRAPHIC REF	PART NUMBER	QTY	PART NAME 1 2 3 4 5 6 (PRODUCT LEVEL)	SEE PAGE
	1	1	**9X-3401**	3	PIN-CONNECTOR (16-GA TO 18-GA)	
					—OR—	
		1	**126-1767**	3	PIN-CONNECTOR (14-GA TO 16-GA)	
	2	1	**102-8803**	1	KIT-RECEPTACLE (3-PIN)	
					(INCLUDES RECEPTACLE AS & WEDGE)	

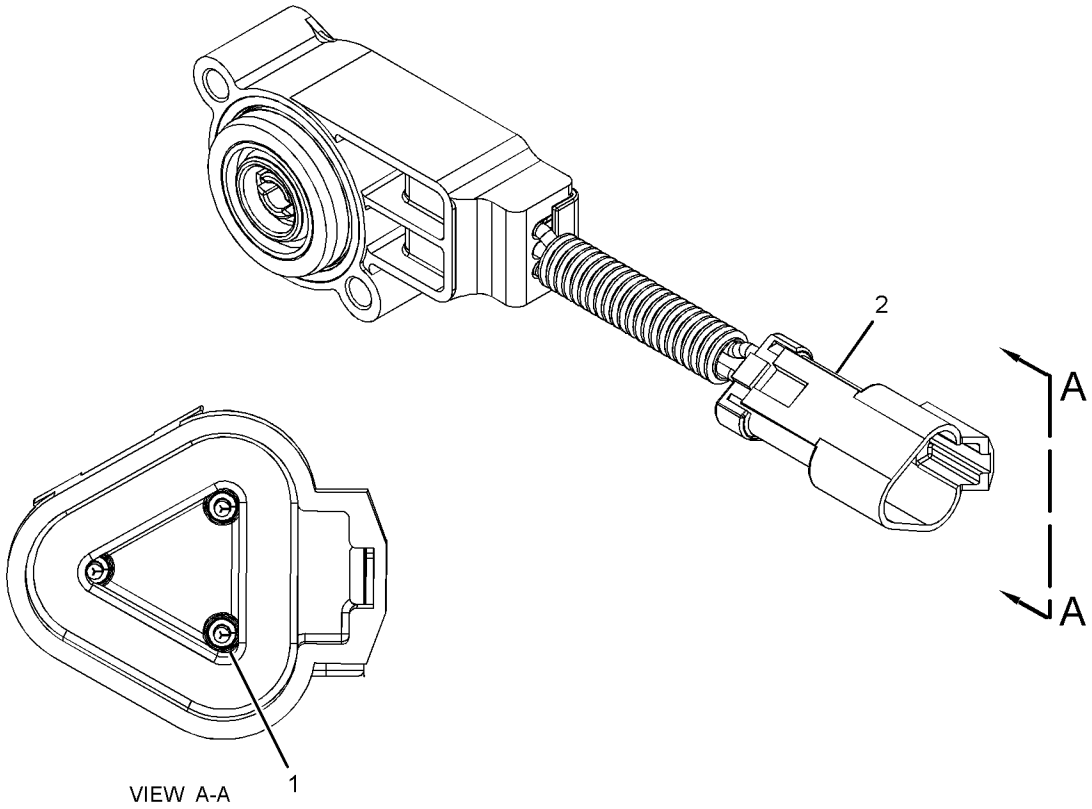

GRAPHIC #1 **<END>** g03134617

266-1470 SENSOR GP-POSITION

S/N: SMC317-UP; GCT510-UP
FIELD REPLACEMENT FOR 224-5530—PAGE: 358
PART OF 224-2791 PEDAL GP-GOVERNOR & BRAKE

SMCS-1905, 1911, 430S

i03899360

NOTE	REF NO	GRAPHIC REF	PART NUMBER	QTY	PART NAME 1 2 3 4 5 6 (PRODUCT LEVEL)	SEE PAGE
	1	1	**180-9339**	3	PIN-CONNECTOR (14-GA TO 18-GA)	
	2	1	**102-8803**	1	KIT-RECEPTACLE (3-PIN)	
					(INCLUDES RECEPTACLE AS & WEDGE)	
E	3	1	**9X-1813**		SLEEVE (13-CM)	

E - ORDER BY THE CENTIMETER

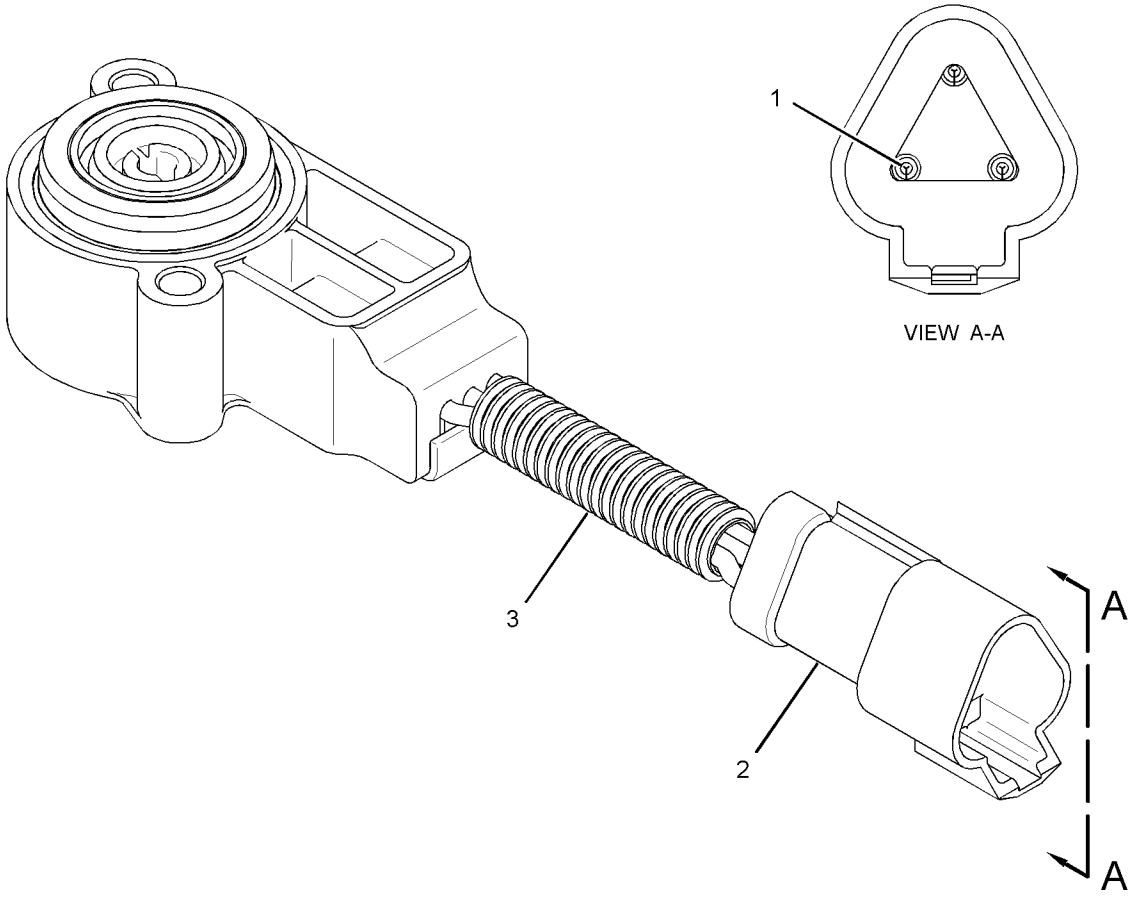

GRAPHIC #1 **<END>** g02140688

161-9926 SENSOR GP-PRESSURE

S/N: SMC1-UP; GCT1-UP

PART OF 279-9548, 368-4241 BATTERY & WIRING GP

SMCS-1718, 1916, 1917, 1923, 1924, 1925 **i04786800**

NOTE	REF NO	GRAPHIC REF	PART NUMBER	QTY	PART NAME 1 2 3 4 5 6 (PRODUCT LEVEL)	SEE PAGE
BE	1	1	**9X-1813**		SLEEVE	
	2	1	**155-2260**	1	KIT-CONNECTING PLUG (3-PIN)	
					(INCLUDES PLUG AS & WEDGE)	
	3	1	**9X-3402**	1	SOCKET-CONNECTOR (16-GA TO 18-GA)	
					(FOR 16-18 GA WIRE)	
					—OR—	
		1	**126-1768**	1	SOCKET-CONNECTOR (14-GA TO 16-GA)	
					(FOR 14 GA WIRE)	
	4	1	**3E-3368**	1	WEDGE-PLUG LOCK (3-PIN)	

B - USE AS REQUIRED
E - ORDER BY THE CENTIMETER

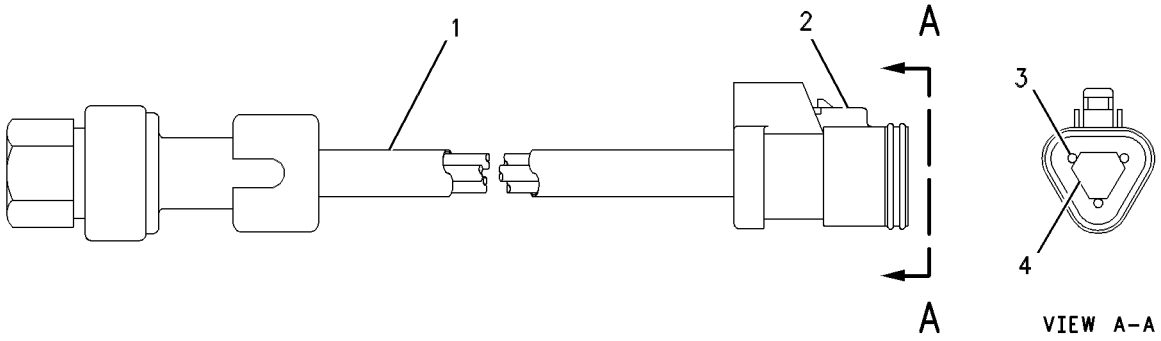

GRAPHIC #1 **<END>** g00513129

194-6725 SENSOR GP-PRESSURE

S/N: TXD1-UP; THX8900-UP
PART OF 264-2014, 397-5040 LINES GP-FUEL
ALSO AN ATTACHMENT

SMCS-1718, 1916, 1917, 1923, 1924, 1925 **i04287262**

NOTE	REF NO	GRAPHIC REF	PART NUMBER	QTY	PART NAME 1 2 3 4 5 6 (PRODUCT LEVEL)	SEE PAGE
E	1	1	**9X-1813**		SLEEVE (34-CM)	
	2	1	**155-2260**	1	KIT-CONNECTING PLUG (3-PIN)	
					(INCLUDES PLUG AS, INTERFACE SEAL & WEDGE)	
	3	1	**180-9340**	3	SOCKET-CONNECTOR (14-GA TO 18-GA)	

E - ORDER BY THE CENTIMETER

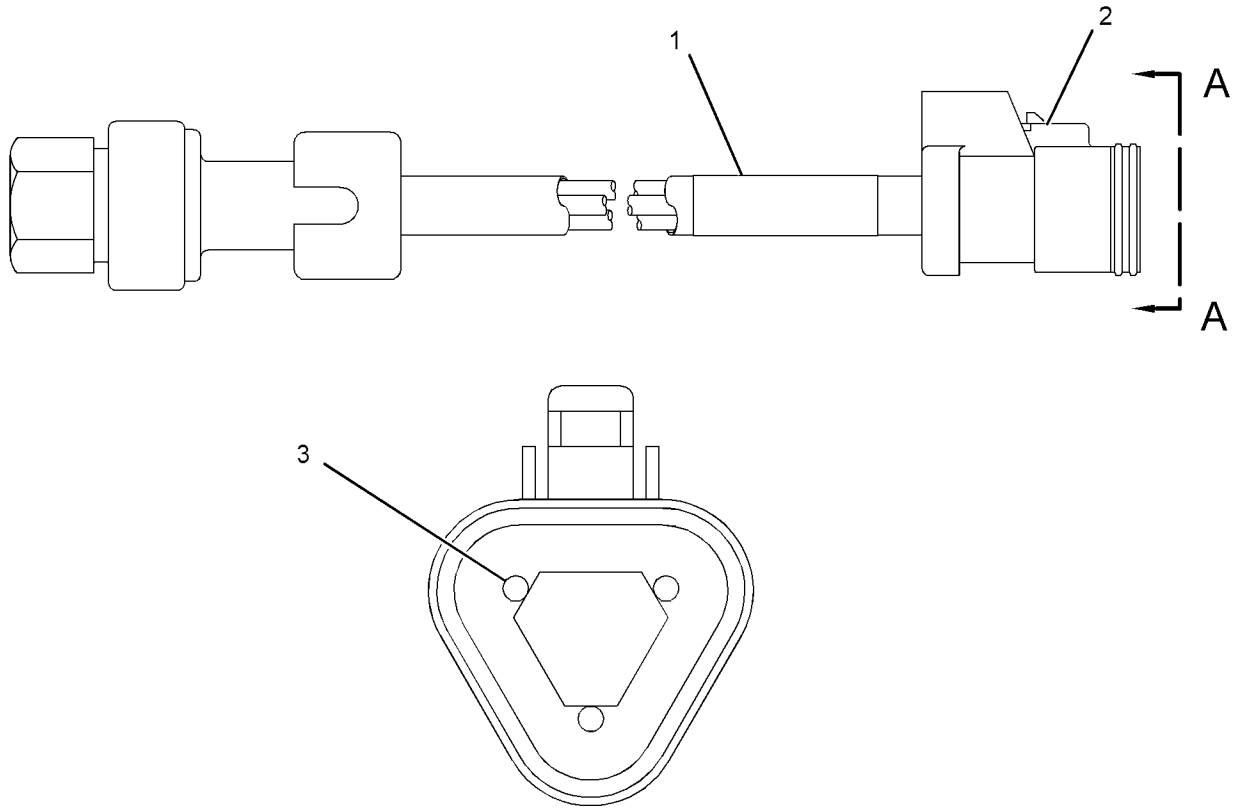

VIEW A-A

GRAPHIC #1 **<END>** g01662003

197-8393 SENSOR GP-PRESSURE

S/N: THX8900-UP
PART OF 231-1978 SENSOR GP-ENGINE
ALSO AN ATTACHMENT

SMCS-1718, 1916, 1917, 1923, 1924, 1925

i04547567

NOTE	REF NO	GRAPHIC REF	PART NUMBER	QTY	PART NAME 1 2 3 4 5 6 (PRODUCT LEVEL)	SEE PAGE
	1	1	**161-1703**	1	SENSOR GP-PRESSURE	
	2	1	**214-7568**	1	SEAL-O-RING	

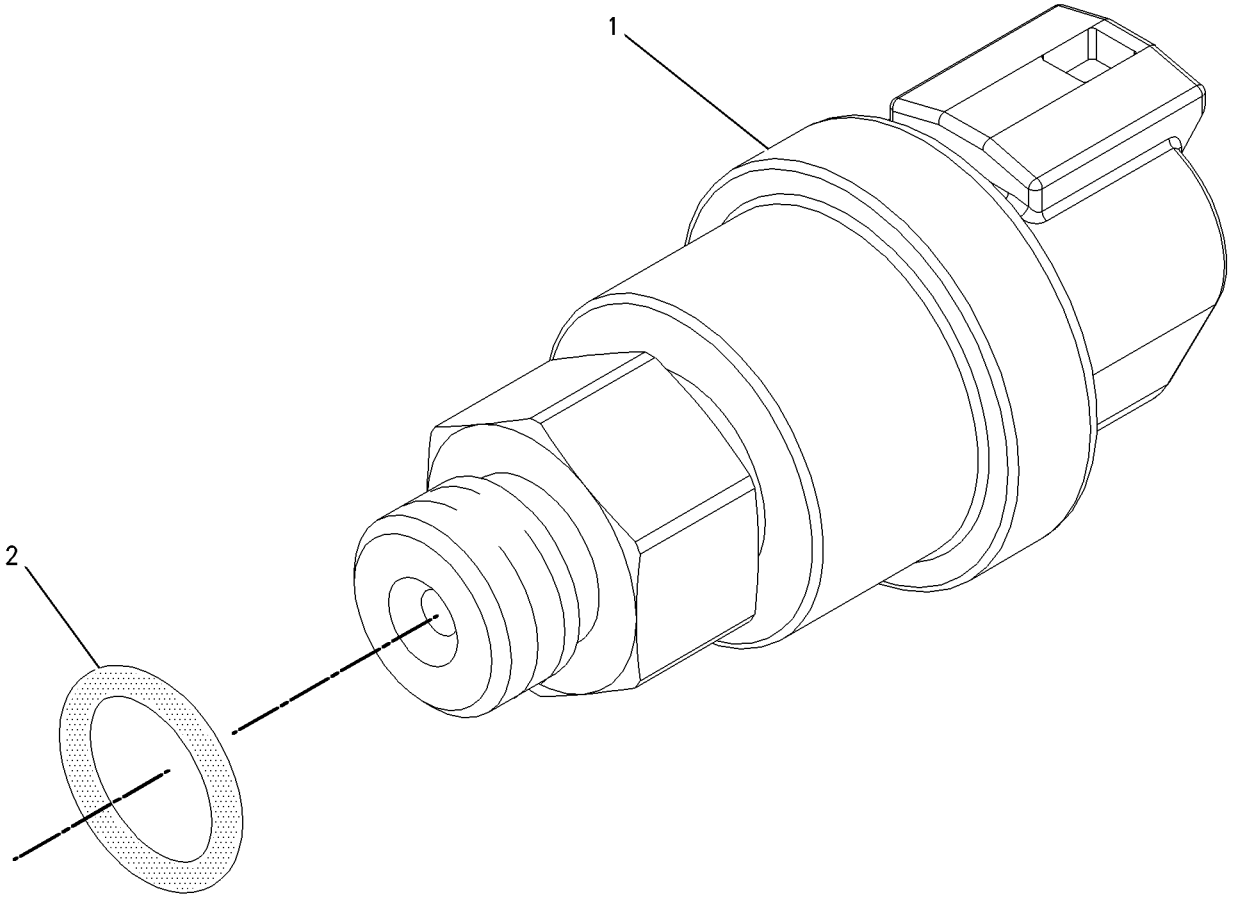

GRAPHIC #1

<END>

g00855973

224-4536 SENSOR GP-PRESSURE

S/N: THX8900-UP

PART OF 236-6220 SENSOR GP-PRESSURE

ALSO AN ATTACHMENT

SMCS-1718, 1916, 1917, 1923, 1924, 1925 **i04947021**

NOTE	REF NO	GRAPHIC REF	PART NUMBER	QTY	PART NAME 1 2 3 4 5 6 (PRODUCT LEVEL)	SEE PAGE
E	1	1	**9X-1813**		SLEEVE (35-CM)	
	2	1	**155-2260**	1	KIT-CONNECTING PLUG (3-PIN)	
					(INCLUDES PLUG AS, WEDGE, & INTERFACE SEAL)	
	3	1	**180-9340**	3	SOCKET-CONNECTOR (14-GA TO 18-GA)	

E - ORDER BY THE CENTIMETER

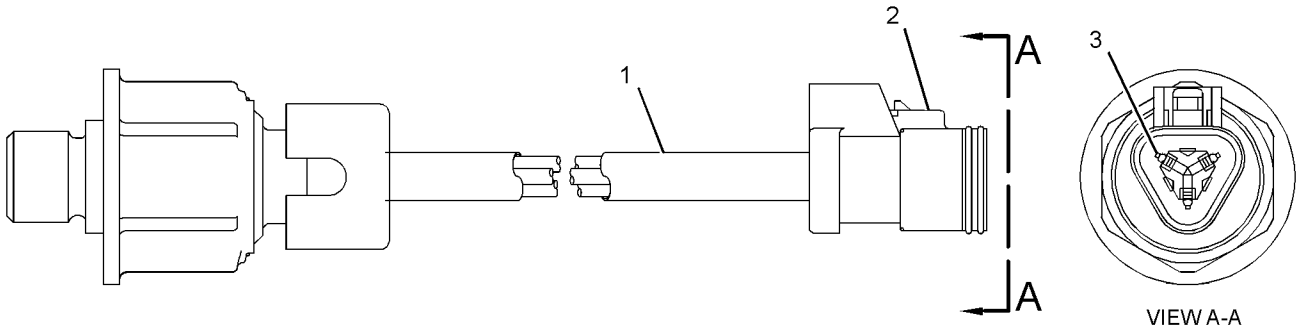

GRAPHIC #1 **<END>** g03134577

236-6220 SENSOR GP-PRESSURE

S/N: THX8900-UP
PART OF 231-1978 SENSOR GP-ENGINE
ALSO AN ATTACHMENT

SMCS-1718, 1916, 1917, 1923, 1924, 1925 **i03500600**

NOTE	REF NO	GRAPHIC REF	PART NUMBER	QTY	PART NAME 1 2 3 4 5 6 (PRODUCT LEVEL)	SEE PAGE
	1	1	**214-7567**	1	SEAL-O-RING	
Y	2	1	**224-4536**	1	SENSOR GP-PRESSURE	364

Y - SEPARATE ILLUSTRATION

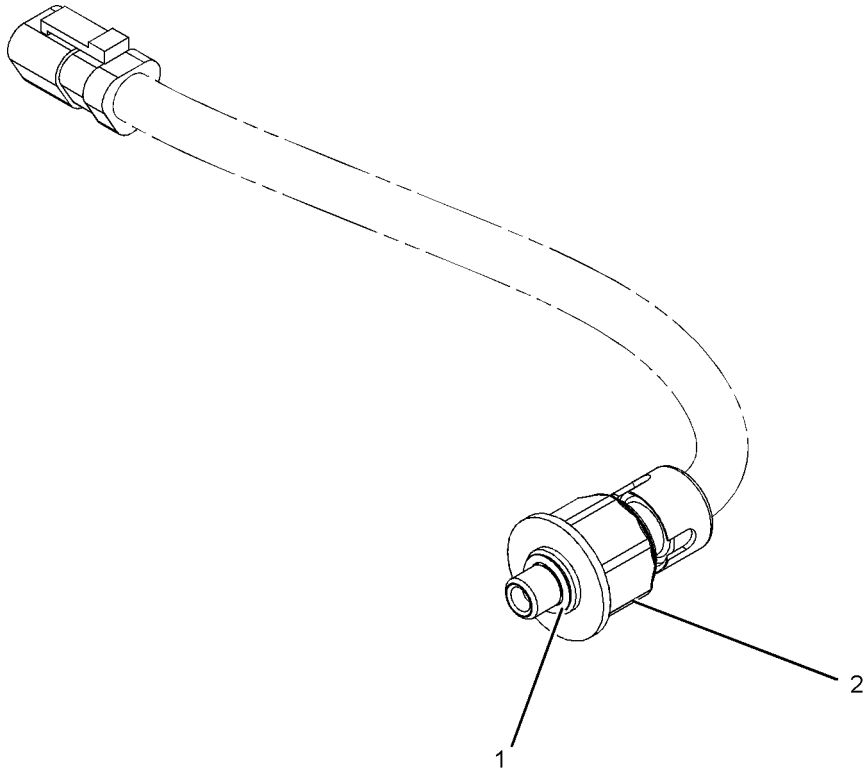

GRAPHIC #1 **<END>** g01054528

267-1402 SENSOR GP-PRESSURE

S/N: TXD1-UP; THX22179-UP
AMPSEAL CONNECTOR
PART OF 330-6034 SENSOR GP-ENGINE
ALSO AN ATTACHMENT

SMCS-1718, 1916, 1917, 1923, 1924, 1925 **i03565217**

NOTE	REF NO	GRAPHIC REF	PART NUMBER	QTY	PART NAME 1 2 3 4 5 6 (PRODUCT LEVEL)	SEE PAGE
	1	1	**214-7567**	1	SEAL-O-RING	
	2	1	**248-2169**	1	SENSOR GP-PRESSURE	

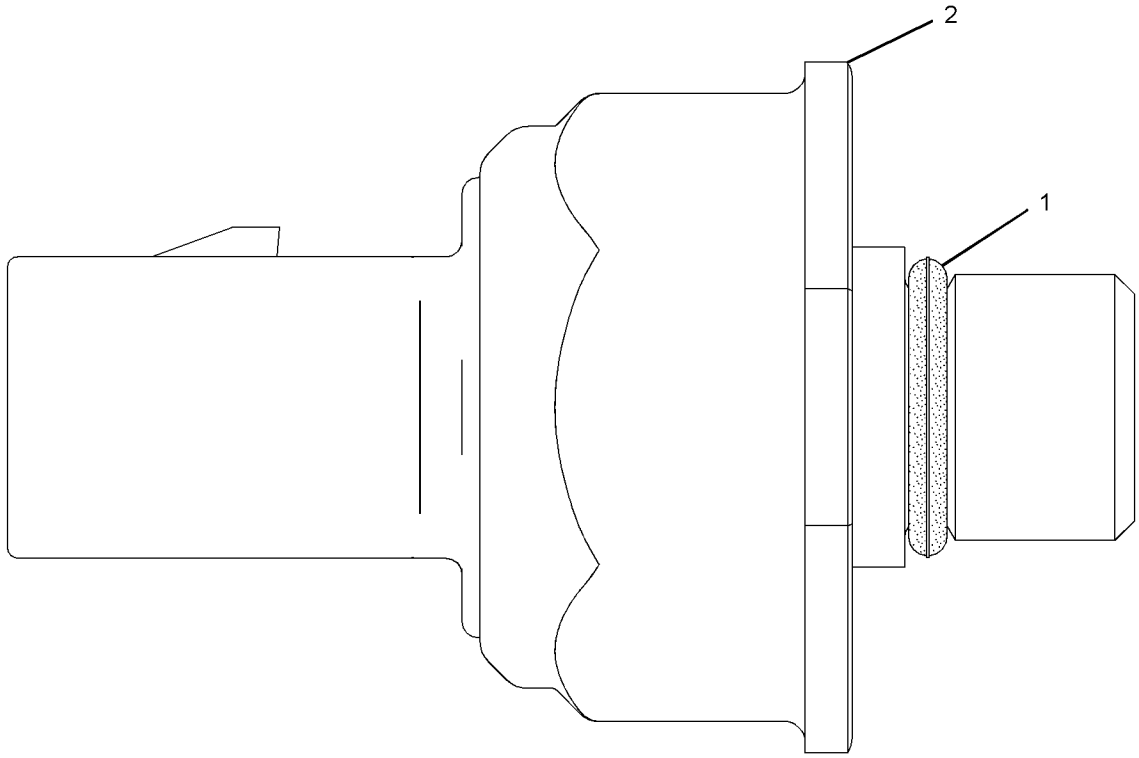

GRAPHIC #1 **<END>** g01164283

303-3357 SENSOR GP-PRESSURE

S/N: TXD1-UP; THX22179-UP
PART OF 330-6034 SENSOR GP-ENGINE
ALSO AN ATTACHMENT

SMCS-1718, 1916, 1917, 1923, 1924, 1925 **i05020732**

NOTE	REF NO	GRAPHIC REF	PART NUMBER	QTY	PART NAME 1 2 3 4 5 6 (PRODUCT LEVEL)	SEE PAGE
	1	1	**296-8060**	1	SENSOR GP-PRESSURE	
	2	1	**214-7568**	1	SEAL-O-RING	

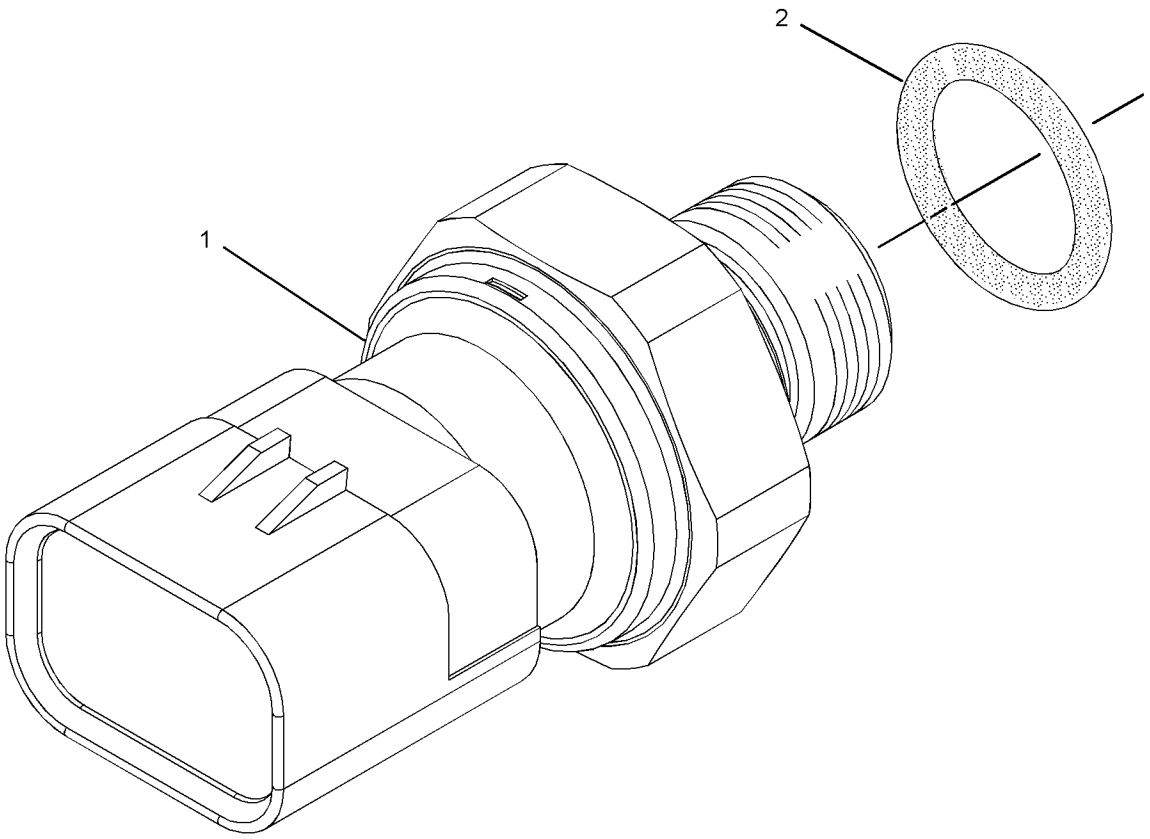

GRAPHIC #1 **<END>** g01331369

236-6221 SENSOR GP-SPEED

S/N: TXD1-UP; THX8900-UP
PART OF 231-1978, 330-6034 SENSOR GP-ENGINE
ALSO AN ATTACHMENT

SMCS-1907 **i04565632**

NOTE	REF NO	GRAPHIC REF	PART NUMBER	QTY	PART NAME 1 2 3 4 5 6 (PRODUCT LEVEL)	SEE PAGE
	1	1	**228-4947**	2	SEAL-O-RING	
	2	1	**245-4630**	1	SENSOR GP-SPEED	

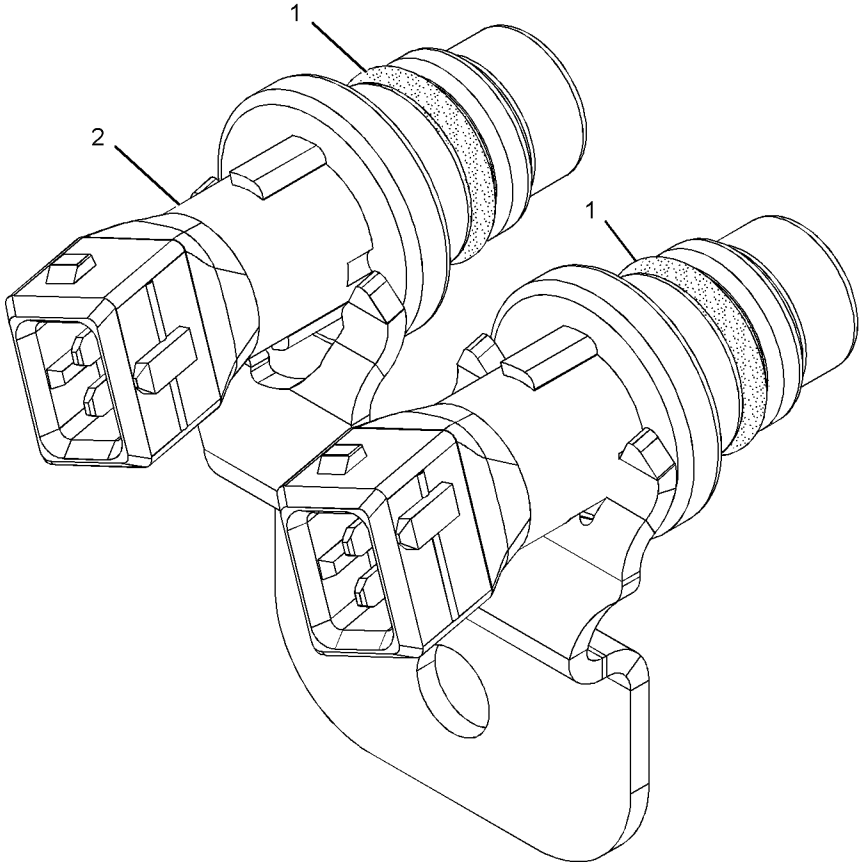

GRAPHIC #1 **<END>** g01013894

290-5792 SENSOR GP-SPEED

S/N: SMC1-UP; GCT1-UP

PART OF 279-9544 WIRING GP-ENGINE

SMCS-1907 **i03645015**

NOTE	REF NO	GRAPHIC REF	PART NUMBER	QTY	PART NAME 1 2 3 4 5 6 (PRODUCT LEVEL)	SEE PAGE
	1	1	**171-5349**	1	STRAP-MARKER	
	2	1	**102-8802**	1	KIT-RECEPTACLE (2-PIN)	
					(INCLUDES RECEPTACLE AS & WEDGE)	
	3	1	**144-1636**	2	PIN-CONNECTOR (14-GA TO 18-GA)	
E	4	1	**9X-1813**		SLEEVE (14-CM)	

E - ORDER BY THE CENTIMETER

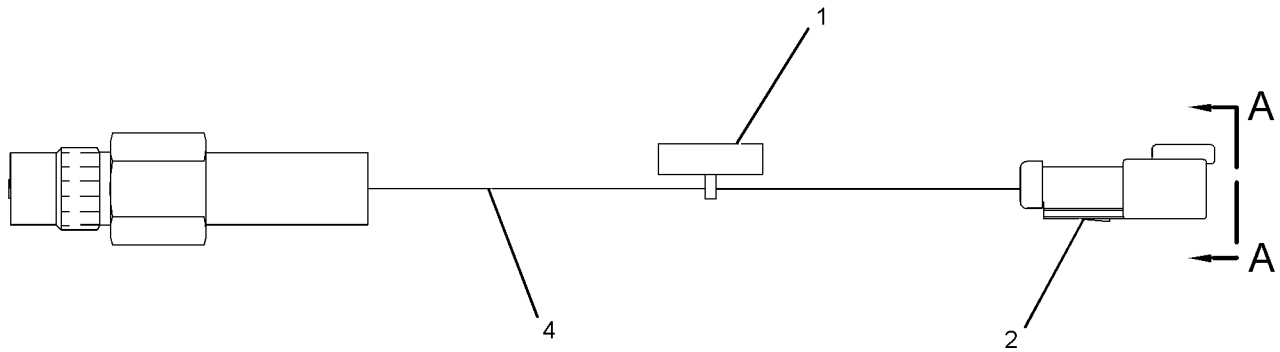

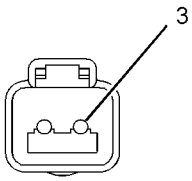

VIEW A-A

GRAPHIC #1 **<END>** g01409880

351-6987 SENSOR GP-SPEED

S/N: SMC1-UP; GCT1-UP
PART OF 251-3600 CLUTCH GP-FAN
AN ATTACHMENT

SMCS-1907 **i04047980**

NOTE	REF NO	GRAPHIC REF	PART NUMBER	QTY	PART NAME 1 2 3 4 5 6 (PRODUCT LEVEL)	SEE PAGE
	1	1	**033-6033**	1	SEAL-O-RING	
	2	1	**8H-3127**	1	BOLT (1/4-20X0.75-IN)	
	3	1	**6N-7523**	1	WASHER (6.48X11.9X1.57-MM THK)	
	4	1	**7X-2031**	1	RETAINER	
E	5	1	**9X-1813**		SLEEVE (16-CM)	
	6	1	**102-8803**	1	KIT-RECEPTACLE (3-PIN)	
					(INCLUDES RECEPTACLE AS & WEDGE)	
	7	1	**8T-8729**	3	PIN-CONNECTOR (16-GA TO 18-GA)	

E - ORDER BY THE CENTIMETER

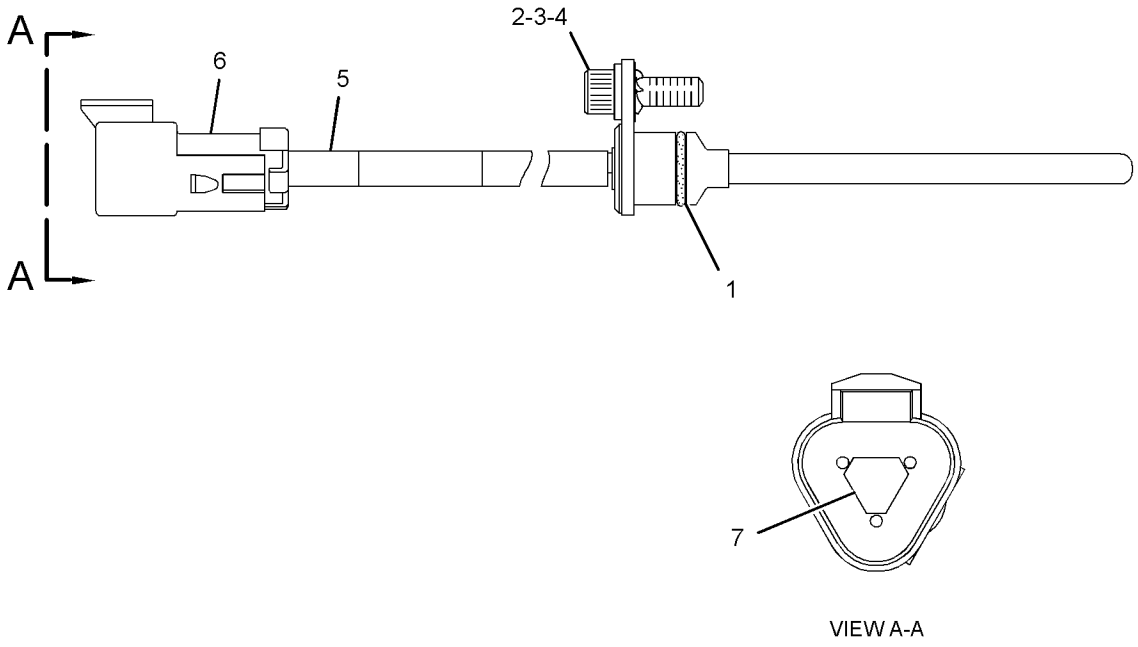

GRAPHIC #1 **<END>** g02078313

145-7028 SENSOR GP-TEMPERATURE

S/N: SMC1-UP; GCT1-UP

PART OF 279-9548, 368-4241 BATTERY & WIRING GP, 279-9544 WIRING GP-ENGINE

SMCS-1906, 1919, 1921, 1922, 1928, 1929 **i01828633**

NOTE	REF NO	GRAPHIC REF	PART NUMBER	QTY	PART NAME 1 2 3 4 5 6 (PRODUCT LEVEL)	SEE PAGE
	1	1	**102-8802**	1	KIT-RECEPTACLE (2-PIN)	
					(INCLUDES RECEPTACLE AS & WEDGE)	
BJ	2	1	**153-5043**		SLEEVE	
	3	1	**8T-8729**	2	PIN-CONNECTOR (16-GA TO 18-GA)	
	4	1	**3E-3365**	1	WEDGE-RECEPTACLE LOCK (2-PIN)	

B - USE AS REQUIRED
J - ORDER BY THE DECIMETER

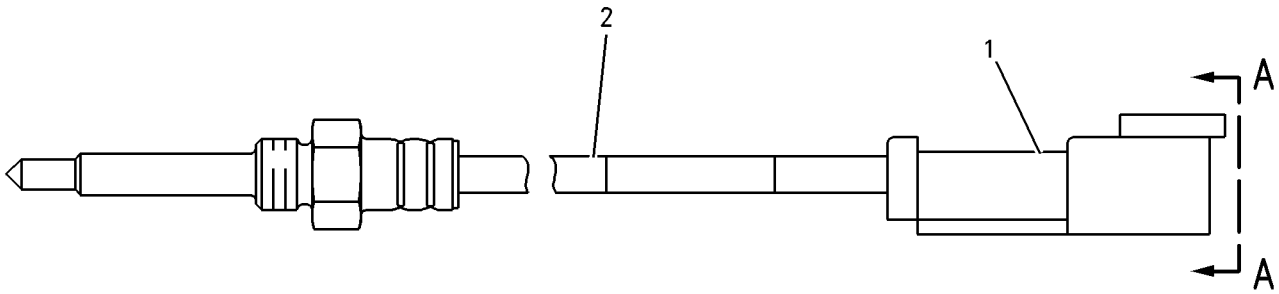

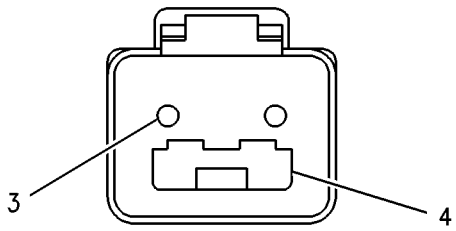

VIEW A-A

GRAPHIC #1 **<END>** g00917620

234-5012 SENSOR GP-TEMPERATURE

S/N: TXD1-UP; THX22179-UP
AMPSEAL CONNECTOR
PART OF 330-6034 SENSOR GP-ENGINE
ALSO AN ATTACHMENT

SMCS-1906, 1919, 1921, 1922, 1928, 1929 **i03565212**

NOTE	REF NO	GRAPHIC REF	PART NUMBER	QTY	PART NAME 1 2 3 4 5 6 (PRODUCT LEVEL)	SEE PAGE
	1	1	**256-6453**	1	SENSOR-TEMPERATURE	
	2	1	**6V-6609**	1	SEAL-O-RING	

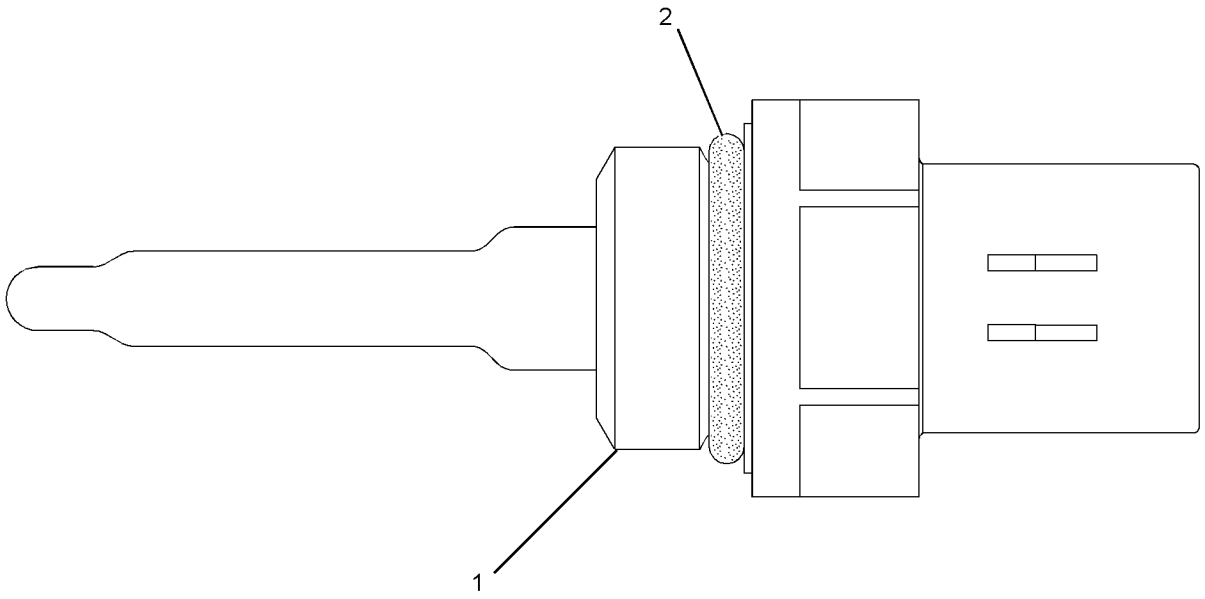

GRAPHIC #1 **<END>** g01164284

234-5013 SENSOR GP-TEMPERATURE

S/N: TXD1-UP; THX22179-UP
AMPSEAL CONNECTOR
PART OF 330-6034 SENSOR GP-ENGINE
ALSO AN ATTACHMENT

SMCS-1906, 1919, 1921, 1922, 1928, 1929 **i03645027**

NOTE	REF NO	GRAPHIC REF	PART NUMBER	QTY	PART NAME 1 2 3 4 5 6 (PRODUCT LEVEL)	SEE PAGE
	1	1	**256-6453**	1	SENSOR-TEMPERATURE	
	2	1	**238-5080**	1	SEAL-O-RING	

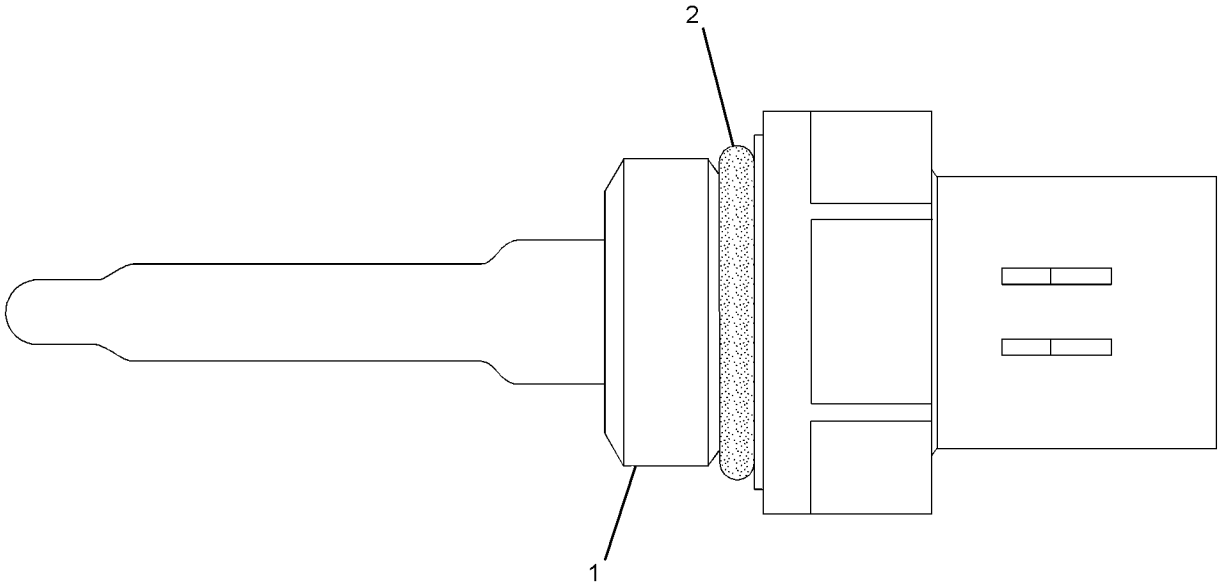

GRAPHIC #1 **<END>** g01164268

274-7395 SENSOR GP-TEMPERATURE

S/N: THX8900-UP

PART OF 231-1978 SENSOR GP-ENGINE

ALSO AN ATTACHMENT

SMCS-1906, 1919, 1921, 1922, 1928, 1929 **i05105670**

NOTE	REF NO	GRAPHIC REF	PART NUMBER	QTY	PART NAME 1 2 3 4 5 6 (PRODUCT LEVEL)	SEE PAGE
	1	1	**264-4297**	1	SENSOR AS-TEMPERATURE	
		1	**137-6645**	1	PAD-CONNECTOR	
	2	1	**238-5080**	1	SEAL-O-RING	

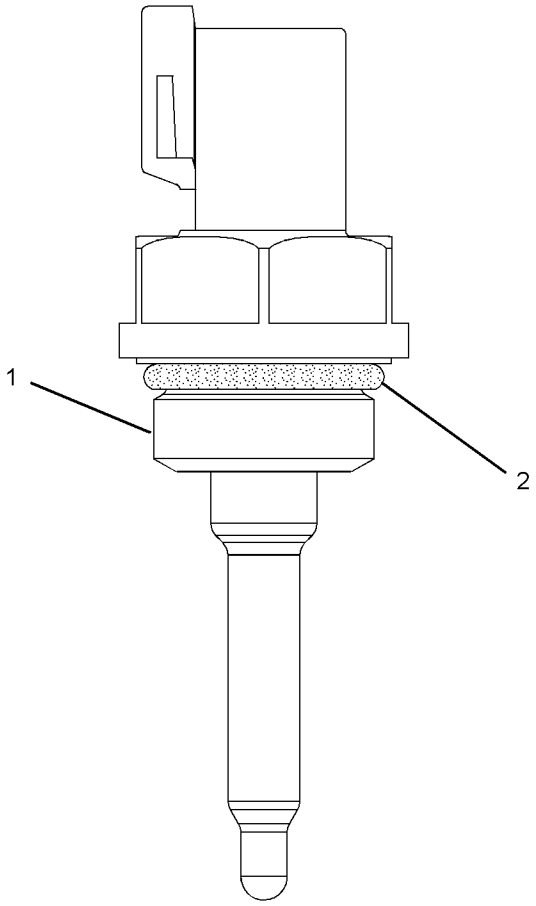

GRAPHIC #1 **<END>** g01353734

274-7396 SENSOR GP-TEMPERATURE

S/N: THX8900-UP
PART OF 231-1978 SENSOR GP-ENGINE
ALSO AN ATTACHMENT

SMCS-1906, 1919, 1921, 1922, 1928, 1929

i03435390

NOTE	REF NO	GRAPHIC REF	PART NUMBER	QTY	PART NAME 1 2 3 4 5 6 (PRODUCT LEVEL)	SEE PAGE
	1	1	**264-4297**	1	SENSOR AS-TEMPERATURE	
		1	**137-6645**	1	PAD-CONNECTOR	
	2	1	**6V-6609**	1	SEAL-O-RING	

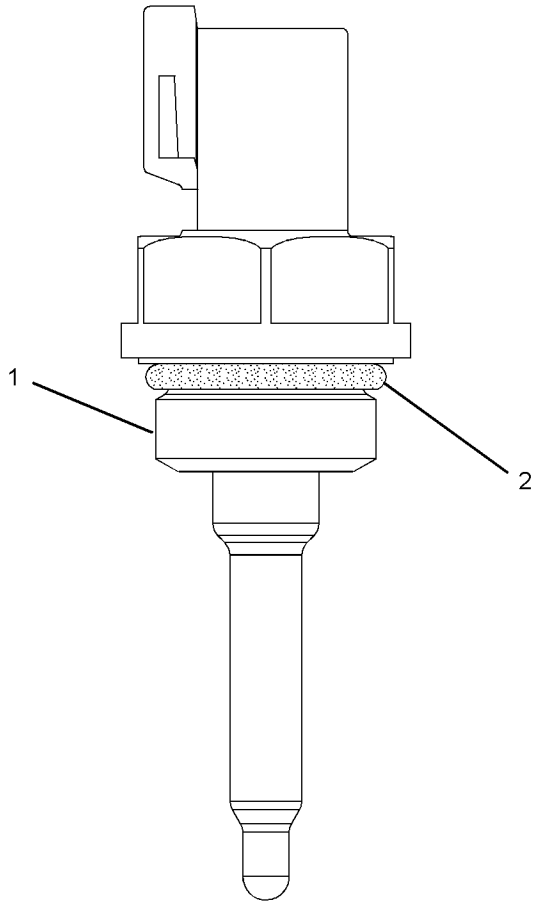

GRAPHIC #1

<END>

g01353734

434-2368 SOFTWARE GP-MONITOR

S/N: SMC1-UP; GCT1-UP
COOLANT TEMPERATURE
FIELD INSTALLATION

SMCS-7490, 7601, 7620

i05326038

NOTE	PART NUMBER	QTY	PART NAME 1 2 3 4 5 6 (PRODUCT LEVEL)	SEE PAGE
			(NO SERVICED PARTS)	

<END>

263-9012 STARTING AID GP-ETHER

S/N: SMC1-UP; GCT1-UP

PART OF 279-9549, 372-6406 INSTALLATION AR-ENGINE

SMCS-1456 **i04701535**

NOTE	REF NO	GRAPHIC REF	PART NUMBER	QTY	PART NAME 1 2 3 4 5 6 (PRODUCT LEVEL)	SEE PAGE
	1	1	**3Y-2888**	1	CONNECTOR	
	2	1	**7N-2059**	1	CLAMP AS	
Y	3	1	**239-1134**	1	VALVE GP-ETHER STARTING (24-VOLT)	400
	4	1	**241-4194**	1	FITTING AS (CONTROL)	
	5	1	**251-4345**	1	ATOMIZER GP-ETHER	
	6	1	**260-3799**	1	BRACKET AS	
M		1	**8T-3612**	4	NUT-WELD (M8X1.25-THD)	
	7	1	**3J-1907**	1	SEAL-O-RING	
	8	1	**4P-8134**	1	CLIP	
	9	1	**5P-4116**	4	WASHER-HARD (8.8X20.5X2-MM THK)	
	10	1	**7X-7729**	2	WASHER (11X25X3-MM THK)	
M	11	1	**8T-4182**	2	BOLT (M10X1.5X45-MM)	
M	12	1	**8T-4189**	4	BOLT (M8X1.25X20-MM)	
E	13	1	**174-9169**		TUBE (35-CM)	
A		1	**7N-0296**	1	CYLINDER AS-ETHER	
					(MUST BE PROCURED LOCALLY FROM YOUR CATERPILLAR DEALER)	

A - NOT PART OF THIS GROUP
E - ORDER BY THE CENTIMETER
M - METRIC PART
Y - SEPARATE ILLUSTRATION

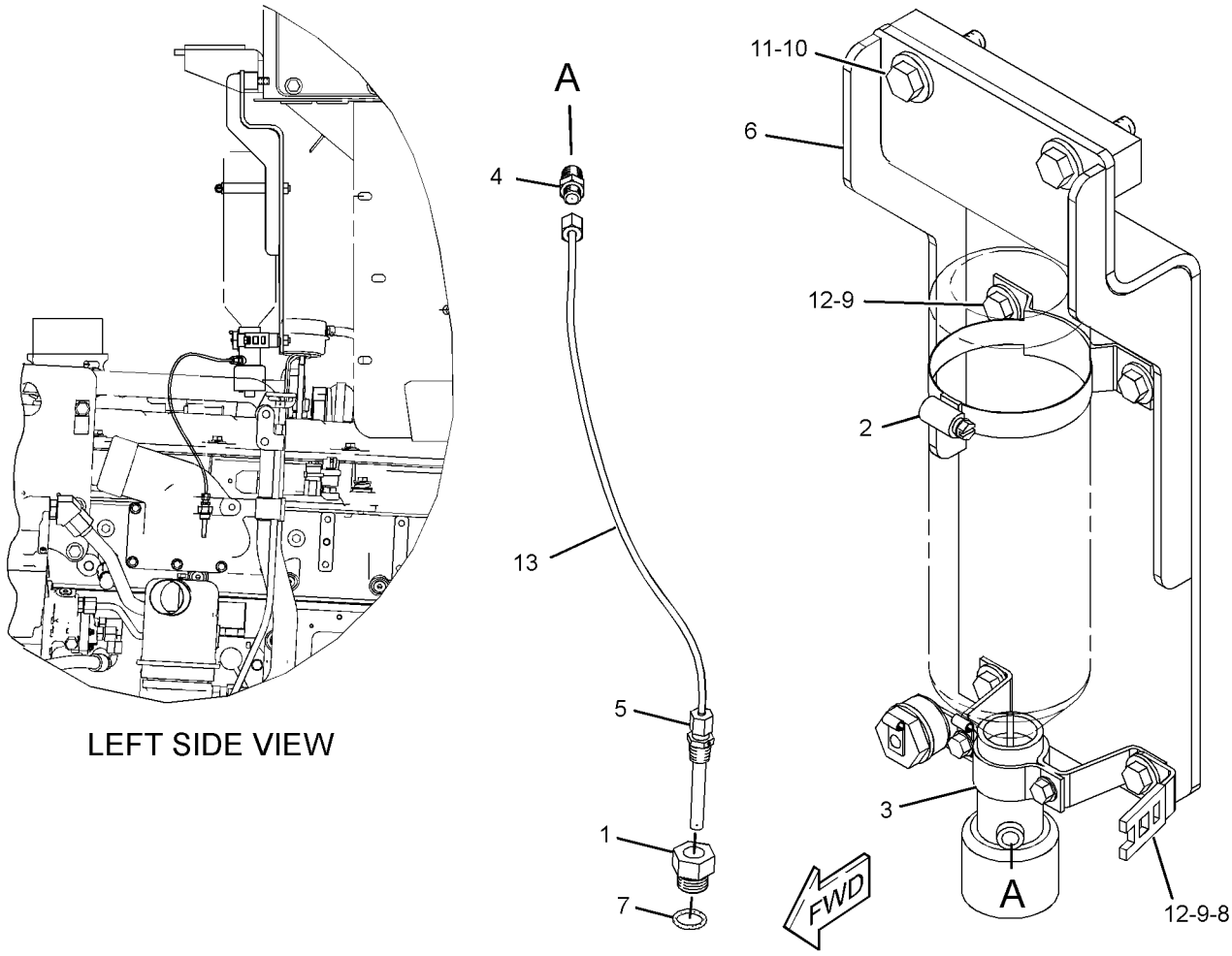

LEFT SIDE VIEW

GRAPHIC #1 **<END>** g01318337

207-1556 STARTING MOTOR GP-ELECTRIC*R

S/N: SMC1-UP; GCT1-UP

24-VOLT

PART OF 223-0558 STARTING MOTOR GP-ELECTRIC

SMCS-1453 **i04663751**

NOTE	REF NO	GRAPHIC REF	PART NUMBER	QTY	PART NAME 1 2 3 4 5 6 (PRODUCT LEVEL)	SEE PAGE
	1	1	**3T-3434**	6	PLUG	
	2	1	**7T-3279**	1	HOUSING AS	
	3	1	**8T-8566**	1	TERMINAL AS	
	4	1	**6V-8188**	4	NUT (1/2-13-THD)	
	5	1	**7X-0562**	4	WASHER-HARD (13.5X19X0.8-MM THK)	
	6	1	**3T-3422**	1	WIRE AS	
	7	1	**7T-3278**	1	HOLDER AS-BRUSH	
	8	1	**7T-3277**	1	COIL AS-FIELD	
	9	1	**7T-3454**	1	INSULATOR	
	10	1	**283-1107**	1	KIT-CONNECTOR (STARTING MOTOR)	
					(INCLUDES CONNECTORS, BOLT & TERMINAL-STARTER)	
	11	1	**7T-3451**	1	KIT-INSULATOR (TERMINAL)	
	12	1	**8T-8569**	1	INSULATOR-TERMINAL	
	13	1	**5S-7349**	4	BOLT (1/4-20X0.5-IN)	
	14	1	**8T-4205**	4	WASHER-HARD (7.2X14.5X2-MM THK)	
	15	1	**8H-1141**	4	SHOE-POLE	
	16	1	**3R-8797**	8	SCREW & WASHER AS (3/8-24X0.72-IN)	
	17	1	**7T-3276**	1	ARMATURE AS (24-VOLT)	
	18	1	**3E-7775**	1	HOUSING AS	
	19	1	**4M-1831**	1	PLUG-LEVER HOUSING	
	20	1	**7L-2894**	1	GASKET	
	21	1	**0S-1597**	5	BOLT (1/4-28X1-IN)	
	22	1	**6N-3826**	1	DRIVE AS-MOTOR	
	23	1	**7T-3974**	1	HOUSING AS-DRIVE	
	24	1	**7X-3373**	6	BOLT (5/16-18X0.88-IN)	
	25	1	**376-4353**	1	KIT-SOLENOID (24-VOLT)	
					(INCLUDES SOLENOID AS, BOLT, NUTS,COVER & CONNECTORS)	
	26	1	**6V-8378**	3	NUT (10-32-THD)	
	27	1	**8F-1434**	2	LOCKWASHER	
	28	1	**8T-0328**	3	WASHER-HARD (5.5X10X1-MM THK)	
	29	1	**9X-4824**	1	COVER-STARTING MOTOR	
	30	1	**8T-9884**	1	KIT-INSULATOR (STARTING MOTOR)	
					(INCLUDES INSULATORS & BUSHING)	
	31	1	**8C-3655**	1	KIT-BRUSH (STARTING MOTOR)	
					(INCLUDES BRUSHES, SPRINGS, SCREWS, SCREW ASSEMBLIES & SEAL)	
	32	1	**7T-3268**	1	KIT-LEVER (STARTING MOTOR)	
					(INCLUDES LEVER ASSEMBLIES, SEAL, NUT, GASKET & RETAINER)	
					AVAILABLE REPAIR KIT(S):	
			7T-3267	1	KIT-BUSHING (STARTING MOTOR)	
					(INCLUDES BUSHINGS, WICKS, CUPS, SEALS, GASKET, SCREW AS, WASHERS, SPACER & NUT)	

207-1556 **STARTING MOTOR GP-ELECTRIC (*contd.*)** **i04663751**

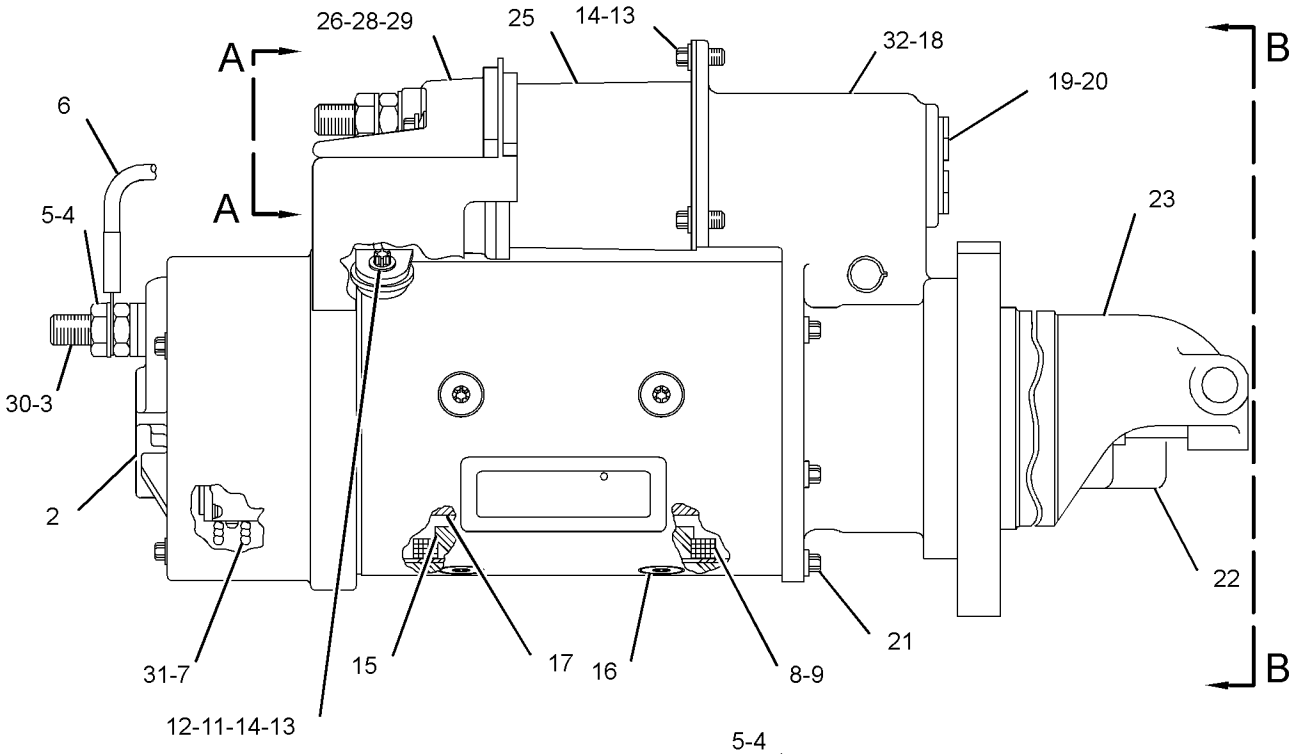

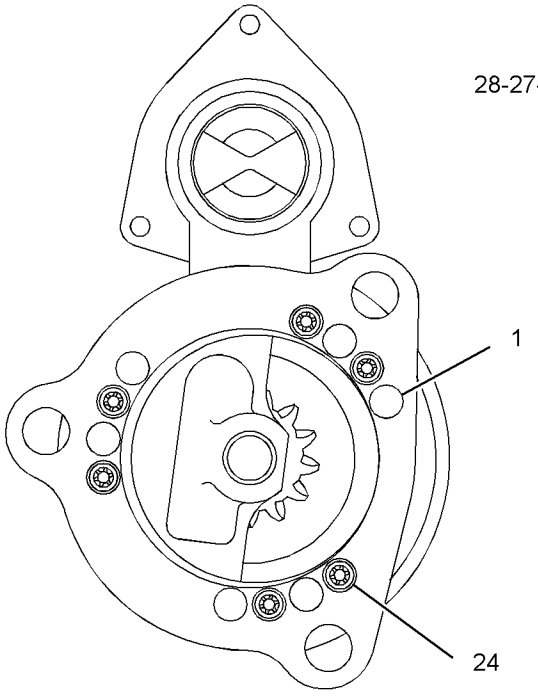

VIEW B-B

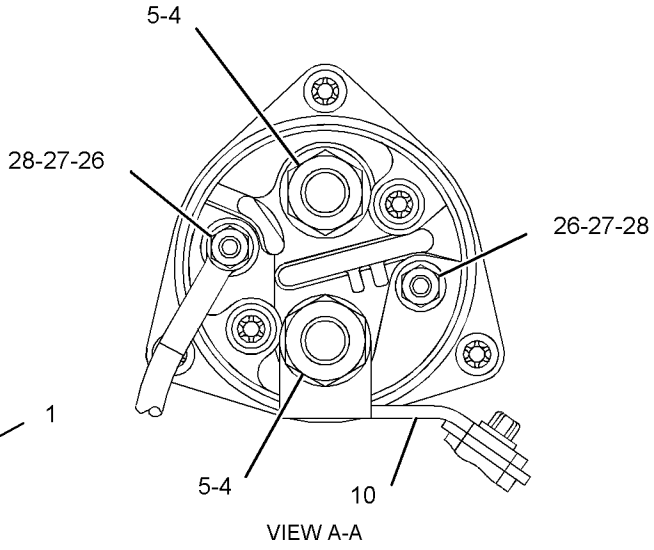

VIEW A-A

GRAPHIC #1 **<END>** g01478692

209-8423 STARTING MOTOR GP-ELECTRIC—HEAVY-DUTY

S/N: SMC1-UP; GCT1-UP
PART OF 227-1229 BATTERY & WIRING GP
AN ATTACHMENT
TYPE 1

SMCS-1453 **i03418236**

NOTE	REF NO	GRAPHIC REF	PART NUMBER	QTY	PART NAME 1 2 3 4 5 6 (PRODUCT LEVEL)	SEE PAGE
	1	1	**4N-1059**	1	GASKET	
	2	1	**185-6393**	1	CABLE AS-STARTING MOTOR	
E		1	**5P-0746**		CABLE (0-GA, BLACK) (30-CM)	
		1	**1M-4986**	1	TERMINAL-RING (0-GA, 1/2-IN SCREW)	
		1	**030-1707**	1	TERMINAL-RING (0-GA, 3/8-IN SCREW)	
YR	3	1	**237-1962**	1	STARTING MOTOR GP-ELECTRIC (24-VOLT)	383
	4	1	**220-0771**	3	BOLT-12 POINT HEAD (M16X2X45-MM)	

E - ORDER BY THE CENTIMETER
R - REMFG PART MAY BE AVAILABLE
Y - SEPARATE ILLUSTRATION

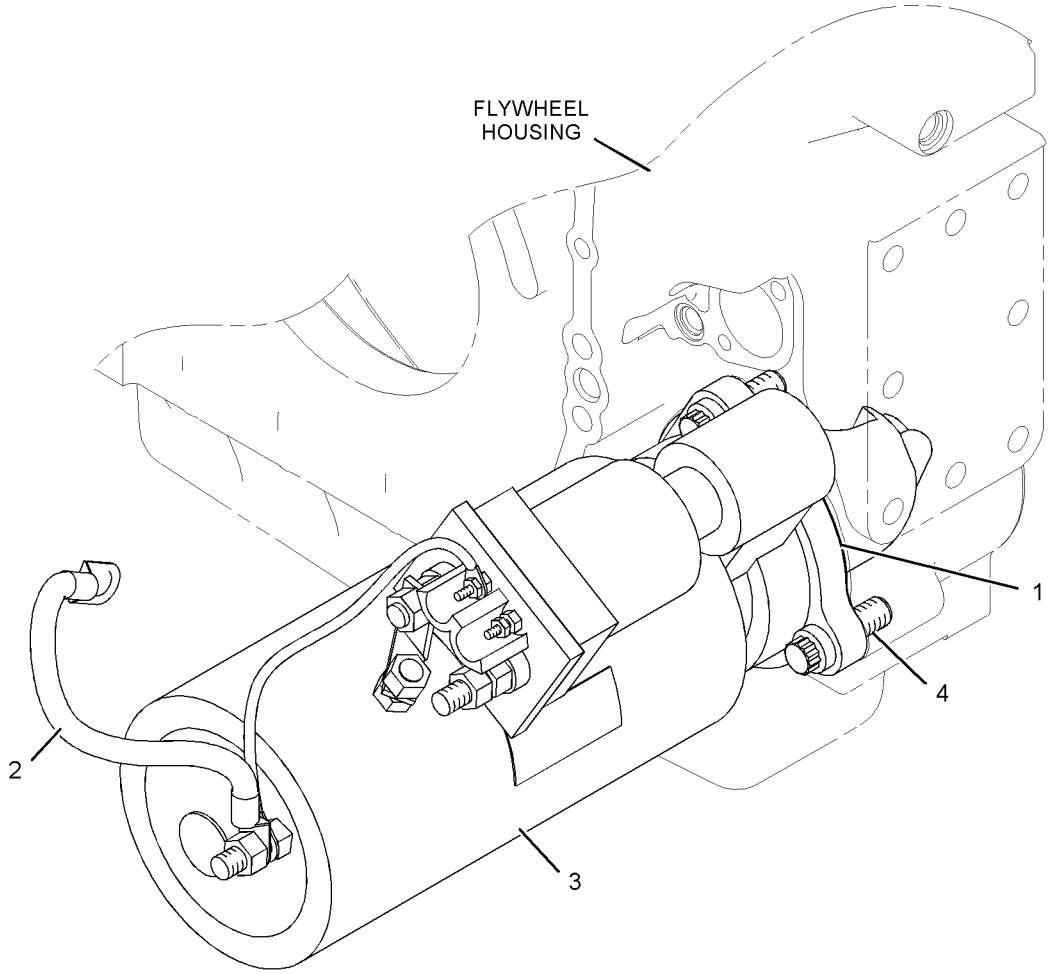

GRAPHIC #1 **<END>** g01023567

209-8423 STARTING MOTOR GP-ELECTRIC—HEAVY-DUTY

S/N: SMC1-UP; GCT1-UP
PART OF 227-1229 BATTERY & WIRING GP
AN ATTACHMENT
TYPE 2

SMCS-1453 **i05221571**

NOTE	REF NO	GRAPHIC REF	PART NUMBER	QTY	PART NAME 1 2 3 4 5 6 (PRODUCT LEVEL)	SEE PAGE
	1	1	**9Y-6089**	1	GASKET	
	2	1	**185-6393**	1	CABLE AS-STARTING MOTOR	
E		1	**5P-0746**		CABLE (0-GA, BLACK) (30-CM)	
		1	**1M-4986**	1	TERMINAL-RING (0-GA, 1/2-IN SCREW)	
		1	**030-1707**	1	TERMINAL-RING (0-GA, 3/8-IN SCREW)	
CYR	3	1	**338-3454**	1	STARTING MOTOR GP-ELECTRIC (24-VOLT)	386
	4	1	**220-0771**	3	BOLT-12 POINT HEAD (M16X2X45-MM)	

C - CHANGE FROM PREVIOUS TYPE
E - ORDER BY THE CENTIMETER
R - REMFG PART MAY BE AVAILABLE
Y - SEPARATE ILLUSTRATION

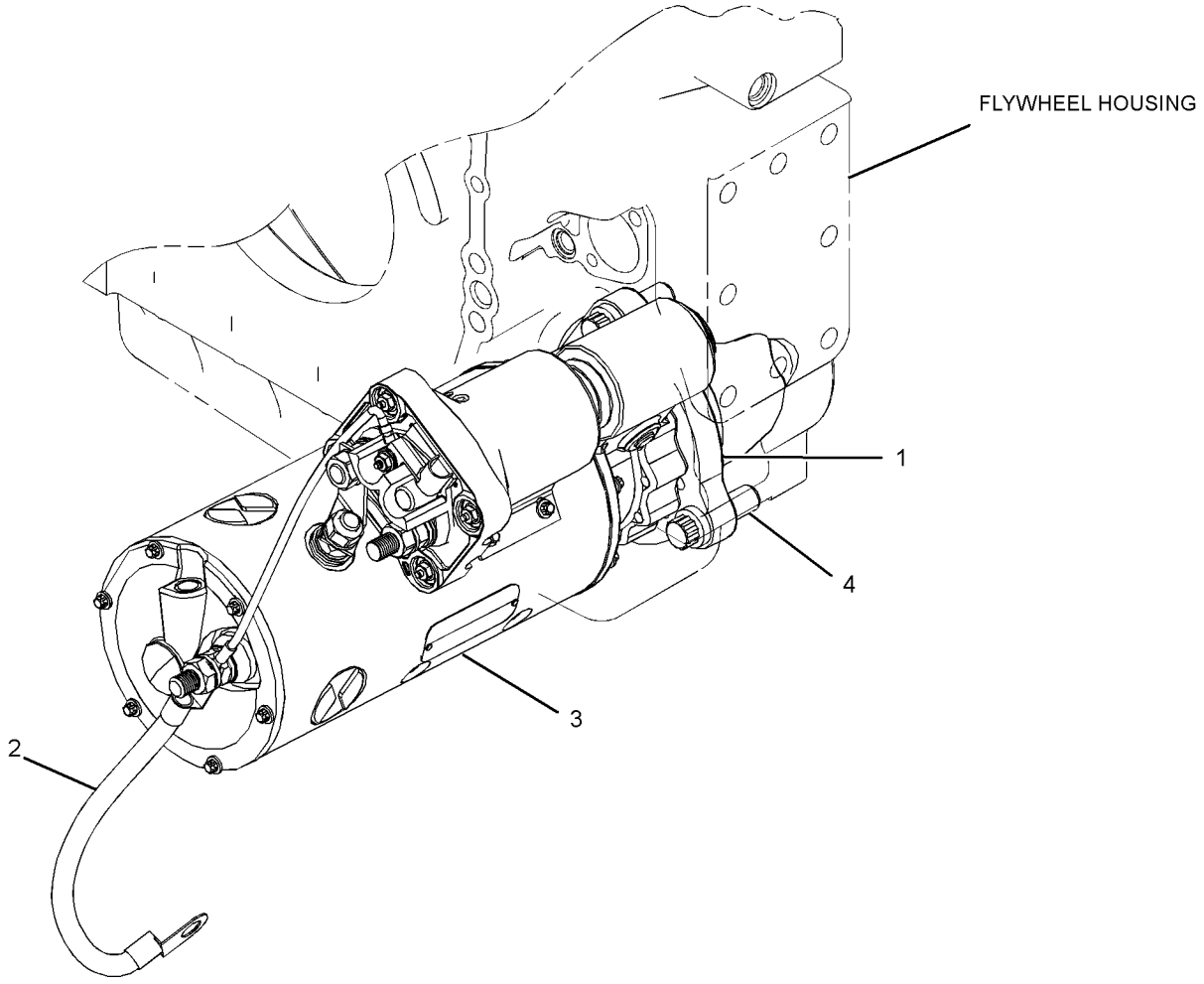

GRAPHIC #1 **<END>** g02224035

223-0558 STARTING MOTOR GP-ELECTRIC

S/N: SMC1-UP; GCT1-UP
24-VOLT
PART OF 279-9549, 372-6406 INSTALLATION AR-ENGINE

SMCS-1453 **i03593241**

NOTE	REF NO	GRAPHIC REF	PART NUMBER	QTY	PART NAME 1 2 3 4 5 6 (PRODUCT LEVEL)	SEE PAGE
	1	1	**9Y-6089**	1	GASKET	
	2	1	**8Y-9603**	1	CABLE AS-STARTING MOTOR	
		1	**1S-7251**	1	TERMINAL-CABLE (00-GA, 1/2-IN BOLT)	
		1	**1S-7252**	1	TERMINAL-CABLE (00-GA, 3/8-IN BOLT)	
E		1	**5P-0747**		CABLE (00-GA, BLACK) (28-CM)	
YR	3	1	**207-1556**	1	STARTING MOTOR GP-ELECTRIC (24-VOLT)	378
	4	1	**220-0771**	3	BOLT-12 POINT HEAD (M16X2X45-MM)	
	5	1	**6V-5839**	1	WASHER (11X21X2.5-MM THK)	
M	6	1	**6V-8212**	1	BOLT (M10X1.5X16-MM)	

E - ORDER BY THE CENTIMETER
M - METRIC PART
R - REMFG PART MAY BE AVAILABLE
Y - SEPARATE ILLUSTRATION

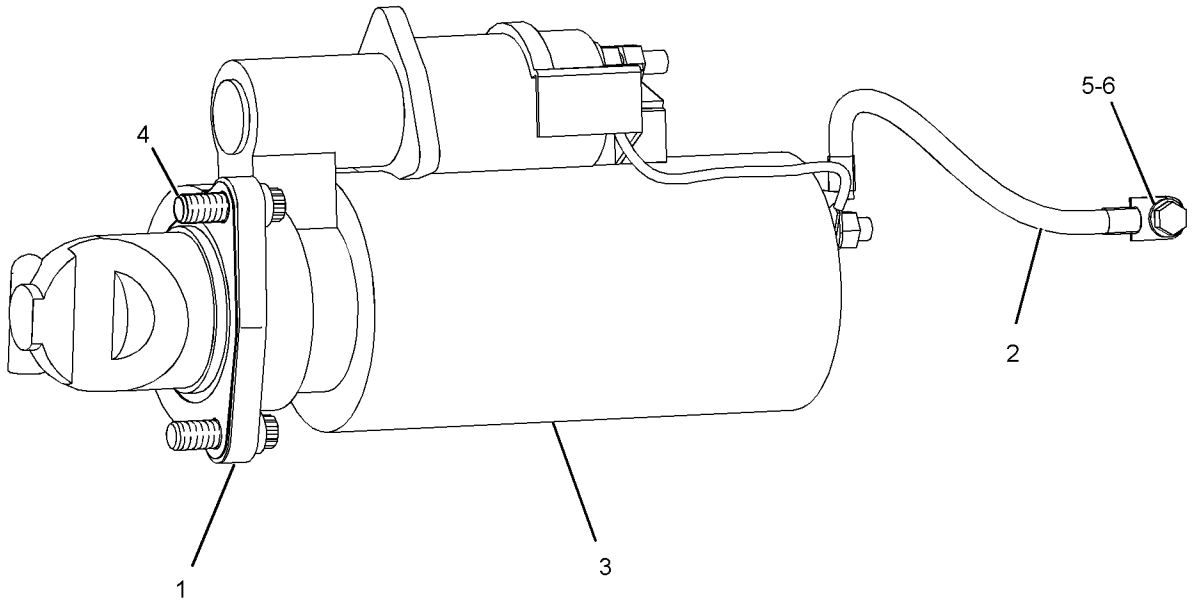

GRAPHIC #1 **<END>** g01206397

237-1962 STARTING MOTOR GP-ELECTRIC—HEAVY-DUTY*R

S/N: SMC1-UP; GCT1-UP
24-VOLT
FIELD REPLACEMENT ORDER 338-3454—PAGE: 386
PART OF 209-8423 STARTING MOTOR GP-ELECTRIC
AN ATTACHMENT

SMCS-1453 **i03630207**

NOTE	REF NO	GRAPHIC REF	PART NUMBER	QTY	PART NAME 1 2 3 4 5 6 (PRODUCT LEVEL)	SEE PAGE
	1	1	**7M-0326**	1	CONNECTOR	
	2	1	**9H-3757**	2	WASHER (0.516X1X0.094-IN THK)	
	3	1	**1S-7446**	3	SCREW-MACHINE (8-32X0.437-IN)	
	4	1	**8C-9660**	3	WASHER (4.6X7.9X0.8-MM THK)	
	5	1	**9S-2544**	9	SCREW-HEX HEAD (8-32X11.13-MM)	
	6	1	**7M-0327**	1	WASHER-THRUST (17.4X25.4X1.6-MM THK)	
	7	1	**3T-3418**	1	FRAME AS-END	
		1	**3T-3423**	1	CUP	
		1	**3T-3424**	1	PLUG-FELT	
		1	**9G-4101**	1	BUSHING-END	
	8	1	**3T-9525**	1	PLATE AS-BRUSH	
	8A	1	**6T-0371**	1	INSULATOR	
	8B	1	**5P-6298**	12	SCREW-MACHINE (10-32X0.5-IN)	
		1	**9F-5599**	12	LOCKWASHER	
	8C	1	**7F-3525**	6	WASHER-BUSHING (0.207X0.39X0.09-IN THK)	
	8D	1	**6T-0372**	1	PLATE	
	8E	1	**3T-4709**	3	PLATE	
	8F	1	**2L-6679**	3	PLATE-INSULATOR	
	8G	1	**3T-4710**	3	PLATE	
	8H	1	**6T-0363**	6	HOLDER AS-BRUSH (STARTING MOTOR)	
					(EACH INCLUDES)	
	8J	1	**3T-9494**	1	SPRING	
	9	1	**1T-0808**	2	WASHER (0.516X0.812X0.09-IN THK)	
	10	1	**3T-3422**	1	WIRE AS (STARTING MOTOR)	
	11	1	**2J-8163**	2	SEAL-O-RING	
	12	1	**7X-3373**	1	BOLT (5/16-18X0.88-IN)	
	13	1	**3T-3434**	6	PLUG	
	14	1	**5J-5314**	5	BOLT (5/16-18X1.5-IN)	
	15	1	**3L-3380**	1	BUSHING-TERMINAL	
	16	1	**036-9821**	1	WASHER	
	17	1	**4M-1828**	1	RETAINER-SPRING	
	18	1	**306-3998**	1	BOOT-RUBBER	
	19	1	**9M-7609**	1	SPRING (SHIFT LEVER)	
	20	1	**4M-1827**	1	RETAINER-SPRING	
	21	1	**8C-3089**	1	SEAL-O-RING	
	22	1	**4M-1853**	1	LEVER AS-SHIFT	
	23	1	**5M-3034**	1	LOCKNUT (5/16-24-THD)	
	24	1	**7L-2894**	4	GASKET	
	25	1	**4M-1831**	4	PLUG-LEVER HOUSING	
	26	1	**4M-1854**	1	SHAFT-LEVER	
	27	1	**1H-1023**	1	SEAL-O-RING	
	28	1	**2D-6392**	1	SEAL-O-RING	
	29	1	**7T-3974**	1	HOUSING AS-DRIVE	
	30	1	**6N-3826**	1	DRIVE AS-MOTOR	
	31	1	**2H-3429**	2	RING-RETAINING	
	32	1	**6V-1322**	4	BOLT (1/4-20X0.375-IN)	
	33	1	**8T-4205**	4	WASHER-HARD (7.2X14.5X2-MM THK)	
	34	1	**6N-3279**	1	INSULATOR	
	35	1	**0S-1597**	13	BOLT (1/4-28X1-IN)	
	36	1	**1M-9971**	1	SPACER (0.835X1.72X0.188-IN THK)	
	37	1	**1H-2629**	3	STRIP-INSULATION	
	38	1	**7M-0324**	1	COIL AS-FIELD	
	39	1	**3R-8797**	12	SCREW & WASHER AS (3/8-24X0.72-IN)	
	40	1	**7F-3488**	6	SHOE-POLE	
	41	1	**7M-8651**	1	ARMATURE AS	

237-1962 **STARTING MOTOR GP-ELECTRIC (*contd.*)** **i03630207**

NOTE	REF NO	GRAPHIC REF	PART NUMBER	QTY	PART NAME 1 2 3 4 5 6 (PRODUCT LEVEL)	SEE PAGE
	42	1	**7M-0325**	1	INSULATOR	
	43	1	**3T-9524**	6	BRUSH AS	
	44	1	**3N-3763**	1	KIT-TERMINAL (STARTING MOTOR)	
					(INCLUDES BUSHINGS & WASHERS)	
	45	1	**125-6537**	1	INSULATOR	
	46	1	**3R-8801**	1	CLAMP	
	47	1	**8F-1434**	2	LOCKWASHER	
	48	1	**6V-8188**	6	NUT (1/2-13-THD)	
	49	1	**7X-0562**	6	WASHER-HARD (13.5X19X0.8-MM THK)	
	50	1	**4B-2049**	6	NUT (10-32-THD)	
	51	1	**8T-0328**	10	WASHER-HARD (5.5X10X1-MM THK)	
	52	1	**3T-9494**	6	SPRING (STARTING MOTOR)	
	53	1	**3E-7771**	1	HOUSING AS (STARTING MOTOR)	
	54	1	**9G-4101**	1	BUSHING-END	
	55	1	**3T-3424**	3	PLUG-FELT	
	56	1	**3T-3423**	3	CUP	
	57	1	**1M-9968**	1	BUSHING	
	58	1	**2F-6678**	1	SEAL-LIP TYPE	
	59	1	**4L-2729**	1	WASHER (0.844X1.9X0.188-IN THK)	
	60	1	**4M-1896**	1	BUSHING-TERMINAL	
	61	1	**045-4065**	4	SCREW-MACHINE (10-32X0.75-IN)	
	62	1	**125-6535**	1	COVER-STARTING MOTOR	
	63	1	**7T-9123**	1	GASKET-PLATE	
	64	1	**318-2082**	1	SOLENOID AS-STARTING MOTOR (24-VOLT)	
	65	1	**125-6536**	1	TERMINAL AS	

237-1962 **STARTING MOTOR GP-ELECTRIC (*contd.*)** **i03630207**

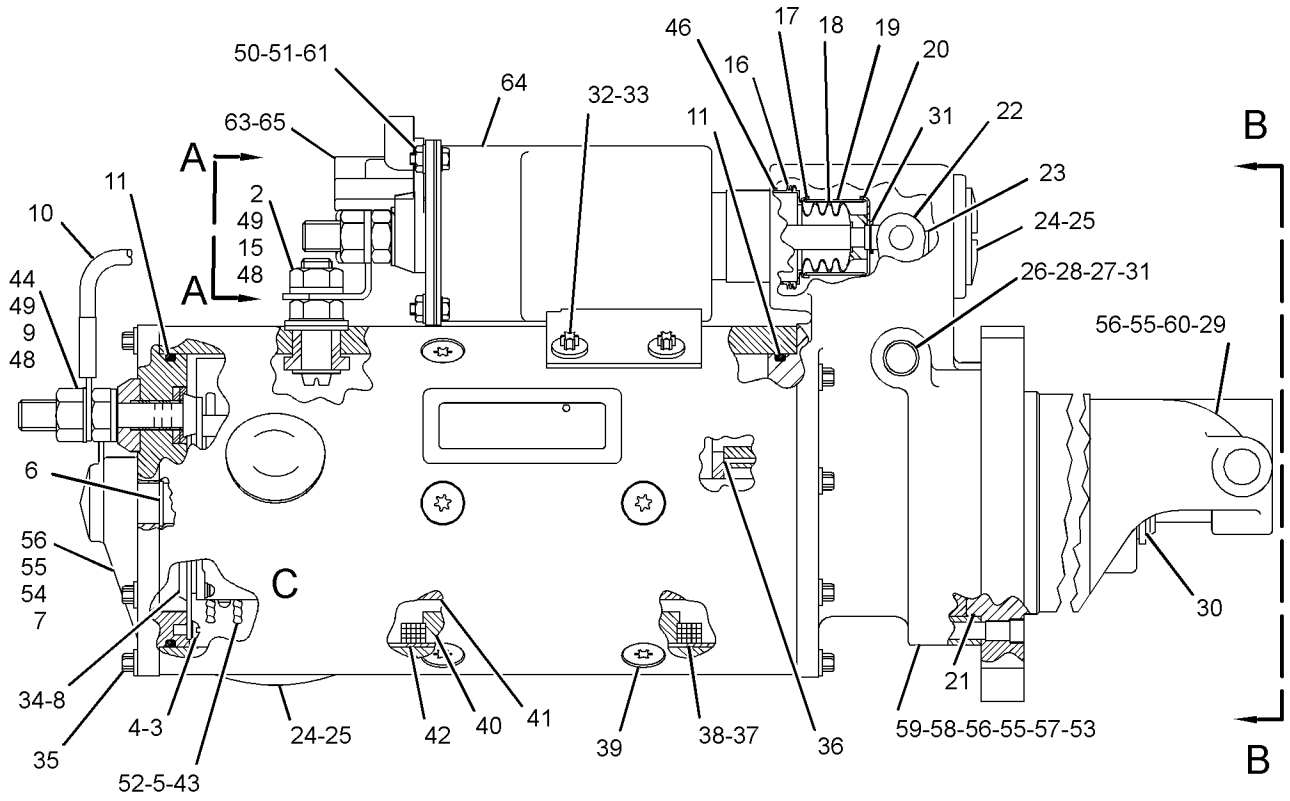

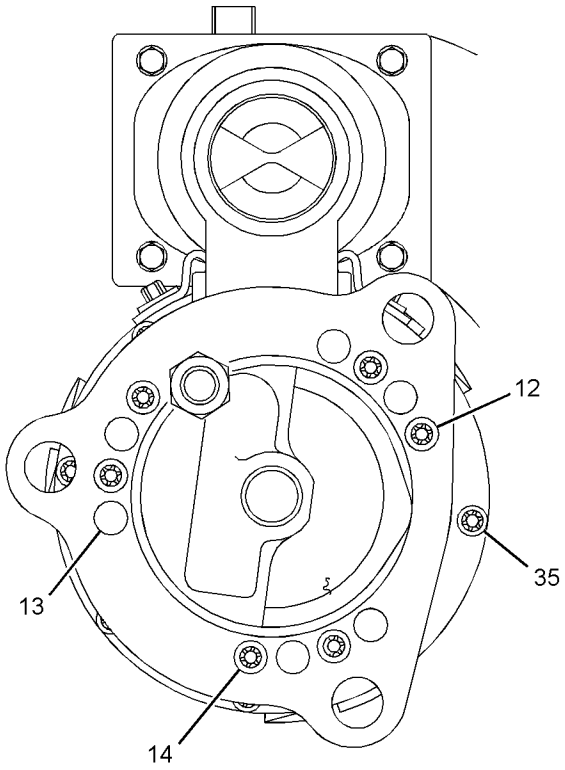

VIEW B-B

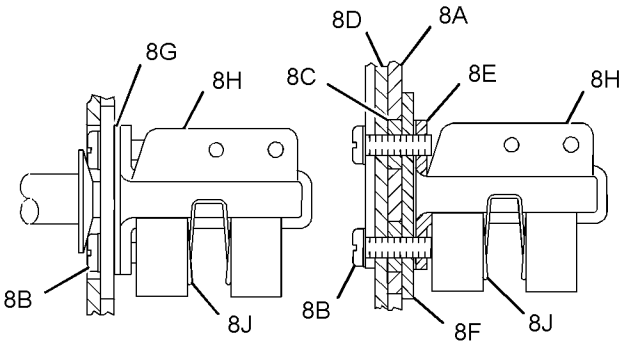

VIEW OF AREA C

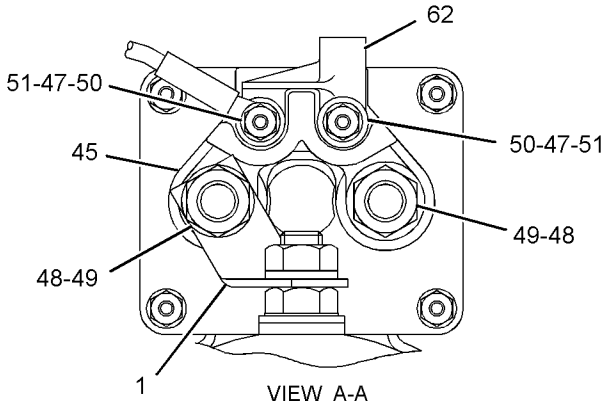

VIEW A-A

GRAPHIC #1 **<END>** g01453239

338-3454 STARTING MOTOR GP-ELECTRIC—HEAVY-DUTY*R

S/N: SMC1-UP; GCT1-UP
24-VOLT
FIELD REPLACEMENT FOR 237-1962—PAGE: 383
PART OF 209-8423 STARTING MOTOR GP-ELECTRIC
AN ATTACHMENT

SMCS-1453 **i05348764**

NOTE	REF NO	GRAPHIC REF	PART NUMBER	QTY	PART NAME 1 2 3 4 5 6 (PRODUCT LEVEL)	SEE PAGE
	1	1	**7M-0326**	1	CONNECTOR	
	2	1	**9H-3757**	2	WASHER (0.516X1X0.094-IN THK)	
	3	1	**1S-7446**	3	SCREW-MACHINE (8-32X0.437-IN)	
	4	1	**8C-9660**	3	WASHER (4.6X7.9X0.8-MM THK)	
	5	1	**9S-2544**	9	SCREW-HEX HEAD (8-32X11.13-MM)	
	6	1	**7M-0327**	1	WASHER-THRUST (17.4X25.4X1.6-MM THK)	
	7	1	**3T-3418**	1	FRAME AS-END	
		1	**3T-3423**	1	CUP	
		1	**3T-3424**	1	PLUG-FELT	
		1	**9G-4101**	1	BUSHING-END	
Y	8	1	**3T-9525**	1	PLATE AS-BRUSH (STARTING MOTOR)	351
	9	1	**1T-0808**	2	WASHER (0.516X0.812X0.09-IN THK)	
	10	1	**3T-3422**	1	WIRE AS	
	11	1	**2J-8163**	2	SEAL-O-RING	
	12	1	**7X-3373**	1	BOLT (5/16-18X0.88-IN)	
	13	1	**3T-3434**	6	PLUG	
	14	1	**5J-5314**	5	BOLT (5/16-18X1.5-IN)	
	15	1	**3L-3380**	1	BUSHING-TERMINAL	
	16	1	**8C-3089**	1	SEAL-O-RING	
	17	1	**4M-1853**	1	LEVER AS-SHIFT	
	18	1	**5M-3034**	1	LOCKNUT (5/16-24-THD)	
	19	1	**7L-2894**	4	GASKET	
	20	1	**4M-1831**	4	PLUG-LEVER HOUSING	
	21	1	**4M-1854**	1	SHAFT-LEVER	
	22	1	**1H-1023**	1	SEAL-O-RING	
	23	1	**2D-6392**	1	SEAL-O-RING	
	24	1	**7T-3974**	1	HOUSING AS-DRIVE	
	25	1	**6N-3826**	1	DRIVE AS-MOTOR	
	26	1	**2H-3429**	1	RING-RETAINING	
	27	1	**6V-1322**	4	BOLT (1/4-20X0.375-IN)	
	28	1	**8T-4205**	4	WASHER-HARD (7.2X14.5X2-MM THK)	
	29	1	**6N-3279**	1	INSULATOR	
	30	1	**0S-1597**	13	BOLT (1/4-28X1-IN)	
	31	1	**1M-9971**	1	SPACER (0.835X1.72X0.188-IN THK)	
	32	1	**1H-2629**	3	STRIP-INSULATION	
	33	1	**7M-0324**	1	COIL AS-FIELD	
	34	1	**3R-8797**	12	SCREW & WASHER AS (3/8-24X0.72-IN)	
	35	1	**7F-3488**	6	SHOE-POLE	
	36	1	**7M-8651**	1	ARMATURE AS	
	37	1	**7M-0325**	1	INSULATOR	
	38	1	**3T-9524**	6	BRUSH AS	
	39	1	**3N-3763**	1	KIT-TERMINAL (STARTING MOTOR) (INCLUDES BUSHINGS & WASHERS)	
	40	1	**338-3453**	1	SOLENOID AS-STARTING MOTOR (24-VOLT)	
	40A	1	**3R-8801**	1	CLAMP	
	42	1	**8F-1434**	2	LOCKWASHER	
	43	1	**6V-8188**	6	NUT (1/2-13-THD)	
	44	1	**7X-0562**	6	WASHER-HARD (13.5X19X0.8-MM THK)	
	45	1	**4B-2049**	6	NUT (10-32-THD)	
	46	1	**8T-0328**	10	WASHER-HARD (5.5X10X1-MM THK)	
	47	1	**3T-9494**	6	SPRING	
	48	1	**3E-7771**	1	HOUSING AS (STARTING MOTOR)	
	49	1	**9G-4101**	1	BUSHING-END	
	50	1	**3T-3424**	3	PLUG-FELT	

338-3454 **STARTING MOTOR GP-ELECTRIC (*contd.*)** **i05348764**

NOTE	REF NO	GRAPHIC REF	PART NUMBER	QTY	PART NAME 1 2 3 4 5 6 (PRODUCT LEVEL)	SEE PAGE
	51	1	**3T-3423**	3	CUP	
	52	1	**1M-9968**	1	BUSHING	
	53	1	**2F-6678**	1	SEAL-LIP TYPE	
	54	1	**4L-2729**	1	WASHER (0.844X1.9X0.188-IN THK)	
	55	1	**4M-1896**	1	BUSHING-TERMINAL	
	56	1	**045-4065**	4	SCREW-MACHINE (10-32X0.75-IN)	
	58	1	**125-6535**	1	COVER-STARTING MOTOR	

Y - SEPARATE ILLUSTRATION

338-3454 **STARTING MOTOR GP-ELECTRIC (*contd.*)** **i05348764**

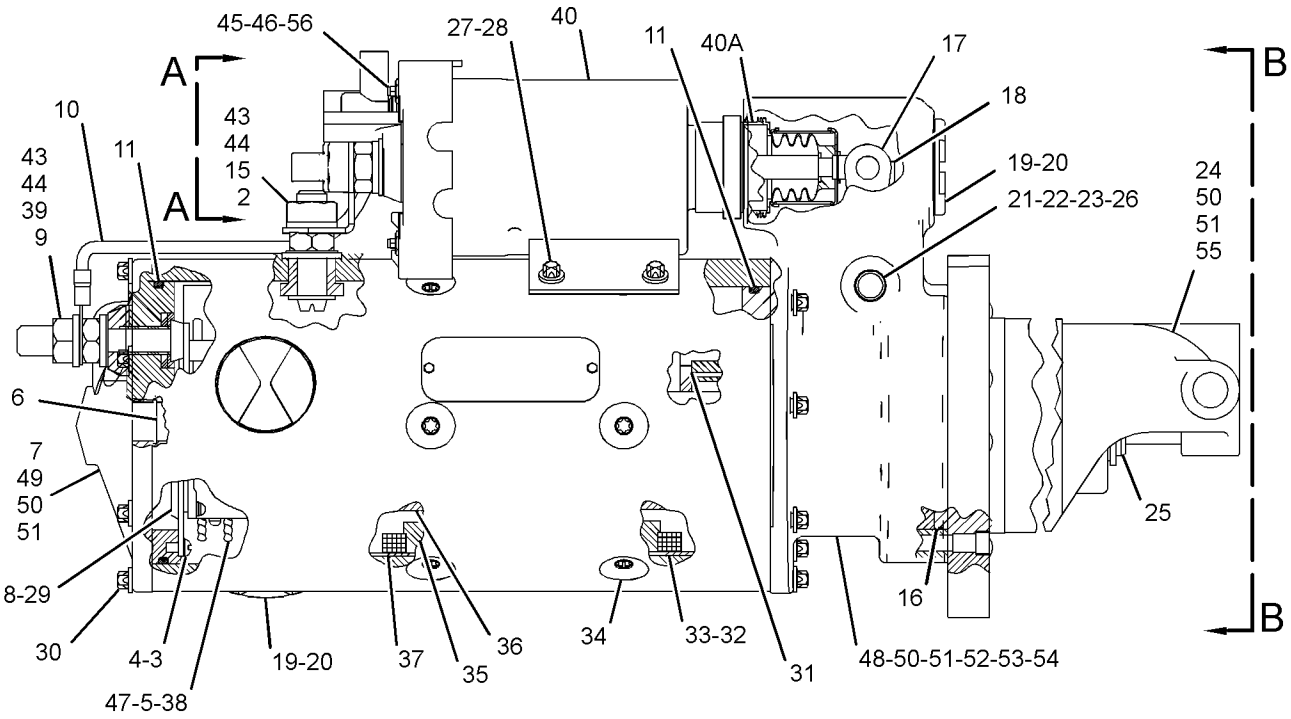

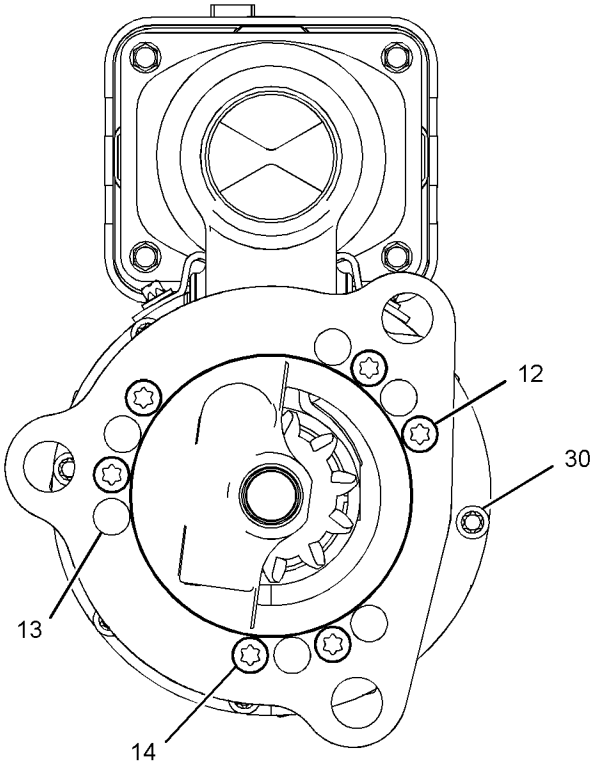

VIEW B-B

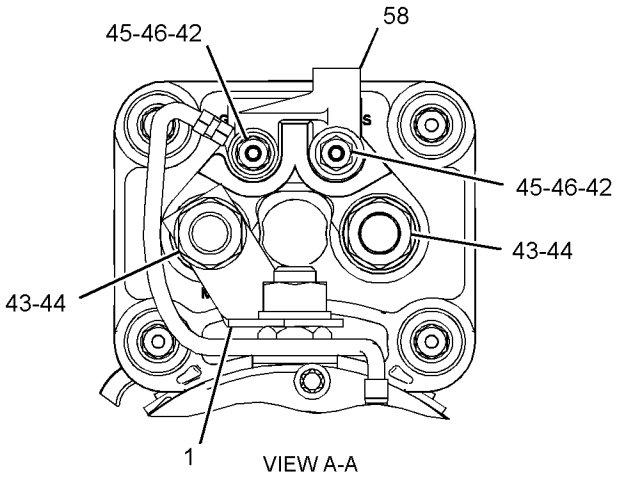

VIEW A-A

GRAPHIC #1 **<END>** g03090296

164-7577 SWITCH GP-BYPASS—POWER TRAIN OIL FILTER

S/N: SMC1-UP; GCT1-UP

PART OF 238-1029, 333-9308 BASE GP-OIL FILTER

SMCS-1408, 1435 **i02891455**

NOTE	REF NO	GRAPHIC REF	PART NUMBER	QTY	PART NAME 1 2 3 4 5 6 (PRODUCT LEVEL)	SEE PAGE
BE	1	1	**9X-1813**		SLEEVE	
	2	1	**102-8802**	1	KIT-RECEPTACLE (2-PIN)	
					(INCLUDES RECEPTACLE AS & WEDGE)	
	3	1	**186-3735**	2	PIN-CONNECTOR (16-GA TO 18-GA)	
	4	1	**3E-3365**	1	WEDGE-RECEPTACLE LOCK (2-PIN)	
	5	1	**3D-2824**	1	SEAL-O-RING	
Z	6	1		1	SWITCH AS	

B - USE AS REQUIRED
E - ORDER BY THE CENTIMETER
Z - NOT SERVICED SEPARATELY

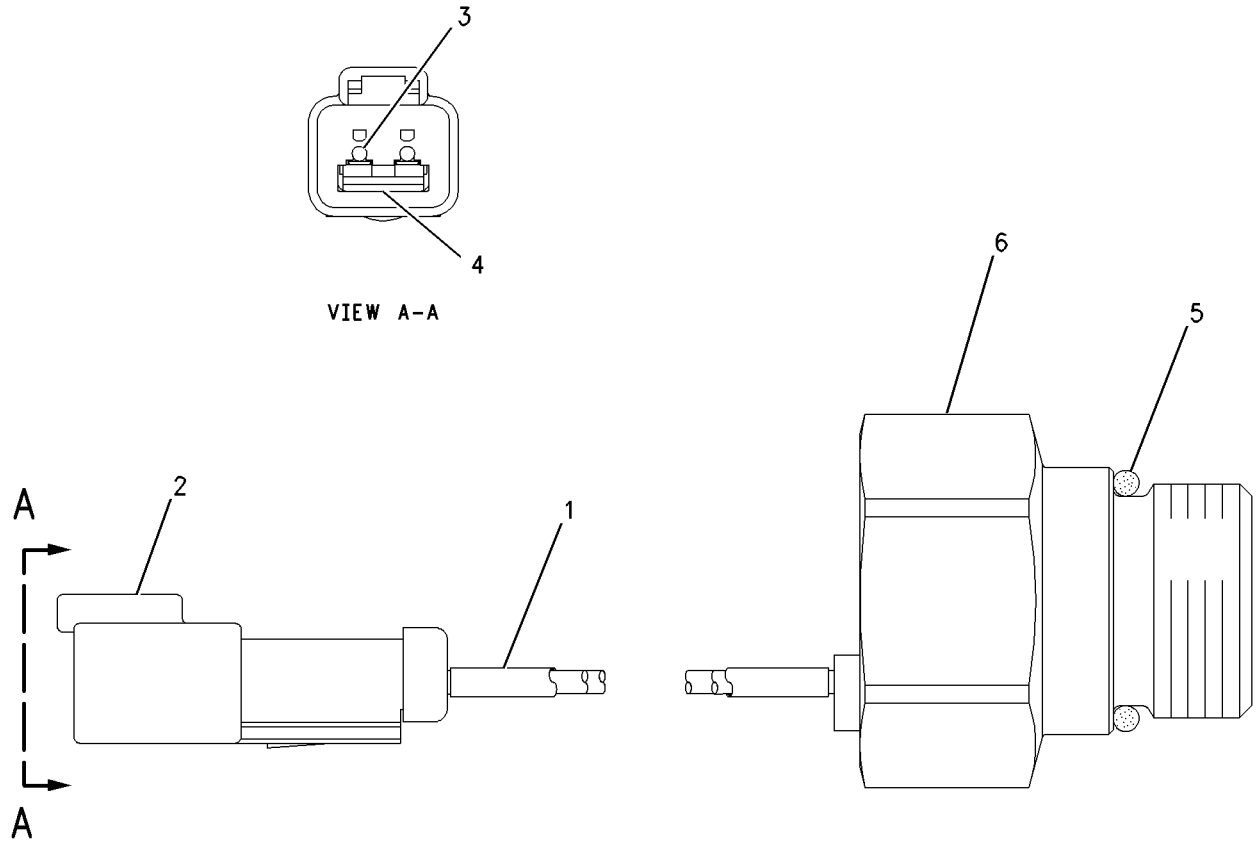

GRAPHIC #1 **<END>** g00750019

7N-0718 SWITCH GP-DISCONNECT–BATTERY

S/N: SMC1-UP; GCT1-UP

12-VOLT

PART OF 279-9548, 368-4241 BATTERY & WIRING GP

SMCS-1411 **i02587657**

NOTE	REF NO	GRAPHIC REF	PART NUMBER	QTY	PART NAME 1 2 3 4 5 6 (PRODUCT LEVEL)	SEE PAGE
	1	1	**8H-5306**	1	KEY (BATTERY DISCONNECT)	
	2	1	**8H-5303**	1	NUT (3/4-16-THD)	
	3	1	**2H-3922**	2	LOCKWASHER	
	4	1	**9F-5644**	2	LOCKWASHER	
	5	1	**6F-7045**	2	NUT-FULL (3/8-24-THD)	

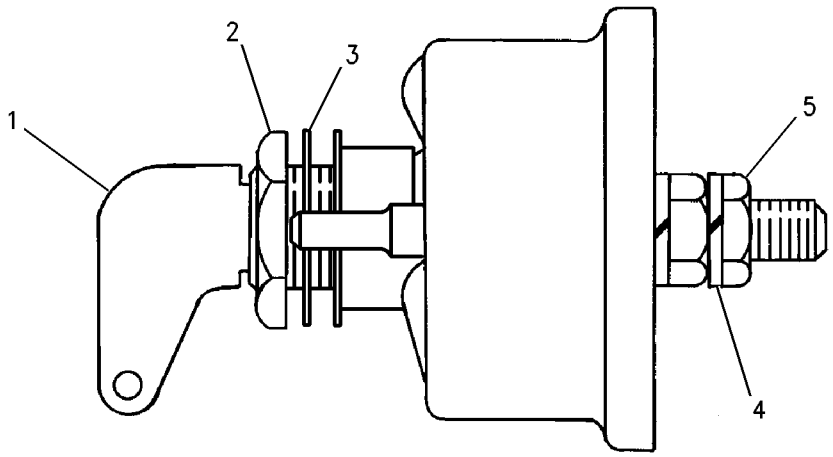

GRAPHIC #1 **<END>** g00715584

297-8159 SWITCH GP-DISCONNECT–AUXILIARY

S/N: SMC1-UP; GCT1-UP

AN ATTACHMENT

SMCS-1411 **i04027131**

NOTE	REF NO	GRAPHIC REF	PART NUMBER	QTY	PART NAME 1 2 3 4 5 6 (PRODUCT LEVEL)	SEE PAGE
	1	1	**7K-1181**	3	STRAP-CABLE	
	2	1	**8T-4999**	1	FILM-INSTRUCTION (BATTERY DISCONNECT)	
	3	1	**248-6977**	1	PANEL AS	
		1	**159-7943**	1	PANEL-ACOUSTICAL	
	4	1	**298-3619**	1	CABLE AS	
		1	**1S-7252**	1	TERMINAL-CABLE (00-GA, 3/8-IN SCREW)	
		1	**6T-0465**	1	COVER-TERMINAL (BLACK)	
		1	**8S-3020**	1	TERMINAL-CABLE (00-GA, 3/8-IN SCREW)	
E		1	**159-8050**		CABLE (00-GA, BLACK) (74-CM)	
	5	1	**298-3620**	1	CABLE AS	
		1	**1S-7252**	2	TERMINAL-CABLE (00-GA, 3/8-IN SCREW)	
		1	**6T-0465**	1	COVER-TERMINAL (BLACK)	
E		1	**159-8050**		CABLE (00-GA, BLACK) (81-CM)	
Y	6	1	**298-5625**	1	CONTROL GP-STEERING & XMSN	755
	7	1	**300-6498**	1	BRACKET	
	8	1	**300-9498**	1	CABLE AS	
		1	**1S-7252**	2	TERMINAL-CABLE (00-GA, 3/8-IN SCREW)	
E		1	**159-8050**		CABLE (00-GA, BLACK) (31-CM)	
	9	1	**204-2281**	1	STRAP-CABLE	
	10	1	**4P-7581**	1	CLIP	
	11	1	**5S-7379**	2	BOLT (3/8-16X0.875-IN)	
	12	1	**7X-7729**	2	WASHER (11X25X3-MM THK)	
	13	1	**9H-2082**	1	SWITCH AS-DISCONNECT (BATTERY)	
		1	**2H-3922**	1	LOCKWASHER	
		1	**5L-7200**	1	SCREW (8-32X0.375-IN)	
		1	**6F-7045**	2	NUT-FULL (3/8-24-THD)	
		1	**8F-3437**	1	LEVER-SWITCH	
		1	**8H-5303**	1	NUT (3/4-16-THD)	
		1	**9B-7233**	1	LOCKWASHER	
		1	**9F-5644**	2	LOCKWASHER	
	14	1	**9S-8752**	2	NUT-FULL (3/8-16-THD)	
D	15	1	**5P-7211**		SEAL (0.1-M)	

D - ORDER BY THE METER
E - ORDER BY THE CENTIMETER
Y - SEPARATE ILLUSTRATION

297-8159 **SWITCH GP-DISCONNECT (*contd.*)** **i04027131**

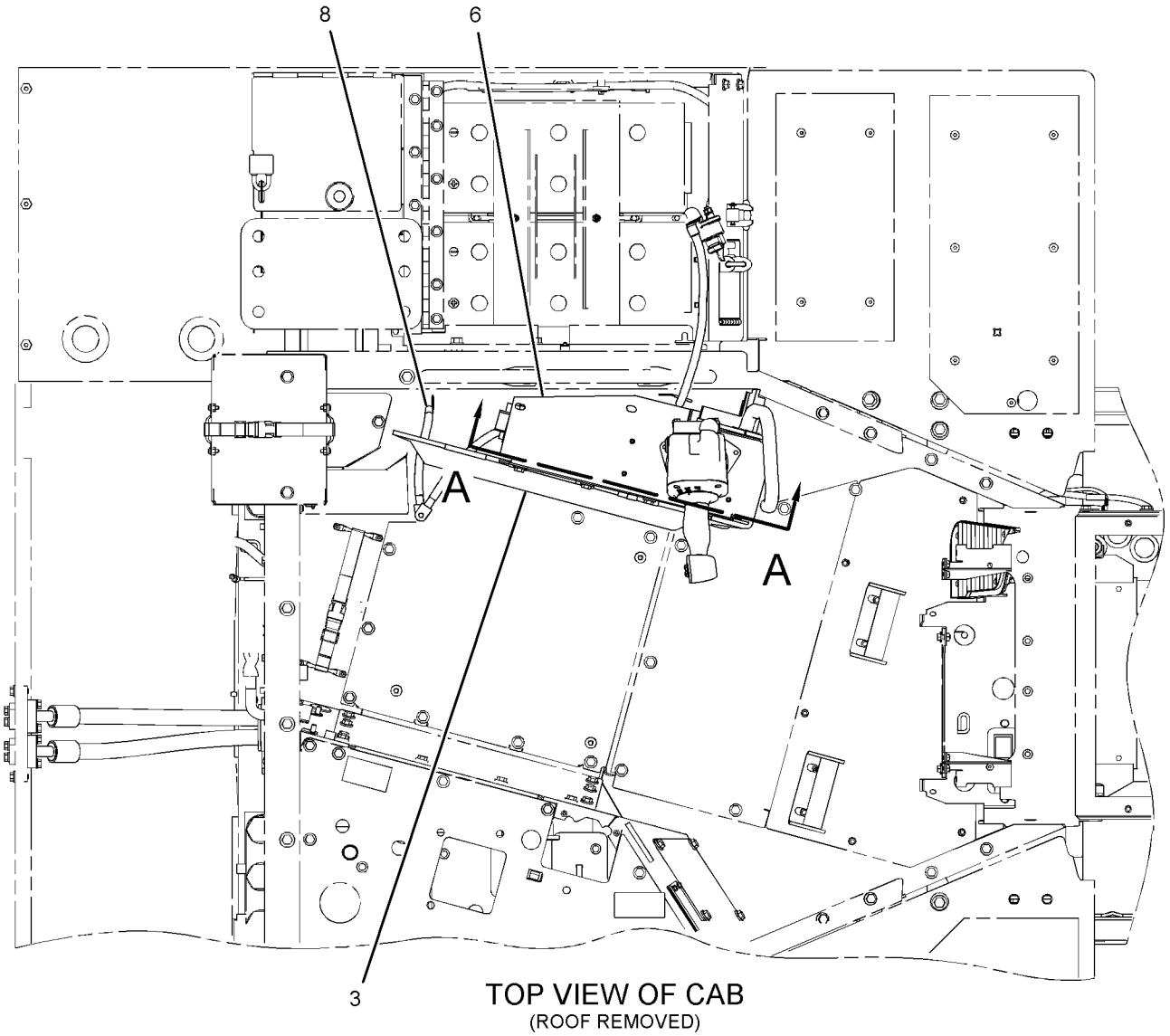

TOP VIEW OF CAB
(ROOF REMOVED)

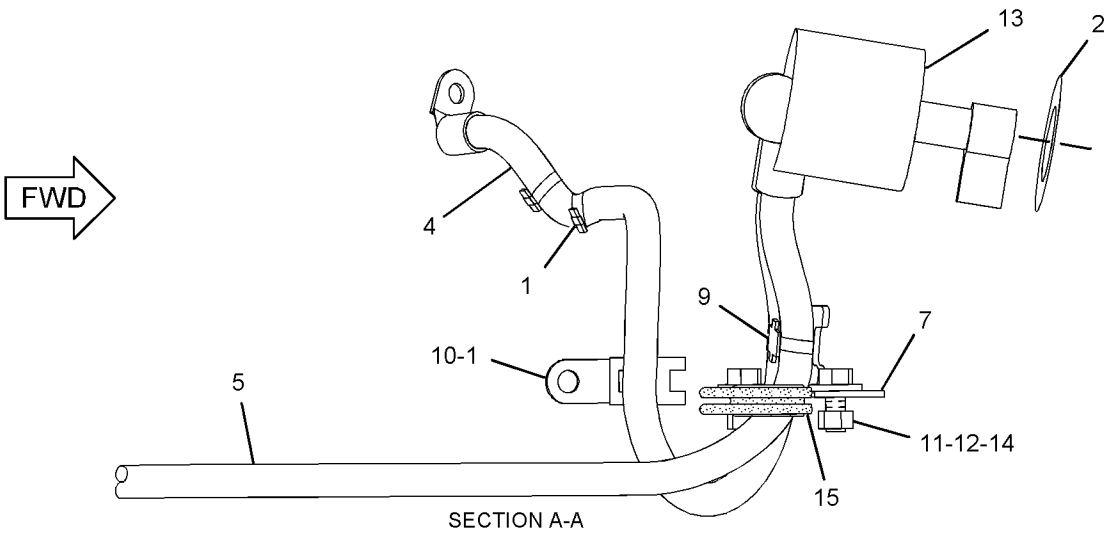

SECTION A-A

GRAPHIC #1 **<END>** g01362047

125-1302 SWITCH GP-MAGNETIC–START RELAY

S/N: SMC1-UP; GCT1-UP
24-VOLT
PART OF 226-9674, 365-7841 PANEL GP-CIRCUIT BREAKER

SMCS-7499 **i03546076**

NOTE	REF NO	GRAPHIC REF	PART NUMBER	QTY	PART NAME 1 2 3 4 5 6 (PRODUCT LEVEL)	SEE PAGE
	1	1	**102-8802**	1	KIT-RECEPTACLE (2-PIN)	
					(INCLUDES RECEPTACLE AS & WEDGE)	
	2	1	**186-3735**	2	PIN-CONNECTOR (16-GA TO 18-GA)	
	3	1	**1H-3338**	2	LOCKWASHER (EXTERNAL TOOTH)	
	4	1	**012-0380**	2	LOCKWASHER (SPLIT)	
M	5	1	**5C-2890**	2	NUT (M6X1-THD)	
BE	6	1	**9X-1813**		SLEEVE	

B - USE AS REQUIRED
E - ORDER BY THE CENTIMETER
M - METRIC PART

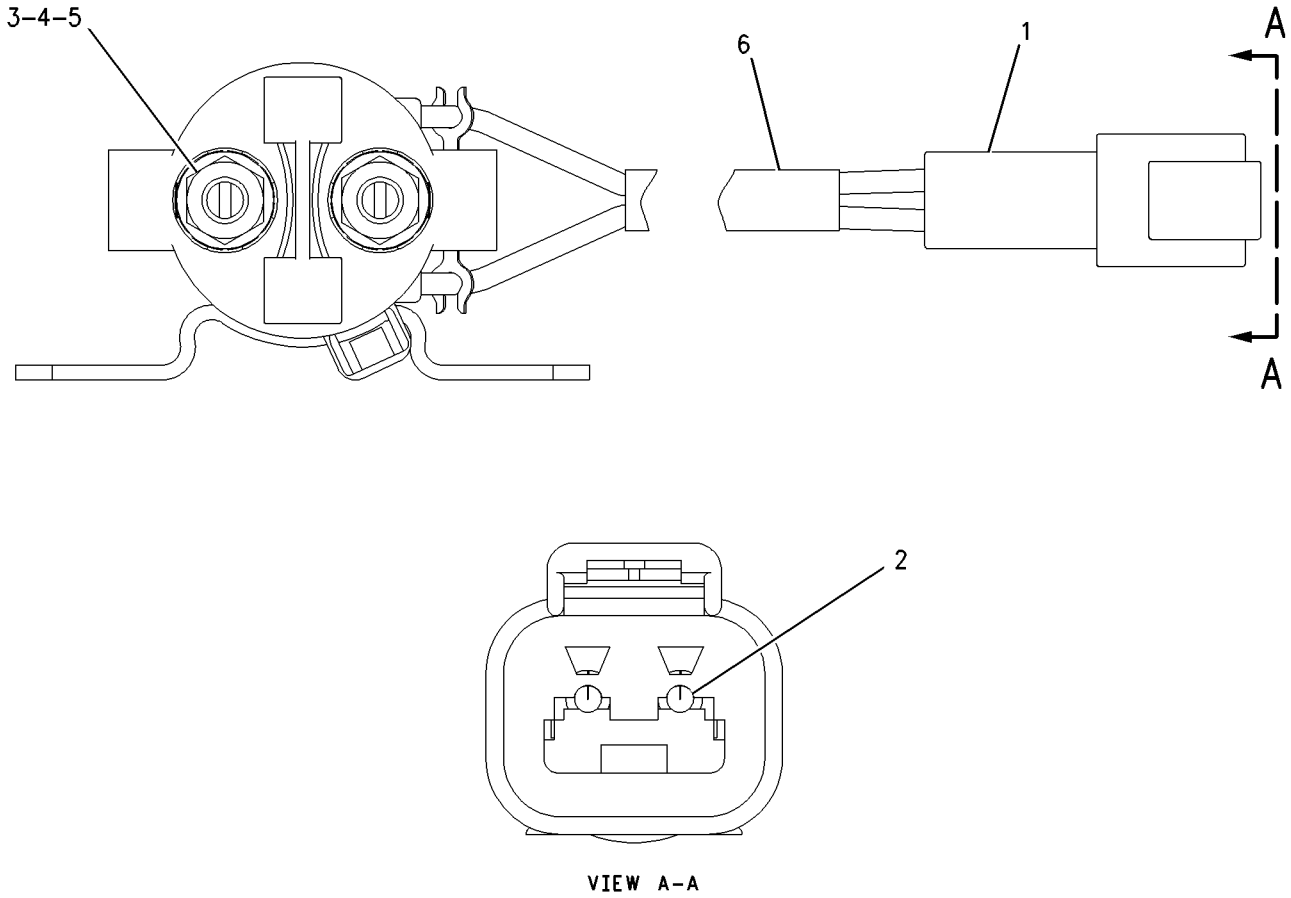

GRAPHIC #1 **<END>** g00987986

241-8368 SWITCH GP-MAGNETIC—MAIN RELAY

S/N: SMC1-UP; GCT1-UP

24-VOLT

PART OF 226-9674, 365-7841 PANEL GP-CIRCUIT BREAKER

SMCS-7499 **i04842710**

NOTE	REF NO	GRAPHIC REF	PART NUMBER	QTY	PART NAME 1 2 3 4 5 6 (PRODUCT LEVEL)	SEE PAGE
	1	1	**155-2270**	1	KIT-CONNECTING PLUG (2-PIN)	
					(INCLUDES PLUG AS, WEDGE & INTERFACE SEAL)	
	2	1	**4F-2294**	2	NUT-JAM (5/16-24-THD)	
	3	1	**8T-8730**	2	SOCKET-CONNECTOR (16-GA TO 18-GA)	

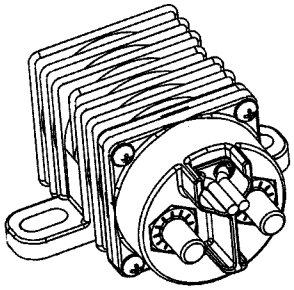

ISOMETRIC VIEW

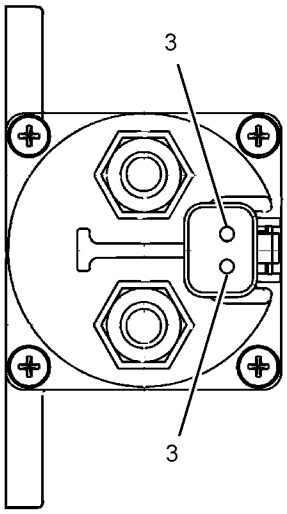

VIEW A-A

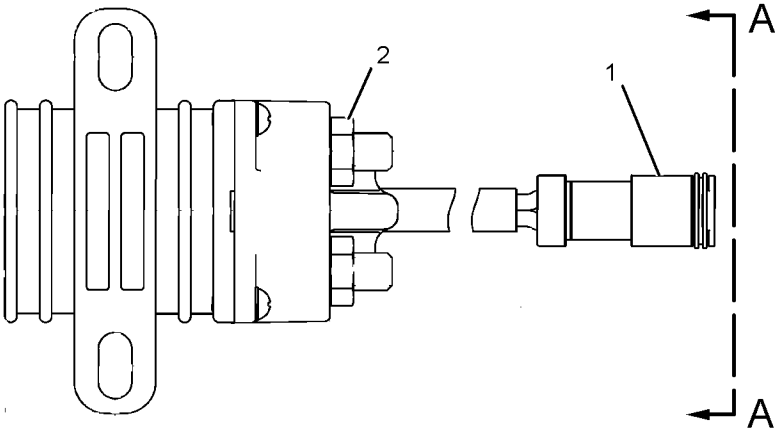

GRAPHIC #1 **<END>** g01077362

158-6632 SWITCH GP-PUSH BUTTON–HORN–FUEL PRIMING PUMP

S/N: SMC1-UP; GCT1-UP

PART OF 279-9548 BATTERY & WIRING GP, 279-9547, 368-4242 WIRING GP-PLATFORM

SMCS-1435, 7332 **i01837970**

NOTE	REF NO	GRAPHIC REF	PART NUMBER	QTY	PART NAME 1 2 3 4 5 6 (PRODUCT LEVEL)	SEE PAGE
	1	1	**9X-0199**	1	BOOT-SWITCH	
	2	1	**7T-9515**	1	KNOB-HORN	
	3	1	**5L-7200**	1	SCREW (8-32X0.375-IN)	
	4	1	**3B-4501**	1	LOCKWASHER	
	5	1	**6V-8370**	1	NUT-HEX (3/4-32-THD)	
	6	1	**2H-3922**	1	LOCKWASHER	
	7	1	**102-8802**	1	KIT-RECEPTACLE (2-PIN)	
					(INCLUDES RECEPTACLE AS & WEDGE)	
	8	1	**9X-3401**	2	PIN-CONNECTOR (16-GA TO 18-GA)	
	9	1	**3E-3365**	1	WEDGE-RECEPTACLE LOCK (2-PIN)	

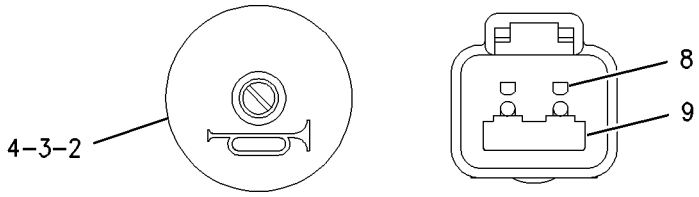

VIEW A–A VIEW B–B

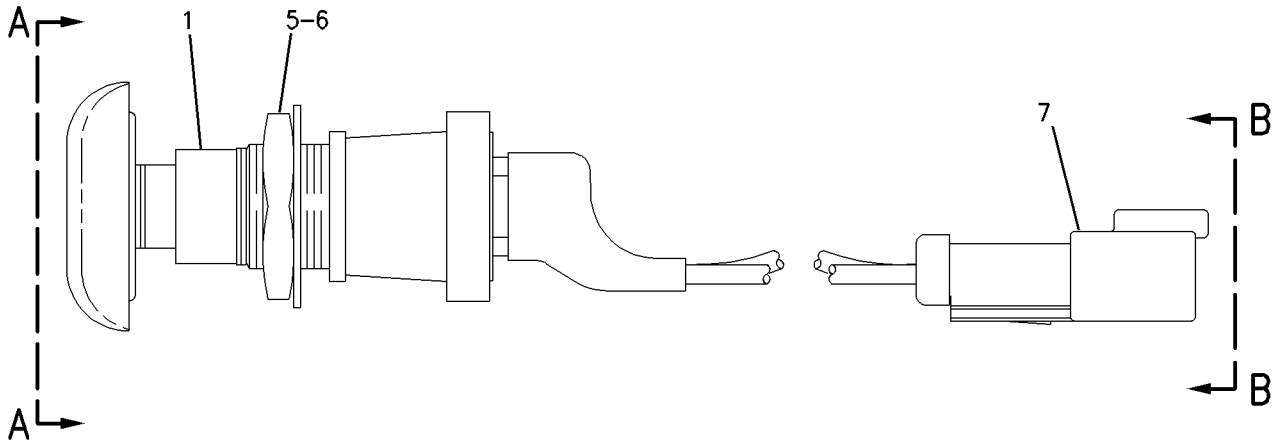

GRAPHIC #1 **<END>** g00942674

282-2586 SWITCH GP-PUSH BUTTON—FUEL PRIMING PUMP

S/N: SMC238-UP; GCT353-UP

PART OF 279-9548, 368-4241 BATTERY & WIRING GP

SMCS-1435, 7332 **i03184561**

NOTE	REF NO	GRAPHIC REF	PART NUMBER	QTY	PART NAME 1 2 3 4 5 6 (PRODUCT LEVEL)	SEE PAGE
	1	1	**9X-0199**	1	BOOT-SWITCH	
	2	1	**238-0303**	1	KNOB	
	3	1	**5L-7200**	1	SCREW (8-32X0.375-IN)	
	4	1	**3B-4501**	1	LOCKWASHER	
	5	1	**6V-8370**	1	NUT-HEX (3/4-32-THD)	
	6	1	**2H-3922**	1	LOCKWASHER	
	7	1	**102-8802**	1	KIT-RECEPTACLE (2-PIN)	
					(INCLUDES RECEPTACLE AS & WEDGE)	
	8	1	**9X-3401**	2	PIN-CONNECTOR (16-GA TO 18-GA)	

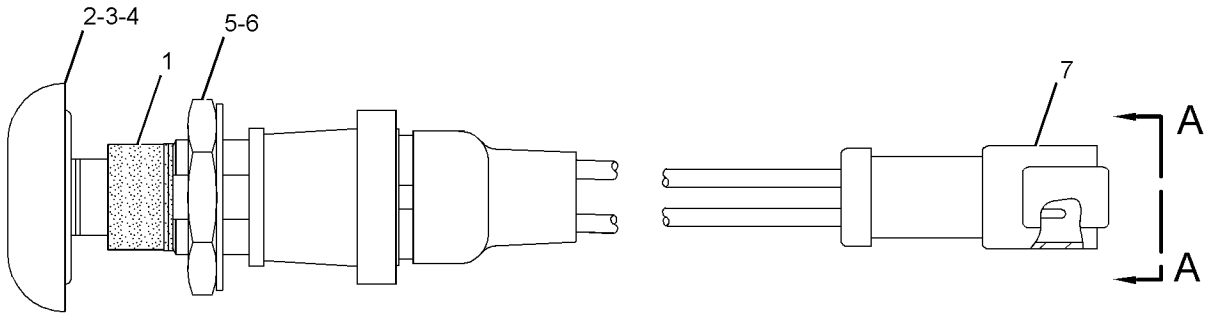

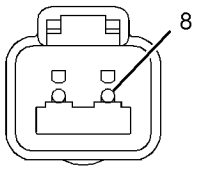

VIEW A-A

GRAPHIC #1 **<END>** g01313210

139-2116 SWITCH GP-TOGGLE

S/N: SMC1-UP; GCT1-UP

PART OF 235-6336, 235-6337, 235-6338, 284-9064 LIGHTING GP-FLOOD AN ATTACHMENT

SMCS-7332 **i04018970**

NOTE	REF NO	GRAPHIC REF	PART NUMBER	QTY	PART NAME 1 2 3 4 5 6 (PRODUCT LEVEL)	SEE PAGE
	1	1	**6T-3631**	2	NUT-HEX (15/32-32-THD)	
	2	1	**6T-3632**	1	LOCKWASHER	
	3	1	**6T-3633**	1	RING-LOCKING	
	4	1	**102-8803**	1	KIT-RECEPTACLE (3-PIN)	
					(INCLUDES RECEPTACLE AS & WEDGE)	
	5	1	**3E-3371**	1	WEDGE-RECEPTACLE LOCK (3-PIN)	
	6	1	**8T-8729**	3	PIN-CONNECTOR (16-GA TO 18-GA)	

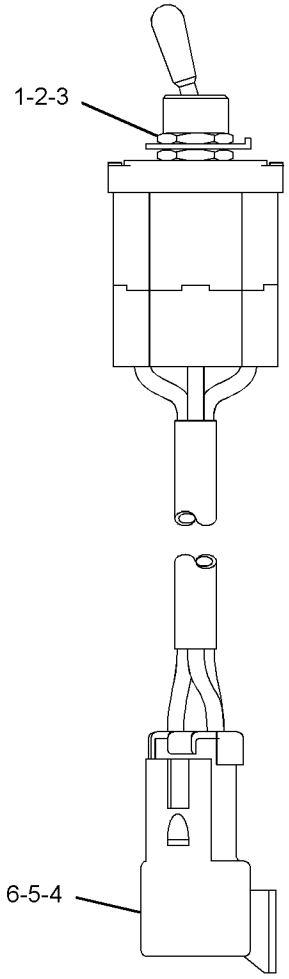

GRAPHIC #1

<END>

g02049876

256-2907 TARGET GP-LASER

S/N: SMC1-UP; GCT1-UP

PART OF 295-9880 TARGET GP-LASER

SMCS-7009 **i04029909**

NOTE	REF NO	GRAPHIC REF	PART NUMBER	QTY	PART NAME 1 2 3 4 5 6 (PRODUCT LEVEL)	SEE PAGE
	1	1	**291-1915**	1	TARGET AS-LASER	
	2	1	**275-3378**	1	SPACER (16.7X38.1X12.7-MM THK)	
	3	1	**7X-0345**	1	BOLT (5/8-11X1.75-IN)	
	4	1	**7M-4672**	1	WASHER (0.656X1.31X0.109-IN THK)	
	5	1	**8T-9368**	4	BOLT (1/4-20X2.25-IN)	
	6	1	**9X-6165**	8	WASHER (6.5X22X2.5-MM THK)	
	7	1	**8C-5607**	8	MOUNT-ISOLATION	
	8	1	**8C-5608**	4	SPACER (6.5X9.5X25.4-MM THK)	
	9	1	**275-4012**	4	BUSHING	
	10	1	**6V-8185**	4	NUT (1/4-20-THD)	
	11	1	**5P-4115**	4	WASHER-HARD (7.2X19X2-MM THK)	
	12	1	**252-9628**	1	MOUNTING GP-RECEIVER (TARGET)	
	12A	1	**113-0693**	1	LOCKWASHER	
	12B	1	**8R-1803**	1	WASHER (10.5X18X1-MM THK)	
	12C	1	**289-8449**	1	HANDLE AS	
	13	1	**264-3171**	1	PLATE-SHOCK	

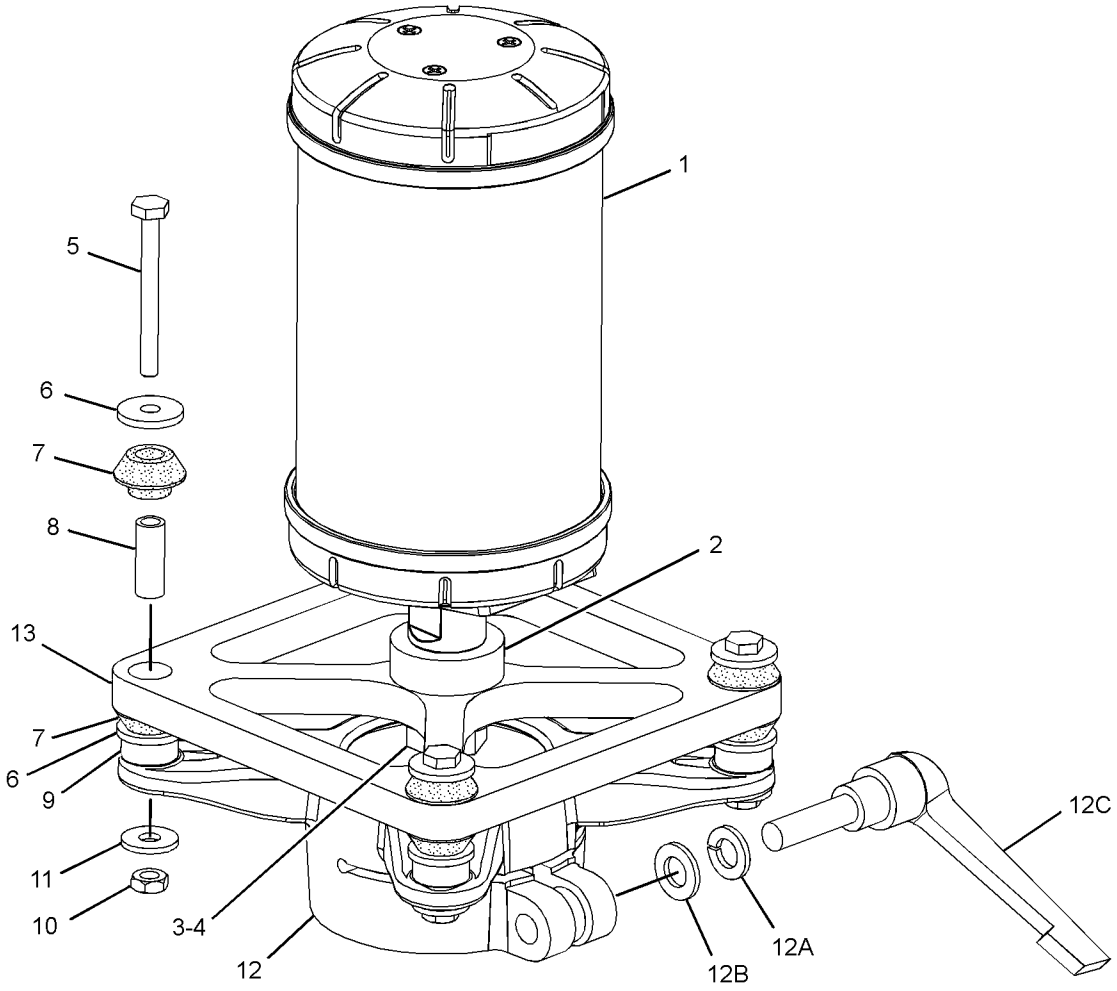

GRAPHIC #1 **<END>** g02059833

295-9880 TARGET GP-LASER

S/N: SMC1-UP; GCT1-UP

PART OF 317-6527 GRADE CONTROL AR

SMCS-7009 **i04029899**

NOTE	PART NUMBER	QTY	PART NAME 1 2 3 4 5 6 (PRODUCT LEVEL)	SEE PAGE
Y	*256-2907*	1	TARGET GP-LASER (GRADE CONTROL)	398
	275-3376	1	BLOCK	
	276-0764	1	CABLE-COILED (LASER RECEIVER)	
	244-1719	1	CASE-CARRYING	
	252-8744	1	FILM-WARNING (BLADE, DO NOT CLIMB, READ OMM)	

Y - SEPARATE ILLUSTRATION

<END>

239-1134 VALVE GP-ETHER STARTING

S/N: SMC1-UP; GCT1-UP

24-VOLT

PART OF 263-9012 STARTING AID GP-ETHER

SMCS-1456 **i03907816**

NOTE	REF NO	GRAPHIC REF	PART NUMBER	QTY	PART NAME 1 2 3 4 5 6 (PRODUCT LEVEL)	SEE PAGE
	1	1	**7N-9801**	1	GASKET	
	2	1	**102-8802**	1	KIT-RECEPTACLE (2-PIN)	
					(INCLUDES RECEPTACLE AS & WEDGE)	
	3	1	**8T-8729**	2	PIN-CONNECTOR (16-GA TO 18-GA)	
	4	1	**358-4889**	1	FILTER (ETHER START)	

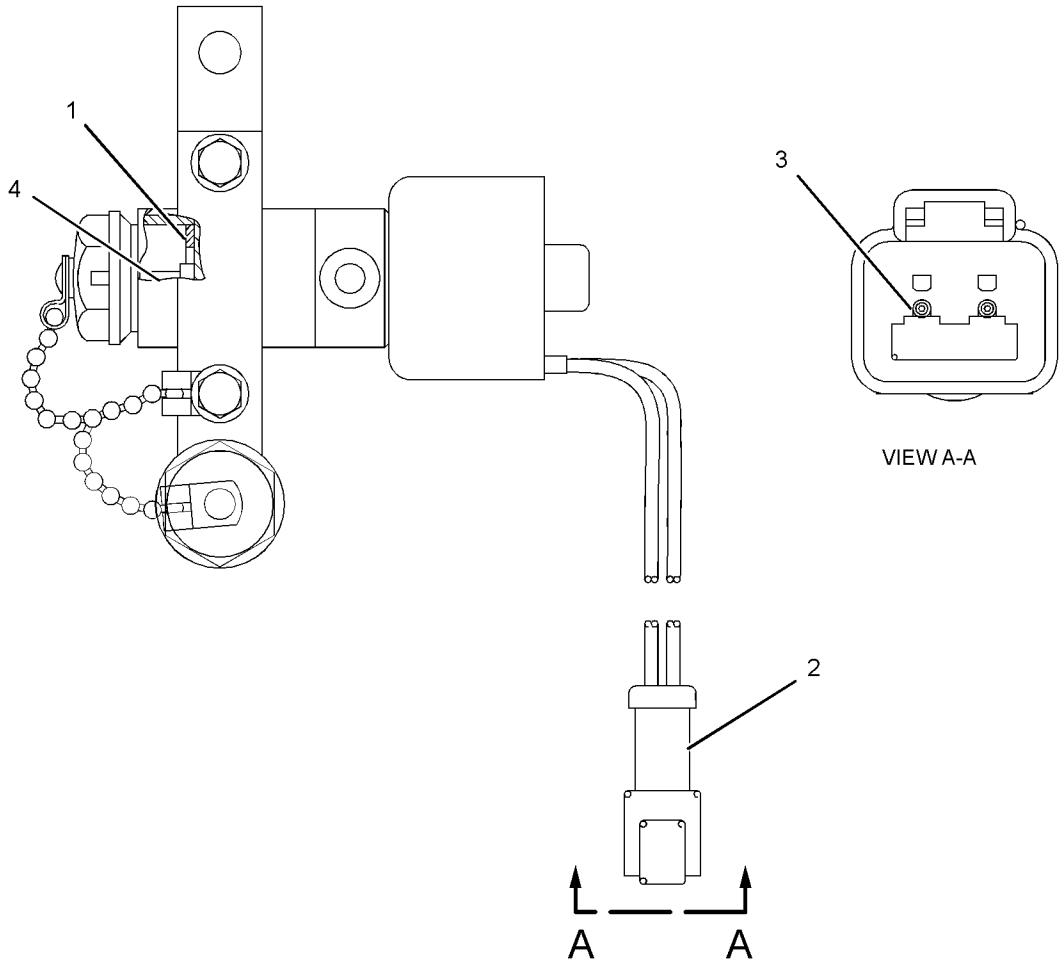

GRAPHIC #1 **<END>** g02138138

235-8203 WIRING GP-ELECTRONIC CONTROL

S/N: THX8900-22179

PART OF 282-3823, 282-3824, 282-3825, 282-3826, 301-5768 ENGINE AR

ALSO AN ATTACHMENT

SMCS-1408, 1900 **i04890970**

NOTE	REF NO	GRAPHIC REF	PART NUMBER	QTY	PART NAME 1 2 3 4 5 6 (PRODUCT LEVEL)	SEE PAGE
	1	1	**3S-2093**	19	STRAP-CABLE	
	2	1	**9M-1974**	6	WASHER-HARD (8.8X16X2-MM THK)	
	3	1	**160-8124**	1	PLUG AS (2-PIN)	
		1	**8T-8737**	2	PLUG-SEAL	
		1	**102-8802**	1	KIT-RECEPTACLE (2-PIN)	
					(INCLUDES RECEPTACLE AS & WEDGE)	
	4	1	**196-9654**	1	BRACKET AS	
		1	**3W-9139**	1	BOSS	
M		1	**6V-9632**	2	NUT-WELD (M6X1-THD)	
		1	**7T-1099**	7	LINK	
M		1	**8T-3490**	1	NUT-WELD (M10X1.5-THD)	
	5	1	**215-3249**	1	HARNESS AS-ENGINE (UNIT INJECTOR)	
		1	**9X-3401**	12	PIN-CONNECTOR (16-GA TO 18-GA)	
					—OR—	
		1	**126-1767**	12	PIN-CONNECTOR (14-GA TO 16-GA)	
		1	**3S-2093**	5	STRAP-CABLE	
		1	**105-1797**	5	MOUNT	
		1	**191-7823**	1	RECEPTACLE AS	
	6	1	**235-8202**	1	HARNESS AS-ENGINE (ELECTRONIC CONTROL MODULE)	
		1	**180-9340**	72	SOCKET-CONNECTOR (14-GA TO 18-GA)	
		1	**305-5362**	4	TERMINAL AS (18-GA)	
		1	**1S-9593**	4	STRAP-CABLE	
		1	**264-5732**	1	PLUG AS-CONNECTOR (120-PIN)	
		1	**288-7324**	1	SEAL-CONNECTOR	
		1	**8T-8737**	95	PLUG-SEAL	
		1	**211-6807**	1	COVER-CONNECTOR	
		1	**9X-3401**	3	PIN-CONNECTOR (16-GA TO 18-GA)	
					—OR—	
		1	**126-1767**	3	PIN-CONNECTOR (14-GA TO 16-GA)	
		1	**100-3320**	1	PLUG AS-CONNECTOR (2-PIN)	
		1	**111-2416**	1	PLUG AS-CONNECTOR (2-PIN)	
					(EACH PLUG AS INCLUDES)	
		1	**126-5011**	1	SEAL-CONNECTOR	
		1	**155-2265**	1	KIT-CONNECTING PLUG (8-PIN)	
		1	**155-2270**	5	KIT-CONNECTING PLUG (2-PIN)	
		1	**155-2260**	3	KIT-CONNECTING PLUG (3-PIN)	
					(EACH PLUG KIT INCLUDES PLUG AS, WEDGE & INTERFACE SEAL)	
		1	**119-3662**		TUBE-HEAT SHRINK (10.85-MM DIA) (33-CM)	
		1	**125-7874**		TUBE-HEAT SHRINK (5.72-MM DIA) (5-CM)	
		1	**125-7875**		TUBE-HEAT SHRINK (7.44-MM DIA) (10-CM)	
		1	**172-6062**	1	PLUG AS-CONNECTOR (18-PIN)	
		1	**102-8802**	1	KIT-RECEPTACLE (2-PIN)	
		1	**102-8803**	1	KIT-RECEPTACLE (3-PIN)	
					(EACH RECEPTACLE KIT INCLUDES RECEPTACLE AS & WEDGE)	
	7	1	**4P-7581**	5	CLIP	
	8	1	**4P-8134**	2	CLIP	
M	9	1	**5P-7970**	5	NUT (M8X1.25-THD)	
	10	1	**6V-4369**	1	CLIP	
M	11	1	**6V-5217**	1	BOLT (M8X1.25X20-MM)	
	12	1	**6V-5839**	5	WASHER (11X21X2.5-MM THK)	
M	13	1	**6V-6317**	4	BOLT (M10X1.5X20-MM)	
M	14	1	**7I-2272**	2	BOLT (M5X0.8X12-MM)	
	15	1	**8T-0328**	2	WASHER-HARD (5.5X10X1-MM THK)	
M	16	1	**8T-4137**	1	BOLT (M10X1.5X20-MM)	

235-8203 **WIRING GP-ELECTRONIC CONTROL (*contd.*)** **i04890970**

NOTE	REF NO	GRAPHIC REF	PART NUMBER	QTY	PART NAME 1 2 3 4 5 6 (PRODUCT LEVEL)	SEE PAGE
	17	1	**8T-4205**	1	WASHER-HARD (7.2X14.5X2-MM THK)	
M	18	1	**8T-5451**	1	BOLT (M6X1X12-MM)	

M - METRIC PART

235-8203 **WIRING GP-ELECTRONIC CONTROL (*contd.*)** **i04890970**

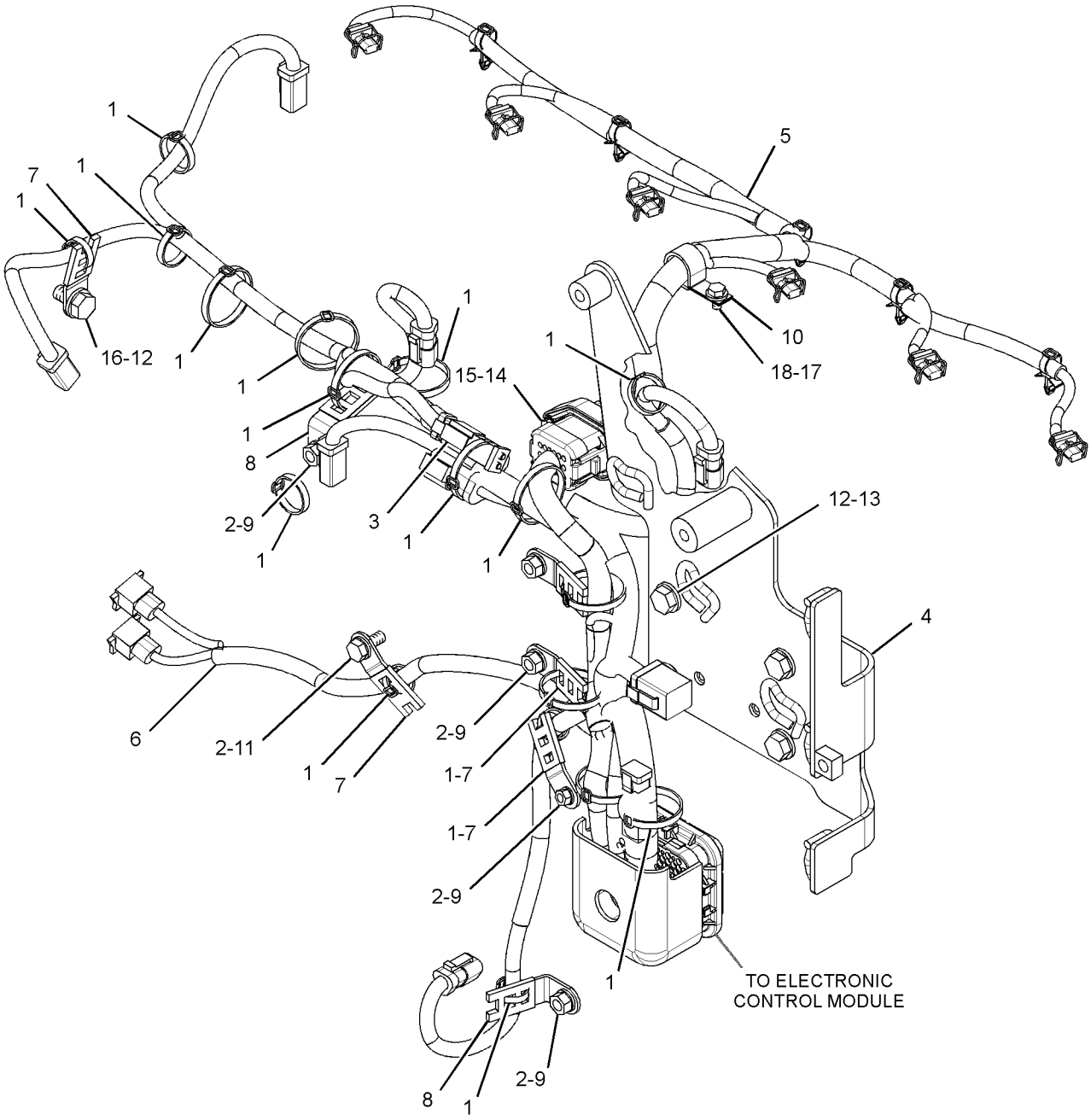

GRAPHIC #1 **<END>** g03025178

330-6019 WIRING GP-ELECTRONIC CONTROL

S/N: TXD1-UP; THX8900-UP

PART OF 282-3823, 282-3824, 282-3825, 282-3826, 301-5768 ENGINE AR, 349-3564, 349-3565, 387-8576, 387-8580 ENGINE AR-COMPLETE

ALSO AN ATTACHMENT

TYPE 1

SMCS-1408, 1900 **i04924847**

NOTE	REF NO	GRAPHIC REF	PART NUMBER	QTY	PART NAME 1 2 3 4 5 6 (PRODUCT LEVEL)	SEE PAGE
	1	1	**3S-2093**	18	STRAP-CABLE	
	2	1	**196-9654**	1	BRACKET AS	
		1	**3W-9139**	1	BOSS	
M		1	**6V-9632**	2	NUT-WELD (M6X1-THD)	
		1	**7T-1099**	7	LINK	
M		1	**8T-3490**	1	NUT-WELD (M10X1.5-THD)	
	3	1	**215-3249**	1	HARNESS AS-ENGINE (UNIT INJECTOR)	
		1	**105-1797**	5	MOUNT	
		1	**9X-3401**	12	PIN-CONNECTOR (16-GA TO 18-GA)	
		1	**191-7823**	1	RECEPTACLE AS	
		1	**307-8428**	1	GASKET	
		1	**3S-2093**	5	STRAP-CABLE	
Y	4	1	**323-9140**	1	HARNESS AS-ENGINE (SPEED SENSOR)	281
	5	1	**4P-7581**	5	CLIP	
	6	1	**4P-8134**	2	CLIP	
M	7	1	**5P-7970**	5	NUT (M8X1.25-THD)	
	8	1	**6V-4369**	1	CLIP	
M	9	1	**6V-5217**	1	BOLT (M8X1.25X20-MM)	
	10	1	**6V-5839**	5	WASHER (11X21X2.5-MM THK)	
M	11	1	**6V-6317**	4	BOLT (M10X1.5X20-MM)	
M	12	1	**7I-2272**	2	BOLT (M5X0.8X12-MM)	
	13	1	**8T-0328**	2	WASHER-HARD (5.5X10X1-MM THK)	
M	14	1	**8T-4137**	1	BOLT (M10X1.5X20-MM)	
	15	1	**8T-4205**	1	WASHER-HARD (7.2X14.5X2-MM THK)	
M	16	1	**8T-5451**	1	BOLT (M6X1X12-MM)	
	17	1	**9M-1974**	6	WASHER-HARD (8.8X16X2-MM THK)	
	18	1	**274-3774**	1	CAP-CONNECTOR	

M - METRIC PART
Y - SEPARATE ILLUSTRATION

330-6019 **WIRING GP-ELECTRONIC CONTROL (*contd.*)** **i04924847**

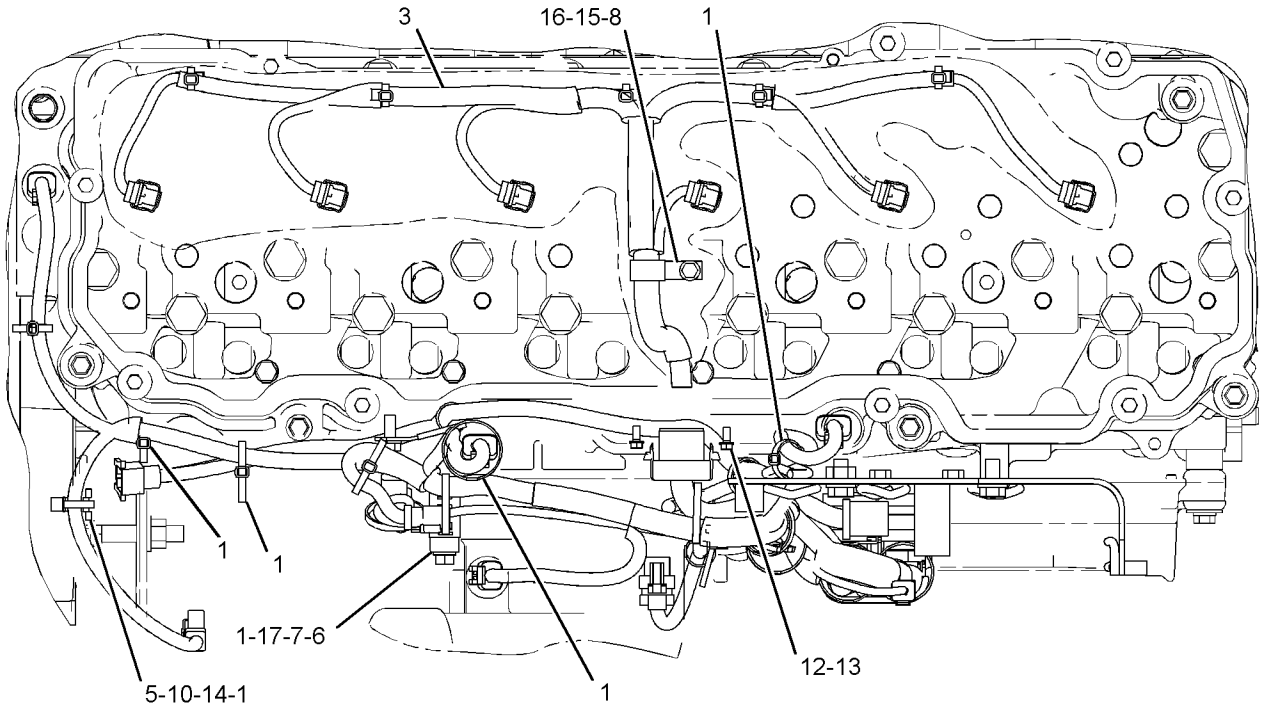

TOP VIEW OF ENGINE

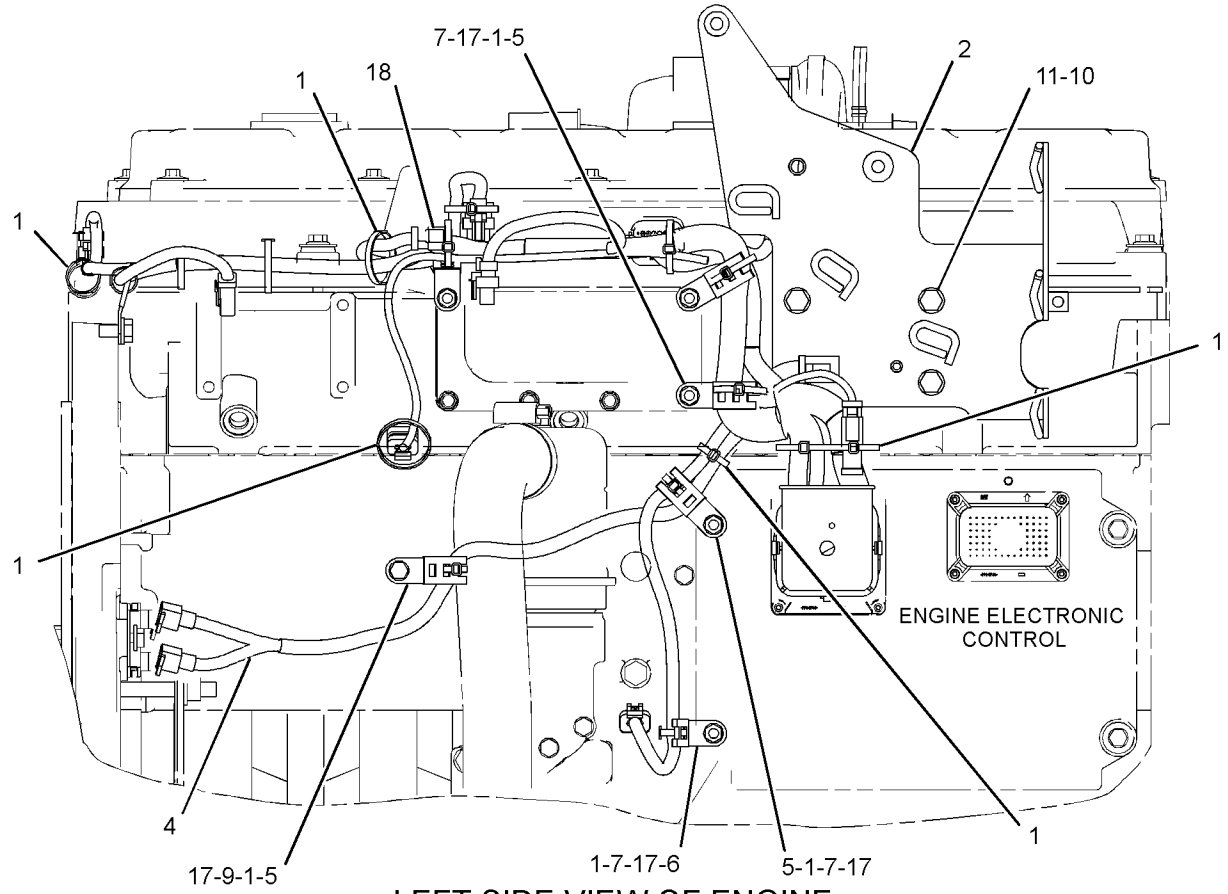

LEFT SIDE VIEW OF ENGINE

GRAPHIC #1 **<END>** g03202161

330-6019 WIRING GP-ELECTRONIC CONTROL

S/N: TXD1-UP; THX8900-UP

PART OF 282-3823, 282-3824, 282-3825, 282-3826, 301-5768 ENGINE AR, 387-8574, 387-8575, 398-6424 ENGINE AR-COMPLETE

ALSO AN ATTACHMENT

TYPE 2

SMCS-1408, 1900 **i05326821**

NOTE	REF NO	GRAPHIC REF	PART NUMBER	QTY	PART NAME 1 2 3 4 5 6 (PRODUCT LEVEL)	SEE PAGE
	1	1	**3S-2093**	18	STRAP-CABLE	
	2	1	**196-9654**	1	BRACKET AS	
		1	**3W-9139**	1	BOSS	
M		1	**6V-9632**	2	NUT-WELD (M6X1-THD)	
		1	**7T-1099**	7	LINK	
M		1	**8T-3490**	1	NUT-WELD (M10X1.5-THD)	
Y	3	1	**419-0841**	1	HARNESS AS-ENGINE (UNIT INJECTOR)	281
Y	4	1	**323-9140**	1	HARNESS AS-ENGINE (SPEED SENSOR) (SPEED SENSOR)	281
	5	1	**4P-7581**	5	CLIP	
	6	1	**4P-8134**	2	CLIP	
M	7	1	**5P-7970**	5	NUT (M8X1.25-THD)	
	8	1	**6V-4369**	1	CLIP	
M	9	1	**6V-5217**	1	BOLT (M8X1.25X20-MM)	
	10	1	**6V-5839**	5	WASHER (11X21X2.5-MM THK)	
M	11	1	**6V-6317**	4	BOLT (M10X1.5X20-MM)	
M	12	1	**7I-2272**	2	BOLT (M5X0.8X12-MM)	
	13	1	**8T-0328**	2	WASHER-HARD (5.5X10X1-MM THK)	
M	14	1	**8T-4137**	1	BOLT (M10X1.5X20-MM)	
	15	1	**8T-4205**	1	WASHER-HARD (7.2X14.5X2-MM THK)	
M	16	1	**8T-5451**	1	BOLT (M6X1X12-MM)	
	17	1	**9M-1974**	6	WASHER-HARD (8.8X16X2-MM THK)	
	18	1	**274-3774**	1	CAP-CONNECTOR	
	19	1	**440-0881**	5	BOLT-SOCKET HEAD (M8X1.25-THD)	
	20	1	**439-4571**	5	CLIP	

M - METRIC PART
Y - SEPARATE ILLUSTRATION

330-6019 **WIRING GP-ELECTRONIC CONTROL (*contd.*)** **i05326821**

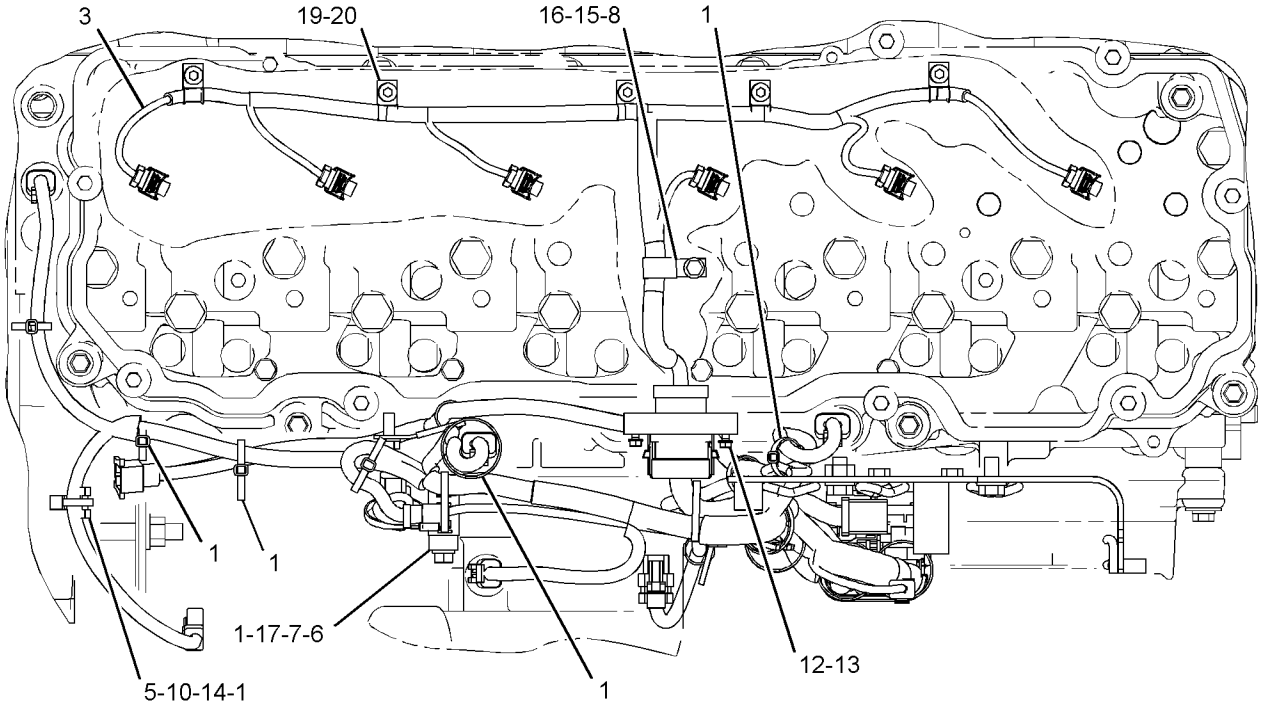

TOP VIEW OF ENGINE

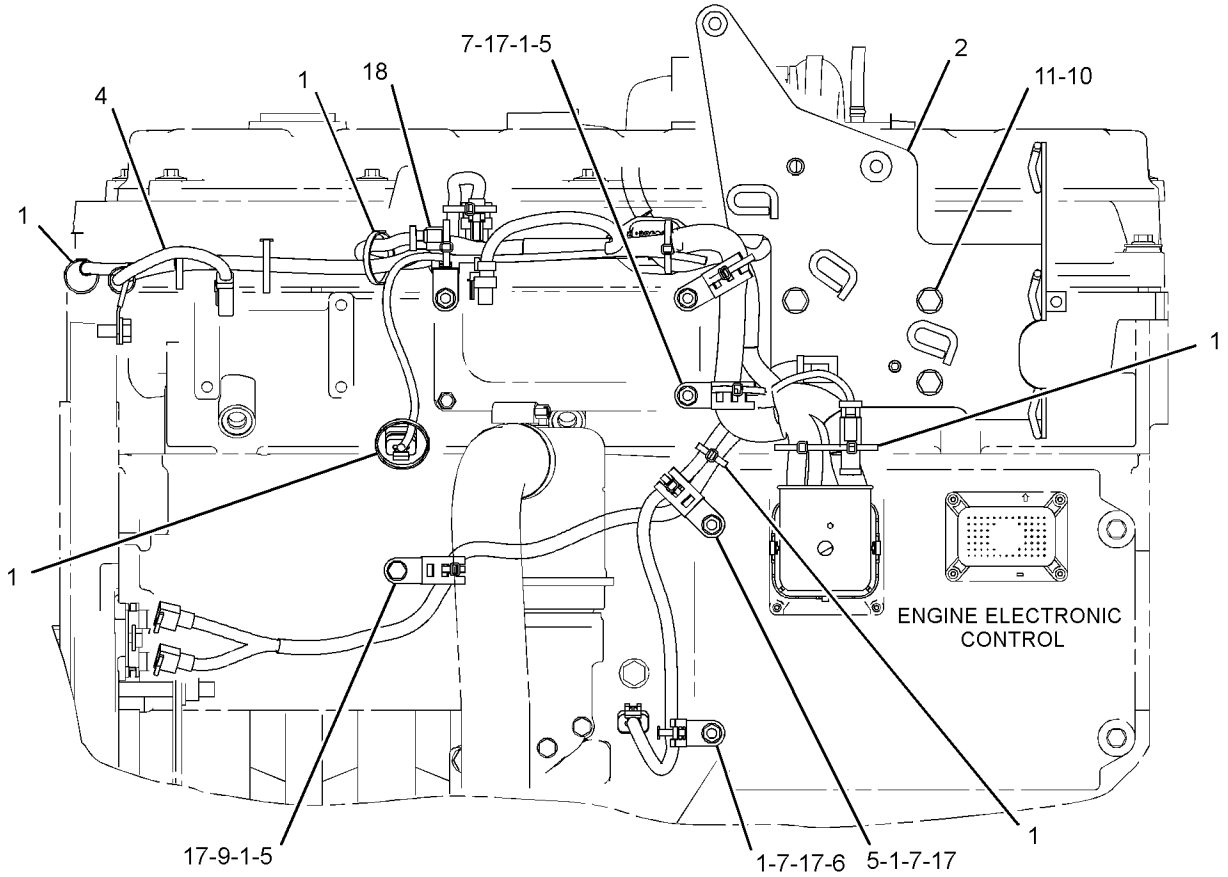

LEFT SIDE VIEW OF ENGINE

GRAPHIC #1 **<END>** g03380734

279-9544 WIRING GP-ENGINE

S/N: SMC1-UP; GCT1-UP

PART OF 279-9549, 372-6406 INSTALLATION AR-ENGINE

SMCS-1000, 1408 **i05350515**

NOTE	REF NO	GRAPHIC REF	PART NUMBER	QTY	PART NAME 1 2 3 4 5 6 (PRODUCT LEVEL)	SEE PAGE
	1	1	**121-2844**	1	HARNESS AS-WIRING (CRANK WITHOUT INJECT)	
		1	**102-8803**	2	KIT-RECEPTACLE (3-PIN)	
					(EACH KIT INCLUDES RECEPTACLE AS & WEDGE)	
		1	**8T-8729**	4	PIN-CONNECTOR (16-GA TO 18-GA)	
		1	**8T-8737**	5	PLUG-SEAL	
		1	**155-2260**	1	KIT-CONNECTING PLUG (3-PIN)	
					(INCLUDES PLUG AS, WEDGE & INTERFACE SEAL)	
	2	1	**139-2116**	1	SWITCH GP-TOGGLE (UNDER HOOD SERVICE LIGHT)	
		1	**3E-3371**	1	WEDGE-RECEPTACLE LOCK (3-PIN)	
		1	**6T-3631**	2	NUT-HEX (15/32-32-THD)	
		1	**6T-3632**	1	LOCKWASHER	
		1	**6T-3633**	1	RING-LOCKING	
		1	**8T-8729**	3	PIN-CONNECTOR (16-GA TO 18-GA)	
		1	**102-8803**	1	KIT-RECEPTACLE (3-PIN)	
					(INCLUDES RECEPTACLE AS & WEDGE)	
Y	3	1	**145-7028**	1	SENSOR GP-TEMPERATURE (TRANSMISSION SUMP)	371
Y	3A	1	**145-7028**	1	SENSOR GP-TEMPERATURE (TORQUE CONVERTER OIL)	371
	4	1	**147-3150**	1	ANGLE AS	
	5	1	**183-4274**	1	BRACKET	
Y	6	1	**290-5792**	1	SENSOR GP-SPEED (TORQUE CONVERTER OUTPUT)	369
	7	1	**237-7308**	1	BRACKET	
	8	2	**368-6473**	1	CABLE AS	
		2	**1S-4915**	2	LINER (CONDUIT)	
		2	**1S-7252**	1	TERMINAL-CABLE (00-GA, 3/8-IN SCREW)	
E		2	**5P-0695**		CONDUIT (165-CM)	
		2	**8N-0869**	1	COVER-TERMINAL (RED)	
E		2	**8T-2225**		TUBE-HEAT SHRINK (25.4-MM DIA) (16-CM)	
		2	**9X-9825**	1	TERMINAL-CABLE (00-GA, 1/2-IN SCREW)	
E		2	**159-8047**		CABLE-ELECTRICAL (0-GA, RED) (187-CM)	
		2	**276-1786**	1	COVER-TERMINAL (RED)	
	9	1	**248-6862**	1	FILM-IDENTIFICATION (WORK LIGHT)	
	10	2	**266-2404**	1	BRACKET AS	
	11	1	**278-7691**	1	BRACKET	
	12	1	**304-4513**	1	HARNESS AS-ENGINE	
		1	**102-8802**	1	KIT-RECEPTACLE (2-PIN)	
		1	**102-8805**	1	KIT-RECEPTACLE (6-PIN)	
					(EACH KIT INCLUDES RECEPTACLE AS & WEDGE)	
		1	**3E-3383**	1	WEDGE-RECEPTACLE LOCK (6-PIN)	
		1	**3S-2093**	2	STRAP-CABLE	
		1	**8N-1544**	1	PIN-CONNECTOR (8-GA)	
		1	**8T-8737**	62	PLUG-SEAL	
		1	**113-0580**	1	RECEPTACLE AS-CONNECTOR (40-PIN)	
E		1	**125-7874**		TUBE-HEAT SHRINK (5.72-MM DIA) (30-CM)	
E		1	**125-7875**		TUBE-HEAT SHRINK (7.44-MM DIA) (15-CM)	
		1	**9X-3402**	61	SOCKET-CONNECTOR (16-GA TO 18-GA)	
					—OR—	
		1	**126-1768**	61	SOCKET-CONNECTOR (14-GA TO 16-GA)	
		1	**126-1774**	1	COVER-CONNECTOR	
		1	**127-5486**	1	RECEPTACLE AS-CONNECTOR (1-PIN)	
		1	**2L-8049**	1	TERMINAL-RING (6-GA, NO. 10 SCREW)	
					—OR—	
		1	**2L-8057**	1	TERMINAL-RING (8-GA, NO. 10 SCREW)	
		1	**2L-8071**	1	TERMINAL-RING (10-GA TO 12-GA, 1/2-IN SCREW)	
		1	**134-2540**	1	RESISTOR AS-CONNECTION (3-PIN)	
		1	**9X-3401**	36	PIN-CONNECTOR (16-GA TO 18-GA)	
					—OR—	

279-9544 **WIRING GP-ENGINE (*contd.*)** **i05350515**

NOTE	REF NO	GRAPHIC REF	PART NUMBER	QTY	PART NAME 1 2 3 4 5 6 (PRODUCT LEVEL)	SEE PAGE
		1	**126-1767**	36	PIN-CONNECTOR (14-GA TO 16-GA)	
		1	**155-2259**	1	WEDGE-PLUG LOCK (8-PIN)	
		1	**155-2265**	1	KIT-CONNECTING PLUG (8-PIN)	
		1	**155-2260**	4	KIT-CONNECTING PLUG (3-PIN)	
		1	**155-2270**	6	KIT-CONNECTING PLUG (2-PIN)	
		1	**155-2274**	1	KIT-CONNECTING PLUG (6-PIN)	
		1	**174-0503**	1	KIT-CONNECTING PLUG (3-PIN)	
					(EACH KIT INCLUDES PLUG AS, WEDGE & INTERFACE SEAL)	
		1	**160-7689**	1	PLUG AS-CONNECTOR (70-PIN)	
		1	**159-9322**	1	SEAL-O-RING	
B		1	**1P-0810**		TAPE-ELECTRICAL	
		1	**274-3774**	1	CAP-CONNECTOR	
		1	**274-3775**	2	CAP-CONNECTOR	
	13	1	**132-5789**	3	CLIP	
	14	2	**1S-0994**	4	CLIP	
	15	2	**1S-1015**	1	CLIP	
Y	16	1	**254-8155**	1	LAMP GP-FLOOD (24-VOLT) (ENGINE COMPARTMENT)	299
	17	1	**4P-7429**	2	CLIP	
	18	1	**4P-7581**	8	CLIP	
	19	1,2	**4P-8134**	5	CLIP	
M	20	1	**5C-7261**	2	NUT (M8X1.25-THD)	
	21	1	**7J-0204**	2	SEAL-O-RING	
	22	1,2	**7K-1181**	49	STRAP-CABLE	
	23	1,2	**8T-4121**	9	WASHER-HARD (11X21X2.5-MM THK)	
M	24	1,2	**8T-4136**	3	BOLT (M10X1.5X25-MM)	
M	25	1,2	**8T-4137**	6	BOLT (M10X1.5X20-MM)	
M	26	1	**8T-4191**	1	BOLT (M10X1.5X16-MM)	
	27	1	**8T-4224**	2	WASHER-HARD (8.8X16X2-MM THK)	
	28	1	**8T-4896**	1	WASHER-HARD (10.2X18.5X2.5-MM THK)	
	29	1	**8T-7934**	2	WASHER-HARD (11X21X5-MM THK)	
	30	1	**8L-2786**	1	SEAL-O-RING	

B - USE AS REQUIRED
E - ORDER BY THE CENTIMETER
M - METRIC PART
Y - SEPARATE ILLUSTRATION

279-9544 **WIRING GP-ENGINE (*contd.*)** **i05350515**

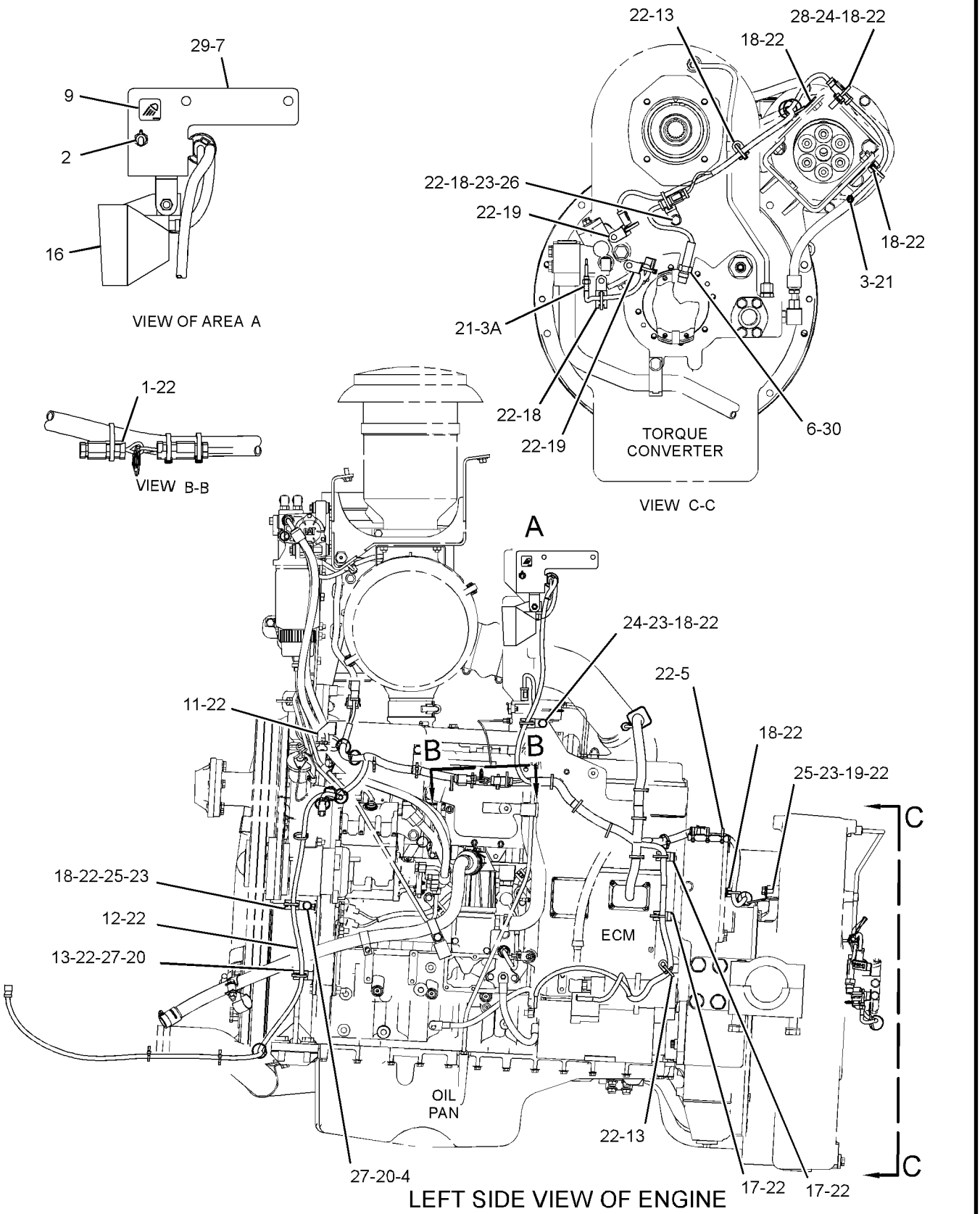

GRAPHIC #1 g03374603

279-9544 **WIRING GP-ENGINE (*contd.*)** **i05350515**

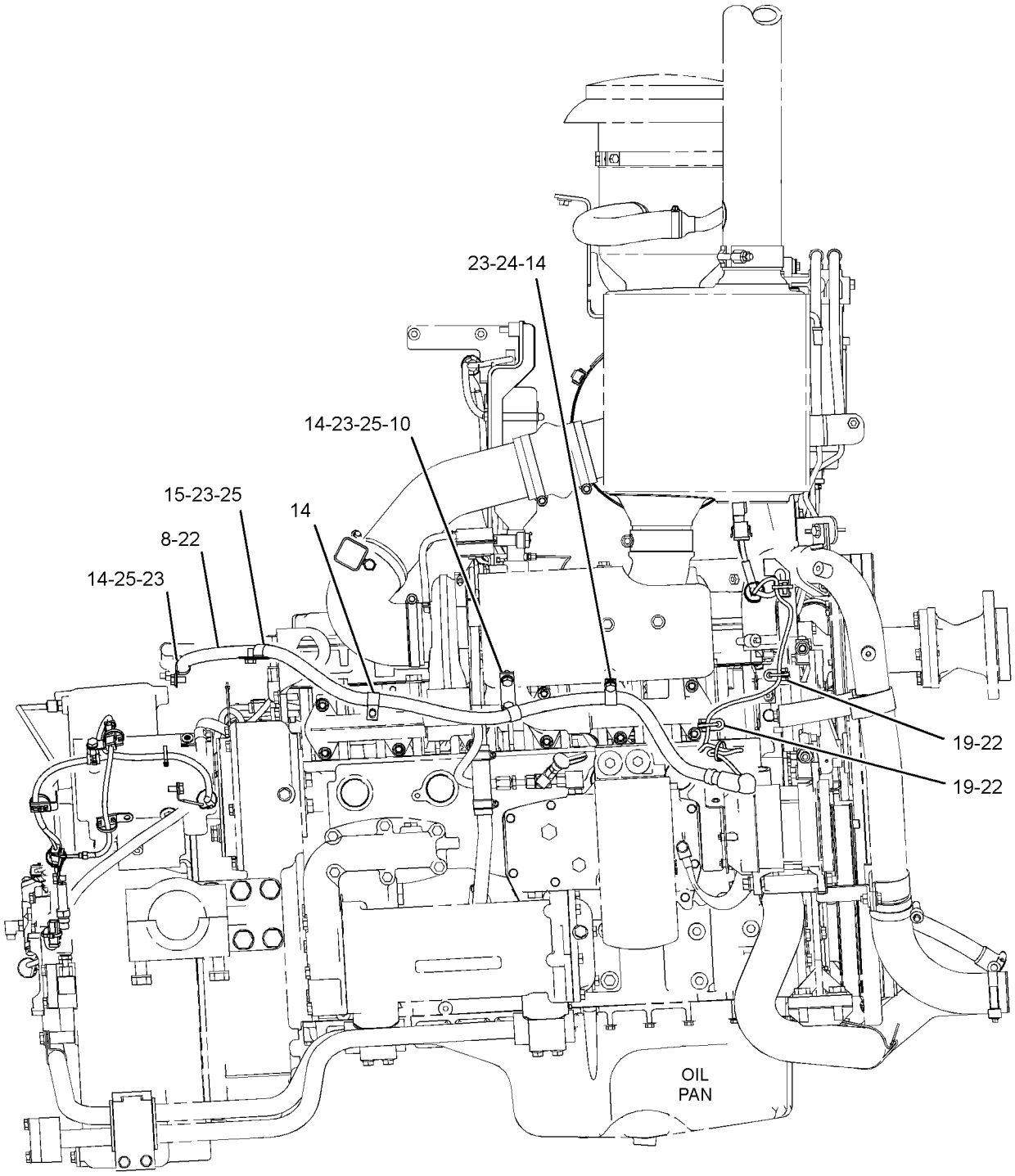

RIGHT SIDE VIEW OF ENGINE

GRAPHIC #2 **<END>** g03374604

283-1231 WIRING GP-GRADE CONTROL

S/N: SMC1-UP; GCT1-UP
PART OF 283-2442, 295-0080 GRADE CONTROL AR
AN ATTACHMENT
TYPE 1

SMCS-1408 **i04046746**

NOTE	REF NO	GRAPHIC REF	PART NUMBER	QTY	PART NAME 1 2 3 4 5 6 (PRODUCT LEVEL)	SEE PAGE
	1	1	**3E-5239**	1	RELAY AS (24-VOLT) (GRADE, SLOPE)	
	2	1	**6D-3033**	12	SCREW-SOCKET HEAD (4-40X0.5-IN)	
	3	1,2	**7K-1181**	51	STRAP-CABLE	
	4	1	**7R-3029**	3	CAP-DUST	
	5	2	**123-0304**	1	INDICATOR AS (ENGINE OIL PRESSURE)	
		2	**123-0306**	1	SOCKET AS	
		2	**115-1748**	1	LAMP (24-VOLT, 3-WATT)	
	6	1	**126-1773**	1	CAP-CONNECTOR	
	7	1	**129-8331**	1	PLATE AS	
	8	2	*150-4027*	1	TEE AS	
		2	**3E-2310**	1	TEE	
		2	**3J-1907**	1	SEAL-O-RING	
		2	**6V-8397**	1	SEAL-O-RING	
	9	1	**236-8826**	3	BOSS (1-1/8-18X0.708-IN)	
	10	2	**242-7090**	1	HARNESS AS-PLATFORM	
	11	1	**256-7789**	1	HARNESS AS-RADIO (GRADE CONTROL)	
	12	2	**261-0420**	1	SENSOR GP-PRESSURE (IMPLEMENT PUMP)	
	13	2	**265-9040**	1	HARNESS AS-WIRING (POWER SUPPLY MODULE)	
	14	2	**265-9042**	1	HARNESS AS-WIRING (POWER SUPPLY MODULE)	
	15	2	**283-1232**	1	HARNESS AS-CHASSIS	
	16	2	**299-3432**	1	HARNESS AS-SENSOR	
	17	2	**301-0076**	1	HARNESS AS-WIRING (LIGHT BAR)	
	18	1	**308-1395**	3	PLATE	
	19	1	**308-5806**	1	COVER AS	
	20	1	**308-6915**	1	HARNESS AS-FRONT	
	21	2	**321-1450**	1	PLATE	
	22	1	**321-1451**	1	HARNESS AS-WIRING (RECEIVER)	
	23	1	**322-1969**	1	BRACKET AS	
	24	1	**130-5300**	2	CLIP	
	25	2	**132-5789**	2	CLIP	
M	26	1	**188-9644**	3	SCREW-FLAT HEAD (M8X1.25X25-MM)	
	27	2	**1J-9671**	1	SEAL-O-RING	
M	28	1	**3E-8020**	4	SCREW-TRUSS HEAD (M6X1X25-MM)	
	29	2	**4P-7581**	4	CLIP	
	30	1	**4P-8134**	2	CLIP	
M	31	1	**5C-8312**	8	NUT (M4X0.7-THD)	
	32	1	**5P-1075**	1	WASHER-HARD (10.2X22.5X3-MM THK)	
	33	1	**5P-7648**	3	GROMMET	
	34	1	**7M-3361**	1	GROMMET	
M	35	1	**7X-2562**	2	BOLT (M20X2.5X45-MM)	
	36	1	**8C-9660**	16	WASHER (4.6X7.9X0.8-MM THK)	
	37	2	**8T-4121**	1	WASHER-HARD (11X21X2.5-MM THK)	
M	38	2	**8T-4136**	3	BOLT (M10X1.5X25-MM)	
M	39	1	**8T-4137**	1	BOLT (M10X1.5X20-MM)	
M	40	1	**8T-4171**	1	BOLT (M6X1X12-MM)	
	41	1	**8T-5439**	2	WASHER-HARD (21.5X45X6-MM THK)	
M	42	1	**8T-9405**	8	BOLT-SOCKET HEAD (M4X0.7X16-MM)	
	43	1	**9X-8267**	1	WASHER (6.6X12X2-MM THK)	

M - METRIC PART

283-1231 **WIRING GP-GRADE CONTROL (*contd.*)** **i04046746**

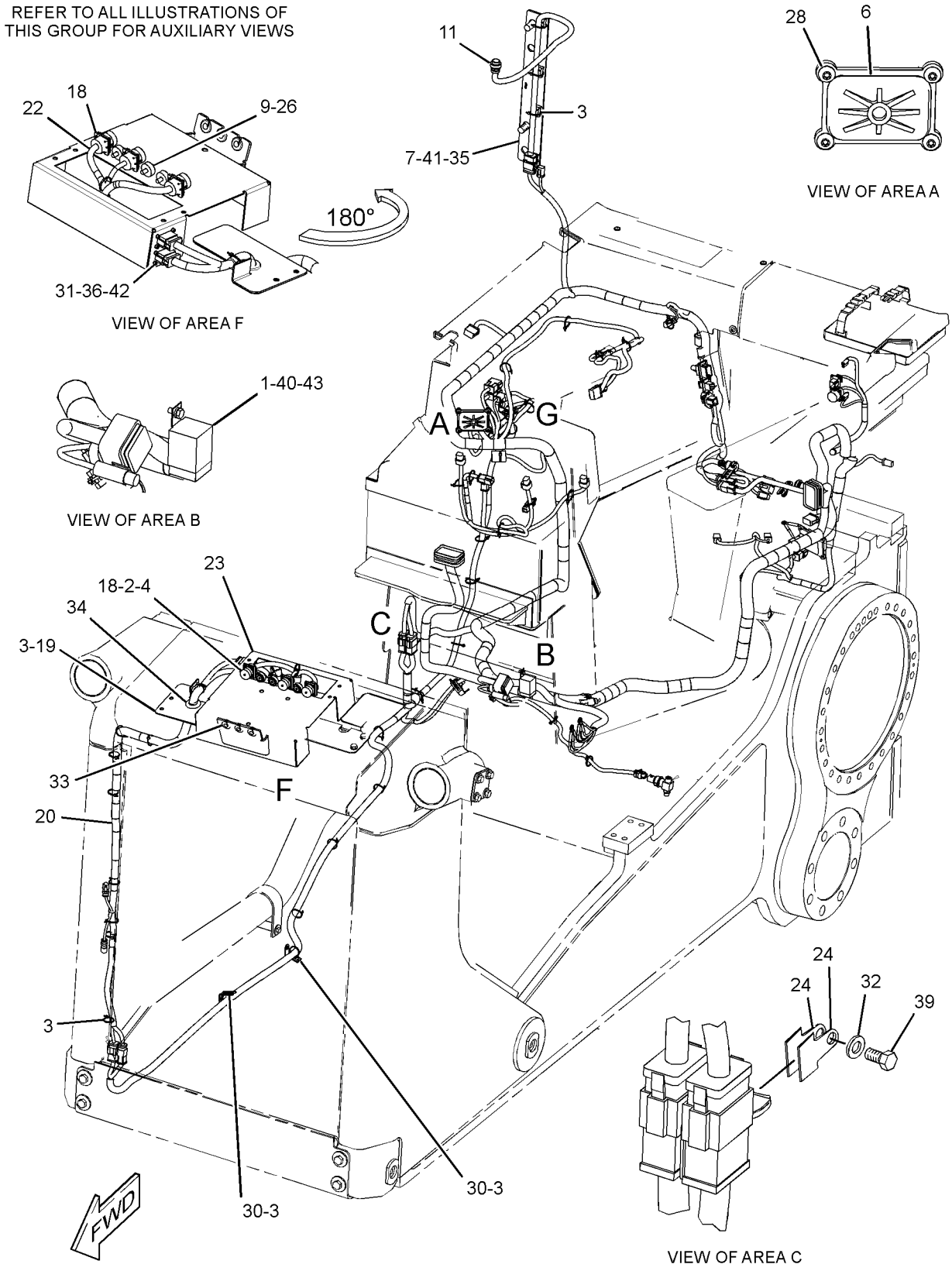

GRAPHIC #1 g01495173

283-1231 **WIRING GP-GRADE CONTROL (*contd.*)** **i04046746**

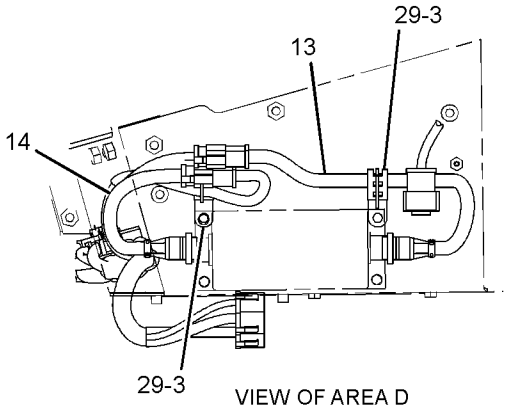

VIEW OF AREA D

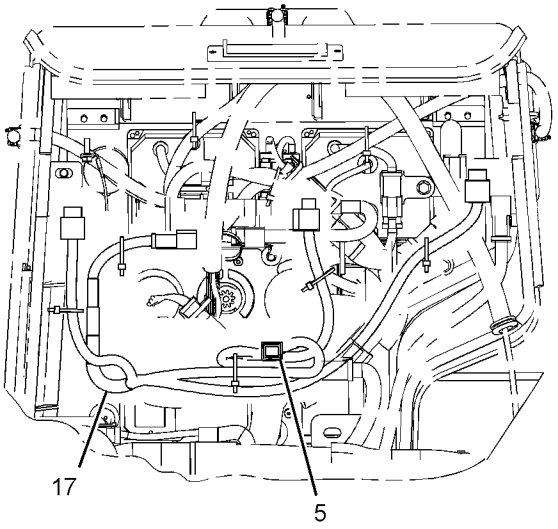

VIEW E-E

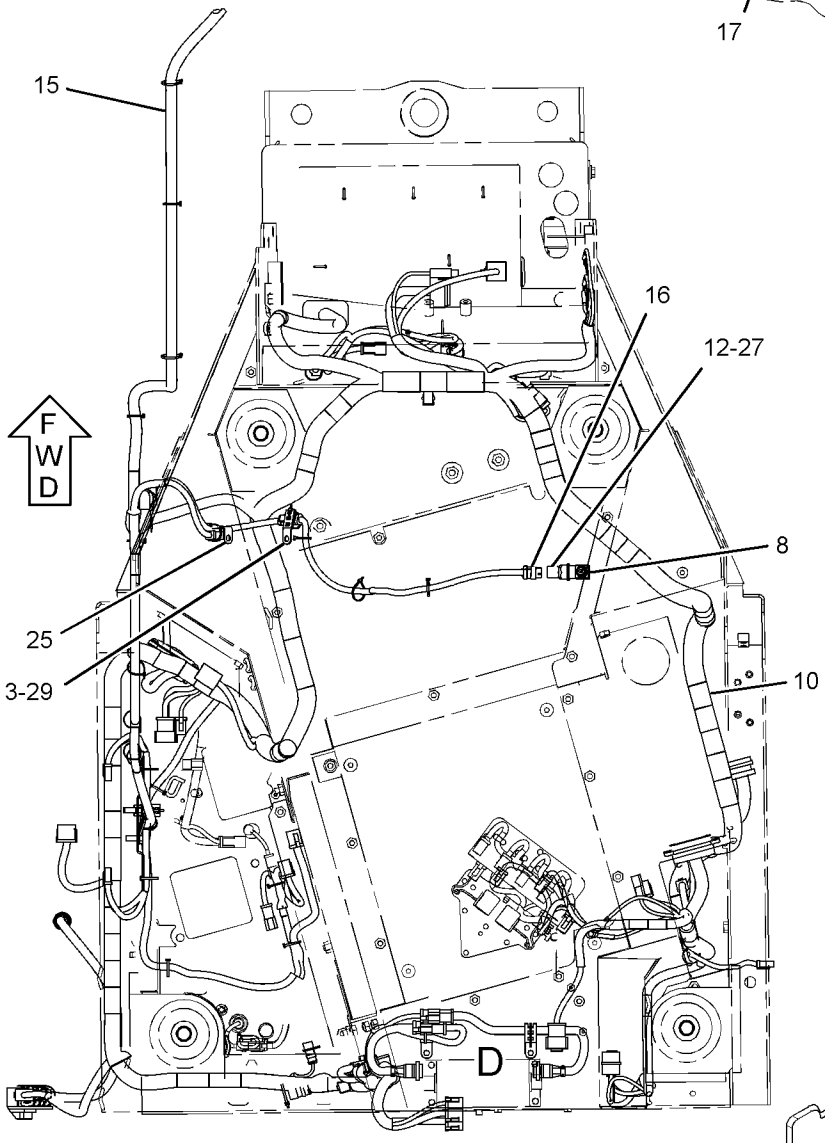

BOTTOM VIEW

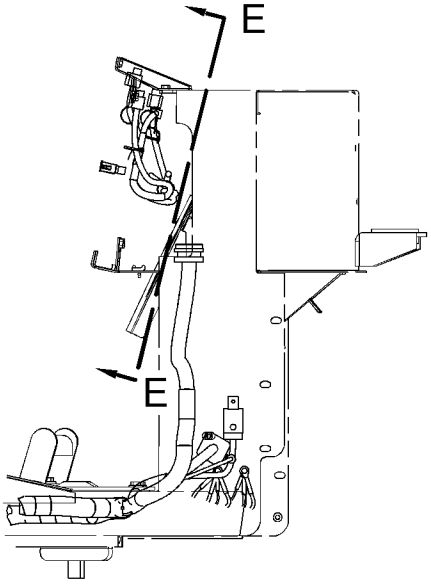

RIGHT SIDE VIEW
(REAR OF DASH)

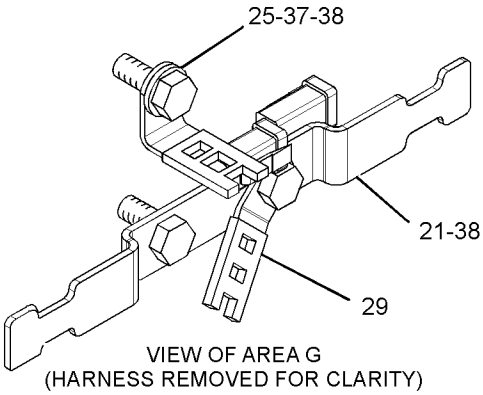

VIEW OF AREA G
(HARNESS REMOVED FOR CLARITY)

GRAPHIC #2 **<END>** g01495193

283-1231 WIRING GP-GRADE CONTROL

S/N: SMC1-UP; GCT1-UP
PART OF 283-2442, 295-0080 GRADE CONTROL AR
AN ATTACHMENT
TYPE 2

SMCS-1408 **i04450269**

NOTE	REF NO	GRAPHIC REF	PART NUMBER	QTY	PART NAME 1 2 3 4 5 6 (PRODUCT LEVEL)	SEE PAGE
	1	1	**231-3930**	1	RELAY AS (24-VOLT) (GRADE, SLOPE)	
	2	1	**6D-3033**	12	SCREW-SOCKET HEAD (4-40X0.5-IN)	
C	3	1,2	**7K-1181**	52	STRAP-CABLE	
	4	1	**7R-3029**	3	CAP-DUST	
	5	2	**123-0304**	1	INDICATOR AS (ACTION LIGHT)	
		2	**123-0306**	1	SOCKET AS	
		2	**115-1748**	1	LAMP (24-VOLT, 3-WATT)	
	6	1	**126-1773**	1	CAP-CONNECTOR	
	7	1	**129-8331**	1	PLATE AS	
	8	2	*150-4027*	1	TEE AS	
		2	**3E-2310**	1	TEE	
		2	**3J-1907**	1	SEAL-O-RING	
		2	**6V-8397**	1	SEAL-O-RING	
	9	1	**154-2302**	1	SPACER (11X20X15-MM THK)	
	10	1	**236-8826**	3	BOSS (1-1/8-18X0.708-IN)	
	11	2	**242-7090**	1	HARNESS AS-PLATFORM	
		2	**102-8802**	1	KIT-RECEPTACLE (2-PIN)	
		2	**102-8803**	1	KIT-RECEPTACLE (3-PIN)	
		2	**102-8804**	2	KIT-RECEPTACLE (4-PIN)	
		2	**102-8805**	2	KIT-RECEPTACLE (6-PIN)	
		2	**102-8801**	2	KIT-RECEPTACLE (12-PIN)	
		2	**166-5229**	1	KIT-RECEPTACLE (12-PIN)	
		2	**190-7615**	1	KIT-RECEPTACLE (12-PIN)	
		2	**197-7565**	2	KIT-RECEPTACLE (4-PIN)	
		2	**265-2106**	1	KIT-RECEPTACLE (4-PIN)	
					(EACH KIT INCLUDES RECEPTACLE AS & WEDGE)	
		2	**110-6845**	1	PLUG AS-CONNECTOR (40-PIN)	
		2	**110-6844**	1	SEAL	
		2	**9X-0196**	2	TERMINAL AS	
		2	**8C-6354**	1	CAP-RECEPTACLE (ET CONNECTOR)	
		2	**8N-1545**	1	SOCKET-CONNECTOR (8-GA)	
		2	**8T-8736**	1	RECEPTACLE-CONNECTOR (9-PIN)	
		2	**8T-8737**	184	PLUG-SEAL	
		2	**9W-0844**	71	SOCKET-CONNECTOR (14-GA TO 16-GA)	
		2	**9W-0852**	18	PIN-CONNECTOR (14-GA TO 16-GA)	
		2	**9W-1951**	1	RECEPTACLE-CONNECTOR (9-PIN)	
		2	**9X-3401**	148	PIN-CONNECTOR (16-GA TO 18-GA)	
		2	**9X-3402**	185	SOCKET-CONNECTOR (16-GA TO 18-GA)	
		2	**100-5041**	4	TERMINAL-RECEPTACLE (18-GA TO 20-GA)	
E		2	**114-8843**		SLEEVE-PLASTIC (40-CM)	
E		2	**114-8845**		SLEEVE-PLASTIC (20-CM)	
		2	**115-3519**	3	PIN-CONNECTOR (12-GA TO 14-GA)	
E		2	**119-3662**		TUBE-HEAT SHRINK (10.85-MM DIA) (52-CM)	
E		2	**125-7874**		TUBE-HEAT SHRINK (5.72-MM DIA) (250-CM)	
E		2	**125-7875**		TUBE-HEAT SHRINK (7.44-MM DIA) (40-CM)	
		2	**126-1774**	1	COVER-CONNECTOR	
		2	**127-5485**	1	PLUG AS-CONNECTOR (1-PIN)	
		2	**2L-8069**	7	TERMINAL-RING (2-GA TO 10-GA, 3/8-IN SCREW)	
		2	**2L-8079**	2	TERMINAL-RING (14-GA TO 16-GA, 3/8-IN SCREW)	
		2	**134-2540**	2	RESISTOR AS-CONNECTION (3-PIN)	
E		2	**149-7372**		SLEEVE-ABRASION (22-CM)	
		2	**155-2255**	7	KIT-CONNECTING PLUG (12-PIN)	
		2	**155-2257**	2	KIT-CONNECTING PLUG (12-PIN)	
		2	**155-2260**	1	KIT-CONNECTING PLUG (3-PIN)	

283-1231 **WIRING GP-GRADE CONTROL (*contd.*)** **i04450269**

NOTE	REF NO	GRAPHIC REF	PART NUMBER	QTY	PART NAME 1 2 3 4 5 6 (PRODUCT LEVEL)	SEE PAGE
		2	**155-2260**	1	KIT-CONNECTING PLUG (3-PIN)	
		2	**155-2270**	5	KIT-CONNECTING PLUG (2-PIN)	
		2	**155-2271**	6	KIT-CONNECTING PLUG (4-PIN)	
		2	**155-2274**	4	KIT-CONNECTING PLUG (6-PIN)	
		2	**174-0503**	2	KIT-CONNECTING PLUG (3-PIN)	
					(EACH KIT INCLUDES PLUG AS, WEDGE, & INTERFACE SEAL)	
		2	**160-7689**	2	PLUG AS-CONNECTOR (70-PIN)	
					(EACH INCLUDES)	
		2	**159-9322**	1	SEAL-O-RING	
		2	**177-9656**	1	KIT-CONNECTING PLUG (4-PIN)	
					(INCLUDES PLUG AS & WEDGE)	
		2	**214-4208**	2	RECEPTACLE AS-CONNECTOR (70-PIN)	
		2	**274-3774**	3	CAP-CONNECTOR	
	12	1	**256-7789**	1	HARNESS AS-RADIO (GRADE CONTROL)	
		1	**102-8801**	1	KIT-RECEPTACLE (12-PIN)	
					(INCLUDES RECEPTACLE AS & WEDGE)	
		1	**8T-8737**	4	PLUG-SEAL	
		1	**126-1767**	2	PIN-CONNECTOR (14-GA TO 16-GA)	
		1	**144-1636**	6	PIN-CONNECTOR (14-GA TO 18-GA)	
		1	**167-8987**	1	PLUG AS-CONNECTOR (8-PIN)	
		1	**268-3371**	1	CAP AS-CONNECTOR	
	13	2	**261-0420**	1	SENSOR GP-PRESSURE (BULLDOZER PILOT OIL)	
	14	2	**265-9040**	1	HARNESS AS-WIRING (POWER SUPPLY MODULE)	
		2	**102-8805**	1	KIT-RECEPTACLE (6-PIN)	
					(INCLUDES RECEPTACLE AS & WEDGE)	
		2	**6D-5257**	1	PLUG AS-CONNECTOR (8-PIN)	
		2	**186-3735**	2	PIN-CONNECTOR (16-GA TO 18-GA)	
		2	**9W-0852**	4	PIN-CONNECTOR (14-GA TO 16-GA)	
E		2	**114-8843**		SLEEVE-PLASTIC (20-CM)	
	15	2	**265-9042**	1	HARNESS AS-WIRING (POWER SUPPLY MODULE)	
		2	**3R-9965**	1	PLUG AS-CONNECTOR (8-PIN)	
		2	**8T-8737**	2	PLUG-SEAL	
		2	**9W-0844**	4	SOCKET-CONNECTOR (14-GA TO 16-GA)	
E		2	**114-8843**		SLEEVE-PLASTIC (20-CM)	
		2	**155-2274**	1	KIT-CONNECTING PLUG (6-PIN)	
					(INCLUDES PLUG AS, WEDGE, & INTERFACE SEAL)	
	16	2	**283-1232**	1	HARNESS AS-CHASSIS	
		2	**102-8804**	2	KIT-RECEPTACLE (4-PIN)	
		2	**102-8805**	1	KIT-RECEPTACLE (6-PIN)	
		2	**102-8805**	1	KIT-RECEPTACLE (6-PIN)	
		2	**102-8801**	1	KIT-RECEPTACLE (12-PIN)	
		2	**190-7615**	1	KIT-RECEPTACLE (12-PIN)	
					(EACH KIT INCLUDES RECEPTACLE AS & WEDGE)	
		2	**186-3735**	32	PIN-CONNECTOR (16-GA TO 18-GA)	
		2	**186-3736**	16	SOCKET-CONNECTOR (16-GA TO 18-GA)	
		2	**8T-8737**	6	PLUG-SEAL	
		2	**9W-0852**	9	PIN-CONNECTOR (14-GA TO 16-GA)	
E		2	**114-8843**		SLEEVE-PLASTIC (20-CM)	
E		2	**125-7874**		TUBE-HEAT SHRINK (5.72-MM DIA) (35-CM)	
E		2	**125-7875**		TUBE-HEAT SHRINK (7.44-MM DIA) (5-CM)	
		2	**155-2260**	1	KIT-CONNECTING PLUG (3-PIN)	
		2	**155-2270**	5	KIT-CONNECTING PLUG (2-PIN)	
		2	**155-2271**	2	KIT-CONNECTING PLUG (4-PIN)	
					(EACH KIT INCLUDES PLUG AS, WEDGE, & INTERFACE SEAL)	
	17	2	**299-3432**	1	HARNESS AS-SENSOR	
		2	**102-8803**	1	KIT-RECEPTACLE (3-PIN)	
E		2	**114-8843**		SLEEVE-PLASTIC (40-CM)	
		2	**126-1766**	3	SOCKET-CONNECTOR (14-GA TO 18-GA)	

283-1231 **WIRING GP-GRADE CONTROL (*contd.*)** **i04450269**

NOTE	REF NO	GRAPHIC REF	PART NUMBER	QTY	PART NAME 1 2 3 4 5 6 (PRODUCT LEVEL)	SEE PAGE
		2	**144-1636**	3	PIN-CONNECTOR (14-GA TO 18-GA)	
		2	**237-0227**	1	PLUG AS-CONNECTOR (3-PIN)	
		2	**264-7030**	1	SEAL-CONNECTOR	
	18	2	**301-0076**	1	HARNESS AS-WIRING (LIGHT BAR)	
		2	**102-8804**	1	KIT-RECEPTACLE (4-PIN)	
E		2	**125-7874**		TUBE-HEAT SHRINK (5.72-MM DIA) (20-CM)	
		2	**126-1766**	12	SOCKET-CONNECTOR (14-GA TO 18-GA)	
		2	**144-1636**	4	PIN-CONNECTOR (14-GA TO 18-GA)	
		2	**230-5008**	3	PLUG AS-CONNECTOR (4-PIN)	
					(EACH INCLUDES)	
		2	**264-7031**	1	SEAL-CONNECTOR	
C	19	1	**308-1357**	1	HARNESS AS-WIRING (RECEIVER)	
E		1	**114-8843**		SLEEVE-PLASTIC (20-CM)	
		1	**126-1766**	3	SOCKET-CONNECTOR (14-GA TO 18-GA)	
		1	**144-1636**	24	PIN-CONNECTOR (14-GA TO 18-GA)	
		1	**155-2271**	1	KIT-CONNECTING PLUG (4-PIN)	
					(INCLUDES PLUG AS, WEDGE, & INTERFACE SEAL)	
		1	**190-7615**	1	KIT-RECEPTACLE (12-PIN)	
					(INCLUDES RECEPTACLE AS & WEDGE)	
		1	**228-3323**	3	CLIP-SPRING	
	20	1	**308-1395**	3	PLATE	
C	21	1	**308-1433**	1	BRACKET AS	
	22	1	**308-5806**	1	COVER AS	
	23	1	**308-6915**	1	HARNESS AS-FRONT	
		1	**186-3736**	18	SOCKET-CONNECTOR (16-GA TO 18-GA)	
		1	**8T-8737**	11	PLUG-SEAL	
		1	**9W-0844**	15	SOCKET-CONNECTOR (14-GA TO 16-GA)	
E		1	**114-8843**		SLEEVE-PLASTIC (60-CM)	
E		1	**119-3662**		TUBE-HEAT SHRINK (10.85-MM DIA) (33-CM)	
E		1	**125-7874**		TUBE-HEAT SHRINK (5.72-MM DIA) (50-CM)	
		1	**134-2540**	2	RESISTOR AS-CONNECTION (3-PIN)	
		1	**155-2255**	1	KIT-CONNECTING PLUG (12-PIN)	
		1	**155-2257**	1	KIT-CONNECTING PLUG (12-PIN)	
		1	**155-2265**	1	KIT-CONNECTING PLUG (8-PIN)	
		1	**155-2274**	1	KIT-CONNECTING PLUG (6-PIN)	
		1	**174-0503**	2	KIT-CONNECTING PLUG (3-PIN)	
					(EACH KIT INCLUDES PLUG AS, WEDGE, & INTERFACE SEAL)	
	24	2	**321-1450**	1	PLATE	
C	25	1	**130-5300**	3	CLIP	
	26	2	**132-5789**	2	CLIP	
M	27	1	**131-3539**	3	SCREW-FLAT HEAD (M8X1.25X30-MM)	
	28	2	**3J-1907**	1	SEAL-O-RING	
M	29	1	**9X-2044**	4	SCREW-TRUSS HEAD (M6X1X16-MM)	
	30	2	**4P-7581**	4	CLIP	
	31	1	**4P-8134**	2	CLIP	
	32	1	**5P-1075**	1	WASHER-HARD (10.2X22.5X3-MM THK)	
	33	1	**5P-7648**	3	GROMMET	
	34	1	**7M-3361**	1	GROMMET	
M	35	1	**7X-2562**	2	BOLT (M20X2.5X45-MM)	
C	36	1,2	**8T-4121**	2	WASHER-HARD (11X21X2.5-MM THK)	
M	37	2	**8T-4136**	3	BOLT (M10X1.5X25-MM)	
M	38	1	**8T-4137**	1	BOLT (M10X1.5X20-MM)	
M	39	1	**8T-4171**	1	BOLT (M6X1X12-MM)	
CM	40	1	**8T-4186**	1	BOLT (M10X1.5X40-MM)	
	41	1	**8T-5439**	2	WASHER-HARD (21.5X45X6-MM THK)	
	42	1	**9X-8267**	1	WASHER (6.6X12X2-MM THK)	

C - CHANGE FROM PREVIOUS TYPE
E - ORDER BY THE CENTIMETER
M - METRIC PART

283-1231 **WIRING GP-GRADE CONTROL (*contd.*)** **i04450269**

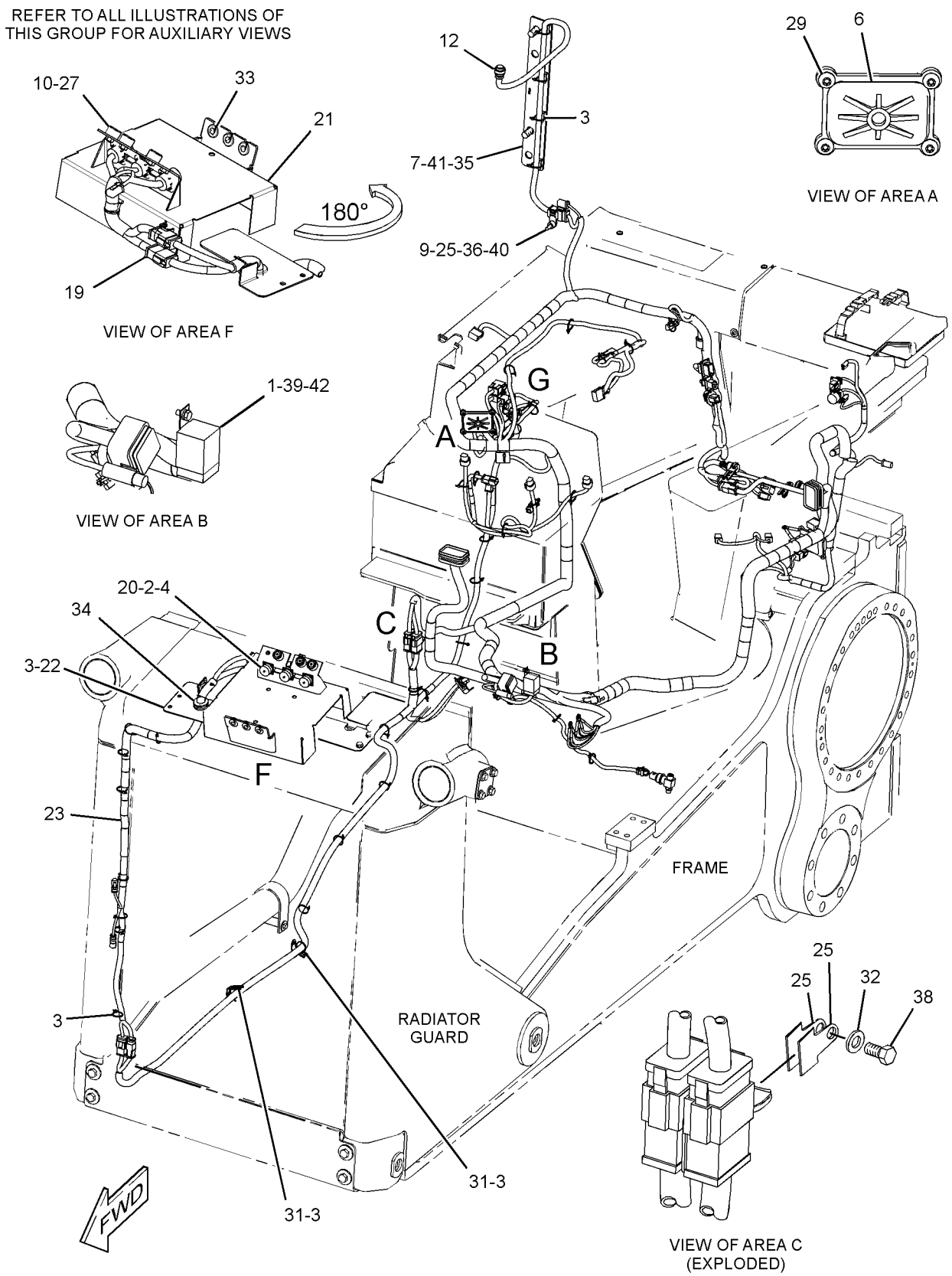

GRAPHIC #1 g01672836

283-1231 **WIRING GP-GRADE CONTROL (*contd.*)** **i04450269**

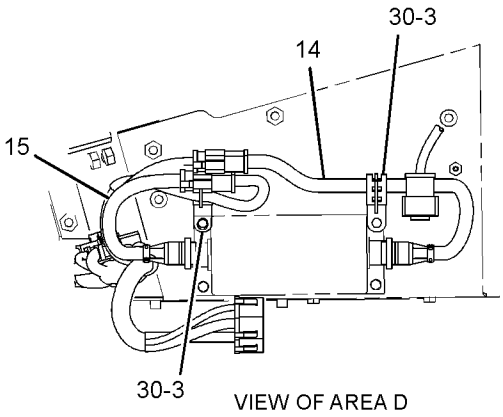

VIEW OF AREA D

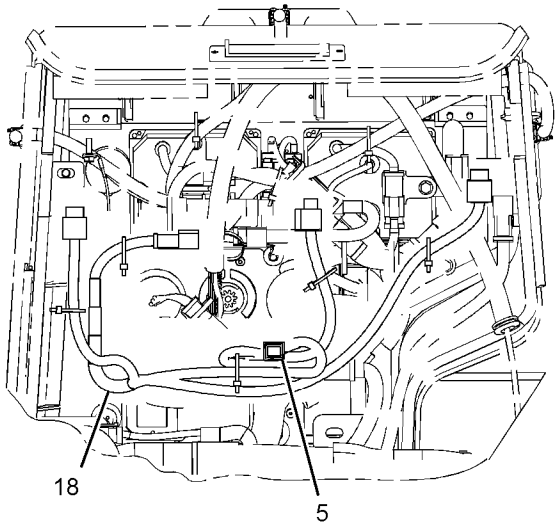

VIEW E-E

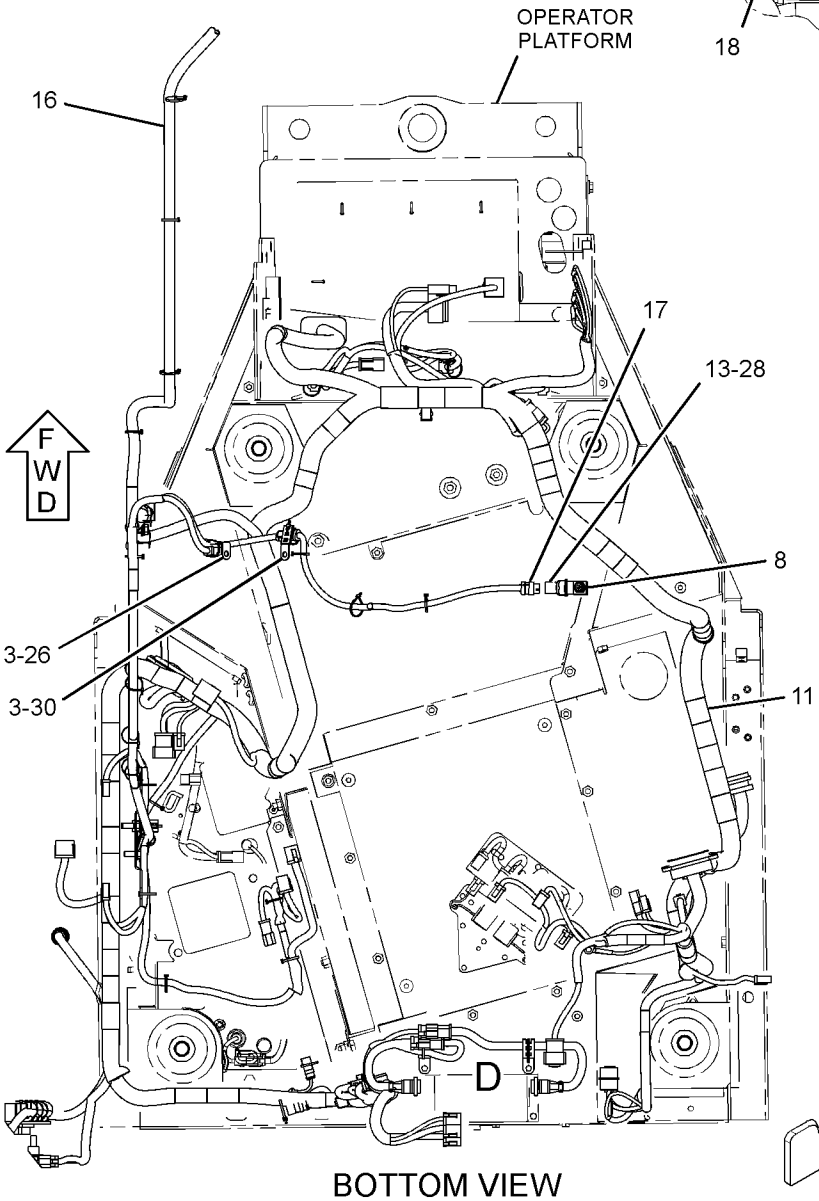

BOTTOM VIEW

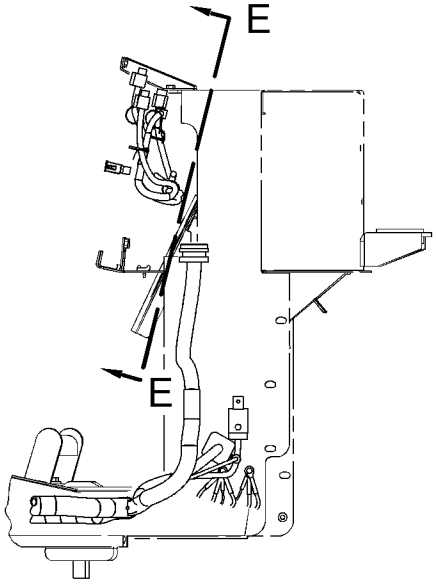

RIGHT SIDE VIEW
(DASH REMOVED FOR CLARITY)

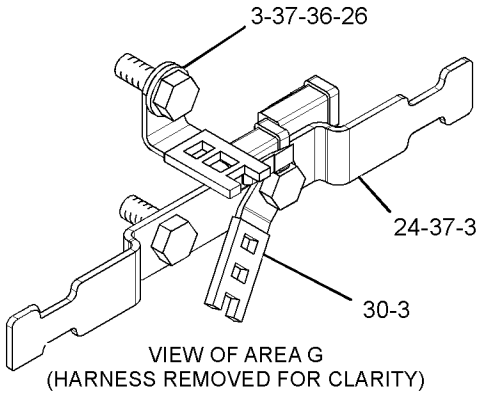

VIEW OF AREA G
(HARNESS REMOVED FOR CLARITY)

GRAPHIC #2 **<END>** g01672838

368-4249 WIRING GP-GRADE CONTROL

S/N: SMC1500-UP; GCT2000-UP
PART OF 283-2442 GRADE CONTROL AR
AN ATTACHMENT

SMCS-1408 **i05335287**

NOTE	REF NO	GRAPHIC REF	PART NUMBER	QTY	PART NAME 1 2 3 4 5 6 (PRODUCT LEVEL)	SEE PAGE
	1	2	**3E-5239**	1	RELAY AS (24-VOLT) (GRADE, SLOPE)	
	2	1	**6D-3033**	12	SCREW-SOCKET HEAD (4-40X0.5-IN)	
	3	1,2,3	**7K-1181**	50	STRAP-CABLE	
	4	1	**7R-3029**	3	CAP-DUST	
	5	2	**123-0304**	1	INDICATOR AS (BLADE FLOAT)	
		2	**115-1748**	1	LAMP (24-VOLT, 3-WATT)	
		2	**123-0306**	1	SOCKET AS	
	6	3	**126-1773**	1	CAP-CONNECTOR	
	7	2	*150-4027*	1	TEE AS	
		2	**3E-2310**	1	TEE	
		2	**3J-1907**	1	SEAL-O-RING	
		2	**6V-8397**	1	SEAL-O-RING	
	8	3	**154-2302**	1	SPACER (11X20X15-MM THK)	
	9	1	**236-8826**	3	BOSS (1-1/8-18X0.708-IN)	
	10	3	**256-7789**	1	HARNESS AS-RADIO (GRADE CONTROL)	
		3	**102-8801**	1	KIT-RECEPTACLE (12-PIN)	
					(INCLUDES RECEPTACLE AS & WEDGE)	
		3	**8T-8737**	4	PLUG-SEAL	
		3	**126-1767**	2	PIN-CONNECTOR (14-GA TO 16-GA)	
		3	**9X-3401**	6	PIN-CONNECTOR (16-GA TO 18-GA)	
					—OR—	
		3	**126-1767**	6	PIN-CONNECTOR (14-GA TO 16-GA)	
		3	**167-8987**	1	PLUG AS-CONNECTOR (8-PIN)	
		3	**268-3371**	1	CAP AS-CONNECTOR	
	11	1	**283-1232**	1	HARNESS AS-CHASSIS	
		1	**102-8805**	1	KIT-RECEPTACLE (6-PIN)	
		1	**102-8806**	1	KIT-RECEPTACLE (8-PIN)	
		1	**102-8801**	1	KIT-RECEPTACLE (12-PIN)	
		1	**190-7615**	1	KIT-RECEPTACLE (12-PIN)	
					(EACH KIT INCLUDES RECEPTACLE AS & WEDGE)	
		1	**8T-8737**	9	PLUG-SEAL	
		1	**9W-0852**	9	PIN-CONNECTOR (14-GA TO 16-GA)	
		1	**9X-3401**	20	PIN-CONNECTOR (16-GA TO 18-GA)	
		1	**9X-3402**	13	SOCKET-CONNECTOR (16-GA TO 18-GA)	
E		1	**125-7874**		TUBE-HEAT SHRINK (5.72-MM DIA) (20-CM)	
		1	**155-2260**	1	KIT-CONNECTING PLUG (3-PIN)	
		1	**155-2270**	5	KIT-CONNECTING PLUG (2-PIN)	
					(EACH KIT INCLUDES PLUG AS, WEDGE, & INTERFACE SEAL)	
	12	2	**299-3432**	1	HARNESS AS-SENSOR	
		2	**102-8803**	1	KIT-RECEPTACLE (3-PIN)	
					(INCLUDES RECEPTACLE AS & WEDGE)	
E		2	**114-8843**		SLEEVE-PLASTIC (40-CM)	
		2	**9X-3402**	3	SOCKET-CONNECTOR (16-GA TO 18-GA)	
					—OR—	
		2	**126-1768**	3	SOCKET-CONNECTOR (14-GA TO 16-GA)	
		2	**9X-3401**	3	PIN-CONNECTOR (16-GA TO 18-GA)	
					—OR—	
		2	**126-1767**	3	PIN-CONNECTOR (14-GA TO 16-GA)	
		2	**237-0227**	1	PLUG AS-CONNECTOR (3-PIN)	
		2	**264-7030**	1	SEAL-CONNECTOR	
	13	2	**301-0076**	1	HARNESS AS-WIRING (LIGHT BAR)	
		2	**102-8804**	1	KIT-RECEPTACLE (4-PIN)	
					(INCLUDES RECEPTACLE AS & WEDGE)	
E		2	**125-7874**		TUBE-HEAT SHRINK (5.72-MM DIA) (20-CM)	
		2	**9X-3402**	12	SOCKET-CONNECTOR (16-GA TO 18-GA)	

368-4249 **WIRING GP-GRADE CONTROL (*contd.*)** **i05335287**

NOTE	REF NO	GRAPHIC REF	PART NUMBER	QTY	PART NAME 1 2 3 4 5 6 (PRODUCT LEVEL)	SEE PAGE
					—OR—	
		2	**126-1768**	12	SOCKET-CONNECTOR (14-GA TO 16-GA)	
		2	**9X-3401**	4	PIN-CONNECTOR (16-GA TO 18-GA)	
					—OR—	
		2	**126-1767**	4	PIN-CONNECTOR (14-GA TO 16-GA)	
		2	**230-5008**	3	PLUG AS-CONNECTOR (4-PIN)	
					(EACH INCLUDES)	
		2	**264-7031**	1	SEAL-CONNECTOR	
	14	1	**308-1395**	3	PLATE	
	15	1	**308-5806**	1	COVER AS	
	16	1	**308-6915**	1	HARNESS AS-FRONT	
		1	**8T-8730**	18	SOCKET-CONNECTOR (16-GA TO 18-GA)	
		1	**8T-8737**	11	PLUG-SEAL	
		1	**9W-0844**	15	SOCKET-CONNECTOR (14-GA TO 16-GA)	
E		1	**114-8843**		SLEEVE-PLASTIC (60-CM)	
E		1	**119-3662**		TUBE-HEAT SHRINK (10.85-MM DIA) (33-CM)	
E		1	**125-7874**		TUBE-HEAT SHRINK (5.72-MM DIA) (50-CM)	
		1	**134-2540**	2	RESISTOR AS-CONNECTION (3-PIN)	
		1	**155-2255**	1	KIT-CONNECTING PLUG (12-PIN)	
		1	**155-2257**	1	KIT-CONNECTING PLUG (12-PIN)	
		1	**155-2265**	1	KIT-CONNECTING PLUG (8-PIN)	
		1	**155-2274**	1	KIT-CONNECTING PLUG (6-PIN)	
		1	**174-0503**	2	KIT-CONNECTING PLUG (3-PIN)	
					(EACH KIT INCLUDES PLUG AS, WEDGE, & INTERFACE SEAL)	
	17	3	**321-1450**	1	PLATE	
	18	1	**321-1451**	1	HARNESS AS-WIRING (RECEIVER)	
		1	**8T-8729**	10	PIN-CONNECTOR (16-GA TO 18-GA)	
		1	**8T-8737**	3	PLUG-SEAL	
		1	**9W-0852**	11	PIN-CONNECTOR (14-GA TO 16-GA)	
		1	**166-5229**	1	KIT-RECEPTACLE (12-PIN)	
					(INCLUDES RECEPTACLE AS & WEDGE)	
		1	**184-7037**	1	RECEPTACLE AS-CONNECTOR (12-PIN)	
		1	**228-3323**	3	CLIP-SPRING	
	19	1	**322-1969**	1	BRACKET AS	
	20	2	**335-5321**	1	SENSOR GP-PRESSURE (HYDRAULIC OIL)	
	21	3	**349-2479**	1	PLATE	
	22	2	**368-4255**	1	HARNESS AS-PLATFORM	
		2	**102-8802**	1	KIT-RECEPTACLE (2-PIN)	
		2	**102-8803**	2	KIT-RECEPTACLE (3-PIN)	
		2	**102-8804**	2	KIT-RECEPTACLE (4-PIN)	
		2	**102-8801**	2	KIT-RECEPTACLE (12-PIN)	
		2	**166-5229**	1	KIT-RECEPTACLE (12-PIN)	
		2	**190-7615**	1	KIT-RECEPTACLE (12-PIN)	
		2	**197-7565**	1	KIT-RECEPTACLE (4-PIN)	
					(EACH KIT INCLUDES RECEPTACLE AS & WEDGE)	
		2	**110-6845**	1	PLUG AS-CONNECTOR (40-PIN)	
		2	**110-6844**	1	SEAL	
		2	**9X-0196**	2	TERMINAL AS	
		2	**8C-6354**	1	CAP-RECEPTACLE (ET CONNECTOR)	
		2	**8N-1545**	1	SOCKET-CONNECTOR (8-GA)	
		2	**8T-8736**	1	RECEPTACLE-CONNECTOR (9-PIN)	
		2	**8T-8737**	174	PLUG-SEAL	
		2	**9W-0844**	63	SOCKET-CONNECTOR (14-GA TO 16-GA)	
		2	**9W-0852**	20	PIN-CONNECTOR (14-GA TO 16-GA)	
		2	**9W-1951**	1	RECEPTACLE-CONNECTOR (9-PIN)	
		2	**9X-3401**	127	PIN-CONNECTOR (16-GA TO 18-GA)	
		2	**9X-3402**	162	SOCKET-CONNECTOR (16-GA TO 18-GA)	
		2	**100-5041**	4	TERMINAL-RECEPTACLE (18-GA TO 20-GA)	
E		2	**119-3662**		TUBE-HEAT SHRINK (10.85-MM DIA) (33-CM)	
E		2	**125-7874**		TUBE-HEAT SHRINK (5.72-MM DIA) (265-CM)	

368-4249 **WIRING GP-GRADE CONTROL (*contd.*)** **i05335287**

NOTE	REF NO	GRAPHIC REF	PART NUMBER	QTY	PART NAME 1 2 3 4 5 6 (PRODUCT LEVEL)	SEE PAGE
E		2	**125-7875**		TUBE-HEAT SHRINK (7.44-MM DIA) (50-CM)	
		2	**127-5485**	1	PLUG AS-CONNECTOR (1-PIN)	
		2	**2L-8069**	6	TERMINAL-RING (2-GA TO 10-GA, 3/8-IN SCREW)	
		2	**2L-8079**	2	TERMINAL-RING (14-GA TO 16-GA, 3/8-IN SCREW)	
		2	**134-2540**	2	RESISTOR AS-CONNECTION (3-PIN)	
		2	**245-7434**	3	KIT-CONNECTING PLUG (10-PIN)	
		2	**155-2255**	6	KIT-CONNECTING PLUG (12-PIN)	
		2	**155-2257**	1	KIT-CONNECTING PLUG (12-PIN)	
		2	**155-2260**	5	KIT-CONNECTING PLUG (3-PIN)	
		2	**155-2270**	5	KIT-CONNECTING PLUG (2-PIN)	
		2	**155-2271**	3	KIT-CONNECTING PLUG (4-PIN)	
		2	**155-2274**	3	KIT-CONNECTING PLUG (6-PIN)	
					(EACH KIT INCLUDES PLUG AS, WEDGE, & INTERFACE SEAL)	
		2	**160-7689**	2	PLUG AS-CONNECTOR (70-PIN)	
					(EACH INCLUDES)	
		2	**159-9322**	1	SEAL-O-RING	
		2	**185-1861**	26	SEAL-WIRE	
		2	**202-5397**	4	PLUG	
		2	**204-1297**	26	TERMINAL AS-BLADE (18-GA TO 20-GA)	
					(EACH INCLUDES)	
		2	**235-4123**	1	TERMINAL (18-GA TO 20-GA)	
		2	**214-4208**	2	RECEPTACLE AS-CONNECTOR (70-PIN)	
		2	**274-3774**	3	CAP-CONNECTOR	
		2	**274-3775**	1	CAP-CONNECTOR	
		2	**274-3777**	1	CAP-CONNECTOR	
E		2	**370-1739**		TUBE (36-CM)	
M	23	3	**107-3786**	2	BOLT (M4X0.7X12-MM)	
	24	2,3	**130-5300**	3	CLIP	
M	25	1	**131-3539**	3	SCREW-FLAT HEAD (M8X1.25X30-MM)	
	26	2,3	**132-5789**	2	CLIP	
	29	2	**1J-9671**	1	SEAL-O-RING	
M	30	3	**3E-8020**	4	SCREW-TRUSS HEAD (M6X1X25-MM)	
	31	2,3	**4P-7581**	2	CLIP	
	32	1	**4P-8134**	2	CLIP	
M	33	1	**5C-8312**	8	NUT (M4X0.7-THD)	
	34	2	**5P-1075**	1	WASHER-HARD (10.2X22.5X3-MM THK)	
	35	1	**5P-7648**	3	GROMMET	
	36	1	**7M-3361**	1	GROMMET	
M	37	3	**7X-2562**	2	BOLT (M20X2.5X45-MM)	
	38	1	**8C-9660**	16	WASHER (4.6X7.9X0.8-MM THK)	
	39	3	**8T-4121**	2	WASHER-HARD (11X21X2.5-MM THK)	
M	40	3	**8T-4136**	3	BOLT (M10X1.5X25-MM)	
M	41	2	**8T-4137**	1	BOLT (M10X1.5X20-MM)	
M	42	2	**8T-4171**	1	BOLT (M6X1X12-MM)	
M	43	3	**8T-4186**	1	BOLT (M10X1.5X40-MM)	
	44	3	**8T-5439**	2	WASHER-HARD (21.5X45X6-MM THK)	
M	45	1	**8T-9405**	8	BOLT-SOCKET HEAD (M4X0.7X16-MM)	
	46	2	**9X-8267**	1	WASHER (6.6X12X2-MM THK)	
	47	3	**368-8599**	1	HARNESS AS-WIRING	
		3	**102-8805**	1	KIT-RECEPTACLE (6-PIN)	
					(INCLUDES RECEPTACLE AS & WEDGE)	
		3	**8T-8737**	4	PLUG-SEAL	
		3	**9W-0844**	12	SOCKET-CONNECTOR (14-GA TO 16-GA)	
		3	**9W-0852**	4	PIN-CONNECTOR (14-GA TO 16-GA)	
		3	**9X-3402**	4	SOCKET-CONNECTOR (16-GA TO 18-GA)	
		3	**155-2274**	1	KIT-CONNECTING PLUG (6-PIN)	
					(EACH PLUG KIT INCLUDES PLUG AS, WEDGE, & INTERFACE SEAL)	
	48	3	**226-9169**	1	MODULE AS-POWER SUPPLY (ELECTRICAL ENCLOSURE)	
	49	3	**156-6175**	2	CLIP	

368-4249 **WIRING GP-GRADE CONTROL (*contd.*)** **i05335287**

NOTE	REF NO	GRAPHIC REF	PART NUMBER	QTY	PART NAME 1 2 3 4 5 6 (PRODUCT LEVEL)	SEE PAGE
	50	3	**9X-8256**	4	WASHER (6.6X12X2-MM THK)	
M	51	3	**8T-4138**	4	BOLT (M6X1X20-MM)	

E - ORDER BY THE CENTIMETER
M - METRIC PART

368-4249 **WIRING GP-GRADE CONTROL (*contd.*)** **i05335287**

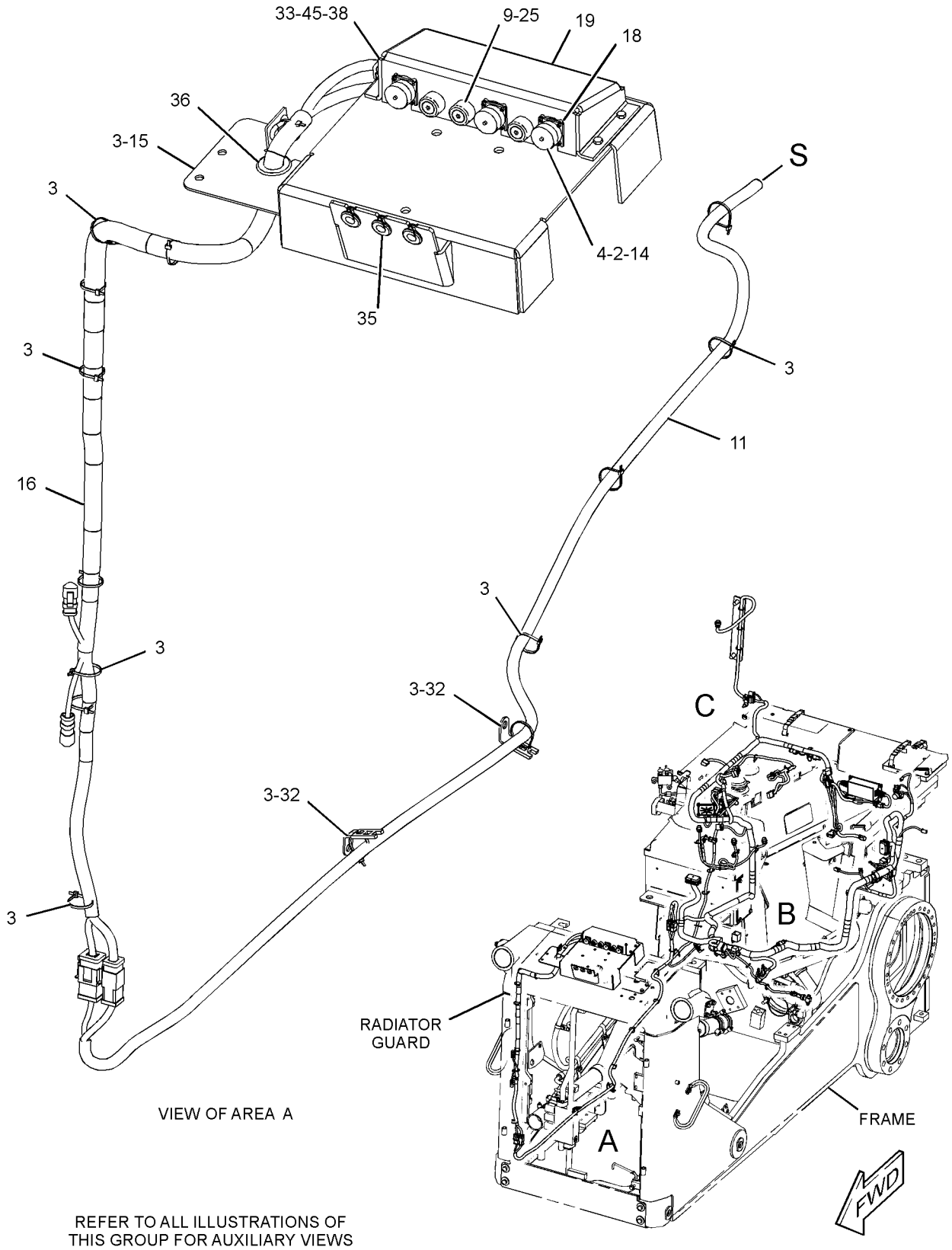

GRAPHIC #1 g03384108

368-4249 **WIRING GP-GRADE CONTROL (*contd.*)** **i05335287**

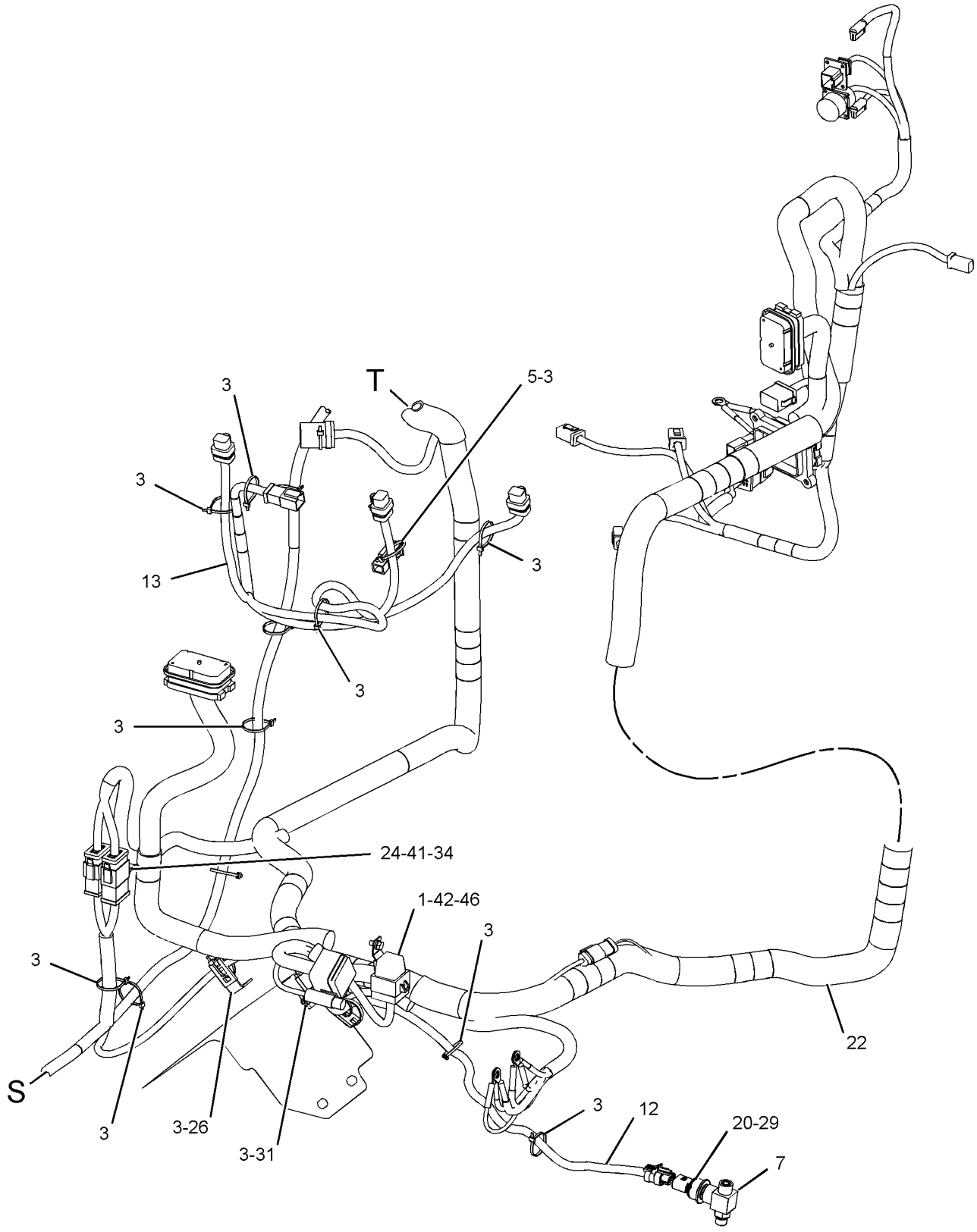

VIEW OF AREA B

GRAPHIC #2 g03343133

368-4249 **WIRING GP-GRADE CONTROL (*contd.*)** **i05335287**

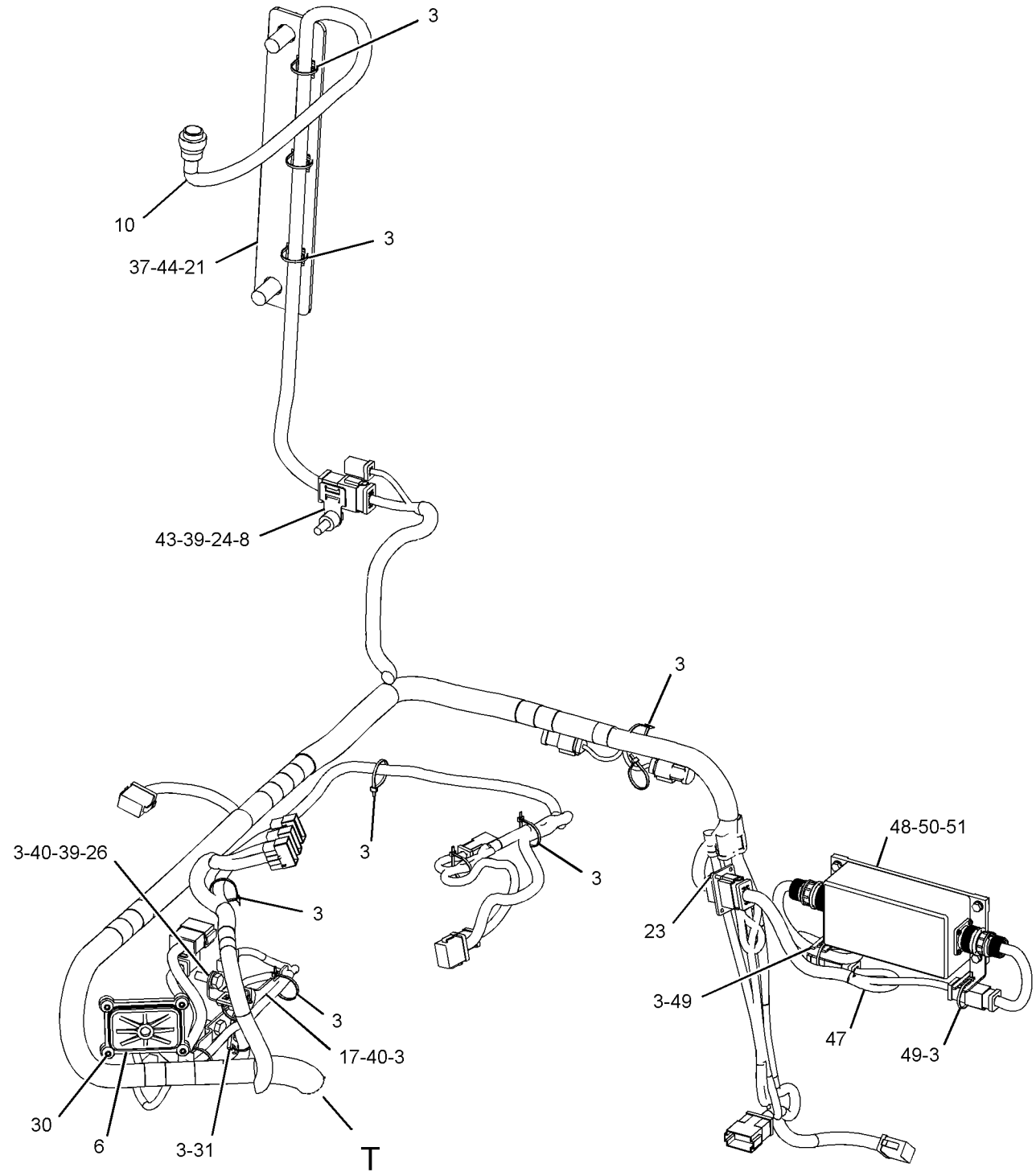

VIEW OF AREA C

GRAPHIC #3 **<END>** g03384109

285-9392 WIRING GP-MONITOR

S/N: SMC1-UP; GCT1-UP
PART OF 295-0080 GRADE CONTROL AR
AN ATTACHMENT

SMCS-1408 **i04030315**

NOTE	REF NO	GRAPHIC REF	PART NUMBER	QTY	PART NAME 1 2 3 4 5 6 (PRODUCT LEVEL)	SEE PAGE
	1	1	**7K-1181**	5	STRAP-CABLE	
	2	1	**167-8712**	1	ALARM	
	3	1	**300-6142**	1	BRACKET	
Y	4	1	*303-2390*	2	MOUNTING GP-MONITOR	1127
	5	1	**304-5172**	1	HARNESS AS-MONITOR	
		1	**251-7591**	1	WIRE AS	
		1	**9X-6772**	2	STRAP-CABLE	
		1	**126-1774**	1	COVER-CONNECTOR	
		1	**160-7689**	1	PLUG AS-CONNECTOR (70-PIN)	
		1	**248-5358**	1	PLUG AS-CONNECTOR (39-PIN)	
		1	**155-2260**	1	KIT-CONNECTING PLUG (3-PIN)	
					(INCLUDES PLUG AS, WEDGE, & INTERFACE SEAL)	
	6	1	**304-5171**	1	HARNESS AS-MONITOR	
		1	**237-0336**	1	COVER (CONNECTOR)	
		1	**147-1444**	1	PLUG AS-CONNECTOR (70-PIN)	
		1	**160-7689**	1	PLUG AS-CONNECTOR (70-PIN)	
		1	**102-8803**	1	KIT-RECEPTACLE (3-PIN)	
					(INCLUDES RECEPTACLE AS & WEDGE)	
		1	**155-2260**	1	KIT-CONNECTING PLUG (3-PIN)	
					(INCLUDES PLUG AS, WEDGE, & INTERFACE SEAL)	

Y - SEPARATE ILLUSTRATION

285-9392 **WIRING GP-MONITOR (*contd.*)** **i04030315**

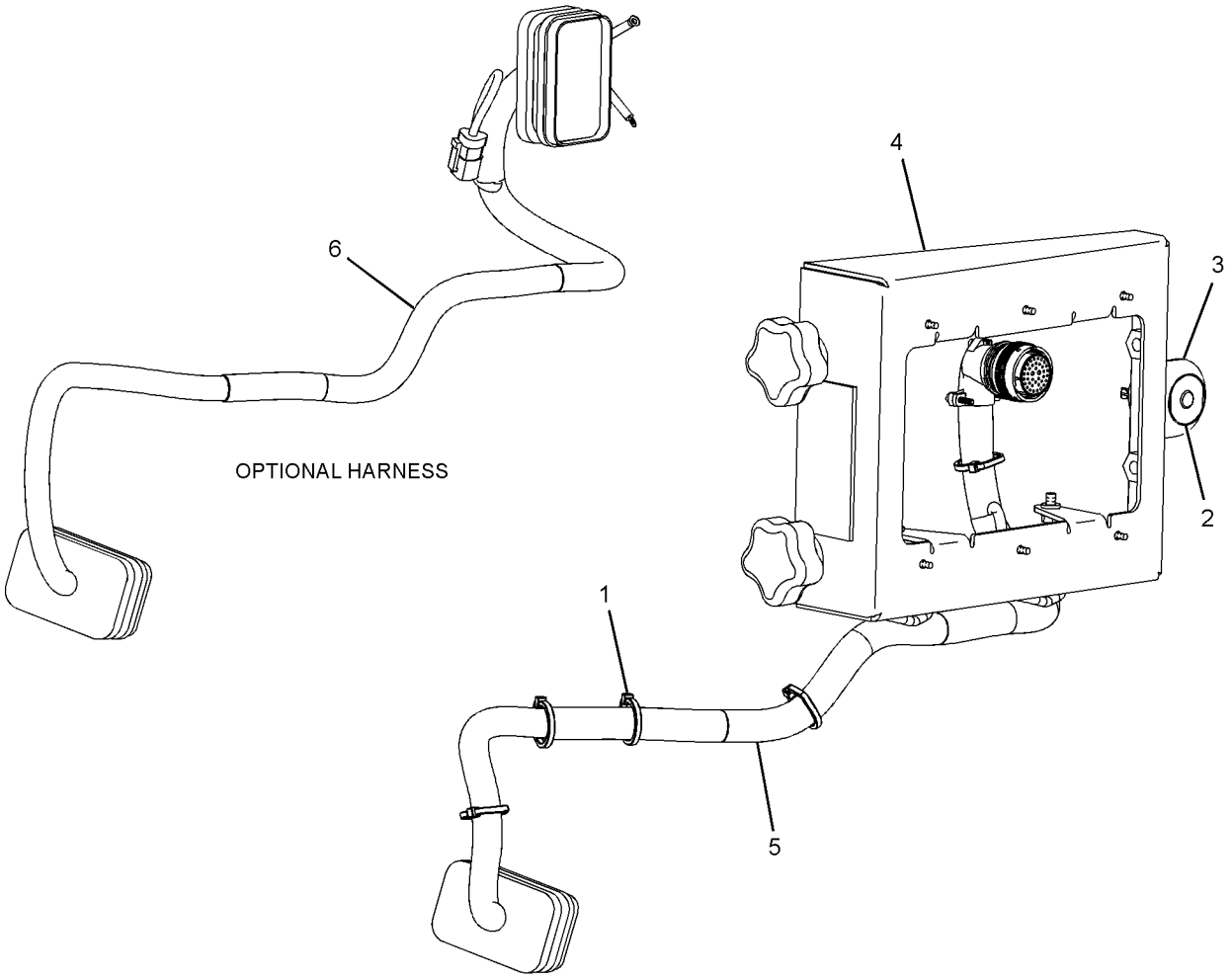

GRAPHIC #1 **<END>** g01362908

279-9547 WIRING GP-PLATFORM

S/N: SMC1-471; GCT1-884

PART OF 269-2044 CHASSIS AR

SMCS-1408 **i04046778**

NOTE	REF NO	GRAPHIC REF	PART NUMBER	QTY	PART NAME 1 2 3 4 5 6 (PRODUCT LEVEL)	SEE PAGE
Y	1	1	**3E-6328**	1	ALARM GP (24-VOLT) (FAULT INDICATOR)	228
	2	2	**6I-1418**	4	SPACER (8.2X12.7X28.7-MM THK)	
	3	1,2	**7K-1181**	33	STRAP-CABLE	
	4	1	**7N-1996**	1	LAMP (24-VOLT)	
	5	2	**8T-9655**	8	MOUNT-ISOLATION	
	6	1	**117-2311**	2	SOCKET-AUXILIARY POWER (12-VOLT)	
	7	1	**149-9818**	1	PLATE	
Y	8	1	**158-6632**	1	SWITCH GP-PUSH BUTTON (HORN)	395
	9	1	**170-3461**	1	LAMP AS-INDICATOR (ACTION LIGHT)	
		1	**102-8802**	1	KIT-RECEPTACLE (2-PIN)	
					(INCLUDES RECEPTACLE AS & WEDGE)	
		1	**3T-0304**	1	BASE AS-INDICATOR LIGHT	
		1	**6V-8374**	2	SCREW-MACHINE (6-32X0.25-IN)	
		1	**186-3735**	2	PIN-CONNECTOR (16-GA TO 18-GA)	
E		1	**9X-1813**		SLEEVE (8-CM)	
D		1	**6V-2689**		TUBE-HEAT SHRINK (6.35-MM DIA) (0.1-M)	
D		1	**5P-5623**		WIRE-ELECTRICAL (16-GA, BLACK) (0.3-M)	
	10	2	**172-4860**	1	WIRE AS	
	11	1	**173-1566**	1	CAP AS	
		1	**8C-6354**	1	CAP-RECEPTACLE (ET CONNECTOR)	
		1	**2L-8077**	1	TERMINAL-RING (14-GA TO 16-GA, 1/4-IN SCREW)	
		1	**155-2271**	1	KIT-CONNECTING PLUG (4-PIN)	
					(INCLUDES PLUG AS, WEDGE, & INTERFACE SEAL)	
E		1	**125-7875**		TUBE-HEAT SHRINK (7.44-MM DIA) (6-CM)	
D		1	**5P-5677**		WIRE (18-GA, BLACK) (0.6-M)	
	12	1	**196-9852**	1	PLATE AS	
	13	1	**202-4327**	1	PULLER-FUSE	
	14	1	**204-8000**	1	MOUNTING-CABLE TIE	
	15	2	**209-0381**	1	CONVERTER-POWER (24-VOLT TO 12-VOLT)	
	16	1	**222-7877**	1	SWITCH AS-ROCKER (24-VOLT) (THROTTLE)	
	17	1	**222-7883**	1	SWITCH AS-ROCKER (24-VOLT) (HYDRAULIC LOCKOUT)	
	18	1	**224-9222**	1	BRACKET	
	19	1	**226-9663**	1	HARNESS AS-CHASSIS	
		1	**9X-0196**	2	TERMINAL AS	
		1	**9W-1951**	1	RECEPTACLE-CONNECTOR (9-PIN)	
		1	**190-7613**	1	RECEPTACLE AS-CONNECTOR (12-PIN)	
		1	**214-4208**	1	RECEPTACLE AS-CONNECTOR (70-PIN)	
		1	**102-8801**	2	KIT-RECEPTACLE (12-PIN)	
		1	**102-8802**	4	KIT-RECEPTACLE (2-PIN)	
		1	**102-8803**	1	KIT-RECEPTACLE (3-PIN)	
		1	**102-8804**	1	KIT-RECEPTACLE (4-PIN)	
		1	**166-5229**	1	KIT-RECEPTACLE (12-PIN)	
		1	**197-7565**	2	KIT-RECEPTACLE (4-PIN)	
		1	**265-2106**	1	KIT-RECEPTACLE (4-PIN)	
					(EACH RECEPTACLE KIT INCLUDES RECEPTACLE AS & WEDGE)	
		1	**110-6845**	1	PLUG AS-CONNECTOR (40-PIN)	
		1	**127-5485**	1	PLUG AS-CONNECTOR (1-PIN)	
		1	**160-7689**	2	PLUG AS-CONNECTOR (70-PIN)	
		1	**155-2255**	3	KIT-CONNECTING PLUG (12-PIN)	
		1	**155-2257**	1	KIT-CONNECTING PLUG (12-PIN)	
		1	**155-2260**	1	KIT-CONNECTING PLUG (3-PIN)	
		1	**155-2270**	5	KIT-CONNECTING PLUG (2-PIN)	
		1	**155-2271**	5	KIT-CONNECTING PLUG (4-PIN)	
		1	**155-2274**	1	KIT-CONNECTING PLUG (6-PIN)	
					(EACH PLUG KIT INCLUDES PLUG AS, WEDGE, & INTERFACE SEAL)	

279-9547 **WIRING GP-PLATFORM (*contd.*)** **i04046778**

NOTE	REF NO	GRAPHIC REF	PART NUMBER	QTY	PART NAME 1 2 3 4 5 6 (PRODUCT LEVEL)	SEE PAGE
		1	**177-9656**	1	KIT-CONNECTING PLUG (4-PIN)	
					(INCLUDES PLUG AS & WEDGE)	
	20	1	**226-9665**	1	HARNESS AS-CONSOLE	
		1	**102-8802**	1	KIT-RECEPTACLE (2-PIN)	
		1	**102-8803**	1	KIT-RECEPTACLE (3-PIN)	
		1	**102-8804**	2	KIT-RECEPTACLE (4-PIN)	
					(EACH RECEPTACLE KIT INCLUDES RECEPTACLE AS & WEDGE)	
		1	**155-2255**	1	KIT-CONNECTING PLUG (12-PIN)	
		1	**155-2257**	1	KIT-CONNECTING PLUG (12-PIN)	
		1	**155-2260**	1	KIT-CONNECTING PLUG (3-PIN)	
		1	**155-2270**	3	KIT-CONNECTING PLUG (2-PIN)	
		1	**155-2271**	1	KIT-CONNECTING PLUG (4-PIN)	
					(EACH PLUG KIT INCLUDES PLUG AS, WEDGE, & INTERFACE SEAL)	
Y	21	2	*226-9674*	1	PANEL GP-FUSE	347
	22	2	**239-3355**	1	GASKET	
	23	2	**239-7392**	1	PLATE AS	
	24	1	**239-8107**	1	FUSE (175-AMPERE) (ALTERNATOR)	
	25	1	**246-4311**	1	GUARD (SWITCH)	
	26	1	**259-2093**	1	LENS (RED)	
	27	1	**261-7990**	1	GROMMET	
R	28	2	**304-5687**	1	CONTROL GP-UNPROGRAMMED (MACHINE)	
	29	2	**281-3179**	1	BRACKET	
	30	1	**283-2382**	1	SWITCH AS-ROCKER (MULTIVELOCITY PROGRAM)	
M	31	2	**107-3786**	12	BOLT (M4X0.7X12-MM)	
	32	1	**130-5300**	2	CLIP	
	33	1	**141-4976**	4	SCREW-WASHER HEAD (4-40X0.5-IN)	
M	34	1	**150-4086**	2	SCREW (M4X0.7X16-MM)	
	35	1,2	**204-2281**	31	STRAP-CABLE	
	36	1	**4B-4863**	2	WASHER (4.7X11X1.2-MM THK)	
	37	2	**4P-8134**	1	CLIP	
	38	1	**5F-9757**	2	GROMMET	
	39	2	**5P-1075**	2	WASHER-HARD (10.2X22.5X3-MM THK)	
M	40	2	**7X-0818**	4	BOLT (M8X1.25X45-MM)	
	41	2	**8T-0328**	6	WASHER-HARD (5.5X10X1-MM THK)	
M	42	2	**8T-0389**	2	LOCKNUT (M10X1.5-THD)	
M	43	1	**8T-2659**	2	LOCKNUT (M4X0.7-THD)	
	44	1,2	**8T-4121**	14	WASHER-HARD (11X21X2.5-MM THK)	
M	45	1,2	**8T-4137**	8	BOLT (M10X1.5X20-MM)	
M	46	1,2	**8T-4138**	8	BOLT (M6X1X20-MM)	
M	47	2	**8T-4191**	2	BOLT (M10X1.5X16-MM)	
M	48	1	**8T-4199**	1	BOLT (M8X1.25X12-MM)	
	49	1	**8T-4224**	1	WASHER-HARD (8.8X16X2-MM THK)	
M	50	2	**8T-6685**	4	BOLT (M10X1.5X110-MM)	
	51	2	**8T-7934**	1	WASHER-HARD (11X21X5-MM THK)	
	52	2	**9N-0869**	4	WASHER-HARD (8.8X25.5X2-MM THK)	
	53	1,2	**9X-8256**	8	WASHER (6.6X12X2-MM THK)	

D - ORDER BY THE METER
E - ORDER BY THE CENTIMETER
M - METRIC PART
R - REMFG PART MAY BE AVAILABLE
Y - SEPARATE ILLUSTRATION

279-9547 **WIRING GP-PLATFORM (*contd.*)** **i04046778**

REFER TO ALL ILLUSTRATIONS OF THIS GROUP FOR AUXILIARY VIEWS

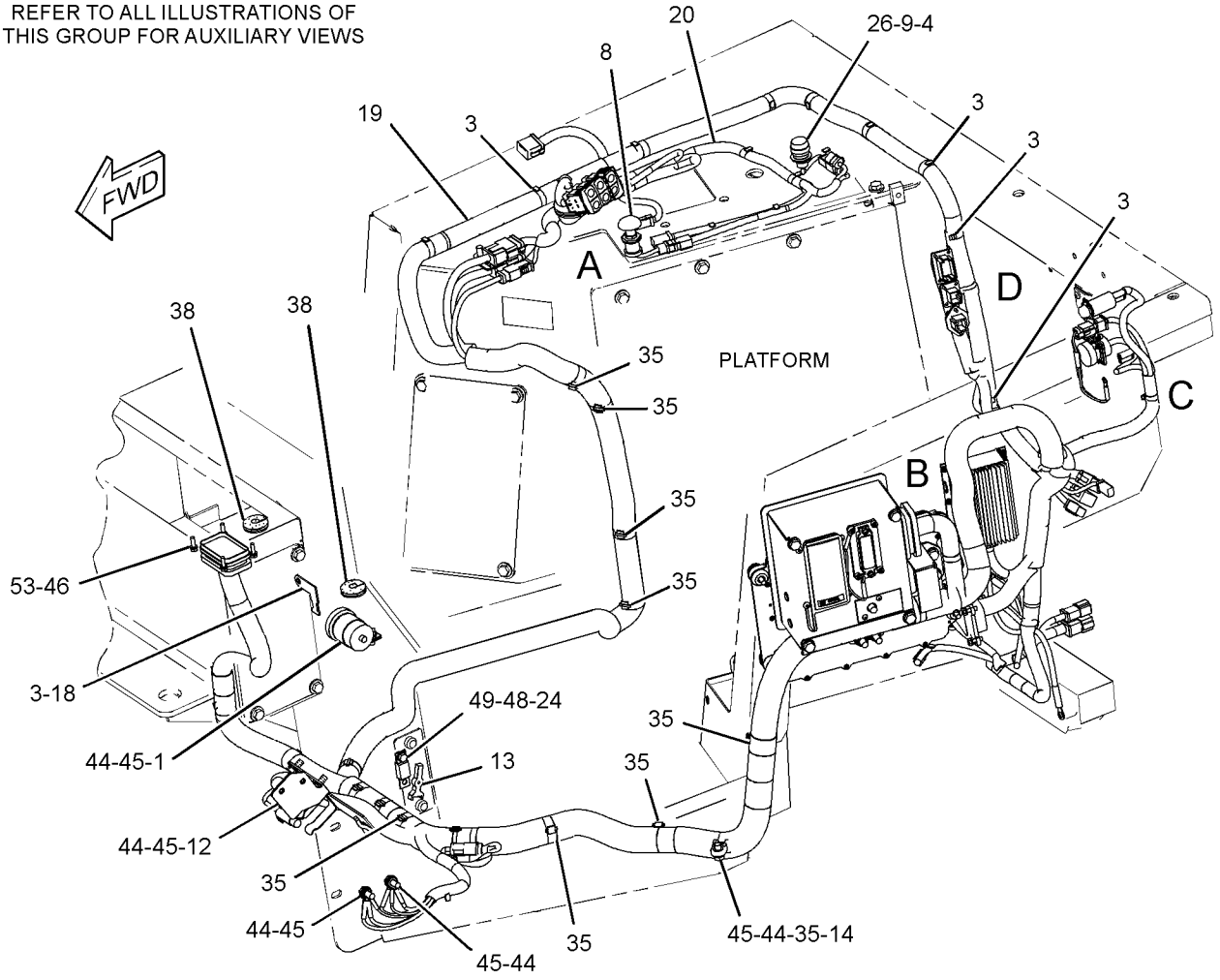

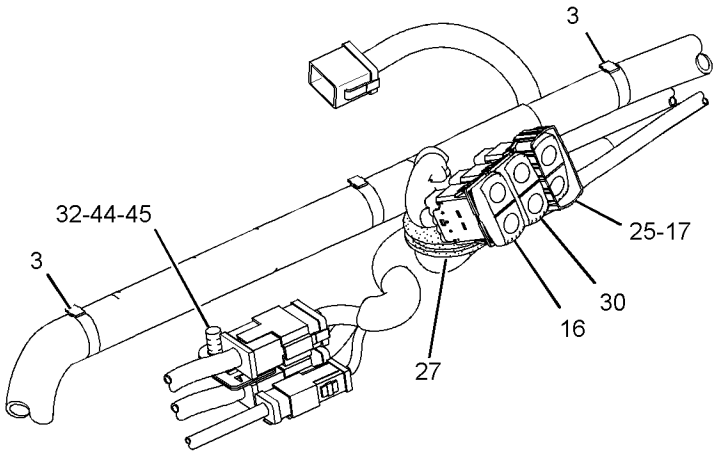

VIEW OF AREA A

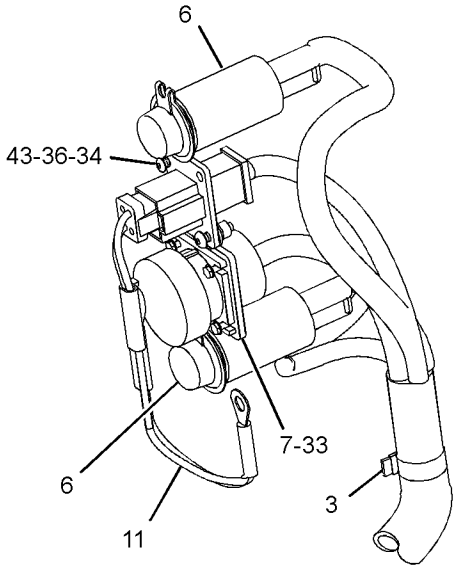

VIEW OF AREA B

GRAPHIC #1

g01418812

279-9547 **WIRING GP-PLATFORM (*contd.*)** **i04046778**

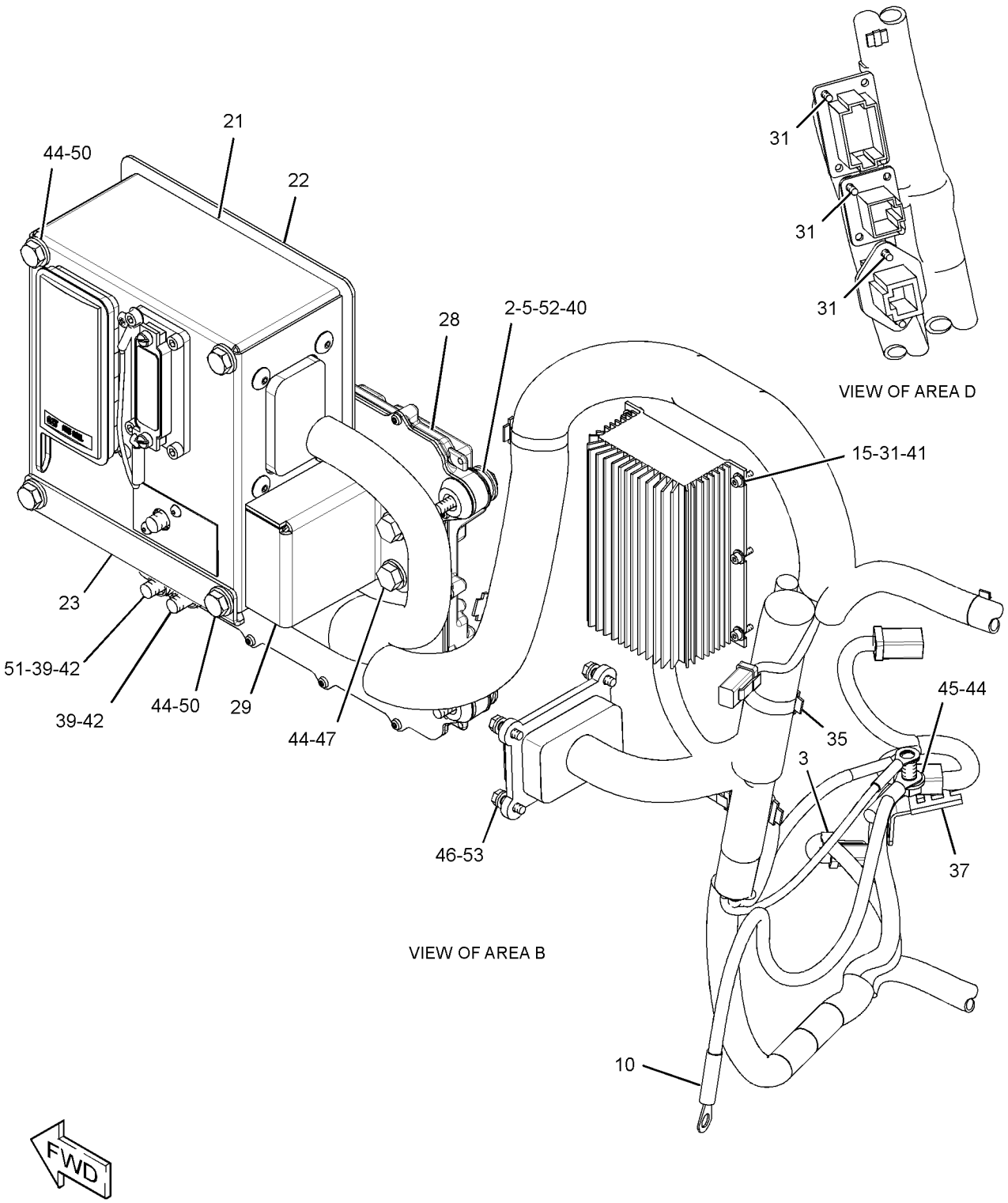

GRAPHIC #2 **<END>** g01418814

279-9547 WIRING GP-PLATFORM

S/N: SMC472-1499; GCT885-1999

PART OF 269-2044 CHASSIS AR

SMCS-1408 **i04647453**

NOTE	REF NO	GRAPHIC REF	PART NUMBER	QTY	PART NAME 1 2 3 4 5 6 (PRODUCT LEVEL)	SEE PAGE
Y	1	1	**3E-6328**	1	ALARM GP (24-VOLT) (FAULT INDICATOR)	228
	2	2	**6I-1418**	4	SPACER (8.2X12.7X28.7-MM THK)	
	3	1,2	**7K-1181**	33	STRAP-CABLE	
	4	1	**7N-1996**	1	LAMP (24-VOLT)	
	5	2	**8T-9655**	8	MOUNT-ISOLATION	
	6	1	**117-2311**	2	SOCKET-AUXILIARY POWER (12-VOLT)	
	7	1	**149-9818**	1	PLATE	
Y	8	1	**158-6632**	1	SWITCH GP-PUSH BUTTON (HORN)	395
	9	1	**170-3461**	1	LAMP AS-INDICATOR (ACTION LIGHT)	
		1	**102-8802**	1	KIT-RECEPTACLE (2-PIN)	
					(INCLUDES RECEPTACLE AS & WEDGE)	
		1	**3T-0304**	1	BASE AS-INDICATOR LIGHT	
		1	**6V-8374**	2	SCREW-MACHINE (6-32X0.25-IN)	
		1	**8T-8729**	2	PIN-CONNECTOR (16-GA TO 18-GA)	
E		1	**9X-1813**		SLEEVE (8-CM)	
D		1	**6V-2689**		TUBE-HEAT SHRINK (6.35-MM DIA) (0.1-M)	
D		1	**5P-5623**		WIRE-ELECTRICAL (16-GA, BLACK) (0.3-M)	
	10	2	**172-4860**	1	WIRE AS	
	11	1	**173-1566**	1	CAP AS	
		1	**8T-8730**	1	SOCKET-CONNECTOR (16-GA TO 18-GA)	
		1	**8C-6354**	1	CAP-RECEPTACLE (ET CONNECTOR)	
		1	**2L-8077**	1	TERMINAL-RING (14-GA TO 16-GA, 1/4-IN SCREW)	
		1	**155-2271**	1	KIT-CONNECTING PLUG (4-PIN)	
					(INCLUDES PLUG AS, WEDGE, & INTERFACE SEAL)	
E		1	**125-7875**		TUBE-HEAT SHRINK (7.44-MM DIA) (3-CM)	
D		1	**5P-5677**		WIRE (18-GA, BLACK) (0.6-M)	
	12	1	**196-9852**	1	PLATE AS	
M		1	**6V-9632**	2	NUT-WELD (M6X1-THD)	
	13	1	**202-4327**	1	PULLER-FUSE	
	14	1	**204-8000**	1	MOUNTING-CABLE TIE	
C	15	2	**340-7161**	1	CONVERTER-POWER (24-VOLT TO 12-VOLT)	
	16	1	**222-7877**	1	SWITCH AS-ROCKER (24-VOLT) (THROTTLE)	
	17	1	**222-7883**	1	SWITCH AS-ROCKER (24-VOLT) (HYDRAULIC LOCKOUT)	
	18	1	**224-9222**	1	BRACKET	
	19	1	**226-9663**	1	HARNESS AS-CHASSIS	
		1	**9X-0196**	2	TERMINAL AS	
		1	**8N-1545**	1	SOCKET-CONNECTOR (8-GA)	
		1	**8T-8730**	2	SOCKET-CONNECTOR (16-GA TO 18-GA)	
		1	**8T-8737**	124	PLUG-SEAL	
		1	**9W-0844**	56	SOCKET-CONNECTOR (14-GA TO 16-GA)	
		1	**9W-0852**	6	PIN-CONNECTOR (14-GA TO 16-GA)	
		1	**9W-1951**	1	RECEPTACLE-CONNECTOR (9-PIN)	
		1	**9X-3401**	115	PIN-CONNECTOR (16-GA TO 18-GA)	
		1	**9X-3402**	113	SOCKET-CONNECTOR (16-GA TO 18-GA)	
E		1	**114-8843**		SLEEVE-PLASTIC (20-CM)	
		1	**115-3519**	3	PIN-CONNECTOR (12-GA TO 14-GA)	
E		1	**119-3662**		TUBE-HEAT SHRINK (10.85-MM DIA) (33-CM)	
E		1	**125-7874**		TUBE-HEAT SHRINK (5.72-MM DIA) (155-CM)	
E		1	**125-7875**		TUBE-HEAT SHRINK (7.44-MM DIA) (30-CM)	
		1	**2L-8069**	6	TERMINAL-RING (2-GA TO 10-GA, 3/8-IN SCREW)	
		1	**2L-8079**	2	TERMINAL-RING (14-GA TO 16-GA, 3/8-IN SCREW)	
		1	**214-4208**	1	RECEPTACLE AS-CONNECTOR (70-PIN)	
		1	**274-3774**	3	CAP-CONNECTOR	
E		1	**370-1739**		TUBE (42-CM)	
		1	**102-8802**	1	KIT-RECEPTACLE (2-PIN)	
		1	**102-8803**	1	KIT-RECEPTACLE (3-PIN)	

279-9547 **WIRING GP-PLATFORM (*contd.*)** **i04647453**

NOTE	REF NO	GRAPHIC REF	PART NUMBER	QTY	PART NAME 1 2 3 4 5 6 (PRODUCT LEVEL)	SEE PAGE
		1	**102-8804**	1	KIT-RECEPTACLE (4-PIN)	
		1	**102-8801**	2	KIT-RECEPTACLE (12-PIN)	
		1	**166-5229**	1	KIT-RECEPTACLE (12-PIN)	
		1	**190-7615**	1	KIT-RECEPTACLE (12-PIN)	
		1	**197-7565**	2	KIT-RECEPTACLE (4-PIN)	
		1	**265-2106**	1	KIT-RECEPTACLE (4-PIN)	
					(EACH INCLUDES RECEPTACLE AS & WEDGE)	
		1	**155-2255**	3	KIT-CONNECTING PLUG (12-PIN)	
		1	**155-2257**	1	KIT-CONNECTING PLUG (12-PIN)	
		1	**155-2260**	1	KIT-CONNECTING PLUG (3-PIN)	
		1	**155-2270**	5	KIT-CONNECTING PLUG (2-PIN)	
		1	**155-2271**	5	KIT-CONNECTING PLUG (4-PIN)	
		1	**155-2274**	1	KIT-CONNECTING PLUG (6-PIN)	
					(EACH INCLUDES PLUG AS, WEDGE & INTERFACE SEAL)	
		1	**177-9656**	1	KIT-CONNECTING PLUG (4-PIN)	
					(EACH INCLUDES PLUG AS & WEDGE)	
		1	**110-6845**	1	PLUG AS-CONNECTOR (40-PIN)	
		1	**110-6844**	1	SEAL	
		1	**127-5485**	1	PLUG AS-CONNECTOR (1-PIN)	
		1	**160-7689**	2	PLUG AS-CONNECTOR (70-PIN)	
	20	1	**226-9665**	1	HARNESS AS-CONSOLE	
		1	**8T-8737**	4	PLUG-SEAL	
		1	**9X-3401**	2	PIN-CONNECTOR (16-GA TO 18-GA)	
		1	**9X-3402**	35	SOCKET-CONNECTOR (16-GA TO 18-GA)	
E		1	**125-7874**		TUBE-HEAT SHRINK (5.72-MM DIA) (30-CM)	
B		1	**1P-0810**		TAPE-ELECTRICAL	
		1	**185-1861**	24	SEAL-WIRE	
		1	**202-5397**	6	PLUG	
		1	**204-1297**	24	TERMINAL AS-BLADE (18-GA TO 20-GA)	
		1	**274-3774**	1	CAP-CONNECTOR	
		1	**274-3775**	1	CAP-CONNECTOR	
		1	**274-3776**	1	CAP-SEAL	
		1	**102-8804**	2	KIT-RECEPTACLE (4-PIN)	
					(EACH INCLUDES RECEPTACLE AS & WEDGE)	
		1	**155-2255**	1	KIT-CONNECTING PLUG (12-PIN)	
		1	**155-2257**	1	KIT-CONNECTING PLUG (12-PIN)	
		1	**155-2260**	1	KIT-CONNECTING PLUG (3-PIN)	
		1	**155-2270**	3	KIT-CONNECTING PLUG (2-PIN)	
		1	**155-2271**	1	KIT-CONNECTING PLUG (4-PIN)	
					(EACH PLUG KIT INCLUDES PLUG AS, WEDGE & INTERFACE SEAL)	
		1	**245-7434**	3	KIT-CONNECTING PLUG (10-PIN)	
					(EACH INCLUDES PLUG AS & WEDGE)	
Y	21	2	*226-9674*	1	PANEL GP-FUSE	347
	22	2	**239-3355**	1	GASKET	
	23	2	**239-7392**	1	PLATE AS	
	24	1	**239-8107**	1	FUSE (175-AMPERE) (ALTERNATOR)	
	25	1	**246-4311**	1	GUARD (SWITCH)	
	26	1	**259-2093**	1	LENS (RED)	
	27	1	**261-7990**	1	GROMMET	
R	28	2	**304-5687**	1	CONTROL GP-UNPROGRAMMED (MACHINE)	
	29	2	**281-3179**	1	BRACKET	
	30	1	**283-2382**	1	SWITCH AS-ROCKER (MULTIVELOCITY PROGRAM)	
CM	31	2	**107-3786**	6	BOLT (M4X0.7X12-MM)	
C	32	1	**130-5300**	4	CLIP	
	33	1	**141-4976**	4	SCREW-WASHER HEAD (4-40X0.5-IN)	
M	34	1	**150-4086**	2	SCREW (M4X0.7X16-MM)	
	35	1,2	**204-2281**	31	STRAP-CABLE	
	36	1	**4B-4863**	2	WASHER (4.7X11X1.2-MM THK)	
	37	2	**4P-8134**	1	CLIP	

279-9547 **WIRING GP-PLATFORM (*contd.*)** **i04647453**

NOTE	REF NO	GRAPHIC REF	PART NUMBER	QTY	PART NAME 1 2 3 4 5 6 (PRODUCT LEVEL)	SEE PAGE
	38	1	**5F-9757**	2	GROMMET	
	39	2	**5P-1075**	2	WASHER-HARD (10.2X22.5X3-MM THK)	
M	40	2	**7X-0818**	4	BOLT (M8X1.25X45-MM)	
C	41	2	**8T-0328**	2	WASHER-HARD (5.5X10X1-MM THK)	
M	42	2	**8T-0389**	2	LOCKNUT (M10X1.5-THD)	
M	43	1	**8T-2659**	2	LOCKNUT (M4X0.7-THD)	
	44	1,2	**8T-4121**	14	WASHER-HARD (11X21X2.5-MM THK)	
M	45	1,2	**8T-4137**	8	BOLT (M10X1.5X20-MM)	
M	46	1,2	**8T-4138**	8	BOLT (M6X1X20-MM)	
M	47	2	**8T-4191**	2	BOLT (M10X1.5X16-MM)	
M	48	1	**8T-4199**	1	BOLT (M8X1.25X12-MM)	
	49	1	**8T-4224**	1	WASHER-HARD (8.8X16X2-MM THK)	
M	50	2	**8T-6685**	4	BOLT (M10X1.5X110-MM)	
	51	2	**8T-7934**	1	WASHER-HARD (11X21X5-MM THK)	
	52	2	**9N-0869**	4	WASHER-HARD (8.8X25.5X2-MM THK)	
	53	1,2	**9X-8256**	8	WASHER (6.6X12X2-MM THK)	
CM	54	2	**8T-9405**	2	BOLT-SOCKET HEAD (M4X0.7X16-MM)	

B - USE AS REQUIRED
C - CHANGE FROM PREVIOUS TYPE
D - ORDER BY THE METER
E - ORDER BY THE CENTIMETER
M - METRIC PART
R - REMFG PART MAY BE AVAILABLE
Y - SEPARATE ILLUSTRATION

279-9547 **WIRING GP-PLATFORM (*contd.*)** **i04647453**

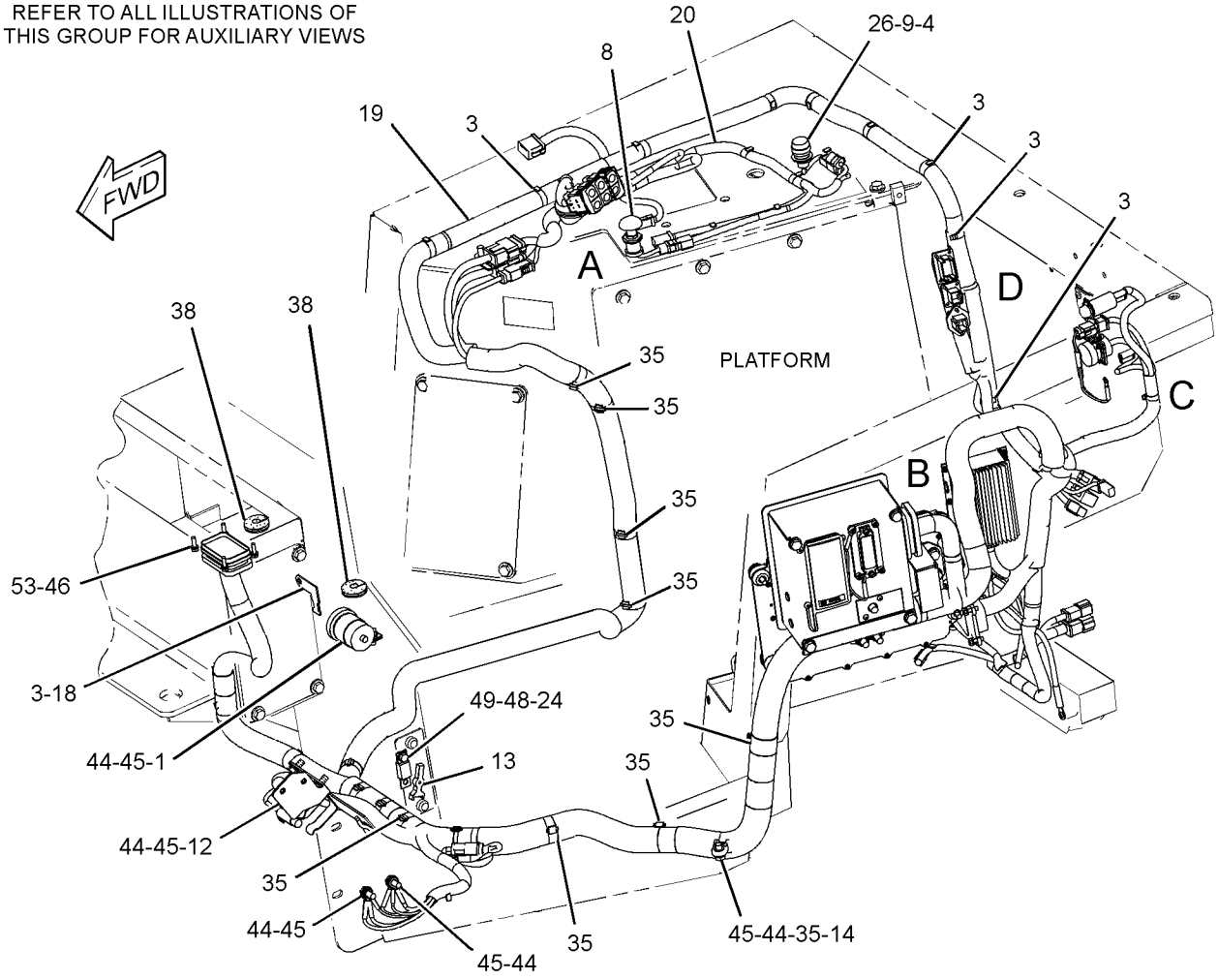

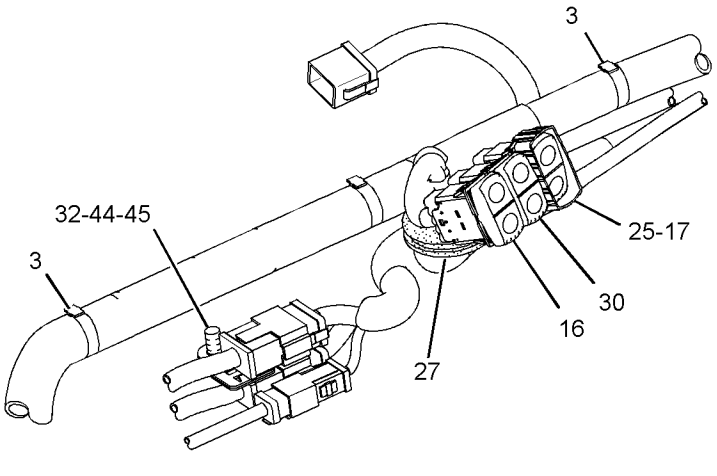

VIEW OF AREA A

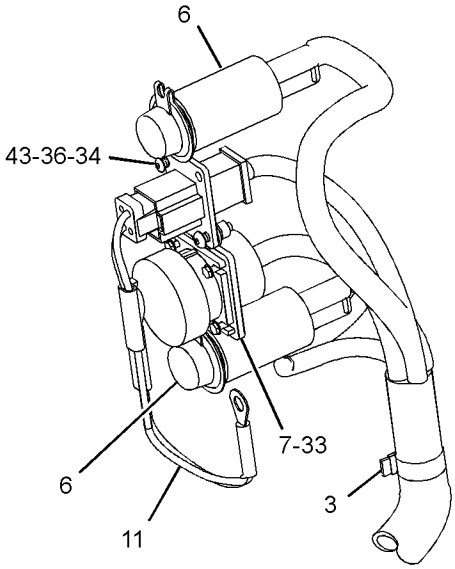

VIEW OF AREA C

GRAPHIC #1

g02856279

279-9547 **WIRING GP-PLATFORM (*contd.*)** **i04647453**

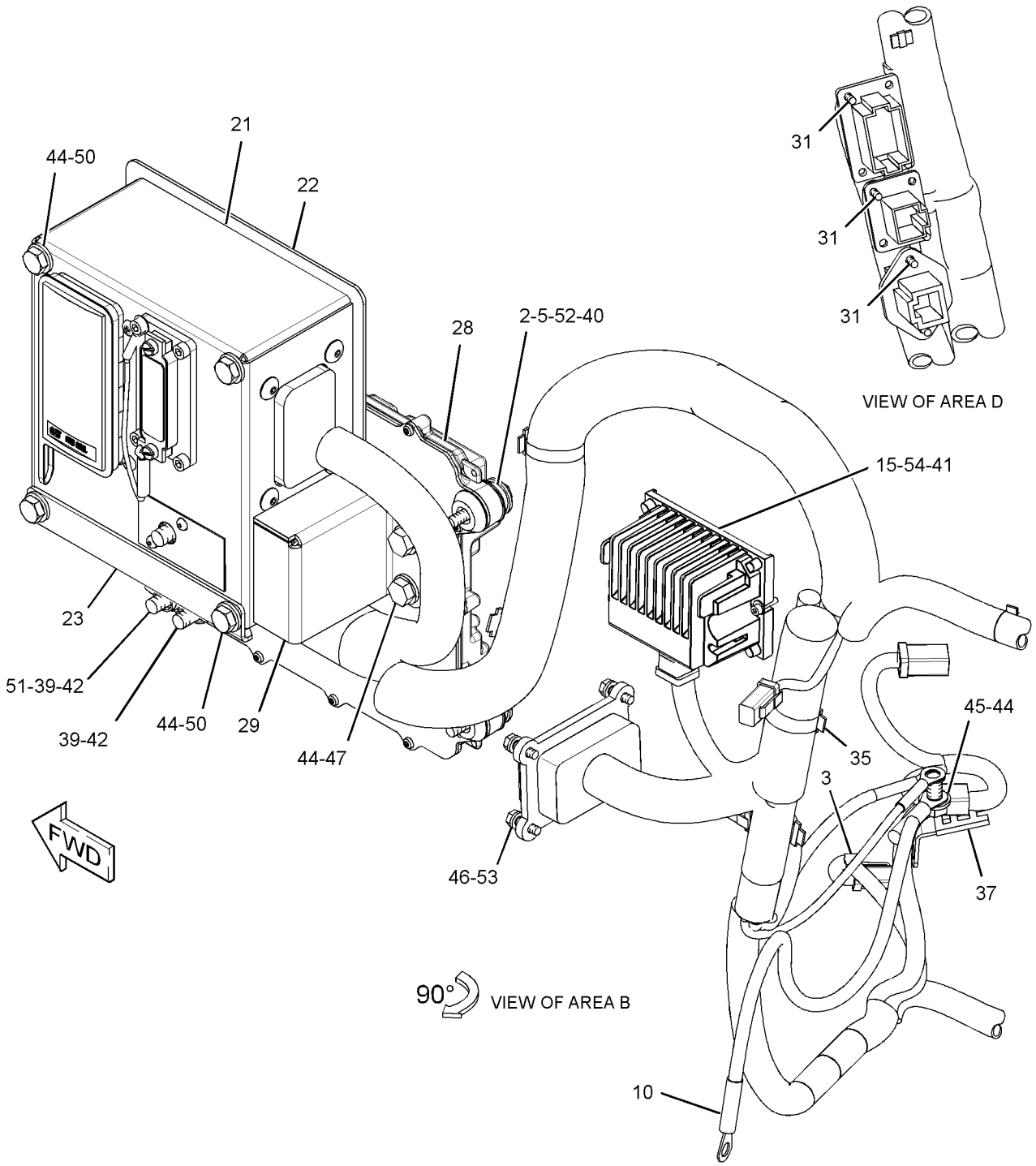

GRAPHIC #2 **<END>** g02856282

368-4242 WIRING GP-PLATFORM

S/N: SMC1500-UP; GCT2000-UP
PART OF 269-2044 CHASSIS AR

SMCS-1408 **i05322975**

NOTE	REF NO	GRAPHIC REF	PART NUMBER	QTY	PART NAME 1 2 3 4 5 6 (PRODUCT LEVEL)	SEE PAGE
Y	1	2	**3E-6328**	1	ALARM GP (24-VOLT) (FAULT)	228
	2	1	**6I-1418**	4	SPACER (8.2X12.7X28.7-MM THK)	
	3	1	**8T-9655**	8	MOUNT-ISOLATION	
	4	1	**117-2311**	2	SOCKET-AUXILIARY POWER (12-VOLT)	
	5	1	**149-9818**	1	PLATE	
Y	6	2	**158-6632**	1	SWITCH GP-PUSH BUTTON (HORN)	395
	7	1	**173-1566**	1	CAP AS	
		1	**8C-6354**	1	CAP-RECEPTACLE (ET CONNECTOR)	
		1	**8T-8730**	1	SOCKET-CONNECTOR (16-GA TO 18-GA)	
E		1	**125-7875**		TUBE-HEAT SHRINK (7.44-MM DIA) (3-CM)	
		1	**2L-8077**	1	TERMINAL-RING (14-GA TO 16-GA, 1/4-IN SCREW)	
		1	**155-2271**	1	KIT-CONNECTING PLUG (4-PIN)	
					(INCLUDES PLUG AS, WEDGE, & INTERFACE SEAL)	
	8	2	**196-9852**	1	PLATE AS	
		2	**6V-6716**	2	RIVET-TRUSS HEAD	
M		2	**6V-9632**	2	NUT-WELD (M6X1-THD)	
		2	**7T-1099**	1	LINK	
		2	**109-1645**	1	CLIP	
	9	2	**202-4327**	1	PULLER-FUSE	
	10	2	**204-8000**	1	MOUNTING-CABLE TIE	
	11	2	**224-9222**	1	BRACKET	
	12	1	**239-3355**	1	GASKET	
	13	1	**239-7392**	1	PLATE AS	
	14	2	**249-5481**	1	SWITCH AS-ROCKER (THROTTLE)	
	15	2	**261-7990**	1	GROMMET	
	16	2	**283-2382**	1	SWITCH AS-ROCKER	
	17	2	**284-3623**	1	SWITCH AS-ROCKER (IMPLEMENT LOCKOUT)	
R	18	1	**304-5687**	1	CONTROL GP-UNPROGRAMMED	
	19	2	**365-1418**	1	PLATE	
Y	20	1	*365-7841*	1	PANEL GP-CIRCUIT BREAKER	349
	21	1	**367-5105**	1	WIRE AS	
	22	1	**368-4250**	1	HARNESS AS-PLATFORM	
		1	**102-8802**	1	KIT-RECEPTACLE (2-PIN)	
		1	**102-8803**	2	KIT-RECEPTACLE (3-PIN)	
		1	**102-8804**	1	KIT-RECEPTACLE (4-PIN)	
		1	**102-8801**	2	KIT-RECEPTACLE (12-PIN)	
		1	**190-7615**	1	KIT-RECEPTACLE (12-PIN)	
		1	**197-7565**	1	KIT-RECEPTACLE (4-PIN)	
					(EACH RECEPTACLE KIT INCLUDES RECEPTACLE AS & WEDGE)	
		1	**155-2255**	3	KIT-CONNECTING PLUG (12-PIN)	
		1	**155-2260**	3	KIT-CONNECTING PLUG (3-PIN)	
		1	**155-2270**	5	KIT-CONNECTING PLUG (2-PIN)	
		1	**155-2271**	2	KIT-CONNECTING PLUG (4-PIN)	
		1	**155-2274**	2	KIT-CONNECTING PLUG (6-PIN)	
					(EACH PLUG KIT INCLUDES PLUG AS, WEDGE, & INTERFACE SEAL)	
		1	**245-7434**	3	KIT-CONNECTING PLUG (10-PIN)	
					(EACH INCLUDES PLUG AS & WEDGE)	
		1	**8T-8737**	133	PLUG-SEAL	
		1	**160-7689**	2	PLUG AS-CONNECTOR (70-PIN)	
					(EACH INCLUDES)	
		1	**159-9322**	1	SEAL-O-RING	
		1	**110-6845**	1	PLUG AS-CONNECTOR (40-PIN)	
		1	**127-5485**	1	PLUG AS-CONNECTOR (1-PIN)	
		1	**8N-1545**	1	SOCKET-CONNECTOR (8-GA)	
		1	**8T-8730**	22	SOCKET-CONNECTOR (16-GA TO 18-GA)	

368-4242 **WIRING GP-PLATFORM (*contd.*)** **i05322975**

NOTE	REF NO	GRAPHIC REF	PART NUMBER	QTY	PART NAME 1 2 3 4 5 6 (PRODUCT LEVEL)	SEE PAGE
		1	**9W-0844**	36	SOCKET-CONNECTOR (14-GA TO 16-GA)	
		1	**9X-3402**	46	SOCKET-CONNECTOR (16-GA TO 18-GA)	
		1	**9X-3402**	33	SOCKET-CONNECTOR (16-GA TO 18-GA)	
					—OR—	
		1	**126-1768**	33	SOCKET-CONNECTOR (14-GA TO 16-GA)	
		1	**126-1768**	18	SOCKET-CONNECTOR (14-GA TO 16-GA)	
		1	**9W-0852**	4	PIN-CONNECTOR (14-GA TO 16-GA)	
		1	**126-1767**	2	PIN-CONNECTOR (14-GA TO 16-GA)	
		1	**9X-3401**	50	PIN-CONNECTOR (16-GA TO 18-GA)	
		1	**9X-3401**	42	PIN-CONNECTOR (16-GA TO 18-GA)	
					—OR—	
		1	**126-1767**	42	PIN-CONNECTOR (14-GA TO 16-GA)	
E		1	**114-8843**		SLEEVE-PLASTIC (40-CM)	
E		1	**119-3662**		TUBE-HEAT SHRINK (10.85-MM DIA) (26-CM)	
E		1	**125-7874**		TUBE-HEAT SHRINK (5.72-MM DIA) (155-CM)	
E		1	**125-7875**		TUBE-HEAT SHRINK (7.44-MM DIA) (30-CM)	
		1	**2L-8069**	5	TERMINAL-RING (2-GA TO 10-GA, 3/8-IN SCREW)	
		1	**2L-8079**	2	TERMINAL-RING (14-GA TO 16-GA, 3/8-IN SCREW)	
		1	**204-1297**	26	TERMINAL AS-BLADE (18-GA TO 20-GA)	
					(EACH INCLUDES)	
		1	**235-4123**	1	TERMINAL (18-GA TO 20-GA)	
		1	**9X-0196**	2	TERMINAL AS	
		1	**9W-1951**	1	RECEPTACLE-CONNECTOR (9-PIN)	
		1	**214-4208**	1	RECEPTACLE AS-CONNECTOR (70-PIN)	
		1	**274-3774**	3	CAP-CONNECTOR	
		1	**274-3775**	1	CAP-CONNECTOR	
		1	**274-3777**	1	CAP-CONNECTOR	
	23	2	**368-4252**	1	HARNESS AS-PLATFORM	
		2	**8T-8737**	6	PLUG-SEAL	
		2	**9X-3402**	14	SOCKET-CONNECTOR (16-GA TO 18-GA)	
					—OR—	
		2	**126-1768**	14	SOCKET-CONNECTOR (14-GA TO 16-GA)	
		2	**155-2257**	1	KIT-CONNECTING PLUG (12-PIN)	
		2	**155-2270**	2	KIT-CONNECTING PLUG (2-PIN)	
		2	**155-2271**	1	KIT-CONNECTING PLUG (4-PIN)	
					(EACH PLUG KIT INCLUDES PLUG AS, WEDGE, & INTERFACE SEAL)	
		2	**274-3774**	1	CAP-CONNECTOR	
		2	**274-3776**	1	CAP-SEAL	
	24	2	**379-3483**	1	PLATE	
M	25	2	**107-3786**	4	BOLT (M4X0.7X12-MM)	
	26	2	**130-5300**	4	CLIP	
	27	1	**141-4976**	4	SCREW-WASHER HEAD (4-40X0.5-IN)	
M	28	1	**150-4086**	2	SCREW (M4X0.7X16-MM)	
	29	1	**340-7161**	1	CONVERTER-POWER (24-VOLT TO 12-VOLT)	
	30	1	**4B-4863**	2	WASHER (4.7X11X1.2-MM THK)	
	31	1	**4P-8134**	1	CLIP	
	32	2	**5F-9757**	2	GROMMET	
	33	1	**5P-1075**	1	WASHER-HARD (10.2X22.5X3-MM THK)	
	34	1,2	**7K-1181**	70	STRAP-CABLE	
M	35	1	**7X-0818**	4	BOLT (M8X1.25X45-MM)	
M	36	1	**8C-4982**	2	BOLT-SOCKET HEAD (M4X0.7X20-MM)	
	37	1,2	**8T-0328**	6	WASHER-HARD (5.5X10X1-MM THK)	
M	38	1	**8T-0389**	1	LOCKNUT (M10X1.5-THD)	
M	39	1	**8T-2659**	2	LOCKNUT (M4X0.7-THD)	
	40	1,2	**8T-4121**	13	WASHER-HARD (11X21X2.5-MM THK)	
M	41	1,2	**8T-4137**	9	BOLT (M10X1.5X20-MM)	
M	42	1,2	**8T-4138**	8	BOLT (M6X1X20-MM)	
M	43	1	**8T-6685**	4	BOLT (M10X1.5X110-MM)	
	44	1	**9N-0869**	4	WASHER-HARD (8.8X25.5X2-MM THK)	
	45	1,2	**9X-8256**	8	WASHER (6.6X12X2-MM THK)	

368-4242 **WIRING GP-PLATFORM (*contd.*)** **i05322975**

NOTE	REF NO	GRAPHIC REF	PART NUMBER	QTY	PART NAME 1 2 3 4 5 6 (PRODUCT LEVEL)	SEE PAGE

E - ORDER BY THE CENTIMETER
M - METRIC PART
R - REMFG PART MAY BE AVAILABLE
Y - SEPARATE ILLUSTRATION

368-4242 **WIRING GP-PLATFORM (*contd.*)** **i05322975**

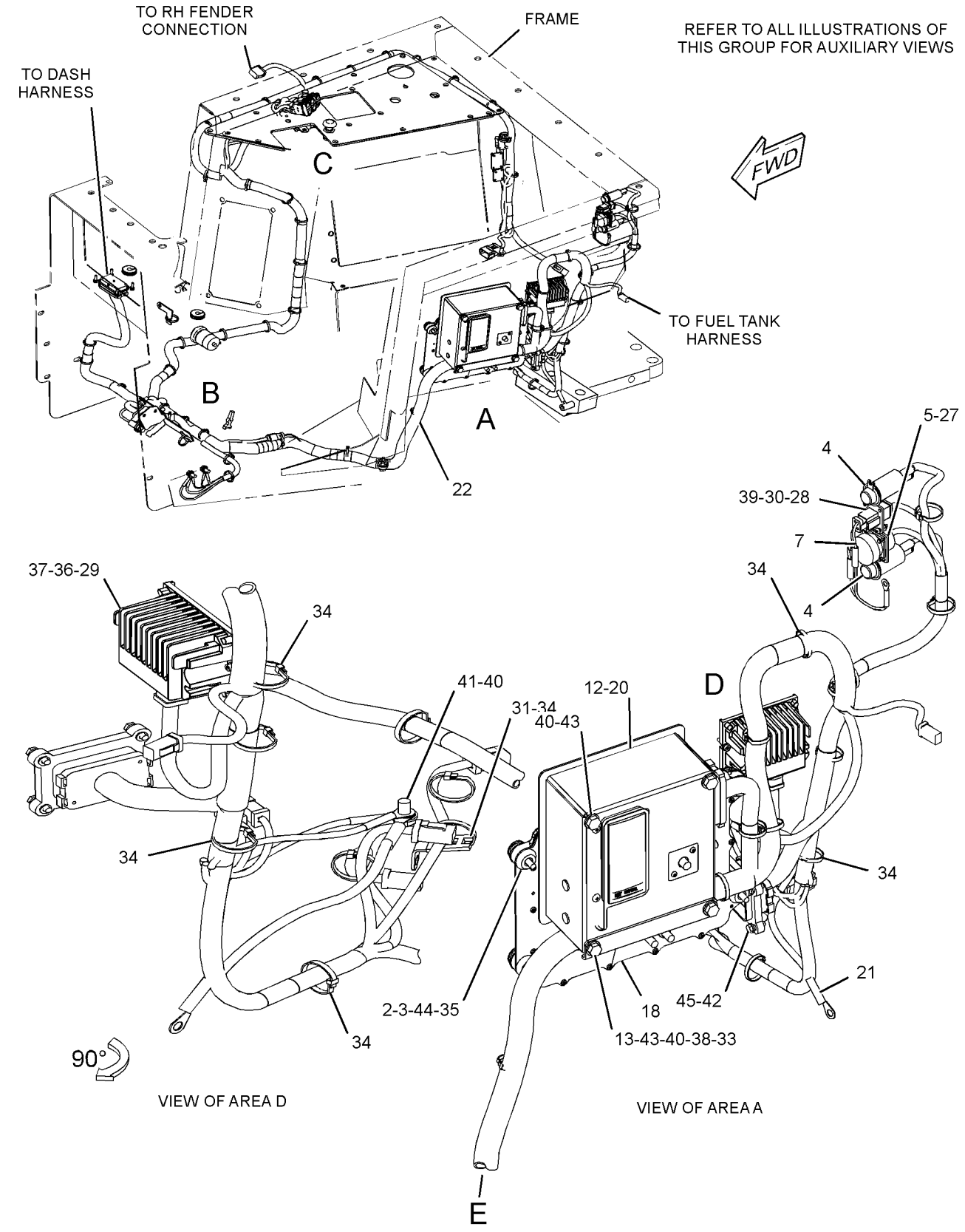

GRAPHIC #1 g03344291

368-4242 **WIRING GP-PLATFORM (*contd.*)** **i05322975**

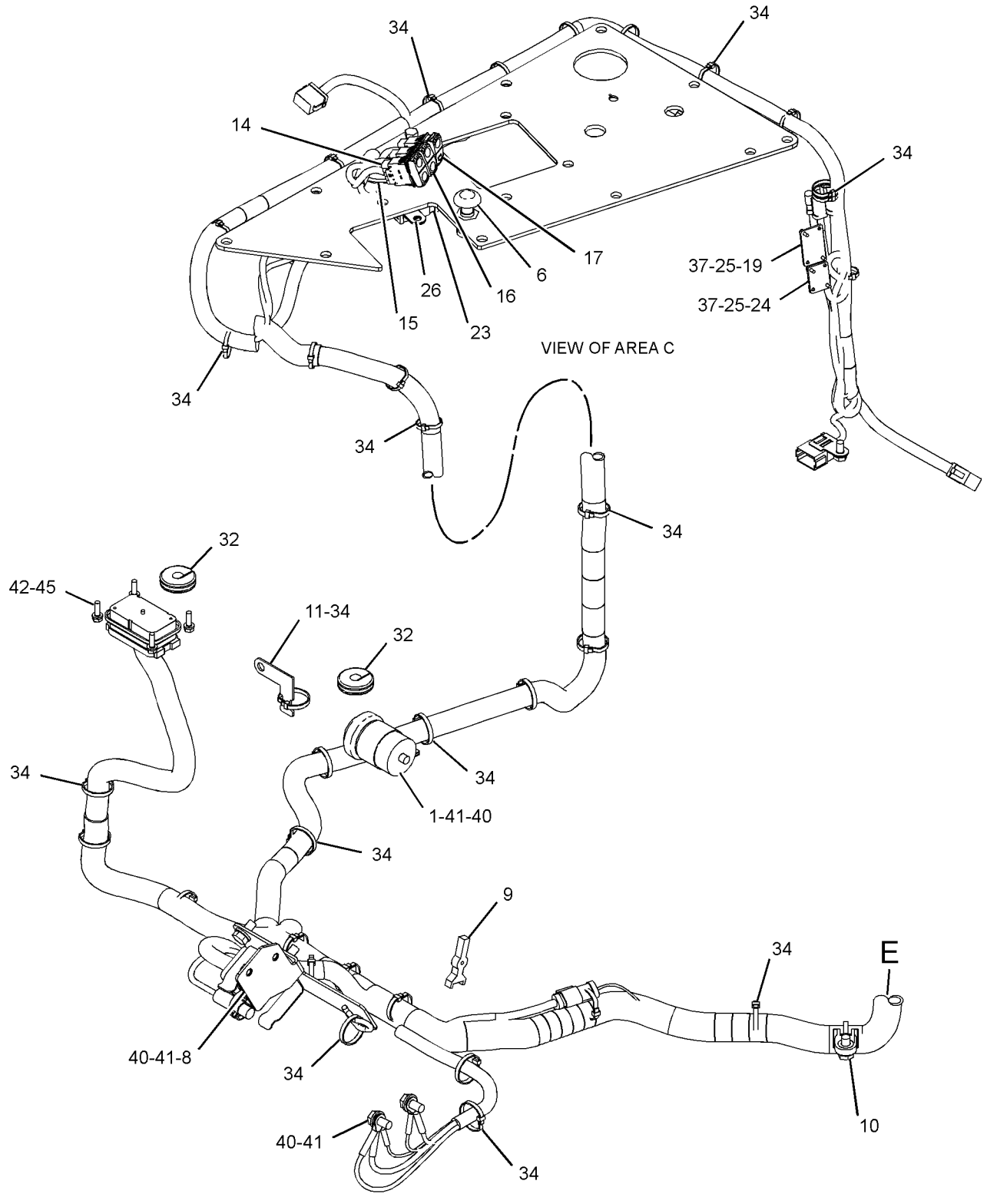

GRAPHIC #2 **<END>** g03344292

255-6934 ACCUMULATOR GP–CHARGED

S/N: SMC1-331; GCT1-534
FIELD REPLACEMENT ORDER 255-6936–PAGE: 444
PART OF 269-2072 LINES GP-POWER TRAIN OIL

SMCS-5077 **i02450539**

NOTE	REF NO	GRAPHIC REF	PART NUMBER	QTY	PART NAME 1 2 3 4 5 6 (PRODUCT LEVEL)	SEE PAGE
	1	1	**241-0037**	1	FILM-WARNING (HIGH PRESSURE, READ OMM)	
	2	1	**158-2336**	1	VALVE-GAS	
	3	1	**069-2536**	1	PROTECTOR-GAS VALVE	
	4	1	**030-9613**	2	SCREW-FORMING (10-24X0.37-IN)	
					AVAILABLE REPAIR KIT(S):	
			160-0496	1	KIT-SEAL (ACCUMULATOR)	
					(INCLUDES SEALS)	

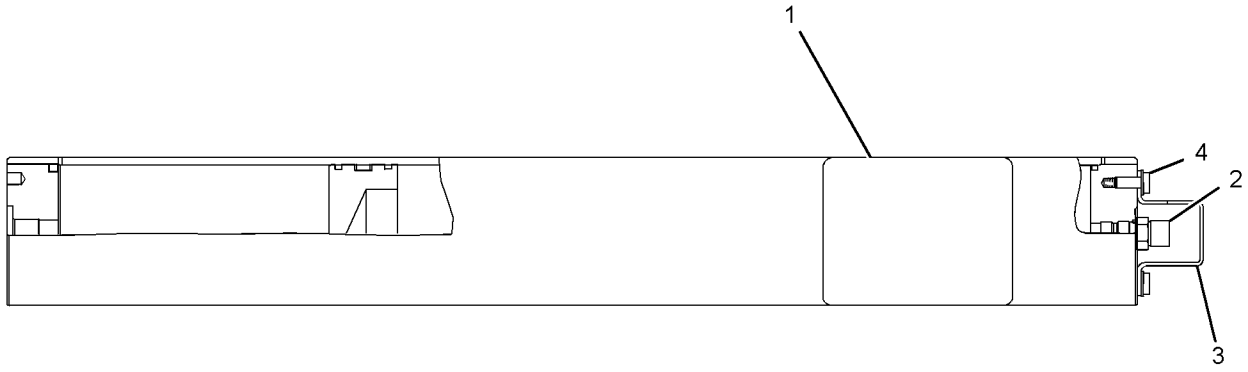

GRAPHIC #1 **<END>** g01209650

255-6936 ACCUMULATOR GP–UNCHARGED

S/N: SMC1-UP; GCT1-UP

FIELD REPLACEMENT FOR 255-6934–PAGE: 443

SMCS-5077 **i02450547**

NOTE	REF NO	GRAPHIC REF	PART NUMBER	QTY	PART NAME 1 2 3 4 5 6 (PRODUCT LEVEL)	SEE PAGE
	1	1	**030-9613**	2	SCREW-FORMING (10-24X0.37-IN)	
	2	1	**158-2336**	1	VALVE-GAS	
	3	1	**069-2536**	1	PROTECTOR-GAS VALVE	
	4	1	**241-0037**	1	FILM-WARNING (HIGH PRESSURE, READ OMM)	
					AVAILABLE REPAIR KIT(S):	
			160-0496	1	KIT-SEAL (ACCUMULATOR)	

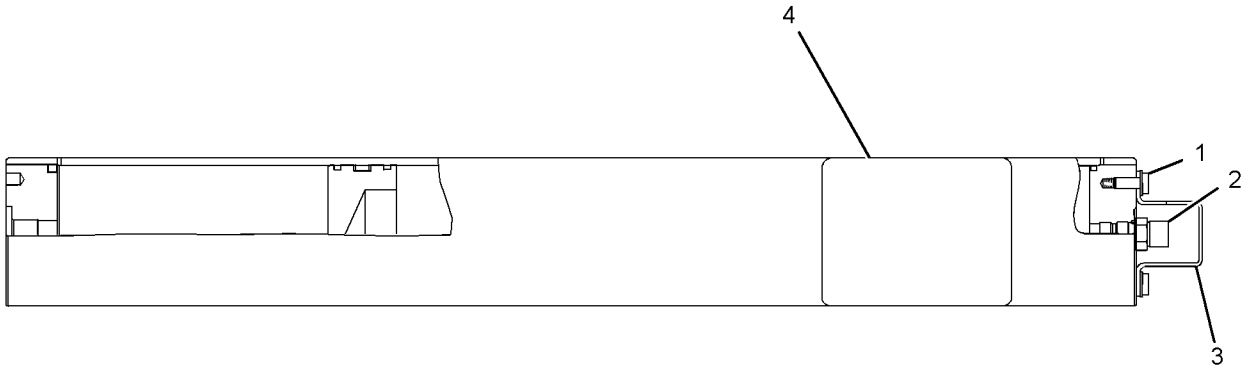

GRAPHIC #1 **<END>** g01209616

3W-6550 AXLE GP

S/N: SMC1-UP; GCT1-UP

PART OF 269-2046 POWER TRAIN AR

SMCS-3282 **i00599820**

NOTE	REF NO	GRAPHIC REF	PART NUMBER	QTY	PART NAME 1 2 3 4 5 6 (PRODUCT LEVEL)	SEE PAGE
	1	1	**3W-6551**	1	SHAFT	
	2	1	**3T-5851**	1	SHAFT (FINAL DRIVE, CENTER)	
C	3	1	**9G-8637**	1	GEAR-SUN (11-TEETH)	

C - CHANGE FROM PREVIOUS TYPE

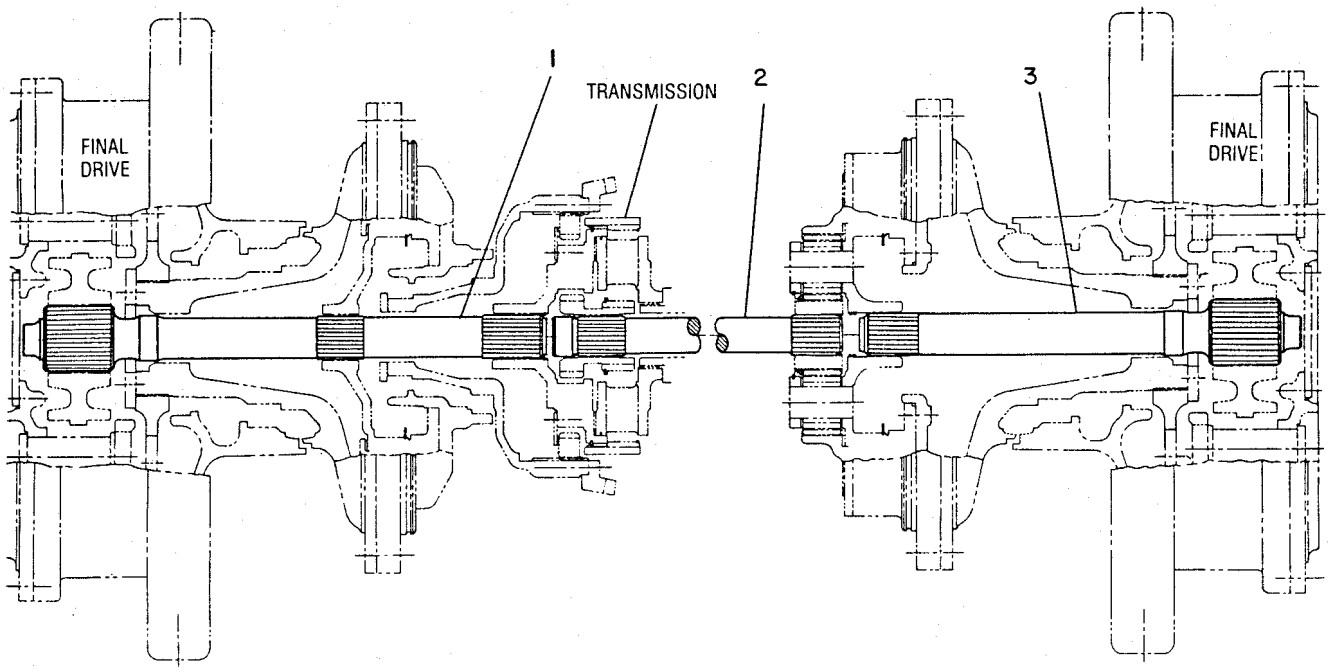

GRAPHIC #1 **<END>** g00188323

238-1029 BASE GP-OIL FILTER—POWER TRAIN

S/N: SMC1-297; GCT1-441
FIELD REPLACEMENT ORDER 333-9308—PAGE: 447
PART OF 235-5812 FILTER GP-OIL

SMCS-3004 **i04082489**

NOTE	REF NO	GRAPHIC REF	PART NUMBER	QTY	PART NAME 1 2 3 4 5 6 (PRODUCT LEVEL)	SEE PAGE
	1	1	**3T-9549**	1	ADAPTER	
	2	1	**7G-4998**	1	SPOOL-BYPASS	
	3	1	**7M-1297**	1	SPRING	
	4	1	**133-2198**	1	SPRING	
Y	5	1	**164-7577**	1	SWITCH GP-BYPASS (POWER TRAIN OIL FILTER)	389
	7	1	**2S-4078**	1	SEAL-O-RING	
	8	1	**3D-2824**	1	SEAL-O-RING	
	9	1	**9S-8008**	1	PLUG-O-RING	
					PARTS SHOWN IN GRAPHIC(S) WITHOUT A REFERENCE NUMBER ARE NOT SERVICED SEPARATELY	

Y - SEPARATE ILLUSTRATION

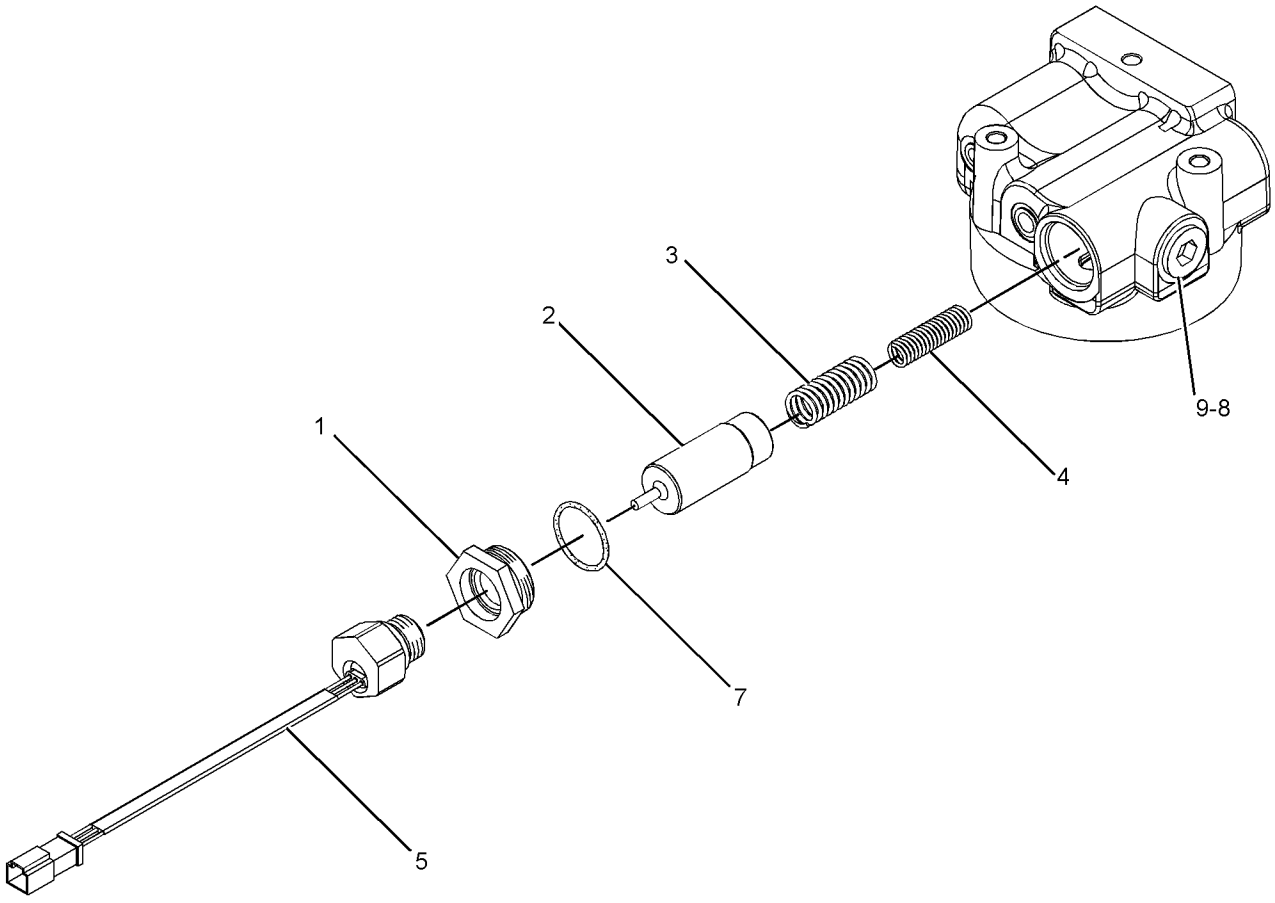

GRAPHIC #1 **<END>** g01366115

333-9308 BASE GP-OIL FILTER—POWER TRAIN

S/N: SMC298-UP; GCT442-UP
FIELD REPLACEMENT FOR 238-1029—PAGE: 446
PART OF 333-6437 FILTER GP-OIL

SMCS-3004 **i03630674**

NOTE	REF NO	GRAPHIC REF	PART NUMBER	QTY	PART NAME 1 2 3 4 5 6 (PRODUCT LEVEL)	SEE PAGE
	1	1	**3T-9549**	1	ADAPTER	
	2	1	**7G-4998**	1	SPOOL-BYPASS	
Y	3	1	**164-7577**	1	SWITCH GP-BYPASS (POWER TRAIN OIL FILTER)	389
	4	1	**334-2679**	1	SPRING	
	5	1	**334-2680**	1	SPRING	
	6	1	**5P-7815**	1	SEAL-O-RING	
	7	1	**6V-5050**	1	SEAL-O-RING	
	8	1	**9S-8008**	1	PLUG-O-RING	
					PARTS SHOWN IN GRAPHIC(S) WITHOUT A REFERENCE NUMBER ARE NOT SERVICED SEPARATELY	

Y - SEPARATE ILLUSTRATION

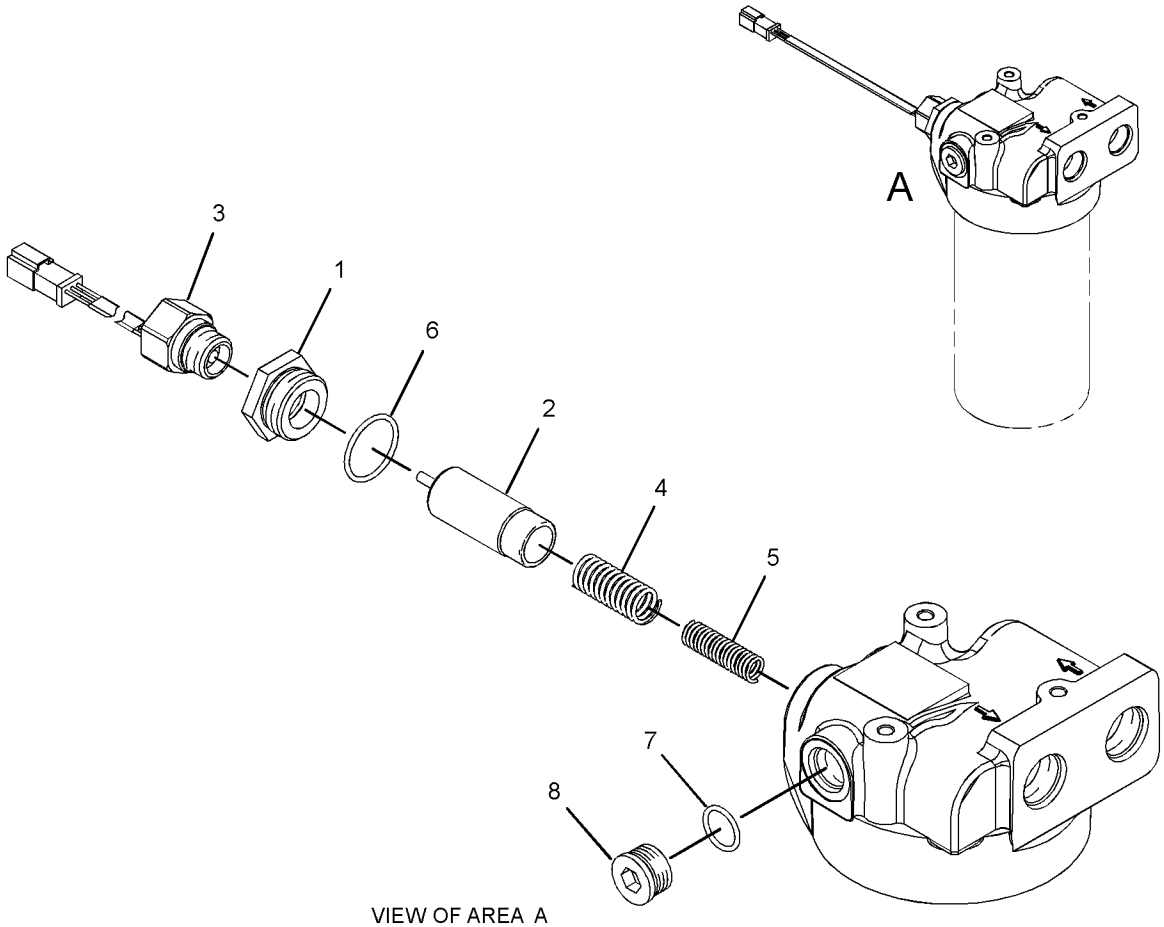

VIEW OF AREA A
(EXPLODED)

GRAPHIC #1 **<END>** g01863853

231-5969 BRAKE & DIFFERENTIAL DRIVE GP

S/N: SMC1-UP; GCT1-UP

PART OF 269-2046 POWER TRAIN AR

SMCS-4131 **i04329053**

NOTE	REF NO	GRAPHIC REF	PART NUMBER	QTY	PART NAME 1 2 3 4 5 6 (PRODUCT LEVEL)	SEE PAGE
	1	1	**2K-5069**	1	CUP-BEARING (TAPERED ROLLER)	
	2	2	**2K-9295**	1	BEARING AS-TAPERED ROLLER	
	3	2	**3B-4124**	1	CUP-BEARING (TAPERED ROLLER)	
	4	1	**3S-2708**	7	PIN-SPRING	
	5	1	**3T-4568**	3	SHAFT-PLANETARY	
	6	1	**292-2016**	1	GEAR AS-SUN (30/24-TEETH)	
	6A	1	**290-9849**	1	RING-RETAINING	
	7	1	**3T-4824**	4	GEAR-PLANETARY (30-TEETH)	
	8	1	**3T-5021**	1	CARRIER-PLANETARY	
	9	1	**3T-5200**	1	CARRIER-PLANETARY	
	10	1	**3T-6963**	1	SEAL-RING	
B	11	2	**3T-9272**	1	SHIM PACK (INCLUDES 8-SHIMS)	
	12	1	**5M-0578**	3	BEARING AS-ROLLER	
	13	1	**5M-7925**	4	BEARING AS-ROLLER	
	14	1	**6I-8724**	1	RING-LOCK	
	15	2	**6P-1735**	1	LOCKWASHER	
	16	2	**6P-1736**	1	WASHER (55.17X76.2X2.67-MM THK)	
	17	1	**6T-0062**	1	PLATE	
	18	1	**6T-0064**	4	SHAFT-PLANETARY	
	19	2	**6T-0850**	2	WASHER-THRUST (255X287.25X2.75-MM THK)	
	20	1	**6V-0855**	1	BEARING AS-TAPERED ROLLER	
		1	**8T-0072**	1	CONE-BEARING	
	21	2	**6V-7646**	3	WASHER-HARD (7.2X25X2-MM THK)	
	22	1	**6Y-0926**	3	GEAR-PLANETARY (23-TEETH)	
	23	1	**6Y-0984**	1	GEAR-RING (75-TEETH)	
	24	2	**6Y-2704**	1	SPRING-DISC	
	25	2	**6Y-9373**	4	DISC-FRICTION	
	26	1	**7G-1596**	1	RING-RETAINING	
	27	2	**7H-4566**	2	CUP-BEARING (TAPERED ROLLER)	
	28	2	**7T-1885**	1	RING	
	29	2	**7T-6994**	3	PLATE-CLUTCH & BRAKE	
	30	1	**7T-8130**	1	RING-RETAINING	
	31	2	**7T-9788**	1	HUB	
	32	2	**214-3573**	1	PISTON	
	33	2	**7T-9837**	1	PLATE	
	34	1	**8E-8307**	6	DISC-THRUST	
	35	1	**8E-8310**	8	DISC-THRUST	
	36	2	**9B-0576**	1	LOCKNUT-BEARING	
	37	1	**9W-1571**	1	SLINGER	
B	38	2	**9W-2853**	1	SHIM PACK (INCLUDES 21-SHIMS)	
	41	1	**9W-6102**	1	GEAR-RING (84-TEETH)	
	42	1	**9W-6103**	1	RING-THRUST	
	43	2	**005-4834**	2	BEARING AS-TAPERED ROLLER	
	44	1	**136-1595**	1	HOUSING-ROTATING	
	45	2	**7T-9832**	1	RETAINER	
	46	2	**216-6371**	1	CARRIER	
	47	2	**217-2293**	1	RETAINER	
	48	1	**226-4462**	1	GEAR-BEVEL (74-TEETH)	
	49	2	**226-4464**	1	PINION-BEVEL (15-TEETH)	
	50	2	**227-2451**	1	HOUSING AS	
	50A	2	**1A-2223**	2	DOWEL	
	50B	2	**5P-8245**	12	WASHER-HARD (13.5X25.5X3-MM THK)	
	50C	2	**1A-1460**	12	BOLT (1/2-13X2-IN)	
	51	1	**030-2135**	4	BOLT-LOCKING (5/16-18X0.625-IN)	
	52	1	**0L-1143**	21	BOLT (3/8-16X2.5-IN)	
	53	2	**0S-1614**	3	BOLT (1/4-20X0.5-IN)	
	54	2	**1A-2029**	6	BOLT (3/8-16X1.125-IN)	
	55	2	**2A-4639**	1	BOLT (3/8-16X1.625-IN)	

231-5969 **BRAKE & DIFFERENTIAL DRIVE GP (*contd.*)** **i04329053**

NOTE	REF NO	GRAPHIC REF	PART NUMBER	QTY	PART NAME 1 2 3 4 5 6 (PRODUCT LEVEL)	SEE PAGE
	56	2	**1A-1460**	6	BOLT (1/2-13X2-IN)	
	57	2	**3K-0360**	2	SEAL-O-RING	
	58	1	**5K-9107**	3	BOLT-LOCKING (3/8-16X0.75-IN)	
	59	2	**5M-2894**	7	WASHER-HARD (10.2X18.5X2.5-MM THK)	
	60	2	**5P-8245**	6	WASHER-HARD (13.5X25.5X3-MM THK)	
	63	2	**6P-5317**	1	RING-SEAL (EXTERNAL)	
	64	2	**7W-6534**	4	PLUG-PIPE	
	66	2	**8M-4438**	1	SEAL-O-RING	
	67	2	**8P-8357**	1	RING-SEAL (INTERNAL)	
	69	1	**9L-9132**	3	WASHER (10.2X25.5X2.5-MM THK)	
	70	2	**9S-8005**	2	PLUG-O-RING	
B	71	1	**1U-8846**		SEALANT-GASKET	

B - USE AS REQUIRED

231-5969 **BRAKE & DIFFERENTIAL DRIVE GP (*contd.*)** **i04329053**

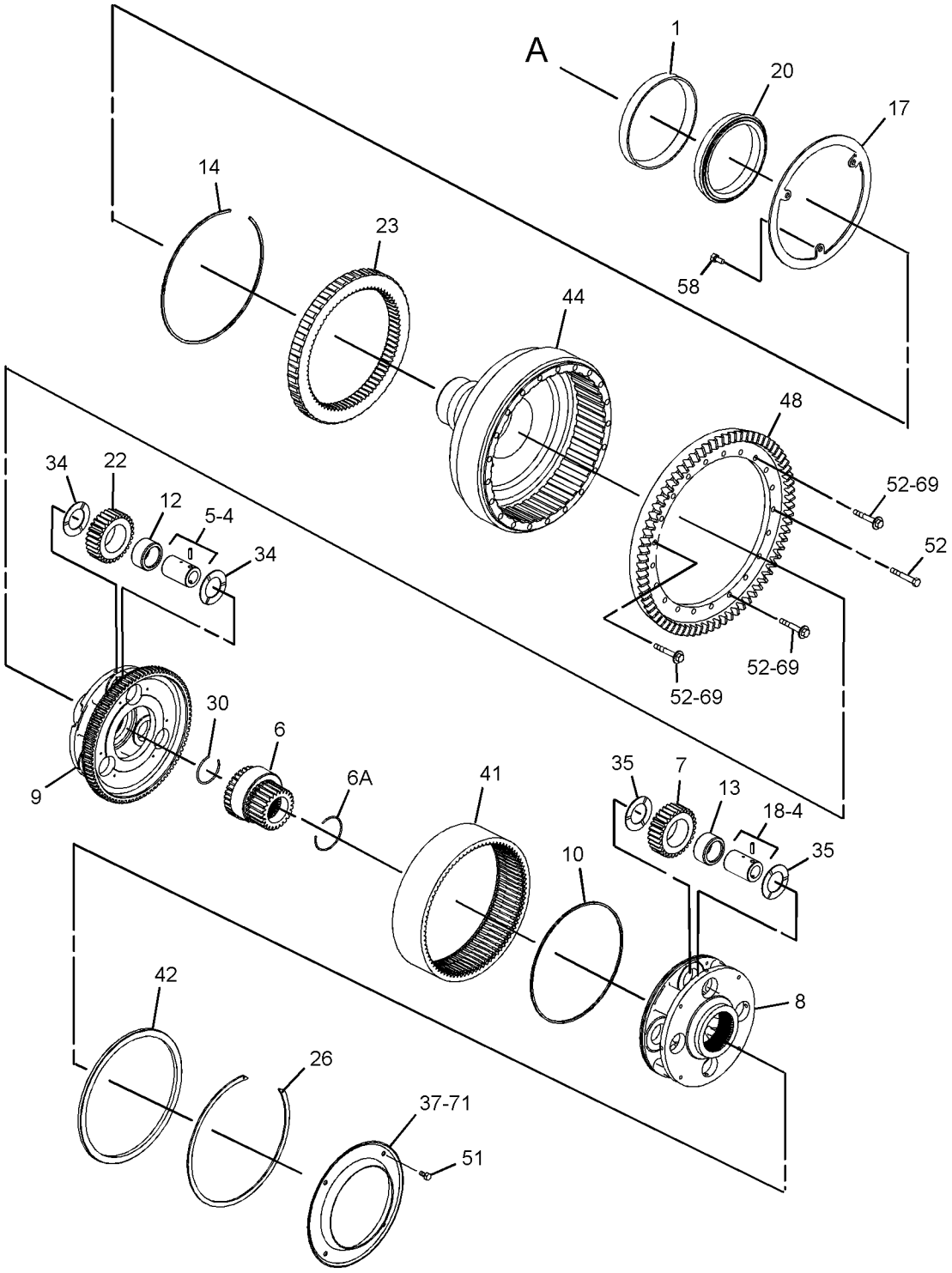

GRAPHIC #1 g01300998

231-5969 **BRAKE & DIFFERENTIAL DRIVE GP (*contd.*)** **i04329053**

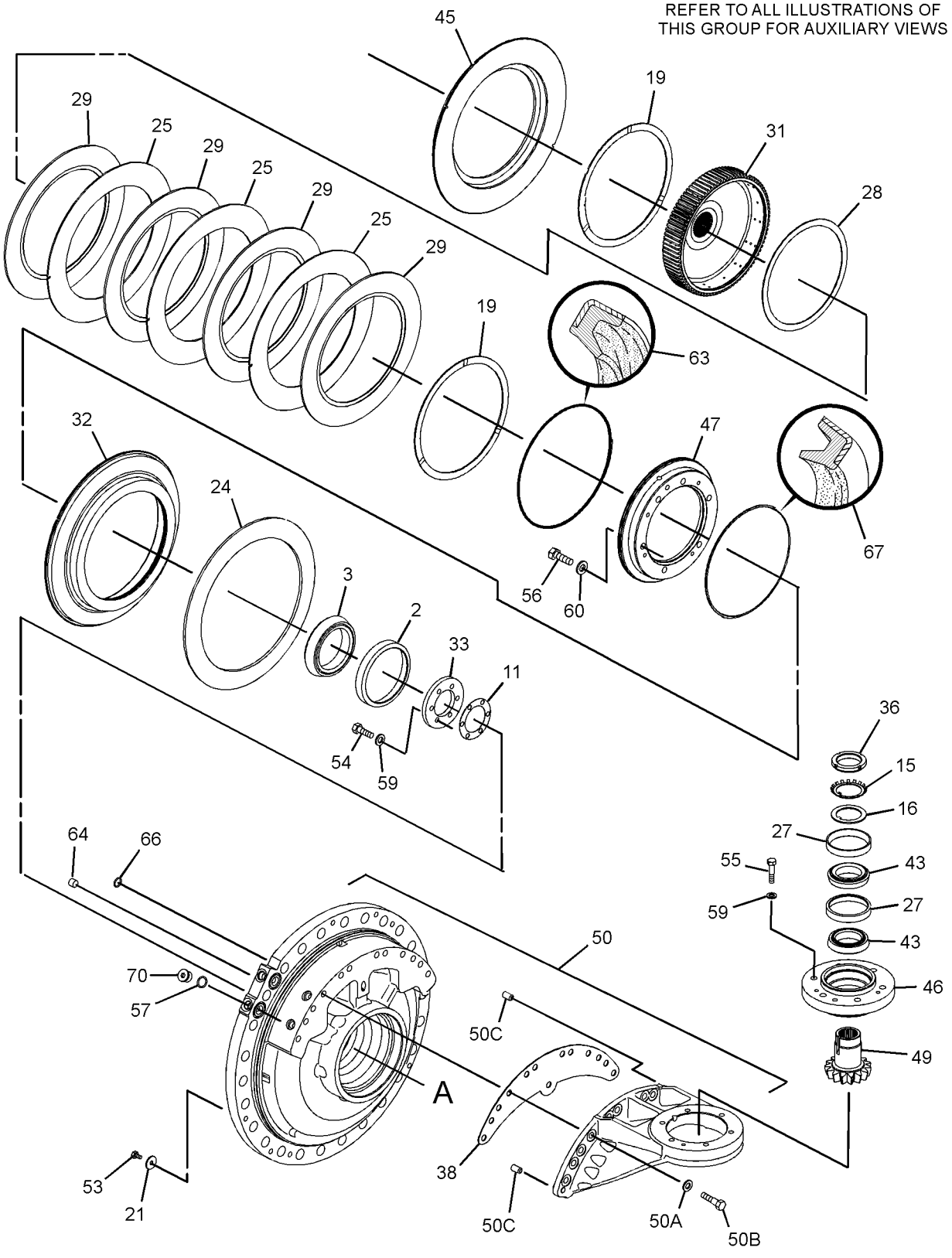

GRAPHIC #2 **<END>** g01301159

231-5990 BRAKE & PLANETARY GP

S/N: SMC1-UP; GCT1-UP

PART OF 269-2046 POWER TRAIN AR

SMCS-4011, 4255 **i04398035**

NOTE	REF NO	GRAPHIC REF	PART NUMBER	QTY	PART NAME 1 2 3 4 5 6 (PRODUCT LEVEL)	SEE PAGE
	1	1	**3S-2708**	3	PIN-SPRING	
	2	1	**3T-5807**	1	SLINGER	
	3	1	**5M-0578**	6	BEARING AS-ROLLER	
	4	1	**6Y-2704**	1	SPRING-DISC	
	5	1	**6Y-9373**	4	DISC-FRICTION	
	6	1	**7T-1885**	1	RING	
	7	1	**7T-6994**	3	PLATE-CLUTCH & BRAKE	
	8	1	**7T-8136**	3	SHAFT-PLANETARY	
	9	1	**7T-9031**	1	GEAR-RING (75-TEETH)	
	10	1	**7T-9837**	1	PLATE	
	11	1	**8E-8307**	6	DISC-THRUST	
	12	1	**9W-7925**	2	BEARING AS-TAPERED ROLLER	
	13	1	**9W-7926**	2	CUP-BEARING	
	14	1	**244-2310**	3	GEAR-PLANETARY (23-TEETH)	
	15	1	**306-0278**	1	GEAR AS-SUN (30-TEETH)	
		1	**3E-4354**	2	BALL	
	16	1	**205-5314**	1	HOUSING	
	17	1	**209-7193**	1	CARRIER	
	18	1	**214-3573**	1	PISTON	
	19	1	**216-4591**	1	RETAINER AS	
		1	**8S-0527**	1	PLUG-CUP	
	20	1	**0S-1585**	12	BOLT (1/2-13X1.5-IN)	
	21	1	**1A-1460**	6	BOLT (1/2-13X2-IN)	
	22	1	**1A-2029**	6	BOLT (3/8-16X1.125-IN)	
	23	1	**1C-0569**	6	BOLT (5/16-18X0.5-IN)	
	24	1	**3K-0360**	2	SEAL-O-RING	
	25	1	**5M-2894**	6	WASHER-HARD (10.2X18.5X2.5-MM THK)	
	26	1	**5P-8245**	18	WASHER-HARD (13.5X25.5X3-MM THK)	
	28	1	**6P-5317**	1	RING-SEAL (EXTERNAL)	
	30	1	**8M-4438**	1	SEAL-O-RING	
	31	1	**8P-8357**	1	RING-SEAL (INTERNAL)	
	32	1	**9S-8005**	2	PLUG-O-RING	
B	33	1	**1U-8846**		SEALANT-GASKET	

B - USE AS REQUIRED

231-5990 **BRAKE & PLANETARY GP (*contd.*)** **i04398035**

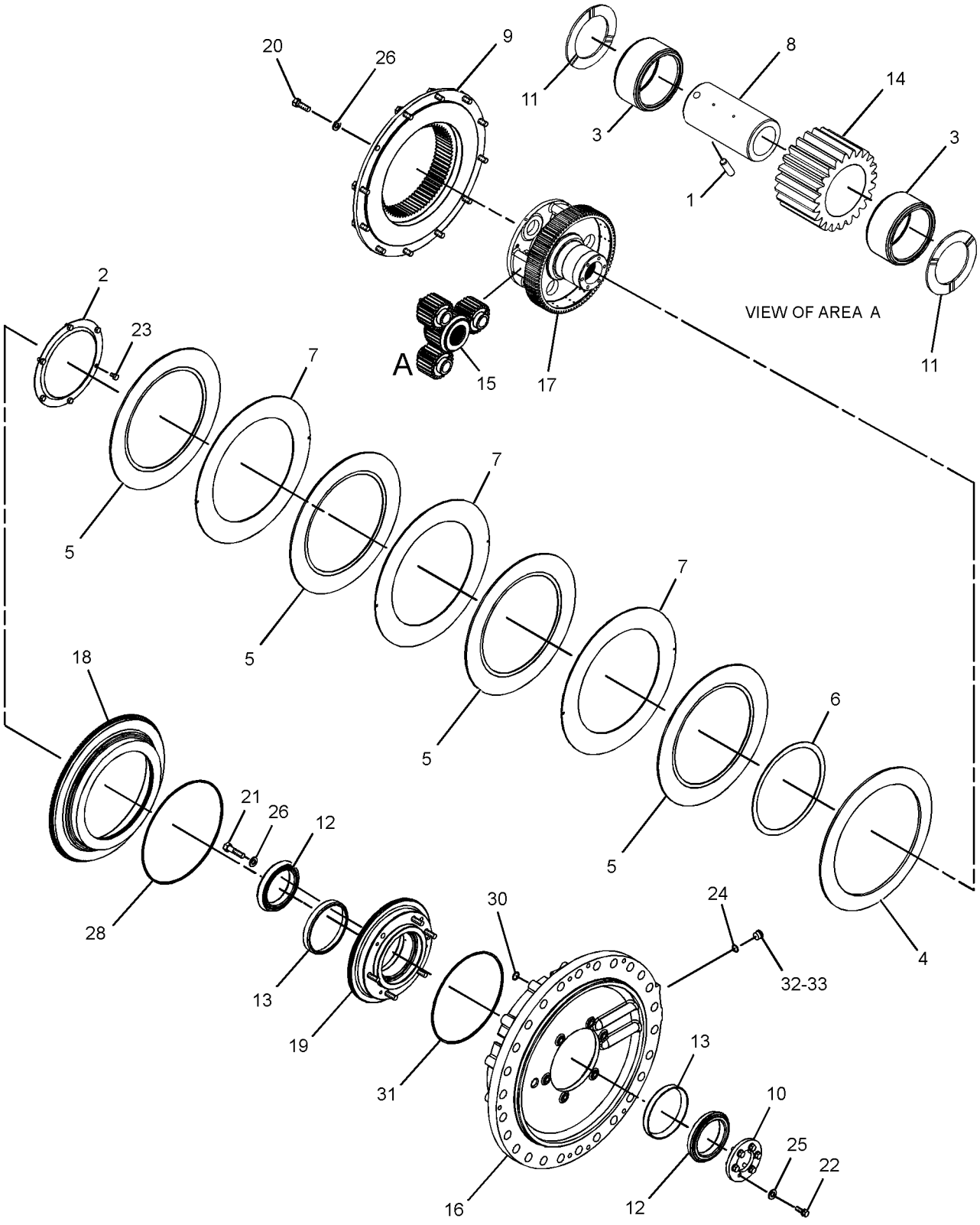

GRAPHIC #1 **<END>** g02185773

221-3342 CASE & PARTS GP-PLANETARY

S/N: KKA1-UP

PART OF 220-1429 TRANSMISSION AR

SMCS-3030, 3064, 3160 **i04009289**

NOTE	REF NO	GRAPHIC REF	PART NUMBER	QTY	PART NAME 1 2 3 4 5 6 (PRODUCT LEVEL)	SEE PAGE
	1	1	**5K-5120**	1	STRIP	
	2	1	**5K-9246**	1	CONNECTOR	
	3	1	**5K-9988**	1	TEE-INVERTED FLARED	
	4	1	**6K-8498**	1	TEE-FLARED	
	5	1	**6V-0852**	7	CAP-DUST	
	6	1	**6V-1720**	1	PLATE-SERIAL NUMBER (TRANSMISSION)	
	7	1	*164-5567*	7	COUPLER AS-QUICK DISCONNECT (MALE)	
					(EACH INCLUDES)	
		1	**3J-1907**	1	SEAL-O-RING	
		1	**6V-3965**	1	FITTING (QUICK DISCONNECT)	
	8	1	**7T-8875**	1	TUBE AS	
	9	1	**7T-8876**	1	TUBE AS	
	10	1	**8S-9130**	1	SCREEN-SUCTION (TRANSMISSION SCAVENGE)	
	11	1	**9G-8615**	1	COVER	
	12	1	**9P-1475**	1	SLEEVE	
	13	1	**9S-7710**	1	ELBOW-FLARED	
	14	1	**9W-4159**	1	TUBE AS	
	15	1	**9W-5334**	1	TUBE AS	
	16	1	**081-8353**	3	BOLT (3/8-16X0.625-IN)	
Y	17	1	**190-2278**	1	CASE GP-TRANSMISSION	459
	18	1	**203-2288**	1	GASKET-COVER	
	19	1	**204-6499**	1	COVER	
	20	1	**210-0091**	1	COVER	
	21	1	**214-9408**	1	MANIFOLD	
	22	1	**216-6202**	1	ADAPTER	
	23	1	**221-0877**	1	GUARD AS	
	24	1	**031-0218**	1	BOLT-LOCKING (3/8-16X0.5-IN)	
	25	1	**0S-1585**	21	BOLT (1/2-13X1.5-IN)	
	26	1	**0T-0102**	1	BOLT (3/8-16X0.625-IN)	
	27	1	*162-6448*	1	PLUG AS	
		1	**1N-5999**	1	PLUG-O-RING	
		1	**7J-0204**	1	SEAL-O-RING	
	28	1	**2M-9780**	1	SEAL-O-RING	
	29	1	**2S-4071**	1	SEAL-O-RING	
	32	1	**3S-7781**	1	GASKET	
	33	1	**4H-5440**	1	COVER	
	34	1	**5M-2894**	1	WASHER-HARD (10.2X18.5X2.5-MM THK)	
	35	1	**5P-4057**	1	SEAL-O-RING	
	36	1	**5P-8245**	21	WASHER-HARD (13.5X25.5X3-MM THK)	
	37	1	**5P-8998**	1	FITTING	
	39	1	**7J-8611**	1	ELBOW-PIPE	
	40	1	**8H-1603**	1	CLIP	
	41	1	**8M-2530**	4	BOLT-12 POINT HEAD (1/2-13X1.25-IN)	
	42	1	**8M-4432**	2	SEAL-O-RING	
	43	1	**8M-5661**	1	SEAL-O-RING	
	44	1	**8P-0058**	1	GASKET-COVER	
	45	1	**9M-9647**	2	SEAL-O-RING	
	46	1	*164-5616*	3	PLUG AS	
					(EACH INCLUDES)	
		1	**2S-4078**	1	SEAL-O-RING	
		1	**9S-6130**	1	PLUG	
M	47	1	**9X-2125**	27	BOLT-LOCKING (M10X1.5X25-MM)	

M - METRIC PART
Y - SEPARATE ILLUSTRATION

221-3342 **CASE & PARTS GP-PLANETARY (*contd.*)** **i04009289**

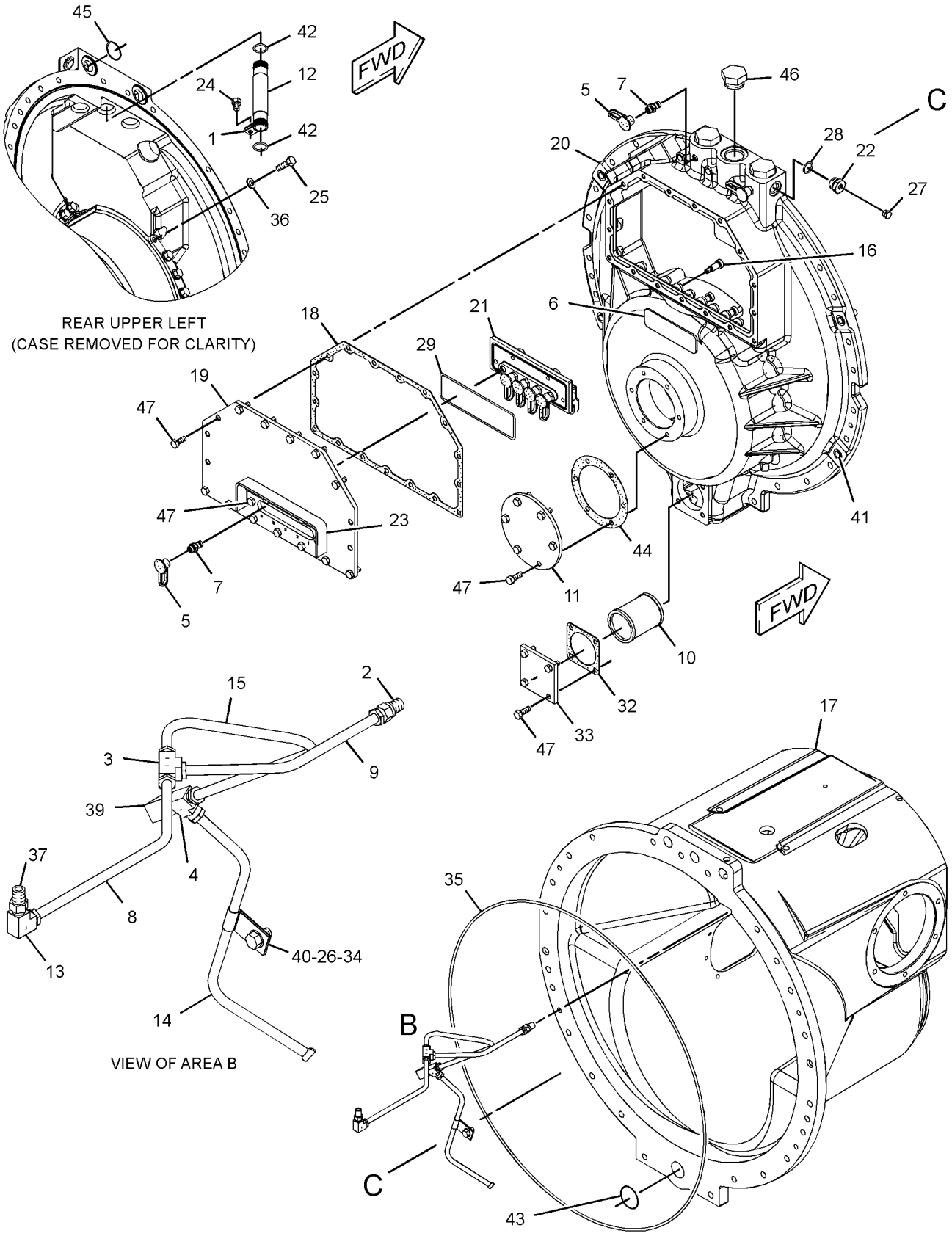

GRAPHIC #1 **<END>** g01413455

354-0153 CASE & PARTS GP-PLANETARY

S/N: K1T1-UP

PART OF 354-0148 TRANSMISSION AR

SMCS-3030, 3064, 3160 **i04181809**

NOTE	REF NO	GRAPHIC REF	PART NUMBER	QTY	PART NAME 1 2 3 4 5 6 (PRODUCT LEVEL)	SEE PAGE
	1	2	**5K-9246**	1	CONNECTOR	
	2	2	**5K-9988**	1	TEE-INVERTED FLARED	
	3	2	**6K-8498**	1	TEE-FLARED	
	4	1	**6V-0852**	2	CAP-DUST	
	5	1	**6V-1720**	1	PLATE-SERIAL NUMBER (TRANSMISSION)	
	6	2	**7T-8875**	1	TUBE AS	
	7	2	**7T-8876**	1	TUBE AS	
	8	1	**8S-9130**	1	SCREEN-SUCTION (TRANSMISSION CASE)	
	9	1	**9G-8615**	1	COVER	
	10	2	**9S-7710**	1	ELBOW-FLARED	
	11	2	**9W-4159**	1	TUBE AS	
	12	2	**9W-5334**	1	TUBE AS	
Y	13	2	**190-2278**	1	CASE GP-TRANSMISSION	459
	14	1	**203-2288**	1	GASKET-COVER	
	15	1	*326-0316*	3	PLUG AS	
					(EACH INCLUDES)	
		1	**9S-6130**	1	PLUG	
		1	**228-7096**	1	SEAL-O-RING	
	16	1	**354-0163**	1	COVER-TRANSMISSION	
	17	1	**354-0166**	1	COVER	
	18	2	**061-9455**	1	SEAL-O-RING	
	19	2	**0S-1585**	21	BOLT (1/2-13X1.5-IN)	
	20	2	**0T-0102**	1	BOLT (3/8-16XO.625-IN)	
	21	1	*164-5567*	2	COUPLER AS-QUICK DISCONNECT (MALE)	
					(EACH INCLUDES)	
		1	**6V-3965**	1	FITTING (QUICK DISCONNECT)	
		1	**214-7568**	1	SEAL-O-RING	
	22	1	*319-6231*	1	PLUG AS	
		1	**9S-4183**	1	PLUG	
		1	**238-5082**	1	SEAL-O-RING	
	23	1	**3S-7781**	1	GASKET	
	24	1	**4H-5440**	1	COVER	
	25	2	**5M-2894**	1	WASHER-HARD (10.2X18.5X2.5-MM THK)	
	26	2	**5P-4057**	1	SEAL-O-RING	
	27	2	**5P-5846**	2	SEAL-O-RING	
	28	2	**5P-8245**	21	WASHER-HARD (13.5X25.5X3-MM THK)	
	29	2	**5P-8998**	1	FITTING	
	30	2	**7J-8611**	1	ELBOW-PIPE	
	31	2	**7B-1597**	1	CLIP	
	32	1	**8M-2530**	4	BOLT-12 POINT HEAD (1/2-13X1.25-IN)	
	33	1	**8P-0058**	1	GASKET-COVER	
M	34	1	**8T-4196**	13	BOLT (M10X1.5X35-MM)	
M	35	1	**9X-2125**	10	BOLT-LOCKING (M10X1.5X25-MM)	

M - METRIC PART
Y - SEPARATE ILLUSTRATION

354-0153 **CASE & PARTS GP-PLANETARY (*contd.*)** **i04181809**

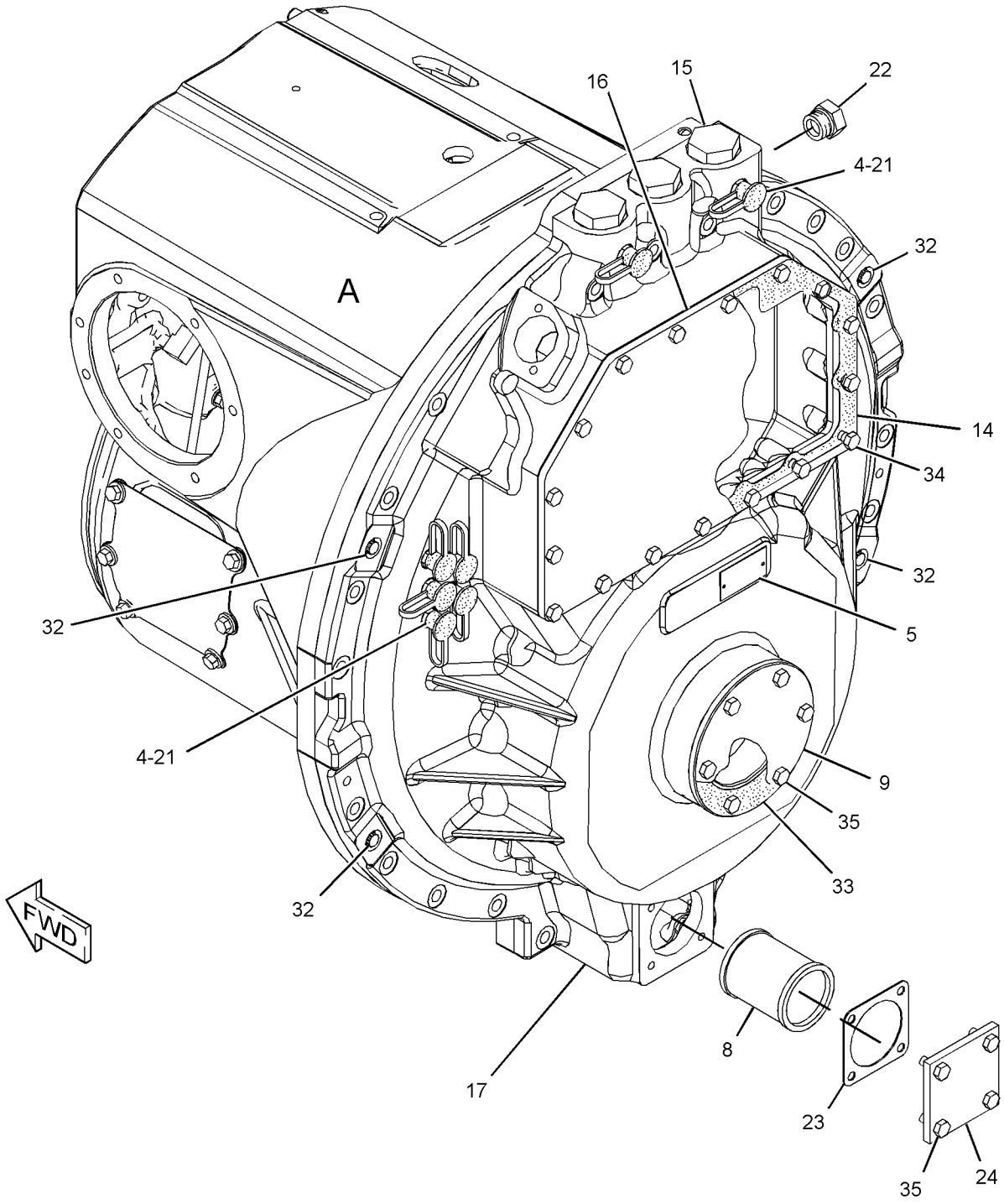

REFER TO ALL ILLUSTRATIONS OF
THIS GROUP FOR AUXILIARY VIEWS

GRAPHIC #1 g02352714

354-0153 **CASE & PARTS GP-PLANETARY (*contd.*)** **i04181809**

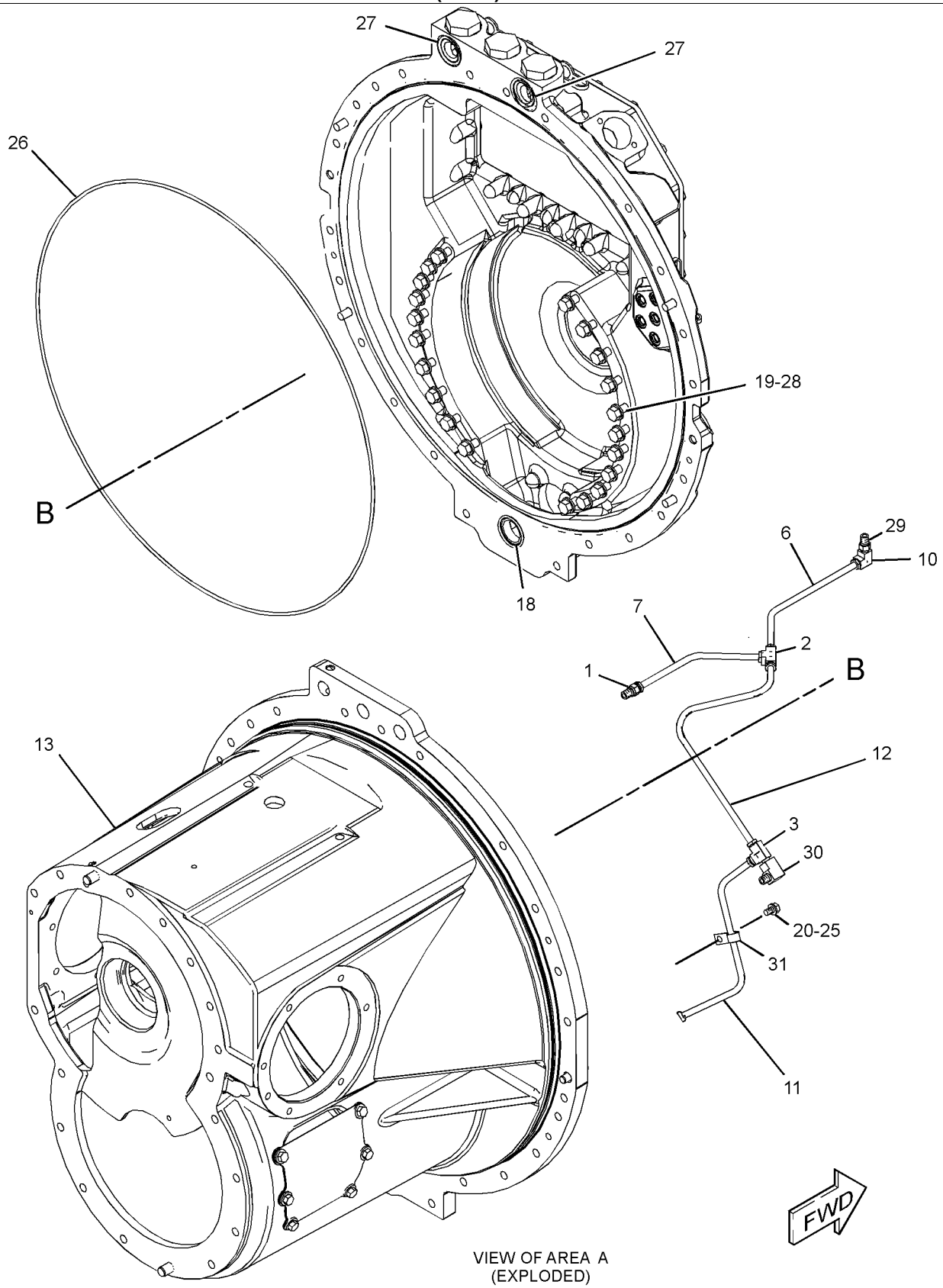

VIEW OF AREA A
(EXPLODED)

GRAPHIC #2 **<END>** g02352715

190-2278 CASE GP-TRANSMISSION

S/N: KKA1-UP; K1T1-UP

PART OF 221-3342, 354-0153 CASE & PARTS GP-PLANETARY

SMCS-3064 **i04009290**

NOTE	REF NO	GRAPHIC REF	PART NUMBER	QTY	PART NAME 1 2 3 4 5 6 (PRODUCT LEVEL)	SEE PAGE
	1	1	**4B-9785**	1	BALL	
	2	1	**1A-2610**	1	DOWEL	
	3	1	**7M-1201**	1	DOWEL	
	4	1	**3F-3442**	2	DOWEL	
	5	1	**4B-9782**	1	BALL	
	6	1	**146-6669**	1	GASKET	
	7	1	**146-6670**	1	COVER	
	8	1	**9X-6458**	6	WASHER-HARD (10.2X22.5X3-MM THK)	
	9	1	**0S-1594**	6	BOLT (3/8-16X1-IN)	
F			**196-8884**	1	BRACKET AS	
			8C-3334	2	RIVET-TUBULAR	
			124-9401	4	CLIP	
F			**0S-1620**	1	BOLT (1/2-13X0.75-IN)	
F			**5P-8245**	1	WASHER-HARD (13.5X25.5X3-MM THK)	

F - NOT SHOWN

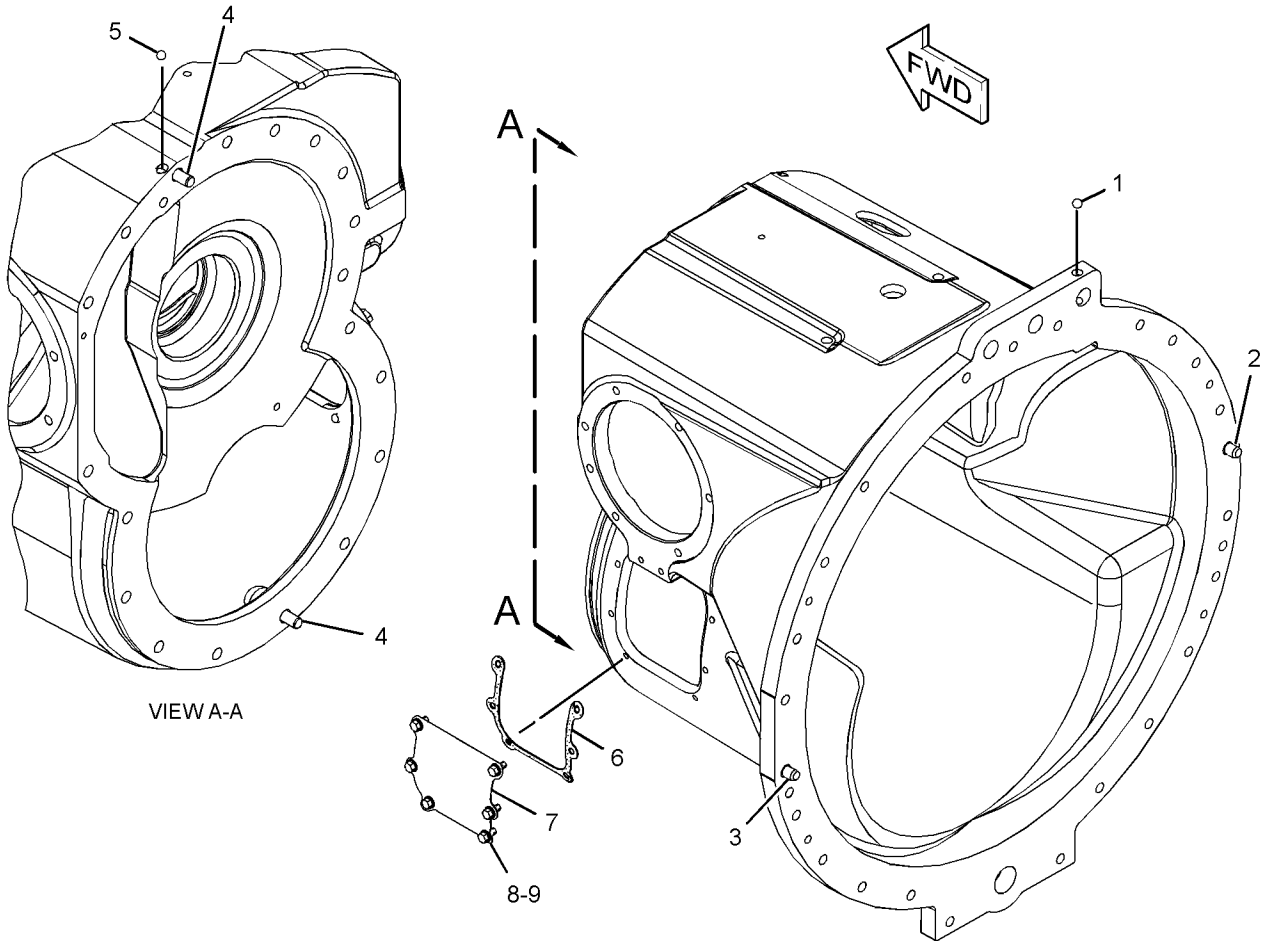

VIEW A-A

GRAPHIC #1 **<END>** g01857854

272-0016 CONTROL GP-STEERING & XMSN

S/N: SMC1-332; GCT1-536

PART OF 269-2046 POWER TRAIN AR

SMCS-4122 **i04046795**

NOTE	REF NO	GRAPHIC REF	PART NUMBER	QTY	PART NAME 1 2 3 4 5 6 (PRODUCT LEVEL)	SEE PAGE
	1	1	**2L-6267**	1	LOCKNUT (3/8-24-THD)	
	2	1	**8E-3131**	1	ROLLER-CAM	
	3	1	**8E-8242**	1	SPACER (71.4X88.9X11.5-MM THK)	
Y	4	1	**9T-8693**	1	VALVE GP-PILOT (STEERING)	808
Y	5	1	*107-3881*	1	CONTROL GP-PARKING BRAKE	753
	6	1	**112-4440**	1	HOUSING	
	7	1	**127-1598**	1	GASKET	
	8	1	**127-1599**	1	GASKET	
	9	1	**136-6093**	1	SEAL	
	10	1	*149-3137*	1	LOCK GP-CYLINDER	
T		1	**5P-9000**	1	LOCK AS-CYLINDER	
		1	**226-0336**	1	CAM	
	11	1	**160-1437**	1	HOUSING-BEARING	
	12	1	**161-3963**	1	SUPPORT AS	
	13	1	**161-3964**	1	COVER AS	
	14	1	**161-6041**	1	HOUSING	
	15	1	**201-9624**	1	HOUSING-MAIN	
Y	16	1	**224-9450**	1	CONTROL GP-HANDLE (STEERING, TRANSMISSION)	1039
	17	1	**226-9673**	1	HARNESS AS-WIRING	
		1	**102-8803**	1	KIT-RECEPTACLE (3-PIN)	
		1	**166-5229**	1	KIT-RECEPTACLE (12-PIN)	
					(EACH RECEPTACLE KIT INCLUDES RECEPTACLE AS & WEDGE)	
		1	**134-2540**	1	RESISTOR AS-CONNECTION (3-PIN)	
		1	**155-2255**	2	KIT-CONNECTING PLUG (12-PIN)	
		1	**155-2271**	1	KIT-CONNECTING PLUG (4-PIN)	
		1	**174-0503**	1	KIT-CONNECTING PLUG (3-PIN)	
		1	**155-2274**	2	KIT-CONNECTING PLUG (6-PIN)	
					(EACH PLUG KIT INCLUDES PLUG AS, WEDGE, & INTERFACE SEAL)	
		1	**147-1445**	1	PLUG AS-CONNECTOR (70-PIN)	
		1	**147-1446**	1	PLUG AS-CONNECTOR (70-PIN)	
		1	**160-7689**	1	PLUG AS-CONNECTOR (70-PIN)	
	18	1	**299-3923**	1	PLATE AS	
	19	1	**2N-3680**	3	SCREW-HEAD (1/4-20X0.75-IN)	
	20	1	**4H-9105**	1	SEAL-O-RING	
	21	1	**4M-5282**	4	BOLT (1/4-20X1.5-IN)	
	22	1	**5L-2029**	2	BALL BEARING	
	23	1	**5P-1075**	2	WASHER-HARD (10.2X22.5X3-MM THK)	
	24	1	**6V-8801**	2	NUT (3/8-16-THD)	
	25	1	**7K-1181**	10	STRAP-CABLE	
	26	1	**7V-0008**	1	BLOCK	
	27	1	**7X-0290**	2	BOLT (3/8-16X3.5-IN)	
	28	1	**7X-7729**	7	WASHER (11X25X3-MM THK)	
	29	1	**8T-2502**	3	BOLT (3/8-16X1.125-IN)	
M	30	1	**8T-4137**	7	BOLT (M10X1.5X20-MM)	
	31	1	**8T-4896**	7	WASHER-HARD (10.2X18.5X2.5-MM THK)	
	32	1	**8T-7008**	2	BOLT (3/8-16X3-IN)	
D	33	1	**6V-5817**		CONDUIT-FLEXIBLE (26.1-MM ID, SPLIT) (0.1-M)	

D - ORDER BY THE METER
M - METRIC PART
T - REQUIRES CORPORATE KEY
Y - SEPARATE ILLUSTRATION

272-0016 **CONTROL GP-STEERING & XMSN (*contd.*)** **i04046795**

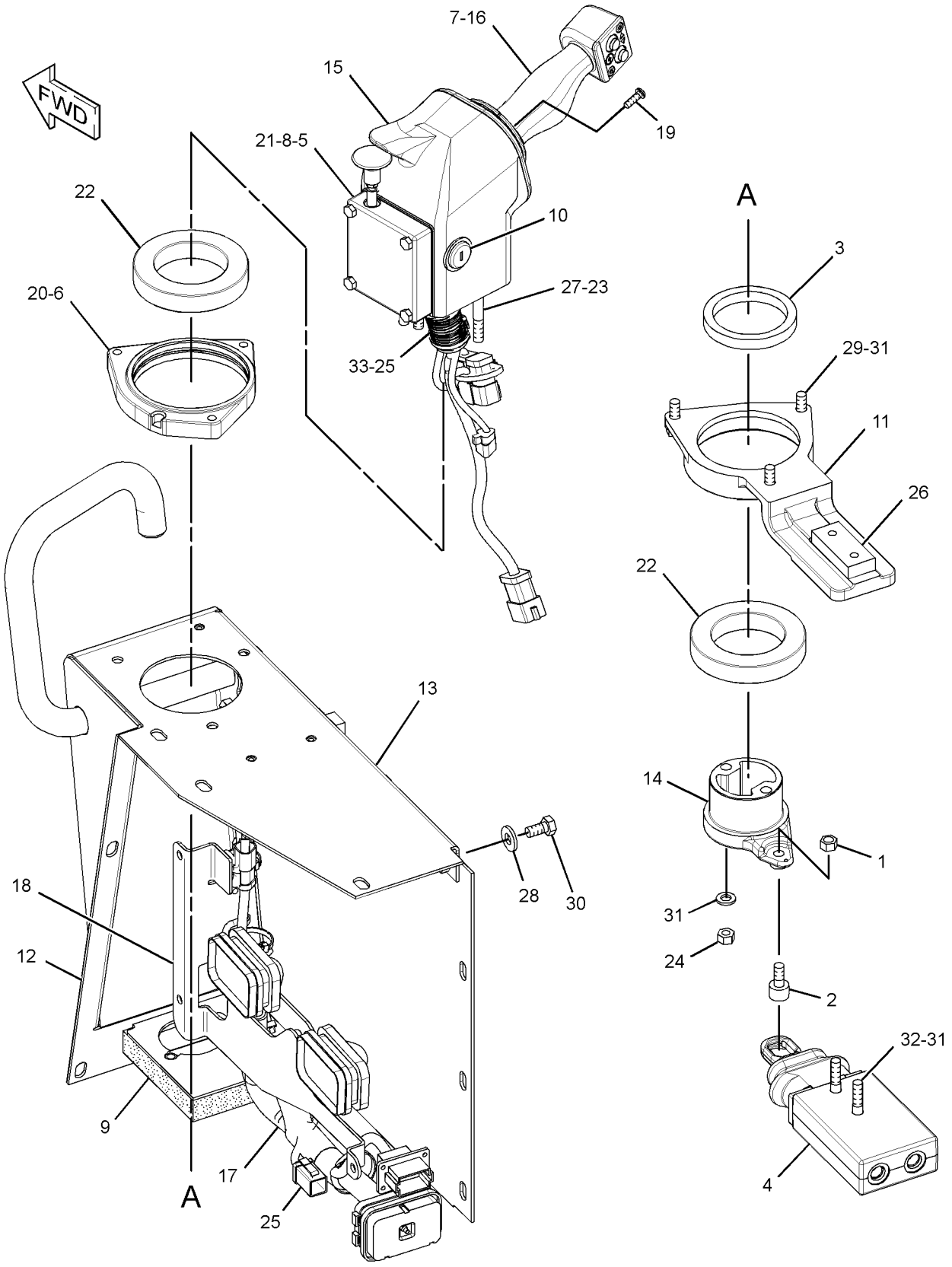

GRAPHIC #1 **<END>** g01359745

272-0016 CONTROL GP-STEERING & XMSN

S/N: SMC333-UP; GCT537-UP

PART OF 269-2046 POWER TRAIN AR

SMCS-4122 **i04046796**

NOTE	REF NO	GRAPHIC REF	PART NUMBER	QTY	PART NAME 1 2 3 4 5 6 (PRODUCT LEVEL)	SEE PAGE
	1	1	**2L-6267**	1	LOCKNUT (3/8-24-THD)	
	2	1	**8E-3131**	1	ROLLER-CAM	
	3	1	**8E-8242**	1	SPACER (71.4X88.9X11.5-MM THK)	
Y	4	1	**9T-8693**	1	VALVE GP-PILOT (STEERING)	808
Y	5	1	*107-3881*	1	CONTROL GP-PARKING BRAKE	753
	6	1	**112-4440**	1	HOUSING	
	7	1	**127-1598**	1	GASKET	
	8	1	**127-1599**	1	GASKET	
	9	1	**136-6093**	1	SEAL	
	10	1	*149-3137*	1	LOCK GP-CYLINDER	
T		1	**5P-9000**	1	LOCK AS-CYLINDER	
		1	**226-0336**	1	CAM	
	11	1	**160-1437**	1	HOUSING-BEARING	
	12	1	**161-3963**	1	SUPPORT AS	
	13	1	**161-3964**	1	COVER AS	
	14	1	**161-6041**	1	HOUSING	
	15	1	**201-9624**	1	HOUSING-MAIN	
Y	16	1	**224-9450**	1	CONTROL GP-HANDLE (STEERING, TRANSMISSION)	1039
	17	1	**226-9673**	1	HARNESS AS-WIRING	
		1	**102-8803**	1	KIT-RECEPTACLE (3-PIN)	
		1	**166-5229**	1	KIT-RECEPTACLE (12-PIN)	
					(EACH RECEPTACLE KIT INCLUDES RECEPTACLE AS & WEDGE)	
		1	**134-2540**	1	RESISTOR AS-CONNECTION (3-PIN)	
		1	**155-2255**	2	KIT-CONNECTING PLUG (12-PIN)	
		1	**155-2271**	1	KIT-CONNECTING PLUG (4-PIN)	
		1	**174-0503**	1	KIT-CONNECTING PLUG (3-PIN)	
		1	**155-2274**	2	KIT-CONNECTING PLUG (6-PIN)	
					(EACH PLUG KIT INCLUDES PLUG AS, WEDGE & INTERFACE SEAL)	
		1	**147-1445**	1	PLUG AS-CONNECTOR (70-PIN)	
		1	**147-1446**	1	PLUG AS-CONNECTOR (70-PIN)	
		1	**160-7689**	1	PLUG AS-CONNECTOR (70-PIN)	
	18	1	**299-3923**	1	PLATE AS	
	19	1	**2N-3680**	3	SCREW-HEAD (1/4-20X0.75-IN)	
	20	1	**4H-9105**	1	SEAL-O-RING	
	21	1	**4M-5282**	4	BOLT (1/4-20X1.5-IN)	
	22	1	**5L-2029**	2	BALL BEARING	
	23	1	**5P-1075**	2	WASHER-HARD (10.2X22.5X3-MM THK)	
	24	1	**6V-8801**	2	NUT (3/8-16-THD)	
C	25	1	**7K-1181**	9	STRAP-CABLE	
	26	1	**7V-0008**	1	BLOCK	
	27	1	**7X-0290**	2	BOLT (3/8-16X3.5-IN)	
	28	1	**7X-7729**	7	WASHER (11X25X3-MM THK)	
	29	1	**8T-2502**	3	BOLT (3/8-16X1.125-IN)	
M	30	1	**8T-4137**	7	BOLT (M10X1.5X20-MM)	
	31	1	**8T-4896**	7	WASHER-HARD (10.2X18.5X2.5-MM THK)	
	32	1	**8T-7008**	2	BOLT (3/8-16X3-IN)	

C - CHANGE FROM PREVIOUS TYPE
M - METRIC PART
T - REQUIRES CORPORATE KEY
Y - SEPARATE ILLUSTRATION

272-0016 **CONTROL GP-STEERING & XMSN (*contd.*)** **i04046796**

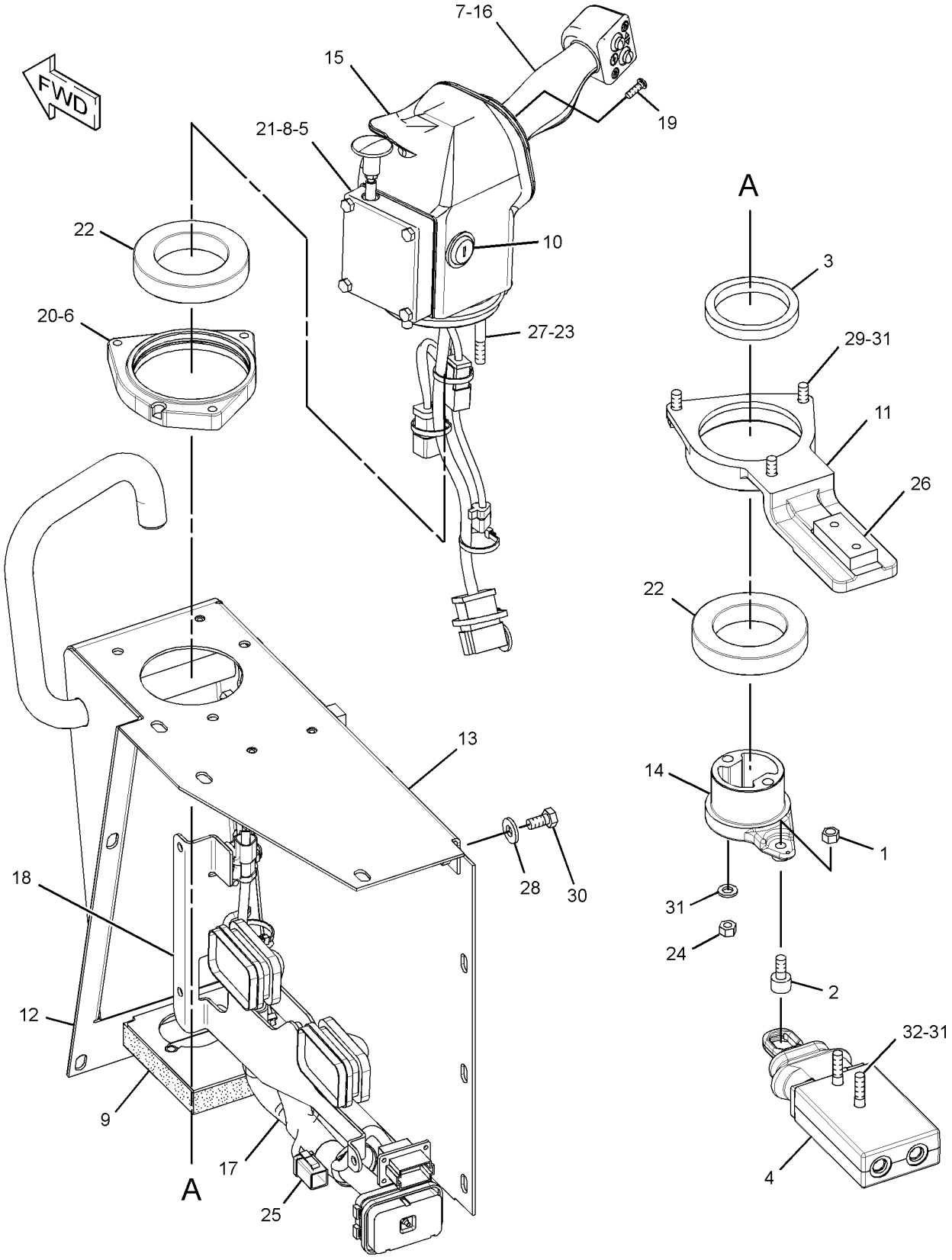

GRAPHIC #1 **<END>** g02158821

265-5278 CONTROL GP-TRANSMISSION HYD

S/N: KKA1-UP

PART OF 220-1429 TRANSMISSION AR

SMCS-3073, 3167 **i04046817**

NOTE	REF NO	GRAPHIC REF	PART NUMBER	QTY	PART NAME 1 2 3 4 5 6 (PRODUCT LEVEL)	SEE PAGE
	1	2	**5K-5120**	2	STRIP	
	2	1	**6P-4977**	2	SLEEVE	
	3	2	**104-6729**	1	RETAINER	
	4	2	**104-6730**	1	GASKET	
	5	1	**204-6501**	1	ELBOW	
	6	1	**205-7205**	5	SLEEVE	
Y	7	1	**213-4540**	1	VALVE GP-RELIEF (MAIN)	565
Y	8	1	*220-4324*	5	VALVE GP-MODULATING (TRANSMISSION CLUTCH)	563
	9	1	**263-4081**	1	HARNESS AS-SENSOR	
		1	**3S-2093**	6	STRAP-CABLE	
		1	**4P-7581**	5	CLIP	
		1	**4P-8134**	1	CLIP	
		1	**6J-2419**	1	SEAL-O-RING	
		1	**155-2270**	7	KIT-CONNECTING PLUG (2-PIN)	
					(EACH INCLUDES PLUG AS, WEDGE, & INTERFACE SEAL)	
	10	2	**031-0218**	2	BOLT-LOCKING (3/8-16X0.5-IN)	
	11	1	**0L-1352**	3	BOLT (3/8-16X3.25-IN)	
	12	1	**0S-0509**	2	BOLT (3/8-16X0.75-IN)	
	13	2	**1D-4540**	10	BOLT (5/16-18X2.75-IN)	
	14	1	**2H-3932**	2	SEAL-O-RING	
	15	2	**5F-4899**	4	BOLT (3/8-16X5.5-IN)	
	16	1,2	**5M-2894**	9	WASHER-HARD (10.2X18.5X2.5-MM THK)	
	17	1	**8M-4432**	4	SEAL-O-RING	
	18	1	**8M-8157**	10	SEAL-O-RING	
	19	2	**9M-1974**	10	WASHER-HARD (8.8X16X2-MM THK)	
M	20	2	**9X-2125**	2	BOLT-LOCKING (M10X1.5X25-MM)	

M - METRIC PART
Y - SEPARATE ILLUSTRATION

265-5278 **CONTROL GP-TRANSMISSION HYD (*contd.*)** **i04046817**

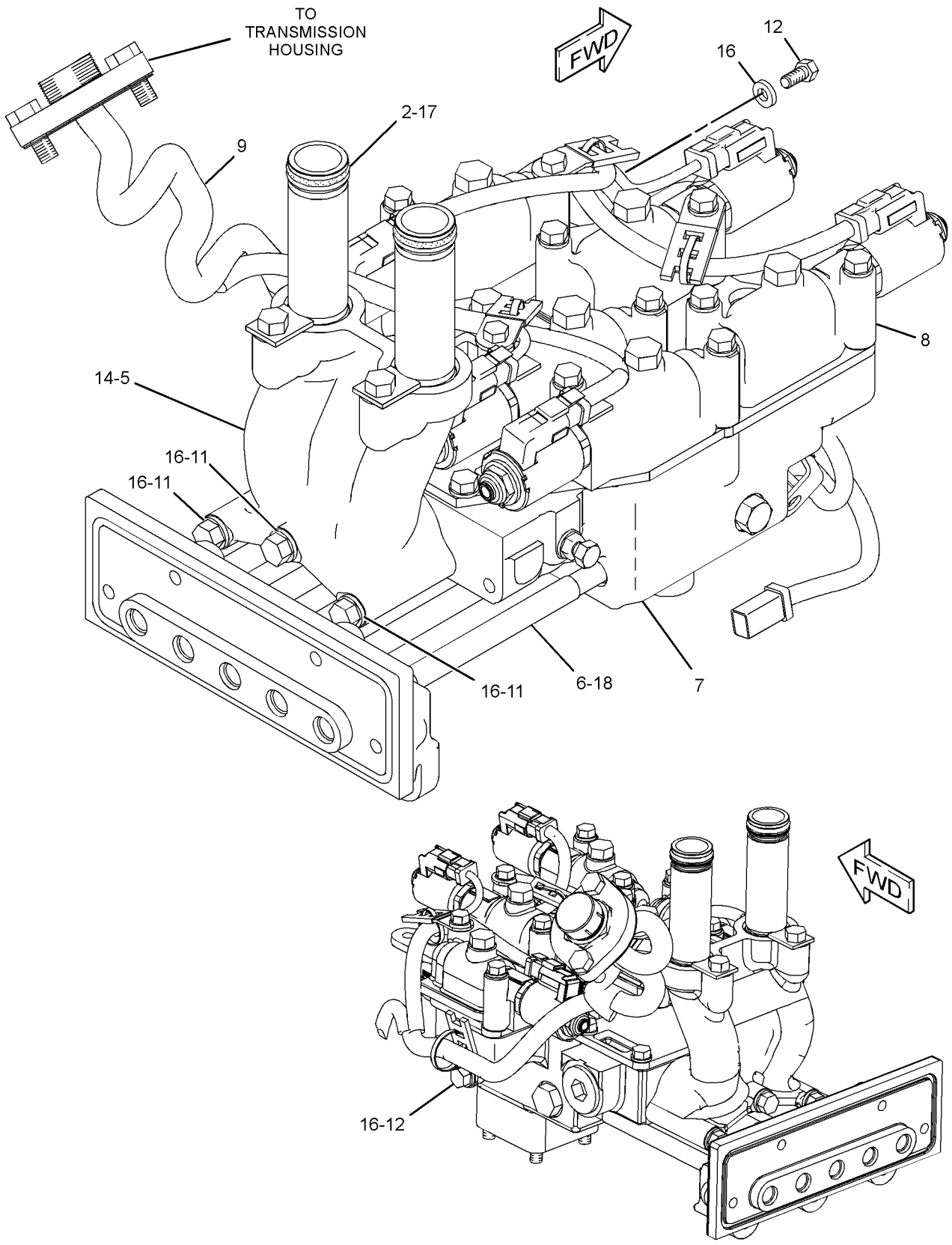

GRAPHIC #1 g02006636

265-5278 **CONTROL GP-TRANSMISSION HYD (*contd.*)** **i04046817**

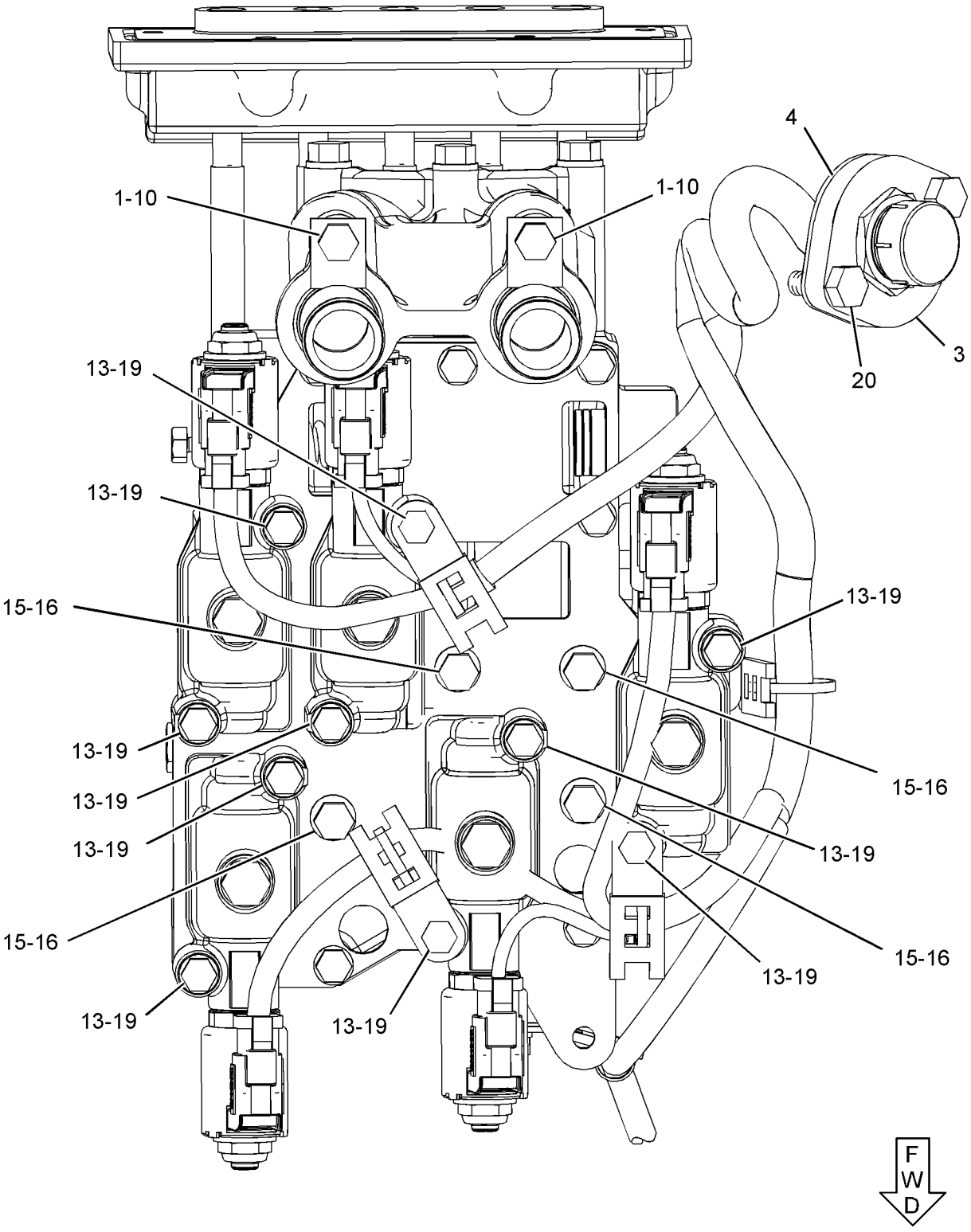

TOP VIEW

GRAPHIC #2 **<END>** g02006639

354-0154 CONTROL GP-TRANSMISSION HYD

S/N: K1T1-UP

PART OF 354-0148 TRANSMISSION AR

SMCS-3073, 3167 **i04275919**

NOTE	REF NO	GRAPHIC REF	PART NUMBER	QTY	PART NAME 1 2 3 4 5 6 (PRODUCT LEVEL)	SEE PAGE
	1	1	**5K-5120**	2	STRIP	
	2	1	**104-6729**	1	RETAINER	
Y	3	1	**244-3114**	5	VALVE GP-MODULATING (24-VOLT) (TRANSMISSION HYDRAULIC CONTROL)	564
	4	1	**354-0155**	1	TUBE AS	
	5	1	**354-0156**	1	TUBE AS	
Y	6	1	**354-0164**	1	VALVE GP-RELIEF (MAIN)	568
	7	1	**354-0165**	2	ADAPTER-DRAIN	
	8	1	**354-0167**	1	HARNESS AS-SENSOR	
		1	**3S-2093**	10	STRAP-CABLE	
		1	**4P-7428**	1	CLIP	
		1	**4P-7581**	1	CLIP	
		1	**132-5789**	2	CLIP	
		1	**174-9603**	2	PLATE	
		1	**5P-8065**	1	SEAL-O-RING	
E		1	**8T-6342**		TUBE-HEAT SHRINK (3.2-MM DIA) (46-CM)	
		1	**9X-3402**	14	SOCKET-CONNECTOR (16-GA TO 18-GA)	
E		1	**125-7874**		TUBE-HEAT SHRINK (5.72-MM DIA) (10-CM)	
		1	*250-3508*	1	RECEPTACLE AS	
		1	**125-5341**	1	NUT (1-1/4-18-THD)	
		1	**331-4226**	7	KIT-CONNECTING PLUG (2-PIN)	
					(EACH INCLUDES PLUG AS, WEDGE & INTERFACE SEAL)	
	9	1	**031-0218**	2	BOLT-LOCKING (3/8-16X0.5-IN)	
	10	1	**0S-1621**	1	BOLT (1/2-13X1-IN)	
	11	1	**104-6730**	1	GASKET	
	12	1	**1D-4539**	4	BOLT (5/16-18X2.5-IN)	
	13	1	**1D-4540**	10	BOLT (5/16-18X2.75-IN)	
	14	1	**5P-8245**	1	WASHER-HARD (13.5X25.5X3-MM THK)	
	15	1	**8M-4432**	4	SEAL-O-RING	
	16	1	**9M-1974**	14	WASHER-HARD (8.8X16X2-MM THK)	
M	17	1	**9X-2125**	2	BOLT-LOCKING (M10X1.5X25-MM)	

E - ORDER BY THE CENTIMETER
M - METRIC PART
Y - SEPARATE ILLUSTRATION

354-0154 **CONTROL GP-TRANSMISSION HYD (*contd.*)** **i04275919**

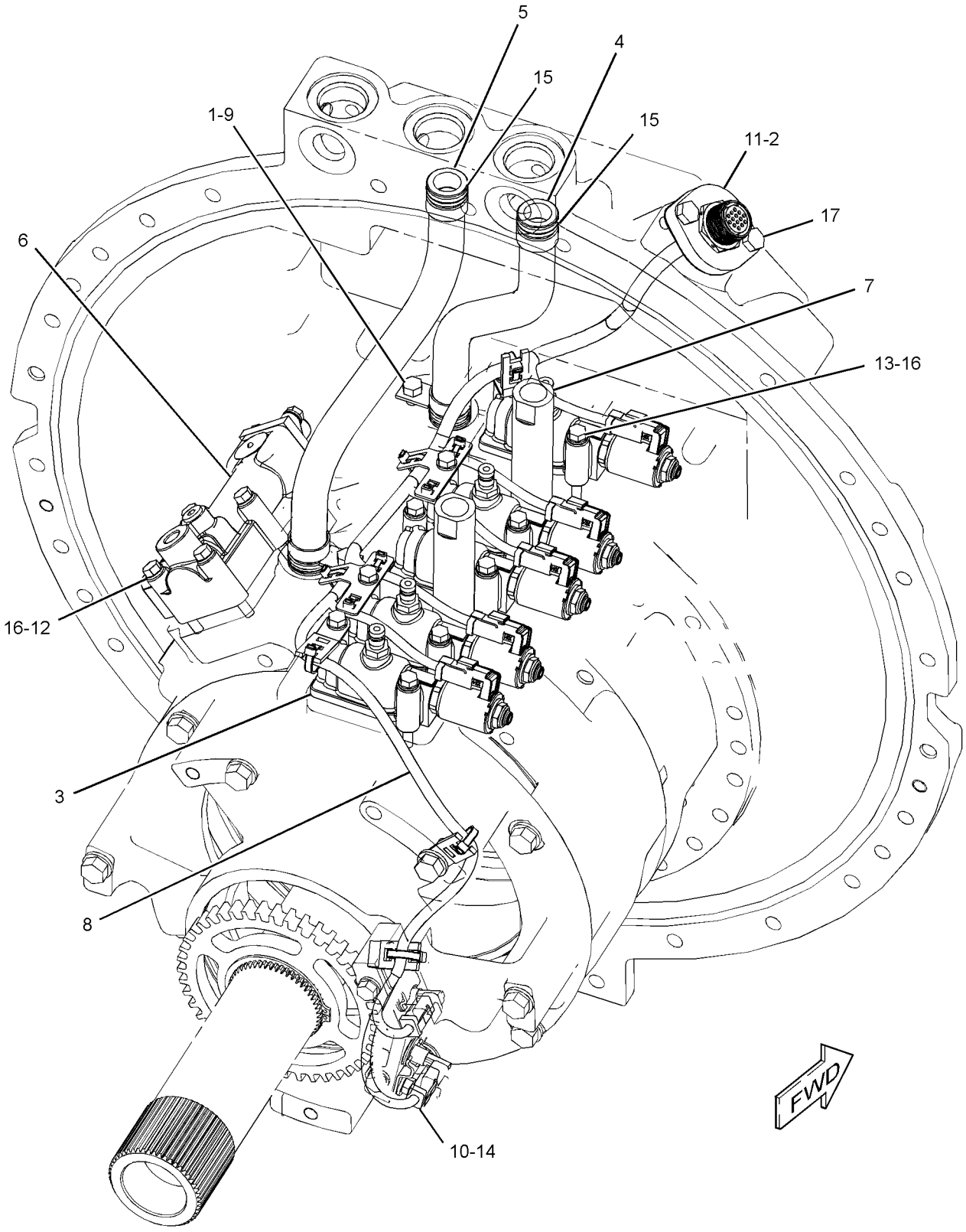

GRAPHIC #1 **<END>** g02357936

238-1116 COOLER GP-TRANSMISSION OIL

S/N: TXD1-UP; THX8900-UP

PART OF 282-3823, 282-3824, 282-3825, 282-3826, 301-5768 ENGINE AR, 349-3564, 349-3565, 387-8574, 387-8575, 387-8576, 387-8580, 398-6424 ENGINE AR-COMPLETE

ALSO AN ATTACHMENT

SMCS-1375 **i05063958**

NOTE	REF NO	GRAPHIC REF	PART NUMBER	QTY	PART NAME 1 2 3 4 5 6 (PRODUCT LEVEL)	SEE PAGE
	1	1	**2S-0795**	2	GASKET	
	2	1	**6F-7062**	1	WASHER (12.7X19.05X1.83-MM THK)	
	3	1	**8M-9307**	1	PLUG (TRANSMISSION OIL COOLER)	
	4	1	**8S-4304**	1	BONNET-XMSN OIL COOLER	
	5	1	**180-3907**	1	SEAL-INTEGRAL	
R	6	1	**187-3523**	1	CORE AS-OIL COOLER (TRANSMISSION)	
	6A	1	**8T-6764**	1	PLUG-PIPE (1/8-27-THD)	
	7	1	**198-3462**	1	DIVERTER	
	8	1	**238-1117**	1	BONNET	
	9	1	*392-0818*	1	PLUG AS	
		1	**6V-6609**	1	SEAL-O-RING	
		1	**360-3693**	1	PLUG	
	10	1	**348-5792**	1	BRACKET	
	11	1	*398-5599*	1	PLUG AS	
		1	**6V-3250**	1	SEAL-O-RING	
		1	**360-3692**	1	PLUG	
	12	1	*398-5614*	1	PLUG AS	
		1	**6V-5064**	1	SEAL-O-RING	
		1	**360-3684**	1	PLUG-O-RING	
M	15	1	**6V-3668**	4	BOLT (M12X1.75X30-MM)	
M	16	1	**6V-3823**	2	BOLT (M12X1.75X60-MM)	
M	17	1	**6V-5696**	6	BOLT (M12X1.75X80-MM)	
M	18	1	**6V-8675**	1	BOLT (M12X1.75X35-MM)	
	19	1	**7D-1649**	3	WASHER-HARD (13.5X32X5-MM THK)	
M	20	1	**7X-2543**	2	BOLT (M10X1.5X120-MM)	
	22	1	**8T-6761**	1	PLUG-PIPE	
M	23	1	**8T-6854**	4	BOLT (M10X1.5X200-MM)	

M - METRIC PART
R - REMFG PART MAY BE AVAILABLE

238-1116 **COOLER GP-TRANSMISSION OIL (*contd.*)** **i05063958**

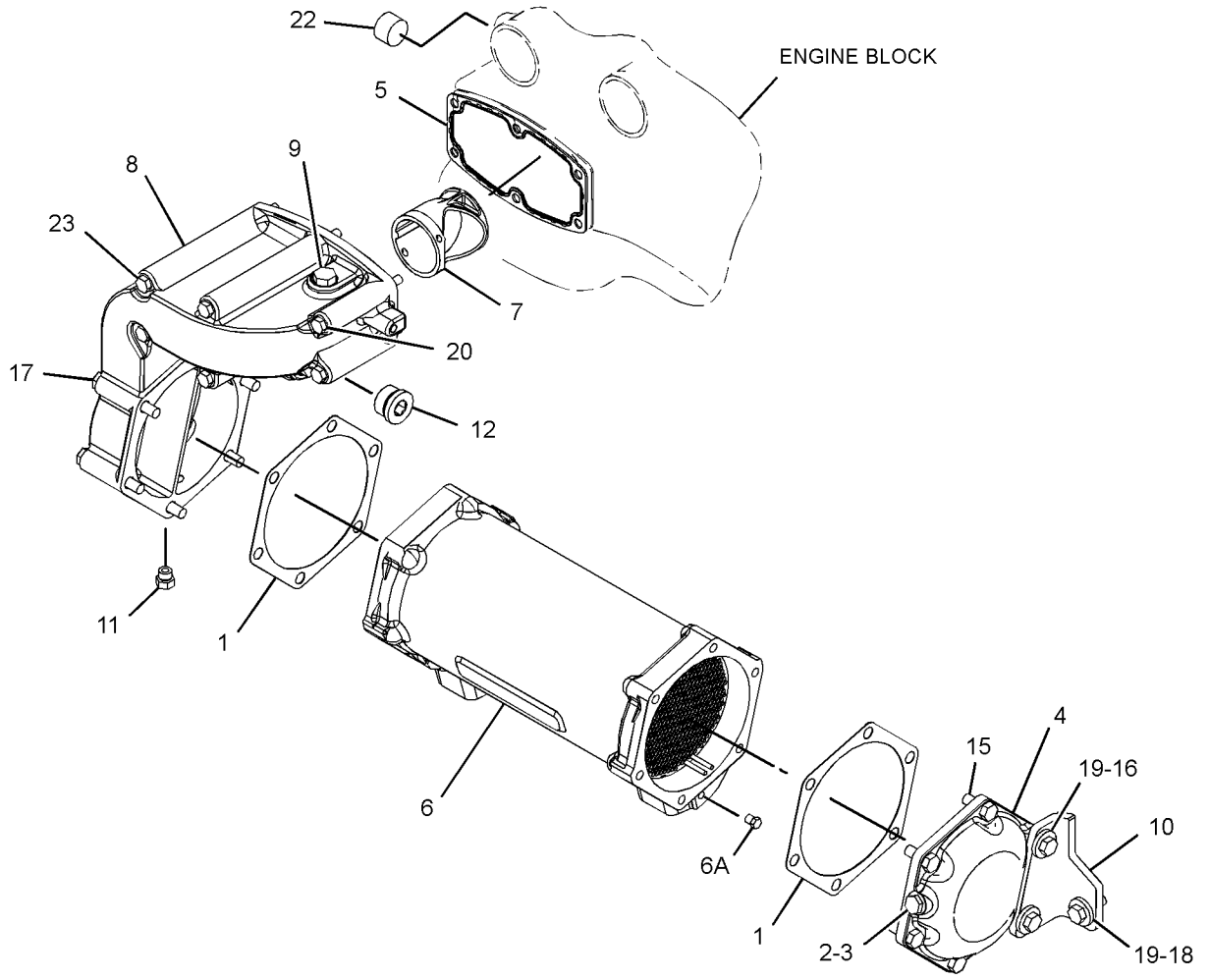

GRAPHIC #1 **<END>** g03316537

225-1506 COUPLING & GUARD GP

S/N: SMC1-UP; GCT1-UP

PART OF 269-2046 POWER TRAIN AR

SMCS-3279 **i02696390**

NOTE	REF NO	GRAPHIC REF	PART NUMBER	QTY	PART NAME 1 2 3 4 5 6 (PRODUCT LEVEL)	SEE PAGE
Y	1	1	*227-0924*	1	COUPLING GP-PUMP	472
	2	1	**284-0638**	1	GUARD AS	
	3	1	**284-0639**	1	BRACKET AS	
	4	1	**8T-4222**	4	WASHER-PLATED (11X32X2.5-MM THK)	
M	5	1	**8T-4195**	4	BOLT (M10X1.5X30-MM)	

M - METRIC PART
Y - SEPARATE ILLUSTRATION

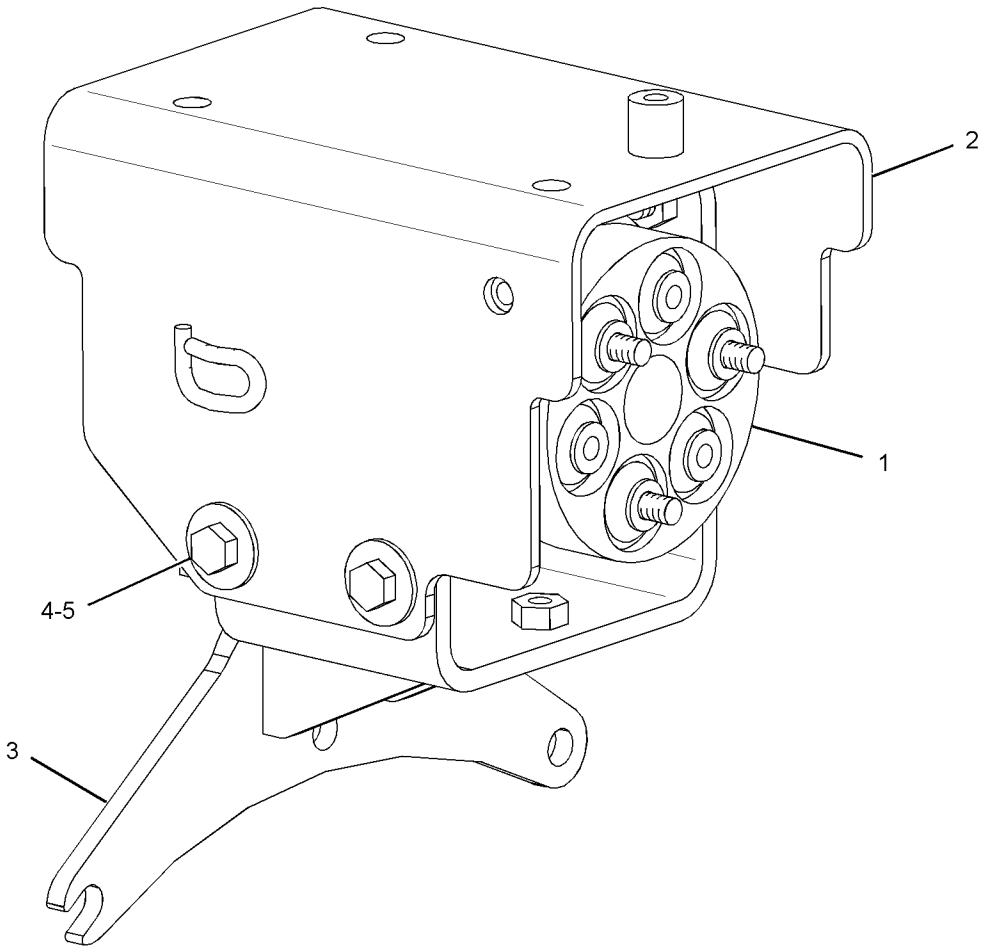

GRAPHIC #1 **<END>** g01362253

227-0924 COUPLING GP-PUMP

S/N: SMC1-UP; GCT1-UP

PART OF 225-1506 COUPLING & GUARD GP

SMCS-5062 **i04092281**

NOTE	REF NO	GRAPHIC REF	PART NUMBER	QTY	PART NAME 1 2 3 4 5 6 (PRODUCT LEVEL)	SEE PAGE
	1	1	**198-1883**	1	TUBE AS	
	2	1	**211-9087**	2	COUPLING AS	
	3	1	**8T-4121**	12	WASHER-HARD (11X21X2.5-MM THK)	
M	4	1	**8T-4182**	6	BOLT (M10X1.5X45-MM)	
M	5	1	**8T-4185**	6	BOLT (M10X1.5X50-MM)	

M - METRIC PART

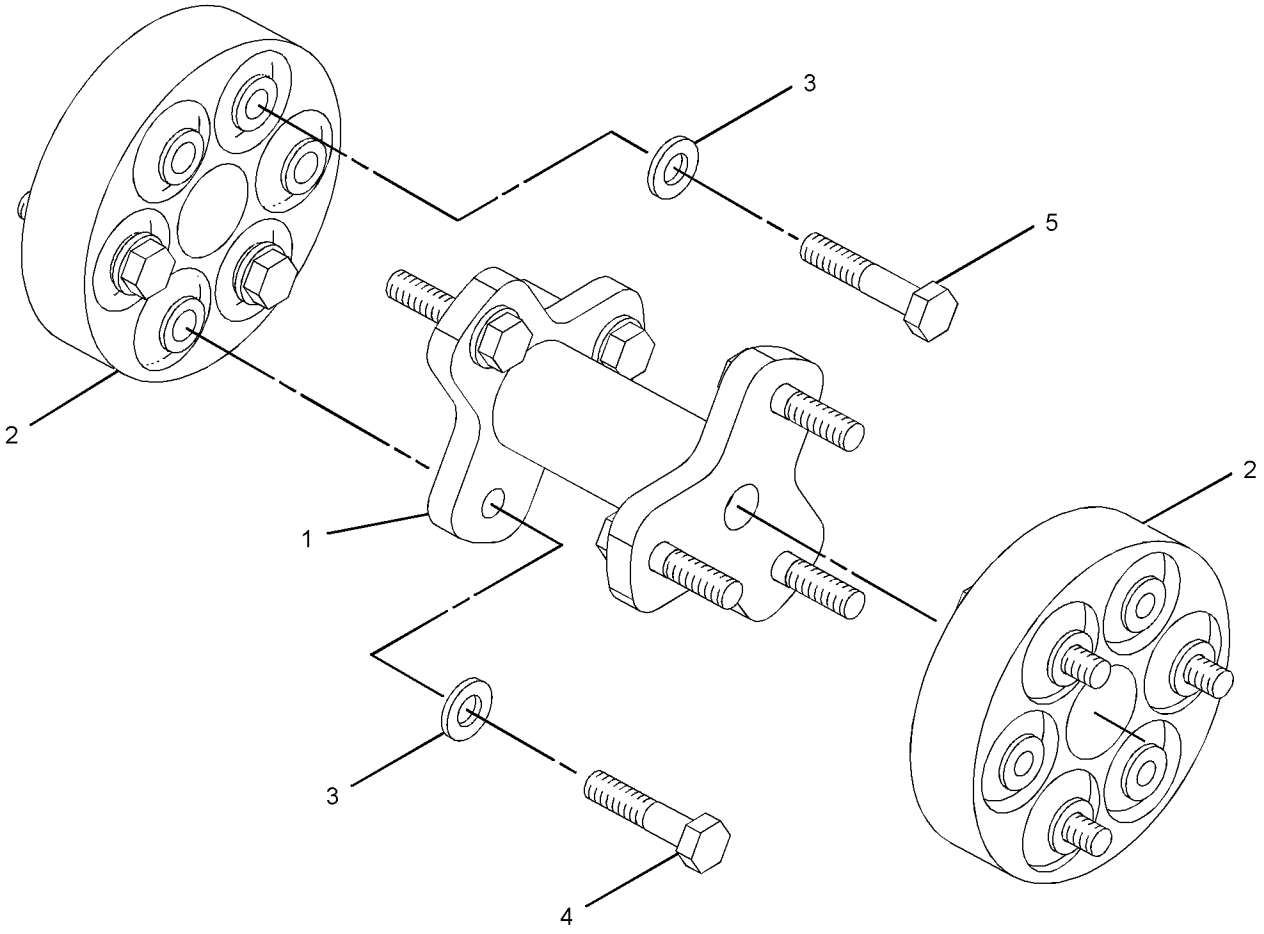

GRAPHIC #1 **<END>** g01208311

106-4150 DRAIN GP-ECOLOGY

S/N: SMC1-UP; GCT1-UP
PART OF 256-9988 DRAIN GP-ECOLOGY
AN ATTACHMENT

SMCS-3100 **i01065592**

NOTE	REF NO	GRAPHIC REF	PART NUMBER	QTY	PART NAME 1 2 3 4 5 6 (PRODUCT LEVEL)	SEE PAGE
	1	1	**4N-3808**	1	PIN-SPRING	
	2	1	**5P-9658**	1	SEAL-O-RING	
A	3	1	**2H-3931**	1	SEAL-O-RING (82.14MM ID)	

A - NOT PART OF THIS GROUP

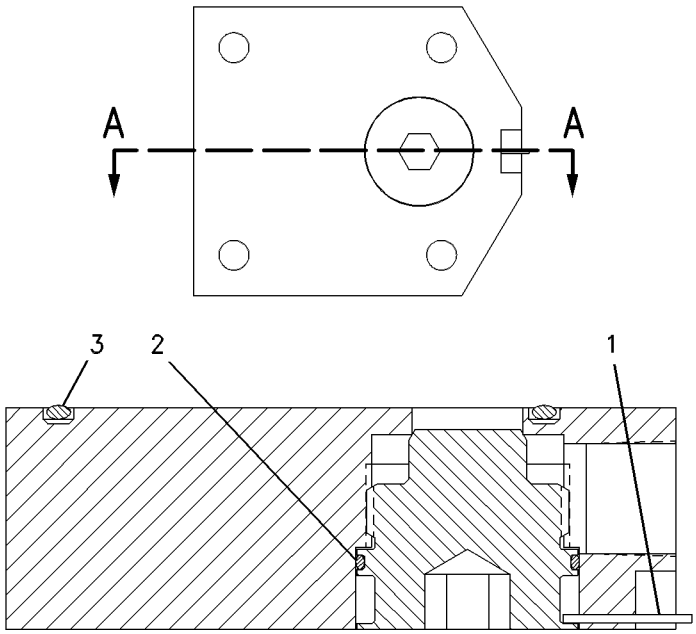

SECTION A-A

GRAPHIC #1 **<END>** g00543496

256-9988 DRAIN GP-ECOLOGY

S/N: SMC1-UP; GCT1-UP

AN ATTACHMENT

SMCS-3100 **i05265828**

NOTE	REF NO	GRAPHIC REF	PART NUMBER	QTY	PART NAME 1 2 3 4 5 6 (PRODUCT LEVEL)	SEE PAGE
	1	1	**4B-7739**	1	PLUG-DRAIN (POWER TRAIN)	
	2	1	**8H-9819**	1	ADAPTER-PLUG	
Y	3	1	**106-4150**	1	DRAIN GP-ECOLOGY (POWER TRAIN)	473
	4	1	**2B-0858**	2	PLUG-PIPE	
	5	1	**2H-3931**	1	SEAL-O-RING	
	6	1	**8H-9818**	1	GASKET	
M	7	1	**8T-4136**	2	BOLT (M10X1.5X25-MM)	
M	8	1	**8T-4185**	4	BOLT (M10X1.5X50-MM)	

M - METRIC PART
Y - SEPARATE ILLUSTRATION

256-9988 **DRAIN GP-ECOLOGY (*contd.*)** **i05265828**

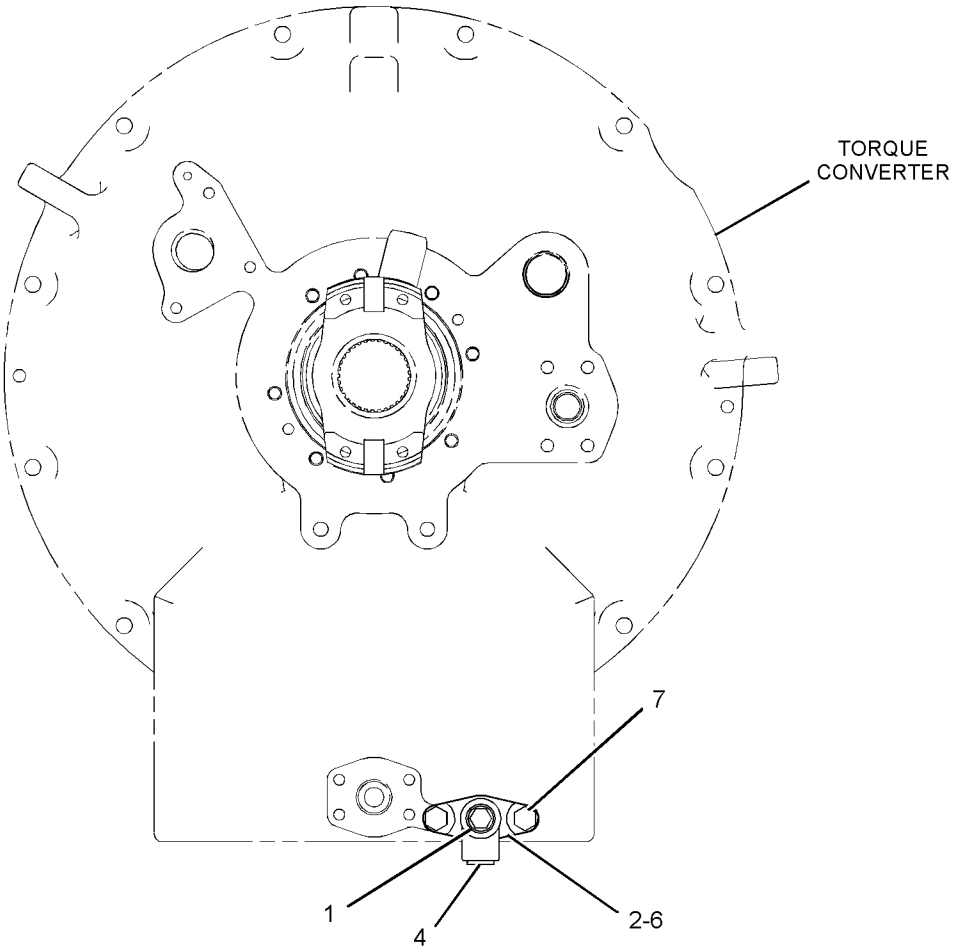

FRONT VIEW

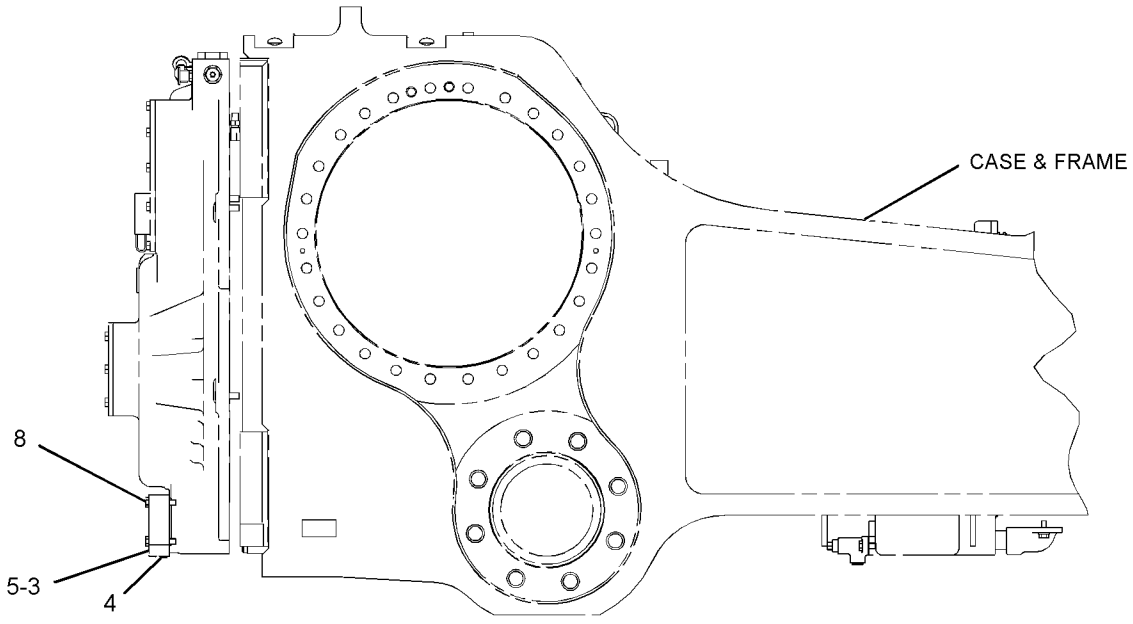

RIGHT SIDE VIEW

GRAPHIC #1 **<END>** g01209353

260-6650 DRIVE GP-FINAL

S/N: SMC1-UP; GCT1-UP

PART OF 269-2046 POWER TRAIN AR

SMCS-4050 **i04046872**

NOTE	REF NO	GRAPHIC REF	PART NUMBER	QTY	PART NAME 1 2 3 4 5 6 (PRODUCT LEVEL)	SEE PAGE
	1	1	**343-6237**	6	BEARING	
	2	1	**1P-9005**	1	SEAL-O-RING	
	3	1	**2P-3696**	3	RETAINER	
	4	1	**2S-4078**	1	SEAL-O-RING	
	5	1	**3K-0360**	1	SEAL-O-RING	
	6	1	**6V-0327**	1	CUP-BEARING (TAPERED ROLLER)	
	7	1	**6V-0328**	1	CONE-BEARING (TAPERED ROLLER)	
	8	1	**6V-0329**	1	CONE-BEARING (TAPERED ROLLER)	
	9	1	**6V-0330**	1	CUP-BEARING (TAPERED ROLLER)	
	10	1	**6V-0439**	1	PLUG-MAGNETIC (FINAL DRIVE, OIL CHECK, FILL)	
	11	1	**6Y-0859**	1	SEAL GP-DUO-CONE	
	11A	1	**1M-9011**	2	RING-TORIC	
	12	1	**8E-2748**	1	HUB-REACTION	
	13	1	**8G-8844**	1	RING-LOCK	
	14	1	**8G-8845**	1	COVER	
	15	1	**9G-8638**	3	GEAR-PLANETARY (40-TEETH)	
	16	1	**335-6121**	1	GEAR-RING (94-TEETH)	
	17	1	**9G-9175**	1	CARRIER	
	18	1	**9G-9180**	1	HUB-SPROCKET	
	19	1	**9G-9181**	1	RETAINER	
	20	1	**333-9410**	3	SHAFT	
	21	1	**9H-3360**	1	SEAL-O-RING	
	22	1	**269-4739**	1	SEAL-LIP TYPE	
	24	1	**260-6642**	1	SPINDLE	
	25	1	**2B-0947**	10	BOLT (1/2-13X2.25-IN)	
	26	1	**4L-6454**	3	BOLT (3/8-16X1-IN)	
	27	1	**7X-0346**	3	BOLT (5/8-11X2-IN)	
	28	1	**8T-4896**	3	WASHER-HARD (10.2X18.5X2.5-MM THK)	
	29	1	**8T-4994**	33	WASHER-HARD (20X36.5X3.5-MM THK)	
	30	1	**8T-9399**	33	BOLT (3/4-10X2.25-IN)	
	31	1	**9S-4185**	1	PLUG-O-RING (FINAL DRIVE, OIL DRAIN)	
	32	1	**1H-9696**	3	SEAL-O-RING	
					PARTS SHOWN IN GRAPHIC(S) WITHOUT A REFERENCE NUMBER ARE NOT SERVICED SEPARATELY	

260-6650 **DRIVE GP-FINAL (*contd.*)** **i04046872**

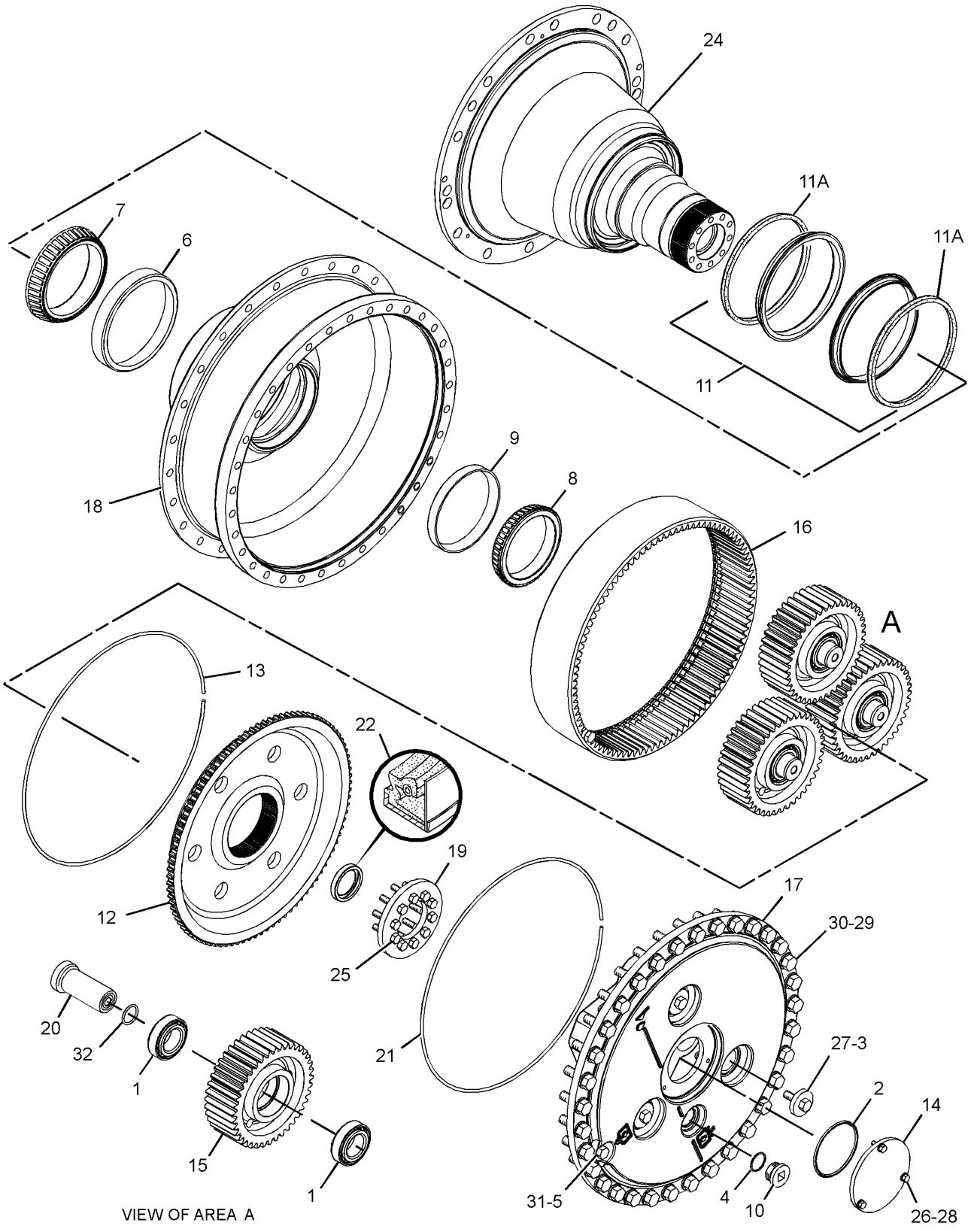

GRAPHIC #1 **<END>** g02192096

260-6652 DRIVE GP-FINAL—WASTE HANDLING

S/N: SMC1-UP; GCT1-UP
WITH PACKING SEAL, AND GUARD
PART OF 262-0554 GUARD AR-FINAL DRIVE
AN ATTACHMENT

SMCS-4050 **i04068993**

NOTE	REF NO	GRAPHIC REF	PART NUMBER	QTY	PART NAME 1 2 3 4 5 6 (PRODUCT LEVEL)	SEE PAGE
	1	1	**1P-9005**	1	SEAL-O-RING	
	2	1	**2P-3696**	3	RETAINER	
	3	1	**2S-4078**	1	SEAL-O-RING	
	4	1	**3K-0360**	1	SEAL-O-RING	
	5	1	**6V-0327**	1	CUP-BEARING (TAPERED ROLLER)	
	6	1	**6V-0328**	1	CONE-BEARING (TAPERED ROLLER)	
	7	1	**6V-0329**	1	CONE-BEARING (TAPERED ROLLER)	
	8	1	**6V-0330**	1	CUP-BEARING (TAPERED ROLLER)	
	9	1	**6V-0439**	1	PLUG-MAGNETIC (FINAL DRIVE, OIL FILL)	
	10	1	**6Y-0859**	1	SEAL GP-DUO-CONE	
	10A	1	**1M-9011**	2	RING-TORIC	
	11	1	**8E-2748**	1	HUB-REACTION	
	12	1	**8G-8844**	1	RING-LOCK	
	13	1	**8G-8845**	1	COVER	
	14	1	**9G-8638**	3	GEAR-PLANETARY (40-TEETH)	
	15	1	**9G-9175**	1	CARRIER	
	16	1	**9G-9181**	1	RETAINER	
	17	1	**9H-3360**	1	SEAL-O-RING	
	18	1	**137-4490**	2	RETAINER	
	19	1	**137-9810**	2	SEAL-PACKING	
	20	1	**180-7910**	1	HUB AS	
		1	**137-4488**	1	GUARD	
	21	1	**260-6644**	1	SPINDLE AS	
	22	1	**269-4739**	1	SEAL-LIP TYPE	
	23	1	**333-9410**	3	SHAFT	
	24	1	**335-6121**	1	GEAR-RING (94-TEETH)	
	25	1	**343-6237**	6	BEARING	
	26	1	**1H-9696**	3	SEAL-O-RING	
	27	1	**2B-0947**	10	BOLT (1/2-13X2.25-IN)	
	28	1	**4L-6454**	3	BOLT (3/8-16X1-IN)	
	29	1	**7X-0346**	3	BOLT (5/8-11X2-IN)	
	30	1	**8C-6561**	16	BOLT (5/16-18X1.375-IN)	
	31	1	**8T-4224**	16	WASHER-HARD (8.8X16X2-MM THK)	
	32	1	**8T-4896**	3	WASHER-HARD (10.2X18.5X2.5-MM THK)	
	33	1	**8T-4994**	33	WASHER-HARD (20X36.5X3.5-MM THK)	
	34	1	**8T-9399**	33	BOLT (3/4-10X2.25-IN)	
	35	1	**9S-4185**	1	PLUG-O-RING (FINAL DRIVE, OIL DRAIN)	
					PARTS SHOWN IN GRAPHIC(S) WITHOUT A REFERENCE NUMBER ARE NOT SERVICED SEPARATELY	

260-6652 **DRIVE GP-FINAL (*contd.*)** **i04068993**

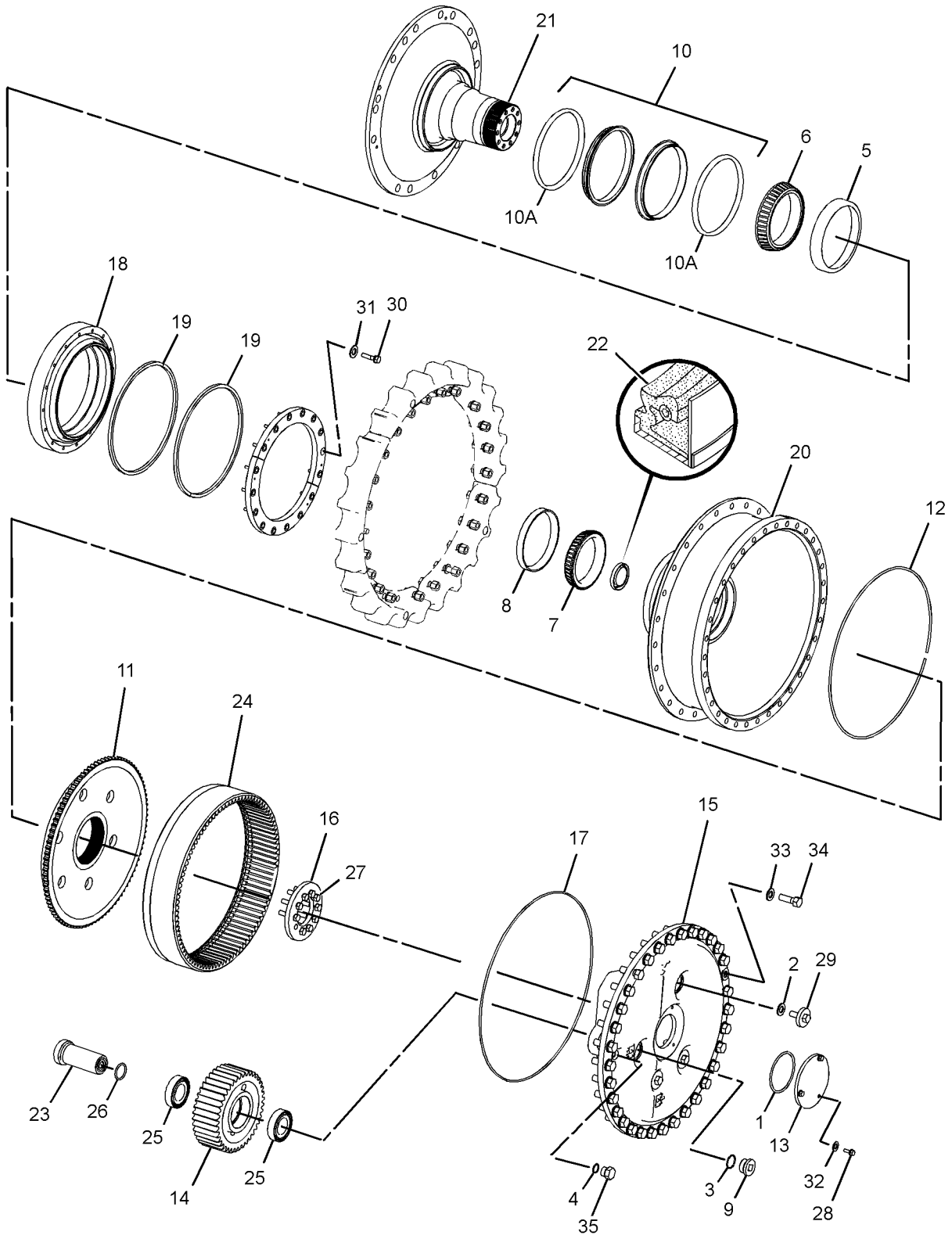

GRAPHIC #1 **<END>** g02255793

246-0599 DRIVE GP-PUMP–WATER

S/N: TXD1-UP; THX8900-UP

PART OF 282-3823, 282-3824, 282-3825, 282-3826, 301-5768 ENGINE AR, 349-3564, 349-3565, 387-8574, 387-8575, 387-8576, 387-8580, 398-6424 ENGINE AR-COMPLETE

ALSO AN ATTACHMENT

SMCS-3108 **i04148397**

NOTE	REF NO	GRAPHIC REF	PART NUMBER	QTY	PART NAME 1 2 3 4 5 6 (PRODUCT LEVEL)	SEE PAGE
	1	1	**236-8240**	1	PULLEY (8-GROOVE)	
M	2	1	**6V-2317**	4	BOLT (M8X1.25X30-MM)	
	3	1	**9M-1974**	4	WASHER-HARD (8.8X16X2-MM THK)	

M - METRIC PART

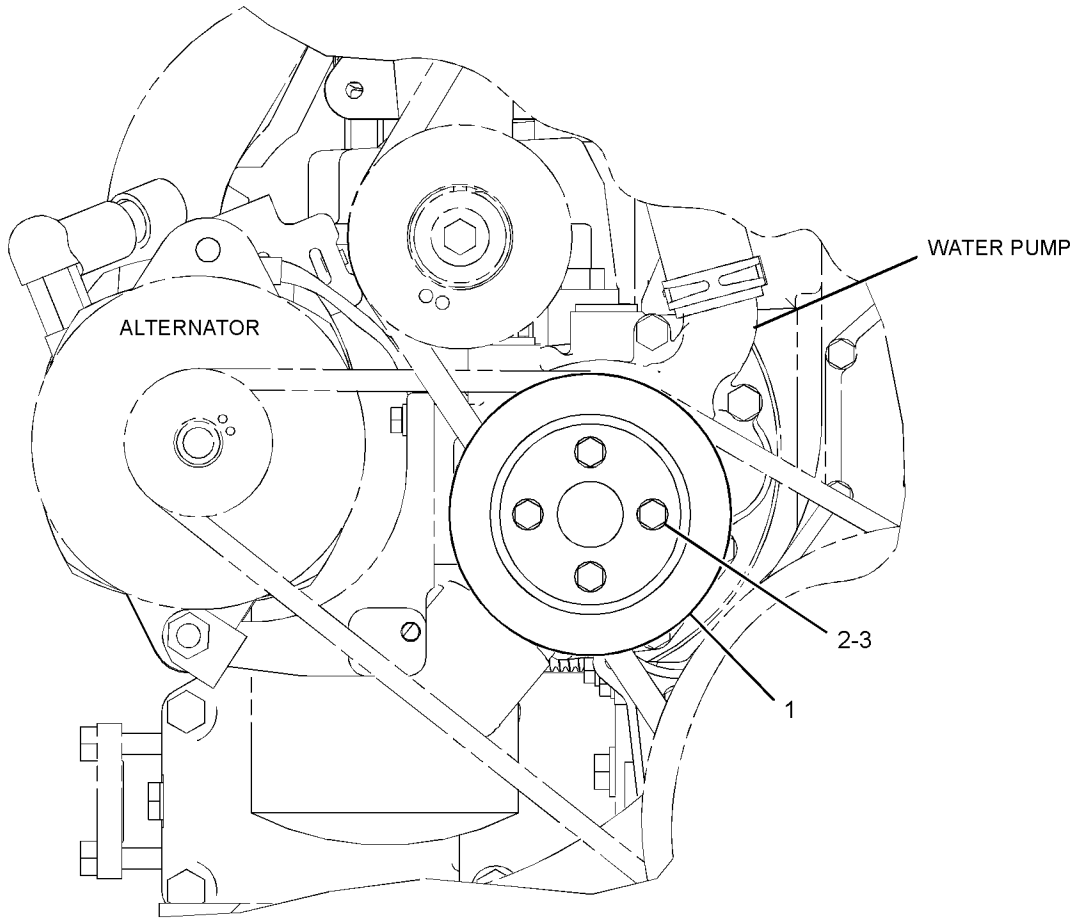

FRONT VIEW

GRAPHIC #1 **<END>** g01205602

235-5812 FILTER GP-OIL—POWER TRAIN

S/N: SMC1-297; GCT1-441

PART OF 269-2072 LINES GP-POWER TRAIN OIL

SMCS-3004, 3067 **i04046892**

NOTE	REF NO	GRAPHIC REF	PART NUMBER	QTY	PART NAME 1 2 3 4 5 6 (PRODUCT LEVEL)	SEE PAGE
	1	1	**1R-1809**	1	FILTER ELEMENT AS-OIL (ULTRA HIGH EFFICIENCY)	
		1	**130-0229**	1	SEAL-O-RING	
	2	1	**6V-0852**	1	CAP-DUST	
	3	1	**8C-3447**	1	CAP-DUST	
Y	4	1	*238-1029*	1	BASE GP-OIL FILTER	446
	5	1	**321-5967**	1	HOUSING GP-FILTER	
		1	**3J-1907**	1	SEAL-O-RING	
		1	**9S-8004**	1	PLUG-O-RING	
	6	1	**3J-1907**	1	SEAL-O-RING	
	7	1	**3J-7354**	1	SEAL-O-RING	
	8	1	**6V-3965**	1	FITTING (QUICK DISCONNECT)	
	9	1	**8C-3446**	1	VALVE-FLUID SAMPLING	
	10	1	**130-0229**	1	SEAL-O-RING	

Y - SEPARATE ILLUSTRATION

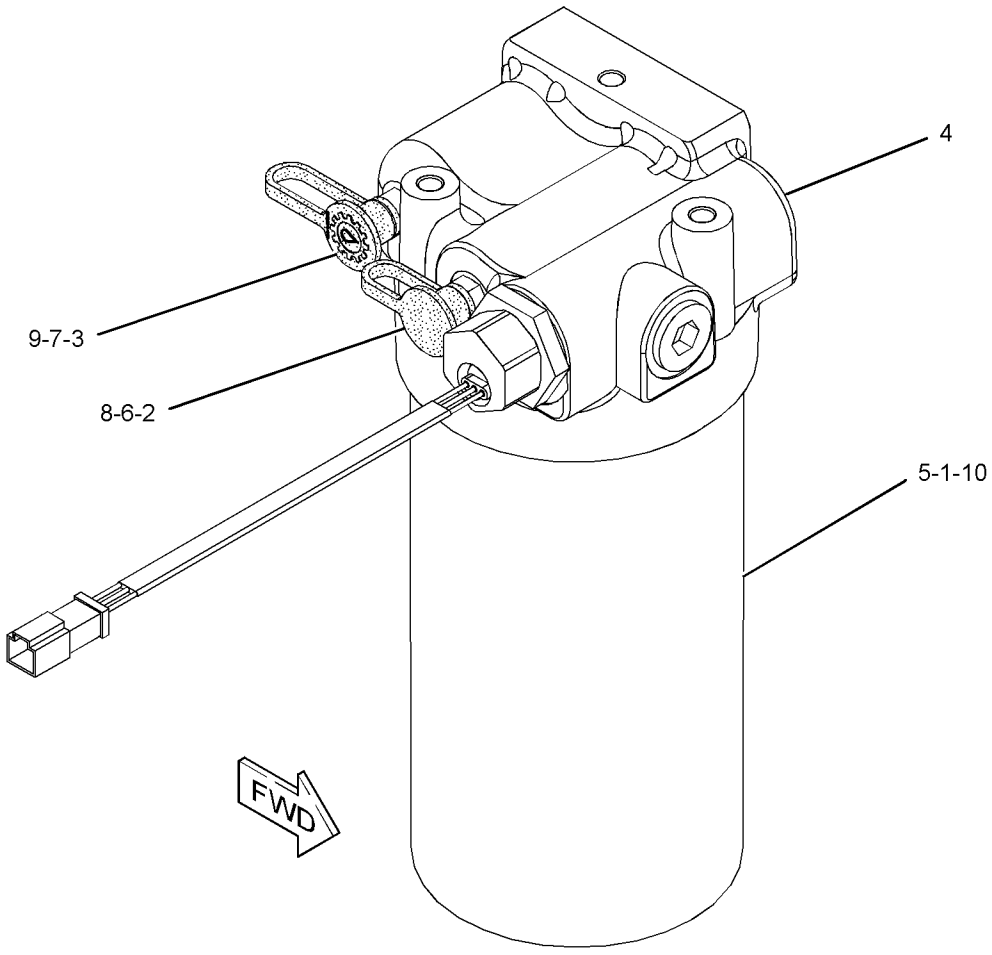

GRAPHIC #1 **<END>** g01217116

333-6437 FILTER GP-OIL—POWER TRAIN

S/N: SMC298-UP; GCT442-UP

PART OF 269-2072 LINES GP-POWER TRAIN OIL

SMCS-3004, 3067 **i03630673**

NOTE	REF NO	GRAPHIC REF	PART NUMBER	QTY	PART NAME 1 2 3 4 5 6 (PRODUCT LEVEL)	SEE PAGE
	1	1	**6V-0852**	1	CAP-DUST	
	2	1	**8C-3447**	1	CAP-DUST	
	3	1	**321-5967**	1	HOUSING GP-FILTER	
		1	**214-7568**	1	SEAL-O-RING	
		1	**9S-8004**	1	PLUG-O-RING	
	4	1	**328-3655**	1	FILTER ELEMENT AS-OIL (ADVANCED EFFICIENCY)	
Y	5	1	**333-9308**	1	BASE GP-OIL FILTER	447
	6	1	**214-7568**	1	SEAL-O-RING	
	7	1	**6V-5048**	1	SEAL-O-RING	
	8	1	**6V-3965**	1	FITTING (QUICK DISCONNECT)	
	9	1	**8C-3446**	1	VALVE-FLUID SAMPLING	
	10	1	**130-0229**	1	SEAL-O-RING	
	11	1	**8L-2786**	1	SEAL-O-RING	
	12	1	**3P-1932**	1	ADAPTER	

Y - SEPARATE ILLUSTRATION

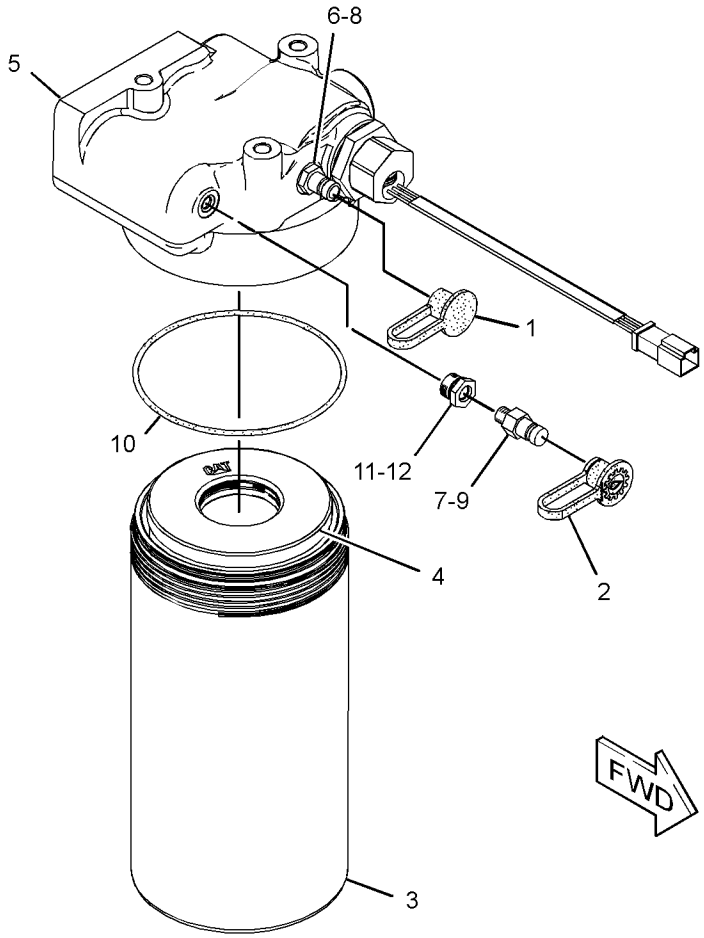

GRAPHIC #1 **<END>** g01888573

244-2616 GEAR GP-BEVEL & TRANSFER

S/N: KKA1-UP; K1T1-UP

PART OF 220-1429, 354-0148 TRANSMISSION AR

SMCS-3011 **i02451035**

NOTE	REF NO	GRAPHIC REF	PART NUMBER	QTY	PART NAME 1 2 3 4 5 6 (PRODUCT LEVEL)	SEE PAGE
	1	1	**190-2277**	1	CASE AS	
		1	**2D-6642**	1	BALL	
B	2	1	**9P-1922**	1	SHIM PACK (INCLUDES 14-SHIMS)	
	3	1	**9W-2992**	1	CAGE-BEARING	
	4	1	**6S-2828**	2	CUP-BEARING	
	5	1	**6S-2829**	2	CONE-BEARING	
	6	1	**248-0849**	1	GEAR-TRANSFER (49-TEETH)	
	7	1	**9W-3660**	1	PINION-BEVEL (20-TEETH)	
B	8	1	**9P-1921**	1	SHIM PACK (INCLUDES 14-SHIMS)	
	9	1	**6I-8511**	1	CAGE-BEARING	
	10	1	**248-0848**	1	GEAR-TRANSFER (45-TEETH)	
	11	1	**7H-7628**	1	BEARING	
	12	1	**8D-1817**	2	CUP-BEARING	
	13	1	**8D-1819**	2	CONE-BEARING	
	14	1	**216-0273**	1	SEAL-LIP TYPE	
	15	1	**7T-1474**	1	BRACKET-ROLLER	
	16	1	**6T-3852**	2	ROLLER	
	17	1	**6T-3853**	2	SLEEVE	
	18	1	**6I-8507**	1	PLATE-RETAINER	
	19	1	**5M-2894**	4	WASHER-HARD (10.2X18.5X2.5-MM THK)	
	20	1	**0S-1591**	4	BOLT (3/8-16X1.5-IN)	
	21	1	**7D-1649**	2	WASHER-HARD (13.5X32X5-MM THK)	
	22	1	**1A-5822**	2	BOLT (1/2-13X2.75-IN)	
	23	1	**7T-1475**	1	BRACKET-ROLLER	
	24	1	**5P-8247**	16	WASHER-HARD (17X32X3.5-MM THK)	
	25	1	**1D-4601**	4	BOLT (5/8-11X8.5-IN)	
	26	1,2	**5P-8245**	24	WASHER-HARD (13.5X25.5X3-MM THK)	
	27	1,2	**7B-3235**	24	BOLT (1/2-13X1.375-IN)	
	28	1	**0L-1169**	12	BOLT (5/8-11X3.75-IN)	
	29	2	**9W-5150**	1	SHAFT-BEVEL GEAR	
	30	2	**9P-1925**	1	GEAR-BEVEL (35-TEETH)	
	31	2	**5P-7592**	1	RACE-ROLLER BEARING	
	32	2	**4H-0019**	1	RACE & ROLLER AS	
	33	2	**6J-3473**	1	RING-SNAP	
	34	2	**7T-9946**	1	CAGE-BEARING	
	35	2	**9G-0832**	1	DOWEL	
	36	2	**0S-1897**	12	BOLT (3/4-16X2.25-IN)	
	37	2	**1S-1860**	12	NUT-TRACK (3/4-16-THD)	
	38	2	**1P-3935**	2	CONE-BEARING	
	39	2	**9W-8612**	1	SPACER-BEARING	
	40	2	**6T-0364**	1	RING-RETAINING	
	41	2	**1P-3934**	2	CUP-BEARING	
	42	2	**9P-7072**	1	WASHER (90.6X115X2.5-MM THK)	
	43	2	**9W-1570**	1	CAGE AS-BEARING	
		2	**4B-9880**	1	BALL	
		2	**9W-1569**	1	PLUG-ORIFICE	
	44	2	**6V-2404**	1	LOCKWASHER-BEARING	
	45	2	**1L-6957**	1	LOCKNUT-BEARING	
B	46	2	**9P-1478**	2	SHIM PACK (INCLUDES 14-SHIMS)	
	47	1	**3T-6742**	1	RETAINER	
	48	1	**0S-1569**	1	BOLT (5/8-11X4-IN)	

B - USE AS REQUIRED

244-2616 **GEAR GP-BEVEL & TRANSFER (*contd.*)** **i02451035**

REFER TO ALL ILLUSTRATIONS OF
THIS GROUP FOR AUXILIARY VIEWS

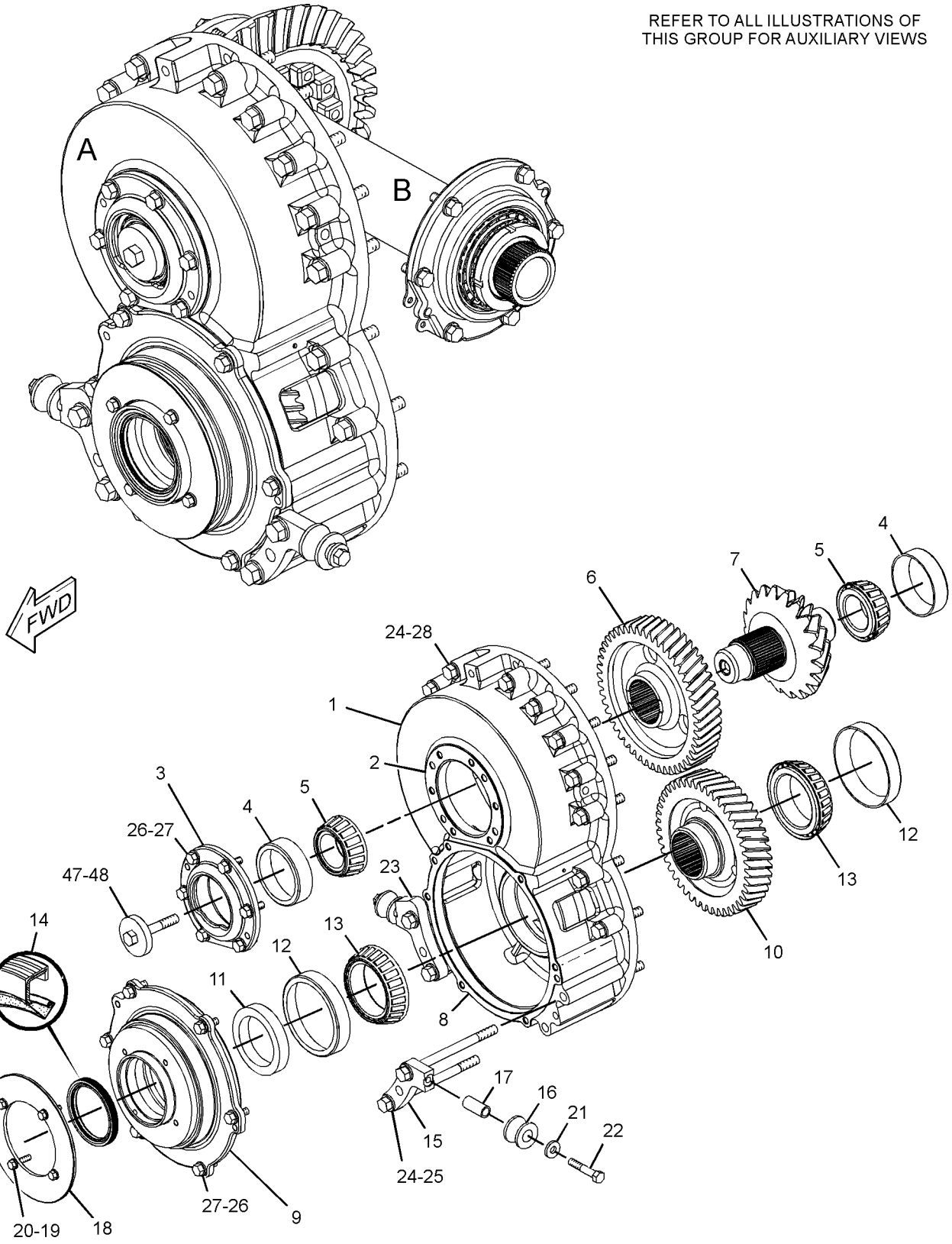

VIEW OF AREA A

GRAPHIC #1 g01210762

244-2616 **GEAR GP-BEVEL & TRANSFER (*contd.*)** **i02451035**

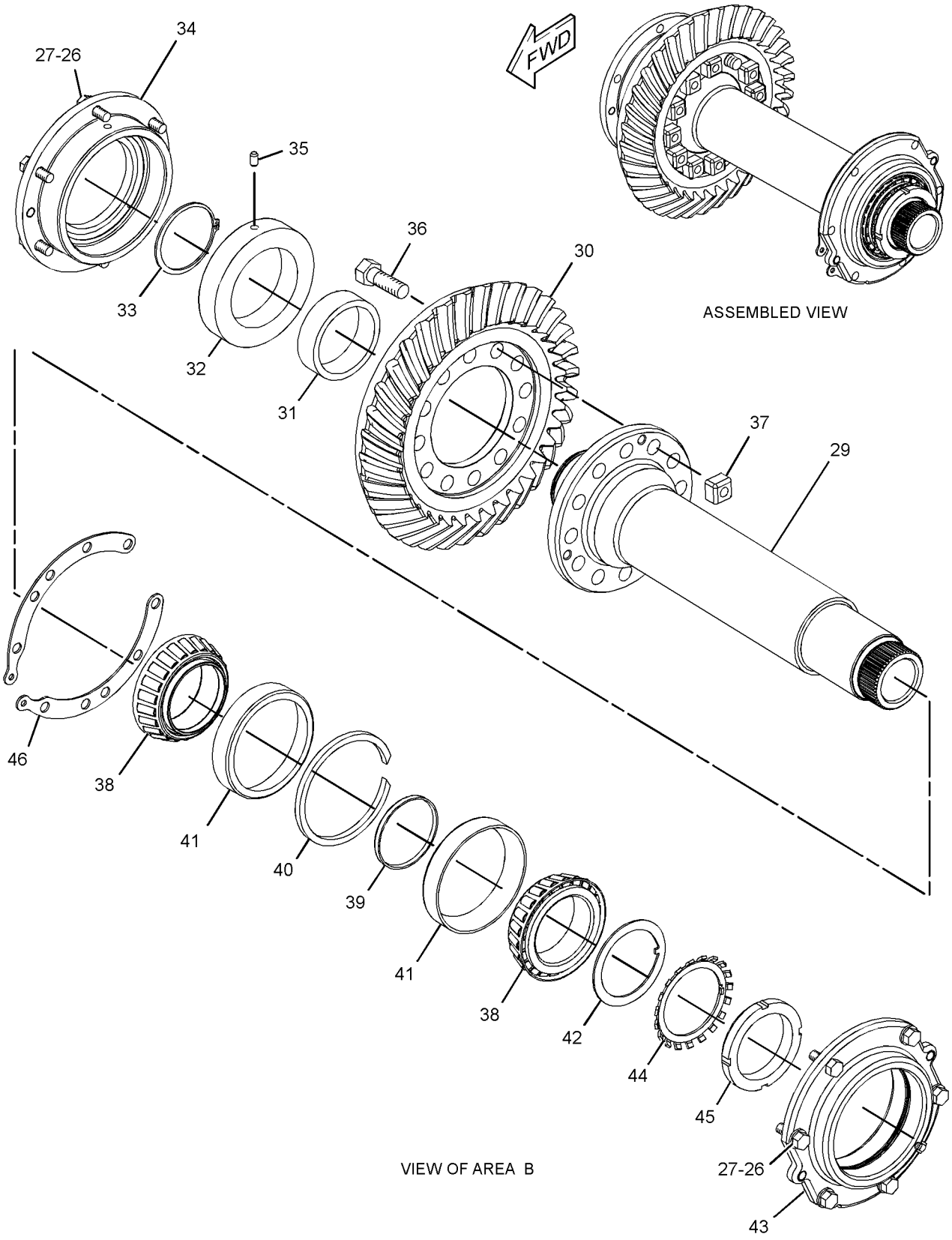

GRAPHIC #2 **<END>** g01210763

313-2064 KIT-TORQUE CONVERTER BEARING

S/N: SMC1-UP; GCT1-UP

FIELD INSTALLATION

SMCS-3101, 3127, 7551 **i05326731**

NOTE	PART NUMBER	QTY	PART NAME 1 2 3 4 5 6 (PRODUCT LEVEL)	SEE PAGE
	9H-8712	1	BEARING AS	
	5P-3930	3	BEARING AS-ROLLER	
	1T-0441	1	BALL BEARING	
	2D-5658	1	BALL BEARING	
	304-9651	1	BALL BEARING	
	1T-0902	2	BUSHING	
	8E-8300	6	DISC-THRUST	
	4S-8537	1	DOWEL	
	5B-0582	1	DOWEL	
	1T-0796	1	LOCK PIN	
	2K-5986	2	PIN-SPRING	
	3S-2708	3	PIN-SPRING	
	4H-1440	6	PIN-SPRING	
	5P-7679	1	RACE-SPECIAL ROLLER BEARING	
	1T-0069	1	RING-METAL SEAL	
	1T-0097	1	RING-METAL SEAL	
	9M-2008	1	RING-METAL SEAL	

<END>

384-0399 KIT-TORQUE CONVERTER GASKET—OVERHAUL

S/N: SMC1-UP; GCT1-UP
FOR USE WITH 269-7635—PAGE: 554
FIELD INSTALLATION

SMCS-3101, 7555

i05326026

NOTE	PART NUMBER	QTY	PART NAME 1 2 3 4 5 6 (PRODUCT LEVEL)	SEE PAGE
	6V-0852	1	CAP-DUST	
	8H-9818	1	GASKET	
	7G-3832	1	GROMMET	
	142-8540	1	RING-SEAL	
	111-4919	1	SEAL-LIP TYPE	
	136-2216	1	SEAL-LIP TYPE	
	1H-5728	1	SEAL-O-RING	
	6V-5266	1	SEAL-O-RING	
	2K-8257	1	SEAL-O-RING	
	8C-5230	1	SEAL-O-RING	
	3J-1907	4	SEAL-O-RING	
	3J-7354	1	SEAL-O-RING	
	3K-0360	2	SEAL-O-RING	
	4J-5477	4	SEAL-O-RING	
	5P-7701	2	SEAL-O-RING	
	6V-7681	1	SEAL-O-RING	
	6L-1649	2	SEAL-O-RING	
	6L-5359	2	SEAL-O-RING	
	6V-1179	1	SEAL-O-RING	
	6V-5188	1	SEAL-O-RING	
	6V-8397	2	SEAL-O-RING	
	6V-8398	2	SEAL-O-RING	
	7M-8485	1	SEAL-O-RING	
	8M-4986	10	SEAL-O-RING	
	8M-4987	3	SEAL-O-RING	
	8M-5254	4	SEAL-O-RING	
	8M-8157	1	SEAL-O-RING	
	6V-5043	1	SEAL-O-RING	
	9X-4609	1	SEAL-O-RING	
	061-9457	1	SEAL-O-RING	
	161-8068	4	SEAL-O-RING	
	165-4854	1	SEAL-O-RING	
	155-5161	1	SEAL-OIL	
	5P-7085	1	SEAL-RECTANGULAR	
	180-4362	2	SEAL-RECTANGULAR	

<END>

383-8926 KIT-TRANSMISSION BEARING–OVERHAUL

S/N: SMC1-UP; GCT1-UP

FOR USE WITH 354-0148–PAGE: 561, 220-1429–PAGE: 560

FIELD INSTALLATION

SMCS-3030, 3064, 7551

i05351853

NOTE	PART NUMBER	QTY	PART NAME 1 2 3 4 5 6 (PRODUCT LEVEL)	SEE PAGE
	5M-6126	6	BEARING AS-ROLLER	
	5P-3930	3	BEARING AS-ROLLER	
	4H-0019	1	RACE & ROLLER AS	
	7G-9555	2	SPIDER & BEARING AS	
	5P-5045	1	BALL BEARING	
	7T-8816	3	BALL BEARING	
	8H-5352	2	BALL BEARING	
	5D-2989	3	BEARING	
	7H-7628	1	BEARING	
	3T-8729	1	BUSHING	
	9G-6744	1	BUSHING	
	1P-3935	2	CONE-BEARING	
	6S-2829	2	CONE-BEARING	
	8D-1819	2	CONE-BEARING	
	1P-3934	2	CUP-BEARING	
	6S-2828	2	CUP-BEARING	
	8D-1817	2	CUP-BEARING	
	8E-8299	6	DISC-THRUST	
	8E-8304	12	DISC-THRUST	
	8E-8305	6	DISC-THRUST	
	6V-2404	1	LOCKWASHER-BEARING	
	3S-2708	6	PIN-SPRING	
	6B-6863	1	PIN-SPRING	
	7M-5130	1	PIN-SPRING	
	112-4511	3	PIN-SPRING	
	7D-1677	1	RACE-BEARING INNER	
	5P-7592	1	RACE-ROLLER BEARING	
	3T-4377	2	SEAL-RING	
	8P-2053	1	SEAL-RING	
	131-4091	1	SEAL-RING	

<END>

384-0405 KIT-TRANSMISSION GASKET–OVERHAUL

S/N: SMC1-UP; GCT1-UP
FOR USE WITH 220-1429–PAGE: 560
FIELD INSTALLATION

SMCS-7555 **i05326027**

NOTE	PART NUMBER	QTY	PART NAME 1 2 3 4 5 6 (PRODUCT LEVEL)	SEE PAGE
	6V-0852	8	CAP-DUST	
	3S-7781	1	GASKET	
	104-6730	1	GASKET	
	146-6669	1	GASKET	
	8P-0058	1	GASKET-COVER	
	203-2288	1	GASKET-COVER	
	162-9523	2	GROMMET	
	7G-2830	2	RING-SEAL	
	8P-2019	3	RING-SEAL	
	8P-2022	4	RING-SEAL	
	8P-2023	1	RING-SEAL	
	9G-0286	1	RING-SEAL	
	1M-9011	1	RING-TORIC	
	216-0273	1	SEAL-LIP TYPE	
	2D-6506	1	SEAL-O-RING	
	2H-3932	2	SEAL-O-RING	
	2M-9780	1	SEAL-O-RING	
	2S-4078	1	SEAL-O-RING	
	3J-1907	3	SEAL-O-RING	
	4J-5477	1	SEAL-O-RING	
	5K-9090	1	SEAL-O-RING	
	5M-3038	2	SEAL-O-RING	
	5P-4057	1	SEAL-O-RING	
	5P-5846	2	SEAL-O-RING	
	5P-7815	1	SEAL-O-RING	
	6J-2419	1	SEAL-O-RING	
	6V-5050	1	SEAL-O-RING	
	6V-8397	2	SEAL-O-RING	
	6V-9746	1	SEAL-O-RING	
	7M-8485	2	SEAL-O-RING	
	8M-4390	1	SEAL-O-RING	
	8M-4432	5	SEAL-O-RING	
	8M-4986	1	SEAL-O-RING	
	8M-5010	2	SEAL-O-RING	
	8M-5254	4	SEAL-O-RING	
	8M-5255	1	SEAL-O-RING	
	8M-5266	1	SEAL-O-RING	
	8M-8157	10	SEAL-O-RING	
	9M-7002	2	SEAL-O-RING	
	061-9455	1	SEAL-O-RING	
	214-7568	9	SEAL-O-RING	
	228-4947	4	SEAL-O-RING	
	228-7096	3	SEAL-O-RING	
	238-5079	1	SEAL-O-RING	
	238-5080	1	SEAL-O-RING	
	238-5081	1	SEAL-O-RING	
	334-6206	1	SEAL-O-RING	
	8D-9739	1	SEAL-RING	

<END>

269-2072 LINES GP-POWER TRAIN OIL

S/N: SMC1-185; GCT1-245

PART OF 269-2046 POWER TRAIN AR

SMCS-3016 **i04046890**

NOTE	REF NO	GRAPHIC REF	PART NUMBER	QTY	PART NAME 1 2 3 4 5 6 (PRODUCT LEVEL)	SEE PAGE
	1	4	*148-8411*	1	PLUG AS	
		4	**3K-0360**	1	SEAL-O-RING	
		4	**9S-4185**	1	PLUG-O-RING	
	2	4	**3T-5301**	1	TUBE	
	3	4	**3T-5302**	1	FLANGE	
	4	4	**3T-6471**	1	SCREEN AS (TORQUE CONVERTER SCAVENGE)	
		4	**3T-6469**	1	WASHER (19X26X1.6-MM THK)	
	5	1,3	**6V-0852**	3	CAP-DUST	
	6	4	**6V-5387**	1	PLATE-ORIFICE	
I	7	1	**8E-5502**	1	HOSE AS	
	8	4	**9D-7924**	3	MOUNTING	
	9	1	**9G-5127**	1	BREATHER AS (TRANSMISSION)	
	10	1	**106-2105**	1	ELBOW	
	11	2	**203-2789**	1	BRACKET AS	
Y	12	1	**220-1418**	1	VALVE GP-RELIEF (TORQUE CONVERTER OUTLET)	567
Y	13	4	*231-4166*	1	SCREEN GP-MAGNETIC (TRANSMISSION)	546
	14	1	**235-4511**	1	HOSE AS	
	15	1	**235-4513**	1	HOSE AS	
	16	1	**235-4514**	1	BRACKET	
	17	1	**235-4515**	1	TUBE AS	
	18	1	**235-4516**	1	TUBE AS	
	19	3	**235-4826**	1	BRACKET AS	
Y	20	1	**235-5812**	1	FILTER GP-OIL (POWER TRAIN)	481
	21	1	**241-5634**	1	TUBE AS	
	22	1	**241-5635**	1	GAUGE AS-OIL LEVEL (TRANSMISSION CASE)	
Y	23	1	*255-6934*	1	ACCUMULATOR GP (CHARGED)	443
	24	1	*260-9187*	3	CONNECTOR AS	
					(EACH INCLUDES)	
		1	**6V-8397**	1	SEAL-O-RING	
		1	**8T-9358**	1	CONNECTOR	
I	25	1	**263-3346**	1	HOSE AS	
I	26	1	**263-3348**	1	HOSE AS	
Y	27	4	**263-9949**	1	MANIFOLD GP-TRANSMISSION (LUBE DISTRIBUTION)	527
Y	28	2	*270-1762*	1	PUMP GP-GEAR (POWER TRAIN OIL)	543
I	29	1	**270-3435**	1	HOSE AS	
I	30	1	**270-3438**	1	HOSE AS	
I	31	1	**287-0414**	1	HOSE AS	
I	32	1	**287-0415**	1	HOSE AS	
I	33	1	**294-3345**	1	HOSE AS	
I	34	1	**294-3346**	1	HOSE AS	
	35	1	**299-4008**	1	HOSE AS	
	37	4	**299-5660**	1	SPACER	
	38	2,3	**033-8248**	2	CLIP	
M	39	3	**109-3001**	1	STUD-TAPERLOCK (M10X1.5X65-MM)	
	41	3	*148-8335*	2	CONNECTOR AS	
					(EACH INCLUDES)	
		3	**6V-8635**	1	CONNECTOR	
		3	**7M-8485**	1	SEAL-O-RING	
		3	**5K-9090**	1	SEAL-O-RING	
	42	1	*148-8336*	1	CONNECTOR AS	
		1	**3J-1907**	1	SEAL-O-RING	
		1	**6V-8397**	1	SEAL-O-RING	
		1	**6V-8636**	1	CONNECTOR	
	43	2	*148-8368*	2	ELBOW AS	
					(EACH INCLUDES)	
		2	**3J-1907**	1	SEAL-O-RING	
		2	**4J-5477**	1	SEAL-O-RING	
		2	**6V-8627**	1	ELBOW	

269-2072 **LINES GP-POWER TRAIN OIL (*contd.*)** **i04046890**

NOTE	REF NO	GRAPHIC REF	PART NUMBER	QTY	PART NAME 1 2 3 4 5 6 (PRODUCT LEVEL)	SEE PAGE
	44	4	*148-8374*	1	ELBOW AS	
		4	**3K-0360**	1	SEAL-O-RING	
		4	**6V-8397**	1	SEAL-O-RING	
		4	**6V-8723**	1	ELBOW	
	45	1	*148-8381*	1	ELBOW AS	
		1	**3D-2824**	1	SEAL-O-RING	
		1	**6V-8398**	1	SEAL-O-RING	
		1	**8T-5429**	1	ELBOW	
	46	1	*148-8426*	1	TEE AS	
		1	**3K-0360**	1	SEAL-O-RING	
		1	**6V-8397**	1	SEAL-O-RING	
		1	**6V-8398**	1	SEAL-O-RING	
		1	**8T-6696**	1	TEE-O-RING	
	47	3	*150-3065*	1	ELBOW AS	
		3	**3J-1907**	1	SEAL-O-RING	
		3	**6V-0484**	1	ELBOW	
	48	1	*153-6243*	1	TEE AS	
		1	**2S-4078**	1	SEAL-O-RING	
		1	**5K-9090**	1	SEAL-O-RING	
		1	**6V-9746**	1	SEAL-O-RING	
		1	**8T-1120**	1	TEE-O-RING PORT	
	49	1	*153-6252*	1	CONNECTOR AS	
		1	**6V-8398**	1	SEAL-O-RING	
		1	**7M-8485**	1	SEAL-O-RING	
		1	**9X-8408**	1	CONNECTOR	
	50	4	**162-9523**	2	GROMMET	
	51	1,3	*164-5567*	3	COUPLER AS-QUICK DISCONNECT (MALE) (EACH INCLUDES)	
		1,3	**3J-1907**	1	SEAL-O-RING	
		1,3	**6V-3965**	1	FITTING (QUICK DISCONNECT)	
	52	1	**180-4362**	2	SEAL-RECTANGULAR	
	54	2	**1H-5728**	1	SEAL-O-RING	
	55	2,3,4	**1P-4578**	10	FLANGE-HALF	
	56	4	**1V-7753**	1	SPACER (0.546X0.841X1.75-IN THK)	
	57	2	**2K-8257**	1	SEAL-O-RING	
	58	2,4	**3G-4214**	4	CLIP (SLOT)	
	59	2,4	**3G-4218**	4	CLIP (TAB)	
	60	1	**3J-1907**	1	SEAL-O-RING	
	61	1,2,3	**4K-6177**	5	CLIP	
	62	1	**5P-7085**	1	SEAL-RECTANGULAR	
	63	3	**5P-7468**	2	CLIP (SLOT)	
	64	3	**5P-7469**	2	CLIP (TAB)	
	65	4	**6L-1649**	2	SEAL-O-RING	
	66	4	**6L-5359**	1	SEAL-O-RING	
	67	4	**6V-1572**	2	CLIP (SLOT)	
	68	4	**6V-1573**	2	CLIP (TAB)	
	69	1	**6V-9168**	3	NUT (11/16-16-THD)	
	70	1	**7D-1649**	2	WASHER-HARD (13.5X32X5-MM THK)	
	71	2	**7G-3832**	1	GROMMET	
	72	2	**7G-3833**	1	CLIP (TAB)	
	73	2	**7G-3834**	1	CLIP (SLOT)	
	74	3	**7S-8920**	1	CLIP (SLOT)	
	75	3	**7S-8921**	1	CLIP (TAB)	
	76	4	**7X-7729**	2	WASHER (11X25X3-MM THK)	
	77	2	**8C-3206**	2	FLANGE-HALF	
	78	1,4	**8M-4986**	9	SEAL-O-RING	
	79	1	**8M-4987**	3	SEAL-O-RING	
	80	2	**8M-5254**	4	SEAL-O-RING	
	81	1	**8M-8157**	1	SEAL-O-RING	
	82	4	**8S-0023**	1	CLIP (SLOT)	
	83	4	**8S-0024**	1	CLIP (TAB)	
	84	2,3	**8T-1893**	3	CLIP (SLOT)	

269-2072 **LINES GP-POWER TRAIN OIL (*contd.*)** **i04046890**

NOTE	REF NO	GRAPHIC REF	PART NUMBER	QTY	PART NAME 1 2 3 4 5 6 (PRODUCT LEVEL)	SEE PAGE
	85	2,3	**8T-1894**	3	CLIP (TAB)	
	86	1,2,3,4	**8T-4121**	58	WASHER-HARD (11X21X2.5-MM THK)	
M	87	2,3,4	**8T-4133**	6	NUT (M10X1.5-THD)	
M	88	1,2,3,4	**8T-4136**	13	BOLT (M10X1.5X25-MM)	
M	89	1	**8T-4137**	1	BOLT (M10X1.5X20-MM)	
M	90	1	**8T-4172**	3	BOLT (M10X1.5X80-MM)	
M	91	4	**8T-4176**	2	BOLT (M12X1.75X90-MM)	
M	92	4	**8T-4178**	4	BOLT (M10X1.5X90-MM)	
M	93	1	**8T-4184**	2	BOLT (M12X1.75X45-MM)	
M	94	2	**8T-4186**	4	BOLT (M10X1.5X40-MM)	
M	95	4	**8T-4191**	1	BOLT (M10X1.5X16-MM)	
M	96	2,3	**8T-4195**	5	BOLT (M10X1.5X30-MM)	
M	97	2,3,4	**8T-4196**	16	BOLT (M10X1.5X35-MM)	
	98	2,4	**8T-4223**	15	WASHER-HARD (13.5X25.5X3-MM THK)	
	99	4	**8T-4226**	6	WASHER-PLATED (10.5X45X3-MM THK)	
M	100	4	**8T-4648**	1	BOLT (M12X1.75X70-MM)	
	101	4	**8T-4896**	4	WASHER-HARD (10.2X18.5X2.5-MM THK)	
M	102	2	**8T-4956**	4	BOLT (M12X1.75X35-MM)	
M	103	1,2	**8T-5005**	8	BOLT (M10X1.5X70-MM)	
M	104	4	**8T-6466**	3	BOLT (M10X1.5X60-MM)	
M	105	2	**8T-6868**	8	BOLT (M12X1.75X80-MM)	
	106	3	**8T-7087**	2	GROMMET	
	107	1	**9X-8257**	6	WASHER (17.5X30X3.5-MM THK)	
	108	4	*148-8407*	1	PLUG AS	
		4	**3J-1907**	1	SEAL-O-RING	
		4	**9S-4191**	1	PLUG-O-RING	

I - REFER TO HYDRAULIC INFORMATION SYSTEM
M - METRIC PART
Y - SEPARATE ILLUSTRATION

269-2072 **LINES GP-POWER TRAIN OIL (*contd.*)** **i04046890**

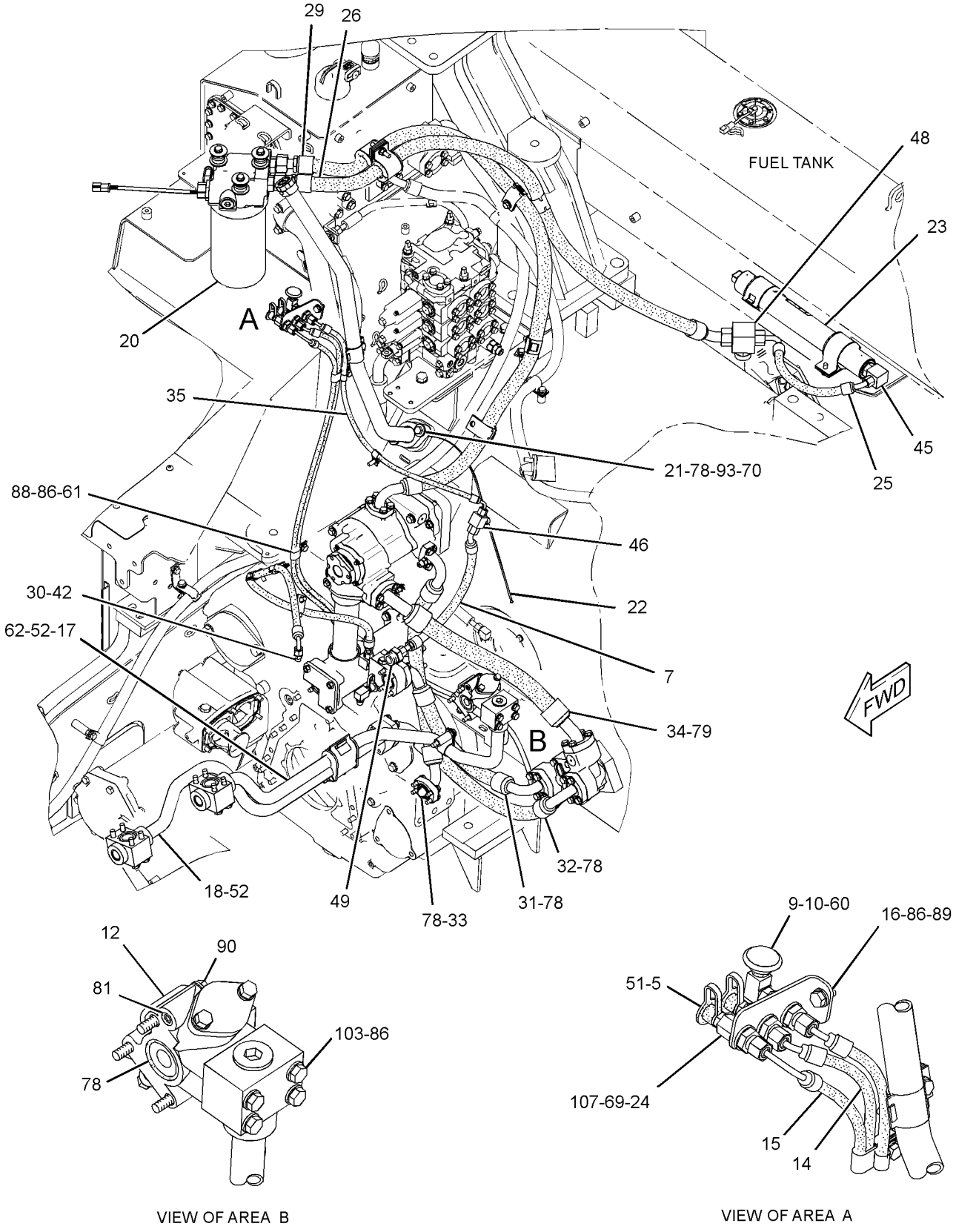

GRAPHIC #1

g01432417

269-2072 **LINES GP-POWER TRAIN OIL (*contd.*)** **i04046890**

REFER TO ALL ILLUSTRATIONS OF THIS GROUP FOR AUXILIARY VIEWS

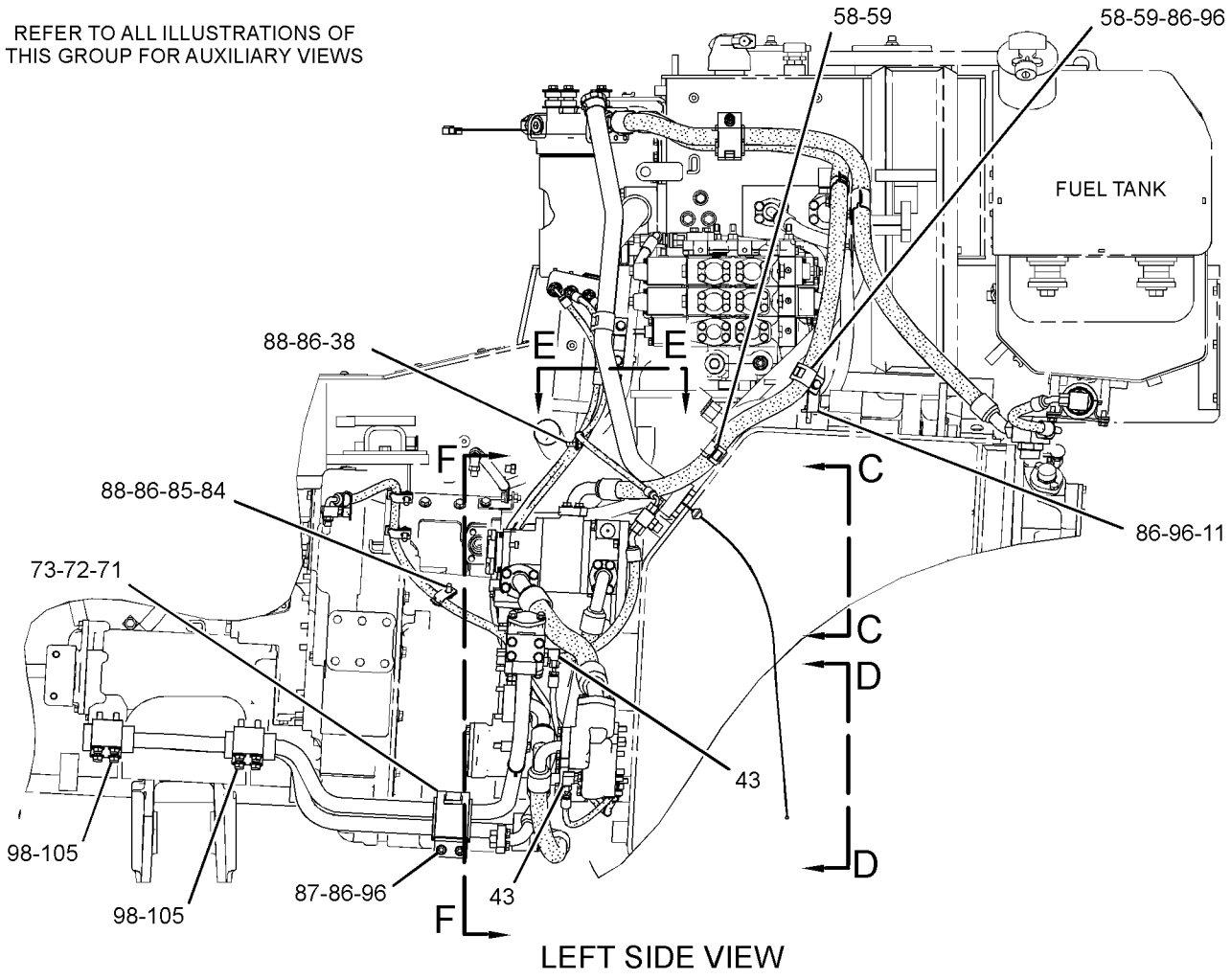

LEFT SIDE VIEW

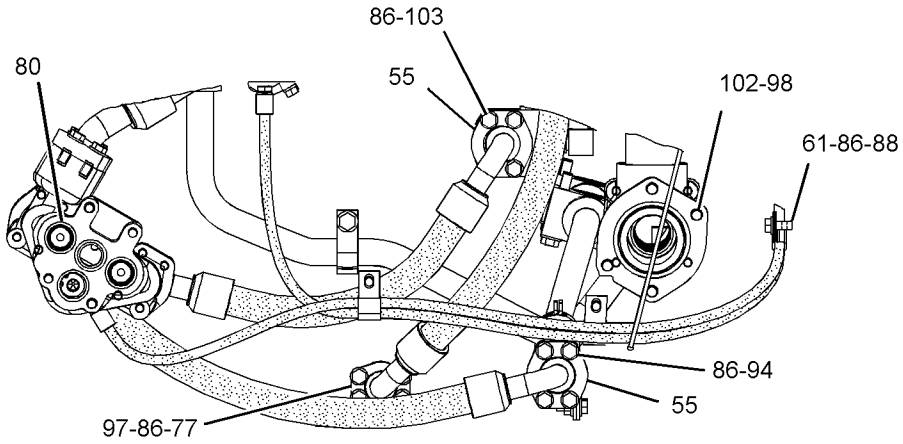

VIEW D-D

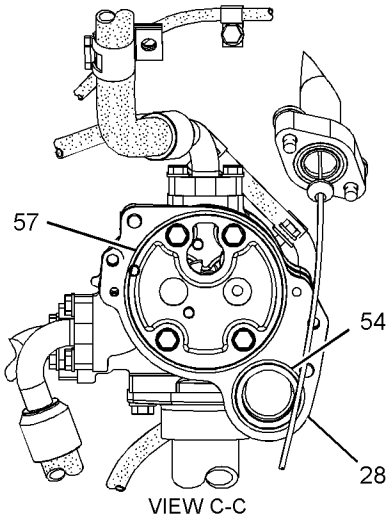

VIEW C-C

GRAPHIC #2

g01445857

269-2072 **LINES GP-POWER TRAIN OIL (*contd.*)** **i04046890**

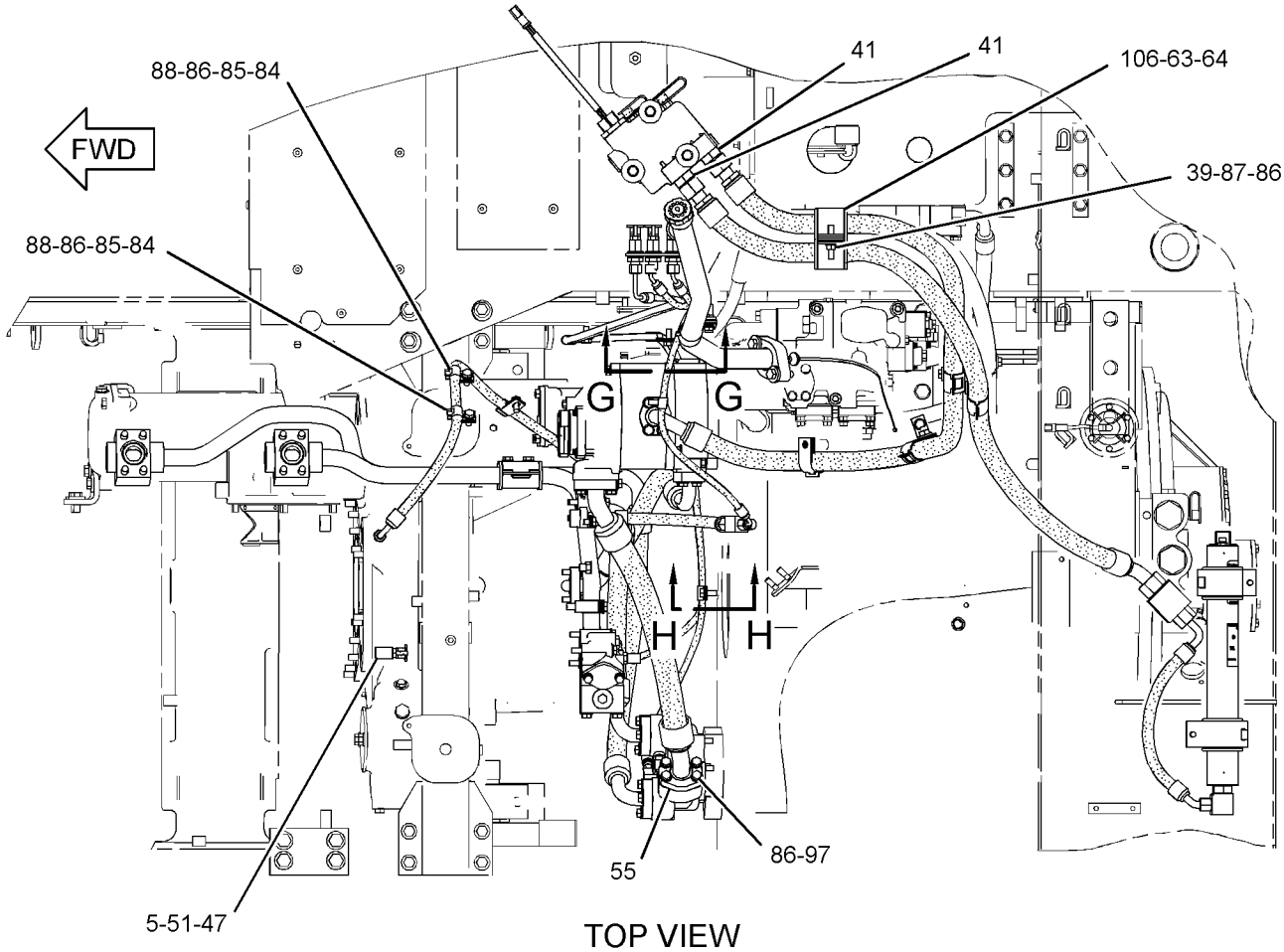

TOP VIEW

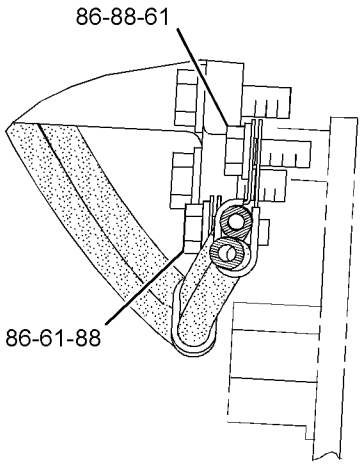

SECTION H-H

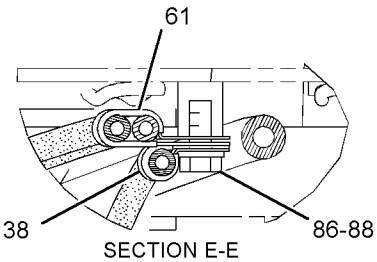

SECTION E-E

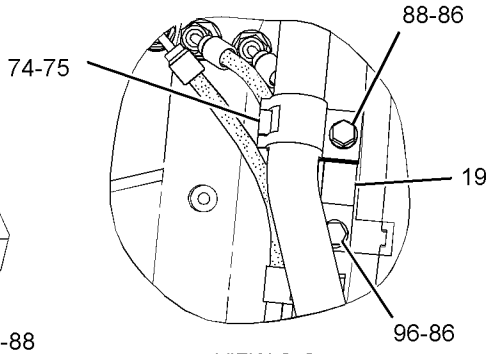

VIEW G-G

GRAPHIC #3 g01432419

269-2072 **LINES GP-POWER TRAIN OIL (*contd.*)** **i04046890**

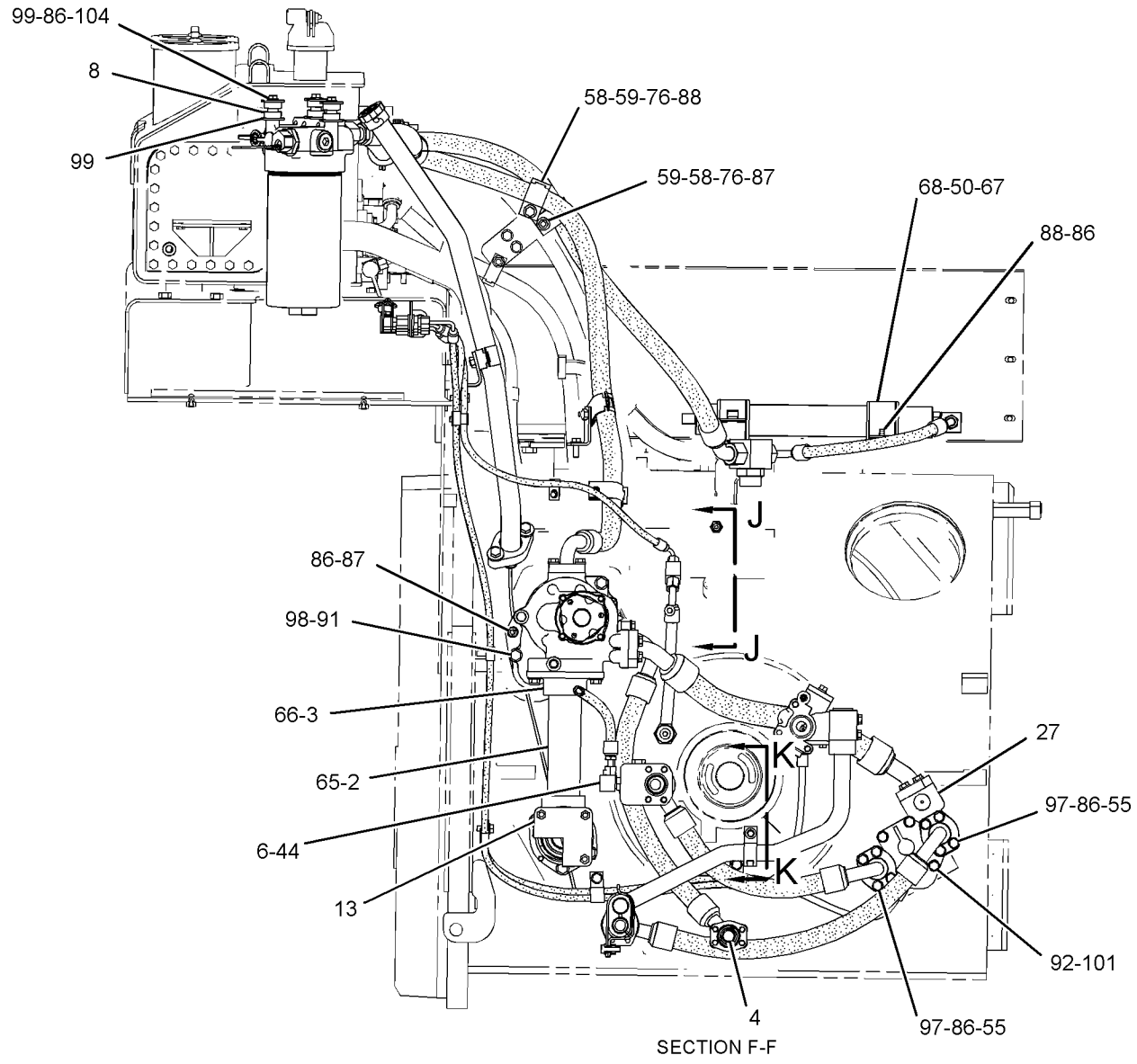

SECTION F-F

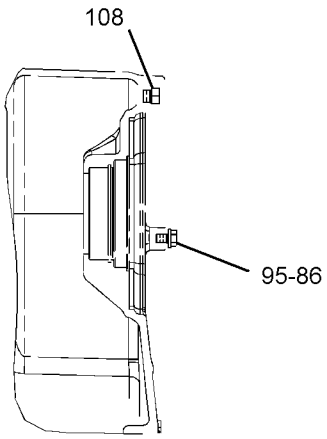

VIEW J-J

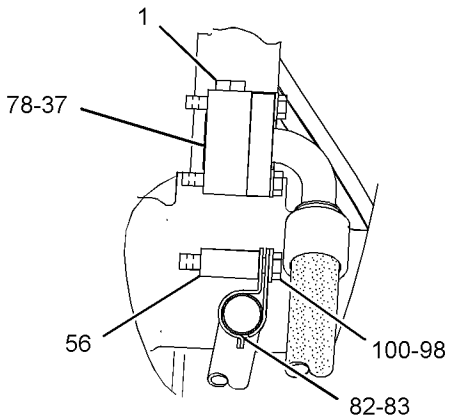

SECTION K-K

GRAPHIC #4 **<END>** g01445858

269-2072 LINES GP-POWER TRAIN OIL

S/N: SMC186-297; GCT246-441

PART OF 269-2046 POWER TRAIN AR

SMCS-3016 **i04046909**

NOTE	REF NO	GRAPHIC REF	PART NUMBER	QTY	PART NAME 1 2 3 4 5 6 (PRODUCT LEVEL)	SEE PAGE
	1	2	**9X-8257**	6	WASHER (17.5X30X3.5-MM THK)	
	2	3	**3T-5301**	1	TUBE	
	3	3	**3T-5302**	1	FLANGE	
	4	2	**3T-6471**	1	SCREEN AS (TORQUE CONVERTER SCAVENGE)	
		2	**3T-6469**	1	WASHER (19X26X1.6-MM THK)	
	5	2	**6V-0852**	3	CAP-DUST	
	6	2	**6V-5387**	1	PLATE-ORIFICE	
I	7	2	**8E-5502**	1	HOSE AS	
	8	1	**9D-7924**	3	MOUNTING	
	9	2	**9G-5127**	1	BREATHER AS (TRANSMISSION)	
	10	2	**106-2105**	1	ELBOW	
	11	2	**203-2789**	1	BRACKET AS	
Y	12	3	**220-1418**	1	VALVE GP-RELIEF (TORQUE CONVERTER OUTLET)	567
Y	13	2	*231-4166*	1	SCREEN GP-MAGNETIC (TRANSMISSION)	546
	14	2	**235-4514**	1	BRACKET	
	15	2	**235-4515**	1	TUBE AS	
	16	2	**235-4516**	1	TUBE AS	
	17	3	**235-4826**	1	BRACKET AS	
Y	18	1	**235-5812**	1	FILTER GP-OIL (POWER TRAIN)	481
	19	2	**241-5634**	1	TUBE AS	
	20	1	**241-5635**	1	GAUGE AS-OIL LEVEL (TRANSMISSION CASE)	
Y	21	1	*255-6934*	1	ACCUMULATOR GP (CHARGED)	443
	22	2	*260-9187*	3	CONNECTOR AS	
					(EACH INCLUDES)	
		2	**6V-8397**	1	SEAL-O-RING	
		2	**8T-9358**	1	CONNECTOR	
I	23	1	**263-3346**	1	HOSE AS	
I	24	1	**263-3348**	1	HOSE AS	
Y	25	2	**263-9949**	1	MANIFOLD GP-TRANSMISSION (LUBE DISTRIBUTION)	527
C	26	3	*268-1601*	1	CONNECTOR AS-ORIFICE	
		3	**3J-7354**	1	SEAL-O-RING	
		3	**4J-5477**	1	SEAL-O-RING	
		3	**112-2628**	1	CONNECTOR	
Y	27	3	*270-1762*	1	PUMP GP-GEAR (POWER TRAIN OIL)	543
I	28	1	**270-3435**	1	HOSE AS	
I	29	2	**270-3438**	1	HOSE AS	
C	30	3	**272-0251**	1	HOSE AS	
I	31	2	**287-0414**	1	HOSE AS	
I	32	2	**287-0415**	1	HOSE AS	
I	33	3	**294-3345**	1	HOSE AS	
I	34	2	**294-3346**	1	HOSE AS	
	35	2	**299-4008**	1	HOSE AS	
	36	3	**299-5660**	1	SPACER	
C	37	2	**314-5179**	1	HOSE AS	
C	38	2	**314-5180**	1	HOSE AS	
	39	2,3	**033-8248**	3	CLIP	
M	40	1	**109-3001**	1	STUD-TAPERLOCK (M10X1.5X65-MM)	
C	41	3	*148-8325*	1	CONNECTOR AS	
		3	**3J-1907**	1	SEAL-O-RING	
		3	**4J-5477**	1	SEAL-O-RING	
		3	**6V-8641**	1	CONNECTOR	
	42	1	*148-8335*	2	CONNECTOR AS	
					(EACH INCLUDES)	
		1	**5K-9090**	1	SEAL-O-RING	
		1	**6V-8635**	1	CONNECTOR	
		1	**7M-8485**	1	SEAL-O-RING	
	43	2	*148-8336*	1	CONNECTOR AS	
		2	**3J-1907**	1	SEAL-O-RING	
		2	**6V-8397**	1	SEAL-O-RING	

269-2072 **LINES GP-POWER TRAIN OIL (*contd.*)** **i04046909**

NOTE	REF NO	GRAPHIC REF	PART NUMBER	QTY	PART NAME 1 2 3 4 5 6 (PRODUCT LEVEL)	SEE PAGE
		2	**6V-8636**	1	CONNECTOR	
	44	2,3	*148-8368*	2	ELBOW AS	
					(EACH INCLUDES)	
		2,3	**3J-1907**	1	SEAL-O-RING	
		2,3	**4J-5477**	1	SEAL-O-RING	
		2,3	**6V-8627**	1	ELBOW	
	45	2	*148-8374*	1	ELBOW AS	
		2	**3K-0360**	1	SEAL-O-RING	
		2	**6V-8397**	1	SEAL-O-RING	
		2	**6V-8723**	1	ELBOW	
	46	1	*148-8381*	1	ELBOW AS	
		1	**3D-2824**	1	SEAL-O-RING	
		1	**6V-8398**	1	SEAL-O-RING	
		1	**8T-5429**	1	ELBOW	
	47	2	*148-8426*	1	TEE AS	
		2	**3K-0360**	1	SEAL-O-RING	
		2	**6V-8397**	1	SEAL-O-RING	
		2	**6V-8398**	1	SEAL-O-RING	
		2	**8T-6696**	1	TEE-O-RING	
	48	2	*150-3065*	1	ELBOW AS	
		2	**3J-1907**	1	SEAL-O-RING	
		2	**6V-0484**	1	ELBOW	
	49	1	*153-6243*	1	TEE AS	
		1	**2S-4078**	1	SEAL-O-RING	
		1	**5K-9090**	1	SEAL-O-RING	
		1	**6V-9746**	1	SEAL-O-RING	
		1	**8T-1120**	1	TEE-O-RING PORT	
	50	2	*153-6252*	1	CONNECTOR AS	
		2	**6V-8398**	1	SEAL-O-RING	
		2	**7M-8485**	1	SEAL-O-RING	
		2	**9X-8408**	1	CONNECTOR	
	51	1	**162-9523**	2	GROMMET	
	52	2	*164-5567*	3	COUPLER AS-QUICK DISCONNECT (MALE)	
					(EACH INCLUDES)	
		2	**214-7568**	1	SEAL-O-RING	
		2	**6V-3965**	1	FITTING (QUICK DISCONNECT)	
C	53	3	*169-7397*	1	ADAPTER GP	
		3	**3K-0360**	1	SEAL-O-RING	
		3	**3P-1932**	1	ADAPTER	
	54	2	**180-4362**	2	SEAL-RECTANGULAR	
	55	3	**1H-5728**	1	SEAL-O-RING	
	56	2,3	**1P-4578**	10	FLANGE-HALF	
	57	3	**1V-7753**	1	SPACER (0.546X0.841X1.75-IN THK)	
	58	3	**2K-8257**	1	SEAL-O-RING	
	59	1,2	**3G-4214**	4	CLIP (SLOT)	
	60	1,2	**3G-4218**	4	CLIP (TAB)	
	61	2	**3J-1907**	1	SEAL-O-RING	
	62	2,3	**4K-6177**	5	CLIP	
	63	2	**5P-7085**	1	SEAL-RECTANGULAR	
	64	1	**5P-7468**	2	CLIP (SLOT)	
	65	1	**5P-7469**	2	CLIP (TAB)	
	66	3	**6L-1649**	2	SEAL-O-RING	
	67	3	**6L-5359**	1	SEAL-O-RING	
	68	1	**6V-1572**	2	CLIP (SLOT)	
	69	1	**6V-1573**	2	CLIP (TAB)	
	70	2	**6V-9168**	3	NUT (11/16-16-THD)	
	71	2	**5P-1076**	2	WASHER-HARD (13.5X30X4-MM THK)	
	72	2	**7G-3832**	1	GROMMET	
	73	2	**7G-3833**	1	CLIP (TAB)	
	74	2	**7G-3834**	1	CLIP (SLOT)	
	75	3	**7S-8920**	1	CLIP (SLOT)	
	76	3	**7S-8921**	1	CLIP (TAB)	

269-2072 **LINES GP-POWER TRAIN OIL (*contd.*)** **i04046909**

NOTE	REF NO	GRAPHIC REF	PART NUMBER	QTY	PART NAME 1 2 3 4 5 6 (PRODUCT LEVEL)	SEE PAGE
	77	1	**7X-7729**	2	WASHER (11X25X3-MM THK)	
	78	2	**8C-3206**	2	FLANGE-HALF	
	80	2	**8M-4986**	9	SEAL-O-RING	
	81	1,3	**8M-4987**	3	SEAL-O-RING	
	82	3	**8M-5254**	4	SEAL-O-RING	
	83	2	**8M-8157**	1	SEAL-O-RING	
	84	3	**8S-0023**	1	CLIP (SLOT)	
	85	3	**8S-0024**	1	CLIP (TAB)	
	86	2	**8T-1893**	3	CLIP (SLOT)	
	87	2	**8T-1894**	3	CLIP (TAB)	
	88	1,2,3	**8T-4121**	58	WASHER-HARD (11X21X2.5-MM THK)	
M	89	1,2,3	**8T-4133**	6	NUT (M10X1.5-THD)	
M	90	1,2,3	**8T-4136**	12	BOLT (M10X1.5X25-MM)	
M	91	1,2	**8T-4137**	2	BOLT (M10X1.5X20-MM)	
M	92	3	**8T-4172**	3	BOLT (M10X1.5X80-MM)	
M	93	2	**8T-4176**	2	BOLT (M12X1.75X90-MM)	
M	94	2	**8T-4178**	4	BOLT (M10X1.5X90-MM)	
M	95	2	**8T-4184**	2	BOLT (M12X1.75X45-MM)	
M	96	3	**8T-4186**	4	BOLT (M10X1.5X40-MM)	
M	97	3	**8T-4191**	1	BOLT (M10X1.5X16-MM)	
M	98	2,3	**8T-4195**	5	BOLT (M10X1.5X30-MM)	
M	99	2	**8T-4196**	16	BOLT (M10X1.5X35-MM)	
	100	2,3	**8T-4223**	15	WASHER-HARD (13.5X25.5X3-MM THK)	
	101	1	**8T-4226**	6	WASHER-PLATED (10.5X45X3-MM THK)	
M	102	3	**8T-4648**	1	BOLT (M12X1.75X70-MM)	
	103	2	**8T-4896**	4	WASHER-HARD (10.2X18.5X2.5-MM THK)	
M	104	3	**8T-4956**	4	BOLT (M12X1.75X35-MM)	
M	105	3	**8T-5005**	8	BOLT (M10X1.5X70-MM)	
M	106	1	**8T-6466**	3	BOLT (M10X1.5X60-MM)	
M	107	2	**8T-6868**	8	BOLT (M12X1.75X80-MM)	
	108	1	**8T-7087**	2	GROMMET	

C - CHANGE FROM PREVIOUS TYPE
I - REFER TO HYDRAULIC INFORMATION SYSTEM
M - METRIC PART
Y - SEPARATE ILLUSTRATION

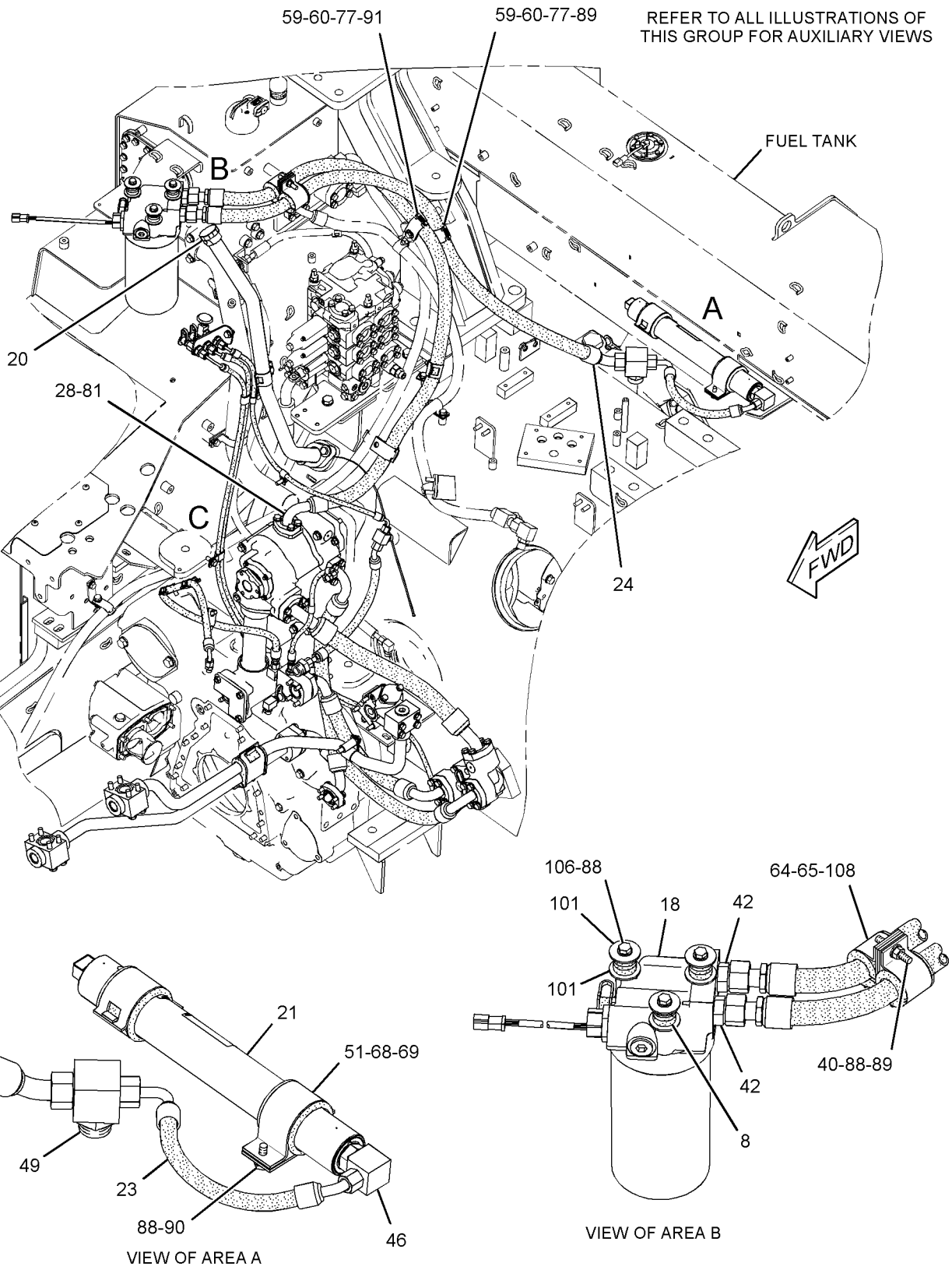

GRAPHIC #1 g01621545

269-2072 **LINES GP-POWER TRAIN OIL (*contd.*)** **i04046909**

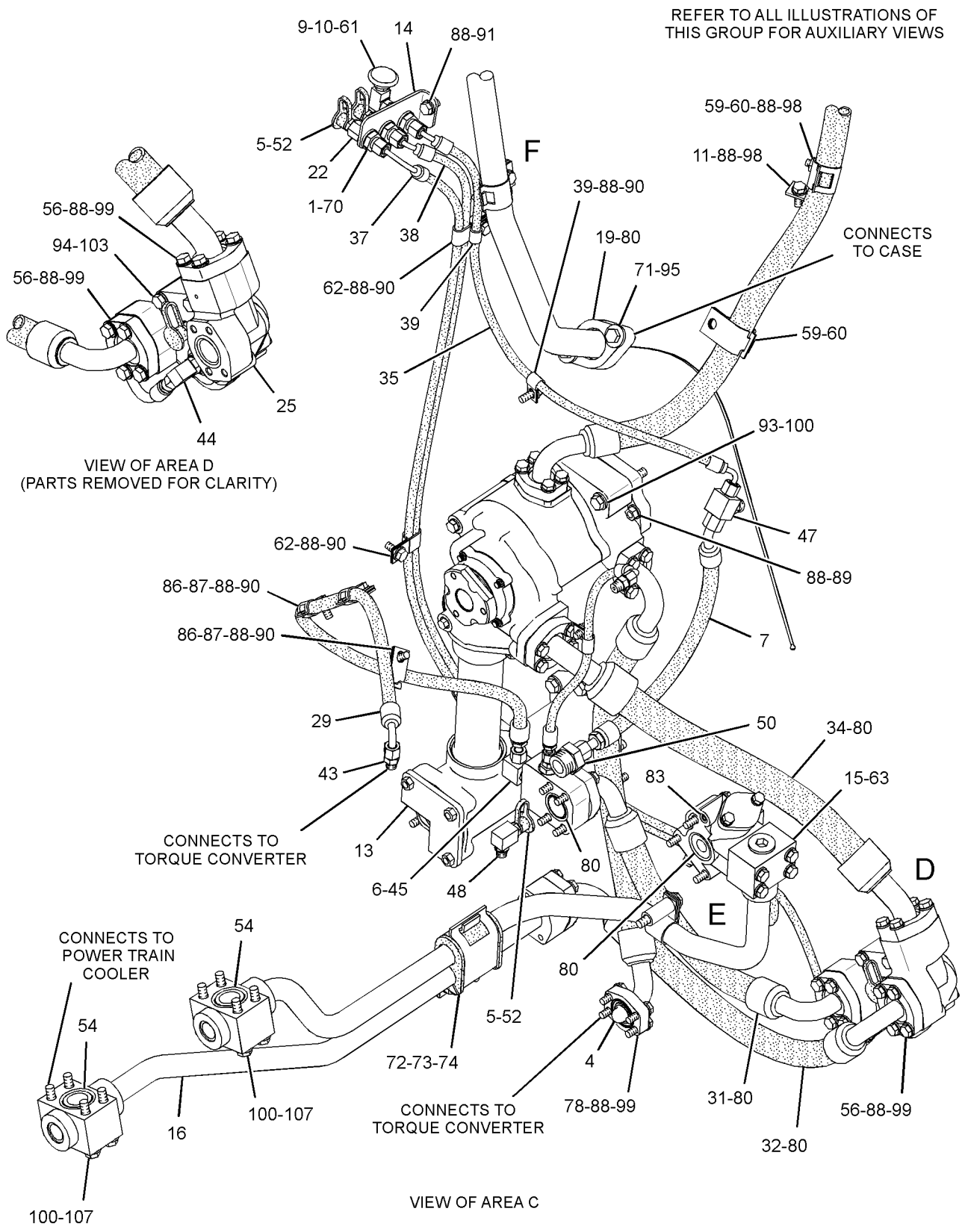

GRAPHIC #2 g01621546

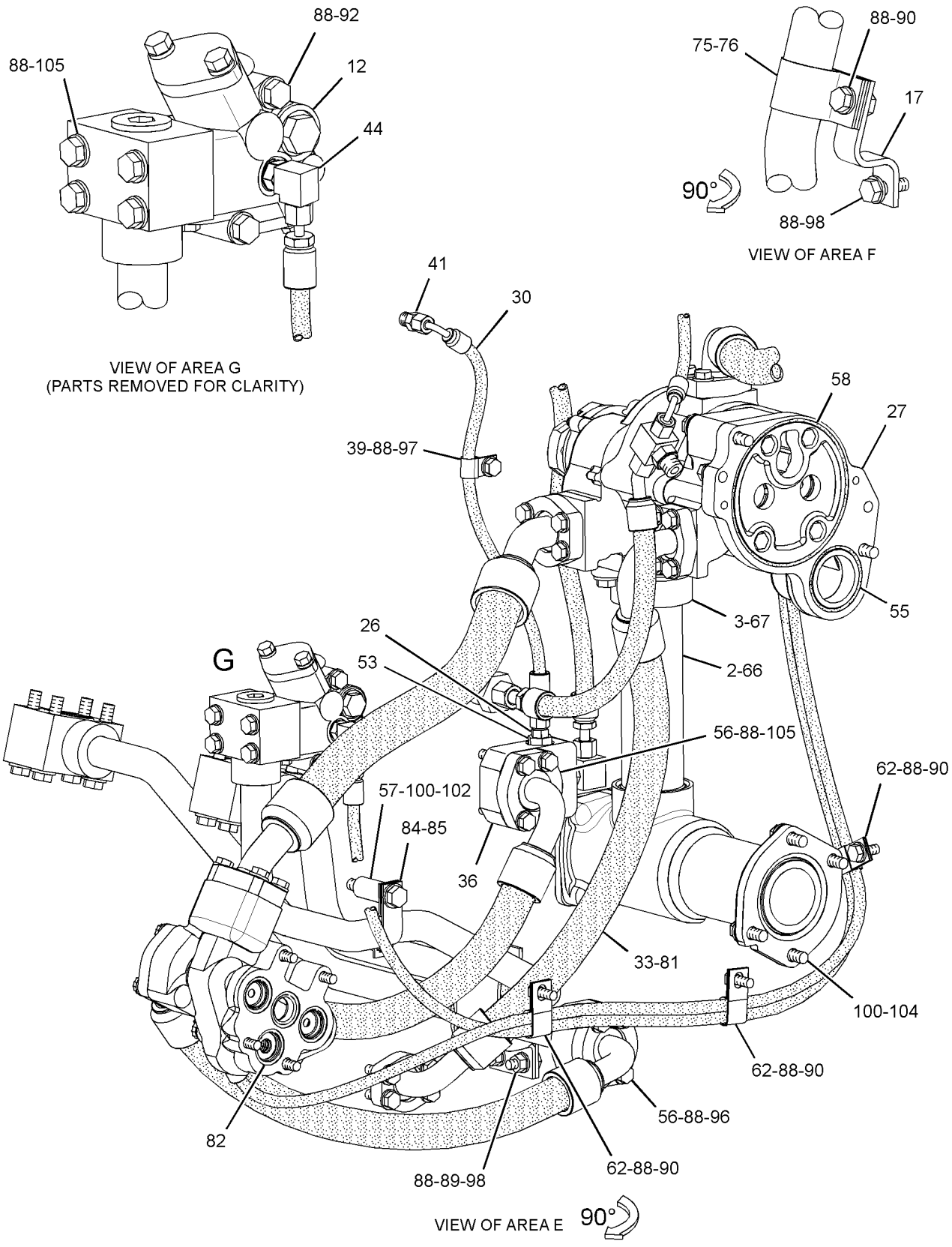

GRAPHIC #3 **<END>** g01621547

269-2072 LINES GP-POWER TRAIN OIL

S/N: SMC298-331; GCT442-534

PART OF 269-2046 POWER TRAIN AR

SMCS-3016 **i04046907**

NOTE	REF NO	GRAPHIC REF	PART NUMBER	QTY	PART NAME 1 2 3 4 5 6 (PRODUCT LEVEL)	SEE PAGE
	1	2	**9X-8257**	6	WASHER (17.5X30X3.5-MM THK)	
	2	3	**3T-5301**	1	TUBE	
	3	3	**3T-5302**	1	FLANGE	
	4	2	**3T-6471**	1	SCREEN AS (TORQUE CONVERTER SCAVENGE)	
		2	**3T-6469**	1	WASHER (19X26X1.6-MM THK)	
	5	2	**6V-0852**	3	CAP-DUST	
	6	2	**6V-5387**	1	PLATE-ORIFICE	
I	7	2	**8E-5502**	1	HOSE AS	
	8	1	**9D-7924**	3	MOUNTING	
	9	2	**9G-5127**	1	BREATHER AS (TRANSMISSION)	
	10	2	**106-2105**	1	ELBOW	
	11	2	**203-2789**	1	BRACKET AS	
Y	12	3	**220-1418**	1	VALVE GP-RELIEF (TORQUE CONVERTER OUTLET)	567
Y	13	2	*231-4166*	1	SCREEN GP-MAGNETIC (TRANSMISSION)	546
	14	2	**235-4514**	1	BRACKET	
	15	2	**235-4515**	1	TUBE AS	
	16	2	**235-4516**	1	TUBE AS	
	17	3	**235-4826**	1	BRACKET AS	
CY	18	1	**333-6437**	1	FILTER GP-OIL (POWER TRAIN)	482
	19	2	**241-5634**	1	TUBE AS	
	20	1	**241-5635**	1	GAUGE AS-OIL LEVEL (TRANSMISSION CASE)	
Y	21	1	*255-6934*	1	ACCUMULATOR GP (CHARGED)	443
	22	2	*260-9187*	3	CONNECTOR AS	
					(EACH INCLUDES)	
		2	**6V-8397**	1	SEAL-O-RING	
		2	**8T-9358**	1	CONNECTOR	
I	23	1	**263-3346**	1	HOSE AS	
I	24	1	**263-3348**	1	HOSE AS	
Y	25	2	**263-9949**	1	MANIFOLD GP-TRANSMISSION (LUBE DISTRIBUTION)	527
	26	3	*268-1601*	1	CONNECTOR AS-ORIFICE	
		3	**3J-7354**	1	SEAL-O-RING	
		3	**4J-5477**	1	SEAL-O-RING	
		3	**112-2628**	1	CONNECTOR	
Y	27	3	*270-1762*	1	PUMP GP-GEAR (POWER TRAIN OIL)	543
I	28	1	**270-3435**	1	HOSE AS	
I	29	2	**270-3438**	1	HOSE AS	
	30	3	**272-0251**	1	HOSE AS	
I	31	2	**287-0414**	1	HOSE AS	
I	32	2	**287-0415**	1	HOSE AS	
I	33	3	**294-3345**	1	HOSE AS	
I	34	2	**294-3346**	1	HOSE AS	
	35	2	**299-4008**	1	HOSE AS	
	36	3	**299-5660**	1	SPACER	
	37	2	**314-5179**	1	HOSE AS	
	38	2	**314-5180**	1	HOSE AS	
	39	2,3	**033-8248**	3	CLIP	
M	40	1	**109-3001**	1	STUD-TAPERLOCK (M10X1.5X65-MM)	
	41	3	*148-8325*	1	CONNECTOR AS	
		3	**3J-1907**	1	SEAL-O-RING	
		3	**4J-5477**	1	SEAL-O-RING	
		3	**6V-8641**	1	CONNECTOR	
	42	1	*148-8335*	2	CONNECTOR AS	
					(EACH INCLUDES)	
		1	**5K-9090**	1	SEAL-O-RING	
		1	**6V-8635**	1	CONNECTOR	
		1	**7M-8485**	1	SEAL-O-RING	
	43	2	*148-8336*	1	CONNECTOR AS	
		2	**3J-1907**	1	SEAL-O-RING	
		2	**6V-8397**	1	SEAL-O-RING	

269-2072 **LINES GP-POWER TRAIN OIL (*contd.*)** **i04046907**

NOTE	REF NO	GRAPHIC REF	PART NUMBER	QTY	PART NAME 1 2 3 4 5 6 (PRODUCT LEVEL)	SEE PAGE
		2	**6V-8636**	1	CONNECTOR	
	44	2,3	*148-8368*	2	ELBOW AS	
					(EACH INCLUDES)	
		2,3	**3J-1907**	1	SEAL-O-RING	
		2,3	**4J-5477**	1	SEAL-O-RING	
		2,3	**6V-8627**	1	ELBOW	
	45	2	*148-8374*	1	ELBOW AS	
		2	**3K-0360**	1	SEAL-O-RING	
		2	**6V-8397**	1	SEAL-O-RING	
		2	**6V-8723**	1	ELBOW	
	46	1	*148-8381*	1	ELBOW AS	
		1	**3D-2824**	1	SEAL-O-RING	
		1	**6V-8398**	1	SEAL-O-RING	
		1	**8T-5429**	1	ELBOW	
	47	2	*148-8426*	1	TEE AS	
		2	**3K-0360**	1	SEAL-O-RING	
		2	**6V-8397**	1	SEAL-O-RING	
		2	**6V-8398**	1	SEAL-O-RING	
		2	**8T-6696**	1	TEE-O-RING	
	48	2	*150-3065*	1	ELBOW AS	
		2	**3J-1907**	1	SEAL-O-RING	
		2	**6V-0484**	1	ELBOW	
	49	1	*153-6243*	1	TEE AS	
		1	**2S-4078**	1	SEAL-O-RING	
		1	**5K-9090**	1	SEAL-O-RING	
		1	**6V-9746**	1	SEAL-O-RING	
		1	**8T-1120**	1	TEE-O-RING PORT	
	50	2	*153-6252*	1	CONNECTOR AS	
		2	**6V-8398**	1	SEAL-O-RING	
		2	**7M-8485**	1	SEAL-O-RING	
		2	**9X-8408**	1	CONNECTOR	
	51	1	**162-9523**	2	GROMMET	
	52	2	*164-5567*	3	COUPLER AS-QUICK DISCONNECT (MALE)	
					(EACH INCLUDES)	
		2	**214-7568**	1	SEAL-O-RING	
		2	**6V-3965**	1	FITTING (QUICK DISCONNECT)	
	53	3	*169-7397*	1	ADAPTER GP	
		3	**3K-0360**	1	SEAL-O-RING	
		3	**3P-1932**	1	ADAPTER	
	54	2	**180-4362**	2	SEAL-RECTANGULAR	
	55	3	**1H-5728**	1	SEAL-O-RING	
	56	2,3	**1P-4578**	10	FLANGE-HALF	
	57	3	**1V-7753**	1	SPACER (0.546X0.841X1.75-IN THK)	
	58	3	**2K-8257**	1	SEAL-O-RING	
	59	1,2	**3G-4214**	4	CLIP (SLOT)	
	60	1,2	**3G-4218**	4	CLIP (TAB)	
	61	2	**3J-1907**	1	SEAL-O-RING	
	62	2,3	**4K-6177**	5	CLIP	
	63	2	**5P-7085**	1	SEAL-RECTANGULAR	
	64	1	**5P-7468**	2	CLIP (SLOT)	
	65	1	**5P-7469**	2	CLIP (TAB)	
	66	3	**6L-1649**	2	SEAL-O-RING	
	67	3	**6L-5359**	1	SEAL-O-RING	
	68	1	**6V-1572**	2	CLIP (SLOT)	
	69	1	**6V-1573**	2	CLIP (TAB)	
	70	2	**6V-9168**	3	NUT (11/16-16-THD)	
	71	2	**5P-1076**	2	WASHER-HARD (13.5X30X4-MM THK)	
	72	2	**7G-3832**	1	GROMMET	
	73	2	**7G-3833**	1	CLIP (TAB)	
	74	2	**7G-3834**	1	CLIP (SLOT)	
	75	3	**7S-8920**	1	CLIP (SLOT)	
	76	3	**7S-8921**	1	CLIP (TAB)	

269-2072 **LINES GP-POWER TRAIN OIL (*contd.*)** **i04046907**

NOTE	REF NO	GRAPHIC REF	PART NUMBER	QTY	PART NAME 1 2 3 4 5 6 (PRODUCT LEVEL)	SEE PAGE
	77	1	**7X-7729**	2	WASHER (11X25X3-MM THK)	
	78	2	**8C-3206**	2	FLANGE-HALF	
	80	2	**8M-4986**	9	SEAL-O-RING	
	81	1,3	**8M-4987**	3	SEAL-O-RING	
	82	3	**8M-5254**	4	SEAL-O-RING	
	83	2	**8M-8157**	1	SEAL-O-RING	
	84	3	**8S-0023**	1	CLIP (SLOT)	
	85	3	**8S-0024**	1	CLIP (TAB)	
	86	2	**8T-1893**	3	CLIP (SLOT)	
	87	2	**8T-1894**	3	CLIP (TAB)	
	88	1,2,3	**8T-4121**	58	WASHER-HARD (11X21X2.5-MM THK)	
M	89	1,2,3	**8T-4133**	6	NUT (M10X1.5-THD)	
M	90	1,2,3	**8T-4136**	12	BOLT (M10X1.5X25-MM)	
M	91	1,2	**8T-4137**	2	BOLT (M10X1.5X20-MM)	
M	92	3	**8T-4172**	3	BOLT (M10X1.5X80-MM)	
M	93	2	**8T-4176**	2	BOLT (M12X1.75X90-MM)	
M	94	2	**8T-4178**	4	BOLT (M10X1.5X90-MM)	
M	95	2	**8T-4184**	2	BOLT (M12X1.75X45-MM)	
M	96	3	**8T-4186**	4	BOLT (M10X1.5X40-MM)	
M	97	3	**8T-4191**	1	BOLT (M10X1.5X16-MM)	
M	98	2,3	**8T-4195**	5	BOLT (M10X1.5X30-MM)	
M	99	2	**8T-4196**	16	BOLT (M10X1.5X35-MM)	
	100	2,3	**8T-4223**	15	WASHER-HARD (13.5X25.5X3-MM THK)	
	101	1	**8T-4226**	6	WASHER-PLATED (10.5X45X3-MM THK)	
M	102	3	**8T-4648**	1	BOLT (M12X1.75X70-MM)	
	103	2	**8T-4896**	4	WASHER-HARD (10.2X18.5X2.5-MM THK)	
M	104	3	**8T-4956**	4	BOLT (M12X1.75X35-MM)	
M	105	3	**8T-5005**	8	BOLT (M10X1.5X70-MM)	
M	106	1	**8T-6466**	3	BOLT (M10X1.5X60-MM)	
M	107	2	**8T-6868**	8	BOLT (M12X1.75X80-MM)	
	108	1	**8T-7087**	2	GROMMET	

C - CHANGE FROM PREVIOUS TYPE
I - REFER TO HYDRAULIC INFORMATION SYSTEM
M - METRIC PART
Y - SEPARATE ILLUSTRATION

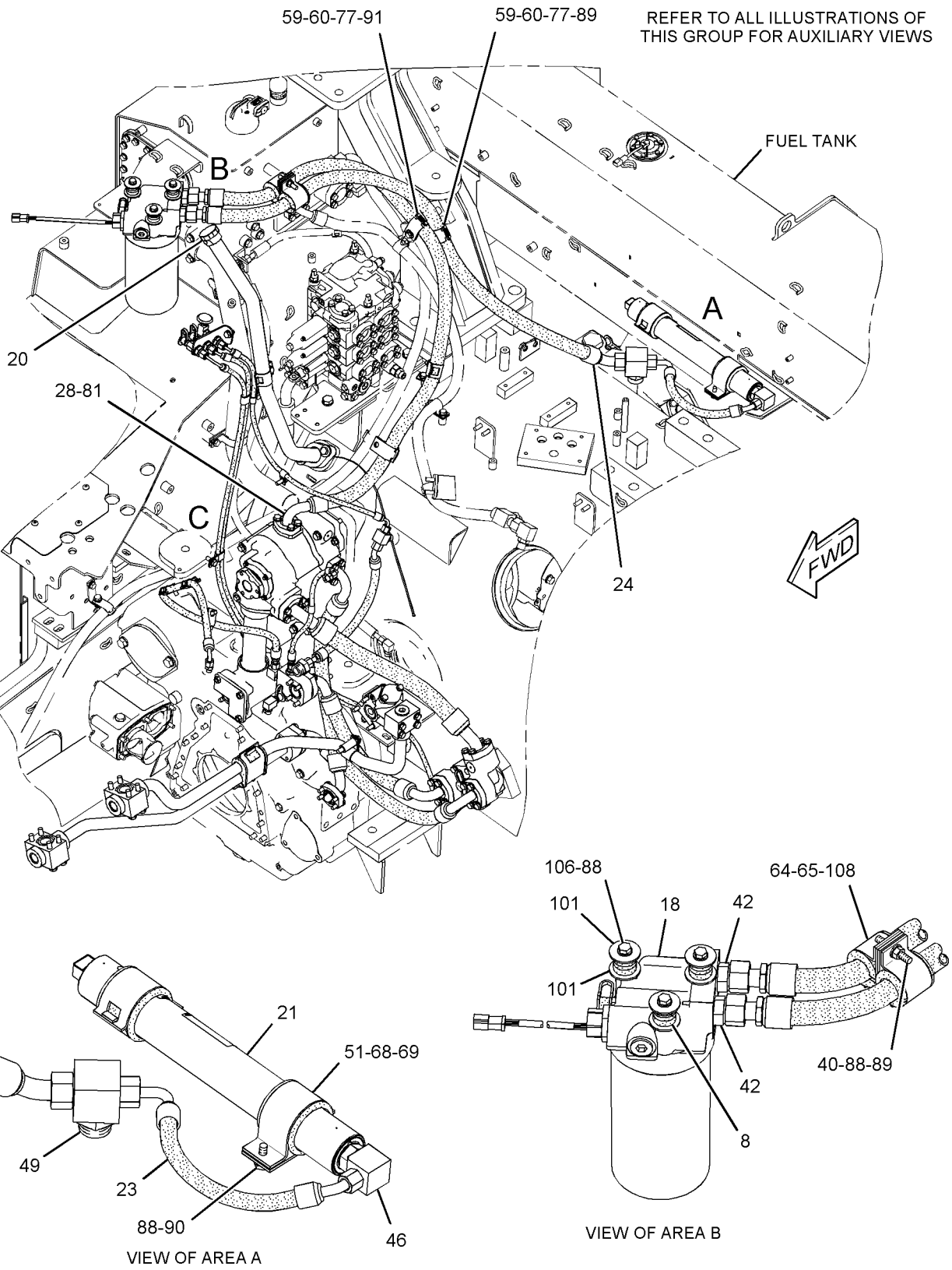

GRAPHIC #1 g01621545

269-2072 **LINES GP-POWER TRAIN OIL (*contd.*)** **i04046907**

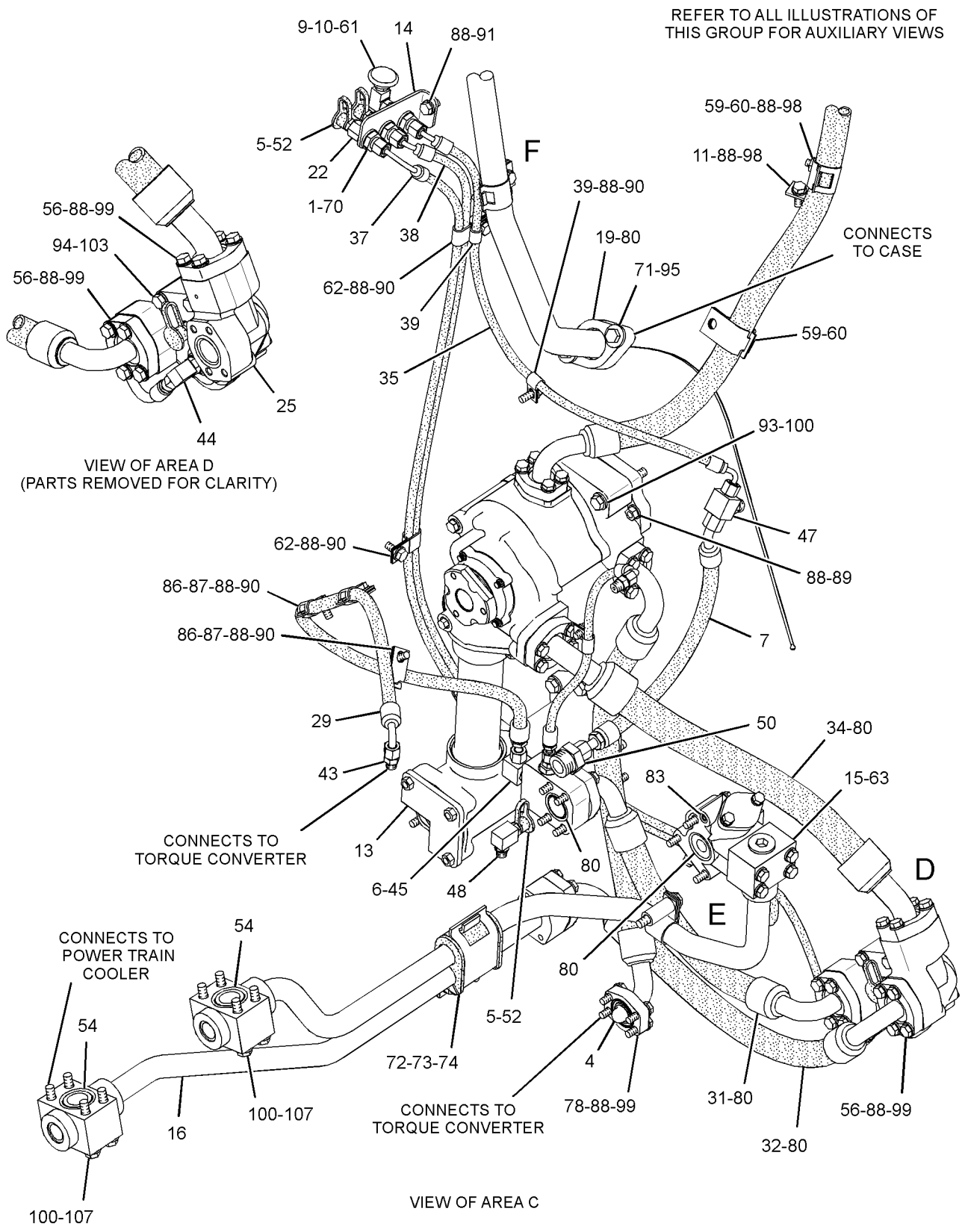

GRAPHIC #2 g01621546

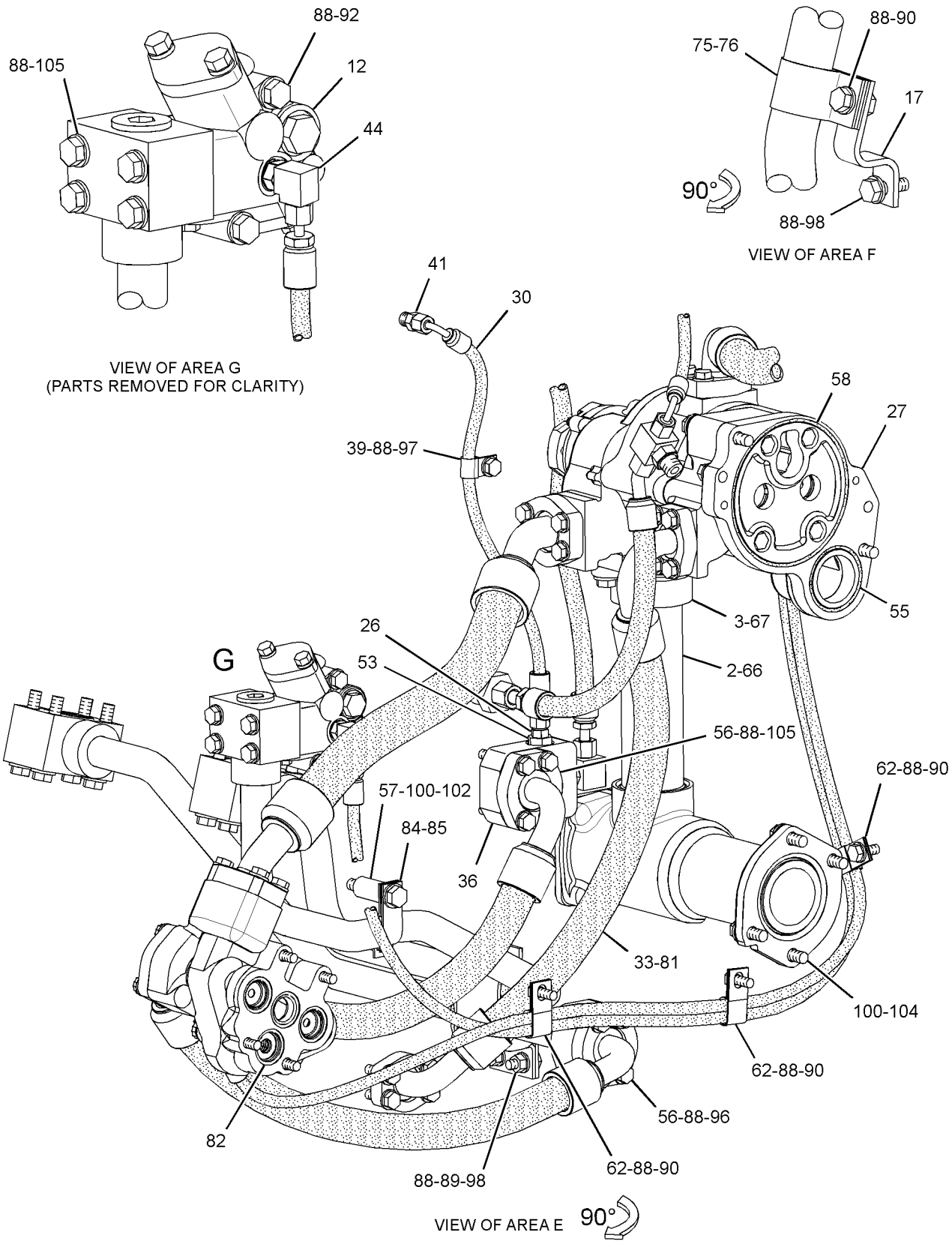

GRAPHIC #3 **<END>** g01621547

269-2072 LINES GP-POWER TRAIN OIL

S/N: SMC332-346; GCT535-583

PART OF 269-2046 POWER TRAIN AR

SMCS-3016 **i04046910**

NOTE	REF NO	GRAPHIC REF	PART NUMBER	QTY	PART NAME 1 2 3 4 5 6 (PRODUCT LEVEL)	SEE PAGE
	1	2	**9X-8257**	6	WASHER (17.5X30X3.5-MM THK)	
	2	3	**3T-5301**	1	TUBE	
	3	3	**3T-5302**	1	FLANGE	
	4	2	**3T-6471**	1	SCREEN AS (TORQUE CONVERTER SCAVENGE)	
		2	**3T-6469**	1	WASHER (19X26X1.6-MM THK)	
	5	2	**6V-0852**	3	CAP-DUST	
	6	2	**6V-5387**	1	PLATE-ORIFICE	
I	7	2	**8E-5502**	1	HOSE AS	
	8	1	**9D-7924**	3	MOUNTING	
	9	2	**9G-5127**	1	BREATHER AS (TRANSMISSION)	
	10	2	**106-2105**	1	ELBOW	
	11	2	**203-2789**	1	BRACKET AS	
Y	12	3	**220-1418**	1	VALVE GP-RELIEF (TORQUE CONVERTER OUTLET)	567
Y	13	2	*231-4166*	1	SCREEN GP-MAGNETIC (TRANSMISSION)	546
	14	2	**235-4514**	1	BRACKET	
	15	2	**235-4515**	1	TUBE AS	
	16	2	**235-4516**	1	TUBE AS	
	17	3	**235-4826**	1	BRACKET AS	
Y	18	1	**333-6437**	1	FILTER GP-OIL (POWER TRAIN)	482
	19	2	**241-5634**	1	TUBE AS	
	20	1	**241-5635**	1	GAUGE AS-OIL LEVEL (TRANSMISSION CASE)	
CY	21	1	*331-7020*	1	ACCUMULATOR GP-HYDRAULIC (CHARGED)	820
	22	2	*260-9187*	3	CONNECTOR AS	
					(EACH INCLUDES)	
		2	**8T-9358**	1	CONNECTOR	
		2	**6V-8397**	1	SEAL-O-RING	
I	23	1	**263-3346**	1	HOSE AS	
I	24	1	**263-3348**	1	HOSE AS	
Y	25	2	**263-9949**	1	MANIFOLD GP-TRANSMISSION (LUBE DISTRIBUTION)	527
	26	3	*268-1601*	1	CONNECTOR AS-ORIFICE	
		3	**112-2628**	1	CONNECTOR	
		3	**3J-7354**	1	SEAL-O-RING	
		3	**4J-5477**	1	SEAL-O-RING	
Y	27	3	*270-1762*	1	PUMP GP-GEAR (POWER TRAIN OIL)	543
I	28	1	**270-3435**	1	HOSE AS	
I	29	2	**270-3438**	1	HOSE AS	
	30	3	**272-0251**	1	HOSE AS	
I	31	2	**287-0414**	1	HOSE AS	
I	32	2	**287-0415**	1	HOSE AS	
I	33	3	**294-3345**	1	HOSE AS	
I	34	2	**294-3346**	1	HOSE AS	
	35	2	**299-4008**	1	HOSE AS	
	36	3	**299-5660**	1	SPACER	
	37	2	**314-5179**	1	HOSE AS	
	38	2	**314-5180**	1	HOSE AS	
	39	2,3	**033-8248**	3	CLIP	
M	40	1	**109-3001**	1	STUD-TAPERLOCK (M10X1.5X65-MM)	
	41	3	*148-8325*	1	CONNECTOR AS	
		3	**6V-8641**	1	CONNECTOR	
		3	**3J-1907**	1	SEAL-O-RING	
		3	**4J-5477**	1	SEAL-O-RING	
	42	1	*148-8335*	2	CONNECTOR AS	
					(EACH INCLUDES)	
		1	**6V-8635**	1	CONNECTOR	
		1	**5K-9090**	1	SEAL-O-RING	
		1	**7M-8485**	1	SEAL-O-RING	
	43	2	*148-8336*	1	CONNECTOR AS	
		2	**6V-8636**	1	CONNECTOR	
		2	**3J-1907**	1	SEAL-O-RING	

269-2072 **LINES GP-POWER TRAIN OIL (*contd.*)** **i04046910**

NOTE	REF NO	GRAPHIC REF	PART NUMBER	QTY	PART NAME 1 2 3 4 5 6 (PRODUCT LEVEL)	SEE PAGE
		2	**6V-8397**	1	SEAL-O-RING	
	44	2,3	*148-8368*	2	ELBOW AS	
					(EACH INCLUDES)	
		2,3	**6V-8627**	1	ELBOW	
		2,3	**3J-1907**	1	SEAL-O-RING	
		2,3	**4J-5477**	1	SEAL-O-RING	
	45	2	*148-8374*	1	ELBOW AS	
		2	**6V-8723**	1	ELBOW	
		2	**3K-0360**	1	SEAL-O-RING	
		2	**6V-8397**	1	SEAL-O-RING	
C	46	1	*148-8364*	1	ELBOW AS	
		1	**6V-8625**	1	ELBOW	
		1	**3K-0360**	1	SEAL-O-RING	
		1	**6V-8398**	1	SEAL-O-RING	
	47	2	*148-8426*	1	TEE AS	
		2	**8T-6696**	1	TEE-O-RING	
		2	**3K-0360**	1	SEAL-O-RING	
		2	**6V-8397**	1	SEAL-O-RING	
		2	**6V-8398**	1	SEAL-O-RING	
	48	2	*150-3065*	1	ELBOW AS	
		2	**6V-0484**	1	ELBOW	
		2	**3J-1907**	1	SEAL-O-RING	
	49	1	*153-6243*	1	TEE AS	
		1	**8T-1120**	1	TEE-O-RING PORT	
		1	**2S-4078**	1	SEAL-O-RING	
		1	**5K-9090**	1	SEAL-O-RING	
		1	**6V-9746**	1	SEAL-O-RING	
	50	2	*153-6252*	1	CONNECTOR AS	
		2	**9X-8408**	1	CONNECTOR	
		2	**6V-8398**	1	SEAL-O-RING	
		2	**7M-8485**	1	SEAL-O-RING	
	51	1	**162-9523**	2	GROMMET	
	52	2	*164-5567*	3	COUPLER AS-QUICK DISCONNECT (MALE)	
					(EACH INCLUDES)	
		2	**6V-3965**	1	FITTING (QUICK DISCONNECT)	
		2	**214-7568**	1	SEAL-O-RING	
	53	3	*169-7397*	1	ADAPTER GP	
		3	**3P-1932**	1	ADAPTER	
		3	**3K-0360**	1	SEAL-O-RING	
	54	2	**180-4362**	2	SEAL-RECTANGULAR	
	55	3	**1H-5728**	1	SEAL-O-RING	
	56	2,3	**1P-4578**	10	FLANGE-HALF	
	57	3	**1V-7753**	1	SPACER (0.546X0.841X1.75-IN THK)	
	58	3	**2K-8257**	1	SEAL-O-RING	
	59	1,2	**3G-4214**	4	CLIP (SLOT)	
	60	1,2	**3G-4218**	4	CLIP (TAB)	
	61	2	**3J-1907**	1	SEAL-O-RING	
	62	2,3	**4K-6177**	5	CLIP	
	63	2	**5P-7085**	1	SEAL-RECTANGULAR	
	64	1	**5P-7468**	2	CLIP (SLOT)	
	65	1	**5P-7469**	2	CLIP (TAB)	
	66	3	**6L-1649**	2	SEAL-O-RING	
	67	3	**6L-5359**	1	SEAL-O-RING	
	68	1	**6V-1572**	2	CLIP (SLOT)	
	69	1	**6V-1573**	2	CLIP (TAB)	
	70	2	**6V-9168**	3	NUT (11/16-16-THD)	
	71	2	**5P-1076**	2	WASHER-HARD (13.5X30X4-MM THK)	
	72	2	**7G-3832**	1	GROMMET	
	73	2	**7G-3833**	1	CLIP (TAB)	
	74	2	**7G-3834**	1	CLIP (SLOT)	
	75	3	**7S-8920**	1	CLIP (SLOT)	
	76	3	**7S-8921**	1	CLIP (TAB)	

269-2072 **LINES GP-POWER TRAIN OIL (*contd.*)** **i04046910**

NOTE	REF NO	GRAPHIC REF	PART NUMBER	QTY	PART NAME 1 2 3 4 5 6 (PRODUCT LEVEL)	SEE PAGE
	77	1	**7X-7729**	2	WASHER (11X25X3-MM THK)	
	78	2	**8C-3206**	2	FLANGE-HALF	
	80	2	**8M-4986**	9	SEAL-O-RING	
	81	1,3	**8M-4987**	3	SEAL-O-RING	
	82	3	**8M-5254**	4	SEAL-O-RING	
	83	2	**8M-8157**	1	SEAL-O-RING	
	84	3	**8S-0023**	1	CLIP (SLOT)	
	85	3	**8S-0024**	1	CLIP (TAB)	
	86	2	**8T-1893**	3	CLIP (SLOT)	
	87	2	**8T-1894**	3	CLIP (TAB)	
	88	1,2,3	**8T-4121**	58	WASHER-HARD (11X21X2.5-MM THK)	
M	89	1,2,3	**8T-4133**	6	NUT (M10X1.5-THD)	
M	90	1,2,3	**8T-4136**	12	BOLT (M10X1.5X25-MM)	
M	91	1,2	**8T-4137**	2	BOLT (M10X1.5X20-MM)	
M	92	3	**8T-4172**	3	BOLT (M10X1.5X80-MM)	
M	93	2	**8T-4176**	2	BOLT (M12X1.75X90-MM)	
M	94	2	**8T-4178**	4	BOLT (M10X1.5X90-MM)	
M	95	2	**8T-4184**	2	BOLT (M12X1.75X45-MM)	
M	96	3	**8T-4186**	4	BOLT (M10X1.5X40-MM)	
M	97	3	**8T-4191**	1	BOLT (M10X1.5X16-MM)	
M	98	2,3	**8T-4195**	5	BOLT (M10X1.5X30-MM)	
M	99	2	**8T-4196**	16	BOLT (M10X1.5X35-MM)	
	100	2,3	**8T-4223**	15	WASHER-HARD (13.5X25.5X3-MM THK)	
	101	1	**8T-4226**	6	WASHER-PLATED (10.5X45X3-MM THK)	
M	102	3	**8T-4648**	1	BOLT (M12X1.75X70-MM)	
	103	2	**8T-4896**	4	WASHER-HARD (10.2X18.5X2.5-MM THK)	
M	104	3	**8T-4956**	4	BOLT (M12X1.75X35-MM)	
M	105	3	**8T-5005**	8	BOLT (M10X1.5X70-MM)	
M	106	1	**8T-6466**	3	BOLT (M10X1.5X60-MM)	
M	107	2	**8T-6868**	8	BOLT (M12X1.75X80-MM)	
	108	1	**8T-7087**	2	GROMMET	

C - CHANGE FROM PREVIOUS TYPE
I - REFER TO HYDRAULIC INFORMATION SYSTEM
M - METRIC PART
Y - SEPARATE ILLUSTRATION

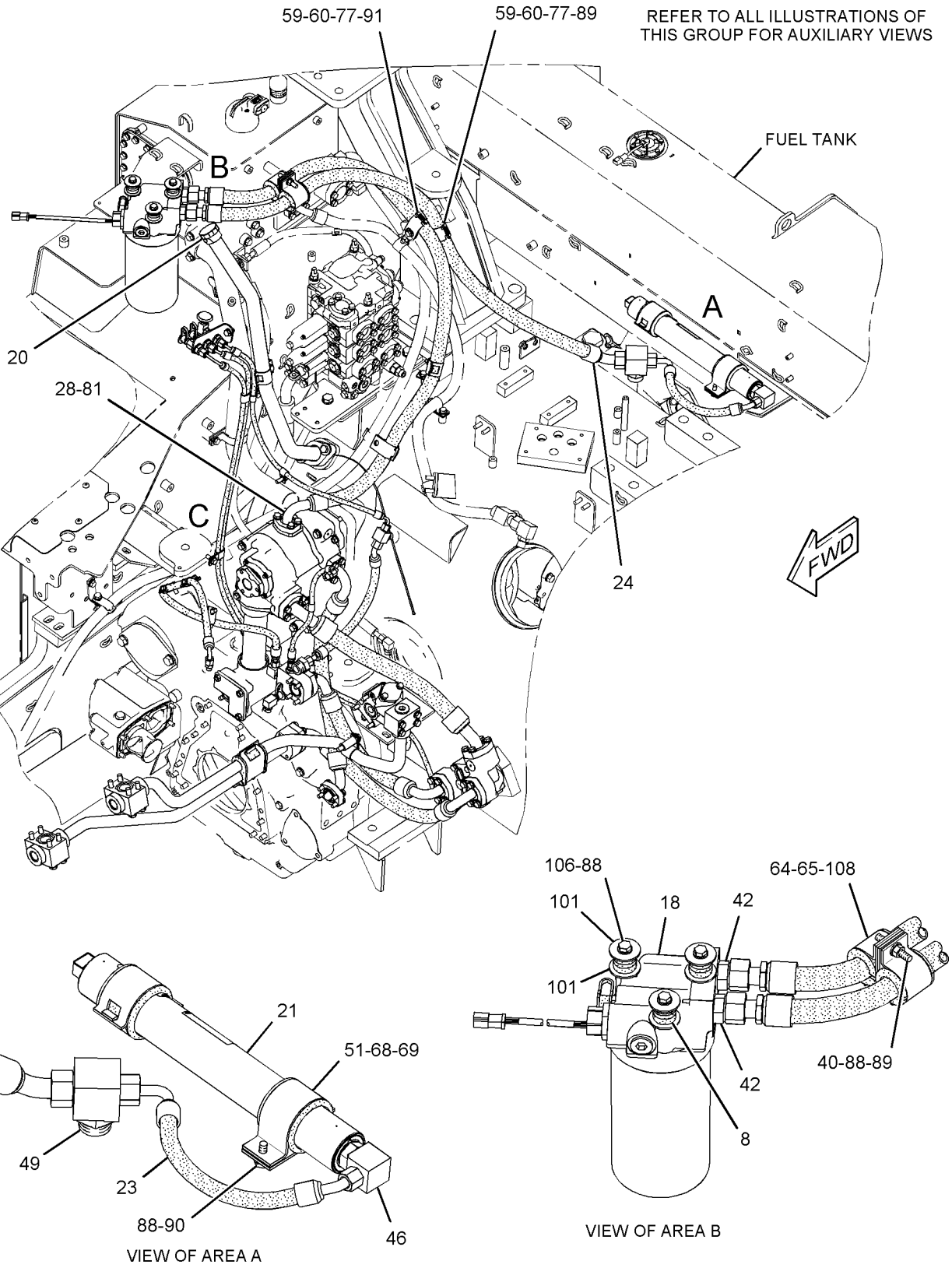

GRAPHIC #1 g01621545

269-2072 **LINES GP-POWER TRAIN OIL (*contd.*)** **i04046910**

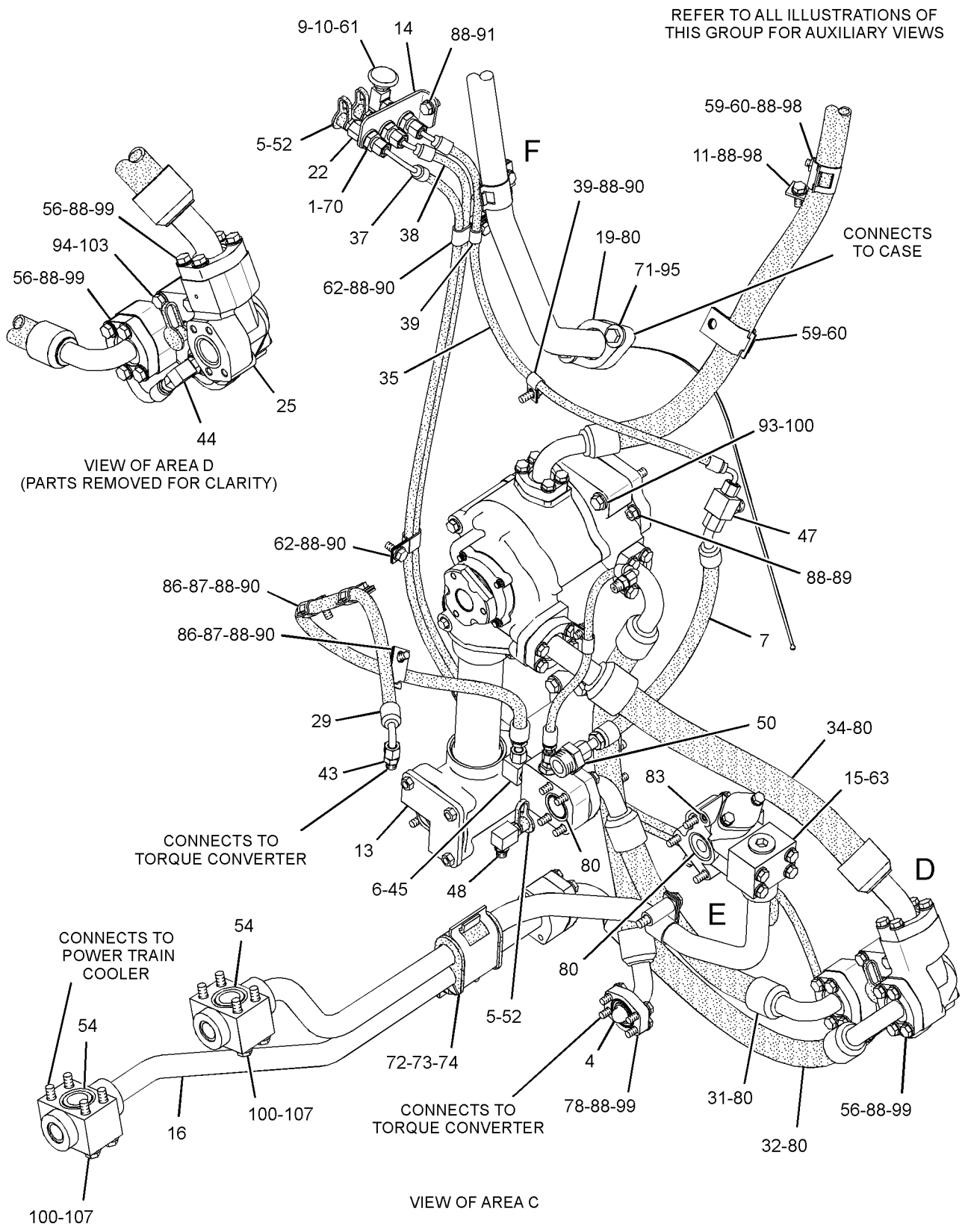

GRAPHIC #2 g01621546

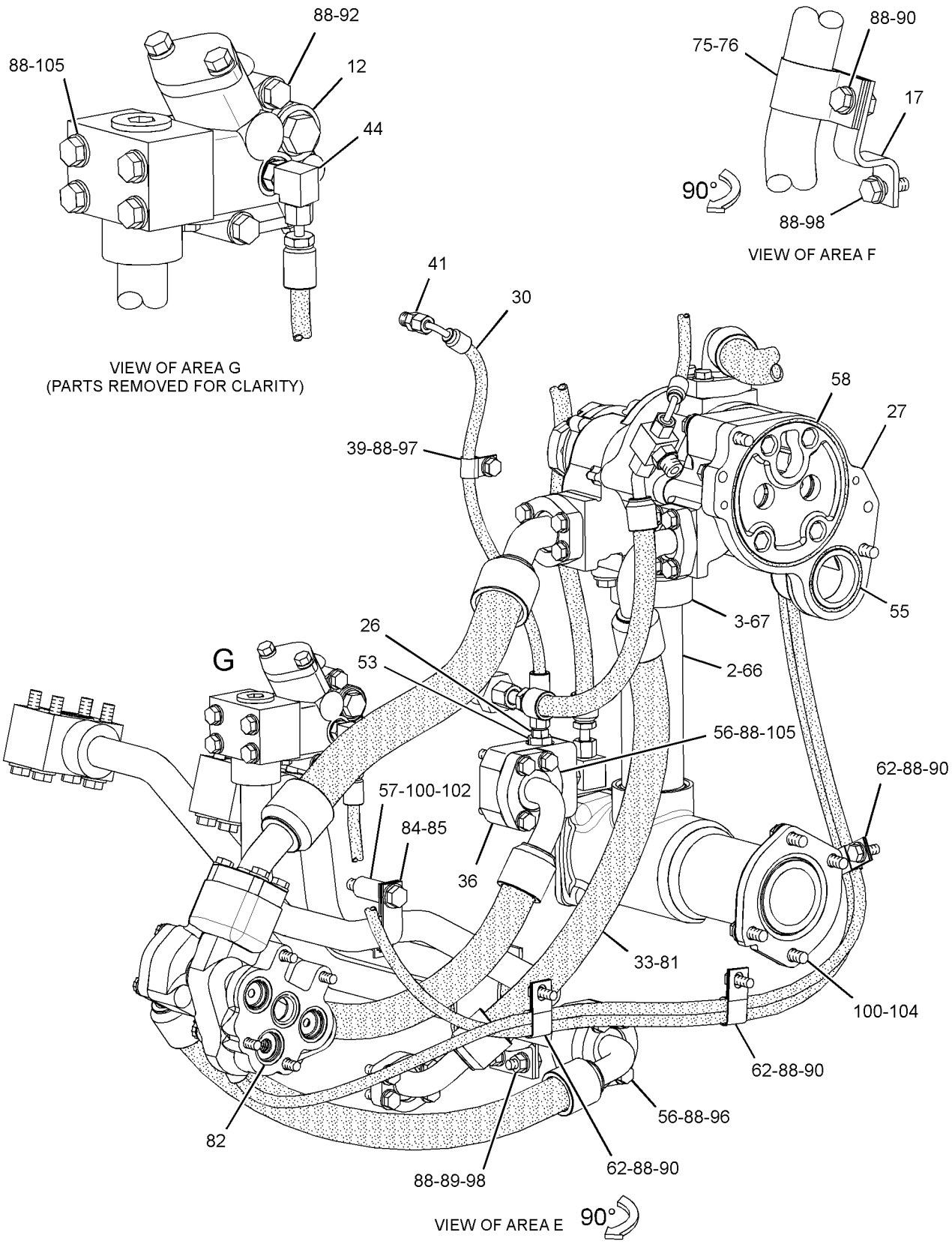

GRAPHIC #3 **<END>** g01621547

269-2072 LINES GP-POWER TRAIN OIL

S/N: SMC347-UP; GCT584-UP
PART OF 269-2046 POWER TRAIN AR
TYPE 1

SMCS-3016 **i04046889**

NOTE	REF NO	GRAPHIC REF	PART NUMBER	QTY	PART NAME 1 2 3 4 5 6 (PRODUCT LEVEL)	SEE PAGE
	1	2	**9X-8257**	6	WASHER (17.5X30X3.5-MM THK)	
	2	3	**3T-5301**	1	TUBE	
	3	3	**3T-5302**	1	FLANGE	
	4	2	**3T-6471**	1	SCREEN AS (TORQUE CONVERTER SCAVENGE)	
		2	**3T-6469**	1	WASHER (19X26X1.6-MM THK)	
	5	2	**6V-0852**	3	CAP-DUST	
	6	2	**6V-5387**	1	PLATE-ORIFICE	
I	7	2	**8E-5502**	1	HOSE AS	
	8	1	**9D-7924**	3	MOUNTING	
	9	2	**9G-5127**	1	BREATHER AS (TRANSMISSION)	
	10	2	**106-2105**	1	ELBOW	
C	11	2	**355-7452**	1	BRACKET AS	
Y	12	3	**220-1418**	1	VALVE GP-RELIEF (TORQUE CONVERTER OUTLET)	567
Y	13	2	*231-4166*	1	SCREEN GP-MAGNETIC (TRANSMISSION)	546
	14	2	**235-4514**	1	BRACKET	
	15	2	**235-4515**	1	TUBE AS	
	16	2	**235-4516**	1	TUBE AS	
	17	3	**235-4826**	1	BRACKET AS	
Y	18	1	**333-6437**	1	FILTER GP-OIL	482
	19	2	**241-5634**	1	TUBE AS	
	20	1	**241-5635**	1	GAUGE AS-OIL LEVEL (TRANSMISSION CASE)	
Y	21	1	*331-7020*	1	ACCUMULATOR GP-HYDRAULIC (CHARGED)	820
	22	2	*260-9187*	3	CONNECTOR AS	
					(EACH INCLUDES)	
		2	**8T-9358**	1	CONNECTOR	
		2	**6V-8397**	1	SEAL-O-RING	
I	23	1	**263-3346**	1	HOSE AS	
I	24	1	**263-3348**	1	HOSE AS	
Y	25	2	**263-9949**	1	MANIFOLD GP-TRANSMISSION (LUBE DISTRIBUTION)	527
	26	3	*268-1601*	1	CONNECTOR AS-ORIFICE	
		3	**112-2628**	1	CONNECTOR	
		3	**3J-7354**	1	SEAL-O-RING	
		3	**4J-5477**	1	SEAL-O-RING	
Y	27	3	*270-1762*	1	PUMP GP-GEAR (POWER TRAIN OIL)	543
I	28	1	**270-3435**	1	HOSE AS	
I	29	2	**270-3438**	1	HOSE AS	
	30	3	**272-0251**	1	HOSE AS	
I	31	2	**287-0414**	1	HOSE AS	
I	32	2	**287-0415**	1	HOSE AS	
I	33	3	**294-3345**	1	HOSE AS	
I	34	2	**294-3346**	1	HOSE AS	
	35	2	**299-4008**	1	HOSE AS	
	36	3	**299-5660**	1	SPACER	
	37	2	**314-5179**	1	HOSE AS	
	38	2	**314-5180**	1	HOSE AS	
	39	2,3	**033-8248**	3	CLIP	
M	40	1	**109-3001**	1	STUD-TAPERLOCK (M10X1.5X65-MM)	
	41	3	*148-8325*	1	CONNECTOR AS	
		3	**6V-8641**	1	CONNECTOR	
		3	**3J-1907**	1	SEAL-O-RING	
		3	**4J-5477**	1	SEAL-O-RING	
	42	1	*148-8335*	2	CONNECTOR AS	
					(EACH INCLUDES)	
		1	**6V-8635**	1	CONNECTOR	
		1	**5K-9090**	1	SEAL-O-RING	
		1	**7M-8485**	1	SEAL-O-RING	
	43	2	*148-8336*	1	CONNECTOR AS	

269-2072 **LINES GP-POWER TRAIN OIL (*contd.*)** **i04046889**

NOTE	REF NO	GRAPHIC REF	PART NUMBER	QTY	PART NAME 1 2 3 4 5 6 (PRODUCT LEVEL)	SEE PAGE
		2	**6V-8636**	1	CONNECTOR	
		2	**3J-1907**	1	SEAL-O-RING	
		2	**6V-8397**	1	SEAL-O-RING	
	44	2,3	*148-8368*	2	ELBOW AS	
					(EACH INCLUDES)	
		2,3	**6V-8627**	1	ELBOW	
		2,3	**3J-1907**	1	SEAL-O-RING	
		2,3	**4J-5477**	1	SEAL-O-RING	
	45	2	*148-8374*	1	ELBOW AS	
		2	**6V-8723**	1	ELBOW	
		2	**3K-0360**	1	SEAL-O-RING	
		2	**6V-8397**	1	SEAL-O-RING	
	46	1	*148-8364*	1	ELBOW AS	
		1	**6V-8625**	1	ELBOW	
		1	**3K-0360**	1	SEAL-O-RING	
		1	**6V-8398**	1	SEAL-O-RING	
	47	2	*148-8426*	1	TEE AS	
		2	**8T-6696**	1	TEE-O-RING	
		2	**3K-0360**	1	SEAL-O-RING	
		2	**6V-8397**	1	SEAL-O-RING	
		2	**6V-8398**	1	SEAL-O-RING	
	48	2	*150-3065*	1	ELBOW AS	
		2	**6V-0484**	1	ELBOW	
		2	**3J-1907**	1	SEAL-O-RING	
	49	1	*153-6243*	1	TEE AS	
		1	**8T-1120**	1	TEE-O-RING PORT	
		1	**2S-4078**	1	SEAL-O-RING	
		1	**5K-9090**	1	SEAL-O-RING	
		1	**6V-9746**	1	SEAL-O-RING	
	50	2	*153-6252*	1	CONNECTOR AS	
		2	**9X-8408**	1	CONNECTOR	
		2	**6V-8398**	1	SEAL-O-RING	
		2	**7M-8485**	1	SEAL-O-RING	
	51	1	**162-9523**	2	GROMMET	
	52	2	*164-5567*	3	COUPLER AS-QUICK DISCONNECT (MALE)	
					(EACH INCLUDES)	
		2	**6V-3965**	1	FITTING (QUICK DISCONNECT)	
		2	**214-7568**	1	SEAL-O-RING	
	53	3	*169-7397*	1	ADAPTER GP	
		3	**3P-1932**	1	ADAPTER	
		3	**3K-0360**	1	SEAL-O-RING	
	54	2	**180-4362**	2	SEAL-RECTANGULAR	
	55	3	**1H-5728**	1	SEAL-O-RING	
	56	2,3	**1P-4578**	10	FLANGE-HALF	
	57	3	**1V-7753**	1	SPACER (0.546X0.841X1.75-IN THK)	
	58	3	**2K-8257**	1	SEAL-O-RING	
	59	1,2	**3G-4214**	4	CLIP (SLOT)	
	60	1,2	**3G-4218**	4	CLIP (TAB)	
	61	2	**3J-1907**	1	SEAL-O-RING	
	62	2,3	**4K-6177**	5	CLIP	
	63	2	**5P-7085**	1	SEAL-RECTANGULAR	
	64	1	**5P-7468**	2	CLIP (SLOT)	
	65	1	**5P-7469**	2	CLIP (TAB)	
	66	3	**6L-1649**	2	SEAL-O-RING	
	67	3	**6L-5359**	1	SEAL-O-RING	
	68	1	**6V-1572**	2	CLIP (SLOT)	
	69	1	**6V-1573**	2	CLIP (TAB)	
	70	2	**6V-9168**	3	NUT (11/16-16-THD)	
	71	2	**5P-1076**	2	WASHER-HARD (13.5X30X4-MM THK)	
	72	2	**7G-3832**	1	GROMMET	
	73	2	**7G-3833**	1	CLIP (TAB)	
	74	2	**7G-3834**	1	CLIP (SLOT)	

269-2072 **LINES GP-POWER TRAIN OIL (*contd.*)** **i04046889**

NOTE	REF NO	GRAPHIC REF	PART NUMBER	QTY	PART NAME 1 2 3 4 5 6 (PRODUCT LEVEL)	SEE PAGE
	75	3	**7S-8920**	1	CLIP (SLOT)	
	76	3	**7S-8921**	1	CLIP (TAB)	
	77	1	**7X-7729**	2	WASHER (11X25X3-MM THK)	
	78	2	**8C-3206**	2	FLANGE-HALF	
	80	2	**8M-4986**	9	SEAL-O-RING	
	81	1,3	**8M-4987**	3	SEAL-O-RING	
	82	3	**8M-5254**	4	SEAL-O-RING	
	83	2	**8M-8157**	1	SEAL-O-RING	
	84	3	**8S-0023**	1	CLIP (SLOT)	
	85	3	**8S-0024**	1	CLIP (TAB)	
	86	2	**8T-1893**	3	CLIP (SLOT)	
	87	2	**8T-1894**	3	CLIP (TAB)	
	88	1,2,3	**8T-4121**	58	WASHER-HARD (11X21X2.5-MM THK)	
M	89	1,2,3	**8T-4133**	6	NUT (M10X1.5-THD)	
M	90	1,2,3	**8T-4136**	12	BOLT (M10X1.5X25-MM)	
M	91	1,2	**8T-4137**	2	BOLT (M10X1.5X20-MM)	
M	92	3	**8T-4172**	3	BOLT (M10X1.5X80-MM)	
M	93	2	**8T-4176**	2	BOLT (M12X1.75X90-MM)	
M	94	2	**8T-4178**	4	BOLT (M10X1.5X90-MM)	
M	95	2	**8T-4184**	2	BOLT (M12X1.75X45-MM)	
M	96	3	**8T-4186**	4	BOLT (M10X1.5X40-MM)	
M	97	3	**8T-4191**	1	BOLT (M10X1.5X16-MM)	
M	98	2,3	**8T-4195**	5	BOLT (M10X1.5X30-MM)	
M	99	2	**8T-4196**	16	BOLT (M10X1.5X35-MM)	
	100	2,3	**8T-4223**	15	WASHER-HARD (13.5X25.5X3-MM THK)	
	101	1	**8T-4226**	6	WASHER-PLATED (10.5X45X3-MM THK)	
M	102	3	**8T-4648**	1	BOLT (M12X1.75X70-MM)	
	103	2	**8T-4896**	4	WASHER-HARD (10.2X18.5X2.5-MM THK)	
M	104	3	**8T-4956**	4	BOLT (M12X1.75X35-MM)	
M	105	3	**8T-5005**	8	BOLT (M10X1.5X70-MM)	
M	106	1	**8T-6466**	3	BOLT (M10X1.5X60-MM)	
M	107	2	**8T-6868**	8	BOLT (M12X1.75X80-MM)	
	108	1	**8T-7087**	2	GROMMET	

C - CHANGE FROM PREVIOUS TYPE
I - REFER TO HYDRAULIC INFORMATION SYSTEM
M - METRIC PART
Y - SEPARATE ILLUSTRATION

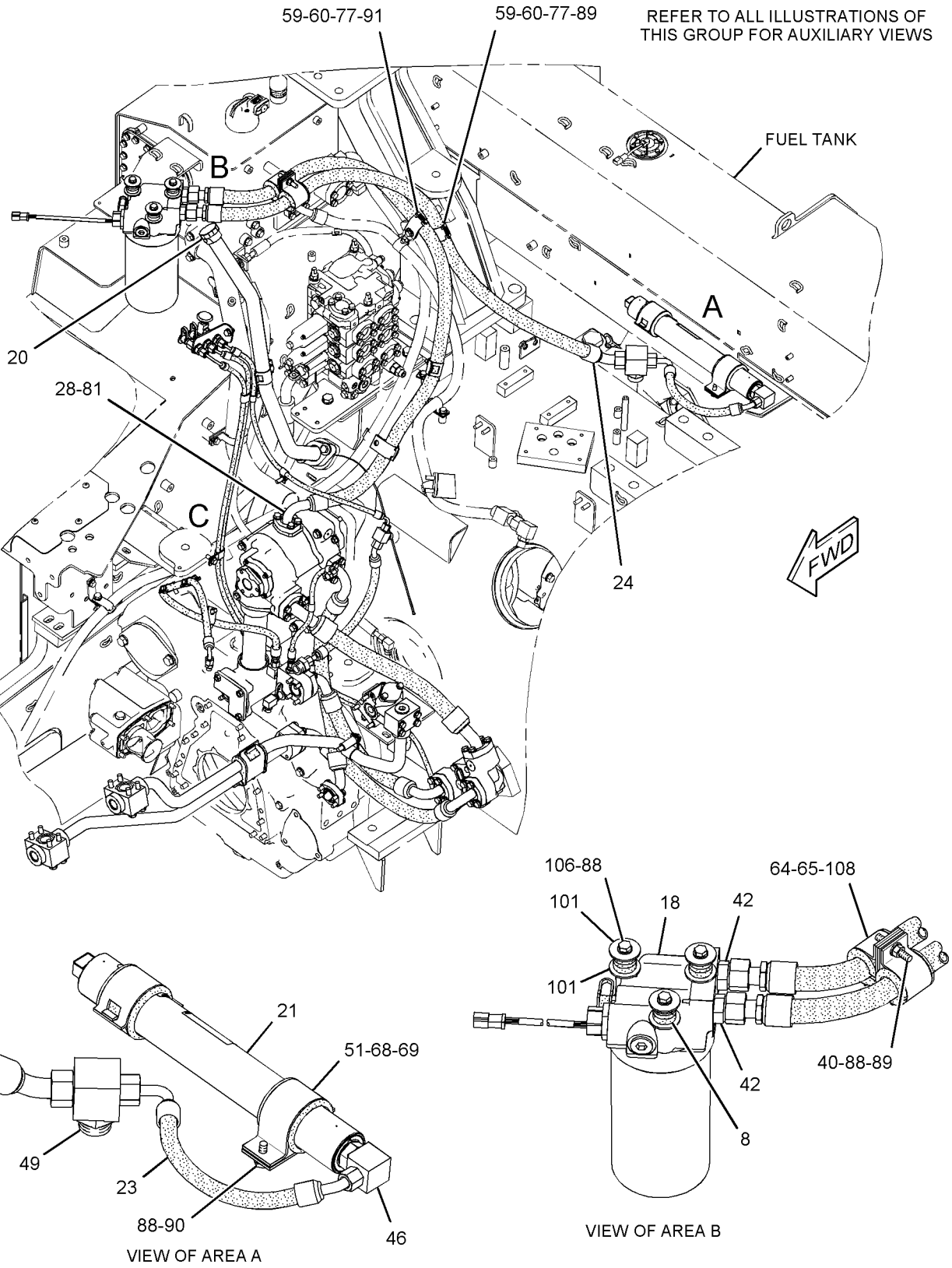

GRAPHIC #1 g01621545

269-2072 **LINES GP-POWER TRAIN OIL (*contd.*)** **i04046889**

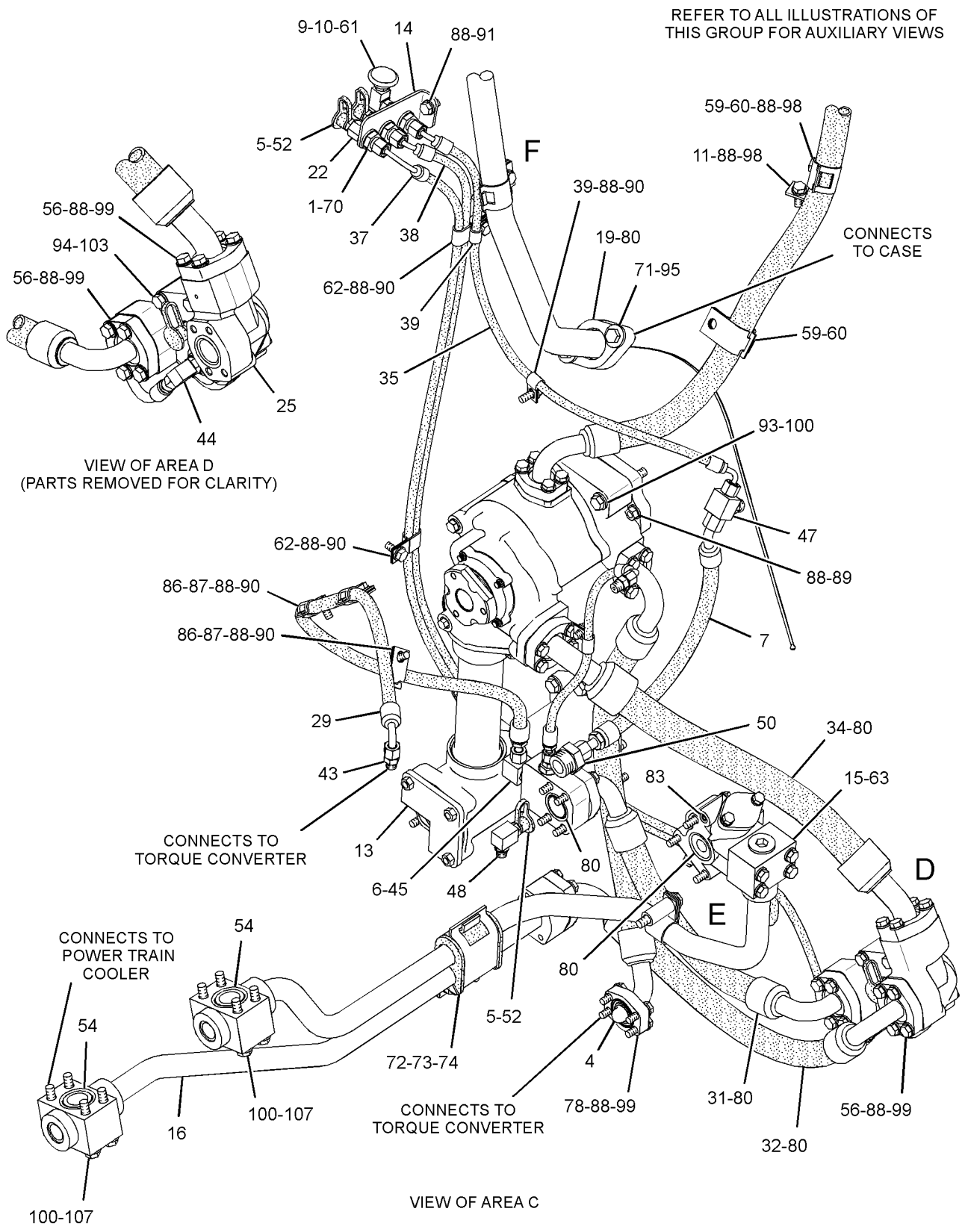

GRAPHIC #2 g02176346

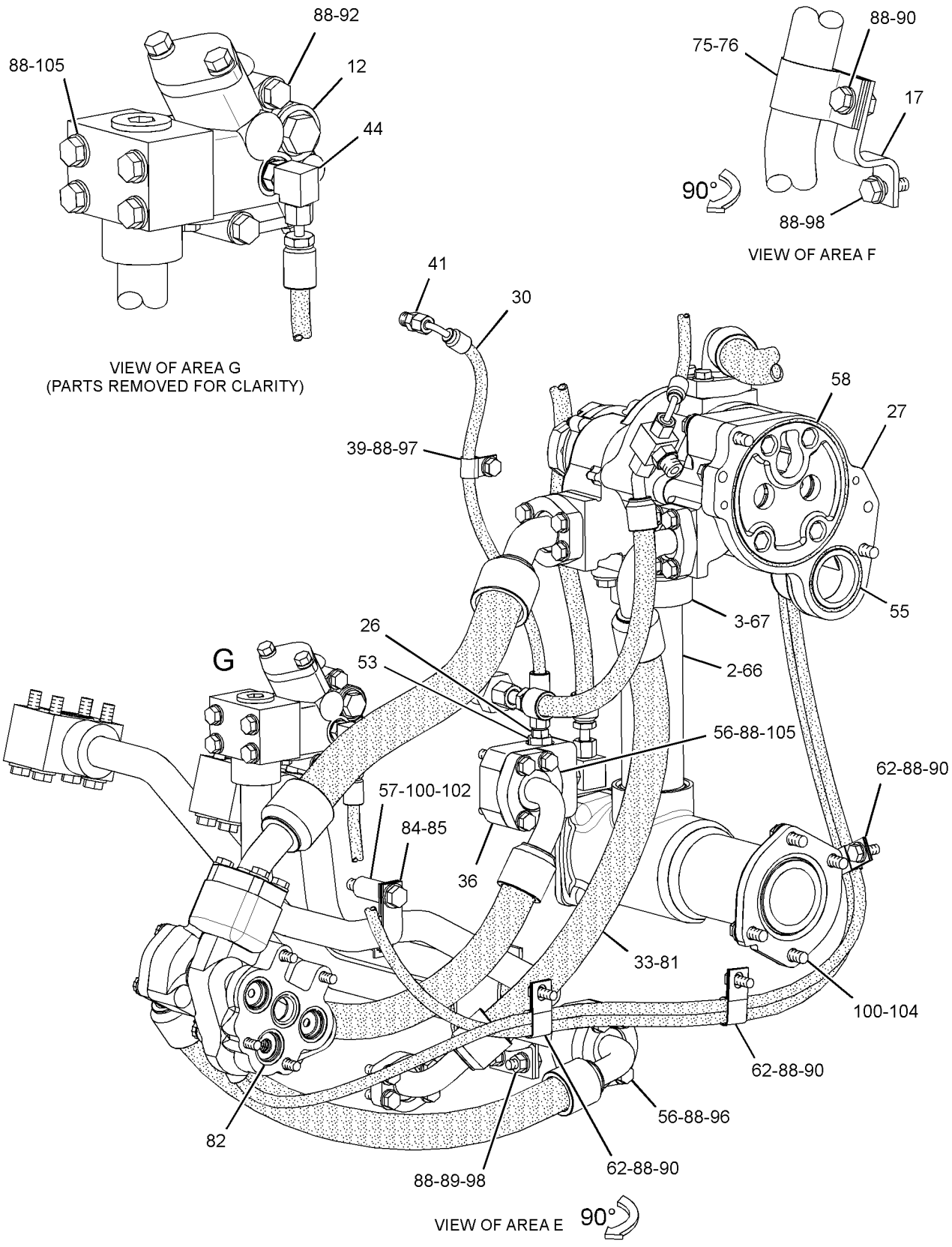

GRAPHIC #3 **<END>** g01621547

269-2072 LINES GP-POWER TRAIN OIL

S/N: SMC347-UP; GCT584-UP
PART OF 269-2046 POWER TRAIN AR
TYPE 2

SMCS-3016 **i05230241**

NOTE	REF NO	GRAPHIC REF	PART NUMBER	QTY	PART NAME 1 2 3 4 5 6 (PRODUCT LEVEL)	SEE PAGE
	1	2	**9X-8257**	6	WASHER (17.5X30X3.5-MM THK)	
	2	2	**3T-5301**	1	TUBE	
	3	2	**3T-5302**	1	FLANGE	
	4	2	**3T-6471**	1	SCREEN AS (TORQUE CONVERTER SCAVENGE)	
	5	1,2	**6V-0852**	3	CAP-DUST	
I	7	2	**8E-5502**	1	HOSE AS	
	8	1	**9D-7924**	3	MOUNTING	
	9	2	**9G-5127**	1	BREATHER AS (TRANSMISSION)	
	10	2	**106-2105**	1	ELBOW	
	11	1	**355-7452**	1	BRACKET AS	
Y	12	1	**220-1418**	1	VALVE GP-RELIEF (TORQUE CONVERTER OUTLET)	567
Y	13	2	*231-4166*	1	SCREEN GP-MAGNETIC (TRANSMISSION)	546
	14	2	**235-4514**	1	BRACKET	
	15	1	**235-4515**	1	TUBE AS	
	16	2	**235-4516**	1	TUBE AS	
	17	1	**235-4826**	1	BRACKET AS	
Y	18	1	**333-6437**	1	FILTER GP-OIL	482
C	19	1	**380-3872**	1	FILLER	
	20	1	**241-5635**	1	GAUGE AS-OIL LEVEL (TRANSMISSION CASE)	
Y	21	1	*331-7020*	1	ACCUMULATOR GP-HYDRAULIC (CHARGED)	820
	22	2	*260-9187*	3	CONNECTOR AS	
					(EACH INCLUDES)	
		2	**8T-9358**	1	CONNECTOR	
		2	**6V-8397**	1	SEAL-O-RING	
I	23	1	**263-3346**	1	HOSE AS	
I	24	1	**263-3348**	1	HOSE AS	
Y	27	2	*270-1762*	1	PUMP GP-GEAR (POWER TRAIN OIL)	543
I	28	1	**270-3435**	1	HOSE AS	
I	29	2	**270-3438**	1	HOSE AS	
CI	30	2	**377-1484**	1	HOSE AS	
CI	31	2	**364-9180**	1	HOSE AS	
CI	32	2	**364-9179**	1	HOSE AS	
I	33	2	**294-3345**	1	HOSE AS	
CI	34	2	**376-6483**	1	HOSE AS	
	35	2	**299-4008**	1	HOSE AS	
	36	2	**299-5660**	1	SPACER	
	37	2	**314-5179**	1	HOSE AS	
CI	38	2	**379-0209**	1	HOSE AS	
C	39	2	**033-8248**	2	CLIP	
M	40	1	**109-3001**	1	STUD-TAPERLOCK (M10X1.5X65-MM)	
C	41	2	*268-1559*	1	ADAPTER AS	
		2	**209-0939**	1	ADAPTER	
		2	**3J-1907**	1	SEAL-O-RING	
		2	**4J-5477**	1	SEAL-O-RING	
	42	1	*148-8335*	2	CONNECTOR AS	
					(EACH INCLUDES)	
		1	**6V-8635**	1	CONNECTOR	
		1	**5K-9090**	1	SEAL-O-RING	
		1	**7M-8485**	1	SEAL-O-RING	
	43	2	*148-8336*	1	CONNECTOR AS	
		2	**6V-8636**	1	CONNECTOR	
		2	**3J-1907**	1	SEAL-O-RING	
		2	**6V-8397**	1	SEAL-O-RING	
	44	1,2	*148-8368*	2	ELBOW AS	
					(EACH INCLUDES)	
		1,2	**6V-8627**	1	ELBOW	
		1,2	**3J-1907**	1	SEAL-O-RING	

269-2072 **LINES GP-POWER TRAIN OIL (*contd.*)** **i05230241**

NOTE	REF NO	GRAPHIC REF	PART NUMBER	QTY	PART NAME 1 2 3 4 5 6 (PRODUCT LEVEL)	SEE PAGE
		1,2	**4J-5477**	1	SEAL-O-RING	
C	45	1	*148-8378*	1	ELBOW AS	
		1	**6V-8397**	1	SEAL-O-RING	
		1	**3J-1907**	1	SEAL-O-RING	
		1	**6V-8724**	1	ELBOW	
	46	1	*148-8364*	1	ELBOW AS	
		1	**6V-8625**	1	ELBOW	
		1	**3K-0360**	1	SEAL-O-RING	
		1	**6V-8398**	1	SEAL-O-RING	
	47	2	*148-8426*	1	TEE AS	
		2	**8T-6696**	1	TEE-O-RING	
		2	**3K-0360**	1	SEAL-O-RING	
		2	**6V-8397**	1	SEAL-O-RING	
		2	**6V-8398**	1	SEAL-O-RING	
	48	1	*150-3065*	1	ELBOW AS	
		1	**6V-0484**	1	ELBOW	
		1	**3J-1907**	1	SEAL-O-RING	
	49	1	*153-6243*	1	TEE AS	
		1	**8T-1120**	1	TEE-O-RING PORT	
		1	**2S-4078**	1	SEAL-O-RING	
		1	**5K-9090**	1	SEAL-O-RING	
		1	**6V-9746**	1	SEAL-O-RING	
	50	1	*153-6252*	1	CONNECTOR AS	
		1	**9X-8408**	1	CONNECTOR	
		1	**6V-8398**	1	SEAL-O-RING	
		1	**7M-8485**	1	SEAL-O-RING	
	51	1	**162-9523**	2	GROMMET	
	52	1,2	*164-5567*	3	COUPLER AS-QUICK DISCONNECT (MALE)	
C	53	1	*154-5232*	1	ADAPTER AS	
		1	**112-9783**	1	ADAPTER	
		1	**4J-5477**	1	SEAL-O-RING	
		1	**3K-0360**	1	SEAL-O-RING	
	54	2	**180-4362**	2	SEAL-RECTANGULAR	
	55	2	**1H-5728**	1	SEAL-O-RING	
	56	1,2	**1P-4578**	10	FLANGE-HALF	
	57	2	**1V-7753**	1	SPACER (0.546X0.841X1.75-IN THK)	
	58	2	**2K-8257**	1	SEAL-O-RING	
	59	1	**3G-4214**	4	CLIP (SLOT)	
	60	1	**3G-4218**	4	CLIP (TAB)	
	61	2	**3J-1907**	1	SEAL-O-RING	
	62	2	**4K-6177**	5	CLIP	
	63	1	**5P-7085**	1	SEAL-RECTANGULAR	
	64	1	**5P-7468**	2	CLIP (SLOT)	
	65	1	**5P-7469**	2	CLIP (TAB)	
	66	2	**6L-1649**	2	SEAL-O-RING	
	67	2	**6L-5359**	1	SEAL-O-RING	
	68	1	**6V-1572**	2	CLIP (SLOT)	
	69	1	**6V-1573**	2	CLIP (TAB)	
	70	2	**6V-9168**	3	NUT (11/16-16-THD)	
	71	1	**5P-1076**	2	WASHER-HARD (13.5X30X4-MM THK)	
	72	2	**7G-3832**	1	GROMMET	
	73	2	**7G-3833**	1	CLIP (TAB)	
	74	2	**7G-3834**	1	CLIP (SLOT)	
	75	1	**7S-8920**	1	CLIP (SLOT)	
	76	1	**7S-8921**	1	CLIP (TAB)	
	77	1	**7X-7729**	2	WASHER (11X25X3-MM THK)	
	78	2	**8C-3206**	2	FLANGE-HALF	
C	80	1	**8M-4986**	2	SEAL-O-RING	
	83	1	**8M-8157**	1	SEAL-O-RING	
	84	2	**8S-0023**	1	CLIP (SLOT)	
	85	2	**8S-0024**	1	CLIP (TAB)	
	86	2	**8T-1893**	3	CLIP (SLOT)	

269-2072 **LINES GP-POWER TRAIN OIL (*contd.*)** **i05230241**

NOTE	REF NO	GRAPHIC REF	PART NUMBER	QTY	PART NAME 1 2 3 4 5 6 (PRODUCT LEVEL)	SEE PAGE
	87	2	**8T-1894**	3	CLIP (TAB)	
C	88	1,2	**8T-4121**	62	WASHER-HARD (11X21X2.5-MM THK)	
M	89	1,2	**8T-4133**	6	NUT (M10X1.5-THD)	
M	90	1,2	**8T-4136**	12	BOLT (M10X1.5X25-MM)	
M	91	1,2	**8T-4137**	2	BOLT (M10X1.5X20-MM)	
M	92	1	**8T-4172**	3	BOLT (M10X1.5X80-MM)	
M	93	2	**8T-4176**	2	BOLT (M12X1.75X90-MM)	
CM	95	1	**8T-4139**	2	BOLT (M12X1.75X30-MM)	
M	96	2	**8T-4186**	4	BOLT (M10X1.5X40-MM)	
M	97	2	**8T-4191**	1	BOLT (M10X1.5X16-MM)	
M	98	1,2	**8T-4195**	5	BOLT (M10X1.5X30-MM)	
M	99	2	**8T-4196**	16	BOLT (M10X1.5X35-MM)	
	100	2	**8T-4223**	15	WASHER-HARD (13.5X25.5X3-MM THK)	
	101	1	**8T-4226**	6	WASHER-PLATED (10.5X45X3-MM THK)	
M	102	2	**8T-4648**	1	BOLT (M12X1.75X70-MM)	
M	104	2	**8T-4956**	4	BOLT (M12X1.75X35-MM)	
M	105	1	**8T-5005**	8	BOLT (M10X1.5X70-MM)	
CM	106	1,2	**8T-6466**	5	BOLT (M10X1.5X60-MM)	
M	107	2	**8T-6868**	8	BOLT (M12X1.75X80-MM)	
	108	1	**8T-7087**	2	GROMMET	
C	109	2	**124-0147**	1	BUSHING	
C	110	1	**4J-5573**	1	SEAL-O-RING	
C	111	2	**364-8477**	2	ORIFICE	
C	112	2	**348-6329**	1	MANIFOLD	
C	113	1	**339-0078**	1	ADAPTER	
C	114	2	**148-1928**	1	VALVE-RELIEF	
C	115	2	**117-1266**	1	SEAL-O-RING	
C	116	2	**033-6034**	1	SEAL-O-RING	
CM	117	2	**8T-4198**	2	BOLT (M10X1.5X100-MM)	
C	118	1	**8L-2786**	1	SEAL-O-RING	
C	119	2	**5P-4268**	1	SEAL-O-RING	
	120	2	**061-7540**	6	SEAL-O-RING	
	121	2	**5P-8066**	2	SEAL-O-RING	
	122	1	**4J-0520**	1	SEAL-O-RING	

C - CHANGE FROM PREVIOUS TYPE
I - REFER TO HYDRAULIC INFORMATION SYSTEM
M - METRIC PART
Y - SEPARATE ILLUSTRATION

269-2072 **LINES GP-POWER TRAIN OIL (*contd.*)** **i05230241**

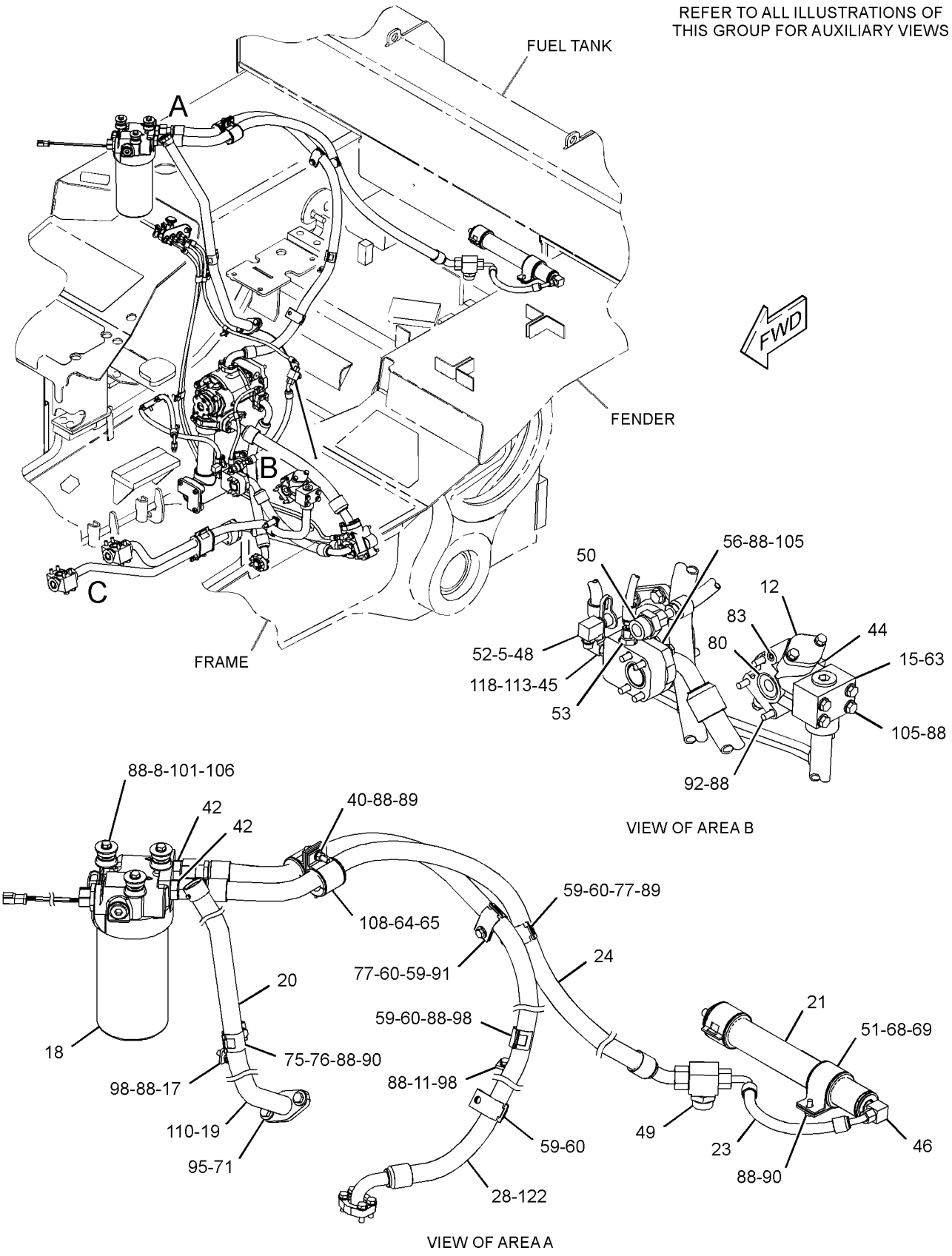

GRAPHIC #1 g03342145

269-2072 **LINES GP-POWER TRAIN OIL (*contd.*)** **i05230241**

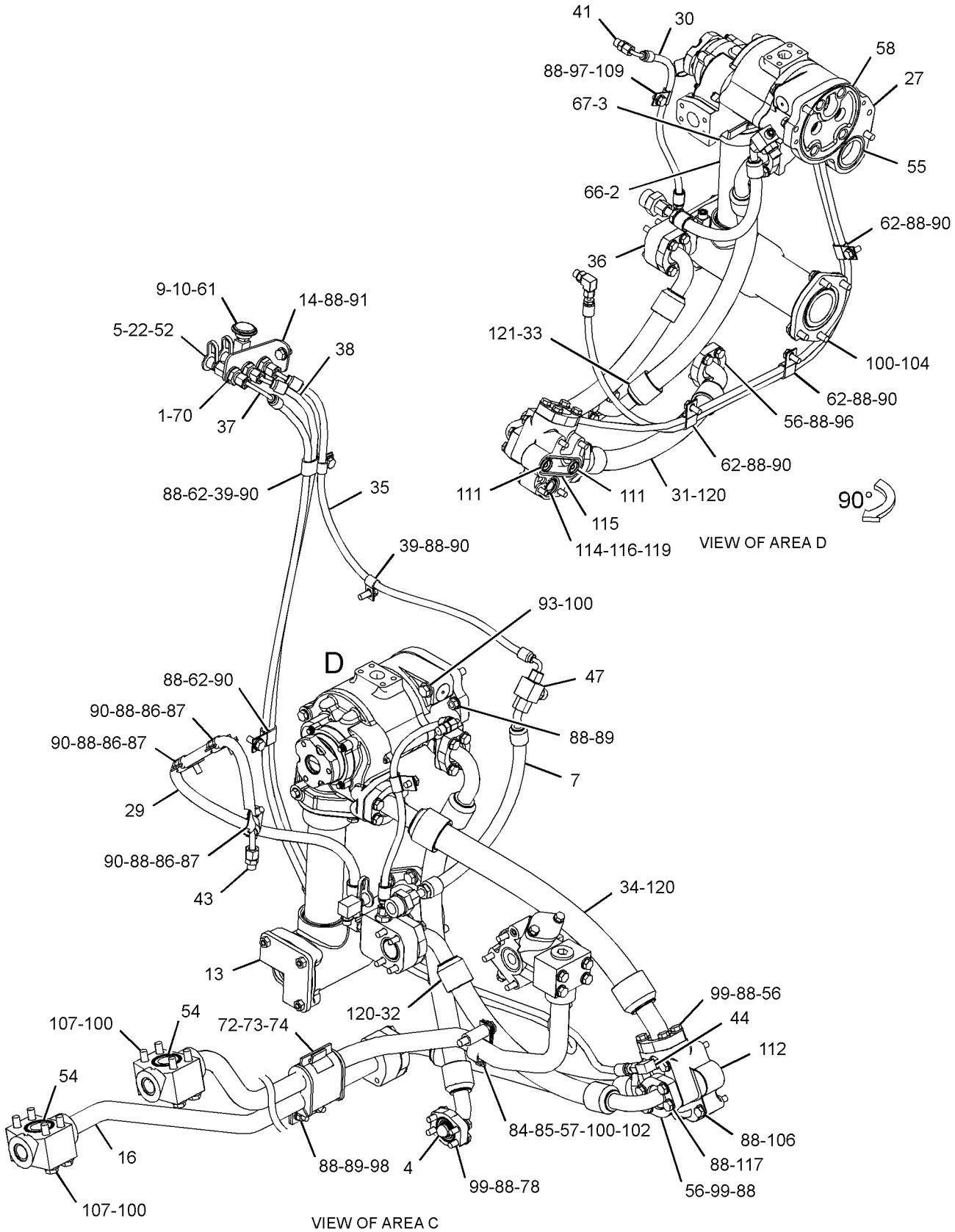

GRAPHIC #2 **<END>** g03342146

192-0729 MANIFOLD GP-CONTROL–DEMAND FAN

S/N: SMC1-UP; GCT1-UP
PART OF 224-0821 LINES GP-OIL SUPPLY
AN ATTACHMENT

SMCS-5264 **i04046962**

NOTE	REF NO	GRAPHIC REF	PART NUMBER	QTY	PART NAME 1 2 3 4 5 6 (PRODUCT LEVEL)	SEE PAGE
	1	1	**175-3616**	1	MANIFOLD AS	
	1A	1	**6V-0852**	1	CAP-DUST	
	1B	1	**6V-3965**	1	FITTING (QUICK DISCONNECT)	
Y	2	1	**176-5321**	1	VALVE GP-MODULATING (DEMAND FAN)	129

Y - SEPARATE ILLUSTRATION

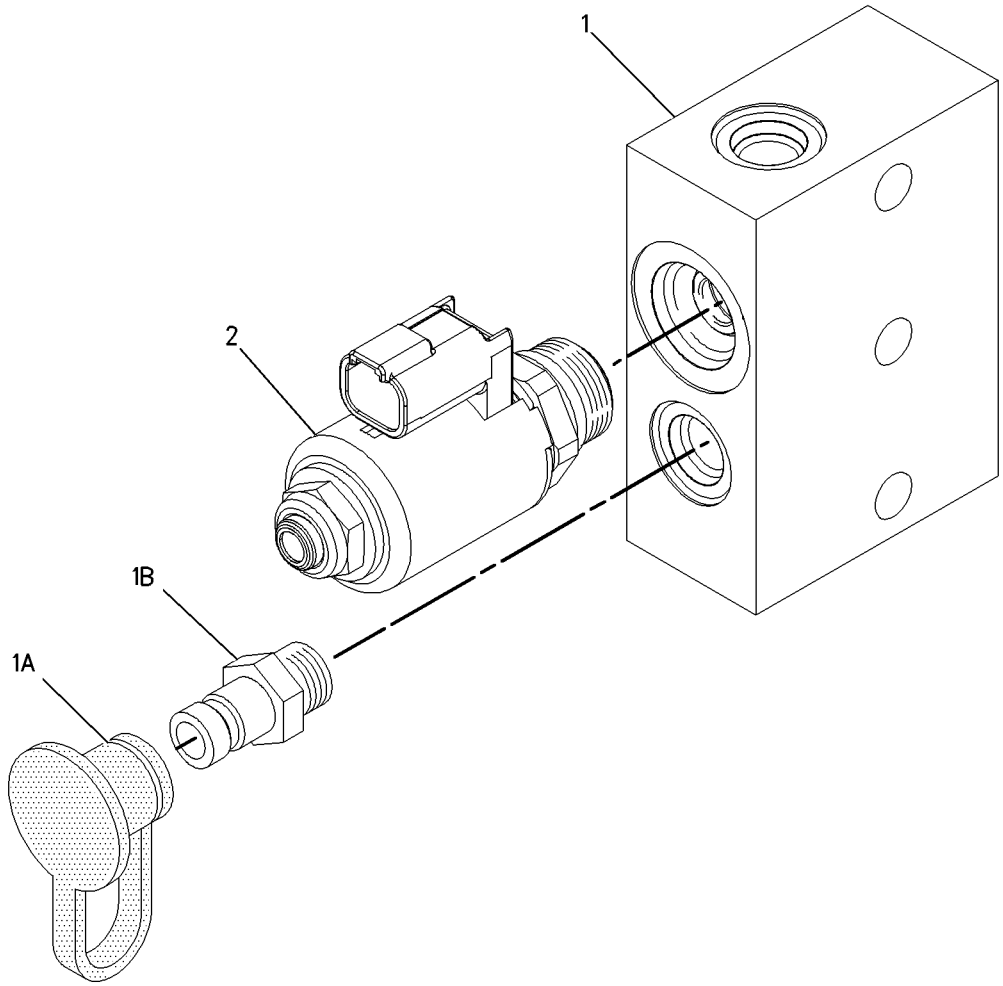

GRAPHIC #1 **<END>** g00756312

263-9949 MANIFOLD GP-TRANSMISSION

S/N: SMC1-UP; GCT1-UP

PART OF 269-2072 LINES GP-POWER TRAIN OIL

SMCS-5264 **i02438121**

NOTE	REF NO	GRAPHIC REF	PART NUMBER	QTY	PART NAME 1 2 3 4 5 6 (PRODUCT LEVEL)	SEE PAGE
	1	1	**6V-0852**	1	CAP-DUST	
	2	1	**8C-3428**	1	RING-RETAINING	
	3	1	**124-6655**	2	ORIFICE	
	4	1	**148-1928**	1	VALVE-RELIEF	
	5	1	**247-2959**	1	MANIFOLD	
	6	1	**250-8466**	1	ORIFICE	
	7	1	**263-9950**	1	RETAINER	
	8	1	**3J-1907**	1	SEAL-O-RING	
	9	1	**6V-3965**	1	FITTING (QUICK DISCONNECT)	
	10	1	**9X-4609**	1	SEAL-O-RING	

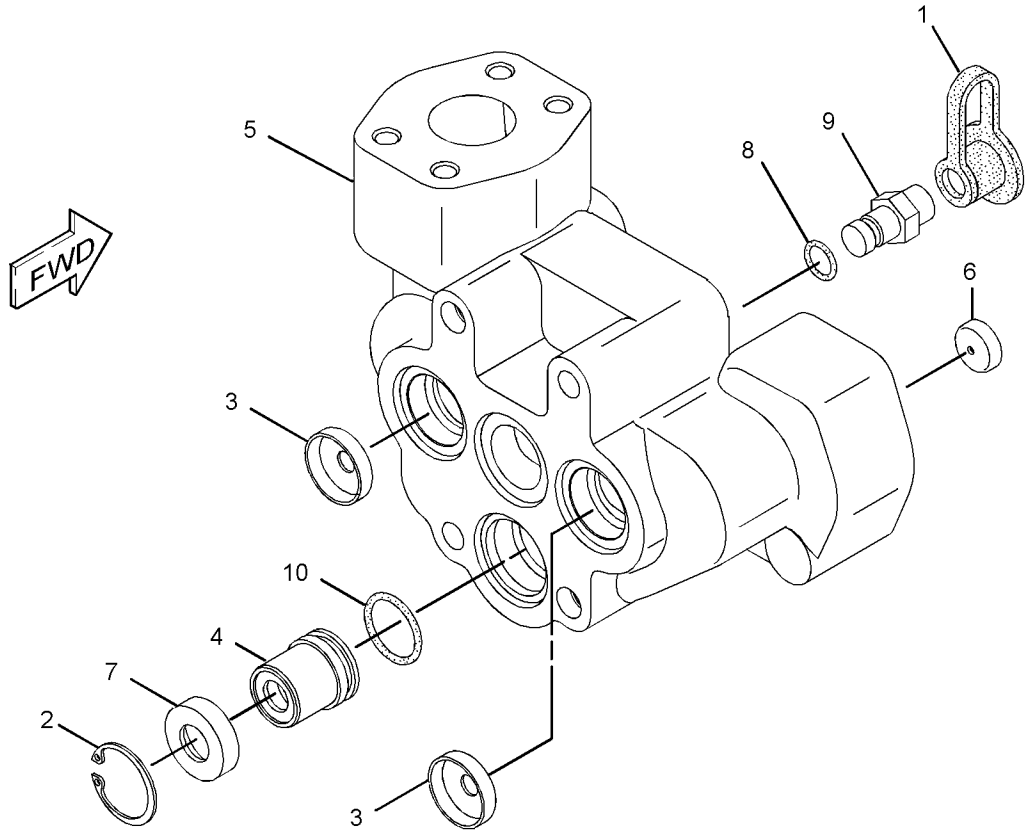

GRAPHIC #1 **<END>** g01208798

259-3119 MOUNTING GP-FINAL DRIVE

S/N: SMC1-UP; GCT1-UP

PART OF 269-2046 POWER TRAIN AR

SMCS-4050 **i04083109**

NOTE	REF NO	GRAPHIC REF	PART NUMBER	QTY	PART NAME 1 2 3 4 5 6 (PRODUCT LEVEL)	SEE PAGE
	1	1	**8D-4771**	2	SEAL-O-RING	
	2	1	**219-4481**	32	BOLT (M22X2.5X85-MM)	
	3	1	**2R-0098**	2	SEAL-O-RING	
	4	1	**6F-6673**	4	SEAL-O-RING	
	5	1	**8C-6913**	32	WASHER-HARD (24X41.5X4-MM THK)	
M	6	1	**8T-4182**	4	BOLT (M10X1.5X45-MM)	
	7	1	**8T-4223**	4	WASHER-HARD (13.5X25.5X3-MM THK)	
	8	1	**8T-8919**	4	BOLT (1/2-13X1.75-IN)	
	9	1	**9X-2027**	4	WASHER (11X18X2-MM THK)	

M - METRIC PART

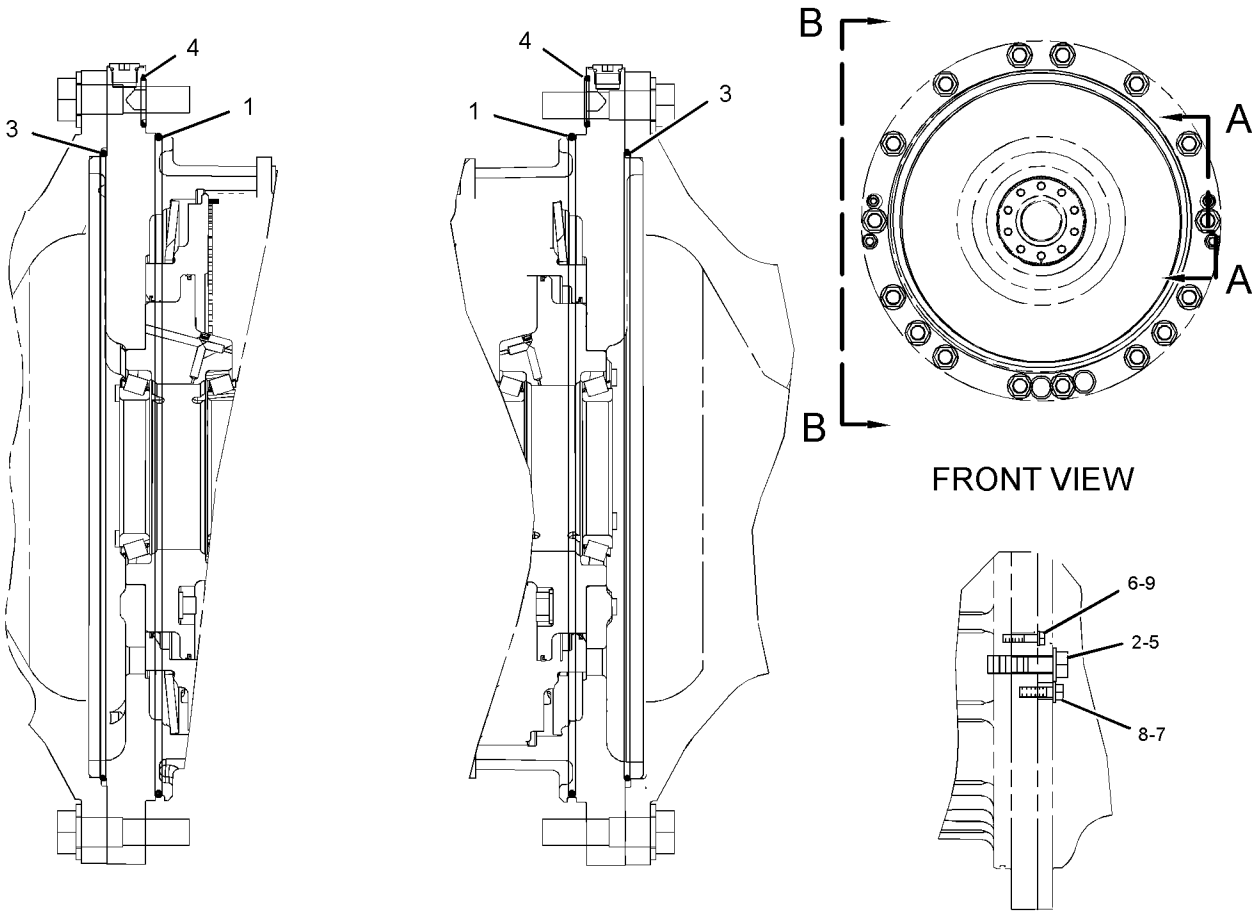

VIEW B-B
(BOTH SIDES)

FRONT VIEW

SECTION A-A

GRAPHIC #1

<END>

g02187413

227-0165 MOUNTING GP-TRANSMISSION

S/N: SMC1-UP; GCT1-UP

PART OF 269-2046 POWER TRAIN AR

SMCS-3082 **i02438193**

NOTE	REF NO	GRAPHIC REF	PART NUMBER	QTY	PART NAME 1 2 3 4 5 6 (PRODUCT LEVEL)	SEE PAGE
	1	1	**8G-9880**	2	TUBE AS	
	2	1	**1M-9011**	1	RING-TORIC	
	3	1	**2D-6506**	1	SEAL-O-RING	
	4	1	**8M-4390**	1	SEAL-O-RING	
	5	1	**8T-4121**	8	WASHER-HARD (11X21X2.5-MM THK)	
M	6	1	**6V-7744**	4	LOCKNUT (M10X1.5-THD)	
M	7	1	**8T-4196**	4	BOLT (M10X1.5X35-MM)	
	8	1	**8T-4223**	22	WASHER-HARD (13.5X25.5X3-MM THK)	
M	9	1	**8T-4648**	19	BOLT (M12X1.75X70-MM)	
M	10	1	**8T-5041**	3	BOLT (M12X1.75X120-MM)	
	11	1	**9M-7002**	2	SEAL-O-RING	

M - METRIC PART

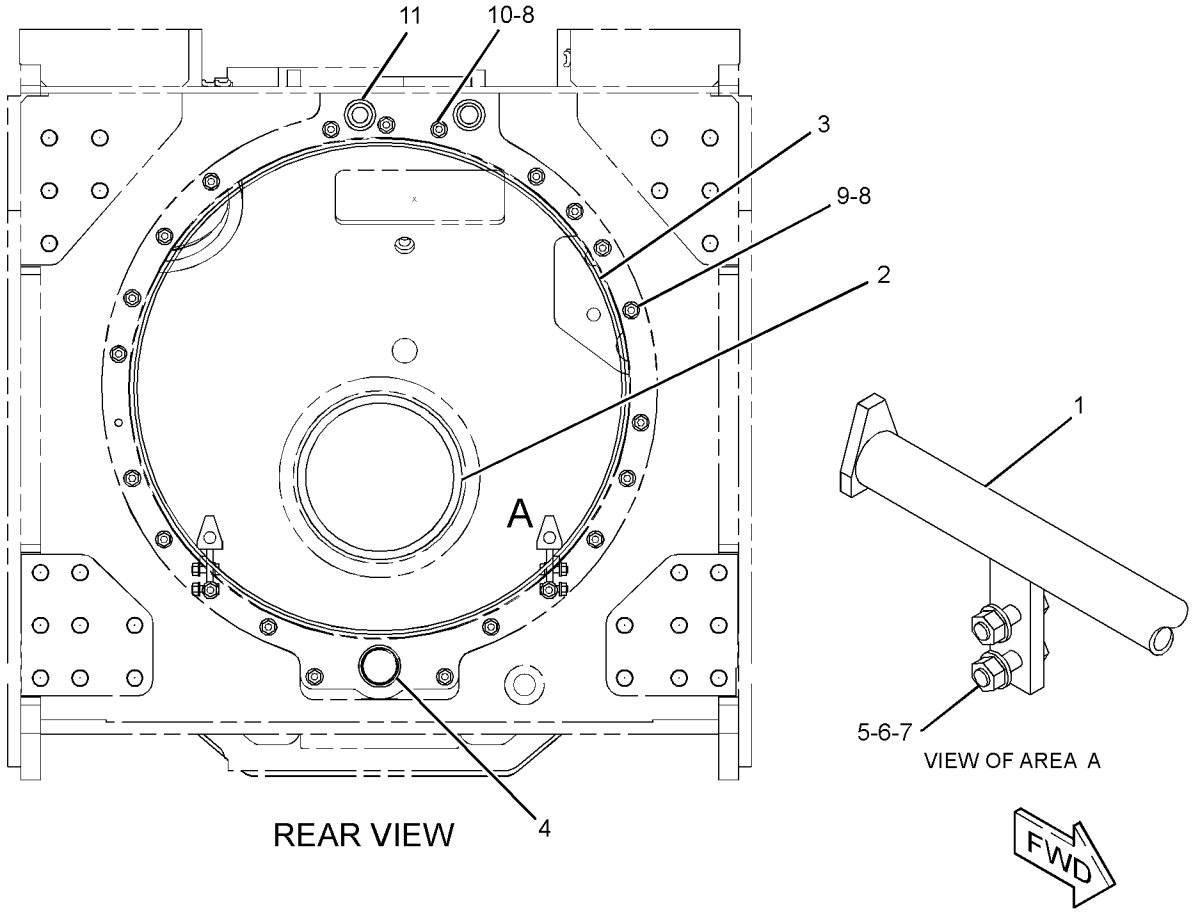

GRAPHIC #1 **<END>** g01206341

220-1403 PLANETARY GP-TRANSMISSION

S/N: KKA1-UP

PART OF 220-1429 TRANSMISSION AR

SMCS-3160 **i04009270**

NOTE	REF NO	GRAPHIC REF	PART NUMBER	QTY	PART NAME 1 2 3 4 5 6 (PRODUCT LEVEL)	SEE PAGE
	1	4	**3T-4377**	2	SEAL-RING	
	2	2	**4M-9592**	20	SPRING	
	3	4	**5D-2989**	3	BEARING	
	4	3	**5M-6126**	6	BEARING AS-ROLLER	
	5	2	**5P-3930**	3	BEARING AS-ROLLER	
	6	1	**5P-8194**	1	RING-RETAINING	
	7	2	**6I-8500**	3	PLATE-CLUTCH	
	8	4	**6T-7882**	3	GEAR-PLANETARY (25-TEETH)	
	9	2,3	**6V-0473**	3	RING-RETAINING	
	10	1	**6V-2478**	1	RING-RETAINING	
	11	4	**6Y-1602**	1	COUPLING	
	12	4	**6Y-4819**	1	CARRIER-PLANETARY	
	13	4	**6Y-4831**	1	PLATE AS	
		4	**5H-6202**	2	PIN	
		4	**7M-5130**	1	PIN-SPRING	
	14	2	**328-4374**	5	DISC-FRICTION	
	15	1	**328-4375**	4	DISC-FRICTION	
	16	3	**7G-2516**	6	GEAR-PLANETARY (24-TEETH)	
	17	1	**7G-2830**	2	RING-SEAL	
	18	3	**7G-6355**	1	GEAR-RING (90-TEETH)	
	19	2	**7G-7218**	1	CARRIER-PLANETARY	
	20	1	**7G-7724**	1	PISTON-CLUTCH	
	21	4	**7H-7658**	10	SPRING	
	22	3	**7T-3950**	1	GEAR (83-TEETH)	
	23	4	**7T-9272**	1	GEAR-SUN (34-TEETH)	
	24	2	**7T-9370**	1	GEAR-SUN (51-TEETH)	
	25	2	**8E-8299**	6	DISC-THRUST	
	26	3	**8E-8304**	12	DISC-THRUST	
	27	4	**8E-8305**	6	DISC-THRUST	
	28	2	**8P-1892**	1	PISTON-CLUTCH	
	29	2	**8P-1916**	3	GEAR-PLANETARY (20-TEETH)	
	30	1	**8P-1964**	3	PLATE-CLUTCH	
R	31	3,4	**8P-2051**	6	PLATE-CLUTCH	
	32	3	**8P-2053**	1	SEAL-RING	
	33	2,4	**8P-9507**	2	PISTON-CLUTCH	
	34	3	**9G-0284**	1	HOUSING-CLUTCH	
	35	3	**9G-0285**	1	PISTON-CLUTCH	
	36	2	**9G-0289**	3	SHAFT-PLANETARY	
	37	1	**9G-0290**	1	HUB-CLUTCH	
	38	1	**9G-8020**	1	PLATE-RETAINER	
	39	3	**9M-4355**	10	DAMPER-BOLT	
	40	3,4	**9P-7390**	8	DISC AS-FRICTION	
	41	3	**9P-7757**	1	GEAR-SUN (42-TEETH)	
	42	2	**9P-8614**	1	GEAR-RING (90-TEETH)	
	43	4	**9P-8623**	3	SHAFT-PLANETARY	
	44	3	**9P-8626**	1	GEAR-SUN (42-TEETH)	
	45	4	**9W-0645**	1	TUBE AS	
	46	1	**346-2033**	1	PLATE-REACTION	
	47	1	**9W-8270**	1	GEAR-RING (90-TEETH)	
	48	1	**105-8183**	1	HOUSING AS	
		1	**6B-6863**	1	PIN-SPRING	
		1	**6P-7704**	1	CARRIER-RING	
	49	3	**112-4511**	3	PIN-SPRING	
	50	3	**112-5585**	3	SHAFT-PLANETARY	
	51	3	**112-8041**	1	CARRIER-PLANETARY	
	52	2	**117-7826**	1	HOUSING AS-CLUTCH	
		2	**1A-2223**	4	DOWEL	
	53	4	**131-4091**	1	SEAL-RING	
	54	2,3,4	**144-4284**	3	RING-LOCK	

220-1403 **PLANETARY GP-TRANSMISSION (*contd.*)** **i04009270**

NOTE	REF NO	GRAPHIC REF	PART NUMBER	QTY	PART NAME 1 2 3 4 5 6 (PRODUCT LEVEL)	SEE PAGE
	55	1	**144-7878**	1	MANIFOLD	
	56	1	**191-8304**	1	SENSOR GP-SPEED (TRANSMISSION OUTPUT 2)	
	57	1	**191-8305**	1	SENSOR GP-SPEED (TRANSMISSION OUTPUT 1)	
	58	4	**220-1411**	1	HOUSING AS	
		4	**3F-5022**	1	PLUG-CUP	
	59	4	**231-8855**	1	SHAFT AS-INPUT	
		4	**156-4406**	1	PLUG-PIPE	
	60	3	**234-9994**	1	SHAFT AS-OUTPUT	
		3	**3T-8729**	1	BUSHING	
		3	**9G-6744**	1	BUSHING	
	61	1	**237-2209**	1	ROTOR	
	62	1	**237-9601**	1	BRACKET AS	
		1	**8M-8489**	2	DOWEL	
	63	4	**030-8538**	1	BOLT (1/2-13X1.25-IN)	
	64	3,4	**061-6711**	2	RING-RETAINING	
	65	4	**068-8093**	2	RING-RETAINING	
	66	1	**0S-1619**	2	BOLT (3/8-16X3-IN)	
	67	1	**117-1385**	2	SEAL-O-RING	
	68	3	**1A-5183**	2	BOLT (3/8-16X4.75-IN)	
	69	1	**1L-7388**	1	RING-RETAINING	
	70	1	**1M-8657**	2	BOLT (1/2-13X15.69-IN)	
	71	1	**2H-3755**	2	BOLT (5/16-18X0.43-IN)	
	72	1	**3E-4352**	2	WASHER-HARD (8.8X20.5X2.5-MM THK)	
	73	2,3	**3K-2511**	10	DOWEL-REACTION	
	74	2,4	**3S-2708**	6	PIN-SPRING	
	75	1	**4M-2442**	8	BOLT (1/2-13X12.32-IN)	
	76	1	**5M-2894**	2	WASHER-HARD (10.2X18.5X2.5-MM THK)	
	77	2,4	**5M-3038**	2	SEAL-O-RING	
	78	1	**5P-5045**	1	BALL BEARING	
	79	1,3	**5P-5296**	4	RING-RETAINING	
	80	1	**5P-5297**	1	RING-RETAINING (EXTERNAL)	
	81	1,4	**5P-8245**	11	WASHER-HARD (13.5X25.5X3-MM THK)	
	82	1	**7G-2343**	3	SPRING-DISC	
	83	2,3	**7T-8816**	3	BALL BEARING	
	84	1	**8D-9739**	1	SEAL-RING	
	85	4	**8H-5352**	2	BALL BEARING	
	86	4	**8M-5010**	2	SEAL-O-RING	
	87	1	**8M-5255**	1	SEAL-O-RING	
	88	4	**8M-5266**	1	SEAL-O-RING	
	89	2,4	**8P-2019**	3	RING-SEAL	
	90	2,3,4	**8P-2022**	4	RING-SEAL	
	91	1	**8P-2023**	1	RING-SEAL	
	92	3	**9G-0286**	1	RING-SEAL	

R - REMFG PART MAY BE AVAILABLE

220-1403 **PLANETARY GP-TRANSMISSION (*contd.*)** **i04009270**

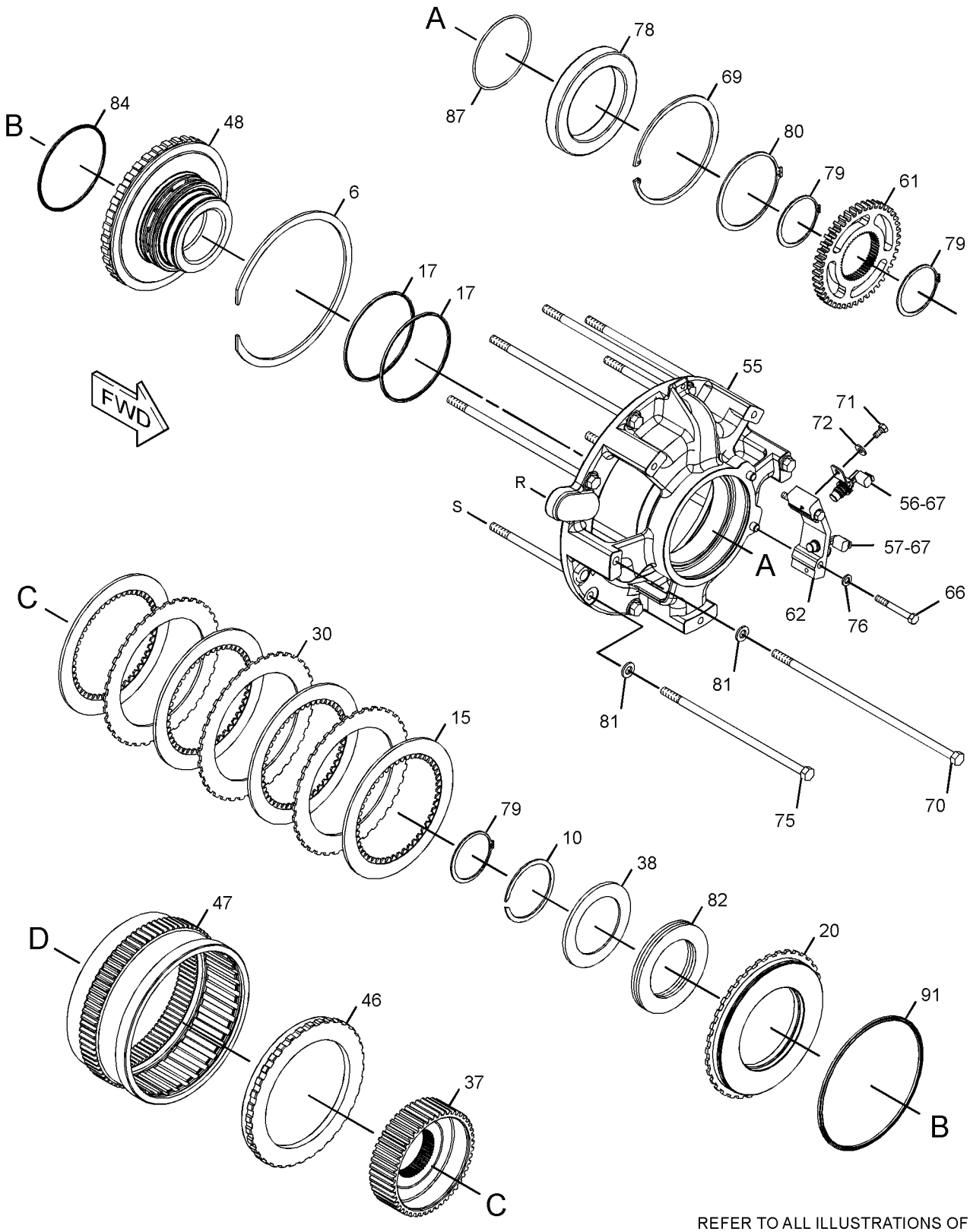

REFER TO ALL ILLUSTRATIONS OF THIS GROUP FOR AUXILIARY VIEWS

GRAPHIC #1

g01211868

220-1403 **PLANETARY GP-TRANSMISSION (*contd.*)** **i04009270**

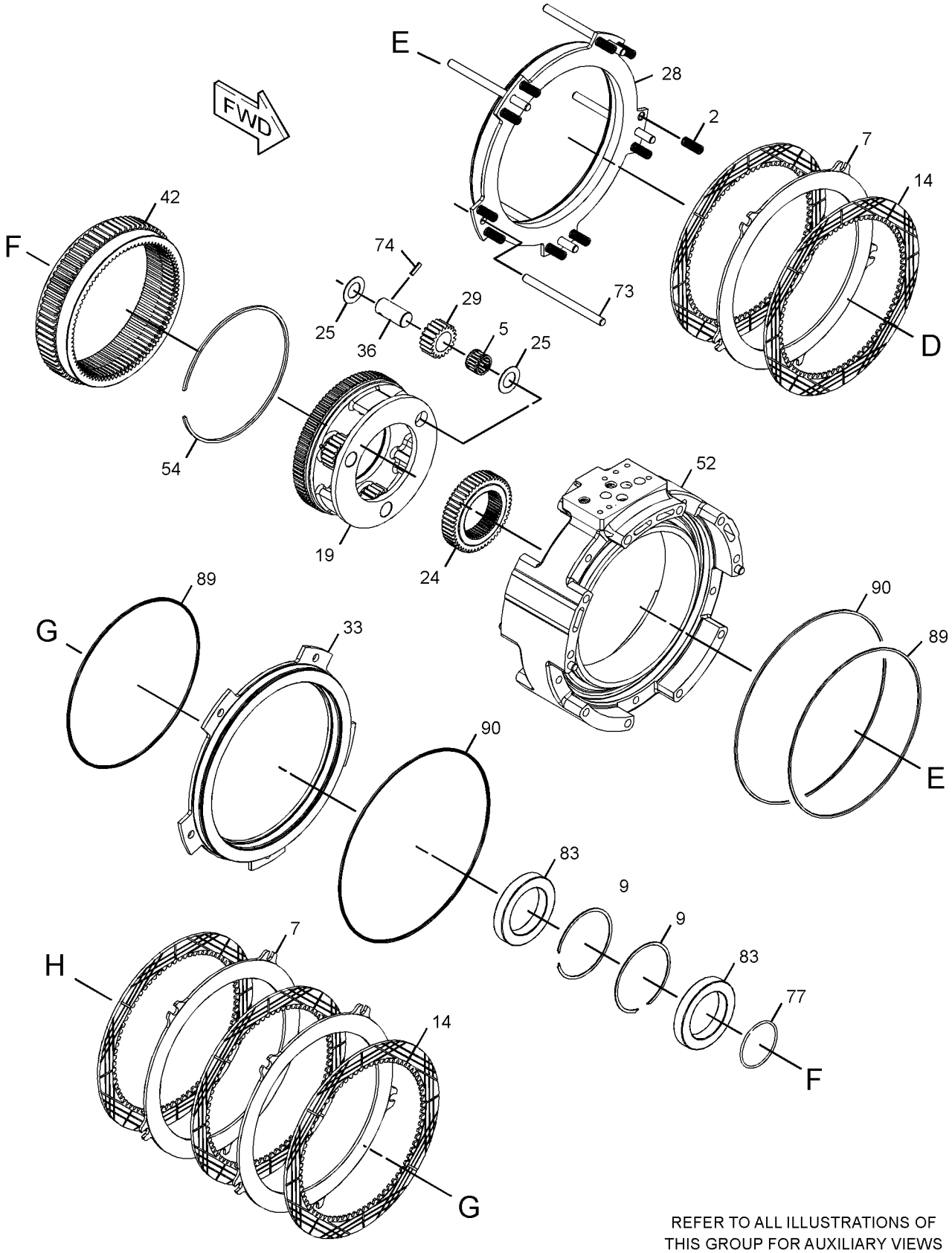

REFER TO ALL ILLUSTRATIONS OF
THIS GROUP FOR AUXILIARY VIEWS

GRAPHIC #2

g01210206

220-1403 **PLANETARY GP-TRANSMISSION (*contd.*)** **i04009270**

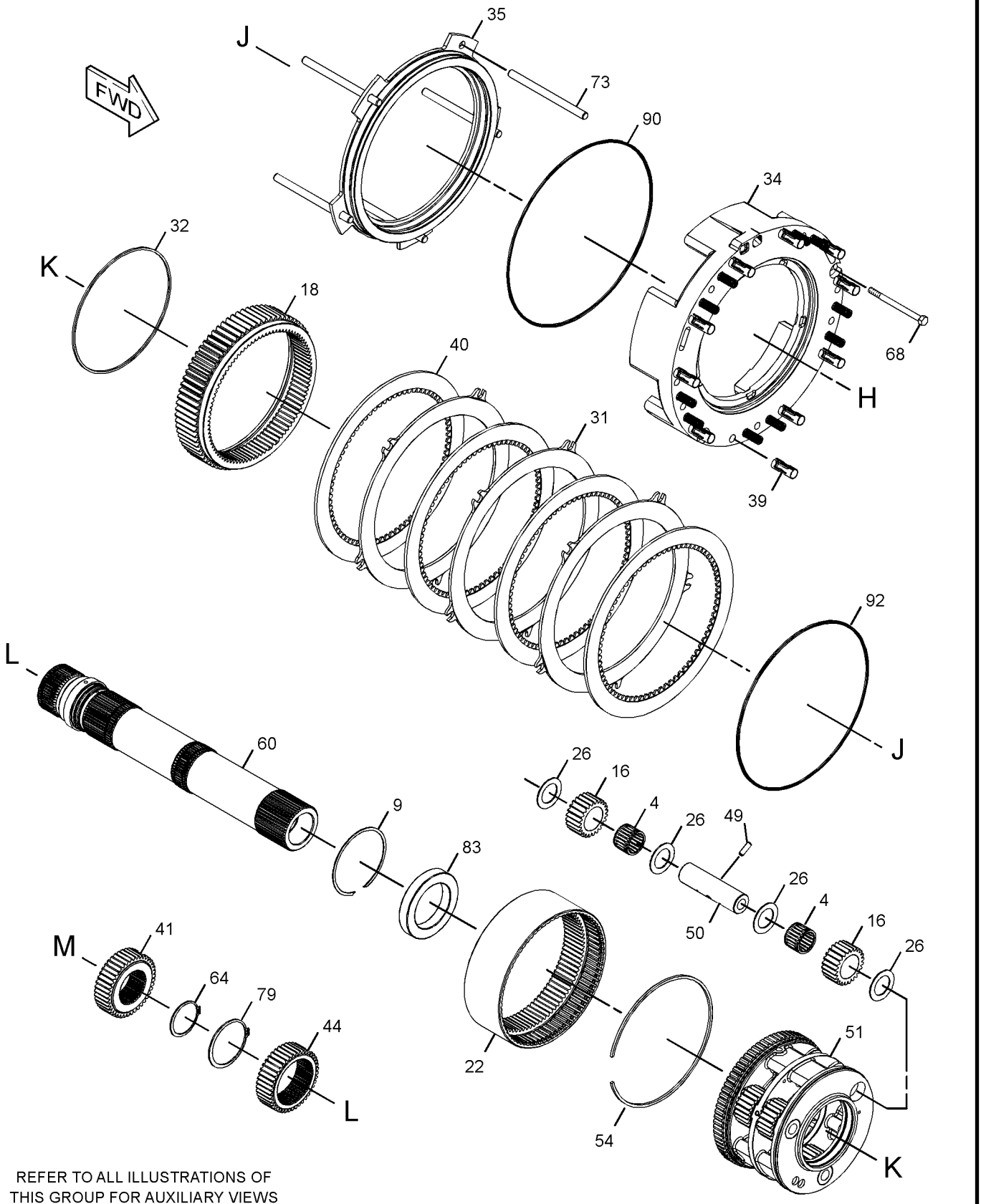

REFER TO ALL ILLUSTRATIONS OF
THIS GROUP FOR AUXILIARY VIEWS

GRAPHIC #3

g01210322

220-1403 **PLANETARY GP-TRANSMISSION (*contd.*)** **i04009270**

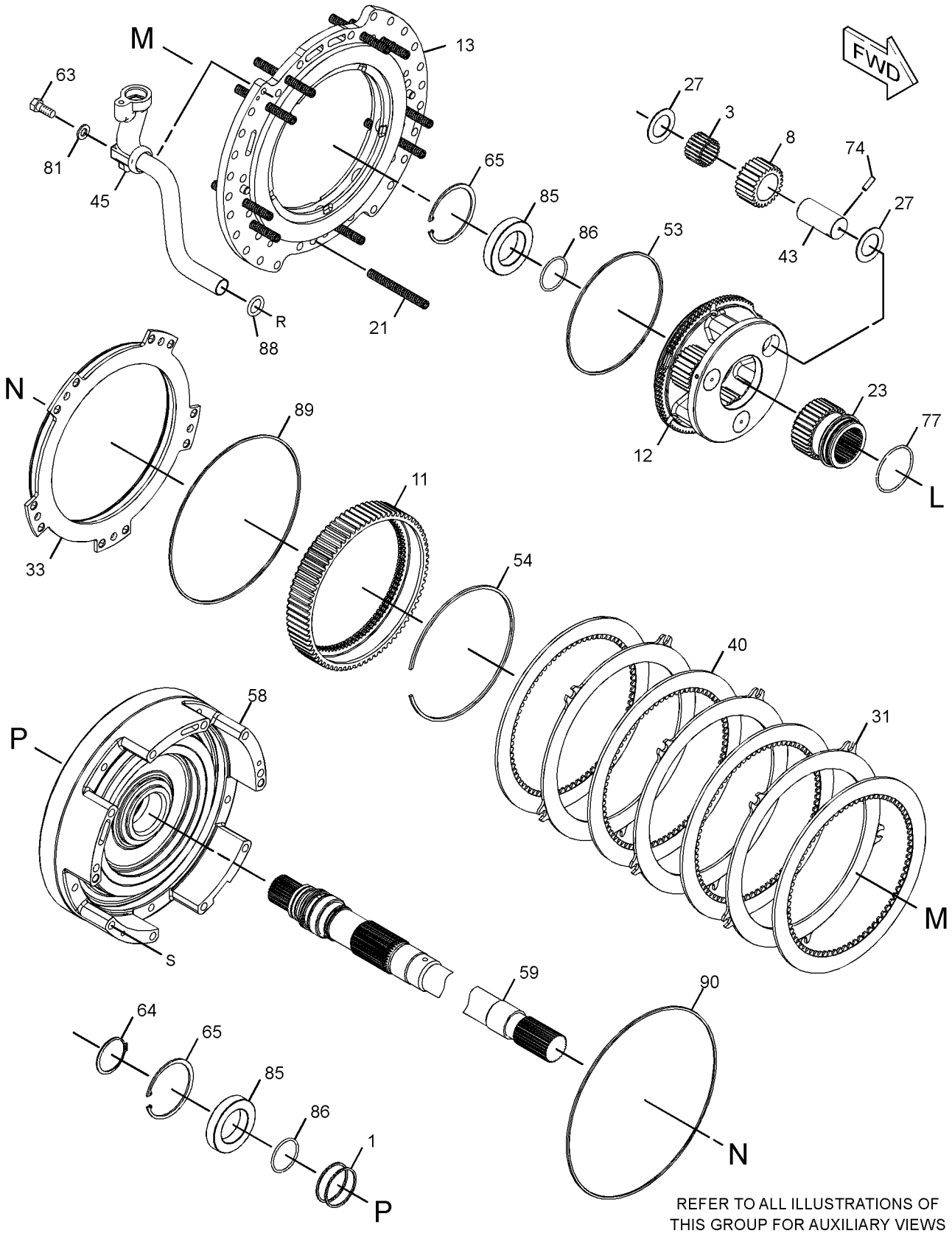

REFER TO ALL ILLUSTRATIONS OF THIS GROUP FOR AUXILIARY VIEWS

GRAPHIC #4 **<END>** g01211870

354-0151 PLANETARY GP-TRANSMISSION

S/N: K1T1-UP

PART OF 354-0148 TRANSMISSION AR

SMCS-3160 **i05192444**

NOTE	REF NO	GRAPHIC REF	PART NUMBER	QTY	PART NAME 1 2 3 4 5 6 (PRODUCT LEVEL)	SEE PAGE
	1	1	**3T-4377**	2	SEAL-RING	
	2	2,3	**4M-9592**	20	SPRING	
	3	1	**5D-2989**	3	BEARING	
	4	3	**5M-6126**	6	BEARING AS-ROLLER	
	5	3	**5P-3930**	3	BEARING AS-ROLLER	
	6	4	**5P-8194**	1	RING-RETAINING	
	7	2,3	**6I-8500**	3	PLATE-CLUTCH	
	8	1	**6T-7882**	3	GEAR-PLANETARY (25-TEETH)	
	9	1,3	**6V-0473**	3	RING-RETAINING	
	10	4	**6V-2478**	1	RING-RETAINING	
	11	1	**6Y-1602**	1	COUPLING	
	12	1	**6Y-4819**	1	CARRIER-PLANETARY	
	13	3	**7G-2516**	6	GEAR-PLANETARY (24-TEETH)	
	14	4	**7G-2830**	2	RING-SEAL	
	15	2	**7G-6355**	1	GEAR-RING (90-TEETH)	
	16	3	**7G-7218**	1	CARRIER-PLANETARY	
	17	2	**7H-7658**	10	SPRING	
	18	2	**7T-3950**	1	GEAR (83-TEETH)	
	19	1	**7T-9272**	1	GEAR-SUN (34-TEETH)	
	20	3	**7T-9370**	1	GEAR-SUN (51-TEETH)	
	21	3	**8E-8299**	6	DISC-THRUST	
	22	3	**8E-8304**	12	DISC-THRUST	
	23	1	**8E-8305**	6	DISC-THRUST	
	24	3	**8P-1916**	3	GEAR-PLANETARY (20-TEETH)	
	25	4	**8P-1964**	2	PLATE-CLUTCH	
R	26	1,2	**8P-2051**	6	PLATE-CLUTCH	
	27	3	**8P-2053**	1	SEAL-RING	
	28	3	**9G-0289**	3	SHAFT-PLANETARY	
	29	4	**9G-0290**	1	HUB-CLUTCH	
	30	4	**9G-8020**	1	PLATE-RETAINER	
	31	2	**9M-4355**	10	DAMPER-BOLT	
	32	1,2	**9P-7390**	8	DISC AS-FRICTION	
	33	3	**9P-7757**	1	GEAR-SUN (42-TEETH)	
	34	3	**9P-8614**	1	GEAR-RING (90-TEETH)	
	35	1	**9P-8623**	3	SHAFT-PLANETARY	
	36	3	**9P-8626**	1	GEAR-SUN (42-TEETH)	
	37	4	**9U-9550**	1	PLATE-CLUTCH	
	38	4	**9W-8270**	1	GEAR-RING (90-TEETH)	
	39	4	**105-8183**	1	HOUSING AS	
		4	**6B-6863**	1	PIN-SPRING	
		4	**6P-7704**	1	CARRIER-RING	
	40	3	**112-4511**	3	PIN-SPRING	
	41	3	**112-5585**	3	SHAFT-PLANETARY	
	42	3	**112-8041**	1	CARRIER-PLANETARY	
	43	1	**131-4091**	1	SEAL-RING	
	44	1,2,3	**144-4284**	3	RING-LOCK	
	45	4	**191-8304**	1	SENSOR GP-SPEED (TRANSMISSION OUTPUT 1)	
	46	4	**191-8305**	1	SENSOR GP-SPEED (TRANSMISSION OUTPUT 2)	
					(EACH INCLUDES)	
		4	**137-6645**	1	PAD-CONNECTOR	
	47	1	**231-8855**	1	SHAFT AS-INPUT	
		1	**156-4406**	1	PLUG-PIPE	
	48	3	**234-9994**	1	SHAFT AS-OUTPUT	
	48A	3	**3T-8729**	1	BUSHING	
	48B	3	**9G-6744**	1	BUSHING	
	49	4	**237-2209**	1	ROTOR	
	50	4	**237-9601**	1	BRACKET AS	
		4	**8M-8489**	2	DOWEL	

354-0151 **PLANETARY GP-TRANSMISSION (*contd.*)** **i05192444**

NOTE	REF NO	GRAPHIC REF	PART NUMBER	QTY	PART NAME 1 2 3 4 5 6 (PRODUCT LEVEL)	SEE PAGE
	51	1,2	**321-5718**	2	PISTON	
	52	3	**321-5719**	1	PISTON	
	53	4	**321-5720**	1	PISTON	
	54	2	**321-5721**	1	PISTON	
	55	2,3	**328-4374**	5	DISC-FRICTION	
	56	4	**328-4375**	3	DISC-FRICTION	
	57	2	**348-7859**	1	HOUSING-CLUTCH	
	58	4	**348-7861**	1	MANIFOLD	
	59	2	**349-4846**	1	PLATE AS	
		2	**5H-6202**	2	PIN	
	60	1	**354-0158**	1	HOUSING AS	
		1	**3F-5022**	1	PLUG-CUP	
	61	3	**354-0168**	1	HOUSING AS-CLUTCH	
		3	**1A-2223**	4	DOWEL	
		3	**4K-8603**	1	PLUG-CUP	
	62	1,3	**061-6711**	2	RING-RETAINING	
	63	1	**068-8093**	2	RING-RETAINING	
	64	4	**0S-1619**	2	BOLT (3/8-16X3-IN)	
	65	4	**117-1385**	2	SEAL-O-RING	
	66	2	**1A-5183**	2	BOLT (3/8-16X4.75-IN)	
	67	4	**1L-7388**	1	RING-RETAINING	
	68	4	**1M-8657**	4	BOLT (1/2-13X15.69-IN)	
	69	4	**2H-3755**	2	BOLT (5/16-18X0.43-IN)	
	70	4	**3E-4352**	2	WASHER-HARD (8.8X20.5X2.5-MM THK)	
	71	2,3	**3K-2511**	10	DOWEL-REACTION	
	72	1,3	**3S-2708**	6	PIN-SPRING	
	73	4	**4M-2442**	6	BOLT (1/2-13X12.32-IN)	
	74	4	**5M-2894**	2	WASHER-HARD (10.2X18.5X2.5-MM THK)	
	75	1,3	**5M-3038**	2	SEAL-O-RING	
	76	4	**5P-5045**	1	BALL BEARING	
	77	3,4	**5P-5296**	4	RING-RETAINING	
	78	4	**5P-5297**	1	RING-RETAINING (EXTERNAL)	
	79	1,2,3	**5P-7530**	5	SEAL-O-RING	
	80	4	**5P-8245**	10	WASHER-HARD (13.5X25.5X3-MM THK)	
	81	4	**7G-2343**	3	SPRING-DISC	
	82	1,3	**7T-8816**	3	BALL BEARING	
	83	4	**8D-9739**	1	SEAL-RING	
	84	1	**8H-5352**	2	BALL BEARING	
	85	1	**8M-5010**	2	SEAL-O-RING	
	86	4	**8M-5255**	1	SEAL-O-RING	
	87	1,2,3	**8P-2019**	3	RING-SEAL	
	88	1,2,3	**8P-2022**	4	RING-SEAL	
	89	4	**8P-2023**	1	RING-SEAL	
	90	2	**9G-0286**	1	RING-SEAL	

R - REMFG PART MAY BE AVAILABLE

354-0151 **PLANETARY GP-TRANSMISSION (*contd.*)** **i05192444**

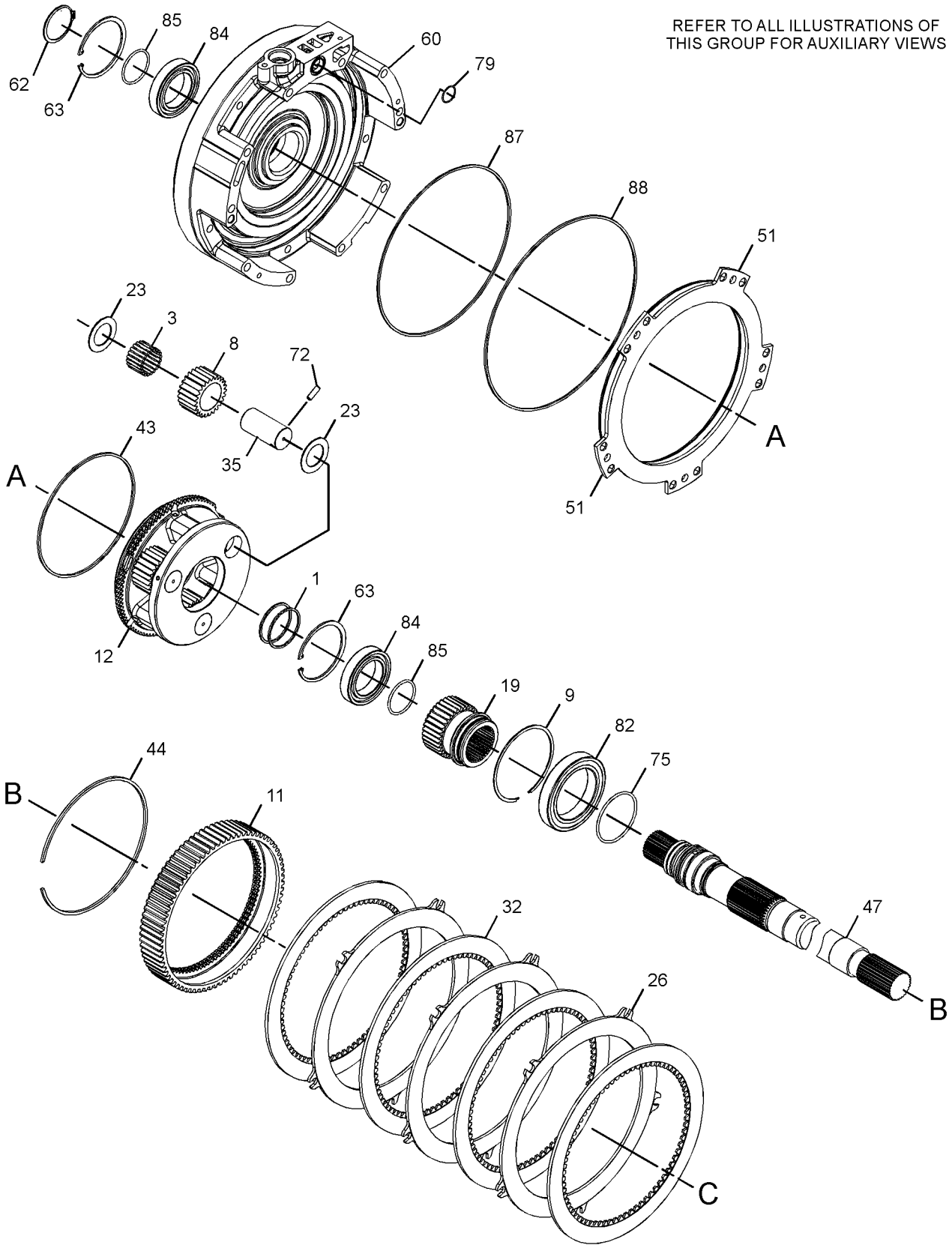

GRAPHIC #1 g02319475

354-0151 **PLANETARY GP-TRANSMISSION (*contd.*)** **i05192444**

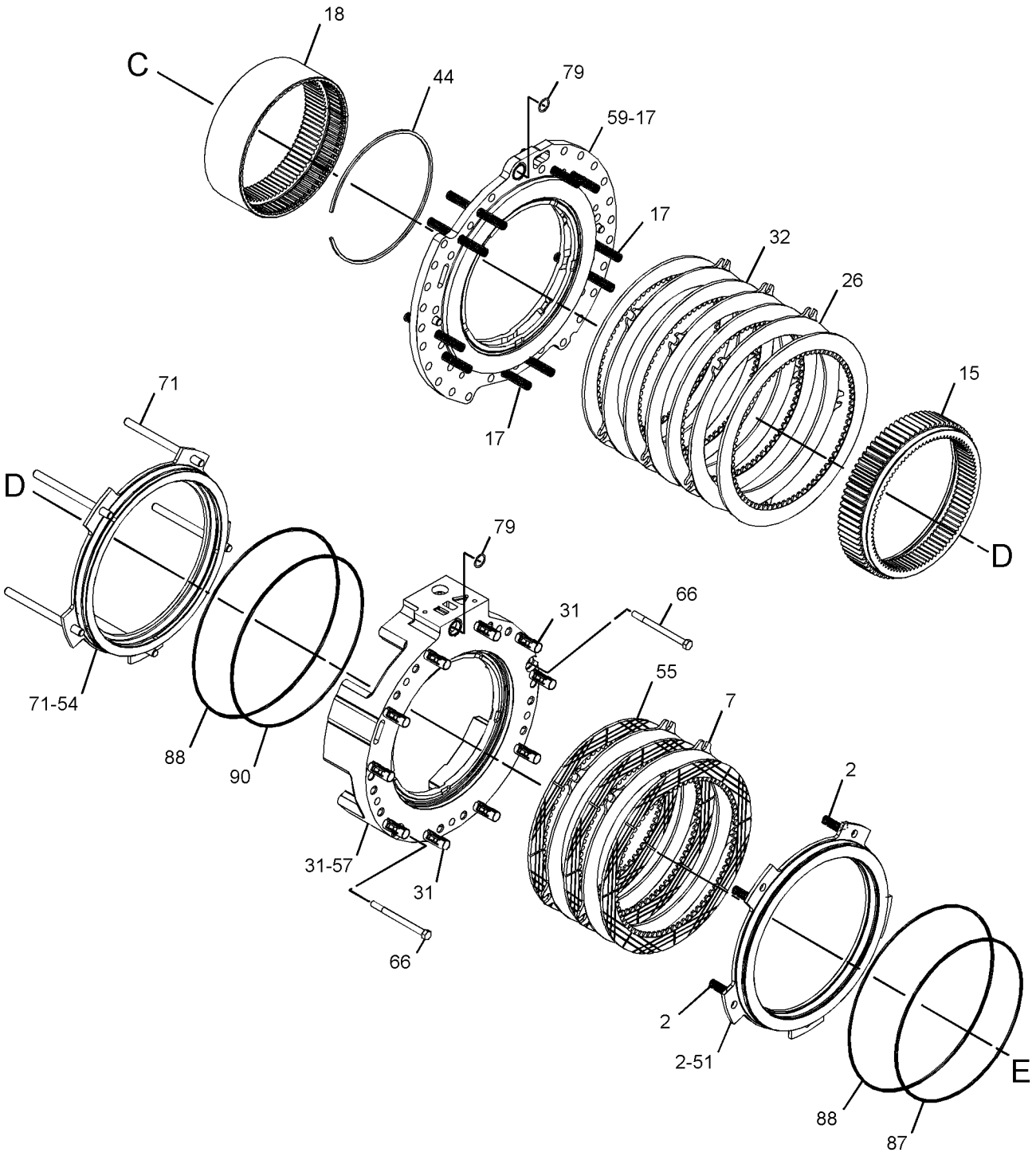

REFER TO ALL ILLUSTRATIONS OF
THIS GROUP FOR AUXILIARY VIEWS

GRAPHIC #2 g02319476

354-0151 **PLANETARY GP-TRANSMISSION (*contd.*)** **i05192444**

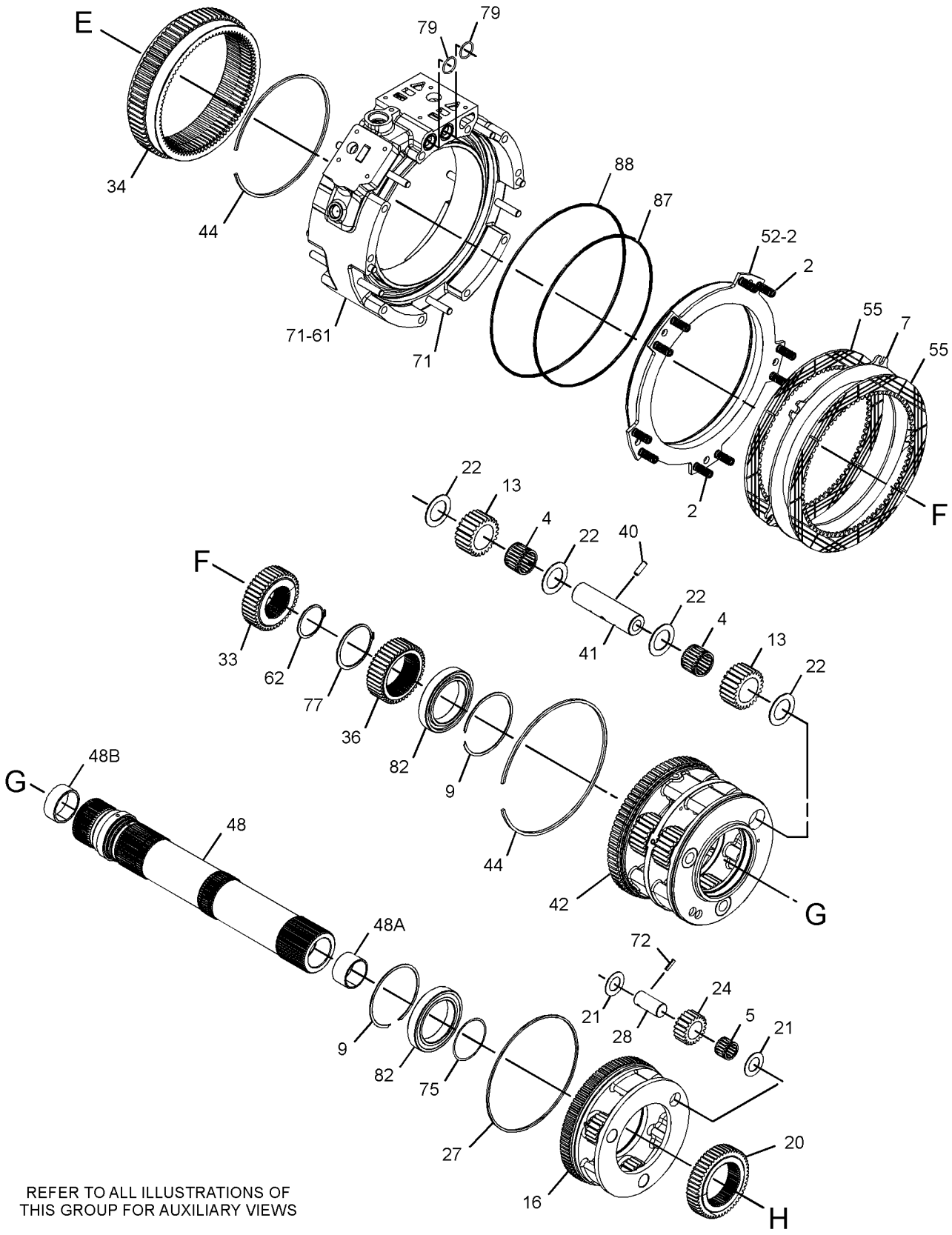

REFER TO ALL ILLUSTRATIONS OF
THIS GROUP FOR AUXILIARY VIEWS

GRAPHIC #3

g02319477

354-0151 **PLANETARY GP-TRANSMISSION (*contd.*)** **i05192444**

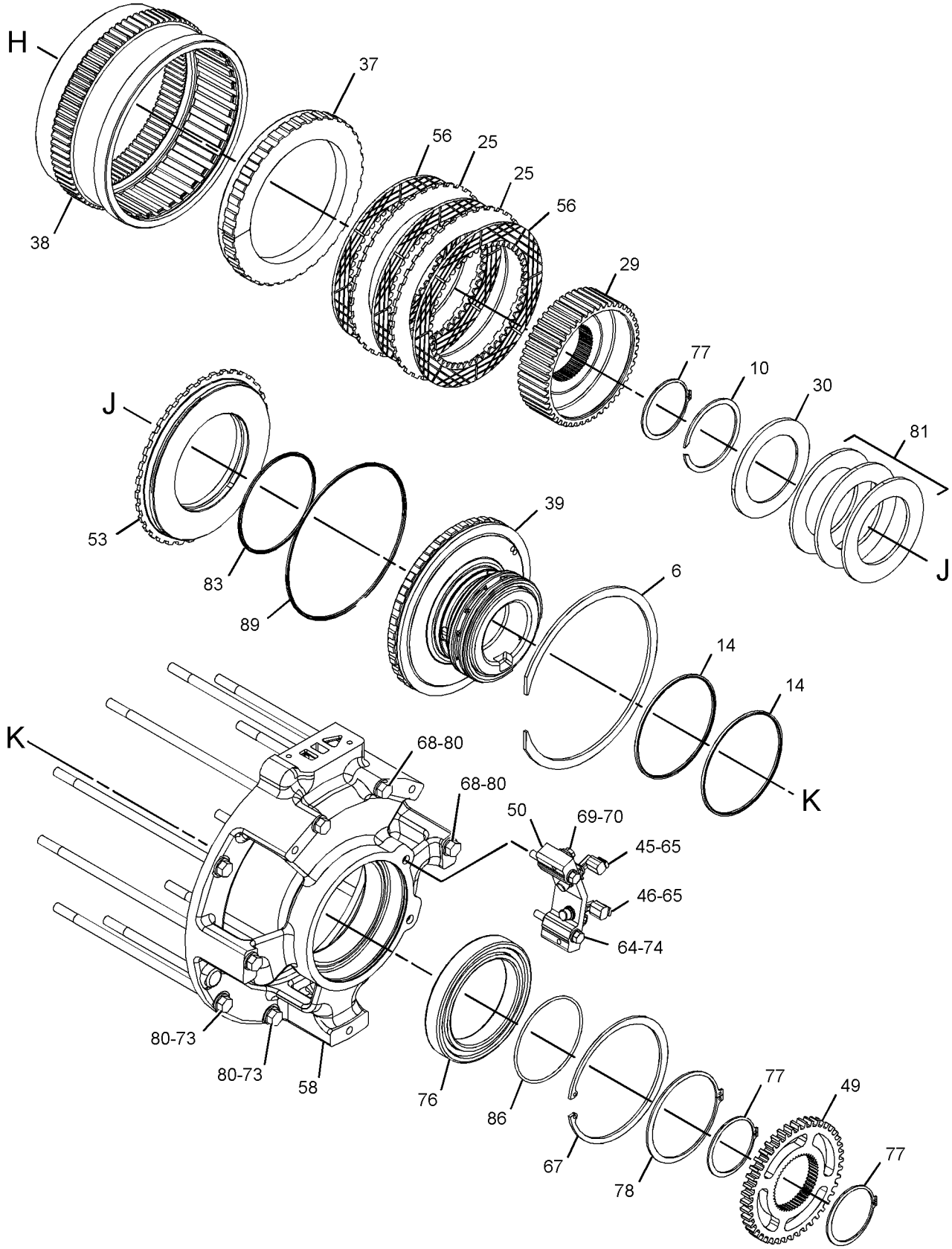

GRAPHIC #4 **<END>** g02319478

269-2046 POWER TRAIN AR

S/N: SMC1-UP; GCT1-UP

PART OF 269-2037, 269-2038 GENERAL AR

SMCS-3000, 4000 **i05322994**

NOTE	PART NUMBER	QTY	PART NAME 1 2 3 4 5 6 (PRODUCT LEVEL)	SEE PAGE
Y	*3W-6550*	1	AXLE GP	445
Y	**231-5969**	1	BRAKE & DIFFERENTIAL DRIVE GP	448
Y	*231-5990*	1	BRAKE & PLANETARY GP	452
Y	*224-2793*	1	CONTROL & MTG GP-PEDAL (GOVERNOR, BRAKE)	1037
Y	*272-0016*	1	CONTROL GP-STEERING & XMSN	460
Y	*225-1506*	1	COUPLING & GUARD GP (POWERSHIFT)	471
Y	**260-6650**	2	DRIVE GP-FINAL	476
Y	*269-2072*	1	LINES GP-POWER TRAIN OIL	490
Y	*303-4142*	1	MOUNTING GP-CONTROL (CONSOLE, LH)	1123
Y	*259-3119*	1	MOUNTING GP-FINAL DRIVE	528
Y	*227-0165*	1	MOUNTING GP-TRANSMISSION	529
Y	*108-1696*	1	SHAFT GP-DRIVE	548
Y	*269-7635*	1	TORQUE CONVERTER GP	554
			S/N: SMC1-1499 ; GCT1-1999	
Y	*336-2447*	1	TORQUE CONVERTER & HOUSING GP	549
			S/N: SMC1500-UP ; GCT2000-UP	
Y	**220-1429**	1	TRANSMISSION AR	560
			—OR—	
Y	**354-0148**	1	TRANSMISSION AR	561
Y	*213-1308*	1	VALVE & MTG GP-CONTROL (BRAKE)	800

Y - SEPARATE ILLUSTRATION

<END>

270-1762 PUMP GP-GEAR—POWER TRAIN OIL

S/N: SMC1-UP; GCT1-UP

PART OF 269-2072 LINES GP-POWER TRAIN OIL

SMCS-3066, 3115, 5073

i05325480

NOTE	REF NO	GRAPHIC REF	PART NUMBER	QTY	PART NAME 1 2 3 4 5 6 (PRODUCT LEVEL)	SEE PAGE
	1	1	**3T-5356**	1	CAGE-BEARING	
	2	1	**5H-4279**	1	PLUG-CUP	
	3	1	**212-2301**	1	FLANGE	
Y	4	1	**270-1763**	1	PUMP GP-GEAR (POWER TRAIN OIL)	545
	5	1	**111-4919**	1	SEAL-LIP TYPE	
	6	1	**1P-4578**	2	FLANGE-HALF	
	7	1	**2M-3974**	1	RING-RETAINING	
	8	1	**5P-9439**	1	BALL BEARING	
	9	1	**6V-1179**	1	SEAL-O-RING	
	10	1	**6L-4783**	4	BOLT-12 POINT HEAD (5/16-18X1.25-IN)	
	11	1	**8C-3206**	4	FLANGE-HALF	
	12	1	**8T-4121**	12	WASHER-HARD (11X21X2.5-MM THK)	
M	13	1	**8T-4956**	2	BOLT (M12X1.75X35-MM)	
M	14	1	**8T-4196**	12	BOLT (M10X1.5X35-MM)	
	15	1	**8T-4223**	2	WASHER-HARD (13.5X25.5X3-MM THK)	

M - METRIC PART
Y - SEPARATE ILLUSTRATION

270-1762 **PUMP GP-GEAR (*contd.*)** **i05325480**

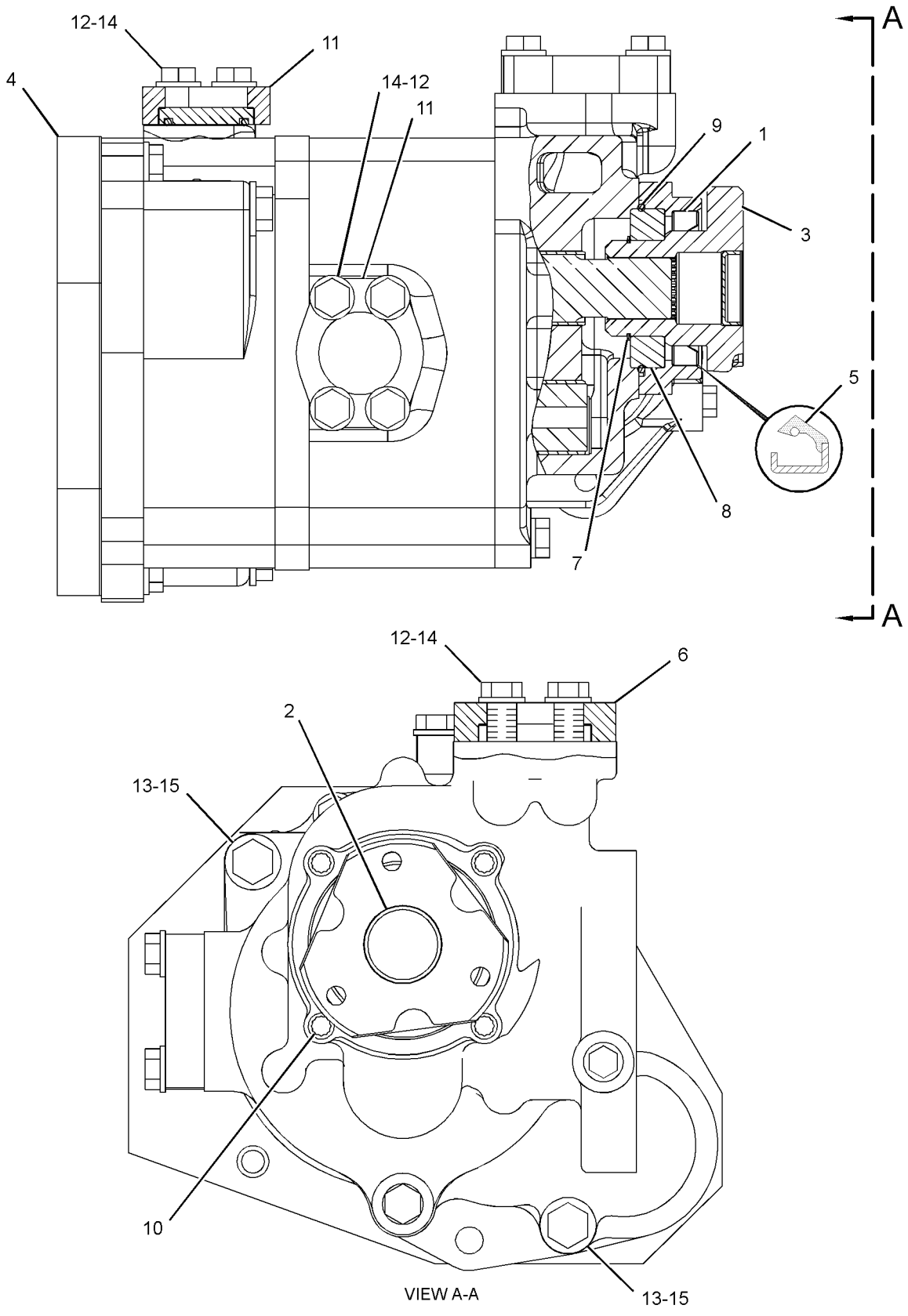

GRAPHIC #1 **<END>** g01208726

270-1763 PUMP GP-GEAR—POWER TRAIN

S/N: SMC1-UP; GCT1-UP

PART OF 270-1762 PUMP GP-GEAR

SMCS-3066, 3115, 5073

i05325479

NOTE	REF NO	GRAPHIC REF	PART NUMBER	QTY	PART NAME 1 2 3 4 5 6 (PRODUCT LEVEL)	SEE PAGE
	1	1	**3S-0004**	5	WASHER (0.406X0.728X0.09-IN THK)	
	2	1	**3T-1447**	2	GEAR (8-TEETH)	
	3	1	**304-5280**	2	GEAR-OIL PUMP (12-TEETH)	
	4	1	**5M-4987**	2	DOWEL	
	5	1	**131-3278**	1	BODY AS-OIL PUMP	
		1	**5M-3605**	2	DOWEL	
	6	1	**133-1400**	1	GEAR AS-OIL PUMP (12-TEETH)	
	7	1	**133-1401**	1	GEAR AS-OIL PUMP (12-TEETH)	
	8	1	**226-3908**	1	BODY AS-OIL PUMP	
	8A	1	**131-0825**	2	BUSHING	
	9	1	**226-3910**	1	COVER	
	10	1	**270-1764**	1	COVER AS-PUMP	
	10A	1	**1M-3909**	2	BUSHING	
	11	1	**270-1766**	1	BODY AS-OIL PUMP	
	11A	1	**1M-3909**	2	BUSHING	
		1	**8M-8489**	2	DOWEL	
	12	1	**1B-8705**	1	KEY-WOODRUFF	
	13	1	**061-9457**	1	SEAL-O-RING	
	14	1	**2B-9373**	1	KEY-WOODRUFF	
	15	1	**161-8068**	4	SEAL-O-RING	
M	16	1	**7X-2547**	5	BOLT (M10X1.5X200-MM)	

M - METRIC PART

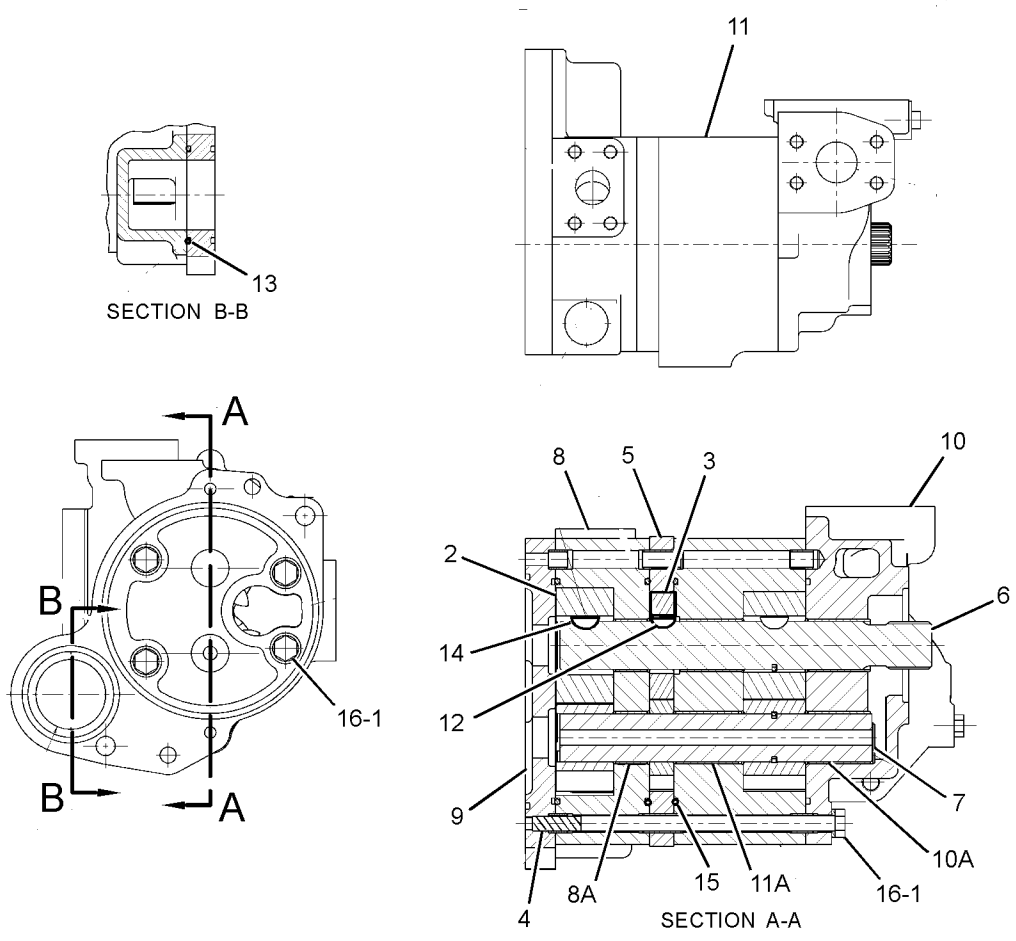

GRAPHIC #1

<END>

g01228440

231-4166 SCREEN GP-MAGNETIC–TRANSMISSION

S/N: SMC1-UP; GCT1-UP

PART OF 269-2072 LINES GP-POWER TRAIN OIL

SMCS-3067 **i03865204**

NOTE	REF NO	GRAPHIC REF	PART NUMBER	QTY	PART NAME 1 2 3 4 5 6 (PRODUCT LEVEL)	SEE PAGE
	1	1	**3S-3440**	1	WASHER-WAVE (68.1X80.8X0.5-MM THK)	
	2	1	**4S-8598**	1	SCREEN-SUCTION (POWER TRAIN)	
	3	1	**240-8259**	1	SCREEN GP-MAGNETIC (POWER TRAIN)	
		1	**8M-7160**	3	MAGNET	
	4	1	**231-4167**	1	HOUSING AS-SCREEN	
	5	1	**3S-3439**	1	COVER-TOP	
	6	1	**6L-5359**	1	SEAL-O-RING	
	7	1	**6V-5188**	1	SEAL-O-RING	
M	8	1	**8T-4133**	4	NUT (M10X1.5-THD)	

M - METRIC PART

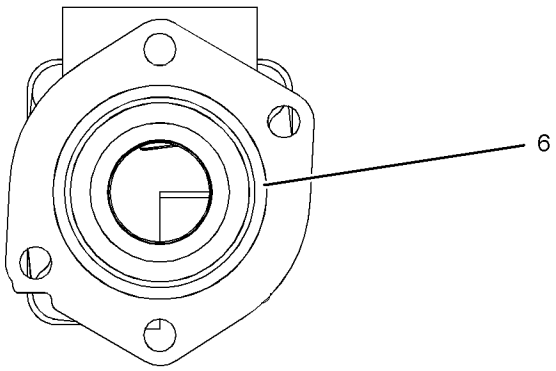

VIEW A-A

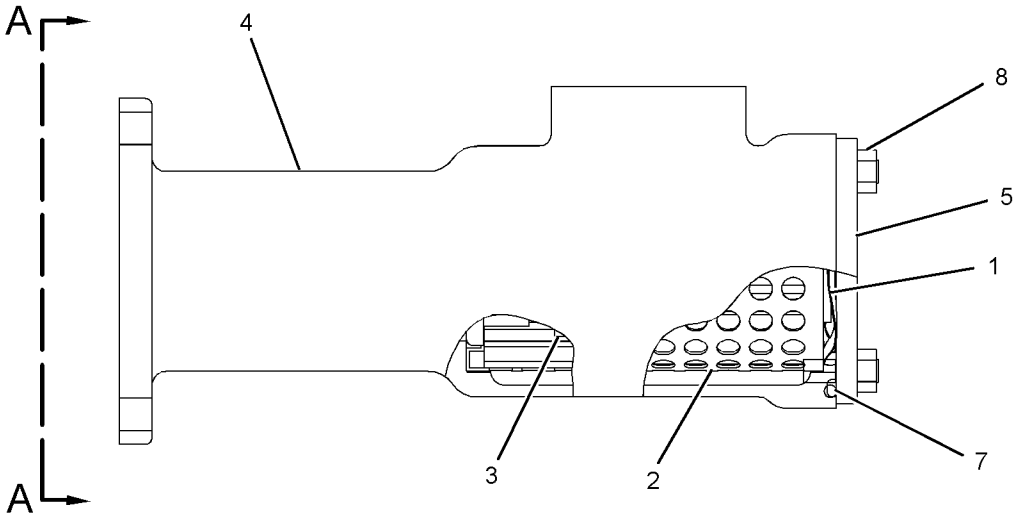

GRAPHIC #1 **<END>** g01209036

188-0908 SEGMENT GP-SPROCKET

S/N: SMC1-UP; GCT1-UP

PART OF 218-4982, 222-8667, 278-6367, 278-6368, 438-4435 UNDERCARRIAGE AR

ALSO AN ATTACHMENT

SMCS-4155 **i04041031**

NOTE	REF NO	GRAPHIC REF	PART NUMBER	QTY	PART NAME 1 2 3 4 5 6 (PRODUCT LEVEL)	SEE PAGE
	1	1	**173-0946**	5	SEGMENT-SPROCKET	
	2	1	**6V-0937**	25	BOLT (5/8-18X2.1-IN)	
	3	1	**2S-5658**	25	WASHER-HARD (17X29X3-MM THK)	
	4	1	**7H-3607**	25	NUT (5/8-18-THD)	

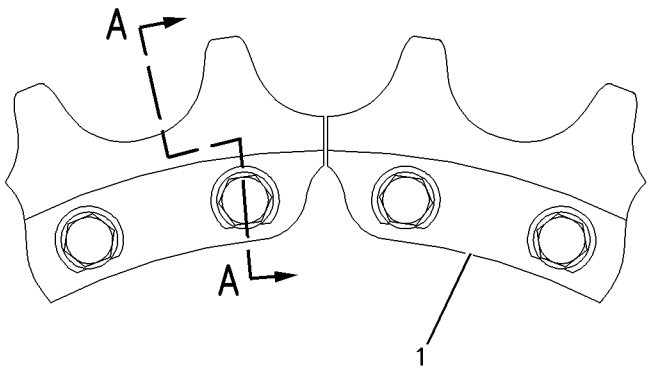

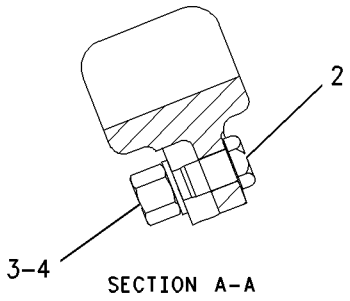

SECTION A–A

GRAPHIC #1 **<END>** g00856173

108-1696 SHAFT GP-DRIVE

S/N: SMC1-UP; GCT1-UP

PART OF 269-2046 POWER TRAIN AR

SMCS-3253 **i01854370**

NOTE	REF NO	GRAPHIC REF	PART NUMBER	QTY	PART NAME 1 2 3 4 5 6 (PRODUCT LEVEL)	SEE PAGE
Y	1	1	**108-2106**	1	UNIVERSAL JOINT GP	562
	2	1	**7X-7477**	8	BOLT (3/8-24X1.75-IN)	
	3	1	**7X-0608**	8	WASHER-HARD (10.2X16X2-MM THK)	
	4	1	**3T-8305**	1	YOKE AS	
		1	**7D-1677**	1	RACE-BEARING INNER	
		1	**8H-2768**	1	PLUG-CUP	

Y - SEPARATE ILLUSTRATION

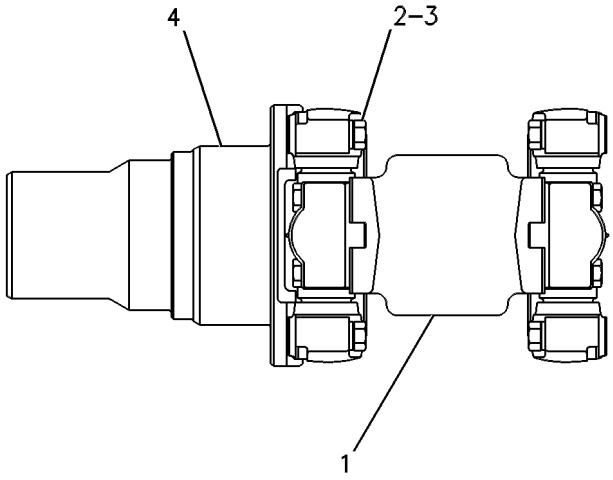

GRAPHIC #1 **<END>** g00254101

336-2447 TORQUE CONVERTER & HOUSING GP

S/N: SMC1500-UP; GCT2000-UP

PART OF 269-2046 POWER TRAIN AR

SMCS-3101, 3105 **i05192420**

NOTE	REF NO	GRAPHIC REF	PART NUMBER	QTY	PART NAME 1 2 3 4 5 6 (PRODUCT LEVEL)	SEE PAGE
	1	1	**2D-1523**	1	RING-RETAINING	
	2	1	**8H-9818**	1	GASKET	
	3	1	**8S-9008**	1	SLEEVE	
	4	1	**9H-8712**	1	BEARING AS	
	5	1	**9M-1976**	1	RING-RETAINING	
	6	1	**9P-3709**	1	GEAR-SUN (35-TEETH)	
	7	1	**108-6954**	1	YOKE-UNIVERSAL JOINT	
	8	1	**155-5161**	1	SEAL-OIL	
	9	1	**210-4458**	1	ELBOW	
	10	1	**232-6411**	1	RETAINER-SHAFT	
	11	1	**268-7831**	1	GEAR-PUMP DRIVE (94-TEETH)	
	12	1	**268-7832**	1	GEAR-PUMP DRIVE (21-TEETH)	
	13	1	**269-7633**	1	HOUSING-TORQUE CONVERTER	
Y	14	1	**336-2442**	1	TORQUE CONVERTER GP	556
	15	1	**136-2216**	1	SEAL-LIP TYPE	
	16	1	**165-4854**	2	SEAL-O-RING	
	17	1	**1F-2771**	1	BALL BEARING	
	18	1	**2K-5967**	1	RING-RETAINING	
	19	1	**110-0510**	1	COVER	
	20	1	**5B-2208**	8	BOLT (3/8-24X1.125-IN)	
	21	1	**5M-4480**	1	RING-RETAINING	
	22	1	**6V-5043**	1	SEAL-O-RING	
	23	1	**6V-5266**	1	SEAL-O-RING	
	24	1	**6V-7681**	1	SEAL-O-RING	
	25	1	**8C-5230**	1	SEAL-O-RING	
	26	1	**8T-4121**	12	WASHER-HARD (11X21X2.5-MM THK)	
M	27	1	**8T-4136**	2	BOLT (M10X1.5X25-MM)	
M	28	1	**8T-4139**	9	BOLT (M12X1.75X30-MM)	
M	29	1	**8T-4176**	1	BOLT (M12X1.75X90-MM)	
M	30	1	**8T-4195**	8	BOLT (M10X1.5X30-MM)	
	31	1	**8T-4223**	12	WASHER-HARD (13.5X25.5X3-MM THK)	
M	32	1	**8T-4183**	3	BOLT (M12X1.75X40-MM)	
M	33	1	**8T-4137**	2	BOLT (M10X1.5X20-MM)	

M - METRIC PART
Y - SEPARATE ILLUSTRATION

336-2447 **TORQUE CONVERTER & HOUSING GP (*contd.*)** **i05192420**

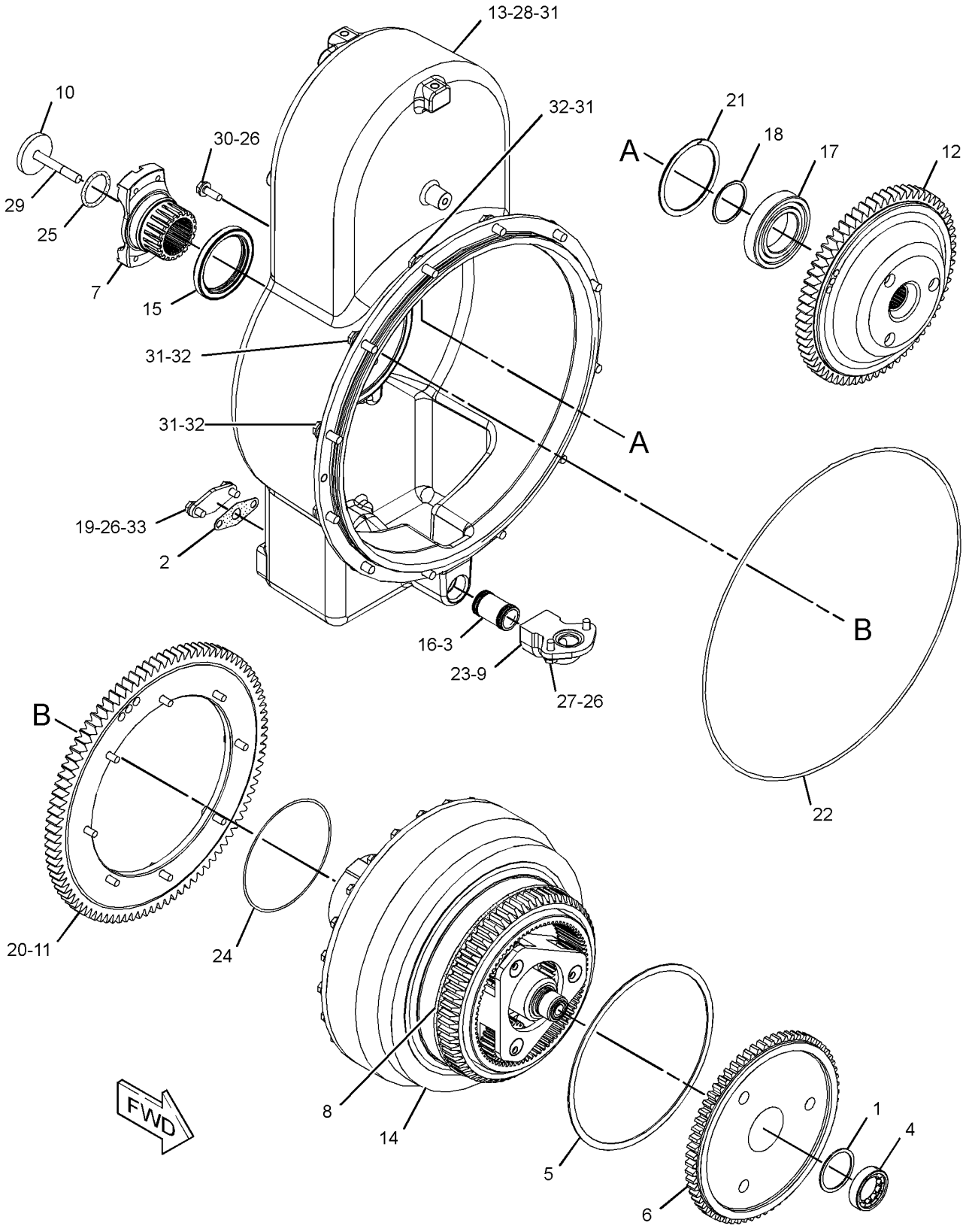

GRAPHIC #1 **<END>** g02283433

1T-2090 TORQUE CONVERTER GP

S/N: BZS1-UP

PART OF 269-7634 TORQUE CONVERTER GP

SMCS-3101 **i05121210**

NOTE	REF NO	GRAPHIC REF	PART NUMBER	QTY	PART NAME 1 2 3 4 5 6 (PRODUCT LEVEL)	SEE PAGE
	1	1	**1T-0097**	1	RING-METAL SEAL	
	2	1	**1T-0438**	1	RETAINER-BEARING	
	3	1	**1T-0446**	6	BOLT (3/8-16X0.75-IN)	
	4	1	**1T-0447**	1	CARRIER-RING	
	5	1	**1T-0599**	1	SPACER (65.1X85X9.52-MM THK)	
	6	1	**1T-1993**	1	WHEEL-TURBINE	
	7	1	**1T-2052**	1	STATOR AS	
	8	1	**1T-2069**	1	CARRIER-BEARING	
	9	1	**1T-2079**	1	IMPELLER-CONVERTER	
	10	1	**1T-2080**	1	HOUSING-ROTATING	
	11	1	**1T-2081**	1	CARRIER AS-STATOR	
		1	**4S-8537**	1	DOWEL	
	12	1	**1T-2086**	1	FLANGE AS-OUTPUT	
		1	**1T-0902**	2	BUSHING	
	13	1	**304-9651**	1	BALL BEARING	
	14	1	**279-9061**	1	RETAINER-BEARING	
	15	1	**142-8540**	1	RING-SEAL	
	16	1	**1A-2029**	24	BOLT (3/8-16X1.125-IN)	
	17	1	**1T-0131**	8	BOLT-SOCKET HEAD (3/8-24X1.25-IN)	
	18	1	**1T-0414**	8	BOLT-12 POINT HEAD (5/16-18X1-IN)	
	19	1	**1T-0441**	1	BALL BEARING	
	20	1	**3F-3727**	1	RING-SNAP	
	21	1	**4H-1440**	6	PIN-SPRING	
	22	1	**5B-0582**	1	DOWEL	
	23	1	**5M-2894**	24	WASHER-HARD (10.2X18.5X2.5-MM THK)	

1T-2090 **TORQUE CONVERTER GP (*contd.*)** **i05121210**

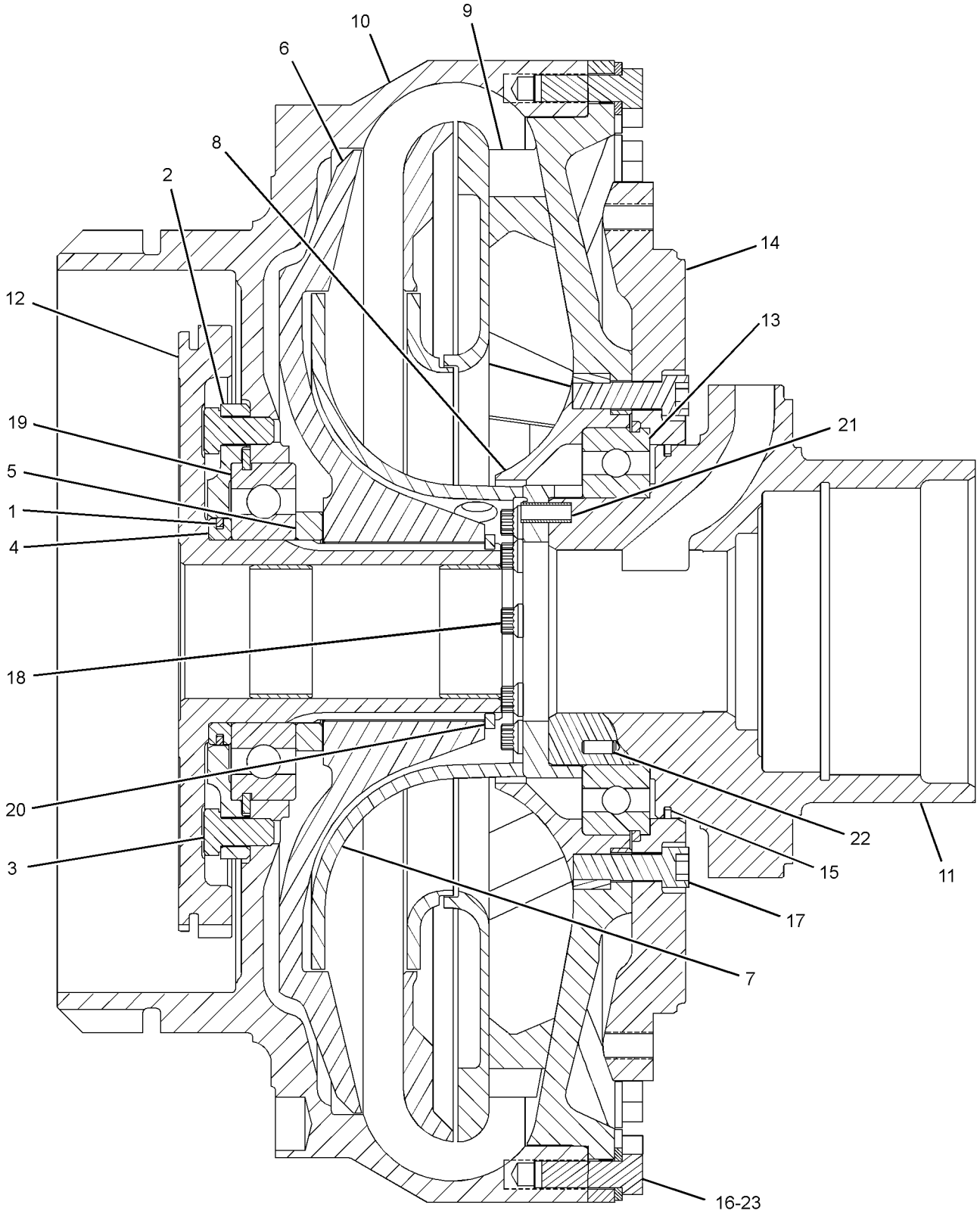

GRAPHIC #1 **<END>** g01381837

269-7634 TORQUE CONVERTER GP—WITH DIVIDER

S/N: BZS1-UP

PART OF 269-7635 TORQUE CONVERTER GP

SMCS-3101 **i02752138**

NOTE	REF NO	GRAPHIC REF	PART NUMBER	QTY	PART NAME 1 2 3 4 5 6 (PRODUCT LEVEL)	SEE PAGE
Y	1	1	*1T-2090*	1	TORQUE CONVERTER GP	551
	2	1	**3T-4007**	1	CARRIER-PLANETARY	
	3	1	**3T-4008**	3	GEAR-PLANETARY (23-TEETH)	
	4	1	**3T-4009**	1	GEAR-RING (82-TEETH)	
	5	1	**3T-4011**	3	SHAFT AS-PLANETARY	
					(EACH INCLUDES)	
		1	**2A-3746**	1	PLUG-CUP	
	6	1	**3T-4013**	1	RETAINER-CARRIER	
	7	1	**5M-7878**	1	RING-SNAP	
	8	1	**5P-3930**	3	BEARING AS-ROLLER	
	9	1	**8E-8300**	6	DISC-THRUST	
	10	1	**9M-2008**	1	RING-METAL SEAL	
	11	1	**233-0668**	1	SHAFT AS	
		1	**5J-7386**	1	PLUG-ORIFICE	
	12	1	**2D-5658**	1	BALL BEARING	
	13	1	**2K-5986**	2	PIN-SPRING	
	14	1	**3S-2708**	3	PIN-SPRING	
	15	1	**5J-3964**	1	RING-LOCK	
	16	1	**5P-7679**	1	RACE-SPECIAL ROLLER BEARING	
	17	1	**6K-3630**	1	RING	
	18	1	**6V-4583**	1	RING-RETAINING	

Y - SEPARATE ILLUSTRATION

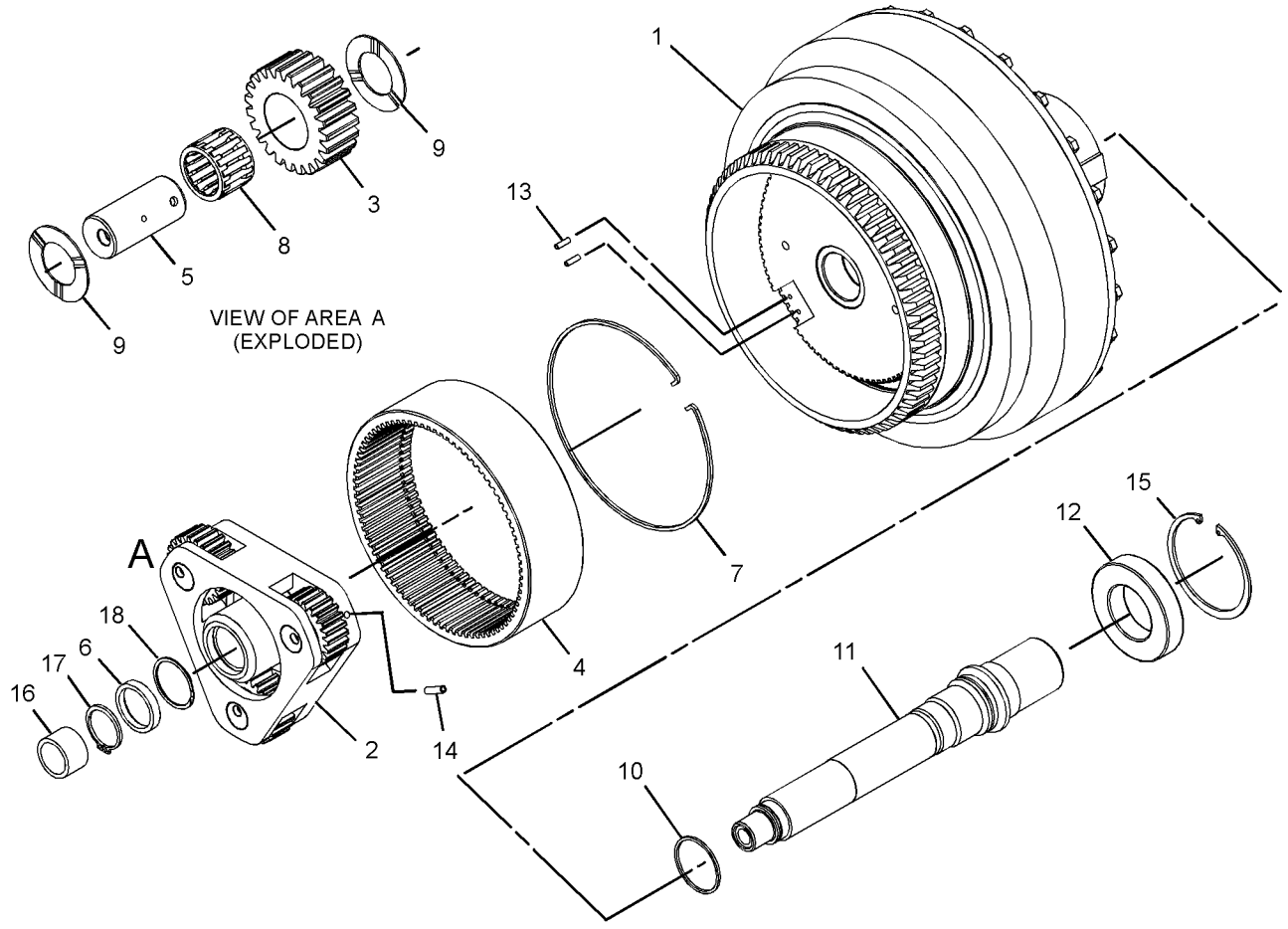

GRAPHIC #1 **<END>** g01359057

269-7635 TORQUE CONVERTER GP—WITH HOUSING

S/N: SMC1-643; GCT1-1163

PART OF 269-2046 POWER TRAIN AR

SMCS-3101 **i02752147**

NOTE	REF NO	GRAPHIC REF	PART NUMBER	QTY	PART NAME 1 2 3 4 5 6 (PRODUCT LEVEL)	SEE PAGE
	1	1	**2D-1523**	1	RING-RETAINING	
	2	1	**2S-2251**	1	SEAL-O-RING	
	3	1	**8H-9818**	1	GASKET	
	4	1	**8S-9008**	1	SLEEVE	
	5	1	**9H-8712**	1	BEARING AS	
	6	1	**9M-1976**	1	RING-RETAINING	
	7	1	**9P-3709**	1	GEAR-SUN (35-TEETH)	
	8	1	**108-6954**	1	YOKE-UNIVERSAL JOINT	
	9	1	**155-5161**	1	SEAL-OIL	
	10	1	**210-4458**	1	ELBOW	
	11	1	**232-6411**	1	RETAINER-SHAFT	
	12	1	**268-7831**	1	GEAR-PUMP DRIVE (94-TEETH)	
	13	1	**268-7832**	1	GEAR-PUMP DRIVE (21-TEETH)	
	14	1	**269-7633**	1	HOUSING-TORQUE CONVERTER	
Y	15	1	**269-7634**	1	TORQUE CONVERTER GP	553
	16	1	**110-0510**	1	COVER	
	17	1	**136-2216**	1	SEAL-LIP TYPE	
	18	1	**165-4854**	2	SEAL-O-RING	
	19	1	**1F-2771**	1	BALL BEARING	
	20	1	**1S-9799**	1	SEAL-O-RING	
	21	1	**2K-5967**	1	RING-RETAINING	
	22	1	**5B-2208**	8	BOLT (3/8-24X1.125-IN)	
	23	1	**5M-4480**	1	RING-RETAINING	
	24	1	**6F-4718**	1	SEAL-O-RING	
	25	1	**8T-4121**	12	WASHER-HARD (11X21X2.5-MM THK)	
M	26	1	**8T-4136**	2	BOLT (M10X1.5X25-MM)	
M	27	1	**8T-4137**	2	BOLT (M10X1.5X20-MM)	
M	28	1	**8T-4139**	9	BOLT (M12X1.75X30-MM)	
M	29	1	**8T-4176**	1	BOLT (M12X1.75X90-MM)	
M	30	1	**8T-4956**	3	BOLT (M12X1.75X35-MM)	
M	31	1	**8T-4195**	8	BOLT (M10X1.5X30-MM)	
	32	1	**8T-4223**	12	WASHER-HARD (13.5X25.5X3-MM THK)	
	33	1	**9H-0846**	1	SEAL-O-RING	

M - METRIC PART
Y - SEPARATE ILLUSTRATION

269-7635 **TORQUE CONVERTER GP (*contd.*)** **i02752147**

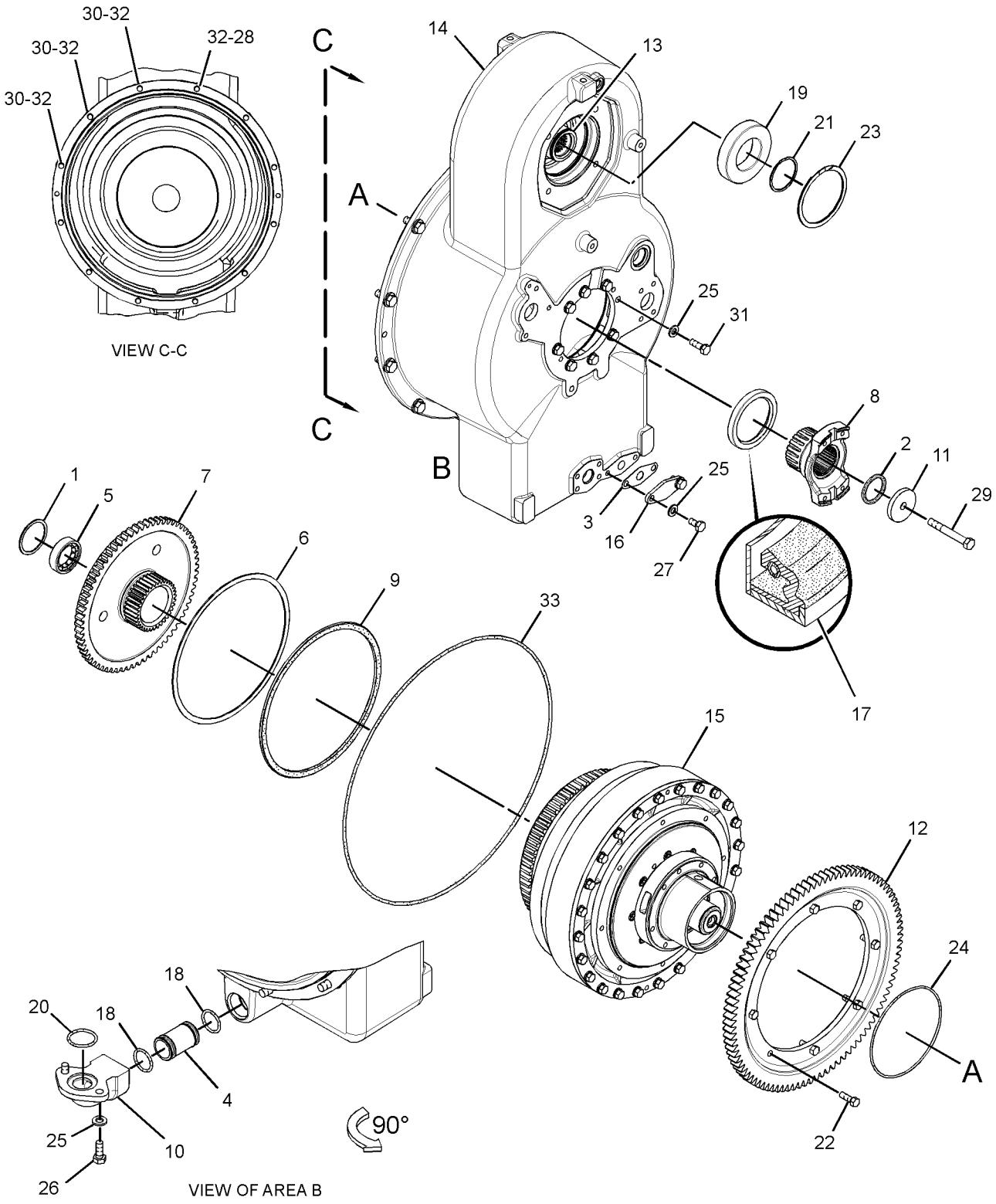

GRAPHIC #1 **<END>** g01359106

336-2442 TORQUE CONVERTER GP

S/N: T1M1-UP

PART OF 336-2447 TORQUE CONVERTER & HOUSING GP

SMCS-3101 **i05192424**

NOTE	REF NO	GRAPHIC REF	PART NUMBER	QTY	PART NAME 1 2 3 4 5 6 (PRODUCT LEVEL)	SEE PAGE
	1	1	**3T-4007**	1	CARRIER-PLANETARY	
	2	1	**3T-4008**	3	GEAR-PLANETARY (23-TEETH)	
	3	1	**3T-4009**	1	GEAR-RING (82-TEETH)	
	4	1	**3T-4011**	3	SHAFT AS-PLANETARY	
					(EACH INCLUDES)	
		1	**2A-3746**	1	PLUG-CUP	
	5	1	**3T-4013**	1	RETAINER-CARRIER	
	6	1	**5M-7878**	1	RING-SNAP	
	7	1	**5P-3930**	3	BEARING AS-ROLLER	
	8	1	**8E-8300**	6	DISC-THRUST	
	9	1	**9M-2008**	1	RING-METAL SEAL	
	10	1	**233-0668**	1	SHAFT AS	
		1	**5J-7386**	1	PLUG-ORIFICE	
Y	11	1	*336-2443*	1	TORQUE CONVERTER GP	558
	12	1	**2D-5658**	1	BALL BEARING	
	13	1	**2K-5986**	2	PIN-SPRING	
	14	1	**3S-2708**	3	PIN-SPRING	
	15	1	**5J-3964**	1	RING-LOCK	
	16	1	**5P-7679**	1	RACE-SPECIAL ROLLER BEARING	
	17	1	**6K-3630**	1	RING	
	18	1	**6V-4583**	1	RING-RETAINING	

Y - SEPARATE ILLUSTRATION

336-2442 **TORQUE CONVERTER GP (*contd.*)** **i05192424**

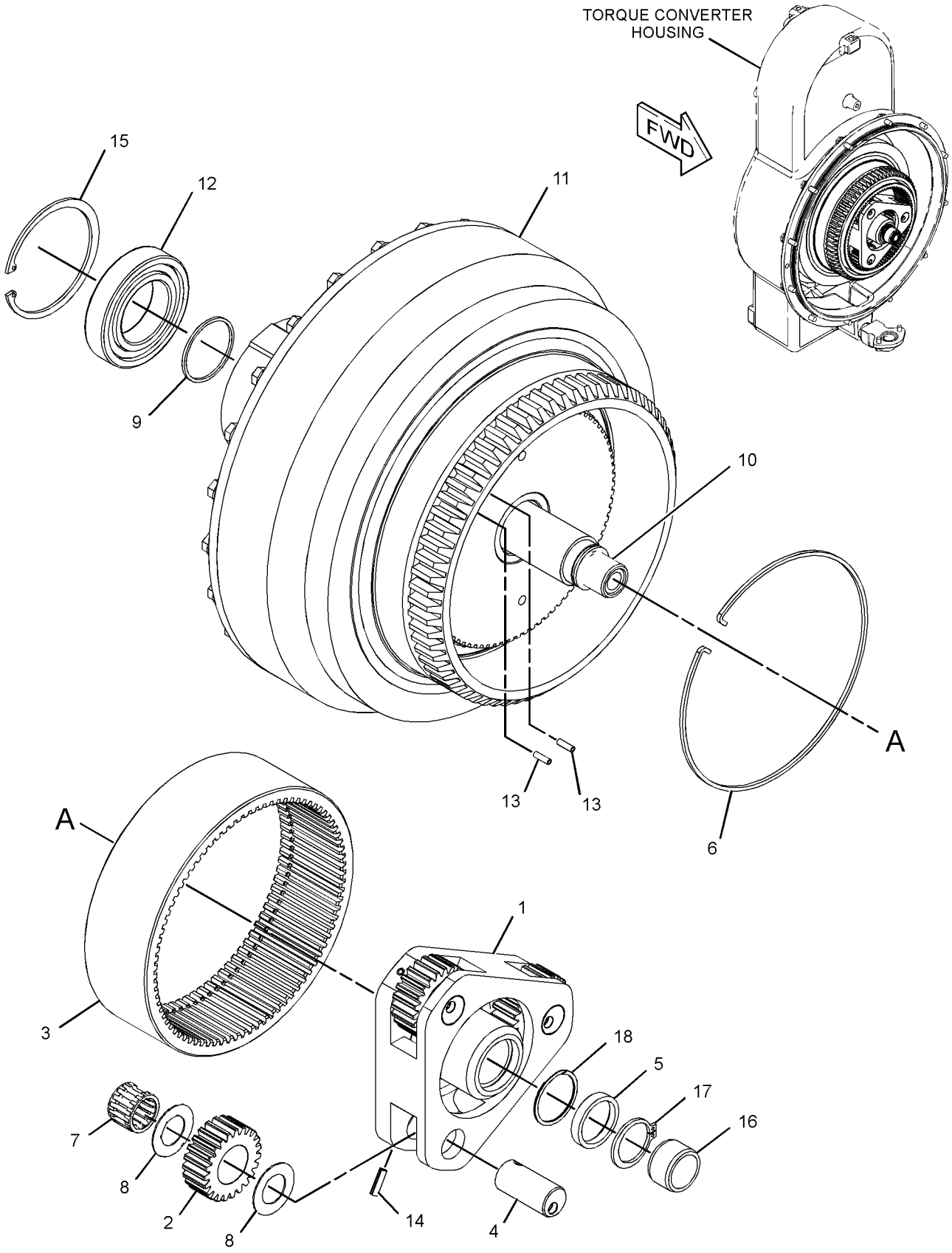

GRAPHIC #1 **<END>** g02282914

336-2443 TORQUE CONVERTER GP

S/N: T1M1-UP

PART OF 336-2442 TORQUE CONVERTER GP

SMCS-3101 **i05192430**

NOTE	REF NO	GRAPHIC REF	PART NUMBER	QTY	PART NAME 1 2 3 4 5 6 (PRODUCT LEVEL)	SEE PAGE
	1	1	**1T-0069**	1	RING-METAL SEAL	
	2	1	**1T-0097**	1	RING-METAL SEAL	
	3	1	**1T-0438**	1	RETAINER-BEARING	
	4	1	**1T-0446**	6	BOLT (3/8-16X0.75-IN)	
	5	1	**1T-0447**	1	CARRIER-RING	
	6	1	**1T-0599**	1	SPACER (65.1X85X9.52-MM THK)	
	7	1	**1T-1993**	1	WHEEL-TURBINE	
	8	1	**1T-2069**	1	CARRIER-BEARING	
	9	1	**1T-2079**	1	IMPELLER-CONVERTER	
	10	1	**1T-2080**	1	HOUSING-ROTATING	
	11	1	**1T-2086**	1	FLANGE AS-OUTPUT	
	11A	1	**1T-0902**	2	BUSHING	
	12	1	**304-9651**	1	BALL BEARING	
	13	1	**336-2433**	1	CARRIER AS-STATOR	
		1	**4S-8537**	1	DOWEL	
	14	1	**336-2435**	1	RETAINER	
	15	1	**1T-2052**	1	STATOR AS	
	16	1	**1A-2029**	24	BOLT (3/8-16X1.125-IN)	
	17	1	**1T-0131**	8	BOLT-SOCKET HEAD (3/8-24X1.25-IN)	
	18	1	**1T-0414**	8	BOLT-12 POINT HEAD (5/16-18X1-IN)	
	19	1	**1T-0441**	1	BALL BEARING	
	20	1	**3F-3727**	1	RING-SNAP	
	21	1	**4H-1440**	6	PIN-SPRING	
	22	1	**5B-0582**	1	DOWEL	
	23	1	**5M-2894**	24	WASHER-HARD (10.2X18.5X2.5-MM THK)	

336-2443 **TORQUE CONVERTER GP (*contd.*)** **i05192430**

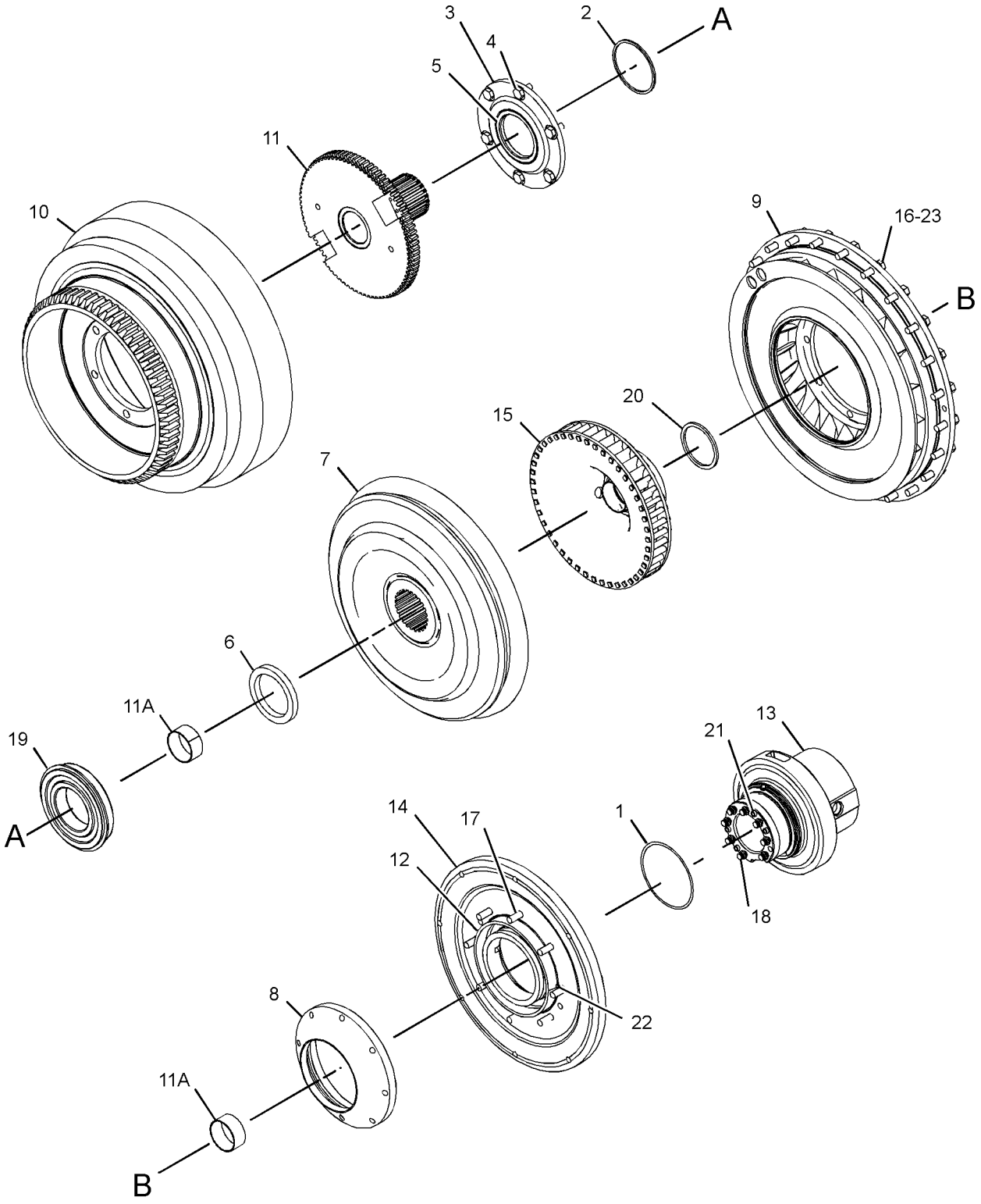

GRAPHIC #1 **<END>** g02258715

220-1429 TRANSMISSION AR

S/N: KKA1-UP

PART OF 269-2046 POWER TRAIN AR

SMCS-3030 **i02450715**

NOTE	REF NO	GRAPHIC REF	PART NUMBER	QTY	PART NAME 1 2 3 4 5 6 (PRODUCT LEVEL)	SEE PAGE
Y	1	1	*221-3342*	1	CASE & PARTS GP-PLANETARY	454
Y	2	1	*244-2616*	1	GEAR GP-BEVEL & TRANSFER	483
Y	3	1	*265-5278*	1	CONTROL GP-TRANSMISSION HYD	464
Y	4	1	*220-1403*	1	PLANETARY GP-TRANSMISSION	530

Y - SEPARATE ILLUSTRATION

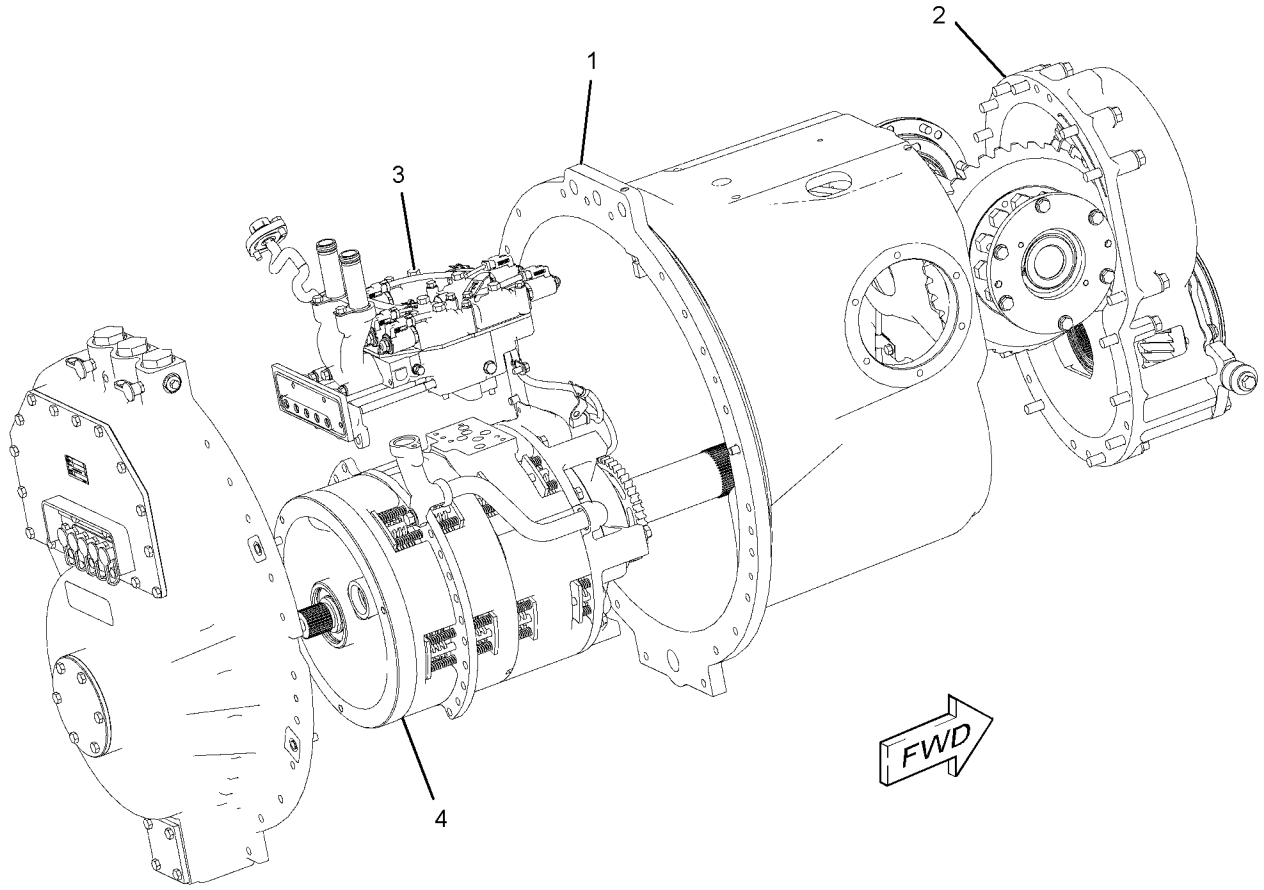

GRAPHIC #1 **<END>** g01210725

354-0148 TRANSMISSION AR

S/N: K1T1-UP

PART OF 269-2046 POWER TRAIN AR

SMCS-3030 **i05192439**

NOTE	REF NO	GRAPHIC REF	PART NUMBER	QTY	PART NAME 1 2 3 4 5 6 (PRODUCT LEVEL)	SEE PAGE
Y	1	1	*244-2616*	1	GEAR GP-BEVEL & TRANSFER	483
Y	2	1	*354-0151*	1	PLANETARY GP-TRANSMISSION	536
Y	3	1	*354-0153*	1	CASE & PARTS GP-PLANETARY	456
Y	4	1	*354-0154*	1	CONTROL GP-TRANSMISSION HYD	467

PARTS SHOWN IN GRAPHIC(S) WITHOUT A REFERENCE NUMBER ARE NOT SERVICED SEPARATELY

Y - SEPARATE ILLUSTRATION

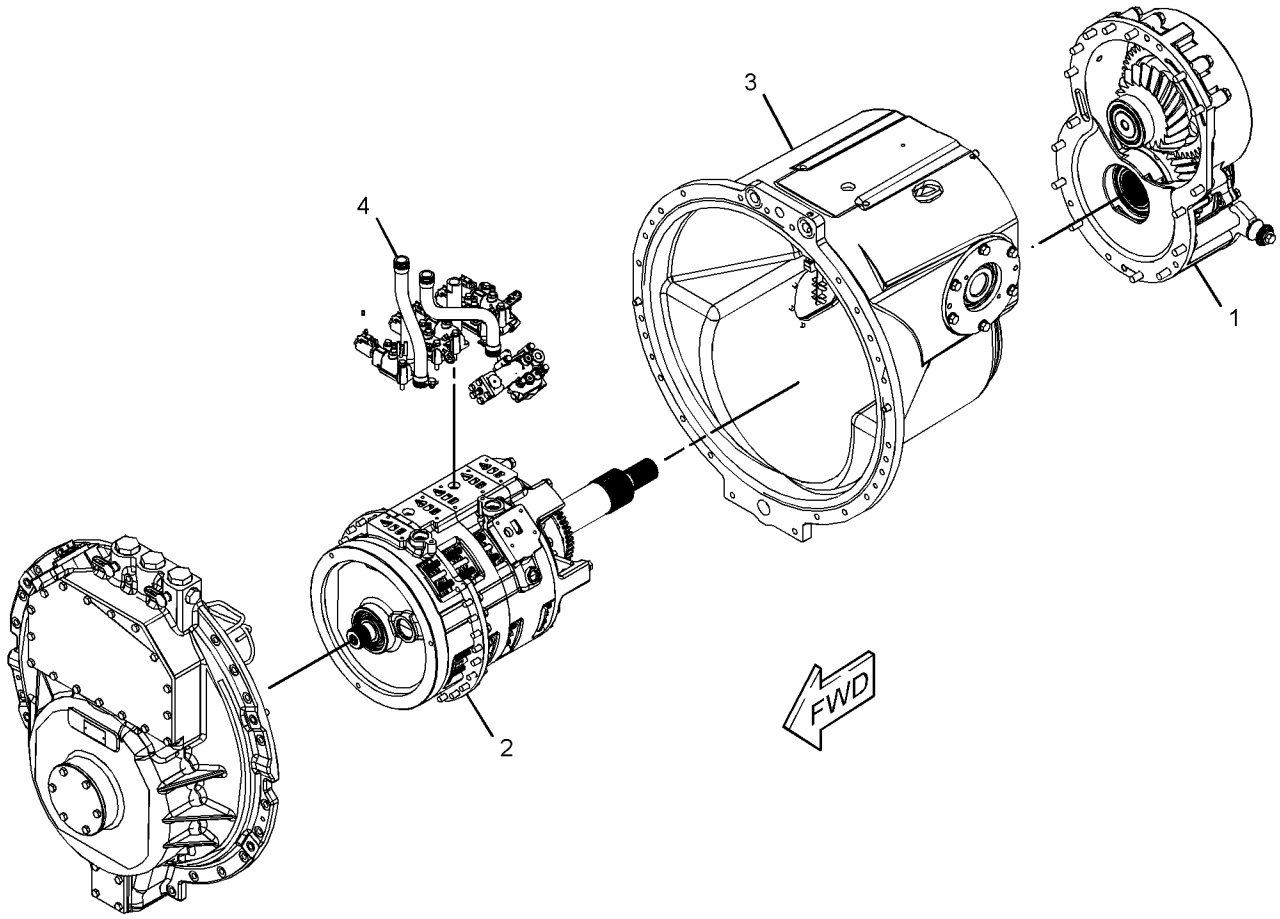

GRAPHIC #1 **<END>** g03266817

108-2106 UNIVERSAL JOINT GP

S/N: SMC1-UP; GCT1-UP

PART OF 108-1696 SHAFT GP-DRIVE

SMCS-3251, 3253

i00599892

NOTE	REF NO	GRAPHIC REF	PART NUMBER	QTY	PART NAME 1 2 3 4 5 6 (PRODUCT LEVEL)	SEE PAGE
	1	1	**3V-2431**	8	WASHER (2.0MM THK)	
	2	1	**7G-9555**	2	SPIDER & BEARING AS	
	3	1	**0L-0478**	8	BOLT (3/8-24X1.75IN)	

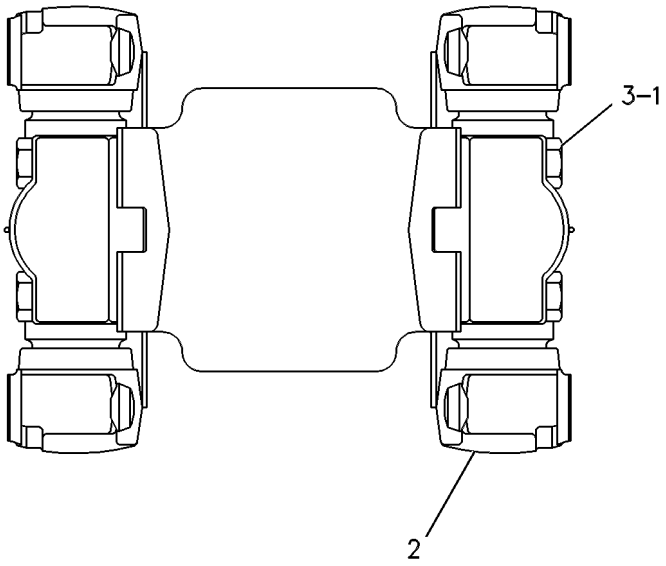

GRAPHIC #1

<END>

g00254100

220-4324 VALVE GP-MODULATING—TRANSMISSION CLUTCH

S/N: KKA1-UP
24-VOLT
FIELD REPLACEMENT ORDER 244-3114—PAGE: 564
PART OF 265-5278 CONTROL GP-TRANSMISSION HYD

SMCS-3139 **i03630500**

NOTE	REF NO	GRAPHIC REF	PART NUMBER	QTY	PART NAME 1 2 3 4 5 6 (PRODUCT LEVEL)	SEE PAGE
	1	1	**164-2108**	1	WASHER (13.03X25.4X2.38-MM THK)	
	2	1	**218-2373**	1	NUT (1/2-28-THD)	
	3	1	**323-9531**	1	COIL AS (24-VOLT)	
	4	1	**214-7568**	1	SEAL-O-RING	
	5	1	**9S-4191**	1	PLUG-O-RING	
					PARTS SHOWN IN GRAPHIC(S) WITHOUT A REFERENCE NUMBER ARE NOT SERVICED SEPARATELY	

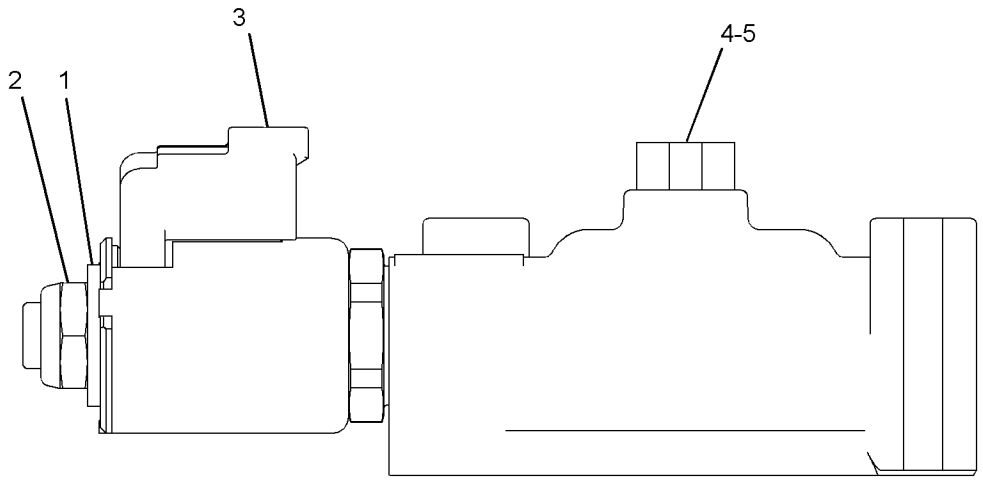

GRAPHIC #1 **<END>** g01533133

244-3114 VALVE GP-MODULATING—TRANSMISSION CLUTCH

S/N: KKA1-UP; K1T1-UP
24-VOLT
FIELD REPLACEMENT FOR 220-4324—PAGE: 563
PART OF 354-0154 CONTROL GP-TRANSMISSION HYD

SMCS-3139 **i05135333**

NOTE	REF NO	GRAPHIC REF	PART NUMBER	QTY	PART NAME 1 2 3 4 5 6 (PRODUCT LEVEL)	SEE PAGE
	1	1	**6V-3965**	1	FITTING (QUICK DISCONNECT)	
	2	1	**323-9531**	1	COIL AS (24-VOLT)	
	3	1	**214-7568**	1	SEAL-O-RING	
	4	1	**164-2108**	1	WASHER (13.03X25.4X2.38-MM THK)	
	5	1	**218-2373**	1	NUT (1/2-28-THD)	
					PARTS SHOWN IN GRAPHIC(S) WITHOUT A REFERENCE NUMBER ARE NOT SERVICED SEPARATELY	

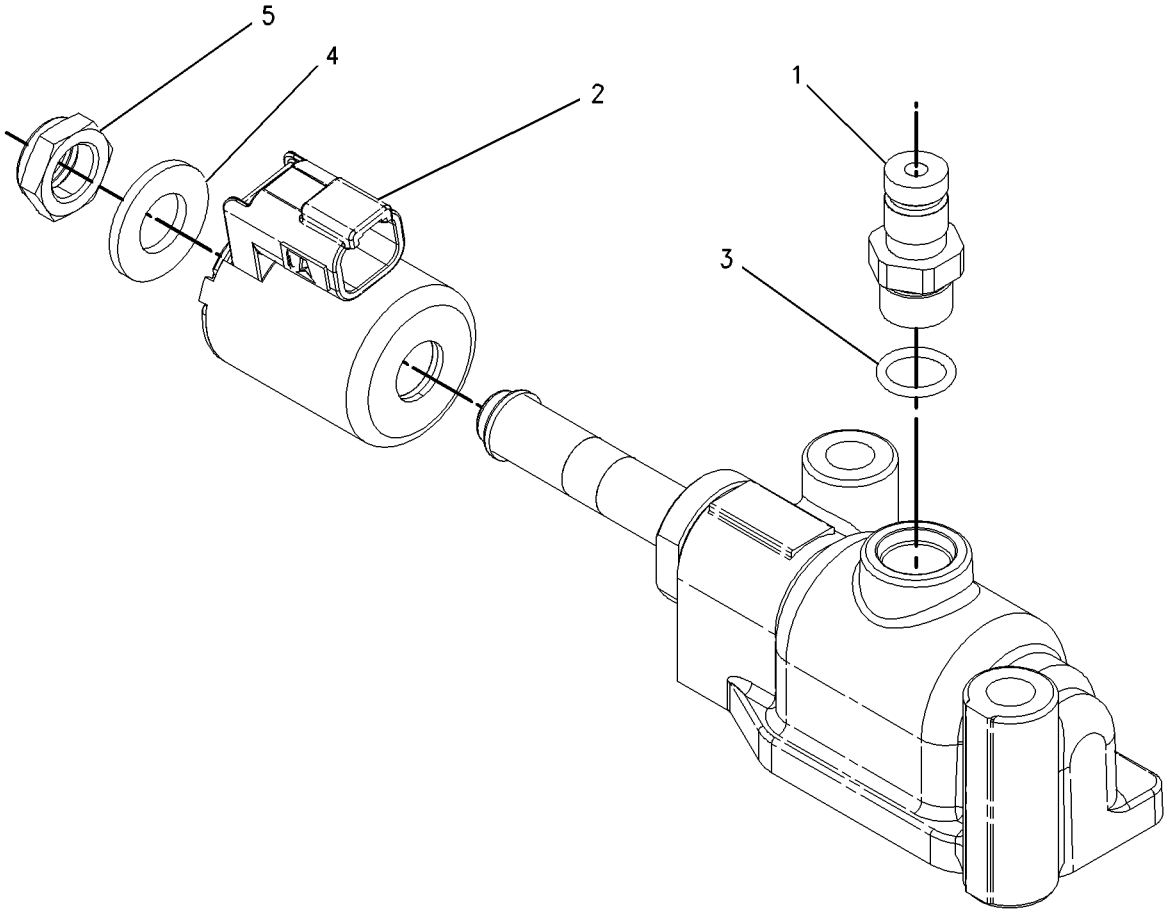

GRAPHIC #1 **<END>** g00919065

213-4540 VALVE GP-RELIEF–MAIN

S/N: KKA1-UP

PART OF 265-5278 CONTROL GP-TRANSMISSION HYD

SMCS-3133, 3182

i04009351

NOTE	REF NO	GRAPHIC REF	PART NUMBER	QTY	PART NAME 1 2 3 4 5 6 (PRODUCT LEVEL)	SEE PAGE
	1	1	**2M-7041**	1	SLUG	
	2	1	**4M-5905**	1	SCREW-ADJUSTMENT (5/16-18X1-IN)	
	3	1	**5B-3180**	1	NUT (5/16-18-THD)	
	4	1	*307-2670*	1	PLUG AS	
		1	**9S-4185**	1	PLUG-O-RING	
		1	**238-5080**	1	SEAL-O-RING	
	5	1	*244-3712*	1	PLUG AS	
		1	**9S-4191**	1	PLUG-O-RING	
		1	**214-7568**	1	SEAL-O-RING	
	6	1	**106-9212**	1	SPRING	
	7	1	**106-9214**	1	PLATE	
	8	1	**109-3968**	1	SPOOL AS-RELIEF	
	9	1	**153-4247**	1	STOP	
	10	1	**204-6502**	1	MANIFOLD	
	11	1	**9M-1974**	7	WASHER-HARD (8.8X16X2-MM THK)	
	12	1	**0S-1617**	6	BOLT (5/16-18X0.75-IN)	
	13	1	*309-2996*	1	PLUG AS	
		1	**6Y-4638**	1	PLUG-HEX SOCKET (1-5/16-12-THD)	
		1	**7M-8485**	1	SEAL-O-RING	

213-4540 **VALVE GP-RELIEF (*contd.*)** **i04009351**

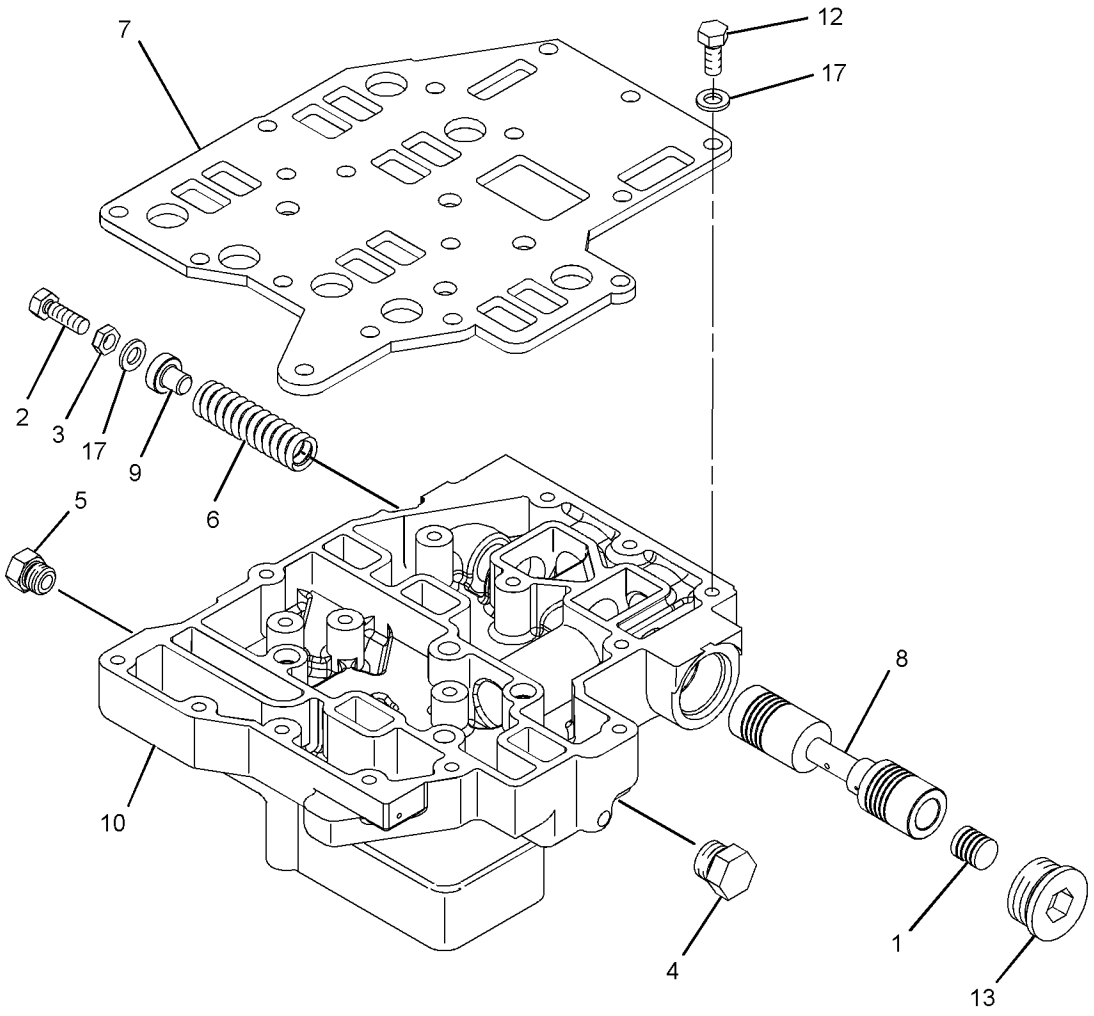

GRAPHIC #1 **<END>** g02142087

220-1418 VALVE GP-RELIEF–TORQUE CONVERTER OUTLET

S/N: SMC1-UP; GCT1-UP

PART OF 269-2072 LINES GP-POWER TRAIN OIL

SMCS-3133, 3182 **i04678070**

NOTE	REF NO	GRAPHIC REF	PART NUMBER	QTY	PART NAME 1 2 3 4 5 6 (PRODUCT LEVEL)	SEE PAGE
	1	1	**225-6363**	1	HOUSING AS-RELIEF VALVE	
		1	**7M-1377**	1	STOP-VALVE	
	2	1	**4M-8239**	2	COVER	
	3	1	**7M-1296**	1	VALVE-RELIEF	
B	4	1	**5M-9623**	5	SHIM (0.9-MM THK)	
M	5	1	**8T-4136**	4	BOLT (M10X1.5X25-MM)	
	6	1	**9X-2027**	7	WASHER (11X18X2-MM THK)	
	7	1	**7M-1297**	1	SPRING	
	8	1	**8M-4986**	2	SEAL-O-RING	
	11	1	**9W-5595**	1	SPRING	
M	12	1	**8T-4172**	3	BOLT (M10X1.5X80-MM)	

B - USE AS REQUIRED
M - METRIC PART

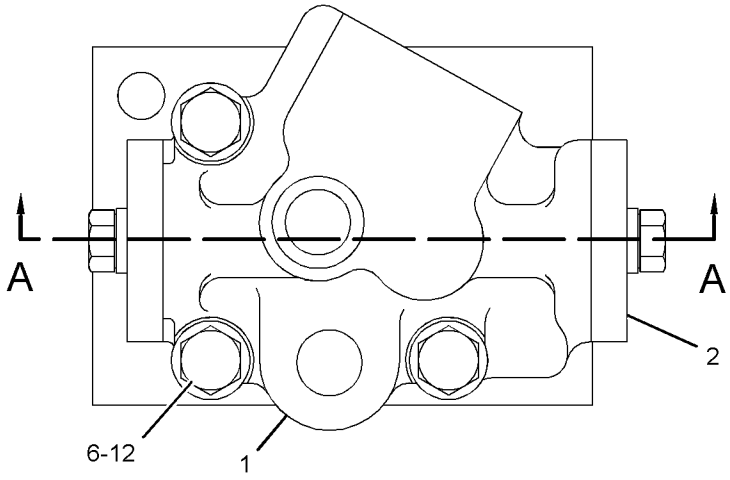

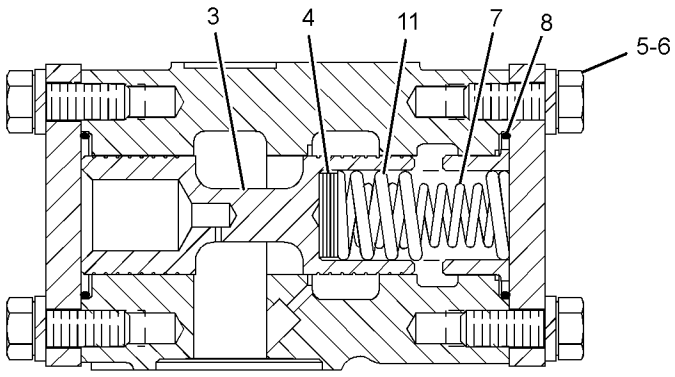

SECTION A-A

GRAPHIC #1 **<END>** g01206826

354-0164 VALVE GP-RELIEF

S/N: K1T1-UP

PART OF 354-0154 CONTROL GP-TRANSMISSION HYD

SMCS-3133, 3182 **i04181913**

NOTE	REF NO	GRAPHIC REF	PART NUMBER	QTY	PART NAME 1 2 3 4 5 6 (PRODUCT LEVEL)	SEE PAGE
	1	1	**1M-9351**	1	SPRING	
	2	1	**2S-5835**	1	PISTON-LOAD	
	3	1	**8E-1143**	1	SLUG	
	4	1	**9U-8668**	1	SPOOL AS	
		1	**3D-8317**	1	RING-RETAINING	
		1	**4B-9880**	1	BALL	
		1	**4M-2381**	1	SPRING	
		1	**9V-8668**	1	PLATE	
		1	**9U-8669**	1	RETAINER	
	5	1	**202-2005**	1	COVER	
	6	1	**355-2381**	1	SCREW-ADJUSTING	
	7	1	*162-0177*	2	PLUG AS	
					(EACH INCLUDES)	
		1	**3J-1907**	1	SEAL-O-RING	
		1	**9S-8004**	1	PLUG-O-RING	
	8	1	**4F-2294**	1	NUT-JAM (5/16-24-THD)	
M	9	1	**6V-3940**	4	BOLT (M8X1.25X25-MM)	
	10	1	**9M-1974**	1	WASHER-HARD (8.8X16X2-MM THK)	

M - METRIC PART

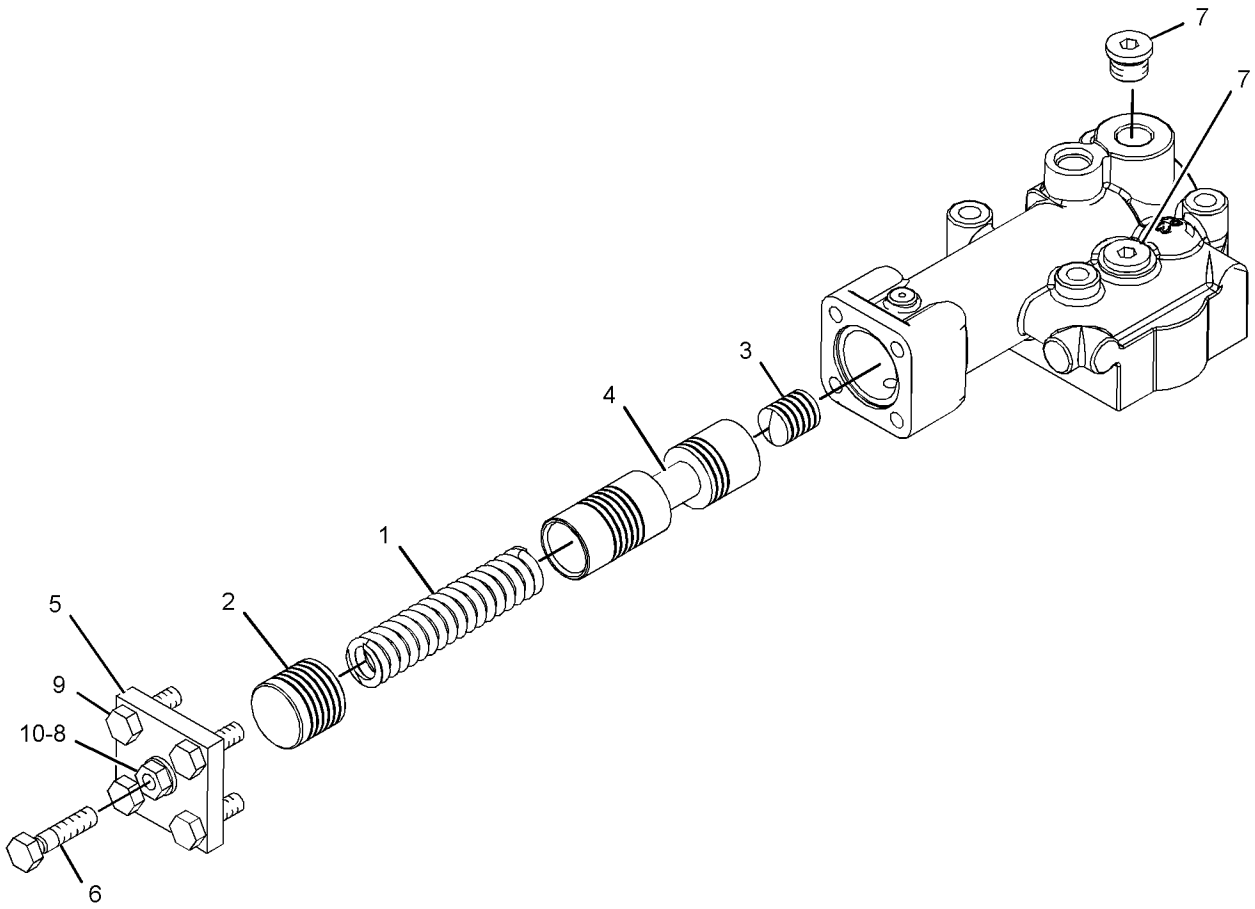

GRAPHIC #1 **<END>** g02416237

214-6659 BAR AR-STRIKER–FRONT

S/N: SMC1-UP
CANNOT BE USED WITH POWER ANGLE TILT, TRACK SHOE OVER (22-IN)
AN ATTACHMENT

SMCS-7180 **i02453917**

NOTE	REF NO	GRAPHIC REF	PART NUMBER	QTY	PART NAME 1 2 3 4 5 6 (PRODUCT LEVEL)	SEE PAGE
	1	1	**194-6814**	1	PLATE AS	
		1	**194-6813**	1	BLOCK	
	2	1	**194-6816**	1	PLATE AS	
		1	**194-6813**	1	BLOCK	
	3	1	**194-6818**	1	PLATE AS	
		1	**194-6813**	1	BLOCK	
	4	1	**194-6820**	1	PLATE AS	
		1	**194-6813**	1	BLOCK	
	5	1	**194-6823**	1	PLATE AS	
	6	1	**213-4852**	1	FRAME AS	
	7	1	**214-6660**	1	PLATE AS	
	8	1	**7X-0402**	28	BOLT (1-8X2-IN)	
	9	1	**7X-0406**	12	BOLT (1-8X3-IN)	
	10	1	**8T-5361**	40	WASHER-HARD (28X49X5-MM THK)	

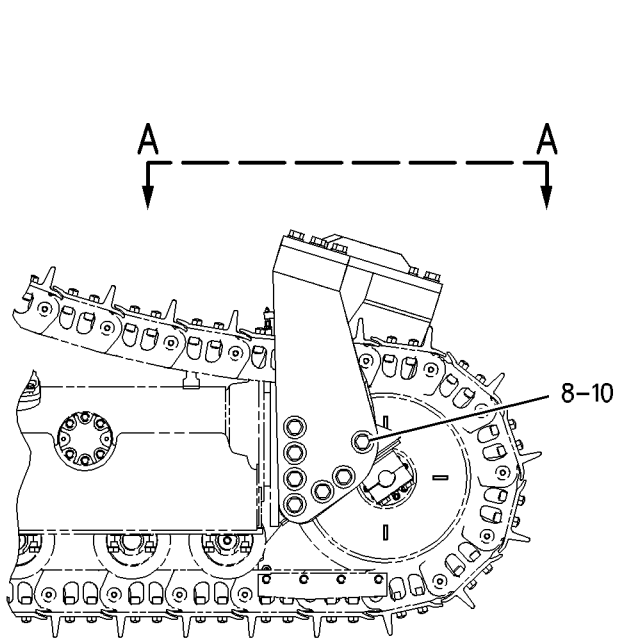

RIGHT SIDE VIEW

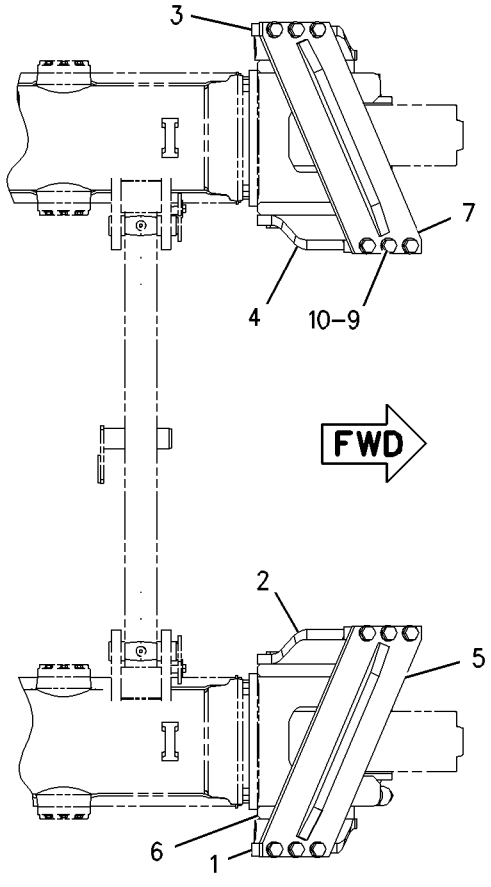

VIEW A-A

GRAPHIC #1 **<END>** g00919165

257-3580 BAR AR-STRIKER—FRONT

S/N: GCT1-UP
FOR USE WITH 559-MM (22-IN) GROUSER SHOE
CANNOT BE USED WITH POWER ANGLE TILT
AN ATTACHMENT

SMCS-7180 **i04026507**

NOTE	REF NO	GRAPHIC REF	PART NUMBER	QTY	PART NAME 1 2 3 4 5 6 (PRODUCT LEVEL)	SEE PAGE
	1	1	**281-4523**	1	FRAME AS-TRACK ROLLER (RH, LH)	
	2	1	**281-4586**	1	PLATE AS	
	3	1	**281-4587**	1	PLATE AS	
	4	1	**281-4588**	1	PLATE AS	
	5	1	**281-4589**	1	PLATE AS	
	6	1	**281-8934**	1	PLATE AS	
	7	1	**281-8935**	1	PLATE AS	
	8	1	**7X-0402**	24	BOLT (1-8X2-IN)	
	9	1	**7X-0406**	12	BOLT (1-8X3-IN)	
	10	1	**8T-5361**	36	WASHER-HARD (28X49X5-MM THK)	

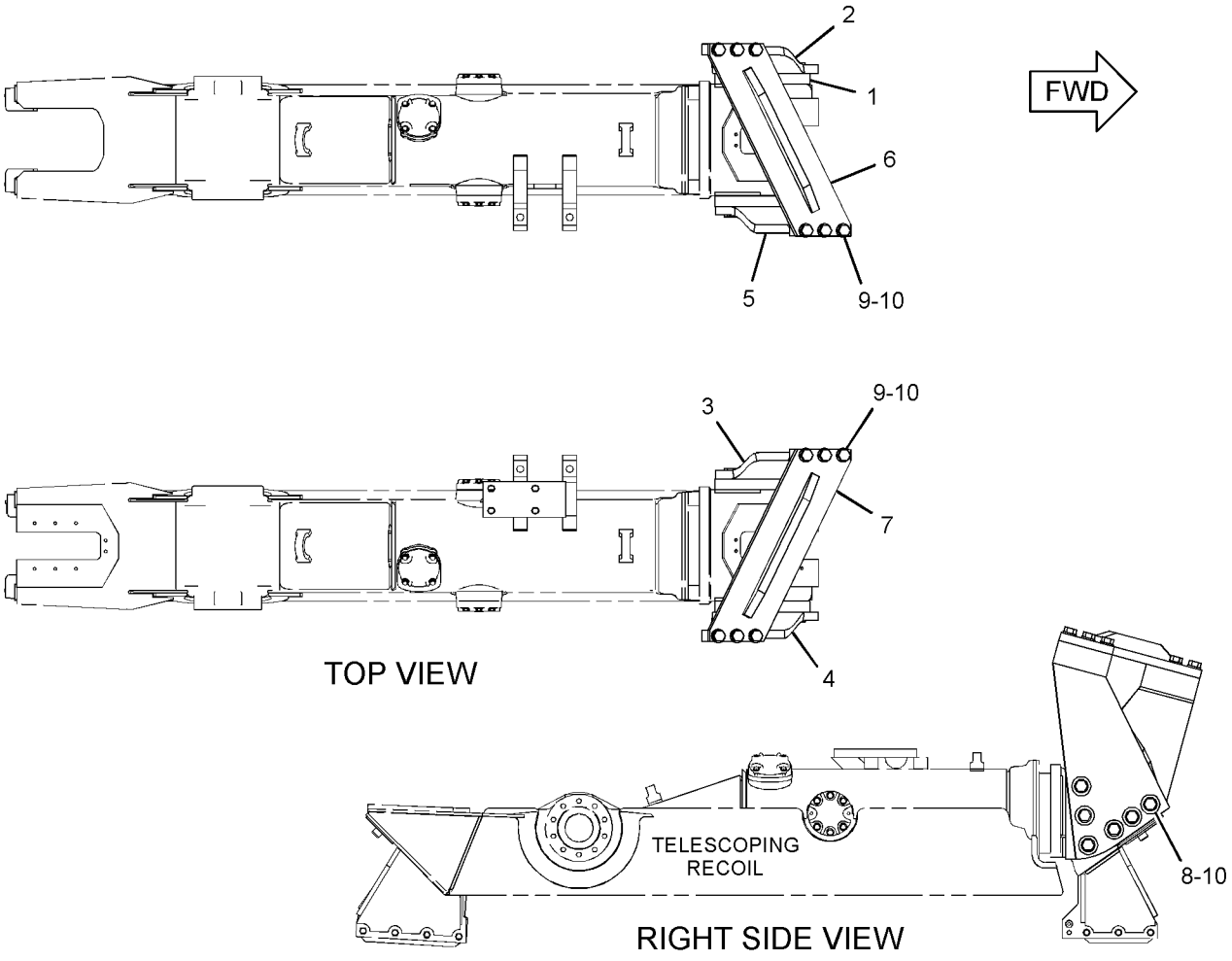

GRAPHIC #1 **<END>** g01363234

380-9633 BAR AR-STRIKER–REAR

S/N: SMC1-UP; GCT1-UP
FOR USE WITH FUEL TANK GUARD
CANNOT BE USED WITH REAR TRANSMISSION GUARDS, RIPPER, WINCH, DRAWBAR, REAR STRIKER BAR
AN ATTACHMENT

SMCS-7180 **i05326366**

NOTE	PART NUMBER	QTY	PART NAME 1 2 3 4 5 6 (PRODUCT LEVEL)	SEE PAGE
Y	*374-7144*	1	ALARM GP (BACKUP)	229
Y	*256-6020*	1	STRIKER GP-REAR	726

Y - SEPARATE ILLUSTRATION

<END>

1Z-0982 BAR GP-STRIKER—REAR

S/N: SMC1-UP; GCT1-UP
TRACK ROLLER FRAME MOUNTED
AN ATTACHMENT

SMCS-7180 **i05335398**

NOTE	REF NO	GRAPHIC REF	PART NUMBER	QTY	PART NAME 1 2 3 4 5 6 (PRODUCT LEVEL)	SEE PAGE
	1	1	**108-5483**	2	BAR	
	2	1	**335-6195**	1	PLATE AS	
		1	**280-3207**	4	BLOCK	
		1	**280-3208**	4	PLATE	
	3	1	**8T-5361**	16	WASHER-HARD (28X49X5-MM THK)	
	4	1	**295-0983**	2	PLATE	
	5	1	**295-0984**	2	PLATE	
	6	1	**7X-0349**	8	BOLT (5/8-11X3-IN)	
C	7	1	**7X-0404**	16	BOLT (1-8X2.5-IN)	
	8	1	**8T-4122**	8	WASHER-HARD (17X32X3.5-MM THK)	

C - CHANGE FROM PREVIOUS TYPE

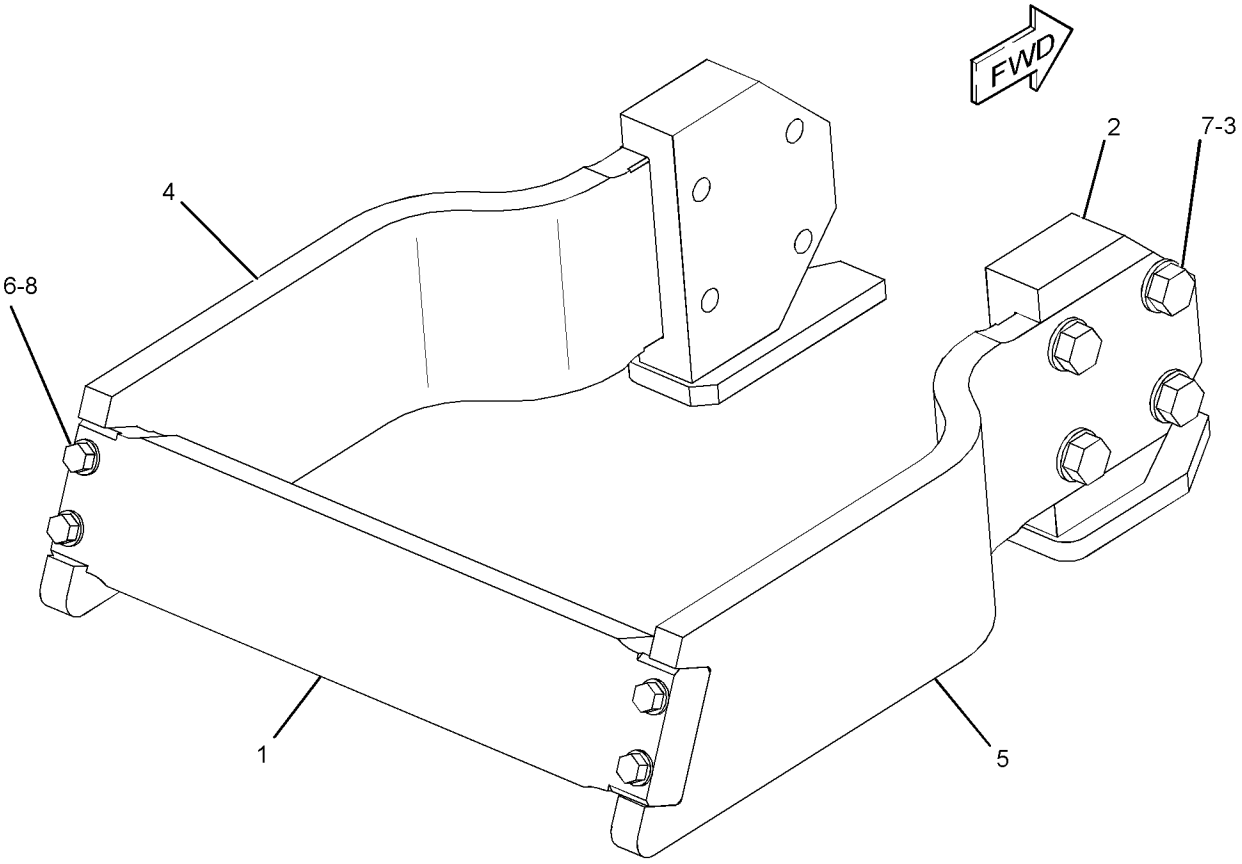

GRAPHIC #1 **<END>** g03126096

256-6021 BAR GP-STRIKER–REAR

S/N: SMC1-UP; GCT1-UP
PART OF 256-6020 STRIKER GP-REAR
AN ATTACHMENT

SMCS-7180 **i04016234**

NOTE	REF NO	GRAPHIC REF	PART NUMBER	QTY	PART NAME 1 2 3 4 5 6 (PRODUCT LEVEL)	SEE PAGE
	1	1	**1L-4418**	2	SPRING-SHUTOFF	
	2	1	**1P-2841**	2	SPACER (0.531X1X0.69-IN THK)	
	3	1	**1Z-9932**	2	HINGE AS	
	4	1	**8F-3556**	4	SPACER (0.75X1.25X1-IN THK)	
	6	1	**8T-1579**	1	PAWL	
	7	1	**8T-9496**	2	LOCKNUT (9/16-18-THD)	
Y	8	1	**8Y-6400**	1	LATCH GP (T-BAR, COMPARTMENT)	632
	9	1	**9Z-9211**	2	PLATE	
	10	1	**9Z-9214**	2	ROD AS	
	11	1	**197-7310**	1	PLATE AS	
	11A	1	**8T-4896**	4	WASHER-HARD (10.2X18.5X2.5-MM THK)	
	11B	1	**9B-7237**	4	BOLT (3/8-16X1.25-IN)	
	11C	1	**190-5149**	1	HINGE	
	12	1	**198-8858**	1	PLATE	
	15	1	**1Z-9933**	2	HINGE AS	
	16	1	**223-8076**	1	DOOR AS	
	17	1	**225-8558**	1	DOOR AS	
	24	1	**2K-4973**	2	LOCKNUT (3/8-16-THD)	
	25	1	**3B-4617**	4	PIN-COTTER	
	26	1	**5P-1076**	4	WASHER-HARD (13.5X30X4-MM THK)	
	27	1	**5S-7382**	2	BOLT (3/8-16X1.375-IN)	
	28	1	**8T-4223**	8	WASHER-HARD (13.5X25.5X3-MM THK)	
M	29	1	**8T-4183**	8	BOLT (M12X1.75X40-MM)	
	30	1	**8T-4896**	6	WASHER-HARD (10.2X18.5X2.5-MM THK)	
	31	1	**8T-2501**	4	BOLT (3/8-16X2-IN)	
	32	1	**7B-9665**	1	PLUG	

M - METRIC PART
Y - SEPARATE ILLUSTRATION

256-6021 **BAR GP-STRIKER (*contd.*)** **i04016234**

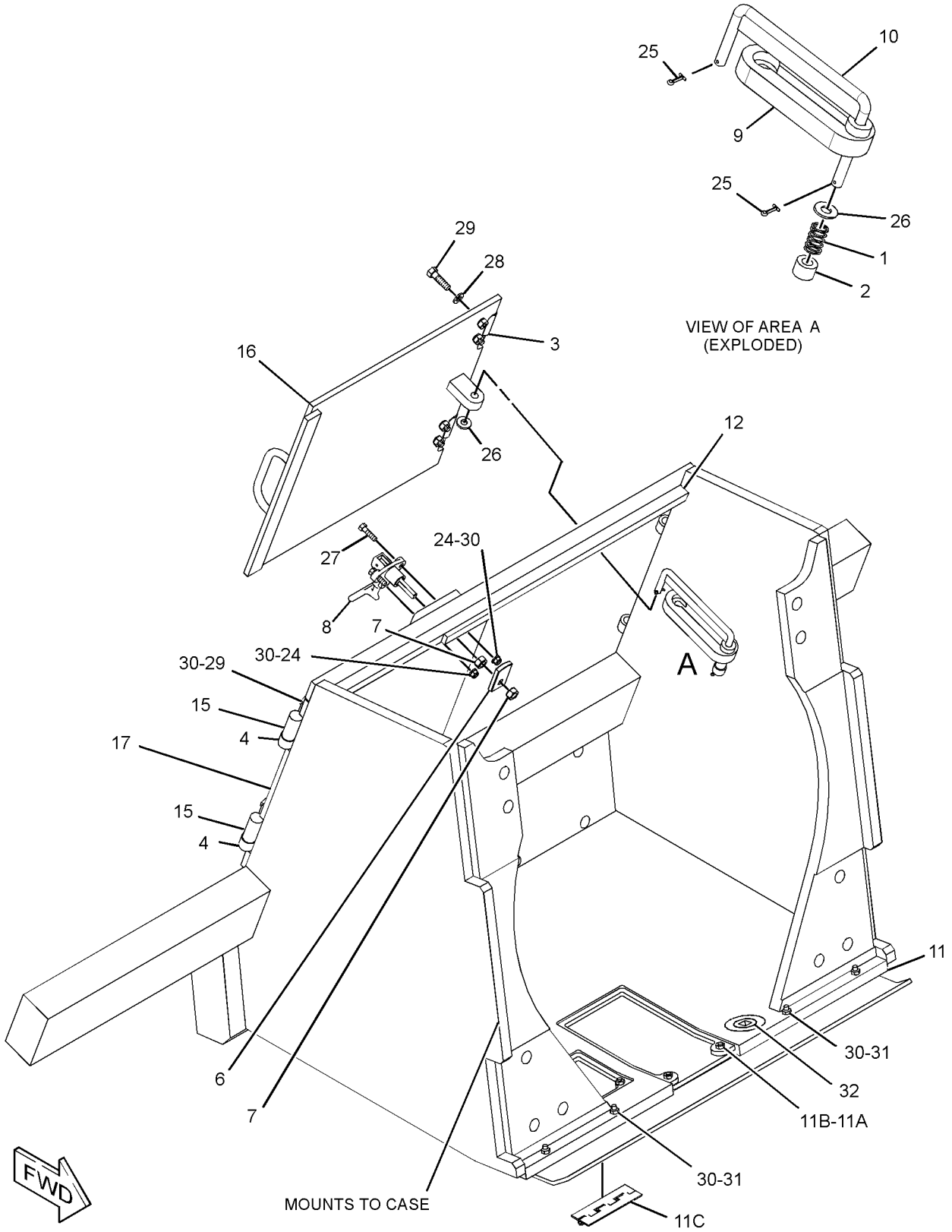

GRAPHIC #1 **<END>** g02177488

271-0461 BOX GP-BATTERY

S/N: SMC1-UP; GCT1-UP
PART OF 269-2044 CHASSIS AR

SMCS-7257 **i04825164**

NOTE	REF NO	GRAPHIC REF	PART NUMBER	QTY	PART NAME 1 2 3 4 5 6 (PRODUCT LEVEL)	SEE PAGE
	1	1	**255-6406**	1	BRACKET	
	2	1	**231-4384**	2	BRACKET AS	
	3	1	**255-6387**	1	DOOR AS	
	3A	1	**4H-1641**	1	PIN-SPRING	
	3B	1	**8E-7561**	1	KNOB AS	
		1	**8E-1205**	1	KNOB	
		1	**7S-2042**	1	STUD (3/8-16X1.5-IN)	
		1	**8T-7566**	1	PIN-SPRING	
	3C	1	**9S-8230**	1	PLATE AS	
		1	**1F-0750**	1	NUT-WELD (3/8-16-THD)	
Y	4	1	*271-0462*	1	BOX GP-BATTERY	576
	5	1	**7X-7729**	14	WASHER (11X25X3-MM THK)	
M	6	1	**8T-4136**	12	BOLT (M10X1.5X25-MM)	
M	7	1	**8T-4192**	2	BOLT (M12X1.75X25-MM)	
	8	1	**8T-4223**	2	WASHER-HARD (13.5X25.5X3-MM THK)	
M	9	1	**8T-4191**	2	BOLT (M10X1.5X16-MM)	

M - METRIC PART
Y - SEPARATE ILLUSTRATION

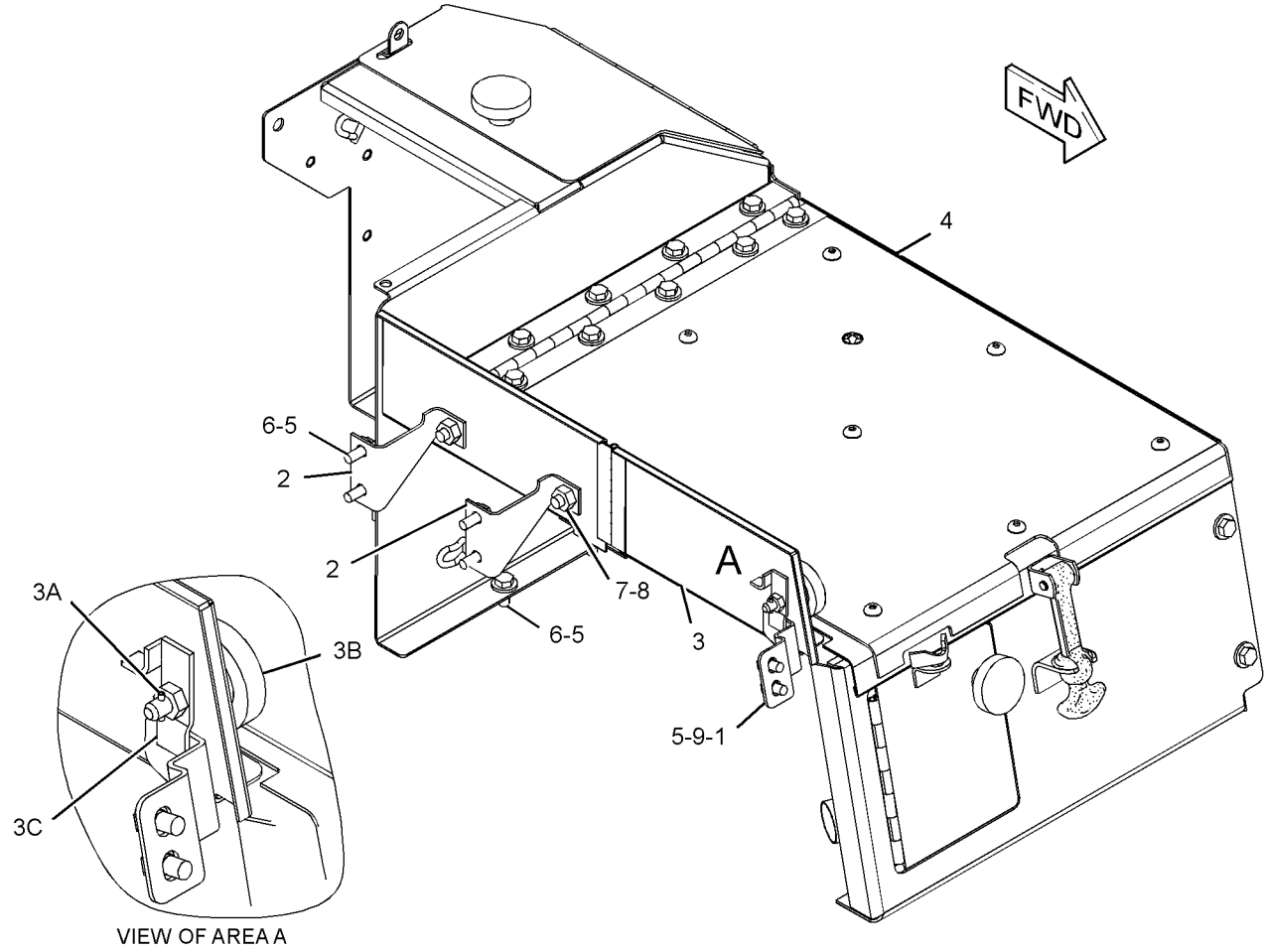

GRAPHIC #1 **<END>** g02357018

271-0462 BOX GP-BATTERY

S/N: SMC1-UP; GCT1-UP

PART OF 271-0461 BOX GP-BATTERY

SMCS-7257 **i02747657**

NOTE	REF NO	GRAPHIC REF	PART NUMBER	QTY	PART NAME 1 2 3 4 5 6 (PRODUCT LEVEL)	SEE PAGE
	1	1	**2M-5795**	1	PIN-CLEVIS	
	2	1	**5V-1496**	1	RETAINER	
	3	1	**6V-9197**	2	LOCK PIN	
	4	1	**6Y-3973**	1	LINK	
	5	1	**8E-7561**	2	KNOB AS (BATTERY BOX)	
					(EACH INCLUDES)	
		1	**8E-1205**	1	KNOB	
		1	**7S-2042**	1	STUD (3/8-16X1.5-IN)	
		1	**8T-7566**	1	PIN-SPRING	
	6	1	**9M-3835**	1	LATCH-RUBBER	
	7	1	**9S-8230**	2	PLATE AS	
					(EACH INCLUDES)	
		1	**1F-0750**	1	NUT-WELD (3/8-16-THD)	
	8	1	**231-4385**	1	COVER AS	
	9	1	**231-4386**	1	PLATE	
	10	1	**231-4387**	1	HINGE AS	
	11	1	**255-5210**	1	COVER AS	
	12	1	**271-0463**	1	COVER AS-BATTERY	
	13	1	**4H-1641**	2	PIN-SPRING	
	14	1	**7X-7729**	14	WASHER (11X25X3-MM THK)	
M	15	1	**8C-8585**	9	SCREW-BUTTON HEAD (M10X1.5X20-MM)	
M	16	1	**8T-4137**	13	BOLT (M10X1.5X20-MM)	
	17	1	**8T-4222**	2	WASHER-PLATED (11X32X2.5-MM THK)	

M - METRIC PART

271-0462 **BOX GP-BATTERY (*contd.*)** **i02747657**

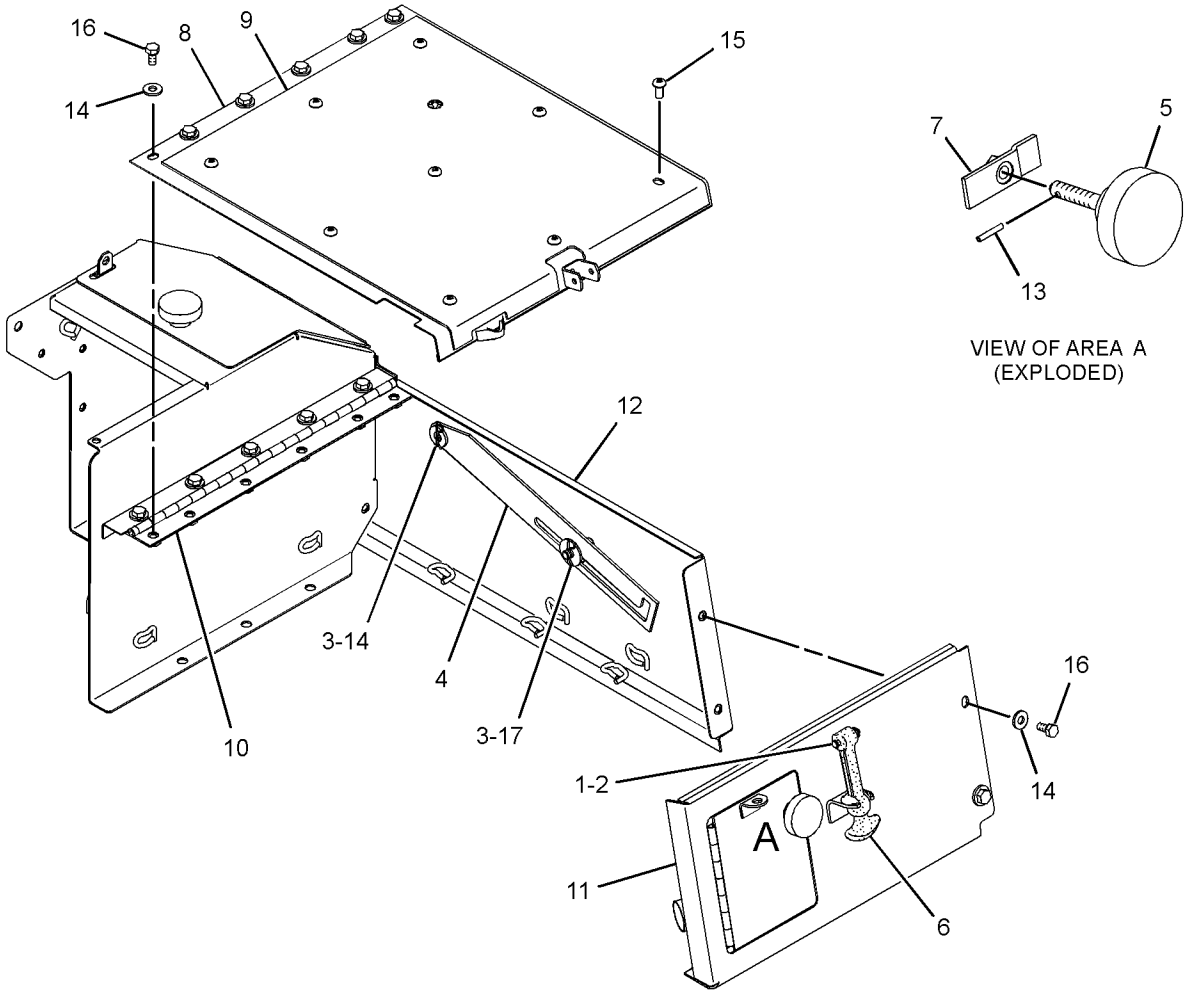

GRAPHIC #1 **<END>** g01358583

280-0942 CASE & FRAME GP

S/N: SMC1-UP; GCT1-UP

PART OF 269-2044 CHASSIS AR

SMCS-7051 **i02748452**

NOTE	REF NO	GRAPHIC REF	PART NUMBER	QTY	PART NAME 1 2 3 4 5 6 (PRODUCT LEVEL)	SEE PAGE
	1	1	**7X-1456**	26	PLUG	
	2	1	**106-8186**	1	VALVE AS-DRAIN (ECOLOGY)	
		1	**077-3241**	1	SEAL-O-RING	
	3	1	**106-8187**	1	PLUG-DRAIN (TRANSMISSION CASE)	
	4	1	**239-6986**	1	PLATE-SERIAL NUMBER (MACHINE)	
M	5	1	**264-0168**	3	STUD-TAPERLOCK (M10X1.5X50-MM)	
	6	1	**280-0941**	1	CASE & FRAME AS	
M	7	1	**109-3001**	1	STUD-TAPERLOCK (M10X1.5X65-MM)	
	8	1	**3T-0996**	2	BUSHING	
	9	1	**6F-0711**	1	SEAL-O-RING	
	10	1	**7B-9665**	1	PLUG	
	11	1	**258-2305**	4	BUSHING	

M - METRIC PART

280-0942 **CASE & FRAME GP (*contd.*)** **i02748452**

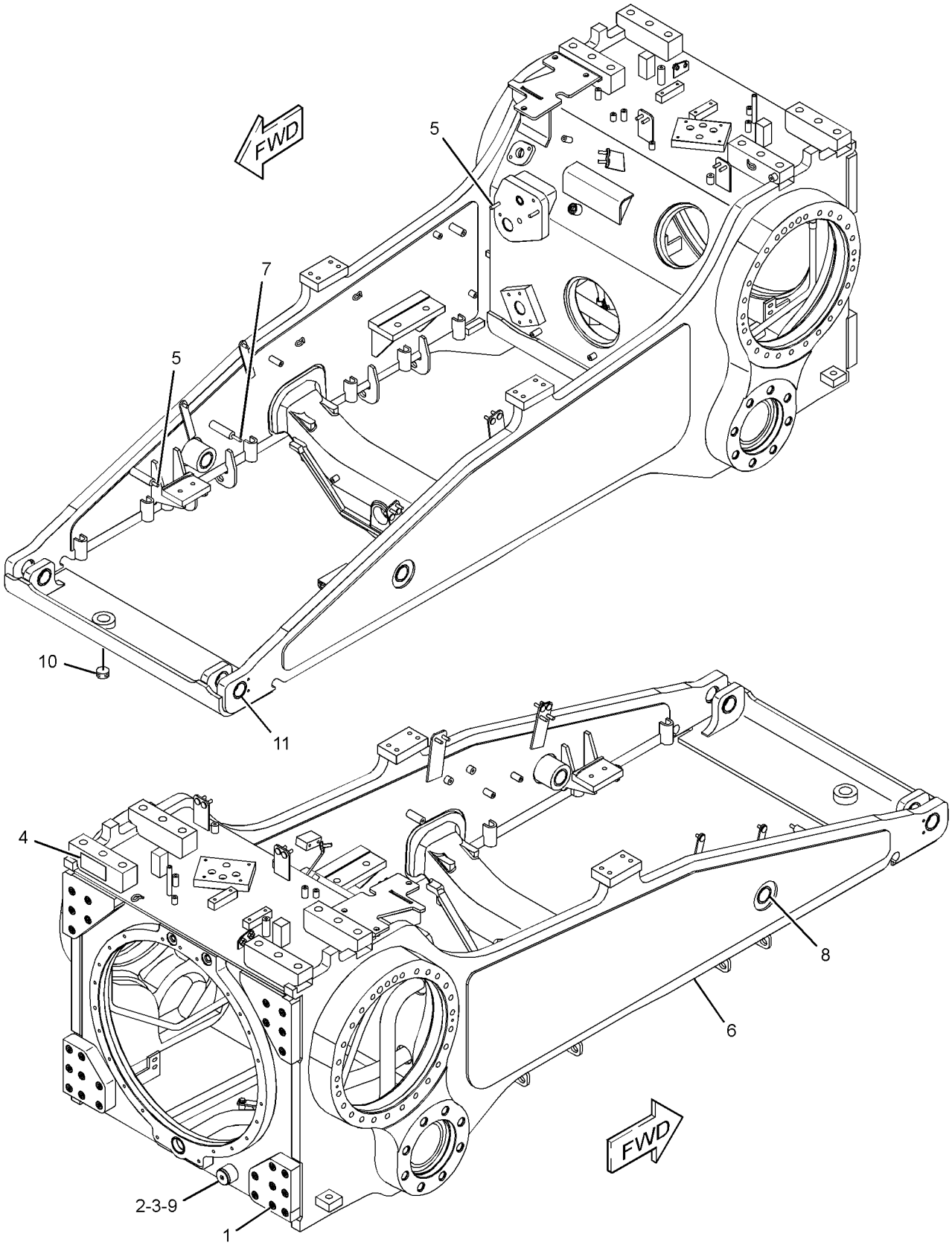

GRAPHIC #1 **<END>** g01361709

1Q-4324 COUNTERWEIGHT GP

S/N: SMC1-UP; GCT1-UP
821-KG
FOR USE WITH 3W-6866—PAGE: 584
CANNOT BE USED WITH RIPPER AR, WINCH AR, GUARD GP-REAR
PART OF 354-3552 OPTION AR-COUNTERWEIGHT
AN ATTACHMENT

SMCS-7056 **i04029689**

NOTE	REF NO	GRAPHIC REF	PART NUMBER	QTY	PART NAME 1 2 3 4 5 6 (PRODUCT LEVEL)	SEE PAGE
	1	1	**1U-0612**	2	PIN	
	2	1	**7X-0292**	2	BOLT (3/8-16X4.5-IN)	
	3	1	**2K-4973**	2	LOCKNUT (3/8-16-THD)	
	4	1	**117-5693**	2	PLATE	
	5	1	**117-5695**	1	PLATE	
	6	1	**117-5694**	1	PLATE	
	7	1	**117-5692**	2	PLATE	
	8	1	**117-5691**	2	PLATE	
	9	1	**1D-4624**	8	BOLT (3/4-10X9-IN)	
	10	1	**8T-4994**	12	WASHER-HARD (20X36.5X3.5-MM THK)	
	11	1	**5D-3118**	8	STUD-TAPERLOCK (1-8-THD)	
	12	1	**6V-8190**	8	NUT (1-8-THD)	
	13	1	**7X-0427**	2	BOLT (1-1/4-7X3.5-IN)	
	14	1	**7X-0533**	2	WASHER-HARD (34X55X6-MM THK)	
	15	1	**8T-9311**	4	BOLT (3/4-10X4.5-IN)	
	16	1	**1U-0301**	2	BRACKET AS	
					(EACH INCLUDES)	
		1	**2K-6279**	1	BOSS	

1Q-4324 **COUNTERWEIGHT GP (*contd.*)** **i04029689**

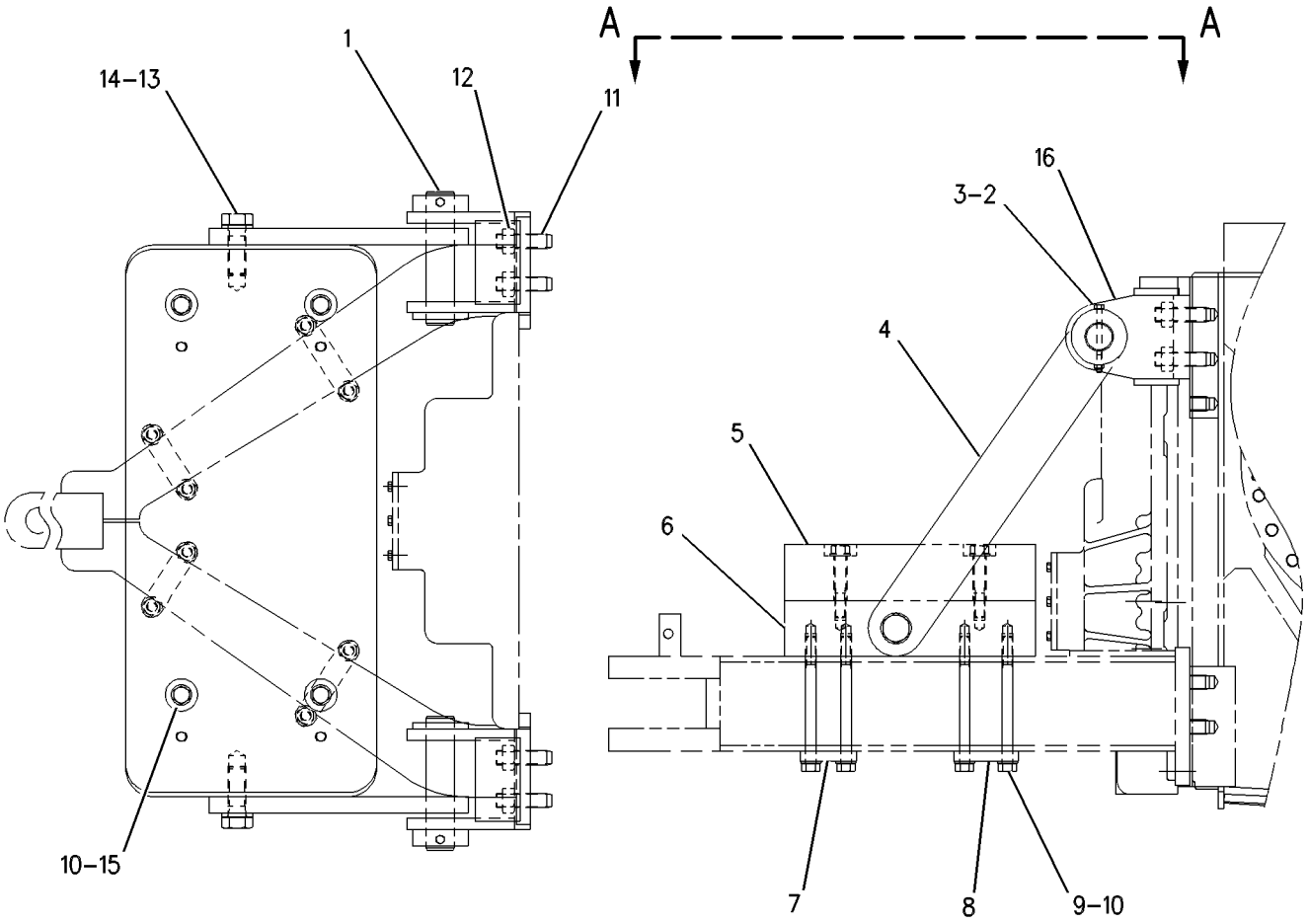

GRAPHIC #1 **<END>** g00285043

117-9058 COUNTERWEIGHT GP

S/N: SMC1-UP; GCT1-UP

348-KG. PROVIDES ADDITIONAL WEIGHT WHEN USED WITH ANOTHER COUNTERWEIGHT GP AN ATTACHMENT

SMCS-7056 **i02757672**

NOTE	REF NO	GRAPHIC REF	PART NUMBER	QTY	PART NAME 1 2 3 4 5 6 (PRODUCT LEVEL)	SEE PAGE
	1	1	**117-5695**	1	PLATE	
	2	1	**8T-9311**	4	BOLT (3/4-10X4.5-IN)	
	3	1	**8T-4994**	4	WASHER-HARD (20X36.5X3.5-MM THK)	

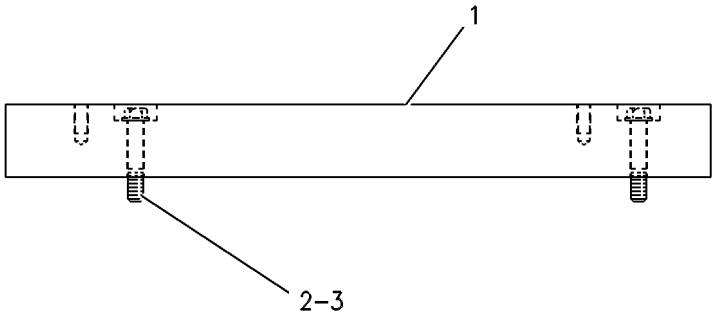

GRAPHIC #1 **<END>** g00267469

238-1177 COUNTERWEIGHT GP

S/N: SMC1-UP; GCT1-UP
305-KG
FOR USE WITH BAR AR-STRIKER
CANNOT BE USED WITH 256-6020—PAGE: 726
AN ATTACHMENT

SMCS-7056 **i02243704**

NOTE	REF NO	GRAPHIC REF	PART NUMBER	QTY	PART NAME 1 2 3 4 5 6 (PRODUCT LEVEL)	SEE PAGE
	1	1	**238-1178**	1	PLATE	
M	2	1	**7X-2584**	8	BOLT (M30X3.5X140-MM)	
	3	1	**9X-8258**	8	WASHER (33X56X6-MM THK)	

M - METRIC PART

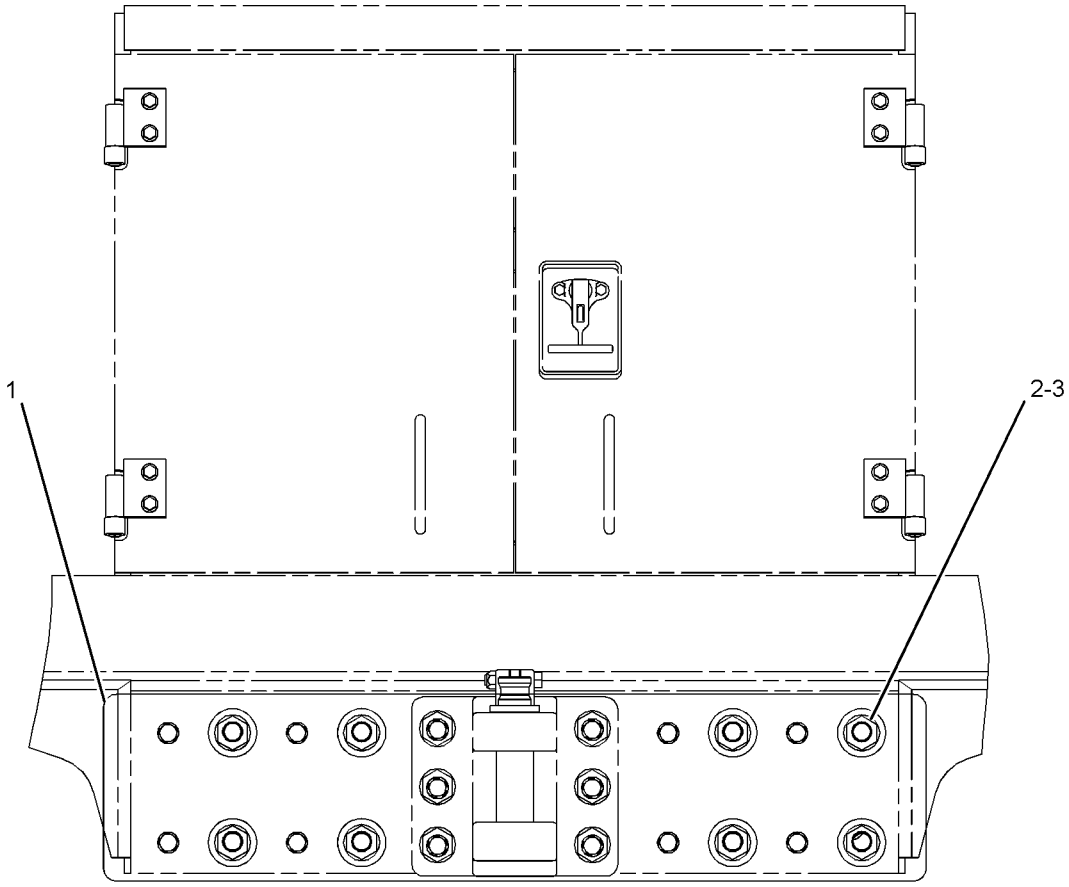

REAR VIEW

GRAPHIC #1 **<END>** g01022370

3W-6866 DRAWBAR GP–LONG

S/N: SMC1-UP; GCT1-UP
PART OF 354-3552 OPTION AR-COUNTERWEIGHT
AN ATTACHMENT

SMCS-7105, 7119 **i04302737**

NOTE	REF NO	GRAPHIC REF	PART NUMBER	QTY	PART NAME 1 2 3 4 5 6 (PRODUCT LEVEL)	SEE PAGE
	1	1	**3W-6867**	1	DRAWBAR AS	
	2	1	**7B-0863**	1	LATCH-PIN	
	3	1	**7F-9547**	1	PIN AS-DRAWBAR	
		1	**7F-9543**	1	COLLAR	
	4	1	**7X-7644**	1	FILM-INFORMATION (TIE-DOWN)	
	5	1	**356-2197**	1	FILM-INFORMATION (DRAWBAR, READ OMM)	
	6	1	**5D-3118**	10	STUD-TAPERLOCK (1-8-THD)	
	7	1	**6V-8190**	10	NUT (1-8-THD)	
M	8	1	**8T-4140**	1	BOLT (M16X2X60-MM)	
M	9	1	**8T-4778**	1	LOCKNUT (M16X2-THD)	
	10	1	**8T-5361**	10	WASHER-HARD (28X49X5-MM THK)	

M - METRIC PART

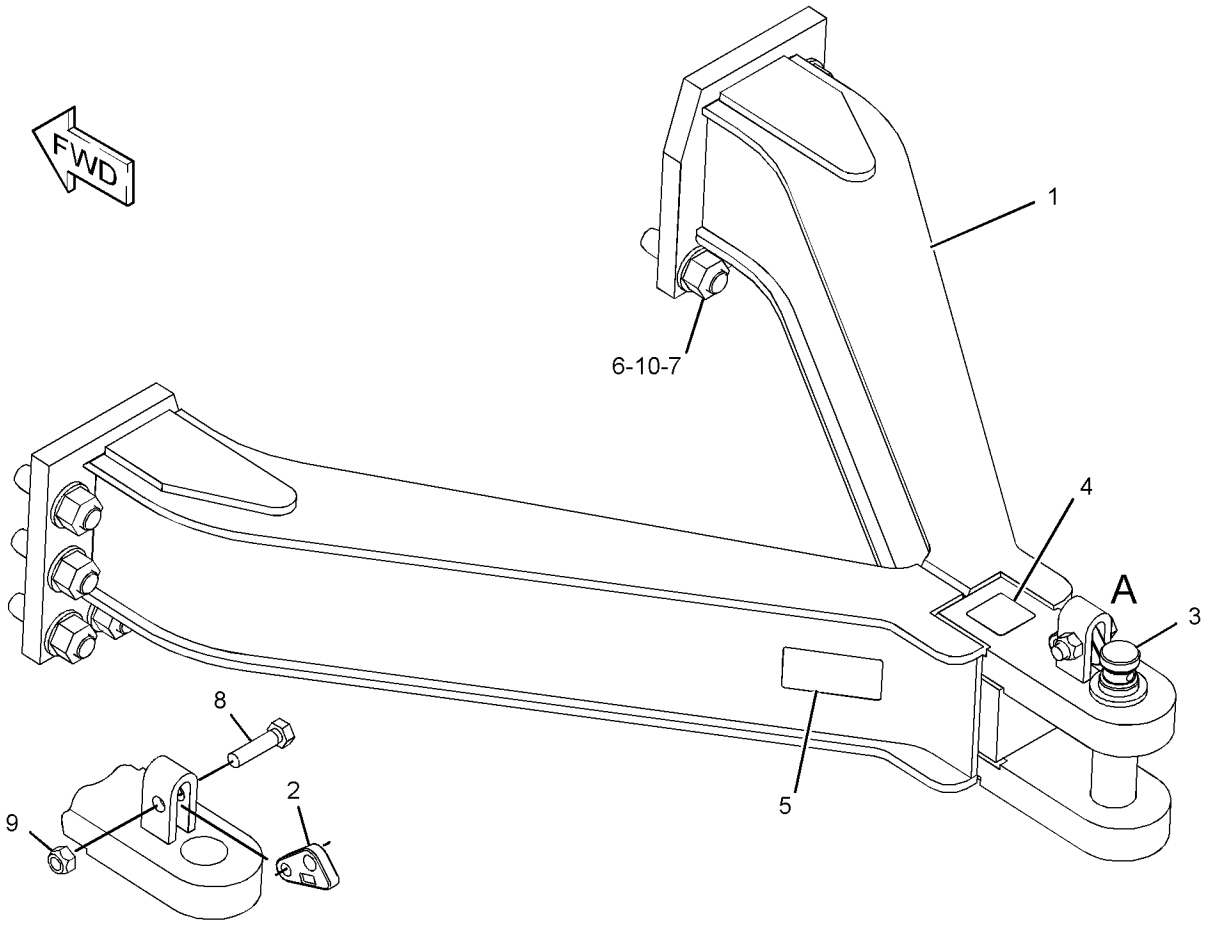

VIEW OF AREA A
(EXPLODED)

GRAPHIC #1 **<END>** g02523758

7G-8975 DRAWBAR GP

S/N: SMC1-UP; GCT1-UP

AN ATTACHMENT

SMCS-7105, 7119 **i04739509**

NOTE	REF NO	GRAPHIC REF	PART NUMBER	QTY	PART NAME 1 2 3 4 5 6 (PRODUCT LEVEL)	SEE PAGE
	1	1	**3W-2182**	1	DRAWBAR AS	
		1	**1P-1547**	1	PLATE-LOCK	
	2	1	**7B-0863**	1	LATCH-PIN	
	3	1	**7F-9547**	1	PIN AS-DRAWBAR	
		1	**7F-9543**	1	COLLAR	
	4	1	**7X-7644**	1	FILM-INFORMATION (TIE-DOWN)	
	5	1	**356-2197**	1	FILM-INFORMATION (DRAWBAR, READ OMM)	
	6	1	**5D-3118**	10	STUD-TAPERLOCK (1-8-THD)	
	7	1	**6V-8190**	10	NUT (1-8-THD)	
M	8	1	**8T-4140**	1	BOLT (M16X2X60-MM)	
M	9	1	**8T-4778**	1	LOCKNUT (M16X2-THD)	
	10	1	**8T-5361**	10	WASHER-HARD (28X49X5-MM THK)	

M - METRIC PART

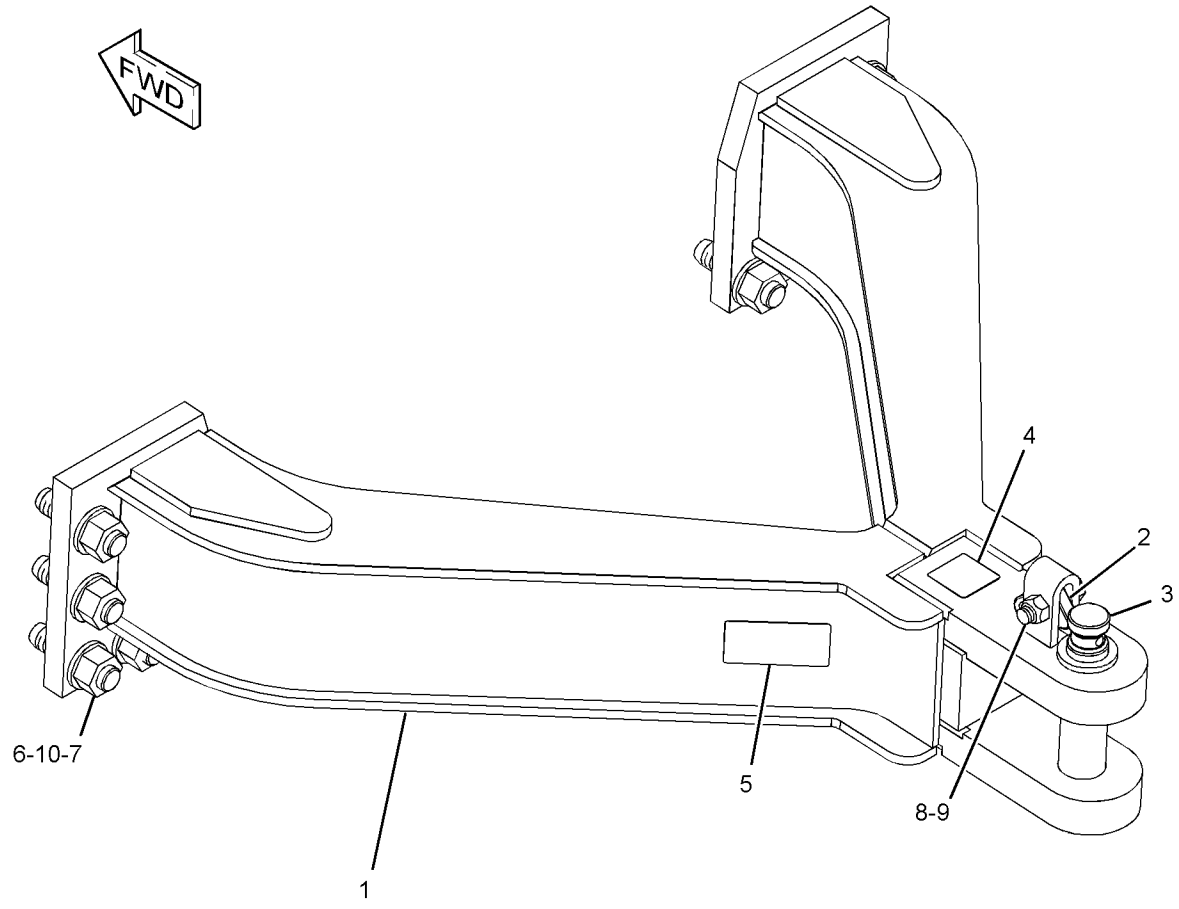

GRAPHIC #1 **<END>** g02486936

218-1835 ENCLOSURE GP-ENGINE

S/N: SMC1-502; GCT1-502

PART OF 269-2044 CHASSIS AR

SMCS-7263 **i02799248**

NOTE	REF NO	GRAPHIC REF	PART NUMBER	QTY	PART NAME 1 2 3 4 5 6 (PRODUCT LEVEL)	SEE PAGE
	1	2	**246-2641**	2	PADLOCK GP	
					(EACH INCLUDES)	
		2	**5P-8500**	1	KEY	
	2	2	**6T-9927**	2	SLIDE	
	3	2	**9P-3066**	2	MOUNTING	
	4	1	**227-9307**	1	DOOR AS (LH)	
	5	1	**231-4382**	1	HOOD AS	
	6	1	**261-3864**	1	TREAD	
Y	7	1	*263-7724*	1	ENCLOSURE GP-ENGINE (RH)	592
Y	8	1	*263-7725*	1	ENCLOSURE GP-ENGINE (LH)	594
	9	1	**279-1127**	1	PLATE AS	
	10	2	**3W-3819**	2	PLATE	
	11	2	**6P-8269**	1	WASHER (20.5X88X6-MM THK)	
M	12	1	**6V-7743**	3	LOCKNUT (M6X1-THD)	
M	13	2	**7X-2555**	1	BOLT (M16X2X80-MM)	
	14	2	**7X-3392**	2	WASHER-HARD (13.5X22.5X3-MM THK)	
	15	1,2	**7X-7729**	48	WASHER (11X25X3-MM THK)	
M	16	1	**8C-8585**	4	SCREW-BUTTON HEAD (M10X1.5X20-MM)	
	17	1	**8E-3070**	1	PLATE	
	18	2	**8G-4014**	2	RETAINER	
	19	2	**8T-2561**	4	WASHER-HARD (10.5X28.5X5-MM THK)	
M	20	1,2	**8T-4136**	26	BOLT (M10X1.5X25-MM)	
M	21	1,2	**8T-4137**	28	BOLT (M10X1.5X20-MM)	
M	22	1	**8T-4971**	2	BOLT (M6X1X30-MM)	
	23	1	**9X-8256**	5	WASHER (6.6X12X2-MM THK)	
	24	2	**9X-8257**	1	WASHER (17.5X30X3.5-MM THK)	
	25	2	**9X-8266**	2	WASHER (10.2X63.5X6-MM THK)	
D	26	1	**5P-7211**		SEAL (1.1-M)	
D	27	1	**5P-8309**		SEAL (5.3-M)	

D - ORDER BY THE METER
M - METRIC PART
Y - SEPARATE ILLUSTRATION

218-1835 **ENCLOSURE GP-ENGINE (*contd.*)** **i02799248**

REFER TO ALL ILLUSTRATIONS OF THIS GROUP FOR AUXILIARY VIEWS

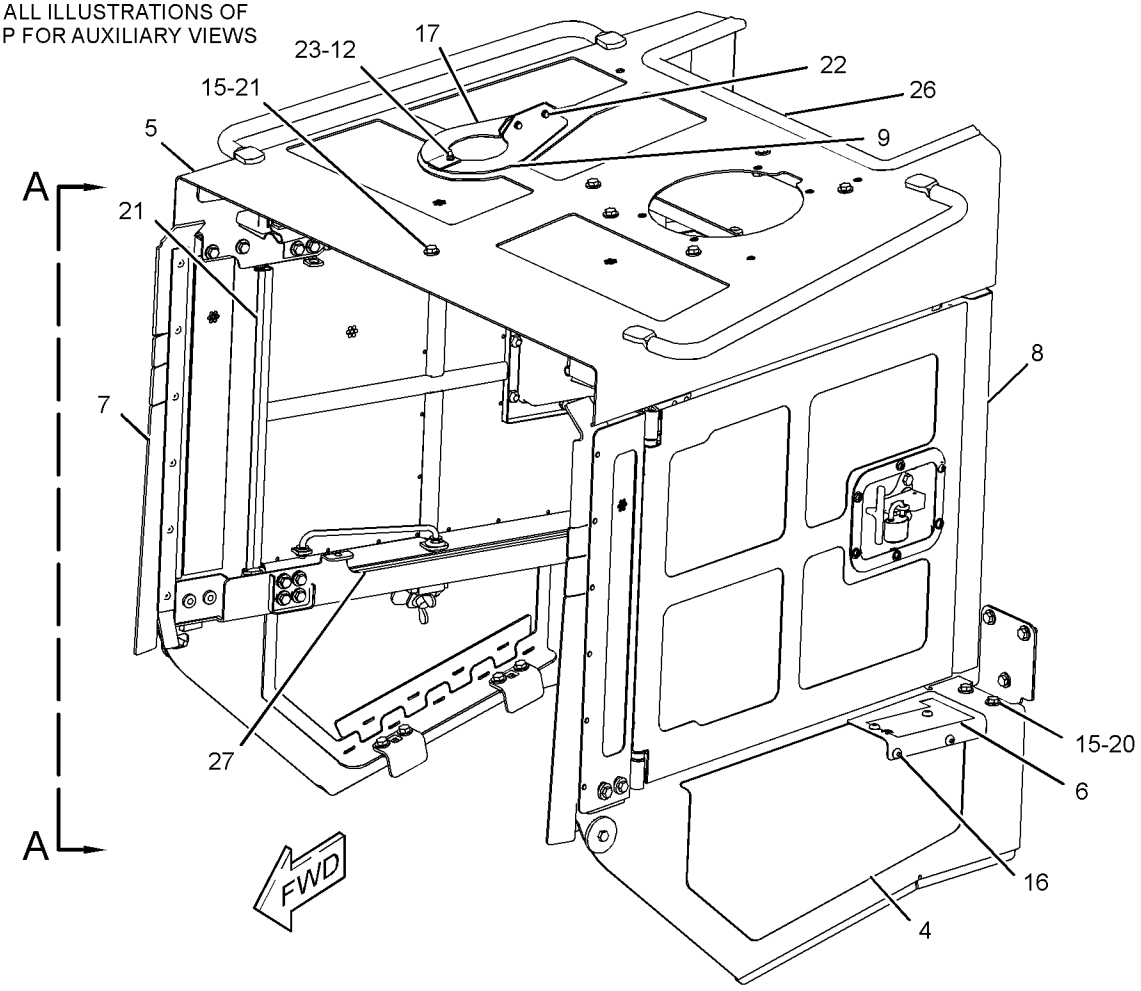

GRAPHIC #1 g01206987

218-1835 **ENCLOSURE GP-ENGINE (*contd.*)** **i02799248**

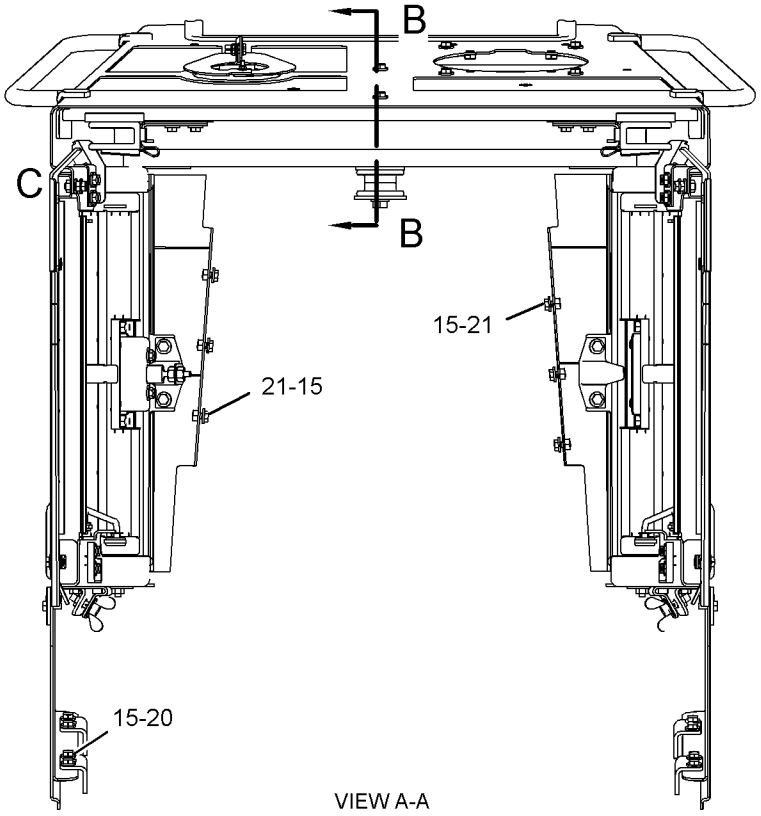

VIEW A-A

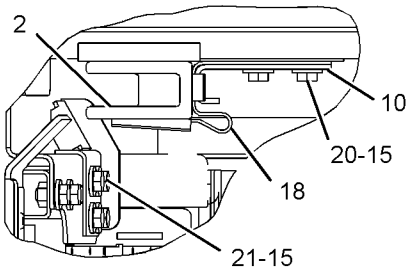

VIEW OF AREA C

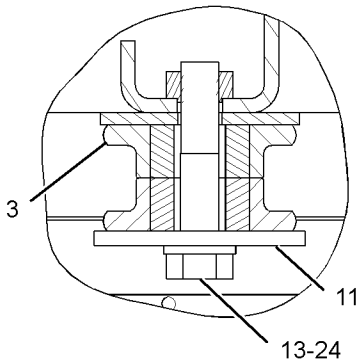

SECTION B-B

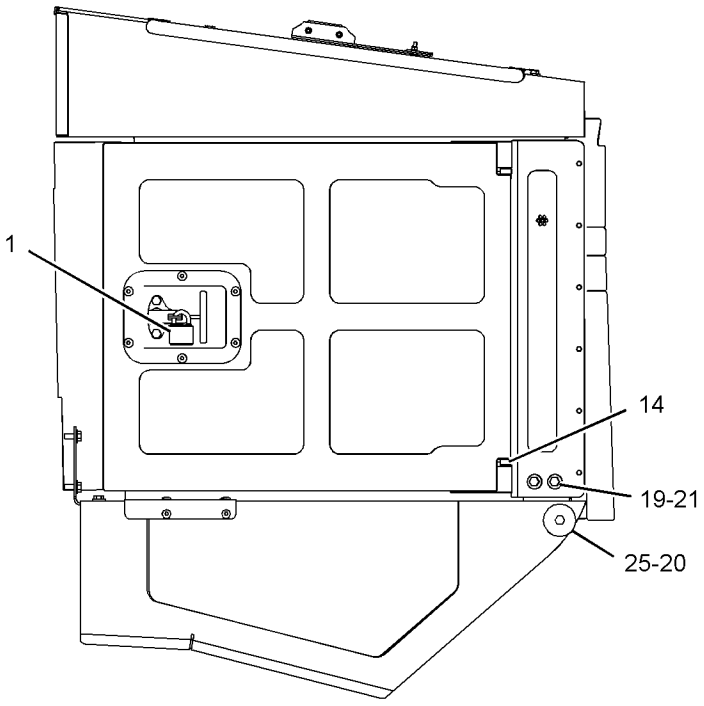

LEFT SIDE VIEW

GRAPHIC #2 **<END>** g01207102

218-1835 ENCLOSURE GP-ENGINE

S/N: SMC503-UP; GCT503-UP
PART OF 269-2044 CHASSIS AR

SMCS-7263 **i05323008**

NOTE	REF NO	GRAPHIC REF	PART NUMBER	QTY	PART NAME 1 2 3 4 5 6 (PRODUCT LEVEL)	SEE PAGE
D	1	1	**5P-7211**		SEAL (1.1-M)	
	2	2	**6T-9927**	2	SLIDE	
	3	2	**9P-3066**	2	MOUNTING	
	4	1	**227-9307**	1	DOOR AS (LH)	
	5	1	**231-4382**	1	HOOD AS	
	6	1	**261-3864**	1	TREAD	
Y	7	1	*263-7724*	1	ENCLOSURE GP-ENGINE (RH)	592
Y	8	1	*263-7725*	1	ENCLOSURE GP-ENGINE (LH)	594
C	9	1	**334-0190**	1	PLATE AS	
	10	2	**3W-3819**	2	PLATE	
	11	2	**6P-8269**	1	WASHER (20.5X88X6-MM THK)	
CM	12	1	**6V-7743**	2	LOCKNUT (M6X1-THD)	
M	13	2	**7X-2555**	1	BOLT (M16X2X80-MM)	
	14	1	**7X-3392**	2	WASHER-HARD (13.5X22.5X3-MM THK)	
	15	1,2	**7X-7729**	48	WASHER (11X25X3-MM THK)	
M	16	1	**8C-8585**	4	SCREW-BUTTON HEAD (M10X1.5X20-MM)	
C	17	1	**334-0193**	1	PLATE AS	
	18	2	**8G-4014**	2	RETAINER	
	19	1	**8T-2561**	4	WASHER-HARD (10.5X28.5X5-MM THK)	
M	20	1,2	**8T-4136**	26	BOLT (M10X1.5X25-MM)	
M	21	1,2	**8T-4137**	28	BOLT (M10X1.5X20-MM)	
M	22	1	**6V-7357**	2	BOLT (M6X1X25-MM)	
C	23	1	**5P-4115**	4	WASHER-HARD (7.2X19X2-MM THK)	
	24	2	**9X-8257**	1	WASHER (17.5X30X3.5-MM THK)	
	25	1	**9X-8266**	2	WASHER (10.2X63.5X6-MM THK)	
D	27	1	**5P-8309**		SEAL (2.1-M EACH)	
D	27A	1	**5P-8309**		SEAL (0.6-M EACH)	

C - CHANGE FROM PREVIOUS TYPE
D - ORDER BY THE METER
M - METRIC PART
Y - SEPARATE ILLUSTRATION

218-1835 **ENCLOSURE GP-ENGINE (*contd.*)** **i05323008**

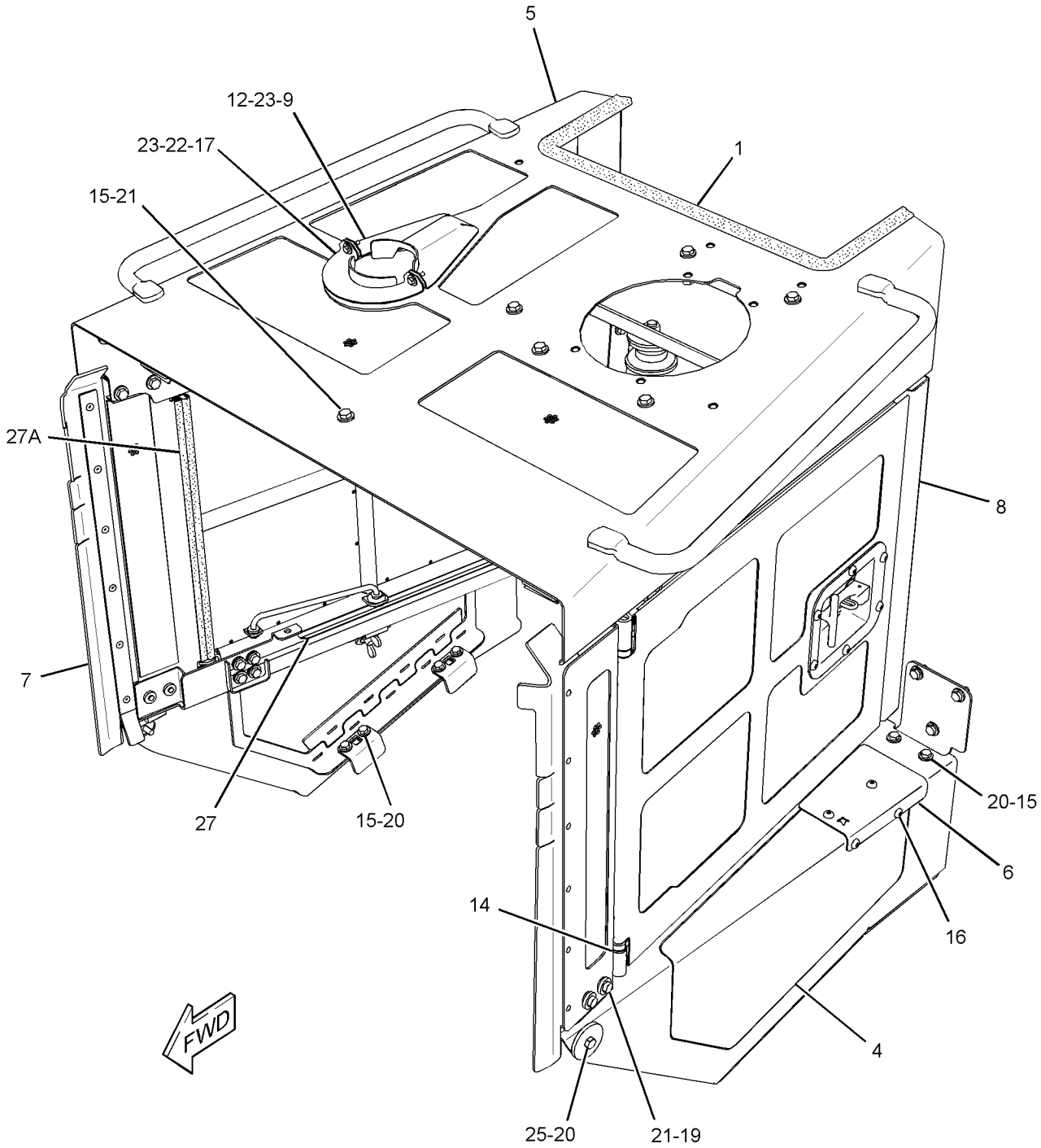

GRAPHIC #1 g02356936

218-1835 **ENCLOSURE GP-ENGINE (*contd.*)** **i05323008**

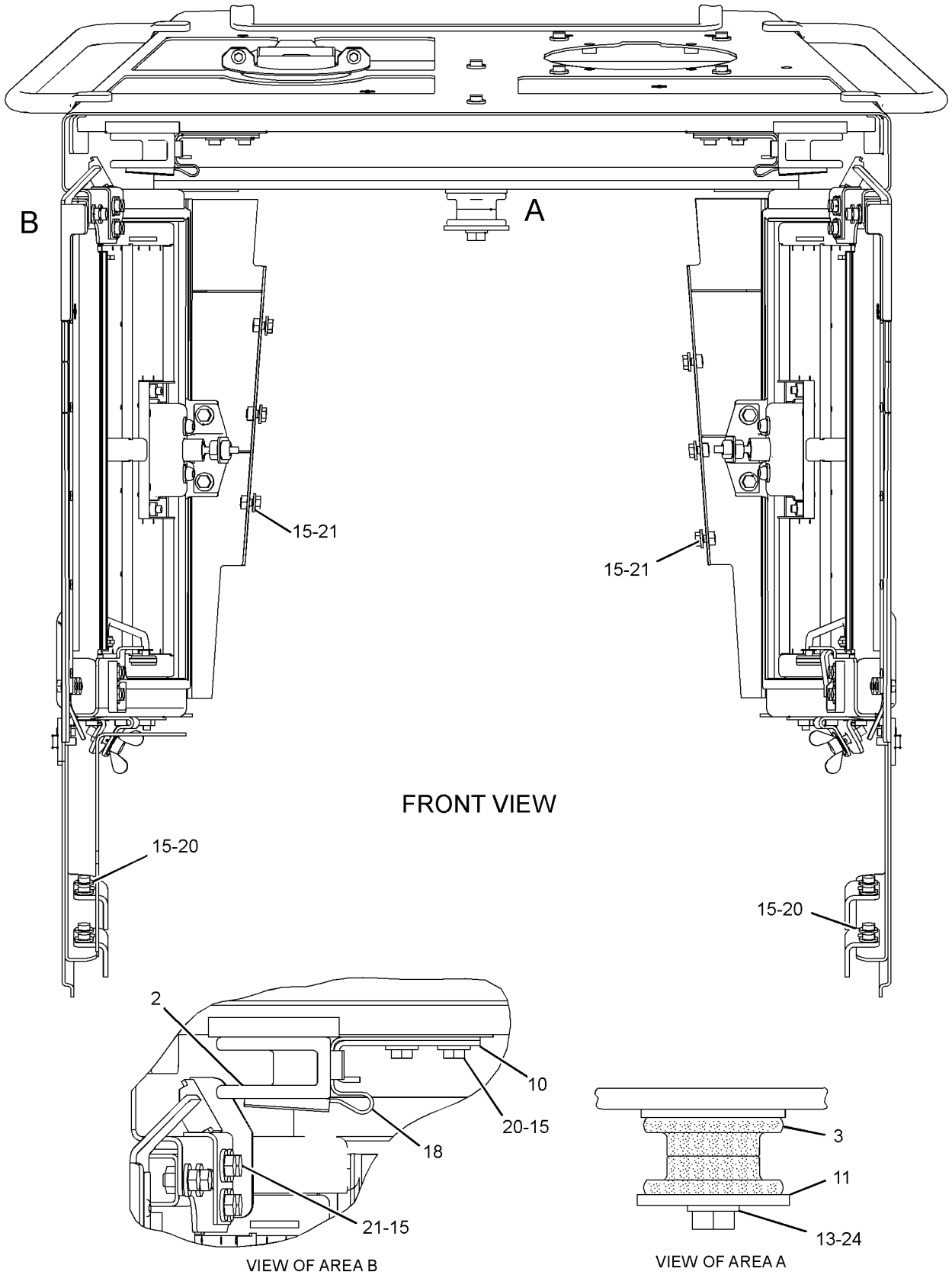

GRAPHIC #2 **<END>** g02038897

263-7724 ENCLOSURE GP-ENGINE–RH

S/N: SMC1-UP; GCT1-UP

PART OF 218-1835 ENCLOSURE GP-ENGINE

SMCS-7263 **i02431045**

NOTE	REF NO	GRAPHIC REF	PART NUMBER	QTY	PART NAME 1 2 3 4 5 6 (PRODUCT LEVEL)	SEE PAGE
	1	1	**3B-4605**	1	PIN-COTTER	
	2	1	**3V-9399**	1	ROD AS	
		1	**4B-4278**	2	WASHER (10.2X20.5X1.6-MM THK)	
	3	1	**4B-4278**	1	WASHER (10.2X20.5X1.6-MM THK)	
	4	1	**8B-4624**	2	SHIM (0.032-IN THK)	
	5	1	**8T-9496**	2	LOCKNUT (9/16-18-THD)	
	6	1	**8Y-4000**	1	LATCH AS (T-BAR, COMPARTMENT)	
	7	1	**170-7694**	2	HINGE	
	8	1	**227-9304**	1	GUARD AS (RH)	
	9	1	**227-9305**	1	DOOR AS (RH)	
	10	1	**227-9310**	2	BRACKET	
	11	1	**237-2732**	1	PLATE AS (RH)	
	12	1	**261-3156**	1	DOOR AS	
	13	1	**261-3865**	1	TREAD	
	14	1	**262-7661**	1	SUPPORT AS (RH)	
	15	1	**264-6816**	1	BAFFLE AS (RH)	
	16	1	**275-4236**	1	SCREW-WING (M12X1.75X40-MM)	
	17	1	**3B-4610**	1	PIN-COTTER	
	18	1	**3W-9207**	1	GUIDE	
	19	1	**3W-9208**	1	PAWL	
	20	1	**4H-2558**	1	GROMMET	
	21	1	**4M-7470**	1	GROMMET	
M	22	1	**6V-7744**	2	LOCKNUT (M10X1.5-THD)	
	23	1	**7X-7729**	14	WASHER (11X25X3-MM THK)	
M	24	1	**8C-8585**	10	SCREW-BUTTON HEAD (M10X1.5X20-MM)	
	25	1	**8E-4832**	1	STRIKER	
M	26	1	**8T-4133**	2	NUT (M10X1.5-THD)	
M	27	1	**8T-4136**	2	BOLT (M10X1.5X25-MM)	
M	28	1	**8T-4137**	4	BOLT (M10X1.5X20-MM)	
M	29	1	**8T-4196**	2	BOLT (M10X1.5X35-MM)	
	30	1	**9W-8940**	1	PLATE	
D	31	1	**8T-5372**		SEAL (0.29-M)	
D	31A	1	**8T-5372**		SEAL (0.57-M)	
D	31B	1	**8T-5372**		SEAL (0.38-M)	

D - ORDER BY THE METER
M - METRIC PART

263-7724 **ENCLOSURE GP-ENGINE (*contd.*)** **i02431045**

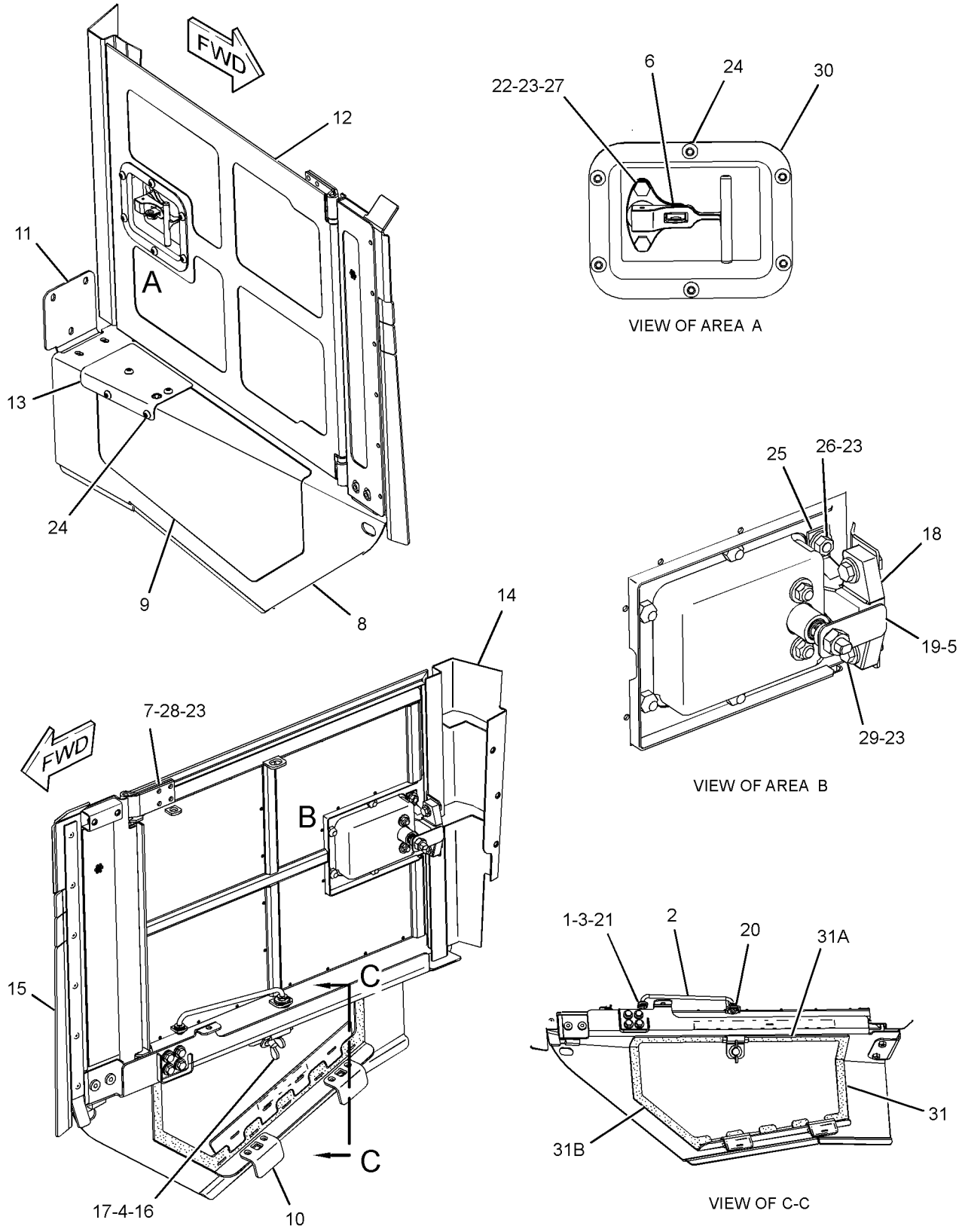

GRAPHIC #1 **<END>** g01212436

263-7725 ENCLOSURE GP-ENGINE–LH

S/N: SMC1-UP; GCT1-UP

PART OF 218-1835 ENCLOSURE GP-ENGINE

SMCS-7263 **i02431044**

NOTE	REF NO	GRAPHIC REF	PART NUMBER	QTY	PART NAME 1 2 3 4 5 6 (PRODUCT LEVEL)	SEE PAGE
	1	1	**3B-4605**	1	PIN-COTTER	
	2	1	**3V-9399**	1	ROD AS	
		1	**4B-4278**	2	WASHER (10.2X20.5X1.6-MM THK)	
	3	1	**4B-4278**	1	WASHER (10.2X20.5X1.6-MM THK)	
	4	1	**8B-4624**	1	SHIM (0.032-IN THK)	
	5	1	**8T-9496**	2	LOCKNUT (9/16-18-THD)	
J	6	1	**8Y-4000**	1	LATCH AS (T-BAR, COMPARTMENT)	
	7	1	**170-7694**	2	HINGE	
	8	1	**227-9306**	1	GUARD AS (LH)	
	9	1	**227-9310**	2	BRACKET	
	10	1	**237-2734**	1	PLATE AS (LH)	
	11	1	**261-3156**	1	DOOR AS	
	12	1	**262-7662**	1	SUPPORT AS (LH)	
	13	1	**264-6817**	1	BAFFLE AS (LH)	
	14	1	**275-4236**	1	SCREW-WING (M12X1.75X40-MM)	
	15	1	**3B-4610**	1	PIN-COTTER	
	16	1	**3W-9207**	1	GUIDE	
	17	1	**3W-9208**	1	PAWL	
	18	1	**4H-2558**	1	GROMMET	
	19	1	**4M-7470**	1	GROMMET	
M	20	1	**6V-7744**	2	LOCKNUT (M10X1.5-THD)	
	21	1	**7X-7729**	14	WASHER (11X25X3-MM THK)	
M	22	1	**8C-8585**	6	SCREW-BUTTON HEAD (M10X1.5X20-MM)	
	23	1	**8E-4832**	1	STRIKER	
M	24	1	**8T-4133**	2	NUT (M10X1.5-THD)	
M	25	1	**8T-4136**	2	BOLT (M10X1.5X25-MM)	
M	26	1	**8T-4137**	4	BOLT (M10X1.5X20-MM)	
M	27	1	**8T-4196**	2	BOLT (M10X1.5X35-MM)	
	28	1	**9W-8940**	1	PLATE	
D	29	1	**8T-5372**		SEAL (0.57-M)	
D	29A	1	**8T-5372**		SEAL (0.28-M)	
D	29B	1	**8T-5372**		SEAL (0.36-M)	

D - ORDER BY THE METER
J - REQUIRES 5P-8500 KEY
M - METRIC PART

263-7725 **ENCLOSURE GP-ENGINE (*contd.*)** **i02431044**

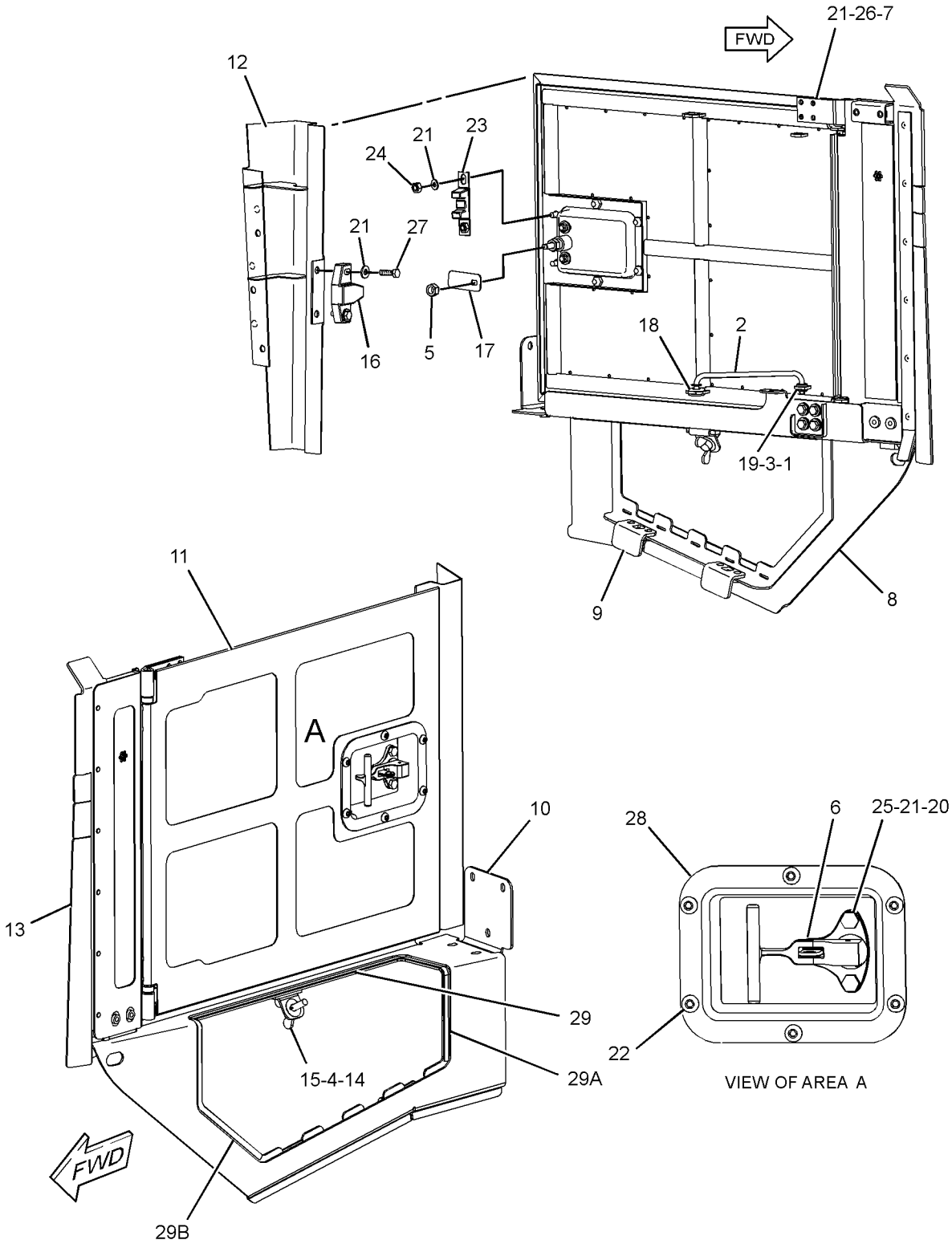

GRAPHIC #1 **<END>** g01209012

263-7726 ENCLOSURE GP-ENGINE–RH

S/N: SMC1-UP; GCT1-UP
PART OF 247-2838 WASTE HANDLING AR
AN ATTACHMENT

SMCS-7263 **i04015981**

NOTE	REF NO	GRAPHIC REF	PART NUMBER	QTY	PART NAME 1 2 3 4 5 6 (PRODUCT LEVEL)	SEE PAGE
	1	1	**3B-4605**	1	PIN-COTTER	
	2	1	**3V-9399**	1	ROD AS	
		1	**4B-4278**	2	WASHER (10.2X20.5X1.6-MM THK)	
	3	1	**4B-4278**	1	WASHER (10.2X20.5X1.6-MM THK)	
	4	1	**8B-4624**	2	SHIM (0.032-IN THK)	
	5	1	**8T-9496**	2	LOCKNUT (9/16-18-THD)	
	6	1	**8Y-4000**	1	LATCH AS (T-BAR, COMPARTMENT)	
	7	1	**170-7694**	2	HINGE	
	8	1	**227-9305**	1	DOOR AS (RH)	
	9	1	**227-9310**	2	BRACKET	
	10	1	**261-3156**	1	DOOR AS	
	11	1	**261-3865**	1	TREAD	
	12	1	**262-7661**	1	SUPPORT AS (RH)	
	13	1	**263-7722**	1	GUARD AS (RH)	
	14	1	**264-6816**	1	BAFFLE AS (RH)	
	15	1	**265-7934**	1	BAFFLE AS	
	16	1	**275-4236**	1	SCREW-WING (M12X1.75X40-MM)	
	17	1	**3B-4610**	1	PIN-COTTER	
	18	1	**3W-9207**	1	GUIDE	
	19	1	**3W-9208**	1	PAWL	
	20	1	**4H-2558**	1	GROMMET	
	21	1	**4M-7470**	1	GROMMET	
M	22	1	**6V-7744**	2	LOCKNUT (M10X1.5-THD)	
	23	1	**7X-7729**	14	WASHER (11X25X3-MM THK)	
M	24	1	**8C-8585**	10	SCREW-BUTTON HEAD (M10X1.5X20-MM)	
	25	1	**8E-4832**	1	STRIKER	
M	26	1	**8T-4133**	2	NUT (M10X1.5-THD)	
M	27	1	**8T-4136**	2	BOLT (M10X1.5X25-MM)	
M	28	1	**8T-4137**	4	BOLT (M10X1.5X20-MM)	
M	29	1	**8T-4196**	2	BOLT (M10X1.5X35-MM)	
	30	1	**9W-8940**	1	PLATE	
D	31	1	**8T-5372**		SEAL (0.30-M)	
D	31A	1	**8T-5372**		SEAL (0.57-M)	
D	31B	1	**8T-5372**		SEAL (0.40-M)	

D - ORDER BY THE METER
M - METRIC PART

263-7726 **ENCLOSURE GP-ENGINE (*contd.*)** **i04015981**

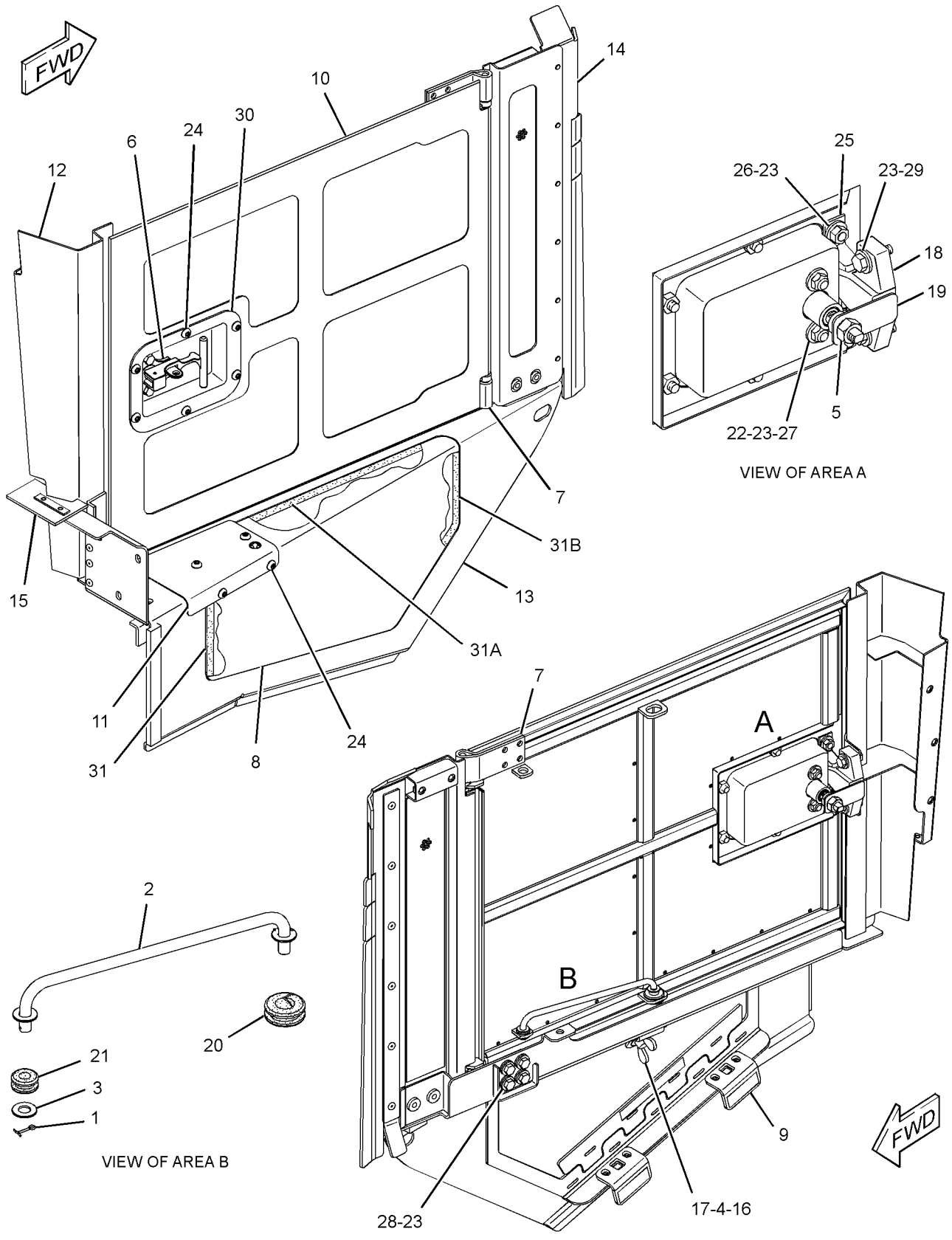

GRAPHIC #1 **<END>** g01219460

263-7727 ENCLOSURE GP-ENGINE–LH

S/N: SMC1-UP; GCT1-UP
PART OF 247-2838 WASTE HANDLING AR
AN ATTACHMENT

SMCS-7263 **i04015984**

NOTE	REF NO	GRAPHIC REF	PART NUMBER	QTY	PART NAME 1 2 3 4 5 6 (PRODUCT LEVEL)	SEE PAGE
	1	1	**3B-4605**	1	PIN-COTTER	
	2	1	**3V-9399**	1	ROD AS	
		1	**4B-4278**	2	WASHER (10.2X20.5X1.6-MM THK)	
	3	1	**4B-4278**	1	WASHER (10.2X20.5X1.6-MM THK)	
	4	1	**8B-4624**	2	SHIM (0.032-IN THK)	
	5	1	**8T-9496**	2	LOCKNUT (9/16-18-THD)	
	6	1	**8Y-4000**	1	LATCH AS (T-BAR, COMPARTMENT)	
	7	1	**170-7694**	2	HINGE	
	8	1	**227-9310**	2	BRACKET	
	9	1	**261-3156**	1	DOOR AS	
	10	1	**262-7662**	1	SUPPORT AS (LH)	
	11	1	**263-7723**	1	GUARD AS (LH)	
	12	1	**264-6817**	1	BAFFLE AS (LH)	
	13	1	**265-7935**	1	BAFFLE AS	
	14	1	**275-4236**	1	SCREW-WING (M12X1.75X40-MM)	
	15	1	**3B-4610**	1	PIN-COTTER	
	16	1	**3W-9207**	1	GUIDE	
	17	1	**3W-9208**	1	PAWL	
	18	1	**4H-2558**	1	GROMMET	
	19	1	**4M-7470**	1	GROMMET	
M	20	1	**6V-7744**	2	LOCKNUT (M10X1.5-THD)	
	21	1	**7X-7729**	14	WASHER (11X25X3-MM THK)	
M	22	1	**8C-8585**	6	SCREW-BUTTON HEAD (M10X1.5X20-MM)	
	23	1	**8E-4832**	1	STRIKER	
M	24	1	**8T-4133**	2	NUT (M10X1.5-THD)	
M	25	1	**8T-4136**	2	BOLT (M10X1.5X25-MM)	
M	26	1	**8T-4137**	4	BOLT (M10X1.5X20-MM)	
M	27	1	**8T-4196**	2	BOLT (M10X1.5X35-MM)	
	28	1	**9W-8940**	1	PLATE	
D	29	1	**8T-5372**		SEAL (0.40-M)	
D	29A	1	**8T-5372**		SEAL (0.60-M)	
D	29B	1	**8T-5372**		SEAL (0.30-M)	

D - ORDER BY THE METER
M - METRIC PART

263-7727 **ENCLOSURE GP-ENGINE (*contd.*)** **i04015984**

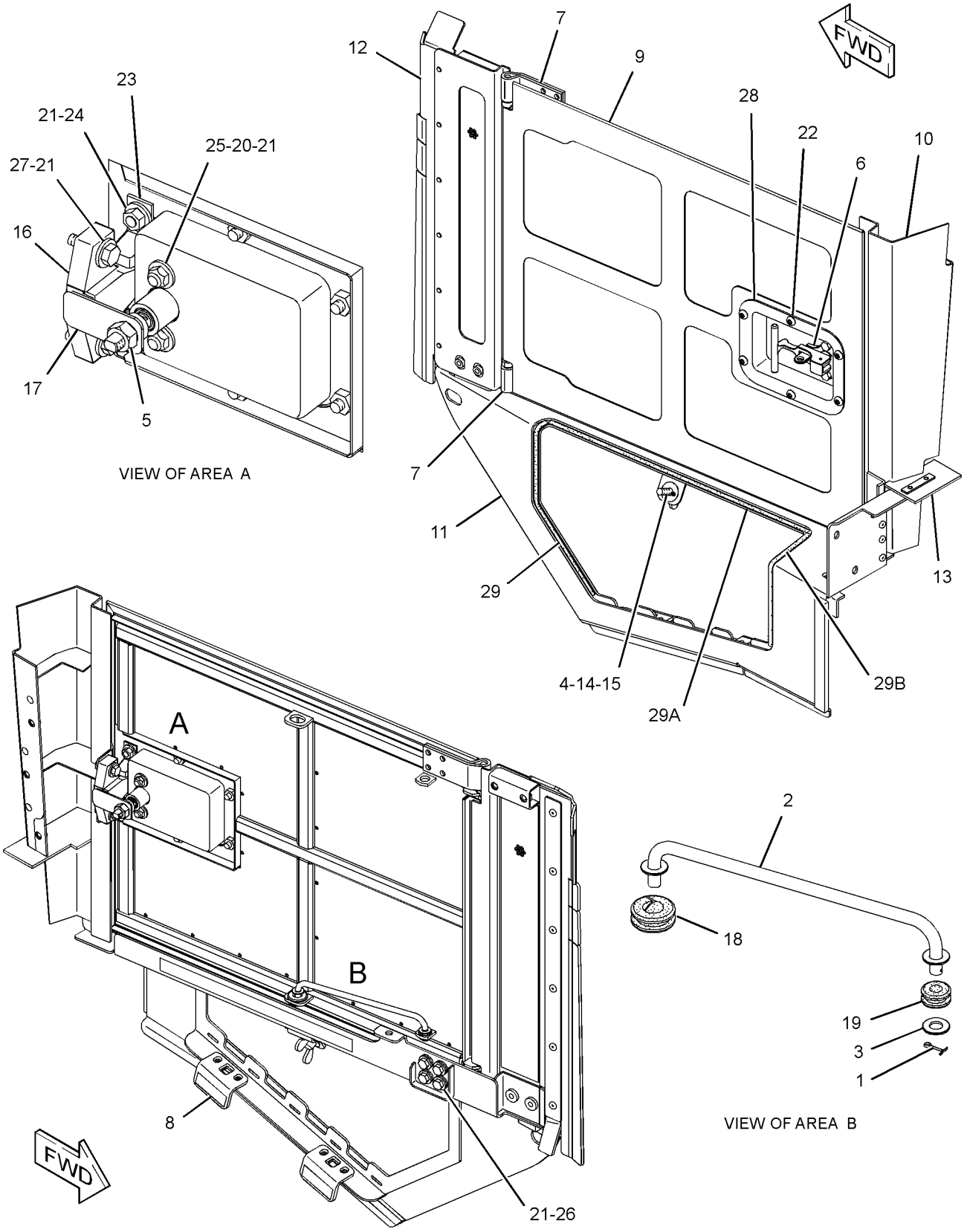

GRAPHIC #1 **<END>** g01219517

218-1839 ENCLOSURE GP-HYDRAULIC TANK

S/N: SMC1-UP; GCT1-UP
PART OF 269-2044 CHASSIS AR

SMCS-5056 **i04764283**

NOTE	REF NO	GRAPHIC REF	PART NUMBER	QTY	PART NAME 1 2 3 4 5 6 (PRODUCT LEVEL)	SEE PAGE
M	1	1	**8T-4137**	2	BOLT (M10X1.5X20-MM)	
	2	1	**231-4390**	1	COVER AS (DOOR ACCESS)	
		1	**4H-1641**	2	PIN-SPRING	
		1	**8E-7561**	2	KNOB AS (DOOR ACCESS)	
					(EACH INCLUDES)	
		1	**8E-1205**	1	KNOB	
		1	**8T-7566**	1	PIN-SPRING	
		1	**7S-2042**	1	STUD (3/8-16X1.5-IN)	
		1	**9S-8230**	2	PLATE AS	
					(EACH INCLUDES)	
		1	**1F-0750**	1	NUT-WELD (3/8-16-THD)	
		1	**7T-0030**	1	HINGE	
	3	1	**241-6498**	1	BRACKET AS	
	4	1	**241-6499**	1	PLATE	
	5	1	**241-6919**	1	BRACKET AS	
	6	1	**7X-7729**	10	WASHER (11X25X3-MM THK)	
M	7	1	**8T-4136**	8	BOLT (M10X1.5X25-MM)	

M - METRIC PART

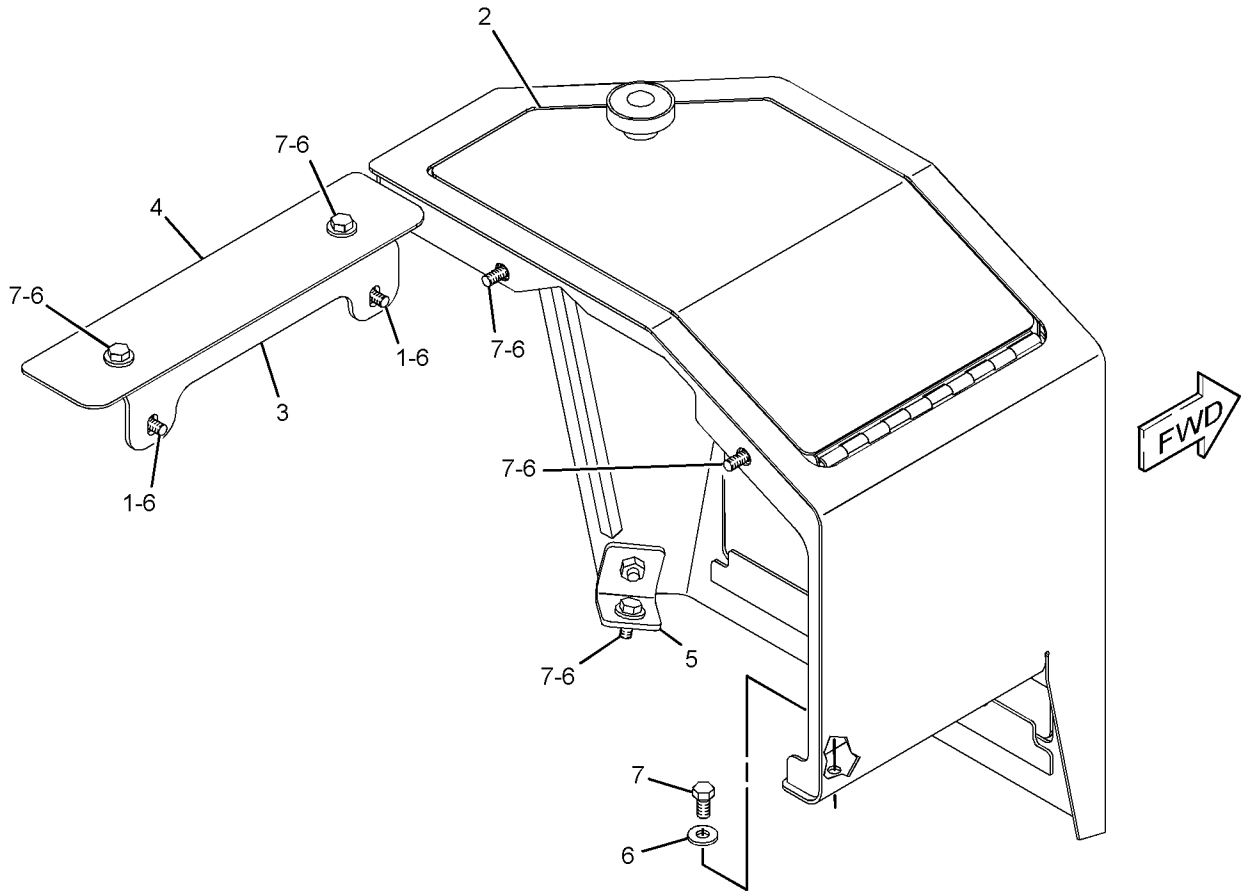

GRAPHIC #1 **<END>** g02570336

218-1841 FENDER GP

S/N: SMC1-UP; GCT1-UP
PART OF 269-2044 CHASSIS AR

SMCS-7252 **i02431201**

NOTE	REF NO	GRAPHIC REF	PART NUMBER	QTY	PART NAME 1 2 3 4 5 6 (PRODUCT LEVEL)	SEE PAGE
	1	1	**3W-3896**	2	HANDHOLD (GRAB)	
	2	1	**106-9361**	1	PLATE	
	3	1	**227-6656**	1	SUPPORT AS	
Y	4	1	*236-2218*	1	FENDER GP (RH)	602
Y	5	1	*236-2219*	1	FENDER GP (LH)	603
	6	1	**5P-1076**	8	WASHER-HARD (13.5X30X4-MM THK)	
M	7	1	**7X-2553**	8	BOLT (M16X2X40-MM)	
	8	1	**7X-3391**	12	WASHER-HARD (13.5X32X6-MM THK)	
	9	1	**8T-4121**	6	WASHER-HARD (11X21X2.5-MM THK)	
M	10	1	**8T-4136**	6	BOLT (M10X1.5X25-MM)	
M	11	1	**8T-4139**	4	BOLT (M12X1.75X30-MM)	
M	12	1	**8T-4183**	20	BOLT (M12X1.75X40-MM)	
M	13	1	**8T-4187**	4	BOLT (M20X2.5X80-MM)	
	14	1	**8T-4223**	4	WASHER-HARD (13.5X25.5X3-MM THK)	
	15	1	**8T-5439**	4	WASHER-HARD (21.5X45X6-MM THK)	
	16	1	**9X-8257**	8	WASHER (17.5X30X3.5-MM THK)	

M - METRIC PART
Y - SEPARATE ILLUSTRATION

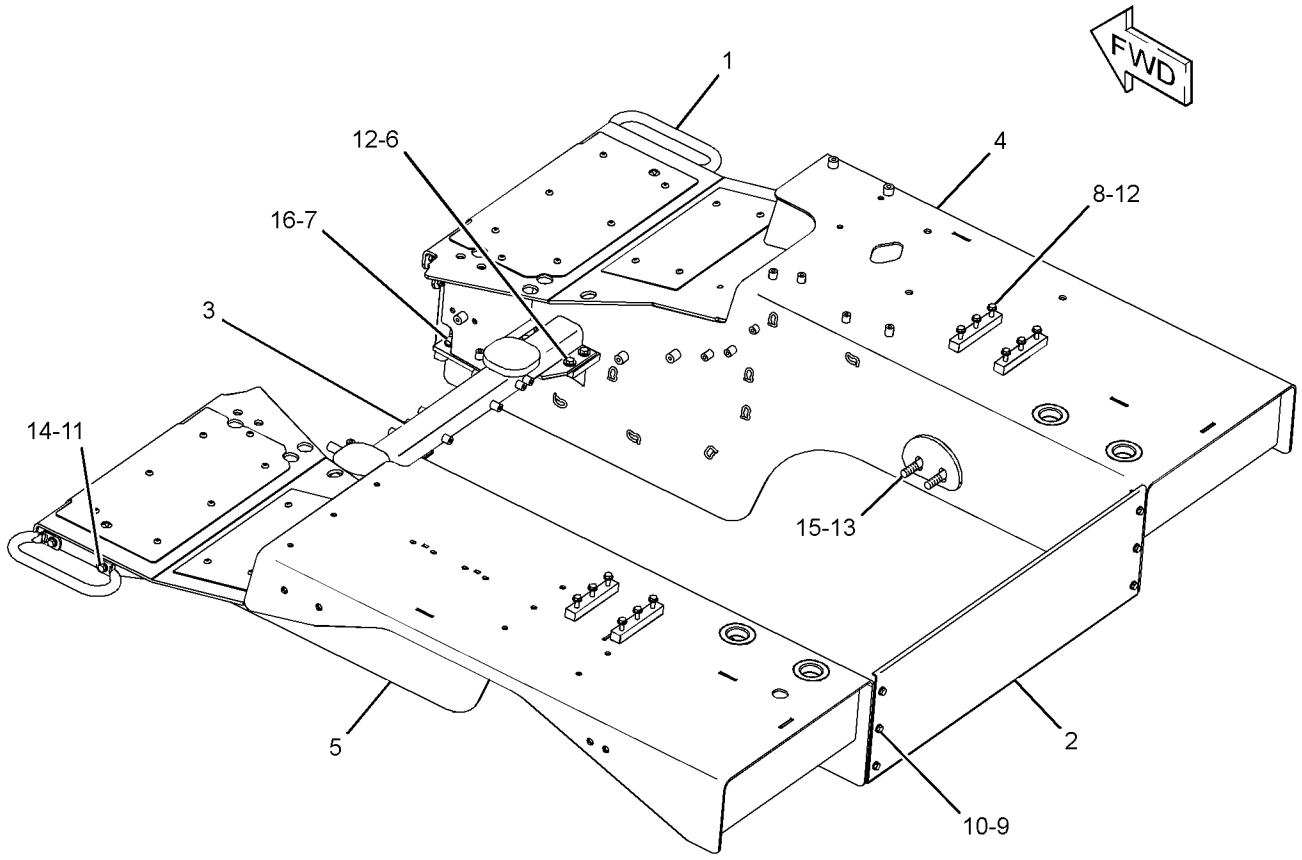

GRAPHIC #1 **<END>** g01206143

236-2218 FENDER GP–RH

S/N: SMC1-UP; GCT1-UP

PART OF 218-1841 FENDER GP

SMCS-7252 **i02813532**

NOTE	REF NO	GRAPHIC REF	PART NUMBER	QTY	PART NAME 1 2 3 4 5 6 (PRODUCT LEVEL)	SEE PAGE
	1	1	**8Y-0374**	1	PLATE	
	2	1	**226-5955**	1	FENDER AS (RH)	
	3	1	**236-2624**	1	PLATE	
M	4	1	**8C-8585**	13	SCREW-BUTTON HEAD (M10X1.5X20-MM)	

M - METRIC PART

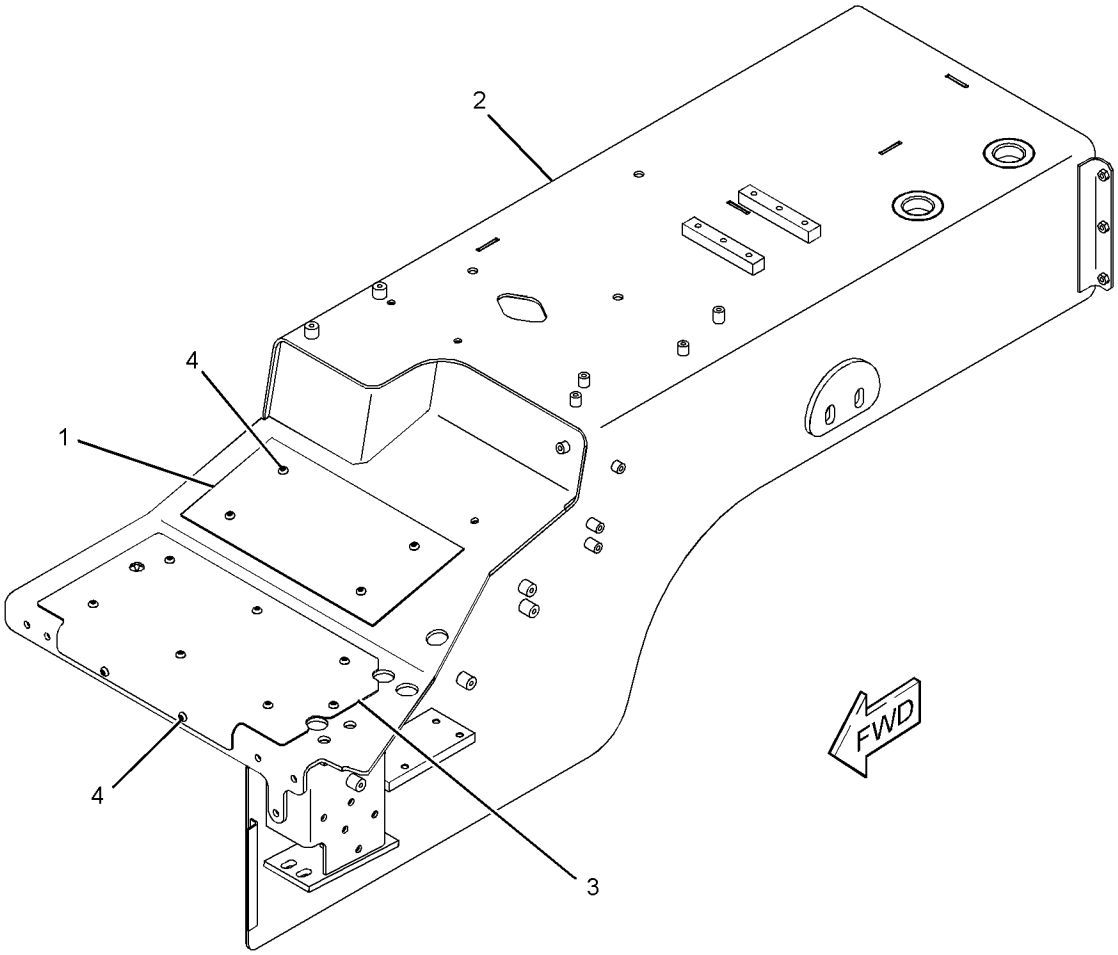

GRAPHIC #1 **<END>** g01205486

236-2219 FENDER GP–LH

S/N: SMC1-UP; GCT1-UP

PART OF 218-1841 FENDER GP

SMCS-7252 **i02431223**

NOTE	REF NO	GRAPHIC REF	PART NUMBER	QTY	PART NAME 1 2 3 4 5 6 (PRODUCT LEVEL)	SEE PAGE
	1	1	**8Y-0374**	1	PLATE	
	2	1	**226-5954**	1	FENDER AS (LH)	
	3	1	**236-5474**	1	PLATE	
M	4	1	**238-0251**	13	SCREW-BUTTON HEAD (M10X1.5X25-MM)	

M - METRIC PART

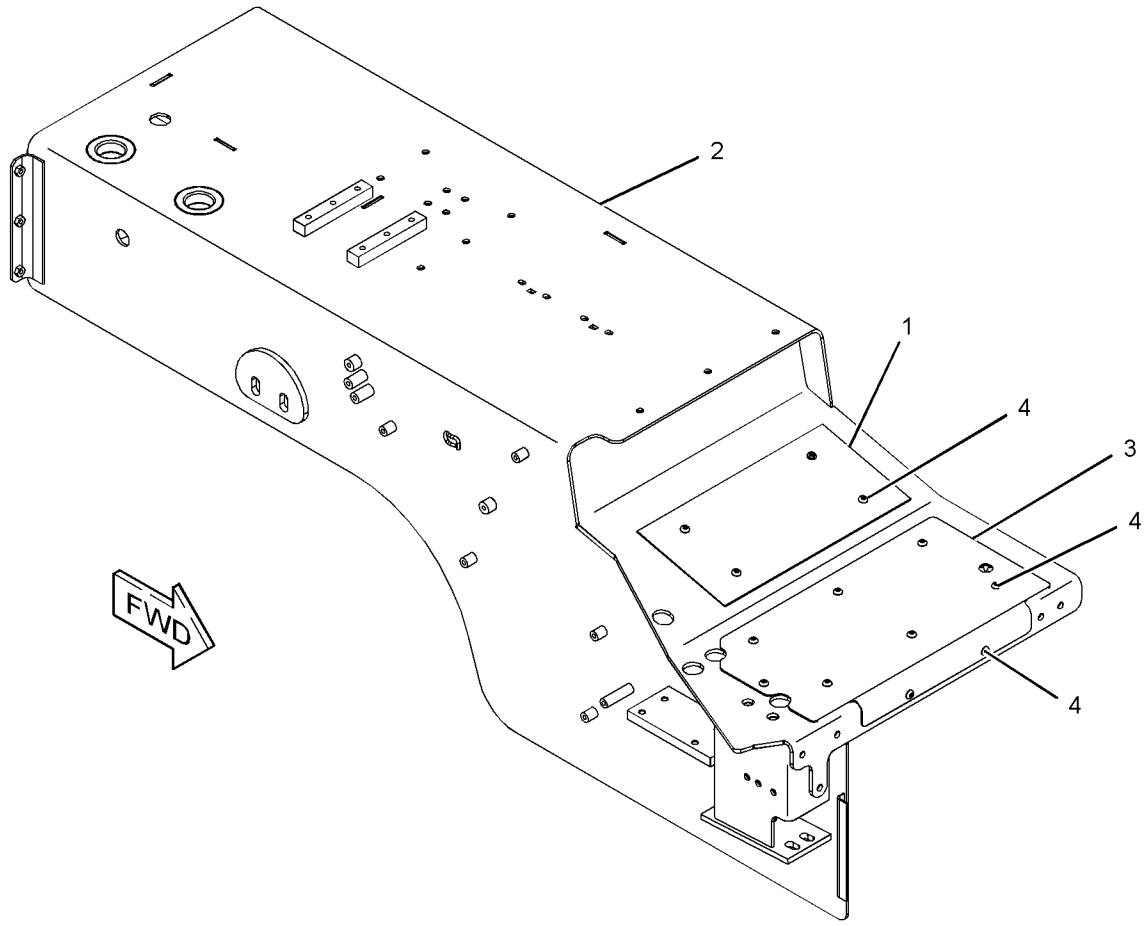

GRAPHIC #1 **<END>** g01210389

173-1852 GRID GP-SAND BLAST ERODING

S/N: SMC1-UP; GCT1-UP
CANNOT BE USED WITH REVERSING FAN, FLEXXAIRE FAN
AN ATTACHMENT

SMCS-7179 **i01816402**

NOTE	REF NO	GRAPHIC REF	PART NUMBER	QTY	PART NAME 1 2 3 4 5 6 (PRODUCT LEVEL)	SEE PAGE
	1	1	**180-6693**	4	BRACKET	
	2	1	**180-6692**	1	GRID AS	
	3	1	**180-6694**	1	BRACKET AS	
M		1	**8T-3490**	4	NUT-WELD (M10X1.5-THD)	
	4	1	**7X-7729**	14	WASHER (11X25X3-MM THK)	
M	5	1	**8T-4133**	2	NUT (M10X1.5-THD)	
M	6	1	**8T-4136**	12	BOLT (M10X1.5X25-MM)	

M - METRIC PART

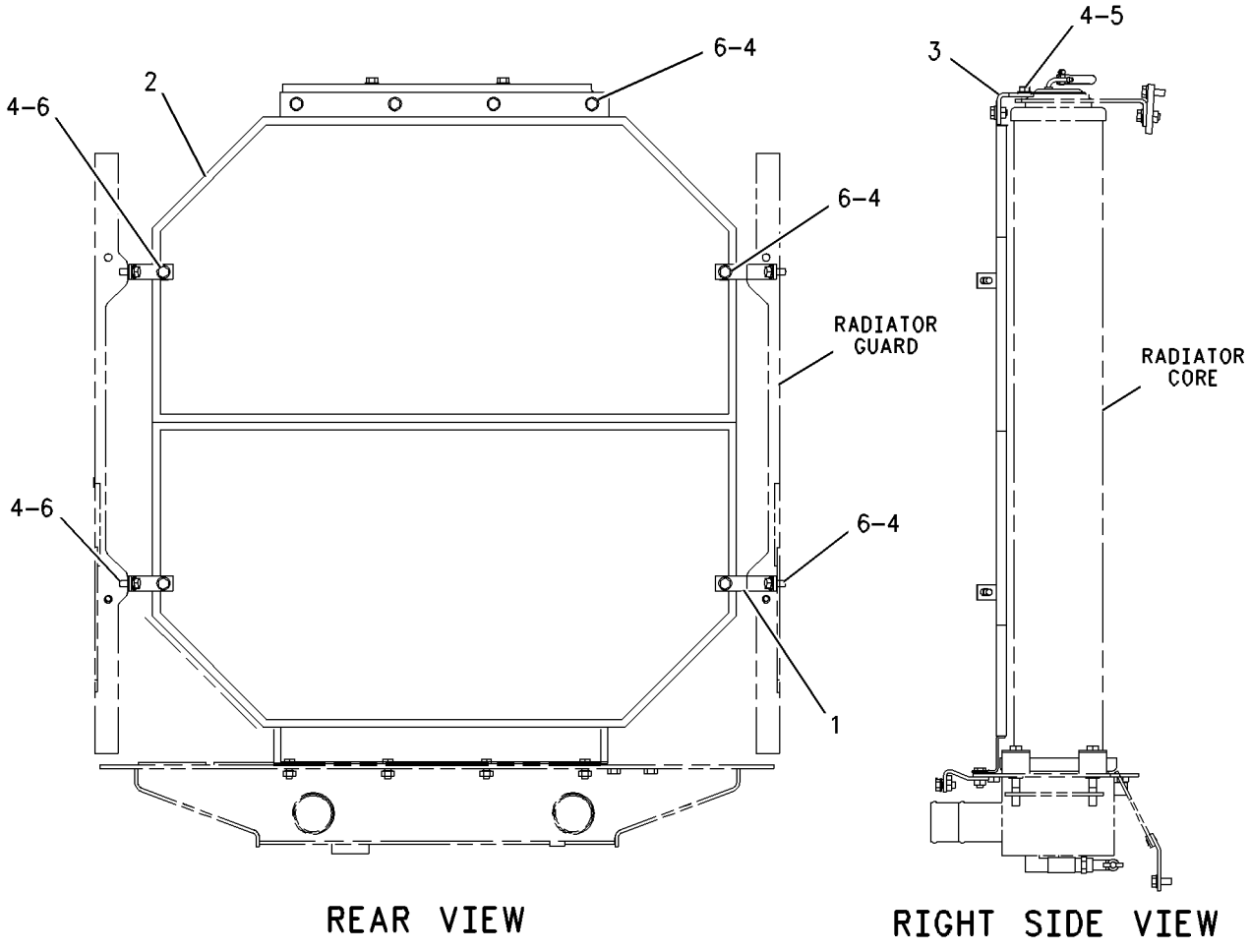

REAR VIEW

RIGHT SIDE VIEW

GRAPHIC #1 **<END>** g00742847

358-3217 GRID GP-SAND BLAST ERODING

S/N: SMC1-UP; GCT1-UP

CANNOT BE USED WITH REVERSING FAN, FLEXXAIRE FAN, WASTE HANDLING AR AN ATTACHMENT

SMCS-7179 **i04542772**

NOTE	REF NO	GRAPHIC REF	PART NUMBER	QTY	PART NAME 1 2 3 4 5 6 (PRODUCT LEVEL)	SEE PAGE
	1	1	**180-6693**	4	BRACKET	
	2	1	**358-3216**	1	GRID AS	
	3	1	**7X-7729**	12	WASHER (11X25X3-MM THK)	
M	4	1	**8T-4136**	12	BOLT (M10X1.5X25-MM)	

M - METRIC PART

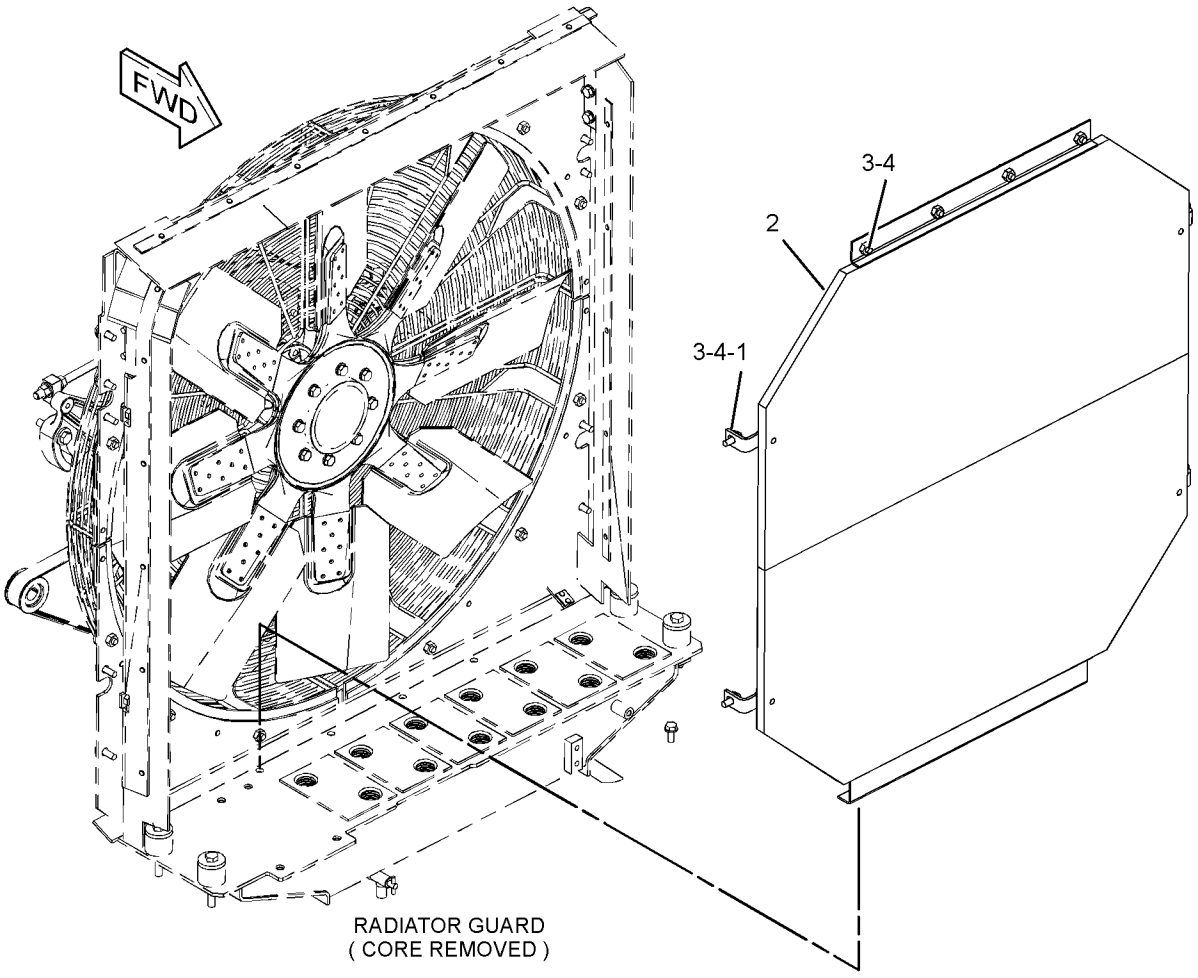

GRAPHIC #1 **<END>** g02361241

172-0964 GRILL GP-RADIATOR—HEAVY DUTY

S/N: SMC1-UP; GCT1-UP
LOUVERED
PART OF 287-4670 FORESTRY AR, 354-3554 OPTION AR-GUARD
AN ATTACHMENT

SMCS-7170 **i04106791**

NOTE	REF NO	GRAPHIC REF	PART NUMBER	QTY	PART NAME 1 2 3 4 5 6 (PRODUCT LEVEL)	SEE PAGE
	1	1	**3W-1944**	1	GRILL AS (RH)	
	2	1	**9W-2822**	1	ROD	
	3	1	**172-0967**	1	GRILL AS (LH)	
	4	1	**3B-4615**	2	PIN-COTTER	
	5	1	**5P-1076**	8	WASHER-HARD (13.5X30X4-MM THK)	
	6	1	**8T-4121**	2	WASHER-HARD (11X21X2.5-MM THK)	
M	7	1	**8T-4194**	4	BOLT (M12X1.75X50-MM)	
M	8	1	**8T-6868**	4	BOLT (M12X1.75X80-MM)	

M - METRIC PART

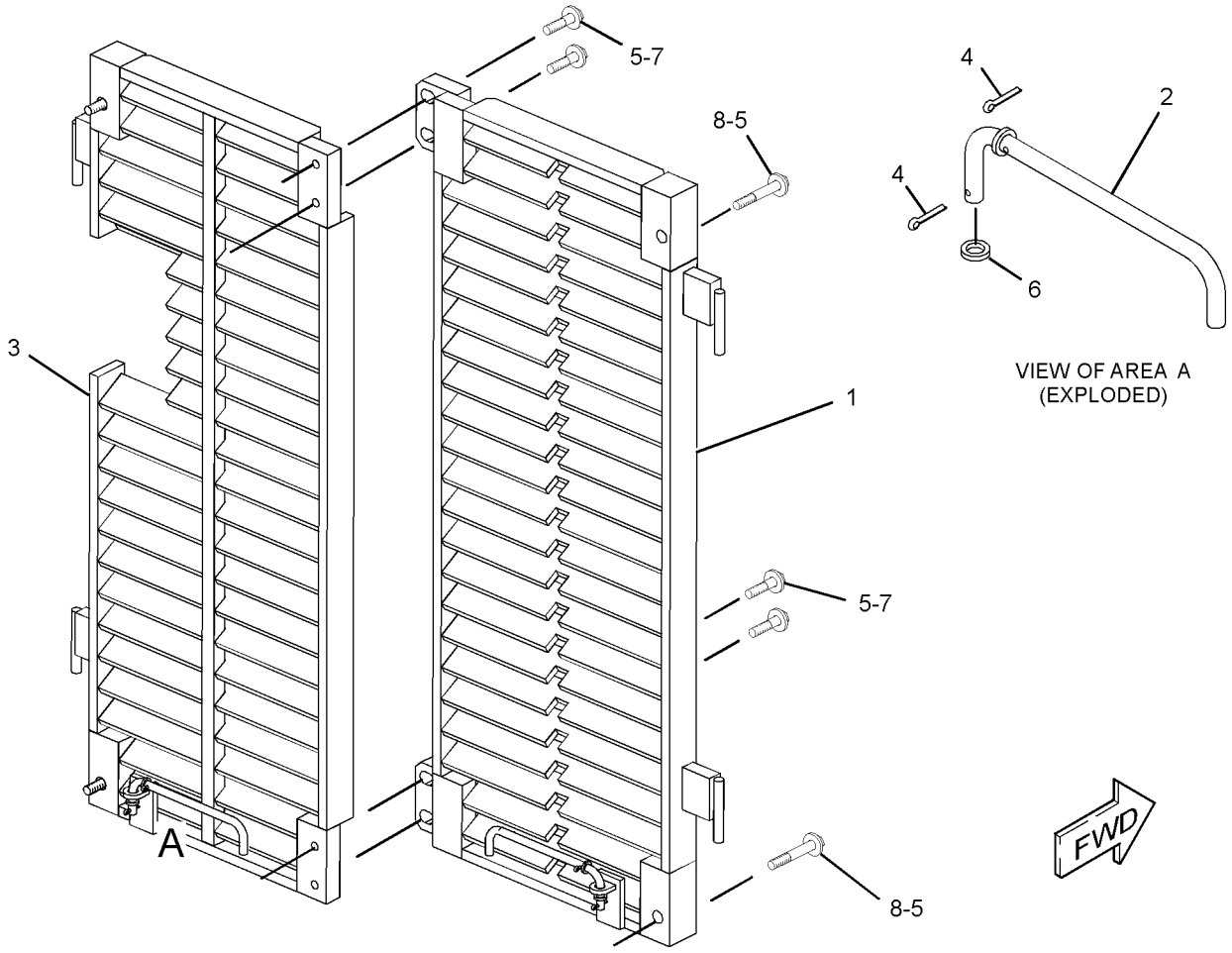

GRAPHIC #1 **<END>** g01360749

293-4691 GUARD & SCRAPER GP-IDLER

S/N: SMC1-UP
FIELD INSTALLATION

SMCS-4159, 7169 **i02655351**

NOTE	PART NUMBER	QTY	PART NAME 1 2 3 4 5 6 (PRODUCT LEVEL)	SEE PAGE
Y	**279-6533**	1	GUARD GP-IDLER	669
Y	*238-0451*	2	SCRAPER GP-IDLER	725
	6K-1330	16	BOLT (3/4-10X5.75-IN)	
M	**8T-0656**	16	BOLT (M20X2.5X150-MM)	
	234-4319	4	PLATE	
	156-5342	8	SHIM (10-MM THK)	
	233-4846	8	SHIM (6-MM THK)	
	5P-8248	16	WASHER-HARD (20X36.5X3.5-MM THK)	
	153-5044	16	WASHER-HARD (21.5X45X6-MM THK)	

M - METRIC PART
Y - SEPARATE ILLUSTRATION

<END>

262-0554 GUARD AR-FINAL DRIVE

S/N: SMC1-UP; GCT1-UP
FOR USE WITH 246-4759—PAGE: 614
PART OF 247-2839, 247-2840 WASTE HANDLING AR
AN ATTACHMENT

SMCS-7172 **i02456107**

NOTE	PART NUMBER	QTY	PART NAME 1 2 3 4 5 6 (PRODUCT LEVEL)	SEE PAGE
Y	**260-6652**	2	DRIVE GP-FINAL	478

Y - SEPARATE ILLUSTRATION

<END>

218-1836 GUARD GP-BOTTOM

S/N: SMC1-UP; GCT1-UP

PART OF 269-2044 CHASSIS AR

SMCS-7153 **i05335634**

NOTE	REF NO	GRAPHIC REF	PART NUMBER	QTY	PART NAME 1 2 3 4 5 6 (PRODUCT LEVEL)	SEE PAGE
	1	1	**217-3655**	14	RETAINER	
	2	1	**227-8802**	1	GUARD AS	
	3	1	**240-8740**	1	GUARD AS-BOTTOM	
	4	1	**230-7700**	1	GUARD AS	
	5	1	**310-9455**	1	COVER AS	
	6	1	**3B-4629**	4	PIN-COTTER	
	7	1	**4J-2036**	4	PIN	
	8	1	**7X-0594**	8	WASHER-HARD (20X38X3-MM THK)	
M	9	1	**8C-8478**	14	BOLT (M20X2.5X140-MM)	
	10	1	**8T-4121**	1	WASHER-HARD (11X21X2.5-MM THK)	
M	11	1	**8T-4131**	14	NUT (M20X2.5-THD)	
M	12	1	**8T-4196**	1	BOLT (M10X1.5X35-MM)	
	13	1	**8T-5439**	14	WASHER-HARD (21.5X45X6-MM THK)	

M - METRIC PART

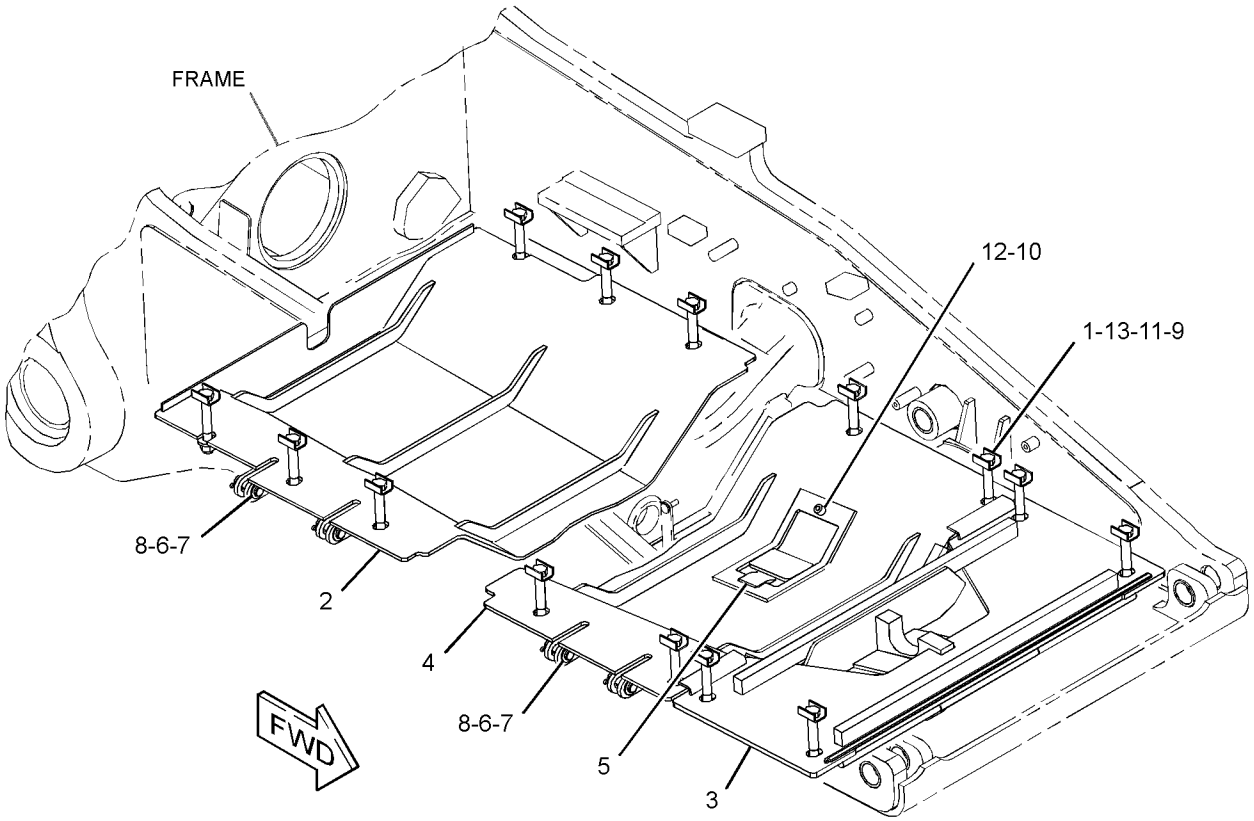

GRAPHIC #1 **<END>** g03318360

236-7241 GUARD GP-BOTTOM

S/N: SMC1-UP; GCT1-UP
EXTREME SERVICE, SEALED
PART OF 287-4670 FORESTRY AR, 354-3554 OPTION AR-GUARD, 247-2838 WASTE HANDLING AR
AN ATTACHMENT

SMCS-7153 **i03618642**

NOTE	REF NO	GRAPHIC REF	PART NUMBER	QTY	PART NAME 1 2 3 4 5 6 (PRODUCT LEVEL)	SEE PAGE
E	1	1	**9X-8699**		SEAL (100-CM)	
	2	1	**217-3655**	14	RETAINER	
	3	1	**310-9455**	1	COVER AS	
	4	1	**258-6948**	1	GUARD AS	
	5	1	**258-6949**	1	GUARD AS	
	6	1	**260-3208**	1	GUARD AS	
	7	1	**3B-4629**	4	PIN-COTTER	
	8	1	**4J-2036**	4	PIN	
	9	1	**7X-0594**	8	WASHER-HARD (20X38X3-MM THK)	
M	10	1	**8C-8478**	14	BOLT (M20X2.5X140-MM)	
	11	1	**8T-4121**	1	WASHER-HARD (11X21X2.5-MM THK)	
M	12	1	**8T-4131**	14	NUT (M20X2.5-THD)	
M	13	1	**8T-4196**	1	BOLT (M10X1.5X35-MM)	
	14	1	**8T-5439**	14	WASHER-HARD (21.5X45X6-MM THK)	
D	15	1	**5P-7483**		SEAL (0.17-M)	
D	15A	1	**5P-7483**		SEAL (0.14-M)	
D	15B	1	**5P-7483**		SEAL (1.18-M)	
D	16	1	**5P-5755**		SEAL (1.1-M)	
D	17	1	**5P-7514**		SEAL (1.1-M EACH)	

D - ORDER BY THE METER
E - ORDER BY THE CENTIMETER
M - METRIC PART

236-7241 **GUARD GP-BOTTOM (*contd.*)** **i03618642**

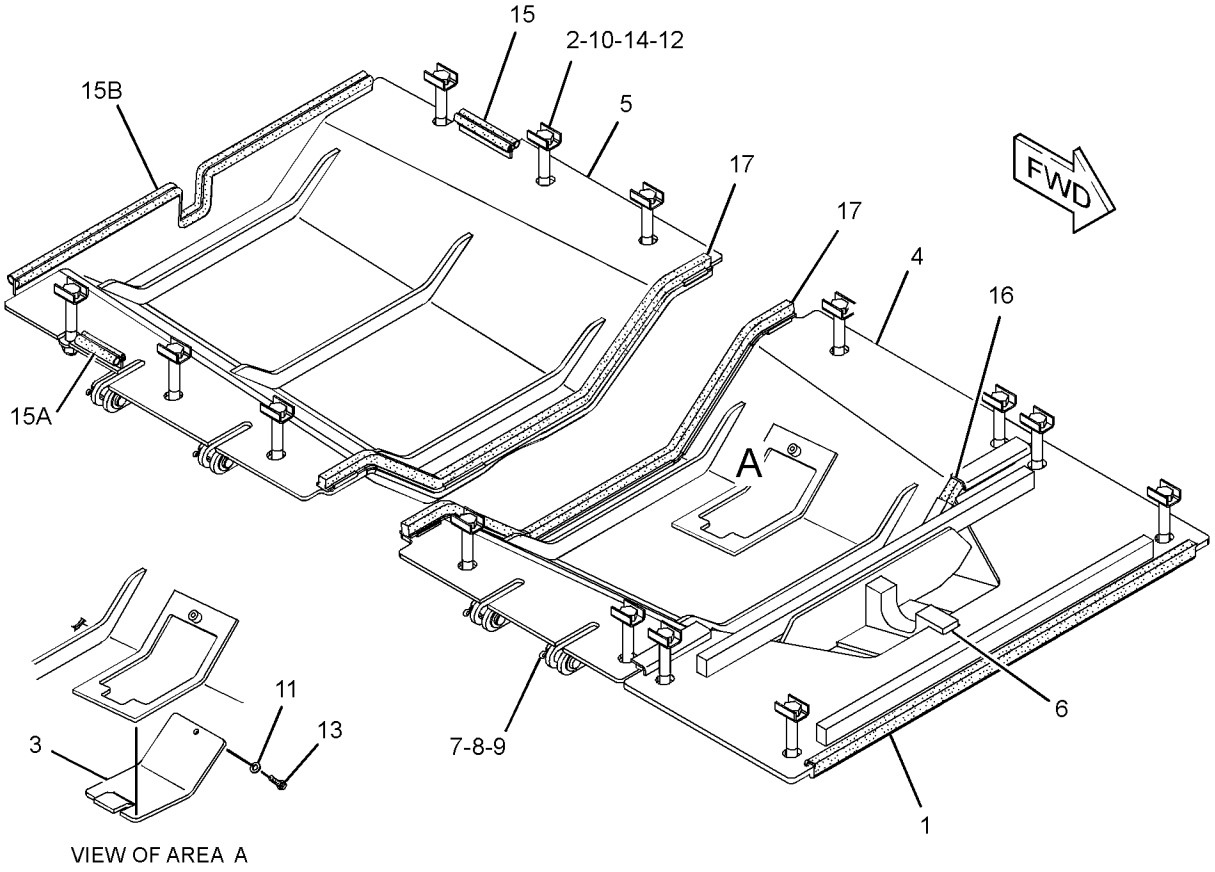

GRAPHIC #1 **<END>** g01941757

257-2696 GUARD GP-BOTTOM

S/N: SMC1-UP; GCT1-UP
WITH HOOK
AN ATTACHMENT

SMCS-7153 **i04780609**

NOTE	REF NO	GRAPHIC REF	PART NUMBER	QTY	PART NAME 1 2 3 4 5 6 (PRODUCT LEVEL)	SEE PAGE
	1	1	**7S-6058**	1	HOOK-FRONT PULL	
	2	1	**217-3655**	14	RETAINER	
	3	1	**227-8802**	1	GUARD AS	
	4	1	**230-7700**	1	GUARD AS	
	5	1	**258-7132**	1	GUARD AS	
	6	1	**310-9455**	1	COVER AS	
	7	1	**3B-4629**	4	PIN-COTTER	
	8	1	**4J-2036**	4	PIN	
	9	1	**7X-0594**	8	WASHER-HARD (20X38X3-MM THK)	
M	10	1	**8C-8478**	14	BOLT (M20X2.5X140-MM)	
	11	1	**8T-4121**	1	WASHER-HARD (11X21X2.5-MM THK)	
	12	1	**8T-4123**	12	WASHER (22X35X3.5-MM THK)	
M	13	1	**8T-4131**	20	NUT (M20X2.5-THD)	
M	14	1	**8T-4141**	6	BOLT (M20X2.5X70-MM)	
M	15	1	**8T-4196**	1	BOLT (M10X1.5X35-MM)	
	16	1	**8T-5439**	14	WASHER-HARD (21.5X45X6-MM THK)	

M - METRIC PART

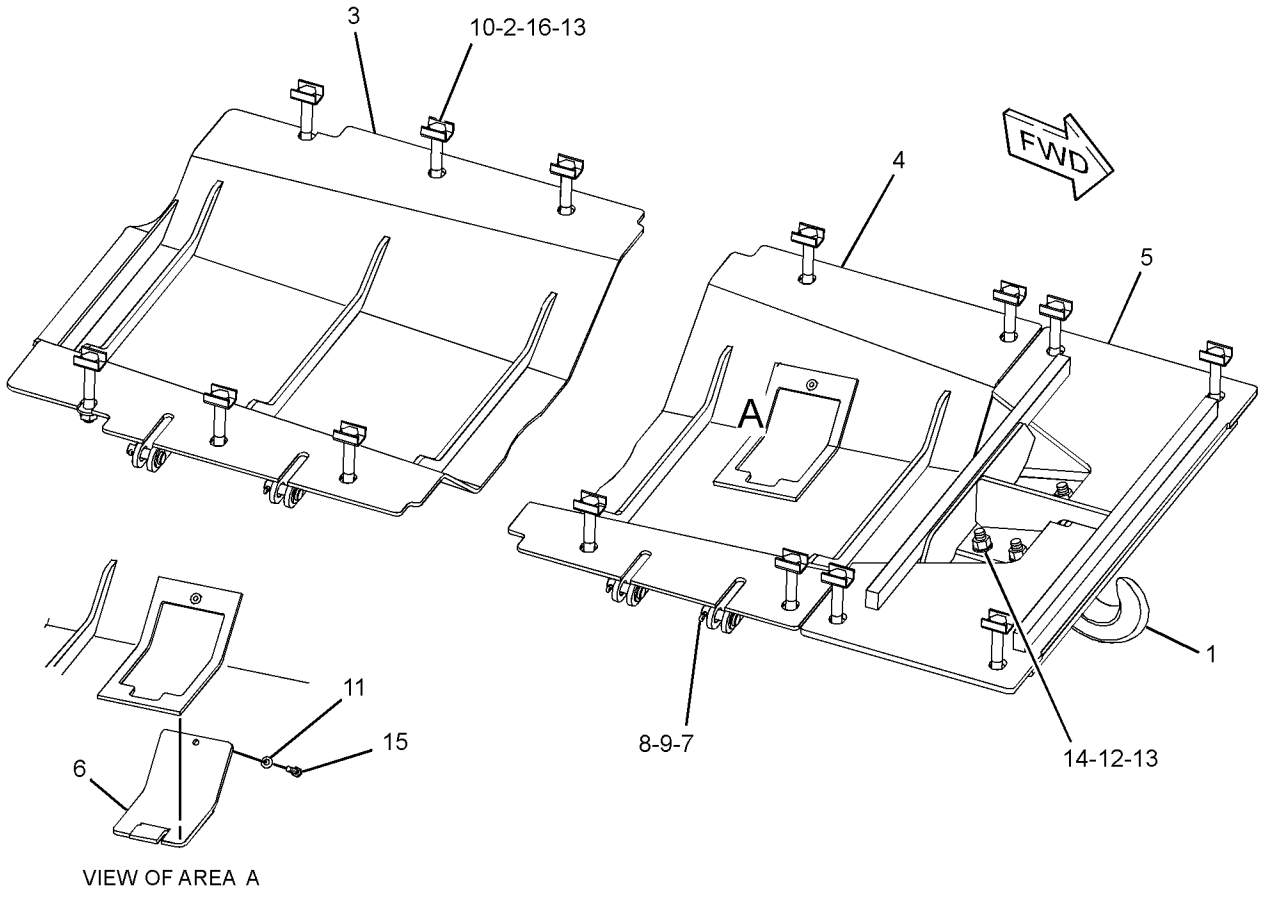

GRAPHIC #1 **<END>** g02254294

257-2698 GUARD GP-BOTTOM–HEAVY-DUTY

S/N: SMC1-UP; GCT1-UP
EXTREME SERVICE, SEALED, WITH HOOK
AN ATTACHMENT

SMCS-7153 **i04268650**

NOTE	REF NO	GRAPHIC REF	PART NUMBER	QTY	PART NAME 1 2 3 4 5 6 (PRODUCT LEVEL)	SEE PAGE
	1	1	**7S-6058**	1	HOOK-FRONT PULL	
	2	1	**217-3655**	14	RETAINER	
	3	1	**258-6948**	1	GUARD AS	
	4	1	**258-6949**	1	GUARD AS	
	5	1	**262-6796**	1	GUARD AS	
	6	1	**310-9455**	1	COVER AS	
	7	1	**3B-4629**	4	PIN-COTTER	
	8	1	**4J-2036**	4	PIN	
	9	1	**7X-0594**	8	WASHER-HARD (20X38X3-MM THK)	
M	10	1	**8C-8478**	14	BOLT (M20X2.5X140-MM)	
	11	1	**8T-4121**	1	WASHER-HARD (11X21X2.5-MM THK)	
	12	1	**8T-4123**	12	WASHER (22X35X3.5-MM THK)	
M	13	1	**8T-4131**	20	NUT (M20X2.5-THD)	
M	14	1	**8T-4141**	6	BOLT (M20X2.5X70-MM)	
M	15	1	**8T-4196**	1	BOLT (M10X1.5X35-MM)	
	16	1	**8T-5439**	14	WASHER-HARD (21.5X45X6-MM THK)	
D	17	1	**5P-5755**		SEAL (1.1-M)	
D	18	1	**5P-7483**		SEAL (1.18-M)	
D	18A	1	**5P-7483**		SEAL (0.14-M)	
D	18B	1	**5P-7483**		SEAL (0.17-M)	
D	19	1	**5P-7514**		SEAL (1.1-M EACH)	
E	20	1	**9X-8699**		SEAL (100-CM)	

D - ORDER BY THE METER
E - ORDER BY THE CENTIMETER
M - METRIC PART

257-2698 **GUARD GP-BOTTOM (*contd.*)** **i04268650**

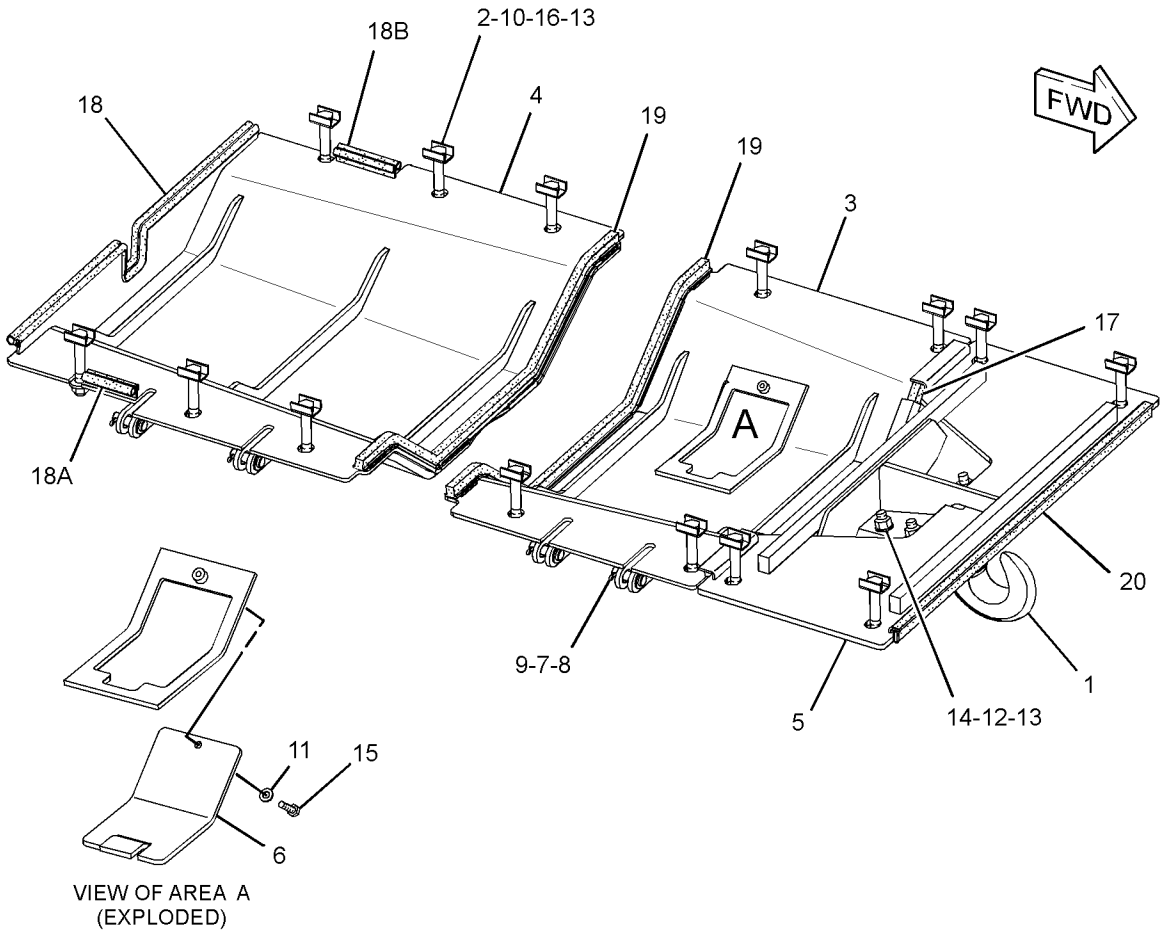

GRAPHIC #1 **<END>** g02255015

246-4759 GUARD GP-FINAL DRIVE

S/N: SMC1-UP; GCT1-UP

AN ATTACHMENT

SMCS-7172 **i04026463**

NOTE	REF NO	GRAPHIC REF	PART NUMBER	QTY	PART NAME 1 2 3 4 5 6 (PRODUCT LEVEL)	SEE PAGE
	1	1	**187-9178**	4	GUARD	
	2	1	**188-9040**	4	COVER	
	3	1	**205-0209**	4	SPACER	
	4	1	**205-0254**	8	SPACER	
	5	1	**238-7545**	16	BOLT (M22X2.5X150-MM)	
	6	1	**5M-2894**	16	WASHER-HARD (10.2X18.5X2.5-MM THK)	
	7	1	**8C-6913**	16	WASHER-HARD (24X41.5X4-MM THK)	
	8	1	**9B-7237**	16	BOLT (3/8-16X1.25-IN)	

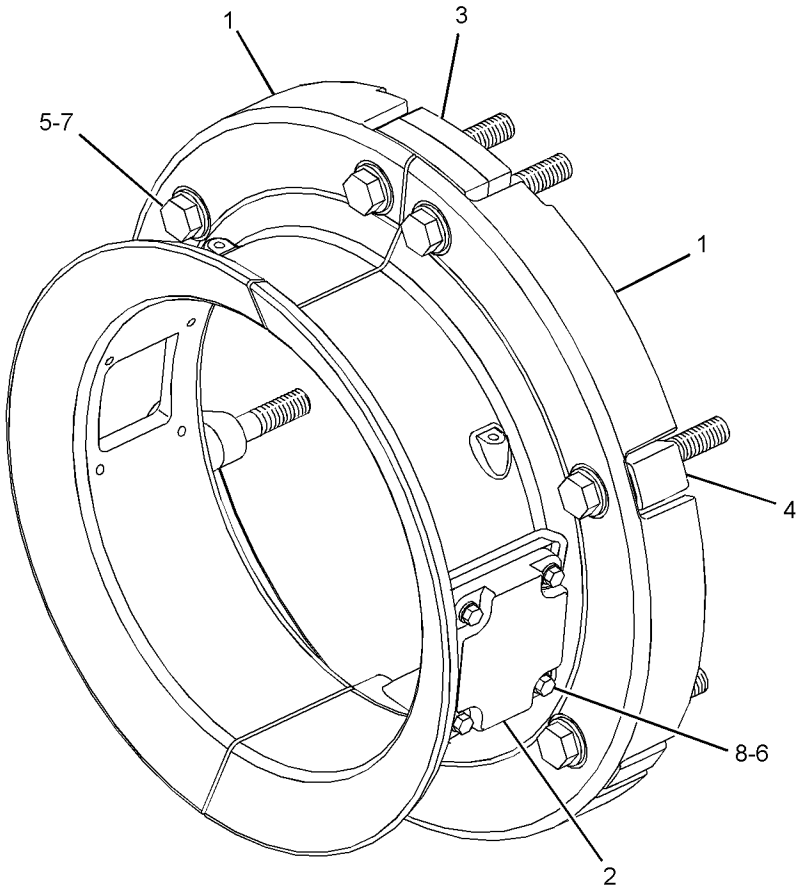

GRAPHIC #1 **<END>** g01208219

287-4665 GUARD GP-FRONT

S/N: SMC1-UP; GCT1-UP
PART OF 287-4670 FORESTRY AR
AN ATTACHMENT

SMCS-7167 **i04030176**

NOTE	REF NO	GRAPHIC REF	PART NUMBER	QTY	PART NAME 1 2 3 4 5 6 (PRODUCT LEVEL)	SEE PAGE
	1	1	**287-6055**	2	CHANNEL AS	
	2	1	**287-6590**	1	GUARD	
	3	1	**287-7103**	2	GUARD AS	
	4	1	**287-8292**	2	CLAMP AS	
	5	1	**287-8293**	2	CLAMP AS	
	6	1	**206-5017**	4	SPACER (11X20X5-MM THK)	
	7	1	**8T-4121**	16	WASHER-HARD (11X21X2.5-MM THK)	
M	8	1	**8T-4133**	4	NUT (M10X1.5-THD)	
M	9	1	**8T-4136**	8	BOLT (M10X1.5X25-MM)	
M	10	1	**8T-4196**	4	BOLT (M10X1.5X35-MM)	

M - METRIC PART

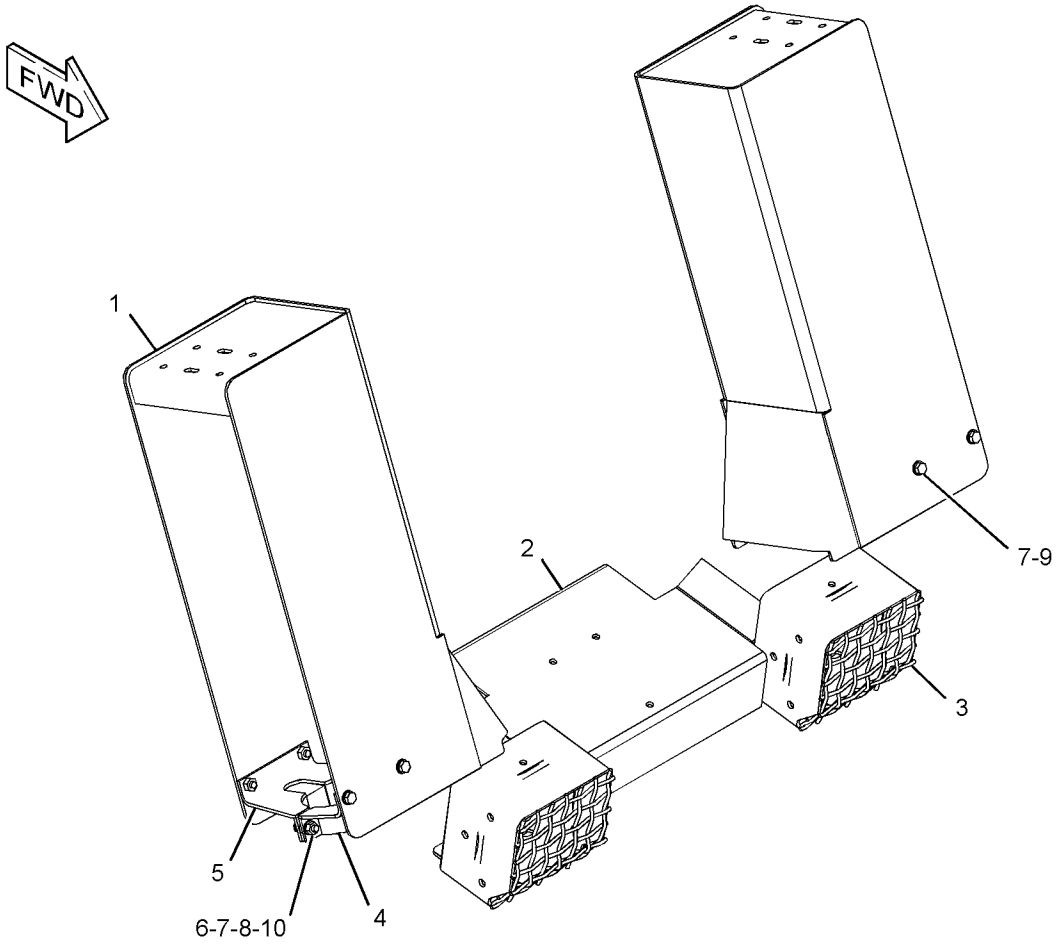

GRAPHIC #1 **<END>** g02222793

287-2428 GUARD GP-FUEL TANK

S/N: SMC1-UP; GCT1-UP
PART OF 287-4670 FORESTRY AR
AN ATTACHMENT

SMCS-1273, 7150 **i04030171**

NOTE	REF NO	GRAPHIC REF	PART NUMBER	QTY	PART NAME 1 2 3 4 5 6 (PRODUCT LEVEL)	SEE PAGE
	1	1	**268-3888**	1	PLATE AS	
		1	**1F-0748**	2	NUT-WELD (1/2-13-THD)	
	2	1	**286-7136**	1	GUARD AS (RH)	
	3	1	**286-7137**	1	GUARD AS (LH)	
	4	1	**286-7140**	1	GUARD AS (RH)	
M		1	**8T-3597**	4	NUT-WELD (M12X1.75-THD)	
	5	1	**286-7143**	1	GUARD AS-REAR (RH)	
		1	**3V-9864**	3	SPACER (16.8X32.0X47.0-MM THK)	
M		1	**8T-3597**	4	NUT-WELD (M12X1.75-THD)	
	6	1	**286-7144**	1	GUARD AS-REAR (LH)	
		1	**3V-9864**	3	SPACER (16.8X32.0X47.0-MM THK)	
M		1	**8T-3597**	4	NUT-WELD (M12X1.75-THD)	
	7	1	**287-2426**	1	GUARD AS-REAR (CENTER)	
M		1	**8T-3597**	4	NUT-WELD (M12X1.75-THD)	
	8	1	**290-3874**	2	PLATE	
	9	1	**290-3875**	1	PLATE	
	10	1	**7X-0550**	64	WASHER-HARD (13.5X32X5-MM THK)	
M	11	1	**8T-4133**	10	NUT (M10X1.5-THD)	
M	12	1	**8T-4194**	8	BOLT (M12X1.75X50-MM)	
M	13	1	**8T-4195**	6	BOLT (M10X1.5X30-MM)	
M	14	1	**8T-4196**	10	BOLT (M10X1.5X35-MM)	
M	15	1	**8T-4956**	24	BOLT (M12X1.75X35-MM)	
M	16	1	**8T-6868**	6	BOLT (M12X1.75X80-MM)	

M - METRIC PART

287-2428 **GUARD GP-FUEL TANK (*contd.*)** **i04030171**

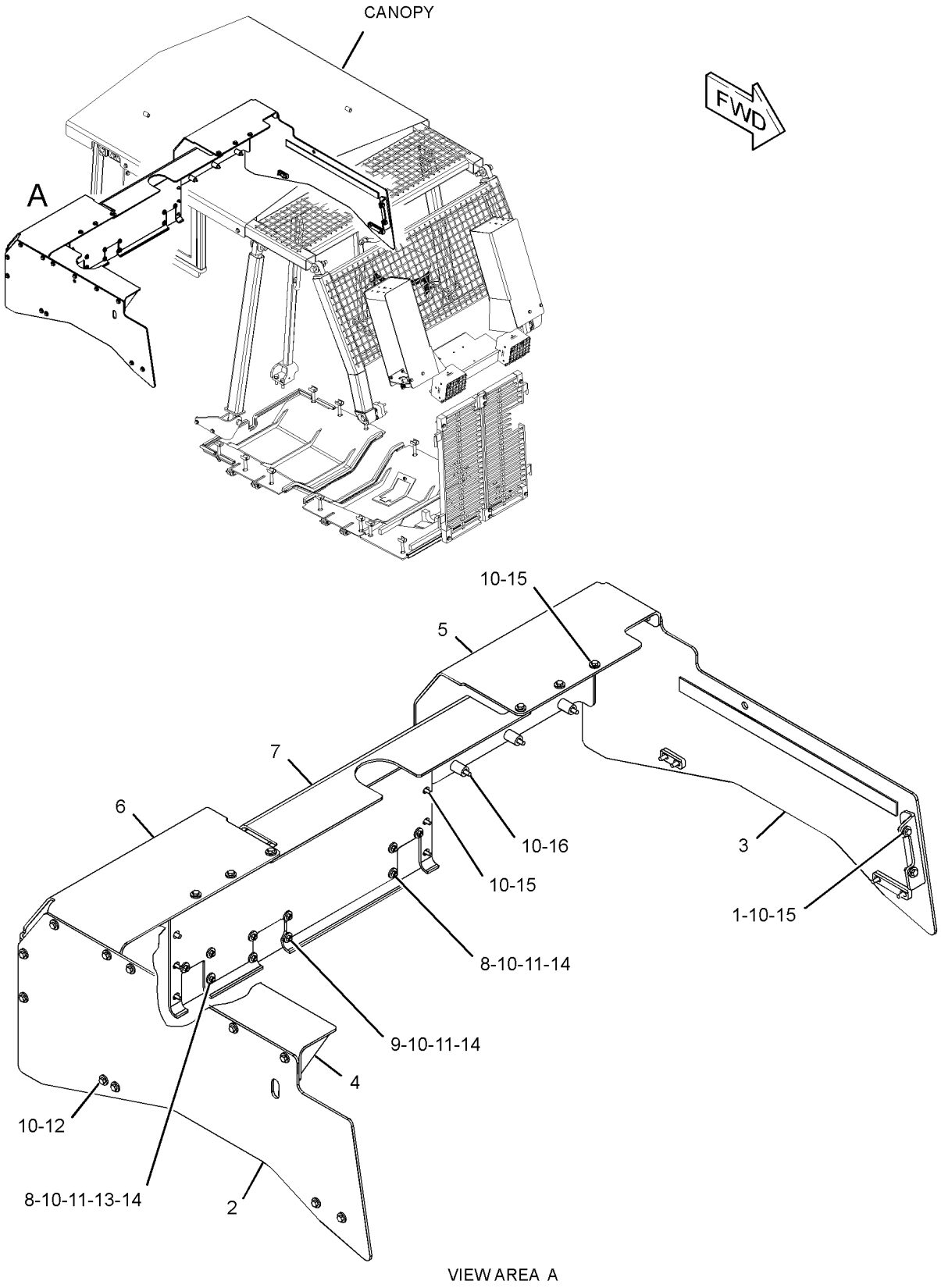

VIEW AREA A

GRAPHIC #1 **<END>** g02223098

292-6053 GUARD GP-FUEL TANK

S/N: SMC1-UP; GCT1-UP
CANNOT BE USED WITH RIPPERS OR HYDRAULIC WINCHES
AN ATTACHMENT

SMCS-1273, 7150

i02784080

NOTE	REF NO	GRAPHIC REF	PART NUMBER	QTY	PART NAME 1 2 3 4 5 6 (PRODUCT LEVEL)	SEE PAGE
	1	1	**255-1137**	1	GUARD AS-REAR (RH)	
	2	1	**255-1138**	1	GUARD AS (LH)	
	3	1	**255-1139**	1	GUARD AS (RH)	
	4	1	**256-7780**	1	GUARD AS-REAR	
	5	1	**256-7782**	1	PLATE	
	6	1	**264-7384**	1	PLATE AS	
	7	1	**5P-1076**	26	WASHER-HARD (13.5X30X4-MM THK)	
	8	1	**7X-7729**	6	WASHER (11X25X3-MM THK)	
M	9	1	**8T-4139**	4	BOLT (M12X1.75X30-MM)	
M	10	1	**8T-4195**	6	BOLT (M10X1.5X30-MM)	
M	11	1	**8T-4956**	16	BOLT (M12X1.75X35-MM)	
M	12	1	**8T-6868**	6	BOLT (M12X1.75X80-MM)	

M - METRIC PART

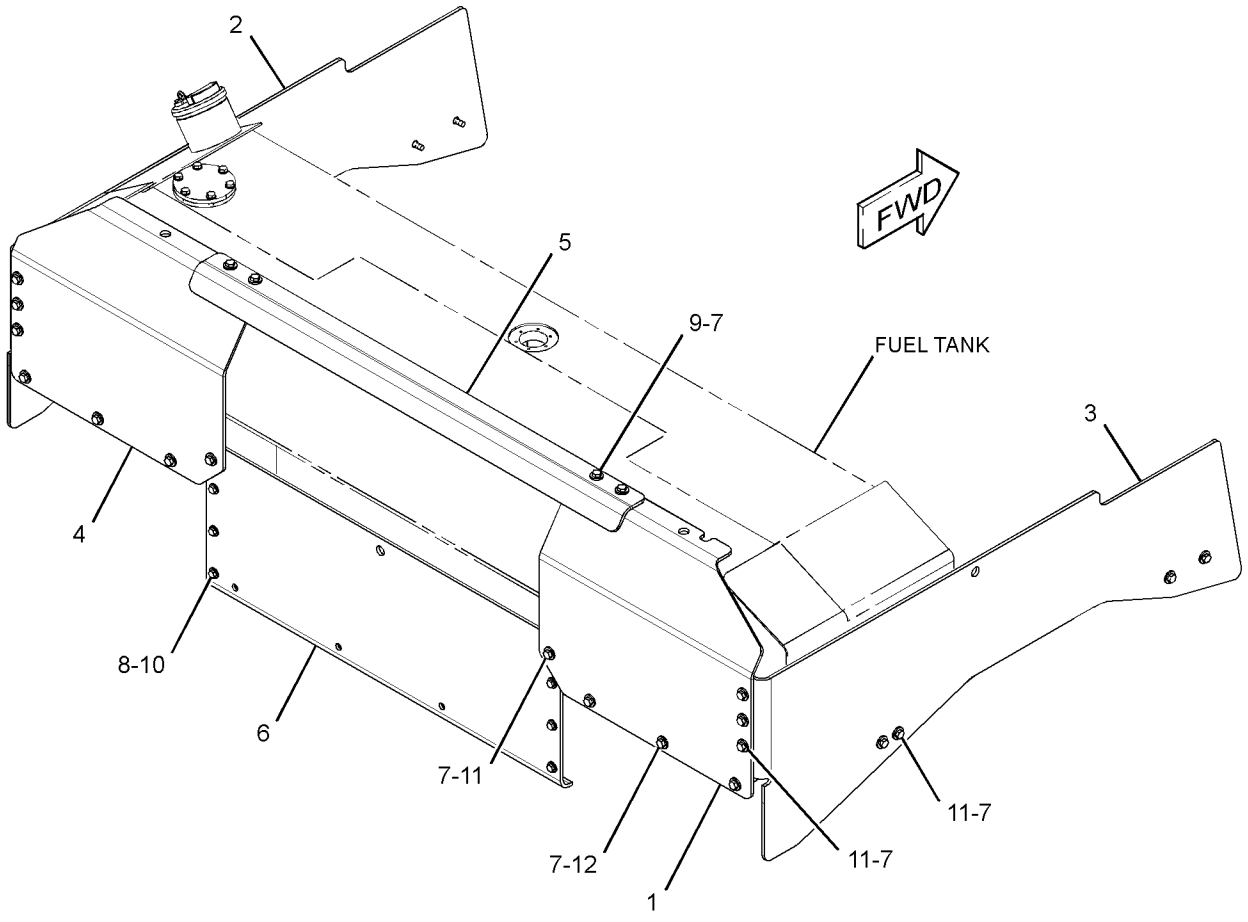

GRAPHIC #1

<END>

g01364735

292-6054 GUARD GP-FUEL TANK

S/N: SMC1-UP; GCT1-UP
FOR USE WITH RIPPER
AN ATTACHMENT

SMCS-1273, 7150

i02784086

NOTE	REF NO	GRAPHIC REF	PART NUMBER	QTY	PART NAME 1 2 3 4 5 6 (PRODUCT LEVEL)	SEE PAGE
	1	1	**255-1137**	1	GUARD AS-REAR (RH)	
	2	1	**255-1138**	1	GUARD AS (LH)	
	3	1	**255-1139**	1	GUARD AS (RH)	
	4	1	**256-7780**	1	GUARD AS-REAR (LH)	
	5	1	**256-7781**	1	GUARD AS-FUEL TANK	
	6	1	**256-7782**	1	PLATE	
	7	1	**5P-1076**	26	WASHER-HARD (13.5X30X4-MM THK)	
	8	1	**7X-7729**	6	WASHER (11X25X3-MM THK)	
M	9	1	**8T-4139**	4	BOLT (M12X1.75X30-MM)	
M	10	1	**8T-4195**	6	BOLT (M10X1.5X30-MM)	
M	11	1	**8T-4956**	16	BOLT (M12X1.75X35-MM)	
M	12	1	**8T-6868**	6	BOLT (M12X1.75X80-MM)	

M - METRIC PART

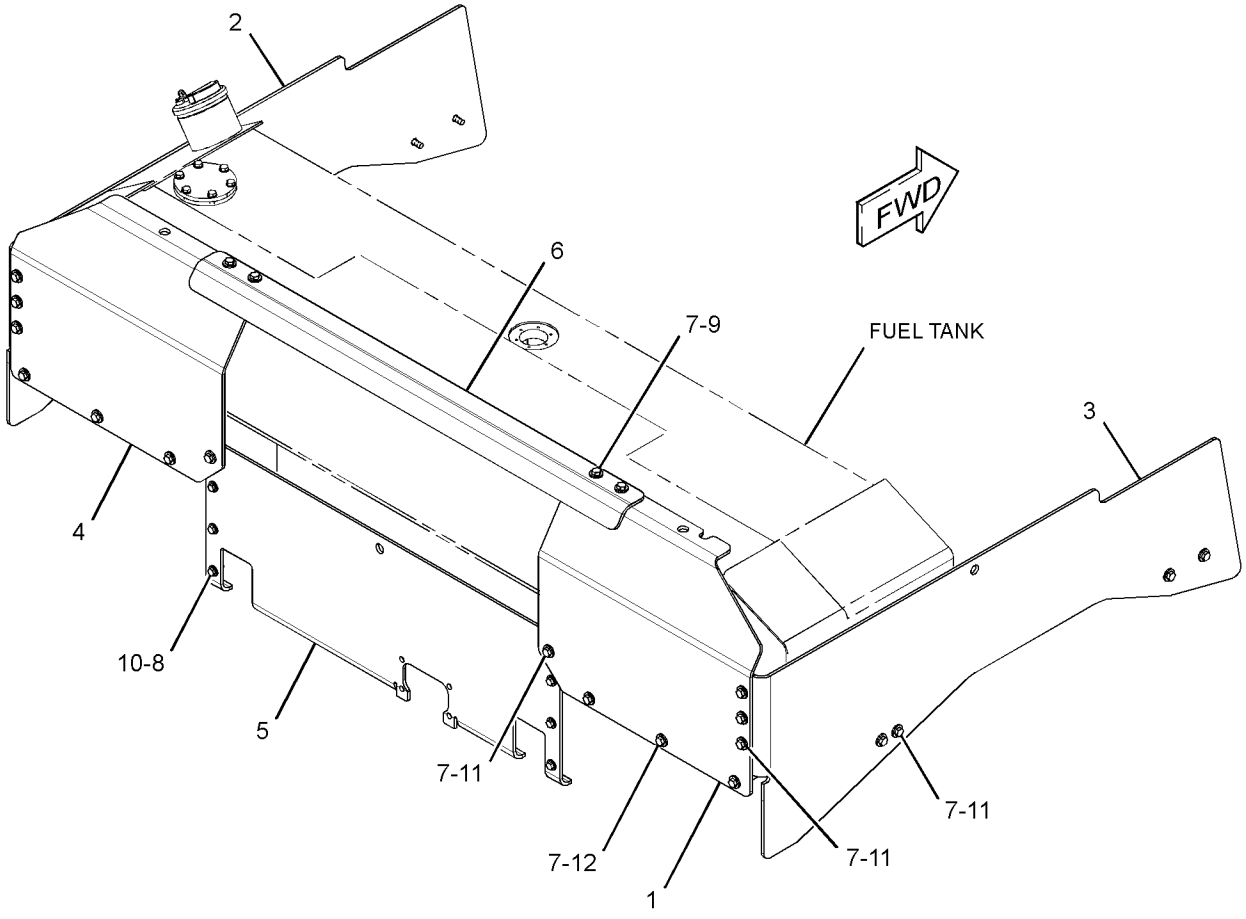

GRAPHIC #1

<END>

g01364743

292-6055 GUARD GP-FUEL TANK

S/N: SMC1-UP; GCT1-UP
FOR USE WITH HYDRAULIC WINCHES
AN ATTACHMENT

SMCS-1273, 7150

i02784090

NOTE	REF NO	GRAPHIC REF	PART NUMBER	QTY	PART NAME 1 2 3 4 5 6 (PRODUCT LEVEL)	SEE PAGE
	1	1	**255-1137**	1	GUARD AS-REAR (RH)	
	2	1	**255-1138**	1	GUARD AS (LH)	
	3	1	**255-1139**	1	GUARD AS (RH)	
	4	1	**256-7780**	1	GUARD AS-REAR	
	5	1	**256-7782**	1	PLATE	
	6	1	**264-7386**	1	PLATE AS	
	7	1	**5P-1076**	26	WASHER-HARD (13.5X30X4-MM THK)	
	8	1	**7X-7729**	6	WASHER (11X25X3-MM THK)	
M	9	1	**8T-4139**	4	BOLT (M12X1.75X30-MM)	
M	10	1	**8T-4195**	6	BOLT (M10X1.5X30-MM)	
M	11	1	**8T-4956**	16	BOLT (M12X1.75X35-MM)	
M	12	1	**8T-6868**	6	BOLT (M12X1.75X80-MM)	

M - METRIC PART

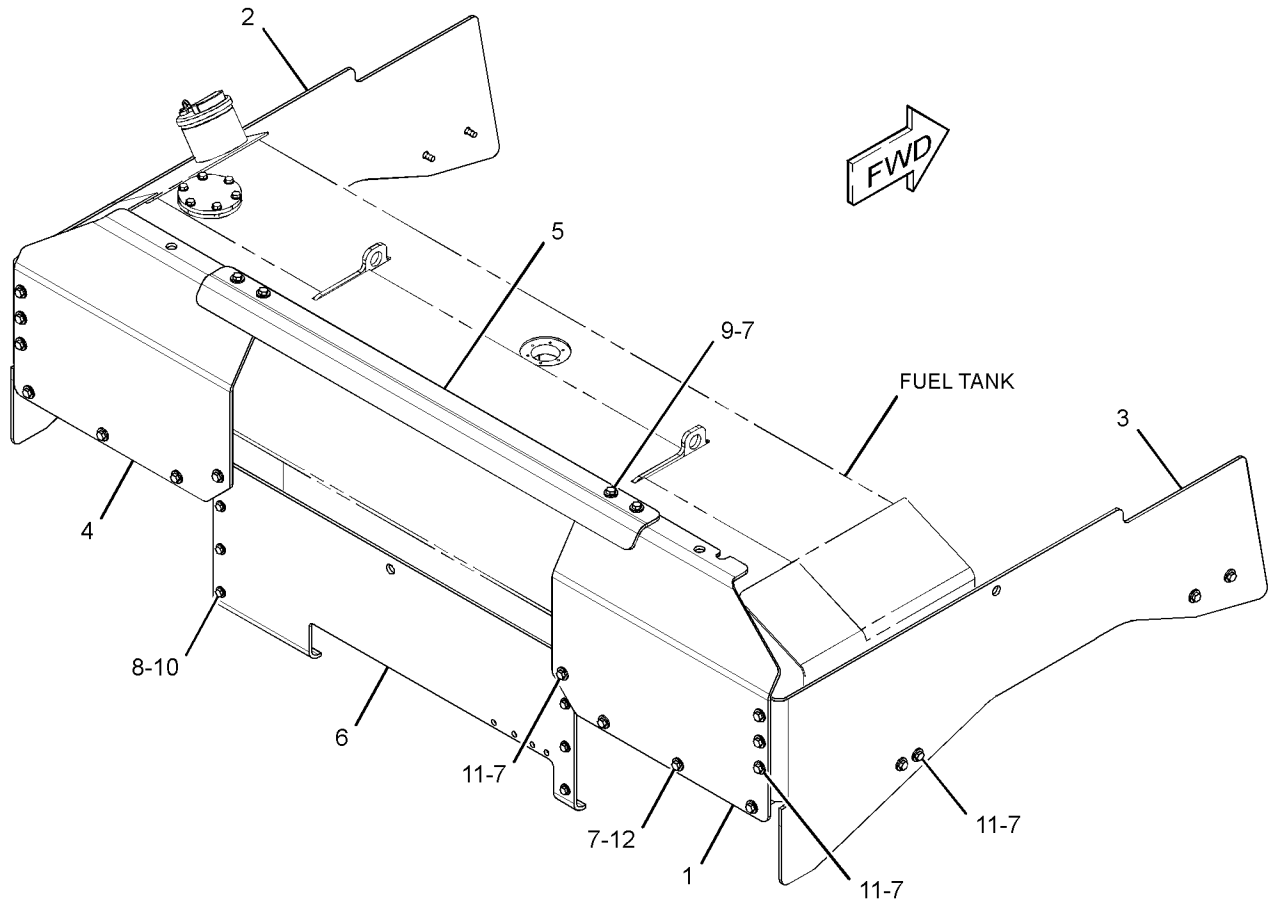

GRAPHIC #1

<END>

g01364751

223-1540 GUARD GP-RADIATOR

S/N: SMC1-UP; GCT1-UP

PART OF 269-2044 CHASSIS AR

SMCS-7155 **i04701533**

NOTE	REF NO	GRAPHIC REF	PART NUMBER	QTY	PART NAME 1 2 3 4 5 6 (PRODUCT LEVEL)	SEE PAGE
M	1	1	**8T-4910**	4	BOLT (M12X1.75X60-MM)	
	2	1	**3W-3896**	2	HANDHOLD	
	3	1	**5G-9973**	2	COVER	
	4	1	**5G-9974**	2	GASKET	
	6	1	**9W-2822**	1	ROD	
	7	1	**109-4757**	1	GRILL AS	
	8	1	**155-8577**	2	COVER AS	
	9	1	**160-2351**	2	WASHER-HARD (22X76X6-MM THK)	
	10	1	**170-8592**	2	PIN	
	11	1	**223-1541**	1	GUARD AS-RADIATOR	
	11A	1	**3G-6372**	2	BUSHING	
	11B	1	**8E-9522**	2	BUSHING	
	11C	1	**258-2303**	2	BUSHING	
	11D	1	**258-2307**	2	BUSHING	
	12	1	**227-3149**	2	PIN	
	13	1	**227-3151**	1	PLATE AS	
	14	1	**2G-9245**	2	PLATE	
	15	1	**3B-4615**	2	PIN-COTTER	
	16	1	**3V-9244**	2	WASHER (16.5X50X5-MM THK)	
	17	1	**5M-6214**	2	PLUG-PIPE	
	18	1	**5P-1076**	16	WASHER-HARD (13.5X30X4-MM THK)	
M	20	1	**7X-2553**	2	BOLT (M16X2X40-MM)	
	22	1	**8T-4121**	9	WASHER-HARD (11X21X2.5-MM THK)	
	23	1	**172-5487**	2	SPACER (17X29X7.5-MM THK)	
M	24	1	**8T-4136**	8	BOLT (M10X1.5X25-MM)	
M	25	1	**8T-4139**	12	BOLT (M12X1.75X30-MM)	
M	26	1	**7X-2488**	2	BOLT (M20X2.5X160-MM)	

M - METRIC PART

223-1540 **GUARD GP-RADIATOR (*contd.*)** **i04701533**

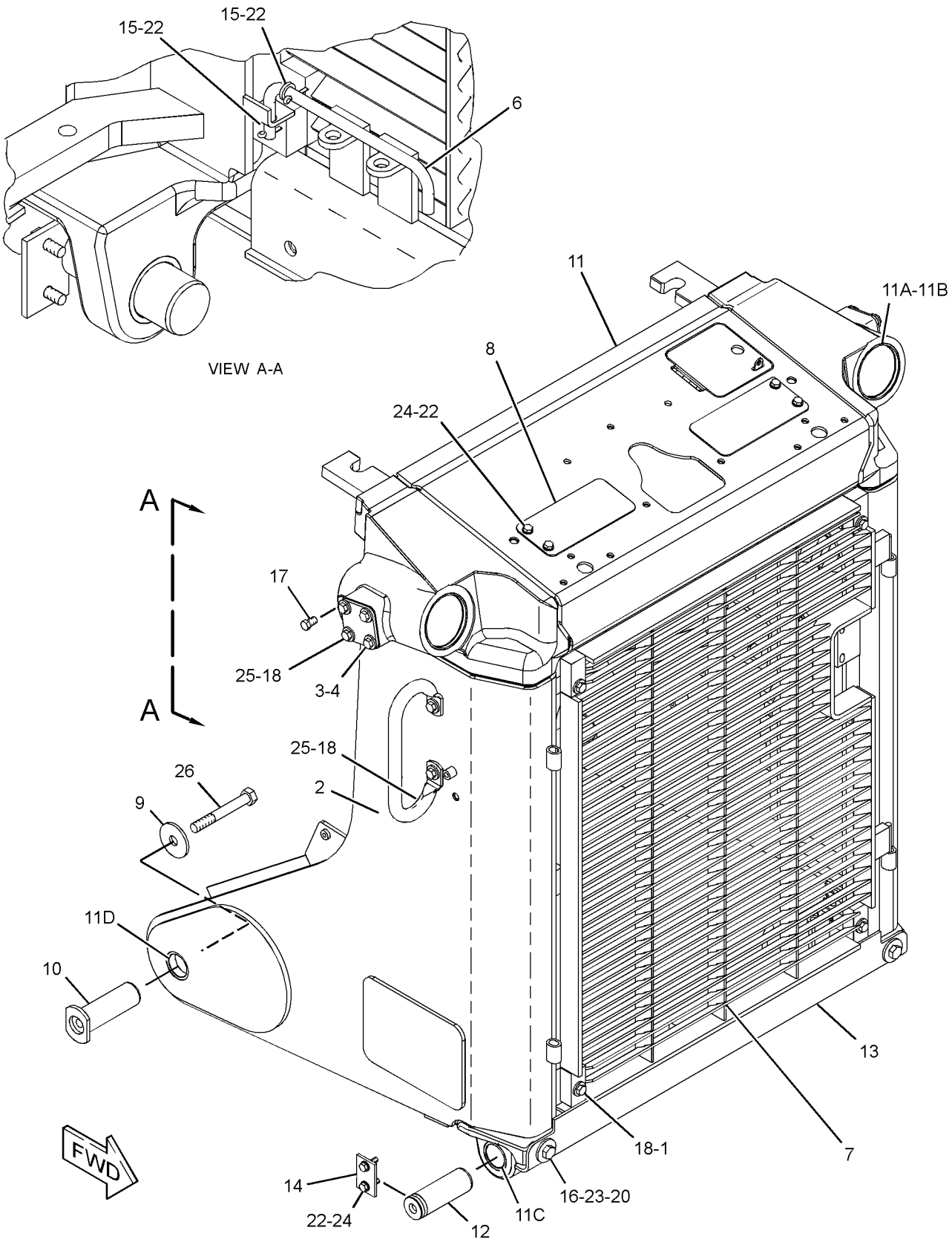

GRAPHIC #1 **<END>** g02990676

258-7597 GUARD GP-RADIATOR–BOTTOM

S/N: SMC1-UP; GCT1-UP

AN ATTACHMENT

SMCS-7155 **i02587034**

NOTE	REF NO	GRAPHIC REF	PART NUMBER	QTY	PART NAME 1 2 3 4 5 6 (PRODUCT LEVEL)	SEE PAGE
	1	1	**258-7607**	1	GUARD AS	
	2	1	**3V-9244**	2	WASHER (16.5X50X5-MM THK)	
M	3	1	**7X-2553**	2	BOLT (M16X2X40-MM)	
	4	1	**8T-4122**	6	WASHER-HARD (17X32X3.5-MM THK)	

M - METRIC PART

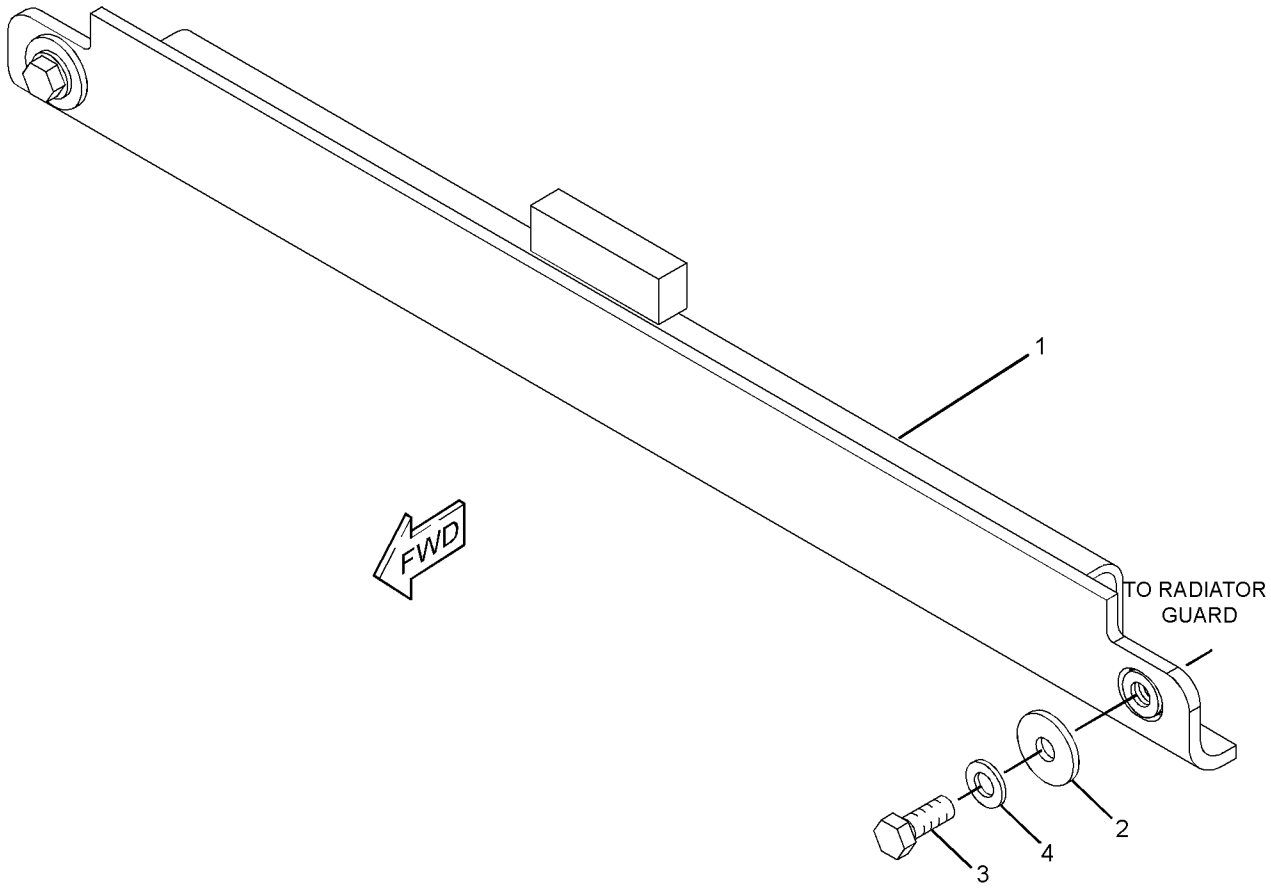

GRAPHIC #1 **<END>** g01329577

281-0777 GUARD GP-RADIATOR

S/N: SMC1-UP; GCT1-UP
QUICK OPENING DOORS
PART OF 247-2838 WASTE HANDLING AR
AN ATTACHMENT

SMCS-7155 **i05146711**

NOTE	REF NO	GRAPHIC REF	PART NUMBER	QTY	PART NAME 1 2 3 4 5 6 (PRODUCT LEVEL)	SEE PAGE
	1	1	**8T-9496**	4	LOCKNUT (9/16-18-THD)	
Y	2	1	**8Y-6400**	2	LATCH GP (T-BAR, COMPARTMENT)	632
	3	1	**9W-2822**	1	ROD	
	4	1	**105-1473**	2	PLATE AS	
	5	1	**184-3008**	2	PAWL	
	6	1	**217-0067**	4	HINGE AS	
	7	1	**217-0070**	1	GRILL AS	
B	8	1	**217-0072**	4	SHIM (2-MM THK)	
	9	1	**219-1930**	1	GRILL AS	
	10	1	**258-7607**	1	GUARD AS	
B	11	1	**1Q-3677**	4	SHIM (3-MM THK)	
	12	1	**2K-4973**	4	LOCKNUT (3/8-16-THD)	
	13	1	**3B-4615**	2	PIN-COTTER	
	14	1	**3V-9244**	2	WASHER (16.5X50X5-MM THK)	
	15	1	**5P-1076**	10	WASHER-HARD (13.5X30X4-MM THK)	
M	16	1	**7X-2553**	2	BOLT (M16X2X40-MM)	
	18	1	**8T-2502**	4	BOLT (3/8-16X1.125-IN)	
	19	1	**8T-4122**	6	WASHER-HARD (17X32X3.5-MM THK)	
M	20	1	**8T-4179**	2	BOLT (M12X1.75X20-MM)	
M	21	1	**8T-4183**	8	BOLT (M12X1.75X40-MM)	
	22	1	**8T-4896**	4	WASHER-HARD (10.2X18.5X2.5-MM THK)	

B - USE AS REQUIRED
M - METRIC PART
Y - SEPARATE ILLUSTRATION

281-0777 **GUARD GP-RADIATOR (*contd.*)** **i05146711**

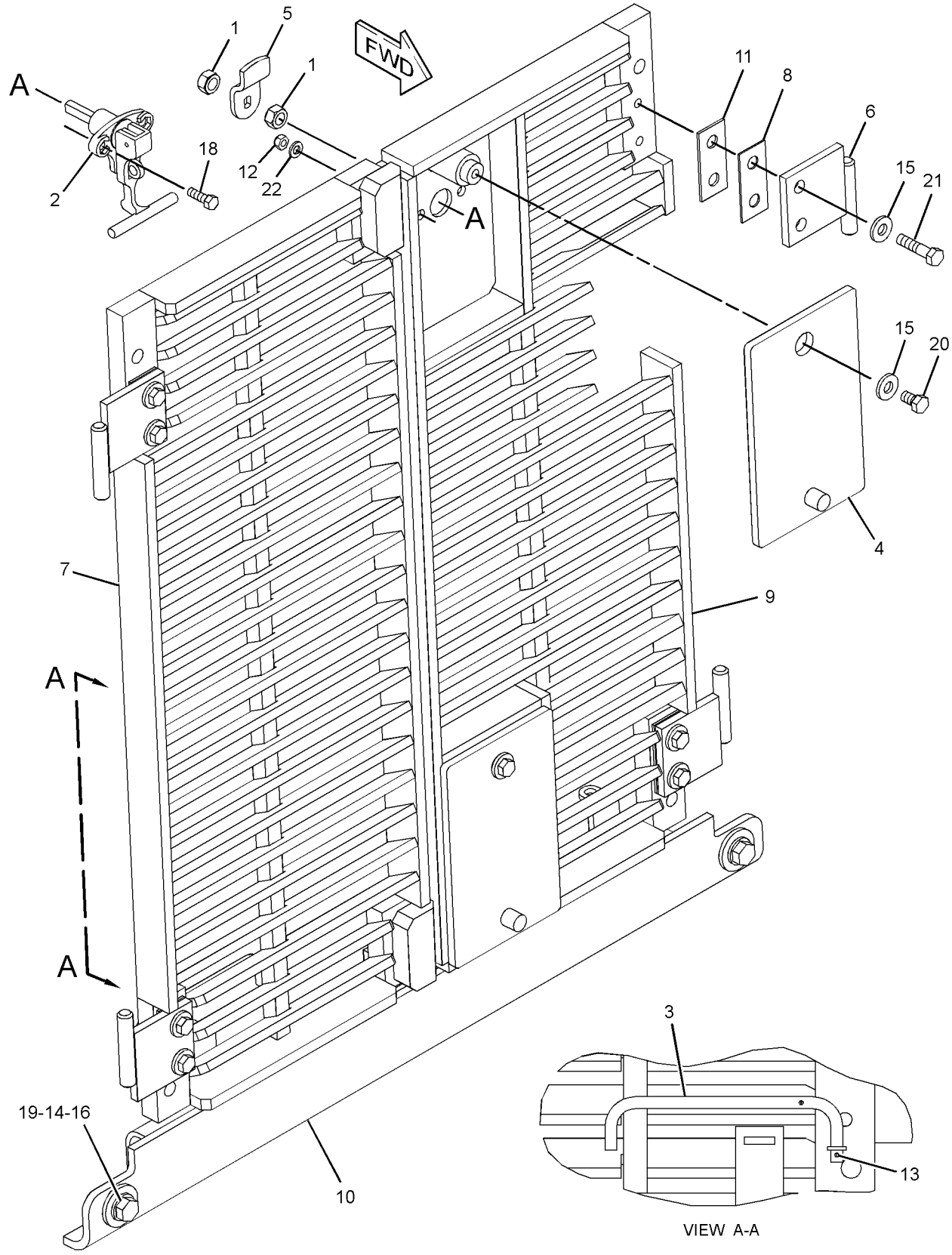

GRAPHIC #1 **<END>** g02309336

250-3413 GUARD GP-REAR—HEAVY-DUTY

S/N: SMC1-UP; GCT1-UP

AN ATTACHMENT

SMCS-7187 **i02455497**

NOTE	REF NO	GRAPHIC REF	PART NUMBER	QTY	PART NAME 1 2 3 4 5 6 (PRODUCT LEVEL)	SEE PAGE
	1	1	**1K-8850**	1	SPRING	
	2	1	**2P-8514**	4	SPACER (1.062X2X1-IN THK)	
	3	1	**5G-7183**	1	GUARD AS	
		1	**4K-7627**	1	BAR	
		1	**4K-8501**	2	CLIP	
		1	**7G-4262**	1	HINGE	
	4	1	**5D-3118**	4	STUD-TAPERLOCK (1-8-THD)	
	5	1	**6V-8190**	4	NUT (1-8-THD)	
	6	1	**8T-5361**	4	WASHER-HARD (28X49X5-MM THK)	
M	7	1	**9X-2125**	4	BOLT-LOCKING (M10X1.5X25-MM)	

M - METRIC PART

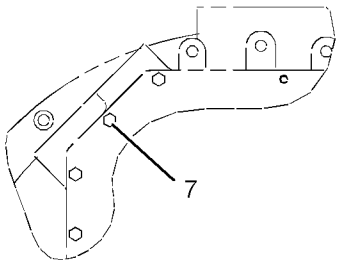

SECTION B-B

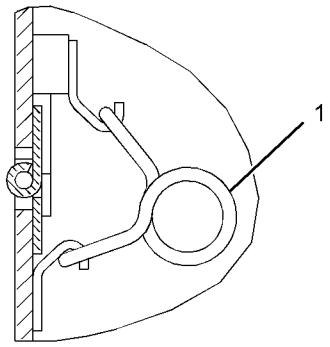

SECTION A-A

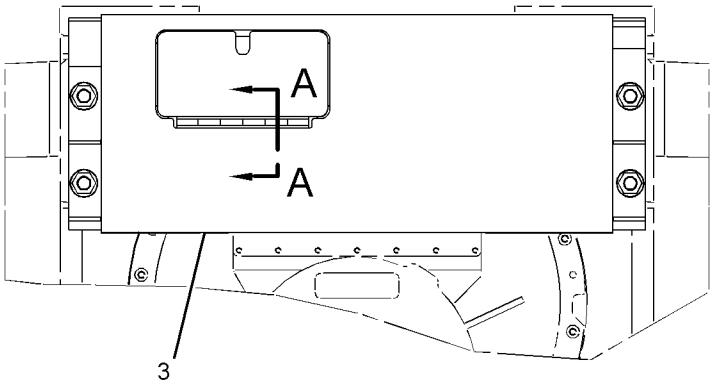

REAR VIEW

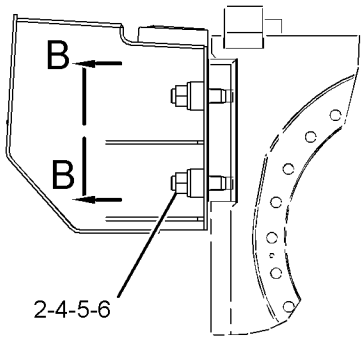

RIGHT SIDE VIEW

GRAPHIC #1 **<END>** g01225932

279-7240 GUARD GP-REAR–FORESTRY

S/N: SMC1-UP; GCT1-494, 499
PART OF 323-2871 CAB AR
AN ATTACHMENT

SMCS-7187 **i04032650**

NOTE	REF NO	GRAPHIC REF	PART NUMBER	QTY	PART NAME 1 2 3 4 5 6 (PRODUCT LEVEL)	SEE PAGE
Y	1	1	*295-3130*	1	GUARD GP-REAR	628
	2	1	**5P-1076**	4	WASHER-HARD (13.5X30X4-MM THK)	
M	3	1	**7X-2562**	4	BOLT (M20X2.5X45-MM)	
M	4	1	**8T-4956**	4	BOLT (M12X1.75X35-MM)	
	5	1	**8T-5439**	4	WASHER-HARD (21.5X45X6-MM THK)	

M - METRIC PART
Y - SEPARATE ILLUSTRATION

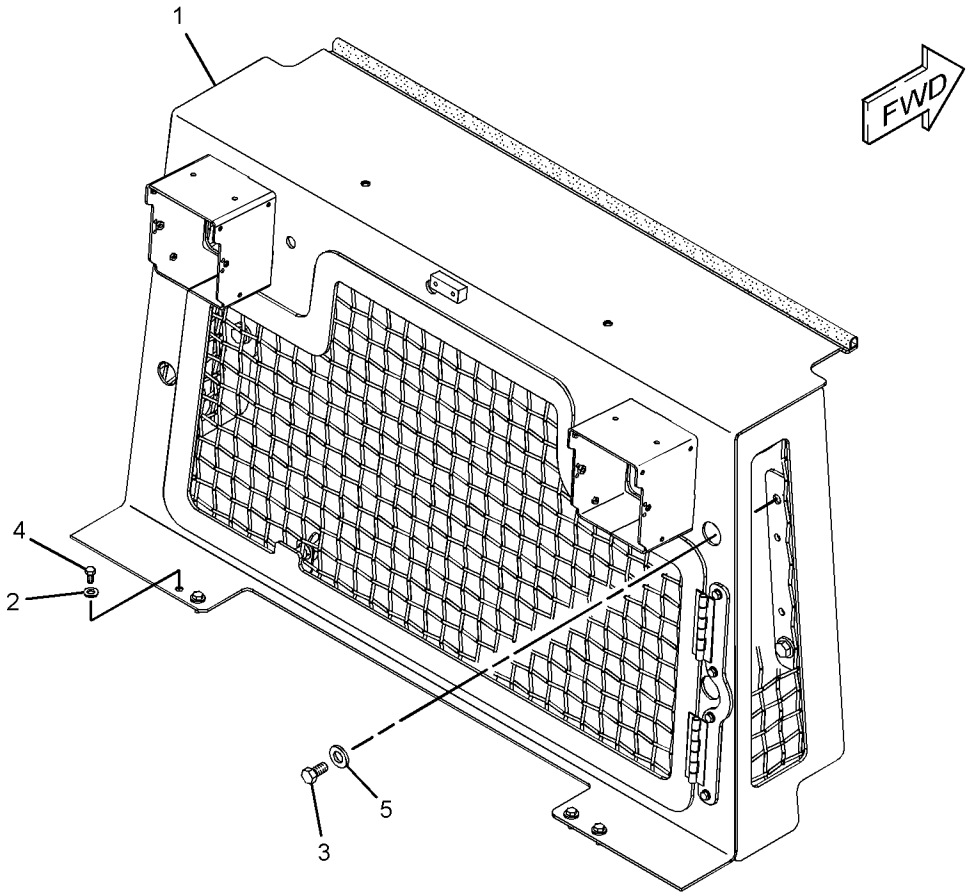

GRAPHIC #1 **<END>** g01365482

295-3130 GUARD GP-REAR–FORESTRY

S/N: SMC1-UP; GCT1-494, 499
PART OF 279-7240 GUARD GP-REAR
AN ATTACHMENT

SMCS-7187 **i04032665**

NOTE	REF NO	GRAPHIC REF	PART NUMBER	QTY	PART NAME 1 2 3 4 5 6 (PRODUCT LEVEL)	SEE PAGE
	1	1	**249-2844**	4	WASHER (12.7X31.7X1-MM THK)	
	2	1	**275-4236**	2	SCREW-WING (M12X1.75X40-MM)	
	3	1	**279-7237**	1	GUARD AS-REAR	
	4	1	**279-7246**	1	DOOR AS	
M		1	**9R-3845**	2	BOSS (M12X1.75X38-MM)	
		1	**155-6479**	2	HINGE AS	
	5	1	**3B-4610**	2	PIN-COTTER	
	6	1	**8T-4121**	4	WASHER-HARD (11X21X2.5-MM THK)	
M	7	1	**8T-4195**	4	BOLT (M10X1.5X30-MM)	
E	8	1	**149-5933**		SEAL (150-CM)	

E - ORDER BY THE CENTIMETER
M - METRIC PART

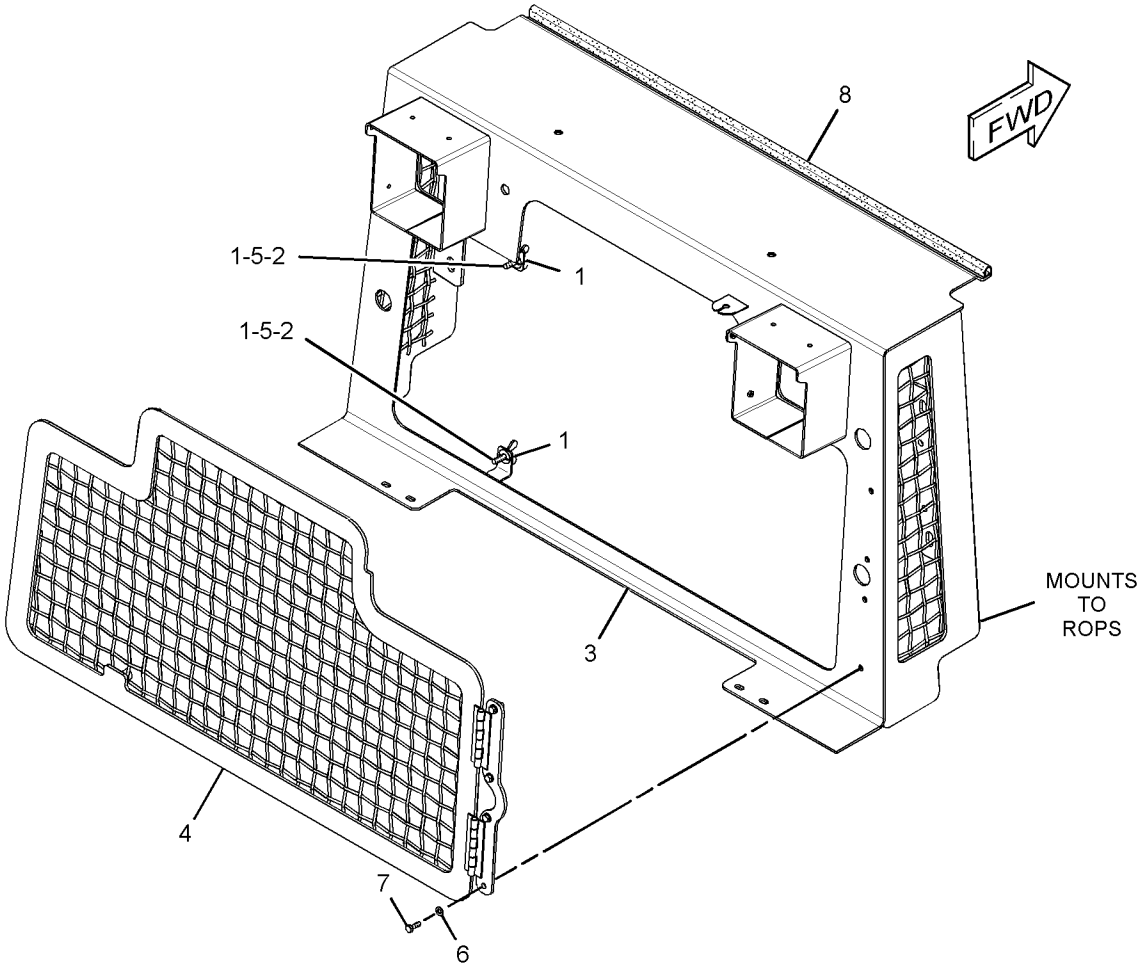

GRAPHIC #1 **<END>** g01321197

329-9221 GUARD GP-REAR–FORESTRY

S/N: SMC1-UP; GCT495-498, 500-UP
PART OF 337-8041 GUARD GP-REAR
AN ATTACHMENT

SMCS-7187 **i04035391**

NOTE	REF NO	GRAPHIC REF	PART NUMBER	QTY	PART NAME 1 2 3 4 5 6 (PRODUCT LEVEL)	SEE PAGE
	1	1	**114-9284**	1	BUMPER	
	2	1	**172-2385**	1	LATCH AS-ROTARY	
	3	1	**314-9421**	1	PLATE AS	
	4	1	**329-9232**	1	GUARD AS-REAR (DOOR)	
	4A	1	**155-6479**	2	HINGE AS	
	5	1	**329-9234**	1	GUARD AS-REAR	
	6	1	**129-3737**	1	STRIKER BOLT-CAB (M12X1.75X17.8-MM)	
M	7	1	**184-0983**	1	NUT-HEX FLANGE (M12X1.75-THD)	
	8	1	**198-4777**	2	WASHER-HARD (11X25X10-MM THK)	
M	9	1	**3T-0849**	4	BOLT-SOCKET HEAD (M6X1X25-MM)	
M	10	1	**5C-7261**	1	NUT (M8X1.25-THD)	
	11	1	**8T-4121**	4	WASHER-HARD (11X21X2.5-MM THK)	
M	12	1	**8T-4195**	4	BOLT (M10X1.5X30-MM)	
M	13	1	**8T-4196**	2	BOLT (M10X1.5X35-MM)	

M - METRIC PART

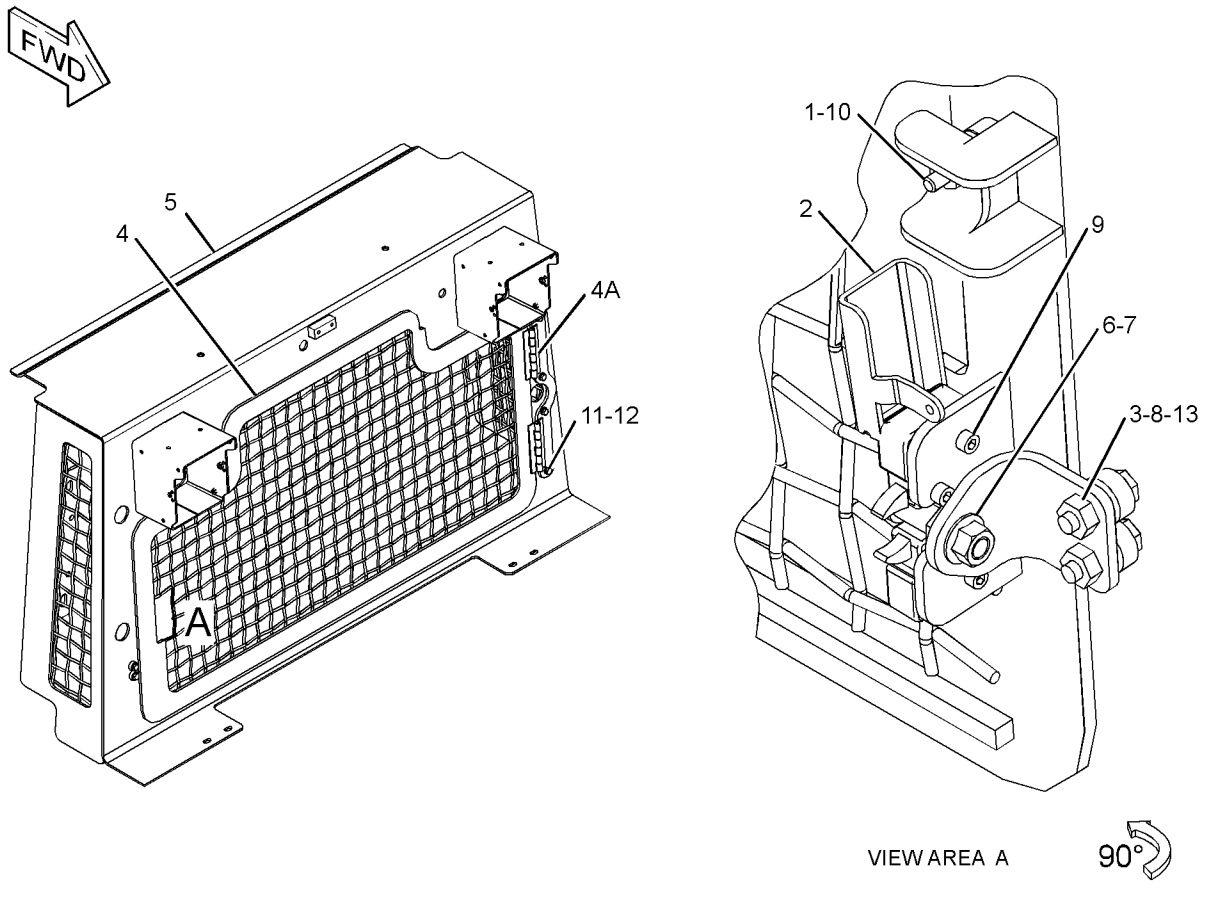

GRAPHIC #1 **<END>** g02234034

337-8041 GUARD GP-REAR–FORESTRY

S/N: SMC1-UP; GCT495-498, 500-UP
PART OF 323-2871 CAB AR
AN ATTACHMENT

SMCS-7187 **i04035358**

NOTE	REF NO	GRAPHIC REF	PART NUMBER	QTY	PART NAME 1 2 3 4 5 6 (PRODUCT LEVEL)	SEE PAGE
Y	1	1	**329-9221**	1	GUARD GP-REAR	629
	2	1	**5P-1076**	4	WASHER-HARD (13.5X30X4-MM THK)	
M	3	1	**7X-2562**	4	BOLT (M20X2.5X45-MM)	
M	4	1	**8T-4956**	4	BOLT (M12X1.75X35-MM)	
	5	1	**8T-5439**	4	WASHER-HARD (21.5X45X6-MM THK)	

M - METRIC PART
Y - SEPARATE ILLUSTRATION

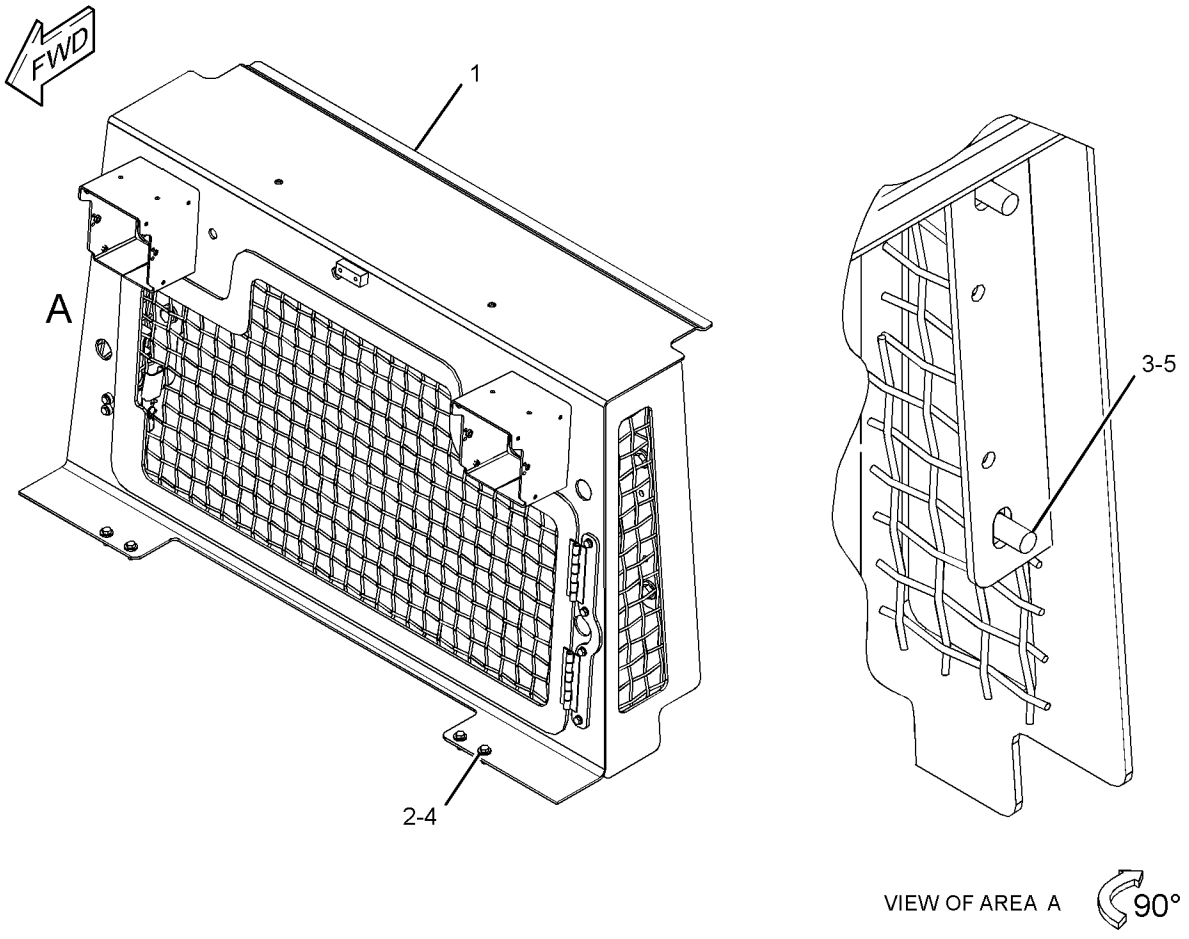

GRAPHIC #1 **<END>** g02235833

3W-1356 GUARD GP-TRANSMISSION

S/N: SMC1-UP; D6D1-UP; GCT1-UP
PART OF 280-1478 CONTROL AR-HYDRAULIC IMPLEMENT, 224-4449 RIPPER AR
AN ATTACHMENT

SMCS-7153 **i05335551**

NOTE	REF NO	GRAPHIC REF	PART NUMBER	QTY	PART NAME 1 2 3 4 5 6 (PRODUCT LEVEL)	SEE PAGE
	1	1	**368-4696**	1	GUARD AS	
	2	1	**7X-0402**	4	BOLT (1-8X2-IN)	
	3	1	**8T-5361**	4	WASHER-HARD (28X49X5-MM THK)	

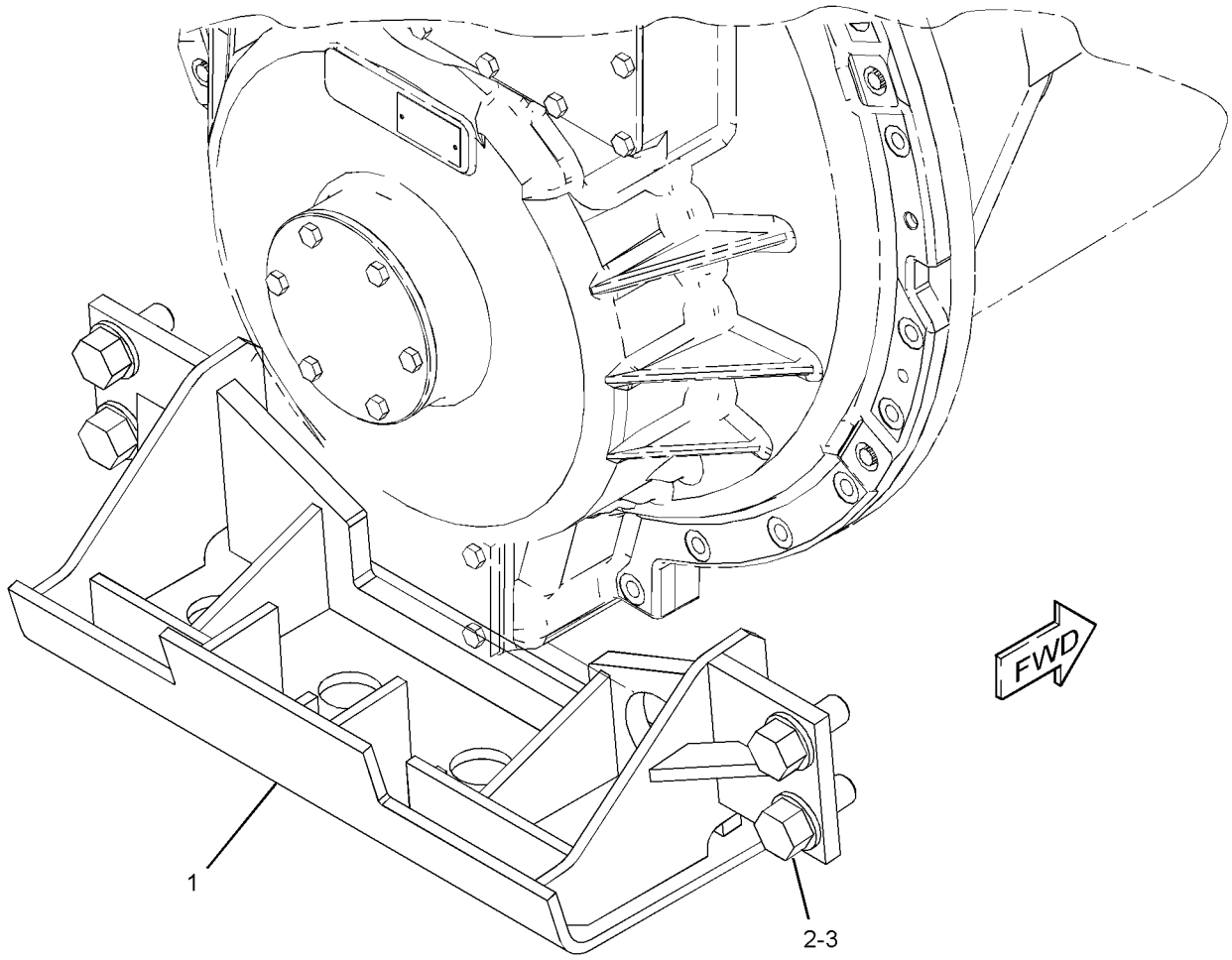

GRAPHIC #1 **<END>** g03072579

8Y-6400 LATCH GP

S/N: SMC1-UP; GCT1-UP
PART OF 256-6021 BAR GP-STRIKER, 281-0777 GUARD GP-RADIATOR
AN ATTACHMENT

SMCS-7251 **i02160253**

NOTE	REF NO	GRAPHIC REF	PART NUMBER	QTY	PART NAME 1 2 3 4 5 6 (PRODUCT LEVEL)	SEE PAGE
	1	1	**7X-0766**	1	SPRING-LATCH	
	2	1	**8Y-5747**	1	BRACKET-MOUNTING	
	3	1	**8Y-3998**	1	HANDLE-LATCH	
	4	1	**8Y-3966**	1	WASHER (14.7X35X1.57-MM THK)	
	5	1	**8Y-8306**	1	SHAFT-LATCH	
	6	1	**6H-3956**	1	PIN	

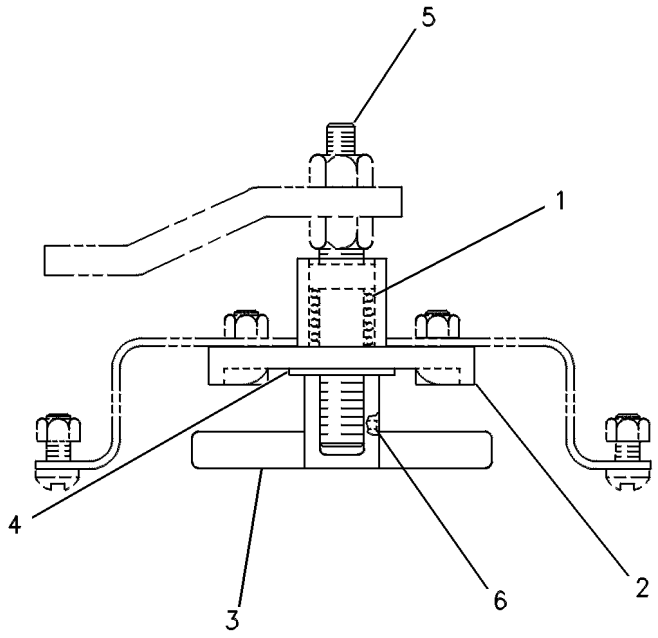

GRAPHIC #1 **<END>** g00236353

172-0962 PLATE GP-RADIATOR—HEAVY-DUTY

S/N: SMC1-UP; GCT1-UP
PERFORATED
AN ATTACHMENT

SMCS-7170 **i01816393**

NOTE	REF NO	GRAPHIC REF	PART NUMBER	QTY	PART NAME 1 2 3 4 5 6 (PRODUCT LEVEL)	SEE PAGE
	1	1	**8E-2014**	1	GRILL AS	
	2	1	**5P-1076**	4	WASHER-HARD (13.5X30X4-MM THK)	
M	3	1	**8T-6868**	4	BOLT (M12X1.75X80-MM)	

M - METRIC PART

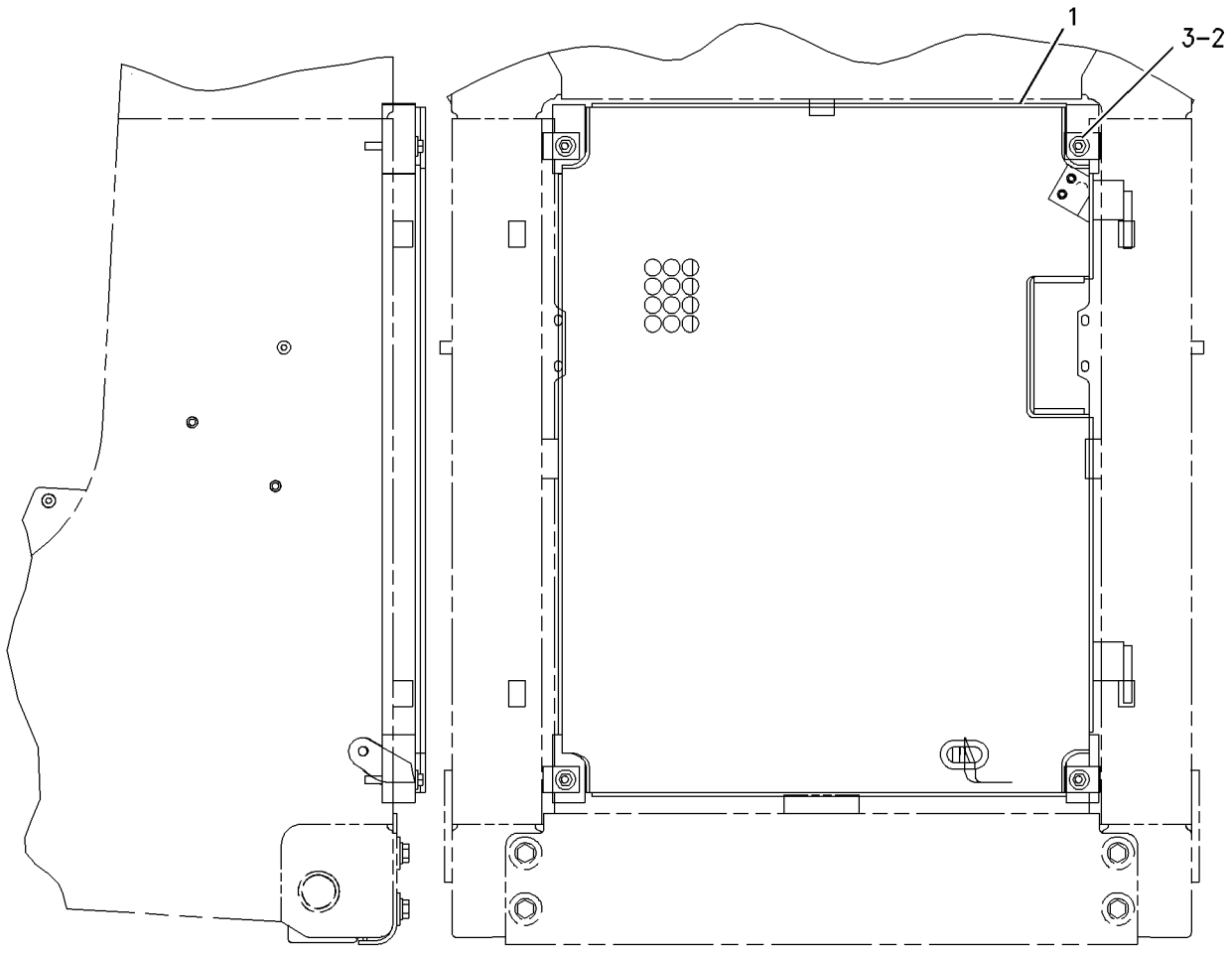

GRAPHIC #1 **<END>** g00741151

265-7424 SEAL GP-WASTE HANDLING

S/N: SMC1-UP; GCT1-UP
PART OF 247-2838 WASTE HANDLING AR
AN ATTACHMENT

SMCS-7555 **i05173129**

NOTE	REF NO	GRAPHIC REF	PART NUMBER	QTY	PART NAME 1 2 3 4 5 6 (PRODUCT LEVEL)	SEE PAGE
	1	1	**226-5954**	1	FENDER AS (LH)	
	2	1	**226-5955**	1	FENDER AS (RH)	
	3	1	**234-6865**	1	PLATE-TREAD (RH)	
	4	1	**234-6866**	1	PLATE-TREAD (LH)	
	5	1	**234-6867**	1	PLATE-TREAD (RH)	
	6	1	**234-6868**	1	PLATE-TREAD (LH)	
	7	1	**382-3024**	1	BAFFLE AS	
	8	1	**269-0209**	1	BAFFLE	
	9	1	**269-0210**	1	BAFFLE	
	10	1	**269-0211**	1	BAFFLE AS	
	11	1	**270-1775**	1	PLATE	
	12	1	**275-5780**	1	SEAL	
	13	1	**5P-1076**	2	WASHER-HARD (13.5X30X4-MM THK)	
	14	1	**7X-7729**	8	WASHER (11X25X3-MM THK)	
M	15	1	**8C-8585**	26	SCREW-BUTTON HEAD (M10X1.5X20-MM)	
M	16	1	**8T-4133**	1	NUT (M10X1.5-THD)	
M	17	1	**8T-4136**	4	BOLT (M10X1.5X25-MM)	
M	18	1	**8T-4137**	1	BOLT (M10X1.5X20-MM)	
D	19	1	**5P-5649**		SEAL-BULK (0.05-M EACH)	
D	20	1	**6V-1359**		SEAL (0.3-M)	
D	21	1	**6V-2499**		SEAL (0.6-M EACH)	
D	22	1	**5P-7211**		SEAL (0.3-M)	
D	22A	1	**5P-7211**		SEAL (0.19-M)	
D	22B	1	**5P-7211**		SEAL (0.17-M EACH)	
D	22C	1	**5P-7211**		SEAL (0.34-M EACH)	
D	22D	1	**5P-7211**		SEAL (0.04-M EACH)	
D	22E	1	**5P-7211**		SEAL (0.08-M EACH)	
D	23	1	**6V-5654**		SEAL (0.85-M)	
D	23A	1	**6V-5654**		SEAL (0.32-M EACH)	
D	23B	1	**6V-5654**		SEAL (1.3-M)	
E	24	1	**132-8502**		SEAL (130-CM)	
E	25	1	**237-9259**		SEAL (70-CM EACH)	
E	26	1	**238-9166**		SEAL (28-CM)	
E	26A	1	**238-9166**		SEAL (72.5-CM)	
E	26B	1	**238-9166**		SEAL (35-CM EACH)	
E	26C	1	**238-9166**		SEAL (100-CM)	
E	26D	1	**238-9166**		SEAL (74-CM)	
E	26E	1	**238-9166**		SEAL (18-CM)	
E	26F	1	**238-9166**		SEAL (25-CM)	
E	27	1	**149-5933**		SEAL (19-CM)	
E	27A	1	**149-5933**		SEAL (168-CM EACH)	
E	27B	1	**149-5933**		SEAL (108-CM EACH)	
E	27C	1	**149-5933**		SEAL (70-CM)	
E	27D	1	**149-5933**		SEAL (53-CM)	
M	28	1	**8T-4196**	4	BOLT (M10X1.5X35-MM)	

D - ORDER BY THE METER
E - ORDER BY THE CENTIMETER
M - METRIC PART

265-7424 **SEAL GP-WASTE HANDLING (*contd.*)** **i05173129**

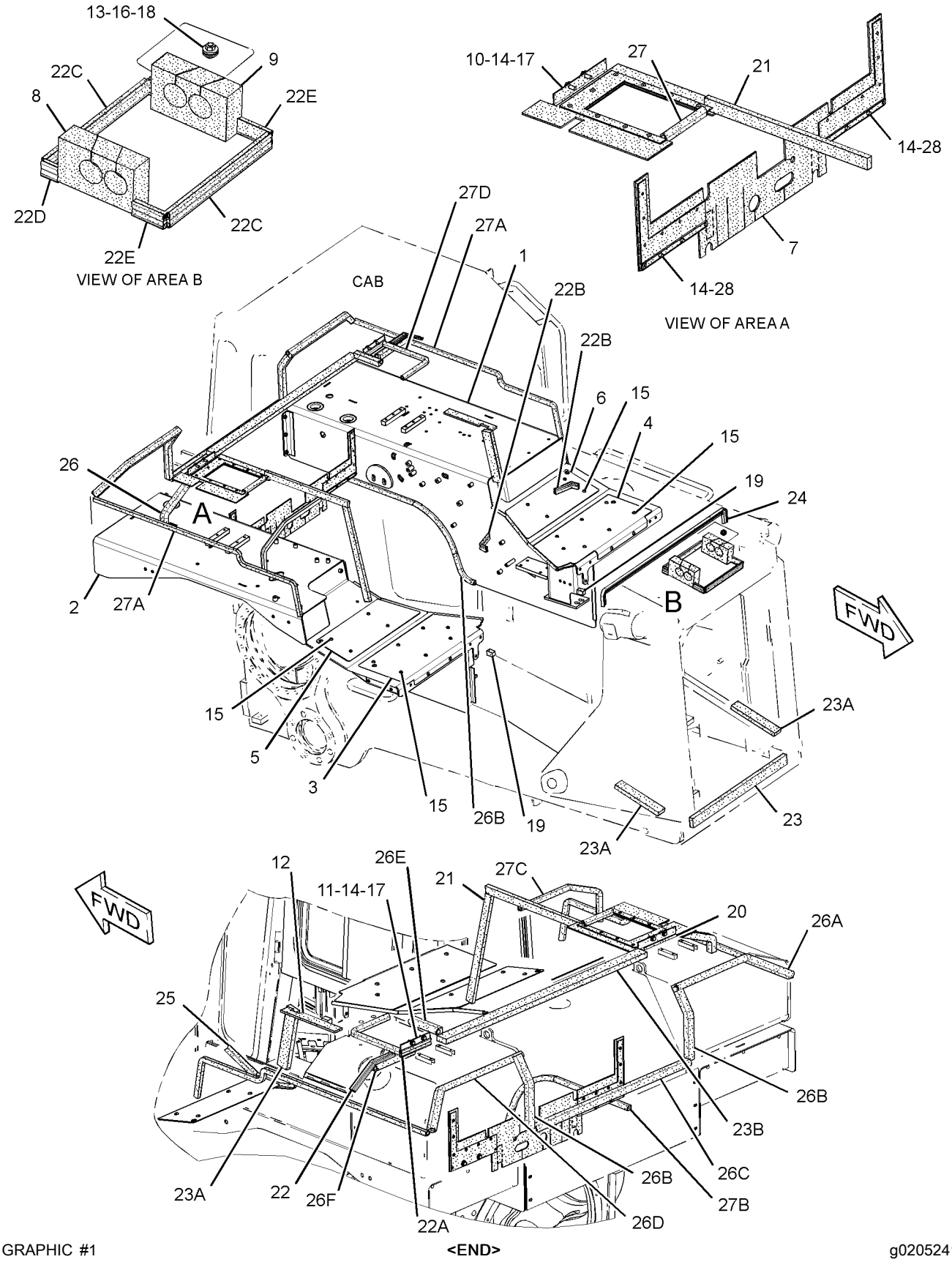

GRAPHIC #1 **<END>** g02052413

237-9318 SWEEP GP

S/N: SMC1-UP; GCT1-UP

AN ATTACHMENT

SMCS-7162 **i03156999**

NOTE	REF NO	GRAPHIC REF	PART NUMBER	QTY	PART NAME 1 2 3 4 5 6 (PRODUCT LEVEL)	SEE PAGE
	1	1	**1P-2772**	8	SPACER (1.031X1.219X0.75-IN THK)	
	2	1	**6T-1698**	8	MOUNT	
	3	1	**235-0541**	2	BLOCK AS	
	4	1	**235-0544**	8	PLATE	
	5	1	**235-0545**	2	SPACER	
	6	1	**256-7285**	1	BRACKET AS (LH)	
	7	1	**256-7286**	1	BRACKET AS (RH)	
	8	1	*271-3863*	1	SWEEP AS	
	8A	1	**1P-2772**	4	SPACER (1.031X1.219X0.75-IN THK)	
	8B	1	**3W-6528**	2	TUBE AS	
	8C	1	**9S-5187**	6	MOUNTING	
	8D	1	**259-1289**	2	PLATE AS	
	8E	1	**259-1291**	1	GUARD AS	
	8F	1	**259-1292**	1	GUARD AS	
	8G	1	**6K-3632**	2	LOCKNUT (1-8-THD)	
	8H	1	**8C-8844**	2	BOLT (1-8X5-IN)	
	8J	1	**8P-5244**	4	WASHER (33.3X69.8X6.35-MM THK)	
	9	1	**278-4696**	2	SPACER	
	10	1	**5P-1076**	12	WASHER-HARD (13.5X30X4-MM THK)	
M	11	1	**6V-7676**	4	NUT (M24X3-THD)	
M	12	1	**7X-2549**	8	BOLT (M12X1.75X100-MM)	
M	13	1	**7X-2563**	4	BOLT (M20X2.5X60-MM)	
M	14	1	**7X-2565**	2	BOLT (M20X2.5X100-MM)	
M	15	1	**7X-2566**	2	BOLT (M20X2.5X110-MM)	
	16	1	**7X-7729**	4	WASHER (11X25X3-MM THK)	
	17	1	**8P-5244**	8	WASHER (33.3X69.8X6.35-MM THK)	
M	18	1	**8T-0363**	4	BOLT (M24X3X120-MM)	
	19	1	**8T-4122**	4	WASHER-HARD (17X32X3.5-MM THK)	
	20	1	**8T-4123**	2	WASHER (22X35X3.5-MM THK)	
M	21	1	**8T-4193**	4	BOLT (M16X2X50-MM)	
M	22	1	**8T-4196**	4	BOLT (M10X1.5X35-MM)	
	23	1	**8T-5439**	6	WASHER-HARD (21.5X45X6-MM THK)	
M	24	1	**9X-8499**	4	BOLT (M12X1.75X60-MM)	
	25	1	**5P-1075**	2	WASHER-HARD (10.2X22.5X3-MM THK)	
M	26	1	**8T-4137**	2	BOLT (M10X1.5X20-MM)	

PARTS SHOWN IN GRAPHIC(S) WITHOUT A REFERENCE NUMBER ARE NOT SERVICED SEPARATELY

M - METRIC PART

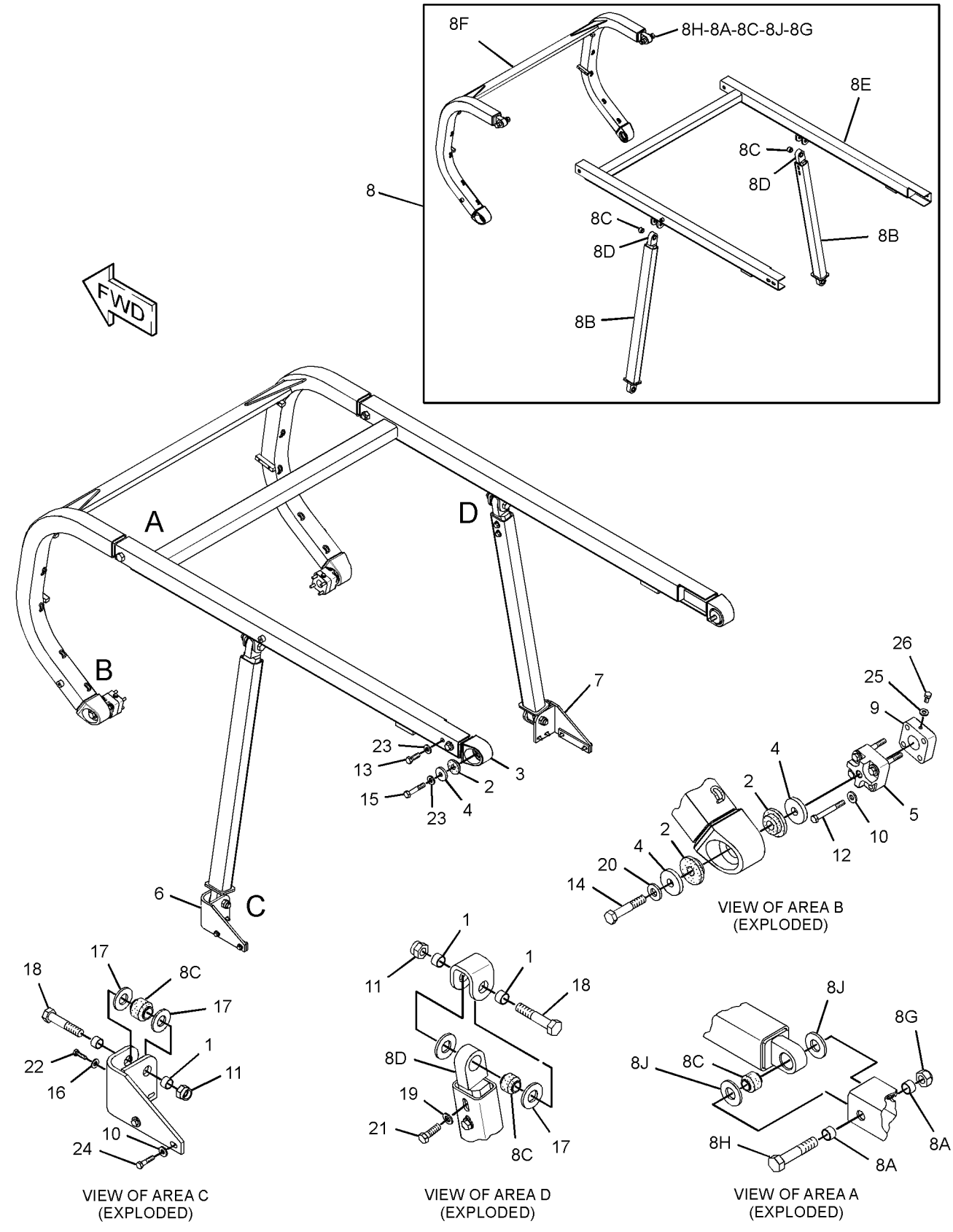

GRAPHIC #1

<END>

g01640048

287-4656 SWEEP GP–FORESTRY

S/N: SMC1-UP; GCT1-UP
PART OF 287-4670 FORESTRY AR
AN ATTACHMENT

SMCS-7162 **i04030175**

NOTE	REF NO	GRAPHIC REF	PART NUMBER	QTY	PART NAME 1 2 3 4 5 6 (PRODUCT LEVEL)	SEE PAGE
	1	2	**1P-2772**	8	SPACER (1.031X1.219X0.75-IN THK)	
	2	1	**3W-6528**	2	TUBE AS	
	3	2	**6T-1698**	8	MOUNT	
	4	2	**9S-5187**	4	MOUNTING	
	5	2	**235-0541**	2	BLOCK AS	
	6	2	**235-0544**	8	PLATE	
	7	2	**235-0545**	2	SPACER	
	8	2	**256-7285**	1	BRACKET AS (LH)	
	9	2	**256-7286**	1	BRACKET AS (RH)	
	10	2	**256-7288**	2	PLATE	
	11	2	**259-1289**	2	PLATE AS	
	12	2	**278-4696**	2	SPACER	
	13	1	*287-4657*	1	SWEEP AS	
	13A	2	**1P-2772**	4	SPACER (1.031X1.219X0.75-IN THK)	
	13B	2	**9S-5187**	2	MOUNTING	
	13C	1	**287-4659**	1	GUARD AS	
	13D	2,1	**287-4660**	1	GUARD AS	
	13E	2	**6K-3632**	2	LOCKNUT (1-8-THD)	
	13F	2	**8C-8844**	2	BOLT (1-8X5-IN)	
	13G	2	**8P-5244**	4	WASHER (33.3X69.8X6.35-MM THK)	
	14	1	**287-4658**	1	ROOF AS	
	15	2	**5P-1076**	12	WASHER-HARD (13.5X30X4-MM THK)	
	16	1	**6H-1717**	8	BOLT (1/2-13X1.125-IN)	
M	17	2	**6V-7676**	4	NUT (M24X3-THD)	
	18	2	**7X-0372**	2	BOLT (3/4-10X4.25-IN)	
M	19	2	**7X-2549**	8	BOLT (M12X1.75X100-MM)	
M	20	1	**7X-2563**	4	BOLT (M20X2.5X60-MM)	
M	21	2	**7X-2566**	2	BOLT (M20X2.5X110-MM)	
	22	2	**7X-7729**	4	WASHER (11X25X3-MM THK)	
	23	2	**8P-5244**	8	WASHER (33.3X69.8X6.35-MM THK)	
M	24	2	**8T-0363**	4	BOLT (M24X3X120-MM)	
	25	1	**8T-4122**	12	WASHER-HARD (17X32X3.5-MM THK)	
M	26	1	**8T-4193**	4	BOLT (M16X2X50-MM)	
M	27	2	**8T-4194**	4	BOLT (M12X1.75X50-MM)	
M	28	2	**8T-4196**	4	BOLT (M10X1.5X35-MM)	
	29	2,1	**8T-5439**	8	WASHER-HARD (21.5X45X6-MM THK)	

M - METRIC PART

287-4656 **SWEEP GP (*contd.*)** **i04030175**

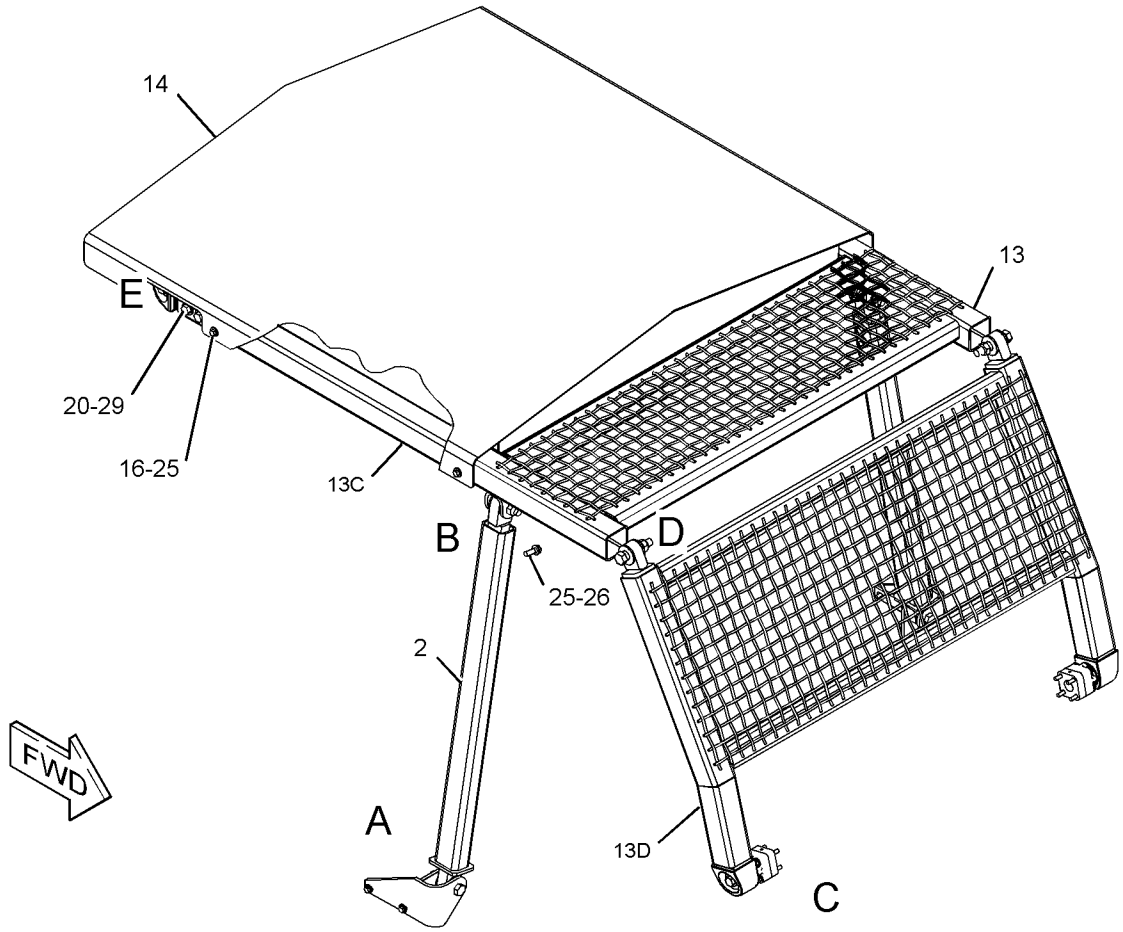

GRAPHIC #1 g02232813

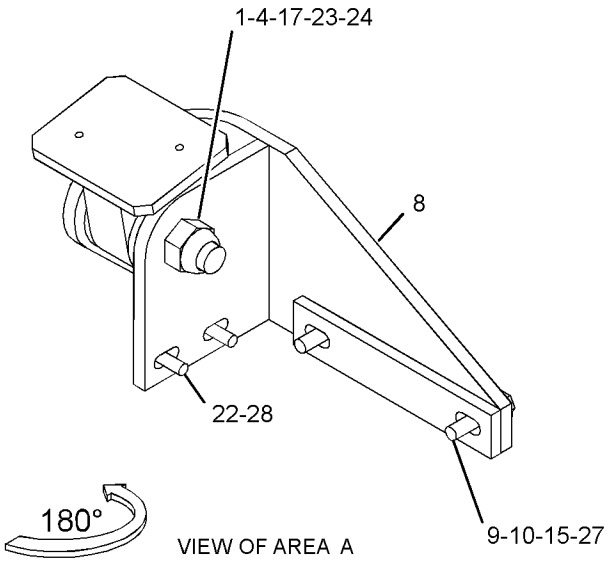

VIEW OF AREA A

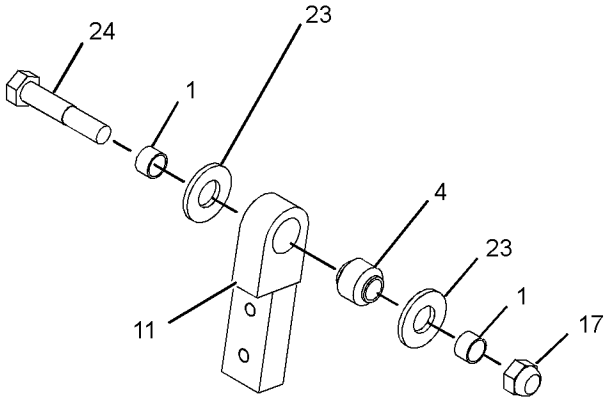

VIEW OF AREA B

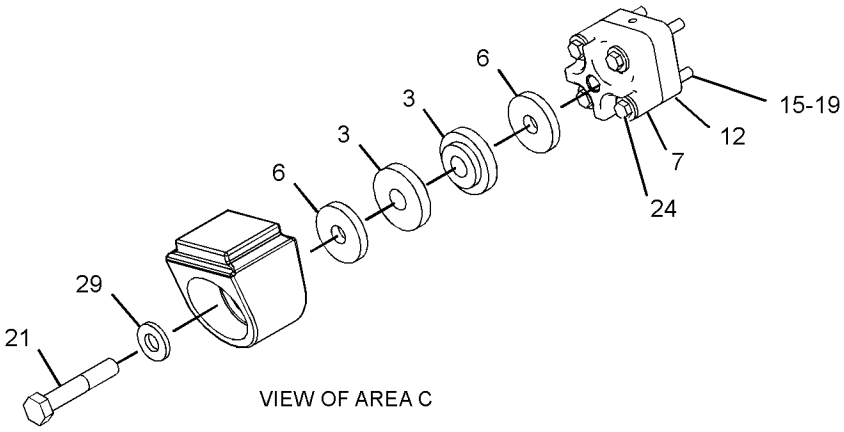

VIEW OF AREA C

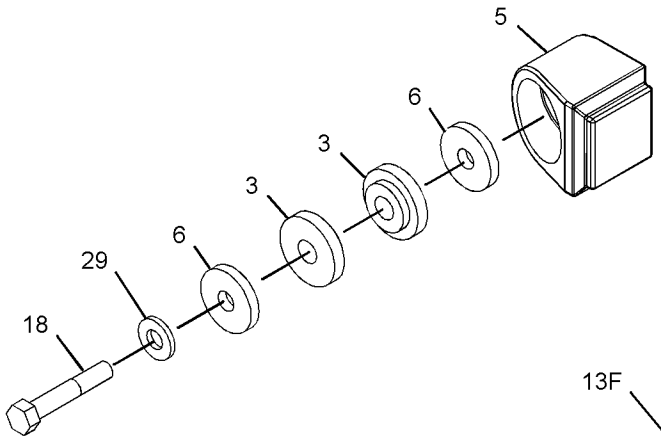

VIEW OF AREA E

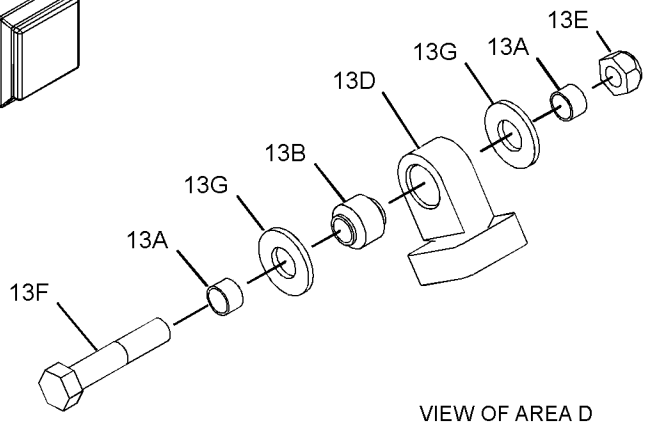

VIEW OF AREA D

GRAPHIC #2 **<END>** g02232816

PART NUMBER INDEX

Part	Page
0	
0L-0478	562
0L-1026	43
0L-1143	448
0L-1169	483
0L-1352	464
0S-0509	464
0S-0519	45
0S-1569	483
0S-1585	452
	454
	456
0S-1591	173
	189
	483
0S-1594	459
0S-1597	378
	383
	386
0S-1614	448
0S-1617	565
0S-1619	531
	537
0S-1620	459
0S-1621	467
0S-1897	483
0T-0102	454
	456
0T-0244	1159
	1162
1	
1A-1460	448
	449
	452
1A-2029	448
	452
	551
	558
1A-2223	448
	530
	537
1A-2610	459
1A-5183	531
	537
1A-5822	483
1B-2578	1136
	1138
	1140
1B-4427	808
1B-5174	648
	650
	652
	654
	656
	658
	660
	662
	664
	666
	749
	750
1B-8705	36
	42
	545
1B-8706	1136
	1138
	1140
1B-8714	1136
	1138
	1140
1B-8735	1005
	1009
	1013
	1017
1C-0569	452
1D-4539	467
1D-4540	464
	467
1D-4601	483
1D-4624	580
1D-5117	259
1F-0748	235
	300
	302
	616
1F-0750	308
	310
	313
	320
	327
	337
	575
	576
	600
	1164
1F-2771	549
	554
1F-6762	837
	839
1F-7960	219
1G-3176	788
	790
	792
1G-7407	760
1G-9011	762
	767
	772
	777
1H-1023	383
	386
1H-2629	383
	386
1H-3244	231
	347
	349
1H-3338	393
	1060
1H-3340	1039
	1041
1H-4106	726
1H-4393	942
1H-5728	487
	491
	498
	504
	510
	516
	522
1H-9696	476
	478
1J-0708	845
1J-2921	847
1J-6472	644
	645
1J-8569	845
1J-9671	224
	226
	412
	422
	763
	768
	773
	778
	820
	821
	928
	952
1K-4129	240
	245
	251
	257
1K-4649	204
1K-5888	877
	885
1K-6984	37
1K-8850	626
1L-4418	573
1L-4775	106
1L-5072	906
1L-6957	483
1L-7388	531
	537
1L-8545	93
	95
1M-1230	1061
1M-1571	837
	839
1M-3909	545
1M-4543	1029
1M-4986	380
	381
1M-6119	239
	240
	245
	246
	251
	252
	257
	259
1M-6120	239
	240
	245
	246
	251
	252
	257
	259
1M-6718	958
1M-8657	531
	537
1M-8747	709
	717
1M-9011	476
	478
	489
	529
1M-9351	568
1M-9968	384
	387
1M-9971	383
	386
1N-5724	753
1N-5999	454
1N-8062	219
1P-0810	240
	246
	252
	409
	434
	997
1P-1547	585
1P-1744	782
1P-2772	636
	638
	1152
1P-2841	573
1P-3702	887
	913
	915
	917
	919
1P-3703	763
	768
	773
	778
	885
	887
1P-3704	764
	769
	774
	779
	858
1P-3706	952
1P-3934	483
	488
1P-3935	483
	488
1P-4278	152
	155
	166
	168
	196
	198
1P-4576	841
	843
1P-4578	491
	498
	504
	510
	516
	522
	543
	870
	913
	915
	917
	919
1P-4584	906
1P-5767	764
	769
	774
	779
1P-6356	1085
	1088
	1091
	1094
	1098
	1102
1P-6522	1033
1P-7009	1086
	1089
	1092
1P-9005	476
	478
1Q-2423	1066
1Q-2606	1013
1Q-2645	1013
1Q-2648	1013
1Q-2976	1013
1Q-2977	1013
1Q-3613	132
1Q-3677	624
1Q-4324	6
	580
1Q-4743	►731
1Q-4930	731
	744
1R-0762	196
	198
1R-0777	906
1R-1808	82

► **PRIMARY REFERENCE**

PART NUMBER INDEX

Part	Page
	109
	112
1R-1809	481
1S-0724	121
1S-0994	196
	198
	206
	208
	241
	247
	253
	259
	409
	887
1S-0996	204
1S-1015	247
	253
	259
	409
1S-1860	483
	731
	732
	733
	741
	742
	743
	744
	745
	746
1S-4305	854
1S-4915	240
	245
	246
	251
	252
	257
	258
	259
	408
1S-6250	808
1S-6420	119
1S-7251	240
	245
	251
	257
	258
	382
1S-7252	240
	246
	253
	258
	382
	391
	408
1S-7446	383
	386
1S-9593	281
	401
	817
	819
	960
	961
	962
	1044
	1045
1S-9799	554
1T-0068	646
	647
1T-0069	486
	558
1T-0097	486
	551
	558
1T-0131	551
	558
1T-0414	551
	558
1T-0438	551
	558
1T-0441	486
	551
	558
1T-0446	551
	558
1T-0447	551
	558
1T-0599	551
	558
1T-0738	806
1T-0765	680
	681
	683
	684
1T-0796	486
1T-0808	383
	386
1T-0902	486
	551
	558
1T-1993	551
	558
1T-2052	551
	558
1T-2069	551
	558
1T-2079	551
	558
1T-2080	551
	558
1T-2081	551
1T-2086	551
	558
1T-2090	►551
	553
1U-0159	1229
	1233
1U-0183	1212
	1214
1U-0300	1229
1U-0301	580
	1229
1U-0612	580
	1229
1U-0725	979
	980
	981
1U-1173	965
1U-1174	965
1U-1175	965
1U-1176	965
1U-1951	1219
1U-2071	808
1U-2752	808
1U-2827	906
1U-3147	808
1U-4069	847
1U-8846	79
	81
	175
	449
	452
1V-3713	124
1V-5872	124
1V-6652	1061
1V-7753	491
	498
	504
	510
	516
	522
1W-2431	178
1W-2715	53
	55
	57
1W-2860	1106
1W-3011	204
1W-3963	808
1W-4724	335
	337
1W-4738	77
	82
1W-4741	77
1W-4746	77
1W-4877	184
	185
1W-5040	300
	302
	1000
1W-8407	45
1Y-7452	152
	155
1Y-7927	1068
1Z-0982	►572
1Z-9932	573
1Z-9933	573
2	
2A-1162	78
	82
2A-1736	1080
2A-3746	52
	59
	60
	82
	553
	556
2A-4429	53
	55
	57
2A-4639	448
2B-0858	474
2B-0947	476
	478
2B-9373	545
2D-1523	549
	554
2D-4202	906
2D-5658	37
	486
	553
	556
2D-6235	1061
	1068
2D-6392	383
	386
2D-6506	489
	529
2D-6642	483
2F-5325	843
2F-5326	644
	645
2F-6678	384
	387
2G-0391	1144
2G-9245	621
2H-3429	383
	386
2H-3755	531
	537
2H-3920	1083
2H-3922	390
	391
	395
	396
2H-3928	679
	680
	681
	682
	683
	684
	685
	709
	711
	717
	719
2H-3931	473
	474
2H-3932	464
	489
2H-3934	894
2H-6622	1180
	1184
	1185
2H-9233	887
2J-0564	841
	849
2J-2866	923
	926
	928
	930
	932
	934
2J-3506	1225
	1226
	1227
2J-3507	726
	896
2J-6274	727
	729
2J-6356	1136
	1138
	1140
2J-7761	906
2J-8163	383
	386
2J-8489	845
	847
	849
2K-0703	1233
2K-2939	37
2K-3258	845
2K-4096	841
	843
2K-4507	841
	843
2K-4821	231
2K-4973	573
	580
	624
	994
	1169
	1171
2K-5069	448
2K-5967	549
	554
2K-5986	486
	553
	556
2K-6279	580
	896
	1229
2K-6830	837
	839

► PRIMARY REFERENCE

PART NUMBER INDEX

Part	Page
2K-8257	487
	491
	498
	504
	510
	516
	522
2K-9295	448
2L-0041	843
2L-5893	1150
2L-6267	460
	462
	755
	757
2L-6679	351
	383
2L-8049	408
2L-8057	408
2L-8069	415
	422
	433
	439
2L-8071	408
2L-8075	1061
	1140
2L-8076	1061
2L-8077	429
	433
	438
2L-8079	415
	422
	433
	439
	1178
2M-1444	997
2M-3432	263
	265
2M-3974	543
2M-4453	82
	147
2M-5795	576
2M-7041	565
2M-7819	1068
2M-9780	196
	198
	204
	454
	489
	762
	763
	767
	768
	772
	773
	777
	778
	800
	802
	804
	816
	870
	952
	957
2N-3680	460
	462
	753
	755
	757
2P-1286	124
2P-2717	108
2P-3696	476
	478
2P-4304	109
	112
2P-4339	1073
2P-6588	883
2P-8514	626
2R-0098	528
2R-5001	753
2S-0795	469
2S-2251	554
2S-2596	923
	926
	928
	930
	932
	934
2S-3029	106
2S-3440	115
2S-4071	454
2S-4078	446
	454
	476
	478
	489
	491
	498
	504
	510
	516
	522
	727
	729
	762
	767
	772
	777
	829
	831
	833
	835
2S-5658	547
2S-5835	568
2S-5926	727
	729
2V-1937	996
2V-2043	124
2V-4868	166
	168
2V-8259	344
2W-5825	136
2W-7381	92
2W-8147	42
2Y-5429	344
2Y-5829	82
	97
	98
	121
	123

3

3A-7880	►1235
3B-0623	43
3B-2263	899
	901
	903
3B-4124	448
3B-4501	395
	396
3B-4508	345
3B-4512	345
3B-4605	592
	594
	596
	598
	753
3B-4610	592
	594
	596
	598
	628
	1063
	1064
3B-4615	606
	621
	624
3B-4617	573
3B-4626	965
3B-4629	608
	609
	611
	612
3B-4632	1221
	1222
	1223
3B-5325	1236
	1237
3B-8489	641
	642
	644
	645
	895
	1233
3D-2824	82
	124
	132
	145
	150
	166
	168
	389
	446
	491
	498
	504
	762
	763
	767
	768
	772
	773
	774
	777
	778
	779
	788
	790
	792
	804
	854
	861
	870
	899
	901
	903
	909
3D-2975	1068
3D-4603	930
	934
3D-7943	782
3D-8317	568
3D-8749	1061
3E-1841	1067
3E-2310	412
	415
	420
3E-3365	371
	389
	395
3E-3368	361
3E-3371	132
	313
	320
	358
	397
	408
3E-3383	408
	1073
	1110
3E-3892	1145
3E-4048	1123
3E-4051	1085
	1088
	1091
	1095
	1098
	1102
3E-4052	1085
	1088
	1091
	1094
	1098
	1102
3E-4057	1085
	1088
	1091
	1095
	1098
	1103
3E-4058	1085
	1088
	1091
	1094
	1098
	1102
3E-4067	1085
	1088
	1091
3E-4080	1094
	1098
	1102
3E-4087	1085
	1088
	1091
	1094
	1098
	1102
3E-4304	1010
	1014
	1060
3E-4313	942
3E-4352	62
	175
	354
	355
	531
	537
3E-4353	84
	87
3E-4354	452
3E-4356	1071
	1072
3E-4999	95
3E-5239	412
	420
	865
	1000
	1031
	1033
3E-5464	996
3E-6328	►228
	429
	433

► **PRIMARY REFERENCE**

PART NUMBER INDEX

Part	Page
	438
3E-6389	►296
	1083
3E-6773	224
	226
3E-6922	1074
3E-7404	1147
3E-7407	870
3E-7410	206
	208
3E-7771	384
	386
3E-7775	378
3E-7835	1060
	1061
3E-7838	1061
3E-7839	1061
3E-8005	38
3E-8008	788
	790
	792
3E-8017	82
	182
	193
	195
3E-8020	412
	422
	1081
3E-8581	960
3E-9205	132
	960
3E-9412	210
3E-9860	305
3E-9867	141
	143
3E-9868	141
	143
3F-3442	459
3F-3727	551
	558
3F-5022	531
	537
3F-5792	79
	82
3F-9556	231
	1111
	1112
	1113
	1114
	1115
	1116
	1117
	1118
	1203
3G-1753	841
3G-1757	841
3G-3267	906
3G-4214	491
	498
	504
	510
	516
	522
	870
3G-4218	491
	498
	504
	510
	516
	522
	870
3G-6372	621
3G-8047	877
	883
	885
3G-8054	764
	769
	774
	779
	877
	883
	885
3G-8057	764
	769
	774
	779
	877
	883
	885
3G-8742	837
	839
3G-9402	895
3G-9405	895
3G-9995	1229
3H-0442	959
3H-7180	1031
3H-8683	885
3J-1770	965
3J-1907	37
	119
	132
	133
	141
	143
	196
	198
	200
	377
	412
	415
	417
	420
	454
	481
	487
	489
	490
	491
	492
	497
	498
	503
	504
	509
	510
	515
	516
	521
	522
	527
	568
	762
	763
	767
	768
	772
	773
	777
	778
	788
	790
	792
	800
	802
	851
	854
	860
	861
	863
	865
	868
	870
	873
	874
	887
	891
	909
	913
	915
	917
	921
	938
	940
	942
	944
	958
3J-2682	978
3J-3679	928
	952
3J-4818	1171
3J-6572	849
3J-6573	965
3J-7354	37
	119
	132
	141
	143
	166
	168
	241
	247
	253
	259
	481
	487
	497
	503
	509
	515
	641
	642
	760
	788
	790
	792
	820
	821
	851
	860
	861
	863
	865
	868
	870
	873
	887
	891
	899
	901
	903
	913
	915
	917
	919
	923
	926
	930
	932
	934
	938
	940
	942
	944
	949
	950
	956
	959
3J-9703	847
	849
3K-0360	4
	37
	53
	82
	119
	132
	145
	150
	157
	204
	449
	452
	476
	478
	487
	490
	491
	498
	504
	510
	516
	522
	763
	764
	768
	769
	773
	774
	778
	779
	788
	790
	792
	854
	860
	883
	887
	922
	938
	946
	947
	948
	954
	955
	956
	1021
	1106
3K-0835	132
	1073
	1076
3K-2511	531
	537
3K-2889	726
3K-8510	1233
3L-0594	1148
3L-3380	383
	386
3L-3813	952
3L-5893	164
	165
3L-8187	1061
3M-7045	124
3N-0759	825
3N-2818	808
3N-3469	1247
3N-3763	384
	386

► **PRIMARY REFERENCE**

PART NUMBER INDEX

Part	Page
3P-1932	482
	498
	504
	510
	516
3P-6308	870
3P-9900	1171
3R-8797	378
	383
	386
3R-8801	384
	386
3R-9965	416
3S-0004	545
	800
	802
3S-2093	206
	208
	401
	404
	406
	408
	464
	467
	753
	806
	997
	1031
	1033
	1041
	1073
	1076
	1083
	1085
	1088
	1091
	1095
	1098
	1103
	1173
	1175
	1177
	1178
3S-2708	448
	452
	486
	488
	531
	537
	553
	556
3S-3439	546
3S-3440	546
3S-6049	240
	246
	252
	259
3S-6162	847
3S-7781	454
	456
	489
3S-8664	1085
	1088
	1091
3S-9233	854
3S-9557	1188
3S-9643	82
	137
3T-0304	429
	433
3T-0598	727
	729
3T-0849	629
3T-0996	578
3T-1121	1180
	1184
	1185
3T-1162	648
	650
	652
	654
	656
	658
	660
	662
	664
	666
	749
	750
3T-1447	545
3T-2051	706
3T-2077	648
	650
	652
	654
	656
	658
	660
	662
	664
	666
	749
	750
3T-3158	1073
3T-3159	1073
3T-3278	1073
3T-3418	383
	386
3T-3422	378
	383
	386
3T-3423	383
	384
	386
	387
3T-3424	383
	384
	386
3T-3434	378
	383
	386
3T-3634	1128
3T-4007	553
	556
3T-4008	553
	556
3T-4009	553
	556
3T-4011	553
	556
3T-4013	553
	556
3T-4377	488
	530
	536
3T-4568	448
3T-4709	351
	383
3T-4710	351
	383
3T-4824	448
3T-4965	774
	779
3T-5021	448
3T-5200	448
3T-5301	490
	497
	503
	509
	515
	521
3T-5302	490
	497
	503
	509
	515
	521
3T-5356	543
3T-5807	452
3T-5851	445
3T-6469	490
	497
	503
	509
	515
3T-6471	490
	497
	503
	509
	515
	521
3T-6742	483
3T-6963	448
3T-8305	548
3T-8371	1175
3T-8729	488
	531
	536
3T-9272	448
3T-9494	351
	383
	384
	386
3T-9524	384
	386
3T-9525	▶351
	383
	386
3T-9549	446
	447
3V-2431	562
3V-3263	1175
3V-9244	621
	623
	624
3V-9399	592
	594
	596
	598
3V-9864	616
3W-0329	727
	729
3W-0640	727
	729
3W-1356	▶631
	827
	1231
	1232
3W-1852	648
	650
	652
	654
	656
	658
	660
	662
	664
	666
	749
	750
3W-1944	606
3W-2182	585
3W-2369	727
	729
3W-2568	163
3W-2647	124
	204
3W-3819	586
	589
3W-3896	601
	621
3W-6528	636
	638
3W-6550	▶445
	542
3W-6551	445
3W-6756	1148
3W-6866	6
	584
3W-6867	584
3W-9139	401
	404
	406
3W-9207	592
	594
	596
	598
3W-9208	592
	594
	596
	598
3W-9678	641
	642
3Y-2888	377
3Y-3866	965
3Y-5405	880
	881
	882
4	
4B-2049	384
	386
4B-3609	1136
	1138
	1140
4B-4098	67
	965
4B-4158	648
	650
	652
	654
	656
	658
	660
	662
	664
	666
	749
	750
	967
	968
	969
	970
	971
	972
	973
	974
	975
	976
	977
	1231
	1232
4B-4274	302

► **PRIMARY REFERENCE**

PART NUMBER INDEX

Part	Page
	1055
	1061
4B-4276	1061
4B-4278	592
	594
	596
	598
	928
	932
	1171
4B-4863	344
	430
	434
	439
4B-5059	1068
4B-7739	474
4B-9782	459
4B-9785	459
4B-9808	1038
	1047
	1048
4B-9880	483
	568
4C-9612	88
4D-6466	866
4D-6716	152
	155
	157
	168
4D-7388	116
4D-7733	1095
	1098
	1103
4D-7735	204
4D-7794	308
	310
	313
	320
4F-0255	965
4F-1252	965
4F-2294	394
	568
4F-4879	1165
	1166
	1167
4F-5695	43
4F-6024	77
4F-7389	906
4G-4972	45
	82
4H-0019	483
	488
4H-0407	1144
4H-1440	486
	551
	558
4H-1641	575
	576
	600
4H-2558	263
	265
	592
	594
	596
	598
	1095
	1098
	1103
4H-5440	454
	456
4H-9105	460
	462
	755
	757
4J-0121	837
	839
4J-0520	523
	829
	831
	833
	835
	854
	858
	861
	870
	874
	879
	885
	887
4J-0522	870
	913
	915
	917
	919
4J-0525	82
	147
4J-0527	224
	226
4J-1641	1212
	1214
	1219
4J-2036	608
	609
	611
	612
4J-2414	978
	979
	981
4J-3420	841
	843
4J-5267	843
	877
	879
	880
	881
	882
	883
	885
4J-5351	923
	926
	928
	930
	932
	934
4J-5477	119
	487
	489
	490
	497
	498
	503
	504
	509
	510
	515
	516
	521
	522
	802
	860
	861
	863
	865
	873
4J-5573	523
4J-6374	837
	839
4J-7533	806
	887
	923
	926
	928
	930
	932
	934
	937
4J-8251	906
4J-8252	906
4J-8997	913
	915
	917
	919
4K-0367	906
4K-1388	829
	831
	833
	835
	913
	915
	917
	919
	923
	926
	928
	932
	934
4K-2039	938
	946
	947
4K-3004	1233
4K-3128	841
	843
4K-3533	1005
	1009
	1013
	1017
4K-6177	491
	498
	504
	510
	516
	522
4K-7627	626
4K-8302	1095
	1099
	1103
4K-8501	626
4K-8603	537
4K-9429	1133
4L-2729	384
	387
4L-6454	235
	316
	323
	327
	331
	337
	476
	478
	1000
	1131
4M-0189	79
	82
4M-1827	383
4M-1828	383
4M-1831	378
	383
	386
4M-1853	383
	386
4M-1854	383
	386
4M-1896	384
	387
4M-2381	568
4M-2442	531
	537
4M-5282	460
	462
	755
	757
4M-5905	565
4M-6425	345
	1005
	1009
	1013
	1017
	1150
4M-6980	952
4M-7470	592
	594
	596
	598
4M-8239	567
4M-9592	530
	536
4N-1059	380
4N-1230	77
	82
4N-2514	75
4N-2927	1068
4N-3808	473
4N-6045	108
4N-9915	1071
	1072
4P-2102	11
	12
	14
	16
	18
	23
	24
	25
	26
	27
	28
	29
	62
4P-4369	83
	182
4P-5524	172
4P-7428	84
	191
	300
	302
	323
	327
	331
	467
	1000
	1095
	1099
	1103
4P-7429	166
	168
	316
	323
	409
	1086
	1089
	1092
	1095
	1099
	1103
	1224
4P-7581	65

PART NUMBER INDEX

Part	Page
	133
	229
	233
	235
	237
	241
	247
	253
	259
	282
	294
	300
	302
	310
	313
	317
	324
	327
	331
	335
	337
	391
	401
	404
	406
	409
	412
	417
	422
	464
	467
	887
	906
	1074
	1077
	1095
	1099
	1103
	1124
4P-8087	93
	95
4P-8134	241
	247
	253
	259
	263
	265
	289
	291
	300
	302
	377
	401
	404
	406
	409
	412
	417
	422
	430
	434
	439
	464
	906
	1000
	1031
	1074
	1077
	1085
	1088
	1091
	1095
	1099
	1103
	1177
4R-9999	82
	99
4S-1962	163
4S-5898	786
	897
	898
4S-8537	486
	551
	558
4S-8598	546
4S-9191	137
4T-0259	847
4T-0521	906
4T-0732	982
	984
	988
	990
4T-0780	982
	984
	988
	990
4T-1108	923
	926
	928
	930
	932
	934
4T-1481	1221
	1222
	1223
4T-1496	1219
4T-1500	1219
4T-1504	1212
	1214
	1219
4T-1506	1219
4T-1509	1219
4T-1520	982
	984
	986
	988
	990
4T-1563	880
	881
	882
4T-1649	928
	932
4T-1700	956
4T-1701	928
	932
4T-1762	1219
4T-1860	923
	926
	930
	932
	934
	958
4T-2741	954
4T-2950	1227
4T-2952	1225
4T-4509	956
4T-4511	928
	932
4T-4628	923
	926
	928
	930
	932
	934
4T-4629	928
4T-4630	928
4T-4631	926
	928
	930
	932
4T-4633	928
4T-4635	928
4T-4659	952
4T-4866	979
	980
	981
	982
	984
	986
	988
	990
4T-4875	895
4T-4932	893
	954
4T-4942	955
4T-5072	923
	926
	928
	930
	932
	934
4T-5073	923
	926
	928
	930
	932
	934
4T-5074	928
	956
4T-5495	965
4T-6820	937
4T-6821	937
4T-7571	954
	955
4V-6981	753
4V-7884	1169
4V-8256	994
4V-8577	1169
	1171
4W-1203	67
4W-1204	67
4W-1413	1243
	1245
4W-2026	39
4Y-6353	1025
4Y-9344	1009
4Z-8826	1215
5	
5B-0582	486
	551
	558
5B-2208	549
	554
5B-3180	565
5C-2874	349
	1041
5C-2890	219
	344
	347
	349
	393
	753
	938
	940
	942
	944
	1031
	1033
	1071
	1072
	1126
	1144
	1171
5C-6565	1022
	1233
5C-7261	124
	139
	299
	409
	629
	1085
	1088
	1091
	1111
	1112
	1113
	1114
	1115
	1116
	1117
	1118
	1203
5C-7883	347
5C-8312	412
	422
5C-9553	222
	342
	343
	997
	1000
5D-1026	204
	1067
5D-1911	906
5D-2989	488
	530
	536
5D-3118	580
	584
	585
	626
	726
	896
5D-4822	1068
5D-5958	794
5D-7635	1178
5D-7927	906
5D-9629	300
	302
5E-7045	810
5F-0304	78
5F-1678	644
	645
	906
5F-3144	300
5F-4899	464
5F-7074	870
5F-8000	709
	711
	717
	719
5F-9144	200
5F-9757	263
	265
	430
	435
	439
5G-2247	686
	687
	691
	692
5G-3676	861
	870

► **PRIMARY REFERENCE**

PART NUMBER INDEX

Part	Page
5G-7183	626
5G-8655	1005
	1009
	1013
	1017
5G-8993	705
	706
5G-9841	705
	706
5G-9842	705
	706
5G-9843	705
	706
5G-9973	621
5G-9974	621
5H-3252	845
5H-4018	843
	885
5H-4020	917
	919
5H-4279	543
5H-6202	530
	537
5H-6734	648
	650
	652
	654
	656
	658
	660
	662
	664
	666
	749
	750
5H-9899	1039
	1041
5I-4376	860
5J-3964	553
	556
5J-4418	845
5J-4419	845
5J-4773	1225
	1226
	1227
5J-4989	845
5J-4991	847
	849
5J-5314	383
	386
5J-5731	845
5J-7386	553
	556
5K-0227	923
	926
	928
	930
	932
	934
5K-5120	454
	464
	467
5K-9090	489
	490
	491
	497
	498
	503
	504
	509
	510
	515
	516
	521
	522
	829
	831
	833
	835
	870
5K-9107	449
5K-9179	1108
	1109
5K-9246	454
	456
5K-9988	454
	456
5L-2029	460
	462
	755
	757
5L-4758	782
5L-7200	391
	395
	396
5M-0578	448
	452
5M-2057	906
	923
	926
	928
	930
	932
	934
5M-2894	449
	452
	454
	456
	464
	483
	531
	537
	551
	558
	614
	680
	681
	683
	684
	1150
5M-3034	383
	386
5M-3038	489
	531
	537
5M-3062	305
	306
	308
	310
	313
	316
	320
	323
	327
	331
	333
	1224
5M-3605	545
5M-4443	709
	711
	717
	719
5M-4480	549
	554
5M-4987	545
5M-5689	139
5M-6126	488
	530
	536
5M-6214	621
	978
5M-7878	553
	556
5M-7925	448
5M-8500	1005
	1009
	1013
	1017
5M-9623	567
5M-9735	93
	95
5N-4185	38
	83
5N-8780	62
5N-9204	1085
	1088
5P-0047	887
5P-0492	282
5P-0537	1134
	1135
5P-0597	335
	337
5P-0599	184
	185
	1147
5P-0695	240
	245
	246
	251
	252
	257
	258
	259
	408
5P-0746	380
	381
5P-0747	240
	245
	247
	257
	258
	382
5P-0761	239
	240
	245
	246
	257
	258
5P-0767	1067
	1106
5P-0809	1014
5P-0892	1014
5P-0998	4
	1128
5P-1075	235
	305
	306
	308
	310
	313
	316
	320
	323
	327
	331
	349
	412
	417
	422
	430
	435
	439
	460
	462
	636
	755
	757
	829
	831
	833
	835
	861
	866
	870
	874
	885
	887
	951
	996
	1022
	1031
	1033
	1049
	1108
	1164
5P-1076	93
	95
	229
	331
	498
	504
	510
	516
	522
	573
	601
	606
	618
	619
	620
	621
	624
	627
	630
	633
	634
	636
	638
	648
	650
	652
	654
	656
	658
	660
	662
	669
	725
	853
	855
	895
	1005
	1009
	1013
	1017
	1022
	1063
	1064
	1119
	1120
	1125
	1128
	1144
	1151
	1152
	1156

PART NUMBER INDEX

Part	Page
5P-1251	166
	168
5P-1295	871
5P-1318	763
	768
	773
	778
5P-1404	800
	802
5P-1465	166
	168
5P-1505	204
5P-2228	316
	327
5P-2618	224
	226
5P-2671	895
5P-2766	1124
5P-2817	174
	184
	185
5P-2955	305
	306
	308
	310
	313
	316
	320
	323
	327
	331
	333
5P-3264	210
5P-3860	184
	185
	1147
5P-3930	486
	488
	530
	536
	553
	556
5P-3948	1094
	1098
	1102
5P-4057	454
	456
	489
5P-4115	4
	398
	589
	1074
	1077
	1128
5P-4116	4
	191
	377
	1052
	1128
5P-4268	523
5P-4295	119
	1095
	1099
	1103
5P-4423	1171
5P-4536	192
5P-4571	865
	1171
5P-5045	488
	531
	537
5P-5296	531
	537
5P-5297	531
	537
5P-5623	229
	429
	433
5P-5639	1067
5P-5643	996
	1006
	1010
	1018
	1067
5P-5649	634
5P-5672	1031
	1033
5P-5677	294
	347
	429
	433
	1074
	1076
5P-5680	1180
	1181
	1182
	1183
	1184
	1185
5P-5755	609
	612
5P-5846	456
	489
5P-5908	1031
5P-5924	1031
	1033
5P-5930	1006
	1010
	1018
5P-5991	196
	198
5P-6010	1171
5P-6129	1086
	1089
	1092
	1095
	1099
	1103
5P-6298	351
	383
5P-6605	1005
	1006
	1009
	1010
	1014
	1018
5P-6874	1108
	1109
5P-7085	487
	491
	498
	504
	510
	516
	522
5P-7177	1051
	1054
5P-7211	391
	586
	589
	634
5P-7464	877
	883
5P-7465	877
	883
5P-7466	874
5P-7467	874
5P-7468	491
	498
	504
	510
	516
	522
	870
5P-7469	491
	498
	504
	510
	516
	522
	870
5P-7483	609
	612
	1006
	1010
	1014
	1018
5P-7509	1144
5P-7513	1122
5P-7514	609
	612
	1122
5P-7530	82
	118
	121
	123
	537
5P-7592	483
	488
5P-7648	412
	417
	422
5P-7679	486
	553
	556
5P-7701	487
5P-7815	447
	489
5P-7854	124
5P-7957	1133
5P-7958	1
	4
	1021
5P-7970	107
	108
	401
	404
	406
5P-8065	467
5P-8066	523
5P-8112	874
5P-8167	300
	302
	1000
5P-8194	530
	536
5P-8196	109
5P-8244	1054
5P-8245	39
	79
	84
	101
	102
	103
	448
	449
	452
	454
	456
	459
	467
	483
	531
	537
5P-8247	231
	483
5P-8248	607
	1225
	1226
5P-8250	726
	896
5P-8309	586
	589
5P-8435	1045
5P-8444	870
5P-8445	1068
5P-8500	1
	4
	586
	1021
	1243
5P-8503	1005
	1009
	1013
	1017
5P-8918	1180
	1184
	1185
5P-8998	454
	456
5P-9000	460
	462
	755
	757
5P-9085	308
	310
	313
	320
5P-9297	123
	196
	198
5P-9439	543
5P-9617	109
	112
	141
	143
	860
	868
5P-9658	473
5P-9909	1145
5R-5718	854
5R-5780	854
5R-6304	854
5S-4246	1039
	1041
5S-7018	808
5S-7348	1074
	1077
5S-7349	231
	378
	1130
5S-7379	308
	310
	313
	320
	391
	1108
5S-7382	573
5S-7383	1150
5S-8709	883
5S-8712	883
5S-8765	883
5S-8766	883
5S-9062	67
5T-4374	641
	642

► **PRIMARY REFERENCE**

PART NUMBER INDEX

Part	Page
5V-0770	1068
5V-1496	576
	1157
	1160
5V-1497	1169
5W-1437	345
6	
6A-5591	79
6B-1124	93
	95
6B-4594	152
	155
	157
	166
6B-6863	488
	530
	536
6B-7246	154
6C-3060	222
6D-1641	1095
	1099
	1103
6D-3033	412
	415
	420
6D-3479	133
6D-4161	1073
6D-4246	874
6D-4247	241
	247
	253
	259
	1106
6D-4636	1106
6D-5257	416
6D-5801	218
6D-7128	139
6E-0381	922
6E-1134	808
6E-1135	808
6E-1136	808
6E-1637	923
	928
6E-1752	906
6E-1835	954
	955
6E-1981	808
6E-1982	808
6E-2193	808
6E-4139	892
	955
6E-4240	814
6E-4350	792
6E-4385	810
	812
6E-4401	760
6E-4402	760
	814
6E-4403	814
6E-4907	952
6E-5066	891
6E-5200	956
6E-6527	950
6E-6528	949
	950
6F-0253	132
	1073
	1076
6F-0711	578
6F-4718	554
6F-6673	528
6F-7045	390
	391
6F-7062	469
6H-1717	638
	1156
6H-3956	632
6H-4005	306
	308
	310
	313
	316
	320
	323
	327
	331
	997
6H-9361	906
6H-9691	813
6I-1418	429
	433
	438
6I-2431	154
6I-2435	154
	159
	161
	171
6I-2501	172
6I-2502	172
6I-4464	172
6I-8500	530
	536
6I-8507	483
6I-8511	483
6I-8724	448
6I-9386	1005
	1009
	1013
	1017
6I-9641	►731
6I-9644	►731
6I-9653	►732
6I-9654	►732
6I-9656	►732
6I-9668	►686
	731
6I-9671	►687
	731
	732
	733
	741
	742
	743
	744
6I-9706	1128
6J-2419	464
	489
	804
	937
6J-2680	870
6J-3134	810
	812
6J-3473	483
6J-5383	982
	984
	986
	988
	990
6J-6439	954
	955
6J-9187	978
6J-9188	978
6K-0806	166
	168
	1028
6K-1330	607
6K-3273	1160
6K-3630	553
	556
6K-3632	636
	638
	1022
	1152
6K-4934	308
	310
	313
	320
6K-4935	308
	310
	313
	320
6K-8162	952
6K-8178	1085
	1088
	1091
	1095
	1099
	1103
6K-8498	454
	456
6L-1649	487
	491
	498
	504
	510
	516
	522
6L-4783	543
6L-5359	487
	491
	498
	504
	510
	516
	522
	546
6L-7159	996
6M-5062	938
	946
	947
6N-1558	178
6N-2985	107
	108
6N-3279	383
	386
6N-3826	378
	383
	386
6N-6984	1061
6N-7523	222
	370
	1195
	1197
	1199
	1201
6N-8744	1028
6P-1735	448
6P-1736	448
6P-2216	1148
6P-4977	464
6P-5317	449
	452
6P-6591	1074
6P-7704	530
	536
6P-8269	586
	589
6S-1066	287
6S-2828	483
	488
6S-2829	483
	488
6S-3002	760
6S-8584	997
6T-0062	448
6T-0064	448
6T-0363	351
	383
6T-0364	483
6T-0371	351
	383
6T-0372	351
	383
6T-0465	391
6T-0850	448
6T-0988	1148
6T-1698	222
	636
	638
6T-3631	313
	316
	320
	323
	397
	408
	1061
6T-3632	313
	316
	320
	323
	397
	408
	1061
6T-3633	313
	316
	320
	323
	397
	408
	1061
6T-3643	347
	349
6T-3852	483
6T-3853	483
6T-4556	1144
6T-4557	1144
6T-5005	►1180
	1181
6T-5008	►1181
	1194
6T-5067	1148
6T-5068	1148
6T-5617	1067
6T-6505	997
6T-6506	997
6T-7695	1083
6T-7882	530
	536
6T-8402	►1182
	1194
6T-8403	►1183
	1194
6T-8714	1144
6T-8943	1061
6T-9244	960
6T-9254	1061
6T-9255	1061
6T-9256	1061
6T-9559	132
6T-9927	586
	589
6V-0327	476

► **PRIMARY REFERENCE**

PART NUMBER INDEX

Part	Page
	478
6V-0328	476
	478
6V-0329	476
	478
6V-0330	476
	478
6V-0400	764
	769
	774
	779
	887
6V-0439	476
	478
6V-0473	530
	536
6V-0484	491
	498
	504
	510
	516
	522
	800
	851
6V-0852	128
	196
	198
	454
	456
	481
	482
	487
	489
	490
	497
	503
	509
	515
	521
	526
	527
	762
	767
	772
	777
	800
	802
	851
	860
	870
6V-0855	448
6V-0894	1136
	1138
	1140
6V-0937	547
6V-0974	764
	769
	774
	779
6V-1178	1003
6V-1179	487
	543
6V-1228	1085
	1088
	1091
	1095
	1099
	1103
6V-1232	1039
	1041
6V-1249	877
	883
6V-1322	383
	386
6V-1355	166
	168
6V-1359	634
	1051
	1054
6V-1572	491
	498
	504
	510
	516
	522
6V-1573	491
	498
	504
	510
	516
	522
6V-1581	141
	143
	870
6V-1582	141
	143
	870
6V-1720	454
	456
6V-1790	4
	1003
	1128
6V-1792	731
	732
	733
	741
	742
	743
	744
	745
	746
6V-1819	126
	127
6V-1820	77
	84
6V-1889	115
6V-1970	1
6V-1971	4
	1021
6V-2226	658
6V-2312	1188
	1190
	1191
6V-2313	302
6V-2314	1039
	1041
6V-2317	72
	85
	480
6V-2331	1005
	1009
	1013
	1017
6V-2372	1085
	1088
	1091
	1095
	1099
	1103
6V-2375	1005
	1009
	1013
	1017
6V-2404	483
	488
6V-2478	530
	536
6V-2483	787
6V-2495	1085
	1088
	1091
	1094
	1098
	1102
6V-2499	634
6V-2689	429
	433
	938
	944
	1039
	1041
6V-2803	1051
	1054
6V-3250	139
	469
6V-3260	1005
	1009
	1013
	1017
6V-3326	794
6V-3538	45
6V-3545	1039
	1041
6V-3668	469
6V-3822	71
6V-3823	469
6V-3918	38
	81
	88
	145
6V-3940	36
	38
	89
	118
	121
	123
	354
	355
	568
6V-3965	128
	196
	198
	454
	456
	481
	482
	491
	498
	504
	510
	516
	526
	527
	564
	763
	768
	773
	778
	800
	802
	851
	861
6V-4248	93
	95
	116
	123
	206
	208
6V-4249	178
6V-4292	204
6V-4298	300
6V-4368	218
6V-4369	401
	404
	406
6V-4583	553
	556
6V-4589	109
	818
	963
	964
6V-5043	487
	549
6V-5048	82
	109
	482
6V-5049	109
	119
	887
6V-5050	447
	489
6V-5064	469
6V-5188	487
	546
6V-5192	926
	928
	930
	932
6V-5201	796
	798
6V-5203	37
6V-5217	37
	81
	118
	401
	404
	406
6V-5218	62
	109
	112
	121
	123
6V-5219	109
	112
6V-5220	109
	112
6V-5230	121
6V-5266	487
	549
6V-5324	958
6V-5387	490
	497
	503
	509
	515
6V-5555	913
	915
	917
	919
6V-5556	928
	932
	956
6V-5586	760
6V-5645	347
	349
6V-5654	634
6V-5683	1081
6V-5684	84
6V-5696	39
	102
	469
6V-5817	460
	755
	1173
	1175
6V-5818	1178

► **PRIMARY REFERENCE**

PART NUMBER INDEX

Part	Page
6V-5833	1180
	1181
	1182
	1183
	1184
	1185
6V-5839	77
	83
	116
	121
	123
	126
	127
	178
	182
	206
	208
	210
	212
	382
	401
	404
	406
	906
6V-5843	76
	87
6V-5844	79
	106
6V-5849	1195
	1197
	1199
	1201
6V-5851	1195
	1197
	1199
	1201
6V-6210	1203
6V-6317	401
	404
	406
6V-6339	949
6V-6467	343
6V-6609	57
	82
	137
	372
	375
	469
6V-6716	438
6V-6717	1067
6V-6789	300
6V-6887	1005
	1009
	1013
	1017
6V-7190	1005
	1009
	1013
	1017
6V-7238	1106
6V-7357	589
	1000
	1029
	1049
	1136
	1138
	1140
	1144
	1195
	1197
6V-7604	48
	50
6V-7636	1005
	1009
	1013
	1017
6V-7646	448
	1071
	1072
	1157
	1160
6V-7673	67
	77
6V-7676	636
	638
6V-7681	487
	549
6V-7687	1229
	1233
6V-7732	906
6V-7742	837
	839
	847
	849
6V-7743	586
	589
6V-7744	529
	592
	594
	596
	598
	906
	1136
	1138
	1140
	1229
	1233
6V-7981	210
	212
6V-8073	1005
	1009
	1013
	1017
6V-8076	196
	198
	762
	767
	772
	777
	860
6V-8077	109
	112
6V-8129	1005
	1009
	1013
	1017
6V-8133	847
	849
6V-8149	39
6V-8185	347
	349
	398
	753
6V-8188	316
	345
	378
	384
	386
	913
	915
	917
	919
6V-8189	231
	306
	308
	310
	313
	316
	320
	323
	327
	331
	333
	1005
	1009
	1013
	1017
6V-8190	580
	584
	585
	626
	1229
6V-8197	79
	84
6V-8200	952
6V-8201	899
	901
	903
6V-8212	382
6V-8218	921
6V-8237	641
	642
	841
	845
	847
	849
6V-8245	166
	168
6V-8260	106
6V-8336	79
6V-8352	814
6V-8369	1083
6V-8370	395
	396
6V-8374	429
	433
	1061
6V-8376	347
	349
	1136
	1138
	1140
6V-8378	378
6V-8397	119
	132
	133
	196
	198
	204
	412
	415
	420
	487
	489
	490
	491
	497
	498
	503
	504
	509
	510
	515
	516
	521
	522
	760
	763
	768
	773
	778
	800
	802
	854
	860
	861
	863
	865
	866
	868
	870
	873
	874
	887
6V-8398	119
	204
	487
	491
	498
	504
	510
	516
	522
	760
	762
	763
	767
	768
	772
	773
	777
	778
	812
	880
	881
	882
	883
	885
	887
6V-8400	762
	767
	772
	777
	829
	831
	833
	835
6V-8547	1144
6V-8556	764
	769
	774
	779
6V-8625	204
	510
	516
	522
	883
6V-8627	490
	498
	504
	510
	516
	521
	802
	861
	863
	865
	873
6V-8628	119
	861
	863
	865
	873
6V-8632	763
	768
	773

PART NUMBER INDEX

Part	Page
	778
6V-8633	762
	767
	772
	777
6V-8634	119
	132
	860
6V-8635	490
	497
	503
	509
	515
	521
6V-8636	119
	121
	123
	132
	139
	206
	208
	212
	490
	498
	504
	509
	516
	521
	800
	860
	865
	868
	887
6V-8637	124
	762
	767
	772
	777
	854
6V-8639	119
	887
6V-8641	119
	497
	503
	509
	515
	860
	863
	873
6V-8647	860
	873
6V-8675	84
	101
	469
6V-8715	196
	198
6V-8716	124
	762
	767
	772
	777
6V-8721	204
	763
	768
	773
	778
6V-8723	109
	112
	119
	204
	491
	498
	504
	510
	516
6V-8724	119
	133
	139
	196
	198
	206
	208
	522
	763
	768
	773
	778
	861
	863
	865
	868
	870
	874
6V-8730	204
6V-8774	133
6V-8781	119
	854
	861
	874
6V-8783	763
	768
	773
	778
6V-8801	189
	305
	308
	310
	316
	320
	323
	327
	331
	349
	460
	462
	755
	757
6V-8818	1039
	1041
6V-8928	1081
6V-8941	763
	768
	773
	778
6V-8969	1134
	1135
6V-8978	788
	790
	792
6V-8981	880
	881
	882
6V-8987	763
	768
	773
	778
6V-9001	133
	206
	208
	763
	768
	773
	778
6V-9002	119
6V-9007	166
	168
	763
	768
	773
	778
	854
	870
6V-9161	868
6V-9167	646
	847
	849
6V-9168	491
	498
	504
	510
	516
	522
	764
	769
	774
	779
	800
	802
	861
	870
6V-9169	880
	881
	882
6V-9197	576
6V-9200	868
	870
6V-9632	401
	404
	406
	433
	438
	1017
	1071
	1128
	1131
6V-9633	906
6V-9746	124
	132
	166
	168
	489
	491
	498
	504
	510
	516
	522
	762
	763
	764
	767
	768
	769
	772
	773
	774
	777
	778
	779
	854
	870
6V-9748	67
6V-9804	267
6V-9829	861
6V-9836	133
	874
6V-9839	763
	768
6V-9843	861
6V-9846	763
	768
	773
	778
6V-9849	860
	873
6V-9850	133
	861
	865
	868
	873
6V-9872	132
	860
	863
	865
	868
	873
6V-9873	210
	887
6V-9877	854
6Y-0040	37
6Y-0206	1052
	1128
	1144
6Y-0352	1237
6Y-0359	1236
6Y-0473	679
	680
	681
	682
	683
	684
	685
	686
	687
	691
	692
	693
	694
	695
	696
	697
	699
	700
	701
	702
	709
	711
	717
	719
6Y-0596	883
6Y-0597	883
6Y-0859	476
	478
6Y-0926	448
6Y-0984	448
6Y-1198	691
	692
6Y-1199	693
	694
	695
	696
6Y-1387	1214
6Y-1390	1212
	1214
6Y-1602	530
	536
6Y-2039	1204
	1225
6Y-2349	854
6Y-2704	448
	452
6Y-2940	►703
	748
	749
6Y-3475	880
6Y-3476	880

► **PRIMARY REFERENCE**

PART NUMBER INDEX

Part	Page
6Y-3973	576
6Y-4638	565
6Y-4819	530
	536
6Y-4831	530
6Y-5113	1109
6Y-5799	727
	729
6Y-6286	731
	732
	741
6Y-6287	732
	743
6Y-6294	731
	732
	741
6Y-6296	732
	743
6Y-6389	731
	732
	742
	745
6Y-6397	731
	744
6Y-6412	731
	732
	742
	745
6Y-6751	1220
6Y-7385	1071
	1072
6Y-8043	37
6Y-8114	1128
6Y-9024	734
	735
	736
	737
	738
	739
	740
6Y-9280	895
6Y-9281	895
6Y-9373	448
	452

7

Part	Page
7B-0863	584
	585
7B-1597	456
7B-3028	648
	650
	652
	654
	656
	658
	660
	662
	664
	666
	749
	750
7B-3039	906
7B-3235	483
7B-9665	573
	578
7C-1493	109
	112
7C-2164	93
	95
7C-3567	86
7C-4354	123
	1000
7C-4355	124
7C-6670	192
7C-6672	192
7C-7431	82
	193
	195
7C-8246	1106
7C-8370	93
	95
7C-8634	67
7D-1649	84
	469
	483
	491
7D-1677	488
	548
7D-6922	1052
7D-7233	166
	168
7D-8431	1148
7E-7547	133
7F-0560	259
7F-2742	37
7F-3488	383
	386
7F-3525	351
	383
7F-6998	1073
7F-8267	906
7F-8607	1094
	1098
	1102
7F-9543	584
	585
7F-9547	584
	585
7G-1596	448
7G-2343	531
	537
7G-2454	1005
	1009
	1017
7G-2516	530
	536
7G-2830	489
	530
	536
7G-3832	487
	491
	498
	504
	510
	516
	522
	874
	879
	887
7G-3833	491
	498
	504
	510
	516
	522
	874
	879
7G-3834	491
	498
	504
	510
	516
	522
	874
	879
	887
7G-4262	626
7G-4332	709
	711
	717
	719
7G-4824	1052
	1128
	1144
7G-4998	446
	447
7G-5186	152
	155
	157
	166
	168
7G-5984	858
7G-5985	858
7G-5986	858
7G-6355	530
	536
7G-6623	726
7G-7053	300
	302
7G-7218	530
	536
7G-7724	530
7G-8975	►585
7G-9555	488
	562
7H-1447	906
7H-3607	547
7H-4543	1061
7H-4566	448
7H-7628	483
	488
7H-7658	530
	536
7H-9737	753
7I-2272	401
	404
	406
	1055
7J-0204	241
	247
	253
	259
	409
	412
	454
	923
	926
	928
	930
	932
	934
7J-2036	679
	680
	681
	682
	683
	684
	685
7J-2595	978
7J-5131	1212
	1214
	1219
7J-8611	454
	456
7J-8955	847
	849
7J-8956	847
	849
7J-9108	124
	763
	768
	773
	778
7J-9933	923
	926
	928
	930
	932
	934
	954
	955
7K-1181	65
	208
	229
	233
	235
	237
	240
	245
	251
	259
	263
	265
	272
	277
	282
	283
	285
	287
	289
	291
	294
	306
	308
	310
	313
	316
	320
	323
	327
	331
	333
	337
	347
	349
	391
	409
	412
	415
	420
	427
	429
	433
	439
	460
	462
	755
	757
	887
	1031
	1049
	1072
	1094
	1098
	1102
	1124
	1224
7K-3176	1094
	1098
	1102
7K-6058	825
7L-2894	378
	383
	386

► PRIMARY REFERENCE

PART NUMBER INDEX

Part	Page
7L-8316	1061
7M-0324	383
	386
7M-0325	384
	386
7M-0326	383
	386
7M-0327	383
	386
7M-1201	459
7M-1296	567
7M-1297	446
	567
7M-1377	567
7M-3361	412
	417
	422
7M-4672	398
7M-5130	488
	530
7M-7219	1068
7M-8485	124
	166
	168
	282
	487
	489
	490
	491
	497
	498
	503
	504
	509
	510
	515
	516
	521
	522
	565
	762
	763
	767
	768
	772
	773
	777
	778
	923
	926
	928
	930
	932
	934
	937
7M-8651	383
	386
7N-0296	377
7N-0718	240
	245
	251
	257
	390
7N-1996	429
	433
7N-2059	377
7N-4333	928
7N-5683	45
7N-9801	400
7N-9943	296
7P-4190	1136
	1138
	1140
7P-6682	240
	245
	251
	257
7P-7610	1009
	1017
7R-3029	412
	415
	420
7S-2042	575
	576
	600
7S-6058	611
	612
7S-8920	491
	498
	504
	510
	517
	522
	829
	831
	833
	835
7S-8921	491
	498
	504
	510
	517
	522
	829
	831
	833
	835
7S-9396	►189
7T-0020	296
7T-0030	600
7T-1068	1182
	1184
7T-1069	1183
	1185
7T-1099	84
	165
	277
	305
	306
	401
	404
	406
	438
	1017
	1031
	1054
	1125
	1155
7T-1330	1182
	1183
7T-1474	483
7T-1475	483
7T-1885	448
	452
7T-1975	1229
7T-3267	378
7T-3268	378
7T-3276	378
7T-3277	378
7T-3278	378
7T-3279	378
7T-3451	378
7T-3454	378
7T-3950	530
	536
7T-3974	378
	383
	386
7T-4532	1024
7T-5856	1031
7T-5886	664
	666
7T-6299	4
	1067
	1128
7T-6934	880
	881
	882
7T-6994	448
	452
7T-7388	343
7T-8130	448
7T-8136	452
7T-8816	488
	531
	537
7T-8875	454
	456
7T-8876	454
	456
7T-8891	1173
7T-8894	1085
	1088
	1091
	1095
	1099
	1103
7T-8895	1085
	1088
	1091
7T-9031	452
7T-9123	384
7T-9272	530
	536
7T-9303	1083
7T-9370	530
	536
7T-9426	1085
	1088
	1091
	1094
	1098
	1102
7T-9515	395
7T-9788	448
7T-9793	1085
	1088
	1091
	1095
	1099
	1103
7T-9832	448
7T-9837	448
	452
7T-9946	483
7U-4892	347
	349
7V-0008	460
	462
	755
	757
7V-3715	641
	642
7V-5191	1068
7W-2632	940
7W-3872	85
7W-6534	449
7W-7381	119
	854
7X-0264	1061
7X-0268	132
7X-0290	460
	462
	755
	757
7X-0292	580
7X-0339	233
	235
	237
7X-0345	398
7X-0346	476
	478
7X-0349	572
	726
7X-0369	1156
7X-0371	703
7X-0372	638
7X-0402	569
	570
	631
7X-0404	572
7X-0406	569
	570
	703
7X-0427	580
7X-0515	86
7X-0533	580
7X-0550	616
7X-0562	378
	384
	386
7X-0578	1005
	1013
	1018
	1031
	1033
7X-0579	196
	198
7X-0582	1156
7X-0584	1039
	1041
7X-0590	855
7X-0594	608
	609
	611
	612
7X-0603	1148
7X-0608	548
	994
7X-0632	1028
7X-0766	632
7X-0818	430
	435
	439
7X-0820	763
	768
	773
	778
	861
	870
7X-0851	641
	642
7X-1456	578
7X-1553	899
	901
	903
7X-2031	370
7X-2049	1085
	1088
	1094
	1098
7X-2488	621
7X-2489	1022
7X-2533	1130
7X-2535	861
7X-2537	804

► **PRIMARY REFERENCE**

PART NUMBER INDEX

Part	Page
7X-2539	196
	198
7X-2541	806
7X-2543	469
	870
	874
	1229
	1233
7X-2547	545
7X-2548	347
7X-2549	636
	638
7X-2552	124
7X-2553	601
	621
	623
	624
	727
	729
	1220
7X-2555	586
	589
7X-2557	895
7X-2562	283
	285
	308
	310
	313
	316
	320
	412
	417
	422
	627
	630
	979
	980
	981
	1029
7X-2563	636
	638
	992
	993
	1022
	1029
	1152
	1220
7X-2564	308
	310
	313
	320
	965
7X-2565	222
	636
7X-2566	636
	638
	982
	984
	986
	988
	990
	1155
7X-2567	979
	980
	981
7X-2575	641
	642
	704
7X-2576	1022
	1151
	1152
7X-2580	705
7X-2581	1132
7X-2582	706
7X-2584	583
7X-2585	726
7X-2619	1059
7X-2908	89
7X-3229	1244
	1245
7X-3373	378
	383
	386
7X-3374	1080
7X-3391	601
7X-3392	586
	589
	1122
7X-4771	1039
	1041
7X-6085	1074
	1076
7X-6315	271
	275
7X-7477	548
7X-7644	584
	585
	1231
	1232
	1243
	1245
7X-7700	222
	224
	226
7X-7702	1106
	1178
7X-7729	4
	133
	135
	136
	141
	143
	152
	155
	157
	170
	173
	177
	179
	183
	184
	185
	190
	196
	198
	204
	229
	263
	265
	283
	285
	340
	377
	391
	460
	462
	491
	499
	505
	511
	517
	522
	575
	576
	586
	589
	592
	594
	596
	598
	600
	604
	605
	618
	619
	620
	634
	636
	638
	641
	642
	755
	757
	764
	769
	774
	779
	858
	870
	877
	1005
	1009
	1013
	1018
	1029
	1035
	1036
	1050
	1085
	1089
	1091
	1095
	1099
	1103
	1122
	1123
	1128
	1136
	1138
	1140
	1142
	1143
	1144
	1164
7X-7742	1029
7X-7877	1148
	1178
7X-7888	1126
7X-7927	1173
	1175
	1178
7X-7928	1173
	1175
	1178
7X-7929	1173
	1175
	1178
7X-7930	1173
	1175
	1178
7Y-3474	1177
7Y-4224	928
7Y-5219	760
7Y-5226	1039
7Y-5233	673
	675
7Y-5235	982
	984
	986
	988
	990
7Y-7388	1083

8

Part	Page
8B-4624	592
	594
	596
	598
8C-3089	383
	386
8C-3205	879
	880
	881
	882
	883
	885
8C-3206	491
	499
	505
	511
	517
	522
	543
	829
	831
	833
	835
	858
	892
	893
	906
	913
	915
	917
	919
	952
8C-3334	459
8C-3428	527
8C-3442	1005
	1009
	1013
	1017
8C-3445	82
	109
	112
8C-3446	109
	112
	141
	143
	481
	482
	851
	861
8C-3447	481
	482
8C-3451	851
	860
8C-3655	378
8C-3681	166
	168
8C-4982	273
	439
8C-4984	69
	70
8C-5060	1195
	1197
	1199
	1201
8C-5063	753
8C-5230	487
	549
8C-5607	283
	285
	287
	289
	291

PART NUMBER INDEX

Part	Page
	294
	398
	1130
8C-5608	283
	285
	287
	289
	291
	294
	398
	1130
8C-5682	1085
	1088
	1091
	1094
	1098
	1102
8C-5917	239
8C-5918	240
	245
	251
	257
8C-6354	415
	421
	429
	433
	438
8C-6358	259
8C-6561	478
8C-6711	219
8C-6857	825
8C-6913	528
	614
8C-6920	854
8C-6965	813
8C-8451	294
8C-8478	608
	609
	611
	612
	982
	984
	986
	988
	990
8C-8580	810
	812
8C-8585	576
	586
	589
	592
	594
	596
	598
	602
	634
8C-8843	1022
	1152
8C-8844	636
	638
8C-9160	837
	839
8C-9660	383
	386
	412
	422
8C-9987	961
8D-0983	1029
8D-1817	483
	488
8D-1819	483
	488
8D-3932	300
	302
	1000
8D-4771	528
8D-7185	1029
8D-9739	489
	531
	537
8E-1118	1071
	1072
8E-1143	568
8E-1205	575
	576
	600
8E-1211	648
	650
	656
	658
	749
	750
8E-1900	705
	706
8E-2014	633
8E-2139	680
	682
	685
8E-2244	1219
8E-2748	476
	478
8E-3070	586
8E-3131	460
	462
	755
	757
8E-3446	►1186
	1194
8E-3447	►1187
	1194
8E-4832	592
	594
	596
	598
8E-5112	1005
	1017
	1194
8E-5113	1005
	1009
	1017
	1194
8E-5114	1005
	1009
	1017
	1194
8E-5188	1214
8E-5190	1214
8E-5192	1214
8E-5194	1214
8E-5205	1212
	1214
8E-5486	978
	979
	981
8E-5502	490
	497
	503
	509
	515
	521
8E-5701	965
8E-5703	847
	849
	982
	984
	986
	988
	990
8E-6856	1178
8E-7222	686
	687
	691
	692
8E-7405	686
	687
8E-7406	686
	687
8E-7407	686
	687
	691
	692
8E-7408	686
	687
	691
	692
8E-7409	686
	687
	691
	692
8E-7410	686
	687
	691
	692
8E-7561	575
	576
	600
8E-7791	1052
	1128
	1144
8E-8242	460
	462
	755
	757
8E-8292	1173
8E-8299	488
	530
	536
8E-8300	486
	553
	556
8E-8304	488
	530
	536
8E-8305	488
	530
	536
8E-8307	448
	452
8E-8310	448
8E-8434	951
8E-9039	►733
8E-9212	837
	839
8E-9289	726
8E-9522	621
8E-9932	673
8F-1434	349
	378
	384
	386
8F-3437	391
8F-3556	573
8F-4387	978
8F-6575	103
8F-7219	200
8F-7702	1136
	1138
	1140
8F-8151	152
	155
	157
8F-9206	906
8G-4014	586
	589
8G-4189	644
	645
8G-8844	476
	478
8G-8845	476
	478
8G-9530	749
	750
	751
8G-9880	529
8H-1141	378
8H-1603	454
8H-2262	709
	717
8H-2768	548
8H-3127	370
8H-5303	390
	391
8H-5306	390
8H-5352	488
	531
	537
8H-8898	1221
	1222
	1223
8H-9818	474
	487
	549
	554
8H-9819	474
8J-1622	808
8J-2095	937
8J-2189	1235
	1236
	1238
8J-2190	1236
	1237
8J-2880	847
	849
	982
	984
	986
	988
	990
8J-6913	906
8J-8322	906
8J-8436	906
8J-8462	923
8J-8468	906
8J-8782	906
8J-8783	906
8J-9348	961
8J-9990	870
8K-1433	1071
	1072
8K-8517	154
	159
	161
8L-2746	818
	963
	964
8L-2779	82
	109
8L-2786	109
	409
	482
	523
	938
	940
	942
	944
8L-5008	166

► **PRIMARY REFERENCE**

PART NUMBER INDEX

Part	Page
	168
8L-6557	641
	642
8L-8413	257
	258
	1068
	1171
	1247
8M-2530	454
	456
8M-2769	1106
8M-2771	1039
8M-2773	119
8M-3494	1231
	1232
8M-4390	489
	529
8M-4432	454
	464
	467
	489
8M-4438	449
	452
8M-4986	487
	489
	491
	499
	505
	511
	517
	522
	567
8M-4987	487
	491
	499
	505
	511
	517
8M-5010	489
	531
	537
8M-5254	487
	489
	491
	499
	505
	511
	517
	800
	802
8M-5255	489
	531
	537
8M-5266	489
	531
8M-5661	454
8M-5860	48
	50
8M-7160	546
8M-8157	464
	487
	489
	491
	499
	505
	511
	517
	522
8M-8489	531
	536
	545
8M-9307	469
8M-9315	78
	82
8N-0869	258
	408
8N-1544	408
8N-1545	415
	421
	433
	438
8N-1725	240
	246
	252
	258
8N-4617	172
8N-6849	62
8N-6854	62
	82
	124
8N-8846	164
	165
8P-0058	454
	456
	489
8P-1892	530
8P-1916	530
	536
8P-1964	530
	536
8P-2019	489
	531
	537
8P-2022	489
	531
	537
8P-2023	489
	531
	537
8P-2051	530
	536
8P-2053	488
	530
	536
8P-5197	711
	719
8P-5244	636
	638
	1022
	1152
8P-5411	335
	337
8P-8357	449
	452
8P-8540	308
	310
	313
	320
8P-9507	530
8P-9747	1022
	1152
8P-9770	978
	984
	988
	990
	1212
	1214
	1219
8Q-1911	131
8R-1803	353
	398
8R-3393	1085
	1088
	1091
	1094
	1098
	1102
8S-0023	491
	499
	505
	511
	517
	522
	829
	831
	833
	835
	858
8S-0024	491
	499
	505
	511
	517
	522
	829
	831
	833
	835
	858
8S-0527	452
8S-0948	874
	1106
8S-3020	240
	245
	247
	251
	253
	257
	258
	391
8S-4304	469
8S-5383	1025
	1027
8S-7499	944
8S-7803	1068
8S-9008	549
	554
8S-9130	454
	456
8T-0072	448
8T-0100	72
	74
8T-0119	204
	1106
8T-0267	272
8T-0269	752
8T-0285	1057
8T-0292	118
8T-0318	1005
	1009
	1013
	1017
8T-0328	273
	300
	302
	378
	384
	386
	401
	404
	406
	430
	435
	439
	753
	1157
	1160
8T-0337	1077
8T-0360	710
	718
	724
8T-0362	837
	839
8T-0363	636
	638
8T-0364	641
	642
8T-0375	705
	706
8T-0389	430
	435
	439
	1126
8T-0404	124
8T-0638	233
	235
	237
8T-0644	137
	147
	148
8T-0646	103
8T-0656	607
	647
8T-0687	1181
	1182
	1183
8T-0707	37
8T-0722	241
	247
	253
	259
	874
8T-0785	837
	839
8T-1120	491
	498
	504
	510
	516
	522
8T-1159	787
8T-1579	573
8T-1742	37
8T-1887	204
	233
	237
	885
8T-1888	204
	233
	237
	885
8T-1889	861
	870
8T-1890	861
	870
8T-1891	139
8T-1892	139
8T-1893	204
	491
	499
	505
	511
	517
	522
8T-1894	204
	492
	499
	505
	511
	517
	523
8T-1895	764
	769
	774
	779
8T-1896	764

PART NUMBER INDEX

Part	Page
	769
	774
	779
8T-1905	133
	854
8T-1979	1005
	1009
	1013
	1017
8T-1980	1005
	1009
	1013
	1017
8T-2192	283
	285
	287
	289
	291
8T-2225	240
	245
	246
	251
	252
	257
	259
	408
8T-2275	906
8T-2353	868
8T-2501	573
8T-2502	460
	462
	624
	755
	757
	1022
8T-2561	586
	589
	828
	895
8T-2659	344
	430
	435
	439
	1077
8T-2922	810
	812
	813
8T-3282	646
	710
	718
	724
8T-3298	906
8T-3490	101
	135
	141
	143
	152
	155
	157
	166
	168
	183
	196
	198
	237
	251
	300
	302
	335
	337
	401
	404
	406
	604
	828
	870
	1031
	1142
	1143
	1164
8T-3518	257
8T-3519	259
8T-3561	1013
	1017
8T-3597	154
	159
	161
	616
	669
	896
	1031
	1125
8T-3612	139
	377
8T-3647	806
8T-3666	92
8T-3957	894
8T-3992	347
8T-4121	64
	65
	93
	95
	115
	119
	124
	133
	135
	139
	141
	143
	152
	154
	155
	157
	159
	161
	163
	166
	168
	170
	171
	173
	196
	198
	204
	224
	226
	229
	233
	235
	237
	241
	247
	253
	259
	273
	287
	289
	291
	300
	302
	333
	335
	337
	347
	409
	412
	417
	422
	430
	435
	439
	472
	492
	499
	505
	511
	517
	523
	529
	543
	549
	554
	601
	606
	608
	609
	611
	612
	615
	621
	628
	629
	648
	650
	652
	654
	656
	658
	660
	662
	664
	666
	727
	729
	749
	750
	764
	769
	774
	779
	826
	841
	843
	855
	858
	871
	874
	877
	879
	880
	881
	882
	883
	887
	892
	893
	906
	913
	915
	917
	919
	952
	996
	1000
	1003
	1005
	1009
	1013
	1018
	1025
	1027
	1028
	1031
	1037
	1049
	1067
	1086
	1089
	1091
	1095
	1099
	1103
	1106
	1109
	1121
	1126
	1136
	1138
	1140
	1142
	1143
	1148
	1164
8T-4122	124
	572
	623
	624
	636
	638
8T-4123	86
	287
	289
	291
	308
	310
	611
	612
	636
	704
	705
	706
	965
	982
	984
	986
	988
	990
	993
	1022
	1152
8T-4131	608
	609
	611
	612
	982
	984
	986
	988
	990
	1155
8T-4132	233
	235
	237
	1025
	1027
8T-4133	115
	124
	133
	173
	179
	204
	241
	247
	253
	259

► **PRIMARY REFERENCE**

PART NUMBER INDEX

Part	Page
	287
	308
	310
	314
	320
	492
	499
	505
	511
	517
	523
	546
	592
	594
	596
	598
	604
	615
	616
	634
	764
	769
	774
	779
	828
	829
	831
	833
	835
	858
	871
	874
	877
	885
	1000
	1003
	1025
	1027
	1028
	1029
	1031
	1037
	1086
	1089
	1091
	1095
	1099
	1103
	1106
	1178
8T-4136	115
	119
	124
	133
	135
	139
	141
	143
	152
	155
	157
	163
	166
	168
	173
	184
	185
	190
	196
	198
	224
	226
	247
	253
	259
	263
	265
	283
	285
	287
	289
	291
	306
	308
	310
	314
	316
	321
	323
	327
	331
	337
	340
	409
	412
	417
	422
	474
	492
	499
	505
	511
	517
	523
	549
	554
	567
	575
	586
	589
	592
	594
	596
	598
	600
	601
	604
	605
	615
	621
	634
	641
	642
	648
	650
	652
	654
	656
	658
	660
	662
	664
	666
	749
	750
	764
	769
	774
	779
	826
	828
	829
	831
	833
	835
	858
	861
	866
	871
	874
	879
	887
	906
	1005
	1009
	1013
	1018
	1028
	1029
	1086
	1089
	1091
	1095
	1099
	1103
	1106
	1122
	1128
	1136
	1138
	1140
	1142
	1143
	1144
	1148
8T-4137	4
	119
	124
	136
	139
	141
	143
	173
	177
	204
	229
	233
	235
	237
	241
	247
	253
	259
	273
	289
	291
	401
	404
	406
	409
	412
	417
	422
	430
	435
	439
	460
	462
	492
	499
	505
	511
	517
	523
	549
	554
	576
	586
	589
	592
	594
	596
	598
	600
	634
	636
	755
	757
	996
	1003
	1029
	1031
	1033
	1049
	1067
	1086
	1089
	1091
	1095
	1099
	1103
	1106
	1123
	1128
	1142
	1143
	1144
	1164
8T-4138	218
	423
	430
	435
	439
	1074
	1077
	1128
	1199
	1201
8T-4139	229
	259
	523
	549
	554
	601
	618
	619
	620
	621
	664
	666
	673
	725
	749
	750
	871
	880
	881
	882
	883
	1029
	1063
	1095
	1099
	1103
	1119
	1120
	1125
	1128
	1144
	1151
	1152
8T-4140	584
	585
8T-4141	611
	612
	671

PART NUMBER INDEX

Part	Page
8T-4149	763
	768
	773
	778
8T-4154	299
8T-4158	1017
8T-4167	673
	675
	704
	979
	980
	981
	982
	984
	986
	988
	990
	1022
	1144
	1151
	1152
8T-4170	86
8T-4171	412
	417
	422
	1057
	1071
	1072
8T-4172	492
	499
	505
	511
	517
	523
	567
8T-4176	154
	159
	161
	300
	302
	492
	499
	505
	511
	517
	523
	549
	554
	871
	1000
8T-4177	806
8T-4178	492
	499
	505
	511
	517
	764
	769
	774
	779
8T-4179	624
	871
8T-4181	283
	285
	287
	291
	1005
	1009
	1013
	1018
8T-4182	64
	135
	204
	377
	472
	528
	727
	729
	855
	883
	885
	915
	1025
	1027
	1086
	1089
	1091
	1106
8T-4183	331
	549
	573
	601
	624
	855
	871
	895
	1005
	1009
	1013
	1018
	1066
8T-4184	492
	499
	505
	511
	517
	648
	650
	652
	654
	656
	658
	660
	662
	664
	666
	673
	749
	750
	764
	769
	774
	779
	887
	906
8T-4185	124
	152
	155
	157
	171
	183
	472
	474
	858
	877
	928
	932
	1025
	1027
	1106
	1121
8T-4186	93
	95
	124
	179
	233
	237
	417
	422
	492
	499
	505
	511
	517
	523
	841
	855
	871
	877
	885
	951
	1000
	1025
	1027
	1136
	1138
	1140
8T-4187	601
	704
	965
8T-4189	4
	139
	191
	377
	1052
	1128
8T-4191	347
	409
	430
	435
	492
	499
	505
	511
	517
	523
	575
	951
	996
8T-4192	575
	826
	1031
	1033
	1064
8T-4193	86
	233
	235
	237
	636
	638
	1025
	1027
8T-4194	65
	606
	616
	638
	648
	650
	652
	654
	656
	658
	660
	662
	669
	764
	769
	774
	779
	874
	1029
	1066
	1128
8T-4195	65
	115
	119
	124
	133
	141
	143
	152
	154
	155
	157
	159
	161
	171
	179
	196
	198
	204
	229
	241
	247
	253
	259
	300
	302
	314
	321
	323
	327
	331
	471
	492
	499
	505
	511
	517
	523
	549
	554
	616
	618
	619
	620
	628
	629
	764
	769
	774
	779
	871
	883
	885
	887
	895
	1000
	1005
	1009
	1013
	1018
	1037
	1049
	1106
	1109
	1126
	1136
	1138
	1140
	1144
8T-4196	93
	95
	124
	135
	152

► **PRIMARY REFERENCE**

PART NUMBER INDEX

Part	Page
	155
	157
	166
	168
	170
	179
	183
	204
	241
	247
	253
	259
	456
	492
	499
	505
	511
	517
	523
	529
	543
	592
	594
	596
	598
	608
	609
	611
	612
	615
	616
	629
	634
	636
	638
	829
	831
	833
	835
	843
	858
	879
	880
	881
	882
	885
	892
	893
	906
	913
	915
	917
	919
	952
	1000
	1086
	1089
	1091
	1095
	1099
	1103
	1144
	1164
8T-4197	937
8T-4198	93
	95
	204
	523
8T-4199	347
	430
	435
8T-4200	1177
8T-4205	132
	231
	347
	349
	378
	383
	386
	402
	404
	406
	753
	997
	1031
	1033
	1035
	1036
	1039
	1041
	1050
	1059
	1074
	1077
	1130
	1136
	1138
	1140
	1157
	1160
8T-4222	471
	576
	1061
8T-4223	65
	93
	95
	133
	204
	224
	226
	233
	235
	237
	259
	300
	302
	316
	327
	347
	492
	499
	505
	511
	517
	523
	528
	529
	543
	549
	554
	573
	575
	601
	648
	650
	652
	654
	656
	658
	660
	662
	664
	666
	673
	749
	750
	764
	769
	774
	779
	786
	826
	855
	871
	874
	879
	880
	881
	882
	883
	888
	906
	913
	915
	917
	919
	1000
	1025
	1027
	1029
	1031
	1033
	1066
	1095
	1099
	1103
	1106
	1128
	1228
	1233
8T-4224	73
	124
	133
	139
	157
	231
	299
	305
	306
	308
	310
	314
	316
	321
	323
	327
	331
	333
	347
	409
	430
	435
	478
	804
	1086
	1089
	1091
	1150
	1177
8T-4226	492
	499
	505
	511
	517
	523
8T-4231	894
8T-4238	157
8T-4244	93
	95
	895
	1025
	1027
	1228
	1233
8T-4648	224
	226
	492
	499
	505
	511
	517
	523
	529
	1228
	1233
8T-4649	1144
8T-4752	1083
8T-4777	1188
	1190
	1191
8T-4778	584
	585
8T-4779	909
	982
	984
	986
	988
	990
	1106
8T-4780	287
8T-4896	133
	136
	196
	198
	204
	306
	308
	310
	314
	316
	321
	324
	327
	331
	409
	460
	462
	476
	478
	492
	499
	505
	511
	517
	573
	624
	679
	682
	685
	755
	758
	1000
	1095
	1099
	1103
	1178
	1224
8T-4908	157
8T-4910	93
	95
	159
	161
	621
	883
	1025
	1027

PART NUMBER INDEX

Part	Page
8T-4943	1144
8T-4956	492
	499
	505
	511
	517
	523
	543
	554
	616
	618
	619
	620
	627
	630
	648
	650
	652
	654
	660
	662
	786
	853
	879
	880
	881
	882
	888
	1106
8T-4970	1074
	1077
	1127
	1136
	1138
	1140
8T-4971	263
	265
	586
	1131
	1148
8T-4984	141
	143
	159
	161
8T-4986	178
8T-4994	476
	478
	580
	582
	703
	825
8T-4999	391
	1244
	1246
8T-5005	492
	499
	505
	511
	517
	523
8T-5030	800
	802
8T-5041	529
	855
8T-5043	139
8T-5071	660
	662
8T-5361	569
	570
	572
	584
	585
	626
	631
	703
	1229
8T-5372	592
	594
	596
	598
8T-5389	212
	763
	768
	773
	778
8T-5400	1178
8T-5410	753
8T-5412	1229
8T-5413	154
	335
	337
8T-5429	491
	498
	504
8T-5436	1027
8T-5439	222
	283
	285
	308
	310
	314
	317
	321
	412
	417
	422
	601
	608
	609
	611
	612
	627
	630
	636
	638
	982
	984
	986
	988
	990
	1029
	1154
	1155
8T-5451	402
	404
	406
8T-5460	289
	291
	705
8T-5668	841
	843
	845
8T-6342	467
8T-6381	965
8T-6430	86
	706
	1154
	1155
8T-6466	119
	133
	136
	139
	170
	492
	499
	505
	511
	517
	523
	871
	888
	1029
	1086
	1089
	1092
	1095
	1099
	1103
8T-6685	430
	435
	439
	1031
	1033
8T-6696	491
	498
	504
	516
	522
8T-6723	204
8T-6724	204
8T-6726	1000
8T-6757	55
	57
8T-6761	469
8T-6762	137
8T-6764	53
	469
8T-6854	469
8T-6868	93
	95
	492
	499
	505
	511
	517
	523
	606
	616
	618
	619
	620
	633
	855
8T-6869	196
	198
8T-6870	133
8T-6912	73
8T-6936	335
	1006
	1010
	1014
	1018
8T-7008	460
	462
	755
	758
8T-7044	182
8T-7087	492
	499
	505
	511
	517
	523
8T-7338	897
	898
8T-7371	967
	968
	969
	970
	971
	972
	973
	974
	975
	976
	977
8T-7547	139
	804
8T-7566	575
	576
	600
	1134
	1135
8T-7568	825
8T-7852	1127
8T-7927	762
	767
	772
	777
8T-7929	1233
8T-7934	163
	306
	308
	310
	314
	317
	321
	324
	327
	331
	409
	430
	435
8T-7971	1066
	1164
8T-8379	847
	849
8T-8442	899
	901
	903
	949
	950
8T-8566	378
8T-8569	378
8T-8729	132
	229
	252
	257
	265
	296
	304
	357
	370
	371
	397
	400
	408
	421
	433
	817
	819
	1031
	1033
	1041
	1045
	1055
	1056
	1091
	1102
	1110
	1111
	1112
	1114
	1140
	1171

► **PRIMARY REFERENCE**

PART NUMBER INDEX

Part	Page
	1178
8T-8730	252
	265
	394
	421
	433
	438
	938
	1178
8T-8736	415
	421
8T-8737	206
	208
	245
	246
	251
	252
	258
	265
	273
	276
	277
	281
	285
	289
	291
	344
	349
	401
	408
	415
	416
	417
	420
	421
	422
	433
	434
	438
	439
	817
	819
	865
	1043
	1044
	1045
	1047
	1055
	1056
	1058
	1102
	1114
	1115
	1116
	1117
	1118
	1123
	1124
	1178
8T-8902	109
	112
8T-8908	4
	1074
	1077
	1128
8T-8914	1005
	1009
	1013
	1017
8T-8919	233
	235
	237
	528
8T-8984	870
8T-8987	829
	831
	833
	835
8T-9043	1005
	1009
	1013
	1018
8T-9082	1157
8T-9311	580
	582
8T-9358	490
	497
	503
	509
	515
	521
	800
	802
8T-9368	398
	1061
8T-9371	1171
8T-9383	204
	345
8T-9388	353
8T-9394	1224
8T-9399	476
	478
8T-9403	915
8T-9405	412
	422
	435
8T-9496	573
	592
	594
	596
	598
	624
8T-9530	132
	1243
	1245
8T-9598	899
8T-9655	196
	198
	267
	268
	429
	433
	438
8T-9756	240
	245
	251
	257
8T-9757	239
	240
	245
	251
	257
8T-9834	1074
8T-9884	378
8U-5951	899
	901
	903
8V-0622	239
8V-5455	1195
	1197
8V-9708	1099
	1103
8W-0327	124
8X-5489	233
	237
8Y-0374	602
	603
8Y-1388	703
8Y-3966	632
8Y-3998	632
8Y-4000	592
	594
	596
	598
8Y-5737	1067
8Y-5747	632
8Y-5945	1068
8Y-5965	1169
8Y-6012	1169
8Y-6014	1169
8Y-6024	1169
8Y-6041	1068
8Y-6045	1068
8Y-6046	1068
8Y-6047	1068
8Y-6060	1068
8Y-6062	1068
8Y-6063	1068
8Y-6064	1068
8Y-6066	1068
8Y-6067	1068
8Y-6068	1068
8Y-6069	1068
8Y-6388	1052
	1073
8Y-6400	573
	624
	632
8Y-6419	1187
8Y-6420	1187
	1188
8Y-6422	1188
8Y-6423	1186
	1187
	1188
	1190
	1191
	1193
8Y-6424	1186
	1187
	1193
8Y-6428	1193
8Y-6429	1193
8Y-6430	1186
	1187
	1188
	1190
	1191
	1193
8Y-6431	1190
8Y-6432	1186
8Y-6433	1186
	1190
8Y-6443	1191
8Y-6445	1193
8Y-6446	►1191
	1193
8Y-6447	1180
8Y-6448	1184
	1185
8Y-6454	1188
	1190
	1191
8Y-6455	1188
	1190
	1191
8Y-6459	1186
	1187
	1188
	1190
	1191
	1193
8Y-6460	1188
	1190
	1191
8Y-6461	1188
	1190
	1191
8Y-6462	1186
	1187
	1193
8Y-6463	1193
8Y-6839	1180
	1181
	1182
	1183
	1184
	1185
8Y-6859	1068
8Y-6860	1068
8Y-6910	1186
	1187
	1188
	1190
	1191
	1193
8Y-7452	860
8Y-8306	632
8Y-8309	1199
	1201
8Y-9603	382

9

Part	Page
9B-0453	345
9B-0576	448
9B-1117	1045
9B-2289	709
	711
	717
	719
9B-7233	347
	349
	391
	1136
	1138
	1140
9B-7237	573
	614
	679
	682
	685
	1061
9D-0630	224
	226
9D-3769	1128
	1144
9D-7924	490
	497
	503
	509
	515
	521
9D-9736	1005
	1009
	1014
	1018
9F-4446	38
	82
9F-5599	351
	383
9F-5644	390
	391
9F-6445	753

► **PRIMARY REFERENCE**

PART NUMBER INDEX

Part	Page
9F-6656	1243
	1245
9G-0002	240
	245
	251
	257
9G-0003	239
	240
	245
	251
	257
9G-0004	239
9G-0005	240
	245
	251
	257
9G-0284	530
9G-0285	530
9G-0286	489
	531
	537
9G-0289	530
	536
9G-0290	530
	536
9G-0832	483
9G-0983	1122
9G-0986	1122
9G-0990	1122
9G-0992	1022
	1152
9G-1127	1005
	1009
	1017
9G-1307	1072
9G-1642	693
	694
	695
	696
	697
	699
	700
	701
	702
9G-2673	133
9G-3695	757
	873
	1039
	1041
	1074
	1076
	1111
	1112
	1113
	1175
9G-4101	383
	384
	386
9G-5127	490
	497
	503
	509
	515
	521
9G-5664	679
	680
	681
	682
	683
	684
	685
9G-6655	282
9G-6744	488
	531
	536
9G-7101	1106
9G-8020	530
	536
9G-8615	454
	456
9G-8637	445
9G-8638	476
	478
9G-9151	1031
9G-9175	476
	478
9G-9180	476
9G-9181	476
	478
9H-0846	554
9H-2082	391
9H-3360	476
	478
9H-3757	383
	386
9H-6454	906
9H-8712	486
	549
	554
9J-2914	906
9J-3139	1236
9J-4782	895
9J-7031	906
9J-8126	923
	926
	932
9J-8923	1237
9J-8926	1233
	1237
9J-9598	1233
9L-3628	1147
9L-6770	231
9L-9068	806
9L-9132	449
9M-0164	115
	184
	185
9M-1974	38
	69
	70
	81
	85
	88
	107
	108
	109
	112
	118
	121
	123
	145
	175
	267
	268
	401
	404
	406
	464
	467
	480
	565
	568
	954
9M-1976	549
	554
9M-2008	486
	553
	556
9M-2904	174
	877
9M-3786	705
	706
9M-3835	576
9M-4355	530
	536
9M-5731	1136
	1138
	1140
9M-5854	1229
9M-7002	489
	529
9M-7394	906
9M-7609	383
9M-7958	116
9M-8406	1086
	1089
	1092
	1095
	1099
	1103
9M-9647	454
9N-0869	74
	267
	268
	430
	435
	439
	1052
9N-1756	959
9N-1995	1014
	1018
	1178
9N-4369	►1193
	1194
9N-4449	1229
	1233
9N-4450	1229
	1233
9N-4685	121
9N-6377	38
9P-1475	454
9P-1478	483
9P-1921	483
9P-1922	483
9P-1925	483
9P-2245	679
	680
	681
	682
	683
	684
	685
9P-3066	586
	589
9P-3709	549
	554
9P-6571	1145
9P-7072	483
9P-7121	222
	224
	226
9P-7390	530
	536
9P-7757	530
	536
9P-7855	1181
9P-7859	1180
	1184
	1185
9P-7860	1180
	1184
	1185
9P-8614	530
	536
9P-8623	530
	536
9P-8626	530
	536
9P-9150	806
9P-9388	1108
	1109
9P-9390	1108
9P-9392	1022
	1108
	1152
9R-2216	1121
9R-2613	190
9R-2640	995
9R-3572	1017
9R-3845	628
9S-1240	233
	235
	237
9S-1305	753
9S-1588	731
9S-1838	731
	732
	733
	741
	742
	743
	744
	745
	746
9S-2544	383
	386
9S-4167	196
	198
	218
9S-4181	930
	934
9S-4182	37
	887
	913
	915
	917
	919
9S-4183	456
	899
	901
	903
9S-4185	4
	109
	476
	478
	490
	565
	887
	1021
9S-4188	913
	915
	917
	919
9S-4190	196
	198
	804
9S-4191	37
	196
	198
	492
	563
	565
	887
	913
	915
	917

► **PRIMARY REFERENCE**

PART NUMBER INDEX

Part	Page
9S-4200	139
9S-4497	154
	159
	161
9S-5187	636
	638
	1022
	1152
9S-6130	454
	456
9S-6758	173
9S-7710	454
	456
9S-8001	887
	923
	926
	928
	930
	932
	934
	937
9S-8002	45
	218
	760
	788
	790
	792
	891
	899
	901
	903
	923
	926
	930
	932
	934
	938
	940
	942
	944
	949
	950
9S-8003	928
	952
9S-8004	200
	481
	482
	568
	788
	790
	792
	854
	891
	938
	940
	942
	944
9S-8005	53
	55
	145
	150
	449
	452
	788
	790
	792
9S-8006	952
9S-8008	145
	150
	446
	447
	788
	790
	792
	804
9S-8010	727
	729
9S-8230	575
	576
	600
9S-8752	173
	391
9S-9334	937
9T-0094	847
	849
9T-1576	794
9T-1579	794
9T-1582	794
9T-1637	794
9T-1642	794
9T-1643	794
9T-1687	794
9T-2378	808
9T-2714	841
9T-3264	906
9T-3853	810
	812
9T-3885	837
	839
9T-3928	788
	790
	792
9T-6093	845
9T-8693	460
	462
	755
	757
	808
9T-8958	837
	839
9T-9836	952
9U-8263	1071
	1072
9U-8668	568
9U-8669	568
9U-8746	1071
9U-8886	37
9U-9121	829
	831
	833
	835
9U-9122	829
	831
	833
	835
9U-9550	536
9V-2818	1163
9V-8668	568
9W-0099	1233
9W-0609	1229
9W-0645	530
9W-0844	245
	246
	251
	252
	257
	258
	273
	415
	416
	417
	421
	422
	433
	439
	997
	1031
	1033
	1043
9W-0852	245
	246
	251
	252
	257
	258
	273
	302
	349
	415
	416
	420
	421
	422
	433
	439
	997
	1031
	1033
	1073
	1076
9W-0873	1233
9W-1441	347
	349
9W-1442	347
	349
9W-1446	347
	349
9W-1464	1039
	1041
9W-1569	483
9W-1570	483
9W-1571	448
9W-1878	1226
9W-1951	415
	421
	429
	433
	439
9W-2032	349
9W-2033	349
9W-2579	982
	984
	988
	990
9W-2822	606
	621
	624
9W-2853	448
9W-2992	483
9W-3073	1072
9W-3660	483
9W-3762	1205
	1206
	1207
	1208
	1209
	1210
	1226
9W-4159	454
	456
9W-4361	305
	308
	310
	316
	320
	323
	327
	331
9W-4381	734
	735
	736
	737
	738
	739
	740
9W-4897	978
9W-5150	483
9W-5334	454
	456
9W-5343	1065
9W-5375	978
9W-5595	567
9W-6102	448
9W-6103	448
9W-6381	1212
	1214
	1219
9W-7925	452
9W-7926	452
9W-8270	530
	536
9W-8612	483
9W-8874	1225
	1226
	1227
9W-8875	1225
	1226
	1227
9W-8940	592
	594
	596
	598
9W-9000	978
9W-9082	883
9W-9083	883
9W-9436	37
9X-0194	1173
	1175
9X-0196	415
	421
	429
	433
	439
9X-0199	395
	396
9X-0261	206
	208
	354
	355
9X-0262	354
	355
9X-1046	344
9X-1054	1000
	1031
	1033
9X-1056	1031
	1033
9X-1386	304
	1085
	1088
	1094
	1098
9X-1813	229
	257
	358
	360
	361
	362
	364
	369
	370
	389
	393
	429
	433
	851

PART NUMBER INDEX

Part	Page
9X-2027	528
	567
	923
	926
9X-2038	1052
9X-2042	349
9X-2043	1052
	1081
9X-2044	417
9X-2045	1052
	1060
	1081
9X-2053	75
9X-2099	72
9X-2125	454
	456
	464
	467
	626
	874
	906
	1164
9X-2185	1067
9X-2205	222
	224
	226
9X-2297	854
9X-2480	294
	1130
9X-2646	179
9X-2647	179
9X-2857	796
	798
9X-3401	206
	208
	229
	245
	246
	251
	252
	253
	258
	273
	276
	277
	281
	349
	359
	395
	396
	401
	404
	408
	415
	420
	421
	433
	434
	439
	753
	865
	1041
	1123
9X-3402	229
	245
	246
	251
	252
	253
	258
	273
	281
	285
	289
	291
	333
	344
	349
	361
	408
	415
	420
	421
	422
	433
	434
	439
	467
	865
	873
	1058
	1074
	1076
9X-3452	1031
	1033
9X-3994	1017
9X-4244	299
9X-4582	648
	650
	652
	654
	656
	658
	660
	662
	664
	666
	749
	750
9X-4609	487
	527
9X-4824	378
9X-5699	240
9X-6154	923
	934
9X-6165	283
	285
	287
	289
	291
	294
	398
	1130
9X-6269	335
	337
9X-6281	1136
	1138
	1140
9X-6340	1244
	1246
9X-6381	1035
	1036
9X-6383	171
9X-6395	954
	955
	956
9X-6458	459
9X-6615	1136
	1138
	1140
9X-6772	283
	285
	287
	300
	302
	427
	873
	1000
	1124
9X-7264	841
	843
9X-7287	224
	226
9X-7378	1086
	1089
	1092
	1095
	1099
	1103
9X-7380	1086
	1089
	1092
	1095
	1099
	1103
9X-7381	1086
	1089
	1092
	1095
	1099
	1103
9X-7382	1085
	1086
	1088
	1089
	1092
	1094
	1095
	1098
	1099
	1103
9X-7383	1086
	1089
	1092
	1095
	1099
	1103
9X-7385	1024
	1086
	1089
	1092
	1095
	1099
	1103
9X-8250	235
9X-8256	233
	235
	237
	263
	265
	272
	283
	285
	287
	291
	342
	343
	344
	347
	349
	423
	430
	435
	439
	586
	861
	1000
	1029
	1039
	1041
	1049
	1057
9X-8257	233
	235
	237
	492
	497
	503
	509
	515
	521
	586
	589
	601
	727
	729
	769
	774
	779
	897
	898
	909
	982
	984
	986
	988
	990
	1025
	1027
	1106
9X-8258	583
	726
	1132
9X-8260	829
	831
	833
	835
9X-8266	586
	589
9X-8267	218
	219
	412
	417
	422
9X-8268	43
	68
	70
	75
	79
	106
	861
	871
9X-8408	491
	498
	504
	510
	516
	522
9X-8499	636
9X-8600	222
	224
	226
9X-8699	609
	612
9X-8918	1068

► **PRIMARY REFERENCE**

PART NUMBER INDEX

Part	Page
9X-8979	899
	901
	903
9X-9365	333
9X-9825	259
	408
9Y-0810	42
9Y-6089	381
	382
9Y-9236	166
	168
9Z-8212	9
9Z-9211	573
9Z-9214	573
9Z-9377	8
0	
003-2143	152
	155
003-9514	152
	155
	157
004-1964	752
005-4834	448
012-0380	393
030-1707	380
	381
030-2135	448
030-7946	641
	642
030-7950	210
030-8538	531
030-9613	443
	444
031-0214	1150
031-0218	454
	464
	467
031-1119	165
032-9882	37
033-6033	370
033-6034	82
	118
	523
	950
033-6043	949
	950
	963
	964
033-6044	808
033-8248	490
	497
	503
	509
	515
	521
033-9139	940
036-9821	383
037-4426	1067
039-8557	1106
045-4065	384
	387
061-6711	531
	537
061-7540	523
061-9455	83
	107
	108
	456
	489
061-9457	487
	545
067-2551	204
068-8093	531
	537
069-2536	443
	444
069-4269	116
	166
	168
077-3241	578
081-3801	788
	790
	792
081-8353	454
083-7784	952
083-9527	1073
	1076
084-4111	1188
	1190
	1191
085-7539	810
	812
	813
085-8091	923
	926
087-4772	760
091-9035	240
	245
	251
	257
095-0843	1157
	1160
095-0878	1068
095-0939	752
095-1750	948
095-7949	37
096-5962	1136
	1138
	1140
096-6166	956
	997
	1057
098-8968	1056
099-0822	37
099-2374	1056
1	
100-3224	1068
100-3320	281
	401
100-4336	196
	198
	204
100-5041	415
	421
	865
100-5179	1069
100-6211	952
100-8010	923
	926
	928
	930
	932
	934
100-8011	923
	926
	928
	930
	932
	934
100-8012	923
	934
101-0003	1169
	1171
101-0742	1195
	1197
	1199
	1201
	►1203
101-2850	172
101-2867	1150
101-3055	1083
101-3128	267
	268
101-3129	873
101-3625	335
	337
101-3934	79
102-0341	1067
102-2913	1244
	1246
102-7365	923
	926
	928
	930
	932
	934
102-8800	1178
102-8801	246
	252
	258
	277
	415
	416
	420
	421
	429
	434
	438
	753
	860
	1045
	1083
	1178
102-8802	132
	222
	228
	229
	246
	247
	252
	253
	257
	258
	263
	265
	294
	300
	302
	304
	308
	310
	313
	316
	320
	323
	327
	331
	347
	349
	369
	371
	389
	393
	395
	396
	400
	401
	408
	415
	421
	429
	430
	433
	438
	851
	865
	938
	944
	961
	962
	997
	1000
	1024
	1031
	1073
	1076
	1085
	1088
	1091
	1094
	1098
	1102
	1171
102-8803	132
	206
	208
	245
	246
	251
	252
	257
	273
	296
	313
	316
	320
	323
	357
	358
	359
	360
	370
	397
	401
	408
	415
	416
	420
	421
	427
	429
	430
	433
	438
	460
	462
	755
	757
	942
	1031
	1033
	1073
	1076
102-8804	246
	252
	306
	308
	310

► PRIMARY REFERENCE

PART NUMBER INDEX

Part	Page
	313
	316
	320
	323
	327
	331
	333
	415
	416
	417
	420
	421
	429
	430
	434
	438
	817
	819
	865
	960
	1000
	1039
	1041
	1073
	1136
	1138
	1140
102-8805	276
	277
	408
	415
	416
	420
	422
	997
	1000
	1039
	1047
	1048
	1055
	1056
	1073
	1094
	1102
	1110
	1111
	1112
	1113
	1114
	1115
	1116
	1117
	1118
	1123
	1173
	1175
102-8806	206
	208
	245
	251
	258
	287
	294
	420
	1073
	1074
	1076
102-9478	826
103-2543	1006
	1010
	1014
	1018
103-6100	1085
	1088
	1094
	1098
103-6262	1039
	1041
103-9425	1083
103-9527	1029
	▶1031
	▶1033
104-2091	344
104-5944	1066
104-6729	464
	467
104-6730	464
	467
	489
104-6931	906
105-1473	624
105-1634	899
	901
	903
105-1635	899
	901
	903
105-1636	899
	901
	903
105-1638	899
	901
	903
105-1639	899
	901
	903
105-1640	899
	901
	903
105-1642	899
	901
	903
105-1646	905
105-1648	905
105-1650	905
105-1651	905
105-1653	905
105-1797	401
	404
105-3031	899
	901
	903
105-3032	899
	901
	903
105-3033	899
	901
	903
105-3481	940
105-3482	1136
	1138
	1140
105-3484	224
	226
105-8183	530
	536
105-9657	999
	▶1071
105-9659	999
	1002
	▶1109
106-1227	894
106-2105	490
	497
	503
	509
	515
	521
106-4150	▶473
	474
106-4572	152
	155
106-5122	▶1024
	1025
	1027
106-5472	1136
	1138
	1140
106-7691	679
	680
	681
	682
	683
	684
	685
106-8186	578
106-8187	578
106-8704	1085
	1088
	1094
	1098
	1102
106-9212	565
106-9214	565
106-9361	601
107-2207	157
107-3786	422
	430
	434
	439
107-3881	460
	462
	▶753
	755
	757
107-3888	753
107-3945	680
	681
	683
	684
107-4393	1094
	1098
	1102
107-4394	1094
	1098
	1102
107-4399	1094
	1098
	1102
107-7694	36
108-1091	▶646
	749
	750
	751
108-1335	999
	▶1065
108-1696	542
	▶548
108-1847	952
108-2106	548
	▶562
108-3138	1071
	1072
108-4086	1069
108-4087	1069
108-4103	1069
108-4311	1171
108-4430	804
108-5157	956
108-5483	572
108-6954	549
	554
108-7251	762
	767
	772
	777
108-8089	124
109-1352	967
	968
	969
	970
	971
	972
	973
	974
	975
	976
	▶992
109-1353	977
	▶993
109-1354	993
109-1633	1085
	1094
109-1634	1085
	1094
109-1645	438
109-3001	132
	204
	490
	497
	503
	509
	515
	521
	578
	870
109-3207	83
	201
	202
	203
109-3968	565
109-4044	1094
	1098
	1102
109-4757	621
109-5498	1029
109-5761	1067
109-6406	996
109-9828	1005
	1009
	1013
	1017
109-9829	1005
	1009
	1013
	1017
110-0510	549
	554
110-2028	1039
	1041
110-2445	166
	168
110-2842	804
110-3844	1028
110-6109	1073
	1076
	1083
110-6393	995
	1243
	1245
110-6844	415
	421
	434
110-6845	415
	421
	429

► **PRIMARY REFERENCE**

PART NUMBER INDEX

Part	Page
	434
	438
110-7882	1039
	1041
110-8152	1081
110-8319	124
110-8379	1136
	1138
	1140
110-8827	124
110-8834	1094
	1098
	1102
111-0343	961
111-2416	281
	401
111-3203	129
111-3780	1136
	1138
	1140
111-3781	1136
	1138
	1140
111-4627	1035
	1036
	1050
111-4919	487
	543
111-5147	1052
111-7978	240
	245
	251
	257
111-8314	305
	306
	308
	310
	313
	316
	320
	323
	327
	331
	333
111-8642	1039
	1041
111-8950	1039
	1041
111-9251	1136
	1138
	1140
112-2628	497
	503
	509
	515
112-2660	753
112-4368	877
112-4440	460
	462
	755
	757
112-4511	488
	530
	536
112-4740	1039
	1041
112-4757	1039
	1041
112-5585	530
	536
112-8041	530
	536
112-9783	522
113-0580	408
113-0693	353
	398
113-5336	62
113-6033	1122
113-6069	76
114-0358	1236
	1237
114-0359	1236
	1237
114-5157	808
114-5333	1085
	1088
	1094
	1098
114-8843	246
	252
	258
	302
	327
	331
	333
	415
	416
	417
	420
	421
	433
	439
	873
	1085
	1088
	1091
	1094
	1098
	1102
	1175
114-8844	246
114-8845	246
	252
	258
	415
	1085
	1088
	1091
	1094
	1098
	1102
114-9125	1224
114-9284	629
114-9363	305
115-1024	308
	310
	313
	320
115-1025	308
	310
	313
	320
115-1748	412
	415
	420
	1073
	1076
115-2422	241
	247
	253
	259
115-3519	415
	433
115-4072	76
	82
115-4219	76
116-3715	83
	182
	762
	767
	772
	777
	858
116-6202	1085
	1088
	1094
	1098
116-6203	1073
	1076
116-6698	709
	711
	717
	719
116-6702	709
	711
	717
	719
117-1266	523
117-1385	531
	537
117-2311	429
	433
	438
117-4491	1162
117-4492	994
117-5691	580
117-5692	580
117-5693	580
117-5694	580
117-5695	580
	582
117-7296	787
117-7826	530
117-8131	1144
117-8863	1148
117-9058	▶582
117-9748	709
	711
	717
	719
117-9966	1144
118-0639	753
118-0693	1005
	1009
	1013
	1017
118-1170	845
118-1727	11
	12
	14
	16
	18
	23
	24
	25
	26
	27
	28
	29
	▶39
118-6299	306
118-6878	124
119-3662	245
	251
	257
	276
	302
	327
	331
	401
	415
	417
119-7903	8
120-4394	760
	788
	790
	792
	899
	901
	903
120-5746	▶717
120-5753	717
	719
120-5766	▶709
120-5767	709
	711
120-5785	709
	711
	717
	719
121-2844	408
121-3917	71
121-4344	139
121-6649	923
	926
	▶956
122-1133	962
122-2358	163
122-3771	806
122-7127	1073
	1076
122-9033	762
	767
	772
	777
123-0304	412
	415
	420
	1073
	1076
123-0306	412
	415
	420
	1073
	1076
123-0790	93
	95
123-1373	241
	247
	253
	259
123-2017	760
123-5748	794
123-7556	760
123-7559	760
123-7560	760
123-7575	788
	790
	792
123-7583	788

▶ **PRIMARY REFERENCE**

PART NUMBER INDEX

Part	Page
	790
	792
123-9294	1073
	1076
123-9624	923
	926
124-0147	523
124-0174	121
	641
	642
124-2463	224
124-3019	870
124-3243	1052
124-6655	527
124-8335	921
124-8490	1031
	1033
124-9401	459
124-9666	982
	984
	988
	990
124-9672	982
	984
	986
	988
	990
125-1302	347
	349
	▶393
125-1362	136
125-4175	▶718
	749
	750
	751
125-4176	▶710
	749
	750
	751
125-4177	676
	▶707
125-5341	467
125-5533	676
	▶707
125-6535	384
	387
125-6536	384
125-6537	384
125-7874	245
	246
	251
	252
	257
	258
	281
	289
	291
	349
	401
	408
	415
	416
	417
	420
	421
	433
	434
	439
	467
	757
	865
	1124
125-7875	245
	251
	257
	265
	347
	401
	408
	415
	416
	422
	429
	433
	438
	439
	757
	865
	997
	1124
125-8254	1005
	1009
	1013
	1017
126-0747	762
	767
	772
	777
	▶921
126-0748	921
126-0810	865
126-0814	762
	767
	772
	777
	860
	870
126-1403	796
	798
126-1477	760
	787
126-1638	788
126-1661	788
	790
	792
126-1757	40
126-1766	246
	247
	327
	331
	416
	417
	757
	1124
126-1767	206
	208
	252
	253
	258
	281
	302
	327
	331
	333
	359
	401
	409
	416
	420
	421
	439
	865
	1102
126-1768	281
	302
	327
	331
	333
	361
	408
	420
	421
	439
	757
	865
	1085
	1088
	1091
	1094
	1098
	1102
	1124
126-1773	412
	415
	420
126-1774	283
	285
	287
	408
	415
	427
	1124
126-3700	1164
126-3701	1164
126-5011	281
	401
126-5948	960
126-7574	275
126-7975	335
	337
126-9092	788
	790
	792
127-1043	1148
127-1044	1148
127-1045	1148
127-1046	1148
127-1048	1148
127-1596	753
127-1597	753
127-1598	460
	462
	755
	757
127-1599	460
	462
	755
	757
127-3018	1125
	1128
127-4833	1000
127-5485	415
	422
	429
	434
	438
127-5486	408
127-8178	184
	185
127-8830	1243
	1245
128-0314	240
	245
	251
	257
128-2569	829
128-2570	829
128-2571	831
128-2572	831
128-2573	833
128-2574	833
128-2575	835
128-2576	835
128-3341	106
128-3813	106
128-5924	1085
	1088
	1091
	1094
	1098
	1102
128-6841	212
129-1831	1073
129-3217	829
	831
	833
	835
129-3737	629
129-5649	762
	767
	772
	777
129-8331	283
	285
	308
	310
	313
	316
	320
	412
	415
130-0229	481
	482
130-1977	877
130-3280	186
	187
130-5300	229
	241
	247
	253
	259
	300
	302
	412
	417
	422
	430
	434
	439
	1000
	1049
	1074
	1077
130-7806	796
	798
130-9192	877
131-0447	1039
	1041
131-0825	545
131-1488	349
131-3278	545
131-3539	417
	422
131-3981	229
131-4091	488
	530
	536
131-4242	1068
131-5137	1083
131-5167	1068
131-5492	1144
132-0338	994
132-1249	845
132-5789	191
	241
	247

▶ **PRIMARY REFERENCE**

PART NUMBER INDEX

Part	Page
	253
	259
	320
	409
	412
	417
	422
	467
	1074
	1077
132-7077	1136
	1138
	1140
132-7419	1039
	1041
132-7450	1039
	1041
132-8502	634
132-9455	784
	785
132-9899	806
132-9900	806
133-1400	545
133-1401	545
133-2198	446
133-2249	817
	819
133-3260	139
133-5545	816
	957
133-5631	644
	645
133-6934	170
133-7810	241
	247
	253
	259
	769
	774
	779
133-9405	132
	1073
	1076
134-0165	300
	302
	1000
134-1251	806
134-2540	408
	415
	417
	421
	422
	460
	462
	755
	757
134-4126	271
	275
134-5366	673
	675
134-5368	673
	675
134-7258	1243
	1245
134-9602	1067
135-0611	1114
135-2964	1212
135-2966	1212
135-3084	1212
135-9819	39
	82
136-0822	40
136-1122	119
136-1543	1133
136-1544	994
136-1595	448
136-2216	487
	549
	554
136-2227	1013
136-2228	1013
136-3188	1195
	1197
	1199
	1201
136-3191	1195
	1197
	1199
136-3192	1195
136-4183	76
136-6093	460
	462
	755
	757
136-9066	1247
136-9297	938
	940
	942
	944
136-9298	938
	940
	942
	944
137-1602	194
137-4488	478
137-4490	478
137-6603	804
137-6645	374
	375
	536
137-6722	1106
137-8793	782
137-8794	782
137-9755	938
	944
137-9810	478
138-0444	222
138-2434	1224
138-2435	1224
139-0566	644
	645
139-0567	644
	645
139-2116	306
	308
	310
	313
	316
	320
	323
	327
	331
	▶397
	408
140-1739	901
	903
140-7480	1130
141-2240	4
	1128
141-4044	1148
141-4123	1067
141-4852	938
	940
	942
	944
141-4976	430
	434
	439
142-2328	1212
142-8540	487
	551
142-8620	1031
142-8858	1073
	1076
142-9425	796
	798
142-9426	796
	798
142-9427	796
	798
142-9429	796
	798
142-9430	796
	798
142-9431	796
	798
142-9432	796
	798
142-9433	796
	798
142-9434	796
	798
142-9435	796
	798
142-9436	796
	798
142-9437	796
	798
142-9438	796
	798
142-9439	796
	798
142-9440	796
	798
142-9643	1212
143-1288	1157
	1160
143-6020	344
143-7052	899
	901
	903
143-7397	828
143-9392	267
	268
144-0195	996
	1173
	1175
	1178
144-0331	1039
	1041
	1044
	1045
144-0367	179
	870
144-1636	246
	247
	327
	331
	369
	416
	417
	757
	1175
144-4284	530
	536
144-5573	749
144-7878	531
145-0326	1169
	1171
145-0905	760
145-0909	787
145-1077	▶787
	788
	790
	792
145-1833	787
145-2334	938
	940
	942
	944
145-3405	1136
	1138
	1140
145-5181	880
	881
	882
145-6669	187
145-7028	240
	245
	251
	257
	▶371
	408
145-7328	1178
145-8355	870
145-8741	1195
	1197
	1199
	1201
146-3728	963
146-6315	938
	940
	942
	944
146-6317	938
	944
146-6433	1199
	1201
146-6669	459
	489
146-6670	459
146-6747	1243
	1245
146-8477	940
146-8479	940
146-8981	940
147-0182	148
147-0319	▶297
	305
	306
	308
	310
	313
	316
	320
	323
	327
	331
	333
147-1444	427
	1124
147-1445	460
	462
	755
	757
147-1446	460
	462
	755
	757
147-3150	408
147-5088	146
147-6603	958
147-6604	958
147-6605	958
147-7976	▶1111

► **PRIMARY REFERENCE**

PART NUMBER INDEX

Part	Page
	1195
	1197
	1199
	1201
147-7979	▶1112
	1195
	1197
148-1928	523
	527
148-2903	83
	201
	202
	203
148-8305	860
	868
148-8312	774
	779
148-8316	860
	873
148-8318	119
	132
	860
148-8319	196
	198
148-8325	119
	497
	503
	509
	515
	860
	863
	873
148-8326	132
	860
	863
	865
	868
	873
148-8327	124
	762
	767
	772
	777
	854
148-8328	762
	767
	772
	777
148-8333	762
	767
	772
	777
148-8335	490
	497
	503
	509
	515
	521
148-8336	119
	132
	490
	497
	503
	509
	515
	521
	800
	860
	865
	868
	887
148-8339	124
	762
	767
	772
	777
148-8340	119
	887
148-8342	763
	768
	773
	778
148-8347	166
	168
	763
	768
	773
	778
	854
	870
148-8351	860
	873
148-8353	132
	763
	768
	773
	778
148-8354	119
148-8359	854
148-8361	868
	870
148-8364	204
	510
	516
	522
148-8366	763
	768
	773
	778
148-8367	133
	860
	865
	868
	873
148-8368	490
	498
	504
	510
	516
	521
	802
	861
	863
	865
	873
148-8369	119
	861
	863
	865
	873
148-8372	204
	763
	768
	773
	778
148-8374	119
	204
	491
	498
	504
	510
	516
148-8378	119
	133
	196
	198
	522
	763
	768
	773
	777
	778
148-8381	491
	498
	504
148-8382	124
148-8391	829
	831
	833
	835
148-8395	53
148-8406	937
148-8407	492
	913
	915
	917
148-8409	804
148-8410	782
	804
148-8411	4
	490
	887
	1021
148-8417	763
	768
	773
	778
148-8421	773
	778
148-8426	491
	498
	504
	510
	516
	522
148-8433	133
	874
148-8434	861
148-8435	119
	854
	861
	874
148-8439	133
148-8449	763
	768
149-2494	679
	680
	681
	682
	683
	684
	685
149-2495	680
	681
	683
	684
149-3137	460
	462
	755
	757
149-5240	201
	202
	203
149-5470	938
	940
	942
	944
149-5933	628
	634
	726
149-7372	415
149-9818	429
	433
	438
150-1293	938
150-3026	204
150-3036	133
	854
150-3065	491
	498
	504
	510
	516
	522
150-4027	412
	415
	420
150-4033	763
	768
	773
	778
150-4043	887
150-4046	802
150-4047	868
150-4049	763
	768
	773
	778
150-4086	430
	434
	439
	1123
151-0254	1195
	1197
	1199
	1201
151-0255	1195
	1197
	1199
	1201
151-0256	1195
	1197
151-1398	347
	349
151-2939	42
151-4453	▶1113
	▶1114
	1199
	1201
151-5803	1039
	1041
151-6689	310
	313
	320
151-9275	1039
	1041
152-3421	646
	647
152-8071	686
	687
	691
	692
152-8343	961
152-8345	937
	▶961
152-8427	▶305
	310
	313
153-1277	187
153-2073	▶298
	316

▶ **PRIMARY REFERENCE**

PART NUMBER INDEX

Part	Page
153-4247	565
153-5043	371
153-5044	607
	647
153-5710	239
153-6243	491
	498
	504
	510
	516
	522
153-6244	763
	768
	773
	778
153-6246	763
	768
	773
	778
	861
	870
153-6251	829
	831
	833
	835
153-6252	491
	498
	504
	510
	516
	522
153-6260	870
153-6281	239
153-6976	926
	930
	932
153-7036	219
153-7067	923
	926
	930
	932
	934
153-7549	923
	934
153-7550	923
	934
153-7551	926
	930
	932
153-7553	923
	934
153-8001	1193
154-2302	415
	420
154-3172	246
	252
	258
154-3358	77
154-5232	522
155-2255	246
	252
	258
	277
	283
	285
	287
	289
	291
	415
	417
	421
	422
	429
	430
	434
	438
	460
	462
	755
	757
	865
	1083
155-2257	415
	417
	421
	422
	429
	430
	434
	439
	865
155-2258	289
155-2259	409
155-2260	246
	252
	361
	362
	364
	401
	408
	409
	415
	416
	420
	422
	427
	429
	430
	434
	438
	873
	887
	1074
	1083
	1094
	1102
	1124
155-2261	938
155-2265	281
	294
	401
	409
	417
	421
	1074
	1076
	1178
155-2270	229
	245
	246
	247
	251
	252
	253
	257
	258
	263
	265
	281
	294
	300
	302
	306
	308
	310
	313
	316
	320
	323
	327
	331
	333
	347
	349
	394
	401
	409
	416
	420
	422
	429
	430
	434
	438
	439
	464
	860
	865
	873
	887
	938
	997
	1000
	1031
	1033
	1074
	1085
	1086
	1088
	1089
	1091
	1092
	1094
	1098
	1102
155-2271	132
	246
	252
	258
	273
	283
	285
	287
	416
	417
	422
	429
	430
	433
	434
	438
	439
	460
	462
	755
	757
	865
	1074
	1178
155-2272	1000
155-2274	132
	246
	252
	258
	263
	265
	272
	273
	409
	416
	417
	421
	422
	429
	430
155-3624	887
	913
	915
	917
	919
155-5161	487
	549
	554
155-6479	628
	629
	1064
155-8577	621
156-0214	851
156-4406	531
	536
156-5342	607
	747
	748
156-5545	994
156-5970	817
	819
	962
156-6175	289
	291
	422
156-7410	1052
157-0670	141
	143
157-1361	1073
157-1373	733
157-1374	733
157-1375	►733
157-2284	960
157-2741	1076
158-0250	297
	298
158-0252	297
	298
158-2336	443
	444
158-2734	1039
	1041
158-2735	1039
	1041
158-5626	942
158-6072	192
	194
158-6632	240
	►395
	429
	433
	438
158-7690	999
	1002
	►1178
158-7694	►999
	1002
	1003
158-7695	999
	1002
	►1081

PART NUMBER INDEX

Part	Page
158-7696	999
	▶1005
	▶1009
158-7697	1005
	1009
	1013
	1017
158-7864	1244
	1246
158-8906	1081
158-9956	891
	▶922
159-0827	762
	767
	772
	777
159-1503	157
	1106
159-2950	▶1165
	1168
159-3042	84
159-3781	938
	944
159-4712	1073
	1076
159-7943	391
	1052
159-7946	1052
159-7948	1052
159-7949	1052
159-8047	408
159-8049	251
	252
	259
159-8050	251
	253
	391
159-8108	1052
159-8109	1052
159-8112	940
159-9257	1073
	1076
159-9322	285
	289
	291
	409
	416
	422
	438
	757
	1124
159-9854	796
	798
160-0496	443
	444
160-0526	41
	82
160-0766	827
	▶938
160-1431	1136
	1138
	1140
160-1432	1136
	1138
	1140
160-1433	1136
	1138
	1140
160-1434	1136
	1138
	1140
160-1435	1136
	1138
	1140
160-1437	460
	462
	755
	757
160-1757	813
160-2351	621
160-2443	▶357
	1136
160-4103	664
	666
	749
160-4702	1035
	1036
	1049
160-5804	1094
	1098
160-5843	960
160-5844	960
160-6305	982
	984
	986
	988
	990
160-6306	965
160-7165	1165
	1166
	▶1169
160-7186	1164
	▶1166
160-7689	409
	416
	422
	427
	429
	434
	438
	460
	462
	755
	757
	1124
160-7690	283
	285
	287
	289
	291
160-7820	686
	687
	691
	692
160-8124	281
	401
160-8184	77
	82
160-8194	89
160-8197	89
160-8199	89
160-8497	235
	237
160-8499	752
161-1083	1081
161-1084	1081
161-1085	1081
161-1091	1081
161-1092	1081
161-1093	1081
161-1094	1081
161-1096	1081
	▶1083
161-1097	1083
161-1098	1081
161-1099	1083
161-1703	363
161-1704	354
161-1705	354
161-2684	926
	930
	932
161-2685	923
	934
161-3398	182
161-3406	30
	31
	32
	33
	▶45
161-3411	82
	182
161-3424	89
161-3615	▶1038
	1049
	1050
161-3616	826
	▶1080
161-3958	1144
161-3963	460
	462
	755
	757
161-3964	460
	462
	755
	757
161-4024	1052
161-5967	1068
161-6041	460
	462
	755
	757
161-6149	816
	948
	957
161-6154	752
	922
161-6161	816
	948
	957
161-6963	192
	194
161-8068	487
	545
161-9289	1167
161-9926	240
	245
	251
	257
	▶361
162-0177	568
	854
	938
	940
	942
	944
162-2166	679
	680
	681
	682
	683
	684
	685
	711
	719
162-2220	218
162-2222	218
162-3148	175
162-5357	▶782
	806
162-5358	782
162-6448	454
162-7862	679
	680
	681
	682
	683
	684
	685
162-8378	1045
162-8387	1045
162-8389	1045
162-9523	489
	491
	498
	504
	510
	516
	522
162-9997	899
	901
	903
163-1135	1171
163-1146	1169
163-2175	664
	666
163-2176	664
	666
163-2437	104
163-2445	103
163-2447	97
163-2459	103
163-2478	53
	55
	57
163-5512	938
	940
	942
	944
163-5671	923
	934
164-0406	▶670
	676
	751
164-0758	1144
164-0847	1073
	1076
164-0938	923
	934
164-1234	1171
164-2108	129
	563
	564
	818
164-3651	909
164-4180	930
	934
164-4531	994
164-4883	1134
	1135
164-5567	128
	196
	198
	454
	456
	491
	498
	504
	510
	516
	522
	763
	768
	773
	778

▶ **PRIMARY REFERENCE**

PART NUMBER INDEX

Part	Page
	861
164-5570	204
164-5590	861
164-5616	454
164-5619	952
164-5669	103
164-5798	335
	337
164-6148	30
	31
	32
	33
	▶42
164-6174	919
164-6863	854
164-7556	299
164-7577	▶389
	446
	447
164-7677	915
	917
164-7678	913
164-9541	1136
	1138
	1140
164-9657	938
164-9869	854
164-9928	827
164-9929	1076
164-9930	827
165-0187	218
165-2273	1106
165-2577	1154
165-4445	11
	12
	14
	16
	18
	23
	24
	25
	26
	27
	28
	29
	▶182
165-4459	11
	12
	14
	16
	18
	23
	24
	25
	26
	27
	28
	29
	▶88
165-4461	11
	12
	14
	16
	18
	23
	24
	25
	26
	27
	28
	29
	▶137
165-4854	487
	549
	554
165-6365	854
165-6779	1136
	1138
	1140
165-6857	1144
165-6946	646
	647
165-6969	794
165-9100	1136
	1138
	1140
165-9102	1136
	1138
	1140
165-9103	1136
	1138
	1140
165-9104	1136
	1138
	1140
166-0211	762
	767
	772
	777
166-1784	11
	12
	14
	16
	18
	23
	24
	25
	26
	27
	28
	29
	▶84
166-1790	11
	12
	14
	16
	18
	23
	24
	25
	26
	27
	28
	29
	▶101
166-1792	11
	12
	14
	16
	18
	23
	24
	25
	26
	27
	28
	29
	▶102
166-2153	1155
166-2287	670
	671
	672
	673
	675
	677
166-3648	89
166-3733	1083
166-3777	1035
	1036
166-5229	415
	421
	429
	434
	460
	462
	755
	757
166-6781	1169
166-6928	1073
	1076
	▶1110
167-0024	47
167-0168	121
167-0171	▶68
	69
167-0172	182
167-1177	826
	▶940
167-1530	1073
	1076
167-1884	306
	308
	310
	313
	316
	320
167-1950	679
	682
	685
167-1951	679
	682
	685
167-1952	679
	682
	685
167-2171	308
	320
167-2201	843
	845
167-2208	847
167-2312	843
	845
167-2319	847
167-2323	727
	729
167-6805	788
	790
	792
167-7715	814
167-7751	753
167-8610	1130
167-8712	427
	1126
167-8987	416
	420
167-9524	129
168-1969	763
	768
	773
	778
168-2599	880
	881
	882
168-7211	89
168-8376	34
	35
	▶135
168-8377	34
	35
	▶178
168-8378	34
	▶141
168-8655	323
	327
	331
168-8656	316
168-8783	34
	35
	▶1028
169-1026	1160
169-1838	164
169-1840	▶164
	166
	168
169-2876	1243
	1245
169-3796	154
	159
	161
169-3797	152
	155
	157
169-3798	152
	155
	157
169-3799	152
169-3800	152
	155
	157
169-3801	152
169-3806	34
	35
	▶828
169-3812	152
169-3821	828
169-3822	828
169-3826	166
	168
169-3883	178
169-3895	102
169-3899	101
169-4368	▶704
	747
	748
	749
	750
	751
169-6902	1142
	1143
169-7380	1169
	1171
169-7397	498
	504
	510
	516
169-7451	800
169-9635	1178
169-9636	1083
169-9637	1002
	1003
	▶1122
169-9639	1051
169-9649	▶1173
	▶1175
	1177
169-9650	1173
170-0251	1144
170-0260	1073
170-0792	679
	682
	685
170-0795	▶668
170-1112	994
170-1114	994
170-1115	994
170-3357	891

PART NUMBER INDEX

Part	Page
	▶948
170-3399	1029
170-3461	429
	433
170-3795	240
	246
	252
170-4001	923
	934
170-4891	887
170-5849	263
	265
	1052
170-5854	1005
	1009
	1013
	1017
170-5855	1005
	1009
	1013
	1017
170-7694	592
	594
	596
	598
170-8590	1150
170-8592	621
171-0808	704
171-1230	1157
	1160
171-2438	1122
171-3054	794
171-3055	794
171-3057	794
171-3058	794
171-3059	794
171-3060	794
171-3061	794
171-3068	794
171-5349	369
171-5882	711
	719
171-5989	794
171-6682	1157
	1160
171-7077	1037
171-8772	962
172-0962	▶633
172-0964	3
	7
	▶606
172-0967	606
172-2385	629
172-2391	817
172-2392	784
	▶817
172-2416	1157
	1160
172-4620	854
172-4860	429
	433
172-4863	347
172-4864	240
	245
	251
	257
172-4868	313
	320
172-4869	308
	310
	313
	320
172-5291	1035
	1036
	1050
172-5487	621
172-5989	1029
172-6062	281
	401
172-6064	281
172-9966	912
172-9981	837
	839
173-0511	923
	926
	928
	930
	932
	934
173-0512	923
	934
173-0514	926
	928
	930
	932
173-0515	923
	934
173-0946	547
173-1016	218
173-1028	▶994
	1157
	1160
173-1566	429
	433
	438
173-1852	▶604
173-2052	1133
173-3083	1162
173-3208	132
173-3283	1160
173-3993	887
	923
	926
	928
	930
	932
	934
	937
173-5787	1165
	1166
	1167
173-7035	1165
	1166
	1167
173-7225	868
173-9685	670
	672
	673
	675
	677
173-9779	841
	845
173-9815	1085
	1088
173-9816	1085
	1088
	1091
174-0503	409
	416
	417
	421
	460
	462
	755
	757
174-1366	940
174-2231	▶1068
	1169
174-2237	1068
174-3091	1044
	1045
	1047
	1048
174-3847	88
174-4590	1243
	1245
174-4909	782
	▶818
174-5415	186
	187
174-7414	▶136
174-7599	196
	198
174-7875	240
	245
	251
	257
174-7876	241
	247
	253
	257
174-9030	1027
174-9169	377
174-9198	▶1238
174-9199	▶1238
174-9570	196
	198
	▶200
174-9603	467
175-0451	310
	313
175-0452	310
175-0454	43
175-1349	1073
	1076
175-3514	887
175-3616	526
175-3721	79
175-3950	1073
	1076
175-4165	1045
175-4170	1045
175-4291	299
175-4292	299
175-4393	1073
175-4972	▶784
	▶785
	806
175-6260	11
	12
	14
	16
	18
	23
	24
	25
	26
	27
	28
	29
	▶77
175-7162	1085
	1088
	1094
	1098
175-7900	837
	839
175-9106	206
	208
176-3022	854
176-3024	854
176-3025	854
176-5321	▶129
	526
176-5913	103
176-5914	103
177-0581	179
177-1044	145
	150
177-1050	146
	149
177-1056	146
	149
177-1058	149
177-1796	854
177-1862	1150
177-1863	1157
	1160
177-4937	1159
	1162
177-6979	762
	767
	772
	777
	▶851
177-7983	9
177-9653	272
177-9656	272
	416
	430
	434
178-0603	▶1157
	1159
178-0606	▶1159
	1166
	1167
178-3003	1076
178-7907	1133
179-4324	300
	302
179-6151	988
	990
179-6152	982
	984
	988
	990
179-6153	982
	984
	988
	990
179-6162	988
	990
179-6401	1074
	1077
179-7376	1045
179-7400	218
179-8128	219
179-9387	▶822
180-3907	469
180-4362	487
	491
	498
	504
	510
	516
	522
180-5737	347
	349
180-6152	938
	940
	942
	944
180-6213	905
180-6600	1022
	1151
	1152

▶ **PRIMARY REFERENCE**

PART NUMBER INDEX

Part	Page
180-6692	604
180-6693	604
	605
180-6694	604
180-6695	152
	155
	157
180-6696	152
	155
	157
180-7304	►1160
	1162
180-7910	478
180-8569	854
	►937
180-9236	1085
	1088
	1091
180-9339	360
	1024
180-9340	362
	364
	401
183-1961	313
183-1982	313
183-2097	11
	12
	14
	16
	18
	23
	24
	25
	26
	27
	28
	29
	►109
	►112
183-2931	150
183-3399	121
	123
	206
	208
	212
183-3406	887
183-4273	1085
	1088
	1091
	1094
	1098
	1102
183-4274	408
183-5163	68
183-7263	923
	926
	930
	932
	934
	938
	940
	942
	944
183-8395	810
	812
183-8398	810
	812
183-8410	814
183-9374	86
184-0982	1128
	1144
184-0983	629
184-1503	1164
184-2298	1157
	1160
184-2299	1157
	1160
184-3008	624
184-3269	1164
184-3270	1164
184-3285	1144
184-3289	1144
184-5498	335
	337
184-6011	►1162
	1165
184-7037	421
184-7211	115
184-8060	1136
	1138
	1140
185-0838	93
	95
185-0844	141
185-0845	141
	143
185-1047	157
185-1861	422
	434
	865
185-2076	1144
185-2638	231
185-2639	231
185-2644	231
185-2645	231
185-2647	231
185-2648	231
185-2650	231
185-2653	231
185-2654	231
185-2655	231
185-2658	231
185-3159	41
	82
185-3503	806
185-3533	1073
	1076
185-3666	1144
185-6393	380
	381
185-9607	308
	320
186-0636	316
186-3735	222
	228
	294
	313
	316
	320
	323
	358
	389
	393
	416
	429
	851
	938
	944
	960
	961
	962
	1039
	1044
	1047
	1048
	1073
	1076
	1085
	1088
	1094
	1098
	1113
	1115
	1116
	1117
	1118
186-3736	416
	417
186-4857	1173
	1175
186-4998	1136
	1138
	1140
186-5097	1076
186-5107	1171
186-5120	183
186-6189	1085
	1088
	1091
	1094
	1098
	1102
187-0541	948
187-1315	52
	59
	60
	82
187-3523	469
187-3961	141
	143
187-3974	119
187-7719	1076
187-8001	788
	790
	792
187-8194	77
187-8195	77
187-8222	77
187-8984	146
187-9178	614
187-9194	906
188-0908	►547
	747
	748
	749
	750
	751
188-1012	1025
	1027
188-1013	1025
	1027
188-1017	84
188-1079	1038
188-2892	938
188-3034	166
	168
188-3826	12
	25
	26
	27
	28
	29
	30
	31
	32
	►130
188-7067	804
188-7068	804
188-7069	804
188-7535	218
188-7536	218
188-7537	218
188-7541	218
188-7568	752
188-7569	752
188-7790	752
188-7791	752
188-7800	752
188-8849	297
	298
188-9040	614
188-9637	905
188-9644	340
	412
189-0985	1233
189-1707	1091
	1102
189-3032	664
	666
	749
	750
189-3158	1091
189-5358	1122
189-5576	119
189-5577	119
189-5586	154
189-5587	154
189-5588	154
	159
	161
189-5881	1022
189-6123	1122
189-9306	11
	12
	14
	16
	18
	23
	24
	25
	26
	27
	28
	29
	►99
190-2277	483
190-2278	454
	456
	►459
190-3562	47
190-5149	573
190-5386	1241
	1243
	1245
190-5583	1088
	1091
	1098
	1102
190-5584	1088
	1091
	1098
	1102
190-6114	82
	88
190-6115	53
	55
	57
190-6117	53
	55
	57
190-7515	141
	143
190-7613	429
190-7615	246
	252
	415

► PRIMARY REFERENCE

PART NUMBER INDEX

Part	Page
	416
	417
	420
	421
	434
	438
190-8609	727
	729
190-8970	196
	198
	▶218
191-1782	196
	198
191-1783	196
	198
191-2933	1167
	▶1171
191-4457	82
	137
191-5439	909
191-7823	281
	401
	404
191-8304	531
	536
191-8305	531
	536
191-8920	940
	944
191-8921	938
	942
	944
191-9247	964
192-0729	119
	▶526
192-2112	997
192-3016	4
	▶1051
	1128
192-3017	1051
	1054
192-3018	1051
	1054
192-7752	1171
192-7755	1171
192-7767	1171
192-7783	1171
192-7787	1171
192-7790	1171
192-7795	1171
192-7799	1171
192-7805	1171
192-7810	1171
192-7812	1171
192-7820	1171
192-7848	1171
192-9734	294
192-9742	132
193-1598	224
	226
193-3356	1073
193-3359	1073
193-3973	241
	247
	253
	259
193-5116	184
	185
193-7377	1051
	1054
194-0935	984
	986
194-0936	984
	986
194-1466	1076
194-2903	1106
194-3708	1155
194-3710	1113
	1114
194-5031	938
194-5032	944
	▶946
194-5033	938
	940
	942
	944
	▶947
194-5171	1195
	1197
	1199
	1201
194-6725	206
	208
	▶362
194-6813	569
194-6814	569
194-6816	569
194-6818	569
194-6820	569
194-6823	569
194-7034	1136
	1138
	1140
194-8031	1057
195-0452	82
	118
195-4989	306
195-7430	962
195-8098	30
	31
	32
	33
	▶126
	▶127
196-1236	733
	746
196-4233	▶752
	788
	790
	792
196-4251	810
196-4253	810
	812
196-4254	810
	812
196-5515	944
196-7839	733
	746
196-8884	459
196-9444	813
196-9445	810
	812
196-9654	401
	404
	406
196-9852	429
	433
	438
196-9858	166
	168
197-0668	240
	245
	251
	257
197-4640	762
	767
	772
	777
197-6280	▶282
197-6281	282
197-7310	573
197-7447	287
197-7565	273
	415
	421
	429
	434
	438
197-7689	1169
197-8393	354
	▶363
197-8419	82
	121
	123
197-8820	▶231
	233
197-9367	89
197-9392	89
198-0921	11
	12
	14
	16
	18
	23
	24
	25
	26
	27
	28
	29
	▶128
198-1319	11
	12
	14
	16
	18
	23
	24
	25
	26
	27
	28
	29
	▶118
198-1883	472
198-2914	964
198-3462	469
198-4777	629
	769
	774
	779
198-4778	912
198-4780	912
198-5389	294
198-6574	1022
	1152
198-6575	1022
	1152
198-8858	8
	573
198-9219	762
	767
	772
	777
	▶815
198-9220	815
	▶816
198-9706	4
	1052
	1074
	1077
	1128
198-9707	1074
	1077
	1144
199-4275	▶942
	1050
199-6609	940
199-7834	944
199-7891	231
199-8436	231
199-9102	808
199-9710	942
2	
200-0189	▶944
	1049
	1050
200-0750	▶823
	860
200-3174	1163
	▶1167
200-4495	76
200-5003	944
200-6179	899
	901
	903
201-0781	762
	767
	772
	777
201-0782	762
	767
	772
	777
201-0950	887
	891
	910
	911
	▶962
201-1260	179
201-3304	938
201-5382	796
	798
201-7269	▶804
	806
201-7274	800
	802
	▶806
201-9127	940
201-9624	460
	462
	755
	757
202-0971	810
	812
202-1214	808
202-2005	568
202-2333	788
	▶810
202-2339	810
	812
202-2340	760
202-2341	810
	812
202-2342	814
202-2343	810
202-2344	810
202-2791	810
	812
202-4295	680
202-4296	▶680
	751

PART NUMBER INDEX

Part	Page
202-4303	681
	682
202-4304	▶681
	749
	750
202-4327	429
	433
	438
202-5397	422
	434
	865
202-6535	812
	813
202-6614	299
203-2070	1031
	1033
203-2288	454
	456
	489
203-2789	490
	497
	503
	509
	762
	767
	772
	777
	1106
203-3237	53
	55
	57
203-3238	53
	55
	57
203-5805	43
	82
203-6090	43
	82
203-6415	▶676
203-6440	▶676
203-7703	1165
	1166
	1167
203-7775	182
204-1297	422
	434
	439
204-1455	760
204-2281	335
	391
	430
	434
204-4444	41
	82
204-6101	1074
	1077
204-6102	1074
	1077
204-6499	454
204-6501	464
204-6502	565
204-8000	429
	433
	438
204-8758	822
	823
	824
204-9218	873
204-9530	1031
	1033
204-9532	1031
205-0209	614
205-0254	614
205-0626	231
205-1320	76
205-1321	30
	31
	32
	33
	▶76
205-2203	1144
205-5285	38
	82
205-5314	452
205-6388	1159
	1162
205-7205	464
205-7331	1136
	1138
	1140
205-8257	294
205-8674	▶172
	173
205-8681	173
205-8900	310
206-1895	668
	▶682
206-2800	944
206-3719	99
206-5017	196
	198
	615
206-5162	294
206-5165	294
206-5575	132
206-5584	132
206-5823	1203
206-5887	108
206-8836	▶671
	676
206-8837	671
206-9000	34
	35
	▶173
207-0544	686
	687
	691
	692
207-1556	▶378
	382
207-7899	913
	915
	917
	919
208-4622	233
	235
	237
208-6726	877
208-6727	877
208-8699	1
	▶1132
208-8705	1
	▶1151
208-8706	1021
	▶1152
208-9619	61
208-9647	753
208-9699	877
209-0381	429
209-0760	40
209-0762	40
	82
209-0939	521
209-2152	982
	984
	988
	990
209-3172	210
209-3565	810
	812
209-5104	1147
209-5105	1000
	▶1147
209-5110	1000
209-5113	8
	▶1066
209-6692	146
	149
209-7193	452
209-7290	82
	109
	112
209-7293	82
	130
209-8423	239
	▶380
	▶381
210-0091	454
210-2262	1150
210-2263	1150
210-2266	1150
210-2270	▶1150
	1157
	1160
210-4458	549
	554
210-5522	126
210-9096	▶145
	147
210-9097	145
	▶146
211-0089	132
211-0220	1052
211-0546	126
211-1044	233
	235
	237
211-1812	11
	12
	14
	16
	18
	23
	24
	32
	33
	▶147
	▶148
211-2134	53
	55
	57
211-5358	1171
211-6807	281
	401
211-8041	11
	12
	14
	16
	18
	23
	24
	25
	26
	27
	28
	29
	▶61
211-9049	999
	▶1013
211-9050	1013
211-9051	1013
211-9087	472
211-9294	1171
212-1336	763
	768
	773
	778
212-2301	543
212-4936	191
212-5839	67
212-5844	67
212-7002	43
212-8917	48
	50
212-8926	▶103
	104
	105
213-1308	542
	▶800
	▶802
213-1724	141
213-2282	880
	881
	882
213-3190	82
	89
213-4363	30
	31
	32
	60
	▶69
	▶70
213-4502	316
	323
	327
	331
213-4504	316
	327
213-4540	464
	▶565
213-4852	569
213-6657	944
213-6658	938
	942
213-6659	940
213-7064	▶1154
213-7315	1073
	1076
213-8516	118
213-9320	▶97
	103
214-1196	1004
	▶1163
214-1197	1021
	▶1168
214-1645	178
214-3573	448
	452
214-4208	347
	349
	416
	422
	429
	433
	439
	1073
214-5705	93
	95
214-6659	▶569
214-6660	569
214-7566	45
	78
	83
	112
	206
	208

PART NUMBER INDEX

Part	Page
	354
	355
214-7567	78
	83
	365
	366
214-7568	53
	55
	57
	78
	83
	91
	112
	121
	123
	128
	175
	196
	198
	206
	208
	210
	212
	221
	354
	355
	363
	367
	456
	482
	489
	498
	504
	510
	516
	563
	564
	565
	773
	778
	964
214-8976	1243
	1245
214-9080	727
214-9389	282
214-9408	454
214-9492	233
	235
	237
	1025
	1027
215-1488	3
	▶177
215-1490	177
215-3249	401
	404
215-3251	34
	35
	▶64
215-3296	93
	95
215-3662	308
215-4441	38
215-8010	813
215-8011	813
215-9801	1136
	1138
	1140
216-0029	794
216-0273	483
	489
216-0349	1025
216-0805	1031
	1033
216-4591	452
216-5586	43
	82
216-6202	454
216-6371	448
216-7877	65
216-8127	▶641
	751
216-8585	825
217-0067	624
217-0070	624
217-0072	624
217-0609	53
	55
	57
217-2293	448
217-3655	608
	609
	611
	612
217-5200	137
217-6887	879
217-7933	1150
217-8433	1071
	1072
217-8669	14
	16
	18
	25
	26
	27
	28
	29
	30
	31
	32
	▶40
217-9049	1157
218-0404	294
218-0861	1157
218-1835	1
	▶586
	▶589
218-1836	1
	▶608
218-1839	1
	▶600
218-1841	1
	▶601
218-1843	1
	▶222
218-2373	563
	564
	818
218-4160	119
218-4982	6
	▶747
218-7136	1044
	1045
218-9894	961
219-0305	1021
	1244
	1246
219-0584	857
219-0585	857
219-0588	▶857
219-0669	157
219-1930	624
219-2391	1039
219-2893	887
219-3305	141
	143
219-4481	528
219-6314	294
219-8666	11
	12
	14
	16
	18
	23
	24
	25
	26
	27
	28
	29
	▶79
219-8675	84
219-8681	11
	12
	14
	16
	18
	23
	24
	25
	26
	27
	28
	29
	▶72
220-0230	229
	241
	247
	253
	257
220-0771	380
	381
	382
220-1403	▶530
	560
220-1411	531
220-1418	490
	497
	503
	509
	515
	521
	▶567
220-1429	542
	▶560
220-1952	45
	▶47
220-2800	1
	▶1144
220-2810	1021
	▶1128
220-4324	464
	▶563
220-7167	229
220-8233	30
	31
	32
	33
	▶210
220-8678	82
	83
	200
221-0144	126
	127
221-0877	454
221-3197	648
	650
	652
	654
	656
	658
	660
	662
	664
	666
	749
	750
221-3200	648
	650
	652
	654
	656
	658
	660
	662
	664
	666
	749
	750
221-3342	▶454
	560
221-3450	▶1115
	1195
221-3451	▶1116
	1195
221-5461	▶78
	79
222-0345	1159
	1162
222-1150	852
	▶1049
222-1160	852
	▶951
222-1783	11
	12
	14
	16
	18
	23
	24
	25
	26
	27
	28
	29
	▶41
222-2209	1195
222-2409	11
	12
	14
	16
	18
	23
	24
	25
	26
	27
	28
	29
	▶71
222-3785	824
222-3901	82
	145
	150
222-5765	824
222-7094	131
222-7095	131
222-7877	429
	433
222-7883	429
	433
222-7885	306
	308
	310
	313
	316

▶ **PRIMARY REFERENCE**

PART NUMBER INDEX

Part	Page
	320
	323
	327
	331
	333
222-8667	6
	▶748
222-9151	93
	95
	1126
	1127
222-9219	751
223-0556	34
	35
	▶86
223-0558	34
	35
	▶382
223-0566	751
223-0567	751
223-0647	▶705
	747
	748
	749
	750
223-0652	▶648
	747
223-0656	▶650
	747
223-0659	648
	650
	652
	654
	656
	658
	664
	666
	▶727
	749
	750
223-1540	1
	▶621
223-1541	621
223-1677	1002
	1003
	▶1085
	▶1088
	▶1091
223-1678	995
	▶1094
	▶1098
	▶1102
223-1679	1
	▶204
223-1680	1002
	1003
	▶1106
223-2205	1
	▶1164
223-3313	1049
	1050
223-3994	▶880
	977
223-4003	977
	▶1223
223-4004	977
	▶982
223-4005	982
223-4006	982
223-4008	▶1211
	1223
223-4009	1211
	▶1219
223-4010	1219
223-4296	287
223-4869	224
	226
223-5098	151
223-5111	154
223-5365	222
223-7564	1156
223-8076	573
223-8173	347
224-0672	1242
224-0821	10
	63
	▶119
224-0881	705
224-2228	206
	208
224-2693	34
	35
	▶106
224-2694	106
224-2695	86
224-2791	1037
	▶1136
	▶1138
	▶1140
224-2793	542
	▶1037
224-3247	36
224-3981	152
224-4013	152
224-4120	749
224-4121	648
	650
224-4122	664
	666
224-4124	648
	662
224-4357	999
	1002
	▶1195
	▶1197
224-4449	▶1231
	▶1232
224-4454	▶1229
	1231
	1232
224-4536	▶364
	365
224-4998	1005
	1009
	1013
224-5000	1005
	1009
	1013
224-5132	820
	821
224-5152	820
	821
224-5530	▶358
	1136
	1138
224-6829	1195
	1197
	1199
	1201
224-7830	1244
	1246
224-9072	1148
224-9222	429
	433
	438
	1095
	1099
	1103
224-9450	460
	462
	755
	757
	▶1039
	▶1041
225-0312	1242
225-0313	1244
	1246
225-1506	▶471
	542
225-2412	124
225-3281	837
	839
	841
	843
	845
225-3284	847
225-4134	1049
	1050
225-4135	1049
	1050
225-4256	1244
	1246
225-4257	1242
225-6363	567
225-8026	891
	▶957
225-8553	347
	349
225-8558	573
225-9480	▶1142
	▶1143
	1144
226-0293	1077
226-0336	460
	462
	755
	757
226-1224	899
	901
	903
	▶905
226-1227	905
226-1335	650
	660
226-1340	727
226-2333	279
	▶339
226-3400	▶1155
226-3492	204
226-3493	860
226-3496	860
226-3497	860
	868
226-3498	860
226-3505	860
226-3506	873
226-3510	863
	866
226-3511	863
	866
	868
226-3908	545
226-3910	545
226-4462	448
226-4464	448
226-4751	860
	▶891
226-4909	335
	337
226-4911	335
	337
226-5954	603
	634
226-5955	602
	634
226-6584	870
226-7269	726
226-7298	858
226-7473	267
	268
	▶270
226-7810	885
226-7906	885
226-7924	885
226-8206	879
226-9169	342
	343
	422
226-9423	1039
	1041
226-9622	818
226-9629	129
226-9663	429
	433
226-9665	430
	434
226-9666	1073
	1076
226-9668	860
226-9670	240
	245
	251
	257
226-9671	240
	245
	251
	257
226-9673	460
	462
	755
	757
226-9674	▶347
	430
	434
226-9675	347
	349
227-0165	▶529
	542
227-0831	951
	▶952
227-0833	34
	▶152
227-0835	152
	155
	157
227-0836	152
	155
	157
227-0841	▶845
	965
227-0842	▶841
	1231
227-0843	833
	835
	▶837
227-0844	829
	831
	▶839
227-0912	347
	349
227-0924	471
	▶472
227-1200	48
	50
227-1226	▶272

PART NUMBER INDEX

Part	Page
	1004
227-1228	▶294
227-1229	▶239
227-2451	448
227-3149	621
227-3151	621
227-4005	▶829
	967
	969
	972
	973
	975
227-4006	▶831
	967
	969
	972
	973
	975
227-4007	▶833
	977
227-4008	▶835
	977
227-4303	829
	833
227-4304	831
	835
227-5054	995
	1151
227-5055	995
227-5056	1152
227-5904	210
	212
227-6656	601
227-8715	▶678
	747
	748
227-8802	608
	611
227-9304	592
227-9305	592
	596
227-9306	594
227-9307	586
	589
227-9310	592
	594
	596
	598
228-1850	800
	802
228-3323	417
	421
228-3621	71
228-4051	1152
228-4052	1152
228-4093	641
	642
228-4678	641
	642
228-4947	368
	489
228-5897	219
228-6089	1003
	1074
	1076
228-6787	1081
228-7089	83
	112
	121
	123
	206
	208
	212
228-7090	83
	210
228-7092	212
228-7096	53
	55
	57
	83
	456
	489
228-7854	▶995
228-9657	231
229-0887	1244
	1245
229-1494	1159
229-2626	837
	839
229-2913	▶192
	193
229-2914	192
229-5354	1039
	1041
229-5421	▶825
	852
229-6635	997
229-6640	1142
229-6957	1211
	▶1227
229-7373	▶642
	747
	748
	749
	750
229-8352	644
	645
229-9281	78
229-9323	644
	645
229-9556	673
229-9557	673
229-9558	675
229-9559	675
229-9560	▶673
229-9570	▶675
229-9601	183
230-1340	283
	285
	287
	289
	291
230-1341	1242
230-3615	204
230-4011	281
230-4013	281
230-4118	11
	12
	14
	16
	18
	23
	24
	26
	27
	29
	▶107
230-4119	107
230-4700	1002
	1003
	▶1148
230-4872	841
230-4873	841
230-4875	837
230-4876	839
230-5008	344
	417
	421
230-5009	1058
230-5040	109
	112
230-5106	1085
	1088
	1094
	1098
230-5385	997
230-5388	▶997
	1148
230-5553	▶973
230-5554	973
	974
	▶984
	▶986
230-5555	▶881
	973
	974
230-5556	1205
	▶1212
	1216
	1218
230-5557	▶1205
	1221
230-5558	973
	974
	▶1221
230-5585	34
	35
	▶115
230-5935	109
230-5974	762
	767
	772
	777
230-7700	608
	611
230-7887	845
230-7892	845
230-8792	349
230-9796	115
231-0336	763
	768
	773
	778
231-0858	335
	337
231-1271	1094
	1098
	1102
231-1345	204
231-1972	▶267
231-1978	11
	12
	14
	16
	18
	▶354
231-2222	▶1043
	1224
231-3087	▶719
231-3088	▶711
231-3775	1000
231-3781	1147
231-3930	415
231-4166	490
	497
	503
	509
	515
	521
	▶546
231-4167	546
231-4382	586
	589
231-4384	575
231-4385	576
231-4386	576
231-4387	576
231-4390	600
231-5969	▶448
	542
231-5990	▶452
	542
231-8855	531
	536
232-0343	206
	208
	▶221
232-1133	139
232-1240	1
	2
	▶139
232-1318	335
	337
232-1398	139
232-1693	267
	268
232-3402	347
232-6411	549
	554
232-7583	1028
232-7586	1028
233-0423	11
	12
	14
	16
	18
	23
	24
	25
	26
	27
	28
	29
	▶74
233-0668	553
	556
233-0891	267
	268
233-2719	1017
233-2720	1017
233-4846	607
	747
	748
233-5216	139
233-6942	868
233-7526	8
233-9134	▶847
	982
	984
	988
233-9135	847
	849
233-9138	847
	849
234-0203	118
234-1494	139
234-1496	139
234-2869	887
234-3043	952
234-3425	887
234-3451	952
234-4319	607
234-5012	355
	▶372
234-5013	355
	▶373

PART NUMBER INDEX

Part	Page
234-5846	316
	327
234-6865	634
234-6866	634
234-6867	634
234-6868	634
234-7526	123
234-9670	▶734
	748
234-9671	▶734
234-9672	▶688
	734
	736
	738
234-9675	▶735
	747
234-9676	▶735
234-9679	688
	▶693
	694
234-9681	688
	▶694
234-9699	688
	689
	690
	693
	697
	699
234-9704	734
	735
234-9705	734
	735
234-9970	279
	339
	▶345
234-9994	531
	536
235-0320	1147
235-0399	913
	915
	917
	919
235-0403	915
	▶923
235-0404	915
	▶926
235-0541	636
	638
235-0544	636
	638
235-0545	636
	638
235-0588	787
235-0892	906
235-0895	906
235-0907	906
235-2542	132
235-2543	132
235-4123	422
	439
235-4157	▶720
	724
235-4511	490
235-4513	490
235-4514	490
	497
	503
	509
	515
	521
235-4515	490
	497
	503
	509
	515
	521
235-4516	490
	497
	503
	509
	515
	521
235-4587	279
235-4605	910
	▶963
235-4606	964
235-4826	490
	497
	503
	509
	515
	521
235-5812	▶481
	490
	497
235-5974	▶708
	747
	748
	749
	750
	751
235-6336	▶306
235-6337	▶308
235-6338	▶310
235-6339	▶313
235-6340	▶316
235-6529	119
	132
235-8180	▶877
	1231
	1232
235-8202	401
235-8203	11
	12
	14
	16
	18
	▶401
235-8805	1231
	1232
	▶1233
235-9651	214
	215
	216
236-2218	601
	▶602
236-2219	601
	▶603
236-2624	602
236-5131	1094
	1098
	1102
236-5132	1085
	1088
	1091
	1094
	1098
	1102
236-5197	1150
236-5474	603
236-6220	354
	▶365
236-6221	354
	355
	▶368
236-6717	218
236-6742	119
236-6743	119
236-7241	3
	7
	8
	▶609
236-7315	11
	12
	14
	16
	18
	23
	24
	25
	26
	27
	28
	29
	▶73
236-8191	86
236-8239	92
236-8240	480
236-8826	340
	412
	415
	420
237-0048	347
237-0049	347
	349
237-0050	347
	349
237-0051	347
237-0052	347
237-0053	347
	349
237-0129	132
237-0204	1128
	1144
237-0205	1128
	1144
237-0225	347
237-0227	281
	417
	420
237-0229	75
237-0336	289
	291
	427
	1124
237-0934	997
237-0956	997
237-0984	204
237-0985	204
237-1000	995
	▶1029
237-1962	380
	▶383
237-2041	16
	25
	27
	30
	31
	▶193
237-2209	531
	536
237-2568	1
	2
237-2708	1
	2
237-2732	592
237-2734	594
237-2737	34
	35
	▶190
237-2738	190
237-4132	345
237-4133	345
237-4134	345
237-4135	345
237-4213	165
237-4214	1
	2
	▶165
237-4240	240
	246
	252
237-4268	1144
237-4269	1144
237-4270	1144
237-7252	345
237-7308	306
	308
	310
	313
	316
	320
	323
	327
	331
	408
237-7552	1228
237-9140	341
	▶1119
	▶1120
237-9250	185
	▶186
237-9251	184
	▶187
237-9252	186
	187
237-9254	186
	187
237-9255	186
	187
237-9259	634
237-9318	▶636
237-9601	531
	536
238-0251	603
238-0303	241
	247
	253
	396
238-0451	607
	▶725
	747
	748
238-0453	725
238-1029	▶446
	481
238-1116	11
	12
	14
	16
	18
	23
	24
	25
	26
	27
	28
	29
	▶469
238-1117	469
238-1177	▶583
238-1178	583
238-2014	347
	349
238-4520	705
238-5017	294

PART NUMBER INDEX

Part	Page
238-5079	159
	161
	489
238-5080	55
	78
	83
	91
	112
	373
	374
	489
	565
238-5081	83
	112
	196
	198
	210
	212
	489
238-5082	83
	91
	116
	210
	212
	456
238-5085	83
	112
238-7545	614
238-7793	1035
	1036
238-8270	1035
	1036
238-9166	634
	726
238-9559	▶895
	967
	969
	972
	973
	975
	977
239-1134	377
	▶400
239-2247	1035
	1036
239-2385	826
	▶1035
	▶1036
239-2402	219
239-3354	347
239-3355	430
	434
	438
239-3686	34
	35
	▶183
239-3902	272
239-5103	1119
239-5113	1144
239-5120	276
	▶341
239-5235	887
239-5317	868
	▶910
	▶911
239-5318	910
	911
239-6074	915
	▶928
239-6986	578
239-7392	430
	434
	438
239-7854	233
239-7981	▶999
	1000
239-8107	347
	430
	434
239-8155	240
	246
	252
	258
239-9271	339
239-9950	279
	▶352
240-0041	38
240-3464	▶340
240-3469	340
240-3470	340
240-7356	959
240-8259	546
240-8317	240
	246
	252
	258
240-8321	239
240-8613	1035
	▶1047
240-8740	608
240-8917	347
240-9755	154
241-0037	443
	444
	820
	821
241-0542	124
241-2501	222
241-2756	152
	▶154
	155
241-3048	159
241-3718	11
	12
	14
	16
	18
	23
	24
	25
	26
	27
	28
	29
	▶75
241-3719	11
	12
	14
	16
	18
	23
	24
	25
	26
	27
	28
	29
	▶116
241-3720	648
	650
	652
	654
	656
	658
	660
	662
	664
	666
	749
	750
241-4167	1244
	1246
241-4194	377
241-4287	1243
	1245
241-4342	1128
	1144
241-4343	1144
241-4344	1128
	1144
241-4345	1144
241-4346	1144
241-4348	1144
241-4349	1144
241-4353	34
	35
	▶174
241-4354	174
241-4981	93
	95
241-5634	490
	497
	503
	509
	515
	521
241-5635	490
	497
	503
	509
	515
	521
241-6215	196
	198
	762
	767
	772
	777
	860
241-6498	600
241-6499	600
241-6919	600
241-7917	4
	1128
241-7918	1224
241-7919	4
	1052
	1128
241-8240	34
	▶1025
241-8368	347
	349
	▶394
241-8382	53
	55
241-8383	53
	55
	57
241-8384	53
	55
	57
241-8385	53
	55
	57
241-8386	53
	55
	57
241-8387	53
	55
	57
241-8388	48
	50
241-8390	53
	55
	57
241-8474	87
241-8475	85
242-0328	98
242-0329	▶98
	103
242-0447	30
	31
	32
	33
	▶104
	▶105
242-0672	30
	31
	32
	▶52
242-0673	36
242-0674	30
	31
	32
	33
	▶36
242-1584	294
242-1585	272
242-2542	841
242-3282	294
242-3360	192
	194
242-3864	109
	112
242-5200	1035
	1036
242-7090	412
	415
242-8397	1002
	1003
	▶1052
242-8399	342
242-8403	1052
242-8404	1052
242-8405	1144
242-8407	1144
242-8409	341
	▶342
243-1171	1052
243-1588	178
243-1589	178
243-1590	178
243-2076	159
	161
243-4585	857
243-5168	1144
243-5170	1144
243-5296	▶300
	▶302
243-5297	▶1000
243-6716	42
244-1716	1057
244-1719	399
244-2310	452
244-2616	▶483
	560
	561
244-3114	467
	▶564
244-3712	196
	198
	565
244-4500	74
244-5891	104
	105
244-6110	652
	654

▶ **PRIMARY REFERENCE**

PART NUMBER INDEX

Part	Page
	656
	658
245-3261	81
245-3262	14
	16
	18
	25
	26
	27
	28
	29
	30
	31
	32
	▶81
245-4230	883
245-4231	883
245-4630	368
245-4747	339
245-7339	82
	99
245-7350	905
245-7434	422
	434
	438
	865
245-8334	1126
	1127
245-8456	1243
	1245
245-9941	163
246-0596	11
	12
	14
	16
	18
	23
	24
	25
	26
	27
	28
	29
	▶175
246-0597	175
246-0598	11
	12
	14
	16
	18
	23
	24
	25
	26
	27
	28
	29
	▶87
246-0599	11
	12
	14
	16
	18
	23
	24
	25
	26
	27
	28
	29
	▶480
246-0600	11
	12
	14
	16
	18
	23
	24
	25
	26
	27
	28
	29
	▶85
246-0601	11
	12
	14
	16
	18
	23
	24
	25
	26
	27
	28
	29
	▶117
246-0602	11
	12
	14
	16
	18
	23
	24
	25
	26
	27
	28
	29
	▶92
246-0605	11
	12
	14
	16
	18
	23
	24
	25
	26
	27
	28
	29
	▶38
246-2641	4
	586
	1021
	1243
246-2900	1247
246-3150	42
246-4311	430
	434
246-4759	▶614
246-5140	736
	737
	740
246-5203	738
	739
246-5215	▶736
246-5216	▶737
246-5217	▶738
246-5218	▶739
246-5804	787
246-5960	340
246-5961	340
246-6036	121
	123
246-7899	117
246-9365	14
	16
	18
	25
	26
	27
	28
	29
	30
	31
	32
	▶268
247-2838	▶8
	9
247-2839	▶9
247-2840	▶9
247-2959	527
247-6875	1244
	1246
247-6876	1242
247-6877	1244
	1246
247-6878	1242
248-0848	483
248-0849	483
248-1500	280
248-2169	366
248-2336	1217
	1218
248-2985	300
248-2986	300
248-5358	427
	1124
248-5513	82
	137
248-6275	854
248-6276	854
248-6862	306
	308
	310
	314
	316
	321
	323
	327
	331
	408
248-6955	300
	302
	1000
248-6957	1000
248-6958	1000
248-6960	1000
248-6961	1000
248-6965	300
	302
248-6966	300
	302
248-6971	1000
248-6974	263
	265
248-6976	755
	757
248-6977	391
248-6979	263
	265
248-7959	349
248-8866	1144
249-0159	109
249-0313	235
	237
249-2844	628
	1063
	1064
249-5481	438
249-5592	300
250-1424	206
	208
250-1911	135
250-3413	▶626
250-3508	467
250-4628	1134
	1135
250-6052	179
250-6053	179
250-6054	179
250-6056	34
	▶170
250-7533	179
250-8466	527
250-8492	873
250-9290	173
251-0061	179
251-1198	1074
251-3600	▶37
	65
251-3601	37
251-3602	37
251-3611	37
251-3612	37
251-3613	37
251-3614	37
251-3617	37
251-3618	37
251-3619	37
251-3620	37
251-3623	37
251-3624	37
251-3625	37
251-4162	263
	265
251-4345	377
251-4553	34
	35
	▶179
251-6112	▶967
251-6113	▶968
251-6120	▶974
251-6128	▶969
251-6129	▶970
251-7214	179
251-7591	427
	1124
251-8202	982
	984
	986
	988
	990
251-8203	979
	980
	981
	982
	984
	986
	988
	990
251-8248	263
	265
251-9814	▶965
	967
	968
	969
	970
	971
	972
251-9815	965
251-9816	965
251-9817	965
251-9818	967

▶ **PRIMARY REFERENCE**

PART NUMBER INDEX

Part	Page
	968
	969
	970
	971
	972
	▶1220
251-9819	▶1204
	1220
251-9820	1204
251-9827	1220
251-9828	965
251-9829	1220
251-9830	967
	968
	▶979
251-9831	979
251-9832	979
	980
	981
251-9834	965
251-9835	978
	979
	981
251-9836	979
	980
	981
251-9840	883
251-9841	883
252-0063	1074
	1076
252-1567	11
	12
	14
	16
	18
	23
	24
	25
	26
	27
	28
	29
	▶91
252-4501	1074
	1076
252-4915	1028
252-5165	▶194
	195
252-5849	▶882
	975
	976
252-5853	975
	976
	▶988
	▶990
252-5854	▶975
252-5855	▶976
252-5856	975
	976
	▶1222
252-5857	▶1206
	1222
252-5858	1206
	▶1214
	1215
	1217
252-6450	▶1207
252-6452	1207
	▶1215
252-6453	▶1208
252-6455	1208
	▶1216
252-6945	276
	▶1124
252-7803	57
252-8439	52
	▶53
	▶55
252-8744	399
	1228
252-9203	894
252-9628	353
	398
253-0395	▶676
	▶677
253-0459	65
253-0861	1239
	1240
253-1346	648
	650
	652
	654
	656
	658
	660
	662
	664
	666
	749
	750
253-1450	▶1242
253-2673	851
253-5369	170
253-8321	1000
253-8323	1000
253-8324	300
	302
253-8326	300
253-8967	345
253-8969	345
253-8981	345
254-0224	734
	735
	736
	737
	738
	739
	740
254-1686	648
	650
	652
	654
	656
	660
	662
	664
	666
	749
	750
254-3941	53
	55
	57
254-3942	53
	55
	57
254-3946	48
	50
254-3947	48
	50
254-4470	734
	735
254-4471	738
	739
254-4472	734
	735
254-4473	736
	737
	740
254-5524	141
	143
254-8108	124
254-8155	▶299
	306
	308
	310
	313
	316
	320
	323
	327
	331
	409
255-0939	353
255-1137	618
	619
	620
255-1138	618
	619
	620
255-1139	618
	619
	620
255-5210	576
255-5232	34
	▶166
255-6387	575
255-6406	575
255-6934	▶443
	490
	497
	503
255-6936	▶444
255-8674	104
	105
255-8951	969
	970
	▶980
255-8952	▶978
	980
255-8954	▶883
	967
	968
	969
	970
	971
	972
256-2907	▶398
	399
256-2941	184
	185
256-2942	▶184
256-2943	▶185
256-4579	339
256-4580	339
256-4581	339
256-4582	339
256-5719	339
256-5720	339
256-5721	339
256-5722	339
256-5732	339
256-6020	571
	▶726
256-6021	▶573
	726
256-6024	726
256-6453	372
	373
256-7285	636
	638
256-7286	636
	638
256-7288	638
256-7780	618
	619
	620
256-7781	619
256-7782	618
	619
	620
256-7789	412
	416
	420
256-9988	▶474
257-1729	352
257-2696	▶611
257-2698	▶612
257-3227	1091
	1102
257-3580	▶570
257-5029	997
257-5858	121
	123
257-9788	906
258-2303	621
258-2305	578
258-2307	621
258-2355	1243
	1245
258-5035	335
	337
258-6948	609
	612
258-6949	609
	612
258-7132	611
258-7597	▶623
258-7607	623
	624
258-8798	668
	▶679
259-1166	1224
259-1289	636
	638
259-1291	636
259-1292	636
259-2093	430
	434
259-3119	▶528
	542
259-4397	1055
	1056
259-4399	1055
	1056
259-4746	344
	▶1130
259-5829	53
	55
	57
260-1914	997
260-2017	800
	802
260-3208	609
260-3799	377
260-4856	53
	55
	57
260-5716	219
260-6478	339
260-6479	887
260-6480	339
260-6642	476
260-6644	478
260-6650	▶476
	542
260-6652	▶478

▶ **PRIMARY REFERENCE**

PART NUMBER INDEX

Part	Page
	607
260-6686	349
260-7524	82
	97
	98
260-7733	648
	650
	660
	662
260-8590	928
	▶959
260-9187	490
	497
	503
	509
	515
	521
261-0420	412
	416
261-0994	652
261-0995	654
261-0996	▶652
	748
261-0997	▶654
	748
261-1544	42
261-3077	▶656
	748
261-3080	▶658
	748
261-3083	656
261-3087	658
261-3156	592
	594
	596
	598
261-3162	117
261-3222	1055
	1056
261-3223	263
	265
261-3224	1055
261-3226	263
	▶1055
261-3257	648
	650
	652
	654
	656
	658
	660
	662
261-3864	586
	589
261-3865	592
	596
261-5694	1133
261-6769	8
	▶668
261-7990	430
	434
	438
261-8619	4
	1128
262-0284	219
262-0554	9
	▶607
262-1421	269
	▶275
	283
	287
262-2027	34
	▶93
262-2029	10
	63
	▶65
262-2030	65
262-2031	65
262-2032	132
	▶138
262-2870	194
262-5901	14
	18
	26
	28
	29
	30
	31
	32
	▶195
262-6796	612
262-7661	592
	596
262-7662	594
	598
263-0853	7
	▶124
263-2601	1152
263-2915	70
263-3346	490
	497
	503
	509
	515
	521
263-3348	490
	497
	503
	509
	515
	521
263-3464	121
	123
263-3823	1117
	1118
263-4081	464
263-5030	8
	▶335
	▶337
263-5031	335
263-5792	222
263-7419	▶320
263-7722	596
263-7723	598
263-7724	586
	589
	▶592
263-7725	586
	589
	▶594
263-7726	8
	▶596
263-7727	8
	▶598
263-7731	206
	208
263-7805	1029
263-8976	750
263-8977	750
263-9012	34
	35
	▶377
263-9088	283
	287
	▶352
263-9949	490
	497
	503
	509
	515
	▶527
263-9950	527
264-0168	578
264-2014	11
	12
	14
	16
	18
	23
	24
	▶206
264-3171	398
264-3177	275
264-3883	868
264-4297	374
	375
264-5352	124
264-5732	281
	401
264-6156	104
	105
264-6816	592
	596
264-6817	594
	598
264-7029	281
264-7030	281
	417
	420
264-7031	417
	421
264-7384	618
264-7386	620
264-7963	1
	2
	▶191
264-7964	191
264-9763	▶695
	696
264-9768	▶696
265-1400	30
	31
	32
	33
	▶89
265-1401	89
265-2106	415
	429
	434
265-5278	▶464
	560
265-7314	1074
265-7315	1076
265-7316	342
265-7424	8
	▶634
265-7934	596
265-7935	598
265-9040	412
	416
265-9042	412
	416
265-9718	1094
	1098
	1102
266-1467	▶359
	1138
	1140
266-1470	▶360
	1140
266-1475	1041
266-1586	277
266-1961	1085
	1088
	1091
	1094
	1098
	1102
266-2404	408
266-2861	287
266-5851	1074
266-9418	▶151
266-9810	11
	14
	18
	23
	24
	26
	28
	29
	▶121
266-9811	12
	16
	25
	27
	▶123
267-1402	355
	▶366
267-2186	166
267-4696	335
	337
267-4746	▶647
	747
	748
267-7507	93
267-7508	93
	95
267-7509	93
	95
267-8685	1083
267-8715	1175
267-9715	32
	33
	▶214
	215
	216
	217
267-9720	30
	31
	32
	▶217
268-1559	521
268-1601	497
	503
	509
	515
268-1621	132
268-1825	1077
268-3293	▶1044
	1047
268-3371	416
	420
268-3490	41
	83
268-3888	616
268-5945	670
268-5986	283
	285
	287
268-5987	287
268-7831	549
	554
268-7832	549
	554
268-9709	648
	650

PART NUMBER INDEX

Part	Page
	652
	654
	656
	658
	660
	662
	664
	666
	749
	750
268-9710	648
	650
	656
	658
	749
	750
269-0209	634
269-0210	634
269-0211	634
269-1974	132
269-2037	▶6
269-2038	▶6
269-2044	▶1
	6
269-2046	6
	▶542
269-2050	6
	▶852
269-2052	6
	▶1243
269-2053	6
	▶1245
269-2072	▶490
	▶497
	▶503
	▶509
	▶515
	▶521
	542
269-2074	852
	▶870
269-2075	▶762
	▶767
	▶772
	▶777
	852
269-2076	852
	▶858
269-2077	852
	▶885
269-2078	852
	▶860
269-2079	826
	▶879
269-2080	826
	▶863
269-2081	827
	▶887
269-2082	827
	▶865
269-2089	826
	▶868
269-2090	852
	▶897
	▶898
269-2091	▶786
	852
269-2092	852
	▶912
269-3364	342
	343
269-4739	476
	478
269-4749	852
	▶894
269-7633	549
	554
269-7634	▶553
	554
269-7635	542
	▶554
269-8153	917
	919
	▶930
269-8154	913
	917
	919
	▶932
269-8155	913
	917
	919
	▶934
269-8157	827
	▶915
269-8160	826
	▶917
269-8161	912
	▶913
270-1762	490
	497
	503
	509
	515
	521
	▶543
270-1763	543
	▶545
270-1764	545
270-1766	545
270-1775	634
270-3435	490
	497
	503
	509
	515
	521
270-3438	490
	497
	503
	509
	515
	521
270-3439	879
270-3440	879
270-3444	762
	767
	772
270-3445	870
270-3446	870
270-3447	870
270-3448	870
270-3449	762
	767
	772
	777
270-3450	870
270-3451	887
270-3453	762
	767
	772
	777
270-3454	762
	767
	772
	777
270-3455	762
	767
	772
	777
270-3459	762
	767
	772
	777
270-3460	762
	767
	772
	777
270-3461	762
270-3462	762
	767
	772
	777
270-3463	762
	767
	772
	777
270-3468	868
270-3471	858
270-3472	858
270-3473	885
270-3474	885
270-3476	887
270-3481	887
270-3482	762
	767
	772
	777
270-8497	7
	▶224
	▶226
271-0461	1
	▶575
271-0462	575
	▶576
271-0463	576
271-0475	1047
	1048
271-2114	786
	▶788
	▶790
271-2116	897
	▶899
271-3863	636
271-7442	53
	55
	57
271-8566	853
272-0016	▶460
	▶462
	542
272-0248	860
272-0249	860
272-0250	860
272-0251	497
	503
	509
	515
	860
272-0254	860
272-0255	863
	865
272-0256	860
272-0257	873
272-3477	1
	▶1002
272-4887	868
272-4888	868
272-4889	868
272-4890	868
272-5171	1002
	1003
	▶1177
272-6240	863
	873
272-6241	863
	873
272-7864	865
272-7865	865
273-2155	▶892
	915
273-2156	▶893
	913
	917
	919
273-6050	▶906
	909
273-6052	906
274-3774	245
	246
	251
	252
	257
	258
	349
	404
	406
	409
	416
	422
	433
	434
	439
274-3775	246
	252
	409
	422
	434
	439
	1124
274-3776	246
	252
	258
	434
	439
274-3777	246
	252
	258
	422
	439
274-3779	246
	252
274-6719	355
274-6978	1239
	1240
274-7395	354
	▶374
274-7396	354
	▶375
275-2124	1074
	1076
275-2518	906
275-3376	399
275-3378	398
275-4012	398
275-4236	592
	594
	596
	598
	628
	1063
	1064
275-5780	634
275-6706	997
275-9639	132
276-0764	352
	399

▶ **PRIMARY REFERENCE**

PART NUMBER INDEX

Part	Page
276-1786	408
276-4391	37
276-4878	1045
276-6146	279
	280
276-6793	355
277-0700	852
	▶909
277-1873	337
277-3578	912
277-5801	1029
277-5802	1029
277-6947	224
	226
277-6951	8
277-8350	826
277-8351	826
277-8760	▶826
277-8761	▶826
277-8990	1122
278-3529	132
278-4519	1219
278-4520	1219
278-4522	1219
278-4696	636
	638
278-6367	▶749
278-6368	▶750
278-7691	408
279-1127	586
279-2570	750
279-2590	1002
	1003
	▶1067
279-2591	▶996
	1002
	1003
279-6533	607
	▶669
279-7237	628
279-7240	▶627
	1004
279-7243	323
	327
	331
279-7246	628
279-7259	1064
279-7260	1004
	▶1064
279-7267	1064
279-7279	1063
279-7280	1004
	▶1063
279-7289	1063
279-8995	6
	▶275
279-9061	551
279-9544	34
	35
	▶408
279-9547	1
	▶429
	▶433
279-9548	1
	▶240
	▶245
	▶251
279-9549	6
	▶34
280-0941	578
280-0942	1
	▶578
280-1476	▶826
280-1478	▶827
280-2691	1055
280-2703	34
	35
	▶233
280-3207	572
280-3208	572
280-3554	240
	246
	252
	258
280-4160	853
280-4162	854
280-4163	854
280-6794	137
280-7870	899
	901
	903
	949
	950
281-0777	8
	▶624
281-2867	1074
	1076
281-3098	1243
	1245
281-3174	263
	265
281-3175	▶263
	▶265
281-3176	263
	265
281-3179	430
	434
281-4015	644
	645
281-4523	570
281-4586	570
281-4587	570
281-4588	570
281-4589	570
281-5984	212
281-7377	337
281-7405	▶131
281-8488	642
	▶644
281-8491	641
	▶645
281-8934	570
281-8935	570
282-1771	42
282-1772	42
282-1951	997
282-1952	997
282-1953	997
282-2478	82
	89
282-2479	82
	89
282-2586	245
	251
	259
	▶396
282-2870	▶63
282-2871	▶10
282-3823	10
	▶11
282-3824	1
	▶12
282-3825	6
	▶14
282-3826	2
	▶16
282-3827	11
	23
	▶30
282-3828	12
	▶30
282-3829	14
	24
	▶31
282-3830	16
	▶31
282-4017	648
	650
	652
	654
	656
	658
	660
	662
	669
282-4390	1013
282-8483	▶283
	▶285
282-8484	▶287
282-8485	240
	246
	252
282-9090	982
	984
	986
	988
	990
282-9553	▶1
282-9554	▶2
282-9555	▶2
282-9934	20
	30
282-9935	20
	21
	31
282-9936	21
	22
	30
283-0581	▶1021
283-0655	1
	▶1073
283-0656	4
	1021
	▶1076
283-1107	378
283-1231	276
	277
	▶412
	▶415
283-1232	412
	416
	420
283-2382	430
	434
	438
283-2442	▶276
283-2454	873
283-4426	1057
283-5249	669
283-5250	669
283-5253	669
283-5254	669
283-6447	349
283-8702	739
283-8704	▶739
283-9530	1059
284-0638	471
284-0639	471
284-3502	121
	123
284-3623	438
284-7650	196
	198
284-7933	▶1002
	1003
284-8532	283
	285
284-9042	1017
284-9064	▶323
	▶327
	▶331
284-9639	196
	198
284-9640	196
284-9696	▶794
	894
284-9697	794
284-9698	794
285-0150	1047
	1048
285-0228	20
	21
	31
285-0852	992
	993
285-4074	82
	99
	▶100
285-4106	41
	83
285-5093	67
285-5234	1017
285-5582	1002
	▶1072
285-5885	1054
285-5886	343
	▶1054
285-5891	343
285-5893	277
	▶343
285-6396	64
	▶67
285-7612	899
	▶949
285-8076	906
285-8252	277
	▶1125
285-8253	277
	▶1131
285-8465	1043
285-8466	1043
285-8884	870
285-9116	224
285-9118	224
285-9119	224
285-9392	277
	▶427
286-0134	279
	280
	▶1057
286-1164	1002
	▶1017
286-1581	1017
286-1582	1017
286-3017	353
286-4322	1125
286-4327	1131
286-7136	616
286-7137	616
286-7140	616
286-7143	616
286-7144	616
286-9124	279
	280
	▶1058
286-9305	678

PART NUMBER INDEX

Part	Page
	▶683
286-9306	679
	683
287-0338	1085
	1088
	1091
	1094
	1098
	1102
287-0414	490
	497
	503
	509
	515
287-0415	490
	497
	503
	509
	515
287-2083	65
287-2426	616
287-2428	3
	▶616
287-3751	788
	790
	▶796
287-3789	796
	798
287-3791	796
287-3902	3
	▶1022
287-3903	1022
287-3904	1022
	▶1156
287-3905	1156
287-3906	1156
287-3907	1022
287-3909	1022
287-3910	1022
287-4563	752
287-4596	760
287-4656	3
	▶638
287-4657	638
287-4658	638
287-4659	638
287-4660	638
287-4665	3
	▶615
287-4670	▶3
	4
287-5855	▶760
	788
	790
	792
287-6055	615
287-6354	788
	790
287-6590	615
287-7103	615
287-7264	762
	767
	772
	777
287-7265	762
	767
	772
	777
287-8292	615
287-8293	615
288-0934	707
	718
	▶721
288-0935	710
	▶713
288-0936	707
	▶714
288-0945	▶722
288-0946	▶715
288-0947	▶723
288-0948	▶716
288-2501	275
	▶276
288-2502	▶275
288-4668	▶4
288-7324	281
	401
289-0509	1131
289-2937	837
	839
	841
289-2948	837
	839
	841
289-5150	281
289-5151	281
289-6011	277
289-8449	353
	398
289-9654	762
	767
	772
	777
289-9655	762
	767
	772
	777
289-9656	762
	767
	772
	777
289-9878	▶1003
290-0862	1233
290-3874	616
290-3875	616
290-3970	141
	143
290-5571	▶280
290-5792	▶369
	408
290-5826	4
	▶333
290-6096	▶1239
	1243
290-6097	▶1240
	1245
290-6112	1059
290-6884	70
290-8226	982
	984
	986
	988
	990
290-8745	240
	246
	252
	258
290-9849	448
291-1915	398
291-4018	323
	327
	331
291-4020	323
	327
	331
291-8148	930
291-9254	241
	247
	253
292-0280	▶280
292-0281	279
	▶339
292-0285	279
	▶352
292-0291	280
	▶353
292-0292	280
	▶353
292-0293	▶279
292-0294	▶262
292-0296	279
	280
	▶344
292-0302	279
	339
	▶1228
292-0303	280
	▶1228
292-0309	279
	▶1059
292-0311	1057
	1059
292-0312	▶279
292-2016	448
292-2175	▶724
	747
	748
292-4396	1239
	1240
292-4399	1239
292-4400	1239
292-4401	1240
292-4402	1240
292-4403	751
292-4404	751
292-4407	4
	▶1241
292-4906	235
	237
292-6053	▶618
292-6054	▶619
292-6055	▶620
292-6097	1134
292-6098	1135
292-6402	▶1133
	1134
	1135
292-9237	▶1134
	1157
292-9238	▶1135
	1160
293-0730	201
	202
	203
293-2851	804
293-2911	1150
293-4071	▶201
	214
293-4691	▶607
293-8350	949
	950
293-9367	130
293-9659	1247
293-9927	865
293-9928	865
294-0806	▶1209
294-0808	▶1210
294-0817	1209
	▶1217
294-0819	1210
	▶1218
294-3342	164
294-3345	490
	497
	503
	509
	515
	521
294-3346	490
	497
	503
	509
	515
294-5042	1157
	1160
294-5076	1106
295-0080	▶277
295-0983	572
295-0984	572
295-1771	116
295-1803	206
	208
295-3130	627
	▶628
295-5516	873
295-5521	873
295-7933	34
	35
	▶196
295-8930	339
295-9880	279
	▶399
296-0612	1124
	▶1126
296-0614	1126
296-1490	853
	▶1050
296-2861	1126
296-7283	912
296-7726	1005
	1009
	1013
	1017
296-7751	▶853
296-8060	367
296-8114	323
297-0693	276
	277
297-4785	697
297-4786	689
	▶697
	698
297-4787	689
	▶698
297-4789	▶689
297-6418	323
297-8159	▶391
297-8989	1247
298-3619	391
298-3620	391
298-5625	391
	▶755
	▶757
298-6397	1124
298-6493	873
298-6494	873
298-6495	873
298-6496	873
298-6498	853
	▶919
298-6499	873
299-3432	412
	416
	420
299-3923	460

▶ **PRIMARY REFERENCE**

PART NUMBER INDEX

Part	Page
	462
	755
	757
299-4008	490
	497
	503
	509
	515
	521
299-5174	▶1003
	1004
299-5344	895
299-5417	1126
299-5418	1126
299-5660	490
	497
	503
	509
	515
	521
299-8067	1243
	1245
299-8151	1243
	1245
299-8938	873
299-9092	245
	251
	257

3

Part	Page
300-1643	1077
300-4939	124
300-5501	1124
300-6142	427
	1126
300-6498	391
300-7367	853
	▶873
300-7369	873
300-7370	873
300-7371	854
300-7372	853
	▶854
300-7374	853
	▶896
300-8547	37
300-8554	204
300-9498	391
301-0076	412
	417
	420
301-0589	283
	285
301-3424	812
301-5768	6
	▶18
301-5769	18
	▶32
301-9279	899
	901
	903
302-3904	20
	21
	32
303-1222	▶1224
303-1224	1224
303-2389	1127
303-2390	427
	▶1127
303-3357	355
	▶367
303-4138	65
303-4142	542
	▶1123
303-4192	896
303-4193	896
304-2729	865
304-4513	408
304-5171	427
304-5172	427
304-5260	104
304-5280	545
304-5687	430
	434
	438
304-9465	208
304-9651	486
	551
	558
305-5362	281
	401
305-9190	1199
	1201
305-9192	1197
	1199
	1201
305-9194	1195
305-9195	1195
306-0177	283
	285
306-0278	452
306-3998	383
306-6621	65
306-7402	▶235
	▶237
306-8040	235
306-9621	196
	198
307-0047	283
	285
	289
	291
307-1613	▶275
307-2670	565
307-2671	45
307-2673	55
307-6264	8
307-8428	281
	404
308-0415	224
	226
308-0416	224
	226
308-1357	417
308-1395	412
	417
	421
308-1433	417
308-4558	1239
	1240
	1241
308-4559	1239
	1240
	1241
308-5806	412
	417
	421
308-6022	881
308-6023	881
308-6024	882
308-6025	882
308-6026	883
308-6027	883
308-6034	9
308-6035	9
308-6038	9
308-6039	9
308-6335	1031
308-6915	412
	417
	421
308-7112	174
	183
308-9223	316
309-2996	565
309-5140	157
310-2189	841
	843
310-4269	672
	677
310-7255	48
	50
310-7257	48
	50
310-9455	608
	609
	611
	612
311-4862	280
311-4863	262
311-4864	279
	280
311-7229	▶48
	53
312-1139	824
312-4245	849
312-4247	849
312-4248	849
312-4646	870
312-5763	873
312-8629	963
	964
313-2064	▶486
313-2205	132
313-3492	196
	198
313-9342	132
313-9630	767
	772
	777
314-2516	729
314-2518	729
314-2690	▶132
314-2911	196
	198
314-3124	1077
314-3283	▶672
	747
314-4018	1024
314-5179	497
	503
	509
	515
	521
314-5180	497
	503
	509
	515
314-5274	1171
314-5275	1171
314-7923	727
	729
314-9421	629
315-1487	65
315-7783	660
	662
315-7785	750
315-7786	660
	662
	▶729
	750
315-9840	112
316-1438	964
316-8663	78
317-1204	281
317-2656	1120
317-6527	▶279
317-7210	48
	50
317-7211	48
	50
317-7212	48
	50
317-7213	48
	50
317-8767	1003
	1021
	▶1121
317-9080	710
	718
	724
318-1064	734
	735
	736
	737
	738
	739
	740
318-1472	1036
	▶1048
318-1474	▶1045
	1048
318-2082	384
318-5081	1057
318-6247	641
	642
318-6357	219
319-0678	210
	▶219
319-6208	112
319-6231	456
319-6237	53
	55
	57
319-6240	210
319-7006	1091
320-6687	1224
321-1450	412
	417
	421
321-1451	412
	421
321-5718	537
321-5719	537
321-5720	537
321-5721	537
321-5967	481
	482
321-6730	337
321-8635	53
	55
321-8638	53
	55
321-8649	112
322-0819	1005
	1009
	1013
	1018
322-1969	412
	421
322-3161	1133
322-4474	1031
322-4964	1175

PART NUMBER INDEX

Part	Page
322-4965	1175
323-1170	678
	▶684
323-1171	684
	685
323-1271	275
323-1272	275
323-2871	▶1004
323-9140	▶281
	404
	406
323-9531	563
	564
324-7380	89
325-1385	806
325-3915	▶43
	47
325-5723	▶843
	1232
325-8041	706
326-0316	456
326-1644	82
	200
328-2293	843
328-2294	843
328-2295	843
328-2296	843
328-2573	▶202
	215
328-3655	482
328-4374	530
	537
328-4375	530
	537
329-5070	233
329-5071	237
329-5451	206
	208
	354
	355
329-5511	112
329-9221	▶629
	630
329-9232	629
329-9234	629
330-5013	▶1117
	1197
	1199
	1201
330-5014	▶1118
	1197
	1199
	1201
330-6019	11
	12
	14
	16
	18
	23
	24
	25
	26
	27
	28
	29
	▶404
	▶406
330-6034	11
	12
	14
	16
	18
	23
	24
	32
	33
	▶355
330-9750	206
	208
331-4226	467
331-4938	35
	▶171
331-7020	509
	515
	521
	▶820
331-7021	▶821
331-8464	699
	700
	701
	702
331-8905	127
331-8906	127
331-9864	171
331-9865	171
331-9866	171
332-0147	981
332-0148	971
	972
	▶981
332-0149	▶971
332-0150	▶972
332-1871	851
332-3619	▶50
	55
	57
333-6437	▶482
	503
	509
	515
	521
333-8554	792
333-9308	▶447
	482
333-9410	476
	478
334-0190	589
334-0193	589
334-0459	▶660
	747
334-0460	▶662
	747
334-2679	447
334-2680	447
334-6074	843
334-6206	489
335-0985	706
335-2350	749
335-2351	749
335-2493	1224
335-5321	421
335-6121	476
	478
335-6195	572
336-2433	558
336-2435	558
336-2442	549
	▶556
336-2443	556
	▶558
336-2447	542
	▶549
336-3545	269
	▶352
336-3566	352
337-6811	331
337-8041	▶630
	1004
337-8766	159
	161
337-8767	159
	161
337-9102	813
338-1132	302
	▶304
338-3453	386
338-3454	381
	▶386
339-0078	523
339-0268	739
339-4589	▶706
	751
339-9915	1175
340-5693	1175
340-7161	273
	433
	439
341-0979	41
	82
341-9214	911
	▶964
342-2723	327
	331
342-9022	271
342-9290	271
342-9559	352
343-5527	200
343-6237	476
	478
344-2149	▶57
	59
	60
344-2732	265
	▶1056
344-2733	1056
344-3037	1031
344-3393	▶269
	285
	291
344-3847	1056
345-8414	30
	31
	32
	▶59
346-2033	530
346-7763	271
346-9376	289
	291
347-0612	901
	903
	▶950
347-1668	263
	265
347-3110	149
347-3148	137
347-3187	693
	694
347-3188	695
	696
347-4428	112
348-5792	469
348-6329	523
348-7859	537
348-7861	537
349-2479	289
	291
	421
349-3318	1091
	1102
349-3319	1091
349-3564	▶23
349-3565	▶24
349-4846	537
349-6123	▶149
	150
350-0014	1132
350-0015	1132
350-0044	1102
350-2536	148
	▶150
350-5417	149
350-8616	1247
351-0320	▶824
351-0886	668
	▶685
351-0955	690
	▶699
	700
351-0956	690
	▶700
351-0958	▶690
	735
	737
	739
	740
351-0963	▶701
	702
351-0964	▶702
351-6987	37
	▶370
351-8488	271
351-8490	▶271
	289
351-9918	297
	298
	299
352-6498	112
352-8839	112
353-2794	353
353-5112	354
	355
353-6988	41
354-0148	542
	▶561
354-0151	▶536
	561
354-0153	▶456
	561
354-0154	▶467
	561
354-0155	467
354-0156	467
354-0158	537
354-0163	456
354-0164	467
	▶568
354-0165	467
354-0166	456
354-0167	467
354-0168	537
354-0703	289
	291
354-3550	▶7
354-3551	▶1004
354-3552	▶6
354-3554	▶7
354-6924	999
	▶1199
	▶1201
355-1205	291
355-1213	289
	291
355-2381	568
355-3148	1091
	1102
355-6555	725

▶ **PRIMARY REFERENCE**

PART NUMBER INDEX

Part	Page
355-7452	515
	521
	871
355-8515	870
356-2197	584
	585
356-7203	333
356-7515	304
357-3554	664
357-3555	666
357-3556	▶664
	751
357-3557	▶666
	751
357-4619	210
358-2851	34
	▶155
358-2852	155
358-3216	605
358-3217	▶605
358-4889	400
358-7872	41
358-7876	41
358-9384	155
	157
358-9385	155
	157
360-3677	78
360-3678	78
360-3679	57
	78
	91
	175
	210
	212
360-3680	57
	78
	91
	112
360-3681	112
360-3682	91
360-3684	469
360-3692	469
	921
360-3693	137
	469
361-1045	289
	291
361-5188	171
362-2187	155
	157
362-2188	155
	157
362-3507	1114
364-4115	837
	839
364-4416	849
364-8477	523
364-9179	521
364-9180	521
364-9652	652
	654
	660
	662
	664
	666
365-1418	438
365-7841	▶349
	438
365-7843	349
365-7844	349
365-8611	817
	819
365-9638	1052
366-4699	921
366-4972	932
367-5105	438
367-7878	302
367-9066	258
367-9478	▶849
	986
	990
367-9479	849
368-4236	▶289
368-4237	▶291
368-4241	1
	▶257
368-4242	1
	▶438
368-4249	276
	▶420
368-4250	438
368-4252	439
368-4255	421
368-4696	631
368-6473	408
368-6474	289
	291
368-8597	258
368-8598	259
368-8599	422
369-4564	289
	291
369-6662	221
370-1739	422
	433
370-9894	1171
371-2442	159
	161
371-2443	159
	161
371-7186	78
371-7190	210
371-7191	210
371-8881	1148
372-2158	1171
372-2905	270
372-4484	151
372-4485	151
372-6361	143
372-6362	143
372-6363	35
	▶143
372-6364	35
	▶168
372-6365	168
372-6366	35
	▶95
372-6368	35
	▶157
372-6369	157
372-6370	157
372-6371	157
372-6372	157
372-6378	157
372-6381	157
	▶159
	▶161
372-6383	159
	161
372-6384	159
	161
372-6385	159
	161
	▶163
372-6386	163
372-6387	159
	161
372-6388	163
372-6389	163
372-6406	6
	▶35
372-6475	858
372-7318	342
372-7319	1224
373-4098	218
374-7144	▶229
	571
375-0254	229
375-0352	297
	298
376-0929	226
376-4353	378
376-6483	521
376-7673	210
377-1484	521
377-9623	210
378-8241	691
	692
378-8242	691
	692
379-0209	521
379-3483	439
380-2369	276
380-3872	521
380-8571	802
380-9633	▶571
380-9849	785
	▶819
380-9866	▶273
	1004
380-9867	273
380-9869	273
381-1042	999
	▶1060
381-1101	790
	▶812
381-2492	1033
381-3642	349
381-8734	877
381-9065	777
382-3024	634
382-3458	1123
382-3459	276
382-5982	271
383-6921	▶151
383-7644	1061
383-8926	▶488
384-0399	▶487
384-0405	▶489
384-0678	212
384-4171	105
384-4172	105
384-5590	32
	33
	▶60
384-6463	275
384-8428	20
	▶32
384-8433	14
	▶20
384-8434	16
	▶20
384-8435	18
	▶20
384-9220	116
384-9605	1143
384-9992	148
385-1747	20
	21
	22
	▶1247
385-2666	▶740
385-2672	▶741
385-2675	▶742
385-2678	▶743
385-2681	▶744
385-5321	895
385-5458	▶745
385-7739	▶746
385-8681	289
	291
386-3993	275
386-9665	1061
387-0314	1171
387-0317	1171
387-7154	212
387-7159	212
387-8405	135
387-8574	1
	▶25
387-8575	6
	▶26
387-8576	2
	▶27
387-8580	6
	▶28
387-8596	▶20
	29
387-8597	▶21
	26
387-8598	▶21
	27
387-8599	▶21
	28
387-8618	20
	21
	22
	▶33
387-8622	33
	▶212
387-9434	▶203
	216
389-3708	57
	78
	91
	175
	210
	212
389-3709	91
389-8270	12
	18
	25
	28
	▶108
390-8427	35
	▶1027
390-9265	95
392-0818	137
	469
392-9788	136
393-3604	843
393-7367	35
	▶198
394-1514	198
396-0385	208
396-0386	208
396-0390	212
396-0393	78
396-0405	57
397-3967	898
	▶901
397-3968	827
	▶903
397-5040	25
	26

PART NUMBER INDEX

Part	Page	Part	Page	Part	Page	Part	Page
	27						
	28						
	29						
	►208						
398-0728	12						
	►21						
398-1972	229						
398-5596	78						
	91						
	112						
398-5599	469						
398-5601	112						
398-5614	469						
398-6424	10						
	►29						
399-3904	21						
	►33						
399-4829	1033						
399-5830	►22						
	25						

4

418-5520	1144						
418-6781	83						
419-0841	►281						
	406						
419-7879	138						
419-7881	138						
419-7883	138						
419-7889	138						
421-5583	304						
421-5584	304						
421-5585	304						
424-0842	►691						
	745						
424-0847	►692						
	733						
	746						
424-4482	►792						
424-4484	792						
	►798						
424-4485	798						
434-1356	352						
434-2368	►376						
435-4301	792						
	►813						
438-4435	►751						
438-9120	►977						
439-4571	406						
440-0598	►82						
440-0881	406						

MEMORANDA



©2013 Caterpillar
All Rights Reserved

CAT, CATERPILLAR, their respective logos, “Caterpillar Yellow”, and the POWER EDGE trade dress as well as corporate and product identity used herein, are trademarks of Caterpillar and may not be used without permission.

SEBP4963-21
VOLUME I
Pages 1-640

D6T TRACK-TYPE TRACTOR

GCT1-UP
SMC1-UP