PARTS BOOK

FORM 34340
AGOSTO 1964

RUTHZIL TRATOR COMERCIAL DE PEÇAS LTDA 11 97083-6812 ROLANDO CITRANGULO

CATERPILLAR

D7 TRACTOR

POWER SHIFT

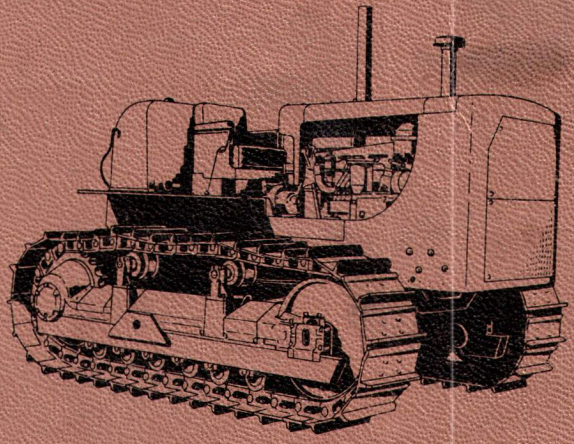

SERIAL NUMBERS

48A1—UP

Caterpillar Tractor Co., General Offices, Peoria, Illinois. • Caterpillar Americas Co., Peoria, Illinois • Caterpillar Overseas S.A., Geneva. • Caterpillar of Australia Pty. Ltd., Melbourne. • Caterpillar Brasil S.A., São Paulo. • Caterpillar Tractor Co. Ltd., Glasgow. • Caterpillar of Canada Ltd., Toronto. • Caterpillar France S.A., Grenoble. • Caterpillar (Africa) (Pty.) Ltd., Johannesburg. • Caterpillar Mexicana S.A. de C.V., Monterrey.

D7 TRACTOR
POWER SHIFT

HOW TO ORDER PARTS

Please be sure to furnish the quantity, part number and name of each part wanted. It is also important to give the serial number of the machine for which the parts are intended. Location of serial number plates may be determined by referring to the "Specifications" page of this parts book. It is suggested that you write the serial number of your machine in this space so that it will be readily available when you need it.

THIS PARTS BOOK FOR MACHINE SERIAL NUMBER
48A.....

To insure prompt delivery, please don't overlook furnishing the correct name of the consignee, also the street address, town, county and state to which the parts are to be shipped, and indicate whether shipment is to be made by freight, express, parcel post or by other means.

WHERE TO ORDER PARTS

Caterpillar dealers maintain over 400 stores in the United States, and similar establishments are located strategically in nearly all countries throughout the world. These organizations are backed by the extensive facilities and resources of Caterpillar Tractor Co.

Dealer personnel are factory trained in the stocking and issuing of parts, and large stocks are constantly maintained to insure prompt service. Contact your nearest Caterpillar dealer to make sure that he has your name and address, the correct serial number of your machine, and an accurate list of accessories and attachments. This record will facilitate the issuance of parts when you need them in a hurry.

WHAT THE CATERPILLAR DEALER CAN DO FOR YOU

Caterpillar dealers are in the business of making it economical and profitable for you to own and operate Caterpillar machinery. They are in constant touch with the factory for new developments in repair and maintenance methods, operating procedures, and parts requirements. Their parts stocks are active and up-to-date, including all parts normally required to protect your investment in Caterpillar machinery.

Nearly all Caterpillar dealers offer 24-hour emergency service. For quick reference, write the name and address of the local dealer on your desk pad or the front of your phone book.

ONLY CATERPILLAR PARTS GIVE CATERPILLAR PERFORMANCE

The same quality and craftsmanship that has made Caterpillar products famous throughout the world is built into all Caterpillar replacement parts.

REVISION PUBLISHED AUGUST 1964

FRANCAIS

COMMENT FAIRE UNE COMMANDE DE PIECES DE RECHANGE. Avant tout, soyez certain de fournir correctement la quantité, le numéro et le nom de chaque pièce désirée. Il est important encore d'indiquer le numéro de série de la machine pour laquelle les pièces sont destinées. L'endroit de la plaque au numéro de série peut être trouvé en étudiant la page des "Spécifications" de ce catalogue de pièces de rechange. Nous recommandons que vous inscriviez de numéro de série de votre machine dans l'espace réservé à cet effet à la page 1 de ce catalogue de pièces de rechange. Ainsi vous ne manquerez pas de le trouver aussitôt que vous en aurez besoin.

Afin d'assurer prompte livraison, ne manquez pas d'indiquer le nom correct du destinataire, son adresse, la rue, la ville, le department, le pays où les pièces en question devront être envoyées, tout en indiquant aussi comment la livraison devra être effectuée: par fret, exprès, colis postal ou par d'autres moyens.

OU COMMANDER LES PIECES DE RECHANGE. Les agences de distribution CATERPILLAR comprennent plus de 400 magasins aux Etats-Unis et des établissements similaires sont situés stratégiquement dans la plupart des pays du monde entier. Ces établissements ont l'appui des facilités et resources extensives de la CATERPILLAR Tractor Co.

Le personnel de vente a reçu son training à l'usine pour ce qui regarde les stocks et la distribution des pièces de rechange et de vastes stocks sont constamment maintenus à jour pour assurer un service prompt. Mettez-vous en rapport avec l'agent CATERPILLAR le plus près de chez vous pour être sûr qu'il a votre nom et adresse, le numéro de série correct de votre machine et une liste précise des accessoires et pièces d'attache. Ce dossier facilitera la livraison de pièces de rechange quand vous en aurez besoin d'urgence.

CE QUE L'AGENT-DISTRIBUTEUR CATERPILLAR PEUT FAIRE POUR VOUS. Les agents-distributeurs CATERPILLAR sont dans les affaires pour rendre économiques et lucratives pour vous et la possession et l'operation des machines CATERPILLAR. Ils sont constamment en contact avec l'usine, afin d'être au courant de nouveaux developpements dans les méthodes de réparations et d'entretien, les procès d'opération, ainsi que pour leurs besoins de pièces de rechange. Leurs stocks de pièces de remplacement sont actifs et au jour, y-inclus toutes les pièces normalement nécessaires pour protéger vos fonds engagés dans les machines CATERPILLAR.

La plupart des agents CATERPILLAR vous offrent un service d'urgence de 24 heures. Afin d'obtenir des renseignements sans delai, soyez certain d'avoir le nom et l'adresse de votre agent sur place dans un carnet sur votre bureau ou à la première page de votre annuaire de téléphone.

SEULES LES PIECES DE RECHANGE CATERPILLAR VOUS DONNENT LA PRODUCTION CATERPILLAR. La même qualité et la main-d'oeuvre qui ont rendu fameux dans le monde entier les produits CATERPILLAR, sont construits dans toutes les pièces de rechange CATERPILLAR.

ITALIANO

MODO DI ORDINARE PEZZI. Si prega di essere sicuri d'indicare la quantità, il numero ed il nome di ogni pezzo desiderato. Ed è altresì importante riferire il numero di serie della macchina per la quale sono destinati i pezzi. Il collocamento delle placche contenenti i numeri di serie si può determinare col riferire alla pagina di specificazioni in questo catalogo di pezzi. Si suggerisce di scrivere il numero di serie della vostra macchina nello spazio provvisto a questo scopo sulla prima pagina di questo catalogo di pezzi.

Per assicurare pronta consegna, si prega di non mancare di fornire il nome del consegnatario correttamente scritto, come pure l'indirizzo, cioè la strada, città, contea e lo stato dove saranno spediti i pezzi, indicando se la spedizione sarà fatta per carico, espresso, pacco postale o per altro mezzo.

DOVE SI ORDINANO PEZZI. I rivenditori CATERPILLAR mantengono più di 400 magazzini negli Stati Uniti, e simili stabilimenti si trovano convenientemente collocati in quasi tutti i paesi del mondo. Questi stabilimenti godono l'appoggio delle estese facilitazioni e forti risorse della ditta CATERPILLAR Tractor Co.

Il personale rivenditore viene istruito, alla fabbrica, nel mantenimento degli assortimenti e rilascio dei pezzi, e si mantengono assortimenti grossi per assicurare pronta consegna. Mettetevi in communicazione col rivenditore e mantenuti al corrente, compresi tutti i pezzi che normalmente sono necessarî per proteggere il vostro capitale di serie della vostra macchine ed una lista accurata di accessorî ed attachi. Così si rende più facile il rilascio di pezzi quando ne avrete di bisogno in fretta.

CIO CHE PUO FARE PER VOI IL RIVENDITORE CATERPILLAR. I rivenditori CATERPILLAR sono lì all'unico scopo di rendere economici e vantaggiosi per voi il possedere e manovrare macchinarî CATERPILLAR. Egli sono constantemente in communicazione colla fabbrica per essere el corrente delle nuove migliorie effettuate nei modi di riparazione e mantenimento, nei metodi d'operazione, e dello sviluppo in richiedimenti di pezzi. I loro assortimenti sono attivi e mantenuti al corrente, compresi tutti i pezzi che normalmente sono necessarî per proteggere il vostro capitale di macchinarî CATERPILLAR.

Quasi tutti i rivenditori CATERPILLAR offrono un servizio d'emergenza giorno e notte. Per riferimento istantaneo, appuntate il nome e l'indirizzo del vostro rivenditore locale sul taccuino della vostra scrivania o in avanti della vostra guida del telefono.

SOLTANTO I PEZZI CATERPILLAR DANNO RISULTATI DEGNI DELLA MARCA CATERPILLAR. La medesima qualità e lavorazione che hanno reso famosi i prodotti CATERPILLAR dappertutto il mondo si trovano in tutti i pezzi macchinarî CATERPILLAR.

DEUTSCH

BESTELLUNGSANGABEN: Grundsätzlich ist bei jeder Bestellung die Ersatzteilnummer, die Ersatzteilbezeichnung und die Stückzahl anzugeben. Ausserdem muss unbedingt die Seriennummer der Maschine erscheinen, für welche die Teile bestellt werden. Die Lage des Seriennummernschildes an der Maschine ist aus der Seite: „Technische Daten" dieser Ersatzteilliste zu ersehen. Es empfiehlt sich deshalb, die Seriennummer Ihrer Maschine auf der Vorderseite dieser Ersatzteilliste in dem, hierfür vorgesehenen Raum einzutragen.

Eine schnelle Auslieferung von Bestellungen kann nur dann erfolgen, wenn der Name und die Empfangsadresse des Bestellers mit Hausnummer, Strasse, Stadt, Kreis und Land oder Kanton vollständig angegeben ist. Ausserdem sollte auf der Bestellung die gewünschte Versandart, wie z.B.: Paketpost, Bahnfracht, Spedition usw. angegeben werden.

BESTELLUNGSAUFGABE: In allen Ländern der freien Welt werden Original Caterpillar Teile durch Caterpillar Händler geliefert, deren Ersatzteillager leicht erreichbar zu Ihrer Verfügung stehen. Diese Caterpillar Händler stehen in direkter Verbindung mit dem Hauptwerk der Caterpillar Tractor Co. und deren Ersatzteildepots.

Durch Werksschulung des Händlerpersonals in der Bearbeitung und Abfertigung von Ersatzteilbestellungen, sowie durch die dauernde Lagerhaltung grosser Ersatzteilbestände, wird Ihnen eine prompte Belieferung gewährleistet. Es empfiehlt sich, Ihrem Caterpillar Händler die genauen Seriennummern Ihrer Maschinen sowie deren Anbaugeräte aufzugeben, damit er seinen Lagerbestand entsprechend abstimmen kann.

CATERPILLAR KUNDENDIENST: Die Hauptaufgabe Ihres Caterpillar Händlers besteht im Kundendienst und in der Betreuung von Caterpillar Maschinen. Durch den engen Kontakt mit dem Hauptwerk ist er bezüglich neuer Wartungs- und Reparaturmethoden, Einsatzmöglichkeiten und Ersatzteilneuheiten immer auf dem Laufenden. Sein Kundendienst ist bestens dazu geeignet, Ihre Kapitalsanlage in Caterpillar Maschinen ertragreich zu gestalten.

Fast alle Caterpillar Händler unterhalten einen Nacht- und Feiertagsdienst für dringende Bedarfsfälle. Diese wichtige Rufnummer sollte deshalb unbedingt in Ihrem Telefon- oder Anschriftenverzeichnis an prominenter Stelle eingetragen sein.

NUR CATERPILLAR ORIGINALTEILE GEWÄHRLEISTEN DIE VOLLE LEISTUNGSKRAFT IHRER CATERPILLAR MASCHINEN ! Jedes Caterpillar Originalersatzteil ist ein Qualitätserzeugnis von der gleichen Güte, die Caterpillar Maschinen in aller Welt berühmt gemacht hat.

ESPAÑOL

CÓMO DEBEN PEDIRSE LAS PIEZAS. Es preciso que se especifique la cantidad y se dé el número y el nombre de las piezas que se necesiten. Es también importante dar el número de la serie a que pertenece la máquina para la cual se piden las piezas. Para saber dónde están las placas con el número de la serie, consúltese la página de este catálogo de piezas en que se dan las "Especificaciones". Sería conveniente que insertara Ud. el número de la serie de su máquina en el espacio que se ha dejado para este objeto en la página uno de este catálogo; de esta manera lo tendrá siempre a la mano cuando la necesite.

Para que el despacho se efectúe con prontitud, es necesario que se dé el nombre correcto del consignatario, así como la dirección y los nombres de la ciudad y la provincia, departamento o estado a que han de enviarse las piezas. Debe especificarse, asímismo, si el despacho hay que hacerlo por flete, expreso, paquete postal u otró conducto.

DONDE PUEDEN CONSEGUIRSE LAS PIEZAS. Hay más de 400 tiendas en los EE. UU. en que se venden los tractores y los accesorios "CATERPILLAR". Establecimientos semejantes a éstos están situados en lugares estratégicos en casi todos los países del mundo. Estas organizaciones cuentan con el ayuda y las extensas facilidades y la cooperación de la CATERPILLAR Tractor Co.

El personal de las tiendas mencionadas ha recibido su preparación en la fábrica en lo que se refiere a piezas y accesorios. Las tiendas mantienen siempre una gran existencia de estos últimos, lo que les permite prestar un servicio rápido. Póngase Ud. en conacto con el agente de la CATERPILLAR más cercano y procure darle su nombre y dirección, así como el número de la serie de su máquina, y averiguar se aquél tiene una lista exacta de accesorios y conexiones. Esto le facilitará el conseguir las piezas cuando las necesite con urgencia.

LO QUE PUEDEN HACER POR UD. LOS AGENTES DE LA CATERPILLAR. Los agentes de la CATERPILLAR tienen por mira el hacer económico y provechoso el uso y el funcionamiento de las máquinas CATERPILLAR; están siempre en constante comunicación con la fábrica, para estar así al corriente de los últimos métodos que se empleen para hacer reparaciones y para la conservación y el funcionamiento de las máquinas y la selección de las piezas que se requieran. Las existencias que mantienen dichos agentes son completas en todo sentido e incluyen todas aquellas piezas que se consideran esenciales para protegar la inversión que Ud. ha hecho en máquinas CATERPILLAR.

Casi todos los agentes de la CATERPILLAR ofrecen un servicio de emergencia de 24 horas. Para cuando se presente el caso, procure Ud. tener siempre a la mano, en su escritorio, el nombre y la dirección del agente.

SOLO LAS PIEZAS CATERPILLAR DAN EL RESULTADO APETECIDO. Todas las piezas CATERPILLAR han sido fabricadas según el patrón de alta calidad y mano de obra que ha hecho famosos los productos CATERPILLAR.

PORTUGUES

COMO ENCOMENDAR PECAS AVULSAS. É indispensável indicar a quantidade, o número e o nome de cada peça que desejar. É tambem importante dar o número de série da máquina a que a nova peça se destina. As chapas que trazem os números de série podem ser localizadas pela página "Especificações" deste catálogo. Sugerimos que V.S. escreva o número de série de usa máquina no espaço reservado para este fim na página número I do catálogo e assim te-lo-á pronto quando precisar.

Afim de assegurar pronta entrega, tenha o cuidado de indicar a nome exato do consignatário, com endereço completo incluindo rua a número, cidade, provincia ou estado e país para onde as peças devem ser despachadas, indicando tambem se o despacho deve ser feito por carga, correio expresso, ou outro meio de transporte.

PARA ONDE DIRIGIR A ENCOMENDA DE PEÇAS. Os distribuidores de CATERPILLAR mantêm mais de 400 casas nos Estados Unidos a estabelecimentos semelhantes estão localizados em pontos convenientes de quase todos os paises do mundo. Todas estas organizações gozam das inúmeras vantagens e recursos da CATERPILLAR Tractor Co.

Todo o pessoal distribuidor tem experiência industrial em armazenamento e distribuição de peças e grandes estoques são sempre mantidos afim de assegurar serviço pronto. Entre em contacto com o distribuidor de CATERPILLAR que lhe ficar mais próximo e providencíe para que e uma lista precisa dos accessórios e peças correspondentes. Etsa relação facilitará o fornecimento de peças quando V.S. tiver necessidade urgente delas.

O QUE O DISTRIBUIDOR DE CATERPILLAR PODE FAZER PARA SERVIR V.S. A função dos distribuidores de CATERPILLAR é tornar económico e profeitoso para V.S. possuir e operar maquinário CATERPILLAR. Constantemente em contacto com a fábrica a respeito de novos processos de concerto e manutenção do maquinário, de técnicas de funcionamento e de caracteristicas das peças, mantêm un estoque ativo, incluindo sempre os últimos tipos e todas as peças normalmente necessárias para que V.S. tire o máximo proveito do capital aplicado em maquinário CATERPILLAR.

Quase todos os nossos distribuidores mantêm serviço de emergência para fornecimento dentro de 24 horas. Afim de ter sempre á mão as referências, escreva no bloco de sua escrevaninha, ou na primeira página de suá lista de telefones, o nome e endereço de seu distribuidor.

Só PEÇAS CATERPILLAR PODEM OFERECER FUNCIONAMENTO CATERPILLAR. A mesma qualidade e técnica de manufatura que tornam os produtos CATERPILLAR famosos no mundo inteiro caracterizam as peças avulsas CATERPILLAR.

INDEX

Diesel Engine
(Page 14)

Name	Page
Accessory Drive	36
Air Cleaner	19
Balancer and Drive	31
Belt Tightener	15
Breather and Oil Filler	22
Camshaft	32
Connecting Rod	32
Control—Compression Release	23
Control—Fuel Pump	35
Control—Governor	35
Crankshaft	29
Crankshaft Bearings	30
Cylinder Block and Covers	26
Cylinder Head	24
Fan and Shroud—Suction	16
Filter—Fuel	40
Flywheel	30
Fuel Filter and Lines—Primary	39
Fuel Injection System	41
Fuel Lines	38
Fuel Tank	38
Gauge—Fuel	22
Gauge—Oil	22
Governor	36
Guard—Radiator	15
Heat Indicator	22
Idler Gear—Water Pump	18
Manifolds	21
Oil Cooler	47
Oil Filter	44
Oil Lines	44
Piston	32
Power Take-Off—Rear	34
Power Take-Off Housing	33
Pump—Fuel Transfer	40
Pump—Oil	43
Pump—Water	18
Radiator	14
Service Meter	34
Specifications	136
Support—Engine	23
Tools	134
Transfer	133
Turbocharger	20
Valve Mechanism	24
Water Lines	17

Starting System
(Page 48)

Air Cleaner	55
Battery	64
Camshaft	49
Carburetor	56
Clutch	58
Connecting Rod	52
Control—Choke	54
Control—Clutch	59
Control—Starter Pinion	59
Control—Throttle	54
Crank—Manual Starting	48
Crankshaft	52
Cylinder Block	50
Cylinder Head	50
Fuel System	53
Generator	67
Governor	49
Ignition System	56
Magneto	57

Starting System—Continued

Name	Page
Manifold	55
Piston	52
Pump—Oil	53
Starter Pinion	60
Starting—Electric—12 Volt	62
Support—Engine	58
Transmission	60
Valve Mechanism	50
Water Lines	48
Wiring	64

Transmission and Chassis

(Page 69)

Bar and Suspension—Equalizer	100
Brakes	92
Case and Covers—Bevel Gear	95
Clutch—Steering	88
Control—Linkage Transmission	74
Control—Steering Clutch Hydraulic	90
Cooler Lines—Transmission Oil	73
Cooler—Torque Converter Oil	72
Drawbar—Fixed	104
Fenders	106
Final Drive	96
Frame	105
Frame—Track Roller	101
Gauges—Transmission	72
Guard—Track Roller Frame	102
Hood and Dash	108
Idler—Front	98
Lubrication System—Steering Clutch	86
Lubrication System—Transmission	82
Relief Valve	94
Roller—Track	103
Roller—Track Carrier	100
Seat Cushions	105
Tool Box	105
Track	104
Transmission	75
Torque Divider	69

Attachments

(Page 109)

Auxiliary Seat	114
Cab	116
Canopy Top	119
Control—Hydraulic	128
Conversion—Lubrication Oil	114
Curtain—Canopy	118
Drawbar—Swinging	112
Fan—Defroster	115
Frame—Track Roller	126
Guard—Brush	109
Guard—Crankcase	112
Guard—Final Drive Wear	128
Guard—Track Roller	127
Instrument Panel Protection	113
Lighting System	120
Pull Hook—Front	111
Service Indicator—Air Filter	113
Street Plate	125
Track	124
Windshield Wiper	115

INDEX ALPHABÉTIQUE

Moteur diesel
(Page 14)

Désignation	Page
Arbre à cames	32
Bielles	32
Bloc-cylindres	26
Canalisations de carburant	38
Canalisations de graissage	44
Caractéristiques	136
Collecteurs	21
Compteur d'entretien	34
Coussinets de vilebrequin	30
Culasse	24
Décompresseur (commande)	23
Entraînements secondaires	36
Equilibreur dynamique et entraînement	31
Filtre à air	19
Filtre à carburant diesel	40
Filtre à huile	44
Groupe d'injection de carburant	41
Instructions sur décalcomanies	133
Manomètre de pression de carburant	22
Manomètre de pression d'huile	22
Outillage	134
Pistons	32
Pompe à eau	18
Pompe à eau (engrenage intermédiaire)	18
Pompe à huile de graissage	43
Pompe d'alimentation de carburant	40
Préfiltre à carburant et canalisations	39
Prise de force arrière	34
Prise de force (boîtier)	33
Protège-radiateur	15
Radiateur	14
Réfrigérant d'huile de graissage	47
Régulateur	36
Régulateur (commande)	35
Régulateur (timonerie extérieure)	35
Reniflard et tubulure de remplissage d'huile	22
Réservoir à carburant	38
Soupapes et train de commande	24
Supports-moteur	23
Tendeur de courroie	15
Thermomètre (eau)	22
Turbo-compresseur	20
Tuyau d'échappement (rallonge)	21
Tuyauterie d'eau	17
Ventilateur aspirant et déflecteur	16
Vilebrequin	29
Volant du moteur	30

Groupe de lancement
(Page 48)

Alimentation d'essence (gazoline)	53
Allumage électrique	56
Arbre à cames	49
Batterie	64
Bielles	52
Bloc-cylindres	50
Boîte de vitesses de lancement	60
Carburateur	56
Carburateur (commande des gaz)	54
Carburateur (volet de départ)	54
Collecteur	55
Commande d'embrayage de lancement	59
Culasse	50
Démarreur électrique—12 volts	62
Dynamo	67
Embrayage de lancement	58
Filtre à air	55
Installation électrique	64
Magnéto	57
Manivelle de départ	48
Pignon de lancement	60

Groupe de lancement—Suite

Désignation	Page
Pignon de lancement (commande)	59
Pistons	52
Pompe à huile de graissage	53
Régulateur	49
Soupapes et train de commande	50
Supports-moteur	58
Tuyauterie d'eau	48
Vilebrequin	52

Bâti et organes de transmission
(Page 69)

Barre d'attelage (non oscillante)	104
Bâti arrière	95
Boîte de vitesses	75
Boîte de vitesses (timonerie)	74
Canalisations du circuit de graissage de la servo-transmission	73
Capot et tablier	108
Chaînes de roulement	104
Châssis	105
Châssis porteurs	101
Châssis porteurs (tôlerie de protection)	102
Circuit hydraulique des embrayages de direction	86
Circuit hydraulique de servo-transmission	82
Coffre à outils	105
Convertisseur (réfrigérant)	72
Coupleur différentiel	69
Embrayages de direction	88
Embrayages de direction (commande)	90
Freins	92
Galets inférieurs	103
Galets supérieurs	100
Garde-boue	106
Instruments de contrôle (boîte de vitesses)	72
Réducteurs de barbotin	96
Roues avant	98
Siège	105
Soupape de décharge	94
Traverse de suspension	100

Accessoires
(Page 109)

Barre d'attelage oscillante	112
Cabine	116
Chaînes de roulement	124
Châssis porteurs	126
Commande hydraulique	128
Crochet d'attelage (avant)	111
Dégivreur	115
Eclairage électrique	120
Essuie-glace	115
Grille de protection de tableau de bord	113
Groupe de transformation du circuit de graissage	114
Indicateur de colmatage du filtre à air	113
Patins de route	125
Protège-carter-moteur	112
Protège-galets	127
Protège-réducteur de barbotin	128
Rideaux (à monter avec le toit en toile)	118
Siège (pour un passager)	114
Toit en toile	119
Tôle pare-broussailles	109

INDICE

Motor Diesel
(Página 14)

Nombre	Página
Amortiguador de Vibración y Mando	31
Bielas	32
Bloque del Motor y Tapas	26
Bomba del Aceite	43
Bomba del Agua	18
Bomba de Transferencia	40
Caja de Toma de Fuerza	33
Calcomanías	133
Cigüeñal	29
Cojinetes de Bancada	30
Control de la Descompresión	23
Control de las Bombas del Combustible	35
Control del Regulador	35
Culata	24
Eje de Levas	32
Enfriador del Aceite	47
Engranaje Loco de la Bomba del Agua	18
Especificaciones	136
Extensión del Escape	21
Filtro de Aire	19
Filtro del Aceite	44
Filtro del Combustible	40
Filtro del Combustible y Tuberías—Primario	39
Herramientas	134
Horómetro	34
Indicador de Temperatura	22
Mando de Accesorios	36
Manómetro del Aceite	22
Manómetro del Combustible	22
Mecanismo de las Válvulas	24
Múltiples	21
Pistones	32
Protección del Radiador	15
Radiador	14
Regulador	36
Respiradero y Tubo de Llenado del Aceite	22
Sistema de Inyección del Combustible	41
Soporte del Motor	23
Tanque del Combustible	38
Tensor de la Correa	15
Toma de Fuerza Trasera	34
Tuberías del Aceito	44
Tuberías del Agua	17
Tuberías del Combustible	38
Turboalimentador	20
Ventilador de Succión y Protección	16
Volante	30

Sistema de Arranque
(Página 48)

Nombre	Página
Alambrado	64
Arranque Eléctrico—12 Voltios	62
Batería	64
Bielas	52
Bloque del Motor	50
Bomba del Aceite	53
Carburador	56
Cigüeñal	52
Control de Estrangulación	54
Control del Acelerador	54
Control del Embrague	59
Control del Piñón de Arranque	59
Culata	50
Eje de Levas	49
Embrague	58
Filtro de Aire	55
Generador	67
Magneto	57
Manivela de Arranque	48

Sistema de Arranque—Continuación

Nombre	Página
Mecanismo de las Válvulas	50
Múltiple	55
Piñón de Arranque	60
Pistón	52
Regulador	49
Sistema de Ignición	56
Sistema del Combustible	53
Soporte del Motor	58
Transmisión	60
Tuberías del Agua	48

Transmisión y Chasís

(Página 69)

Barra Compensadora y Suspensión	100
Barra de Tiro Fija	104
Bastidor	105
Bastidor de los Rodillos	101
Caja de Herramientas	105
Caja de la Corona y Tapas	95
Capó y Tablero	108
Carril	104
Cojines del Asiento	105
Control Hidráulico de Embragues de Dirección	90
Control—Varillaje de la Transmisión	74
Divisor de Torque	69
Embrague de Dirección	88
Enfriador del Convertidor de Torque	72
Frenos	92
Instrumentos—Transmisión	72
Mando Final	96
Protección—Bastidor de los Rodillos	102
Rodillos Inferiores	103
Rodillos Superiores	100
Rueda Guía	98
Sistema del Aceite de la Transmisión	82
Sistema del Aceite de los Embragues de Dirección	86
Tappabarros	106
Transmisión	75
Tubos del Enfriador del Aceite—Transmisión	73
Válvula de Seguridad	94

Accesorios

(Página 109)

Asiento Auxiliar	114
Barra de Tiro Giratoria	112
Bastidor de los Rodillos	126
Cabina	116
Carril	124
Controles Hidráulicos	128
Conversión—Aceite Lubricante	114
Cortina para Toldo	118
Gancho Delantero de Tiro	111
Indicador de Servicio del Filtro de Aire	113
Limpia Parabrisas	115
Placas para Calle	125
Protección contra Maleza	109
Protección del Cárter	112
Protección del Tablero de Instrumentos	113
Protección—Desgaste—Mando Final	128
Protección—Rodillos Inferiores	127
Sistema de Alumbrado	120
Toldo	119
Ventilador Descongelador	115

ÍNDICE

Motor diesel
(Página 14)

Nomenclatura	Página
Arrefecedor do óleo	47
Árvore de comando das válvulas	32
Árvore de manivelas (virabrequim)	29
Biela	32
Bloco do motor e tampas	26
Bocal de enchimento de óleo	44
Bomba d'água	18
Bomba de óleo	43
Bomba de transferência do combustível	40
Caixa de tomada de fôrça	33
Coletores	21
Comando de acessórios	36
Contrabalanço e comando	31
Contrôle das bombas injetoras	35
Contrôle da descompressão	23
Contrôle do regulador	35
Culatra (cabeçote)	24
Decalcomanias	133
Engrenagem intermediária da bomba d'água	18
Especificações	136
Extensão do escapamento	21
Ferramentas	134
Filtro primário do combustível e tubulações	39
Filtro principal do combustível	40
Indicador de temperatura (termômetro)	22
Indicador do combustível	22
Indicador do óleo	22
Mancais principais	30
Marcador de horas de serviço (horômetro)	34
Mecanismo das válvulas	24
Pistão	32
Protetor do radiador	15
Purificador de ar	19
Radiador	14
Regulador de velocidade	36
Respiro e filtro de óleo	22
Sistema de injeção do combustível	41
Suporte do motor	23
Tanque de combustível	38
Tensor das correias	15
Tomada de fôrça traseira	34
Tubos d'água	17
Tubulações do combustível	38
Tubulações do óleo	44
Turbocompressor	20
Ventilador de sucção e defletor	16
Volante do motor	30

Sistema de partida
(Página 48)

Árvore de comando das válvulas	49
Árvore de manivelas	52
Bateria	64
Biela	52
Bloco do motor	50
Bomba de óleo	53
Caixa de mudanças	60
Carburador	56
Coletor	55
Contrôle da embreagem	59
Contrôle do abafador	54
Contrôle do acelerador	54
Contrôle do pinhão de partida	59
Culatra (cabeçote)	50
Dínamo	67
Embreagem	58
Instalação elétrica	64
Magneto	57
Manícula	48

Sistema de partida—Continuação

Nomenclatura	Página
Mecanismo das válvulas	50
Partida elétrica de 12 volts	62
Pinhão de partida	60
Pistão	52
Purificador de ar	55
Regulador de velocidade	49
Sistema de combustível	53
Sistema de ignição	56
Suporte do motor	58
Tubos d'água	48

Sistema de transmissão e chassi

(Página 69)

Assento—almofadas	105
Armação dos rolêtes	101
Arrefecedor do conversor de torque	72
Barra de suspensão	100
Barra de tração fixa	104
Caixa da coroa e tampas	95
Caixa de ferramentas	105
Caixa de mudanças	75
Capota e painel	108
Chassi	105
Comando final	96
Contrôle hidráulico das embreagens de direção	90
Divisor de torque	69
Embreagem de direção	88
Esteira	104
Freios	92
Indicadores do sistema de transmissão	72
Ligações de contrôle das marchas	74
Pára-lamas	106
Protetor da armação dos rolêtes	102
Roda-guia	98
Rolête inferior	103
Rolête superior	100
Sistema do óleo da caixa de mudanças	82
Sistema do óleo da embreagem de direção	86
Tubulações do arrefecedor de óleo do sistema de marchas	73
Válvula de segurança	94

Acessórios

(Página 109)

Armação dos rolêtes	126
Assento auxiliar	114
Barra de tração oscilável	112
Cabina	116
Calço para sapata	125
Comando hidráulico	128
Conversão da lubrificação	114
Cortinas para o tôldo	118
Descongelador	115
Esteira	124
Gancho dianteiro	111
Guarda-mato	109
Indicador de limpeza do purificador de ar	113
Limpador do pára-brisa	115
Proteção do painel de instrumentos	113
Protetor da caixa do comando final	128
Protetor do cárter	112
Protetor dos rolêtes inferiores	127
Sistema de iluminação	120
Tôldo	119

INHALTSVERZEICHNIS

Dieselmotor
(Seite 14)

Bezeichnung	Seite
Abgasturbolader	20
Abziehbilder und Schriftplatten	133
Auspuffrohrverlängerung	21
Auswuchtwelle und Antrieb	31
Dekompressionssteuerung	23
Entlüfter und Öleinfüllstutzen	22
Fernthermometer	22
Filter und Leitungen der Kraftstoffvoreinspritzung	39
Kolben	32
Kraftstoffeinspritzanlage	41
Kraftstoffilter	40
Kraftstofförderpumpe	40
Kraftstoffleitungen	38
Kraftstoffmesser	22
Kraftstoffpumpensteuerung	35
Kraftstofftank	38
Krümmer	21
Kühler	14
Kühlerschutz	15
Kurbelwelle	29
Kurbelwellenlager	30
Lüfter und Schirmblech (Anblase-)	16
Luftreiniger	19
Motoraufhängung	23
Nockenwelle	32
Öldruckmesser	22
Ölfilter	44
Ölkühler	47
Ölleitungen	44
Ölpumpe	43
Pleuel	32
Regler	36
Reglersteuerung	35
Riemenspanner	15
Schwungscheibe	30
Steuerantrieb	36
Technische Daten	136
Ventilmechanismus	24
Wartungsmesser	34
Wasserleitungen	17
Wasserpumpe	18
Wasserpumpen-Zwischenrad	18
Werkzeuge	134
Zapfwelle, hinten	34
Zapfwellengehäuse	33
Zylinderkopf	24
Zylinderkurbelgehäuse und Deckel	26

Startanlage
(Seite 48)

Anlasser, elektrisch—12 Volt	62
Anlassritzel	60
Anlassritzelsteuerung	59
Batterie	64
Gashebelsteuerung	54
Getriebe	60
Handkurbel	48
Kolben	52
Kraftstoffanlage	53
Krümmer	55
Kupplung	58
Kupplungssteuerung	59
Kurbelwelle	52
Lichtmaschine	67
Luftklappensteuerung	54
Luftreiniger	55
Motoraufhängung	58
Nockenwelle	49
Ölpumpe	53
Pleuel	52
Regler	49

Startanlage—Fortsetzung

Bezeichnung	Seite
Ventilmechanismus	50
Vergaser	56
Verkabelung	64
Wasserleitungen	48
Zündanlage	56
Zündmagnet	57
Zylinderblock	50
Zylinderkopf	50

Getriebe und Laufwerk
(Seite 69)

Ausgleichstraverse und Aufhängung	100
Bremsen	92
Differentialwandler	69
Endantrieb	96
Getriebe	75
Getriebearmaturen	72
Getriebeschaltgestänge	74
Hauptrahmen	105
Hydraulik steuerung der Lenkkupplung	90
Kegeltriebgehäuse und Deckel	95
Laufkette	104
Laufrolle	103
Laufrollenrahmen	101
Laufwerksrahmenverkleidung	102
Leitrad, vorne	98
Lenkkupplung	88
Motorhaube und Stirnverkleidung	108
Ölkühler des Drehmomentwandlers	72
Ölkühlerleitungen des Getriebes	73
Schmiersystem des Getriebes	82
Schmiersystem der Lenkkupplungen	86
Schutzbleche	106
Sitzpolster	105
Stützrolle	100
Überdruckventil	94
Werkzeugkasten	105
Zugbalken, starr	104

Zubehör
(Seite 109)

Armaturenbrettschutz	113
Beifahrersitz	114
Beleuchtungsanlage	120
Entfrostergebläse	115
Fahrerhaus	116
Frontzughaken	111
Hydraulikanlage	128
Kurbelgehäuseschutz	112
Laufkette	124
Laufrollenrahmen	126
Laufrollenverkleidung	127
Motorseitenverkleidung	109
Scheibenwischer	115
Strassenlaufplatte	125
Umbaugruppe des Schmiersystems	114
Verschleisschutz der Endantriebsgehäuse	128
Wartungsanzeige des Luftreinigers	113
Wetterdach	119
Wetterdach-Planen	118
Zugbalken, unstarr	112

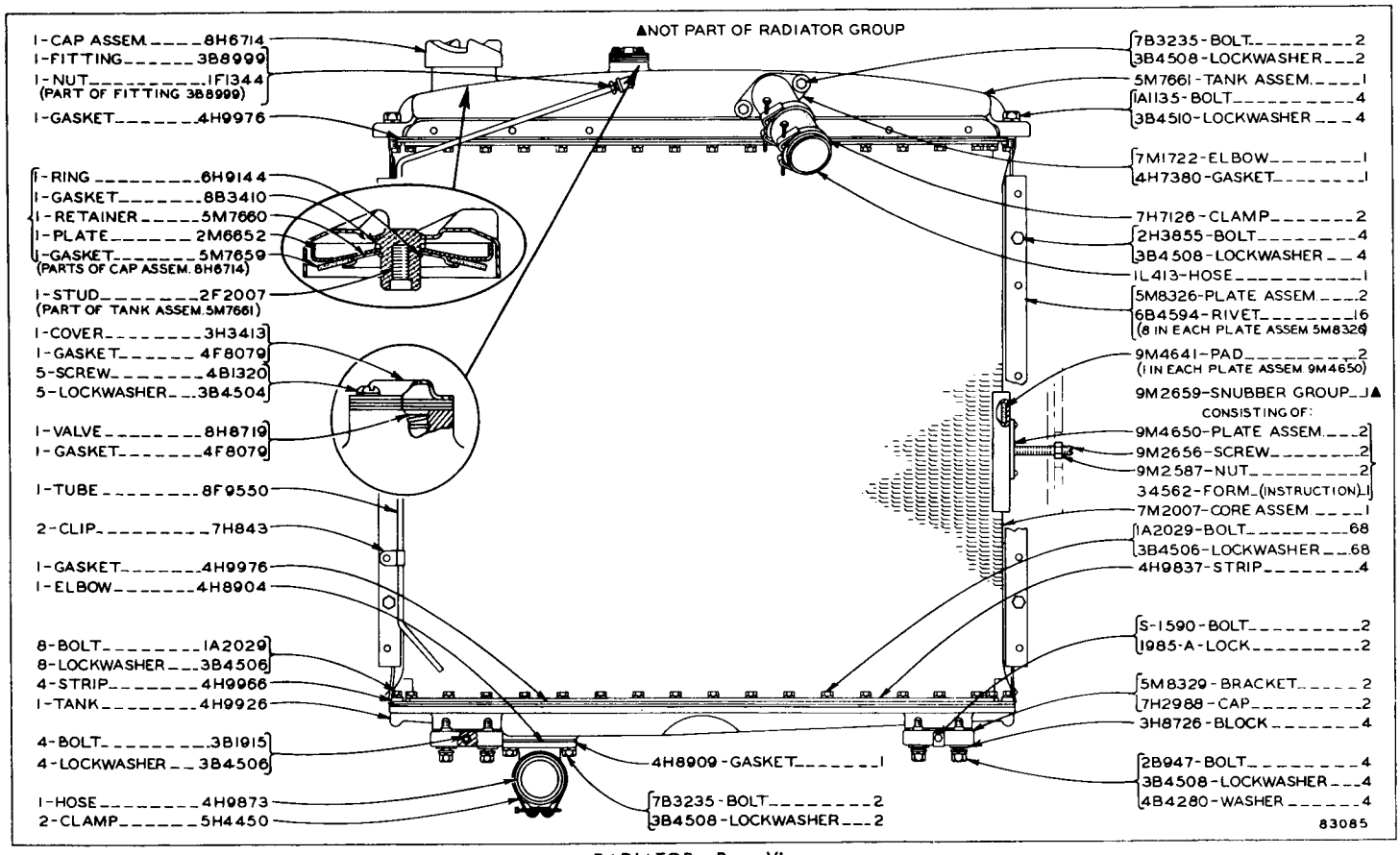

RADIATOR—Rear View
Serial No. 48A1 to 48A248 inclusive
Note: 6F6041 Rust Inhibitor is available

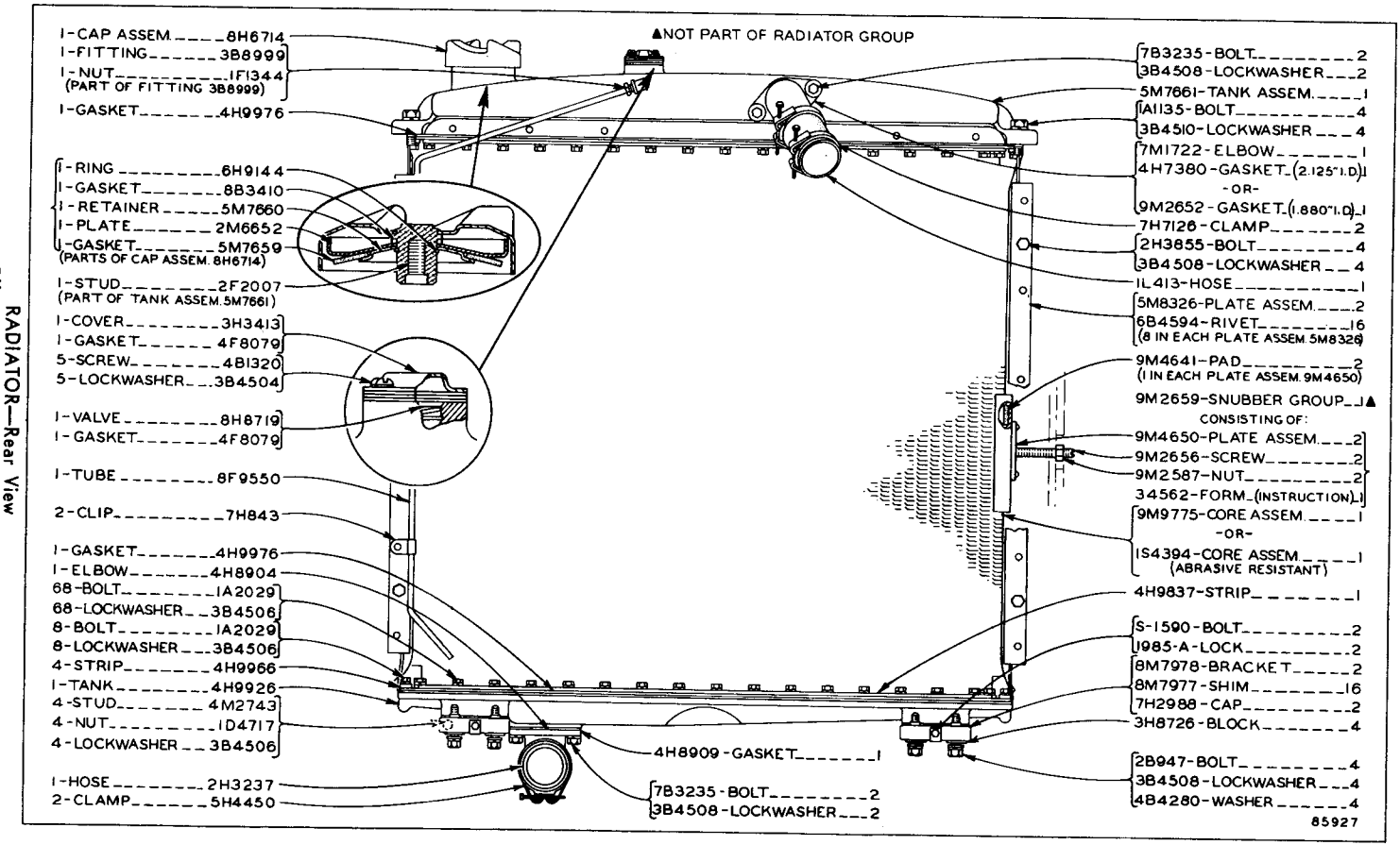

RADIATOR—Rear View
Effective with Serial No. 48A249
Note: 6F6041 Rust Inhibitor is available

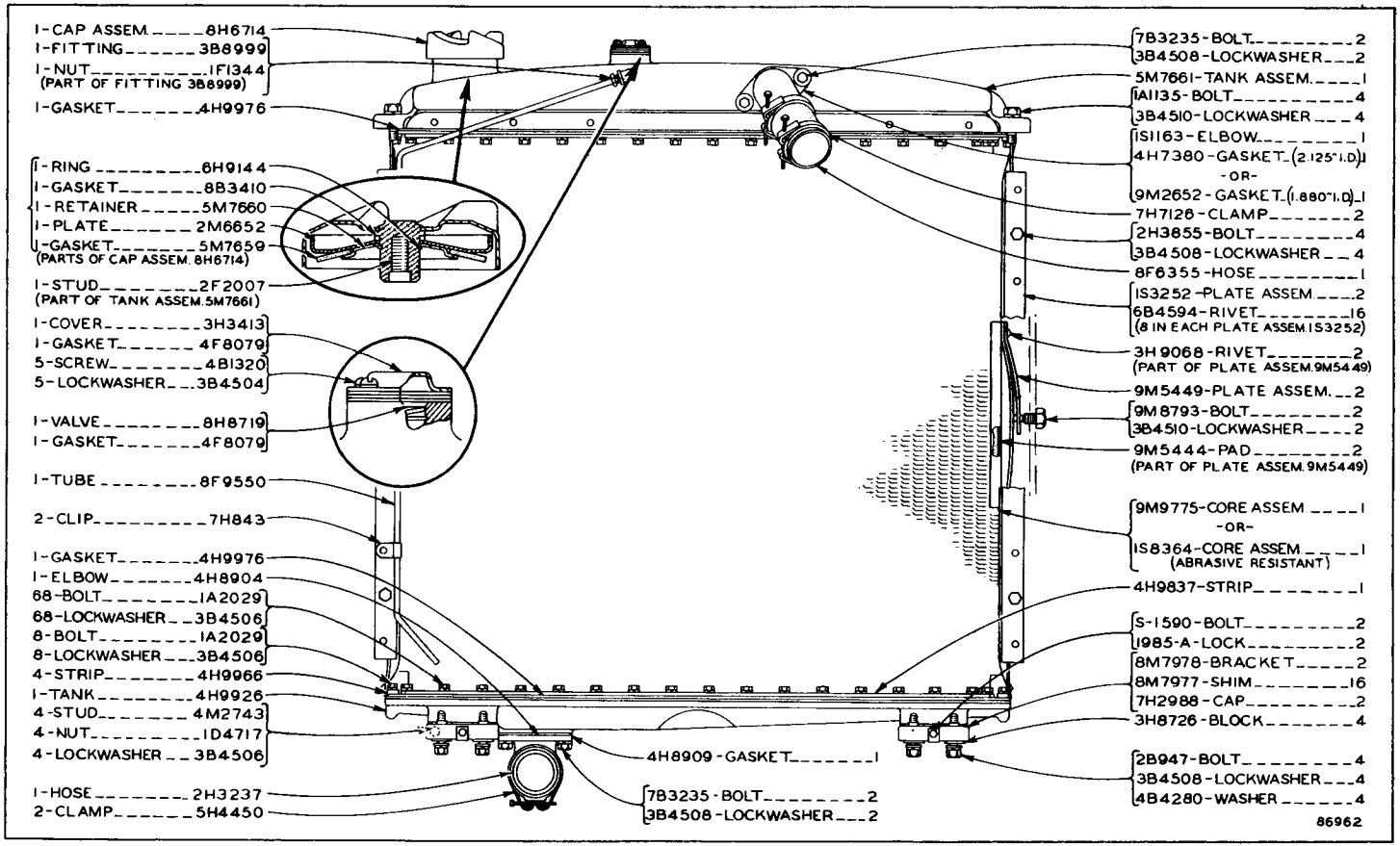

RADIATOR—Rear View
Effective with Serial No. 48A2455
Note: 1S8364 Core Assembly, for use with Blower Fan is available. Note: 6F6041 Rust Inhibitor is available

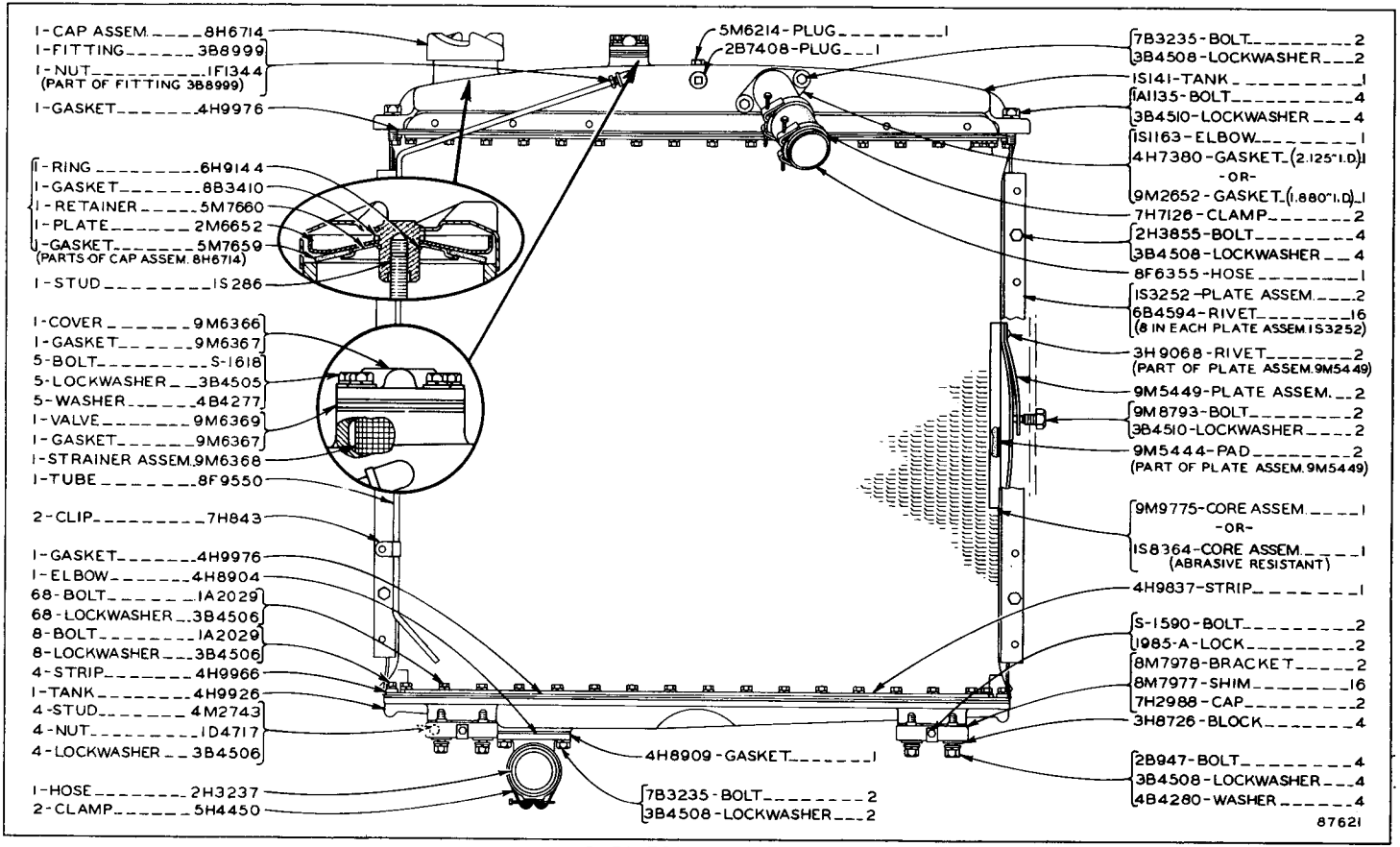

RADIATOR—Rear View
Effective with Serial No. 48A2611
Note: 6F6041 Rust Inhibitor is available

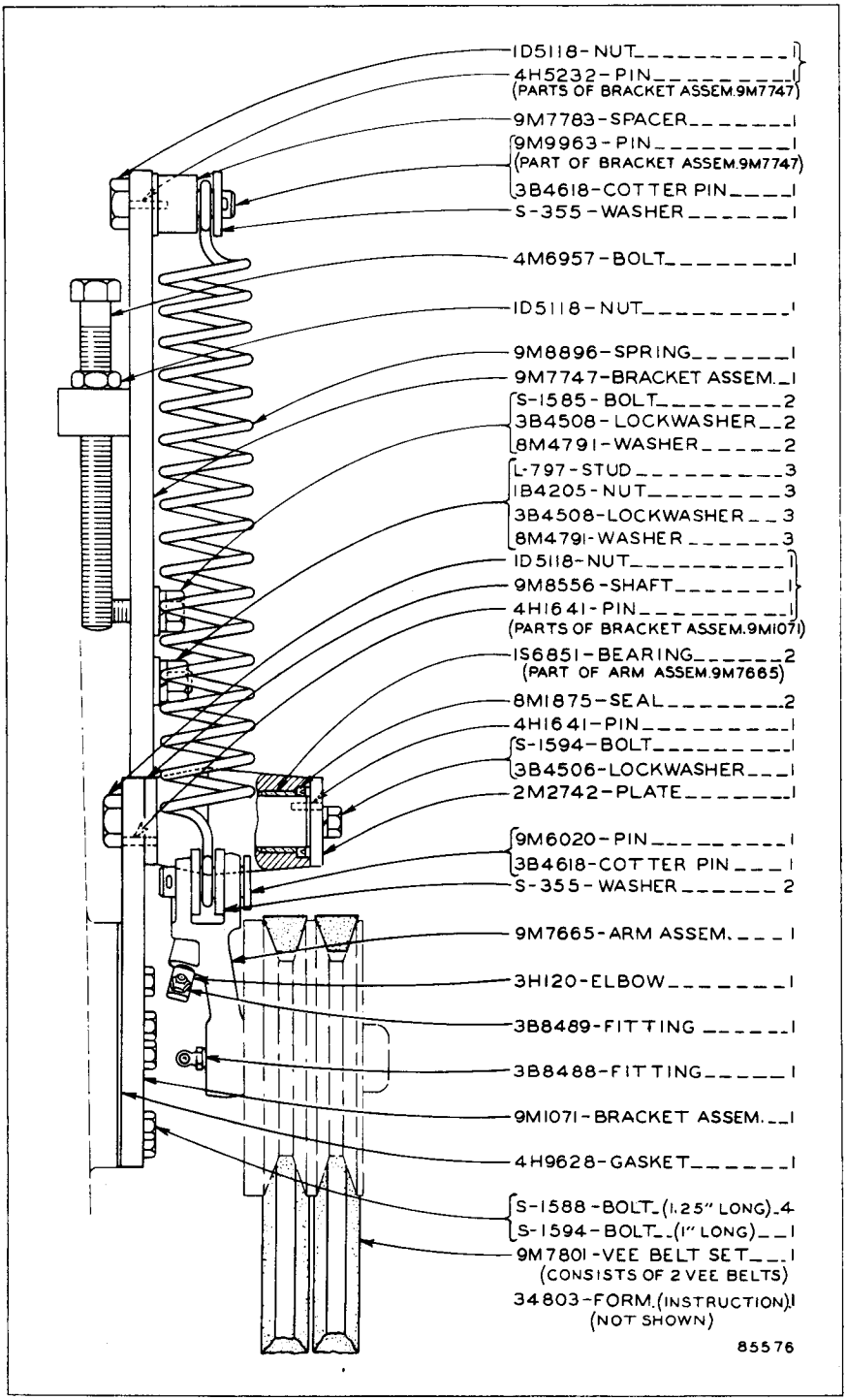

9M9994 BELT TIGHTENER GROUP—Field Installation
Serial No. 48A1 to 48A2200 inclusive

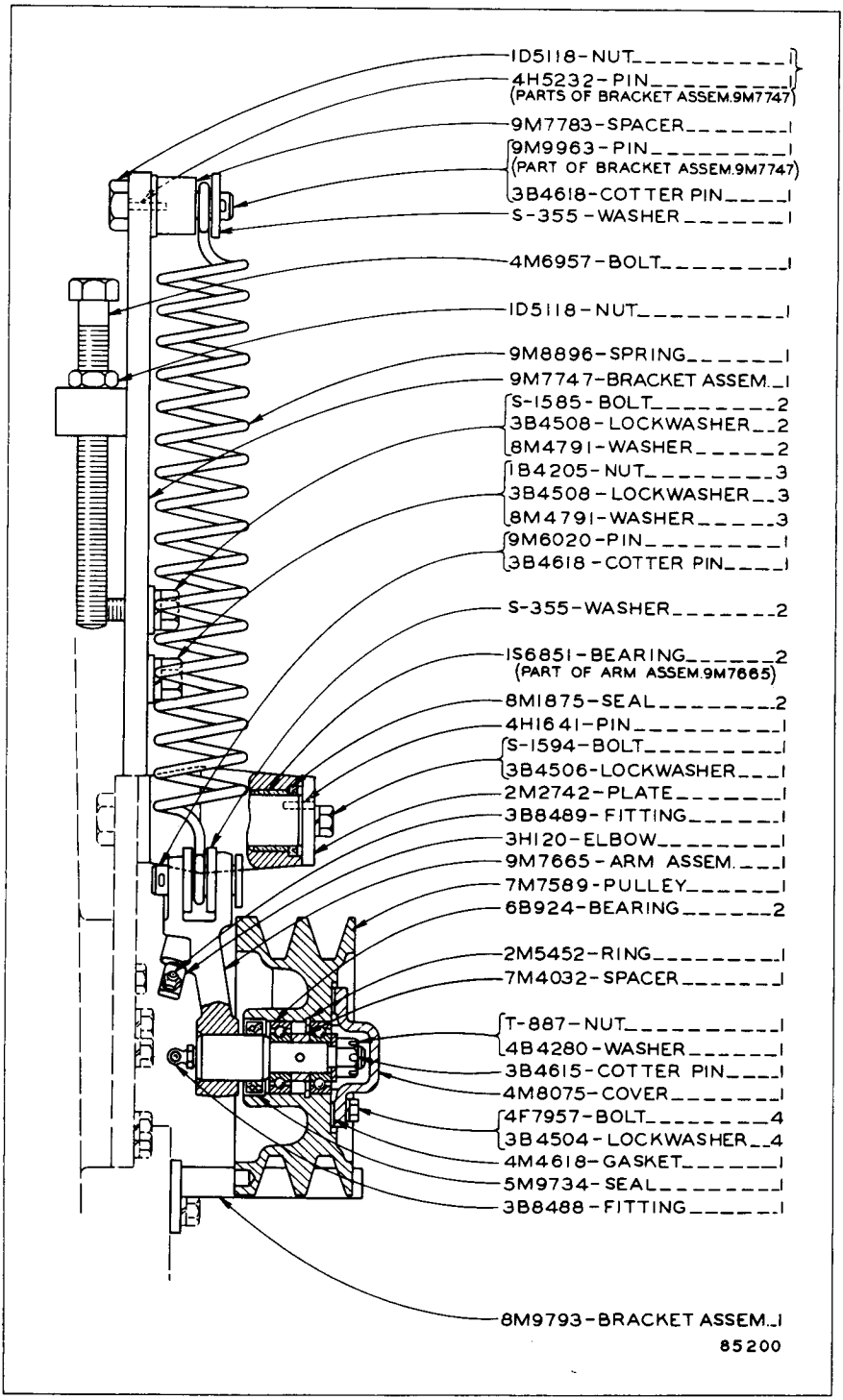

BELT TIGHTENER
Effective with Serial No. 48A2201

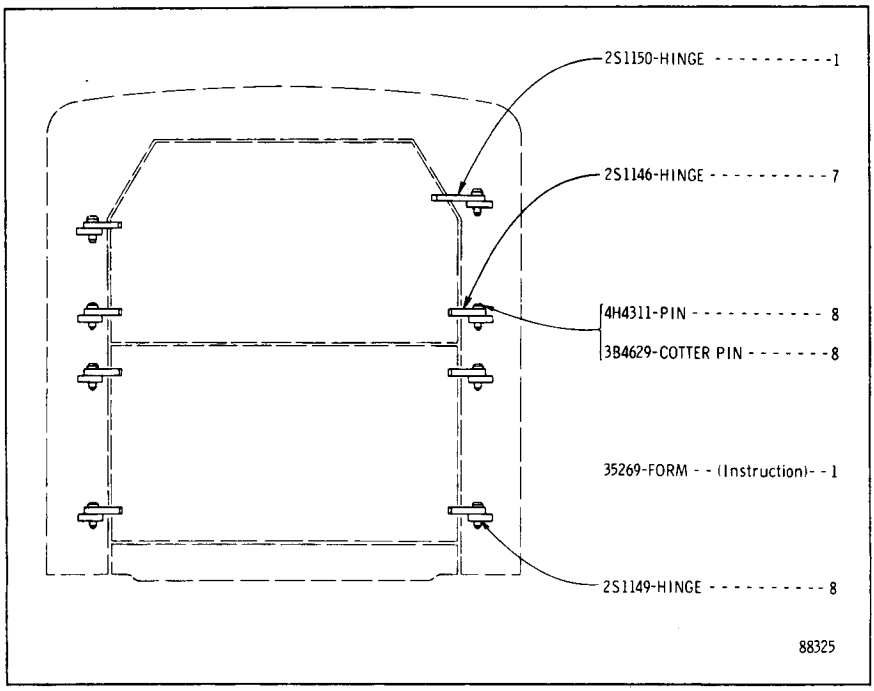

2S1164 RADIATOR GUARD HINGE GROUP

Note: 2S1162 Hinge Group, consisting of four complete hinges to mount one guard, is available

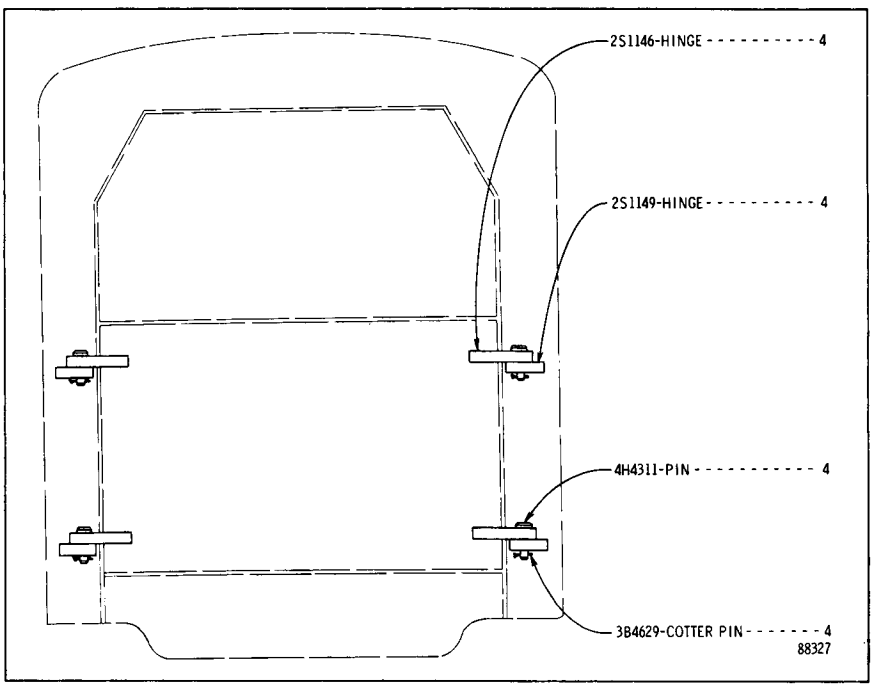

2S1163 RADIATOR GUARD HINGE GROUP

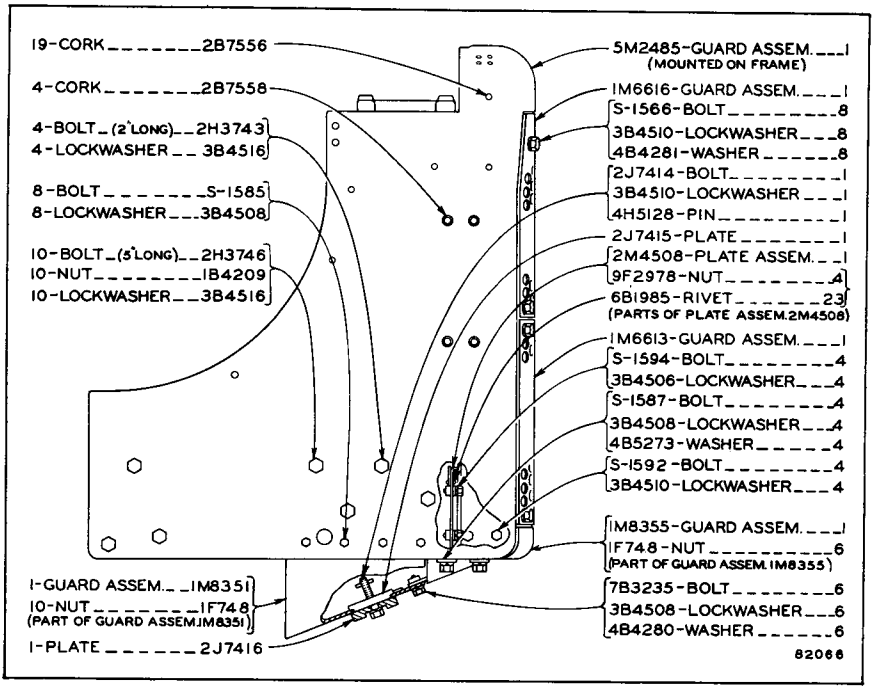

RADIATOR GUARD

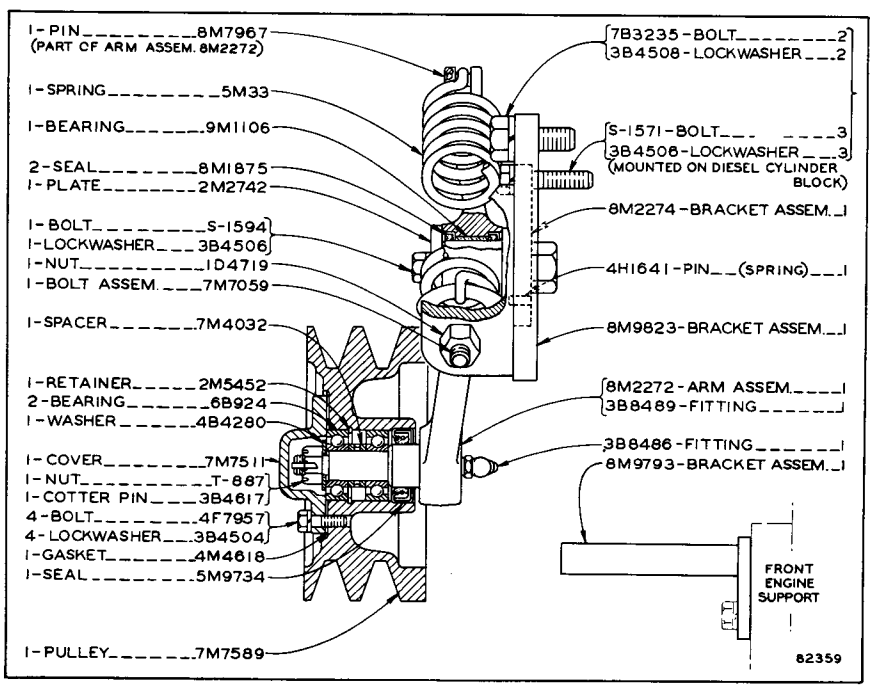

BELT TIGHTENER

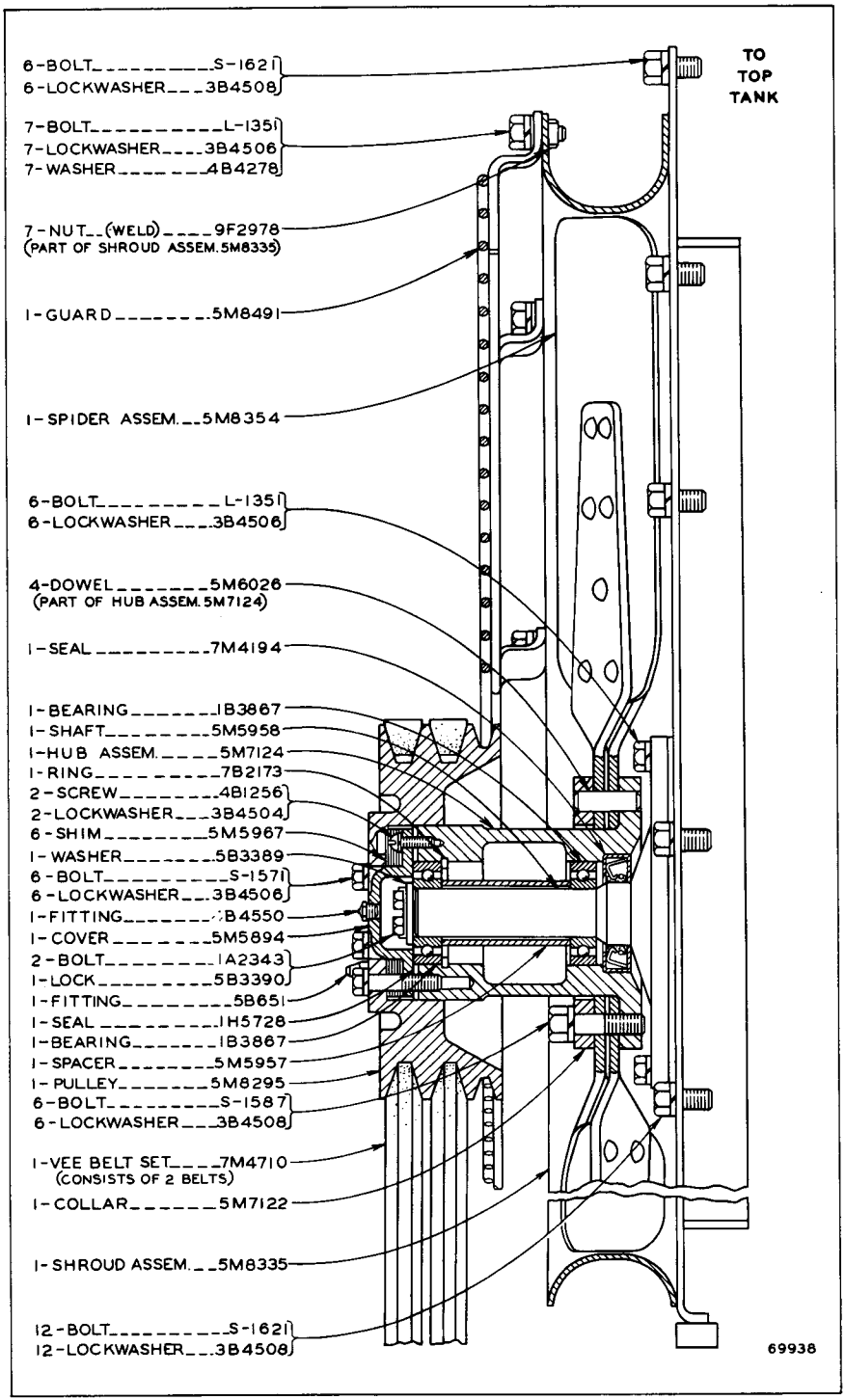

BLOWER FAN AND SHROUD

Note: 5M8355 Suction Fan Spider Assembly is available

PARTS BOOK INSERT

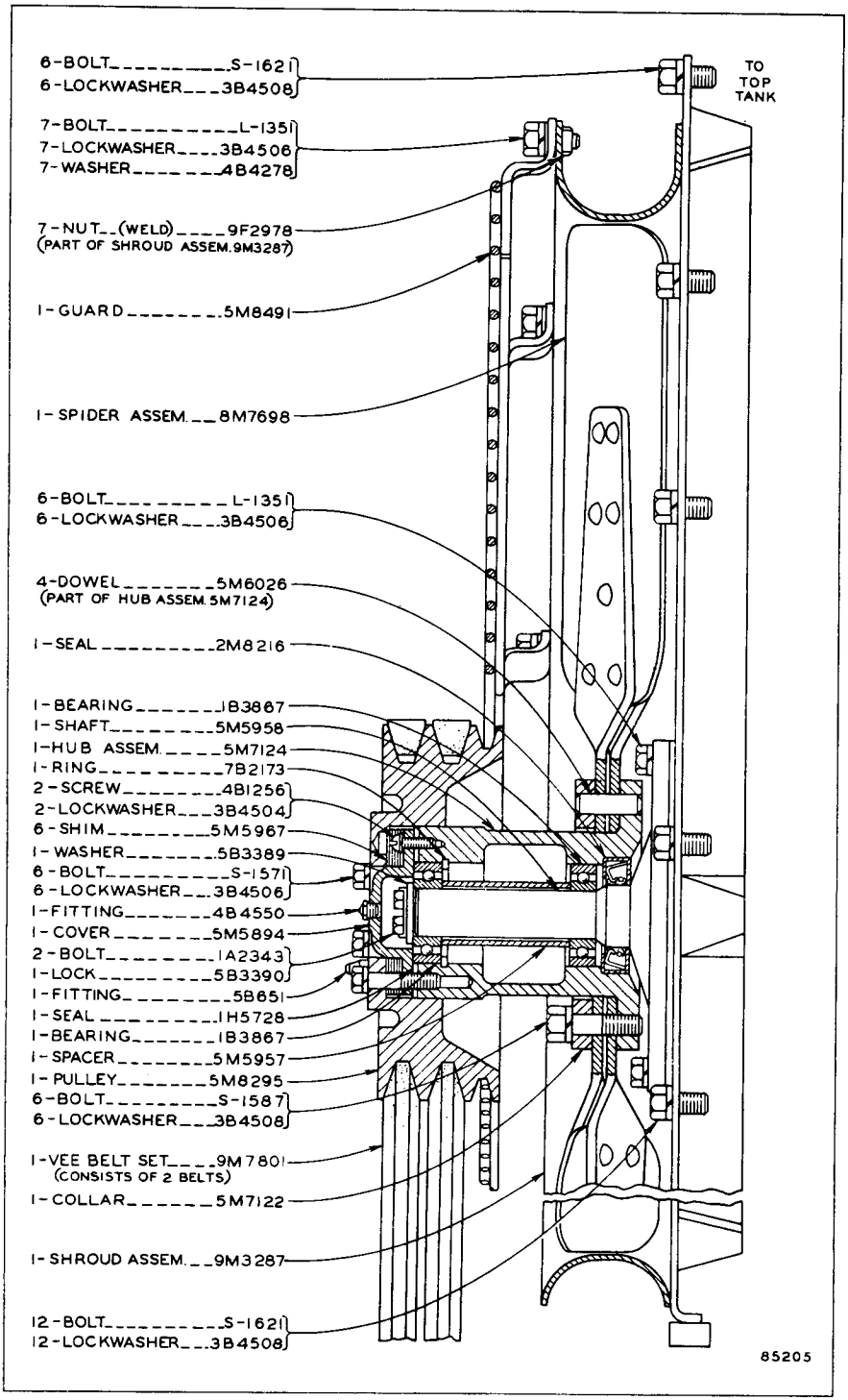

BLOWER FAN AND SHROUD

Effective with Serial No. 48A2201

Note: 5M8355 Suction Fan Spider Assembly is available

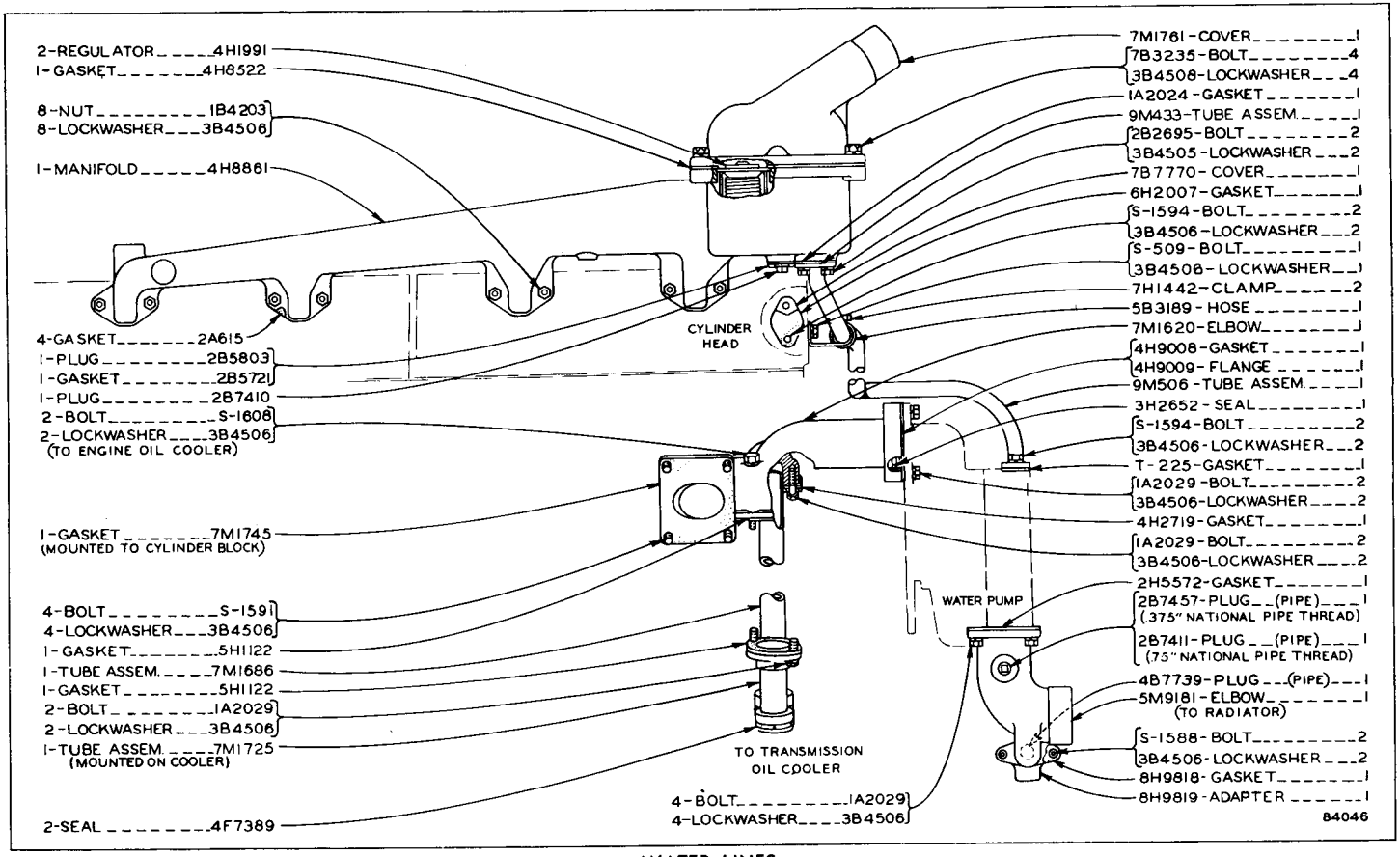

WATER LINES
Effective with Serial No. 48A1331

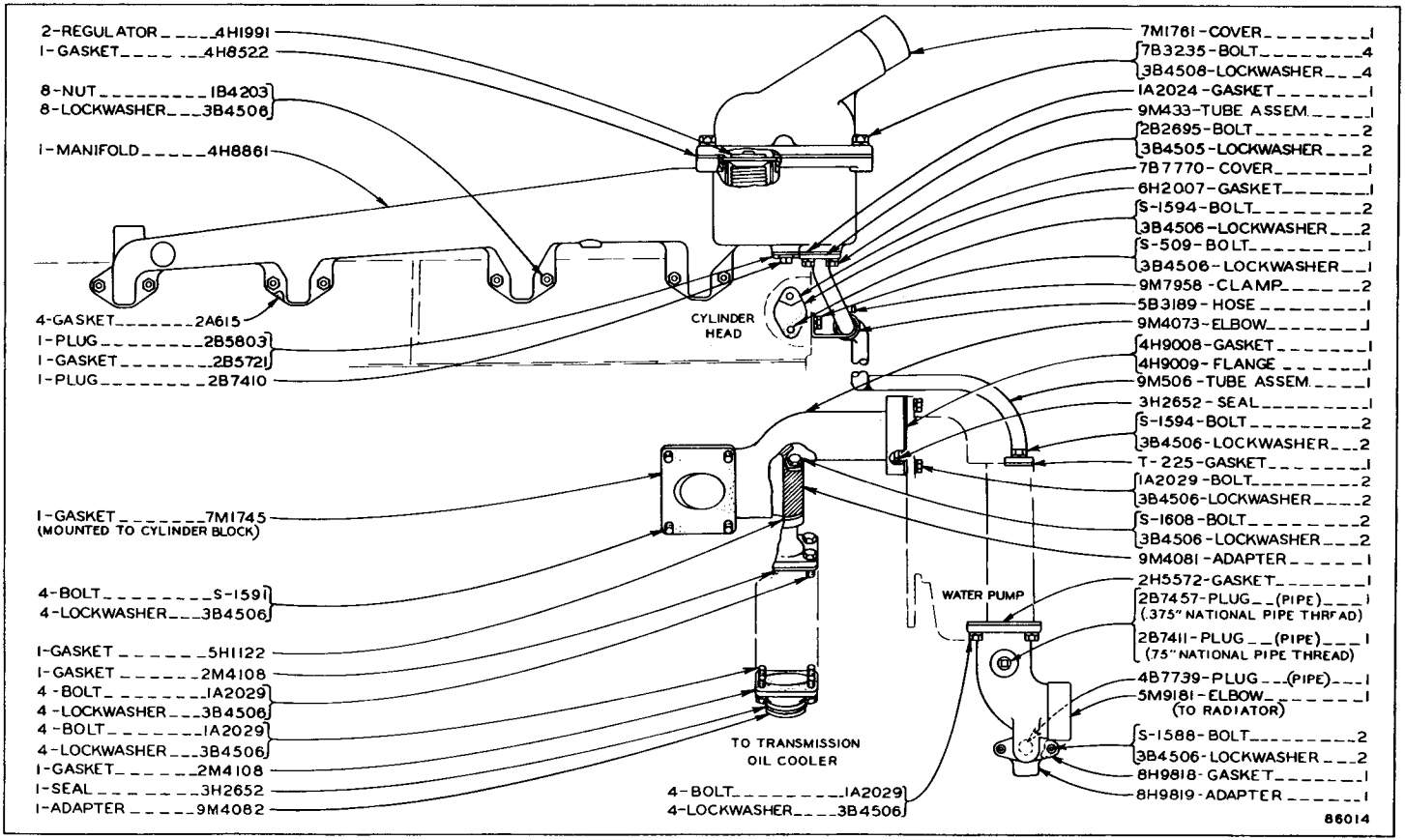

WATER LINES
Effective with Serial No. 48A2324

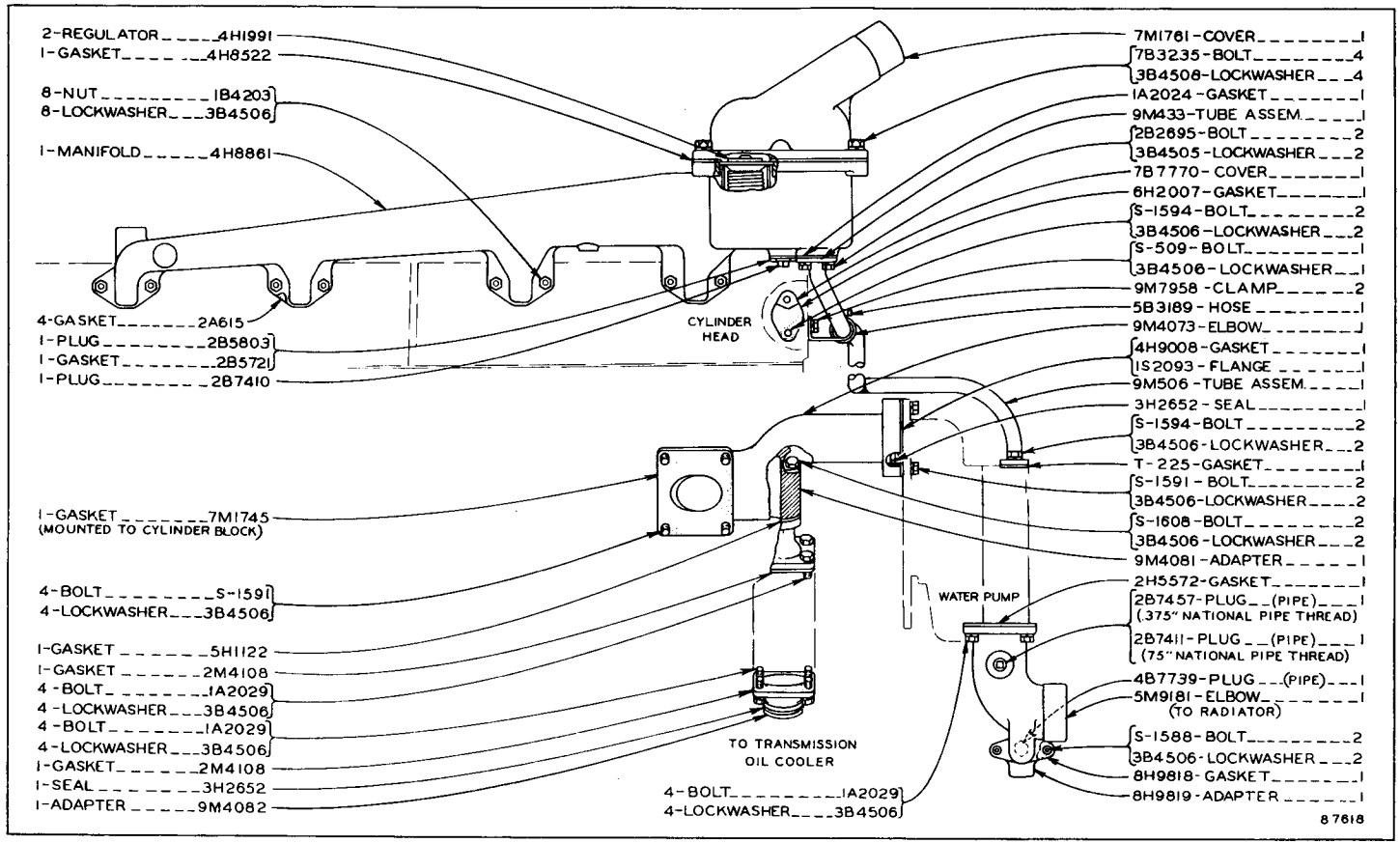

WATER LINES
Effective with Serial No. 48A2602

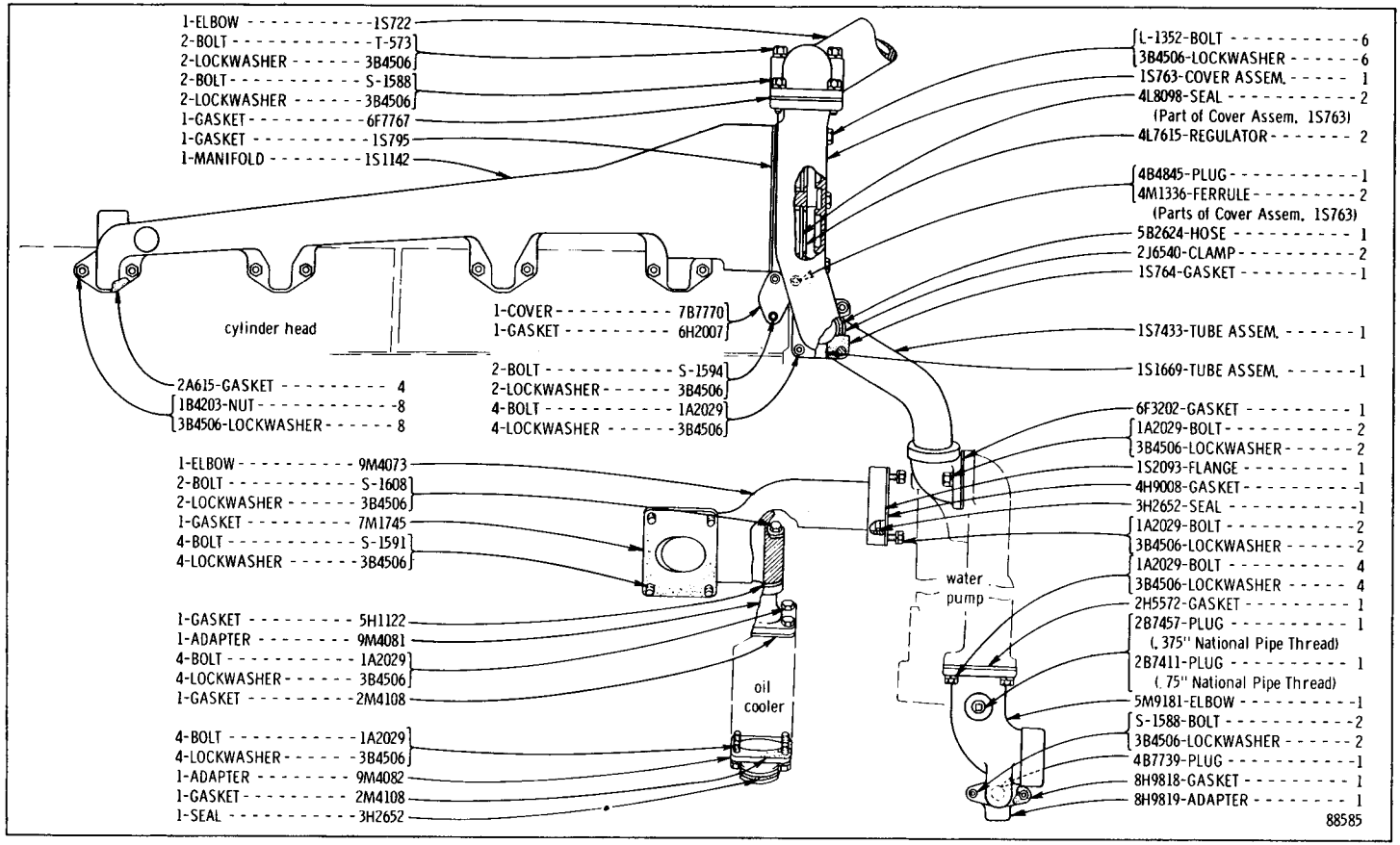

WATER LINES
Effective with Serial No. 48A2809

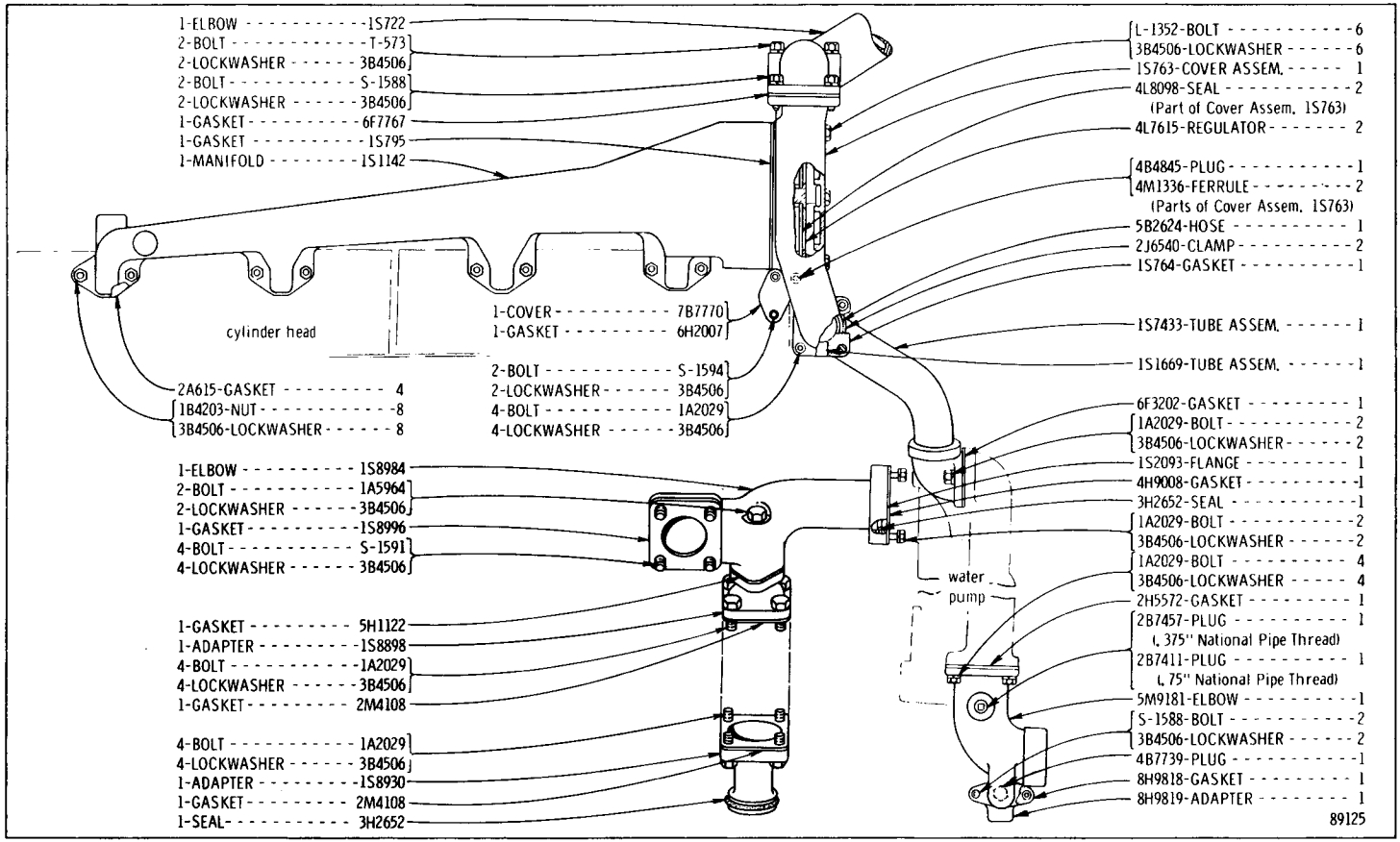

WATER LINES
Effective with Serial No. 48A2935

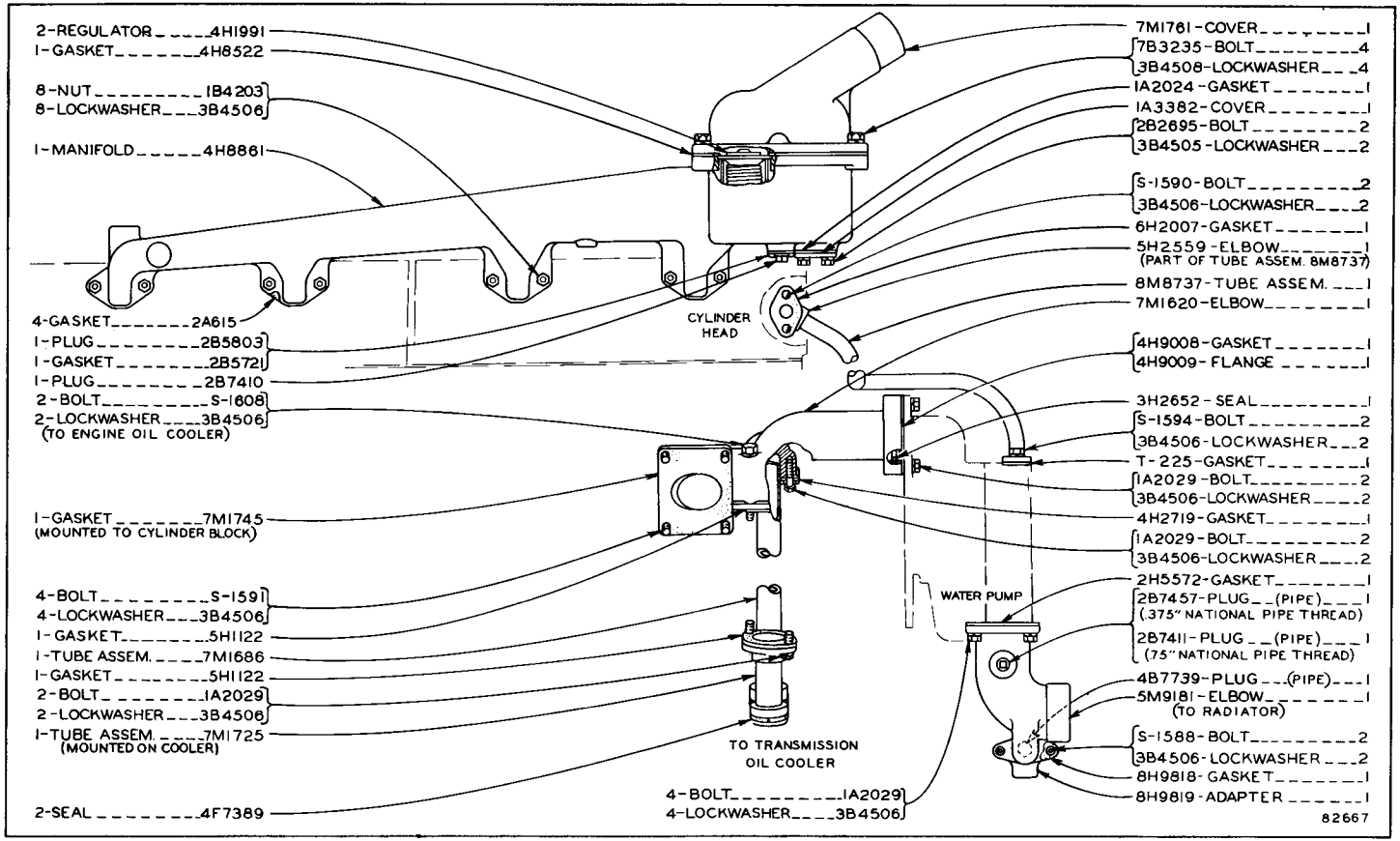

WATER LINES

ONLY "CATERPILLAR" PARTS GIVE "CATERPILLAR" PERFORMANCE

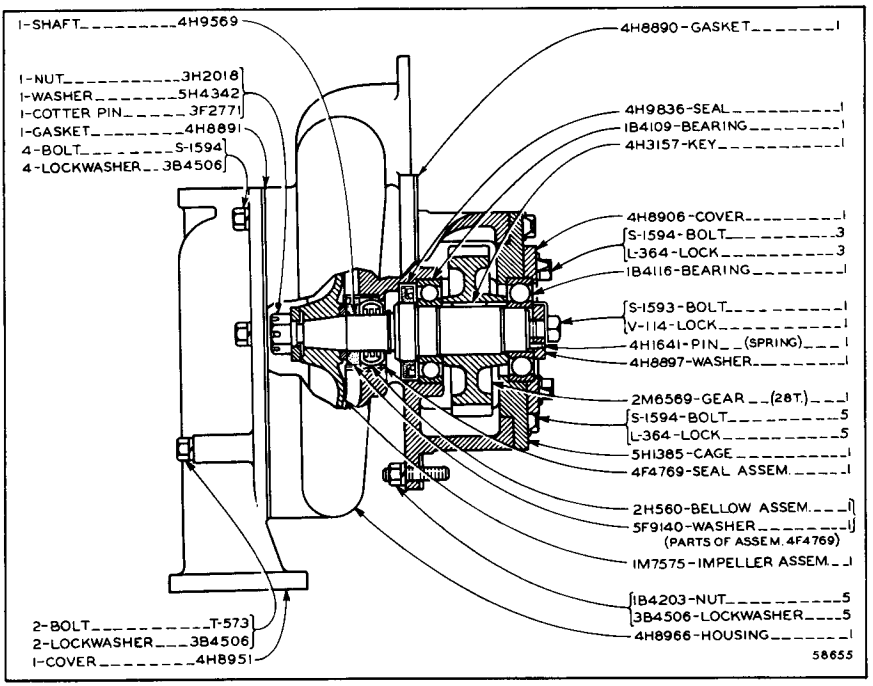

2M7894 WATER PUMP GROUP

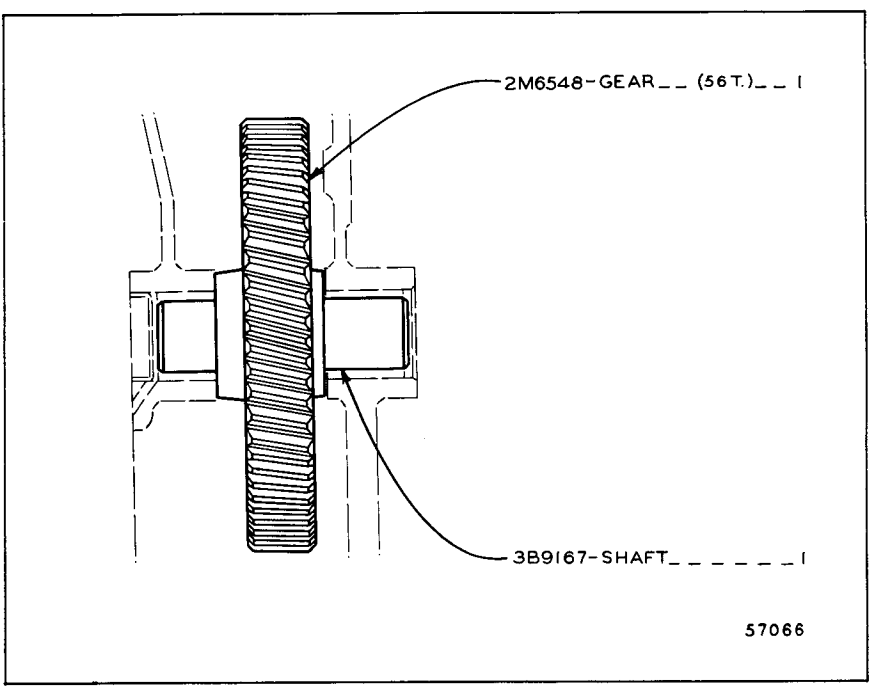

WATER PUMP IDLER GEAR

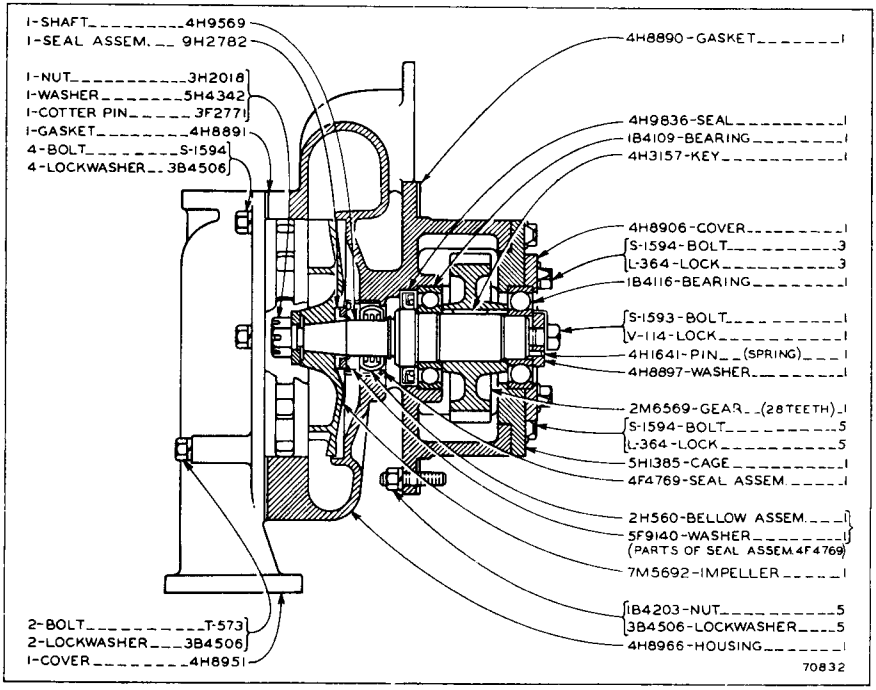

2M7894 WATER PUMP GROUP

Serial No. 48A480, 48A483 to 48A488, 48A490, 48A492, 48A494 to 48A516, 48A518 to 48A522, 48A524 to 48A528, 48A530—Up

Note: 6H5839 Water Pump Gasket Kit is available

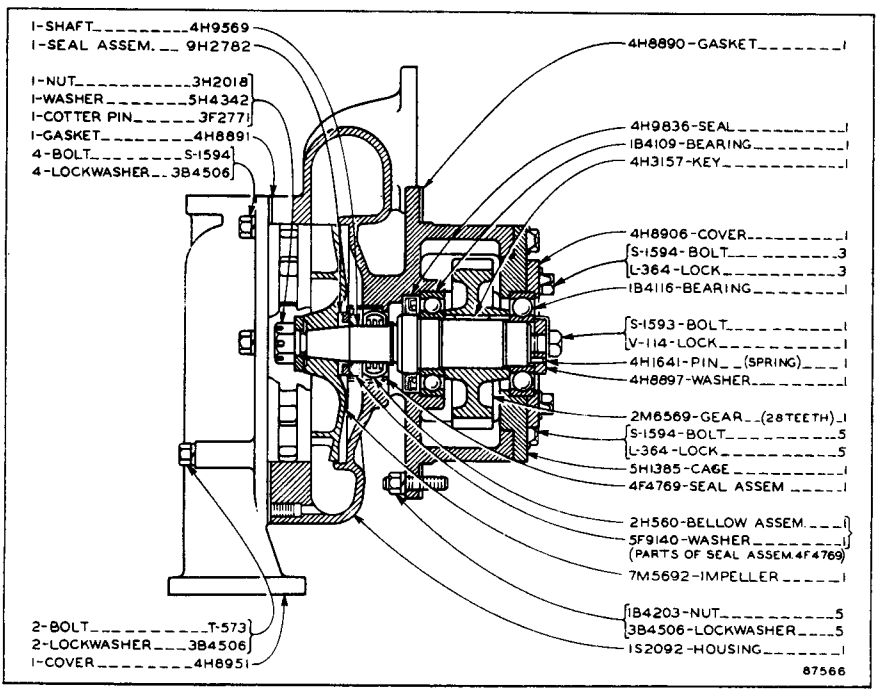

2M7894 WATER PUMP GROUP

Effective with Serial No. 48A2602

Note: 6H5839 Water Pump Gasket Kit is available

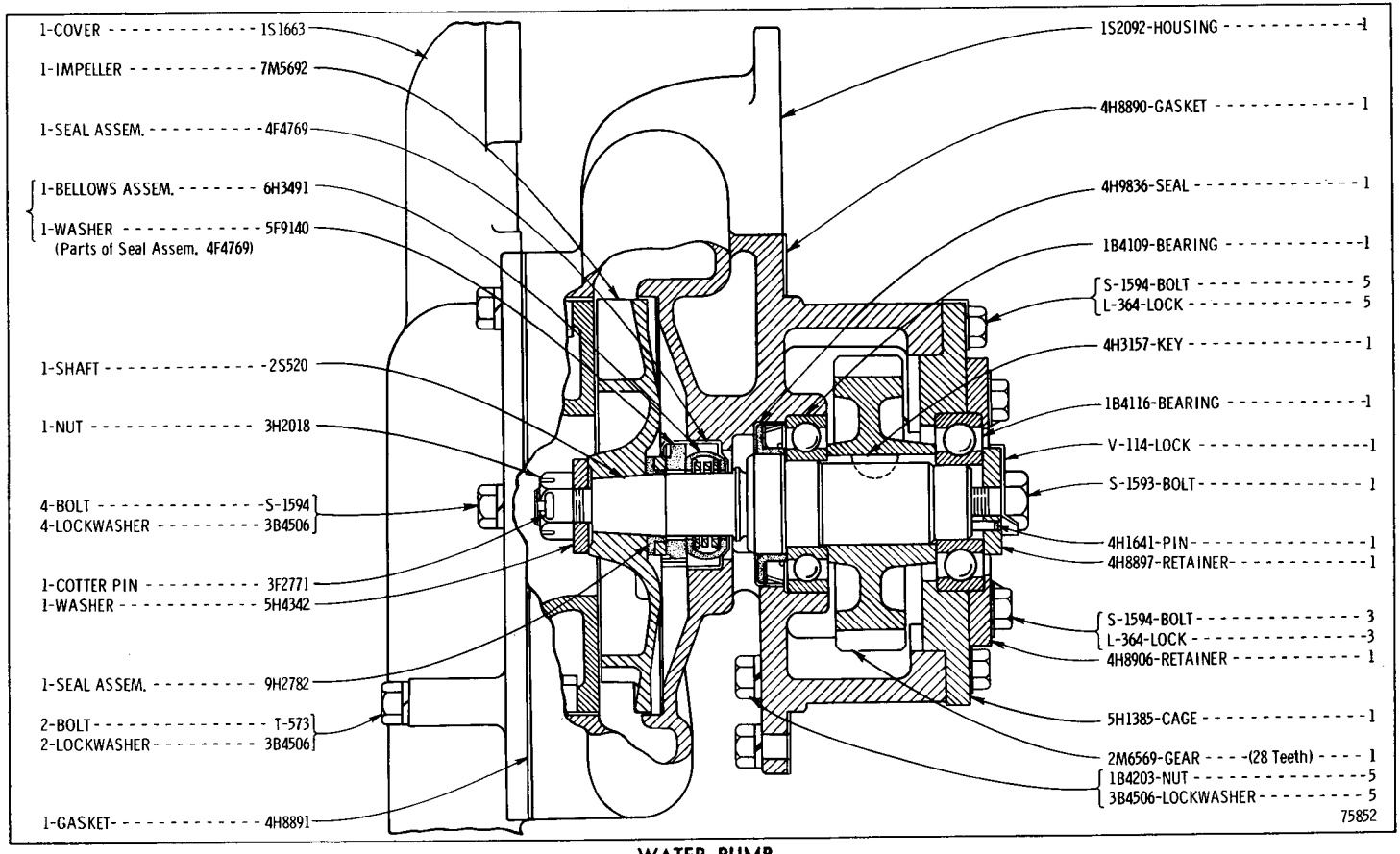

WATER PUMP
Effective with Serial No. 48A2809
Note: 6H5839 Water Pump Gasket Kit is available

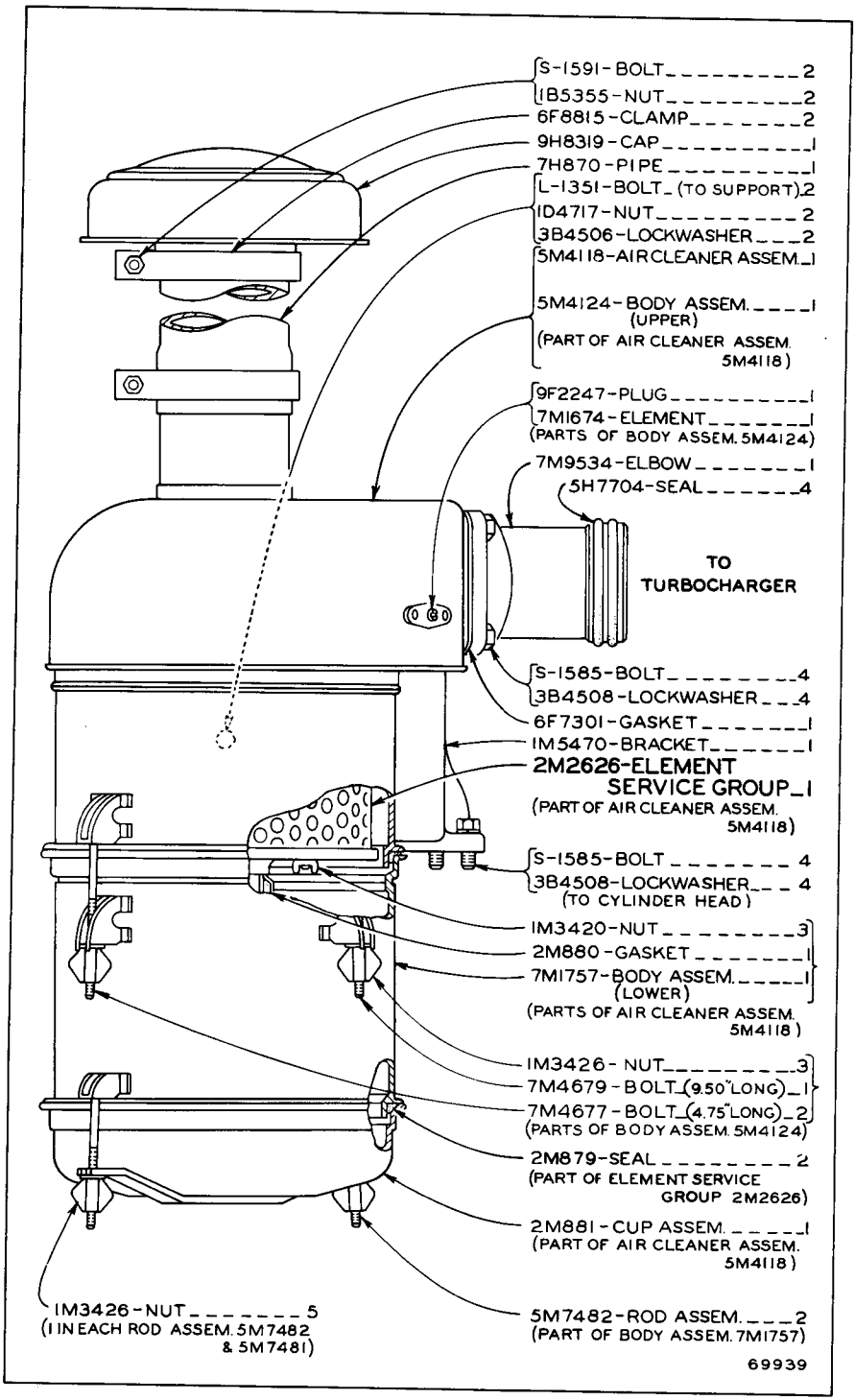

AIR CLEANER—Dry Type

Refer also to Page 113 for special parts

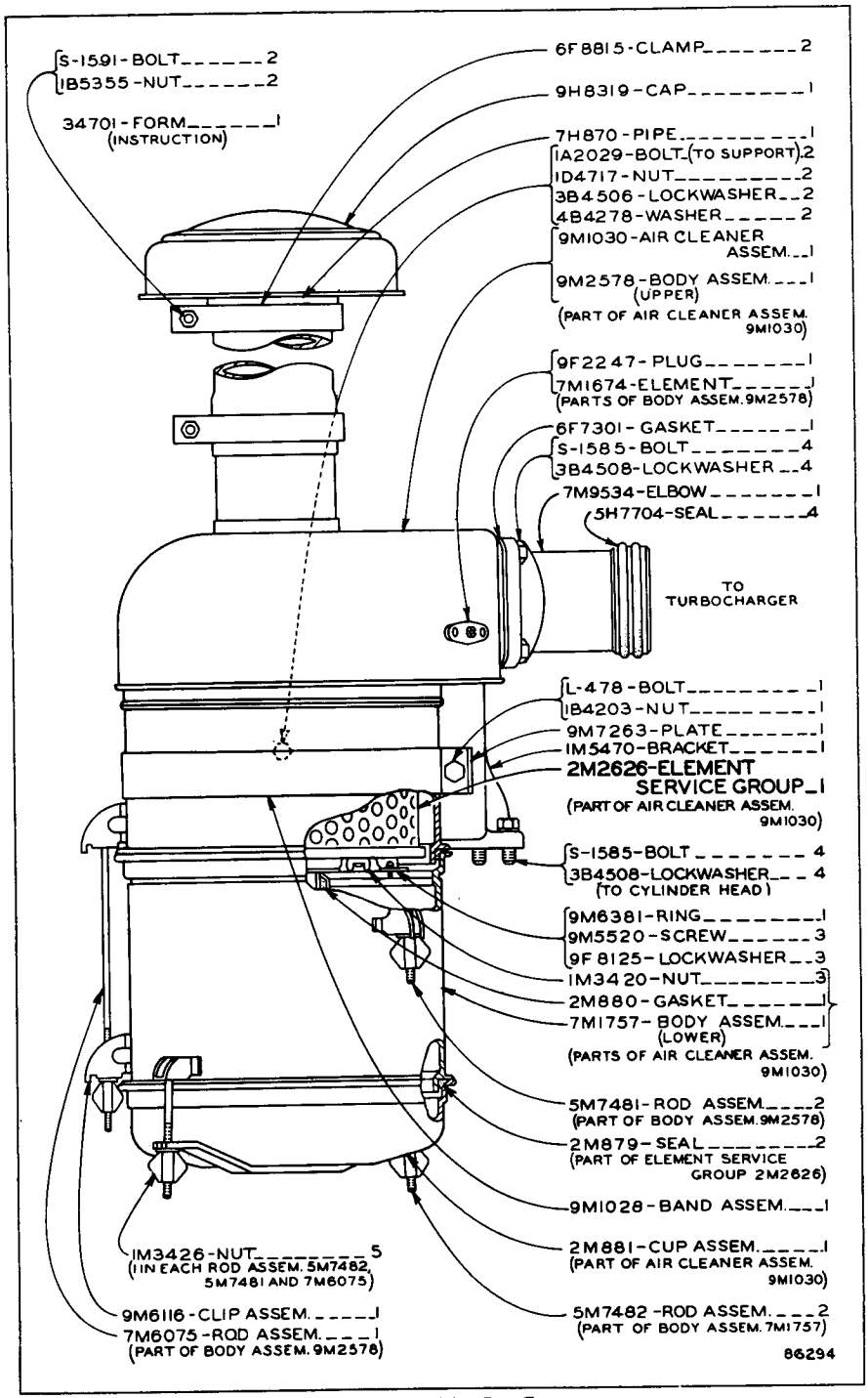

AIR CLEANER—Dry Type

Serial No. 48A1311 to 48A1529 inclusive

Refer also to Page 113 for special parts. Note: 7F5720 Precleaner is available for use on operations where there is a possibility of foreign material other than dust being drawn into the Air Cleaner

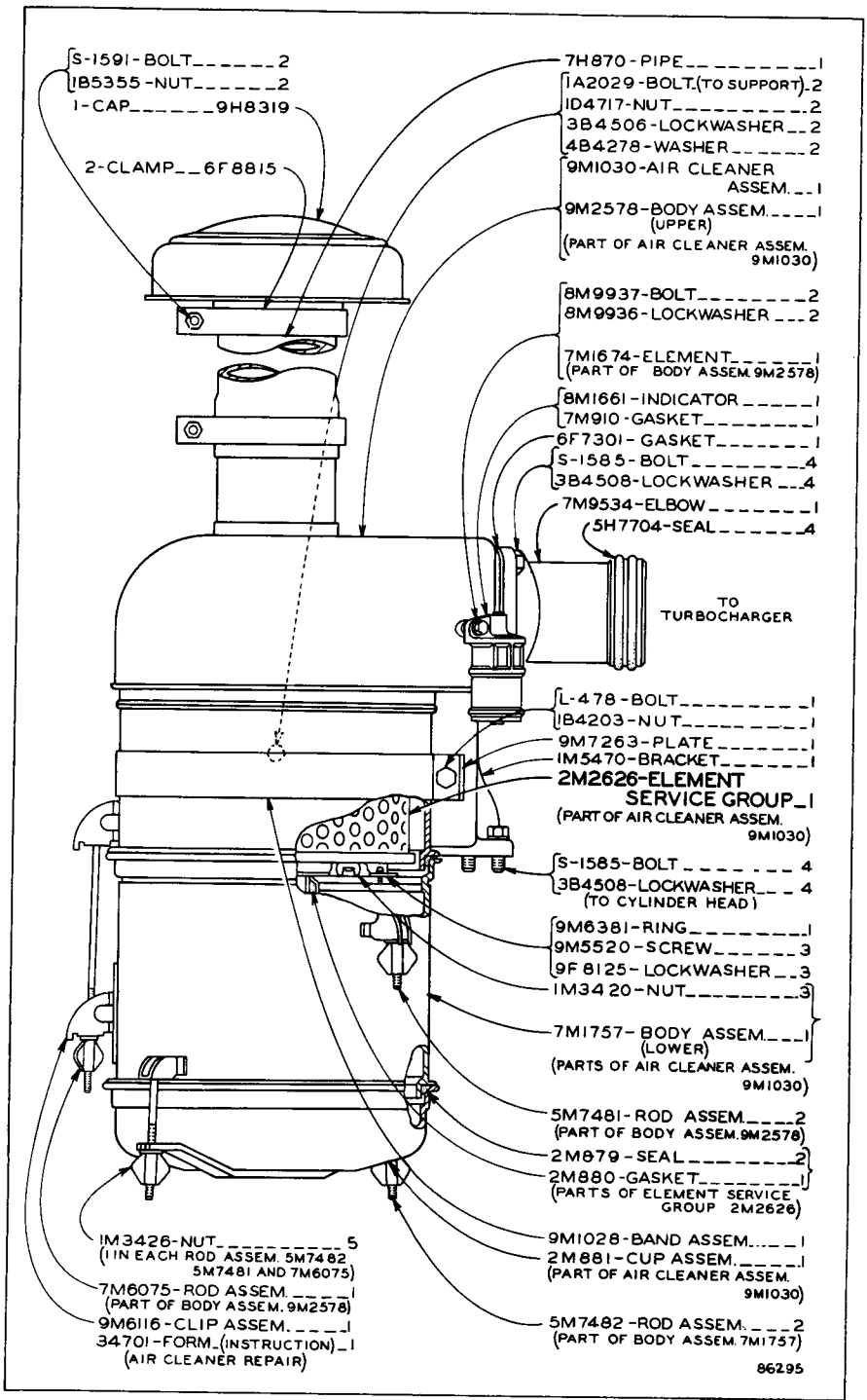

AIR CLEANER—Dry Type
Effective with Serial No. 48A1530
Refer also to Page 113 for special parts. Note: 7F5720 Precleaner is available for use on operations where there is a possibility of foreign material other than dust being drawn into the Air Cleaner

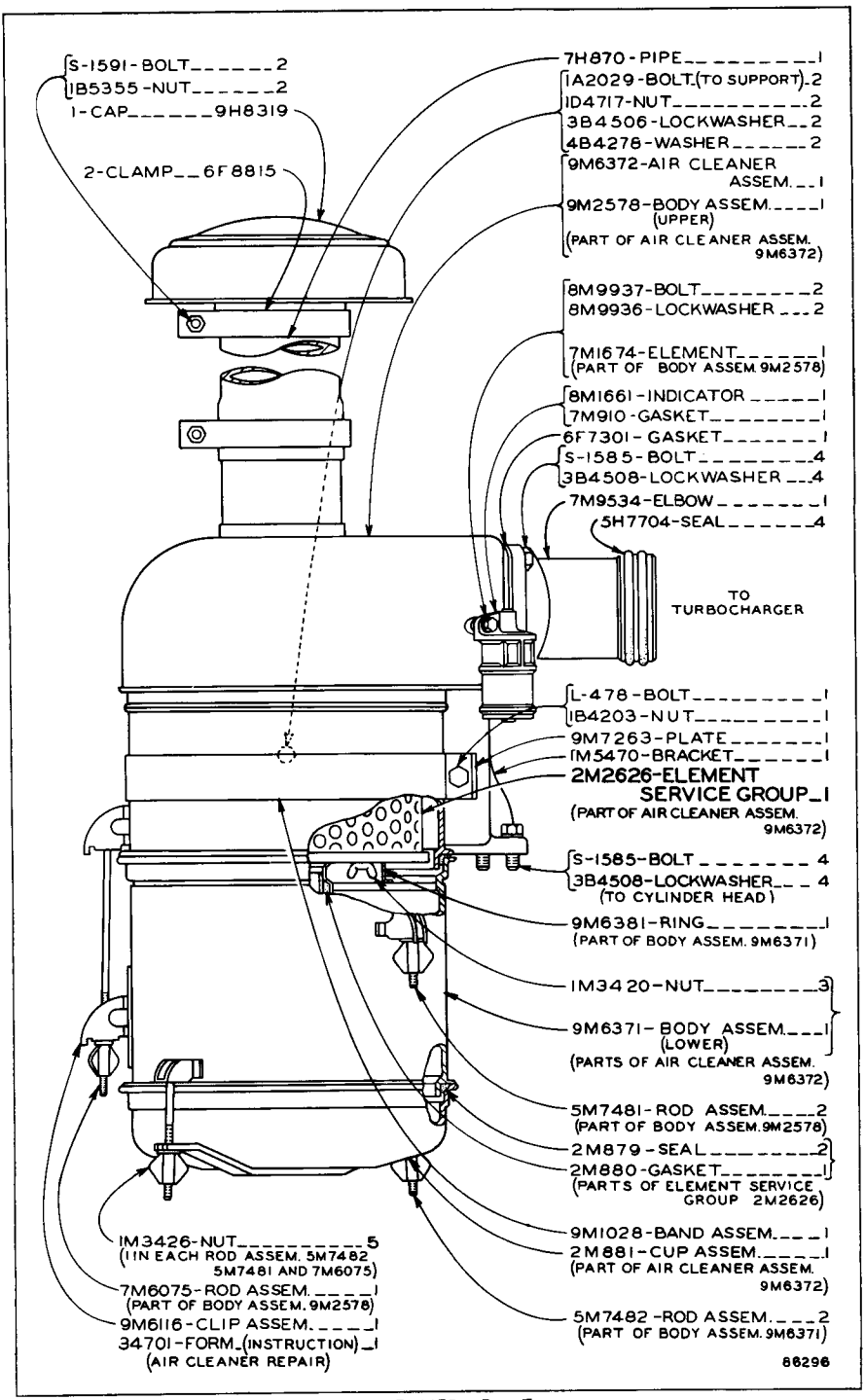

AIR CLEANER—Dry Type

Effective with Serial No. 48A1652

Note: 7F5720 Precleaner is available for use on operations where there is a possibility of foreign material other than dust being drawn into the Air Cleaner

Refer also to Page 113 for special parts

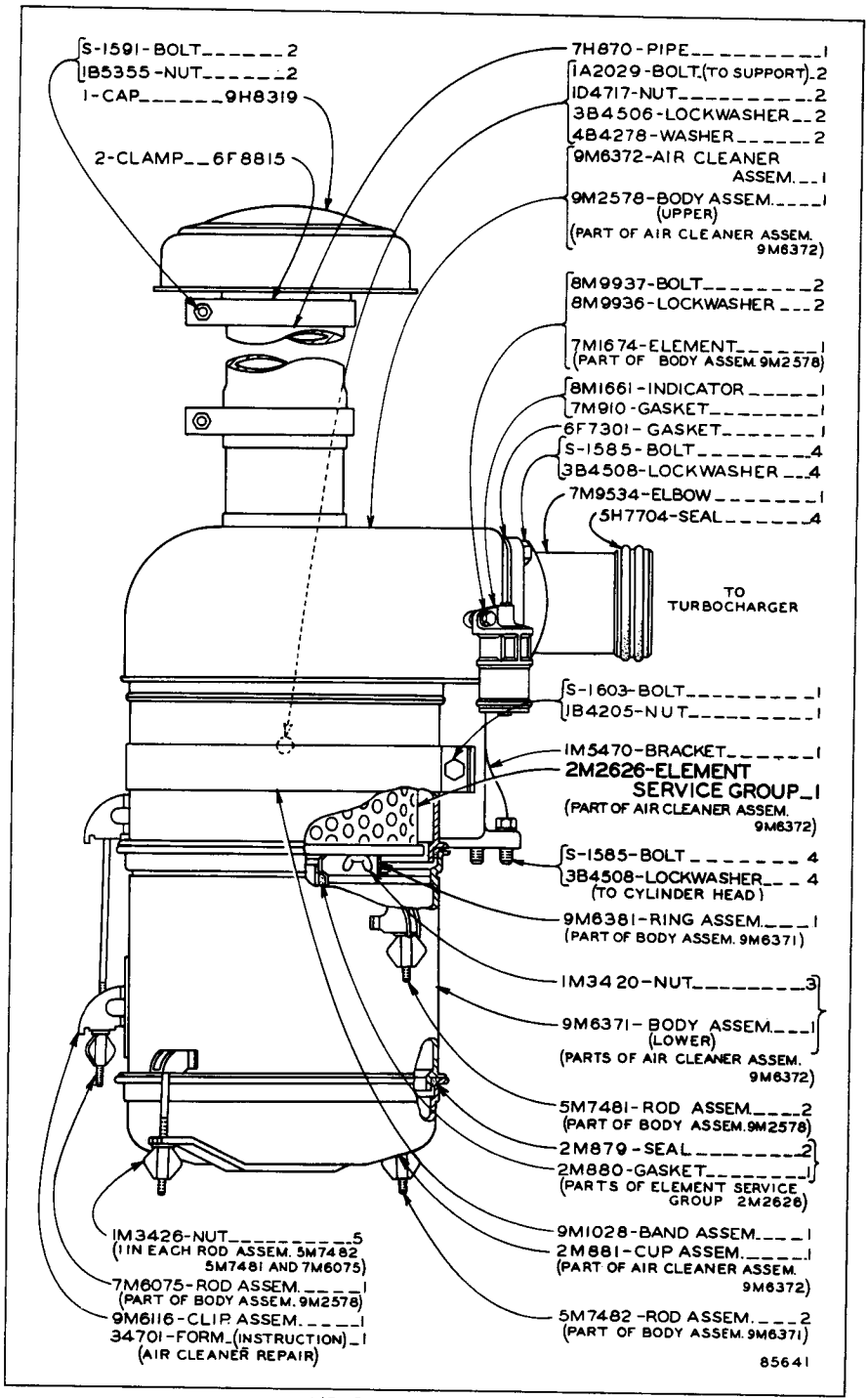

AIR CLEANER—Dry Type

Effective with Serial No. 48A2313

Refer also to Page 113 for special parts. Note: 7F5720 Precleaner is available for use on operations where there is a possibility of foreign material other than dust being drawn into the Air Cleaner

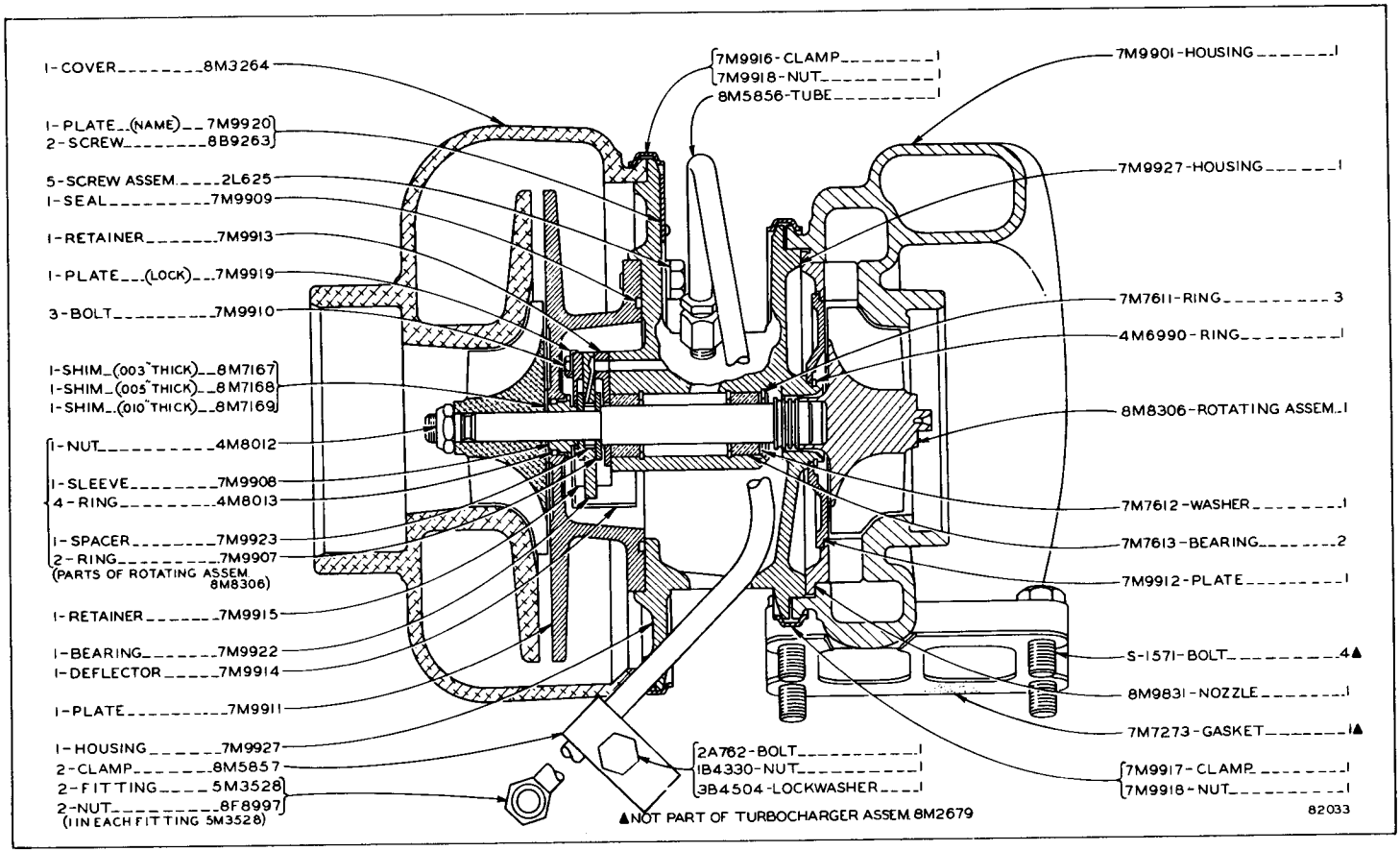

8M2679 TURBOCHARGER ASSEMBLY

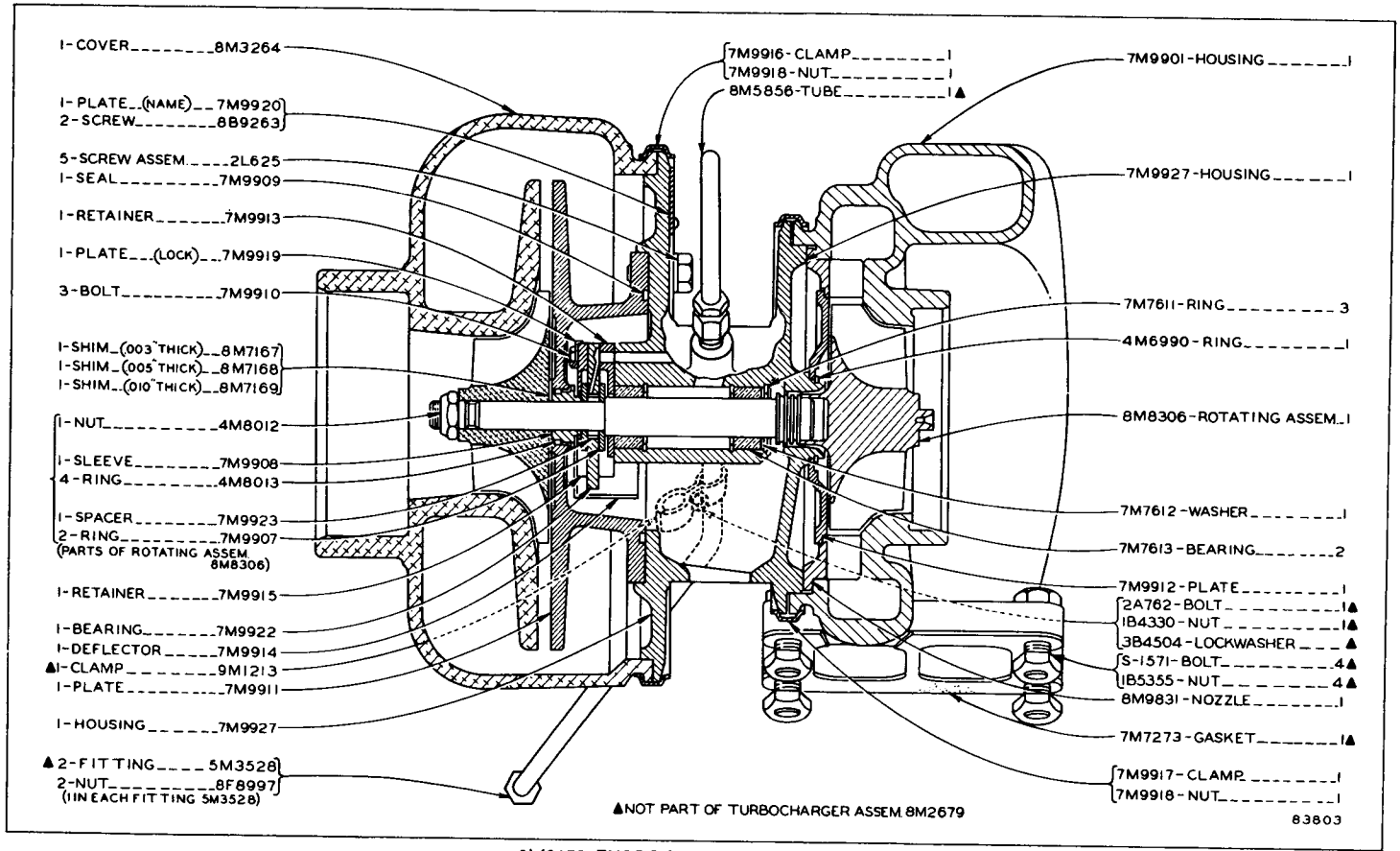

8M2679 TURBOCHARGER ASSEMBLY
Effective with Serial No. 48A1313

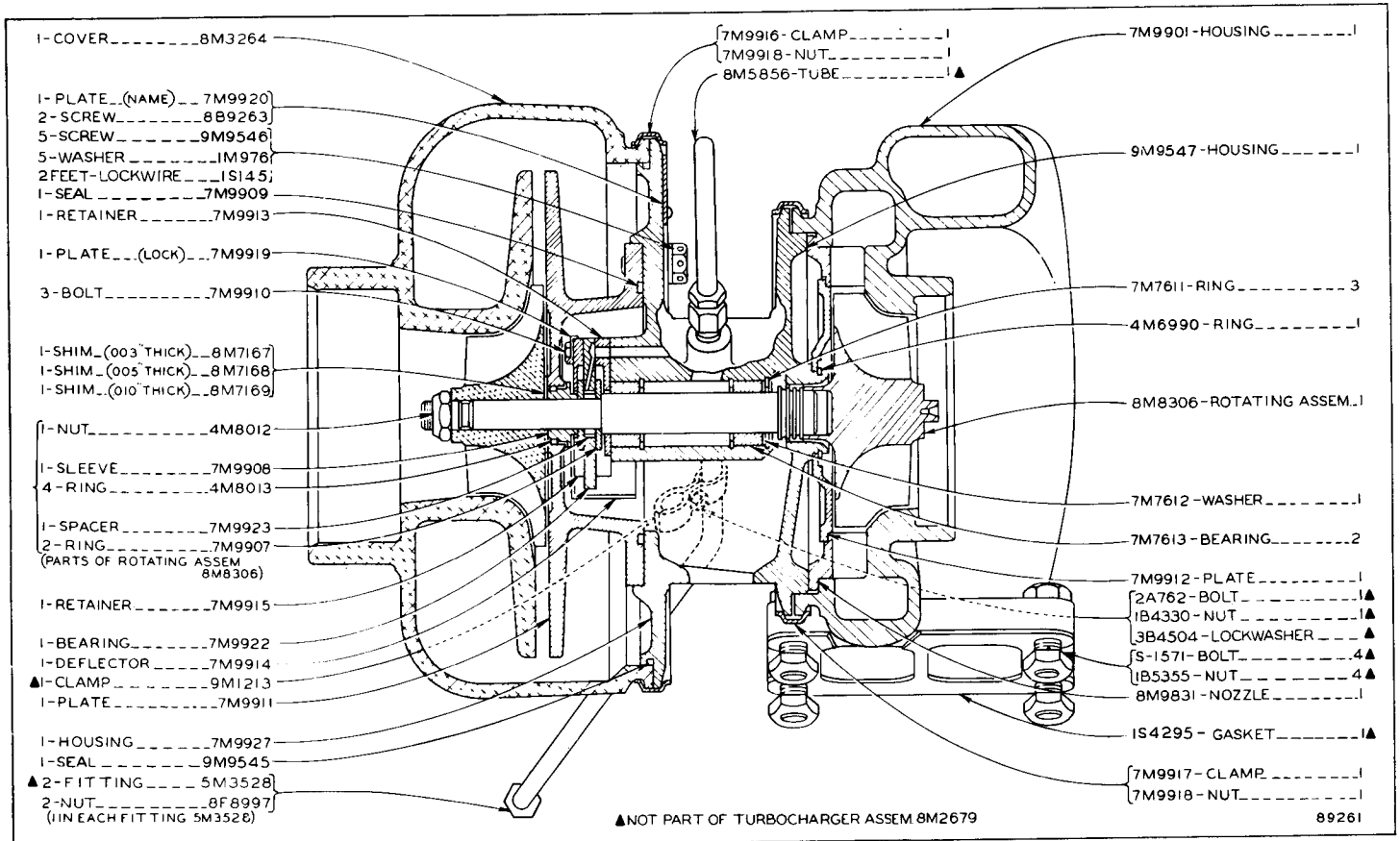

8M2679 TURBOCHARGER ASSEMBLY
Serial No. 48A1396 to 48A1763 inclusive

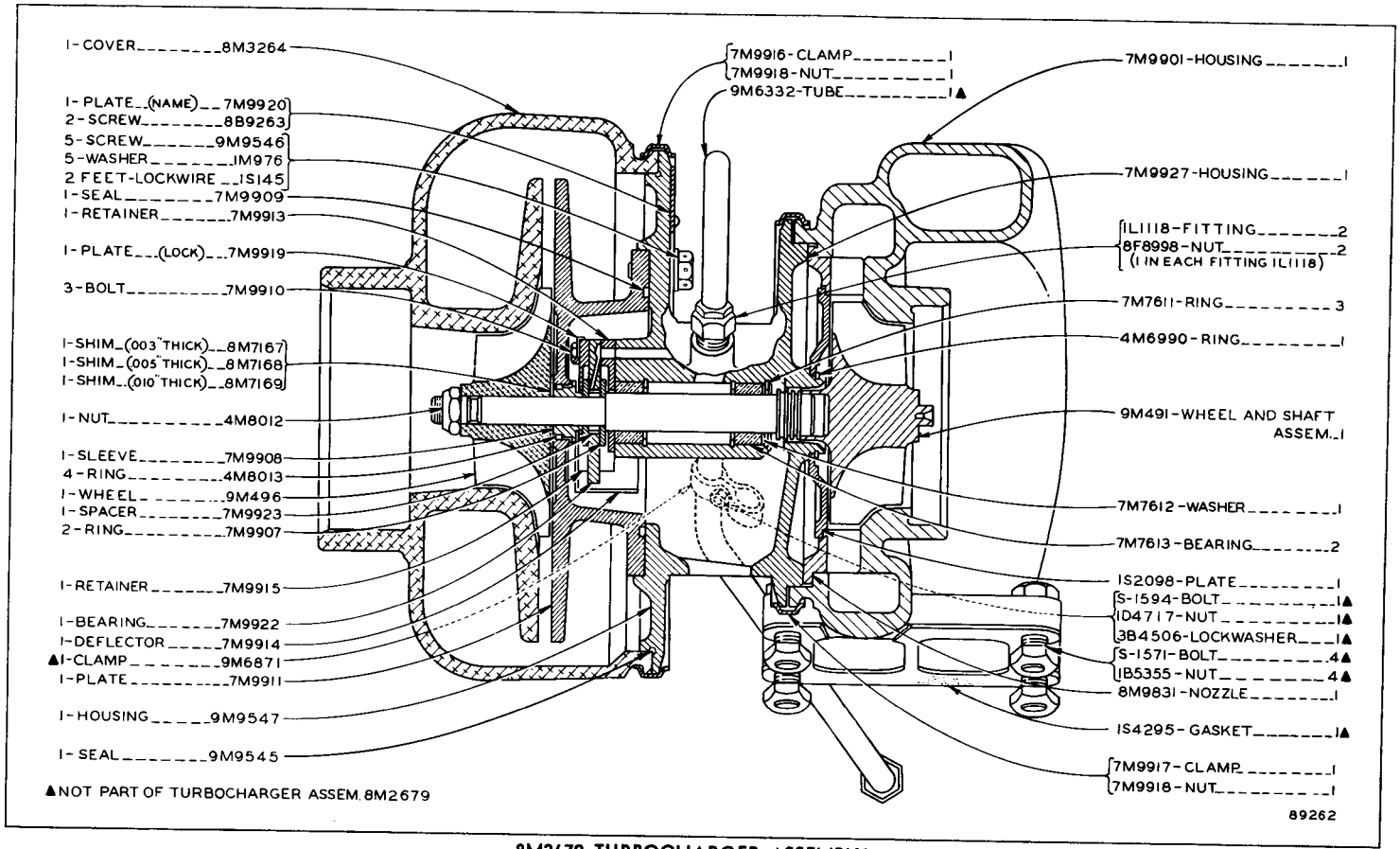

8M2679 TURBOCHARGER ASSEMBLY
Effective with Serial No. 48A1764

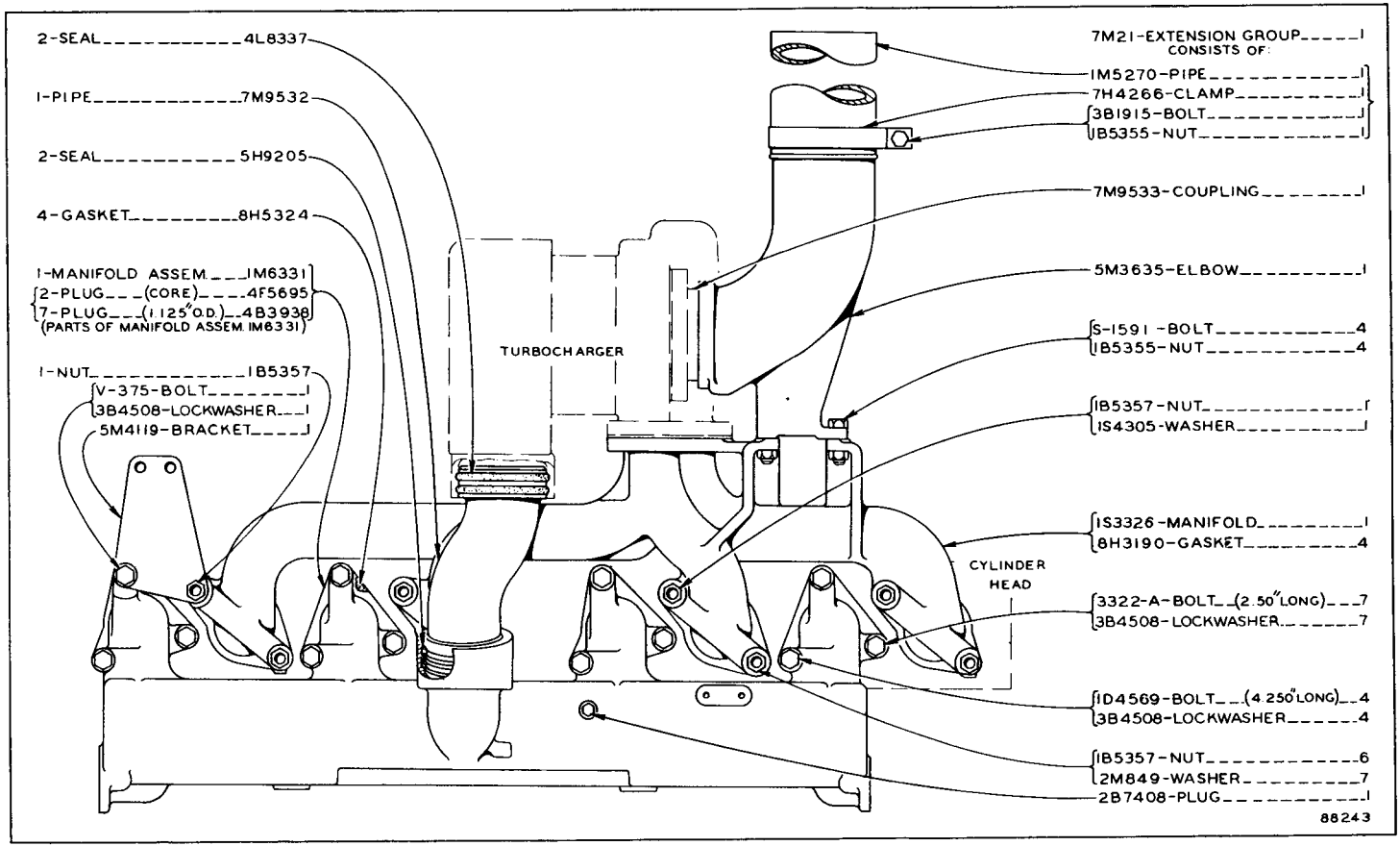

MANIFOLDS

Effective with Serial No. 48A2621

Note: 1S3628 Rain Cap Assembly is available

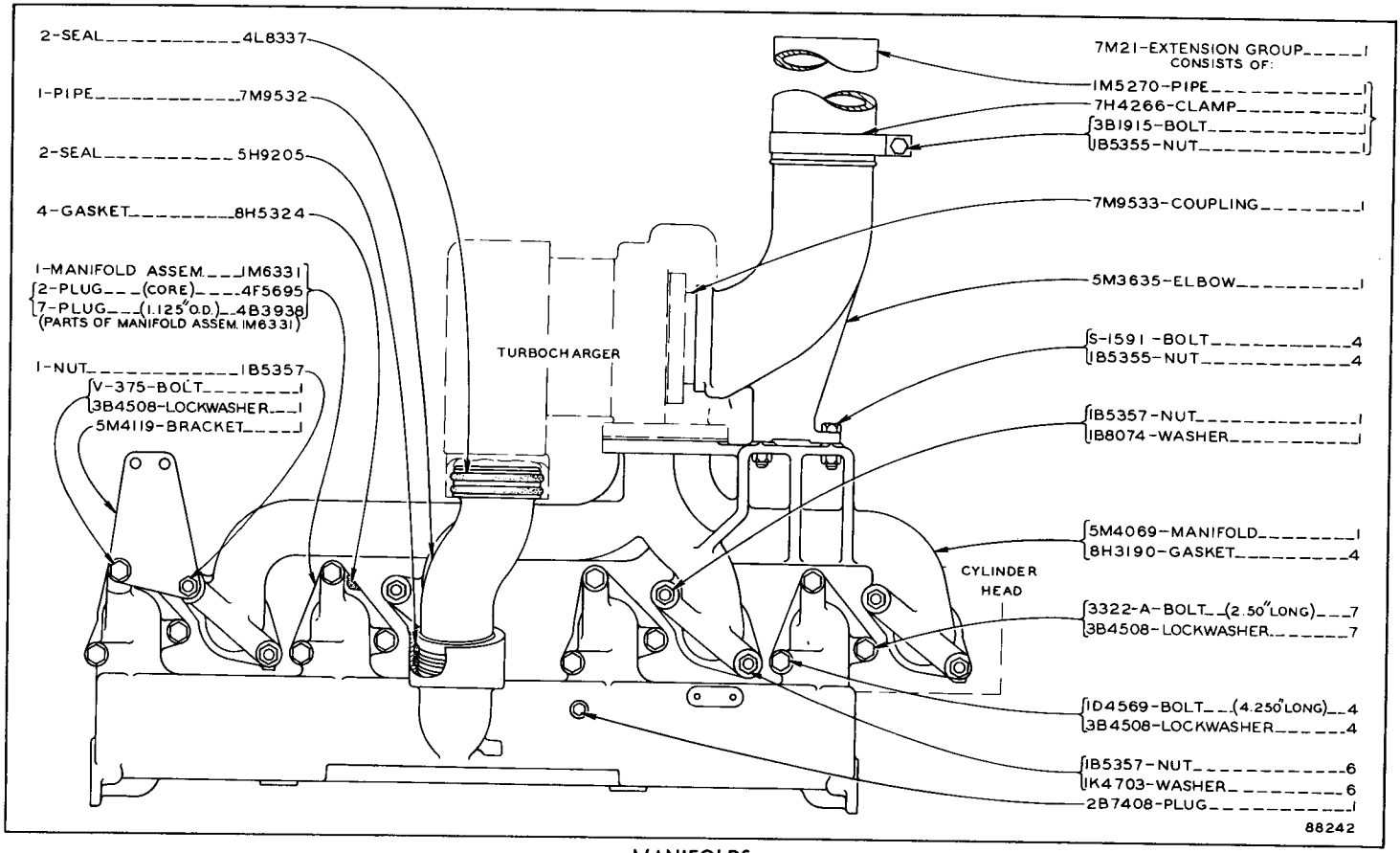

MANIFOLDS

ONLY "CATERPILLAR" PARTS GIVE "CATERPILLAR" PERFORMANCE

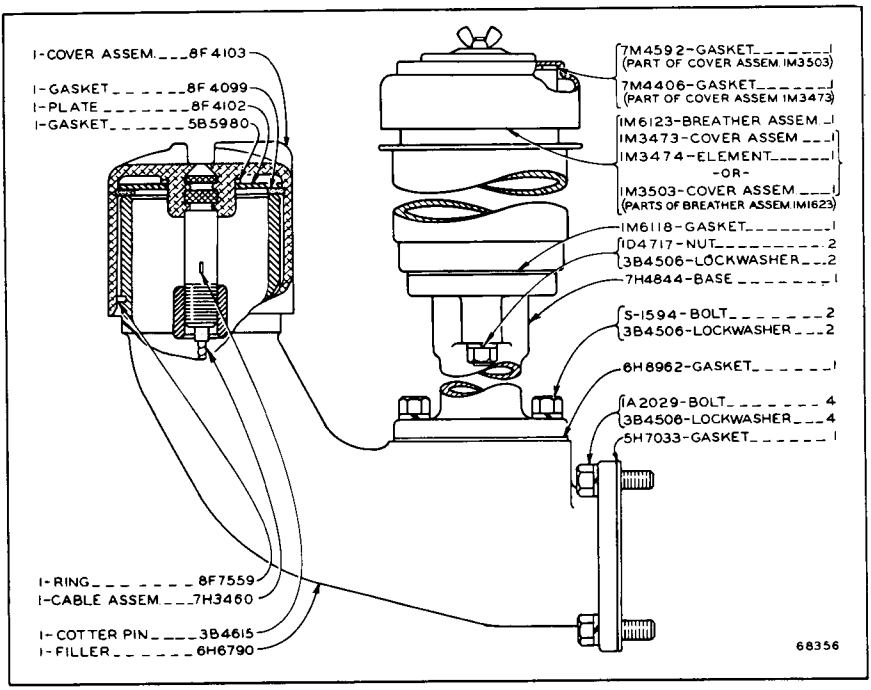

6H9806 BREATHER AND OIL FILLER GROUP

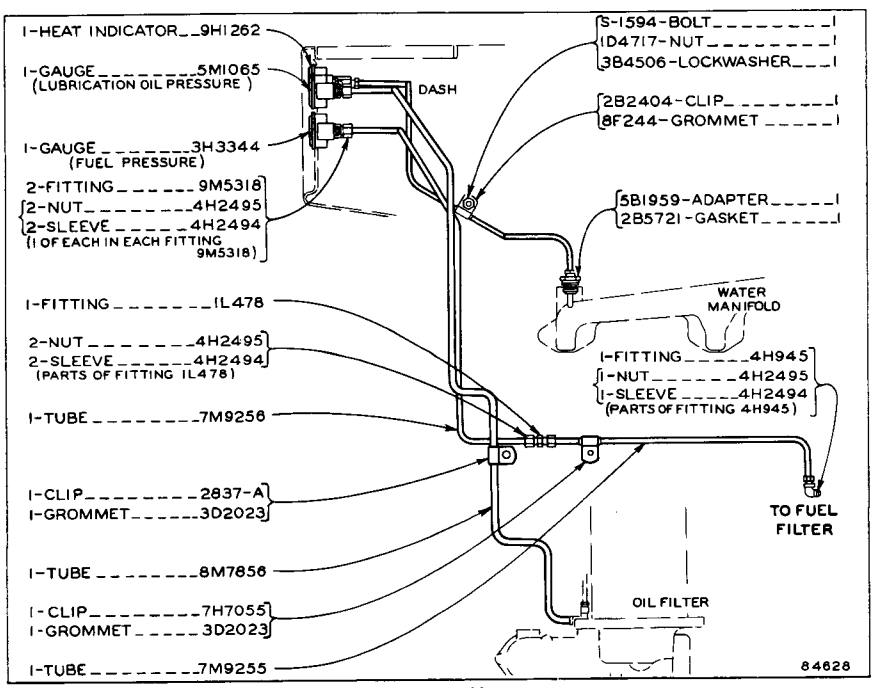

GAUGES

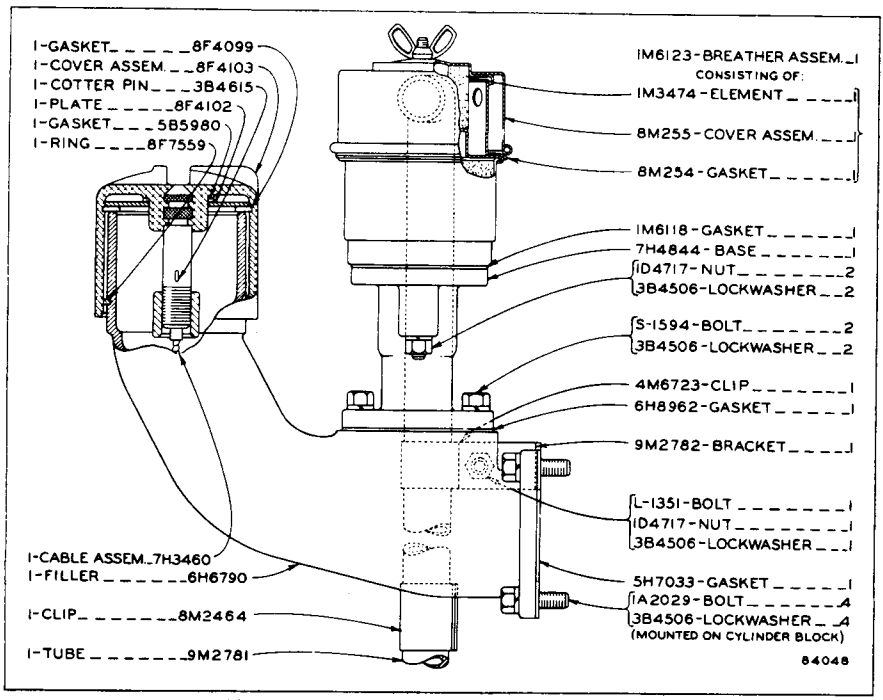

6H9806 BREATHER AND OIL FILLER GROUP
Effective with Serial No. 48A1336

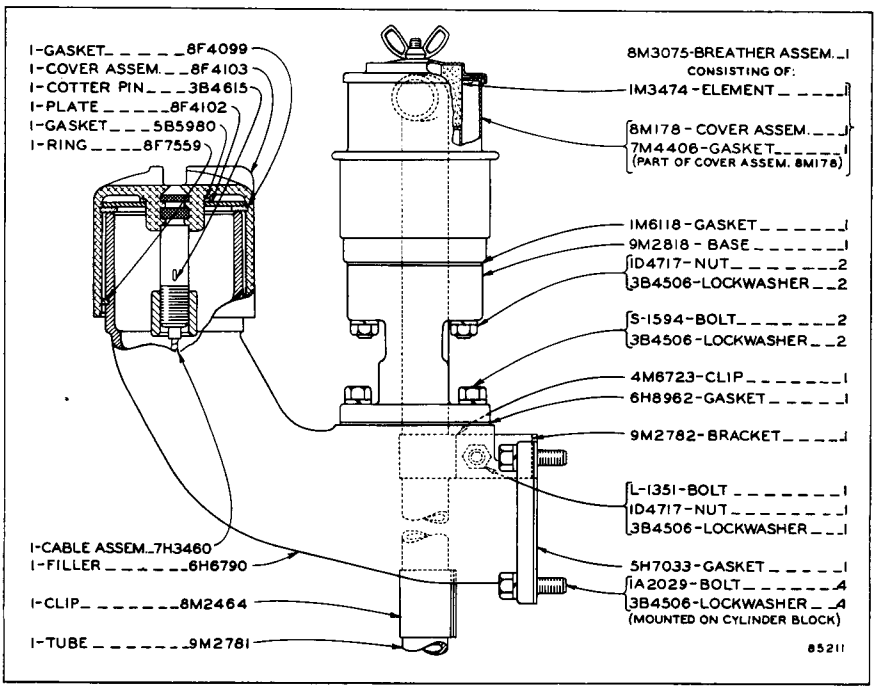

6H9806 BREATHER AND OIL FILLER GROUP
Effective with Serial No. 48A2081

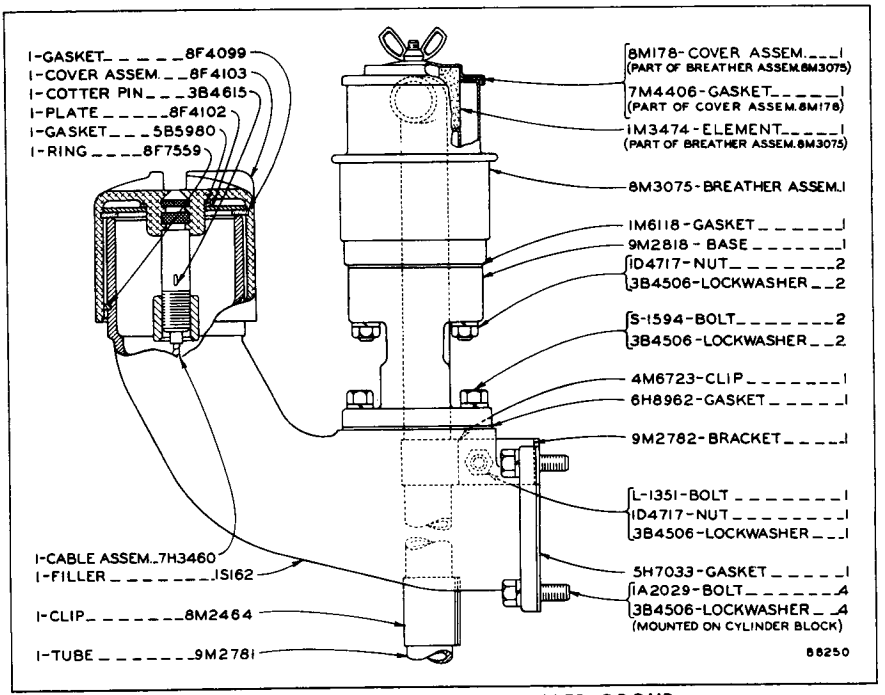

6H9806 BREATHER AND OIL FILLER GROUP
Effective with Serial No. 48A2642

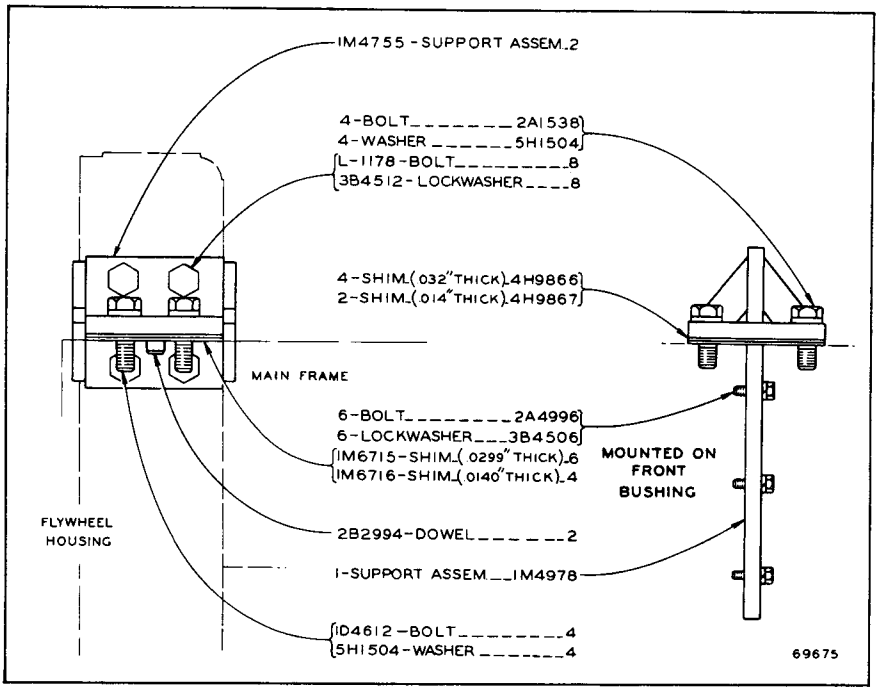

ENGINE SUPPORT

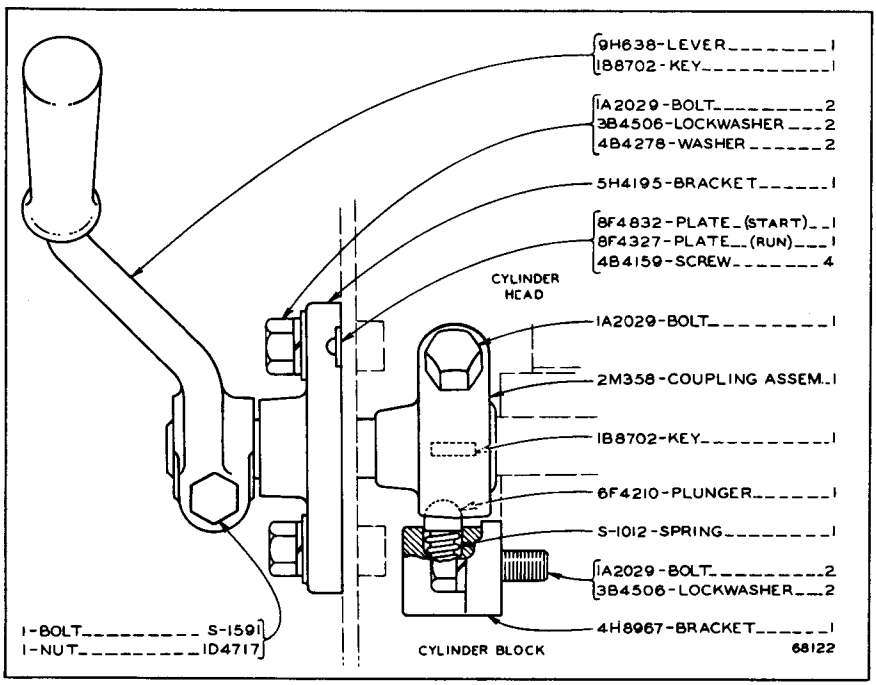

COMPRESSION RELEASE CONTROL

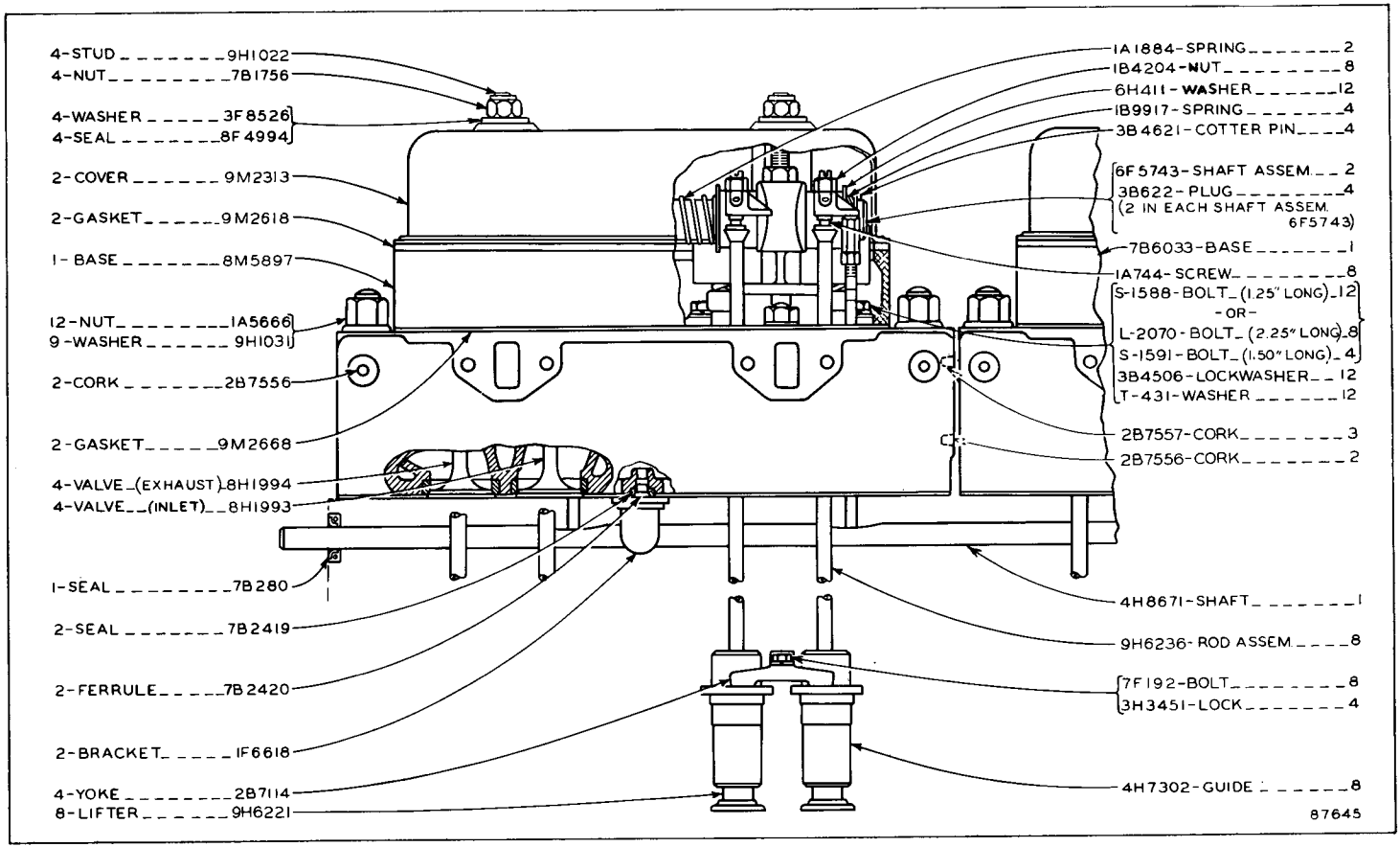

CYLINDER HEAD AND VALVE MECHANISM—Part One

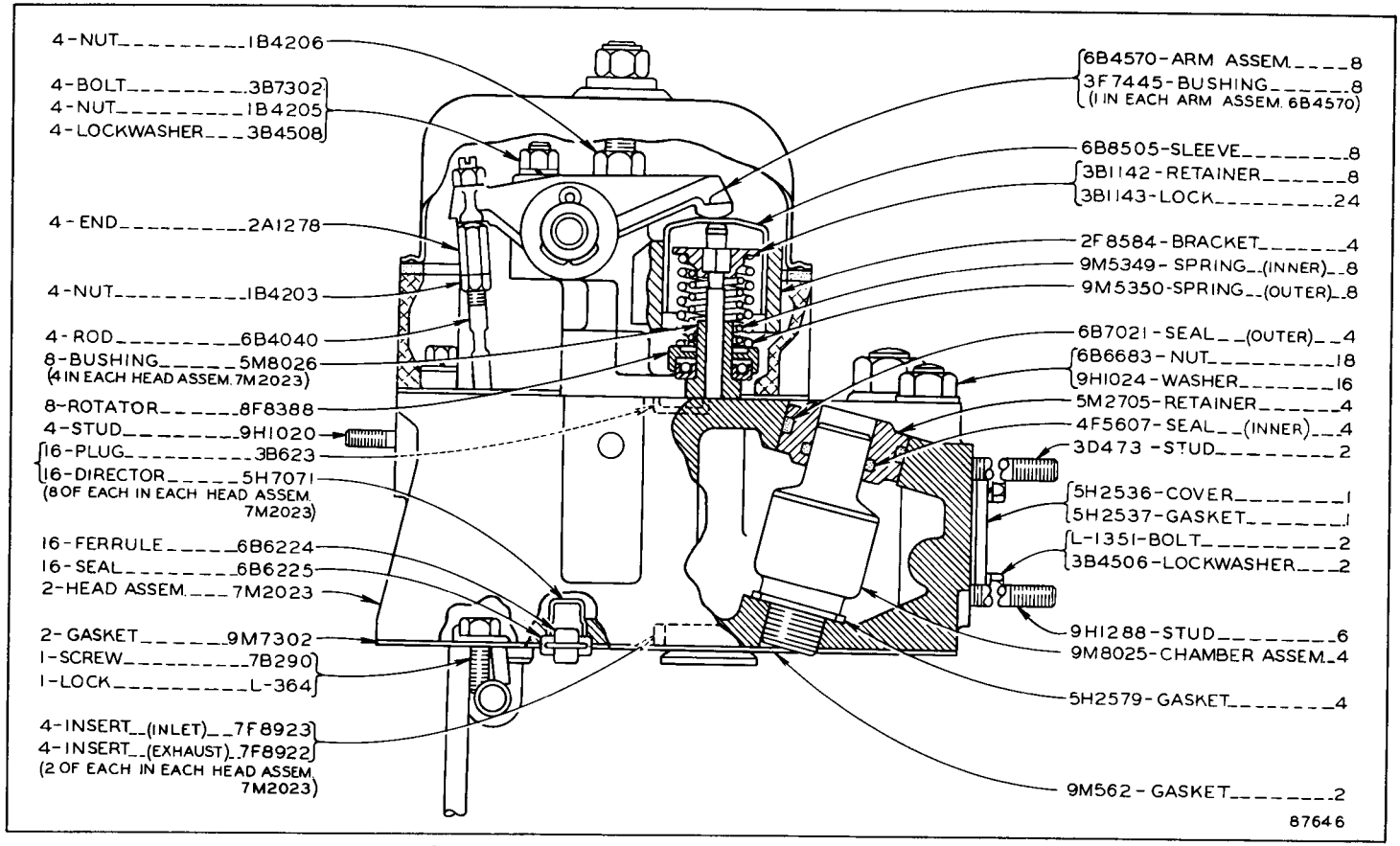

CYLINDER HEAD AND VALVE MECHANISM—Part Two

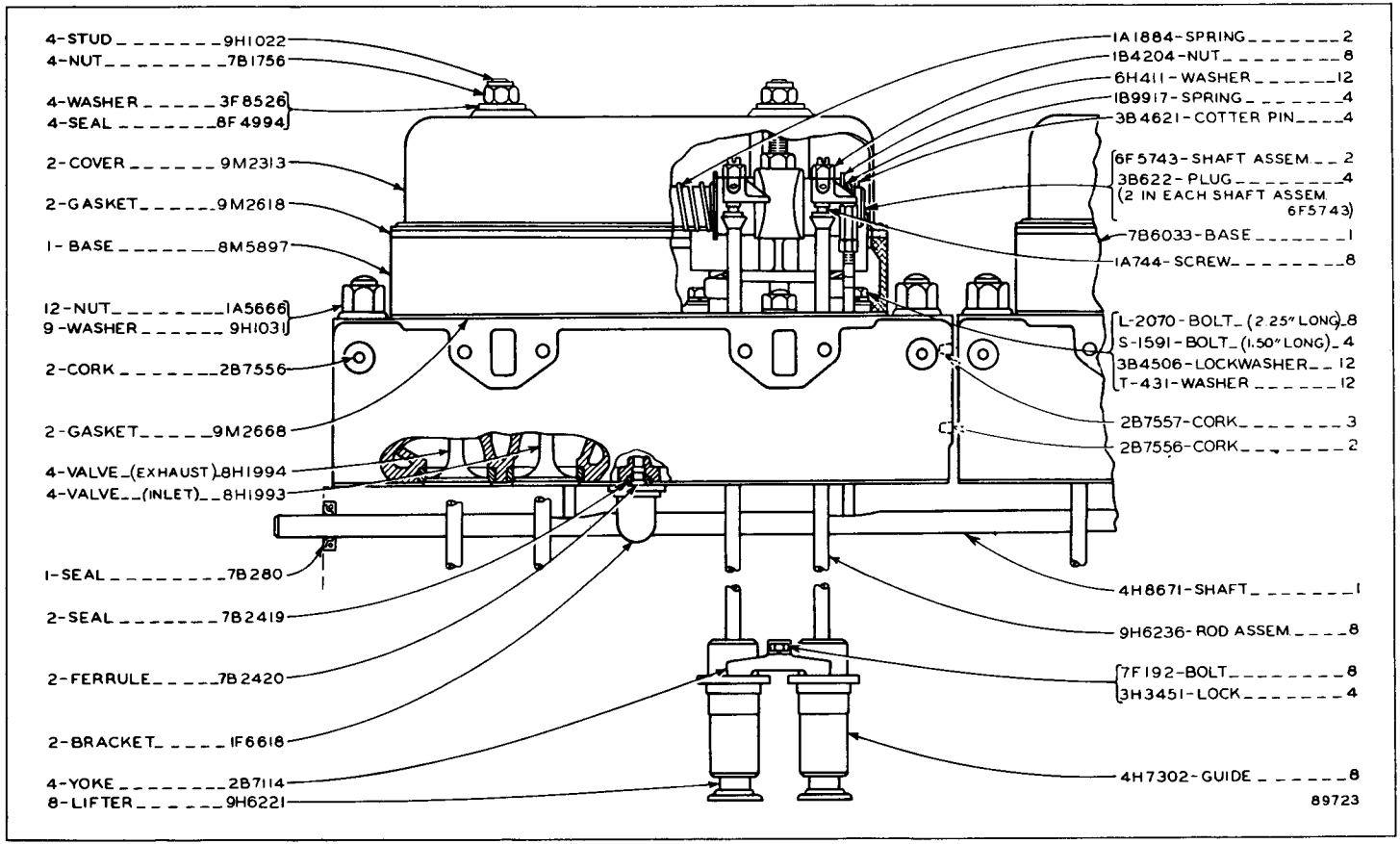

CYLINDER HEAD AND VALVE MECHANISM—Part One
Effective with Serial No. 48A2324

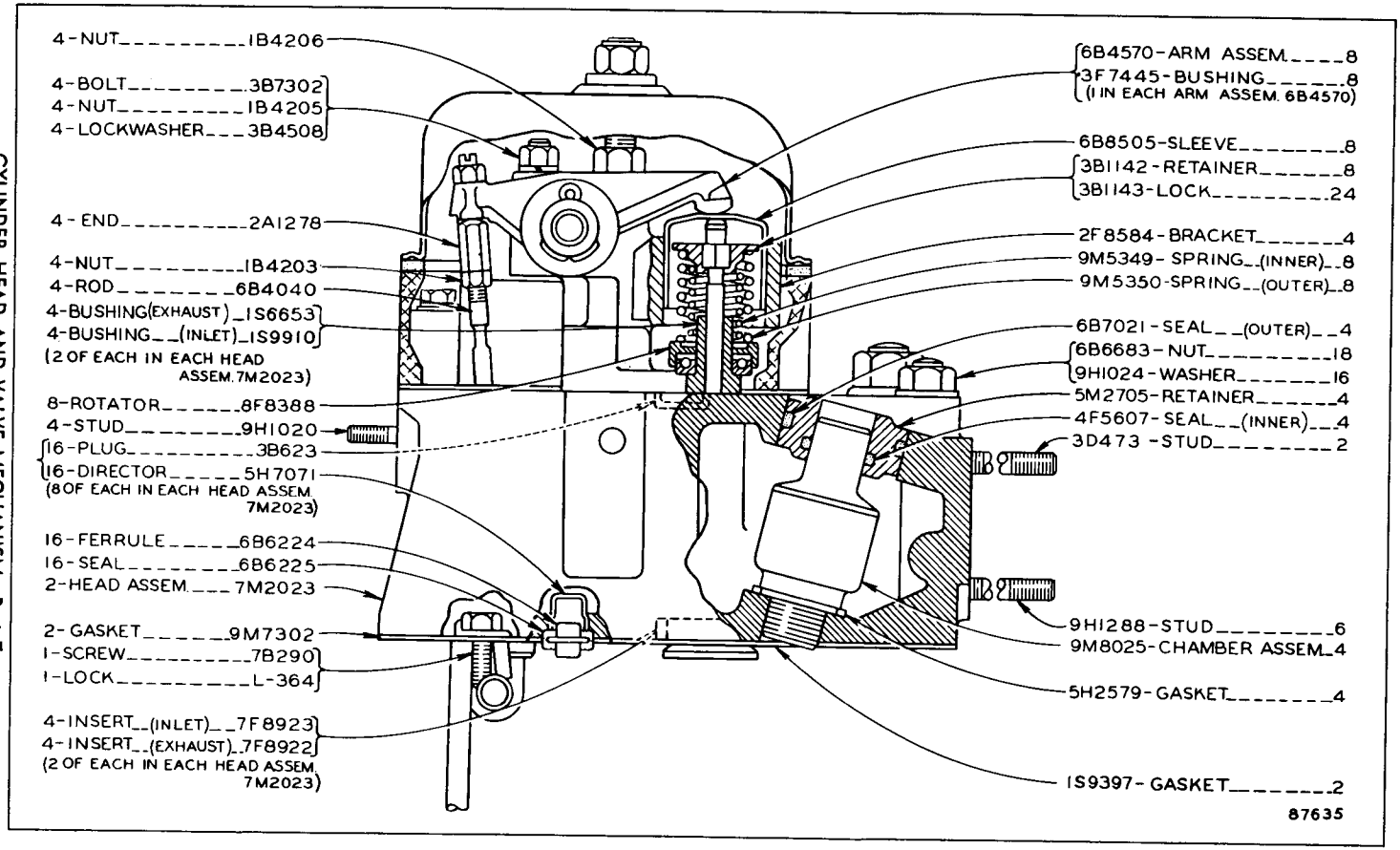
4-NUT_____1B4206
4-BOLT_____3B7302
4-NUT_____1B4205
4-LOCKWASHER___3B4508
4-END_____2A1278
4-NUT_____1B4203
4-ROD_____6B4040
4-BUSHING(EXHAUST)_1S6653
4-BUSHING__(INLET)_1S9910
(2 OF EACH IN EACH HEAD ASSEM. 7M2023)
8-ROTATOR_____8F8388
4-STUD_____9H1020
16-PLUG_____3B623
16-DIRECTOR_____5H7071
(8 OF EACH IN EACH HEAD ASSEM. 7M2023)
16-FERRULE_____6B6224
16-SEAL_____6B6225
2-HEAD ASSEM.___7M2023
2-GASKET_____9M7302
1-SCREW_____7B290
1-LOCK_____L-364
4-INSERT__(INLET)__7F8923
4-INSERT__(EXHAUST)_7F8922
(2 OF EACH IN EACH HEAD ASSEM. 7M2023)
6B4570-ARM ASSEM.____8
3F7445-BUSHING_____8
(1 IN EACH ARM ASSEM. 6B4570)
6B8505-SLEEVE_____8
3B1142-RETAINER_____8
3B1143-LOCK_____24
2F8584-BRACKET_____4
9M5349-SPRING__(INNER)__8
9M5350-SPRING__(OUTER)__8
6B7021-SEAL___(OUTER)__4
6B6683-NUT_____18
9H1024-WASHER_____16
5M2705-RETAINER_____4
4F5607-SEAL___(INNER)___4
3D473-STUD_____2
9H1288-STUD_____6
9M8025-CHAMBER ASSEM._4
5H2579-GASKET_____4
1S9397-GASKET_____2
87635

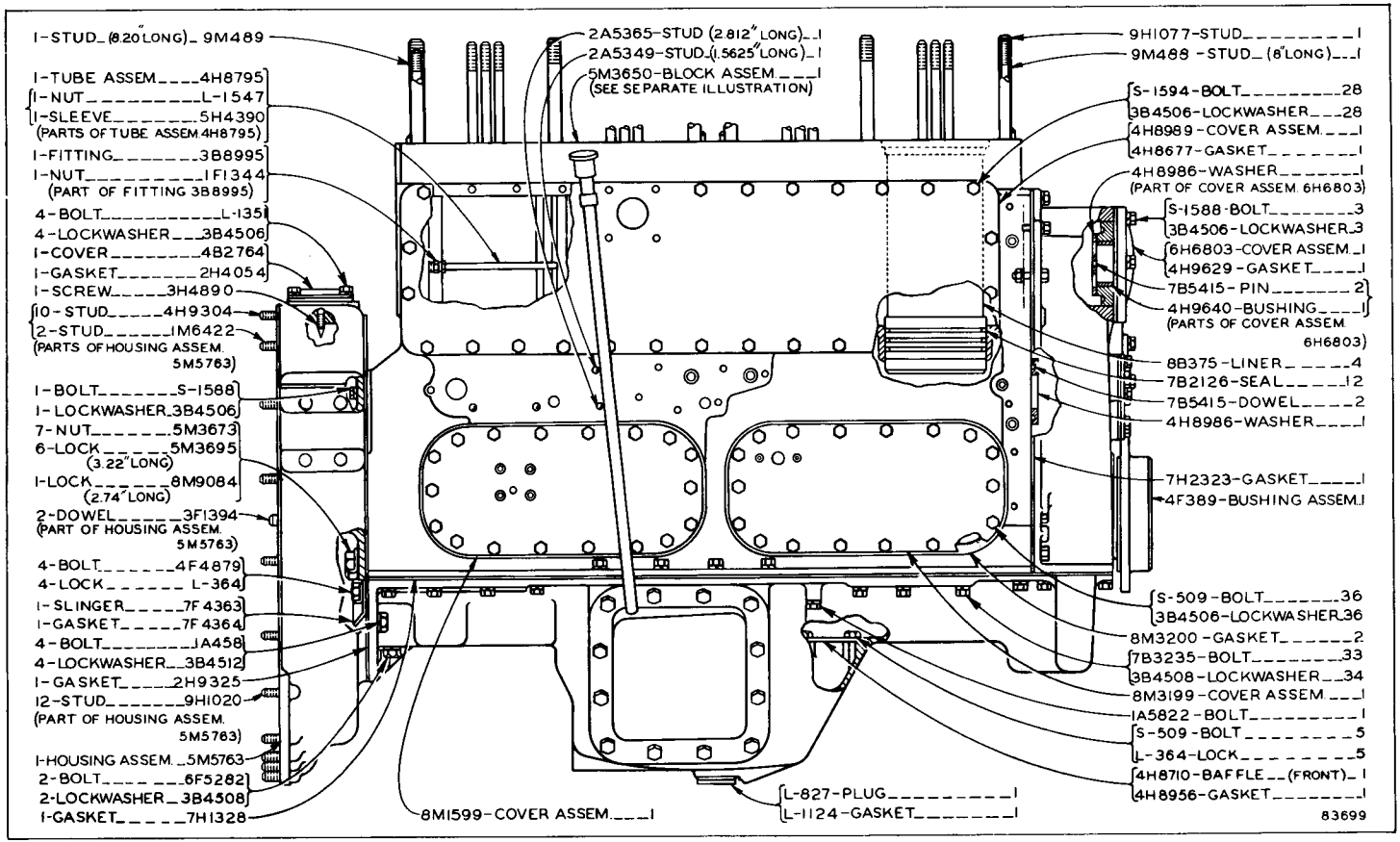

CYLINDER BLOCK AND COVERS—Side View

5M3650 Cylinder Block Assembly parts are shown on Page 28

Note: 1M7215 Piston and Liner Group is available

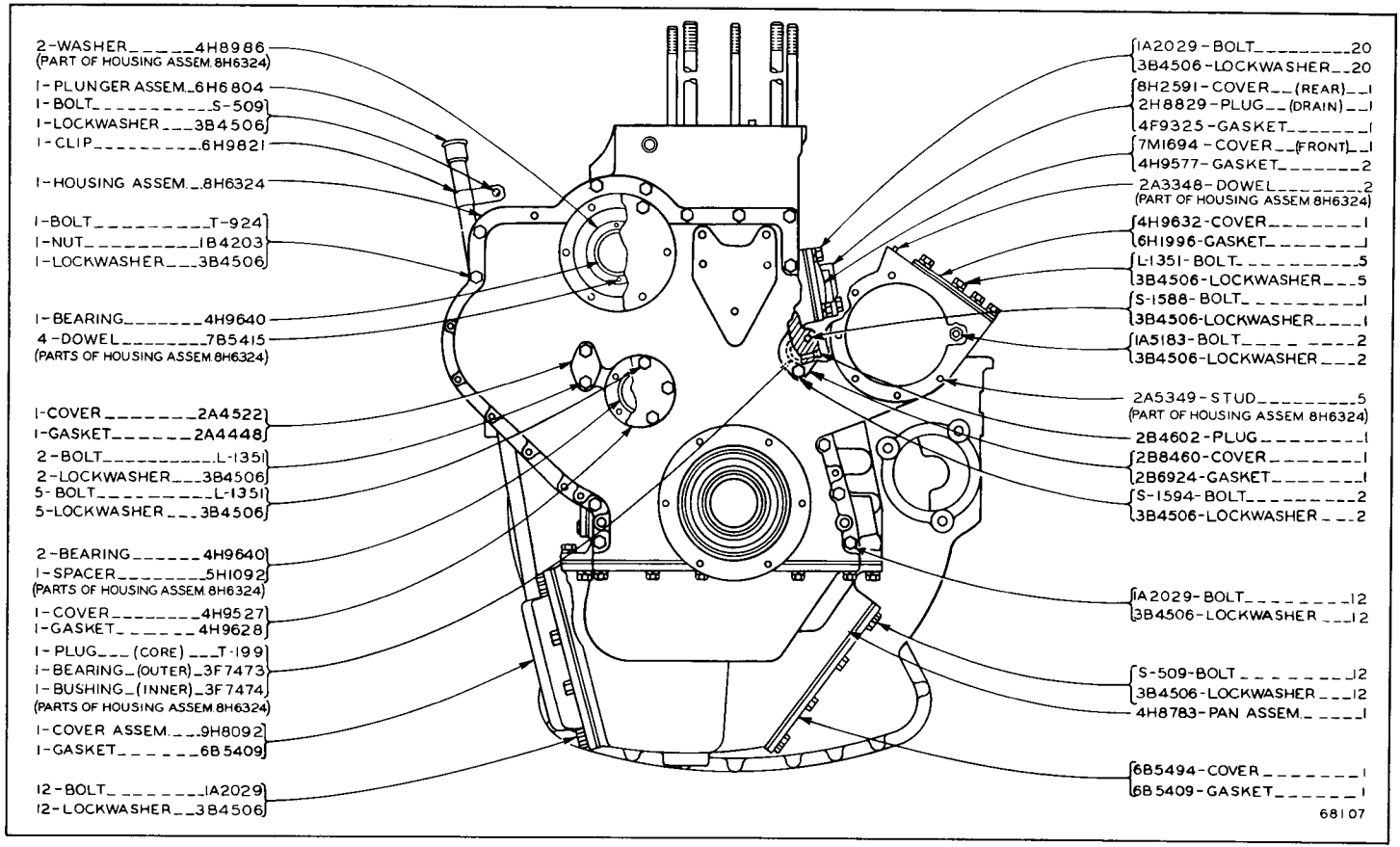

CYLINDER BLOCK AND COVERS—End View

ONLY "CATERPILLAR" PARTS GIVE "CATERPILLAR" PERFORMANCE

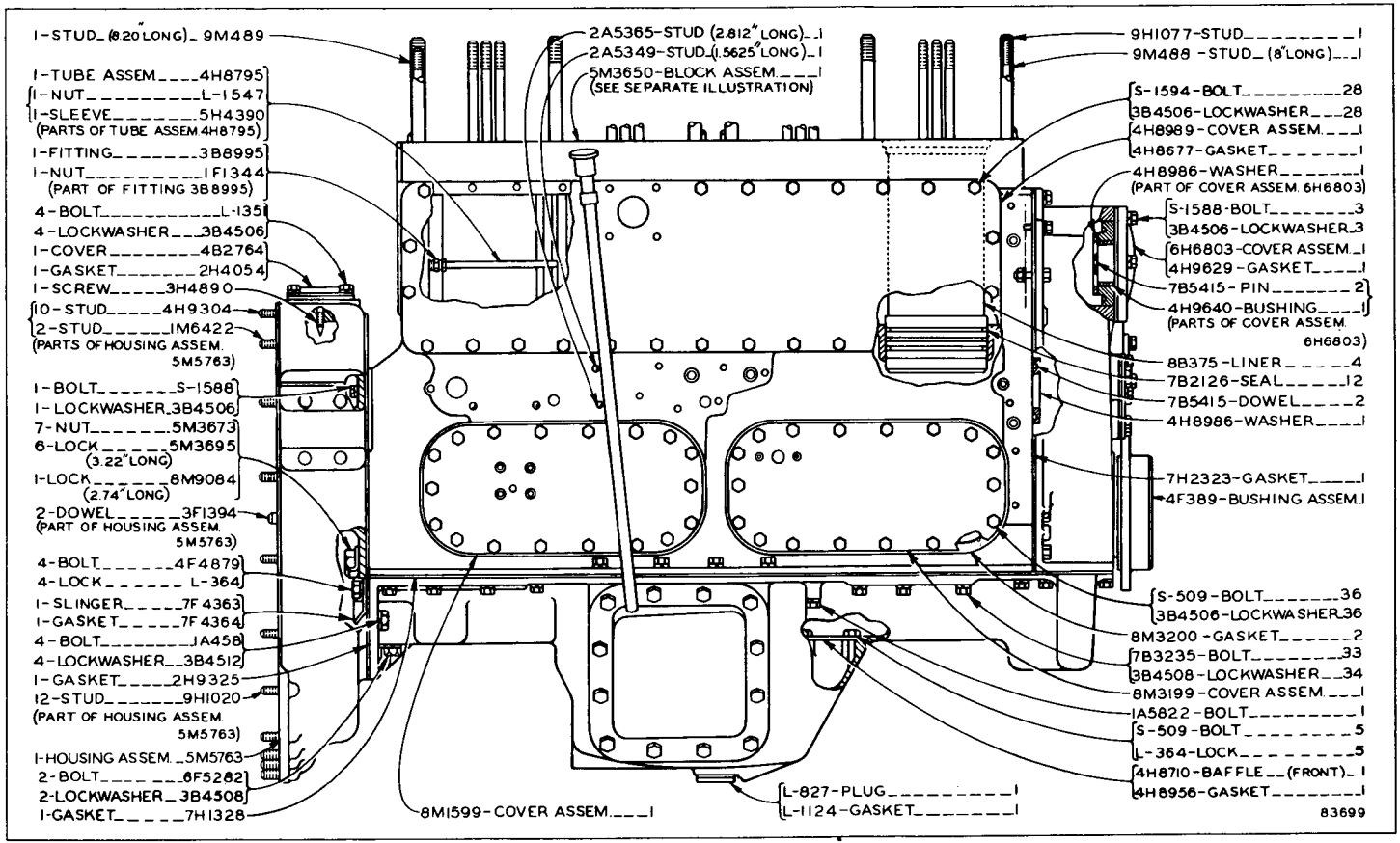

CYLINDER BLOCK AND COVERS—Side View

Effective with Serial No. 48A2201

5M3650 Cylinder Block Assembly parts are shown on Page 28. Note: 1M7215 Piston and Liner Group is available. Additional parts are shown on reverse side of this insert

CYLINDER BLOCK AND COVERS—End View

Effective with Serial No. 48A2201

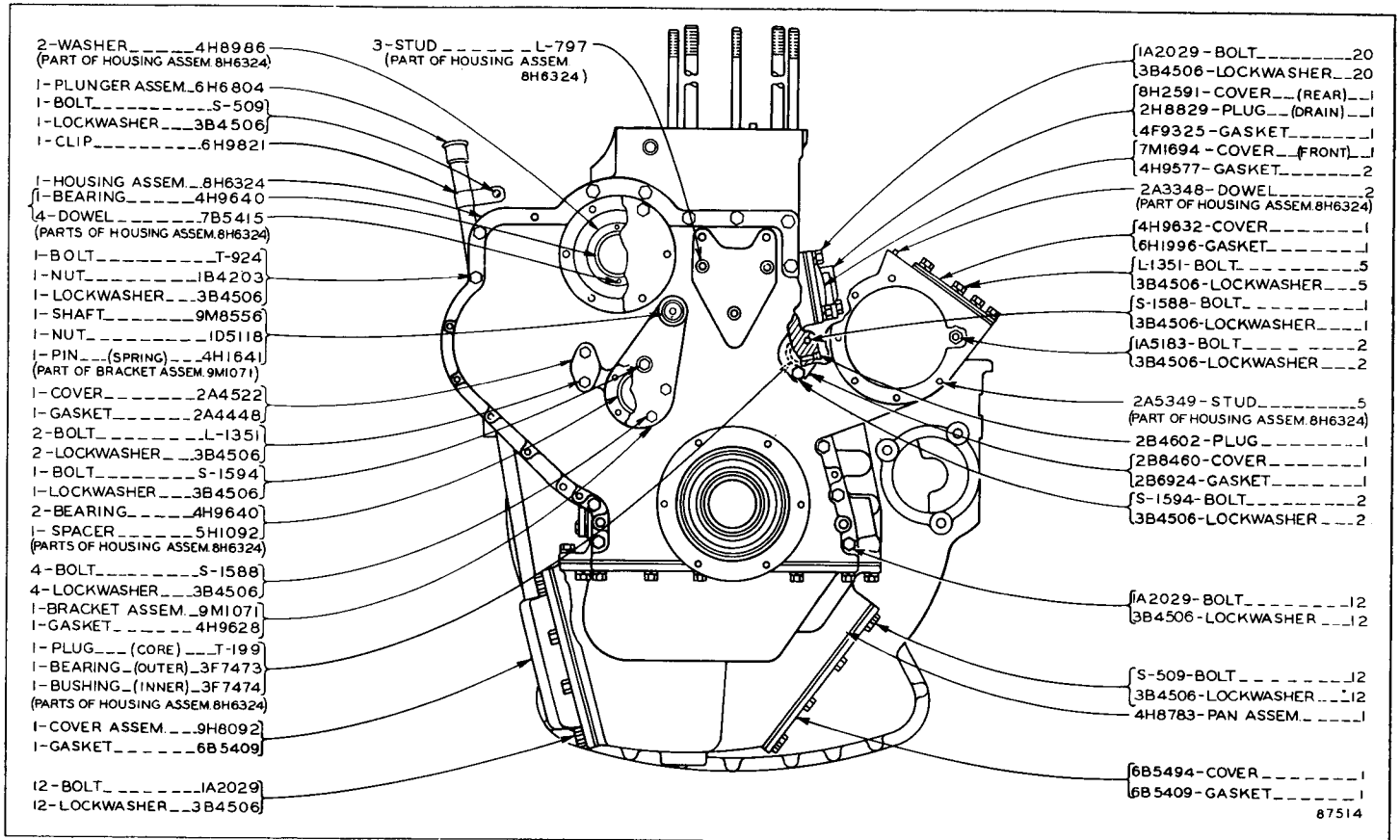

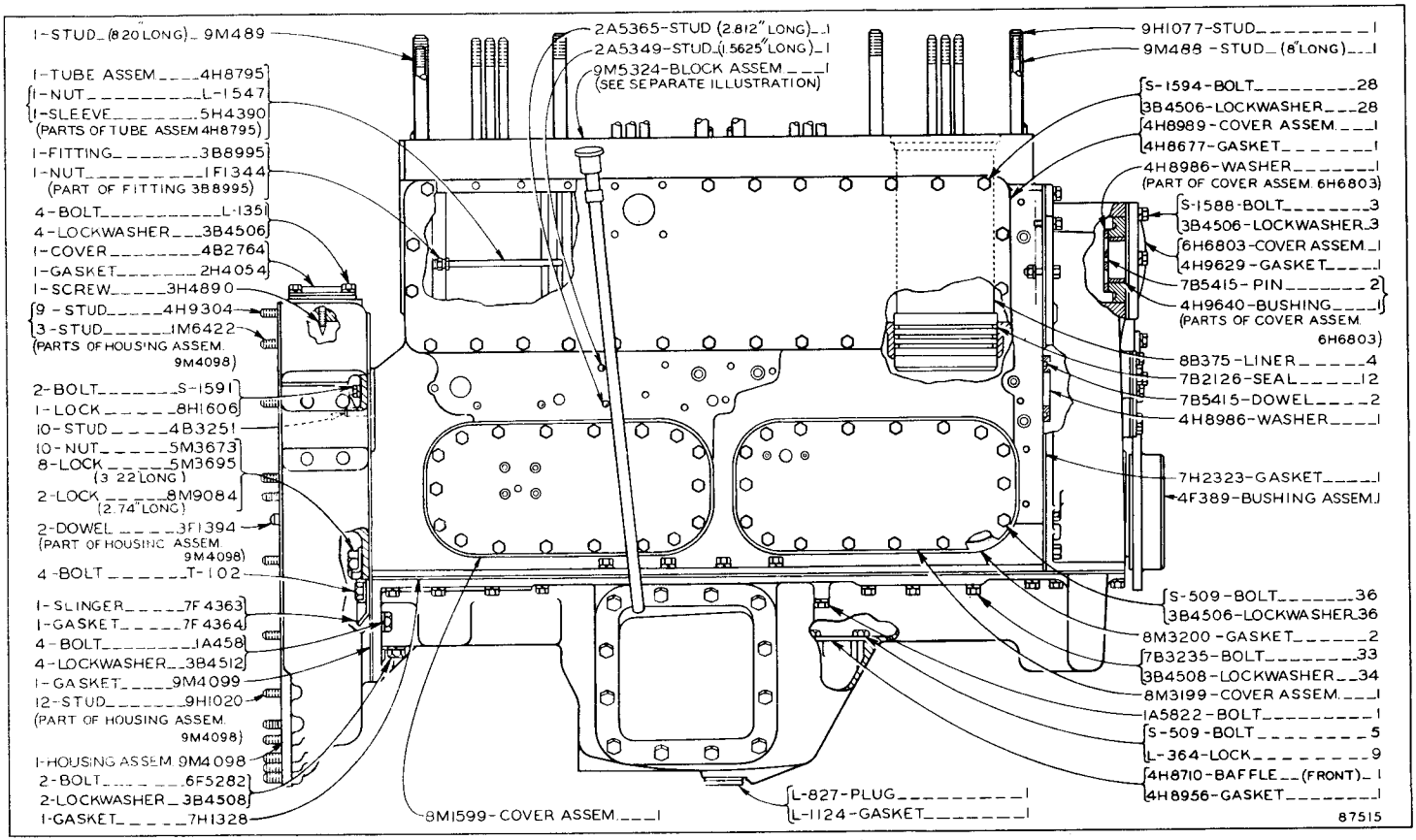

CYLINDER BLOCK AND COVERS—Side View

Effective with Serial No. 48A2438

9M5324 Cylinder Block Assembly parts are shown on insert between Pages 28 and 29. Note: 1M7215 Piston and Liner Group 9M1365 Cylinder Liner and Piston Replacement Gasket Kit and 9M1364 Valve Grinding Gasket Kit are available. Piston and Liner replacement require the use of 9M1365 and 9M1364 Gasket Kit. Additional parts are shown on reverse side of this insert.

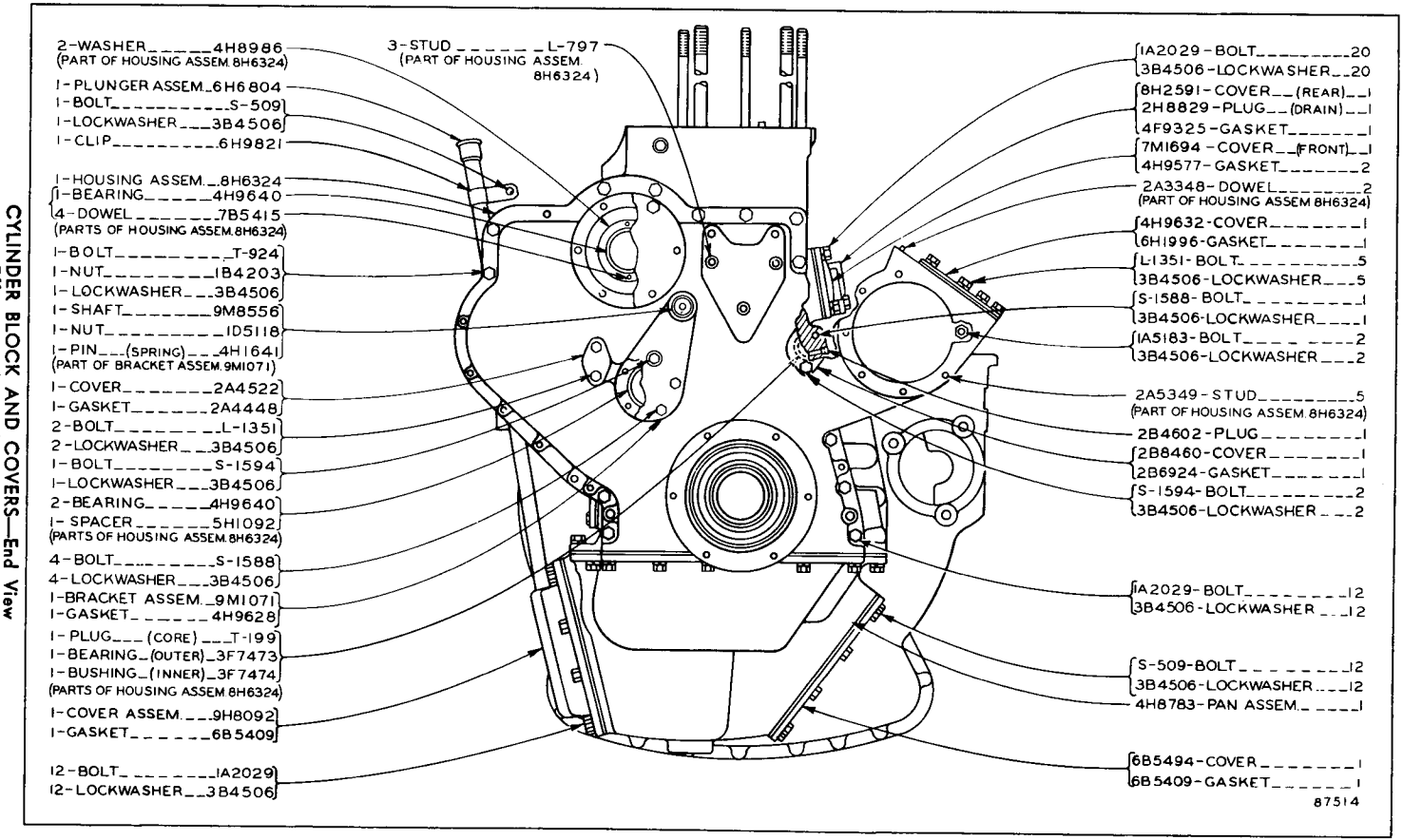

CYLINDER BLOCK AND COVERS—End View
Effective with Serial No. 48A2438

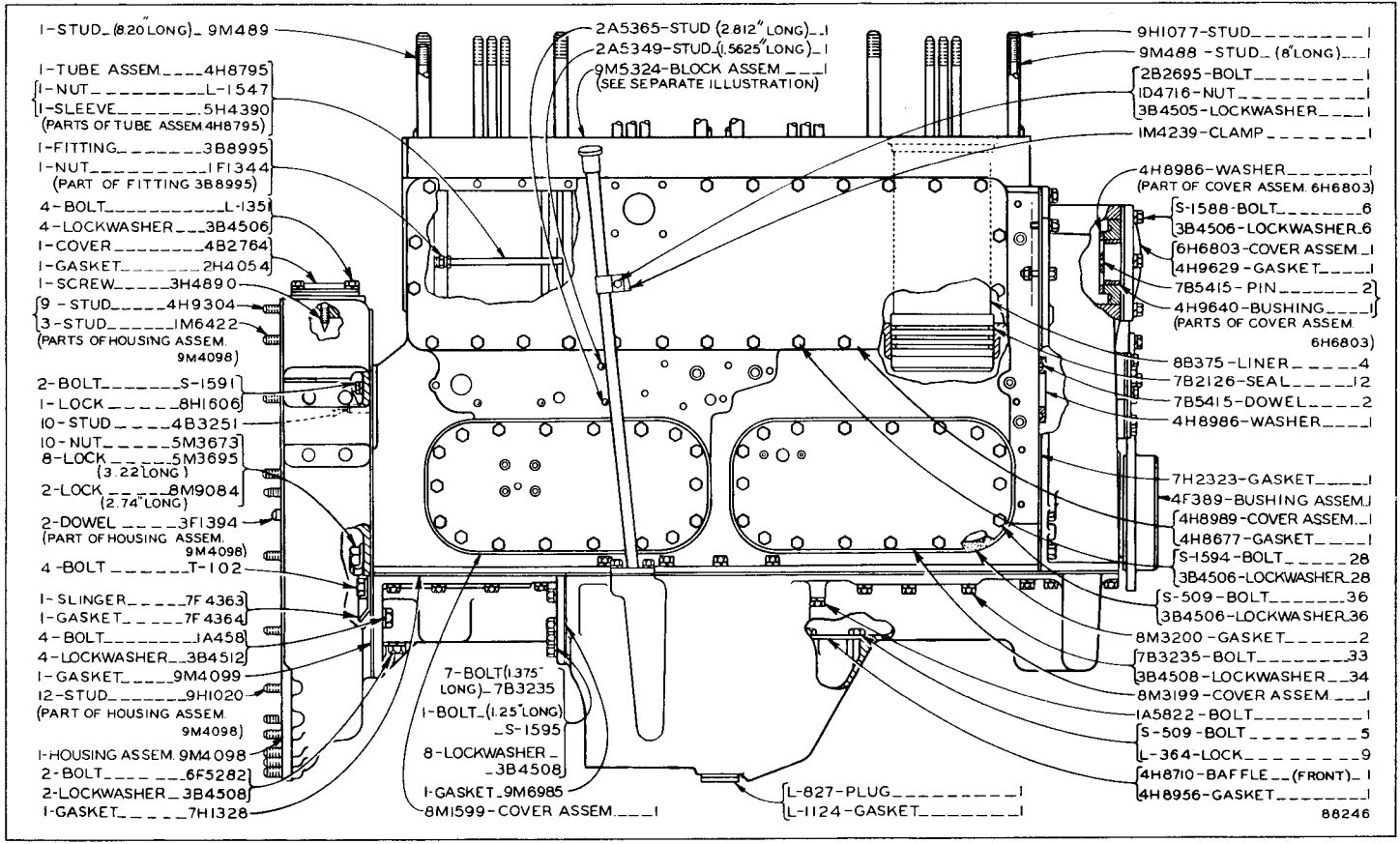

CYLINDER BLOCK AND COVERS—Side View

Effective with Serial No. 48A2642

9M5324 Cylinder Block Assembly parts are shown on insert between Pages 28 and 29. Note: 1M7215 Piston and Liner Group is available. Additional parts are shown on reverse side of this insert

CYLINDER BLOCK AND COVERS—End View

Effective with Serial No. 48A2642

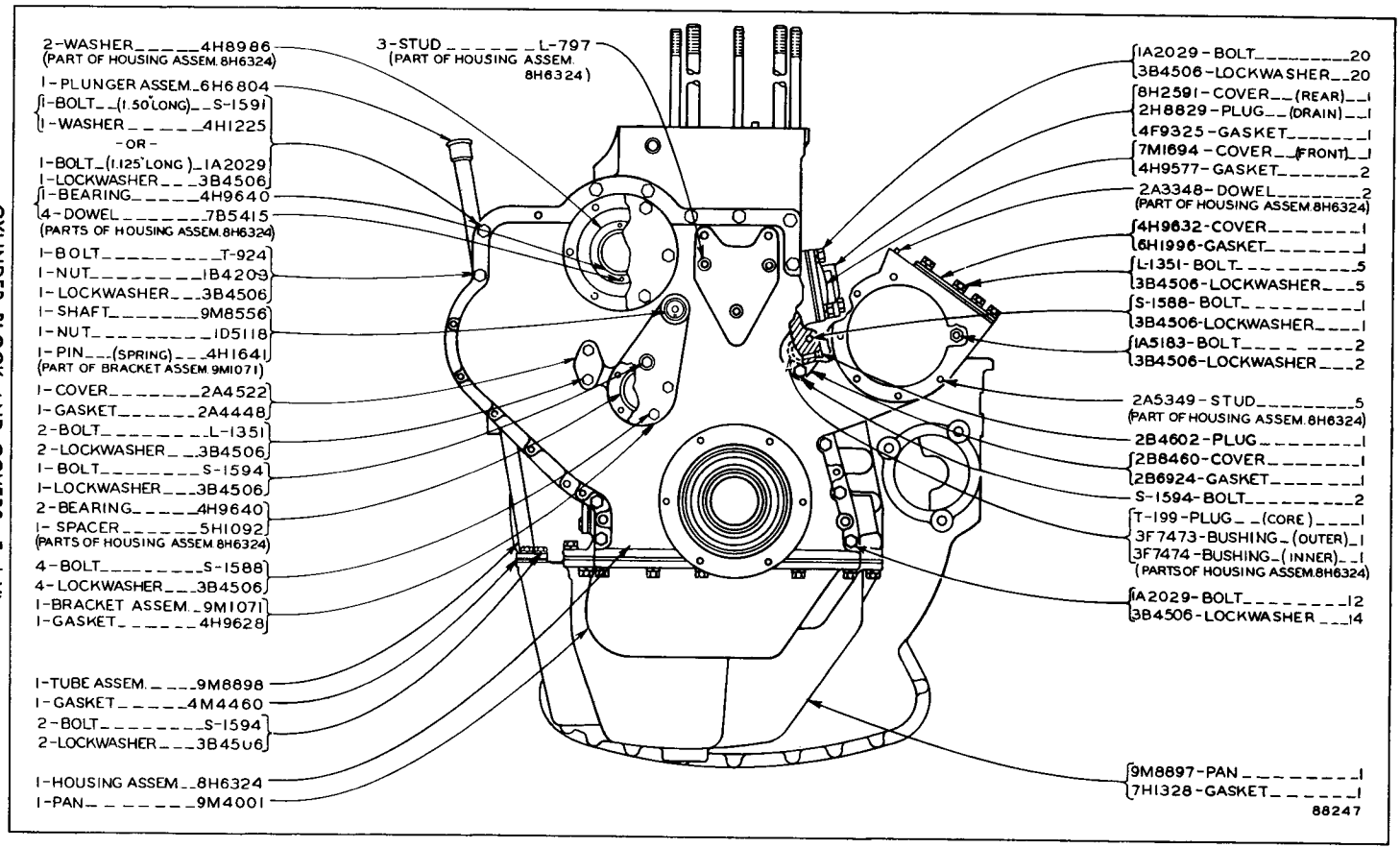

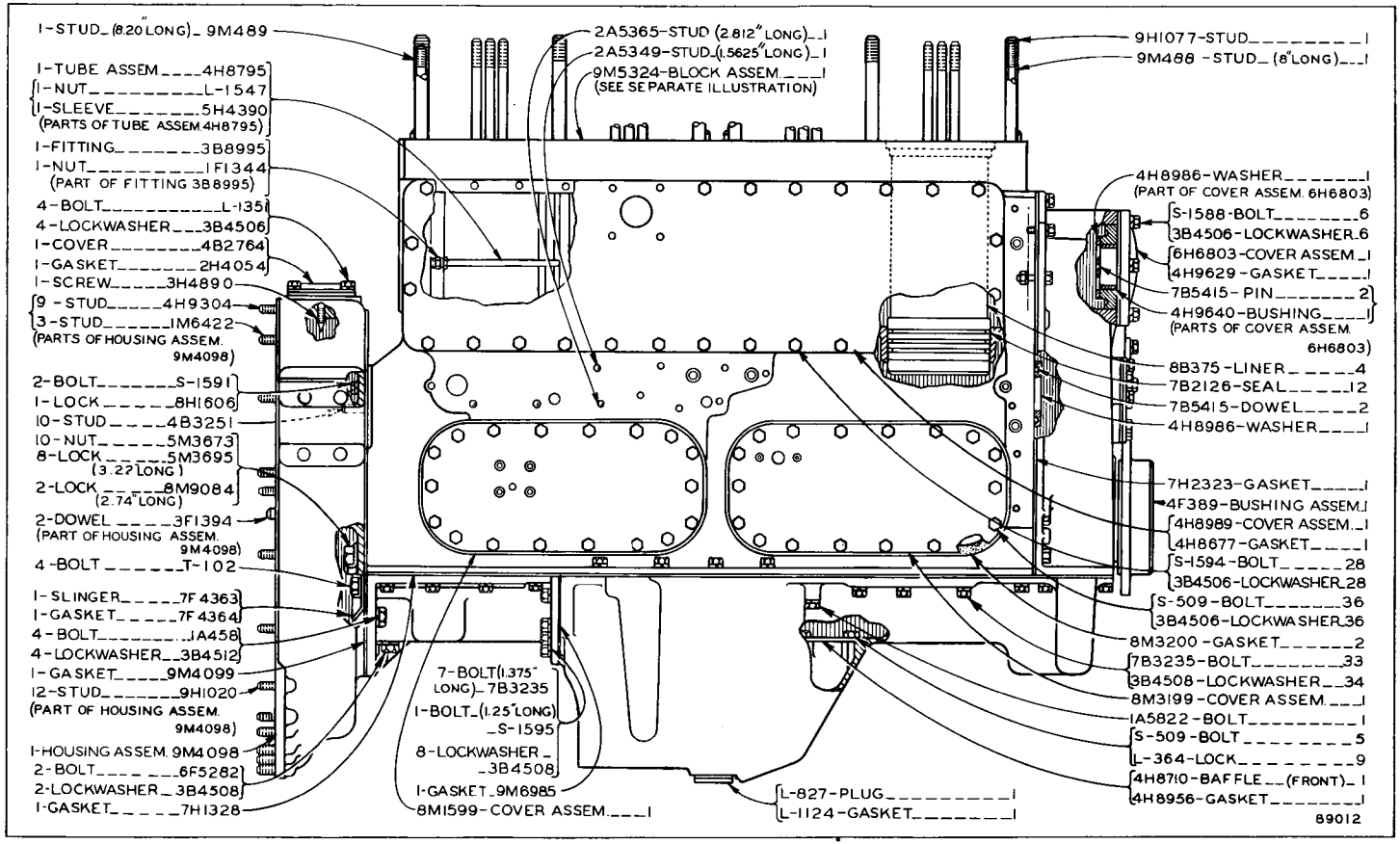

CYLINDER BLOCK AND COVERS—Side View

Serial No. 48A2746 to 48A2934 inclusive

9M5324 Cylinder Block Assembly parts are shown on insert between Pages 28 and 29. Note: 1M7215 Piston and Liner Group, 9M1365 Cylinder Liner and Piston Replacement Gasket Kit and 9M1364 Valve Grinding Gasket Kit are available. Piston and Liner replacement require

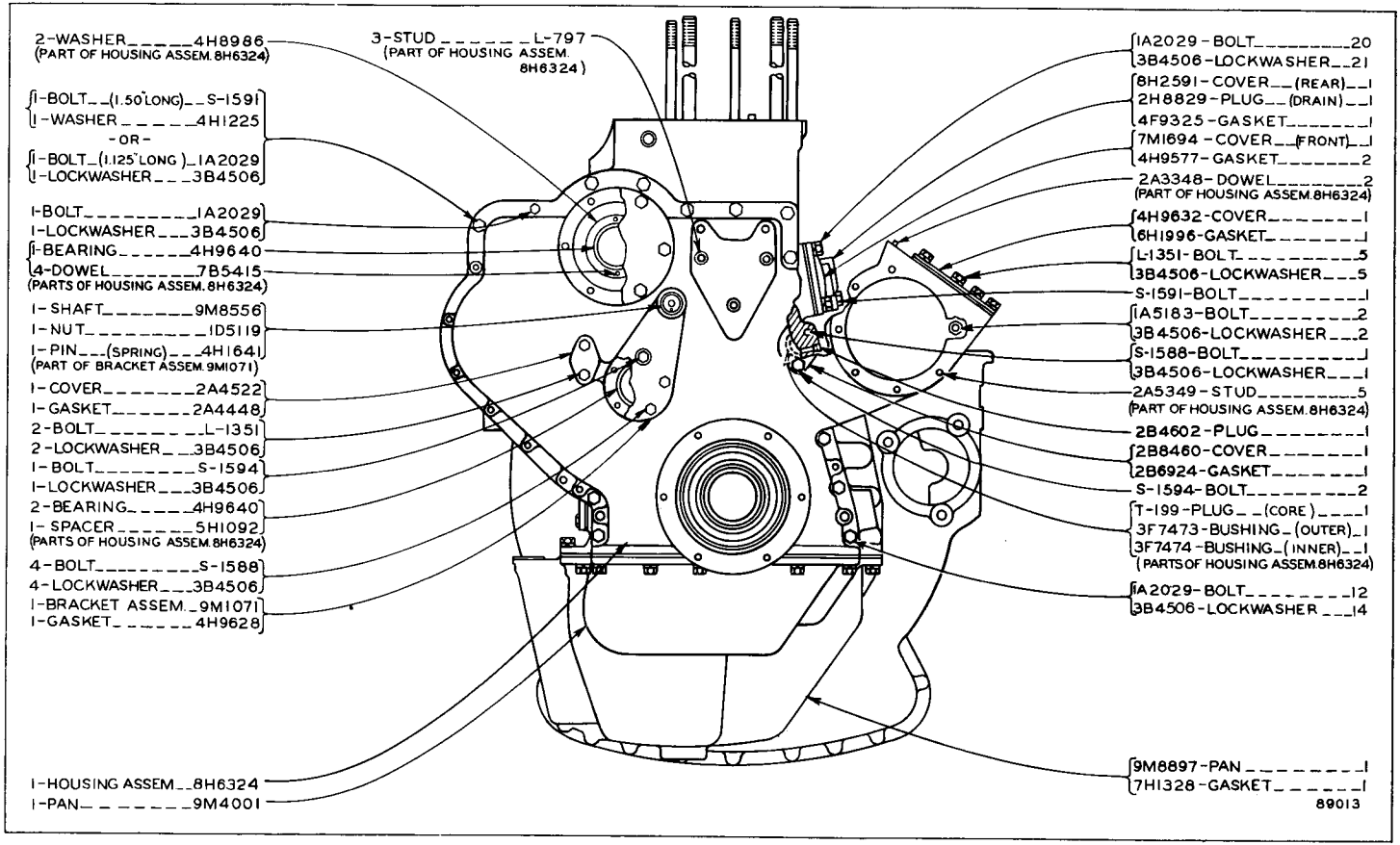

CYLINDER BLOCK AND COVERS—End View
Serial No. 48A2746 to 48A2934 inclusive

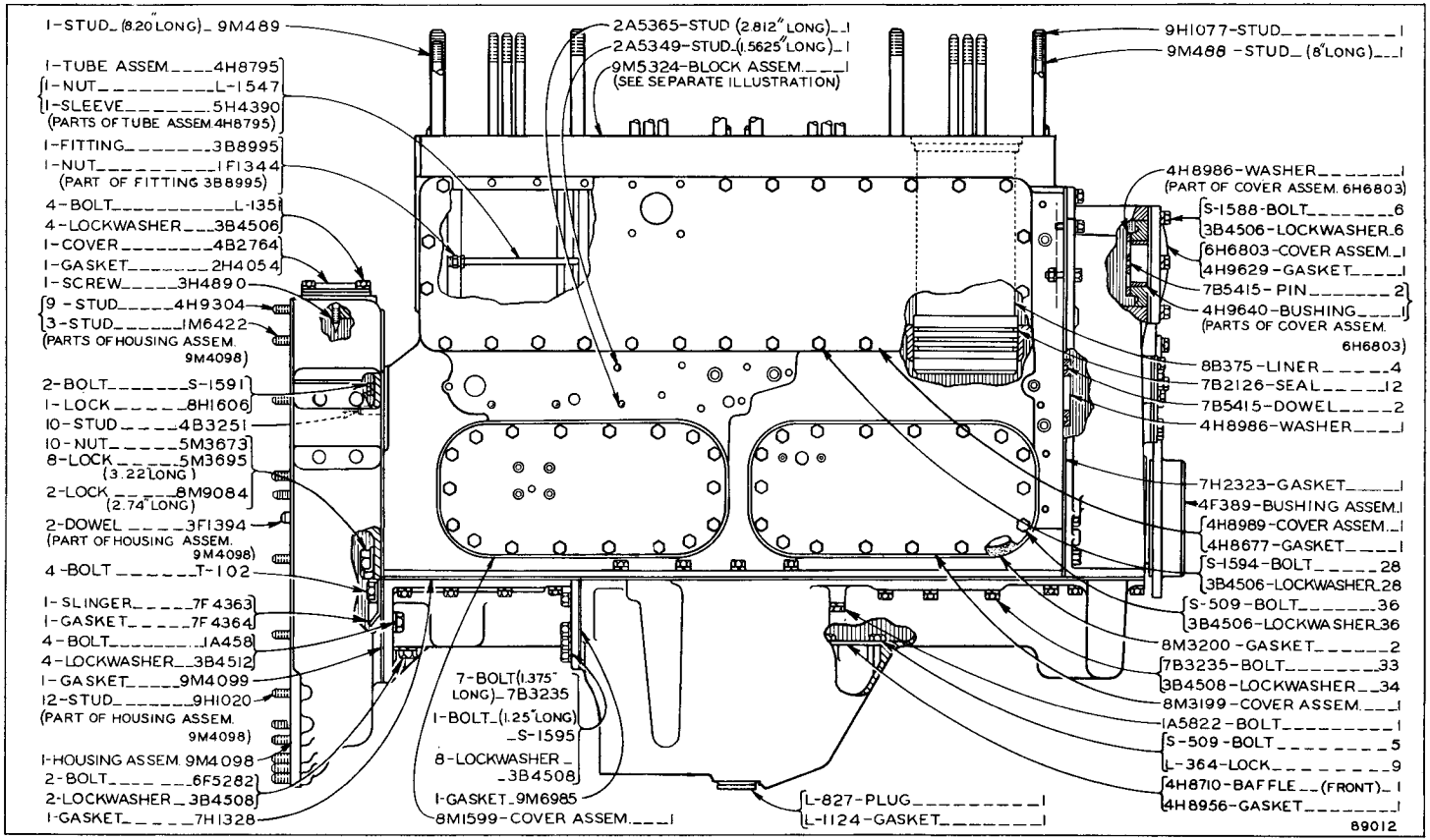

CYLINDER BLOCK AND COVERS—Side View

Effective with Serial No. 48A2935

9M5324 Cylinder Block Assembly parts are shown on insert between Pages 28 and 29. Note: 1M7215 Piston and Liner Group, 9M1365 Cylinder Liner and Piston Replacement Gasket Kit and 9M1364 Valve Grinding Gasket Kit are available. Piston and Liner replacement require the use of 9M1365 and 9M1364 Gasket Kits. Additional parts are shown on reverse side of this insert

CYLINDER BLOCK AND COVERS—End View

Effective with Serial No. 48A2935

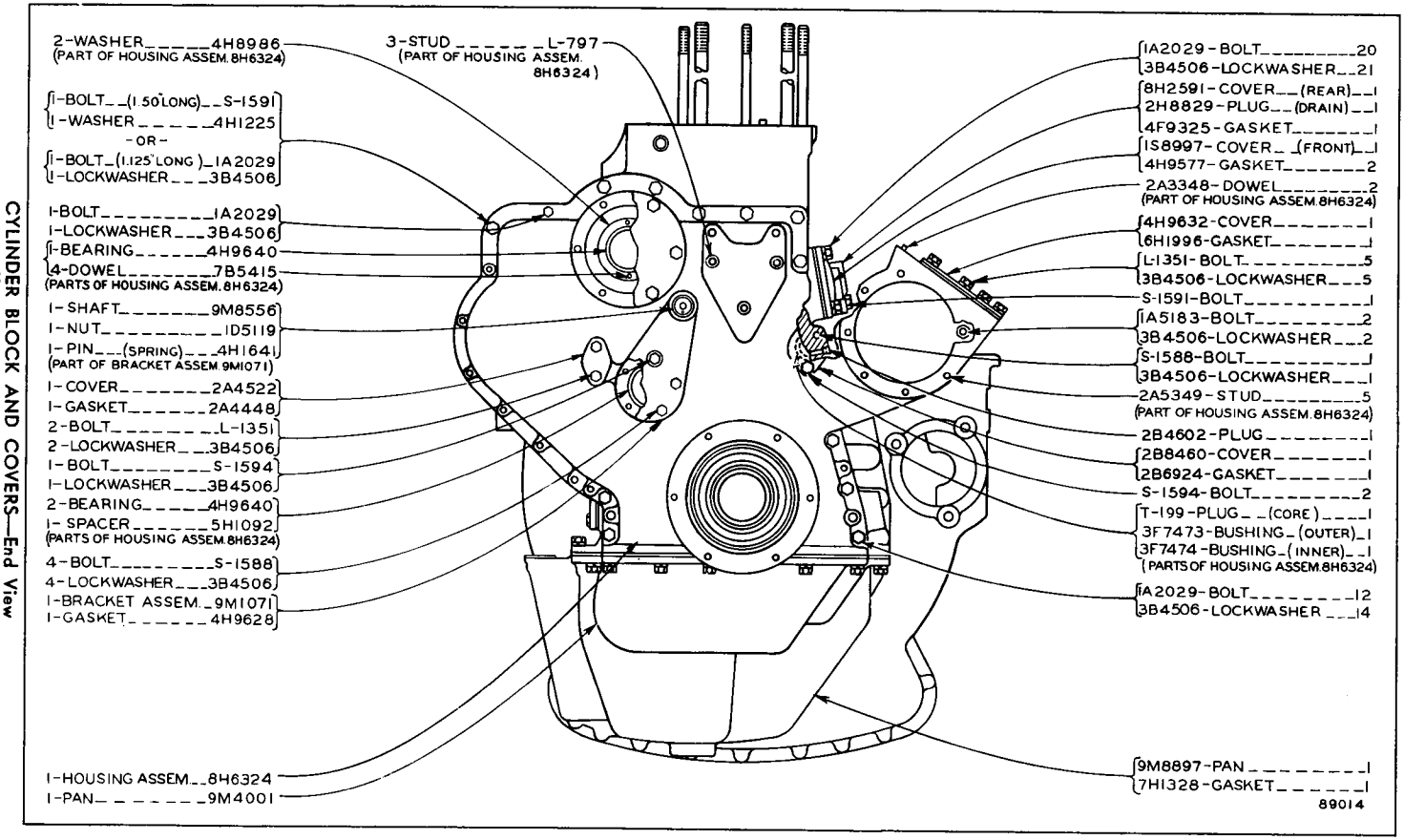

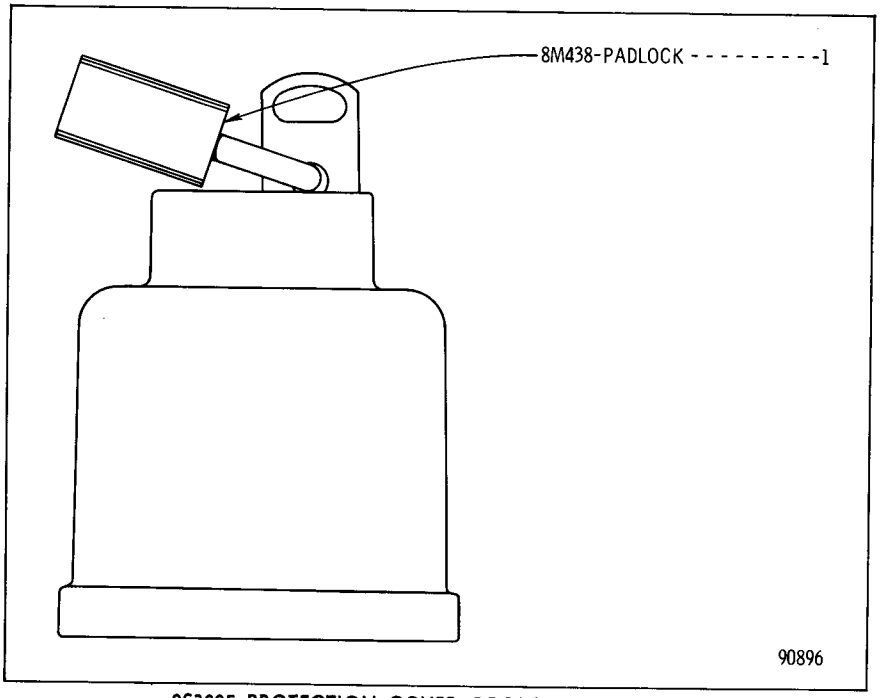

2S3025 PROTECTION COVER GROUP—Oil Filler Cap

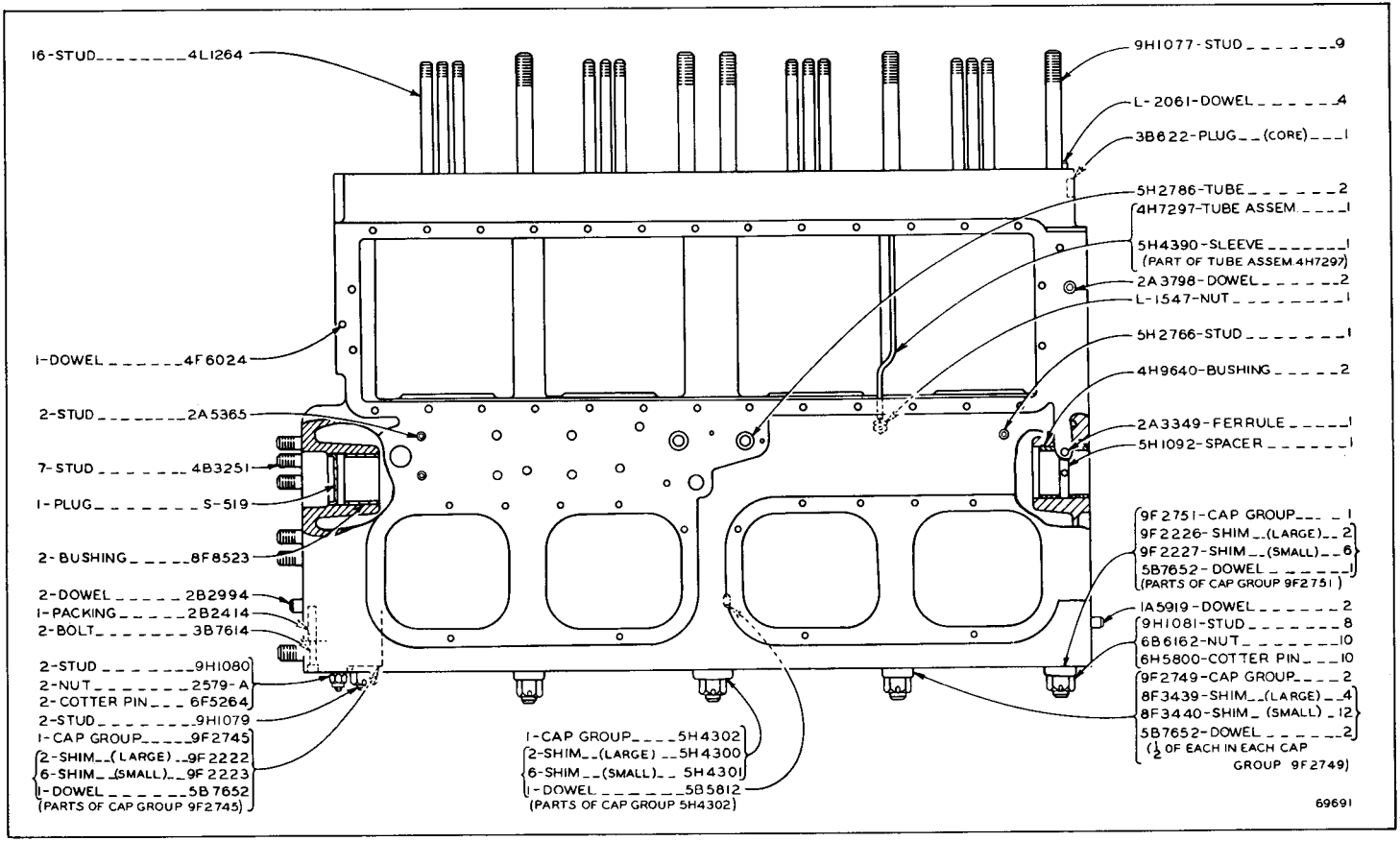

5M3650 CYLINDER BLOCK ASSEMBLY

Part of Cylinder Block and Covers shown on Page 26

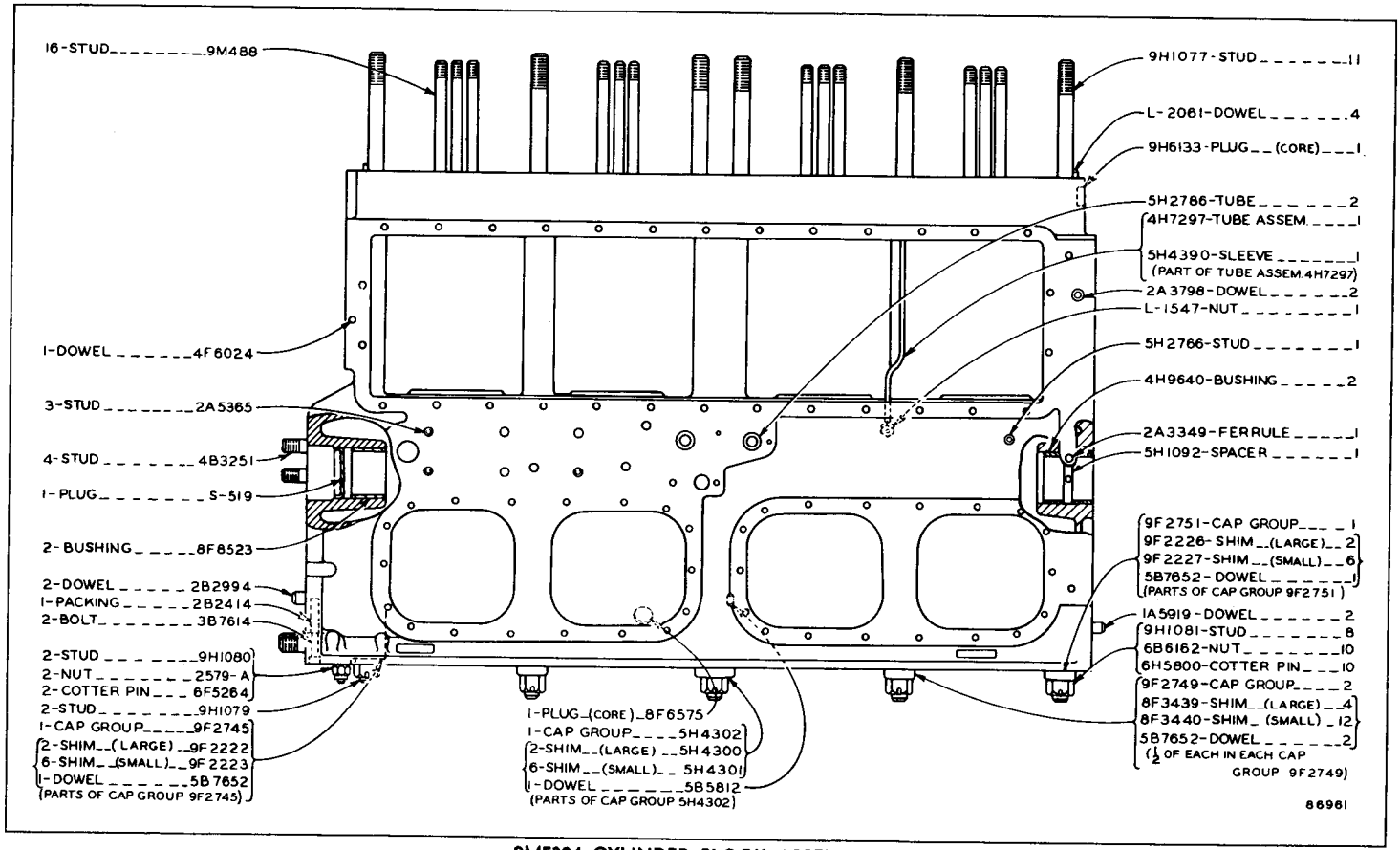

9M5324 CYLINDER BLOCK ASSEMBLY

Part of Cylinder Block and Covers shown on insert between Pages 26 and 27

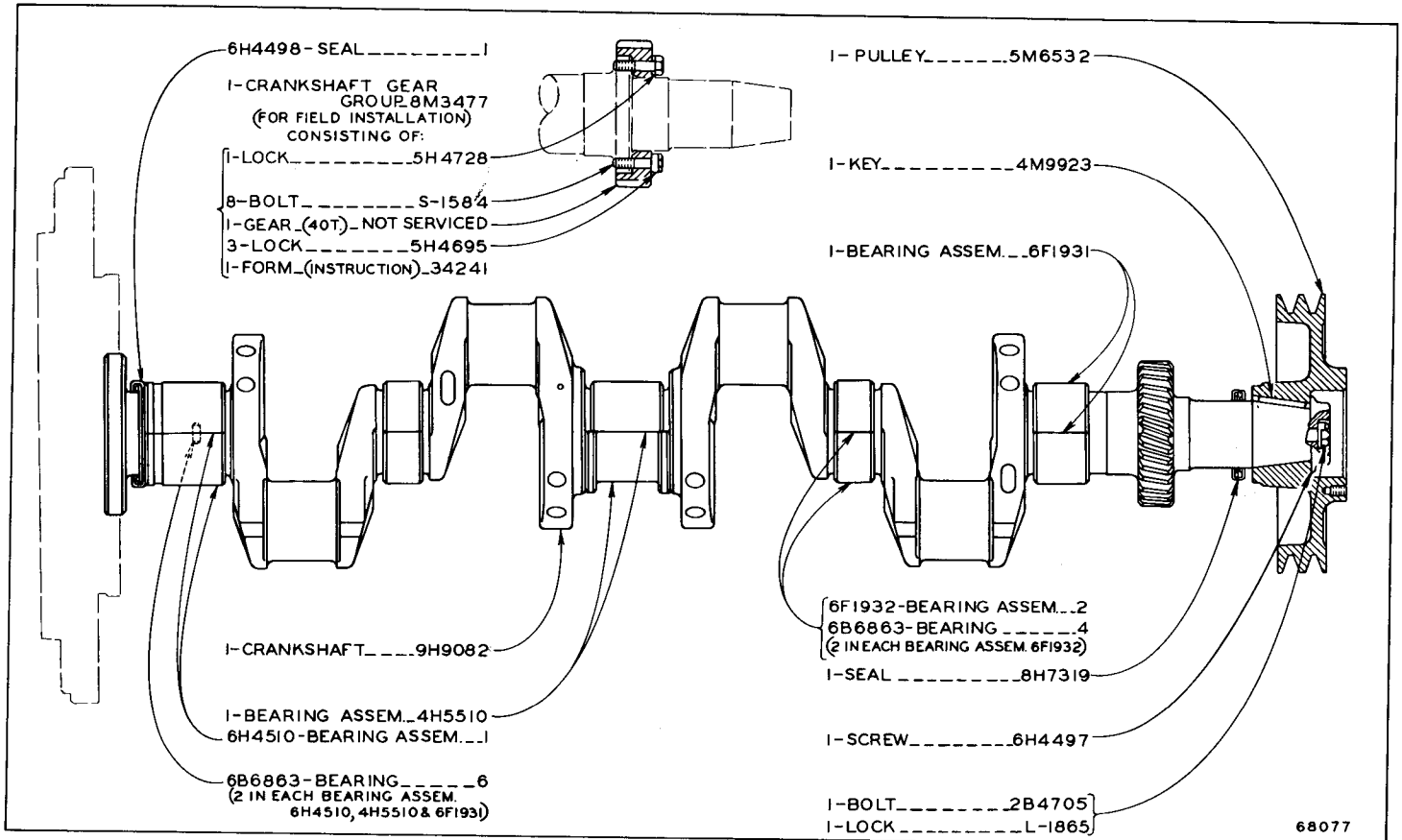

CRANKSHAFT

ONLY "CATERPILLAR" PARTS GIVE "CATERPILLAR" PERFORMANCE

7H6754 For use with Standard Crankshaft

Consists of:

Complete set of Bearing Assemblies as shown with Standard Crankshaft

7H6756 For use with .025 Undersize Crankshaft

Consists of:

2	2H2449	Bearing Assembly—Intermediate
1	2H2451	Bearing Assembly—Front
1	4H5511	Bearing Assembly—Center
1	7H4448	Bearing Assembly—Rear
1	7H6747	Seal—Rear Main Bearing

7H6758 For use with .050 Undersize Crankshaft

Consists of:

1	6F1935	Bearing Assembly—Front
2	6F1936	Bearing Assembly—Intermediate
1	4H5512	Bearing Assembly—Center
1	7H4449	Bearing Assembly—Rear
1	7H6747	Seal—Rear Main Bearing

CRANKSHAFT BEARING REPLACEMENT GROUPS

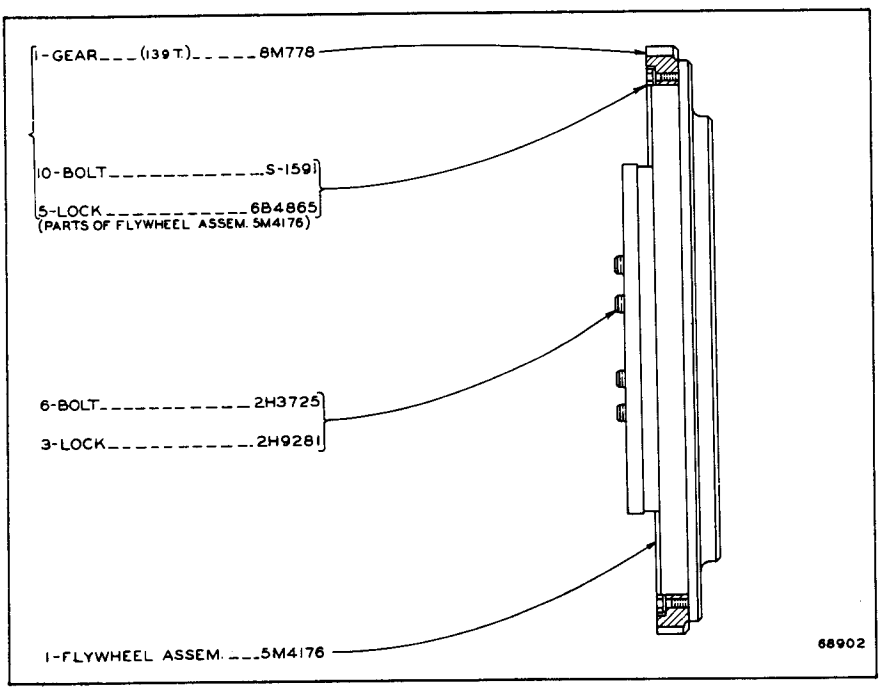

FLYWHEEL

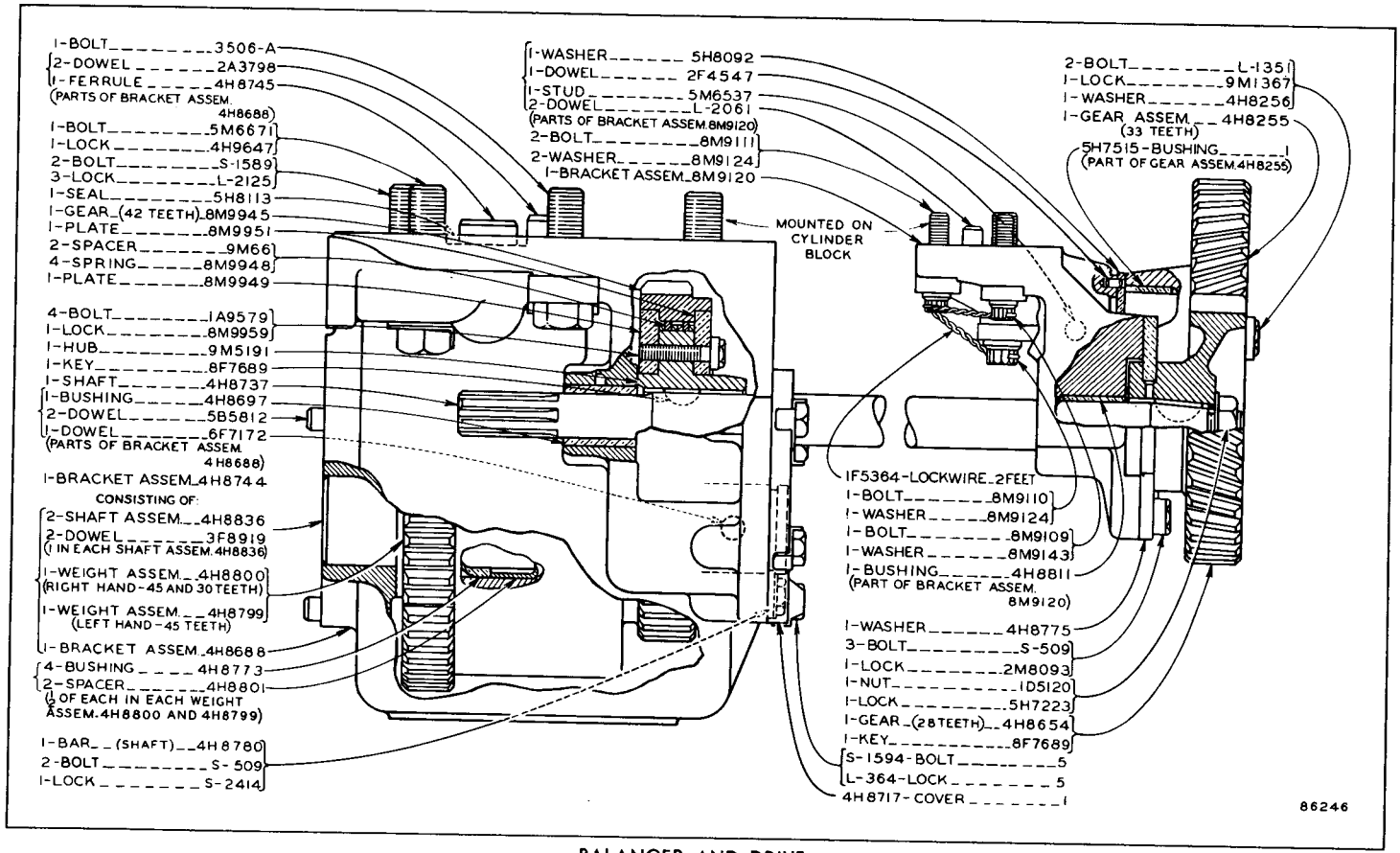

BALANCER AND DRIVE

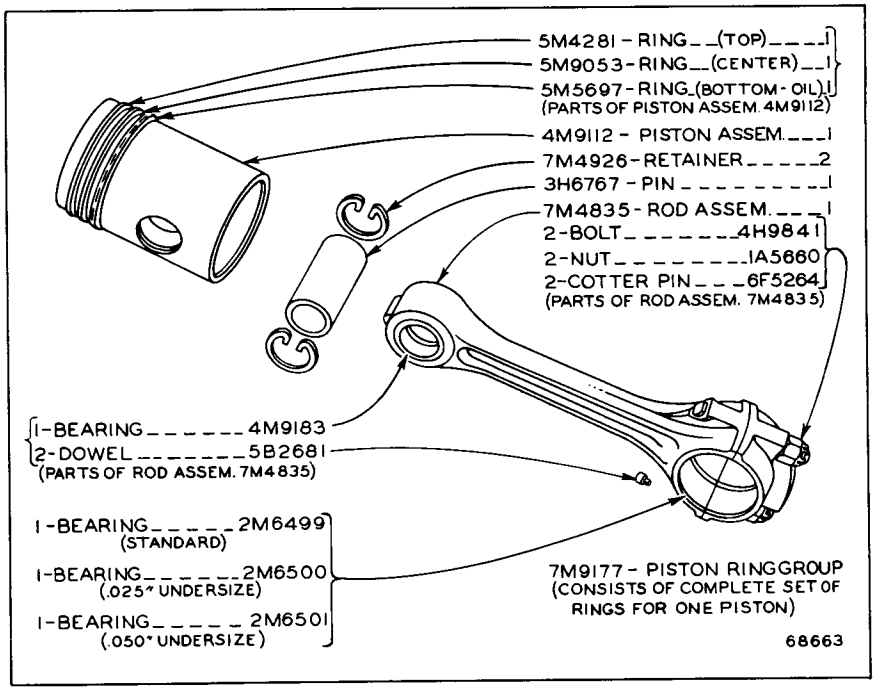

CONNECTING ROD AND PISTON—4 Required

Note: 1M7215 Piston and Liner Group, consisting of 1—Piston Assembly, 1—Liner and 3—Seal, is available

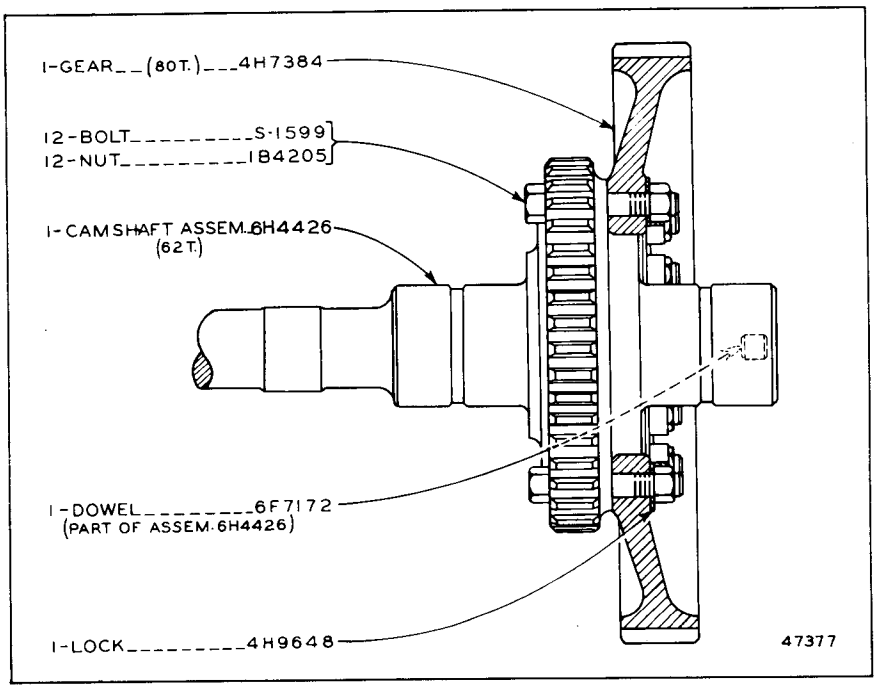

CAMSHAFT

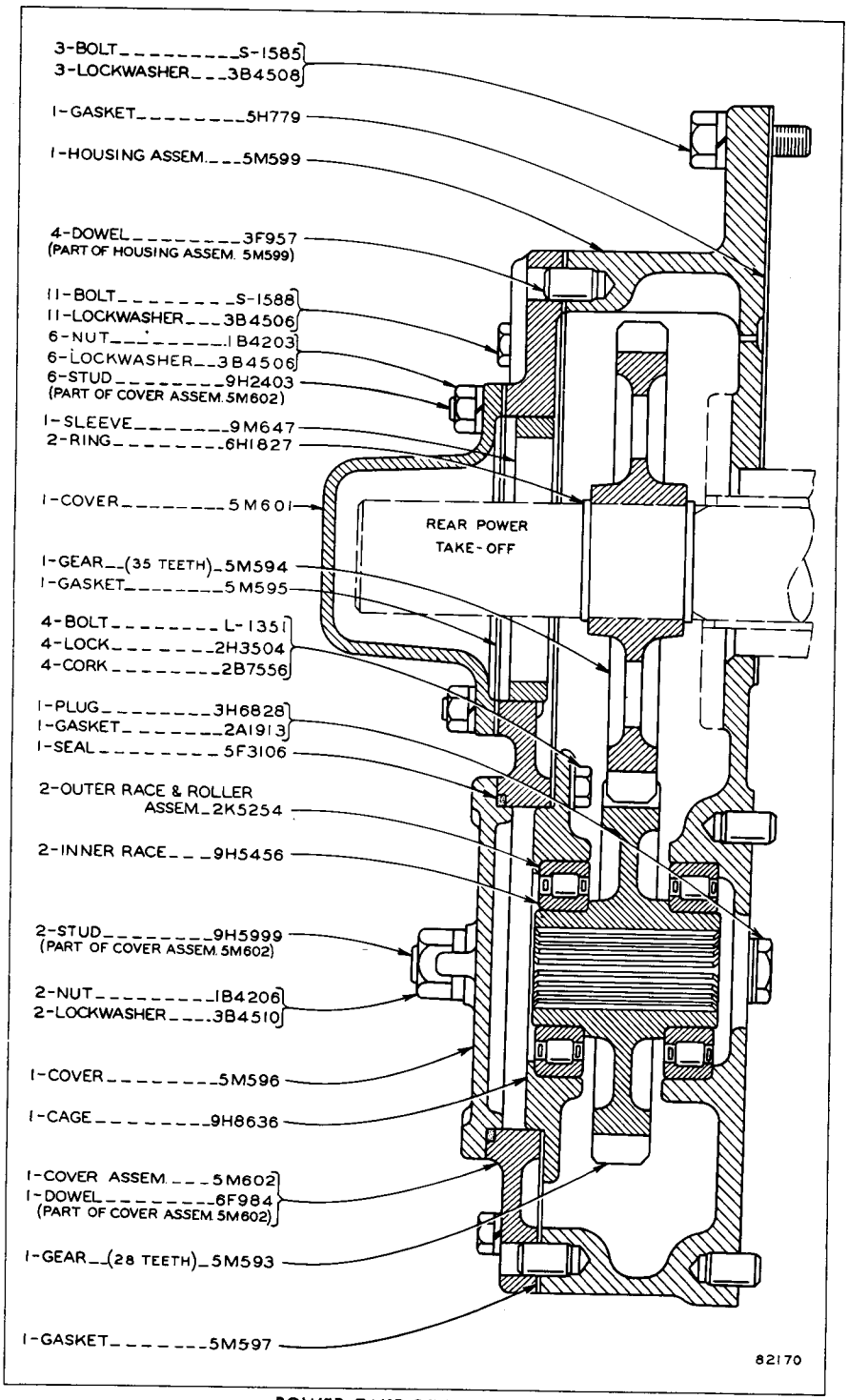

POWER TAKE-OFF HOUSING
Serial No. 48A1 to 48A158 inclusive

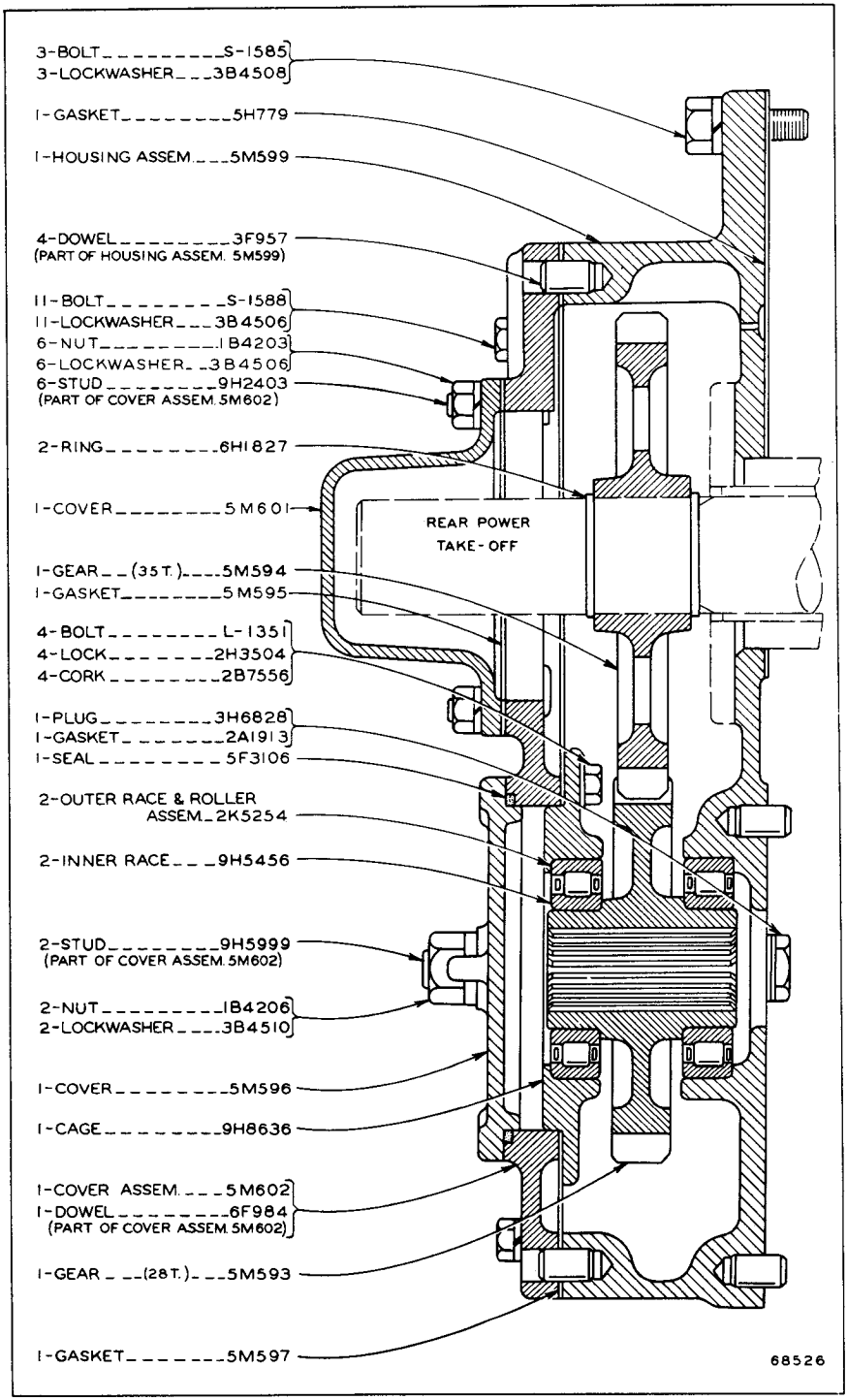

POWER TAKE-OFF HOUSING
Effective with Serial No. 48A159

ALWAYS GIVE SERIAL NUMBER WHEN ORDERING PARTS

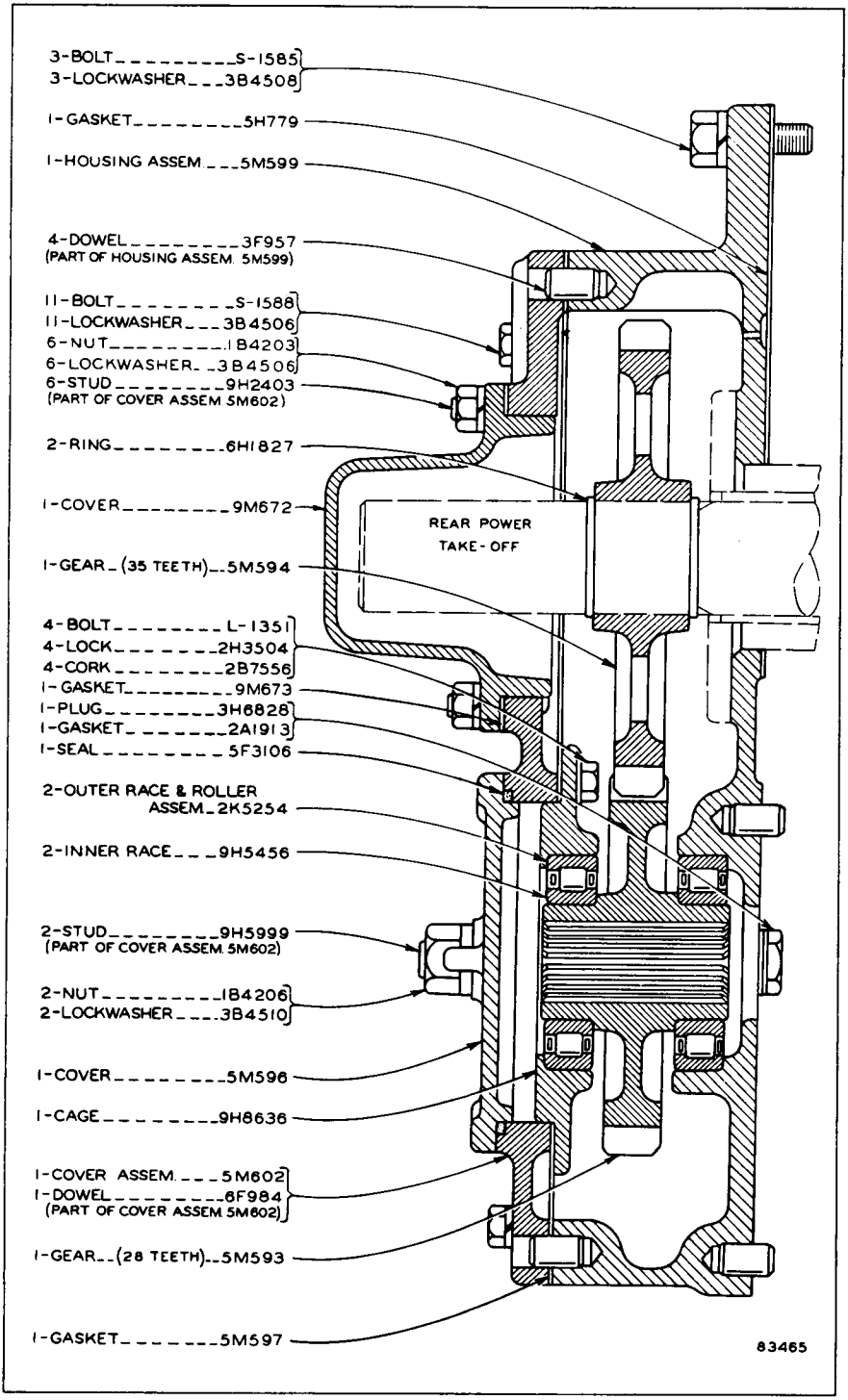

POWER TAKE-OFF HOUSING
Effective with Serial No. 48A1159

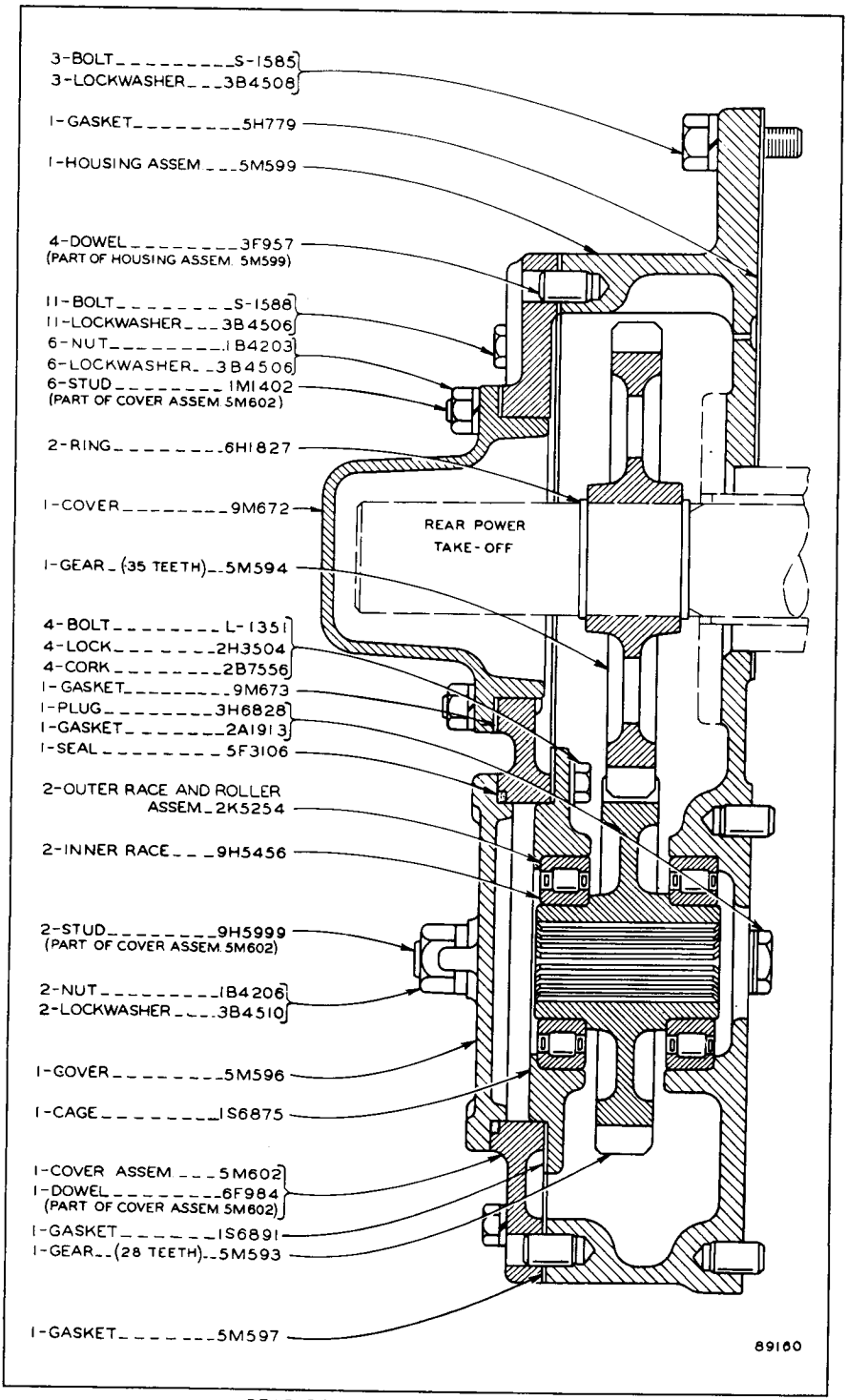

REAR POWER TAKE-OFF HOUSING
Serial No. 48A2998 to 48A3004 and 48A3006—Up

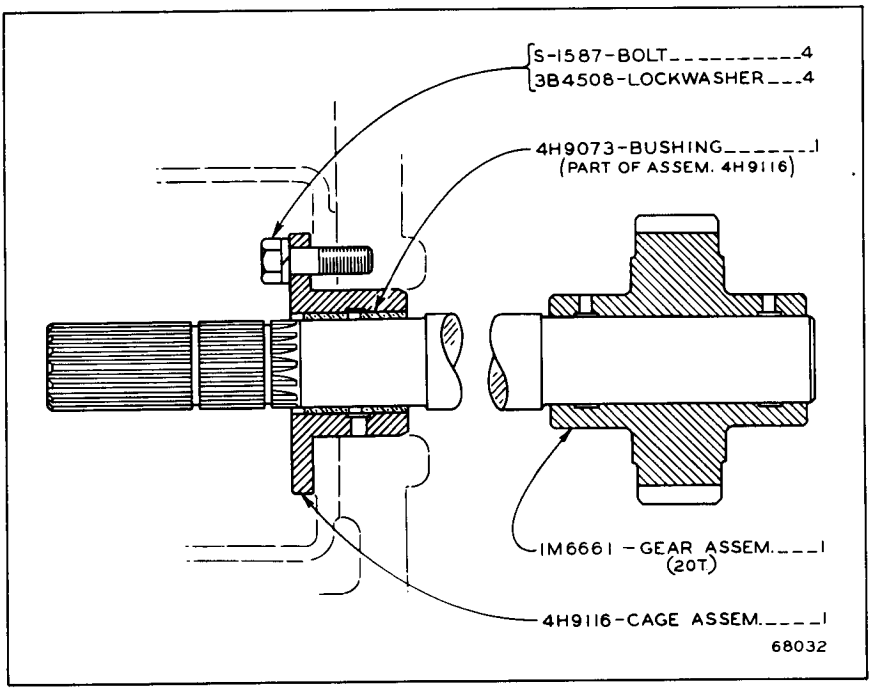

REAR POWER TAKE-OFF

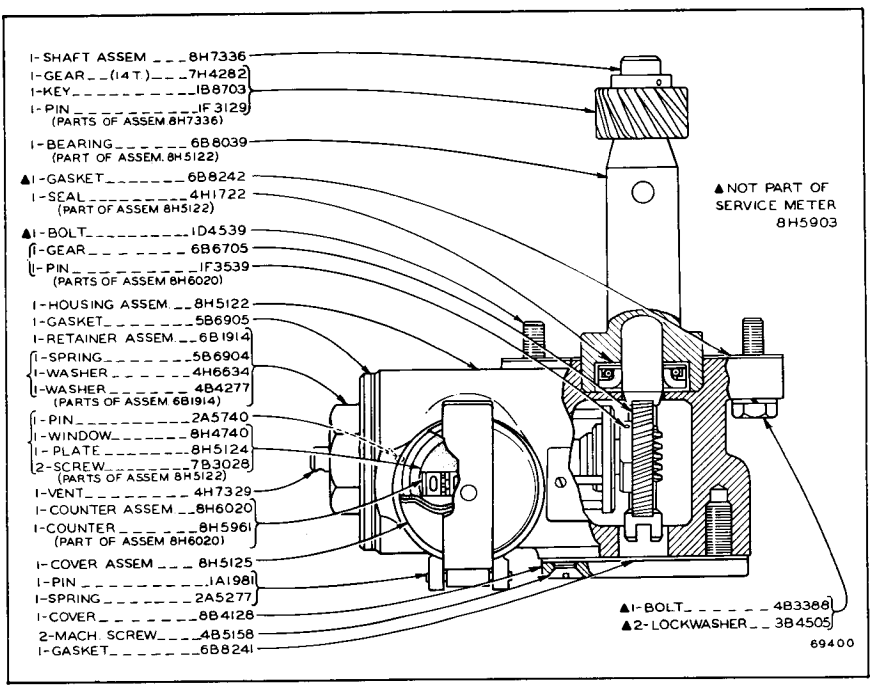

8H5903 SERVICE METER GROUP

ALWAYS GIVE SERIAL NUMBER WHEN ORDERING PARTS

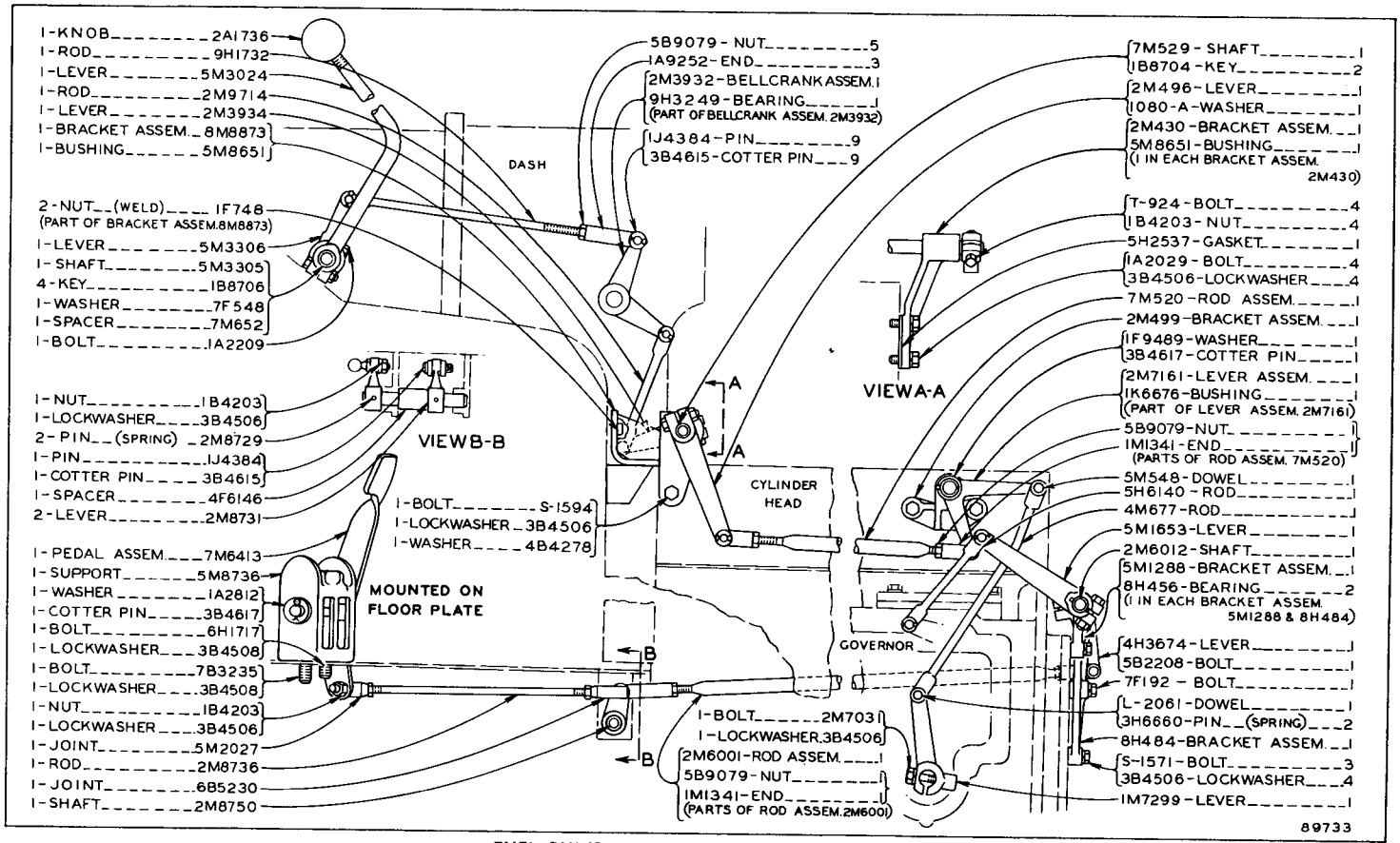

FUEL PUMP AND GOVERNOR CONTROL
Effective with Serial No. 48A1276

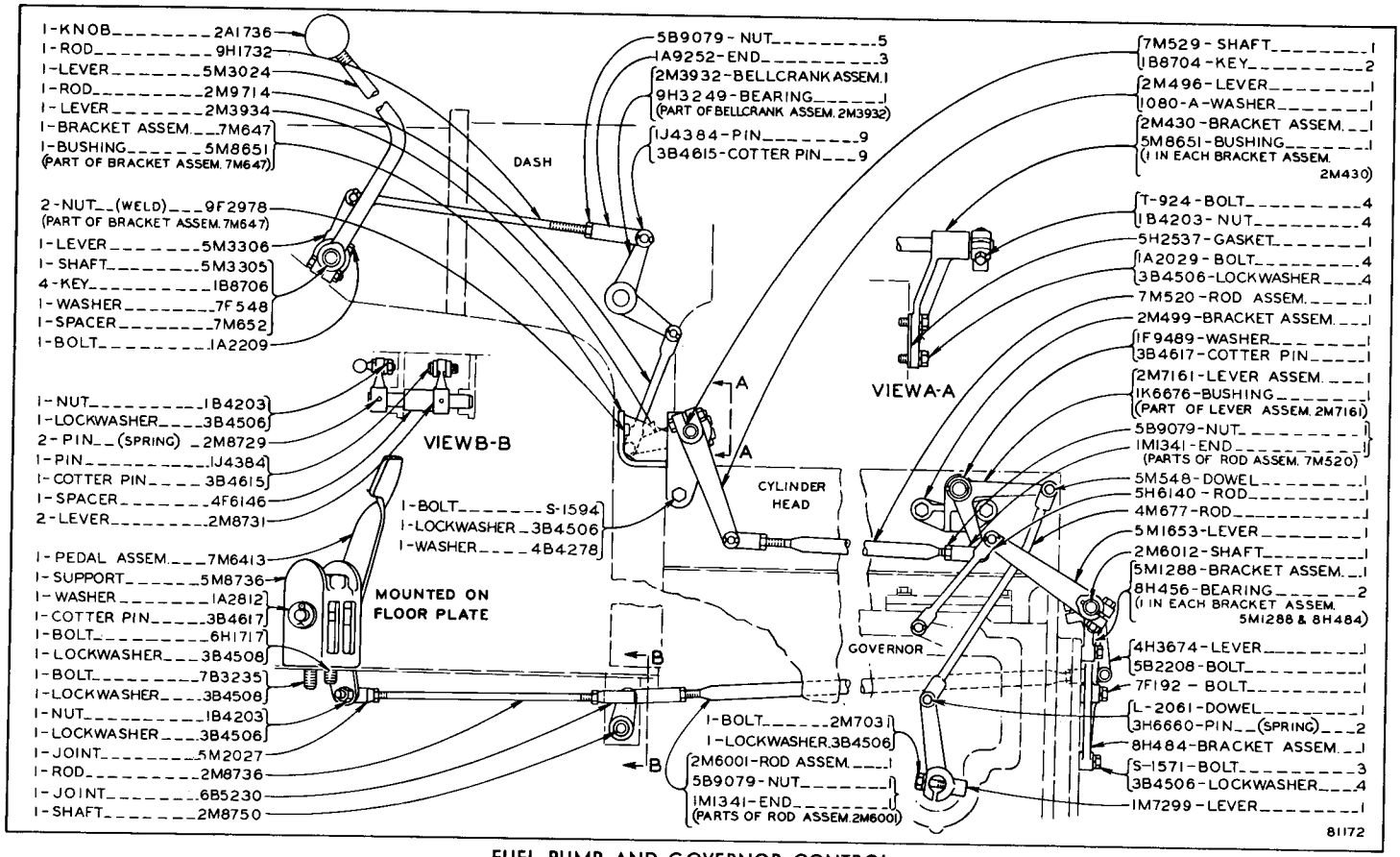

FUEL PUMP AND GOVERNOR CONTROL

ONLY "CATERPILLAR" PARTS GIVE "CATERPILLAR" PERFORMANCE

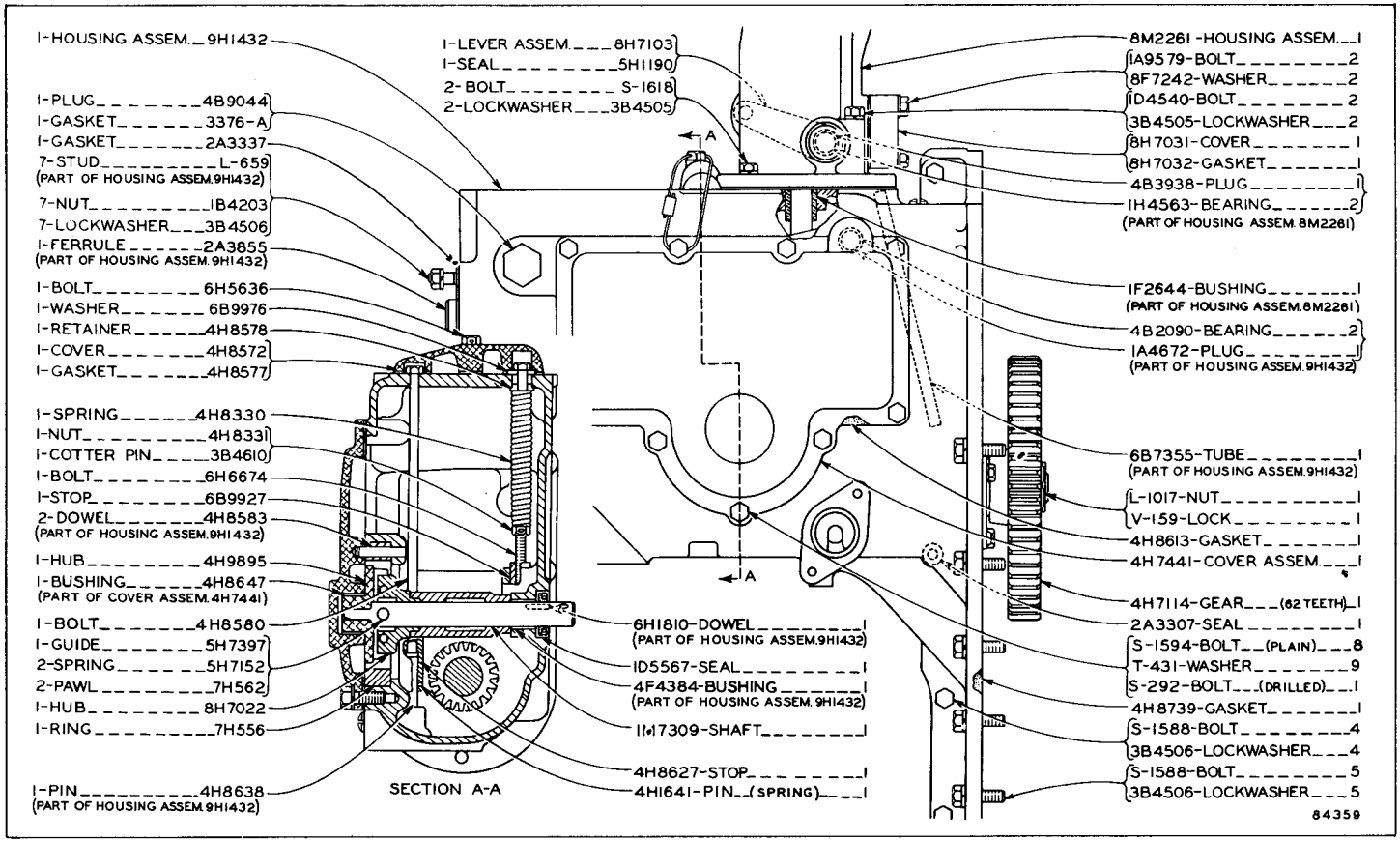

ACCESSORY DRIVE AND GOVERNOR—Part One

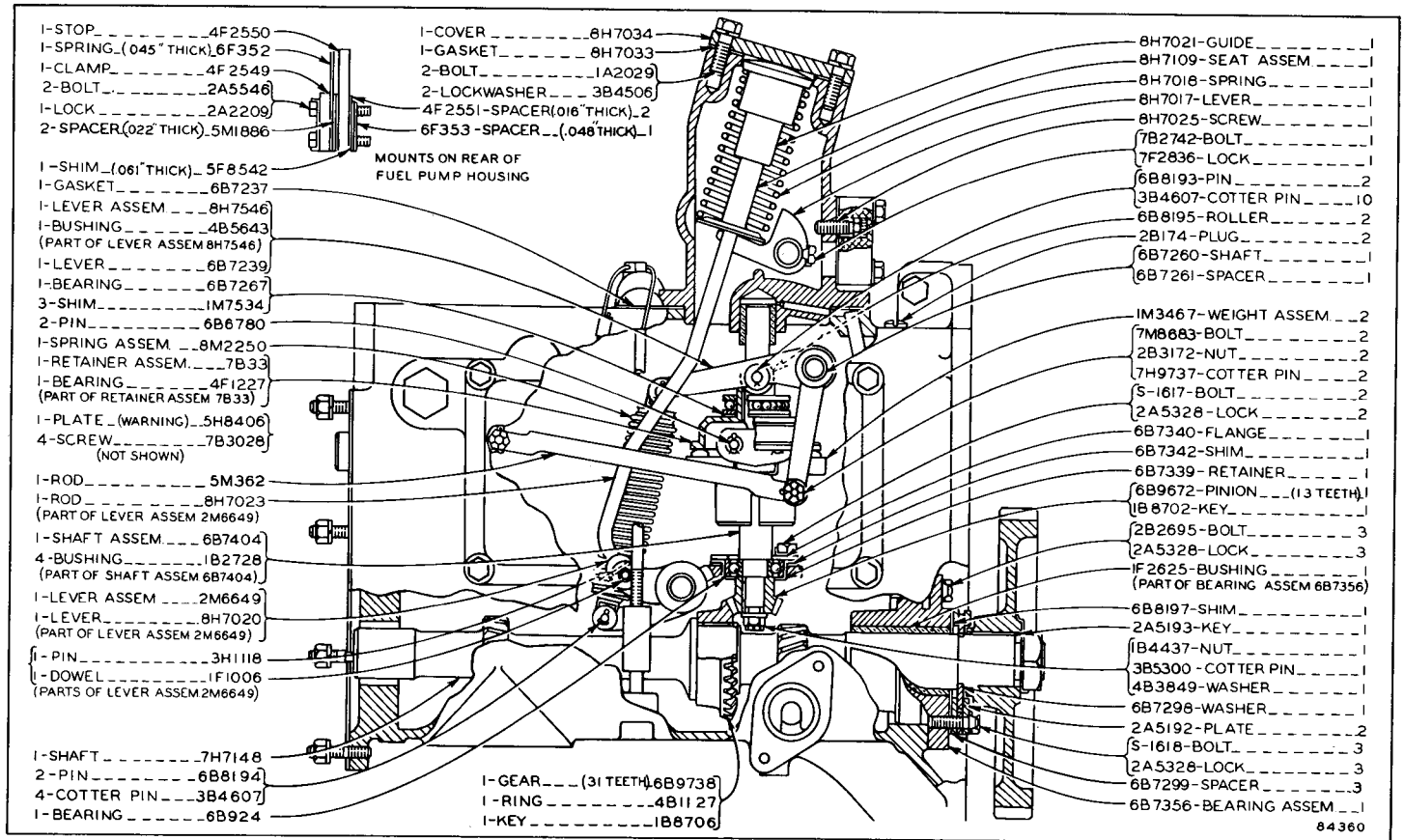

ACCESSORY DRIVE AND GOVERNOR—Part Two

ONLY "CATERPILLAR" PARTS GIVE "CATERPILLAR" PERFORMANCE

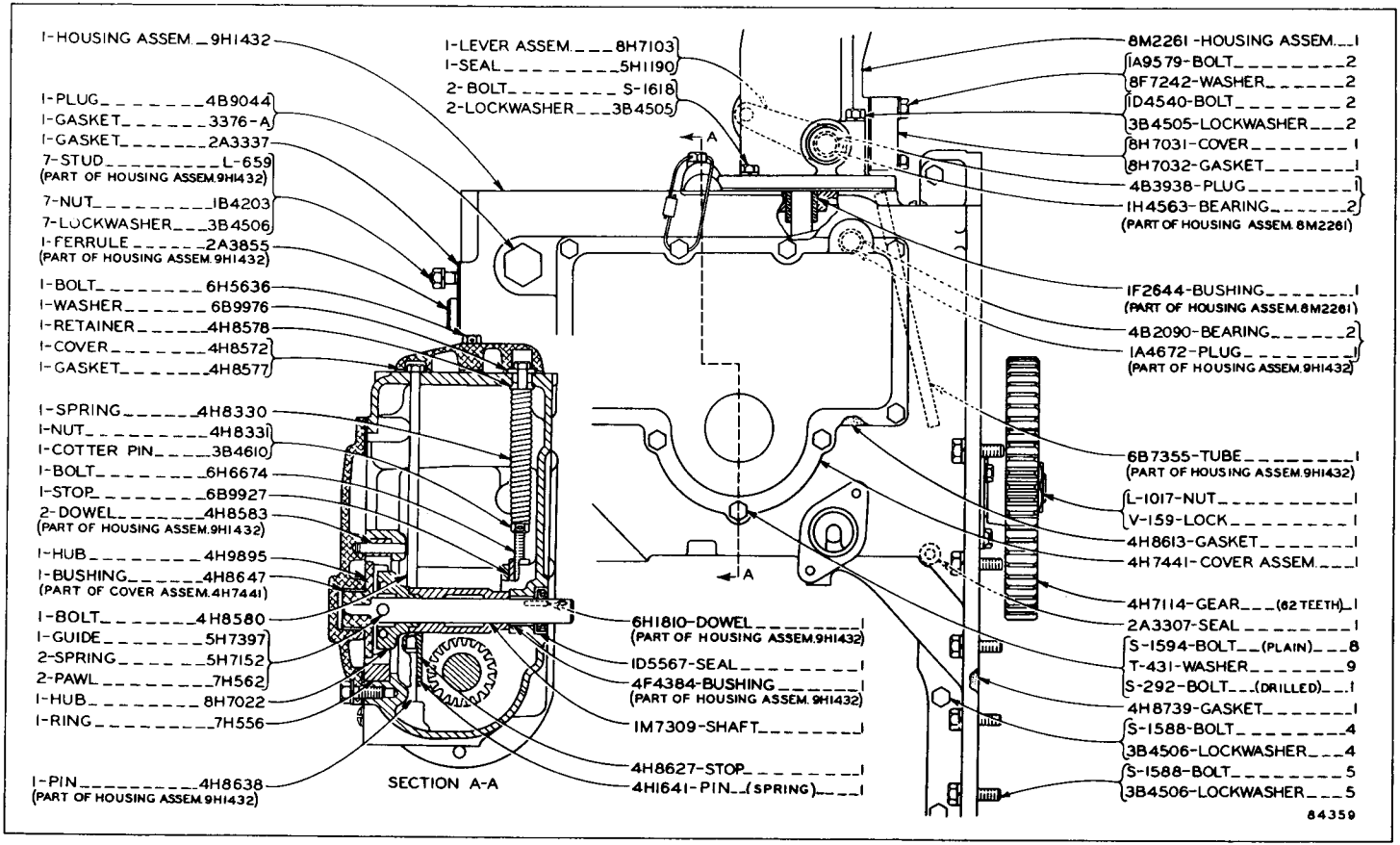

ACCESSORY DRIVE AND GOVERNOR—Part One

Effective with Serial No. 48A1558

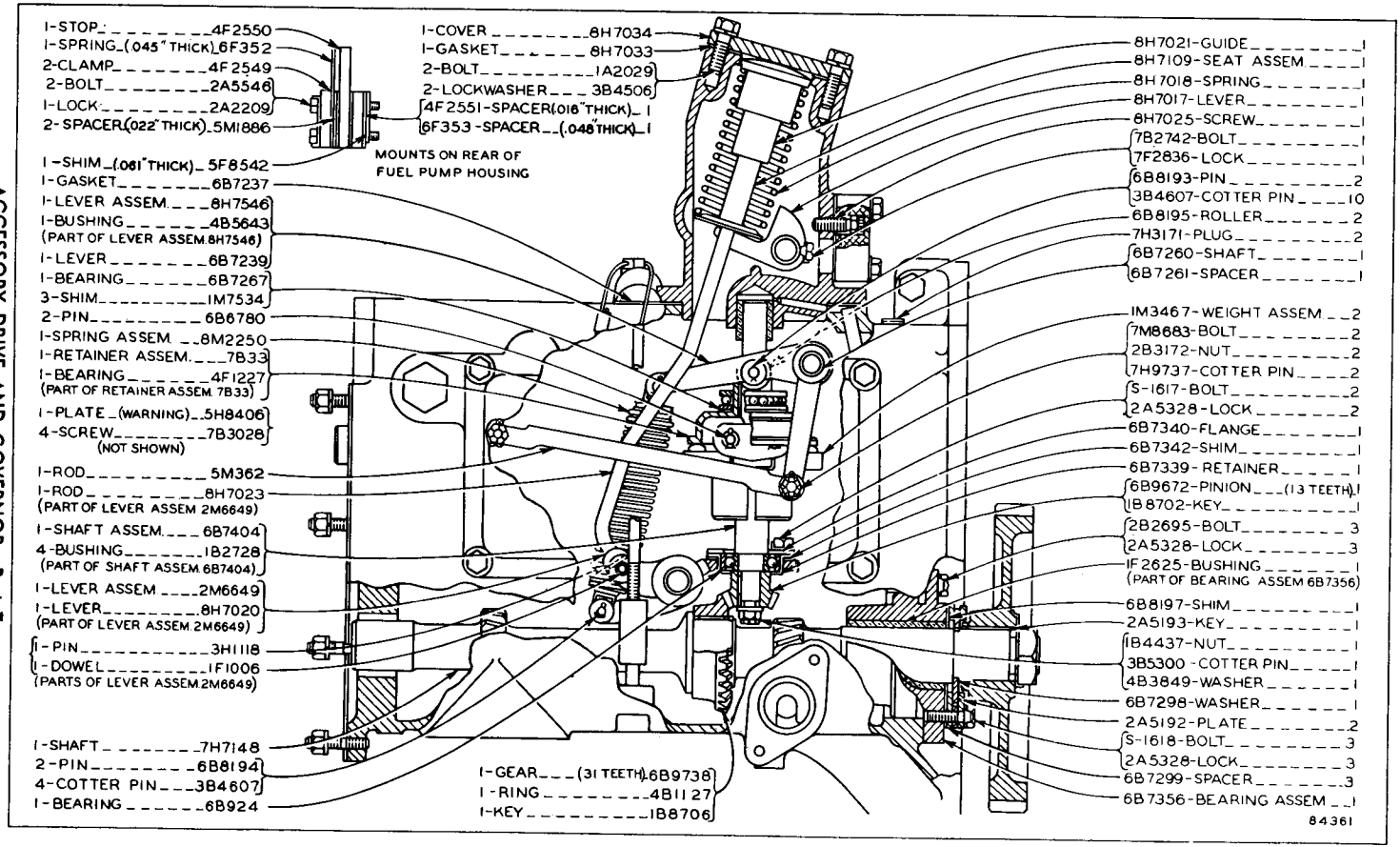
1-STOP 4F2550
1-SPRING (.045" THICK) 6F352
2-CLAMP 4F2549
2-BOLT 2A5546
1-LOCK 2A2209
2-SPACER (.022" THICK) 5M1886
1-SHIM (.061" THICK) 5F8542
1-GASKET 6B7237
1-LEVER ASSEM. 8H7546
1-BUSHING 4B5643
(PART OF LEVER ASSEM. 8H7546)
1-LEVER 6B7239
1-BEARING 6B7267
3-SHIM 1M7534
2-PIN 6B6780
1-SPRING ASSEM. 8M2250
1-RETAINER ASSEM. 7B33
1-BEARING 4F1227
(PART OF RETAINER ASSEM. 7B33)
1-PLATE (WARNING) 5H8406
4-SCREW 7B3028
(NOT SHOWN)
1-ROD 5M362
1-ROD 8H7023
(PART OF LEVER ASSEM 2M6649)
1-SHAFT ASSEM. 6B7404
4-BUSHING 1B2728
(PART OF SHAFT ASSEM. 6B7404)
1-LEVER ASSEM 2M6649
1-LEVER 8H7020
(PART OF LEVER ASSEM. 2M6649)
1-PIN 3H1118
1-DOWEL 1F1006
(PARTS OF LEVER ASSEM. 2M6649)
1-SHAFT 7H7148
2-PIN 6B8194
4-COTTER PIN 3B4607
1-BEARING 6B924
1-COVER 8H7034
1-GASKET 8H7033
2-BOLT 1A2029
2-LOCKWASHER 3B4506
4F2551-SPACER (.016" THICK) 1
6F353-SPACER (.048" THICK) 1
MOUNTS ON REAR OF
FUEL PUMP HOUSING
1-GEAR (31 TEETH) 6B9738
1-RING 4B1127
1-KEY 1B8706
8H7021-GUIDE 1
8H7109-SEAT ASSEM. 1
8H7018-SPRING 1
8H7017-LEVER 1
8H7025-SCREW 1
7B2742-BOLT 1
7F2836-LOCK 1
6B8193-PIN 2
3B4607-COTTER PIN 10
6B8195-ROLLER 2
7H3171-PLUG 2
6B7260-SHAFT 1
6B7261-SPACER 1
IM3467-WEIGHT ASSEM. 2
7M8683-BOLT 2
2B3172-NUT 2
7H9737-COTTER PIN 2
S-1617-BOLT 2
2A5328-LOCK 2
6B7340-FLANGE 1
6B7342-SHIM 1
6B7339-RETAINER 1
6B9672-PINION (13 TEETH) 1
1B8702-KEY 1
2B2695-BOLT 3
2A5328-LOCK 3
1F2625-BUSHING 1
(PART OF BEARING ASSEM 6B7356)
6B8197-SHIM 1
2A5193-KEY 1
1B4437-NUT 1
3B5300-COTTER PIN 1
4B3849-WASHER 1
6B7298-WASHER 1
2A5192-PLATE 2
S-1618-BOLT 3
2A5328-LOCK 3
6B7299-SPACER 3
6B7356-BEARING ASSEM. 1
84361

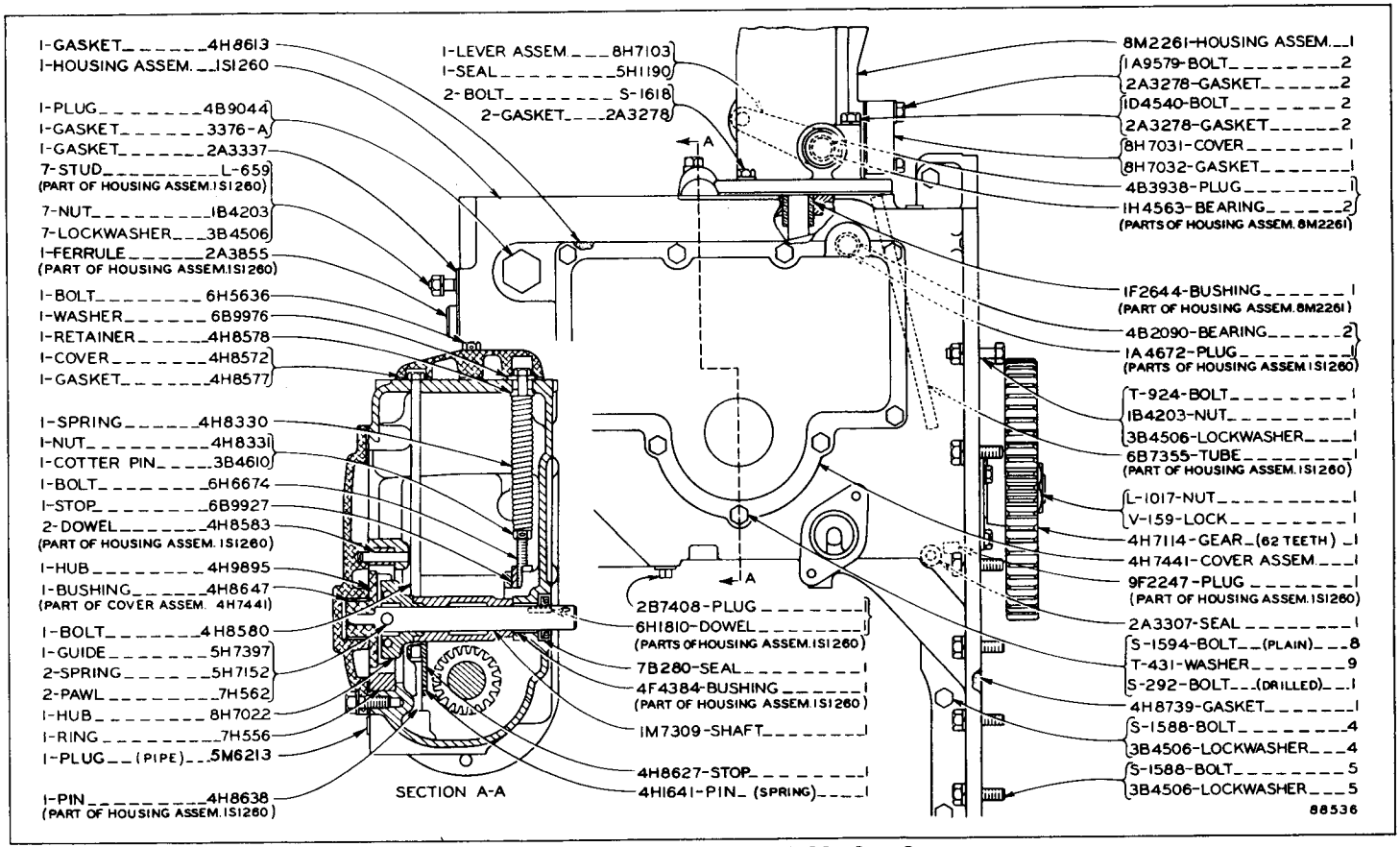

ACCESSORY DRIVE AND GOVERNOR—Part One

Effective with Serial No. 48A2809

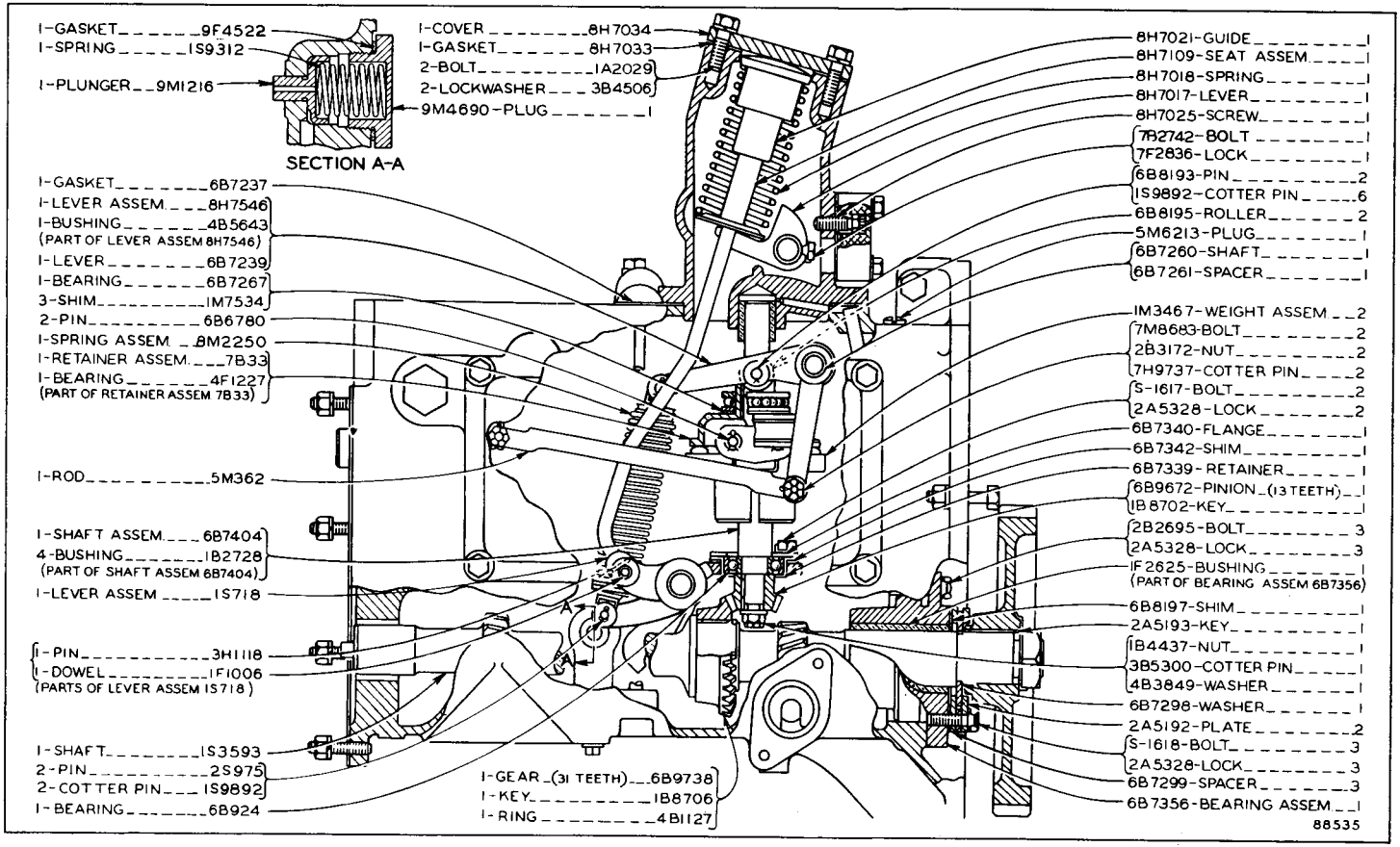
1-GASKET 9F4522
1-SPRING 1S9312
1-PLUNGER 9M1216
SECTION A-A
1-COVER 8H7034
1-GASKET 8H7033
2-BOLT 1A2029
2-LOCKWASHER 3B4506
9M4690-PLUG 1
8H7021-GUIDE 1
8H7109-SEAT ASSEM. 1
8H7018-SPRING 1
8H7017-LEVER 1
8H7025-SCREW 1
7B2742-BOLT 1
7F2636-LOCK 1
6B8193-PIN 2
1S9892-COTTER PIN 6
6B8195-ROLLER 2
5M6213-PLUG 1
6B7260-SHAFT 1
6B7261-SPACER 1
1-GASKET 6B7237
1-LEVER ASSEM. 8H7546
1-BUSHING 4B5643
(PART OF LEVER ASSEM 8H7546)
1-LEVER 6B7239
1-BEARING 6B7267
3-SHIM 1M7534
2-PIN 6B6780
1-SPRING ASSEM. 8M2250
1-RETAINER ASSEM. 7B33
1-BEARING 4F1227
(PART OF RETAINER ASSEM 7B33)
IM3467-WEIGHT ASSEM 2
7M8683-BOLT 2
2B3172-NUT 2
7H9737-COTTER PIN 2
S-1617-BOLT 2
2A5328-LOCK 2
6B7340-FLANGE 1
6B7342-SHIM 1
6B7339-RETAINER 1
6B9672-PINION (13 TEETH) 1
1B8702-KEY 1
1-ROD 5M362
1-SHAFT ASSEM. 6B7404
4-BUSHING 1B2728
(PART OF SHAFT ASSEM 6B7404)
1-LEVER ASSEM 1S718
2B2695-BOLT 3
2A5328-LOCK 3
1F2625-BUSHING 1
(PART OF BEARING ASSEM 6B7356)
6B8197-SHIM 1
2A5193-KEY 1
1B4437-NUT 1
3B5300-COTTER PIN 1
4B3849-WASHER 1
1-PIN 3H1118
1-DOWEL 1F1006
(PARTS OF LEVER ASSEM 1S718)
6B7298-WASHER 1
2A5192-PLATE 2
S-1618-BOLT 3
2A5328-LOCK 3
6B7299-SPACER 3
6B7356-BEARING ASSEM 1
1-SHAFT 1S3593
2-PIN 2S975
2-COTTER PIN 1S9892
1-BEARING 6B924
1-GEAR (31 TEETH) 6B9738
1-KEY 1B8706
1-RING 4B1127
88535

Consists of:

1	1A2209	Bolt—Lever to shaft
1	1A4784	Washer—To bolt
1	2A2209	Lock—Bolts to clamp
1	2A4382	Bolt—Lever to shaft
2	2A5328	Lock—Bolts to flange
2	1B4203	Nut—To ball joint
4	2B2695	Bolt—Cover assembly to housing
2	3B4506	Lockwasher—To bolt
4	3B4507	Cotter—Pin to lever and spring assembly
4	3B4507	Cotter—Pin to shaft assembly and weight assembly
1	4B4278	Washer—Spring to pedal
2	5B9079	Nut—Rod to ball joint
1	6B7237	Gasket—Cover assembly to housing assembly
2	1D5117	Nut—To detent
1	3D2777	Spring—To pedal
1	5F8542	Shim—Spacer to injection pump housing
1	6F6204	Lock—Lever to bolts
4	8F6820	Washer—To bolt
1	3H4861	Spring—Clamp to spacer
1	3H6660	Pin—Lever to dowel
1	4H8577	Gasket—Cover to housing assembly
1	4H8613	Gasket—Cover assembly to housing assembly
1	7H7717	Cover Assembly—To shaft assembly
2	7H9737	Cotter—Bolt to nut and rod
1	8H7035	Gasket—Cover to housing assembly
1	1L7265	Lever—Shaft to spring assembly
2	5M2027	Ball Joint—Lever to pedal
1	8M6253	Pin—Pedal Assembly—To support assembly
1	8M6254	Block—Support to retainer
1	8M6255	Pin—Detent to pedal
1	8M6270	Retainer—Detent pin to pedal
1	8M6271	Pedal Assembly
1	9M3853	Rod Assembly—Ball joint to ball joint
1	9M3858	Spring—Rod assembly to support assembly
1	9M3864	Lever—Shaft to rod
1	9M4071	Spring Assembly—Lever assembly to lever
1	9M4091	Shaft—Lever to housing
1	9M4401	Lever—To end
1	9M4404	Support Assembly—Pedal to floor plate
1	9M4460	Rod Assembly
2	1S8319	Weight Assembly—To shaft
1	L-2061	Dowel—Lever to end
1	S-1570	Bolt—Lever to shaft
1	S-1588	Bolt—Support to block
1	.....	Installation Instruction Form No. 35168

	Consists of:		Page
1	9M3851	Governor and Accelerator Control Group	Between 36 & 37
1	9M4061	Accessory Drive and Governor Group	Between 36 & 37
1	2S1034	Governor and Accelerator Control Group	Shown below
2	1A2029	Bolt—Cover to head	
2	2B7560	Cork—Plug holes in console	
2	3B4506	Lockwasher—To bolt	
1	5H2536	Cover—Rear cylinder head assembly	
1	5H2537	Gasket—Cover to head	
1	9H3273	Spacer	
1	9M3857	Angle Assembly	
1	9M4397	Floor Plate Assembly	
1	9M4398	Cover Assembly—Floor plate	

9M4409 ACCELERATOR ARRANGEMENT—Factory Installation

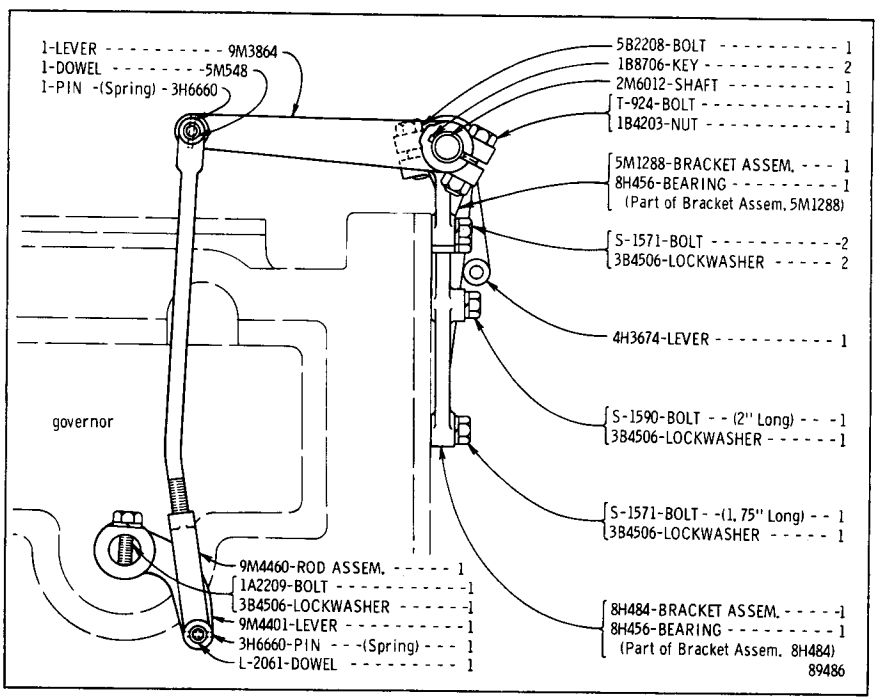

2S1034 GOVERNOR AND ACCELERATOR CONTROL GROUP
Part of 9M4409 Accelerator Arrangement

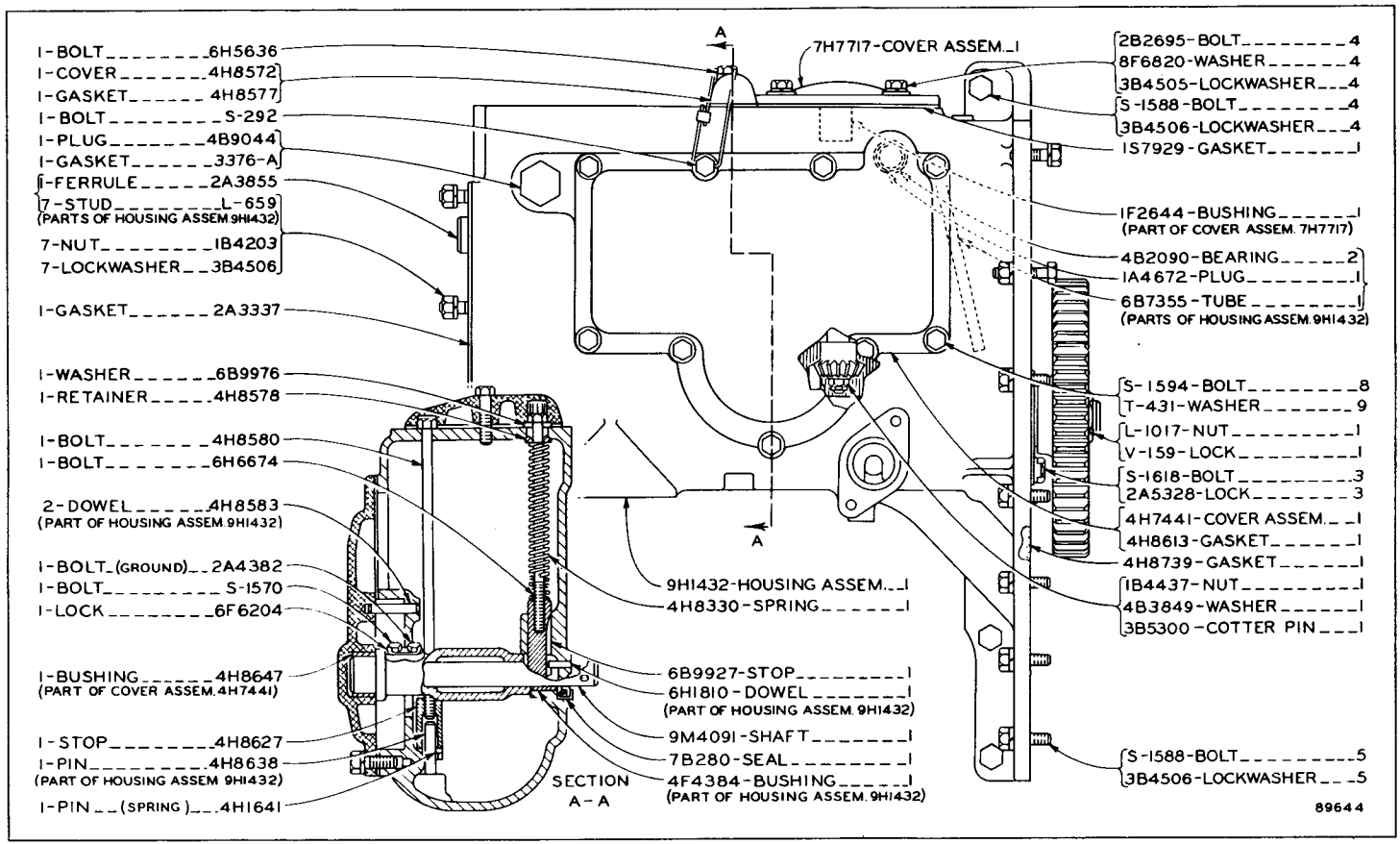

9M4061 ACCESSORY DRIVE AND GOVERNOR GROUP—Part One

Part of 9M4409 Accelerator Arrangement listed on insert between Pages 36 and 37

9M4061 ACCESSORY DRIVE AND GOVERNOR GROUP—Part Two

Part of 9M4409 Accelerator Arrangement listed on insert between Pages 36 and 37

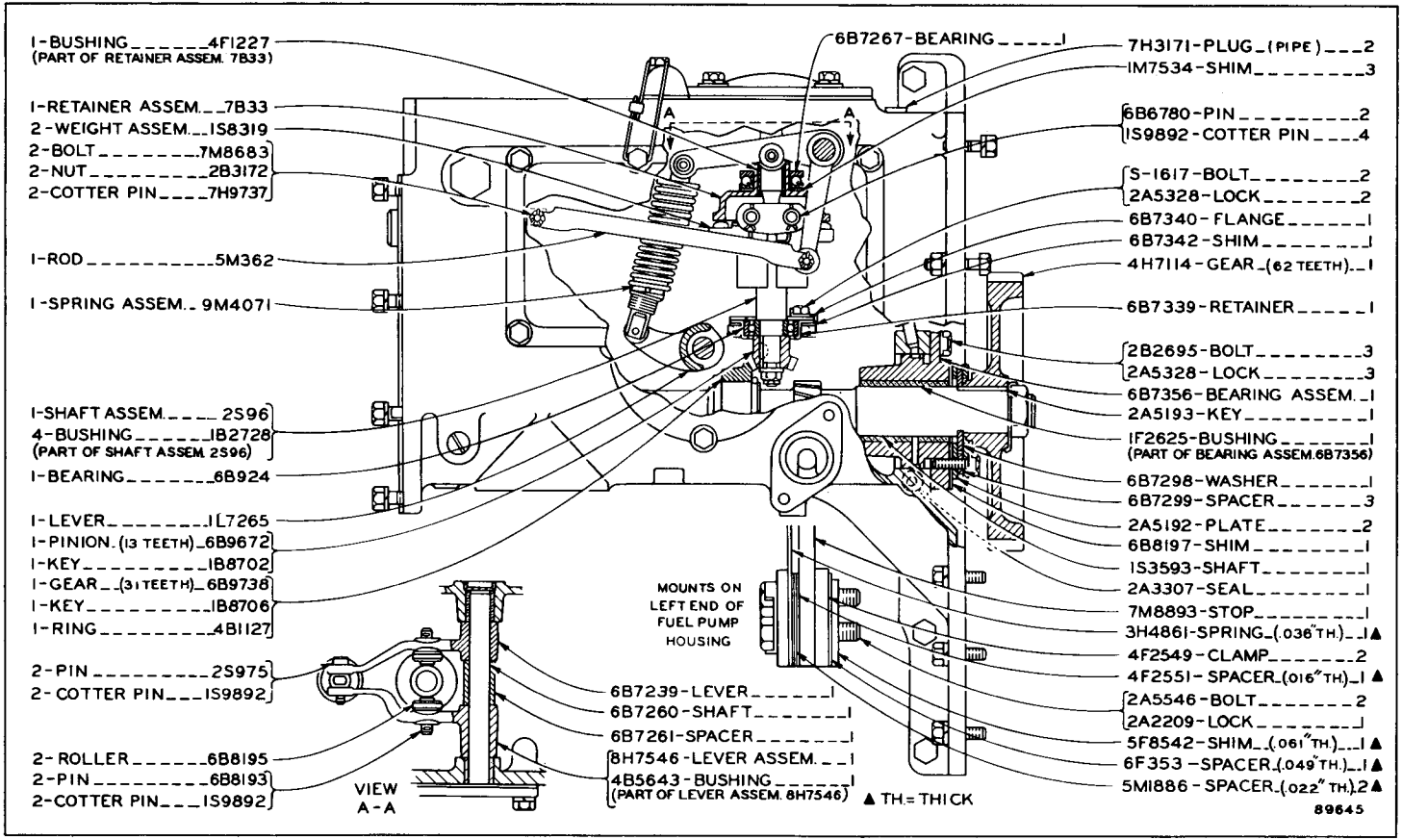

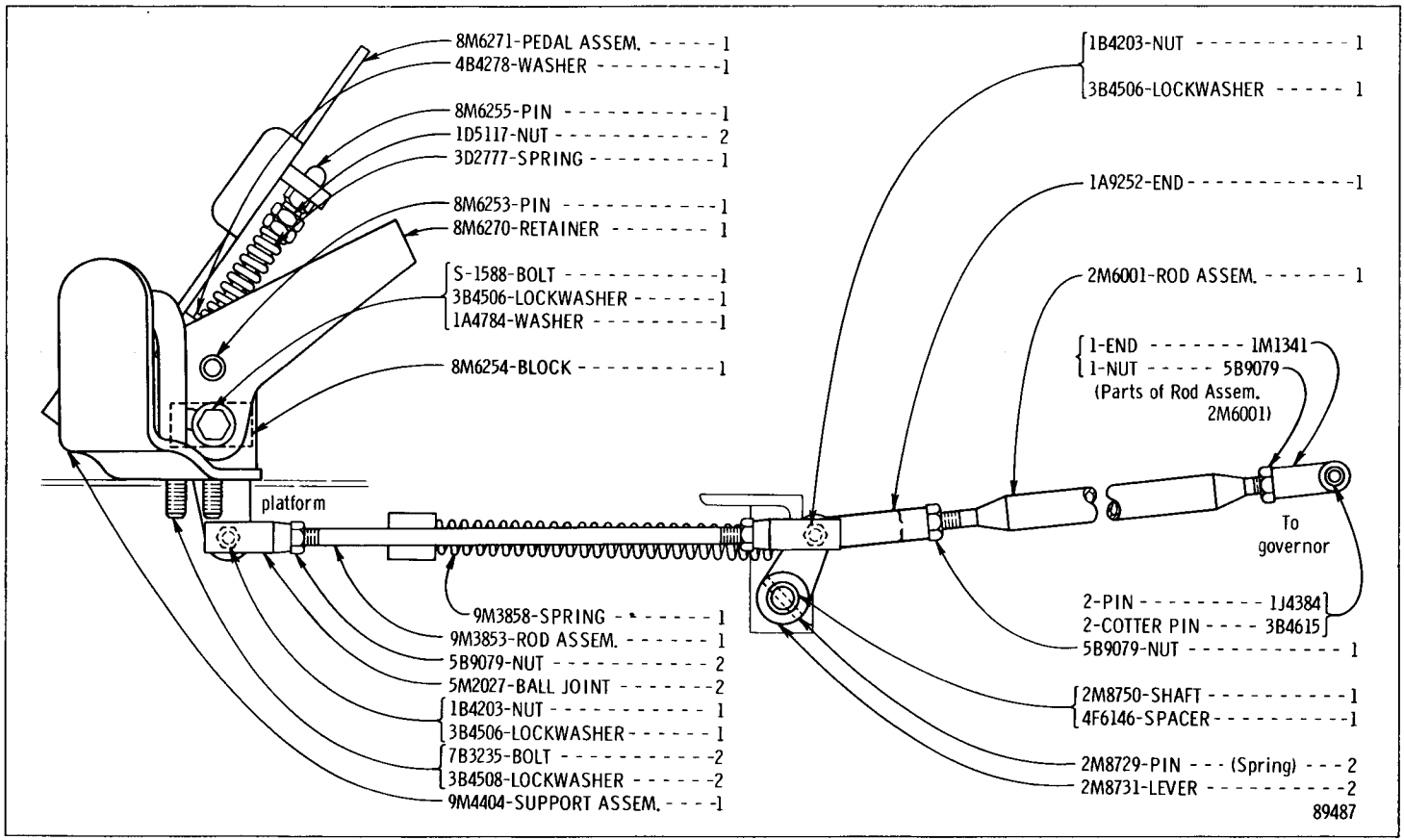

9M3851 GOVERNOR AND ACCELERATOR CONTROL GROUP

Part of 9M4409 Accelerator Arrangement listed on insert between Pages 36 and 37

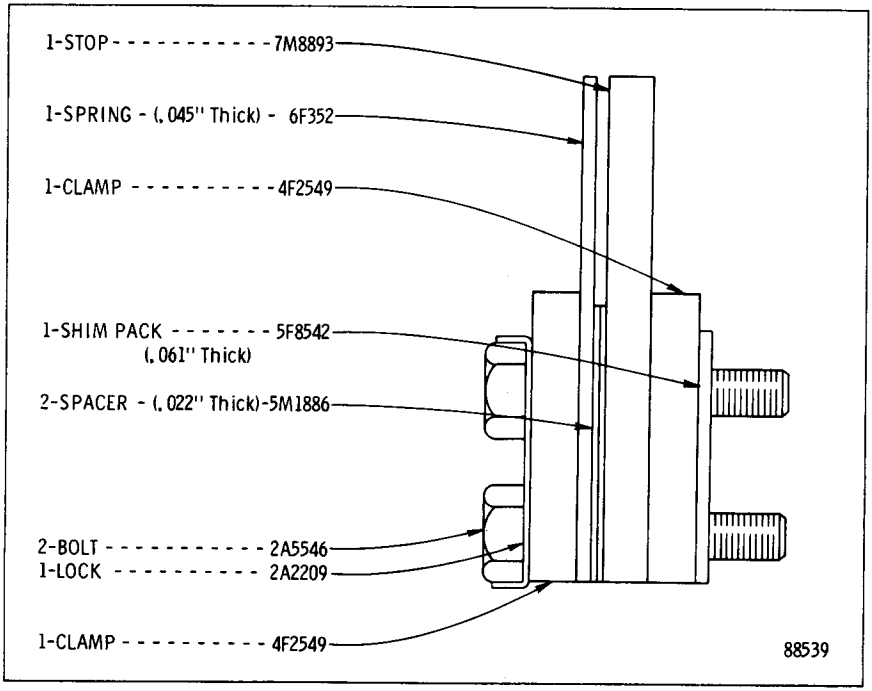

TORQUE SPRING
Effective with Serial No. 48A2809

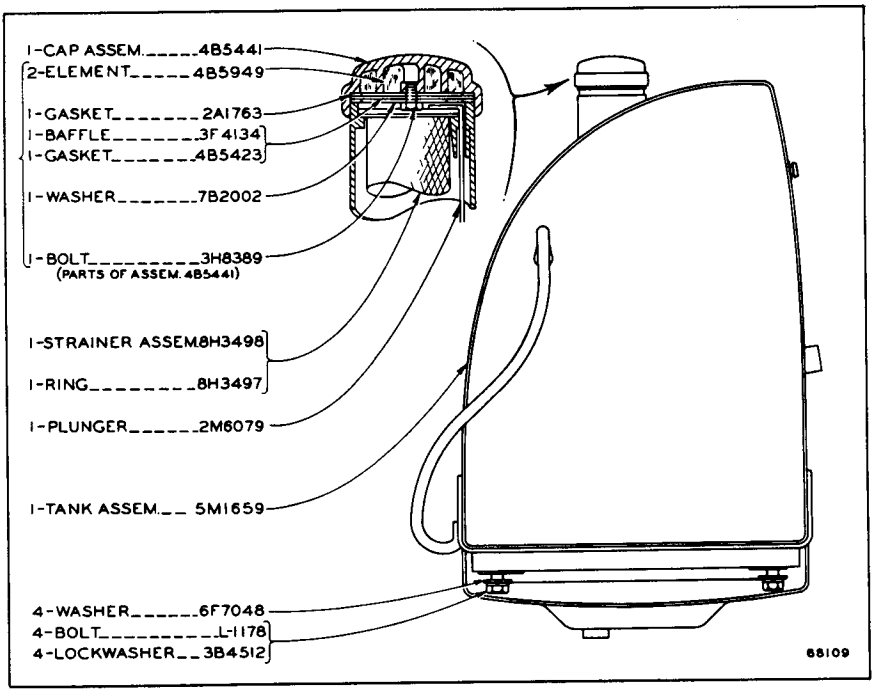

FUEL TANK

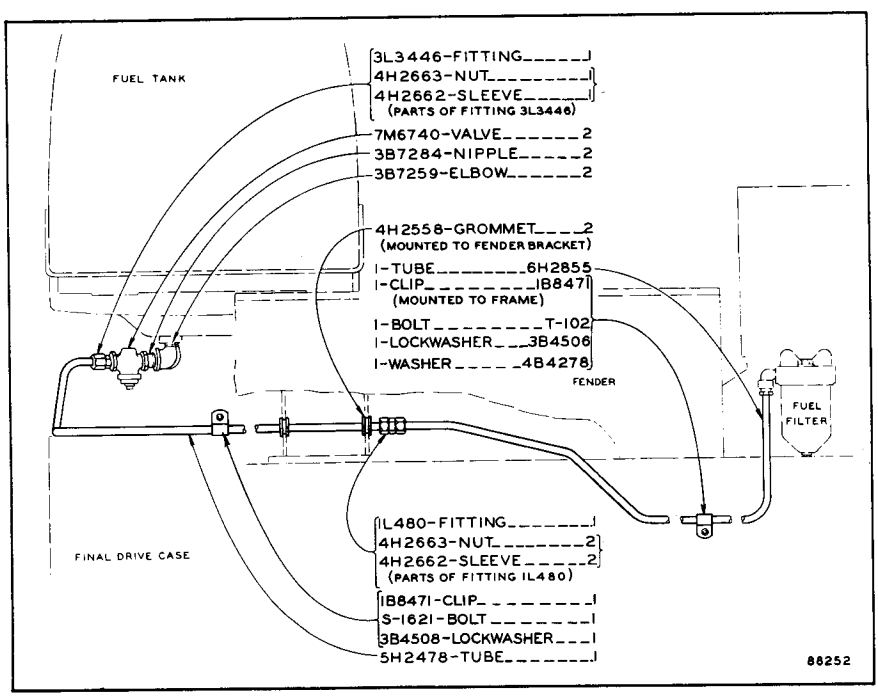

FUEL LINES—Side View

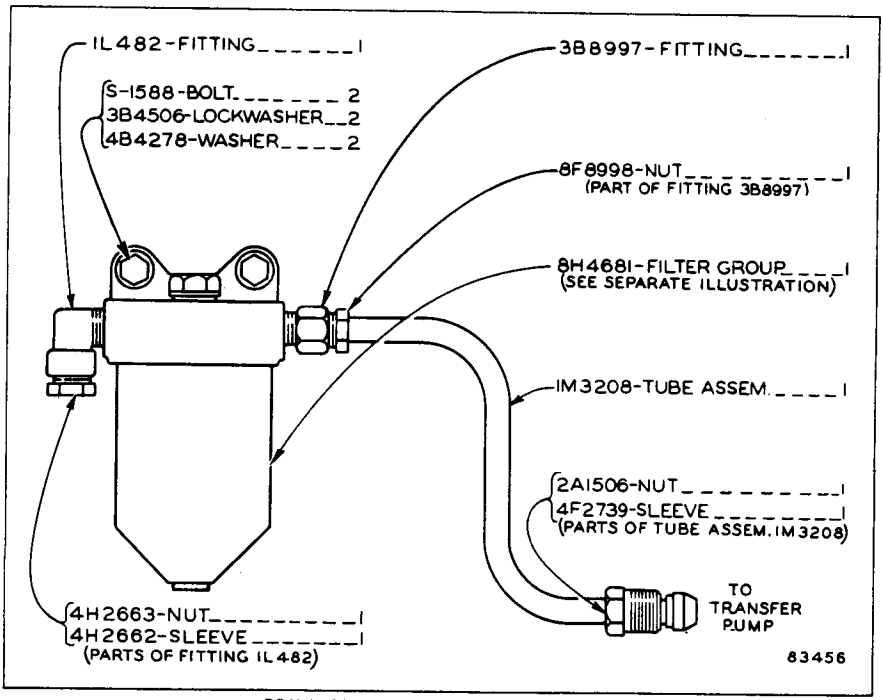

PRIMARY FUEL FILTER AND LINES
Effective with Serial No. 48A971
8H4681 Fuel Filter Group parts are shown on Page 39

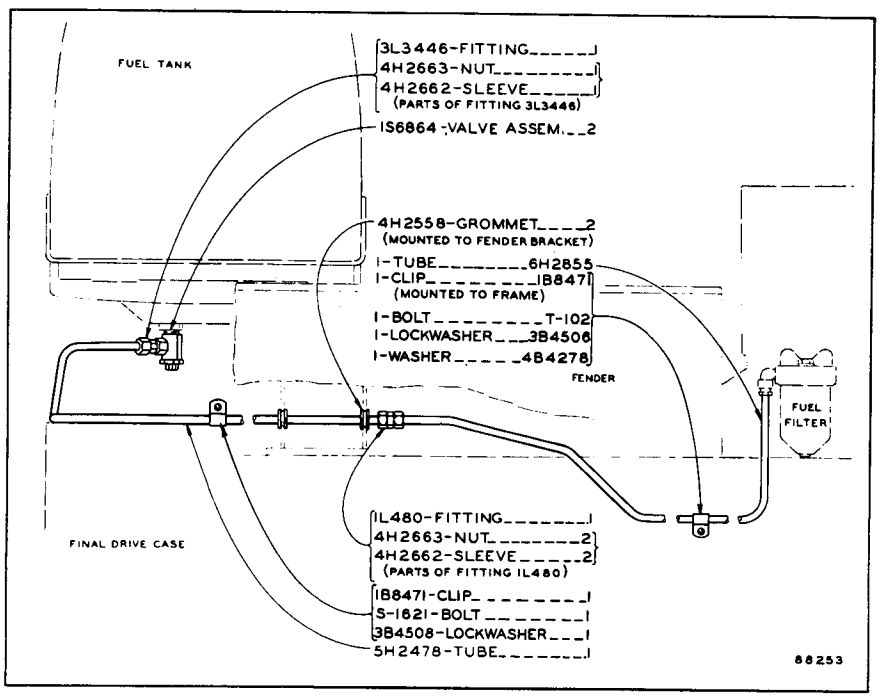

FUEL LINES—Side View
Effective with Serial No. 48A2756

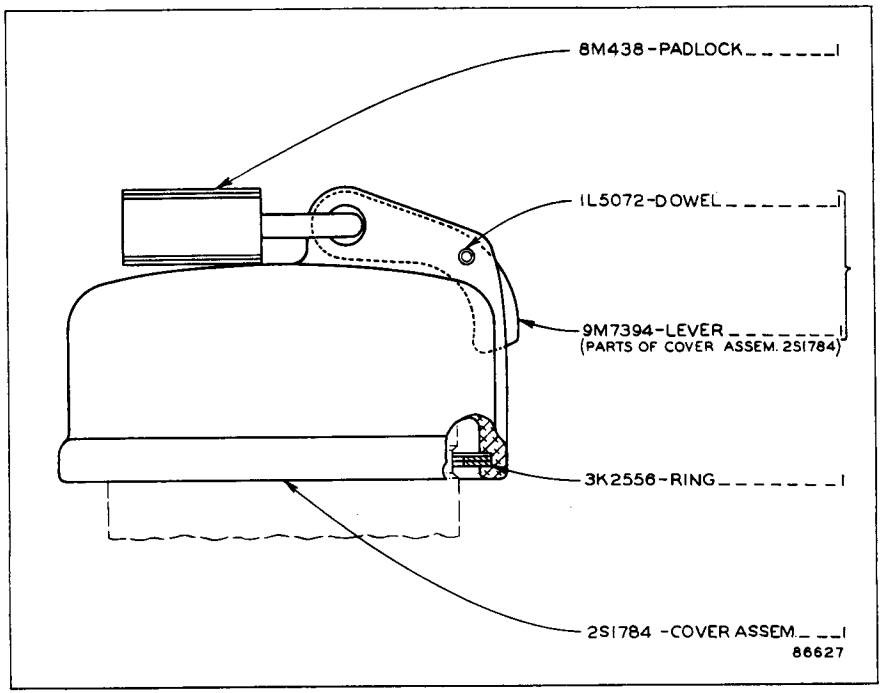

1S6307 PROTECTION COVER GROUP
Provides protective cover for Fuel Tank Cap

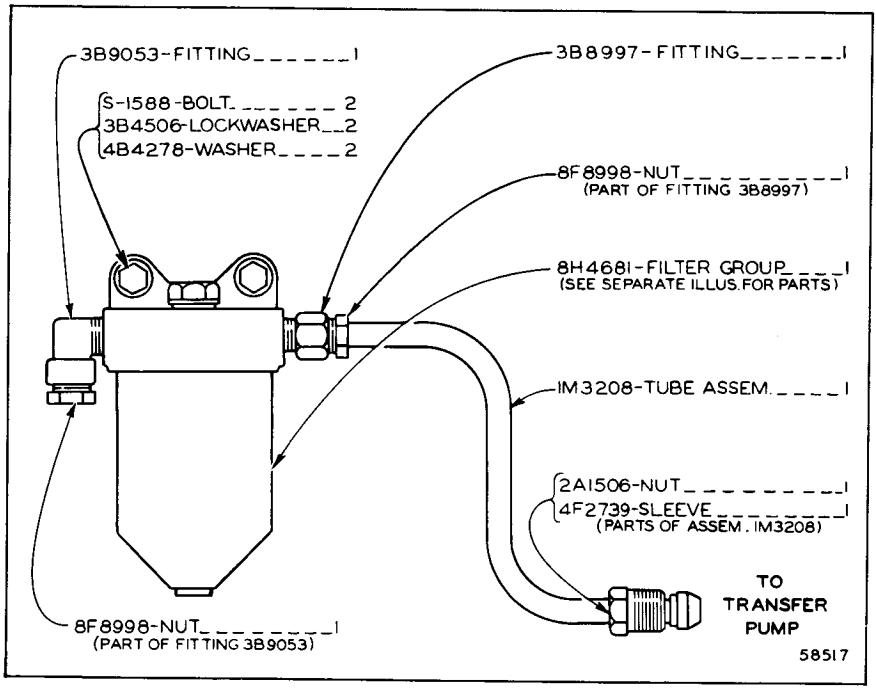

PRIMARY FUEL FILTER AND LINES

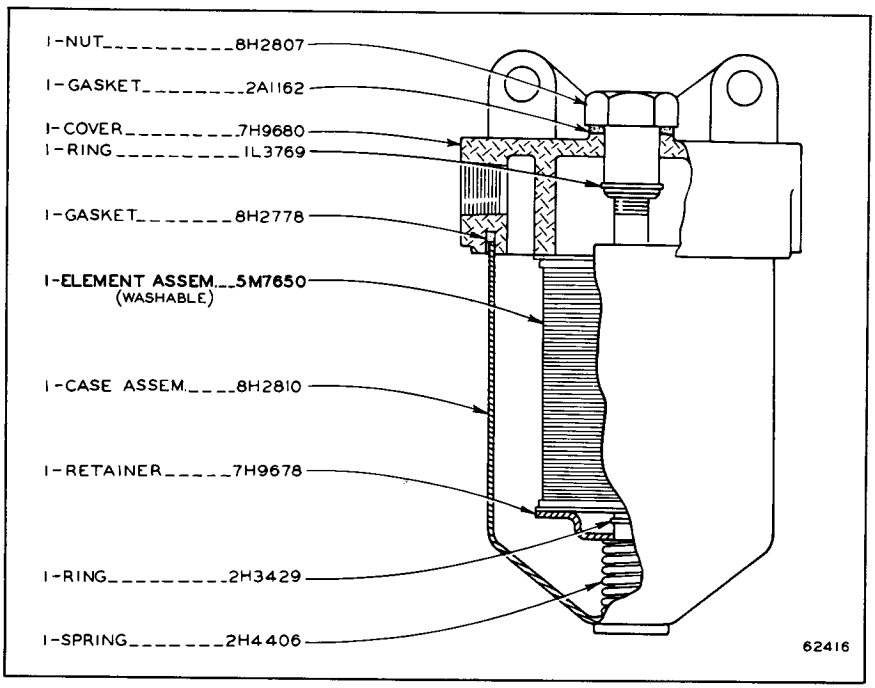

8H4681 PRIMARY FUEL FILTER GROUP
Part of Primary Fuel Filter and Lines

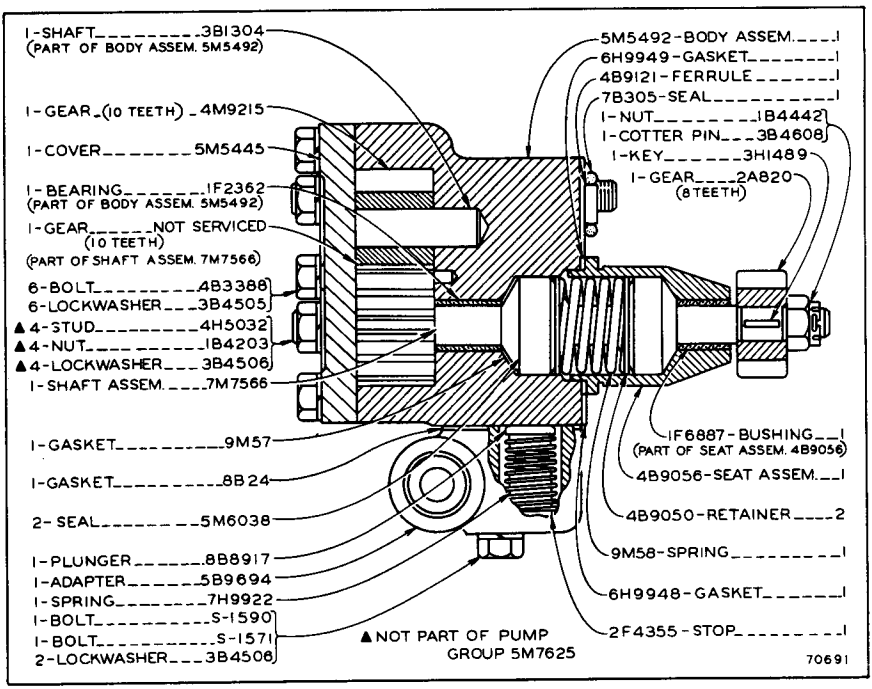

5M7625 FUEL TRANSFER PUMP GROUP

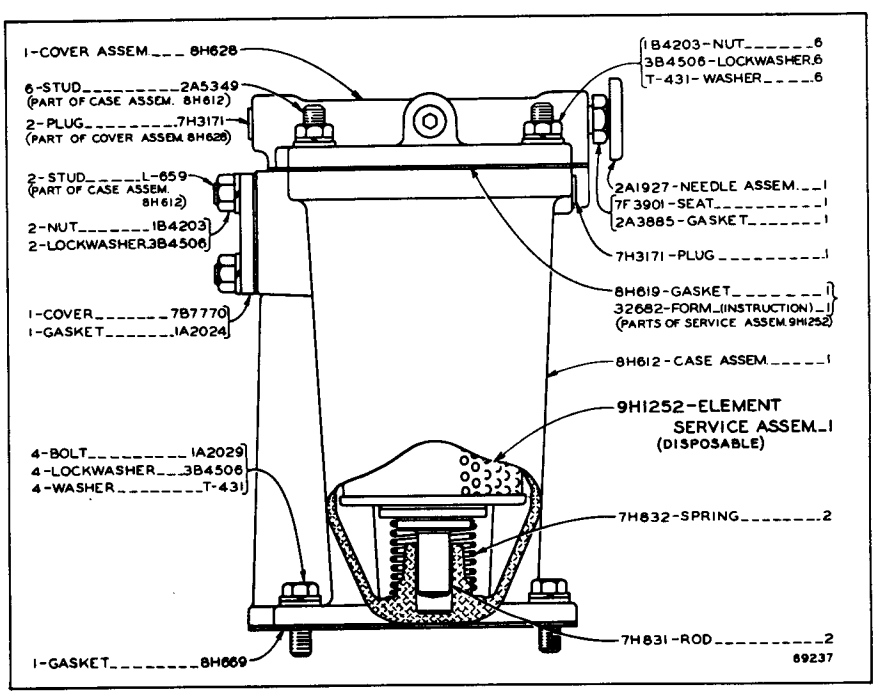

8H664 FUEL FILTER GROUP

ALWAYS GIVE SERIAL NUMBER WHEN ORDERING PARTS

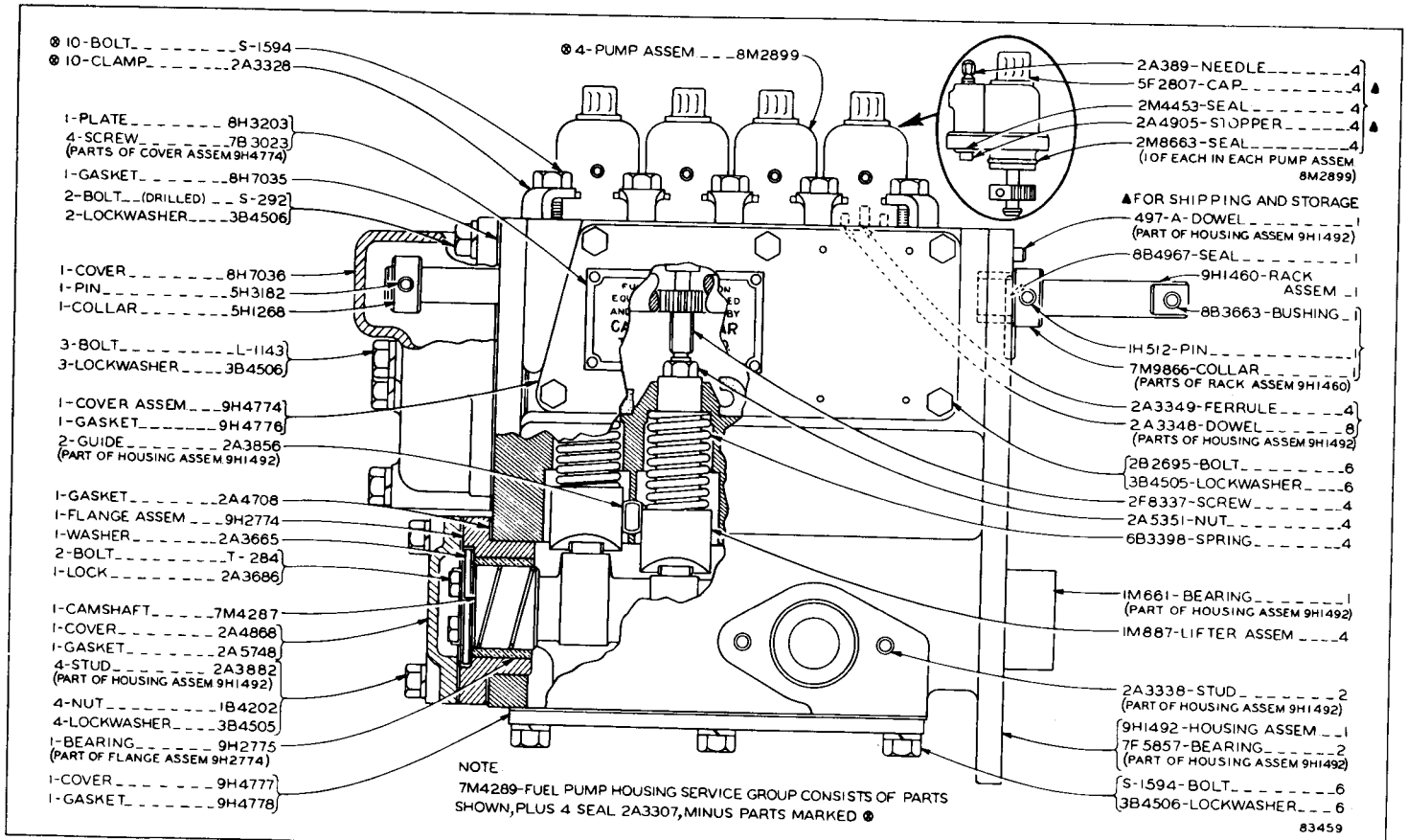

FUEL PUMP HOUSING
Effective with Serial No. 48A1082

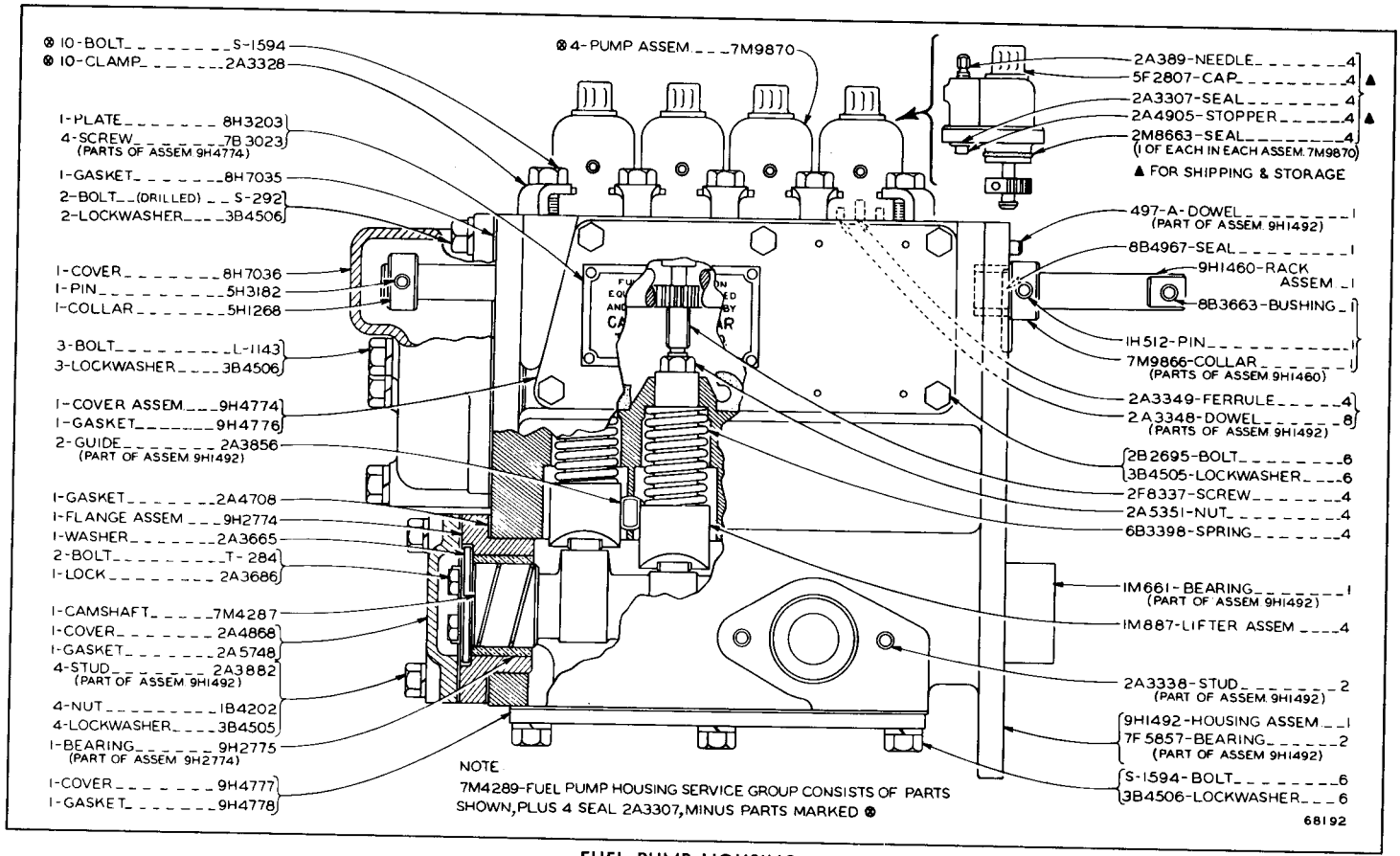

FUEL PUMP HOUSING

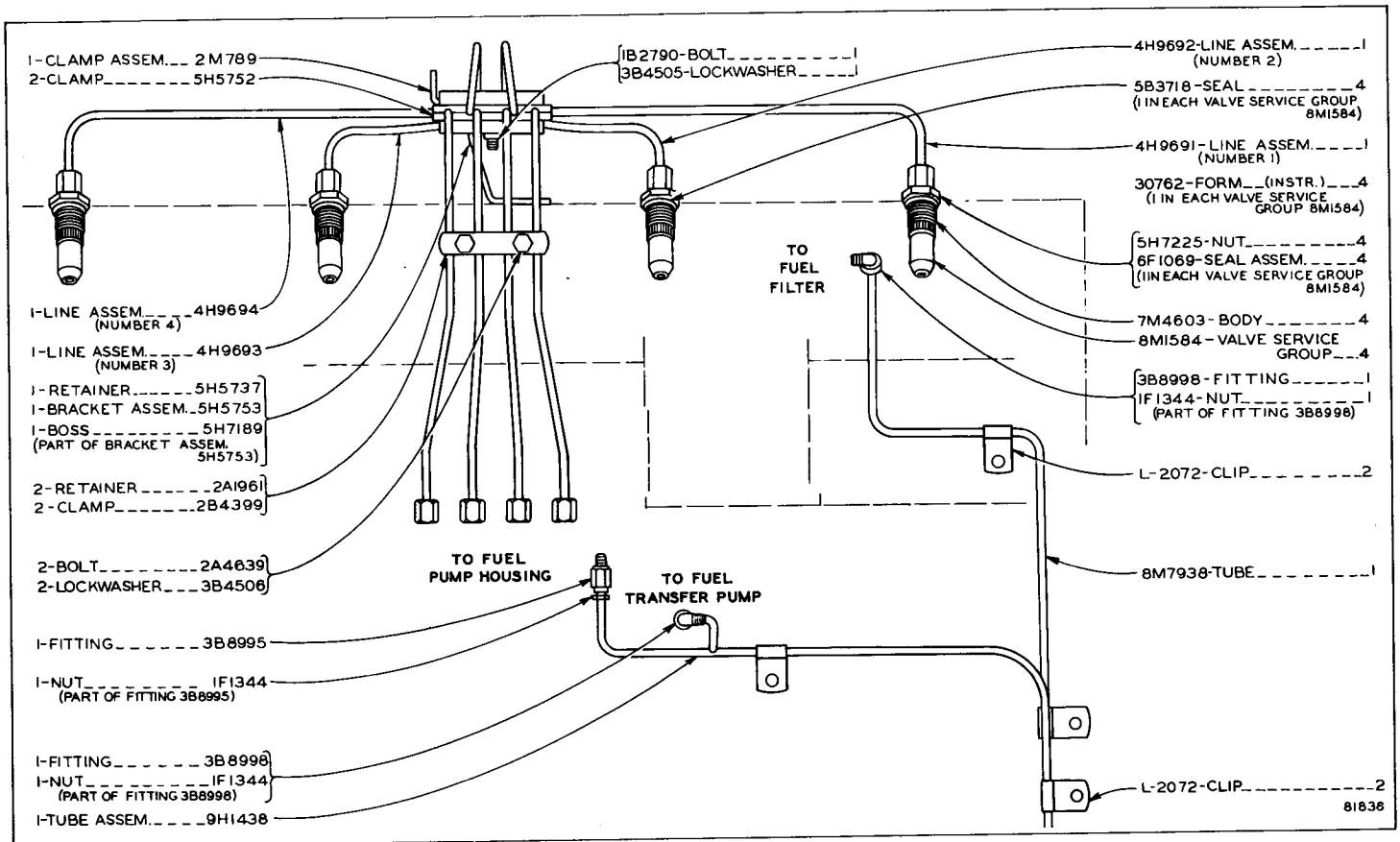

FUEL INJECTION VALVES AND LINES

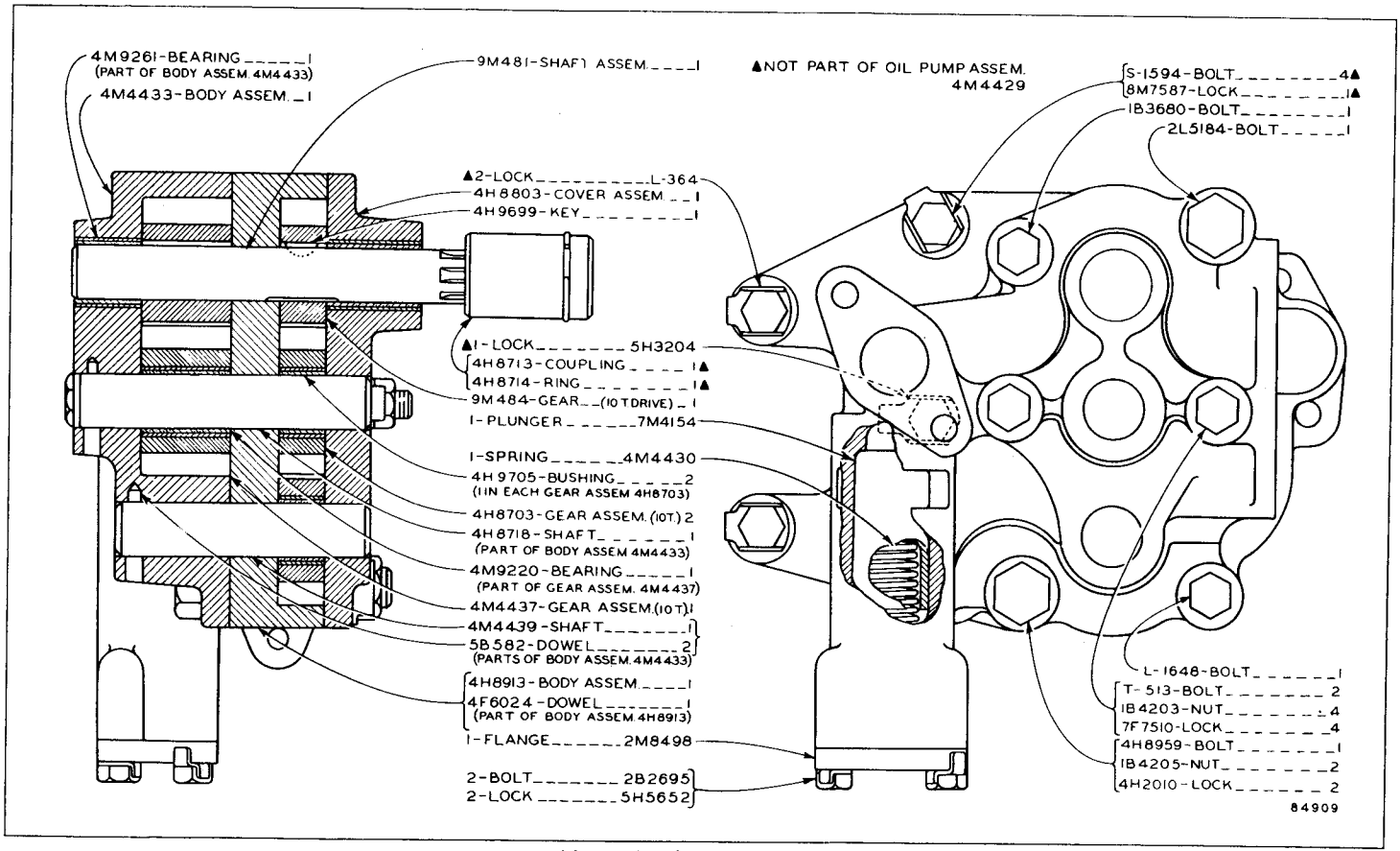

4M4429 OIL PUMP ASSEMBLY
Effective with Serial No. 48A1769

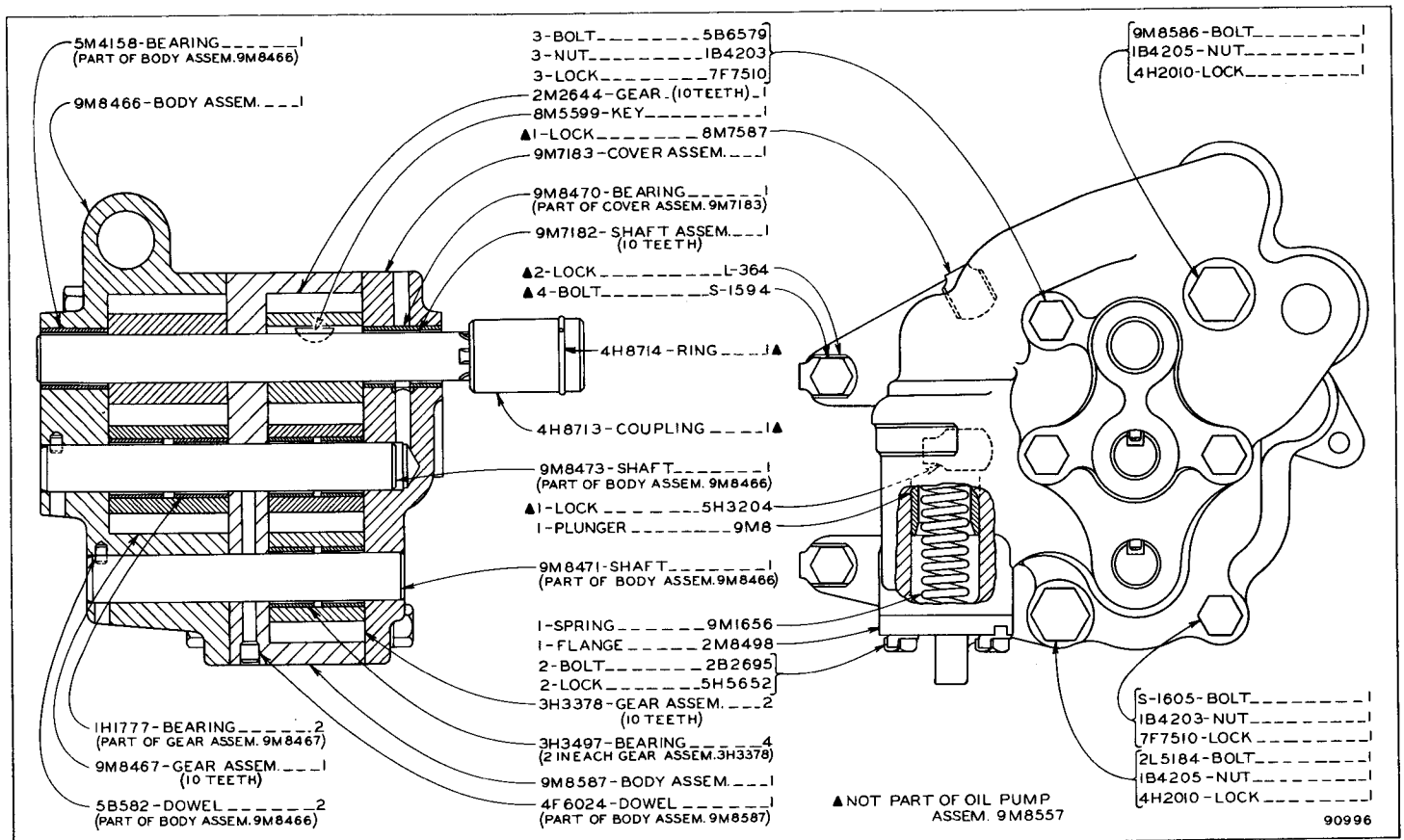

9M8557 OIL PUMP ASSEMBLY
Effective with Serial No. 48A2232

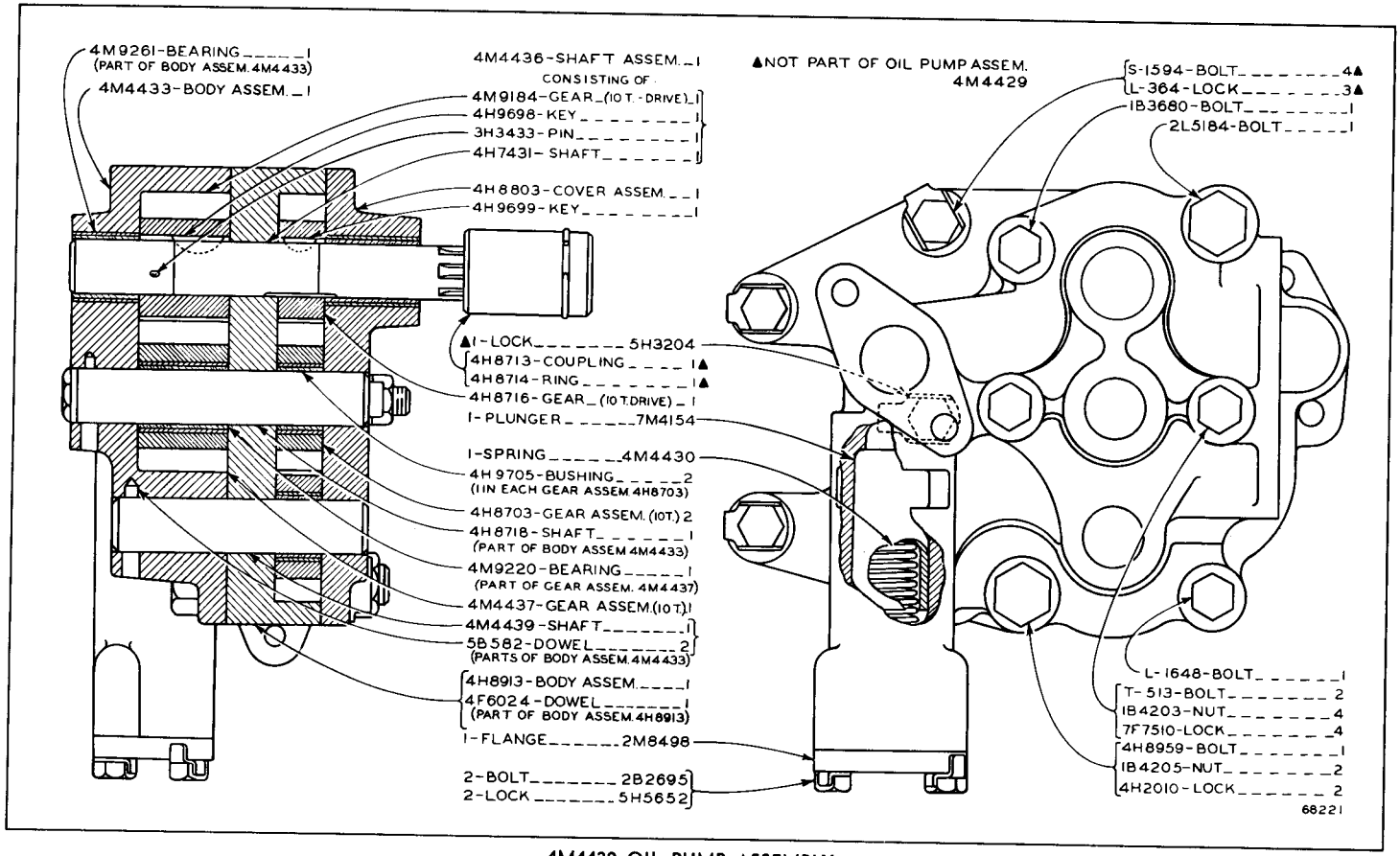

4M4429 OIL PUMP ASSEMBLY

ONLY "CATERPILLAR" PARTS GIVE "CATERPILLAR" PERFORMANCE

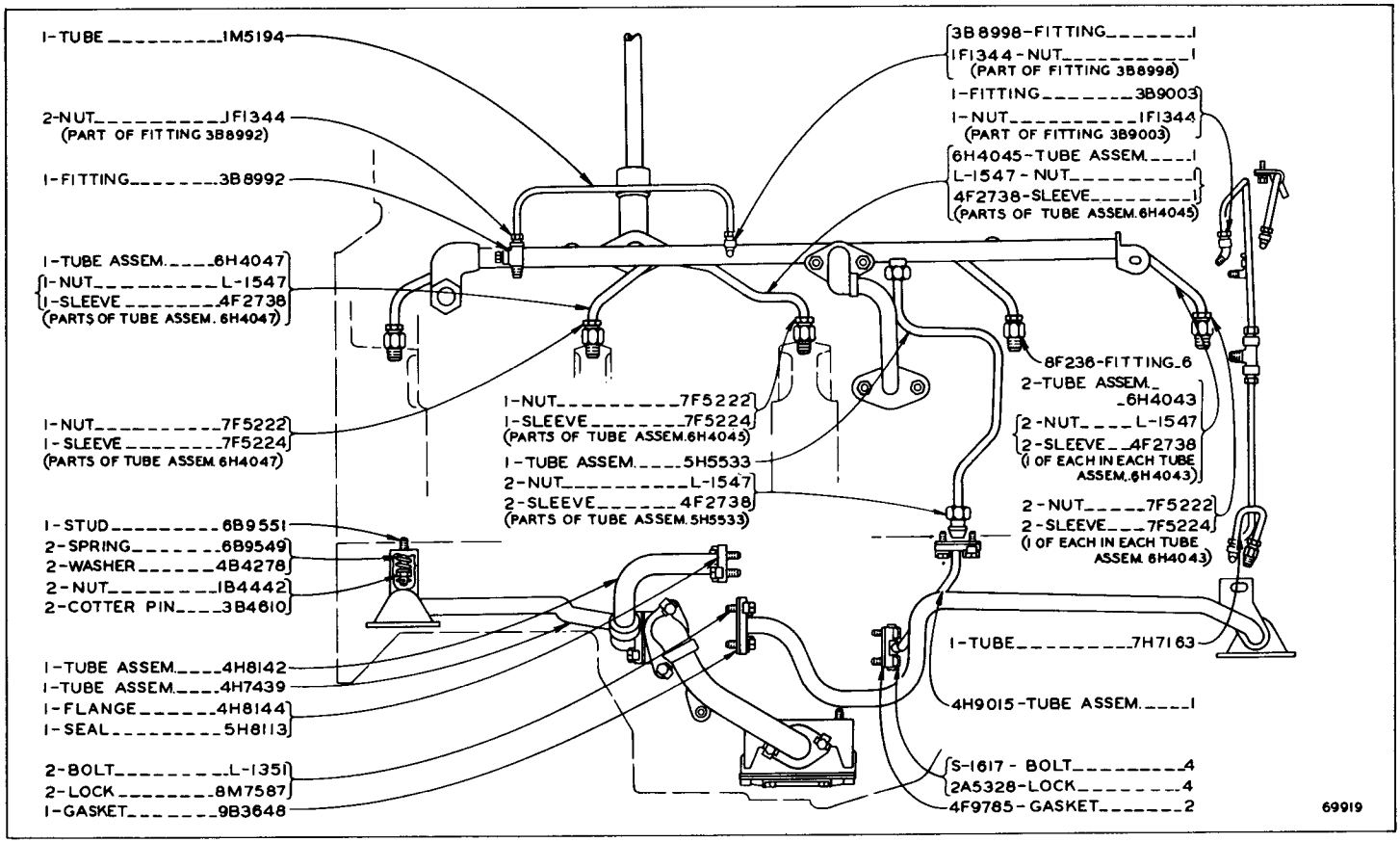

OIL LINES AND FILTER—Part One—Side View

ADDITIONAL PARTS ARE SHOWN ON PAGES 45 AND 46

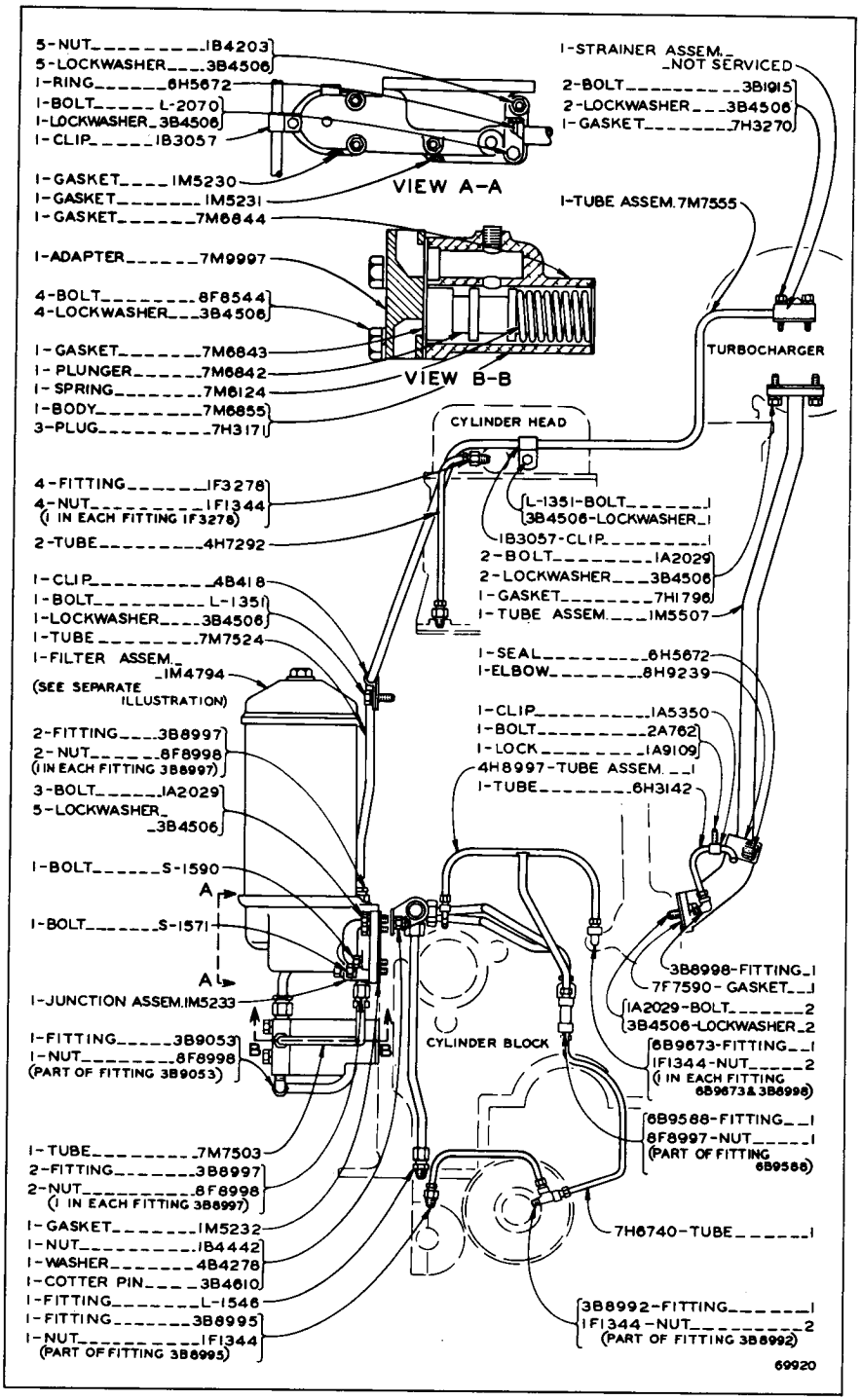

OIL LINES AND FILTER—Part Two—Front View

1M4794 Oil Filter Assembly parts are shown on Page 47

ADDITIONAL PARTS ARE SHOWN ON PAGES 44 AND 46

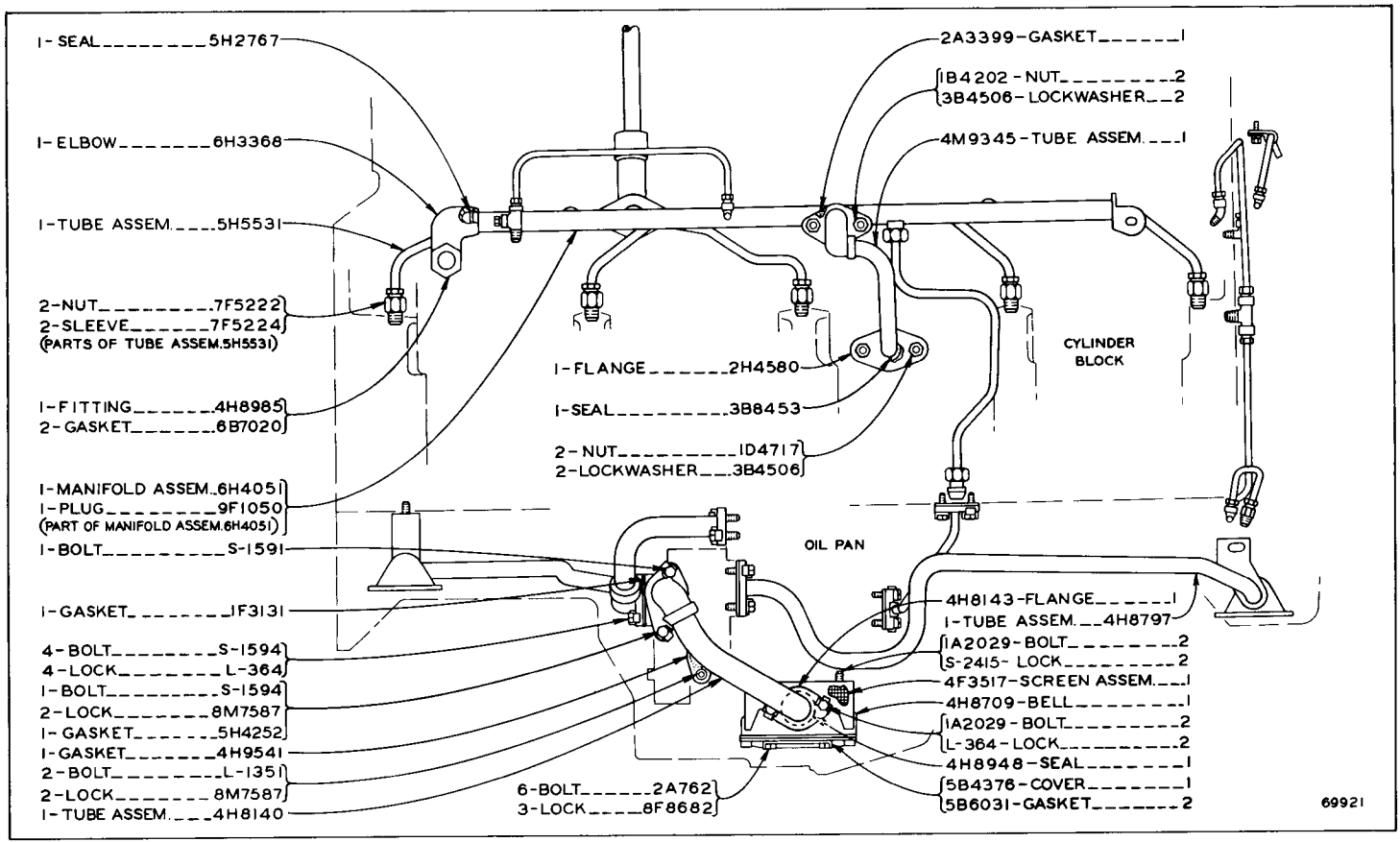

OIL LINES AND FILTER—Part Three—Side View

ADDITIONAL PARTS ARE SHOWN ON PAGES 44 AND 45

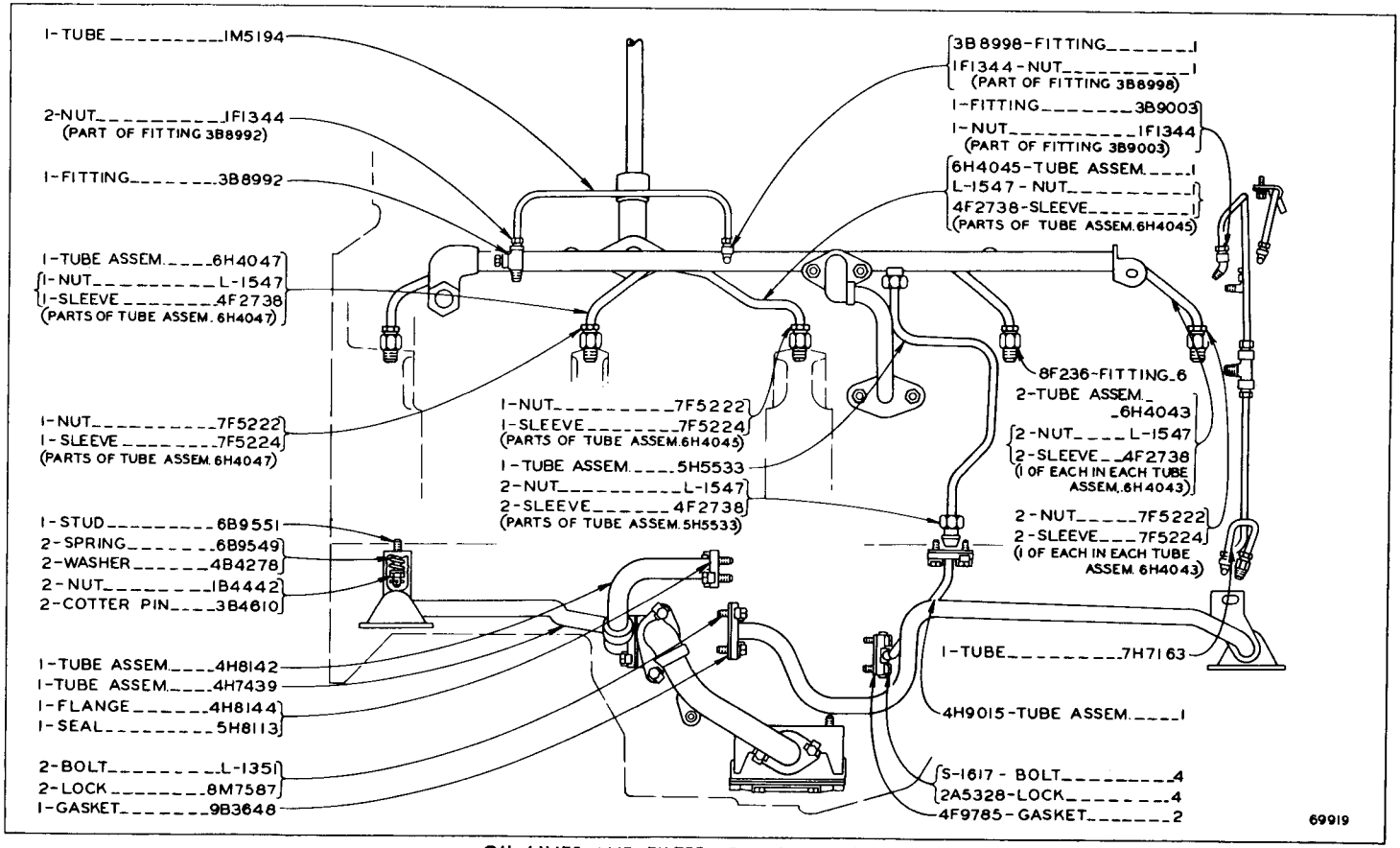

OIL LINES AND FILTER—Part One—Side View
Serial No. 48A650 to 48A654 and 48A656—Up
ADDITIONAL PARTS ARE SHOWN ON INSERTS NO. 51A AND 52

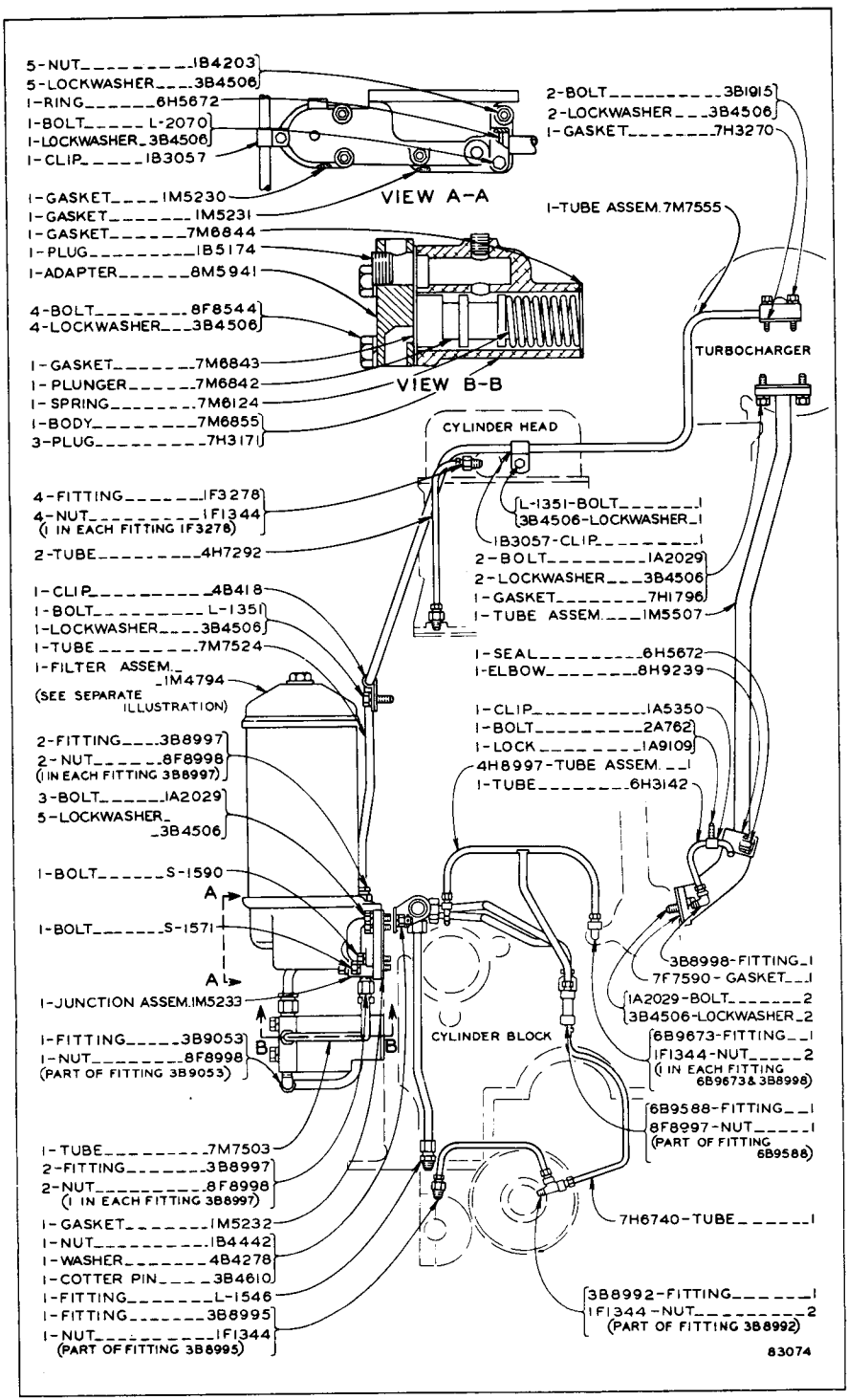

OIL LINES AND FILTER—Part Two—Front View
Serial No. 48A650 to 48A654 and 48A656—Up
1M4794 Oil Filter Assembly parts are shown on Page 47
ADDITIONAL PARTS ARE SHOWN ON INSERTS NO. 51 AND 52

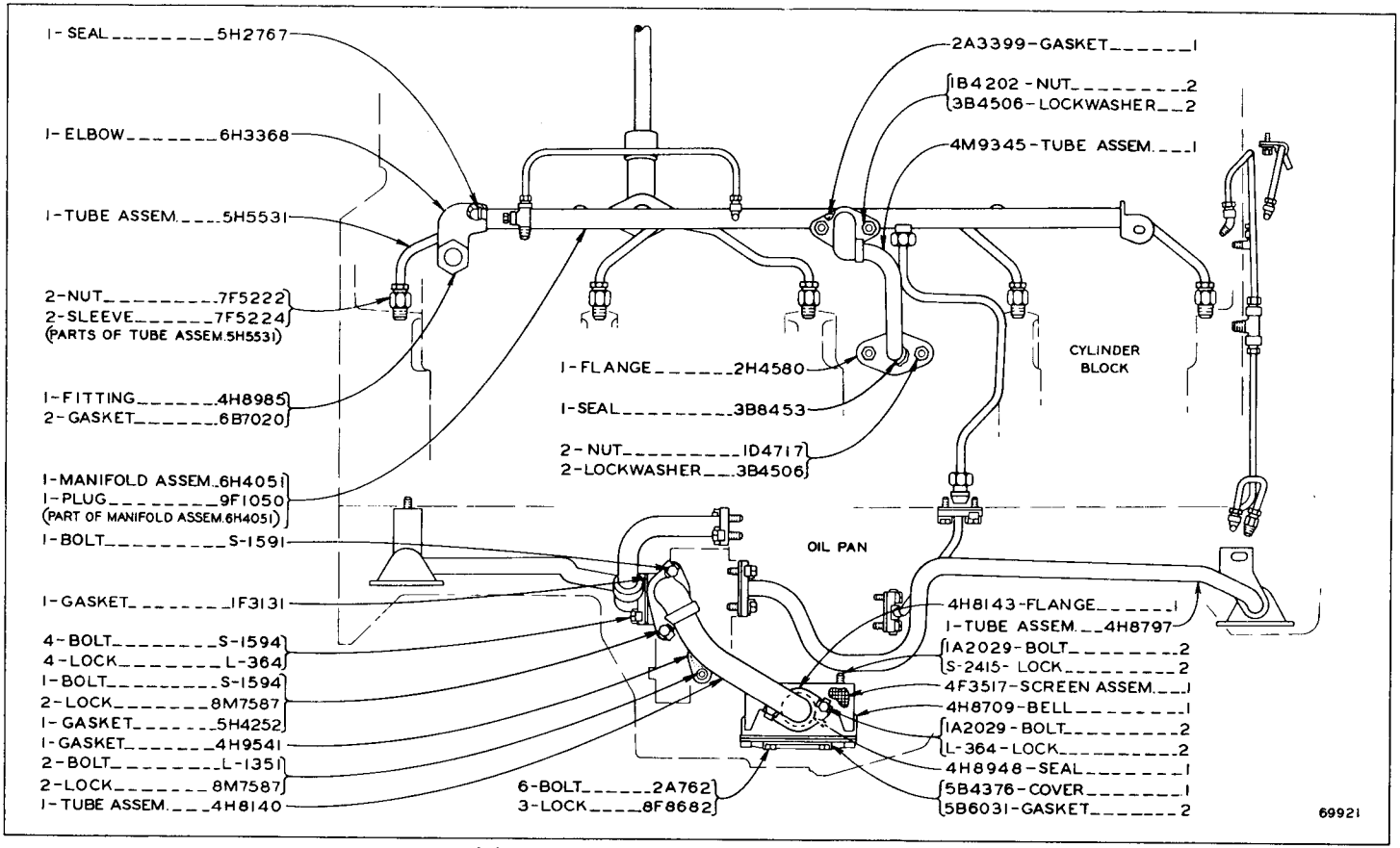

OIL LINES AND FILTER—Part Three—Side View
Serial No. 48A650 to 48A654 and 48A656—Up
ADDITIONAL PARTS ARE SHOWN ON INSERTS NO. 51 AND 51A

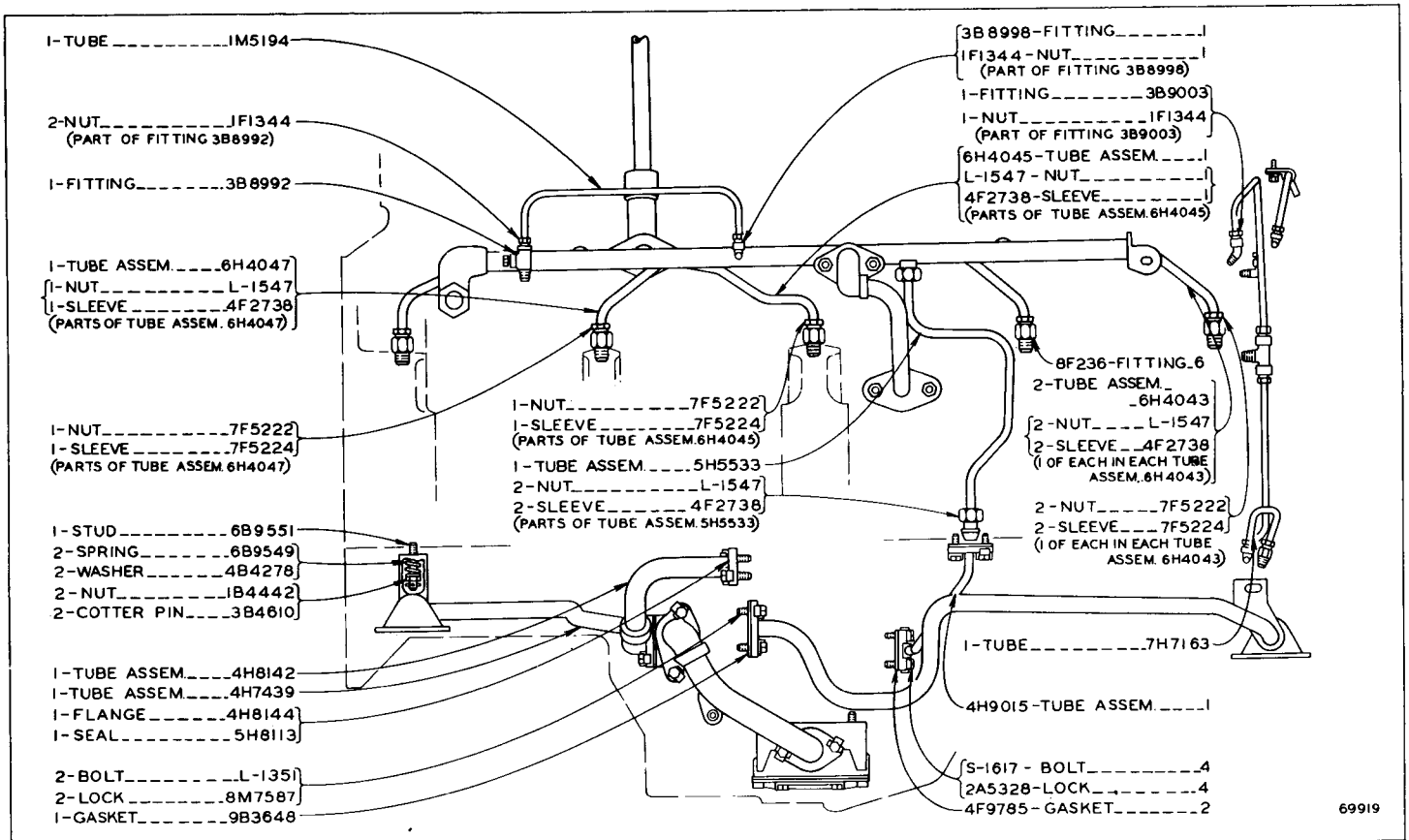

OIL LINES AND FILTER—Part One—Side View
Effective with Serial No. 48A1313
ADDITIONAL PARTS ARE SHOWN ON INSERTS NO. 57A AND 58

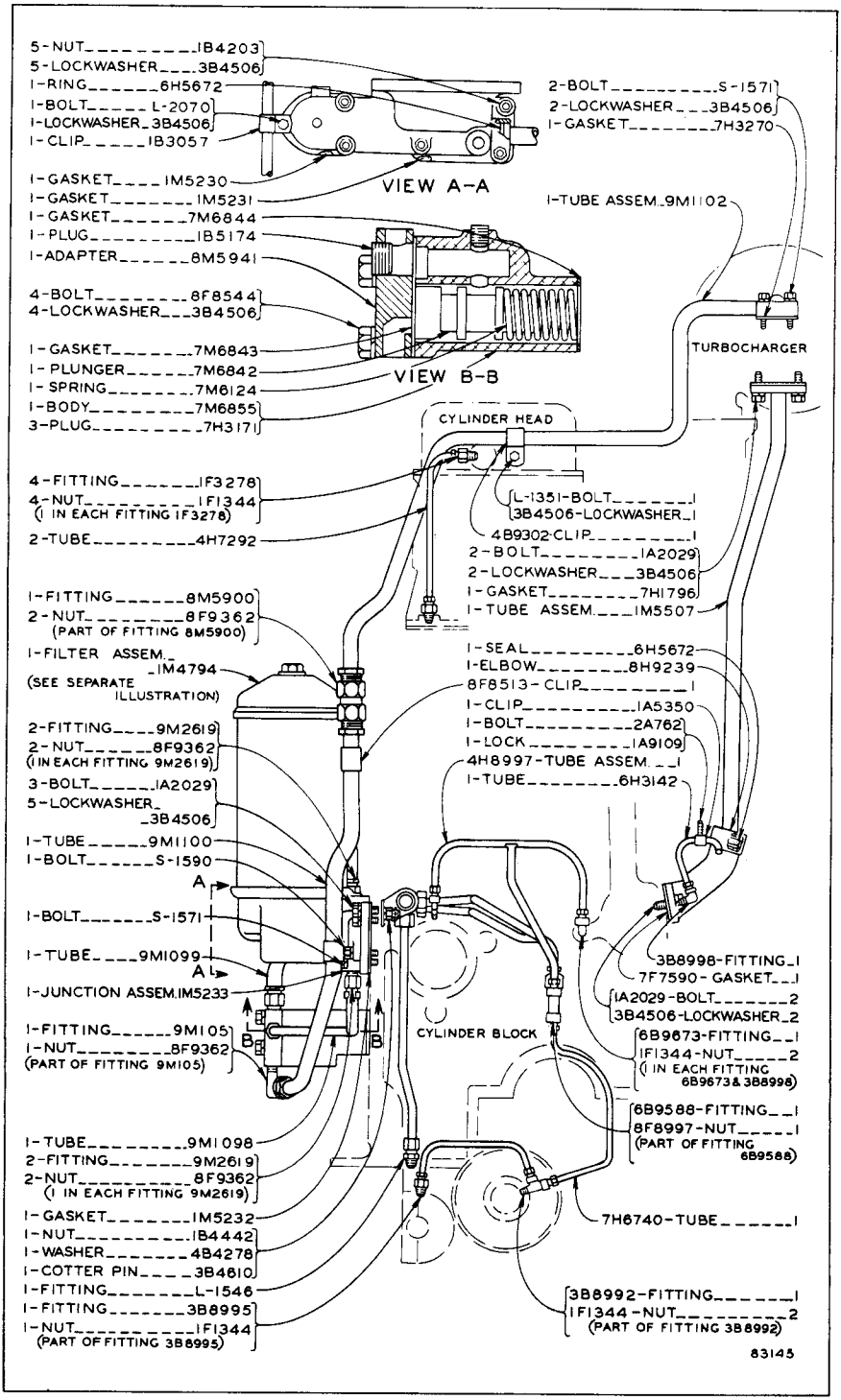

OIL LINES AND FILTER—Part Two—Front View
Effective with Serial No. 48A1313
1M4794 Oil Filter Assembly parts are shown on Page 47
ADDITIONAL PARTS ARE SHOWN ON INSERTS NO. 57 AND 58

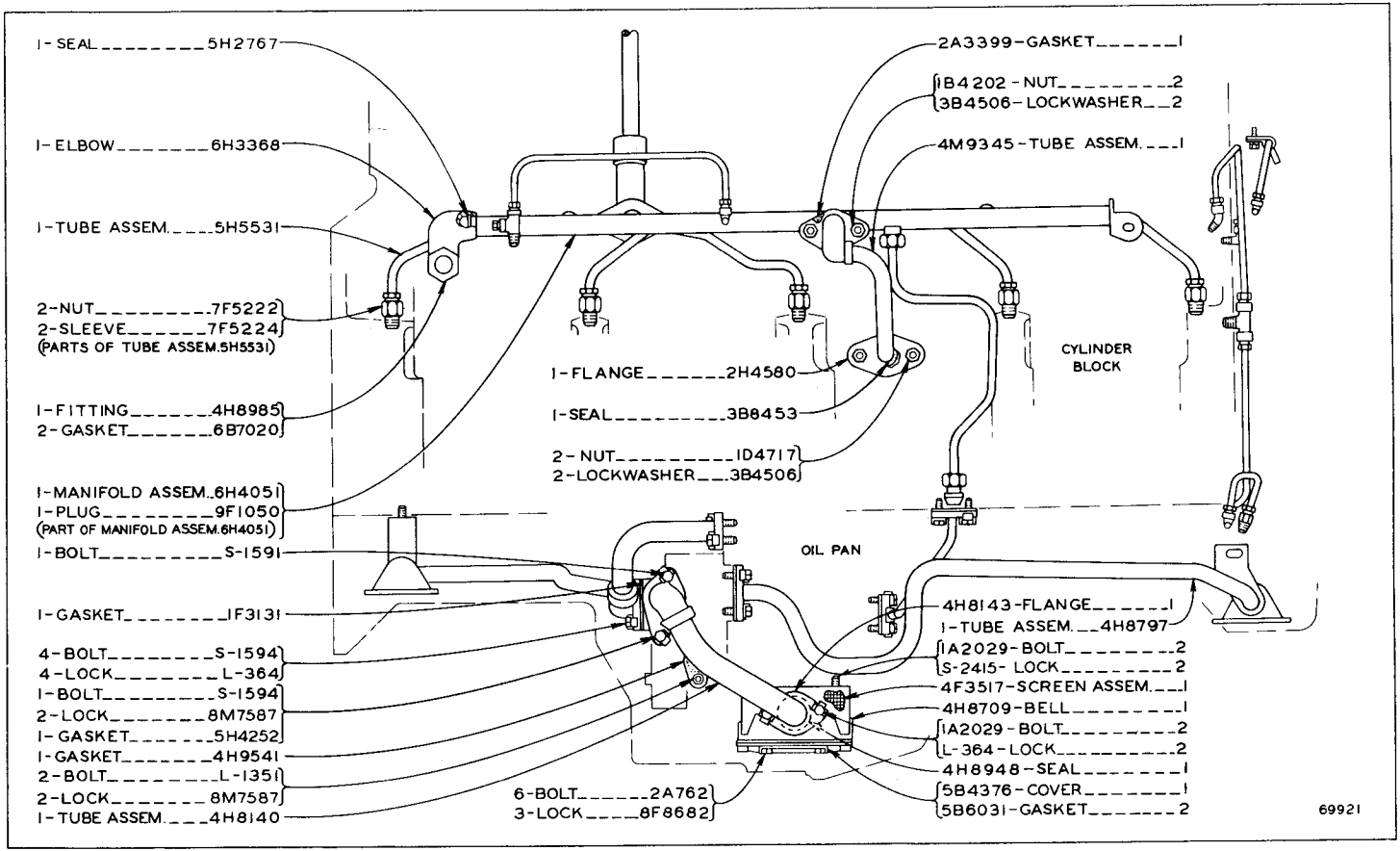

OIL LINES AND FILTER—Part Three—Side View
Effective with Serial No. 48A1313
ADDITIONAL PARTS ARE SHOWN ON INSERTS NO. 57 AND 57A

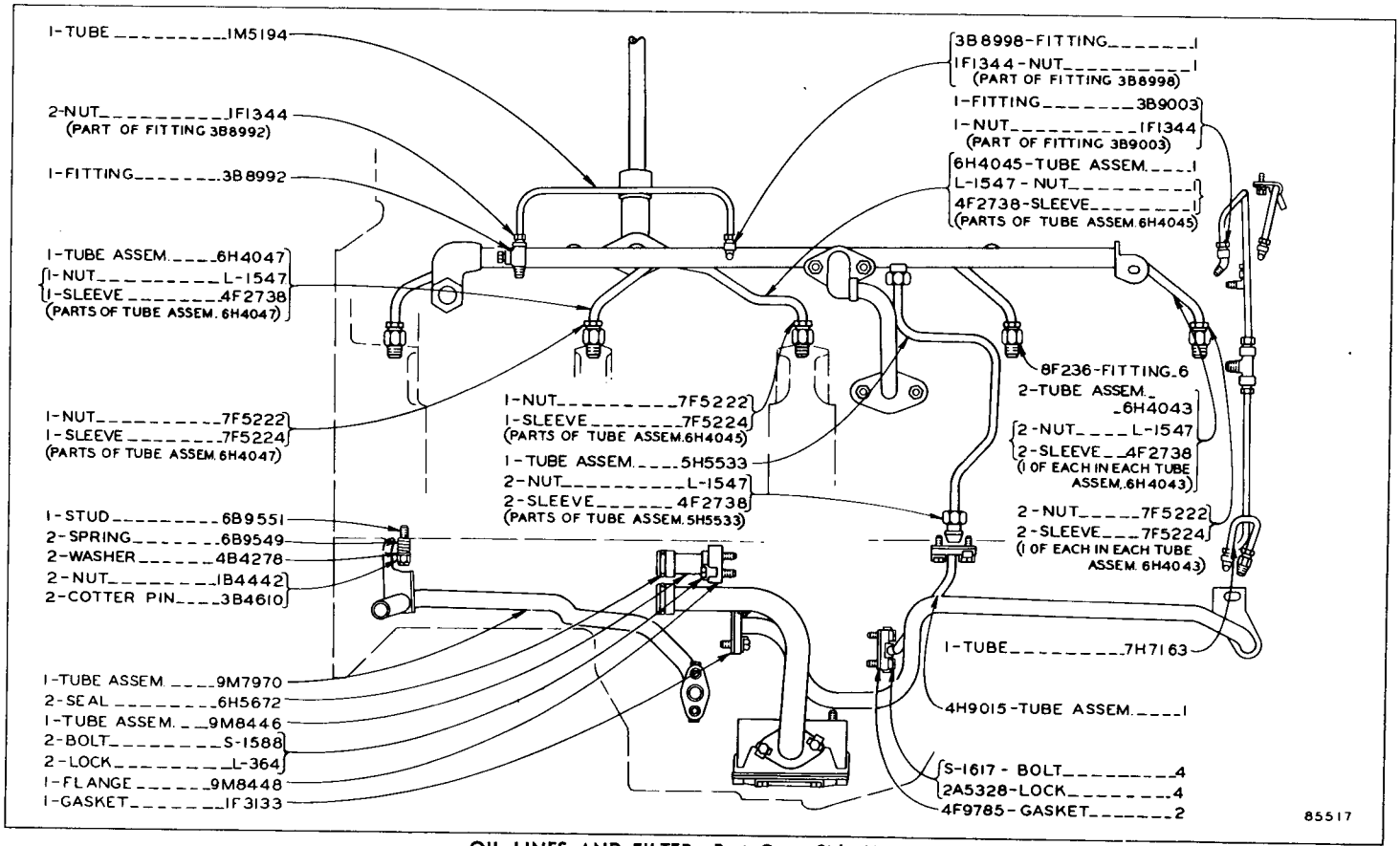

OIL LINES AND FILTER—Part One—Side View
Effective with Serial No. 48A2232
ADDITIONAL PARTS ARE SHOWN ON INSERTS NO. 41A AND 42

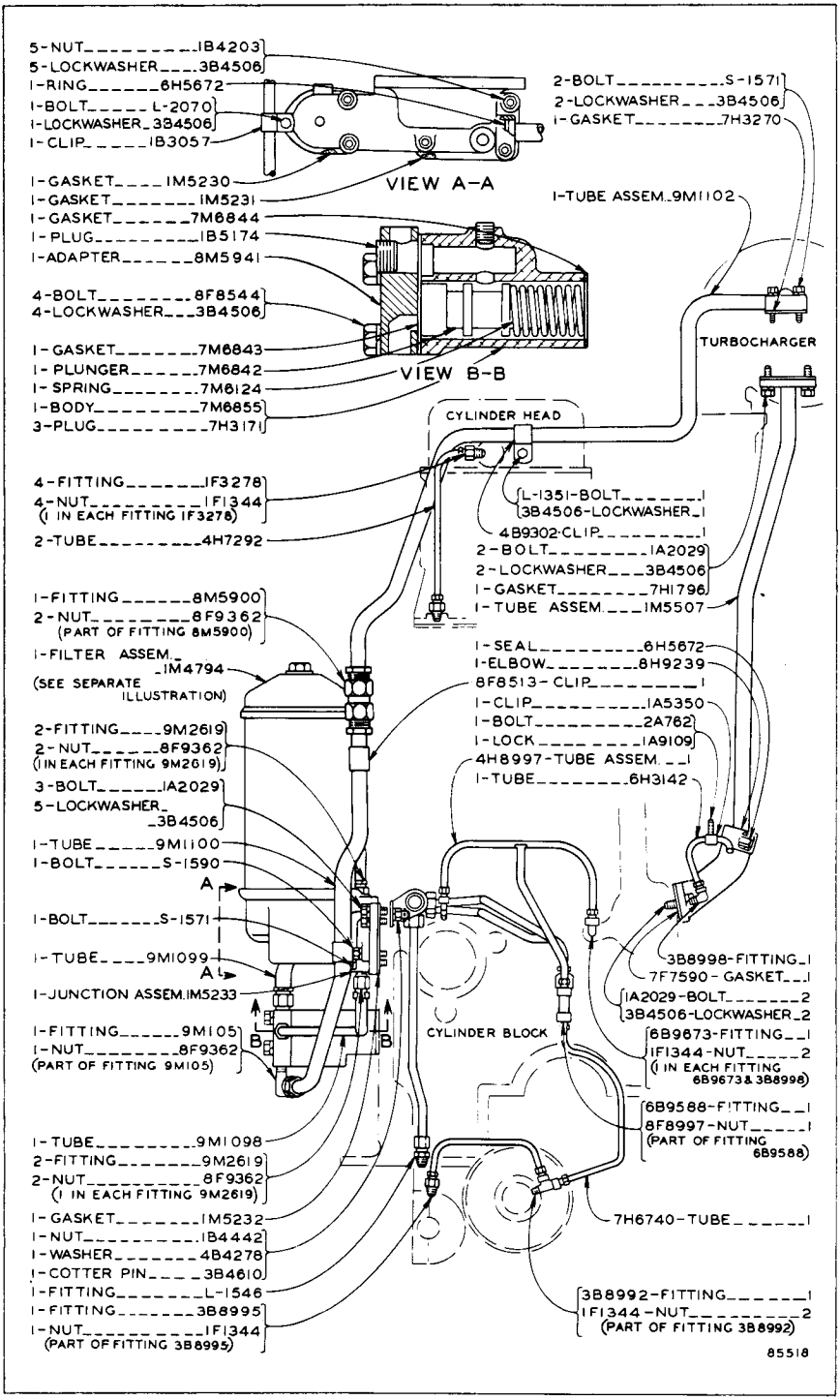

OIL LINES AND FILTER—Part Two—Front View
Effective with Serial No. 48A2232
1M4794 Oil Filter Assembly parts are shown on Page 47
ADDITIONAL PARTS ARE SHOWN ON INSERTS NO. 41 AND 42

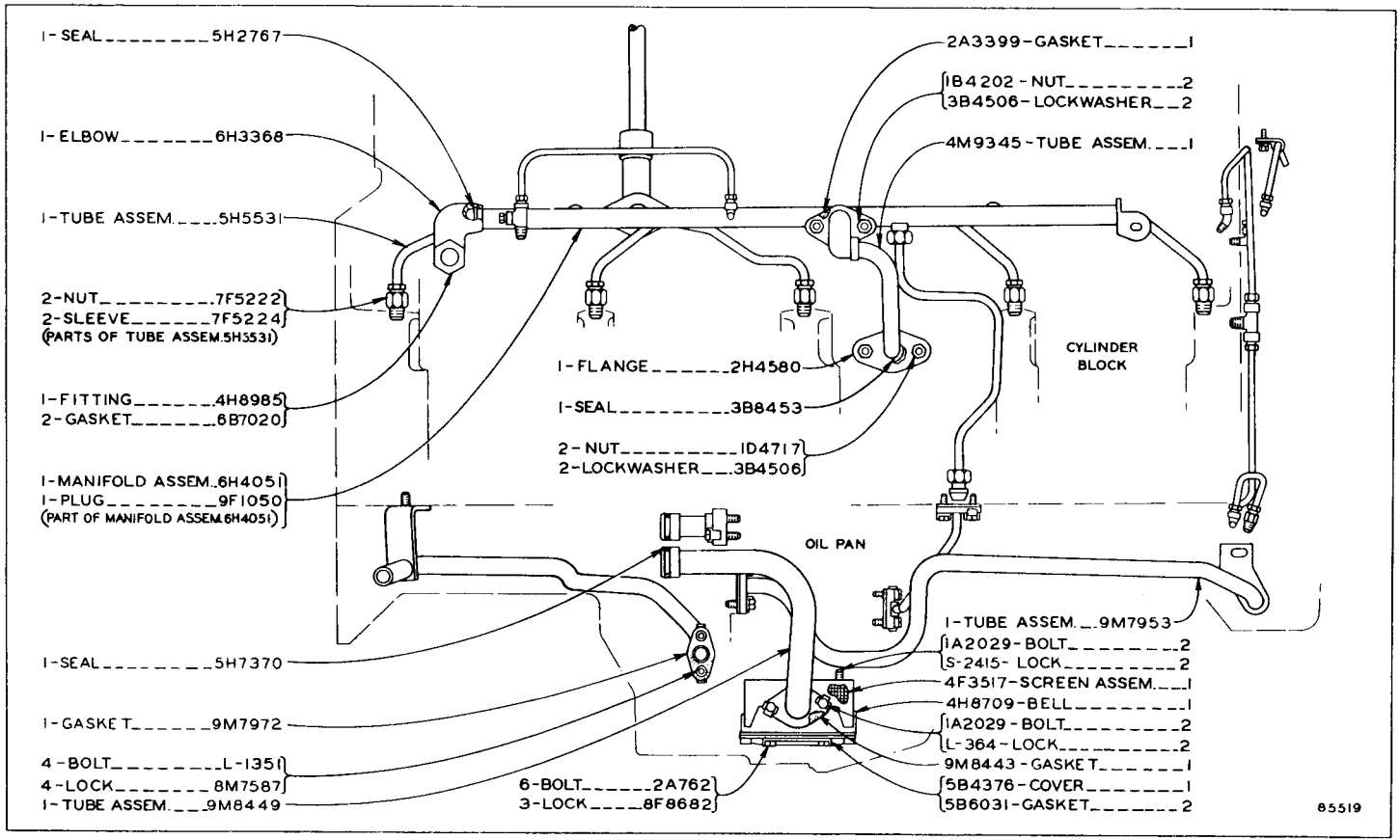

OIL LINES AND FILTER—Part Three—Side View
Effective with Serial No. 48A2232
ADDITIONAL PARTS ARE SHOWN ON INSERTS NO. 41 AND 41A

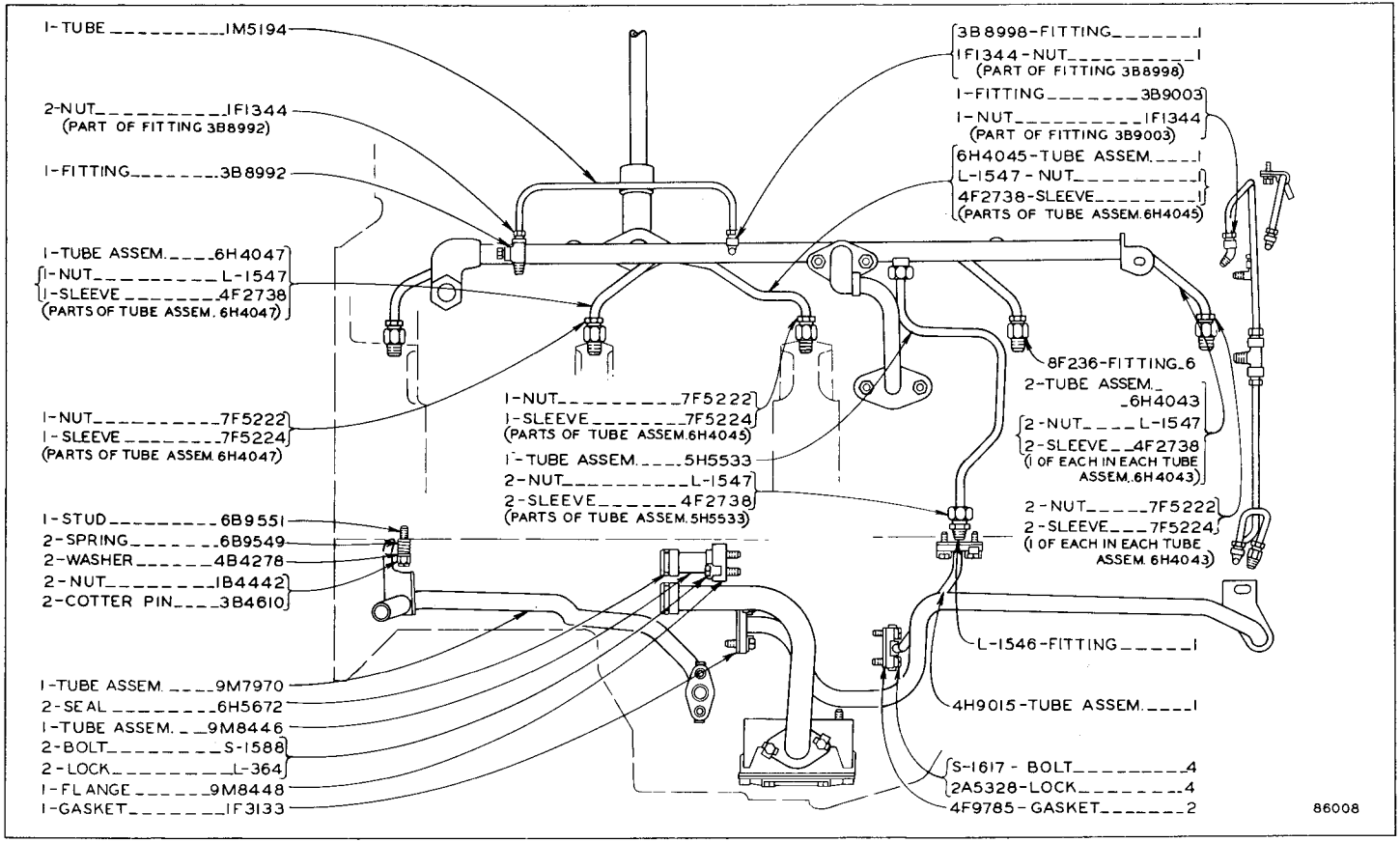

OIL LINES AND FILTER—Part One—Side View

Effective with Serial No. 48A2324

ADDITIONAL PARTS ARE SHOWN ON INSERTS NO. 25A AND 26

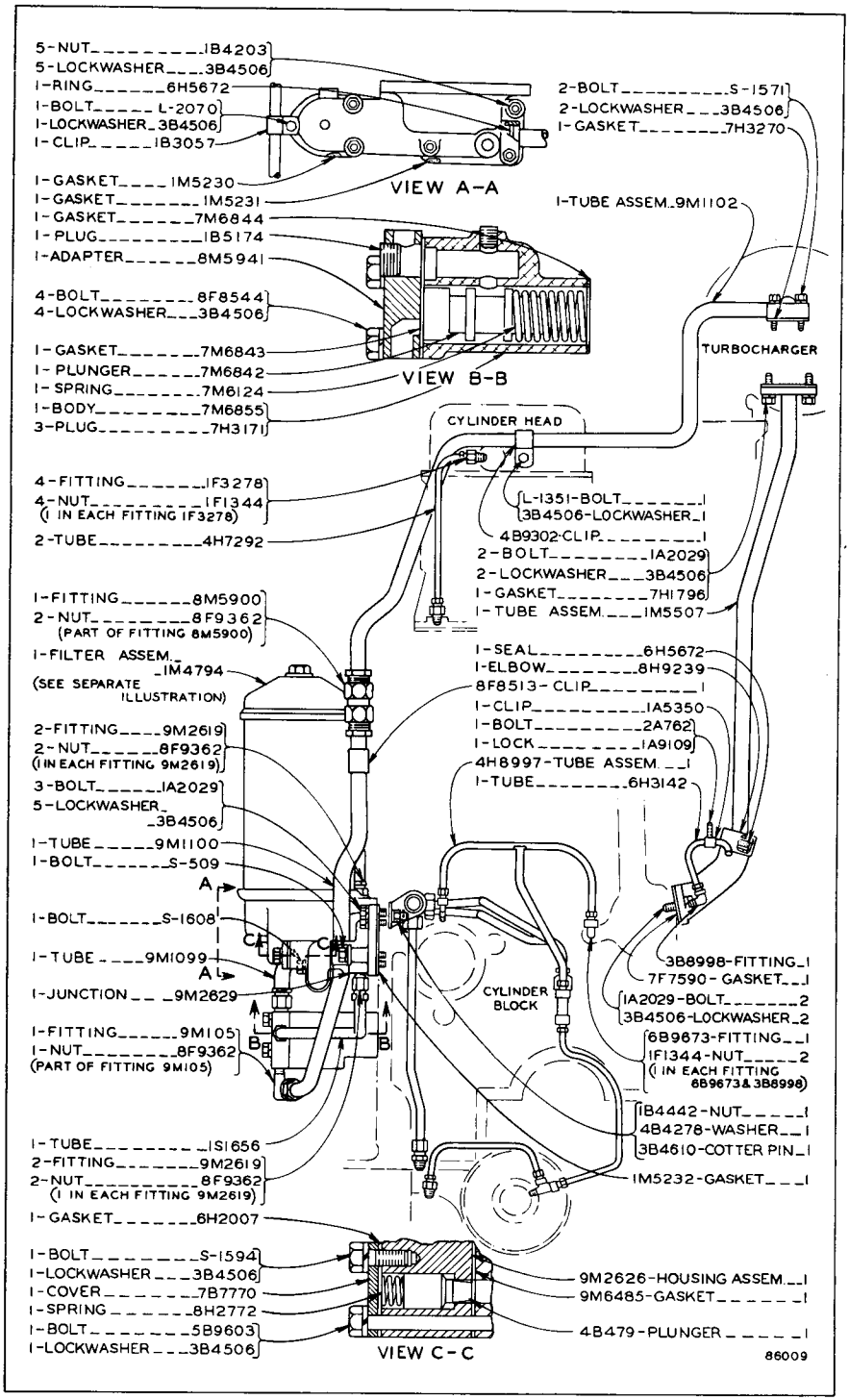

OIL LINES AND FILTER—Part Two—Front View
Effective with Serial No. 48A2324
1M4794 Oil Filter Assembly parts are shown on Page 47
ADDITIONAL PARTS ARE SHOWN ON INSERTS NO. 25 AND 26

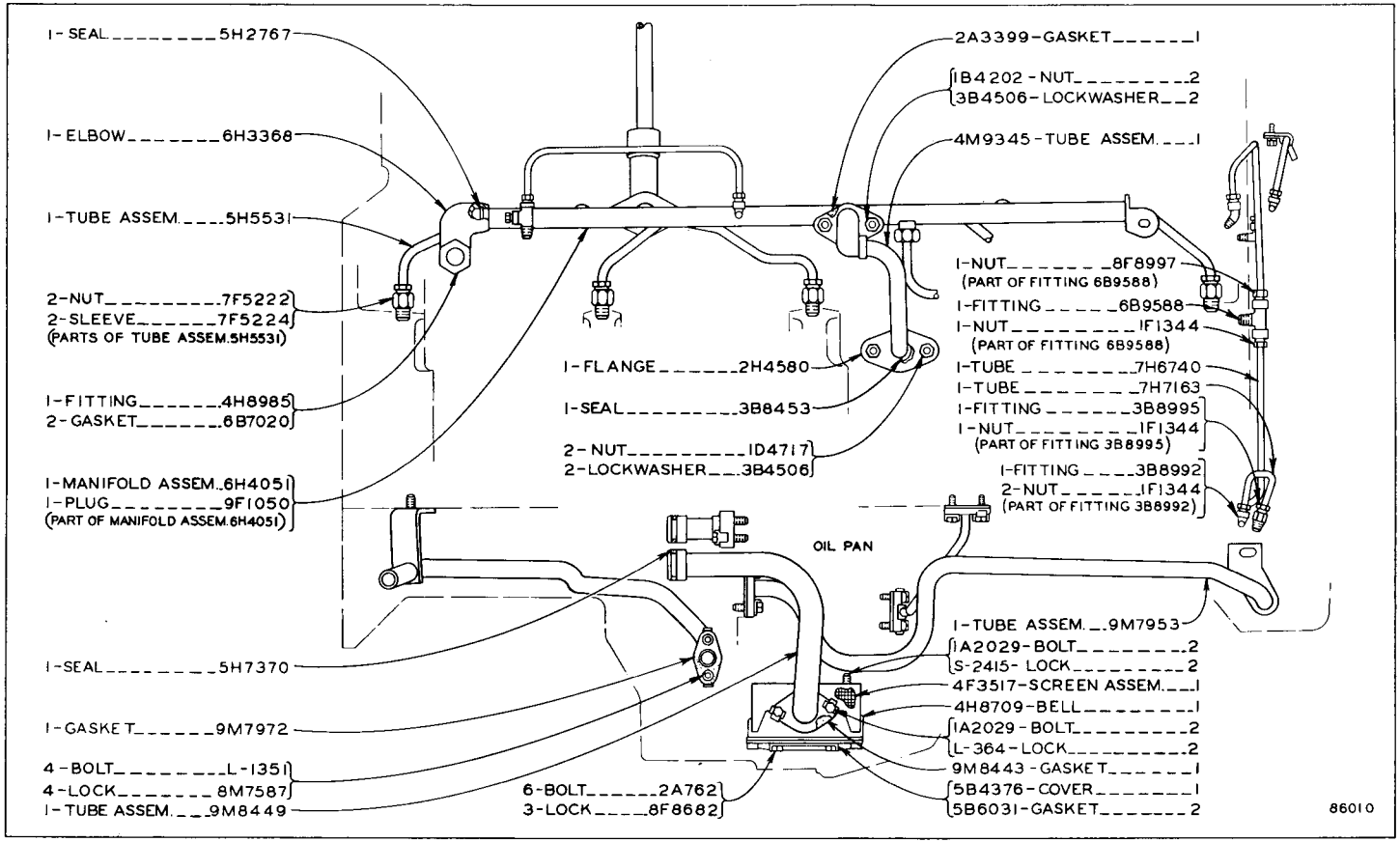

OIL LINES AND FILTER—Part Three—Side View
Effective with Serial No. 48A2324
ADDITIONAL PARTS ARE SHOWN ON INSERTS NO. 25 AND 25A

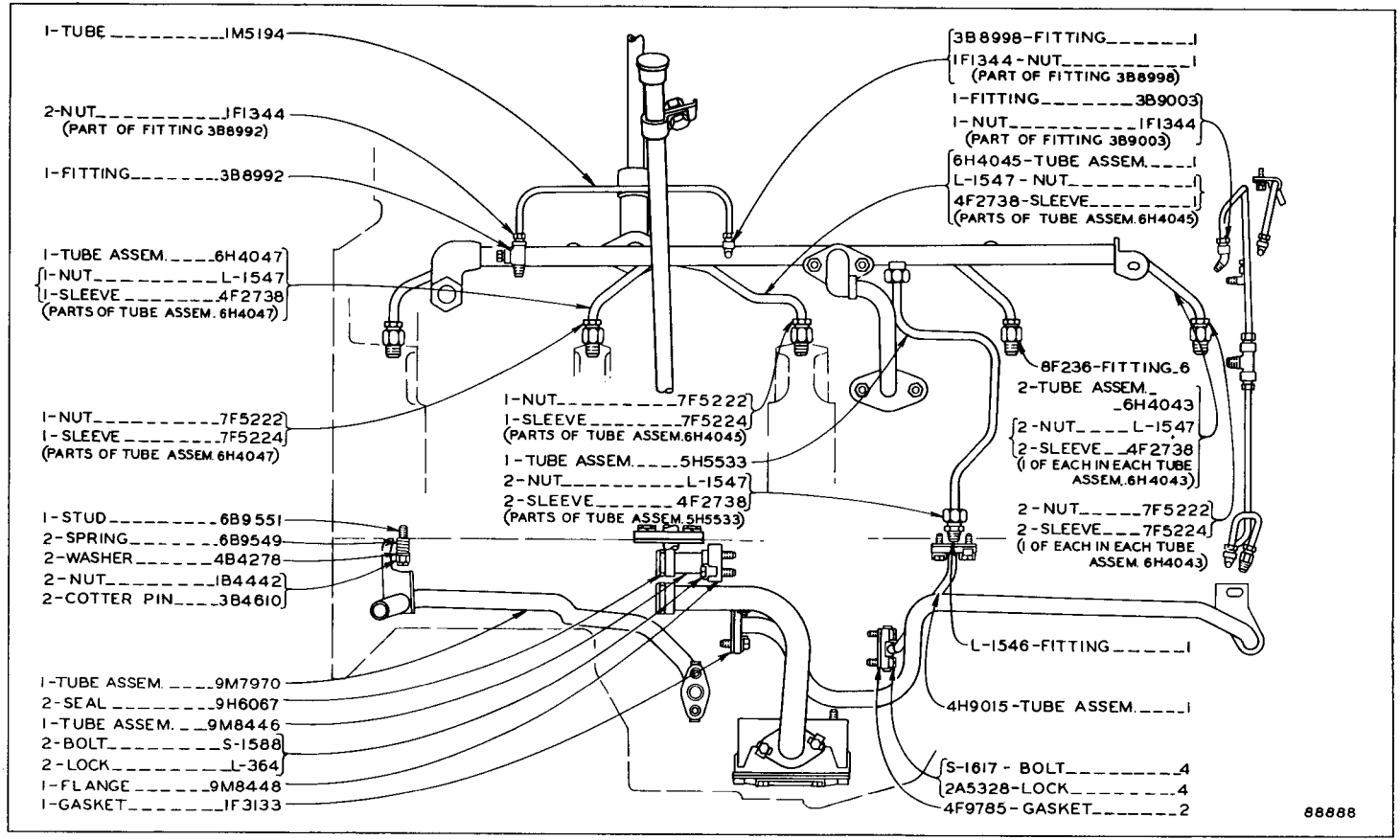

OIL LINES AND FILTER—Part One—Side View
Serial No. 48A2746 to 48A2934 inclusive
ADDITIONAL PARTS ARE SHOWN ON INSERTS NO. 35A AND 36

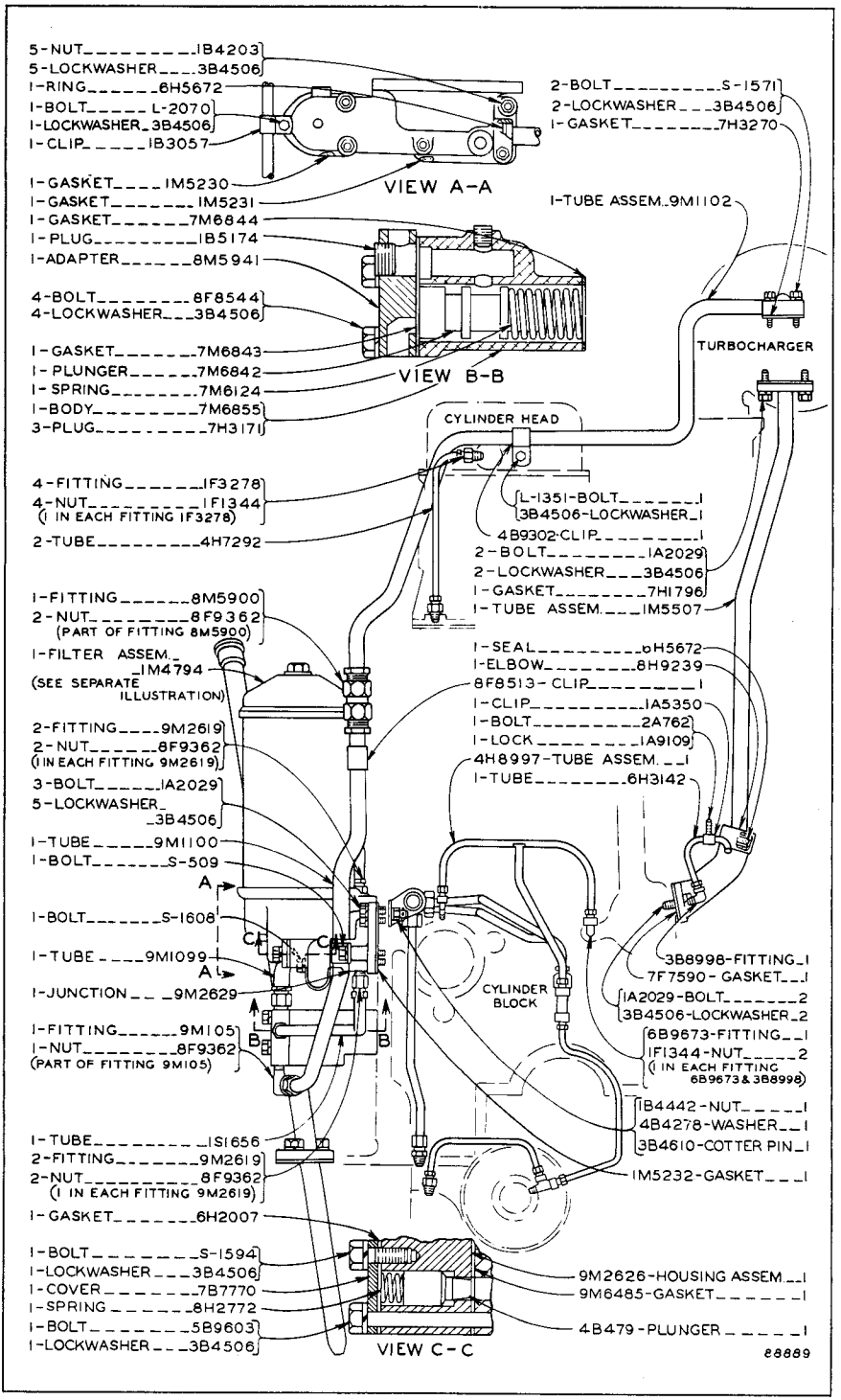

OIL LINES AND FILTER—Part Two—Front View

Serial No. 48A2746 to 48A2934 inclusive

1M4794 Oil Filter Assembly parts are shown on Page 47

ADDITIONAL PARTS ARE SHOWN ON INSERTS NO. 35 AND 36

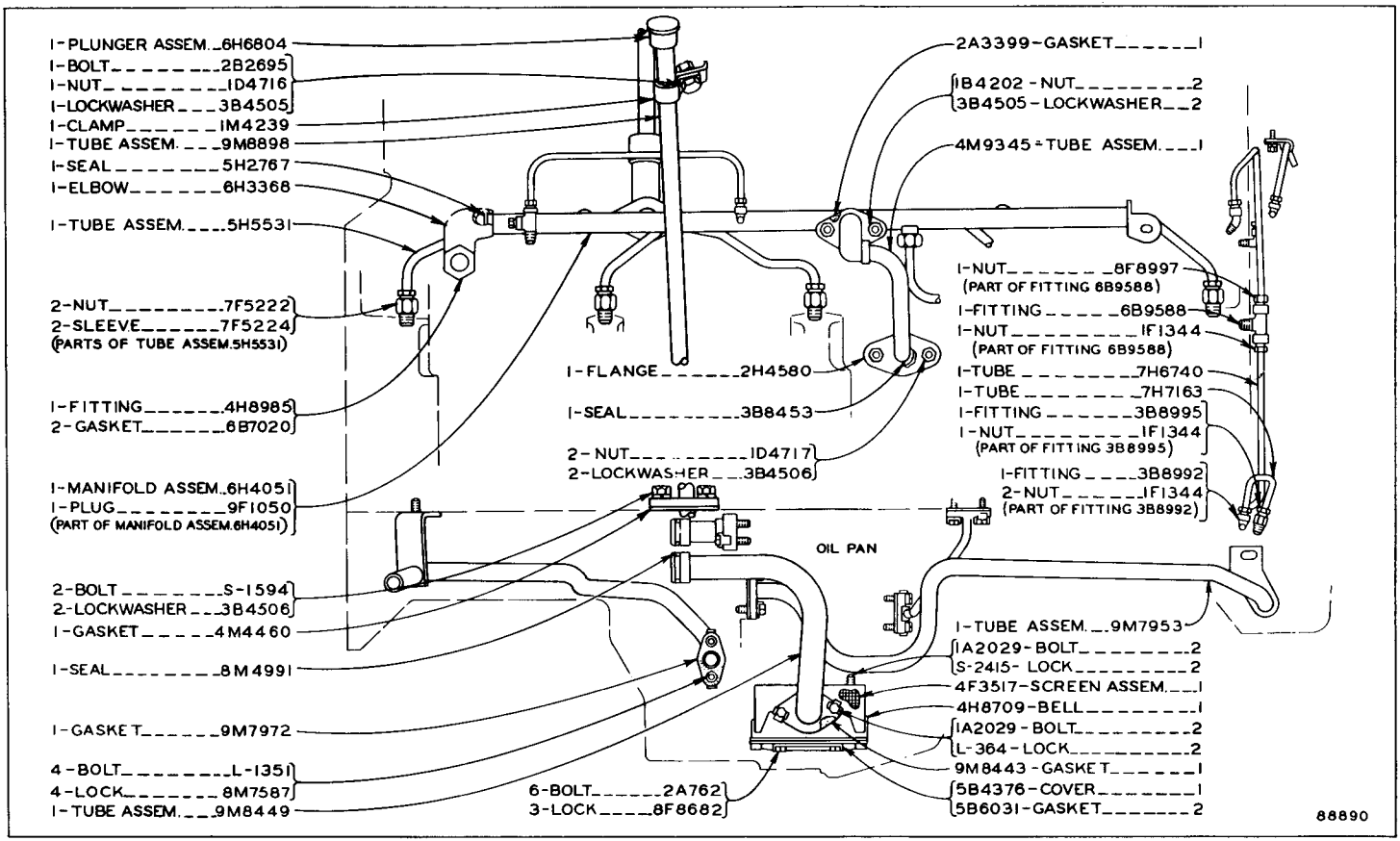

OIL LINES AND FILTER—Part Three—Side View
Serial No. 48A2746 to 48A2934 inclusive
ADDITIONAL PARTS ARE SHOWN ON INSERTS NO. 35 AND 35A

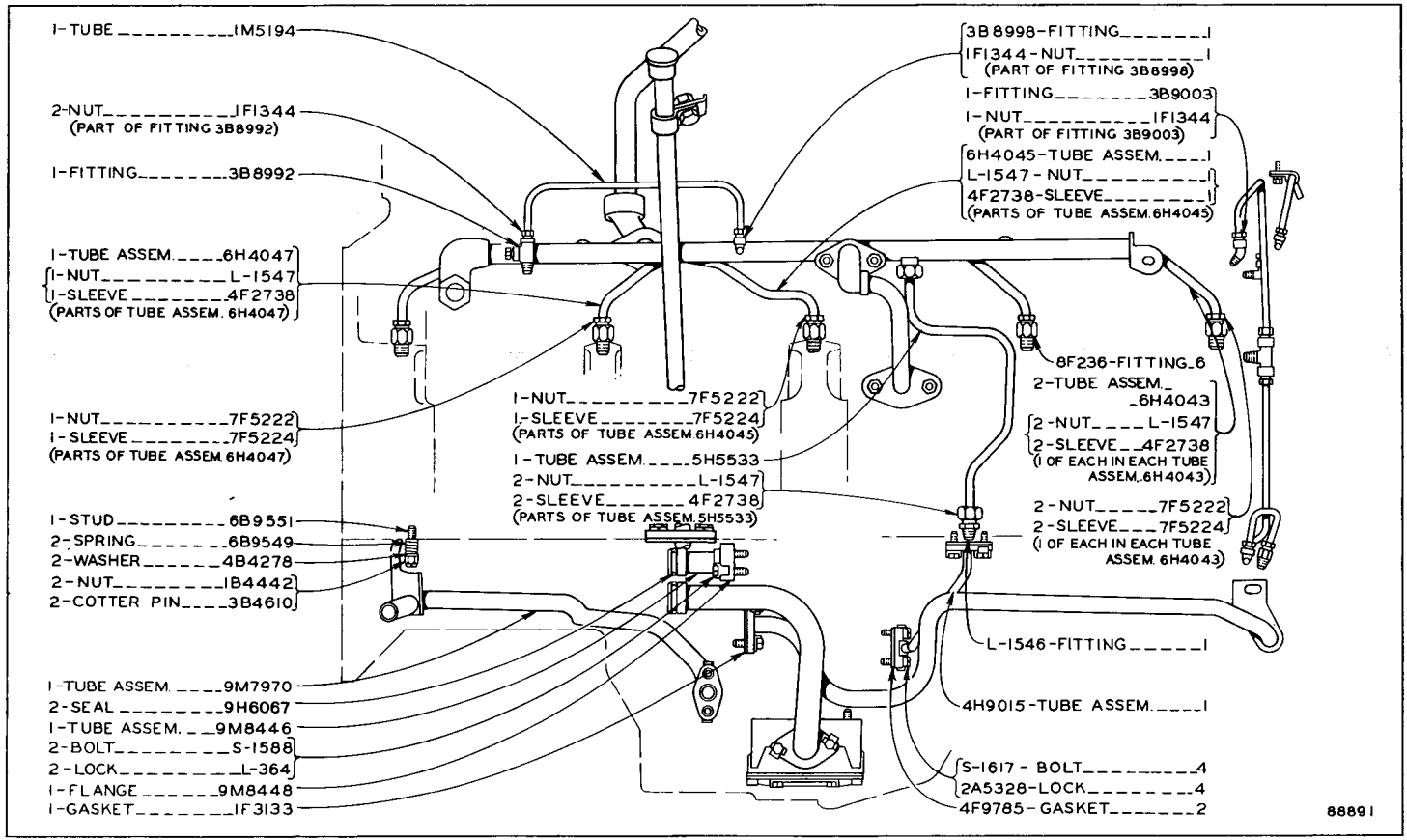

OIL LINES AND FILTER—Part One—Side View

Effective with Serial No. 48A2935

ADDITIONAL PARTS ARE SHOWN ON INSERTS NO. 37 AND 37A

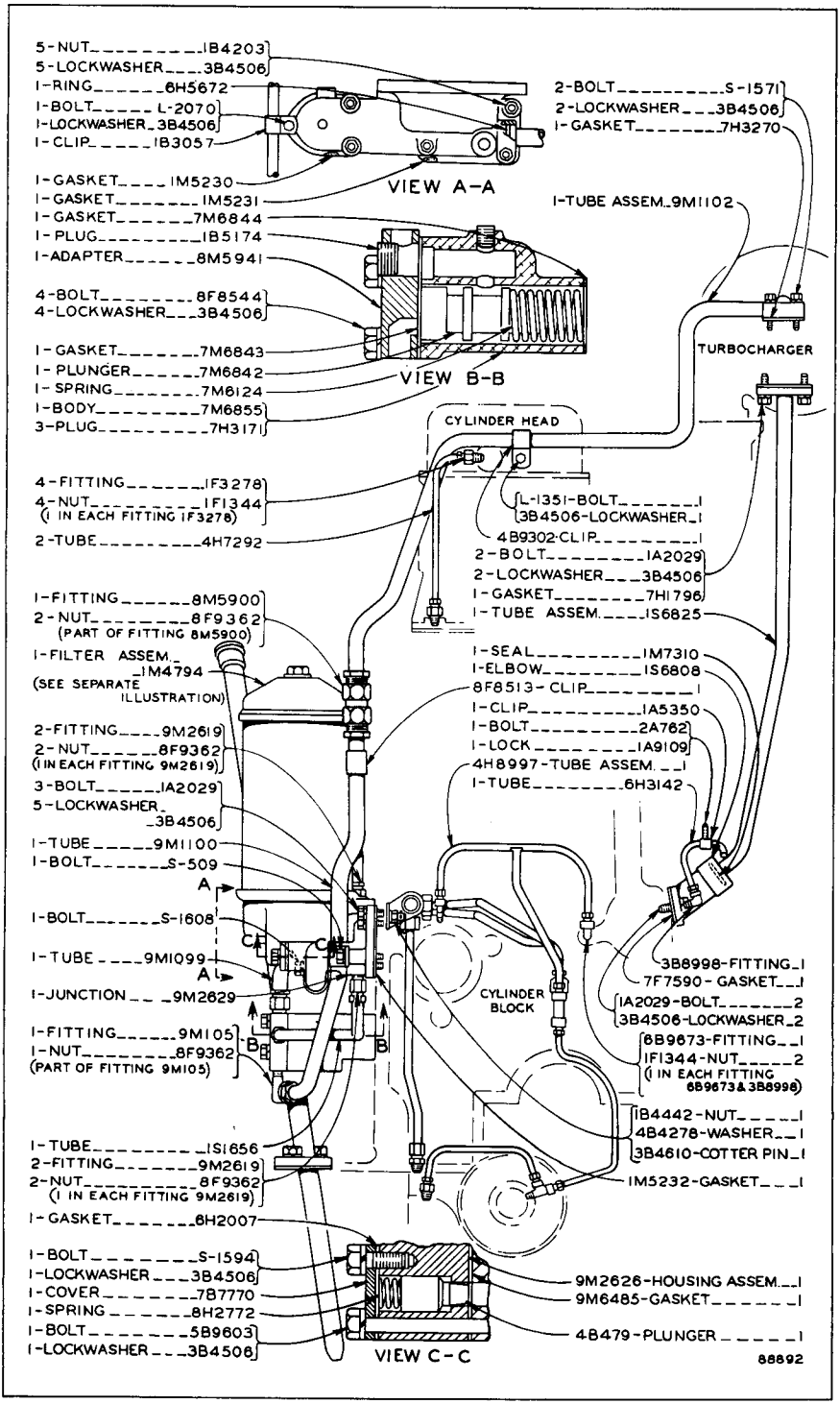

OIL LINES AND FILTER—Part Two—Front View
Effective with Serial No. 48A2935
1M4794 Oil Filter Assembly parts are shown on Page 47
ADDITIONAL PARTS ARE SHOWN ON INSERTS NO. 36A AND 37A

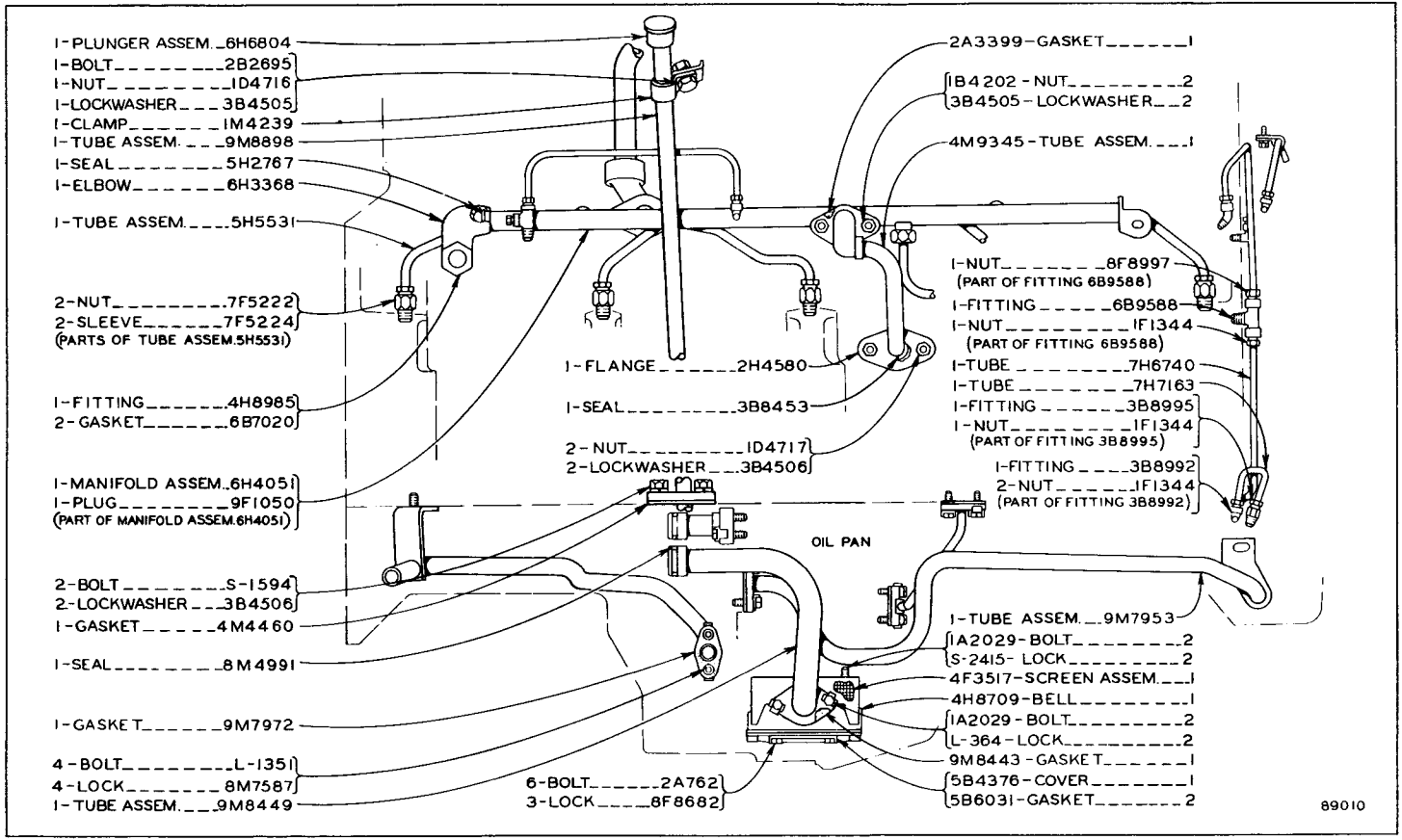

OIL LINES AND FILTER—Part Three—Side View
Effective with Serial No. 48A2935
ADDITIONAL PARTS ARE SHOWN ON INSERTS NO. 36A AND 37

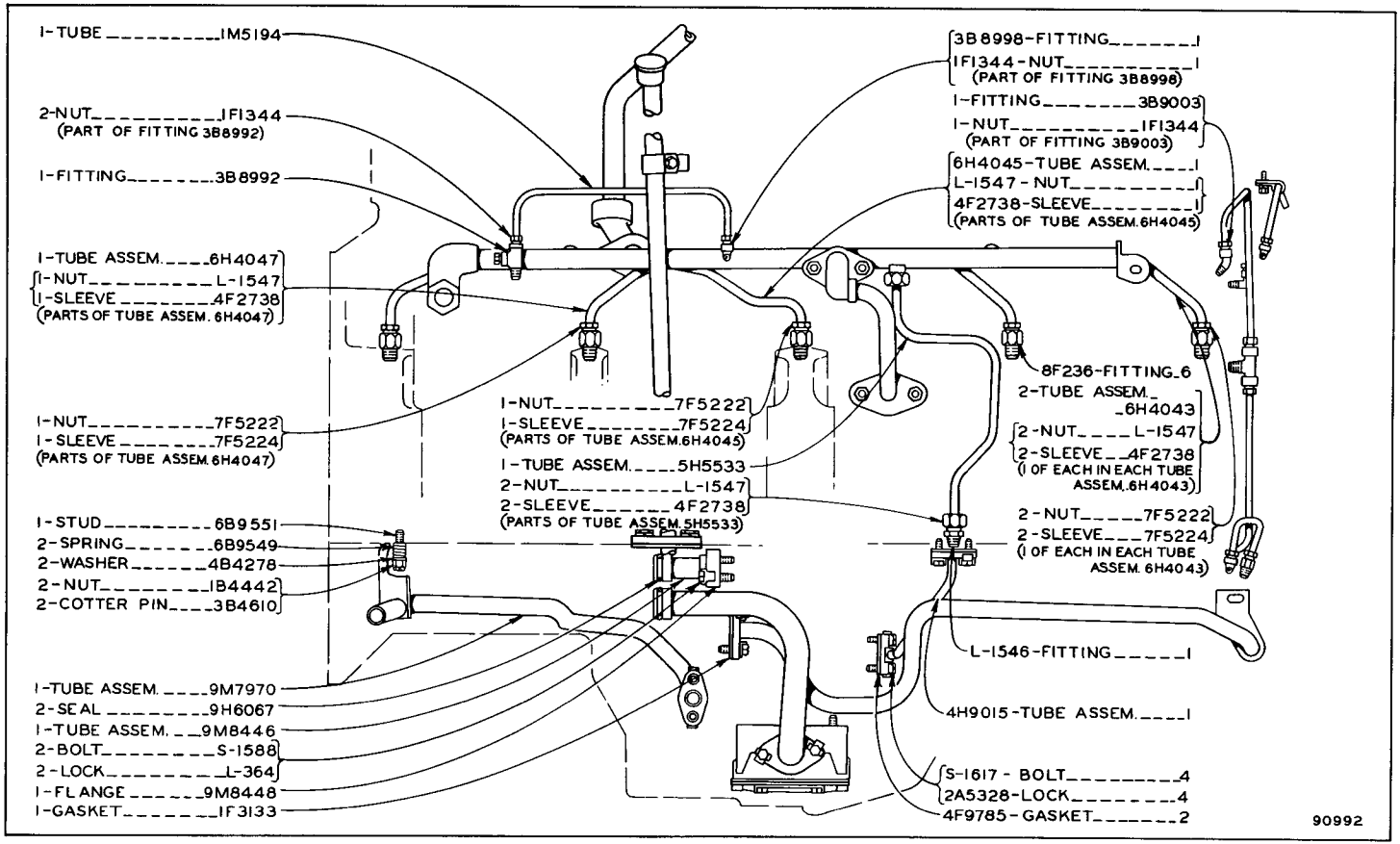

OIL LINES AND FILTER—Part One—Side View
Effective with Serial No. 48A3399
ADDITIONAL PARTS ARE SHOWN ON PAGES 46V AND 46W

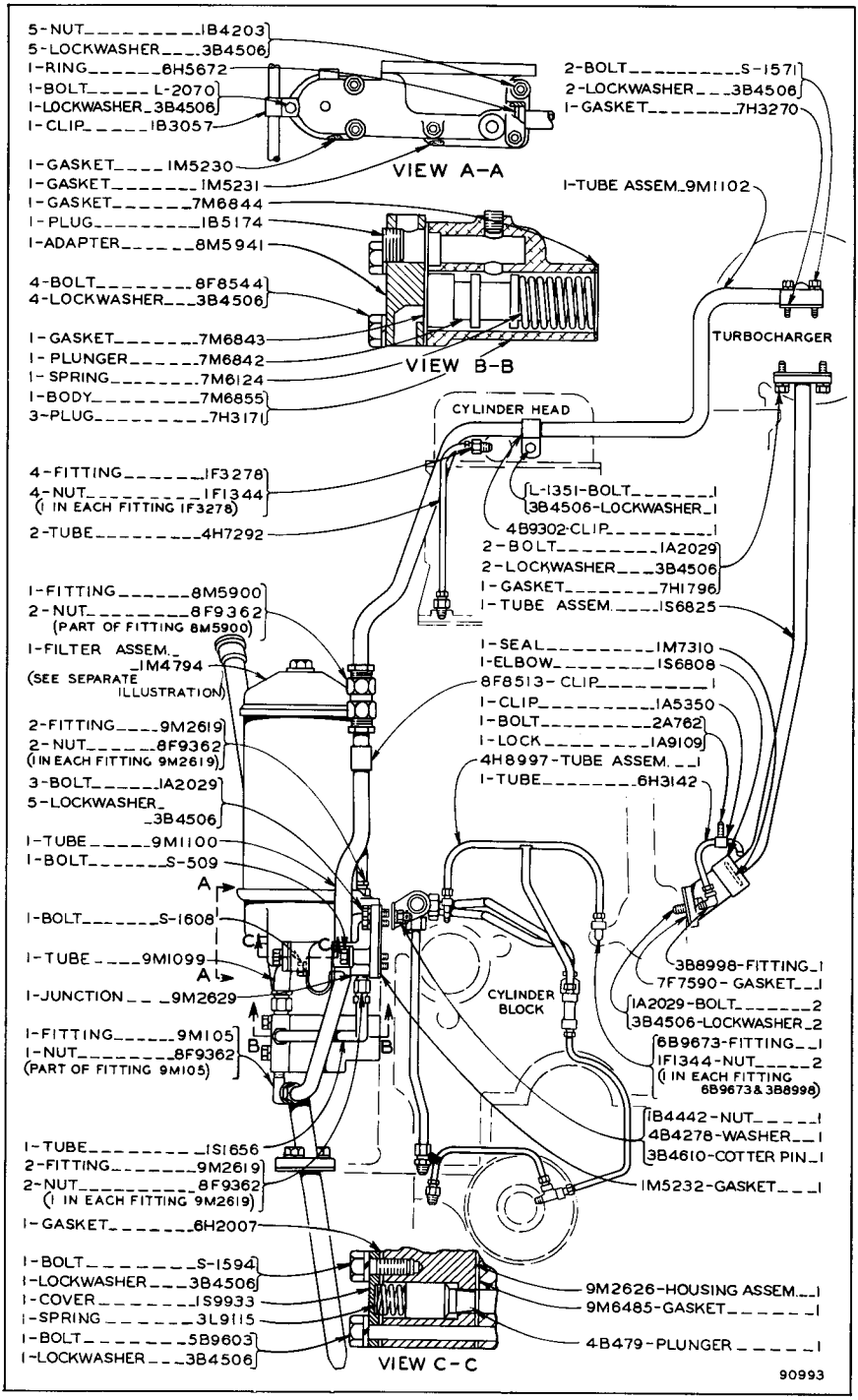

OIL LINES AND FILTER—Part Two—Front View
Effective with Serial No. 48A3399
1M4794 Oil Filter Assembly parts are shown on Page 47
ADDITIONAL PARTS ARE SHOWN ON PAGES 46U AND 46W

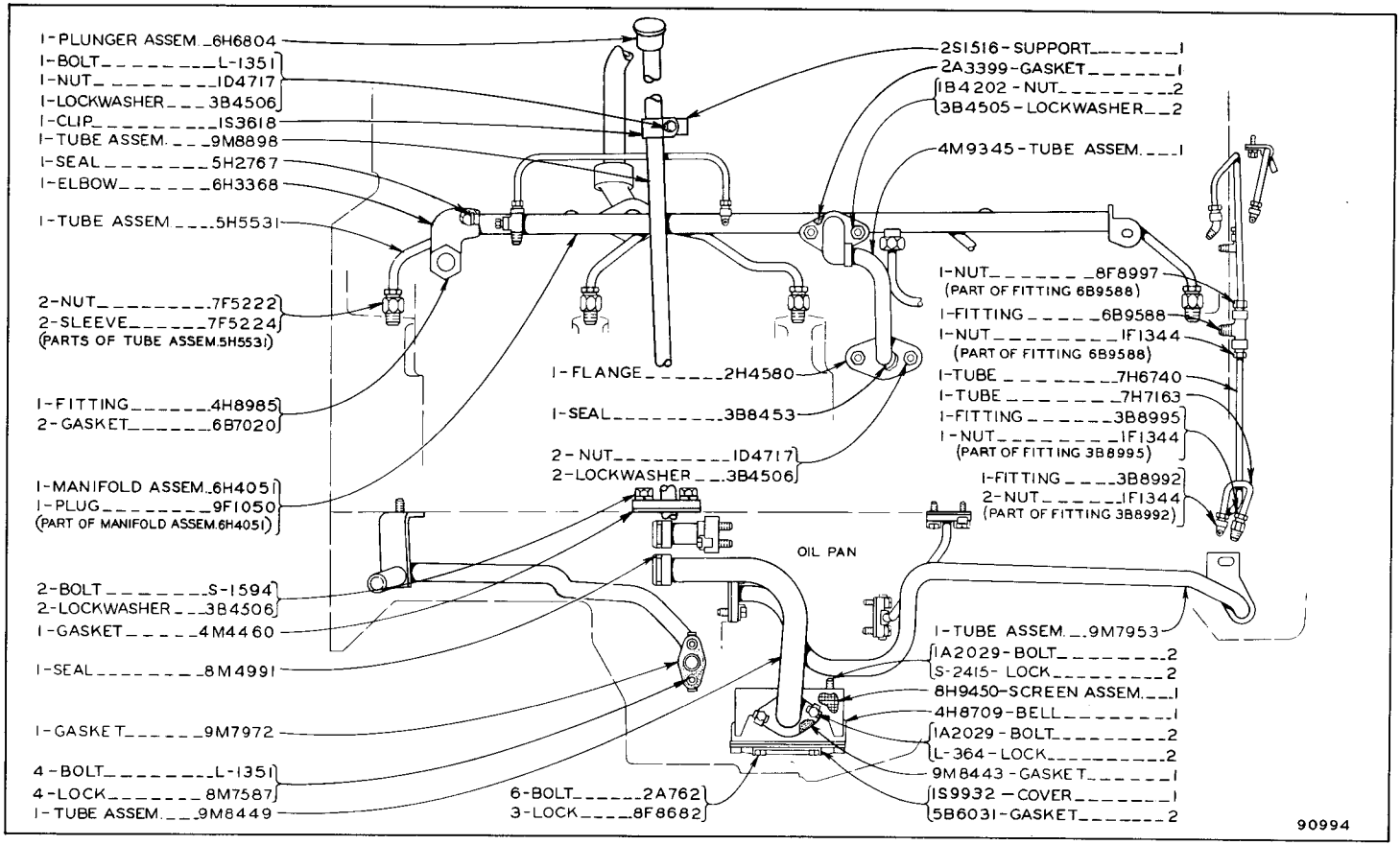

OIL LINES AND FILTER—Part Three—Side View
Effective with Serial No. 48A3399
ADDITIONAL PARTS ARE SHOWN ON PAGES 46U AND 46V

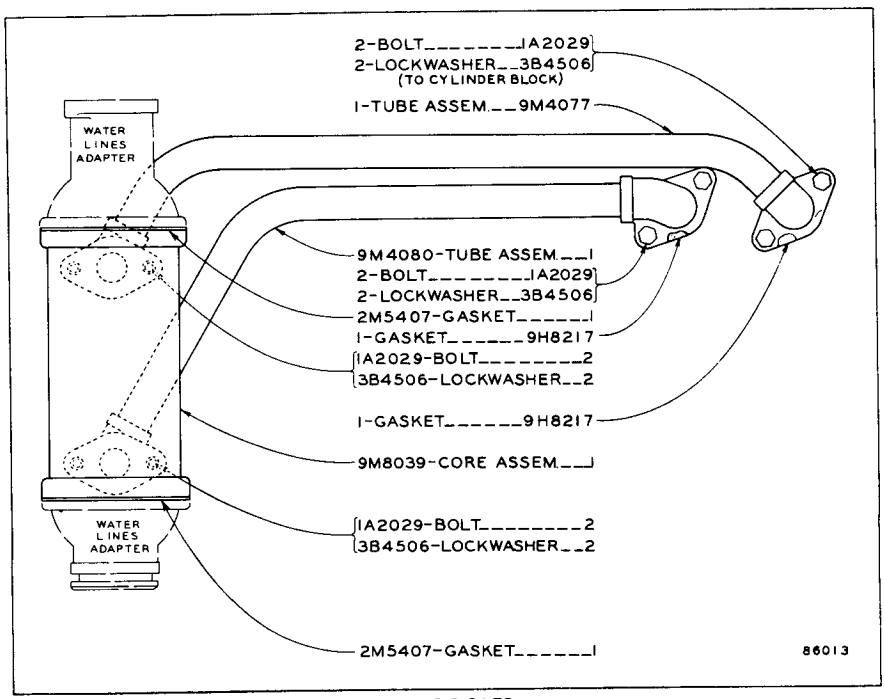

OIL COOLER
Effective with Serial No. 48A2324

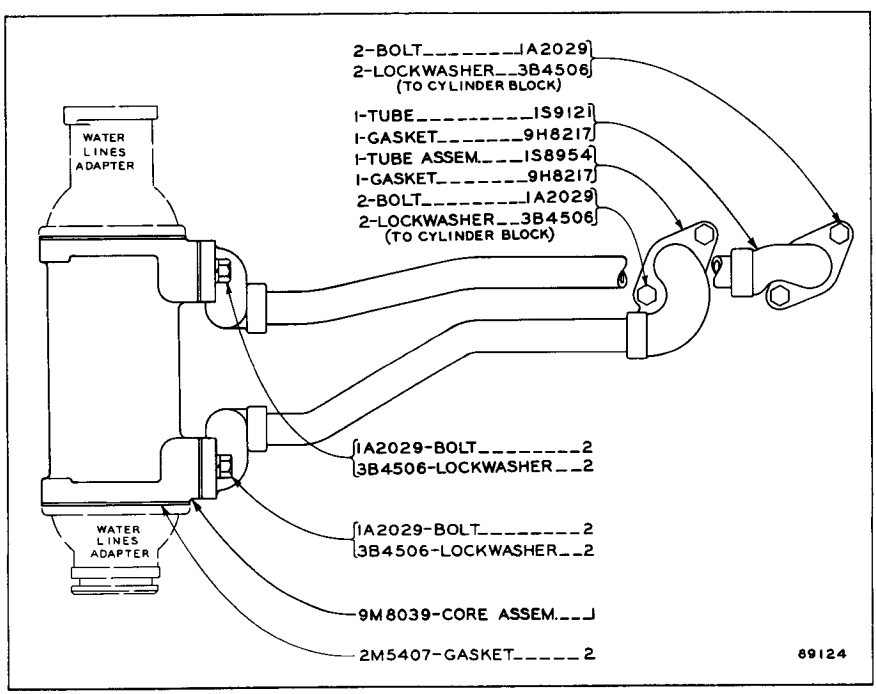

OIL COOLER
Effective with Serial No. 48A2935

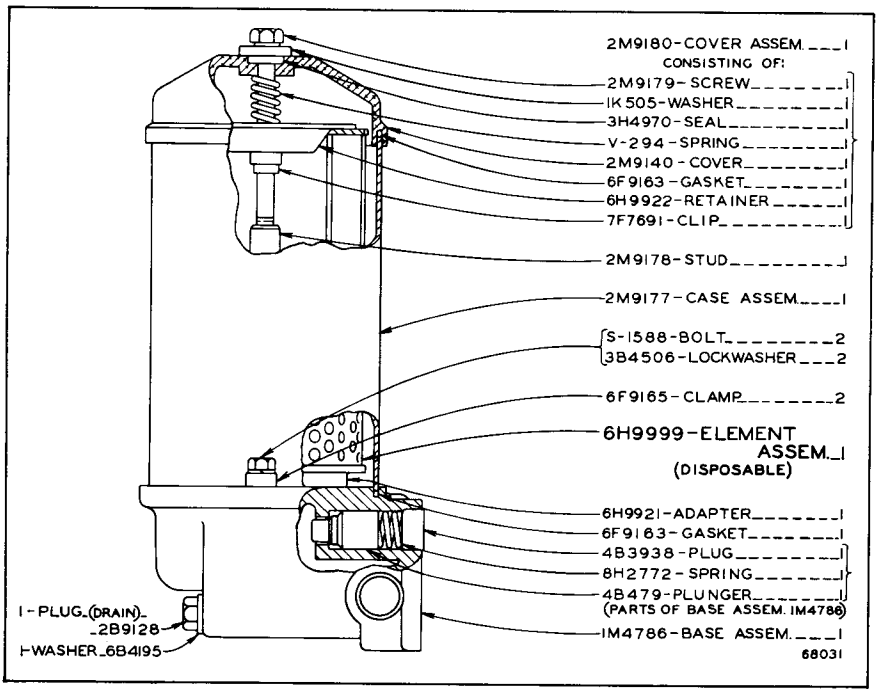

1M4794 OIL FILTER ASSEMBLY

Part of Oil Lines and Filter shown on Page 45

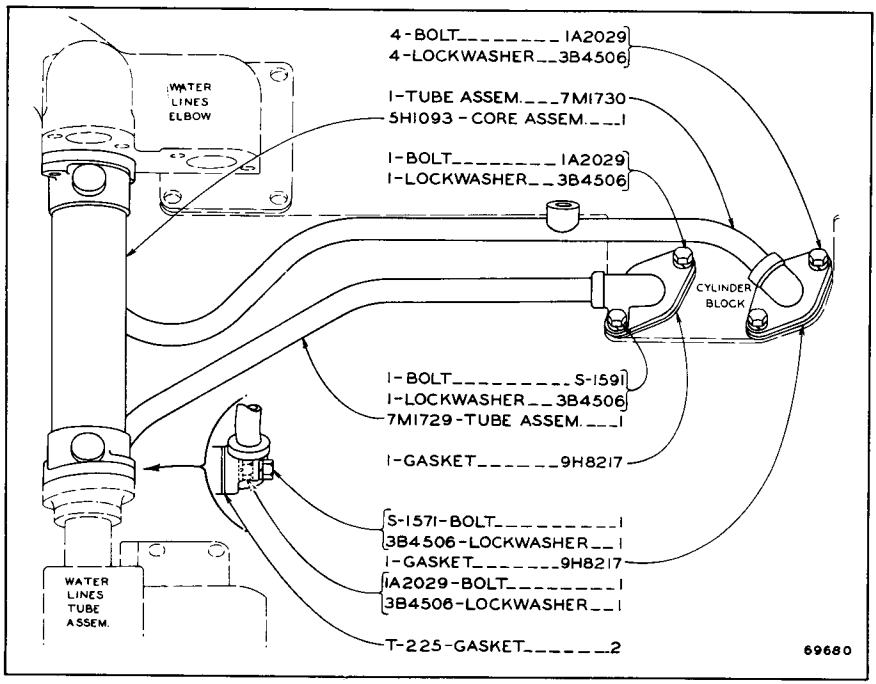

OIL COOLER

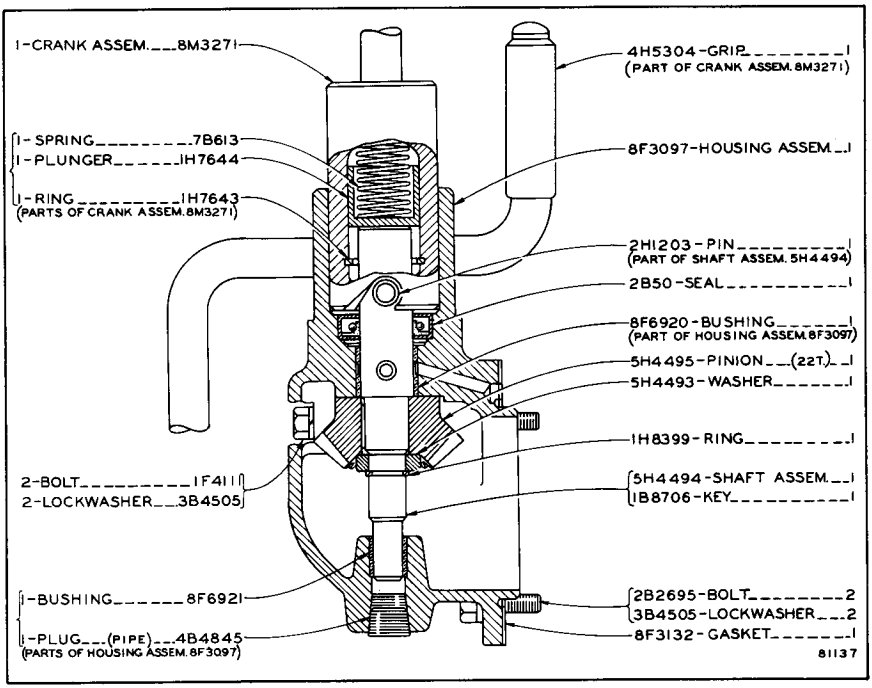

MANUAL STARTING CRANK

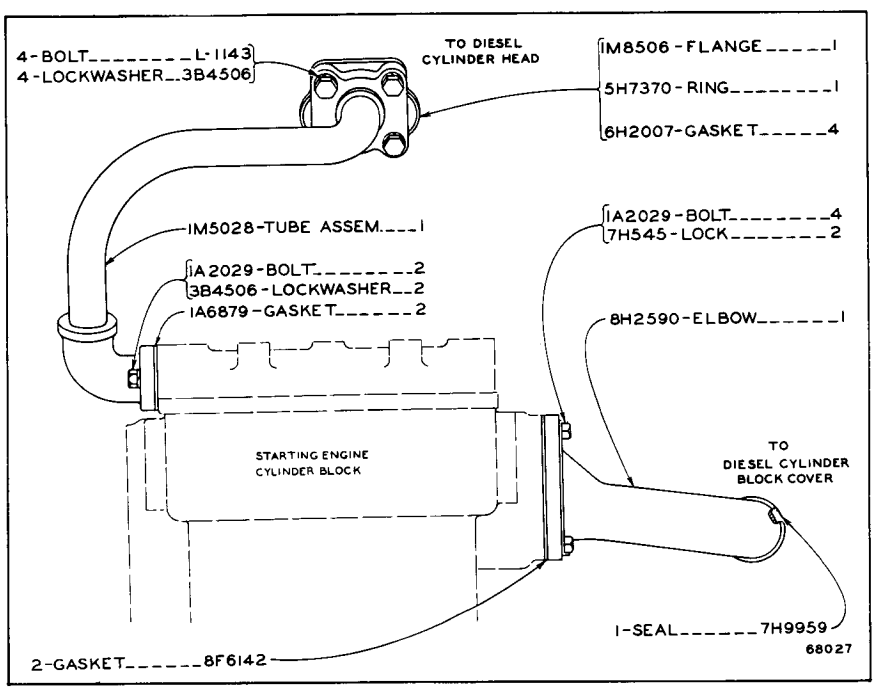

1M5338 WATER LINES GROUP—Side View

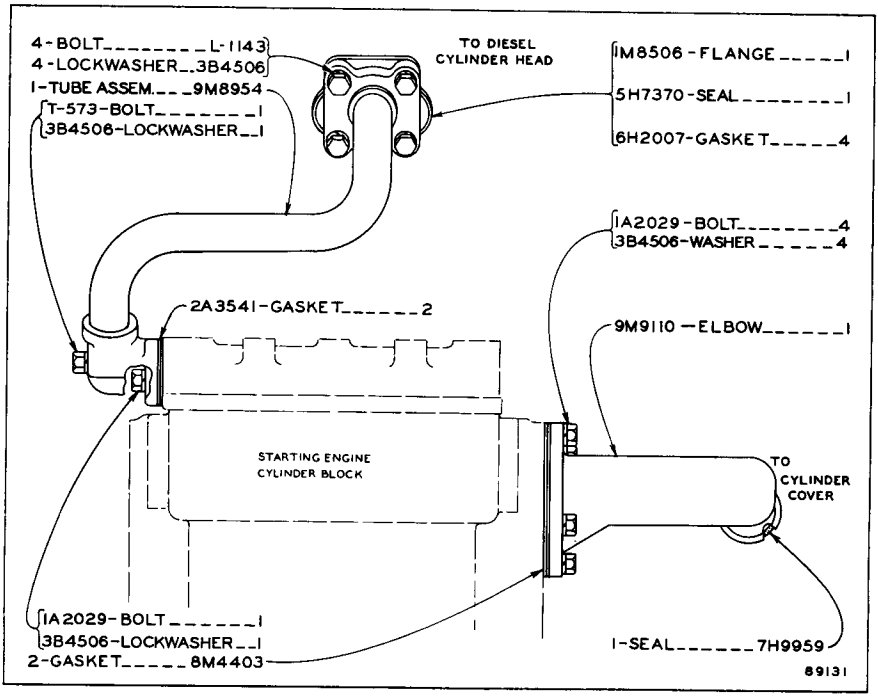

9M9232 WATER LINES GROUP—Side View
Effective with Serial No. 48A2935

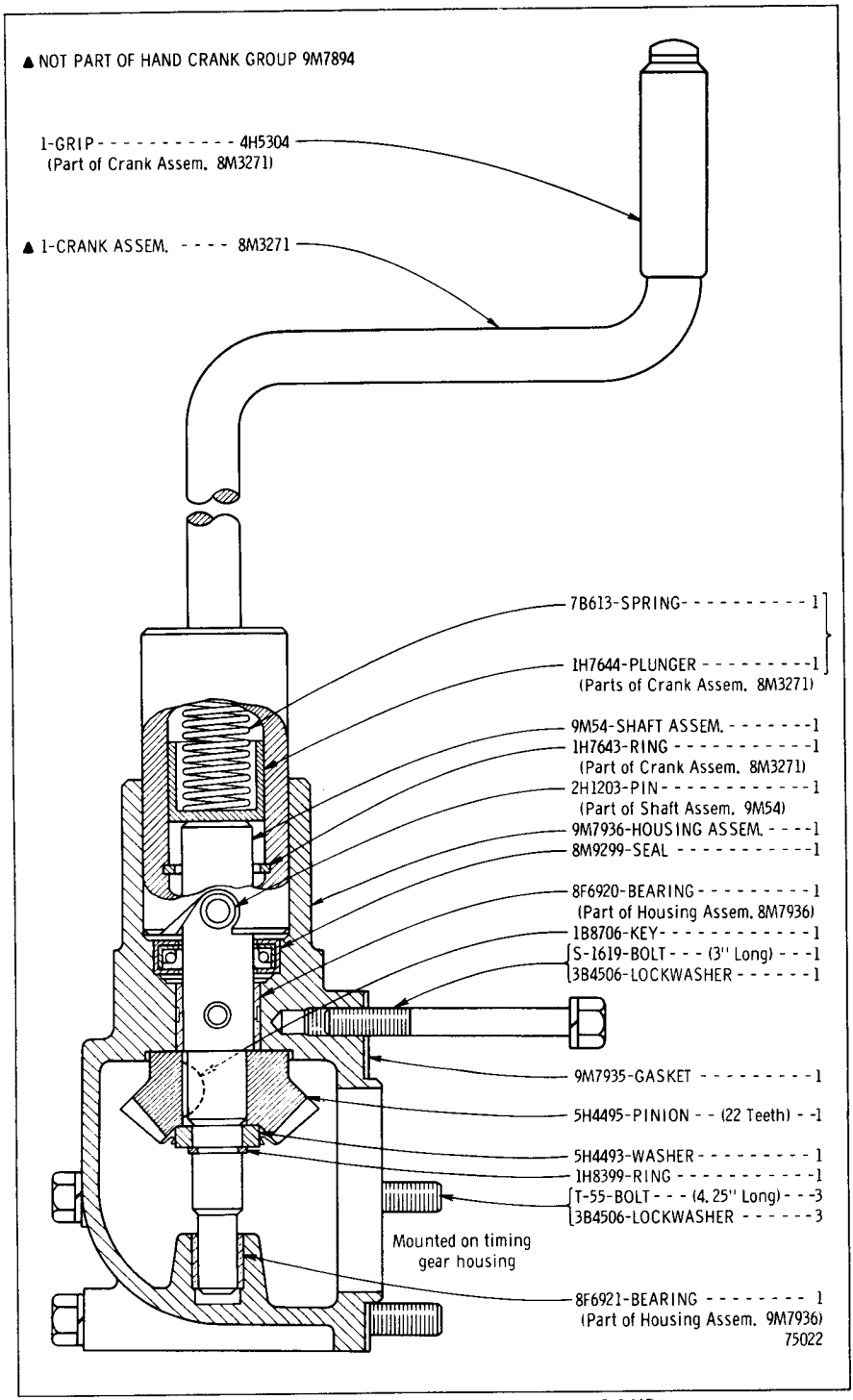

9M7894 MANUAL STARTING CRANK GROUP

Effective with Serial No. 48A2935—Up and Starting Engine Block No. F832—Up

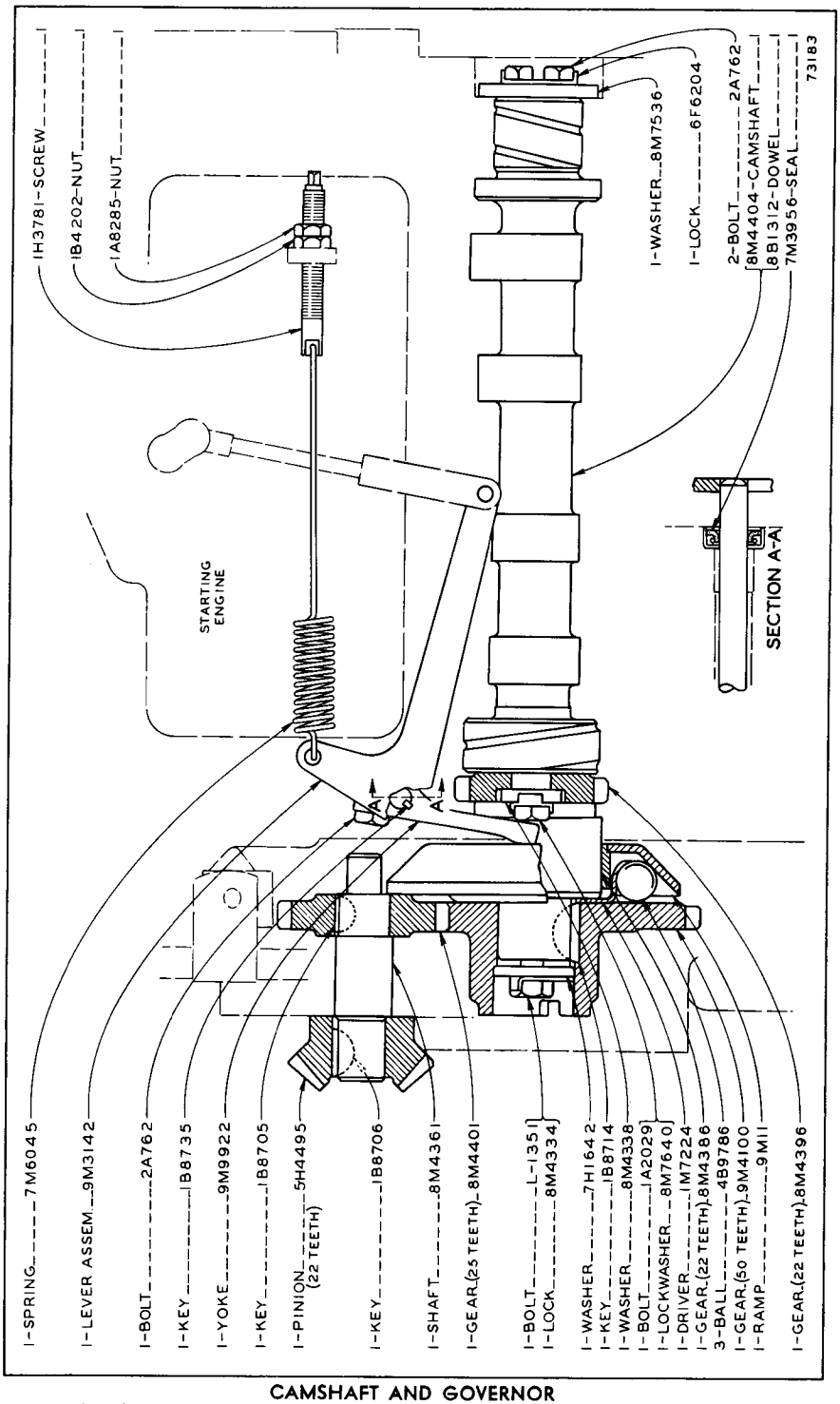

CAMSHAFT AND GOVERNOR
Serial No. 48A2935 to 48A3095 inclusive and Starting Engine Block No. F832 to F1612 inclusive

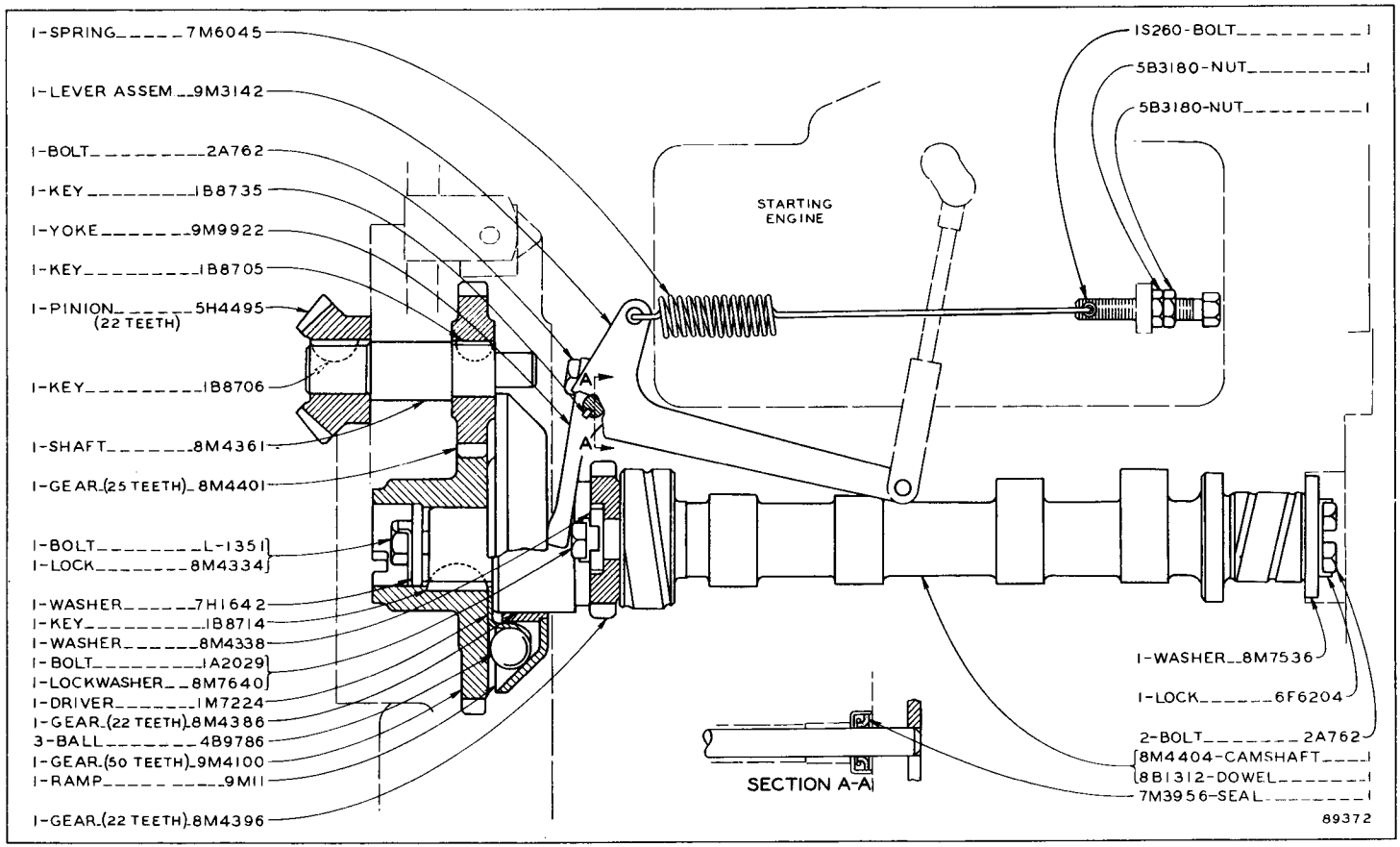

CAMSHAFT AND GOVERNOR

Effective with Serial No. 48A3096—Up and Starting Engine Block No. F1613—Up

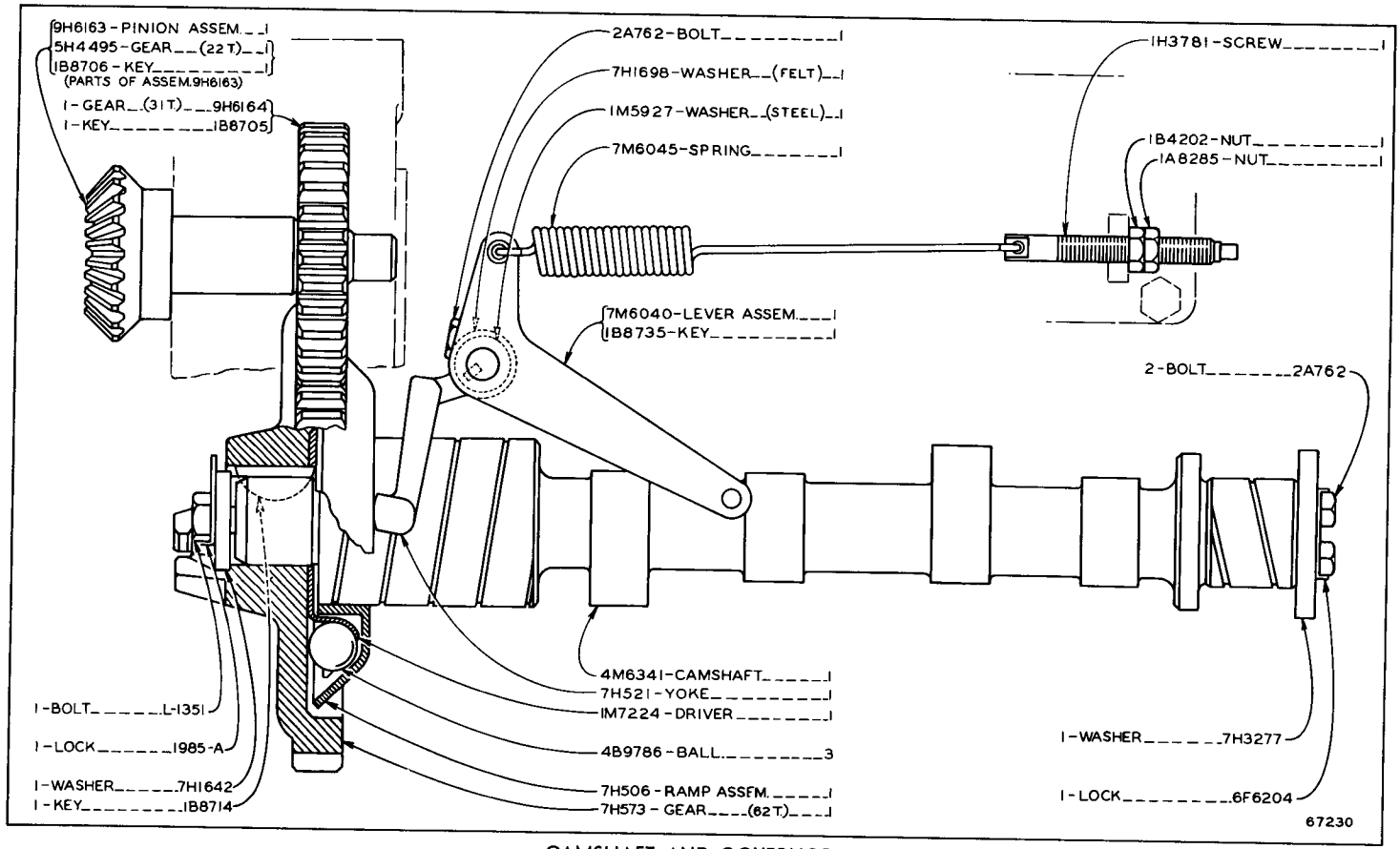

CAMSHAFT AND GOVERNOR

ONLY "CATERPILLAR" PARTS GIVE "CATERPILLAR" PERFORMANCE

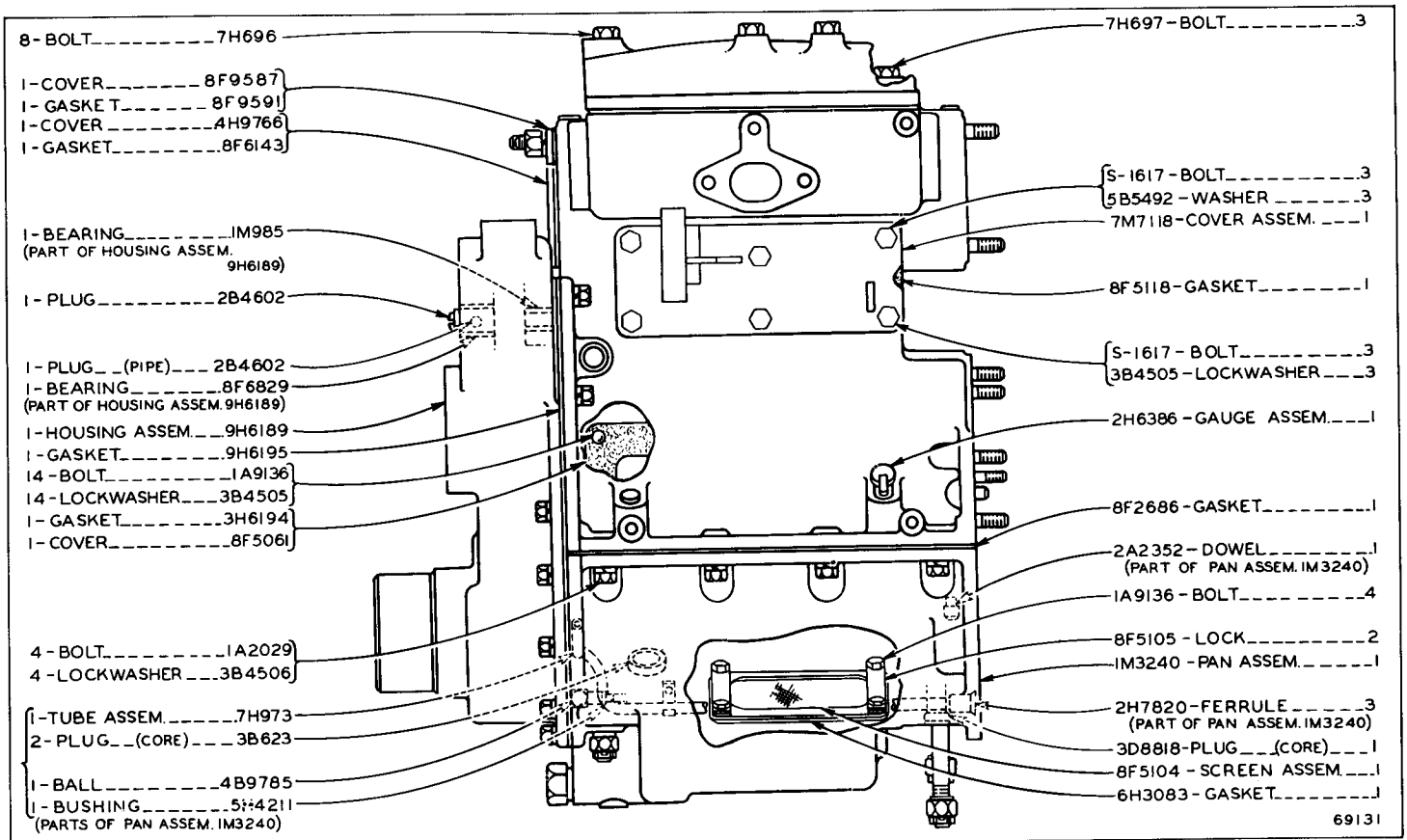

CYLINDER BLOCK, CYLINDER HEAD AND VALVE MECHANISM—Part One

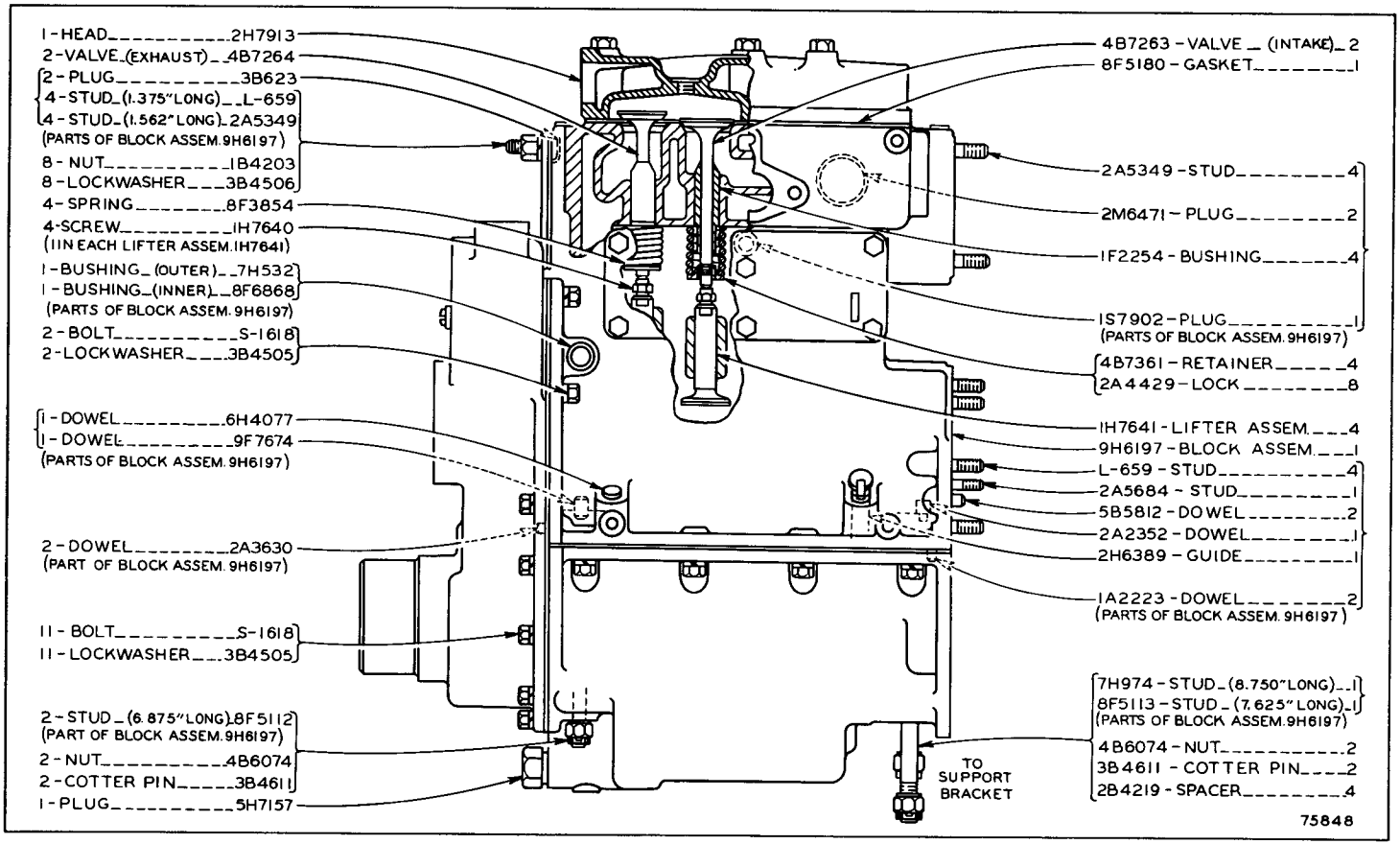

CYLINDER BLOCK, CYLINDER HEAD AND VALVE MECHANISM—Part Two

ONLY "CATERPILLAR" PARTS GIVE "CATERPILLAR" PERFORMANCE

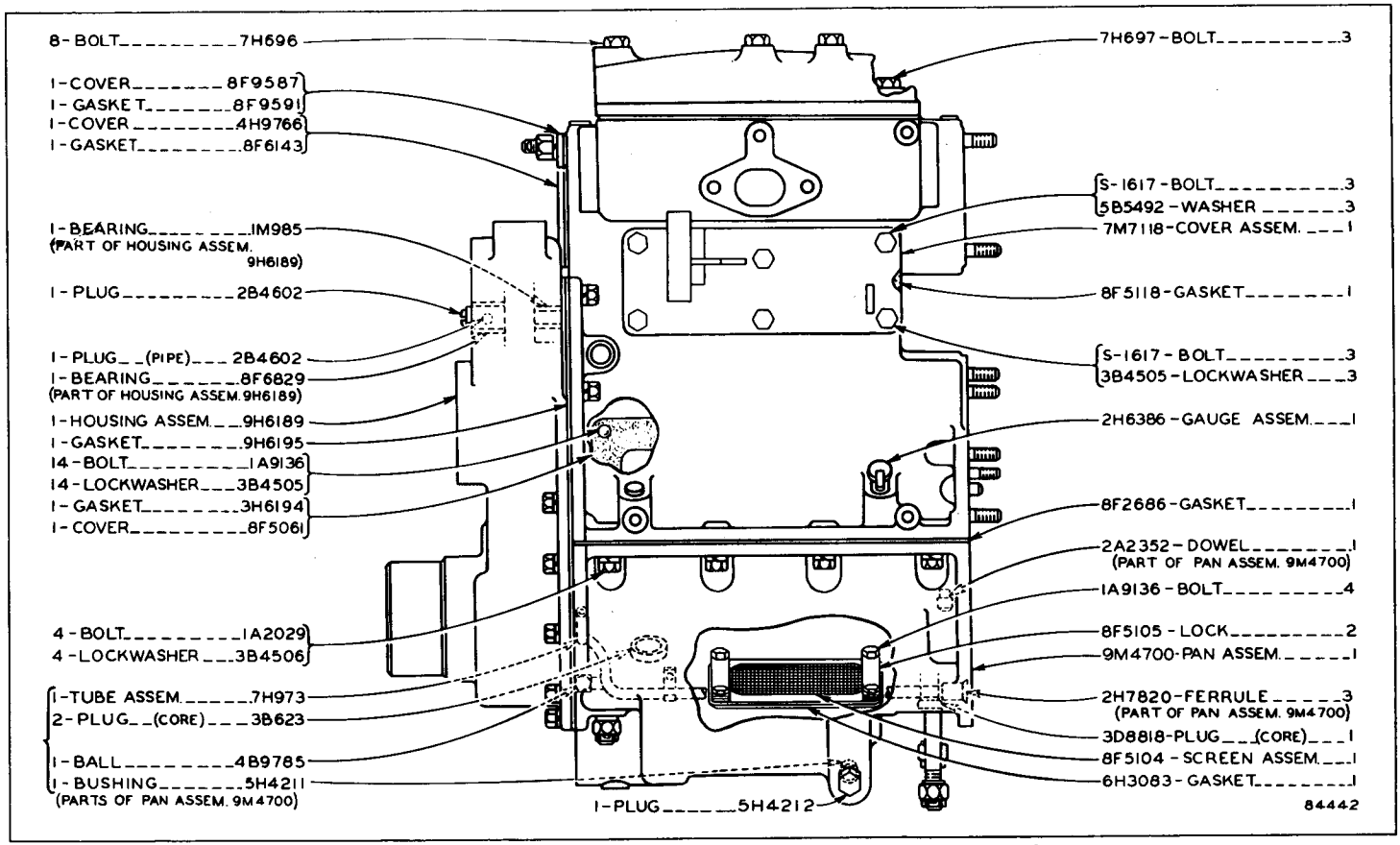

CYLINDER BLOCK, CYLINDER HEAD AND VALVE MECHANISM—Part One

Effective with Serial No. 48A1528—Up and Starting Engine Block No. H357—Up

Additional parts are shown on reverse side of this insert

CYLINDER BLOCK, CYLINDER HEAD AND VALVE MECHANISM—Part Two

Effective with Serial No. 48A1528—Up and Starting Engine Block No. H357—Up

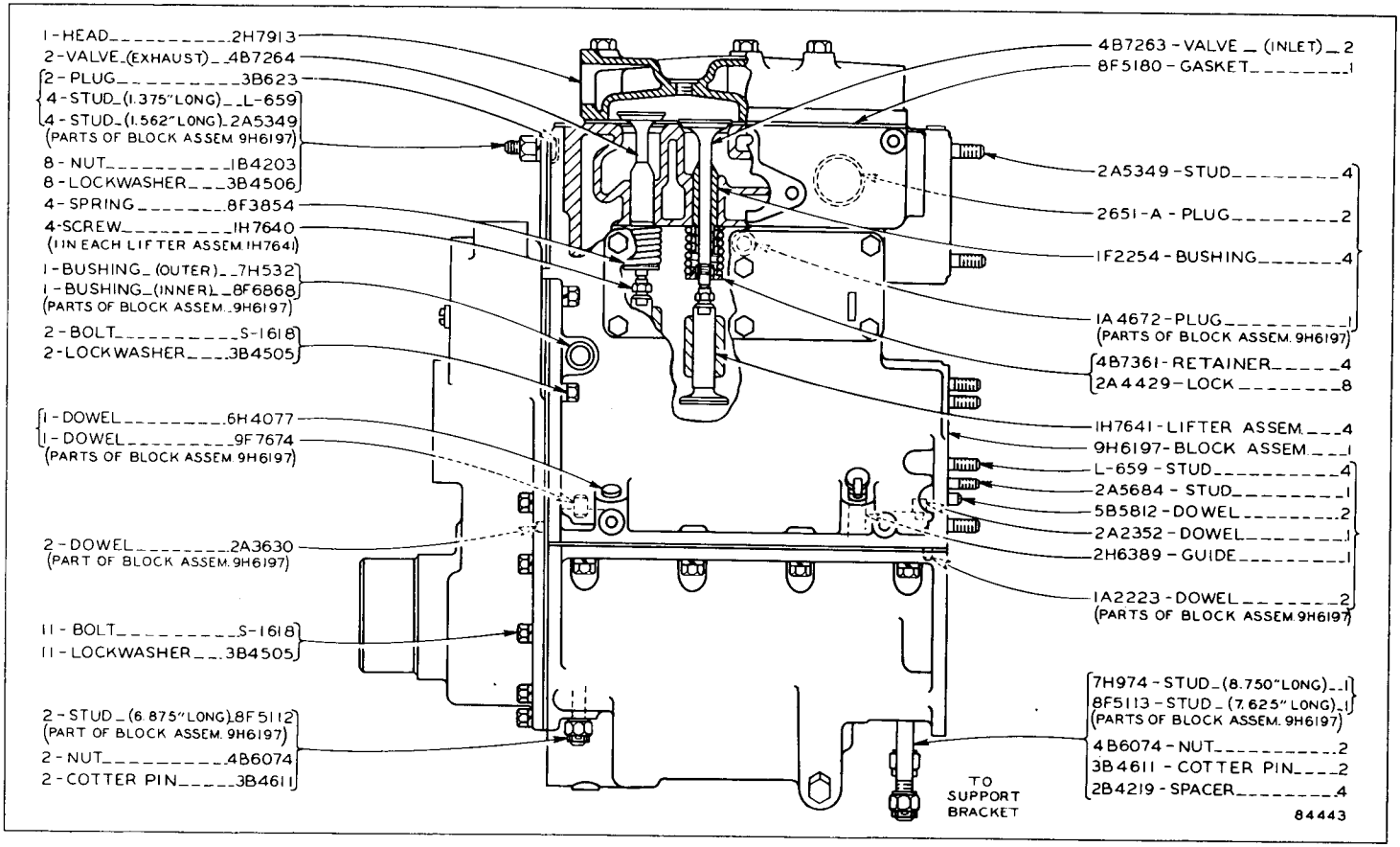

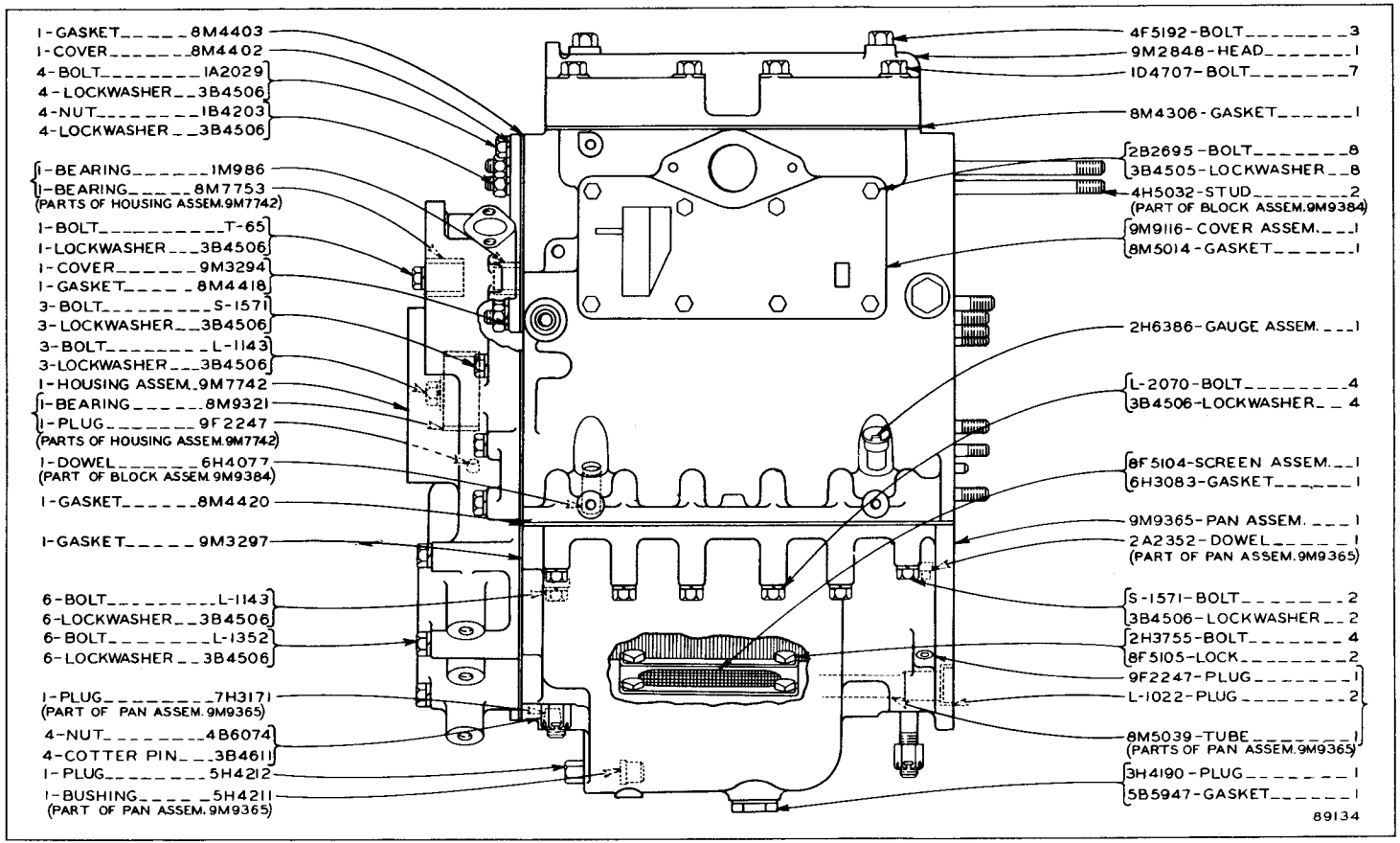

CYLINDER BLOCK, CYLINDER HEAD AND VALVE MECHANISM—Part One
Effective with Serial No. 48A2935

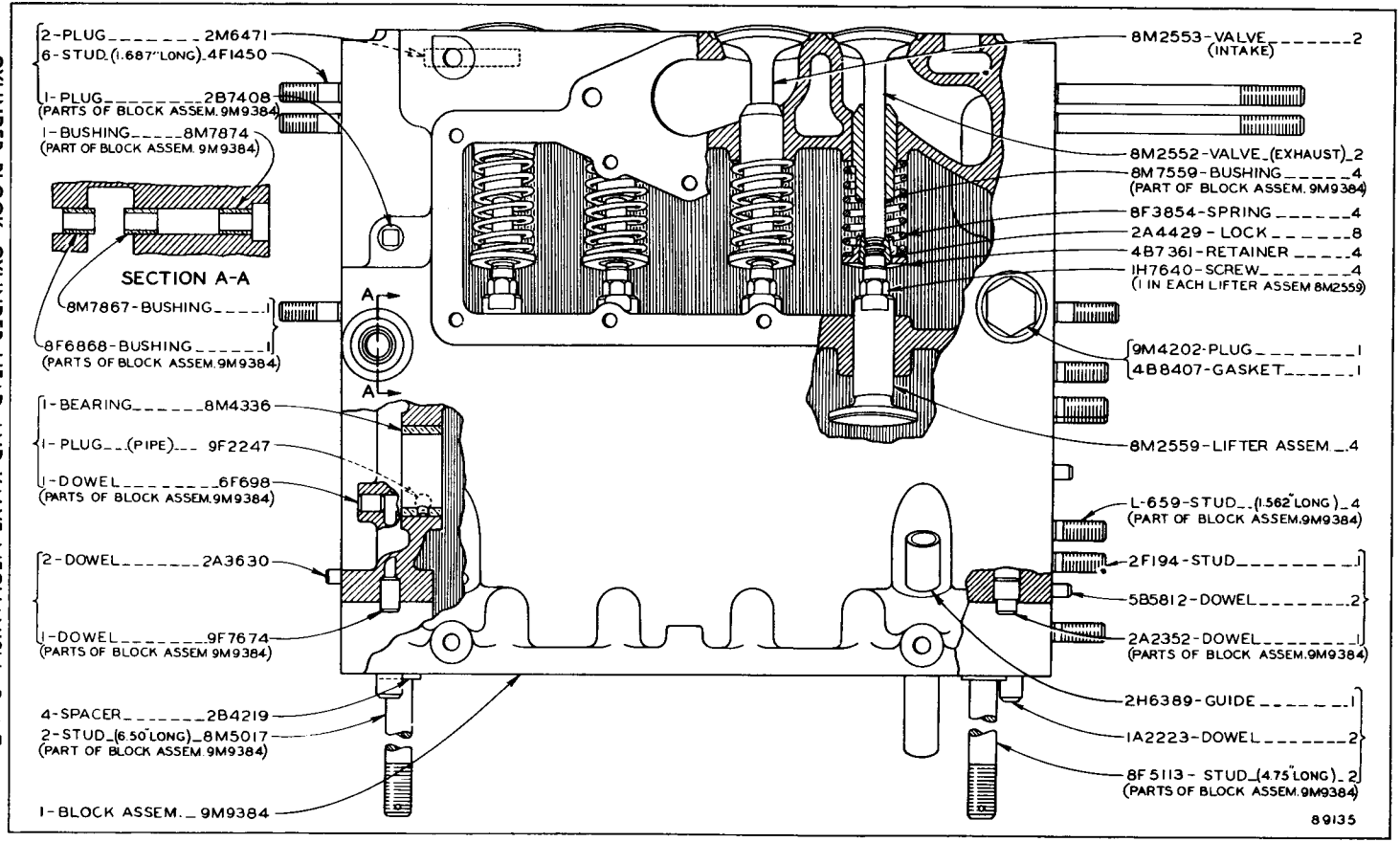
2-PLUG_____2M6471
6-STUD.(1.687"LONG)_4F1450
1-PLUG_____2B7408
(PARTS OF BLOCK ASSEM.9M9384)
1-BUSHING_____8M7874
(PART OF BLOCK ASSEM.9M9384)
SECTION A-A
8M7867-BUSHING_____1
8F6868-BUSHING_____1
(PARTS OF BLOCK ASSEM.9M9384)
1-BEARING_____8M4336
1-PLUG__(PIPE)___9F2247
1-DOWEL_____6F698
(PARTS OF BLOCK ASSEM.9M9384)
2-DOWEL_____2A3630
1-DOWEL_____9F7674
(PARTS OF BLOCK ASSEM.9M9384)
4-SPACER_____2B4219
2-STUD_(6.50"LONG)_8M5017
(PART OF BLOCK ASSEM.9M9384)
1-BLOCK ASSEM._9M9384
8M2553-VALVE_____2
(INTAKE)
8M2552-VALVE_(EXHAUST)_2
8M7559-BUSHING_____4
(PART OF BLOCK ASSEM.9M9384)
8F3854-SPRING_____4
2A4429-LOCK_____8
4B7361-RETAINER_____4
1H7640-SCREW_____4
(1 IN EACH LIFTER ASSEM 8M2559)
9M4202-PLUG_____1
4B8407-GASKET_____1
8M2559-LIFTER ASSEM._4
L-659-STUD_(1.562"LONG)_4
(PART OF BLOCK ASSEM.9M9384)
2F194-STUD_____1
5B5812-DOWEL_____2
2A2352-DOWEL_____1
(PARTS OF BLOCK ASSEM.9M9384)
2H6389-GUIDE_____1
1A2223-DOWEL_____2
8F5113-STUD_(4.75"LONG)_2
(PARTS OF BLOCK ASSEM.9M9384)
89135

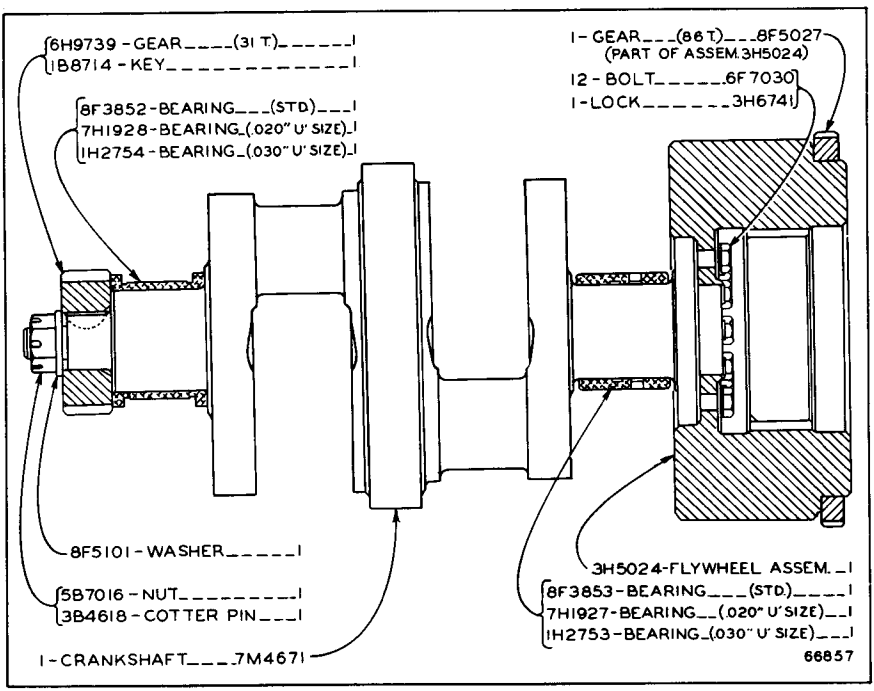

CRANKSHAFT

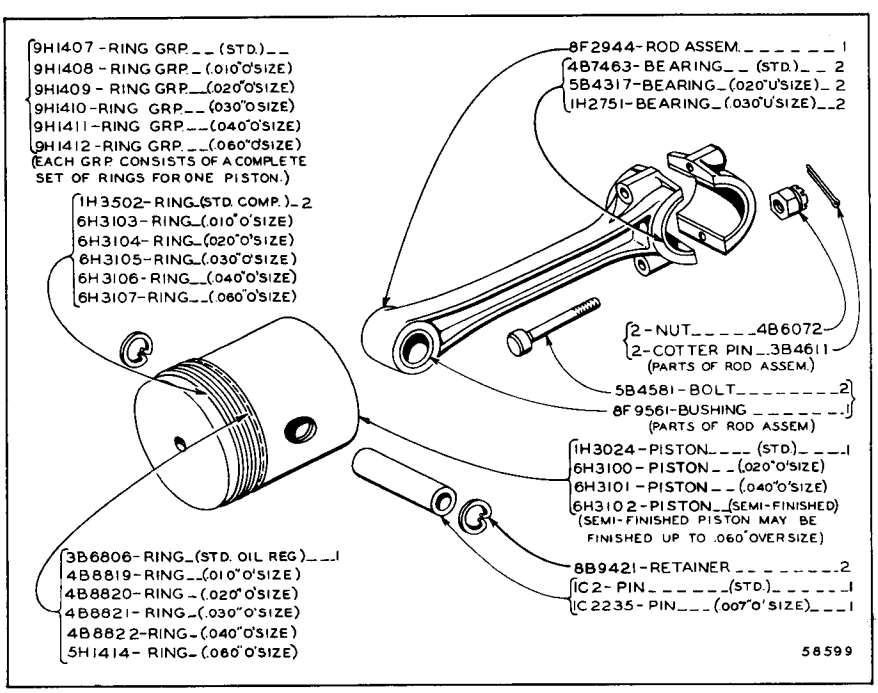

CONNECTING ROD AND PISTON—2 Required

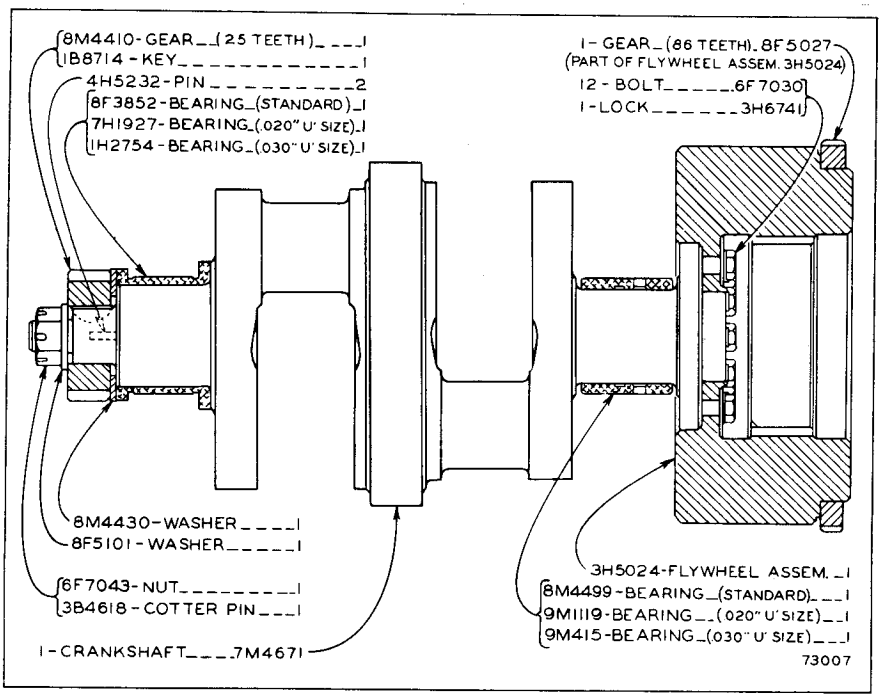

CRANKSHAFT
Effective with Serial No. 48A2935—Up and Starting Engine Block No. F832—Up

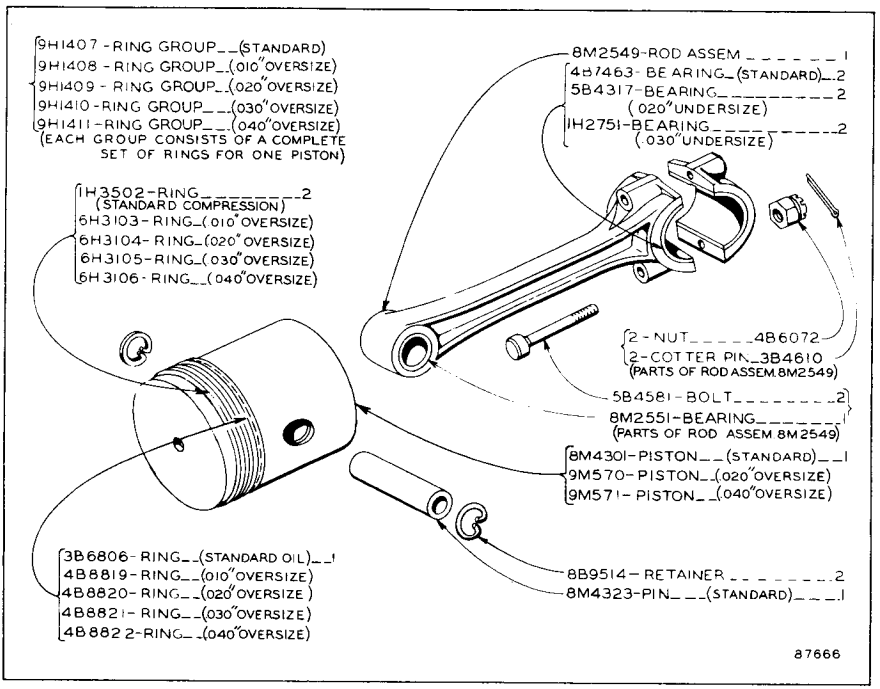

CONNECTING ROD AND PISTON—2 Required
Effective with Serial No. 48A2935—Up and Starting Engine Block No. F832—Up

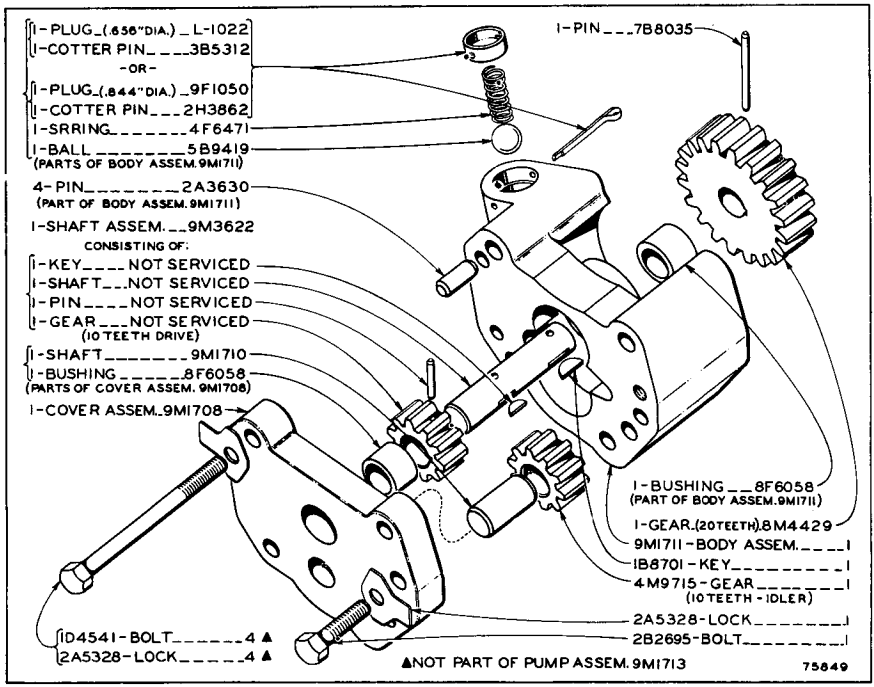

9MI713 OIL PUMP ASSEMBLY

Effective with Serial No. 48A2935—Up and Starting Engine Block No. F832—Up

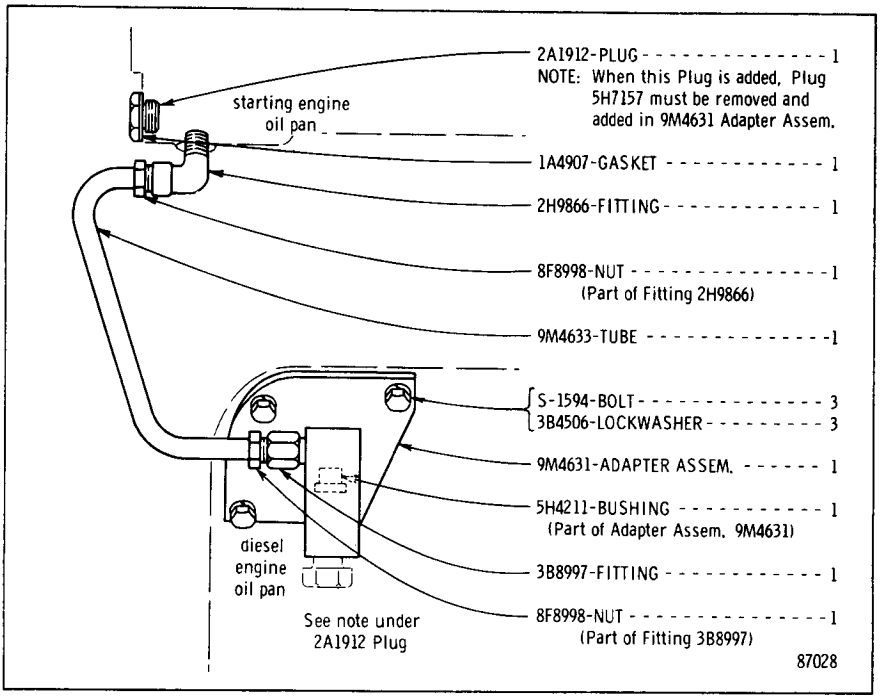

9M4651 OIL DRAIN LINES GROUP—Field Installation
Serial No. 48A1 to 48A1527 inclusive

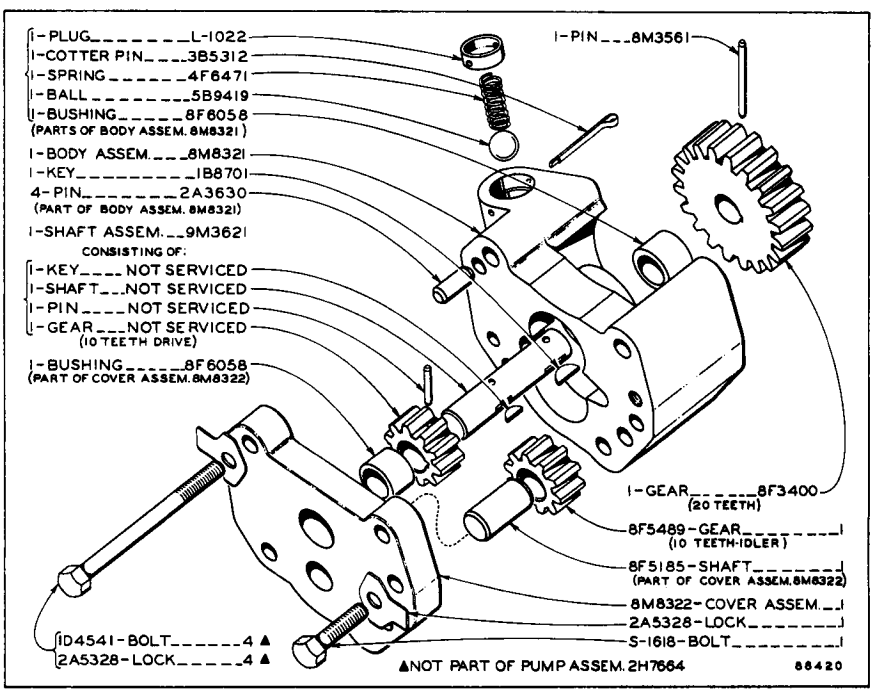

2H7664 OIL PUMP ASSEMBLY
Effective with Serial No. 48A760—Up and Starting Engine Block No. D7054—Up

PARTS BOOK INSERT

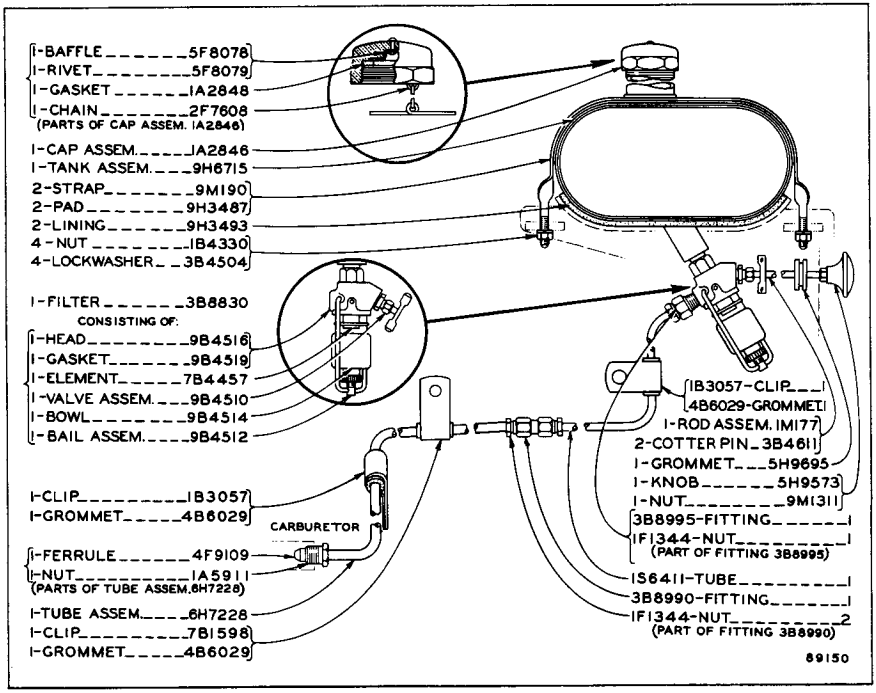

5M4429 FUEL SYSTEM GROUP

Effective with Serial No. 48A2935

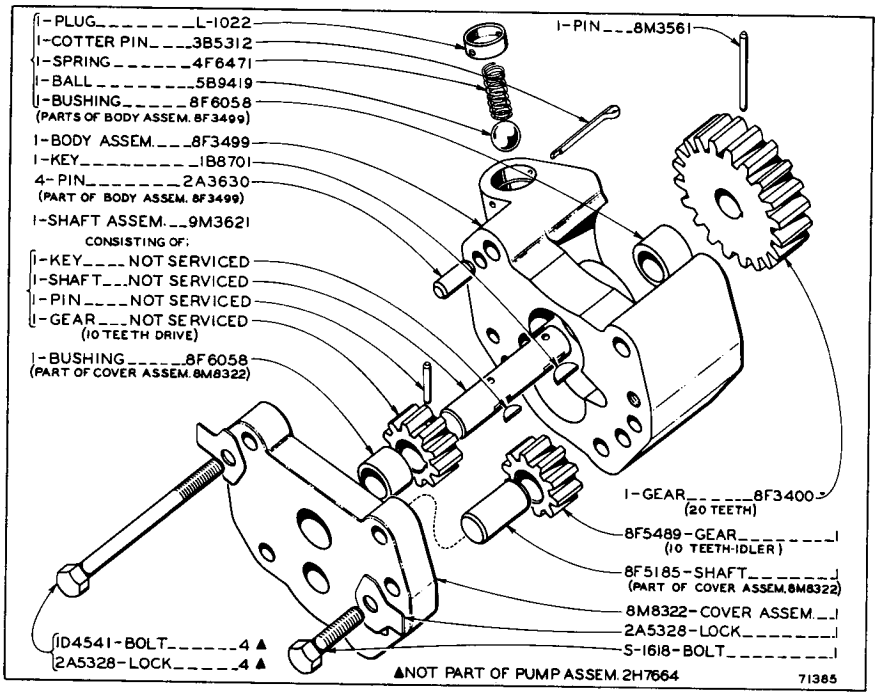

2H7664 OIL PUMP ASSEMBLY

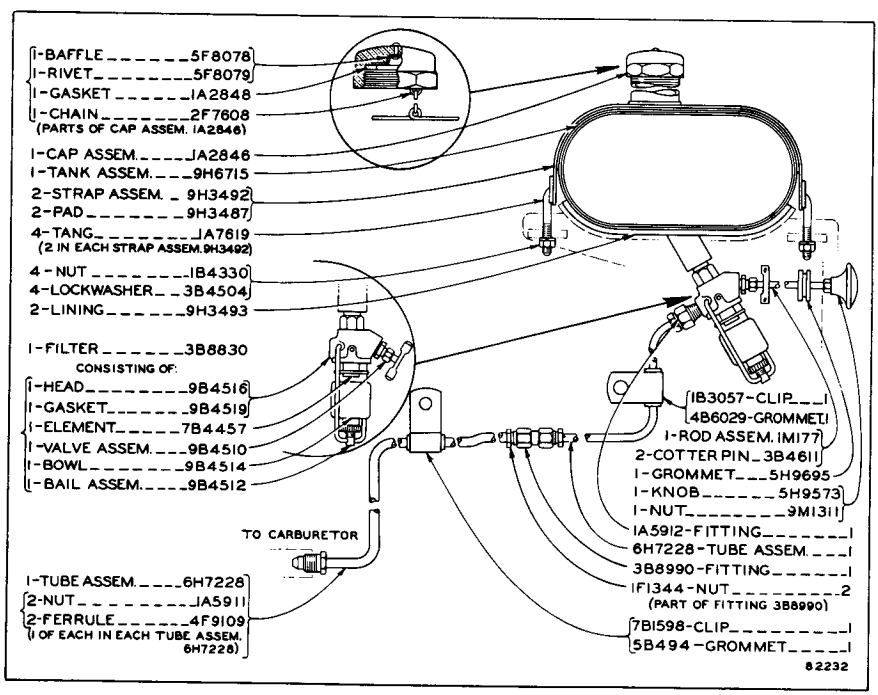

5M4429 FUEL SYSTEM GROUP

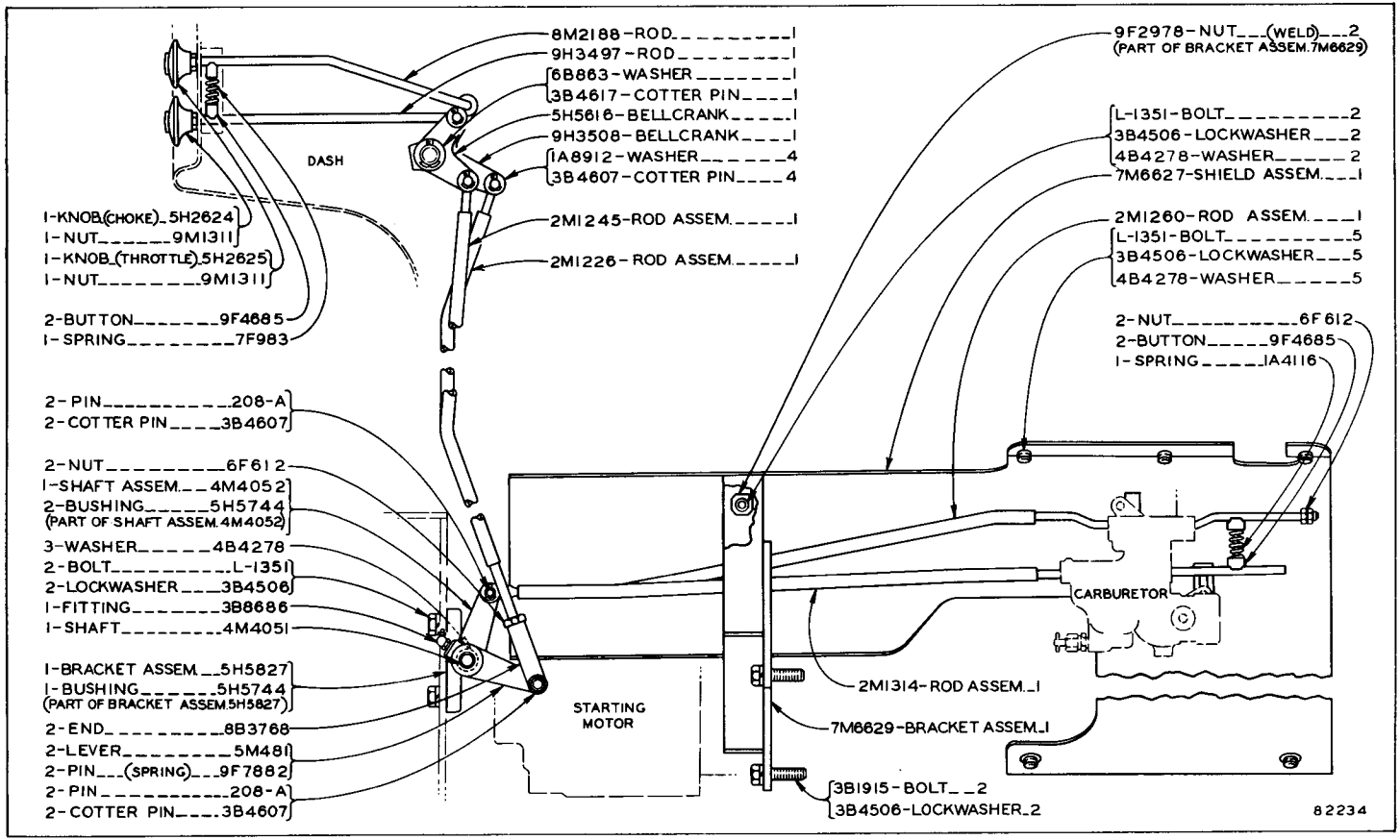

CHOKE AND THROTTLE CONTROL

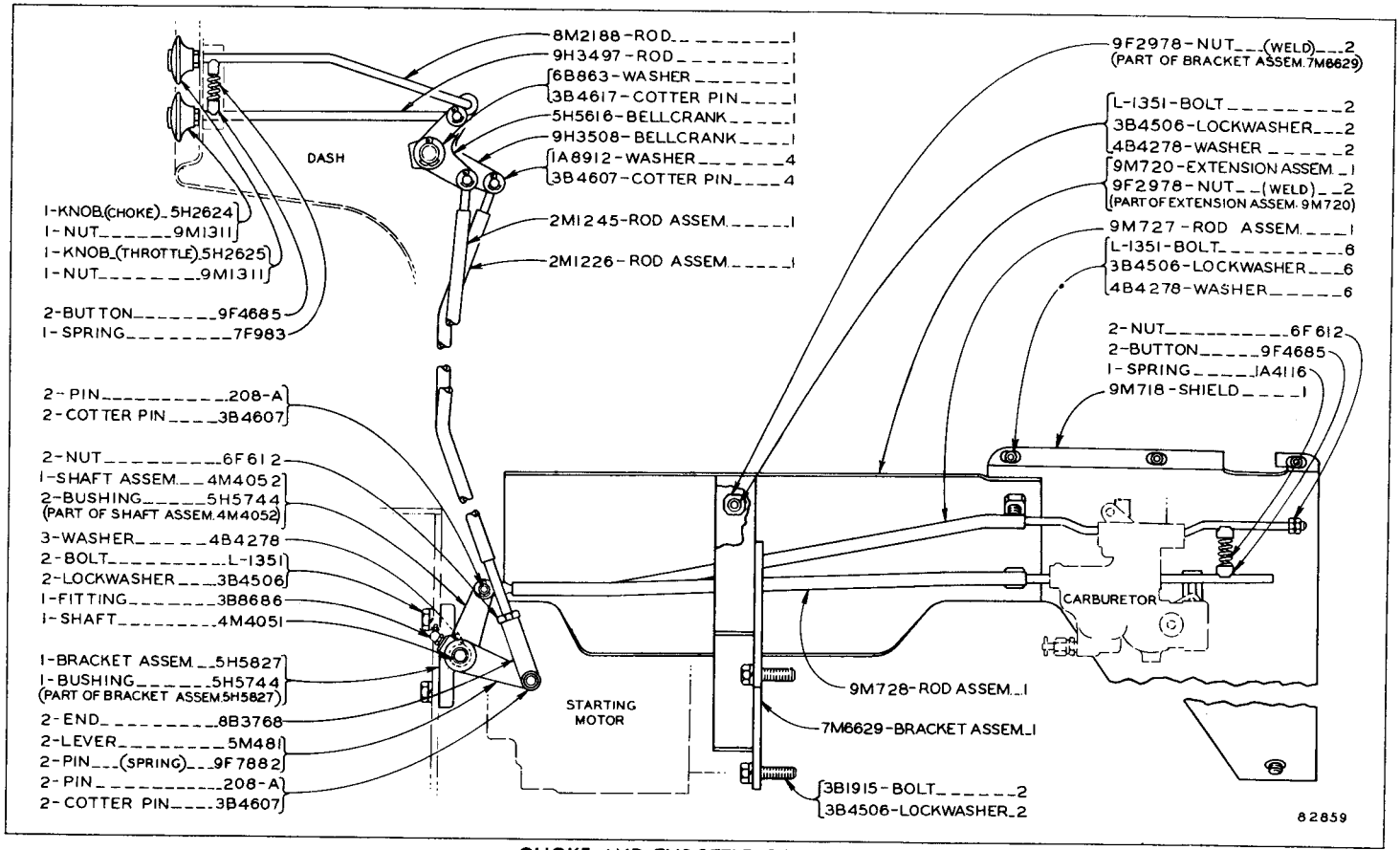

CHOKE AND THROTTLE CONTROLS
Effective with Serial No. 48A750

1S4492 CHOKE AND THROTTLE CONTROL GROUP

Effective with Serial No. 48A2935

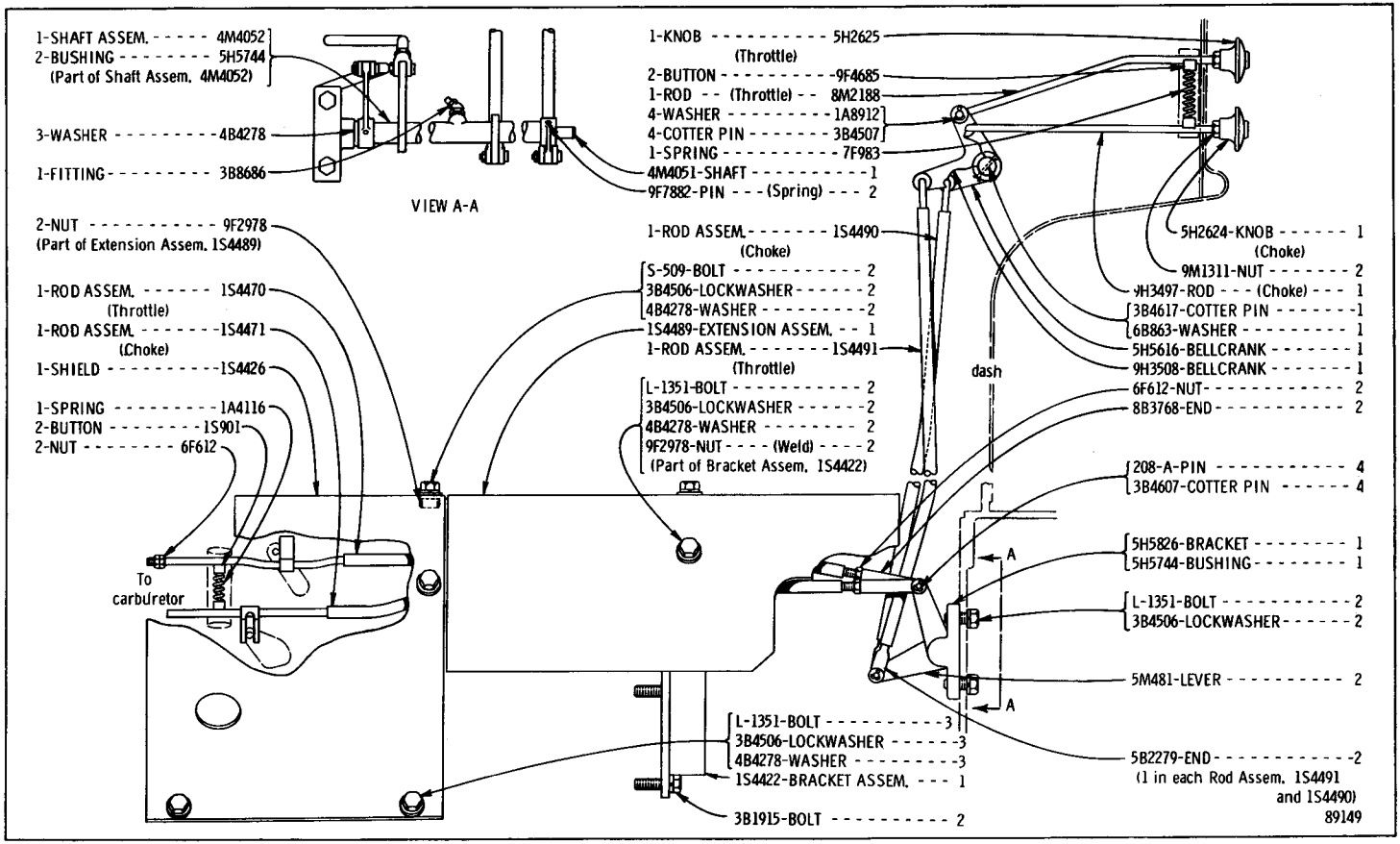

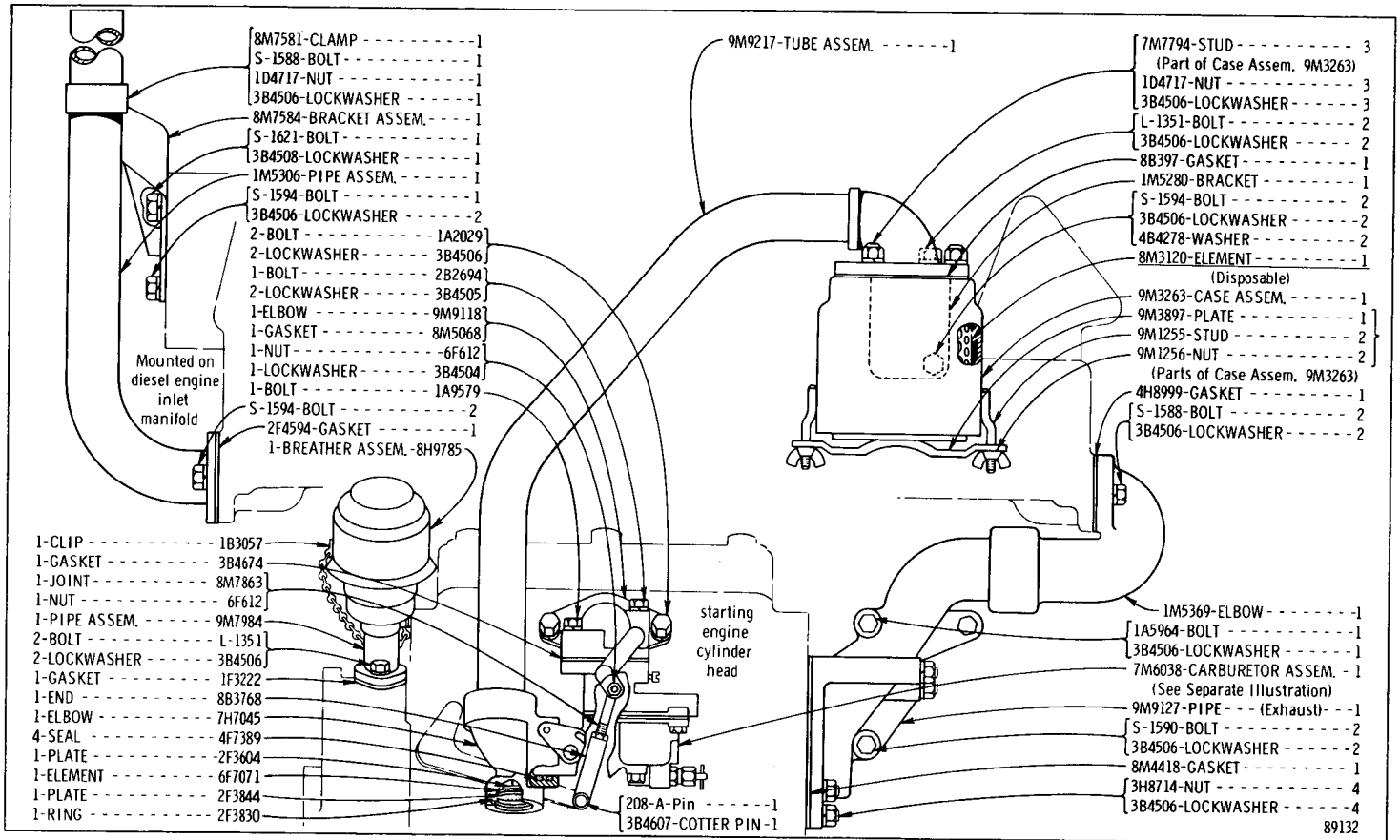

9M9233 MANIFOLD, CARBURETOR AND AIR CLEANER GROUP

Effective with Serial No. 48A2935

7M6038 Carburetor Assembly parts are shown on Page 56

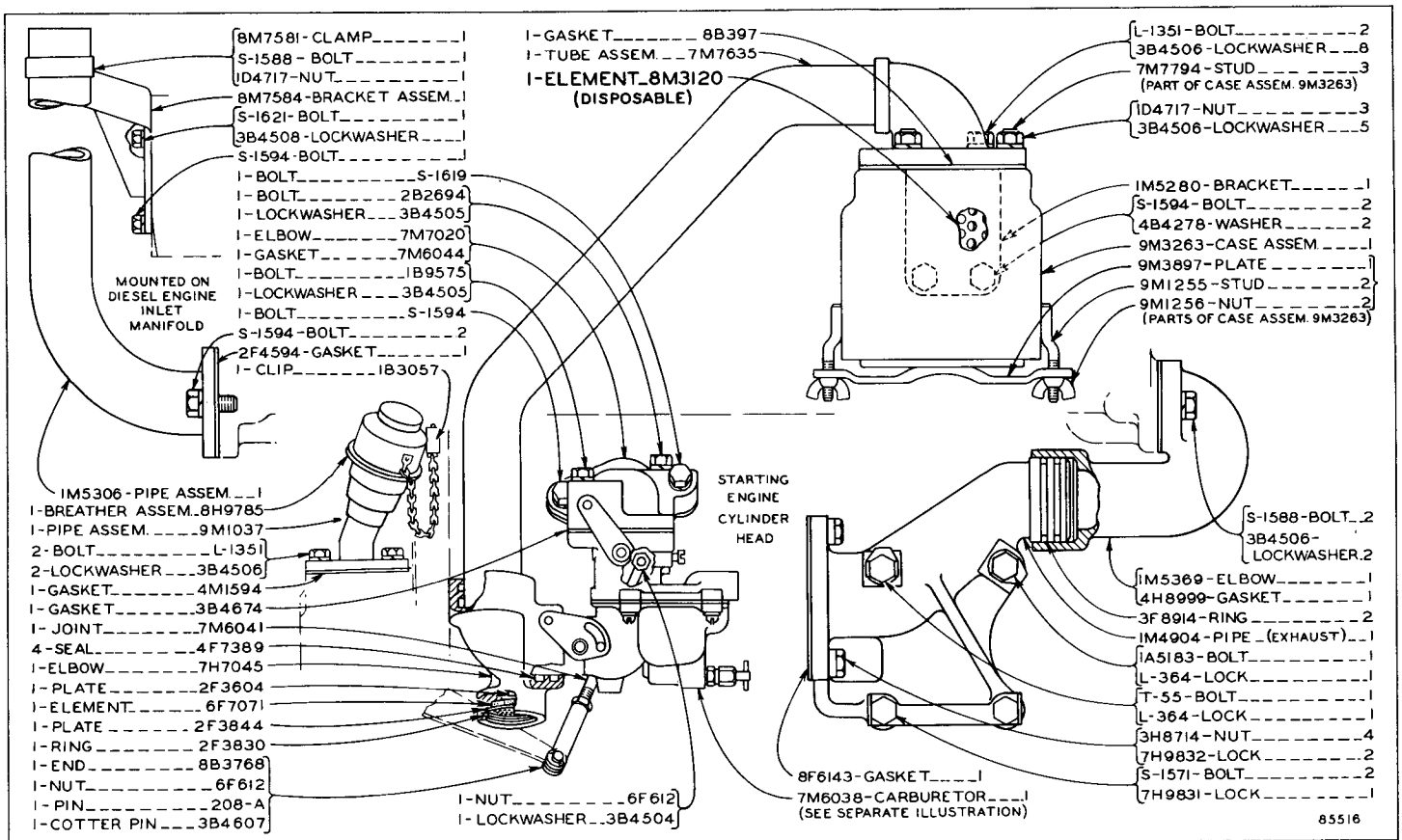

1M5337 MANIFOLD, CARBURETOR AND AIR CLEANER GROUP

Serial No. 48A2227, 48A2228 and 48A2232—Up

7M6038 Carburetor Assembly parts are shown on Page 56

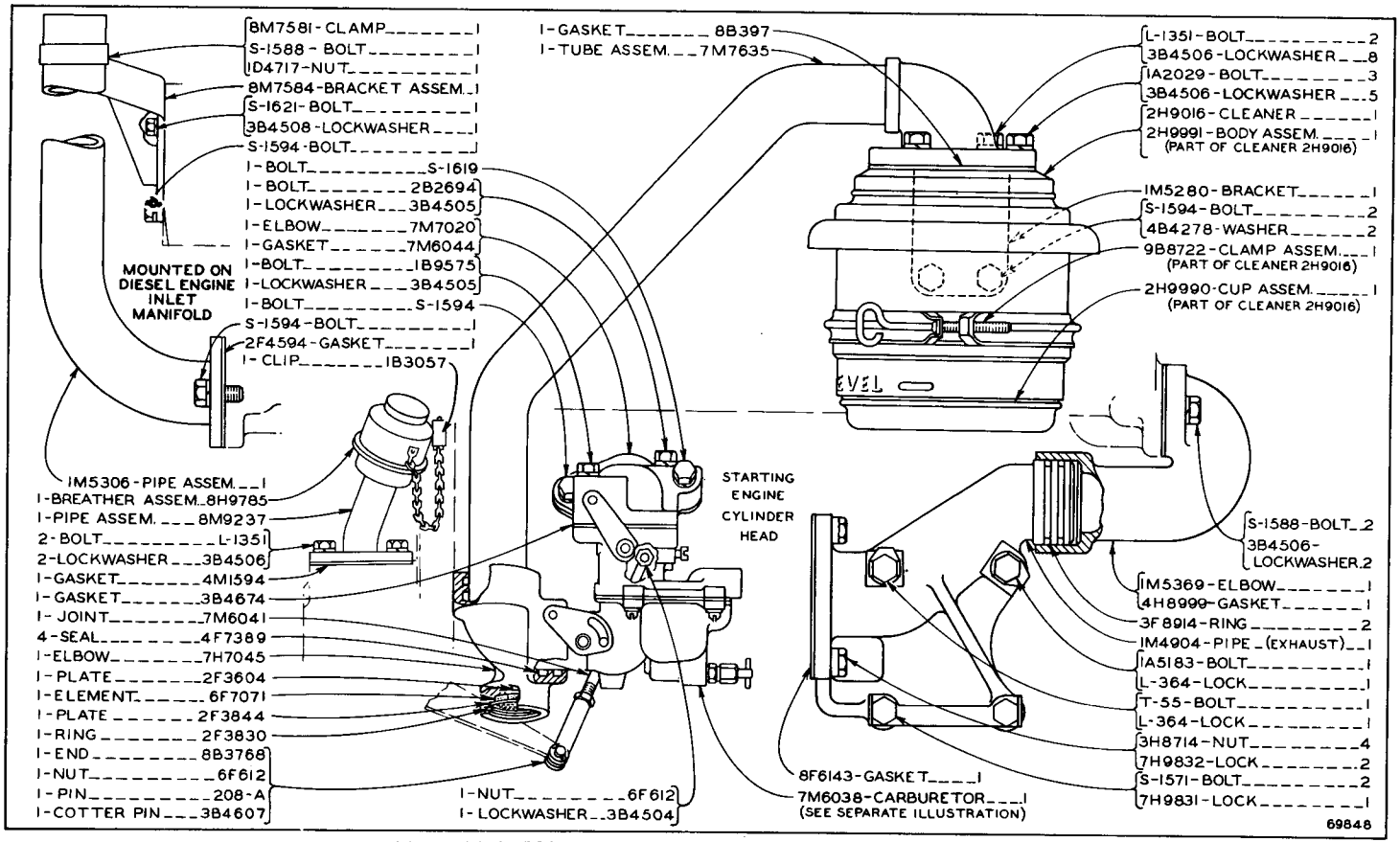

1M5337 MANIFOLD, CARBURETOR AND AIR CLEANER GROUP

7M6038 Carburetor Assembly parts are shown on Page 56

ONLY "CATERPILLAR" PARTS GIVE "CATERPILLAR" PERFORMANCE

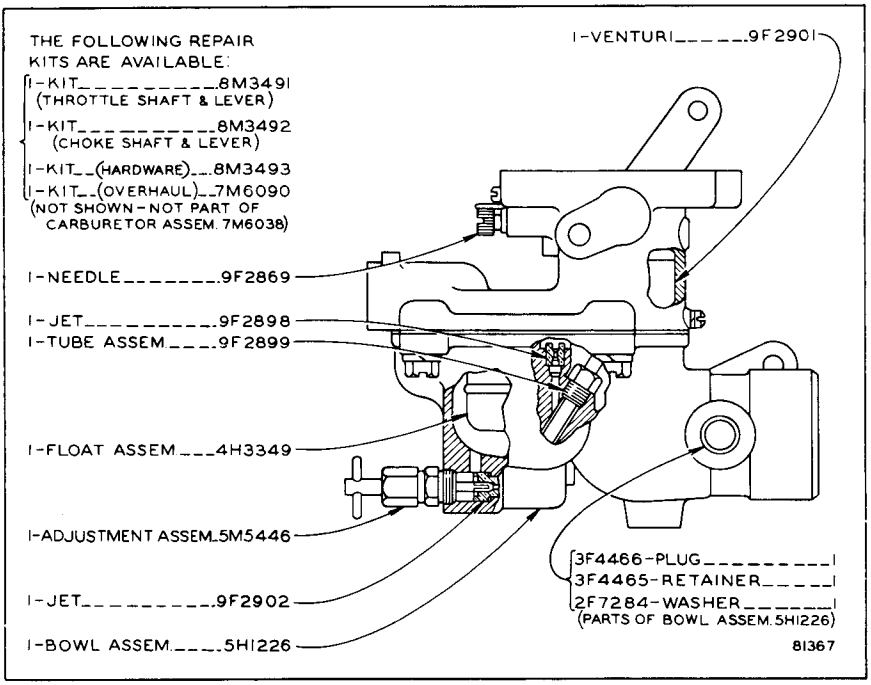

7M6038 CARBURETOR ASSEMBLY

Part of 1M5337 Manifold, Carburetor and Air Cleaner Group shown on Page 55

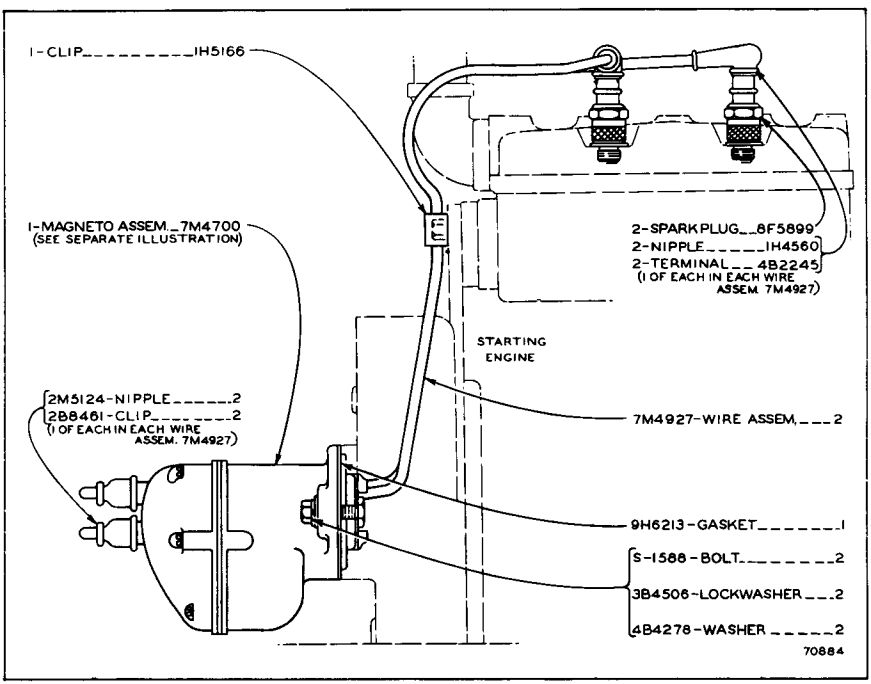

9H6203 IGNITION SYSTEM GROUP

PARTS BOOK INSERT

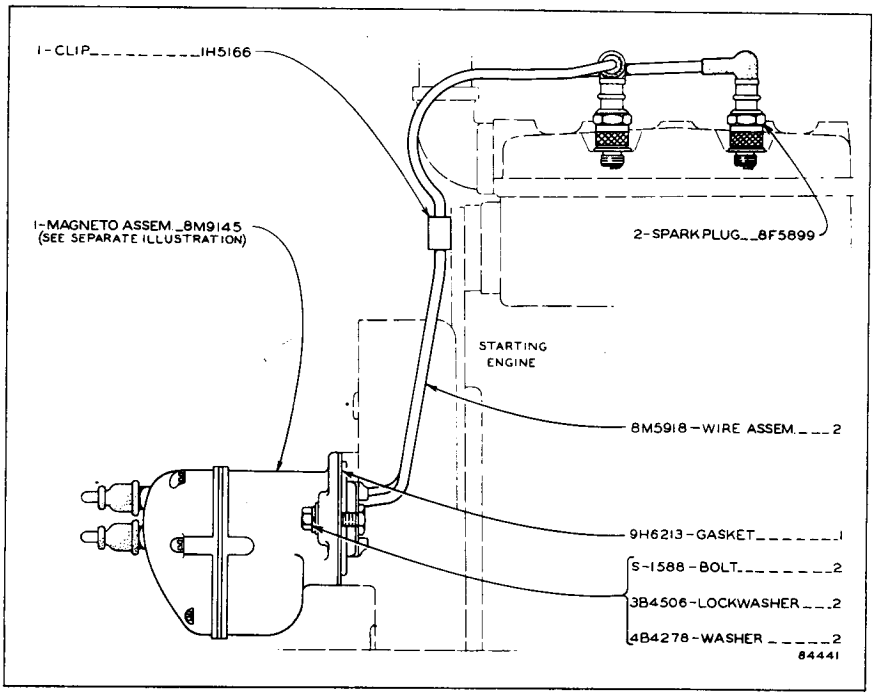

9H6203 IGNITION SYSTEM GROUP

Effective with Serial No. 48A1396—Up and Starting Engine Block No. D9734—Up
8M9145 Magneto Assembly parts are shown on reverse side of this insert

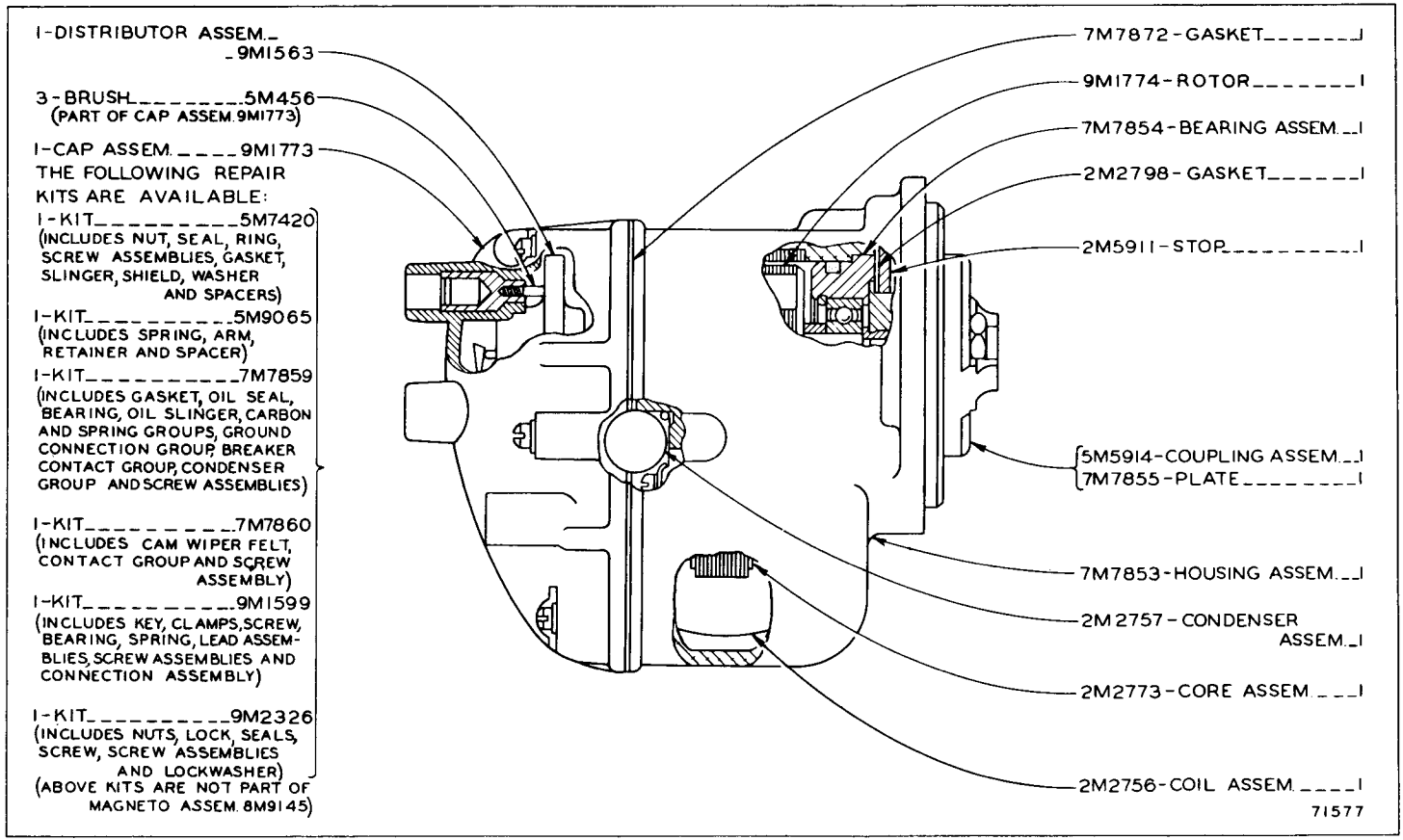

8M9145 MAGNETO ASSEMBLY

Part of 9H6203 Ignition System Group shown on front side of this insert

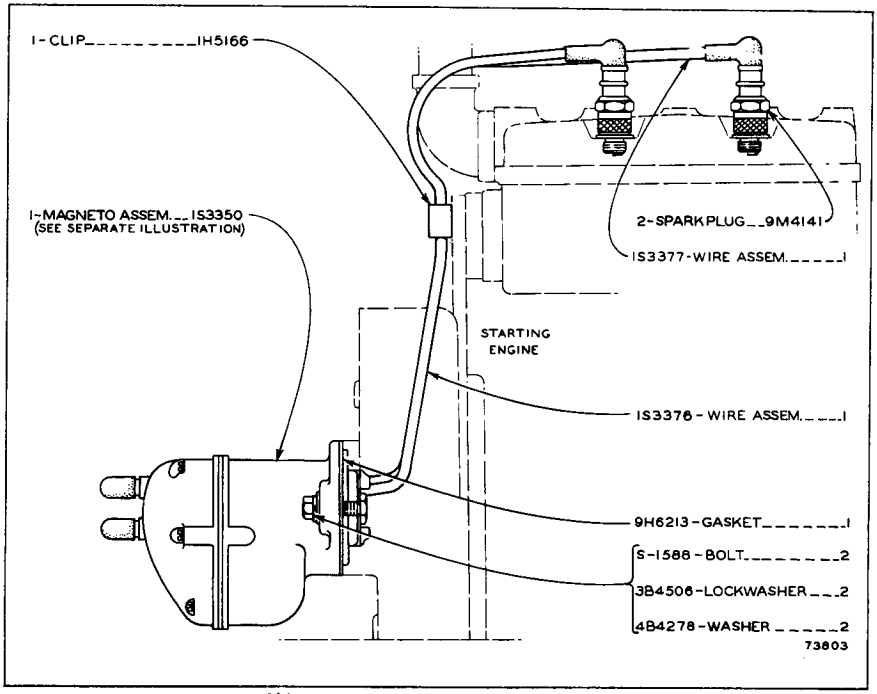

9H6203 IGNITION SYSTEM GROUP

Effective with Serial No. 48A2773—Up and Starting Engine Block No. H7086—Up
1S3350 Magneto Assembly parts are shown on reverse side of this insert

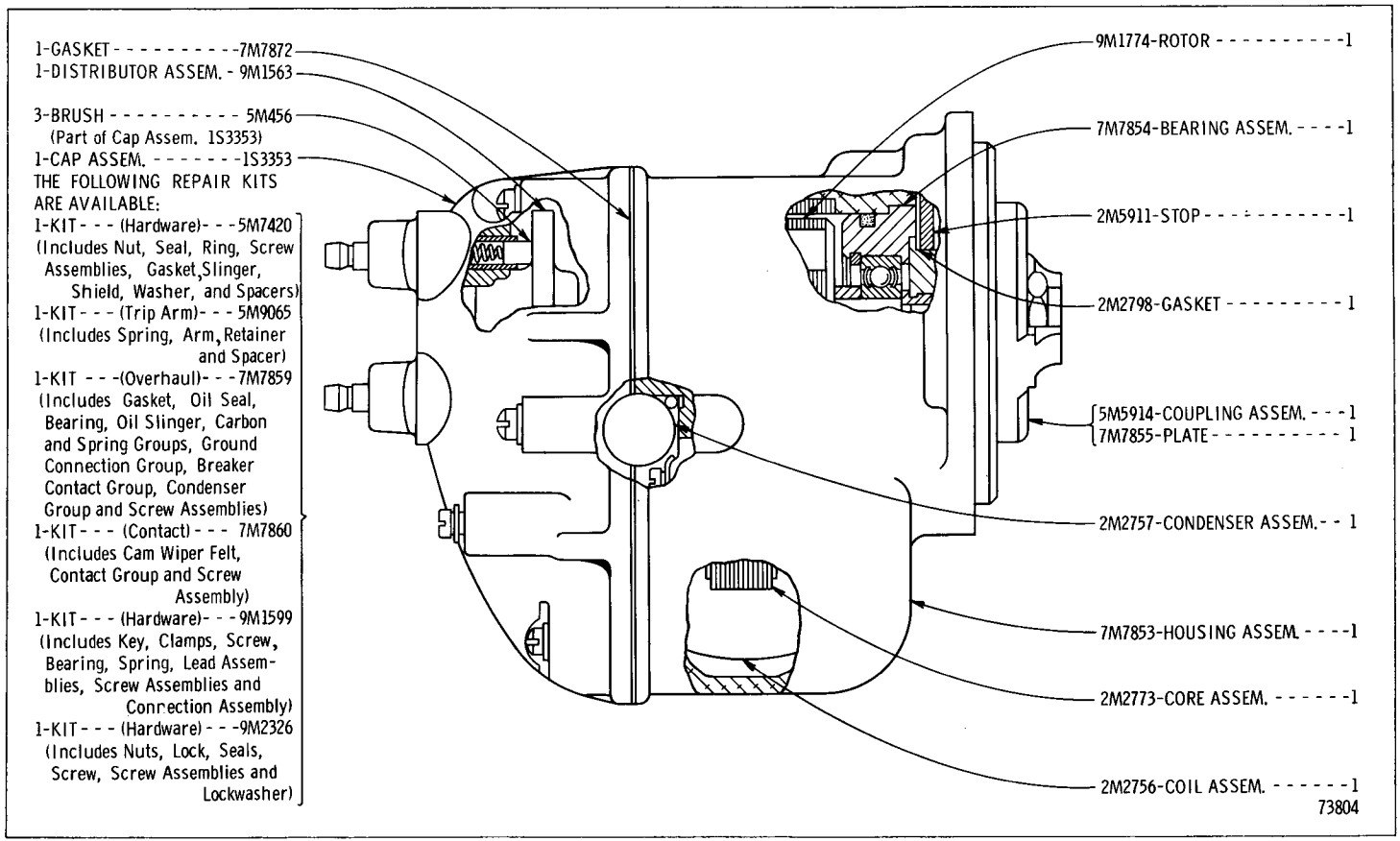

IS3350 MAGNETO ASSEMBLY

Part of 9H6203 Ignition System Group shown on front side of this insert

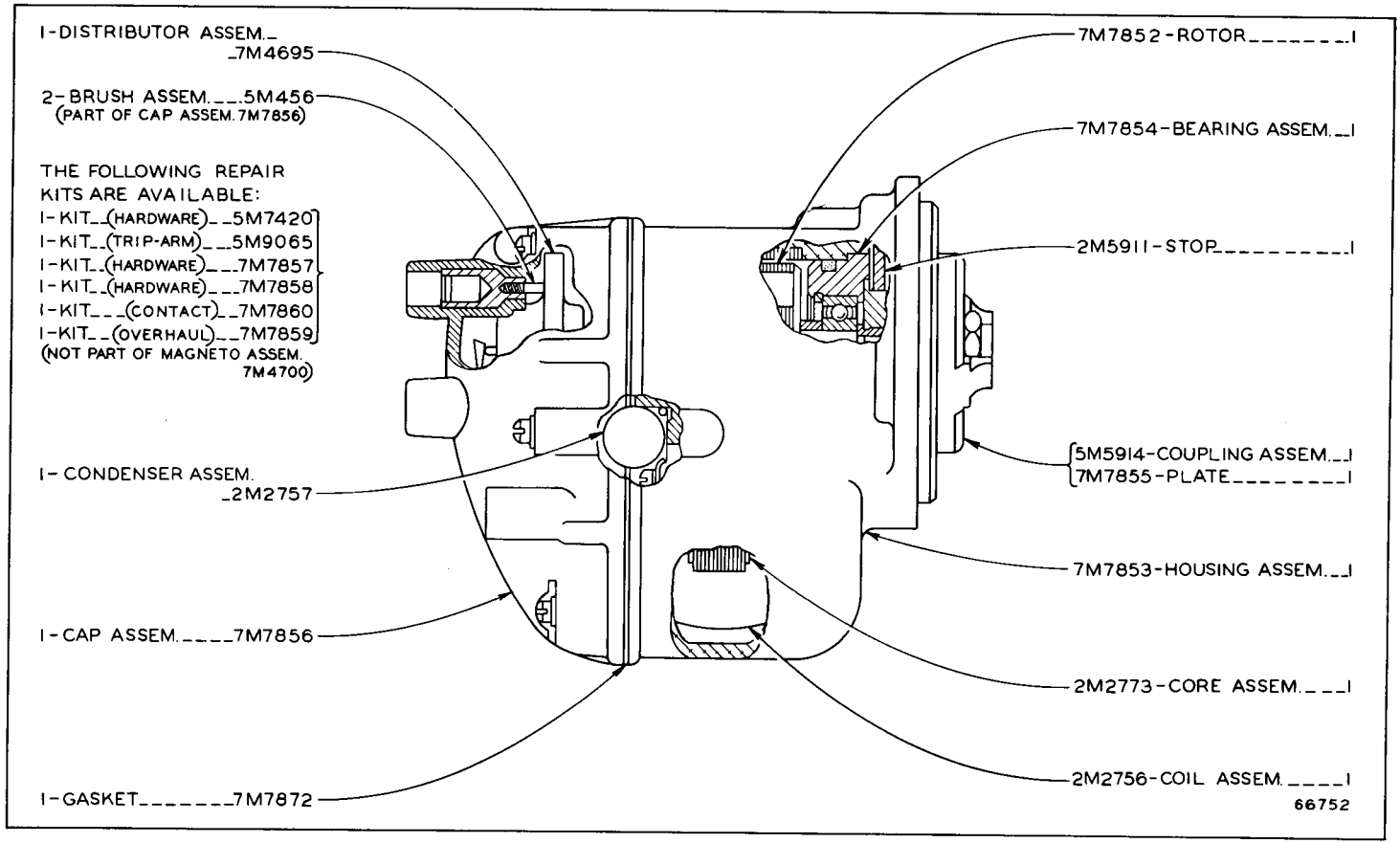

7M4700 MAGNETO ASSEMBLY
Part of 9H6203 Ignition System Group

ONLY "CATERPILLAR" PARTS GIVE "CATERPILLAR" PERFORMANCE

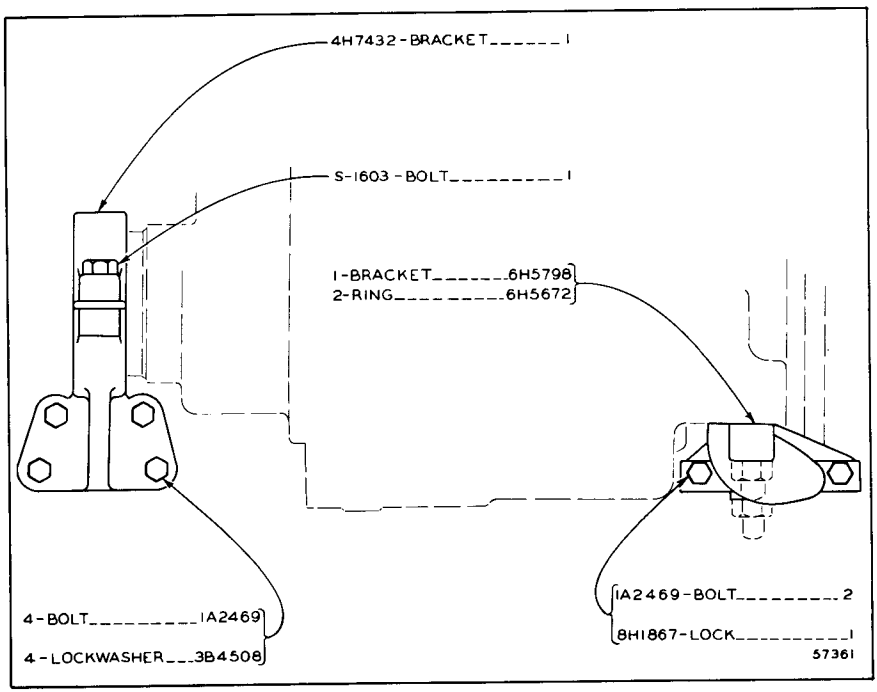

ENGINE SUPPORT

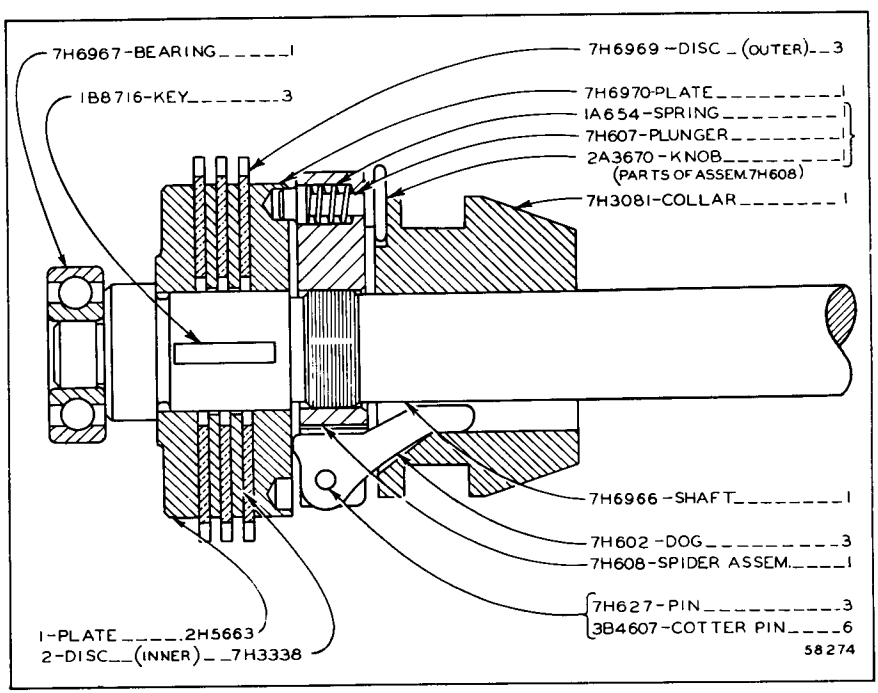

9H4826 CLUTCH GROUP

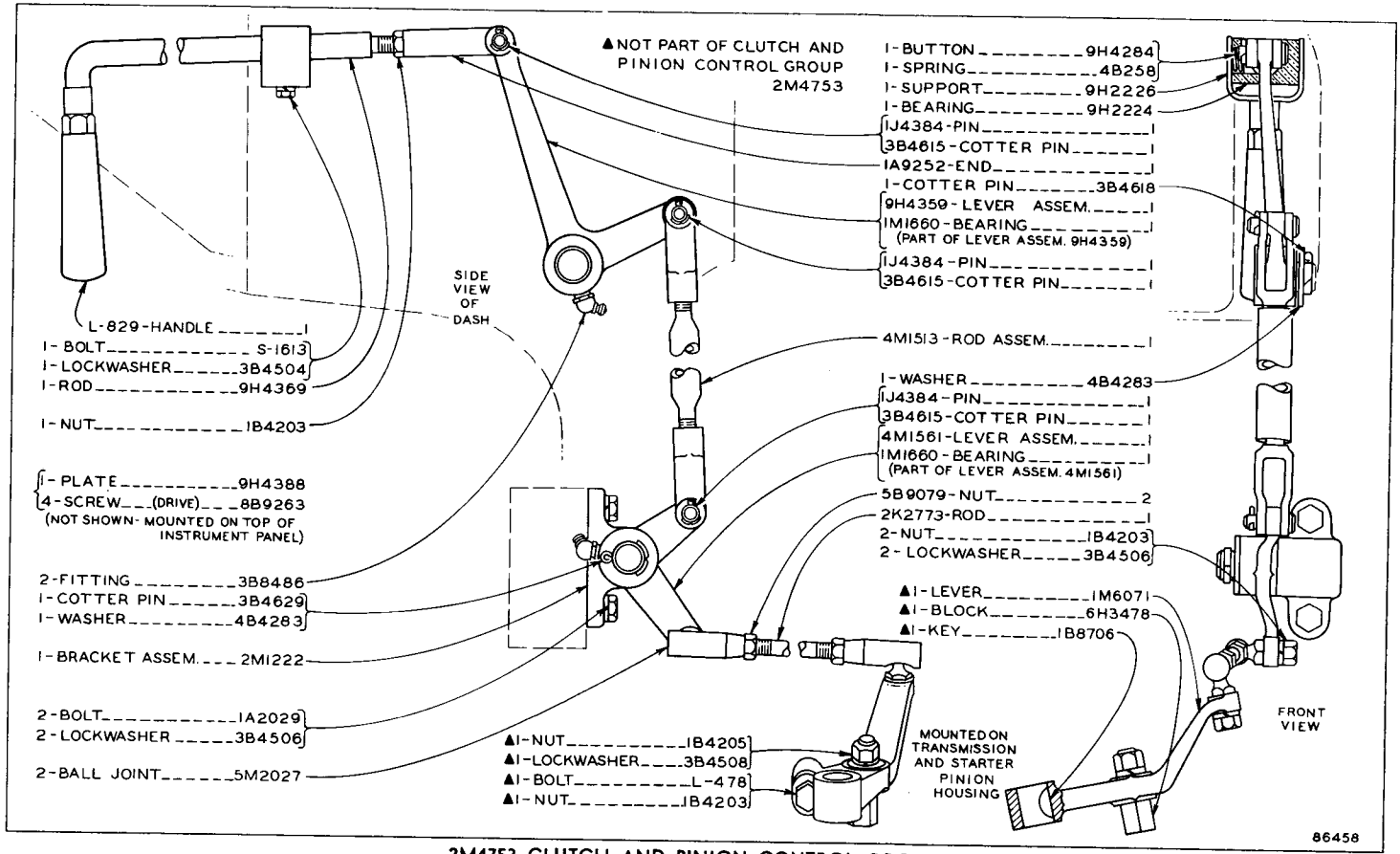

2M4753 CLUTCH AND PINION CONTROL GROUP

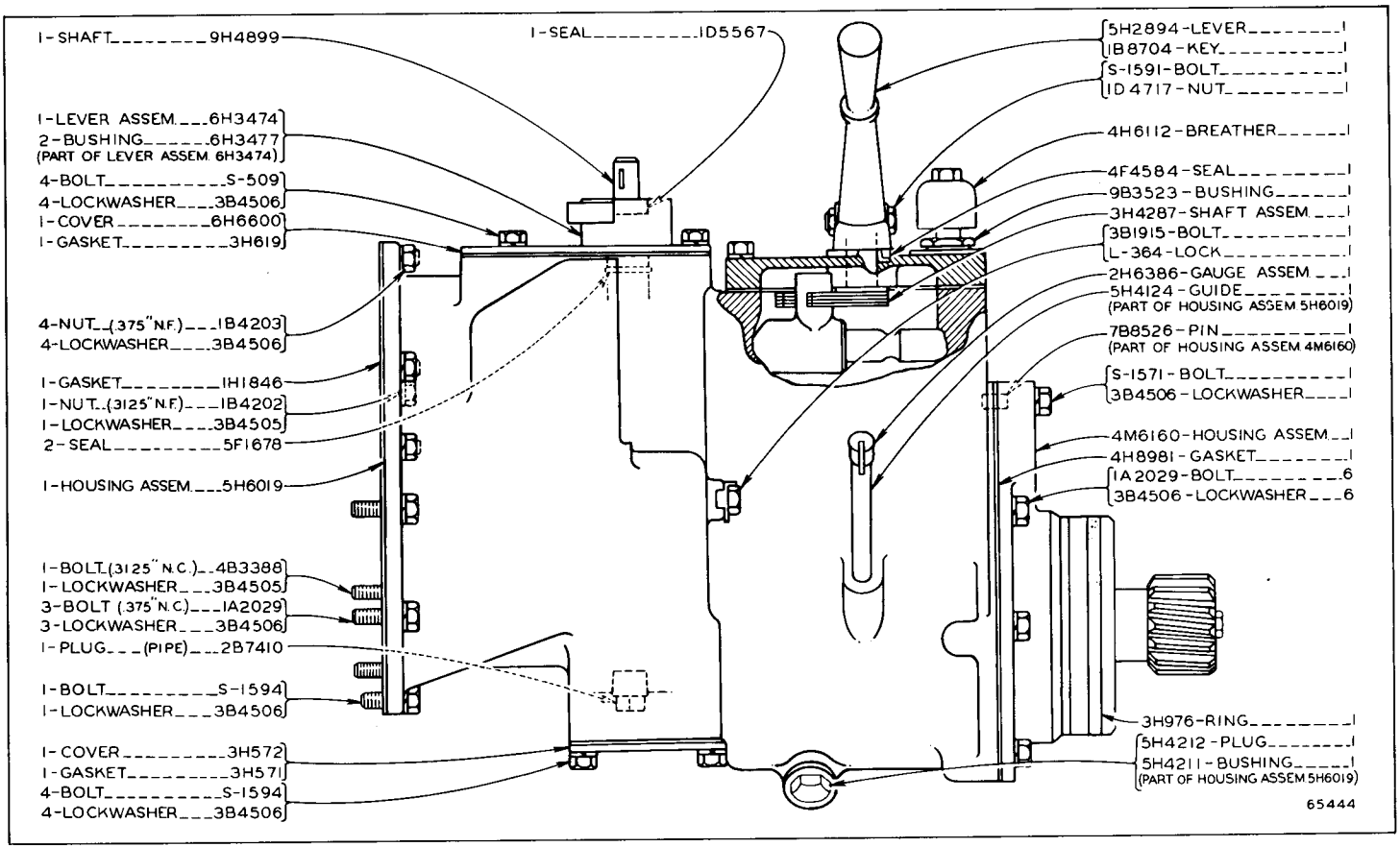

4M6262 TRANSMISSION AND STARTER PINION GROUP—Part One

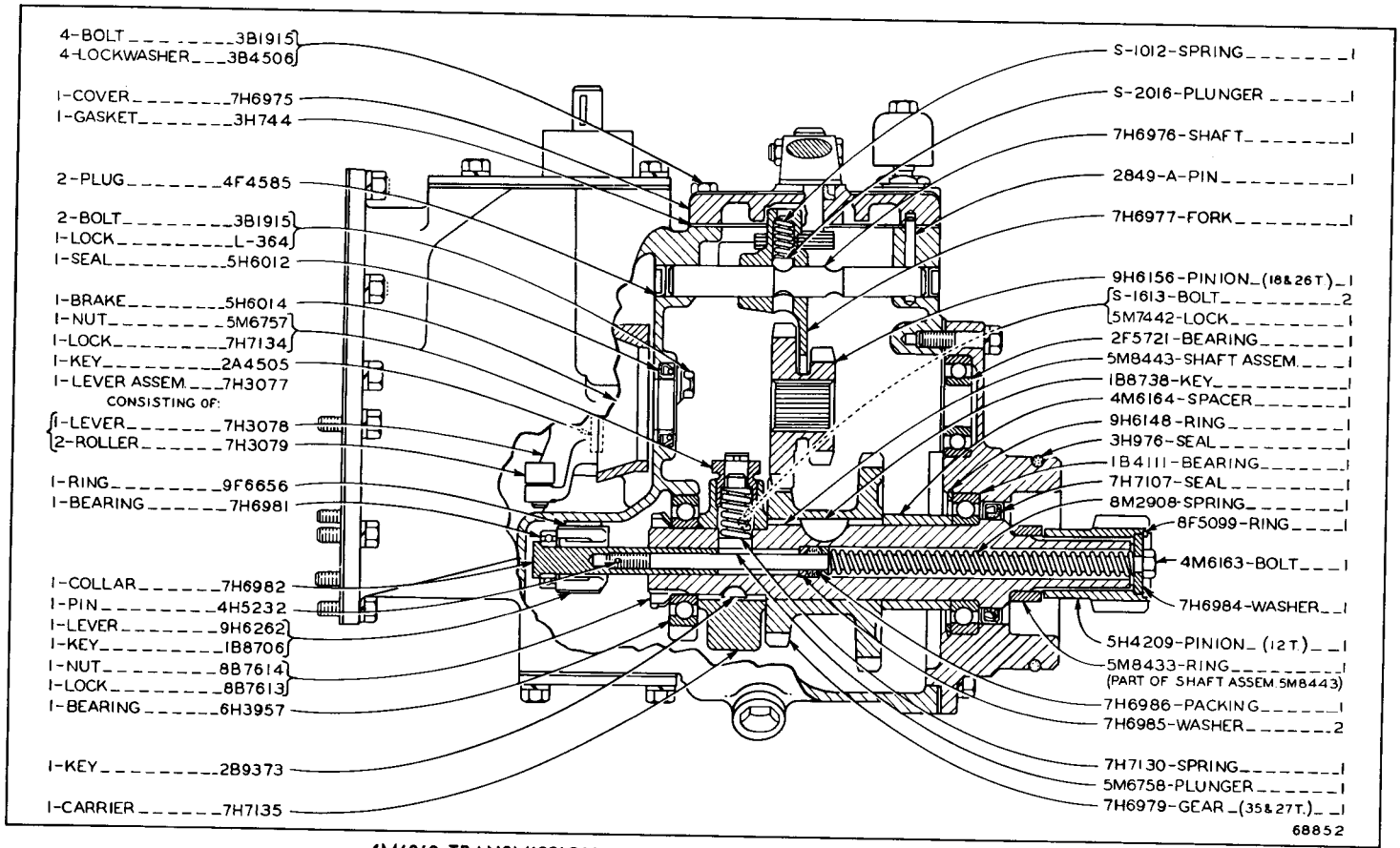

4M6262 TRANSMISSION AND STARTER PINION GROUP—Part Two

ONLY "CATERPILLAR" PARTS GIVE "CATERPILLAR" PERFORMANCE

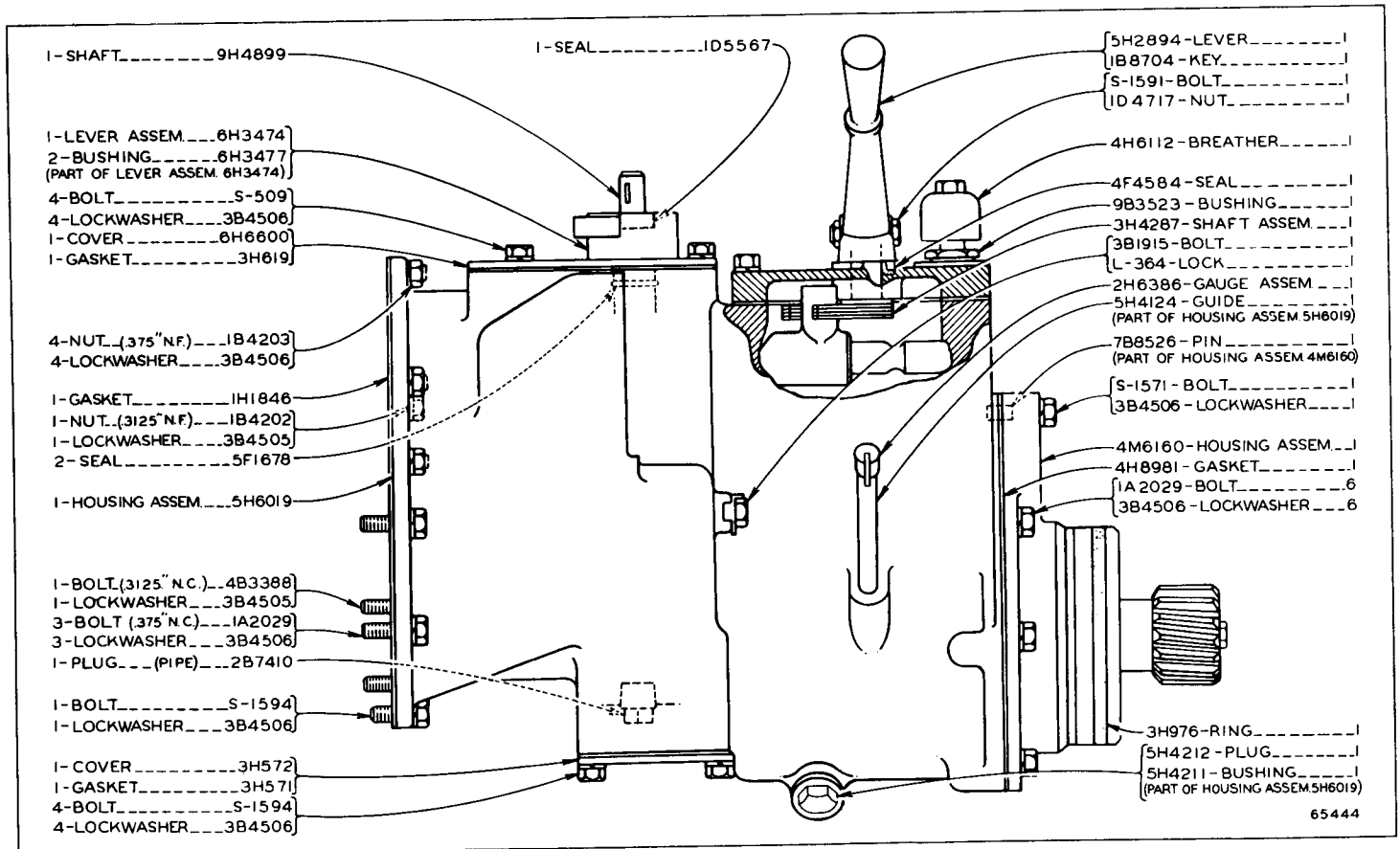

4M6262 TRANSMISSION AND STARTER PINION GROUP—Part One

Serial No. 48A863 to 48A915 inclusive and Starting Engine Block No. D7475 to D7655 inclusive

4M6262 TRANSMISSION AND STARTER PINION GROUP—Part Two

Serial No. 48A863 to 48A915 inclusive and Starting Engine Block No. D7475 to D7655 inclusive

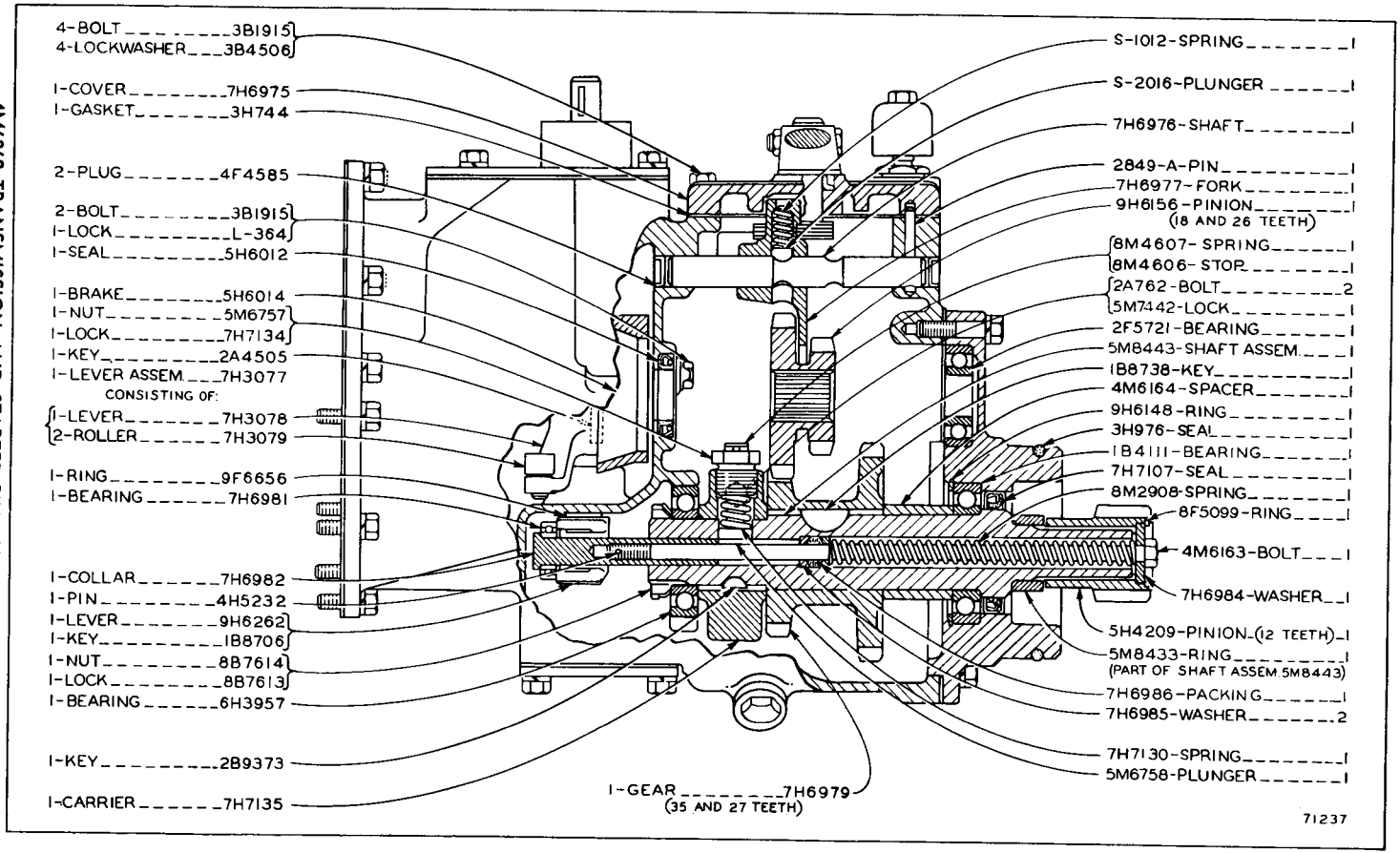

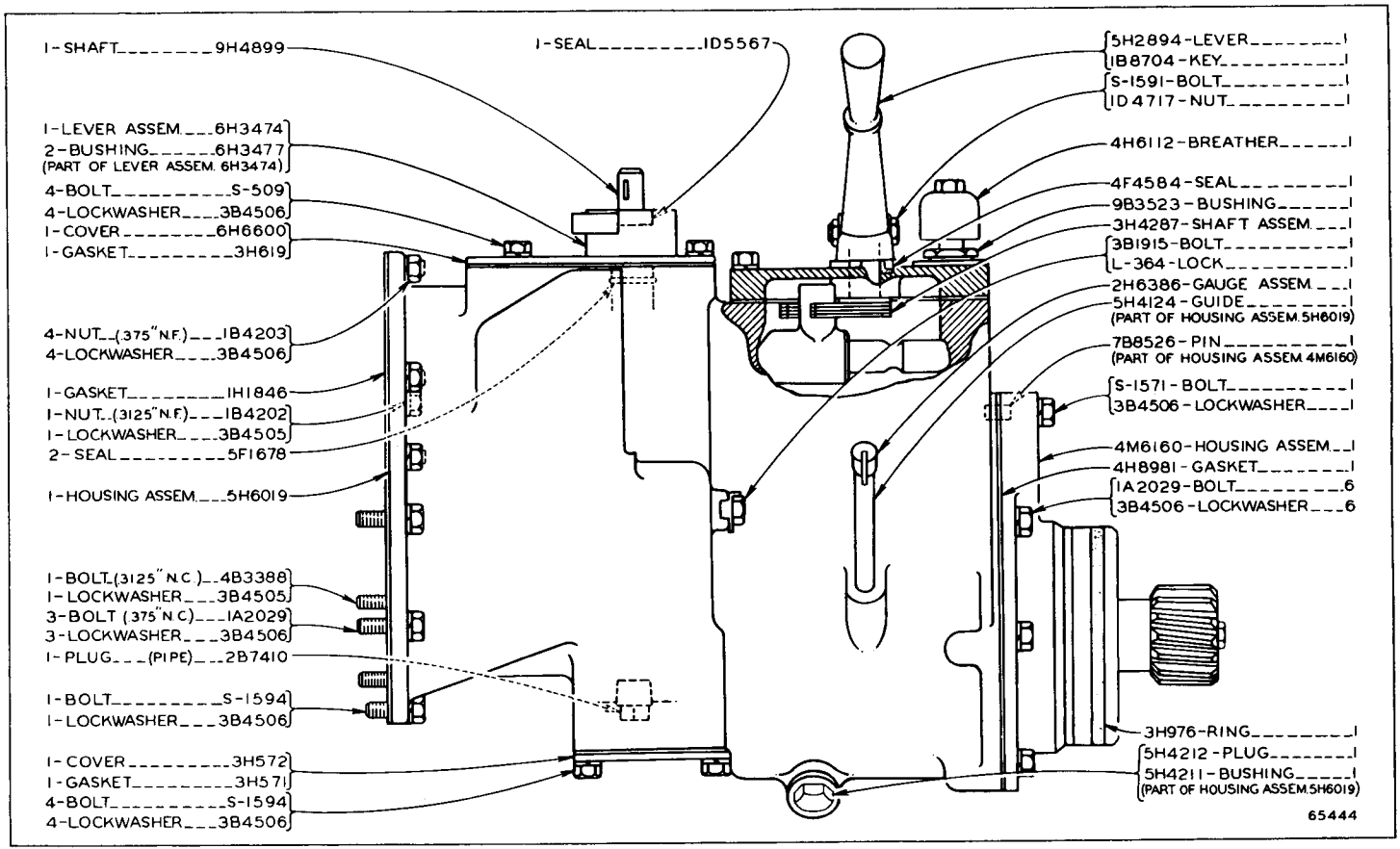

4M6262 TRANSMISSION AND STARTER PINION GROUP—Part One
Effective with Serial No. 48A916—Up and Starting Engine Block No. D7656—Up

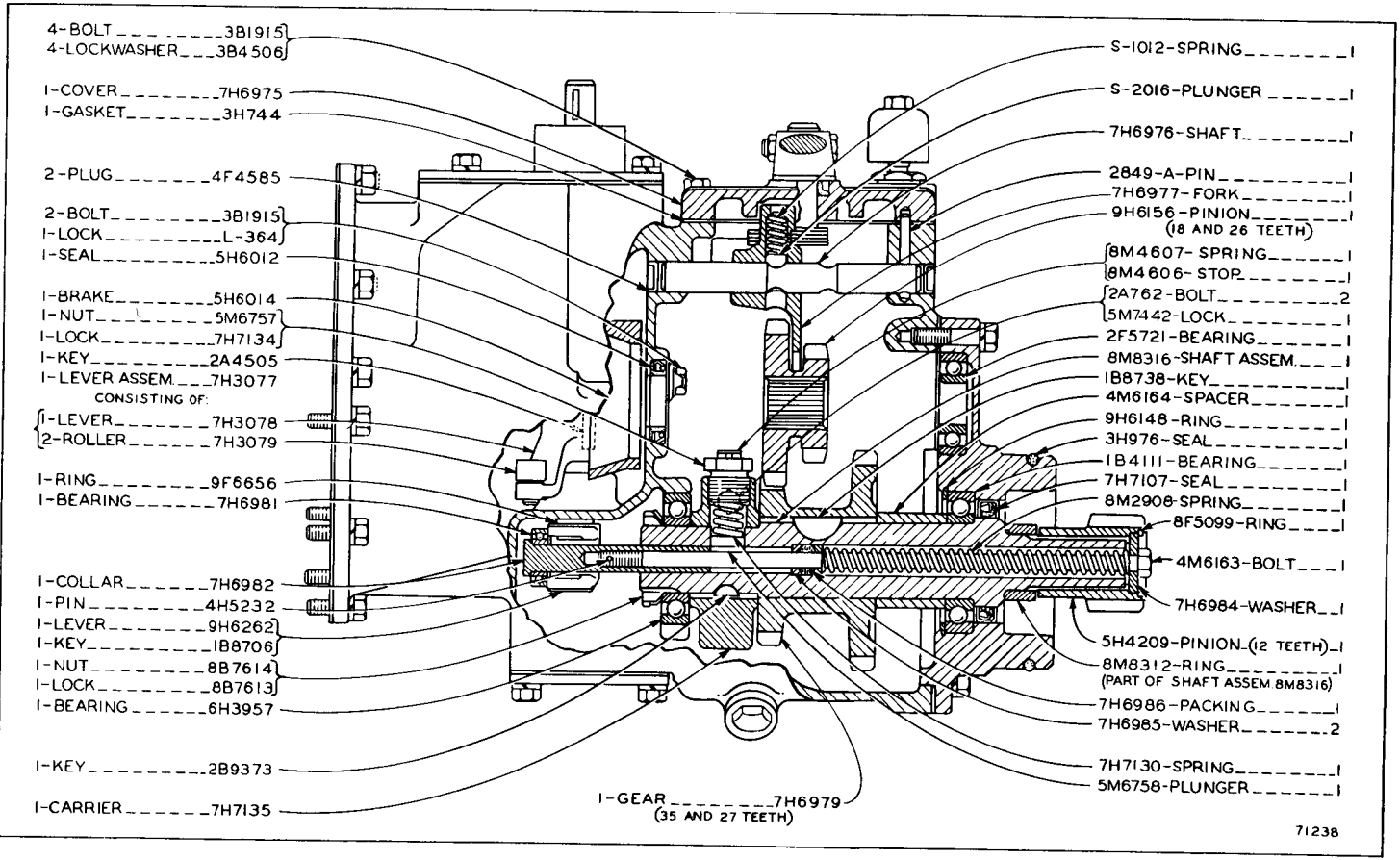
4-BOLT 3B1915
4-LOCKWASHER 3B4506
1-COVER 7H6975
1-GASKET 3H744
2-PLUG 4F4585
2-BOLT 3B1915
1-LOCK L-364
1-SEAL 5H6012
1-BRAKE 5H6014
1-NUT 5M6757
1-LOCK 7H7134
1-KEY 2A4505
1-LEVER ASSEM. 7H3077
CONSISTING OF:
1-LEVER 7H3078
2-ROLLER 7H3079
1-RING 9F6656
1-BEARING 7H6981
1-COLLAR 7H6982
1-PIN 4H5232
1-LEVER 9H6262
1-KEY 1B8706
1-NUT 8B7614
1-LOCK 8B7613
1-BEARING 6H3957
1-KEY 2B9373
1-CARRIER 7H7135
1-GEAR 7H6979
(35 AND 27 TEETH)
S-1012-SPRING
S-2016-PLUNGER
7H6976-SHAFT
2849-A-PIN
7H6977-FORK
9H6156-PINION
(18 AND 26 TEETH)
8M4607-SPRING
8M4606-STOP
2A762-BOLT 2
5M7442-LOCK
2F5721-BEARING
8M8316-SHAFT ASSEM.
1B8738-KEY
4M6164-SPACER
9H6148-RING
3H976-SEAL
1B4111-BEARING
7H7107-SEAL
8M2908-SPRING
8F5099-RING
4M6163-BOLT
7H6984-WASHER
5H4209-PINION (12 TEETH)
8M8312-RING
(PART OF SHAFT ASSEM. 8M8316)
7H6986-PACKING
7H6985-WASHER 2
7H7130-SPRING
5M6758-PLUNGER
71238

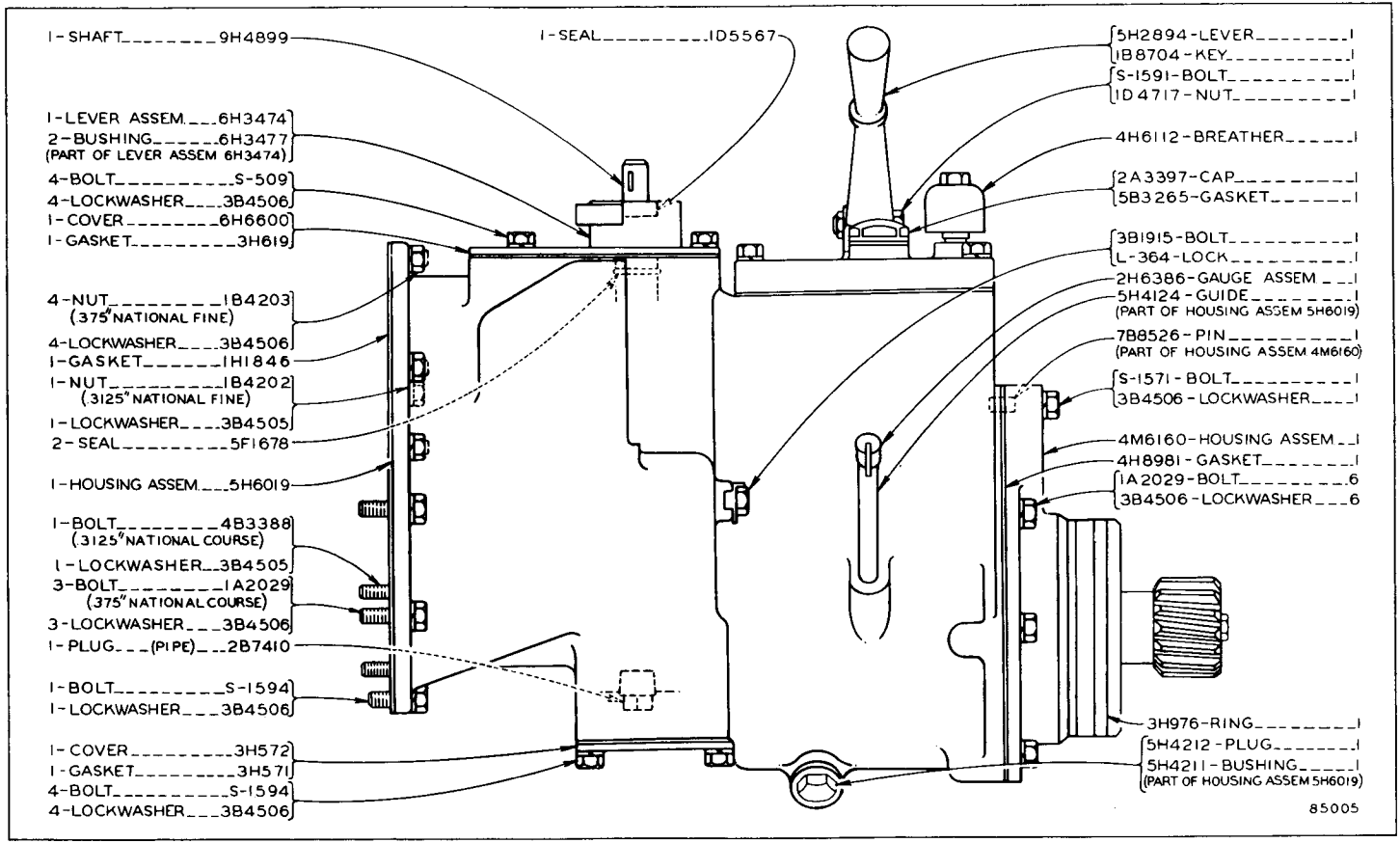

4M6262 TRANSMISSION AND STARTER PINION GROUP—Part One
Effective with Serial No. 48A1827—Up and Starting Engine Block No. H2476—Up

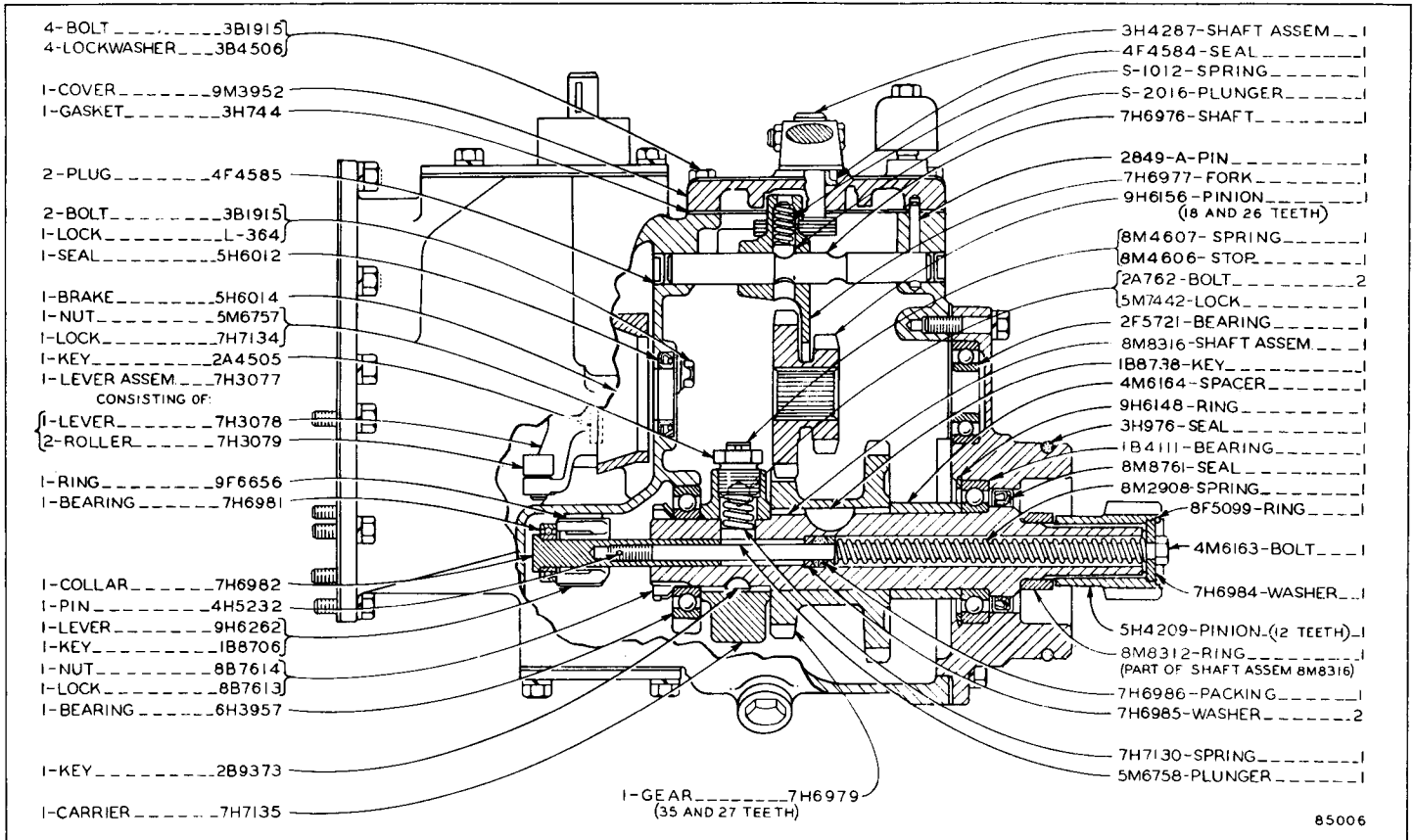

4M6262 TRANSMISSION AND STARTER PINION GROUP—Part Two

Effective with Serial No. 48A1827—Up and Starting Engine Block No. H2476—Up

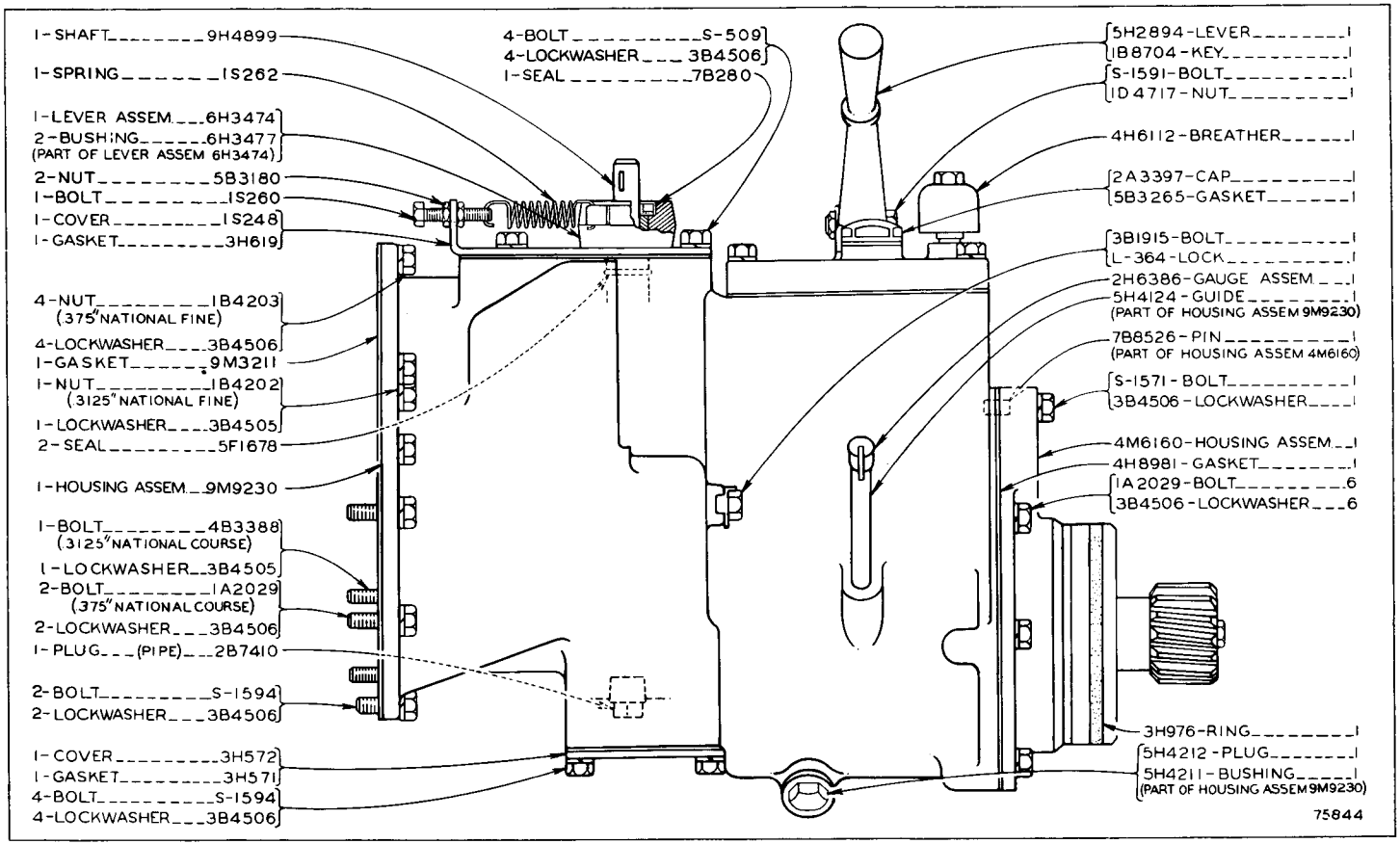

9M9229 TRANSMISSION AND STARTER PINION GROUP—Part One

Effective with Serial No. 48A2935—Up and Starting Engine Block No. F832—Up

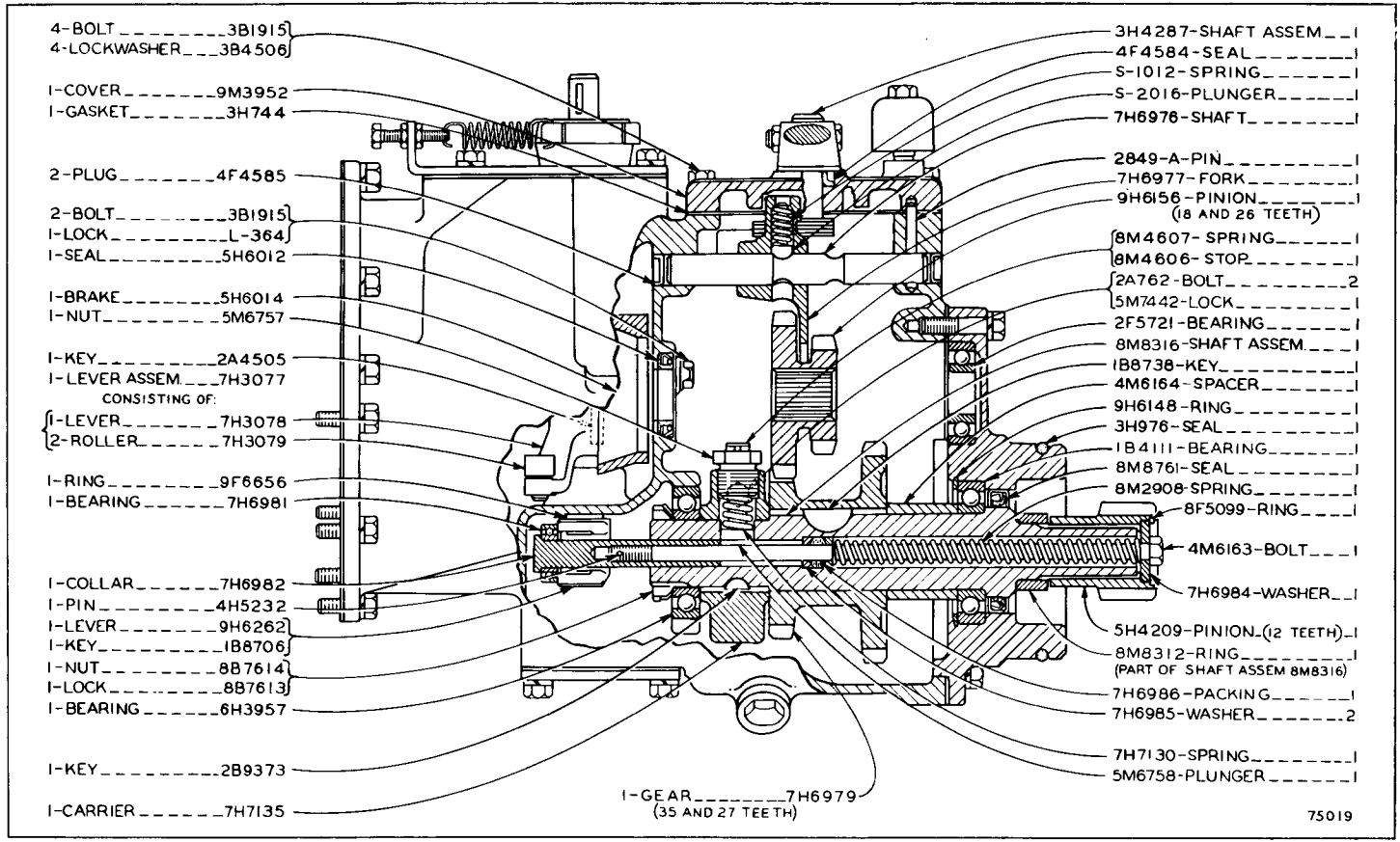
4-BOLT 3B1915
4-LOCKWASHER 3B4506
1-COVER 9M3952
1-GASKET 3H744
2-PLUG 4F4585
2-BOLT 3B1915
1-LOCK L-364
1-SEAL 5H6012
1-BRAKE 5H6014
1-NUT 5M6757
1-KEY 2A4505
1-LEVER ASSEM. 7H3077
CONSISTING OF:
1-LEVER 7H3078
2-ROLLER 7H3079
1-RING 9F6656
1-BEARING 7H6981
1-COLLAR 7H6982
1-PIN 4H5232
1-LEVER 9H6262
1-KEY 1B8706
1-NUT 8B7614
1-LOCK 8B7613
1-BEARING 6H3957
1-KEY 2B9373
1-CARRIER 7H7135
1-GEAR 7H6979
(35 AND 27 TEETH)
3H4287-SHAFT ASSEM 1
4F4584-SEAL 1
S-1012-SPRING 1
S-2016-PLUNGER 1
7H6976-SHAFT 1
2849-A-PIN 1
7H6977-FORK 1
9H6156-PINION 1
(18 AND 26 TEETH)
8M4607-SPRING 1
8M4606-STOP 1
2A762-BOLT 2
5M7442-LOCK 1
2F5721-BEARING 1
8M8316-SHAFT ASSEM. 1
1B8738-KEY 1
4M6164-SPACER 1
9H6148-RING 1
3H976-SEAL 1
1B4111-BEARING 1
8M8761-SEAL 1
8M2908-SPRING 1
8F5099-RING 1
4M6163-BOLT 1
7H6984-WASHER 1
5H4209-PINION (12 TEETH) 1
8M8312-RING 1
(PART OF SHAFT ASSEM 8M8316)
7H6986-PACKING 1
7H6985-WASHER 2
7H7130-SPRING 1
5M6758-PLUNGER 1
75019

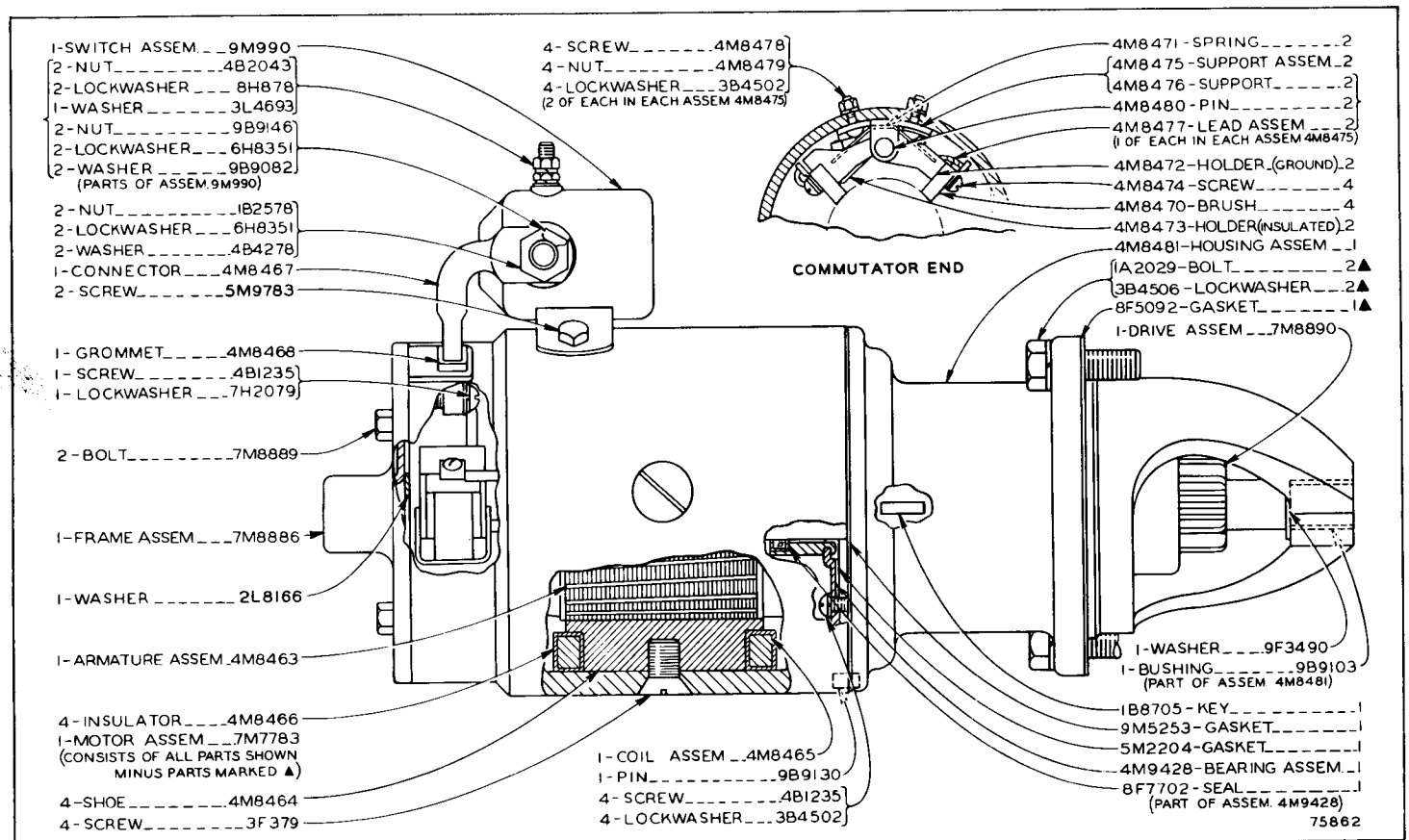

7M7793 ELECTRIC STARTER GROUP—12 Volt
Used to start the gasoline starting engine

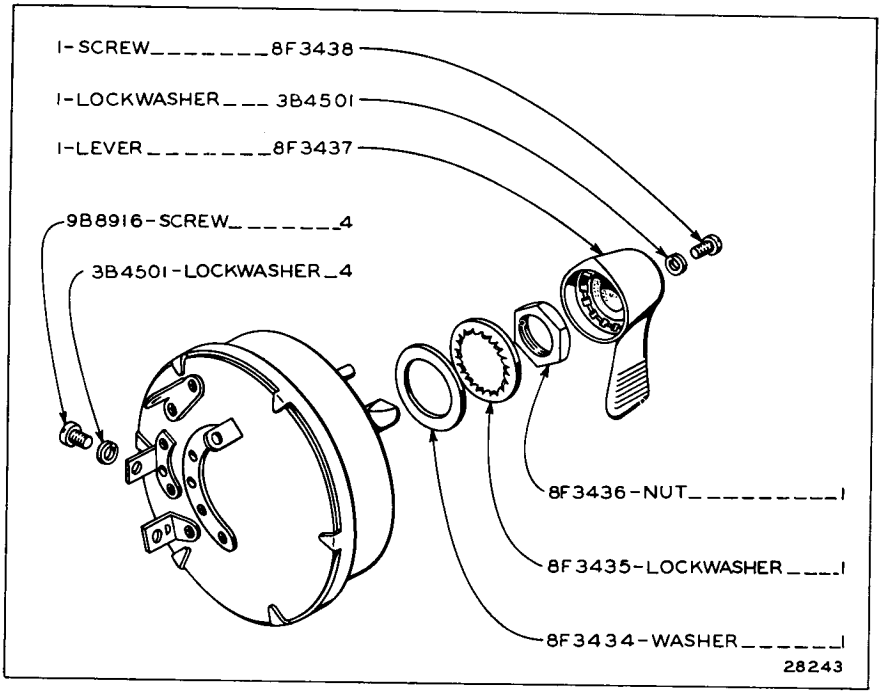

7F2921 COMBINATION SWITCH
Part of Battery and Wiring shown on Page 65

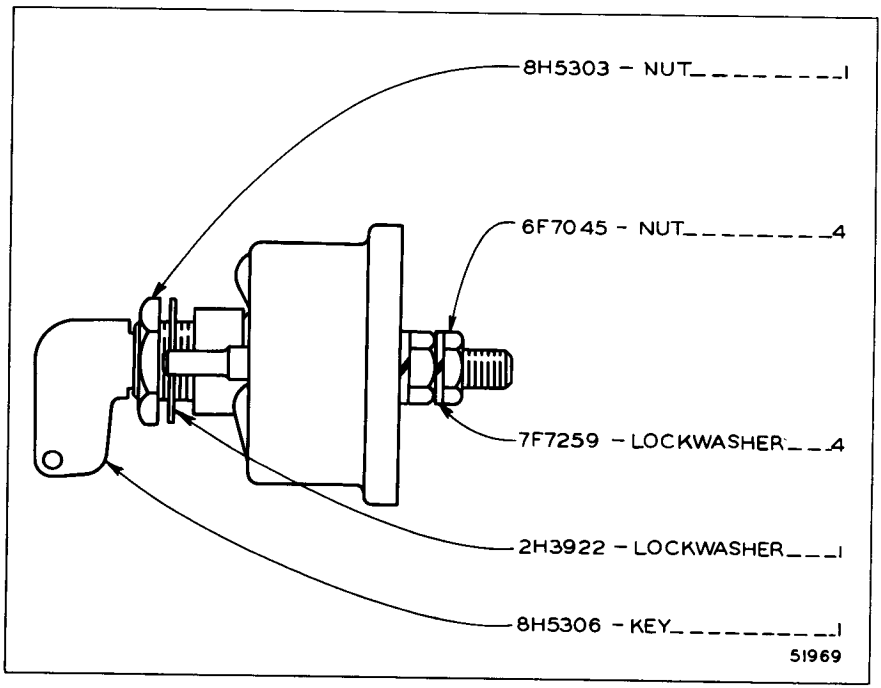

7H7290 DISCONNECT SWITCH ASSEMBLY
Part of Battery and Wiring shown on Page 64

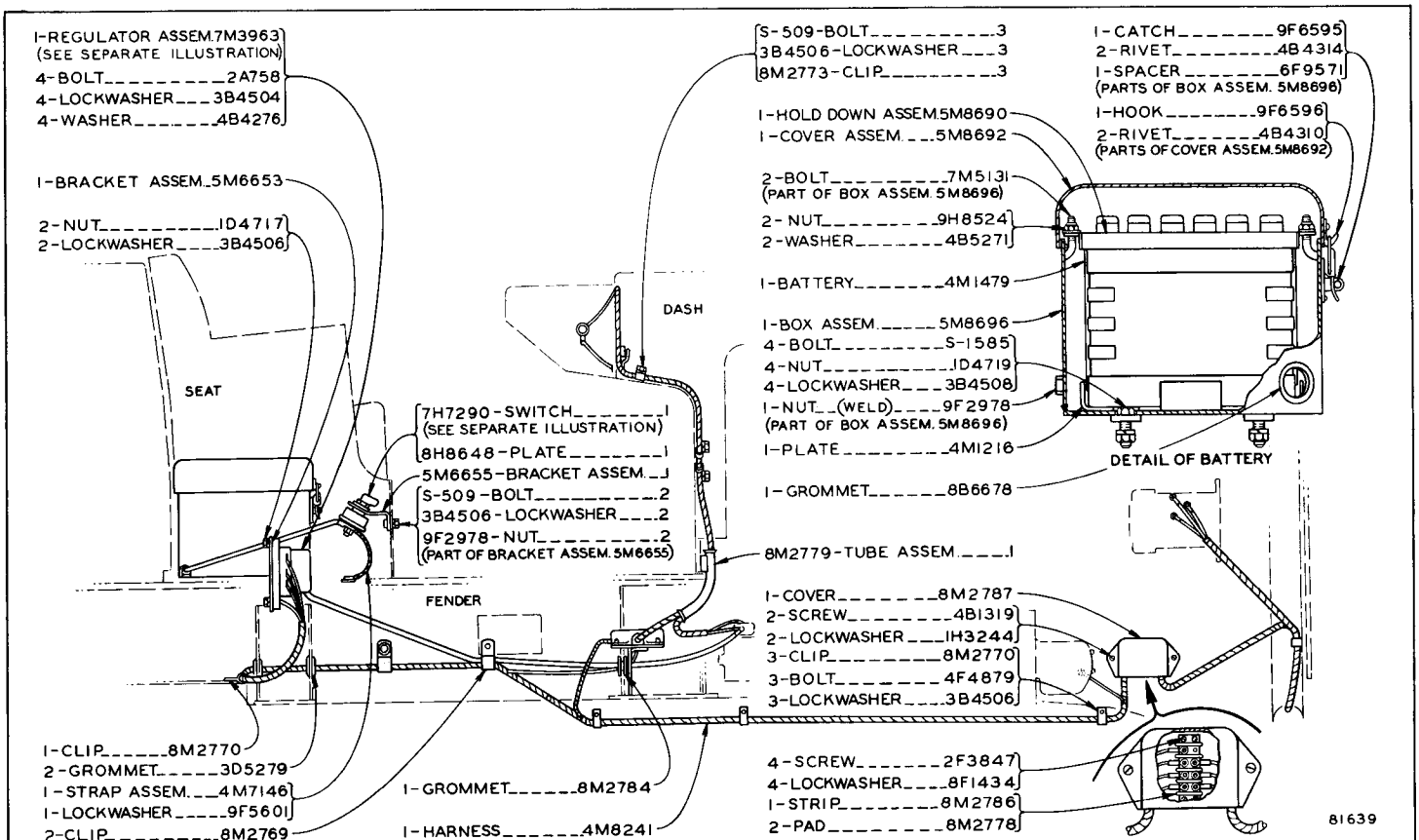

BATTERY AND WIRING—12 Volt—Side View

7H7290 Disconnect Switch Assembly and 7M3963 Regulator Assembly parts are shown on Pages 63 and 66

ALWAYS GIVE SERIAL NUMBER WHEN ORDERING PARTS

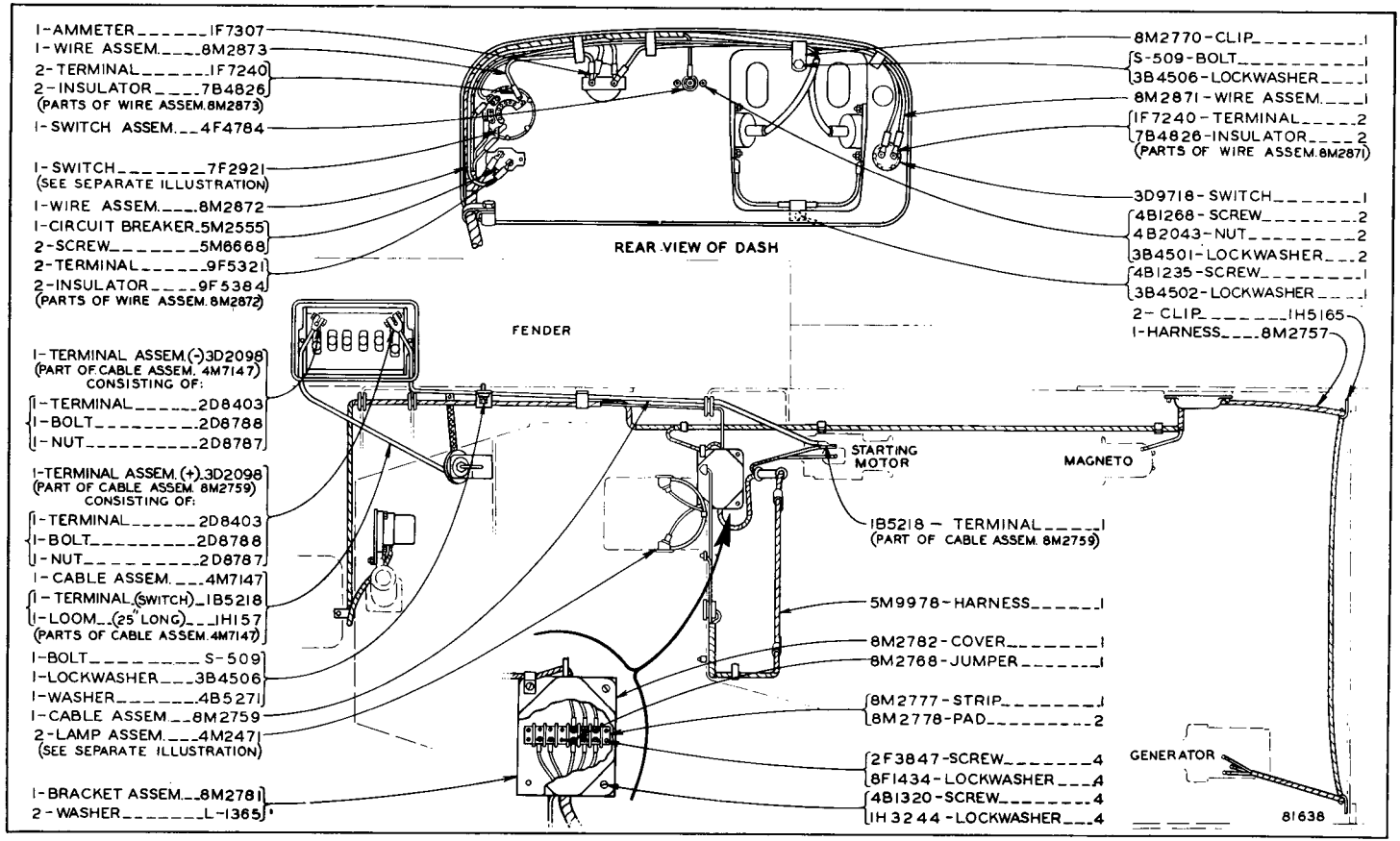

BATTERY AND WIRING—12 Volt——Top View

7F2921 Combination Switch and 4M2471 Dash Lamp Assembly parts are shown on Pages 63 and 67

ONLY "CATERPILLAR" PARTS GIVE "CATERPILLAR" PERFORMANCE

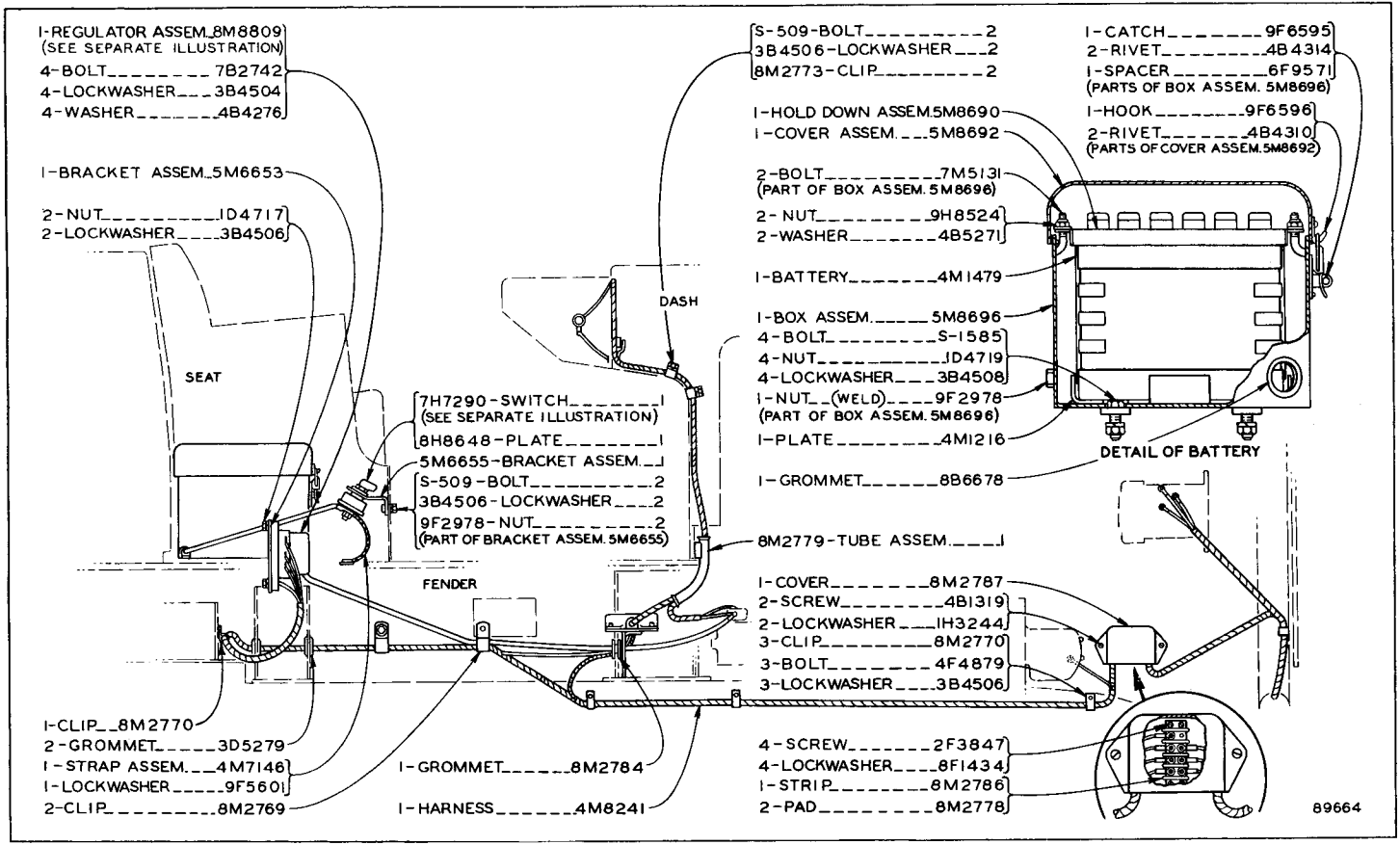

BATTERY AND WIRING—12 Volt—Side View

Effective with Serial No. 48A291

7H7290 Disconnect Switch Assembly, 8M8809 Regulator Assembly parts are shown on Page 63 and on insert between Pages 66 & 67

BATTERY AND WIRING—12 Volt—Top View

Effective with Serial No. 48A291

7F2921 Combination Switch and 4M2471 Dash Lamp Assembly parts are shown on Pages 63 & 67

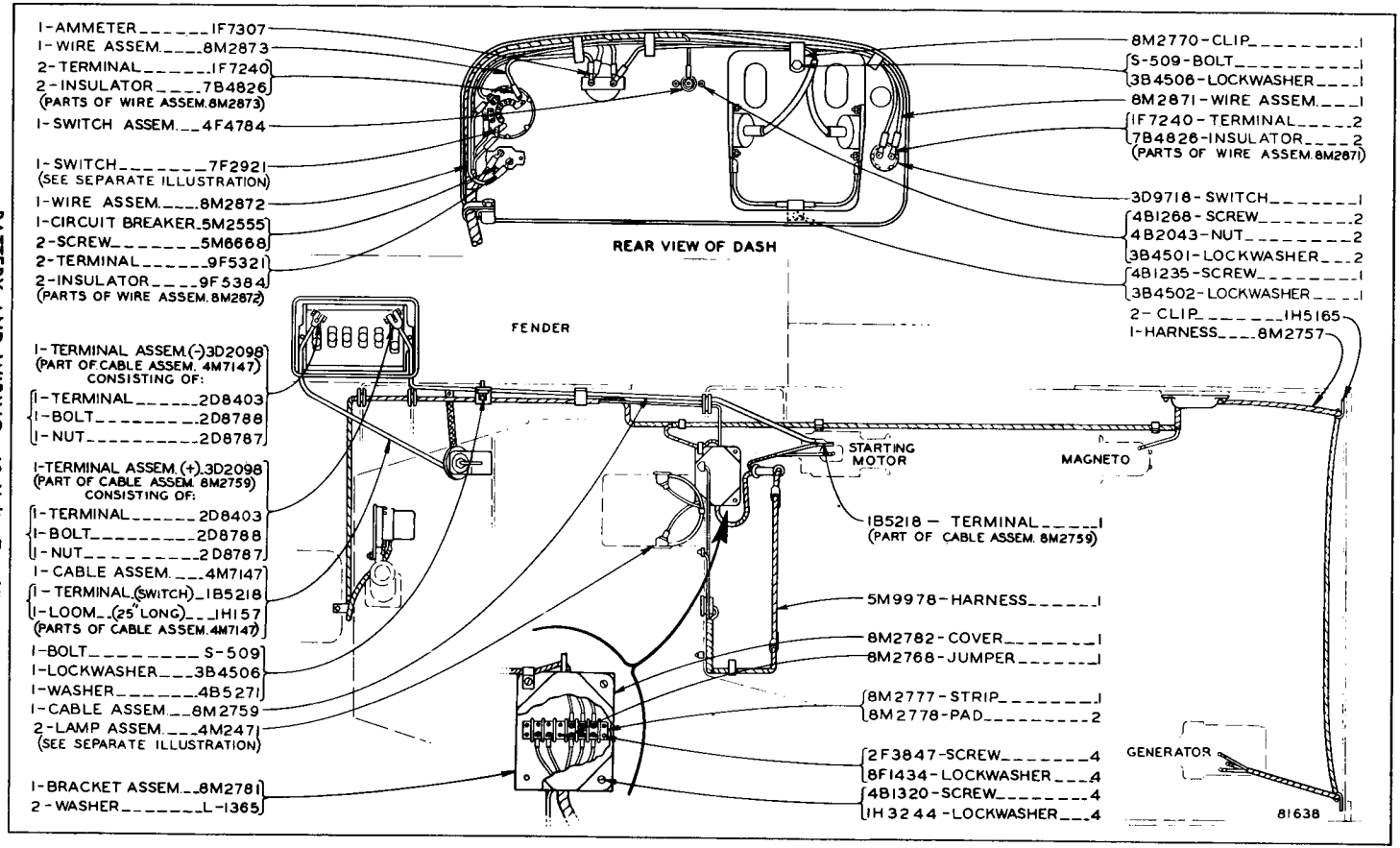

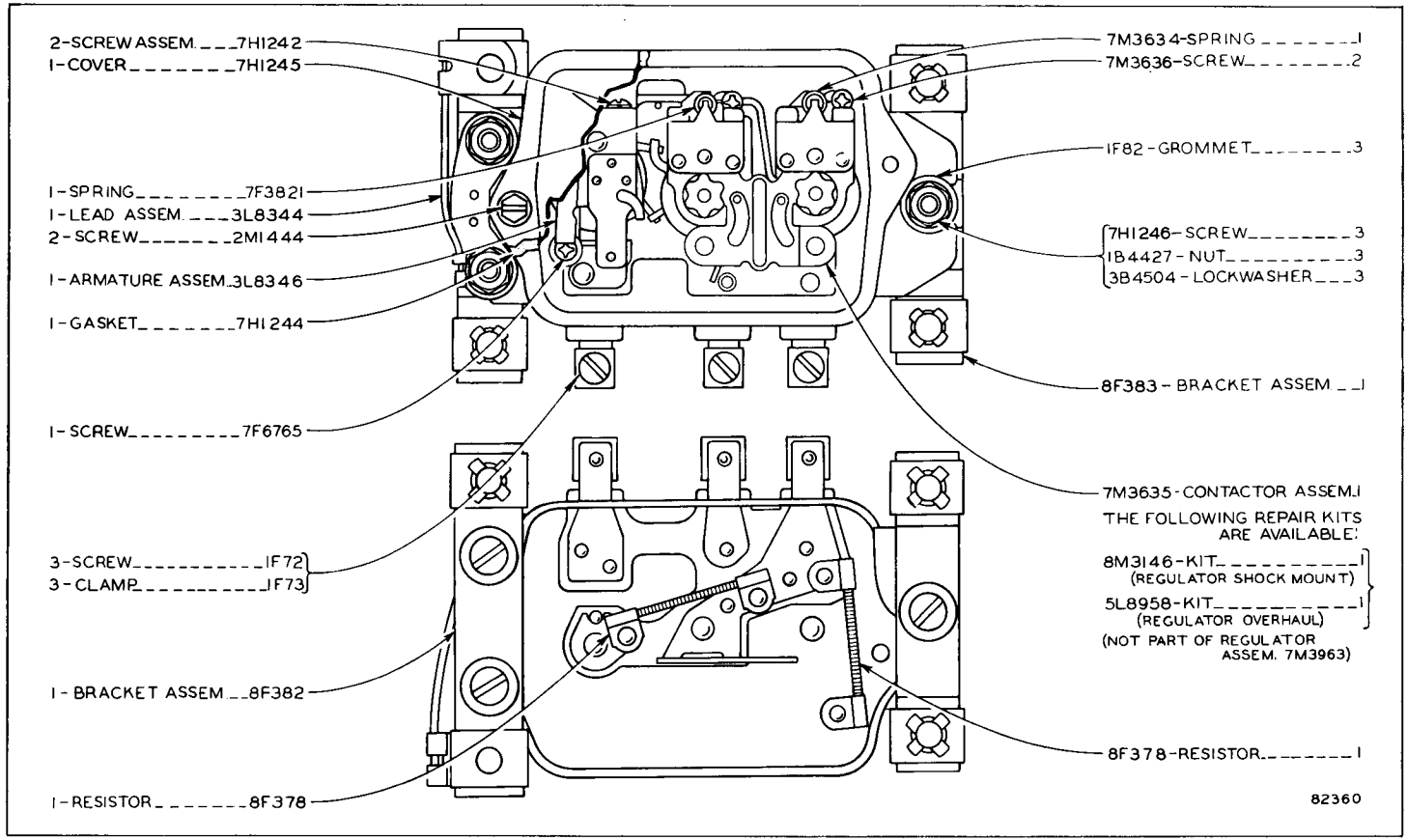

7M3963 REGULATOR ASSEMBLY—12 Volt, 24 Ampere
Part of Battery and Wiring shown on Page 64

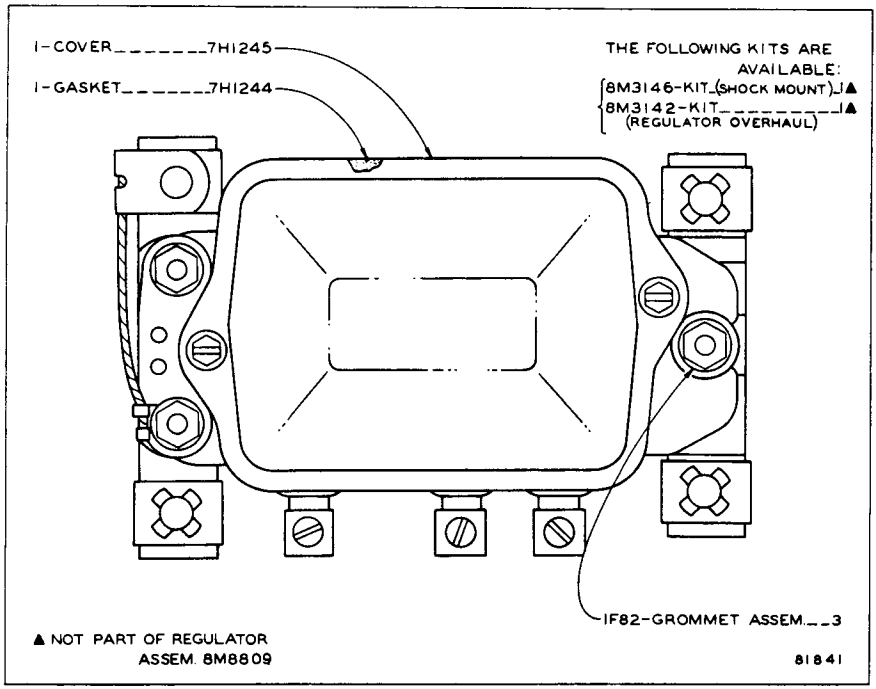

8M8809 REGULATOR ASSEMBLY—12 Volt, 24 Ampere
Part of Battery and Wiring shown on insert between Pages 64 & 65

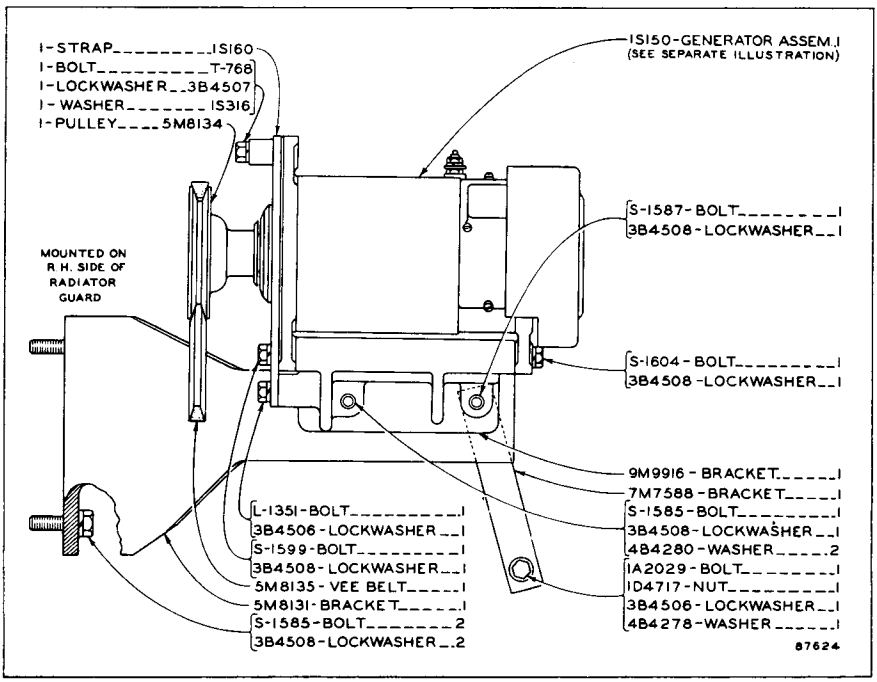

GENERATOR—12 Volt, 24 Ampere—R.H.—Side View
Effective with Serial No. 48A2628
1S150 Generator Assembly parts are shown on reverse side of this insert

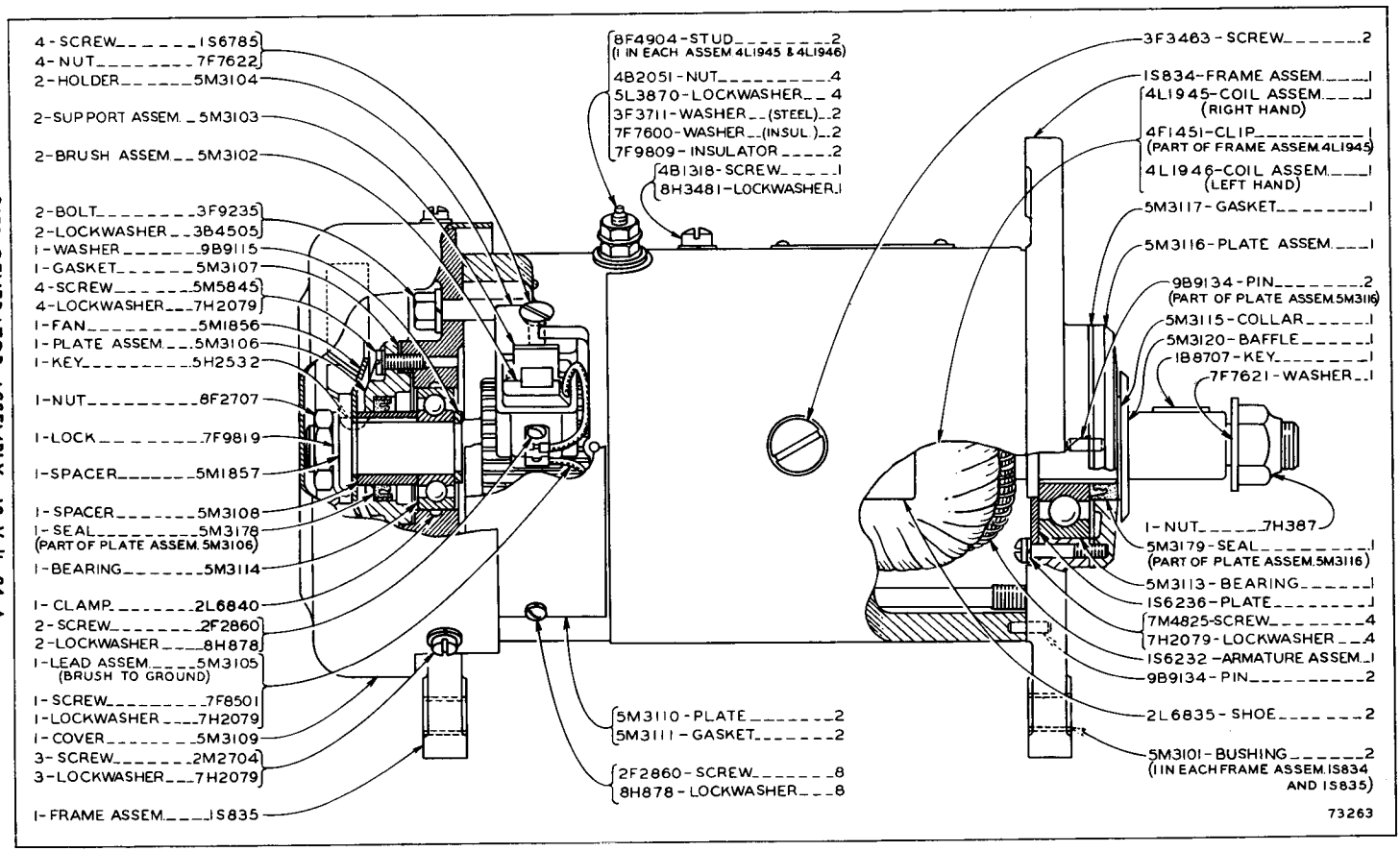

1S150 GENERATOR ASSEMBLY—12 Volt, 24 Ampere
Part of Generator shown on front side of this insert

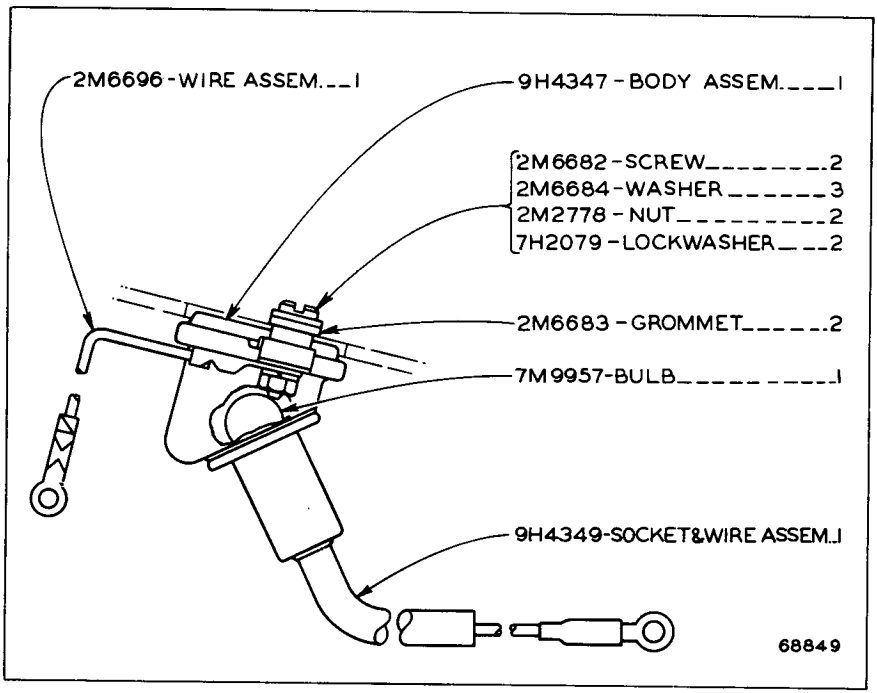

4M2471 DASH LAMP ASSEMBLY—12 Volt
Part of Battery and Wiring shown on Page 65

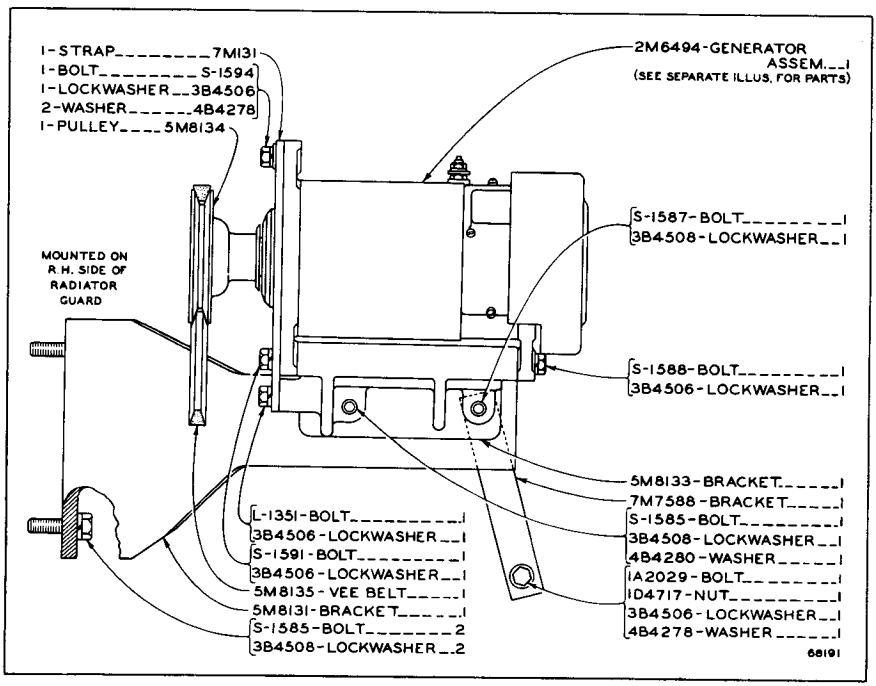

GENERATOR—12 Volt, 24 Ampere—R.H.—Side View
2M6494 Generator Assembly parts are shown on Page 68

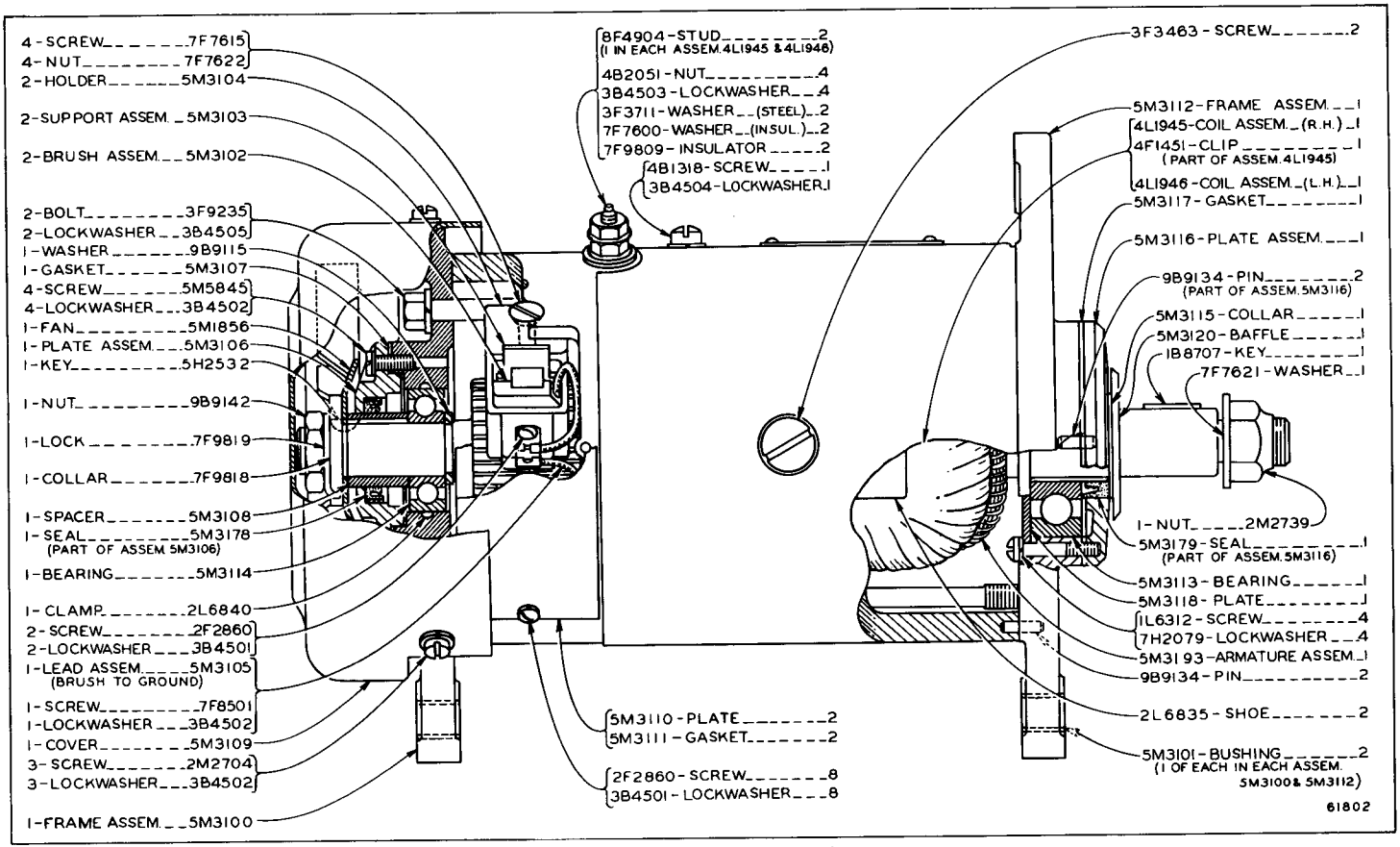

2M6494 GENERATOR ASSEMBLY—12 Volt, 24 Ampere

Part of Generator shown on Page 67

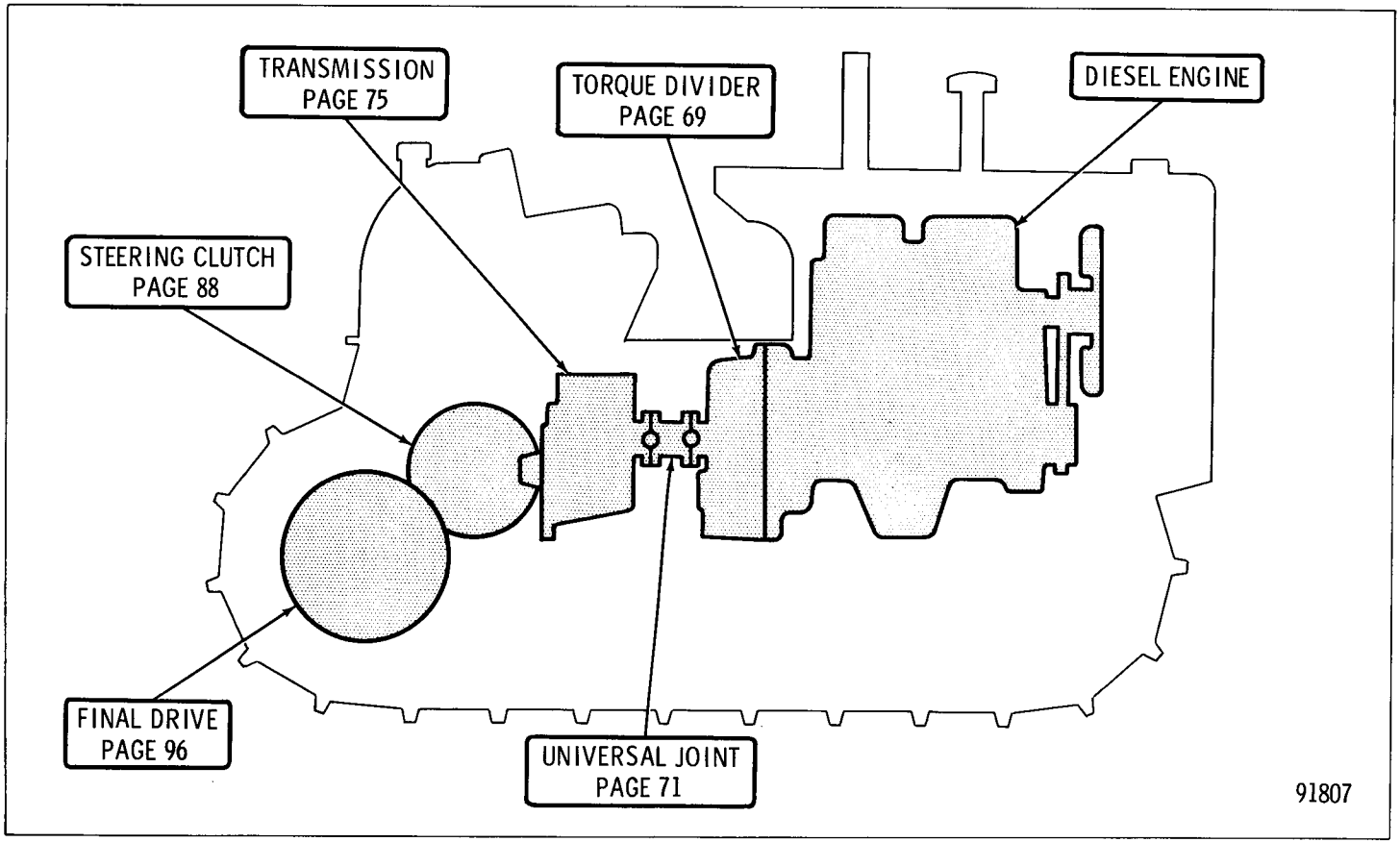

POWER TRAIN ARRANGEMENT

ONLY "CATERPILLAR" PARTS GIVE "CATERPILLAR" PERFORMANCE

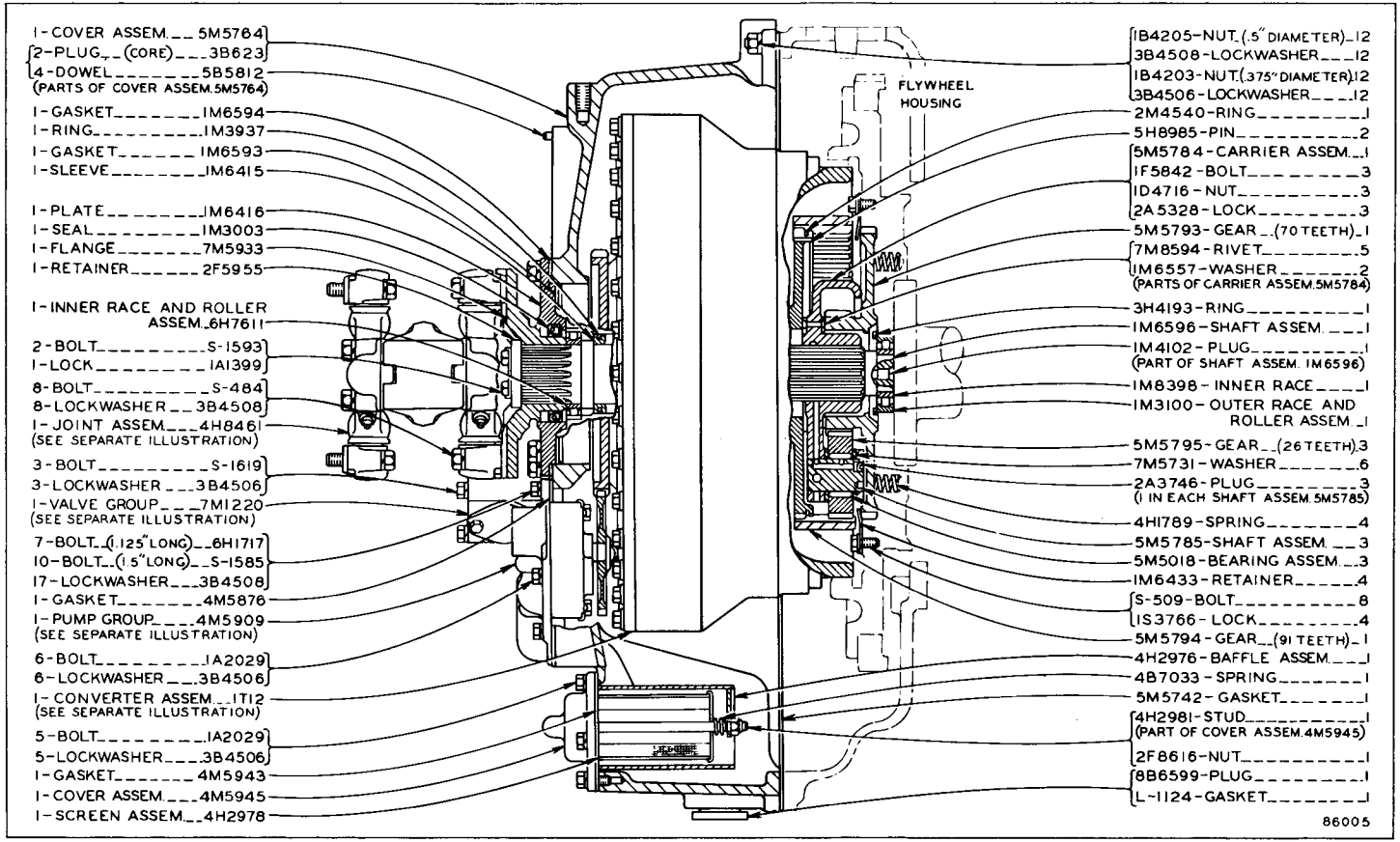

TORQUE DIVIDER

1T12 Torque Converter Assembly, 4M5909 Scavenge Pump Group, 4H8461 Universal Joint Assembly and 7M1220 Relief Valve Group parts are shown on Pages 70, 71 and 94

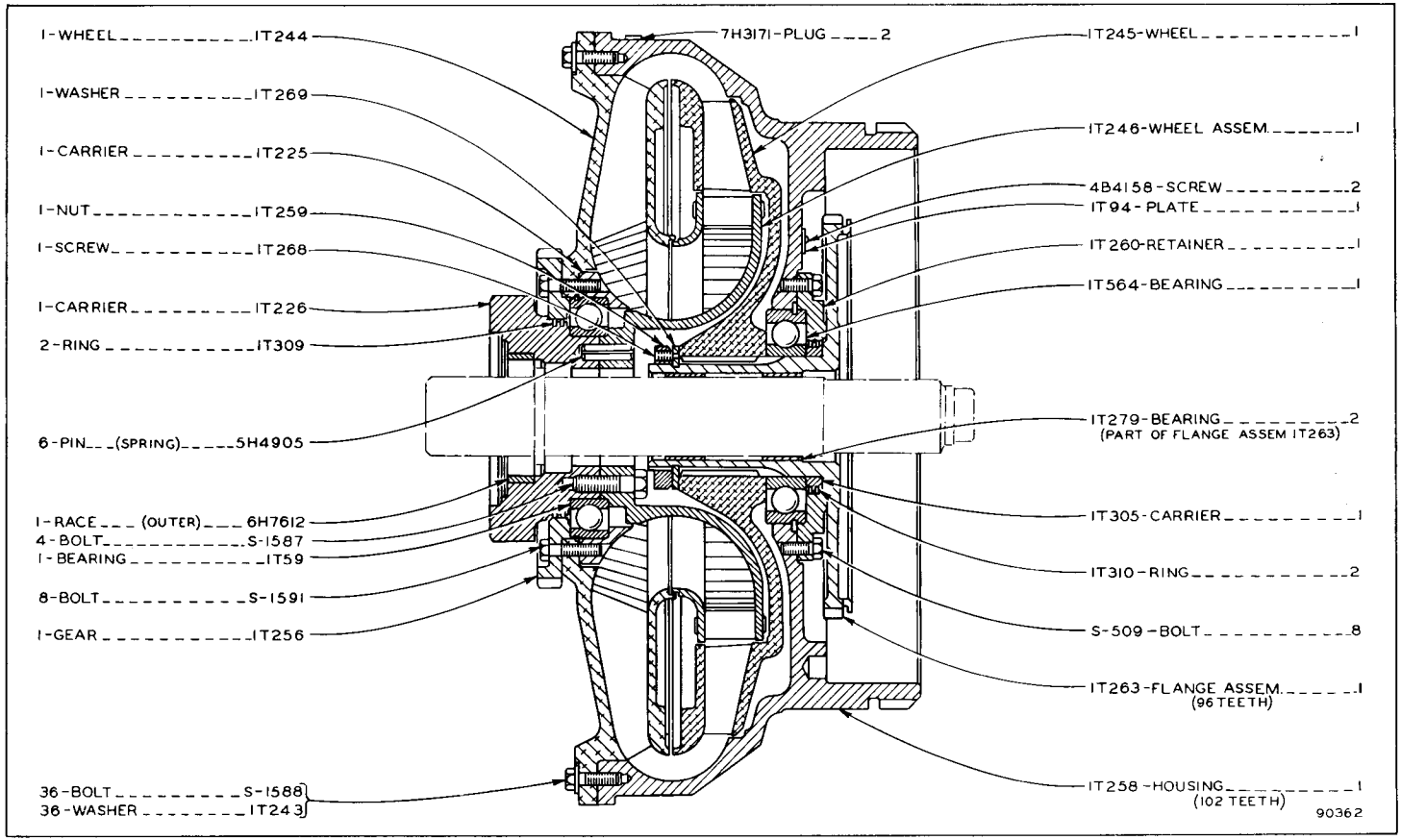

IT12 TORQUE CONVERTER ASSEMBLY
Effective with Torque Converter Serial No. 21T1—Up
Part of Torque Divider shown on Page 69

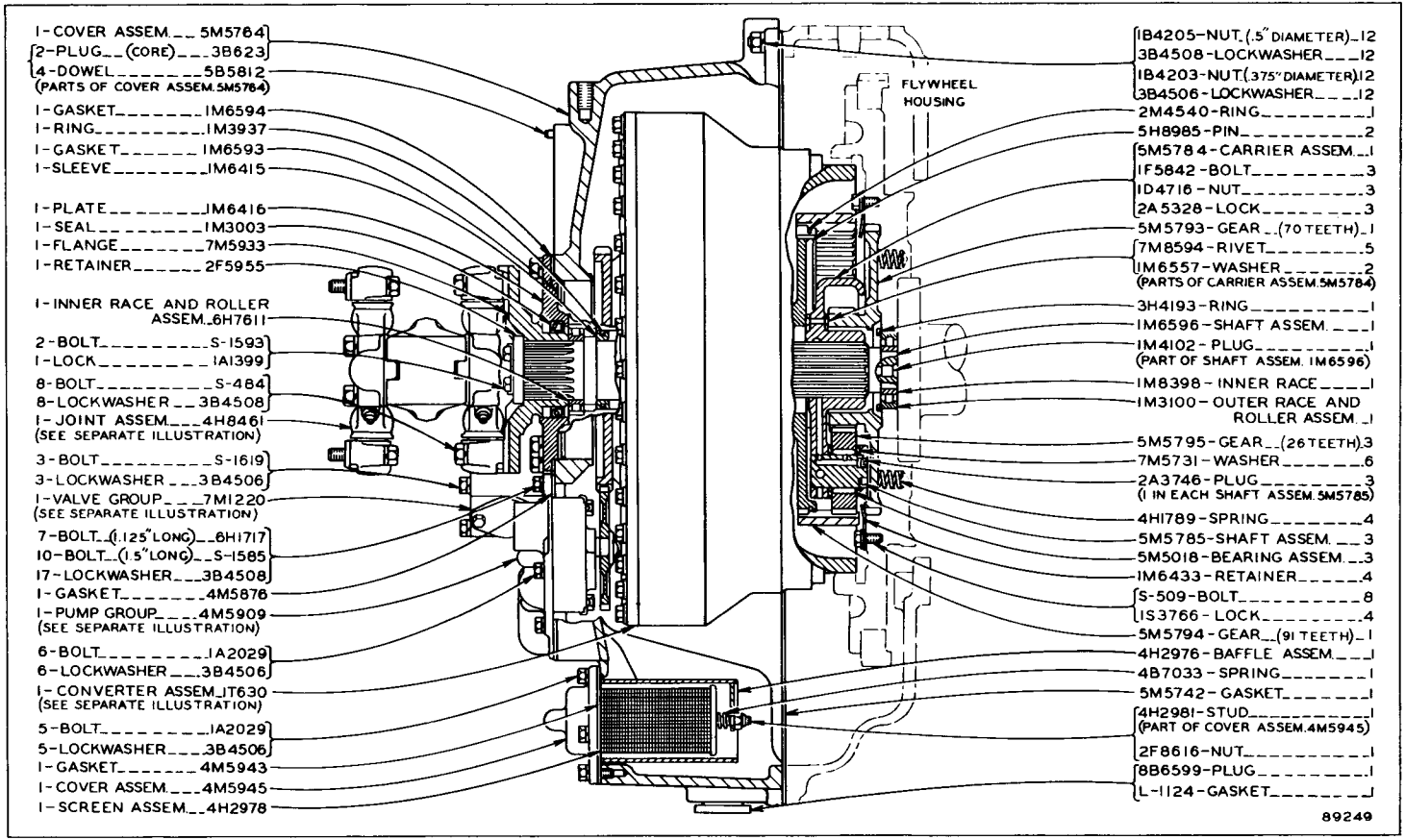

TORQUE DIVIDER

Effective with Serial No. 48A3279

4M5909 Scavenge Pump Group, 4H8461 Universal Joint Assembly, 7M1220 Relief Valve Group and 1T630 Torque Converter Assembly parts are shown on Pages 71, 94 and on reverse side of this insert

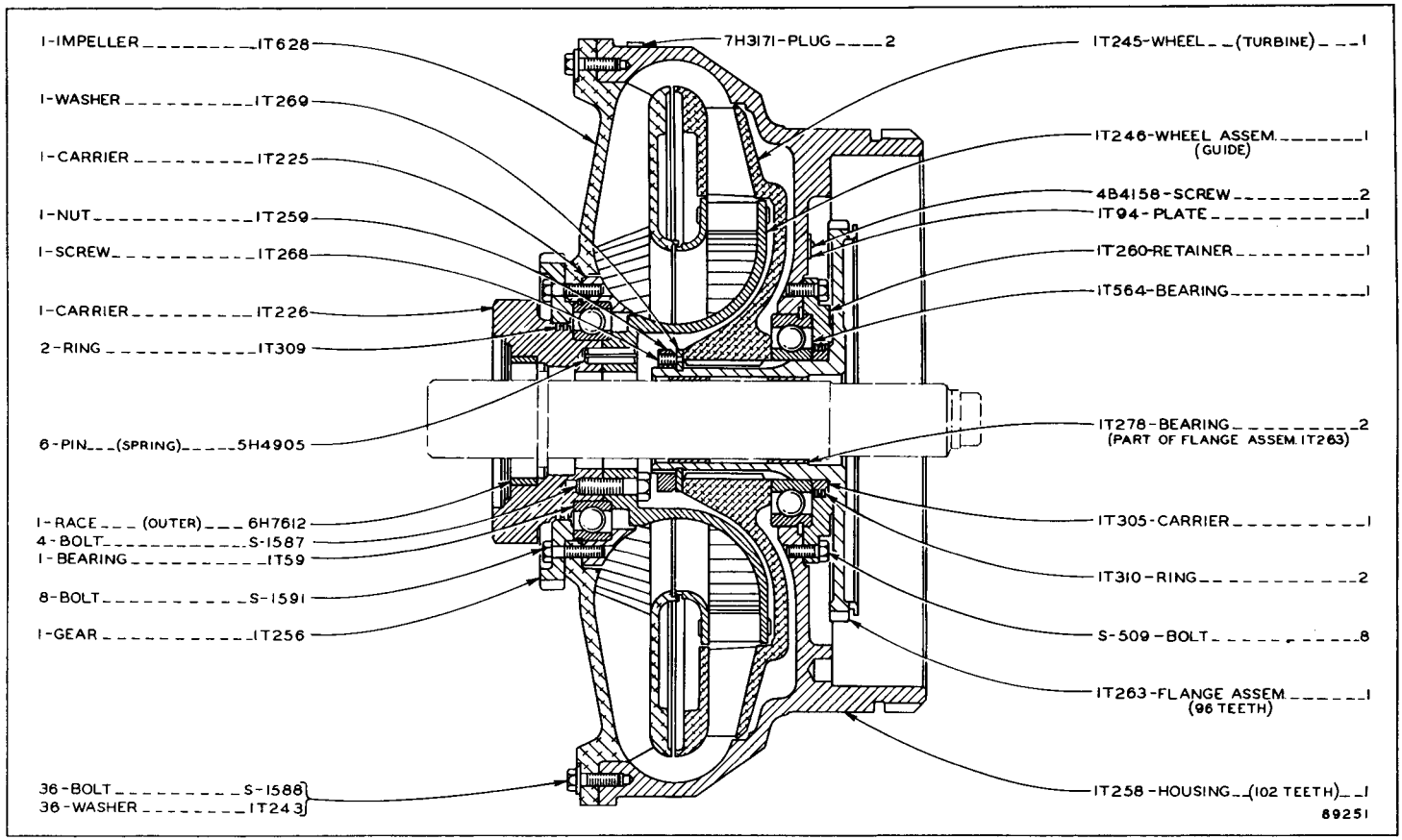

IT630 HYDRAULIC TORQUE CONVERTER ASSEMBLY
Effective with Torque Converter Serial No. M-1715-B
Part of Torque Divider shown on front side of this insert

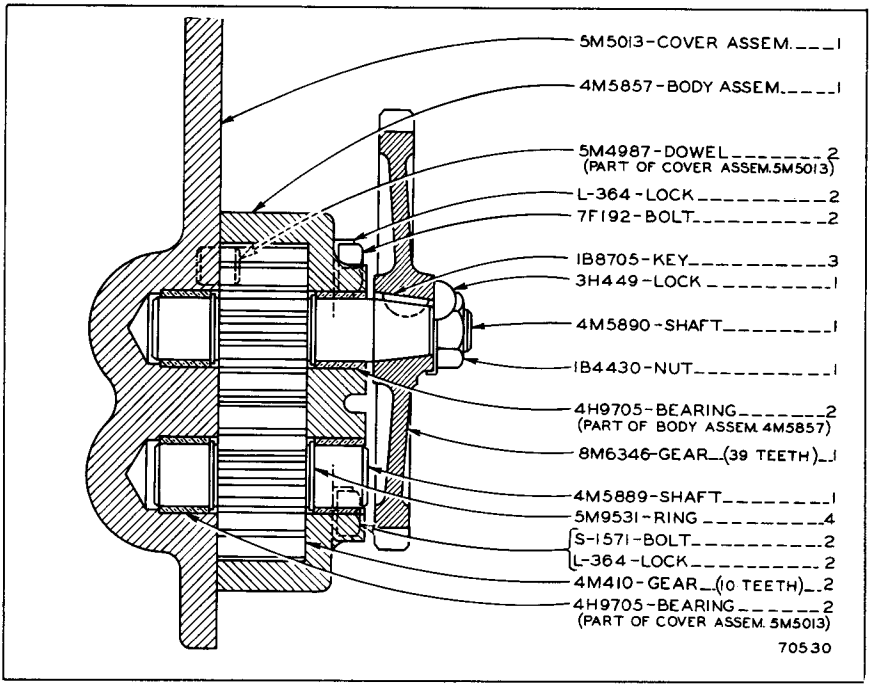

4M5909 SCAVENGE PUMP GROUP
Part of Torque Divider shown on Page 69

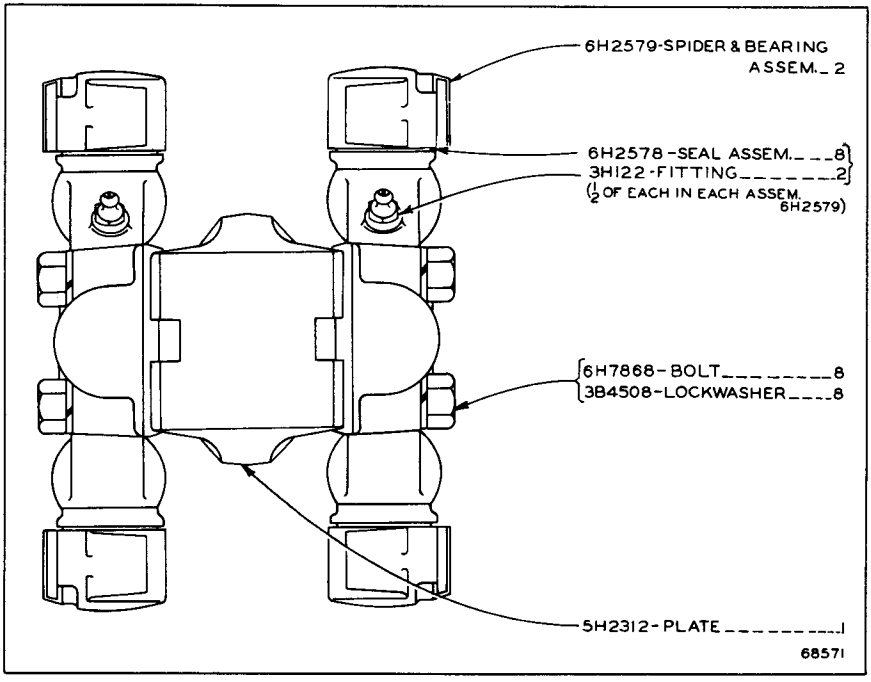

4H8461 UNIVERSAL JOINT ASSEMBLY
Part of Torque Divider shown on Page 69

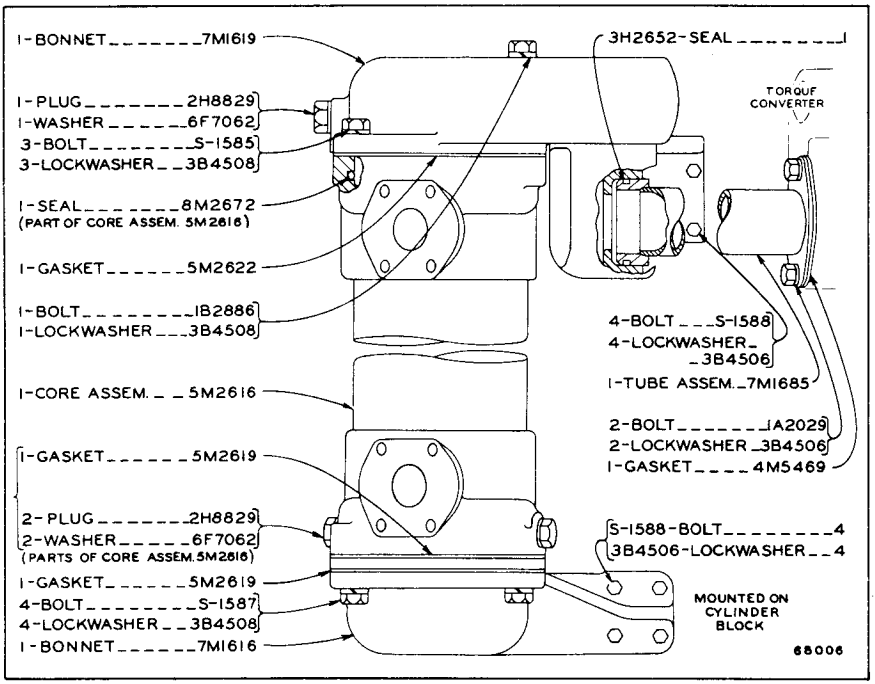

TORQUE CONVERTER OIL COOLER

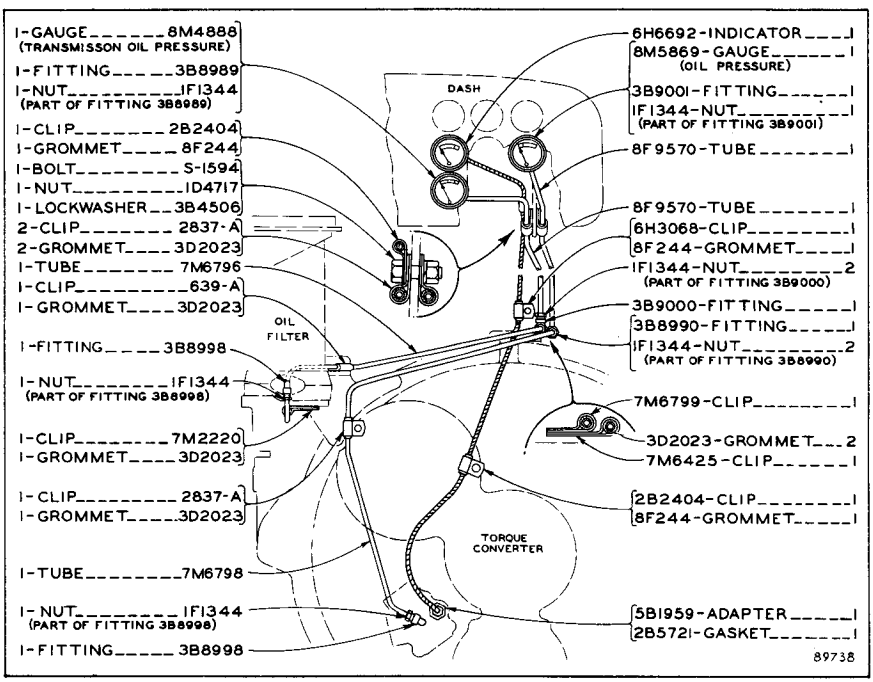

TRANSMISSION GAUGES
Serial No. 48A1 to 48A1258 inclusive

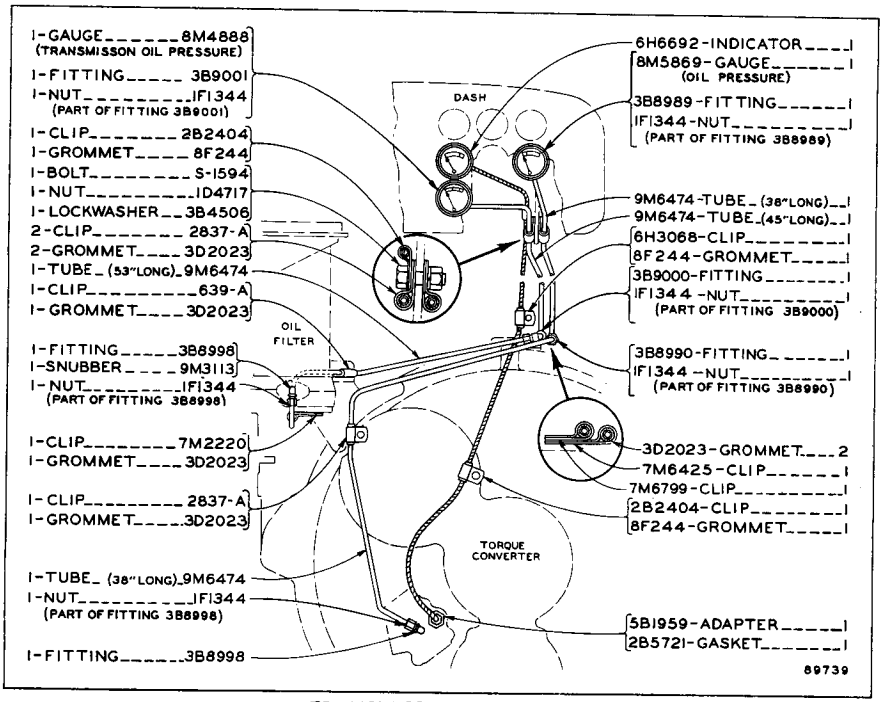

TRANSMISSION GAUGES
Serial No. 48A1259 to 48A3315 inclusive

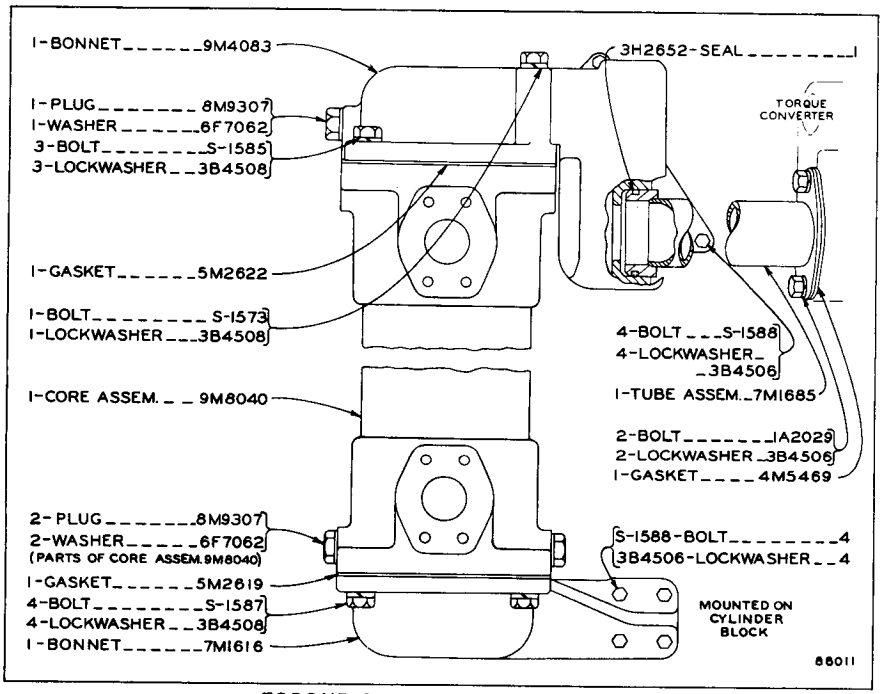

TORQUE CONVERTER OIL COOLER
Effective with Serial No. 48A2324

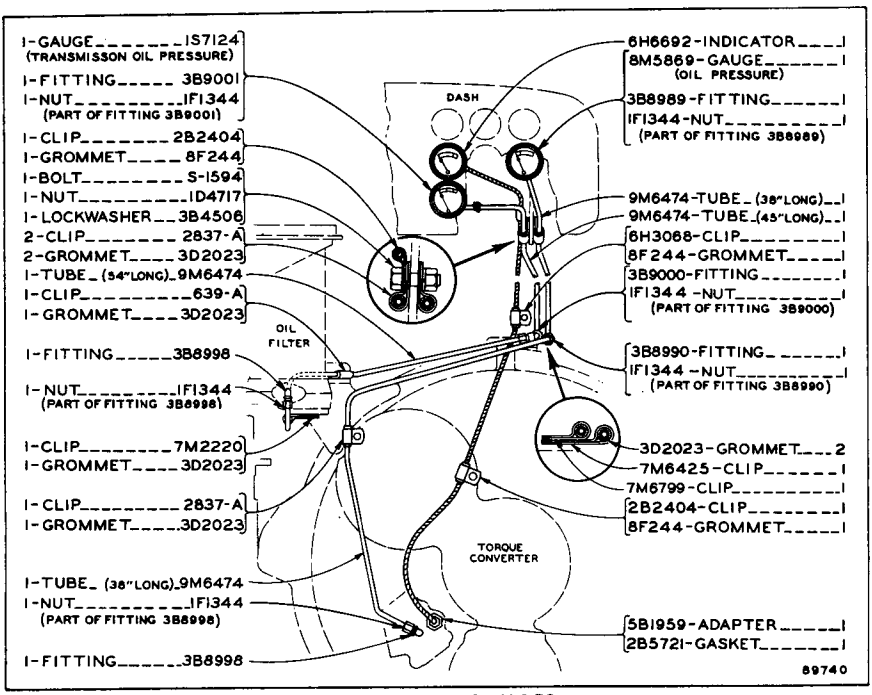

TRANSMISSION GAUGES
Effective with Serial No. 48A3316

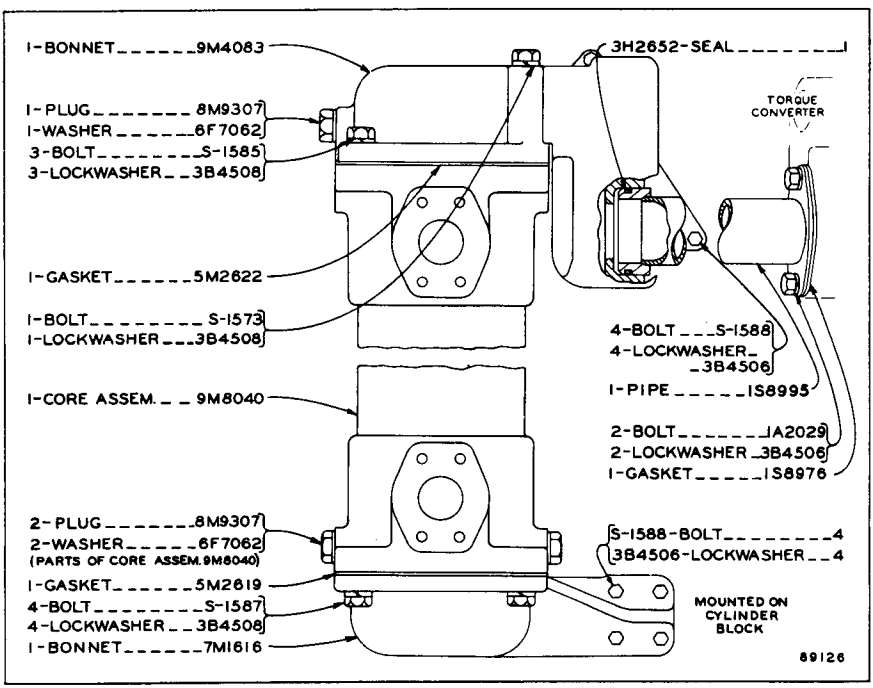

TORQUE CONVERTER OIL COOLER
Effective with Serial No. 48A2935

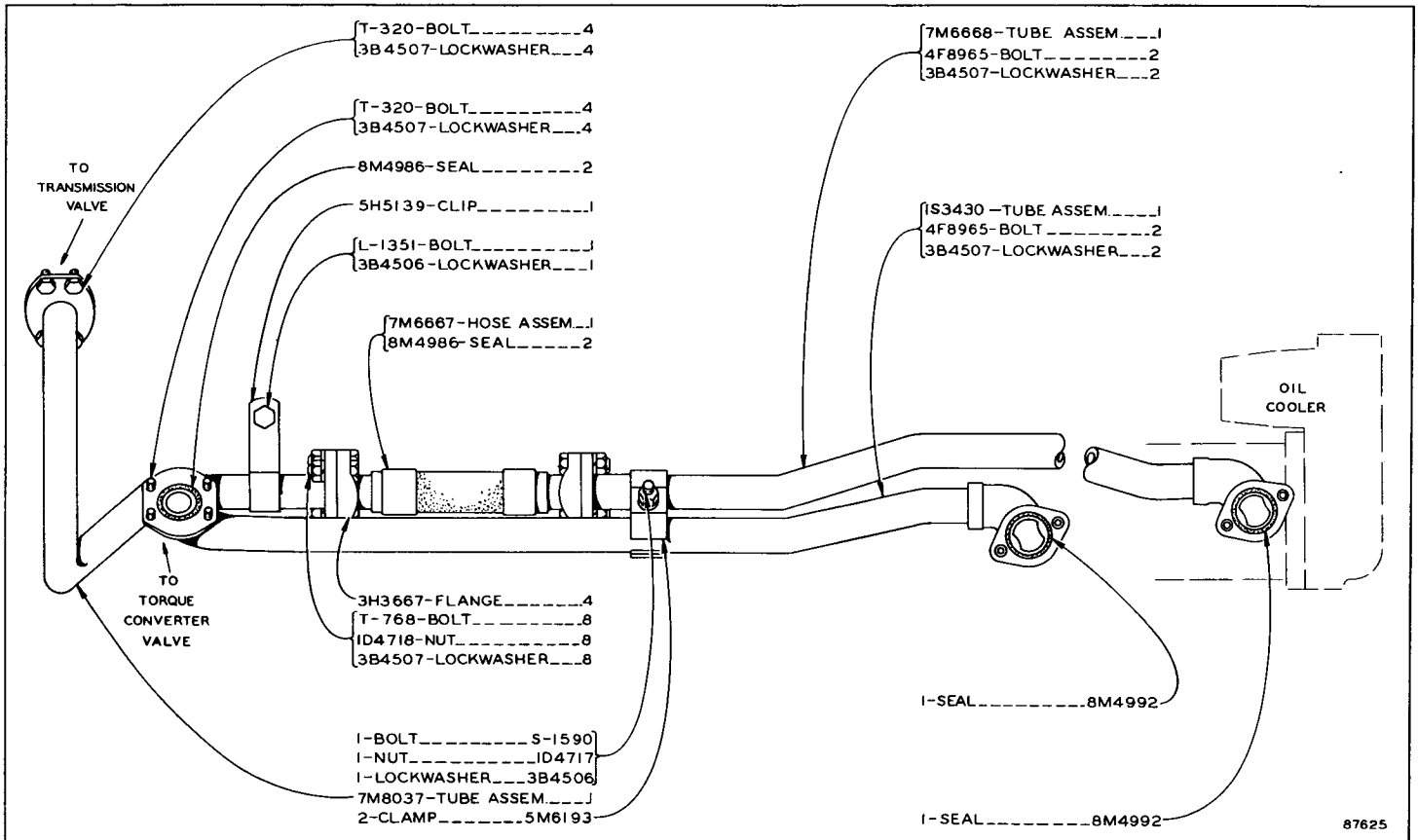

TRANSMISSION OIL COOLER LINES—Side View
Effective with Serial No. 48A2637

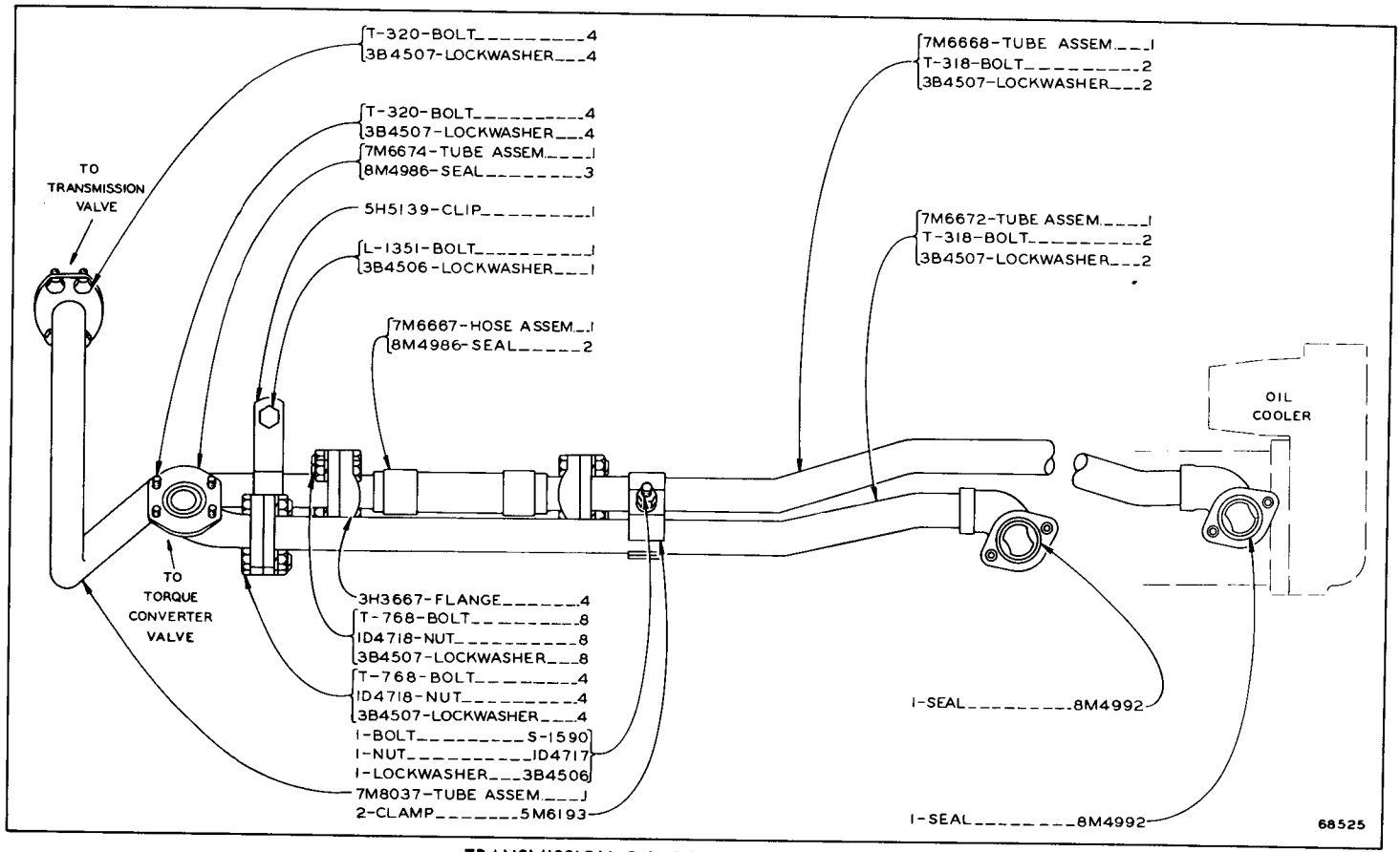

TRANSMISSION OIL COOLER LINES—Side View

ONLY "CATERPILLAR" PARTS GIVE "CATERPILLAR" PERFORMANCE

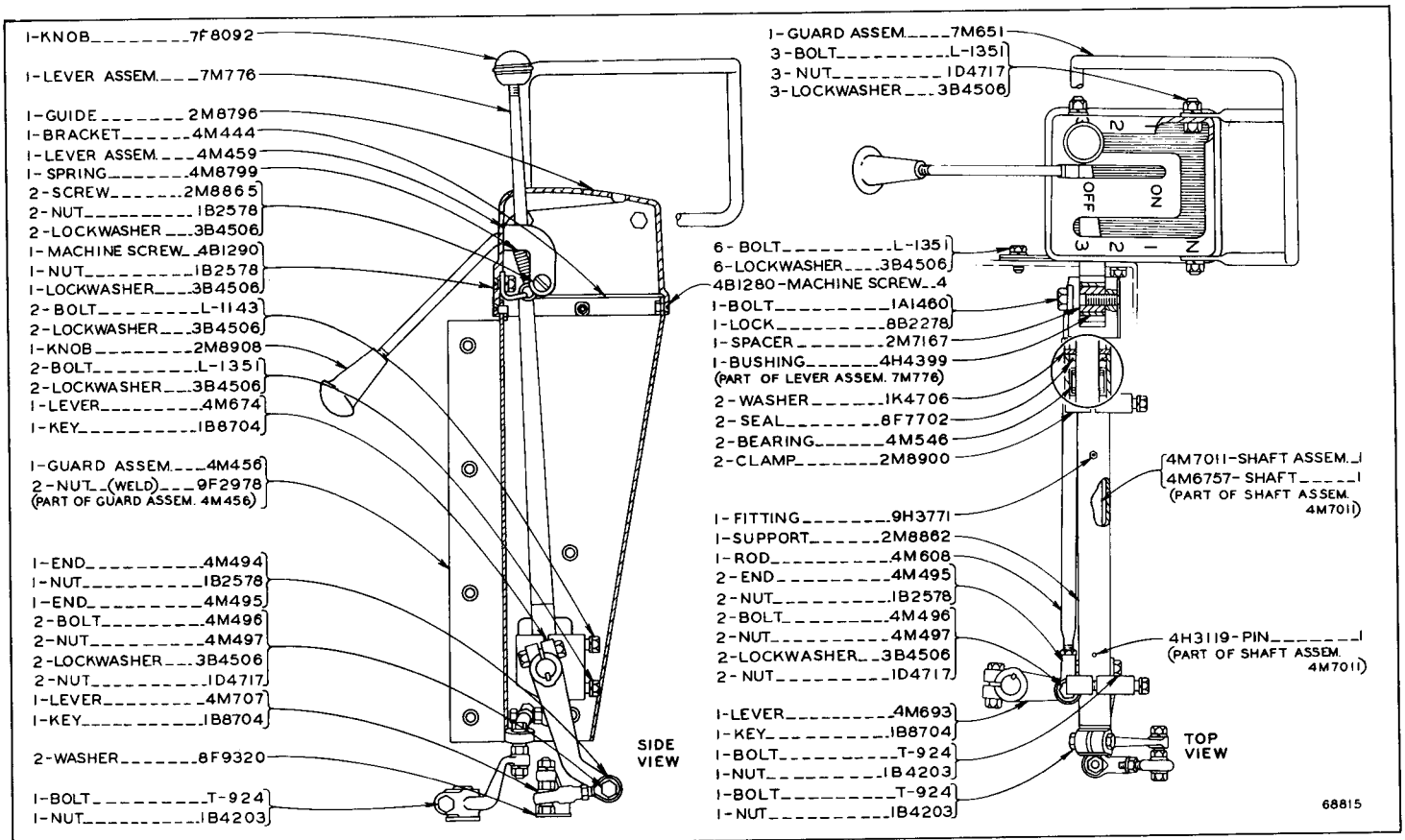

TRANSMISSION CONTROL LINKAGE

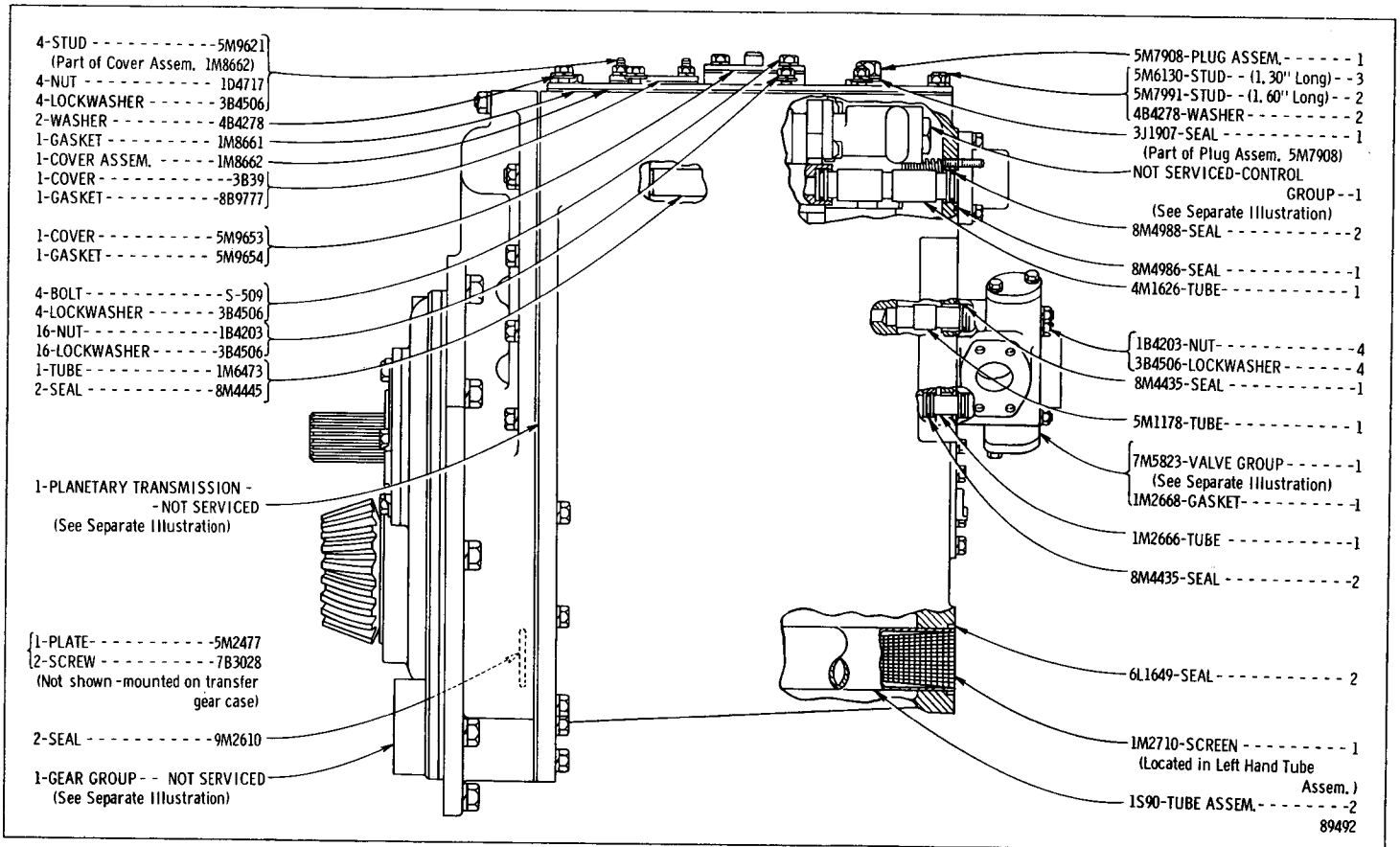

7M806 TRANSMISSION GROUP—Side View
Effective with Serial No. 48A2428
Planetary Transmission, Transfer Gears, Transmission Hydraulic Control and 7M5823 Lubrication Regulator Valve Group parts are shown on Pages 76 through 80

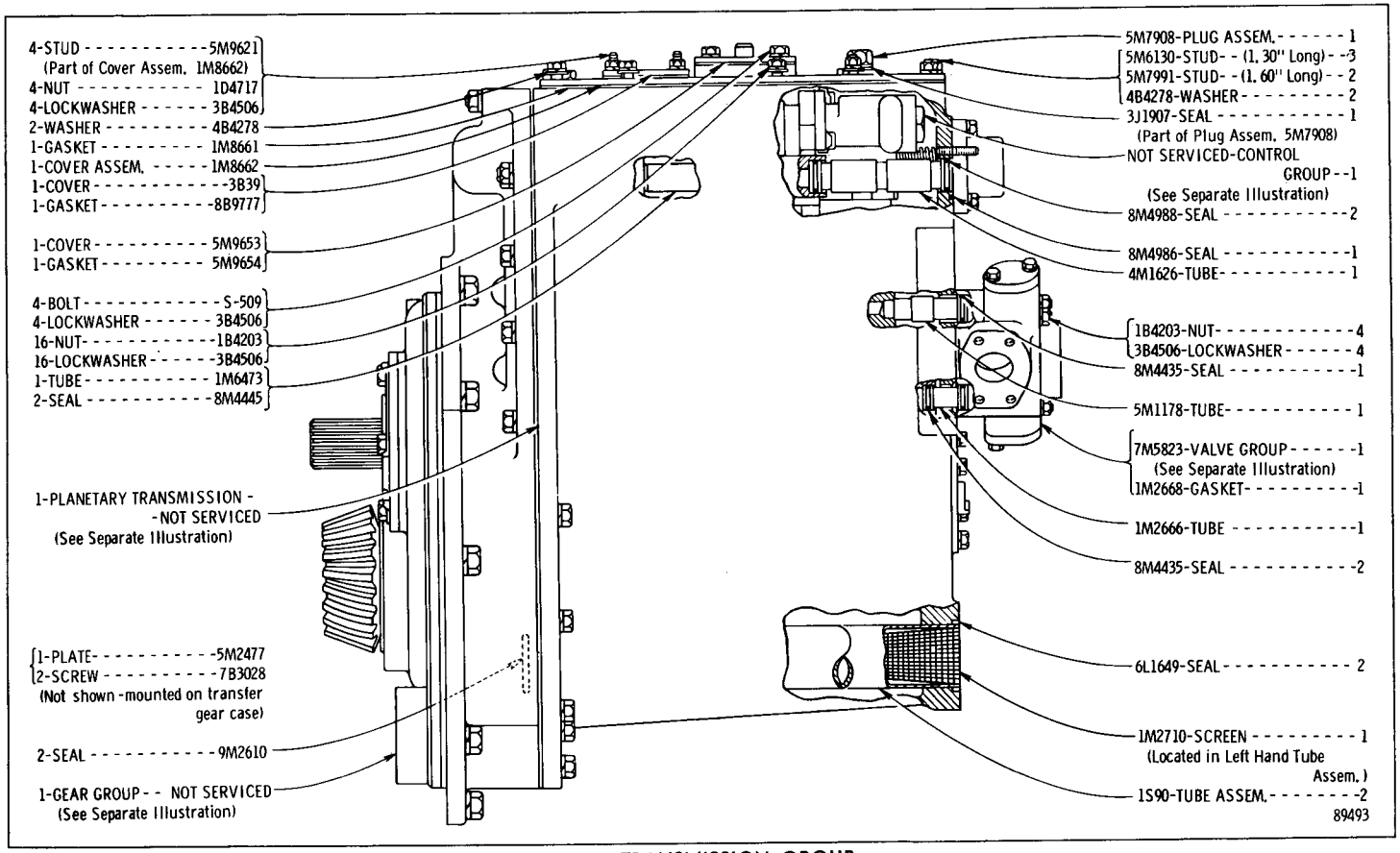

2S3552 TRANSMISSION GROUP

Effective with Serial No. 48A3279—Up and Test No. 3405—Up

Planetary Transmission, Transfer Gear, Transmission Hydraulic Control and 7M5823 Lubrication Regulator Valve Group parts are shown on

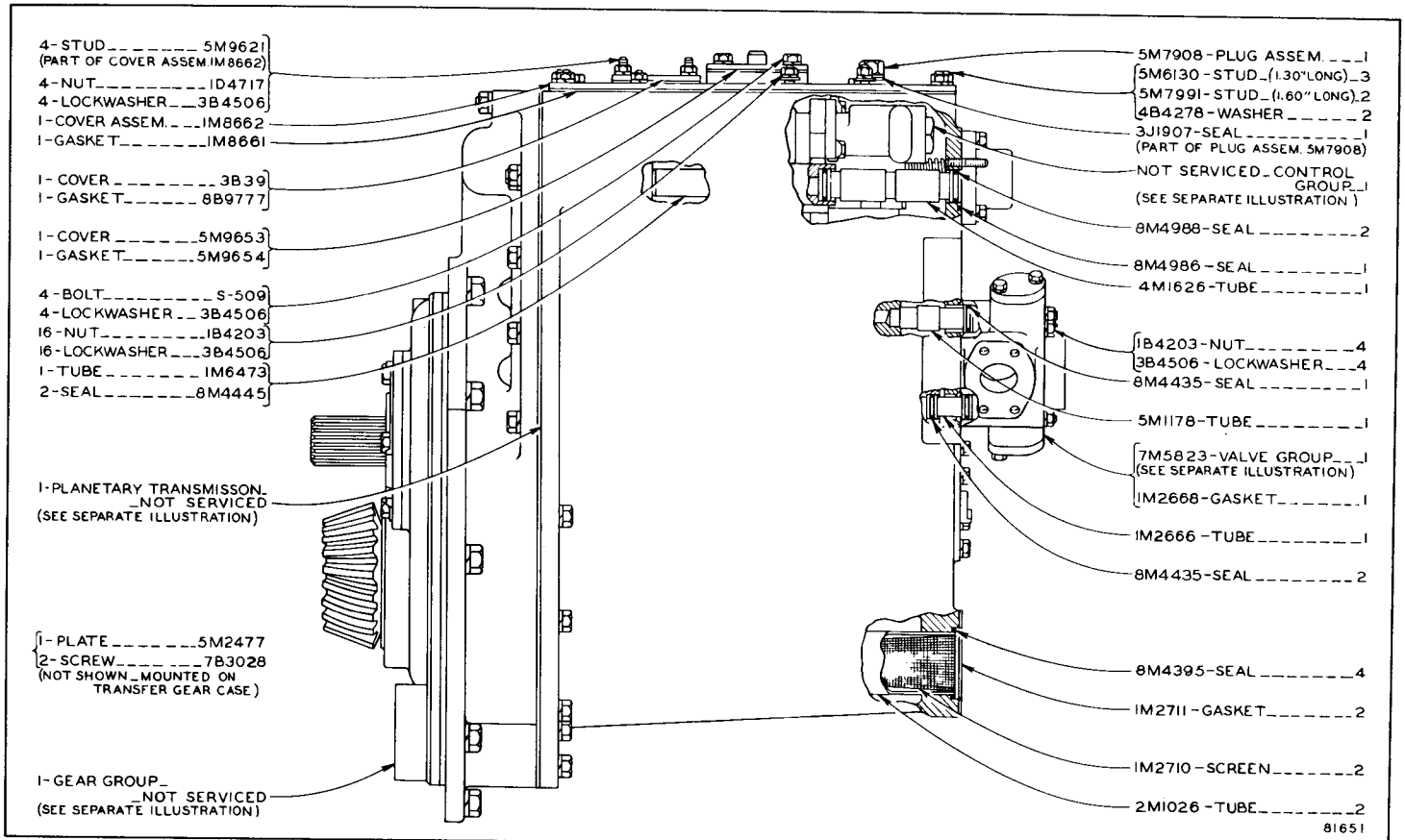

7M806 TRANSMISSION GROUP—Side View

Planetary Transmission, Transfer Gears, Transmission Hydraulic Control and 7M5823 Lubrication Regulator Valve Group parts are shown on Pages 76 through 80

ONLY "CATERPILLAR" PARTS GIVE "CATERPILLAR" PERFORMANCE

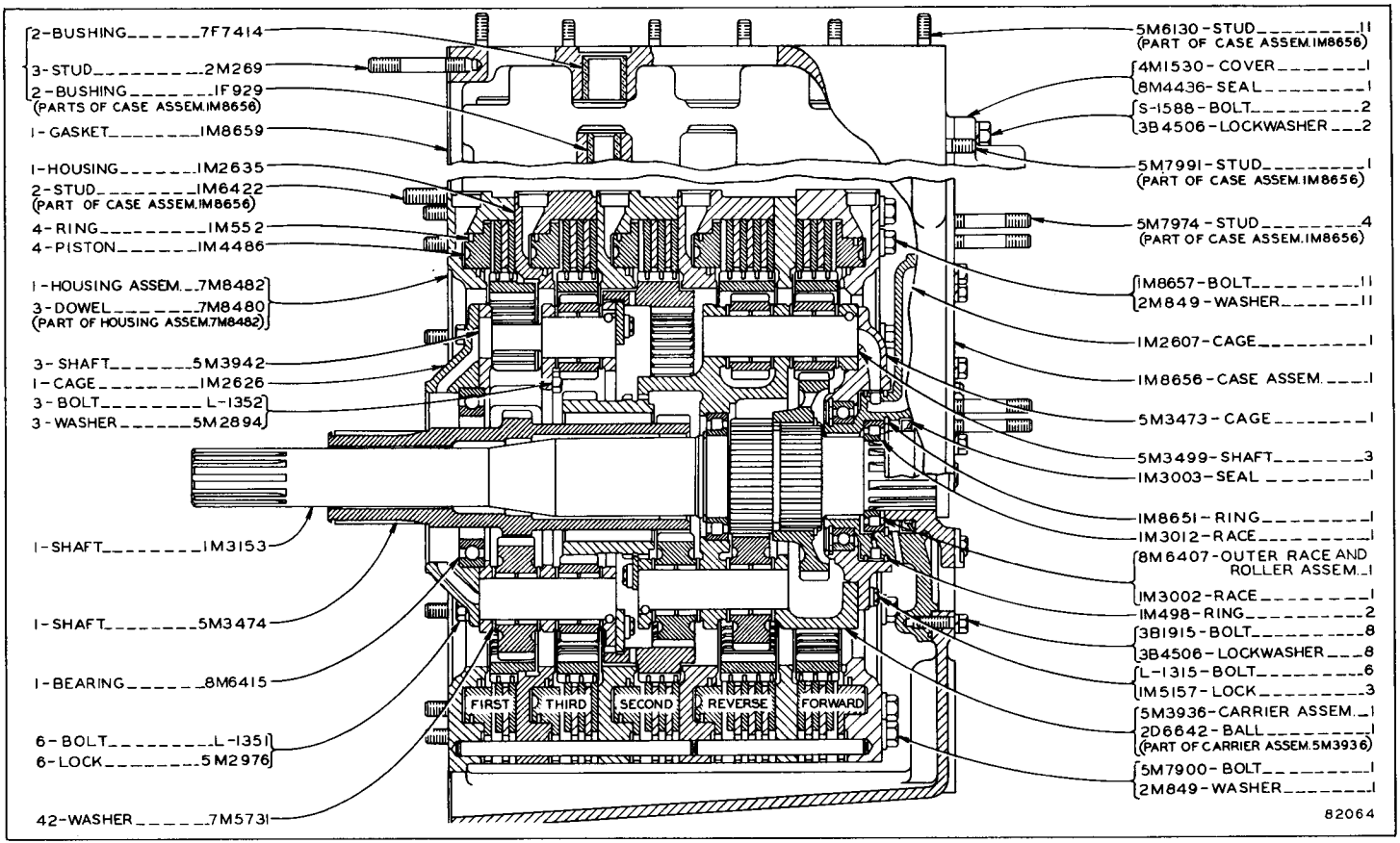

PLANETARY TRANSMISSION—Part One

Part of 7M806 Transmission Group shown on Page 75. Note: This Transmission provides the following maximum speeds: (Forward) First—2.3, Second—3.9 and Third—6.2 M.P.H.; (Reverse) First—2.7, Second—4.6 and Third—7.3 M.P.H.

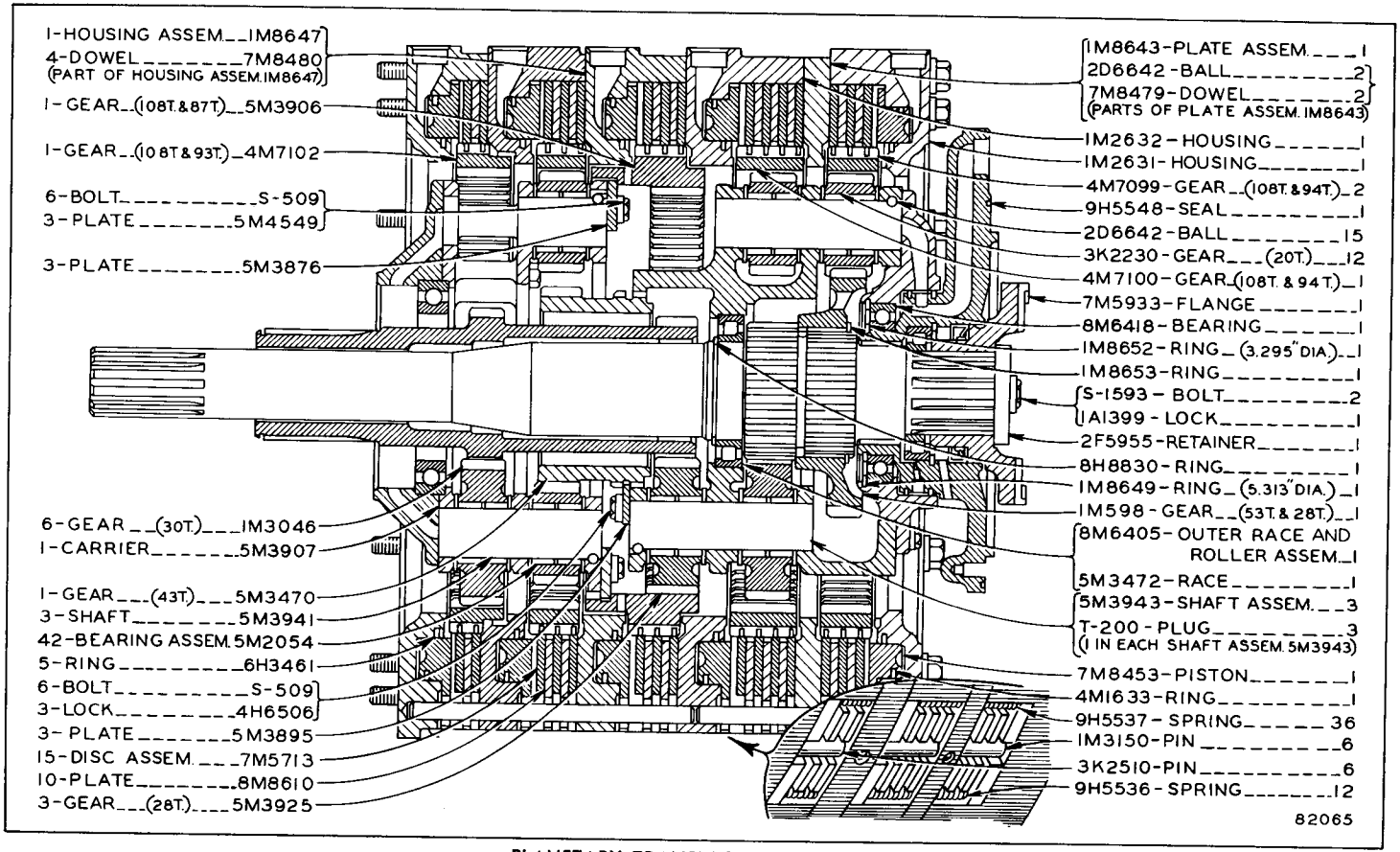

PLANETARY TRANSMISSION—Part Two

Part of 7M806 Transmission Group shown on Page 75. Note: This Transmission provides the following maximum speeds: (Forward) First—2.3, Second—3.9 and Third—6.2 M.P.H.; (Reverse) First—2.7, Second—4.6 and Third—7.3 M.P.H.

ONLY "CATERPILLAR" PARTS GIVE "CATERPILLAR" PERFORMANCE

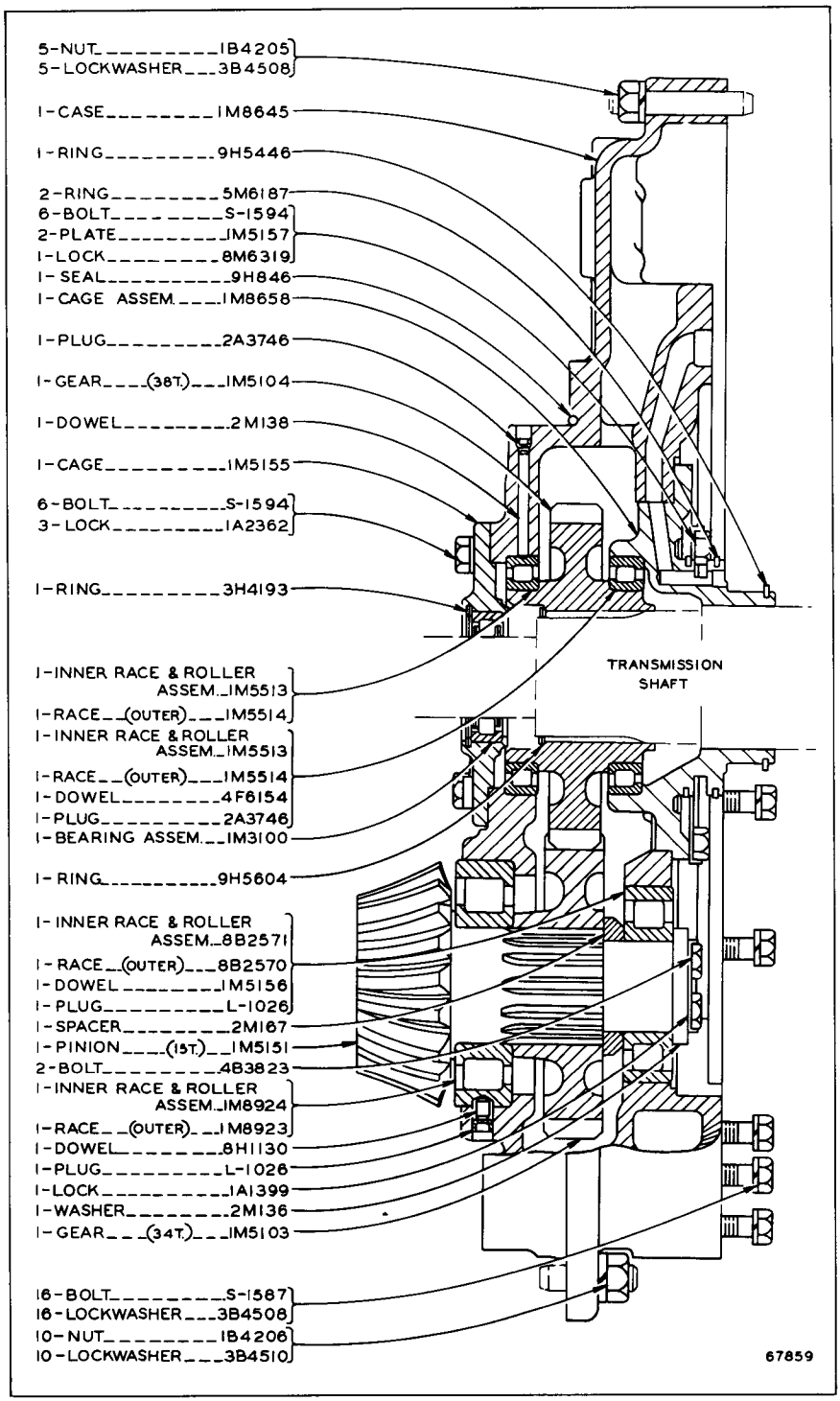

TRANSFER GEARS

Part of 7M806 Transmission Group shown on Page 75

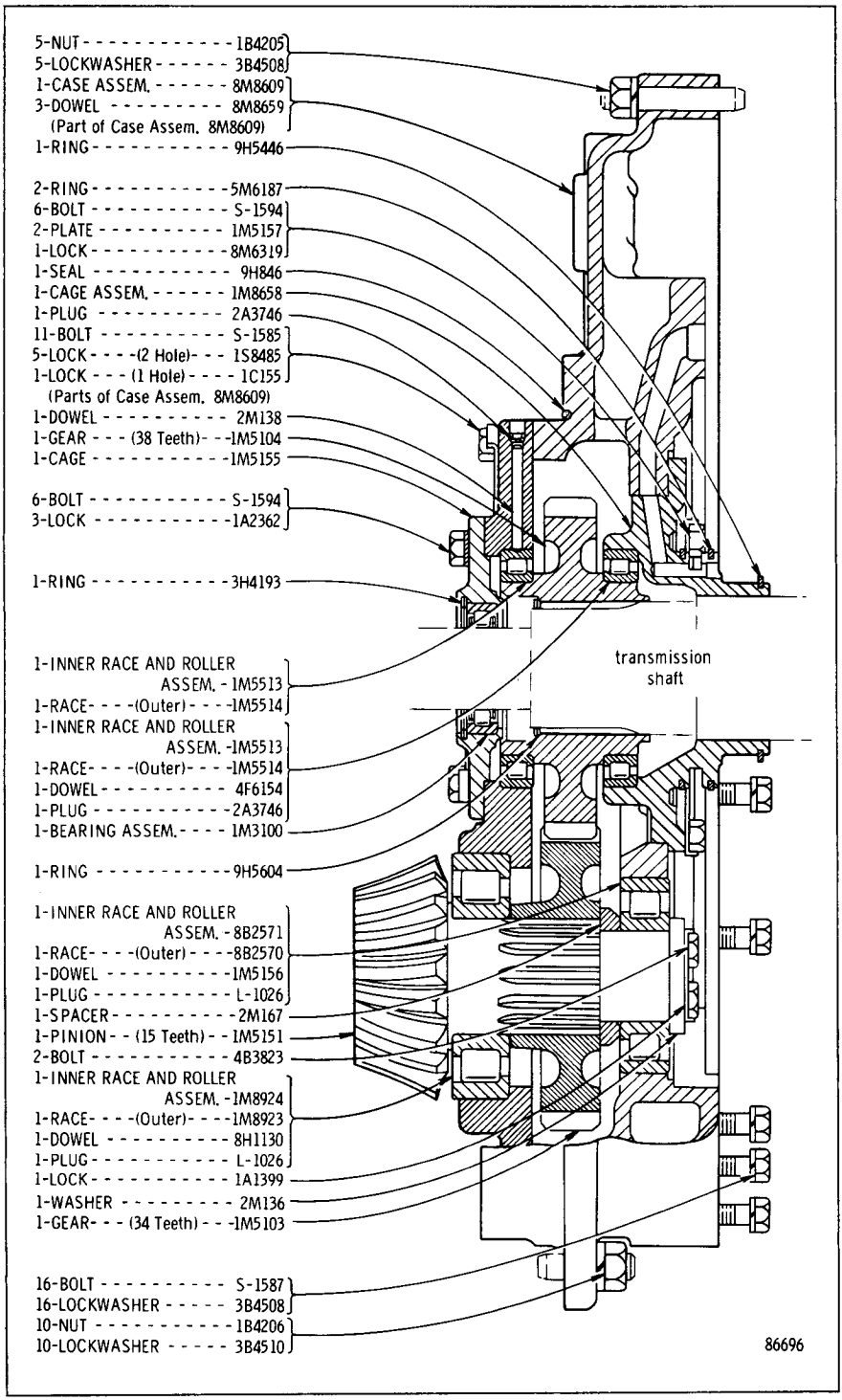

TRANSFER GEARS
Effective with Serial No. 48A2428
Part of 7M806 Transmission Group shown on insert between Pages 74 and 75

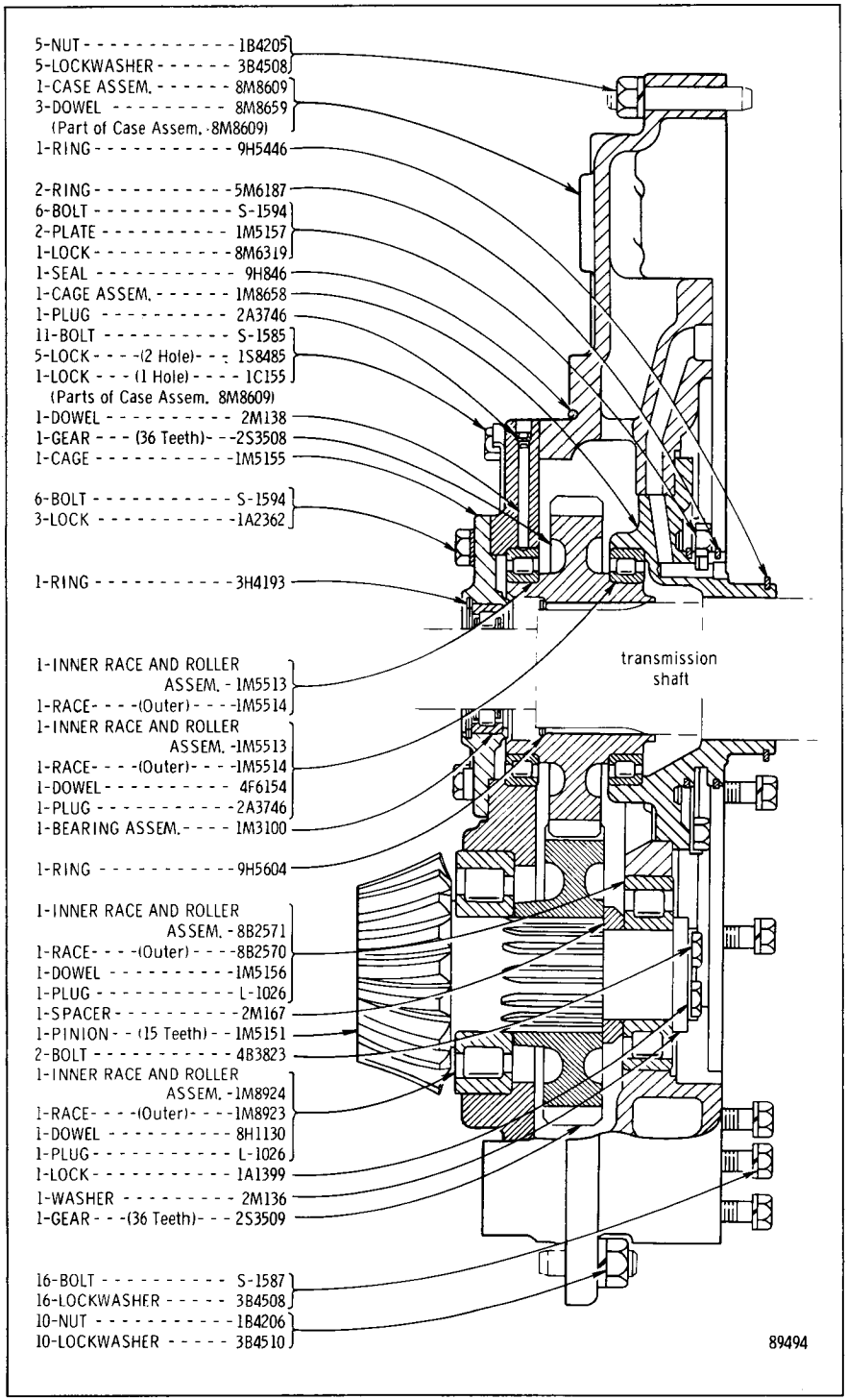

TRANSFER GEARS

Effective with Serial No. 48A3279—Up and Test No. 3405—Up

Part of 2S3552 Transmission Group shown on insert between Pages 74 and 75

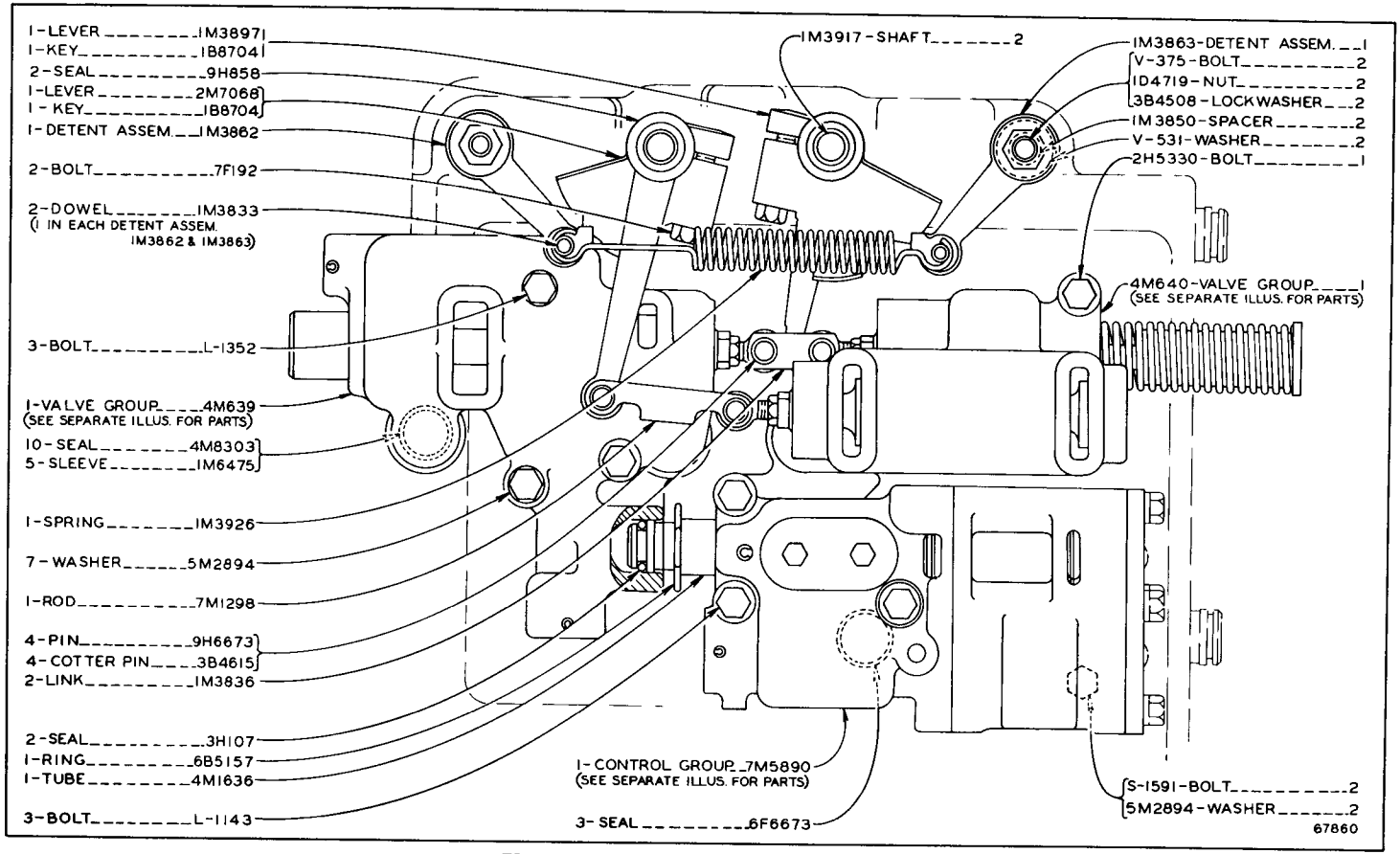

TRANSMISSION HYDRAULIC CONTROL

Part of 7M806 Transmission Group shown on Page 75

4M639 Selector Valve Group, 4M640 Directional Valve Group and 7M5890 Pressure Control Group parts are shown on Pages 80 and 81

ONLY "CATERPILLAR" PARTS GIVE "CATERPILLAR" PERFORMANCE

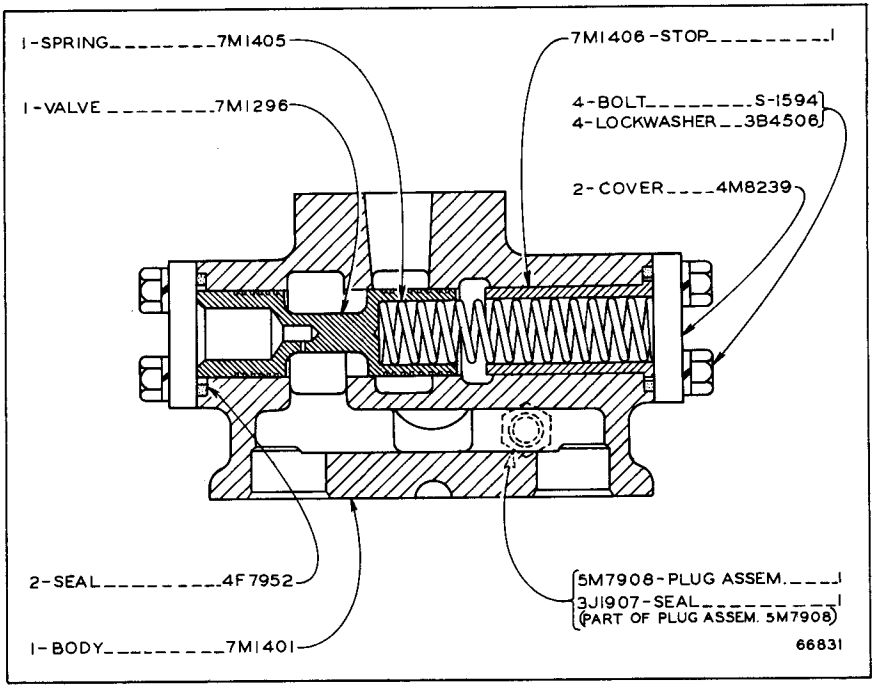

7M5823 LUBRICATION REGULATOR VALVE GROUP
Part of 7M806 Transmission Group shown on Page 75

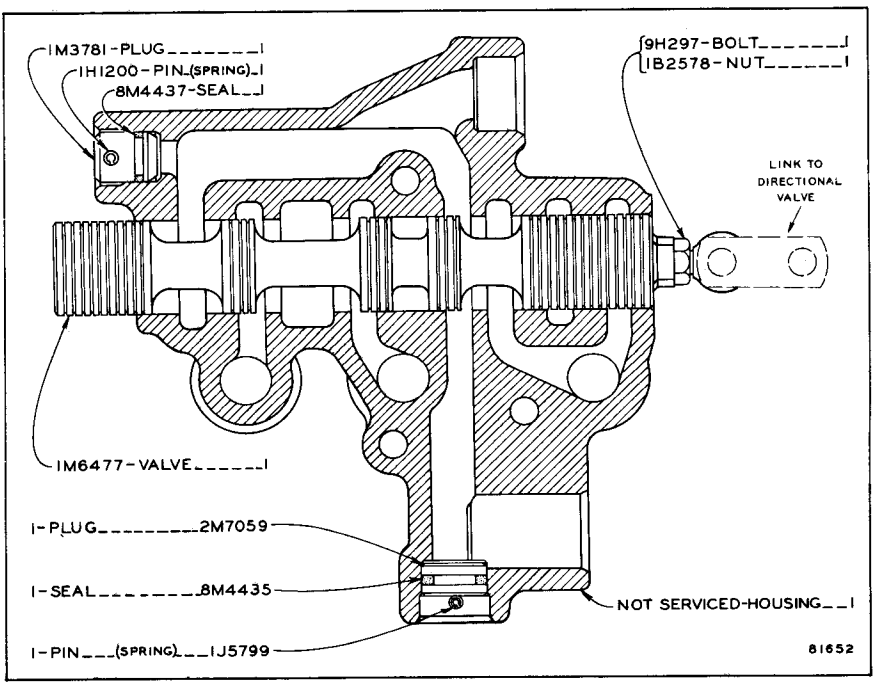

4M639 SELECTOR VALVE GROUP
Part of Transmission Hydraulic Control shown on Page 79

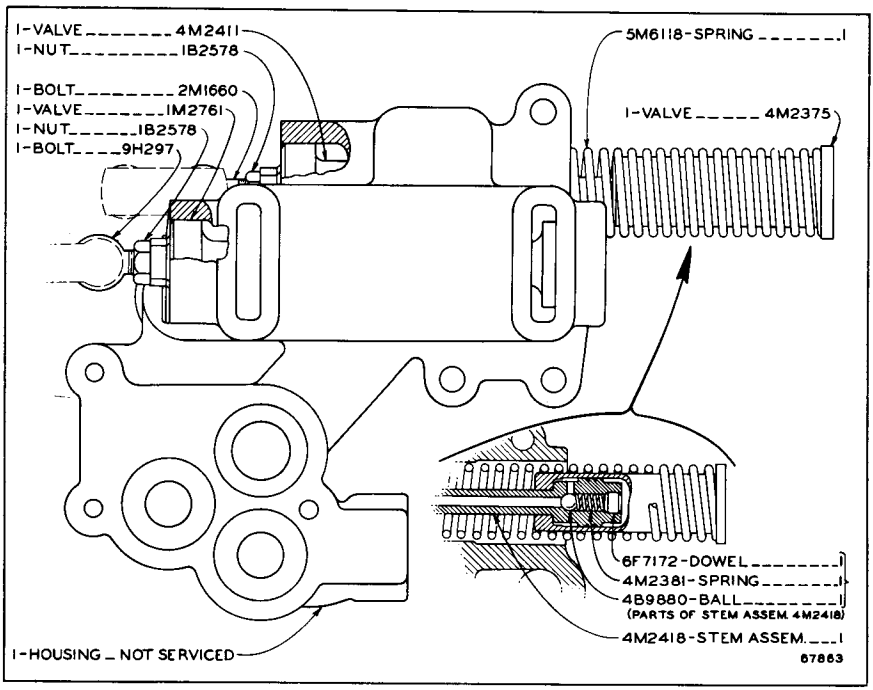

4M640 DIRECTIONAL VALVE GROUP
Part of Transmission Hydraulic Control shown on Page 79

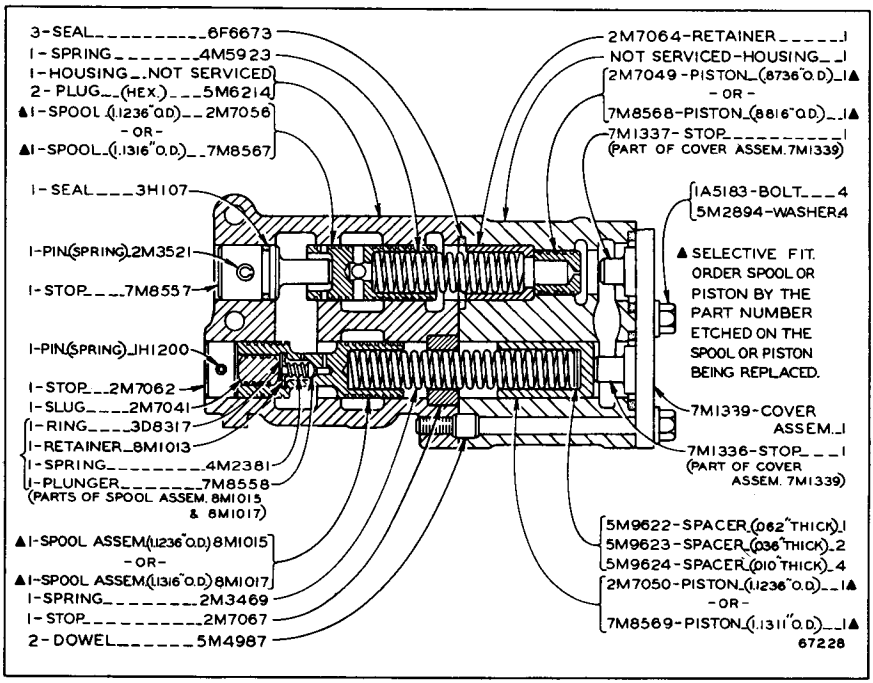

7M5890 PRESSURE CONTROL GROUP
Part of Transmission Hydraulic Control shown on Page 79

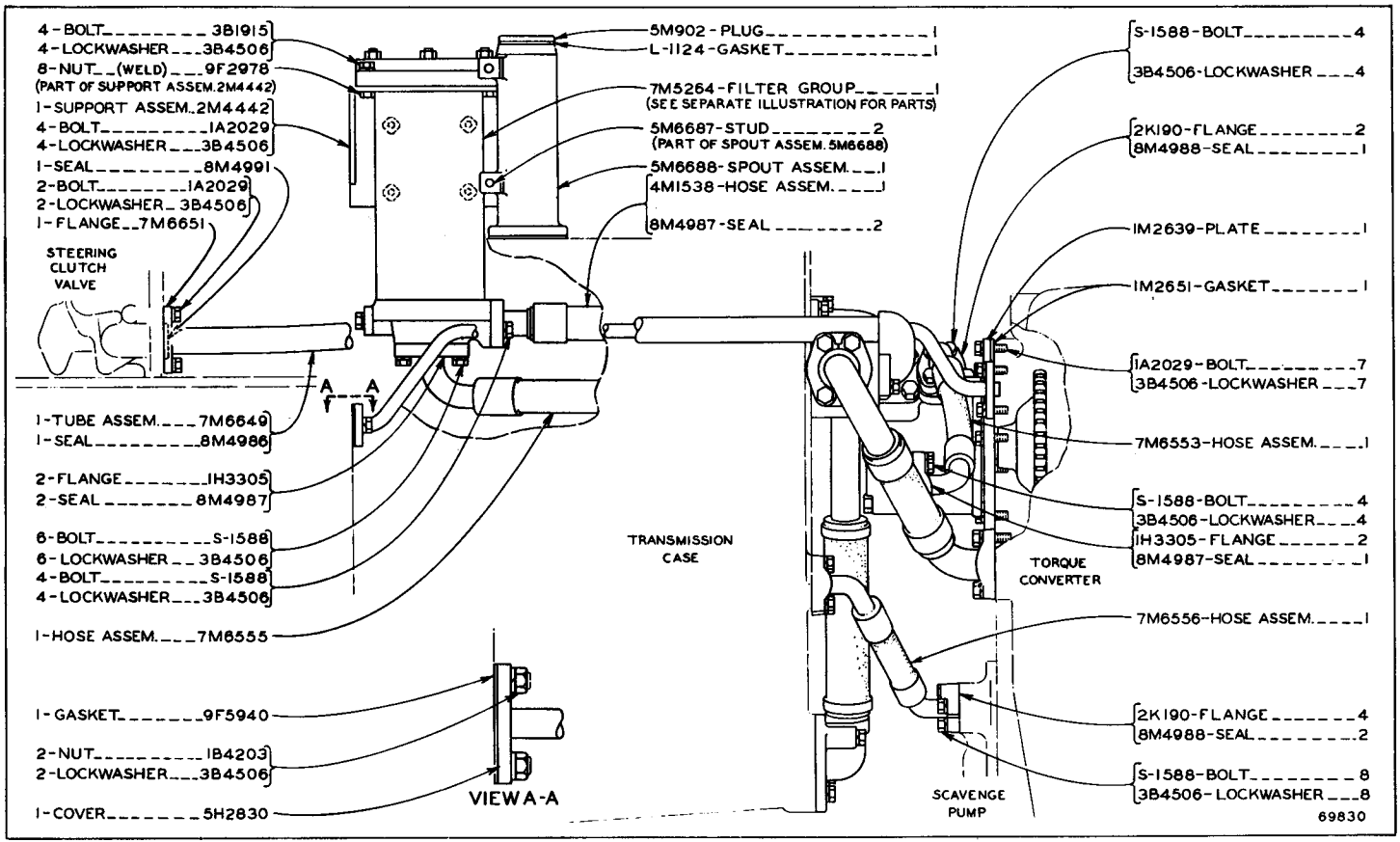

TRANSMISSION LUBRICATION SYSTEM—Part One

7M5264 Oil Filter Group parts are shown on Page 84

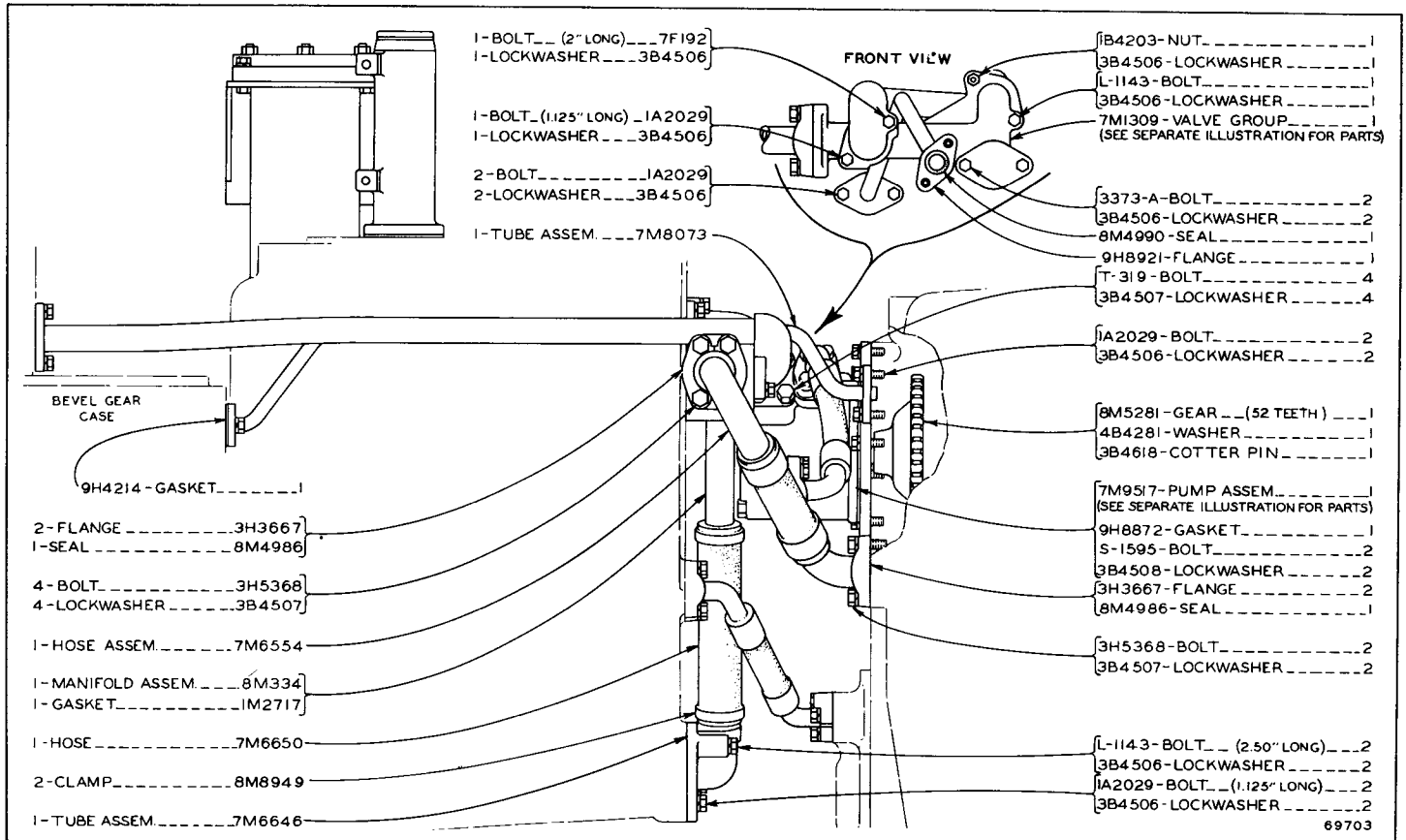

TRANSMISSION LUBRICATION SYSTEM—Part Two

7M9517 Oil Pump Assembly and 7M1309 Relief Valve Group parts are shown on Pages 84 and 85

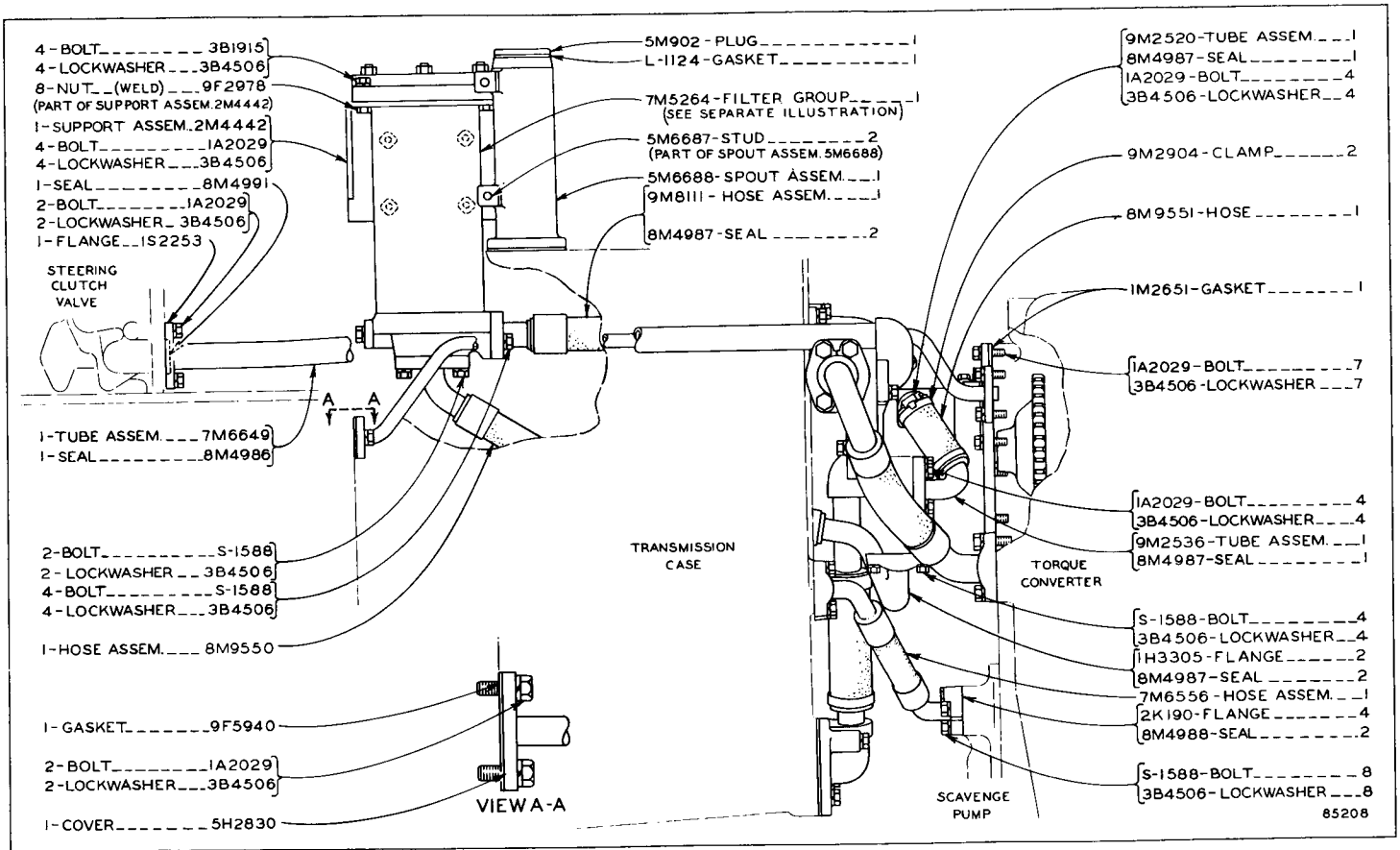

TRANSMISSION LUBRICATION SYSTEM—Part One

Serial No. 48A1276 and 48A1343—Up

7M5244 Oil Filter Group parts are shown on Page 84. Additional parts are shown on reverse side of this insert

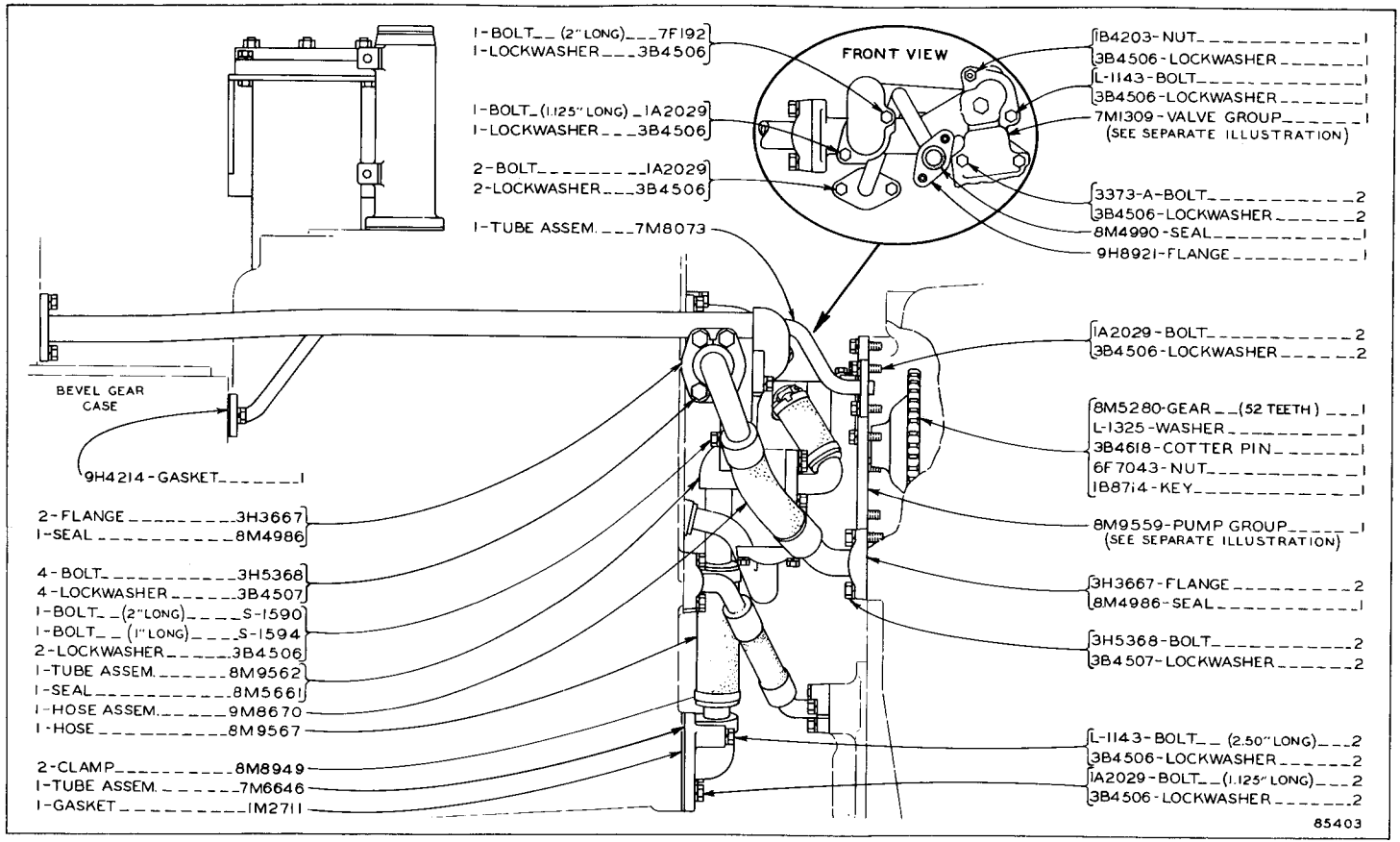

TRANSMISSION LUBRICATION SYSTEM—Part Two

Serial No. 48A1276 and 48A1343—Up. 8M9559 Pump Group and 7M1309 Valve Group parts are shown on insert between Pages 84 & 85 and on Page 85

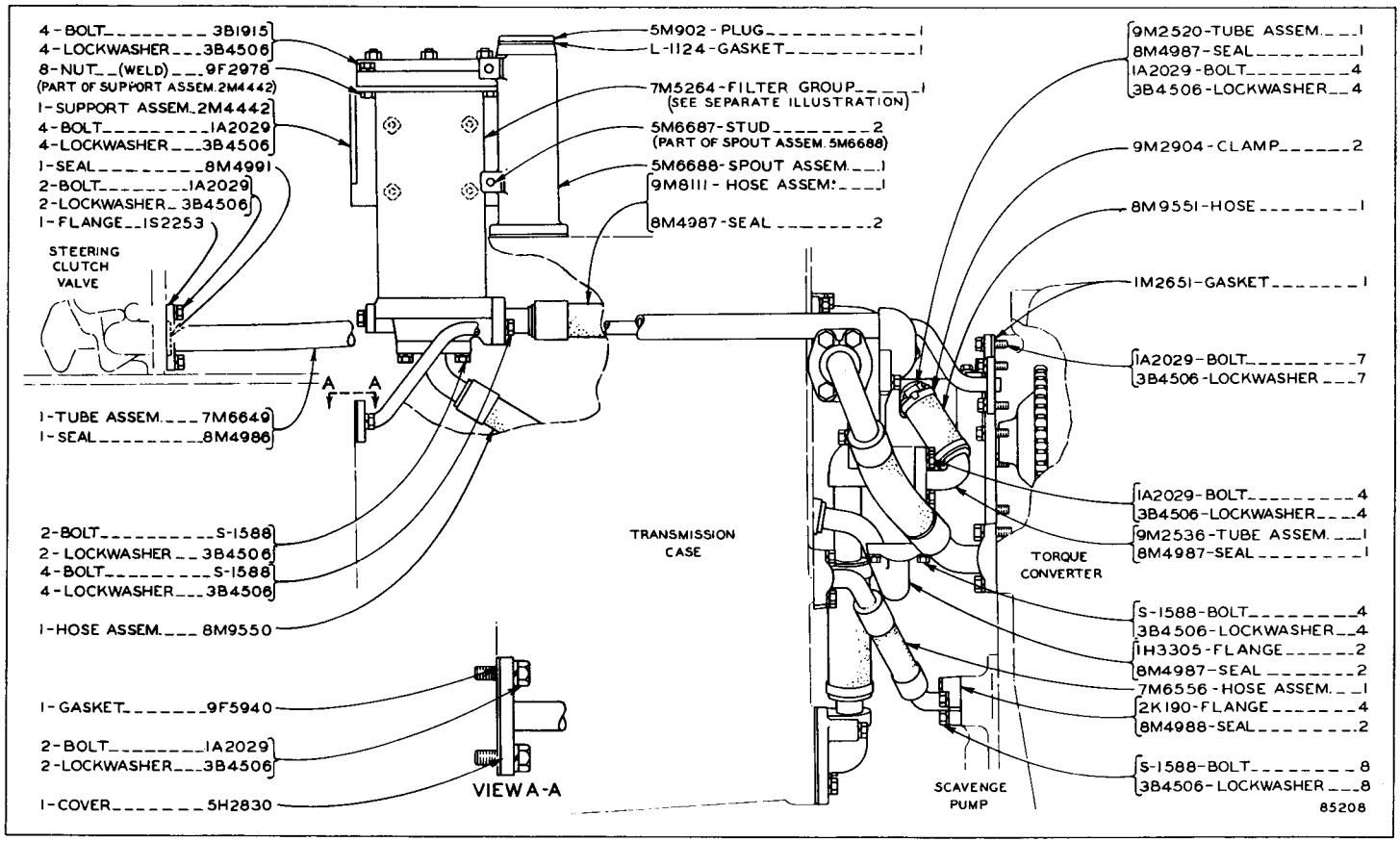

TRANSMISSION LUBRICATION SYSTEM—Part One

Effective with Serial No. 48A2138

7M5264 Oil Filter Group parts are shown on Page 84. Additional parts are shown on reverse side of this insert

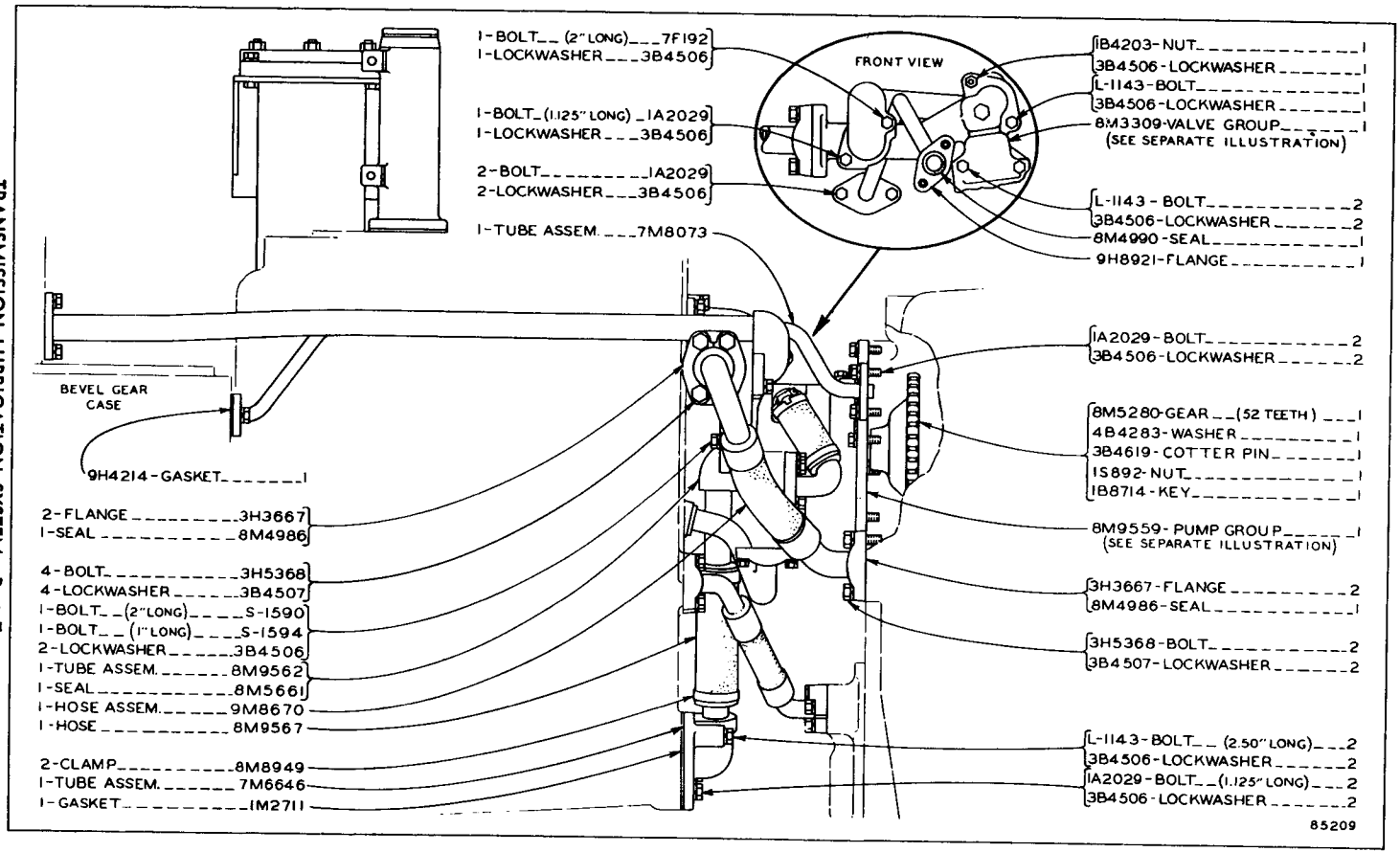

TRANSMISSION LUBRICATION SYSTEM—Part Two

Effective with Serial No. 48A2138. 8M9559 Oil Pump Group and 8M3309 Relief Valve Group parts are shown on inserts between Pages 84 and 85

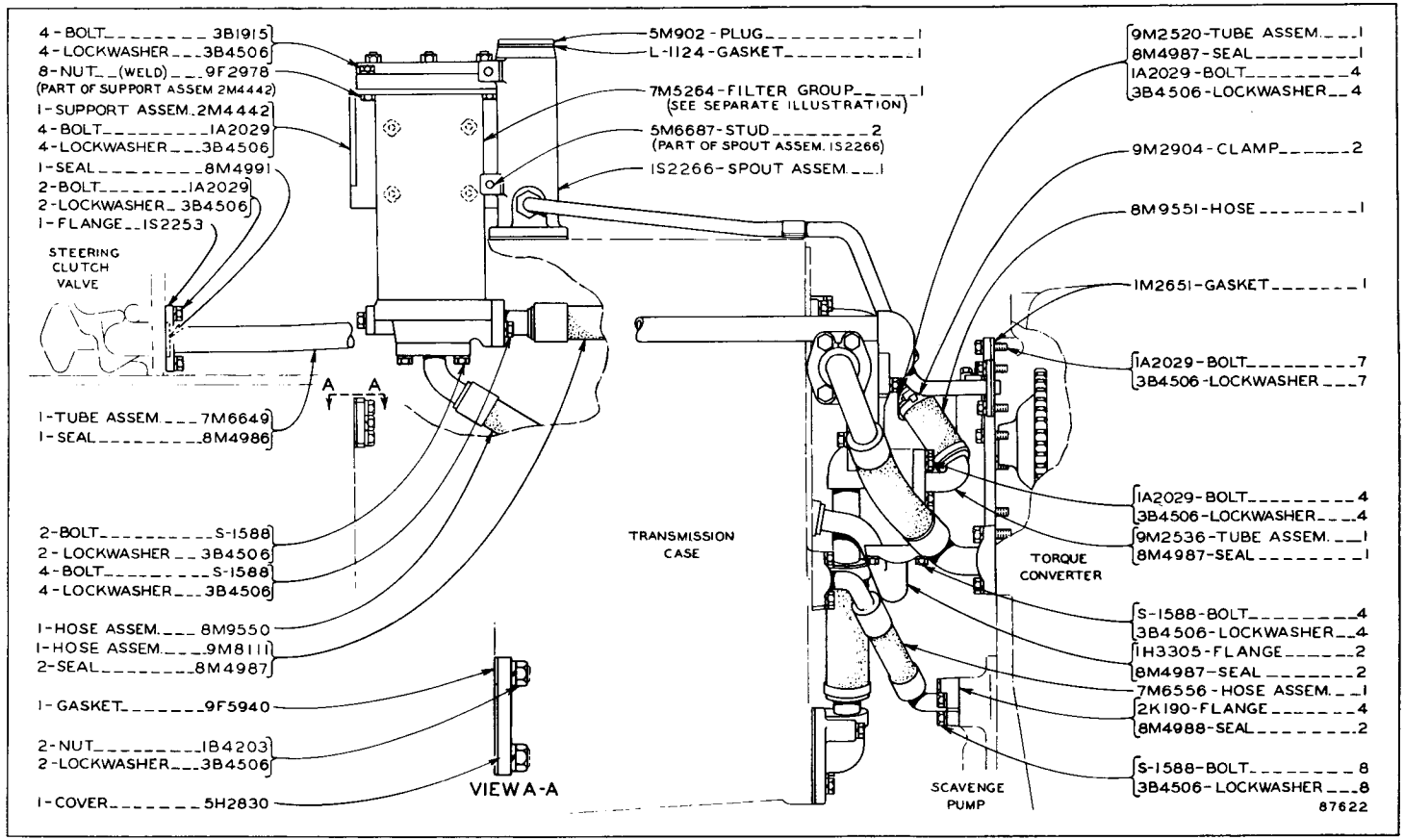

TRANSMISSION LUBRICATION SYSTEM—Part One

Effective with Serial No. 48A2622

7M5264 Oil Filter Group parts are shown on Page 84. Additional parts are shown on reverse side of this insert

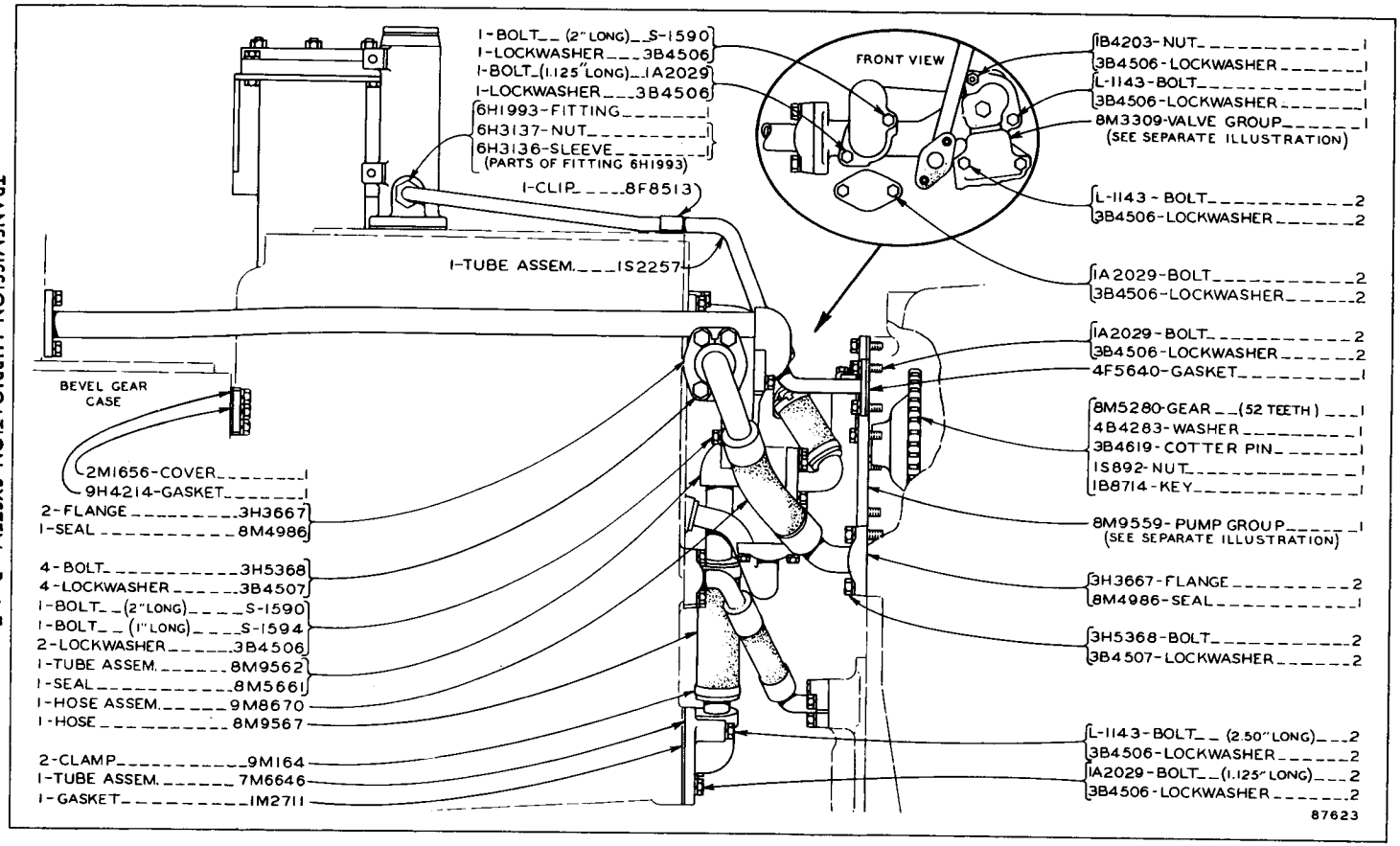

TRANSMISSION LUBRICATION SYSTEM—Part Two

Effective with Serial No. 48A2622

8M9559 Oil Pump Group and 8M3309 Relief Valve Group parts are shown on inserts between Pages 84 and 85

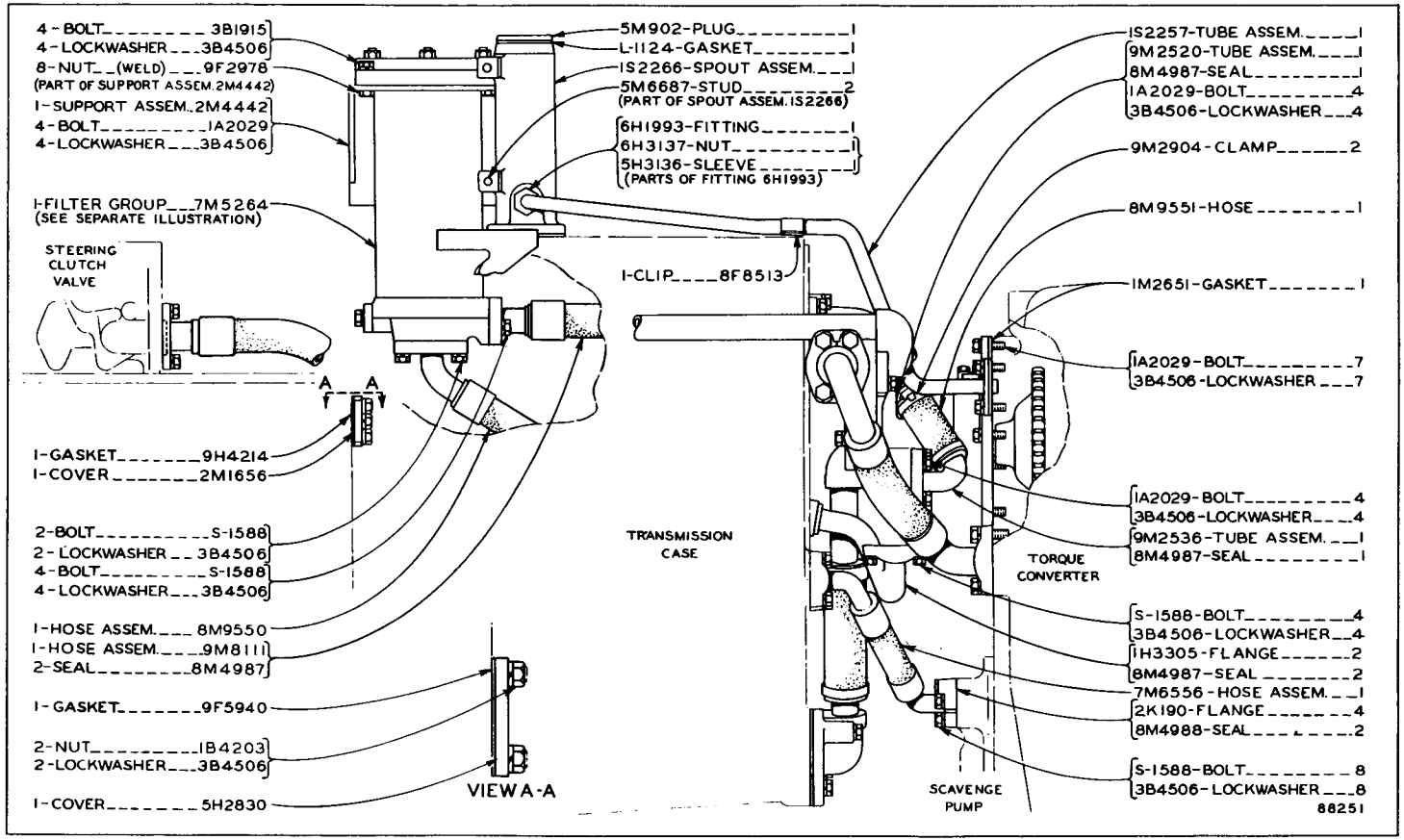

TRANSMISSION LUBRICATION SYSTEM—Part One

Effective with Serial No. 48A2745

7M5264 Oil Filter Group parts are shown on Page 84. Additional parts are shown on reverse side of this insert

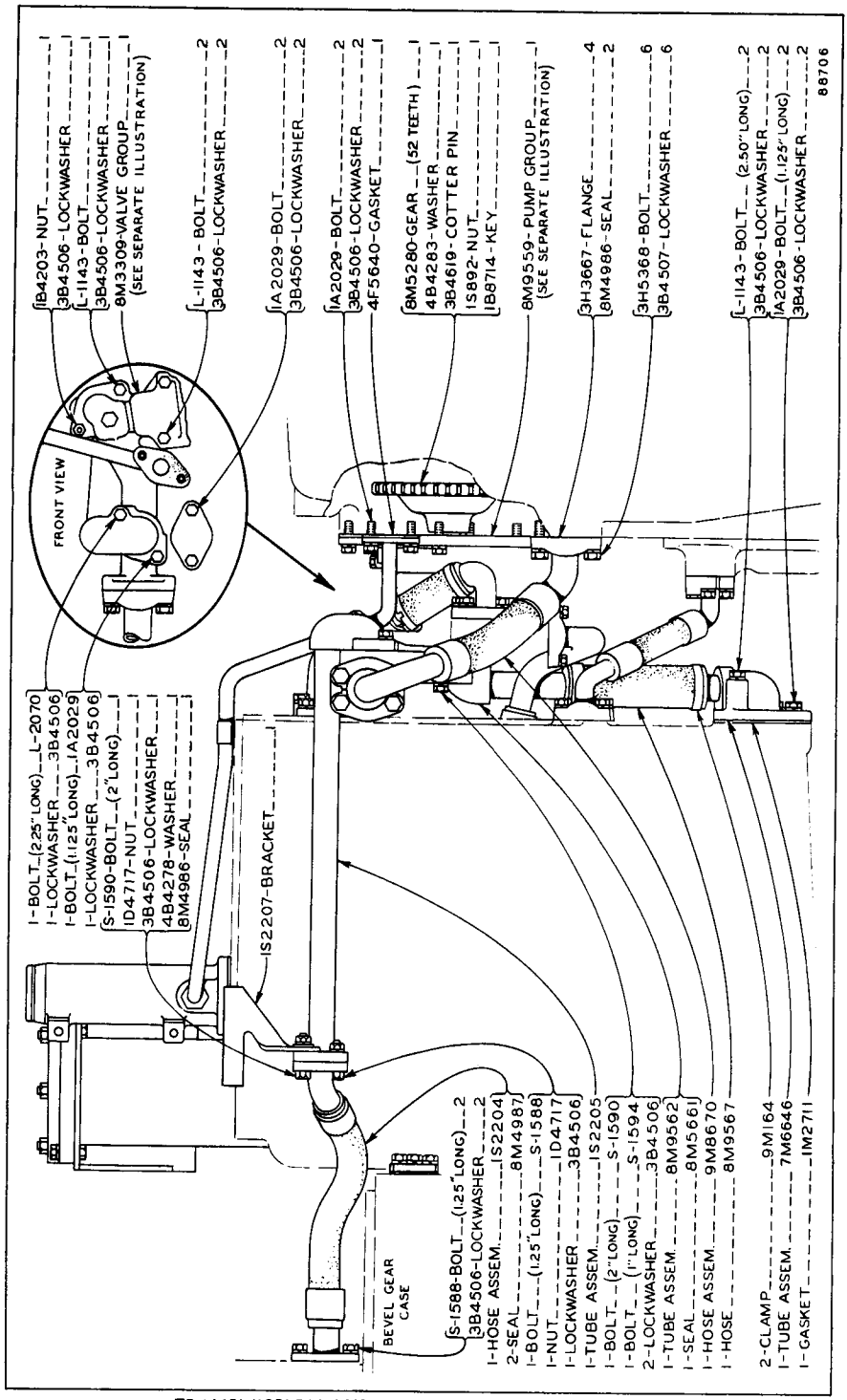

TRANSMISSION LUBRICATION SYSTEM—Part Two
Effective with Serial No. 48A2745
8M9559 Oil Pump Group and 8M3309 Relief Valve Group parts are shown on inserts between Pages 84 and 85

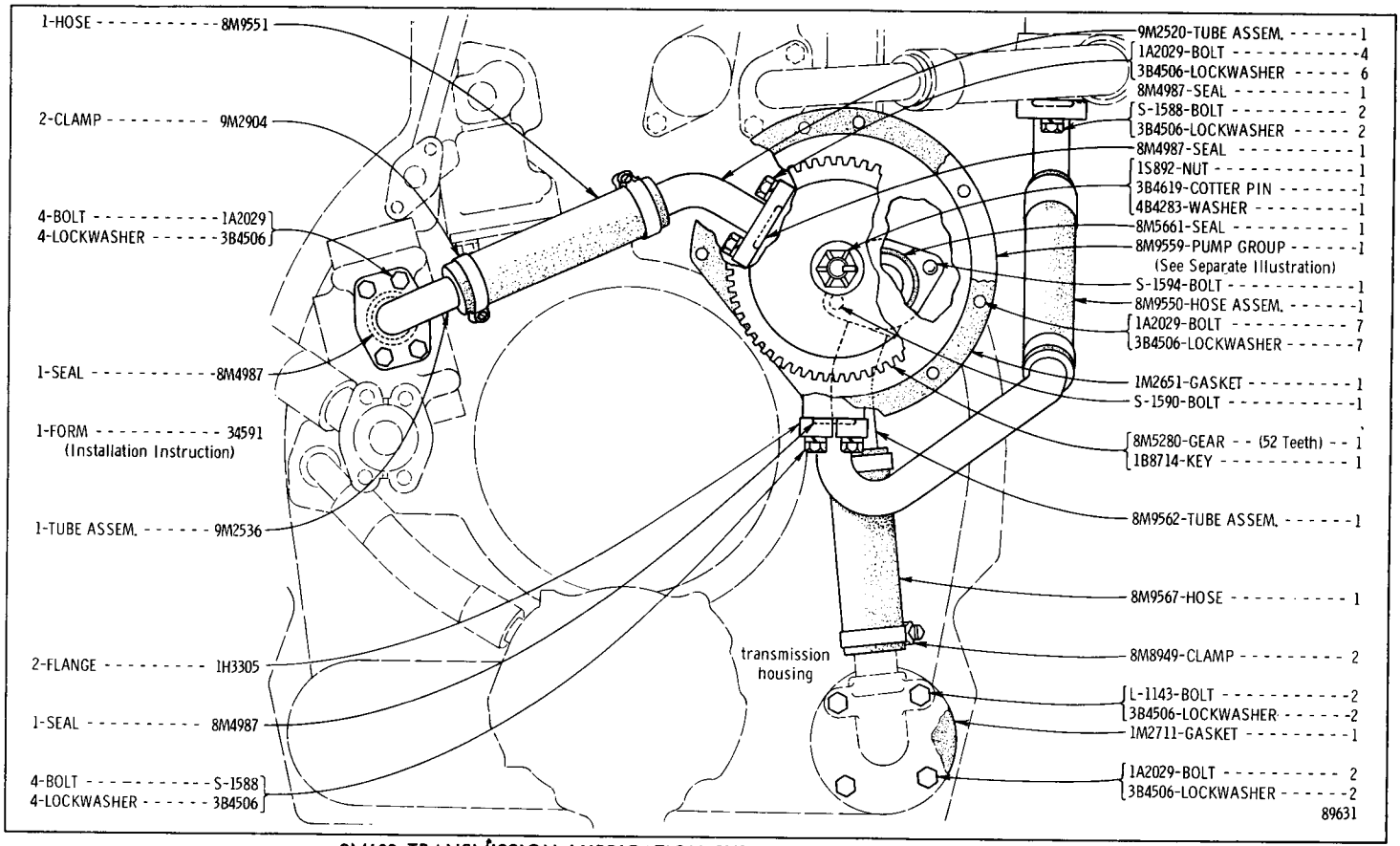

9M682 TRANSMISSION LUBRICATION SYSTEM GROUP—Field Installation

Serial No. 48A1 to 48A2137 inclusive

8M9559 Oil Pump Group parts are shown on insert between Pages 84 and 85

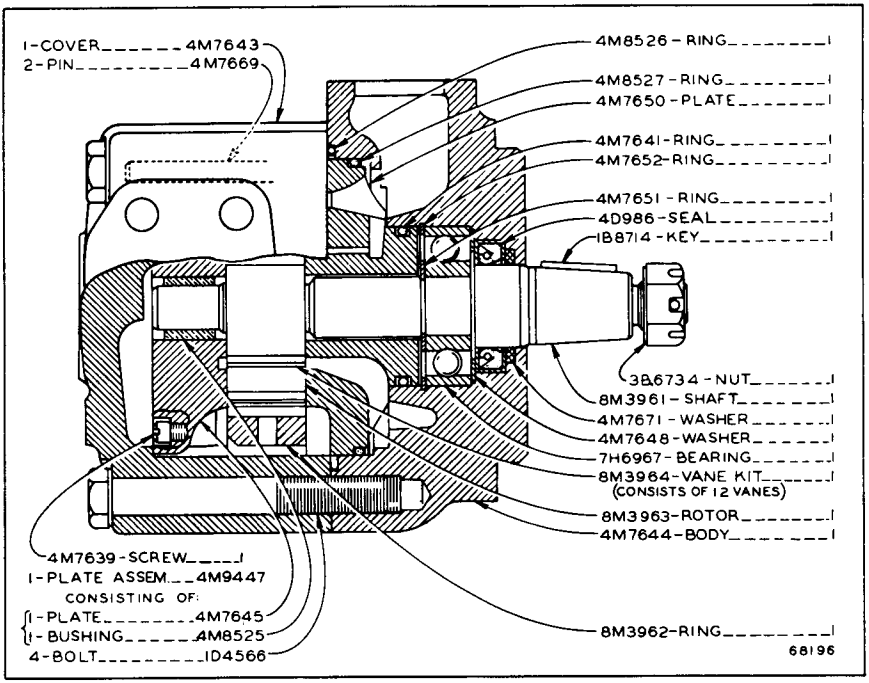

7M9517 OIL PUMP ASSEMBLY
Part of Transmission Lubrication System shown on Page 83

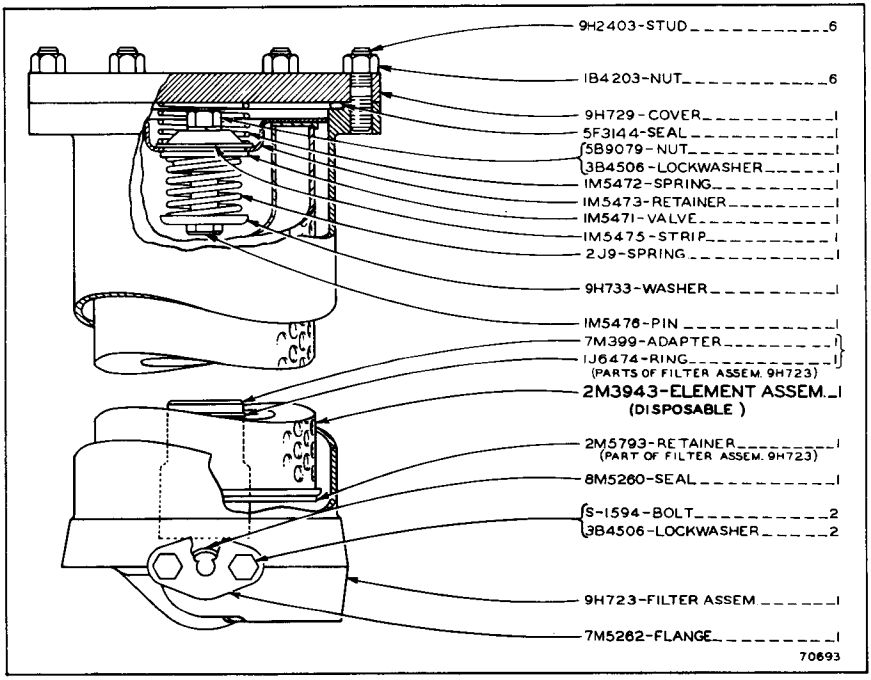

7M5264 OIL FILTER GROUP
Part of Transmission Lubrication System shown on Page 82

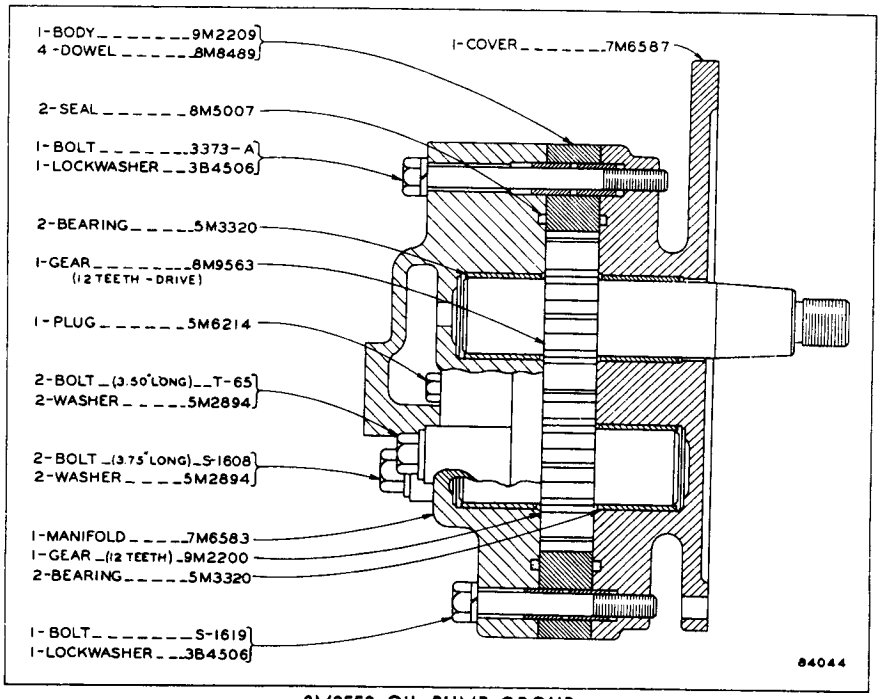

8M9559 OIL PUMP GROUP

Part of Transmission Lubrication System shown on insert between Pages 82 and 83

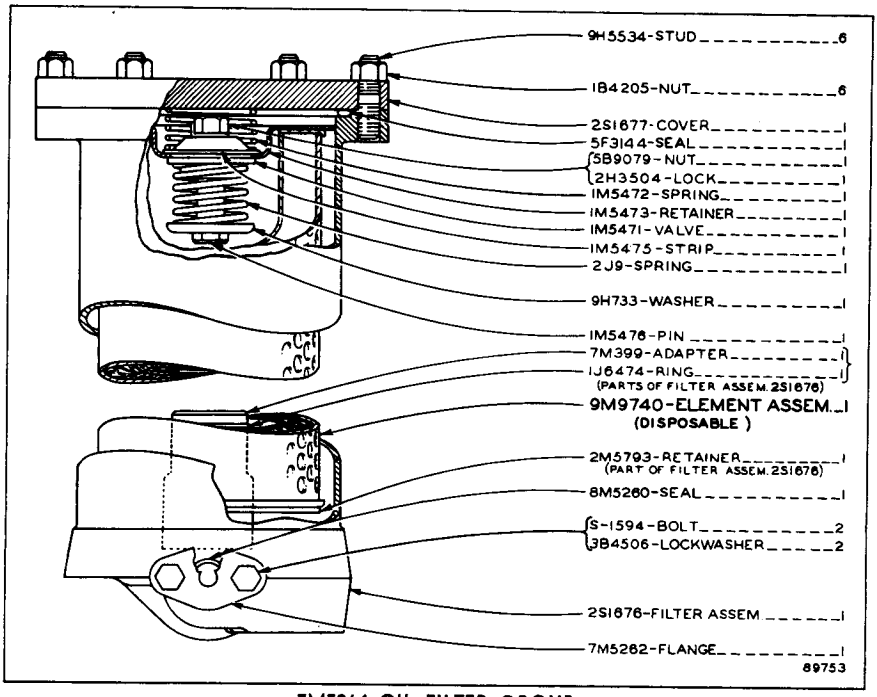

7M5264 OIL FILTER GROUP

Effective with Serial No. 48A3333

Part of Transmission Lubrication System shown on insert between Pages 82 and 83

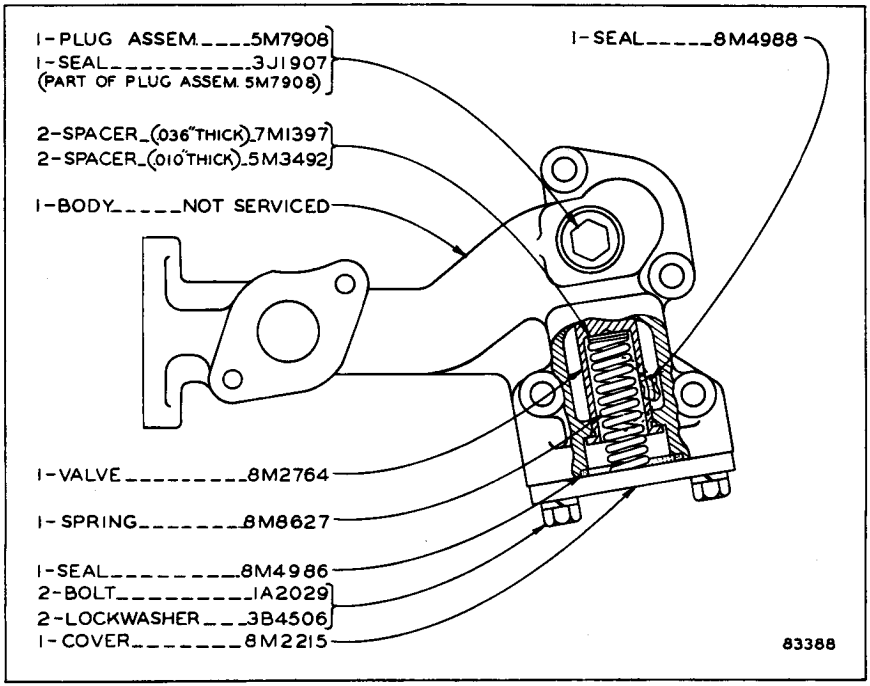

8M3309 RELIEF VALVE GROUP

Part of Transmission Lubrication System shown on insert between Pages 82 and 83

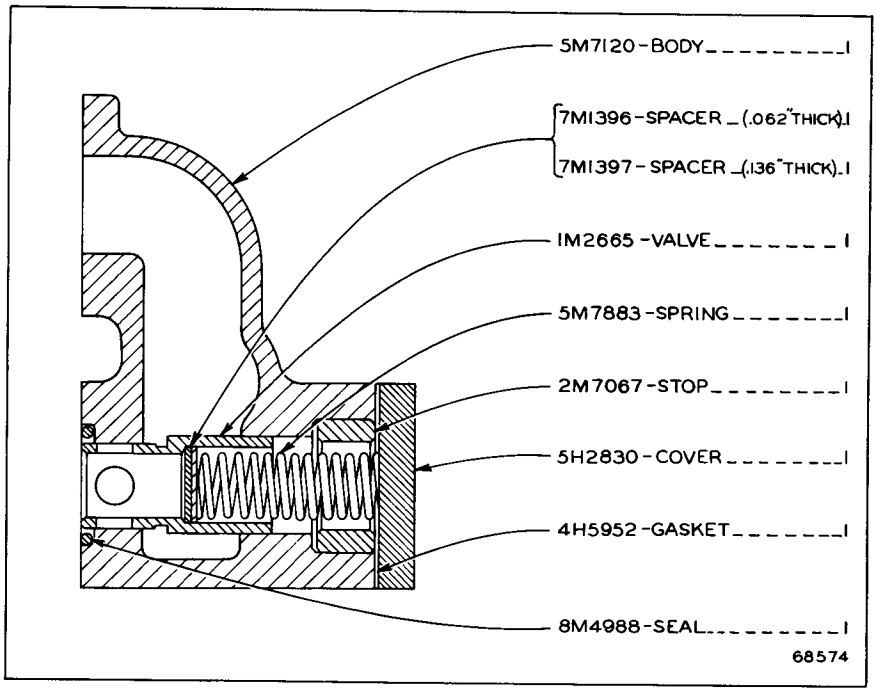

7M1309 RELIEF VALVE GROUP
Part of Transmission Lubrication System shown on Page 83

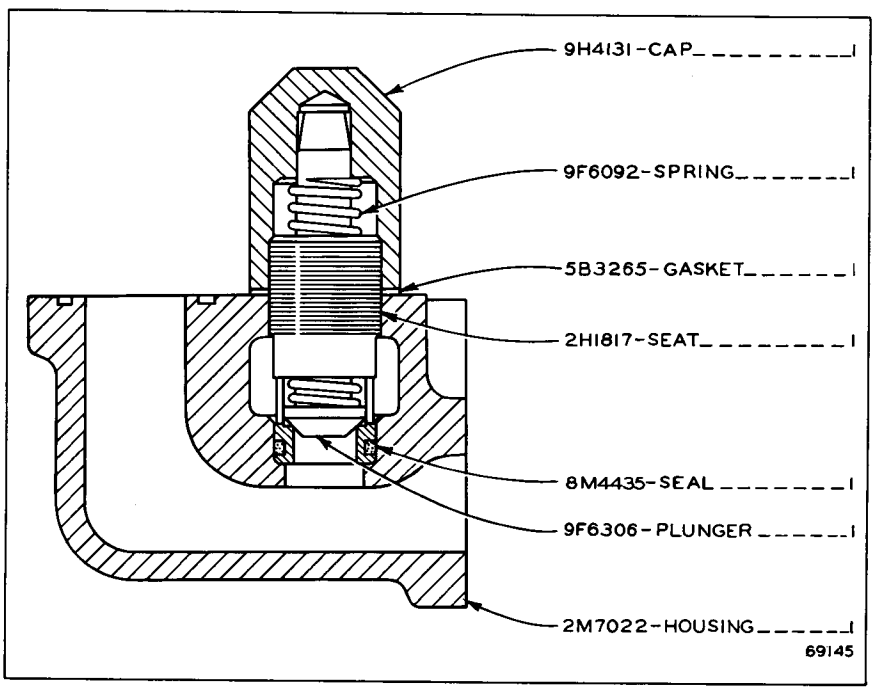

2M8765 RELIEF VALVE GROUP
Part of Steering Clutch Lubrication System shown on Page 86

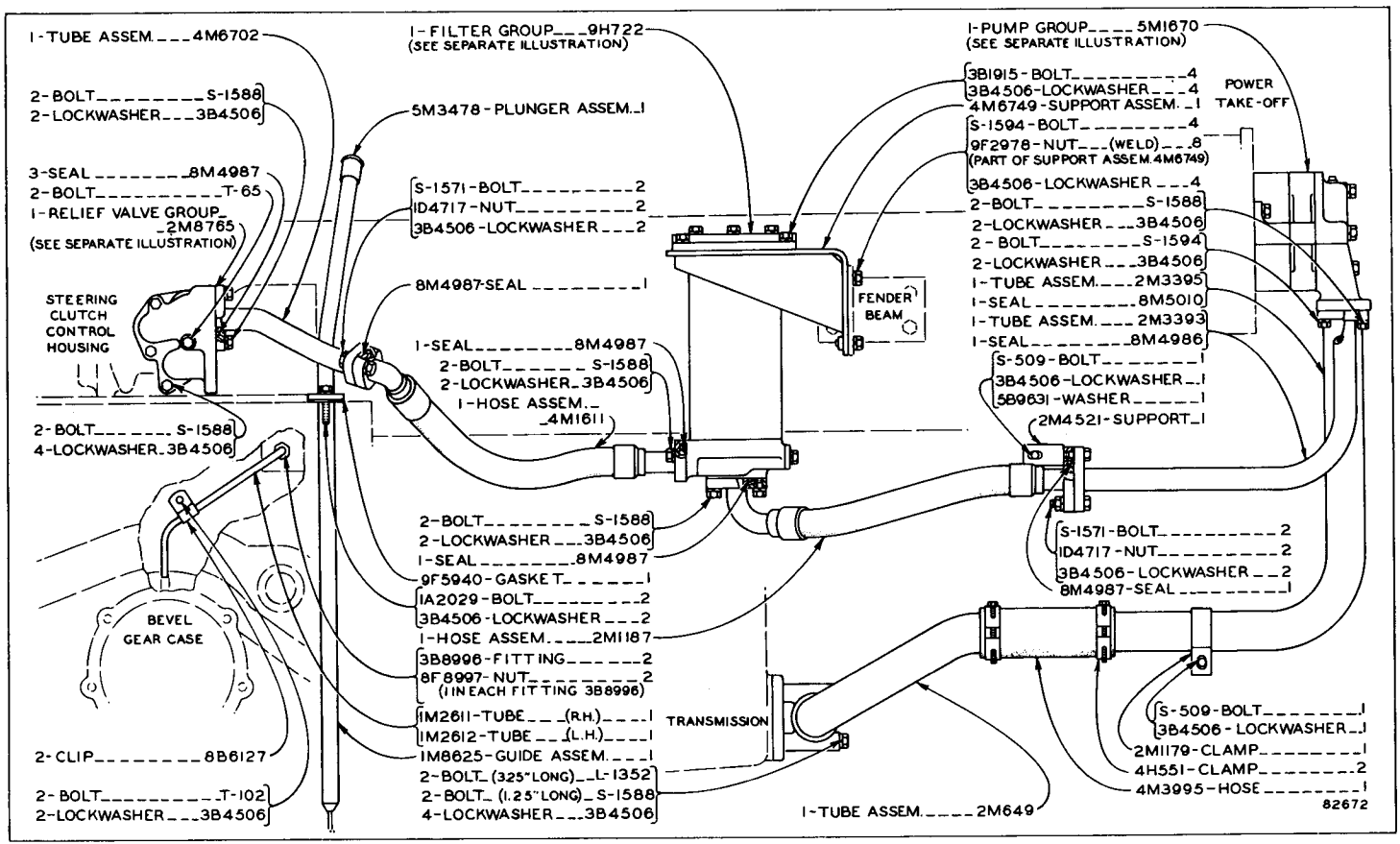

STEERING CLUTCH LUBRICATION SYSTEM

2M8765 Relief Valve Group, 5M1670 Oil Pump Group and 9H722 Oil Filter Group parts are shown on Pages 85 and 87

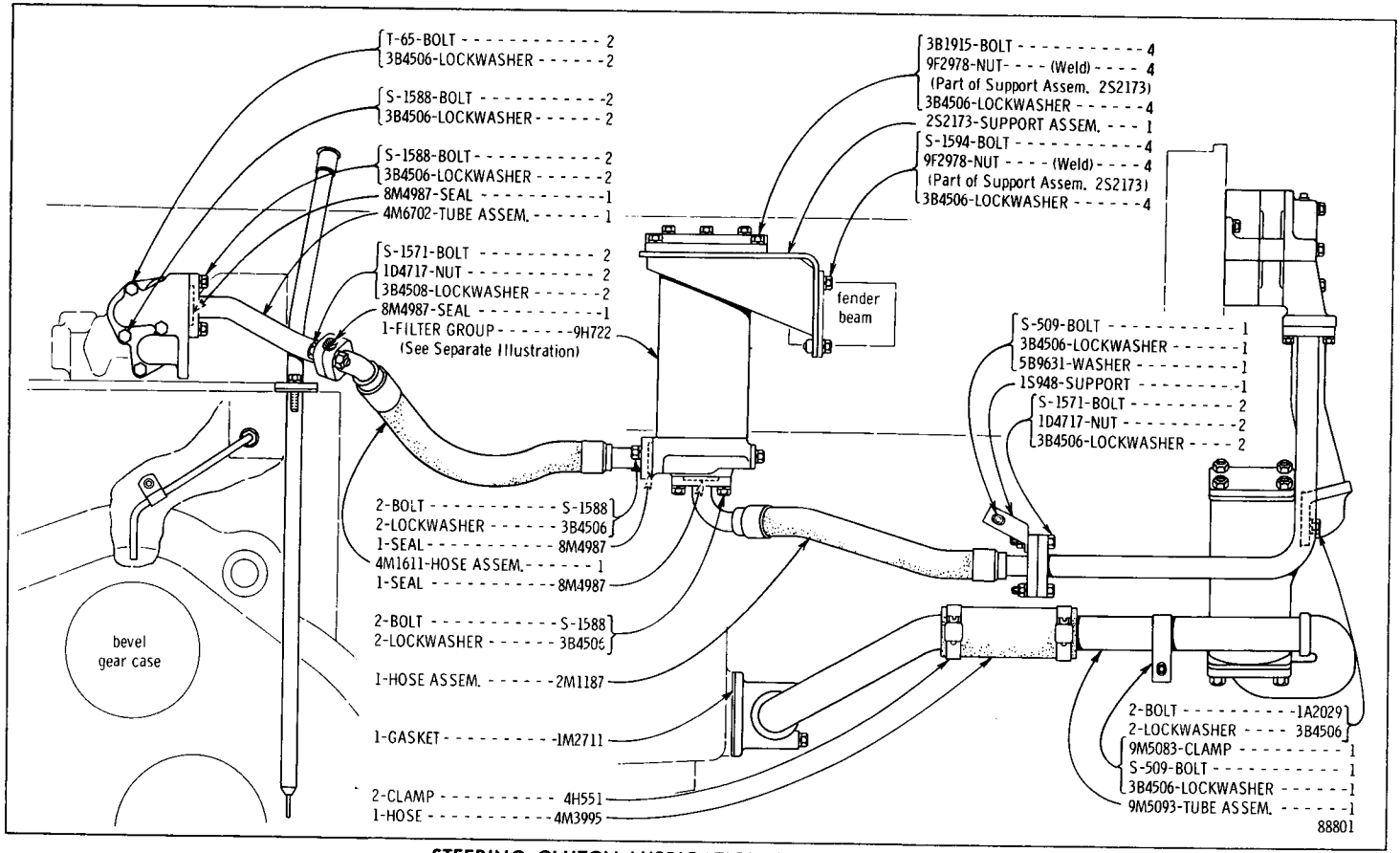

STEERING CLUTCH LUBRICATION SYSTEM—Side View

Effective with Serial No. 48A2428

9H722 Oil Filter Group parts are shown on Page 87. Additional parts are shown on reverse side of this insert

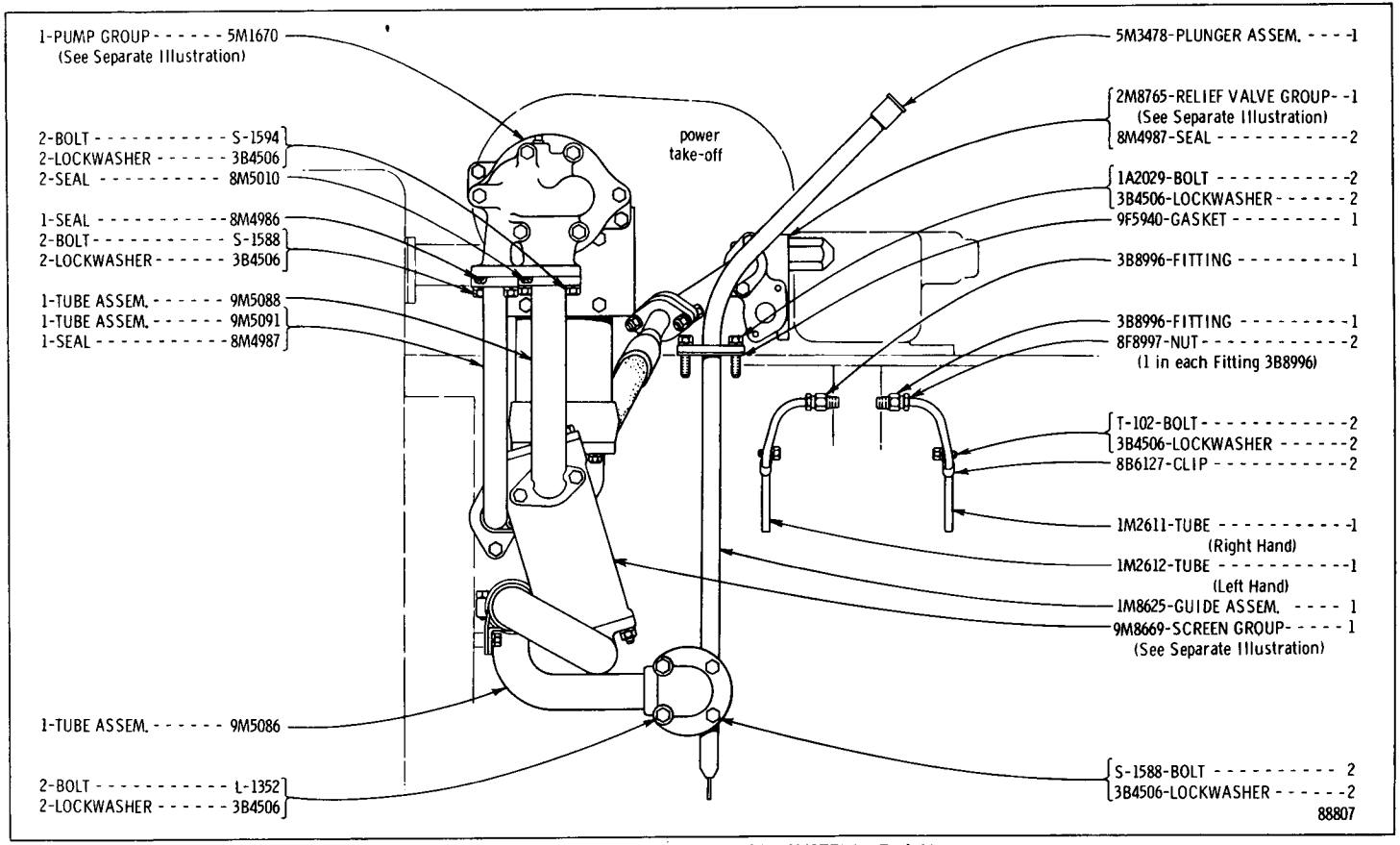

STEERING CLUTCH LUBRICATION SYSTEM—End View

Effective with Serial No. 48A2428

2M8765 Valve Group, 5M1670 Oil Pump Group and 9M8669 Magnetic Screen Group parts are shown on Pages 85 and 87 and on

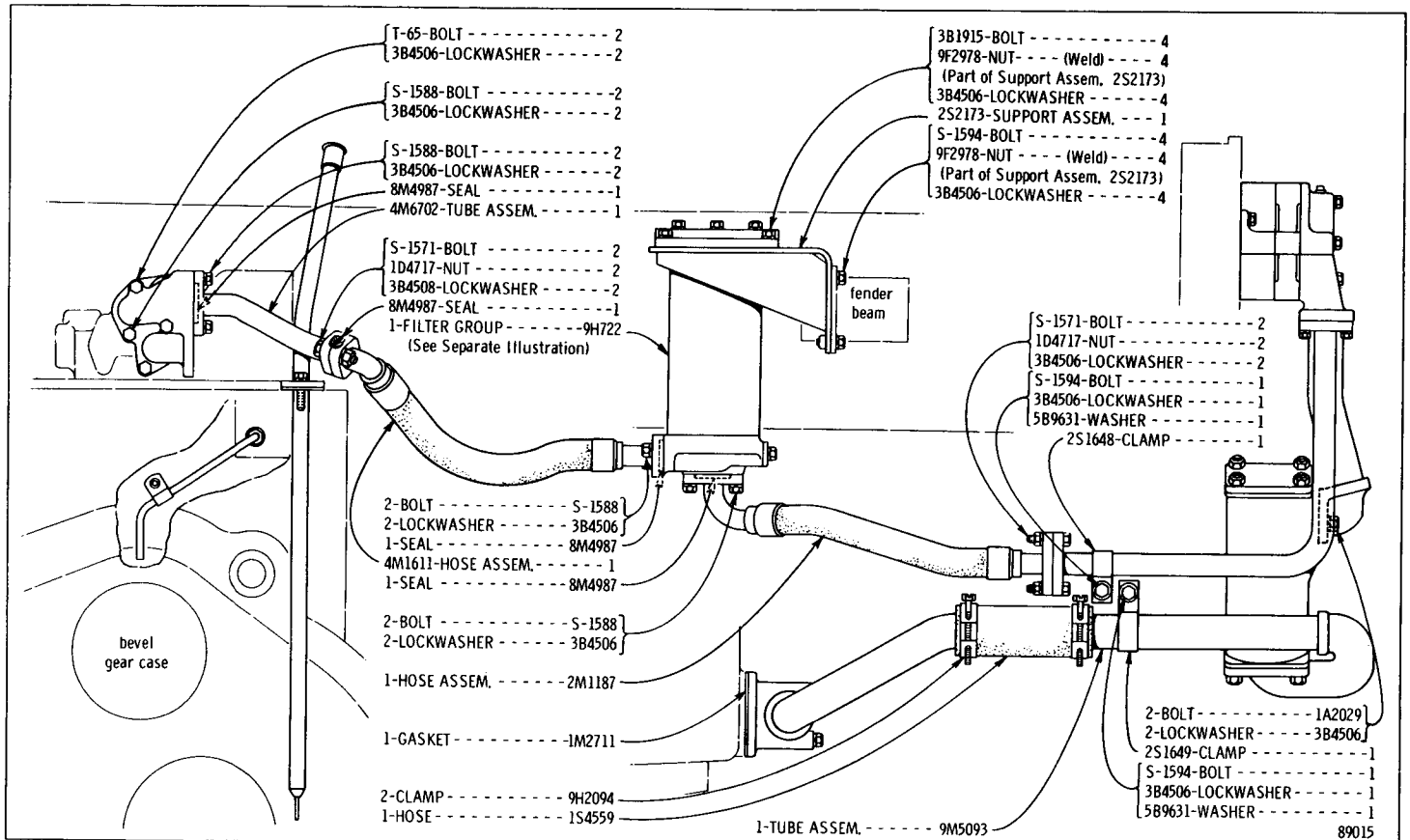

STEERING CLUTCH LUBRICATION SYSTEM—Side View

Effective with Serial No. 48A2956

9H722 Oil Filter Group parts are shown on Page 87 and on insert between Pages 86 and 87

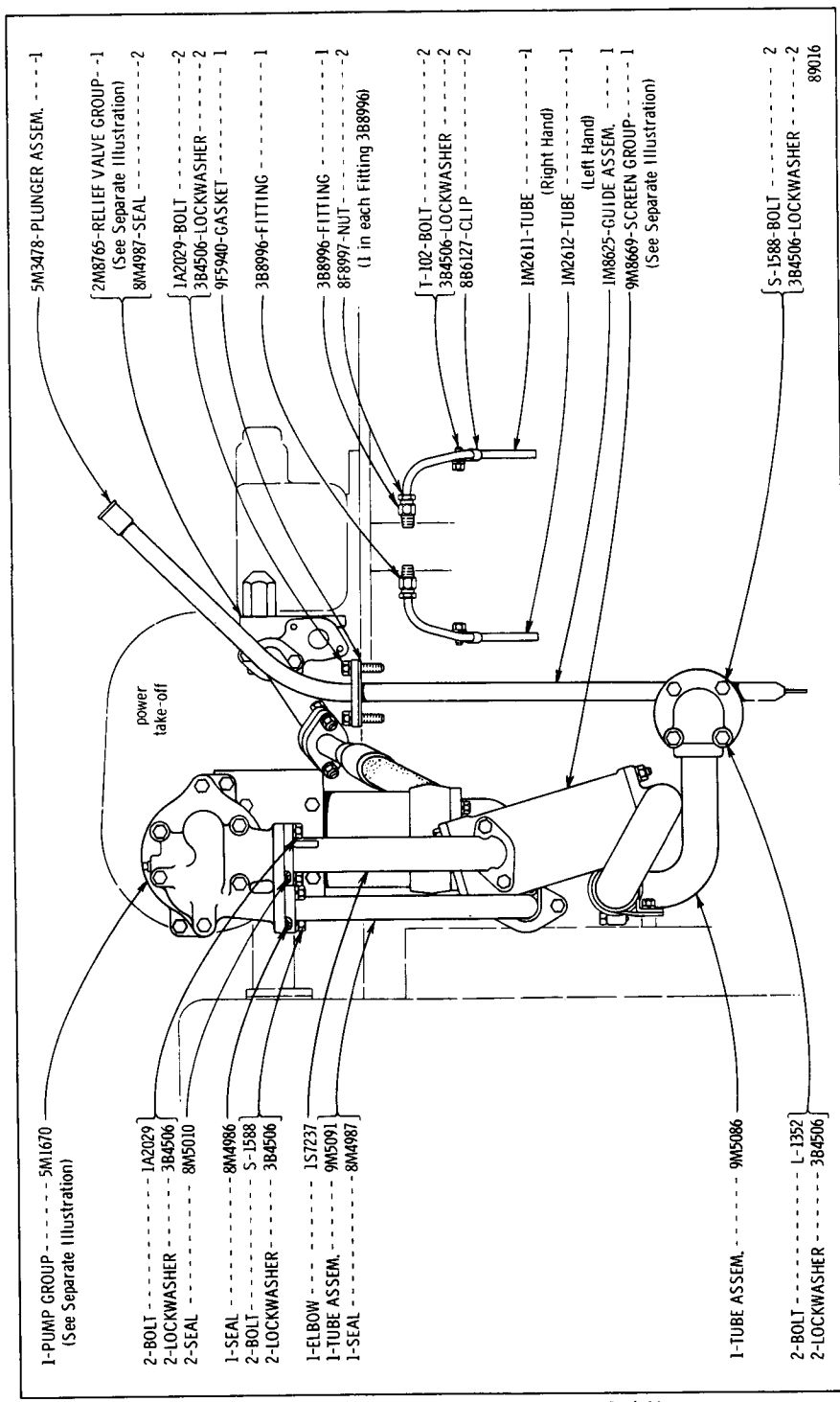

STEERING CLUTCH LUBRICATION SYSTEM—End View
Effective with Serial No. 48A2956
2M8765 Relief Valve Group, 5M1670 Oil Pump Group and 9M8669 Magnetic Screen Group parts are shown on Page 85, 87 and on insert between Pages 86 and 87

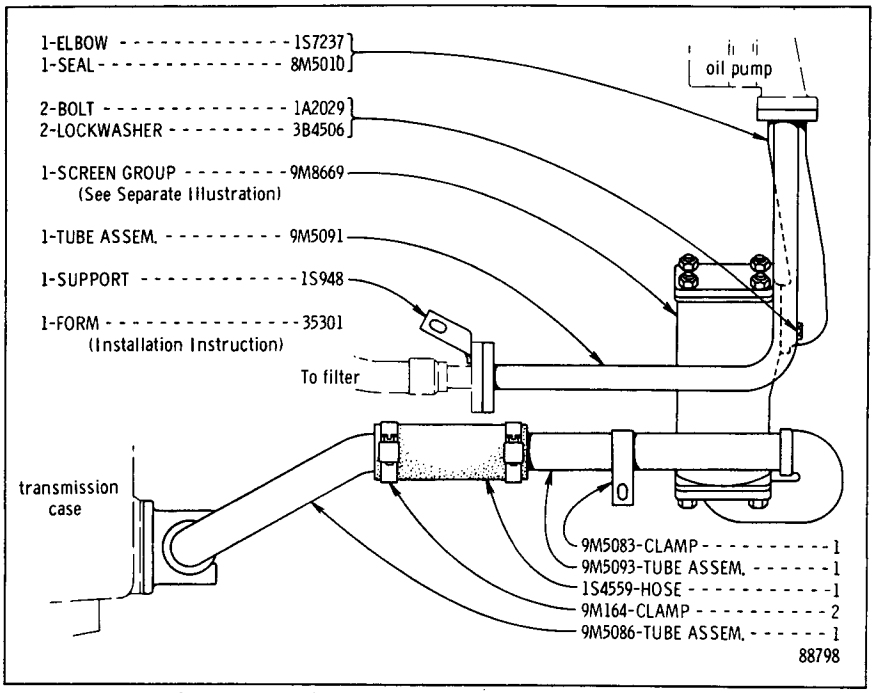

2S2579 MAGNETIC SCREEN GROUP—Field Installation
Serial No. 48A1 to 48A2427 inclusive

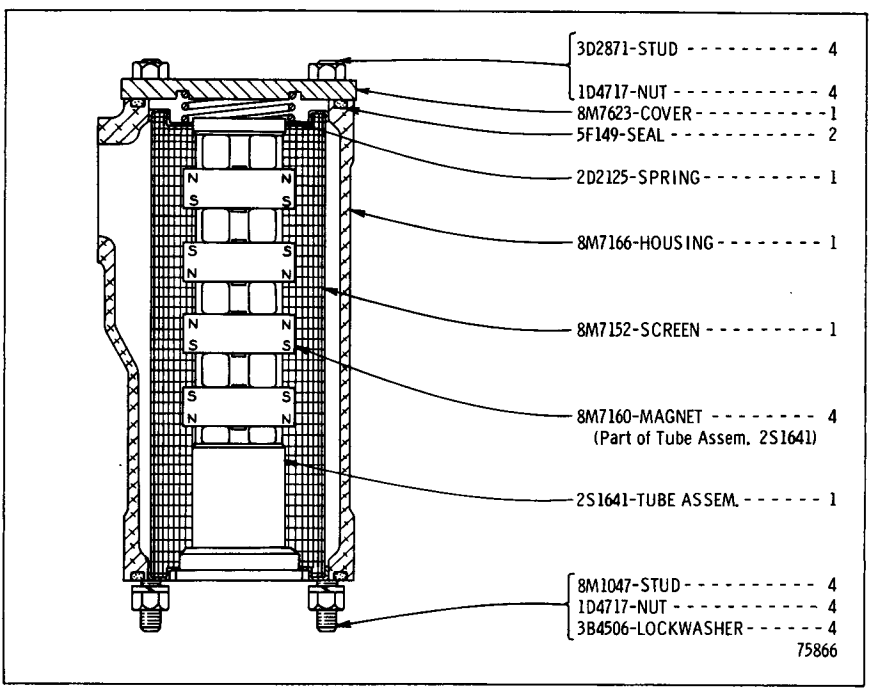

9M8669 MAGNETIC SCREEN GROUP
Part of 2S2579 Magnetic Screen Group and Steering Clutch Lubrication System shown above and on front side of this insert

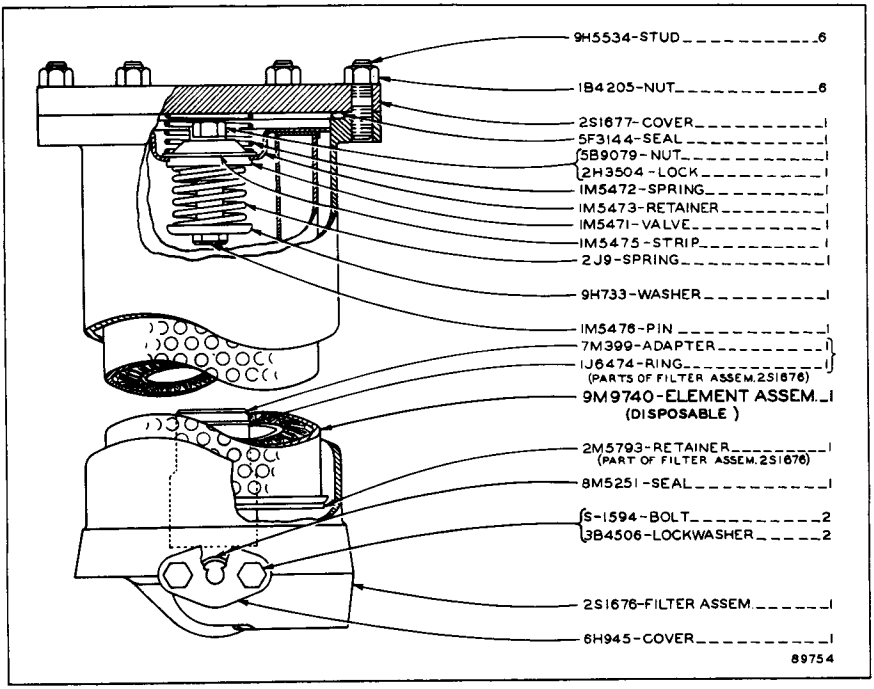

9H722 OIL FILTER GROUP

Effective with Serial No. 48A3333

Part of Steering Clutch Lubrication System shown on insert between Pages 86 and 87

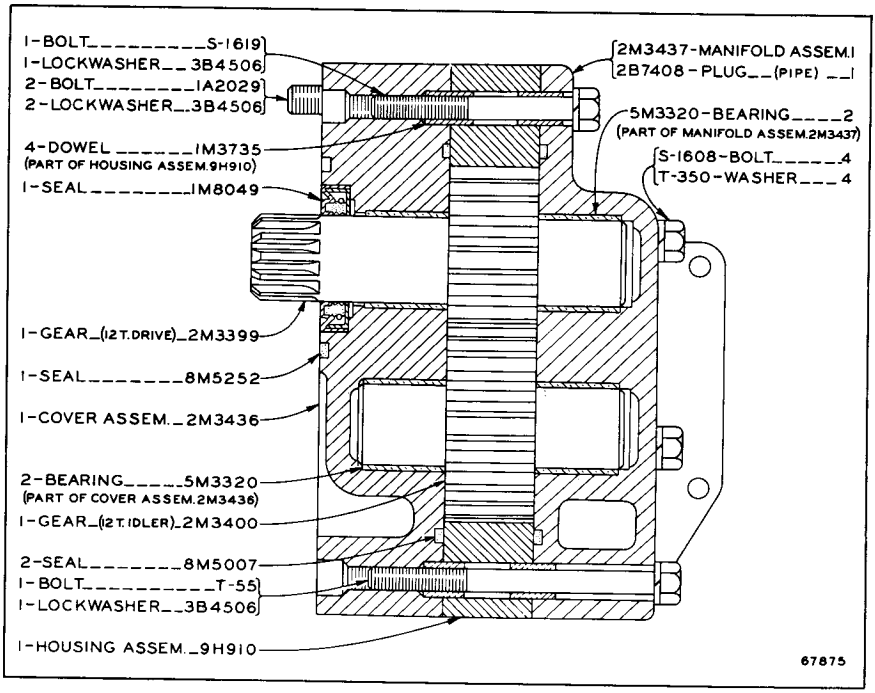

5M1670 OIL PUMP GROUP—Top View
Part of Steering Clutch Lubrication System

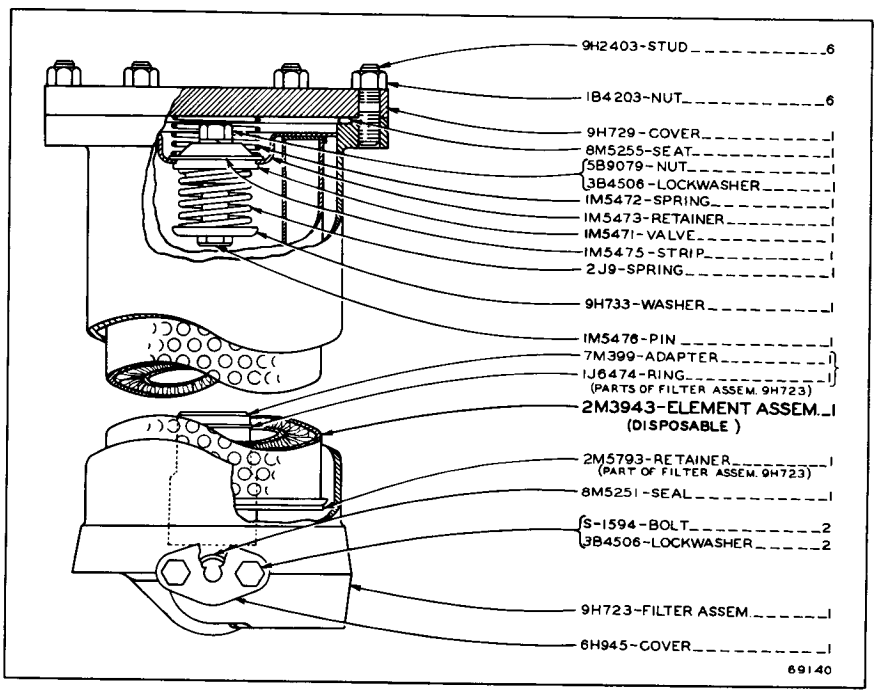

9H722 OIL FILTER GROUP
Part of Steering Clutch Lubrication System

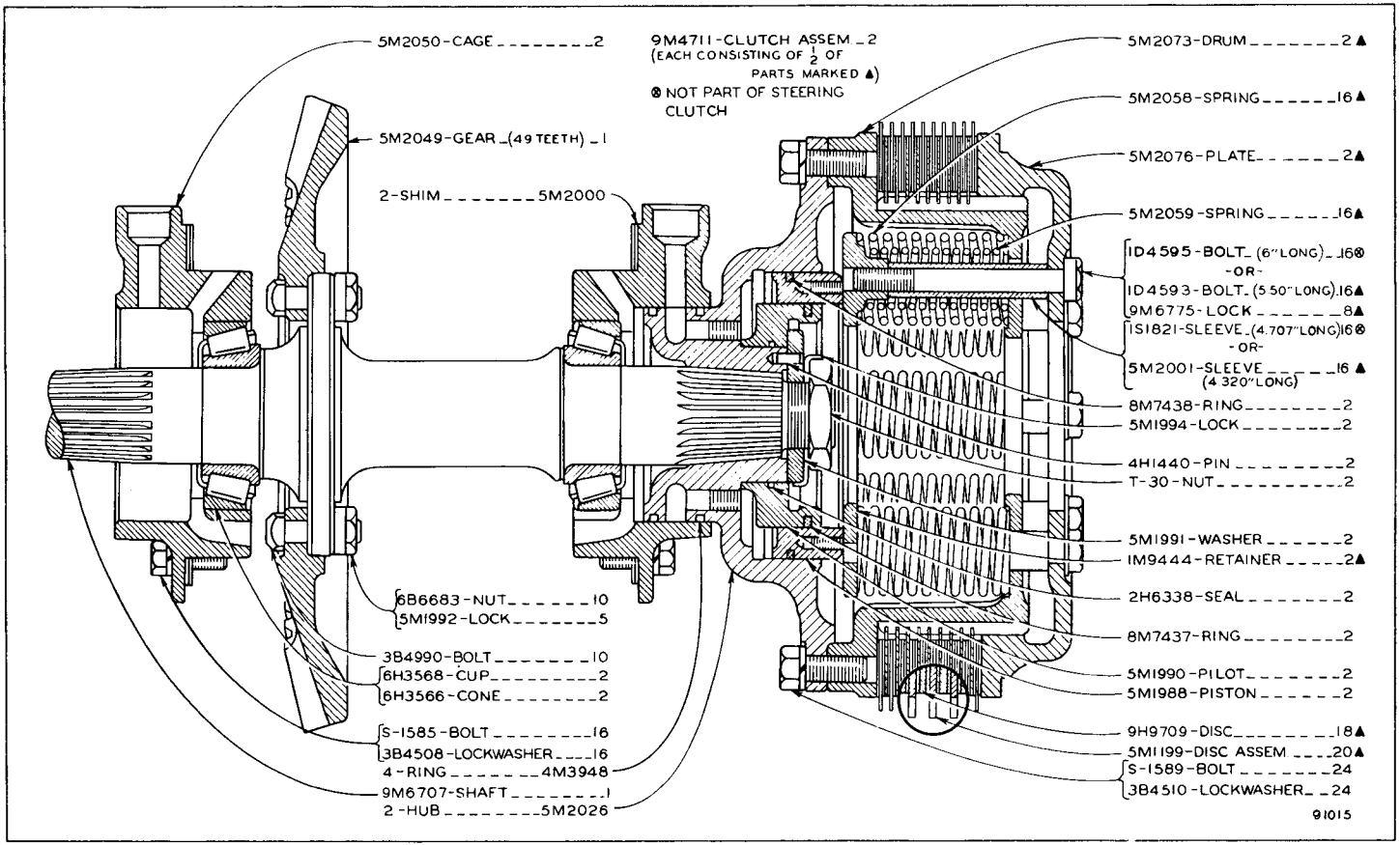

OIL STEERING CLUTCH

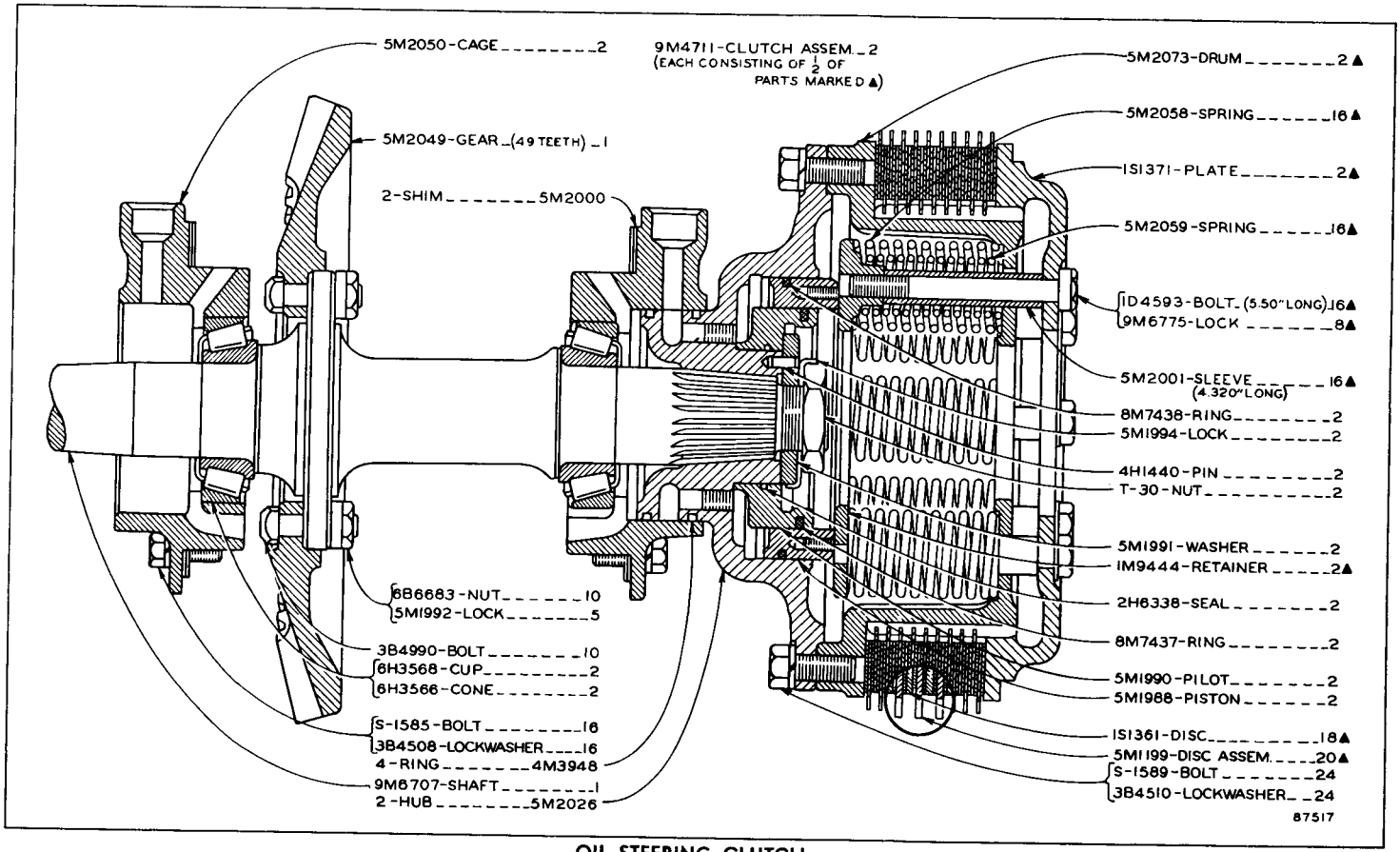

OIL STEERING CLUTCH
Effective with Serial No. 48A2538

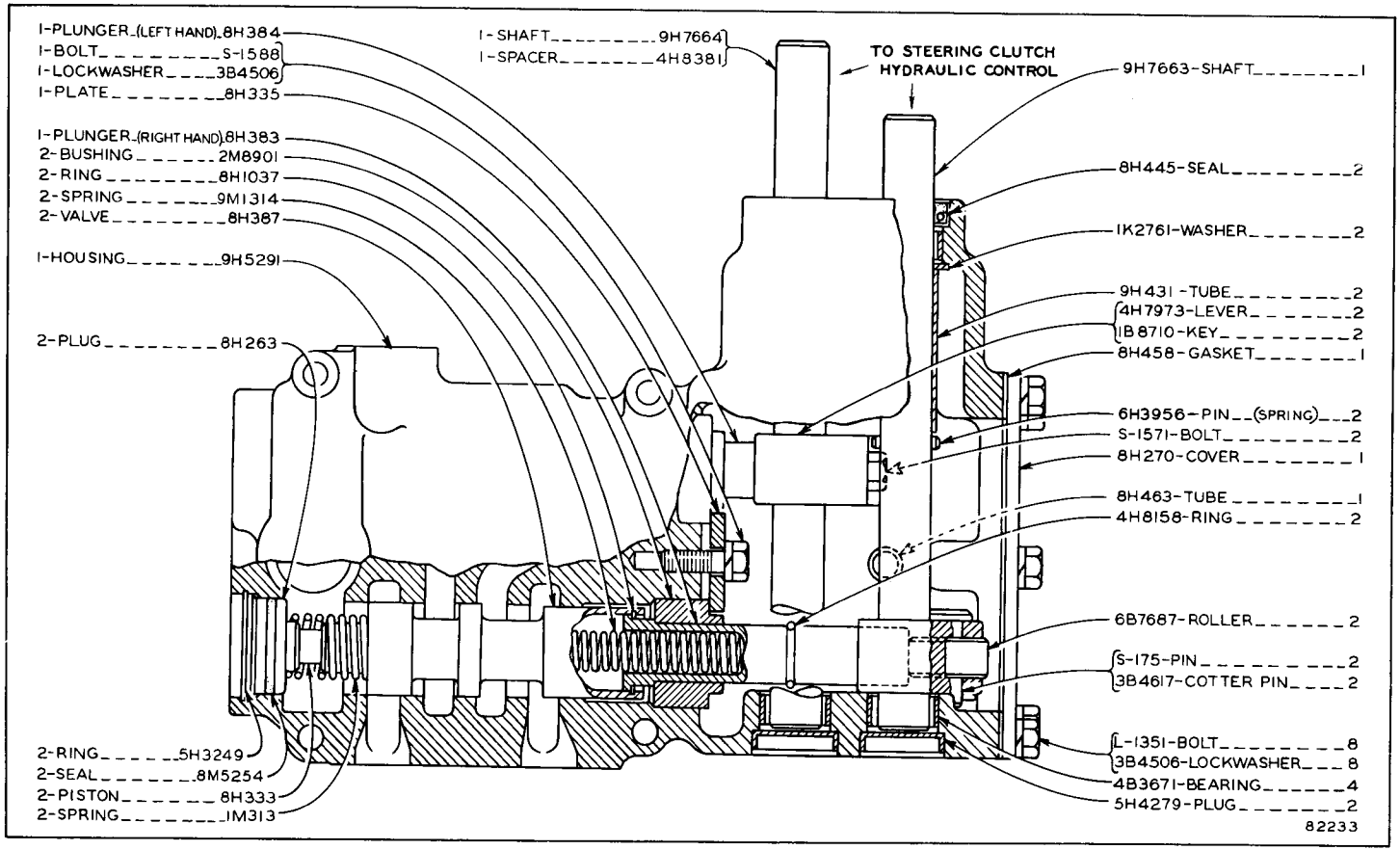

9H5376 VALVE GROUP—Top View

Part of Steering Clutch Hydraulic Control shown on Page 90

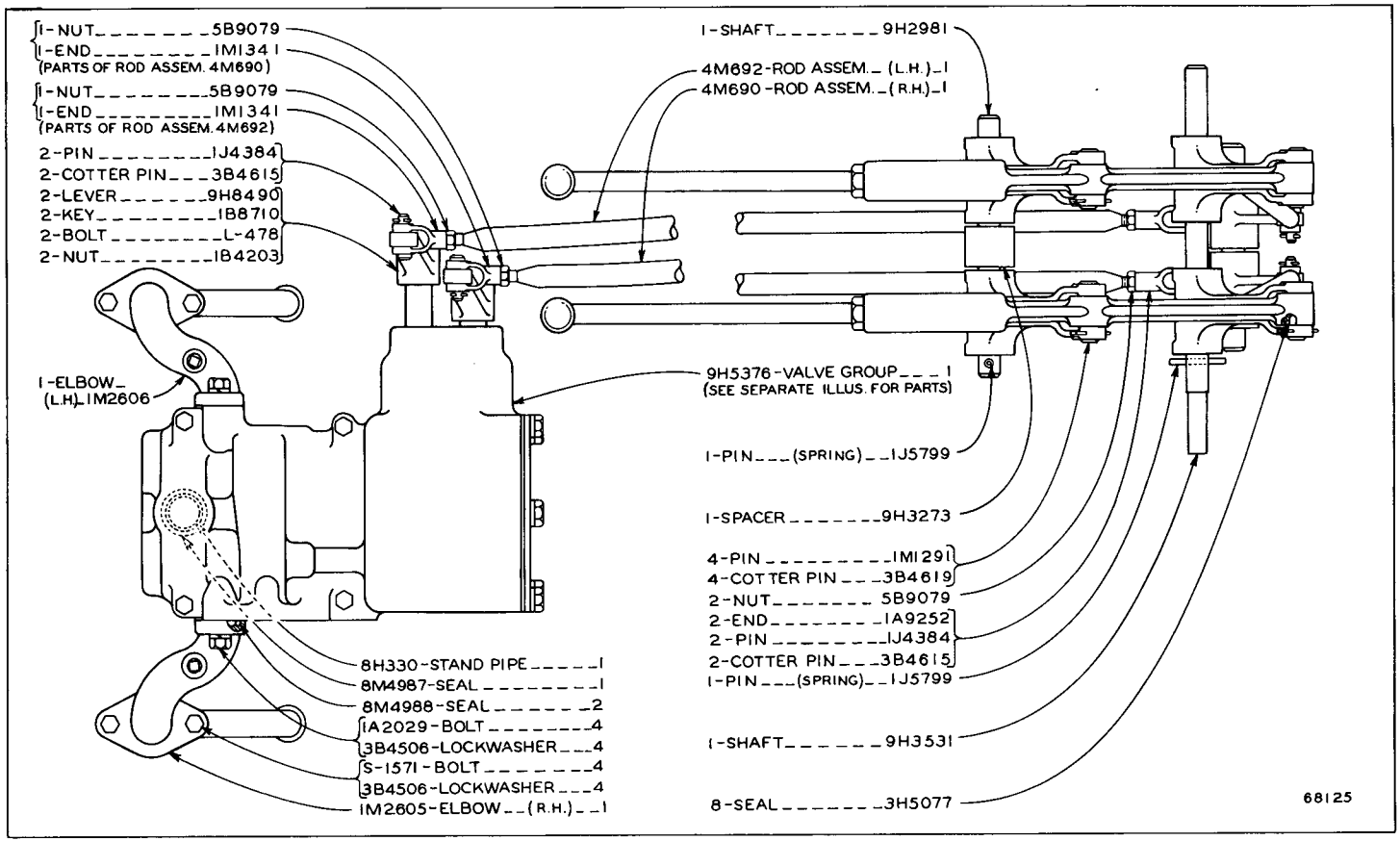

STEERING CLUTCH HYDRAULIC CONTROL—Top View

9H5376 Valve Group parts are shown on Page 89

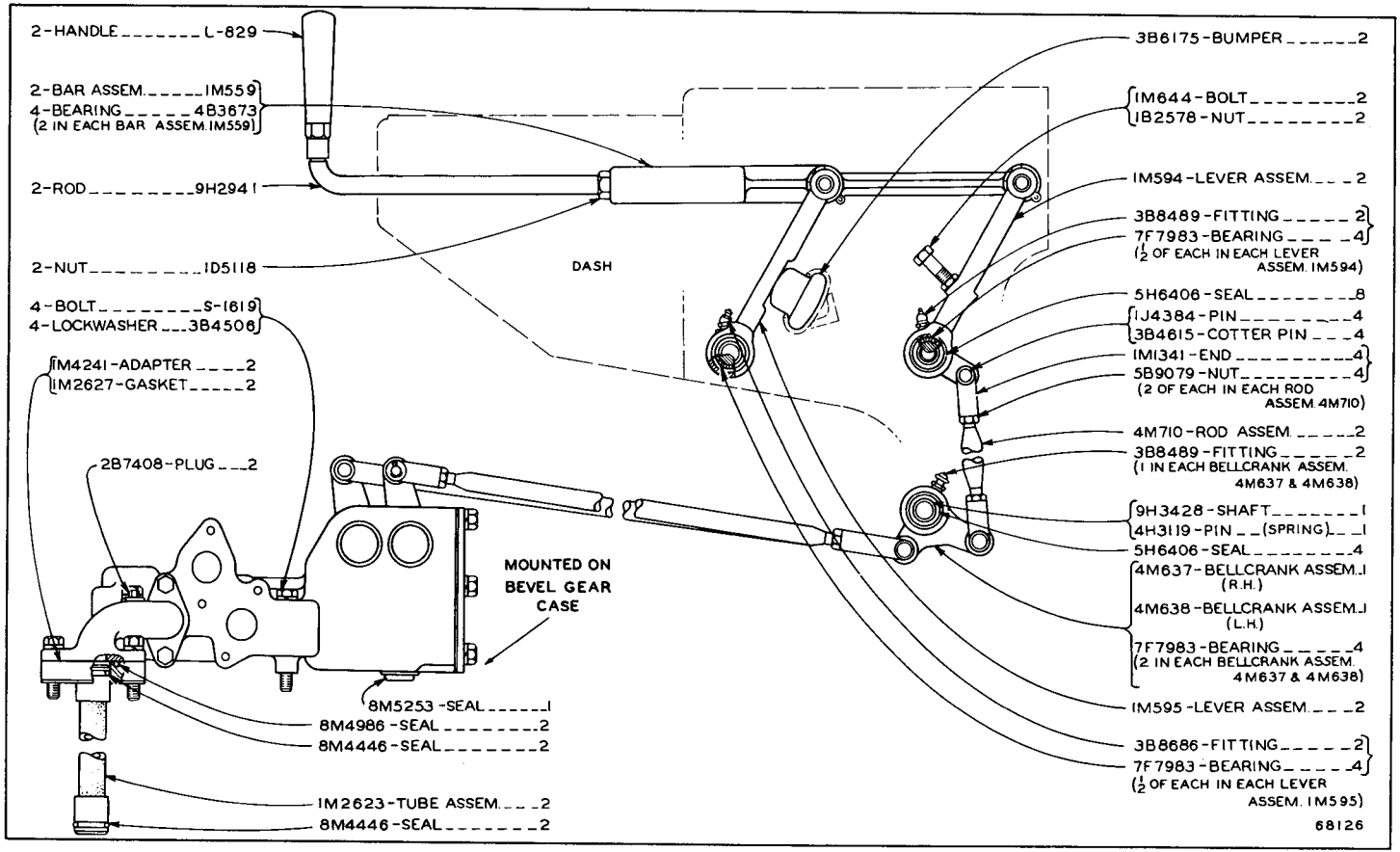

STEERING CLUTCH HYDRAULIC CONTROL—Side View

ONLY "CATERPILLAR" PARTS GIVE "CATERPILLAR" PERFORMANCE

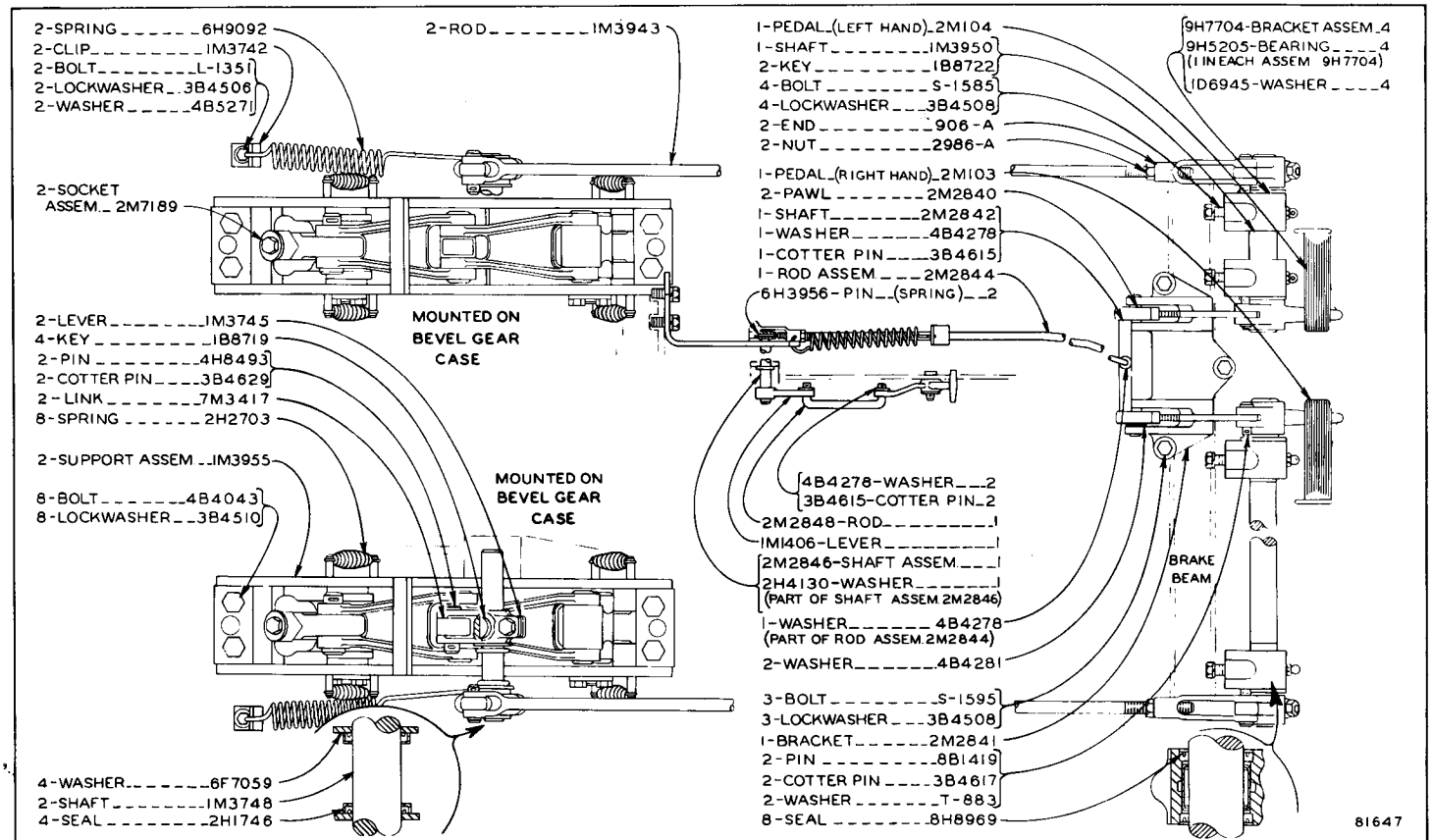

BRAKES—Top View

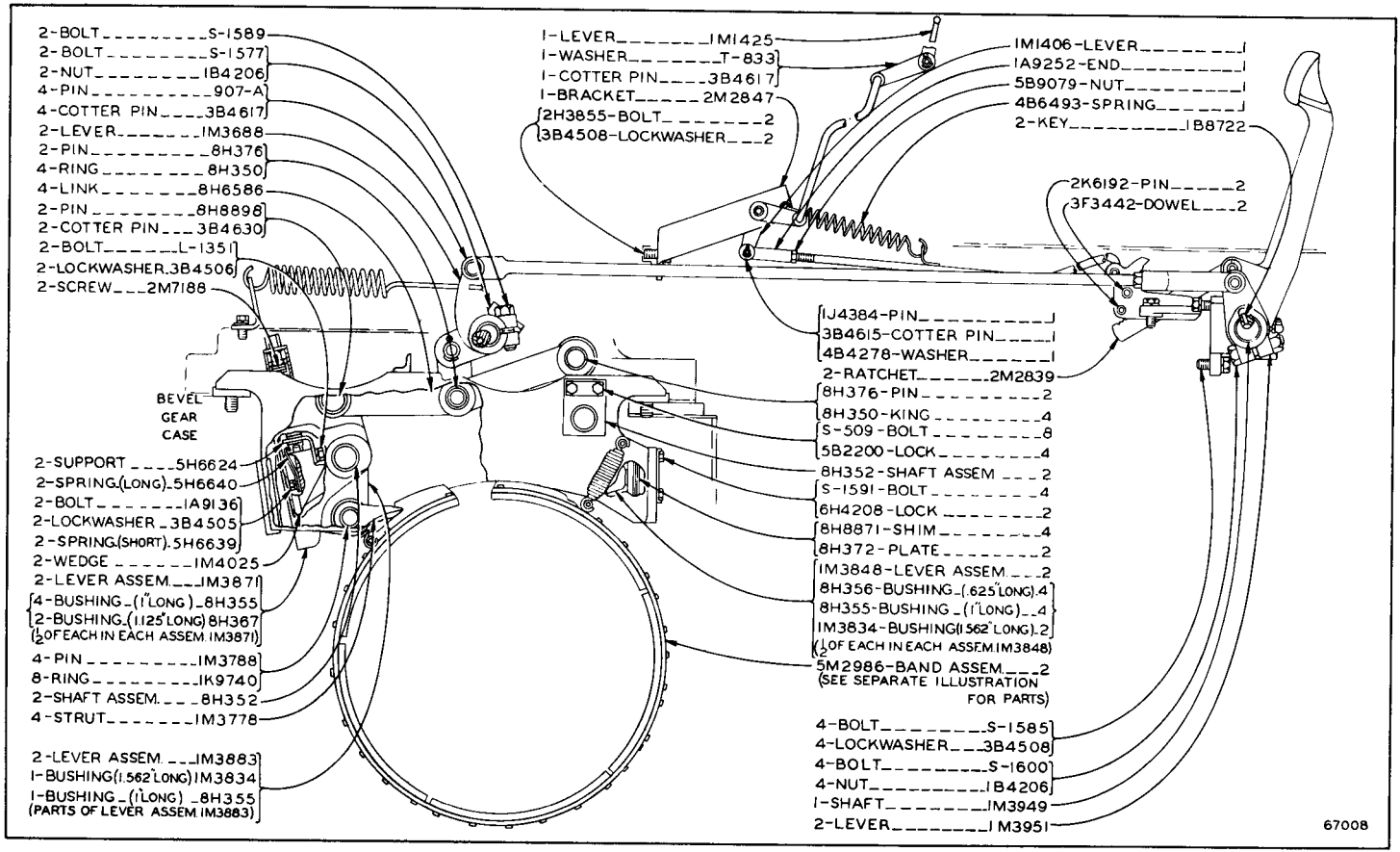

BRAKES—Side View

5M2986 Band Assembly parts are shown on Page 94

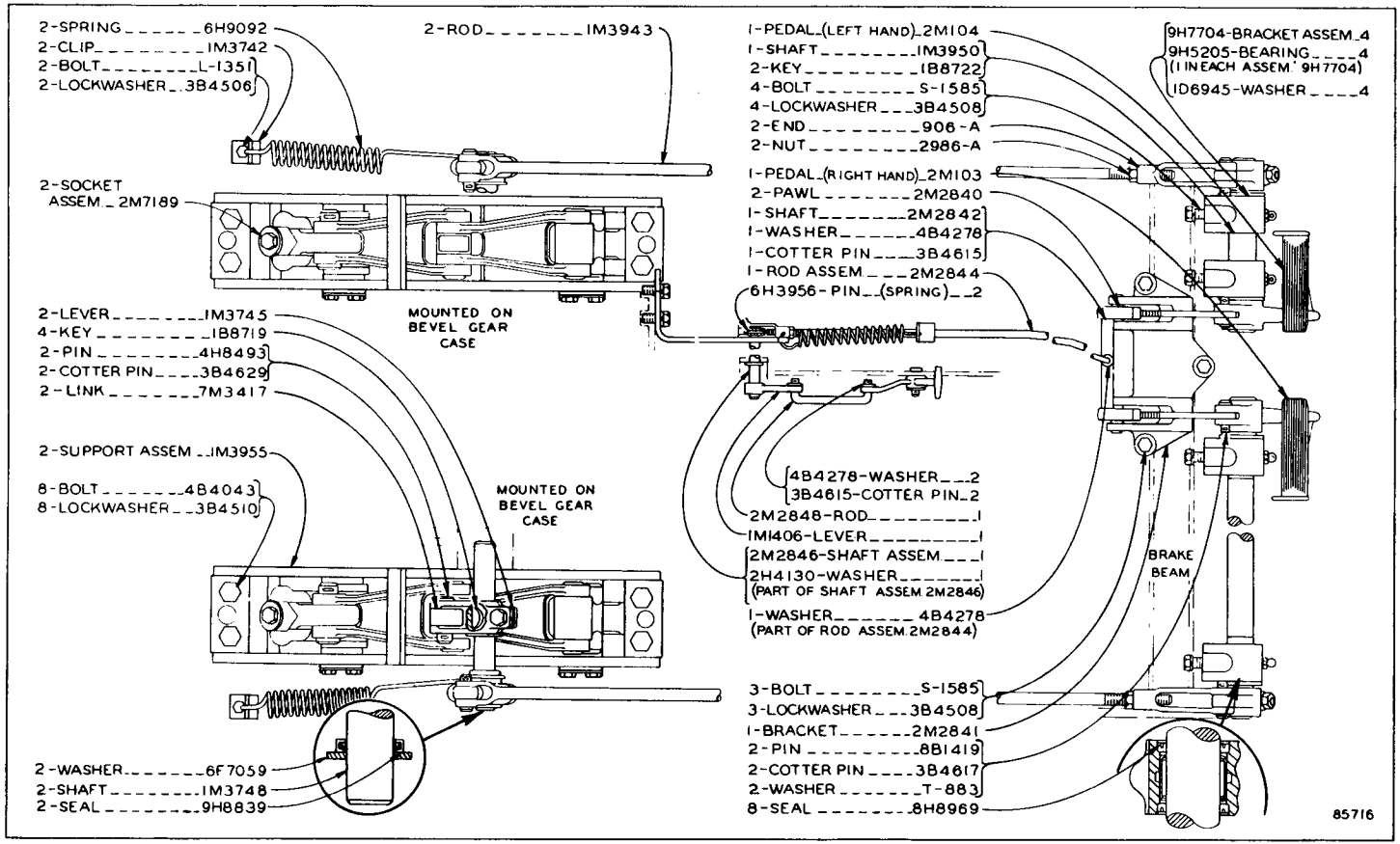

BRAKES—Top View
Effective with Serial No. 48A646

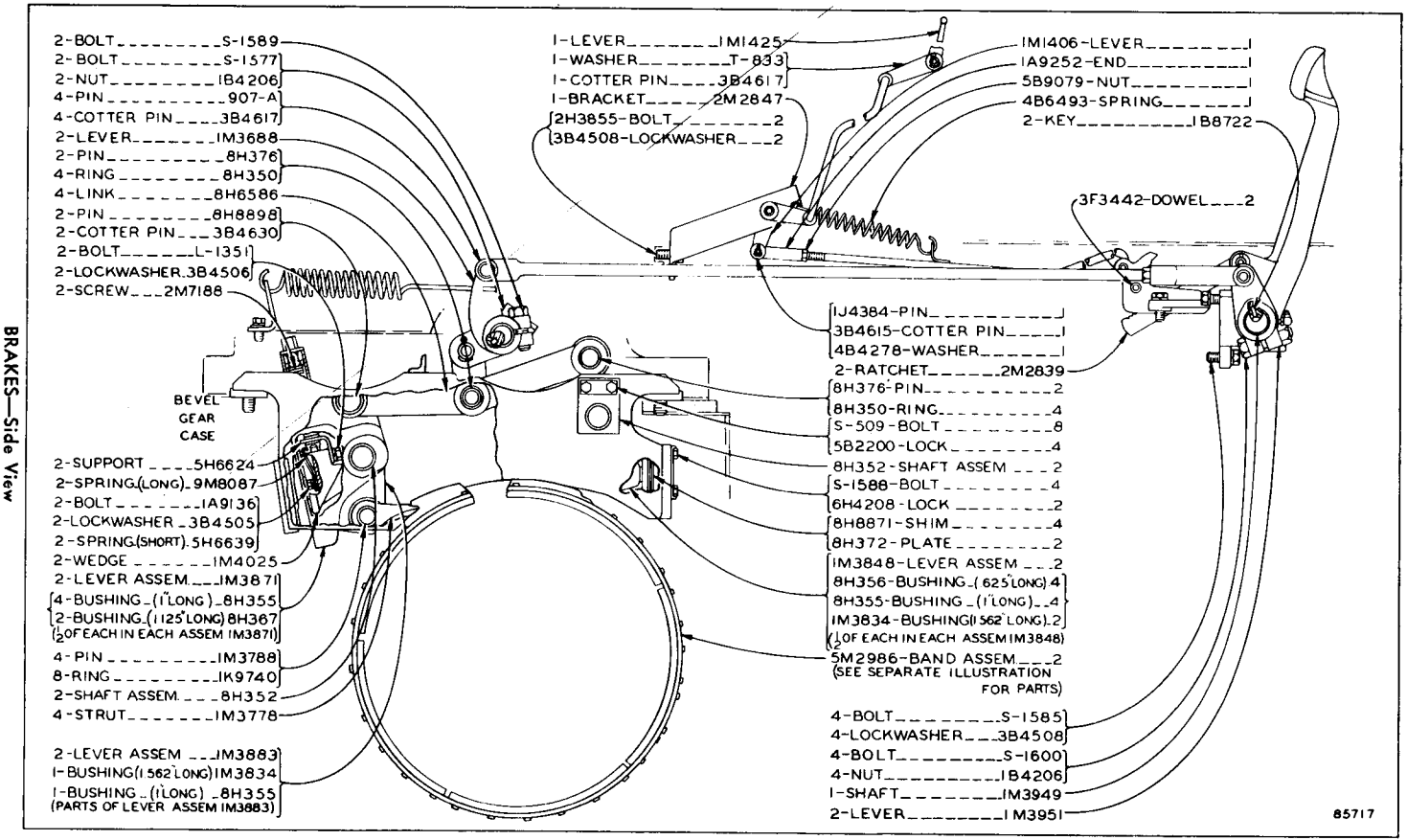

BRAKES—Side View
Effective with Serial No. 48A646
5M2986 Brake Band Assembly parts are shown on insert between Pages 94 & 95

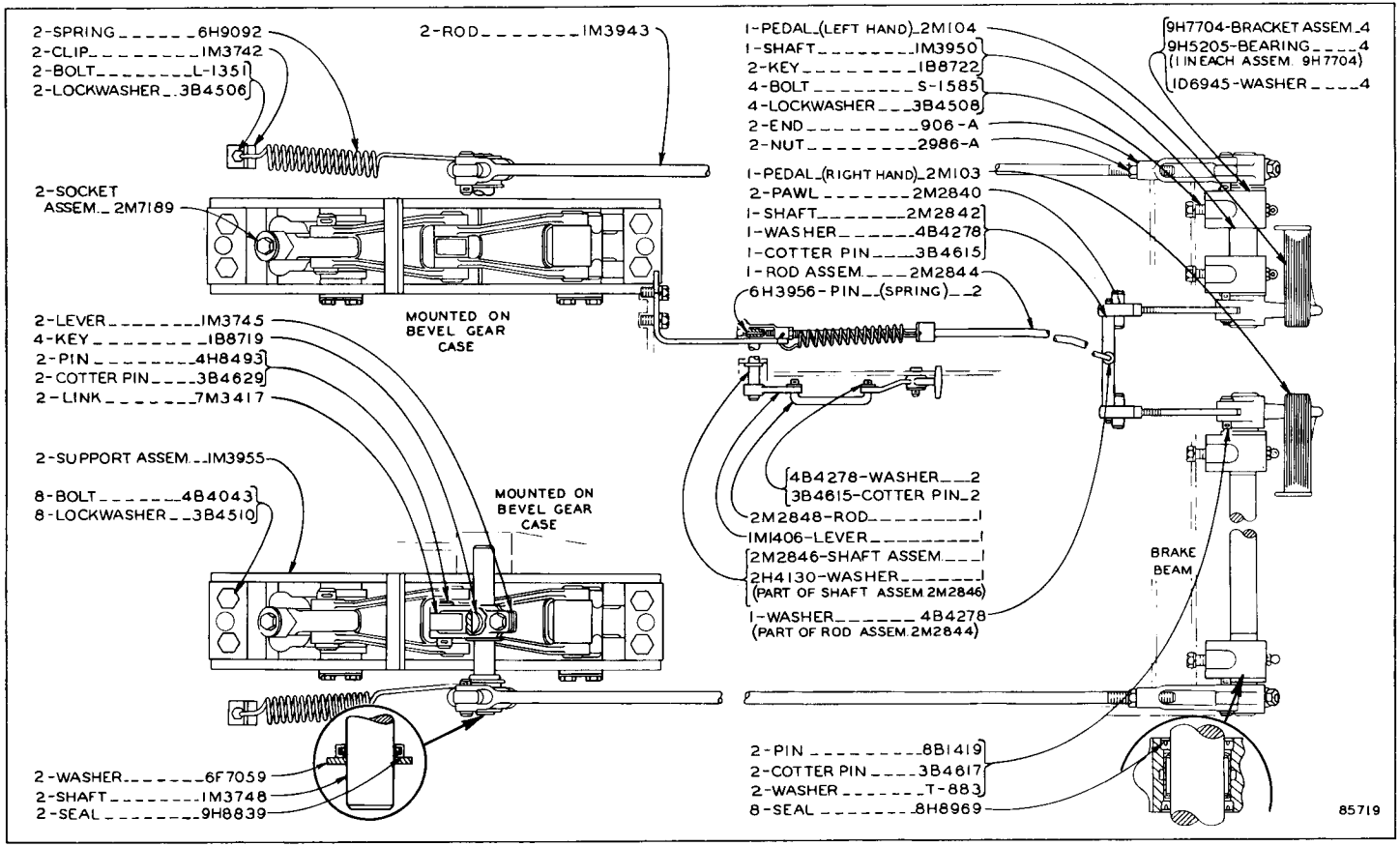

BRAKES—Top View
Effective with Serial No. 48A2337
Additional parts are shown on reverse side of this insert

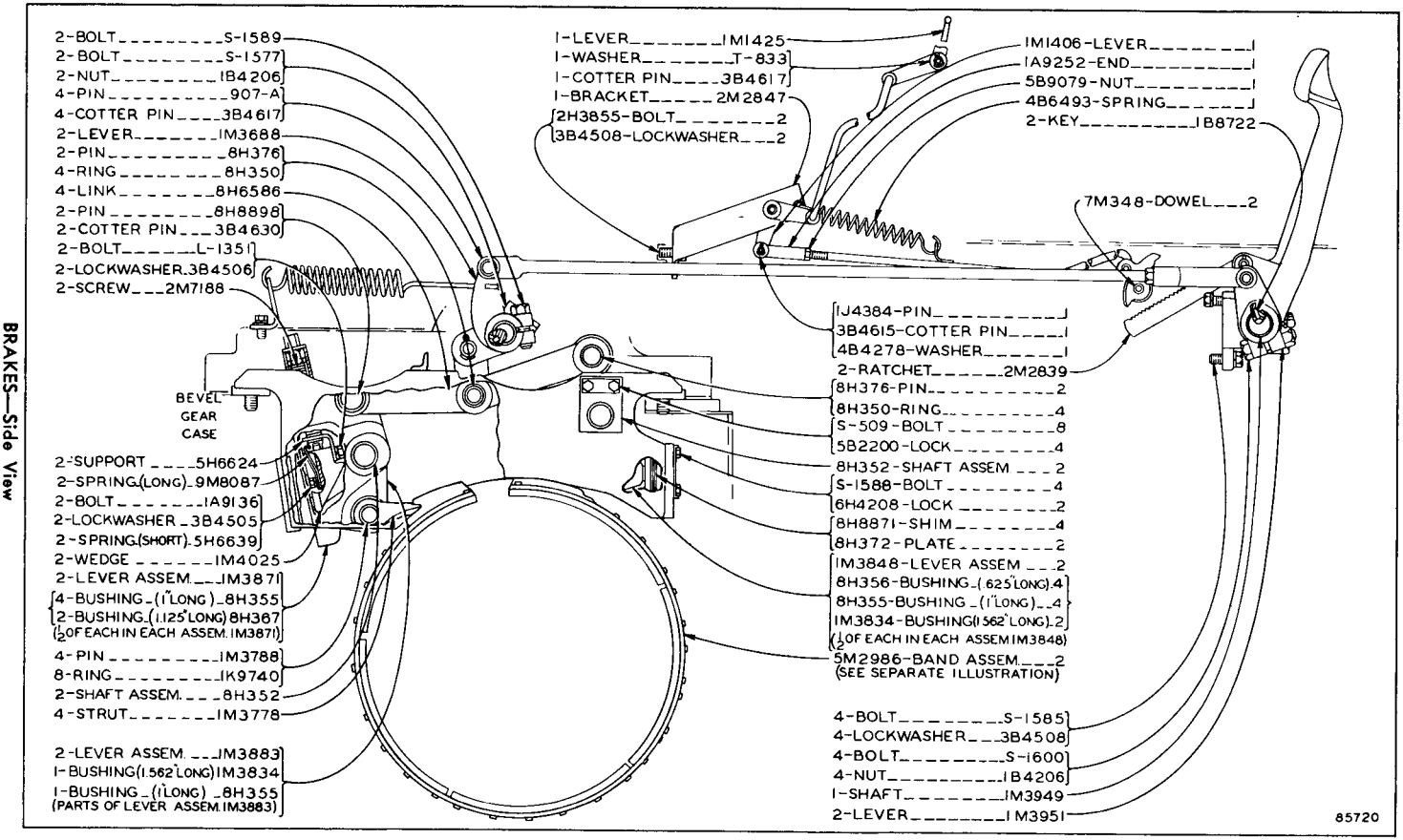

BRAKES—Side View
Effective with Serial No. 48A2337
5M2986 Brake Band Assembly parts are shown on insert between Pages 94 & 95

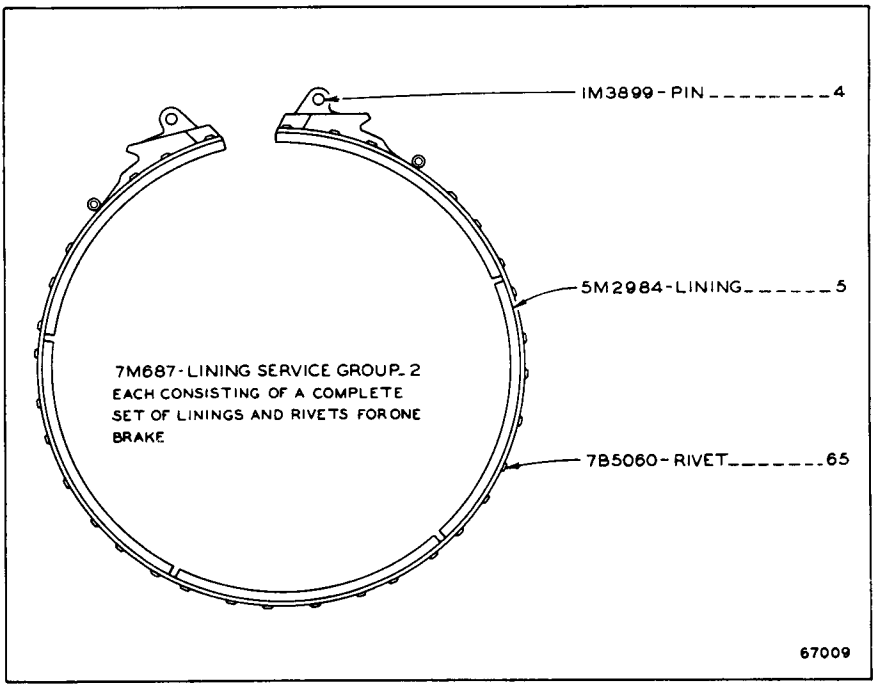

5M2986 BAND ASSEMBLY—2 Required
Part of Brakes shown on Page 93

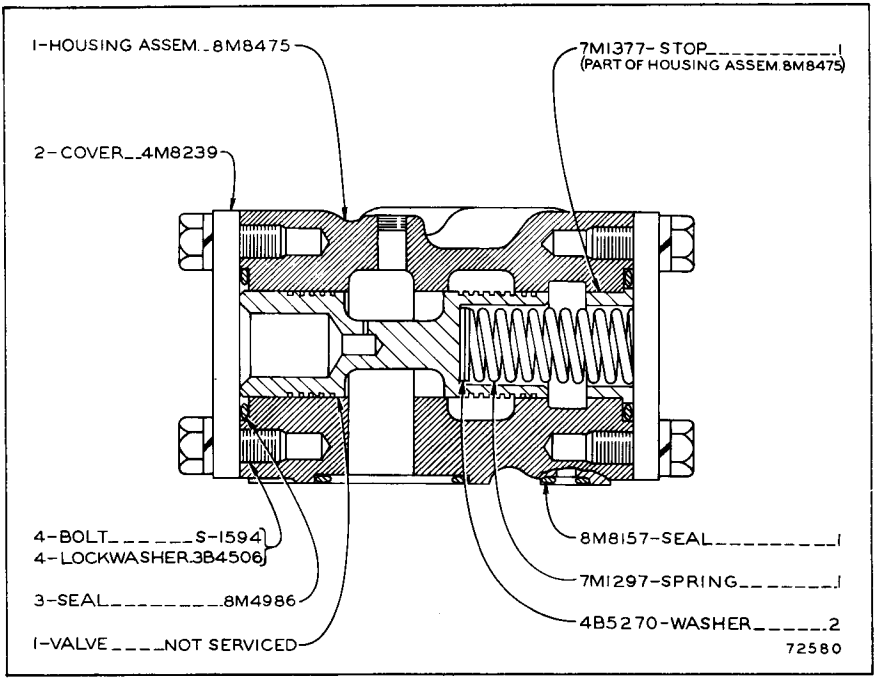

7M1220 RELIEF VALVE GROUP

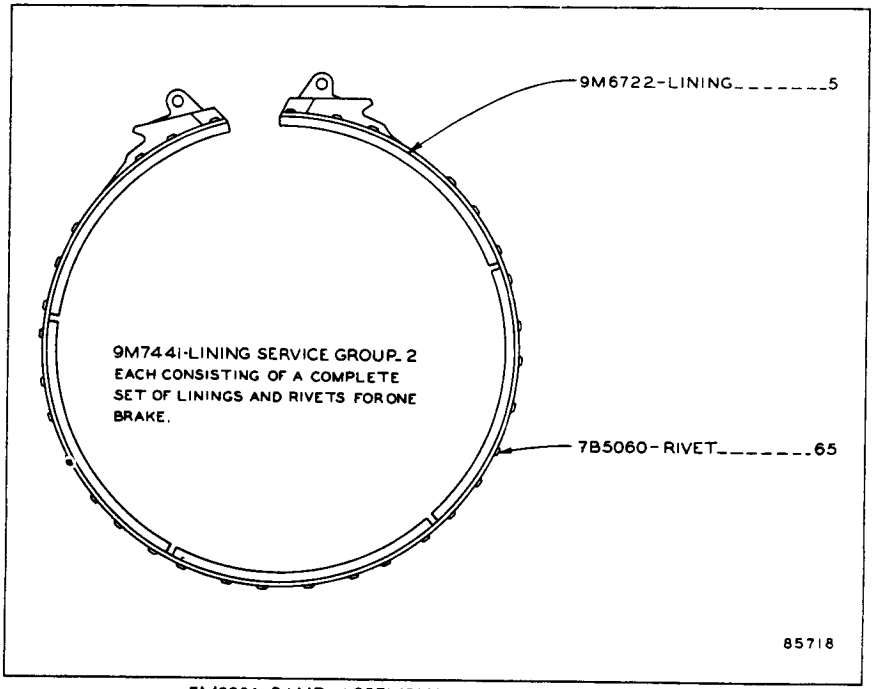

5M2986 BAND ASSEMBLY—2 Assemblies Required
Effective with Serial No. 48A646
Part of Brakes shown on insert between Pages 92 & 93

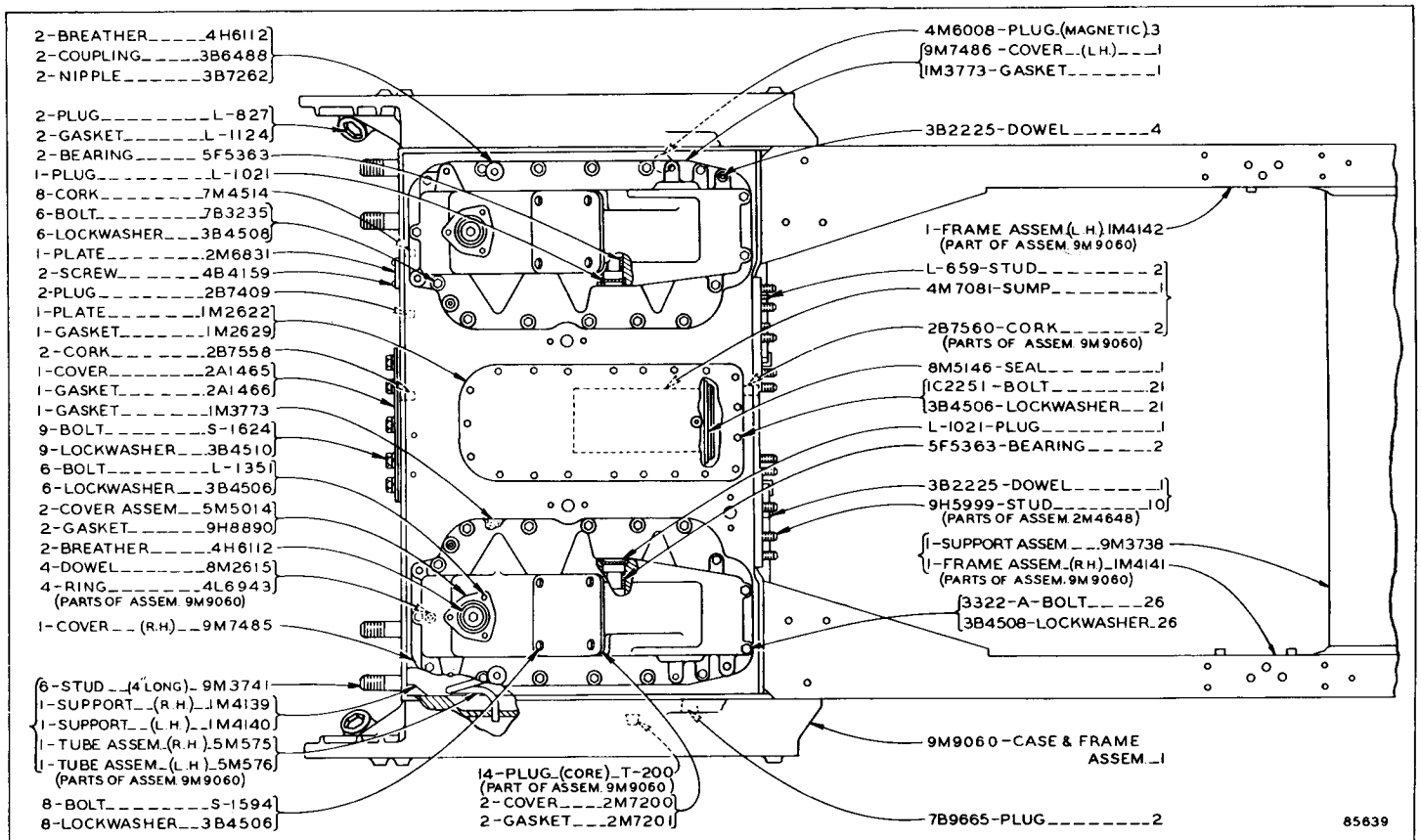

BEVEL GEAR CASE AND COVERS—Top View
Effective with Serial No. 48A2209

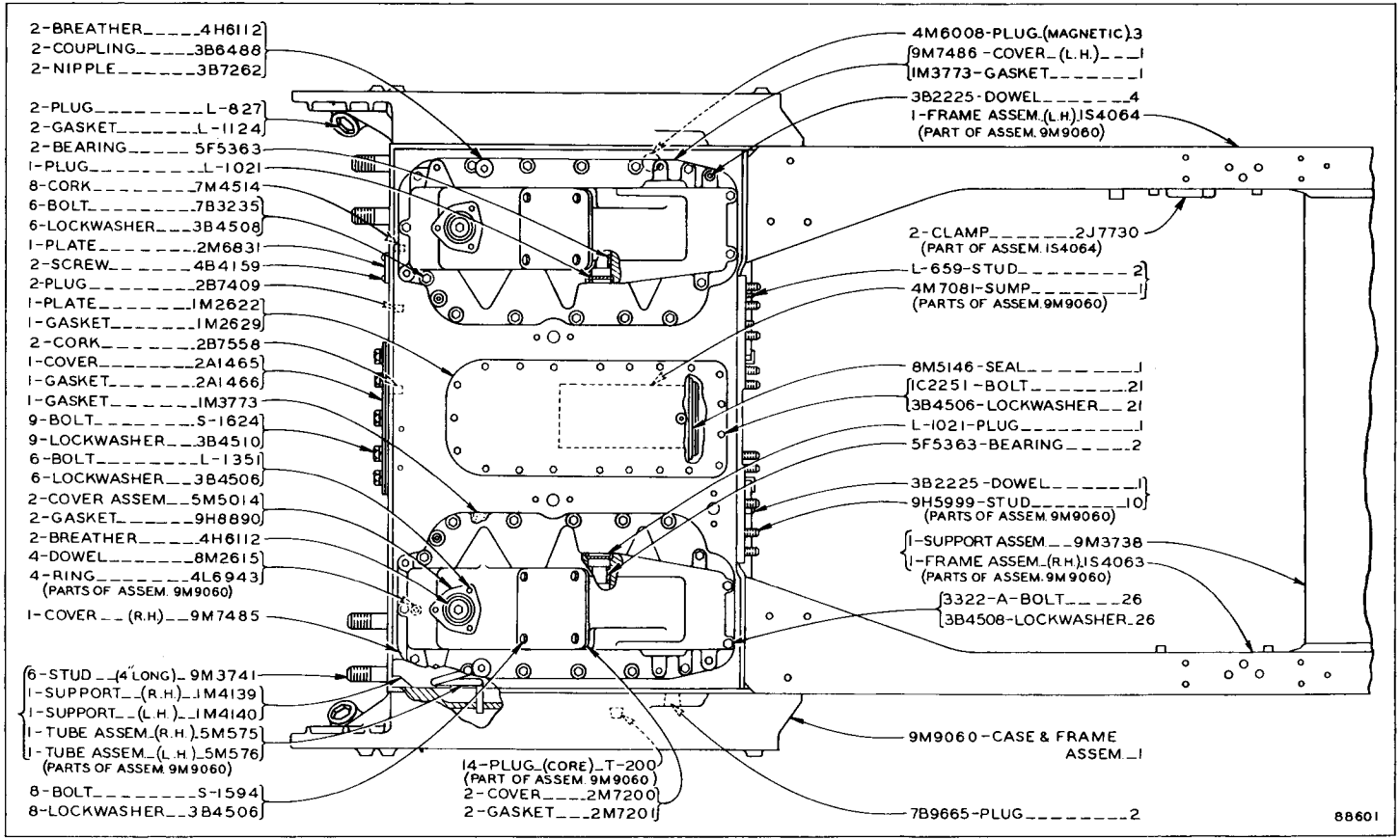

BEVEL GEAR CASE AND COVERS—Top View
Effective with Serial No. 48A2812

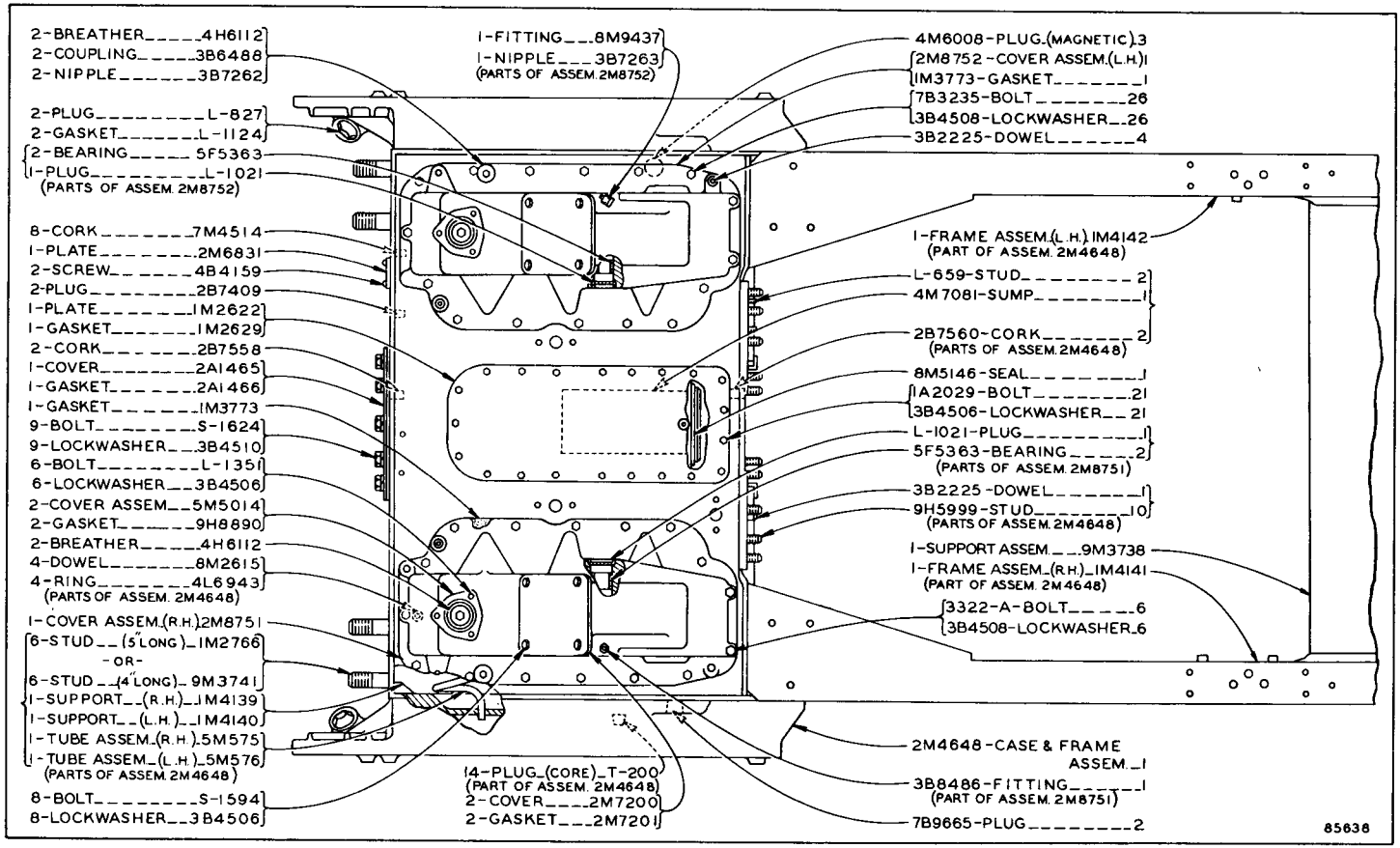

BEVEL GEAR CASE AND COVERS—Top View

ONLY "CATERPILLAR" PARTS GIVE "CATERPILLAR" PERFORMANCE

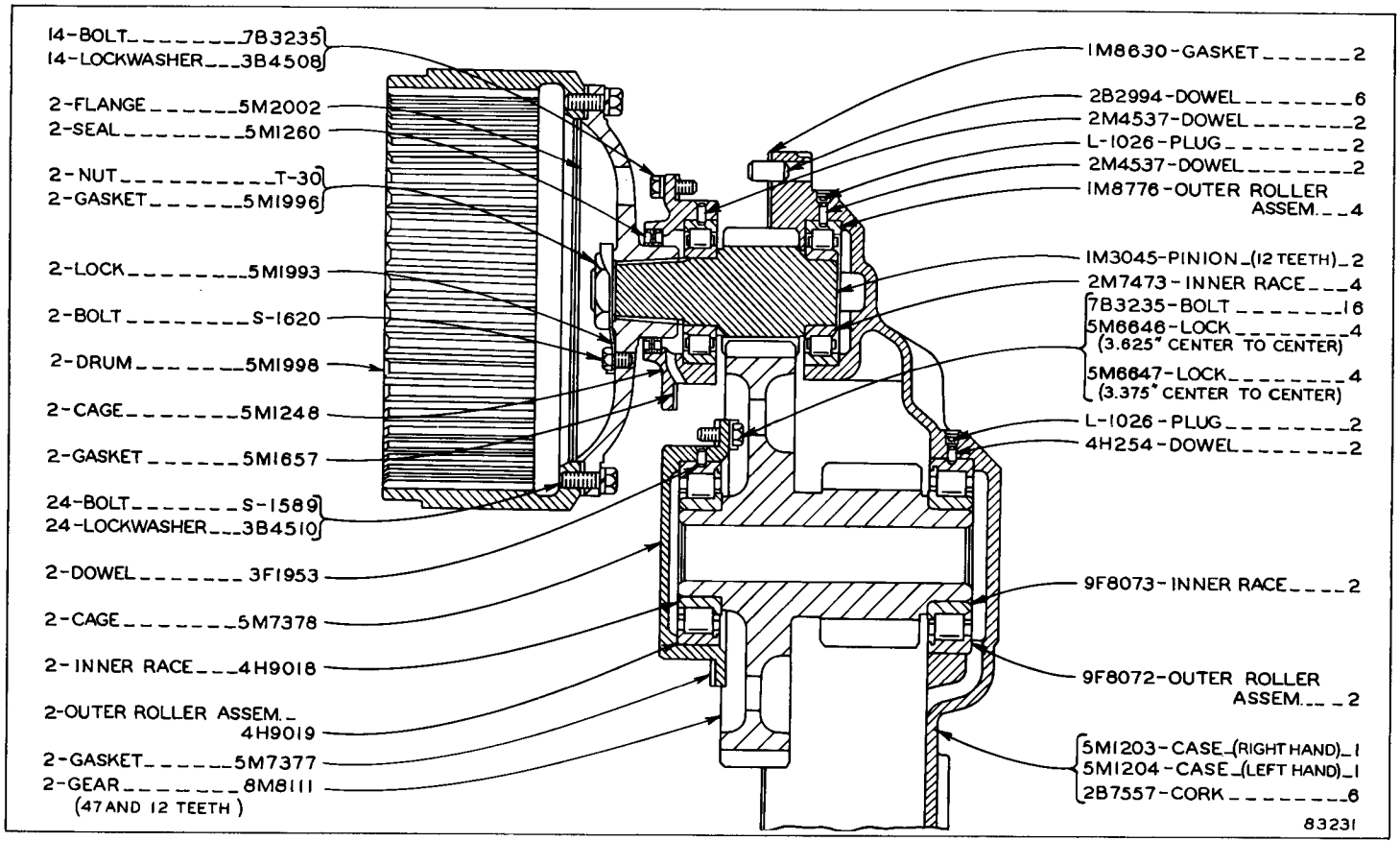

FINAL DRIVE—Part One

Note: Quantities shown are those required for both R.H. and L.H. sides
Refer also to Page 128 for special parts

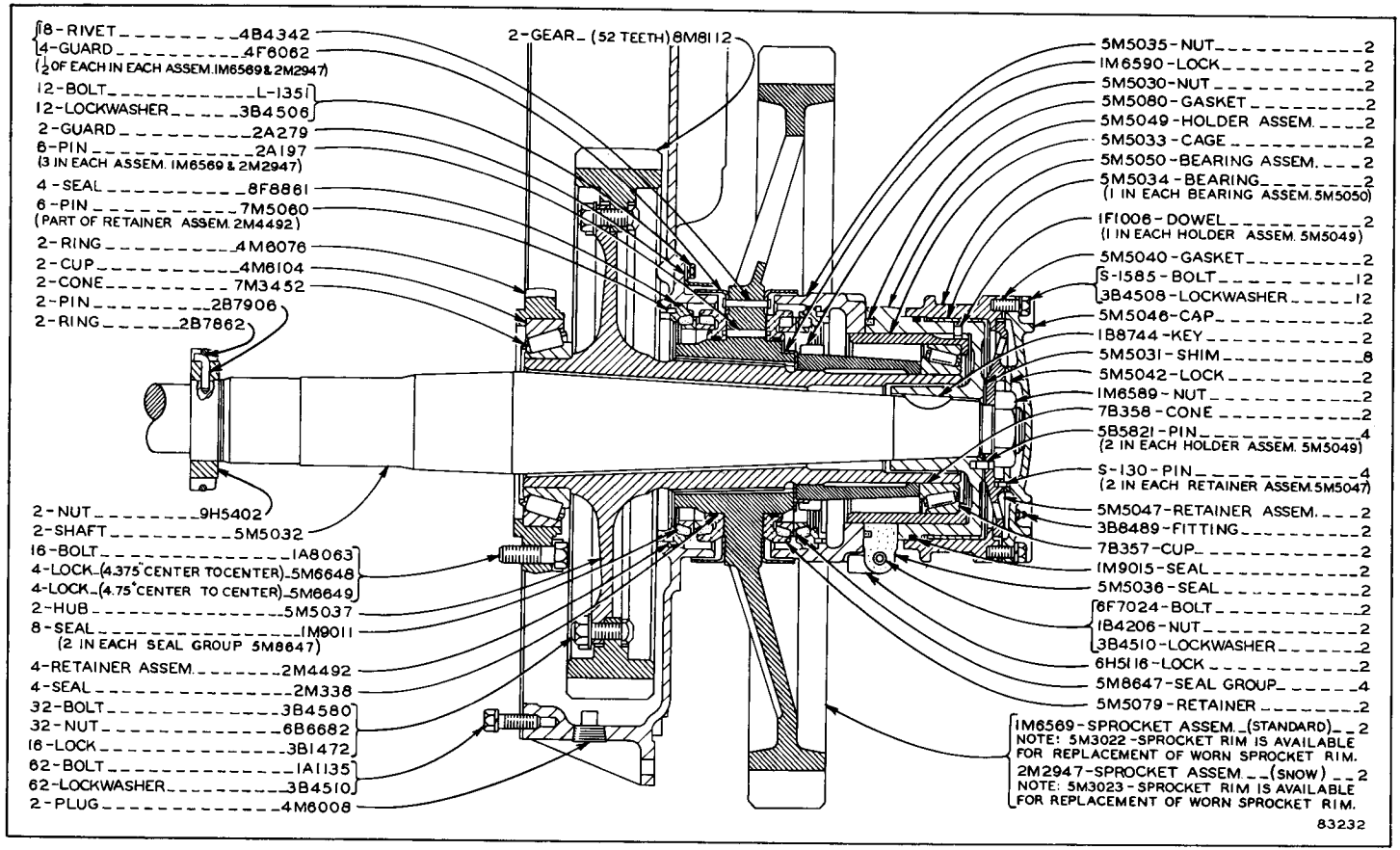

FINAL DRIVE—Part Two

Note: Quantities shown are those required for both R.H. and L.H. sides

ONLY "CATERPILLAR" PARTS GIVE "CATERPILLAR" PERFORMANCE

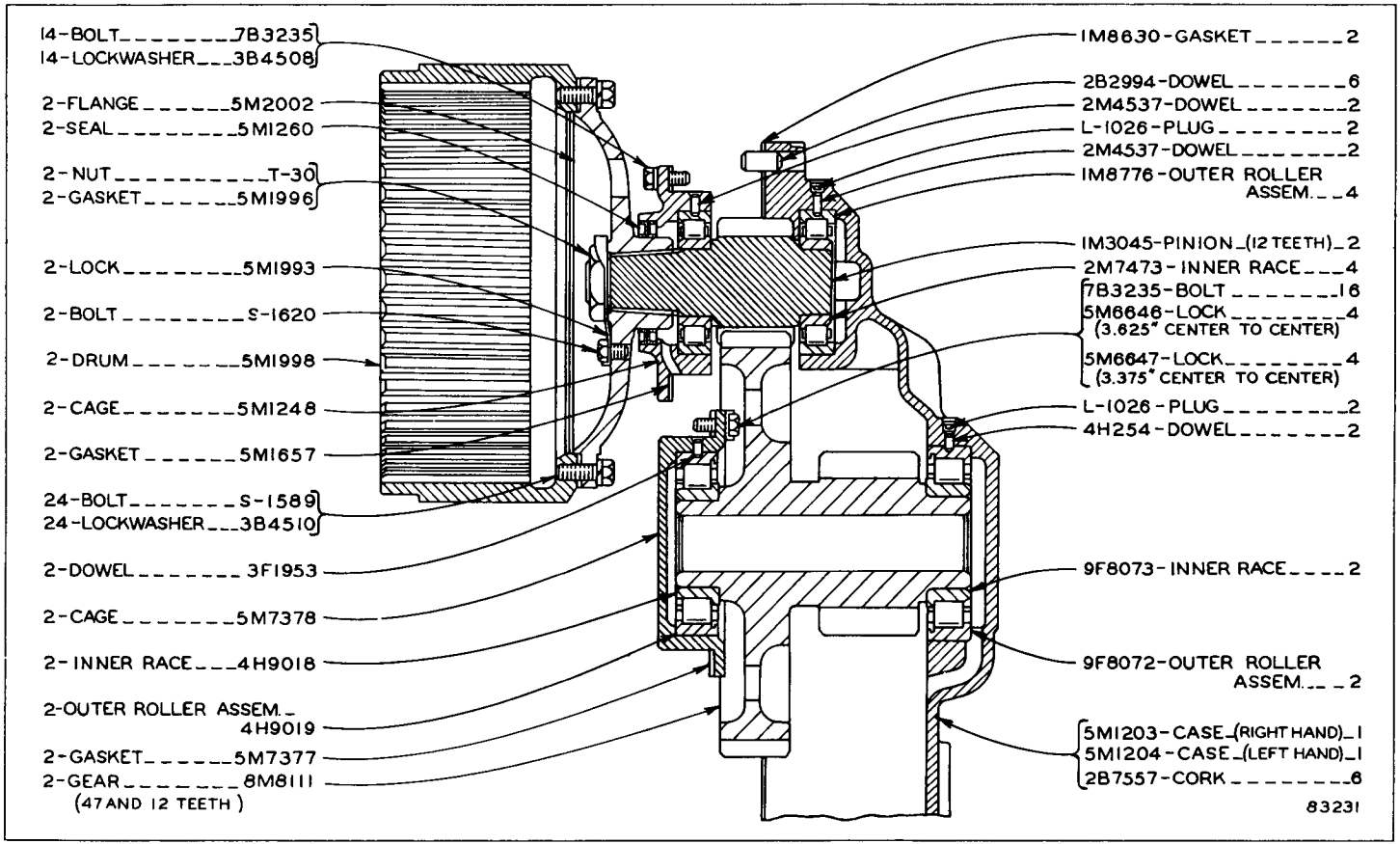

FINAL DRIVE—Part One
Effective with Serial No. 48A1136
Note: Quantities shown are those required for both R.H. and L.H. sides. Refer also to Page 128 for special parts

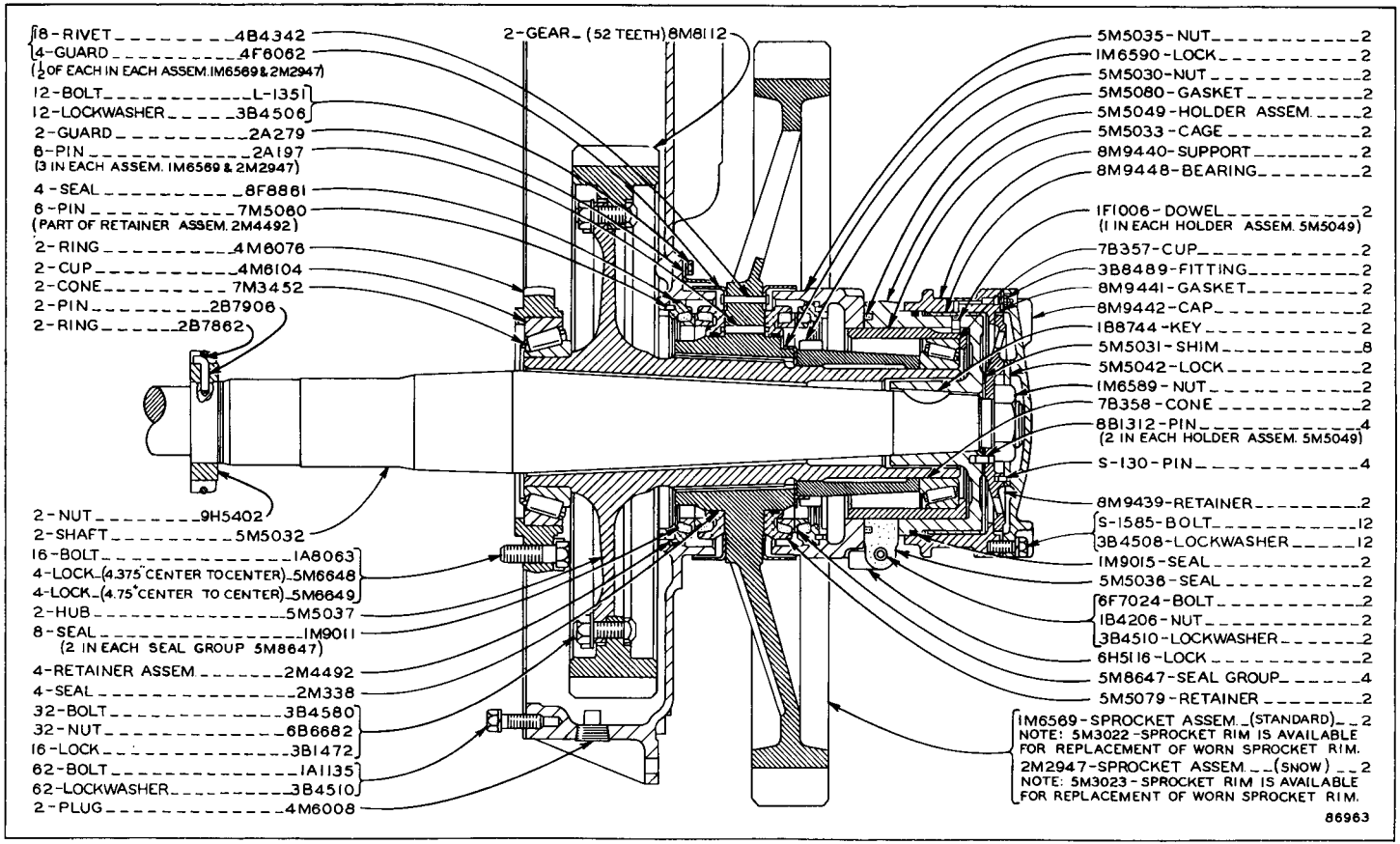

FINAL DRIVE—Part Two
Effective with Serial No. 48A1136

Note: Quantities shown are those required for both R.H. and L.H. sides

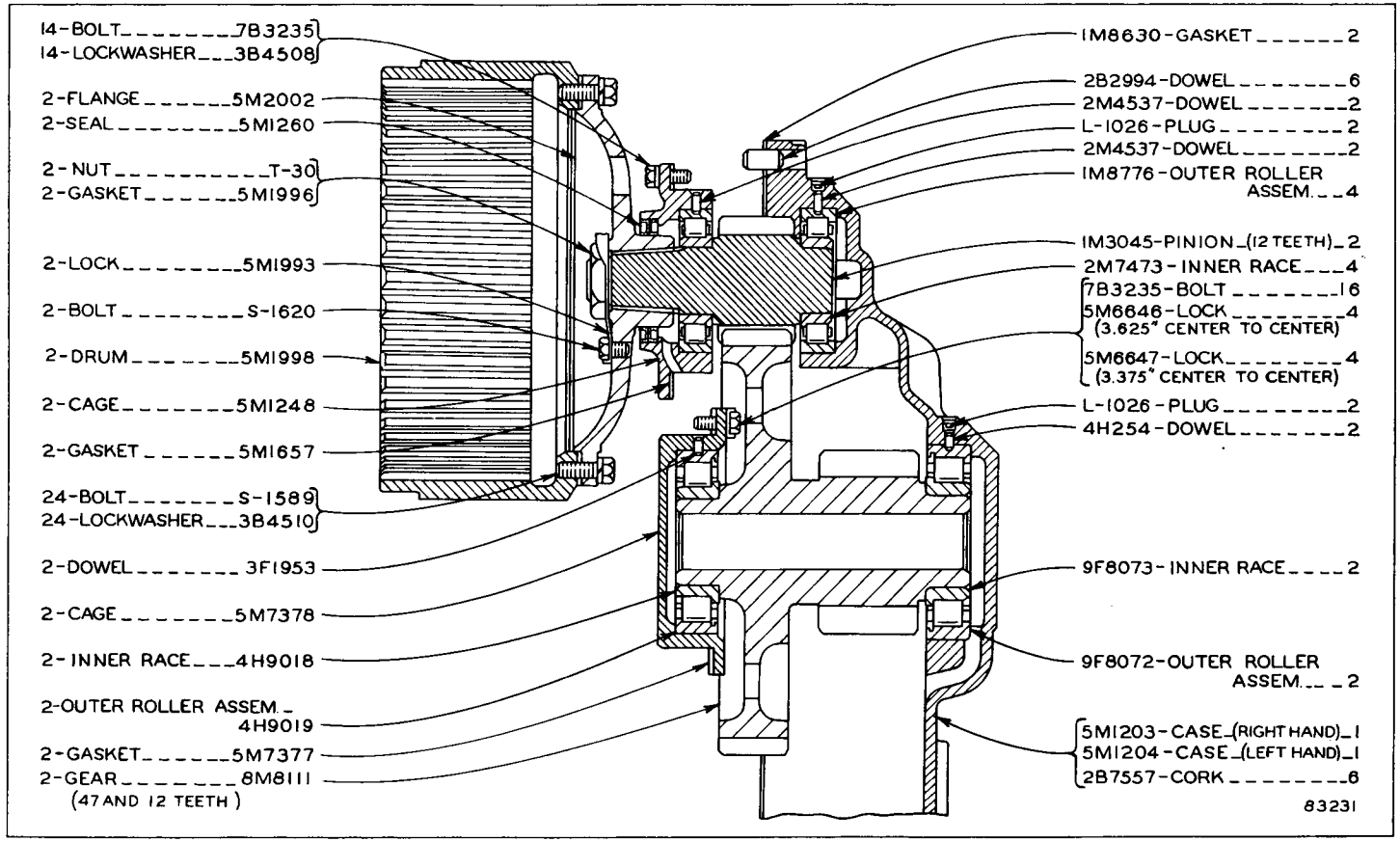

FINAL DRIVE—Part One
Effective with Serial No. 48A2473
Note: Quantities shown are those required for both R.H. and L.H. sides

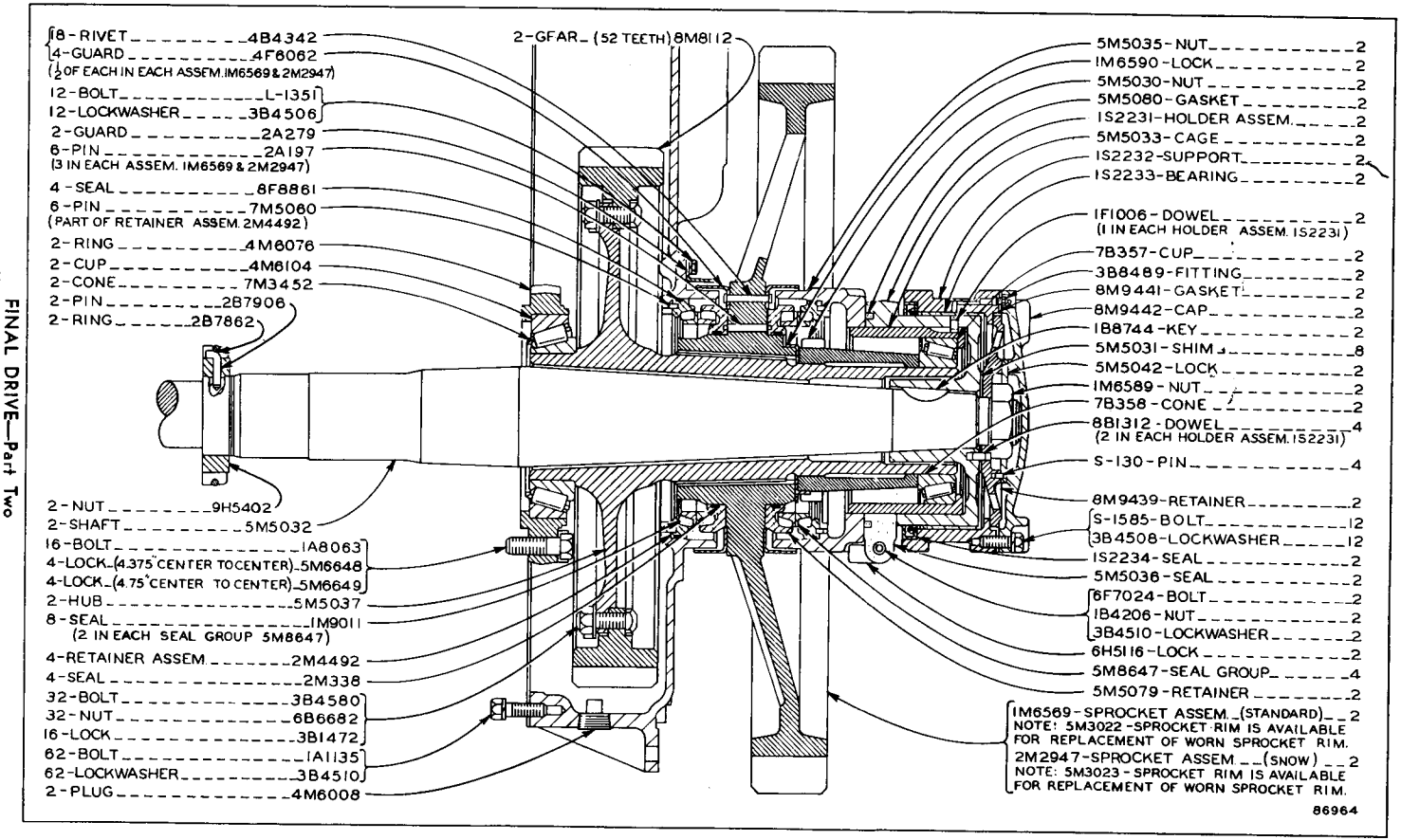

FINAL DRIVE—Part Two
Effective with Serial No. 48A2473

Note: Quantities shown are those required for both R.H. and L.H. sides

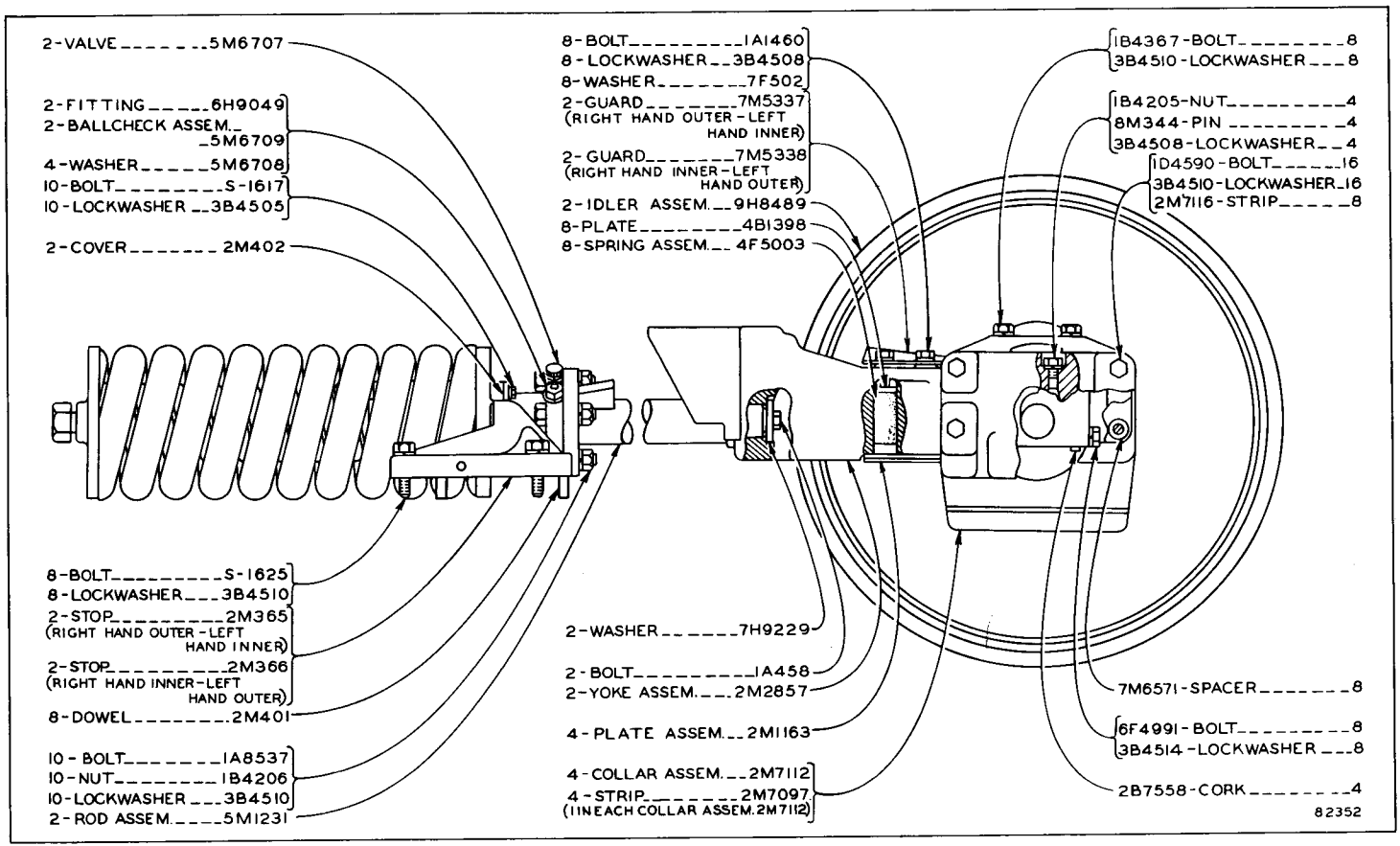

FRONT IDLER—Part One

Note: Quantities shown are those required for both R.H. and L.H. sides

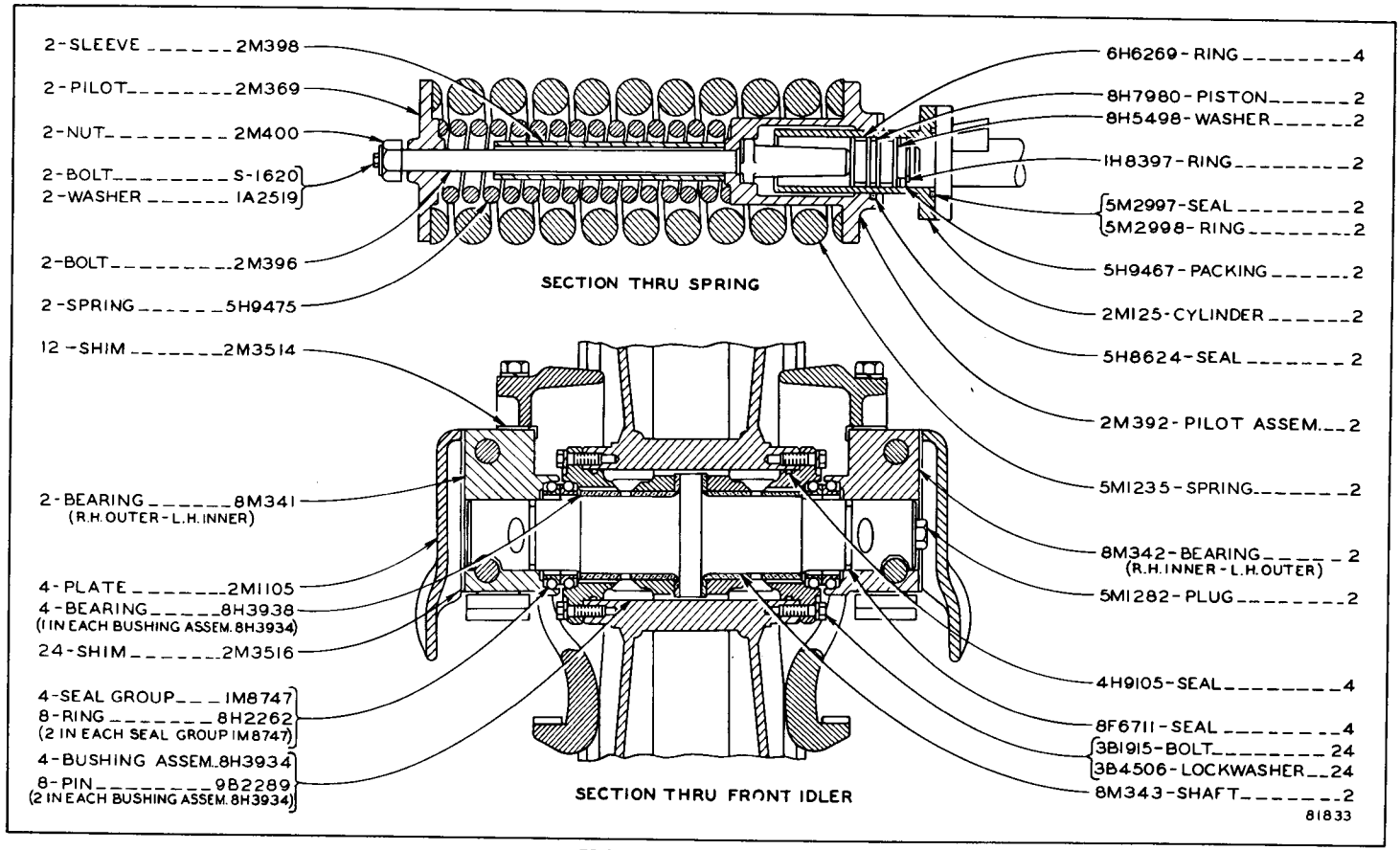

FRONT IDLER—Part Two

Note: Quantities shown are those required for both R.H. and L.H. sides

ONLY "CATERPILLAR" PARTS GIVE "CATERPILLAR" PERFORMANCE

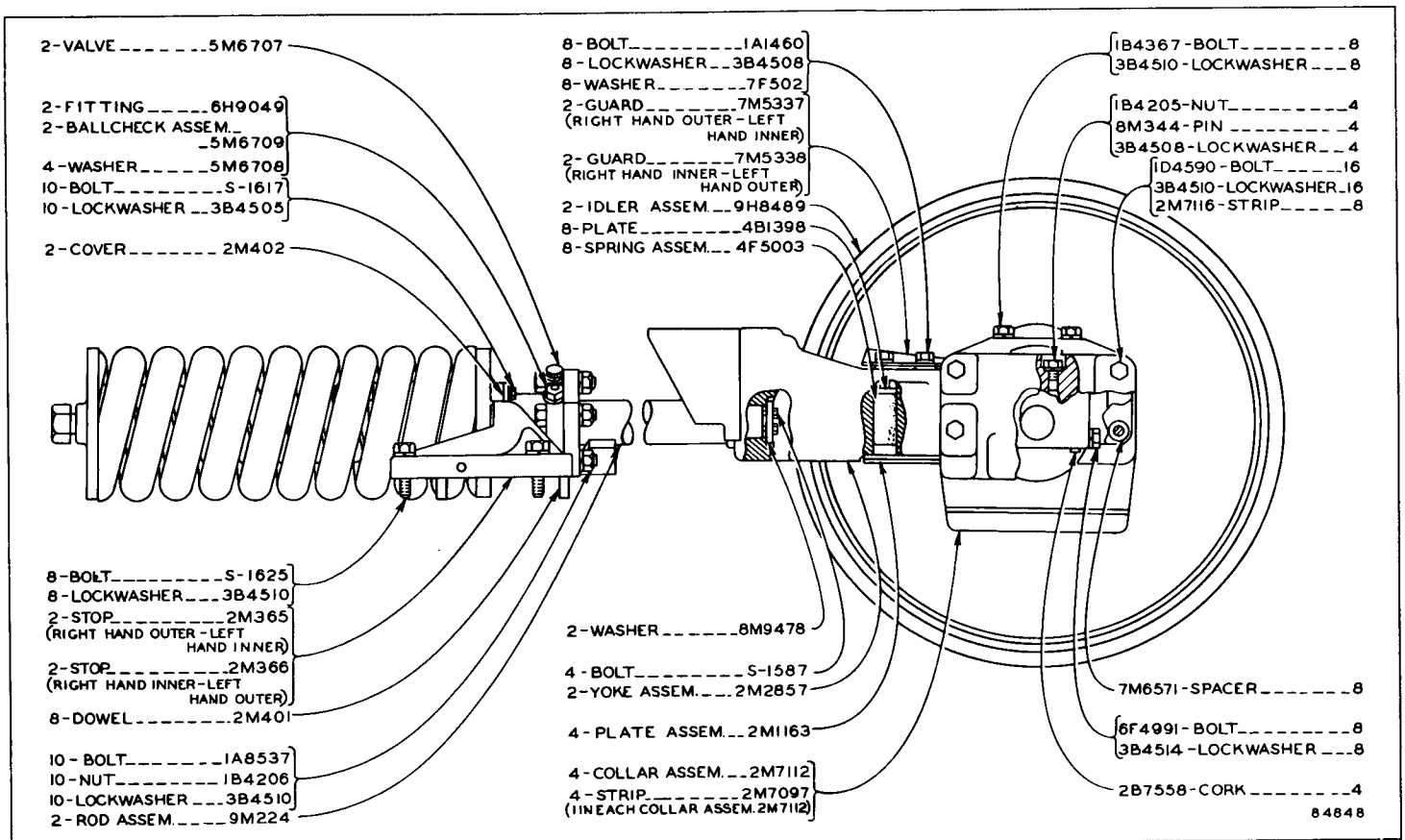

FRONT IDLER—Part One
Effective with Serial No. 48A1740
Note: Quantities shown are those required for both R.H. and L.H. sides

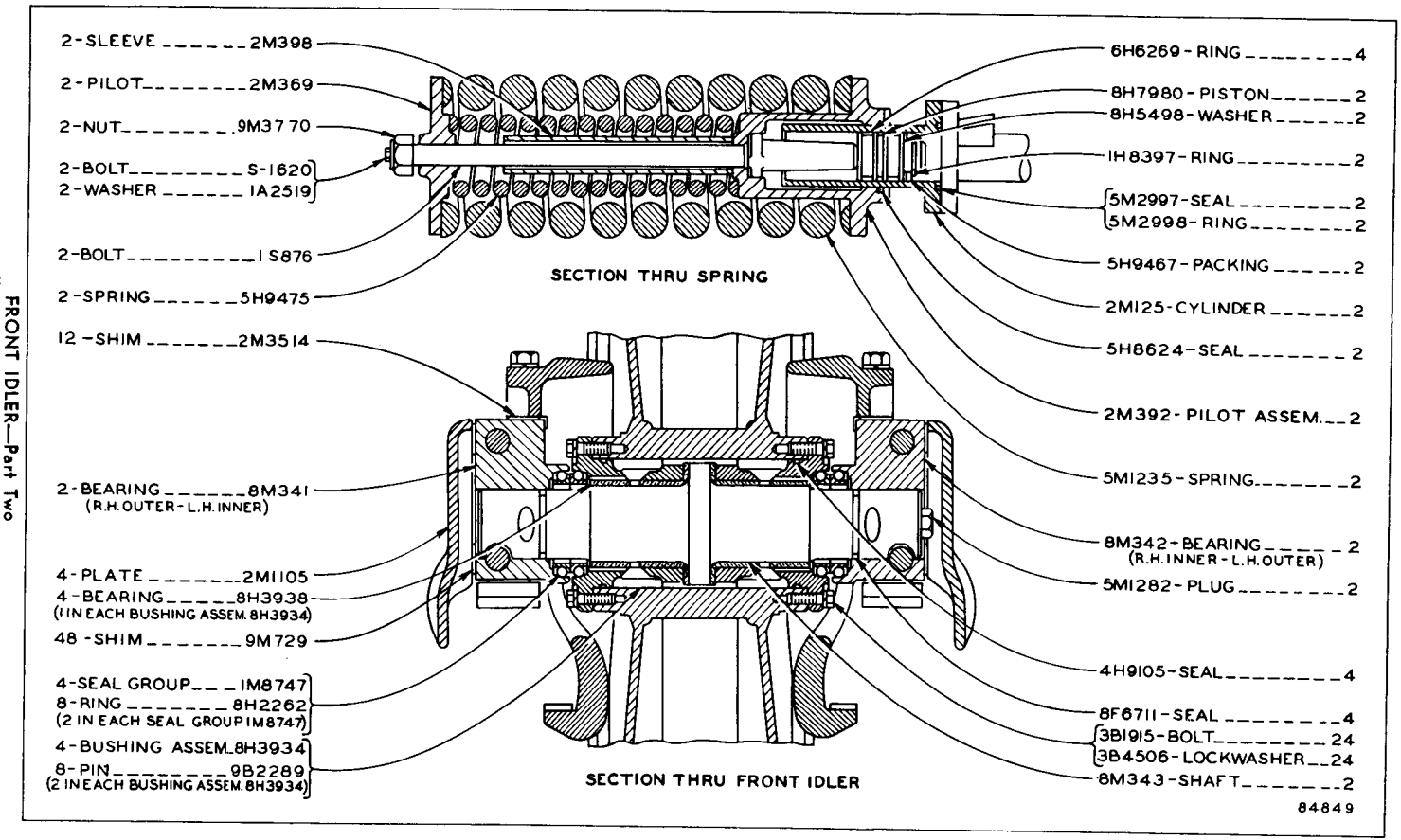

FRONT IDLER—Part Two
Effective with Serial No. 48A1740

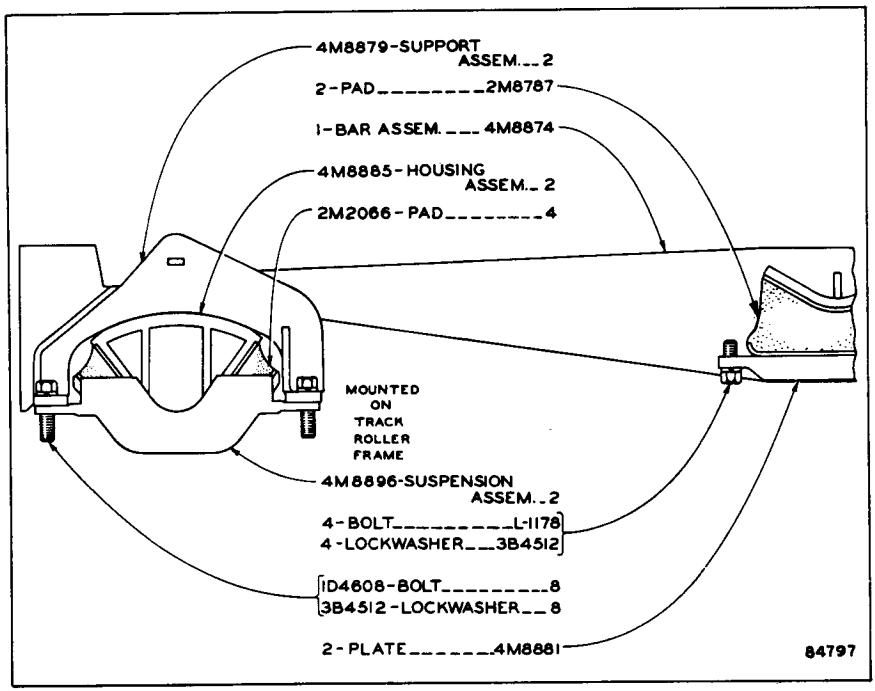

EQUALIZER BAR AND SUSPENSION

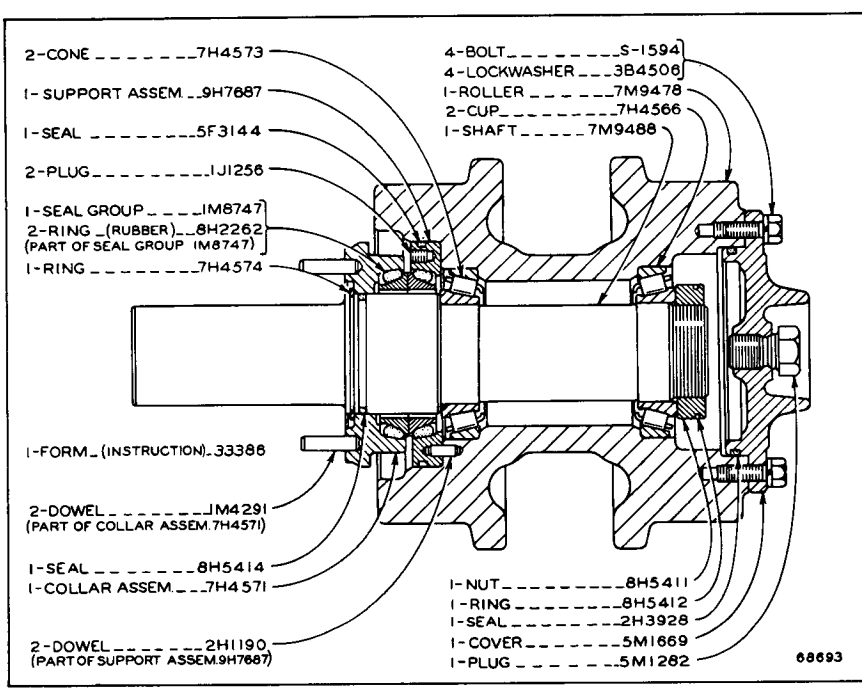

7M9489 TRACK CARRIER ROLLER GROUP—4 Groups Required

PARTS BOOK INSERT

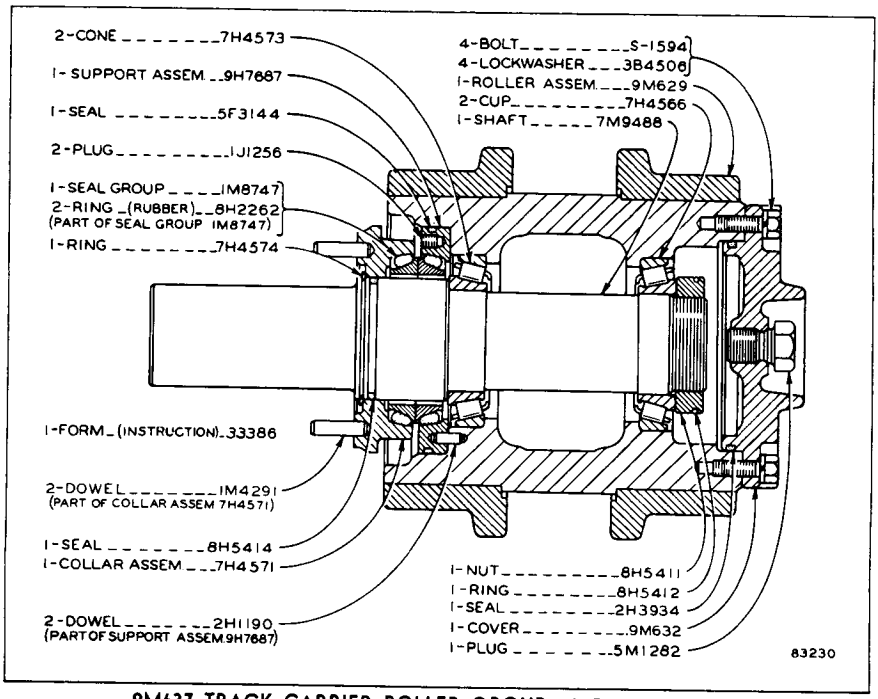

9M637 TRACK CARRIER ROLLER GROUP—4 Groups Required
Effective with Serial No. 48A1125

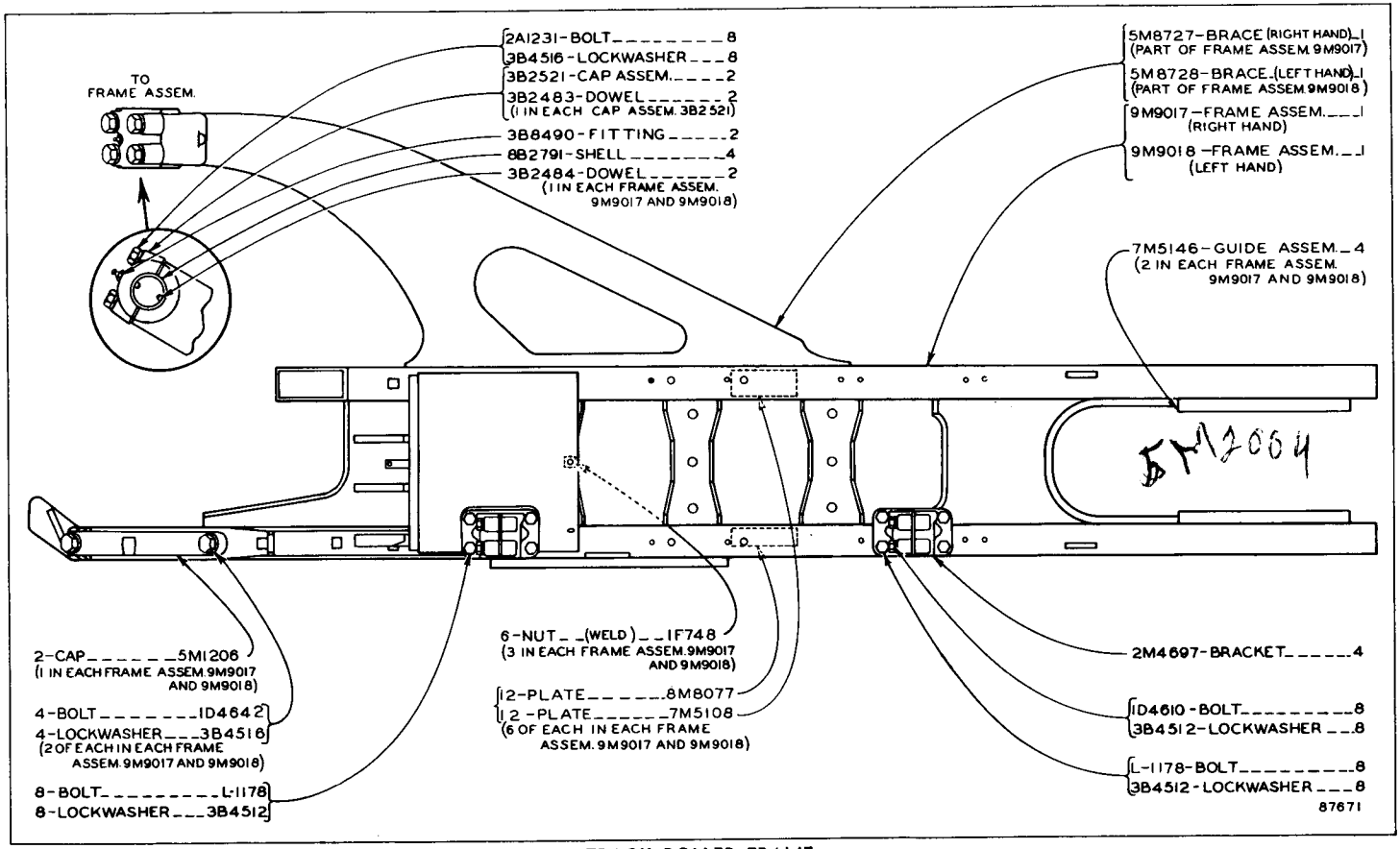

TRACK ROLLER FRAME

Effective with Serial No. 48A2609

Note: Quantities shown are those required for both R.H. and L.H. sides

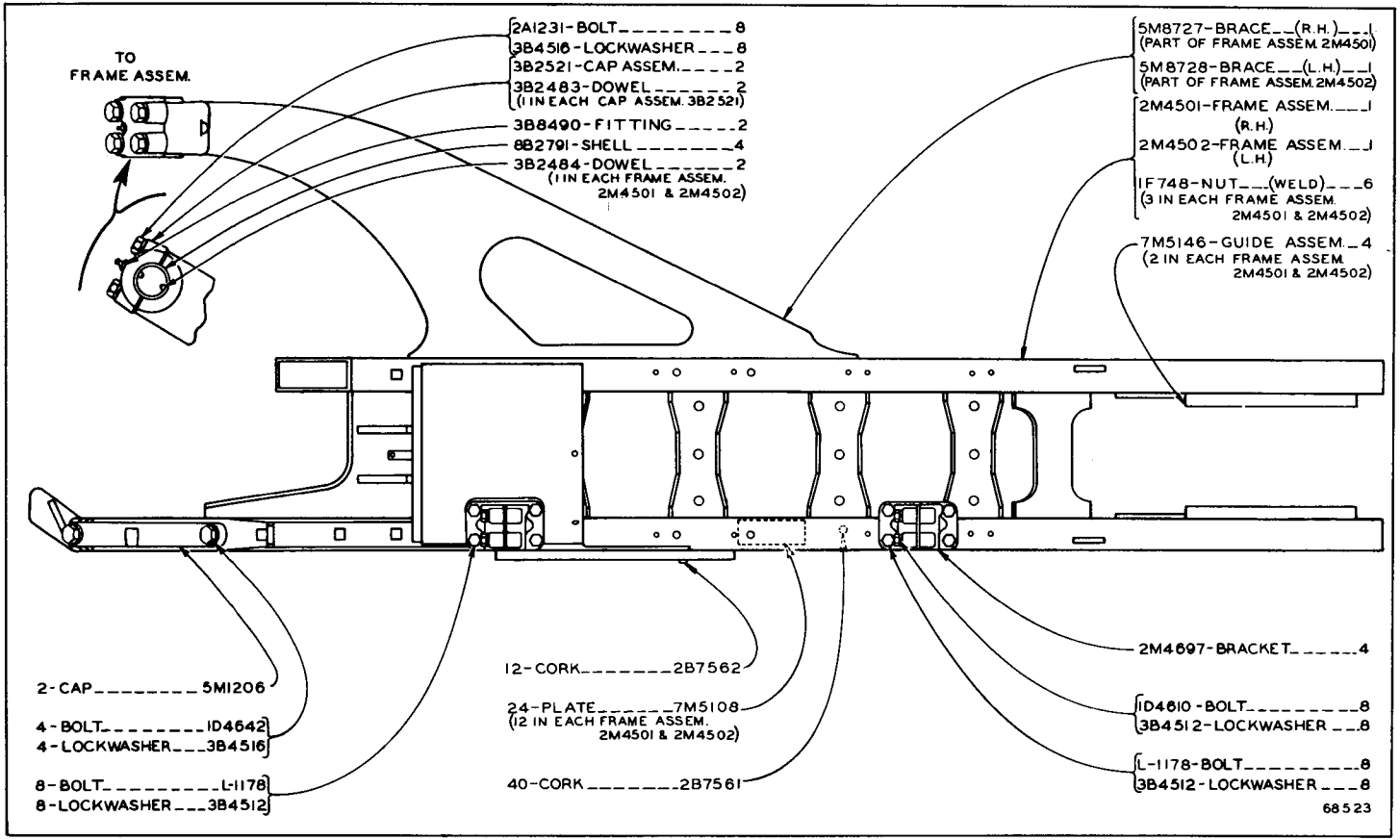

TRACK ROLLER FRAME

Note: Quantities shown are those required for both R.H. and L.H. sides

Refer also to Page 126 for special parts

ONLY "CATERPILLAR" PARTS GIVE "CATERPILLAR" PERFORMANCE

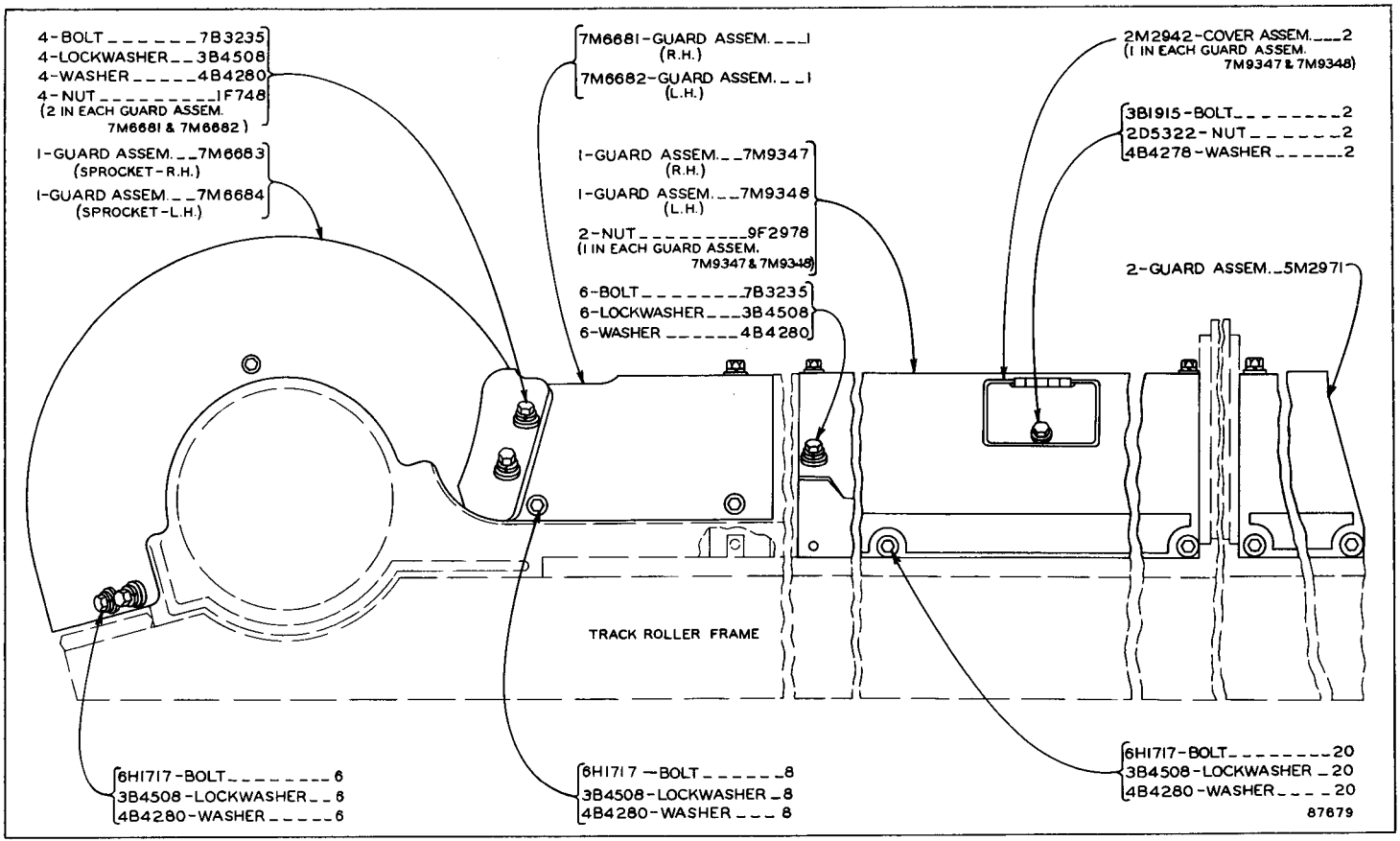

TRACK ROLLER FRAME GUARDS

Note: Quantities shown are those required for both R.H. and L.H. sides

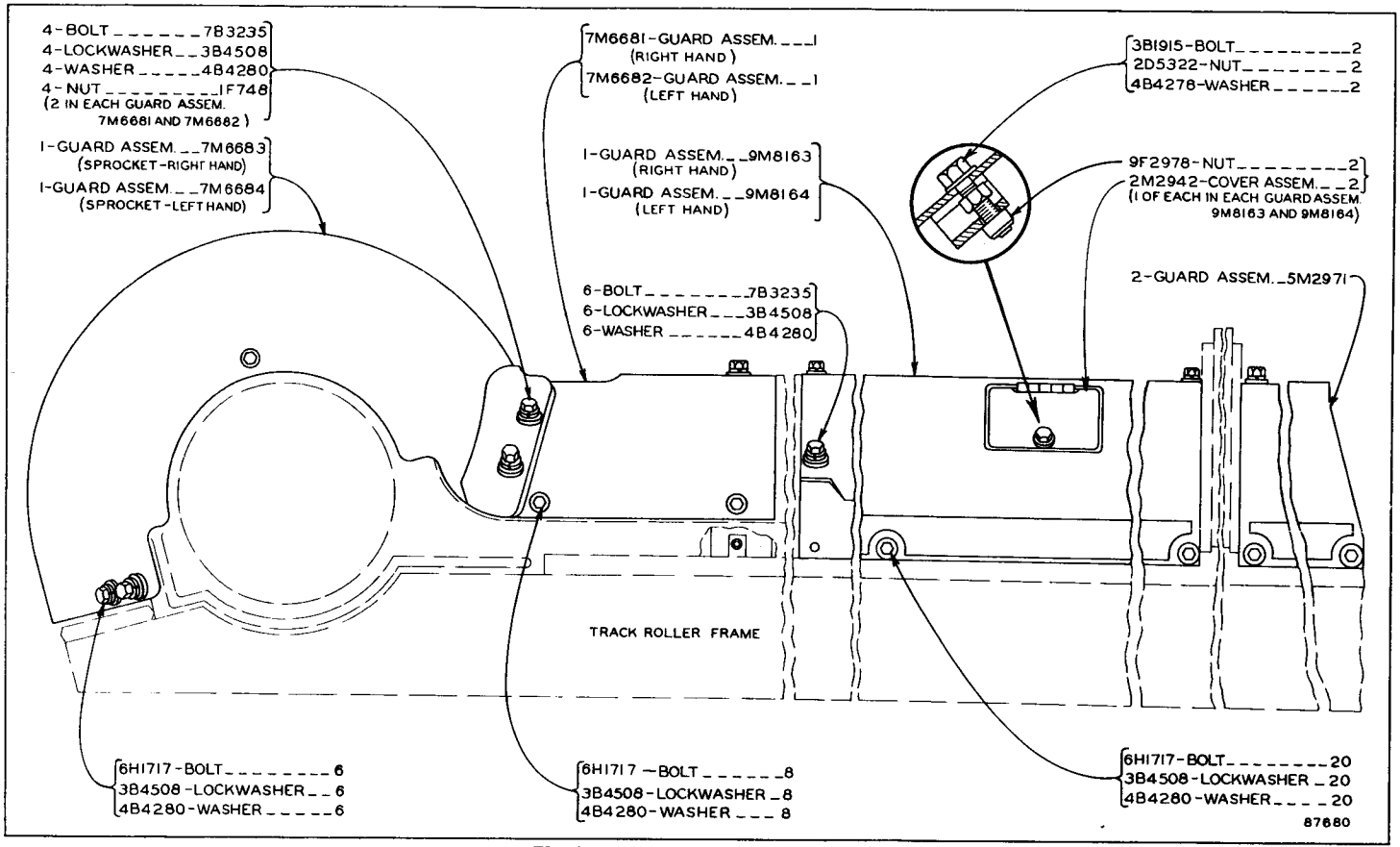

TRACK ROLLER FRAME GUARDS
Effective with Serial No. 48A2609
Note: Quantities shown are those required for both R.H. and L.H. sides

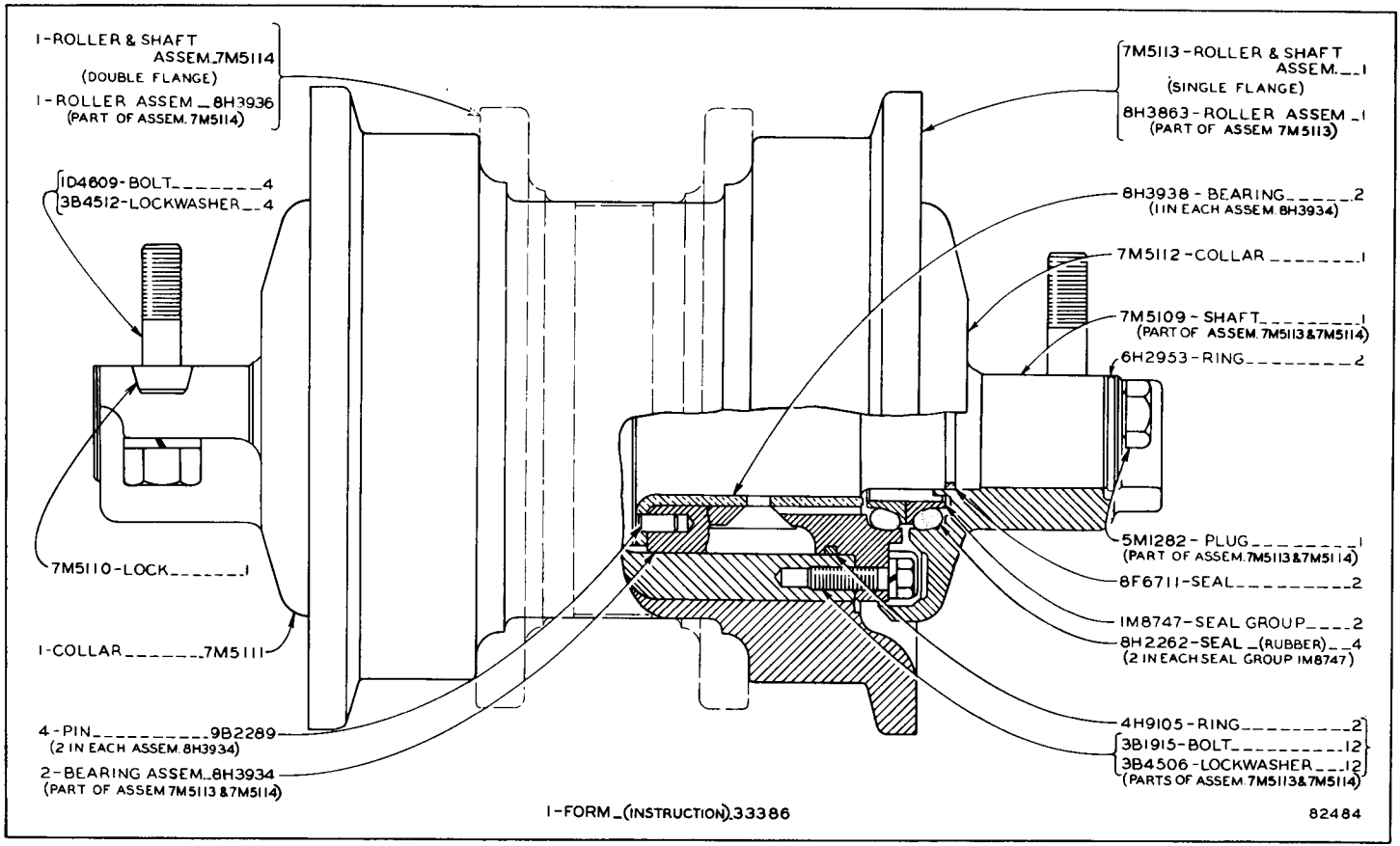

TRACK ROLLER—Single Flange—6 Required
TRACK ROLLER—Double Flange—6 Required

ONLY "CATERPILLAR" PARTS GIVE "CATERPILLAR" PERFORMANCE

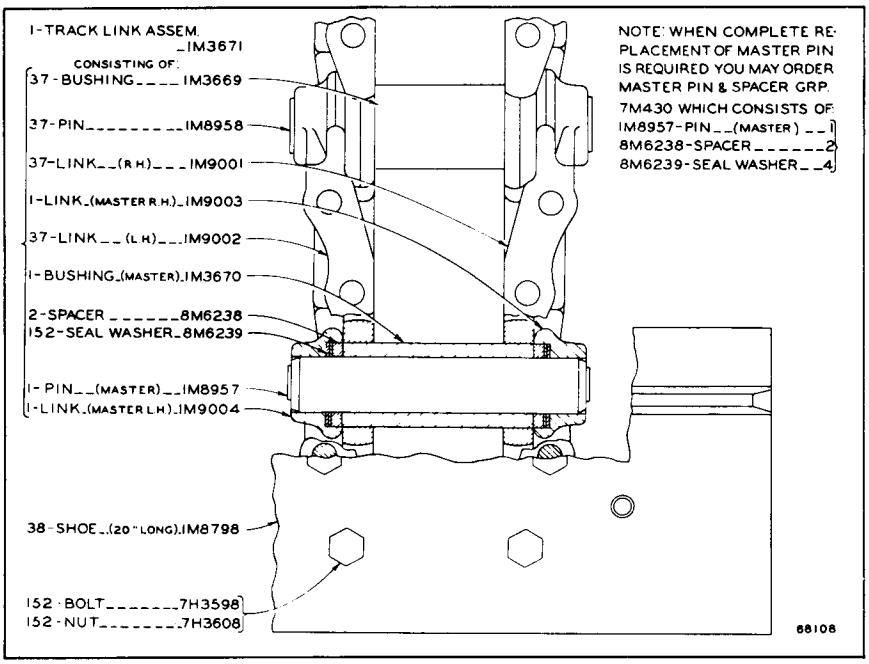

1M3673 TRACK GROUP—20" Grouser Shoe—2 Required

Note: 7M429 Track Pin and Bushing Group, consisting of a complete set of Pins and Bushings for one Track, is available

Refer also to Pages 124 and 125 for special parts

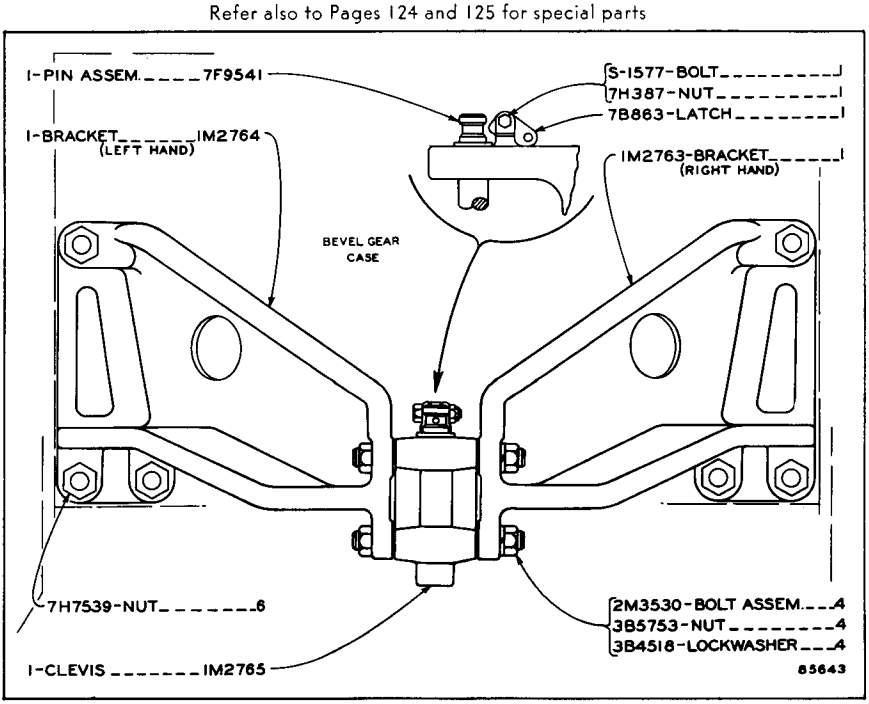

FIXED DRAWBAR—Rear View

Refer also to Page 112 for special parts

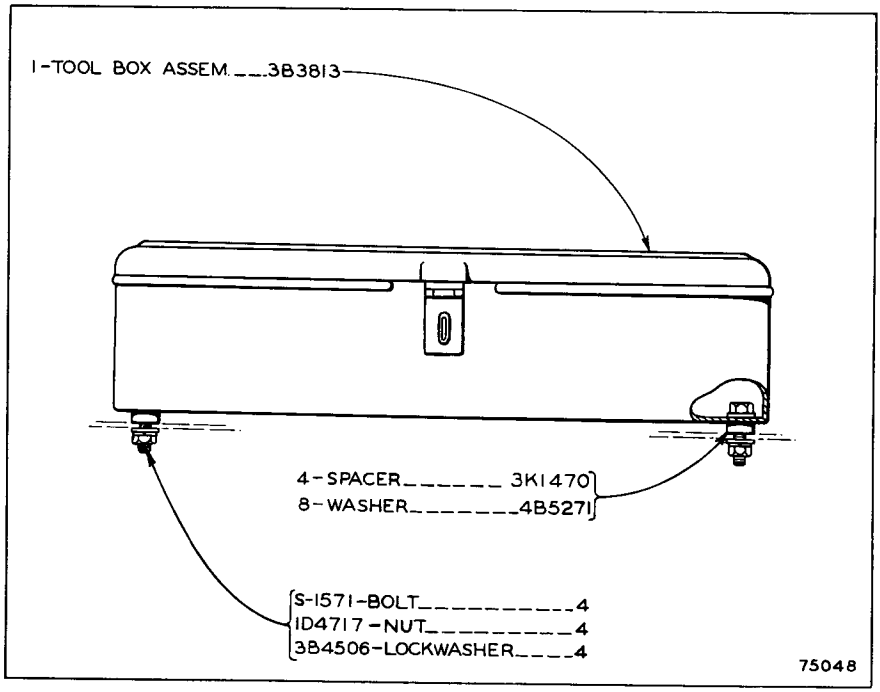

3B136 TOOL BOX GROUP

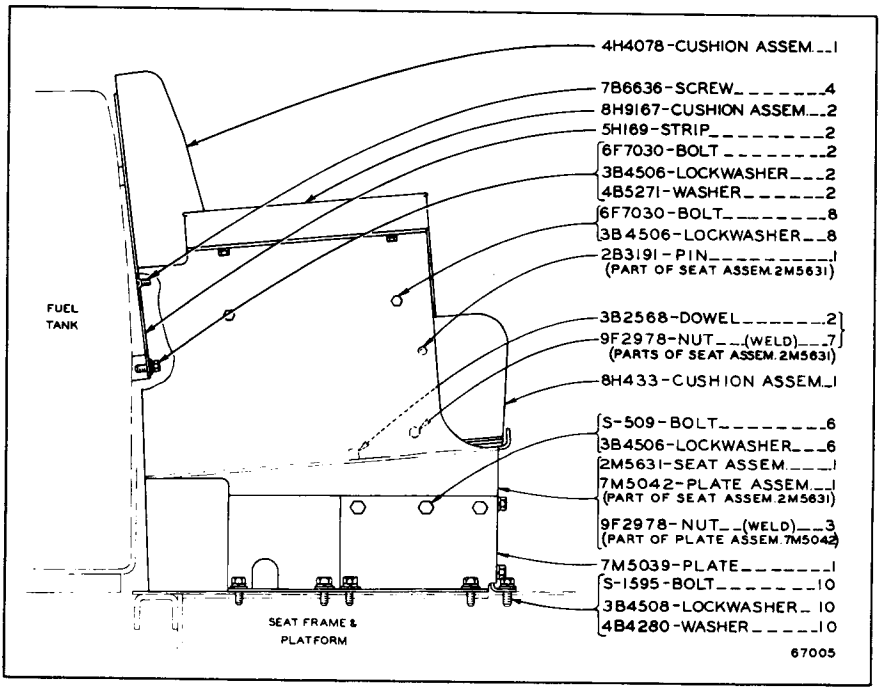

SEAT CUSHION AND FRAME

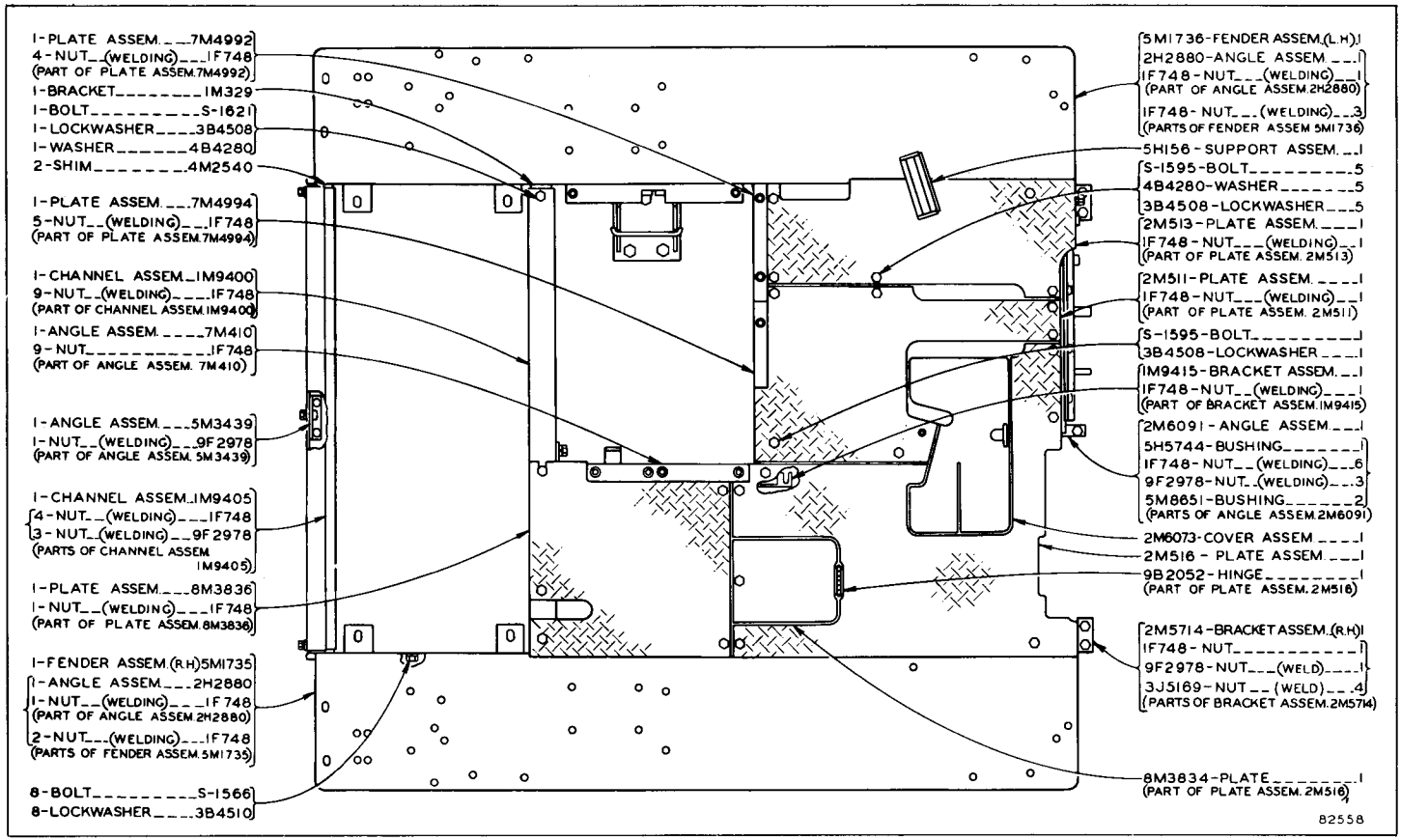

FENDERS—Part One

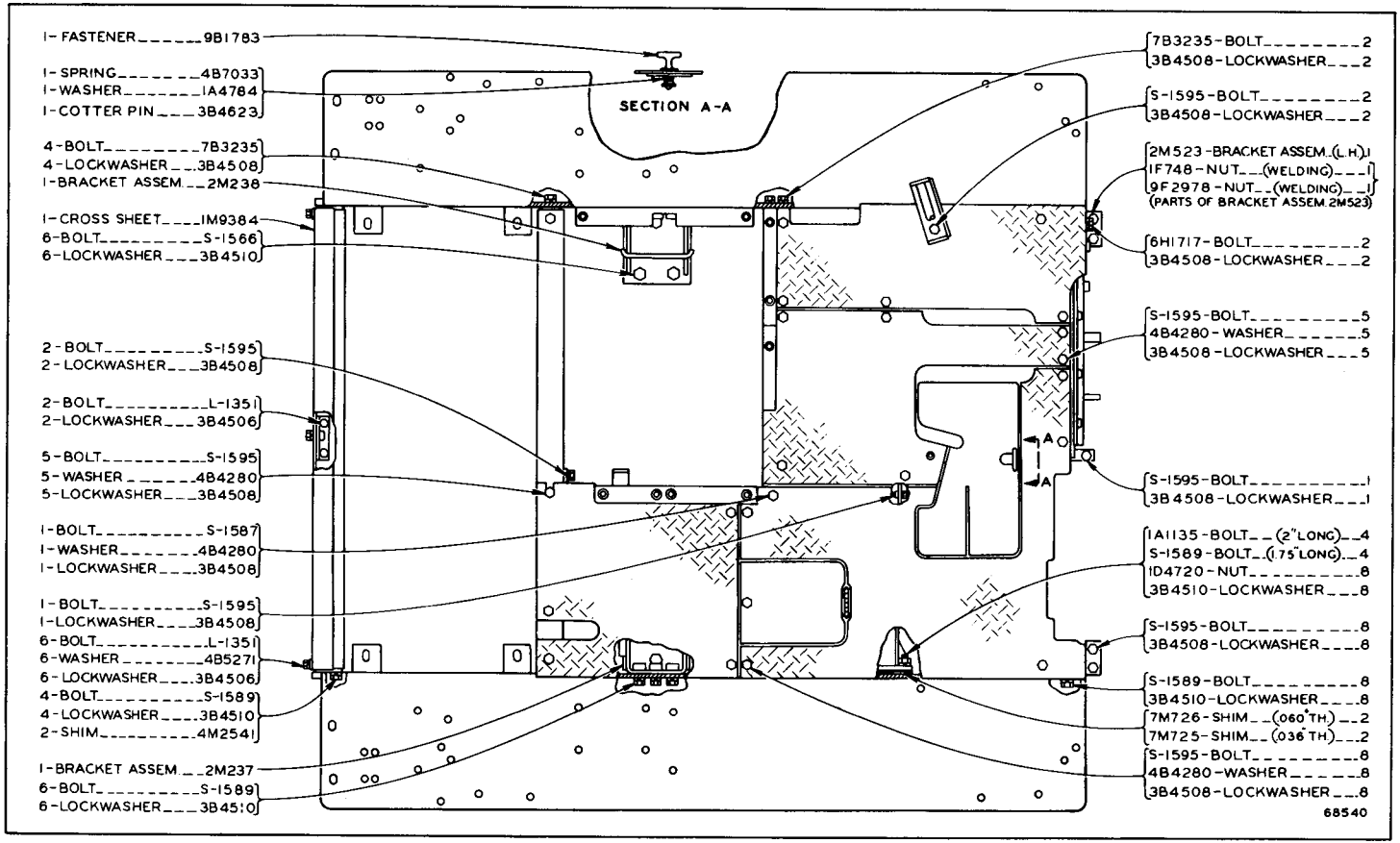

FENDERS—Part Two

ONLY "CATERPILLAR" PARTS GIVE "CATERPILLAR" PERFORMANCE

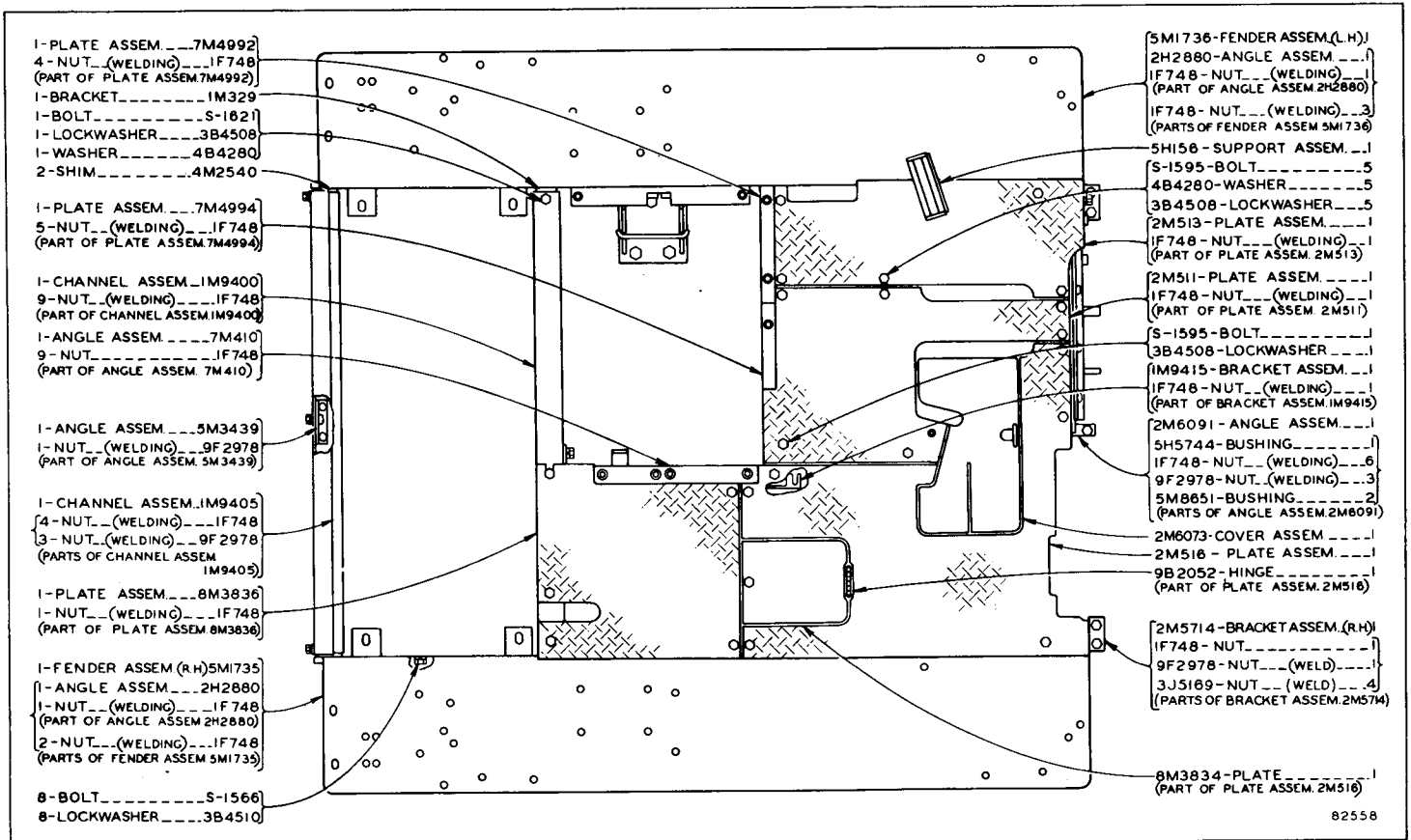

FENDERS—Part One

Serial No. 48A350 to 48A779 inclusive

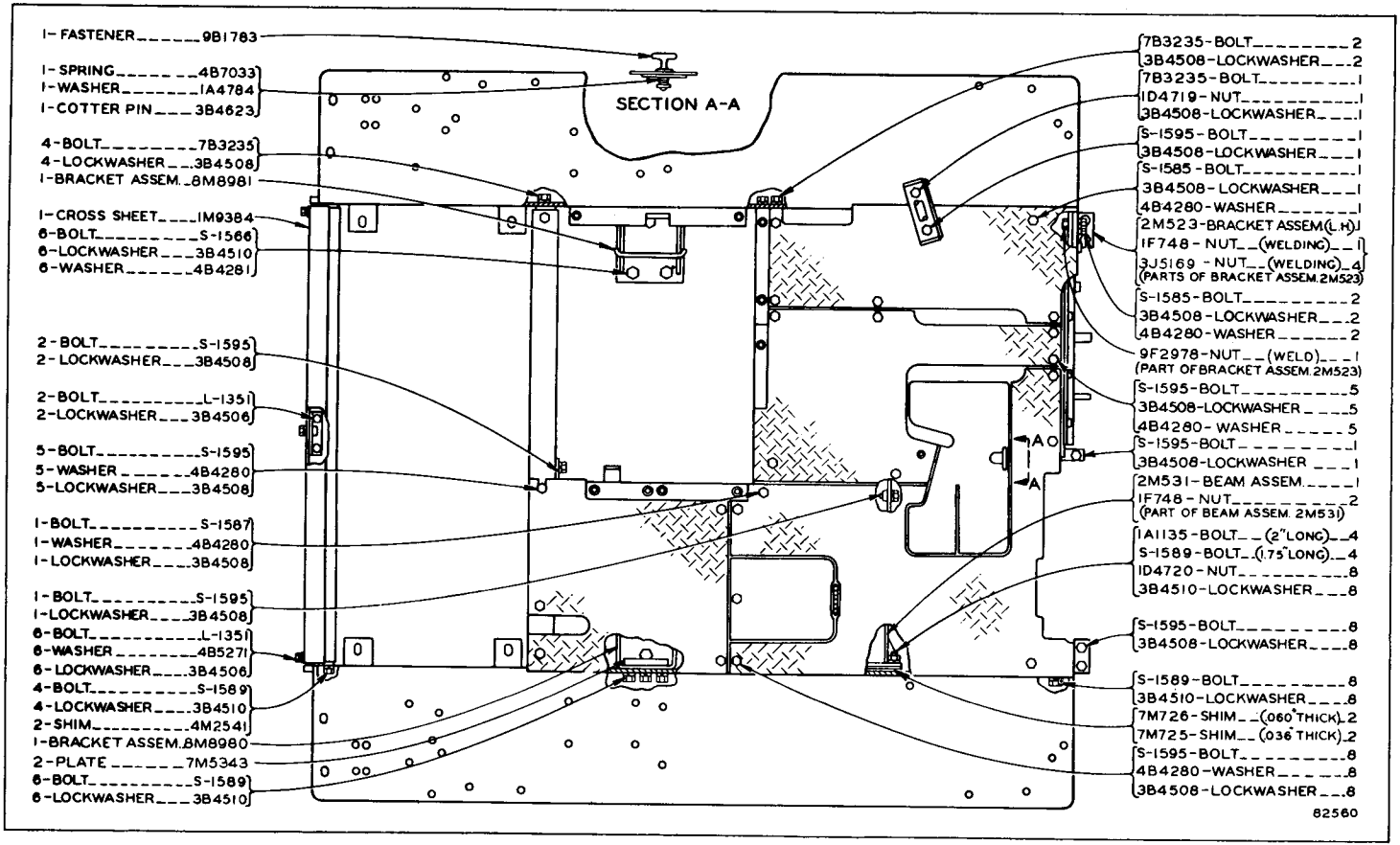
SECTION A-A
A
A
1-FASTENER 9B1783
1-SPRING 4B7033
1-WASHER 1A4784
1-COTTER PIN 3B4623
4-BOLT 7B3235
4-LOCKWASHER 3B4508
1-BRACKET ASSEM. 8M8981
1-CROSS SHEET 1M9384
6-BOLT S-1566
6-LOCKWASHER 3B4510
6-WASHER 4B4281
2-BOLT S-1595
2-LOCKWASHER 3B4508
2-BOLT L-1351
2-LOCKWASHER 3B4506
5-BOLT S-1595
5-WASHER 4B4280
5-LOCKWASHER 3B4508
1-BOLT S-1587
1-WASHER 4B4280
1-LOCKWASHER 3B4508
1-BOLT S-1595
1-LOCKWASHER 3B4508
6-BOLT L-1351
6-WASHER 4B5271
6-LOCKWASHER 3B4506
4-BOLT S-1589
4-LOCKWASHER 3B4510
2-SHIM 4M2541
1-BRACKET ASSEM. 8M8980
2-PLATE 7M5343
6-BOLT S-1589
6-LOCKWASHER 3B4510
7B3235-BOLT 2
3B4508-LOCKWASHER 2
7B3235-BOLT 1
ID4719-NUT 1
3B4508-LOCKWASHER 1
S-1595-BOLT 1
3B4508-LOCKWASHER 1
S-1585-BOLT 1
3B4508-LOCKWASHER 1
4B4280-WASHER 1
2M523-BRACKET ASSEM.(L.H.) 1
1F748-NUT (WELDING) 1
3J5169-NUT (WELDING) 4
(PARTS OF BRACKET ASSEM. 2M523)
S-1585-BOLT 2
3B4508-LOCKWASHER 2
4B4280-WASHER 2
9F2978-NUT (WELD) 1
(PART OF BRACKET ASSEM. 2M523)
S-1595-BOLT 5
3B4508-LOCKWASHER 5
4B4280-WASHER 5
S-1595-BOLT 1
3B4508-LOCKWASHER 1
2M531-BEAM ASSEM. 1
1F748-NUT 2
(PART OF BEAM ASSEM. 2M531)
1A1135-BOLT (2" LONG) 4
S-1589-BOLT (1.75" LONG) 4
ID4720-NUT 8
3B4510-LOCKWASHER 8
S-1595-BOLT 8
3B4508-LOCKWASHER 8
S-1589-BOLT 8
3B4510-LOCKWASHER 8
7M726-SHIM (.060" THICK) 2
7M725-SHIM (.036" THICK) 2
S-1595-BOLT 8
4B4280-WASHER 8
3B4508-LOCKWASHER 8
82560

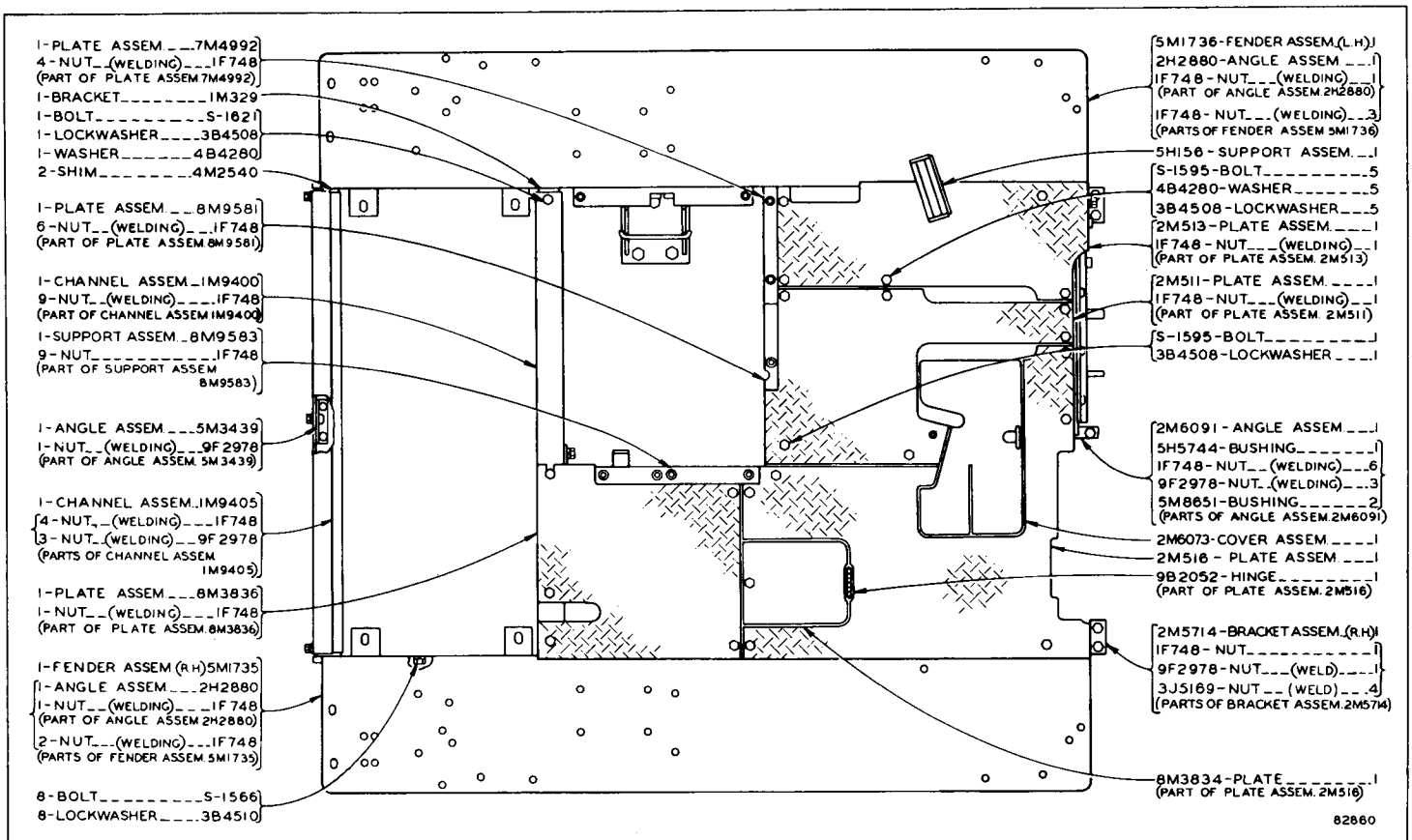

FENDERS—Part One
Effective with Serial No. 48A780

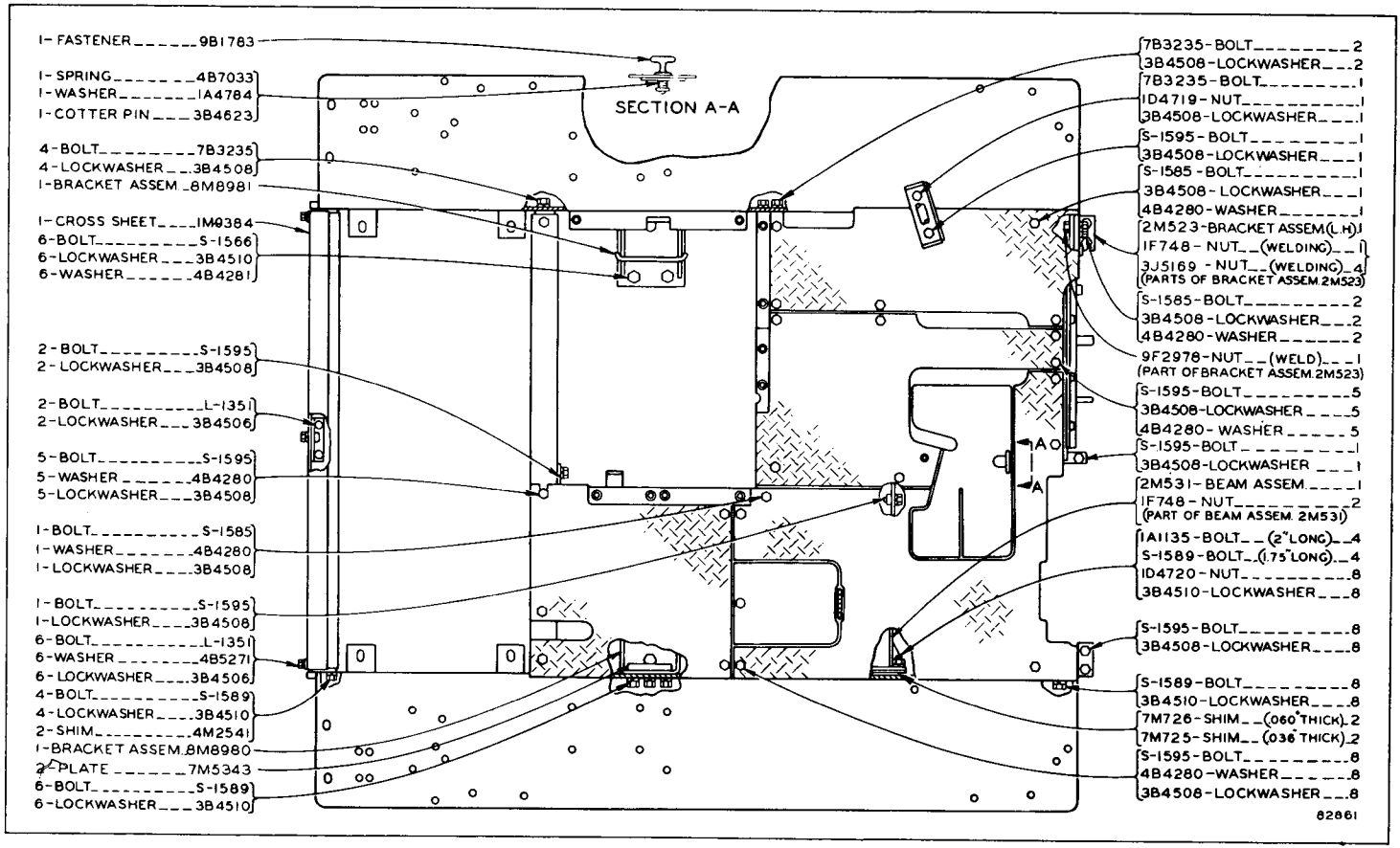
1-FASTENER_____9B1783
1-SPRING_____4B7033
1-WASHER_____1A4784
1-COTTER PIN___3B4623
4-BOLT_____7B3235
4-LOCKWASHER___3B4508
1-BRACKET ASSEM_8M8981
1-CROSS SHEET____1M9384
6-BOLT_____S-1566
6-LOCKWASHER___3B4510
6-WASHER_____4B4281
2-BOLT_____S-1595
2-LOCKWASHER___3B4508
2-BOLT_____L-1351
2-LOCKWASHER___3B4506
5-BOLT_____S-1595
5-WASHER_____4B4280
5-LOCKWASHER___3B4508
1-BOLT_____S-1585
1-WASHER_____4B4280
1-LOCKWASHER___3B4508
1-BOLT_____S-1595
1-LOCKWASHER___3B4508
6-BOLT_____L-1351
6-WASHER_____4B5271
6-LOCKWASHER___3B4506
4-BOLT_____S-1589
4-LOCKWASHER___3B4510
2-SHIM_____4M2541
1-BRACKET ASSEM.8M8980
2-PLATE_____7M5343
6-BOLT_____S-1589
6-LOCKWASHER___3B4510
SECTION A-A
A
A
7B3235-BOLT_____2
3B4508-LOCKWASHER___2
7B3235-BOLT_____1
1D4719-NUT_____1
3B4508-LOCKWASHER___1
S-1595-BOLT_____1
3B4508-LOCKWASHER___1
S-1585-BOLT_____1
3B4508-LOCKWASHER___1
4B4280-WASHER_____1
2M523-BRACKET ASSEM(L.H)1
1F748-NUT__(WELDING)__1
3J5169-NUT__(WELDING)_4
(PARTS OF BRACKET ASSEM.2M523)
S-1585-BOLT_____2
3B4508-LOCKWASHER___2
4B4280-WASHER_____2
9F2978-NUT__(WELD)___1
(PART OF BRACKET ASSEM.2M523)
S-1595-BOLT_____5
3B4508-LOCKWASHER____5
4B4280-WASHER_____5
S-1595-BOLT_____1
3B4508-LOCKWASHER___1
2M531-BEAM ASSEM.____1
1F748-NUT_____2
(PART OF BEAM ASSEM. 2M531)
1A1135-BOLT__(2"LONG)__4
S-1589-BOLT__(1.75"LONG)__4
1D4720-NUT_____8
3B4510-LOCKWASHER___8
S-1595-BOLT_____8
3B4508-LOCKWASHER____8
S-1589-BOLT_____8
3B4510-LOCKWASHER____8
7M726-SHIM__(.060"THICK)_2
7M725-SHIM__(.036"THICK)_2
S-1595-BOLT_____8
4B4280-WASHER_____8
3B4508-LOCKWASHER___8
82861

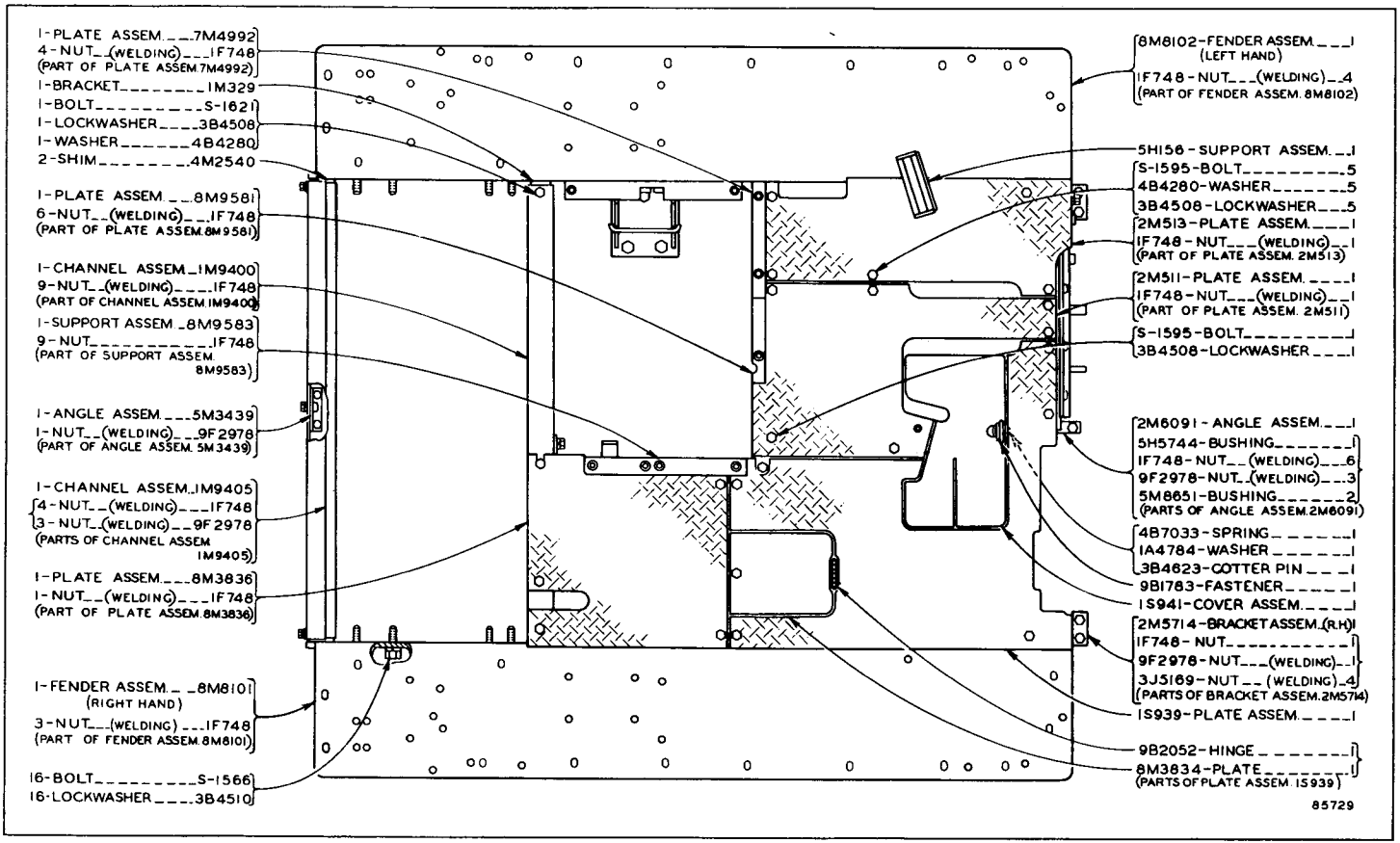

FENDERS—Part One
Effective with Serial No. 48A1306

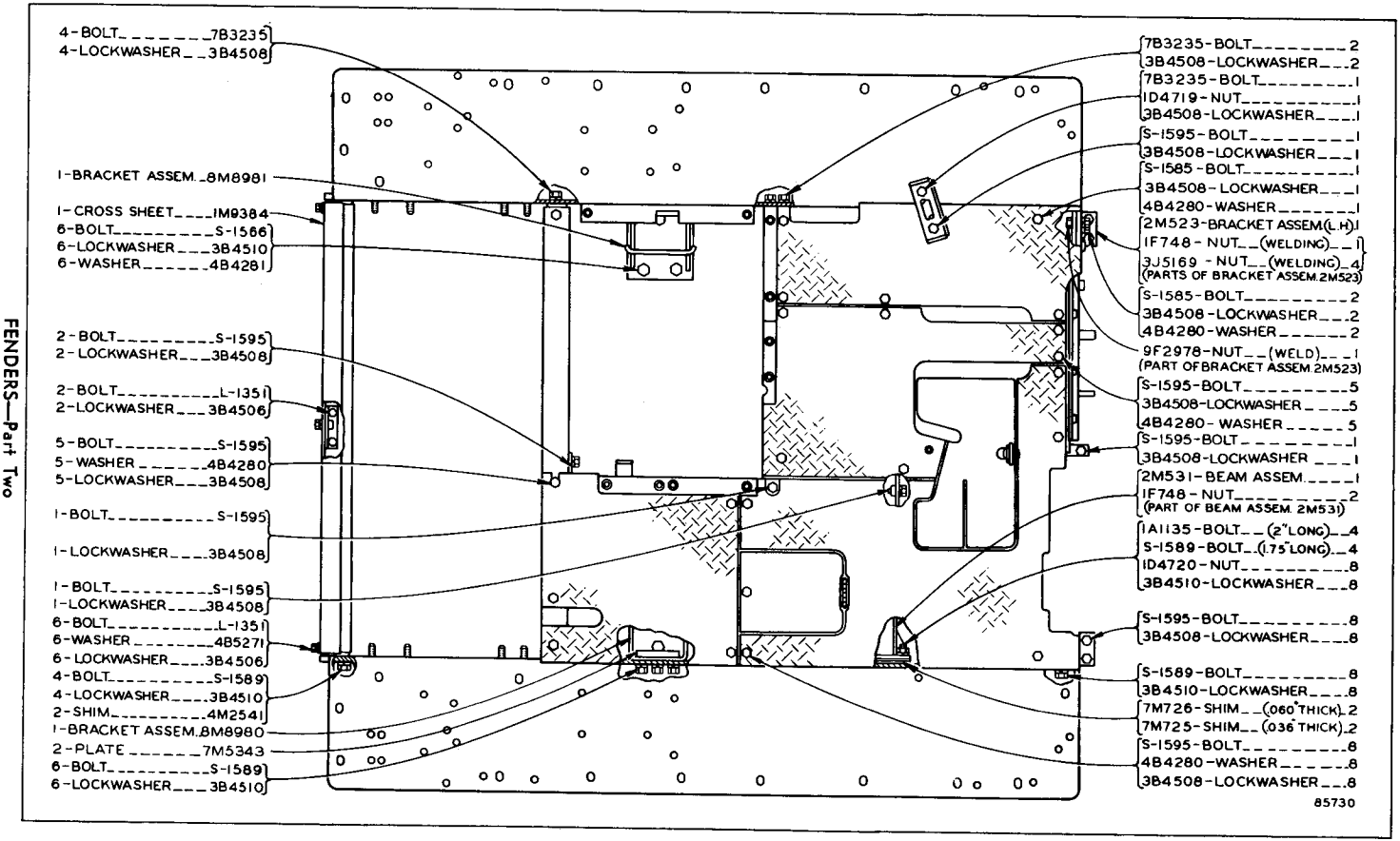
4-BOLT_____7B3235
4-LOCKWASHER__3B4508
1-BRACKET ASSEM._8M8981
1-CROSS SHEET____1M9384
6-BOLT_____S-1586
6-LOCKWASHER___3B4510
6-WASHER_____4B4281
2-BOLT_____S-1595
2-LOCKWASHER___3B4508
2-BOLT_____L-1351
2-LOCKWASHER___3B4506
5-BOLT_____S-1595
5-WASHER_____4B4280
5-LOCKWASHER___3B4508
1-BOLT_____S-1595
1-LOCKWASHER____3B4508
1-BOLT_____S-1595
1-LOCKWASHER____3B4508
6-BOLT_____L-1351
6-WASHER_____4B5271
6-LOCKWASHER____3B4506
4-BOLT_____S-1589
4-LOCKWASHER____3B4510
2-SHIM_____4M2541
1-BRACKET ASSEM.8M8980
2-PLATE_____7M5343
6-BOLT_____S-1589
6-LOCKWASHER___3B4510
7B3235-BOLT_____2
3B4508-LOCKWASHER___2
7B3235-BOLT_____1
1D4719-NUT_____1
3B4508-LOCKWASHER____1
S-1595-BOLT_____1
3B4508-LOCKWASHER____1
S-1585-BOLT_____1
3B4508-LOCKWASHER____1
4B4280-WASHER_____1
2M523-BRACKET ASSEM(L.H)1
1F748-NUT__(WELDING)__1
3J5169-NUT__(WELDING)_4
(PARTS OF BRACKET ASSEM.2M523)
S-1585-BOLT_____2
3B4508-LOCKWASHER___2
4B4280-WASHER_____2
9F2978-NUT__(WELD)__1
(PART OF BRACKET ASSEM.2M523)
S-1595-BOLT_____5
3B4508-LOCKWASHER____5
4B4280-WASHER_____5
S-1595-BOLT_____1
3B4508-LOCKWASHER____1
2M531-BEAM ASSEM._____1
1F748-NUT_____2
(PART OF BEAM ASSEM. 2M531)
1A1135-BOLT__(2"LONG)__4
S-1589-BOLT__(1.75"LONG)__4
1D4720-NUT_____8
3B4510-LOCKWASHER___8
S-1595-BOLT_____8
3B4508-LOCKWASHER____8
S-1589-BOLT_____8
3B4510-LOCKWASHER___8
7M726-SHIM__(.060"THICK)_2
7M725-SHIM__(.036"THICK)_2
S-1595-BOLT_____8
4B4280-WASHER_____8
3B4508-LOCKWASHER___8
85730

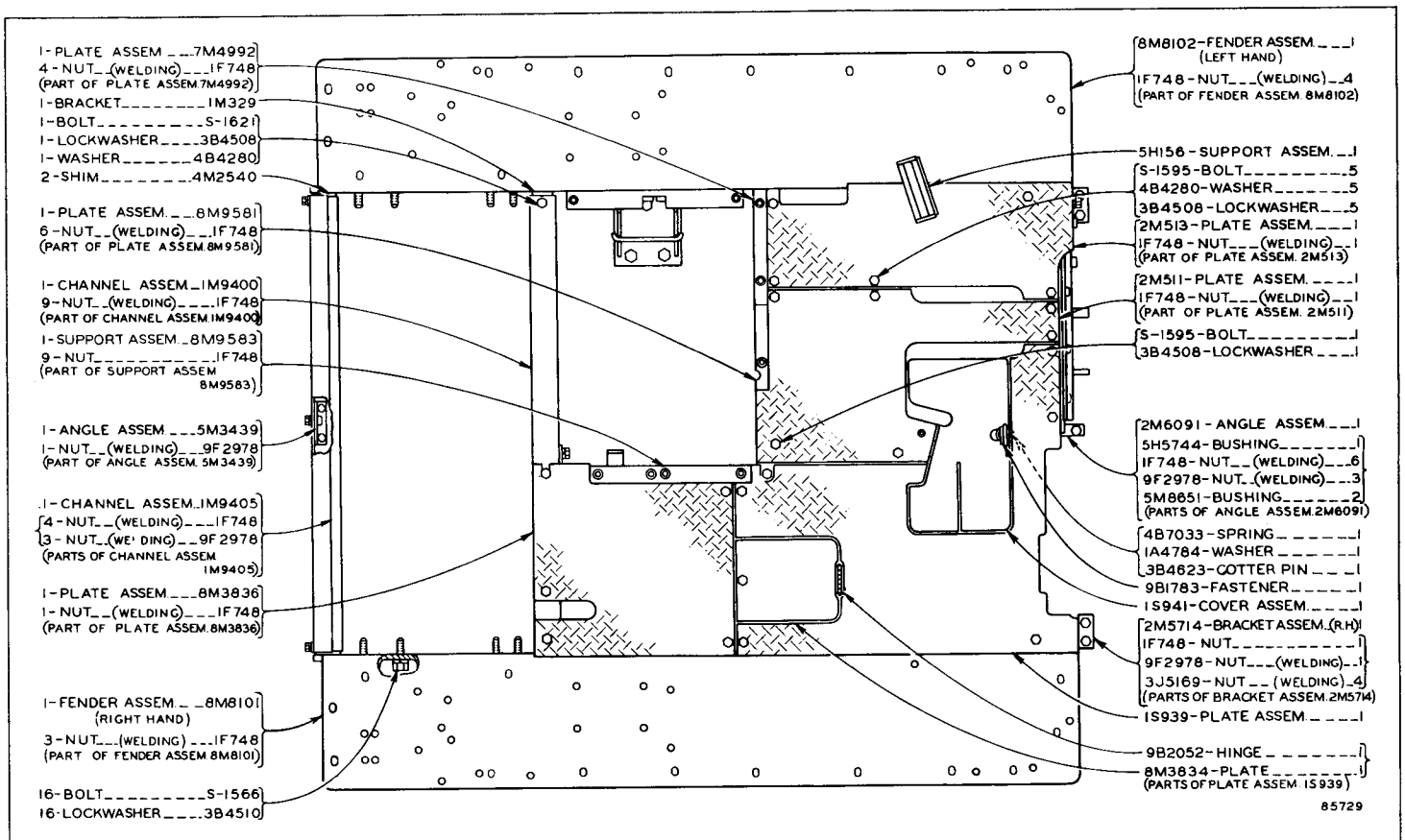

FENDERS—Part One
Effective with Serial No. 48A2337

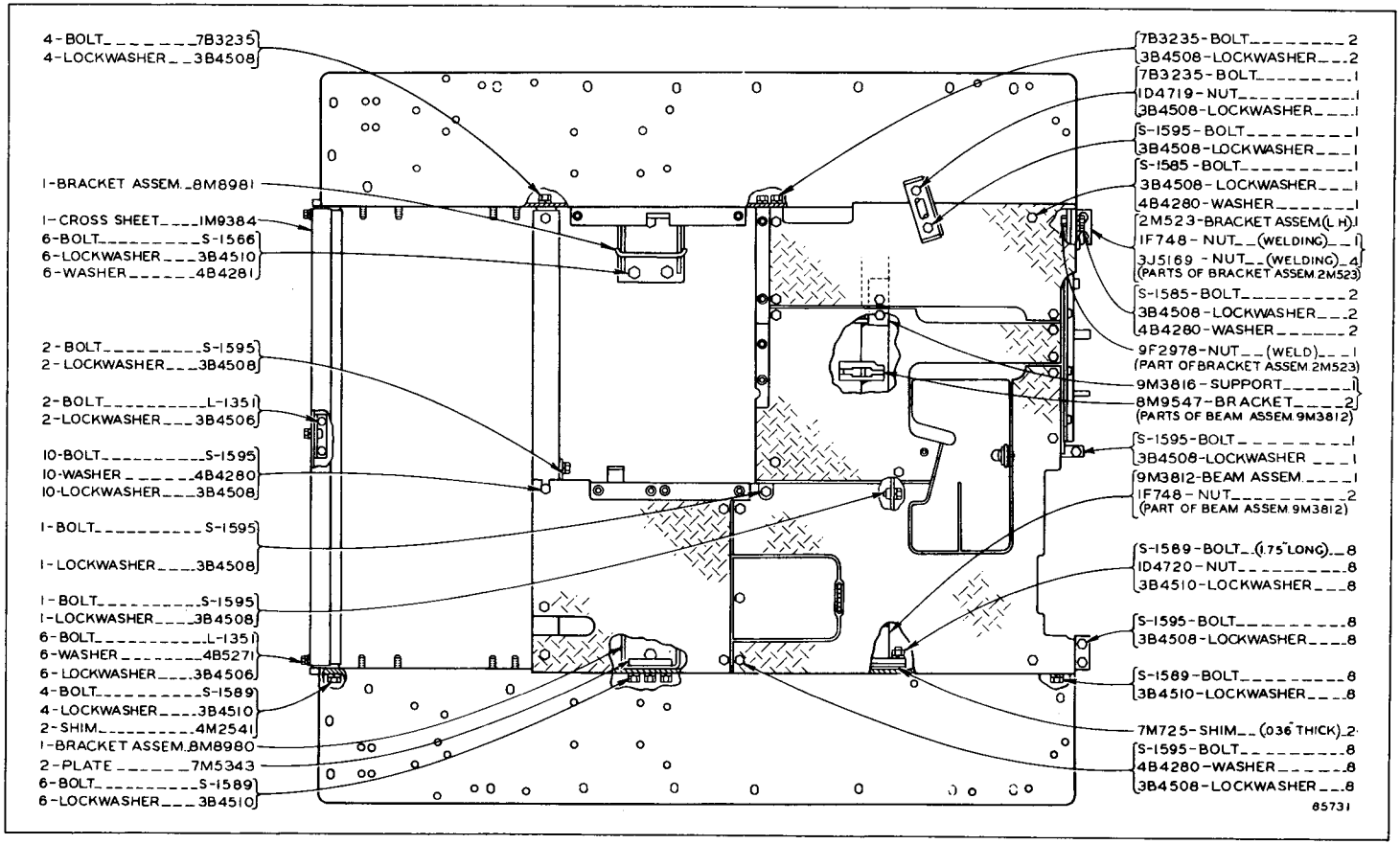
4-BOLT_____7B3235
4-LOCKWASHER__3B4508
1-BRACKET ASSEM._8M8981
1-CROSS SHEET____1M9384
6-BOLT_____S-1566
6-LOCKWASHER___3B4510
6-WASHER_____4B4281
2-BOLT_____S-1595
2-LOCKWASHER___3B4508
2-BOLT_____L-1351
2-LOCKWASHER___3B4506
10-BOLT_____S-1595
10-WASHER_____4B4280
10-LOCKWASHER___3B4508
1-BOLT_____S-1595
1-LOCKWASHER____3B4508
1-BOLT_____S-1595
1-LOCKWASHER____3B4508
6-BOLT_____L-1351
6-WASHER_____4B5271
6-LOCKWASHER____3B4506
4-BOLT_____S-1589
4-LOCKWASHER____3B4510
2-SHIM_____4M2541
1-BRACKET ASSEM.8M8980
2-PLATE_____7M5343
6-BOLT_____S-1589
6-LOCKWASHER___3B4510
7B3235-BOLT_____2
3B4508-LOCKWASHER___2
7B3235-BOLT_____1
1D4719-NUT_____1
3B4508-LOCKWASHER___1
S-1595-BOLT_____1
3B4508-LOCKWASHER___1
S-1585-BOLT_____1
3B4508-LOCKWASHER___1
4B4280-WASHER_____1
2M523-BRACKET ASSEM.(L H)1
1F748-NUT__(WELDING)__1
3J5169-NUT__(WELDING)_4
(PARTS OF BRACKET ASSEM.2M523)
S-1585-BOLT_____2
3B4508-LOCKWASHER___2
4B4280-WASHER_____2
9F2978-NUT__(WELD)___1
(PART OF BRACKET ASSEM.2M523)
9M3816-SUPPORT_____1
8M9547-BRACKET____2
(PARTS OF BEAM ASSEM.9M3812)
S-1595-BOLT_____1
3B4508-LOCKWASHER___1
9M3812-BEAM ASSEM.____1
1F748-NUT_____2
(PART OF BEAM ASSEM.9M3812)
S-1589-BOLT_(1.75"LONG)__8
1D4720-NUT_____8
3B4510-LOCKWASHER___8
S-1595-BOLT_____8
3B4508-LOCKWASHER____8
S-1589-BOLT_____8
3B4510-LOCKWASHER___8
7M725-SHIM__(.036" THICK)_2
S-1595-BOLT_____8
4B4280-WASHER_____8
3B4508-LOCKWASHER___8
85731

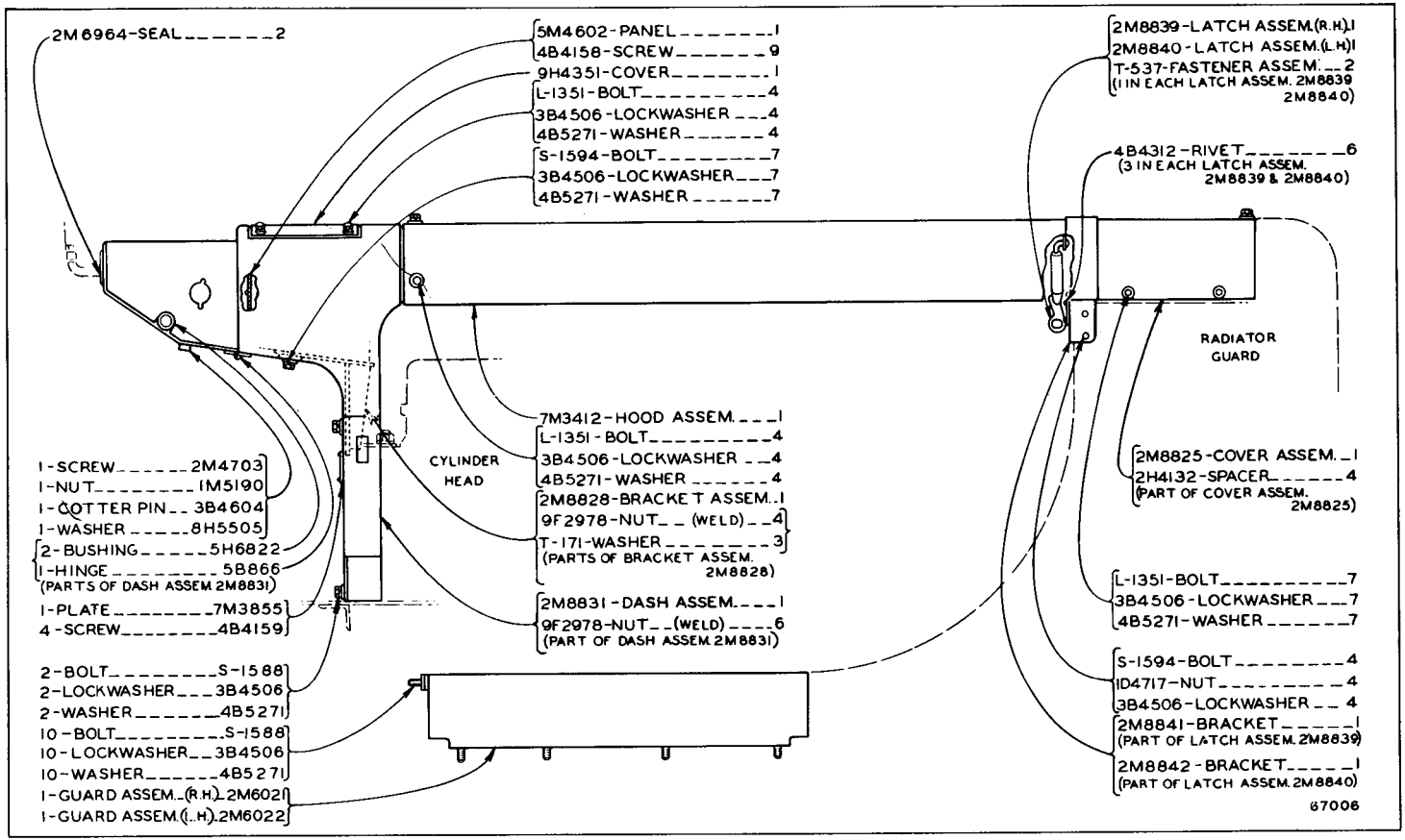

HOOD AND DASH

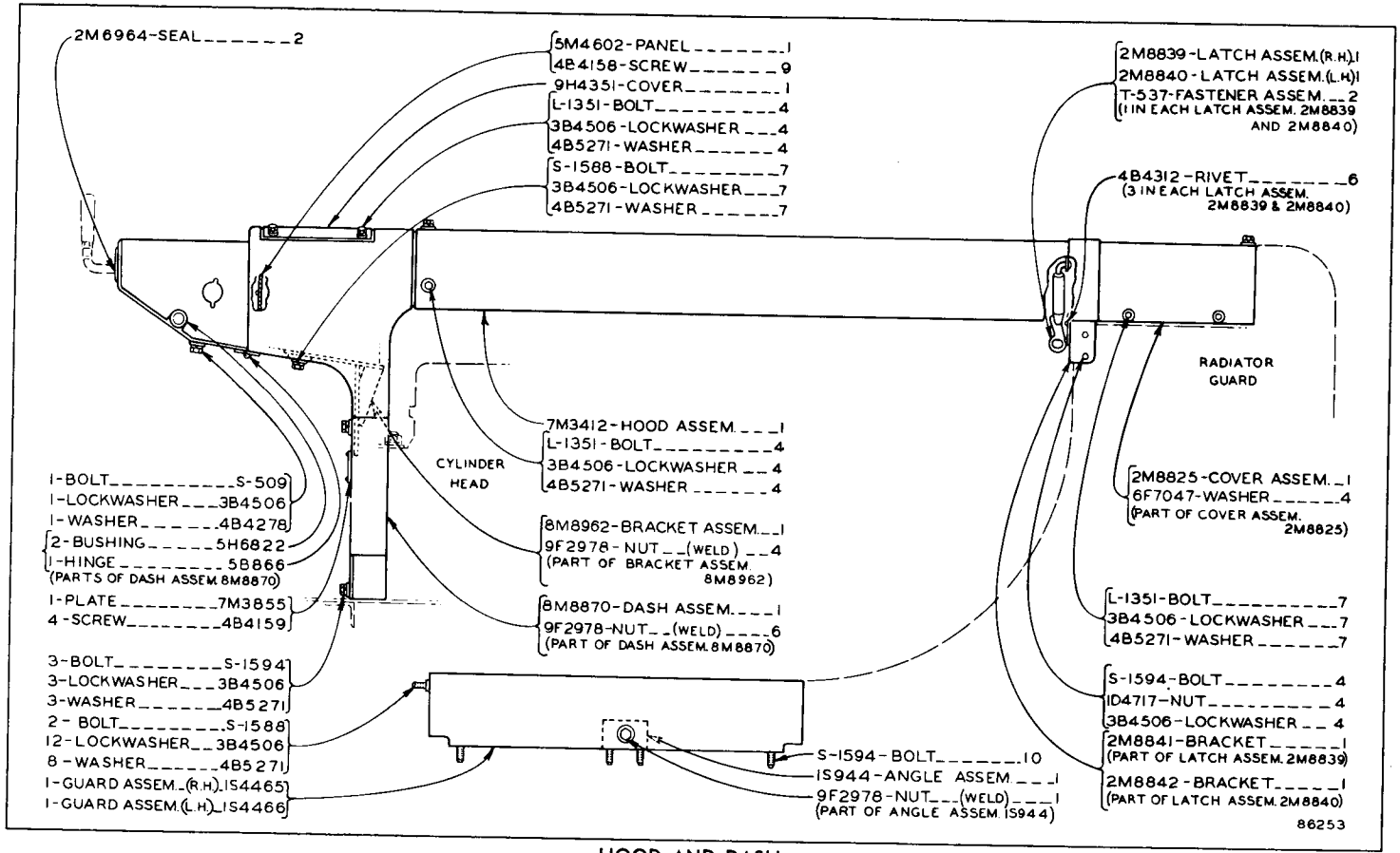

HOOD AND DASH

Effective with Serial No. 48A1276

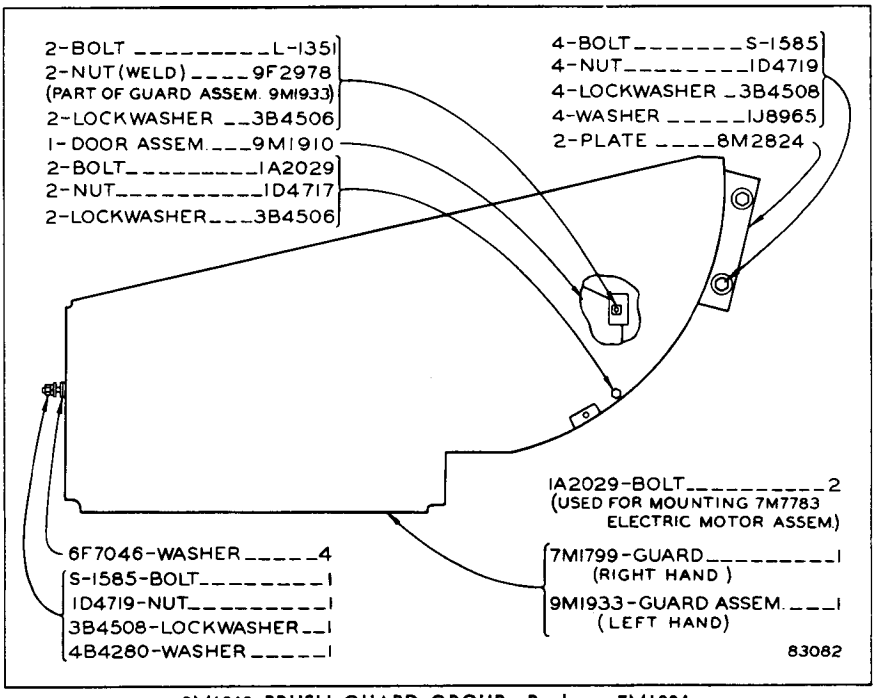

9M1913 BRUSH GUARD GROUP—Replaces 7M1804

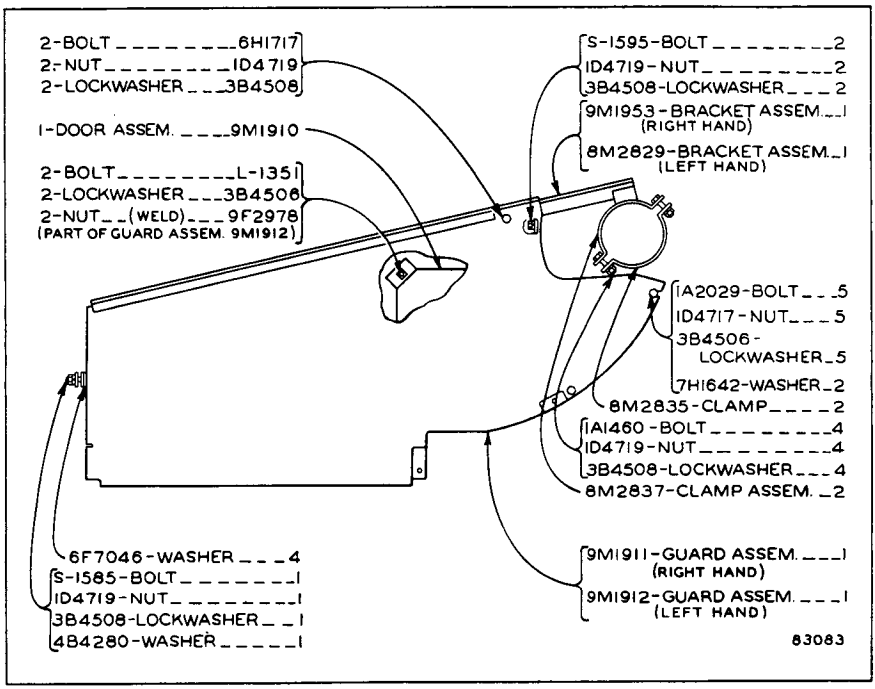

9M1914 BRUSH GUARD GROUP—Replaces 7M1803
For use with Hydraulic Dozer

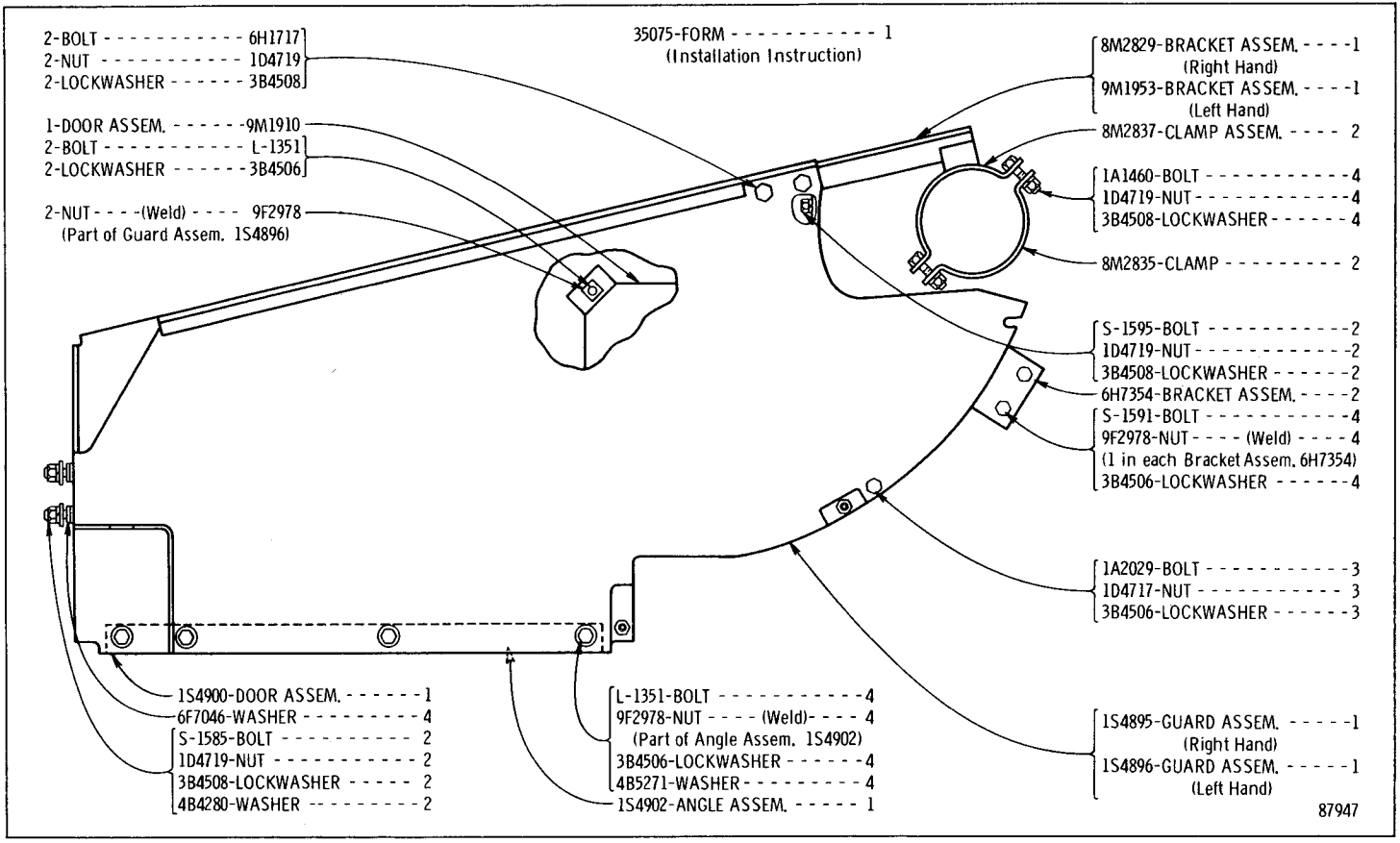

1S4903 BRUSH GUARD GROUP—Replaces 7M1803
For use with Hydraulic Bulldozer

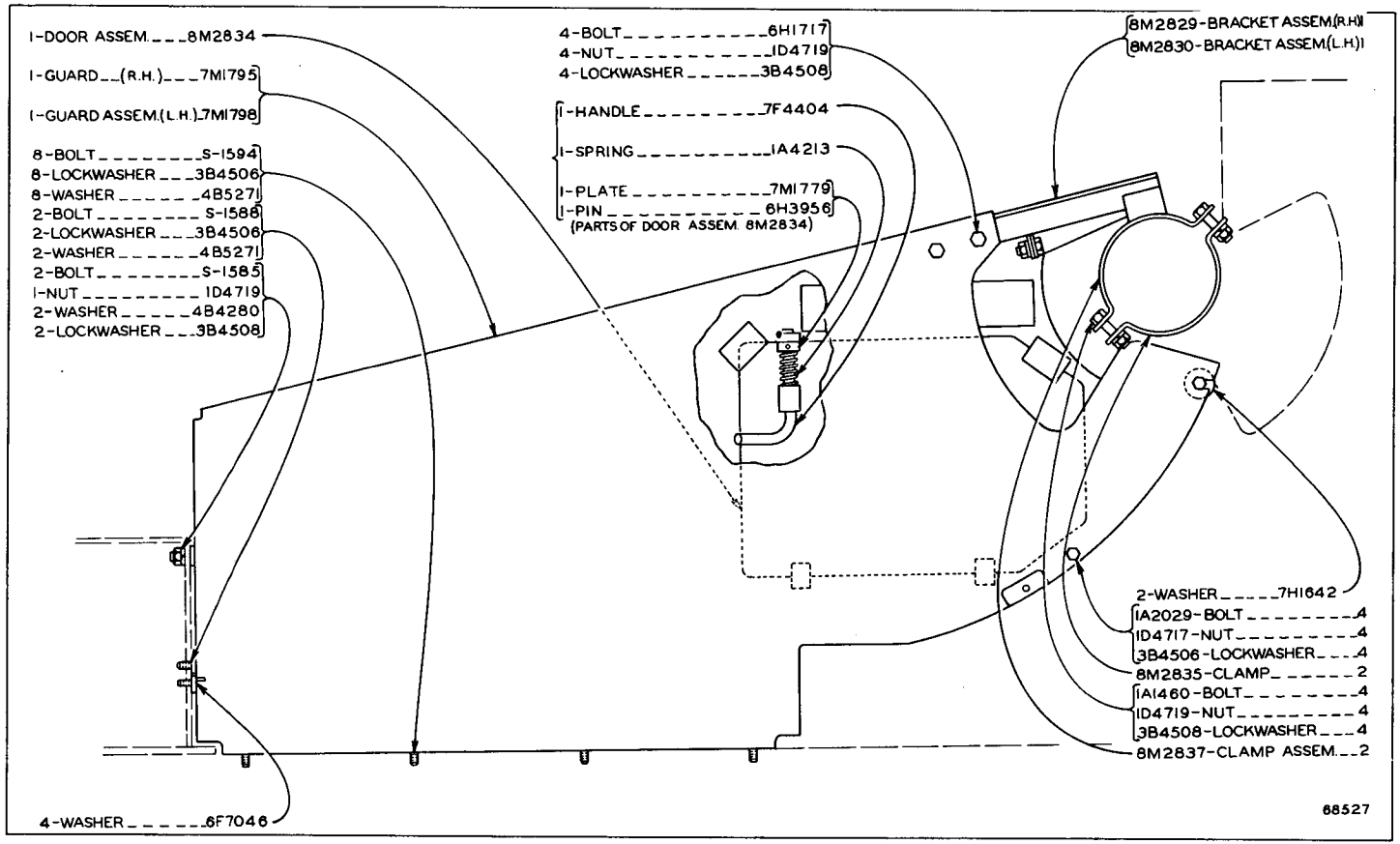

7M1803 BRUSH AND GUARD GROUP
For use with Hydraulic Bulldozer

ONLY "CATERPILLAR" PARTS GIVE "CATERPILLAR" PERFORMANCE

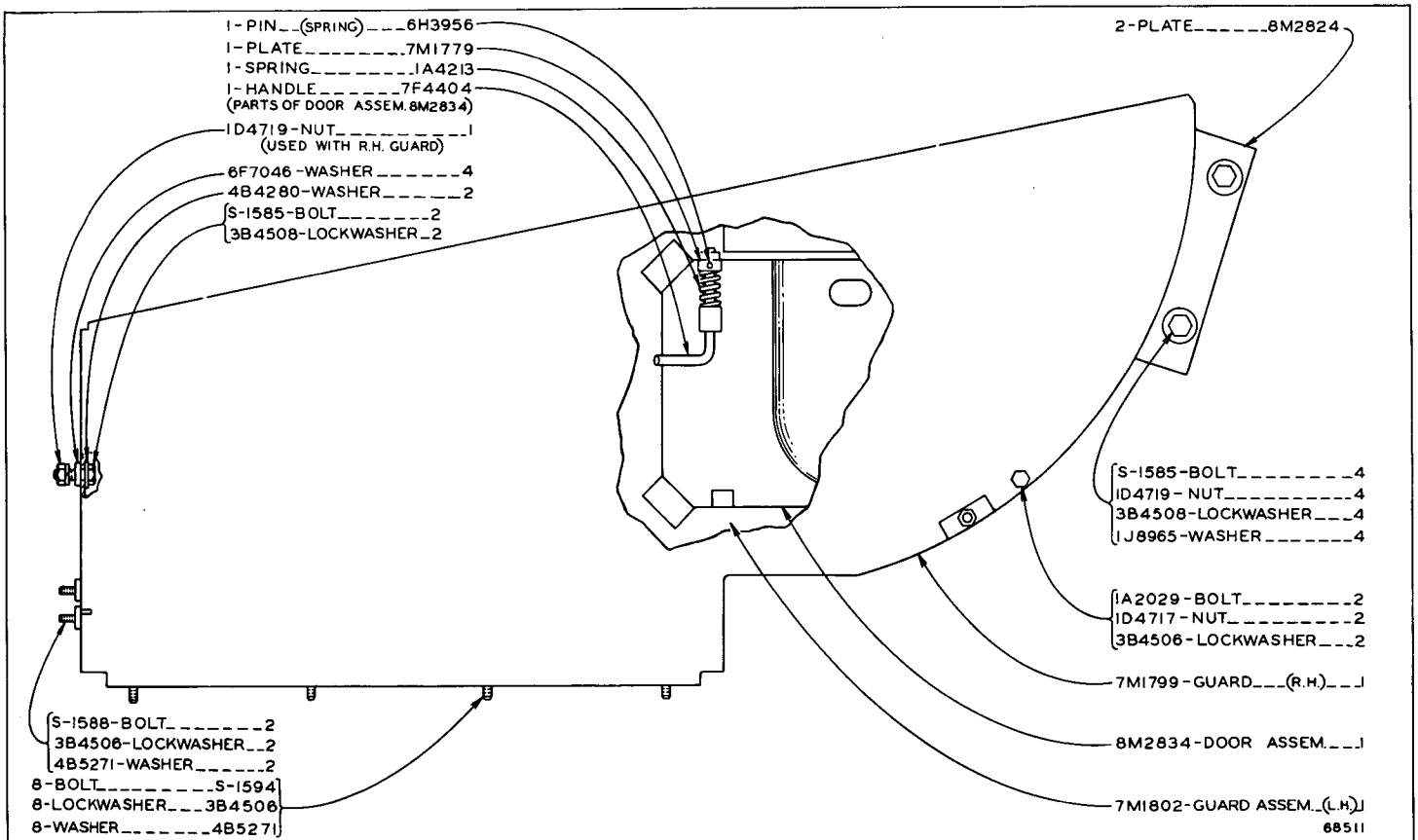

7M1804 BRUSH GUARD GROUP

ALWAYS GIVE SERIAL NUMBER WHEN ORDERING PARTS

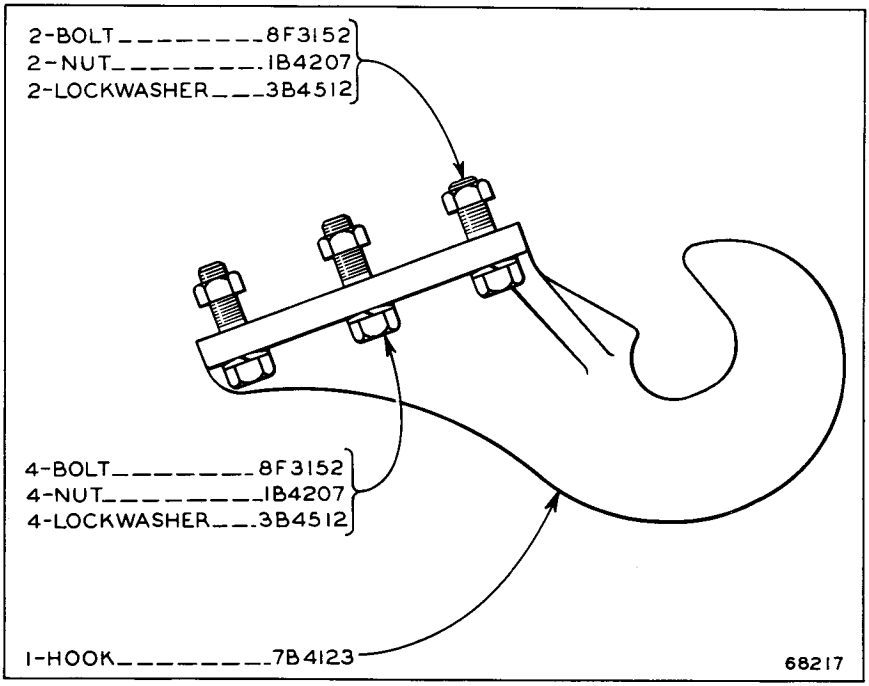

7B4464 FRONT PULL HOOK GROUP
For use with Crankcase Guard

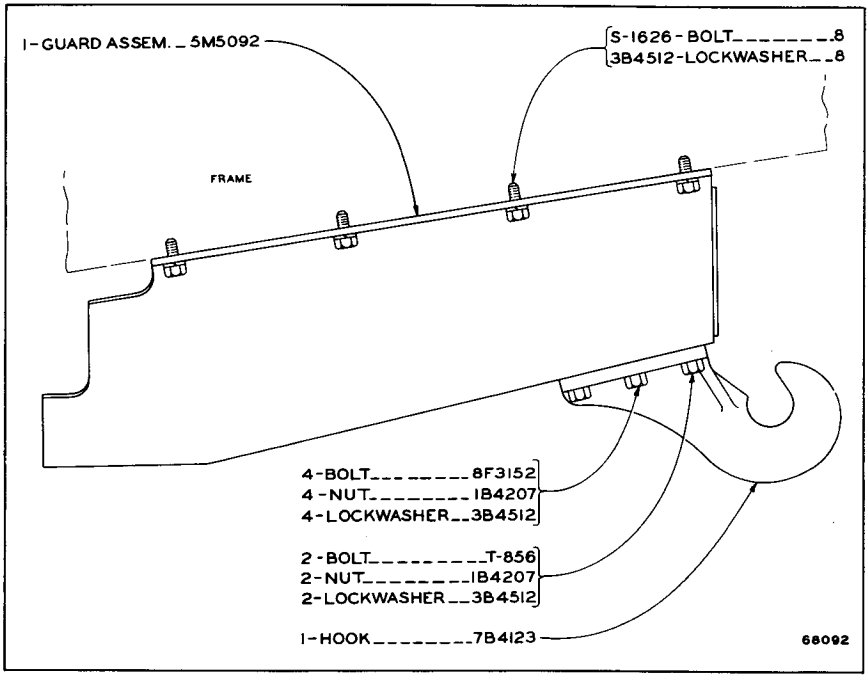

4M3964 FRONT PULL HOOK GROUP
For use without Crankcase Guard

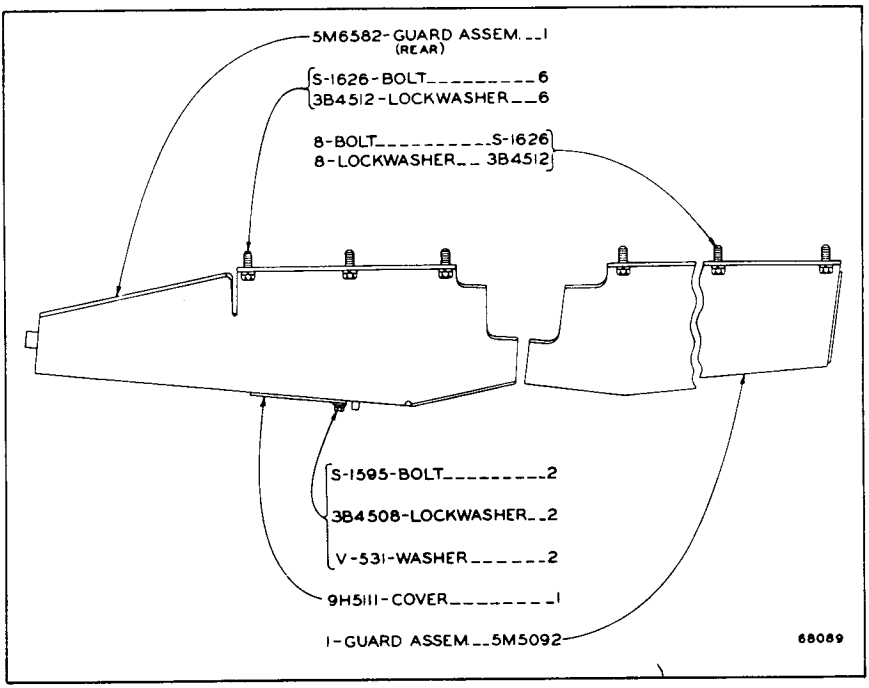

5M6583 CRANKCASE GUARD GROUP

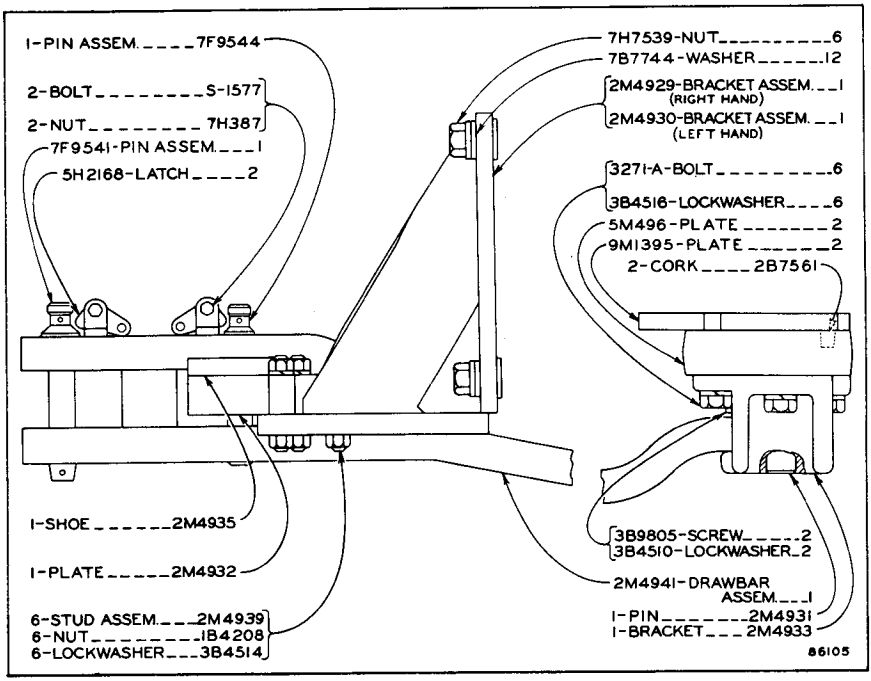

2M5740 SWINGING DRAWBAR GROUP

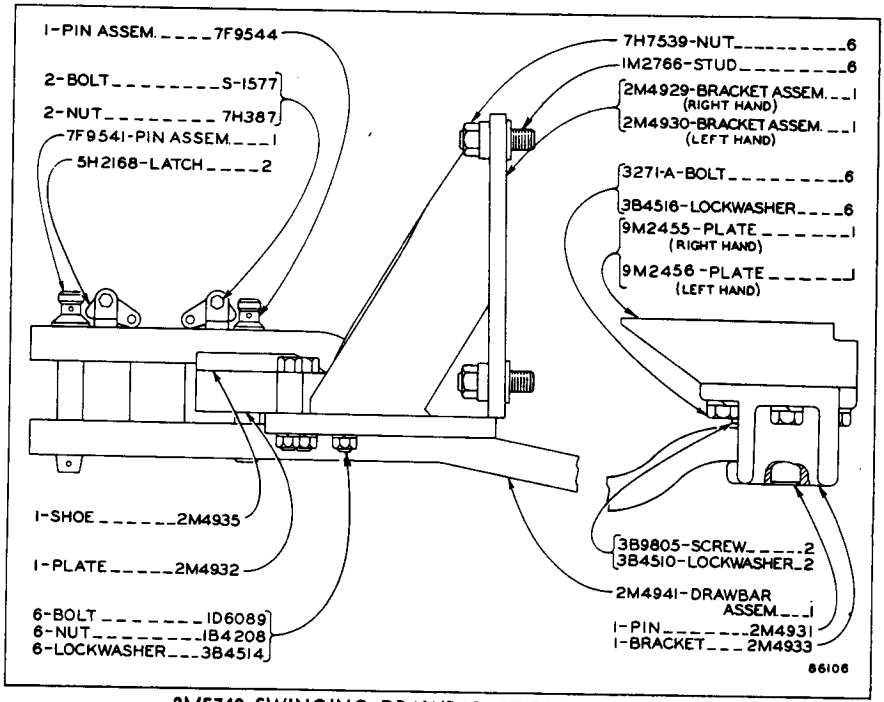

2M5740 SWINGING DRAWBAR GROUP—Second Type

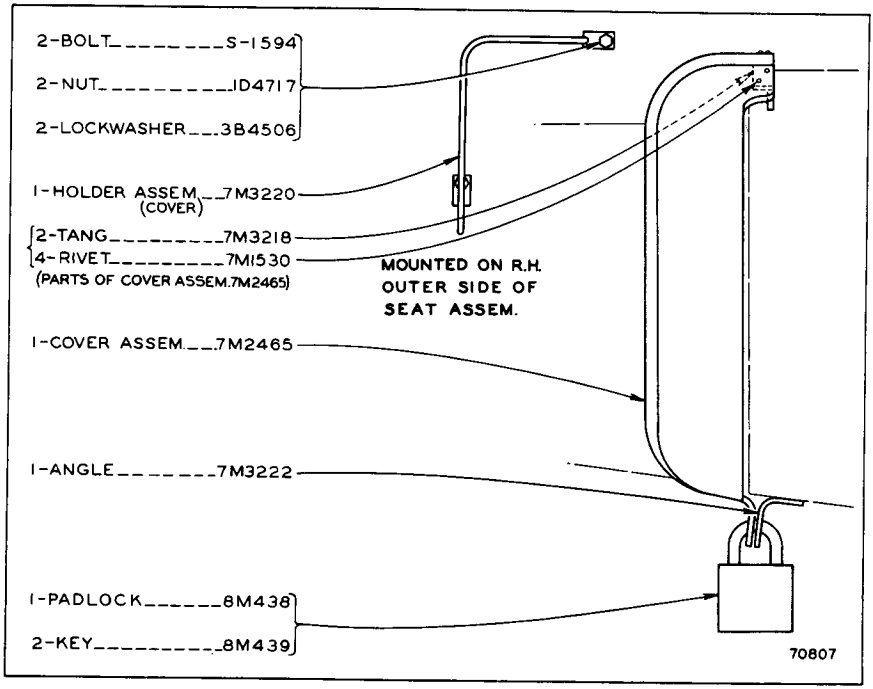

7M3221 INSTRUMENT PANEL PROTECTION GROUP

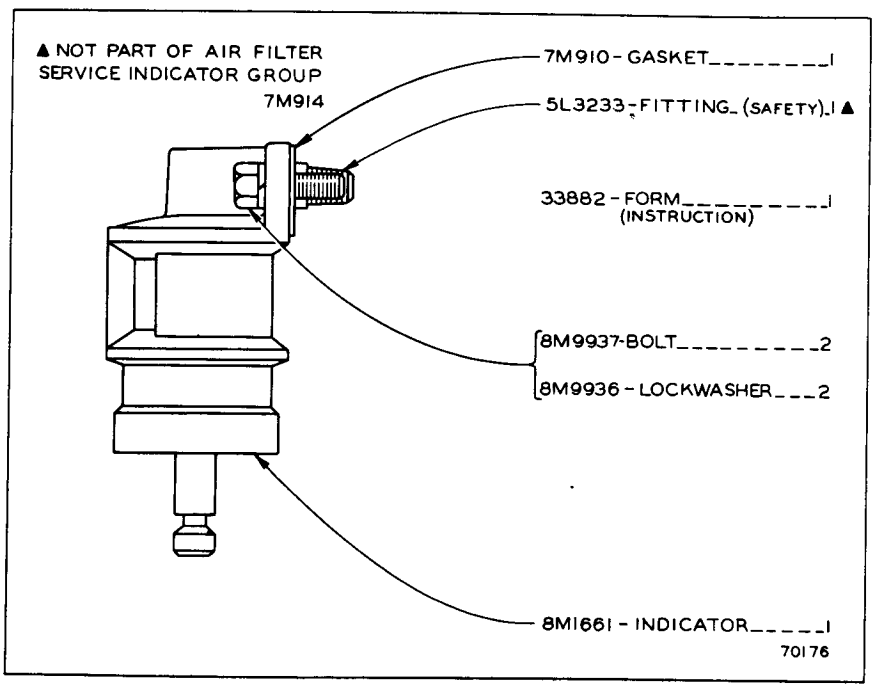

7M914 AIR FILTER SERVICE INDICATOR GROUP
For use with Dry Type Air Cleaner

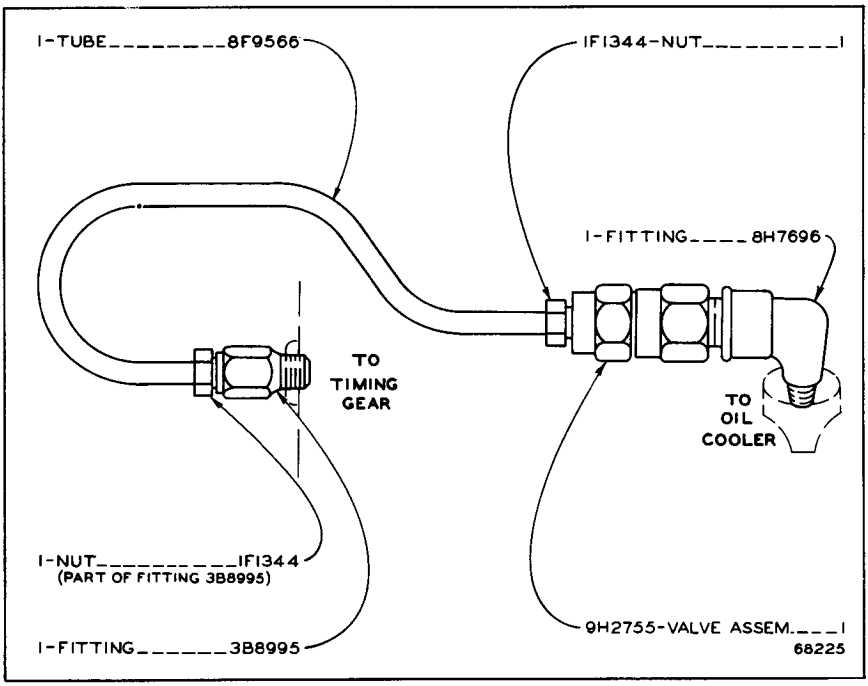

2M4866 SEPARATE TO COMMON LUBRICATION OIL CONVERSION GROUP

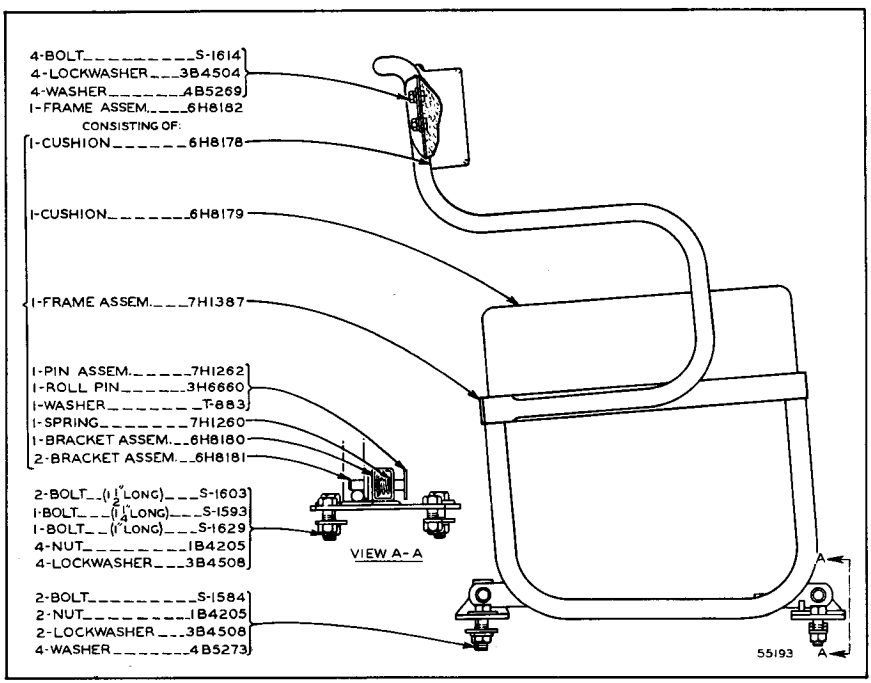

6H3754 AUXILIARY SEAT GROUP

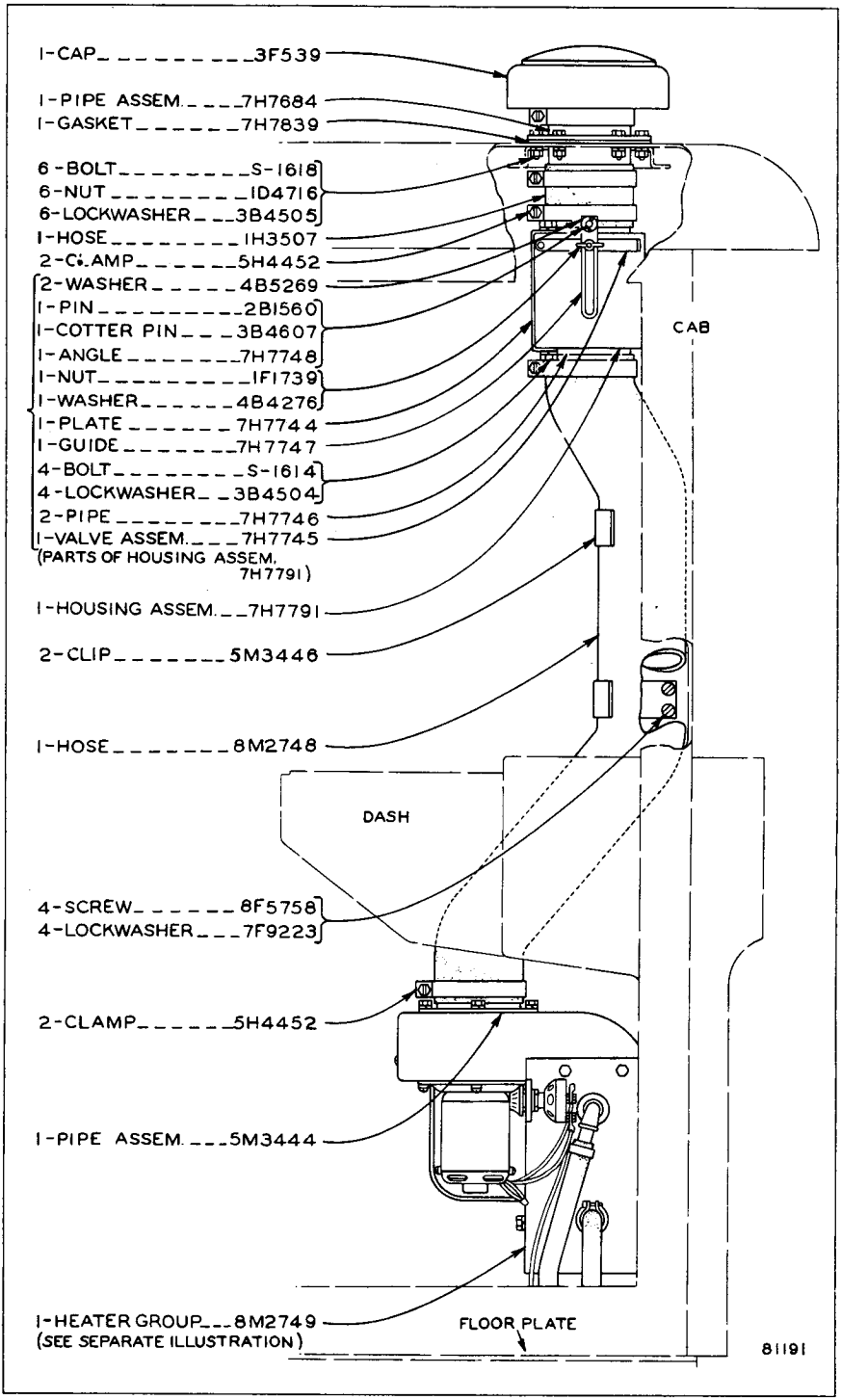

8M2750 FRESH AIR HEATER GROUP

8M2749 Heater Group parts are shown on reverse side of this insert

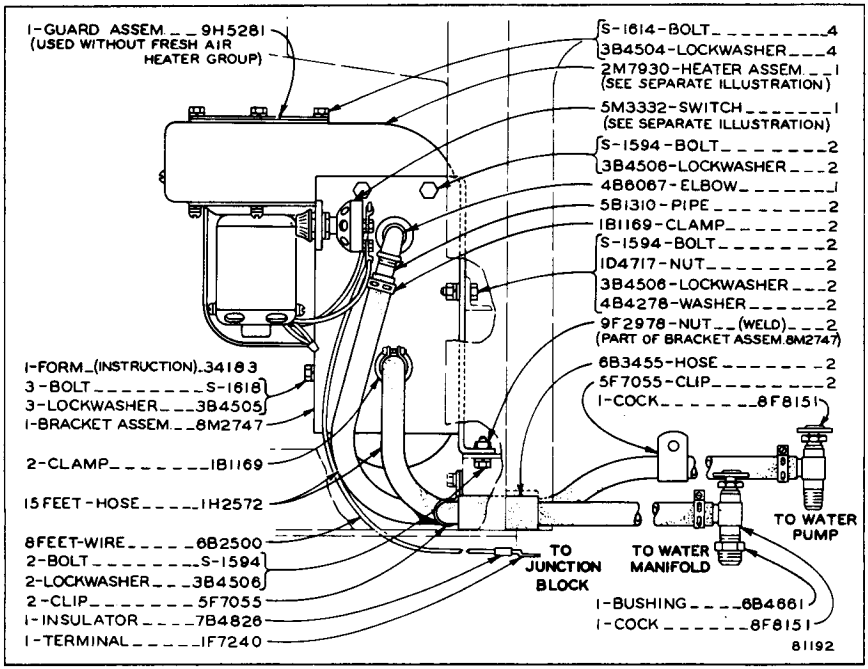

8M2749 HEATER GROUP—12 Volt—Recirculating

Also part of 8M2750 Fresh Air Heater Group shown on front side of this insert
2M7930 Heater Assembly and 5M3332 Switch Assembly parts are shown below
and on insert between Pages 114 and 115

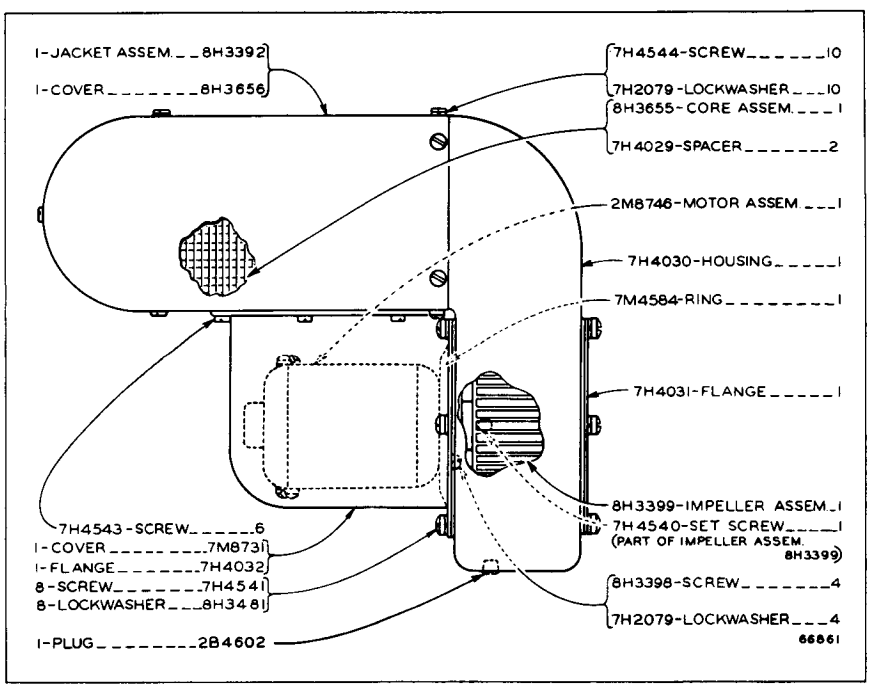

2M7930 HEATER ASSEMBLY—12 Volt

Part of 8M2749 Heater Group

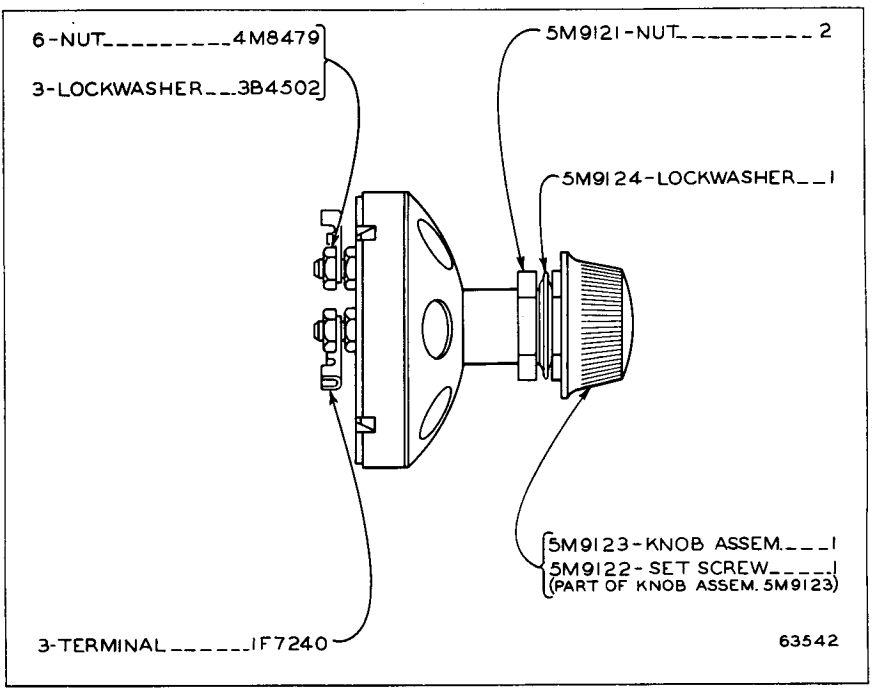

5M3332 SWITCH ASSEMBLY—12 Volt

Part of 8M2749 Heater Group shown on insert between Pages 114 and 115

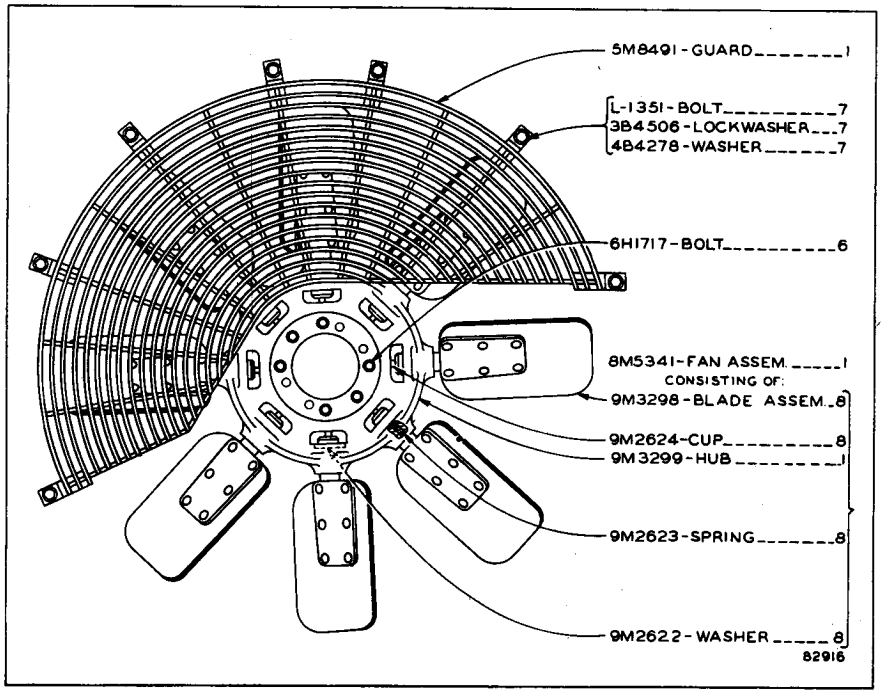

9M936 FAN GROUP—Reversible Blade

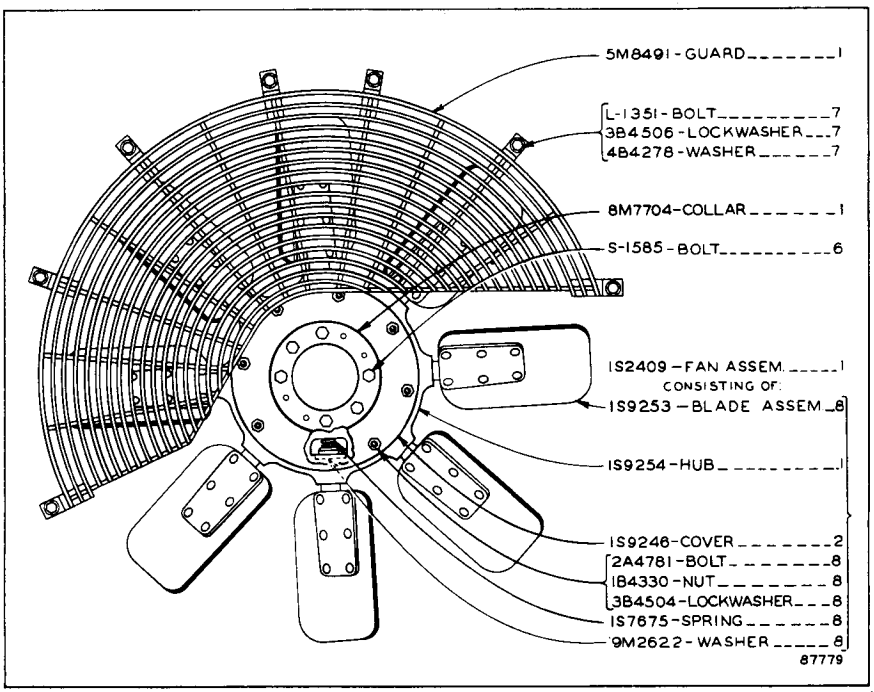

1S4789 FAN GROUP—Reversible Blade—Replaces 9M936

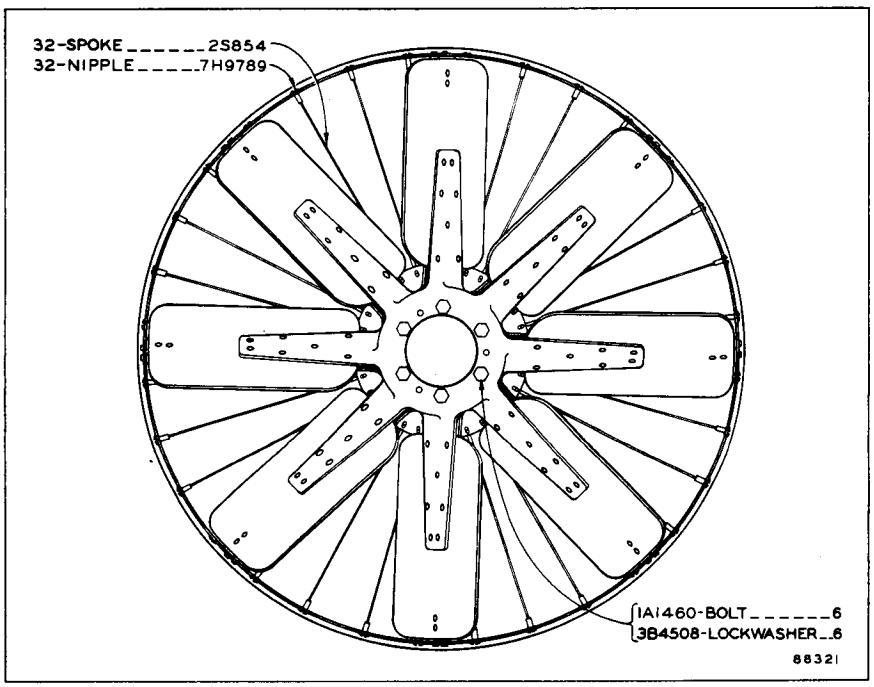

2S853 FAN GROUP—Self Cleaning

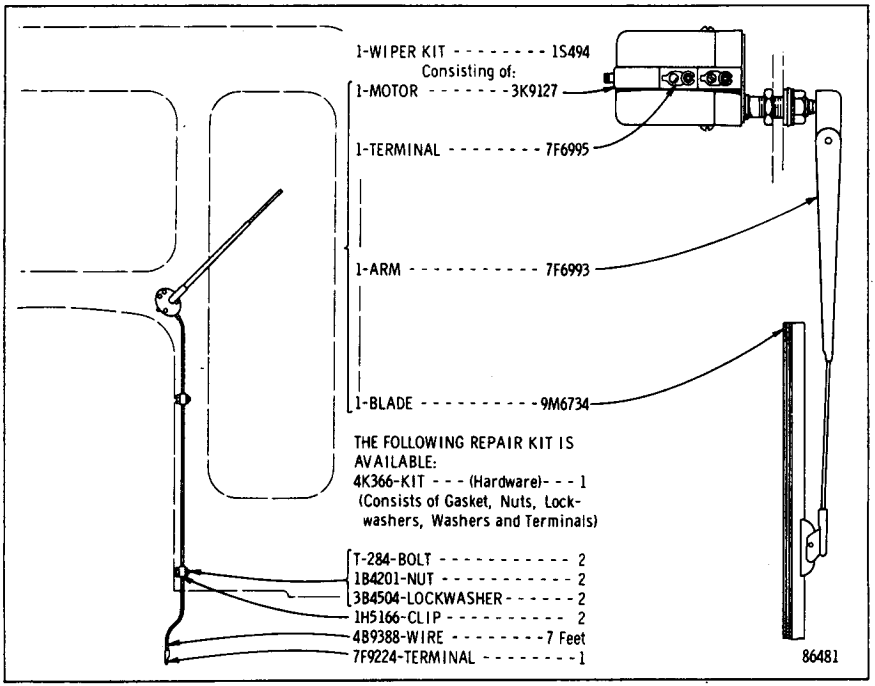

1S478 WINDSHIELD WIPER GROUP—12 Volt
For use with 9M147 Cab Group

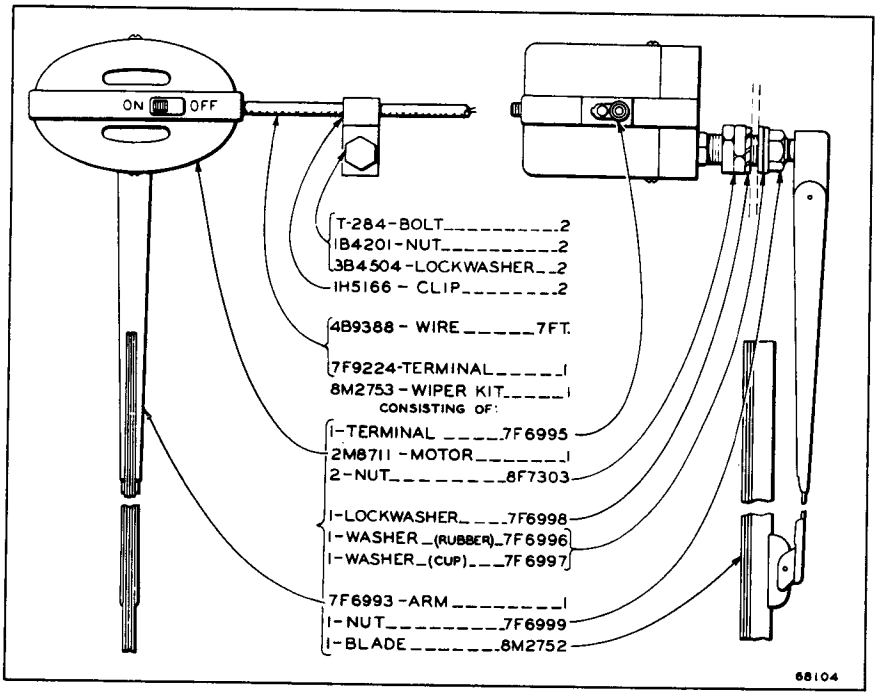

8M2754 WINDSHIELD WIPER GROUP—12 Volt

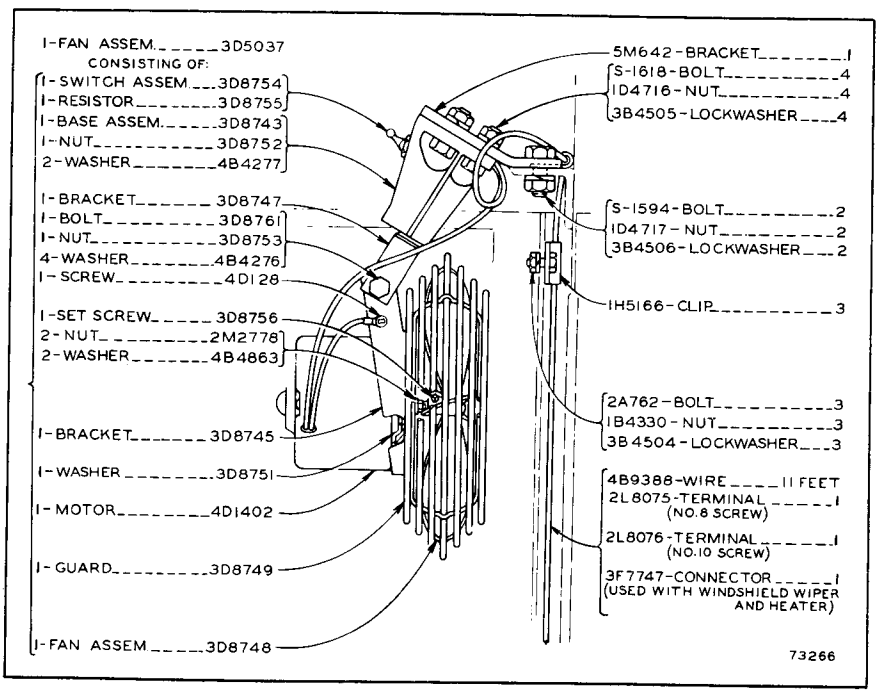

5M2022 DEFROSTER FAN GROUP—12 Volt

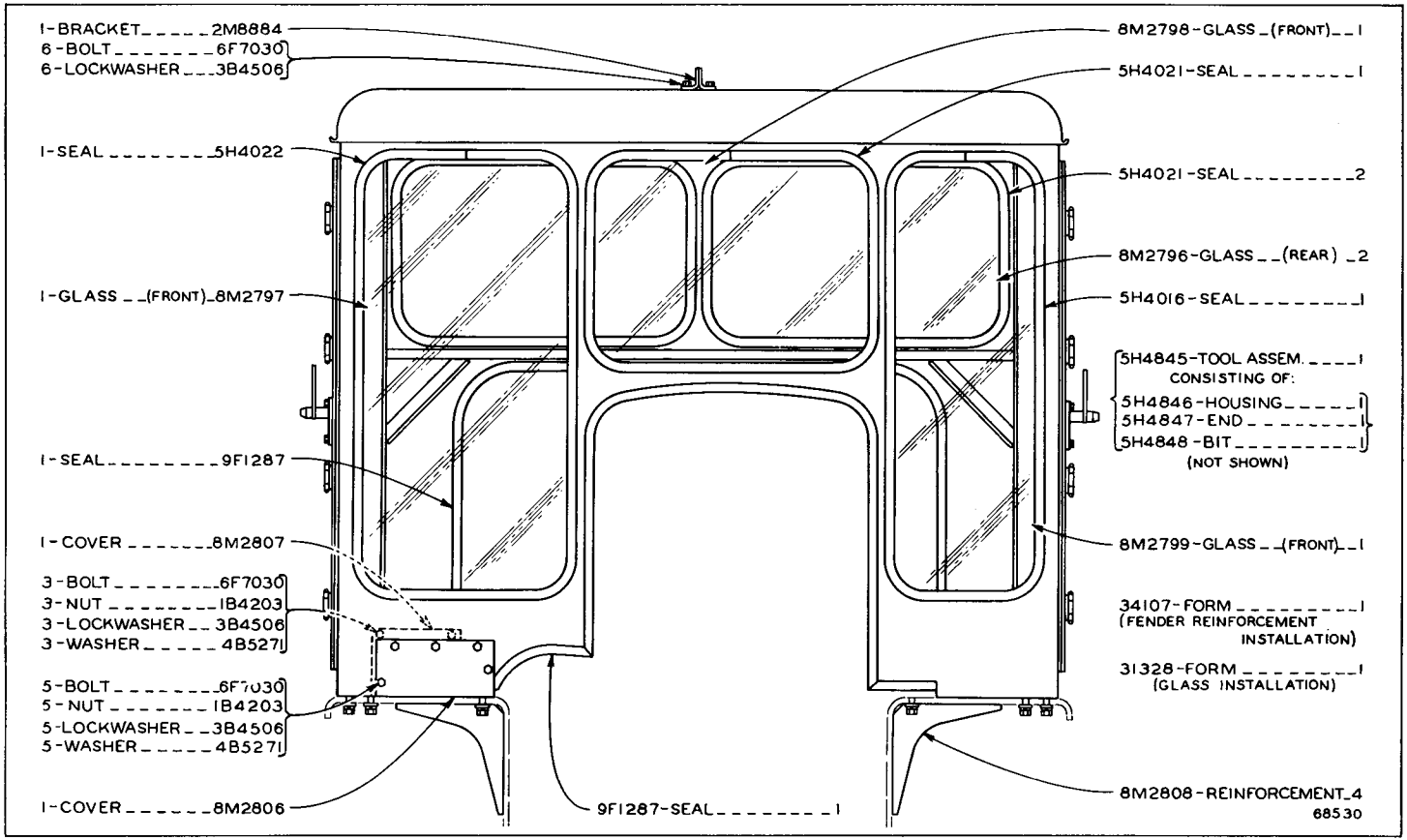

8M2810 CAB GROUP—Front View

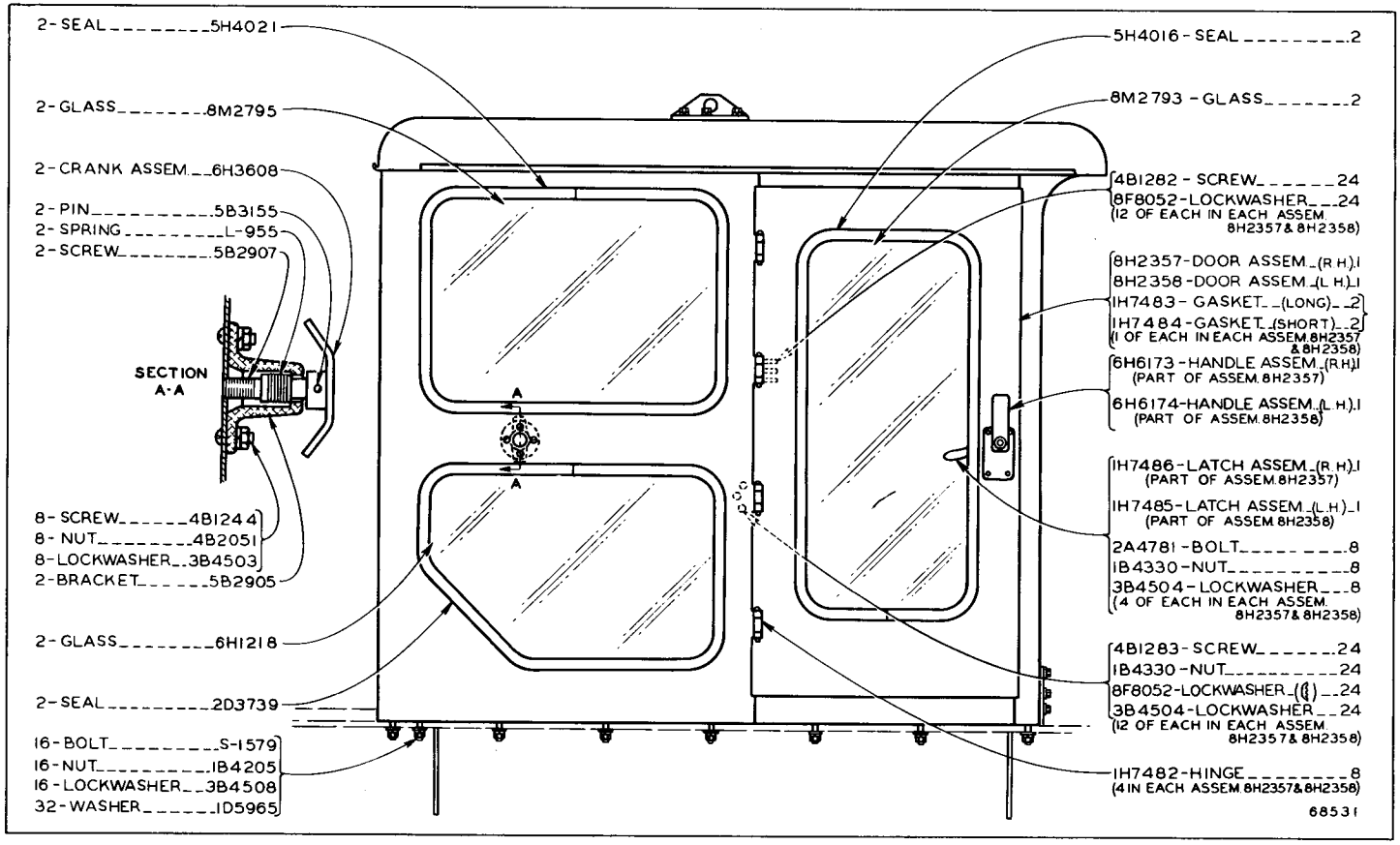

8M2810 CAB GROUP—Side View

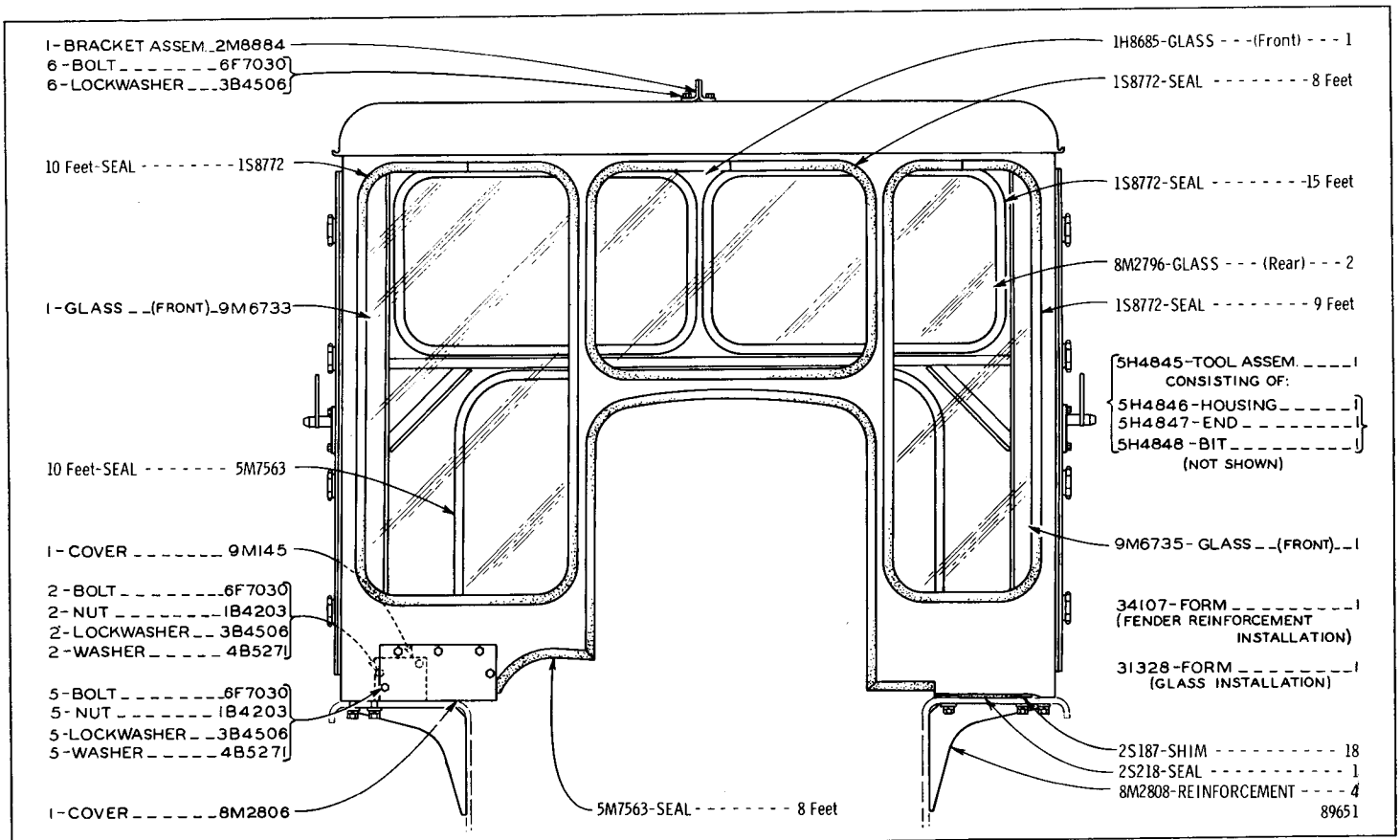

9M147 CAB GROUP—Front View

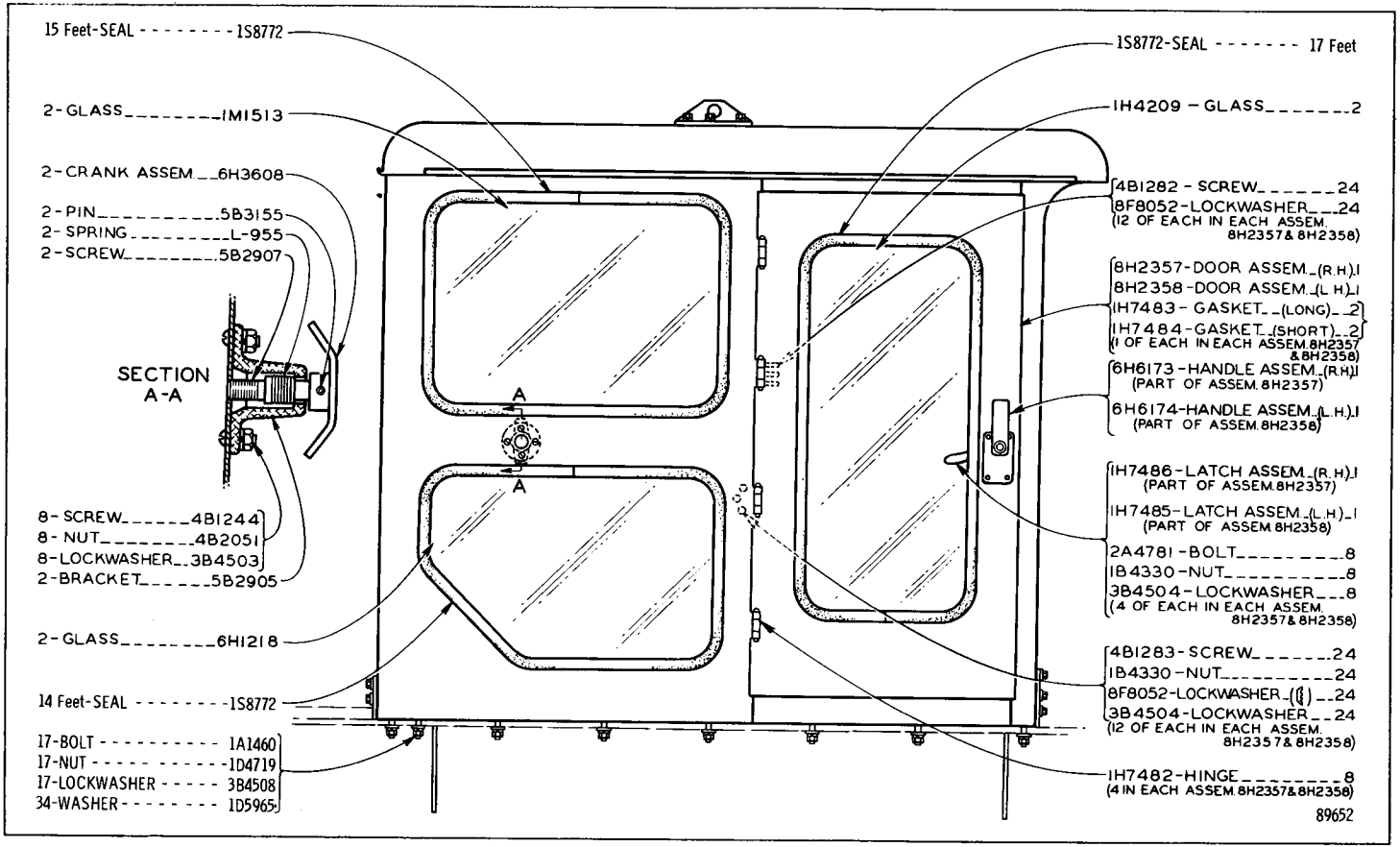

9M147 CAB GROUP—Side View

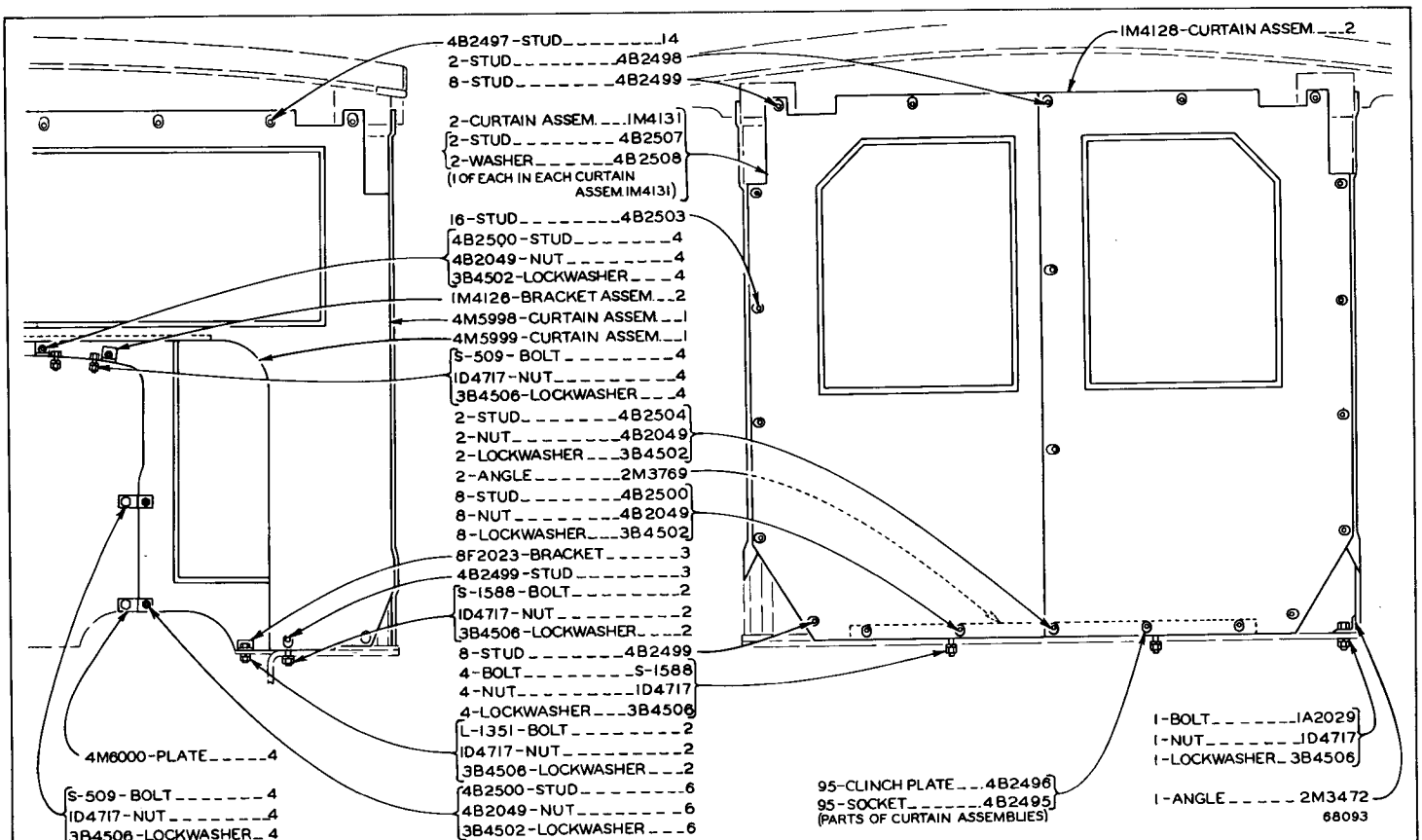

4M6001 CANOPY CURTAIN GROUP—Rear and Side Views

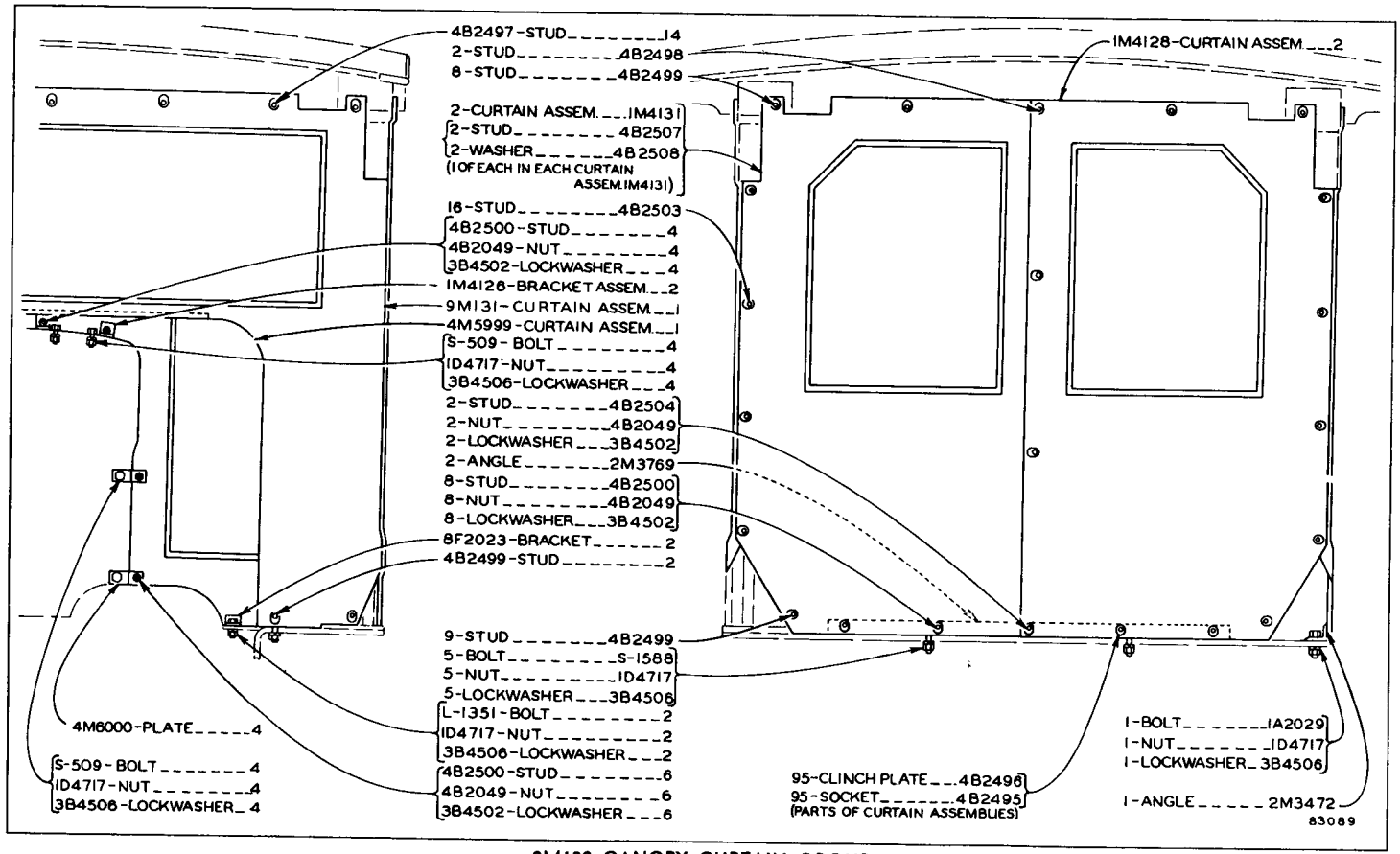

9M132 CANOPY CURTAIN GROUP

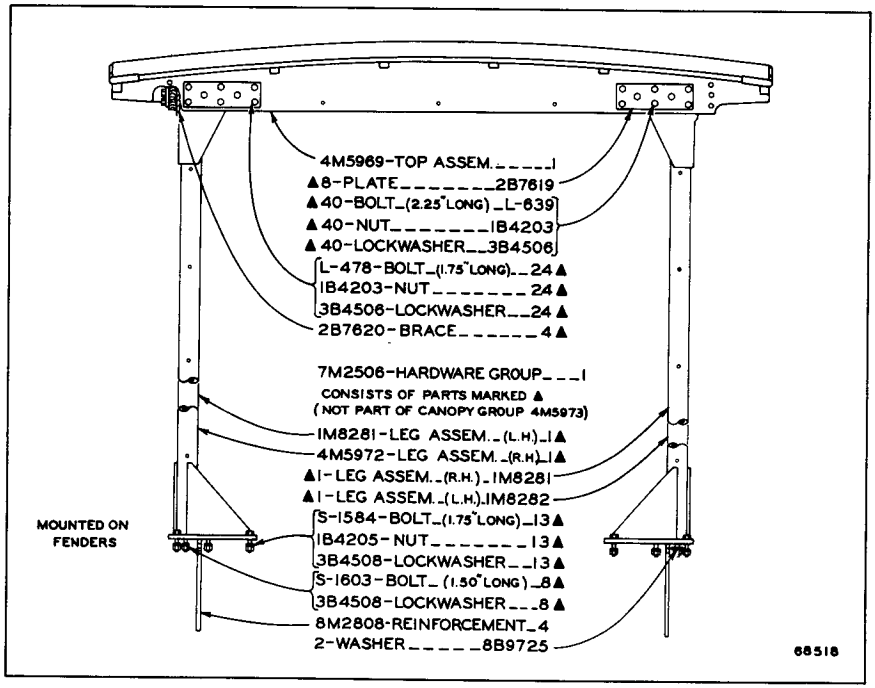

4M5973 CANOPY TOP GROUP

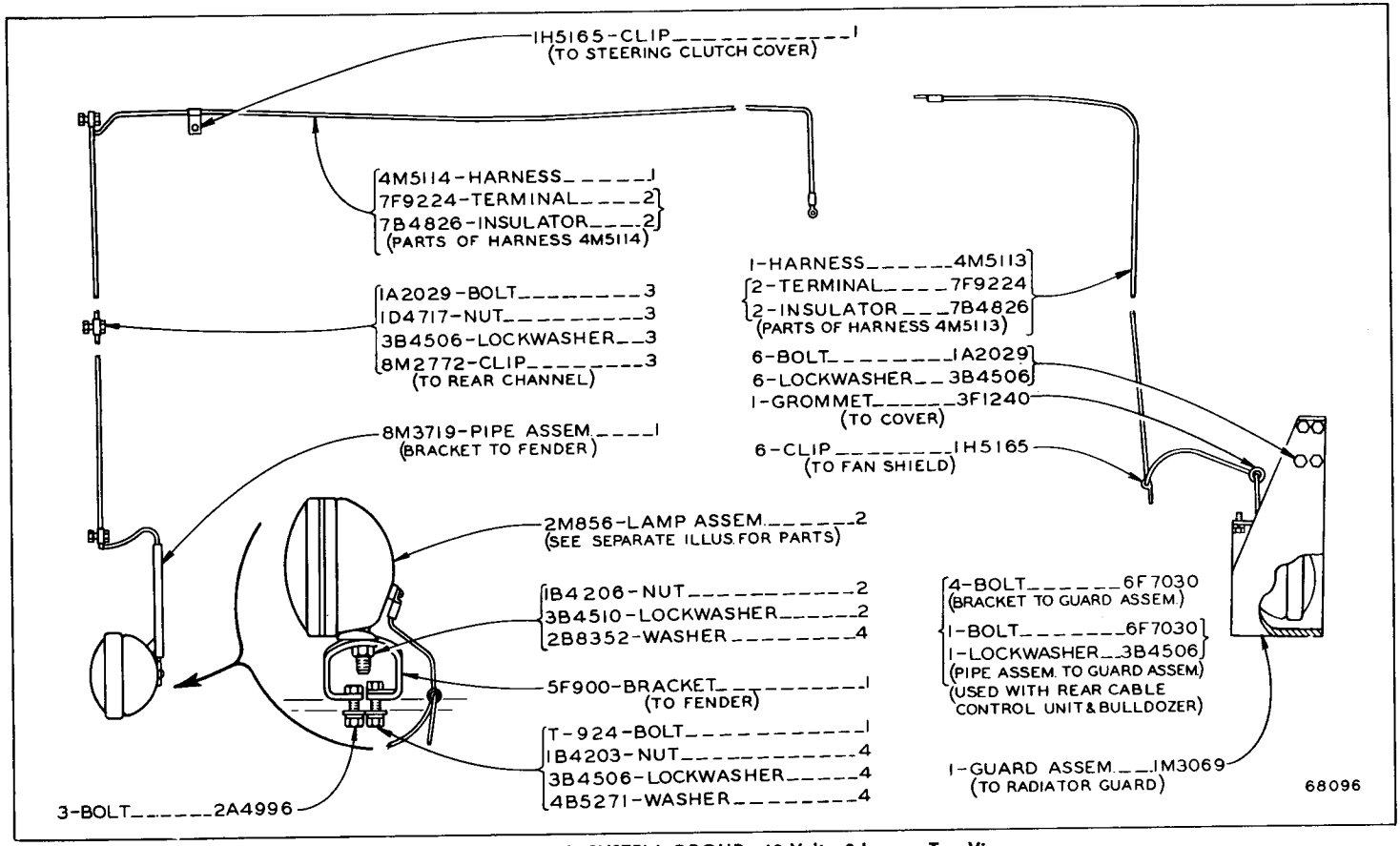

4M5111 LIGHTING SYSTEM GROUP—12 Volt—2 Lamp—Top View

For use without Cab

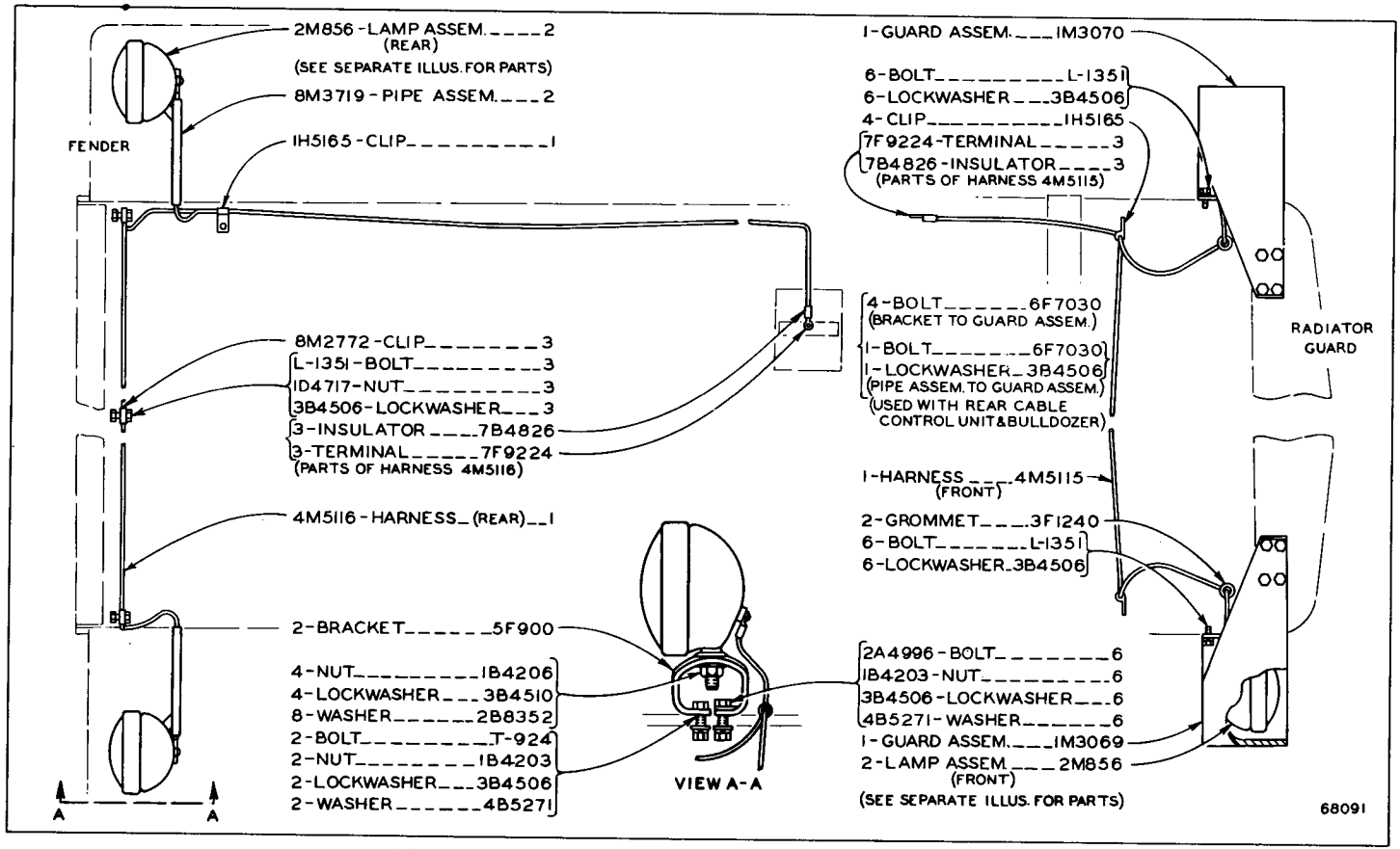

4M5112 LIGHTING SYSTEM GROUP—12 Volt—4 Lamp—Top View

For use without Cab

2M856 Flood Lamp Assembly parts are shown on Page 123

ONLY "CATERPILLAR" PARTS GIVE "CATERPILLAR" PERFORMANCE

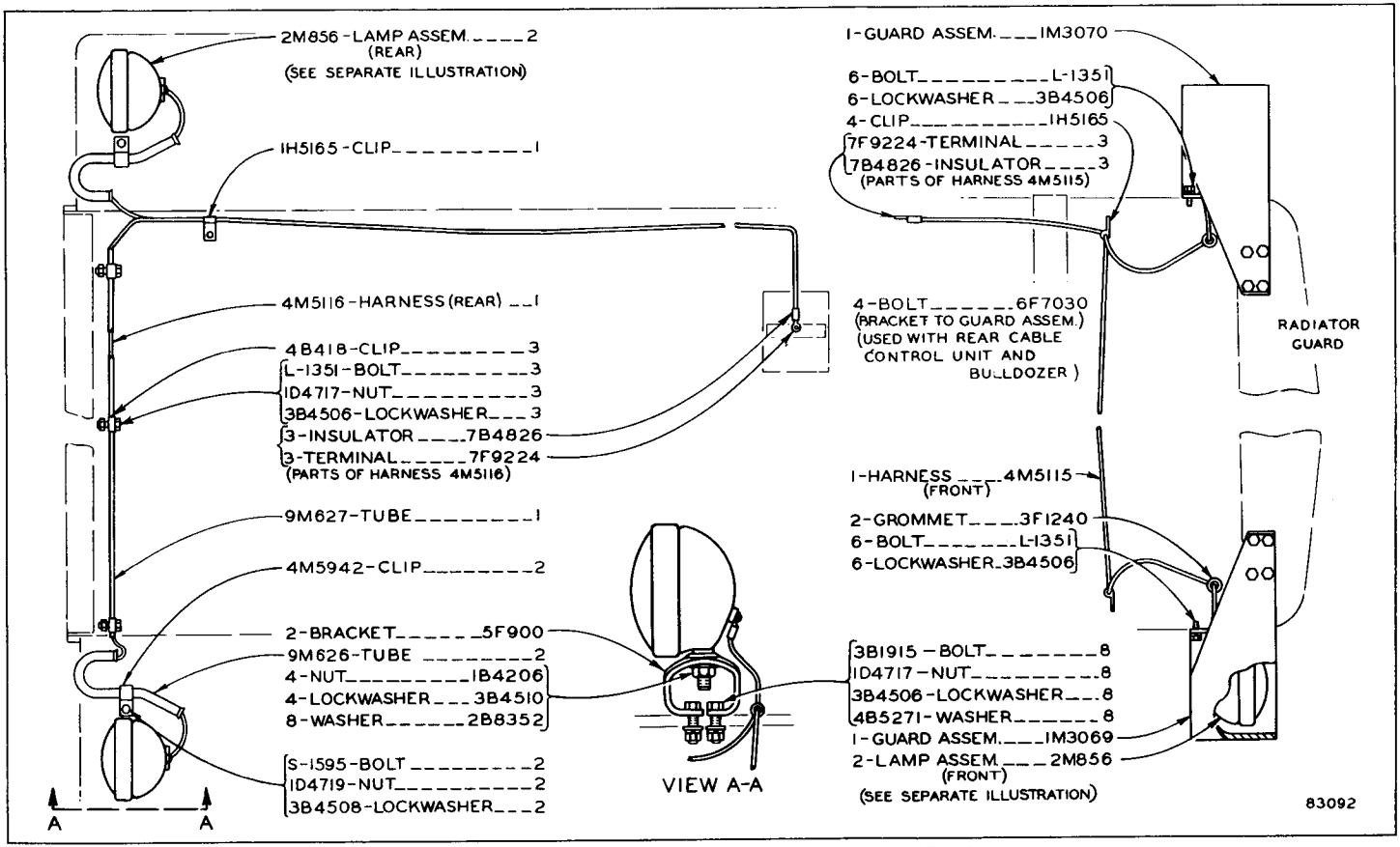

9M664 LIGHTING SYSTEM GROUP—12 Volt—4 Lamp—Top View

For use without Cab

Effective with Serial No. ____A130 ____ 2 ____ 5 ____ Field Lamp Assembly ____ Serial No. ____ on Page 123

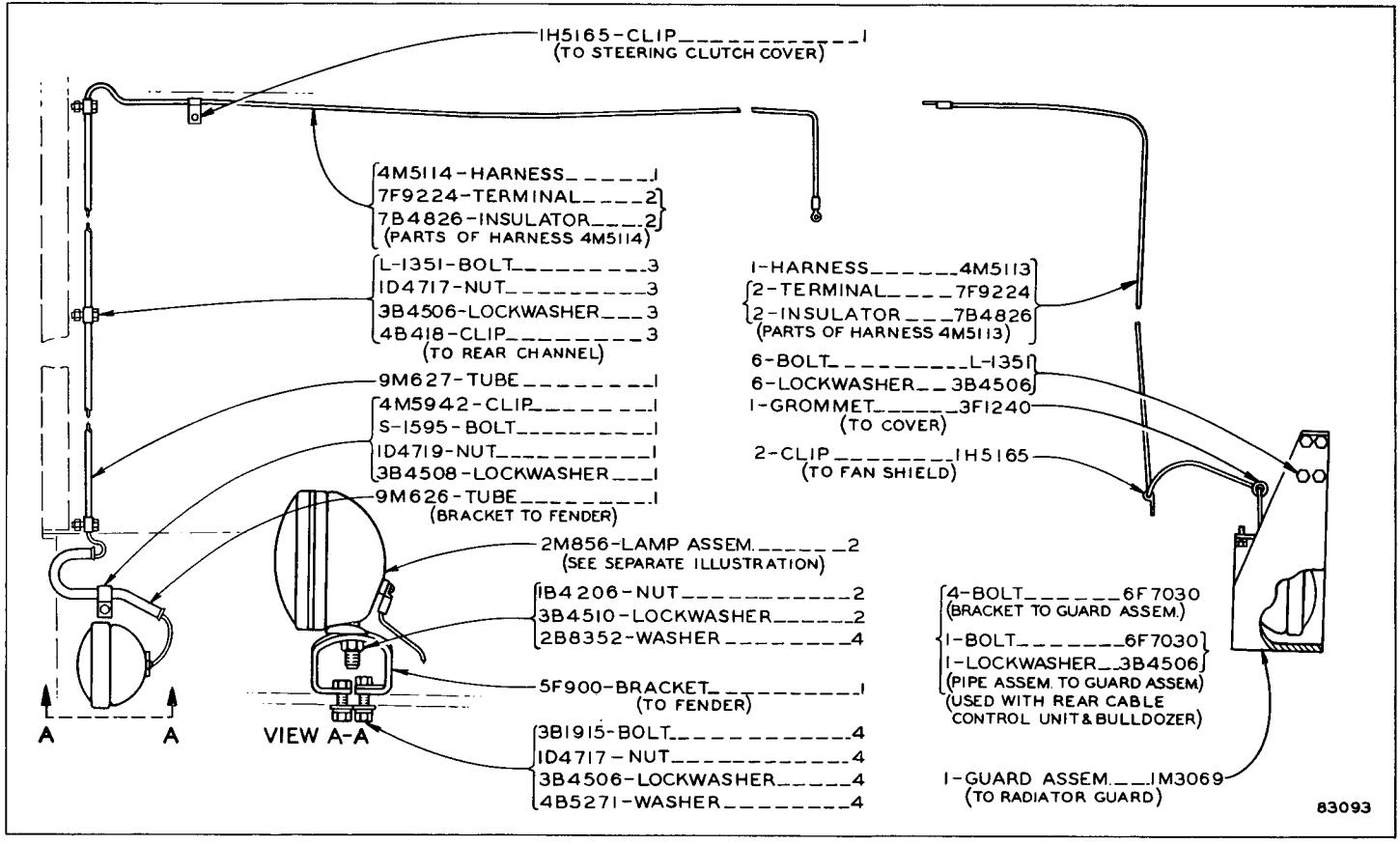

9M663 LIGHTING SYSTEM GROUP—12 Volt—2 Lamp—Top View

For use without Cab. Effective with Serial No. 48A1306

2M856 Flood Lamp Assembly parts are shown on Page 123

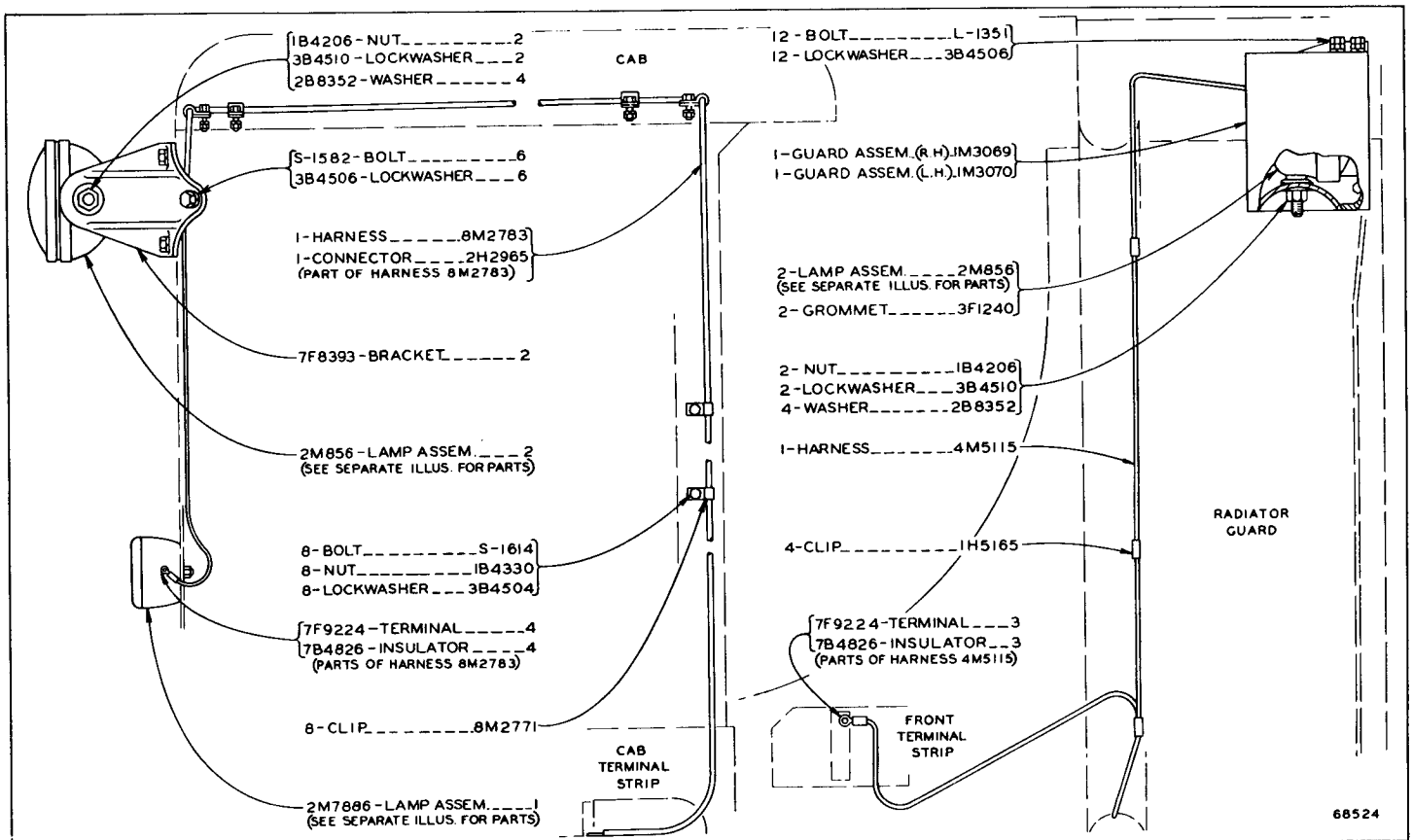

8M2789 LIGHTING SYSTEM GROUP—12 Volt—4 Lamp—Side View
For use with Cab

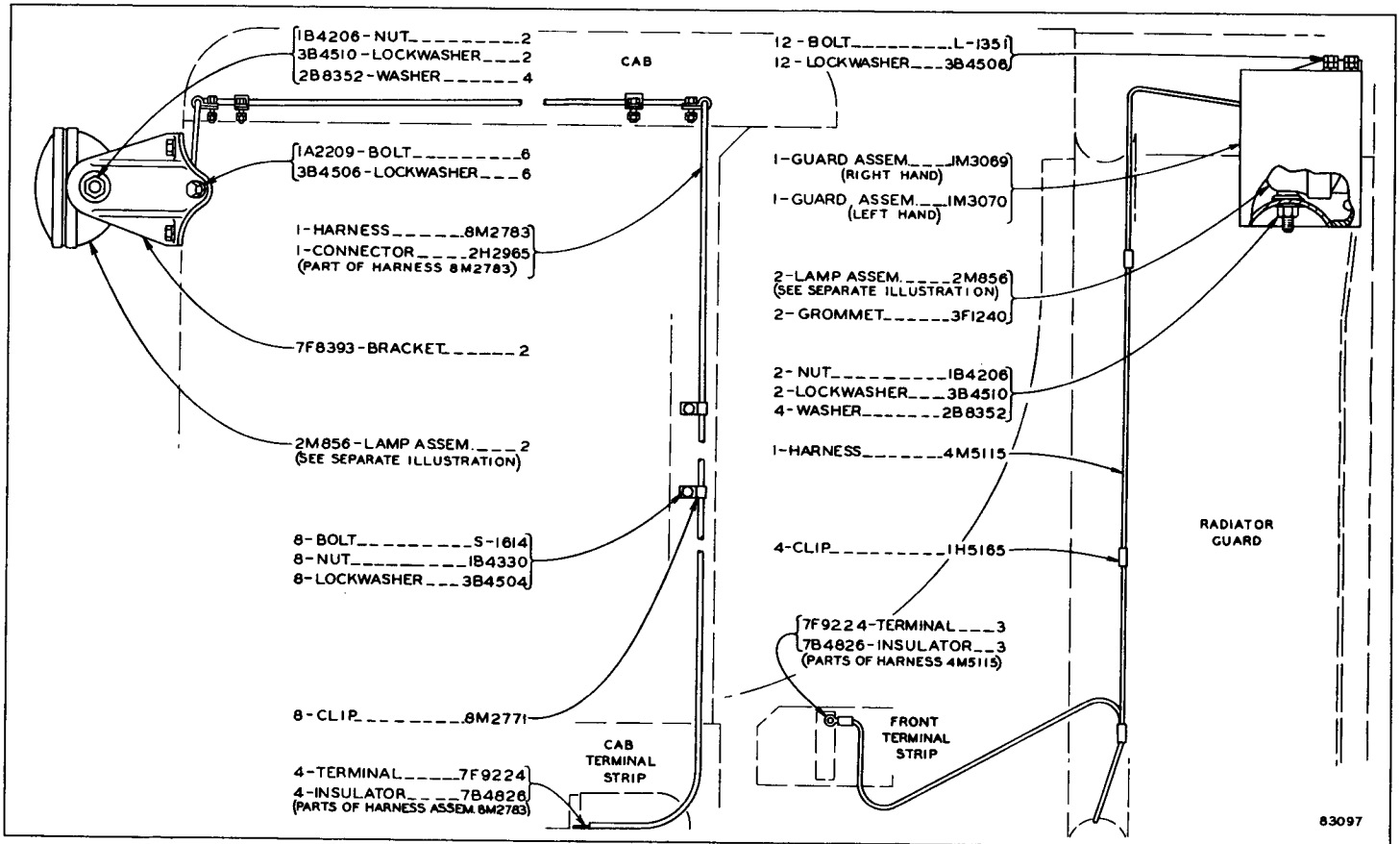

8M2789 LIGHTING SYSTEM GROUP—12 Volt—4 Lamp—Side View—Second Type

For use with Cab

2M856 Flood Lamp Assembly parts are shown on Page 123

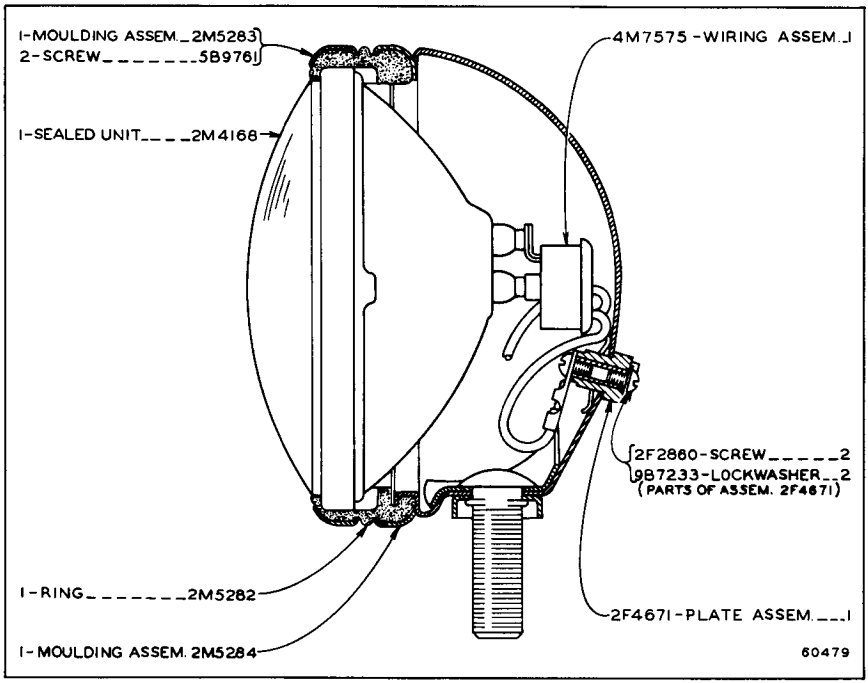

2M856 FLOOD LAMP ASSEMBLY—12 Volt
Part of 4M5111, 4M5112 and 8M2789 Lighting System Groups shown on Pages 120, 121 and 122

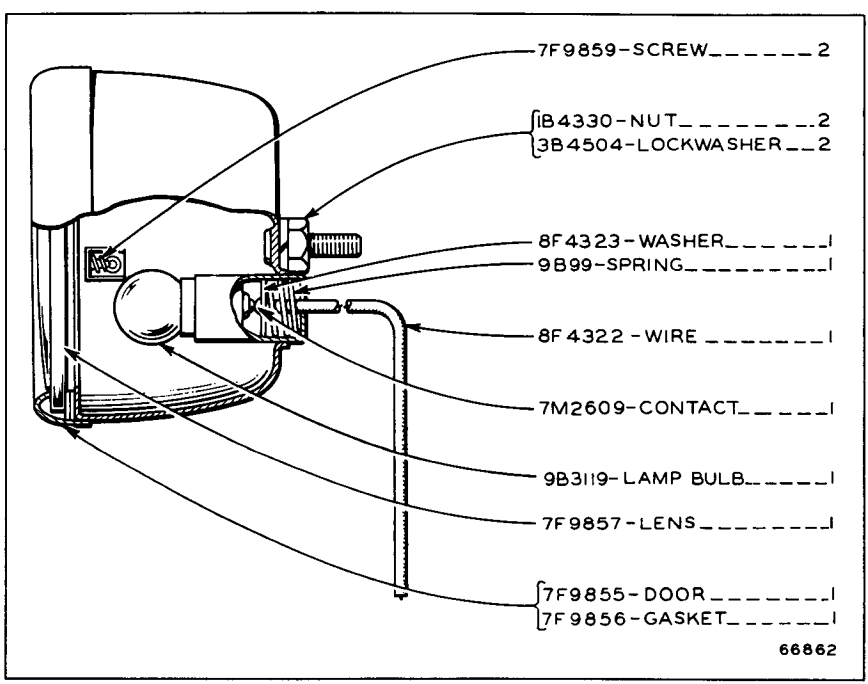

2M7886 TAIL LAMP ASSEMBLY—12 Volt
Part of 8M2789 Lighting System Group

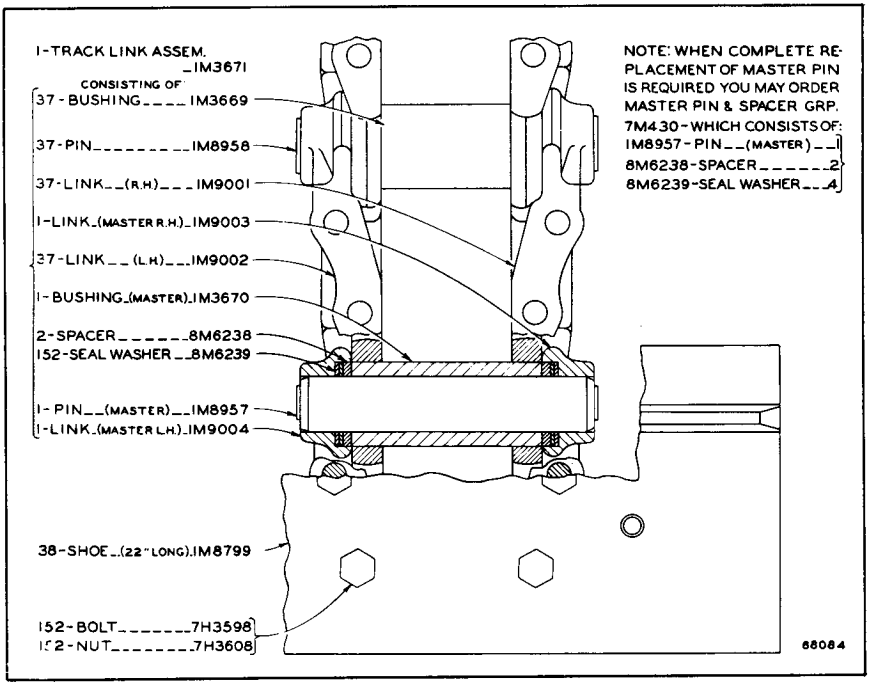

1M9005 TRACK GROUP—22" Grouser Shoe—2 Required

Note: 7M429 Track Pin and Bushing Group, consisting of a complete set of Pins and Bushings for one Track, is available

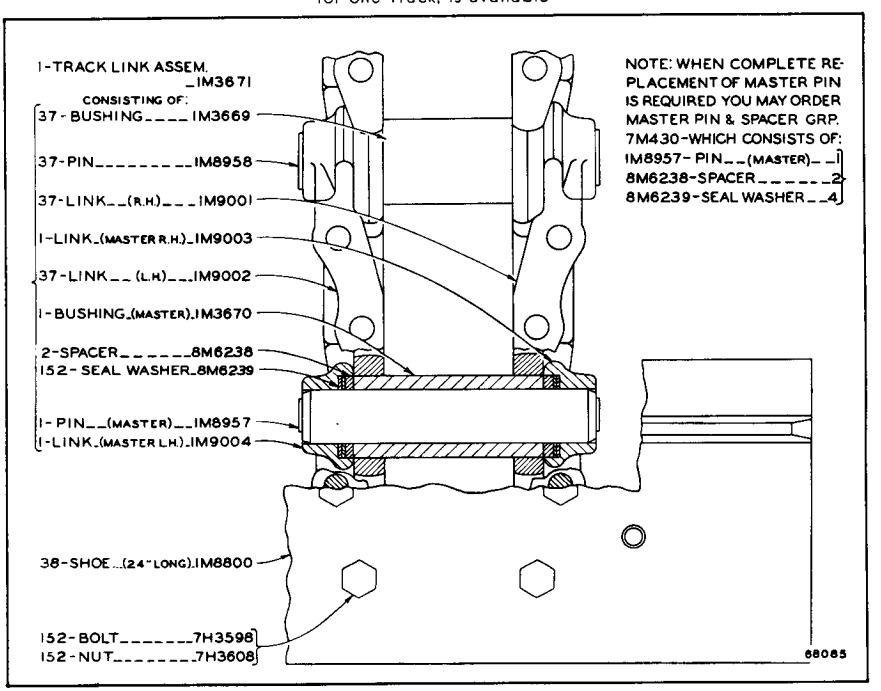

1M9006 TRACK GROUP—24" Grouser Shoe—2 Required

Note: 7M429 Track Pin and Bushing Group, consisting of a complete set of Pins and Bushings for one Track, is available

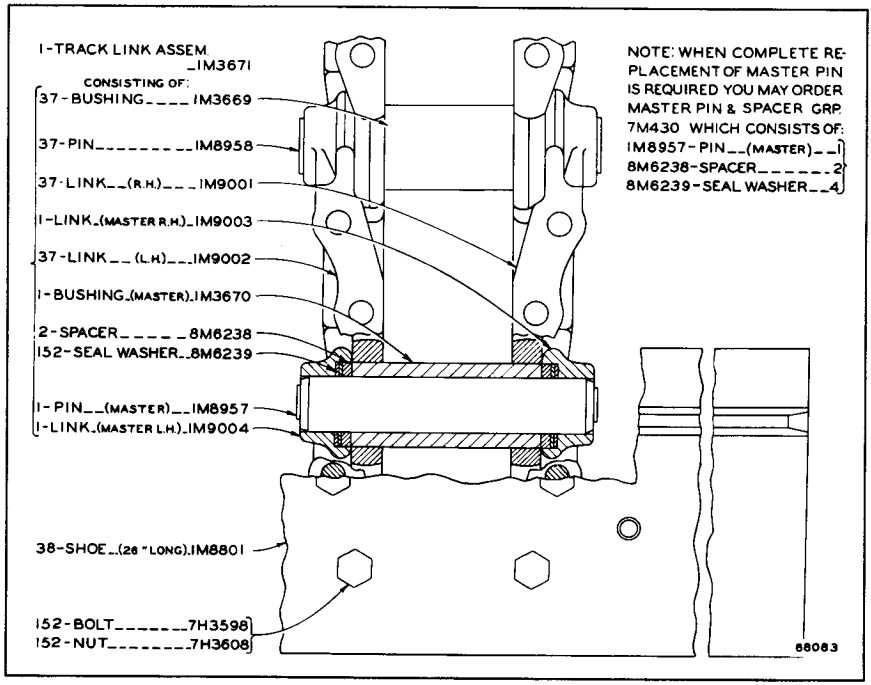

1M9007 TRACK GROUP—26" Grouser Shoe—2 Required

Note: 7M429 Track Pin and Bushing Group, consisting of a complete set of Pins and Bushings for one Track, is available

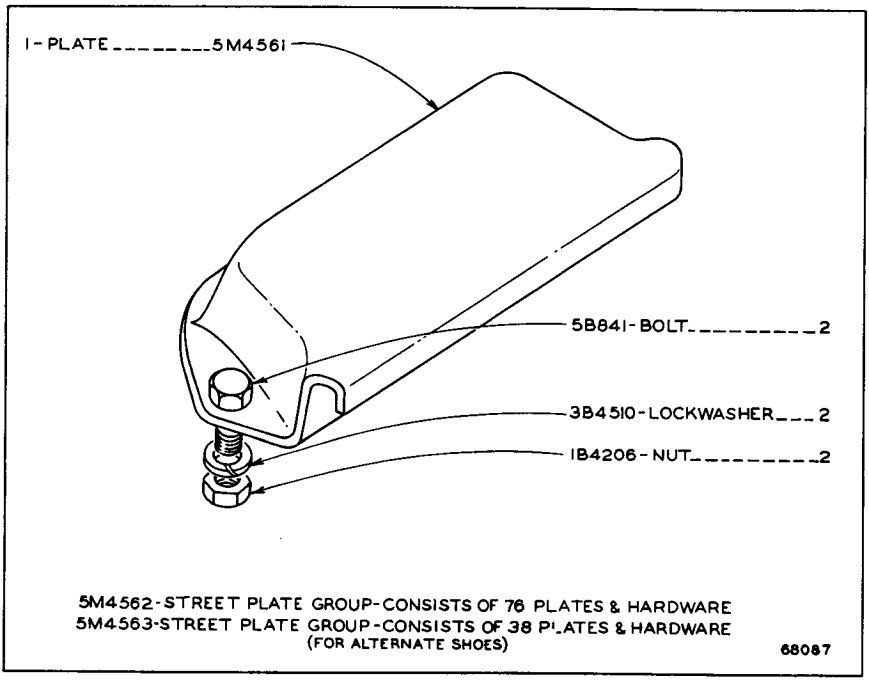

STREET PLATES

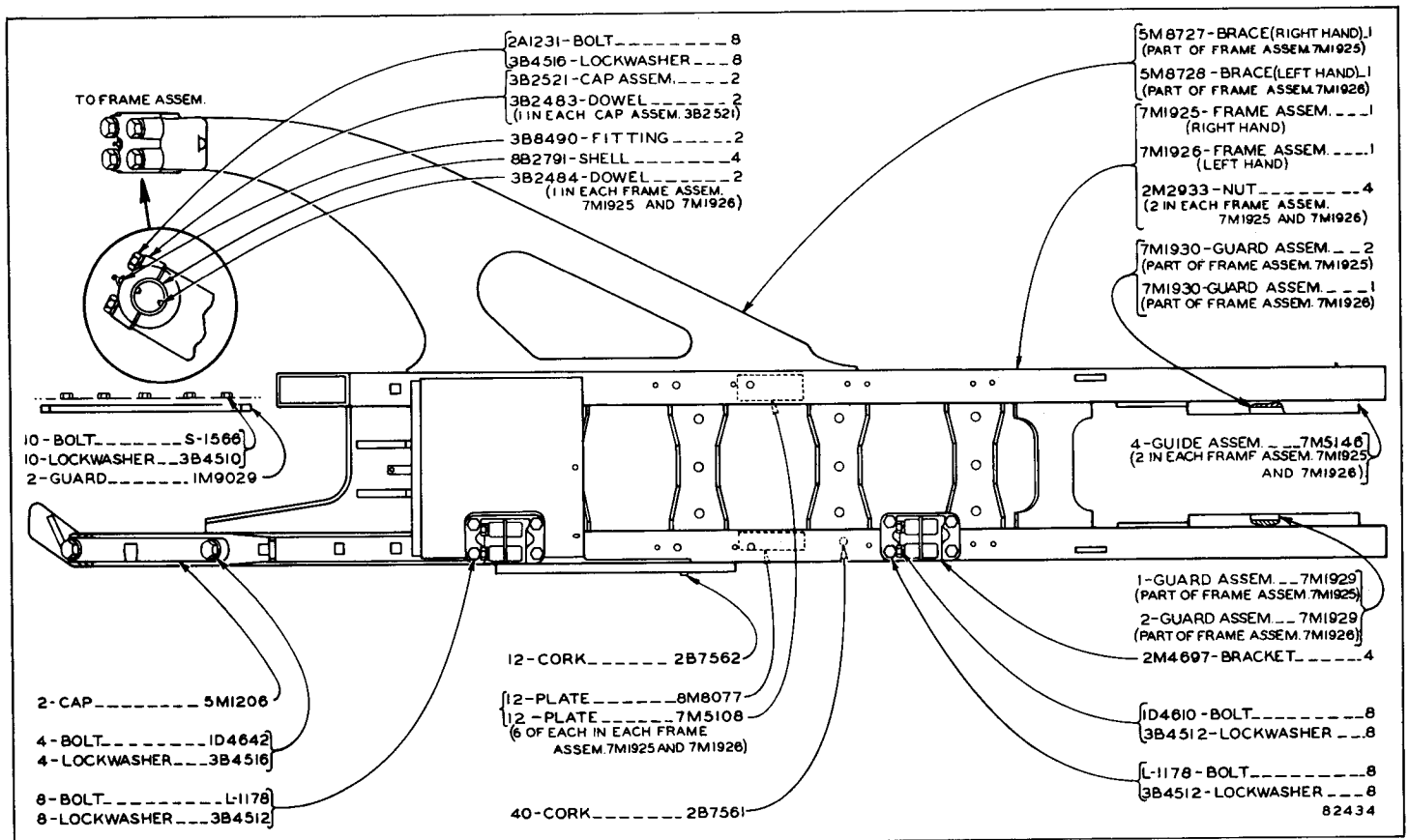

7M1933 TRACK ROLLER FRAME GROUP

For use with Track Guiding Guards

Note: Quantities shown are those required for R.H. and L.H. sides

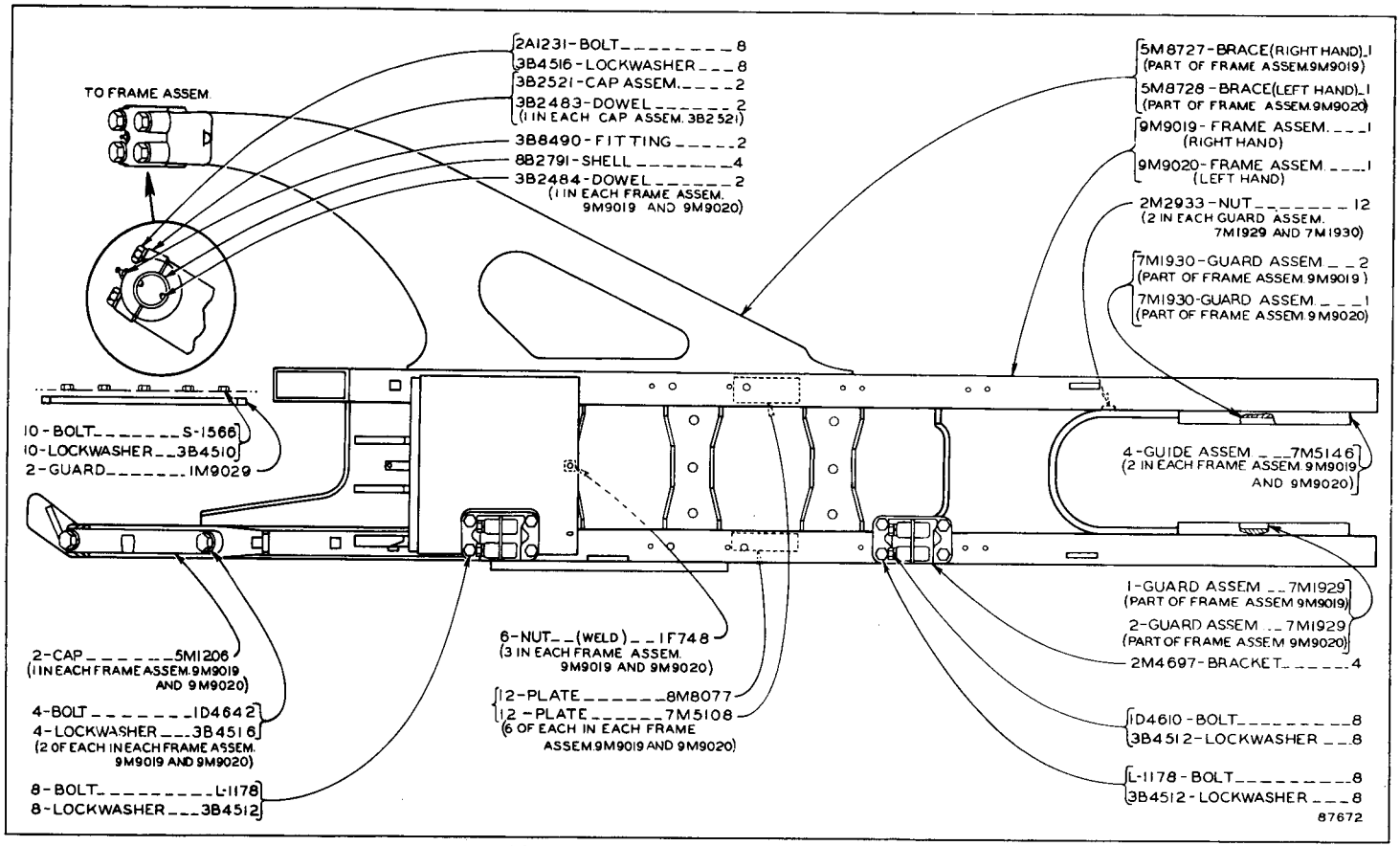

7M1933 TRACK ROLLER FRAME GROUP

Effective with Serial No. 48A2609

For use with Track Guiding Guards. Note: Quantities shown are those required for both R.H. and L.H. sides

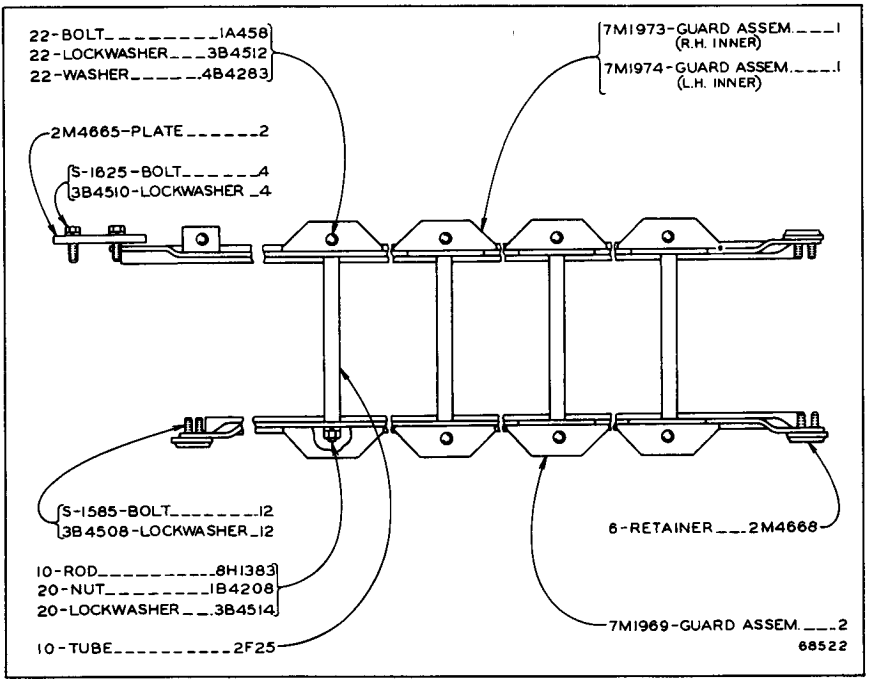

7M1970 TRACK ROLLER GUARD GROUP—Top View
For use with 7M1933 Track Roller Frame Group

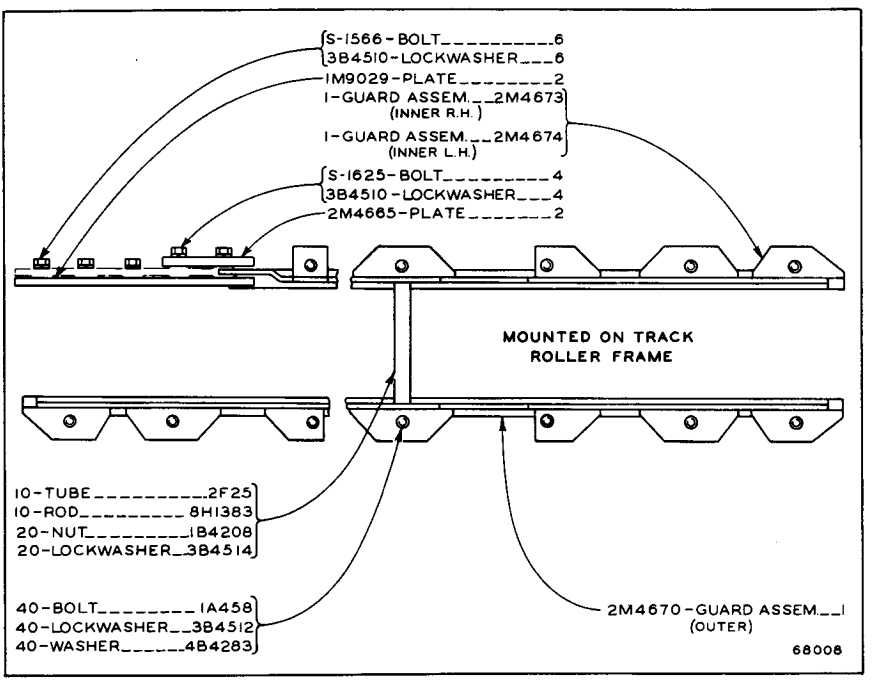

2M4675 TRACK ROLLER GUARD GROUP—Top View

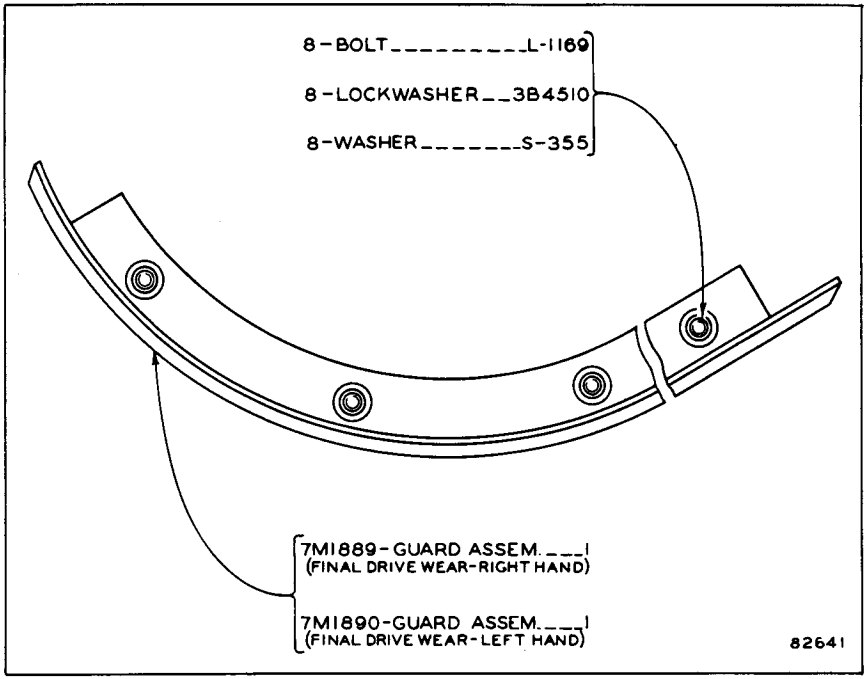

7M1893 FINAL DRIVE WEAR GUARD GROUP
Note: Quantities shown are those required for both R.H. and L.H. sides

3J7912 Hydraulic Control Arrangement—Blade Tilt

16 Gallons per Minute—1765 R.P.M.

	Consists of:		Page
1	3J7747	Valve Group	131
1	3J7838	Blade Tilt Cylinder Lines Group	130
1	3J7897	Pump Lines Group	129
1	3J8053	Pump and Mounting Group	132

171 HYDRAULIC CONTROL ARRANGEMENT

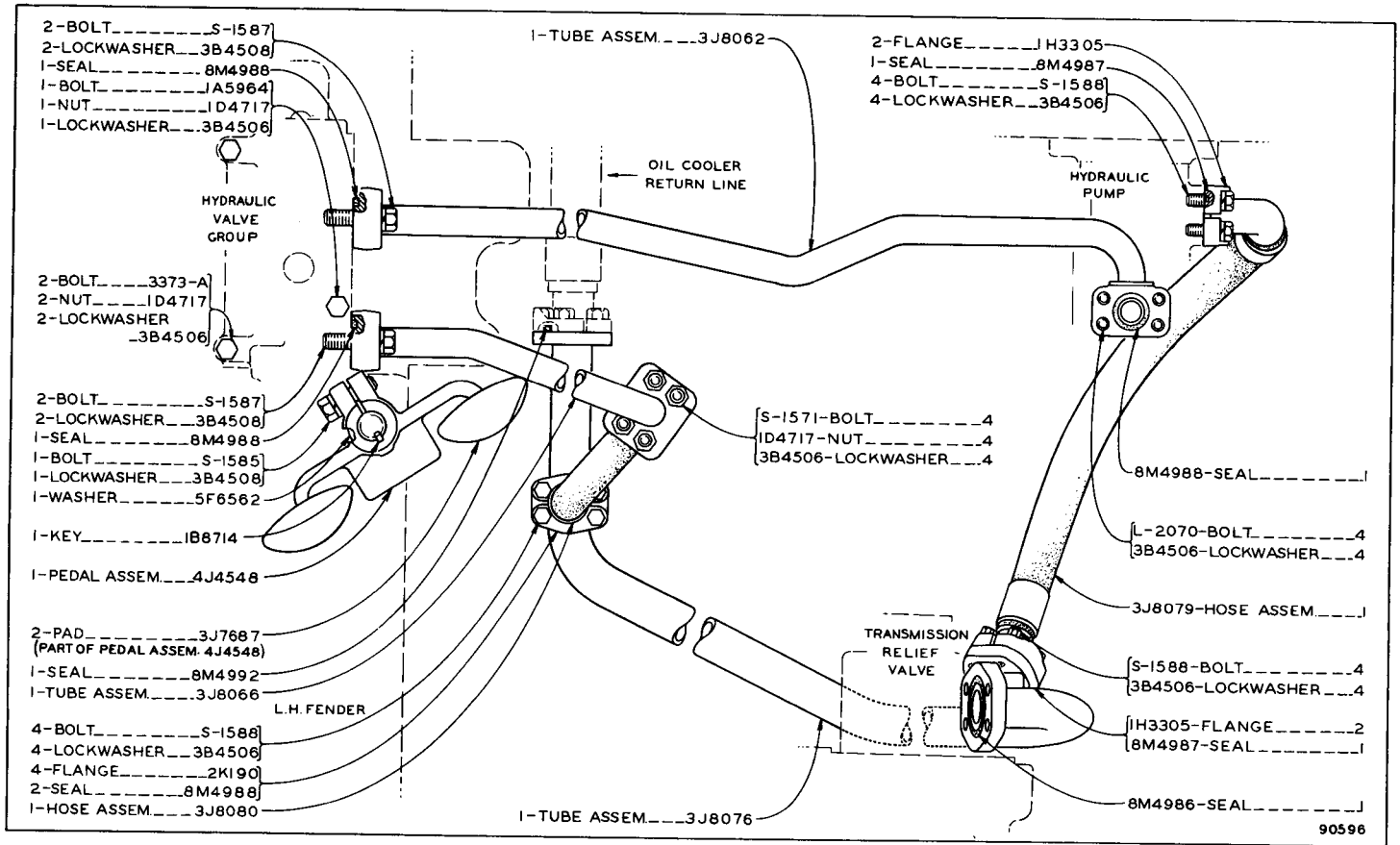

3J7897 PUMP LINES GROUP—Tilt Control—Top View
Part of 3J7912 Hydraulic Control Arrangement

ONLY "CATERPILLAR" PARTS GIVE "CATERPILLAR" PERFORMANCE

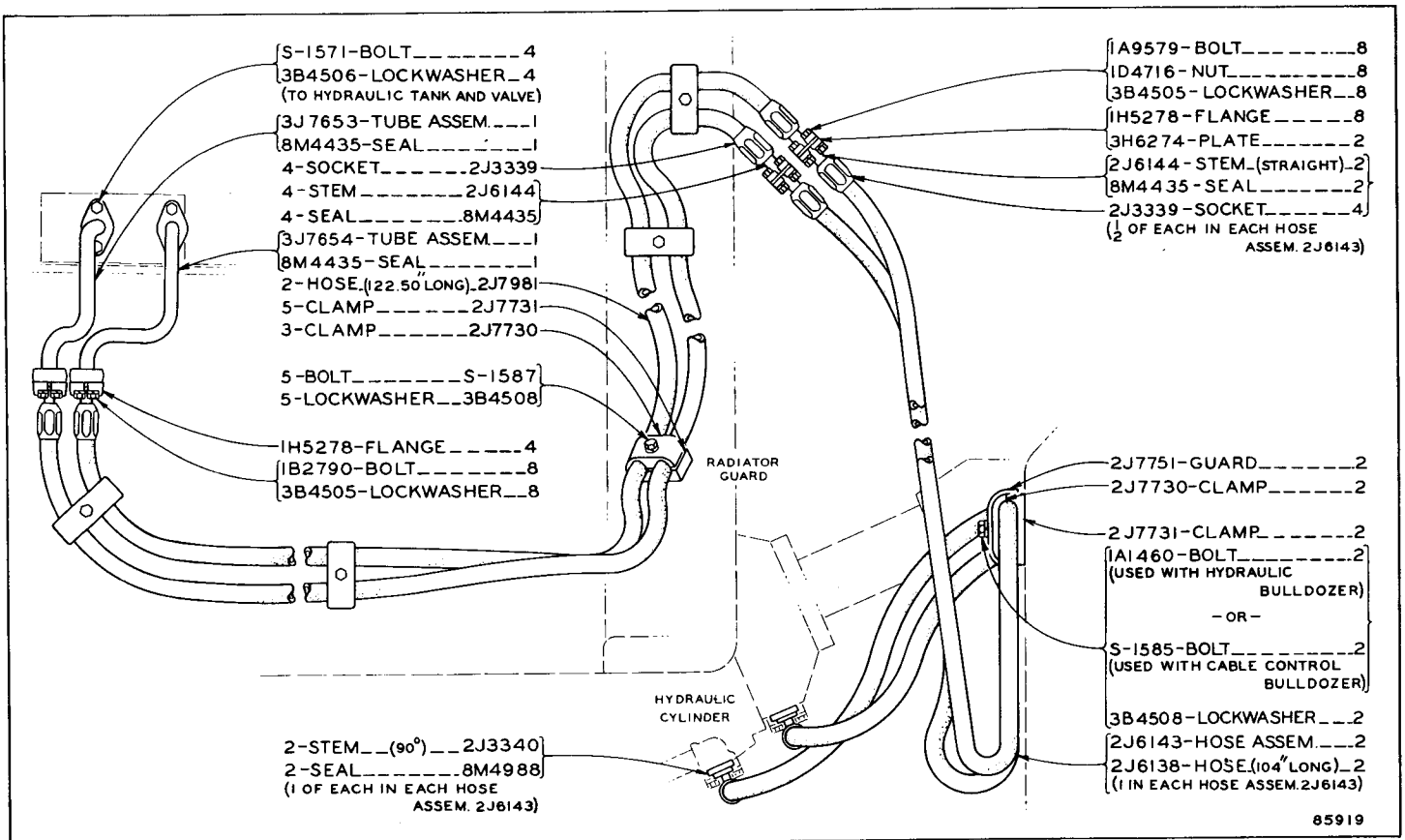

3J7838 BLADE TILT CYLINDER LINES GROUP

Part of 3J7912 Hydraulic Control Arrangement listed on Page 128

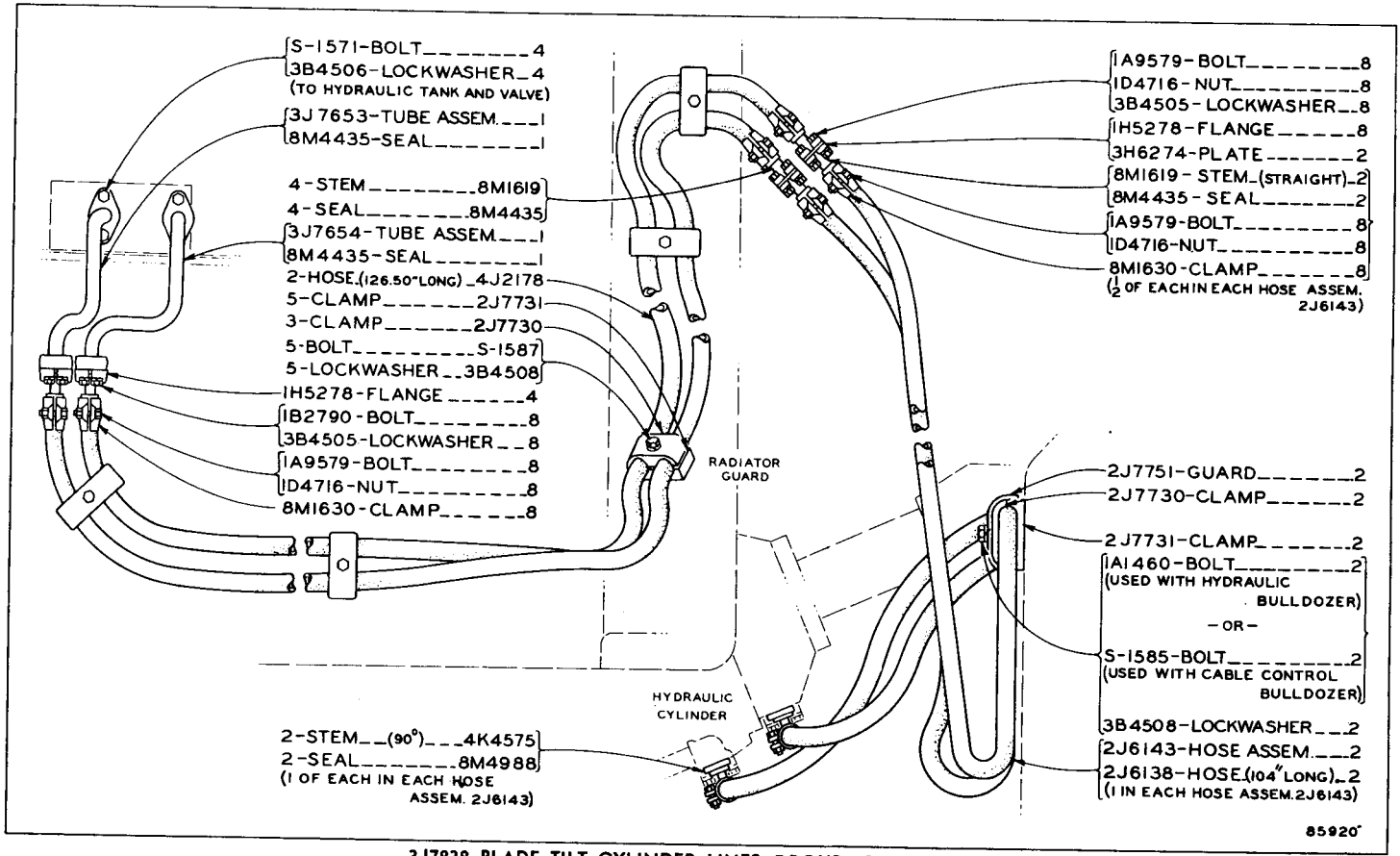

3J7838 BLADE TILT CYLINDER LINES GROUP—Second Type
Part of 3J7912 Hydraulic Control Arrangement listed on Page 128

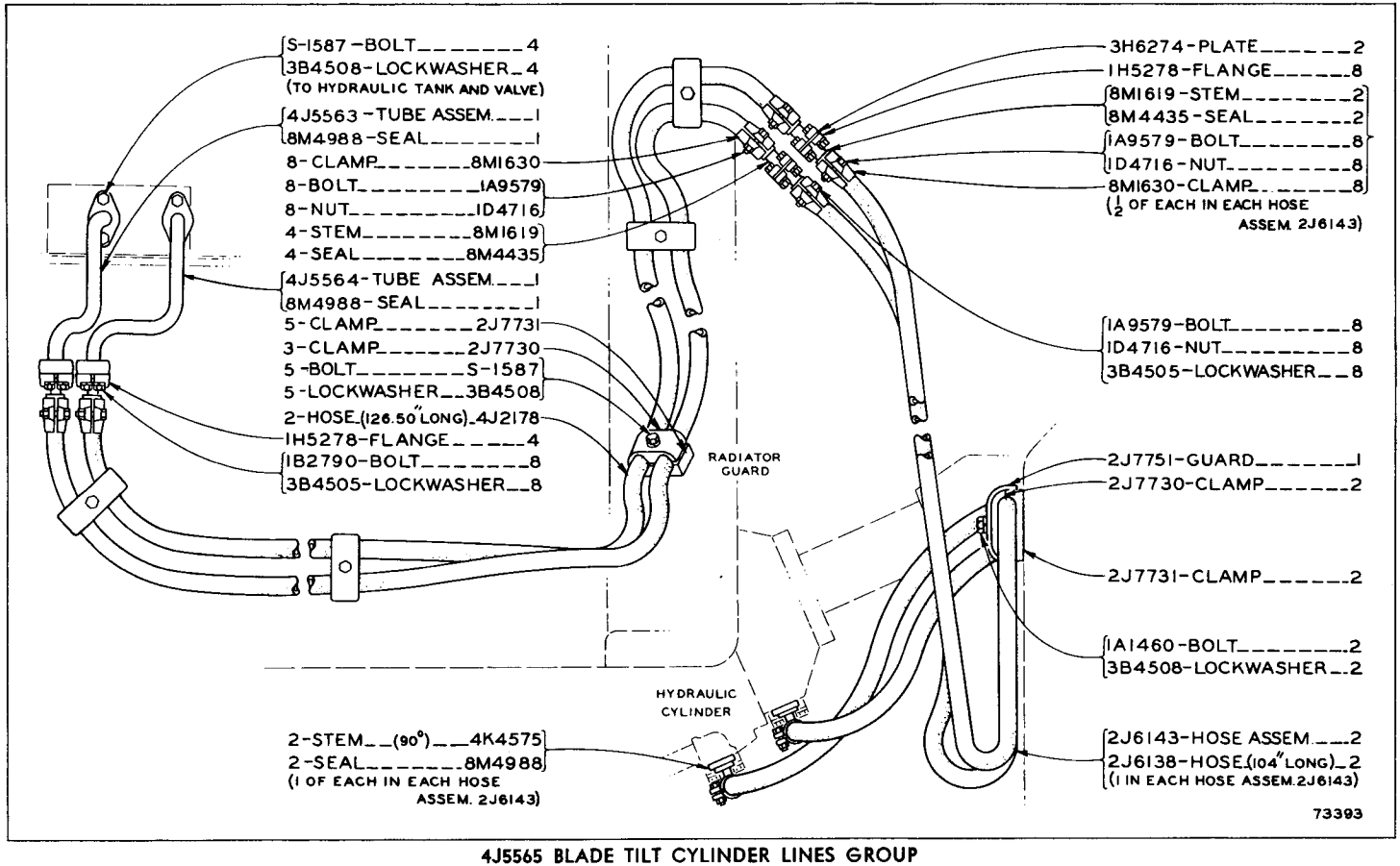

4J5565 BLADE TILT CYLINDER LINES GROUP

Part of 3J7912 Hydraulic Control Arrangement listed on Page 128

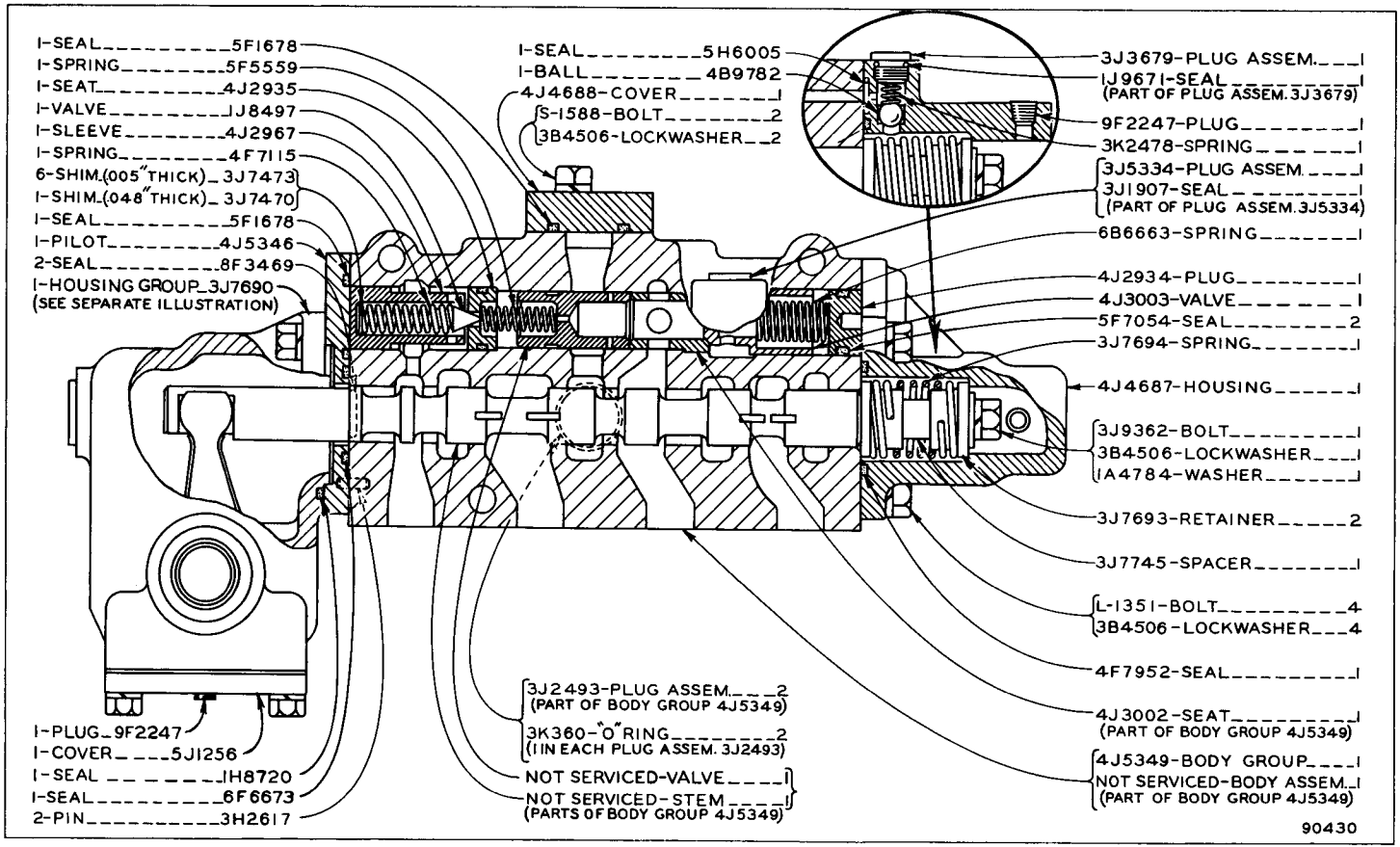

4J5350 EXTERNAL CONTROL VALVE GROUP

Part of 3J7912 Hydraulic Control Arrangement listed on Page 128
3J7690 Control Lever Housing Group parts are shown on Page 133

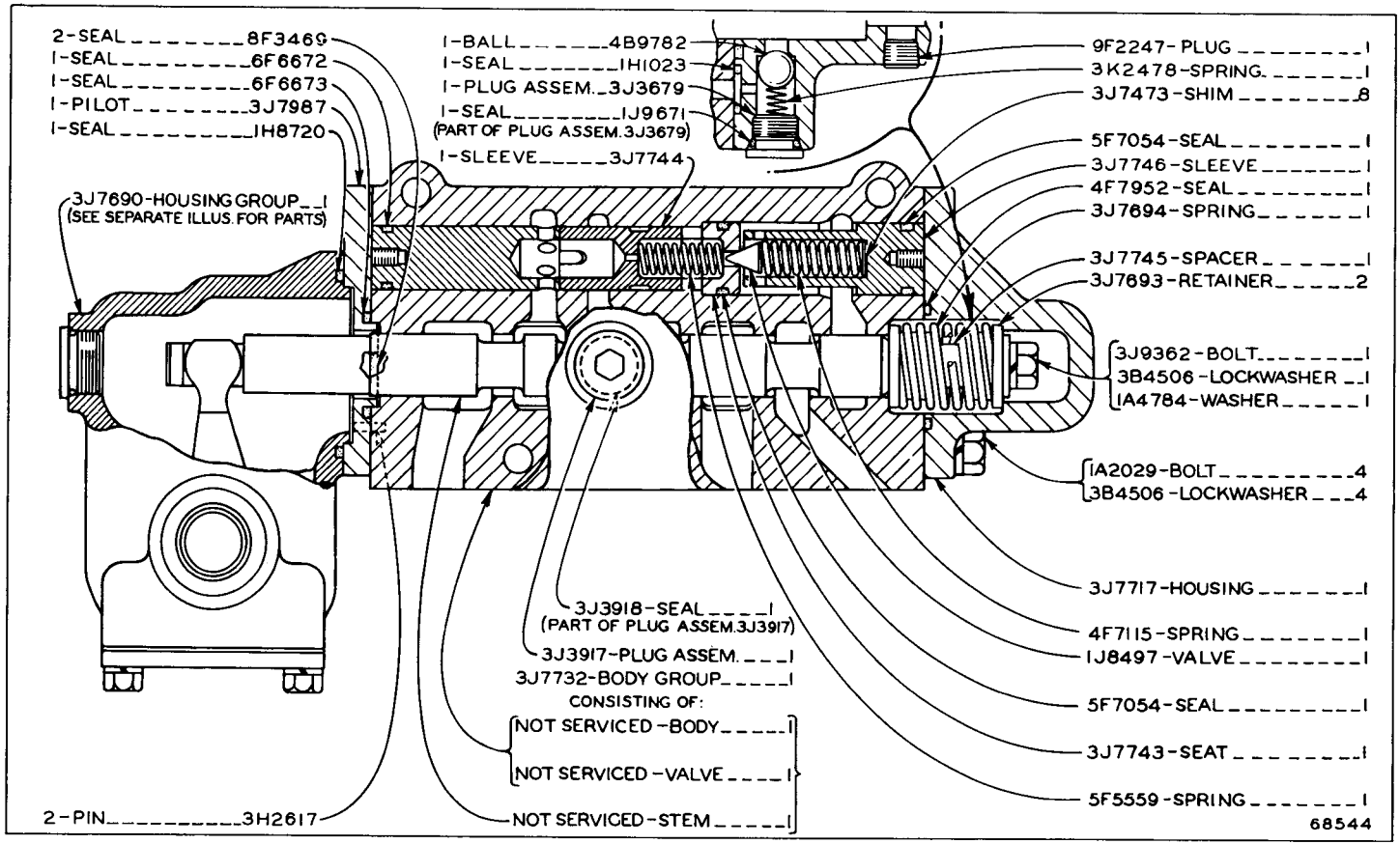

3J7747 VALVE GROUP

Part of 3J7912 Hydraulic Control Arrangement listed on Page 128
3J7690 Control Lever Housing Group parts are shown on Page 133

ONLY "CATERPILLAR" PARTS GIVE "CATERPILLAR" PERFORMANCE

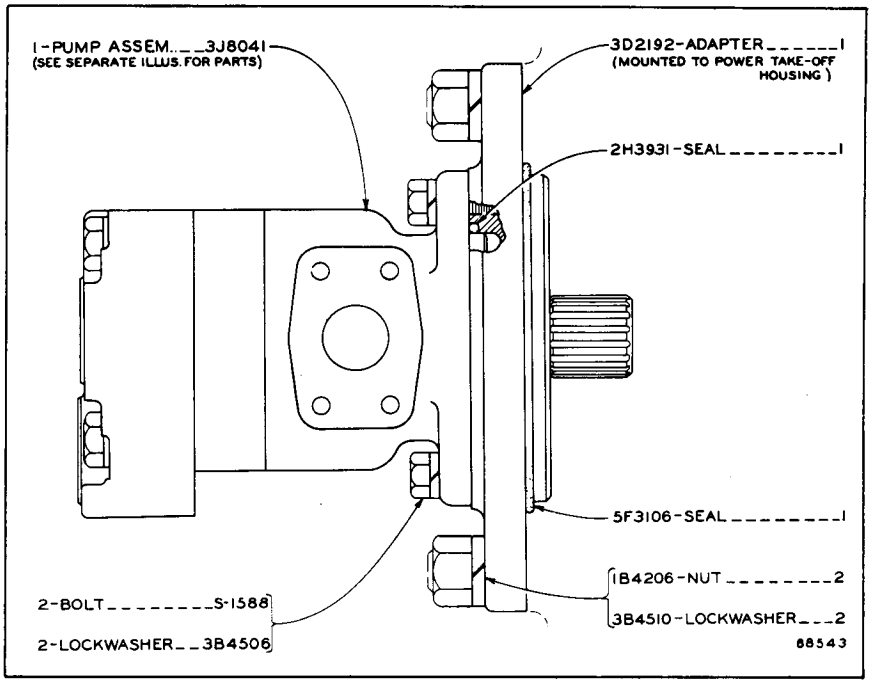

3J8053 PUMP AND MOUNTING GROUP
Part of 3J7912 Hydraulic Control Arrangement listed on Page 128

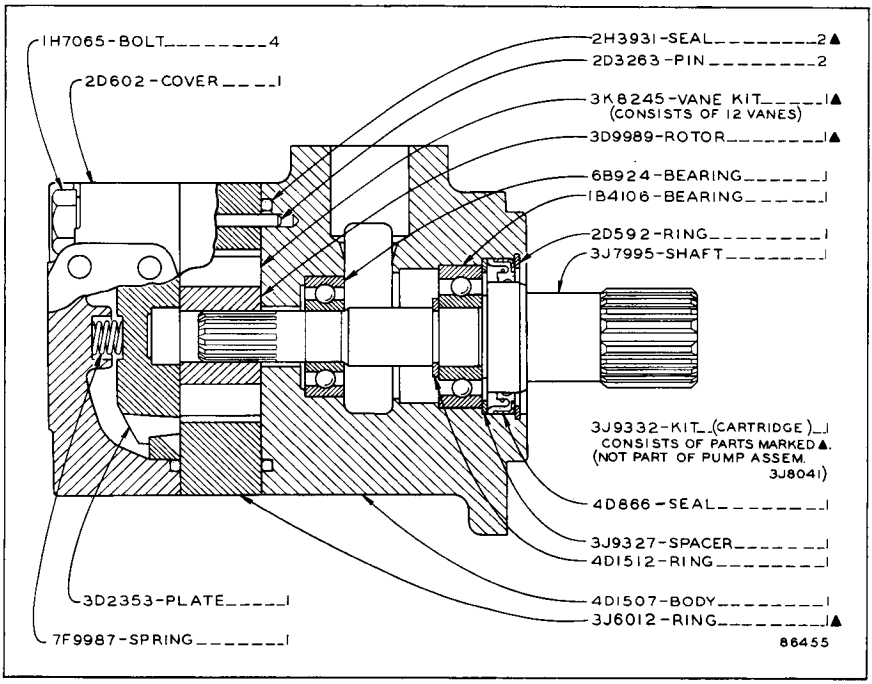

3J8041 HYDRAULIC PUMP ASSEMBLY
Part of 3J8053 Pump and Mounting Group

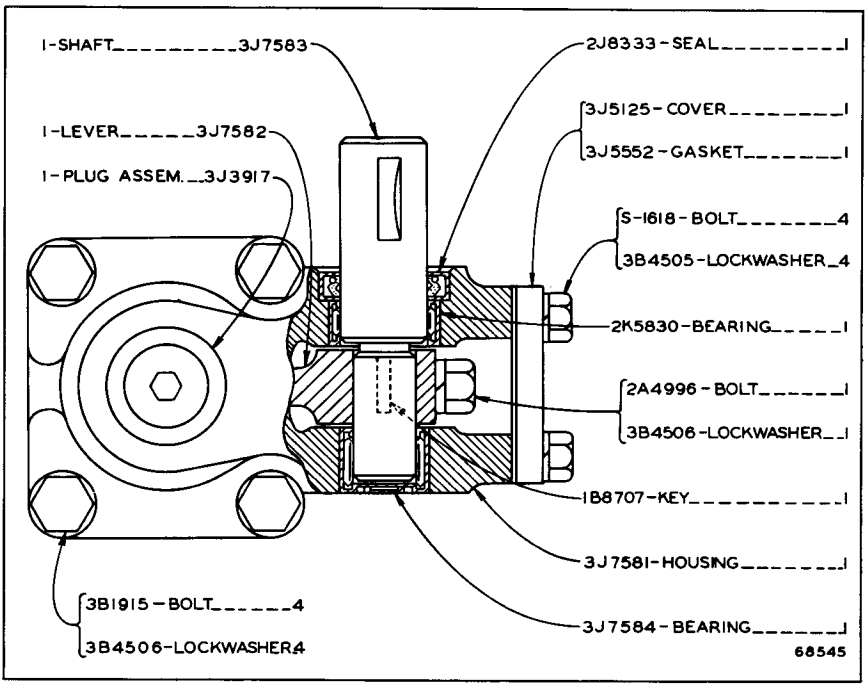

3J7690 CONTROL LEVER HOUSING GROUP
Part of 3J7747 Valve Group shown on Page 131

Quantity Used	Part Number	Description
1	2M6831	Plate—Serial Number
1	6H4356	Plate—Warning
6	4B4158	Drive Screw
1	5M3209	Transfer Group
	Consists of:	
1	.....	Transfer—Safety
1	.....	Transfer—Address
1	.....	Transfer—Filter Instructions
1	.....	Transfer—Safety
1	.....	Transfer—Air Cleaner Instructions
1	.....	Transfer—Track Type Tractor
1	.....	Transfer—Series E
1	.....	Transfer—Generator Instructions
1	.....	Transfer—Instruction
1	.....	Transfer—Air Cleaner Instructions
1	.....	Transfer—D7
2	.....	Transfer—D7E
1	5H8460	Transfer—Caterpillar
2	7H6814	Transfer—"CAT"
3	7M7469	Transfer—Caterpillar

NAME PLATE AND TRANSFERS

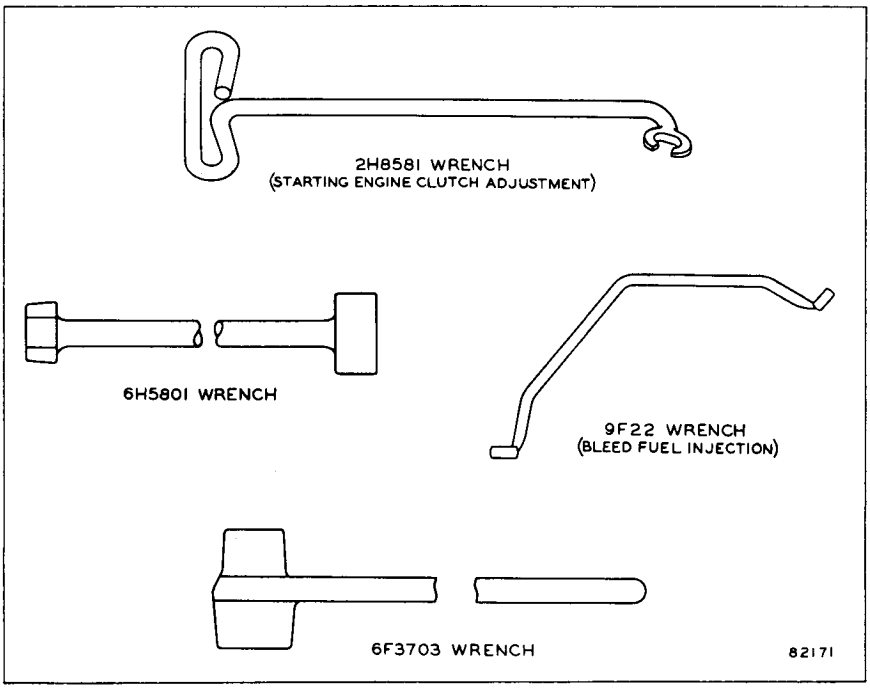

8M9659 TOOL GROUP

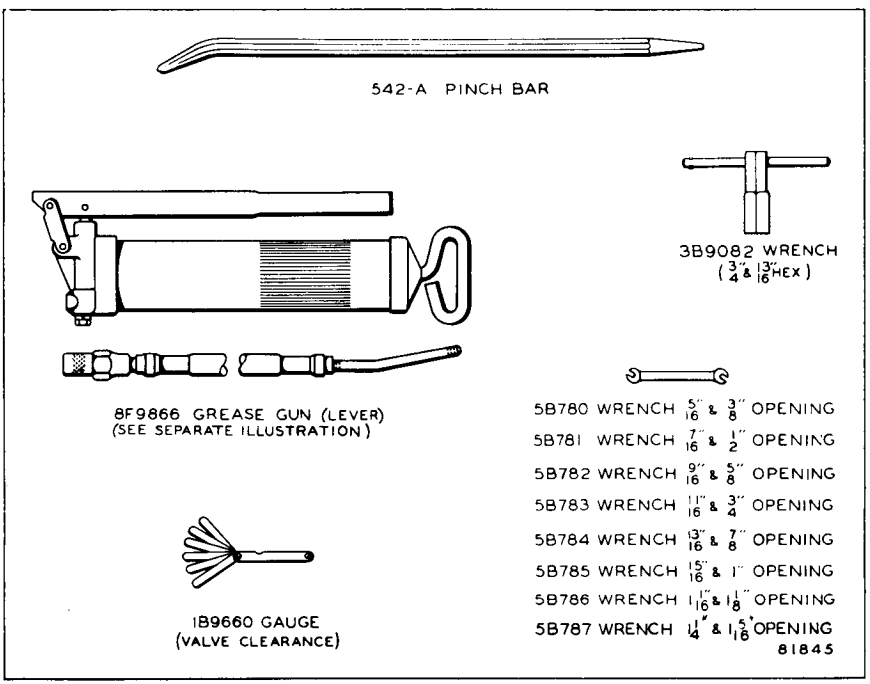

8M9854 TOOL GROUP

8F9866 Grease Gun parts are shown on Page 135

AN ATTACHMENT

ALWAYS GIVE SERIAL NUMBER WHEN ORDERING PARTS

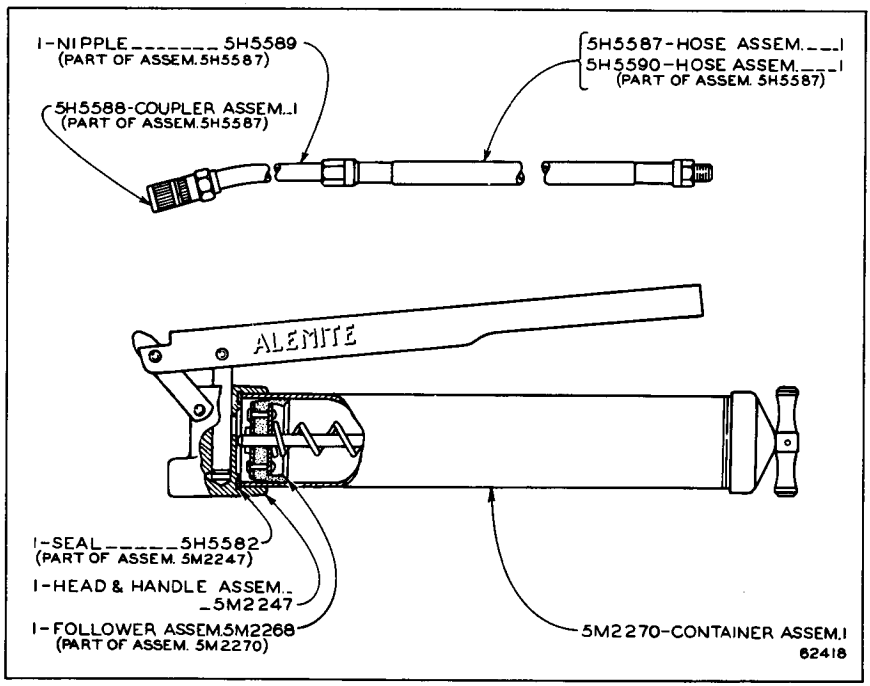

8F9866 GREASE GUN—First Type
Part of Tools

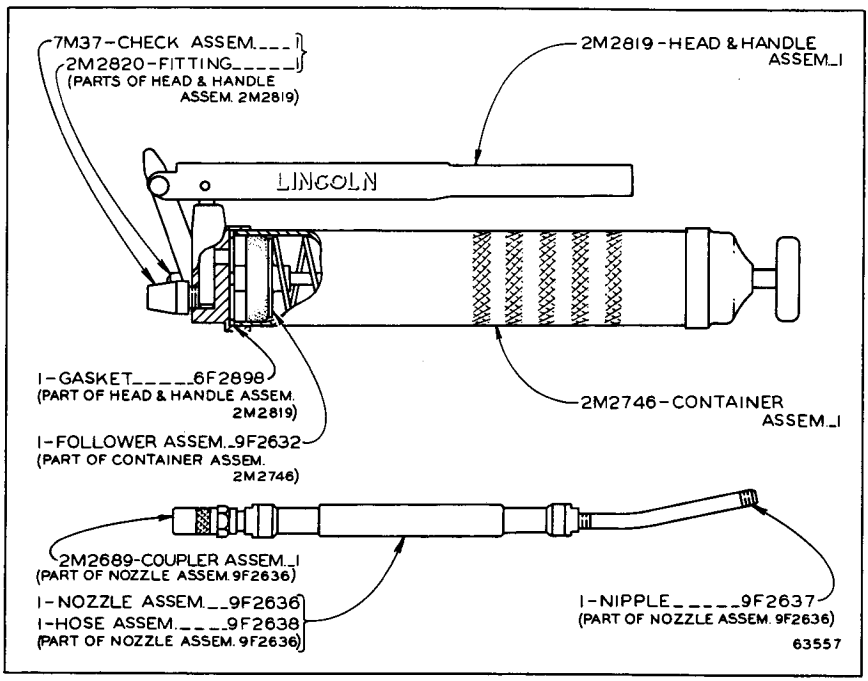

8F9866 GREASE GUN—Second Type
Part of Tools

SPECIFICATIONS

(SUBJECT TO CHANGE WITHOUT NOTICE)

Weight, dry (approximate) ..... 31,870 lbs.

DIMENSIONS

Length	14' 8"
Height	7' 6 5/8"
Width	8' 4 7/8"
Gauge (center to center tracks)	78"
Ground clearance	15 1/4"
Drawbar height	17 3/4"

CAPACITIES

Cooling System	21 U.S. Gal.
Crankcase, lubricating oil	5 1/2 U.S. Gal.
Transmission, Steering Clutch and Brake, lubricating oil	31 U.S. Gal.
Final Drive, lubricating oil, each side	9 U.S. Gal.
Fuel Tank	120 U.S. Gal.

ATTACHMENTS

Additional equipment such as Power Take-Off, Belt Pulley Drive, Cable and Hydraulic Controls, Lighting System, Cabs, etc., are available at extra cost. Consult your "Caterpillar" Dealer.

MACHINE SERIAL NUMBER PLATE LOCATION

Serial number plates are located on the back of the transmission case and on the left-hand side of the cylinder block.

PRINTED IN U. S. A. FORM 34340