SETEMBRO 1942
RUTHZIL TRATOR COMERCIAL DE PEÇAS LTDA 11 97083-6812 ROLANDO

1/4 U113 .2 TM 1942

TM 9-1773

WAR DEPARTMENT

U.S. Dept. of Army

TECHNICAL MANUAL

ORDNANCE MAINTENANCE

HEAVY TRACTOR M1, CATERPILLAR D7

September 5, 1942

UNIVERSITY OF CALIFORNIA
LIBRARY
OCT 14 1942
DOCUMENTS DIVISION

Digitized by Google
Original from UNIVERSITY OF CALIFORNIA
Generated on 2014-11-15 19:35 GMT / http://hdl.handle.net/2027/uc1.b3243973
Public Domain, Google-digitized / http://www.hathitrust.org/access_use#pd-google

Generated on 2014-11-15 19:35 GMT / http://hdl.handle.net/2027/uc1.b3243973
Public Domain, Google-digitized / http://www.hathitrust.org/access_use#pd-google

Digitized by Google

Original from
UNIVERSITY OF CALIFORNIA

U113
.2
TM9:1773
1942

TECHNICAL MANUAL
No. 9-1773

WAR DEPARTMENT,
WASHINGTON, September 5, 1942

ORDNANCE MAINTENANCE

HEAVY TRACTOR M1 (CATERPILLAR D7)

		Paragraphs
CHAPTER 1. General.		
SECTION I.	General	1–4
II.	Trouble shooting	5–6
III.	Lubrication	7–9
CHAPTER 2. Engine.		
SECTION I.	Specifications	10
II.	Cooling system	11–18
III.	Cylinder head and valve mechanism	19–24
IV.	Pistons, rings, and cylinder liners	25–26
V.	Bearings	27–30
VI.	Crankshaft	31–35
VII.	Removing Diesel engine	36
VIII.	Timing gear assembly	37–39
IX.	Lubrication system	40–43
X.	Fuel system	44–51
XI.	Governor	52–59
XII.	Lighting system	60–63
XIII.	Air compressor	64–72
CHAPTER 3. Starting engine.		
SECTION I.	Valves	73–74
II.	Carburetor	75–84
III.	Magneto	85–99
IV.	Governor mechanism	100–102
V.	Removing and replacing the starting engine	103
VI.	Pistons and rings	104–110
VII.	Bearings	111–112
VIII.	Starting mechanism	113–116
CHAPTER 4. Power transmission units.		
SECTION I.	General	117–120
II.	Steering clutch and bevel gear removal	121–124
III.	Brakes	125–126
IV.	Final drive	127–128
V.	Power take-off shaft	129–130

476795°--42——1

M574673

Digitized by Google

Original from
UNIVERSITY OF CALIFORNIA

Generated on 2014-11-15 19:35 GMT / http://hdl.handle.net/2027/uc1.b3243973
Public Domain, Google-digitized / http://www.hathitrust.org/access_use#pd-google

CHAPTER 5. Track frame assembly. Paragraphs
SECTION I. General 131–133
II. Front idler assembly 134–137
III. Track carrier roller 138–139
IV. Track 140–145
Page
APPENDIX. List of references 177
Index 179

Digitized by Google
Original from UNIVERSITY OF CALIFORNIA
Generated on 2014-11-15 19:35 GMT / http://hdl.handle.net/2027/uc1.b3243973
Public Domain, Google-digitized / http://www.hathitrust.org/access_use#pd-google

TECHNICAL MANUAL

HEAVY TRACTOR M1, CATERPILLAR D7

CHANGES No. 1

WAR DEPARTMENT,
WASHINGTON, December 24, 1942.

TM 9–1773, September 5, 1942, is changed as follows:

10. Specifications. (Superseded.)

a. Engine.

Make and type	Caterpillar Diesel, 9U series
Dimensions	6′6¾″ long x 4′9⅞ high x 3′2½ wide
Weight:	
With accessories	4,400 lb (approx.)
Without accessories	4,100 lb (estimated)
Number of cylinders	4
Brake horsepower (at 975 rpm)	80 draw bar, 92 belt
Bore	5¾ in.
Stroke	8 in.
Piston displacement	207.7 cu in./cylinder; total, 831 cu in.
Compression ratio	16:1
Compression pressure (at cranking speed)	700 lb/sq in.
Firing order	1—3—4—2
Horsepower	92
Torque (at *850* rpm)	496 lb-ft, 513 lb-ft at 700 rpm
Speed:	
Maximum allowable	1075
Full load	975
No load	1075
Idling speed:	
Minimum	425
Full load	975
Location of engine number	Same as serial number of tractor
Serial number	Left rear of transmission case, left front side of engine
Normal operating range	450 to 975 rpm
Maximum economy speed	975 rpm

b. Camshaft.

Drive	Gear
End play	0.014 to 0.018
Bearings:	
Type	Bronze
Clearance	0.0025 to 0.004

c. Connecting rod bearings.

Type	Shell, nonadjustable

UNIVERSITY OF CALIFORNIA LIBRARY MAR 6 1943 DOCUMENTS DIVISION

Digitized by Google
Original from UNIVERSITY OF CALIFORNIA
Generated on 2014-11-15 19:35 GMT / http://hdl.handle.net/2027/uc1.b3243973
Public Domain, Google-digitized / http://www.hathitrust.org/access_use#pd-google

Sizes	3¼-in. diameter
Material	Babbitt
End play	0.0025
Clearance	0.0045 to 0.006
Rod pin bushing	Bronze (replaceable)
d. Crankshaft bearings.	
Number used	5
Type	Shell; shims provided for adjustment
Sizes	3½ in. diameter
End play (crankshaft)	0.007 to 0.010
Clearance	0.003 to 0.0055
Which bearing takes shaft thrust	Thrust plates on end of crankshaft
e. Cylinders.	
Maximum allowable taper	0.001 (manufacturing)
Maximum allowable out of round	0.001 (manufacturing)
f. Engine lubrication.	
Type	Pressure
Dry sump or wet sump	Wet
Pump type	Gear, with scavenger section
Speed of pump	Fixed
Drive	Gear
Oil pressure (limits, normal)	15 to 35 lb
Pressure—relief valve setting	25 to 35 lb
Oil temperature at inlet	Fixed
Desired	Fixed
Maximum	Fixed
Oil temperature, minimum under full load	Fixed
Oil filter:	
Make and model	Caterpillar part No. 5B9423, full flow
Location	Right side of engine
Oil gage:	
Make and model	Caterpillar part No. T–543
Oil consumption	1 pt make-up/hr
Oil grade	SAE 30 above freezing; SAE 10 below freezing (see lubrication guide)
Oil capacity	17 qt
g. Pistons.	
Type	Aluminum alloy
Diameter	5¾ in.

Digitized by Google
Original from UNIVERSITY OF CALIFORNIA
Generated on 2014-11-15 19:36 GMT / http://hdl.handle.net/2027/uc1.b3243973
Public Domain, Google-digitized / http://www.hathitrust.org/access_use#pd-google

h. Piston rings.

Number per piston	6
Type	Plain and lap joint; 1–5B910 compression, 3–6B2174 compression, 2–4B5315 oil (slotted)
Size	5¾ in.

i. Starting engine.

Make	Caterpillar
Type	2-cylinder gasoline, 4-cycle
Drive	Starter pinion
Number of teeth in flywheel ring gear	120
Number of teeth in starter pinion	14

j. Valves.

Type of head	Valve-in-head
Intake	4
Exhaust	4
Type of valve	Special alloy steel
Valve tappet type	Mushroom
Valve to tappet clearance (hot):	
Intake	0.012
Exhaust	0.012
Valve timing:	
Intake opens	12° BTC
Exhaust closes	22° ATC

[A. G. 062.11 (11–26–42).] (C1, Dec. 24, 1942.)

11. General.

* * * * * * *

d. (Added.) *Data.*

Medium	Water
Radiator	One-piece core
Capacity	18½ gal.
Water pump:	
Type	Centrifugal
Drive	Gear
Shaft end play	Should not exceed 0.0625
Fan:	
Diameter	24 in.
Number of blades	6
How driven	Gear
Radiator:	
Make and type	Modine, fin and tube
Capacity	8 gal.
Thickness	3¼ in.
Location of thermostat	Water manifold

Digitized by Google
Original from UNIVERSITY OF CALIFORNIA
Generated on 2014-11-15 19:36 GMT / http://hdl.handle.net/2027/uc1.b3243973
Public Domain, Google-digitized / http://www.hathitrust.org/access_use#pd-google

Radiator—Continued.	
Thermostat begins to open (temperature range).	165° F.
Thermostat fully open (temperature range).	180° ± 5° F.
Heat indicator, make and type	Caterpillar part No. 6B6795

[A. G. 062.11 (11-26-42).] (C1, Dec. 24, 1942.)

44. General.

* * * * * * *

a. (Added.) *Feed and exhaust.*

Carburetor (starting engine):	
Make and model	Zenith
Type	22AX8
Float level measurement	1½ ± 3/64 between face of air intake (without gasket) and float
Air cleaner (Diesel):	
Type	Donaldson
Capacity	Varies with engine speed
Size of jet:	
Compensator	#23
Main	#4W and #36
Idling	#14
Fuel filter (Diesel):	
Make	Caterpillar
Location	After transfer pump
Fuel pump:	
Make and model	Caterpillar
Type	Gear
Drive	Gear
Pressure	15 lb/sq in. (bypass valve regulated)

b. (Added.) *Fuel gages.*

At tank:	
Make	Caterpillar
Type	Bayonet
At instrument panel:	
Make	Caterpillar
Type	No. 6B6158
Fuel tank:	
Location	At rear of seat
Size	L-shape
Capacity	60 gal.
Fuel	Diesel fuel
Consumption	0.435 gal/BHP-hr at 850 rpm
Cetane rating	35 minimum

Digitized by Google
Original from UNIVERSITY OF CALIFORNIA
Generated on 2014-11-15 19:36 GMT / http://hdl.handle.net/2027/uc1.b3243973
Public Domain, Google-digitized / http://www.hathitrust.org/access_use#pd-google

Fuel—Continued.

Pressure:	
Maximum	16 lb
Minimum	12 lb
Fuel injector (Diesel):	
Pressure	Fixed
Valve and body clearance	Fixed
Springs	Fixed

[A. G. 062.11 (11-26-42.)] (C 1, Dec. 24, 1942.)

60. Generator.

* * * * * * *

e. (Added.) *Data.*

Make and model	Delco-Remy 953U
Voltage	6 volt, 90 watt
Drive	Gear
Rotation	Counterclockwise
Charging control	Relay
Number of brushes	3
Maximum rate of charge	11½ amp at 8 v
Armature end-play	0.002

[A. G. 062.11 (11-26-42.)] (C 1, Dec. 24, 1942.)

61. Lamps.

* * * * * * *

d. (Added.) *Data.*

Lights	Single contact 6 to 8 volts
Service headlight	32 cp
Service tail	3 cp
Service signal light	32 cp
Service instrument lights	3 cp

63. Battery.—***a.*** After recharging, if one * * * the manufacturer's recommendation.

b. (Added.) *Data.*

Make or type	Willard No. 4121 Type RH–2–15
Number of cells	3
Number of plates	15/cell
Dimensions	10 5/16 x 7 1/8 x 9 5/16
Capacity (amp-hr)	119 amp-hrs, 20-hr rate
Voltage	6
Hydrometer readings:	
Fully charged	1.275–1.300
Half charged	1.225
Dangerously low	1.150
Freezing temperature	1.100=18° F. above zero
Terminal ground	Negative

Digitized by Google
Original from UNIVERSITY OF CALIFORNIA
Generated on 2014-11-15 19:36 GMT / http://hdl.handle.net/2027/uc1.b3243973
Public Domain, Google-digitized / http://www.hathitrust.org/access_use#pd-google

Hydrometer reading—Continued.	
Voltmeter reading	7+
Ammeter:	
Make	Caterpillar No. 166881

[A. G. 062.11 (11-26-42).] (C 1, Dec. 24, 1942.)

118. Flywheel clutch.

* * * * * * *

d. (Added.) *Data.*

Manufacturer and model	Caterpillar
Type	Overcenter engagement
Diameter	16
Facing material	Metallic
Outside diameter	16
Inside diameter	8
Thickness	0.191 to 0.195
Area	151 sq in.
Release bearing:	
Type	Bronze thrust
Make and model	Caterpillar
Hand lever adjustments	Screw type

[A. G. 062.11 (11-26-42).] (C 1, Dec. 24, 1942.)

119. Transmission.

* * * * * * *

c. (Added.) *Data.*

Make and model	Caterpillar D7
Type	Selective type change speed gear set
Number of speeds (rpm each speed):	
Forward	4
Reverse	1
Transmission ratios (various speeds):	
1st	1.81 mph
2d	2.75 mph
3d	3.90 mph
4th	5.39 mph
5th	8.00 mph
Bearings:	
Pinion	Ball and roller
Mainshaft	Center ball
Mainshaft, rear	Roller
Mainshaft, pilot	Roller
Steering clutch shaft	Taper roller
Reverse idler gear	Bushing
Type of lubrication	Splash

Digitized by Google
Original from UNIVERSITY OF CALIFORNIA
Generated on 2014-11-15 19:37 GMT / http://hdl.handle.net/2027/uc1.b3243973
Public Domain, Google-digitized / http://www.hathitrust.org/access_use#pd-google

Bearings—Continued.	
Quantity of oil	32 qt
Grade of oil	SAE 90 above freezing; SAE 80 below freezing. (See lubrication guide)
Brake band adjustment	Adjust so that they are effective when pedal is down three-fourths of total travel
Transfer case (final drive—one each side):	
Make and model	Caterpillar D7
Speeds	See transmission
Oil:	
Capacity	16 qt each
Grade	Same as transmission
Track tension and axles	spring dead

[A. G. 062.11(11-26-42).] (C 1, Dec. 24, 1942.)

122. Steering clutch disassembly.

* * * * * * *

c. Equalizer bar.—The equalizer bar * * * with the two offset holes toward the **inside** of the tractor.

[A. G. 062.11 (11-26-42).] (C 1, Dec. 24, 1942.)

126½. (Added.) **Data on service brakes.**

Manufacturer and model	Caterpillar
Type	Band
Diameter	16⅞ in.
Lining material and make	Raybestos molded block
Length	7 in. each block
Thickness	¼ in.
Width	3½ in.
Area	150 sq in. each
Clearance between pedal and floorboard	None (pedal movement almost parallel to floorboard)
Pedal travel	Depends on brake adjustment
Free play	Depends on brake adjustment

[A. G. 062.11(11-26-42).] (C 1, Dec. 24, 1942.)

140. General.

* * * * * * *

a. (Added.) *Tracks.*

Weight of tracks (2 tracks)	Approx. 2,470 lb including street plates
Type of blocks	Steel
Number of blocks	35 on each track

Digitized by Google
Original from UNIVERSITY OF CALIFORNIA
Generated on 2014-11-15 19:37 GMT / http://hdl.handle.net/2027/uc1.b3243973
Public Domain, Google-digitized / http://www.hathitrust.org/access_use#pd-google

Size of blocks	20 in.
Weight of blocks	35 lb each (included in above weight)
Pitch of track	7½ in.
Tension of track	Depends on adjustment
Size of track pin	1⅝-in. diameter
Bogie wheels:	
Size	8¾-in. diameter
Weight	114 lb
Track support roller:	
Size	6¾-in. diameter
Weight	40 lb
Front idler:	
Size	25½-in. rolling diameter, 27¼-in. flange diameter
Weight	279 lb
How to press tire on bogie wheel	Heat and shrink
Method of adjustment of track	Bolt action

b. (Added.) *Springs and shock absorbers (equalizer).*

Springs, main and auxiliary:	
Type	Leaf
Main spring:	
Length	78 in.
Width	4½ in.
Thickness	6¾ in.
No. of leaves	6
Spring rate	Above length when loaded to 8,500 lb
Auxiliary springs:	
Lengths	22 in.
Width	3½ in.
Thickness	2½ in.
No. of leaves	8
Bolt diameter	⅞ in.
Bushing diameter	57/64 in.
Over-all length	23¾ in.
Spring rate	23¾ when loaded to 3,000 lb

[A. G. 062.11 (11-26-42).] (C 1, Dec. 24, 1942.)

BY ORDER OF THE SECRETARY OF WAR:

G. C. MARSHALL,
Chief of Staff.

OFFICIAL:

J. A. ULIO,
Major General,
The Adjutant General.

U. S. GOVERNMENT PRINTING OFFICE: 1942

Digitized by Google
Original from UNIVERSITY OF CALIFORNIA
Generated on 2014-11-15 19:37 GMT / http://hdl.handle.net/2027/uc1.b3243973
Public Domain, Google-digitized / http://www.hathitrust.org/access_use#pd-google

CHAPTER 1

GENERAL

Paragraphs
Section I. General 1–4
II. Trouble shooting 5–6
III. Lubrication 7–9

SECTION I

GENERAL

Paragraph
Scope 1
Description 2
Fuels 3
The mechanic 4

1. Scope.—This manual is published for the information and guidance of ordnance maintenance personnel. It contains detailed instructions for inspection, disassembly, assembly, maintenance, and repair of the heavy tractor M1, caterpillar D7, supplementary to those in the Field and Technical Manuals prepared for the using arm. Addi-

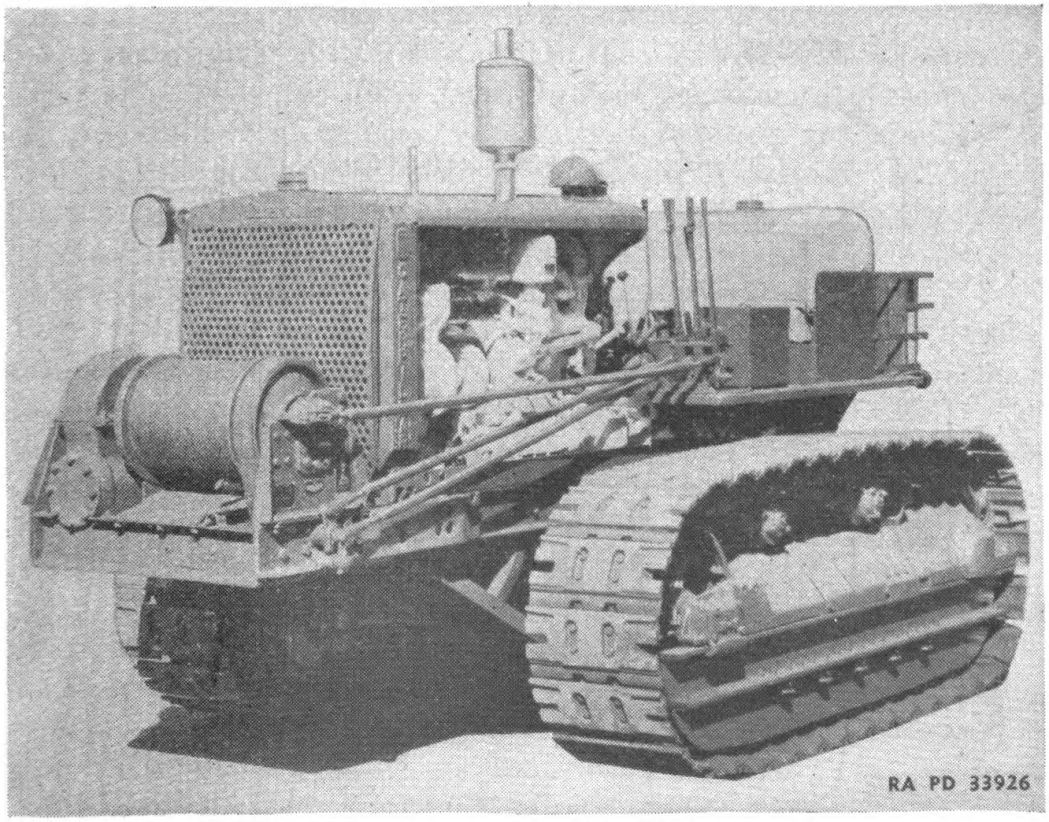

FIGURE 1.—Heavy tractor M1, caterpillar D7.

Digitized by Google
Original from UNIVERSITY OF CALIFORNIA
Generated on 2014-11-15 19:37 GMT / http://hdl.handle.net/2027/uc1.b3243973
Public Domain, Google-digitized / http://www.hathitrust.org/access_use#pd-google

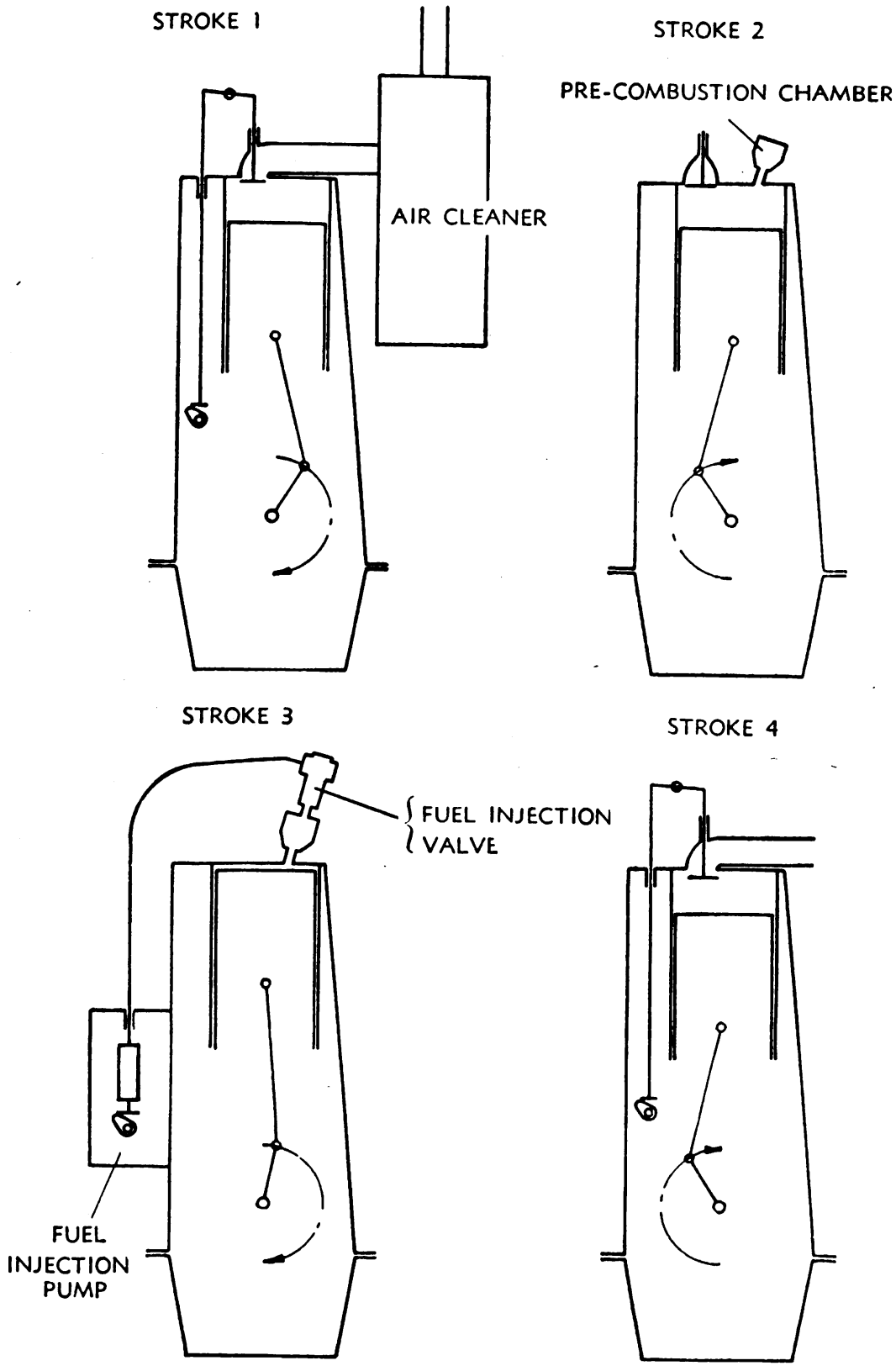

FIGURE 2.—Working process of Diesel engine.

Digitized by Google
Original from UNIVERSITY OF CALIFORNIA
Generated on 2014-11-15 19:38 GMT / http://hdl.handle.net/2027/uc1.b3243973
Public Domain, Google-digitized / http://www.hathitrust.org/access_use#pd-google

tional descriptive matter and illustrations are included to aid in providing a complete working knowledge of the matériel.

2. Description.—The Diesel engine is a relatively simple piece of machinery and is easy to maintain and service. Its simplicity is more evident if the principles underlying Diesel engine operation are thoroughly understood.

a. Working process.—The Diesel engine operates on the four-stroke cycle (fig. 2) and burns Diesel fuels without the assistance of spark plugs or externally heated surfaces.

(1) *Stroke one.*—As the piston moves down on the inlet stroke, air is drawn through the air cleaner, through the inlet valve opening, and then into the combustion chamber. The Diesel engine always takes in a full charge of air on each inlet stroke regardless of whether it is operating at idling speed or at full load.

(2) *Stroke two.*—On the compression stroke, both the inlet and exhaust valves are closed and the piston moves up, crowding the air into a very small space. The high compression in the main and precombustion chambers raises the temperature of this air to over 1,000° F.

(3) *Stroke three.*—Near the end of the compression stroke and during the beginning of the power stroke, the fuel injection pump forces a measured quantity of fuel through the fuel line to the fuel injection valve. The fine spray from the fuel injection valve passes into the precombustion chamber, where it heats quickly and ignites. As fuel injection continues, burning fuel passes through the opening in the precombustion chamber into the main combustion chamber where additional air is available to complete its combustion. Expansion is thus obtained and the piston is forced down by the pressure.

(4) *Stroke four.*—As the piston moves up on the exhaust stroke, the exhaust valve opens, and the burned gases are forced out through the exhaust pipe. The exhaust stroke completes the Diesel cycle; as the piston moves downward on its next stroke, the working process is started over again.

b. Care.—The Diesel engine will give long uninterrupted service if it is given the care which it deserves.

(1) The most important single item in preserving the long life of an engine is to keep out dirt.

(2) Every precaution has been taken to safeguard against dirt entering the engine. Filters and cleaners have been supplied to keep the supply of air, fuel, and lubricating oil clean.

(3) Regardless of the original effectiveness of these cleaning units, it is highly important that they be kept clean; otherwise they will

Digitized by Google
Original from UNIVERSITY OF CALIFORNIA
Generated on 2014-11-15 19:38 GMT / http://hdl.handle.net/2027/uc1.b3243973
Public Domain, Google-digitized / http://www.hathitrust.org/access_use#pd-google

become ineffective. Unnecessary wear will result if dirt is allowed to work its way into the engine.

3. Fuels.—*a.* Clean fuel is the most important factor affecting the life of the fuel injection equipment. Dirty fuel contains solid material which is abrasive. If some of this abrasive material reaches the fuel injection equipment, it begins to scratch the finely finished surfaces, and the equipment no longer functions as it should. Under such circumstances, the engine will begin to exhibit symptoms of loss of power, incomplete combustion, hard starting, missing, and other forms of erratic operation. These difficulties can be avoided by the use of clean fuel.

b. Storage.—(1) Use only oil, fuel, Diesel, for high speed automotive type Diesel engines and then keep it clean. Since natural settling is an effective method of cleaning Diesel fuel, allow the fuel to stand as long as possible after delivery before using.

(2) A storage and settling tank (fig. 3) of 500-gallon capacity or greater provides one of the most satisfactory methods for handling

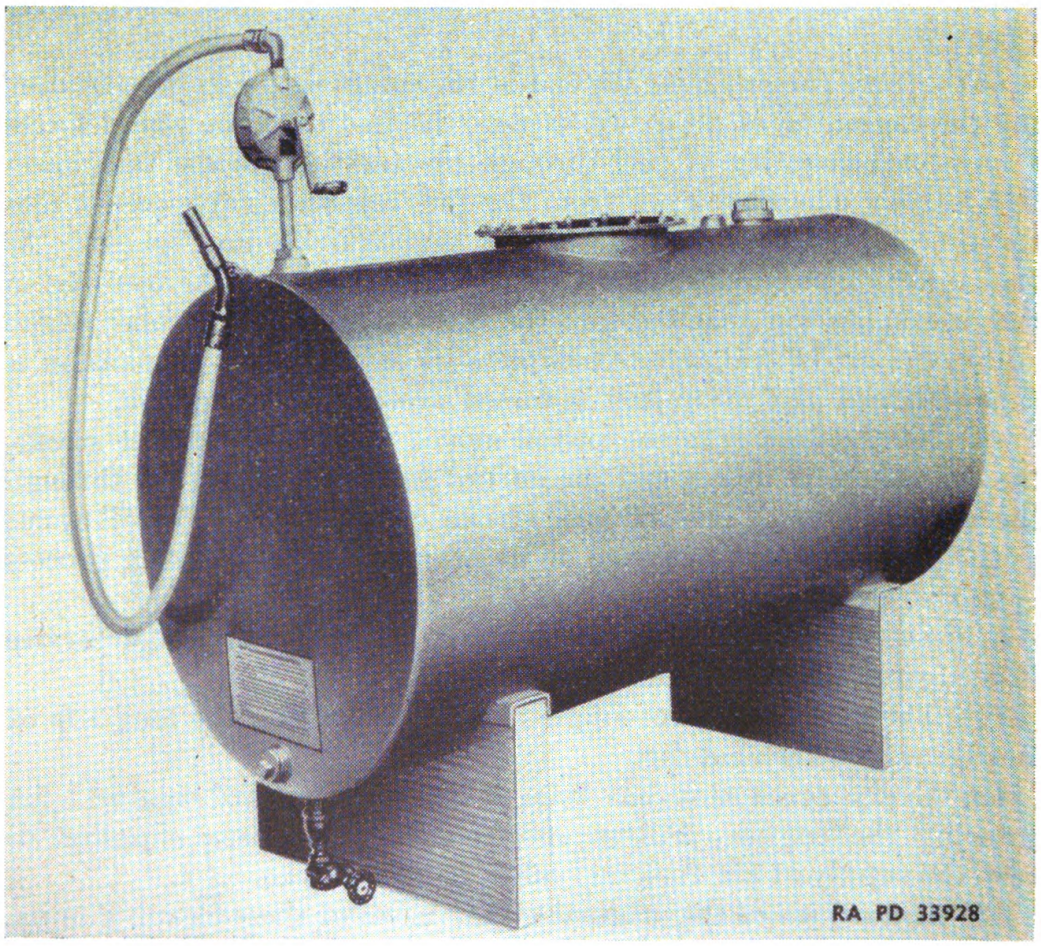

FIGURE 3.—Storage tank with pump.

Digitized by Google
Original from UNIVERSITY OF CALIFORNIA
Generated on 2014-11-15 19:38 GMT / http://hdl.handle.net/2027/uc1.b3243973
Public Domain, Google-digitized / http://www.hathitrust.org/access_use#pd-google

Diesel fuel. Such a tank allows continuous settling, and even though some dirt might accidentally get into the fuel during its delivery, it will be clarified considerably as the dirt settles out in the tank. Settling will usually be well accomplished after 24 hours. Should it be necessary to move the tank after filling and settling, some fuel should be drained from the bottom of the tank to remove settlings. Wherever possible, fuel should be transferred directly from the storage tank to the tractor fuel tank.

(3) When a storage tank is not available and other methods of fuel handling become necessary, use containers which are absolutely clean and reduce agitation to a minimum. When not in use, the containers should be provided with dustproof and waterproof covers.

(4) It is inadvisable to use funnels, particularly those equipped with screens due to dust collecting on the oily surfaces.

(5) A portable hand pump similar to that shown in the top of the storage tank is usually most satisfactory for transferring fuel from drums. When not in use, the inlet and outlet ends of the pump should be capped. Rinsing and cleaning of tops of drums, containers, or can spouts before opening will reduce the possibilities of dirt and water accidentally contaminating the fuel while it is being transferred to the tractor fuel tank.

(6) In short, it is desirable to have the fuel placed in the tractor fuel tank as absolutely free from contaminating substances as possible. All precautions taken in handling fuel will assist greatly in assuring uninterrupted, satisfactory engine performance.

4. The mechanic.—Whenever service work is done on any machine, it is highly recommended that all parts, tools, cleaning equipment, and personnel be kept as clean as possible. This will preclude the possibility of harmful dirt and grit getting into moving parts which ultimately shortens their useful life.

a. Tools.—All service tools should be kept in first class condition. The proper wrench for the particular job should be used. Adjustable wrenches should be used only when no other wrench is available for doing the job. Special service tools should be used for removing or installing parts wherever they are recommended. These tools have been developed especially for these jobs and will save considerable time and cut to a minimum the amount of damage to parts.

b. Handling parts.—Care should be taken when handling finished parts to see that the contact surfaces are not damaged. If a moving part does not yield readily to removal or installation, a hammer should not be used as a means of persuasion. Rather, a careful check should be made to see just what the difficulty is. Under some circumstances,

Digitized by Google
Original from UNIVERSITY OF CALIFORNIA
Generated on 2014-11-15 19:38 GMT / http://hdl.handle.net/2027/uc1.b3243973
Public Domain, Google-digitized / http://www.hathitrust.org/access_use#pd-google

the paint used on equipment may keep a shaft from being removed readily. Under these circumstances, it may be advisable to use paint remover on these parts so as to permit the shaft to slide back through a bearing. Oftentimes, watchfulness in this respect will save both time and equipment. All parts should be as clean as possible before reinstalling them on a machine.

c. Gaskets.—A piece of machinery can usually be assembled so no oil or water leaks will be present if care is taken in handling gaskets. The surfaces on which the gaskets are to be installed should be clean and smooth. New gaskets which have shrunk can often be restored to size by soaking them in water before installation. Cork or felt gaskets will usually adhere better to a metal surface if both the metal and the gasket are coated with a sealing compound or shellac and allowed to dry until the surfaces become tacky.

d. Oil seals.—The rawhide seal (fig. 4) has a leather wiping edge which is held around a surface to be sealed by the tension of a spring.

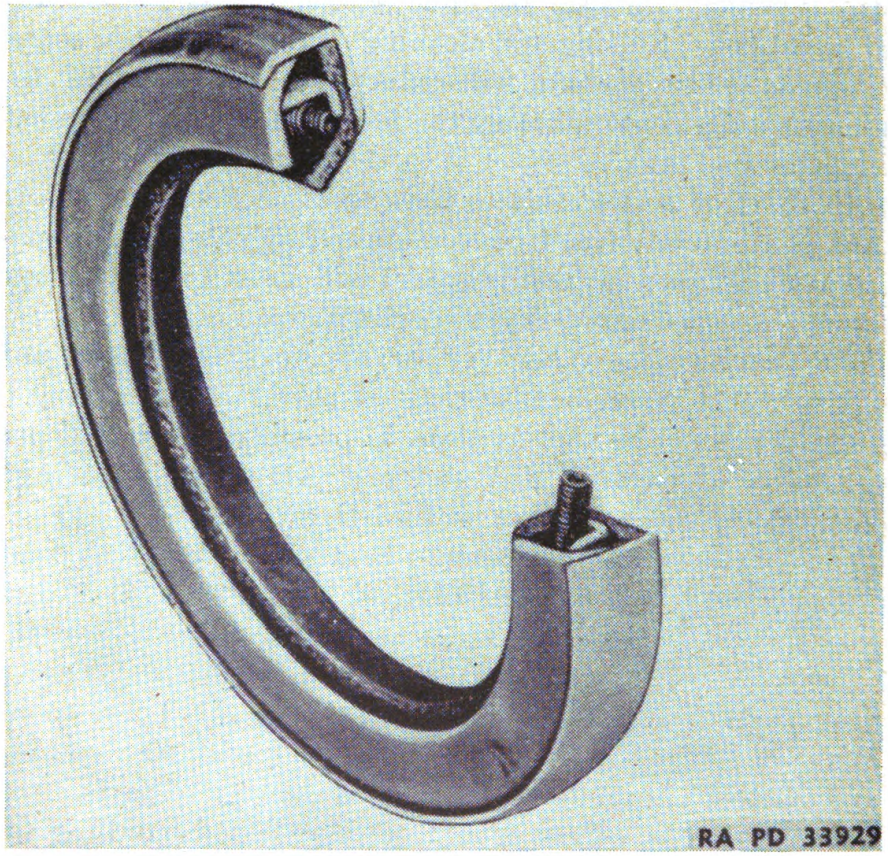

FIGURE 4.—Oil seal.

Before an oil seal is removed, the direction in which the wiping edge is turned should be noted. Install the new seal in the same direction.

Digitized by Google
Original from UNIVERSITY OF CALIFORNIA
Generated on 2014-11-15 19:52 GMT / http://hdl.handle.net/2027/uc1.b3243973
Public Domain, Google-digitized / http://www.hathitrust.org/access_use#pd-google

A seal should be placed in a container of warm oil, engine, approximately one-half hour before installation to saturate the leather. If there is a shoulder or splines on the shaft, the seal should be protected against cutting or damage. Wrap a piece of shim stock or thin metal strip over the shoulder or splines and work the seal onto the shim stock. Take care not to cut the seal. The seal can then be slid into position without damage.

e. Installing press fit parts on shafts.—Bearings, gears, sleeves, or similar parts which are a press fit on a shaft can usually be installed more easily if the part is expanded by heating in a bath of oil, then installed and allowed to cool.

(1) Suspend the article in the center of a container of oil so the heat will not be applied directly to the part and stir the oil. When the oil has been heated sufficiently, it will begin to smoke. At that point, remove the part from the oil, install it, and immediately draw any retaining nuts up tight.

(2) The temperature at which lubricating oil will begin to give off smoke is well above the boiling point of water. With this in mind, care should be taken to avoid burns.

f. Preparations for starting.—Whenever a machine has been reconditioned, attention should be given to see that lubricant is replaced in any housings which have been disassembled and require lubricants. The machine should be completely lubricated before it leaves the shop. Also, a careful check should be made on an engine to see that water is in the radiator and that oil is in the crankcase of the Diesel engine and starting engines before setting the machine in operation. Although these are elementary points, it has been found in numerous instances that some one of them has been overlooked, resulting in minor or major damage to the machine and as consequence, loss of time.

Digitized by Google
Original from UNIVERSITY OF CALIFORNIA
Generated on 2014-11-15 19:53 GMT / http://hdl.handle.net/2027/uc1.b3243973
Public Domain, Google-digitized / http://www.hathitrust.org/access_use#pd-google

SECTION II

TROUBLE SHOOTING

Paragraph
Starting engine 5
Diesel engine 6

5. Starting engine.

Probable causes	*Remedies*
Fails to start.	
Fuel system clogged.	Clean sediment bowl and filter.
Carburetor out of adjustment.	Adjust.
Dirty spark plugs.	Clean and set gap to .022″.
Faulty magneto.	Repair.
Incorrect timing.	Retune magneto.

6. Diesel engine.

Probable causes	*Remedies*
a. Fails to start.	
Lack of fuel.	Add fuel.
Worn fuel injection pumps.	Repair or replace.
Air bound fuel system.	Bleed system.
b. Engine smoking or running irregularly.	
Faulty injection valves.	Replace.
Piston pumping lubricating oil.	Replace rings.
c. Low oil pressure.	
Insufficient amount of oil.	Add oil.
Broken oil lines.	Repair or replace.
Defective gage.	Repair or replace.
Oil diluted.	Drain and refill.
Oil pump out of adjustment.	Adjust.
d. High oil consumption.	
Oil leaks.	Repair lines.
Pistons pump oil.	Replace rings, pistons (if wear is excessive).
Poor grade of lubricating oil.	Use specified oil.

Digitized by Google
Original from UNIVERSITY OF CALIFORNIA
Generated on 2014-11-15 19:53 GMT / http://hdl.handle.net/2027/uc1.b3243973
Public Domain, Google-digitized / http://www.hathitrust.org/access_use#pd-google

Probable causes	*Remedies*
e. Excessive oil temperature.	
Insufficient oil supply.	Drain, flush, and refill crankcase.
Dirty oil.	Drain, flush, and refill crankcase.
Oil diluted.	Drain and refill.
f. Low power and uneven running.	
Incorrect governor setting.	Adjust.
Worn fuel injection pumps.	Replace.
Injection valves have poor spray characteristics.	Clean or replace.
Fuel injection pump racks and gears out of alinement.	Realine.
Faulty valves.	Clean, grind or replace.

SECTION III

LUBRICATION

	Paragraph
General	7
Schedule	8
Methods	9

7. General.—Lubrication is an essential part of preventive maintenance, determining to a great extent the serviceability of parts and assemblies. Lubrication, or the lack of it, influences repairs and operations materially, and is one of the most important factors affecting dependable service and useful vehicle life. Refer to OFSB 6–1 for a description of the ordnance lubrication program.

8. Schedule.—*a. Records.*—A complete record of lubrication will be kept for every vehicle. Responsible personnel will execute a check sheet at regular intervals to indicate the actual mileage and date at which each component receives such attention as prescribed.

b. Supplies.—Lubricants and application equipment should conform to the recommendations of responsible manufacturers or the supply services concerned. Refer to OFSB6–2 for the product guide and to the proper War Department lubrication guide.

Digitized by Google
Original from UNIVERSITY OF CALIFORNIA
Generated on 2014-11-15 19:53 GMT / http://hdl.handle.net/2027/uc1.b3243973
Public Domain, Google-digitized / http://www.hathitrust.org/access_use#pd-google

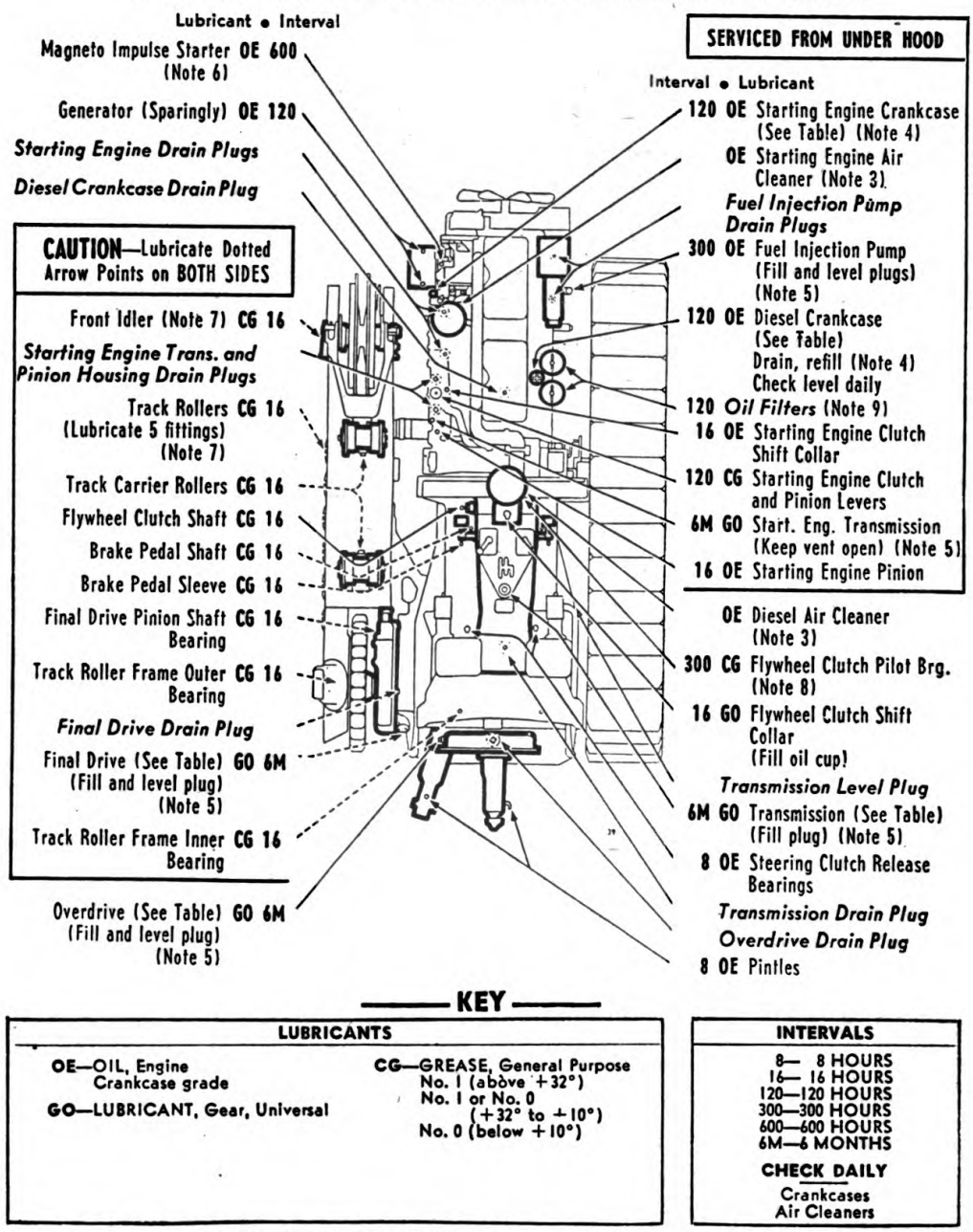

FIGURE 5.—Lubrication guide for heavy tractor M1.

Digitized by Google
Original from UNIVERSITY OF CALIFORNIA
Generated on 2014-11-15 19:53 GMT / http://hdl.handle.net/2027/uc1.b3243973
Public Domain, Google-digitized / http://www.hathitrust.org/access_use#pd-google

LUBRICATION INSTRUCTIONS (fig. 5)

Tractor starting serial No. 9G6700. Located on side of driver's seat.

Table of capacities with recommendations at temperatures shown

	Capacity	Above +32°	+32° to +10°	+10° to −10°	Below −10°
Diesel Crankcase	17 quarts	Caution: Use only U. S. Army Spec. 2-104A OE SAE 30	OE SAE 30 or 10	OE SAE 10	Refer to OFSB 6-11
Starting Engine Crankcase	2 quarts				
Transmission	32 quarts	GO SAE 90	GO SAE 90 or 80	GO SAE 80	
Final Drive (each unit)	16 quarts				
Overdrive	6 quarts				

NOTES.—Additional lubrication and service instructions on individual units and parts. *Cold weather:* For lubrication and service below −10°, refer to OFSB 6–11.

1. *Fittings.*—Clean before applying lubricant. ***Caution:*** Lubricate track rollers, idlers, and frame points after washing tractor.

2. *Odometer.*—Odometer readings are translated into operating hours on the basis of 40 miles equal 8 hours, 600 miles equal 120 hours, etc. Lubrication interval should be based upon mileage or operating hours, whichever comes first.

3. *Air cleaners.*—Clean and refill oil cup to circular level mark with used crankcase oil OE every 5 to 60 hours, depending on operating conditions. Remove screens and wash in solvent every 60 to 300 hours on Diesel engine, every 60 hours on gasoline starting engine. Clean air pipes and reassemble. Keep all connections tight and precleaner clean. (Crankcase breather.) Remove and clean filter element in solvent, pour ¼ pint used crankcase oil OE through filter and drain every 300 hours. (Air compressor.) Remove filter mat and wash every 100 hours. (Air compressor governor.) Remove and wash strainer every 200 hours.

4. *Crankcases.*—Drain only while engine is hot. Clean breathers and strainer screens with solvent, dip in OE, and drain. Refill crankcases to "full" mark on gage. Run engine a few minutes and recheck oil level. ***Caution:*** Be sure pressure gage indicates oil is circulating. (See table.)

5. *Gear cases.*—Check level every 120 hours, add lubricant if necessary. Check with tractor on level ground. Drain, flush, and refill as indicated at points on guide. When draining, drain immediately after operation. Fuel injection pump is to be checked at the same time.

6. *Magneto.*—Every 900 hours pour solvent over pawls. Lubricate pawls and catch plate. Keep ventilator openings clean.

7. *Mud and deep water operation.*—Lubricate track rollers and idlers every 4 hours. ***Caution:*** Be sure that pipe plugs are in engine and steering clutch compartments; remove plugs every 60 hours to drain accumulated oil.

8. *Flywheel clutch pilot bearing.*—Reached by removing cover on bottom of flywheel clutch compartment and rotating engine until fitting is in position. ***Caution:*** Do not overlubricate.

9. *Oil filters.*—Remove, clean, and replace elements when changing crankcase oil.

10. *Compressed air tank.*—Drain water from air tank daily.

11. *Oilcan points.*—Lubricate all moving and rubbing metal parts, including linkages, throttle control rods, etc., which are not provided with oilers or fittings with OE every 60 hours.

12. *Points requiring no lubrication.*—Fan, water pumps, magneto rotor bearings, air compressor, tracks.

Digitized by Google
Original from UNIVERSITY OF CALIFORNIA
Generated on 2014-11-15 19:53 GMT / http://hdl.handle.net/2027/uc1.b3243973
Public Domain, Google-digitized / http://www.hathitrust.org/access_use#pd-google

TRACTOR STARTING SERIAL No.—9G6700. Located on side of driver's seat.

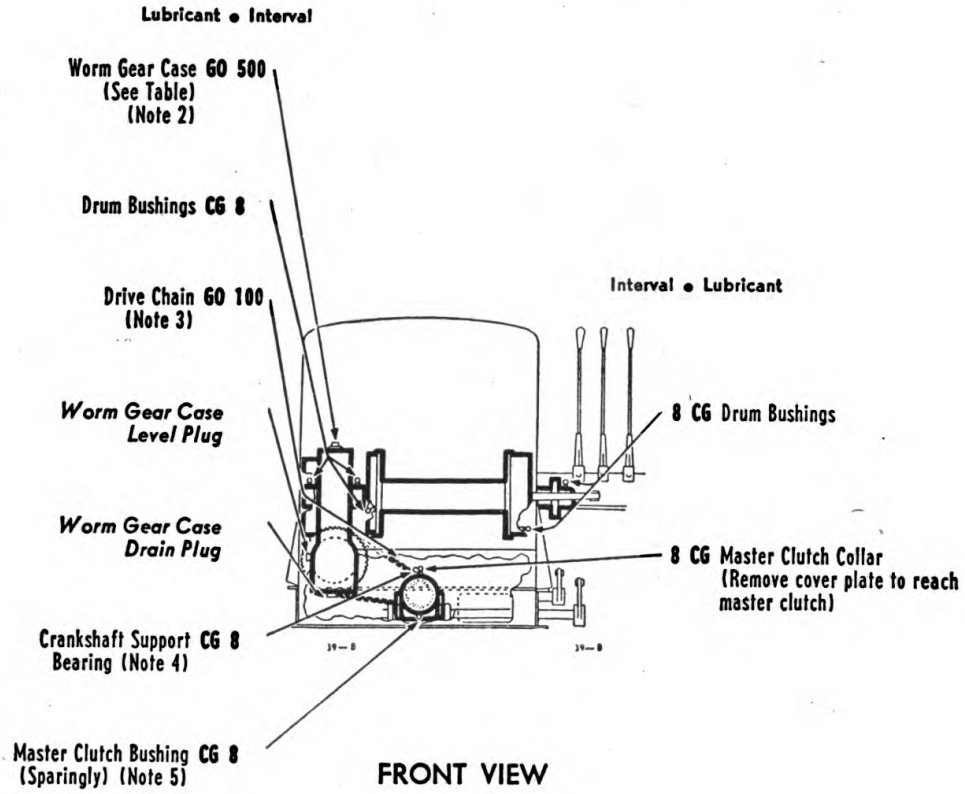

KEY

LUBRICANTS		INTERVALS
OE—OIL, Engine Crankcase grade	CG—GREASE, General Purpose No. 1 (above +32°) No. 1 or No. 0 (+32° to +10°) No. 0 (below +10°)	8— 8 HOURS
GO—LUBRICANT, Gear, Universal		100—100 HOURS
		500—500 HOURS

FIGURE 6.—Lubrication guide for winch.

Digitized by Google
Original from UNIVERSITY OF CALIFORNIA
Generated on 2014-11-15 19:53 GMT / http://hdl.handle.net/2027/uc1.b3243973
Public Domain, Google-digitized / http://www.hathitrust.org/access_use#pd-google

LUBRICATION INSTRUCTIONS (fig. 6)

Tractor starting serial No. 9G6700. Located on side of driver's seat.

Table of capacities with recommendations at temperatures shown

	Capacity	Above +32°	+32° to +10°	+10° to −10°	Below −10°
Worm Gear Case	4 quart	GO SAE 90	GO SAE 90 or 80	GO SAE 80	Refer to OFSB 6–11

NOTES.—Additional lubrication and service instructions on individual units and parts.

Cold weather: For lubrication and service below −10°, refer to OFSB 6–11.

1. *Fittings.*—Clean before applying lubricant. Lubricate until new grease is forced from the bearing.

2. *Worm gear case.*—To get correct reading when checking oil level, stop engine, or throw out master clutch so gears are idle. Check level every 100 hours, add lubricant if necessary. Drain, flush, and refill as indicated at point on guide.

3. *Drive chain.*—To inspect, remove chain guard. Check every 100 hours for undue wear or need of cleaning. Remove and clean as often as conditions require. To lubricate, remove chain from sprockets, wash, dry, dip repeatedly in warmed GO until lubricant has penetrated to bearing surfaces.

4. *Crankshaft support bearing.*—Located between drum and radiator and reached from above.

5. *Master clutch bushing.*—Reached through handhole in bottom of frame.

6. *Oilcan points.*—Lubricate control linkages, brake cams, quadrants, shaft bearings, shifter fork, and all rubbing surfaces with OE every 60 hours.

9. Methods.—Refer to OFSB 6–10 for general lubricating instructions.

a. Low temperature lubrication.—Refer to OFSB 6–11 for information which supplements the lubrication guides in connection with chassis, crankcase, and gear lubricants utilized in temperatures below minus 10° F.

b. Lubrication of rubber parts.—Friction and vibration tend to develop squeaks, groans, improper fitting of rubber chassis parts, instrument panel accessories, and engine mounts. Lubricants such as oil, engine, or grease, must not be used because they tend to swell or rot the rubber. A satisfactory lubricant can be made by mixing graphite, powdered with ethylene glycol or glycerin, and adding enough water to prevent rapid drying before the solution has penetrated. The solution can be applied with an ordinary spray, but a needle spray will be needed to force the lubricant between parts having close clearance. Rubber parts which are used to keep other parts from slipping or rotating should not be lubricated.

Digitized by Google
Original from UNIVERSITY OF CALIFORNIA
Generated on 2014-11-15 19:53 GMT / http://hdl.handle.net/2027/uc1.b3243973
Public Domain, Google-digitized / http://www.hathitrust.org/access_use#pd-google

CHAPTER 2

ENGINE

		Paragraphs
Section I.	Specifications	10
II.	Cooling system	11–18
III.	Cylinder head and valve mechanism	19–24
IV.	Pistons, rings, and cylinder liners	25–26
V.	Bearings	27–30
VI.	Crankshaft	31–35
VII.	Removing Diesel engine	36
VIII.	Timing gear assembly	37–39
IX.	Lubrication system	40–43
X.	Fuel system	44–51
XI.	Governor	52–59
XII.	Lighting system	60–63
XIII.	Air compressor	64–72

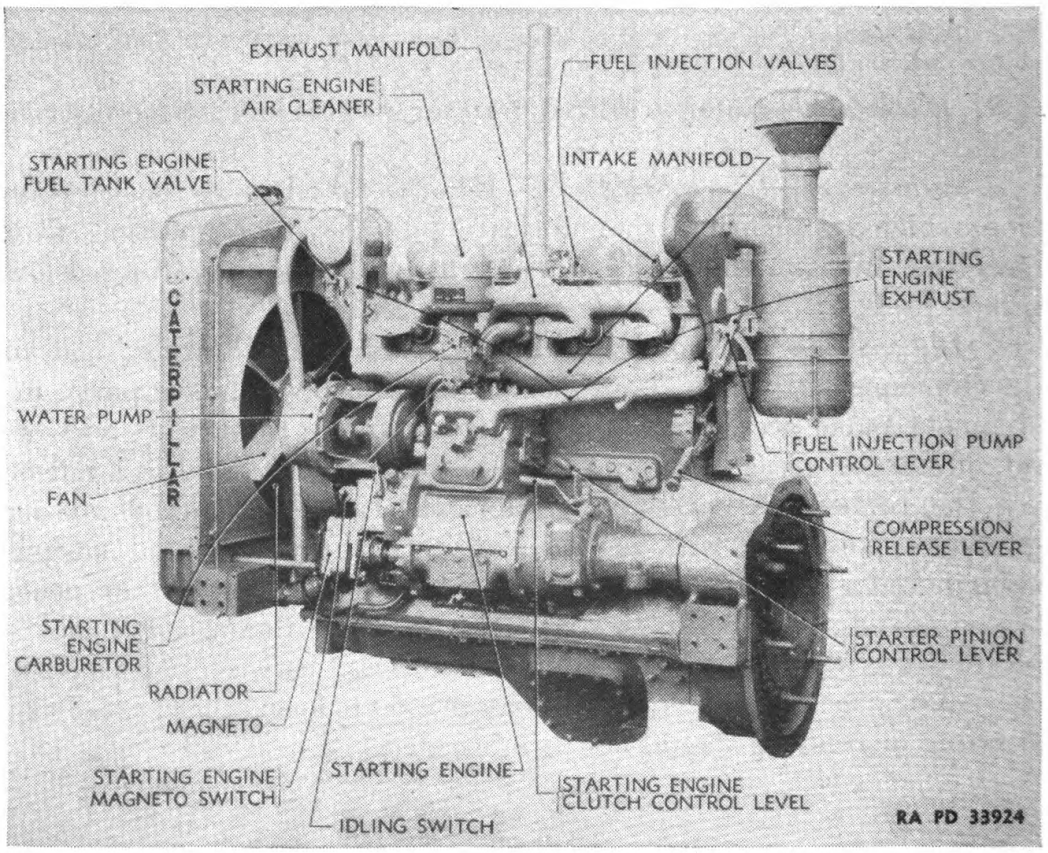

FIGURE 7.—Engine, heavy tractor M1, left side.

Digitized by Google
Original from UNIVERSITY OF CALIFORNIA
Generated on 2014-11-15 19:53 GMT / http://hdl.handle.net/2027/uc1.b3243973
Public Domain, Google-digitized / http://www.hathitrust.org/access_use#pd-google

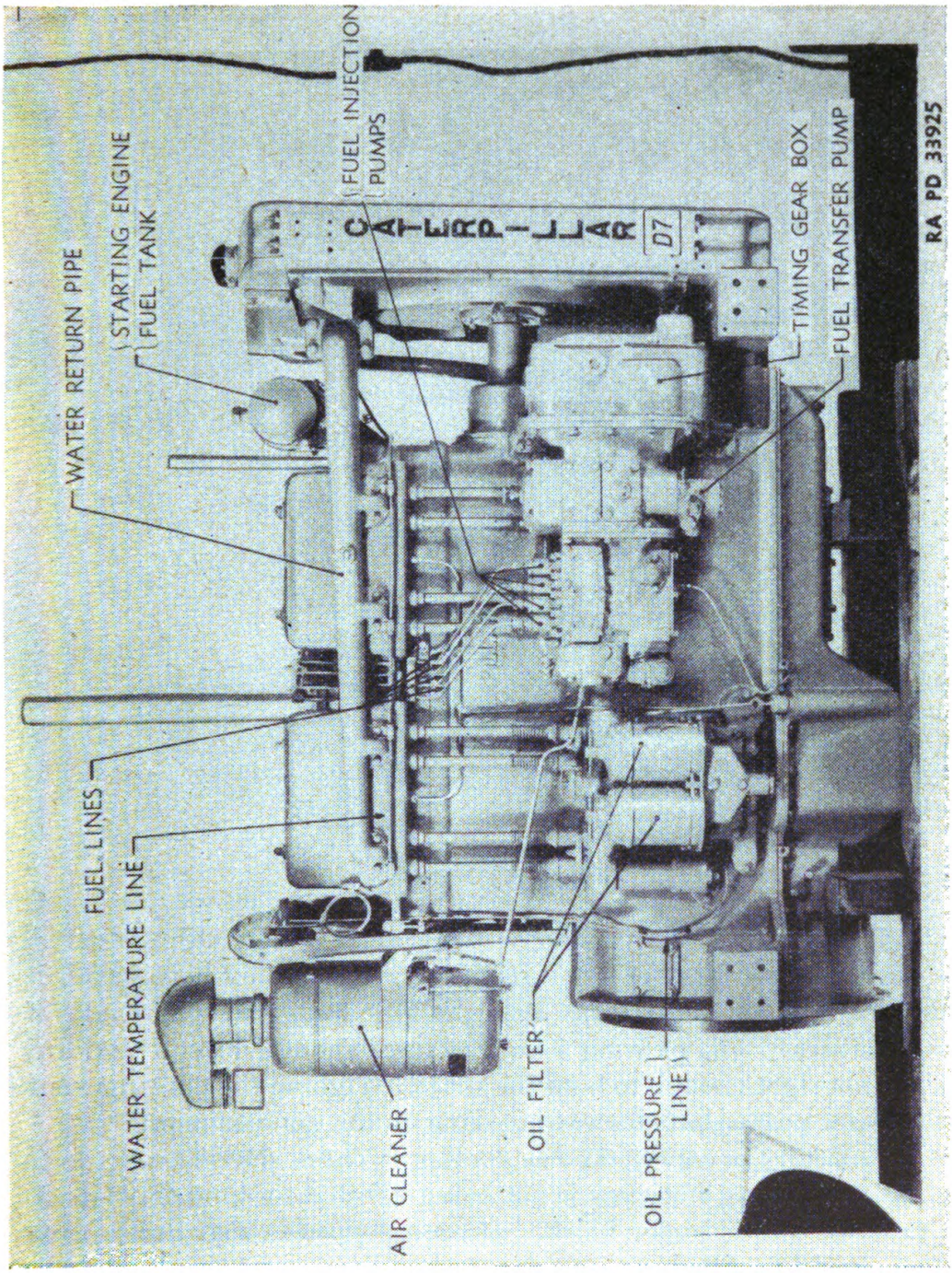

FIGURE 8.—Engine, heavy tractor M1, right side.

476795°—42——2

Digitized by Google

Original from UNIVERSITY OF CALIFORNIA

Generated on 2014-11-15 19:54 GMT / http://hdl.handle.net/2027/uc1.b3243973
Public Domain, Google-digitized / http://www.hathitrust.org/access_use#pd-google

SECTION I

SPECIFICATIONS

Paragraph
Specifications 10

10. Specifications.

Engine		*Capacities*	
Four-cycle, water-cooled, Diesel fuels		Cooling system in U. S. standard gallons	18½
Number of cylinders	4	Crankcase, in quarts	17
Bore	5¾ in.	Lubrication	Force feed
Stroke	8 in.	Weight as shown in pounds (approx.)	4,400
Piston displacement	831 cu. in.		

SECTION II

COOLING SYSTEM

Paragraph
General 11
Radiator 12
Fan 13
Fan drive 14
Water pump 15
Water temperature regulators 16
Manifold 17
Air cleaner 18

11. General.—*a.* The cooling system should be kept clean and free of scale deposits. Tighten the water pump packing nut by turning it in the direction the shaft turns until the leak stops and then back off one-sixth turn. The packing should be tight enough only to stop any leak but not tight enough to bind the shaft. Tighten the packing vent on the water pump shaft forward bearing on the same manner.

b. If difficulty is experienced in cooling, a check should be made to see that the cooling efficiency is not being affected by lime deposits in the radiator and cylinder block. If such deposits exist, the cooling system should be filled with a mixture consisting of 10 percent solution of acid, muriatic (hydrochloric acid), and water. Mix the acid into water to form the solution.

c. Operate the engine for 3 hours and then drain out cleaning solution. Thoroughly flush the system and refill with soft water.

Cover (A) (fig. 9) can be removed to aid in removing sediment in the starting engine block.

Digitized by Google
Original from UNIVERSITY OF CALIFORNIA
Generated on 2014-11-15 19:54 GMT / http://hdl.handle.net/2027/uc1.b3243973
Public Domain, Google-digitized / http://www.hathitrust.org/access_use#pd-google

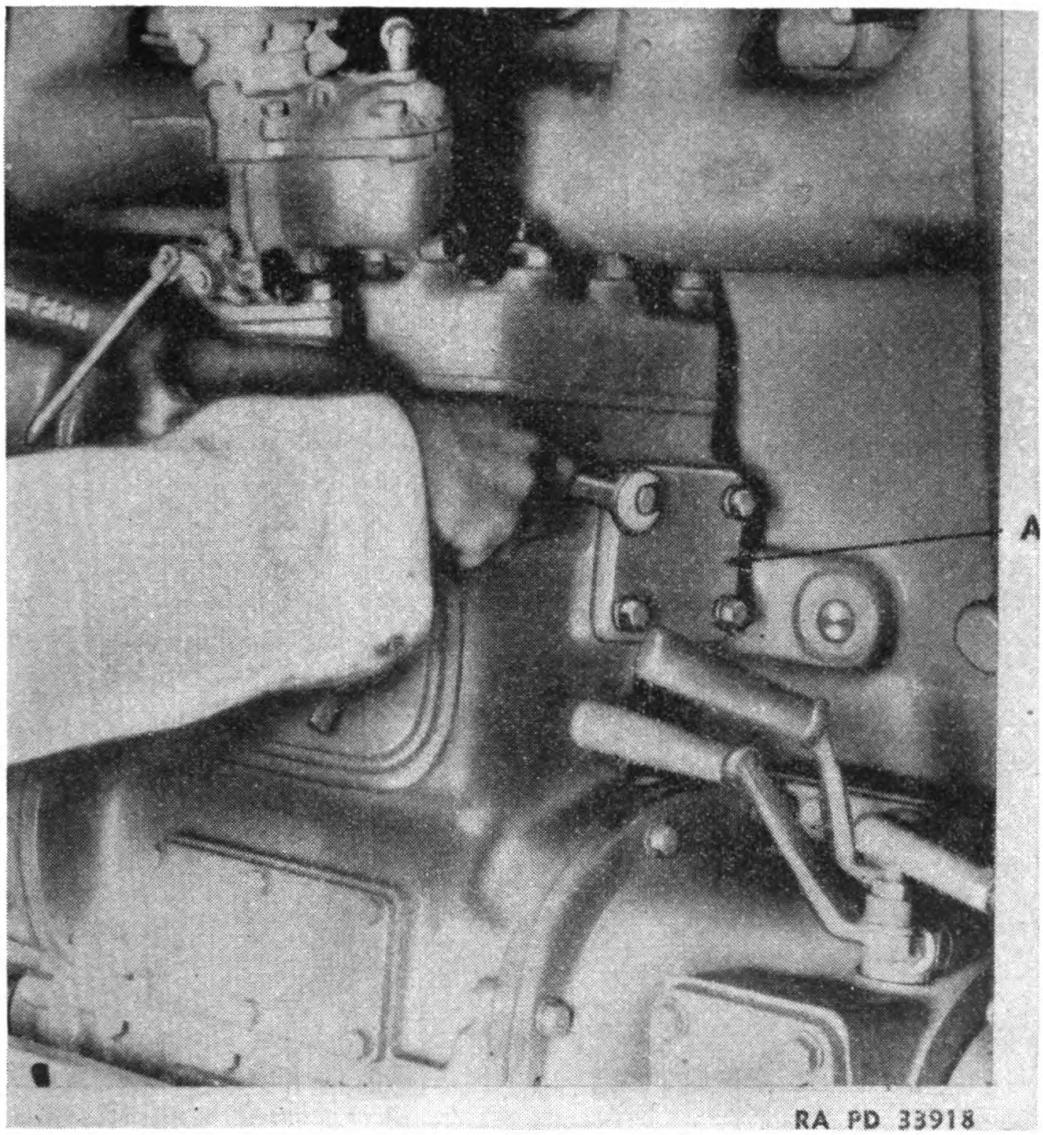

FIGURE 9.—Removing cover.

12. Radiator (fig. 10).—*a. Removal.*—Remove winch, power take-off front bearing, and engine hood. Drain cooling system. Disconnect water lines (6) and remove capscrews (10) that secure the radiator to the timing gear housing.

NOTE.—The radiator group as shown weighs approximately 450 pounds.

b. Disassembly.—Remove overflow tube (2), fan shield (4), and guard (7). The top tank (1), bottom tank (9), and side plates (5) can be taken off by removing a series of capscrews at (3) and (8). New gaskets should be used in reassembly.

13. Fan (fig. 11).—*a. Removal.*—The fan is driven from the camshaft gear through an idler gear (15). Composition disks (5) in the

Digitized by Google
Original from UNIVERSITY OF CALIFORNIA
Generated on 2014-11-15 19:54 GMT / http://hdl.handle.net/2027/uc1.b3243973
Public Domain, Google-digitized / http://www.hathitrust.org/access_use#pd-google

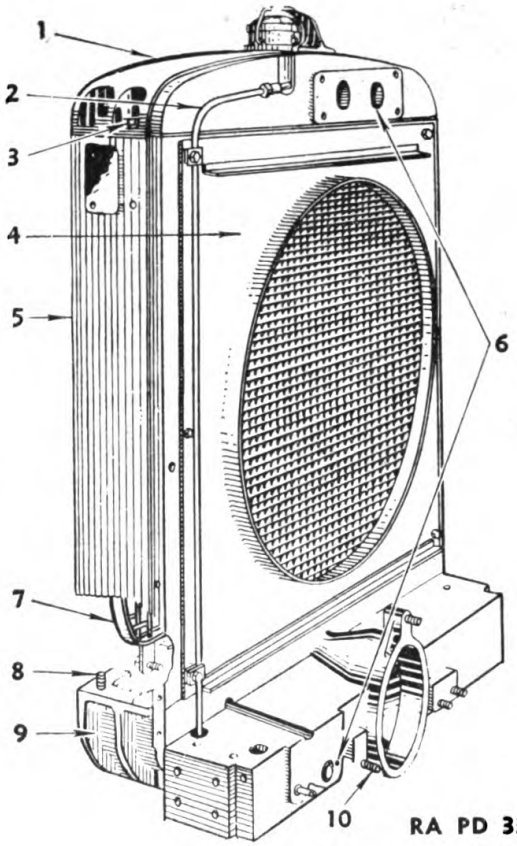

FIGURE 10. Radiator.

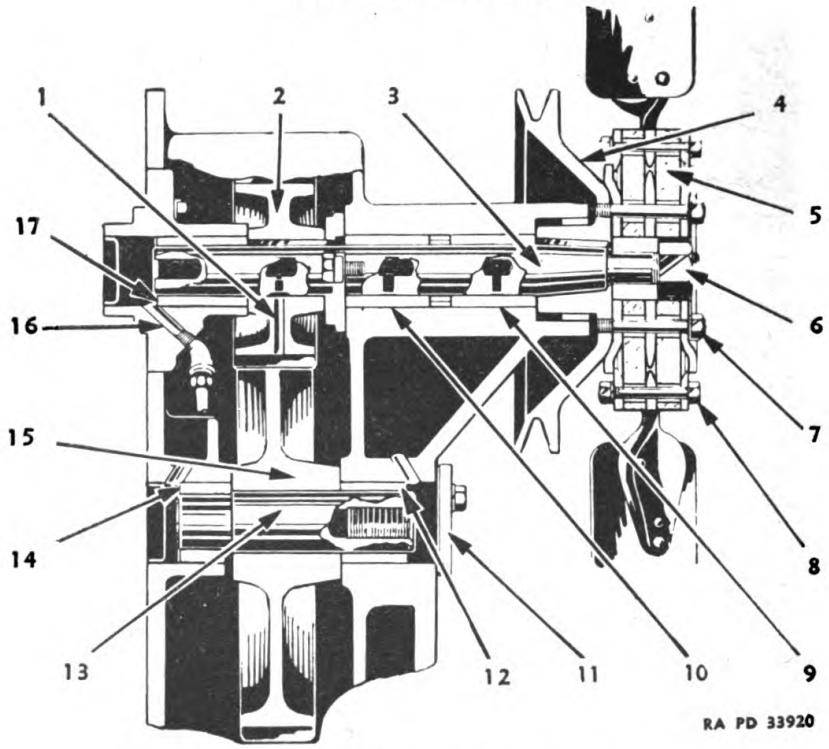

FIGURE 11.—Fan assembly—schematic.

Digitized by Google
Original from UNIVERSITY OF CALIFORNIA
Generated on 2014-11-15 19:54 GMT / http://hdl.handle.net/2027/uc1.b3243973
Public Domain, Google-digitized / http://www.hathitrust.org/access_use#pd-google

fan hub absorb shocks to the fan. The radiator must be removed to replace the flexible drive disks or the fan. The timing gear housing must be taken off for any work on the fan drive.

b. Disassembly.—Remove nuts (7) and slide fan off the hub. Disassemble fan by taking out bolts (8). If cracks appear in the composition drive disks, replace them. Nut (6) requires a $1\frac{5}{16}$-inch wrench. Pully (4) can be pulled from the shaft by using a screw type puller and $2\frac{3}{8}$ N. F. by 5-inch capscrews in the stud holes (7). Protect the end of the fan shaft while pulling the hub so the puller screw will not distort the threads.

14. Fan drive.—*a. Lubrication.*—The fan shaft bushings are pressure lubricated by crankcase oil entering the drilled fan shaft through tube (16) (fig. 11). Oil escaping through the passage (1) in gear (2) is sprayed throughout the timing gear housing as the gear is rotated. Some of the lubricant from the fan shaft is caught in a reservoir at each end of the idler gear shaft to lubricate the idler shaft bushings.

b. Disassembly.—Should it be desired to replace the fan shaft or idler shaft bushings, the timing gear housing should be removed. With the fan and pully (4) off the shaft, the shaft (3) and gear (2) can be withdrawn from the rear of the housing. Idler shaft (13) is pressed into gear (15). The shaft is threaded for a $\frac{5}{8}$-inch, 18-puller screw made accessible by removing plate (11).

(1) If care is taken in replacing bushings (9), (10), and (17), no fitting or reaming will be necessary. A check should be made to see that the fan turns freely. Bushings (12) and (14) will require reaming after installation.

(2) The clearance of the fan shaft or the idler shaft in the bushings should be from .002 inch to .003 inch.

15. Water pump.—*a. General.*—The water pump which is mounted to the rear of the timing gear case on the left side of the engine provides circulation of the coolant through the engine.

(1) Care should be taken when tightening a water pump packing nut not to bind the shaft by overtightening. Too tight an adjustment prevents the coolant from wetting and lubricating the pump packing and shaft and results in scoring the shaft.

(2) If the pump leaks when adjusted properly, new packing should be installed. If a pump shaft is badly worn or scored, it should be replaced. Always renew the pump packing when installing a new shaft.

(3) The pump packing should be replaced when the adjusting nuts cannot be tightened further indicating that the packing is compressed solidly.

Digitized by Google
Original from UNIVERSITY OF CALIFORNIA
Generated on 2014-11-15 19:54 GMT / http://hdl.handle.net/2027/uc1.b3243973
Public Domain, Google-digitized / http://www.hathitrust.org/access_use#pd-google

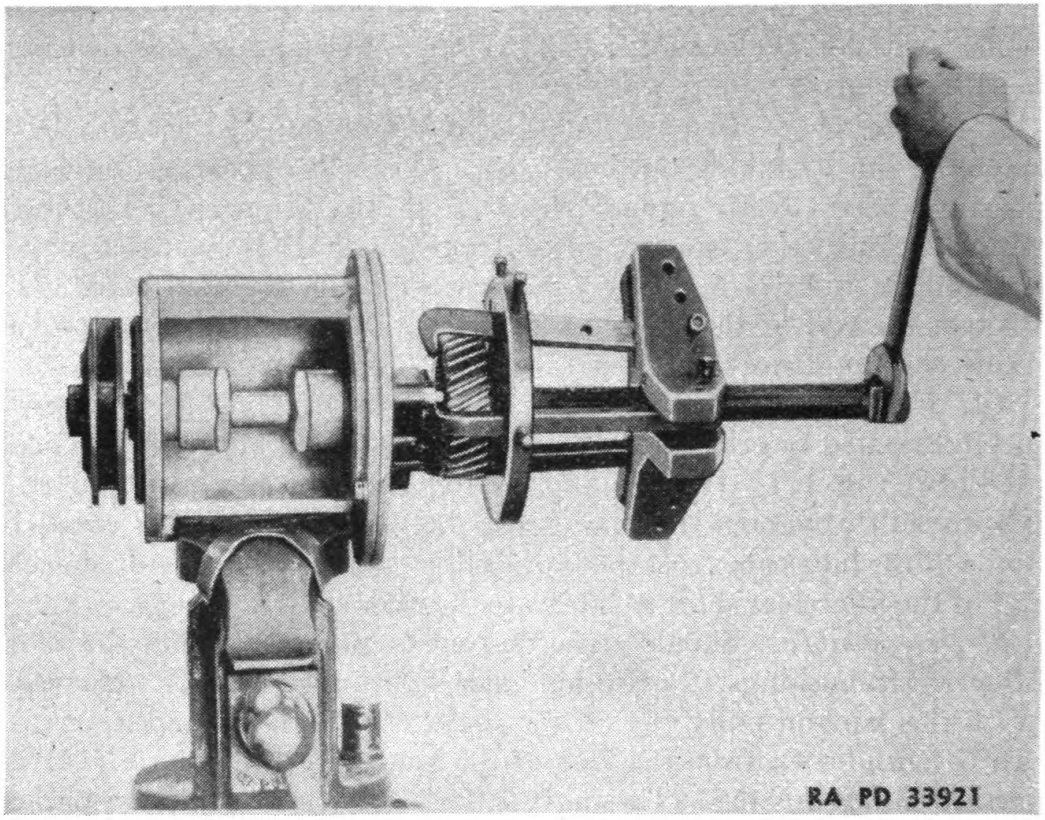

FIGURE 12.—Disassembly of water pump.

b. Disassembly.—Remove water pump body assembly from timing gear housing. Then pull gear from the end of the shaft after having removed shaft nut and nut lock. Remove key from shaft. Detach pump impeller body and loosen packing nuts. The pump impeller and shaft can then be pushed back out of the pump body. The pump impeller can be pressed off the shaft after the small end of the taper pin has been filed flush with the impeller hub and driven out.

c. Assembly.—If bushings (1) and (2) (fig. 13) become worn, they should be replaced. The drive gear should be installed before the taper pin is placed in the impeller, otherwise the pin might be sheared when pressing the gear on. If the end play in the shaft exceeds .050 inch, thrust plates at (3) should be replaced. Use a letter "C" (.242-inch) drill and a No. 5 taper reamer for installing the taper pin in the impeller. Before tightening the packing, make certain the pump shaft, impeller and gear turn freely.

16. Water temperature regulators.—*a.* Water temperature regulators are used to restrict the flow of water through the radiator until the engine has warmed up. While the engine is cold, the bellows of the regulators are contracted causing the outlet valve to be

Digitized by Google
Original from UNIVERSITY OF CALIFORNIA
Generated on 2014-11-15 19:54 GMT / http://hdl.handle.net/2027/uc1.b3243973
Public Domain, Google-digitized / http://www.hathitrust.org/access_use#pd-google

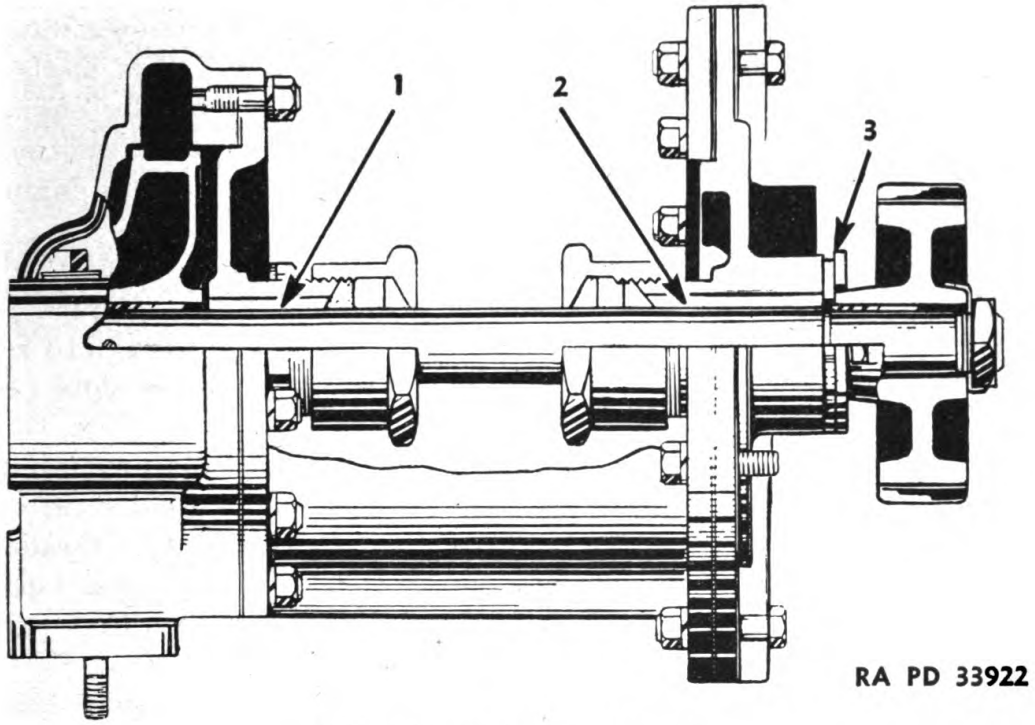

FIGURE 13.—Water pump assembly.

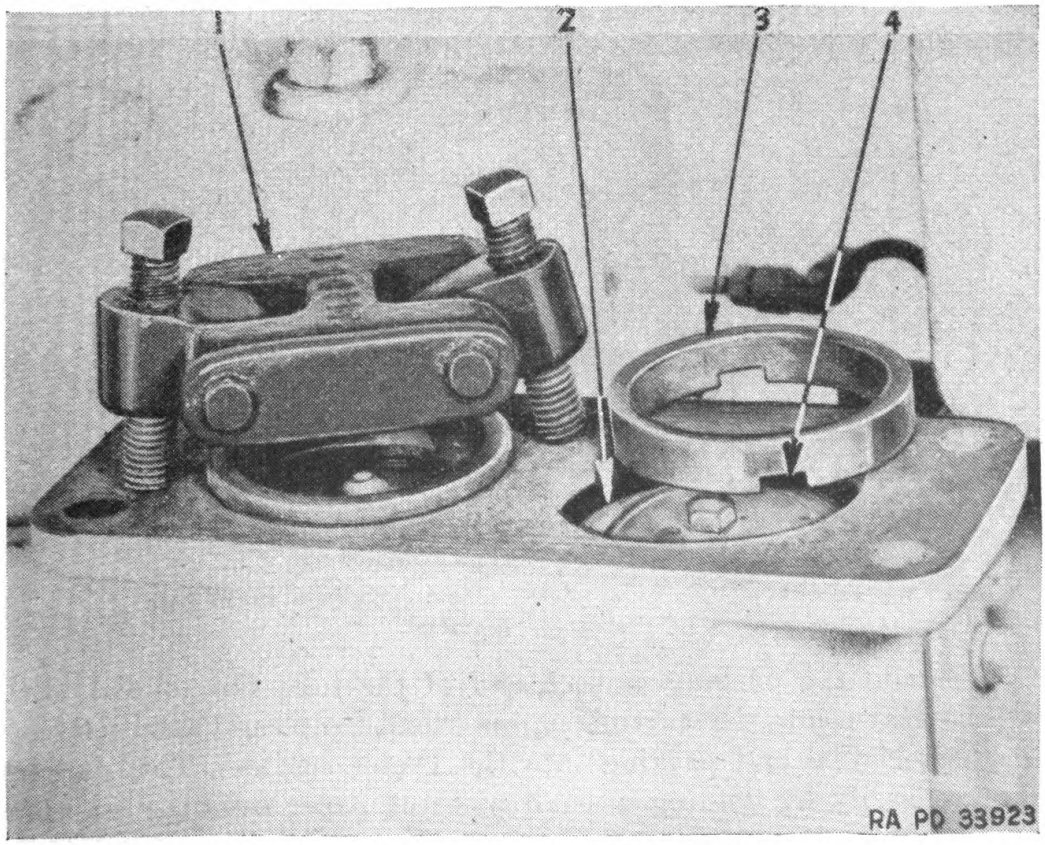

FIGURE 14.—Use of regulator retainer puller.

Digitized by Google
Original from UNIVERSITY OF CALIFORNIA
Generated on 2014-11-15 19:54 GMT / http://hdl.handle.net/2027/uc1.b3243973
Public Domain, Google-digitized / http://www.hathitrust.org/access_use#pd-google

closed, thus directing the water through a by-pass tube into the water pump rather than passing it through the radiator. This method allows a cold engine to warm up more rapidly. As the engine warms, the regulators will open only enough to allow sufficient water to pass through the radiator to maintain a satisfactory engine temperature.

b. The construction of the regulators is such that should the bellows become punctured, the regulator will open fully. Figure 14 shows the use of a CAT3B7184 regulator retainer puller (1) to remove the retainer (3). The hooks of the puller fit in the slots (4) of the retainer. Lift out regulator (2).

c. A regulator should be fully open at 180° F. (plus or minus 5° F.). To check a water temperature regulator, suspend it in an open pan of water so the regulator is completely covered. Gradually heat the water until the regulator reaches its fully opened position. Use an accurate thermometer to note the temperature. Stir the water to obtain a more accurate check.

d. The regulators are not adjustable and if not properly calibrated should be replaced.

17. Manifold.—*a.* The inlet manifold (fig. 15) for the Diesel engine is heated for starting by the starting engine exhaust passing through a tube inside the inlet manifold.

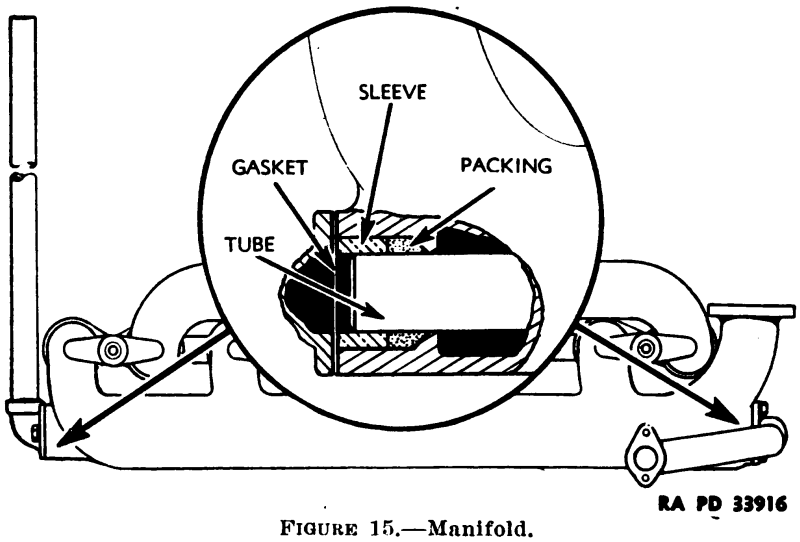

FIGURE 15.—Manifold.

b. Should the packing at each end of the tube fail to seal, dirt will be drawn into the starting engine exhaust pipe and pass between the heater tube and packing into the Diesel engine. This can be checked easily by holding a small piece of paper over the starting

Digitized by Google
Original from UNIVERSITY OF CALIFORNIA
Generated on 2014-11-15 19:55 GMT / http://hdl.handle.net/2027/uc1.b3243973
Public Domain, Google-digitized / http://www.hathitrust.org/access_use#pd-google

engine exhaust with the starting engine stopped and the Diesel engine running. With a leaking seal there is some tendency for the piece of paper to be drawn down the starting engine exhaust pipe. Replace the packing if leaks are evident.

c. New packing should be installed when an engine is reconditioned.

18. Air cleaner.—*a.* At the time other engine reconditioning work is being done, the air cleaner (fig. 16) should be removed for a thorough inspection. Remove oil cup (1) and replaceable screens (4). Thoroughly clean center stack (3) of dirt accumulations.

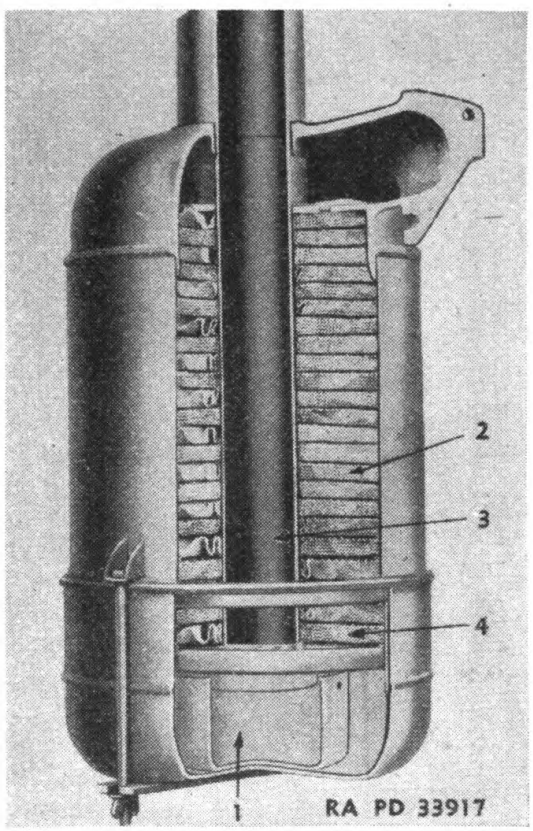

FIGURE 16.—Air cleaner.

b. The permanent screens (2) can be removed for inspection by melting away the solder securing the lower screen to the air cleaner body. Examine screens for depreciation or for clogging. If the screens are broken sufficiently to lessen their effectiveness, the cleaner should be replaced.

Digitized by Google
Original from UNIVERSITY OF CALIFORNIA
Generated on 2014-11-15 19:55 GMT / http://hdl.handle.net/2027/uc1.b3243973
Public Domain, Google-digitized / http://www.hathitrust.org/access_use#pd-google

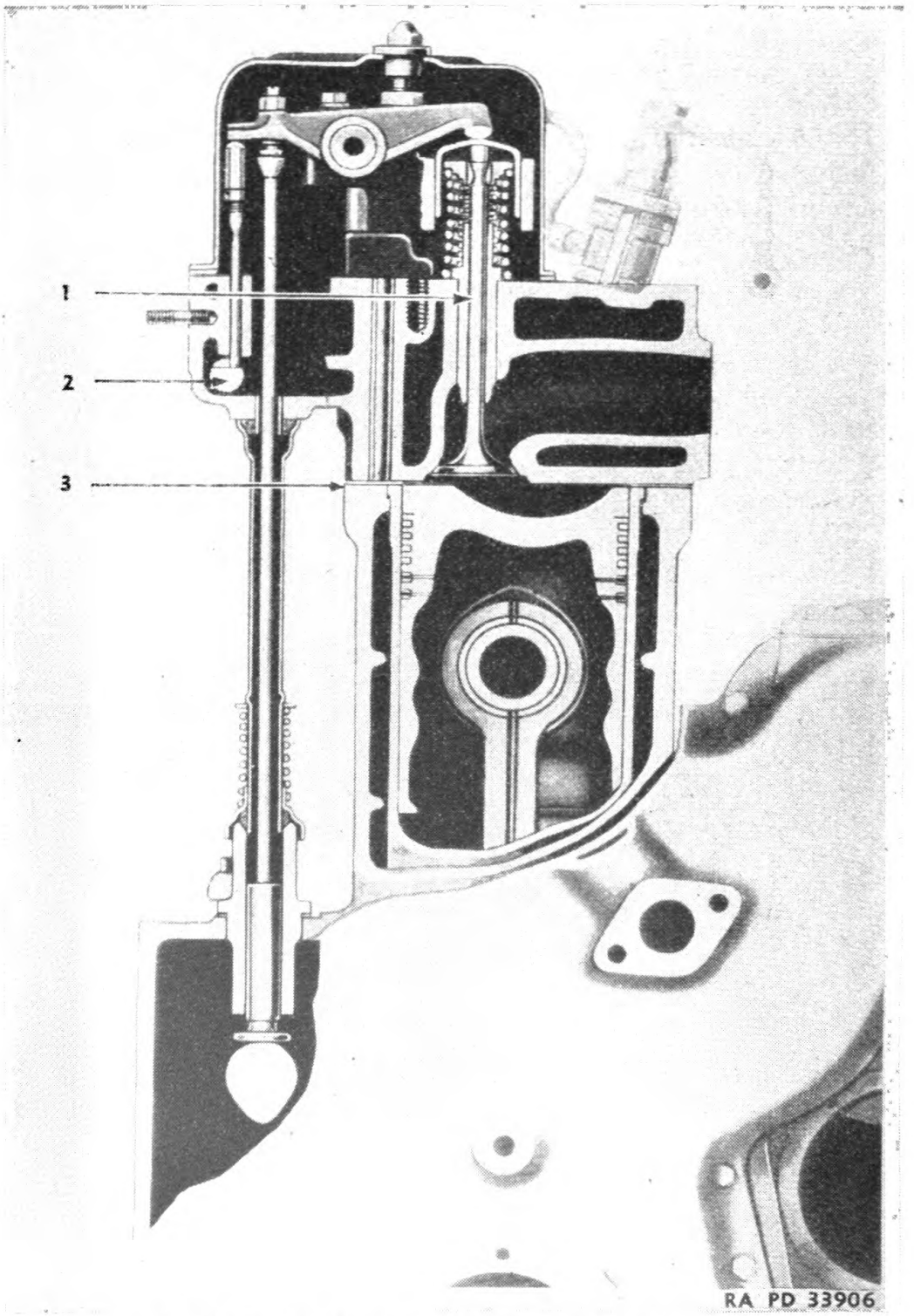

FIGURE 17.—Cross section of cylinder head and rocker arm.

Digitized by Google
Original from UNIVERSITY OF CALIFORNIA
Generated on 2014-11-15 19:55 GMT / http://hdl.handle.net/2027/uc1.b3243973
Public Domain, Google-digitized / http://www.hathitrust.org/access_use#pd-google

SECTION III

CYLINDER HEAD AND VALVE MECHANISM

	Paragraph
General	19
Cylinder head removal	20
Cylinder head installation	21
Valves and valve mechanism	22
Valve stem bushings	23
Valve inspection and reconditioning	24

19. General.—*a.* The two individually removable cylinder heads (fig. 17) are equipped with pressure lubricated overhead valve mechanisms. A compression release mechanism (2) is used to hold the exhaust valves open while cranking the Diesel engine to relieve the initial starting load on the starting engine.

b. Valve stem bushings (1) are replaceable.

c. Copper asbestos gaskets (3) are used between the heads and the cylinder block.

20. Cylinder head removal.—After removing the inlet, exhaust, and water manifolds in addition to the valve covers and the rocker arm assemblies, the cylinder heads can be removed.

21. Cylinder head installation.—*a.* When installing, the cylinder head gaskets should be inspected for damage. Damaged head gaskets can usually be determined by inspection. Gaskets showing blow-by marks or cracks should be replaced with new gaskets. However, cylinder head gaskets can generally be used several times, and it is not always necessary to put on a new gasket whenever the cylinder head is removed. Cylinder head gaskets plainly marked "For 5¾ bore engines" only should be used.

b. Excessive tightening of the cylinder head nuts is unnecessary. Tighten center row of small nuts, the two rows of large nuts, then small nuts around the outside of the heads. Recheck tension on all nuts in the same order before installing the valve rocker mechanism. After 120 to 150 hours' operation, the valve rocker mechanism should be removed and the head nut tension rechecked.

22. Valves and valve mechanism.—Properly adjusted valves (fig. 18) will operate for many hours before they need to be serviced. Eventually, however, the valve faces and seats may become slightly pitted which ultimately allows compression losses.

a. Valve seating.—It is well to check the valves occasionally for proper seating. This may be easily done by "rocking" (fig. 19) the engine against compression with the Diesel handcrank. If the engine

Digitized by Google
Original from UNIVERSITY OF CALIFORNIA
Generated on 2014-11-15 19:55 GMT / http://hdl.handle.net/2027/uc1.b3243973
Public Domain, Google-digitized / http://www.hathitrust.org/access_use#pd-google

does not "rock back" against compression, it is quite likely that the valves and valve seats should be refaced and reground. Valve leakage can often be heard distinctly in the manifold.

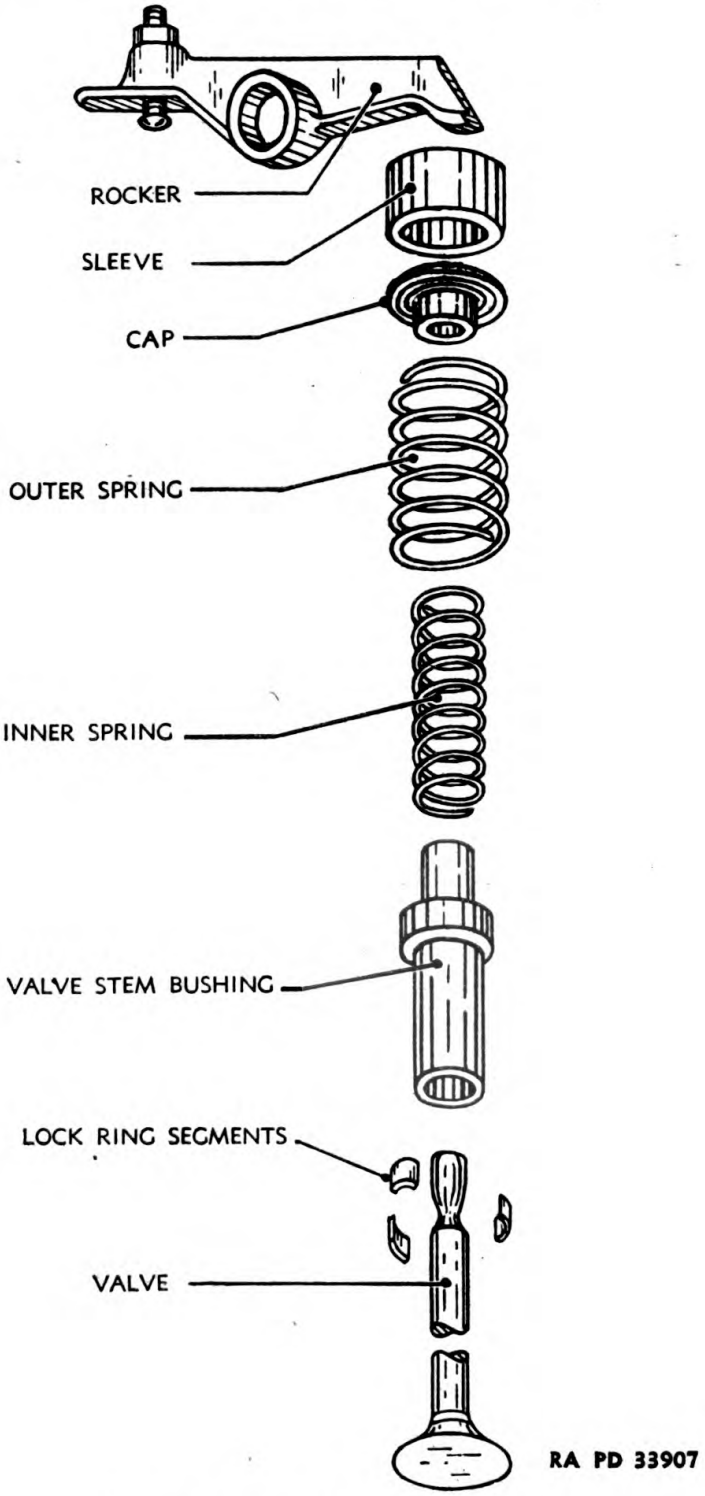

FIGURE 18.—Valve assembly—exploded view.

Digitized by Google
Original from UNIVERSITY OF CALIFORNIA
Generated on 2014-11-15 19:55 GMT / http://hdl.handle.net/2027/uc1.b3243973
Public Domain, Google-digitized / http://www.hathitrust.org/access_use#pd-google

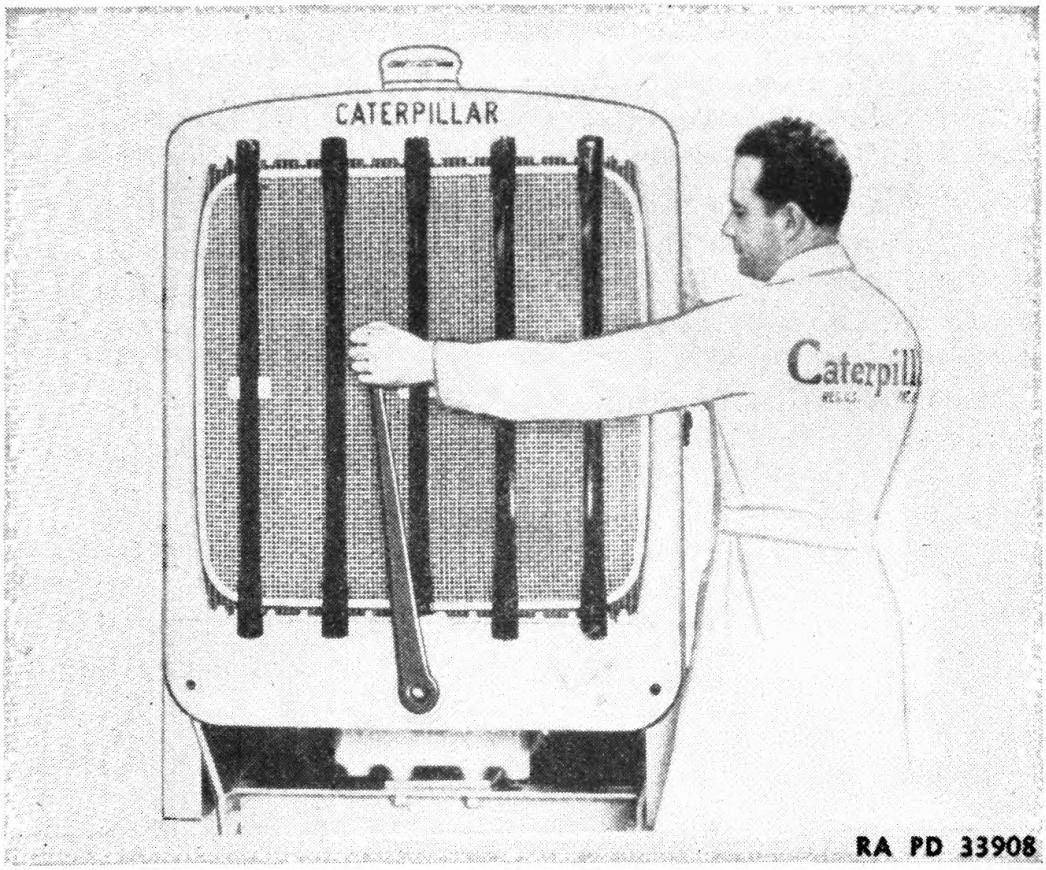

FIGURE 19.—Rocker method for checking compression.

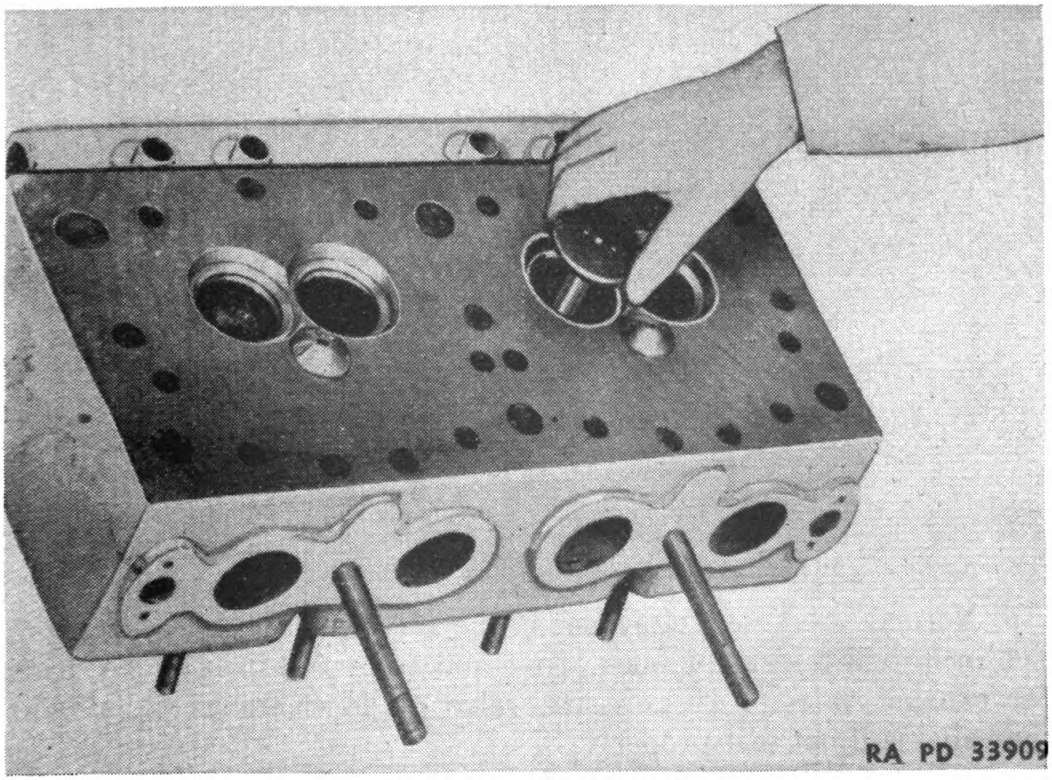

FIGURE 20.—Cylinder head.

Digitized by Google
Original from UNIVERSITY OF CALIFORNIA
Generated on 2014-11-15 19:55 GMT / http://hdl.handle.net/2027/uc1.b3243973
Public Domain, Google-digitized / http://www.hathitrust.org/access_use#pd-google

NOTE.—Worn pistons and piston rings or a damaged cylinder head gasket will keep the engine from "rocking" against compression; therefore, these items should be checked before concluding the valves are at fault. Worn pistons and rings can usually be detected, without dismantling the engine, as considerable oil vapor will come out of the breather pipe while the engine is running.

b. To remove carbon.—After removing the cylinder head (fig. 20) from the Diesel engine and the valve assemblies from the head, carefully scrape all carbon accumulations from the parts. Be sure to clean the valves thoroughly, as well as the valve stems, valve guide bushings, and valve ports.

23. Valve stem bushings.—*a.* The valve stems operate in replaceable bushings. A valve stem bushing can be roughly checked for wear by cleaning up the inside of it and inserting a new valve in the bushing. If the valve stem bushing is worn, an excessive amount of side play will be present.

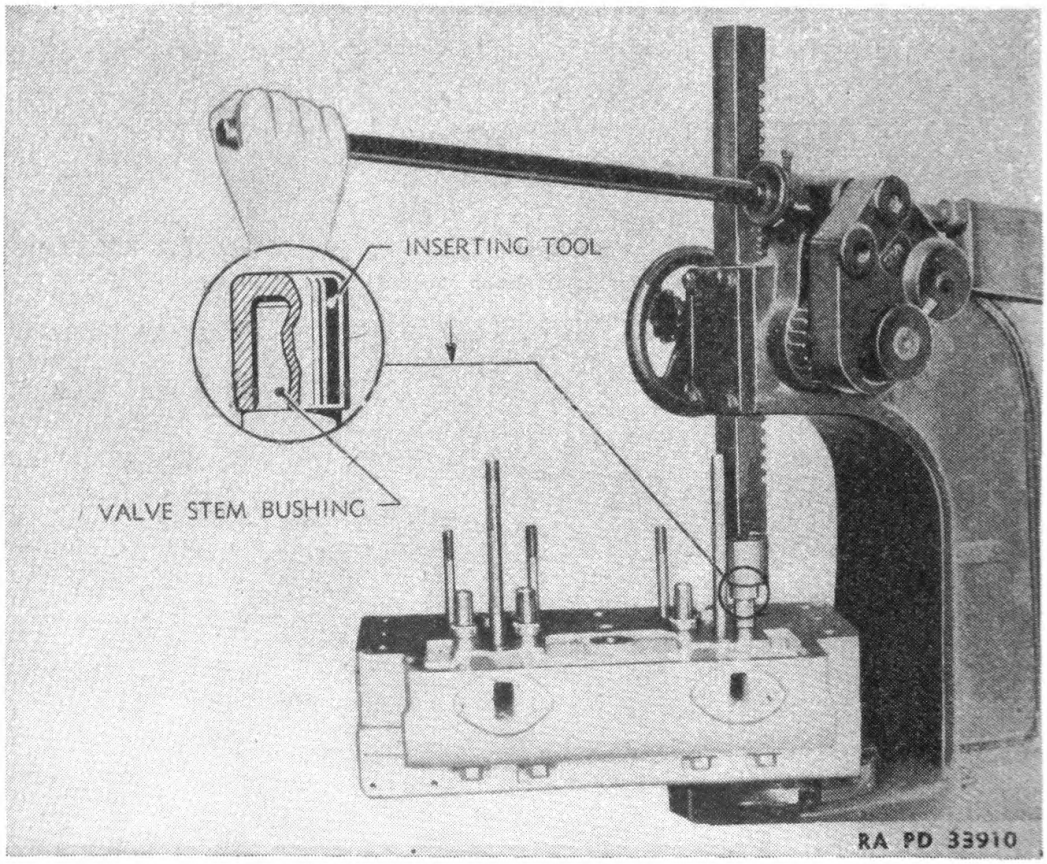

FIGURE 21.—Inserting valve stem bushing.

b. Normal valve stem clearance in the valve stem bushings is from .005 inch to .006 inch for inlet valves and from .006 inch to .007 inch for exhaust valves. If excessive valve guide clearance is present the valve will not seat properly.

Digitized by Google
Original from UNIVERSITY OF CALIFORNIA
Generated on 2014-11-15 19:55 GMT / http://hdl.handle.net/2027/uc1.b3243973
Public Domain, Google-digitized / http://www.hathitrust.org/access_use#pd-google

(1) The valve stem bushings can be driven out from the inside of the head with a suitable drift.

(2) The bushings should be pressed into place carefully with the type of driver shown in figure 21 to prevent damage to their ends.

(3) Bushings should always be reamed to .499 inch to .500 inch after they have been pressed into place.

24. Valve inspection and reconditioning. — *a. General.* — The valve faces should always be inspected and refaced if possible. If they are badly pitted or warped they should be replaced.

(1) The valve seats should be carefully inspected. A reseating tool may be used to advantage, but care should be exercised in its use, as much valuable material may be removed quickly and unknowingly.

(2) Finish the valve seat by grinding with fine grinding compound.

Caution: Never turn valves one complete revolution while grinding as the compound is likely to create grooves in the valve seats.

b. Checking valve seats.—When a perfect seat and face are apparently obtained, remove the valve and clean it and the valve seat

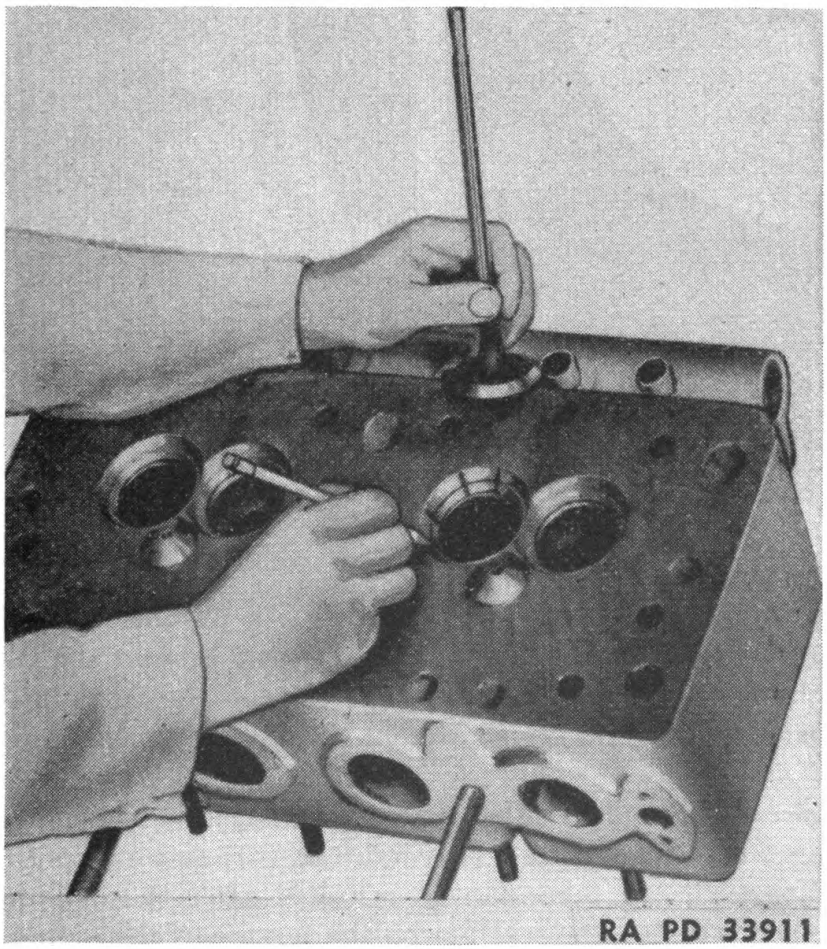

FIGURE 22.—Method of checking valve seat.

Digitized by Google
Original from UNIVERSITY OF CALIFORNIA
Generated on 2014-11-15 19:55 GMT / http://hdl.handle.net/2027/uc1.b3243973
Public Domain, Google-digitized / http://www.hathitrust.org/access_use#pd-google

thoroughly. Make ten or twelve evenly spaced marks around the valve seat (fig. 22) with a soft lead pencil. Replace the valve and rotate it lightly in its seat about one-eighth turn. Remove the valve and examine the pencil marks. If each of the marks has been partially wiped out, the valve seat is all right. If not, continue to lap in the valve until a satisfactory seat is obtained.

c. Valve seat widths.—Valve seats (fig. 23) in the cylinder heads are from $^{11}/_{64}$ inch to $^{3}/_{16}$ inch wide. Originally, the seat contacted the valve in the center of the valve face or $^{3}/_{64}$ inch from the top or from the bottom of the valve face.

(1) It is unnecessary to narrow the valve seats in the head unless the seat becomes wide enough to contact within $^{1}/_{64}$ inch of the top of the valve face.

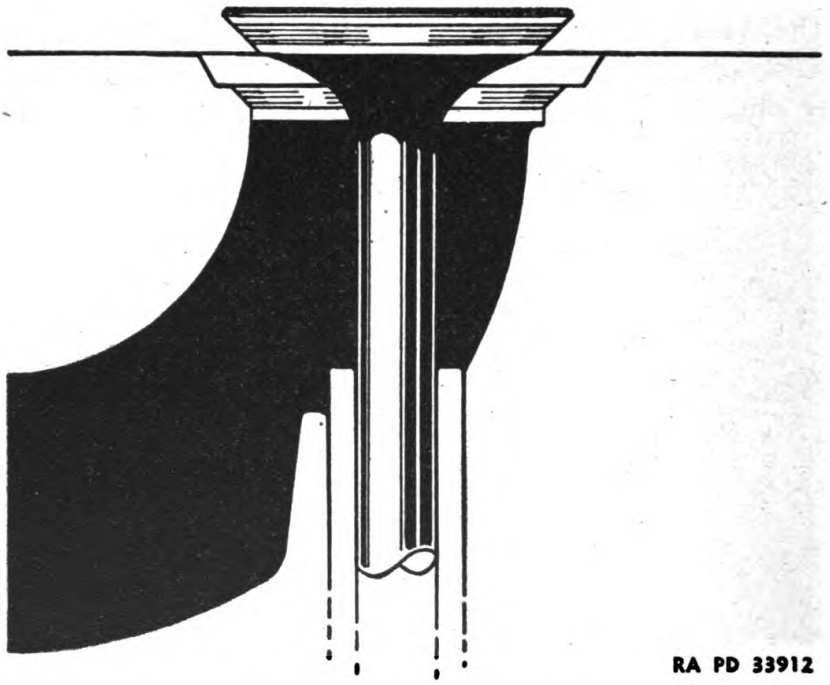

FIGURE 23.—Valve seat.

(2) To narrow the seats, a 15° stone or a fly cutter can be used. By using a fly cutter the size of the hole, cut around the valve seat can be limited leaving sufficient material for the installation of a valve seat insert should some accident occur making that work necessary.

d. Valve lifters.—The valve lifters (fig. 24) can be removed after removing push rod (2), tube (3), retainer (6), and clamp (9).

(1) The push rod tubes can be installed after the cylinder heads are in place. Install the seal (1) on the ferrule of the cylinder head.

Digitized by Google
Original from UNIVERSITY OF CALIFORNIA
Generated on 2014-11-15 19:55 GMT / http://hdl.handle.net/2027/uc1.b3243973
Public Domain, Google-digitized / http://www.hathitrust.org/access_use#pd-google

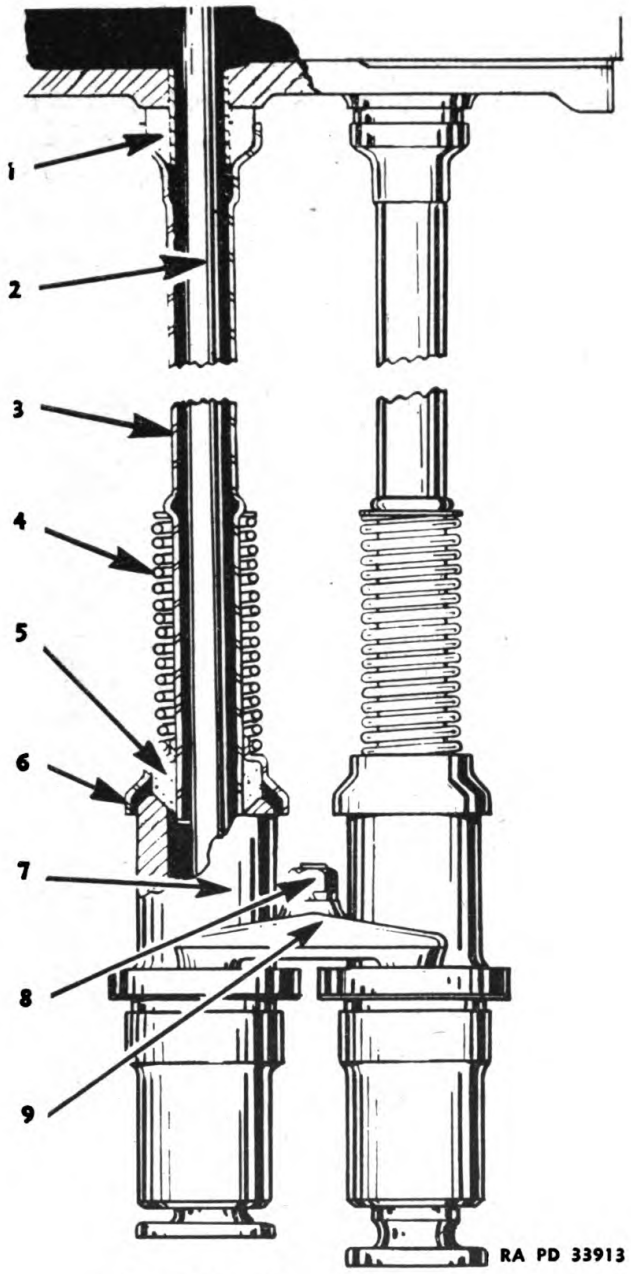

FIGURE 24.—Valve lifter—schematic.

Telescope the tube, washer, spring, retainer, and lower seal in the hands and install them as a unit, upper end first. Rotate the tube and the retainer to seat the seals (1) and (5).

(2) Nuts (8) should always be kept tight.

e. Valve timing.—The valve timing is controlled by the setting of the timing gears. Corresponding marks on the crankshaft, camshaft, and fuel injection pump gears must be in line before assembling the timing gear cover.

Digitized by Google
Original from UNIVERSITY OF CALIFORNIA
Generated on 2014-11-15 19:56 GMT / http://hdl.handle.net/2027/uc1.b3243973
Public Domain, Google-digitized / http://www.hathitrust.org/access_use#pd-google

f. Valve clearance adjustment.—The valve clearance adjustment (fig. 25) should be made while the engine is hot; that is, after the engine has been stopped 10 minutes and before it has been stopped 20 minutes. If the adjustment is not completed during this 10-minute interval, start the engine and allow it to warm up. The exhaust valve clearance adjustment and the compression release clearance adjustment must be made or checked with the compression release lever in the "run" position.

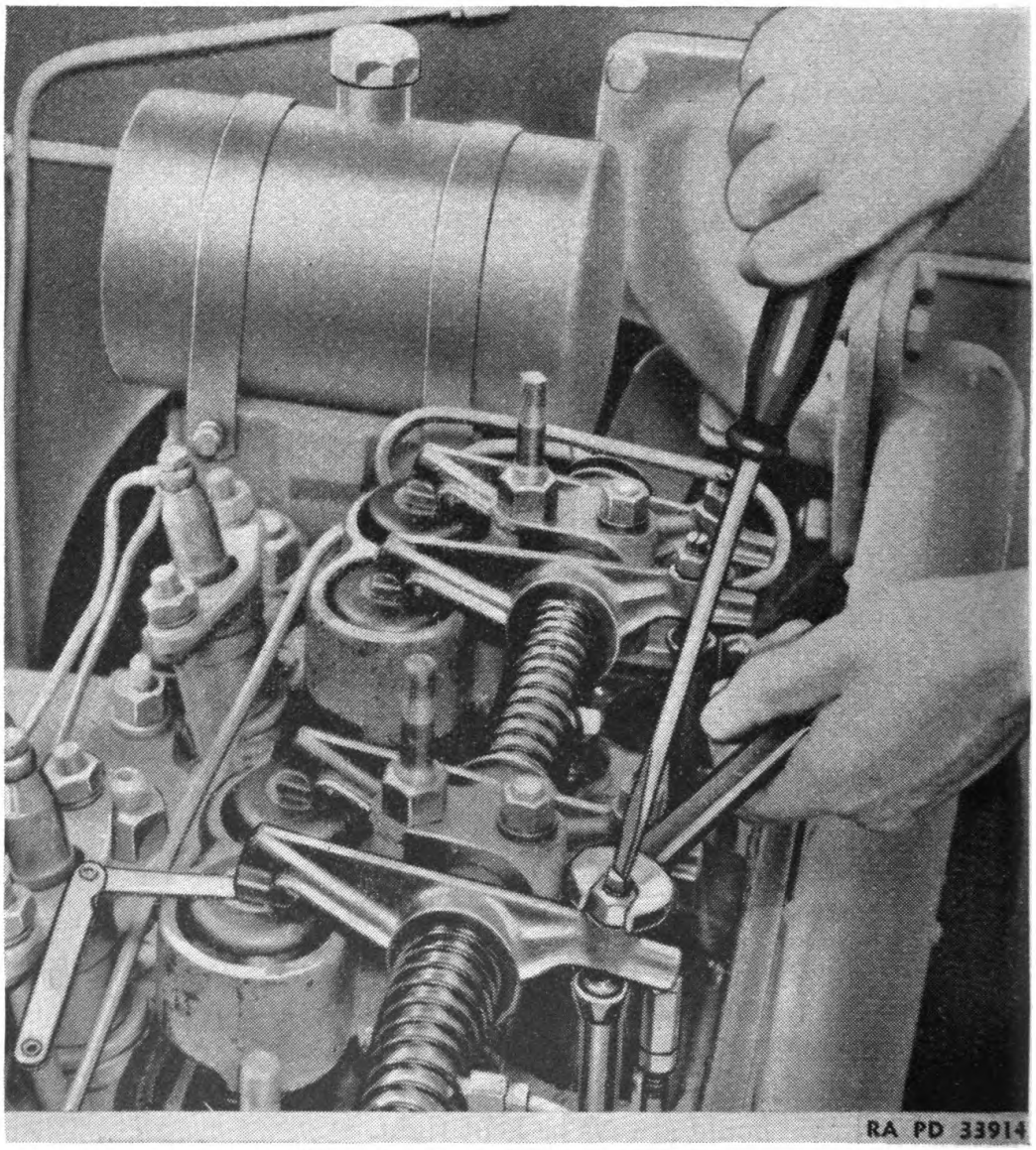

FIGURE 25.—Valve clearance adjustment.

(1) Adjust valves in the firing order of engine.

(2) Crank engine in the direction of normal rotation until the inlet valve closes, then give the engine one-third additional turn and adjust both valves at the same time.

Digitized by Google
Original from UNIVERSITY OF CALIFORNIA
Generated on 2014-11-15 19:56 GMT / http://hdl.handle.net/2027/uc1.b3243973
Public Domain, Google-digitized / http://www.hathitrust.org/access_use#pd-google

(3) Loosen valve adjusting screw nut on valve rocker.

(4) Turn screw to obtain correct clearance between the top of the valve sleeve and the end of the valve rocker.

(5) Set this clearance for the exhaust and inlet valves at .012 inch.

(6) Recheck adjustment after adjusting screw nut is tightened.

g. Compression release adjustment.—After adjusting the exhaust valve clearance and while the release lever is still in the "run" position, check clearance between the upper end of compression release push rod (fig. 26) and the tail of the valve rocker. This clearance should be .025 inch to .030 inch. To adjust the compression release, loosen lock nut on compression release push rod and turn adjusting nut until the correct clearance is obtained. Recheck adjustment after lock nut is tightened. Check this clearance every time the exhaust valve clearance is changed or checked.

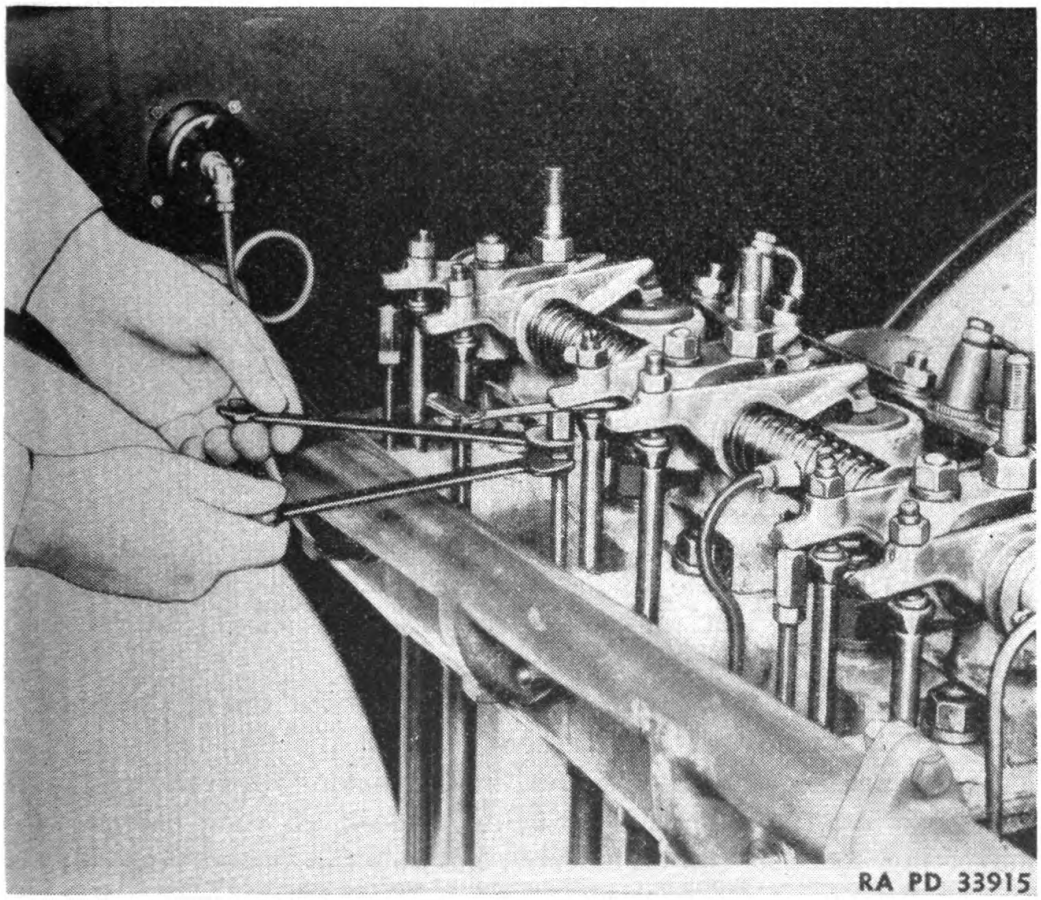

FIGURE 26.—Compression release adjustment.

Digitized by Google
Original from UNIVERSITY OF CALIFORNIA
Generated on 2014-11-15 19:56 GMT / http://hdl.handle.net/2027/uc1.b3243973
Public Domain, Google-digitized / http://www.hathitrust.org/access_use#pd-google

SECTION IV

PISTONS, RINGS, AND CYLINDER LINERS

Paragraph
General 25
Running-in cylinder equipment 26

25. General.—Piston ring and cylinder liner wear usually results in loss of power, a smoky exhaust, loss of compression, and excessive oil consumption. (See fig. 27.)

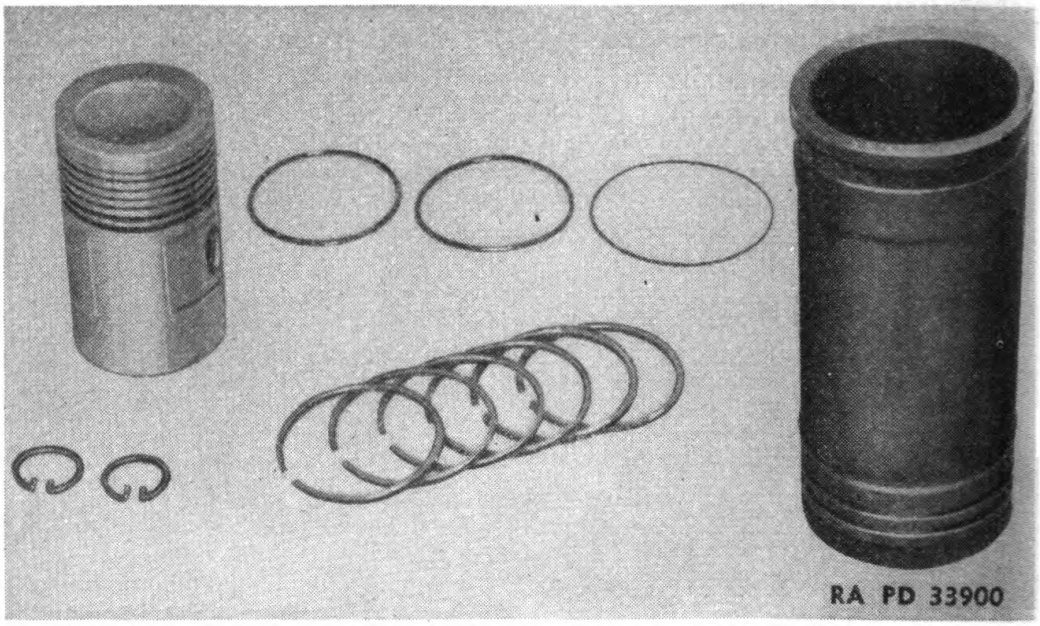

FIGURE 27.—Pistons, rings, and cylinder liner.

a. Removing pistons.—(1) Drain lubricating oil and remove cylinder head (fig. 28) and cylinder block inspection plates or oil pan.

(2) The piston and connecting rod assembly should be removed from the top of the cylinder block.

(3) Clean away any carbon accumulation at the top of the liner.

(4) In liners with a considerable ridge at the top, there may be some interference with the removal of the pistons when the rings are raised against the ridge. By placing a block of wood between the connecting rod and the crankshaft, holding the piston rings firmly against the liner ridge with the crankshaft, and bumping on top the piston head with a hammer handle, this work can be more easily accomplished.

b. Cleaning pistons.—(1) Pistons which are not excessively worn or badly scored should be cleaned and used again, providing the ring

Digitized by Google
Original from UNIVERSITY OF CALIFORNIA
Generated on 2014-11-15 20:02 GMT / http://hdl.handle.net/2027/uc1.b3243973
Public Domain, Google-digitized / http://www.hathitrust.org/access_use#pd-google

grooves are square and not damaged, and there is not too much clearance between the ring and groove. The side clearance between a new ring and the top ring groove should not exceed .012 inch. Pistons with ring grooves worn beyond this limit should be replaced. Slight surface cracks or checks on the top of pistons are not detrimental.

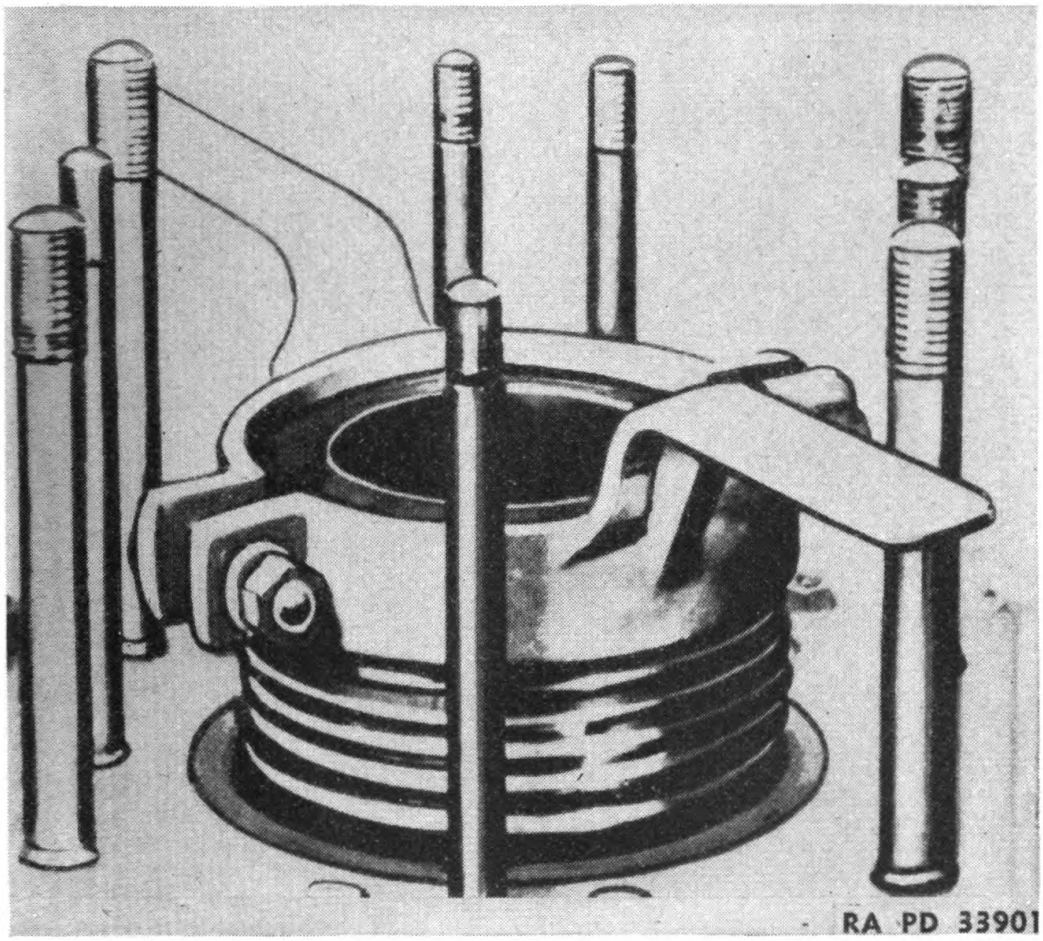

FIGURE 28.—Removing piston.

(2) Never scrape the contact surfaces of aluminum alloy pistons to clean them. The area above the top ring may be filed smooth but pistons badly scored below the top ring groove should be replaced.

(3) To avoid damage to the piston, remove rings with a ring expander and clean bottom of ring grooves. *Do not scrape the sides of ring grooves.*

c. Replacing rings.—(1) Always install piston rings with the piston ring expanding tool (CAT7B7974) (fig. 29). The ring expander is not only a great time saver but it will also prevent rings from being broken and distorted and will not damage ring grooves. Piston rings obtained through the factory parts department require no fitting.

Digitized by Google
Original from UNIVERSITY OF CALIFORNIA
Generated on 2014-11-15 20:02 GMT / http://hdl.handle.net/2027/uc1.b3243973
Public Domain, Google-digitized / http://www.hathitrust.org/access_use#pd-google

(2) Normally, pistons should not be removed and new rings installed if the engine is dismantled for some other reason.

d. Cylinder liners.—(1) Cylinder liners need to be replaced only when they are worn at the top of the ring travel more than .015 inch or when they are scratched or scored.



FIGURE 29.—Installing piston rings.

(2) Cylinder liner surfaces are machined, hardened, ground, and finally honed to a mirror finish and chemically treated. The resultant surface is so hard that ordinary boring tools will not machine it.

(3) Liners, pistons, and rings are available from the factory in standard sizes only and require no fitting.

e. Removal.—Cylinder liner tools (fig. 30) are available for removing and installing cylinder liners. The puller stud hole through bottom plate (2) is elongated so the bottom plate can be angled and inserted from the top of the liner. By using guide (1) the bottom plate will be properly centered at the bottom of the liner. Always drain the block of water and protect the crankshaft and bear-

Digitized by Google
Original from UNIVERSITY OF CALIFORNIA
Generated on 2014-11-15 20:02 GMT / http://hdl.handle.net/2027/uc1.b3243973
Public Domain, Google-digitized / http://www.hathitrust.org/access_use#pd-google

ing with clean rags when changing liners to prevent water and sediment from working its way into the oil passages and bearings.

f. Installation.—(1) Wash liners thoroughly before installation to remove all dirt and also the rust proofing used during storage and shipment.

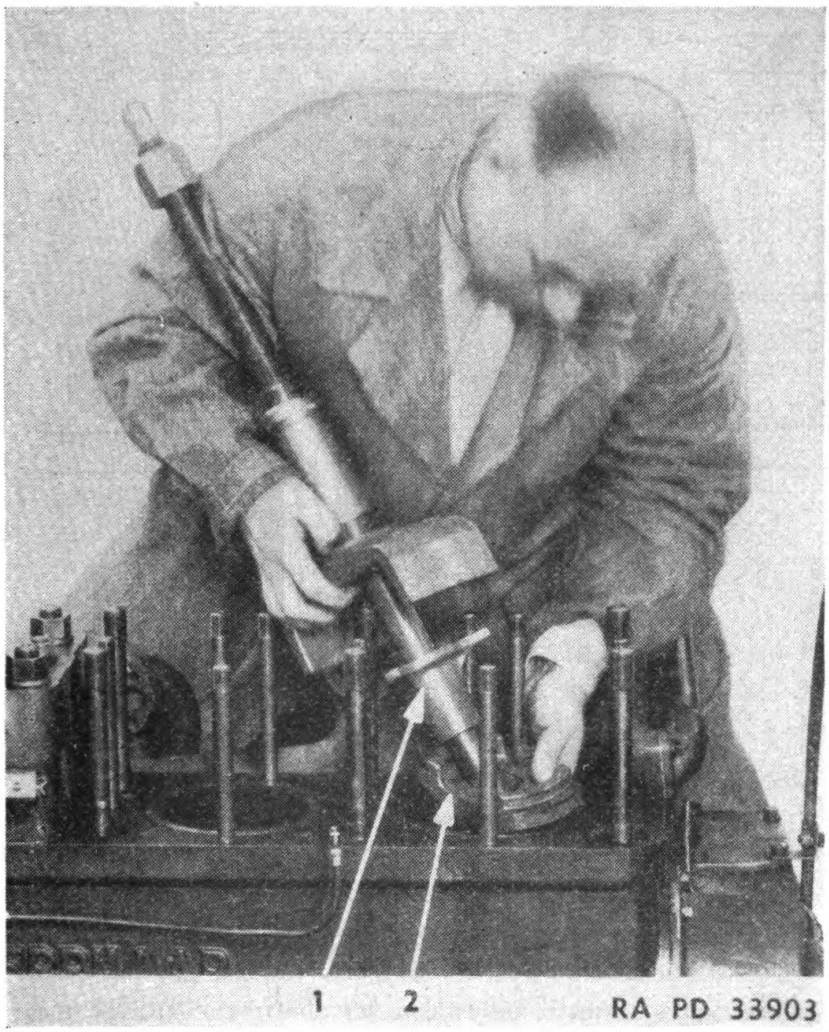

FIGURE 30.– Liner removal tools.

(2) Each liner installed (fig. 32) should have a new copper gasket at the top between the flange on the liner and the cylinder block, and new rubber seals in the grooves at the bottom of the liner to prevent water leaks.

(3) Coat exposed portion of the rubber seals with a mixture of soapstone and glycerin or soap and water before installing the liner to avoid damaging the seals.

(4) Thoroughly clean upper and lower sealing surfaces of the block and cylinder liner.

Digitized by Google
Original from UNIVERSITY OF CALIFORNIA
Generated on 2014-11-15 20:03 GMT / http://hdl.handle.net/2027/uc1.b3243973
Public Domain, Google-digitized / http://www.hathitrust.org/access_use#pd-google

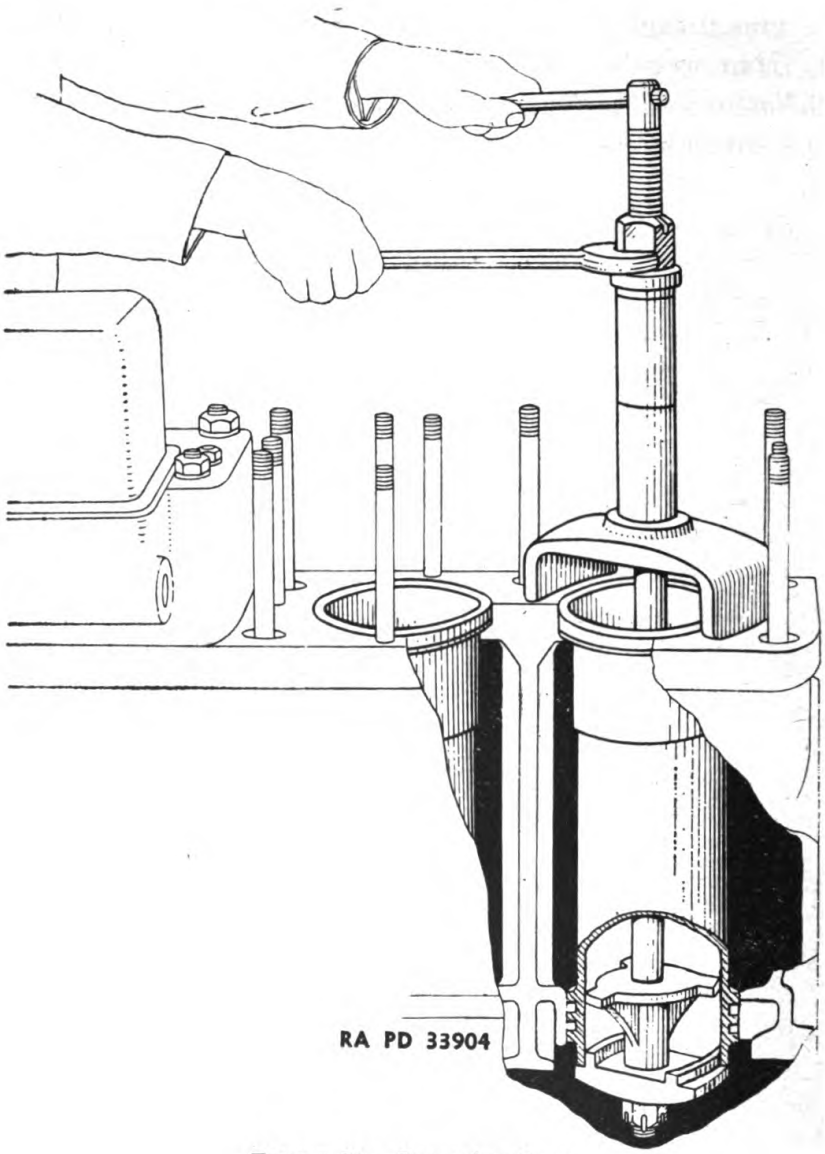

FIGURE 31.—Removing liner.

(5) Special care should be taken to clean the under side of the flange on the cylinder liner. Then lower the liner carefully into the block and use the service tools to install it.

(6) Except for a different top and bottom puller plate the same tools are used for removing and installing the liners.

(7) The liner is a very light press fit because of the sealing rings at the bottom of the liner. If resistance is felt, alternately apply and relieve pressure until the rubber sealing rings slip into place.

(8) Properly installed liners should extend slightly above the face of the cylinder block. This insures proper holding and sealing of the cylinder liner when the cylinder head is drawn down against the copper ring in the cylinder head gasket.

Digitized by Google
Original from UNIVERSITY OF CALIFORNIA
Generated on 2014-11-15 20:03 GMT / http://hdl.handle.net/2027/uc1.b3243973
Public Domain, Google-digitized / http://www.hathitrust.org/access_use#pd-google

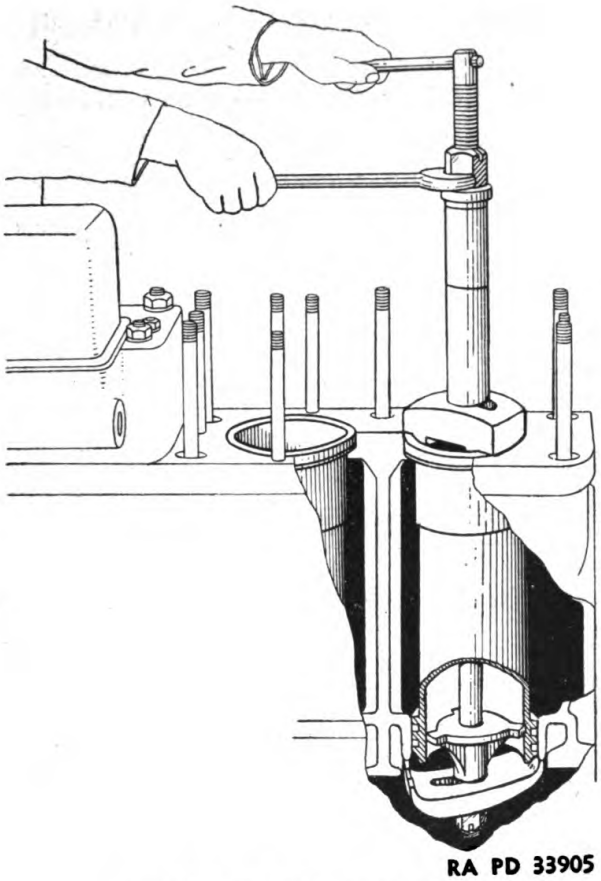

FIGURE 32.—Installing liner.

(9) Liners may be slightly loose in the bore at the bottom, yet serve satisfactorily without water or antifreeze leaking past the seals.

26. Running-in cylinder equipment.—*a.* After any new cylinder equipment has been installed, the engine should be run-in in accordance with the following running-in schedule. It is beneficial during the running-in period that an engine temperature of about 160° F. to 180° F. be maintained even if partial covering of the radiator is necessary. Lubricating oil may be noticed around the exhaust pipe during the first few hours of the run-in period. This is normal.

b. Following the run-in period, some additional lubricating oil may be required until the rings have become thoroughly seated against the liner walls. Thorough seating of the rings may not occur before 300–350 hours although longer periods have been required in some engines.

c. It is highly recommended that factory running-in oil be used during the first 30 hours after reconditioning. Diesel engine superior

Digitized by Google
Original from UNIVERSITY OF CALIFORNIA
Generated on 2014-11-15 20:03 GMT / http://hdl.handle.net/2027/uc1.b3243973
Public Domain, Google-digitized / http://www.hathitrust.org/access_use#pd-google

all-purpose lubricating oil can be used for make-up oil during this period.

Caution: Whenever new rings, piston assemblies, or liners are installed, be sure to run in the engine *at least 6 hours* before operating on normal load. Avoid loading the engine excessively at any time when running it in. The following schedules are adequate and should be adhered to:

	Tractors	Engines
Period 1, 1 hour:	Operate the engine idle with the throttle half way between the slow speed idle and full speed idle positions.	Operate the engine idle with the throttle half way between the slow speed idle and full speed idle positions.
Period 2, 1½ hours:	Operate the tractor in 4th gear without load but with throttle wide open.	Operate the engine on work approximating one-fourth maximum load.
Period 3, 1½ hours:	Operate the tractor on work approximating one-fourth maximum load.	Operate the engine on work approximating one-half maximum load.
Period 4, 2 hours:	Operate the tractor on work approximating one-half to three-fourths maximum load.	Operate the engine on work approximating three-fourths maximum load.

Only where it is absolutely impossible to adhere to these periods should they be varied. Where certain periods are impractical, increase the length of other periods to accumulate *at least 6 hours* before operating on normal load.

Section V

BEARINGS

	Paragraph
Inspection	27
Checking bearing clearances	28
Main bearings	29
Connecting rod bearing replacement	30

27. Inspection.—*a. General.*—The connecting rod bearings can be inspected and the main bearings can be inspected or adjusted either with the engine in the tractor or removed from the tractor. How-

Digitized by Google
Original from UNIVERSITY OF CALIFORNIA
Generated on 2014-11-15 20:03 GMT / http://hdl.handle.net/2027/uc1.b3243973
Public Domain, Google-digitized / http://www.hathitrust.org/access_use#pd-google

ever, considering the amount of equipment which must be removed to make a proper bearing inspection, the most logical time for that work is at the time the engine has already been removed for general reconditioning.

(1) Barring accidents or the entrance of excessive dirt into the crankcase, the life of the bearings should normally be such that more frequent inspections are unnecessary. Precautionary checks can be made quite easily by observing the condition of the lubricating oil filters at oil change periods. Occasional traces of babbitt may appear on the filter elements. Excessive quantities of babbitt, however, indicate that a bearing inspection should be made.

(2) Before inspecting the bearings for loss of oil pressure, review paragraph 41. It will be noted that several inspections for low oil pressure are suggested before inspecting the bearing condition.

NOTE: For piston pin bearing and camshaft bearing inspection, see paragraphs 30 and 39.

(3) To inspect the connecting rod bearings and the main bearings without removing the engine from the tractor, remove the crankcase guard, oil pan, oil pump, and oil pump front suction bell.

(4) The rod shells can be inspected after the cap has been removed and the piston pushed up into the cylinder bore.

(5) The main bearing upper shells are held in the cylinder block by dowel pins. It is necessary to remove the crankshaft before the upper shells can be inspected. However, the condition of the upper shells can be fairly well determined without removing the crankshaft by making several checks.

(6) The absence of babbitt wiped from the upper into the lower shell should be an indication that the upper shell is sound. Any loose babbitt in the crankcase not accounted for by determining the condition of the rod shells or the lower main bearing shells should warrant the crankshaft removal for a complete bearing inspection.

b. Crankcase guard.—(1) Remove roller chain guard and roller chain from the winch in order to remove crankcase guard bolt on the right-hand side of the guard at the front. A master link provides a means of disconnecting the roller chain.

(2) With an acetylene cutting torch, cut approximately ½ inch from the rear of the winch lower frame or guard to permit removal of the crankcase guard. If no torch is available, it will be necessary to remove the winch.

(3) Remove all bolts attaching the crankcase guard to the engine and transmission case. Before detaching the auxiliary spring brackets, lift the front of the engine high enough with a chain hoist to

Digitized by Google
Original from UNIVERSITY OF CALIFORNIA
Generated on 2014-11-15 20:03 GMT / http://hdl.handle.net/2027/uc1.b3243973
Public Domain, Google-digitized / http://www.hathitrust.org/access_use#pd-google

permit the angle bracket supports on the crankcase guard to pass under the equalizer spring. If no chain hoist is available, it will be necessary to remove the two rear angle supports from the crankcase guard before it can be removed from under the tractor.

c. Oil pan removal.—(1) Block the track so the tractor cannot move. Remove crankcase guard and auxiliary spring.

(2) Raise and block engine sufficiently high so the rear flange of the oil pan will clear the equalizer spring.

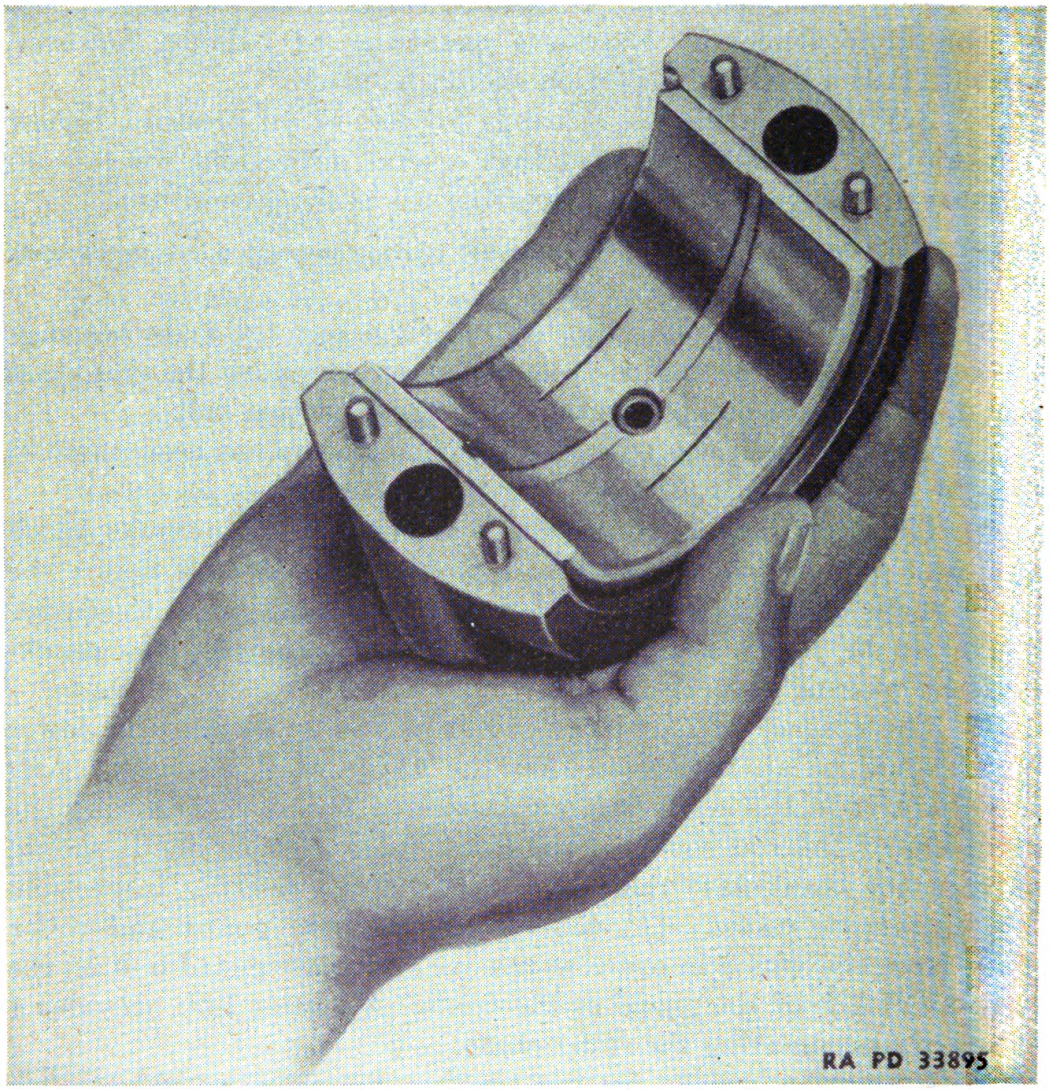

FIGURE 33.—Soft wire test for bearing clearance.

28. Checking bearing clearances.—*a. Micrometer test.*—The most accurate method for checking bearing clearance is by the use of inside and outside micrometers. The bearing clearance can be measured by the use of ordinary newspaper and a 0- to 1-inch micrometer. Check one bearing at a time. Place three or four pieces of

Digitized by Google
Original from UNIVERSITY OF CALIFORNIA
Generated on 2014-11-15 20:03 GMT / http://hdl.handle.net/2027/uc1.b3243973
Public Domain, Google-digitized / http://www.hathitrust.org/access_use#pd-google

paper in the lower shell over one-third of the bearing circumference and full bearing width. Add or remove one piece of paper at a time until the shaft can just be turned by hand. Check thickness of the paper in the bearing to determine bearing clearance.

b. Soft wire test.—Another satisfactory method of determining bearing clearance is to use soft lead wire, approximately .015 inch diameter, in the bearing. Coat two 1-inch lengths of lead wire with soft grease and place them on the bearing (one on each side of the oil groove) along the direction of shaft rotation (fig. 33). The soft grease will keep the wire from slipping out of position while installing and tightening the bearing cap. Rock the shaft back and forth slightly during the final tightening. Remove cap and measure compressed wire with a 0- to 1-inch micrometer to ascertain the actual bearing clearance. Wire (CAT5B1161) should be used for this purpose.

(1) In the case of the adjustable main bearings, shims should be removed or added until the correct clearance is obtained.

(2) In the case of the precision connecting rod bearings, new bearing shells should be installed if the bearing clearance becomes excessive.

c. Bearing clearance.

Crankshaft	Standard	0.050 undersize	*Clearance
Crankpin	3.250 in.–3.249 in.	3.200 in.–3.199 in.	.0045 in.–.006 in.
Main bearing journal	3.500 in.–3.499 in.	3.450 in.–3.449 in.	.003 in.–.0055 in.
Rear oil return thread surface	3.500 in.–3.499 in.	3.450 in.–3.449 in.	.007 in.–.009 in.
Piston pin	2.3750 in.–2.3747 in.	Standard only	.0005 in.–.0010 in.
Camshaft	2.620 in.–2.619 in.	Standard only	.0025 in.–.004 in.

*These clearances apply to standard and undersize crankshafts.

29. Main bearings.—*a. Adjustment.*—(1) Release the compression, disengage flywheel clutch and front winch clutch. Rotate the engine several turns to become acquainted with existing drag. Adjust bearings one at a time starting with the center bearing and working each way.

(2) The shim laminations are .003 inch in thickness. Remove an equal number of laminations from the shim on each side of the bearing until a slightly additional drag can be felt when the crankshaft is completely rotated. Add one shim lamination on each side to obtain correct bearing clearance of .003 to .0055 inch. A bearing adjusted with slightly more than the minimum of .003 inch clear-

Digitized by Google
Original from UNIVERSITY OF CALIFORNIA
Generated on 2014-11-15 20:03 GMT / http://hdl.handle.net/2027/uc1.b3243973
Public Domain, Google-digitized / http://www.hathitrust.org/access_use#pd-google

ance is more desirable than one adjusted with less than .003 inch clearance.

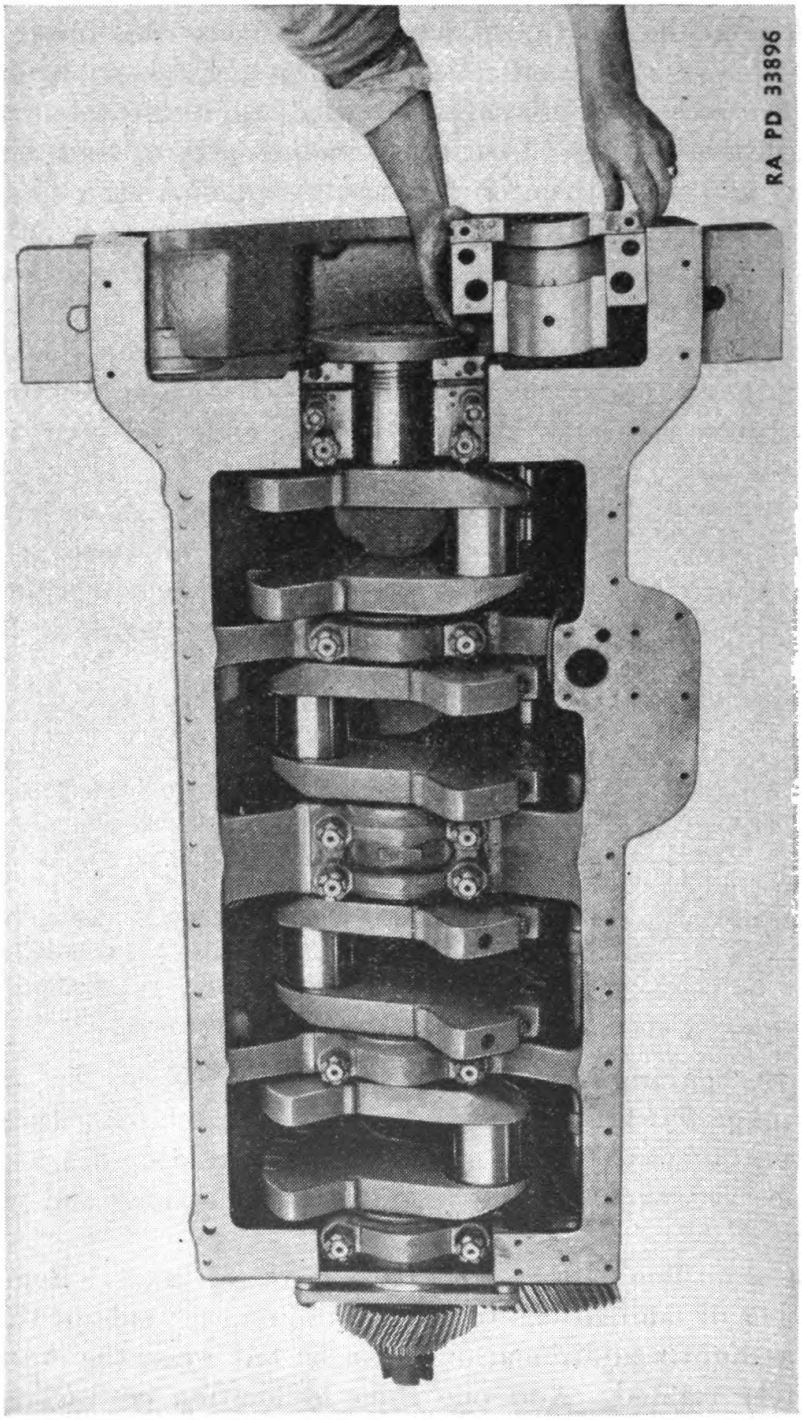

FIGURE 34.—Replacing bearing shell.

(3) The rear oil seal should have approximately twice the clearance of the bearings. Should the babbitt in the rear seal contact the oil return thread on the shaft, an oil leak into the flywheel clutch housing might develop.

Digitized by Google
Original from UNIVERSITY OF CALIFORNIA
Generated on 2014-11-15 20:04 GMT / http://hdl.handle.net/2027/uc1.b3243973
Public Domain, Google-digitized / http://www.hathitrust.org/access_use#pd-google

b. Replace.—(1) When removing the bearing caps, they should not be distorted or damaged. When replacing, never file the sides of the bearing caps or the cylinder block in an attempt to facilitate installation.

(2) The main bearings are available as replacements in line-bored sets in either standard or .050 inch undersize. These sets should be installed without fitting. Line-bored sets should be ordered by a group part number which provides all shells, shims, and packing necessary for one engine. Individual replacement shells are available in either standard or .050 inch undersize but these shells contain additional babbitt stock and do require hand fitting.

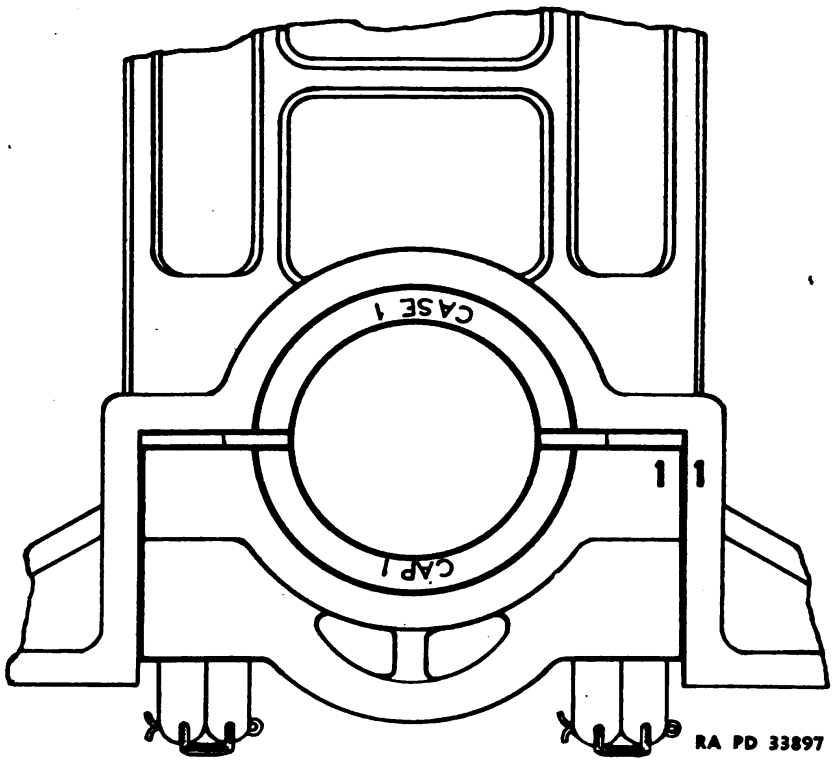

FIGURE 35.—Stamped bearing shells.

(3) (*a*) Remove crankshaft, old bearings, and oil filter base, and flush all oil passages in the engine thoroughly. It is important that the bearing shells (fig. 34), the bearing bores in the block, and the caps be cleaned of all foreign material or burs. Do not apply oil to the crankshaft or bearings until after the shells have been pressed into place.

(*b*) The shells are stamped "cap" or "case" (fig. 35). The shells and the shims for a journal are numbered in groups from the front to the rear of the engine. The shells and shims should be installed with the identification marks to the front.

Digitized by Google
Original from UNIVERSITY OF CALIFORNIA
Generated on 2014-11-15 20:04 GMT / http://hdl.handle.net/2027/uc1.b3243973
Public Domain, Google-digitized / http://www.hathitrust.org/access_use#pd-google

(4) Use a block of wood to bridge across the bearing, taking care not to mar the babbitt, and seat the shells firmly in the cap and the cylinder block by tapping on the wood block. Apply oil to the shaft. Install shims, shaft, and caps. Run all nuts down against the caps and tighten all bearings gradually. Roll the shaft as each bearing is tightened, striking the bearing cap with a lead hammer to loosen any binding tendency. If the installation is carefully made, it should be possible after rolling the shaft several revolutions to rotate the shaft by hand without too much effort with all nuts tightened and keyed.

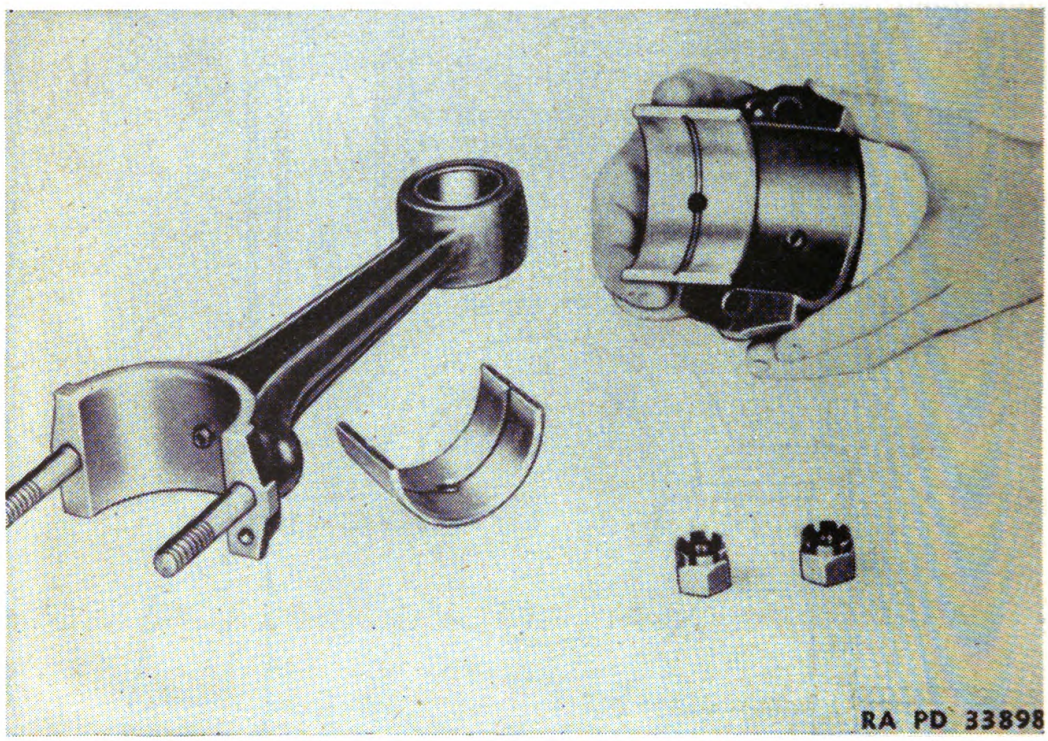

FIGURE 36.—Connecting rod bearing replacement.

(5) There is a packing groove on each side of the rear oil seal cap. Using a small diameter punch or awl the groove should be solidly packed. Normally, ½ ounce of ⅛ inch round braided packing (not graphited) will suffice for an engine. Packing is supplied with bearing replacement groups.

30. Connecting rod bearing replacement.—*a. General.*—The connecting rod bearing shells (fig. 36) are of the precision type and are available in standard size or .050 inch undersize. Precision bearings, standard or undersize, are to be installed without fitting, reaming,

Digitized by Google
Original from UNIVERSITY OF CALIFORNIA
Generated on 2014-11-15 20:04 GMT / http://hdl.handle.net/2027/uc1.b3243973
Public Domain, Google-digitized / http://www.hathitrust.org/access_use#pd-google

or scraping the rod, cap, or shells. These shells are designed for installation without removing the rod from the engine.

To replace bearings, drain oil from crankcase and remove the two inspection doors from the oil pan. The dowel pin hole in the upper bearing shell is round while the dowel pin hole in the lower bearing shell is elongated.

b. Connecting rod alinement.—Do not attempt to aline connecting rods by bending. Bent rods are not suitable for service and should be discarded.

c. Piston pin bushing.—It is not always necessary to replace piston pin bushings whenever precision bearing shells are installed in a rod. In many cases, bushings may be serviceable even though the second replacement of bearing shells has been made.

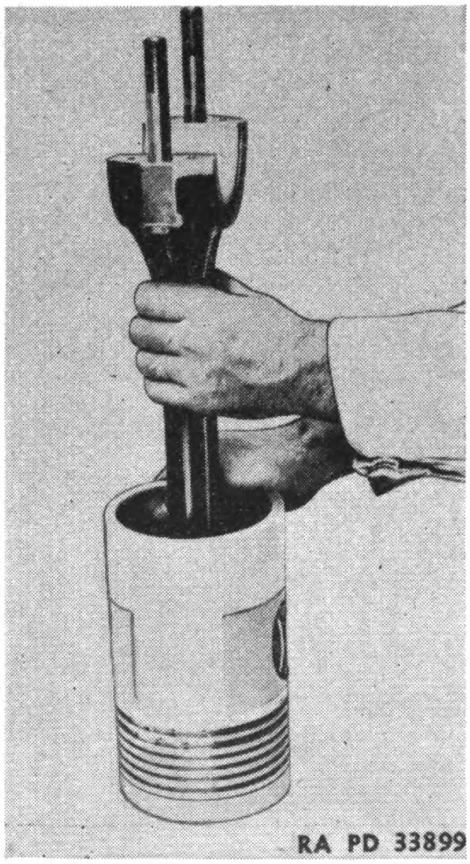

FIGURE 37.—Testing pin and bushing clearance.

(1) After the oil has been removed from the pin and bushing, it is possible to feel the clearance between them (fig. 37). This normal oil clearance must not be mistaken for wear.

(2) A new bushing should be installed only when the clearance between the bushing and a new piston pin exceeds .005 inch.

Digitized by Google
Original from UNIVERSITY OF CALIFORNIA
Generated on 2014-11-15 20:04 GMT / http://hdl.handle.net/2027/uc1.b3243973
Public Domain, Google-digitized / http://www.hathitrust.org/access_use#pd-google

(3) New connecting rods have the piston pin bushing bored in a special machine which maintains the proper center-to-center distance and parallelism of the connecting rod bearing and piston pin bore. Reconditioned rods should be machined in the same manner.

(4) A new connecting rod makes the best templet for center-to-center distance.

(5) After pressing a new bushing into place, it should be machined accurately from .0005 inch to .001 inch larger than the new piston pin diameter.

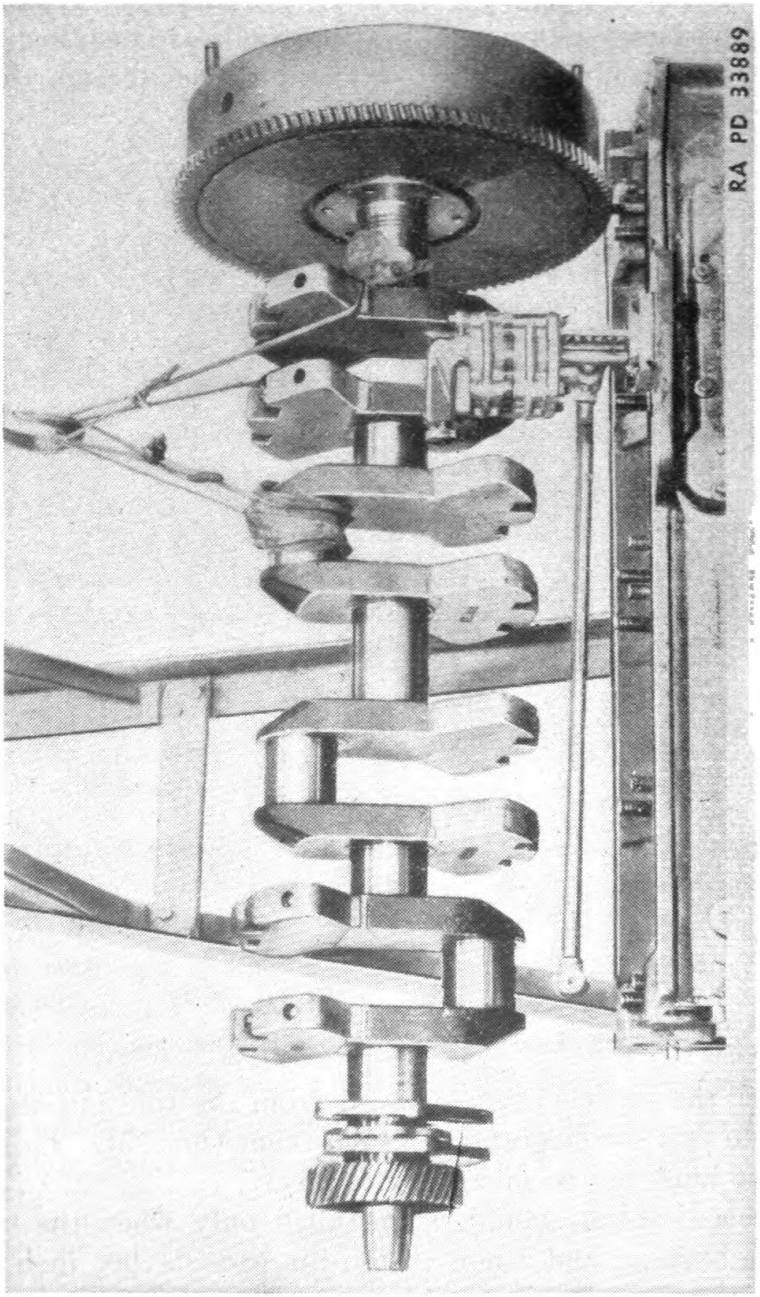

FIGURE 38.—Crankshaft.

Digitized by Google
Original from UNIVERSITY OF CALIFORNIA
Generated on 2014-11-15 20:04 GMT / http://hdl.handle.net/2027/uc1.b3243973
Public Domain, Google-digitized / http://www.hathitrust.org/access_use#pd-google

SECTION VI

CRANKSHAFT

	Paragraph
General	31
End-play	32
Thrust washer	33
Gear	34
Flywheel	35

31. General.—The crankshaft (fig. 38) is balanced by the use of counterweights. As these shafts are statically and dynamically balanced at the factory the balance weights should not be removed or machined for any reason. When removed from the engine, the shaft should be handled carefully so there will be no possibility of springing the shaft. When transporting a shaft, it should be crated and well supported.

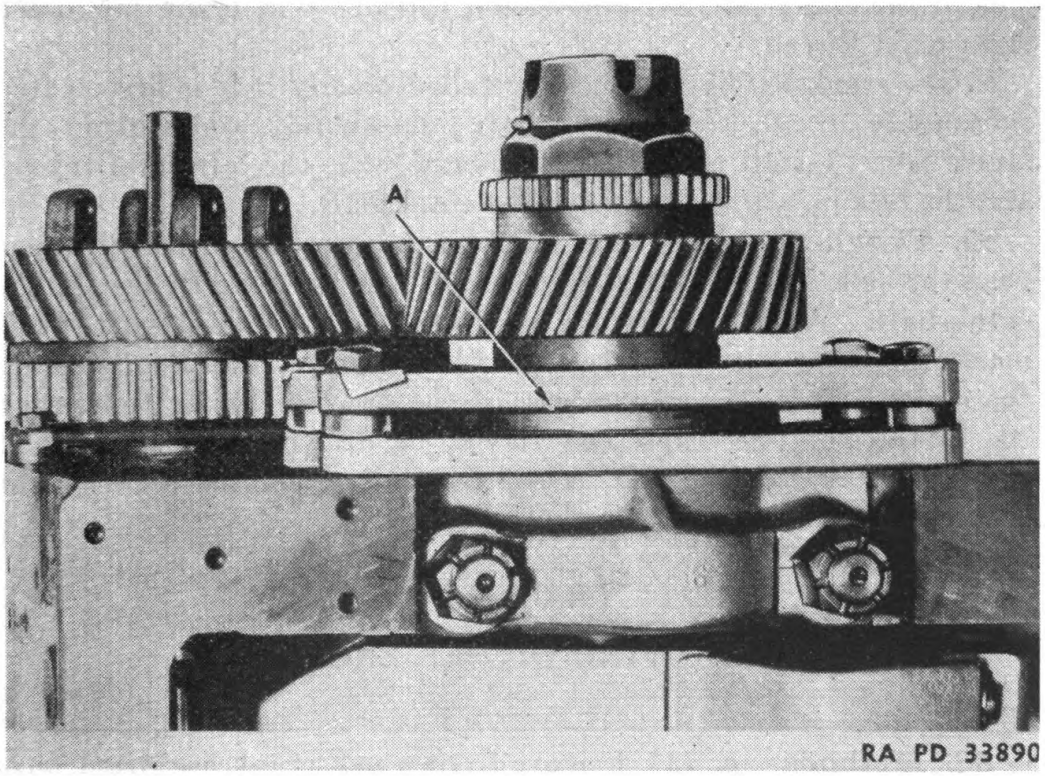

FIGURE 39.—Crankshaft thrust washer.

a. A crankshaft should not be put back into an engine if a journal is scored or if the wear on the main bearing or connecting rod bearing journals exceeds .009 inch, nor should the connecting rod bearing journals be more than .007 inch out-of-round. The amount a journal is out-of-round is the difference between the measurement at the point of maximum wear and the measurement at the point of least wear.

Digitized by Google
Original from UNIVERSITY OF CALIFORNIA
Generated on 2014-11-15 20:04 GMT / http://hdl.handle.net/2027/uc1.b3243973
Public Domain, Google-digitized / http://www.hathitrust.org/access_use#pd-google

b. If an undersize crankshaft is installed, it will be necessary to install new undersize main bearings and connecting rod bearings. Crankshafts should be ground .050 inch undersize.

c. Connecting rod and main bearings .050 inch oversize are serviced.

32. End-play.—The crankshaft end-play is from .007 inch to .010 inch when the engine leaves the factory. The crankshaft end-play is controlled by thrust plates and spacers just to the rear of the crankshaft gear. Should the end-play of the crankshaft exceed .025 inch, the thrust plate and spacers should be replaced.

33. Thrust washer.—The bronze thrust washer (A) (fig. 39) should be installed with the chamfer around the bore toward the rear of the crankshaft.

34. Gear.—*a.* Two holes tapped for ½ inch N. F. studs are provided to pull the crankshaft gear. The locking capscrew on the inside of the crank jaw has a left-hand thread. The crank jaw has a right-hand thread.

b. The crankshaft gear can be installed readily if it is first heated thoroughly in oil. Install the gear immediately and tighten the crank jaw. Install the locking capscrew with the left-hand thread and the locking pin in the end of the crankshaft.

35. Flywheel.—There is a mark on the rear face of the flywheel near the hole in the center and a mark on the rear flange of the crankshaft. When the flywheel is installed on the crankshaft, these marks should be alined. Care should be taken to center the flange on the crankshaft in the counterbore of the flywheel before tightening the capscrews. The capscrews should be drawn down evenly and tightly before securing the locks. No dirt should be between the crankshaft flange and the flywheel.

SECTION VII

REMOVING DIESEL ENGINE

Paragraph
Methods 36

36. Methods.—*a.* (1) Remove front winch, crankcase guard, auxiliary spring, floor plates, engine hood, and sheet metal.

(2) Disconnect fuel line at the transfer pump and throttle control rod at governor housing.

(3) Block tracks front and rear so the tractor cannot move.

(4) Engage flywheel clutch to hold clutch center disk in position. Then when the engine is installed, the teeth on the center disk will line up with the teeth in the flywheel.

Digitized by Google
Original from UNIVERSITY OF CALIFORNIA
Generated on 2014-11-15 20:13 GMT / http://hdl.handle.net/2027/uc1.b3243973
Public Domain, Google-digitized / http://www.hathitrust.org/access_use#pd-google

(5) If a hoist is used, it should be of at least 2-ton capacity. If two chain hoists are available, removing and replacing the engine can be simplified by placing one on either side permitting the engine to be rotated better to aline the holes in the transmission case with those in the bell housing.

b. (1) Another method can be used by making brackets similar to the one shown in figure 40. Attach the brackets, one at the front of the front head and one at the rear of the rear head. The chains or cables used should be so placed that the engine will remain at the same angle as the transmission case when the bolts are removed. This is necessary so as to prevent damage to the pilot bearing for the upper transmission shaft. Raise the engine, place a heavy bar across the track roller frames under the front of the transmission case, then lower the engine until the transmission case just rests on the bar.

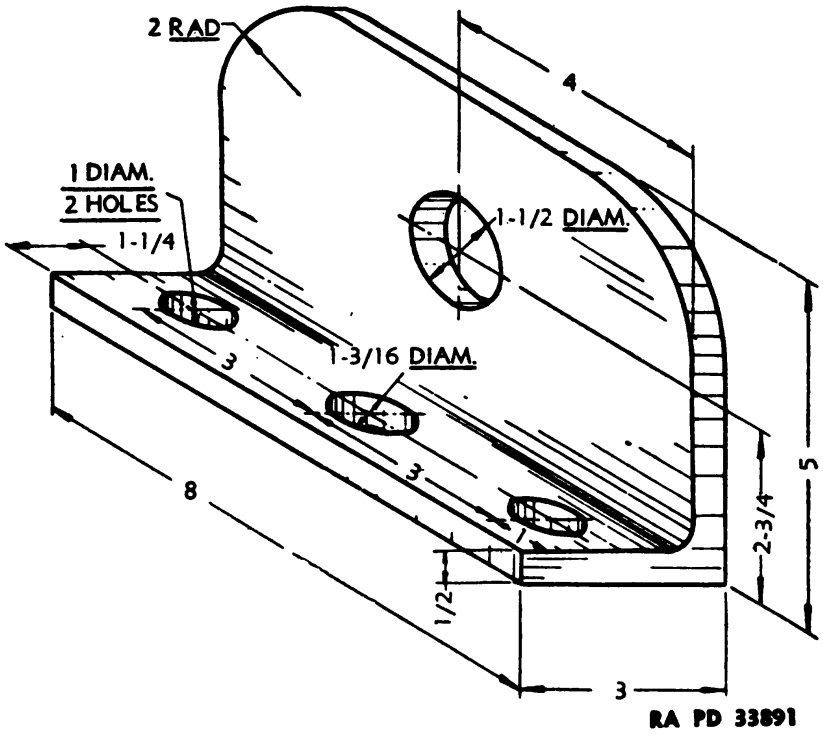

FIGURE 40.—Bracket.

(2) Detach the engine from the transmission case and move it straight forward until the clutch shaft clears the pilot bearing in the flywheel.

(3) If no facilities are available for using a chain hoist, it is advisable as a safety factor to part one track and remove the equalizer spring.

Digitized by Google
Original from UNIVERSITY OF CALIFORNIA
Generated on 2014-11-15 20:13 GMT / http://hdl.handle.net/2027/uc1.b3243973
Public Domain, Google-digitized / http://www.hathitrust.org/access_use#pd-google

(4) The engine should then be lowered until the transmission case just touches a bar placed across the track roller frames to support it when the engine is removed. After the engine has been blocked securely so that it will remain in alinement with the transmission, the chassis can be backed away.

SECTION VIII

TIMING GEAR ASSEMBLY

	Paragraph
General	37
Camshaft gear	38
Camshaft	39

37. General.—*a.* Remove front winch, power take-off shaft, radiator, generator, and air compressor. The fan need not be disassembled nor is it necessary to remove the water pump. Remove bolts and capscrews around timing gear housing and water pump. Pry timing gear housing off dowel pins carefully.

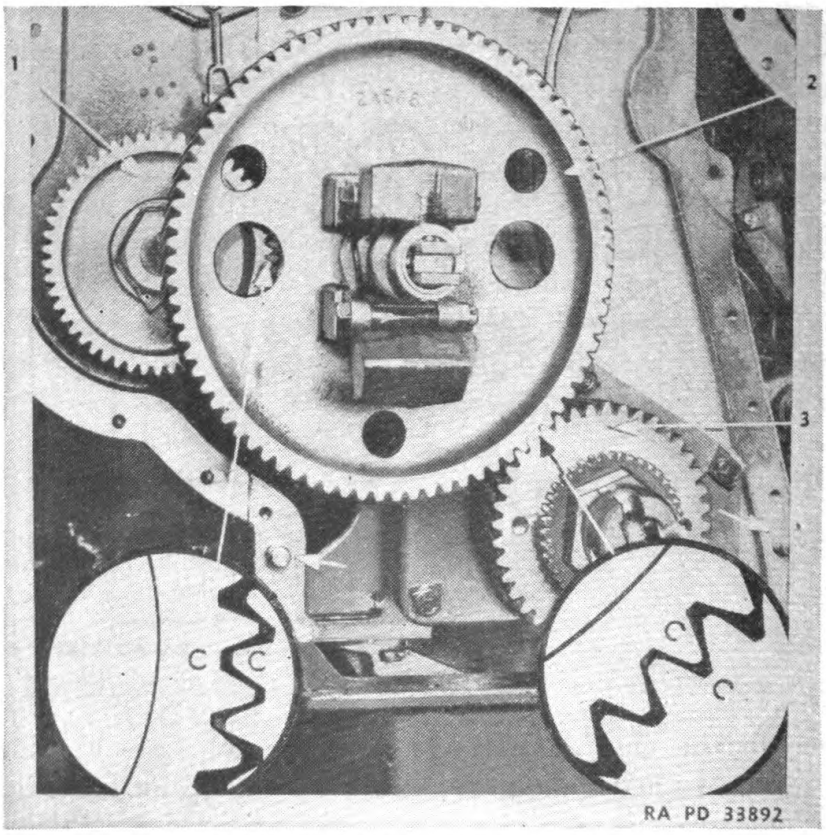

FIGURE 41.—Timing gear assembly.

b. The crankshaft gear (3) (fig. 41) is timed to the camshaft gear (2) (right insert). The accessory shaft gear (1) is timed to the camshaft gear (left insert). The remaining gears in the timing gear housing require no timing.

Digitized by Google
Original from UNIVERSITY OF CALIFORNIA
Generated on 2014-11-15 20:13 GMT / http://hdl.handle.net/2027/uc1.b3243973
Public Domain, Google-digitized / http://www.hathitrust.org/access_use#pd-google

38. Camshaft gear.—The camshaft gear can be removed from the camshaft without removing the camshaft from the engine. The puller tools required for replacing the gear are illustrated in figure 42.

a. Remove camshaft gear retaining nut and screw the puller stud (1) on the threads. The puller stud is used to protect the end of the camshaft on which the governor sleeve moves.

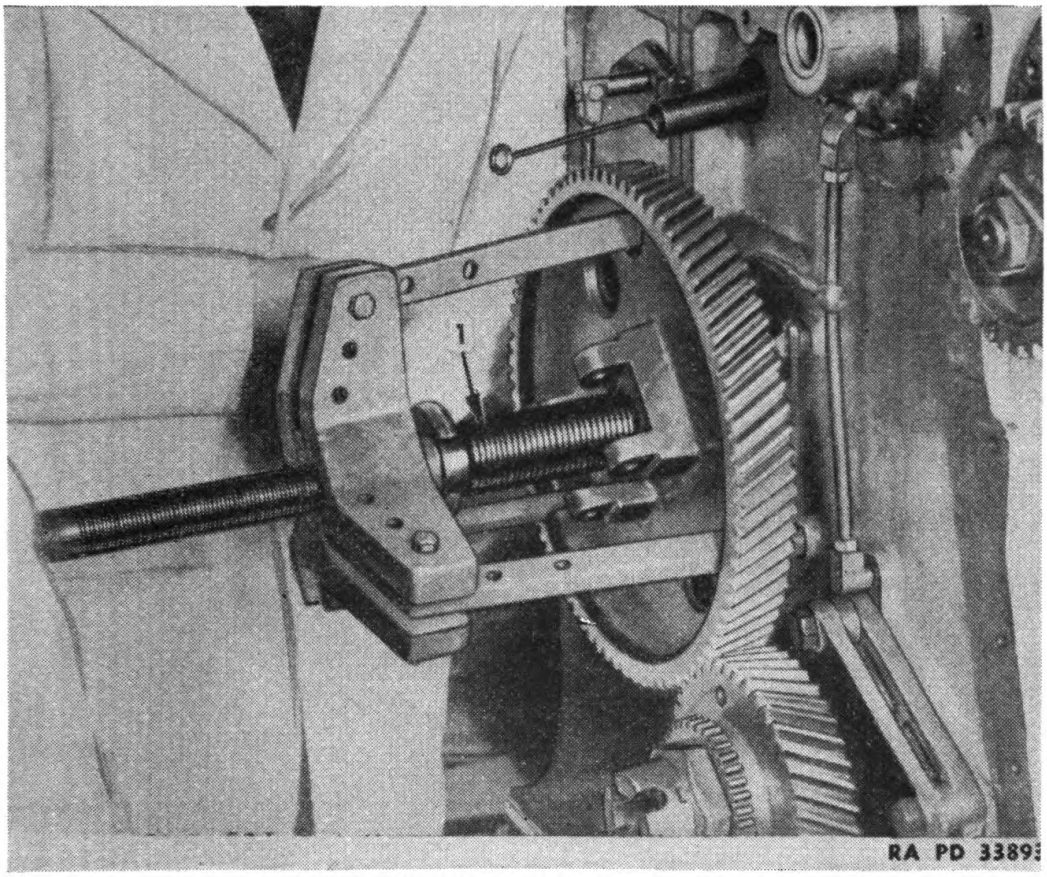

FIGURE 42.—Camshaft gear puller tools.

b. There are left-hand threads on the outside of the stud and on the inside of the nut (2) used for installing the camshaft gear. When a wrench (fig. 43) is used on the nut to press the gear on the shaft, a wrench should be used on the stud to hold the shaft from turning.

39. Camshaft.—Lower the oil pump to clear the camshaft drive. Remove the valve rocker mechanism, push rods and valve lifters. It is not necessary to remove the gear from the camshaft. Remove the capscrews from the thrust plate by working through the holes in the camshaft gear. Pull camshaft out taking care that camshaft bearing bores are not damaged.

a. End-play.—If the end-play of the camshaft exceeds .025 inch, the thrust washer and thrust plate should be replaced. Install thrust washer with chamfer around the bore toward the rear of the engine.

Digitized by Google
Original from UNIVERSITY OF CALIFORNIA
Generated on 2014-11-15 20:13 GMT / http://hdl.handle.net/2027/uc1.b3243973
Public Domain, Google-digitized / http://www.hathitrust.org/access_use#pd-google

b. Bearings.—(1) Ordinarily, an inspection of the camshaft bearings at the time the engine is removed for reconditioning should be sufficient.

(2) The bearings are replaceable babbitt-lined bushings. If pressed in straight without marring the babbitt, reaming after installation is unnecessary.

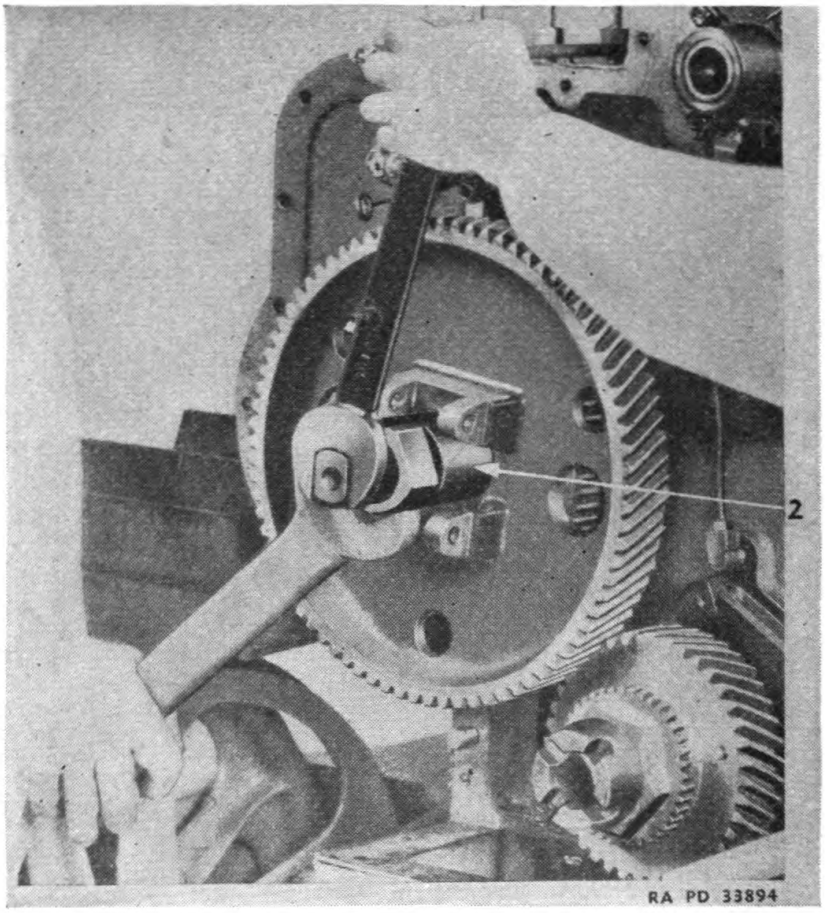

FIGURE 43.—Wrench method of pressing gear on shaft.

SECTION IX
LUBRICATION SYSTEM

	Paragraph
General	40
Oil pump	41
Oil filter	42
Internal oil lines	43

40. General.—*a.* The oil pump gears (4) (fig. 44) supply oil under pressure through drilled passages (5) in the crankshaft to the connecting rods (1), valve rockers (8), and timing gears (7). Gears (3) bring oil from the front of the engine (6). Spiral grooves (2) on the crankshaft are for carrying oil away from the clutch.

Digitized by Google
Original from UNIVERSITY OF CALIFORNIA
Generated on 2014-11-15 20:13 GMT / http://hdl.handle.net/2027/uc1.b3243973
Public Domain, Google-digitized / http://www.hathitrust.org/access_use#pd-google

b. One of the most important items contributing to the long life of an engine is that of proper lubrication. The lubricating system (fig. 44) has been designed to meet all working conditions, but it should be inspected occasionally to see that everything is functioning properly.

41. Oil pump.—*a.* Ordinarily, the oil pump gears should not be replaced unless they have worn sufficiently to cause a considerable drop in the oil pressure.

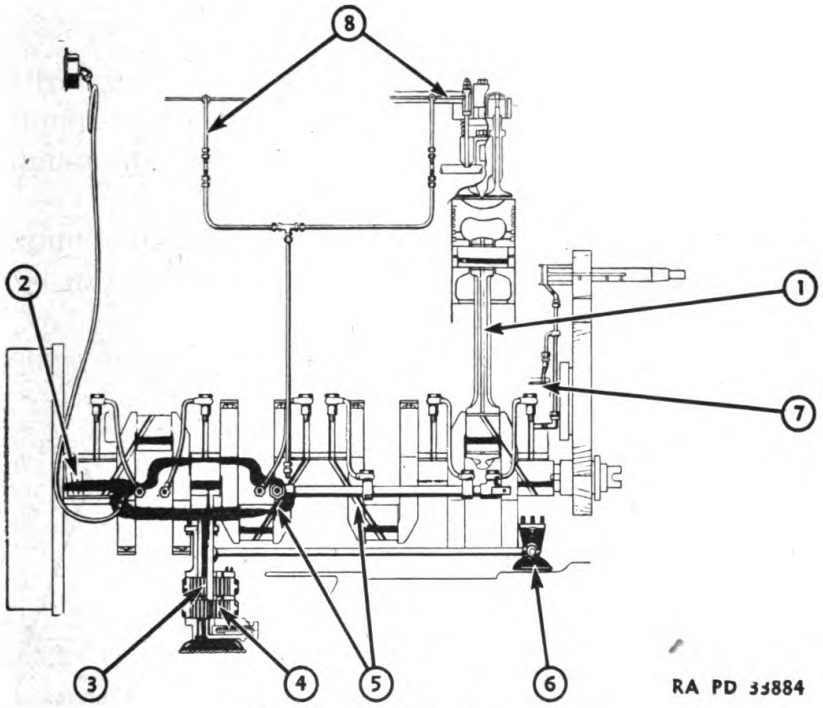

FIGURE 44.—Lubricating system.

b. The oil pump screens should be removed and cleaned at least twice a year; more frequently if necessary to keep them clean.

c. (1) An adjustable oil pressure relief valve is an integral part of the pump assembly. If the gage indicates a low pressure or no pressure at all, check for the following before attempting to adjust the spring pressure on the oil pump plunger:

(*a*) Clogged oil filters.
(*b*) Defective oil gage.
(*c*) Clogged oil pump screen or gage line.
(*d*) Sticking oil pump plunger.
(*e*) Broken oil pump drive gear pin.
(*f*) Leaky connections.
(*g*) Loose bearings.
(*h*) Worn oil pump gears.

(2) If the above points have been carefully checked and put in order, and the oil pressure continues to be incorrect, the pressure may be

Digitized by Google
Original from UNIVERSITY OF CALIFORNIA
Generated on 2014-11-15 20:13 GMT / http://hdl.handle.net/2027/uc1.b3243973
Public Domain, Google-digitized / http://www.hathitrust.org/access_use#pd-google

increased by turning *in* on the adjusting screw, or decreased by turning *out* on the adjusting screw. The pressure adjusting screw or the oil pump screen can be reached by removing the side door from the engine oil pan.

d. The pump, driven by a spiral gear on the camshaft, contains two sets of gears, each set with a separate purpose. The upper or auxiliary oil pump gears return oil to the main oil sump from the front of the oil pan, while the tractor is being operated downhill. The lower gears in the pump supply oil under pressure to the engine.

(1) To remove the oil pump, take off the crankcase guard and the engine oil pan. Disconnect the line to the auxiliary pump front suction bell and remove the capscrews which secure the pump to the cylinder block. The pump can then be lowered.

(2) If the bushings, gears, or separator plates in the pump are replaced, a check should be made to see that the pump can be turned freely by hand before it is installed.

(3) New gaskets should be used on the pump and pump connections.

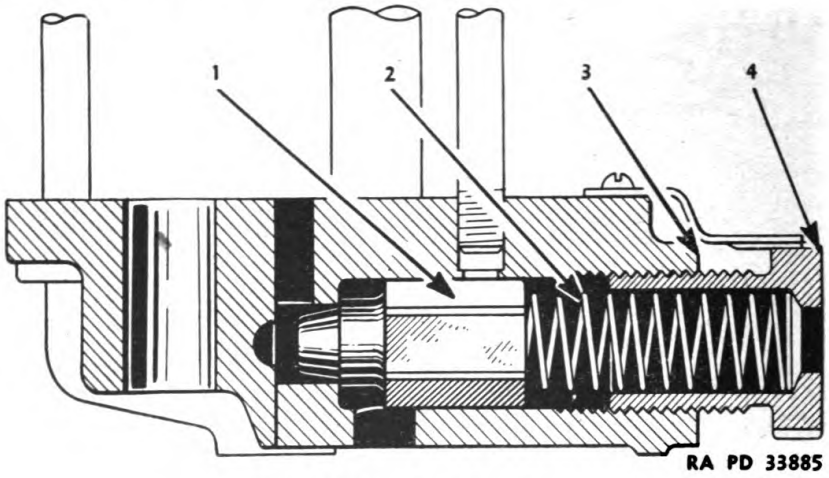

FIGURE 45.—Relief plunger.

e. Relief plunger (1) (fig. 45) is hexagonal in form which permits the by-passed oil to flow on all six sides of the plunger, reducing any tendency for the plunger to stick in the bore of the pump. Adjusting screw (4) governs the tension on the relief plunger spring (2). Before removing the plunger, mark adjusting screw and pump body (3) and count number of turns required to remove the screw. In installation, the original tension can be restored to the spring by reinstalling the screw the same number of turns.

f. The oil pressure with the engine operating at normal load and operating temperature is about 30 pounds. This pressure brings the gage needle (fig. 46) approximately midway across the pressure scale

Digitized by Google
Original from UNIVERSITY OF CALIFORNIA
Generated on 2014-11-15 20:13 GMT / http://hdl.handle.net/2027/uc1.b3243973
Public Domain, Google-digitized / http://www.hathitrust.org/access_use#pd-google

on the gage dial. As long as the needle stays within the "operating range", under normal working conditions it may be assumed that the oil pump is operating correctly.

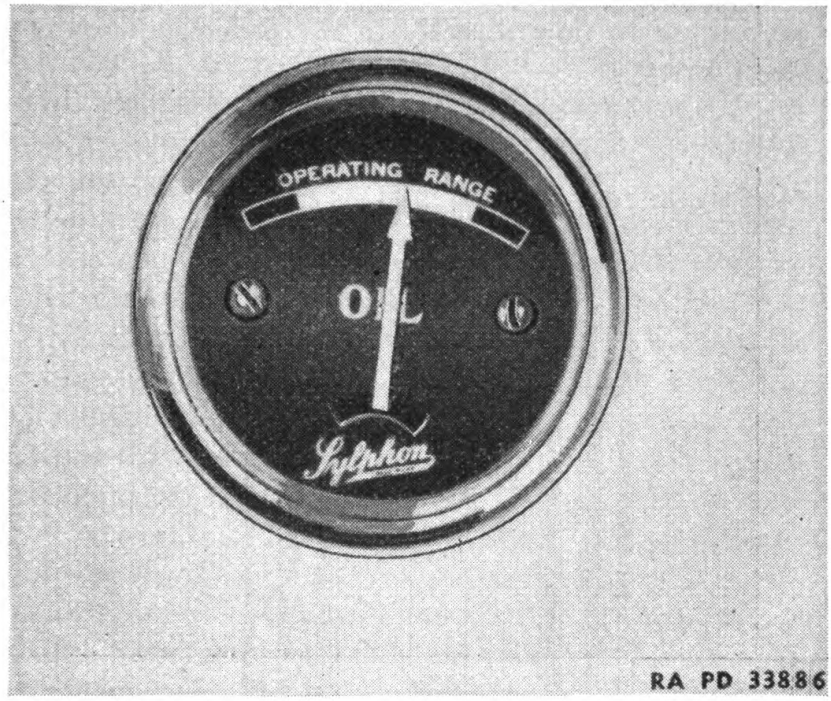

FIGURE 46.—Oil pressure gage.

42. Oil filter.—*a.* The filters (fig. 47) should be cleaned and the sludge compartment drained each time the crankcase lubricating oil is changed. Each filter element shown is made up of fine flat ribbon wound on a corrugated brass shell. Spaces .003 inch wide exist between each ribbon. Filtering occurs on the outside edges of the ribbon as the cleaned oil passes through the fine spaces.

b. A drop in lubricating oil pressure may be noted as the oil drain period approaches because the outer surfaces of the elements become coated with foreign material. This pressure drop can usually be corrected by cleaning the elements.

c. Some crankcase lubricating oils, however, have a tendency to deposit gums and lacquers when change periods are neglected. Because of this, the elements may become partially restricted by deposits in the spaces between the ribbon. This will be accompanied by a decided drop in lubricating oil pressure which cannot be restored by cleaning the elements.

d. No solvent or cleaner has yet been found that will effectively dissolve or loosen all these gums or lacquers. The use of live steam only tends to set the gums or lacquers inside the elements rather than to

Digitized by Google
Original from UNIVERSITY OF CALIFORNIA
Generated on 2014-11-15 20:13 GMT / http://hdl.handle.net/2027/uc1.b3243973
Public Domain, Google-digitized / http://www.hathitrust.org/access_use#pd-google

remove them. If a wire brush is used to clean the elements, a bright finish may be obtained on the outside but the spaces will not be opened.

e. The normal passage of oil through the filters is shown in figure 47. If the filter elements are clogged, the ball check in the filter base will open to permit oil to flow directly to the bearings without passing through the filters.

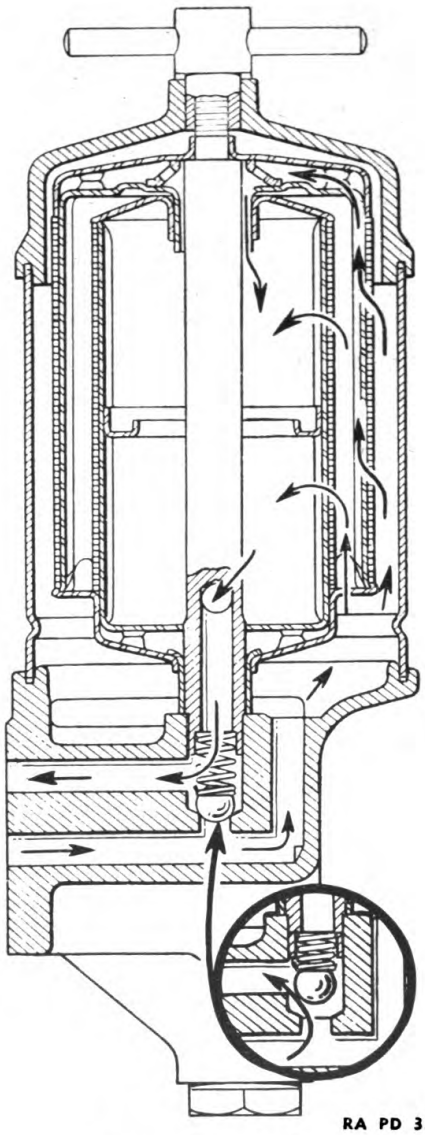

FIGURE 47.—Oil filter.

f. If the crankcase lubricating oil pressure drops noticeably, first make sure the filters are clean. Then if the pressure is still below normal, the internal condition of the elements should be checked.

(1) The internal condition of the elements can best be checked by operating the engine for a short period with the elements removed and noting if the pressure is improved.

Digitized by Google
Original from UNIVERSITY OF CALIFORNIA
Generated on 2014-11-15 20:13 GMT / http://hdl.handle.net/2027/uc1.b3243973
Public Domain, Google-digitized / http://www.hathitrust.org/access_use#pd-google

(2) The internal condition can also be checked by comparing the rate of flow of some noninflammable fluid such as Diesel fuel (do not use water) through the elements with that of a new set. Plug the hole in the top of one of the elements in question. Also plug the top hole in a new element. Invert the elements and immerse in fluid until all the filter ribbon is covered. If the old element is not at least three quarters full when the new element is filled, indicating a 25 percent loss in capacity, the old element should be discarded. Check each element in the same manner.

g. Whenever the engine is reconditioned, the oil filter base and the oil filter base manifold should be removed and flushed thoroughly. Remove the standpipes in the filter base and the ball relief checks. If the ball and spring are corroded replace them. Smooth the seat if rough by brazing one of the old balls to the end of a rod and use fine grinding compound. Make certain all the grinding compound is removed after this operation.

43. Internal oil lines.—*a. Clean and flush.*—With the filter base removed, all the oil lines in the engine should be flushed thoroughly by forcing solvent, dry-cleaning, through the lines.

b. Repair and service.—Internal oil lines which are damaged should be replaced. Satisfactory repairs are difficult to make. The small cost of a replacement line does not warrant the risk hazarded by a questionable repair.

SECTION X

FUEL SYSTEM

	Paragraph
General	44
Fuel tank filler cap	45
Fuel transfer pump and adapter	46
Fuel injection equipment	47
Precombustion chamber	48
Fuel injection pumps	49
Fuel injection pump lifter adjustment	50
Fuel injection pump lifter springs	51

44. General.—Maximum efficiency of the fuel system can be expected only when clean fuel is used. Dirty fuel, caused by careless handling or improper storage facilities, will cause wear to the fuel transfer pump and fuel injection equipment and eventually result in improper operation of the Diesel engine. It is important to clean out the fuel tank and fuel lines when new fuel injection equipment is installed. This will prevent former dirt and sediment accumulations from working their way into the newly installed equipment.

45. Fuel tank filler cap.—The fuel tank cap (fig. 48) is provided with an element similar to that used in breathers. Air enters at the

Digitized by Google
Original from UNIVERSITY OF CALIFORNIA
Generated on 2014-11-15 20:13 GMT / http://hdl.handle.net/2027/uc1.b3243973
Public Domain, Google-digitized / http://www.hathitrust.org/access_use#pd-google

venthole (A) located on the side and passes through the breather element (B), around baffles (C), and through the drilled stud (D) before it enters the fuel tank. The element should be washed out every 300 hours, saturated with lubricating oil, and drained. Replace the element if it is in poor condition. The cap is easily disassembled by removing the nut in the center.

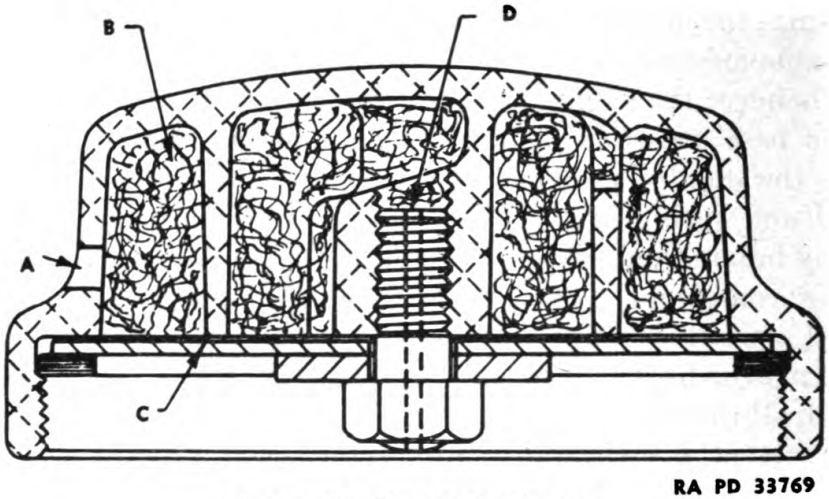

FIGURE 48.—Fuel tank filler cap.

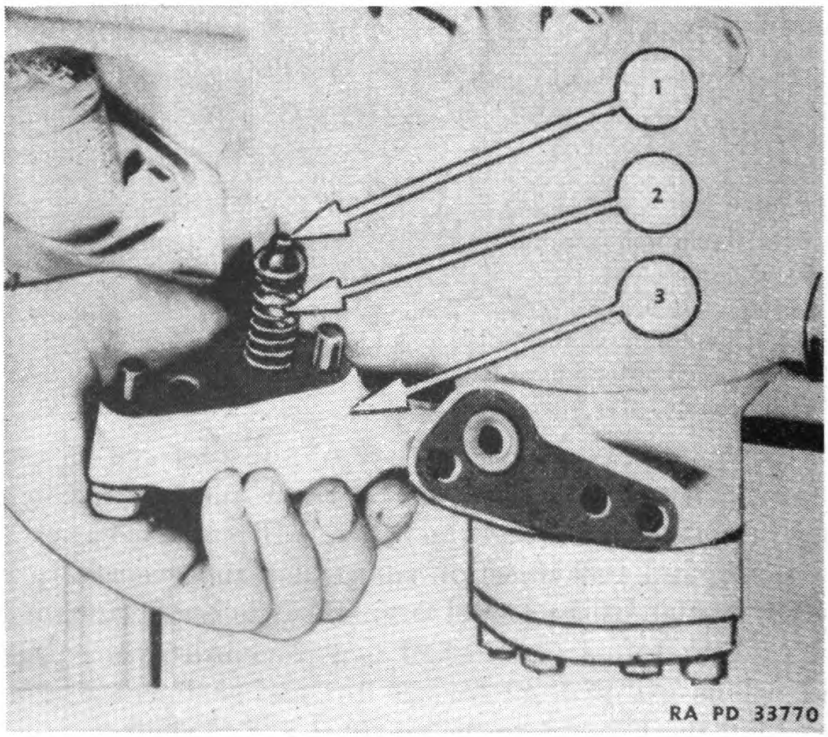

FIGURE 49.—Fuel transfer pump adapter.

Digitized by Google
Original from UNIVERSITY OF CALIFORNIA
Generated on 2014-11-15 20:14 GMT / http://hdl.handle.net/2027/uc1.b3243973
Public Domain, Google-digitized / http://www.hathitrust.org/access_use#pd-google

46. Fuel transfer pump and adapter.—*a.* The fuel transfer pump mounts directly under the fuel filter housing and is driven by the accessory shaft. This pump is self-venting. An adapter (3) (fig. 49) is mounted on the side of the transfer pump and contains a plunger (1) and spring (2). This plunger opens when the fuel injection pumps do not use all the fuel or when the fuel filters become clogged. The spring pressure is such that fuel is bypassed within the pump and adapter without causing damage to the fuel filter or gage mechanism.

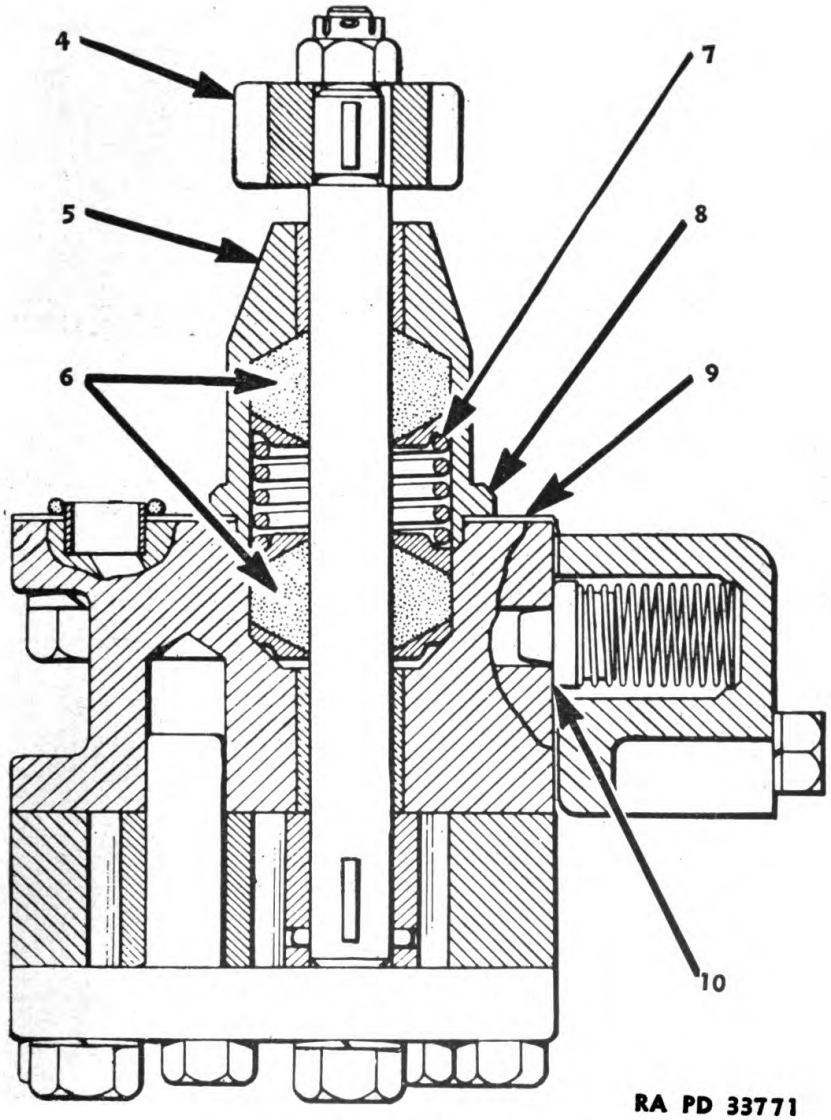

FIGURE 50.—Fuel transfer pump.

b. The plunger may fail to function properly if dirt gets between the seat and the plunger (10) (fig. 50). This may cause the fuel pressure

Digitized by Google
Original from UNIVERSITY OF CALIFORNIA
Generated on 2014-11-15 20:14 GMT / http://hdl.handle.net/2027/uc1.b3243973
Public Domain, Google-digitized / http://www.hathitrust.org/access_use#pd-google

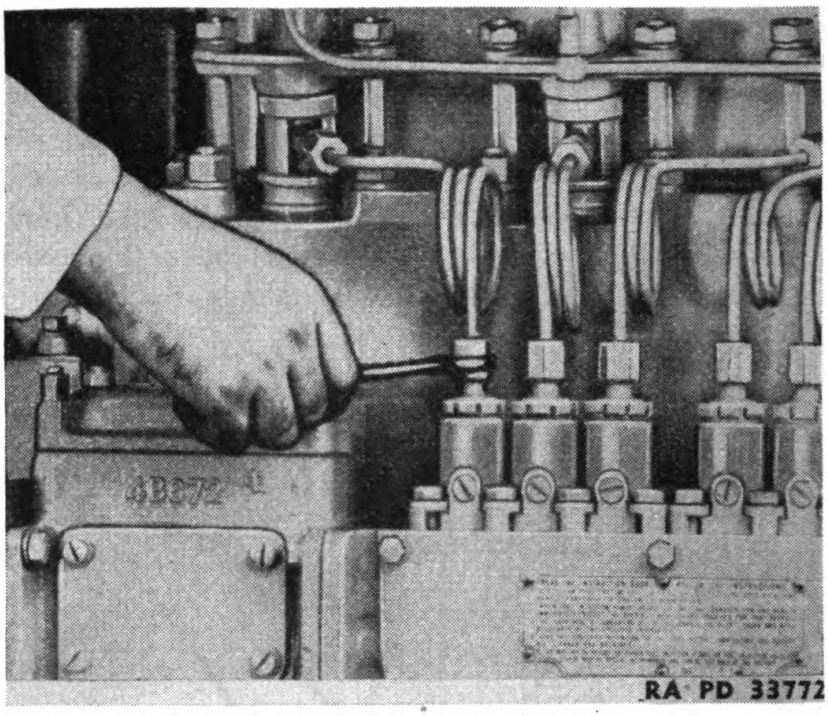

FIGURE 51.—Checking fuel injection equipment.

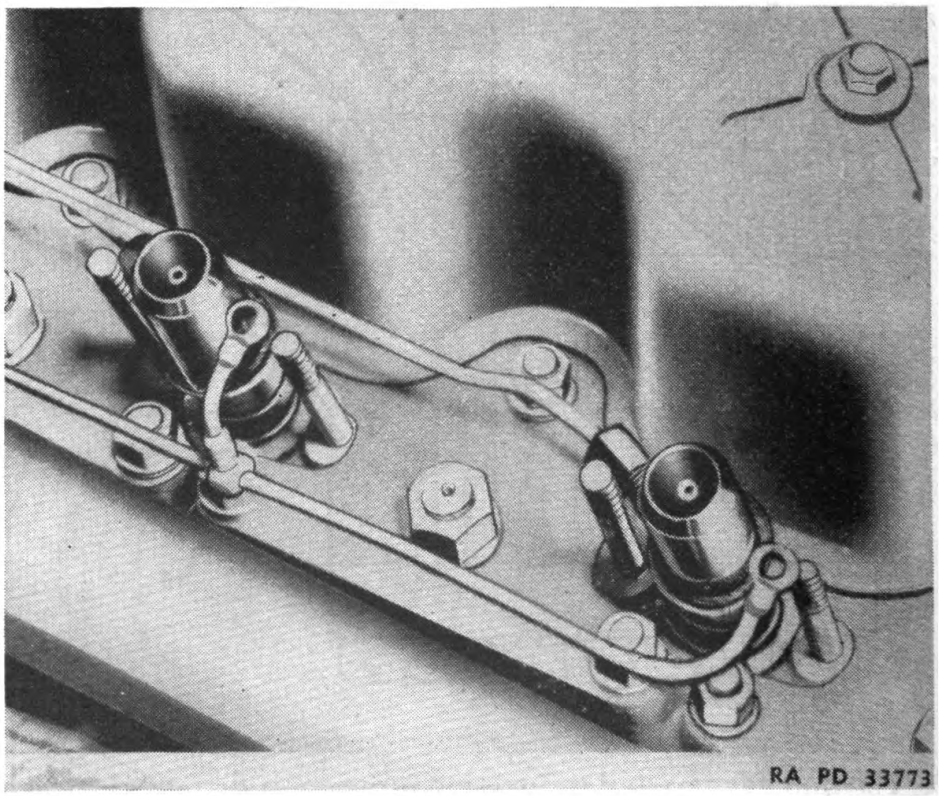

FIGURE 52.—Checking fuel injection valves.

gage needle to show a wide variation between low idle and high idle speed. After cleaning the contact surfaces, check to see that the seat

Digitized by Google
Original from UNIVERSITY OF CALIFORNIA
Generated on 2014-11-15 20:14 GMT / http://hdl.handle.net/2027/uc1.b3243973
Public Domain, Google-digitized / http://www.hathitrust.org/access_use#pd-google

is smooth and flat, and that the sealing surface of the plunger is in good condition. If this plunger is functioning properly, the gage needle should vary only slightly.

c. The transfer pump and adapter may be removed as a unit, or either the adapter or the cover, body, and one gear may be removed without taking out the entire unit.

d. Wear in the pump gears is caused by dirty fuel. Gears may be replaced in a pump if the bracket and cover plate are not worn. The clearances are small between the moving and stationary parts of the pump (fig. 50), and for this reason ground joints instead of gaskets are used between the pump body sections.

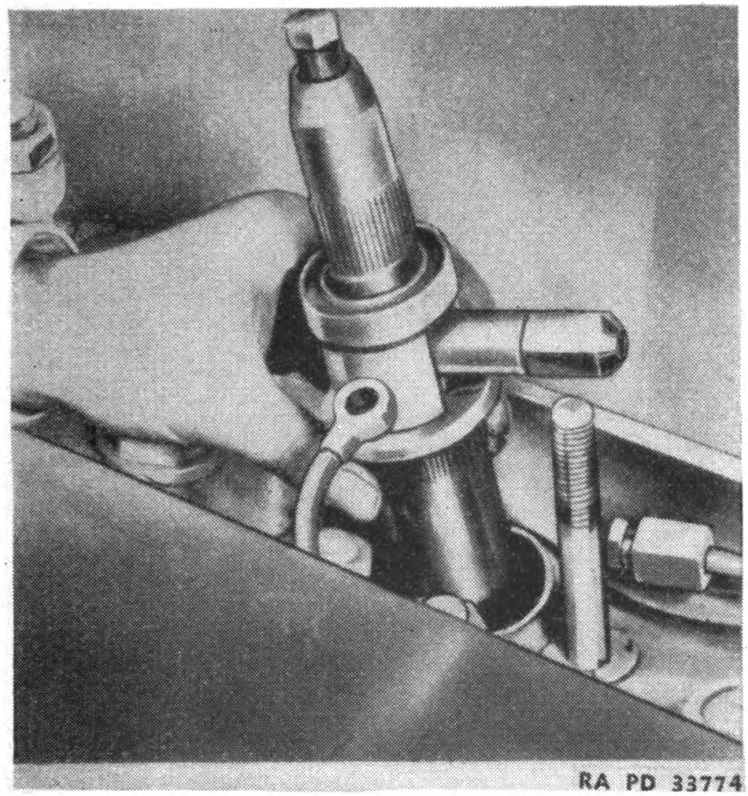

FIGURE 53.—Removal of fuel injection valve.

e. The fuel transfer pump shaft seals (6) (fig. 50) are to keep fuel and lubricant from leaking along the shaft. The seat assembly (5) can be removed and the seals replaced after the gear (4) is pulled from the end of the shaft. The spring (7) between the two seal assemblies makes the seals self-adjusting. Should fuel leak past the seals, the pump should be dismantled and the seals replaced. In reassembly, gasket (9) must extend completely under the flange (8) of seat assembly (5) or fuel may be forced into the accessory shaft housing.

47. Fuel injection equipment.—The life of the fuel injection equipment is directly dependent upon the cleanliness of the fuel. Dirt,

Digitized by Google
Original from UNIVERSITY OF CALIFORNIA
Generated on 2014-11-15 20:14 GMT / http://hdl.handle.net/2027/uc1.b3243973
Public Domain, Google-digitized / http://www.hathitrust.org/access_use#pd-google

if allowed to get into the fuel injection equipment, will result in premature wear and faulty engine operation. The most likely causes for faulty fuel injection are low fuel supply, clogged fuel filters, water in the fuel, or air in the system. If these conditions are checked and corrected and the engine still does not operate properly, it is well to check the fuel injection equipment.

a. Checking fuel injection equipment.—A simple check should always be made before attempting to remove a fuel injection valve or pump from the engine for the purpose of testing.

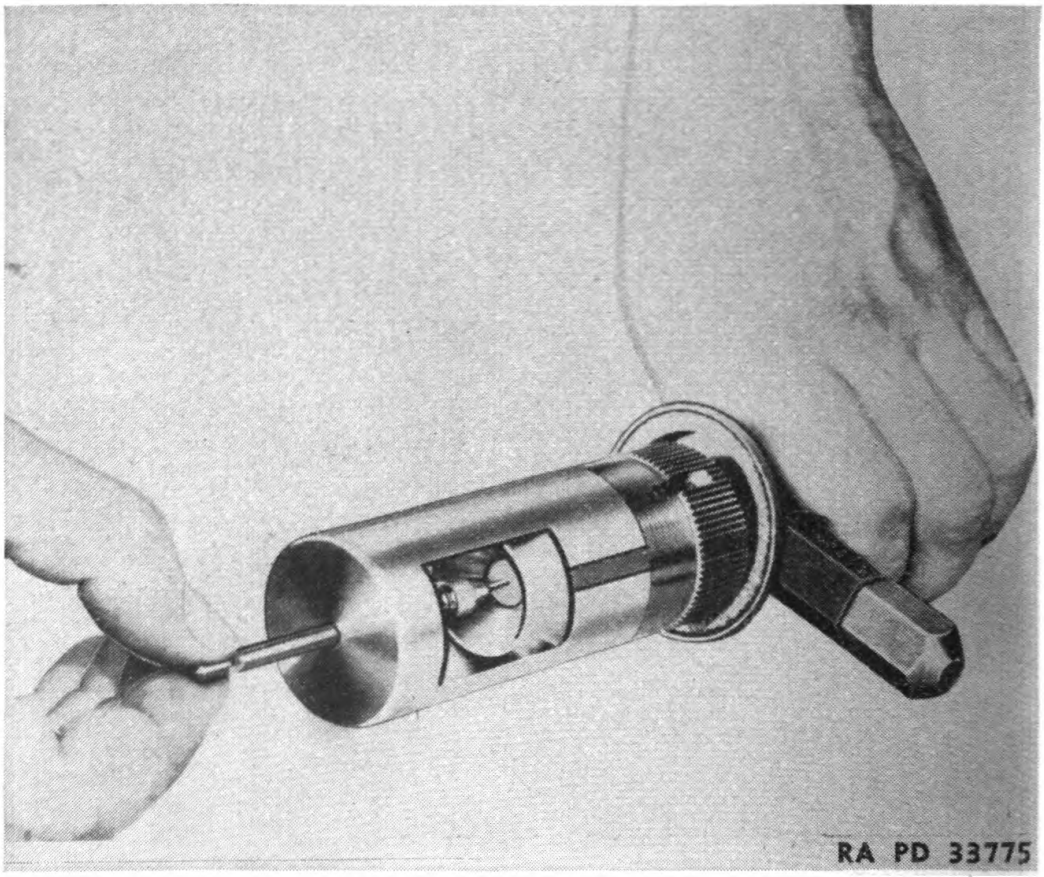

FIGURE 54.—Cleaning fuel injection valve discharge hole.

(1) With the engine running at a speed that makes the irregularity most pronounced, loosen fuel line nut (fig. 51) just above fuel pump sufficiently to "cut-out" the cylinder. Check each cylinder in the same manner. If one is found where loosening makes no difference in the operation of the engine, probably the valve and pump on that cylinder only need be tested.

(2) Irregular engine operation and smoking may be caused by a faulty injection valve. Hard starting and irregular operation may be the result of a weak pump not supplying sufficient fuel.

Digitized by Google
Original from UNIVERSITY OF CALIFORNIA
Generated on 2014-11-15 20:14 GMT / http://hdl.handle.net/2027/uc1.b3243973
Public Domain, Google-digitized / http://www.hathitrust.org/access_use#pd-google

b. Testing fuel injection valve.—Before testing a fuel injection valve, clean all dust and dirt from the valve and adjacent areas; then disconnect fuel injection line and fuel drain line and remove the hold-down nuts that keep the valve in place (fig. 53). Turn the valve in a horizontal position if possible or upside down (fig. 52) and connect the fuel line again.

(1) Before testing the valve, loosen the line nuts above each pump not being tested to prevent fuel being injected into the cylinders.

(2) Start the starting engine, and with the Diesel engine compression release lever in the "start" position, engage starter pinion and clutch. If the starting engine is operated slightly above its low idle speed, the Diesel engine will be turned sufficiently fast to insure an accurate check on the spray characteristics of the valve.

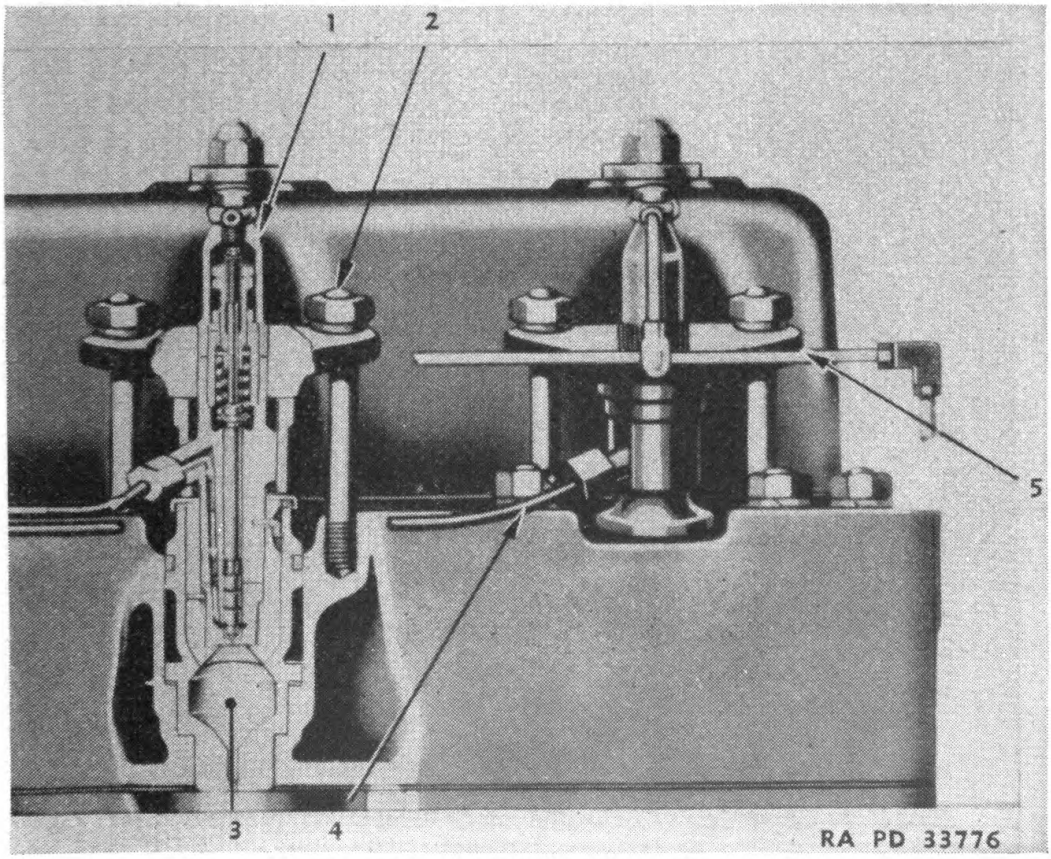

FIGURE 55.—Fuel injection valve and precombustion chamber.

(3) With the starting engine cranking the Diesel engine, open the Diesel engine throttle wide; move fuel injection pump control lever to the "run" position and notice the fuel spray that comes from the fuel injection valve.

(*a*) If the fuel injection valve emits a fine, even spray in the form of a mist, it indicates that the valve is in good condition.

Digitized by Google
Original from UNIVERSITY OF CALIFORNIA
Generated on 2014-11-15 20:14 GMT / http://hdl.handle.net/2027/uc1.b3243973
Public Domain, Google-digitized / http://www.hathitrust.org/access_use#pd-google

(*b*) If the spray characteristics of a fuel injection valve do not come up to standard, the fuel discharge hole in the nozzle end (fig. 54) should be cleaned. This may be done with a cleaning tool (CAT 5B1401) using a No. 73 .024-inch diameter drill.

(4) The fuel discharge hole in the nozzle end will not clog completely with carbon accumulations, but may under some conditions collect a small amount of carbon on the inner diameter of the fuel discharge opening. This smaller opening, resulting from carbon accumulations, causes the fuel to be emitted in a stream instead of being thoroughly atomized. Also, if a slightly greater amount of carbon forms on one side of the opening than on the other, the spray will have a tendency to shoot off to one side.

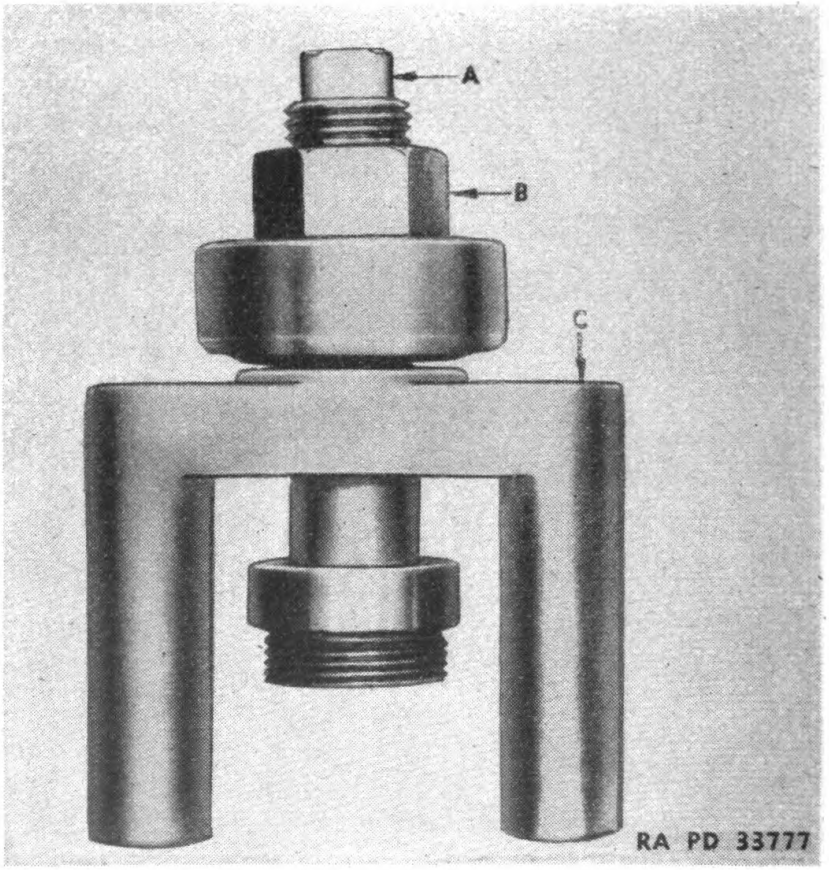

A. Shaft.
B. Nut assembly.
C. Saddle.

FIGURE 56.—Tool for installing injection valve.

(5) Cleaning of the fuel discharge opening in the fuel injection valve nozzle end is often all that is necessary to make a valve operate properly.

(6) The valve should be replaced if it shows the following spray characteristics:

Digitized by Google
Original from UNIVERSITY OF CALIFORNIA
Generated on 2014-11-15 20:14 GMT / http://hdl.handle.net/2027/uc1.b3243973
Public Domain, Google-digitized / http://www.hathitrust.org/access_use#pd-google

(*a*) Fuel discharged in a solid stream or jet.

(*b*) Fuel spray emitted on one side of the nozzle.

(7) A valve should not be rejected, however, unless it fails to spray properly when the starting engine is operating at "full governed speed." This speed is only about half the slowest speed at which the Diesel engine is required to run.

NOTE.—Always keep in mind that the quality of the spray is determined by the condition of the fuel injection valve, while the quantity of the spray in a properly operating valve is determined by the condition of the fuel injection pump.

48. Precombustion chamber.—To remove a precombustion chamber (3) (fig. 55), remove overflow line (5), clamp nuts (2), injection line (4), and injection valve assembly (1).

a. Special tools are required to pull the precombustion chamber:

1 CAT2B1902 Saddle.
1 CAT2B1941 Nut assembly.
1 CAT2B1118 Shaft.

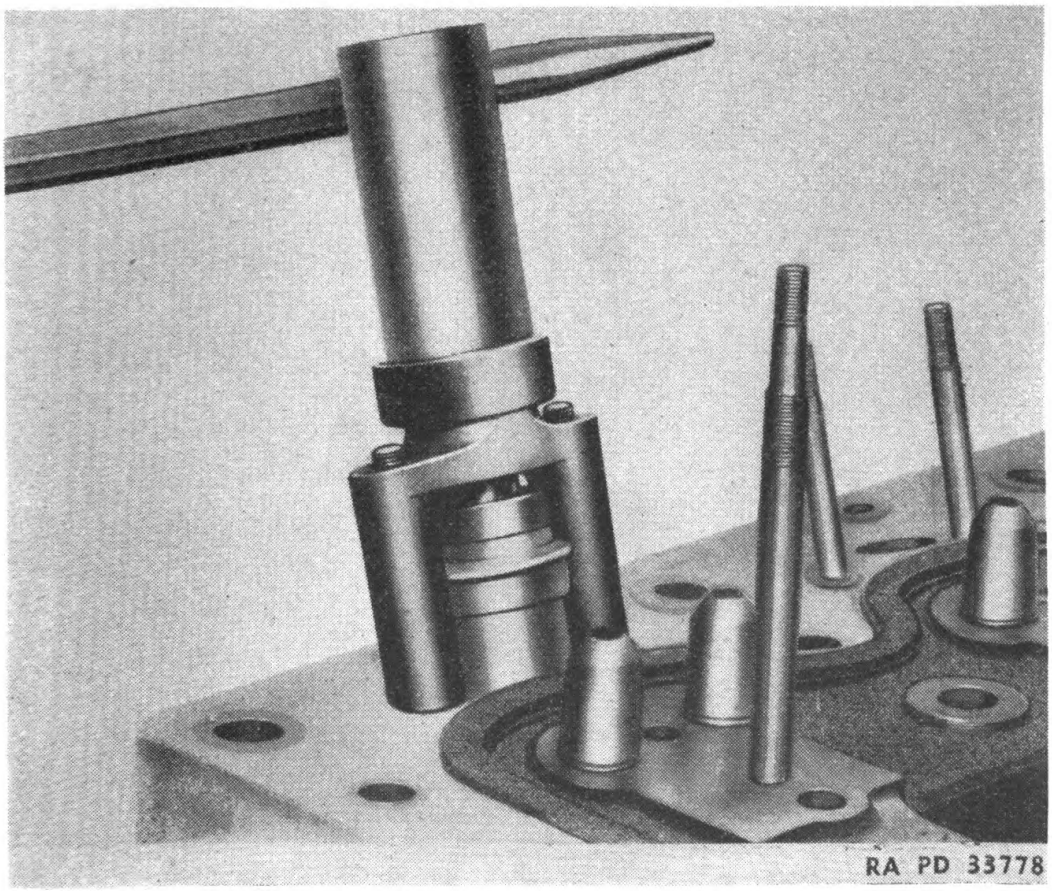

FIGURE 57.—Reinstalling the precombustion chamber.

Digitized by Google
Original from UNIVERSITY OF CALIFORNIA
Generated on 2014-11-15 20:14 GMT / http://hdl.handle.net/2027/uc1.b3243973
Public Domain, Google-digitized / http://www.hathitrust.org/access_use#pd-google

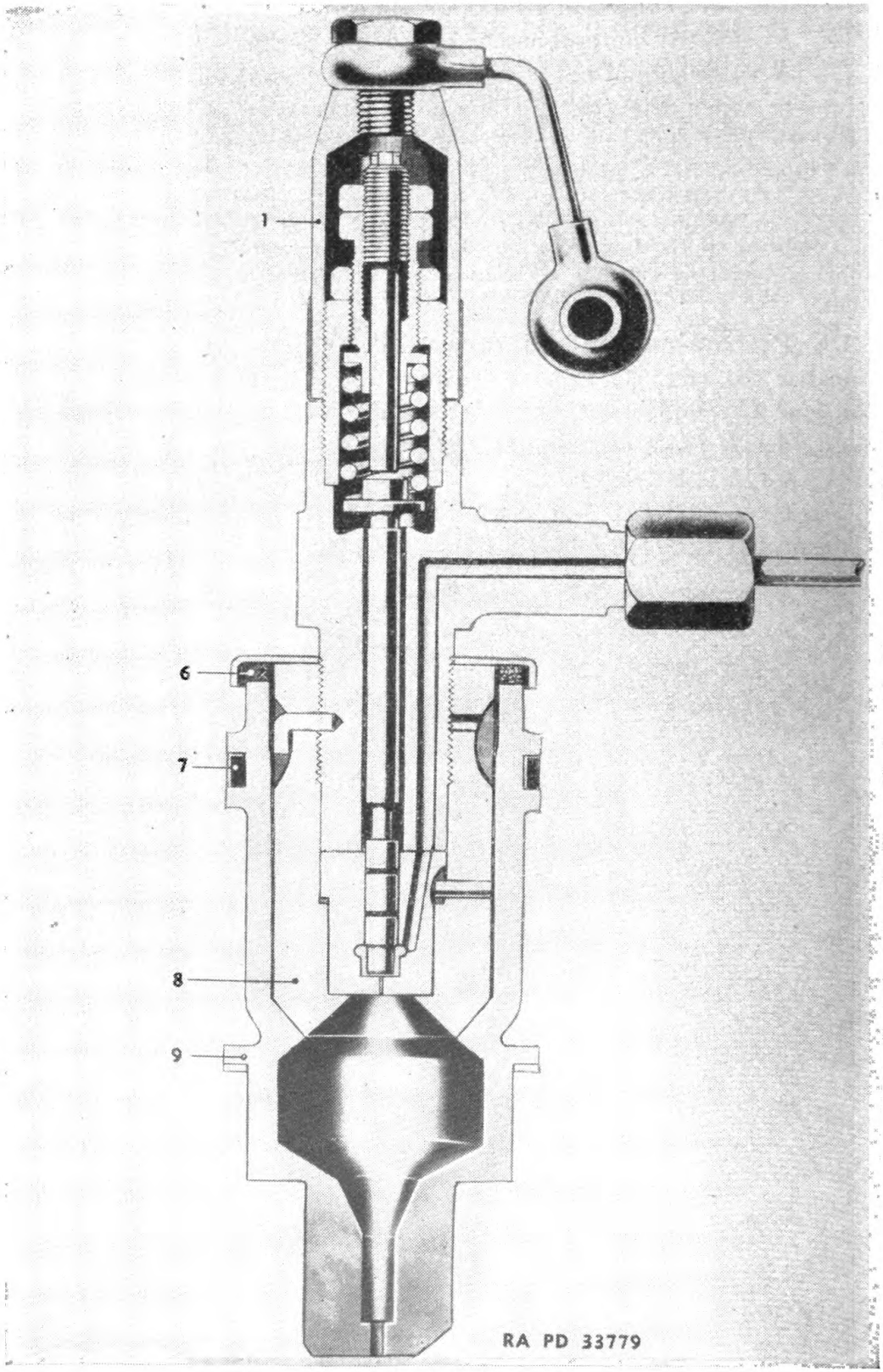

FIGURE 58.—Injection valve.

Digitized by Google
Original from UNIVERSITY OF CALIFORNIA
Generated on 2014-11-15 20:14 GMT / http://hdl.handle.net/2027/uc1.b3243973
Public Domain, Google-digitized / http://www.hathitrust.org/access_use#pd-google

b. In installation, a new gasket (9) (fig. 58) and seal (7) should be used. Coat the seal with soap and take care that the seal is not sheared as the precombustion chamber is driven into the head.

c. In reinstalling the injection valve (fig. 57) make certain the tapered end of the valve at (8) (fig. 58) and its seat in the precombustion chamber are perfectly clean and that the gasket (6) is in place. The clamp nuts (2) (fig. 55) should be drawn down evenly and with only sufficient tension to prevent leaks between the valve and valve seat. Excessive tightening may force the tapered end (8) (fig. 58) of the injection valve into its seat sufficiently to cause permanent damage to the valve and may even break the cylinder head.

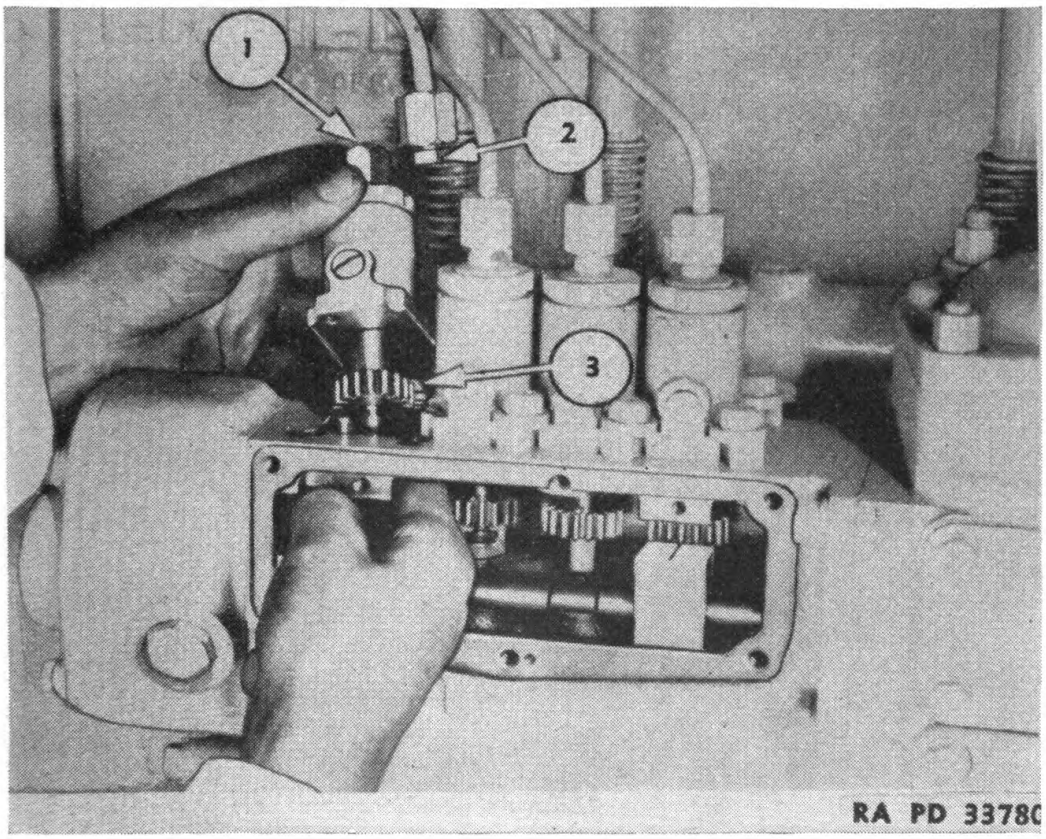

FIGURE 59.—Pump removal.

d. Repairs and adjustments to fuel injection valves should be attempted only if the equipment required for that work is available.

49. Fuel injection pumps.—Ordinarily, if even one fuel injection pump on an engine is not supplying sufficient fuel, it will be found that all of the pumps are worn and need replacing.

a. Pump removal.—The end pumps (fig. 59) may be removed from the pump housing without disturbing the other pumps, but neither center pump should be removed until the end pump next to it has been taken out.

Digitized by Google
Original from UNIVERSITY OF CALIFORNIA
Generated on 2014-11-15 20:35 GMT / http://hdl.handle.net/2027/uc1.b3243973
Public Domain, Google-digitized / http://www.hathitrust.org/access_use#pd-google

(1) After cleaning the top of the housing and around the inspection plate, disconnect fuel injection lines from the pumps and immediately cap the openings with covers (1) and (2).

(2) Remove inspection plate and then the coupling that fastens the rack to the slide bar.

(3) Remove capscrews and retaining plates that hold the rack in place and pull the rack out of the housing.

(4) Remove capscrews and clamps that hold the fuel injection pump to the housing and lift the pump straight up only enough to clear the dowel pins.

(5) Reach through the inspection opening to hold the plunger from dropping out of the pump barrel.

(6) Shift pump to free the end of the pump plunger from the slot in the lifter and remove pump and plunger assembly from the housing.

(7) Always cap fuel outlet (3) with a rubber nipple to keep out dirt.

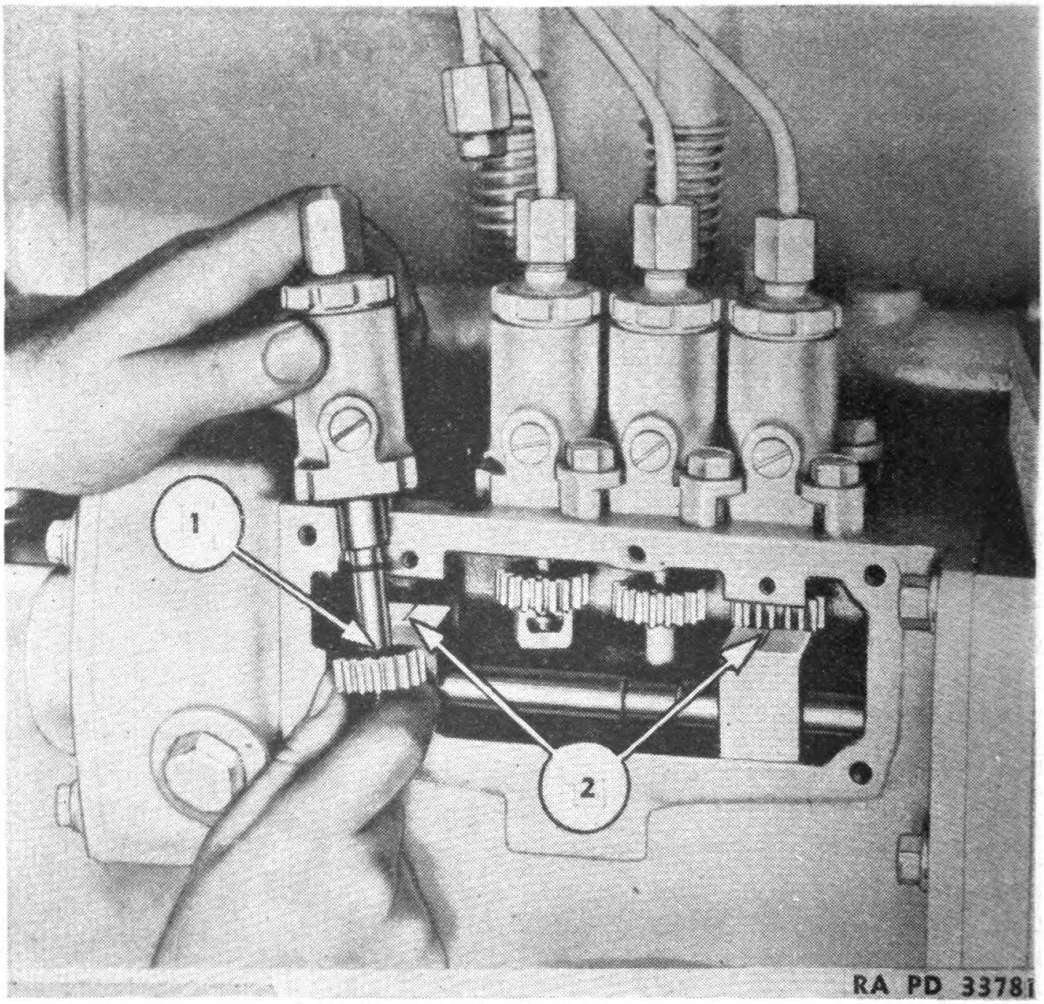

① Lining up marked tooth of pump gear.

FIGURE 60.—Pump installation.

Digitized by Google
Original from UNIVERSITY OF CALIFORNIA
Generated on 2014-11-15 20:36 GMT / http://hdl.handle.net/2027/uc1.b3243973
Public Domain, Google-digitized / http://www.hathitrust.org/access_use#pd-google

b. Pump installation.—Remove the rubber nipple from the top of the housing and lower the pump assembly into the housing, taking care that the pump plunger does not slide out of the pump barrel. Slide the end of the plunger into the slot in the lifter and lower the pump body onto the dowel pins. Then fasten the pump in place.

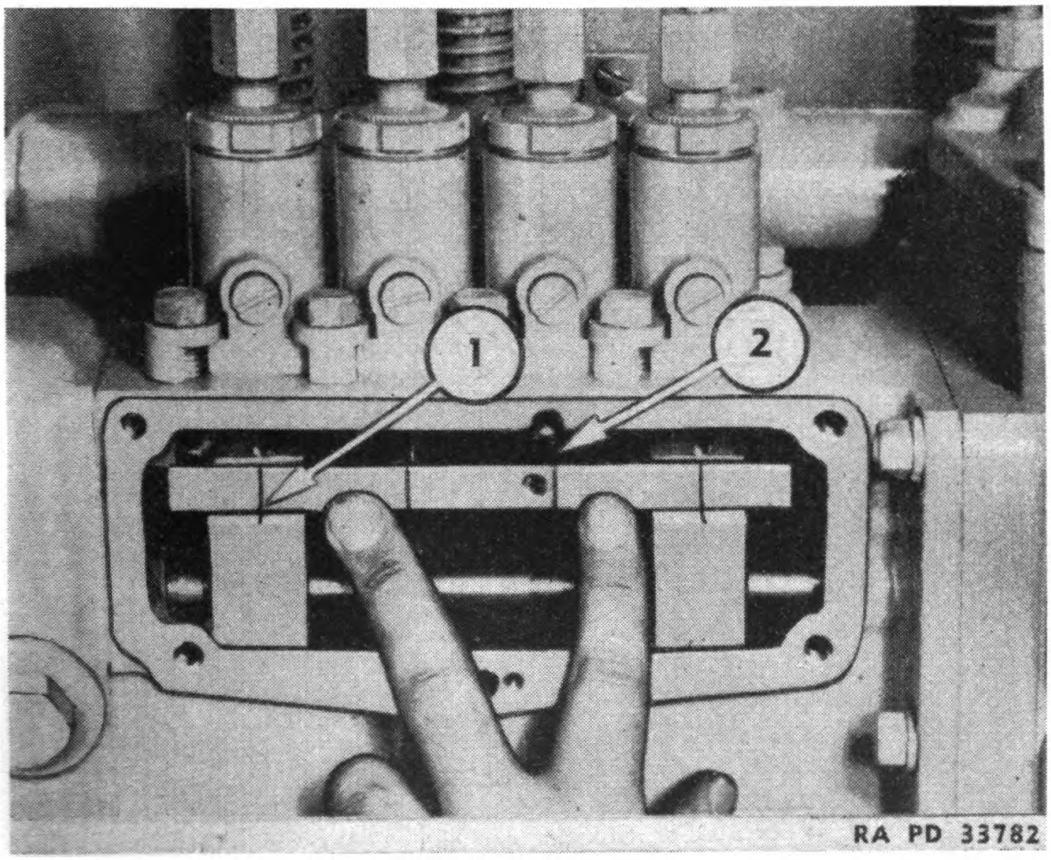

② Replacing fuel pump rack.

Figure 60.—Pump installation—Continued.

(1) If the pump plunger does accidentally fall out, wash the plunger thoroughly with clean Diesel fuel and then replace it in the pump barrel.

(*a*) Turn the gears on pump plungers (fig. 60①) until the marked tooth (1) of each gear faces toward the pump rack. Engage the marked tooth on the pump rack with the marked tooth of the plunger gears.

(*b*) The end pumps can be alined (fig. 60②) with the marks (2) on the fuel pump housing. Aline rack marks with housing marks. The other pumps can be alined as the rack is slid into position.

(*c*) Install capscrews and rack retaining plates (fig. 60③). Open throttle and fasten coupling in place. Replace inspection cover and connect fuel lines.

Digitized by Google
Original from UNIVERSITY OF CALIFORNIA
Generated on 2014-11-15 20:36 GMT / http://hdl.handle.net/2027/uc1.b3243973
Public Domain, Google-digitized / http://www.hathitrust.org/access_use#pd-google

(2) To prime the fuel system, check to see that the main fuel line valve is open and open the fuel filter vent valves and the vents on the fuel injection pumps. Start the starting engine, engage the starter pinion and starting engine clutch. Allow the starting engine to crank the Diesel engine at idle speed, with the compression release lever in the "start" position, so that the fuel transfer pump will force the air and fuel through the fuel filters and into the fuel pumps. The fuel injection pump control lever should be in the "off" position to keep the fuel from being injected into the combustion chambers. When the flow of fuel through the vents becomes continuous and contains no air bubbles, close vents. Open and close vents several times in succession to be sure that all the air is bled from the system.

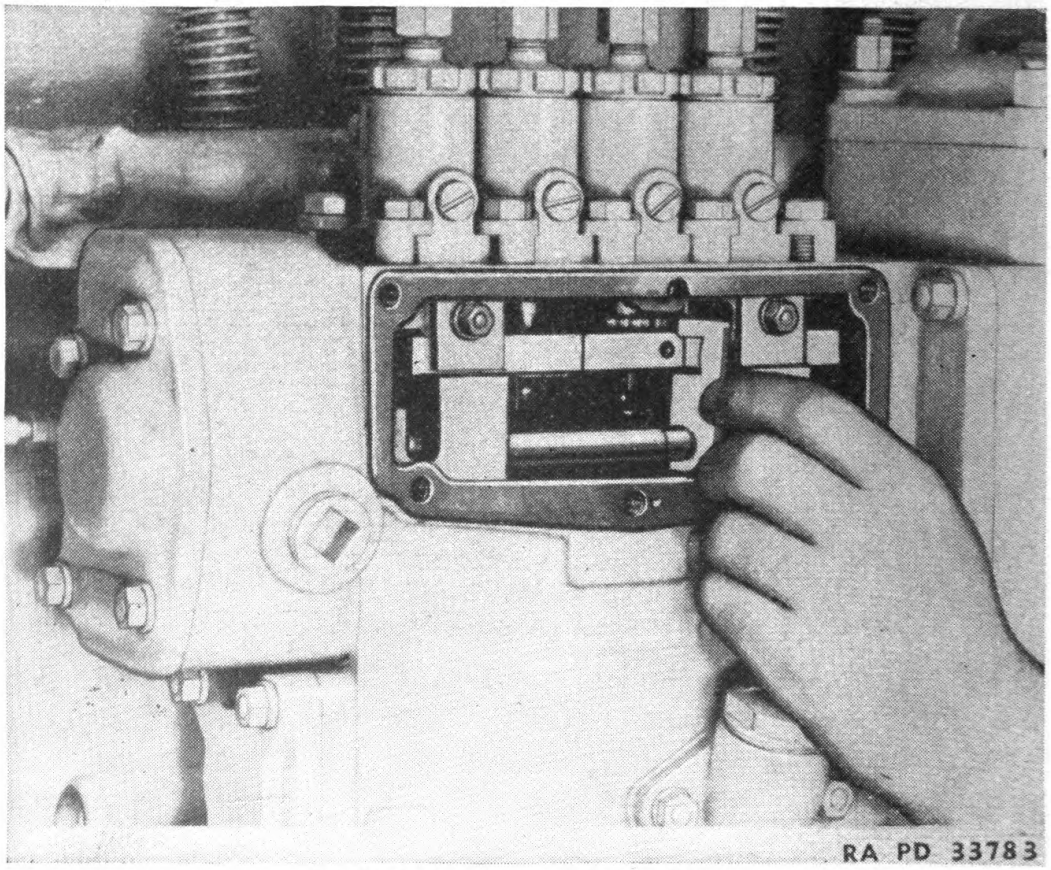

③ Replacing pump rack coupling.
FIGURE 60.—Pump installation—Continued.

50. Fuel injection pump lifter adjustment.—*a.* Ordinarily, adjustment (fig. 61) is required only if the fuel injection pump housing or lifter assembly is taken apart. On machines that have seen considerable service, it may be advisable to check the adjustment at the time of engine reconditioning and to correct the adjustment to compensate for wear that may have occurred in the lifter assembly.

Digitized by Google
Original from UNIVERSITY OF CALIFORNIA
Generated on 2014-11-16 08:45 GMT / http://hdl.handle.net/2027/uc1.b3243973
Public Domain, Google-digitized / http://www.hathitrust.org/access_use#pd-google

b. The following tools are required for making the lifter adjustment:

1 CAT4B6059 gage assembly.
1 CAT4B7617 lifter screw wrench.
1 CAT4B7618 lock nut wrench.
1 CAT5B641 fuel injection camshaft indicator.

These are precision tools and should be used carefully.

c. Drain fuel pump housing.

(1) Remove hour meter to expose the end of the fuel pump camshaft.

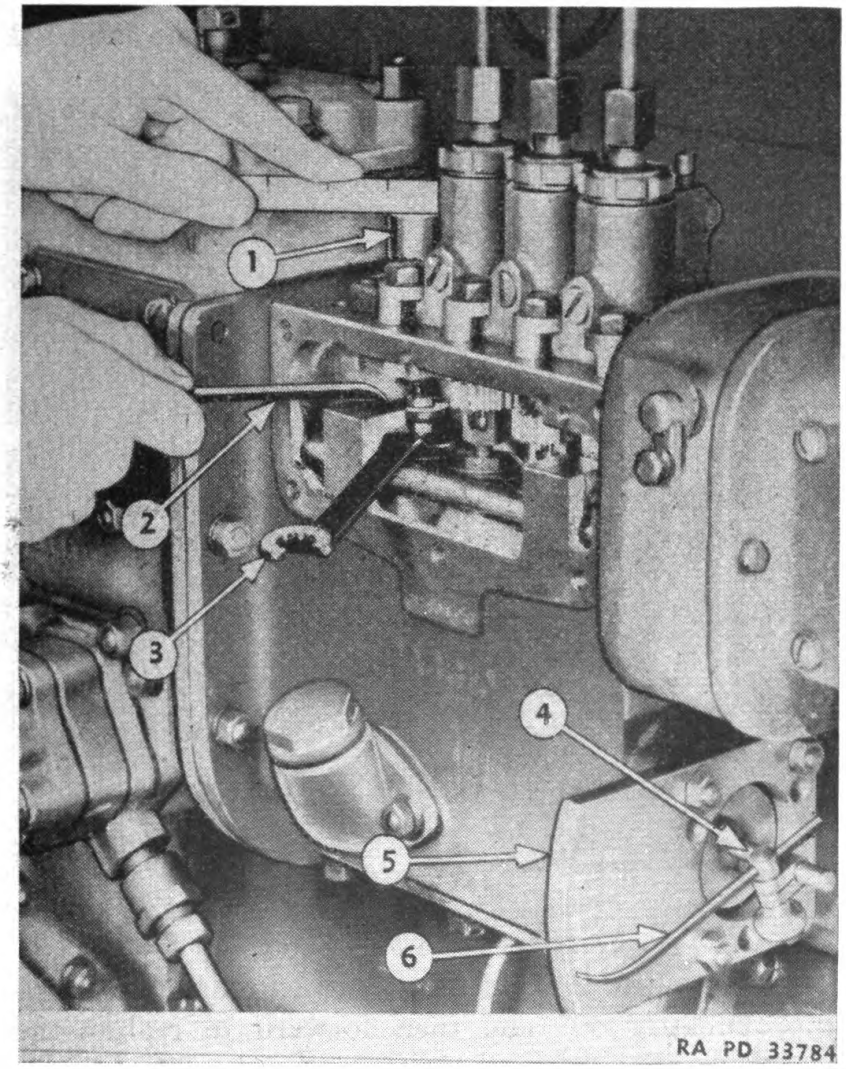

FIGURE 61.—Fuel injector pump lifter adjustment.

(2) Fasten pointer spindle (4) to the end of the camshaft (over the thrust washer) by removing thrust washer capscrews and lock, and using the longer capscrews supplied with the indicator.

Digitized by Google
Original from UNIVERSITY OF CALIFORNIA
Generated on 2014-11-16 08:45 GMT / http://hdl.handle.net/2027/uc1.b3243973
Public Domain, Google-digitized / http://www.hathitrust.org/access_use#pd-google

(3) Install indicator plate (5) over the four studs at the rear end of the camshaft with the spacers between the plate and the housing.

(4) *Do not install pointer* (*6*).

d. By removing a small cover on the right side of the flywheel housing, the timing pointer will be exposed.

(1) Turn crankshaft until No. 1 piston comes up on the compression stroke.

(2) Aline "top center" mark on flywheel for No. 1 cylinder with the timing pointer.

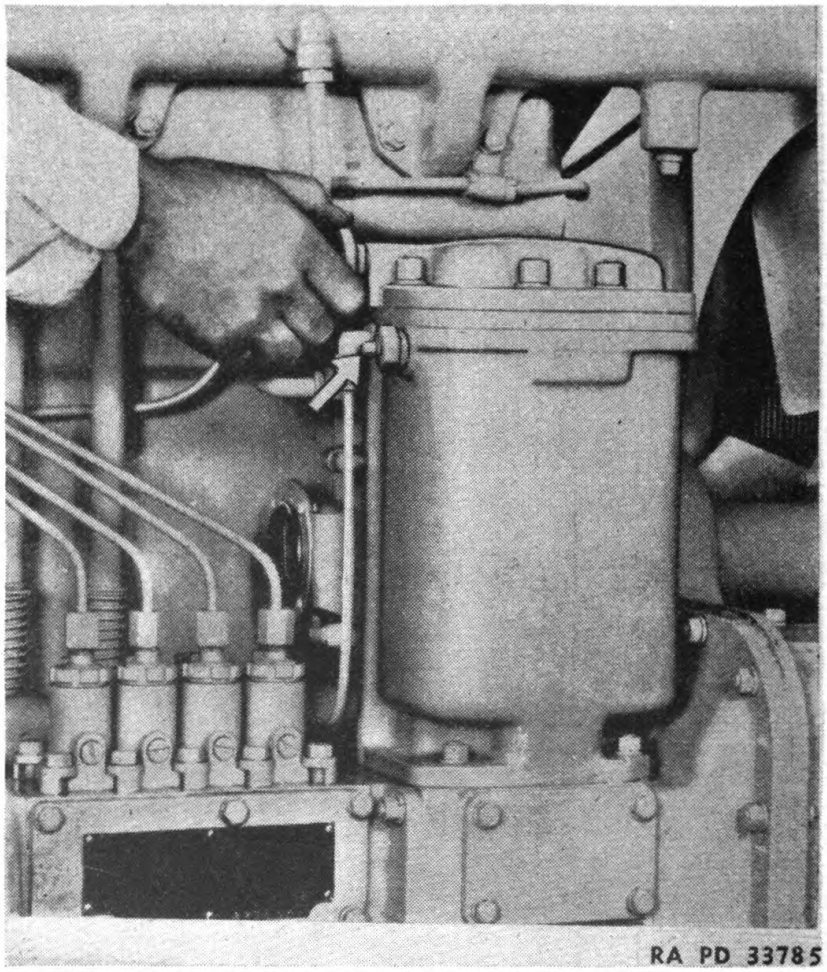

FIGURE 62.—Opening fuel filter vents.

(3) If the flywheel is accidentally turned too far, turn crankshaft back approximately 60° and then forward to realine the marks. This procedure eliminates errors which might otherwise occur because of backlash in the timing gears.

(4) Remove cylinder No. 1 fuel pump, place lifter screw wrench (2) over the lifter screw (selecting the proper sized opening), and replace fuel pump with the lifter gage (1).

(5) Install pointer (6).

Digitized by Google
Original from UNIVERSITY OF CALIFORNIA
Generated on 2014-11-16 08:45 GMT / http://hdl.handle.net/2027/uc1.b3243973
Public Domain, Google-digitized / http://www.hathitrust.org/access_use#pd-google

e. Then set pointer (6) to 0° on indicator plate (5).

(1) Turn crankshaft back approximately 60° and then forward until the pointer returns to the 17½° mark on the indicator plate.

(2) Place a straightedge across the top of the gage (1). If the fuel pump lifter is set correctly, the top of the stem should be flush with the top of the gage.

f. If the variation is greater than .002 inch, loosen lock nut with lock nut wrench (3) and carefully reset fuel pump lifter adjustment. Recheck lifter setting after the adjustment has been made and the lock nut tightened, to insure that the setting has not changed.

g. Remove gage and loosen pointer clamp before turning the crankshaft to the proper position for the next cylinder. Carefully check each lifter in the same manner. Proceed similarly until all lifters have been checked.

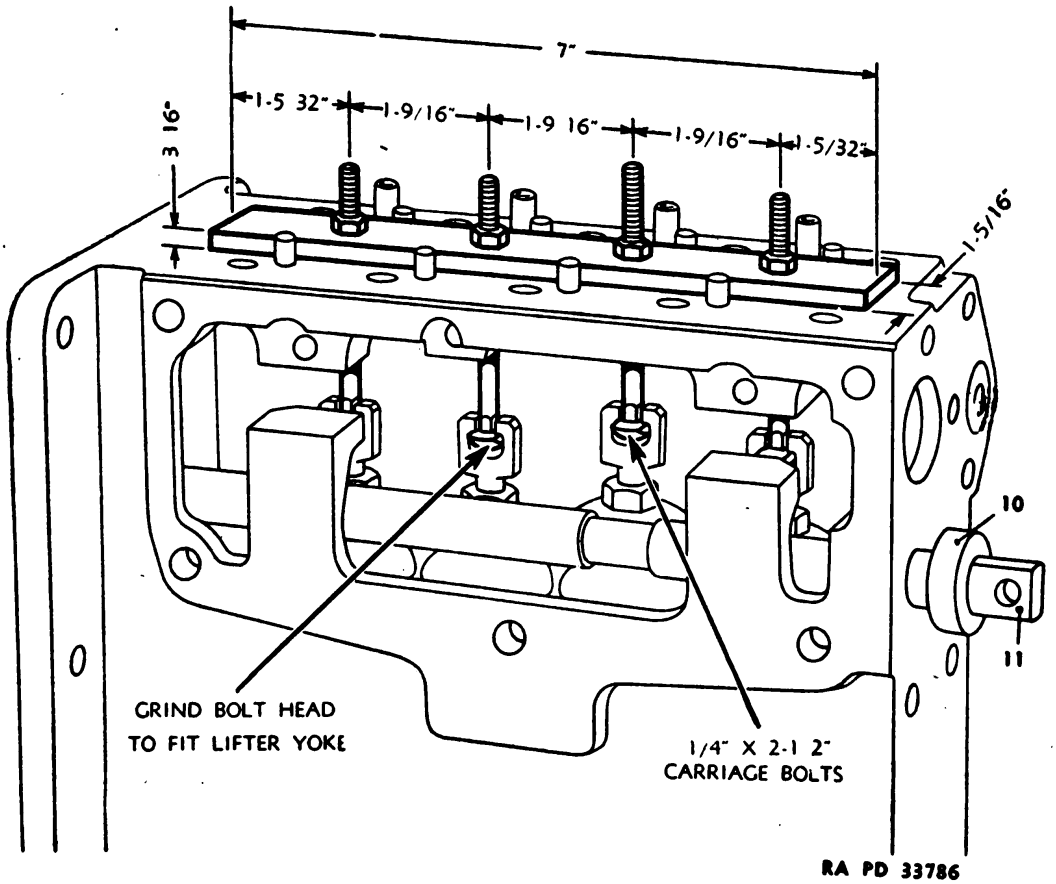

FIGURE 63.—Plate construction for the removal of fuel injection pump lifter springs.

51. Fuel injection pump lifter springs.—*a.* In the event that a lifter spring is broken, the fuel injection pump housing should be taken off the engine (fig. 62).

(1) Drain injection pump housing.

Digitized by Google
Original from UNIVERSITY OF CALIFORNIA
Generated on 2014-11-16 08:45 GMT / http://hdl.handle.net/2027/uc1.b3243973
Public Domain, Google-digitized / http://www.hathitrust.org/access_use#pd-google

(2) Remove covers, rod, hour meter, and lines.

(3) Disconnect fuel injection pump slide bar from the governor mechanism after removing cover and remove fuel injection pump housing.

(4) Remove slide bar to rack coupling and then the rack. If it is desired to remove slide bar, drive out the pin in the slide bar collar at the front end of the injection pump housing so as not to disturb the stop nut at the other end.

(5) Separate housing from injection pump housing then pull slide bar out.

(6) Remove cover.

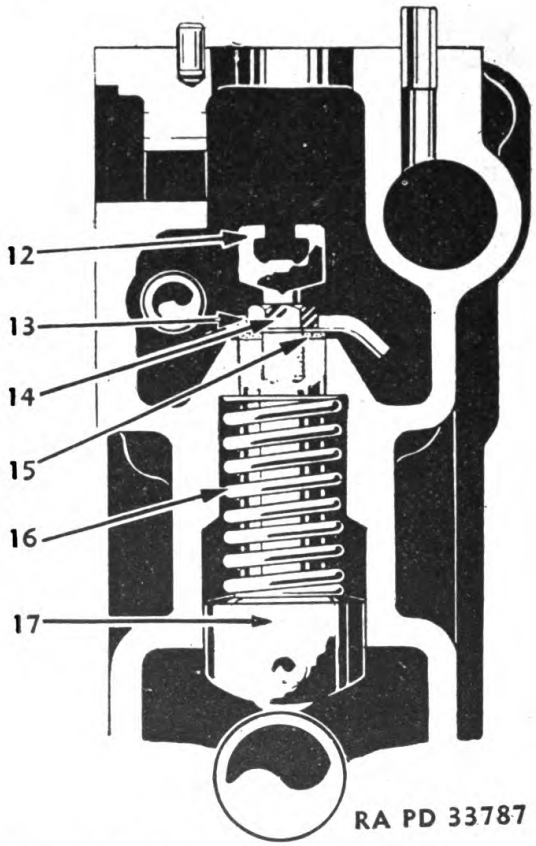

FIGURE 64.—Fuel injection pump lifter spring assembly—schematic.

b. With a plate (fig. 63) constructed as shown, hold up lifter assemblies with carriage bolts or wire the lifters in position and then remove fuel injection pump camshaft after thrust plate and bearing assembly have been removed.

c. Remove yoke (12) (fig. 64), lock nut (14), and oil trough (13) from the top of lifter assembly (17) and lower the remainder of the assembly out the bottom of fuel injection pump housing. The lifter spring (16) can then be installed and the unit put back in position. Install a new gasket (15) if the old one is damaged.

Digitized by Google
Original from UNIVERSITY OF CALIFORNIA
Generated on 2014-11-16 08:46 GMT / http://hdl.handle.net/2027/uc1.b3243973
Public Domain, Google-digitized / http://www.hathitrust.org/access_use#pd-google

d. The fuel injection pump camshaft is driven by a tongue and groove connection. The tongue and groove are offset from the center line of the camshaft. In installing the injection pump housing, the tongue and groove will mate only in one position.

e. After the fuel injection pump housing has been reassembled to the engine, the lifters can be reset as previously described.

Section XI

GOVERNOR

	Paragraph
General	52
High idle speed adjustment	53
Low idle speed adjustment	54
Throttle control rod adjustment	55
Fuel injection pump control lever	56
Balancing governor	57
Checking engine speed	58
Hour meter	59

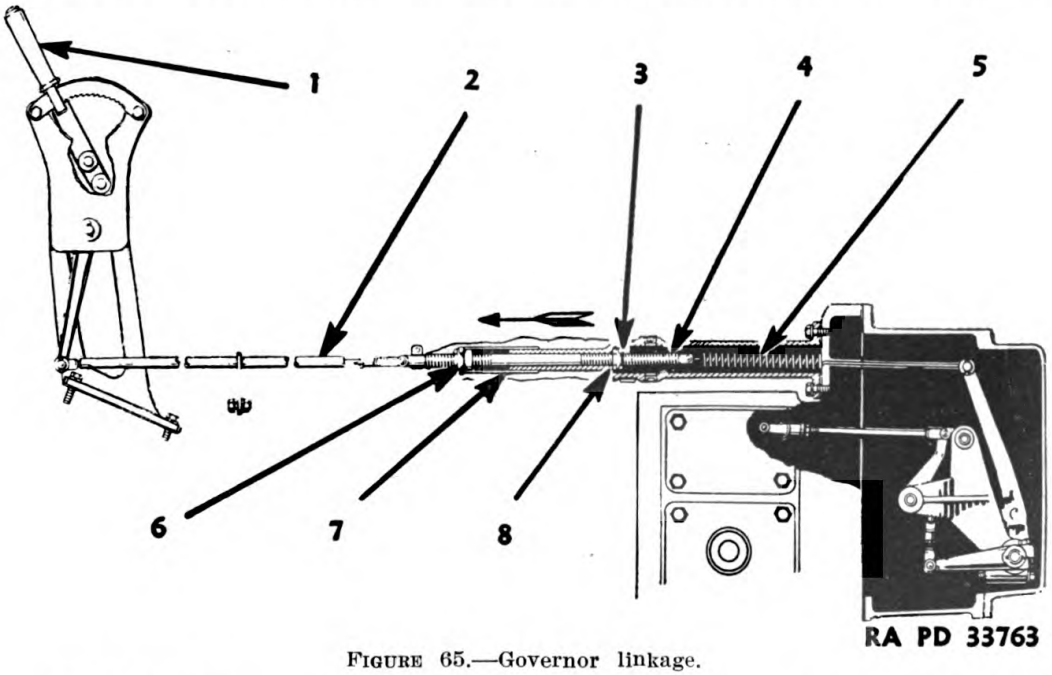

FIGURE 65.—Governor linkage.

52. General.—*a.* Governing of the engine is maintained by the centrifugal force of the governor weights as opposed to the tension force of the governor spring. Any difference in force values is transmitted through various linkage (fig. 65) to move the slide bar and increase or decrease the amount of fuel delivered to the combustion chambers. Moving the hand throttle changes the tension on the governor spring; the greater the tension, the higher the speed.

b. When hand throttle (1) is moved toward the open position as shown, connecting rod (2) and throttle control rod (4) are moved in

Digitized by Google
Original from UNIVERSITY OF CALIFORNIA
Generated on 2014-11-16 08:46 GMT / http://hdl.handle.net/2027/uc1.b3243973
Public Domain, Google-digitized / http://www.hathitrust.org/access_use#pd-google

the direction of the arrow, putting more tension on governor spring (5). The amount of tension that can be applied to the governor spring is controlled by high idle adjusting nut (3) coming against stop (8) in the throttle control housing.

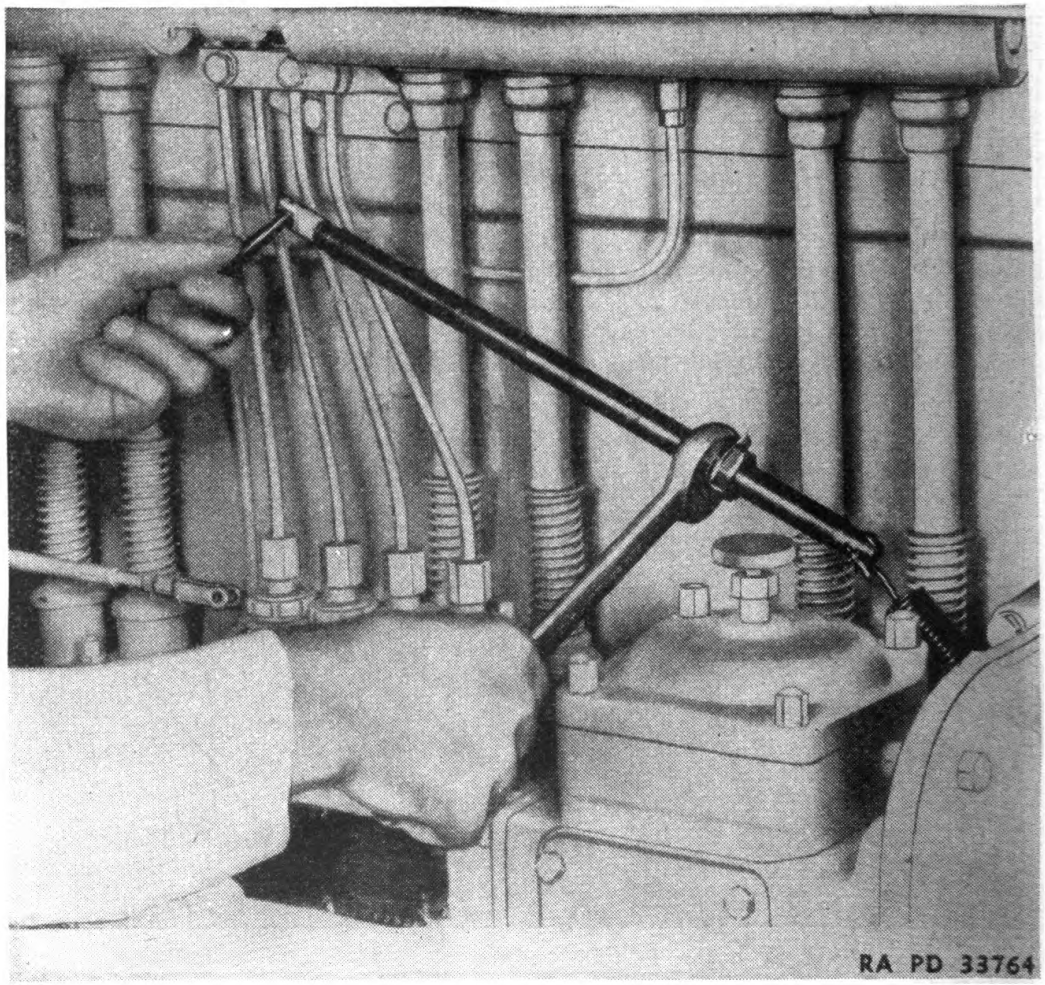

FIGURE 66.—Loosening the governor adjusting nut.

c. Similarly, by moving the hand throttle forward, connecting rod (2) and throttle control rod (4) are moved in the direction opposite to the arrow reducing the tension on the governor spring. The low idle speed of the engine is obtained when low idle adjusting nut (6) has moved forward against stop (7).

d. The idle speeds (low and high) are adjustable. The low and high idle are the engine speeds attained (without load) when operating at closed throttle and full throttle respectively. The low idle speed should be set to 425 rpm. For correct high idle setting see paragraph 53. The approximate high idle speed is 1,075 rpm.

Digitized by Google
Original from UNIVERSITY OF CALIFORNIA
Generated on 2014-11-16 08:46 GMT / http://hdl.handle.net/2027/uc1.b3243973
Public Domain, Google-digitized / http://www.hathitrust.org/access_use#pd-google

53. High idle speed adjustment.—*a.* To make the high idle speed adjustment, the idle adjusting sleeve and lock nut must be removed from the rear of the throttle control rod.

b. When the high idle speed is below normal, loosen governor spring housing (fig. 66) from the engine block, but do not completely remove the capscrews holding it (fig. 67). Simultaneously advance throttle and loosen screws until the desired speed is obtained. Then, measure the resulting gap between the governor spring housing and engine block. This distance will be the amount adjusting nuts must be turned on the adjusting rod to obtain proper adjustment.

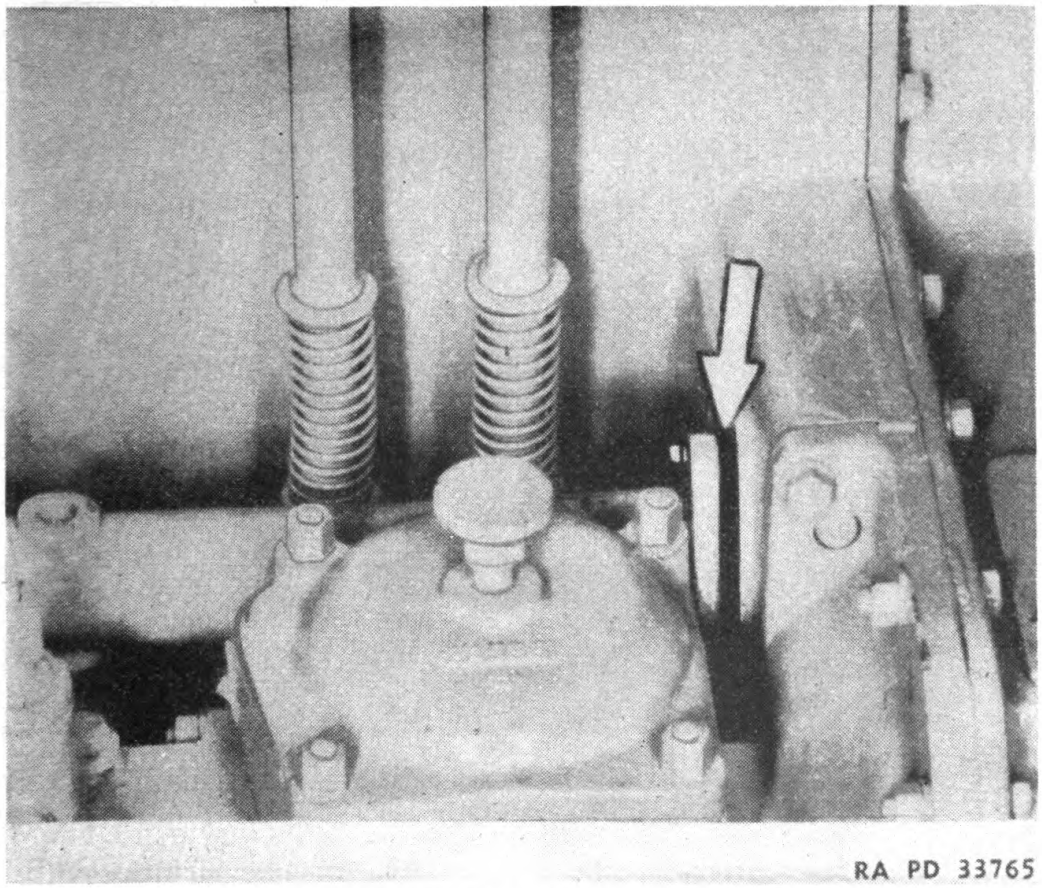

FIGURE 67.—Loosening governor spring housing.

c. When the high idle speed is above normal, remove throttle control rod boot and scribe a mark on the governor spring adjusting rod housing at the end of adjusting nut assembly. With the engine operating, set throttle control lever to give the desired speed and then scribe another mark on the adjusting rod housing. Measure the distance between the two marks and move high idle speed adjusting nuts this amount.

Digitized by Google
Original from UNIVERSITY OF CALIFORNIA
Generated on 2014-11-16 08:46 GMT / http://hdl.handle.net/2027/uc1.b3243973
Public Domain, Google-digitized / http://www.hathitrust.org/access_use#pd-google

54. Low idle speed adjustment.—Low idle speed adjustment (fig. 68) can be reached after removing throttle control rod boot from governor spring housing. Loosen lock nut that keeps adjusting sleeve from turning, hold onto the rod to prevent it from rotating, and turn adjusting sleeve in or out until the proper low idle speed is obtained. Tighten lock nut after completing the adjustment.

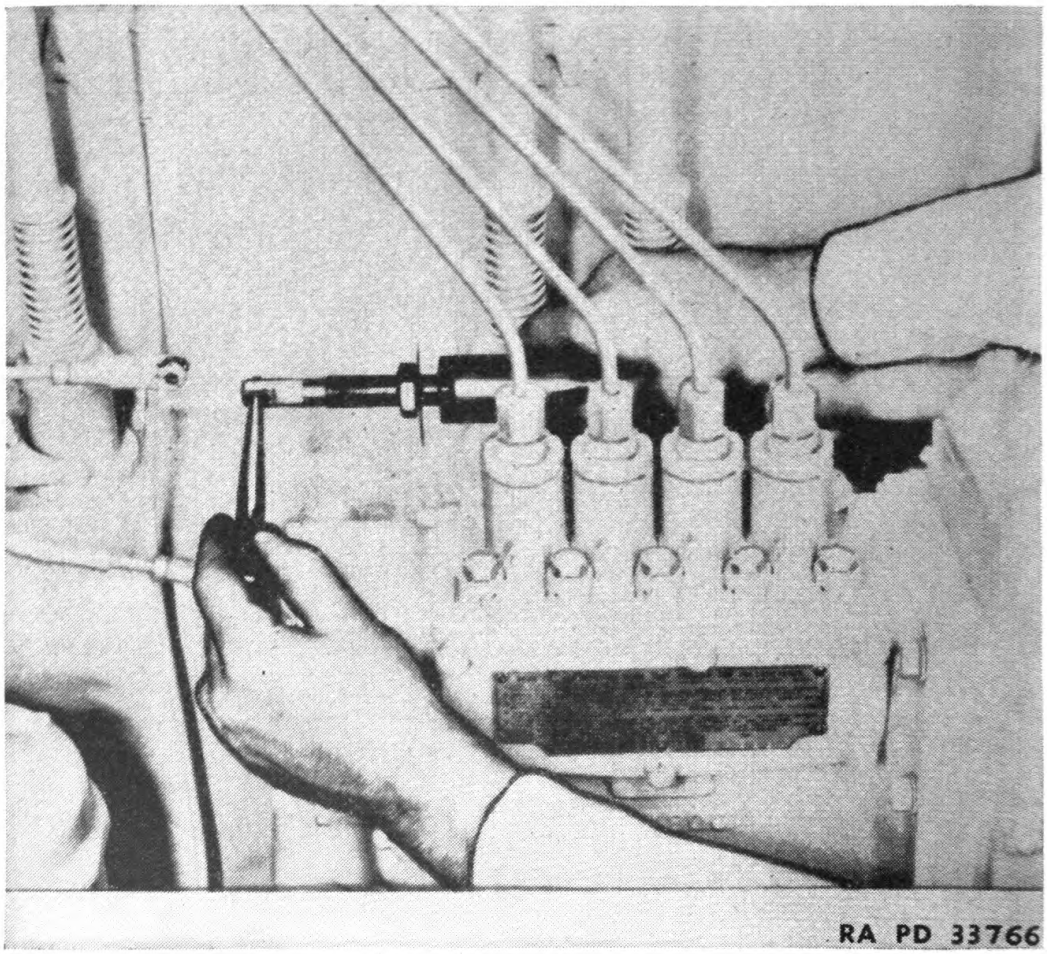

FIGURE 68.—Low idle speed adjustment.

55. Throttle control rod adjustment.—*a.* The throttle control rod should be checked and adjusted for length to assure full opening and closing of the throttle. If the control mechanism has been removed or its adjustment altered, it may be necessary to adjust the control rod to eliminate interference with other assemblies.

b. Adjustment is accomplished by removing the pin from adjusting yoke, loosening lock nut and then turning the yoke until the correct throttle setting is obtained without control rod interference.

Digitized by Google
Original from UNIVERSITY OF CALIFORNIA
Generated on 2014-11-16 08:46 GMT / http://hdl.handle.net/2027/uc1.b3243973
Public Domain, Google-digitized / http://www.hathitrust.org/access_use#pd-google

56. Fuel injection pump control lever.—*a.* The length of rod (6) (fig. 69) should be adjusted until lever (5) is moved to the "stop" position; the fuel injection pumps will be shut off and the engine can be stopped.

b. With lever (5) in the "run" position and the engine stopped, slide bar stop nut (3) should be free to compress the flat leaf torque spring (2) without the lever (1) interfering.

57. Balancing governor.—*a.* Set high idle speed to approximately 1,075 rpm with throttle in the fully advanced position. The governor can then be "balanced" to insure full power output of the engine at rated speed.

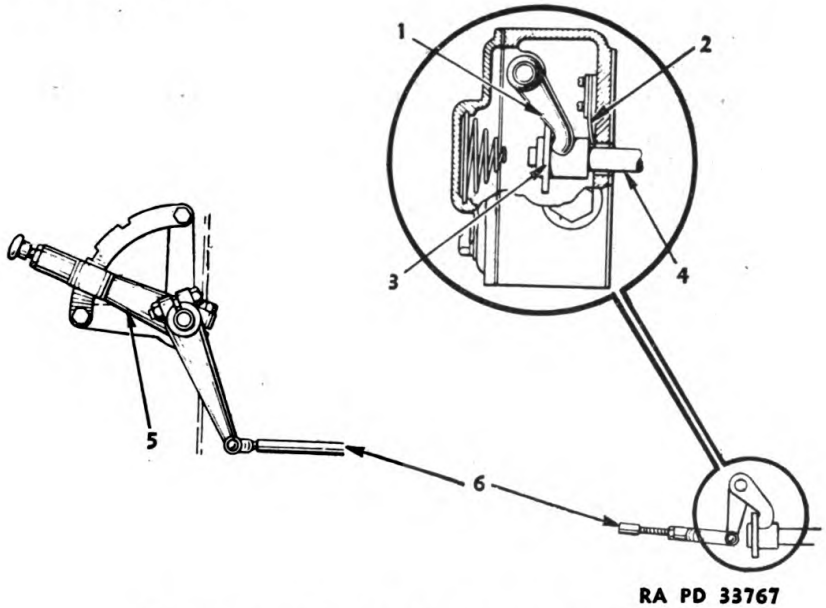

FIGURE 69.—Fuel injection pump control lever.

b. Stop the engine and remove covers (2), (5), and (6), (fig. 65). Move fuel pump control lever to the "run" position and hand throttle to the high idle position. Lengthen or shorten the adjustable rod (found after removing cover (6), (fig. 65) so the flyballs will have $\frac{1}{16}$ inch free movement. Shorten the rod to increase the free movement, lengthen the rod to decrease the free movement.

c. When the cover at the rear of the fuel injection pump housing is removed, the fuel injection pump slide bar stop nut and flat leaf torque spring can be observed. Remove coupling between fuel injection pump slide bar and fuel injection pump rack.

d. Controlling the rack position by hand, start Diesel engine and continue to increase the speed by hand until the stop nut just contacts the torque spring. Never let go of the rack while controlling the speed by hand as the engine speed may increase rapidly and cause damage to the engine. Do not attempt to lock the rack in one position. Con-

Digitized by Google
Original from UNIVERSITY OF CALIFORNIA
Generated on 2014-11-16 08:46 GMT / http://hdl.handle.net/2027/uc1.b3243973
Public Domain, Google-digitized / http://www.hathitrust.org/access_use#pd-google

tinue to operate the rack by hand until the stop nut will just balance against the torque spring but not compress it. Then the speed of the engine should be checked.

(1) Vary the high idle speed adjustment until the stop nut will just contact the torque spring when the engine is operating at 975 rpm.

(2) The above method will insure the maximum horsepower output

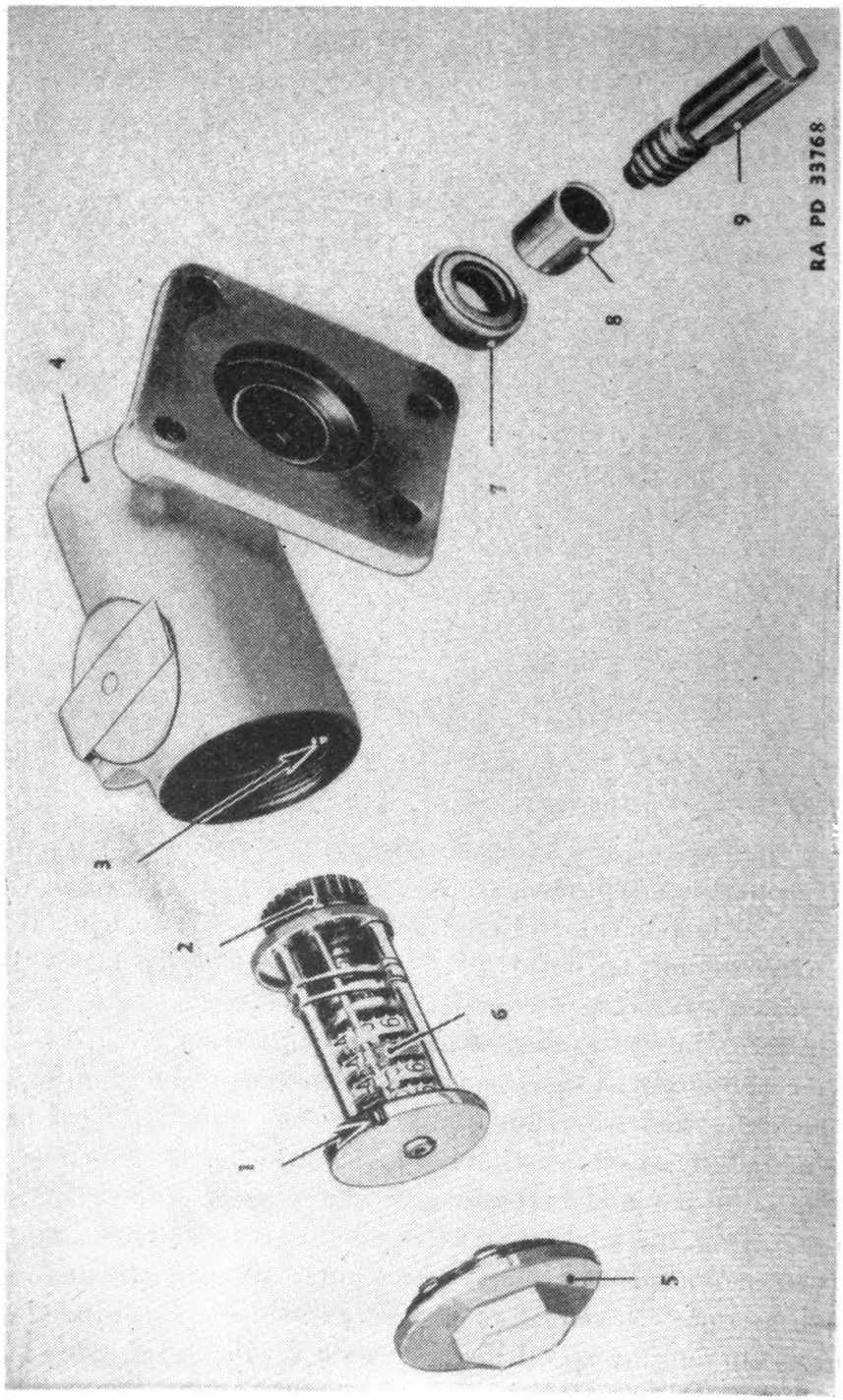

FIGURE 70.- Hour meter.

Digitized by Google
Original from UNIVERSITY OF CALIFORNIA
Generated on 2014-11-16 08:46 GMT / http://hdl.handle.net/2027/uc1.b3243973
Public Domain, Google-digitized / http://www.hathitrust.org/access_use#pd-google

of the engine at 975 rpm. After these adjustments, the high idle speed may then be found to vary from 1,075 rpm.

58. Checking engine speed.—Speed of the engine can be checked from the rear of the upper transmission shaft with the rear drive attachment removed, or from the end of the front power take-off shaft with the winch removed. Both of these shafts turn at engine speed.

59. Hour meter.—*a.* The hour meter (fig. 70) can be disassembled after being removed from the engine by taking off retainer nut (5). Countermechanism (6), worm shaft (9), seal (7), and bushing (8) can then be removed in the order named.

b. In installation, place a small amount of a heat-resistant grease on worm gear of countermechanism (2). Aline notch (1) and dowel pin (3) when installing the countermechanism.

c. The wiping edge of the seal (7) should face toward the front of the engine.

Section XII

LIGHTING SYSTEM

	Paragraph
Generator	60
Lamps	61
Lighting switches	62
Battery	63

60. Generator.—A 90-watt, 6-volt generator of the adjustable third brush type supplies current for the lighting system.

a. The generator wiring connections should be kept clean and tight at all times.

b. The commutator should be polished with 00 sandpaper if the surface becomes glazed or darkened.

c. If the commutator beeomes rough, the armature should be removed from the generator and the commutator turned down until it is smooth. The commutator should then check for concentricity.

d. To increase charging rate of the generator, loosen setscrew on end plate, move the third brush in the direction of rotation, and then tighten setscrew.

61. Lamps.—*a.* Lamps (fig. 71) can be removed by disconnecting lead (7) and removing mounting bolt nut (9).

b. To disassemble the lamps, remove capscrews (1), lens (2), reflector (3), and loosen screw (5). Lead (4) can be pulled through the bulb socket after the bulb has been taken out and terminal (6) taken off the wire.

Digitized by Google
Original from UNIVERSITY OF CALIFORNIA
Generated on 2014-11-16 08:46 GMT / http://hdl.handle.net/2027/uc1.b3243973
Public Domain, Google-digitized / http://www.hathitrust.org/access_use#pd-google

c. In reassembly, make certain that all connections are clean and tight. The lamp base (8) acts as a ground so the surface upon which the lamp is mounted should be cleaned to the bare metal to insure a good contact.

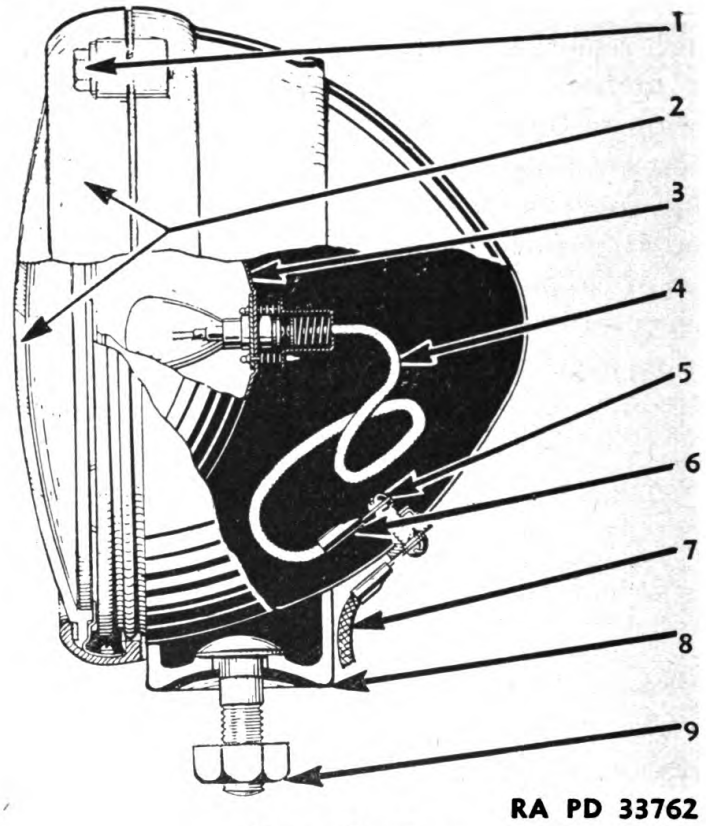

FIGURE 71.—Lamp.

62. Lighting switches.—Should a light switch become inoperative, replace it. The construction of the switch makes repair difficult.

63. Battery.—After recharging, if one or more cells of the storage battery fail to retain the charge, the battery should be replaced. If a new battery is not available, the old battery should be inspected and rebuilt according to the manufacturer's recommendation.

SECTION XIII

AIR COMPRESSOR

	Paragraph
General	64
Maintenance	65
Disassembly	66
Head and valve assembly	67
Air strainer	68
Connecting rod and piston assemblies	69
Crankshaft base assembly	70
Lubrication	71
Belt adjustment	72

Digitized by Google
Original from UNIVERSITY OF CALIFORNIA
Generated on 2014-11-16 08:46 GMT / http://hdl.handle.net/2027/uc1.b3243973
Public Domain, Google-digitized / http://www.hathitrust.org/access_use#pd-google

64. General.—The two-cylinder air-cooled air compressor has a rated capacity of 7¼ cubic feet of air per minute.

65. Maintenance.—Inefficiency of the air compressor (fig. 72) is usually due to defective unloader valves (fig. 73), discharge valves, worn rings or cylinders, or carbon accumulations. Periodic inspections should be made for the purpose of replacing parts that are unserviceable as the result of wear and to remove carbon accumula-

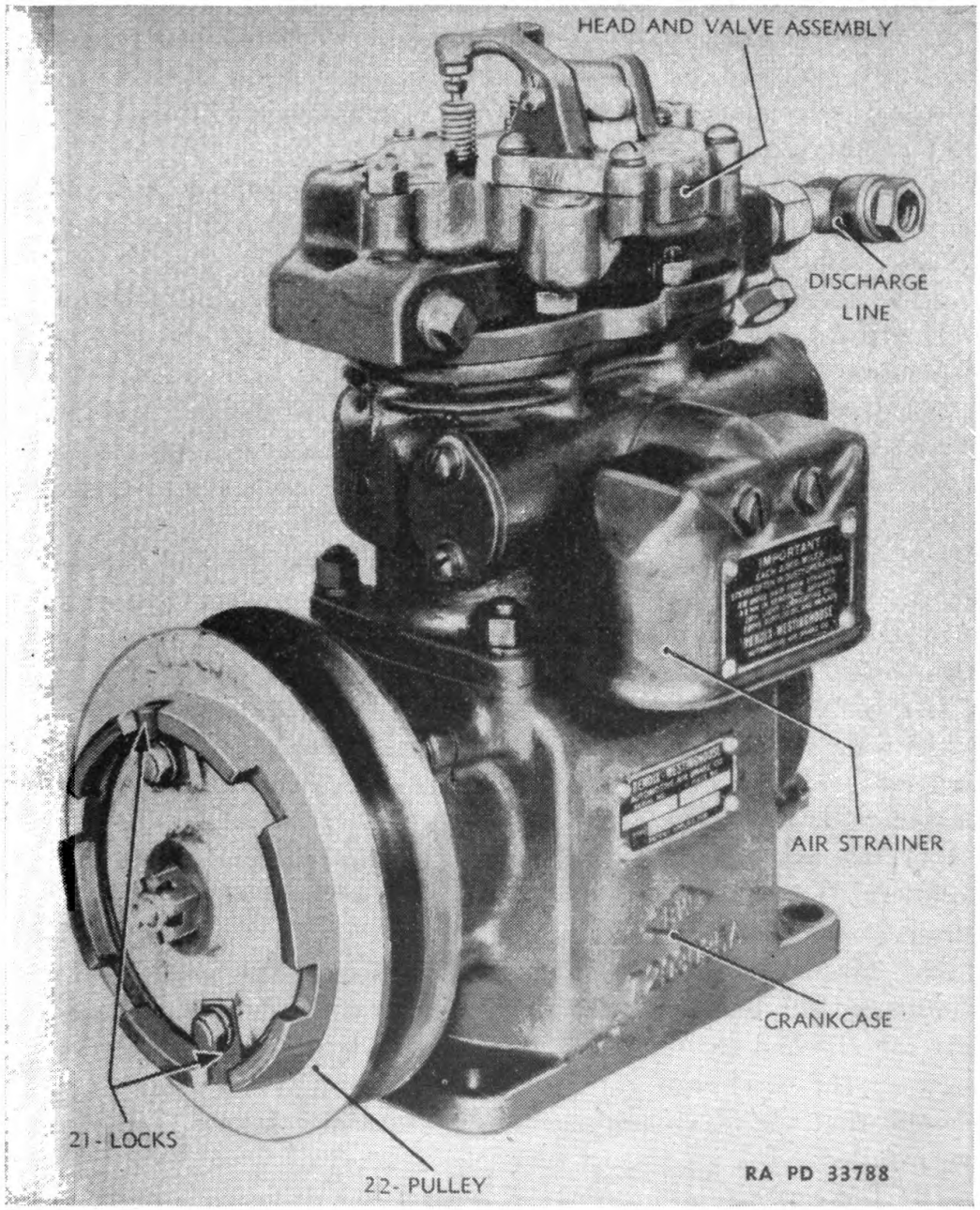

FIGURE 72.—Air compressor.

Digitized by Google
Original from UNIVERSITY OF CALIFORNIA
Generated on 2014-11-16 08:47 GMT / http://hdl.handle.net/2027/uc1.b3243973
Public Domain, Google-digitized / http://www.hathitrust.org/access_use#pd-google

tions that interfere with the free and proper functioning of moving parts.

a. Carbon may be removed from the unloader valves and valve seats by soaking with kerosene or some noninflammable cleaning solvent; then cleaning them with a rag or soft brush. Wire brushes or implements that would scratch or score the valve seat should not be used. In case the valve seat is pitted, the valve should be "ground in" slightly with a fine grade grinding compound.

b. The discharge valves if not pitted or worn too badly may be carefully polished on the opposite side and reinstalled with the polished side against the seat. In this manner, additional service may be obtained.

c. The pressure line from the compressor to the supply tank should be removed periodically and inspected to make certain that it is not choked with carbon.

d. To insure proper functioning of the air compressor, the following adjustments and care are necessary every 60 to 120 hours depending upon the type of operation:

(1) Unloader valve (B) clearance should be checked and maintained at .010 inch minimum to .015 inch maximum. An adjusting screw and lock nut in the unloader valve rocker arm is used in making the adjustment.

(2) Unloader valve rocker arm (C) should be checked for movement. At a time when wear is sufficient to prevent maintaining proper adjustment of the unloader valves, the unloader valve rocker arm should be replaced.

(3) Remove cap nuts (D) and check discharge valves (A) and valve seats for carbon. If carbon is excessive, remove cylinder heads and clean carbon away from the discharge valves, unloader valves, chambers, and springs.

(4) Remove unloader box cover (F) and unloader diaphragm follower (G) and inspect unloader valve diaphragms (H). If unserviceable, they should be replaced.

(5) The discharge valve lift should be checked frequently. Travel should be .042 inch minimum to .075 inch maximum. This clearance may be checked by removing the head and inserting a feeler gage between the discharge valve seat and valve. When wear is great enough that the maximum clearance is exceeded, a new valve should be installed.

(6) Lubricate fulcrum pin (E) with a few drops of a light grade lubricating oil.

Digitized by Google
Original from UNIVERSITY OF CALIFORNIA
Generated on 2014-11-16 08:47 GMT / http://hdl.handle.net/2027/uc1.b3243973
Public Domain, Google-digitized / http://www.hathitrust.org/access_use#pd-google

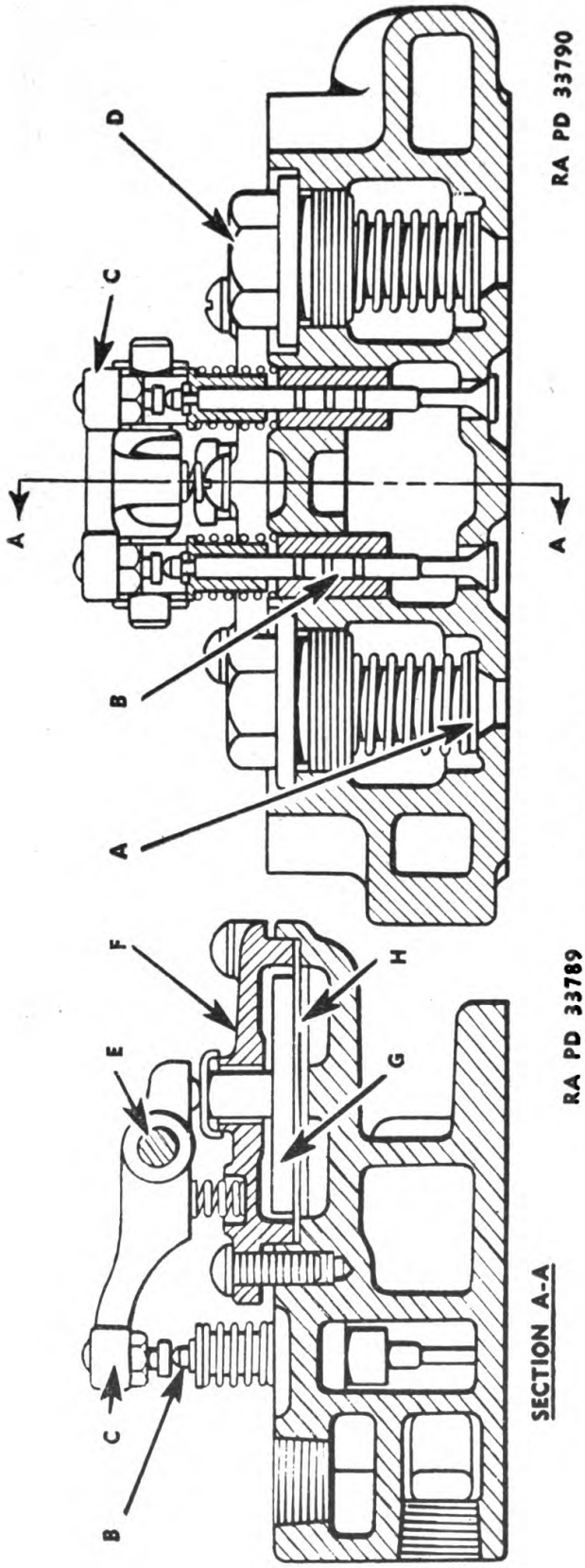

FIGURE 73.—Head and valve assembly.

Digitized by Google
Original from UNIVERSITY OF CALIFORNIA
Generated on 2014-11-16 08:47 GMT / http://hdl.handle.net/2027/uc1.b3243973
Public Domain, Google-digitized / http://www.hathitrust.org/access_use#pd-google

66. Disassembly.—To disassemble, remove the unit from the mounting bracket.

67. Head and valve assembly.—Unscrew cap nut (8) (fig. 74) to remove discharge valve (12) and spring (11). Remove fulcrum pin (2) from rocker arm bracket (3) and remove rocker arm (1), spring (5), and dust guard (6). Lift out the two diaphragms (4) and diaphragm follower (7) from unloader valve recess (9). The grain of these two diaphragms should be perpendicular to each other

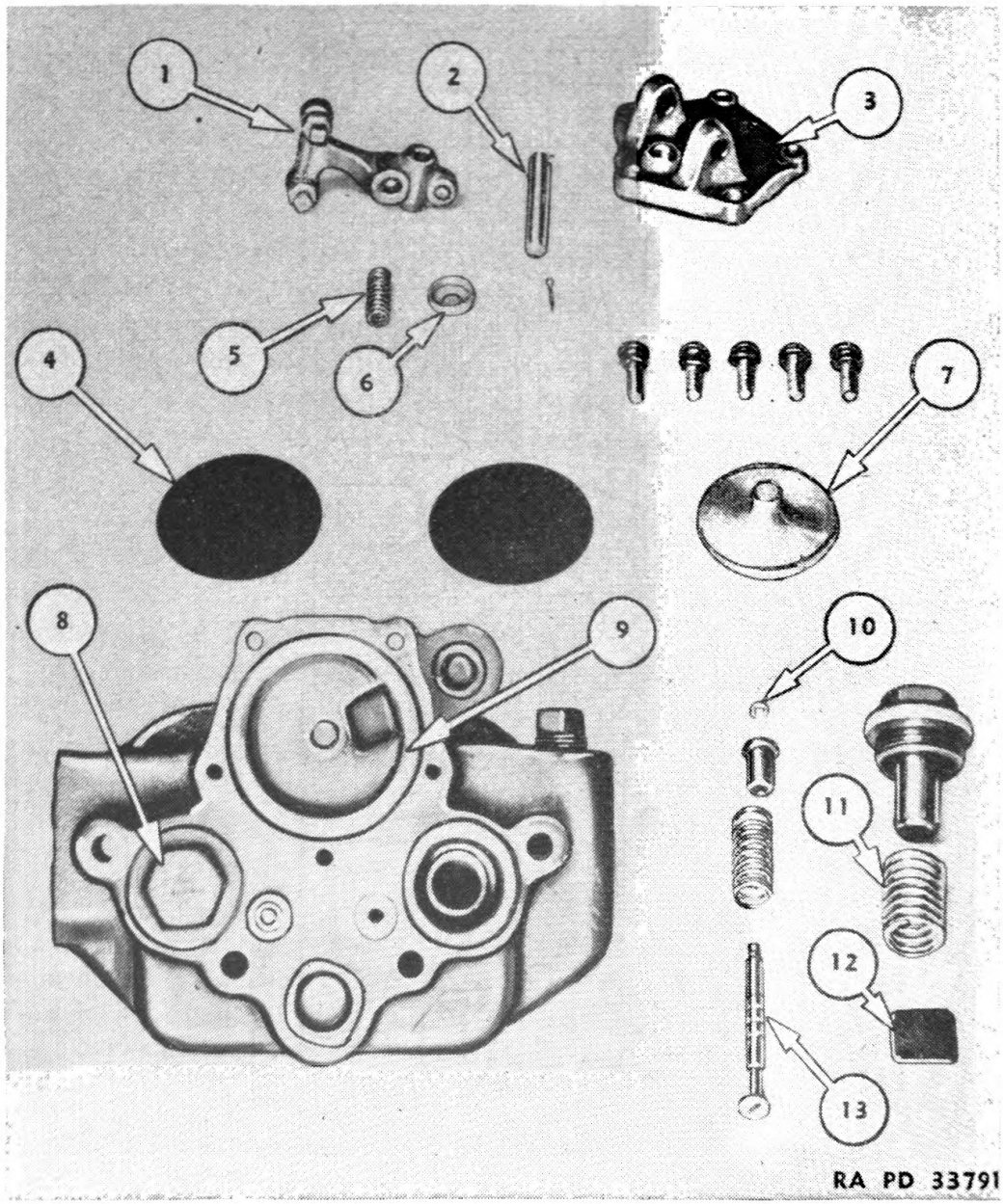

FIGURE 74.—Disassembly of head and valves.

Digitized by Google
Original from UNIVERSITY OF CALIFORNIA
Generated on 2014-11-16 09:11 GMT / http://hdl.handle.net/2027/uc1.b3243973
Public Domain, Google-digitized / http://www.hathitrust.org/access_use#pd-google

in assembling. To take out unloader valves (13), take off head and remove lock (10).

68. Air strainer.—Remove the air strainer (fig. 75) from the block and disassemble by taking out wire lock, air deflectors (14), screens (15), and spring and curled hair (16). Wash the hair with kerosene or some noninflammable washing fluid, dry, then saturate with a light grade of pure mineral lubricating oil before replacing.

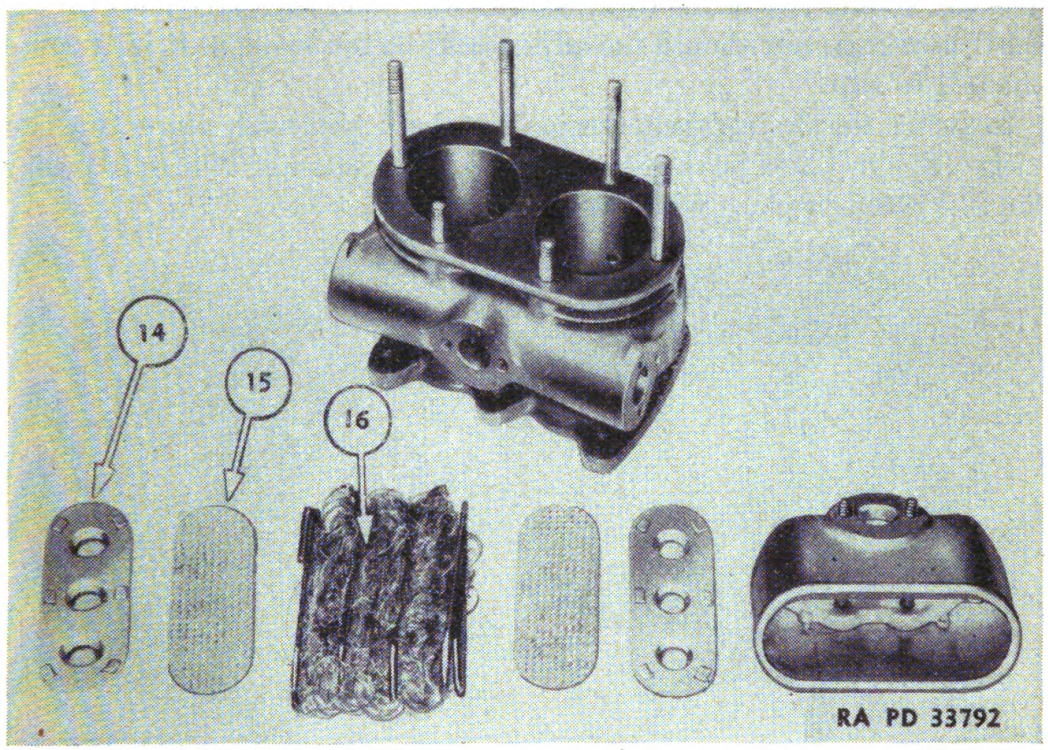

FIGURE 75.—Air strainer assembly.

69. Connecting rod and piston assemblies.—Remove block, then connecting rod and piston assemblies (fig. 76), taking care to note their location. The pistons have an upper and lower compression ring (18) and an upper and lower oil ring (17). The connecting rod bearings should be assembled in their proper location. Remove wire lock inside wrist pin to remove it.

70. Crankshaft base assembly.—Remove front and rear end covers. Replace oil seals in front cover if worn. Install leather seal with the wiping edge "in". Remove lock nut (19) (fig. 77) and lock (20) to remove the crankshaft. When assembling, pull lock nut up tight and lock in position.

71. Lubrication.—The unit is pressure-lubricated by the engine lubrication system. The oil enters the rear crankshaft cover, flows

Digitized by Google
Original from UNIVERSITY OF CALIFORNIA
Generated on 2014-11-16 09:11 GMT / http://hdl.handle.net/2027/uc1.b3243973
Public Domain, Google-digitized / http://www.hathitrust.org/access_use#pd-google

through the drilled crankshaft, up the drilled connecting rod to the piston pin. The ball bearings on each end of the crankshaft are lubricated by the oil mist in the crankcase. Oil is returned to the Diesel engine crankcase through the mounting bracket.

72. Belt adjustment.—*a.* The compressor has a pulley with an adjustable outer rim (22) (fig. 72). The V-belt should be put in place and the outer rim adjusted until a satisfactory belt tension is obtained. The belt should not be too tight, as this will place excessive load on the shaft bearings; nor should the adjustment be too loose, as it will cause the belt to slip.

b. After the desired belt tension has been obtained, place the two locks (21) in place in the slots provided in the outer rim and pulley hub. Fasten in place with capscrews.

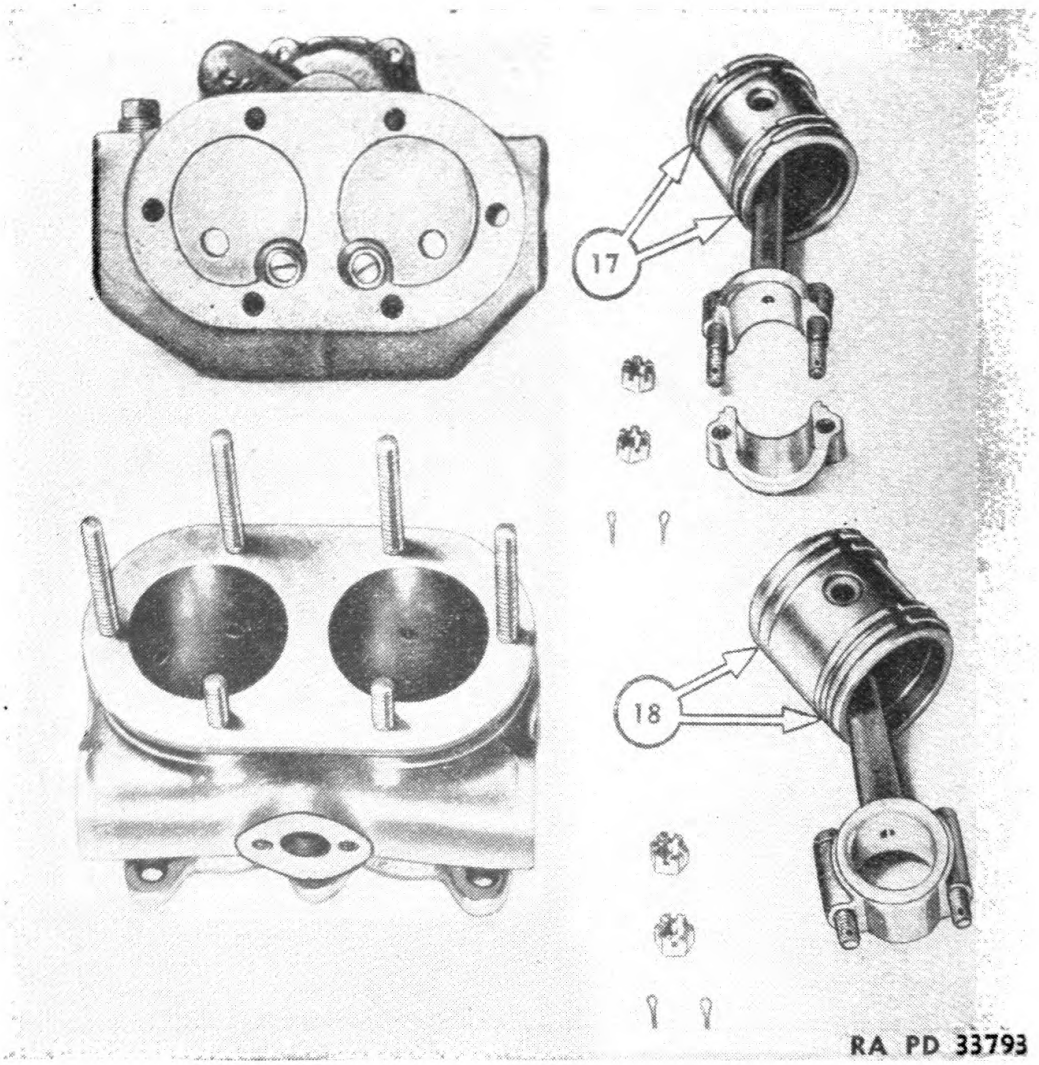

FIGURE 76.—Connecting rod and piston assemblies.

Digitized by Google
Original from UNIVERSITY OF CALIFORNIA
Generated on 2014-11-16 09:11 GMT / http://hdl.handle.net/2027/uc1.b3243973
Public Domain, Google-digitized / http://www.hathitrust.org/access_use#pd-google

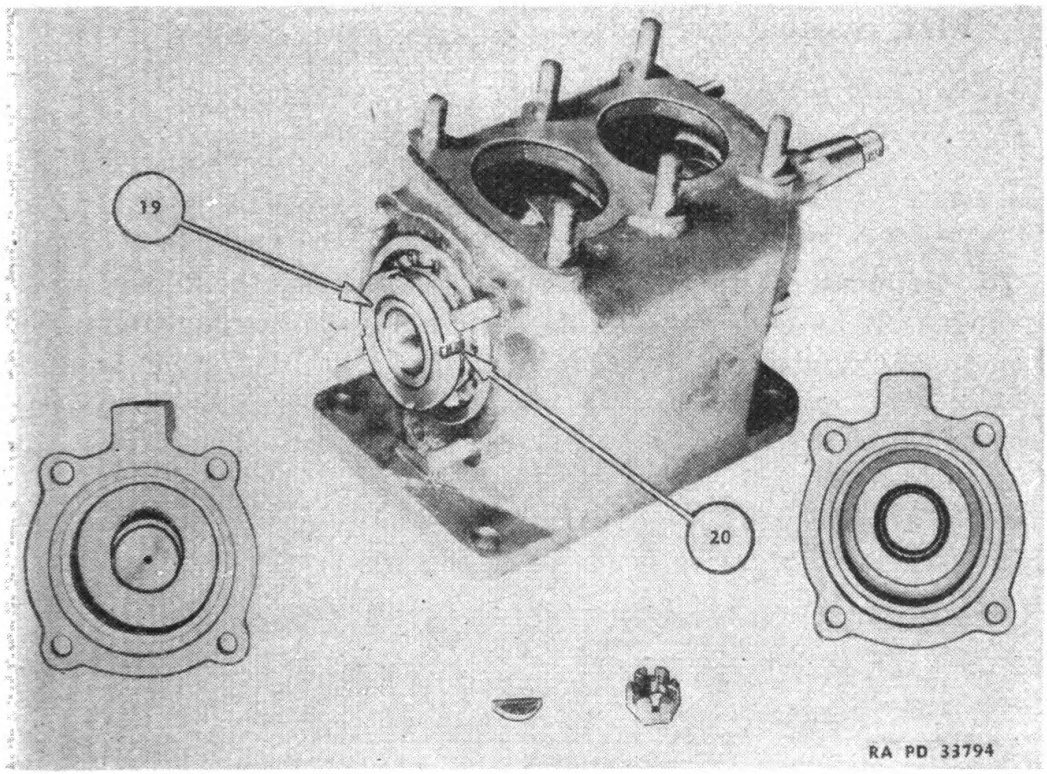

FIGURE 77.—Crankshaft and case assembly.

Digitized by Google
Original from UNIVERSITY OF CALIFORNIA
Generated on 2014-11-16 09:12 GMT / http://hdl.handle.net/2027/uc1.b3243973
Public Domain, Google-digitized / http://www.hathitrust.org/access_use#pd-google

CHAPTER 3

STARTING ENGINE

	Paragraphs
SECTION I. Valves	73–74
II. Carburetor	75–84
III. Magneto	85–99
IV. Governor mechanism	100–102
V. Removing and replacing the starting engine	103
VI. Pistons and rings	104–110
VII. Bearings	111–112
VIII. Starting mechanism	113–116

SECTION I

VALVES

	Paragraph
General	73
Valve clearance adjustment	74

73. General.—Although the starting engine uses the L-head valve arrangement and the Diesel the over-head valve arrangement, the general service information regarding valves (fig. 78) for one is much the same as for the other (see par. 22.) Always clean the engine and valve parts thoroughly when reassembling, and check the valve clearance adjustment carefully.

74. Valve clearance adjustment.—The valve clearance adjustment (fig. 80) should be made while the engine is hot. Crank the

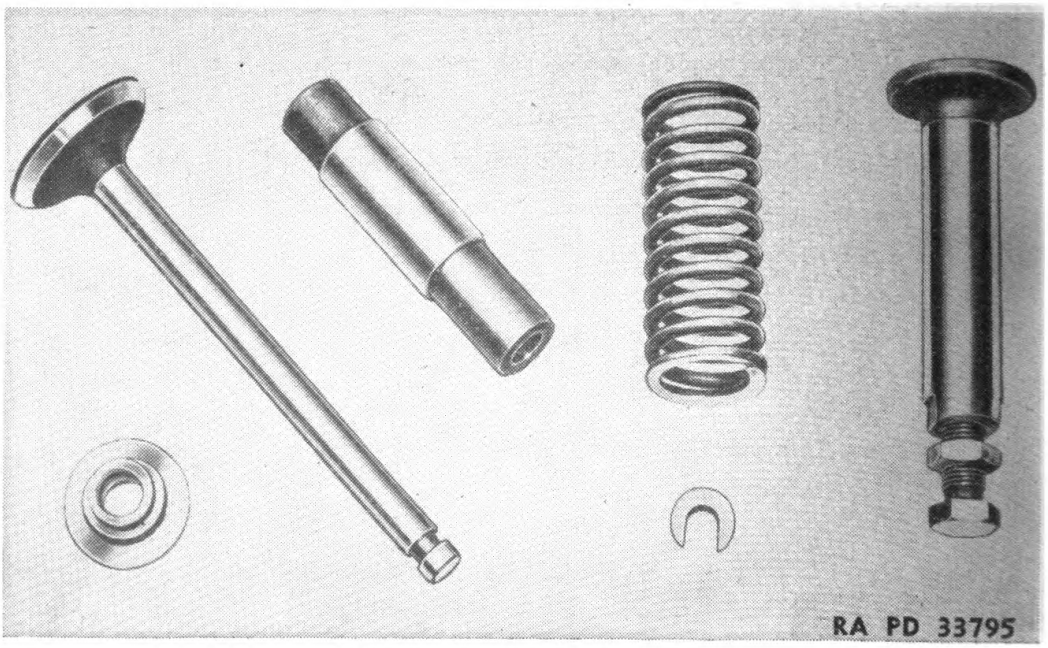

FIGURE 78.—Valve assembly.

Digitized by Google
Original from UNIVERSITY OF CALIFORNIA
Generated on 2014-11-16 09:12 GMT / http://hdl.handle.net/2027/uc1.b3243973
Public Domain, Google-digitized / http://www.hathitrust.org/access_use#pd-google

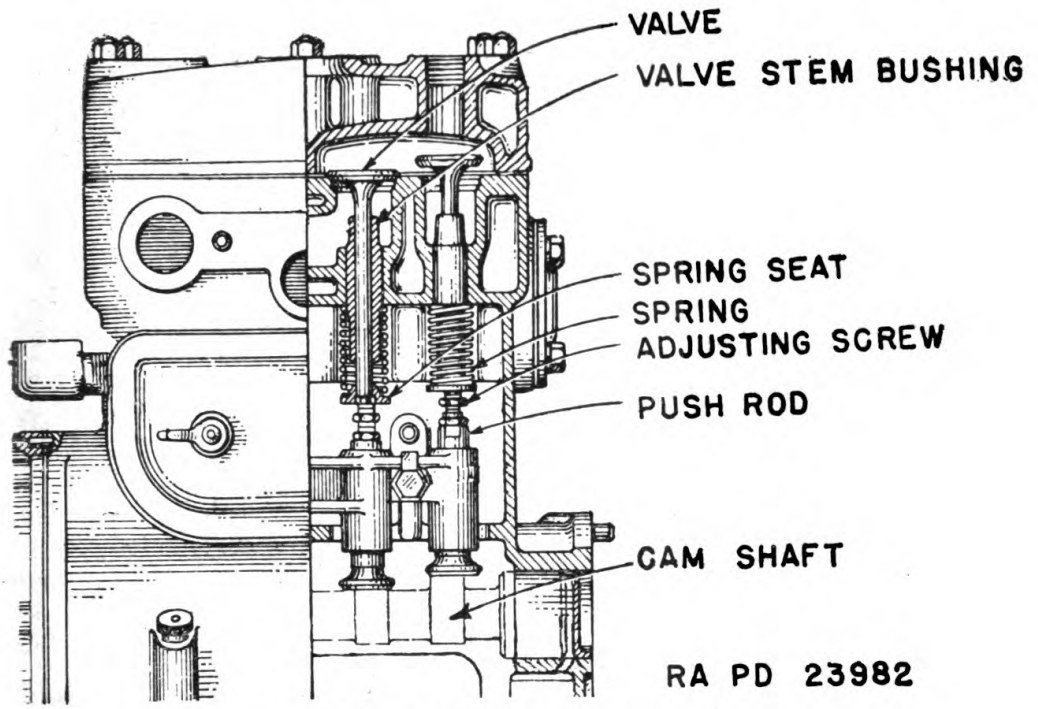

FIGURE 79.—Starting engine valve mechanism.

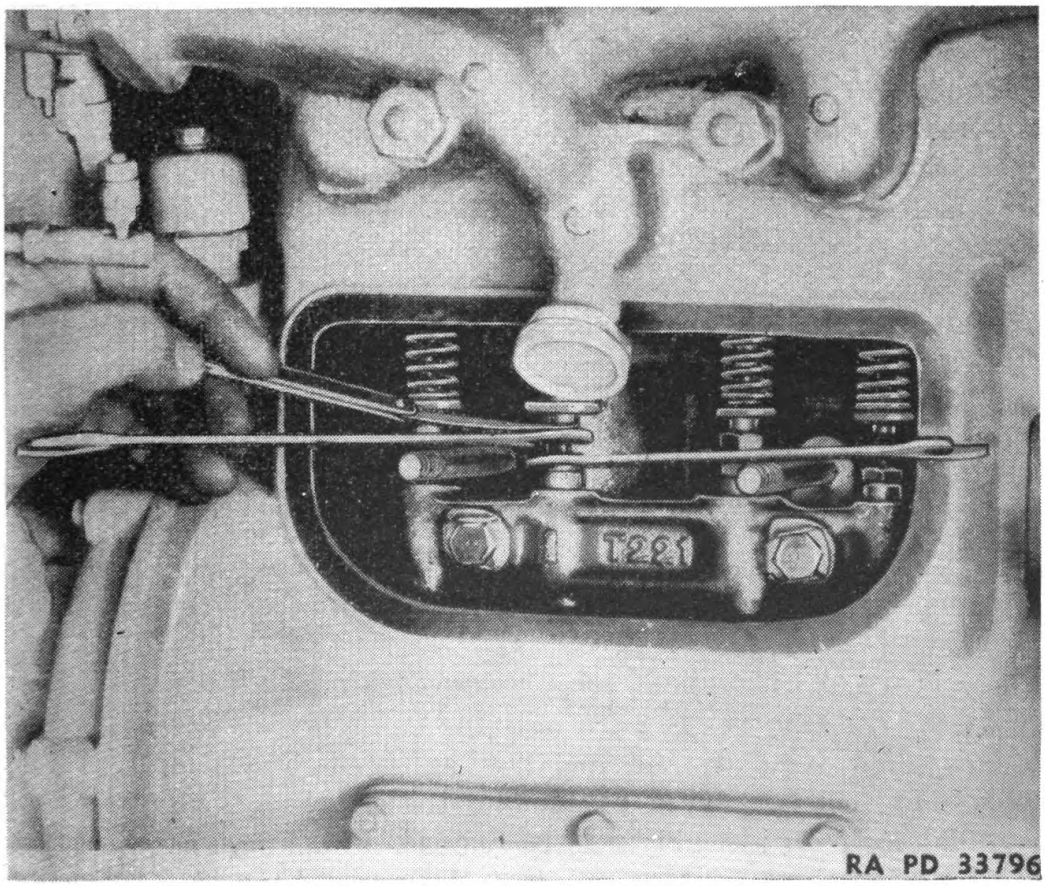

FIGURE 80.—Valve clearance adjustment.

Digitized by Google
Original from UNIVERSITY OF CALIFORNIA
Generated on 2014-11-16 09:12 GMT / http://hdl.handle.net/2027/uc1.b3243973
Public Domain, Google-digitized / http://www.hathitrust.org/access_use#pd-google

engine until the valve closes and valve lifter is at its lowest point. Loosen lock nut on valve adjusting screw and turn screw until there is .008 inch clearance between the end of the valve stem and the head of the adjusting screw. Tighten lock nut and check adjustment.

SECTION II

CARBURETOR

	Paragraph
Type	75
Removal	76
Inlet body	77
Air shutter or choke control	78
Throttle shutter	79
Main or high speed jet	80
Venturi	81
Idling jet	82
Float assembly	83
Cleaning fuel system	84

75. Type.—A Zenith 22 series carburetor of the downdraft type is used.

76. Removal.—Disconnect fuel line from inlet body. Drain bowl by removing the plug in the base. Remove air cleaner and adapter assembly and throttle control rod. Remove nuts which attach the carburetor to inlet manifold and lift off carburetor.

77. Inlet body.—Remove inlet body (2) (fig. 83) and screen (1) by taking out stud (3). Clean screen and inspect solder joint to see that there are no cracks.

78. Air shutter or choke control.—Remove air shutter lever assembly (6) (fig. 82). Take out screws (4) after melting the solder away from screws and shutter plate (5). Slip out the shutter and then the air shutter shaft assembly (7). Replace shaft bushings in the housing if worn.

79. Throttle shutter.—Remove screws (9) (fig. 81). The shutter will slide out of the shaft and shaft (11) can be withdrawn. Drive taper pin (8) out of stop assembly. The stop assembly (10) will now come off the shaft. The shaft packing in the housing should be replaced.

80. Main or high speed jet.—Remove main jet adjustment screw. If screw (12) (fig. 84) is worn near the tip, replace with a new one as this screw regulates the fuel flow at speeds above idling. The amount of fuel is reduced by turning the screw clockwise.

a. The main jet assembly may be removed by taking out plug (13) and screwing the assembly out. This jet assembly is nonadjustable.

Digitized by Google
Original from UNIVERSITY OF CALIFORNIA
Generated on 2014-11-16 09:12 GMT / http://hdl.handle.net/2027/uc1.b3243973
Public Domain, Google-digitized / http://www.hathitrust.org/access_use#pd-google

Carefully wash main jet (15) and cap jet assembly (14) and clean with compressed air. The cap jet assembly, by means of the size and shape of its openings, determines the rate of fuel discharge when the engine is operating.

b. The compensator jet (20) (fig. 85) which admits the fuel for the idling jet and also for the main jet may be removed with a screw driver.

81. Venturi.—The venturi assemblies (17) and (18) (fig. 85) can be removed by hand. The pin (16) should register with the notches in each venturi.

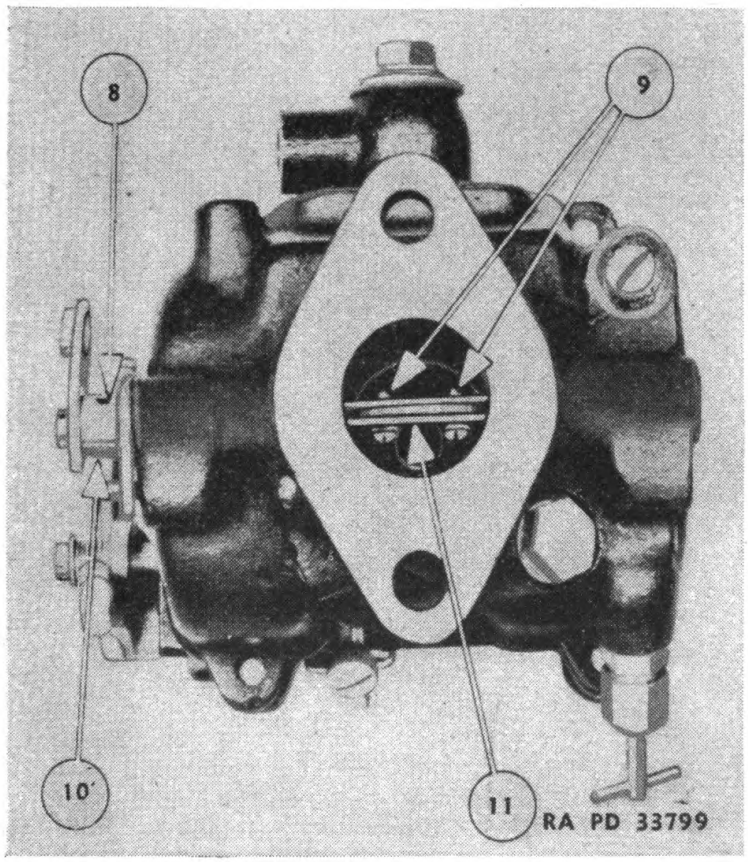

FIGURE 81.—Carburetor.

82. Idling jet.—The idle adjustment screw (21) (fig. 86) regulates the amount of air to be mixed with the fuel at the idling jet. The nonadjustable jet (19) (fig. 85) controls the amount of fuel taken from the compensator well. The fuel and air pass through the priming plug located in the carburetor throat adjacent to the idling position of the throttle shutter.

Digitized by Google
Original from UNIVERSITY OF CALIFORNIA
Generated on 2014-11-16 09:12 GMT / http://hdl.handle.net/2027/uc1.b3243973
Public Domain, Google-digitized / http://www.hathitrust.org/access_use#pd-google

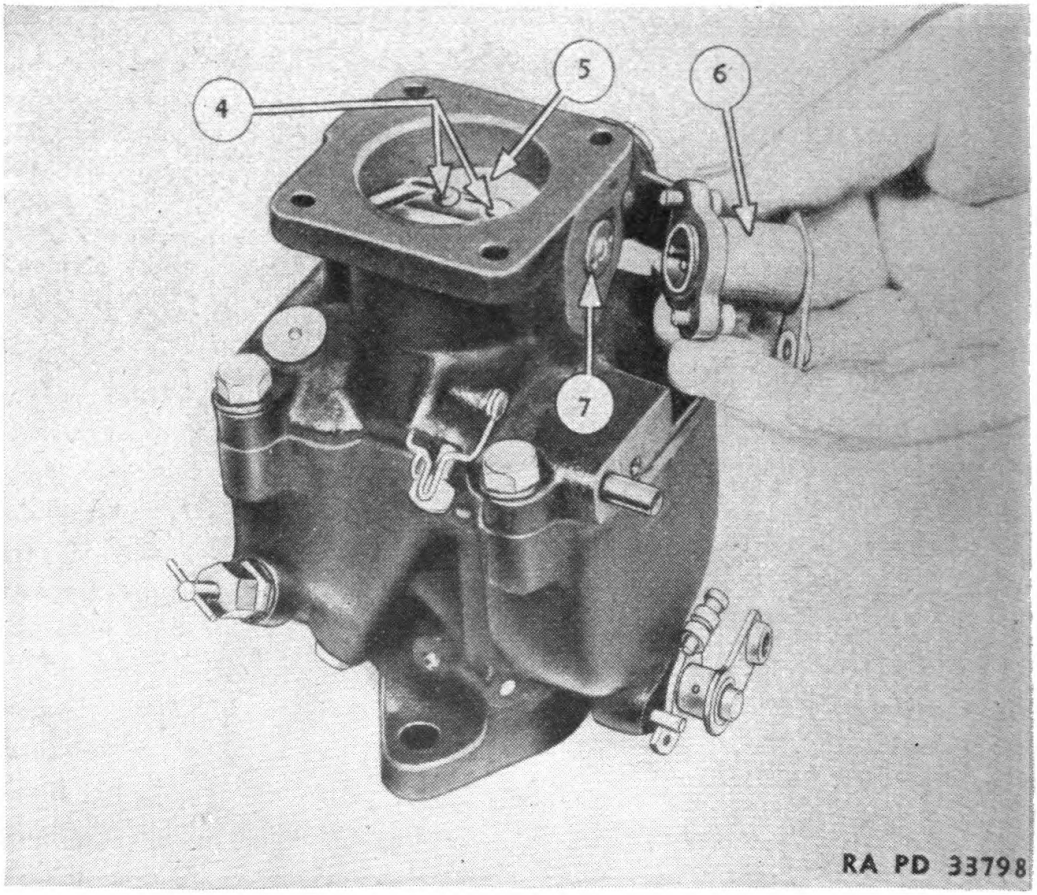

FIGURE 82.—Air shutter or choke control disassembly.

Digitized by Google
Original from UNIVERSITY OF CALIFORNIA
Generated on 2014-11-16 09:12 GMT / http://hdl.handle.net/2027/uc1.b3243973
Public Domain, Google-digitized / http://www.hathitrust.org/access_use#pd-google

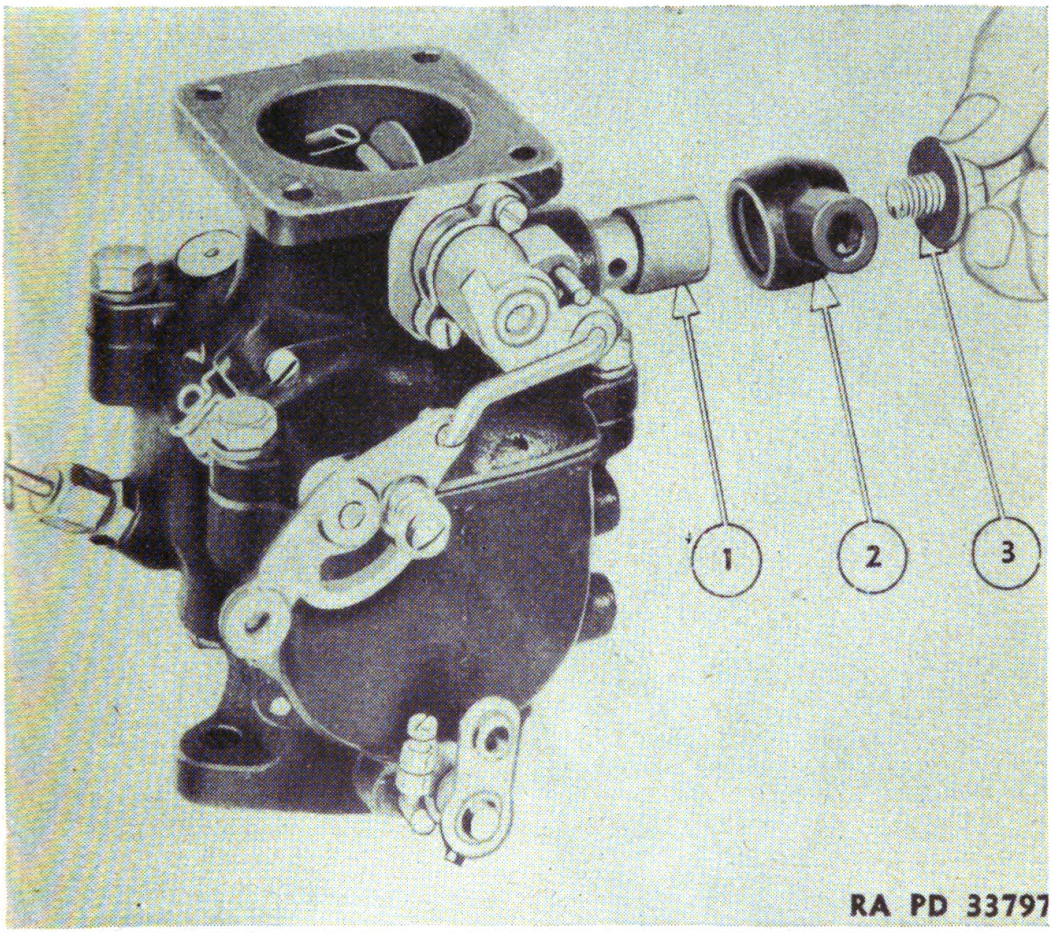

FIGURE 83.—Disassembly of inlet body.

Digitized by Google
Original from UNIVERSITY OF CALIFORNIA
Generated on 2014-11-16 09:12 GMT / http://hdl.handle.net/2027/uc1.b3243973
Public Domain, Google-digitized / http://www.hathitrust.org/access_use#pd-google

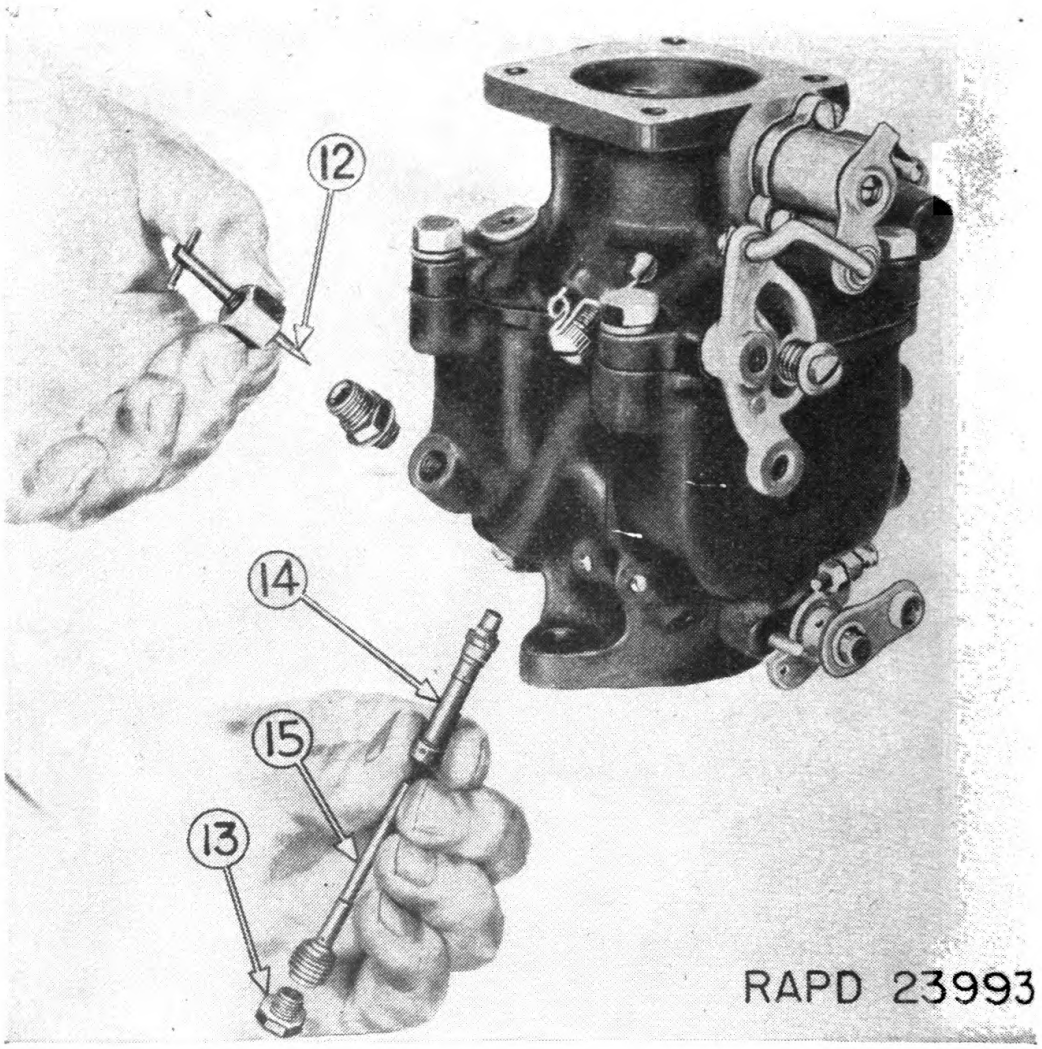

FIGURE 84.—Starting engine carburetor—idle jet and main jet.

Digitized by Google
Original from UNIVERSITY OF CALIFORNIA
Generated on 2014-11-16 09:12 GMT / http://hdl.handle.net/2027/uc1.b3243973
Public Domain, Google-digitized / http://www.hathitrust.org/access_use#pd-google

83. Float assembly.—If fuel valve (23) (fig. 87) leaks as evidenced by fuel leaking out of the intake manifold breather on the starting engine, inspect the seat of valve assembly after removing pin (22) and float assembly. Clean any foreign material from the seat or, if worn, replace the valve assembly. If a measurement of 1½ inches plus or minus $\frac{3}{64}$ inch does not exist between the face (24) of the air intake assembly (fig. 88) (without gasket) and the float as shown, replace the float assembly.

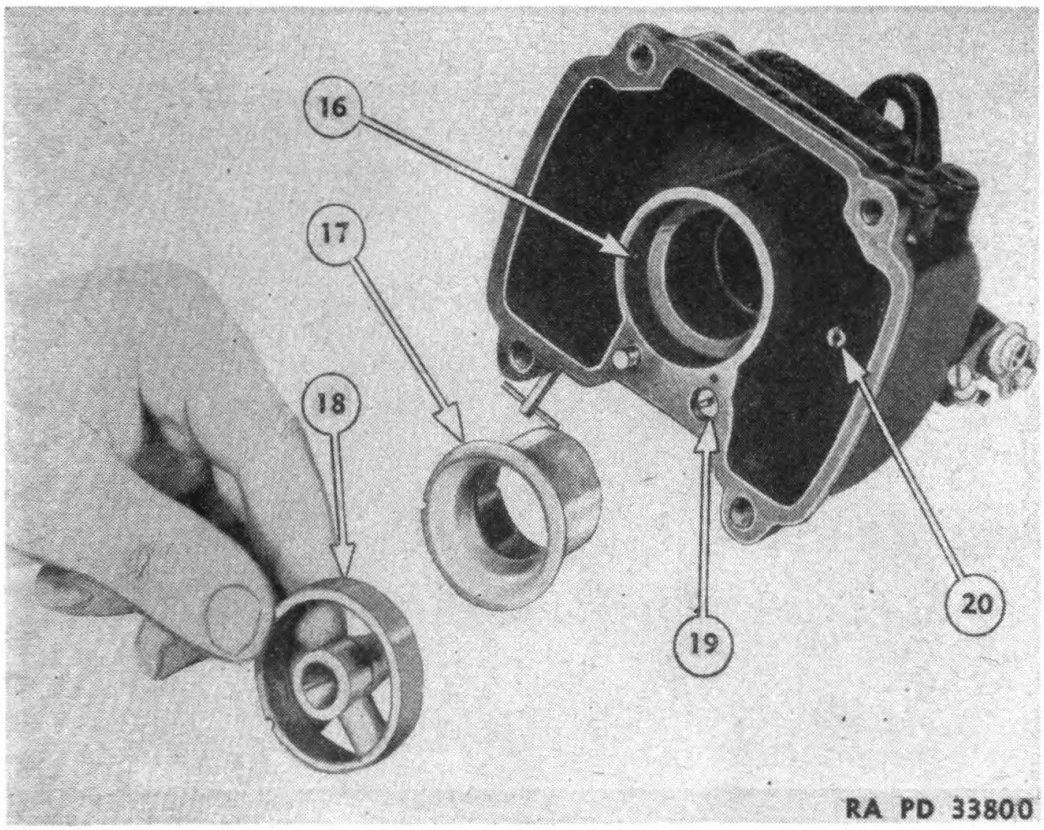

FIGURE 85.—Venturi assembly.

84. Cleaning fuel system.—*a.* Under some conditions, evaporation of gasoline may cause gums to form in the fuel tank, fuel line, carburetor, etc., during storage, thereby causing considerable difficulty. These gums are highly insoluble in most liquids and are very difficult to remove once they are deposited on metallic surfaces.

b. The following mixtures have been recommended as suitable solvents for removing such gum:

(1) Benzine (benzol) and alcohol, ethyl, solution in the proportions of 60 percent benzol and 40 percent alcohol usually suffice.

Digitized by Google
Original from UNIVERSITY OF CALIFORNIA
Generated on 2014-11-16 09:13 GMT / http://hdl.handle.net/2027/uc1.b3243973
Public Domain, Google-digitized / http://www.hathitrust.org/access_use#pd-google

(2) In obstinate cases a mixture of 60 percent benzine, 30 percent alcohol, and 10 percent carbon tetrachloride (pyrene) may be more effective.

c. None of the commercial gasolines appears to give any considerable degree of difficulty in this respect when they remain in continuous use. When a gasoline is being used that is suspected of having gum depositing characteristics, the entire fuel system should be drained when the machine is stored.

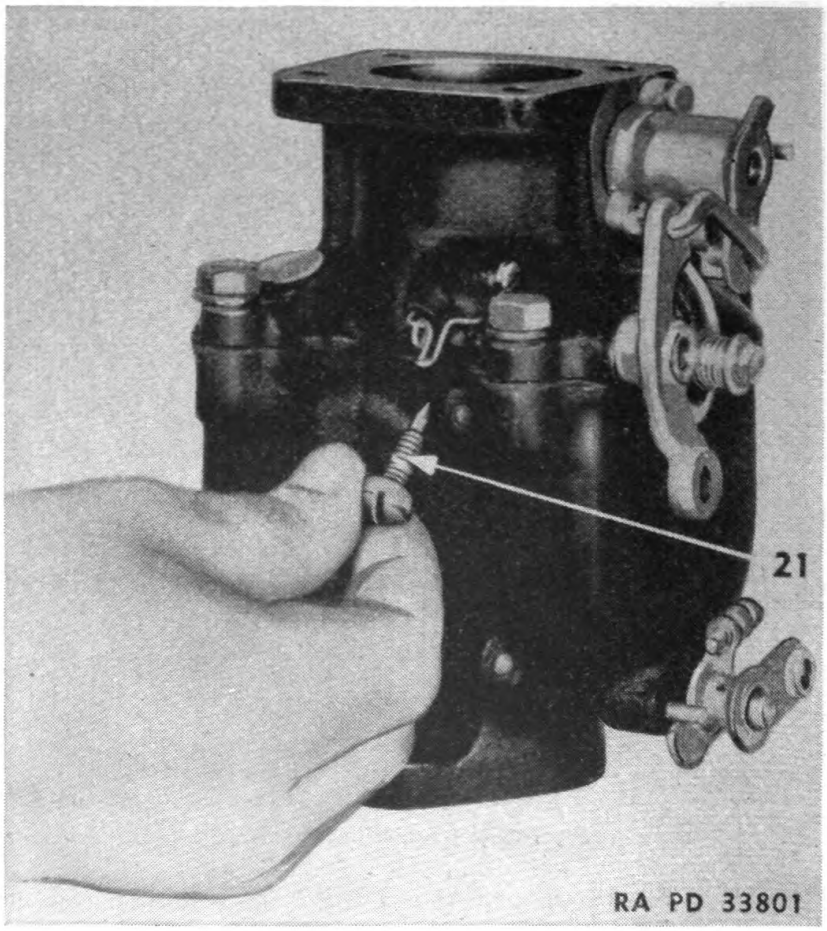

FIGURE 86.—Idle adjustment screw.

Digitized by Google
Original from UNIVERSITY OF CALIFORNIA
Generated on 2014-11-16 09:13 GMT / http://hdl.handle.net/2027/uc1.b3243973
Public Domain, Google-digitized / http://www.hathitrust.org/access_use#pd-google

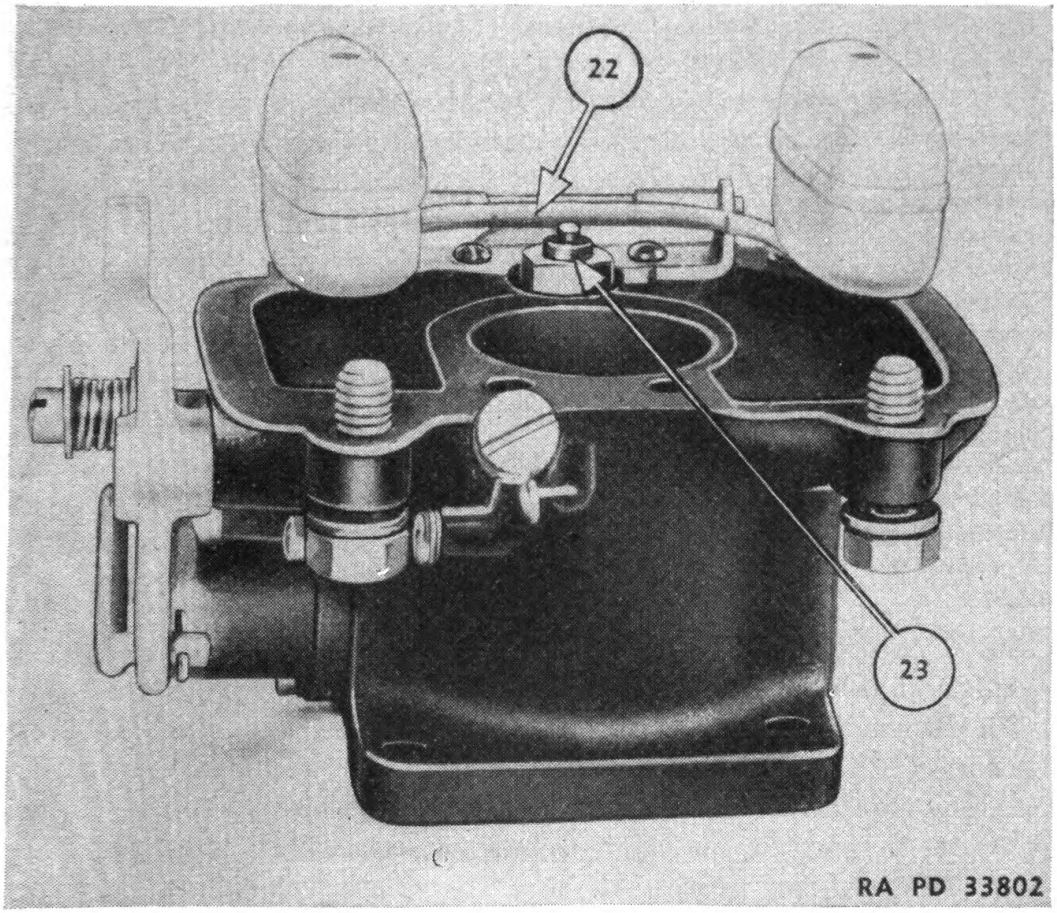

FIGURE 87.—Float assembly.

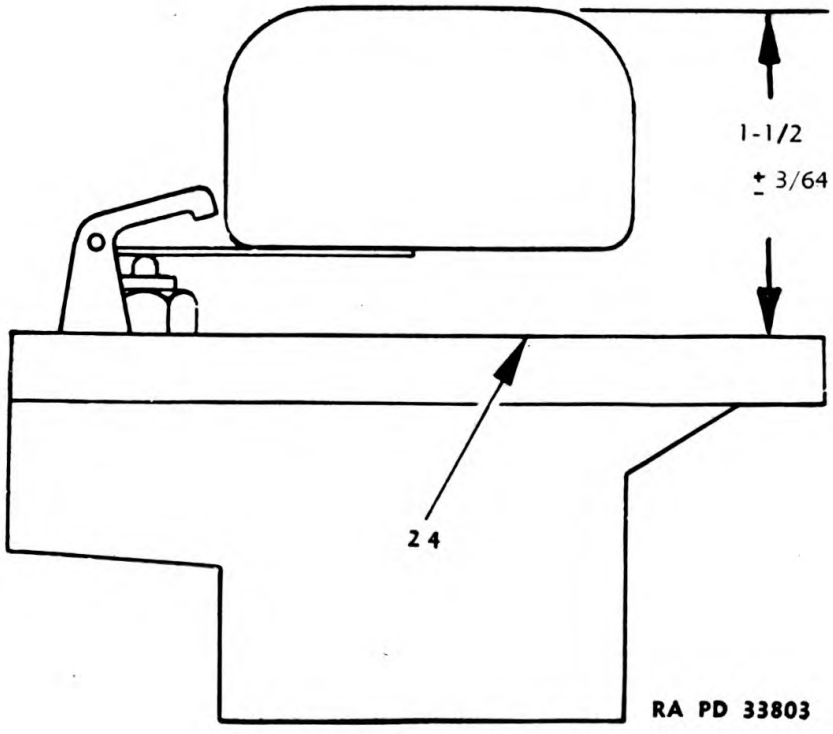

FIGURE 88.—Air intake and float.

Digitized by Google
Original from UNIVERSITY OF CALIFORNIA
Generated on 2014-11-16 09:13 GMT / http://hdl.handle.net/2027/uc1.b3243973
Public Domain, Google-digitized / http://www.hathitrust.org/access_use#pd-google

SECTION III

MAGNETO

	Paragraph
Type	85
Removal	86
Distributor plate	87
Brushes	88
Rotor	89
Winding or coil	90
Breaker assembly	91
Contact points	92
Adjustment	93
Timing	94
Condenser	95
Impulse starter	96
Distributor gear and shaft	97
Induction rotor and gear	98
Magnet	99

85. Type.—An Eisemann magneto model RC–2Q with an impulse starter and an adjustable drive hub is used on the starting engine.

86. Removal.—Pull spark plug wires out of distributor plate and disconnect the wire to the switch. Disconnect adjustable coupling and remove clamp band. Then take out capscrews and nuts which secure the magneto to the magneto bracket.

87. Distributor plate.—Remove distributor plate (fig. 89) by loosening screws (4). Using a clean soft cloth dampened with solvent, dry-cleaning, carefully clean the inside of the plate of carbon dust. The gasket (3) should be replaced if damaged.

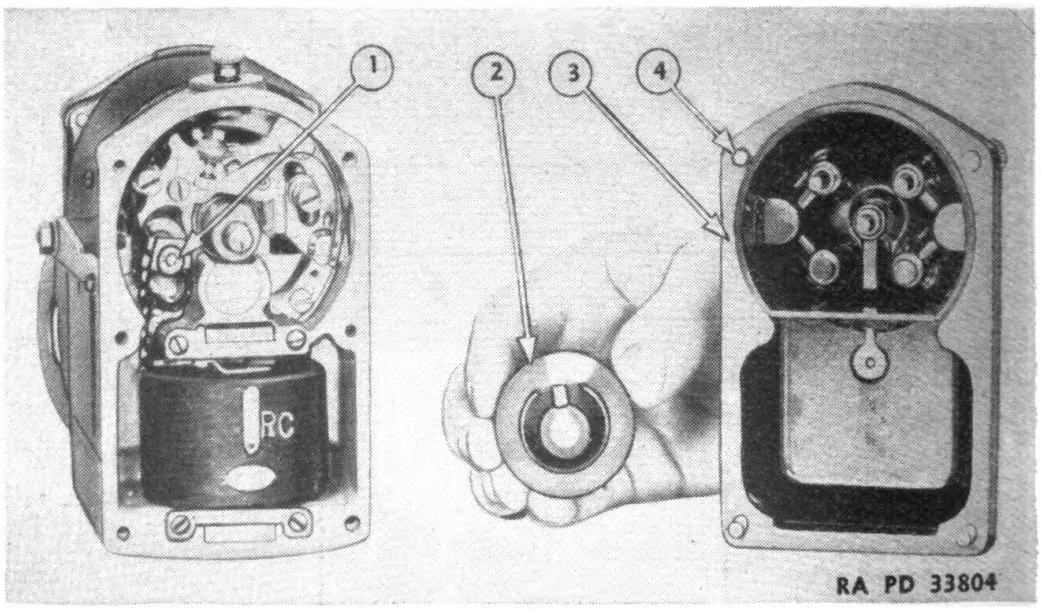

FIGURE 89.—Magneto removal.

Digitized by Google
Original from UNIVERSITY OF CALIFORNIA
Generated on 2014-11-16 09:28 GMT / http://hdl.handle.net/2027/uc1.b3243973
Public Domain, Google-digitized / http://www.hathitrust.org/access_use#pd-google

88. Brushes.—To install a new brush, after the old ones have been pulled out of their sockets, place the small end of coil spring on the brush, press spring straight into the socket and twist the brush a few turns clockwise and again compress the spring by pressing carbon brush into the socket. The brushes should move freely and protrude uniformly from their sockets.

89. Rotor.—Pull rotor (2) from shaft and clean both sides. Replace rotor if the brass insert is burned, the rotor is cracked, or the face is grooved.

90. Winding or coil.—The winding (6) (fig. 90) may be removed by taking off slotted nut (1) and washer and removing the winding lead. Remove screws (8) holding straps (9) in position and slide out the winding. An ohmmeter will register infinity if the winding is unserviceable. When replacing, press firmly on the winding to seat the core ends in tapered pole shoes (7) before replacing the clamps.

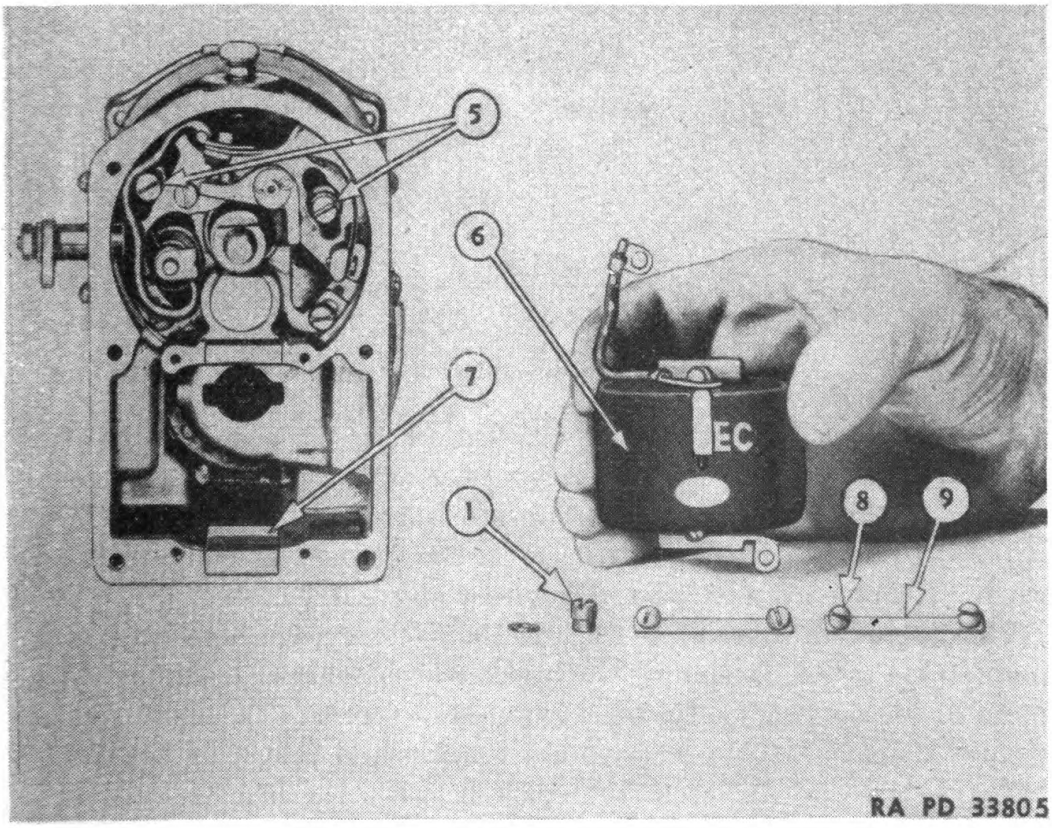

FIGURE 90.—Winding or coil removal.

91. Breaker assembly.—In order not to disturb the spark advance fork stops (10) when removing breaker assembly (fig. 91), take off spark advance lever (17), plate (16), and lever assembly (15). Re-

Digitized by Google
Original from UNIVERSITY OF CALIFORNIA
Generated on 2014-11-16 09:28 GMT / http://hdl.handle.net/2027/uc1.b3243973
Public Domain, Google-digitized / http://www.hathitrust.org/access_use#pd-google

move slotted head screws (5), and pull out breaker assembly (12) after removing the lead (11) from the condenser post.

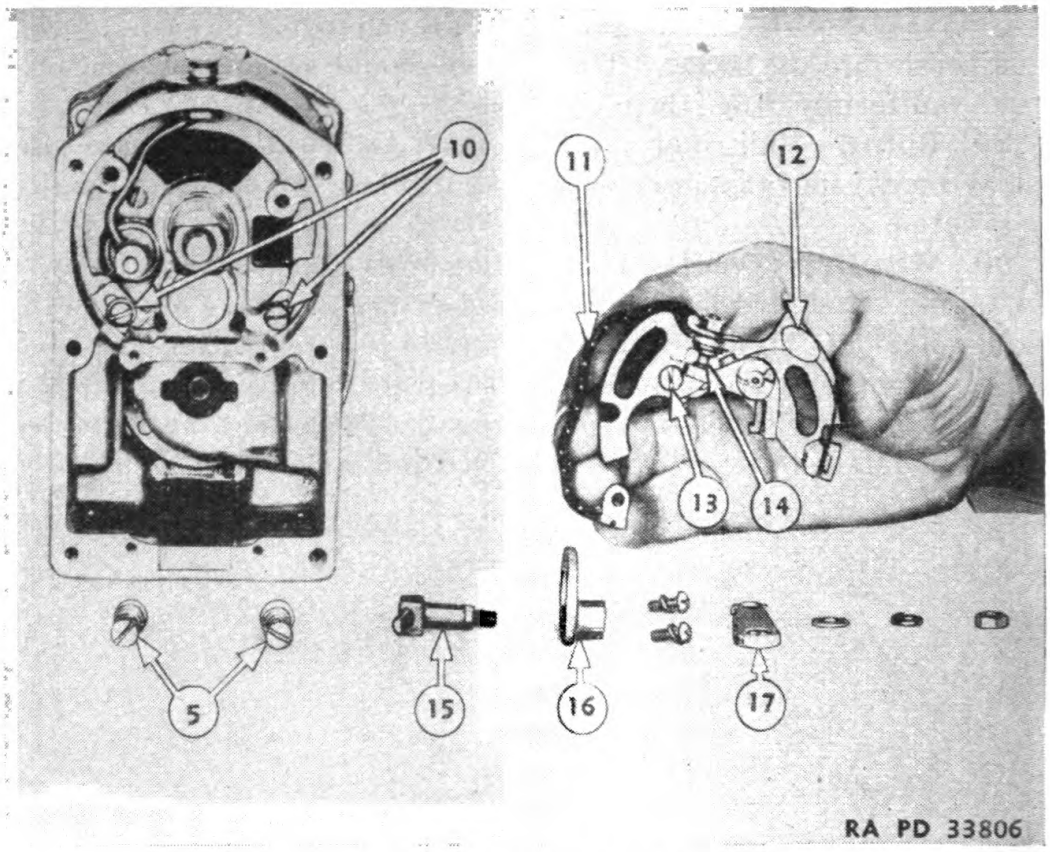

FIGURE 91.—Breaker assembly.

92. Contact points.—Every 1,200 hours, check contact point opening and adjust the gap if necessary. If contact points wear unevenly or become pitted, a fine carborundum stone instead of a steel file should be used to smooth them. Replace contact points if badly pitted or worn. Remove all dust particles with a clean, dry cloth.

93. Adjustment.—Insert a .020 inch feeler gage between contact points (14) after positioning the breaker lever bumper block on a high point of the cam. To adjust the gap, loosen screw (13) (fig. 91) which secures the adjustable contact point bracket and move the bracket by inserting a screw driver in the space between the head of the screw and the lip on the bracket. Move the bracket to obtain .020 inch gap. Tighten screw (13).

94. Timing.—To obtain maximum spark intensity when the breaker points separate and to insure proper timing, the induction rotor should be properly positioned with respect to the breaker plate.

a. Remove plate and gasket covering inspection holes in the base of the housing.

Digitized by Google
Original from UNIVERSITY OF CALIFORNIA
Generated on 2014-11-16 09:28 GMT / http://hdl.handle.net/2027/uc1.b3243973
Public Domain, Google-digitized / http://www.hathitrust.org/access_use#pd-google

b. With the magneto lying on its side so the top is toward the operator and the impulse starter is to the right, insert the shank of a No. 31 drill (.1200 inch diameter) or a ⅛ inch drill through the upper hole.

c. Turn impulse starter the reverse of the operating direction until the drill is locked lightly between the induction rotor and lower pole-shoe.

d. Loosen fork stop screws (10) (fig. 91) and shift breaker plate until the contact points just start to separate.

e. To check this, use a 6-volt "split lamp circuit" or draw a piece of cigarette paper between the contact points. This is the maximum spark advance position.

f. Lock fork stop against breaker plate on the opposite side of the magneto from the advance lever. This limits the travel of the breaker plate.

g. To obtain the retard position, rotate breaker plate counterclockwise ⅜ inch or 15° and lock fork stop adjacent to the advance lever.

95. Condenser.—To replace the condenser (fig. 92) remove breaker assembly as outlined. Slip off spacer (22) and remove lead

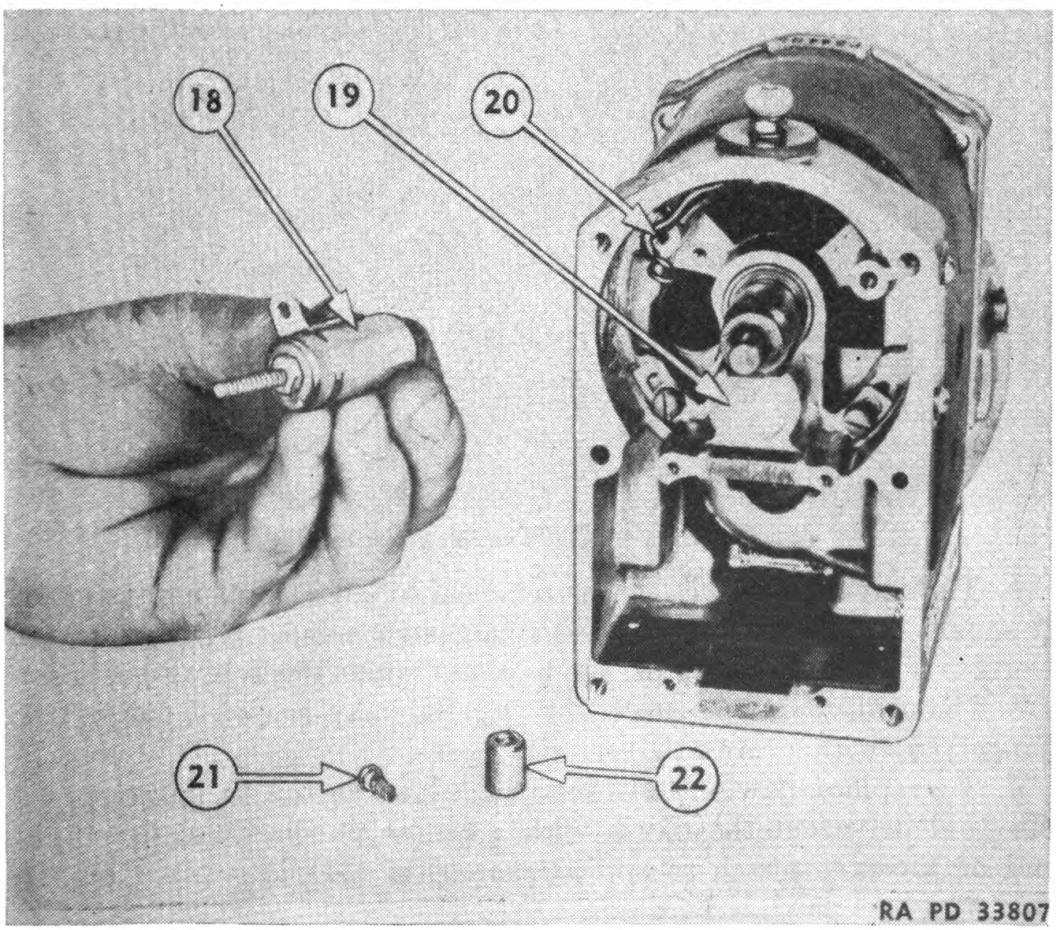

FIGURE 92.—Condenser replacement.

Digitized by Google
Original from UNIVERSITY OF CALIFORNIA
Generated on 2014-11-16 09:28 GMT / http://hdl.handle.net/2027/uc1.b3243973
Public Domain, Google-digitized / http://www.hathitrust.org/access_use#pd-google

(20) from the condenser post. Remove screw (21) and slide out condenser (18). To check the condenser, use the post as one terminal and the condenser case as the other terminal in series with a lamp on a 110-volt circuit. If the lamp lights, the condenser is burned out. A 6-volt battery circuit may be used if 110 volts is not available.

96. Impulse starter.—*a.* The impulse starter (23) (fig. 93) may be removed by removing nut (25) and prying with two screw drivers between the catch plate and flange.

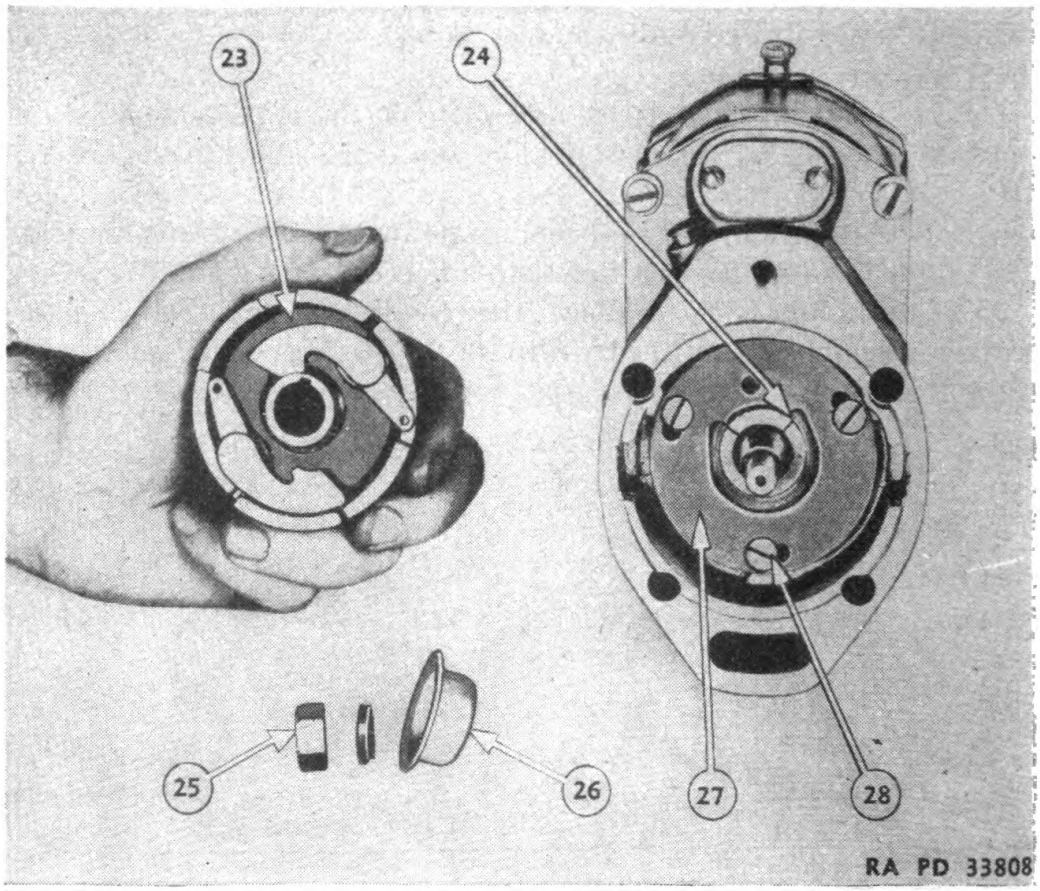

FIGURE 93.—Impulse starter assembly.

b. The catch plate (27) can be removed by taking out screws (28). It should be replaced if the pawl engagement edge (24) is rough or worn. When replacing the catch plate, stake the screws securely.

c. The compression spring (31) (fig. 94) may be pried out of the flange (33) with a screw driver.

d. To replace pawls (32), rest the edges of the flange across a vise and drive out the pawls with a center punch. Use the blunt end of a center punch to spread snap ring (34) into place on the stud of a new pawl.

e. To install a new spring, grip the drive cup lugs in a vise, hook

Digitized by Google
Original from UNIVERSITY OF CALIFORNIA
Generated on 2014-11-16 09:28 GMT / http://hdl.handle.net/2027/uc1.b3243973
Public Domain, Google-digitized / http://www.hathitrust.org/access_use#pd-google

the outer end of the spring to post (29), wind up the inner coil with pliers and seat the spring in the drive cup (30).

f. Apply a very light coat of oil, engine, over the compression spring before installing the flange.

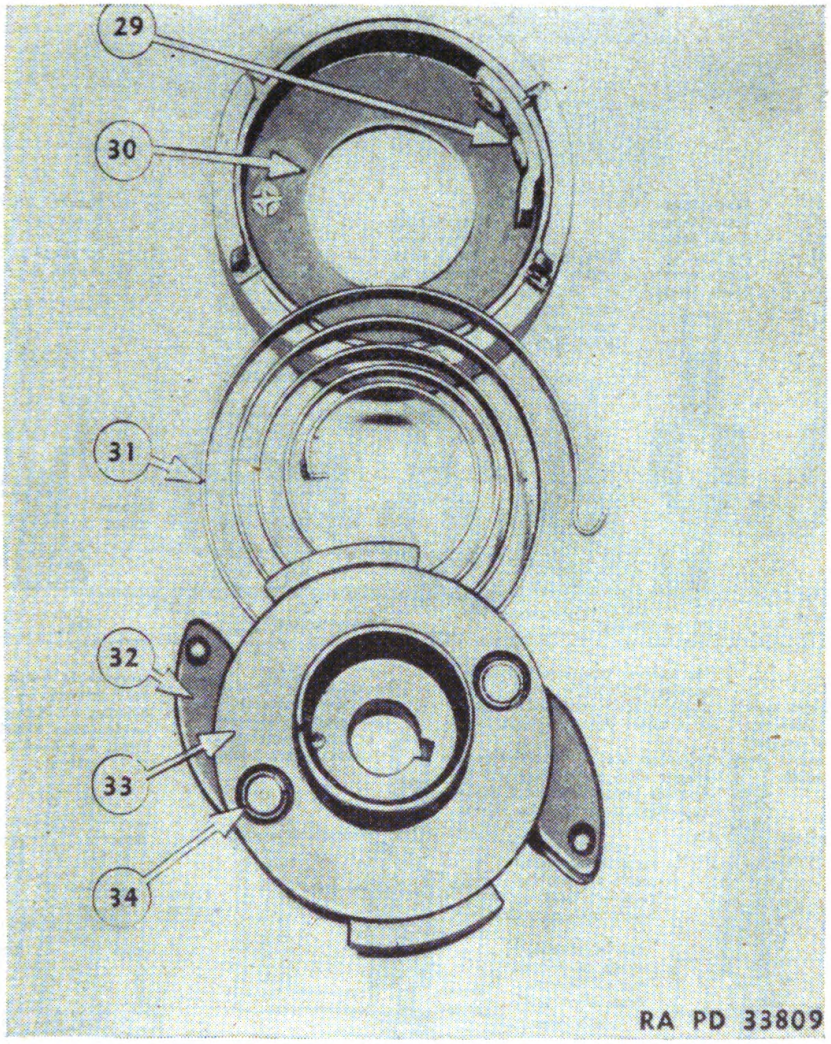

FIGURE 94.—Compression spring assembly.

g. Hook inner end of spring to slot in the hub of the flange and wind up tight with fingers, at the same time lifting the flange to clear the high walls of the drive cup.

h. If the impulse starter drive cup binds against the flange after assembly, install a spacing washer under retaining cup (26) (fig. 93) to prevent contact between the two assemblies.

97. Distributor gear and shaft.—*a.* Pry out plug (19) (fig. 92) holding oil wick which lubricates the breaker cam and remove the oil wick.

b. Impregnate oil wick with oil, engine.

Digitized by Google
Original from UNIVERSITY OF CALIFORNIA
Generated on 2014-11-16 09:28 GMT / http://hdl.handle.net/2027/uc1.b3243973
Public Domain, Google-digitized / http://www.hathitrust.org/access_use#pd-google

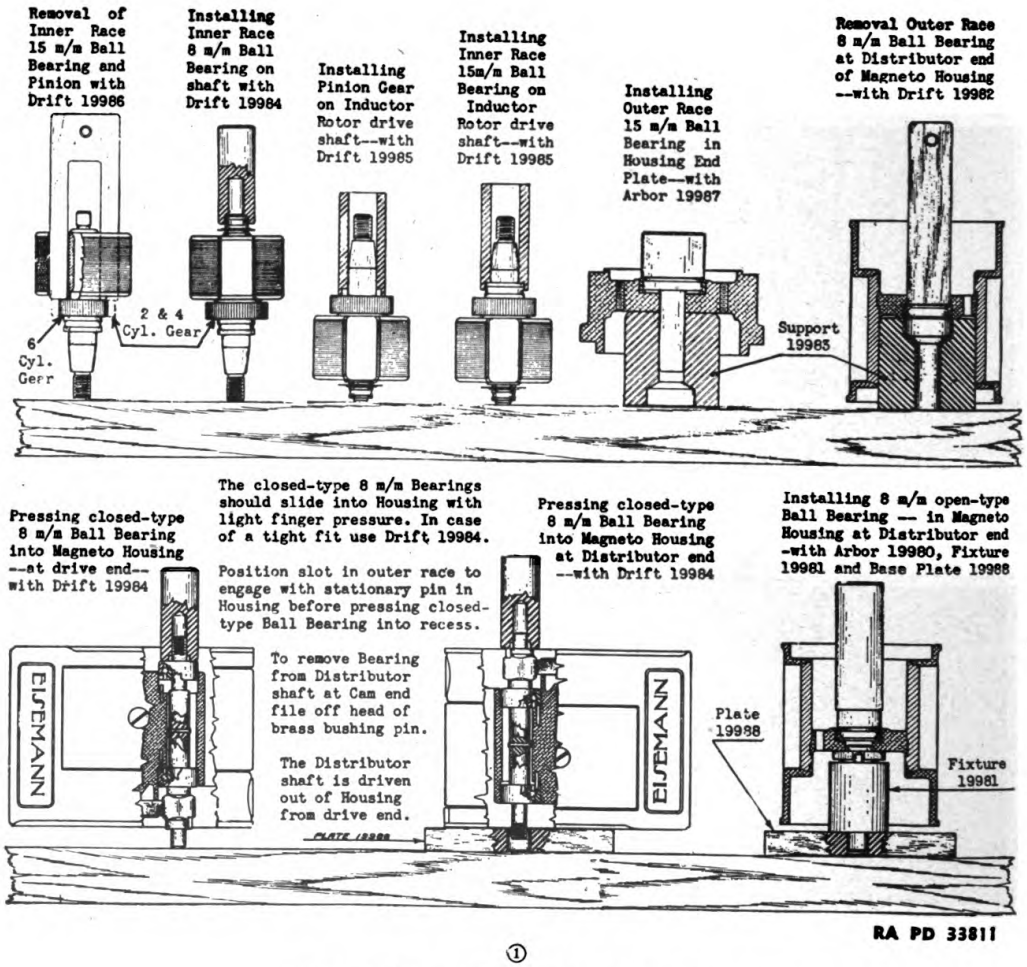

①

FIGURE 95.—Service tools for magneto.

Digitized by Google
Original from UNIVERSITY OF CALIFORNIA
Generated on 2014-11-16 09:28 GMT / http://hdl.handle.net/2027/uc1.b3243973
Public Domain, Google-digitized / http://www.hathitrust.org/access_use#pd-google

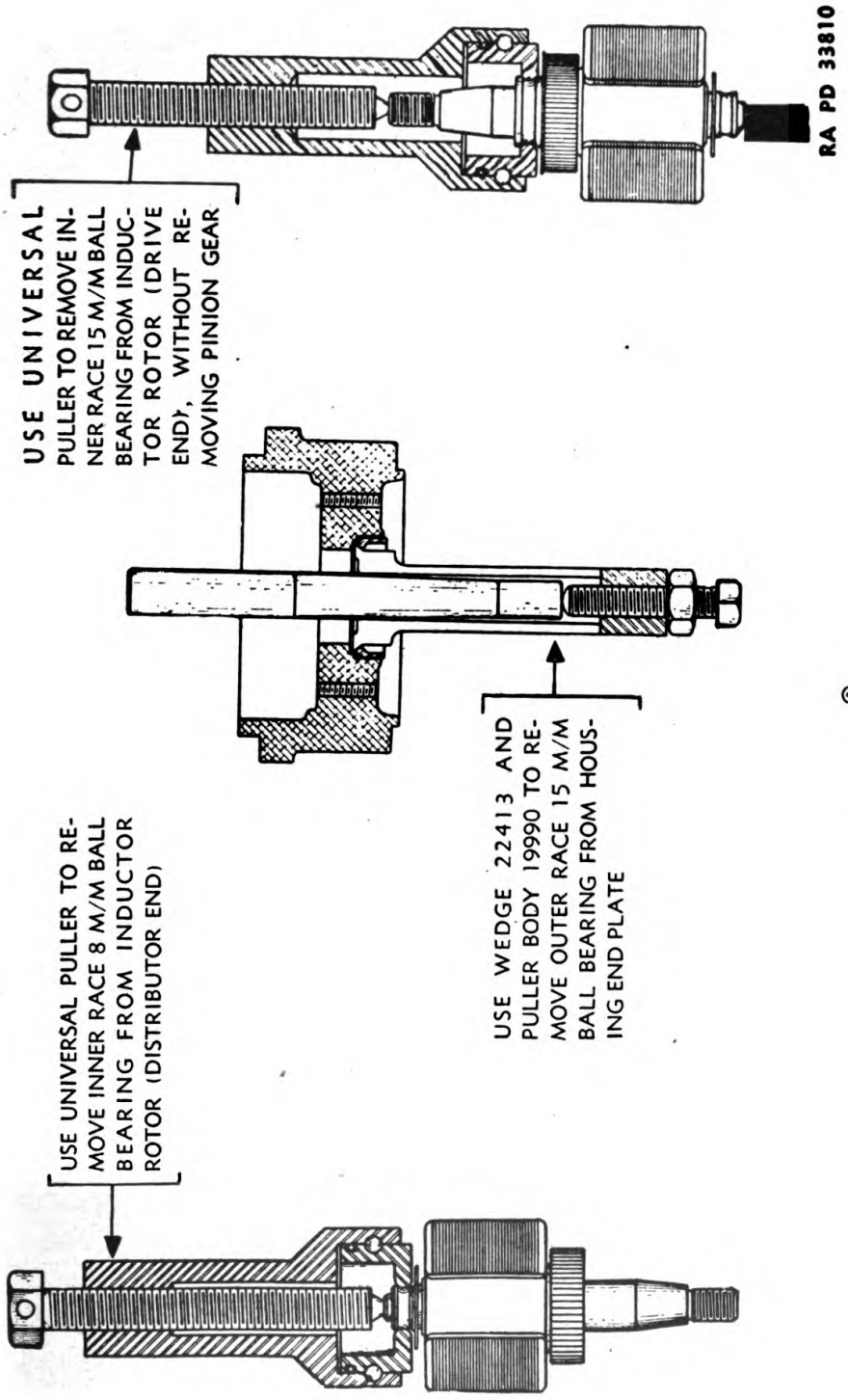

FIGURE 95.—Service tools for magneto—Continued.

Digitized by Google
Original from UNIVERSITY OF CALIFORNIA
Generated on 2014-11-16 09:29 GMT / http://hdl.handle.net/2027/uc1.b3243973
Public Domain, Google-digitized / http://www.hathitrust.org/access_use#pd-google

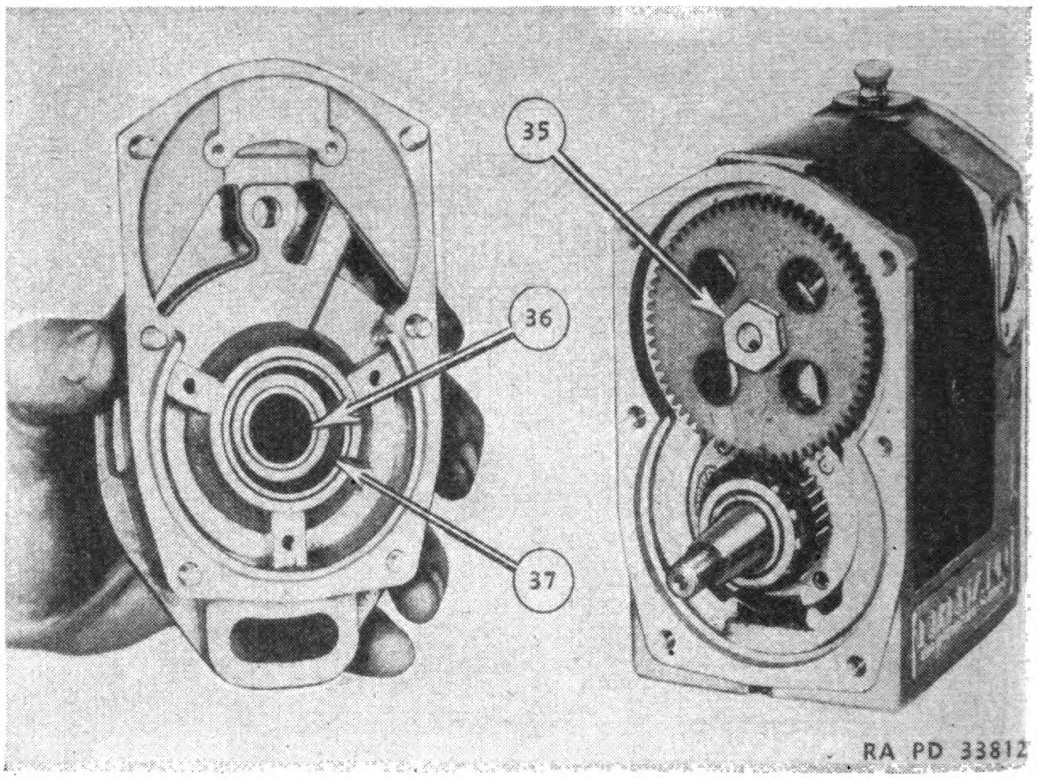

FIGURE 96.—Shaft removal.

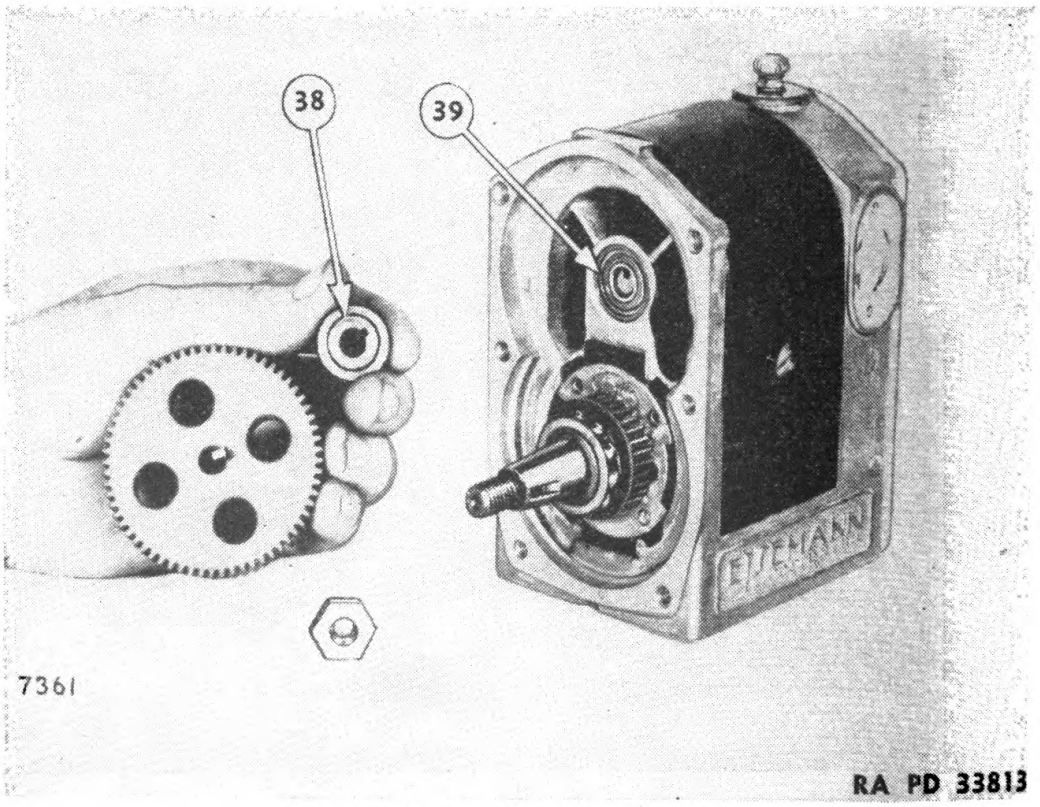

FIGURE 97.—Distributor gear removal.

Digitized by Google
Original from UNIVERSITY OF CALIFORNIA
Generated on 2014-11-16 09:29 GMT / http://hdl.handle.net/2027/uc1.b3243973
Public Domain, Google-digitized / http://www.hathitrust.org/access_use#pd-google

c. Remove cotter pin and nut (35) (fig. 96) on the shaft and gently tap the shaft out of the gear.

d. Be sure to aline timing marks on rotor, gear (43) (fig. 99) and distributor gear when reassembling.

e. The shaft will now slide out of the magneto. The spacer (38) (fig. 97) is used to locate properly distributor gear bearing (39). If damaged, this bearing should be tapped out and replaced with drift (19984).

f. The breaker cam bearing (40) (fig. 98) may be removed after the pin in brass bushing (41) has been driven out. If the cam is scored, replace shaft and cam assembly.

g. Line up slot in the outer race with pin (42) in the housing before pressing the bearings into position.

h. Before installation, pack the bearings with grease, general purpose No. 2.

i. The seal (36) (fig. 96) should be replaced if damaged.

98. Induction rotor and gear.—*a.* With distributor gear removed, the induction rotor will slide out. The rotor gear and bearing (43) (fig. 99) may be driven off by using forked drift (19986). The race alone can be removed by pulling with the Universal puller with chuck (19973). Drift (19985) will install either the race or the gear.

b. Use wedge (22413) and puller body (19990) (fig. 95②) to remove the outer race (37) (fig. 96) from the housing. Arbor (19987) (fig. 95①) and support (19983) should be used to install this outer bearing race.

c. The bearing race (45) (fig. 99) can be pulled using the Universal puller with chuck (19971). Drift (19984) (fig 95①) should be used to install this race.

d. Drift (19982) with support (19983) will remove the outer race (46) (fig. 99) from the housing. Arbor (19980), fixture (19981), and base plate (19988) should be used to install the race.

e. The bearings should be packed with grease, general purpose No. 2, upon installation.

NOTE.—Tools referred to in paragraphs 97 and 98 are Eisemann magneto service tools. (See fig. 95.)

99. Magnet.—Remove the magnet only when replacing the housing by taking out the screws. Reinstall the end marked "N" on the side of the housing with the cast "N" on it.

Digitized by Google
Original from UNIVERSITY OF CALIFORNIA
Generated on 2014-11-16 09:29 GMT / http://hdl.handle.net/2027/uc1.b3243973
Public Domain, Google-digitized / http://www.hathitrust.org/access_use#pd-google

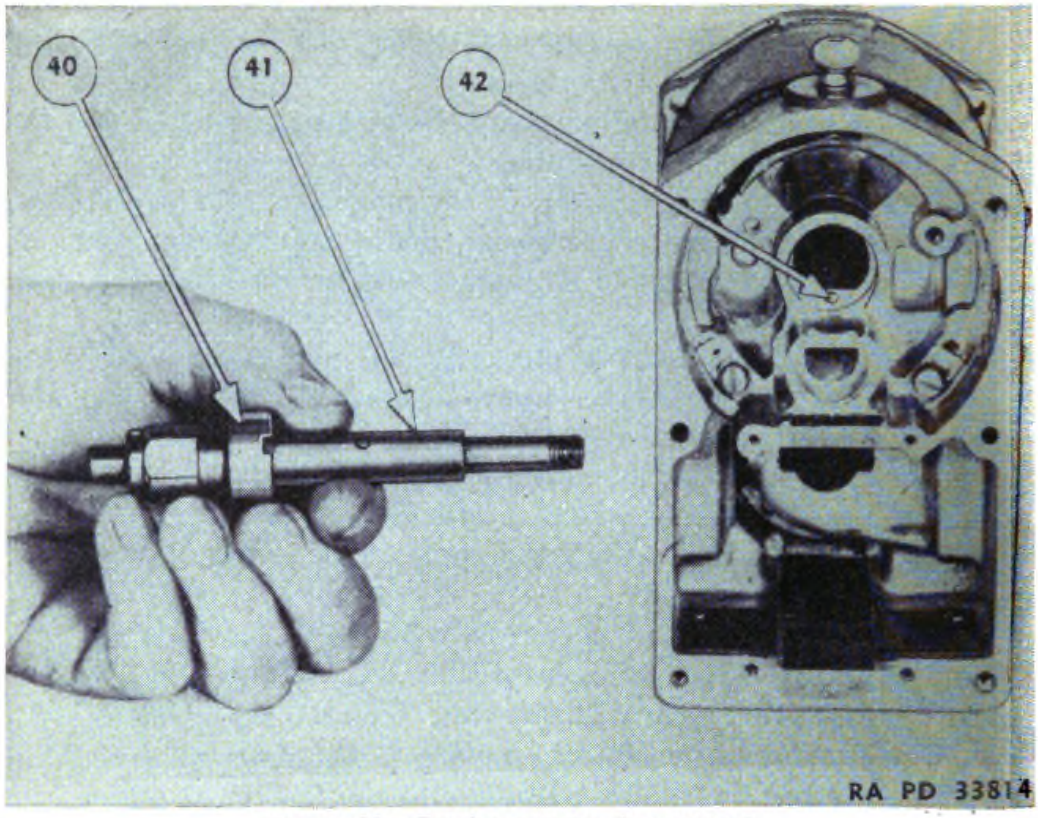

FIGURE 98.—Breaker cam bearing removal.

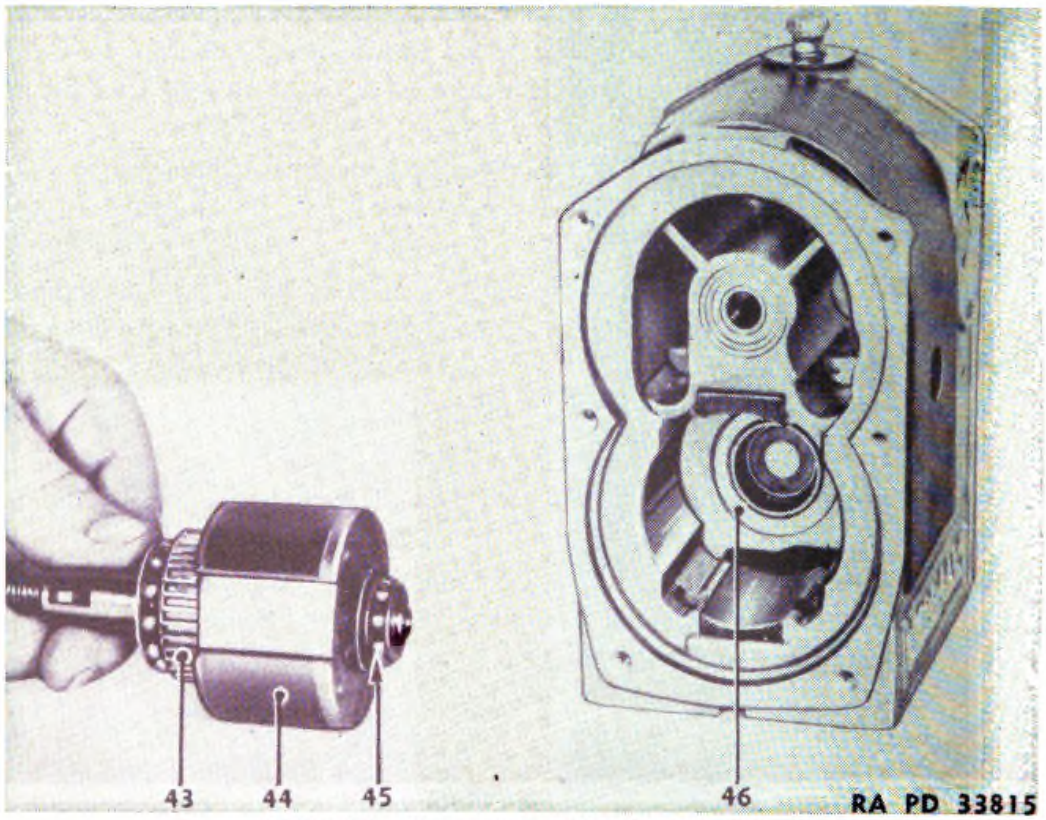

FIGURE 99.—Rotor gear and bearing removal.

Digitized by Google
Original from UNIVERSITY OF CALIFORNIA
Generated on 2014-11-16 09:29 GMT / http://hdl.handle.net/2027/uc1.b3243973
Public Domain, Google-digitized / http://www.hathitrust.org/access_use#pd-google

SECTION IV

GOVERNOR MECHANISM

Paragraph
General 100
High idle speed 101
Low idle speed 102

100. General.—The rotation of the governor weights (fig. 100) sets up a force acting against the tension of the governor spring. The position of the sliding sleeve and lever arrangement determines

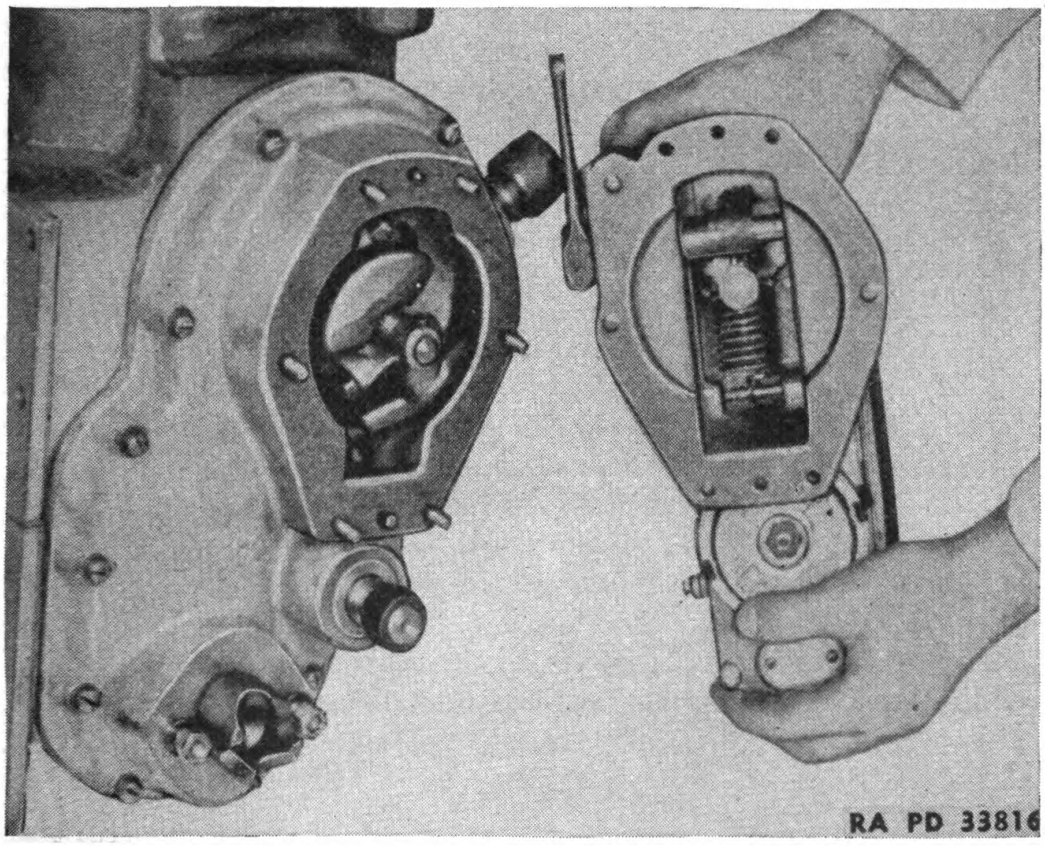

FIGURE 100.—Governor mechanism.

the opening of the carburetor throttle butterfly valve, thus governing the engine speed, except at low idle, where the control rod is held in a fixed position by the low idle latch.

High idle speed	2,300 rpm
Low idle speed	800 rpm

101. High idle speed.—*a.* If the starter pinion latches disengage too soon, it may be necessary to lower the starting engine high idle speed or to adjust the starter pinion latches as outlined in section VIII.

Digitized by Google
Original from UNIVERSITY OF CALIFORNIA
Generated on 2014-11-16 09:29 GMT / http://hdl.handle.net/2027/uc1.b3243973
Public Domain, Google-digitized / http://www.hathitrust.org/access_use#pd-google

b. If the governor has a tendency to "surge" or "hunt," the condition can usually be corrected by freeing the throttle connections or by changing the length of the control rod from the governor to the barburetor butterfly valve.

c. The high idle speed of the starting engine may be regulated after removing the cover plate from the front of the timing gear housing by altering the point at which the spring is attached to the governor lever. Increasing the spring tension increases the high idle speed.

102. Low idl speed.—The low idle speed is controlled by the adjusting screw on the low idle latch.

Section V

REMOVING AND REPLACING THE STARTING ENGINE

Paragraph
Procedure 103

103. Procedure.—*a.* The engine should be drained and then unbolted from the starter pinion support and from the Diesel block. The engine (fig. 101) can then be slipped forward a few inches and angled away from the Diesel without the necessity of removing the water pump, providing the starter pinion is disengaged.

b. Clean the gasket surfaces on the cylinder blocks and cement the large gasket in place on the Diesel engine block and allow it to set. Coat the outside surface of the gasket with grease and the rubber water connection seal with soap or a solution of soapstone and glycerin. (Never use grease or oil on rubber.) It is always wise to install new gaskets and seals. Slide the engine into place, exercising care to avoid possible damage to gaskets.

Section VI

PISTONS AND RINGS

Removing piston assembly 104
Gaging cylinder bore 105
Fitting pistons 106
Cleaning pistons 107
Ring side clearance 108
Fitting pistons 106
Piston pin bearing 110

104. Removing piston assembly.—The piston assembly (piston, piston pin, rings, and connecting rod) can be removed from the

Digitized by Google
Original from UNIVERSITY OF CALIFORNIA
Generated on 2014-11-16 09:29 GMT / http://hdl.handle.net/2027/uc1.b3243973
Public Domain, Google-digitized / http://www.hathitrust.org/access_use#pd-google

top of the block. Care must be exercised when removing the bearing cap and when replacing it on the rod after the assembly is removed to keep the shims in their original location.

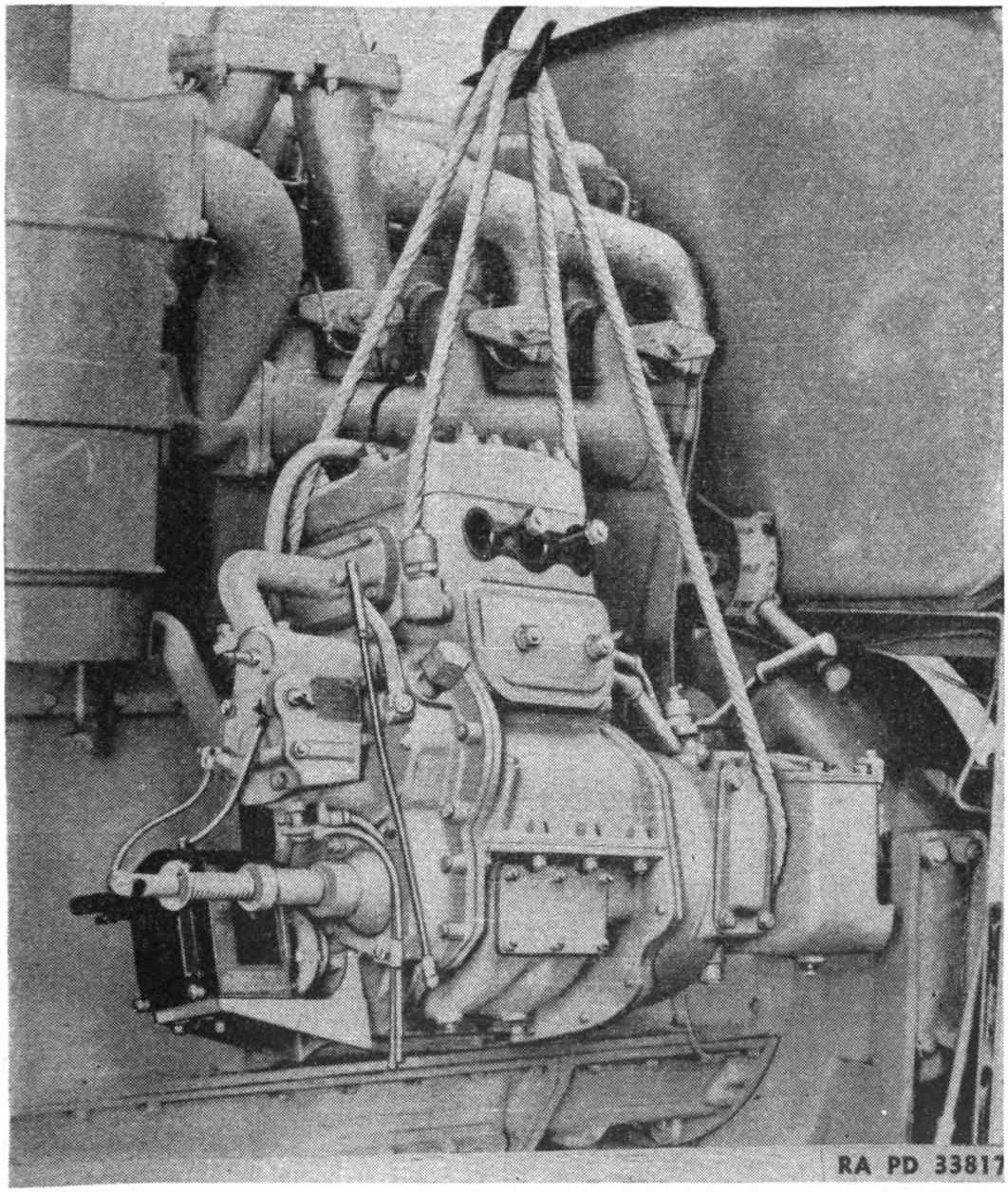

FIGURE 101.—Starting engine removal.

105. Gaging cylinder bore.—*a.* An engine that shows a loss of power or excessive oil consumption may need to have the cylinder bores reconditioned.

b. While the piston is removed, it is good practice to gage the cylinder bore (fig. 102) for possible out-of-round (eccentricity) and

Digitized by Google
Original from UNIVERSITY OF CALIFORNIA
Generated on 2014-11-16 09:29 GMT / http://hdl.handle.net/2027/uc1.b3243973
Public Domain, Google-digitized / http://www.hathitrust.org/access_use#pd-google

wall taper. If the cylinder bore shows an out-of-round of more than .003 inch or a taper of more than .005 inch, the cylinder bore should be reconditioned and new pistons and rings installed.

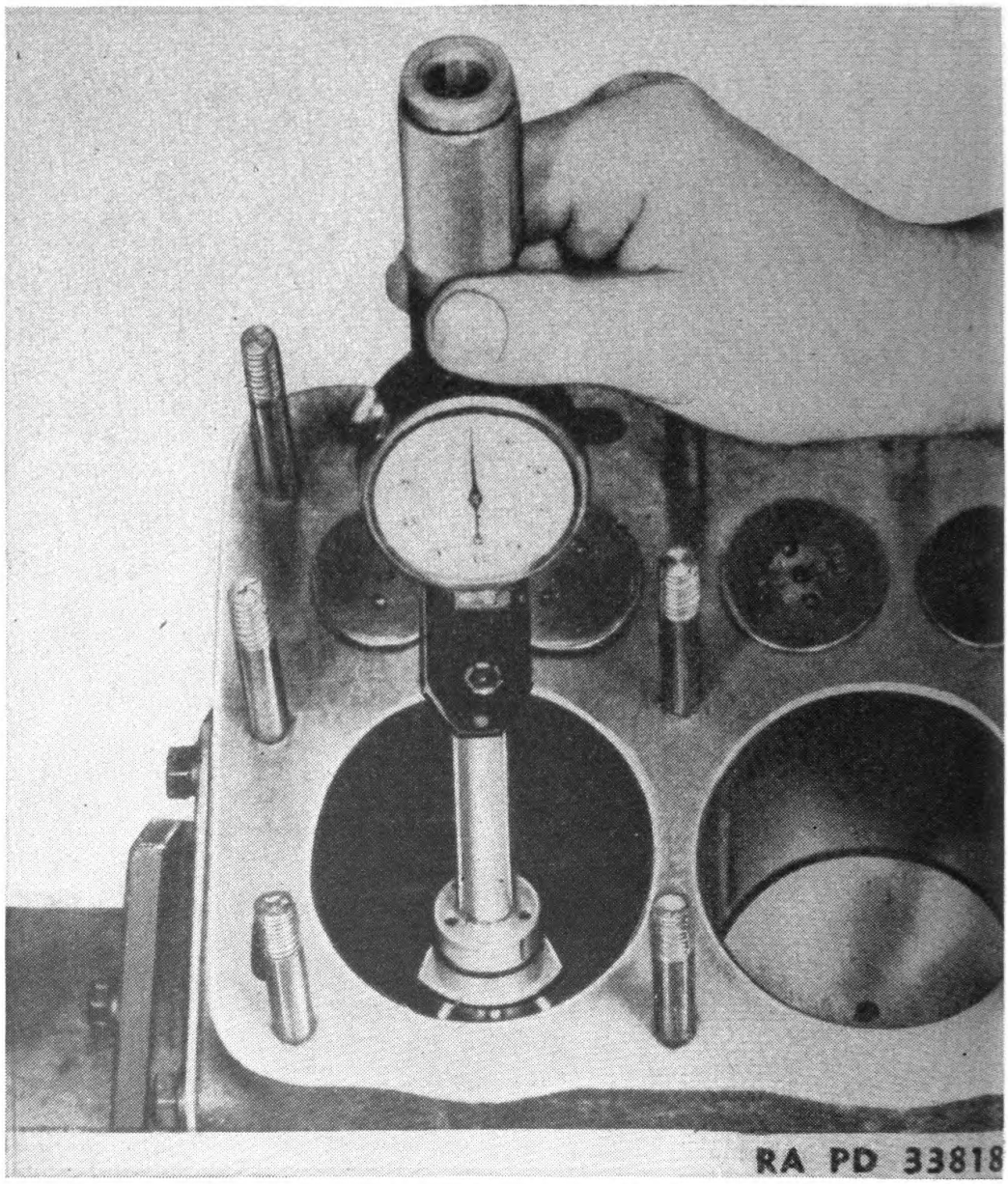

FIGURE 102.—Gaging the cylinder bore.

106. Fitting pistons.—*a.* Piston clearance should be measured by a thickness gage (fig. 103), on the thrust side of the piston. Cast iron pistons having a clearance of more than .012 inch to .015 inch should be replaced.

b. A new cast iron piston in a reconditioned cylinder bore should have a skirt clearance of .003 inch to .005 inch.

Digitized by Google
Original from UNIVERSITY OF CALIFORNIA
Generated on 2014-11-16 09:29 GMT / http://hdl.handle.net/2027/uc1.b3243973
Public Domain, Google-digitized / http://www.hathitrust.org/access_use#pd-google

107. Cleaning pistons.—The piston surfaces and ring grooves should be thoroughly cleaned before installing rings or replacing pistons in the cylinder. The most satisfactory method of cleaning is to follow the same recommendations as set forth for cleaning Diesel engine pistons. (See par. 25*b*.)

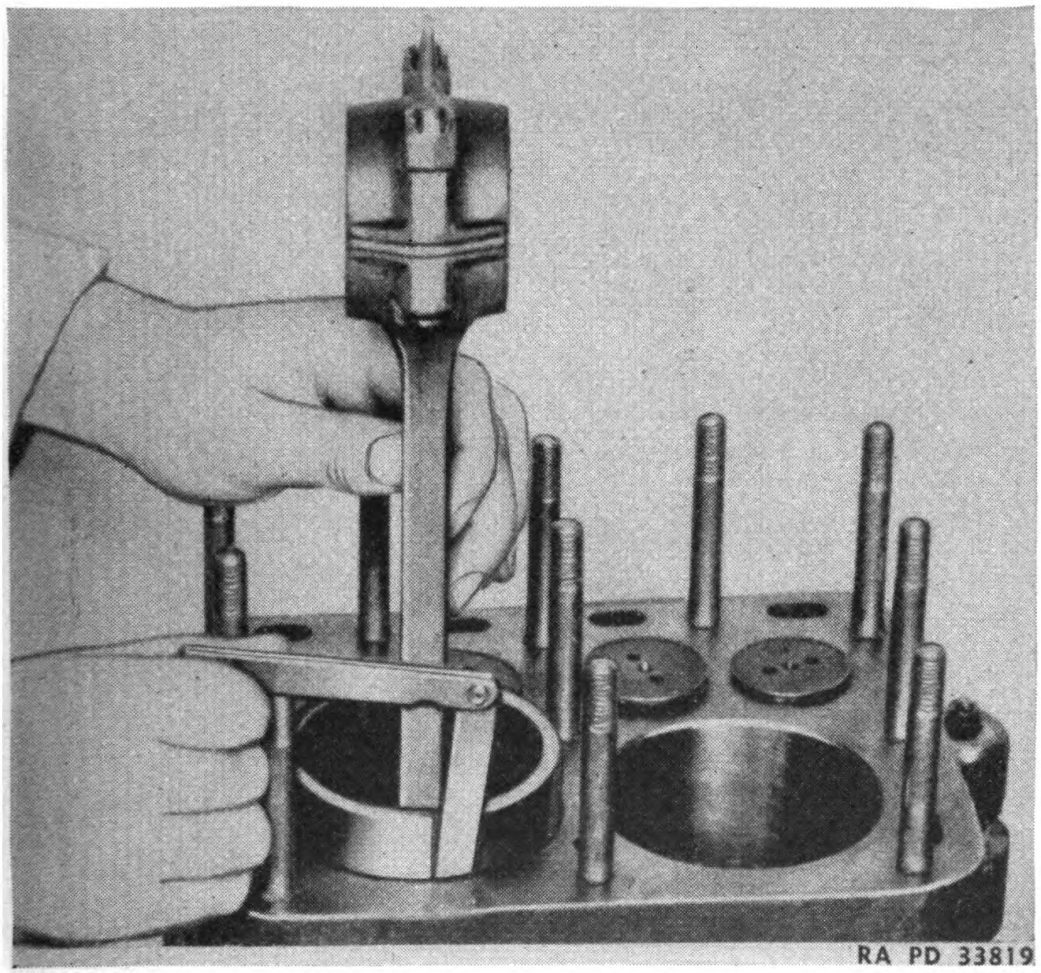

FIGURE 103.—Measuring piston clearance.

108. Ring side clearance.—New piston rings should have .0015 inch to .003 inch side clearance in the groove. After the rings have been installed on the pistons it should be possible to rotate them around on the piston without binding.

109. Ring gap.—The ring gap should be .008 inch to .020 inch for the compression rings and oil control rings. This measurement should be taken at the smallest diameter of the cylinder bore.

110. Piston pin bearing.—*a.* A piston pin bushing furnished from stock must be finished to correct size after it is pressed into the connecting rod, and the oil hole drilled.

Digitized by Google
Original from UNIVERSITY OF CALIFORNIA
Generated on 2014-11-16 10:38 GMT / http://hdl.handle.net/2027/uc1.b3243973
Public Domain, Google-digitized / http://www.hathitrust.org/access_use#pd-google

b. Piston pins are furnished in standard size and .007 inch oversize. A piston pin should be a thumb push fit in the connecting rod bushing and piston at normal room temperature (70° F.). The piston pin or retaining plugs must never be forced into the piston.

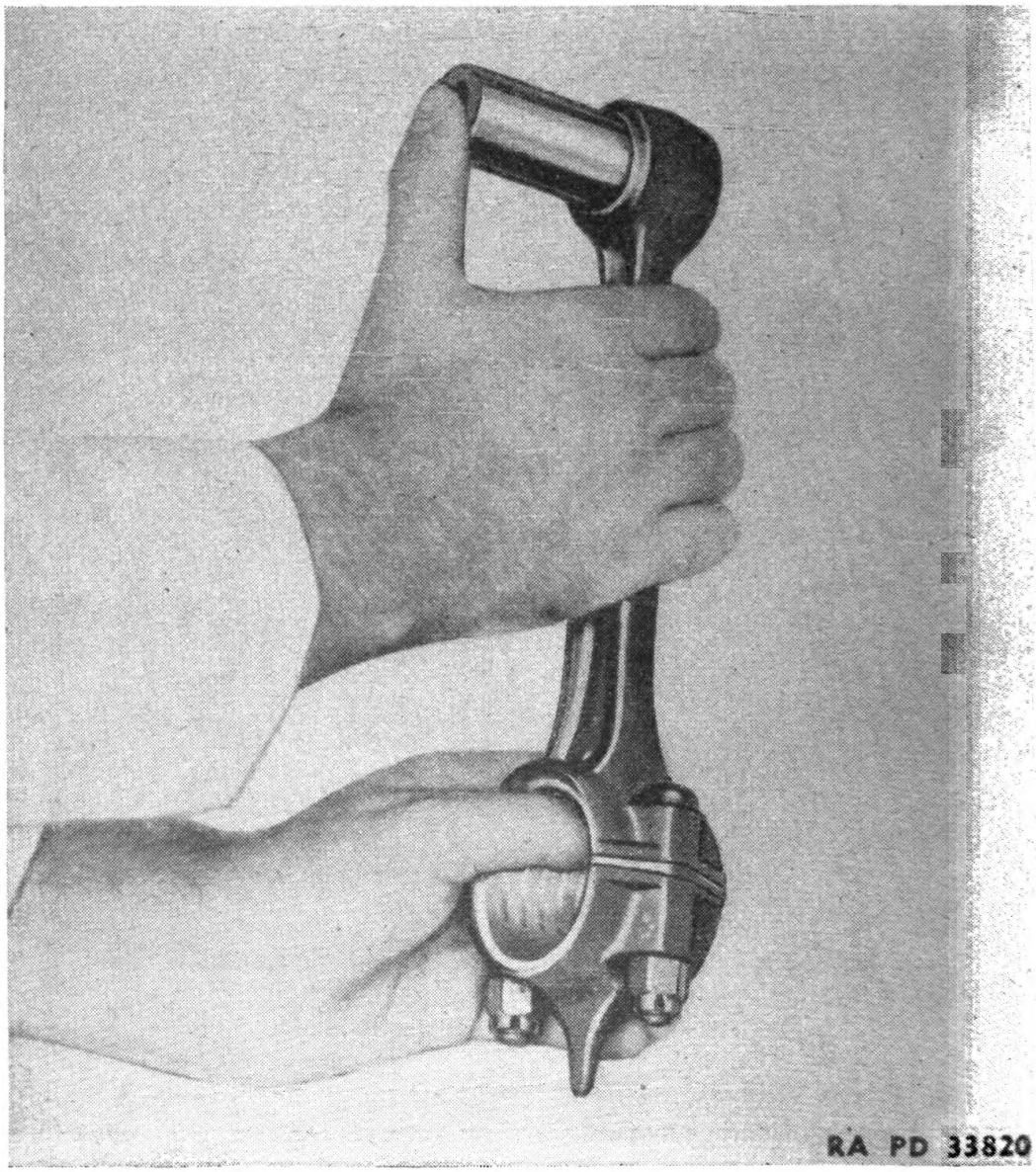

FIGURE 104.—Checking piston pin clearance.

c. Piston assemblies should be replaced in the same cylinders from which they were removed. The connecting rods are marked on the camshaft side to assure correct assembly. Cylinder number one is located next to the timing gears.

Digitized by Google
Original from UNIVERSITY OF CALIFORNIA
Generated on 2014-11-16 10:38 GMT / http://hdl.handle.net/2027/uc1.b3243973
Public Domain, Google-digitized / http://www.hathitrust.org/access_use#pd-google

SECTION VII

BEARINGS

Paragraph
Main bearings 111
Connecting rod bearings 112

111. Main bearings.—The babbitt-lined, bushing type of main bearings can be readily replaced after the timing gear (fig. 105) and flywheel have been removed. Normal main bearing clearance should be from .002 inch to .004 inch.

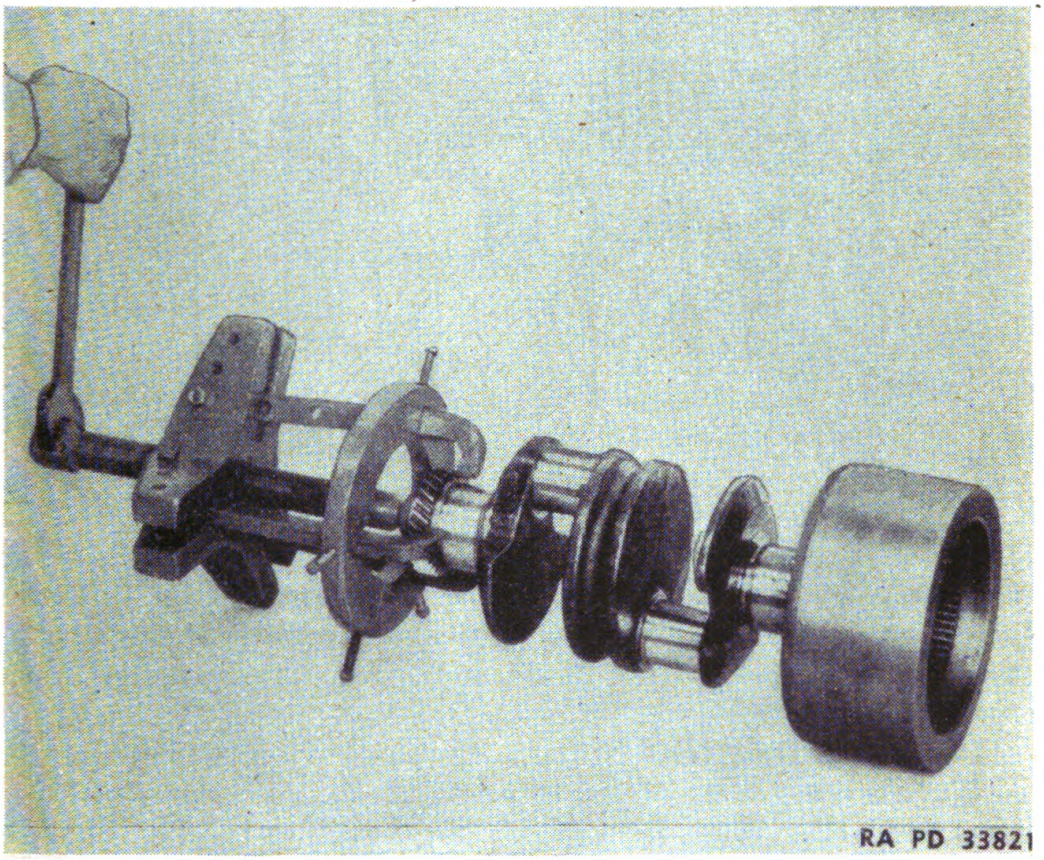

FIGURE 105.—Timing gear removal.

a. The front main bearing flange controls thrust and end-play. When replacing the flywheel, make sure the key is in place and that the flywheel is pressed tightly onto the tapered shaft before tightening the retainer nut and securing the nut lock.

b. The crankshaft assembly should be replaced so that the main bearings fit over their respective dowel pins (fig. 107), and the timing gear marks line up.

c. Four spacer washers are provided (one for each of the bearing studs) adjacent to each main bearing to prevent the oil pan from

Digitized by Google
Original from UNIVERSITY OF CALIFORNIA
Generated on 2014-11-16 10:38 GMT / http://hdl.handle.net/2027/uc1.b3243973
Public Domain, Google-digitized / http://www.hathitrust.org/access_use#pd-google

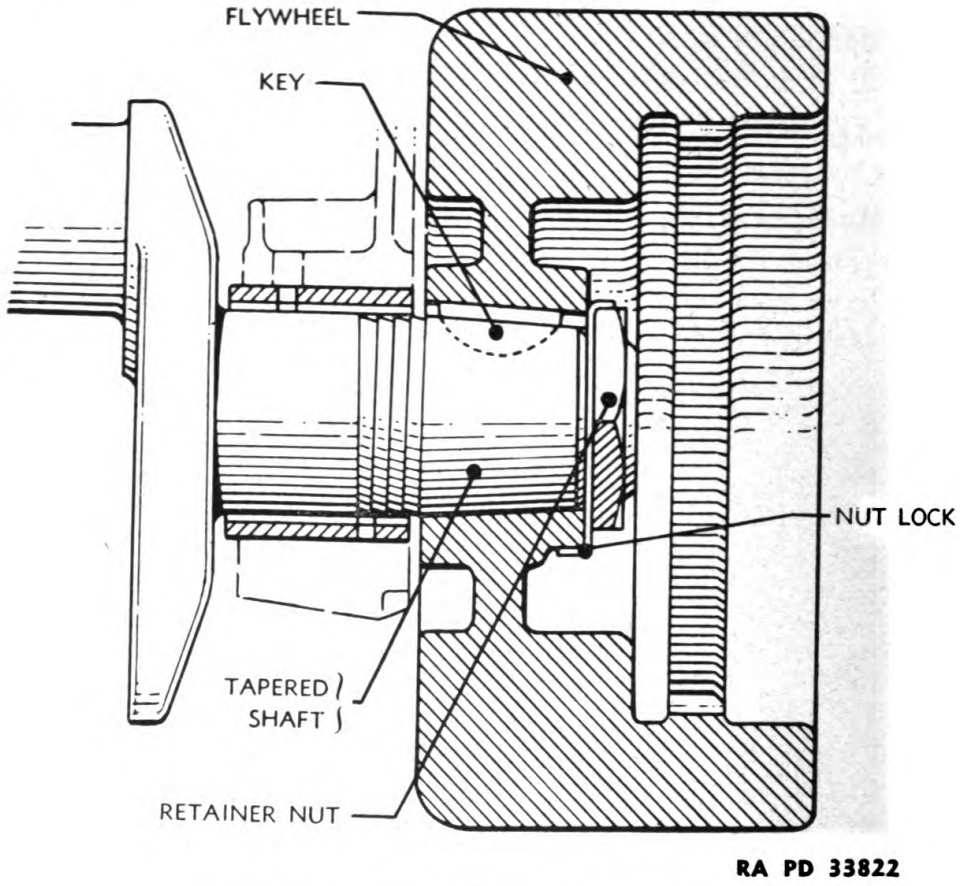

FIGURE 106.—Flywheel assembly on crankshaft.

being pulled tight enough to distort the bearings. Be sure the spacers are located in the recesses provided for them in the oil pan gasket. Overlapping of the gasket and spacers may cause oil leaks around the bearings.

112. Connecting rod bearings.—*a.* Connecting rod bearings on machines before serial number 9G7084 (fig. 108) are provided with shims for adjustment. In machines beginning with serial number 9G7084, the connecting rods are equipped with the precision type bearing shells (fig. 109). Adjustment of the shim type rod or replacement of the shells in the precision rods can be accomplished through the inspection opening. The normal bearing clearance is .002 inch to .004 inch.

b. Rods with .020 inch undersize bearings are available for machines below 9G7084. Bearing shells .020 inch undersize are available for machines 9G7084 and up.

Digitized by Google
Original from UNIVERSITY OF CALIFORNIA
Generated on 2014-11-16 10:38 GMT / http://hdl.handle.net/2027/uc1.b3243973
Public Domain, Google-digitized / http://www.hathitrust.org/access_use#pd-google

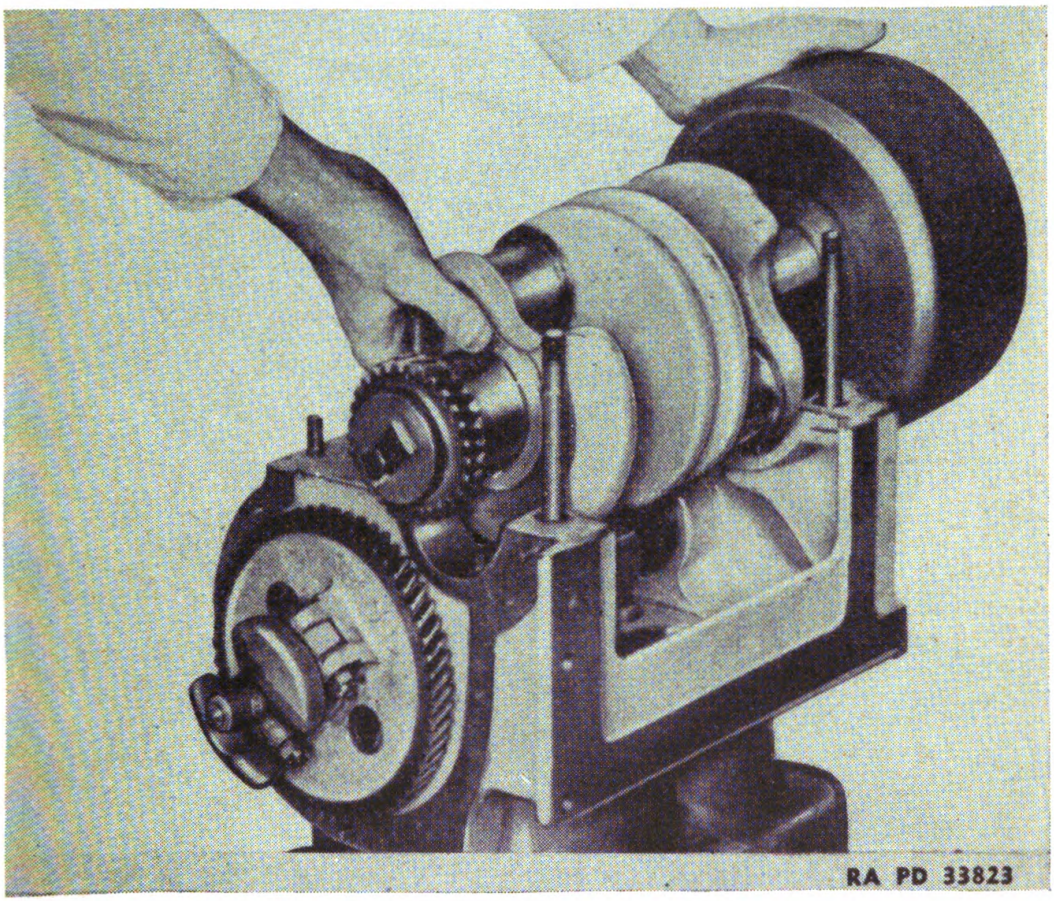

FIGURE 107.—Replacing crankshaft assembly.

Digitized by Google
Original from UNIVERSITY OF CALIFORNIA
Generated on 2014-11-16 10:38 GMT / http://hdl.handle.net/2027/uc1.b3243973
Public Domain, Google-digitized / http://www.hathitrust.org/access_use#pd-google

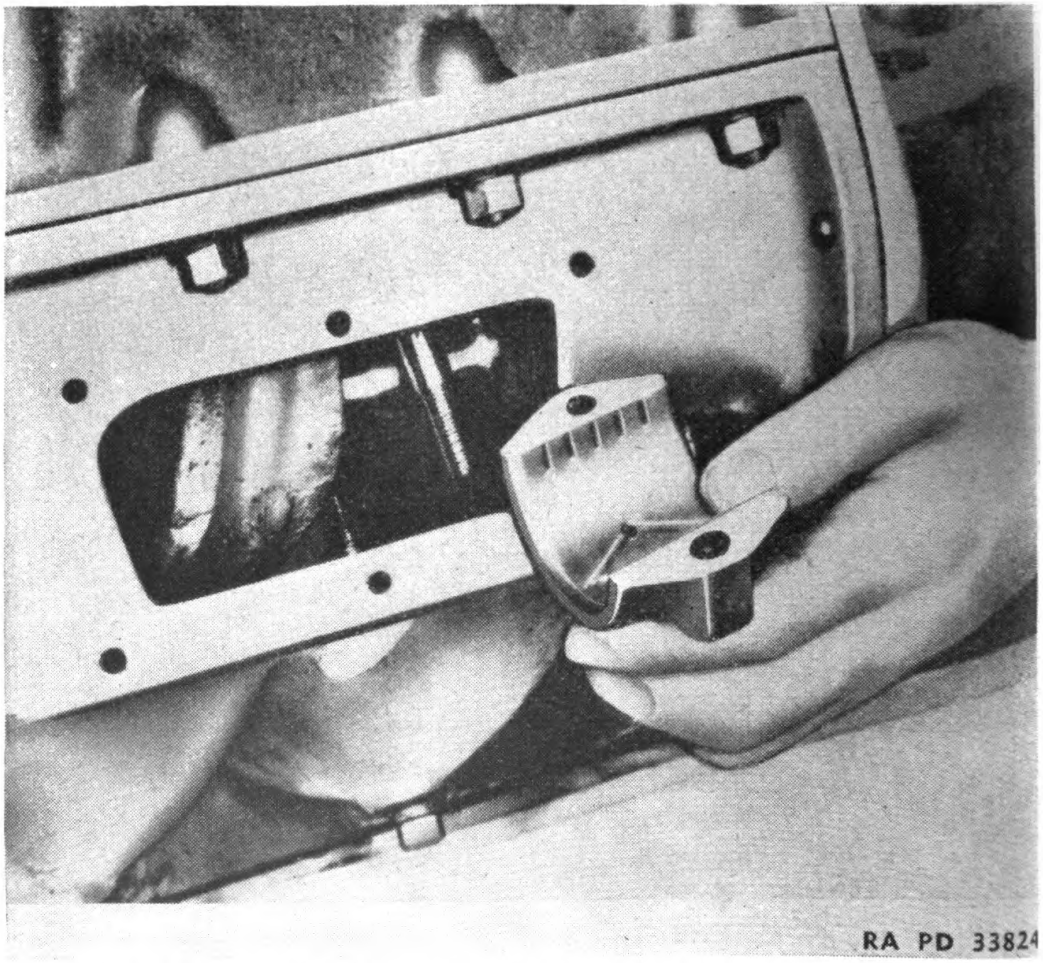

FIGURE 108.—Babbitted-in type connecting rods used in tractors prior to serial number 9G7084.

Digitized by Google
Original from UNIVERSITY OF CALIFORNIA
Generated on 2014-11-16 10:38 GMT / http://hdl.handle.net/2027/uc1.b3243973
Public Domain, Google-digitized / http://www.hathitrust.org/access_use#pd-google

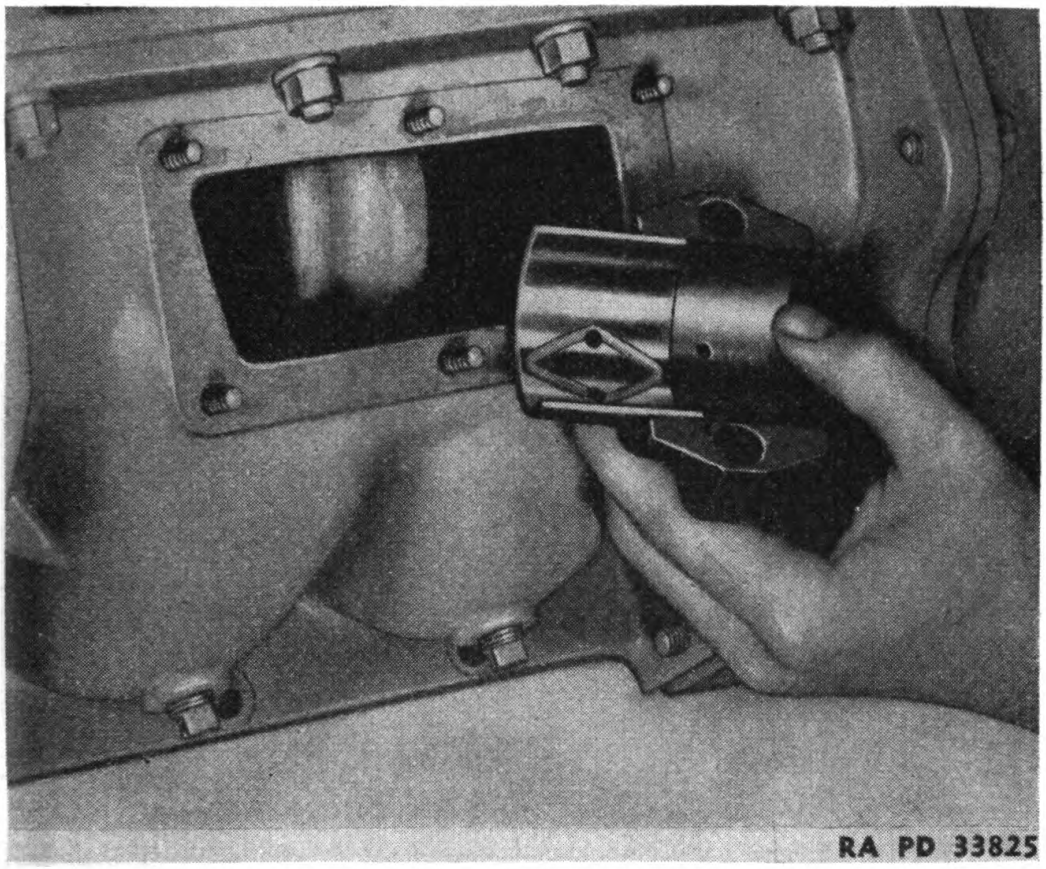

FIGURE 109.—Precision type connecting rod shells used in tractors from serial number 9G7084 and up.

SECTION VIII

STARTING MECHANISM

Paragraph
General 113
Clutch 114
Pinion 115
Transmission 116

113. General.—The starting engine transmits its power through a single plate clutch to a sliding pinion which is engaged with the Diesel engine flywheel gear by means of a hand lever (fig. 110). The pinion is automatically disengaged by centrifugal force acting on the pinion latches when the Diesel engine begins to operate under its own power.

Digitized by Google
Original from UNIVERSITY OF CALIFORNIA
Generated on 2014-11-16 10:39 GMT / http://hdl.handle.net/2027/uc1.b3243973
Public Domain, Google-digitized / http://www.hathitrust.org/access_use#pd-google

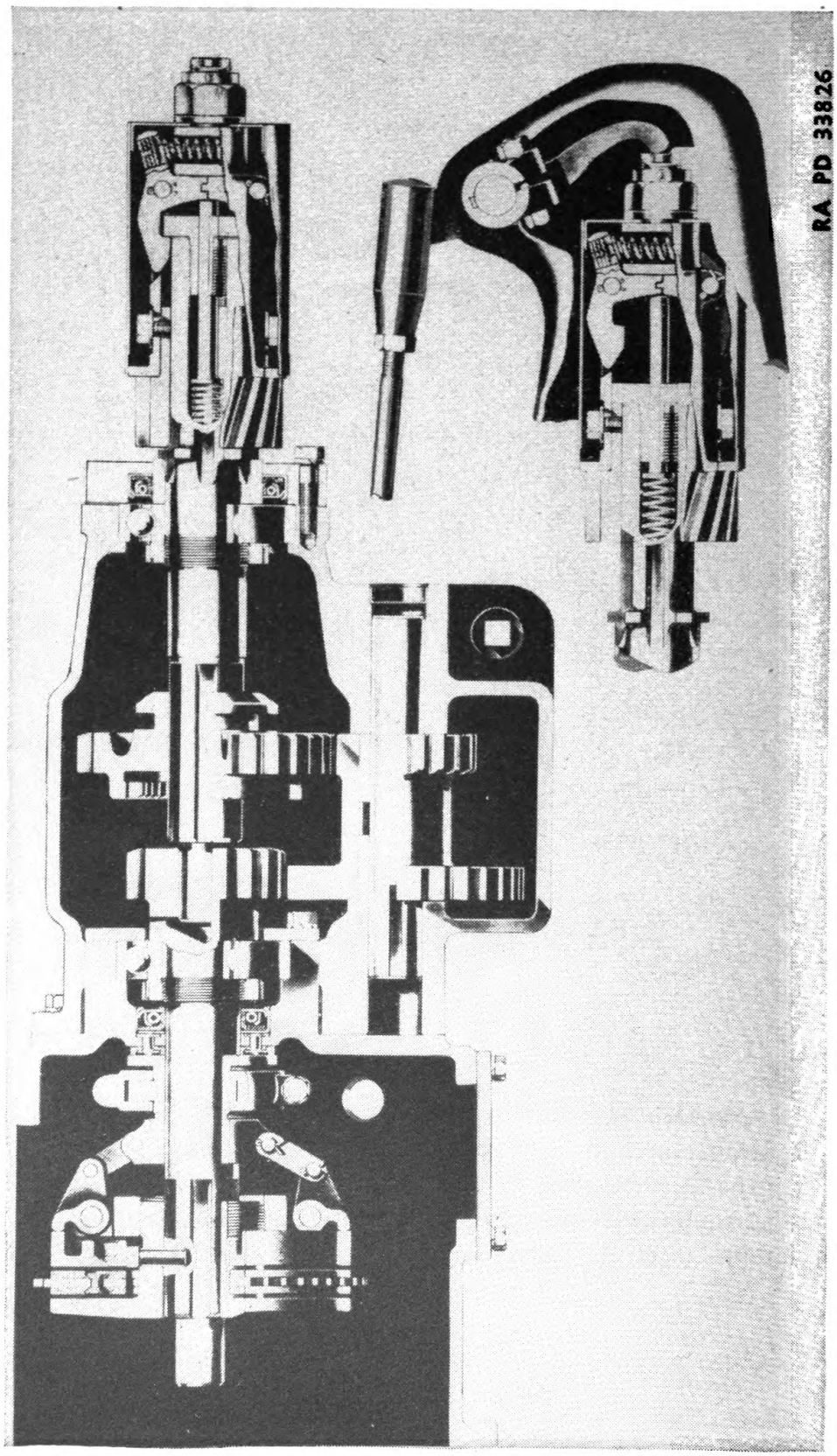

FIGURE 110.—Starting engine clutch and transmission.

Digitized by Google
Original from UNIVERSITY OF CALIFORNIA
Generated on 2014-11-16 10:39 GMT / http://hdl.handle.net/2027/uc1.b3243973
Public Domain, Google-digitized / http://www.hathitrust.org/access_use#pd-google

114. Clutch.—It is important that the starting engine clutch be maintained in proper adjustment.

a. To adjust.—Remove the plate from the side of the clutch compartment. Turn the clutch adjusting collar until the lock pin is accessible. Pull the lock pin out and turn the collar to the right until the lock pin drops into the next hole. Test the adjustment by engaging the clutch. If one hole gives a slightly loose adjustment and the next gives too tight an adjustment, use the looser adjustment. Test the clutch frequently and adjust when necessary. If oil is noticed in the housing, remove the plug and drain the compartment. This adjustment will assure longer clutch facing wear, and more satisfactory starting of the Diesel engine. Neglecting to drain the starting engine clutch compartment periodically may cause the clutch facings to be ruined by oil.

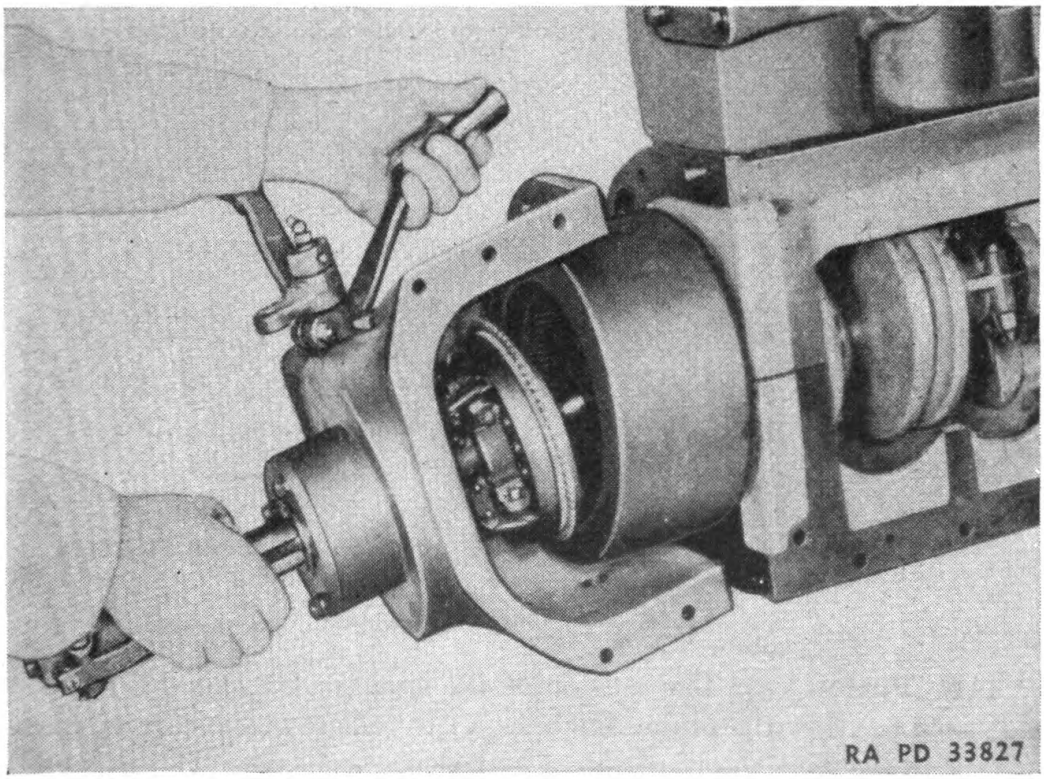

FIGURE 111.—Clutch removal.

b. To remove.—(1) The clutch driving plate is accessible after its housing is separated from the starting engine. Pull out on the adjusting collar lock pin and back the collar (4) (fig. 112) away from the front pressure plate (1) until the dowel pin (3) in the hub can be lifted out. The assembly can then be slid or pulled off the shaft.

Digitized by Google
Original from UNIVERSITY OF CALIFORNIA
Generated on 2014-11-16 10:39 GMT / http://hdl.handle.net/2027/uc1.b3243973
Public Domain, Google-digitized / http://www.hathitrust.org/access_use#pd-google

(2) After removal, the clutch plate (2) may be readily changed or the clutch dismantled for replacements. The clutch brake (5) should be inspected while the clutch assembly is removed and relined if worn.

NOTE.—When reassembling the clutch, be sure to replace the dowel pin (3) (fig. 112).

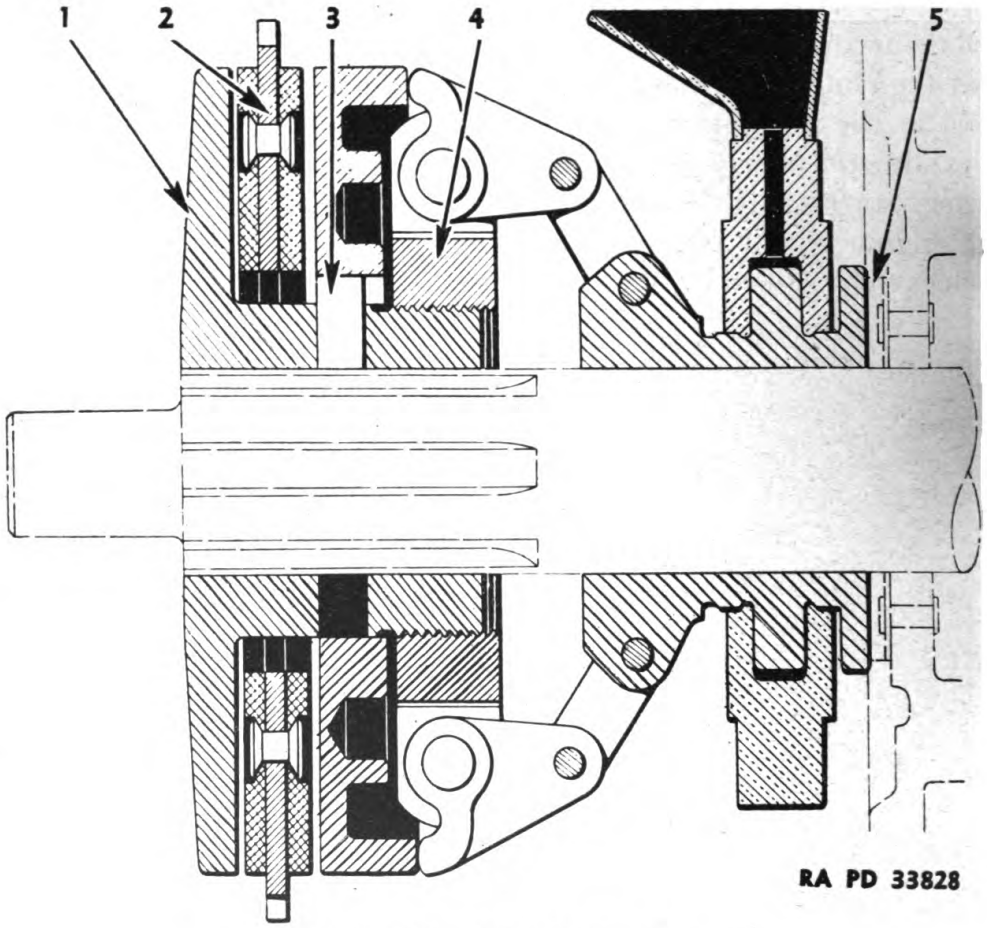

FIGURE 112.—Clutch disassembly.

115. Pinion.—*a.* The tension of the spring (B) (fig. 114) can be adjusted to allow the pinion latches (A) to release at the correct speed. Check to see that the high idle speed is properly set. If the latches disengage too soon, screw (D) can be turned in to increase the spring tension. One turn of the adjusting screw will change the releasing speed about 100 to 150 rpm. Care must be exercised not to raise the releasing speed too much as this may cause damage to the starting mechanism and starting engine.

b. If the unit is to be disassembled, note the exact position of adjusting screws (D) with reference to latch face (E). Install screws

Digitized by Google
Original from UNIVERSITY OF CALIFORNIA
Generated on 2014-11-16 10:39 GMT / http://hdl.handle.net/2027/uc1.b3243973
Public Domain, Google-digitized / http://www.hathitrust.org/access_use#pd-google

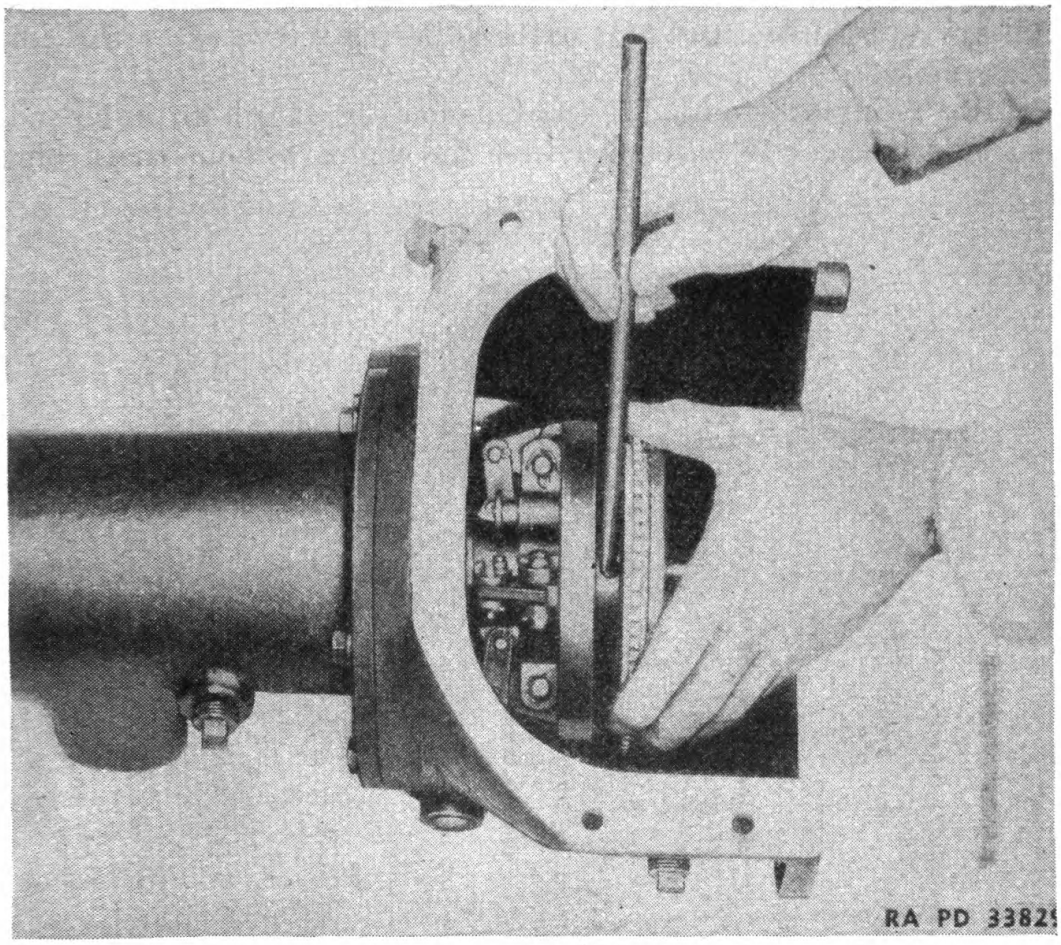

FIGURE 113.—Dowel pin replacement.

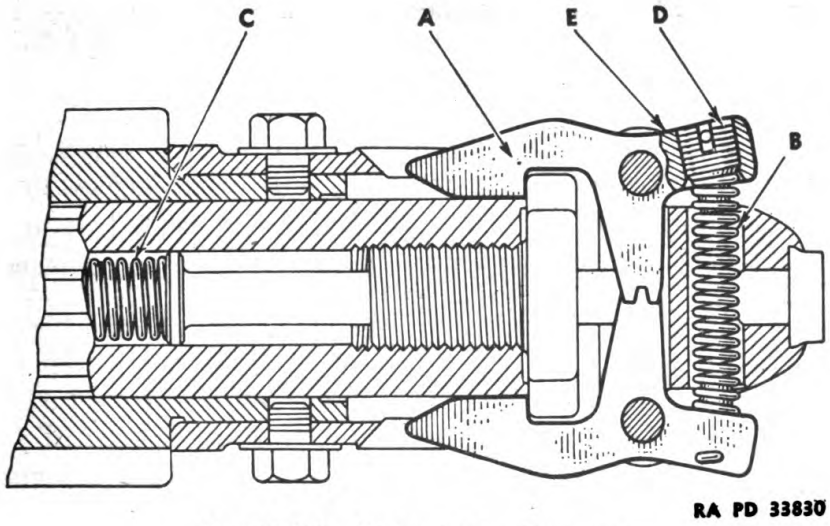

FIGURE 114.—Pinion latch adjustment.

Digitized by Google
Original from UNIVERSITY OF CALIFORNIA
Generated on 2014-11-16 10:39 GMT / http://hdl.handle.net/2027/uc1.b3243973
Public Domain, Google-digitized / http://www.hathitrust.org/access_use#pd-google

again in the same position to retain the same disengaging speed. Always replace the cotter pins in the adjusting screws after the unit is assembled.

116. Transmission.—The transmission (fig. 115) is an independent unit and may be uncoupled from the engine without disturbing

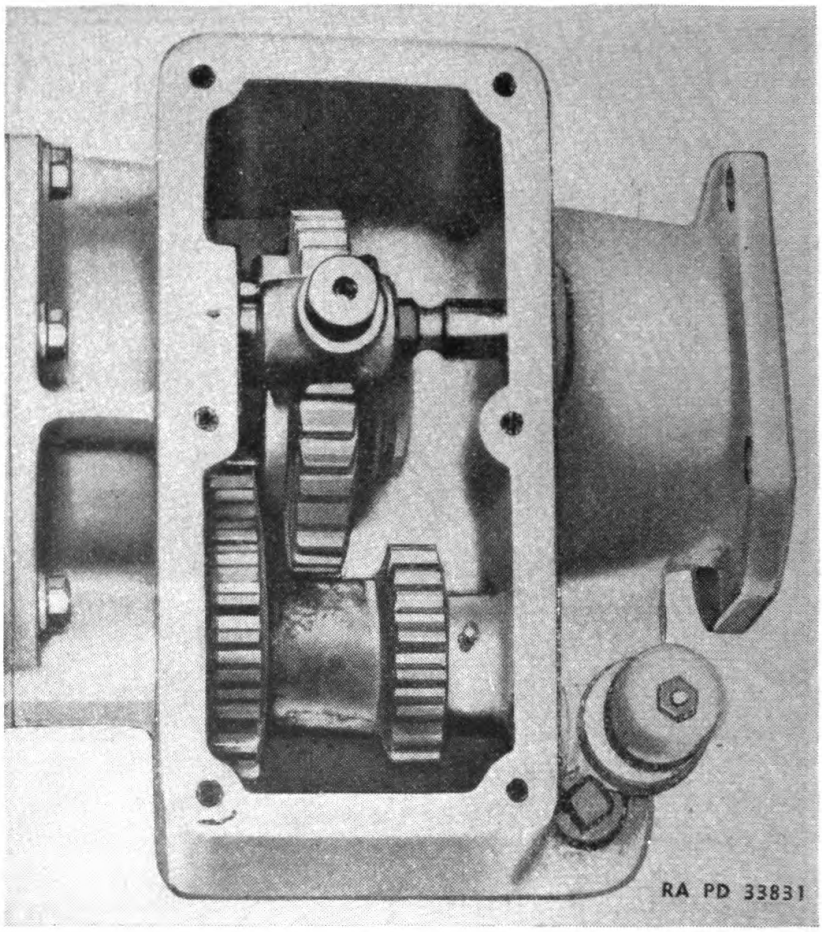

FIGURE 115.—Transmission.

the clutch. The shafts may be driven out with a brass bar. The bearings should be removed or installed only with sleeves or pullers. Leather seals should be handled carefully and inspected upon removal to note the position of the wiping edge so they can be replaced in the correct manner.

Digitized by Google
Original from UNIVERSITY OF CALIFORNIA
Generated on 2014-11-16 10:39 GMT / http://hdl.handle.net/2027/uc1.b3243973
Public Domain, Google-digitized / http://www.hathitrust.org/access_use#pd-google

CHAPTER 4

POWER TRANSMISSION UNITS

		Paragraphs
SECTION I.	General	117–120
II.	Steering clutch and bevel gear removal	121–124
III.	Brakes	125–126
IV.	Final drive	127–128
V.	Power take-off shaft	129–130

SECTION I

GENERAL

	Paragraph
General	117
Flywheel clutch	118
Transmission	119
Rear drive attachment	120

117. General.—Power is transmitted from the engine through the flywheel clutch (A), transmission (B), steering clutches (C), final drive (D), and tracks (fig. 116).

118. Flywheel clutch.—The over center type flywheel clutch is metallic lined (2) (fig. 117). A clutch brake (4) is provided to stop the upper transmission shaft for easier gear shifting.

a. Clutch removal.—(1) Remove the engine (par. 36). Remove nut (3) (fig. 117), back clutch adjusting spider (5) off hub of plate assembly (1), and remove clutch assembly from upper transmission shaft.

(2) Disconnect clutch release yoke from release collar. The remainder of the clutch can then be removed.

b. Facing replacement.—The clutch or clutch brake facings may now be replaced. Care should be taken to prevent any lubricant from getting on the facings as this will cause glazing of the surfaces.

c. Clutch pilot bearing.—The clutch pilot bearing (7) is lubricated through a drilled passage in the flywheel. At the time the engine is removed, some grease, general purpose No. 1, should be forced through the grease passage to insure its being open. The pilot bearing can be removed after removing capscrews (6).

119. Transmission.—*a. Removal.*—The amount of equipment to be removed to do work inside the transmission case varies with the work to be done. To remove the gears in the transmission, it is necessary to remove the engine, fuel tank, seat and fenders, and

Digitized by Google
Original from UNIVERSITY OF CALIFORNIA
Generated on 2014-11-16 10:39 GMT / http://hdl.handle.net/2027/uc1.b3243973
Public Domain, Google-digitized / http://www.hathitrust.org/access_use#pd-google

(*e*) Disconnect air brake lines from the valves at the right-hand, rear corner of transmission case and remove air brake lines.

(*f*) Loosen steering clutch and brake adjustments, remove brake rods attached to the pedals, and screw them out of the yokes.

(*g*) Remove left inside fender bracket.

(*h*) The fuel line can be removed after disconnecting it from the fuel filter housing.

(*i*) Disconnect starting engine pinion lever linkage at the rear end and remove small connecting lever at this point.

(*j*) Remove pin which connects the transmission gear shift locking arrangement and clutch lever near the left brake pedal shaft.

(*k*) Remove flywheel clutch lever.

(*l*) The electric brake wires should be cut approximately 1 inch to the rear of the junction splice located at the right rear side of the engine.

(*m*) Remove capscrews and bolts which secure transmission cover to the transmission case.

(*n*) The cover, fenders, and tool boxes can now be lifted off as a unit.

(*o*) Push the transmission gear shift locking lever all the way forward before attempting to lift the cover. When the cover is replaced, the gear shift locking mechanism, brake lever clevises and adjusting screws, steering clutch bell cranks, and gear shift lever must all be in a neutral position. The steering clutch release bearing oil tubes must be put into place after the cover is installed.

(3) *Gear shift mechanism.*—(*a*) The gear shift mechanism (fig. 118) is interconnected with the flywheel clutch release mechanism in such a way that when the flywheel clutch is engaged, the transmission gears are locked in position. When the flywheel clutch is disengaged, the transmission can be shifted in or out of gear.

(*b*) Three shift forks (5), (6), and (12) can be moved to the front or rear on shafts at (7) by lever (1). Notches (2) receive lug (11) on each lock assembly (10). The lock bars (10) are pivoted at (4) and are held up in position by springs (9). When the flywheel clutch is engaged, latch (8) is hooked under the end of lock bars (10). This holds the locking lug up into the shift fork, thus preventing its being moved. When the clutch is disengaged, the gears can be shifted because the shift mechanism is unlocked by the rotation of the latch.

(*c*) Remove transmission top cover and capscrews (3). The shift mechanism can then be lifted off.

(*b*). *Disassembly.*—Either of two methods can be used to remove the upper transmission shaft according to whether the rear drive attachment is in place or is removed.

Digitized by Google
Original from UNIVERSITY OF CALIFORNIA
Generated on 2014-11-16 10:39 GMT / http://hdl.handle.net/2027/uc1.b3243973
Public Domain, Google-digitized / http://www.hathitrust.org/access_use#pd-google

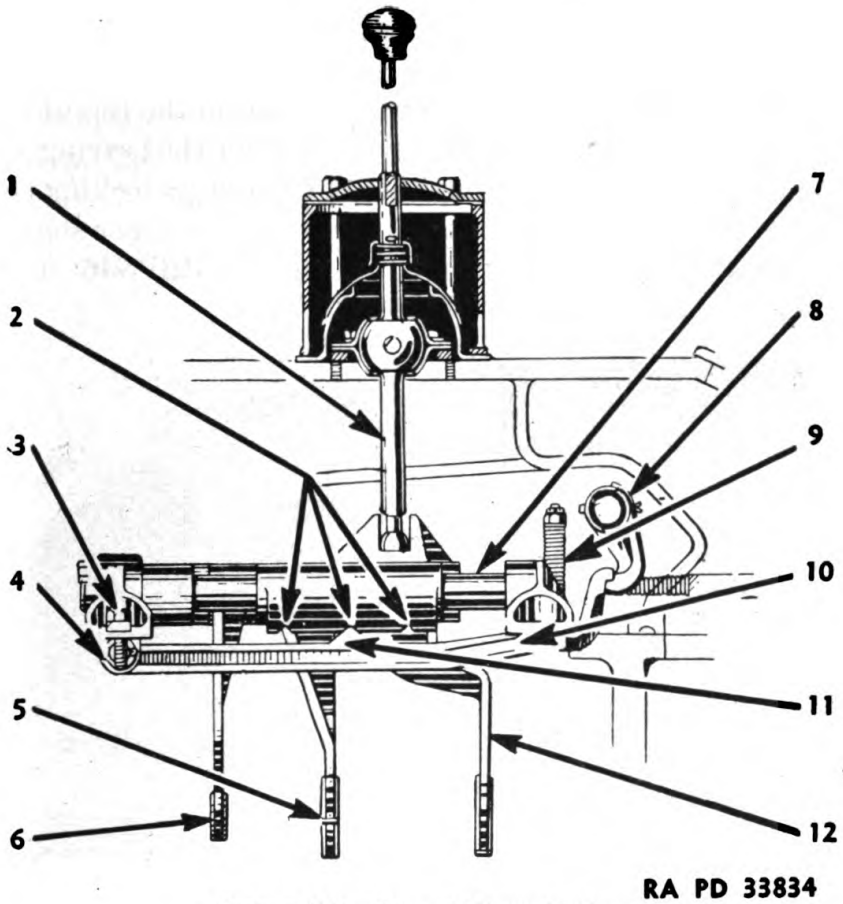

FIGURE 118.—Gear shift mechanism.

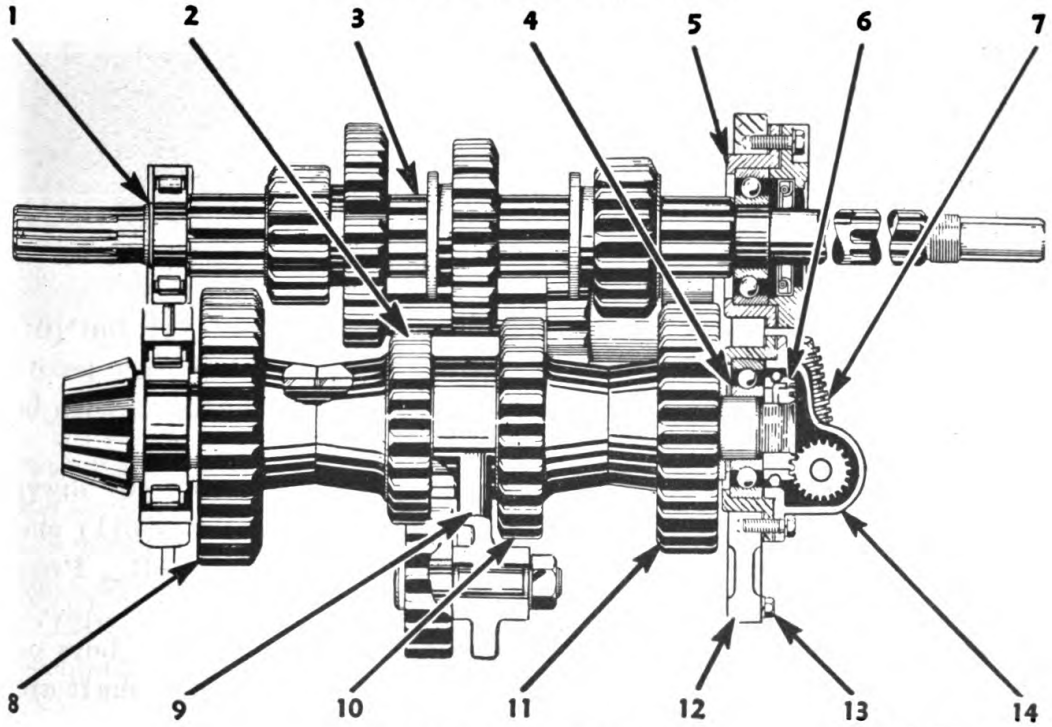

FIGURE 119.—Transmission.

Digitized by Google
Original from UNIVERSITY OF CALIFORNIA
Generated on 2014-11-16 10:39 GMT / http://hdl.handle.net/2027/uc1.b3243973
Public Domain, Google-digitized / http://www.hathitrust.org/access_use#pd-google

(1) With the rear drive attachment in place, remove upper shaft front bearing and cage (5) (fig. 119) so upper shaft (3) can be pulled forward and then removed through the opening in the top of the case. The gears on the upper shaft can be taken off after the bearing at either end is removed. The rear bearing is held in place by a locking ring (1).

(2) If the rear drive attachment is removed, the upper shaft can be pulled from the rear (fig. 120) by using CAT2B6946 stud (A), CAT2132A bar (B), and CAT2580A nut (C).

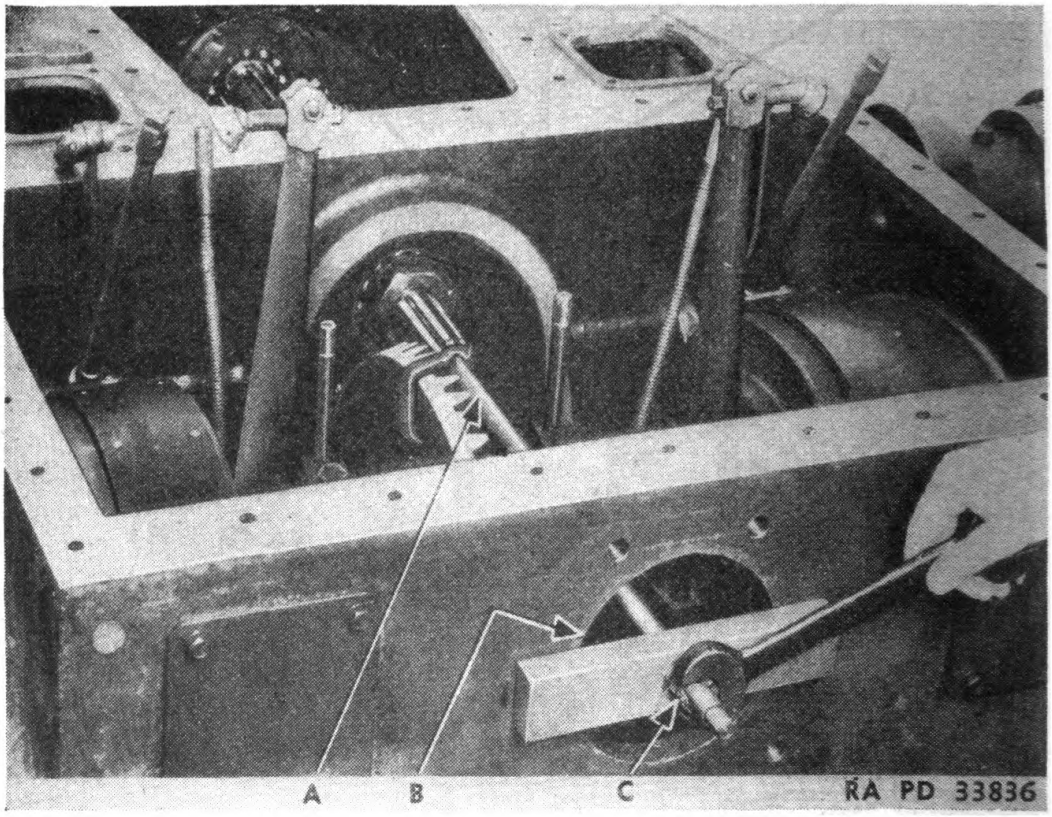

FIGURE 120.—Second method of upper transmission shaft removal.

(3) Remove odometer drive cable (7) (fig. 119), case (14), nut (6), and front cover nuts (13). Make certain that all shims (4) are recovered when front cover (12) is removed. The lower shaft can then be removed.

(4) A press will be required to remove the gears from the lower transmission shaft. Press off the two front gears (10) and (11) and remove the keys. Gear bracket (9) can be pried off the shaft. Press off the two rear gears (2) and (8).

(5) In installation, care should be taken to see that any burs or sharp edges in the bores of the gears or on the transmission shaft are

Digitized by Google
Original from UNIVERSITY OF CALIFORNIA
Generated on 2014-11-16 10:40 GMT / http://hdl.handle.net/2027/uc1.b3243973
Public Domain, Google-digitized / http://www.hathitrust.org/access_use#pd-google

smoothed. The sharp corners on the ends of the keys should be rounded to reduce the tendency for them to "pick up."

(6) Use a lubricant in the gear bores and on the shaft. Make certain that no metal particles accumulate on the gear hubs that will prevent their being pressed into their correct location.

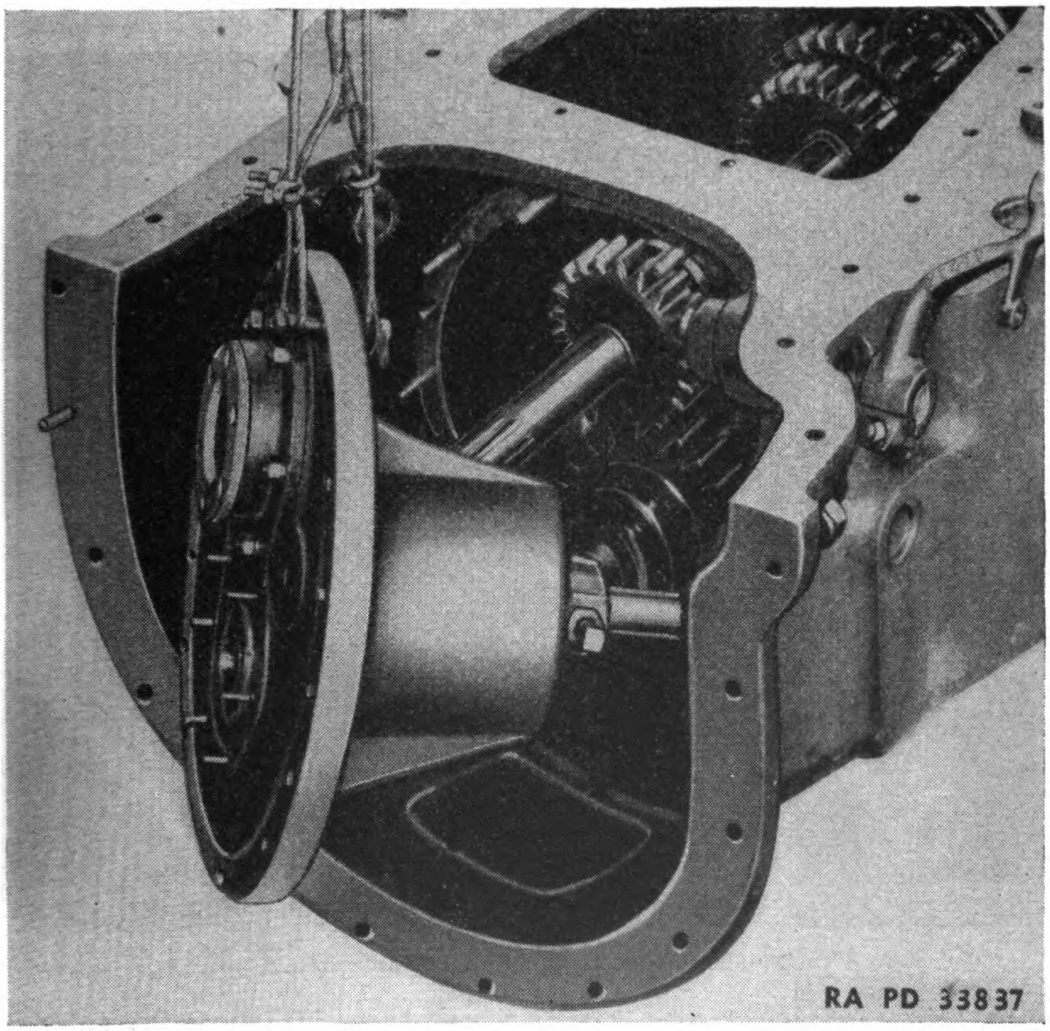

FIGURE 121.—Front cover removal.

(7) If the same lower pinion shaft is reused, make certain the spacer and the same number of shims removed are put back in. After the spanner nut on the front of the shaft has been tightened as much as possible, it will probably be found necessary to drill a new hole for the L-type lock. Use a $^{13}/_{64}$-inch drill for this purpose.

120. Rear drive attachment.—*a. Removal.*—The rear drive attachment can be removed after disconnecting the control rod and

Digitized by Google
Original from UNIVERSITY OF CALIFORNIA
Generated on 2014-11-16 10:49 GMT / http://hdl.handle.net/2027/uc1.b3243973
Public Domain, Google-digitized / http://www.hathitrust.org/access_use#pd-google

removing the nuts which secure the rear drive attachment case to the transmission case.

b. Disassembly.—(1) Remove capscrews which secure housing (4) (fig. 123) to the drive attachment and lift the shift fork out.

(2) Take off drawbar plate (1) which will expose the nuts on lower shaft (10) and on intermediate shaft (15) (fig. 124).

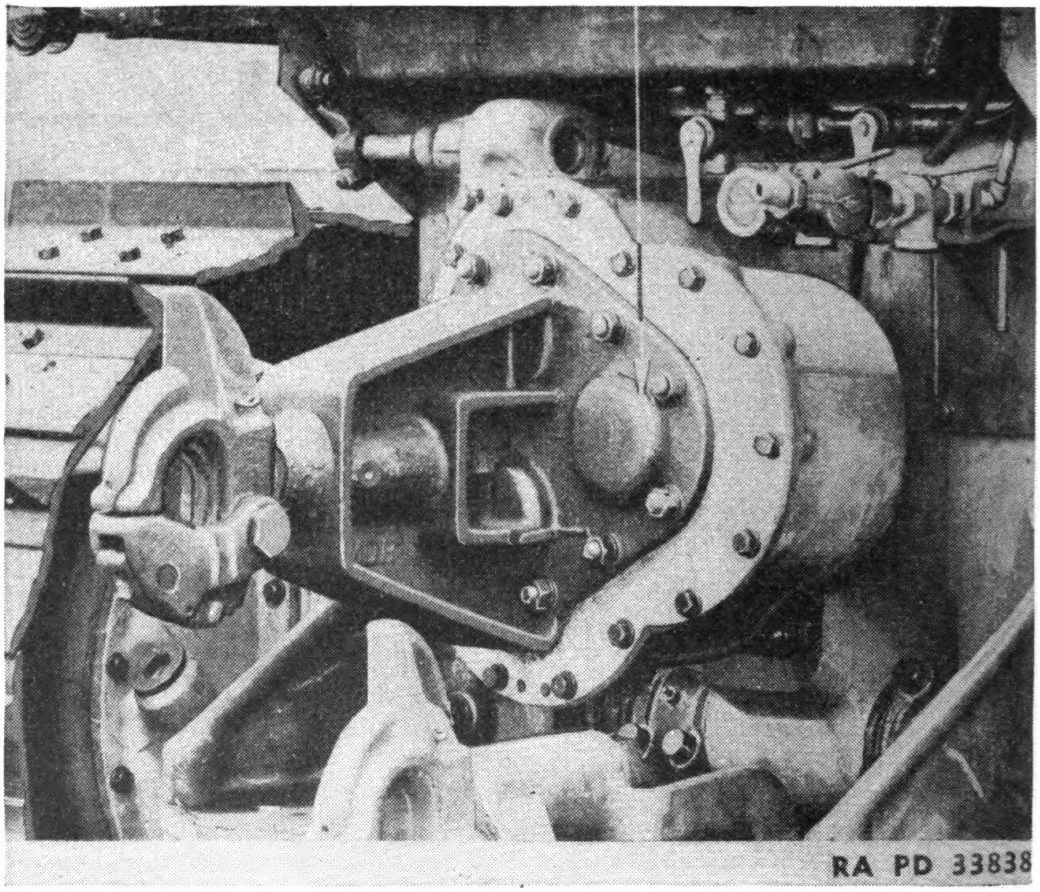

FIGURE 122.—Location of intermediate shaft.

(3) Nuts (7) (fig. 123), (14), and (16) (fig. 124) are 2¼ inches for which wrench L2075 can be used.

(4) The intermediate shaft (15) is located under plate (1) (fig. 123). Remove lower shaft nut (7) and plate (3). When plate (3) is removed, the intermediate shaft will be withdrawn with the plate.

(5) Shims (8) are for locating the lower shaft pinion with relation to the bevel gear.

(6) After gear (9) has been removed, slide lower shaft forward out of bearings (12). Remove bearing cage (6).

(7) Bearings (12) are secured in cage (6) by locking ring (13). Note direction of wiping edge of seal (11). Care should be taken when

Digitized by Google
Original from UNIVERSITY OF CALIFORNIA
Generated on 2014-11-16 10:49 GMT / http://hdl.handle.net/2027/uc1.b3243973
Public Domain, Google-digitized / http://www.hathitrust.org/access_use#pd-google

installing the shaft not to damage the seal with the shoulder on the shaft.

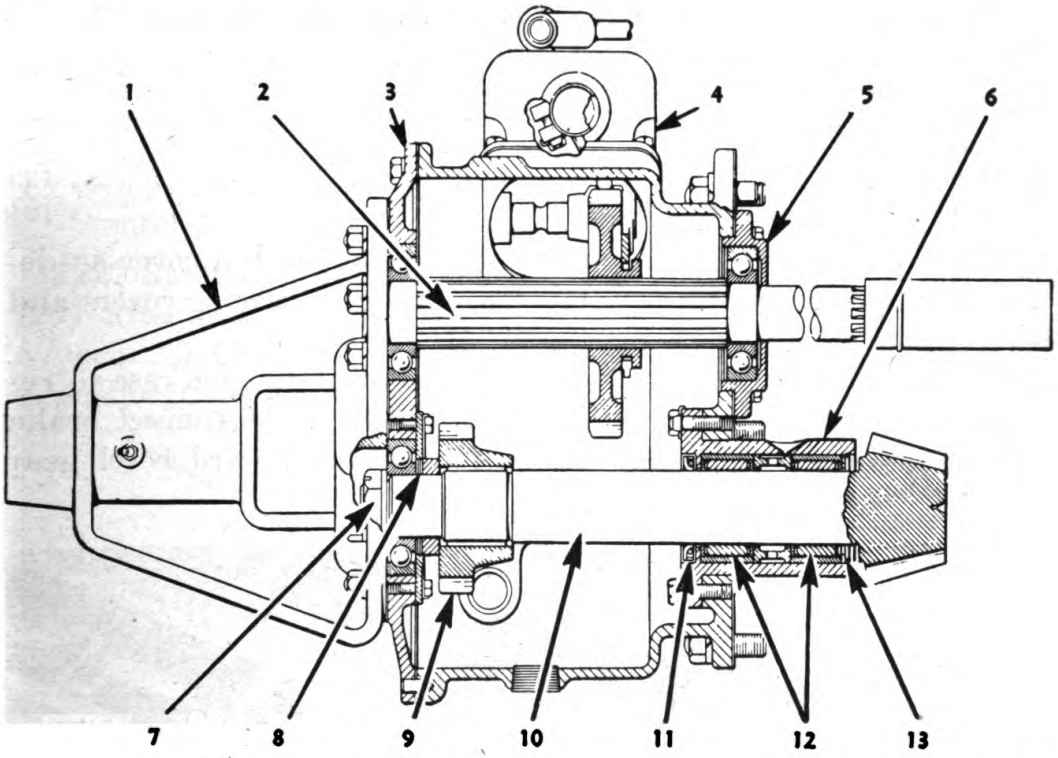

FIGURE 123.—Rear drive attachment disassembly.

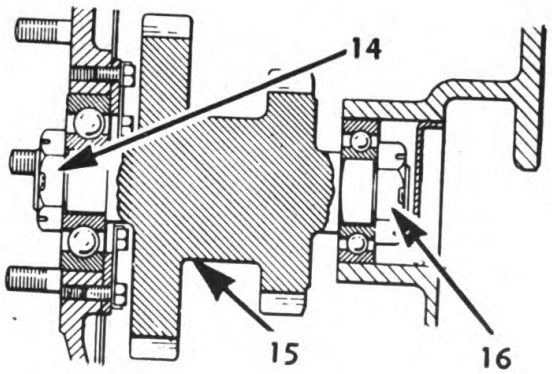

FIGURE 124.—Location of intermediate shaft—sectional view.

(8) The upper shaft (2) can be taken out with bearing cage (5).

(9) All nuts and capscrews which secure the drive attachment rear plates to the drive attachment and those which secure the attachment to the transmission case should be kept tight.

Digitized by Google
Original from UNIVERSITY OF CALIFORNIA
Generated on 2014-11-16 10:49 GMT / http://hdl.handle.net/2027/uc1.b3243973
Public Domain, Google-digitized / http://www.hathitrust.org/access_use#pd-google

SECTION II

STEERING CLUTCH AND BEVEL GEAR REMOVAL

Paragraph
General 121
Steering clutch disassembly 122
Bevel gear 123
Bevel gear and pinion adjustment 124

121. General.—*a.* After removing transmission top cover as described in paragraph 119*a*(2), take off bevel gear bearing covers and bearing caps (4) (fig. 125).

(1) A hole is provided in each side of the transmission case to remove capscrews holding drum (2) to flange (1). Disconnect brake linkage. Remove capscrews and slide the drum toward bevel gear (3) for clearance.

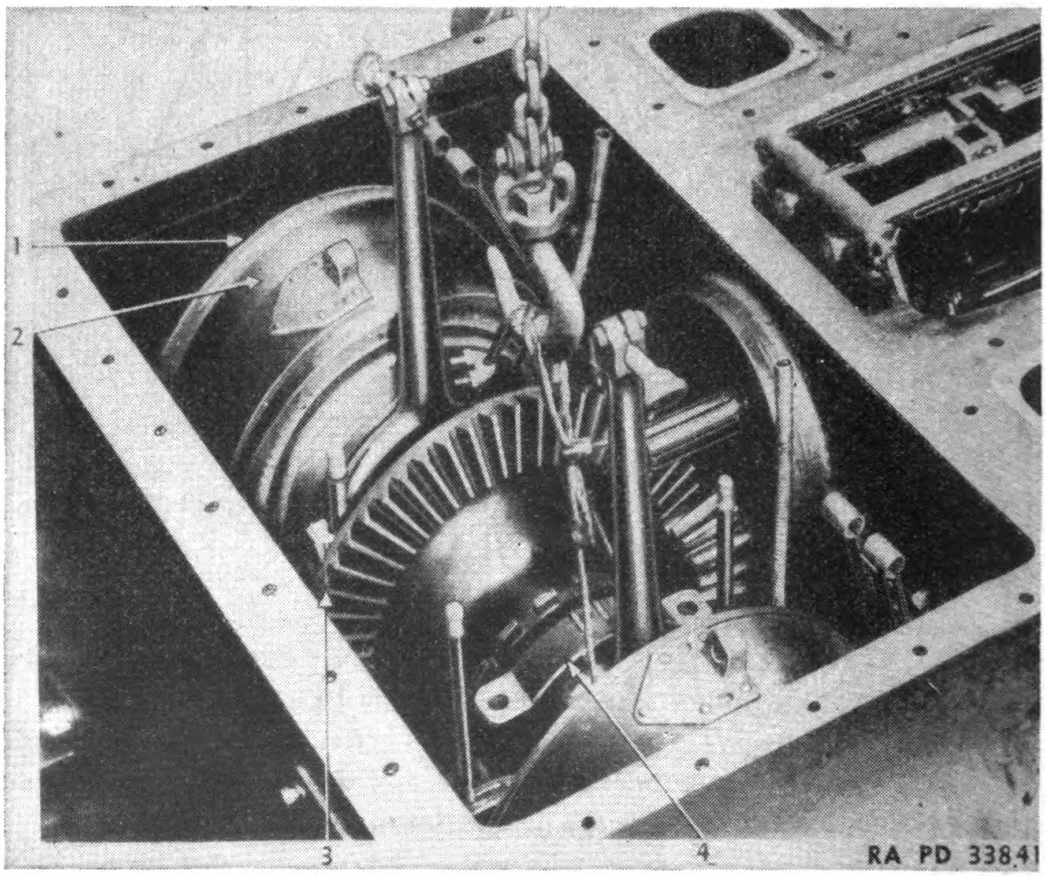

FIGURE 125.—Steering clutch and bevel gear removal.

(2) Using a chain or wire rope sling the steering clutches, release yokes, outer drums, and brake bands can be lifted out as a unit.

Digitized by Google
Original from UNIVERSITY OF CALIFORNIA
Generated on 2014-11-16 10:49 GMT / http://hdl.handle.net/2027/uc1.b3243973
Public Domain, Google-digitized / http://www.hathitrust.org/access_use#pd-google

b. In reassembly, examine the mating faces of outer drum (2) and final drive pinion flange (1) and remove any burs which might have been made when separating the two.

NOTE—When available, metallic type facings will be used for replacement purposes in the master and steering clutches; availability being dependent upon exhaustion of present spare parts stocks of the nonmetallic type.

Model and part number	*Metallic part number*
Master (fits clutch plate (6B1986), (6B1978))	S–737
Steering (4B4982)	S–553

122. Steering clutch disassembly.—*a.* Remove nut (8) (fig. 126) after straightening lock (7). The nut requires a $2^{21}/_{32}$-inch wrench. A socket wrench (3B6352) is available through the parts department for this work.

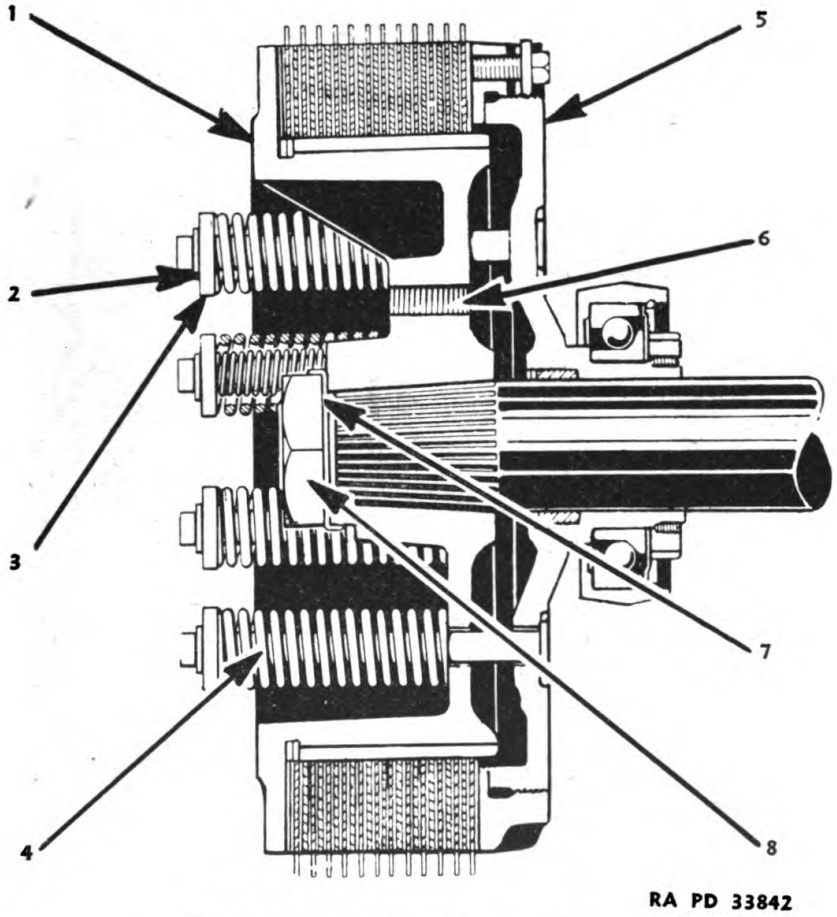

FIGURE 126.—Steering clutch—schematic.

(1) Two puller stud holes (6) tapped for $^5/_8$-inch N. C. studs are provided for removing each entire clutch assembly from the shaft.

(2) Compress springs (4), remove locks (2) and retainers (3). The inner drum (1) and the pressure plate (5) can now be separated.

Digitized by Google
Original from UNIVERSITY OF CALIFORNIA
Generated on 2014-11-16 10:49 GMT / http://hdl.handle.net/2027/uc1.b3243973
Public Domain, Google-digitized / http://www.hathitrust.org/access_use#pd-google

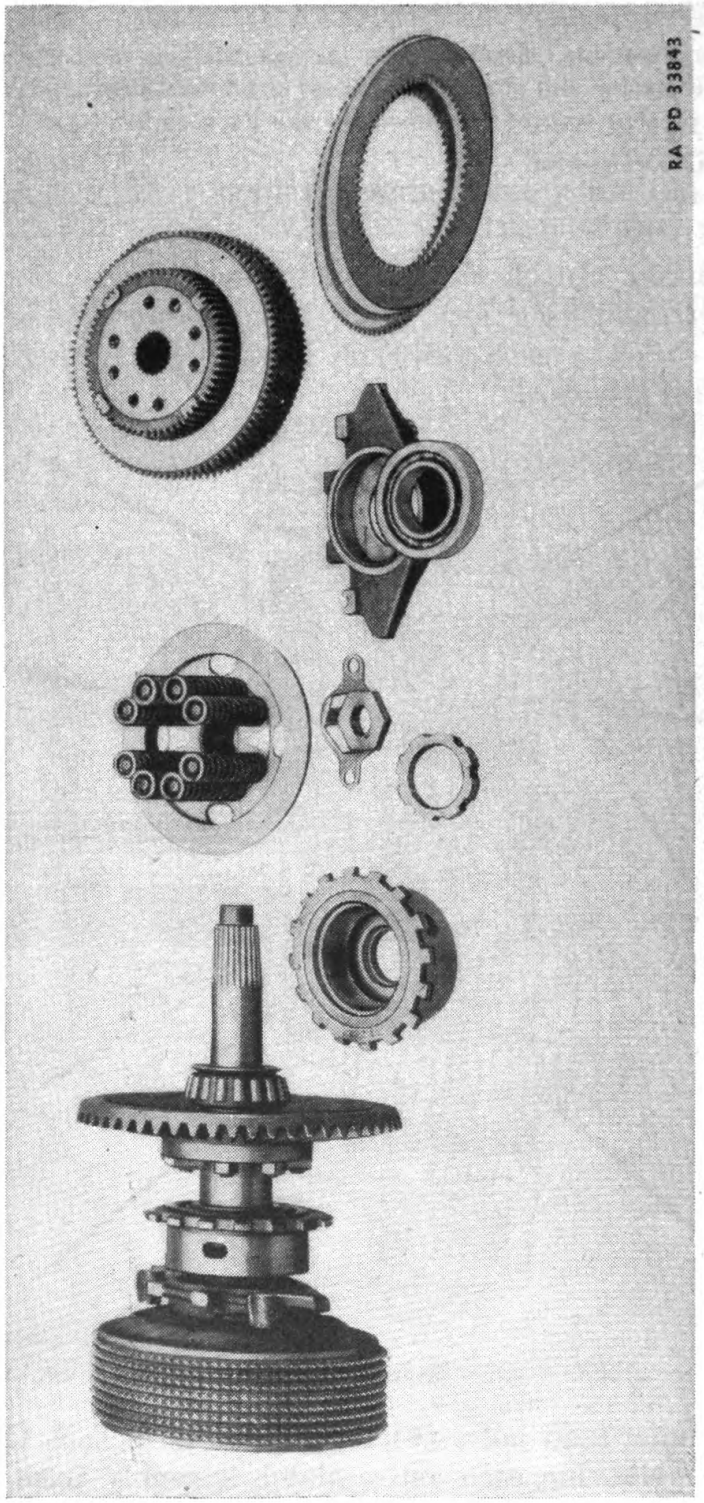

FIGURE 127.—Steering clutch assembly—exploded view.

Digitized by Google
Original from UNIVERSITY OF CALIFORNIA
Generated on 2014-11-16 10:50 GMT / http://hdl.handle.net/2027/uc1.b3243973
Public Domain, Google-digitized / http://www.hathitrust.org/access_use#pd-google

(3) If the teeth have been grooved until the clutch disks will not slide smoothly and freely along the teeth, the inner and outer drum should be changed from one side of the machine to the other. This will give new working surfaces for the clutch parts (fig. 127) and insure complete disengagement when the steering clutch lever is operated.

b. Release bearing.—(1) Setscrews (8) (fig. 128) are used to lock retaining nut (1). In original assembly, after the setscrews are installed, the threads around the holes are peened. Remove peened material, setscrews, and nut (1). Lock ring (2) holds oil retainer (6) in position.

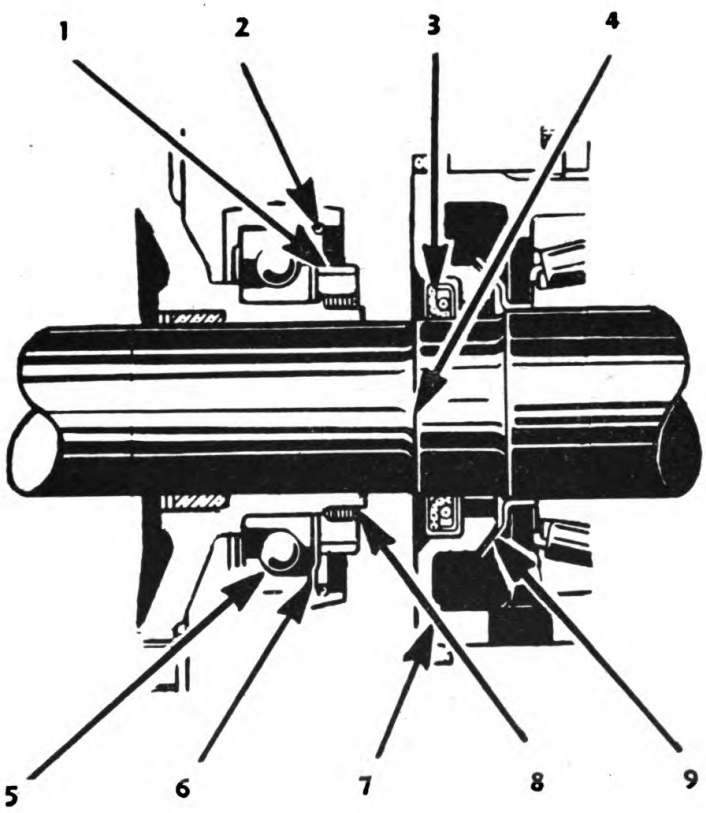

FIGURE 128.—Release bearing.

(2) Two ⅜-inch holes (fig. 129) are provided in the steering clutch release bearing cage to facilitate removal of the release bearing.

(3) In installation, make certain that bearing (5) (fig. 131) is installed as illustrated so that thrust in the proper direction can be taken.

c. Equalizer bar.—The equalizer bar in the bottom of each steering clutch compartment should be installed with the two off-set holes toward the outside of the tractor.

Digitized by Google
Original from UNIVERSITY OF CALIFORNIA
Generated on 2014-11-16 10:50 GMT / http://hdl.handle.net/2027/uc1.b3243973
Public Domain, Google-digitized / http://www.hathitrust.org/access_use#pd-google

123. Bevel gear.—*a. Removal.*—After removing steering clutch assemblies from steering clutch shaft (1) (fig. 131), straighten lock (3) and remove bearings (2) and (5). Bearing (5) can be removed part way by backing retaining nut (4) off as far as possible forcing the bearing to move, then using a spacer between the nut and the bearing to force the bearing completely off. The nut requires a $4\frac{11}{32}$-inch end wrench for which wrench CAT1B4665 is available.

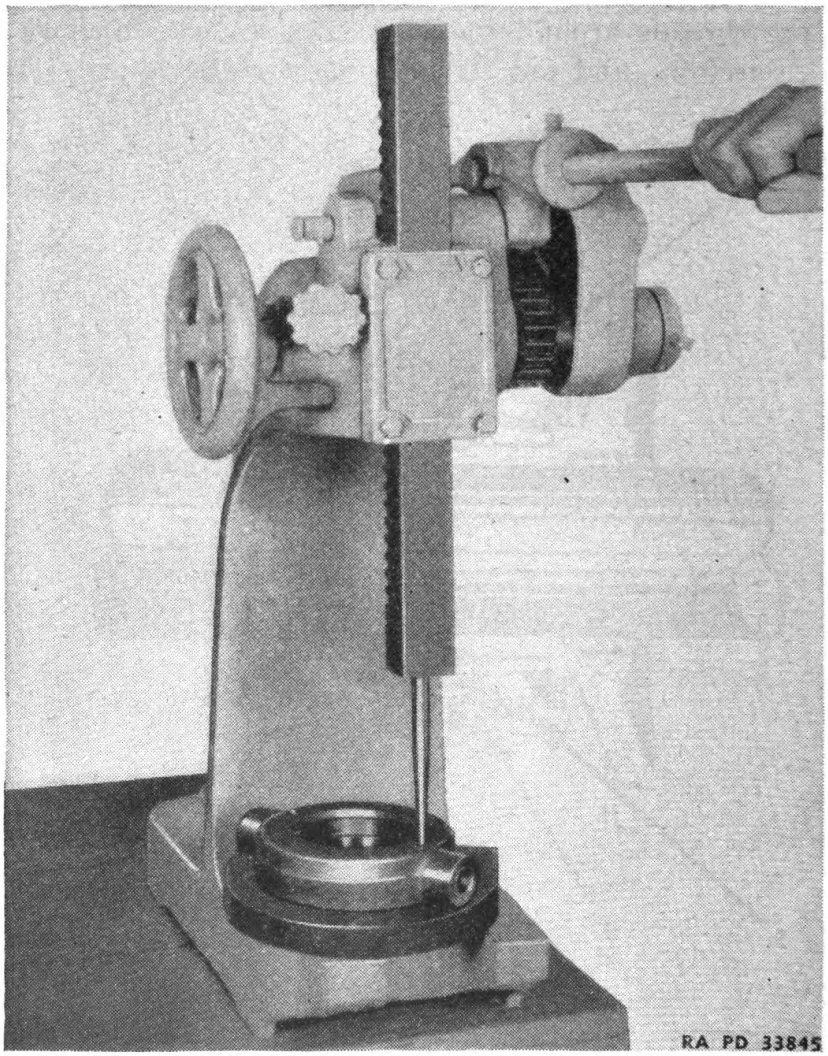

FIGURE 129.—Release bearing removal.

The gear retaining nut should be reinstalled on the shaft but several threads left loose from the gear hub to catch the gear when it loosens suddenly from the shaft.

b. Installation.—For installing the gear on the shaft, the taper surfaces should be clean and free from rough spots. The gear should be pressed on the shaft.

Digitized by Google
Original from UNIVERSITY OF CALIFORNIA
Generated on 2014-11-16 10:50 GMT / http://hdl.handle.net/2027/uc1.b3243973
Public Domain, Google-digitized / http://www.hathitrust.org/access_use#pd-google

c. Bearing cages.—Before installing bevel gear bearing cages (7) (fig. 128), make certain that oil thrower (9) is in place. The wiping edge of seal (3) should be toward the bevel gear and should be protected as the seal is installed over shoulder (4) of bevel gear shaft.

124. Bevel gear and pinion adjustment.—When the steering clutch assemblies and the bevel gear are being installed in the tractor, it is necessary to make two adjustments:

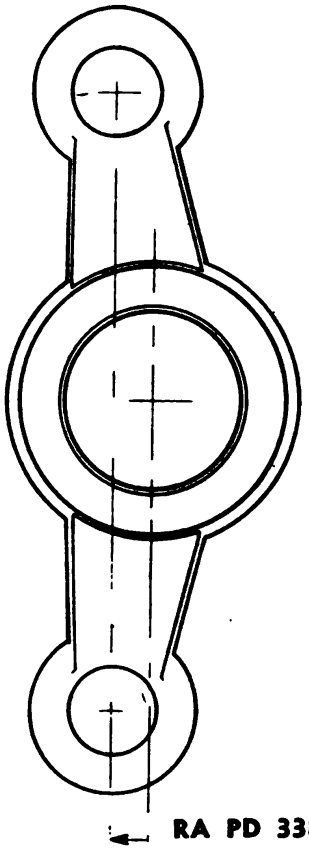

FIGURE 130.—Steering clutch release yoke equalizer bar.

a. The first adjustment is to provide the proper loading on the taper roller bearings which support the bevel gear shaft.

(1) To make this adjustment, install bevel gear bearing caps and tighten capscrews lightly. All oil and foreign material must be removed from the holes for the capscrews, otherwise the capscrews might bottom against the foreign material and loosen with subsequent operation.

(2) Using spanner wrench (S1055), draw adjusting nuts on each side of the gear as tightly as possible, making certain that the bevel gear is not being forced against the pinion.

b. The second adjustment is to locate the gear and pinion with respect to one another so that the maximum area of their teeth will

Digitized by Google
Original from UNIVERSITY OF CALIFORNIA
Generated on 2014-11-16 10:50 GMT / http://hdl.handle.net/2027/uc1.b3243973
Public Domain, Google-digitized / http://www.hathitrust.org/access_use#pd-google

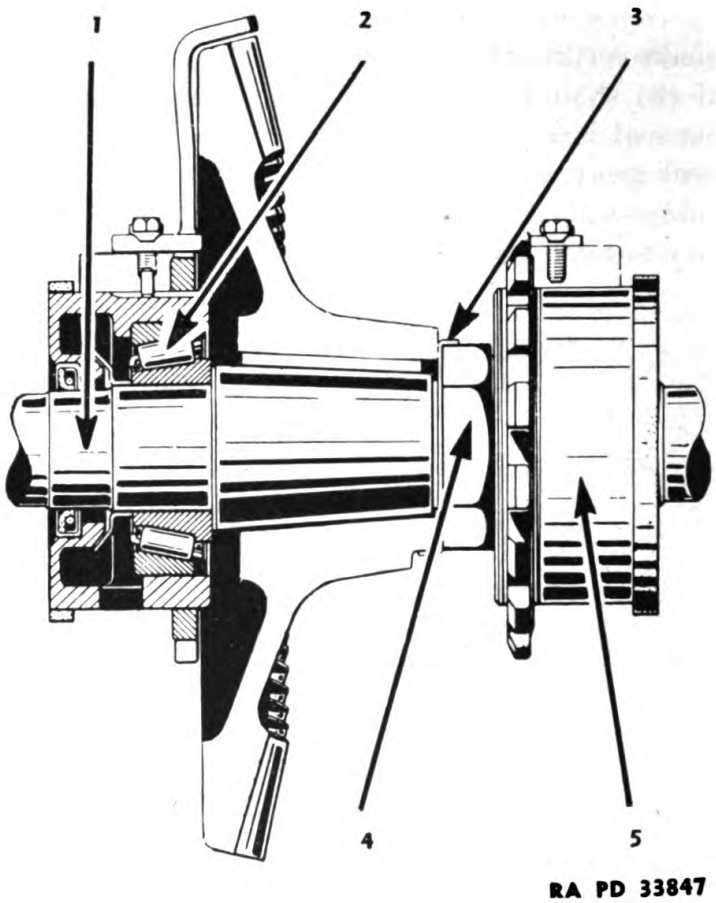

FIGURE 131.—Bevel gear assembly.

be contacting while the tractor is under load in a forward gear. Proper tooth contact is essential for quiet operation and long life of the gears. The area of the teeth contacting one another can be varied by—

(1) Adding or removing shims at the front of the pinion shaft to move the pinion forward or backward.

(2) Moving the bevel gear to the right or left by loosening the spanner nut on one side of the bevel gear and tightening the other. Shims .010 inch and .005 inch thick are located between the front bearing and a spacer at the front of the bevel pinion shaft.

c. The correct tooth contact adjustment (fig. 132) has been obtained when the tooth contact is over at least three-fourths of the tooth length at the toe or small end of the tooth. When the contacting area of the teeth has been properly set, a backlash clearance of from .008 inch to .012 inch should exist between a new gear and pinion at the tightest spot. Approximately .015 inch backlash is suitable for gears that have been in service.

Digitized by Google
Original from UNIVERSITY OF CALIFORNIA
Generated on 2014-11-16 10:50 GMT / http://hdl.handle.net/2027/uc1.b3243973
Public Domain, Google-digitized / http://www.hathitrust.org/access_use#pd-google

d. The contacting areas can be obtained by coating the teeth of the bevel gear with Prussian blue or red lead and running a piece of paper between the gear and pinion to make an impression. Use a strip of ordinary wrapping paper cut in a quarter circle the size of the gear.

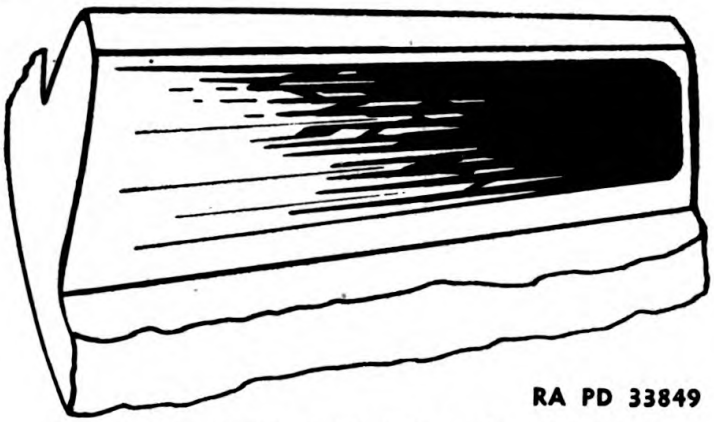

FIGURE 132.—Correct bevel gear tooth contact area.

e. Keep pinion pressed forward. Turn pinion by hand in the normal direction of rotation and rotate paper between the gear and pinion. This will insure obtaining an impression from the surfaces of the teeth that will be operating against one another while the tractor is moving. The backlash can be measured best by using a dial indicator (fig. 133). In checking the backlash setting, try the gear and pinion together in numerous places as they are rotated.

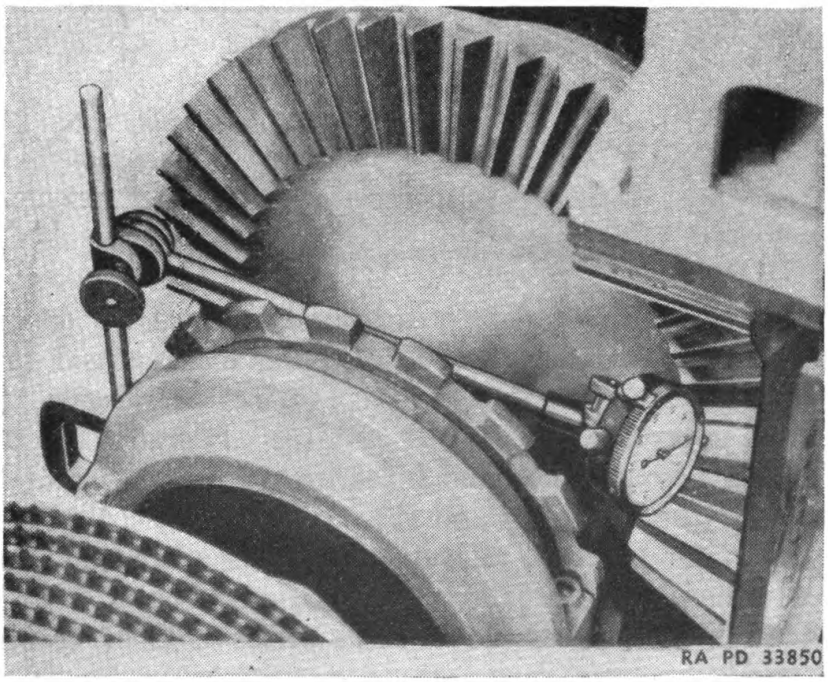

FIGURE 133.—Measuring backlash with dial indicator.

Digitized by Google
Original from UNIVERSITY OF CALIFORNIA
Generated on 2014-11-16 10:50 GMT / http://hdl.handle.net/2027/uc1.b3243973
Public Domain, Google-digitized / http://www.hathitrust.org/access_use#pd-google

f. Lock the nut on the front of the pinion shaft and the bevel gear bearing spanner nuts. Pull bearing cap capscrews down evenly and tight. Recheck bevel gear and pinion adjustment.

SECTION III

BRAKES

Paragraph
Removal 125
Reassembly 126

125. Removal.—The three sections of the brake bands can be taken apart and removed through the hand holes (12) (fig. 134) in the rear face of the transmission case.

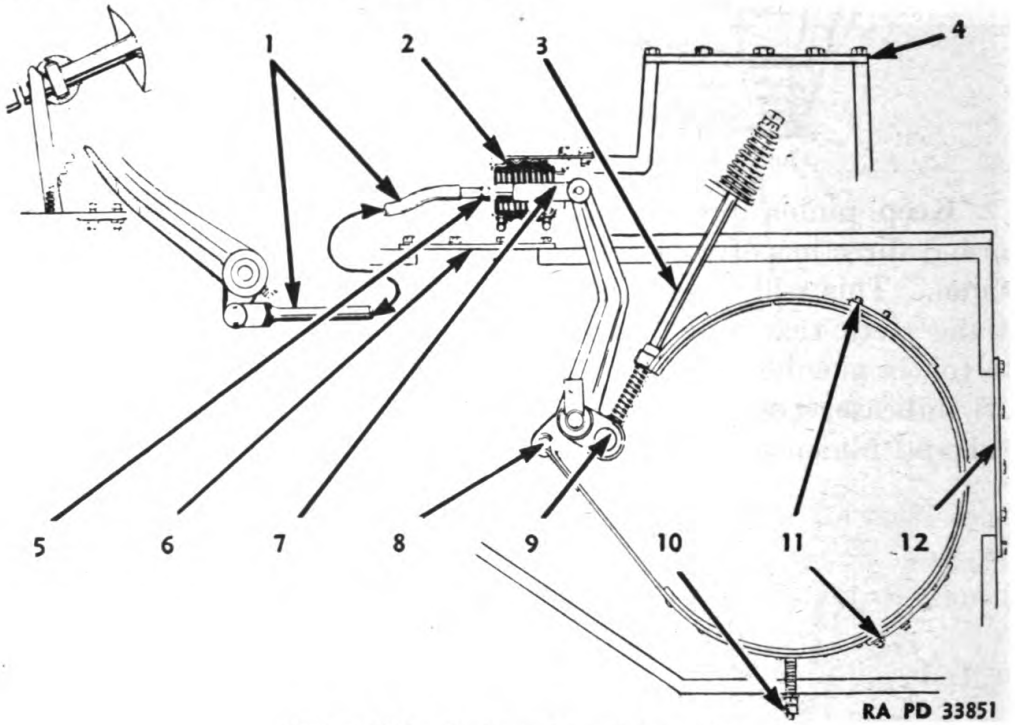

FIGURE 134.—Brake system—schematic.

a. Remove seat cushion, floor boards, and cover (4).

b. Loosen nut (5), remove boot (2), and unscrew rod (1) from clevis (7).

c. Remove cover (6).

d. Working through the hand holes provided at (4) and (6), remove screw (3) and pins (8) and (9).

e. In removing pin (8), take out the cotter pin at its outer end and remove the pin toward the center of the tractor.

f. Remove bottom screw (10) from under side of transmission case.

Digitized by Google
Original from UNIVERSITY OF CALIFORNIA
Generated on 2014-11-16 10:50 GMT / http://hdl.handle.net/2027/uc1.b3243973
Public Domain, Google-digitized / http://www.hathitrust.org/access_use#pd-google

g. Working through hand hole at (12) in the rear face of the transmission case, disconnect brake band sections at (11).

126. Reassembly.—In reassembling, the bolts securing the brake band sections together should be drawn quite tight.

SECTION IV

FINAL DRIVE

Paragraph
Removal 127
Taper roller bearing adjustment 128

127. Removal.—*a. General.*—(1) Remove track and bearing cap on diagonal brace.

(2) Remove capscrews from track roller frame outer bearing.

(3) Jack up tractor until diagonal brace is free of final drive shaft and dowel in bearing assembly (5) (fig. 135), is free of the track roller frame.

(4) Remove cap (1), lock ring (2), nut (3), and washer assembly (4), (fig. 135). Nut (3) is $2\frac{5}{16}$-inch, for which wrench L2075 is available.

(5) The shims (6) fig. (136), behind washer (4) are for alining the track roller frame centrally with the sprocket.

(6) When properly adjusted, the rear roller in the track roller frame will be centered with relation to the sprocket.

(7) Removing shims will allow the roller frame to move toward the center of the tractor; adding shims will move the roller frame out.

(8) If more than .020 inch in feeler gage thickness can be inserted between the bushing in bearing assembly (5) and the hub of bearing cage holder (9) (fig. 137), a new bushing should be used.

b. Bearing cage holder assembly.—Use the puller arrangement for sprocket hub bearing holder (9).

c. Bearing cage.—(1) Unscrew final drive adjusting nut from cage holder. Pull cage (7) (fig. 138) from the holder using the CAT8B7548 and CAT8B7554 pullers as shown. The same combination will pull outer cone (8) (fig. 139) from the cage.

(2) Replace copper bellows seal in adjusting nut if bellows section (10) (fig. 140) is damaged. Gaskets (11) and (12) can be replaced if worn or damaged. A varnish, shellac cement should be used.

(3) The bearing (14) (fig. 141) can be crowded off the hub by loosening sprocket retaining nut (15) with wrench (1B4641). Inasmuch as there is insufficient threading on the sprocket hub to force

Digitized by Google
Original from UNIVERSITY OF CALIFORNIA
Generated on 2014-11-16 10:50 GMT / http://hdl.handle.net/2027/uc1.b3243973
Public Domain, Google-digitized / http://www.hathitrust.org/access_use#pd-google

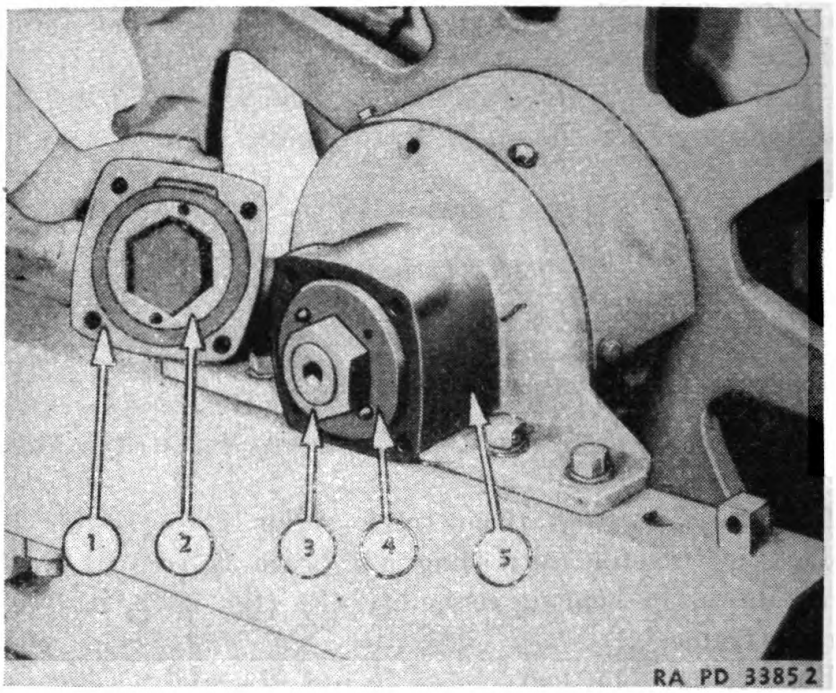

FIGURE 135.—Cap, lock ring, and washer assembly.

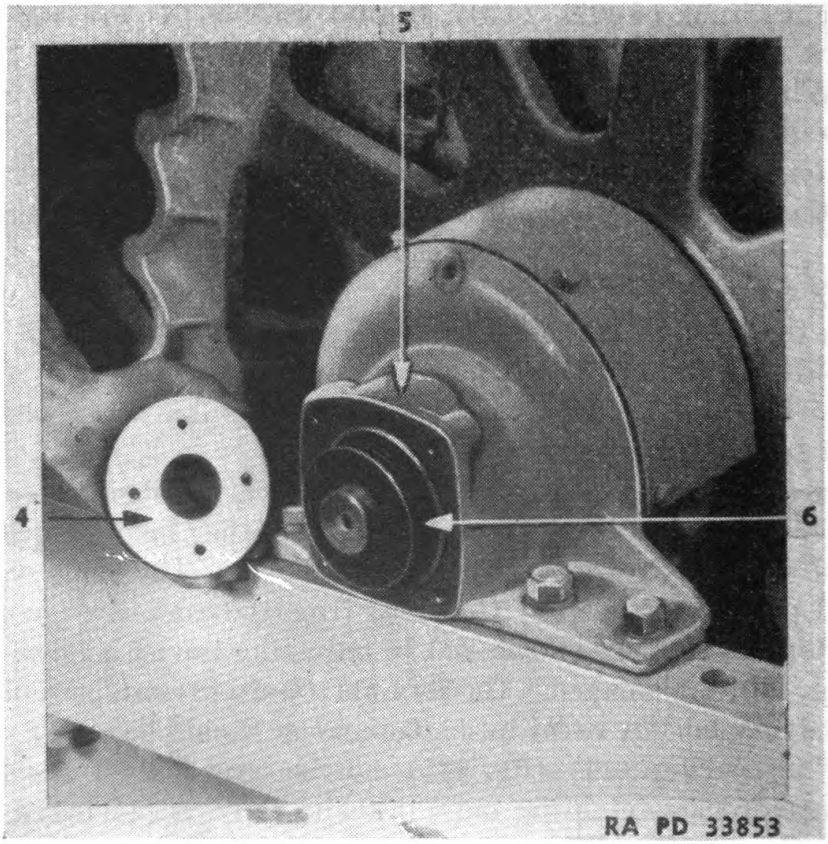

FIGURE 136.—Washer and bearing assembly.

Digitized by Google
Original from UNIVERSITY OF CALIFORNIA
Generated on 2014-11-16 10:50 GMT / http://hdl.handle.net/2027/uc1.b3243973
Public Domain, Google-digitized / http://www.hathitrust.org/access_use#pd-google

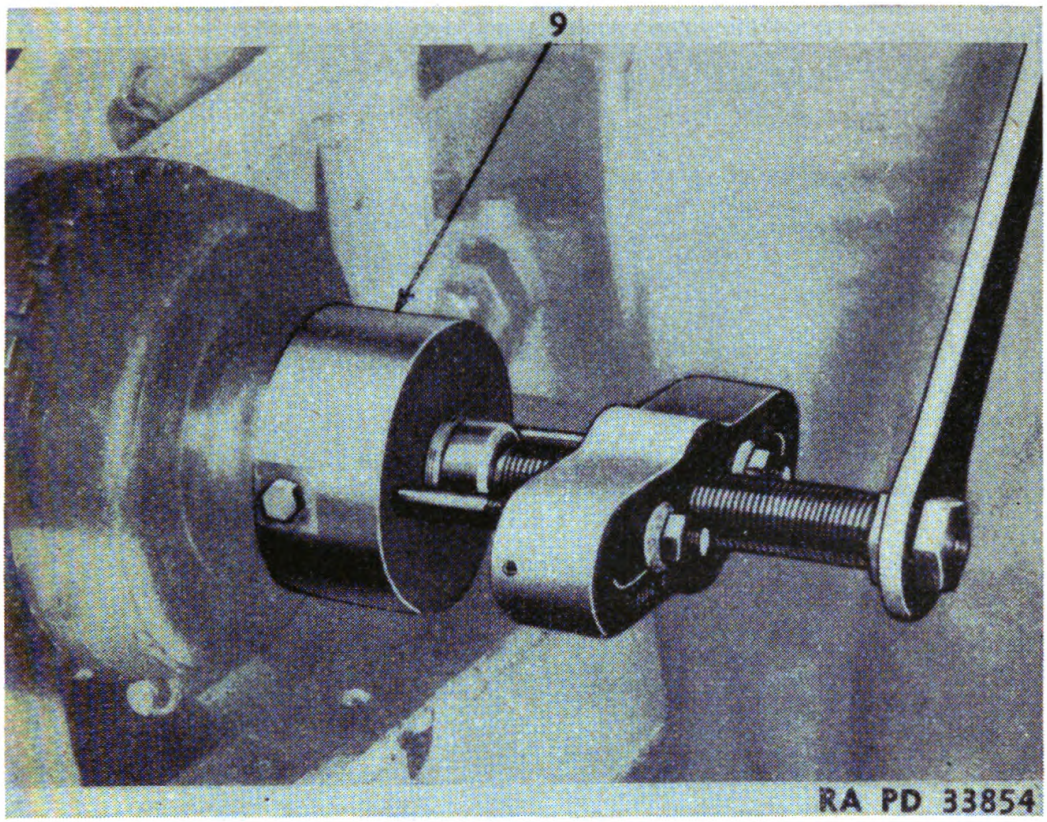

FIGURE 137.—Puller arrangement for sprocket hub bearing holder.

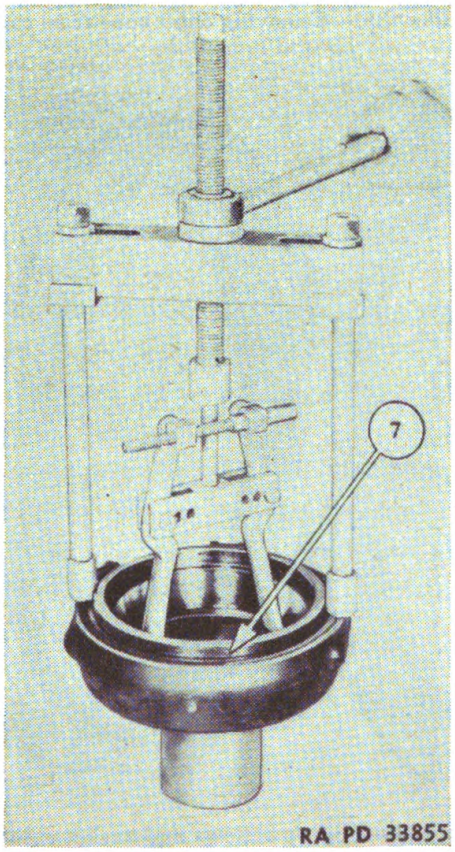

FIGURE 138.—Method of cage removal.

Digitized by Google
Original from UNIVERSITY OF CALIFORNIA
Generated on 2014-11-16 10:51 GMT / http://hdl.handle.net/2027/uc1.b3243973
Public Domain, Google-digitized / http://www.hathitrust.org/access_use#pd-google

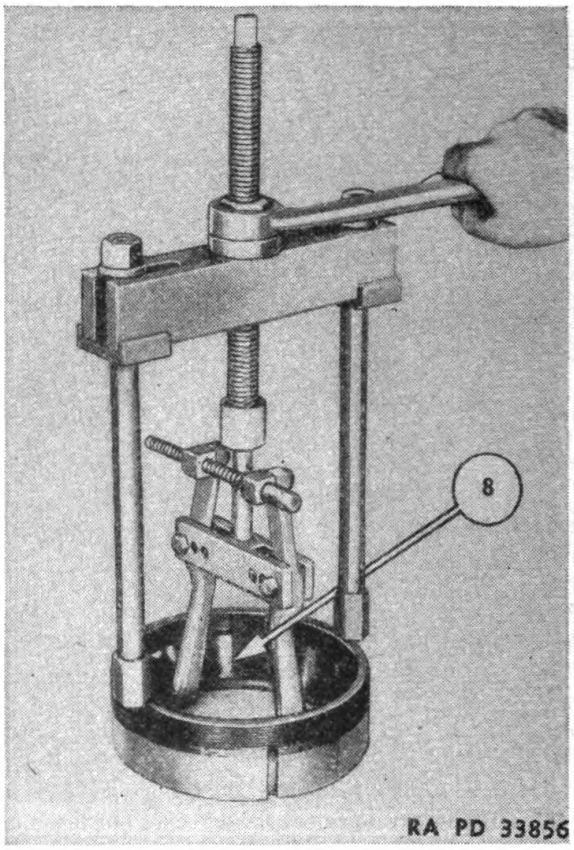

FIGURE 139.—Removing outer cone from cage.

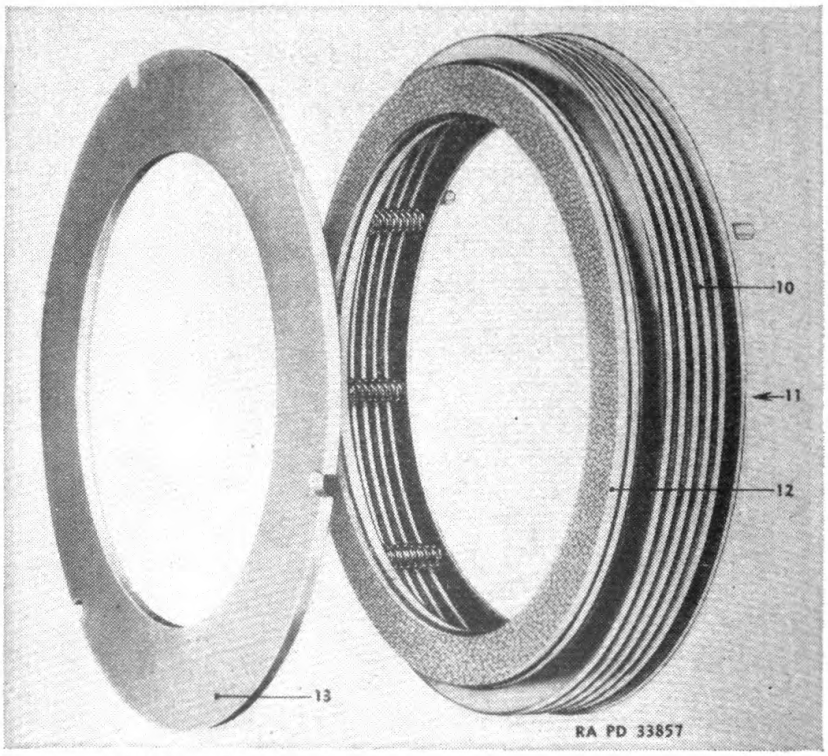

FIGURE 140.—Copper bellows and gasket assembly.

Digitized by Google
Original from UNIVERSITY OF CALIFORNIA
Generated on 2014-11-16 10:51 GMT / http://hdl.handle.net/2027/uc1.b3243973
Public Domain, Google-digitized / http://www.hathitrust.org/access_use#pd-google

the bearing completely off the hub, a yoke (CAT4B6091) can be used as a spacer between the nut and the bearing after the nut has crowded the bearing off half way.

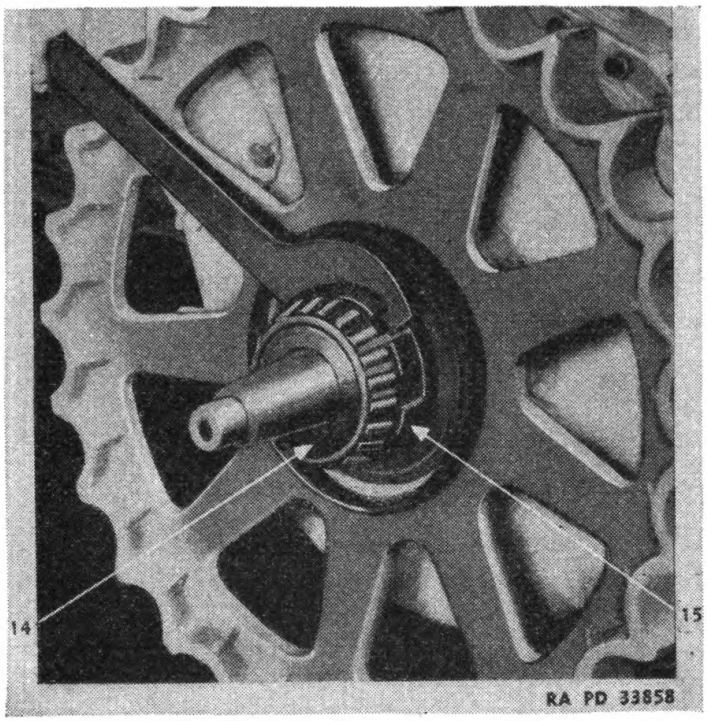

FIGURE 141.—Method of bearing removal.

d. Sprocket removal.—(1) Replace sprocket retaining nut (15) (fig. 142) on the final drive gear hub with some space between it and the sprocket. This will prevent the sprocket jumping off the shaft when it is removed. Attach the sprocket puller arrangement as shown and pull the sprocket.

(2) On each side of the sprocket is a thrust washer (13) (fig. 140) which rotates against the bellows seal. Should the washer become worn, it should be turned over or replaced. Install a new gasket between the washer and the sprocket.

e. Final drive gear replacement.—After the sprocket has been removed, the final drive case can be separated from the tractor by removing capscrews and bolts (16) (fig. 144) around the flange of the case and prying the case off the dowel pins. The hub and gear can then be lifted off the final drive shaft.

f. Sprocket hub inner bearing outer race.—For removing the bearing race (A) (fig. 143), use one CAT3B7084 puller and two CAT3B7080 screws.

Digitized by Google
Original from UNIVERSITY OF CALIFORNIA
Generated on 2014-11-16 11:12 GMT / http://hdl.handle.net/2027/uc1.b3243973
Public Domain, Google-digitized / http://www.hathitrust.org/access_use#pd-google

g. Extension housing removal.—A spanner nut locked by a wire ring is threaded on a tapered sleeve which supports the final drive shaft in the extension housing. Working through inspection hole (17) (fig. 144), remove lock and loosen nut several turns. Pry against the nut and loosen the tapered sleeve in the extension housing. After removing the nut entirely from the sleeve and taking out the sleeve, separate the extension housing by removing capscrews and bolts (18).

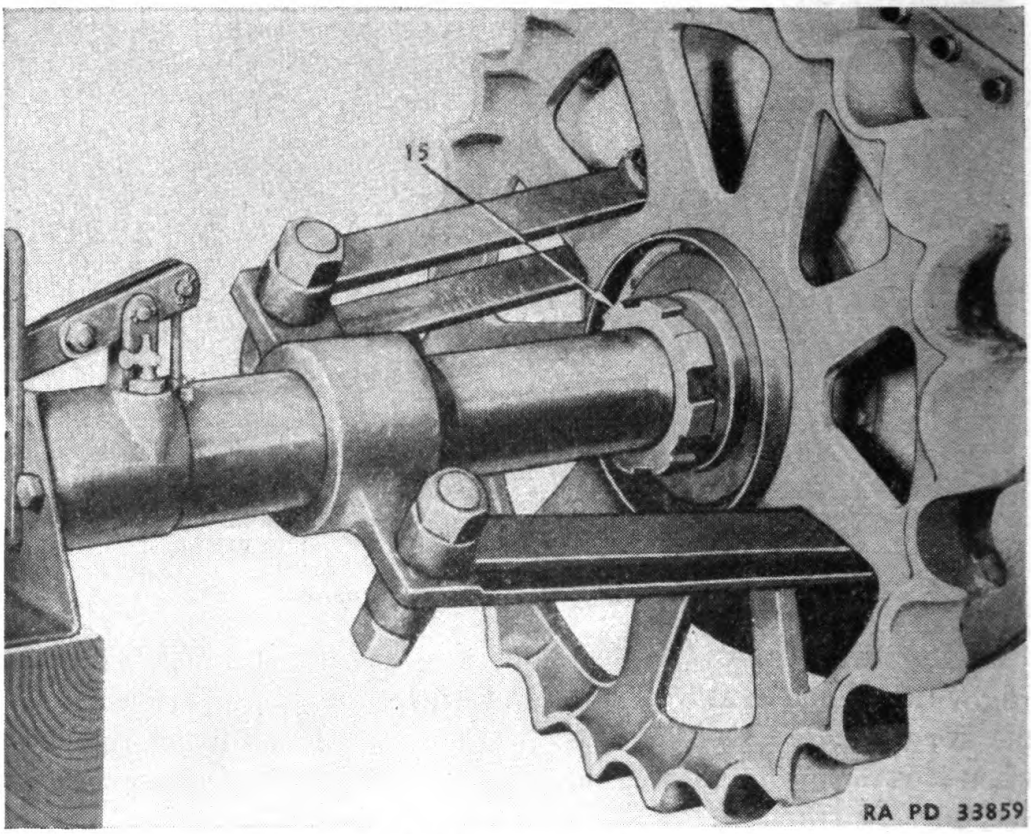

FIGURE 142.—Puller arrangement for sprocket removal.

h. Final drive pinion replacement.—(1) The final drive pinion and the pinion cage can be taken out after the steering clutches have been removed. Take out capscrews which secure the flange of the pinion cage to the inside wall of steering clutch compartment. Pull pinion and pinion cage into the steering clutch compartment.

(2) The pinion can be removed from the cage after the pinion flange has been removed. A 2⅝-inch nut secures the flange on the pinion. Two ¾-inch N. C. holes are provided for puller studs.

(3) Make certain the oil throwers and seals are in place when reinstalling the pinion.

Digitized by Google
Original from UNIVERSITY OF CALIFORNIA
Generated on 2014-11-16 11:12 GMT / http://hdl.handle.net/2027/uc1.b3243973
Public Domain, Google-digitized / http://www.hathitrust.org/access_use#pd-google

128. Taper roller bearing adjustment.—*a.* The adjustment of the final drive taper roller bearings should be tested at final drive oil drain periods (6-month intervals). Remove guards over the sprocket and insert a bar between inside face of sprocket rim and final drive case. Looseness in the bearings can be determined by watching for

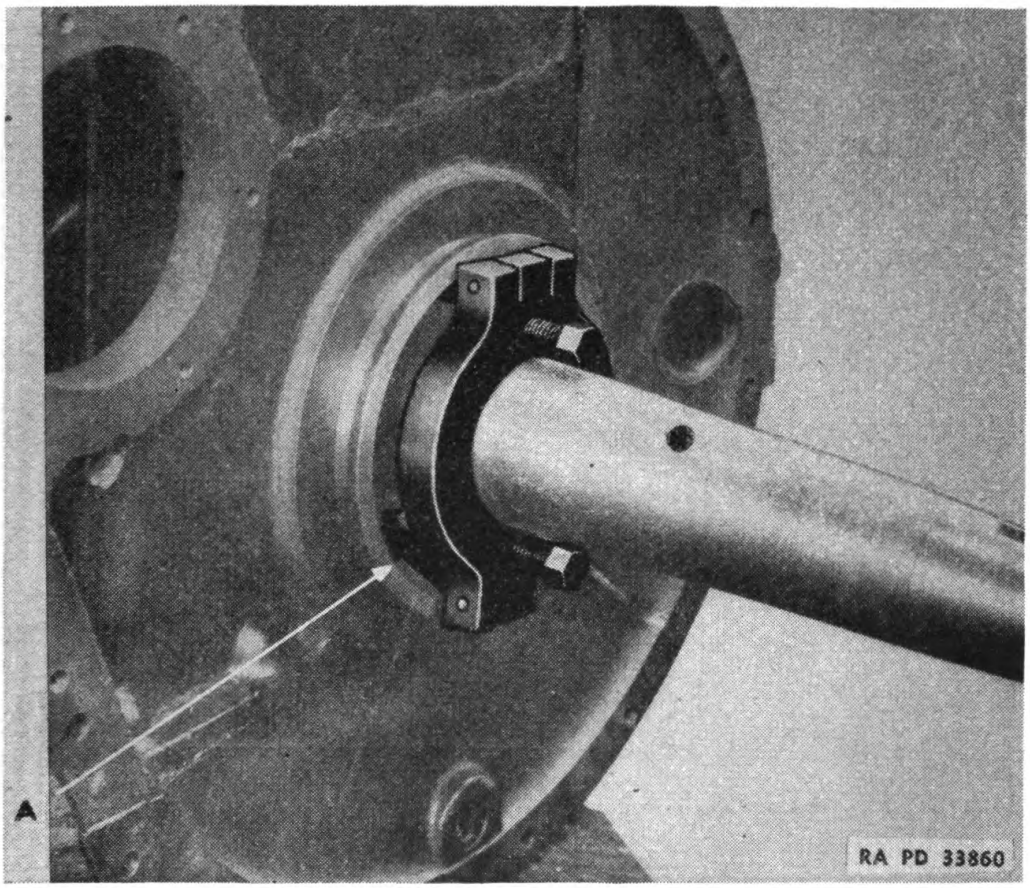

FIGURE 143.—Bearing race removal.

movement of the sprocket hub. Do not be confused by the normal flexing of the sprocket rim and spokes.

b. If the adjustment is loose, remove lock underneath spanner adjusting nut and draw nut (fig. 145) tight using a CAT1B4262 wrench with a 4-foot length of pipe. Turn the nut counterclockwise to tighten adjustment. Then loosen adjusting nut (by turning clockwise) until the lock can be installed in the first available notch.

Digitized by Google
Original from UNIVERSITY OF CALIFORNIA
Generated on 2014-11-16 11:12 GMT / http://hdl.handle.net/2027/uc1.b3243973
Public Domain, Google-digitized / http://www.hathitrust.org/access_use#pd-google

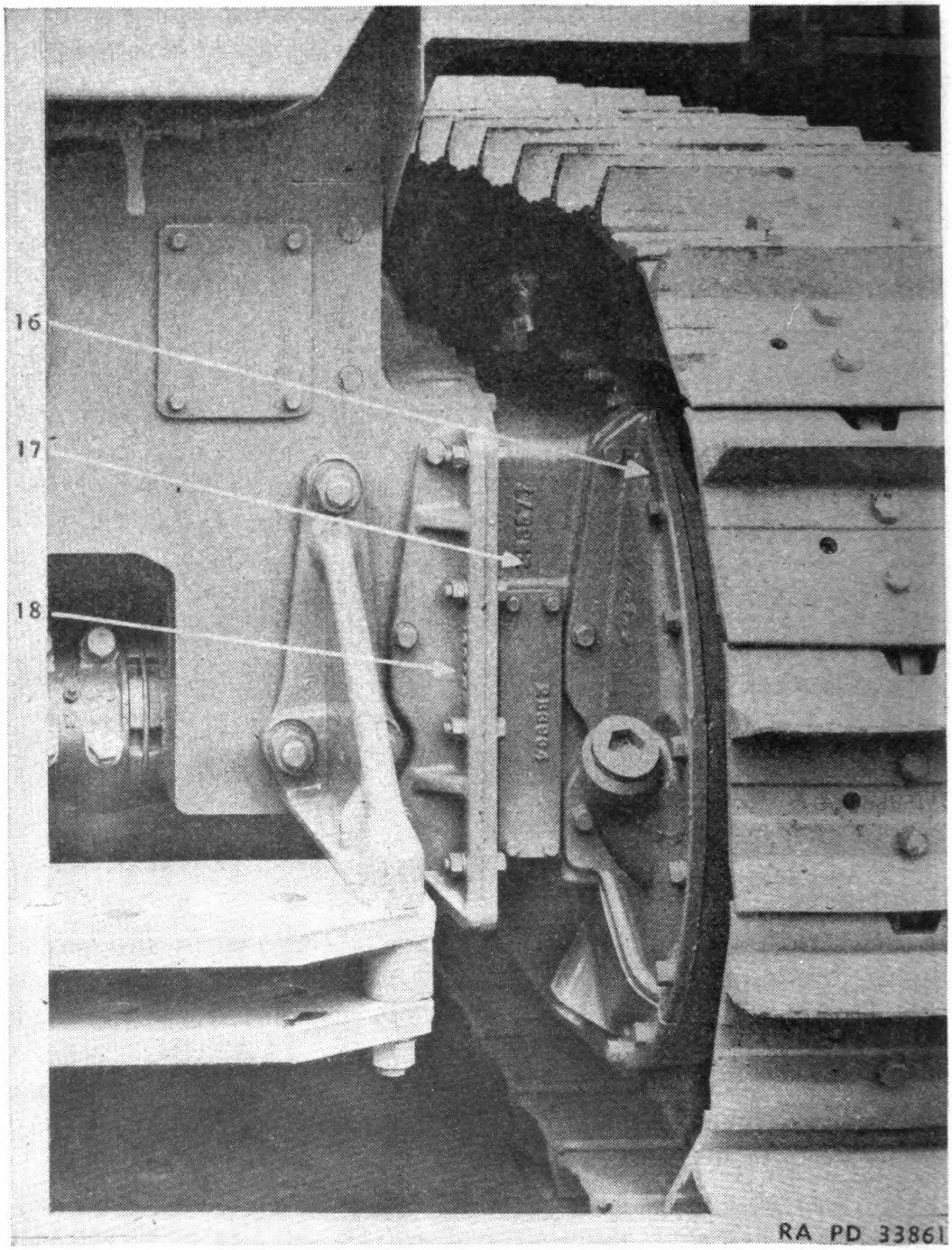

FIGURE 144.—Extension housing.

Digitized by Google
Original from UNIVERSITY OF CALIFORNIA
Generated on 2014-11-16 11:12 GMT / http://hdl.handle.net/2027/uc1.b3243973
Public Domain, Google-digitized / http://www.hathitrust.org/access_use#pd-google

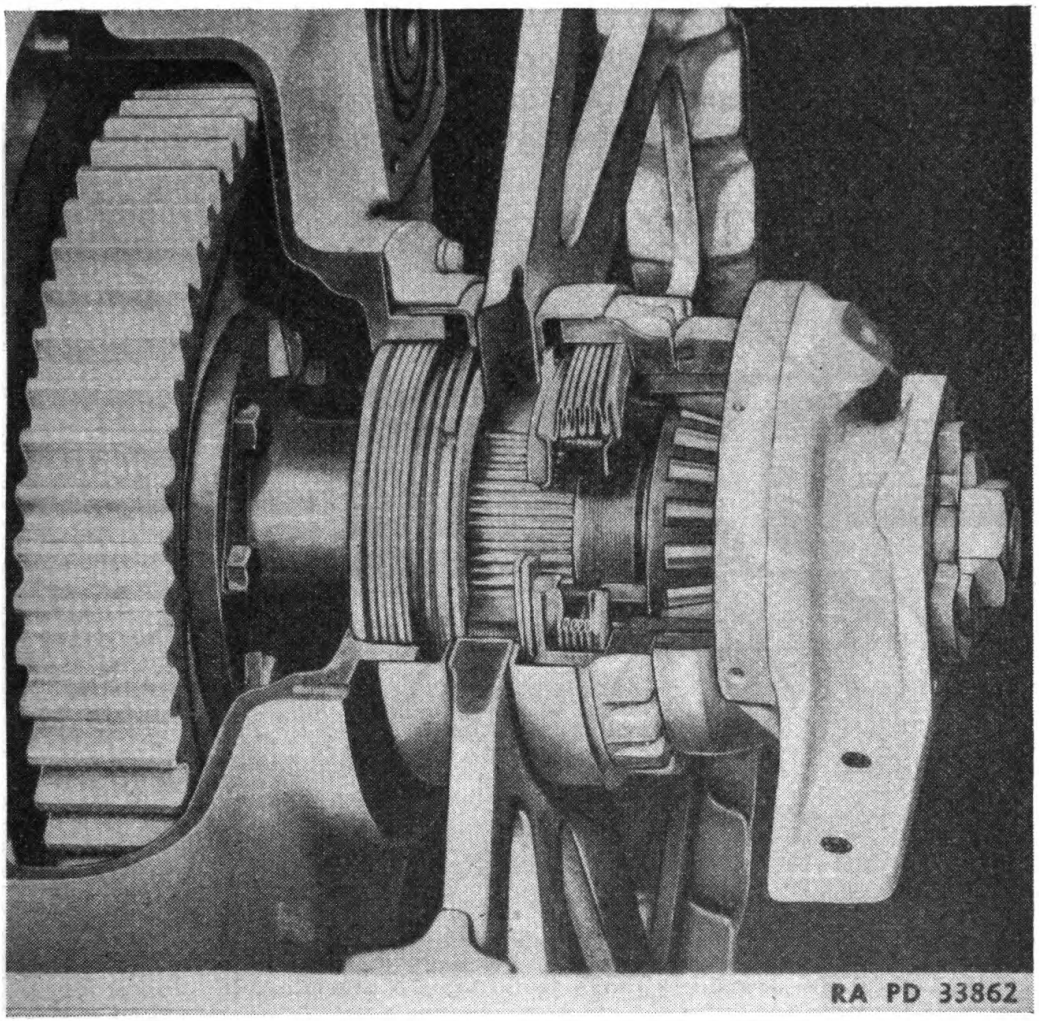

FIGURE 145.—Final drive taper roller bearing adjustment.

SECTION V

POWER TAKE-OFF SHAFT

Paragraph
Front shaft 129
Winch 130

129. Front shaft.—*a. General.*—The front winch is driven by the engine crankshaft (fig. 146) through a connecting power take-off shaft (7). A splined coupling on the front of crankshaft (1) is engaged in internal splines on the rear of take-off shaft (4).

b. Removal.—After the winch has been removed, the two capscrews which secure the front support bearing to the radiator bottom tank should be removed. Remove cover (3). Pull bearing (9) and cage (8) off the shaft. Remove radiator and take out capscrews (6).

Digitized by Google
Original from UNIVERSITY OF CALIFORNIA
Generated on 2014-11-16 11:12 GMT / http://hdl.handle.net/2027/uc1.b3243973
Public Domain, Google-digitized / http://www.hathitrust.org/access_use#pd-google

The shaft (7) and ring (5) can then be lifted off. Seals (2) should be replaced if found to be damaged.

130. Winch.—Remove brush guard over the three winch control links on the left side of the tractor and disconnect the links. Under-

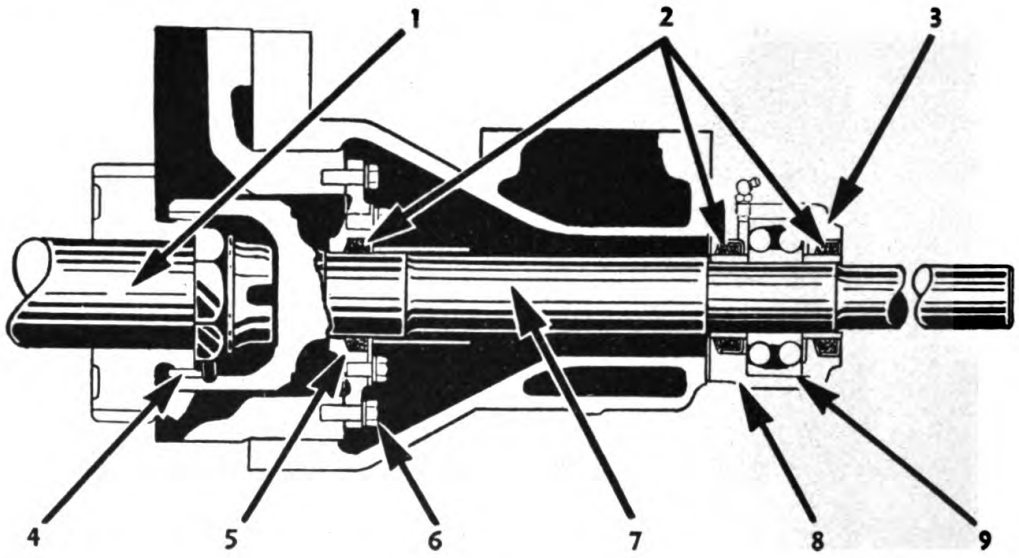

FIGURE 146.—Power take-off shaft.

neath the unit, take off clutch guard and drive chain guard. Remove capscrews which secure the winch to the crankcase guard side channels and slide drum unit off. Remove setscrew and dowel pin which secure the clutch assembly on power take-off shaft. The clutch assembly can then be removed.

Digitized by Google
Original from UNIVERSITY OF CALIFORNIA
Generated on 2014-11-16 11:12 GMT / http://hdl.handle.net/2027/uc1.b3243973
Public Domain, Google-digitized / http://www.hathitrust.org/access_use#pd-google

CHAPTER 5

TRACK FRAME ASSEMBLY

Paragraphs
SECTION I. General 131–133
II. Front idler assembly 134–137
III. Track carrier roller 138–139
IV. Track 140–145

SECTION I

GENERAL

Paragraph
Purpose 131
Removal 132
Equalizer spring 133

131. Purpose.—The track frame assembly carries the weight of the tractor and maintains track alinement. The construction of the track frame assembly allows each track to operate independently and to move up and down relative to one another.

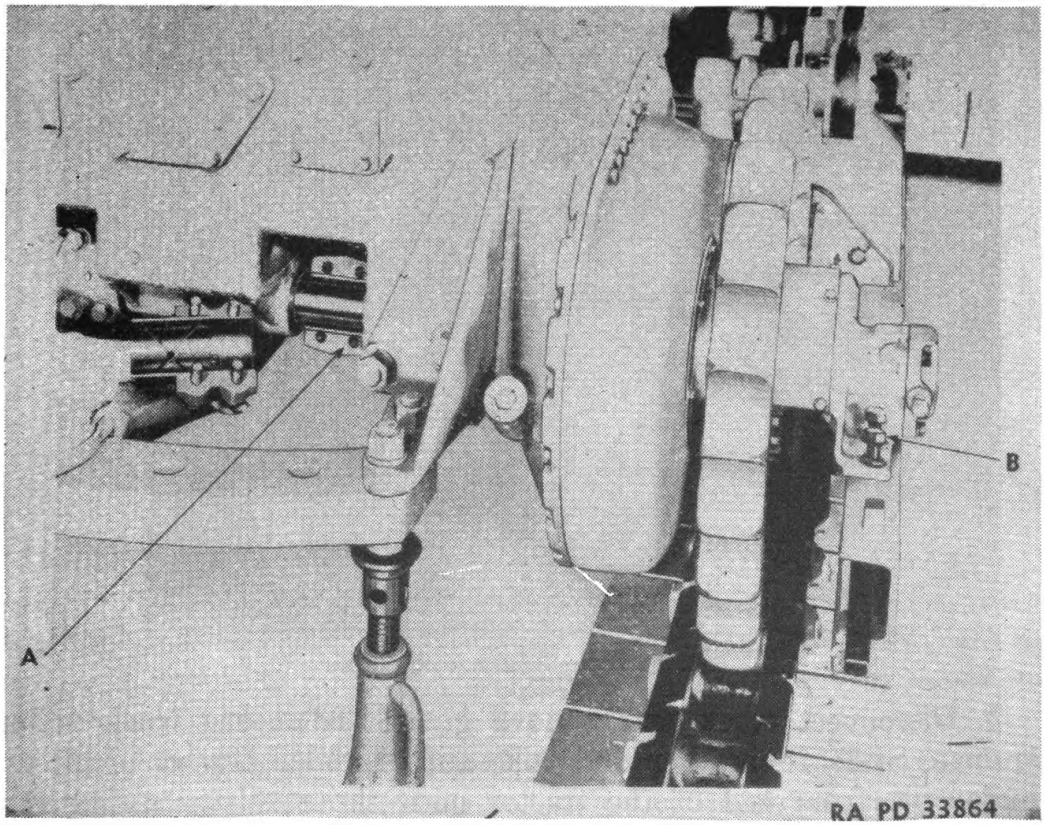

FIGURE 147.—Track frame removal.

Digitized by Google
Original from UNIVERSITY OF CALIFORNIA
Generated on 2014-11-16 11:13 GMT / http://hdl.handle.net/2027/uc1.b3243973
Public Domain, Google-digitized / http://www.hathitrust.org/access_use#pd-google

132. Removal.—The roller frames can be removed by lifting the equalizer spring off the roller frame and disconnecting at (A) and (B) (fig. 147). As the rear end of the tractor is raised, the roller frame should be pried forward until the diagonal brace clears the inner end of the final drive shaft. The roller frame can then be swung out from under the tractor.

133. Equalizer spring.—The equalizer spring supports the front end of the tractor and transfers this load to the track roller frames. The auxiliary spring holds the equalizer spring in the equalizer spring saddle and permits the equalizer spring to oscillate when one track is raised relative to the other.

a. Jack up shackle assembly at either end as shown in figure 148. Remove shackle pin (1) from one side. Remove jack and then pin on opposite side of the engine.

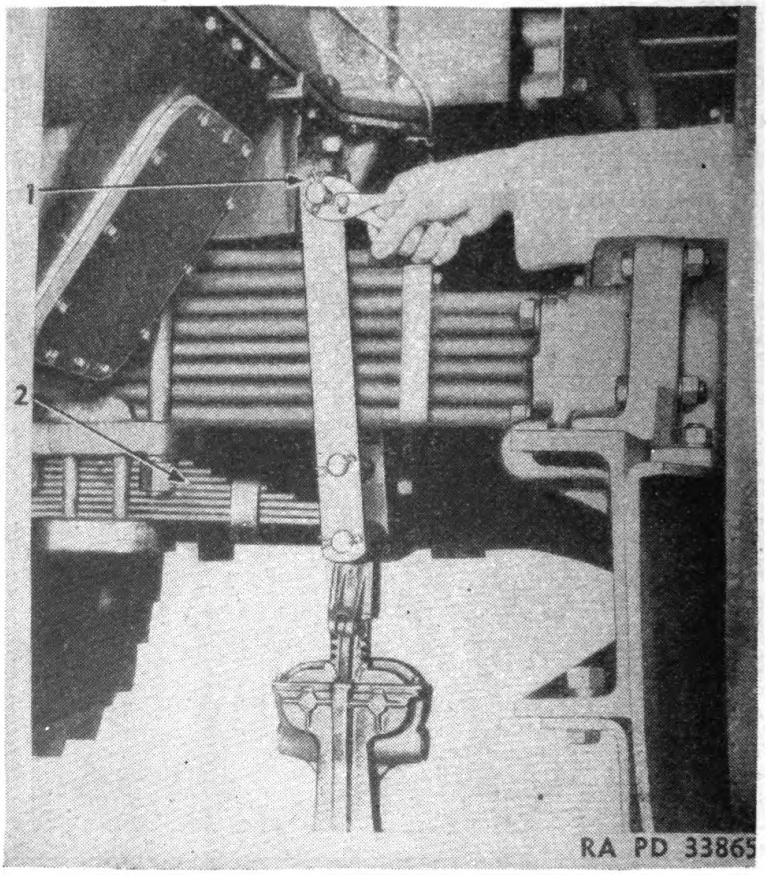

FIGURE 148.—Shackle pin removal.

b. Disconnect track and remove guards from one track roller frame. Slide front idler and yoke out of roller frame. Jack up under the front end of the tractor until the equalizer spring can be removed. It is important that the equalizer spring clip nuts (2) are tightened periodically.

Digitized by Google
Original from UNIVERSITY OF CALIFORNIA
Generated on 2014-11-16 11:13 GMT / http://hdl.handle.net/2027/uc1.b3243973
Public Domain, Google-digitized / http://www.hathitrust.org/access_use#pd-google

SECTION II

FRONT IDLER ASSEMBLY

Paragraph
General 134
Bushings, shafts, and thrush washers 135
Idler yoke 136
Recoil spring 137

134. General.—The front idler is used to maintain proper tension in the track and to guide the track. Turning adjusting nut (9) (fig. 150) moves recoil spring (1) (fig. 149), idler yoke (2), and idler (3) forward or backward on the roller frame. The idler and yoke move back against the compression of spring (1) when an obstruction is encountered at the front of the track assembly. Guides (4) and (5)

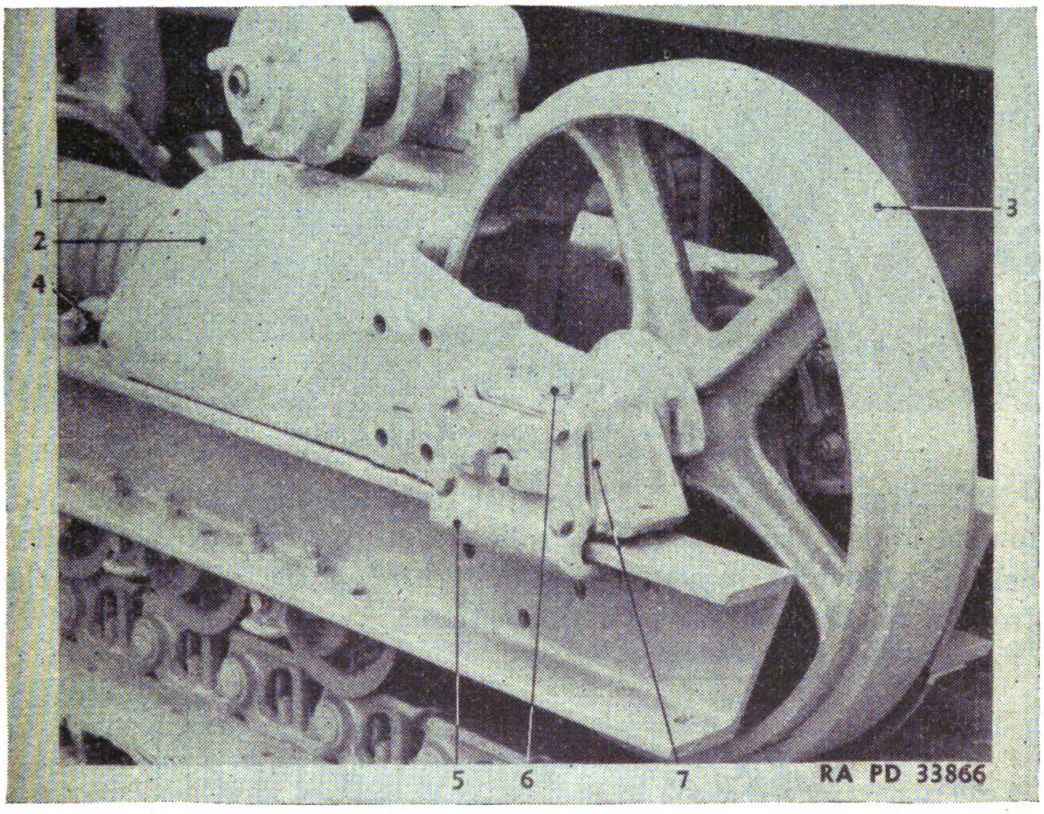

FIGURE 149.—Front idler assembly.

hold the idler yoke in alinement on the roller frame. With the track disconnected and laid out flat, the front idler and yoke can be removed as a unit by taking off guides (4) and (5) and removing capscrews (8) (fig. 150).

135. Bushings, shafts, and thrust washers.—The bushings and shafts can be removed as recommended for track rollers after setscrew (6) (fig. 149) is removed from each end of the idler shaft.

Digitized by Google
Original from UNIVERSITY OF CALIFORNIA
Generated on 2014-11-16 11:13 GMT / http://hdl.handle.net/2027/uc1.b3243973
Public Domain, Google-digitized / http://www.hathitrust.org/access_use#pd-google

136. Idler yoke.—*a.* The idler yoke should have from ⅛- to 3/16-inch side movement on the roller frame. Amounts in excess should be reduced by removing shims (7) (fig. 149).

b. The idler yoke can then be centered on the roller frame by shifting the shims from one side to the other.

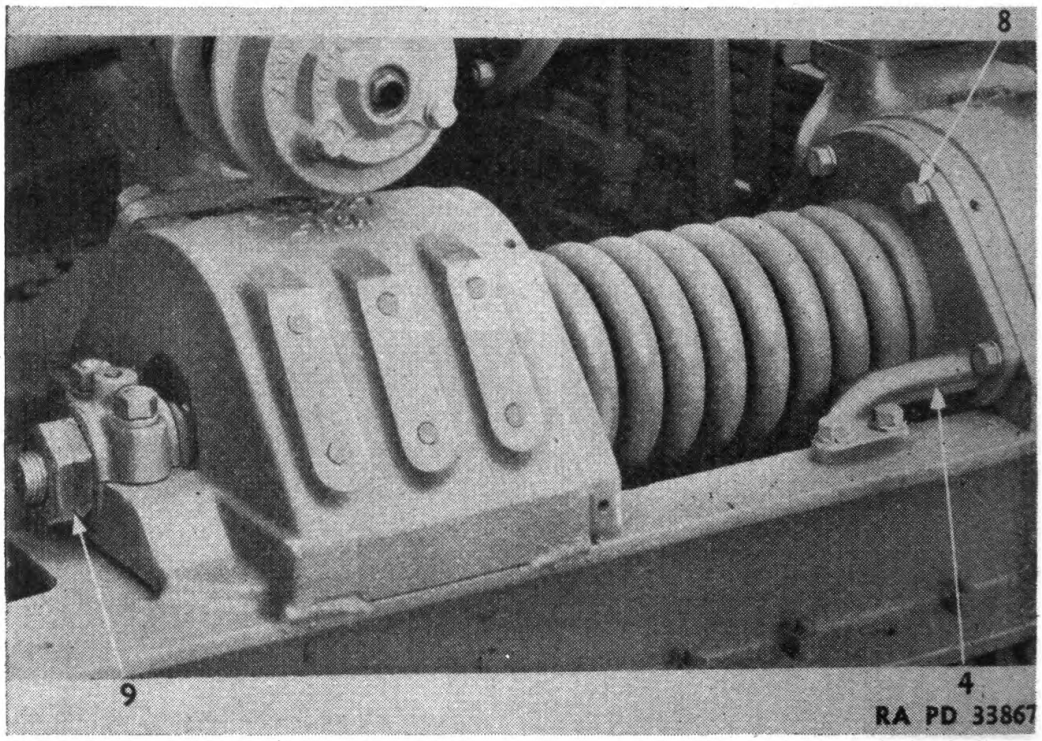

FIGURE 150.—Front idler and yoke removal.

137. Recoil spring.—*a.* The idler recoil spring is provided to allow the idler to move back in the roller frame to relieve excessive track tension caused by something passing through the track or to the front of the track striking an obstruction.

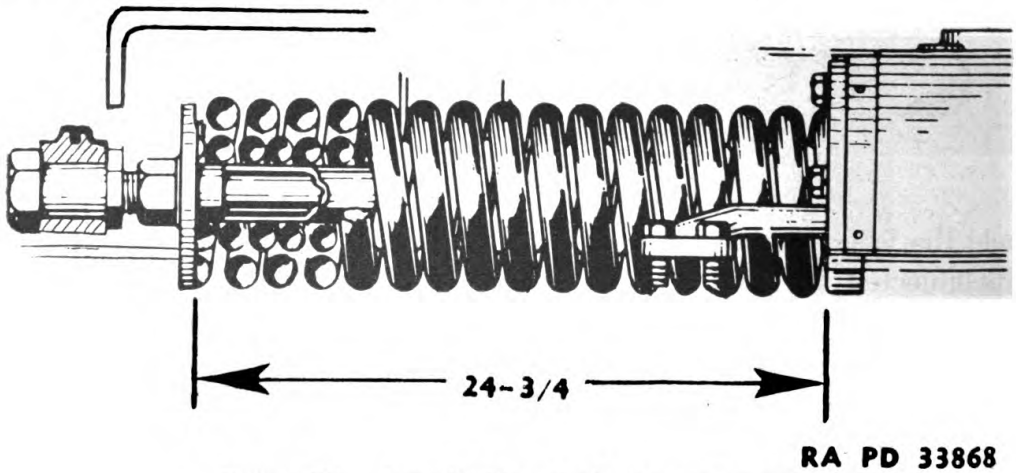

FIGURE 151.—Assembled length of idler recoil spring.

Digitized by Google
Original from UNIVERSITY OF CALIFORNIA
Generated on 2014-11-16 11:13 GMT / http://hdl.handle.net/2027/uc1.b3243973
Public Domain, Google-digitized / http://www.hathitrust.org/access_use#pd-google

b. The assembled length of the spring (fig. 151) from the end of the front coil to the end of the rear coil should be 24¾ inches. This is governed by the nut on the recoil spring bolt ahead of nut (9) (fig. 150).

c. Track adjusting nut (9) does not change the tension of the recoil spring but rather slides the complete spring, yoke and idler.

d. The spring can be removed by removing idler yoke and clamp over track adjusting nut.

SECTION III

TRACK CARRIER ROLLER

Paragraph
General 138
Track rollers 139

138. General.—*a.* Proper alinement of the top portion of the track between the idler and the sprocket is maintained by the cantilever-type track carrier rollers which also support the track to prevent excessive sagging.

(1) Insert a short piece of hardwood 2 inches by 4 inches or a 2-inch diameter pipe between the sprocket and track.

(2) Back up tractor until the track clears carrier rollers.

(3) Remove carrier roller from tractor.

(4) Take off cap (1) (fig. 152) and washer (2).

(5) Slide roller off the shaft.

(6) Note direction of wiping edge on seal (3).

(7) If seal sleeve (4) is grooved, it can be cut with a chisel and removed.

(8) The new sleeve should be heated in oil and slipped onto the shaft.

(9) Care should be taken not to damage the bushings when they are pressed in.

(10) Solvent, dry-cleaning, should be used on the outside of a bushing when pressing it into position.

b. When new shafts are installed, they should be pressed into the brackets to give an 8⅜-inch length as shown in figure 153.

139. Track rollers.—*a. General.*—Track rollers are used to carry the weight of the tractor and to aid the idler in guiding the track. Three single flange and two double flange rollers at alternate positions are used in each track frame assembly.

(1) The track rollers are of the end thrust construction in which two hardened thrust washers are used in each end of the roller, one (2) (fig.

Digitized by Google
Original from UNIVERSITY OF CALIFORNIA
Generated on 2014-11-16 11:13 GMT / http://hdl.handle.net/2027/uc1.b3243973
Public Domain, Google-digitized / http://www.hathitrust.org/access_use#pd-google

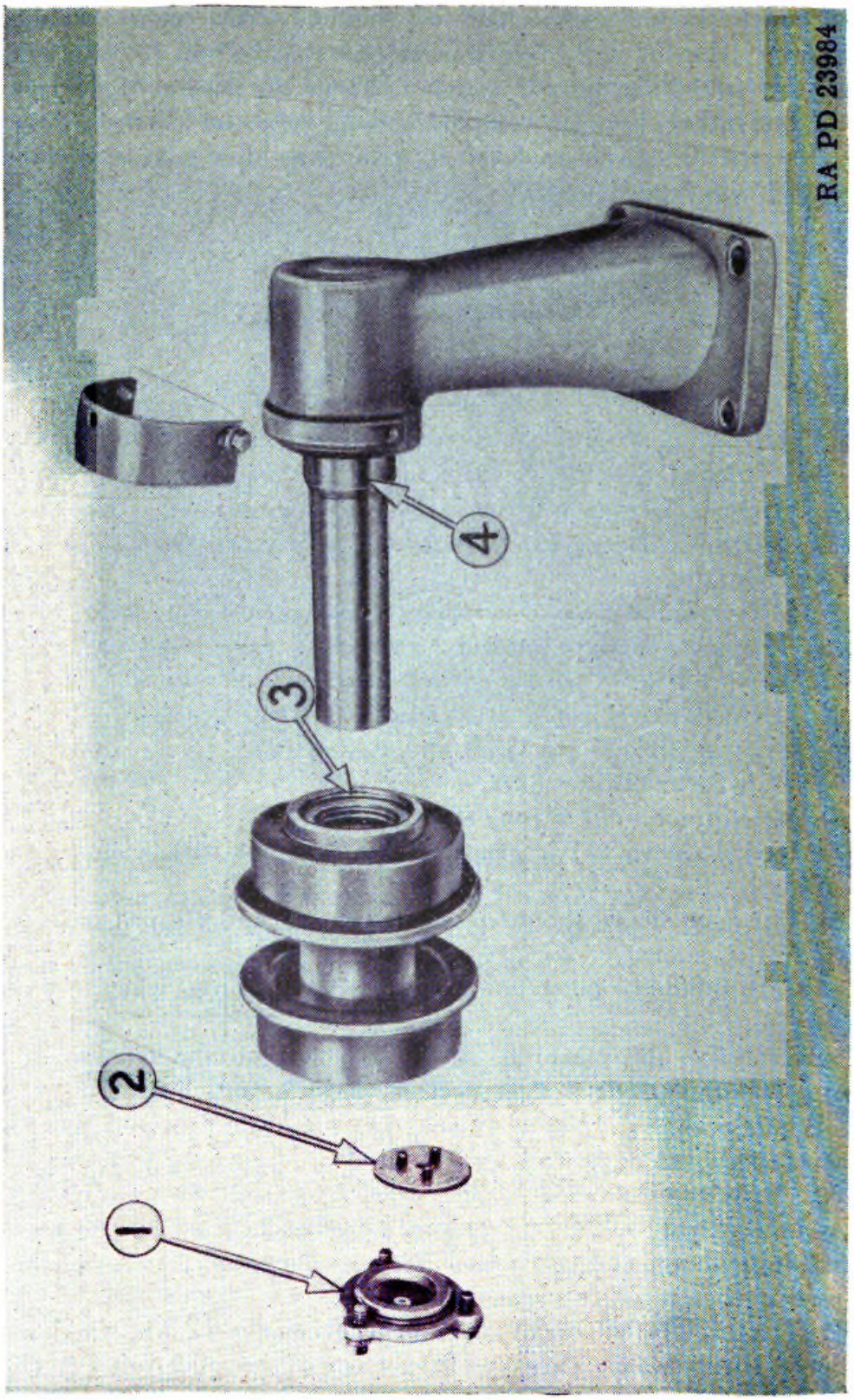

FIGURE 152.—Track carrier roller assembly.

Digitized by Google
Original from UNIVERSITY OF CALIFORNIA
Generated on 2014-11-16 11:13 GMT / http://hdl.handle.net/2027/uc1.b3243973
Public Domain, Google-digitized / http://www.hathitrust.org/access_use#pd-google

154) turning with the roller and one (4) remaining stationary in the roller end collar.

(2) Wear between the thrust washers of the track rollers (front idlers have the same end thrust construction) allows an increase in end play which should be taken up occasionally by adding shims (3).

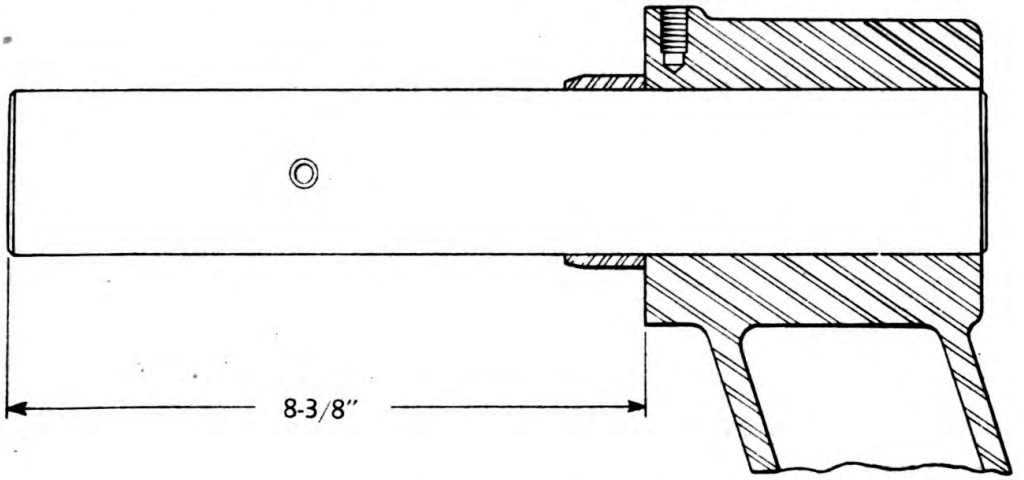

FIGURE 153.—New shaft installation.

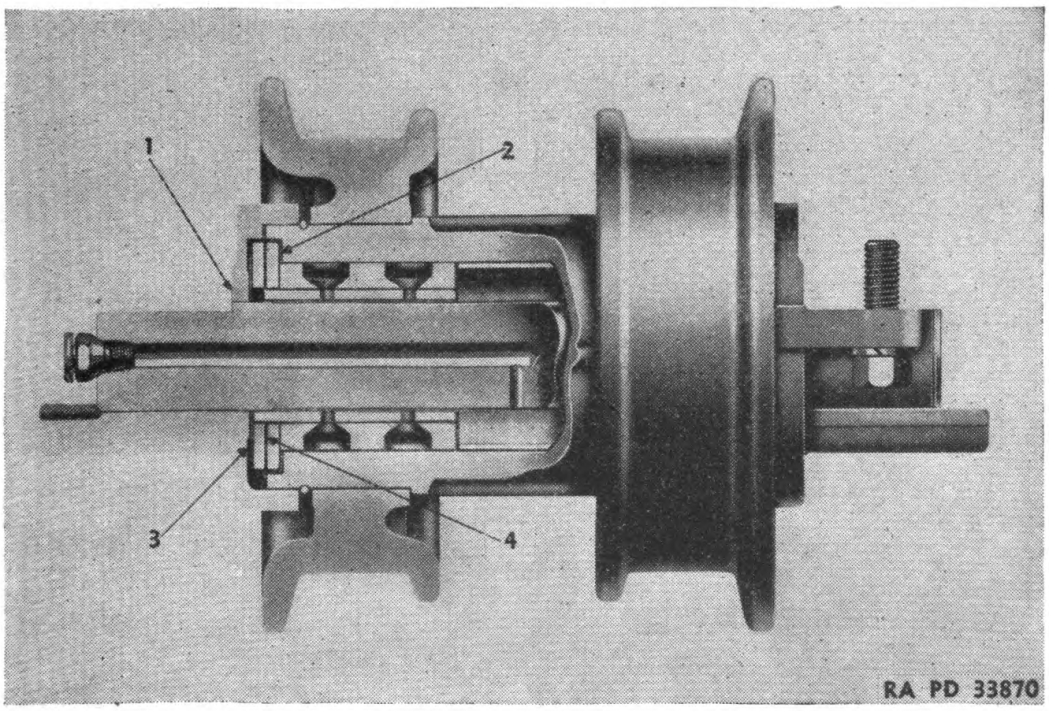

FIGURE 154.—Track roller assembly.

(3) A small amount of end play is desirable since it will allow some lubricant to work out from between the two thrust washers. This will

Digitized by Google
Original from UNIVERSITY OF CALIFORNIA
Generated on 2014-11-16 11:13 GMT / http://hdl.handle.net/2027/uc1.b3243973
Public Domain, Google-digitized / http://www.hathitrust.org/access_use#pd-google

wash away dirt and lubricate the washers. Too much end play, however, results in dirt working in and lubricant leaking out.

(4) Rollers and idlers are correctly adjusted when the outer surfaces of the end collars are flush with the shoulders on the shaft as at (1) and there is .010 inch to .019 inch end play. To adjust, assemble the roller or idler on the shaft with its thrust washers and end collars. Line up one end collar with the shaft shoulder and force the other collar on as far as possible. Add shims until this collar is flush with the shoulder on the shaft, minus the minimum allowable clearance. Shims should be divided equally and placed between the end collars and the thrust washers (not between the thrust washers).

b. Inspection.—(1) The rollers can be inspected without disconnecting the track by placing a block approximately 12 inches high immediately in front of one track and allowing the tractor to move forward until the block is approximately under the second roller (fig. 155). Then place another block immediately behind the same track and back the tractor onto the second block until the rear block is under the sprocket and the front block is under the idler. This will have pulled all the slack in the track to the bottom. Block the other track to prevent the tractor from moving.

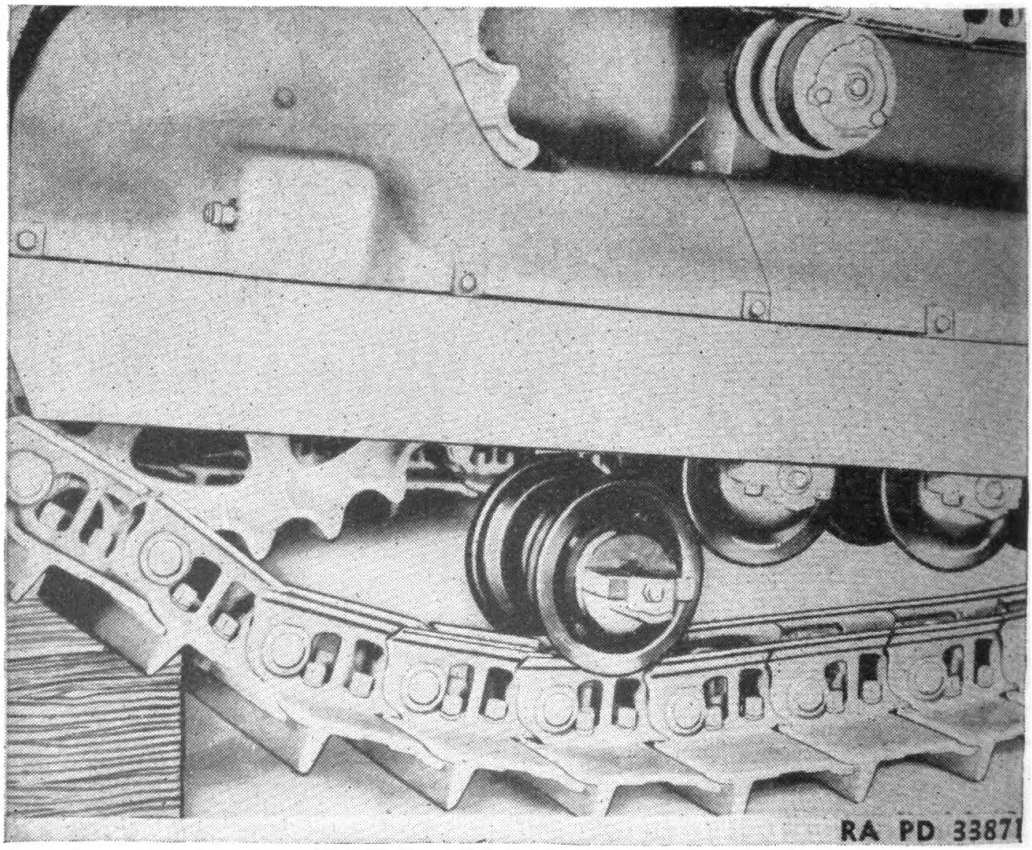

FIGURE 155.—Roller removal.

Digitized by Google
Original from UNIVERSITY OF CALIFORNIA
Generated on 2014-11-16 11:13 GMT / http://hdl.handle.net/2027/uc1.b3243973
Public Domain, Google-digitized / http://www.hathitrust.org/access_use#pd-google

(2) The rollers can now be reached to determine the shaft or bushing wear or the end clearance.

c. Removal.—(1) Increase slack in the track by backing off the track adjustment. Then remove track roller guards. After doing this, the same method as described in *b* above can be used for roller removal (fig. 156). With the tracks on the blocks, a small jack can be used between the track shoes and the roller frame to aid in giving clearance. Remove the center roller first then roll the others toward the center where the most slack in the track exists.

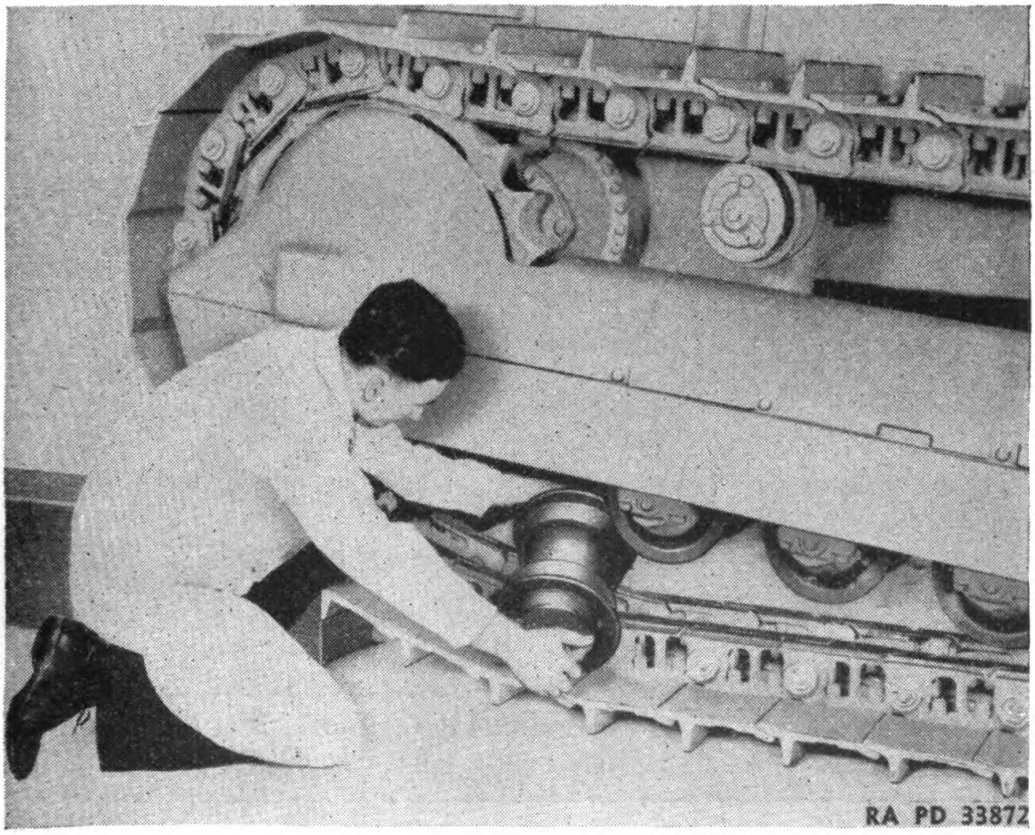

FIGURE 156.—Roller removal.

(2) (*a*) Each roller bushing assembly consists of an iron bushing (B) (fig. 157) with a bronze insert bushing (A). Whenever a bronze insert bushing is to be replaced press out both the iron and bronze bushings. Clean thoroughly the recesses of the iron bushing before replacing it. Make certain the oil holes in the bronze insert bushing and the iron bushing are alined.

(*b*) The gray iron bushings can be replaced if desired.

(*c*) The iron bushings are available in ⅛ inch oversize on their O. D. If the roller or idler hubs are worn internally they should be

Digitized by Google
Original from UNIVERSITY OF CALIFORNIA
Generated on 2014-11-16 11:14 GMT / http://hdl.handle.net/2027/uc1.b3243973
Public Domain, Google-digitized / http://www.hathitrust.org/access_use#pd-google

turned out sufficiently to clean up the bore. The bushings should be turned to give a .005 inch to .008 inch press fit in the hub of the idler or roller.

(*d*) Solvent, drying cleaning, should be used on the outside of the bushings when pressing them into place.

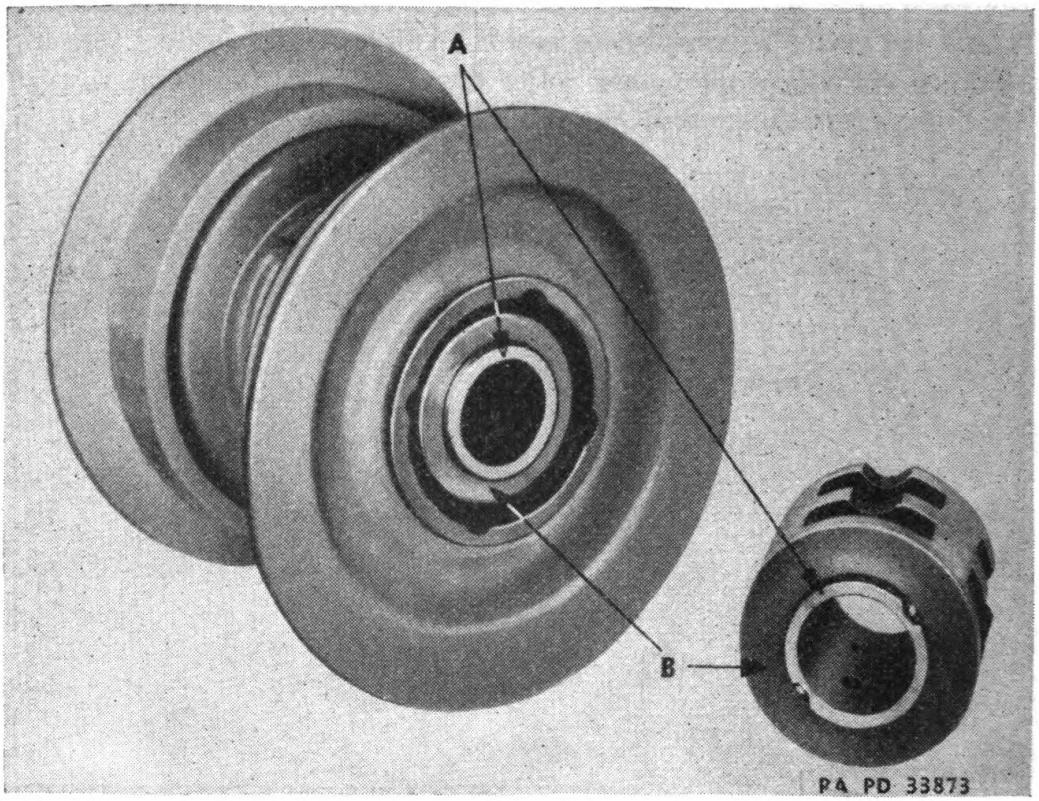

FIGURE 157.—Bushing removal.

SECTION IV

TRACK

Paragraph
General ---- 140
Disconnecting the track ---- 141
Connecting the track ---- 142
Track links ---- 143
Adjusting track tension ---- 144
Track pins and bushings ---- 145

140. General.—The track link assembly (fig. 158) consists of links, pins, and bushings. Each link (6) overlaps the preceding link thus forming a continuous chain. Each link is counterbored in the overlapped portion to provide a tight, well-sealed joint and to minimize the entrance of abrasives. The bushings (8) are all alike except the master bushing (1) which is shorter for assembly purposes.

Digitized by Google
Original from UNIVERSITY OF CALIFORNIA
Generated on 2014-11-16 11:14 GMT / http://hdl.handle.net/2027/uc1.b3243973
Public Domain, Google-digitized / http://www.hathitrust.org/access_use#pd-google

With the master bushing, collars (4) are inserted in the counterbored space. The pins (7) are alike except the master pin (5) which is taper reamed and split at each end. A tapered plug (2) is driven into the master pin to hold the pin in position. The cork (3) protects the threads in the plug.

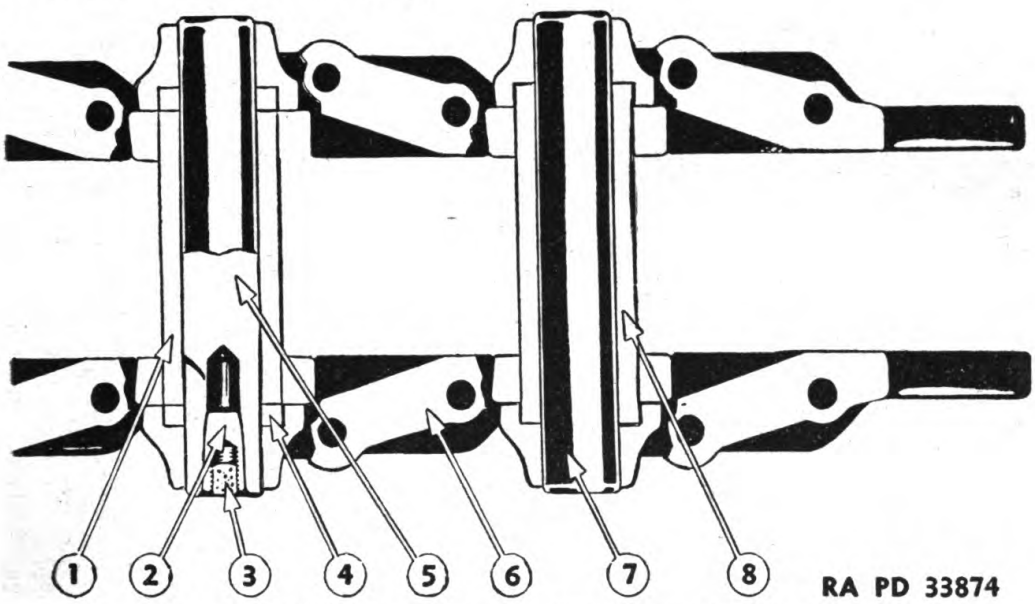

FIGURE 158.—Track link assembly—schematic.

141. Disconnecting the track.—*a.* Loosen track adjustment as much as possible. Drive the tractor up on a block approximately 12 inches high so that the track shoe below the master pin rides on the block. The master pin will then be in a position in front of the idler and approximately even with the top of the track roller frame. Set brake so that the slack in the track will remain in the top portion.

b. Remove cork from plug and pull plug on outside of the track using 1B9990 sleeve (9) (fig. 159), 3B1022 screw (10), and 3B1023 nut (11). Drive out the master pin using a punch inserted in the plug hole of the master bushing. Do not damage the tapered bore in the master pin. Remove collars (12) (fig. 160).

c. Using a bar (fig. 161), slowly back up the tractor to lay out the track. In the interest of personal safety, always hold the bar from the side as shown, whether removing or replacing the track.

142. Connecting the track.—To replace the track, back the tractor until the sprocket is just ahead of the rear end of the track. With the bar in the track, aid the track to climb up and over the sprocket, carrier rollers, and idler as the tractor is driven slowly forward. With the block under the first track shoe, the track will come together. Be sure to install the collars. Drive the master pin in after the other plug has been removed. Clean tapered plugs and

Digitized by Google
Original from UNIVERSITY OF CALIFORNIA
Generated on 2014-11-16 11:14 GMT / http://hdl.handle.net/2027/uc1.b3243973
Public Domain, Google-digitized / http://www.hathitrust.org/access_use#pd-google

the mating surfaces in the master pin before installing the master pin plugs and corks.

143. Track links.—*a.* A damaged track link not adjacent to the master pin can be replaced without disassembling the track.

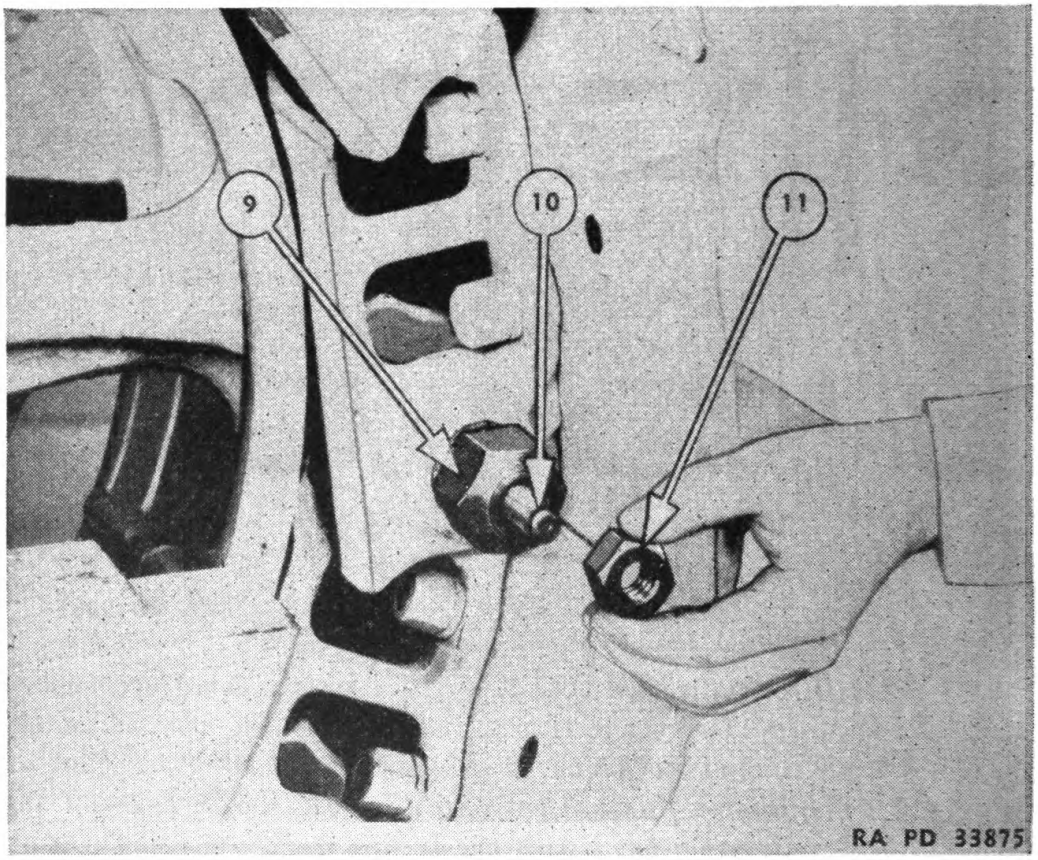

FIGURE 159.—Sleeve, screw and nut assembly.

(1) Remove shoe from track links in question.

(2) Press out track pins at both ends of track link.

(3) It will not be necessary to cut both links as shown in figure 162.

(4) With a torch cut link in two to be replaced and a 5/8-inch section out of the bushing.

(5) Remove the cut link (A) (fig. 162) and bushing (B), the other portion of the cut link (C) and then the other link (E) and the remaining portion of the bushing (D).

b. Due to the possibility of uneven wear, press two new links on the track.

(1) Install a standard track pin in the overlapping portions of the new links and a master bushing at the opposite ends.

(2) Insert collars in the counterbore of the mating links and press in a master pin.

(3) Install master pin plugs and corks.

Digitized by Google
Original from UNIVERSITY OF CALIFORNIA
Generated on 2014-11-16 11:14 GMT / http://hdl.handle.net/2027/uc1.b3243973
Public Domain, Google-digitized / http://www.hathitrust.org/access_use#pd-google

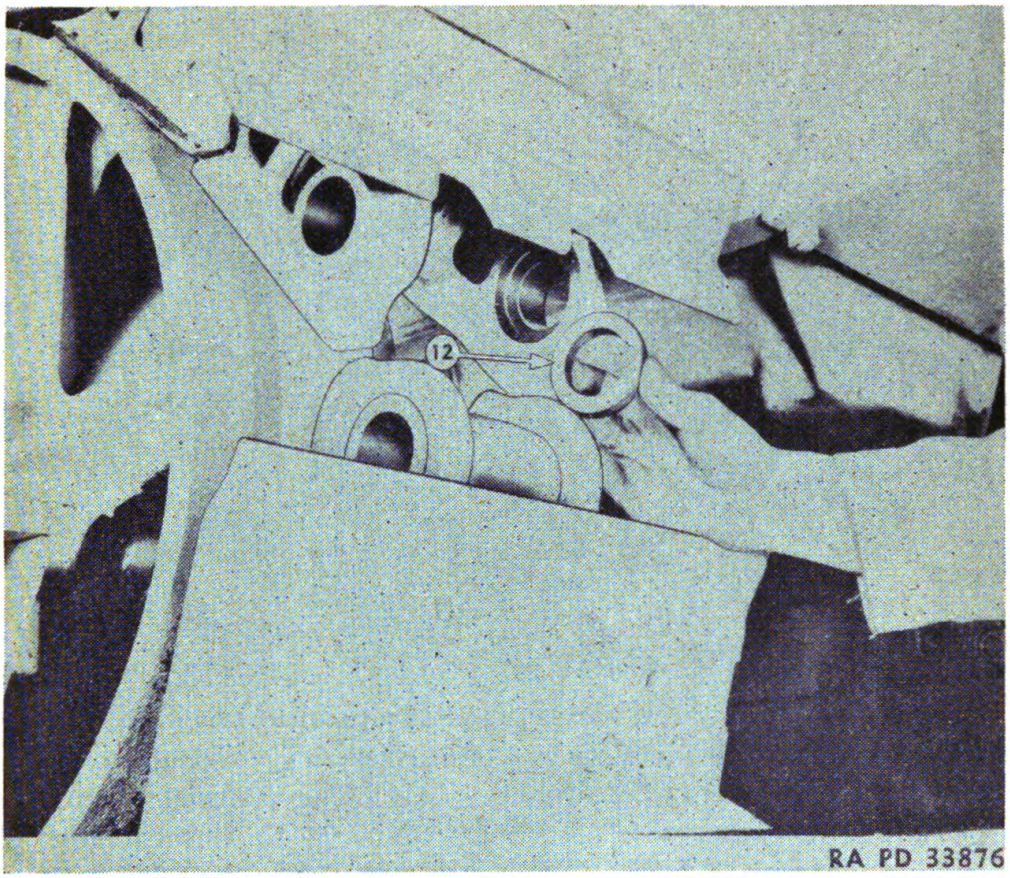

FIGURE 160.—Collar removal.

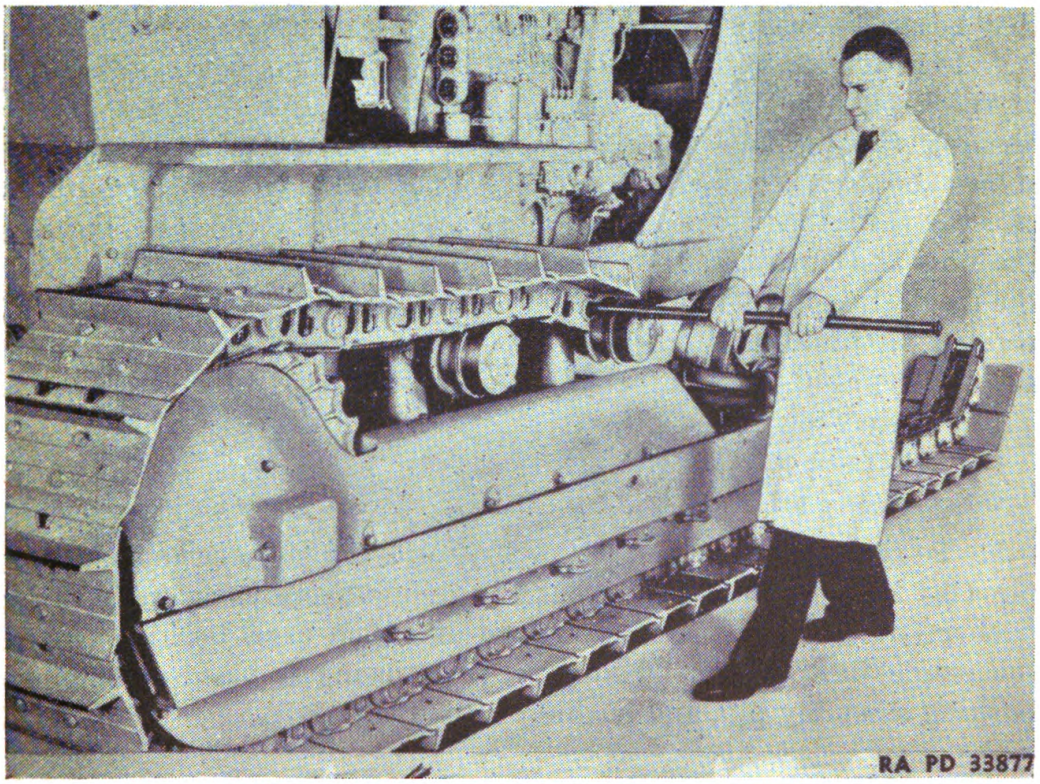

FIGURE 161.—Bar method of laying out track.

Digitized by Google
Original from UNIVERSITY OF CALIFORNIA
Generated on 2014-11-16 11:14 GMT / http://hdl.handle.net/2027/uc1.b3243973
Public Domain, Google-digitized / http://www.hathitrust.org/access_use#pd-google

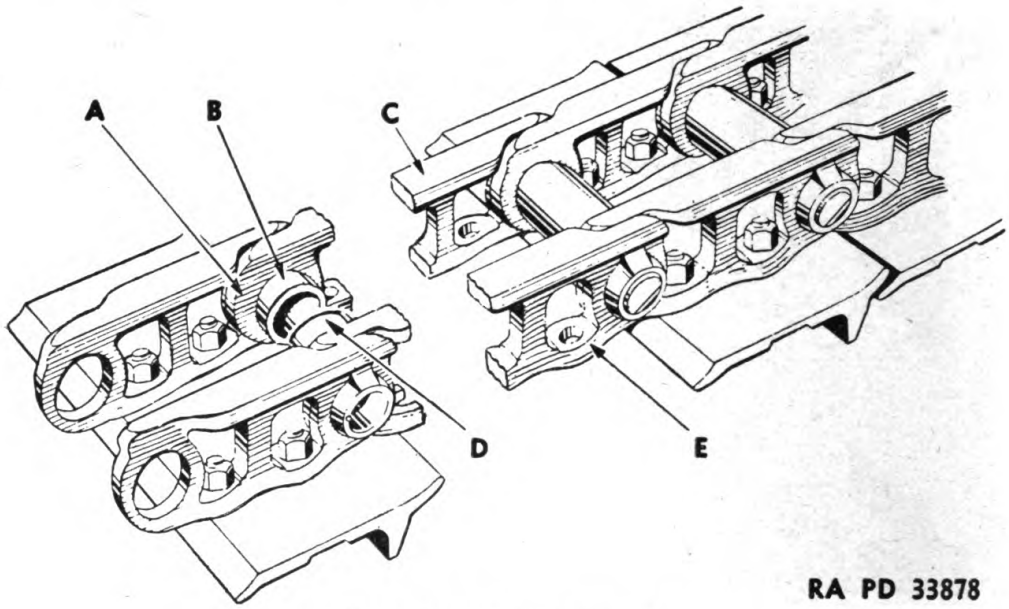

FIGURE 162.—Link removal.

144. Adjusting track tension.—As continued track adjustment becomes necessary through service, the following precaution should be observed to prevent the adjusting bolt being screwed out of the large adjusting nut, with subsequent damage to the threads. A maximum measurement of 3½ inches should not be exceeded between the adjacent faces of the track adjusting nut (fig. 163) and the nut that holds the recoil spring.

f. **145. Track pins and bushings.**—*a.* To obtain maximum life of track pins and bushings, the wear on the outer diameter of the bushing should not exceed 5/64 inch. The measurement taken as shown should not exceed 3½ inches. When either of the above limits of wear is reached the pins and bushings should be turned. To turn the pins and bushings, they should be pressed out of the links after the track shoes have been removed. Each pin and bushing should be rotated 180° and reinstalled to obtain new contact surfaces. There are two types of presses for track reconditioning.

(1) Heavy duty hand press.
(2) Portable power press.

NOTE.—Figures 164, 165, 166, and 167 show the use of a heavy duty power press.

b. To remove press out track pins using a pin adapter and pushing pin (fig. 164.) Press bushing out of one link using jaws and bushing pusher (fig. 165.) Turn link around and then press bushing out of the single link. Press bushing in place using a bushing adapter, bushing assembly pin, and bushing collar (fig. 166).

Digitized by Google
Original from UNIVERSITY OF CALIFORNIA
Generated on 2014-11-16 11:14 GMT / http://hdl.handle.net/2027/uc1.b3243973
Public Domain, Google-digitized / http://www.hathitrust.org/access_use#pd-google

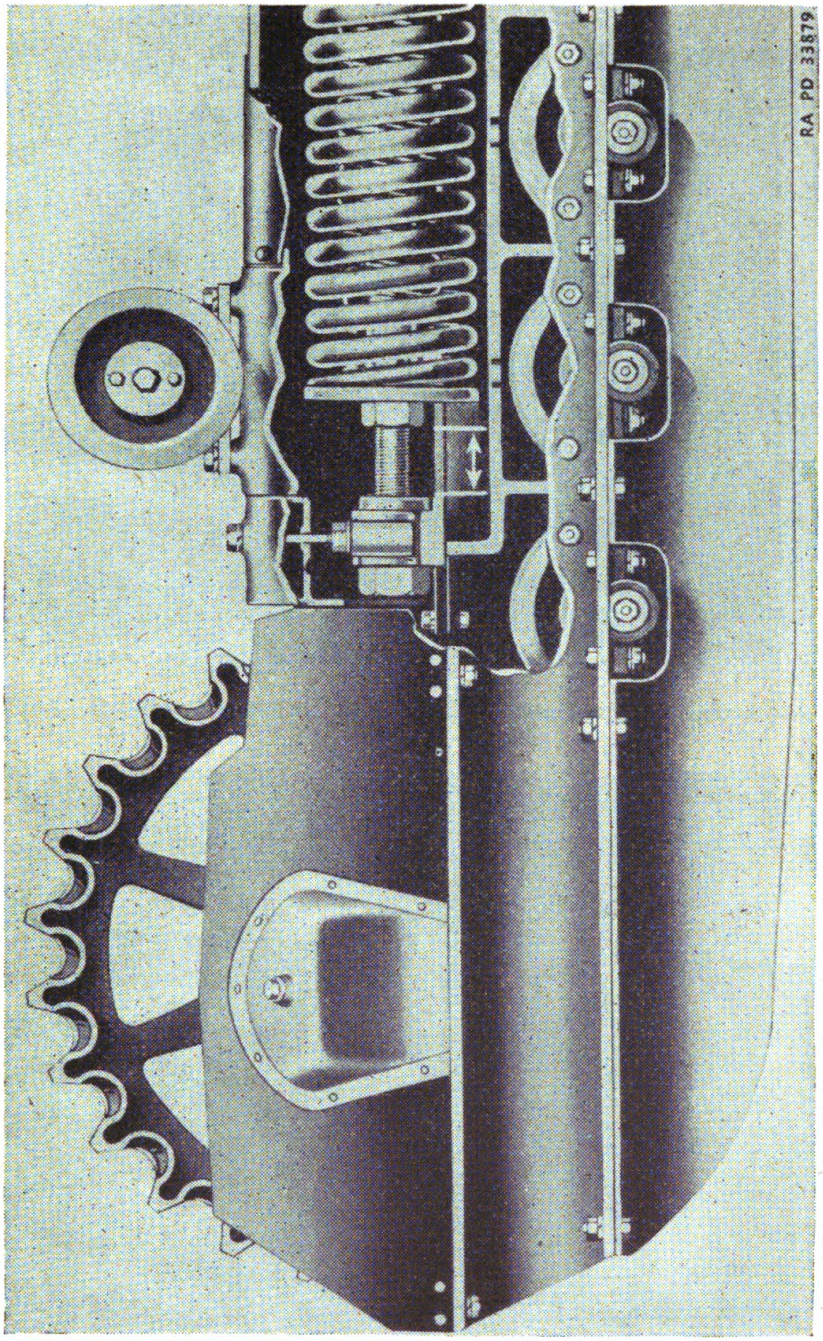

FIGURE 163.—Adjusting track tension.

Digitized by Google
Original from UNIVERSITY OF CALIFORNIA
Generated on 2014-11-16 11:14 GMT / http://hdl.handle.net/2027/uc1.b3243973
Public Domain, Google-digitized / http://www.hathitrust.org/access_use#pd-google

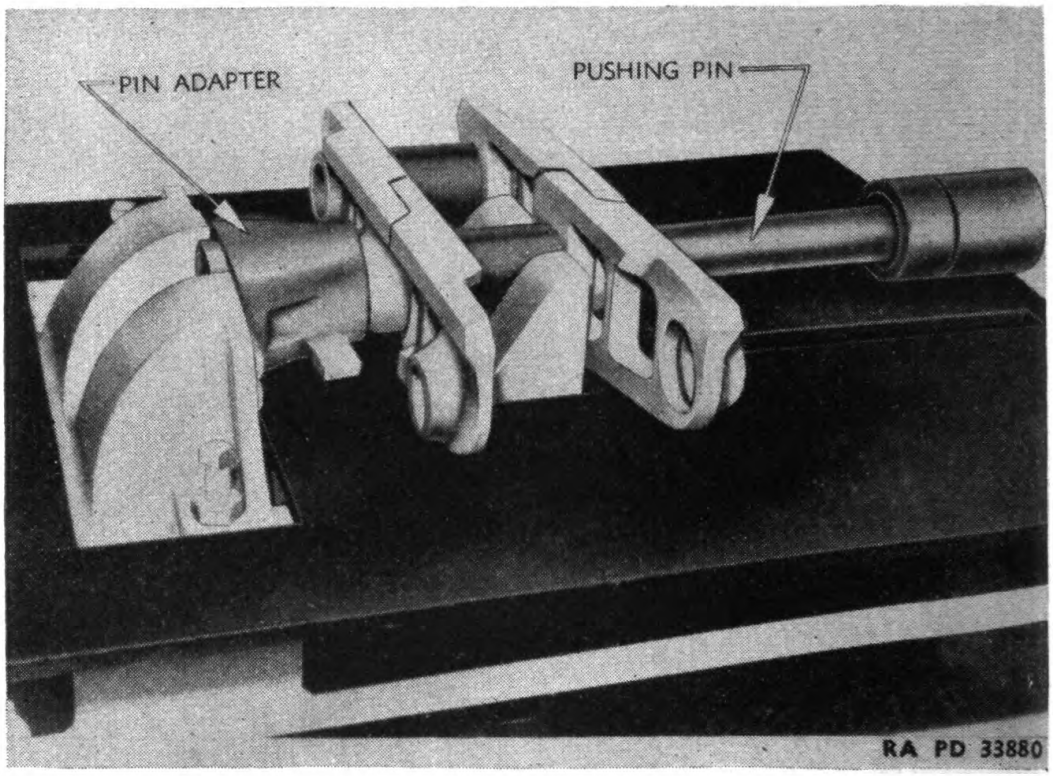

FIGURE 164.—Pressing out track pins using pin adapter and pushing pin.

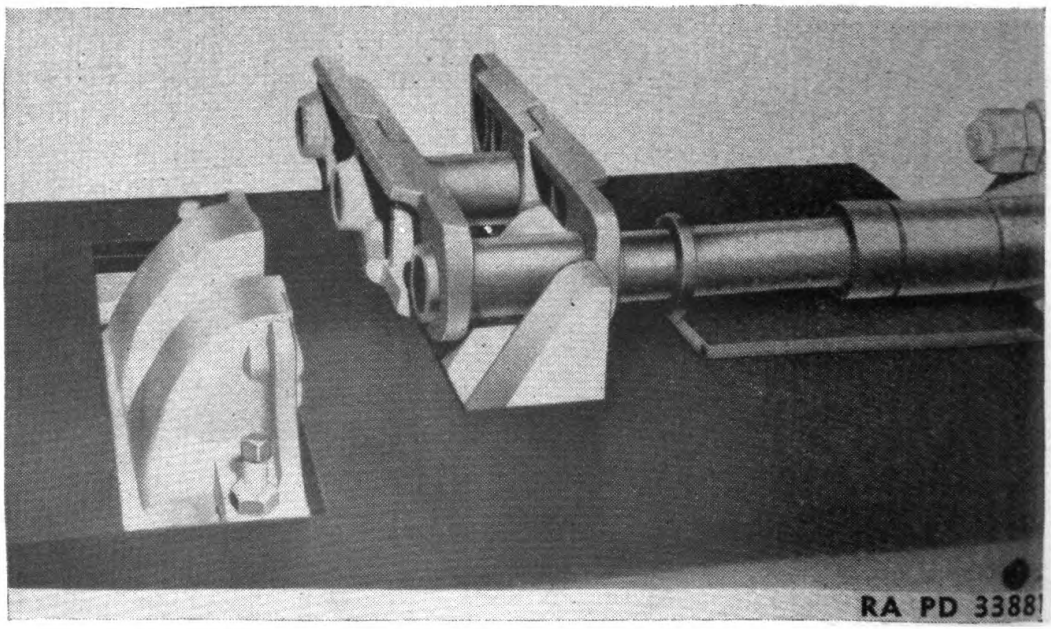

FIGURE 165.—Pressing bushing out of link with bushing pusher.

Digitized by Google
Original from UNIVERSITY OF CALIFORNIA
Generated on 2014-11-16 11:14 GMT / http://hdl.handle.net/2027/uc1.b3243973
Public Domain, Google-digitized / http://www.hathitrust.org/access_use#pd-google

c. Place one of the next links in position with the counterbored portion on the bushing previously installed. With the pilot pin in place, press bushing in position using the bushing adapter, bushing assembly pin, and bushing collar (fig. 167). After the bushings are pressed into position, press in track pins.

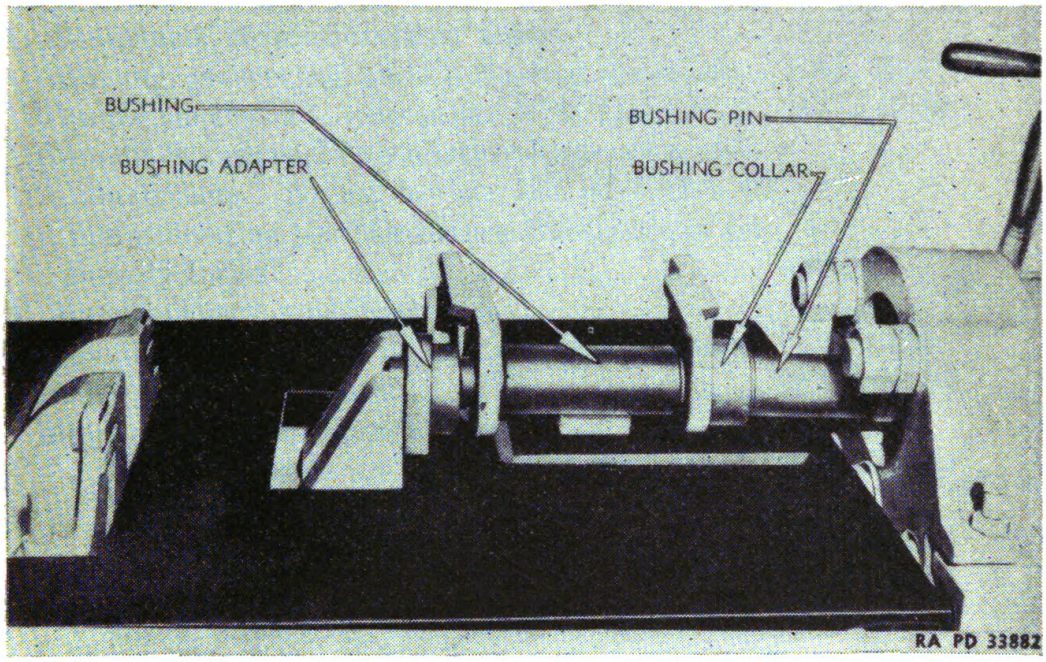

FIGURE 166.—Pressing bushing in place using bushing adapter, bushing assembly pin and bushing collar.

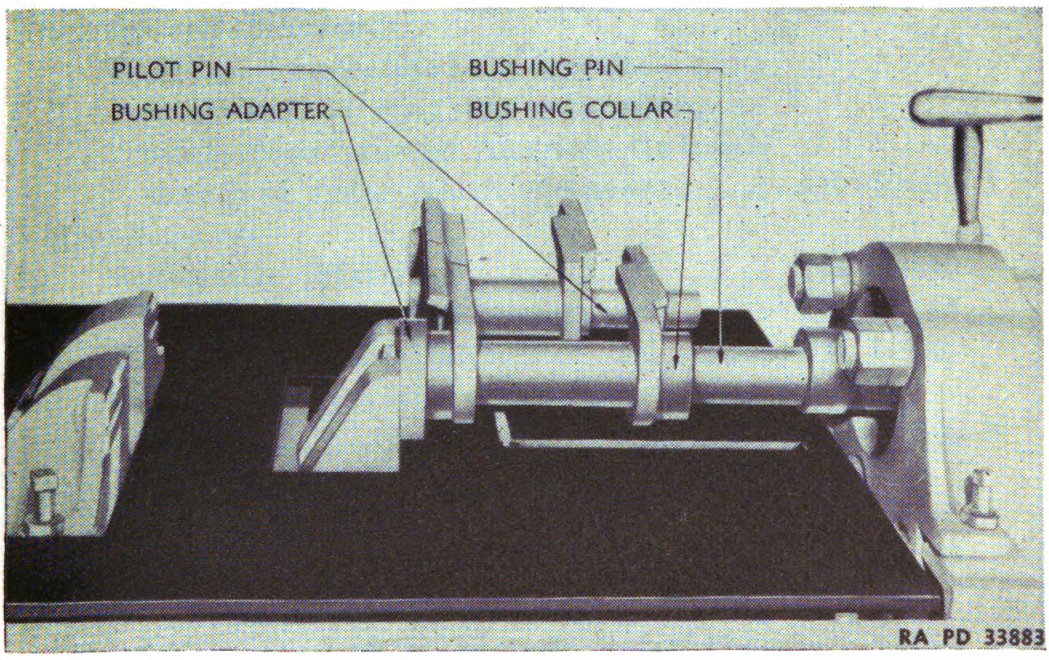

FIGURE 167.—Pressing bushing into position.

Digitized by Google
Original from UNIVERSITY OF CALIFORNIA
Generated on 2014-11-16 11:14 GMT / http://hdl.handle.net/2027/uc1.b3243973
Public Domain, Google-digitized / http://www.hathitrust.org/access_use#pd-google

Appendix

LIST OF REFERENCES

1. Standard Nomenclature Lists.

Cleaning, preserving, and lubricating materials	SNL K–1
Tractor, heavy, M1, caterpillar RD7 (Diesel)	SNL G–89
Current Standard Nomenclature Lists are as tabulated here. An up-to-date list of SNL's is maintained as the "Ordnance Publications for Supply Index"	OPSI

2. Explanatory publications.

Cleaning, preserving, and lubricating materials	TM 9–850
Diesel engines and fuels	TM 10–575
Maintenance, inspection and repair.	
Echelon system of maintenance	TM 10–525
Fire prevention, safety precautions, accidents	TM 10–360
Motor transport inspection	TM 10–545
Hand, measuring, and power tools	TM 10–590
Sheet metal work, body, fender and radiator repairs	TM 10–450
Maintenance and repair	TM 10–520
Storage and shipment.	
Loading of mechanized and motorized army equipment on open top railroad equipment—Association of American Railroads	
storage of motor vehicle equipment	AR 850–18
Miscellaneous.	
Automotive lubrication	TM 10–540
Automotive power transmission units	TM 10–585
Electrical fundamentals	TM 1–455
Cold weather operation of automotive equipment	OFSB 6–G–3
List of training publications	FM 21–6
Motor transport	FM 25–10
Military motor vehicles	AR 850–15

Generated on 2014-11-16 11:15 GMT / http://hdl.handle.net/2027/uc1.b3243973
Public Domain, Google-digitized / http://www.hathitrust.org/access_use#pd-google
Digitized by Google
Original from UNIVERSITY OF CALIFORNIA

3. Training films and film strips.

Lubrication	FS 10–39
Diesel engine and components.	
Diesel engines	TF 9–159
Diesel engines and fuels	FS 10–37
Engine of the Diesel tractractor	TF 9–171
Power train of the Diesel tractractor	TF 9–172
The electrical system of the Diesel tractractor	TF 9–169
The fuel system of the Diesel tractractor	TF 9–170
The track and suspension system of the Diesel tractractor	TF 9–173
Maintenance.	
Third echelon of maintenance	FS 10–55
Fourth echelon of maintenance	FS 10–56
The motor vehicle driver, loading, trouble shooting, reports and vehicle abuse	TF 11–559
Miscellaneous.	
Automotive electricity	FS 10–33
Internal combustion engines	FS 1–15
Storage battery	FS 10–61

Digitized by Google

Original from UNIVERSITY OF CALIFORNIA

Generated on 2014-11-16 11:15 GMT / http://hdl.handle.net/2027/uc1.b3243973
Public Domain, Google-digitized / http://www.hathitrust.org/access_use#pd-google

INDEX

	Paragraph	Page
Air—		
Cleaner	18	25
Compressor	64–72	87
Shutter	78	96
Strainer	68	91
Battery	63	86
Bearings:		
Diesel engine	27–30, 128	42, 155
Starting engine	111, 112, 128	121, 155
Belt adjustment	72	92
Bevel gear	123, 124	144
Brakes	125, 126	148
Breaker assembly	91	105
Brushes	88	105
Bushings	135, 145	161, 172
Camshaft—		
Drive	39	55
Gear	38	55
Carburetor	75–84	96
Choke control	78	96
Cleaning fuel system	84	101
Clutch:		
Starting engine	114	127
Steering	121, 122	140
Coil	89	105
Connecting rod	27, 30, 69, 112	42, 48, 91, 122
Contact points	92	106
Cooling system	11–18	18
Crankshaft	31–35, 70	51, 91
Cylinder head:		
Installation	21	27
Removal	20	27
Cylinder liners	25–26	36
Diesel engine. (*See* Engines.)		
Distributor—		
Gear	97	109
Plate	87	104

Digitized by Google

Original from UNIVERSITY OF CALIFORNIA

Generated on 2014-11-16 11:15 GMT / http://hdl.handle.net/2027/uc1.b3243973
Public Domain, Google-digitized / http://www.hathitrust.org/access_use#pd-google

INDEX

	Paragraph	Page
End-play	32	52
Engines:		
Diesel:		
Air compressor	64–72	87
Bearings	27–30	42
Cooling system	11–18	18
Crankshaft	31–35	51
Cylinder—		
Head	20–21	27
Liner	25, 26	36
Description	2	3
Fuel system	44–51	61
Governor	52–59	79
Handling parts	4	7
Lighting system	60–63	85
Pistons	25, 26	36
Removing	36	52
Specifications	10	18
Trouble shooting	6	10
Valve mechanism	22–24	27
Starting:		
Bearings	111, 112	121
Carburetor	75–84	96
Governor mechanism	100–102	115
Magneto	85–99	104
Pistons and rings	104–110	116
Removing and replacing	103	116
Starting mechanism	113–116	125
Trouble shooting	5	10
Valves	73, 74	94
Equalizer spring	133	160
Fan	13	19
Fan drive	14	21
Films, training and strips	App.	178
Filter oil	42	59
Final drive	127, 128	149
Float assembly	83	101
Flywheel	35	52
Flywheel clutch	118	131
Frame, track	131–145	159
Front idler assembly	134–137	161
Fuel—		
Injection equipment	47	65
Injection pump	49–51	71
Tank filler cap	45	61
Transfer pump and adapter	46	63
Fuels, care and storage	3	5

Digitized by Google
Original from UNIVERSITY OF CALIFORNIA
Generated on 2014-11-16 11:15 GMT / http://hdl.handle.net/2027/uc1.b3243973
Public Domain, Google-digitized / http://www.hathitrust.org/access_use#pd-google

INDEX

	Paragraph	Page
Gear:		
Bevel	123, 124	144
Camshaft	38	55
Crankshaft	334	52
Distributor	97	109
Rotor	98	113
Timing	37–39	54
Generator	60	85
Governor:		
Diesel engine:		
Balancing	57	83
Checking engine speed	58	85
Description	52	79
Fuel injection pump control lever	56	83
High idle speed adjustment	53	81
Hour meter	59	85
Low idle speed	54	82
Throttle control rod adjustment	55	82
Starting engine	100–102	115
High speed jet	80	96
Idler—		
Shaft	135	161
Yoke	136	162
Idling jet	82	97
Impulse starter	96	108
Induction rotor	98	113
Injection—		
Equipment	47	65
Pumps	49–51	74
Inlet body	77	96
Jet:		
High speed	80	96
Idling	82	97
Main	80	96
Lamps	61	85
Lighting system	60–64	85
Links, track	143	170
Lubrication:		
Air compressor	71	91
Importance	7	11
Instructions	8	13
Methods	9	14
Schedule	8	11
System	40–43	56
Magneto	85–99	104
Main—		
Bearings	29, 111	45, 121
Jet	80	96

Digitized by Google
Original from UNIVERSITY OF CALIFORNIA
Generated on 2014-11-16 11:15 GMT / http://hdl.handle.net/2027/uc1.b3243973
Public Domain, Google-digitized / http://www.hathitrust.org/access_use#pd-google

INDEX

	Paragraph	Page
Mechanic, instructions	4	7
Meter, hour	59	85
Nomenclature lists	App.	177
Oil—		
Filter	42	59
Lines	43	61
Pump	41	57
Pinion	115, 124	128, 145
Pins, track	145	172
Pistons:		
Diesel engine	25–26, 69	36, 91
Starting engine	104–110	116
Points, contact	92	106
Power—		
Take-off shaft	129, 130	157
Transmission units	117–130	131
Precombustion chamber	48	69
Publications, explanatory	App.	177
Pump:		
Fuel injection	49, 50, 56	71, 74, 83
Oil	41	63
Transfer	46	63
Water	15	21
Radiator	12	19
Rear drive attachment	120	137
Recoil spring	137	162
Rings	25–26	36
Rollers, track	139	163
Rotor	89	105
Rotor, induction	98	113
Shaft:		
Idler	135	161
Power take-off	129, 130	157
Starting engine	97	109
Shutter:		
Air	78	96
Throttle	79	96
Specifications	10	18
Speed:		
Checking	58	85
High idle	53, 101	81, 115
Low idle	54, 102	82, 116
Spring:		
Equalizer	133	160
Recoil	137	162
Starting engine. (*See* Engines.)		
Steering clutch	121, 122	140
Switches, lighting	62	86

Digitized by Google
Original from UNIVERSITY OF CALIFORNIA
Generated on 2014-11-16 11:15 GMT / http://hdl.handle.net/2027/uc1.b3243973
Public Domain, Google-digitized / http://www.hathitrust.org/access_use#pd-google

INDEX

	Paragraph	Page
Tank filler cap, fuel	45	61
Taper roller bearing	128	155
Thrust washer	33, 135	52, 161
Timing:		
Gear assembly	37–39	54
Starting engine	94	106
Tools, care	4	7
Track frame assembly	131–145	159
Transmission	116, 119	130, 131
Trouble shooting	5, 6	10
Valves:		
Diesel engine:		
Assembly	67	90
Inspection	24	31
Mechanism	22	27
Reconditioning	24	31
Stem bushings	23	30
Starting engine:		
Clearance adjustment	74	94
Description	73	94
Venturi	81	97
Washer, thrust	33, 135	52, 161
Water—		
Pump	15	21
Temperature regulators	16	22
Winch	130	158
Winding	90	105
Yoke, idler	136	162

[A. G. 062.11 (4–24–42).]

BY ORDER OF THE SECRETARY OF WAR:

G. C. MARSHALL,
Chief of Staff.

OFFICIAL:

J. A. ULIO,
Major General,
The Adjutant General.

DISTRIBUTION:

IBn 9 (1); IC 9 (3) (or 91 medium and heavy maintenance companies).

(For explanation of these symbols see FM 21–6)

U. S. GOVERNMENT PRINTING OFFICE: 1942

For sale by the Superintendent of Documents, Washington, D. C. - - - - - - Price 25 cents

Digitized by Google
Original from UNIVERSITY OF CALIFORNIA
Generated on 2014-11-16 11:15 GMT / http://hdl.handle.net/2027/uc1.b3243973
Public Domain, Google-digitized / http://www.hathitrust.org/access_use#pd-google

Digitized by Google
Original from UNIVERSITY OF CALIFORNIA
Generated on 2014-11-16 11:15 GMT / http://hdl.handle.net/2027/uc1.b3243973
Public Domain, Google-digitized / http://www.hathitrust.org/access_use#pd-google