PARTS BOOK

FEVEREIRO 1974

CATERPILLAR

D7 TRACTOR

POWER SHIFT

RUTHZIL TRATOR COMERCIAL DE PEÇAS LTDA 11 97083-6812 ROLANDO CITRANGULO

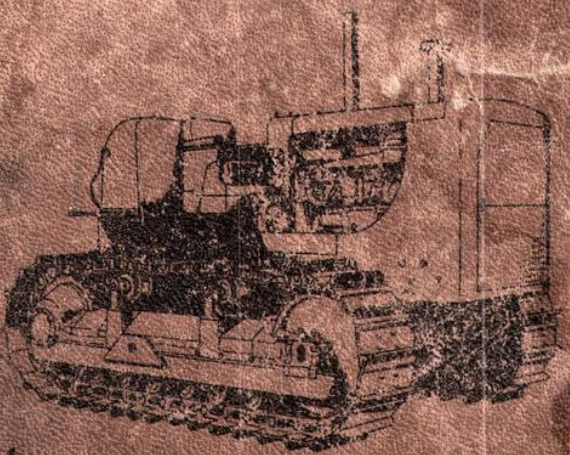

SERIAL NUMBERS

48A6393 — UP

D7 TRACTOR
POWER SHIFT

HOW TO ORDER PARTS

Please be sure to furnish the quantity, part number and name of each part wanted. It is also important to give the serial number of the machine for which the parts are intended. Location of serial number plates may be determined by referring to the "Specifications" page of this parts book. It is suggested that you write the serial number of your machine in this space so that it will be readily available when you need it.

THIS PARTS BOOK FOR MACHINE SERIAL NUMBER
48A.....

To insure prompt delivery, please don't overlook furnishing the correct name of the consignee, also the street address, town, county and state to which the parts are to be shipped, and indicate whether shipment is to be made by freight, express, parcel post or by other means.

WHERE TO ORDER PARTS

Caterpillar dealers maintain over 400 stores in the United States, and similar establishments are located strategically in nearly all countries throughout the world. These organizations are backed by the extensive facilities and resources of Caterpillar Tractor Co.

Dealer personnel are factory trained in the stocking and issuing of parts, and large stocks are constantly maintained to insure prompt service. Contact your nearest Caterpillar dealer to make sure that he has your name and address, the correct serial number of your machine, and an accurate list of accessories and attachments. This record will facilitate the issuance of parts when you need them in a hurry.

WHAT THE CATERPILLAR DEALER CAN DO FOR YOU

Caterpillar dealers are in the business of making it economical and profitable for you to own and operate Caterpillar machinery. They are in constant touch with the factory for new developments in repair and maintenance methods, operating procedures, and parts requirements. Their parts stocks are active and up-to-date, including all parts normally required to protect your investment in Caterpillar machinery.

Nearly all Caterpillar dealers offer 24-hour emergency service. For quick reference, write the name and address of the local dealer on your desk pad or the front of your phone book.

ONLY CATERPILLAR PARTS GIVE CATERPILLAR PERFORMANCE

The same quality and craftsmanship that has made Caterpillar products famous throughout the world is built into all Caterpillar replacement parts.

REVISION PUBLISHED FEBRUARY 1974

COMPILED BY SUSAN McGEHEE

INDEX

Diesel Engine
(Page 14)

Name	Page
Accessory Drive	36
Air Cleaner	20
Balancer and Drive	31
Belt Tightener	16
Breather and Oil Filler	23
Camshaft	33
Connecting Rod	32
Control—Compression Release	23
Control—Decelerator	35
Control—Governor	35
Crankshaft	29
Crankshaft Bearings	30
Cylinder Block and Covers	26
Cylinder Head	24
Fan and Shroud—Blower	15
Filter and Lines—Primary Fuel	41
Filter—Fuel	42
Filter—Oil	46
Flywheel	32
Fuel Injection System	43
Fuel Lines	40
Gasket Kits	30
Gauge—Fuel	39
Gauge—Oil	39
Gauge—Water	39
Governor	36
Guard—Radiator	17
Heat Indicator	39
Idler Gear—Water Pump	17
Manifolds	22
Oil Cooler	50
Oil Lines	46
Piston	32
Power Take-Off Housing—Rear	34
Power Take-Off—Rear	33
Pump—Fuel Transfer	42
Pump—Oil	45
Pump—Water	18
Radiator	14
Service Meter	38
Specifications	160
Support—Diesel Engine	50
Tools	157
Torque Spring—Governor	38
Transfers	159
Turbocharger	21
Valve Mechanism	24
Water Lines	19

Starting System
(Page 51)

Air Cleaner	58
Battery and Wiring	68
Camshaft	51
Carburetor	57
Clutch	60
Connecting Rod	54
Control—Choke	56
Control—Clutch	61
Control—Starter Pinion	61
Control—Throttle	56
Crank—Manual Starting	64
Crankshaft	54
Cylinder Block	52
Cylinder Head	52
Fuel System	57
Generator	65
Governor	51
Ignition System	60
Magneto	59
Manifold	58
Piston	54
Pump—Oil	55

Starting System—Continued

Name	Page
Starter—Electric	67
Starter Pinion	62
Support—Engine	65
Transmission	62
Valve Mechanism	52
Water Lines	55

Transmission and Chassis
(Page 74)

Bar and Suspension—Equalizer	106
Brakes	98
Case and Covers	101
Clutch—Steering	94
Control Linkage—Transmission	80
Control—Steering Clutch Hydraulic	96
Cooler Lines—Transmission Oil	79
Drawbar—Fixed	110
Fenders	114
Final Drive	102
Frame—Track Roller	107
Fuel System	113
Gauges—Transmission	81
Guard—Track Roller Frame	108
Hood and Dash	111
Idler—Front	104
Lubrication System—Steering Clutch	89
Lubrication System—Transmission	89
Oil Cooler—Torque Converter	78
Power Train	74
Roller—Track	109
Roller—Track Carrier	106
Seat Cushion and Frame	112
Tool Box	116
Torque Divider	75
Track	110
Transmission—Range	81

Attachments
(Page 116)

Alternator	116Y
Cab	138
Canopy	137
Case & Guard—Final Drive	150
Control—Accelerator	129
Control—Hydraulic	151
Drawbar—Swinging	116
Dust Ejector	124
Dust Valve	125
Electric Starting	116B
Engine Enclosure	150B
Fan—Defroster	136
Fan—Reversible Blade	121
Fan—Self-Cleaning	122
Field Conversion	122C-1
Frame—Track Roller	149
Guard—Brush	117
Guard—Crankcase	120
Guard—Final Drive Wear	151
Guard—Powershift Control	150G
Guard—Track Roller	150
Heater—Cab	133
Hinge—Radiator Guard	122
Hook—Front Pull	119
Hub	150A
Instrument Panel Protection	128
Lighting System	143
Muffler	150F-1
Protection Cover	126
Protection Cover—Radiator Cap	123
Rain Cap—Starting Engine	126
Seat Belt	142
Sprocket	150A
Street Plates	146
Tools	158
Track	147
Water Pressure Gauge	134D
Windshield Wiper	136

INDEX ALPHABÉTIQUE

Moteur Diesel
(Page 14)

Désignation	Page
Arbre à cames	33
Bielles	32
Bloc-cylindres	26
Butée élastique de course de crémaillère	38
Canalisations de carburant	40
Canalisations de graissage	46
Caractéristiques	160
Collecteurs	22
Compteur d'entretien	38
Coussinets de vilebrequin	30
Culasse	24
Décélérateur (commande)	35
Décompresseur (commande)	23
Entraînements secondaires	36
Equilibreur dynamique et entraînement	31
Filtre à air	20
Filtre à carburant diesel	42
Filtres à huile	46
Groupe d'injection de carburant	43
Instructions sur décalcomanies	159
Jeux de joints	30
Manomètre (pression de carburant)	39
Manomètre (pression de refroidissement)	39
Manomètre (pression d'huile)	39
Outillage	157
Pistons	32
Pompe à eau	18
Pompe à eau (engrenage intermédiaire)	17
Pompe à huile de graissage	45
Pompe d'alimentation de carburant	42
Préfiltre à carburant et canalisations	41
Prise de force arrière	33
Prise de force arrière (boîtier)	34
Protège-radiateur	17
Radiateur	14
Réfrigérant d'huile de graissage	50
Régulateur	36
Régulateur (commande)	35
Reniflard et tubulure de remplissage d'huile	23
Soupapes et train de commande	24
Supports-moteur	50
Tendeur de courroie	16
Thermomètre (eau)	39
Turbo-compresseur	21
Tuyauterie d'eau	19
Ventilateur soufflant et déflecteur	15
Vilebrequin	29
Volant du moteur	32

Groupe de lancement
(Page 51)

Alimentation d'essence (gazoline)	57
Allumage électrique	60
Arbre à cames	51
Batterie et installation électrique	68
Bielles	54
Bloc-cylindres	52
Boîte de vitesses de lancement	62
Carburateur	57
Carburateur (commande des gaz)	56
Carburateur (volet de départ)	56
Collecteur	58
Commandes de lancement (embrayage et pignon)	61
Culasse	52
Démarreur électrique	67
Dynamo	65
Embrayage de lancement	60
Filtre à air	58
Magnéto	59
Manivelle de départ	64

Groupe de lancement—Continué

Désignation	Page
Pignon de lancement	62
Pistons	54
Pompe à huile de graissage	55
Régulateur	51
Soupapes et train de commande	52
Supports-moteur	65
Tuyauterie d'eau	55
Vilebrequin	54

Bâti et organes de transmission
(Page 74)

Alimentation en carburant diesel	113
Barre d'attelage (non oscillante)	110
Bâti arrière	101
Boîte de vitesses (canalisations du réfrigérant)	79
Boîte de vitesses (timonerie)	80
Capot et tablier	111
Chaînes de roulement	110
Châssis porteurs latéraux	107
Châssis porteurs (tôlerie de protection)	108
Coffre á outils	116
Convertisseur (réfrigérant)	78
Coupleur différentiel	75
Démultiplicateur	81
Embrayages de direction	94
Embrayages de direction (circuit de graissage)	89
Embrayages de direction (servo)	96
Freins	98
Galets inférieurs	109
Galets supérieurs	106
Garde-boue	114
Manomètres du circuit de transmission	81
Réducteurs de barbotin	102
Roues avant	104
Servo-transmission (circuit de graissage)	89
Siège (coussin et support)	112
Train de transmission	74
Traverse de suspension	106

Accessoires
(Page 116)

Accélérateur (commande)	129
Barre d'attelage oscillante	116
Cabine	138
Carter de réducteur de barbotin	150G
Ceinture de sécurité	142
Chaînes de roulement	147
Châssis porteurs latéraux	149
Chauffage de la cabine	133
Commande hydraulique	151
Couvercle de protection	126
Couvercle du bouchon de radiateur	123
Crochet d'attelage (avant)	119
Dégivreur	136
Eclairage électrique	143
Ejecteur automatique de poussière	124
Essuie-glace	136
Outillage	158
Patins de route	146
Protecteur de tableau de bord	128
Protège-carter-moteur	120
Protège-galets	150
Protège-radiateur sur charnière	122
Protège-réducteur de barbotin	151
Soupape dépoussiéreur	125
Toit en toile	137
Tôle pare-broussailles	117
Ventilateur à pales réversibles	121
Ventilateur autonettoyeur	122
Volet (moteur de lancement)	126

INDICE

Motor Diesel
(Página 14)

Nombre	Página
Amortiguador de Vibración y Mando	31
Arbol de Levas	33
Bielas	32
Bloque del Motor y Tapas	26
Bomba de Transferencia del Combustible	42
Bomba del Aceite	45
Bomba del Agua	18
Caja de Toma de Fuerza Trasera	34
Cajas con Empaquetaduras	30
Calcomanías	159
Cigüeñal	29
Cojinetes de Bancada	30
Control—Decelerador	35
Control de la Descompresión	23
Control del Regulador	35
Culata	24
Enfriador del Aceite	50
Engranaje Loco de la Bomba del Agua	17
Especificaciones	160
Filtro de Aire	20
Filtro del Aceite	46
Filtro del Combustible	42
Filtro Primario del Combustible y Tuberías	41
Herramientas	157
Indicador de la Temperatura	39
Mando de Accesorios	36
Manómetro del Aceite	39
Manómetro del Agua	39
Manómetro del Combustible	39
Mecanismo de las Válvulas	24
Medidor de Servicio	38
Múltiples	22
Pistones	32
Protección del Radiador	17
Radiador	14
Regulador	36
Resorte de Torsión del Regulador	38
Respiradero y Tubo de Llenado del Aceite	23
Sistema de Inyección del Combustible	43
Soporte del Motor Diesel	50
Tensor de la Correa	16
Toma de Fuerza Trasera	33
Tuberías del Aceite	46
Tuberías del Agua	19
Tuberías del Combustible	40
Turboalimentador	21
Ventilador Insuflador y Cubierta	15
Volante	32

Motor de Arranque
(Página 51)

Arbol de Levas	51
Arranque Eléctrico	67
Batería y Alambrado	68
Bielas	54
Bloque del Motor	52
Bomba del Aceite	55
Carburador	57
Cigüeñal	54
Control de la Estrangulación	56
Control del Acelerador	56
Control del Embrague	61
Control del Piñón de Arranque	61
Culata	52
Embrague	60
Filtro de Aire	58
Generador	65
Magneto	59
Manivela para el Arranque	64
Mecanismo de las Válvulas	52
Múltiple	58
Piñón de Arranque	62
Pistón	54

Motor de Arranque—Continuación

Nombre	Página
Regulador	51
Sistema de Encendido	60
Sistema del Combustible	57
Soporte del Motor	65
Transmisión	62
Tuberías del Agua	55

Transmisión y Chasis
(Página 74)

Barra Compensadora y Suspensión 106
Barra de Tiro Fija 110
Bastidor de los Rodillos 107
Caja de Herramientas 116
Caja y Tapas 101
Capó y Tablero 111
Carril 110
Cojín del Asiento y Bastidor 112
Control Hidráulico de Embrague de Dirección 96
Divisor de Torsión 75
Embrague de Dirección 94
Enfriador del Aceite del Convertidor de Torsión 78
Frenos 98
Instrumentos de la Transmisión 81
Mando Final 102
Protección del Bastidor de los Rodillos 108
Rodillo Inferior 109
Rodillo Superior 106
Rueda Guía 104
Servotransmisión 81
Sistema de Lubricación—Embrague de Dirección 89
Sistema de Lubricación de la Transmisión 89
Sistema del Combustible 113
Tapabarros 114
Tren de Potencia 74
Tuberías del Enfriador del Aceite de la Transmisión 79
Varillaje de Control de la Transmisión 80

Accesorios
(Página 116)

Barra de Tiro Giratoria 116
Bastidor de los Rodillos 149
Cabina 138
Caja y Protección—Mandos Finales 150G
Calentador de la Cabina 133
Carril 147
Cinturón de Seguridad 142
Control del Acelerador 129
Control Hidráulico 151
Eyector de Polvo 124
Gancho Delantero 119
Herramientas 158
Limpia Parabrisas 136
Planchas para Calle 146
Protección contra Desgaste—Mandos Finales 151
Protección contra Maleza 117
Protección de los Rodillos 150
Protección del Cárter 120
Protección del Tablero de Instrumentos 128
Protección Engoznada para el Radiador 122
Sistema de Luces 143
Tapa contra la Lluvia del Motor de Arranque 126
Tapa Protectora 126
Tapa Protectora del Radiador 123
Toldo 137
Válvula para el Polvo 125
Ventilador de Autolimpieza 122
Ventilador de Paletas Reversibles 121
Ventilador Descongelador 136

ÍNDICE

Motor diesel
(Página 14)

Nomenclatura	Página
Arrefecedor do óleo	50
Árvore de comando das válvulas	33
Árvore de manivelas (virabrequim)	29
Biela	32
Bloco do motor e tampas	26
Bomba d'água	18
Bomba de óleo	45
Bomba de transferência do combustível	42
Cabeçote	24
Caixa da tomada de fôrça traseira	34
Coletores	22
Comando de acessórios	36
Contrabalanço e comando	31
Contrôle da descompressão	23
Contrôle do regulador de velocidade (acelerador)	35
Decalcomanias	159
Decelerador	35
Engrenagem intermediária da bomba d'água	17
Especificações	160
Ferramentas	157
Filtro de óleo	46
Filtro primário do combustível e tubulações	41
Filtro principal do combustível	42
Indicador de temperatura (termômetro)	39
Jogos de juntas	30
Mancais principais do motor	30
Manômetro d'água	39
Manômetro do combustível	39
Manômetro do óleo	39
Marcador de horas de serviço	38
Mecanismo das válvulas	24
Mola de contrôle do torque	38
Pistão	32
Protetor do radiador	17
Purificador de ar	20
Radiador	14
Regulador de velocidade	36
Respiro e bocal de enchimento de óleo	23
Sistema de injeção do combustível	43
Suporte do motor diesel	50
Tensor das correias	16
Tomada de fôrça traseira	33
Tubos d'água	19
Tubulações do combustível	40
Tubulações do óleo	46
Turbocompressor	21
Ventilador de sôpro e protetor	15
Volante do motor	32

Sistema de partida
(Página 51)

Nomenclatura	Página
Acelerador	56
Afogador	56
Árvore de comando das válvulas	51
Árvore de manivelas (virabrequim)	54
Bateria e fios	68
Biela	54
Bloco do motor	52
Bomba de óleo	55
Cabeçote	52
Caixa de mudanças	62
Carburador	57
Coletor	58
Contrôle da embreagem	61
Contrôle do pinhão de partida	61
Embreagem	60
Gerador	65
Magneto	59
Manícula	64
Mecanismo das válvulas	52
Motor elétrico de arranque	67
Pinhão de partida	62
Pistão	54
Purificador de ar	58

Sistema de partida—Continuação

Nomenclatura	Página
Regulador de velocidade	51
Sistema de alimentação do combustível	57
Sistema de ignição	60
Suporte do motor	65
Tubos d'água	55

Sistema de transmissão e chassi
(Página 74)

Armação do assento e almofadas	112
Armação dos rolêtes de esteira	107
Arrefecedor de óleo do conversor de torque	78
Barra de suspensão e suportes	106
Barra de tração fixa	110
Caixa da coroa e embreagens de direção	101
Caixa das ferramentas	116
Caixa planetária de mudanças	81
Capô e painel	111
Comando final	102
Contrôle hidráulico das embreagens de direção	96
Divisor de torque	75
Embreagem de direção	94
Esteira	110
Freios	98
Indicadores do sistema de transmissão	81
Ligações de contrôle das marchas	80
Pára-lamas	114
Protetor dos rolêtes inferiores	108
Roda-guia	104
Rolête inferior	109
Rolête superior	106
Sistema de alimentação do combustível	113
Sistema de lubrificação das embreagens de direção	89
Sistema de lubrificação do sistema de marchas	89
Sistema de transmissão	74
Tubulações do arrefecedor de óleo do conversor	79

Acessórios
(Página 116)

Aquecedor da cabine	133
Armação dos rolêtes de esteira	149
Barra de tração oscilável	116
Cabine	138
Caixa de comando final e protetor	150G
Calços para as sapatas	146
Cinto de segurança	142
Comando hidráulico	151
Descongelador do pára-brisa	136
Ejetor de pó	124
Esteira	147
Ferramentas	158
Gancho dianteiro	119
Grade articulada do radiador	122
Guarda-mato	117
Ligações do acelerador a pedal	129
Limpador do pára-brisa	136
Protetor da caixa do comando final	151
Protetor do cárter	120
Protetor do painel de instrumentos	128
Protetor dos rolêtes inferiores	150
Sistema de iluminação	143
Tampa do painel de instrumentos	126
Tampa do radiador com trava	123
Tampa do tubo de descarga do motor de partida	126
Tôldo	137
Válvula ejetora de pó	125
Ventilador de limpeza própria	122
Ventilador de pás reversíveis	121

INHALTSVERZEICHNIS

Dieselmotor
(Seite 14)

Bezeichnung	Seite
Abziehbilder	159
Blasventilator und Schirmblech	15
Dekompressionshebel	23
Dichtungssätze	30
Einspritzanlage	43
Entlüfter und Füllstutzen	23
Gasgestänge	35
Gasreduzierpedal	35
Kolben	32
Kraftstoffdruckmesser	39
Kraftstoffilter	42
Kraftstofförderpumpe	42
Kraftstoffleitungen	40
Krümmer	22
Kühldruckmesser	39
Kühlernetz	14
Kühlerschutz	17
Kurbellager	30
Kurbelwelle	29
Luftreiniger	20
Motoraufhängung	50
Motorblock und Deckel	26
Nockenwelle	33
Öldruckmesser	39
Ölkühler	50
Ölleitungen	46
Pleuel	32
Primärkraftstoffilter und Leitungen	41
Regler	36
Reglerdrehmomentfeder	38
Riemenspanner	16
Schmierfilter	46
Schmierpumpe	45
Schwungscheibe	32
Steuerantrieb	36
Technische Daten	160
Turbolader	21
Ventilsteuerung	24
Wärmeanzeige	39
Wartungsmesser	38
Wasserleitungen	19
Wasserpumpe	18
Wasserpumpenspannrad	17
Werkzeuge	157
Wuchtwelle und Antrieb	31
Zapfwelle, hinten	33
Zapfwellengehäuse, hinten	34
Zylinderkopf	24

Startanlage
(Seite 51)

Anlasser, elektrisch	67
Batterie und Verkabelung	68
Einspritzsystem	57
Gasgestänge	56
Getriebe	62
Handkurbel	64
Kolben	54
Krümmer	58
Kupplung	60
Kupplungsgestänge	61
Kurbelwelle	54
Lichtmaschine	65
Luftklappengestänge	56
Luftreiniger	58
Motoraufhängung	65
Motorblock	52
Nockenwelle	51
Pleuel	54
Regler	51
Schmierpumpe	55
Starterritzel	62
Starterritzelgestänge	61

Startanlage—Fortgesetzt

Bezeichnung	Seite	Bezeichnung	Seite
Ventilsteuerung	52	Zündanlage	60
Vergaser	57	Zündmagnet	59
Wasserleitungen	55	Zylinderkopf	52

Getriebe und Laufwerk
(Seite 74)

Bremsen	98	Leitrad	104
Differentialwandler	75	Lenkkupplung	94
Einspritzanlage	113	Lenkkupplungsschmiersystem	89
Gehäuse und Deckel	101	Motorhaube und Armaturenbrett	111
Getriebearmaturen	81	Planetengetriebe	81
Getriebeölkühlerleitungen	79	Quertraverse und Auflager	106
Getriebeschaltgestänge	80	Schutzbleche	114
Getriebschmiersystem	89	Seitenantrieb	102
Hydrauliklenkkupplungsgestänge	96	Sitzpolster und Rahmen	112
Kraftübertragung	74	Stützrolle	106
Laufkette	110	Wandlerölkühler	78
Laufrolle	109	Werkzeugkasten	116
Laufwerksrahmen	107	Zugbalken, starr	110
Laufwerksrahmenschutz	108		

Zubehör
(Seite 116)

Entfrostergebläse	136	Motorseitenverkleidung	117
Fahrerhaus	138	Scheibenwischer	136
Fahrerhausheizung	133	Seitenantriebsgehäuse und Schutz	150G
Frontzughaken	119	Seitenantriebsverschleisschutz	151
Gaspedalgestänge	129	Sicherheitsgurt	142
Hydraulikgestänge	151	Startermotorregenfänger	126
Instrumentenbrettschutz	128	Staubauswerfer	124
Kühlerkappe, abschliessbar	123	Staubauswerferventil	125
Kühlerschutz mit Scharnieren	122	Strassenplatten	146
Kurbelgehäuseschutz	120	Tankkappe, abschliessbar	126
Laufkette	147	Ventilator, selbstreinigend	122
Laufrollenschutz	150	Ventilator, umkehrbar	121
Laufwerksrahmen	149	Werkzeuge	158
Lichtanlage	143	Wetterdach	137
		Zugbalken, beweglich	116

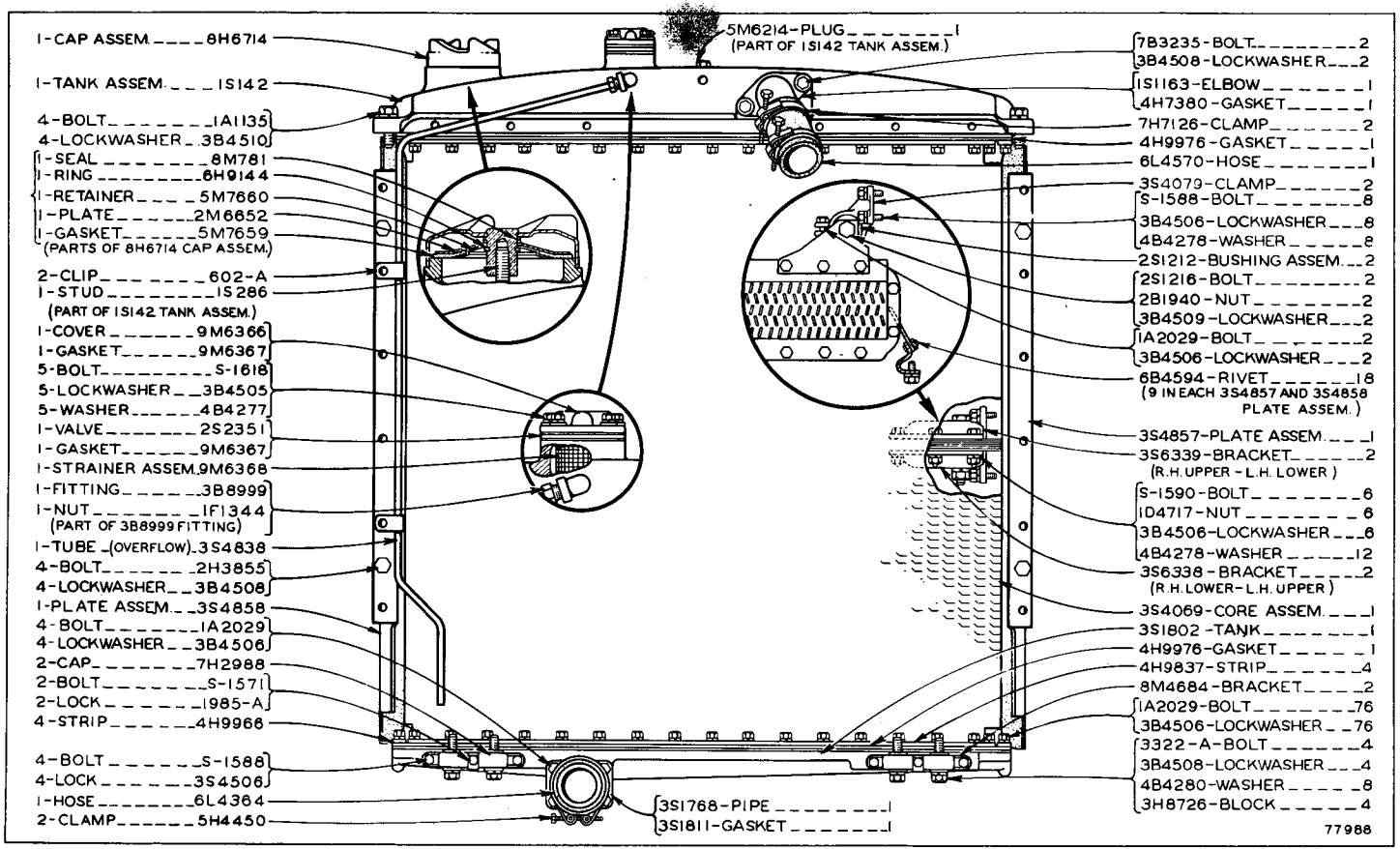

RADIATOR--AS VIEWED FROM REAR OF ENGINE

SERIAL NO. 48A6393 TO 48A7481 INCLUSIVE. NOTE: 5S572 CORE ASSEMBLY (ABRASIVE RESISTANT), FOR USE WITH BLOWER FAN, IS AVAILABLE. 6F6041 RUST INHIBITOR IS AVAILABLE. REFER ALSO TO PAGE 123 FOR SPECIAL PARTS

RADIATOR—Rear View

Serial No. 48A7482 to 48A9314 inclusive. Note: 5S572 Core Assembly (Abrasive Resistant), for use with Blower Fan, is available

Refer also to Page 123 for special parts

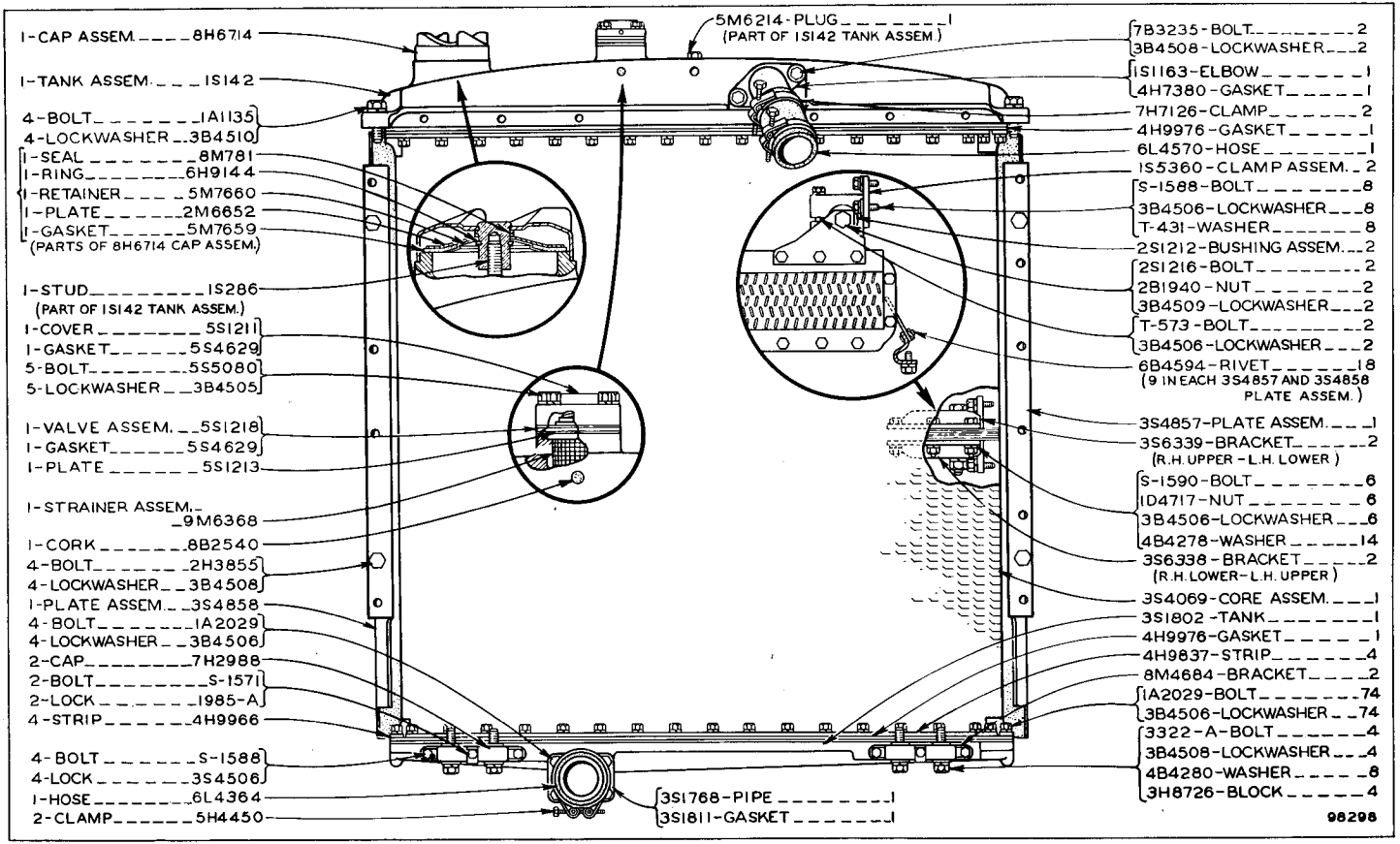

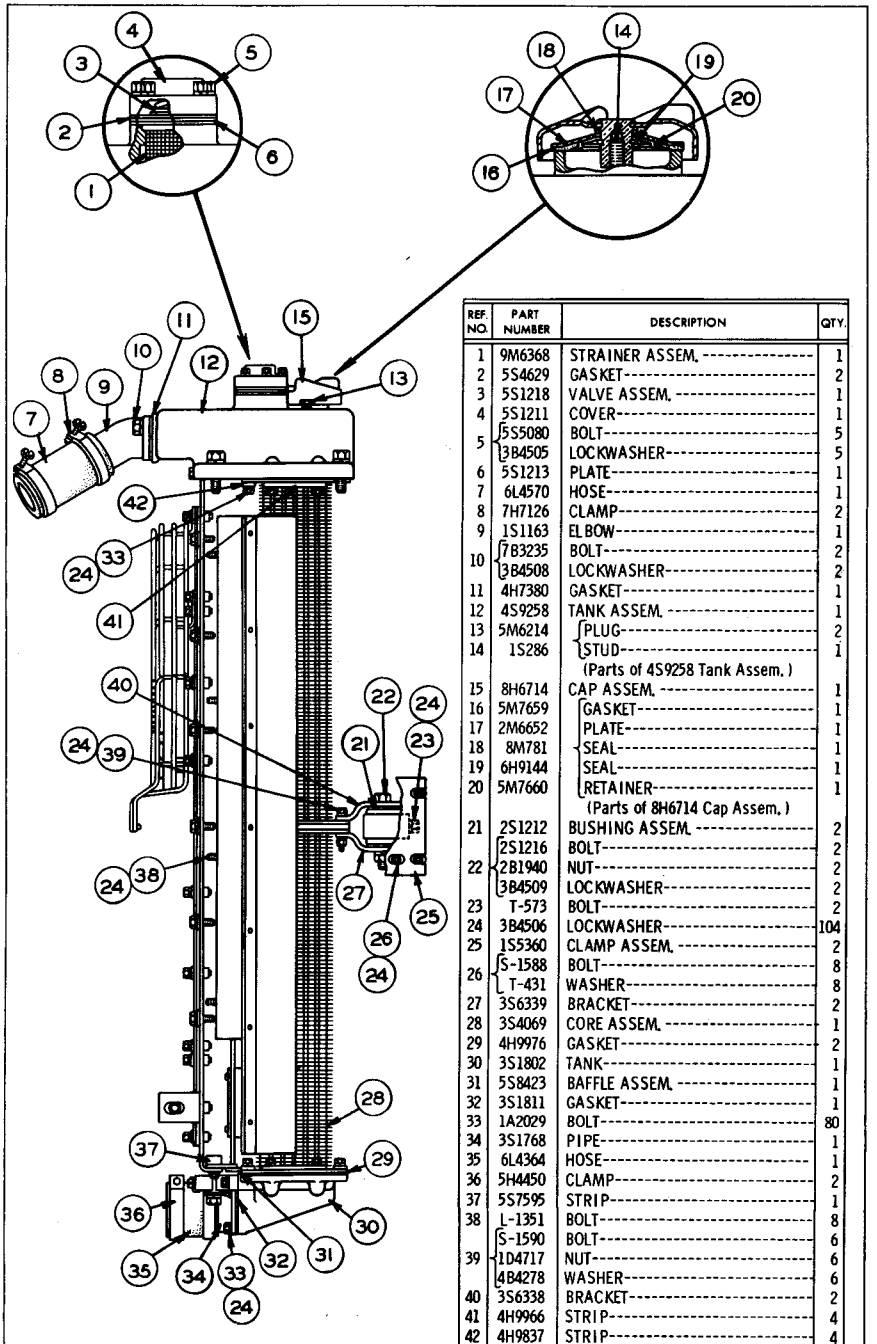

REF. NO.	PART NUMBER	DESCRIPTION	QTY.
1	9M6368	STRAINER ASSEM.	1
2	5S4629	GASKET	2
3	5S1218	VALVE ASSEM.	1
4	5S1211	COVER	1
5	5S5080	BOLT	5
	3B4505	LOCKWASHER	5
6	5S1213	PLATE	1
7	6L4570	HOSE	1
8	7H7126	CLAMP	2
9	1S1163	ELBOW	1
10	7B3235	BOLT	2
	3B4508	LOCKWASHER	2
11	4H7380	GASKET	1
12	4S9258	TANK ASSEM.	1
13	5M6214	PLUG	2
14	1S286	STUD	1
		(Parts of 4S9258 Tank Assem.)	
15	8H6714	CAP ASSEM.	1
16	5M7659	GASKET	1
17	2M6652	PLATE	1
18	8M781	SEAL	1
19	6H9144	SEAL	1
20	5M7660	RETAINER	1
		(Parts of 8H6714 Cap Assem.)	
21	2S1212	BUSHING ASSEM.	2
22	2S1216	BOLT	2
	2B1940	NUT	2
	3B4509	LOCKWASHER	2
23	T-573	BOLT	2
24	3B4506	LOCKWASHER	104
25	1S5360	CLAMP ASSEM.	2
26	S-1588	BOLT	8
	T-431	WASHER	8
27	3S6339	BRACKET	2
28	3S4069	CORE ASSEM.	1
29	4H9976	GASKET	2
30	3S1802	TANK	1
31	5S8423	BAFFLE ASSEM.	1
32	3S1811	GASKET	1
33	1A2029	BOLT	80
34	3S1768	PIPE	1
35	6L4364	HOSE	1
36	5H4450	CLAMP	2
37	5S7595	STRIP	1
38	L-1351	BOLT	8
39	S-1590	BOLT	6
	1D4717	NUT	6
	4B4278	WASHER	6
40	3S6338	BRACKET	2
41	4H9966	STRIP	4
42	4H9837	STRIP	4

122022

RADIATOR—Side View
Serial No. 48A9315 to 48A11277 inclusive
Note: 6F6041 Rust Inhibitor is available

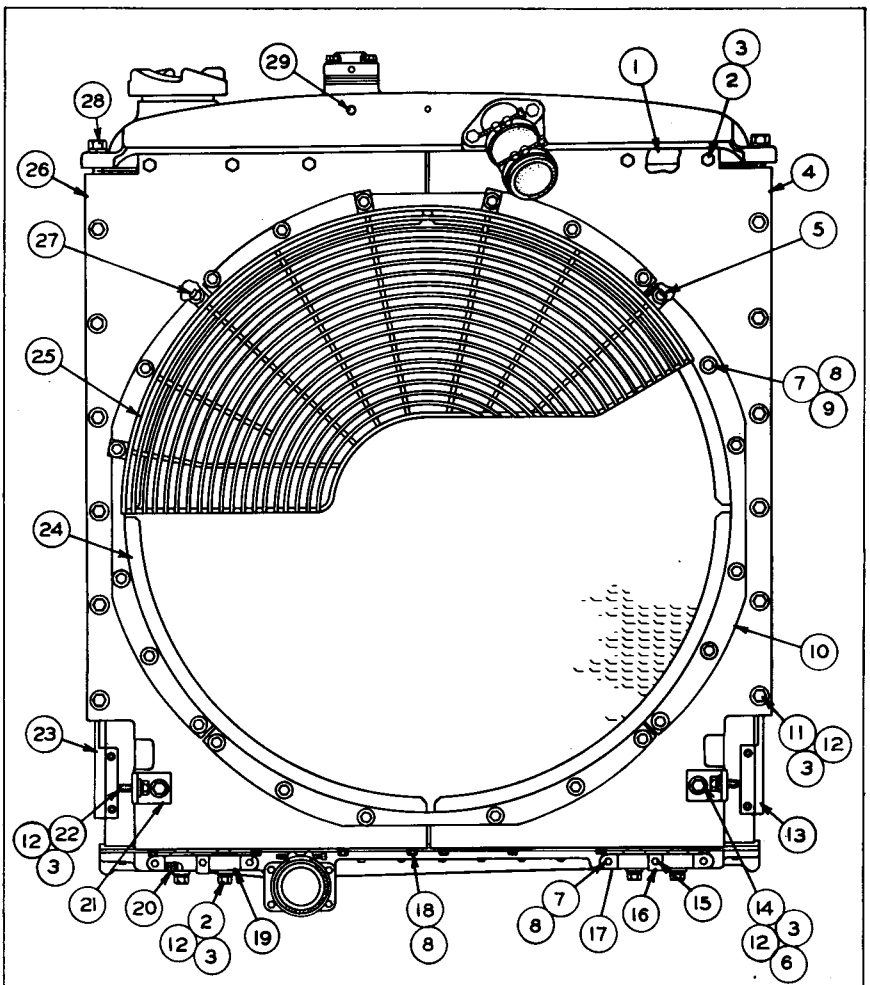

REF. NO.	PART NUMBER	DESCRIPTION	QTY.
1	5S8067	SPACER	1
2	1A5822	BOLT	10
3	3B4508	LOCKWASHER	26
4	5S7599	SHIELD ASSEM.	1
5	9F2978	NUT (Weld)	10
6	1F748	NUT	1
		(Parts of 5S7599 Shield Assem.)	
7	S-1588	BOLT	28
8	3B4506	LOCKWASHER	36
9	4B4278	WASHER	24
10	5S7597	STRIP	4
11	6H1717	BOLT	12
12	4B4280	WASHER	24
13	5S8419	BAFFLE ASSEM.	1
14	7B3235	BOLT	2
15	S-1571	BOLT	2
16	1985-A	LOCK	2

REF. NO.	PART NUMBER	DESCRIPTION	QTY.
17	5S7596	BRACKET	2
18	S-1594	BOLT	8
19	7H2988	CAP	2
20	3H8726	BLOCK	4
21	3S4856	ANGLE	2
22	S-1585	BOLT	2
23	5S8420	BAFFLE ASSEM.	1
24	5S7606	BAFFLE	4
25	5S7588	GUARD	1
26	5S7600	SHIELD ASSEM.	1
	1F748	NUT (Weld)	1
27	9F2978	NUT (Weld)	10
		(Parts of 5S7600 Shield Assem.)	
28	1A1135	BOLT	4
	3B4510	LOCKWASHER	4
29	2B7558	CORK	1

122023

RADIATOR—Rear View
Serial No. 48A9315 to 48A11277 inclusive
Refer also to Pages 122A and 122B for special parts

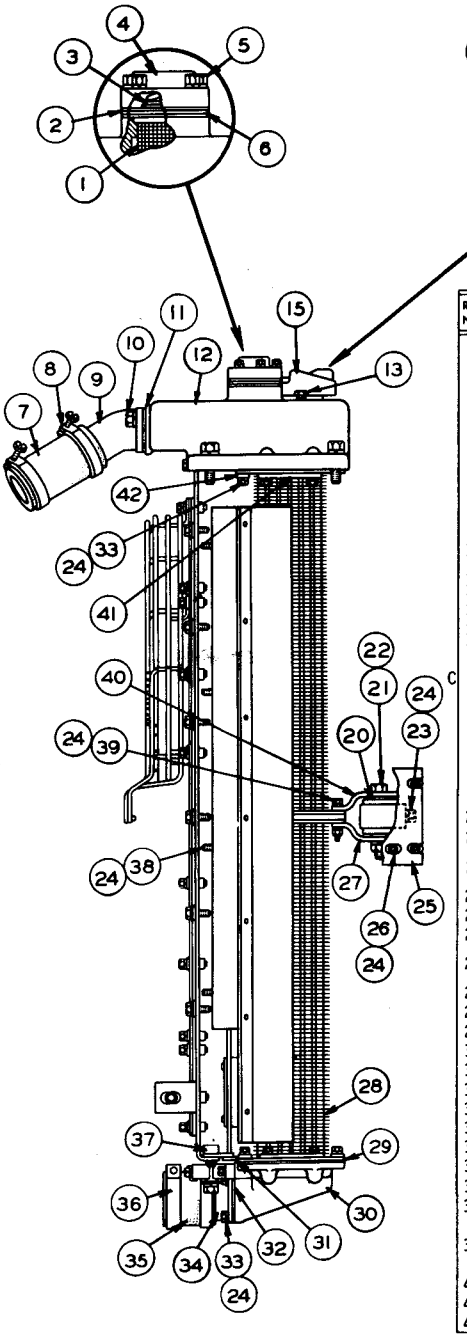

REF. NO.	PART NUMBER	DESCRIPTION	QTY.
1	9M6368	STRAINER ASSEM.	1
2	5S4629	GASKET	2
3	5S1218	VALVE ASSEM.	1
4	5S1211	COVER	1
5	5S5080	BOLT	5
	3B4505	LOCKWASHER	5
6	5S1213	PLATE	1
7	6L4570	HOSE	1
8	7H7126	CLAMP	2
9	1S1163	ELBOW	1
10	7B3235	BOLT	2
	3B4508	LOCKWASHER	2
11	4H7380	GASKET	1
12	4S9258	TANK ASSEM.	1
13	5M6214	PLUG	2
14	1S286	STUD	1
		(Parts of 4S9258 Tank Assem.)	
15	7S7809	CAP ASSEM.	1
16	2S5200	GASKET ASSEM.	1
17	7S7807	INSERT	1
18	2S2846	RETAINER	1
19	6H9144	RING	1
		(Parts of 7S7809 Assem.)	
20	2S1212	BUSHING ASSEM.	2
21	2S1216	BOLT	2
22	2B1940	NUT	2
	3B4509	LOCKWASHER	2
23	T 573	BOLT	2
24	3B4506	LOCKWASHER	104
25	1S5360	CLAMP ASSEM.	2
26	S 1588	BOLT	8
	T 431	WASHER	8
27	3S6339	BRACKET	2
28	3S4069	CORE ASSEM.	1
29	4H9976	GASKET	2
30	3S1802	TANK	1
31	5S8423	BAFFLE ASSEM.	1
32	3S1811	GASKET	1
33	1A2029	BOLT	80
34	3S1768	PIPE	1
35	6L4364	HOSE	1
36	5H4450	CLAMP	2
37	5S7595	STRIP	1
38	L 1351	BOLT	8
39	S 1590	BOLT	6
	1D4717	NUT	6
	4B4278	WASHER	6
40	3S6338	BRACKET	2
41	4H9966	STRIP	4
42	4H9837	STRIP	4

C INDICATES CHANGE FROM PREVIOUS TYPE

124596

RADIATOR—Side View
Effective with Serial No. 48A11278
Note:6F6041 Rust Inhibitor is available

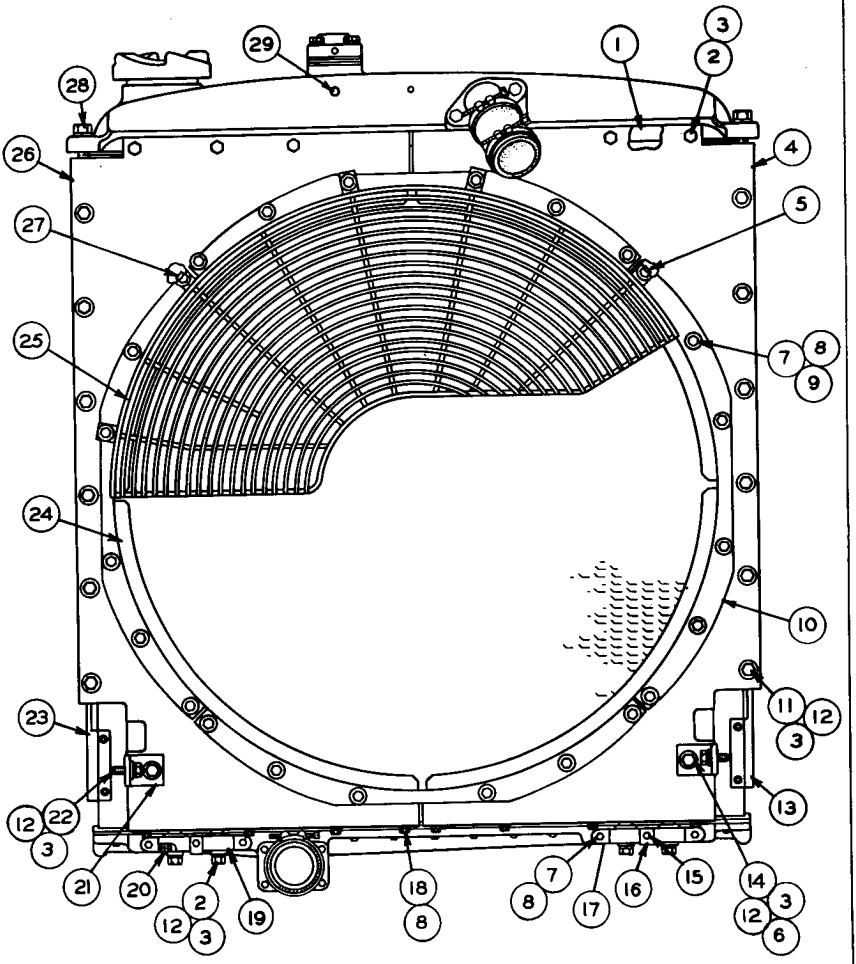

REF. NO.	PART NUMBER	DESCRIPTION	QTY.
1	5S8067	SPACER	1
2	1A5822	BOLT	10
3	3B4508	LOCKWASHER	26
4	5S7599	SHIELD ASSEM.	1
5	9F2978	NUT (Weld)	10
6	1F748	NUT	1
		(Parts of 5S7599 Shield Assem.)	
7	S-1588	BOLT	28
8	3B4506	LOCKWASHER	36
9	4B4278	WASHER	24
10	5S7597	STRIP	4
11	6H1717	BOLT	12
12	4B4280	WASHER	24
13	5S8419	BAFFLE ASSEM.	1
14	7B3235	BOLT	2
15	S-1571	BOLT	2
16	1985-A	LOCK	2

REF. NO.	PART NUMBER	DESCRIPTION	QTY.
17	5S7596	BRACKET	2
18	S-1594	BOLT	8
19	7H2988	CAP	2
20	3H8726	BLOCK	4
21	3S4856	ANGLE	2
22	S-1585	BOLT	2
23	5S8420	BAFFLE ASSEM.	1
24	5S7606	BAFFLE	4
25	5S7588	GUARD	1
26	5S7600	SHIELD ASSEM.	1
	1F748	NUT (Weld)	1
27	9F2978	NUT (Weld)	10
		(Parts of 5S7600 Shield Assem.)	
28	1A1135	BOLT	4
	3B4510	LOCKWASHER	4
29	2B7558	CORK	1

122023

RADIATOR—Rear View
Effective with Serial No. 48A11278
Refer also to Pages 122A and 122B for special parts

REF NO	PART NUMBER	DESCRIPTION	QTY
1	7M4721	VEE BELT SET	1
		(Consists of 2 Belts)	
2	2S4662	SPIDER ASSEM.	1
3	L-1351	BOLT	11
4	3B4506	LOCKWASHER	25
5	1A2029	BOLT	8
6	5M5957	SPACER	1
7	5M5967	SHIM	6
8	S-1571	BOLT	6
9	5B9916	FITTING	1
10	5M5894	COVER	1
11	1A2343	BOLT	2
	5B3390	LOCK	1
12	5B3389	WASHER	1
13	4B1256	SCREW	2
	3B4504	LOCKWASHER	2
14	7B2173	RING	1
15	3S4815	PULLEY	1
16	1H5728	SEAL	1
17	3S4842	SHROUD ASSEM.	1
18	9F2978	NUT (Weld)	5
19	1F748	NUT (Weld)	2
20	1L9551	RIVET	5
		(Parts of 3S4842 Shroud Assem.)	
21	3S4849	GUARD	1
22	4B4278	WASHER	5
23	S-1621	BOLT	16
24	3B4508	LOCKWASHER	20
25	4B4280	WASHER	14
26	1B3867	BEARING	2
27	3S2121	SHAFT ASSEM.	1
	8H9208	DOWEL	1
		(Part of 3S2121 Shaft Assem.)	
28	2M8216	SEAL	1
29	3S4796	HUB	1
30	S-1585	BOLT	2
31	7B3235	BOLT	2
32	3S4856	ANGLE	2
33	4B4550	FITTING	1

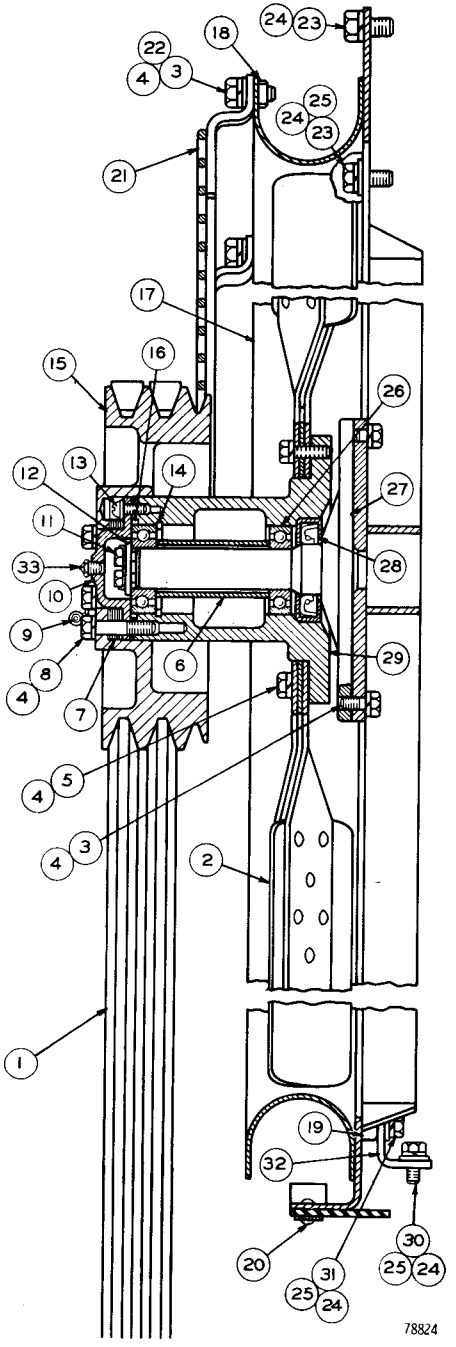

BLOWER FAN AND SHROUD

SERIAL NO. 48A6393 TO 48A6537 INCLUSIVE

REFER ALSO TO PAGES 121 AND 122 FOR SPECIAL PARTS

REF NO	PART NUMBER	DESCRIPTION	QTY
1	7M4721	VEE BELT SET (Consists of 2 Belts)	1
2	5S1421	SPIDER ASSEM.	1
3	L-1351	BOLT	11
4	3B4506	LOCKWASHER	25
5	3B1915	BOLT	8
6	5M5957	SPACER	1
7	5M5967	SHIM	6
8	S-1571	BOLT	6
9	5B9916	FITTING	1
10	5M5894	COVER	1
11	1A2343	BOLT	2
	5B3390	LOCK	1
12	5B3389	WASHER	1
13	4B1256	SCREW	2
	3B4504	LOCKWASHER	2
14	7B2173	RING	1
15	3S4815	PULLEY	1
16	1H5728	SEAL	1
17	3S4842	SHROUD ASSEM.	1
18	9F2978	NUT (Weld)	5
19	1F748	NUT (Weld)	2
20	1L9551	RIVET (Parts of 3S4842 Shroud Assem.)	5
21	3S4849	GUARD	1
22	4B4278	WASHER	5
23	S-1621	BOLT	16
24	3B4508	LOCKWASHER	20
25	4B4280	WASHER	14
26	1B3867	BEARING	2
27	3S2121	SHAFT ASSEM.	1
	8H9208	DOWEL (Part of 3S2121 Shaft Assem.)	1
28	2M8216	SEAL	1
29	3S4796	HUB	1
30	S-1585	BOLT	2
31	7B3235	BOLT	2
32	3S4856	ANGLE	2
33	4B4550	FITTING	1

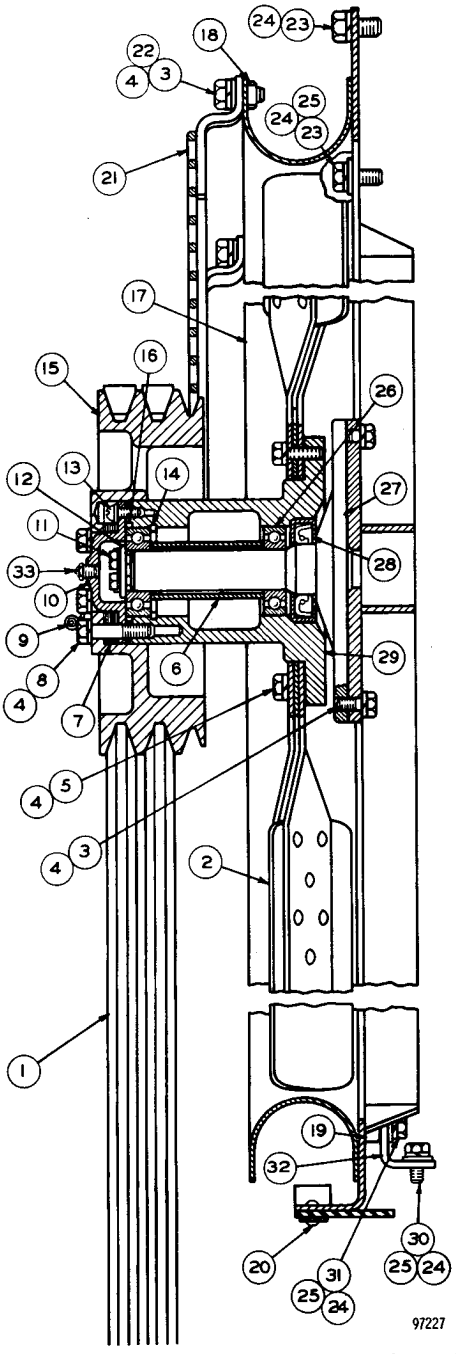

BLOWER FAN AND SHROUD
Serial No. 48A6538 to 48A9314 inclusive
Refer also to Pages 121 and 122 for special parts

REF. NO.	PART NUMBER	DESCRIPTION	QTY.
1	5S7469	BASE ASSEM.	1
2	8H9189	DOWEL (Part of 5S7469 Base Assem.)	1
3	5M9739	SEAL	1
4	4H1566	SPACER	1
5	7S1204	SPACER	1
6	7S1175	WASHER	1
7	1A2029	BOLT	3
8	3B4506	LOCKWASHER	3
9	S-1594	BOLT	2
10	7S1151	COVER	1
11	9M909	LOCK	2
12	9F4446	SEAL	1
13	6H3957	BEARING	2
14	5S7265	PULLEY	1
15	7M4721	VEE BELT SET (Consists of 2 Belts)	1
16	S-1585	BOLT	3
17	3B4508	LOCKWASHER	3
18	3B8995	FITTING	2
	1F1344	NUT (1 in each 3B8995 Fitting)	2
19	5S8463	TUBE	1
20	3B8489	FITTING	1

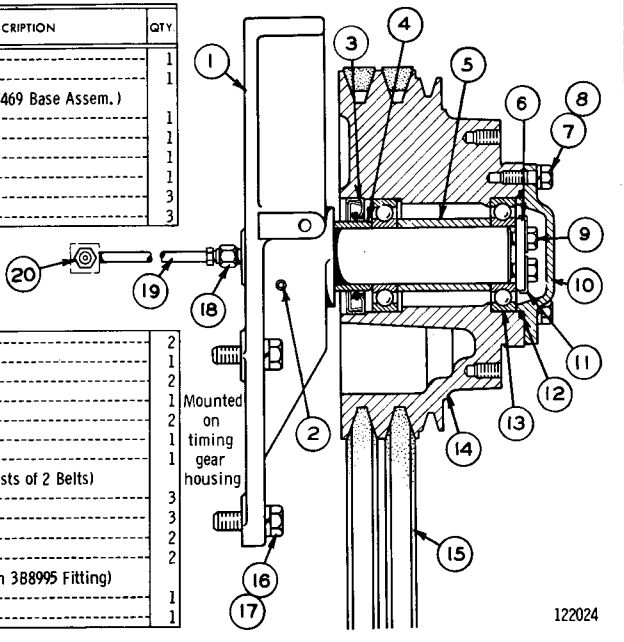

FAN DRIVE (5S8487 N/S)
Serial No. 48A9315 to 12954, 12960, 12961, 13023, 13039, 13060 and 48A13066 inclusive

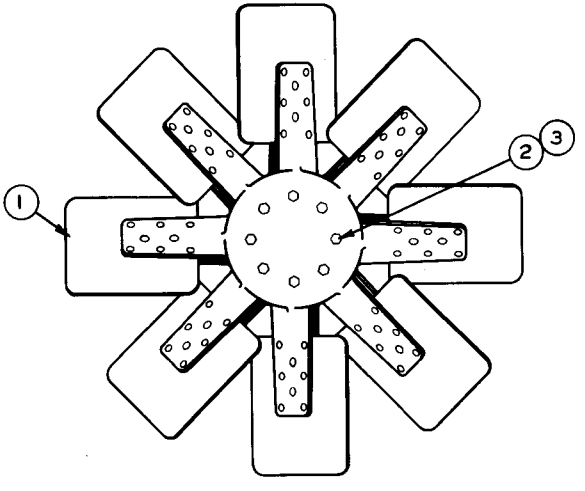

REF. NO.	PART NUMBER	DESCRIPTION	QTY.
1	2S4662	SPIDER ASSEM.	1
2	1A2029	BOLT	8

REF. NO.	PART NUMBER	DESCRIPTION	QTY.
3	3B4506	LOCKWASHER	8

122025

5S8525 BLOWER FAN GROUP
Effective with Serial No. 48A9315
Refer also to Pages 121, 122 and 122A for special parts

REF. NO.	PART NUMBER	DESCRIPTION	QTY.
1	5S7469	BASE ASSEM.	1
2	8H9189	DOWEL (Part of 5S7469 Base Assem.)	1
3	5M9739	SEAL	1
4	4H1566	SPACER	1
5	7S1204	SPACER	1
6	7S1175	WASHER	1
7	1A2029	BOLT	3
8	3B4506	LOCKWASHER	3
9	S 1594	BOLT	2
10	7S1151	COVER	1
11	9M909	LOCK	2
12	9F4446	SEAL	1
13	6H3957	BEARING	2
14	5S7265	PULLEY	1
15	7M4721	VEE BELT SET (Consists of 2 Belts)	1
16	S-1585	BOLT	3
17	3B4508	LOCKWASHER	3
C 18	3B9400	FITTING	1
C 19	8S2387	HOSE ASSEM.	1
20	3B8489	FITTING	1
C 21	S550	CLIP	1

C INDICATES CHANGE FROM PREVIOUS TYPE

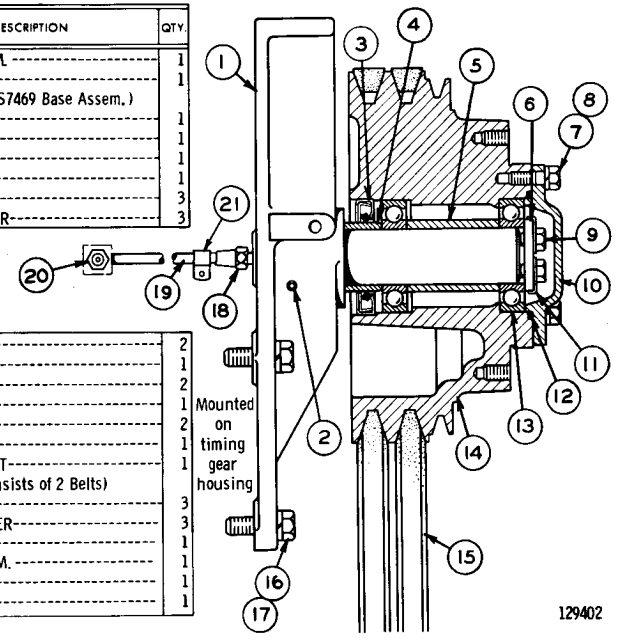

FAN DRIVE (5S8487 N/S)
Serial No. 48A12955 to 12959, 12962 to 13022, 13024 to 13038, 13040 to 13059, 13061 to 13065 and 48A13067—Up

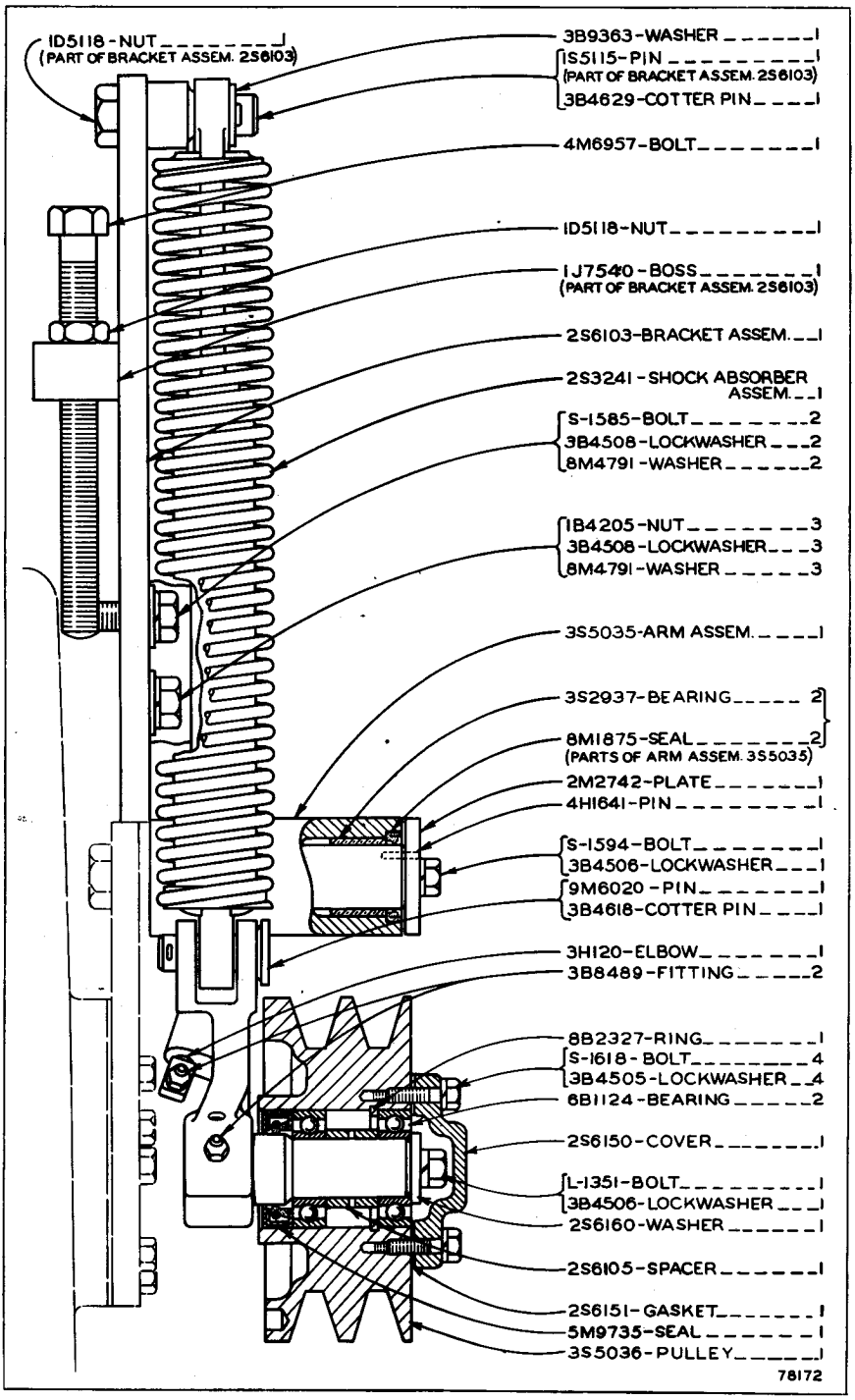

BELT TIGHTENER (9M8001 N/S)
Serial No. 48A6393 to 48A9314 inclusive

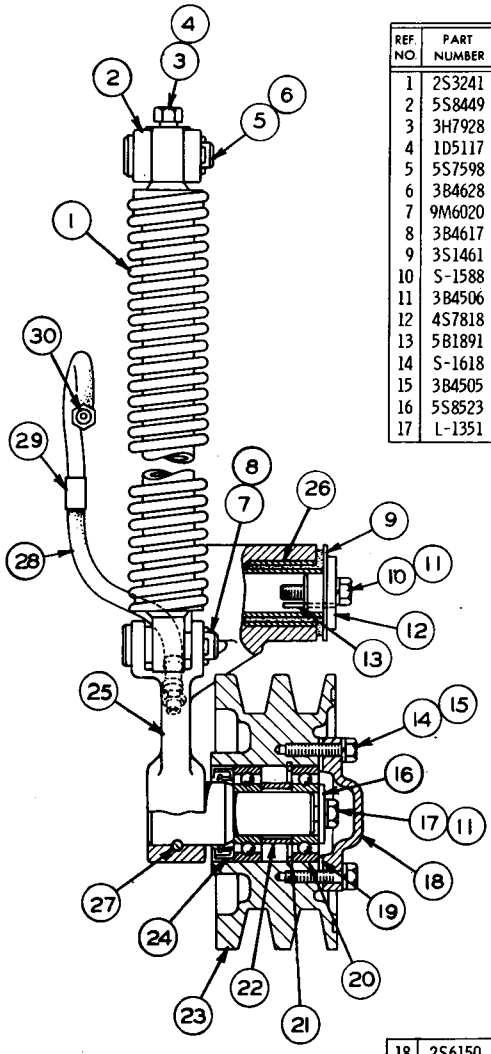

REF. NO.	PART NUMBER	DESCRIPTION	QTY.
1	2S3241	SHOCK ABSORBER ASSEM.	1
2	5S8449	BRACKET	1
3	3H7928	ADJUSTING SCREW	1
4	1D5117	NUT	1
5	5S7598	PIN	1
6	3B4628	COTTER PIN	1
7	9M6020	PIN	1
8	3B4617	COTTER PIN	1
9	3S1461	SHIM	1
10	S-1588	BOLT	2
11	3B4506	LOCKWASHER	3
12	4S7818	PLATE	1
13	5B1891	PIN	1
14	S-1618	BOLT	4
15	3B4505	LOCKWASHER	4
16	5S8523	WASHER	1
17	L-1351	BOLT	1

18	2S6150	COVER	1
19	2S6151	GASKET	1
20	6B1124	BEARING	2
21	8B2327	RING	1
22	5S7472	SPACER	1
23	5S7473	PULLEY	1
24	4M2343	SEAL	1
25	5S7471	ARM ASSEM.	1
26	3S9029	BUSHING ASSEM.	1
27	3H703	DOWEL	1
		(Parts of 5S7471 Arm Assem.)	
28	3R3809	HOSE ASSEM.	1
29	602-A	CLIP	1
30	3B8489	FITTING	1

122030

BELT TIGHTENER

Serial No. 48A9315 to 10451, 10454 to 10457, 10465, 10471, 10472, 10478, 10479 and 10513 to 48A10515 inclusive

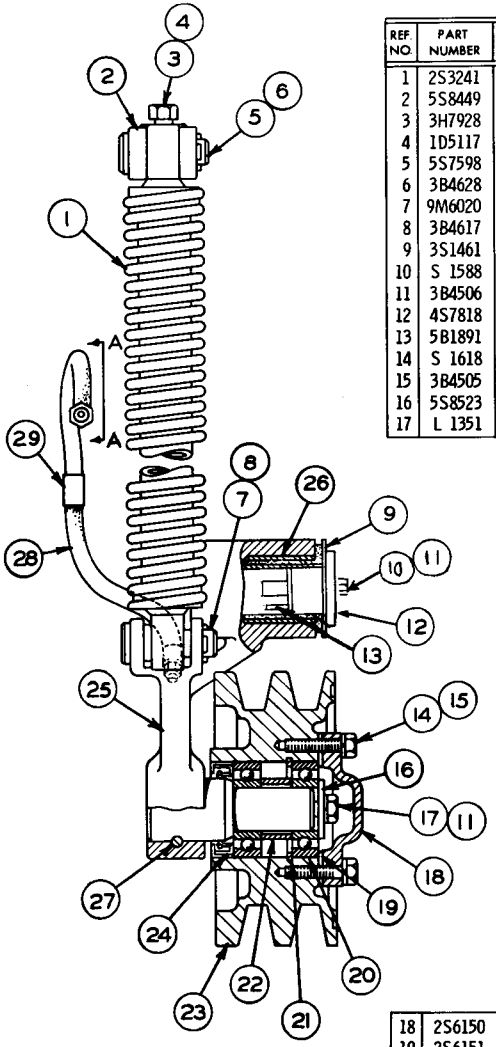

REF. NO.	PART NUMBER	DESCRIPTION	QTY.
1	2S3241	SHOCK ABSORBER ASSEM.	1
2	5S8449	BRACKET	1
3	3H7928	ADJUSTING SCREW	1
4	1D5117	NUT	1
5	5S7598	PIN	1
6	3B4628	COTTER PIN	1
7	9M6020	PIN	1
8	3B4617	COTTER PIN	1
9	3S1461	SHIM	1
10	S 1588	BOLT	2
11	3B4506	LOCKWASHER	3
12	4S7818	PLATE	1
13	5B1891	PIN	1
14	S 1618	BOLT	4
15	3B4505	LOCKWASHER	4
16	5S8523	WASHER	1
17	L 1351	BOLT	1

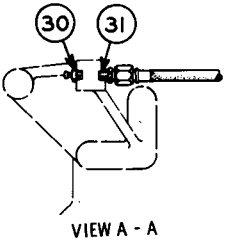

VIEW A - A

	18	2S6150	COVER	1
	19	2S6151	GASKET	1
	20	6B1124	BEARING	2
	21	8B2327	RING	1
	22	5S7472	SPACER	1
	23	5S7473	PULLEY	1
	24	4M2343	SEAL	1
	25	5S7471	ARM ASSEM.	1
	26	3S9029	BUSHING ASSEM.	1
	27	3H703	DOWEL	1
			(Parts of 5S7471 Arm Assem.)	
C	28	8S2388	HOSE ASSEM. -(26.50" long overall)	1
C	29	4B9233	CLIP	1
	30	3B8489	FITTING	1
C	31	3B9400	FITTING	1

C INDICATES CHANGE FROM PREVIOUS TYPE

127396

BELT TIGHTENER (5S8397 N/S)
Serial No. 48A10452, 10453, 10458 to 10464, 10466 to 10470, 10473 to 10477, 10480 to 10512 and 48A10516–Up

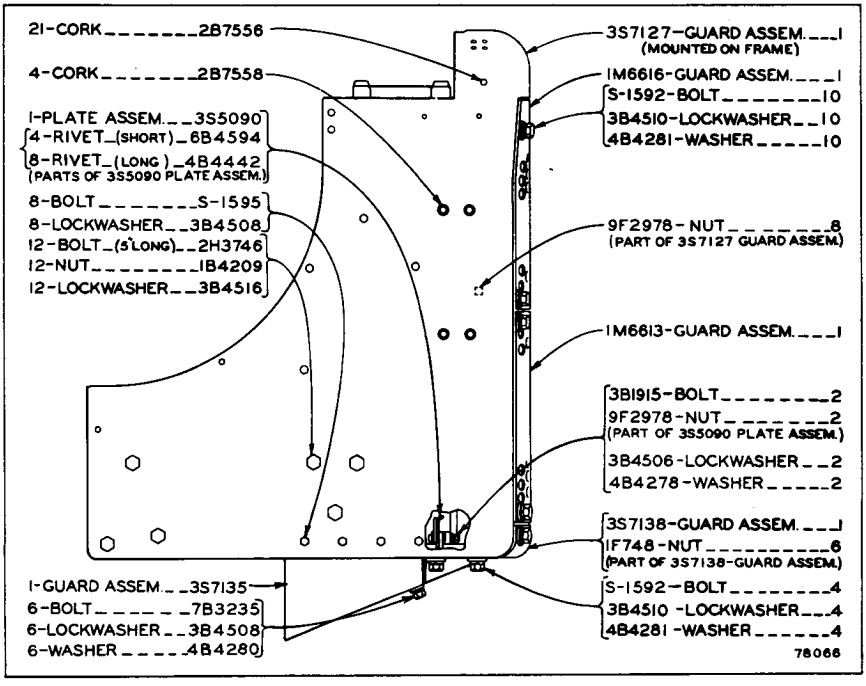

RADIATOR GUARD
Serial No. 48A6393 to 48A7060 inclusive
Refer also to Pages 122, 122A and 123 for special parts

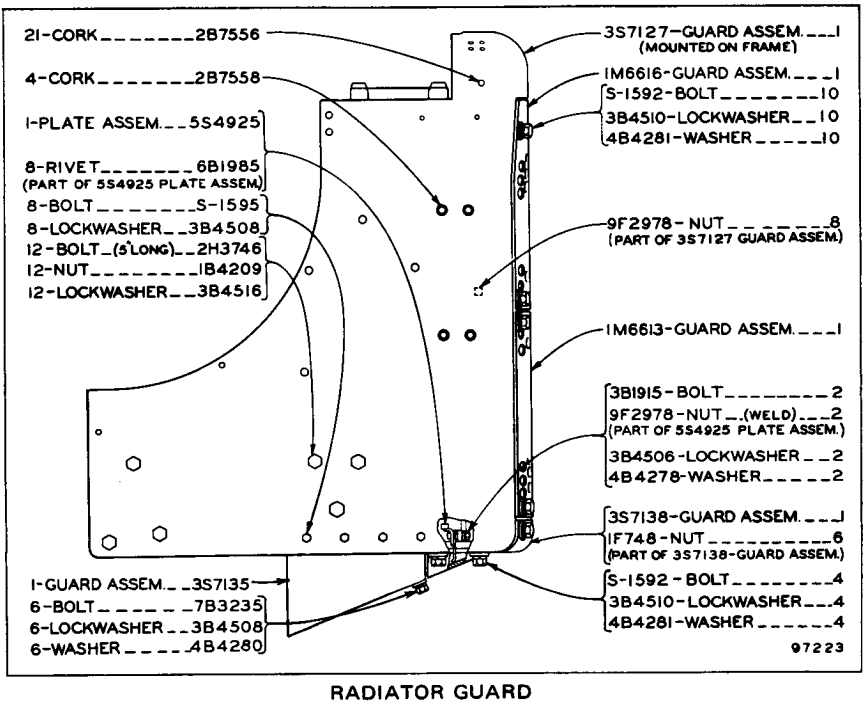

RADIATOR GUARD
Serial No. 48A7061 to 48A9314 inclusive
Refer also to Pages 122, 122A and 123 for special parts

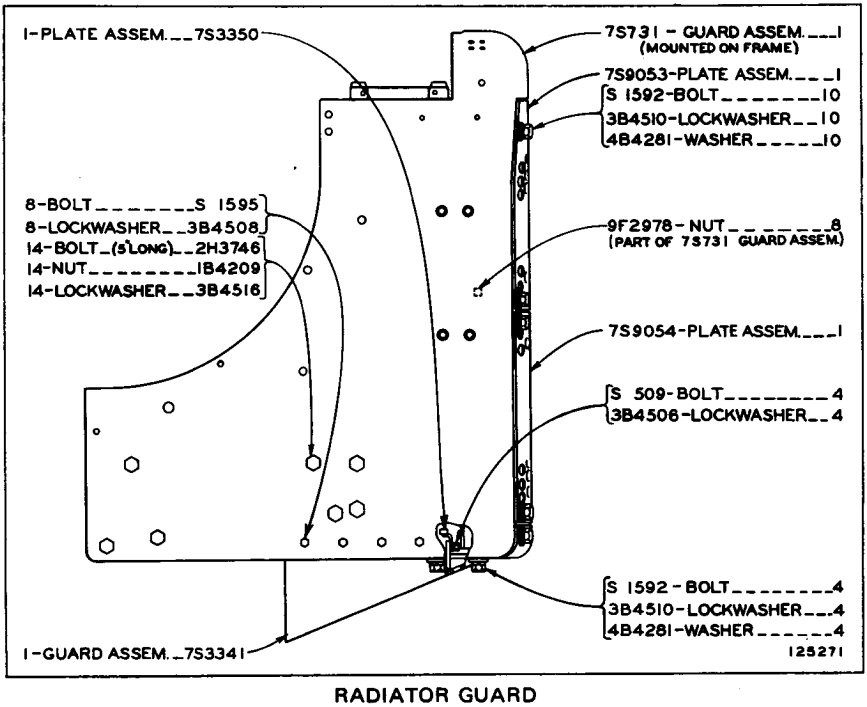

RADIATOR GUARD
Effective with Serial No. 48A9315
Refer also to Pages 122, 122A and 123 for special parts

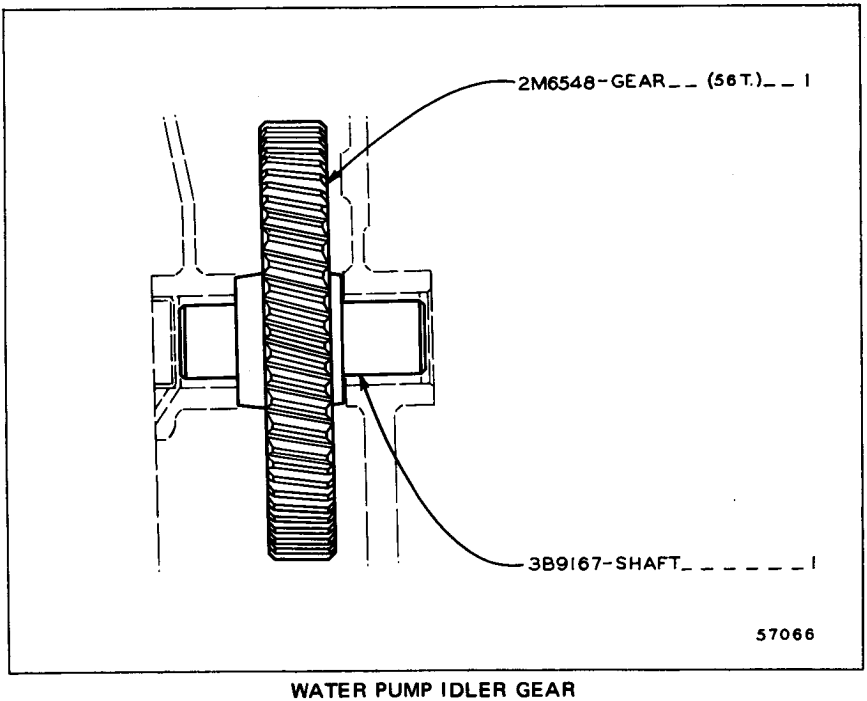

WATER PUMP IDLER GEAR

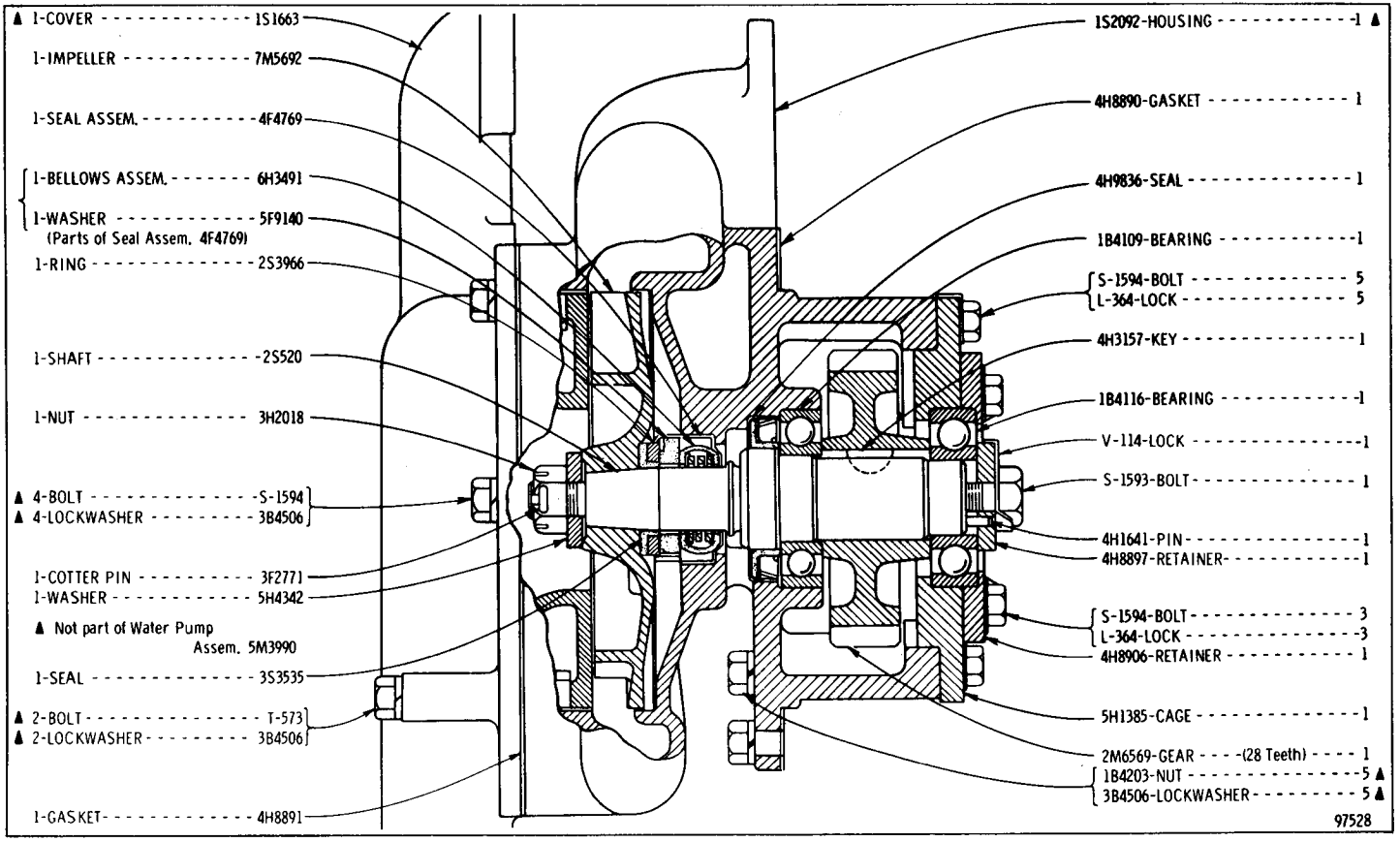

5M3990 WATER PUMP ASSEMBLY

WATER LINES

SERIAL NO. 48A6393 TO 48A7971, 48A7974 TO 48A7976, 48A7981, 48A7983, 48A7984, 48A7992, 48A8024, 48A8031 AND 48A8090 INCLUSIVE

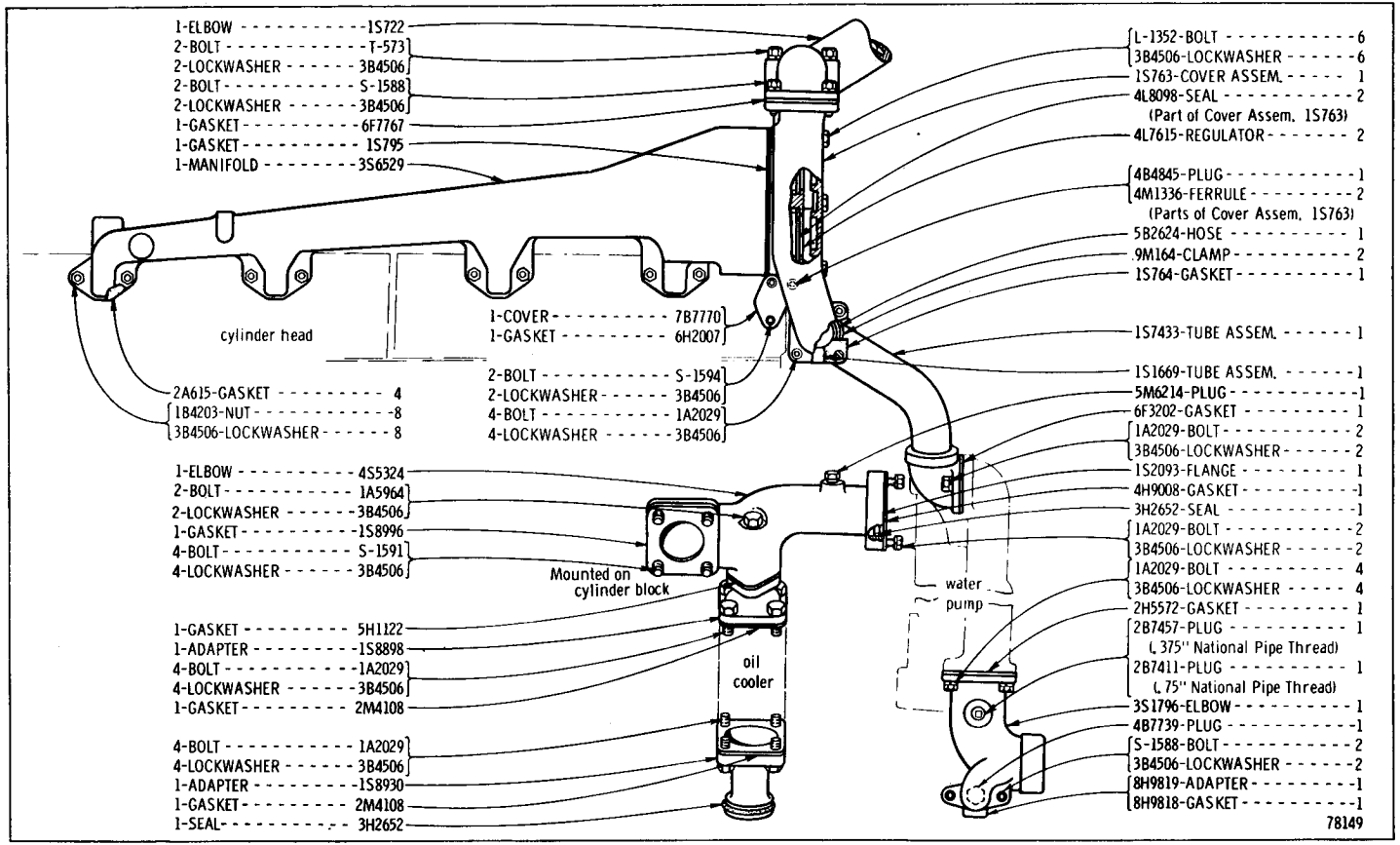

WATER LINES

SERIAL No. 48A7972, 48A7973, 48A7977 TO 48A7980, 48A7982, 48A7985 TO 48A7991, 48A7993 TO 48A8023, 48A8025 TO 48A8030, 48A8032 TO 48A8089 AND 48A8091-UP

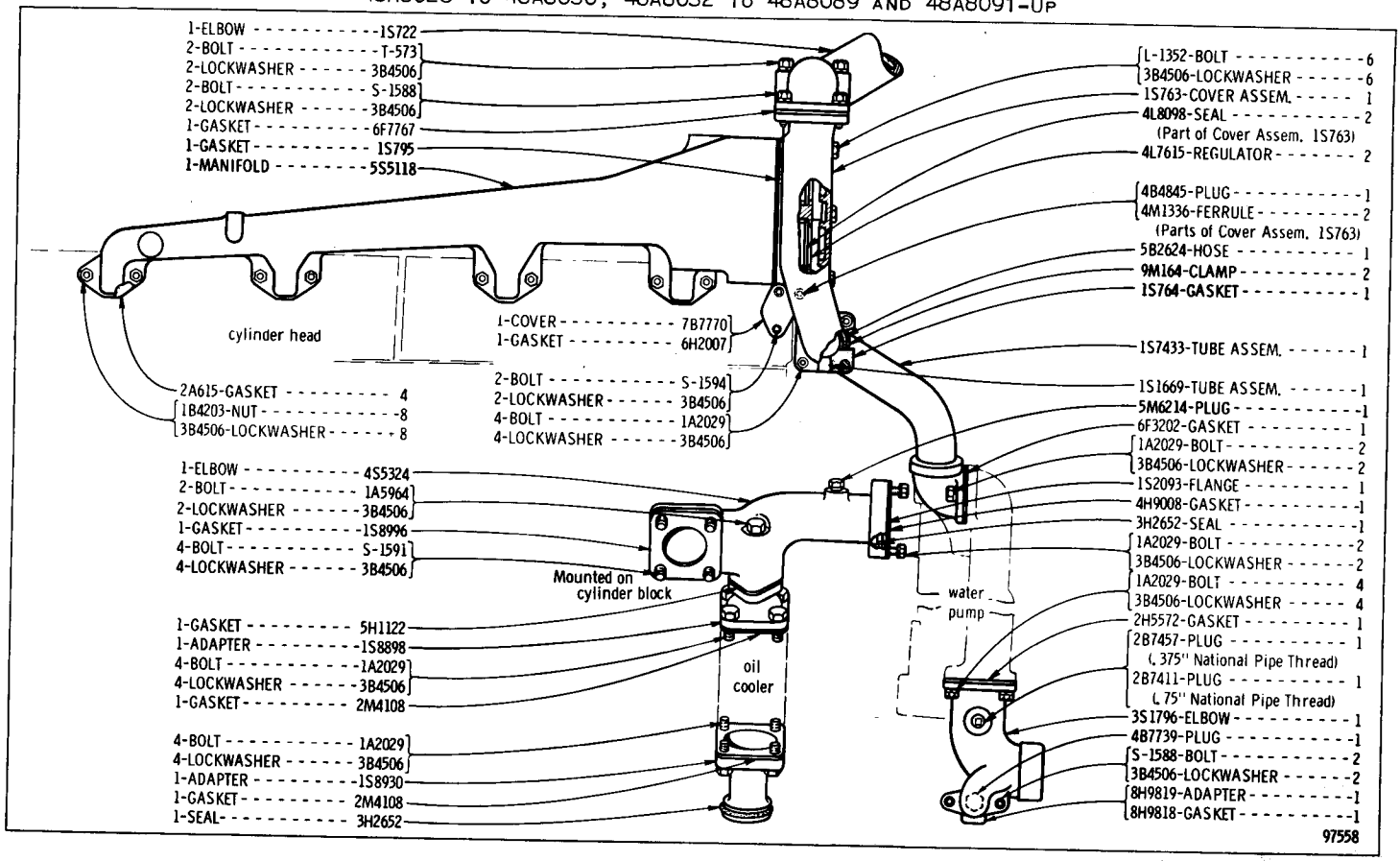

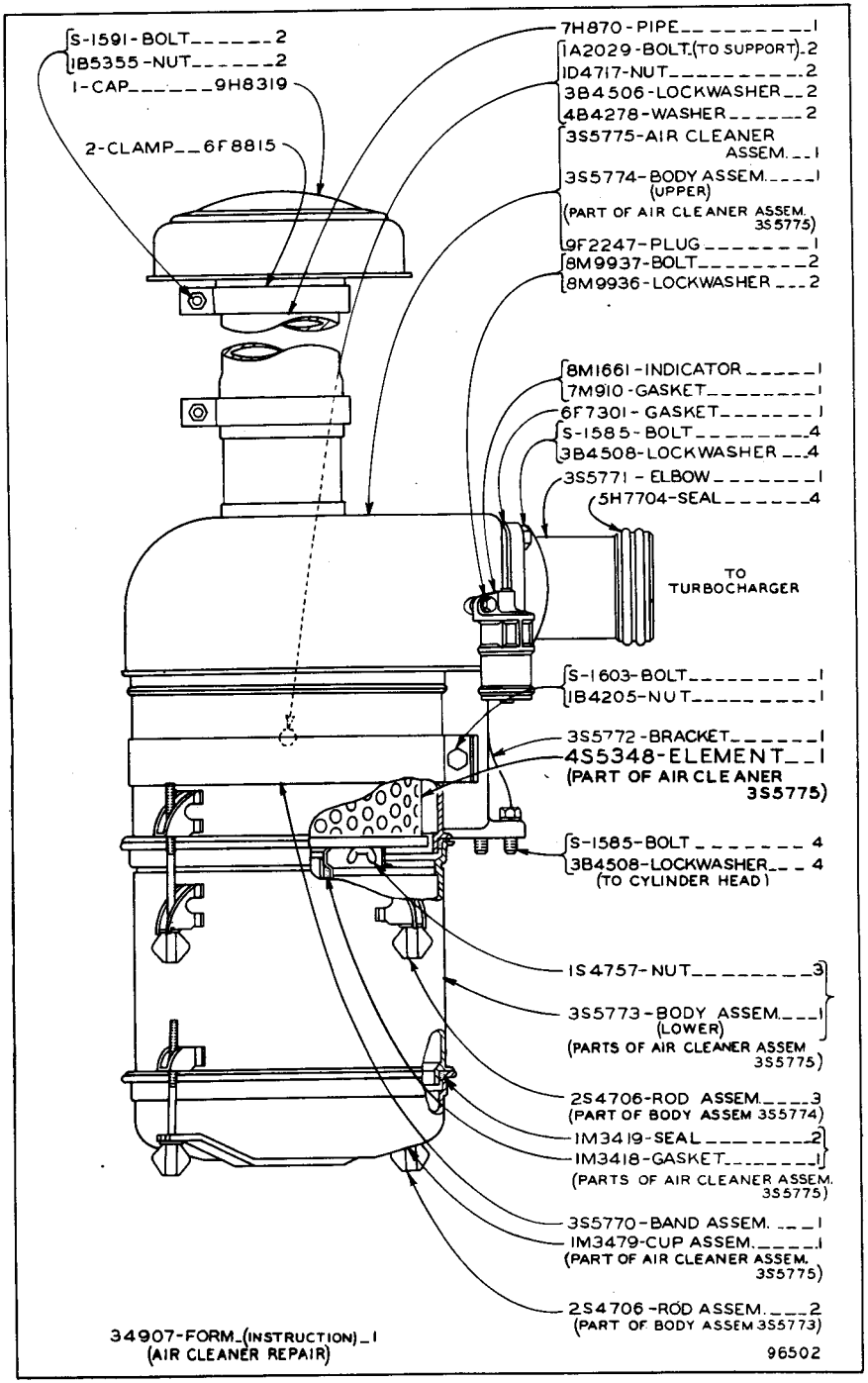

AIR CLEANER

Serial No. 48A6393 to 48A6882 inclusive

Note: 7F5720 Precleaner is available for use on operations where there is a possibility of foreign material other than dust being drawn into the Air Cleaner

Refer also to Pages 124 and 125 for special parts

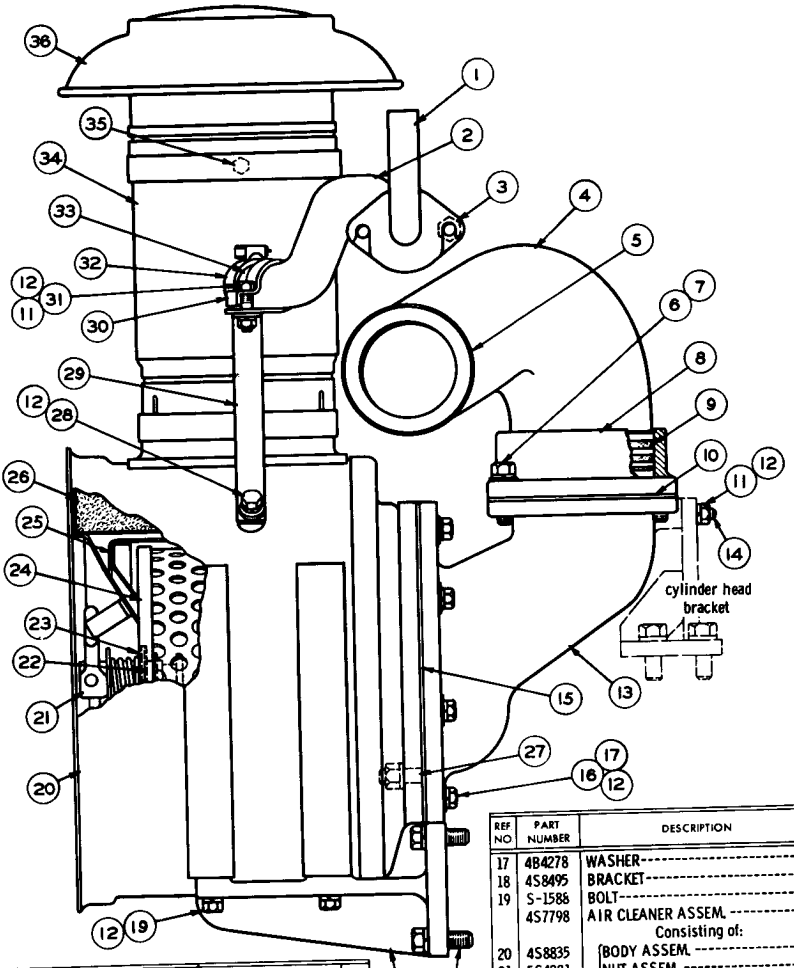

REF. NO.	PART NUMBER	DESCRIPTION	QTY.
1	5S1352	TUBE ASSEM.	1
2	5S1349	TUBE ASSEM.	1
3	1B5355	NUT	2
4	4S8822	PIPE ASSEM.	1
	7M1674	ELEMENT (Part of 4S8822 Pipe Assem.)	1
5	5H7704	SEAL	2
6	S-1585	BOLT	8
	3B4508	LOCKWASHER	8
7	4B4280	WASHER	4
8	4S8489	ADAPTER	1
9	6H1871	SEAL	2
10	4S8490	GASKET	1
11	1D4717	NUT	3
12	3B4506	LOCKWASHER	16
13	4S8832	ELBOW ASSEM.	1
14	1K4337	STUD (Part of 4S8832 Elbow Assem.)	2
15	3S2317	GASKET	1
16	1A2029	BOLT	8

REF. NO.	PART NUMBER	DESCRIPTION	QTY.
17	4B4278	WASHER	8
18	4S8495	BRACKET	2
19	S-1588	BOLT	4
	4S7798	AIR CLEANER ASSEM.	1
		Consisting of:	
20	4S8835	BODY ASSEM.	1
21	5S4281	NUT ASSEM.	1
22	5S4280	CLIP	1
23	5S4279	GASKET	1
24	4S8834	ELEMENT--------(Inner)--------	1
25	4S8837	RETAINER	1
26	4S8833	ELEMENT--------(Outer)--------	1
27	3S5123	STUD	8
	1D4717	NUT	8
	3B4506	LOCKWASHER	8
28	S-509	BOLT	1
	1A4784	WASHER	1
29	5S1486	BRACKET	1
30	5S1689	CLAMP	1
31	3B1915	BOLT	2
32	9M164	CLAMP	2
33	6L3929	HOSE	1
	4S8824	PRECLEANER ASSEM.	1
		Consisting of:	
34	4S8826	BODY ASSEM.	1
35	S-1591	BOLT	2
	1D4717	NUT	2
36	4S8825	HOOD ASSEM.	1

97203

AIR CLEANER

Serial No. 48A6883 to 48A12061 inclusive

Note: 8S1283 Intake Air Stack Assembly is available

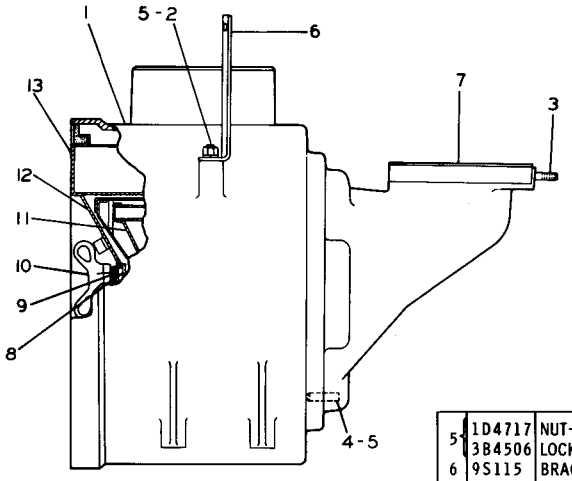

REF. NO.	PART NUMBER	DESCRIPTION	QTY
1	8S9930	BODY ASSEM.	1
2	9M2151	STUD	1
3	L765	STUD	2
4	2M1538	STUD	8

5	1D4717	NUT	9
	3B4506	LOCKWASHER	9
6	9S115	BRACKET	1
7	4S8490	GASKET	1
8	5S4280	CLIP	1
9	5S4279	GASKET	1
10	5S4281	NUT ASSEM.	1
11	4S8834	ELEMENT ASSEM. ---(Secondary)---	1
12	4S8837	RETAINER	1
13	4S8833	ELEMENT ASSEM. ----(Primary)----	1

138390

8S9931 AIR CLEANER GROUP
Serial No. 48A6883 to 48A12061 inclusive
Provides field replacement for 4S7798 Air Cleaner Assembly shown on Page 20A

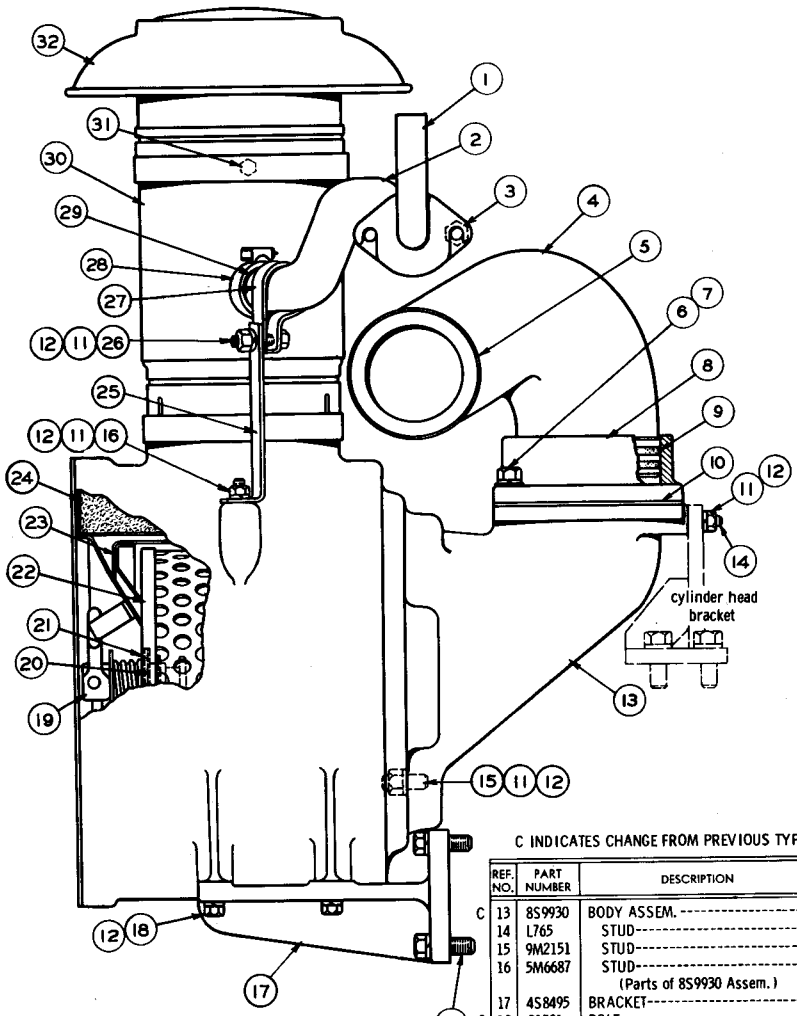

C INDICATES CHANGE FROM PREVIOUS TYPE

	REF. NO.	PART NUMBER	DESCRIPTION	QTY
C	13	8S9930	BODY ASSEM.	1
	14	L765	STUD	2
	15	9M2151	STUD	8
	16	5M6687	STUD (Parts of 8S9930 Assem.)	1
	17	4S8495	BRACKET	2
C	18	S1591	BOLT	4
C	19	5S4281	NUT ASSEM.	1
C	20	5S4280	CLIP	1
C	21	5S4279	GASKET	1
C	22	4S8834	ELEMENT-------(Secondary)-------	1
C	23	4S8837	RETAINER	1
C	24	4S8833	ELEMENT--------(Primary)--------	1
C	25	9S115	BRACKET	1
	26	3B1915	BOLT	1
	27	5S1689	CLAMP	1
	28	9M164	CLAMP	2
	29	6L3929	HOSE	1
		4S8824	PRECLEANER ASSEM. Consisting of:	1
	30	4S8826	BODY ASSEM.	1
	31	S1591	BOLT	2
		1D4717	NUT	2
	32	4S8825	HOOD ASSEM.	1

REF. NO.	PART NUMBER	DESCRIPTION	QTY
1	5S1352	TUBE ASSEM.	1
2	5S1349	TUBE ASSEM.	1
3	1B5355	NUT	2
4	4S8822	PIPE ASSEM.	1
	7M1674	ELEMENT (Part of 4S8822 Assem.)	1
5	5H7704	SEAL	2
6	S1585	BOLT	8
	3B4508	LOCKWASHER	8
7	4B4280	WASHER	4
8	4S8489	ADAPTER	1
9	6H1871	SEAL	2
10	4S8490	GASKET	1
C 11	1D4717	NUT	12
12	3B4506	LOCKWASHER	16

125645

AIR CLEANER
Effective with Serial No. 48A12062
Note: 8S2383 Intake Air Stack is available

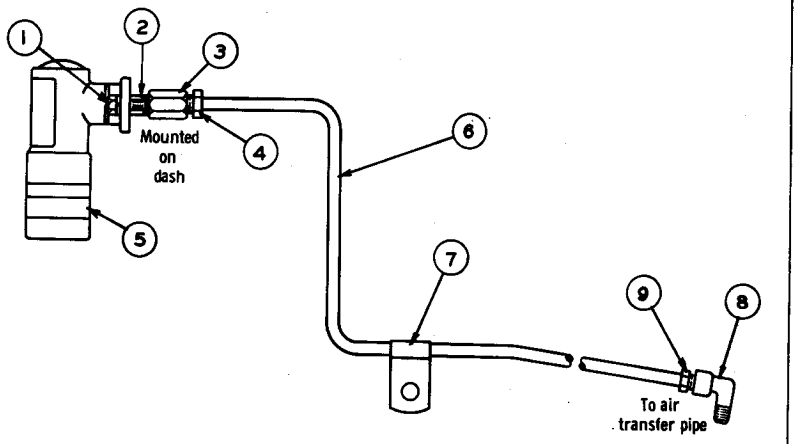

REF. NO.	PART NUMBER	DESCRIPTION	QTY.
1	8M9937	BOLT	2
	8M9936	LOCKWASHER	2
2	8B2283	NIPPLE	1
3	3B8989	FITTING	1
4	1F1344	NUT	1
		(Part of 3B8989 Fitting)	

REF. NO.	PART NUMBER	DESCRIPTION	QTY.
5	4S6998	INDICATOR	1
6	4S8800	TUBE	1
7	L-2072	CLIP	1
8	3B8998	FITTING	1
9	1F1344	NUT	1
		(Part of 3B8998 Fitting)	

120531

AIR FILTER SERVICE INDICATOR
Effective with Serial No. 48A6883

4S9706 TURBOCHARGER ASSEMBLY

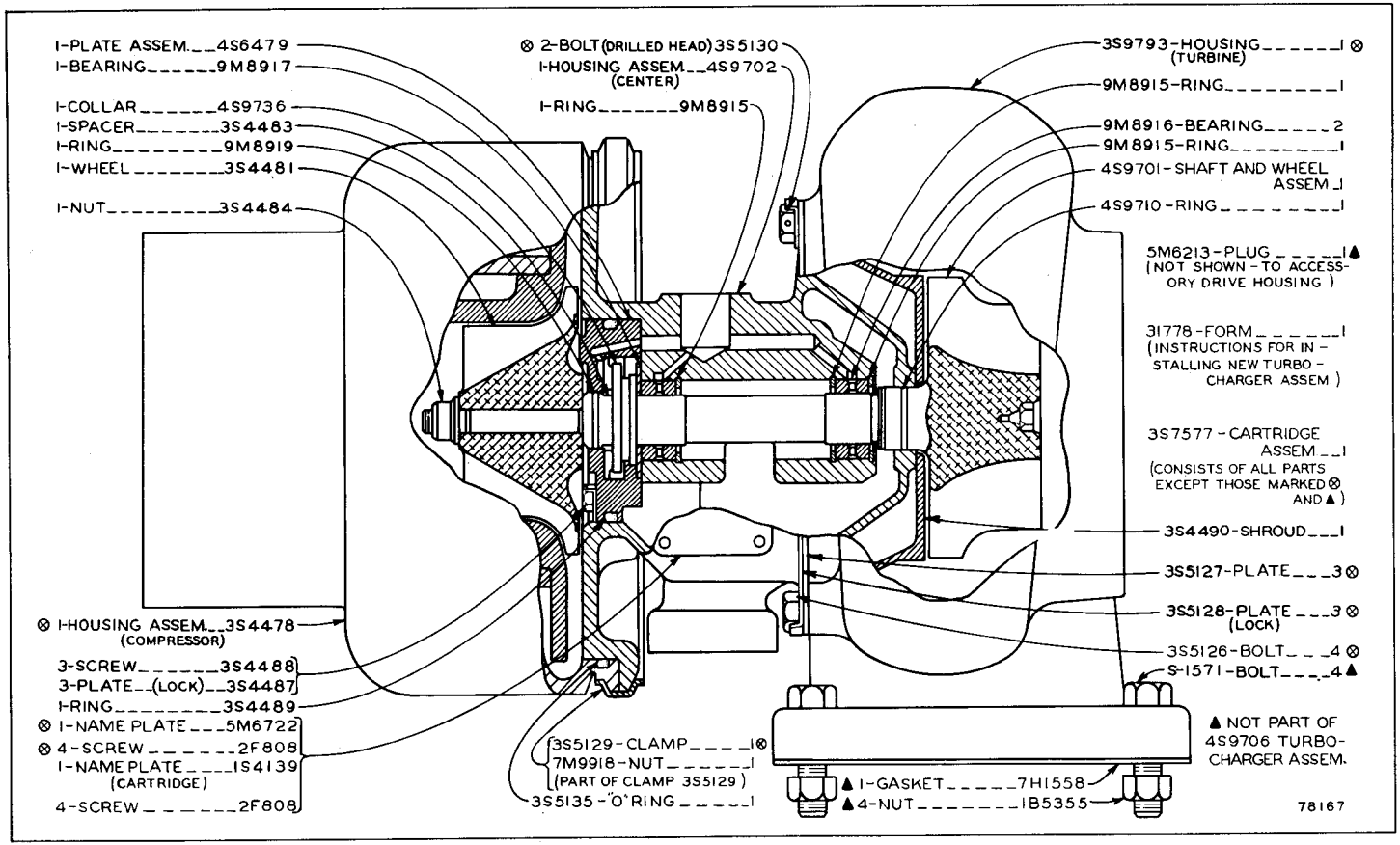

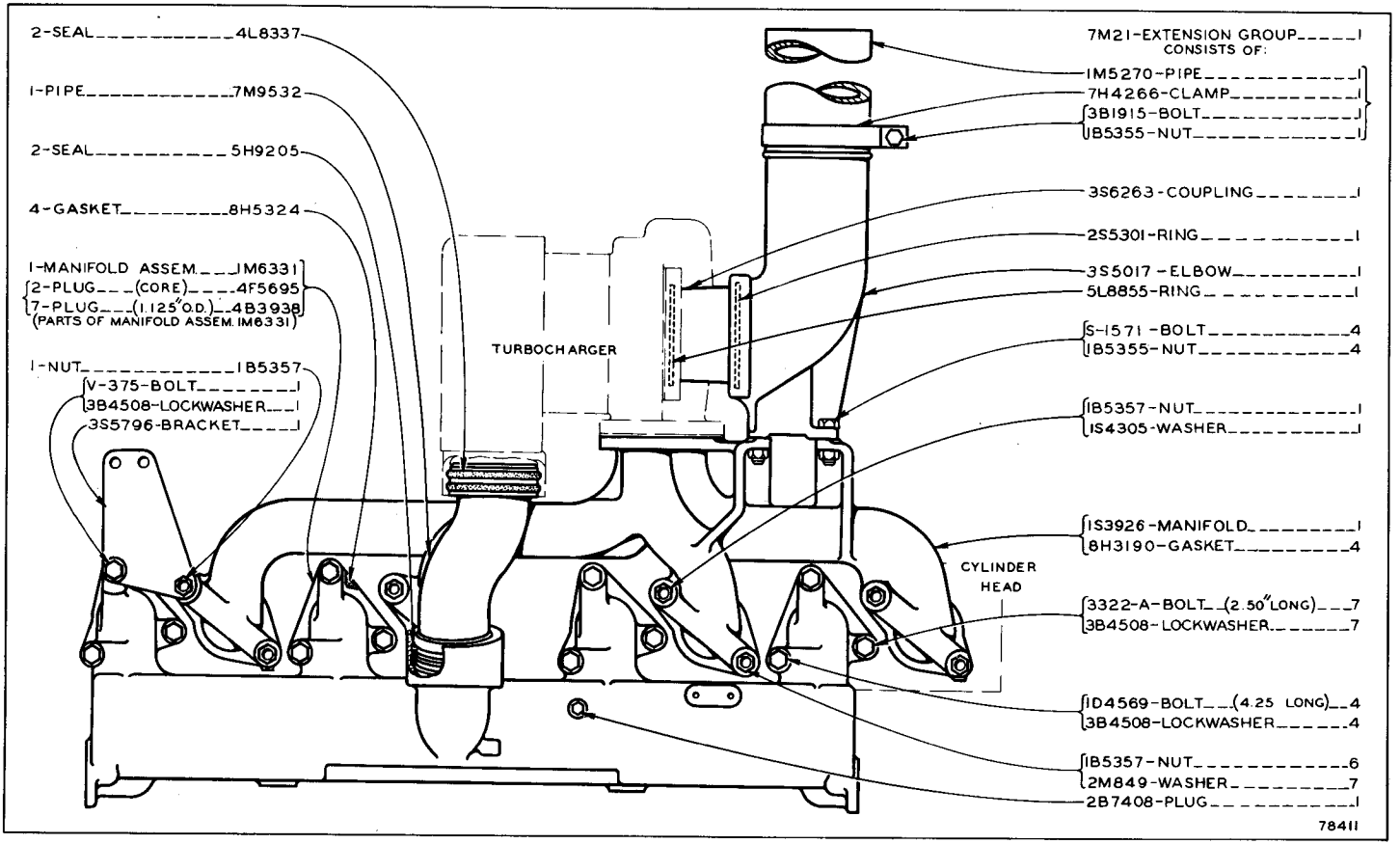

MANIFOLDS
Serial No. 48A6393 to 48A6882 inclusive
Note: 1S3628 Rain Cap Assembly is available

MANIFOLDS AND EXHAUST EXTENSION (1M4698 N/S)

Serial No. 48A6883 to 10069, 10071 to 10078, 10080 to 10088, 10090 to 10094, 10096, 10101 and 48A10102 inclusive

Note: 7S4411 Rain Cap Assembly is available

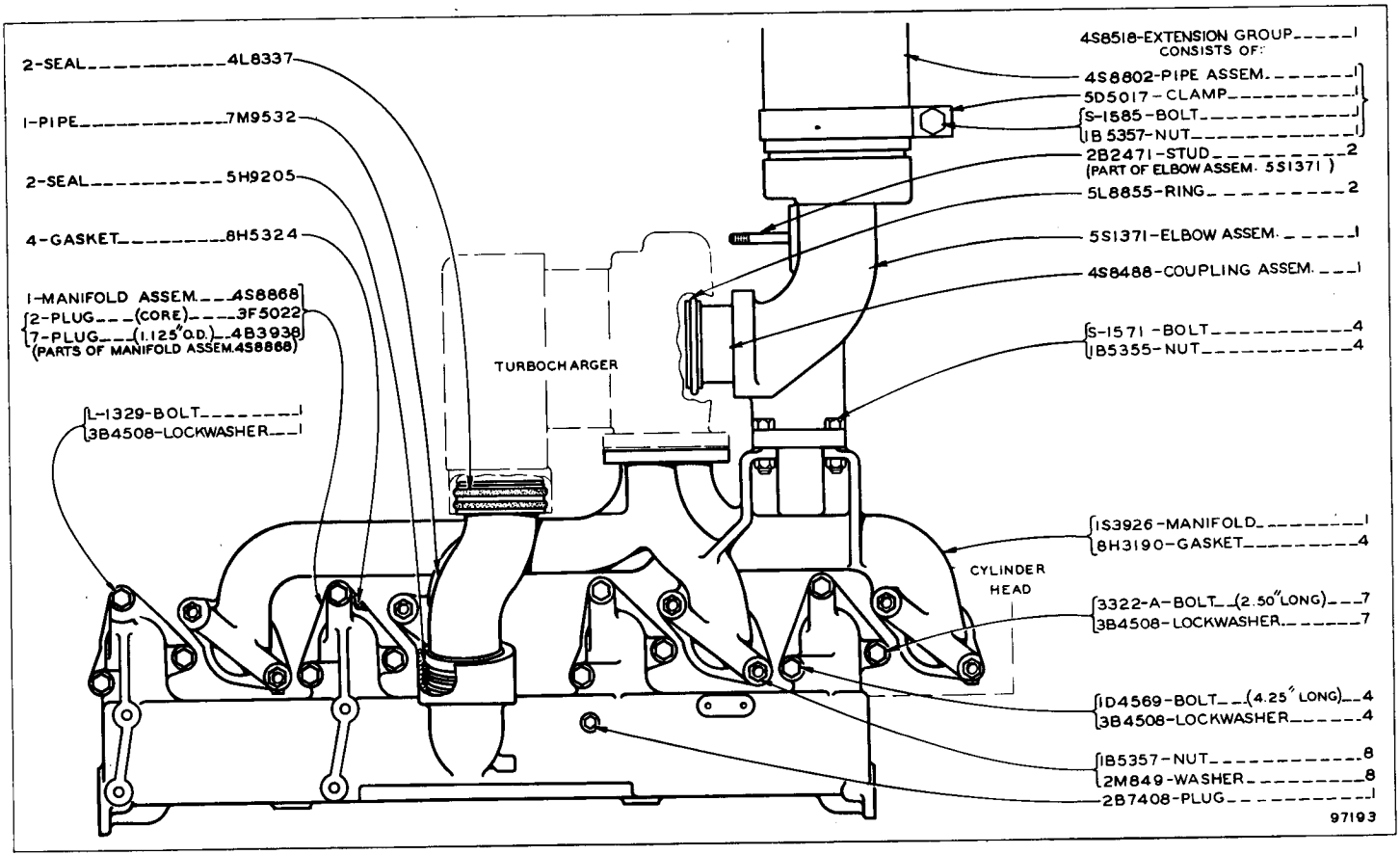

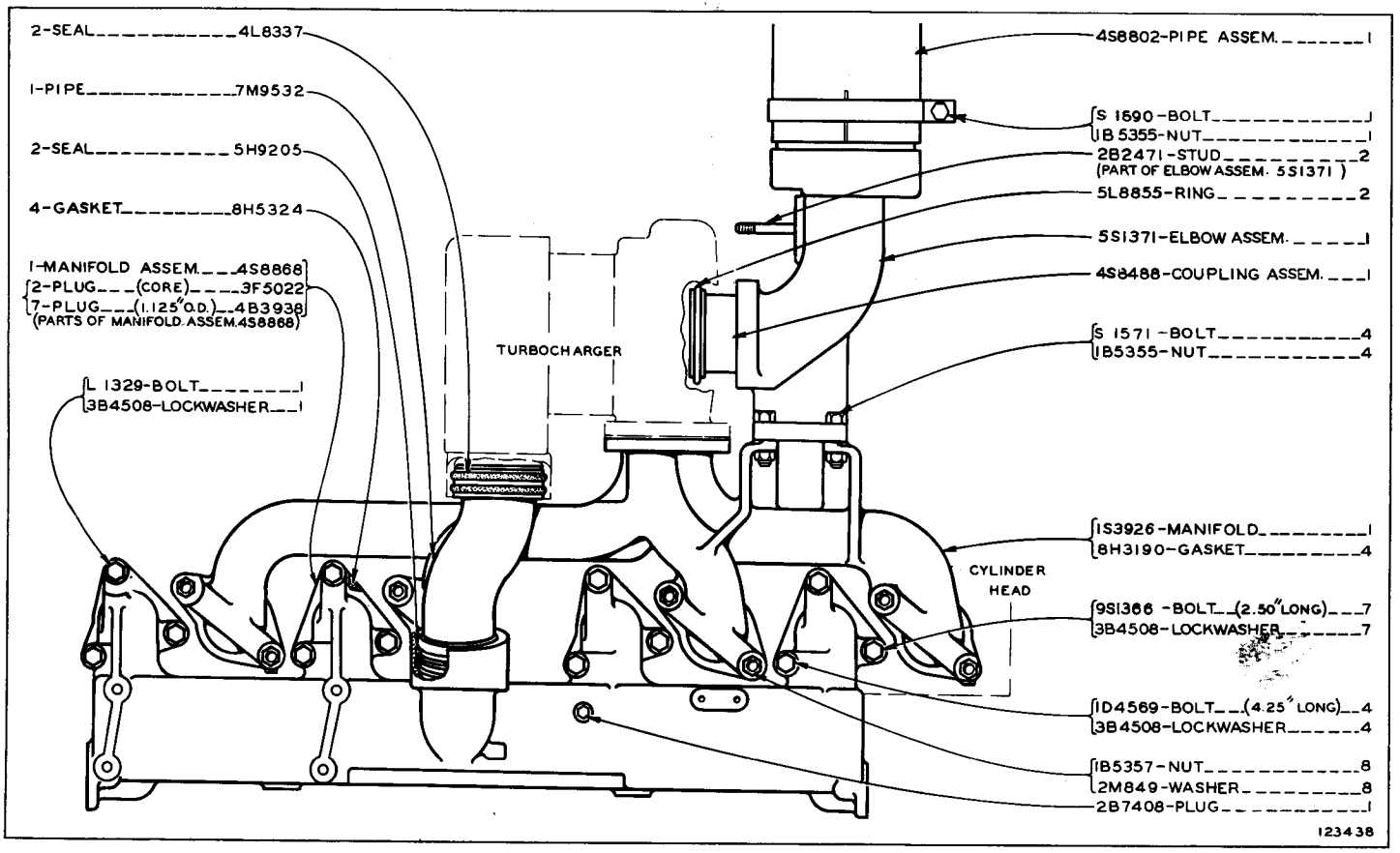

MANIFOLDS AND EXHAUST EXTENSION
Serial No. 48A10070, 10079, 10089, 10095, 10097 to 10100 and 10103 to 48A10726 inclusive

MANIFOLDS AND EXHAUST EXTENSION
Effective with Serial No. 48A10727
Note: 7S4411 Rain Cap is available

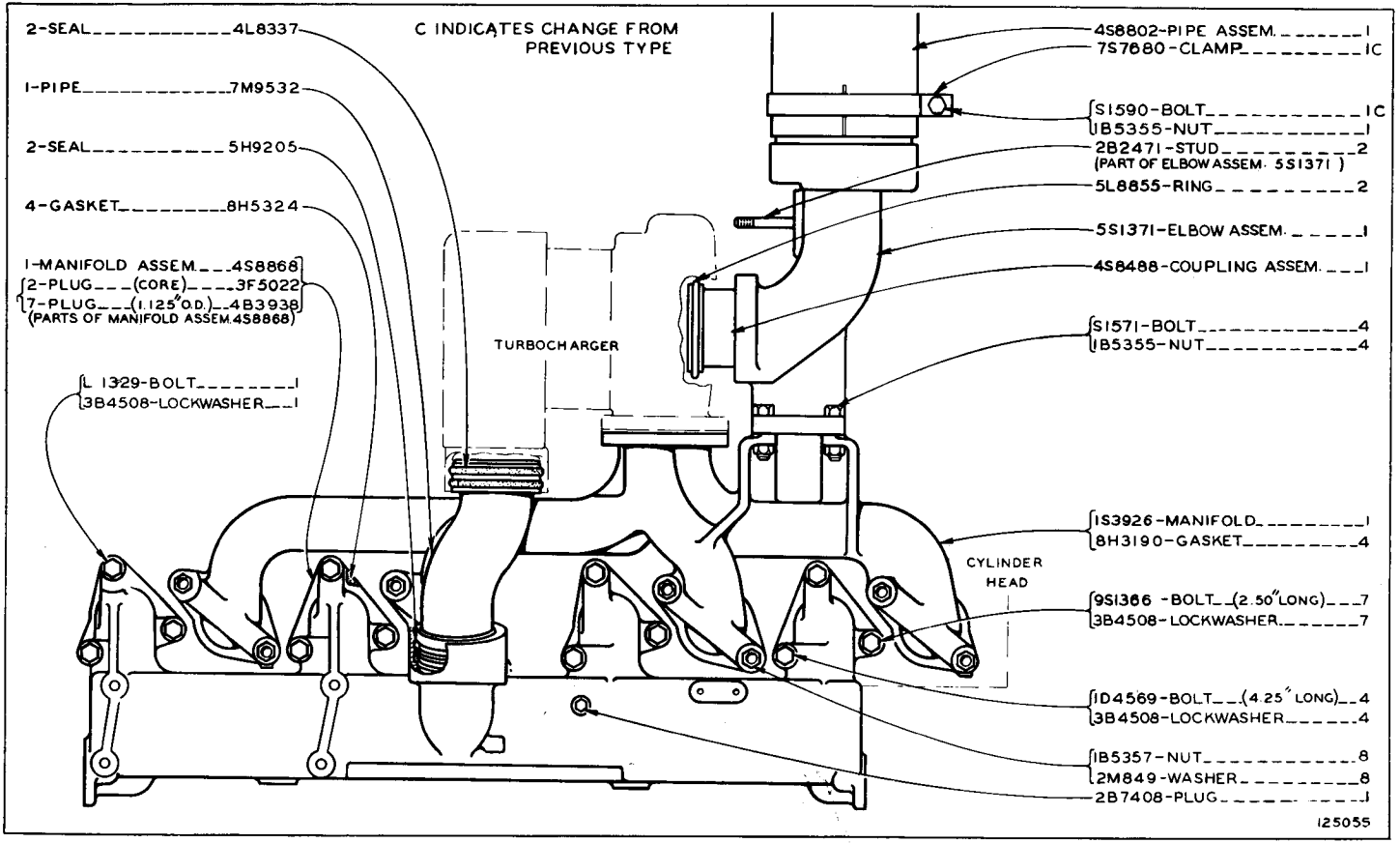

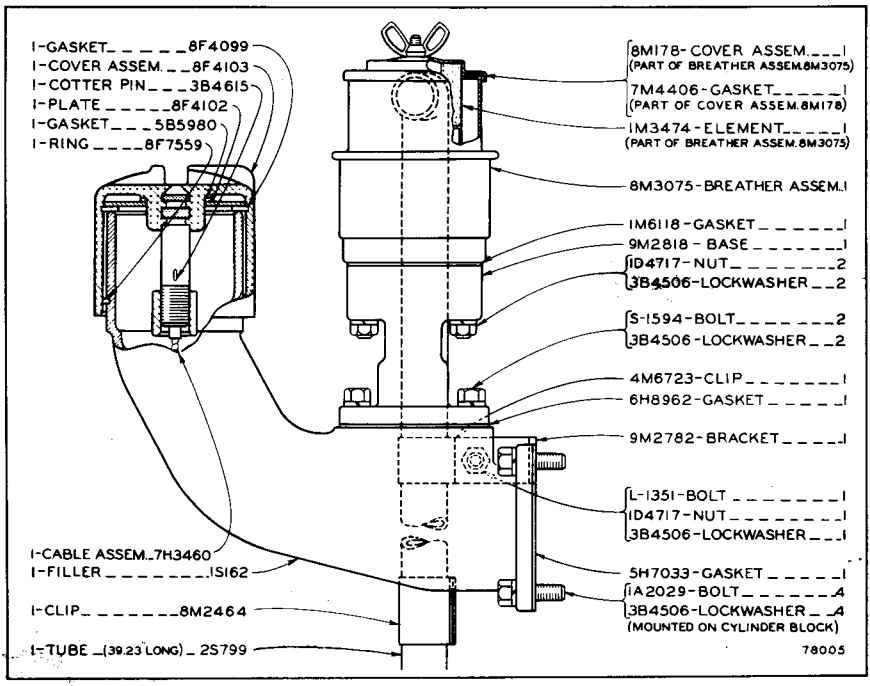

BREATHER AND OIL FILLER

Refer also to Page 127 for special parts

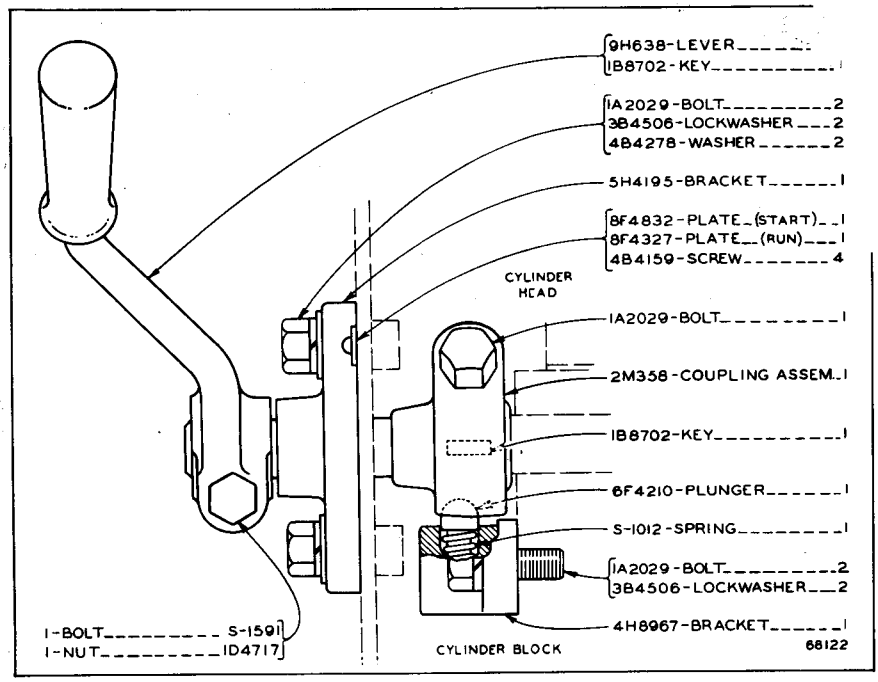

COMPRESSION RELEASE CONTROL

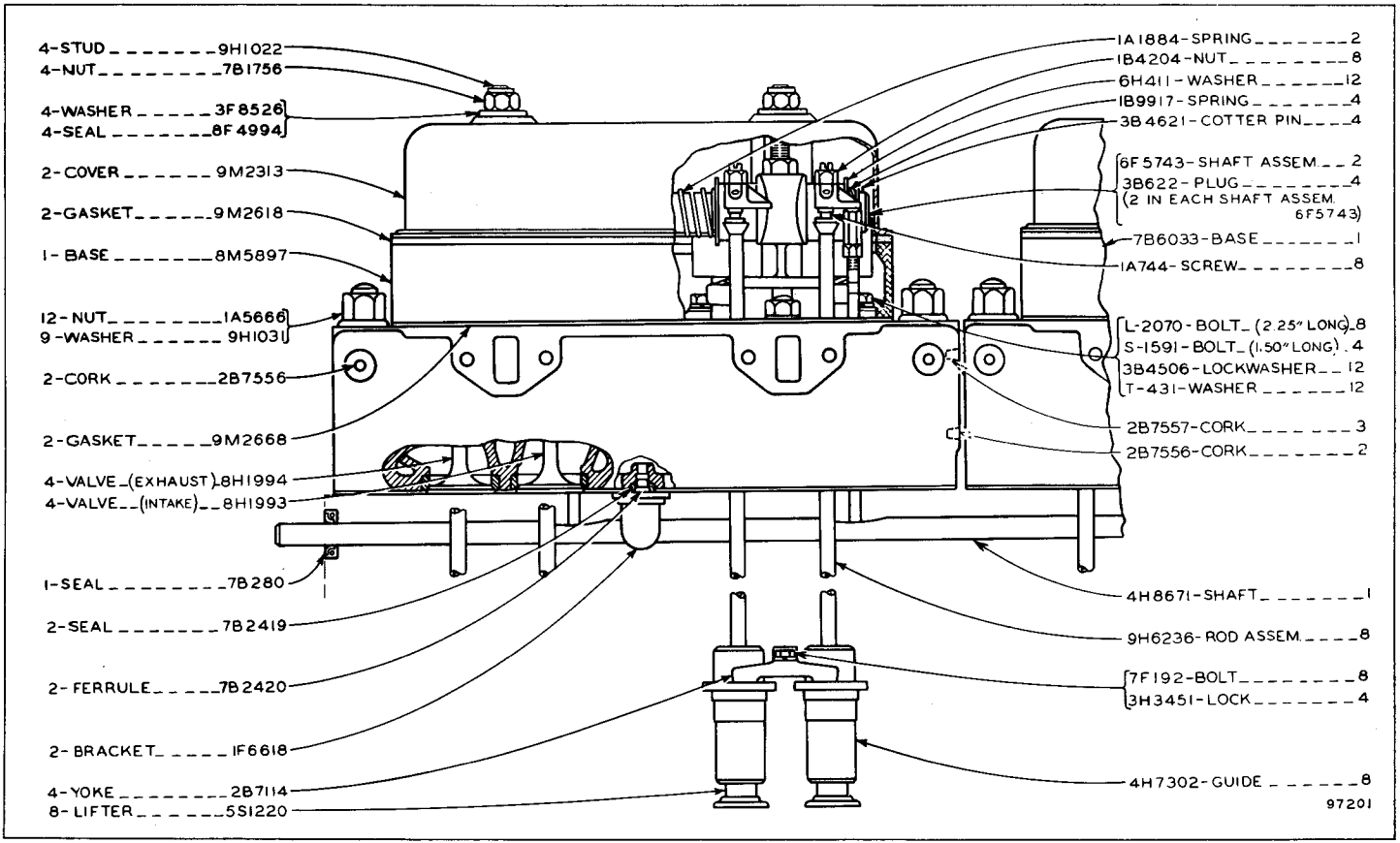

CYLINDER HEAD AND VALVE MECHANISM (1M4709 N/S)—Side View
Serial No. 48A6393 to 13196, 13198 to 13201, 13203 and 48A13205 inclusive
See Page 30 for Gasket Kit

CYLINDER HEAD AND VALVE MECHANISM (1M4709 N/S)—End View
Serial No. 48A6393 to 13196, 13198 to 13201, 13203 and 48A13205 inclusive

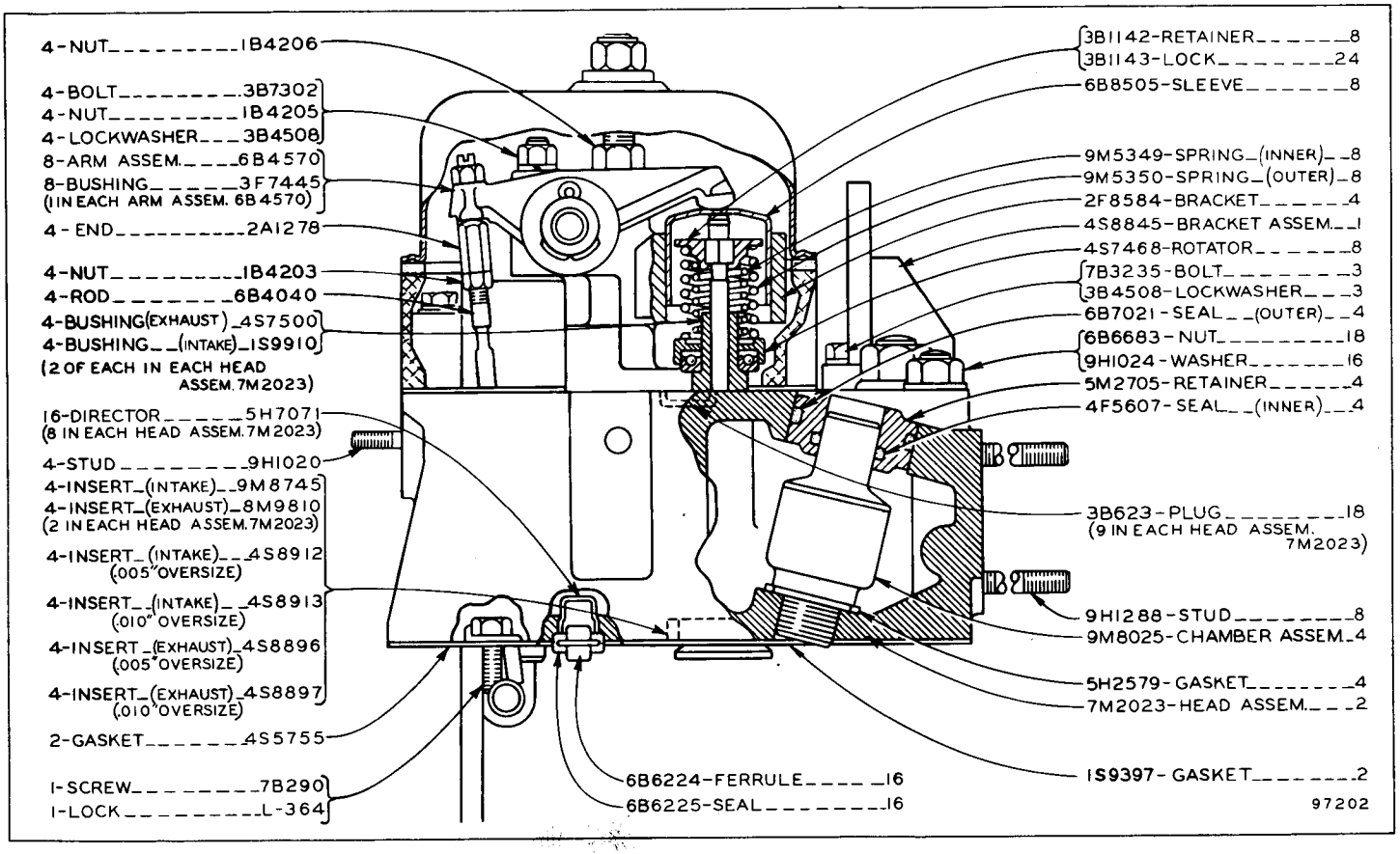

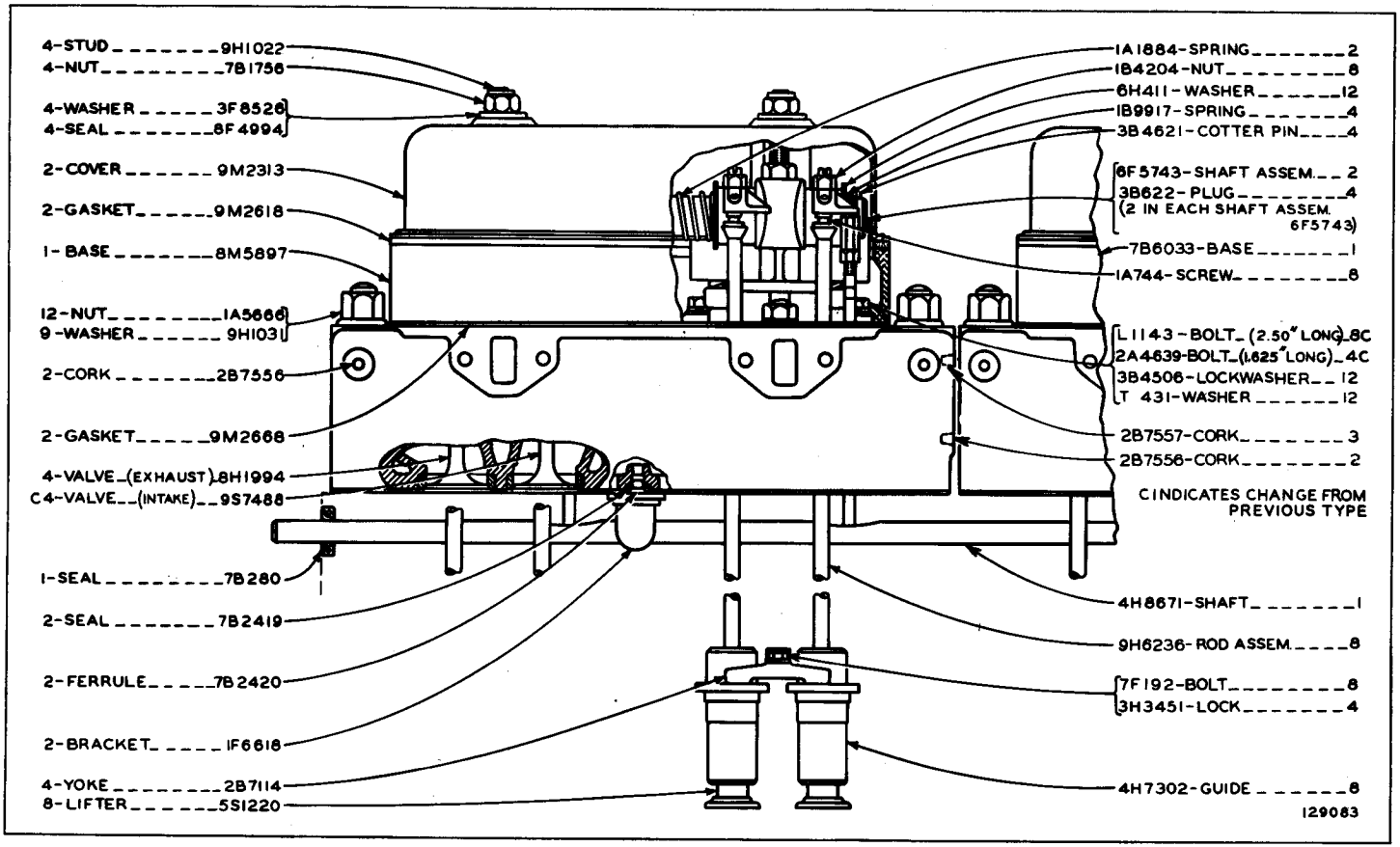

CYLINDER HEAD AND VALVE MECHANISM (1M4709 N/S)—Side View
Serial No. 48A13197, 13202, 13204 and 48A13206 to 48A13647 inclusive
See Page 30 for Gasket Kit

CYLINDER HEAD AND VALVE MECHANISM (1M4709 N/S)—End View
Serial No. 48A13197, 13202, 13204 and 48A13206 to 48A13647 inclusive

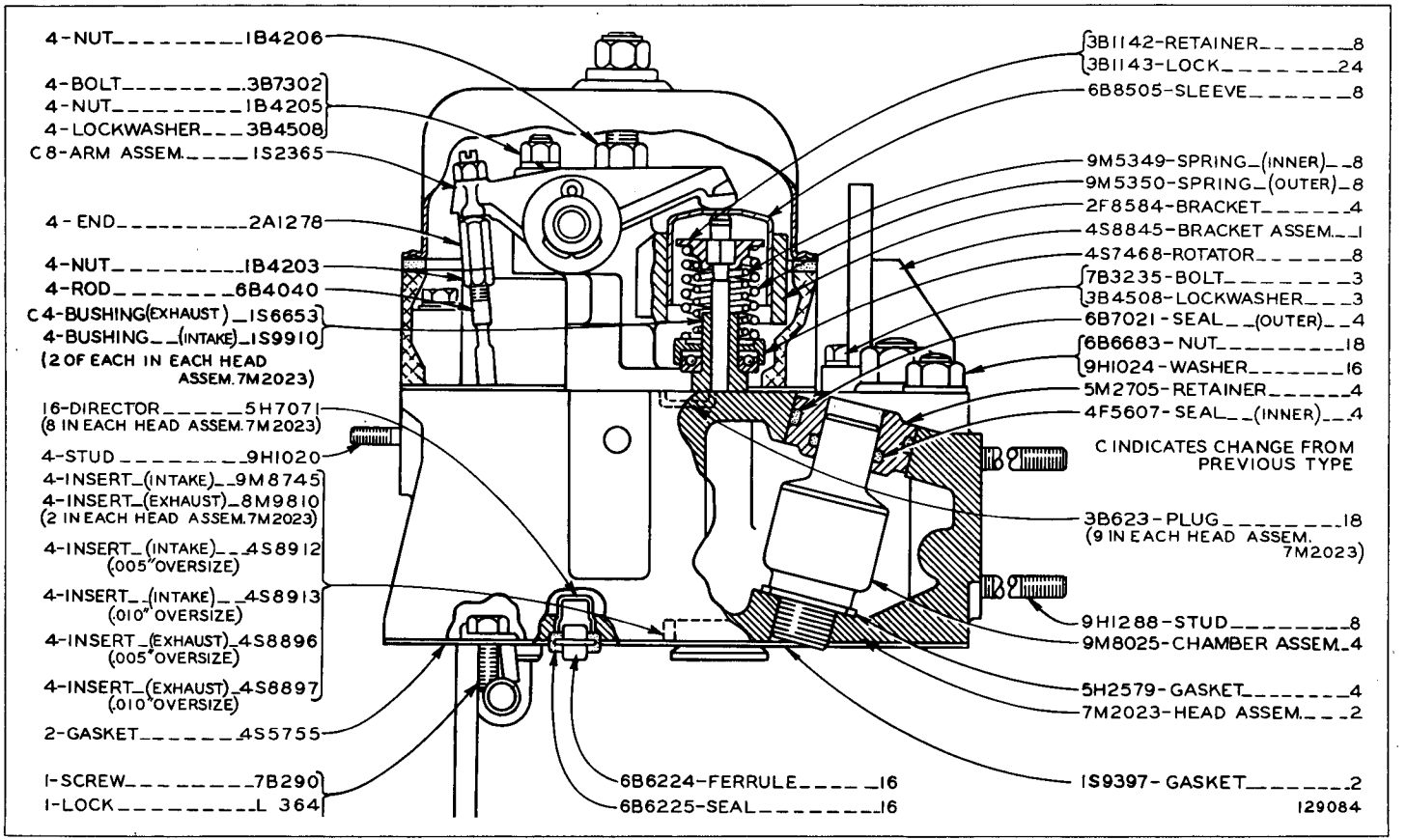

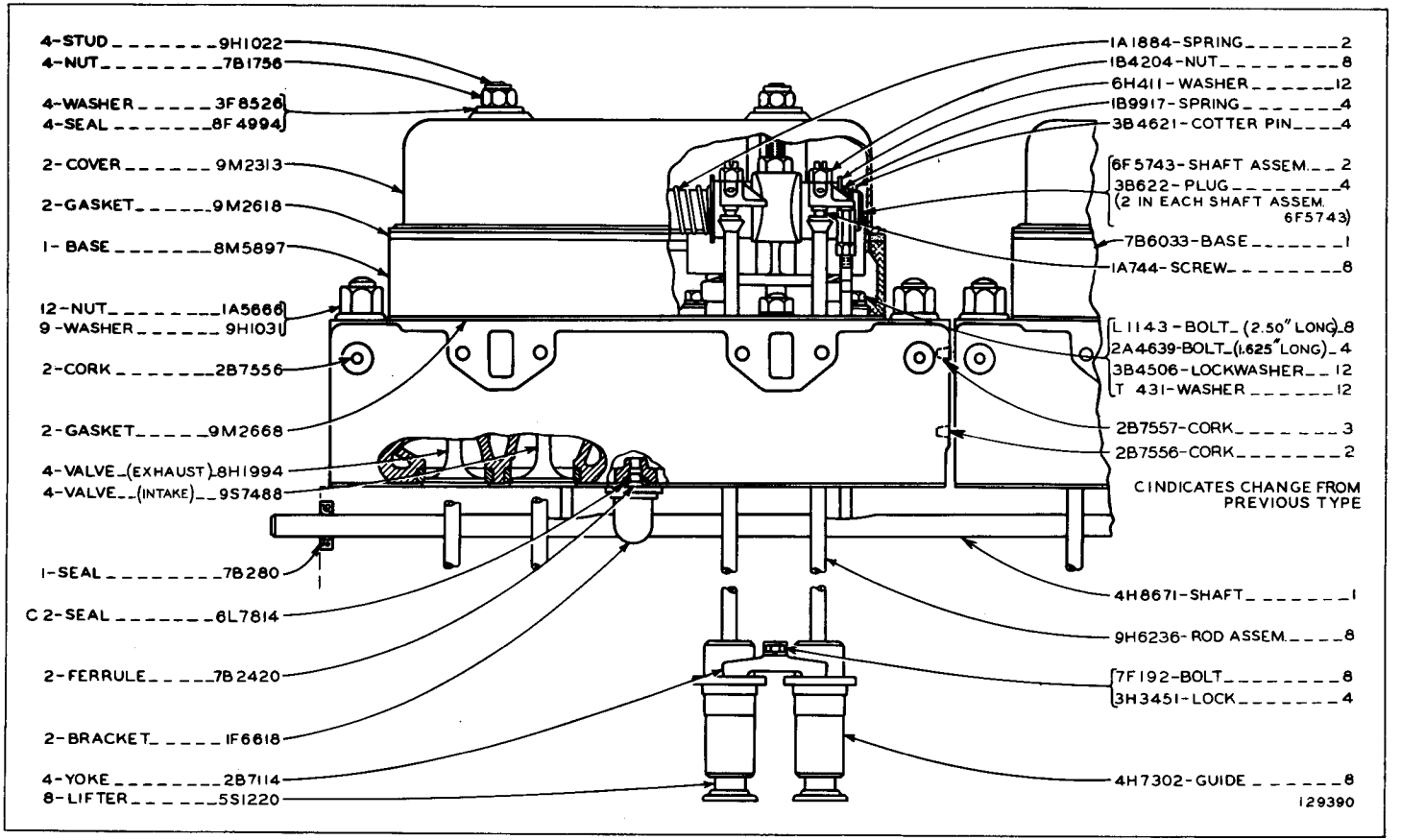

CYLINDER HEAD AND VALVE MECHANISM (1M4709 N/S)—Side View
Serial No. 48A13648 to 13687, 13691 and 48A13692 inclusive
See Page 30 for Gasket Kit

CYLINDER HEAD AND VALVE MECHANISM (1M4709 N/S)—End View
Serial No. 48A13648 to 13687, 13691 and 48A13692 inclusive

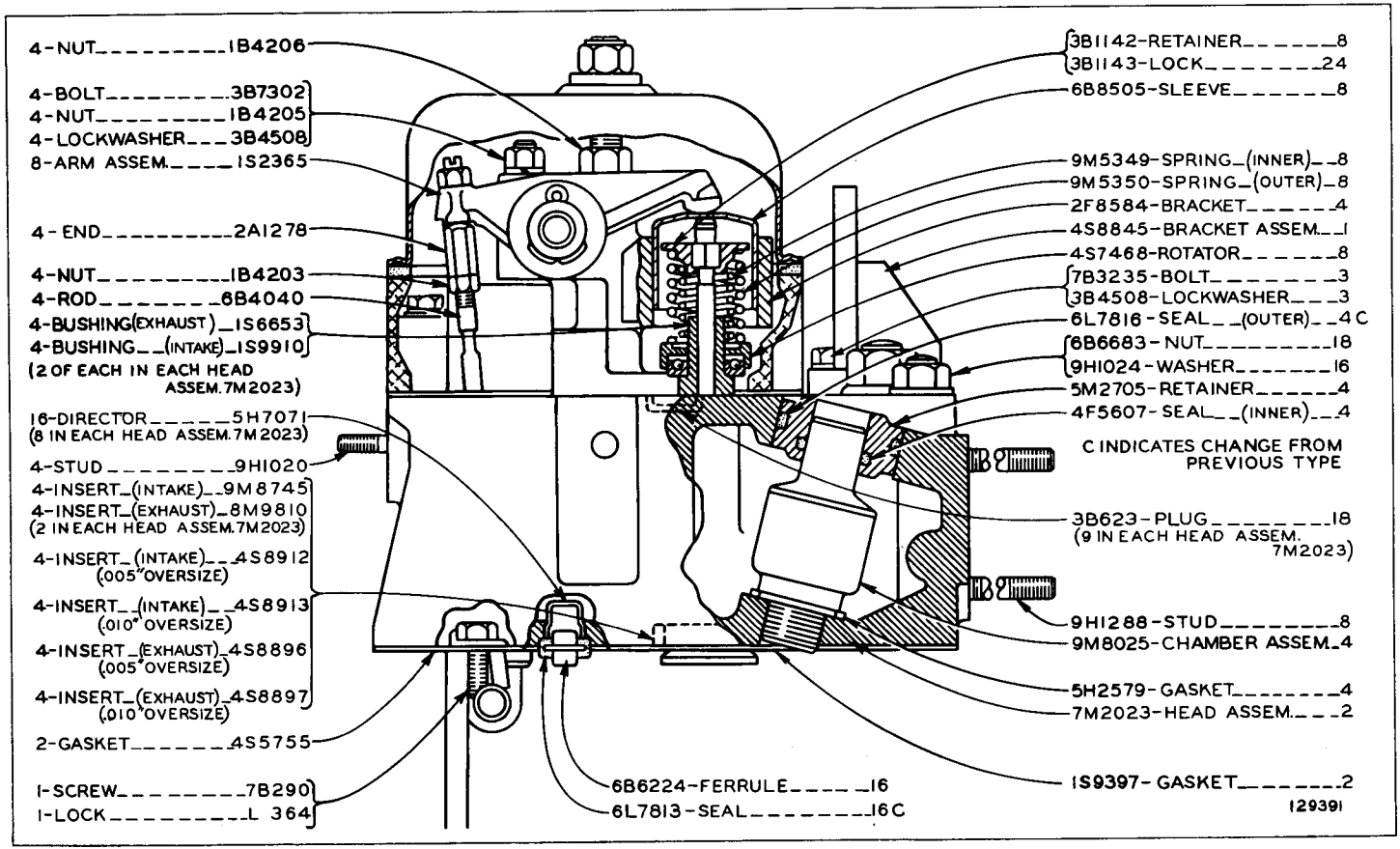

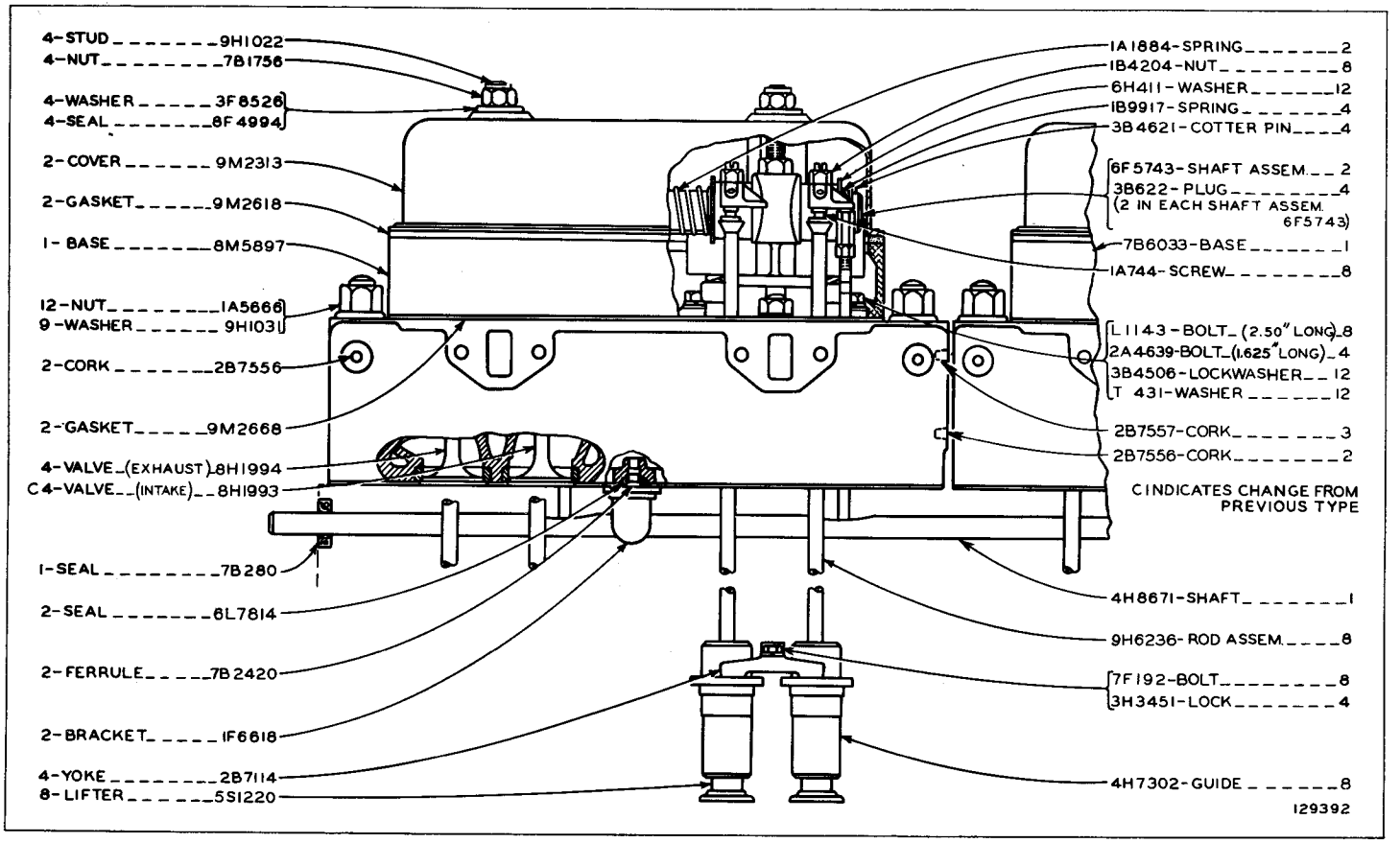

CYLINDER HEAD AND VALVE MECHANISM (1M4709 N/S)—Side View
Serial No. 48A13688 to 13690 and 48A13693—Up
See Page 30 for Gasket Kit

CYLINDER HEAD AND VALVE MECHANISM (1M4709 N/S)—End View
Serial No. 48A13688 to 13690 and 48A13693—Up

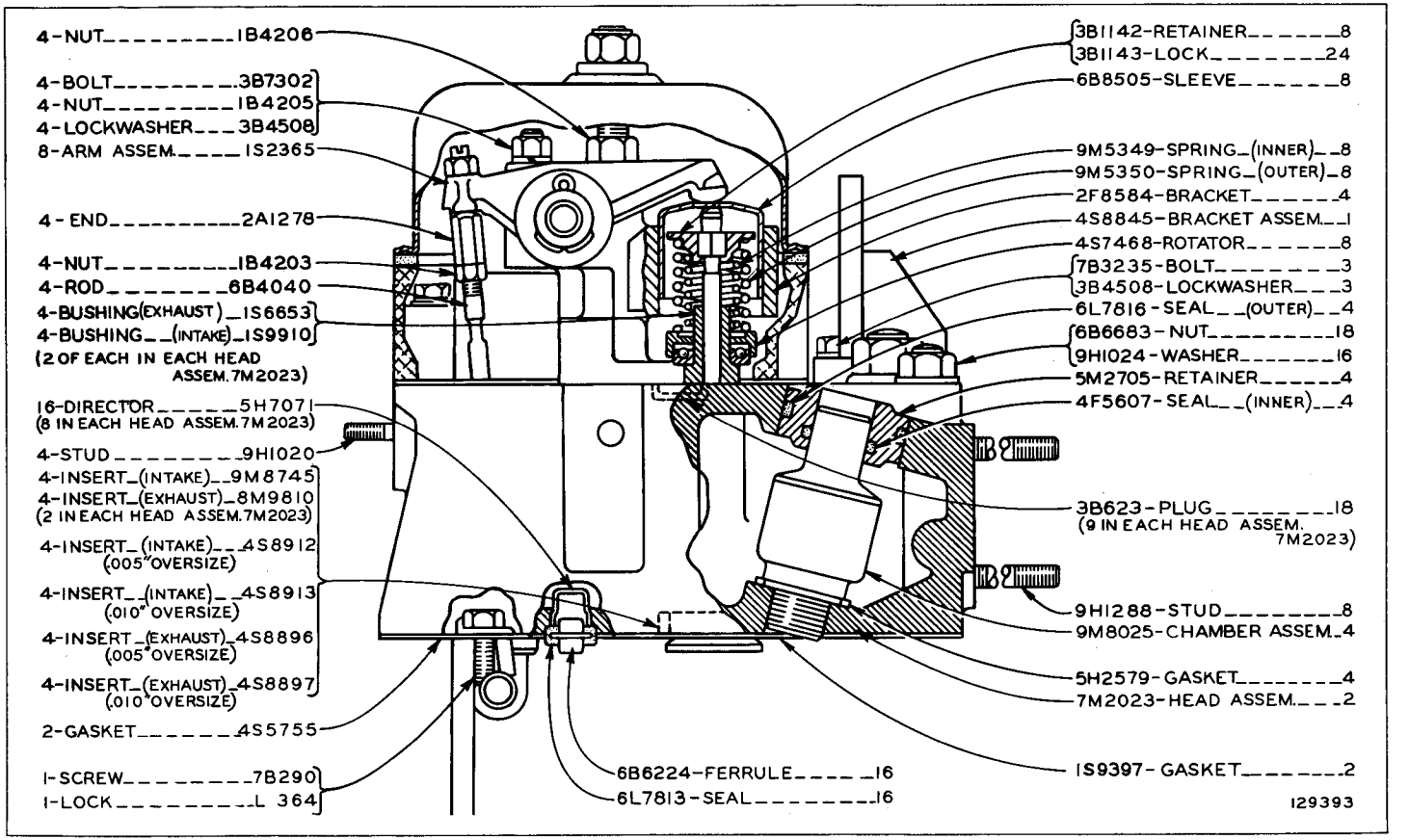

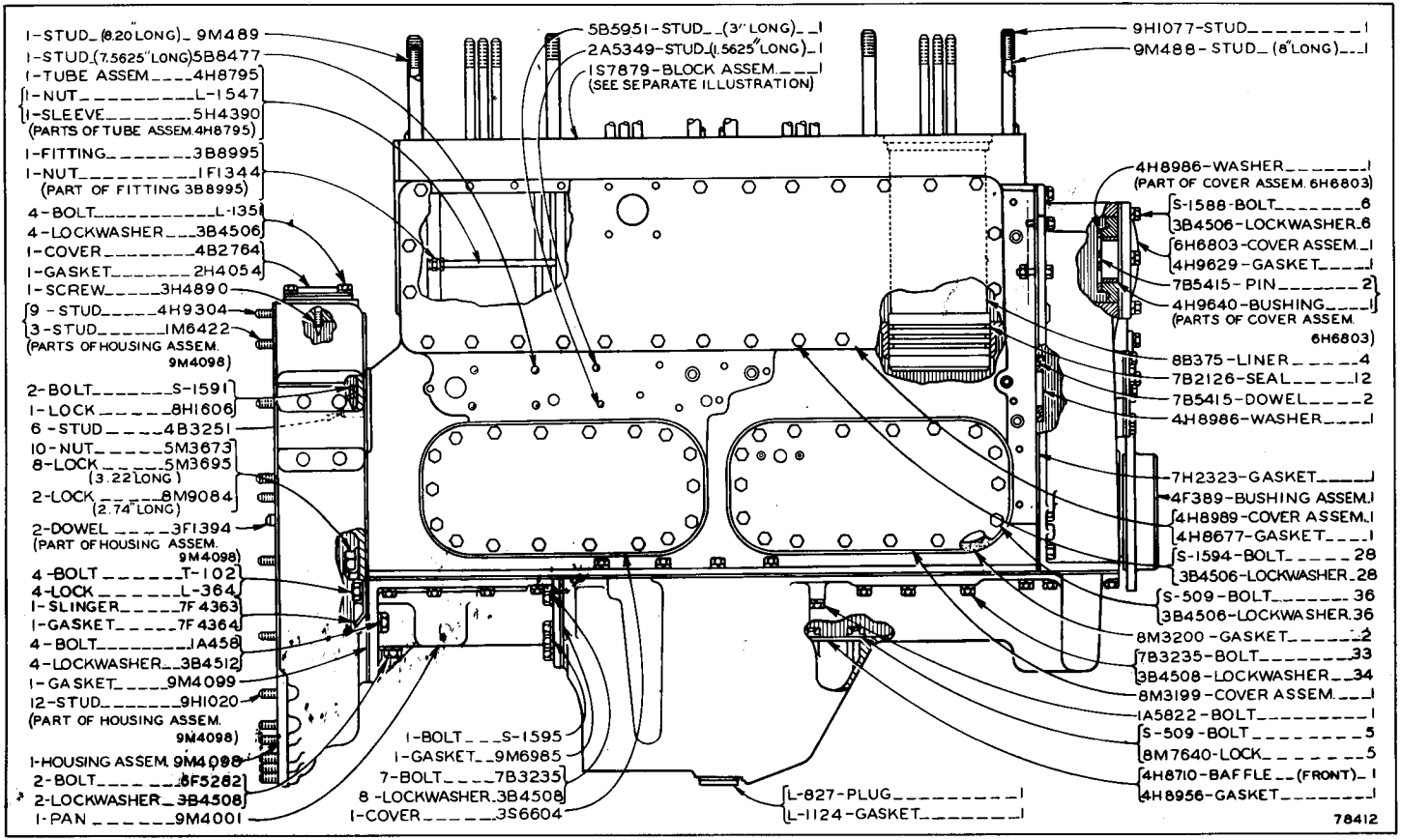

CYLINDER BLOCK AND COVERS—Side View
Serial No. 48A6393 to 48A6882 inclusive
1S7879 Cylinder Block Assembly parts are shown on Page 28. See Page 30 for Gasket Kits

CYLINDER BLOCK AND COVERS—End View

Serial No. 48A6393 to 48A6882 inclusive

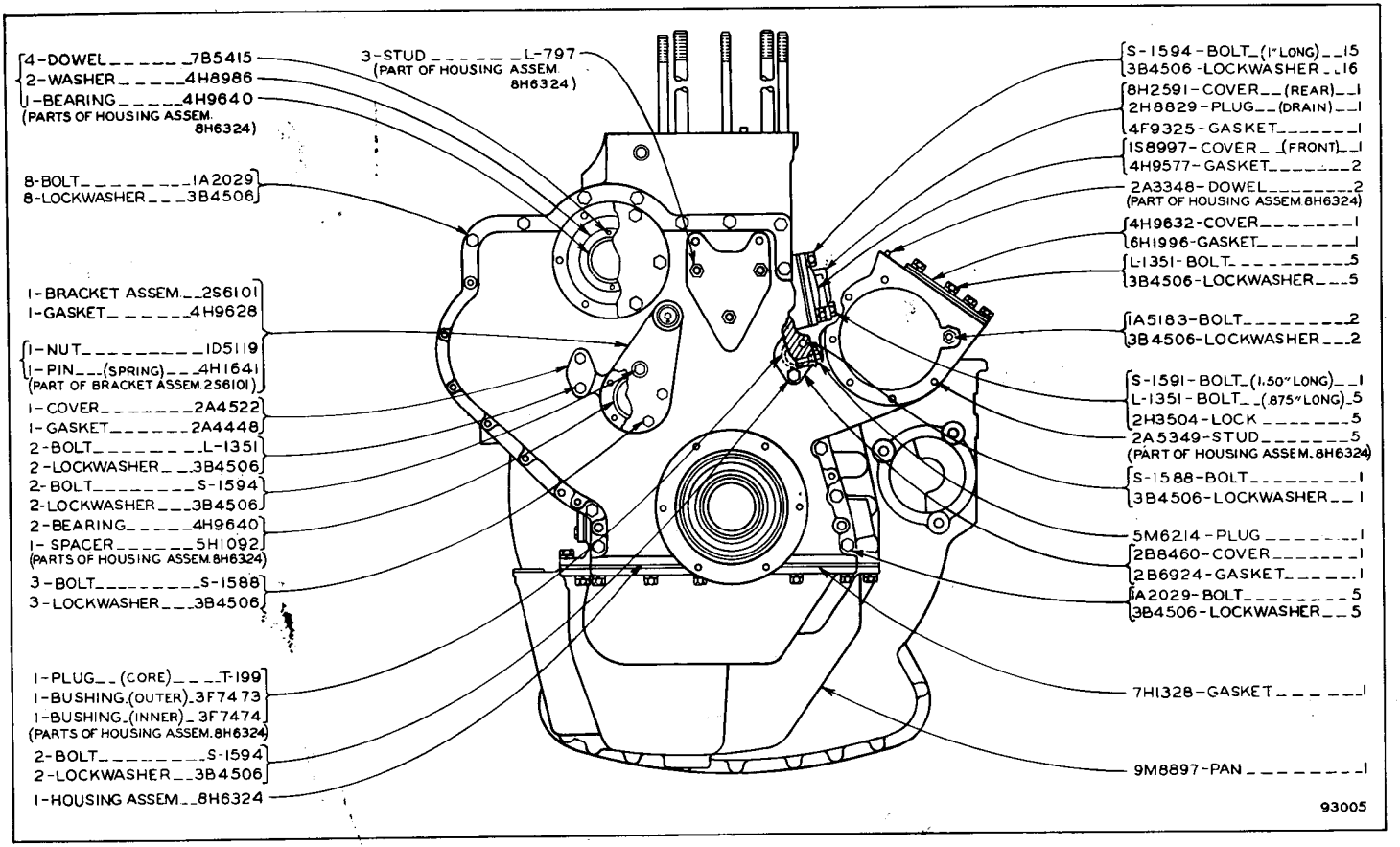

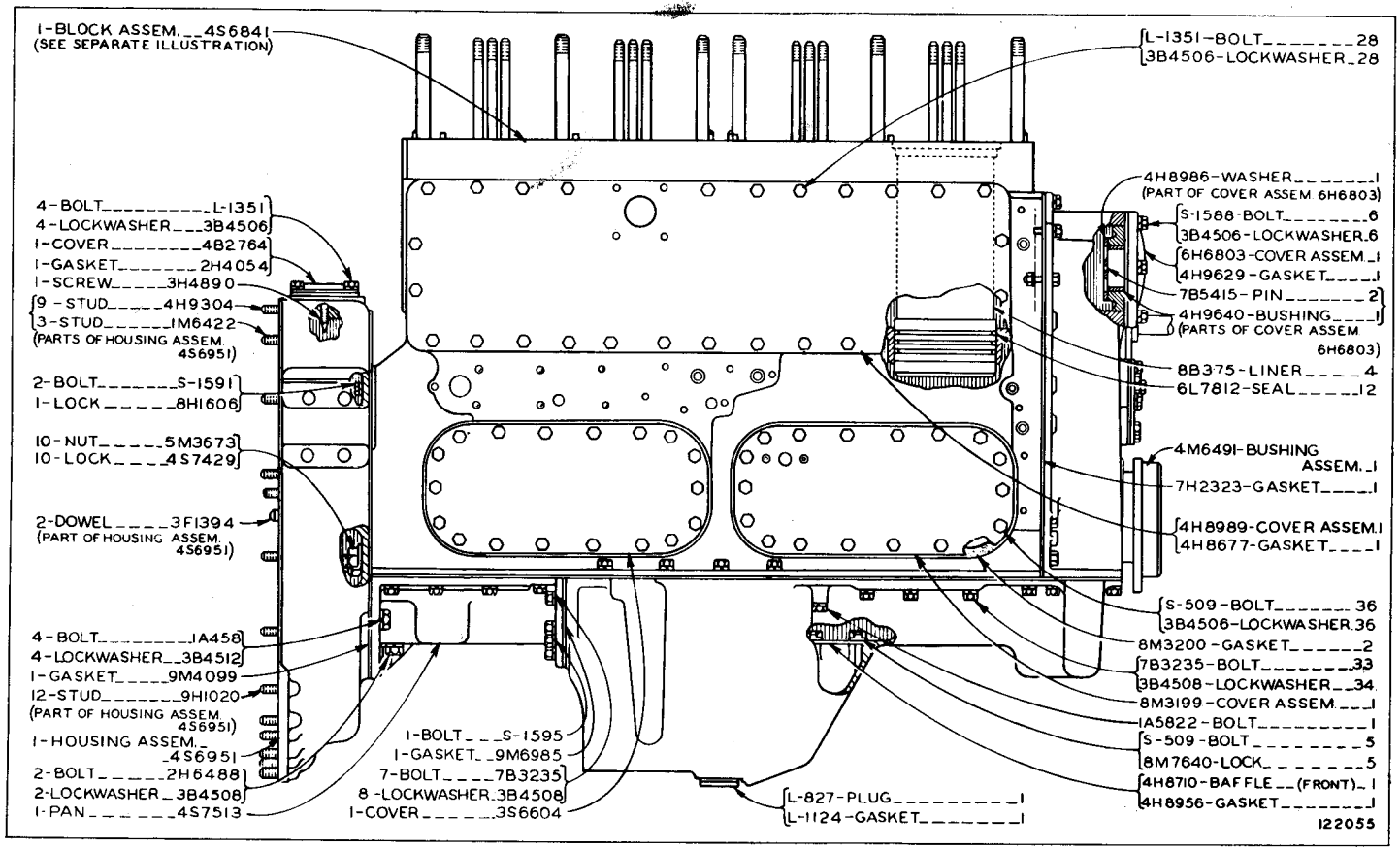

CYLINDER BLOCK AND COVERS—Side View
Serial No. 48A6883 to 48A9314 inclusive
4S6841 Cylinder Block parts are shown on Page 28A. See Page 30 for Gasket Kits

CYLINDER BLOCK AND COVERS—End View
Serial No. 48A6883 to 48A9314 inclusive

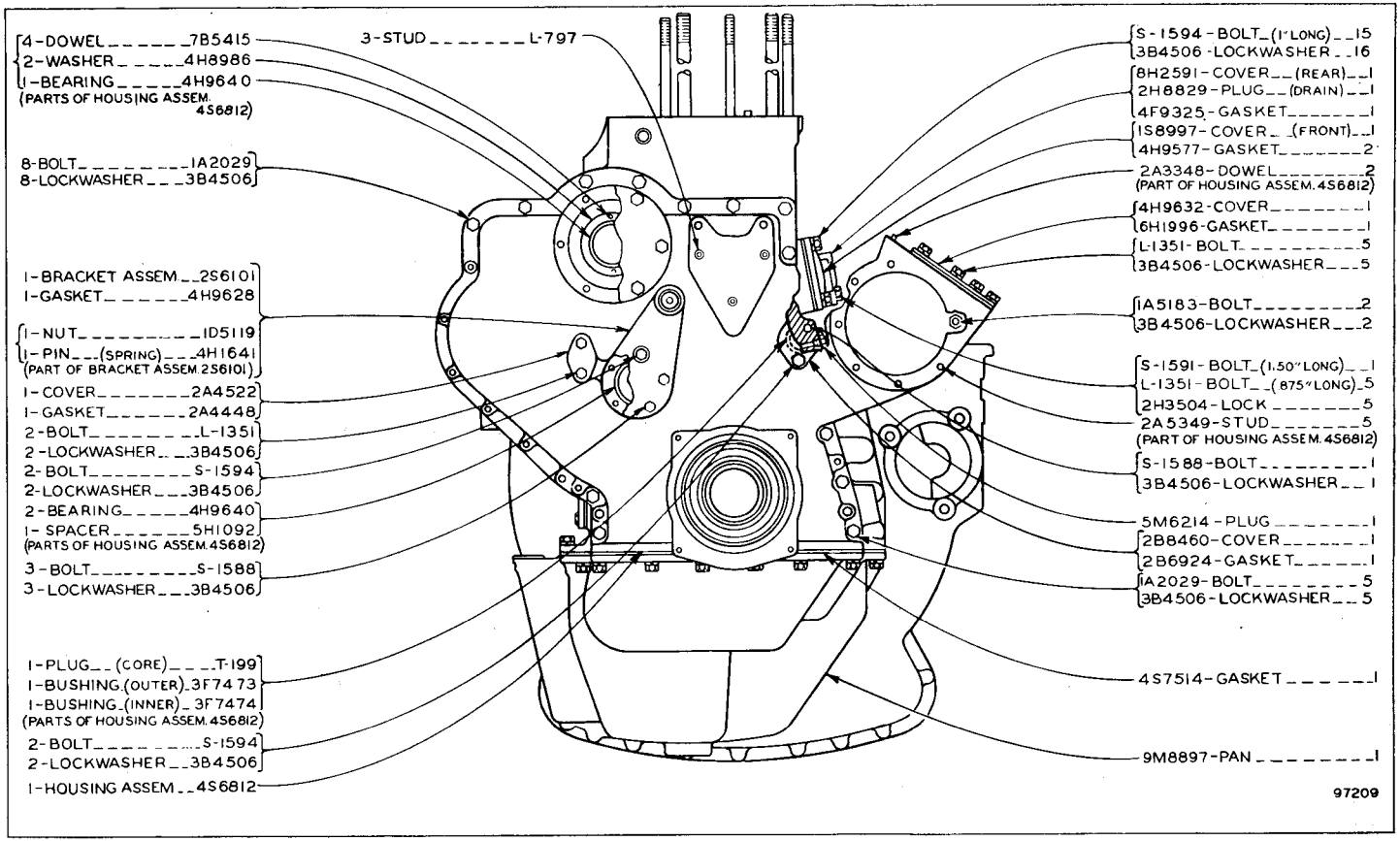

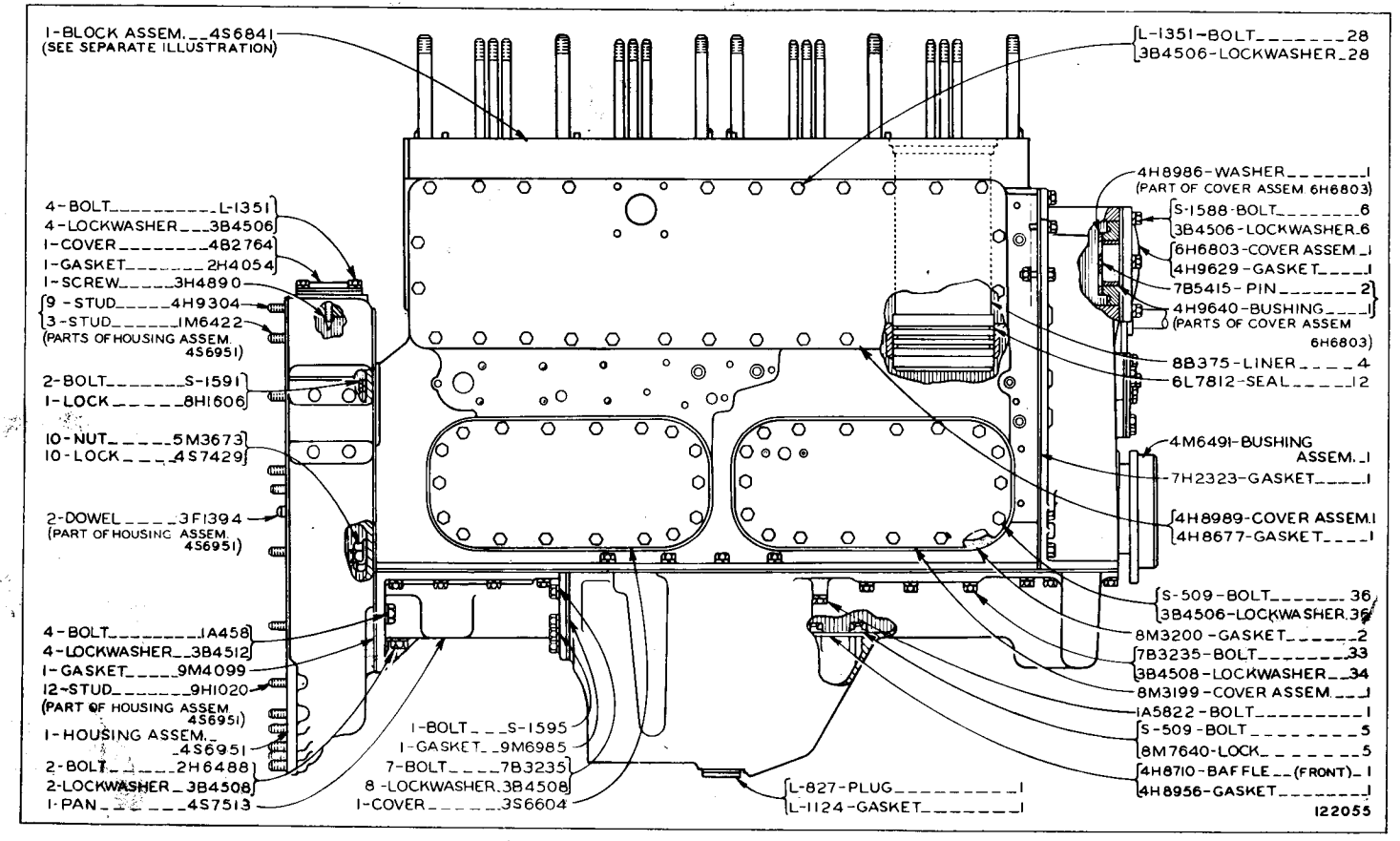

CYLINDER BLOCK AND COVERS—Side View
Effective with Serial No. 48A9315. 4S6841 Block parts are shown on Page 28A
See Page 30 for Gasket Kits

CYLINDER BLOCK AND COVERS—End View
Effective with Serial No. 48A9315

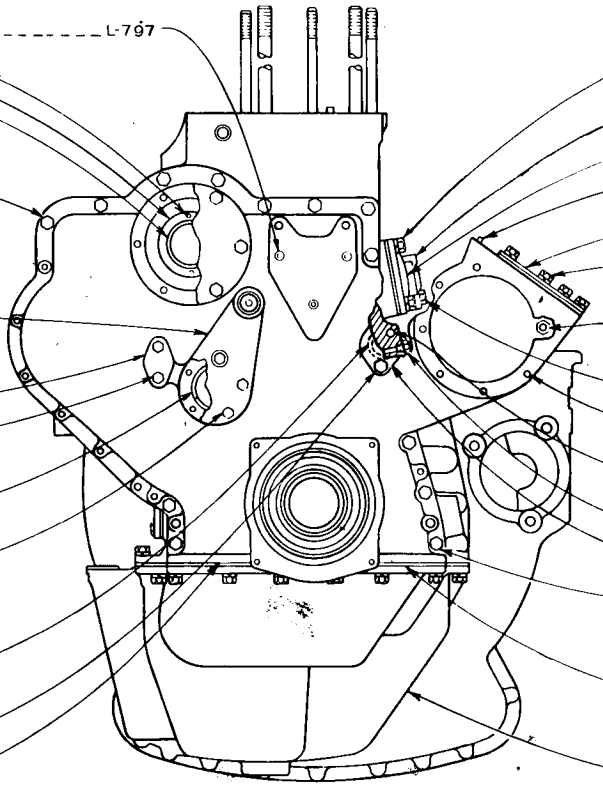

4 - DOWEL _____ 7B5415
2 - WASHER _____ 4H8986
1 - BEARING _____ 4H9640
(PARTS OF HOUSING ASSEM. 5S9962)

8 - BOLT _____ 1A2029
8 - LOCKWASHER ___ 3B4506

1 - BASE ASSEM. ___ 5S7476
1 - GASKET _____ 4H9628

1 - DOWEL _____ 3H703
(PART OF BASE ASSEM. 5S7476)

1 - COVER _____ 2A4522
1 - GASKET _____ 2A4448
2 - BOLT _____ L-1351
2 - LOCKWASHER ___ 3B4506

2 - BEARING _____ 4H9640
1 - SPACER _____ 5H1092
(PARTS OF HOUSING ASSEM. 5S9962)

5 - BOLT _____ S-1588
5 - LOCKWASHER ___ 3B4506

1 - PLUG ___ (CORE) ___ T-199
1 - BUSHING (OUTER) 3F7473
1 - BUSHING (INNER) 3F7474
(PARTS OF HOUSING ASSEM. 5S9962)

2 - BOLT _____ S-1594
2 - LOCKWASHER ___ 3B4506

1 - HOUSING ASSEM ___ 5S9962

3 - STUD _____ L-797

5 - 1594 BOLT (1" LONG) ___ 15
3B4506 LOCKWASHER ___ 16

8H2591 - COVER ___ (REAR) ___ 1
2H8829 - PLUG ___ (DRAIN) ___ 1
4F9325 - GASKET _____ 1

1S8997 - COVER ___ (FRONT) ___ 1
4H9577 - GASKET _____ 2

2A3348 - DOWEL _____ 2
(PART OF HOUSING ASSEM. 5S9962)

4H9632 - COVER _____ 1
6H1996 - GASKET _____ 1

L-1351 - BOLT _____ 5
3B4506 - LOCKWASHER ___ 5

1A5183 - BOLT _____ 2
3B4506 - LOCKWASHER ___ 2

S-1591 - BOLT (1.50" LONG) ___ 1
L-1351 - BOLT (.875" LONG) 5
2H3504 - LOCK _____ 5
2A5349 - STUD _____ 5
(PART OF HOUSING ASSEM. 5S9962)

S-1588 - BOLT _____ 1
3B4506 - LOCKWASHER ___ 1

5M6214 - PLUG _____ 1
2B8460 - COVER _____ 1
2B6924 - GASKET _____ 1
1A2029 - BOLT _____ 5
3B4506 - LOCKWASHER ___ 5

4S7514 - GASKET _____ 1

9M8897 - PAN _____ 1

122056

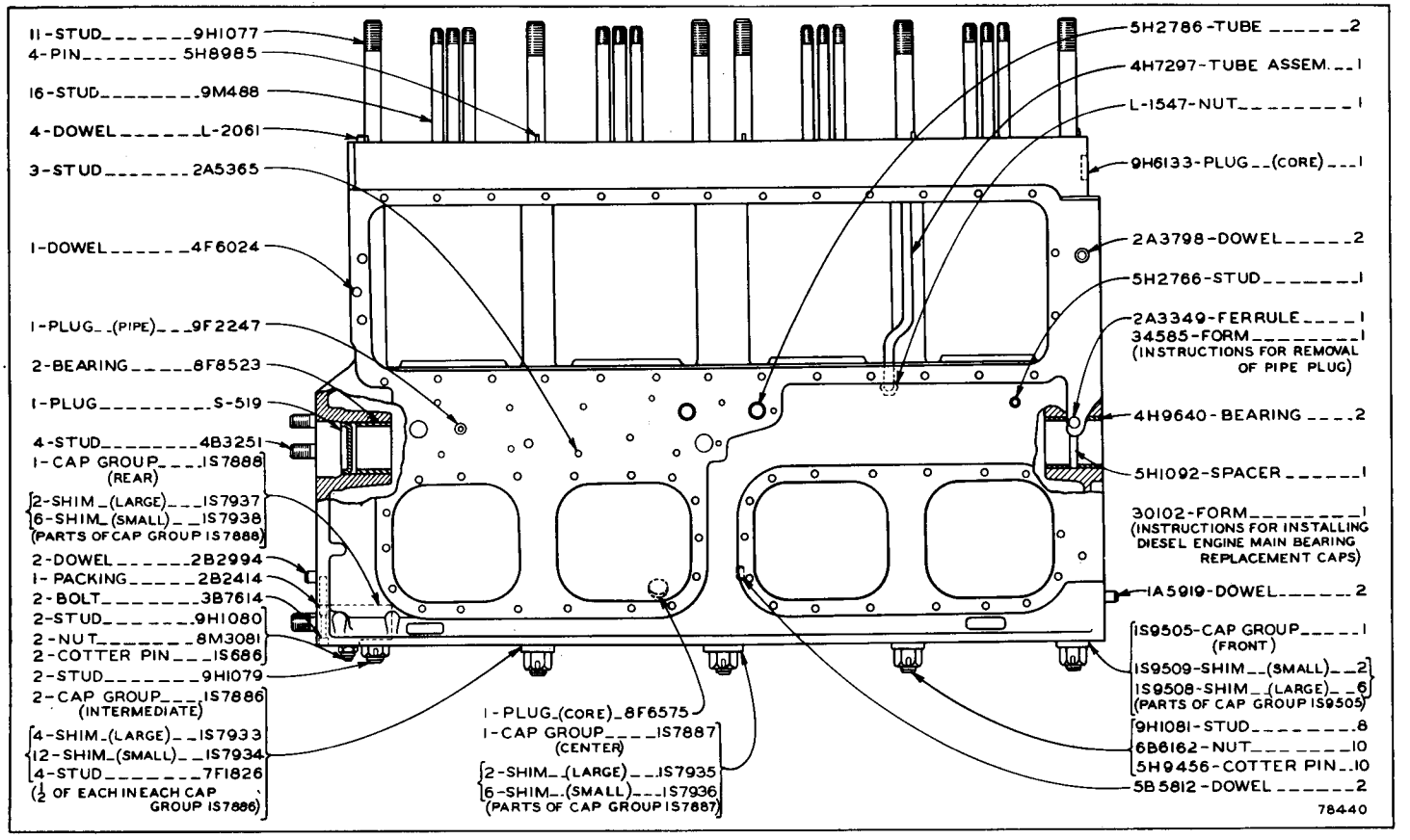

1S7879 CYLINDER BLOCK ASSEMBLY
Serial No. 48A6393 to 48A6882 inclusive
Part of Cylinder Block and Covers shown on Page 26

4S6841 CYLINDER BLOCK ASSEMBLY—Type 1
Effective with Serial No. 48A6883
Part of Cylinder Block and Covers shown on Pages 27A & 27C

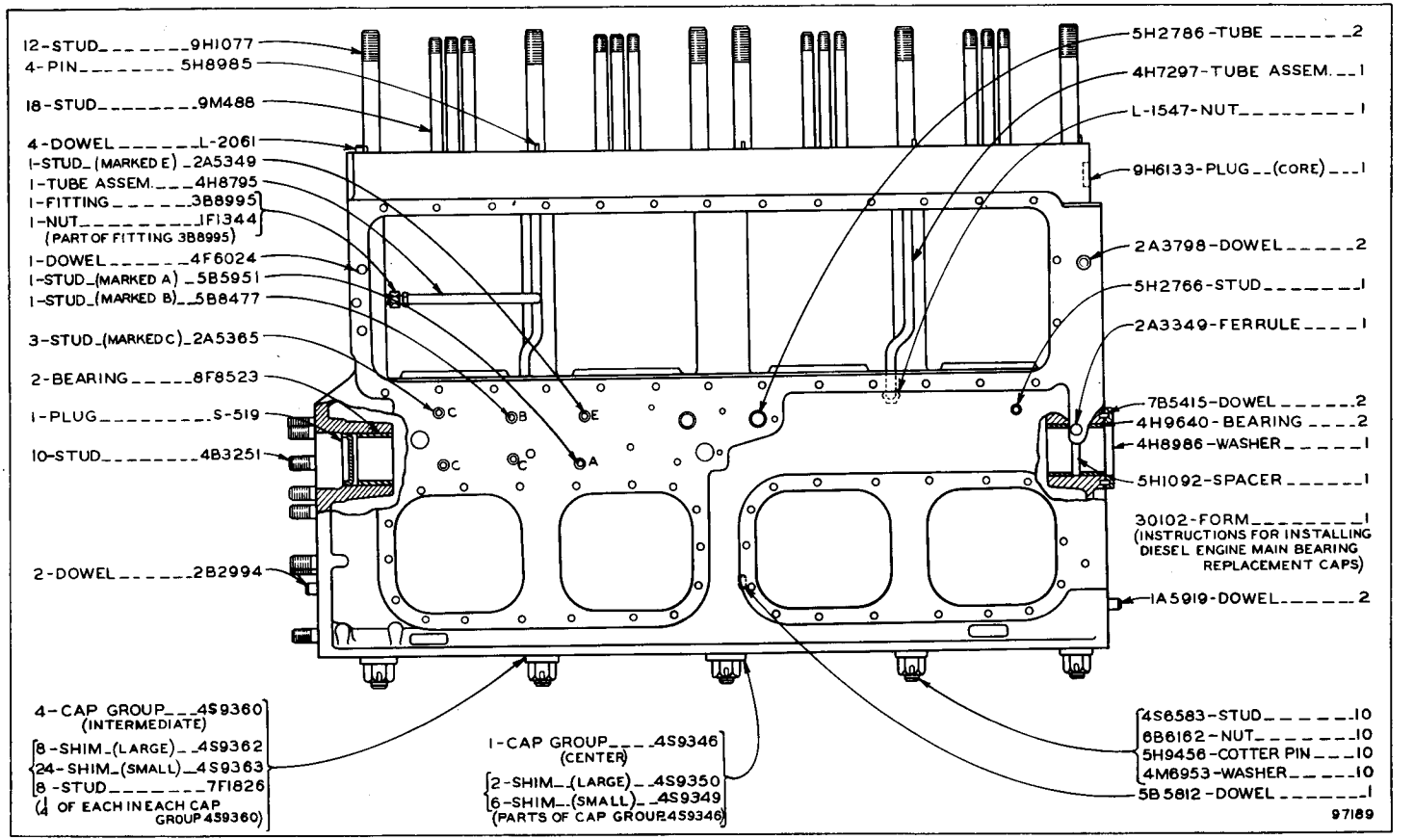

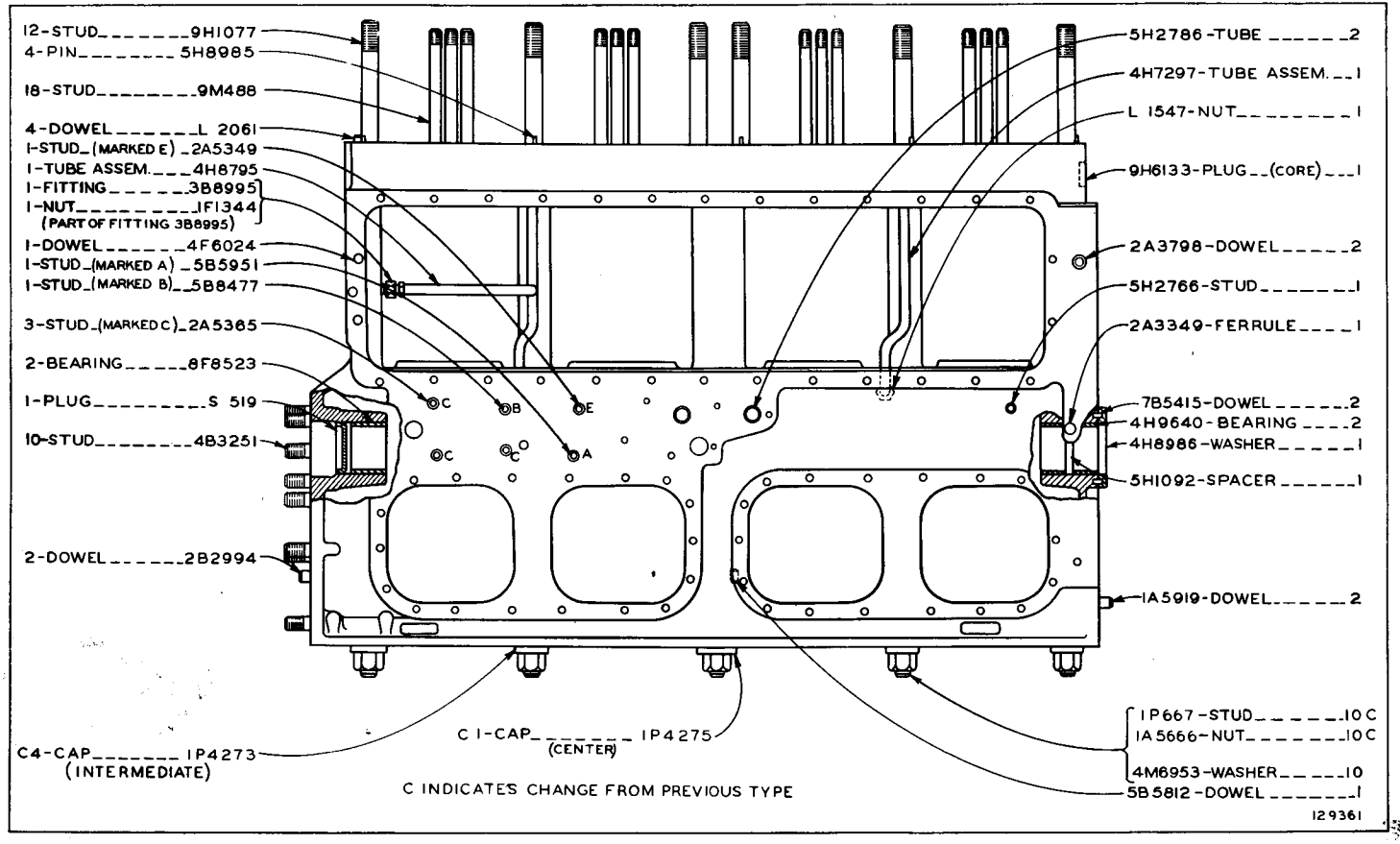

4S6841 CYLINDER BLOCK ASSEMBLY—Type 2
Effective with Serial No. 48A6883
Part of Cylinder Block and Covers shown on Pages 27A & 27C

CRANKSHAFT (1M4717 N/S)
Serial No. 48A6393 to 48A6882 inclusive

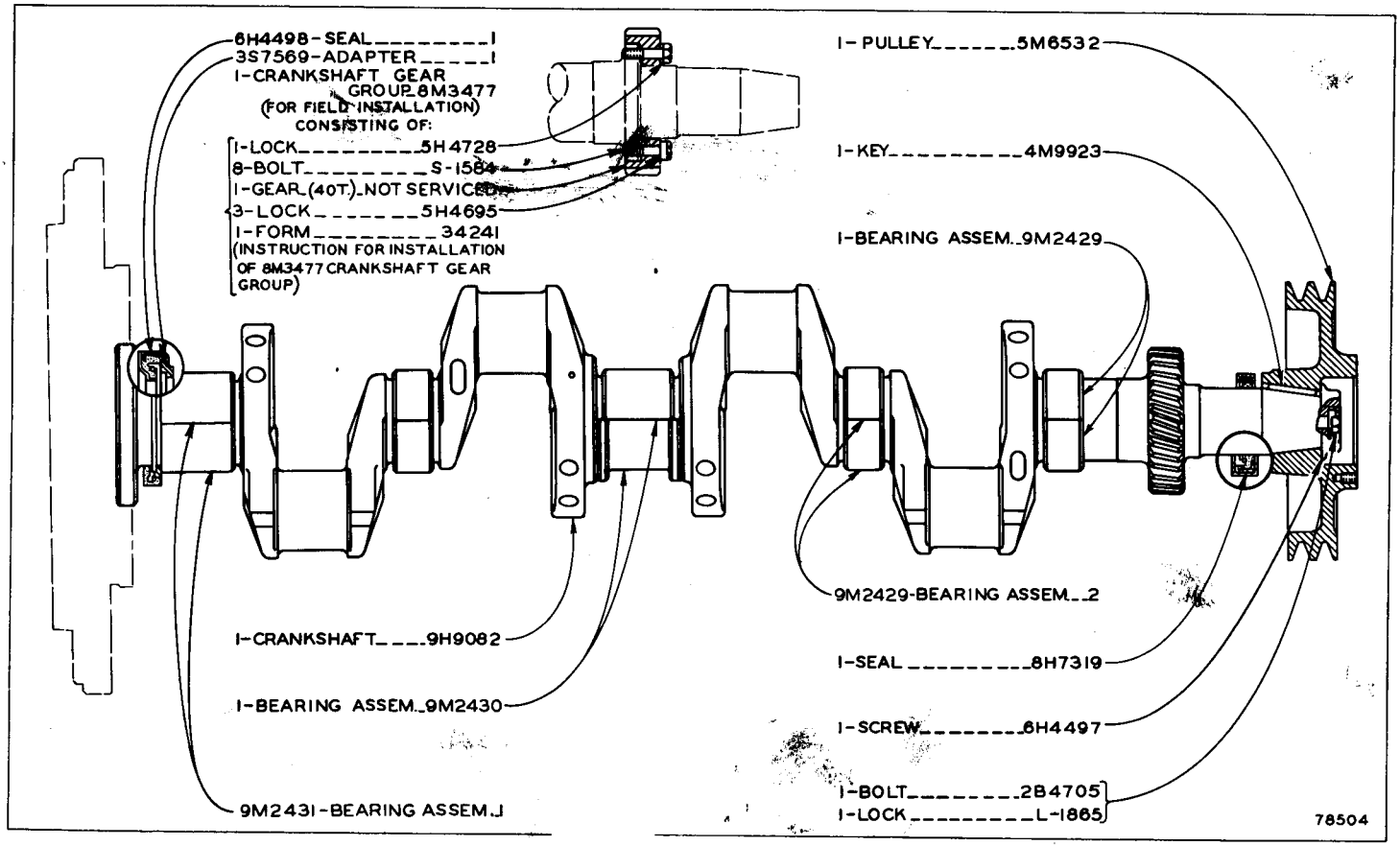

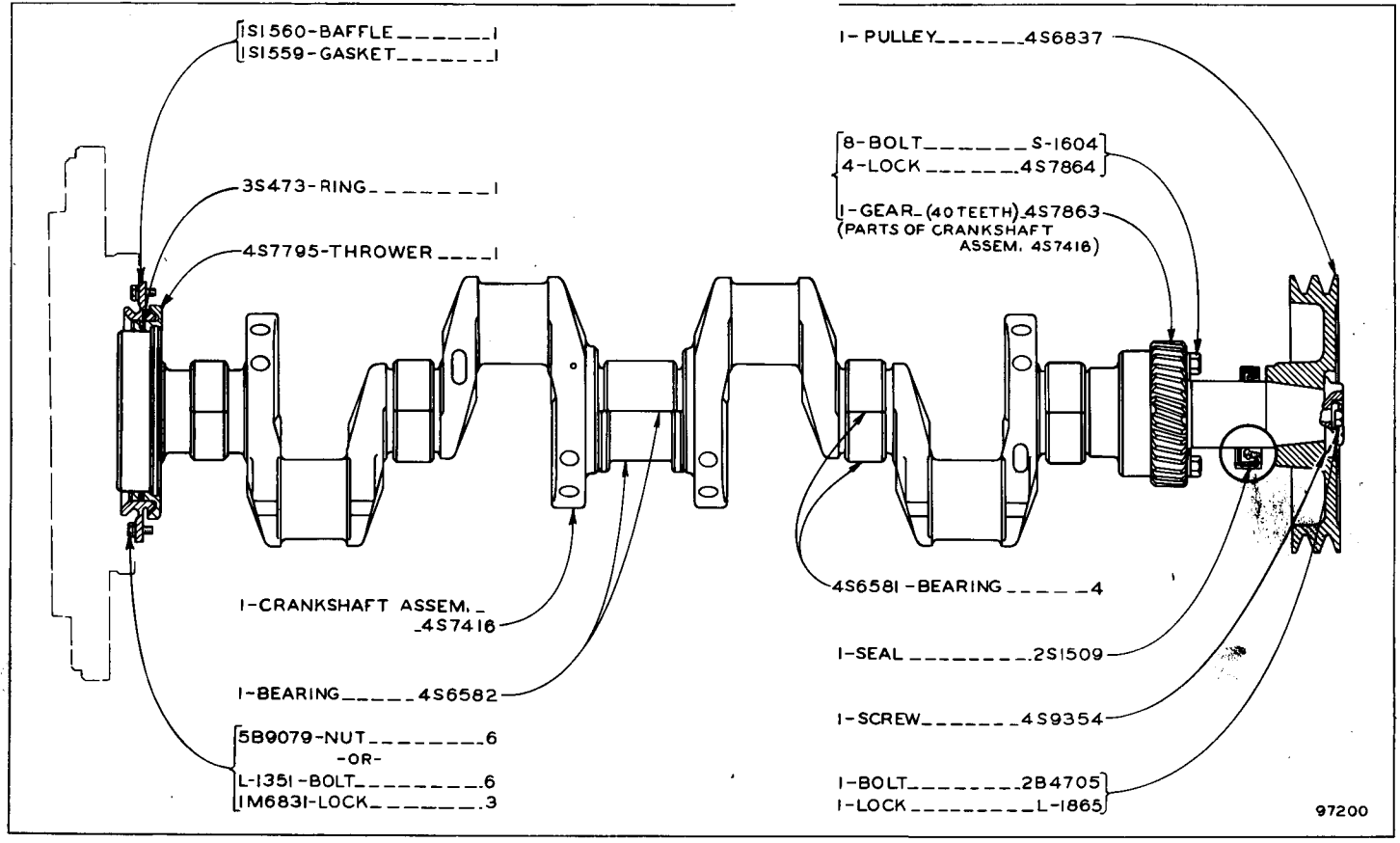

CRANKSHAFT (4S7415 N/S)
Serial No. 48A6883 to 7915, 7917, 7918, 7923 and 48A7926 inclusive

CRANKSHAFT

Serial No. 48A7916, 48A7919 to 48A7922, 48A7924, 48A7925 and 48A7927-Up

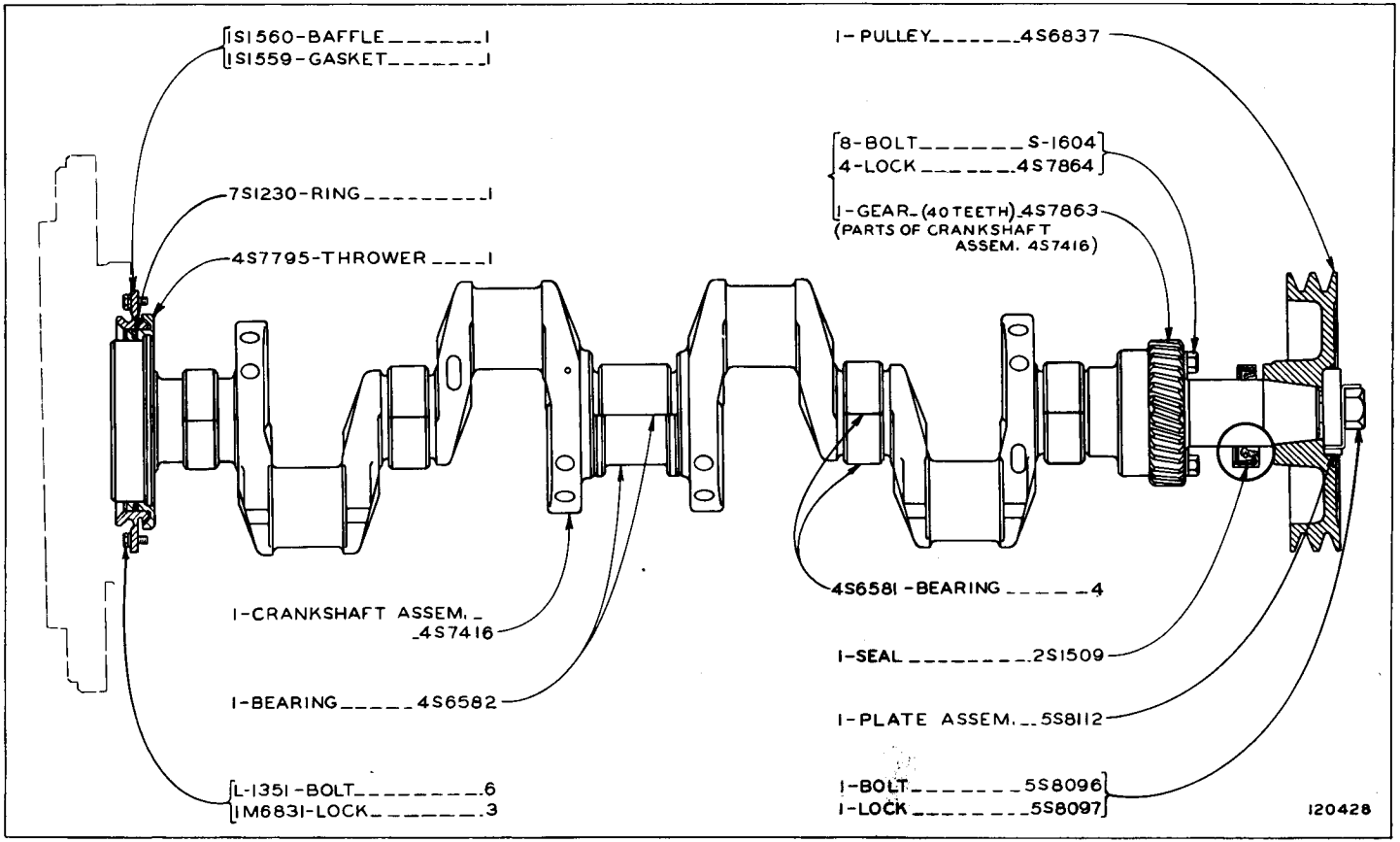

1S7579	FOR USE WITH STANDARD CRANKSHAFT	
	CONSISTS OF:	
	COMPLETE SET OF BEARING ASSEMBLIES AS SHOWN WITH STANDARD CRANKSHAFT	
1S7580	FOR USE WITH .025 UNDERSIZE CRANKSHAFT	
	CONSISTS OF:	
3	1S7573	BEARING ASSEMBLY--INTERMEDIATE
1	1S7574	BEARING ASSEMBLY--CENTER
1	1S7575	BEARING ASSEMBLY--REAR
1	7H6747	SEAL--REAR MAIN BEARING
1	4S5358	ADAPTER--REAR SEAL
1S7581	FOR USE WITH .050 UNDERSIZE CRANKSHAFT	
	CONSISTS OF:	
3	1S7576	BEARING ASSEMBLY--INTERMEDIATE
1	1S7577	BEARING ASSEMBLY--CENTER
1	1S7578	BEARING ASSEMBLY--REAR
1	7H6747	SEAL--REAR MAIN BEARING
1	4S5358	ADAPTER--REAR SEAL

CRANKSHAFT BEARING REPLACEMENT GROUPS
Serial No. 48A6393 to 48A6882 inclusive

3P1034	DIESEL ENGINE COMPLETE SERIAL NO. 48A6393 TO 48A9314 INCLUSIVE
3P1035	DIESEL ENGINE COMPLETE SERIAL NO. 48A9315-UP
5S1684	VALVE GRINDING
9M1365	CYLINDER LINER AND PISTON REPLACEMENT NOTE: PISTON AND LINER REPLACEMENT REQUIRES THE USE OF 5S1684 AND 9M1365 GASKET KITS
6H5839	WATER PUMP
3S803	GASOLINE STARTING ENGINE BASIC
3S802	GASOLINE STARTING ENGINE SUPPLEMENTARY
3S1718	GASOLINE STARTING ENGINE CLUTCH MECHANISM REPAIR
1S1321	TORQUE DIVIDER
1S1322	TRANSMISSION

GASKET KITS

4S9390 For use with Standard Crankshaft

Consists of:

Complete set of Bearing Assemblies as shown with Standard Crankshaft

4S9392 For use with .025 Undersize Crankshaft

Consists of:

4	4S9396	Bearing Assembly—Intermediate
1	4S9397	Bearing Assembly—Center

4S9391 For use with .050 Undersize Crankshaft

Consists of:

4	4S9398	Bearing Assembly—Intermediate
1	4S9399	Bearing Assembly—Center

CRANKSHAFT BEARING REPLACEMENT GROUPS
Effective with Serial No. 48A6883

BALANCER AND DRIVE

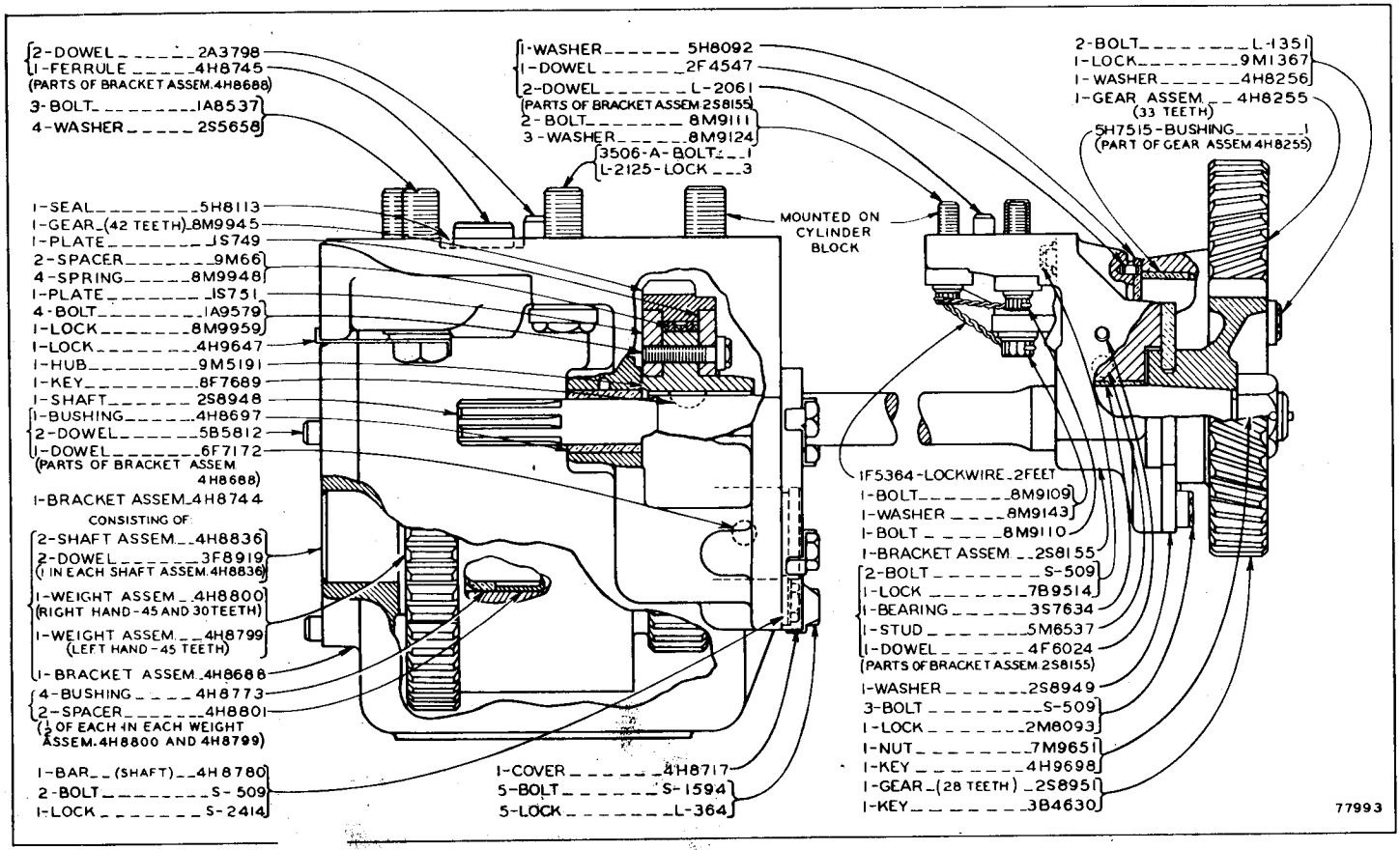

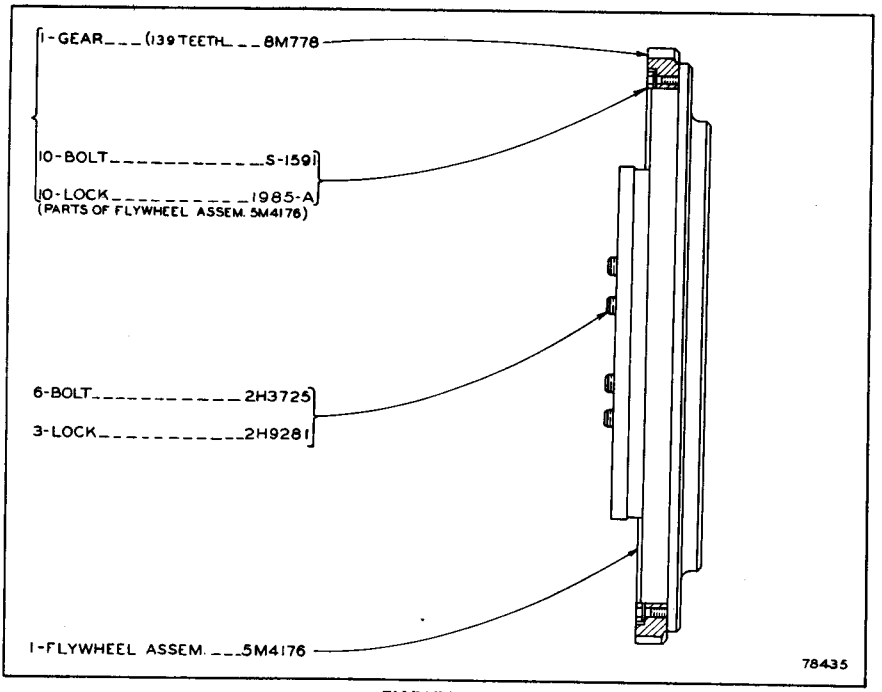

FLYWHEEL
Serial No. 48A6393 to 48A6882 inclusive

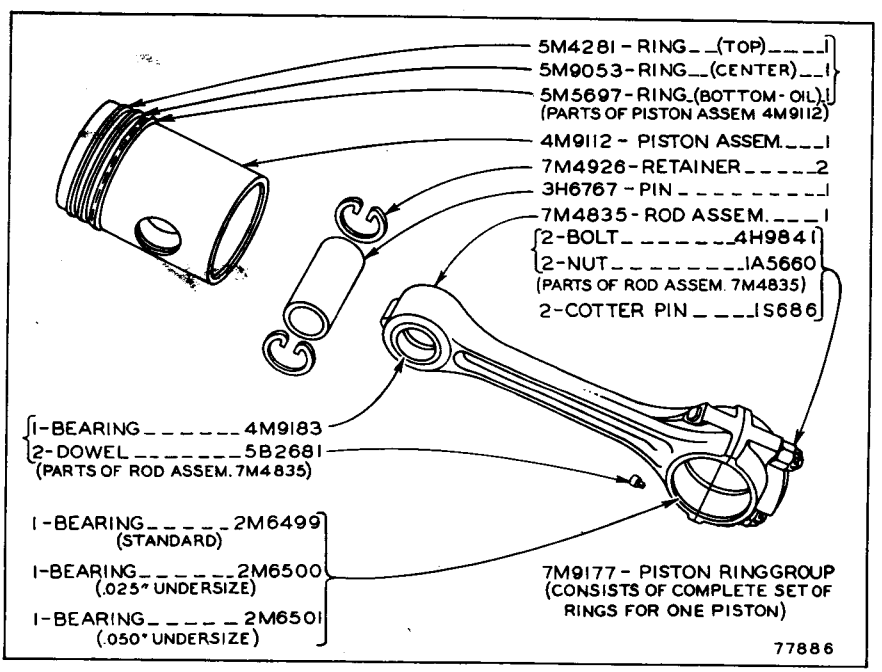

CONNECTING ROD AND PISTON—4 Required
Serial No. 48A6393 to 48A6585 inclusive
Note: 3S4032 Piston and Liner Group, consisting of: 1—Piston Assembly, 1—Liner and 3—Seal is available

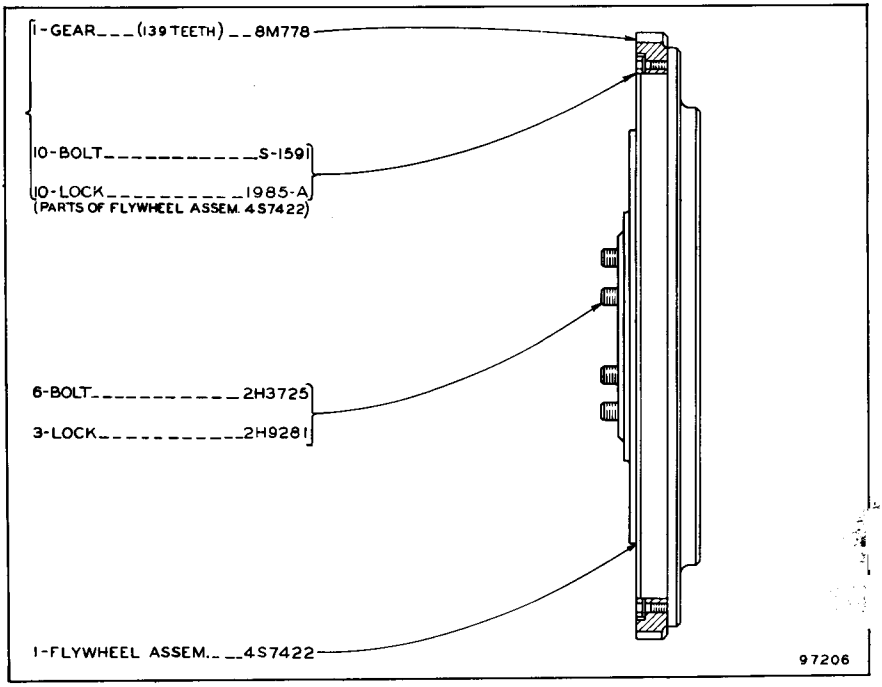

FLYWHEEL
Effective with Serial No. 48A6883

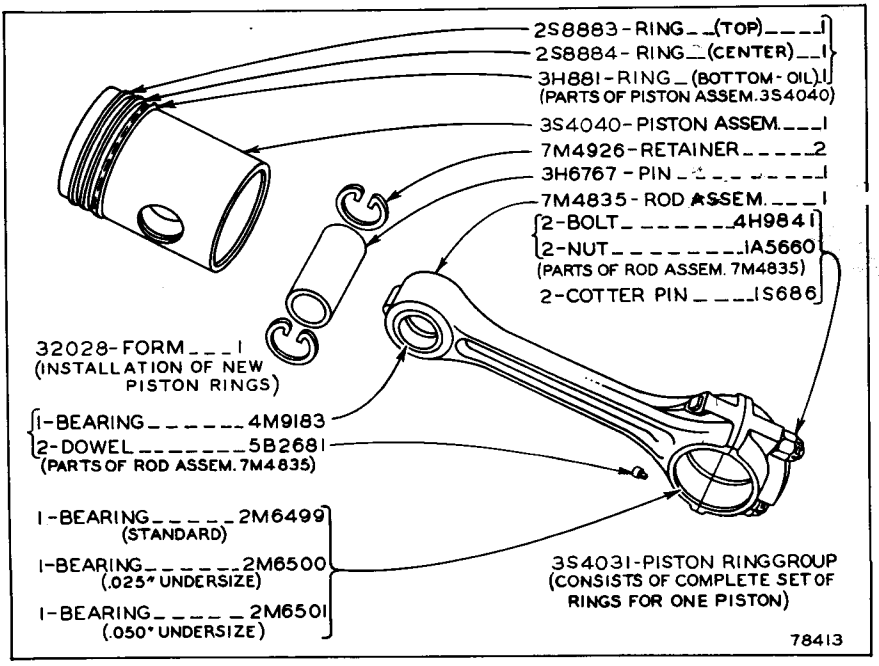

CONNECTING ROD AND PISTON—4 Required
Serial No. 48A6586 to 48A6882 inclusive
Note: 3S4032 Piston and Liner Group, consisting of 1—Piston Assembly, 1—Liner and 3—Seal, is available

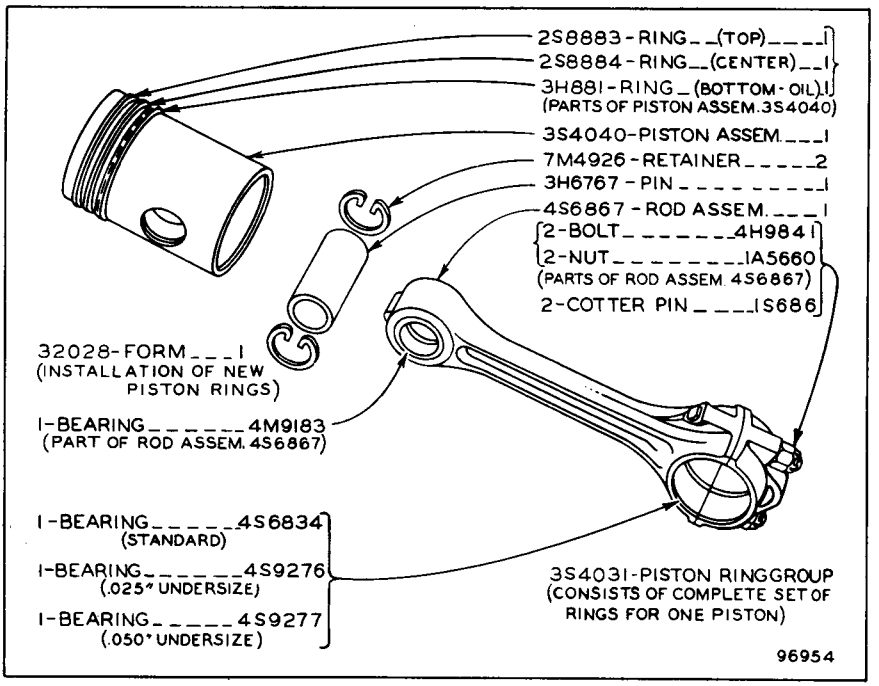

CONNECTING ROD AND PISTON—4 Required
Effective with Serial No. 48A6883
Note: 3S4032 Piston and Liner Group, consisting of 1—Piston Assembly, 1—Liner and 3—Seal, is available

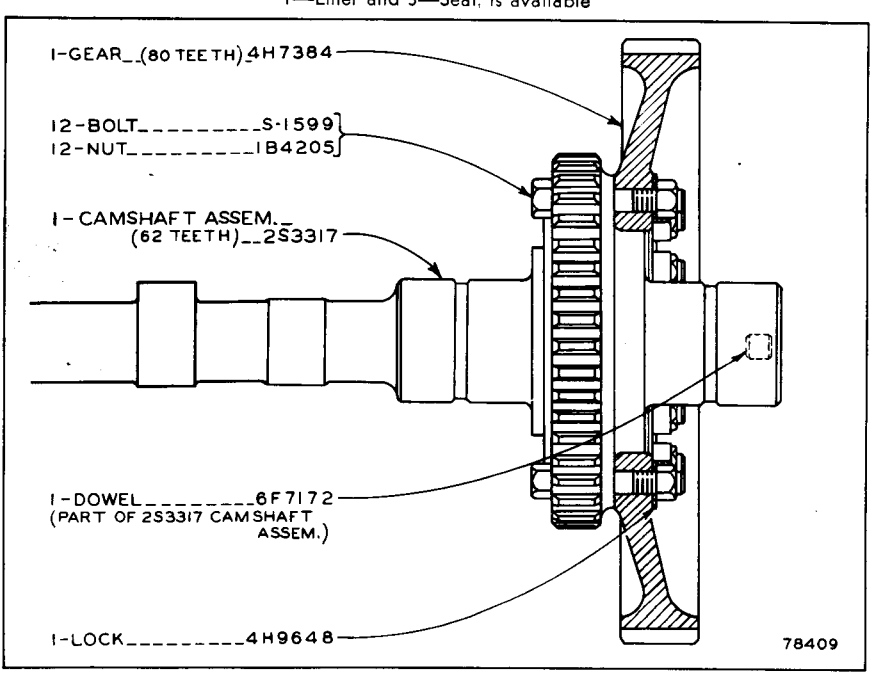

CAMSHAFT
Serial No. 48A6393 to 48A6859 inclusive

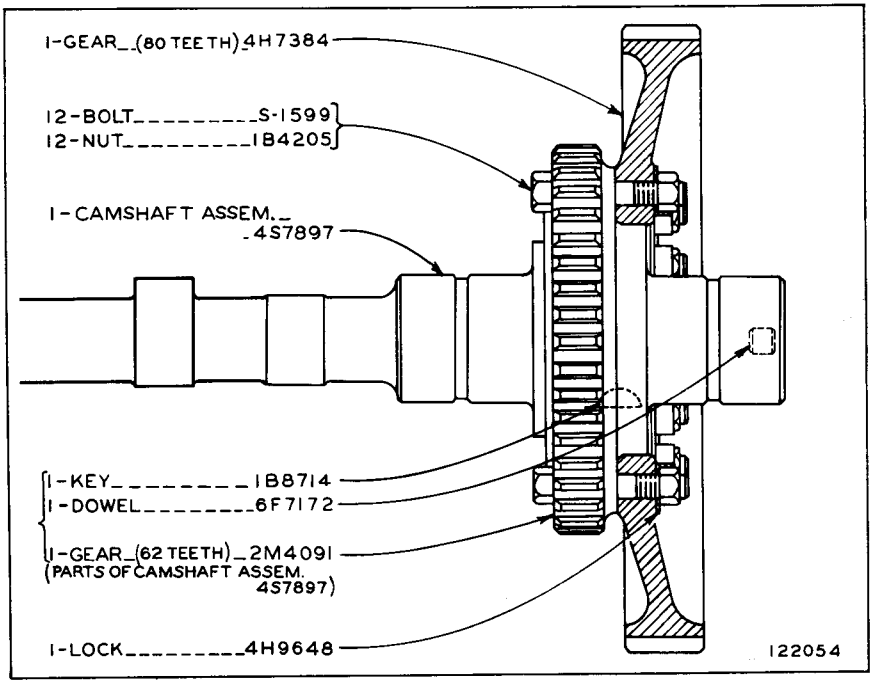

CAMSHAFT
Effective with Serial No. 48A6860

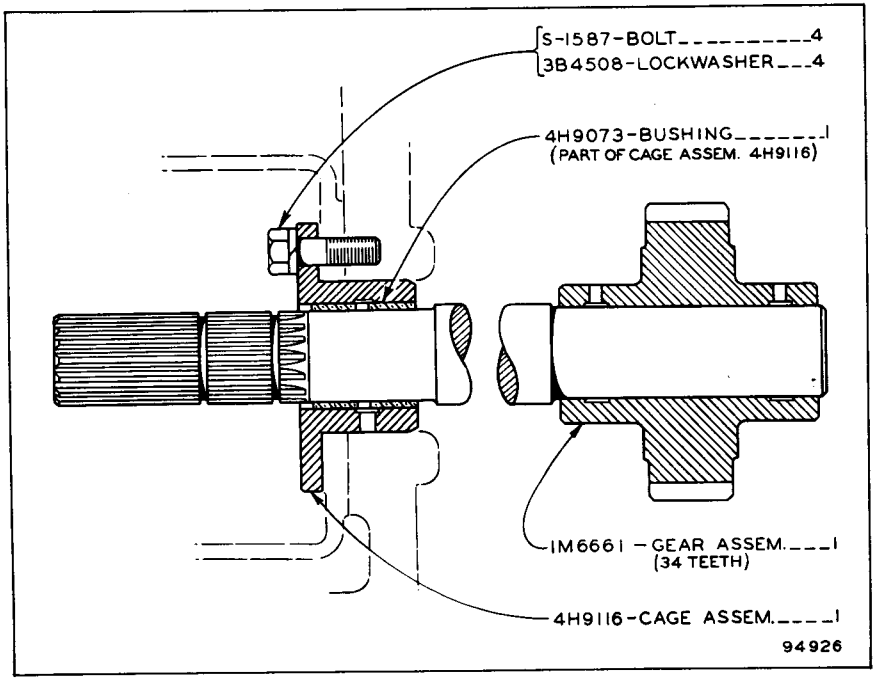

REAR POWER TAKE-OFF

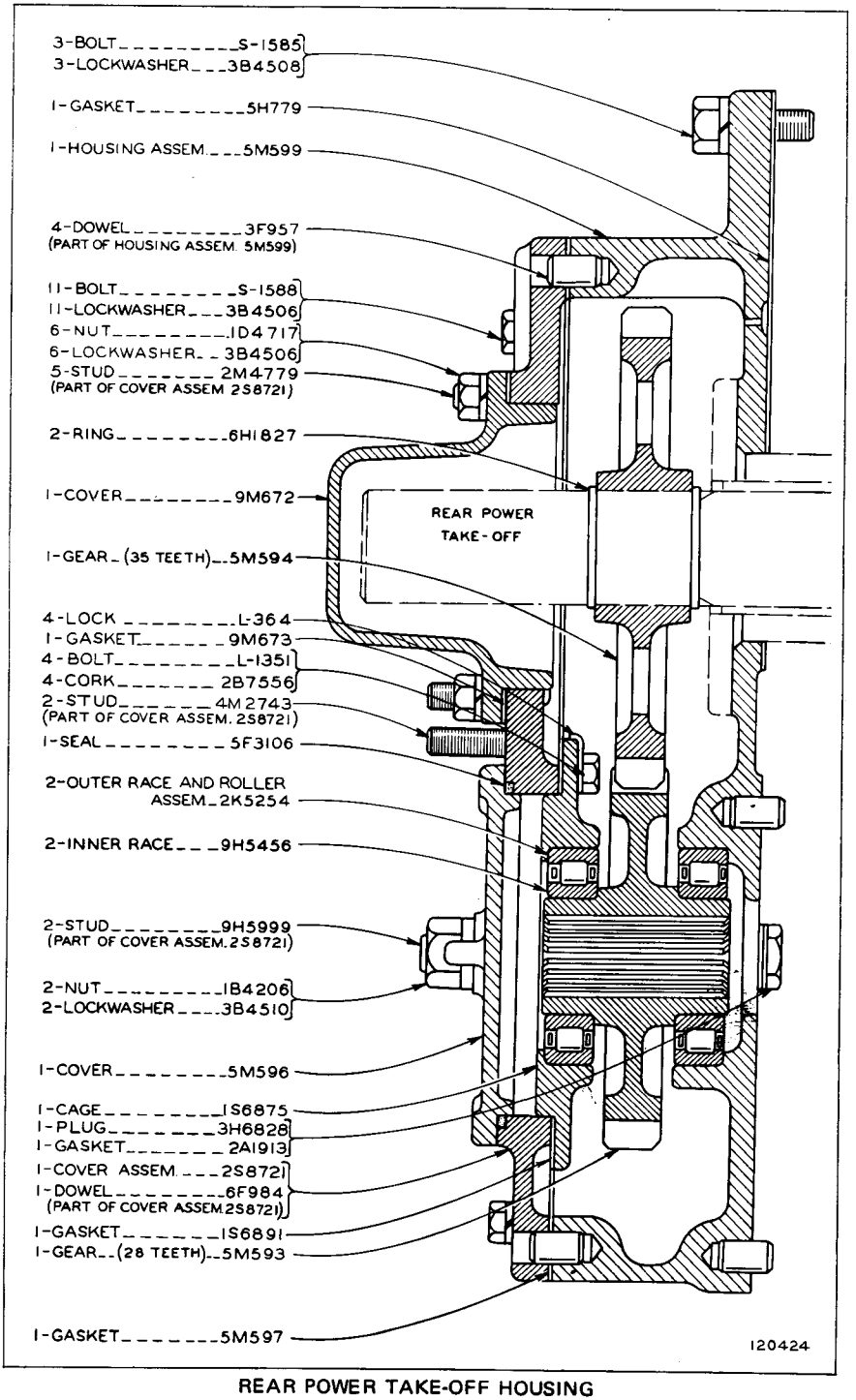

REAR POWER TAKE-OFF HOUSING
Serial No. 48A6393 to 48A7599 inclusive

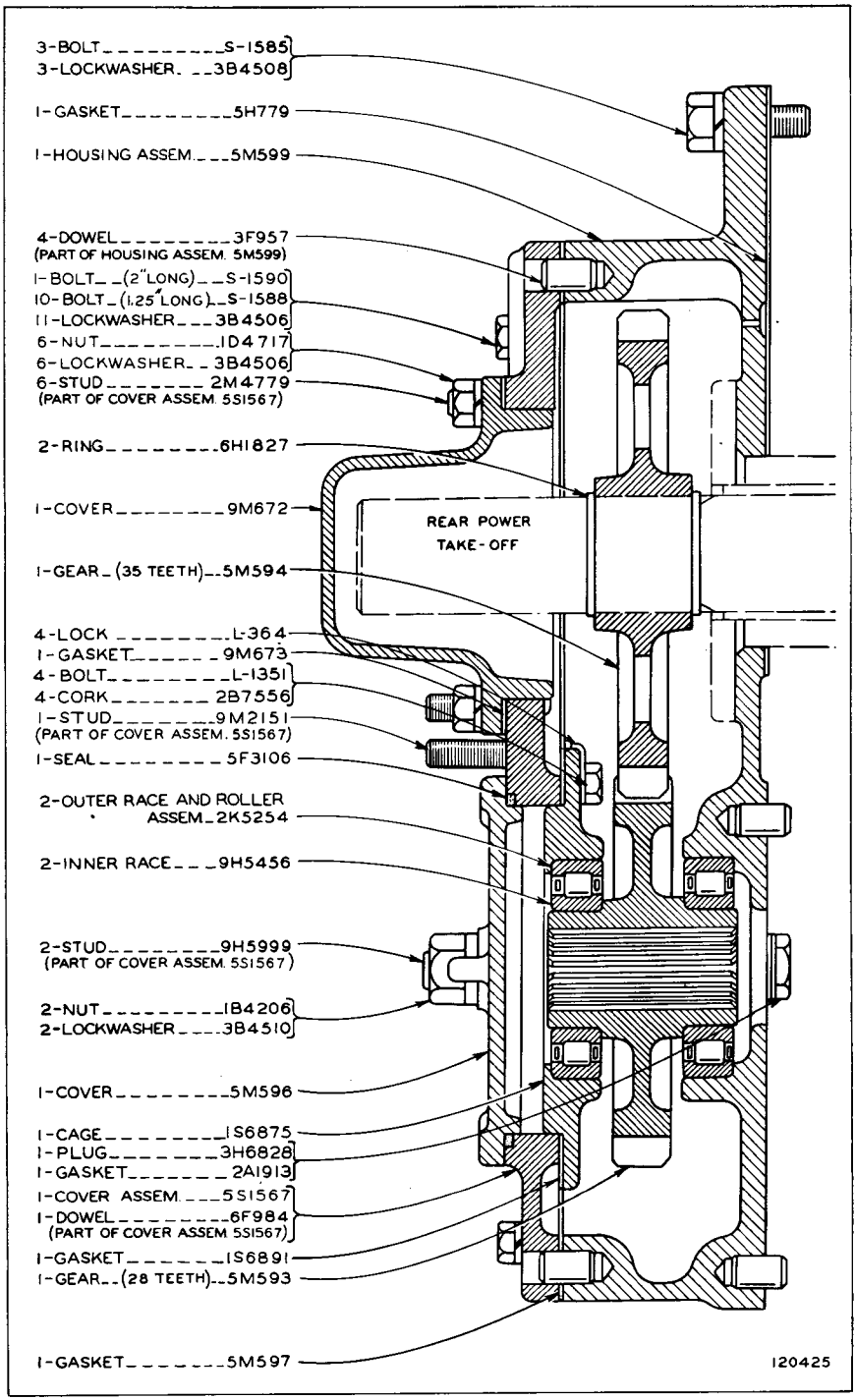

REAR POWER TAKE-OFF HOUSING
Effective with Serial No. 48A7600

GOVERNOR AND DECELERATOR CONTROL

Refer also to Pages 128 and 129 for special parts

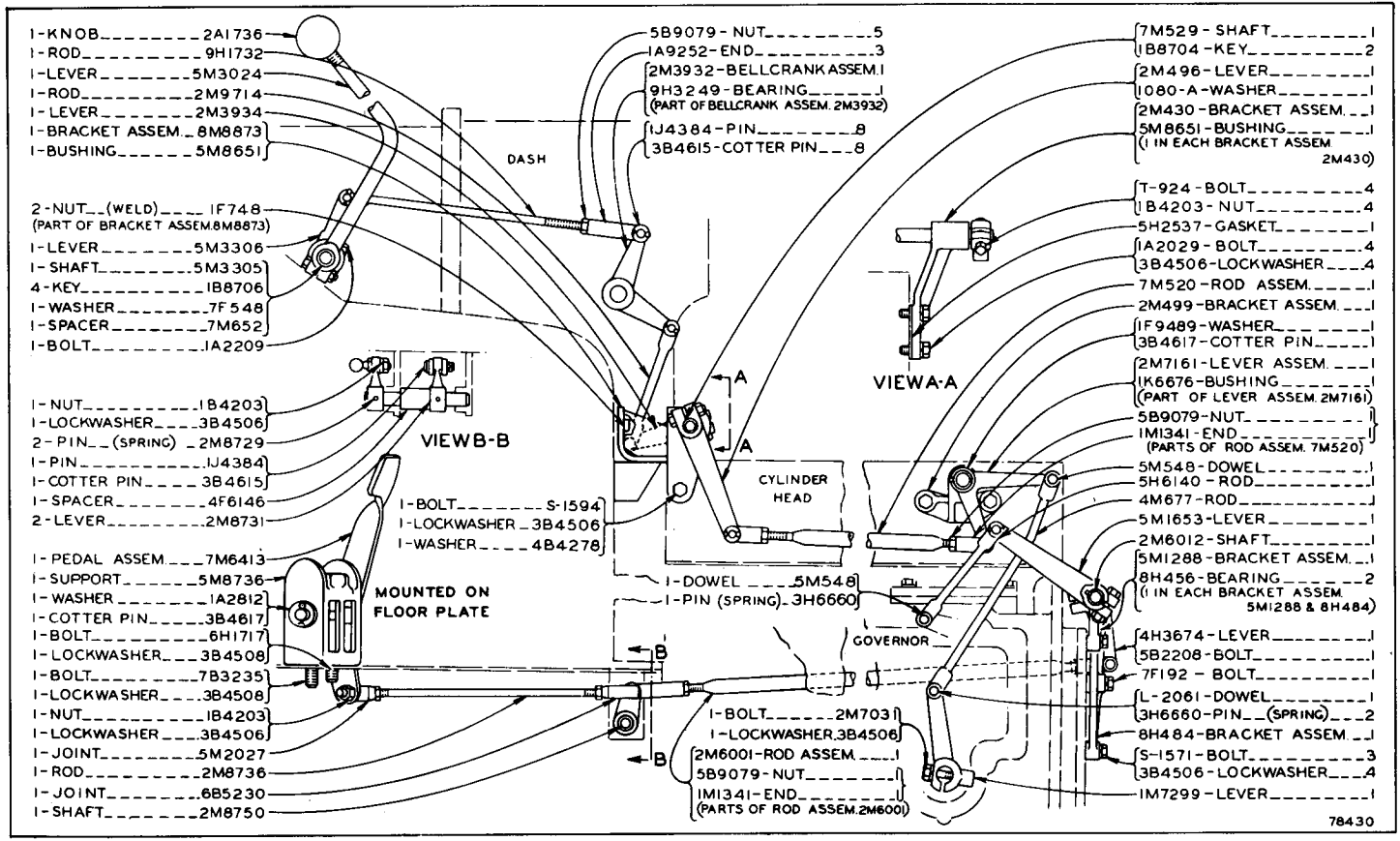

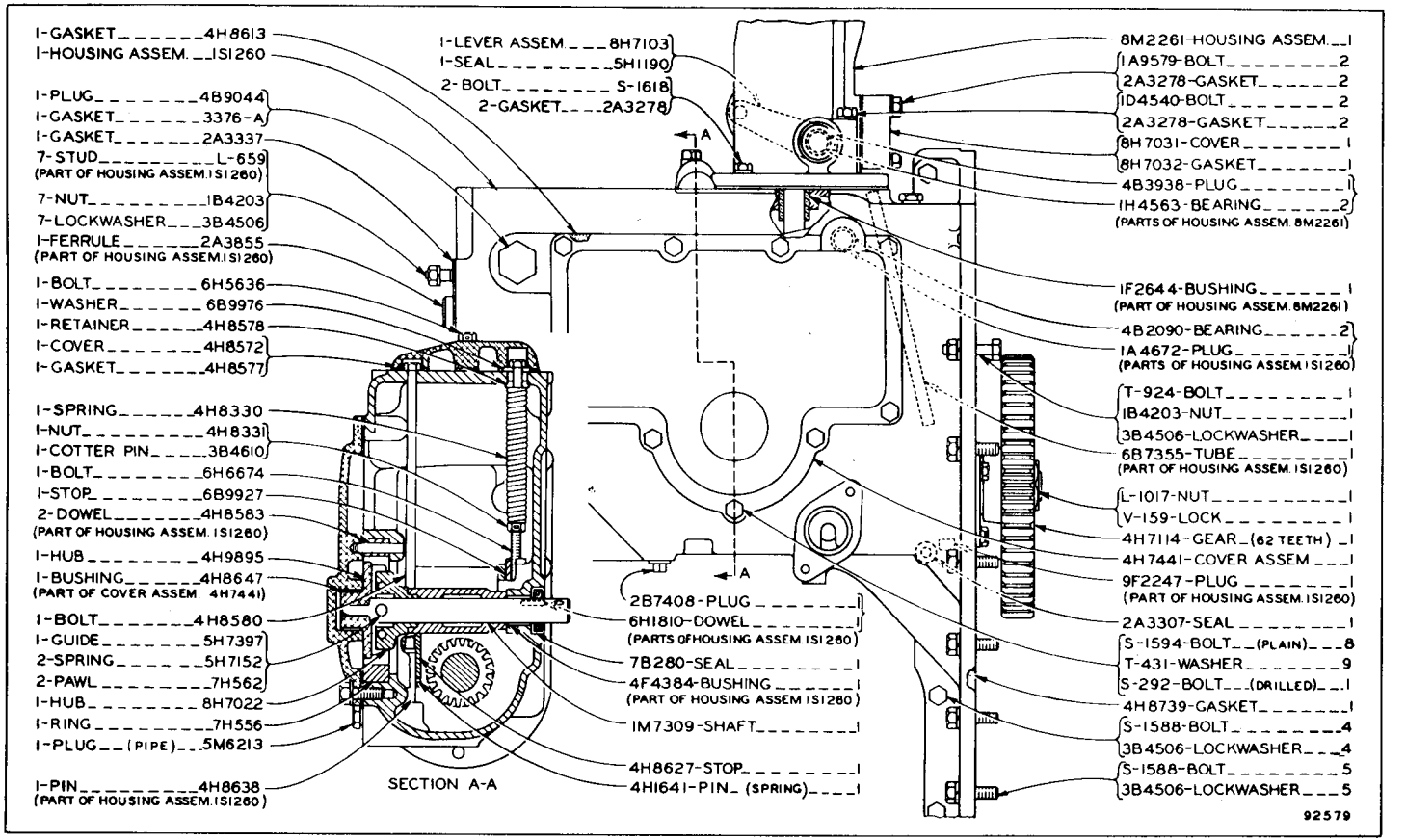

ACCESSORY DRIVE AND GOVERNOR—Part One

Refer also to Pages 128 and 129 for special parts

ACCESSORY DRIVE AND GOVERNOR—Part Two

Refer also to Pages 128 and 129 for special parts

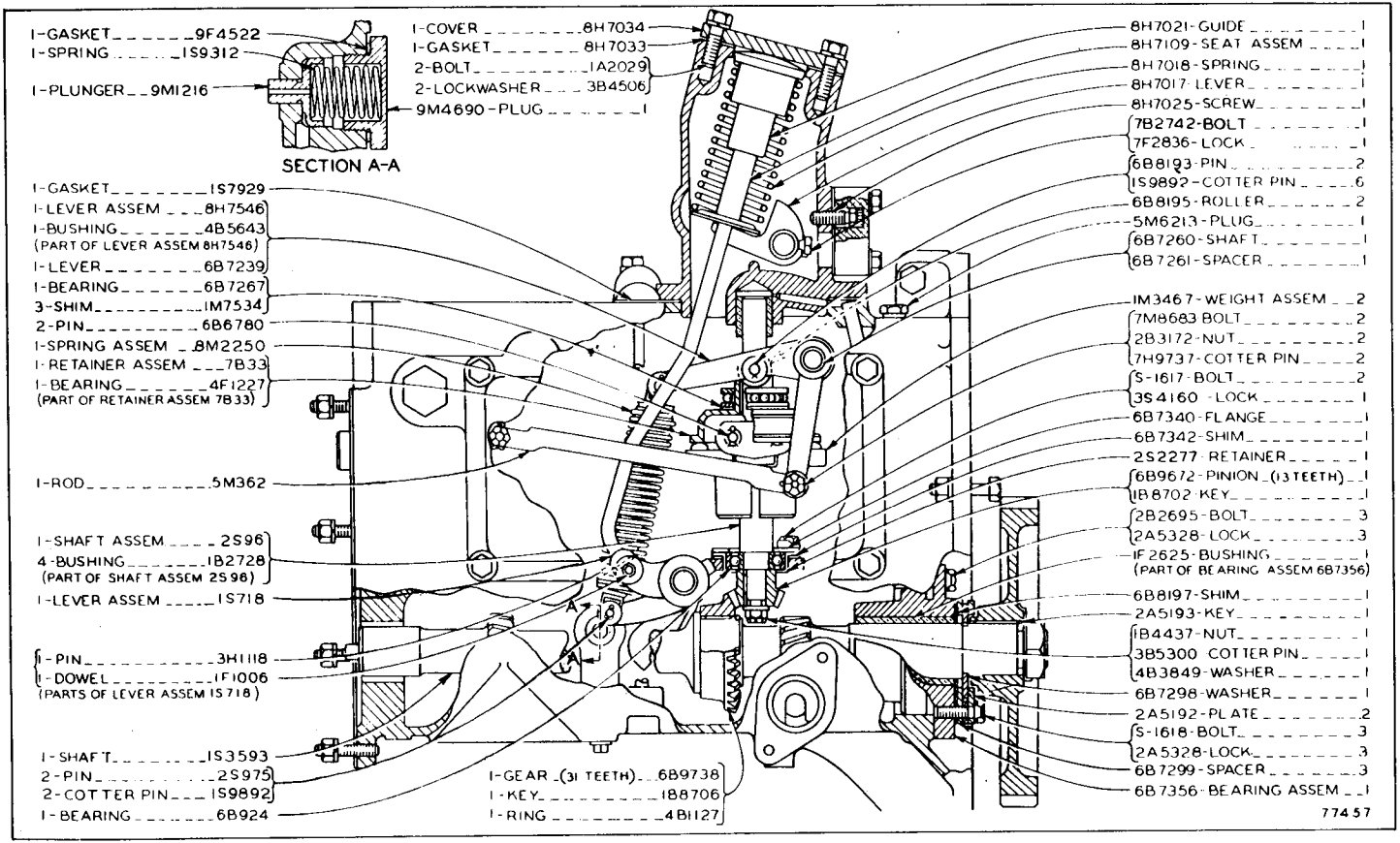

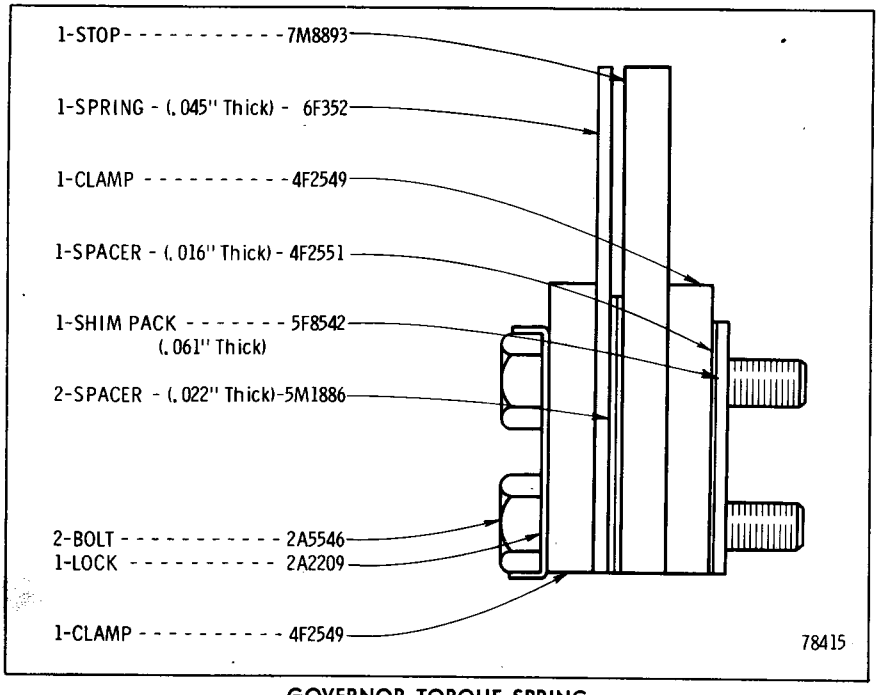

GOVERNOR TORQUE SPRING
Serial No. 48A6393 to 48A6882 inclusive

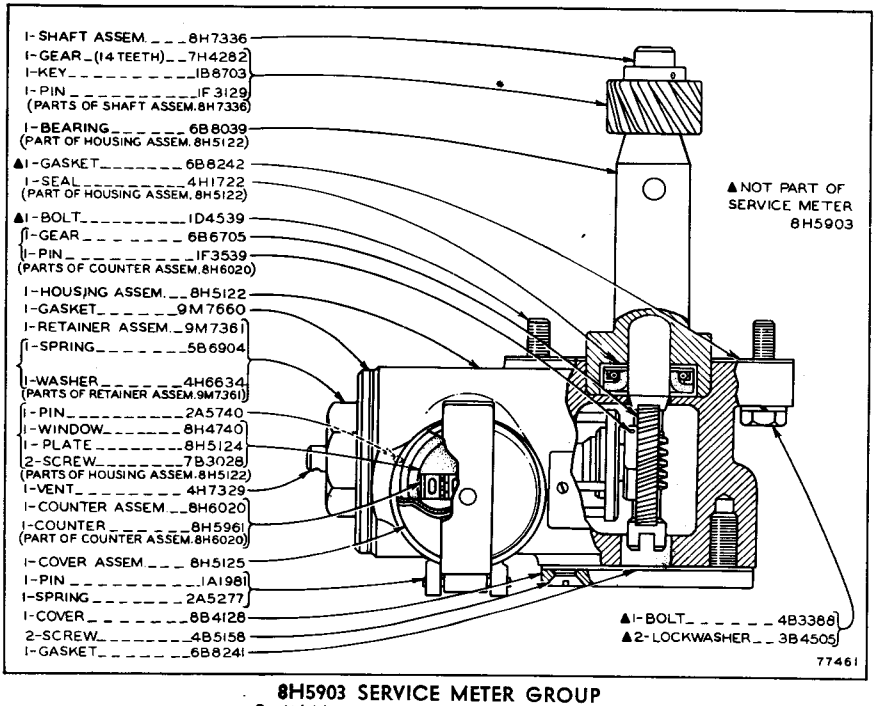

8H5903 SERVICE METER GROUP
Serial No. 48A6393 to 48A6720 inclusive

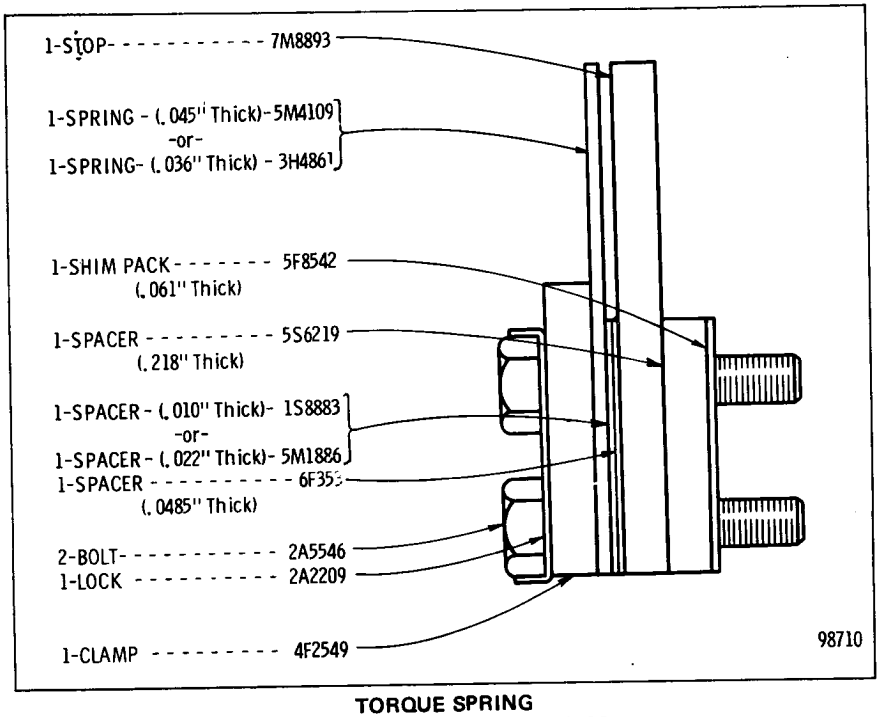

TORQUE SPRING
Effective with Serial No. 48A6883

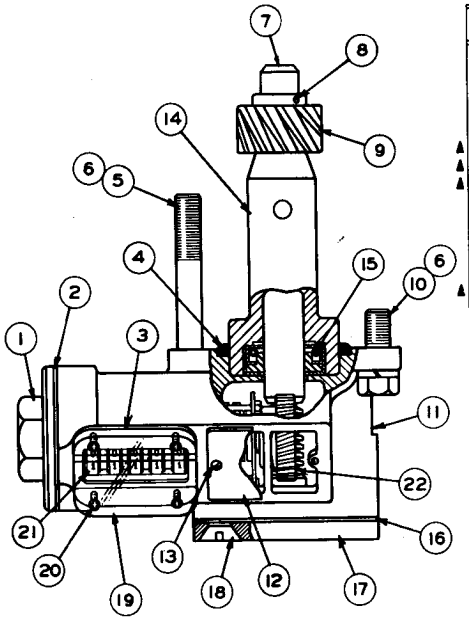

REF NO.	PART NUMBER	DESCRIPTION	QTY
1	4S7001	RETAINER ASSEM.	1
	5B6904	SPRING	1
		(Part of 4S7001 Retainer Assem.)	
2	9M7660	GASKET	1
3	9M3866	GASKET	1
4	4F7952	SEAL	1
5	1D4539	BOLT	1
6	3B4505	LOCKWASHER	2
7	8H7336	SHAFT ASSEM.	1
8	1F3129	PIN	1
9	7H4282	GEAR--------(14 teeth)--------	1
	1B8703	KEY	1
		(Parts of 8H7336 Shaft Assem.)	
10	2B2695	BOLT	1
11	3S3573	HOUSING ASSEM.	1
12	8H5124	PLATE------(Identification)-----	1
13	7B3028	SCREW	2
14	6B8039	BEARING	1
15	4H1722	SEAL	1
		(Parts of 3S3573 Housing Assem.)	
16	6B8241	GASKET	1
17	8B4128	COVER	1
18	4B5158	SCREW	2
19	1S3365	WINDOW	1
20	3S9557	SCREW	4
	8H6020	COUNTER ASSEM.	1
		Consisting of:	
21	8H5961	COUNTER	1
22	6B6705	GEAR--------(30 teeth)--------	1

▲ Not part of 3S3577 Service Meter Group

125035

3S3577 SERVICE METER GROUP
Serial No. 48A6721 to 10468, 10471, 10472, 10478 to 10485, 10487 to10489, 10514, 10515, 10519 to 10522, 10525, 10526, 10551, 10558 to 10560, 10567 and 10579 to 48A10582 inclusive

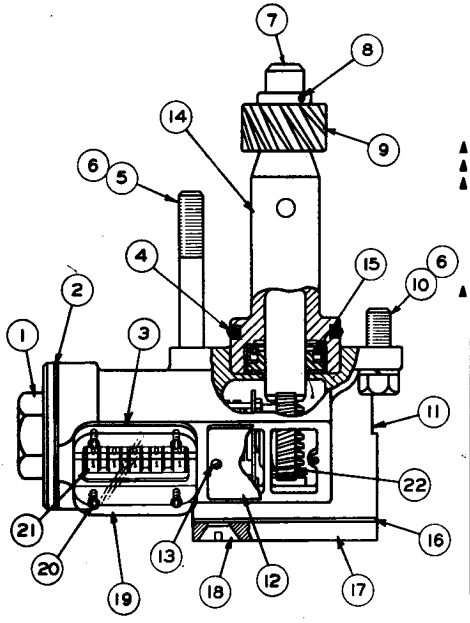

REF NO.	PART NUMBER	DESCRIPTION	QTY.
1	4S7001	RETAINER ASSEM.	1
	5B6904	SPRING	1
		(Part of 4S7001 Retainer Assem.)	
2	9M7660	GASKET	1
3	9M3866	GASKET	1
▲ 4	8M8515	SEAL	1
▲ 5	1D4539	BOLT	1
▲ 6	3B4505	LOCKWASHER	2
7	8H7336	SHAFT ASSEM.	1
8	1F3129	PIN	1
9	7H4282	GEAR--------(14 teeth)---------	1
	1B8703	KEY	1
		(Parts of 8H7336 Shaft Assem.)	
▲ 10	2B2695	BOLT	1
11	8S4659	HOUSING ASSEM.	1
12	8H5124	PLATE------(Identification)-----	1
13	7B3028	SCREW	2
14	8S4657	BEARING	1
15	4H1722	SEAL	1
		(Parts of 8S4659 Housing Assem.)	
16	6B8241	GASKET	1
17	8B4128	COVER	1
18	4B5158	SCREW	2
19	7S9820	WINDOW	1
20	3S9557	SCREW	4
	8H6020	COUNTER ASSEM.	1
		Consisting of:	
21	8H5961	COUNTER	1
22	6B6705	GEAR--------(30 teeth)---------	1

▲ Not part of 8S4660 Service Meter Group

129381

8S4660 SERVICE METER GROUP
Serial No. 48A10469, 10470, 10473 to 10477, 10486, 10490 to 10513, 10516 to 10518, 10523, 10524, 10527 to 10550, 10552 to 10557, 10561 to 10566, 10568 to 10578, 10583 to 13641 and 48A13644 inclusive

REF. NO.	PART NUMBER	DESCRIPTION	QTY
1	9S8740	BEARING ASSEM.	1
2	[illegible]	SEAL	1
		(Part of 9S8740 Assem.)	

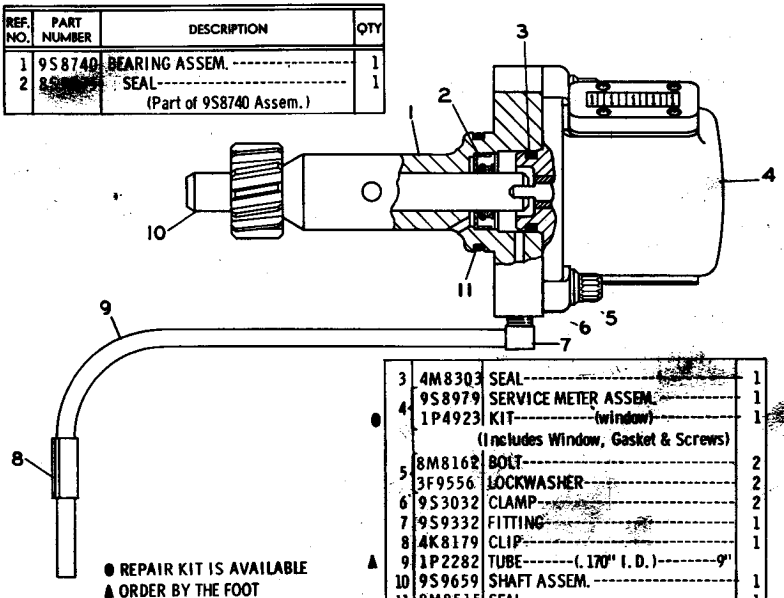

3	4M8303	SEAL	1
● 4	9S8979	SERVICE METER ASSEM.	1
	1P4923	KIT----------(window)----------	1
		(Includes Window, Gasket & Screws)	
5	8M8162	BOLT	2
	3F9556	LOCKWASHER	2
6	9S3032	CLAMP	2
7	9S9332	FITTING	1
8	4K8179	CLIP	1
▲ 9	1P2282	TUBE-------(.170" I.D.)--------9"	
10	9S9659	SHAFT ASSEM.	1
11	8M8515	SEAL	1

● REPAIR KIT IS AVAILABLE
▲ ORDER BY THE FOOT
I.D. = INSIDE DIAMETER

111741

9S8978 SERVICE METER GROUP
Serial No. 48A13642, 13643 and 48A13645—Up

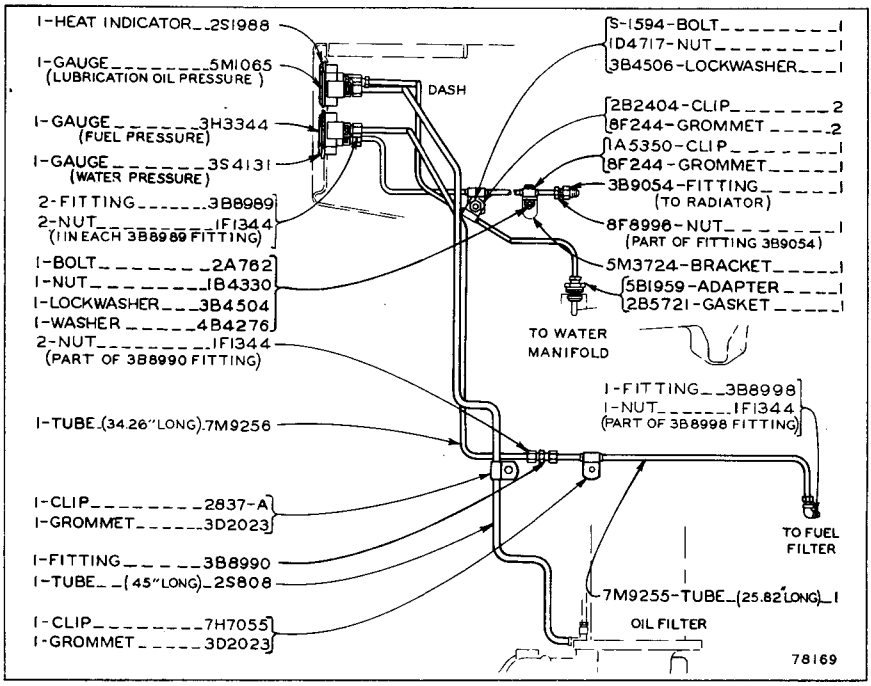

OIL GAUGE, FUEL GAUGE, WATER GAUGE AND HEAT INDICATOR
SERIAL NO. 48A6393 TO 48A7971, 48A7974 TO 48A7976, 48A7981, 48A7983 AND 48A7992 INCLUSIVE

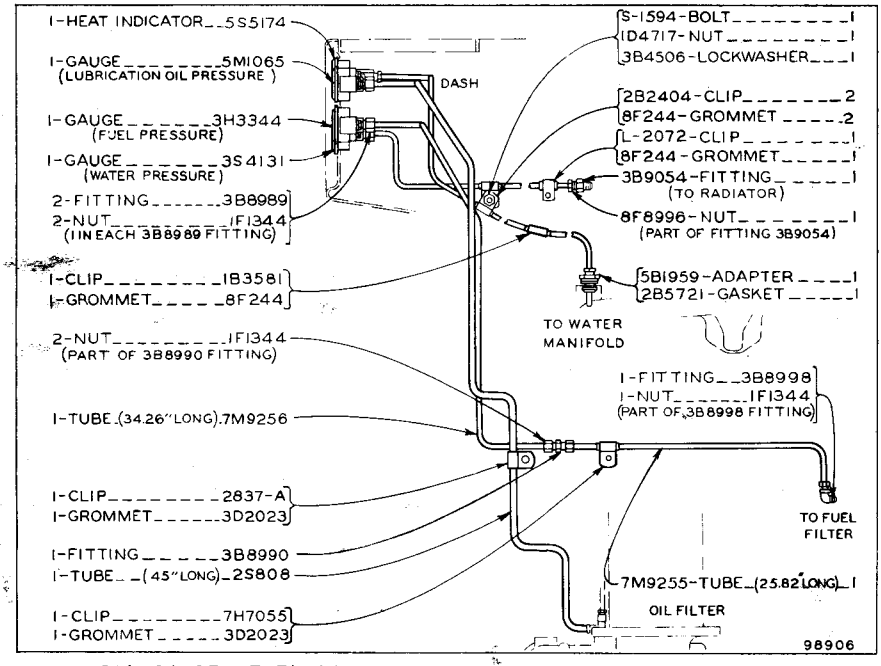

OIL GAUGE, FUEL GAUGE, WATER GAUGE AND HEAT INDICATOR
SERIAL NO. 48A7972, 48A7973, 48A7977 TO 48A7980, 48A7982, 48A7984 TO 48A7991 AND 48A7993-UP

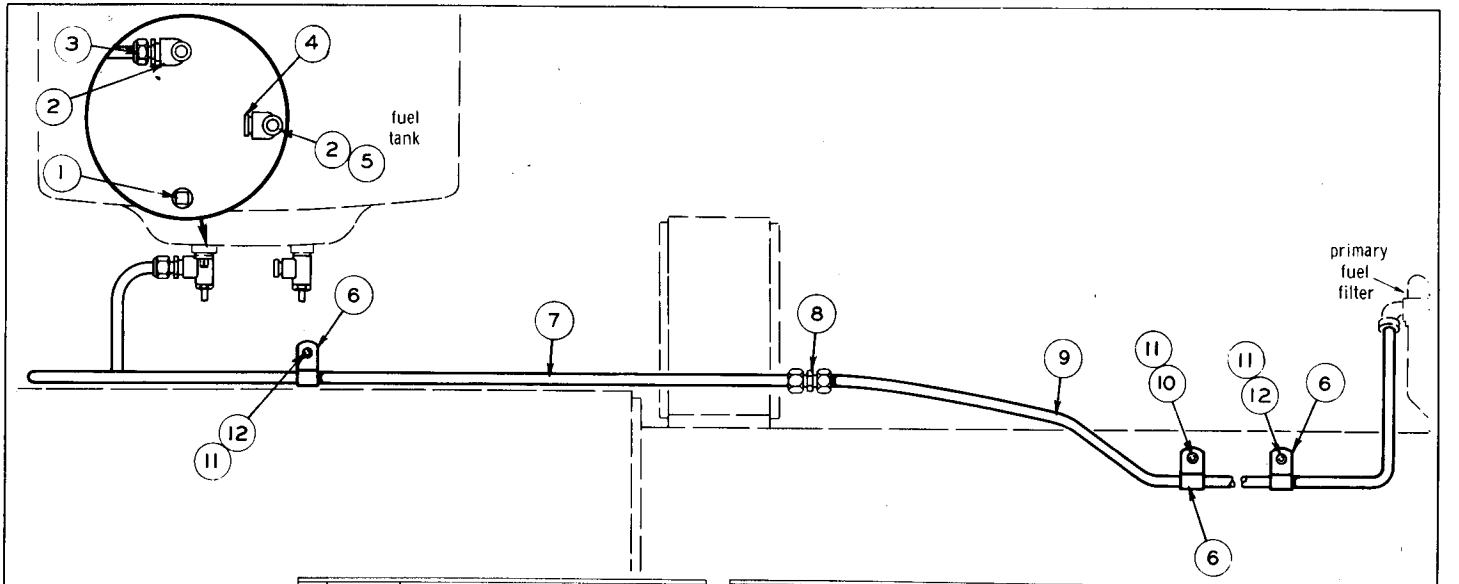

REF NO	PART NUMBER	DESCRIPTION	QTY
1	2B7410	PLUG	1
2	2S5100	VALVE ASSEM.	2
3	3L3446	FITTING	1
	4H2663	NUT	1
	4H2662	SLEEVE	1
		(Parts of 3L3446 Fitting)	
4	1K6776	PLUG	1
5	2S5103	SCREEN	1
6	1B8471	CLIP	3

REF NO	PART NUMBER	DESCRIPTION	QTY
7	3S6193	TUBE--------(72. 83" Long)	1
8	1L480	FITTING	1
	4H2663	NUT	2
	4H2662	SLEEVE	2
		(Parts of 1L480 Fitting)	
9	3S6192	TUBE--------(62. 77" Long)	1
10	S-1620	BOLT	2
11	3B4508	LOCKWASHER	3
12	1K6705	BOLT	1

FUEL LINES

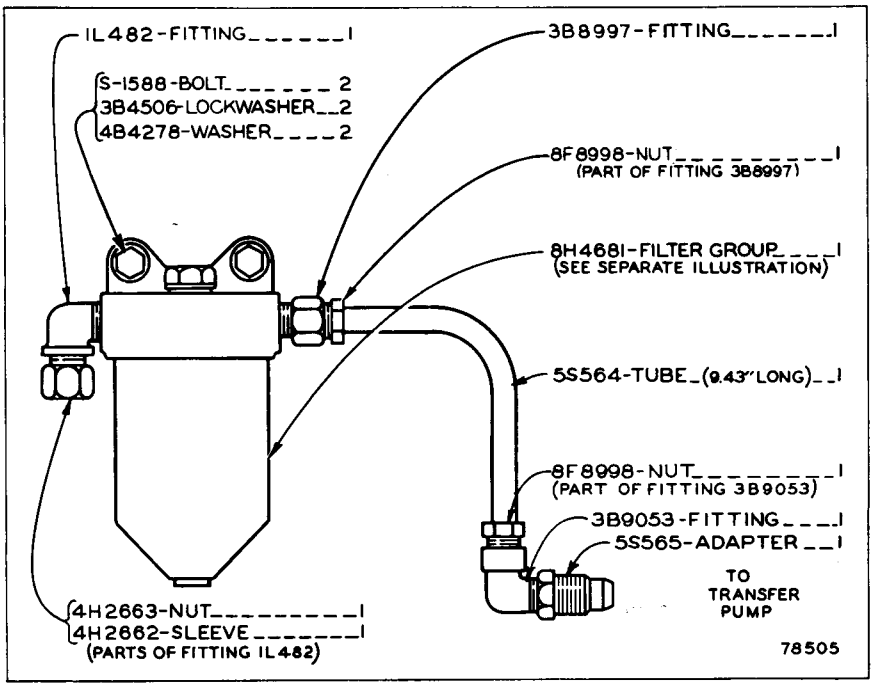

PRIMARY FUEL FILTER AND LINES
SERIAL NO. 48A6393 TO 48A6797 INCLUSIVE
8H4681 PRIMARY FUEL FILTER GROUP PARTS ARE SHOWN ON PAGE 41

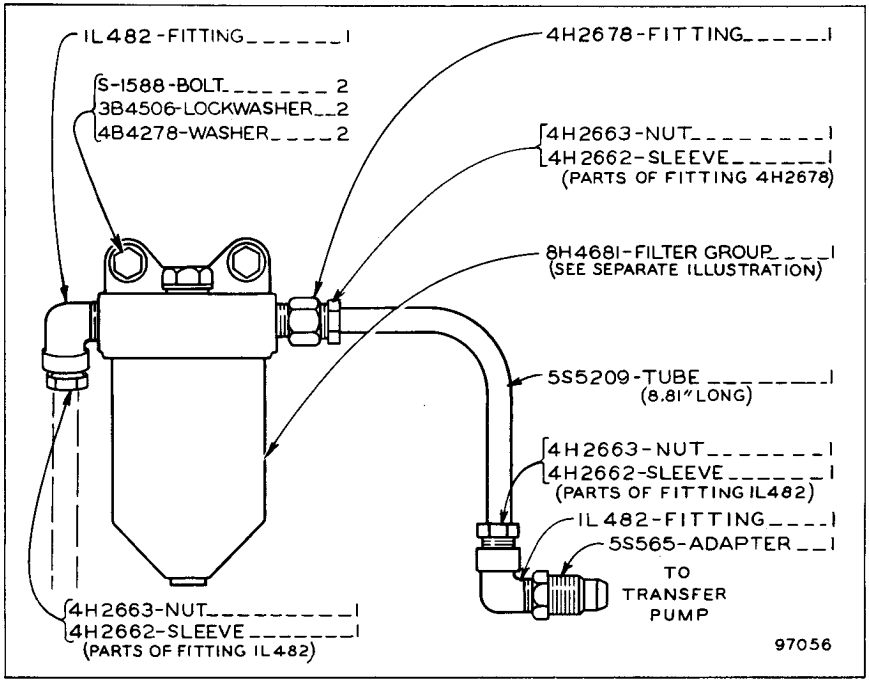

PRIMARY FUEL FILTER AND LINES
EFFECTIVE WITH SERIAL No. 48A6798

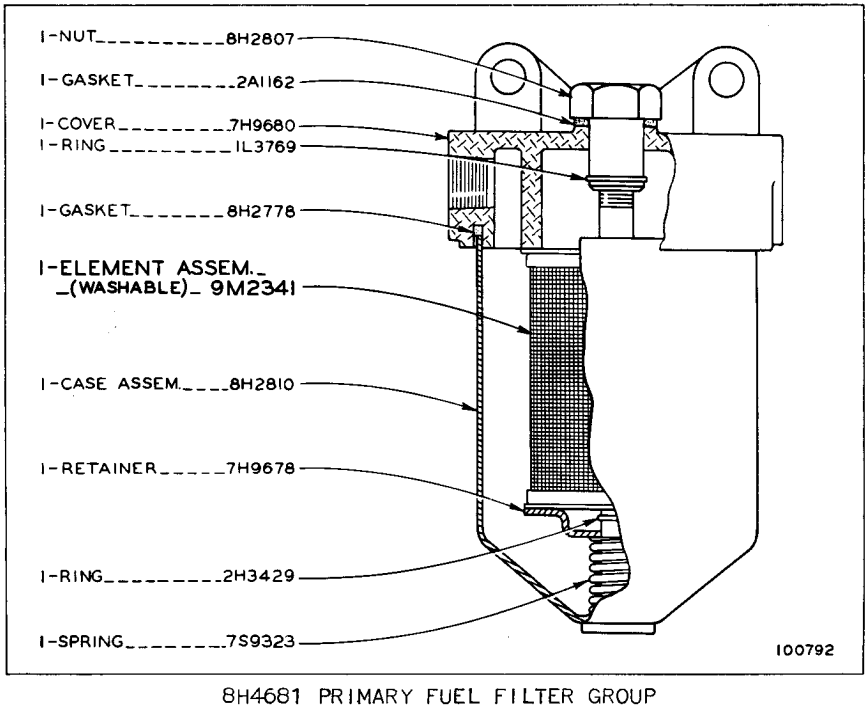

8H4681 PRIMARY FUEL FILTER GROUP
PART OF PRIMARY FUEL FILTER AND LINES SHOWN ON PAGES 40A AND 41

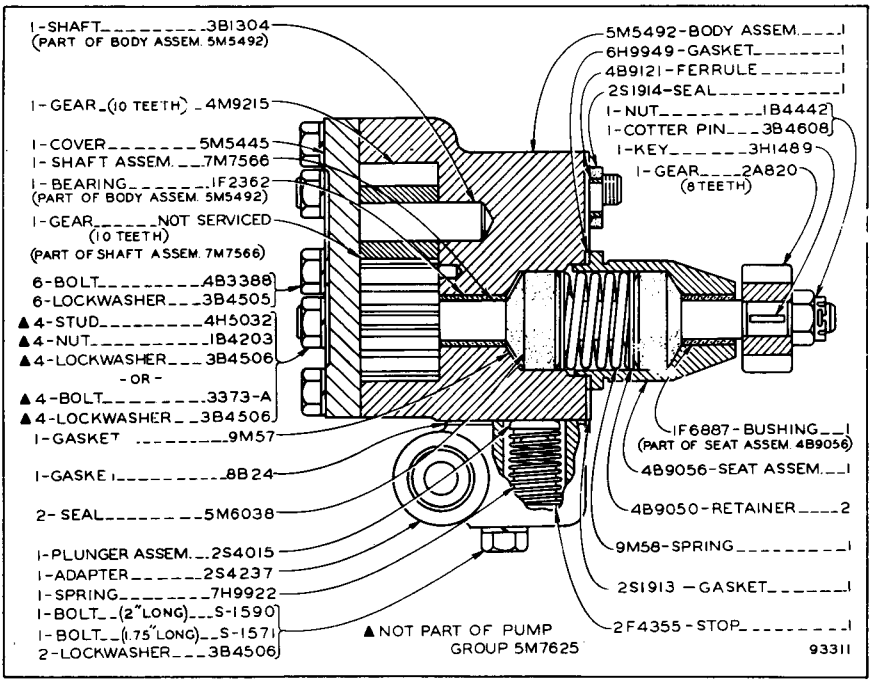

5M7625 FUEL TRANSFER PUMP GROUP

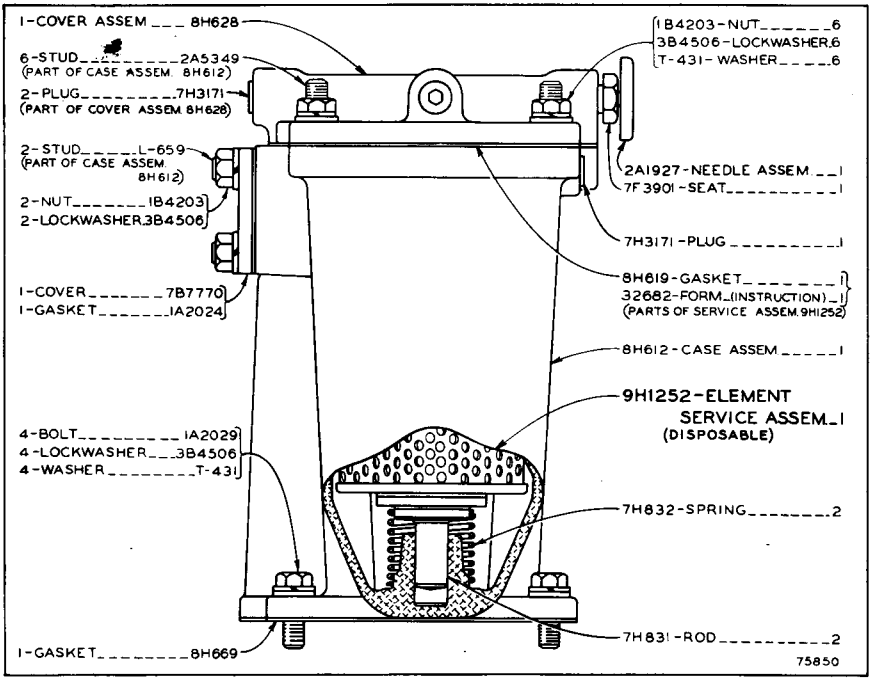

8H664 FUEL FILTER GROUP

FUEL PUMP HOUSING

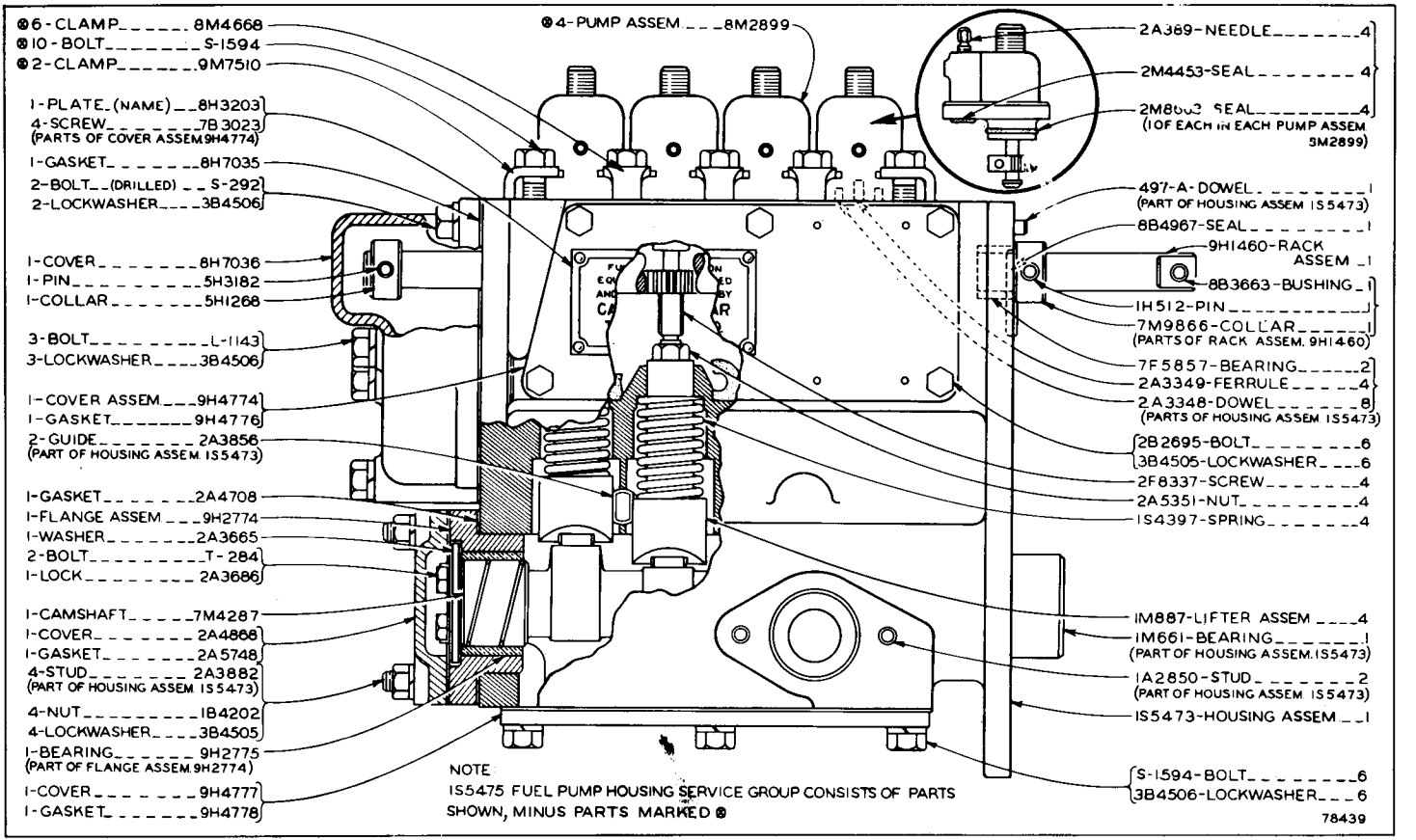

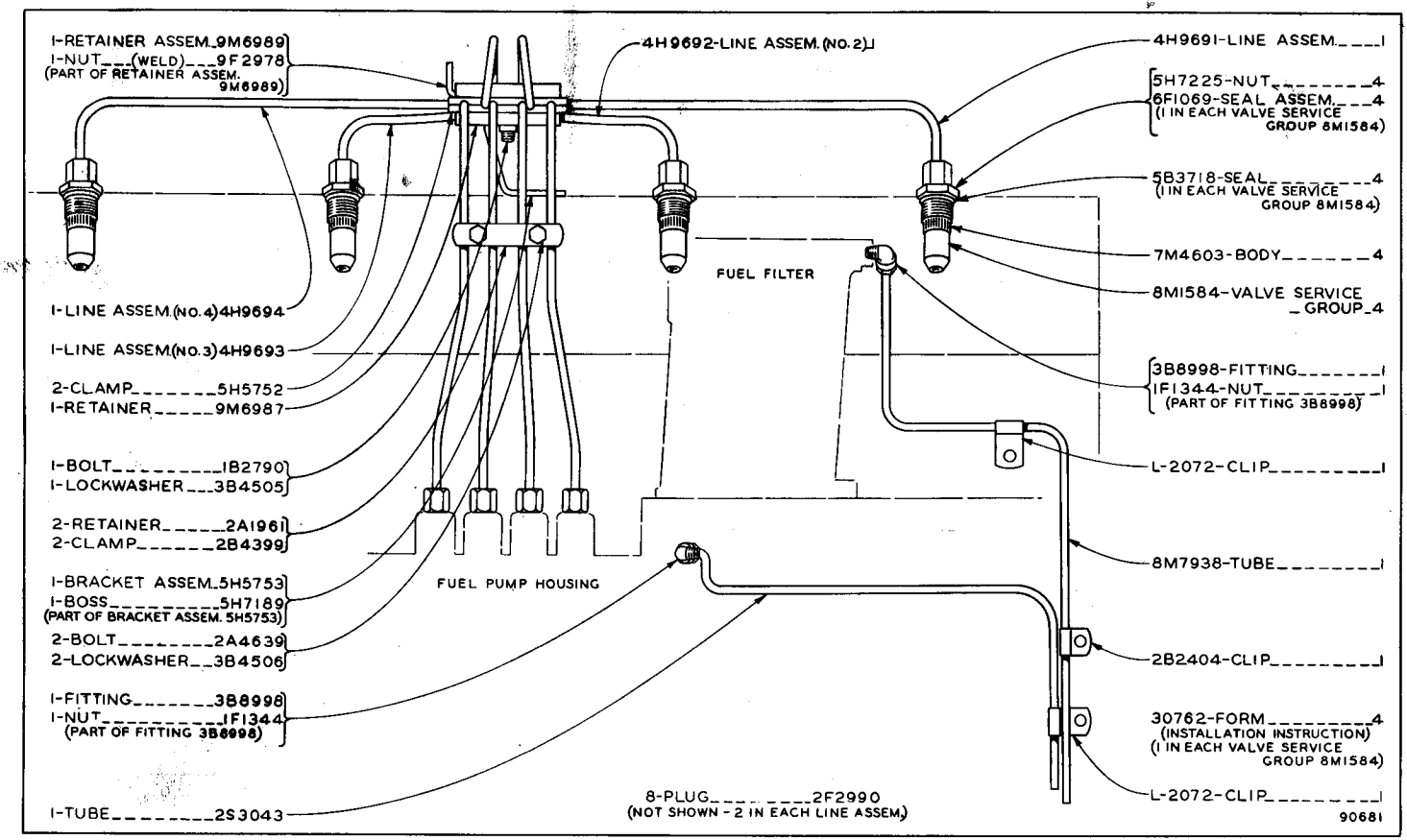

FUEL INJECTION VALVES AND LINES

2S770 OIL PUMP ASSEMBLY
Serial No. 48A6393 to 9843, 9845 and 48A9846 inclusive

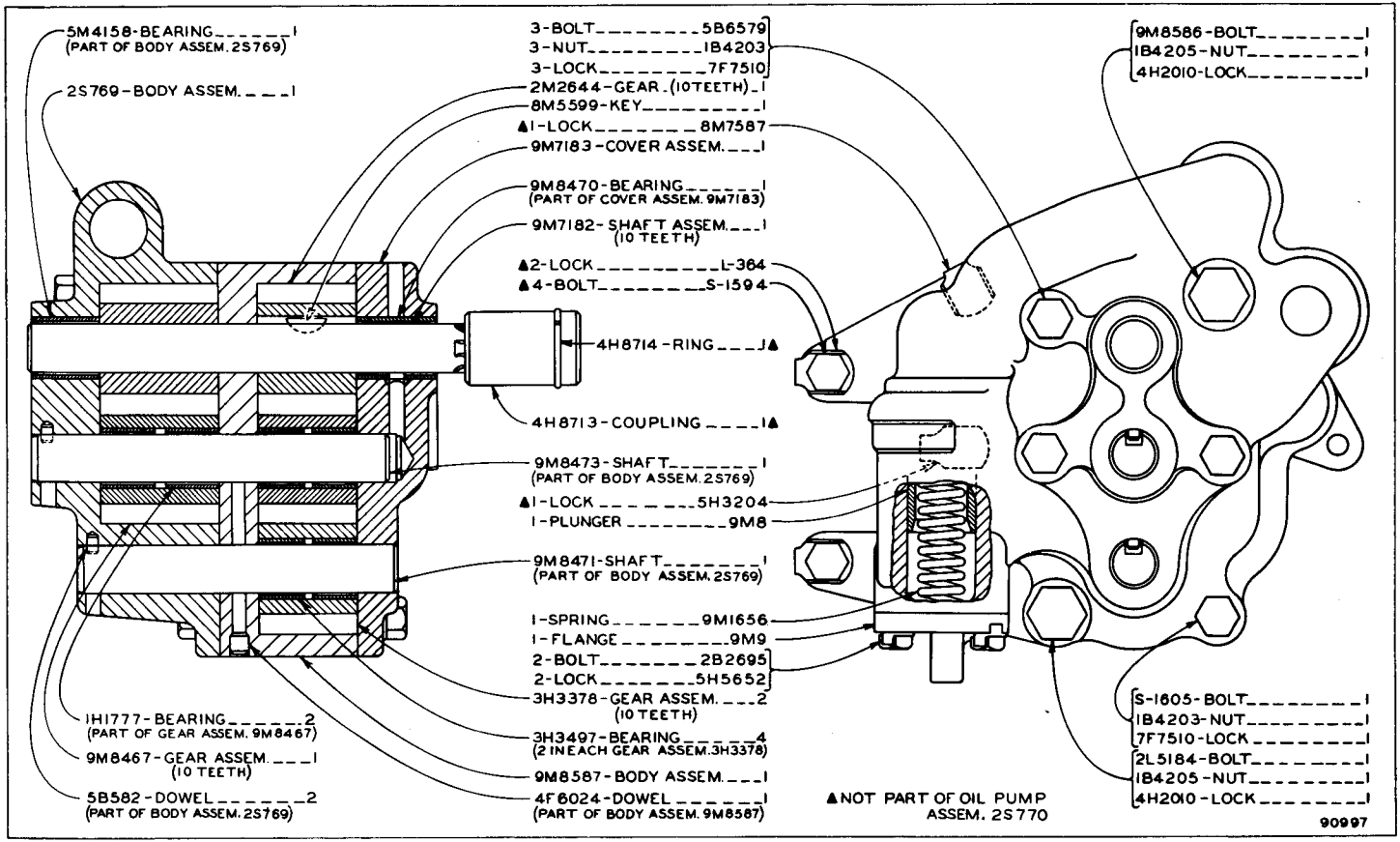

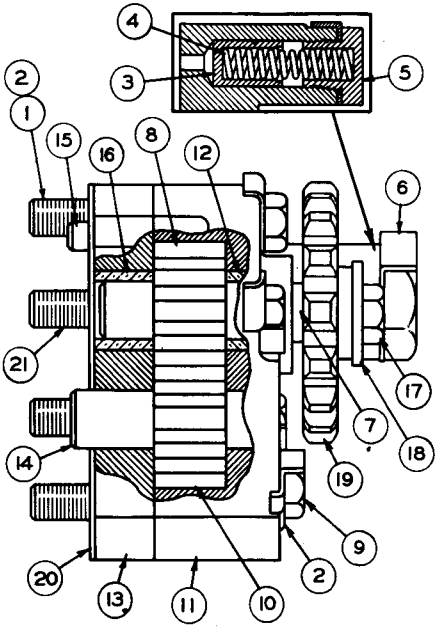

REF NO	PART NUMBER	DESCRIPTION	QTY
	3S2363	OIL PUMP ASSEM.	1
		Consisting of:	
1	2A5546	BOLT	1
2	7F2836	LOCK	2
3	3S2354	PLUNGER	1
4	9S1510	SPRING	1
5	3S2356	PLUG	1
6	3S2362	LOCK	1
7	8M1327	SHAFT ASSEM.	1
8	Not Serv.	GEAR----(10 Teeth-Drive)------	1
		(Part of 8M1327 Shaft Assem.)	
9	7B8167	BOLT	1
10	4M9715	GEAR------(10 Teeth-Idler)------	1
11	3S2359	BODY ASSEM.	1
12	1S1125	BEARING	1
		(Part of 3S2359 Body Assem.)	
13	3S2361	PLATE ASSEM.	1
14	4M9710	SHAFT	1
15	3H703	DOWEL	1
16	8F6058	BUSHING	1
		(Parts of 3S2361 Plate Assem.)	
17	4F7957	BOLT	1
18	7M3510	WASHER	1
19	1S1082	GEAR-------(20 Teeth-Drive)-------	1
20	3S2365	GASKET	1
21	2B2694	BOLT	4
	2A5328	LOCK	4

126148

3S2364 OIL PUMP GROUP
Serial No. 48A10482—Up

2S9535 OIL PUMP ASSEMBLY
Serial No. 48A9844 and 48A9847-Up

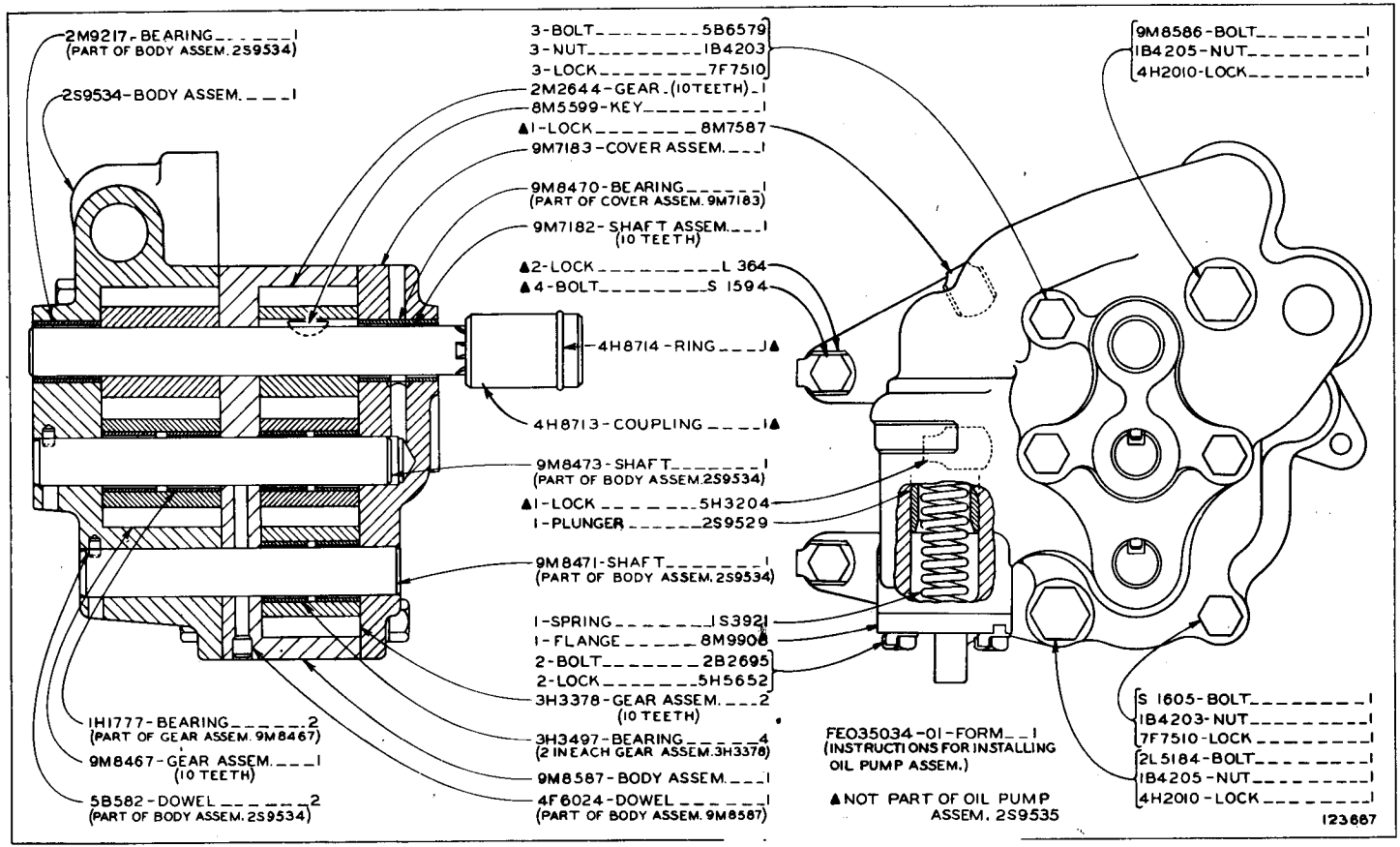

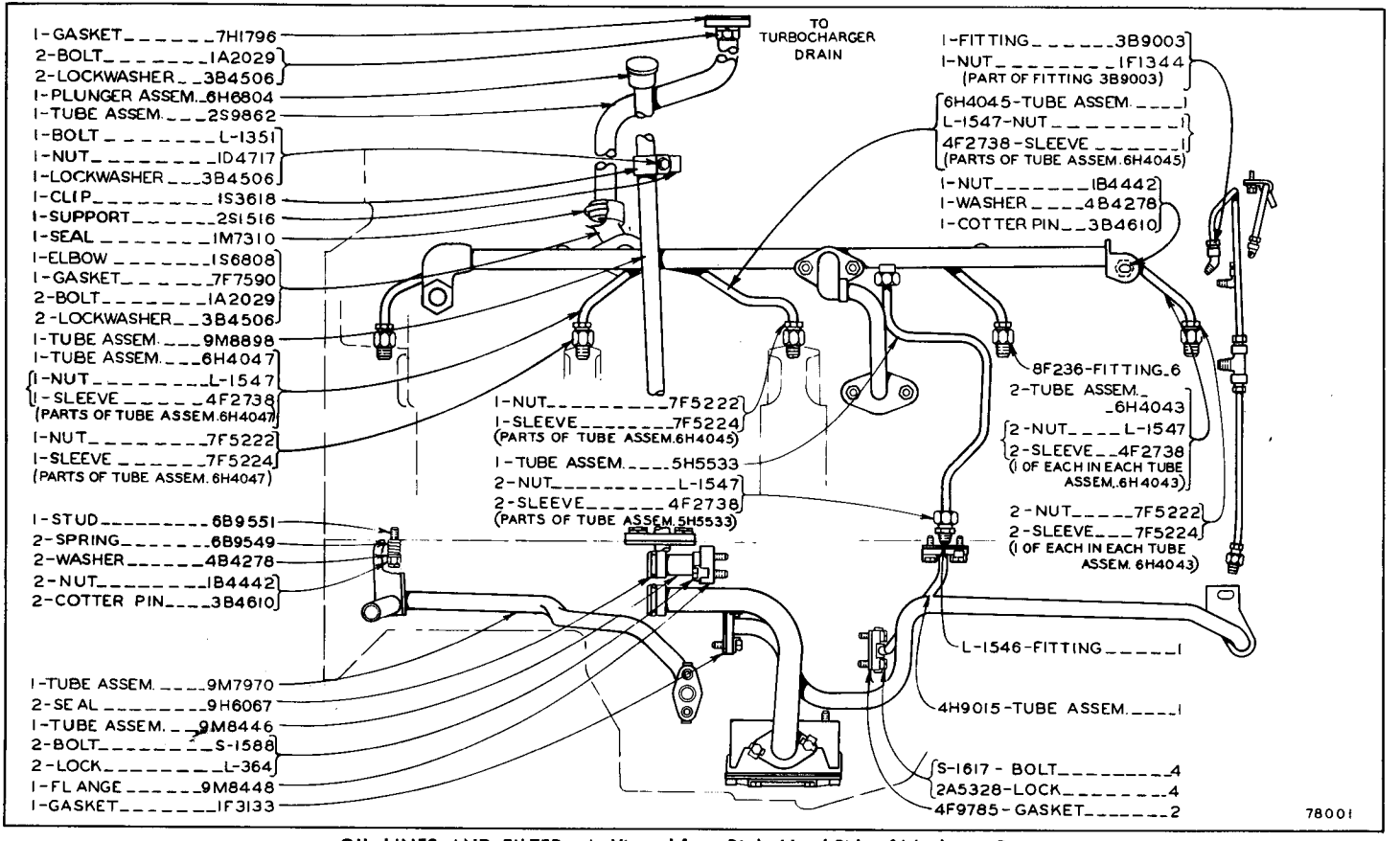

OIL LINES AND FILTER—As Viewed from Right Hand Side of Machine—Part I

Serial No. 48A6393 to 48A6882 inclusive

ADDITIONAL PARTS ARE SHOWN ON PAGES 47 AND 48

OIL LINES AND FILTER—As Viewed from Right Hand Side of Machine—Part 2

Serial No. 48A6393 to 48A6882 inclusive

ADDITIONAL PARTS ARE SHOWN ON PAGES 46 AND 48

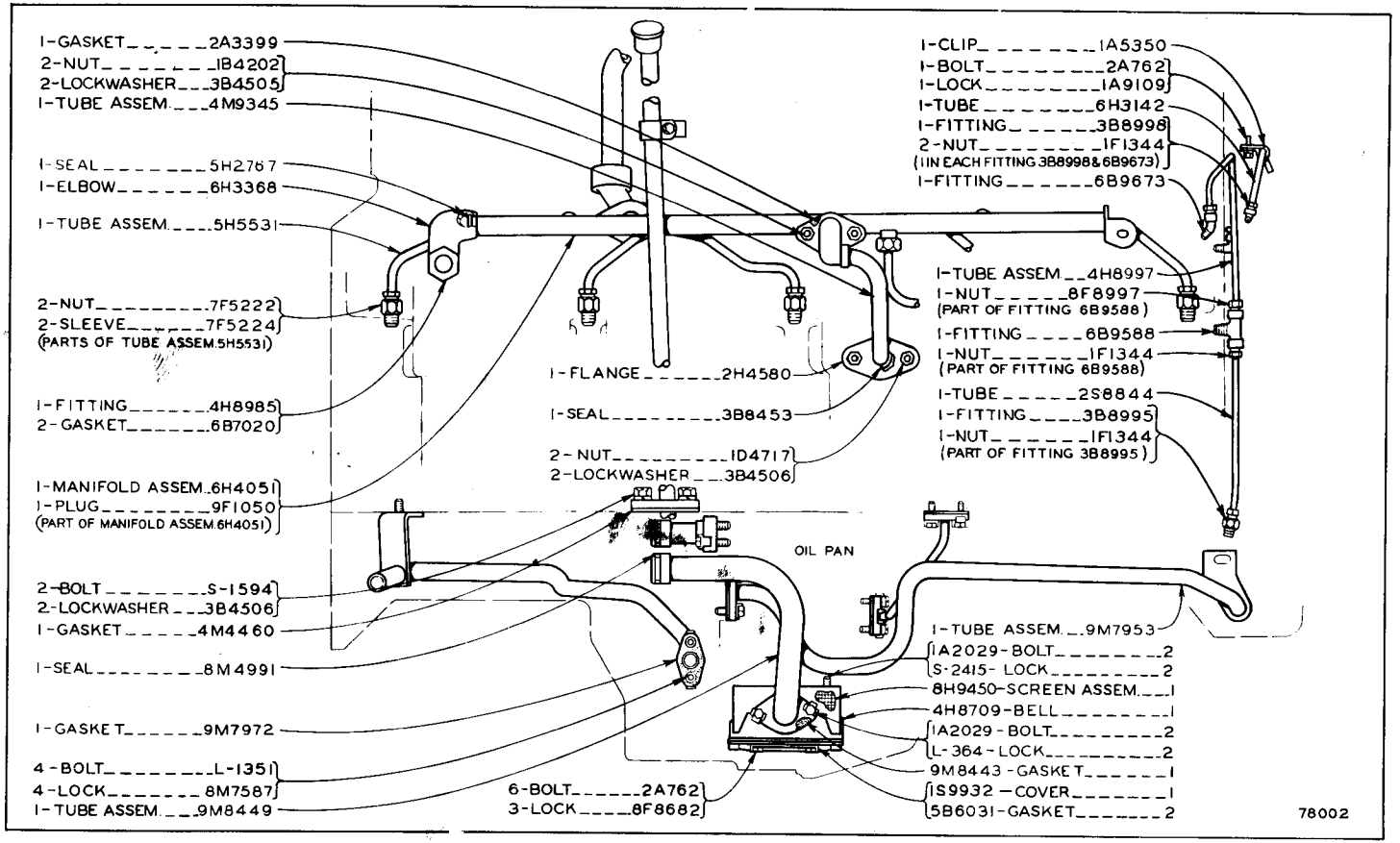

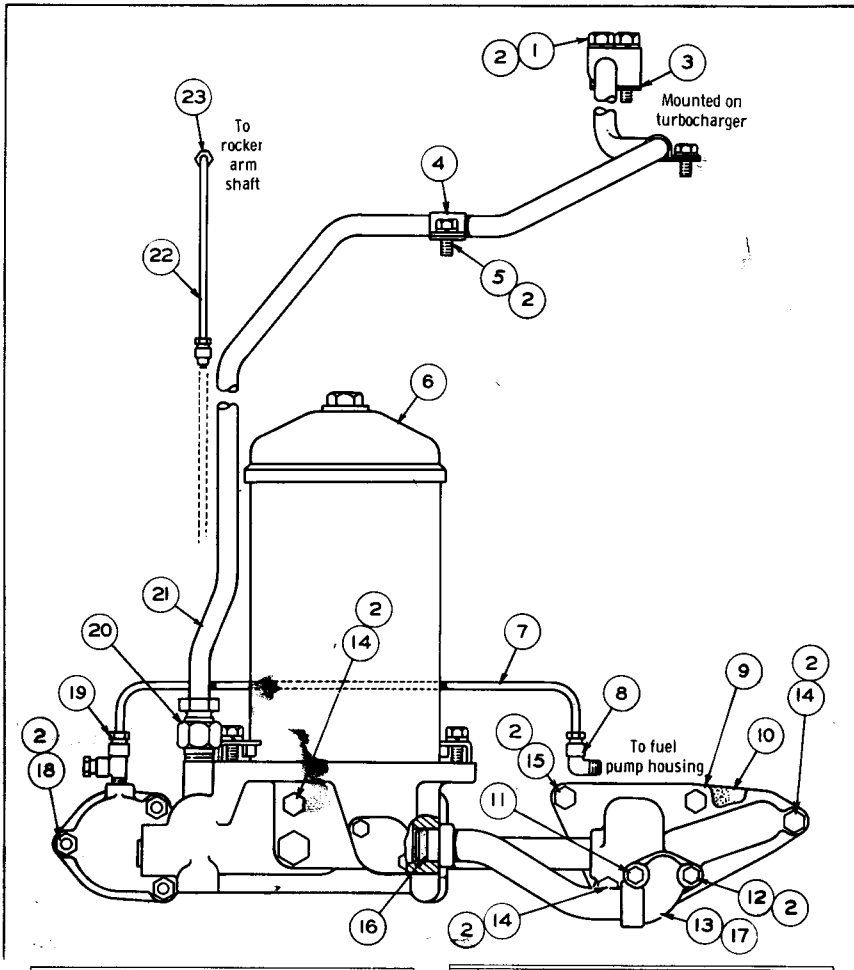

REF. NO.	PART NUMBER	DESCRIPTION	QTY.
1	S-1571	BOLT	2
2	3B4506	LOCKWASHER	15
3	7H3270	GASKET	1
4	4B9302	CLIP	2
5	L-1351	BOLT	2
6	1S9954	FILTER ASSEM. (See Separate Illustration)	1
	1S9851	GASKET	1
7	2S775	TUBE--(17.50" Long) (Filter Base to Fuel Pump Housing)	1
8	3B8998	FITTING	1
	1F1344	NUT (Part of 3B8998 Fitting)	1
9	2S753	JUNCTION ASSEM.	1
10	1M5232	GASKET	1
11	S-1588	BOLT--(1.25" Long)	1
12	3373-A	BOLT--(4" Long)	1
13	4S5471	ELBOW ASSEM.	1

REF. NO.	PART NUMBER	DESCRIPTION	QTY.
14	L-2070	BOLT--(2.25" Long)	3
15	1A2029	BOLT	2
16	9H6067	SEAL	1
17	6H2007	GASKET	1
18	1B4203	NUT	6
19	3B8992	FITTING	1
	1F1344	NUT (Part of 3B8992 Fitting)	2
20	1F6068	FITTING	1
	8F9362	NUT (Part of 1F6068 Fitting)	1
21	2S71	TUBE ASSEM.--(58.11" Long) (Turbocharger Oil Supply)	1
22	4H7292	TUBE--(7.93" Long) (Cylinder Head to Rocker Arm Shaft)	2
23	1F3278	FITTING	4
	1F1344	NUT (1 in each 1F3278 Fitting)	4

78003

OIL LINES AND FILTER—As Viewed from Front of Machine—Part 3
Serial No. 48A6393 to 48A6882 inclusive
1S9954 Oil Filter Assembly parts are shown on Page 49
ADDITIONAL PARTS ARE SHOWN ON PAGES 46 AND 47

1S9954 OIL FILTER ASSEMBLY

Part of Oil Lines and Filter

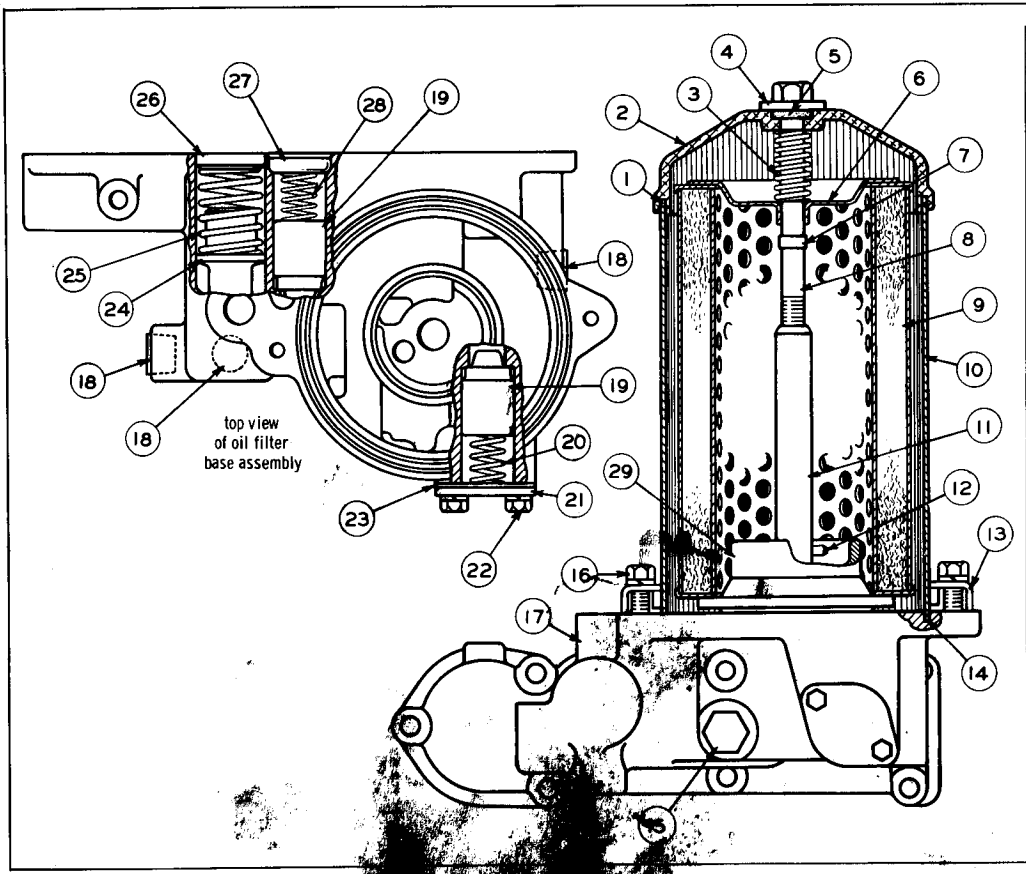

REF. NO.	PART NUMBER	DESCRIPTION	QTY.
	2M9180	COVER ASSEM.	1
		Consisting of:	
1	6F9163	GASKET	1
2	2M9140	COVER	1
3	V-294	SPRING	1
4	1K505	WASHER	1
5	3H4970	SEAL	1
6	6H9922	RETAINER	1
7	7F7691	CLIP	1
8	2M9179	SCREW	1
9	6H9999	ELEMENT ASSEM. ---(Disposable)---	1
10	2M9177	CASE ASSEM.	1
	9M451	STUD ASSEM.	1
		Consisting of:	
11	9M452	STUD	1
12	4H3119	PIN	1
13	6F9165	CLAMP	2
14	6F9163	GASKET	1
15	2B9128	PLUG	1
	4B8407	GASKET	1
16	S-1588	BOLT	2
	3B4506	LOCKWASHER	2
17	1S9895	BASE ASSEM.	1
18	3L1850	PLUG	3
19	9M853	PLUNGER	2
20	8M3182	SPRING	1
21	6B830	COVER	1
22	2B2695	BOLT	2
	3B4505	LOCKWASHER	2
23	6B831	GASKET	1
24	8M9928	PLUNGER	1
25	9M4685	SPRING	1
26	8M9929	RETAINER	1
27	L-2288	PLUG	1
28	6F8007	SPRING	1
		(Parts of 1S9895 Base Assem.)	
29	6H9921	ADAPTER	1

78004

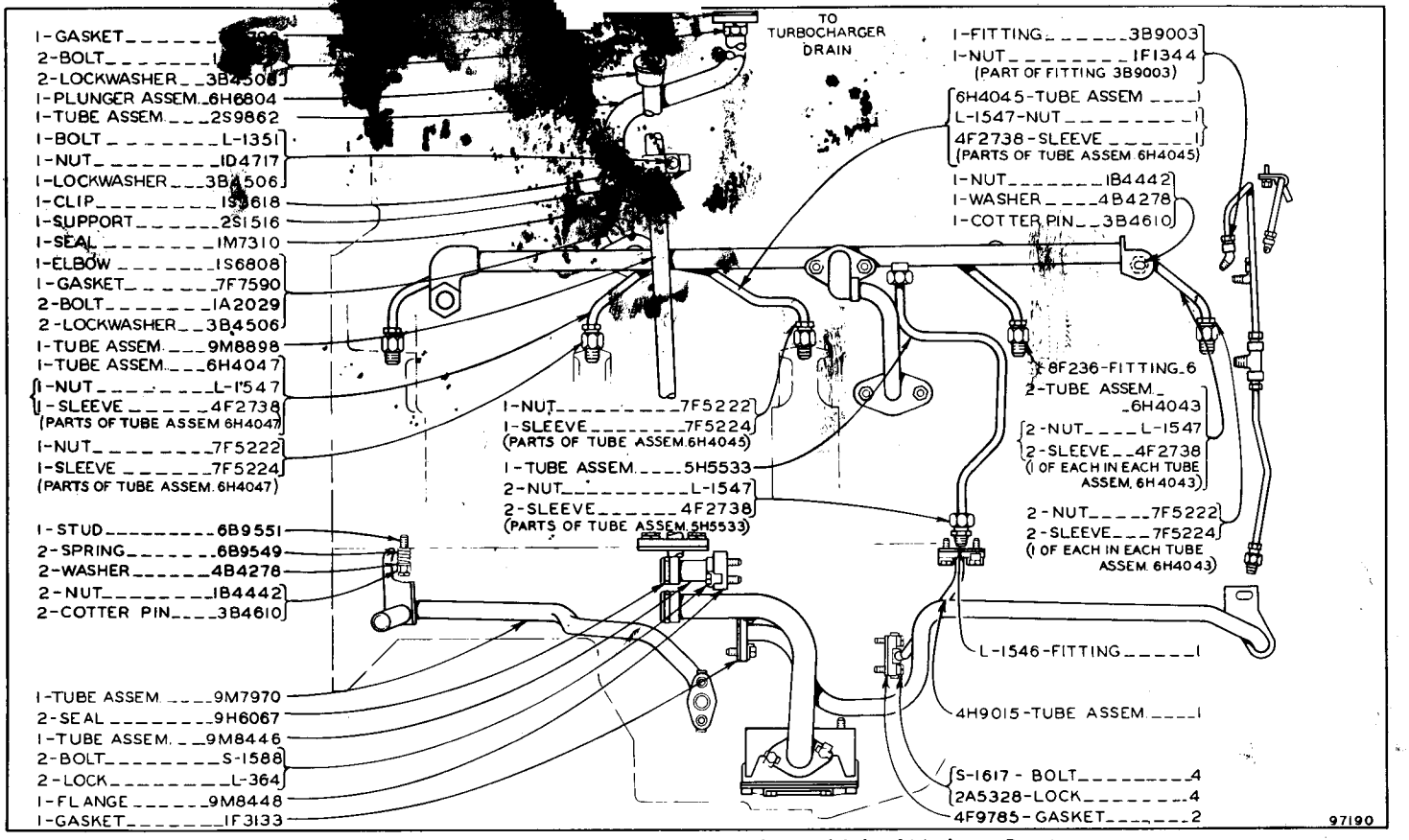

OIL LINES AND FILTER—As Viewed from Right Hand Side of Machine—Part 1
Effective with Serial No. 48A6883
ADDITIONAL PARTS ARE SHOWN ON PAGES 49B AND 49C

OIL LINES AND FILTER—As Viewed from Right Hand Side of Machine—Part 2

Effective with Serial No. 48A6883

ADDITIONAL PARTS ARE SHOWN ON PAGES 49A AND 49C

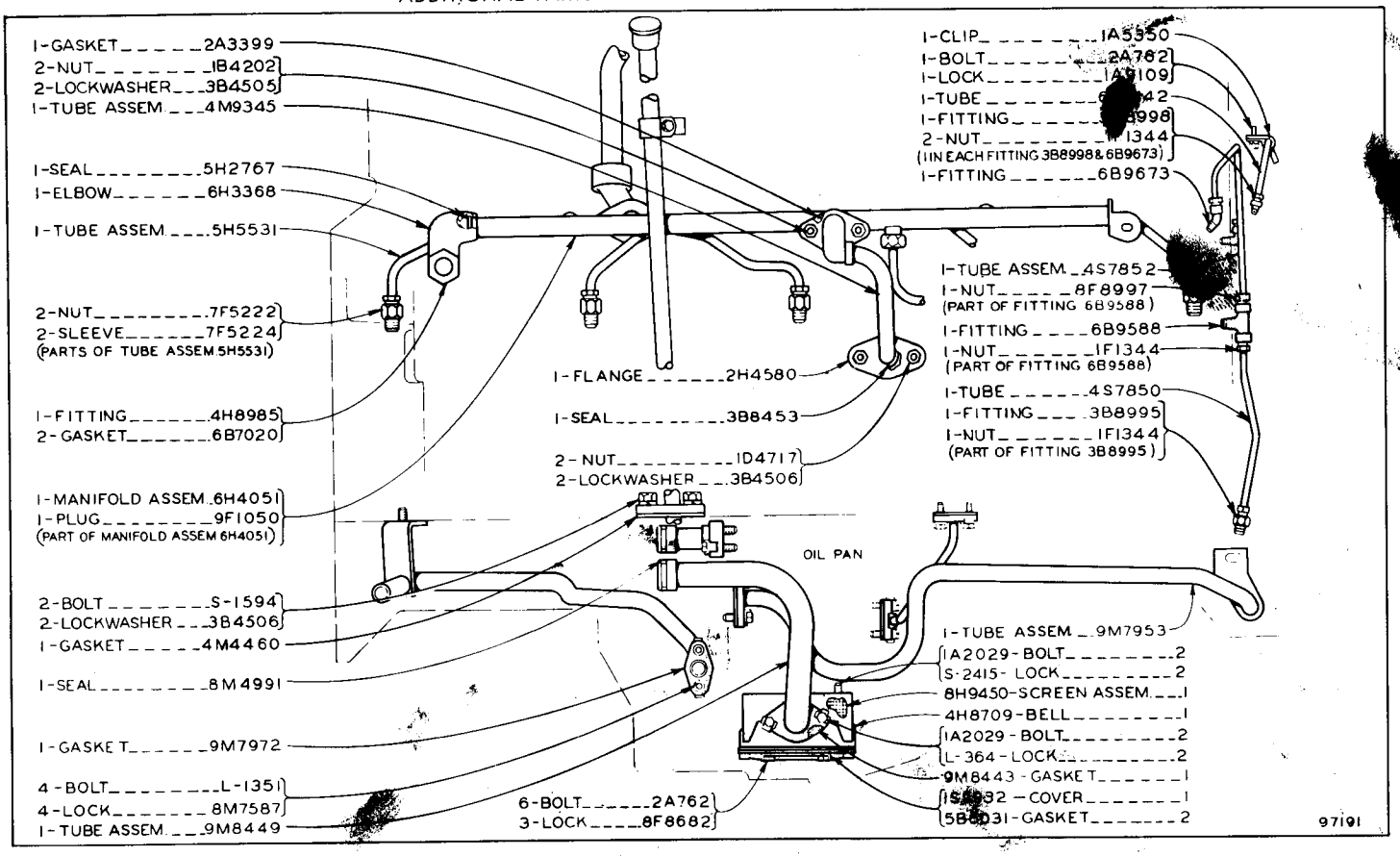

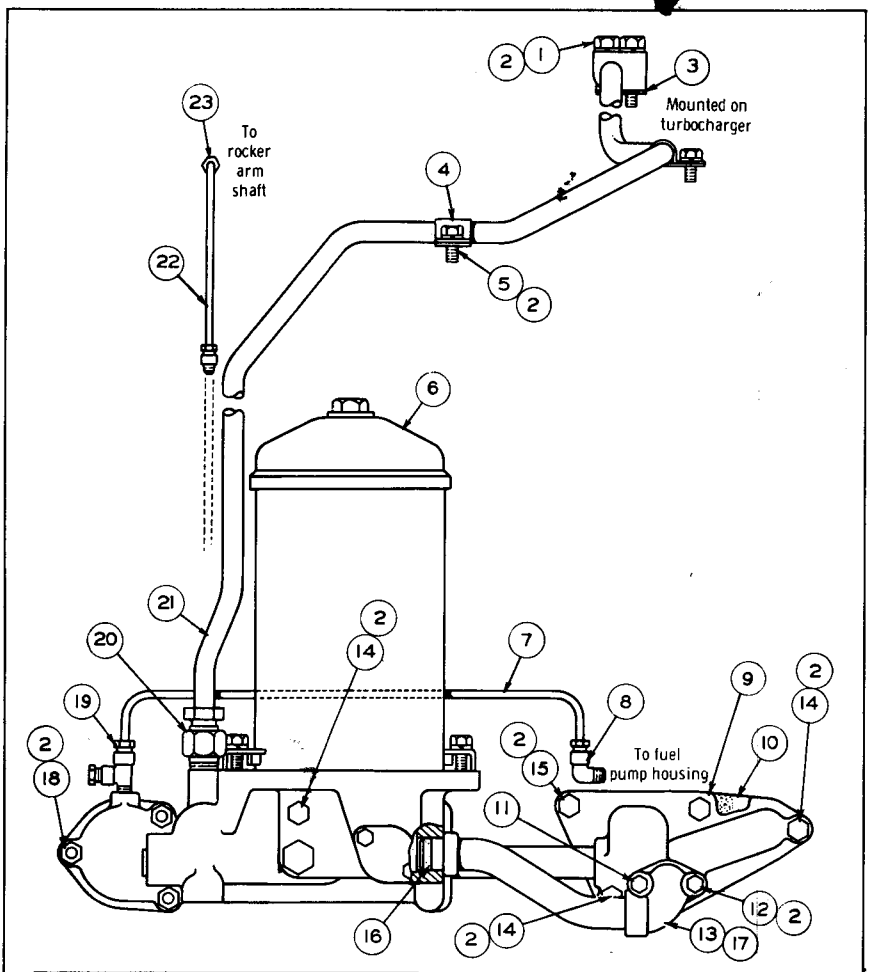

REF NO	PART NUMBER	DESCRIPTION	QTY
1	S-1571	BOLT	2
2	3B4506	LOCKWASHER	15
3	7H3270	GASKET	1
4	4B9302	CLIP	2
5	L-1351	BOLT-(.875" Long)	1
	T-102	BOLT-(.625" Long)	1
6	1S9954	FILTER ASSEM. (See Separate Illustration)	1
	1S9851	GASKET	1
7	2S775	TUBE-(17.50" Long) (Filter Base to Fuel Pump Housing)	1
8	3B8998	FITTING	1
	1F1344	NUT (Part of 3B8998 Fitting)	1
9	2S753	JUNCTION ASSEM.	1
10	1M5232	GASKET	1
11	S-1588	BOLT-(1.25" Long)	1
12	3373-A	BOLT-(4" Long)	1
13	4S5471	ELBOW ASSEM.	1
14	L-2070	BOLT-(2.25" Long)	3
15	1A2029	BOLT	2
16	9H6067	SEAL	1
17	6H2007	GASKET	1
18	1B4203	NUT	6
19	3B8992	FITTING	1
	1F1344	NUT (Part of 3B8992 Fitting)	2
20	1F6068	FITTING	1
	8F9362	NUT (Part of 1F6068 Fitting)	1
21	2S71	TUBE ASSEM.-(58.11" Long) (Turbocharger Oil Supply)	1
22	4H7292	TUBE-(7.93" Long) (Cylinder Head to Rocker Arm Shaft)	2
23	1F3278	FITTING	4
	1F1344	NUT (1 in each 1F3278 Fitting)	4

97192

OIL LINES AND FILTER—As Viewed from Front of Machine—Part 3
Effective with Serial No. 48A6883
1S9954 Oil Filter Assembly parts are shown on Page 49
ADDITIONAL PARTS ARE SHOWN ON PAGES 49A AND 49B

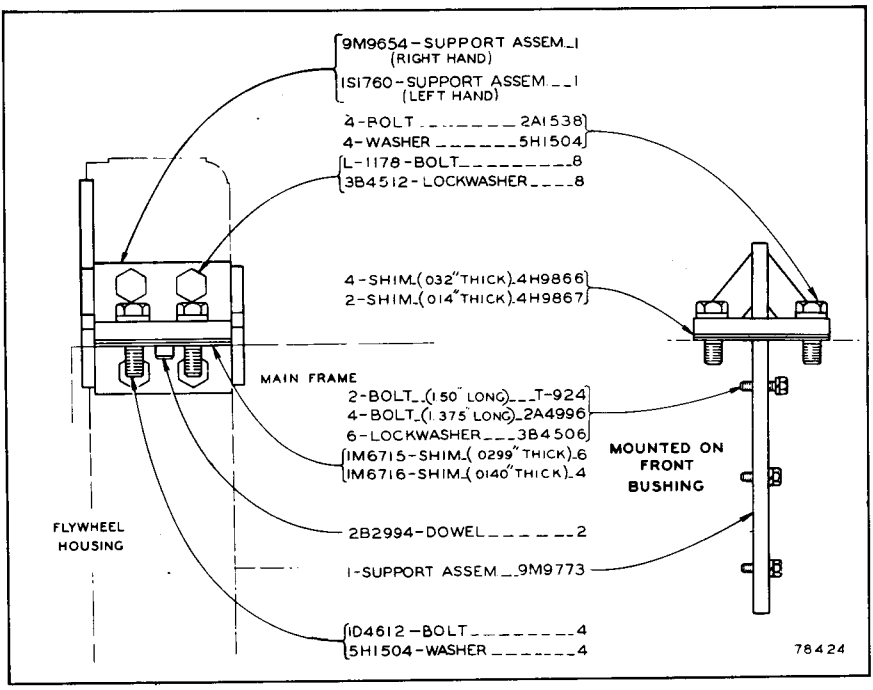

DIESEL ENGINE SUPPORT
Serial No. 48A6393 to 48A6882 inclusive

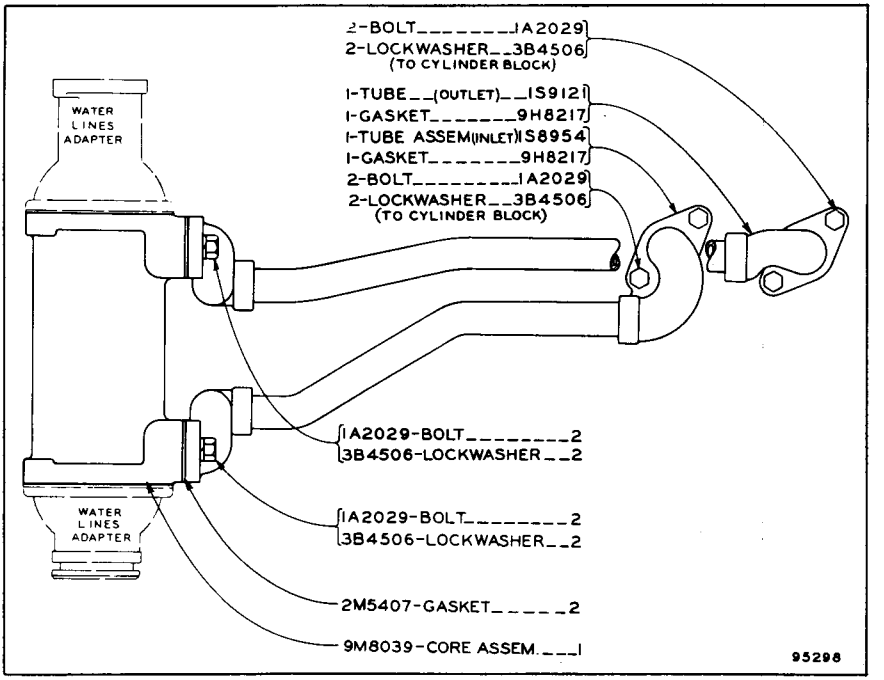

OIL COOLER

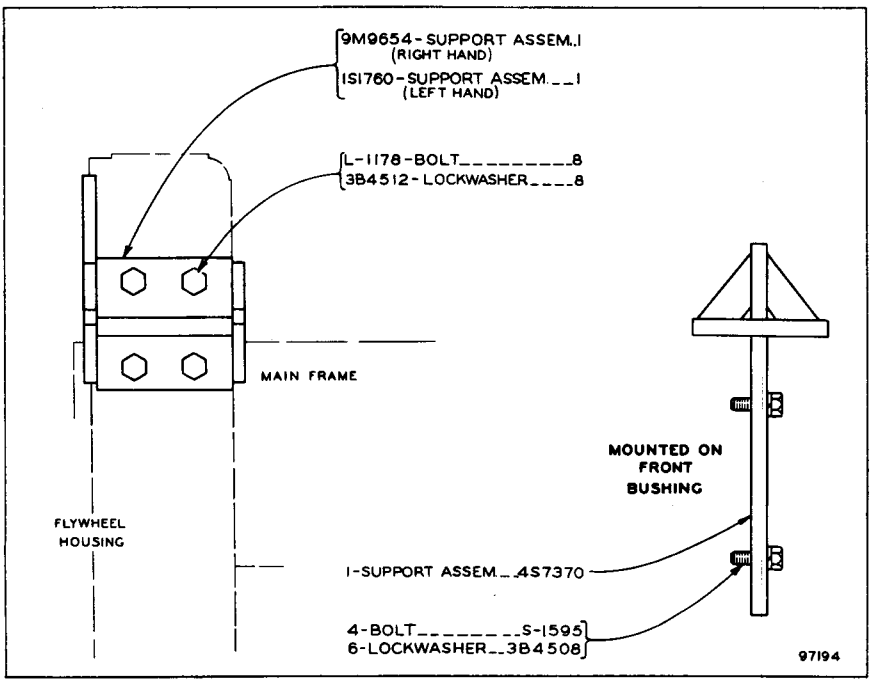

ENGINE SUPPORT
Effective with Serial No. 48A6883

CAMSHAFT AND GOVERNOR

Serial No. 48A6393 to 48A9075 inclusive. Starting Engine Block No. F11590 to F27136 inclusive

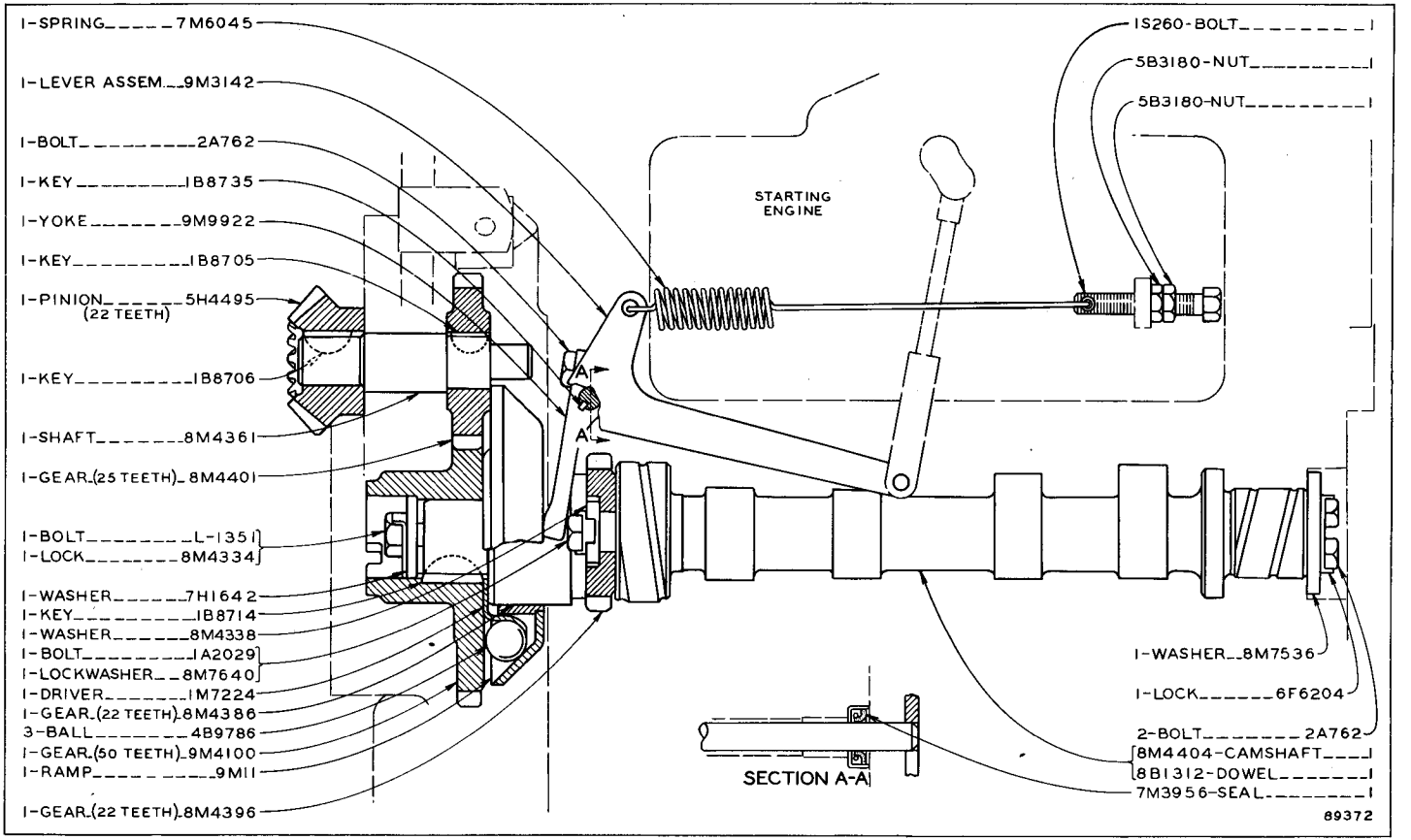

CAMSHAFT AND GOVERNOR

Effective with Serial No. 48A9076-Up and Starting Engine Block No. F27137-Up

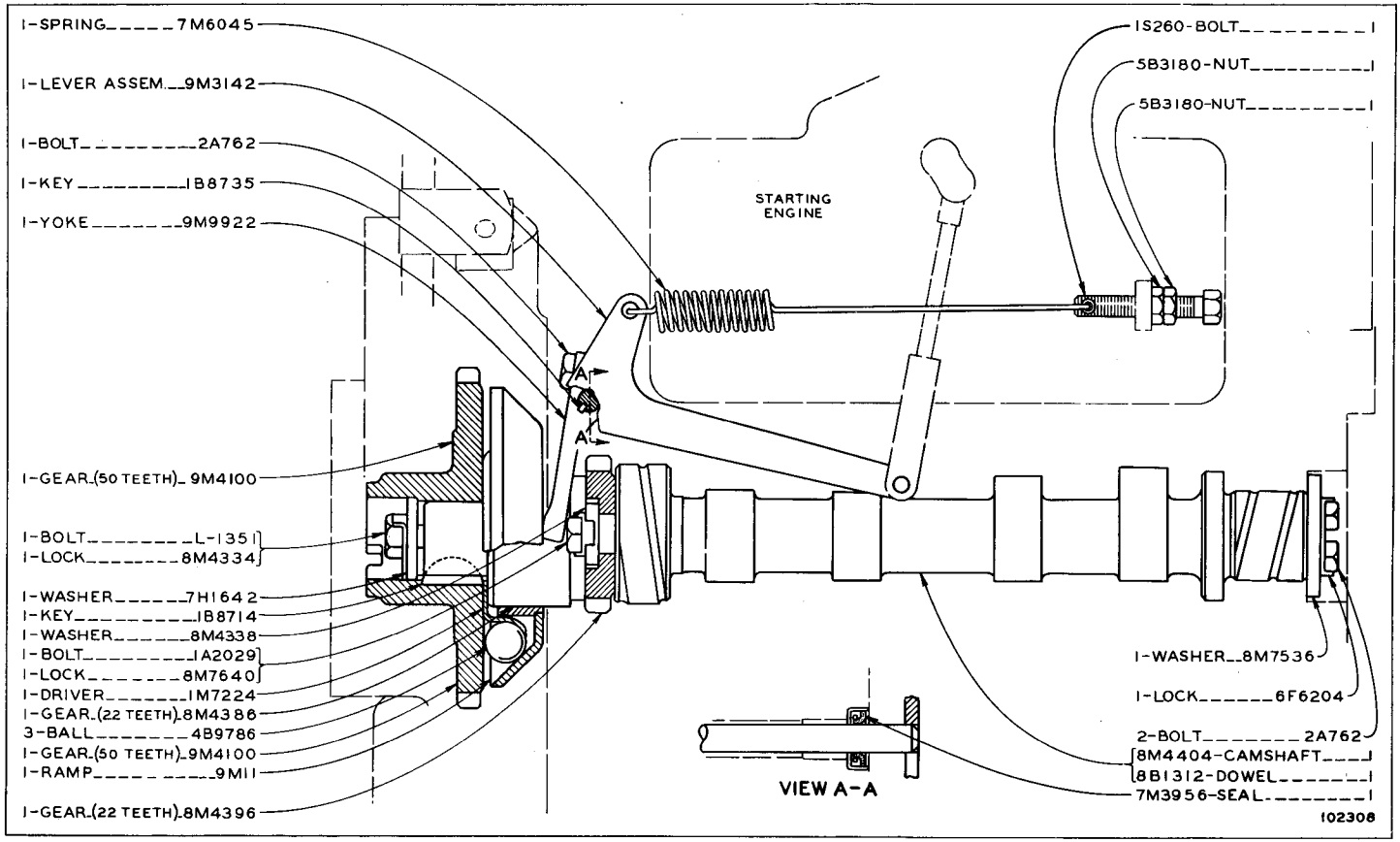

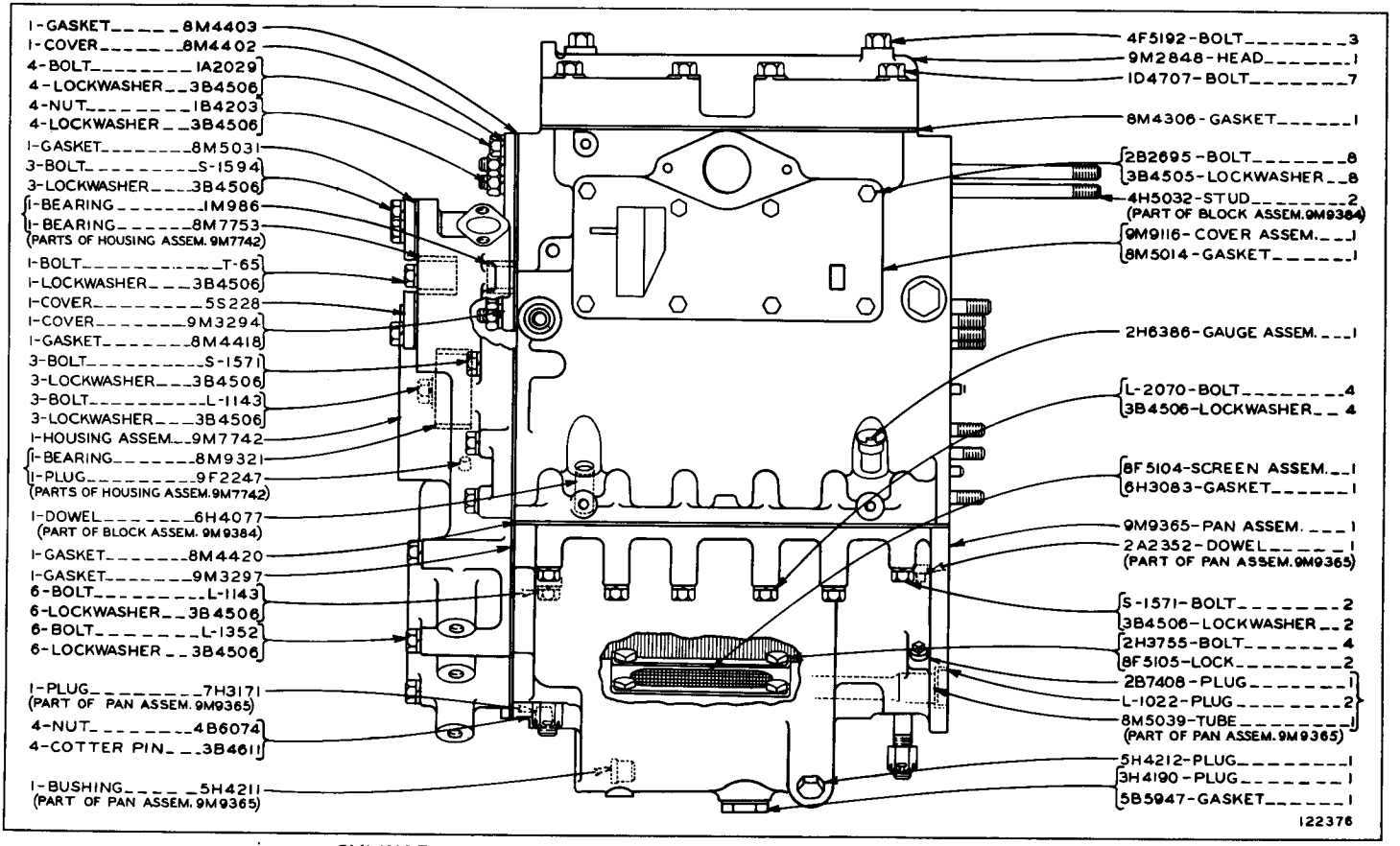

CYLINDER BLOCK, CYLINDER HEAD AND VALVE MECHANISM—Part 1
Serial No. 48A6393 to 48A10481 inclusive and Starting Engine Block No. F11590 to F99999 and K1 to K20 inclusive

CYLINDER BLOCK, CYLINDER HEAD AND VALVE MECHANISM—Part 2
Serial No. 48A6393 to 48A10481 inclusive and Starting Engine Block No. F11590 to F99999 and K1 to K20 inclusive

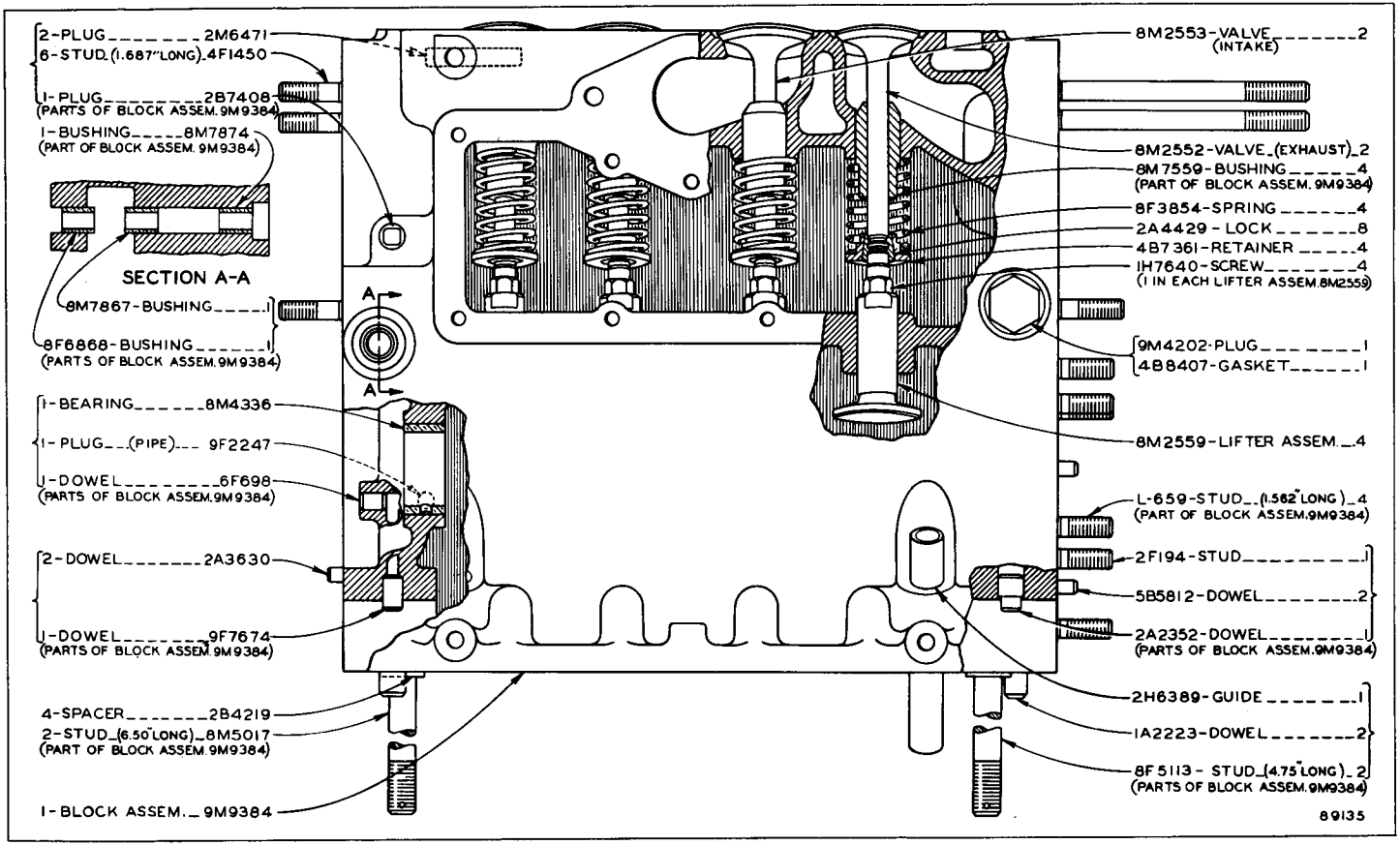

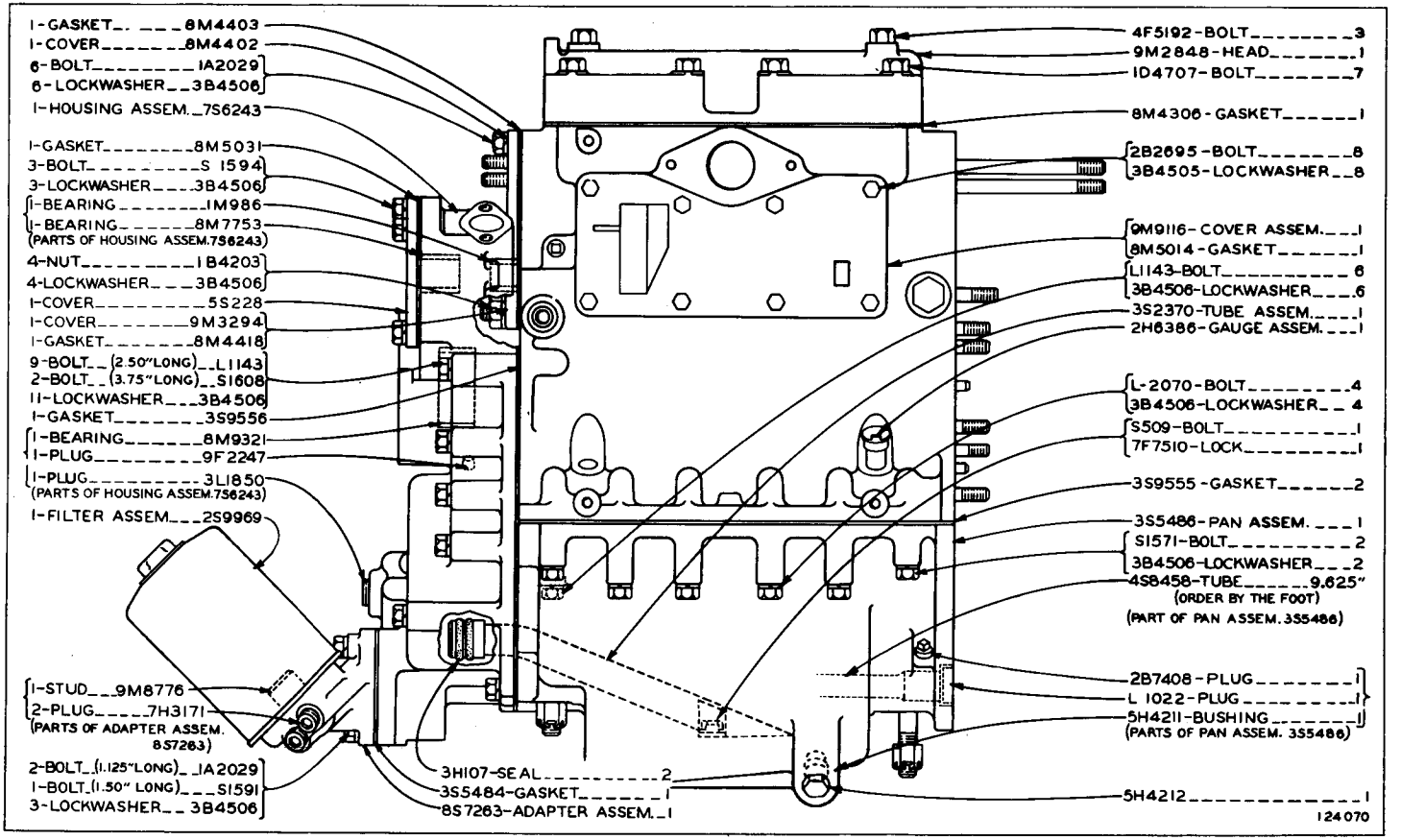

CYLINDER BLOCK, CYLINDER HEAD AND VALVE MECHANISM (7S6262 N/S)—Part 1
Serial No. 48A10482 to 48A12071 inclusive and Starting Engine Block No. K21 to K2799 inclusive

CYLINDER BLOCK, CYLINDER HEAD AND VALVE MECHANISM (7S6262 N/S)—Part 2

Serial No. 48A10482 to 48A12071 inclusive and Starting Engine Block No. K21 to K2799 inclusive

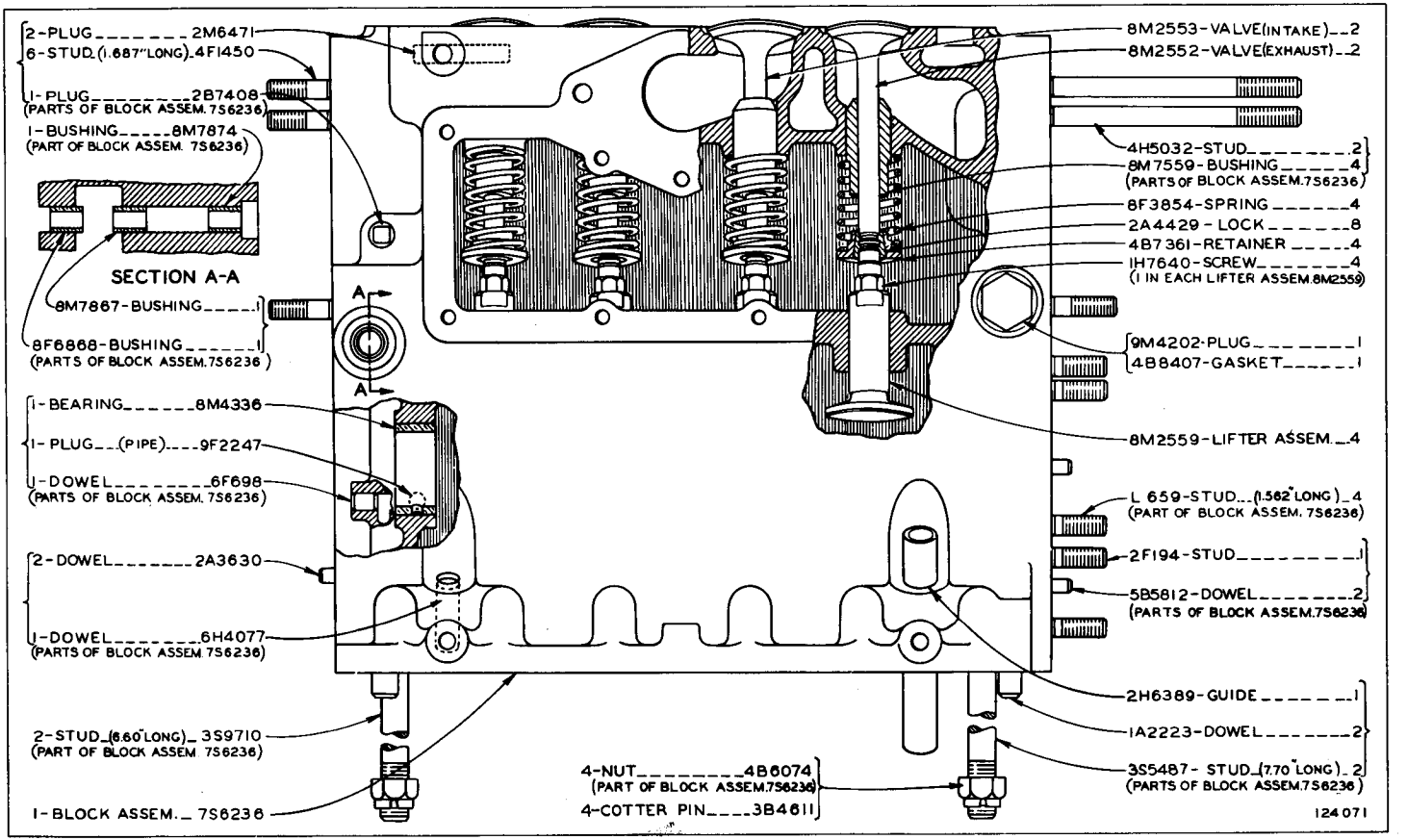

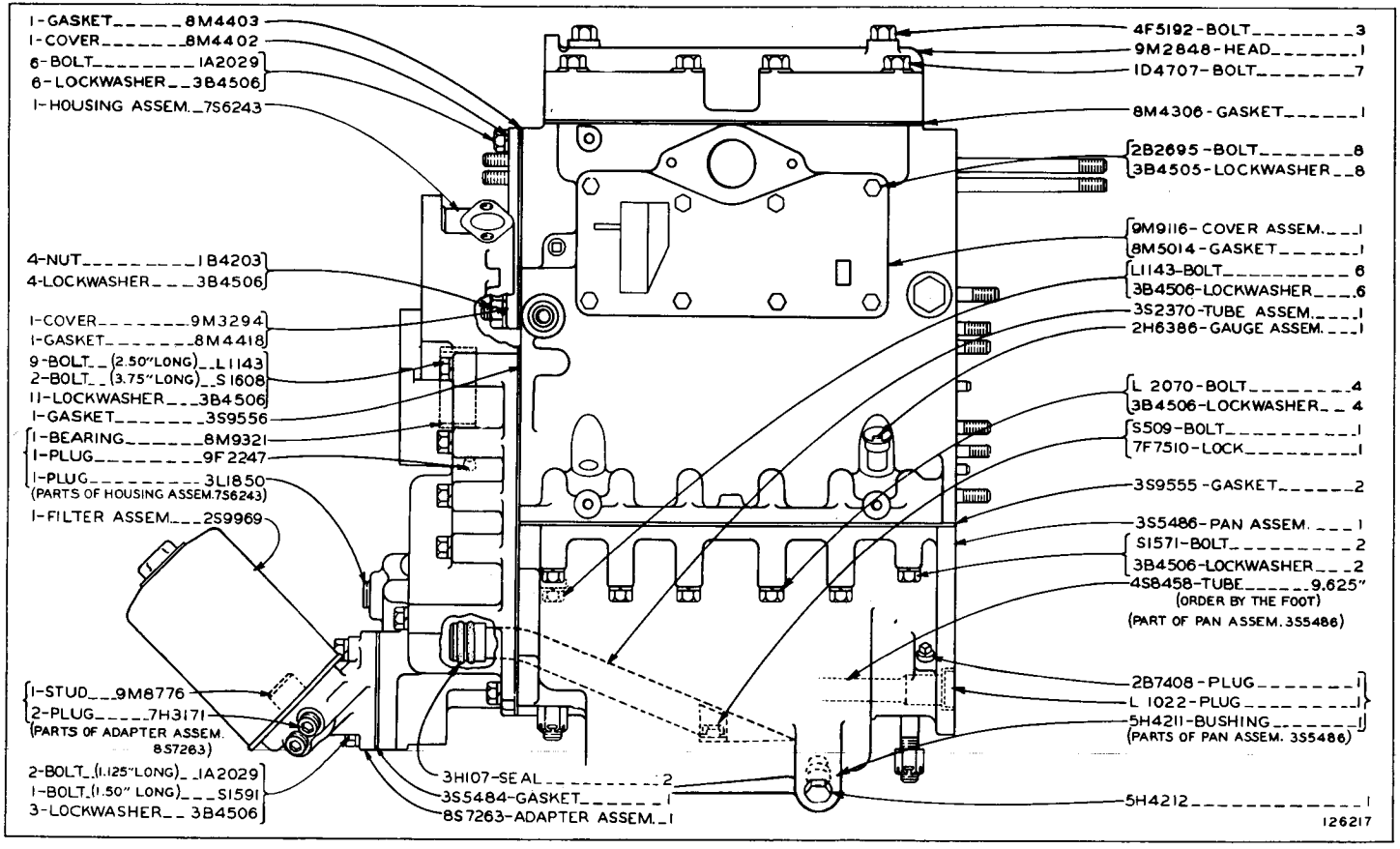

CYLINDER BLOCK, CYLINDER HEAD AND VALVE MECHANISM (7S6262 N/S)—Part 1
Effective with Serial No. 48A12072—Up and Starting Engine Block No. K2800—Up

CYLINDER BLOCK, CYLINDER HEAD AND VALVE MECHANISM (7S6262 N/S)—Part 2
Effective with Serial No. 48A12072—Up and Starting Engine Block No. K2800—Up

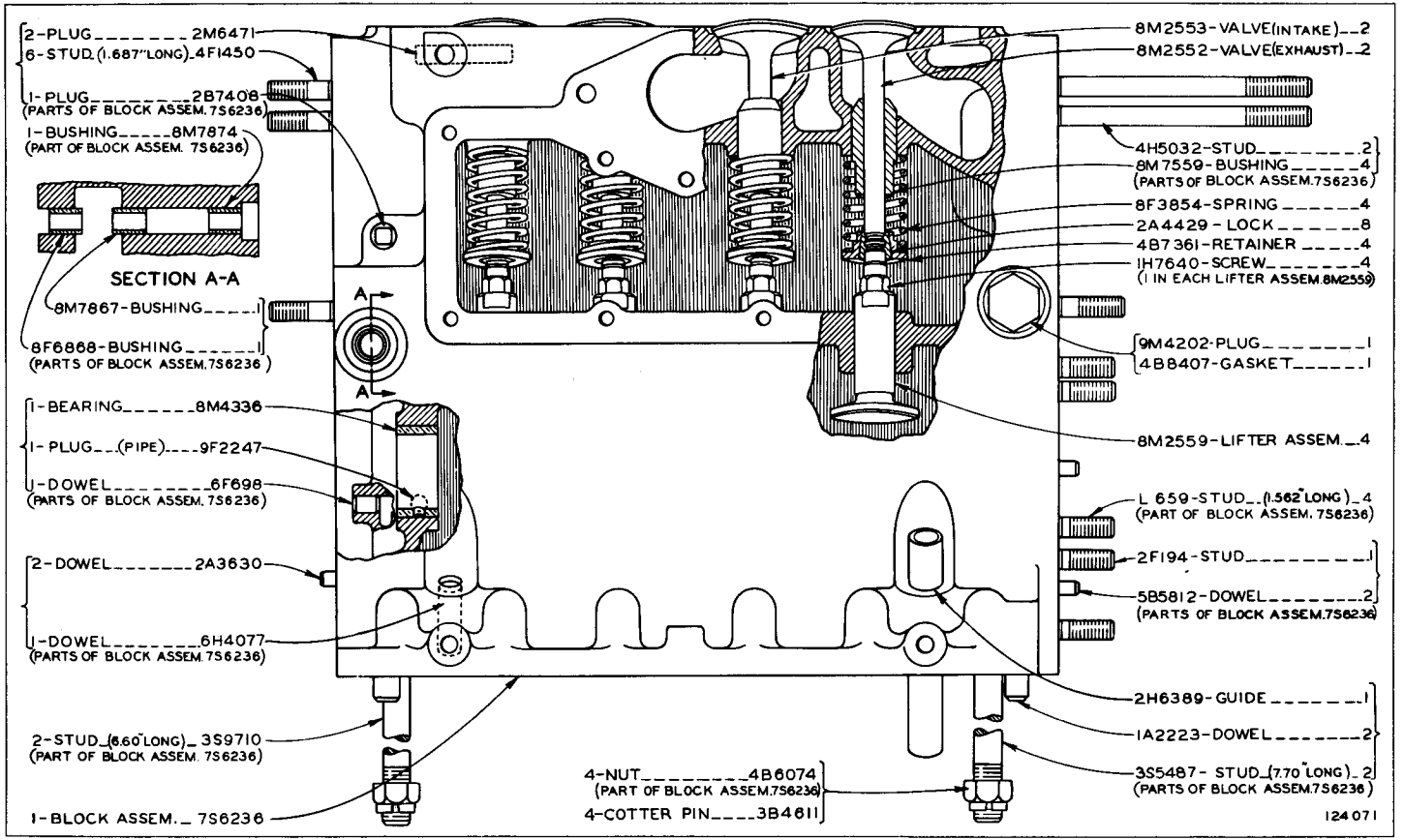

1P3951 CYLINDER BLOCK GROUP

Serial No. 48A10482—Up

Provides Field Replacement for 3S5486 Pan and 7S6236 Block shown on Pages 52B through 53

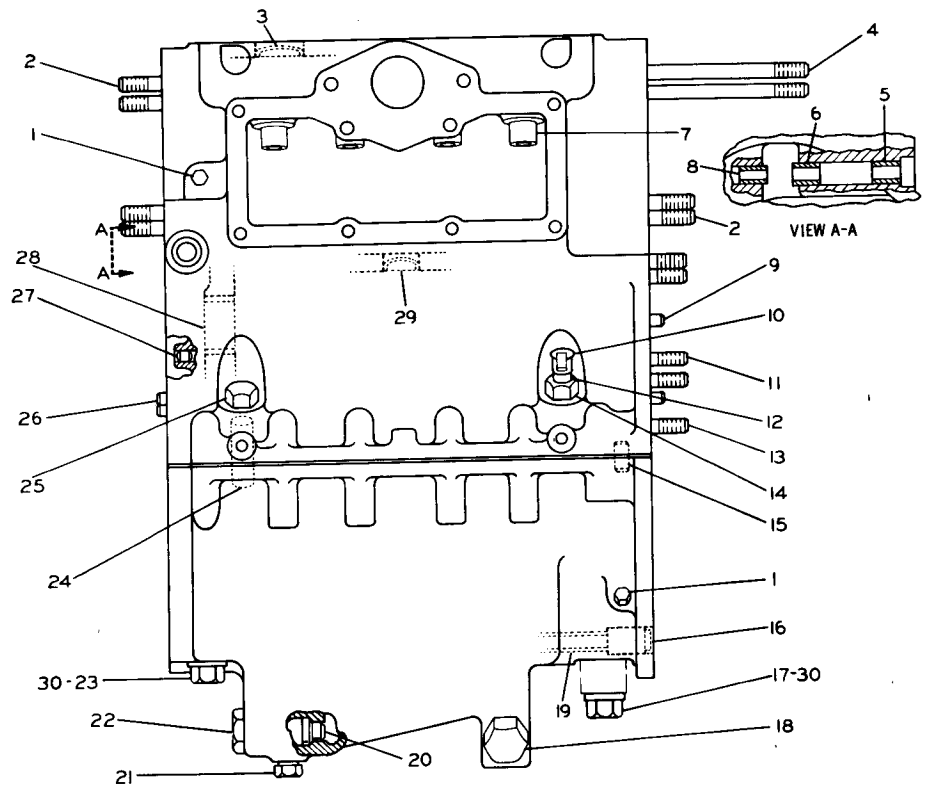

REF. NO.	PART NUMBER	DESCRIPTION	QTY
1	5M6214	PLUG	3
2	4F1450	STUD	6
3	2M6471	PLUG	2
4	4H5032	STUD	2
5	8M7874	BEARING	1
6	8M7867	BUSHING	1
7	8M7559	BUSHING	4
8	8F6868	BEARING	1
9	5B5812	DOWEL	2
10	2H6386	GAUGE ASSEM.	1
11	2F194	STUD	1
12	1P3947	GUIDE	1
13	L659	STUD	4
14	8F8998	NUT	1
15	1A2223	DOWEL	2
16	L1022	PLUG	1
17	1A7669	BOLT	2
18	5H4212	PLUG	1
▲ 19	4S8458	TUBE-----1 ft	
20	5H4211	BUSHING	2
21	5M6213	PLUG	1
22	2A1912	PLUG	1
	3B1925	WASHER	1
23	1D4574	BOLT	2
24	1P3160	TUBE	2
25	1P3950	PLUG	1
26	2A3630	DOWEL	2
27	6F698	DOWEL	1
28	8M4336	BEARING	1
29	1S7902	PLUG	1
30	2M849	WASHER	4
	GMG00562	FORM--(Installation Instructions)-	1

▲ ORDER BY THE FOOT

142500

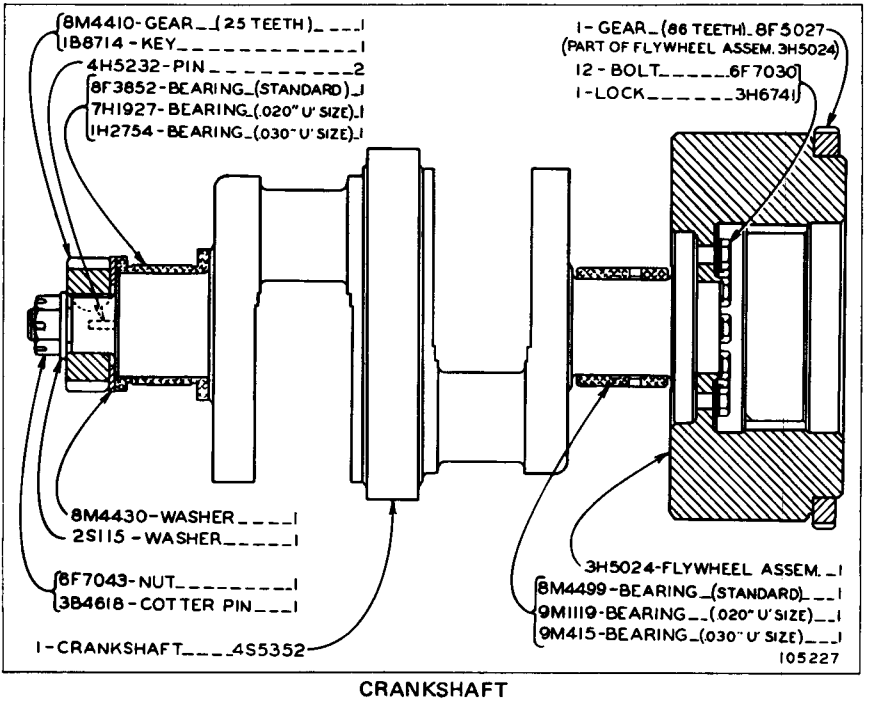

CRANKSHAFT
Serial No. 48A6393 to 48A10481 inclusive. Starting Engine Block
No. F11590 to F99999 and K1 to K20 inclusive

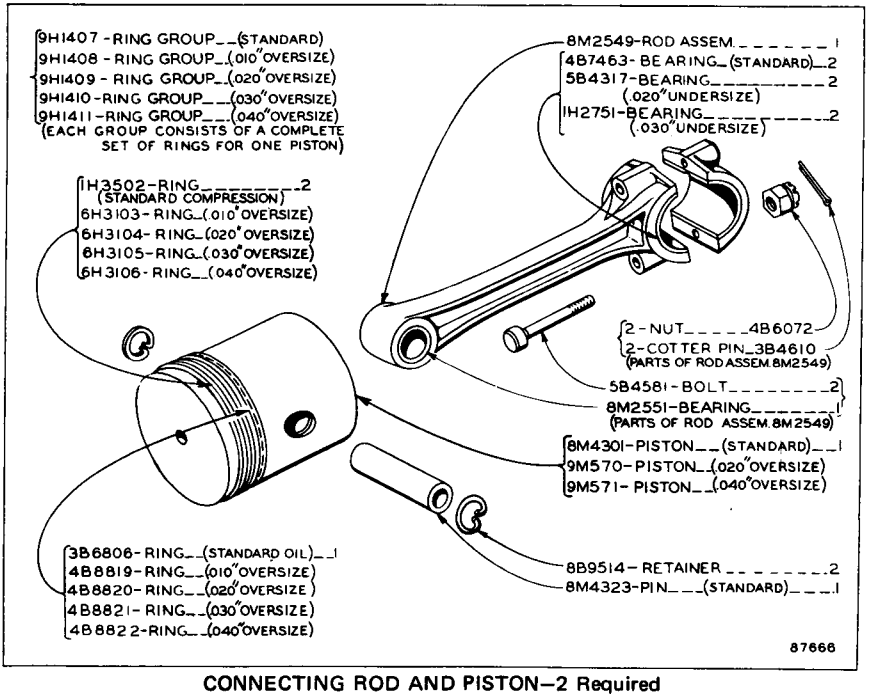

CONNECTING ROD AND PISTON—2 Required
Effective with Starting Engine Block No. F11590

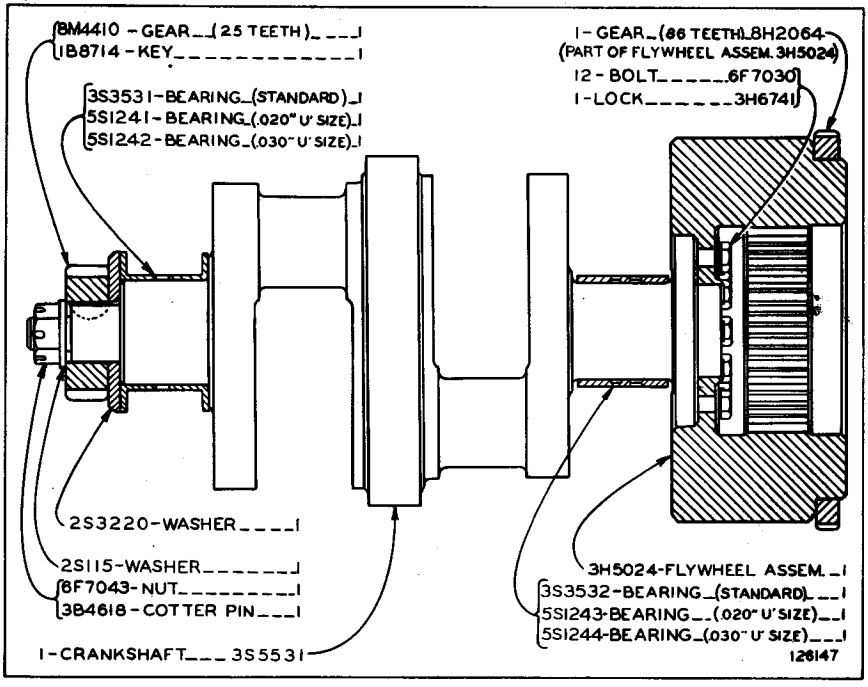

CRANKSHAFT (3S5532 N/S)
Effective with Serial No. 48A10482—Up and
Starting Engine Block No. K21—Up

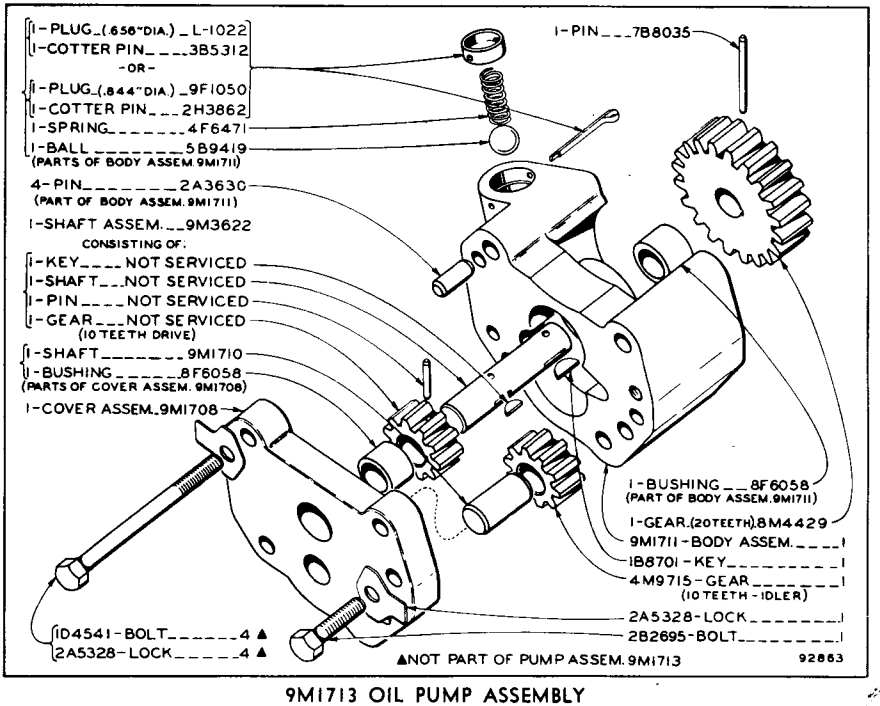

9M1713 OIL PUMP ASSEMBLY
Effective with Starting Engine Block No. F11590

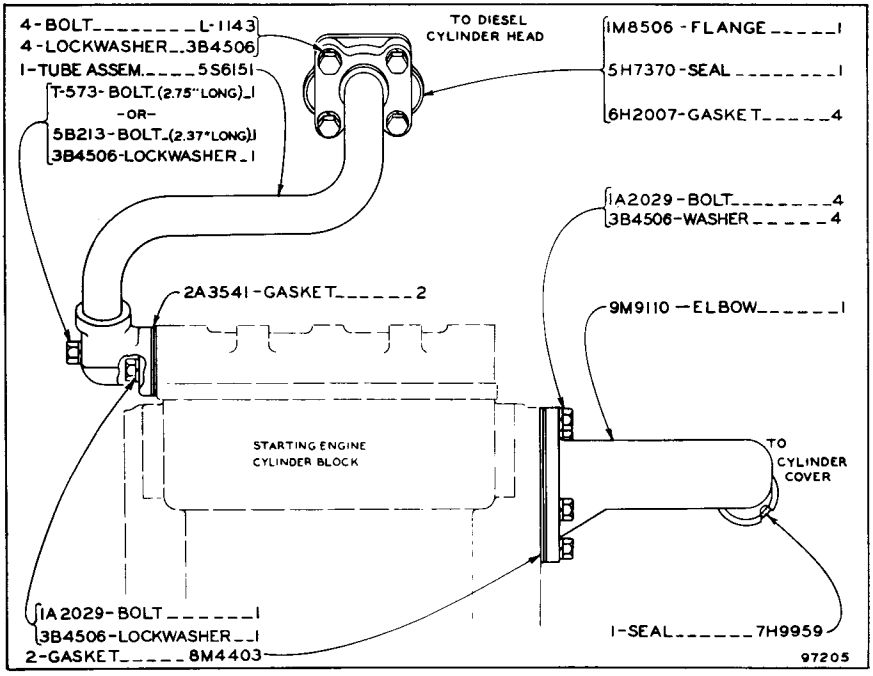

9M9232 WATER LINES GROUP—Side View
Effective with Starting Engine Block No. F11590

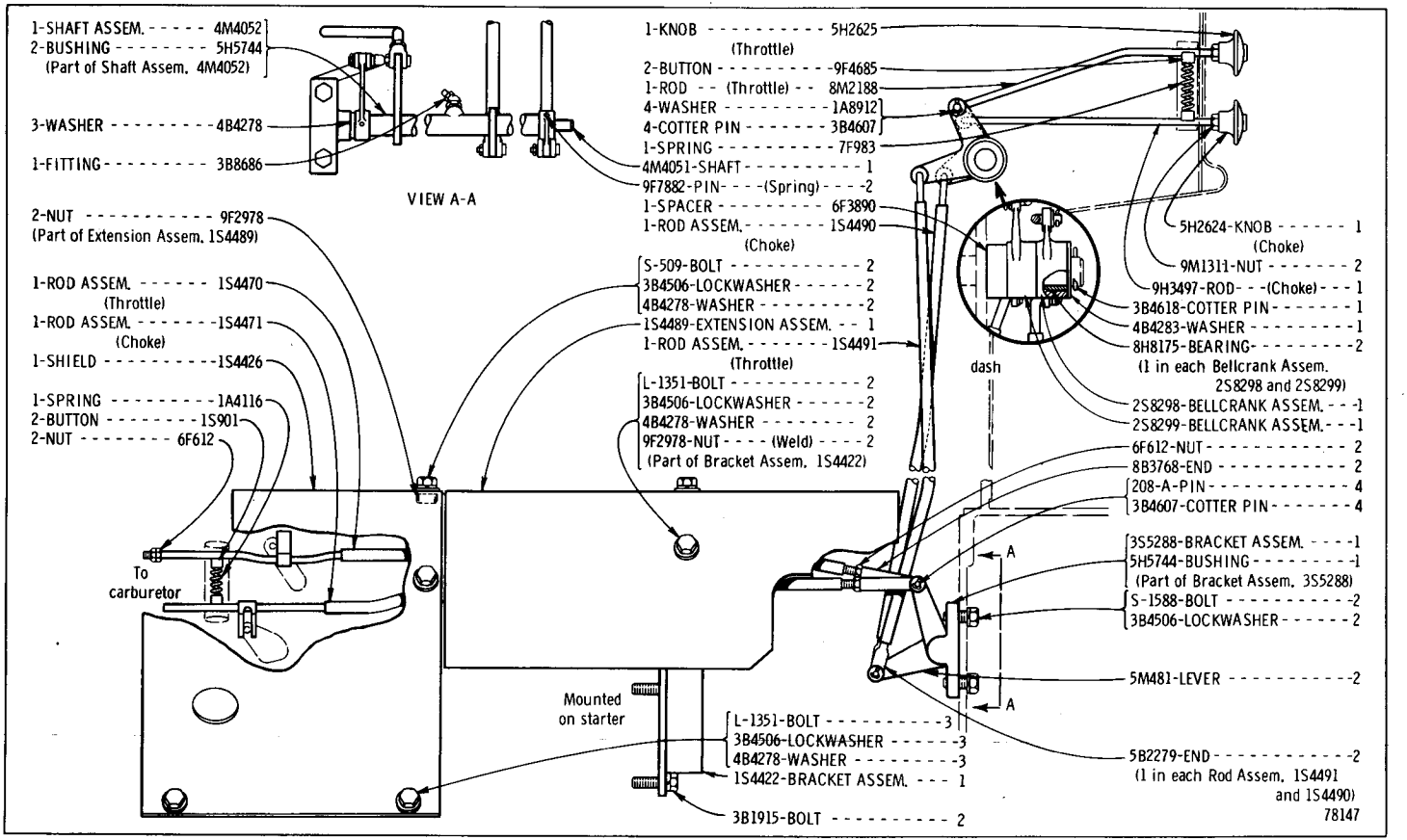

1S4492 CHOKE AND THROTTLE CONTROL GROUP

1S4492 CHOKE AND THROTTLE CONTROL GROUP

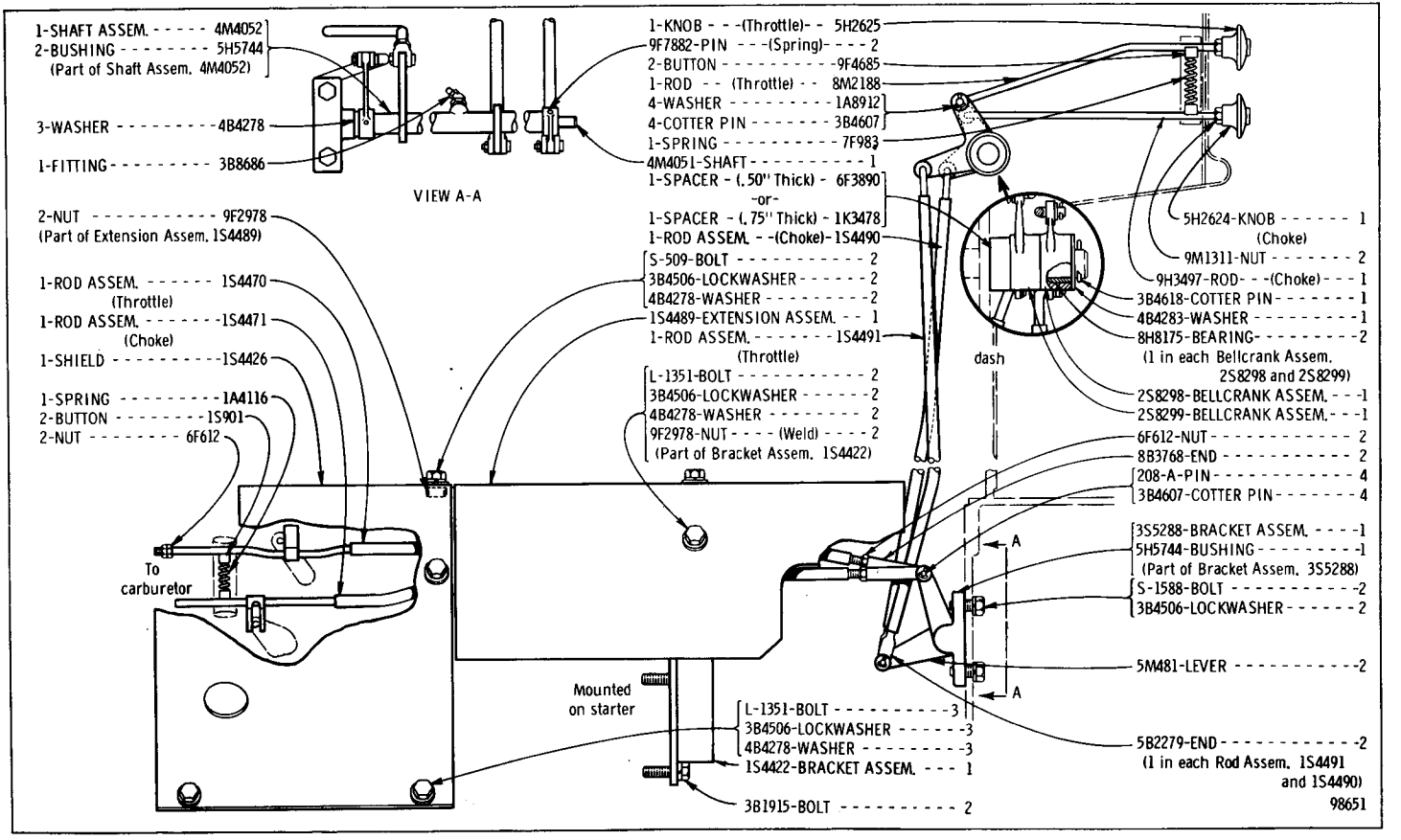

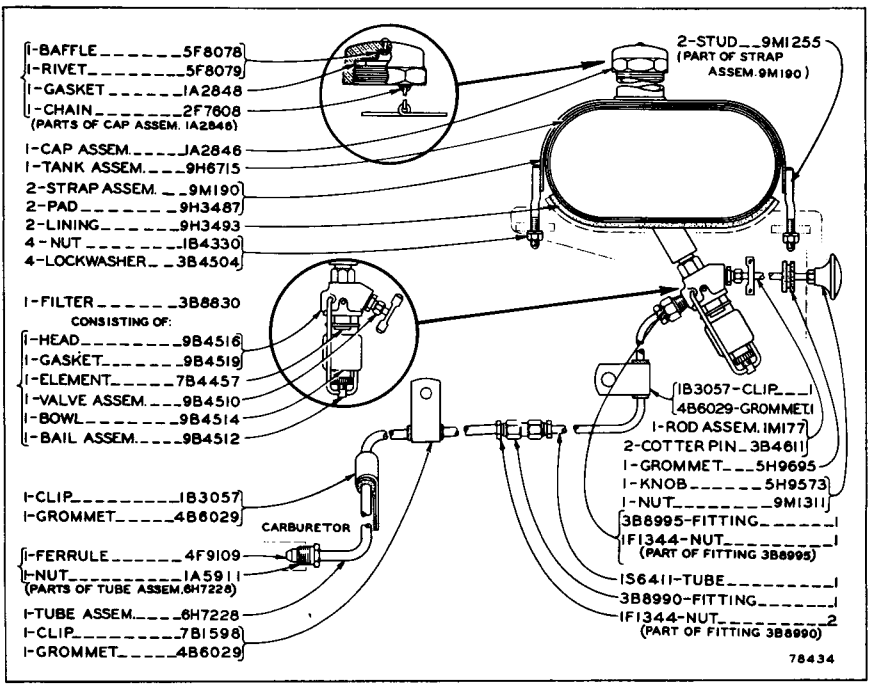

5M4429 FUEL SYSTEM GROUP

REFER ALSO TO PAGE 127 FOR SPECIAL PARTS

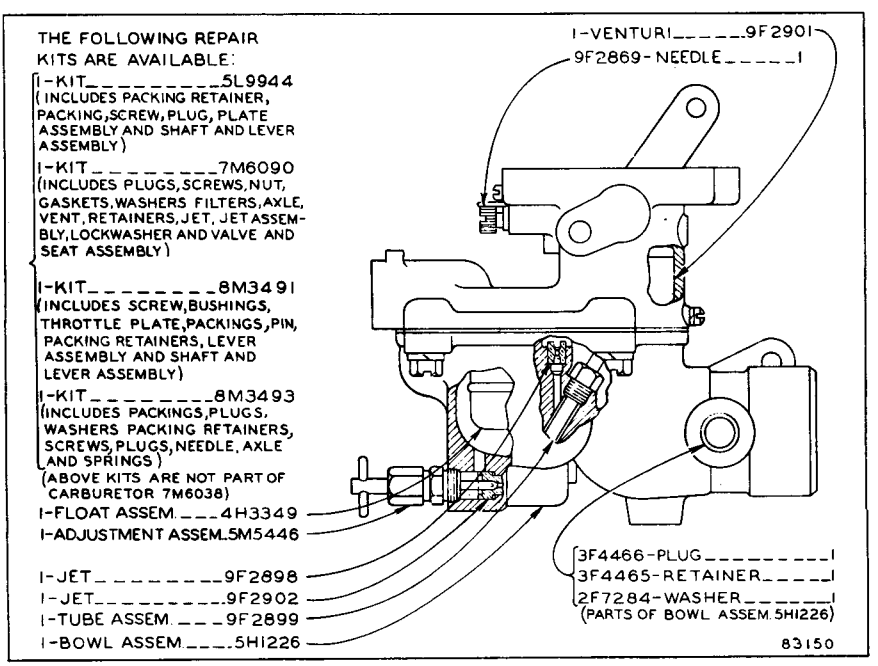

7M6038 CARBURETOR ASSEMBLY

PART OF 9M9233 MANIFOLD, CARBURETOR AND AIR CLEANER GROUP SHOWN ON PAGES 58 AND 58A

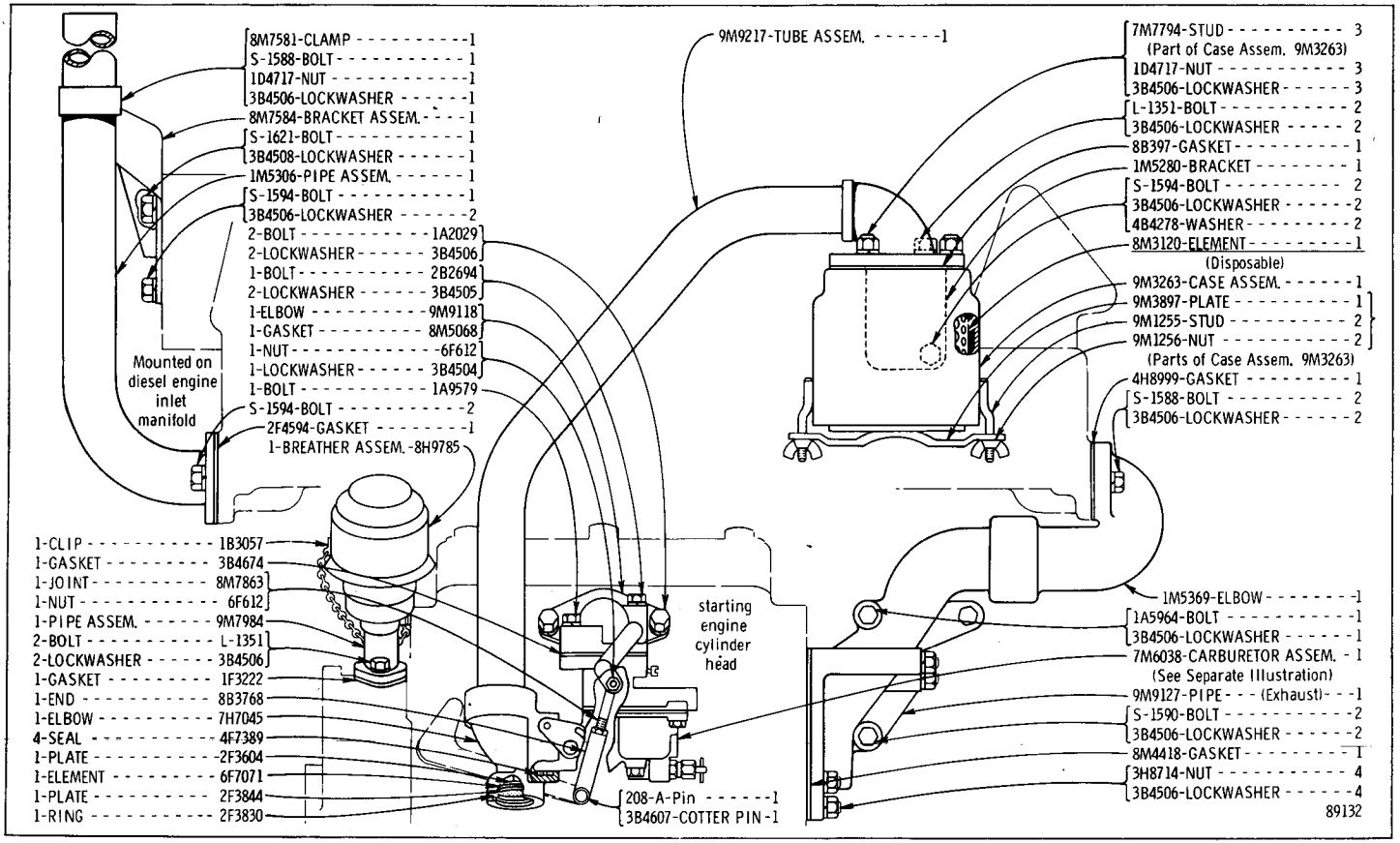

9M9233 MANIFOLD, CARBURETOR AND AIR CLEANER GROUP

SERIAL NO. 48A6393 TO 48A7651 INCLUSIVE AND STARTING ENGINE BLOCK NO. F11590

7M6038 CARBURETOR ASSEMBLY PARTS ARE SHOWN ON PAGE 57. REFER ALSO TO PAGE 126 FOR SPECIAL PARTS

9M9233 MANIFOLD, CARBURETOR AND AIR CLEANER GROUP

EFFECTIVE WITH SERIAL No. 48A7652

7M6038 CARBURETOR ASSEMBLY PARTS ARE SHOWN ON PAGE 57. REFER ALSO TO PAGE 126 FOR SPECIAL PARTS

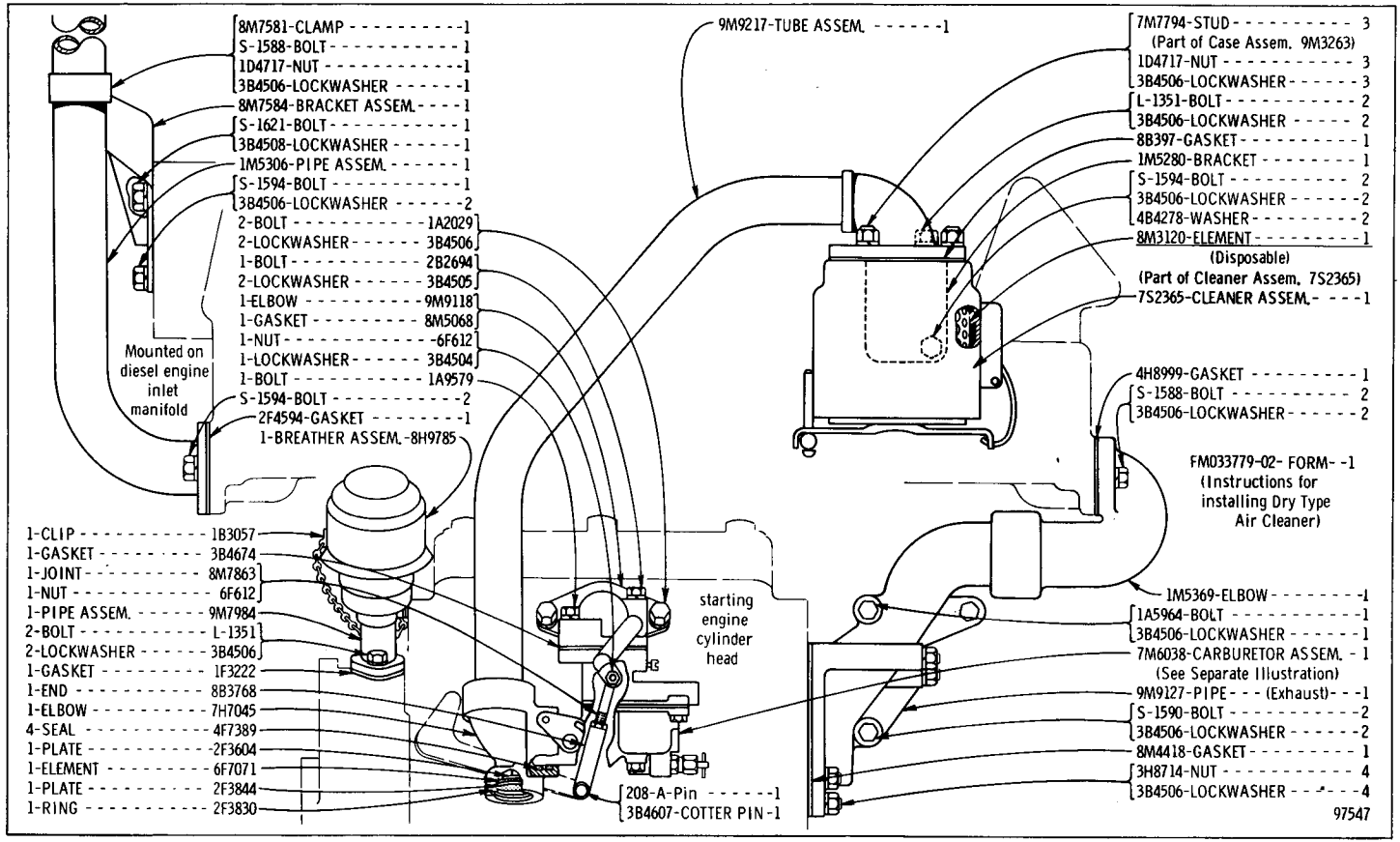

3S2987 MAGNETO ASSEMBLY

Part of 9H6203 Ignition System Group shown on Page 60

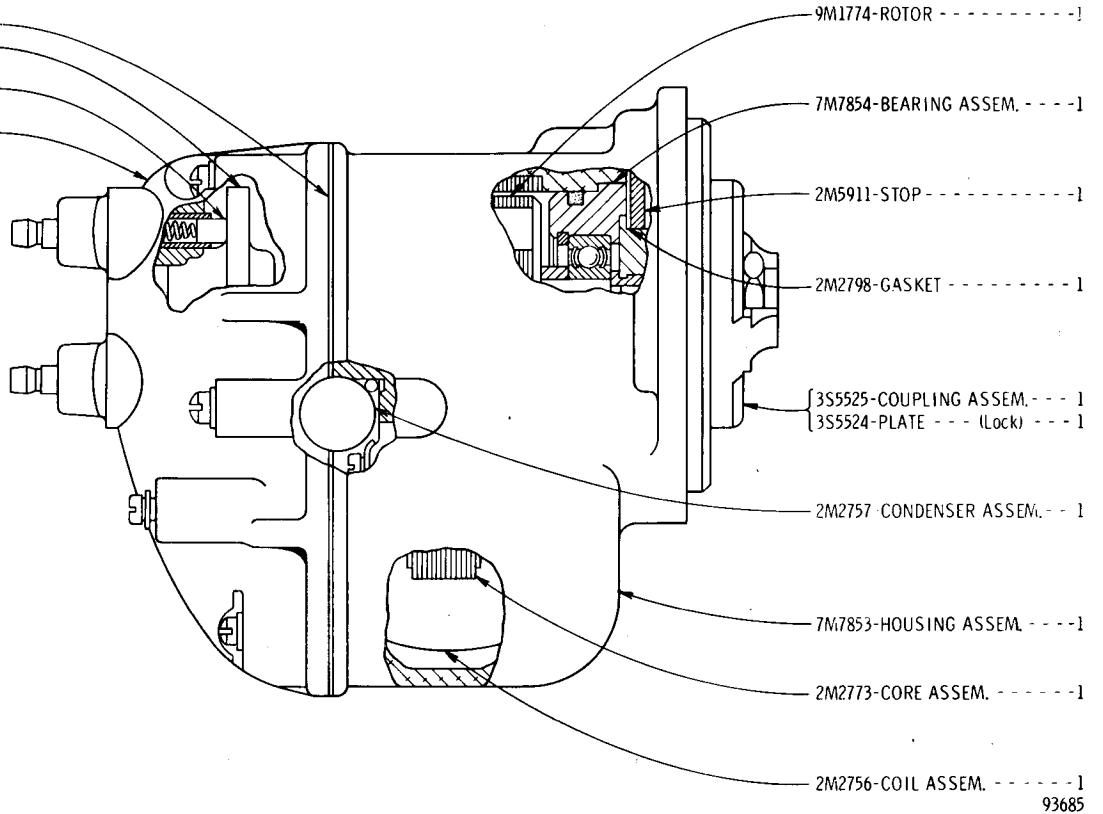

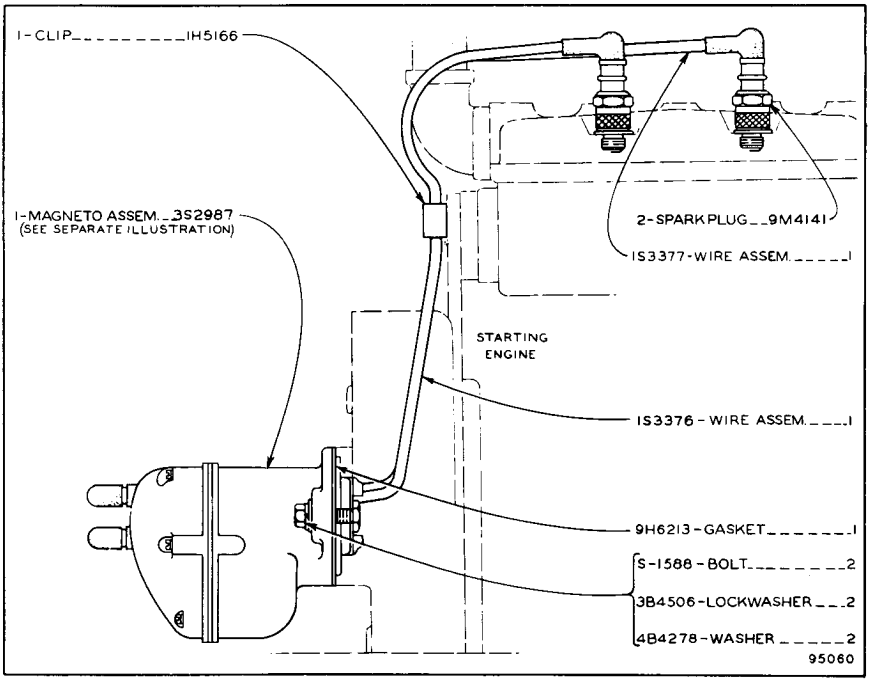

9H6203 IGNITION SYSTEM GROUP
Effective with Starting Engine Block No. F11590
3S2987 Magneto Assembly parts are shown on Page 59

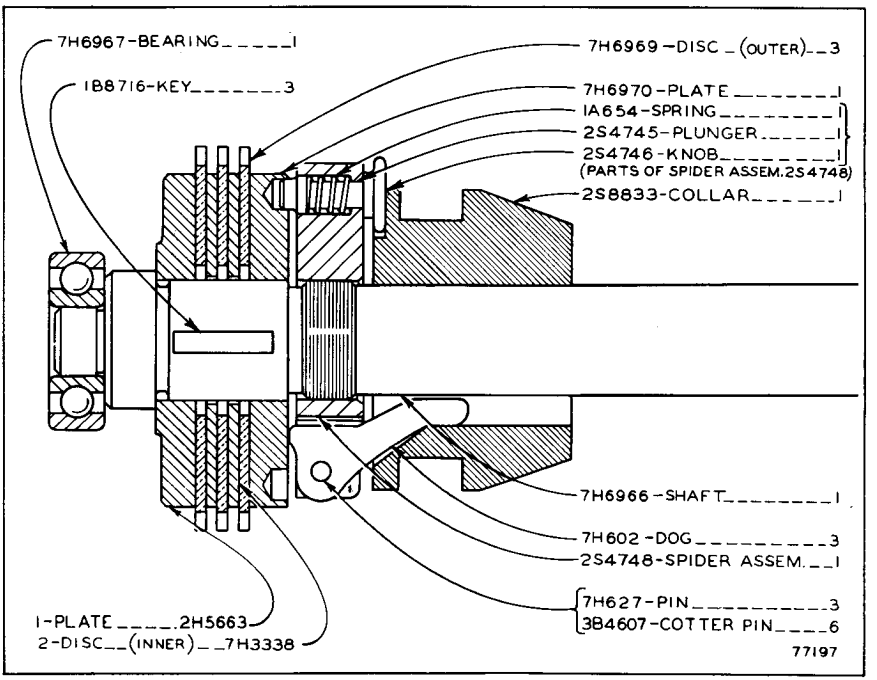

9H4826 CLUTCH GROUP

2M4753 CLUTCH AND STARTER PINION CONTROL GROUP

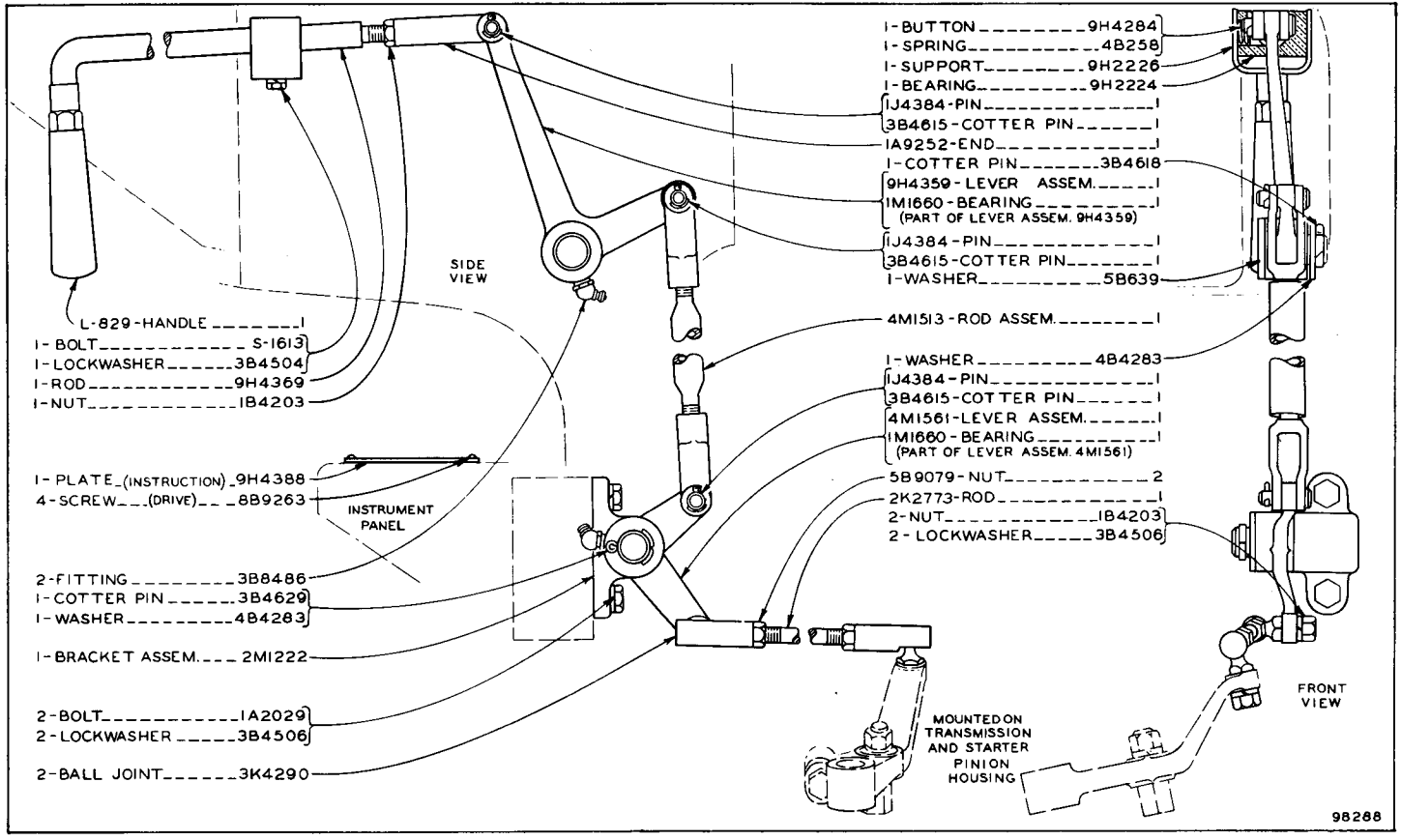

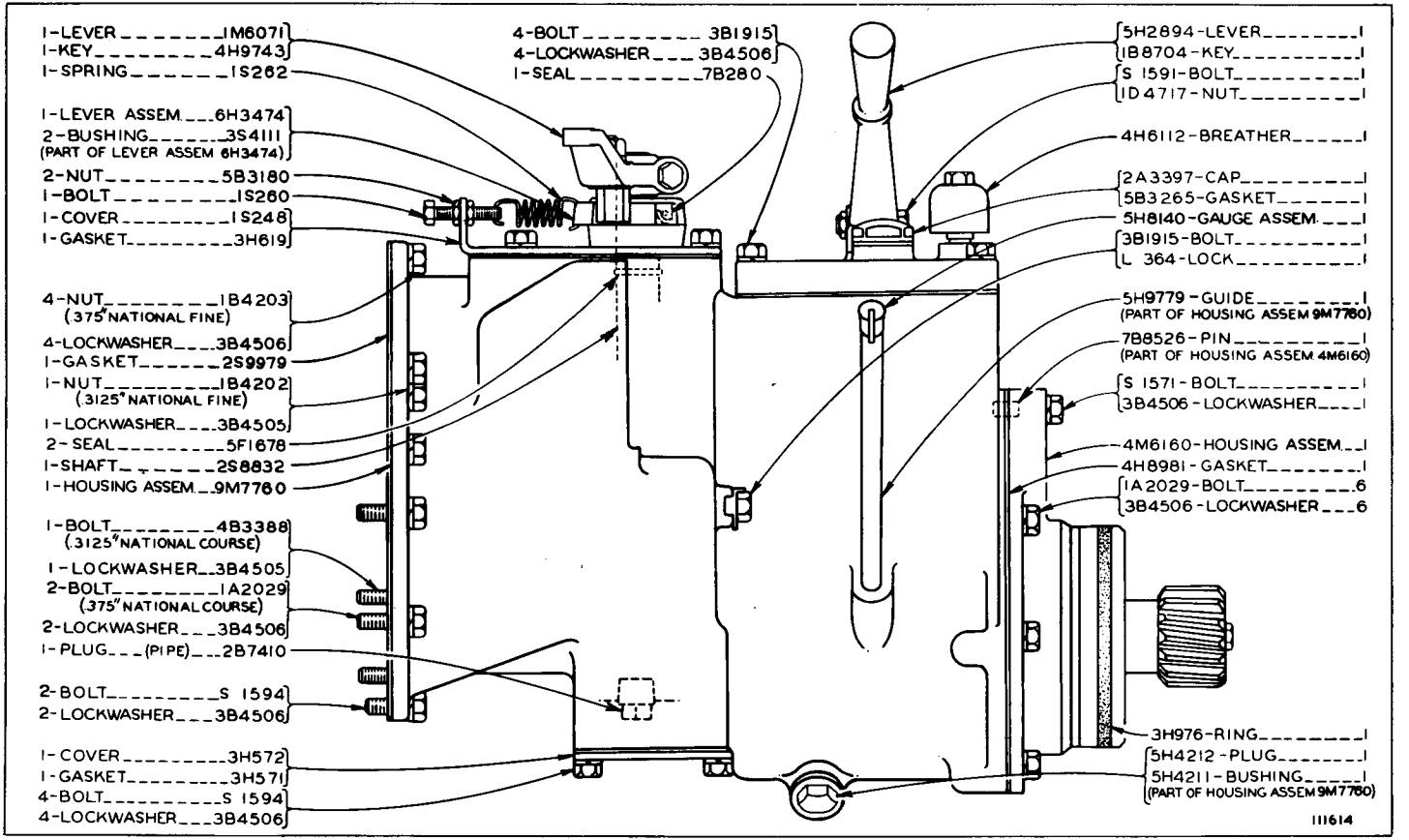

9M9229 TRANSMISSION AND STARTER PINION GROUP—Part One
Effective with Starting Engine Block No. F11590

9M9229 TRANSMISSION AND STARTER PINION GROUP—Part Two

Effective with Starting Engine Block No. F11590

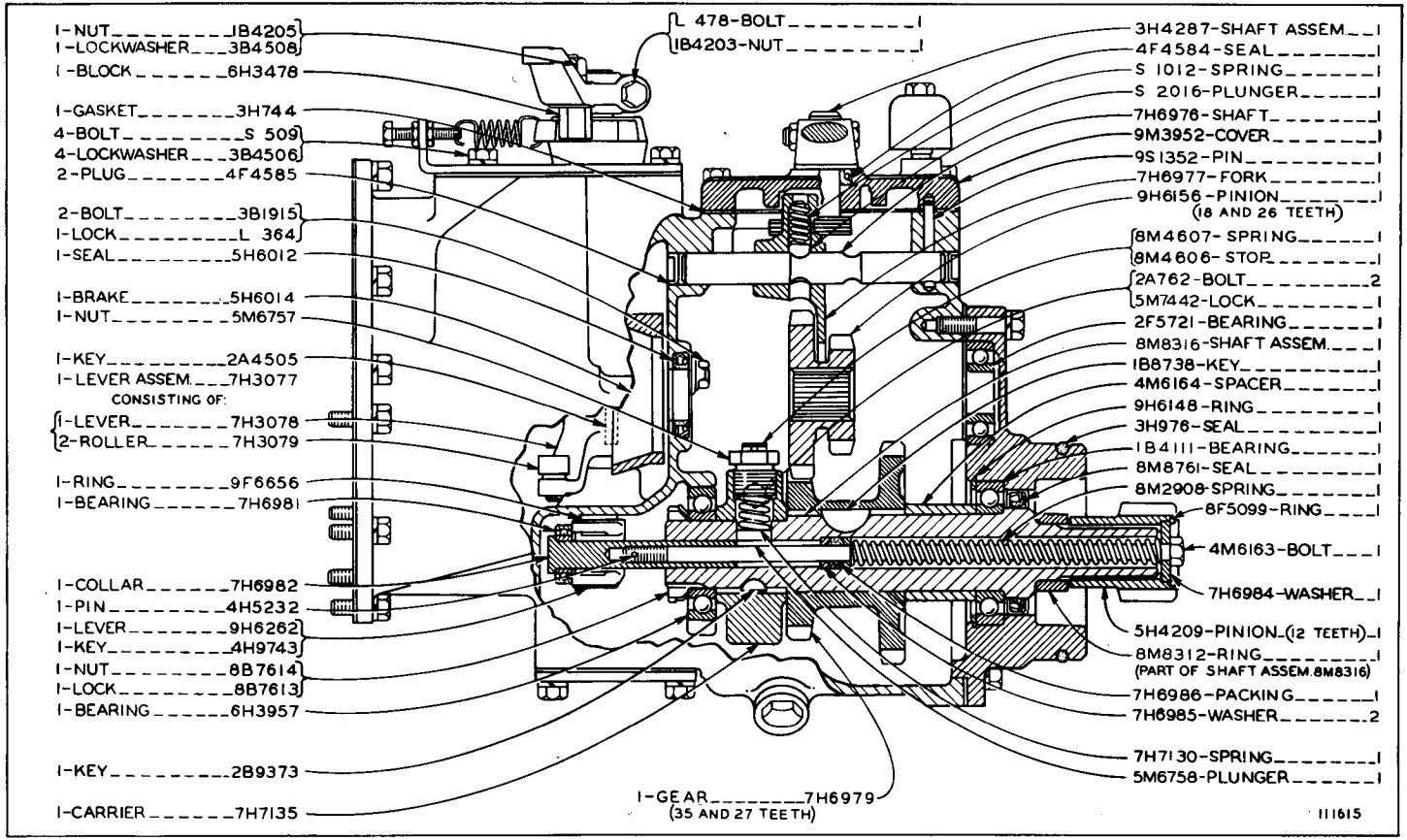

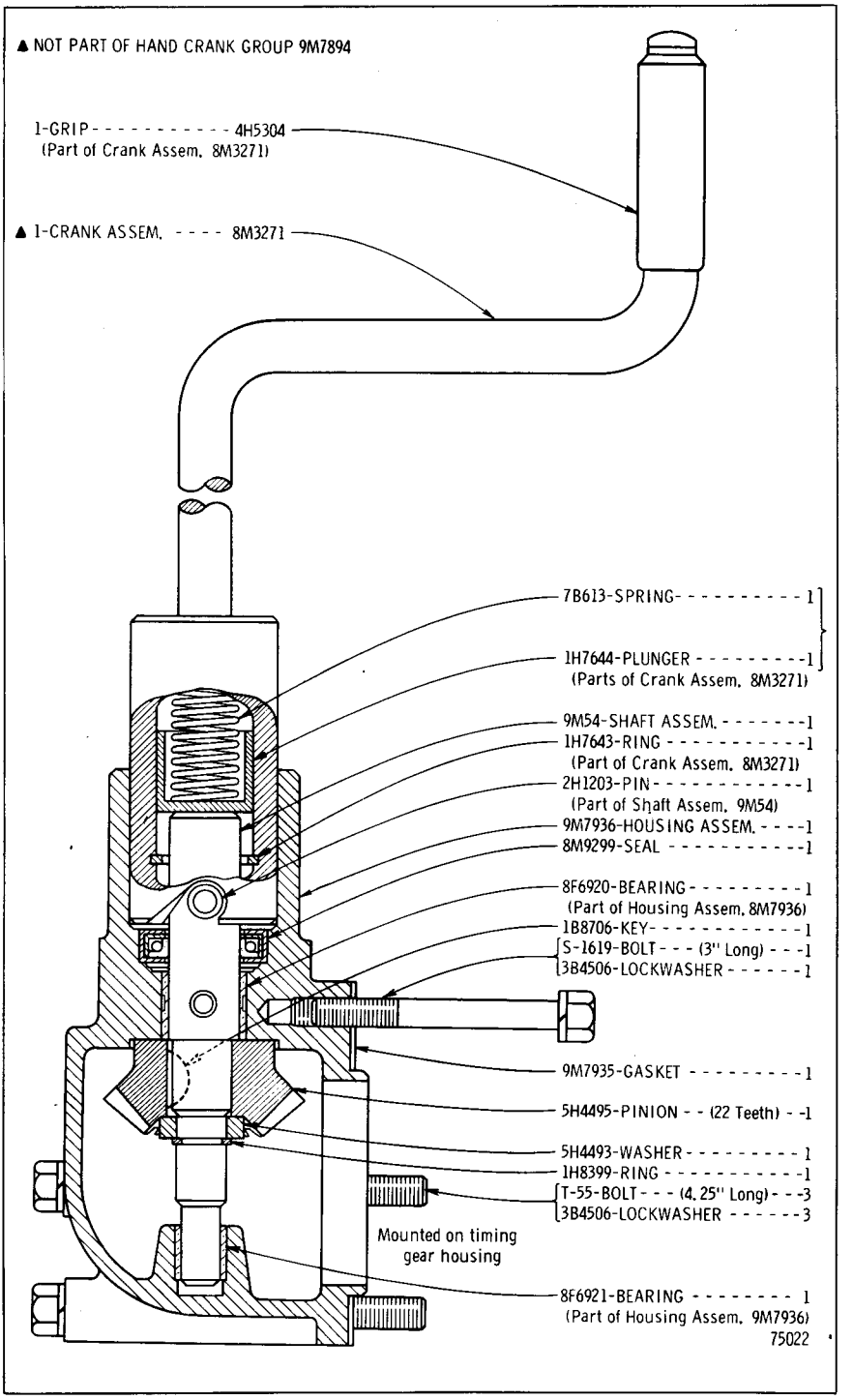

9M7894 MANUAL STARTING CRANK GROUP
Effective with Starting Engine Block No. F11590

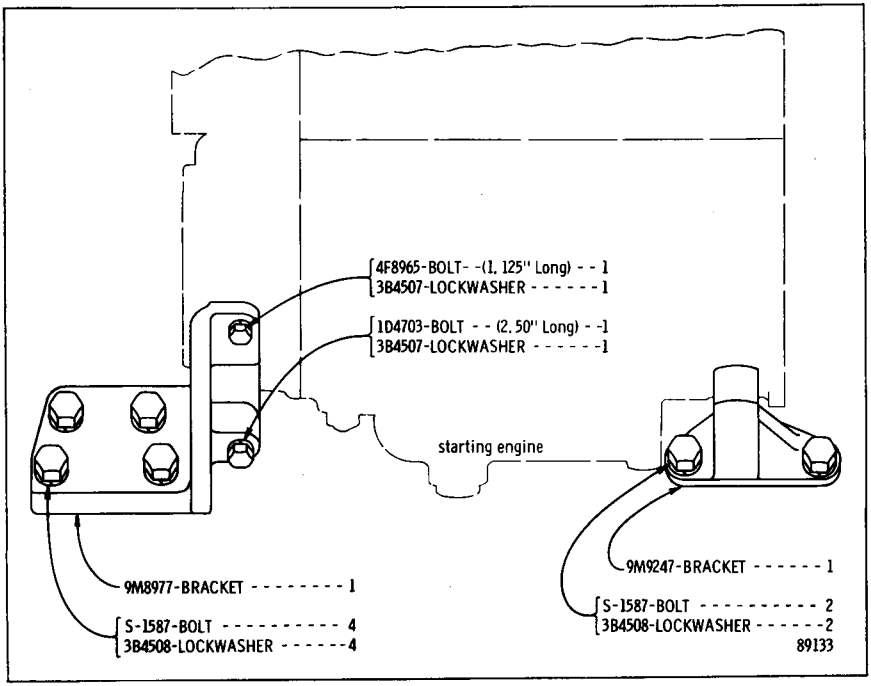

9M9231 STARTING ENGINE SUPPORT GROUP
Serial No. 48A6393 to 48A10481 inclusive and Starting Engine Block No. F11590 to F99999 and K1 to K20 inclusive

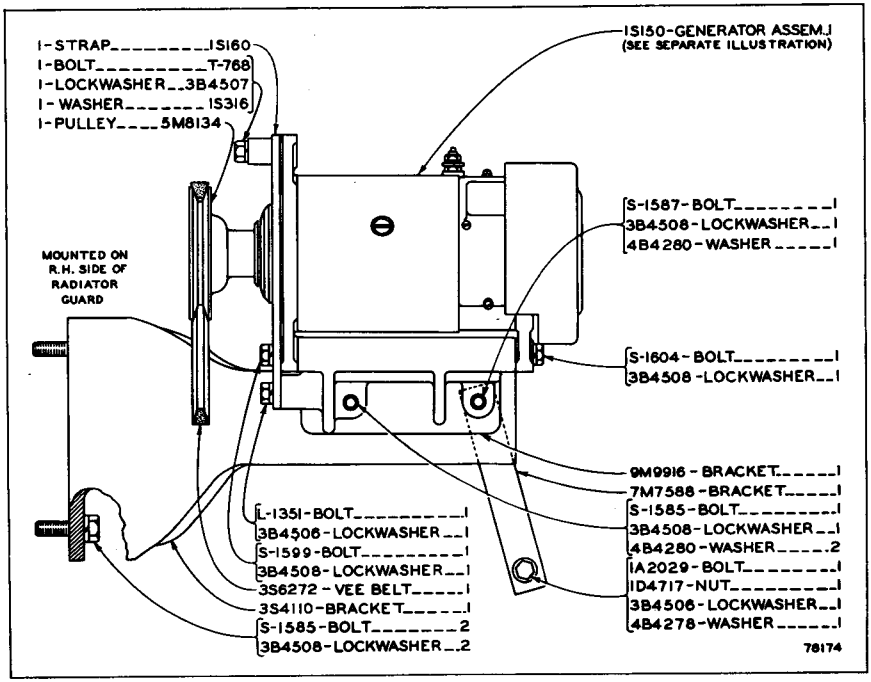

GENERATOR—12 Volt, 24 Ampere
Serial No. 48A6393 to 48A9314 inclusive
1S150 Generator parts are shown on Page 66

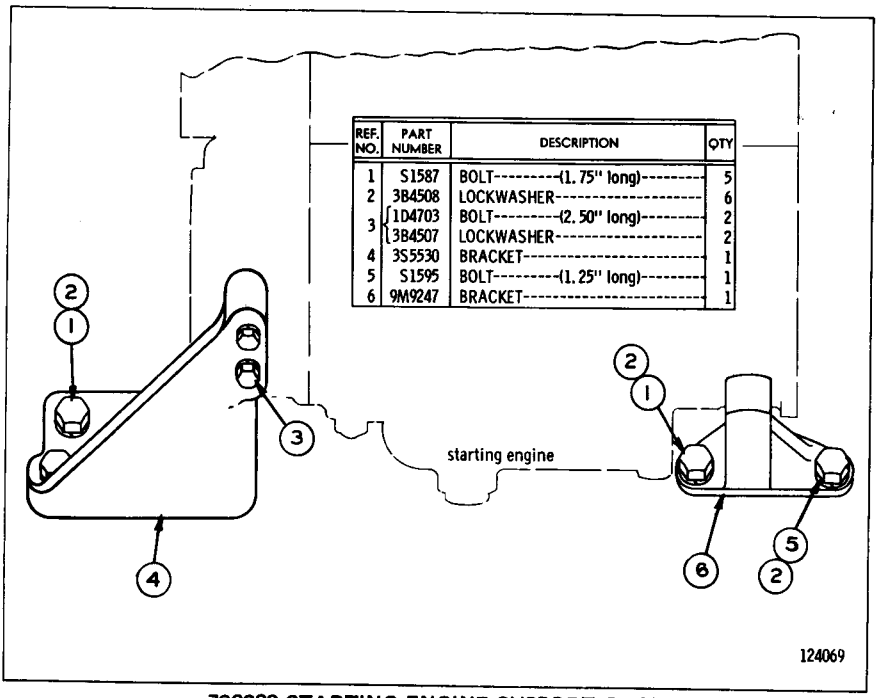

REF. NO.	PART NUMBER	DESCRIPTION	QTY
1	S1587	BOLT---------(1.75" long)---------	5
2	3B4508	LOCKWASHER----------	6
3	1D4703	BOLT---------(2.50" long)---------	2
	3B4507	LOCKWASHER----------	2
4	3S5530	BRACKET----------	1
5	S1595	BOLT---------(1.25" long)---------	1
6	9M9247	BRACKET----------	1

7S6238 STARTING ENGINE SUPPORT GROUP
Effective with Serial No. 48A10482-Up and Starting Engine Block No. K21-Up

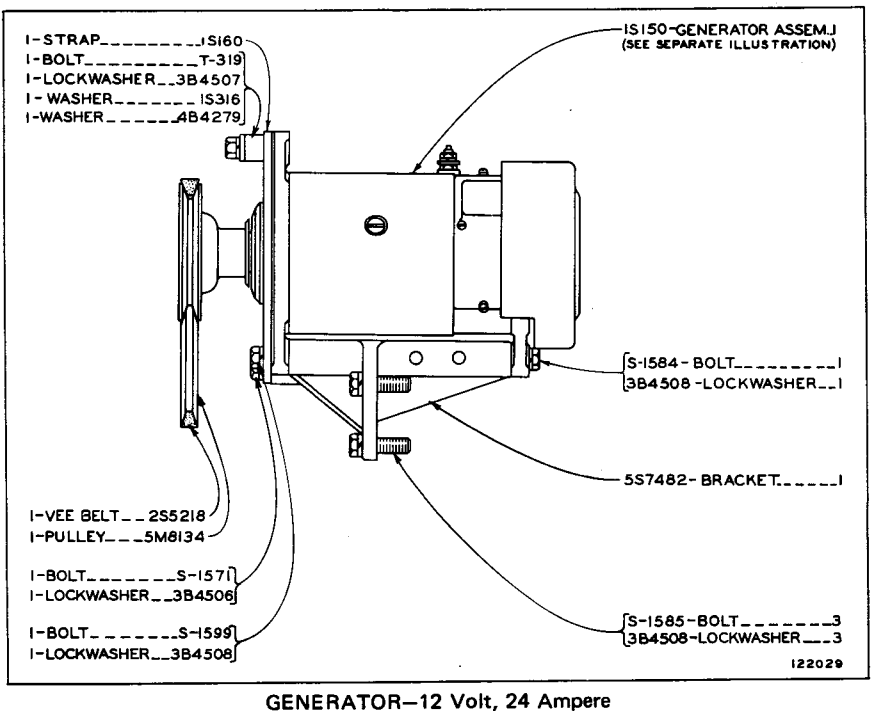

GENERATOR—12 Volt, 24 Ampere
Effective with Serial No. 48A9315
1S150 Generator parts are shown on Page 66

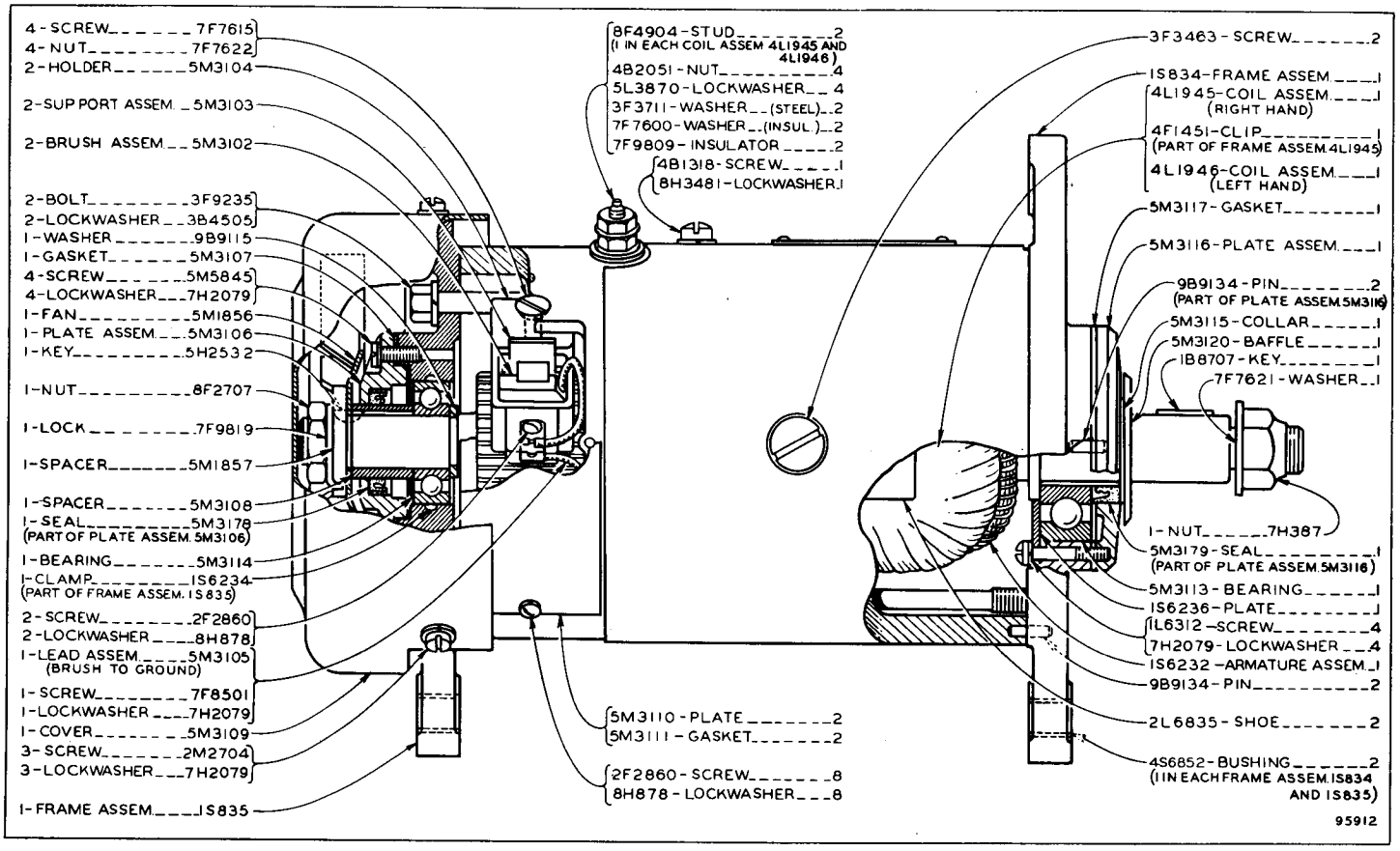

1S150 GENERATOR ASSEMBLY—12 Volt, 24 Ampere

Part of Generator shown on Page 65

7M7793 ELECTRIC STARTER GROUP—12 Volt—Type 1
Only separate parts serviced

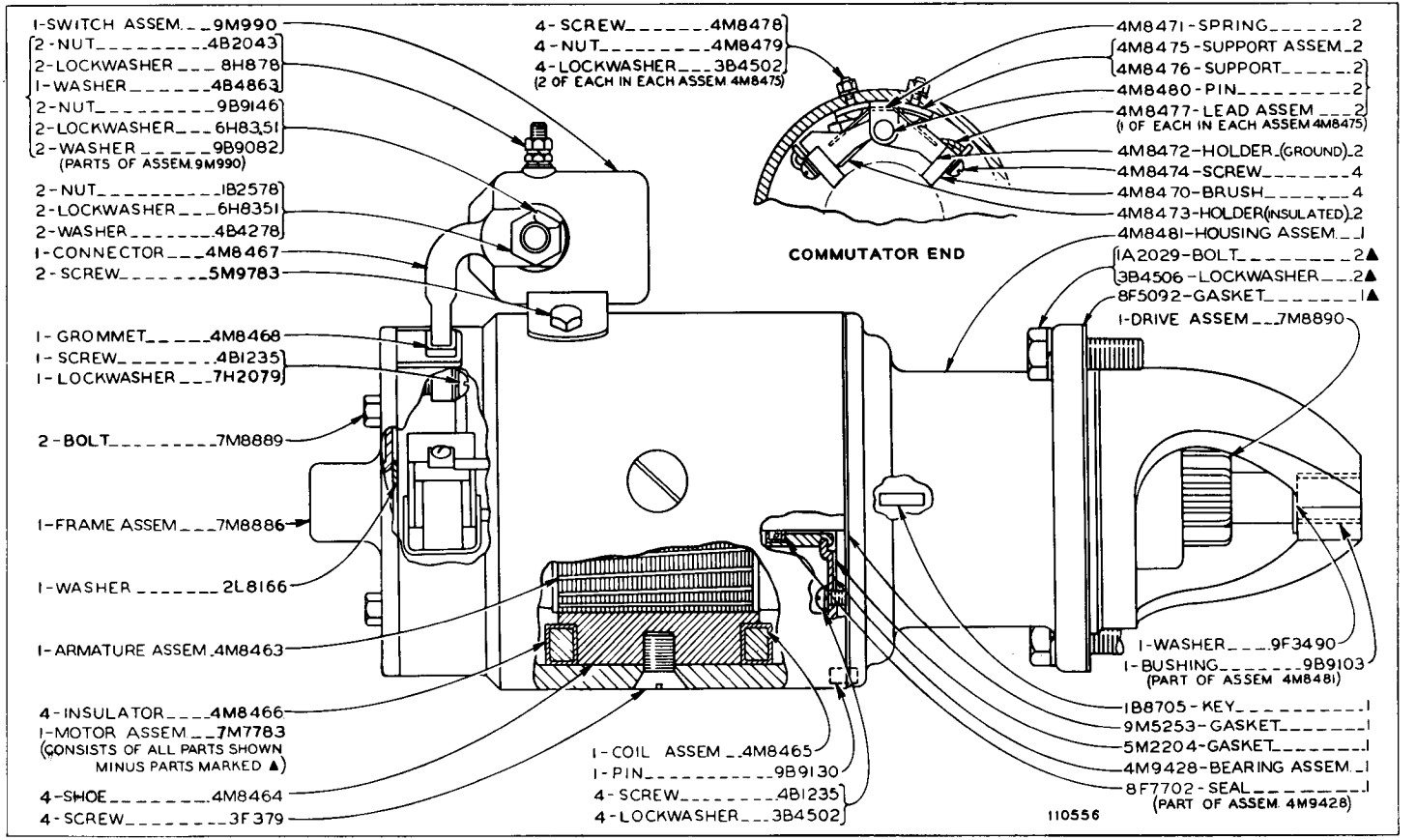

7M7793 ELECTRIC STARTER GROUP—12 Volt—Type 2
Only separate parts serviced

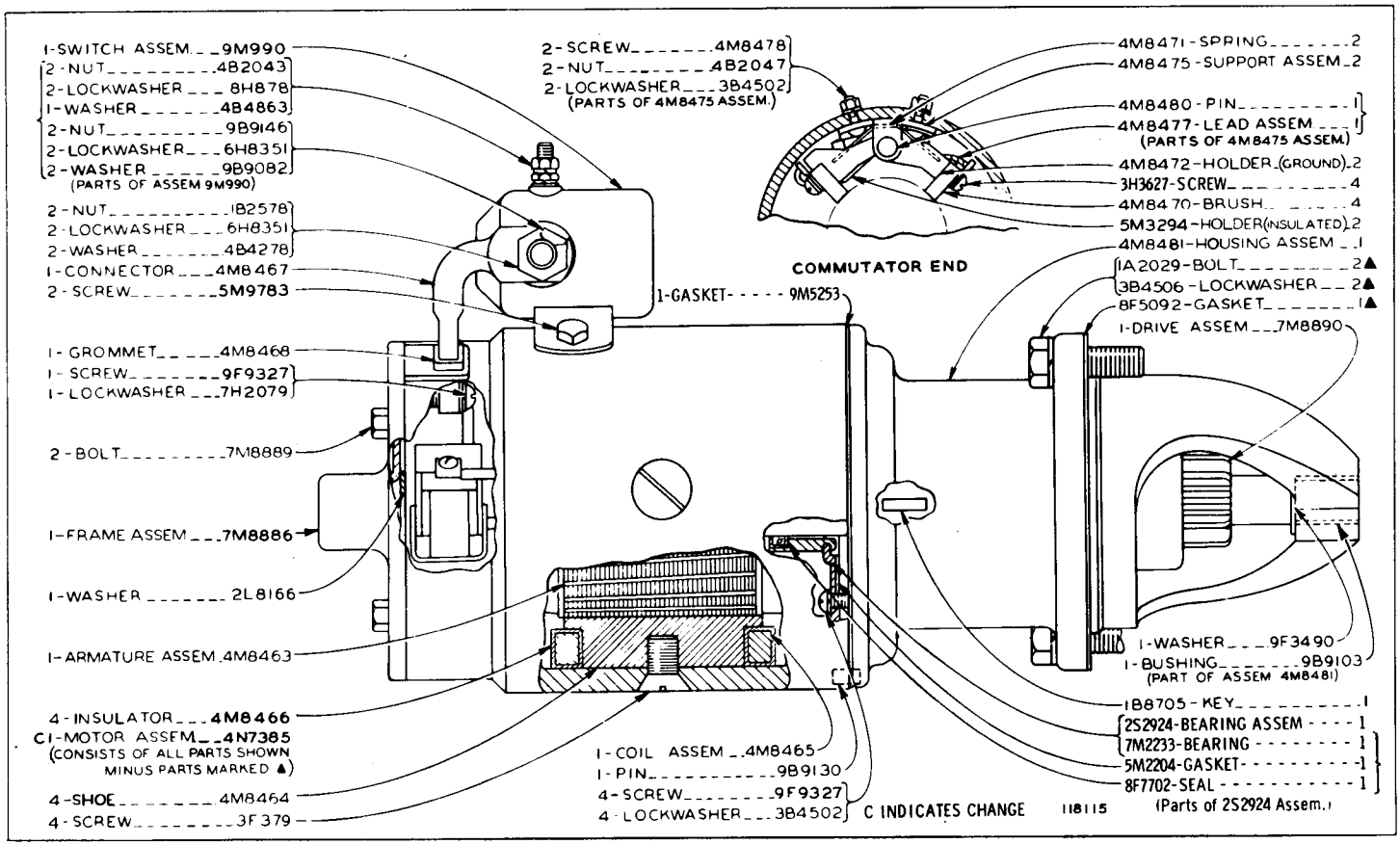

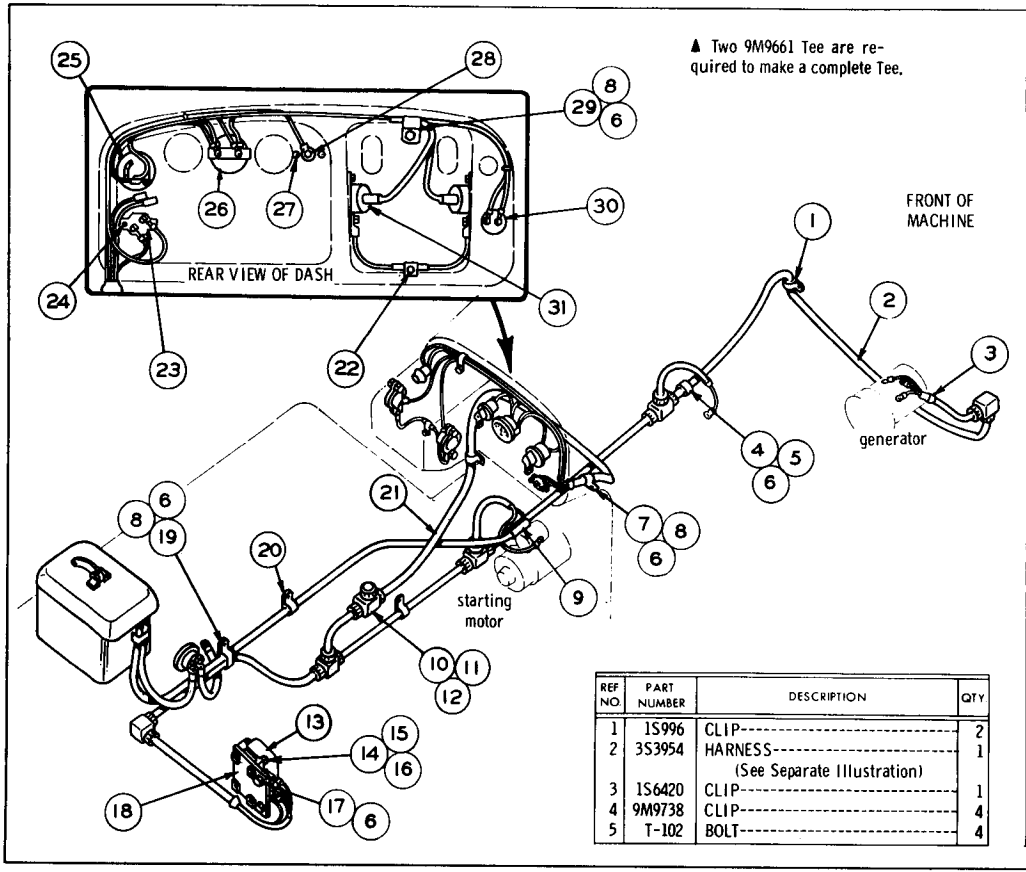

REF NO	PART NUMBER	DESCRIPTION	QTY
1	1S996	CLIP	2
2	3S3954	HARNESS (See Separate Illustration)	1
3	1S6420	CLIP	1
4	9M9738	CLIP	4
5	T-102	BOLT	4

REF NO	PART NUMBER	DESCRIPTION	QTY
6	3B4506	LOCKWASHER	11
7	1S994	CLIP	3
8	S-509	BOLT	5
9	8M5397	BOOT	1
10	▲9M9661	TEE	2
11	9M9662	NUT	1
12	2S3163	PLUG	1
13	2M6495	REGULATOR	1
		THE FOLLOWING REPAIR KIT IS AVAILABLE:	
	8M3146	KIT--------(Shockmount) (Includes Brackets, Grommets, Lead Assem. and Hardware)	1
14	7B2742	BOLT	4
15	3B4504	LOCKWASHER	4
16	4B4276	WASHER	4
17	1D4717	NUT	2
18	5S1624	BRACKET ASSEM.	1
	9F6445	NUT----------(Weld) (Part of 5S1624 Bracket Assem.)	4
19	1S3403	CLIP	1
20	5D2651	CLIP	1
21	5S1531	HARNESS (See Separate Illustration)	1
22	9F9327	SCREW	1
	3B4502	LOCKWASHER	1
23	5M2555	CIRCUIT BREAKER	1
24	5M6668	SCREW	2
25	4D1259	SWITCH	1
26	1F7307	AMMETER	1
27	4B1268	SCREW	2
	4B2043	NUT	2
	3B4501	LOCKWASHER	2
28	4F4784	SWITCH ASSEM.	1
29	8M2770	CLIP	1
30	3F1006	SWITCH	1
31	4M2471	LAMP ASSEM. (See Separate Illustration)	2

97224

BATTERY AND WIRING—12 Volt—As Viewed from Rear Right Hand Side of Machine—Part 1

5S1531, 3S3954 Wiring Harness and 4M2471 Dash Lamp Assembly parts are shown on Pages 71 through 73. See Page 70 for Wiring Diagram

BATTERY AND WIRING—12 Volt—As Viewed from Rear Right Hand Side of Machine—Part Two

7H7290 Disconnect Switch Assembly parts are shown on Page 73. See Page 70 for Wiring Diagram

REF NO	PART NUMBER	DESCRIPTION	QTY
1	3S4634	COVER GROUP	1
	9M5617	GROMMET	4
	1S6385	LUG	4
		(Parts of 3S4634 Cover Group)	
2	1J4384	PIN	1
	3B4615	COTTER PIN	1

REF NO	PART NUMBER	DESCRIPTION	QTY
3	3B8153	PIN	1
	3B4617	COTTER PIN	1
	2B4823	WASHER	1
4	1H7365	HANDLE	1
5	1B9920	SPRING	1
6	T-431	WASHER	1
7	1H7366	ROD	1
8	1S6957	BOLT	2
9	4M1479	BATTERY	1
10	3S4620	HOLD DOWN ASSEM.	1
11	9H8524	NUT	2
	4B5271	WASHER	2

REF NO	PART NUMBER	DESCRIPTION	QTY
12	S-1585	BOLT	4
	1D4719	NUT	4
	3B4508	LOCKWASHER	4
13	3S3351	BOX ASSEM.	1
	9F2978	NUT-(Weld)	1
	2A2677	SPACER	2
		(Parts of 3S3351 Box Assem.)	
14	9M9015	CLAMP	1
	T-102	BOLT	1
	3B4506	LOCKWASHER	1
15	2S2628	CABLE ASSEM.	1
	3D2098	TERMINAL ASSEM.	1
		(Part of 2S2628 Cable Assem.) Consisting of:	
16	2D8403	TERMINAL-(+)	1
	2D8788	BOLT	1
	2D8787	NUT	1
17	4S8732	CONDUIT-(6 Feet)	1
18	1S2244	BOOT	4
	1S4915	LINER	4
	1S6329	TIE	4
19	2S3388	CABLE ASSEM.	1
	3D2098	TERMINAL ASSEM.	1
		(Part of 2S3388 Cable Assem.) Consisting of:	
20	2D8403	TERMINAL-(-)	1
	2D8788	BOLT	1
	2D8787	NUT	1
21	4S8732	CONDUIT-(2 Feet)	1
22	7H7290	SWITCH ASSEM. (See Separate Illustration)	1
	8H8648	PLATE	1
23	5H9481	CABLE ASSEM.	1
24	1M4986	TERMINAL	1
25	1B5218	TERMINAL	1
		(Parts of 5H9481 Cable Assem.)	
26	1S7839	TERMINAL	2

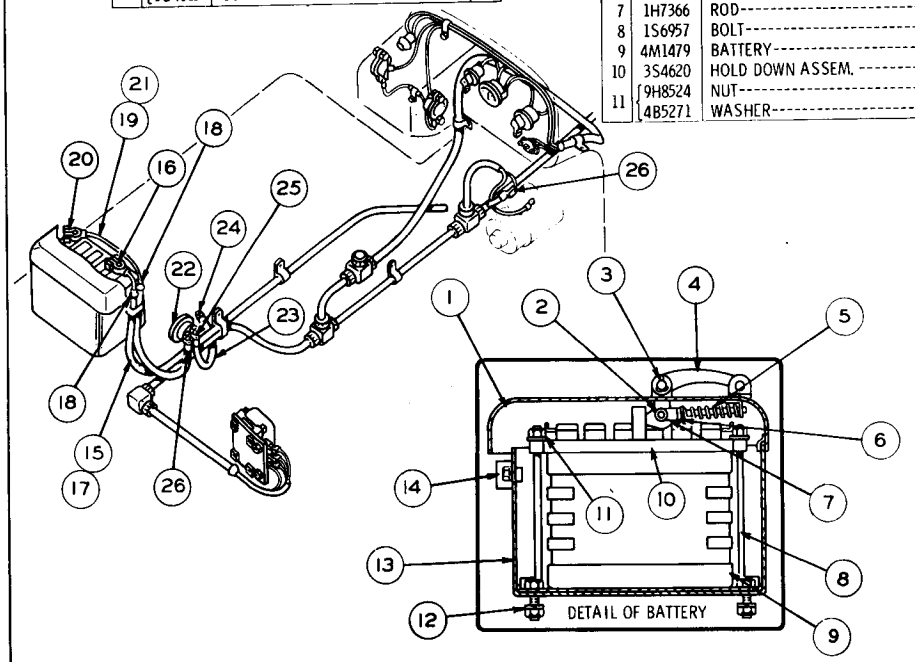

97225

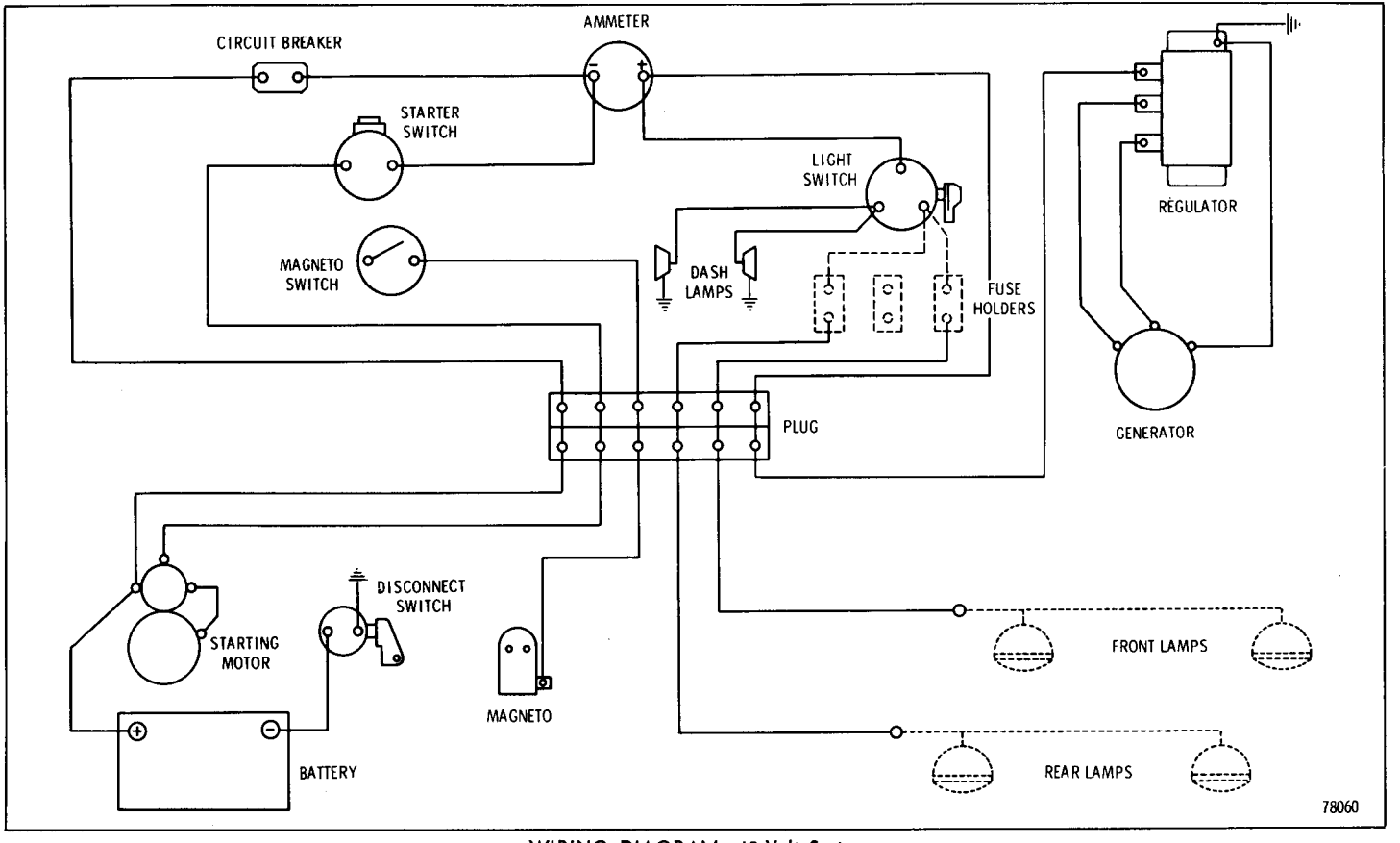

WIRING DIAGRAM—12 Volt System

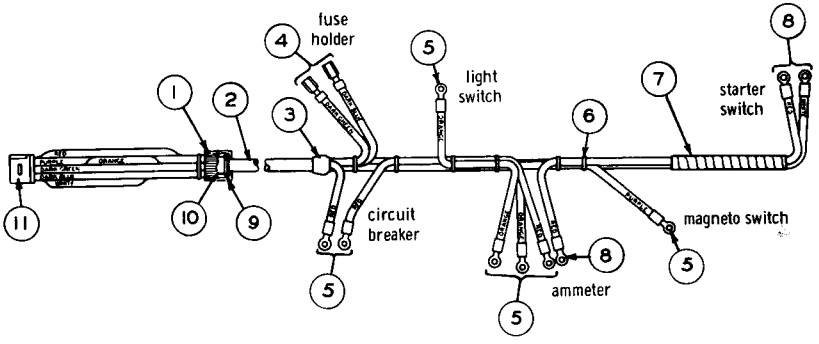

REF NO	PART NUMBER	DESCRIPTION	QTY
1	9M9662	NUT	1
2	4S8732	CONDUIT-5 Feet	
3	1S2244	BOOT	1
4	4L3916	TERMINAL	2
5	2L8066	TERMINAL	7
6	1S6329	TIE	7

REF NO	PART NUMBER	DESCRIPTION	QTY
7	2S285	SLEEVE-1 Foot	
8	2L8076	TERMINAL	3
9	1S4914	RING	1
10	1S4916	FERRULE	1
	1S4915	LINER	2
11	2S5060	PLUG ASSEM.	1

94896

5S1531 WIRING HARNESS—12 Volt
Part of Battery and Wiring shown on Page 68

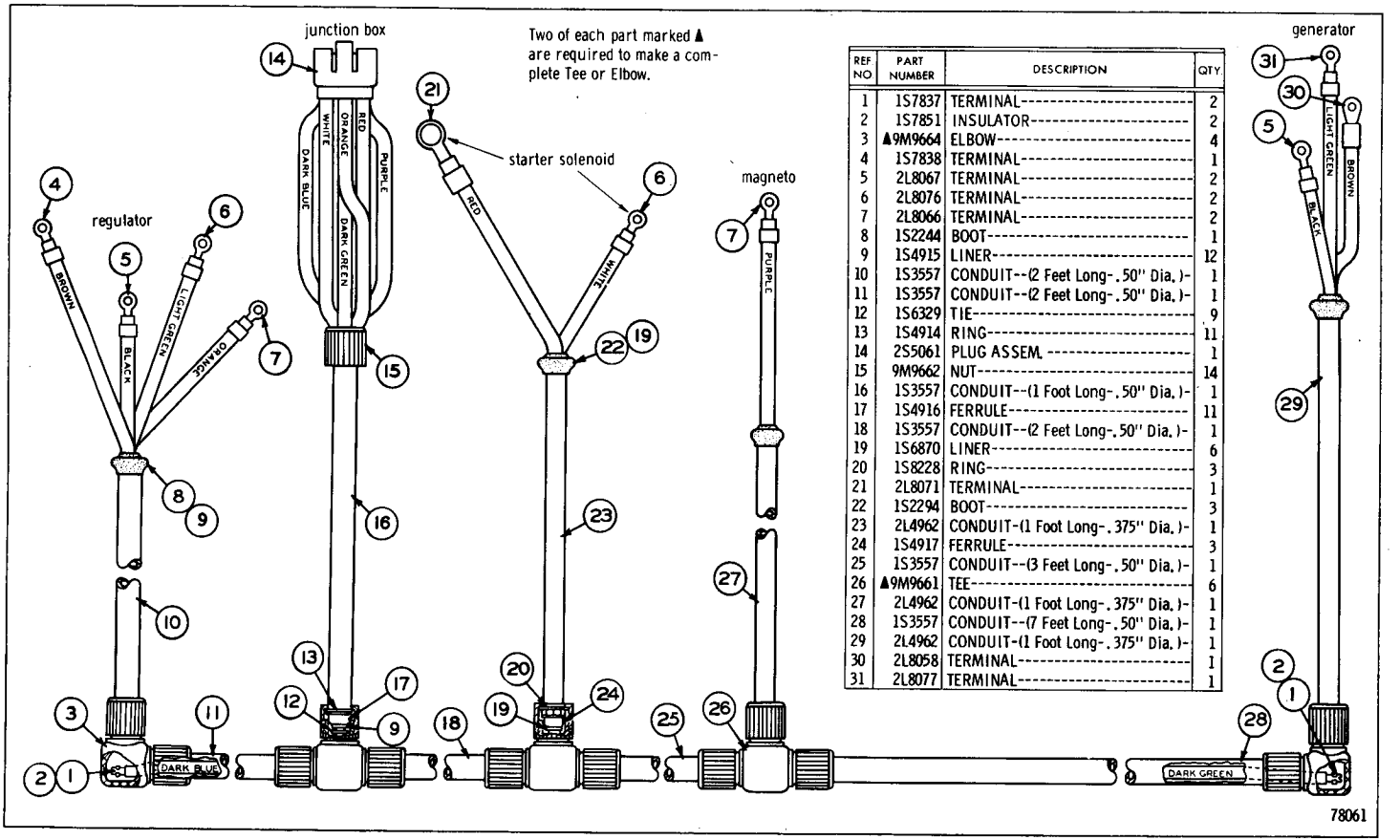

REF NO	PART NUMBER	DESCRIPTION	QTY.
1	1S7837	TERMINAL	2
2	1S7851	INSULATOR	2
3	▲9M9664	ELBOW	4
4	1S7838	TERMINAL	1
5	2L8067	TERMINAL	2
6	2L8076	TERMINAL	2
7	2L8066	TERMINAL	2
8	1S2244	BOOT	1
9	1S4915	LINER	12
10	1S3557	CONDUIT--(2 Feet Long-.50" Dia.)-	1
11	1S3557	CONDUIT--(2 Feet Long-.50" Dia.)-	1
12	1S6329	TIE	9
13	1S4914	RING	11
14	2S5061	PLUG ASSEM.	1
15	9M9662	NUT	14
16	1S3557	CONDUIT--(1 Foot Long-.50" Dia.)-	1
17	1S4916	FERRULE	11
18	1S3557	CONDUIT--(2 Feet Long-.50" Dia.)-	1
19	1S6870	LINER	6
20	1S8228	RING	3
21	2L8071	TERMINAL	1
22	1S2294	BOOT	3
23	2L4962	CONDUIT-(1 Foot Long-.375" Dia.)-	1
24	1S4917	FERRULE	3
25	1S3557	CONDUIT--(3 Feet Long-.50" Dia.)-	1
26	▲9M9661	TEE	6
27	2L4962	CONDUIT-(1 Foot Long-.375" Dia.)-	1
28	1S3557	CONDUIT--(7 Feet Long-.50" Dia.)-	1
29	2L4962	CONDUIT-(1 Foot Long-.375" Dia.)-	1
30	2L8058	TERMINAL	1
31	2L8077	TERMINAL	1

3S3954 WIRING HARNESS—12 Volt
Serial No. 48A6393 to 48A10644 inclusive
Part of Battery and Wiring shown on Page 68

3S3954 WIRING HARNESS—12 Volt
Effective with Serial No. 48A10645
Part of Battery and Wiring shown on Page 68

C INDICATES CHANGE FROM PREVIOUS TYPE

● ORDER BY THE FOOT
I. D. = INSIDE DIAMETER

TWO OF EACH PART MARKED ▲ ARE REQUIRED TO MAKE A COMPLETE TEE OR ELBOW.

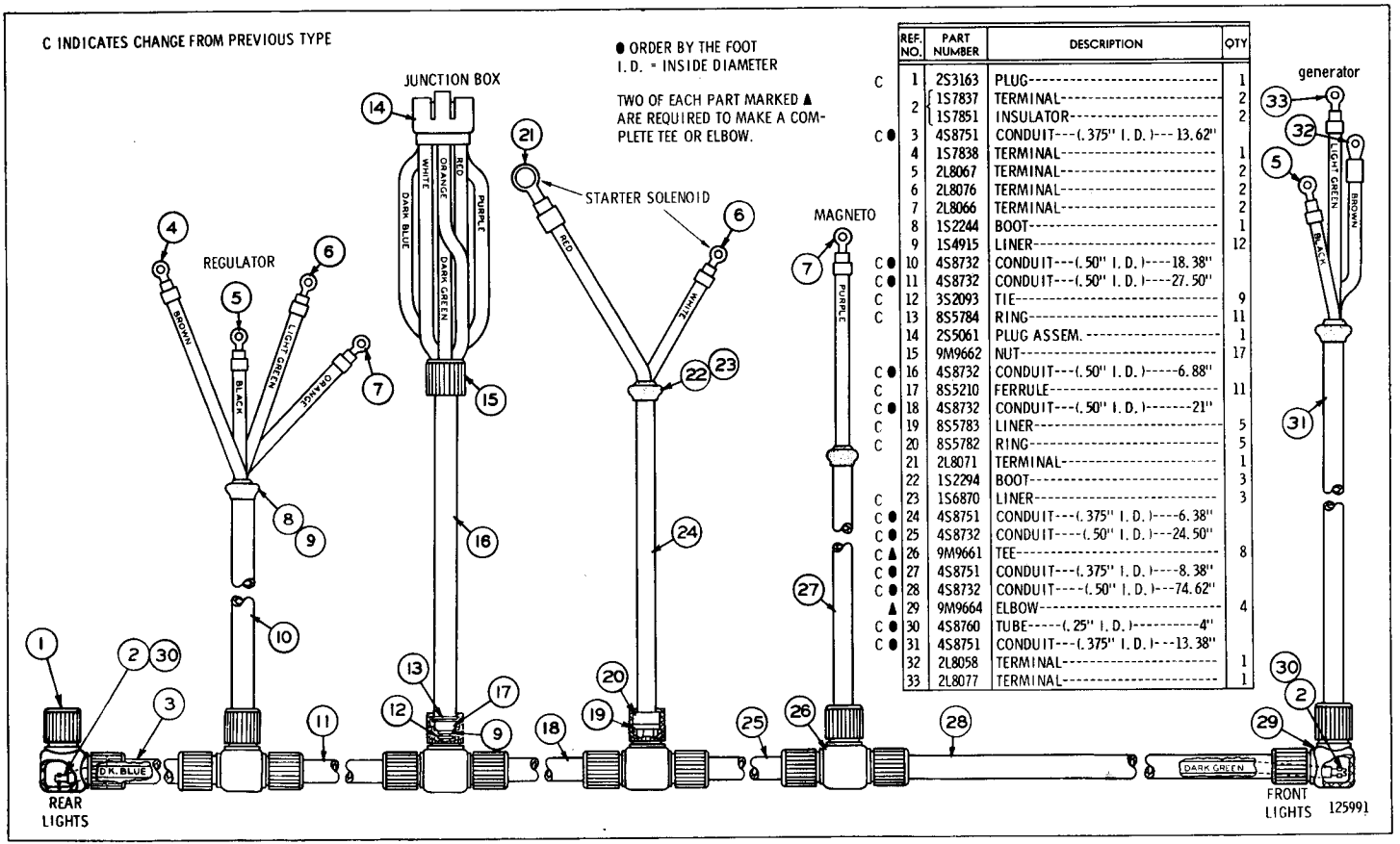

	REF. NO.	PART NUMBER	DESCRIPTION	QTY
C	1	2S3163	PLUG	1
	2	1S7837	TERMINAL	2
		1S7851	INSULATOR	2
C●	3	4S8751	CONDUIT---(.375" I. D.)---13.62"	
	4	1S7838	TERMINAL	1
	5	2L8067	TERMINAL	2
	6	2L8076	TERMINAL	2
	7	2L8066	TERMINAL	2
	8	1S2244	BOOT	1
	9	1S4915	LINER	12
C●	10	4S8732	CONDUIT---(.50" I. D.)----18.38"	
C●	11	4S8732	CONDUIT---(.50" I. D.)----27.50"	
C	12	3S2093	TIE	9
C	13	8S5784	RING	11
	14	2S5061	PLUG ASSEM.	1
	15	9M9662	NUT	17
C●	16	4S8732	CONDUIT---(.50" I. D.)-----6.88"	
C	17	8S5210	FERRULE	11
C●	18	4S8732	CONDUIT---(.50" I. D.)-------21"	
C	19	8S5783	LINER	5
C	20	8S5782	RING	5
	21	2L8071	TERMINAL	1
	22	1S2294	BOOT	3
C	23	1S6870	LINER	3
C●	24	4S8751	CONDUIT---(.375" I. D.)----6.38"	
C●	25	4S8732	CONDUIT----(.50" I. D.)---24.50"	
C▲	26	9M9661	TEE	8
C●	27	4S8751	CONDUIT---(.375" I. D.)----8.38"	
C●	28	4S8732	CONDUIT----(.50" I. D.)---74.62"	
▲	29	9M9664	ELBOW	4
C●	30	4S8760	TUBE-----(.25" I. D.)----------4"	
C●	31	4S8751	CONDUIT---(.375" I. D.)---13.38"	
	32	2L8058	TERMINAL	1
	33	2L8077	TERMINAL	1

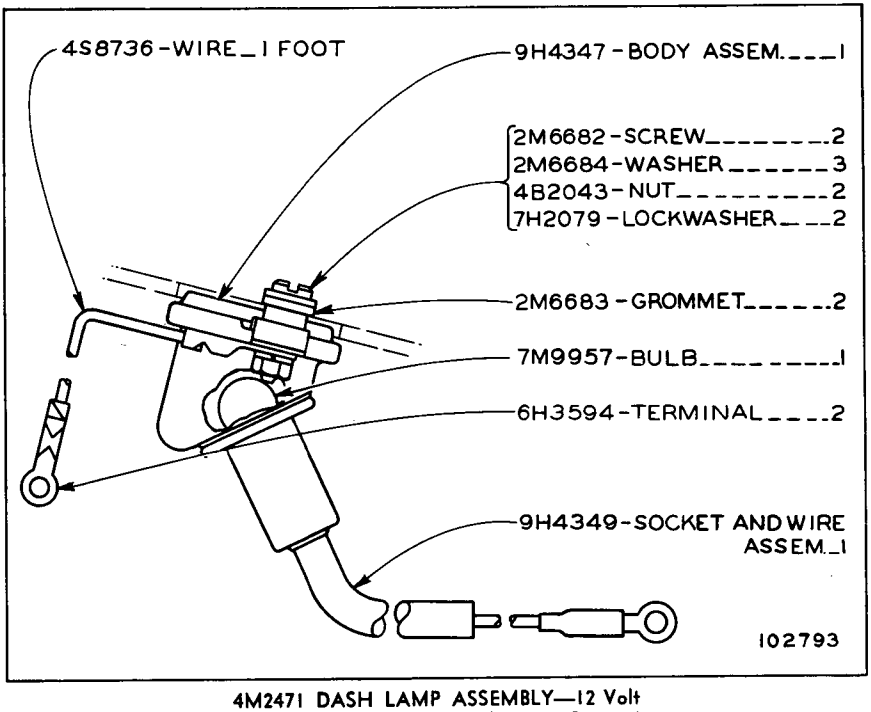

4M2471 DASH LAMP ASSEMBLY—12 Volt
Part of Battery and Wiring shown on Page 68

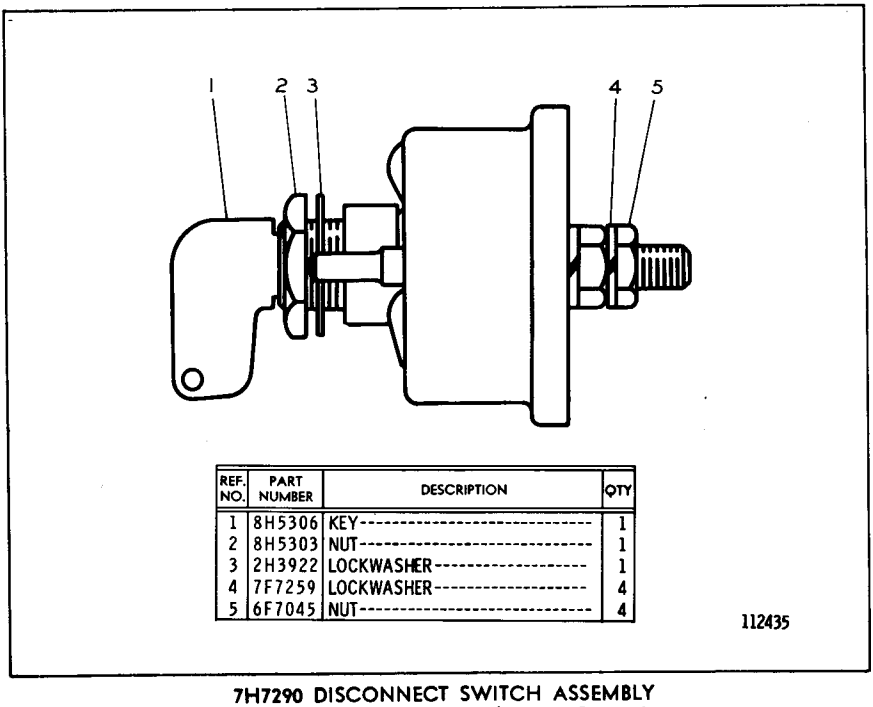

REF. NO.	PART NUMBER	DESCRIPTION	QTY
1	8H5306	KEY	1
2	8H5303	NUT	1
3	2H3922	LOCKWASHER	1
4	7F7259	LOCKWASHER	4
5	6F7045	NUT	4

112435

7H7290 DISCONNECT SWITCH ASSEMBLY
Part of Battery and Wiring shown on Page 69

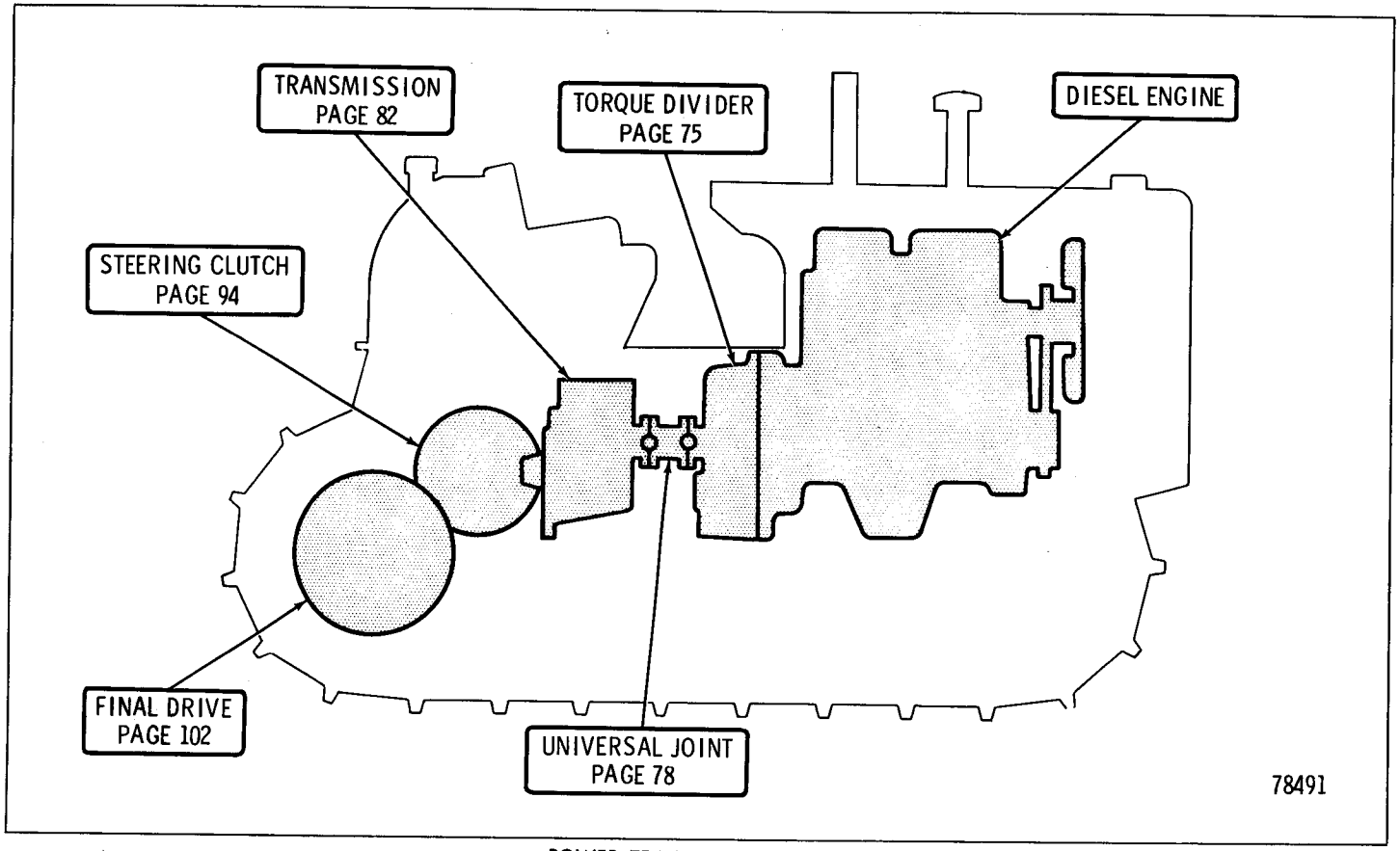

POWER TRAIN ARRANGEMENT

TORQUE DIVIDER—As Viewed from Right Hand Side of Machine

Serial No. 48A6393 to 48A6882 inclusive

1T630 Torque Converter Assembly, 7M1220 Relief Valve Group, 2S7873 Pump Group and 4H8461 Universal Joint Assembly parts are shown on Pages 76, 77 and 78

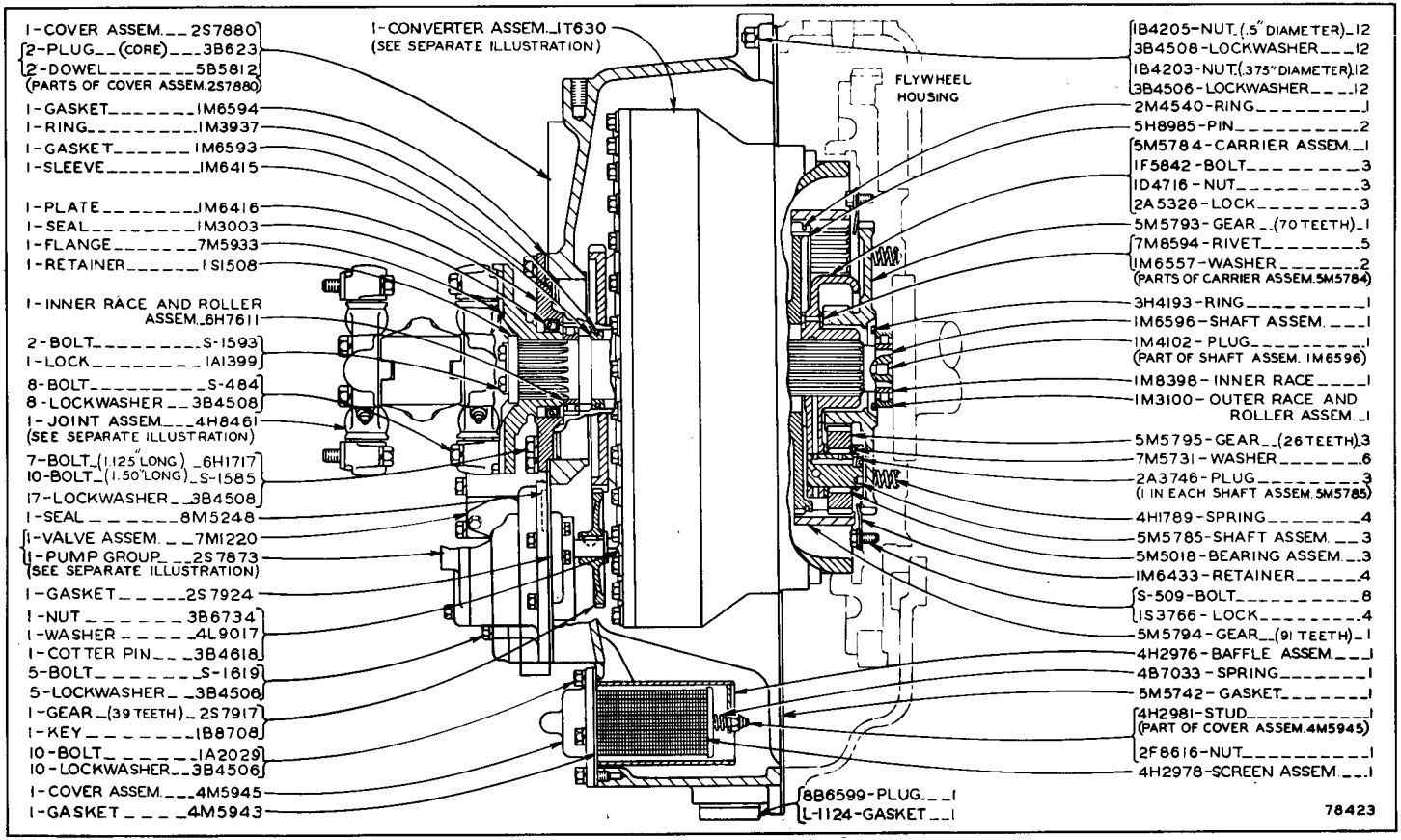

TORQUE DIVIDER—As Viewed from Right Hand Side of Machine

Effective with Serial No. 48A6883

1T630 Torque Converter Assembly, 7M1220 Relief Valve Group, 2S7873 Pump Group and 4H8461 Universal Joint Assembly parts are shown on Pages 76, 77 and 78

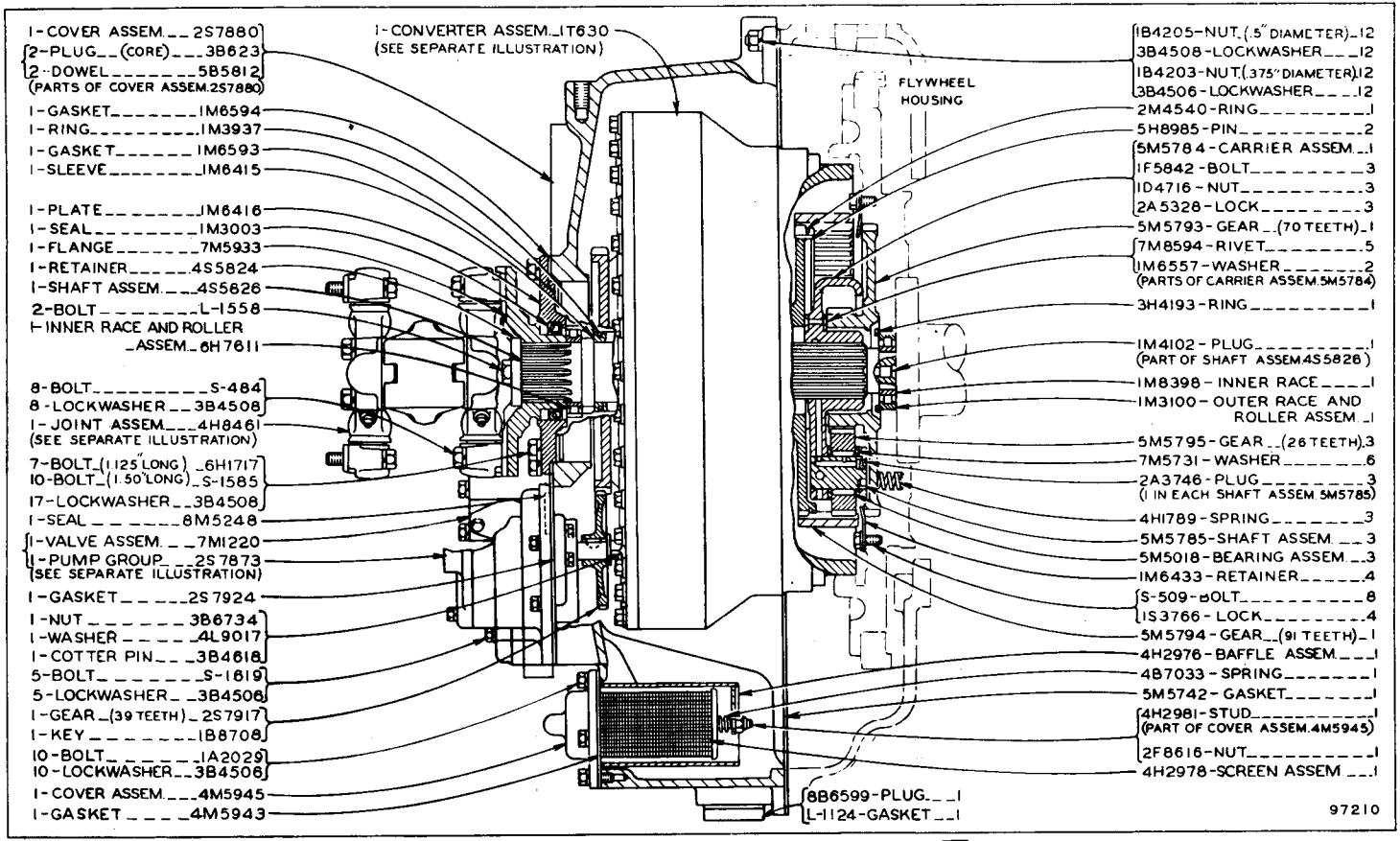

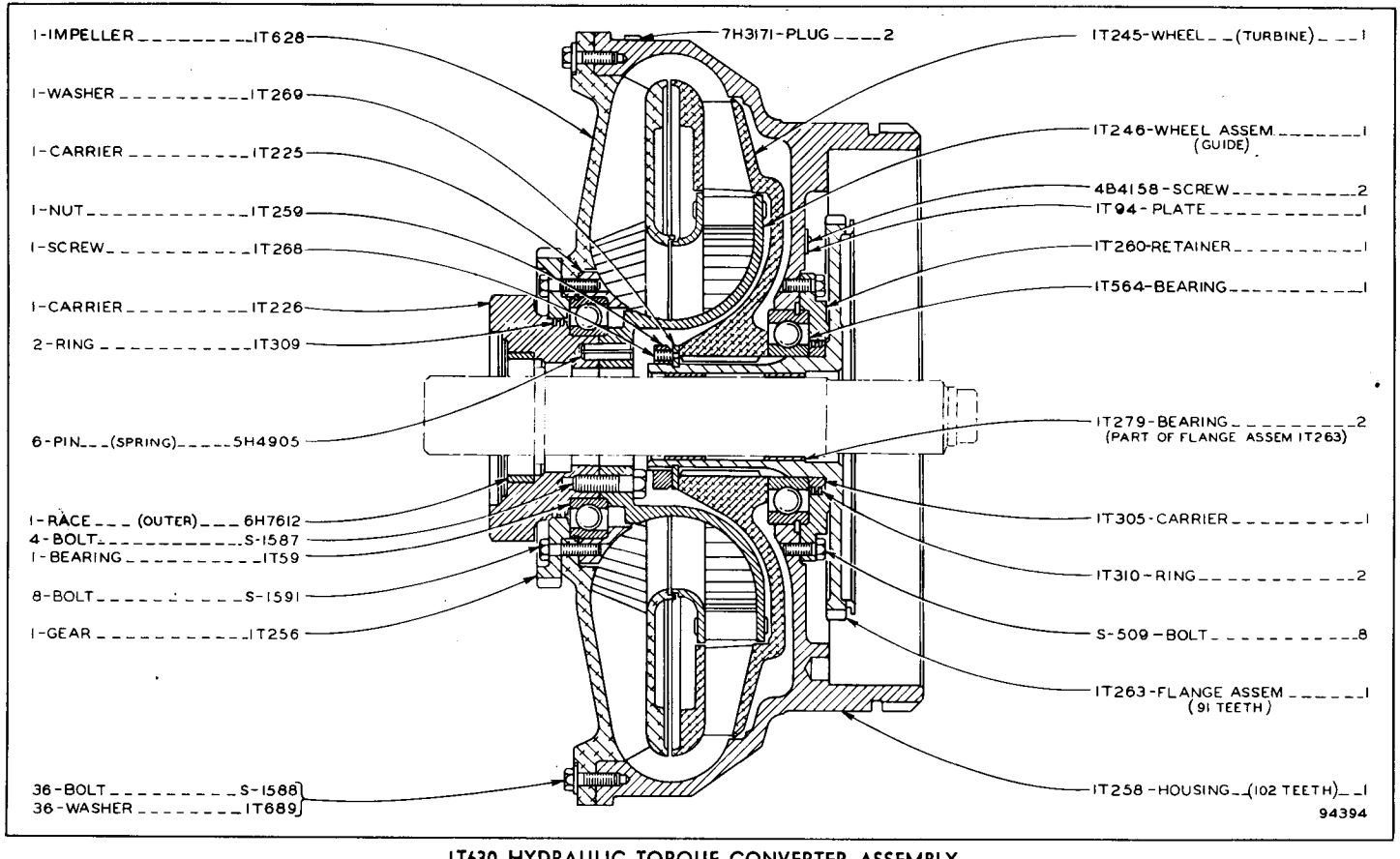

IT630 HYDRAULIC TORQUE CONVERTER ASSEMBLY
Effective with Torque Converter Serial No. M-1715-B
Part of Torque Divider shown on Page 75

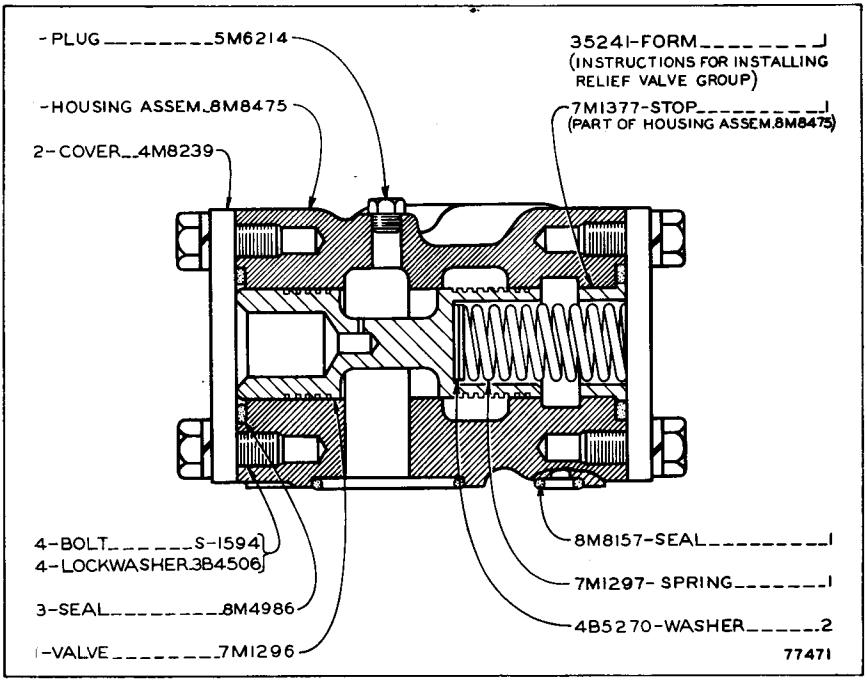

7M1220 RELIEF VALVE GROUP
Part of Torque Divider shown on Pages 74A and 75

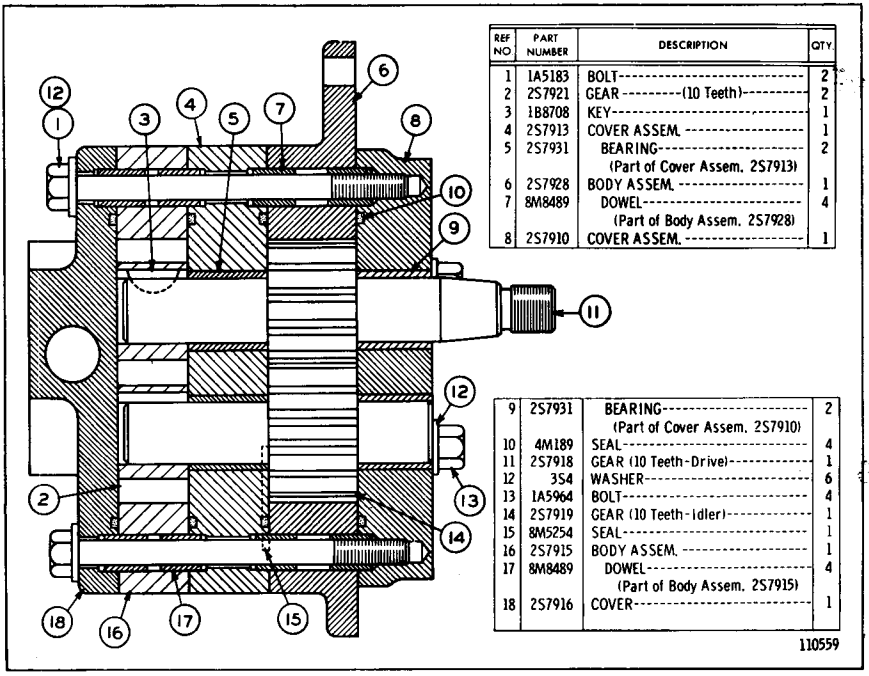

REF NO	PART NUMBER	DESCRIPTION	QTY
1	1A5183	BOLT	2
2	2S7921	GEAR (10 Teeth)	2
3	1B8708	KEY	1
4	2S7913	COVER ASSEM.	1
5	2S7931	BEARING (Part of Cover Assem. 2S7913)	2
6	2S7928	BODY ASSEM.	1
7	8M8489	DOWEL (Part of Body Assem. 2S7928)	4
8	2S7910	COVER ASSEM.	1
9	2S7931	BEARING (Part of Cover Assem. 2S7910)	2
10	4M189	SEAL	4
11	2S7918	GEAR (10 Teeth-Drive)	1
12	3S4	WASHER	6
13	1A5964	BOLT	4
14	2S7919	GEAR (10 Teeth-Idler)	1
15	8M5254	SEAL	1
16	2S7915	BODY ASSEM.	1
17	8M8489	DOWEL (Part of Body Assem. 2S7915)	4
18	2S7916	COVER	1

110559

2S7873 SCAVENGE AND CIRCULATING PUMP GROUP
Part of Torque Divider shown on Pages 74A and 75

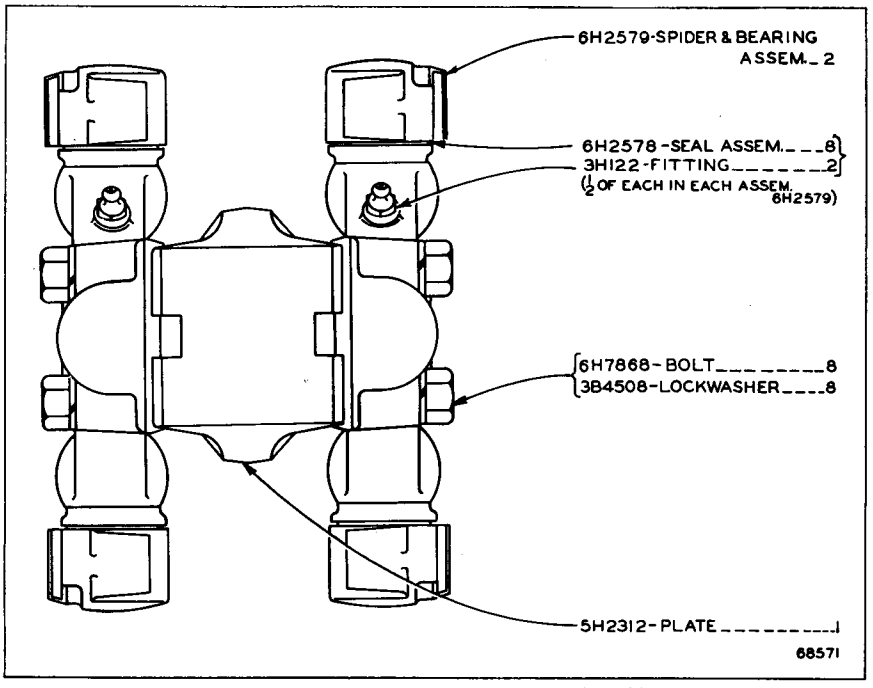

4H8461 UNIVERSAL JOINT ASSEMBLY
Part of Torque Divider shown on Page 75

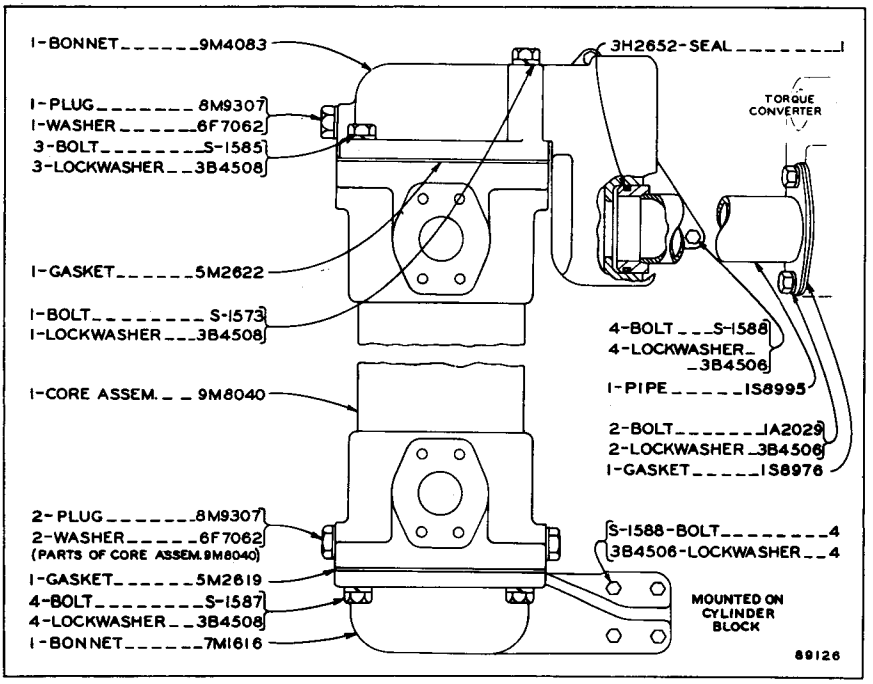

TORQUE CONVERTER OIL COOLER
Serial No. 48A6393 to 48A12479 inclusive

TORQUE CONVERTER OIL COOLER
Effective with Serial No. 48A12480

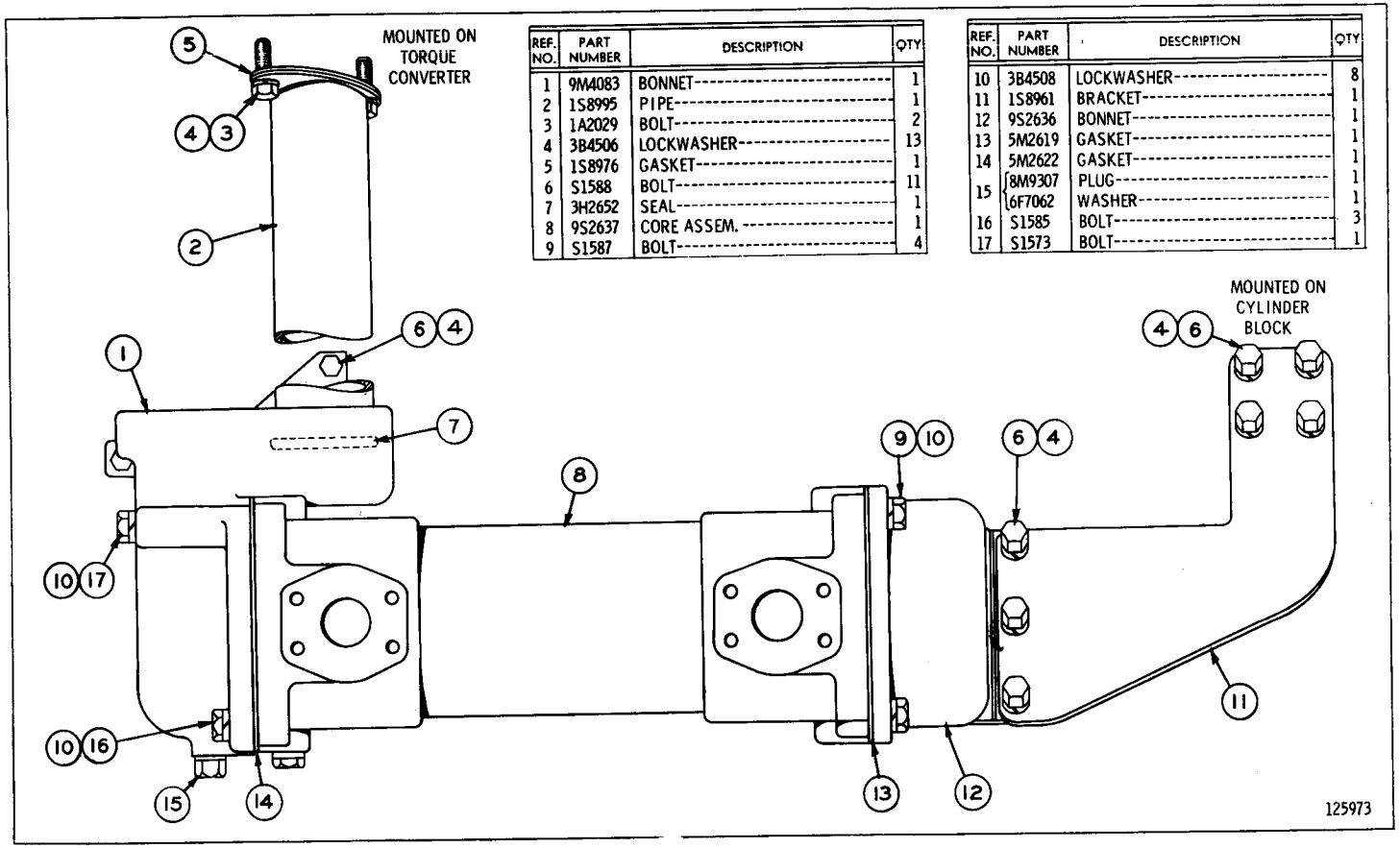

REF. NO.	PART NUMBER	DESCRIPTION	QTY
1	9M4083	BONNET	1
2	1S8995	PIPE	1
3	1A2029	BOLT	2
4	3B4506	LOCKWASHER	13
5	1S8976	GASKET	1
6	S1588	BOLT	11
7	3H2652	SEAL	1
8	9S2637	CORE ASSEM.	1
9	S1587	BOLT	4

REF. NO.	PART NUMBER	DESCRIPTION	QTY
10	3B4508	LOCKWASHER	8
11	1S8961	BRACKET	1
12	9S2636	BONNET	1
13	5M2619	GASKET	1
14	5M2622	GASKET	1
15	8M9307	PLUG	1
	6F7062	WASHER	1
16	S1585	BOLT	3
17	S1573	BOLT	1

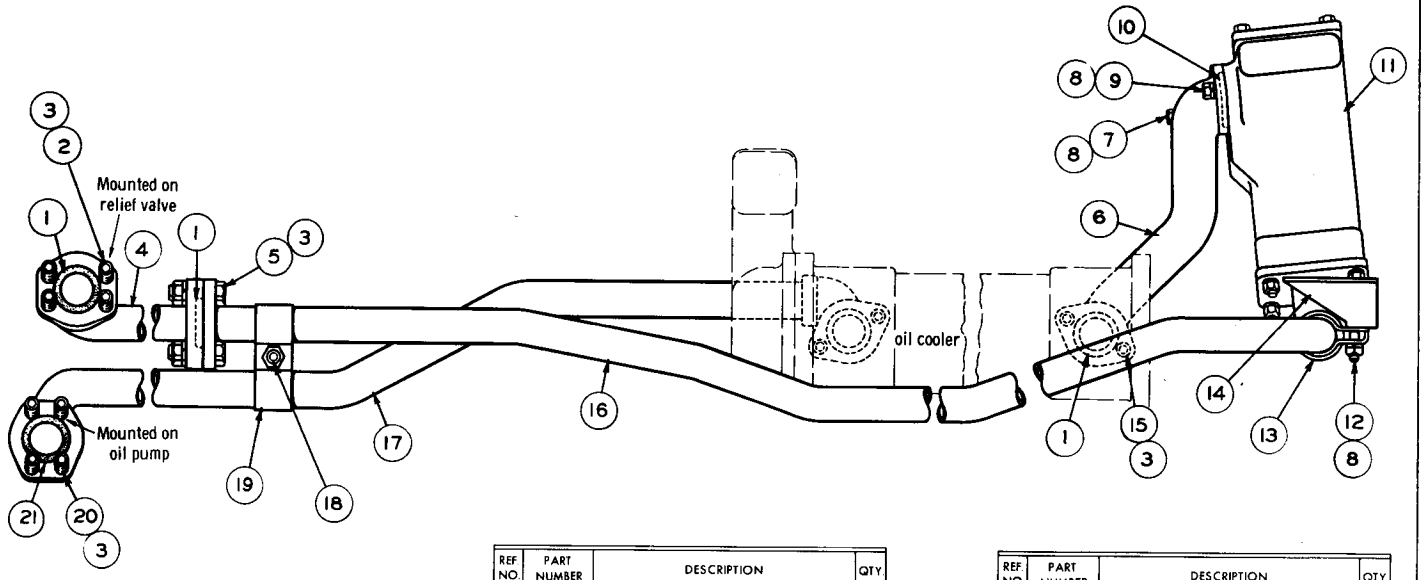

REF NO.	PART NUMBER	DESCRIPTION	QTY.
1	8M4992	SEAL	4
2	T 768	BOLT	4
3	3B4507	LOCKWASHER	16
4	2S8685	TUBE ASSEM. (14.35" long overall)- (Ref. No. 16 to Relief Valve)	1
5	T 319	BOLT	4
	1D4718	NUT	4

REF NO.	PART NUMBER	DESCRIPTION	QTY.
6	3S3863	ELBOW	1
7	L 1143	BOLT	1
8	3B4506	LOCKWASHER	3
9	1A2029	BOLT	1
10	8M5010	SEAL	1
11	9M8669	SCREEN GROUP (See Separate Illustration)	1
12	3B1915	BOLT	1
	1D4717	NUT	1
13	8M4106	CLAMP	1
14	3S3870	BRACKET	1

REF NO.	PART NUMBER	DESCRIPTION	QTY.
15	4F8965	BOLT	4
16	3S3426	TUBE ASSEM. (61.73" long overall)- (Ref. No. 11 to Ref. No. 4)	1
17	3S3345	TUBE ASSEM. (46.43" long overall)- (Oil Cooler to Oil Pump)	1
18	S 1621	BOLT	1
	1D4719	NUT	1
	3B4508	LOCKWASHER	1
19	7M5138	CLIP	2
20	T 320	BOLT	4
21	8M4986	SEAL	1

126590

TRANSMISSION OIL COOLER LINES (3S4647 N/S)
Serial No. 48A6393 to 48A12492 inclusive
9M8669 Screen parts are shown on Page 92

TRANSMISSION OIL COOLER LINES (3S4647 N/S)
Effective with Serial No. 48A12493
9M8669 Screen parts are shown on Page 92

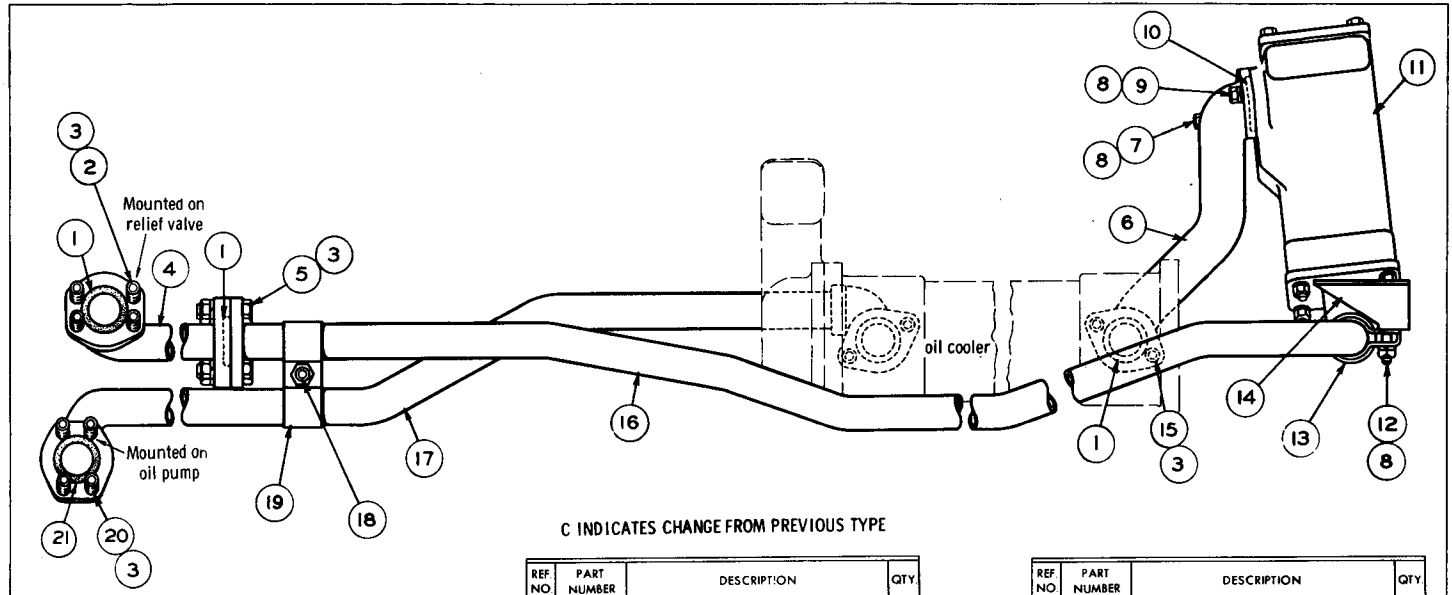

C INDICATES CHANGE FROM PREVIOUS TYPE

	REF. NO	PART NUMBER	DESCRIPTION	QTY.
	1	8M4992	SEAL	4
	2	T 768	BOLT	4
	3	3B4507	LOCKWASHER	16
	4	2S8685	TUBE ASSEM. (14.35" long overall)- (Ref. No. 16 to Relief Valve)	1
C	5	1D4707	BOLT	4
		1D4718	NUT	4
	6	3S3863	ELBOW	1
	7	L 1143	BOLT	1
	8	3B4506	LOCKWASHER	3
	9	1A2029	BOLT	1
	10	8M5010	SEAL	1
	11	9M8669	SCREEN GROUP (See Separate Illustration)	1
	12	3B1915	BOLT	1
		1D4717	NUT	1
	13	8M4106	CLAMP	1
	14	3S3870	BRACKET	1
	15	4F8965	BOLT	4
	16	3S3426	TUBE ASSEM. (61.73" long overall)- (Ref. No. 11 to Ref. No. 4)	1
C	17	9S2670	TUBE ASSEM. (53.53" long overall)- (Oil Cooler to Oil Pump)	1
	18	S 1621	BOLT	1
		1D4719	NUT	1
		3B4508	LOCKWASHER	1
	19	7M5138	CLIP	2
	20	T 320	BOLT	4
	21	8M4986	SEAL	1

126591

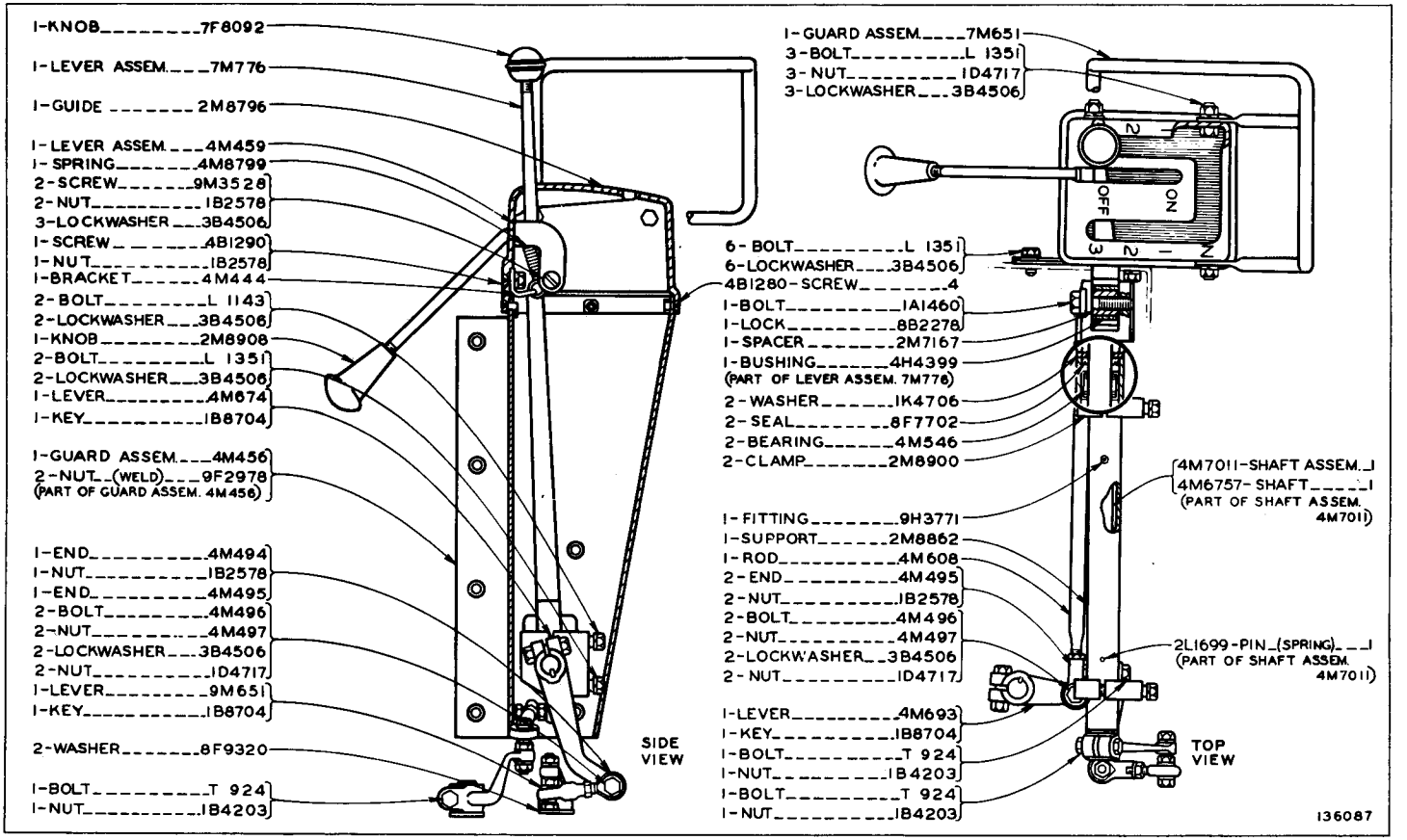

TRANSMISSION CONTROL LINKAGE (4M711 N/S)
Serial No. 48A6393 to 48A11997 inclusive
Refer also to Page 150G for special parts

TRANSMISSION CONTROL LINKAGE (4M711 N/S)
Serial No. 48A11998 to 13308 and 48A13311 inclusive

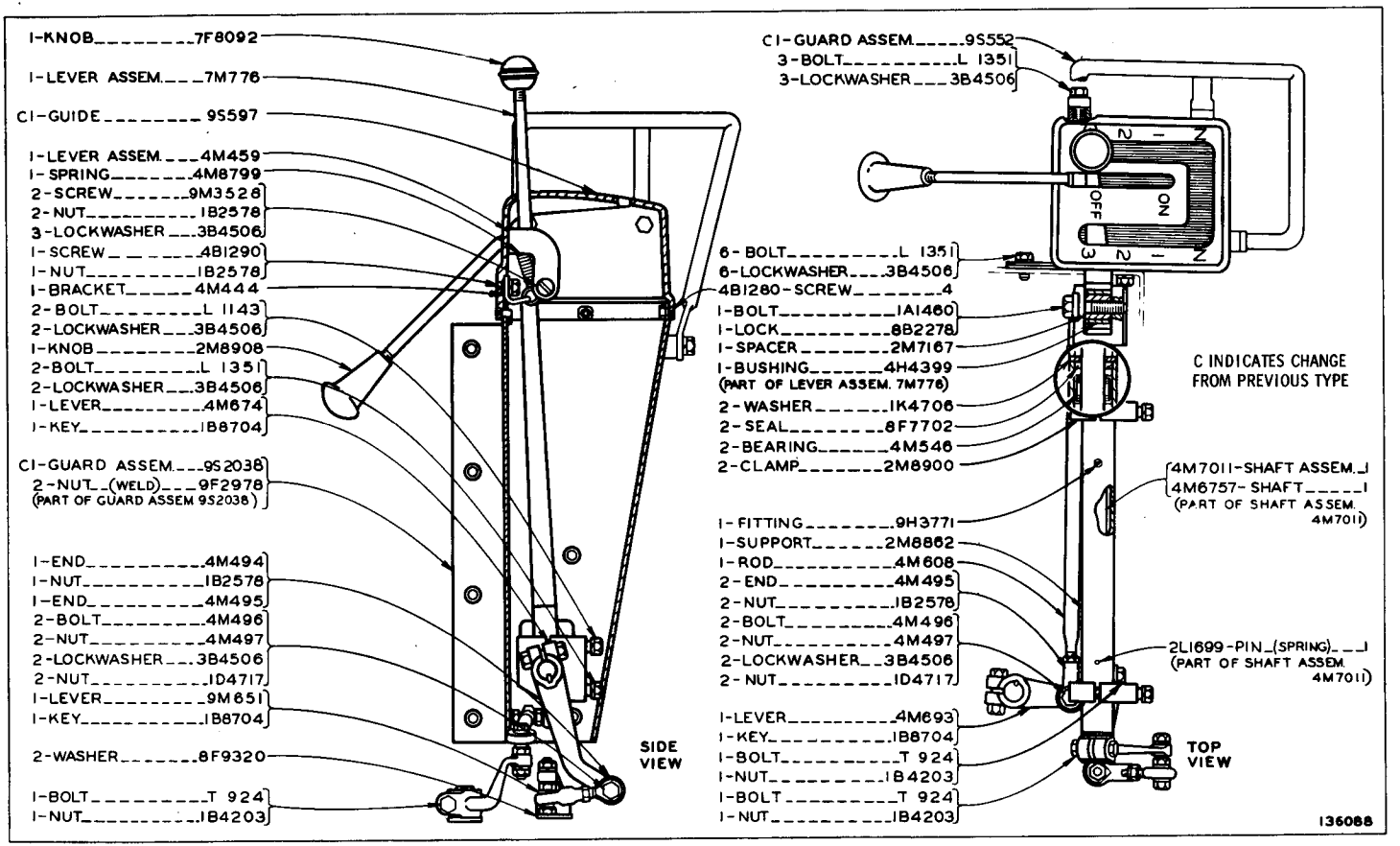

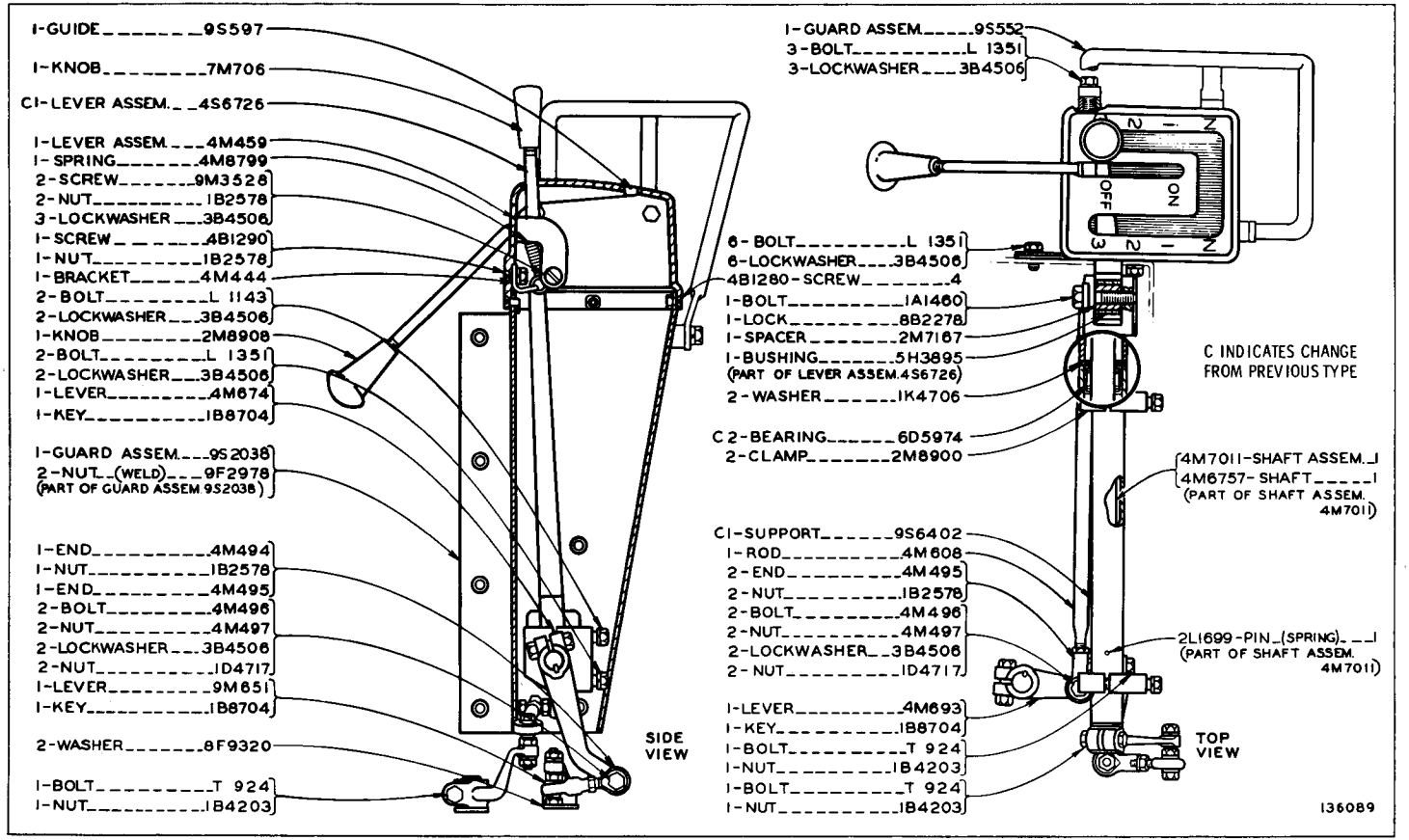

TRANSMISSION CONTROL LINKAGE (4M711 N/S)
Serial No. 48A13309, 13310 and 48A13312–Up

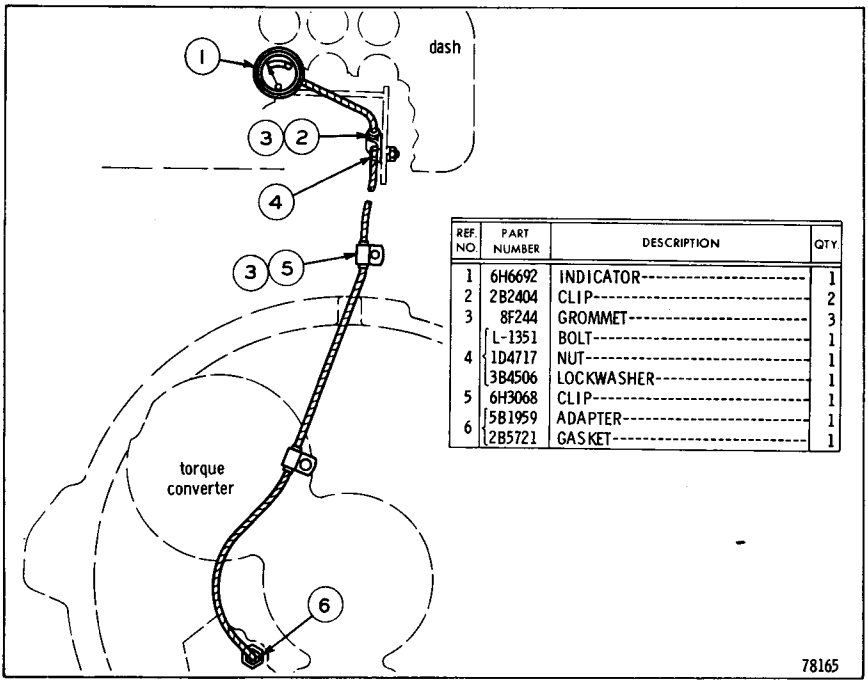

REF. NO.	PART NUMBER	DESCRIPTION	QTY.
1	6H6692	INDICATOR	1
2	2B2404	CLIP	2
3	8F244	GROMMET	3
4	L-1351	BOLT	1
	1D4717	NUT	1
	3B4506	LOCKWASHER	1
5	6H3068	CLIP	1
6	5B1959	ADAPTER	1
	2B5721	GASKET	1

TRANSMISSION GAUGES (3S4682 N/S)

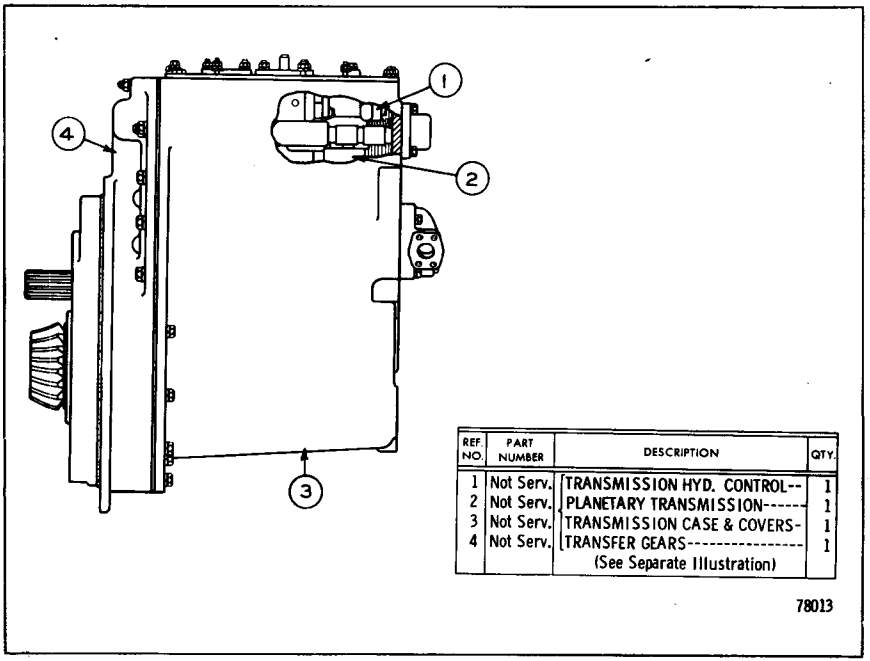

REF. NO.	PART NUMBER	DESCRIPTION	QTY.
1	Not Serv.	TRANSMISSION HYD. CONTROL	1
2	Not Serv.	PLANETARY TRANSMISSION	1
3	Not Serv.	TRANSMISSION CASE & COVERS	1
4	Not Serv.	TRANSFER GEARS (See Separate Illustration)	1

2S7900 RANGE TRANSMISSION ARRANGEMENT—As Viewed from R.H. Side of Machine Serial No. 48A6393 to 48A6882 inclusive and Test No. 6659 to 7181 inclusive. Transfer Gears, Planetary Transmission, Transmission Case and Covers and Transmission Hydraulic Control parts are shown on Pages 81B, 82, 83, 84 and 85

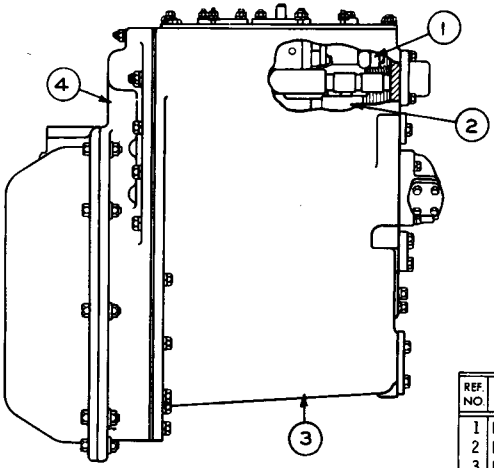

REF. NO.	PART NUMBER	DESCRIPTION	QTY.
1	Not Serv.	TRANSMISSION HYD. CONTROL--	1
2	Not Serv.	PLANETARY TRANSMISSION------	1
3	Not Serv.	TRANSMISSION CASE & COVERS-	1
4	Not Serv.	TRANSFER GEARS---------- (See Separate Illustration)	1

97419

5S1000 RANGE TRANSMISSION ARRANGEMENT—As Viewed from R.H. Side of Machine
Effective with Serial No. 48A6883—Up and Test No. 7182—Up
Transfer Gears, Planetary Transmission, Transmission Case and Covers and Transmission Hydraulic Control parts are shown on Pages 81B-1, 81B-2, 83A, 83B, 84, 85, 86 & 86A

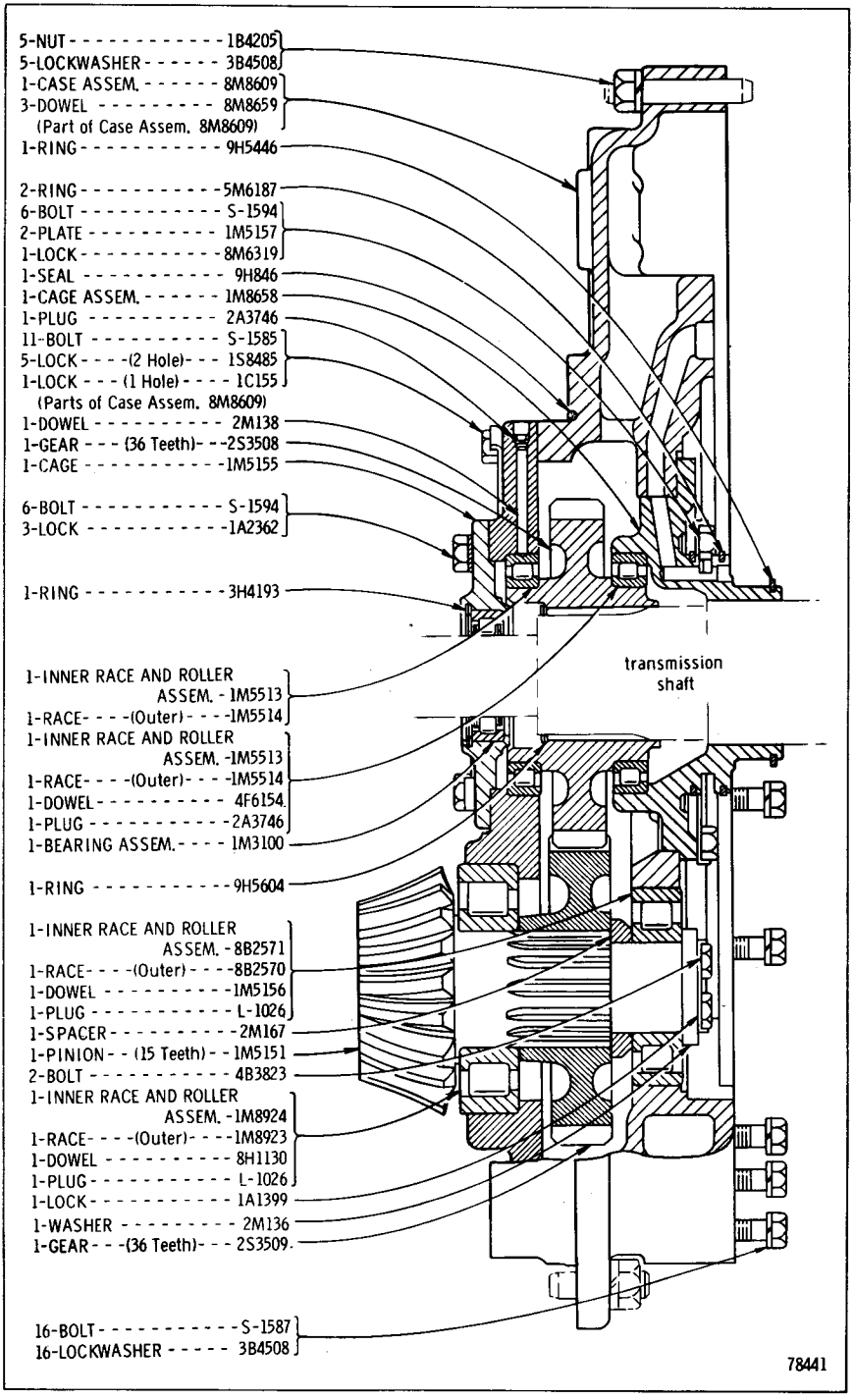

TRANSFER GEARS (2S3541 N/S)—As Viewed from R.H. Side of Machine
Serial No. 48A6393 to 48A6882 inclusive and Test No. 6659 to 7181 inclusive
Part of 2S7900 Range Transmission Arrangement shown on Page 81

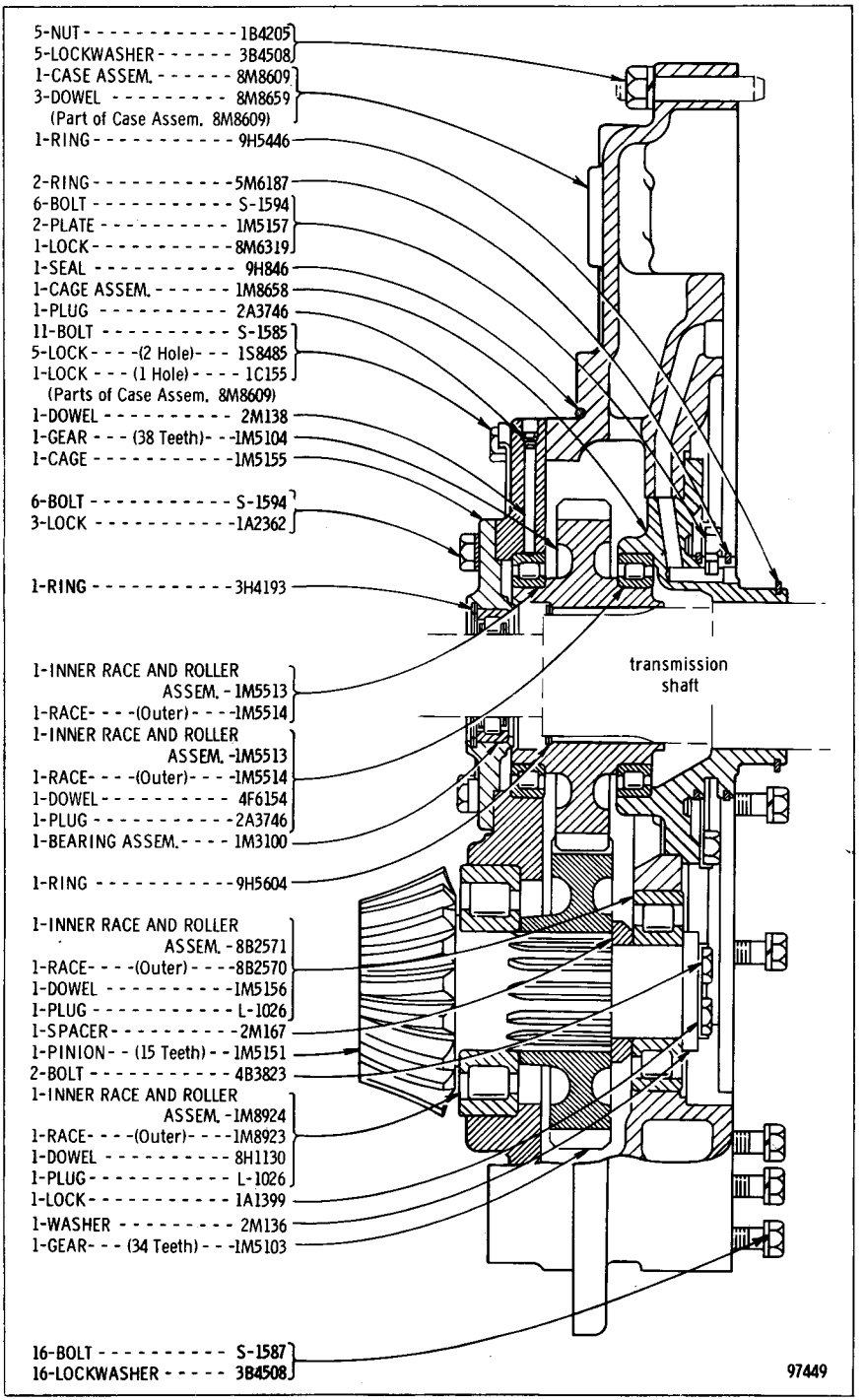

TRANSFER GEARS (1M8650 N/S)—As Viewed from R.H. Side of Machine
Serial No. 48A6883 to 48A13636 inclusive and Test No. 7182 to 14818 inclusive
Part of 5S1000 Range Transmission Arrangement shown on Page 81A

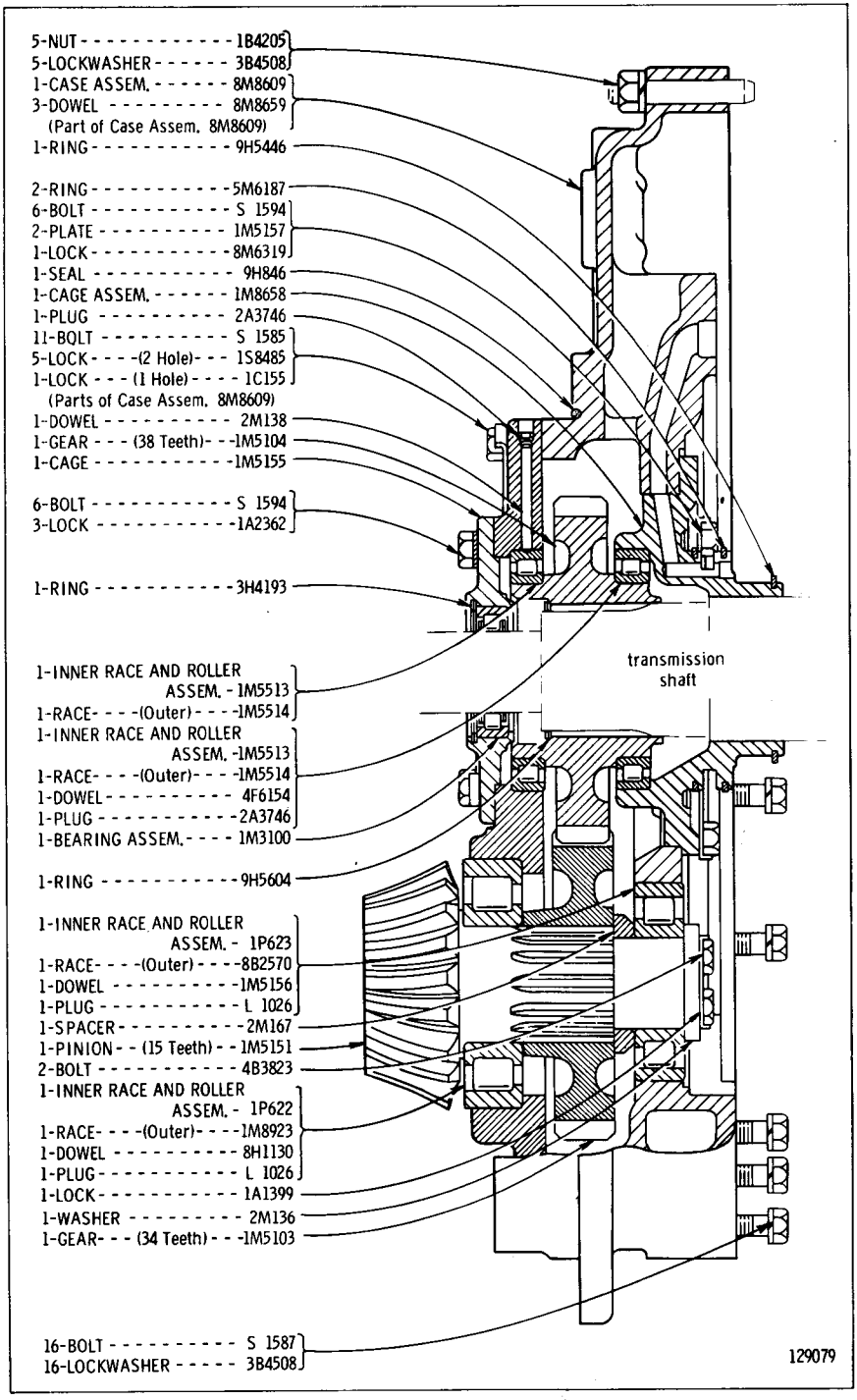

TRANSFER GEARS (1P630 N/S)—As Viewed from R.H. Side of Machine—Type 1
Serial No. 48A13637—Up and Test No. 14819—Up
Part of 5S1000 Transmission Arrangement shown on Page 81A

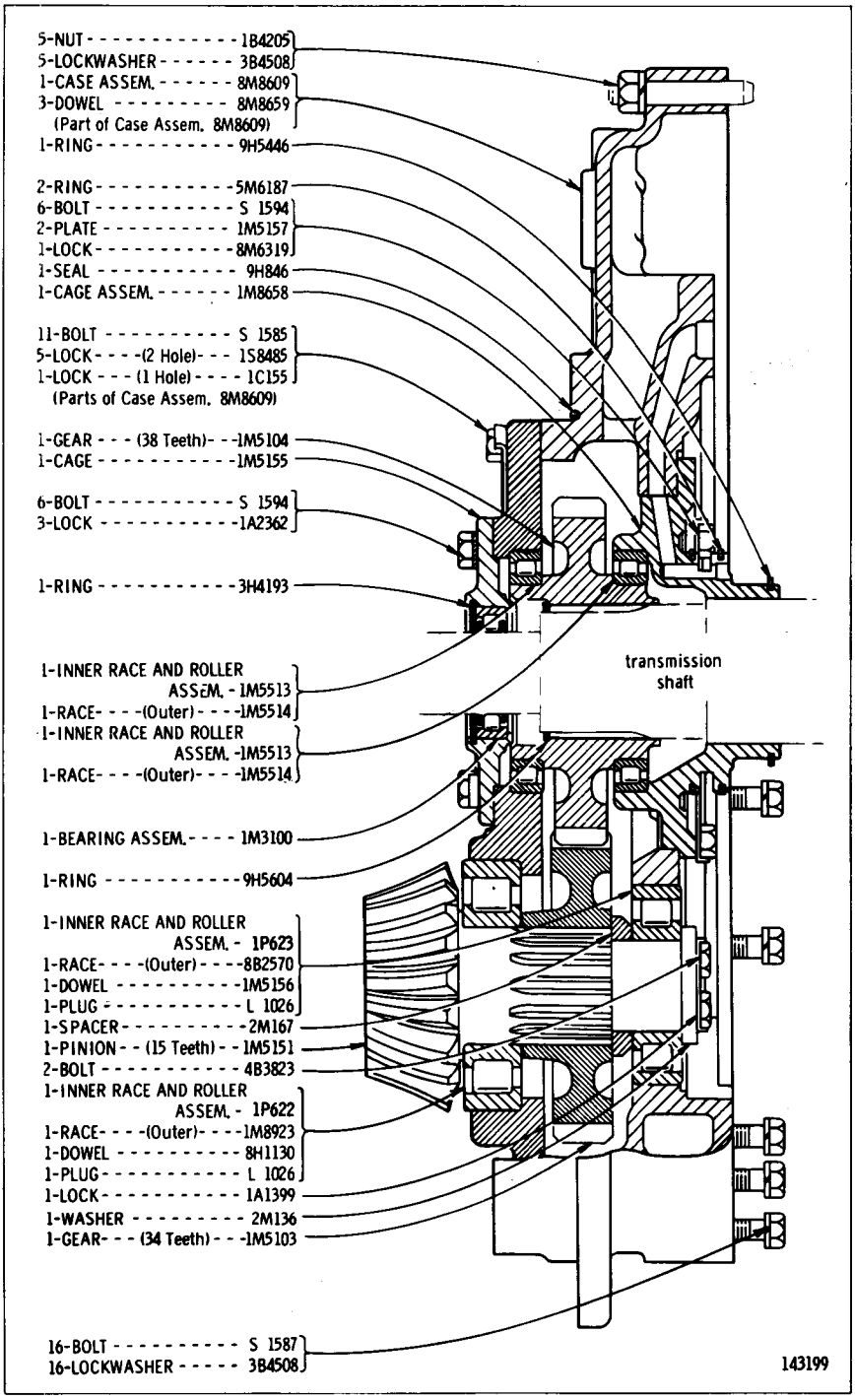

TRANSFER GEARS (1P630 N/S)—As Viewed from R.H. Side of Machine—Type 2
Serial No. 48A13637—Up and Test No. 14819—Up
Part of 5S1000 Transmission Arrangement shown on Page 81A

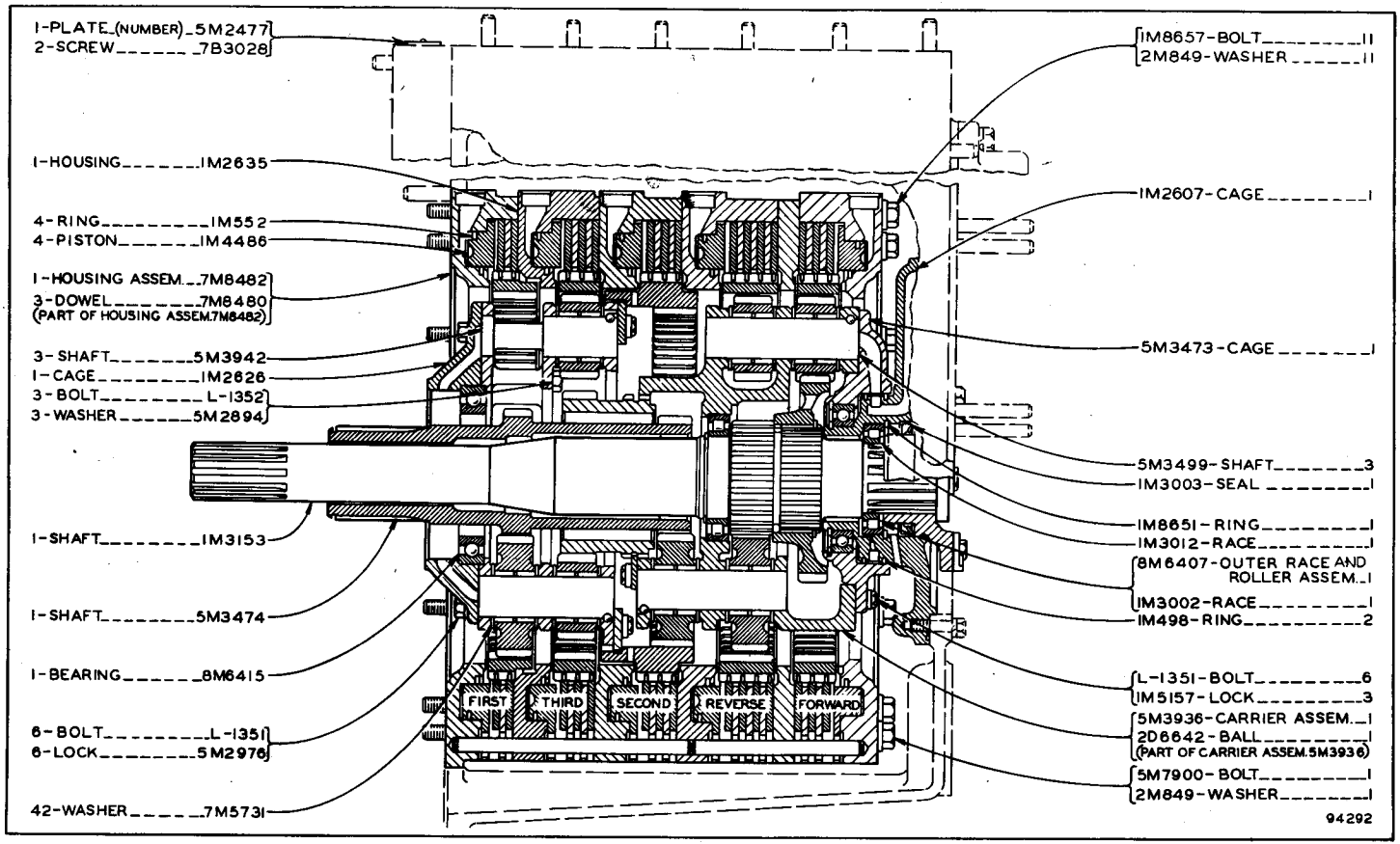

PLANETARY TRANSMISSION—Part 1
Serial No. 48A6393 to 48A6882 inclusive. Test No. 6659 to No. 7181 inclusive
Part of 2S7900 Range Transmission Arrangement shown on Page 81

PLANETARY TRANSMISSION—Part 2

Serial No. 48A6393 to 48A6882 inclusive. Test No. 6659 to No. 7181 inclusive
Part of 2S7900 Range Transmission Arrangement shown on Page 81

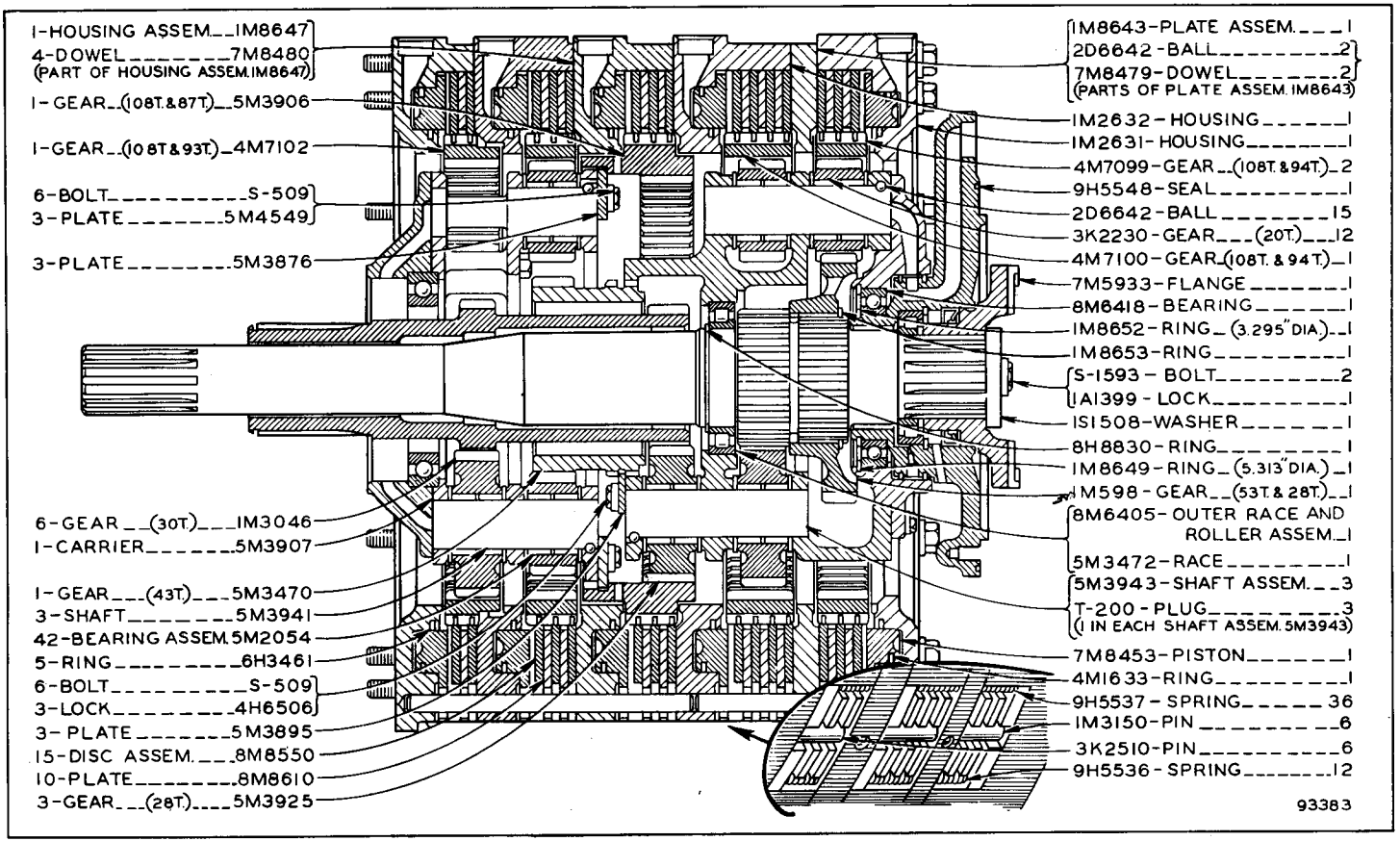

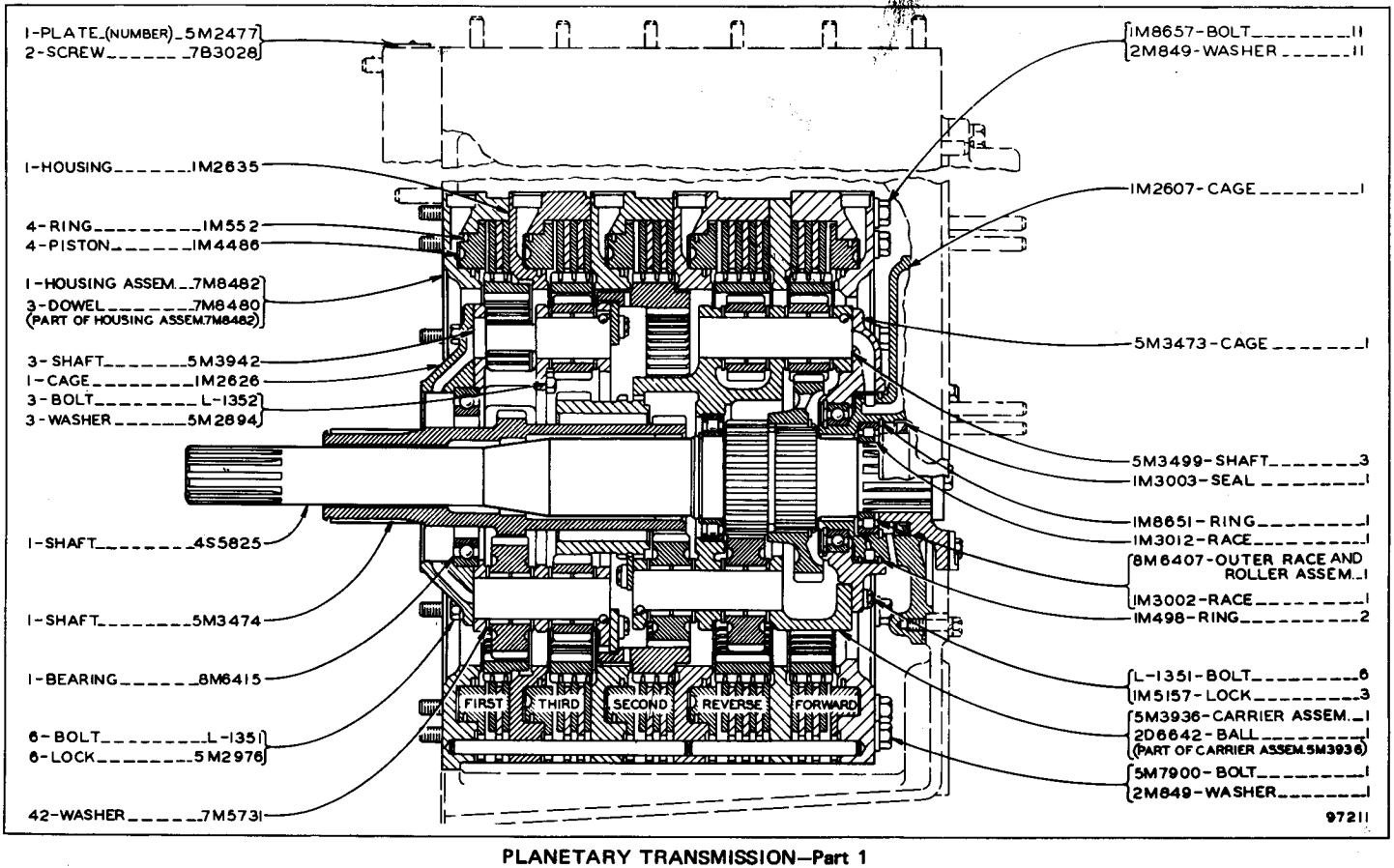

PLANETARY TRANSMISSION—Part 1
Effective with Serial No. 48A6883-Up and Test No. 7182-Up
Part of 5S1000 Range Transmission Arrangement shown on Page 81A

PLANETARY TRANSMISSION—Part 2

Effective with Serial No. 48A6883-Up and Test No. 7182-Up

Part of 5S1000 Range Transmission Arrangement shown on Page 81A

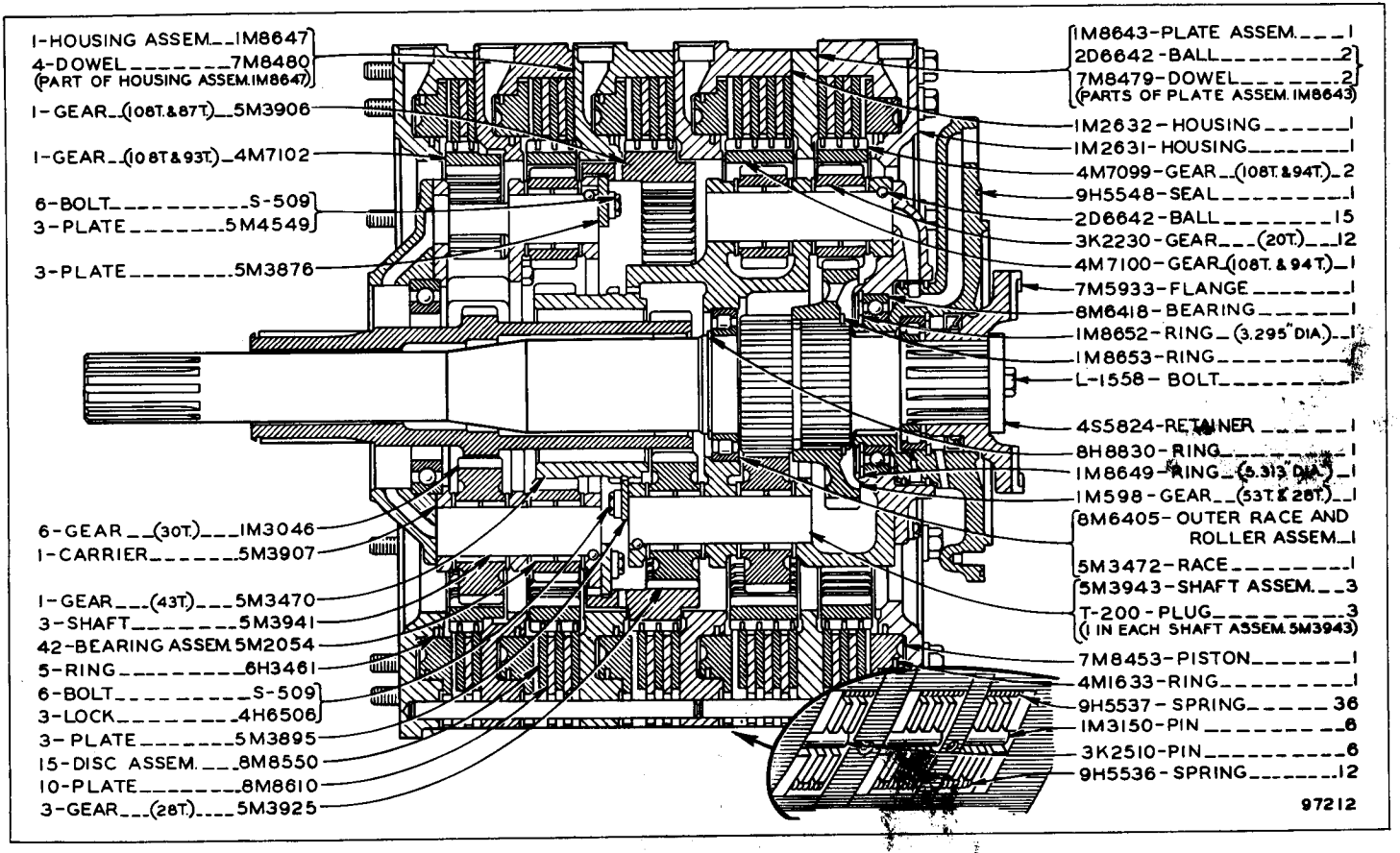

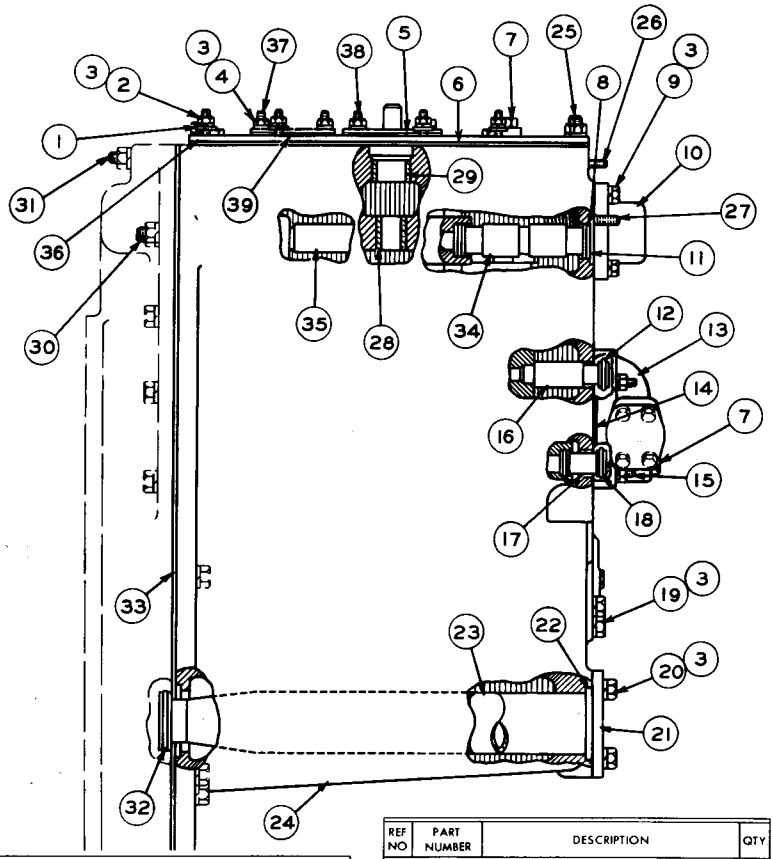

REF NO	PART NUMBER	DESCRIPTION	QTY
1	4B4278	WASHER	4
2	1B4203	NUT	16
3	3B4506	LOCKWASHER	38
4	1D4717	NUT	8
5	5M9653	COVER	1
	5M9654	GASKET	1
6	1M8661	GASKET	1
7	5M7908	PLUG ASSEM.	2
	3J1907	SEAL (1 in each 5M7908 Plug Assem.)	2
8	8M4432	SEAL	2
9	S-1588	BOLT	2
10	4M1530	COVER	1
	8M4436	SEAL	1
11	8M4986	SEAL	1
12	8M4435	SEAL	1
13	4S8651	MANIFOLD	1
14	4S5881	GASKET	1
15	7H3051	STUD	4
	1B4203	NUT	4
	3B4506	LOCKWASHER	4
16	2S4954	SLEEVE	1
17	2S4958	SLEEVE	1

REF NO	PART NUMBER	DESCRIPTION	QTY
18	8M4435	SEAL	2
19	3B1915	BOLT	8
20	L-1351	BOLT	4
21	1S2197	COVER	1
22	6L1649	SEAL	2
23	1S90	TUBE ASSEM.	2
24	3S6899	CASE ASSEM.	1
25	1M6421	STUD	7
26	3S86	STUD	10
27	4S8628	STUD	1
28	1A9221	BUSHING	2
29	3F7415	BUSHING	2
30	1M6422	STUD	2
31	2M269	STUD (Parts of 3S6899 Case Assem.)	3
32	9M2610	SEAL	2
33	1M8659	GASKET	1
34	2S4955	SLEEVE	1
35	2S4963	SLEEVE	1
	8M4445	SEAL	2
36	3S6878	COVER ASSEM.	1
37	5M9621	STUD	4
38	7M7794	STUD (Parts of 3S6878 Cover Assem.)	4
39	8B9777	GASKET	1

78158

TRANSMISSION CASE AND COVERS (4S8652 N/S)—Type 1
Test No. 6659—Up
Part of 2S7900 and 5S1000 Range Transmission Arrangements
shown on Pages 81 and 81A

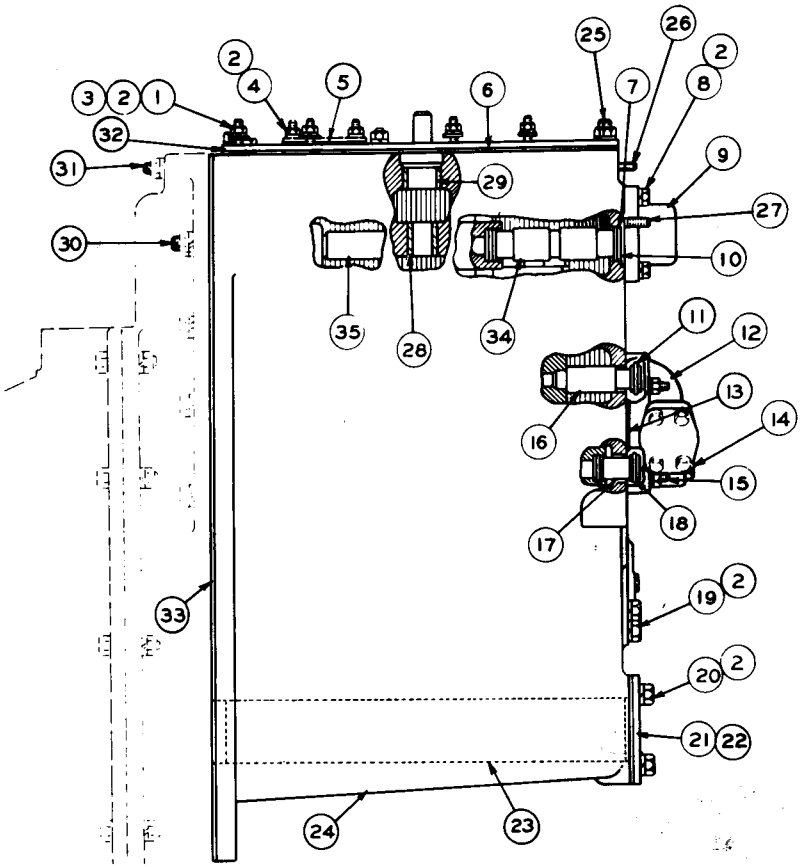

REF. NO.	PART NUMBER	DESCRIPTION	QTY
1	1B4203	NUT	16
2	3B4506	LOCKWASHER	34
3	4B4278	WASHER	4
4	1D4717	NUT	4
5	8B9777	GASKET	1
6	1M8661	GASKET	1
7	8M4432	SEAL	2
8	S1588	BOLT	2
9	4M1530	COVER	1
	8M4436	SEAL	1
10	8M4986	SEAL	1
11	8M4435	SEAL	1
12	4S8651	MANIFOLD	1
13	4S5881	GASKET	1
14	5M7908	PLUG ASSEM.	1
	3J1907	SEAL	1
15	7H3051	STUD	4
	1B4203	NUT	4
	3B4506	LOCKWASHER	4
16	5S4466	SLEEVE	1
17	2S4958	SLEEVE	1
18	8M4435	SEAL	2

19	3B1915	BOLT	8
20	L1351	BOLT	4
21	1S2197	COVER	1
C 22	9S8848	GASKET	1
C 23	2P129	TUBE	2
C 24	2P133	CASE ASSEM.	1
25	1M6421	STUD	7
26	3S86	STUD	10
C 27	1J8668	STUD	2
28	1F929	BUSHING	2
29	9S2836	BEARING	2
30	1M6422	STUD	2
31	2M269	STUD	3
32	9S6893	COVER ASSEM.	1
33	1M8659	GASKET	1
34	2S4955	SLEEVE	1
35	2S4963	SLEEVE	1
	8M4445	SEAL	2

C INDICATES CHANGE

140219

TRANSMISSION CASE AND COVERS (4S8652 N/S)—Type 2
Test No. 6659—Up
Part of 2S7900 and 5S1000 Range Transmission Arrangements
shown on Pages 81 and 81A

TRANSMISSION HYDRAULIC CONTROL (4M641 N/S)

Serial No. 48A6393 to 48A12190 inclusive and Test No. 6659 to 13068 inclusive. Part of 2S7900 and 5S1000 Range Transmission Arrangements shown on Pages 81 and 81A. 7M5890, 4M639, 4M640 Valve parts are shown on Pages 86B, 87 and 88

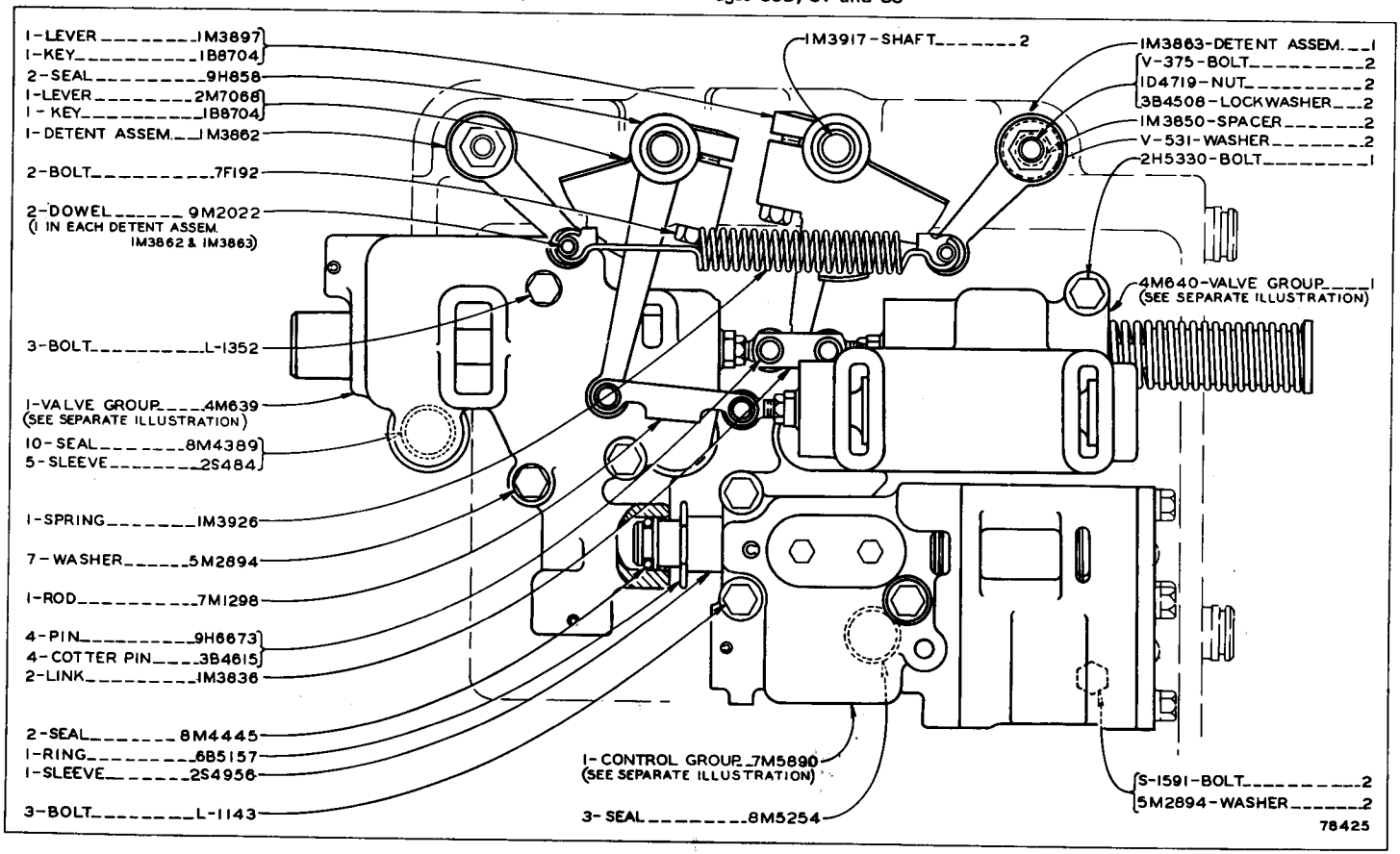

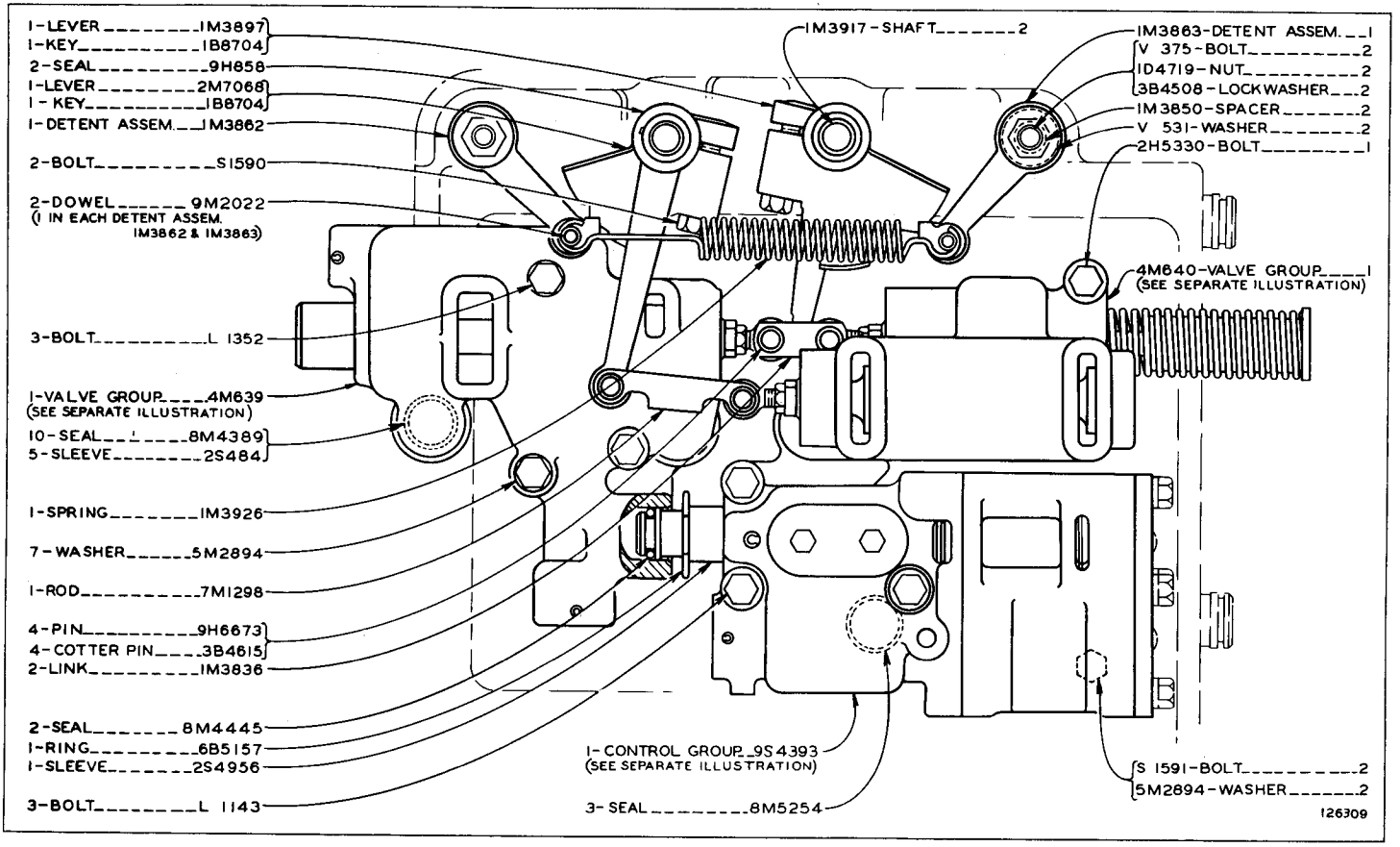

TRANSMISSION HYDRAULIC CONTROL (9S4400 N/S)

Serial No. 48A12191 to 48A13605 inclusive and Test No. 13069—Up. Part of 5S1000 Range Transmission Arrangement shown on Page 81A. 9S4393 Pressure Control, 4M639 and 4M640 Valve parts are shown on Pages 87A and 88

TRANSMISSION HYDRAULIC CONTROL (9S4400 N/S)

Effective with Serial No. 48A13606—Up and Test No. 13069—Up. Part of 5S1000 Range Transmission Arrangement shown on Page 81A. 9S4402 Pressure Control, 4M639 and 4M640 Valve parts are shown on Pages 87B and 88

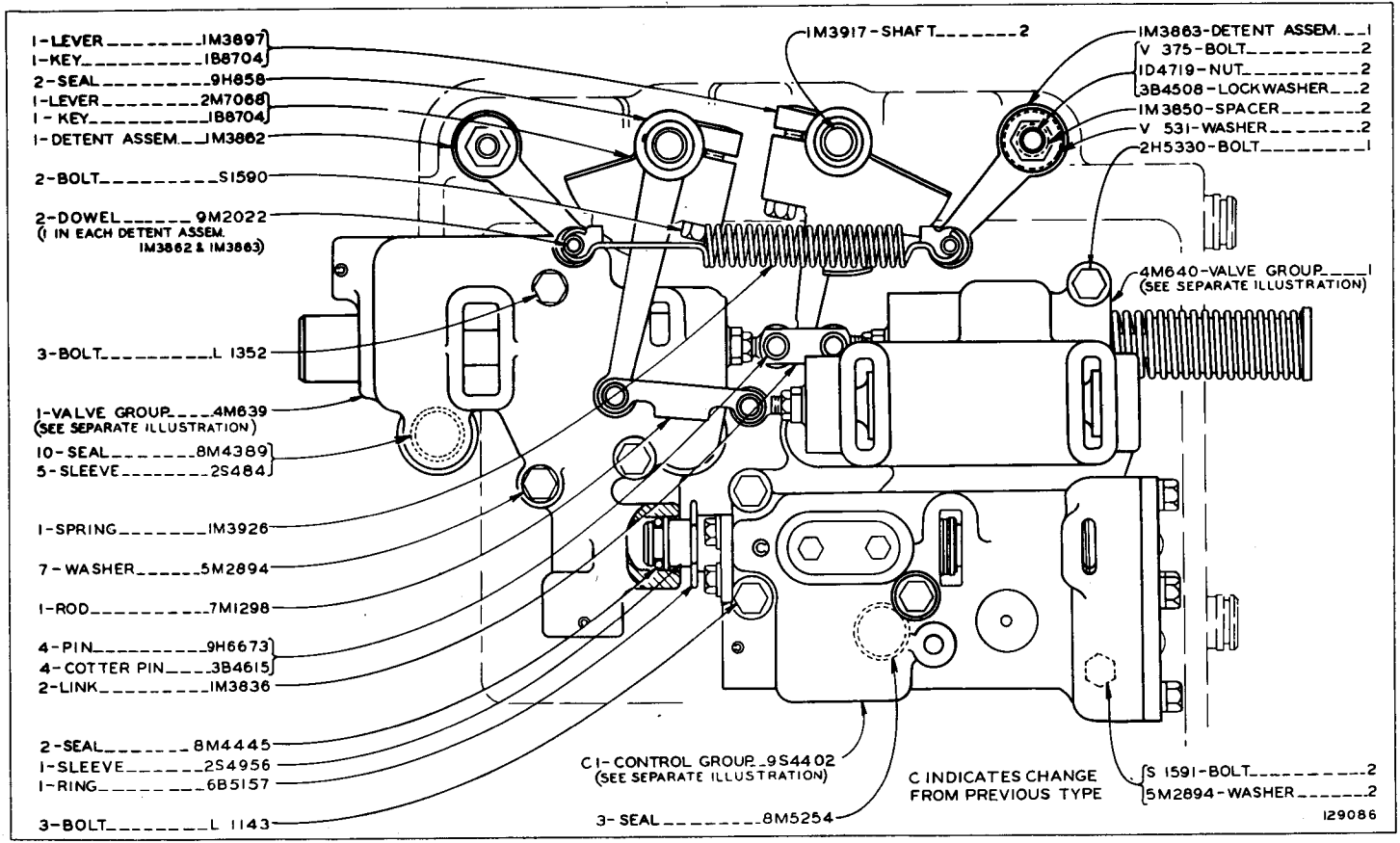

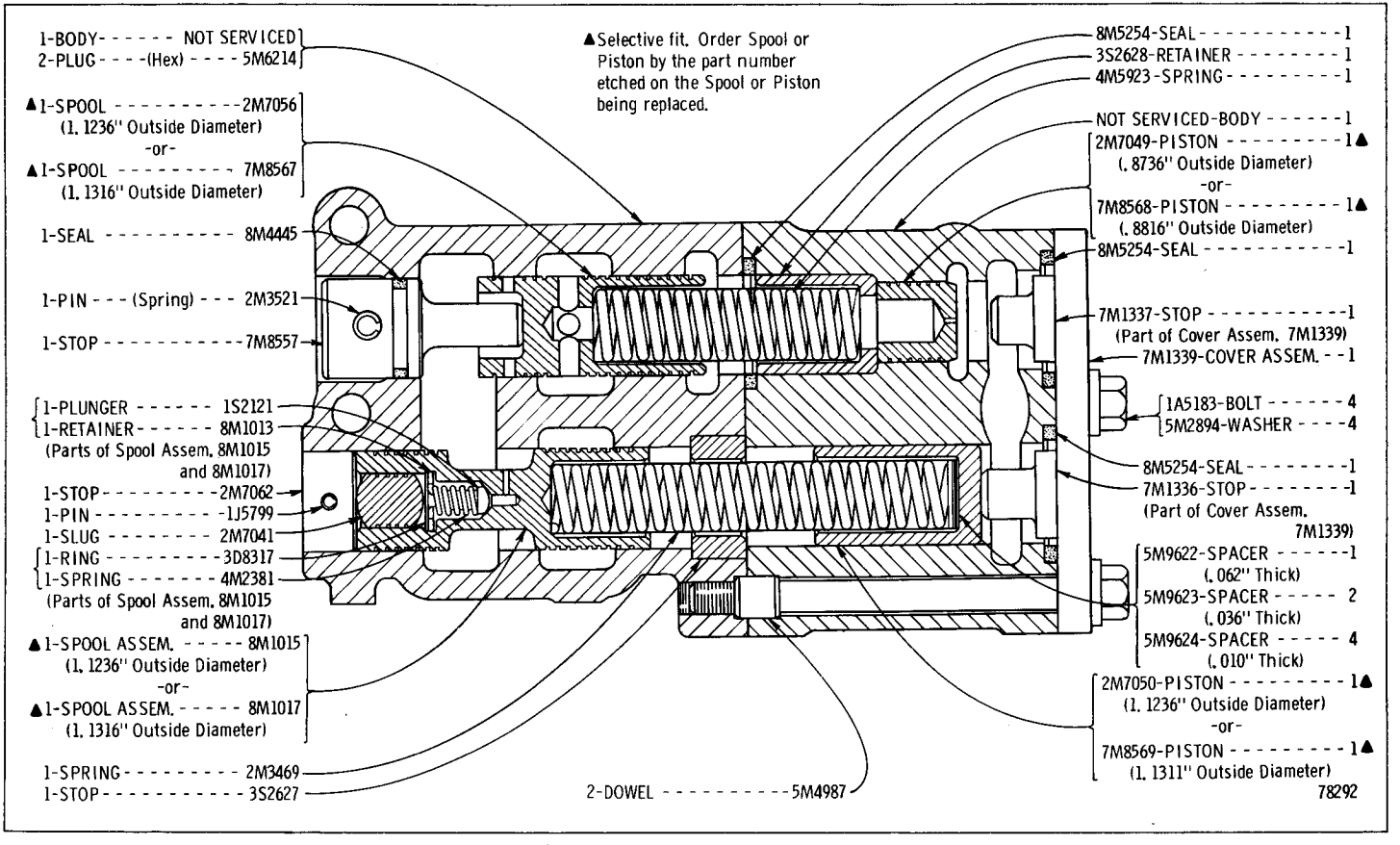

7M5890 PRESSURE CONTROL GROUP
Serial No. 48A6393 to 9303, 9306, 9307, 9314 and 48A9315 inclusive
Part of Transmission Hydraulic Control shown on Page 85

7M5890 PRESSURE CONTROL GROUP

Serial No. 48A9304, 9305, 9308 to 9313 and 48A9316 to 48A12190 inclusive and Test No. 9845 to 13068 inclusive

Part of Transmission Hydraulic Control shown on Page 85

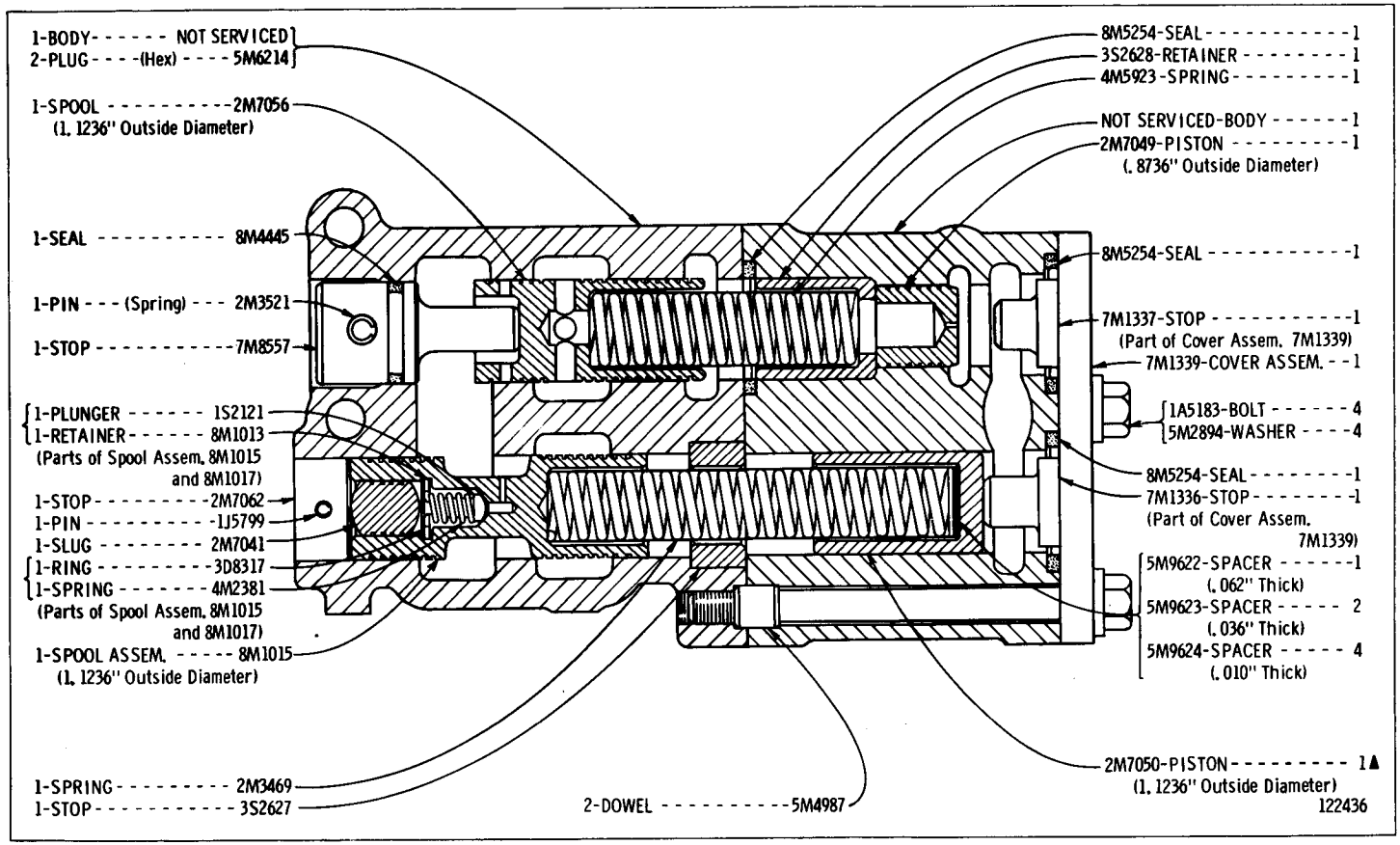

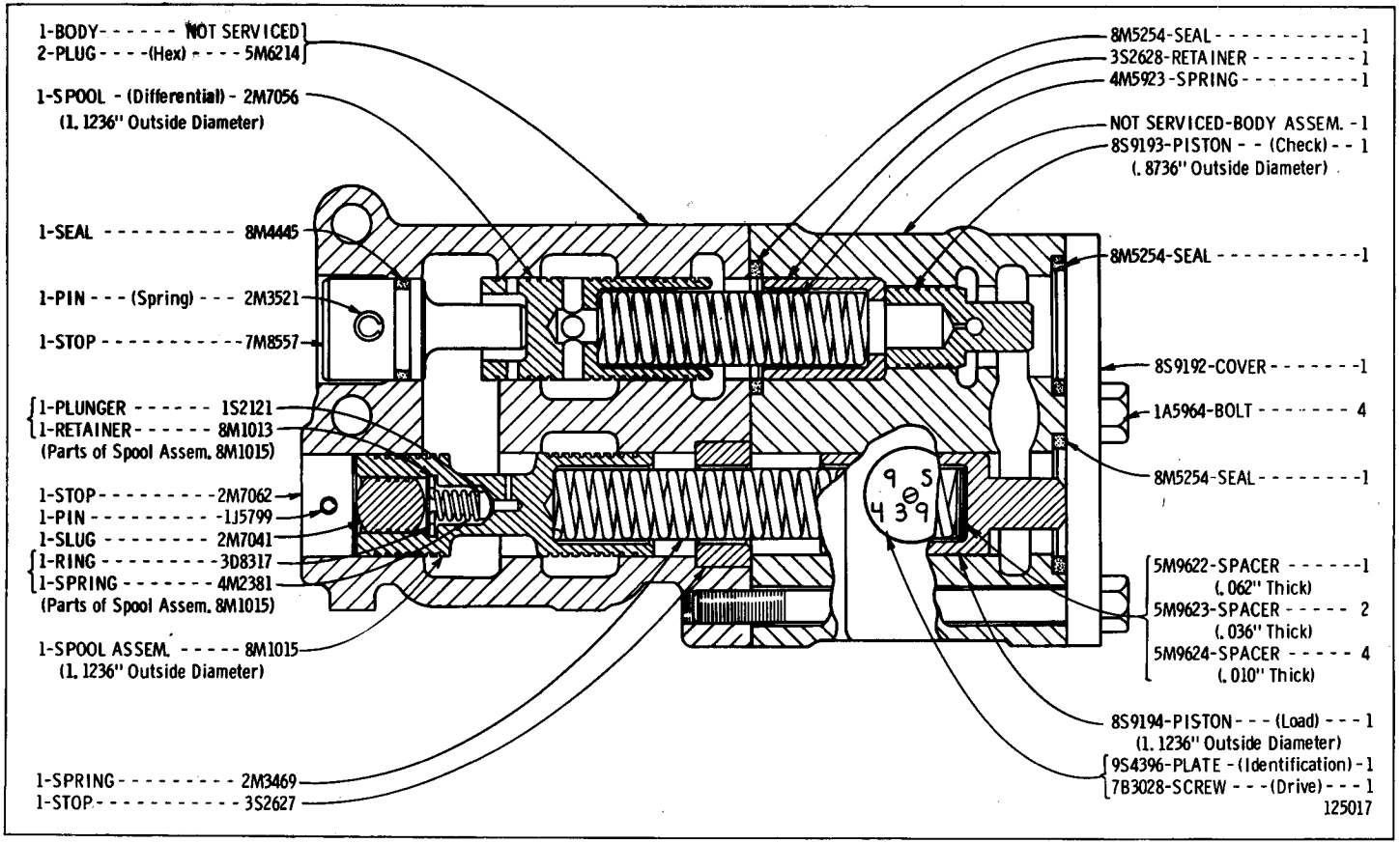

9S4393 PRESSURE CONTROL GROUP
Serial No. 48A12191 to 48A13605 inclusive and Test No. 13069—Up
Part of Transmission Hydraulic Control shown on Page 86

9S4402 PRESSURE CONTROL GROUP
Effective with Serial No. 48A13606—Up and Test No. 13069—Up
Part of Transmission Hydraulic Control shown on Page 86A

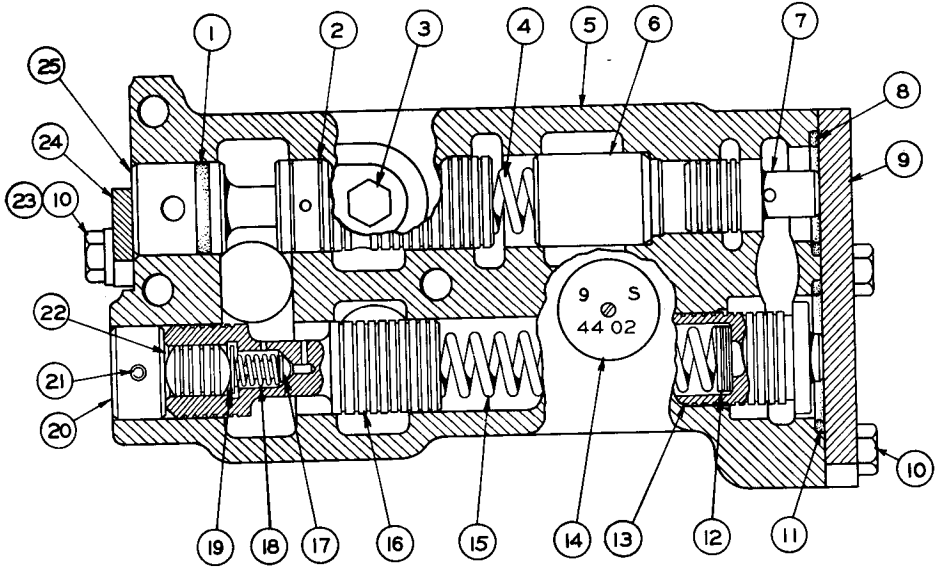

REF. NO.	PART NUMBER	DESCRIPTION	QTY
1	8M4445	SEAL	1
2	2M7056	SPOOL	1
3	5M6214	PLUG	2
4	4M5923	SPRING	1
5	Not Serv	BODY ASSEM.	1
6	9S2803	RETAINER (Part of Body Assem.)	1
7	8S9193	VALVE	1
8	8M5254	SEAL	1
9	8S9192	COVER	1
10	S1594	BOLT	6
11	8M4992	SEAL	1
12	5M9622	SPACER-(.062" Thick)	2
	5M9623	SPACER-(.036" Thick)	2
	5M9624	SPACER-(.010" Thick)	4
13	9S4394	PISTON	1
14	9S4403	PLATE-(Identification)	1
	7B3028	SCREW	1
15	2M3469	SPRING	1
16	8M1015	SPOOL ASSEM.	1
17	1S2121	PLUNGER	1
18	4M2381	SPRING	1
19	8M1013	RETAINER	1
	3D8317	RING (Parts of 8M1015 Assem.)	1
20	2M7062	STOP	1
21	1J5799	PIN	1
22	2M7041	SLUG	1
23	5M2894	WASHER	2
24	8M5172	PLATE	1
25	7M8557	STOP	1

106293

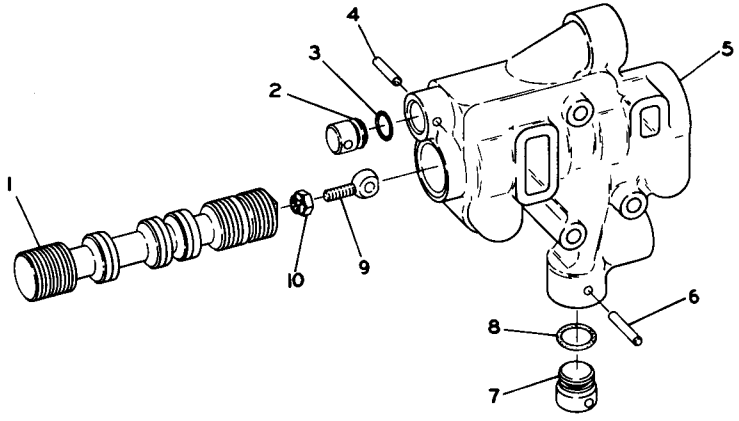

REF. NO.	PART NUMBER	DESCRIPTION	QTY
1	1M6477	VALVE	1
2	1M3781	PLUG	1
3	8M4437	SEAL	1
4	1H1200	PIN	1
5	4M634	HOUSING	1
6	1J5799	PIN	1
7	2M7059	PLUG	1
8	8M4435	SEAL	1
9	9H297	BOLT	1
10	2S5717	NUT	1

112248

4M639 SELECTOR VALVE GROUP
Part of Transmission Hydraulic Control shown on Pages 85, 86 & 86A

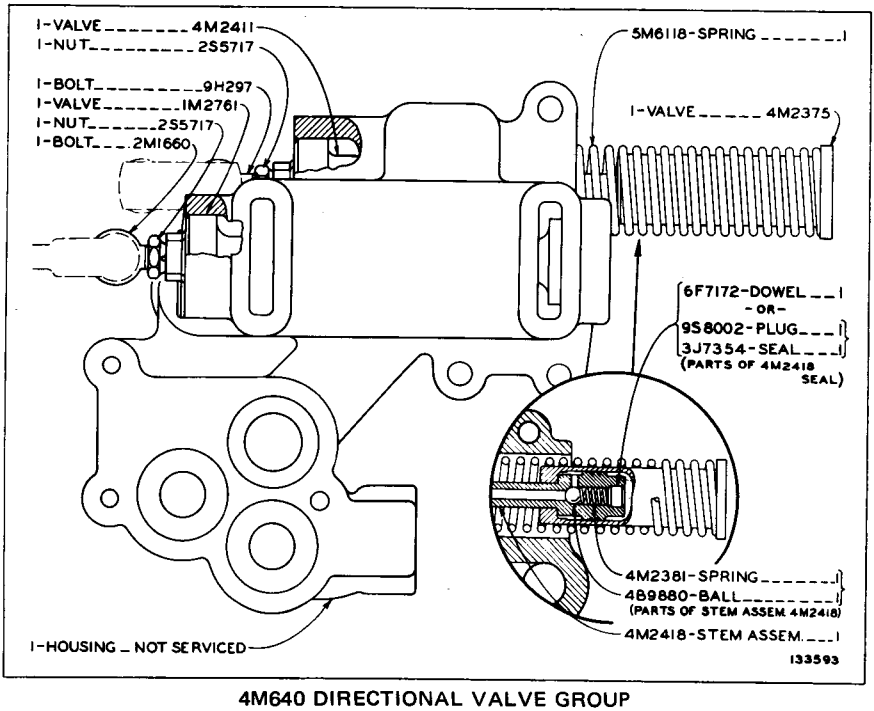

4M640 DIRECTIONAL VALVE GROUP
Part of Transmission Hydraulic Control shown on Pages 85, 86 & 86A

TRANSMISSION AND STEERING CLUTCH LUBRICATION SYSTEM

Serial No. 48A6393 to 48A8558 inclusive

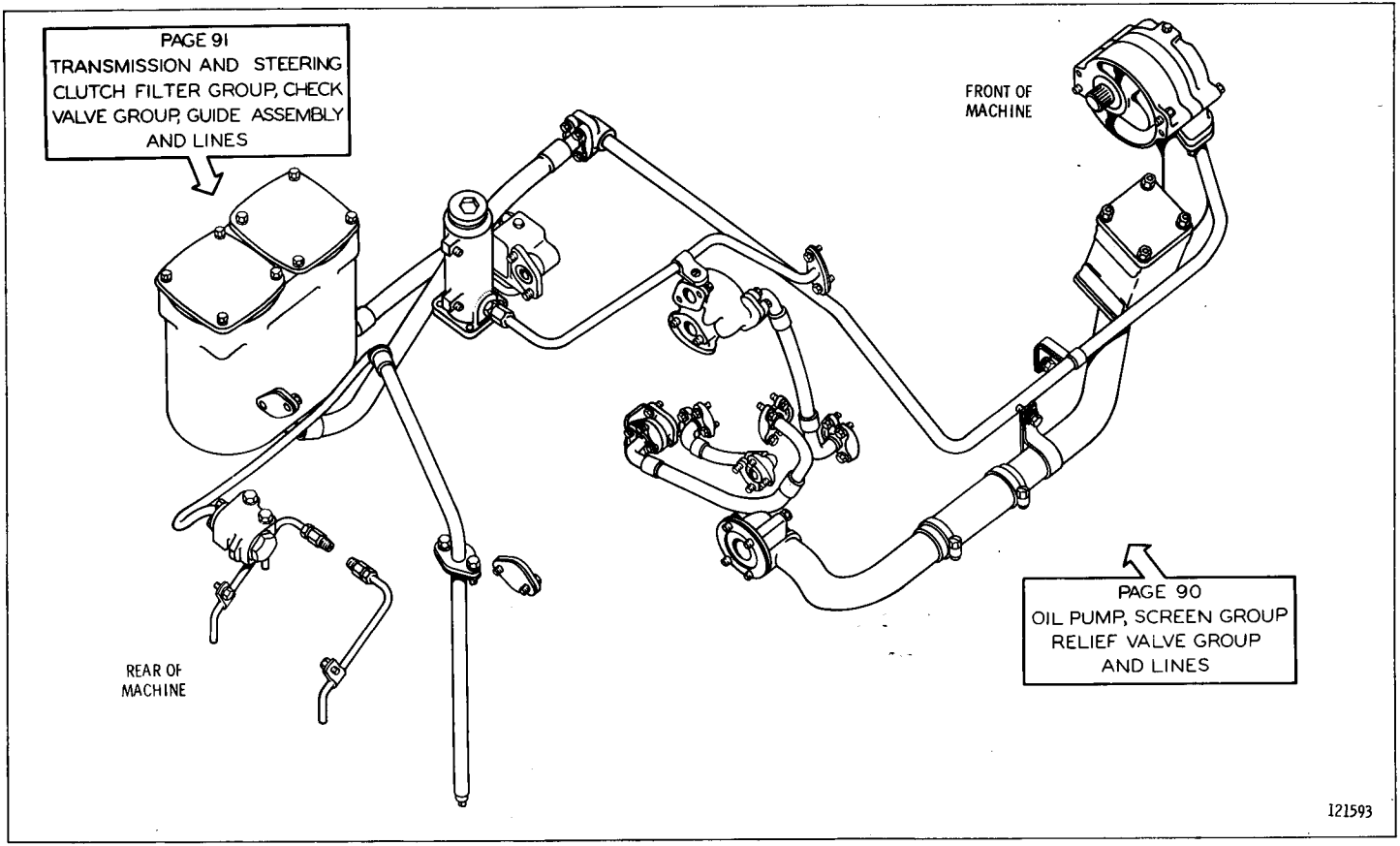

TRANSMISSION AND STEERING CLUTCH LUBRICATION SYSTEM

Effective with Serial No. 48A8559

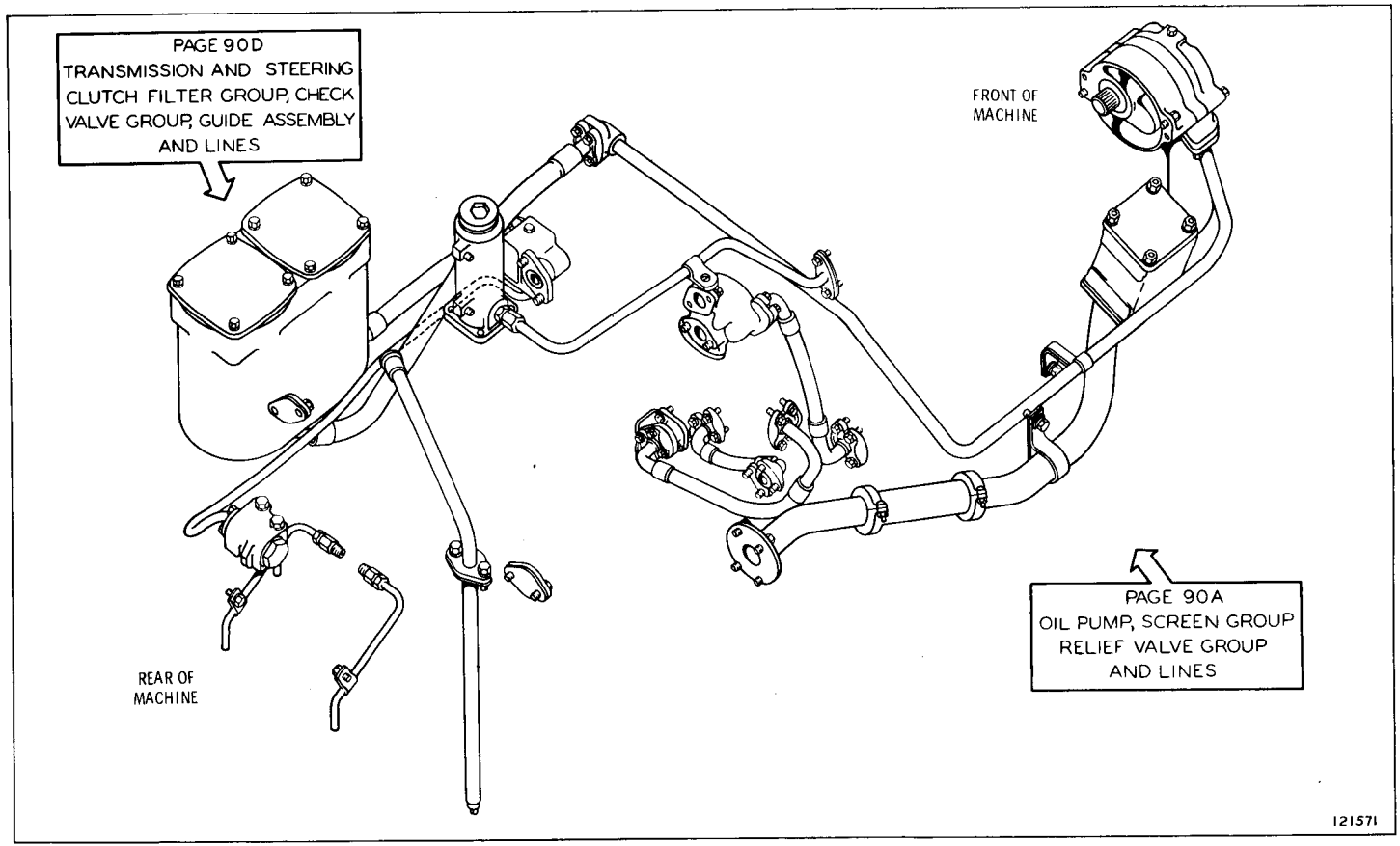

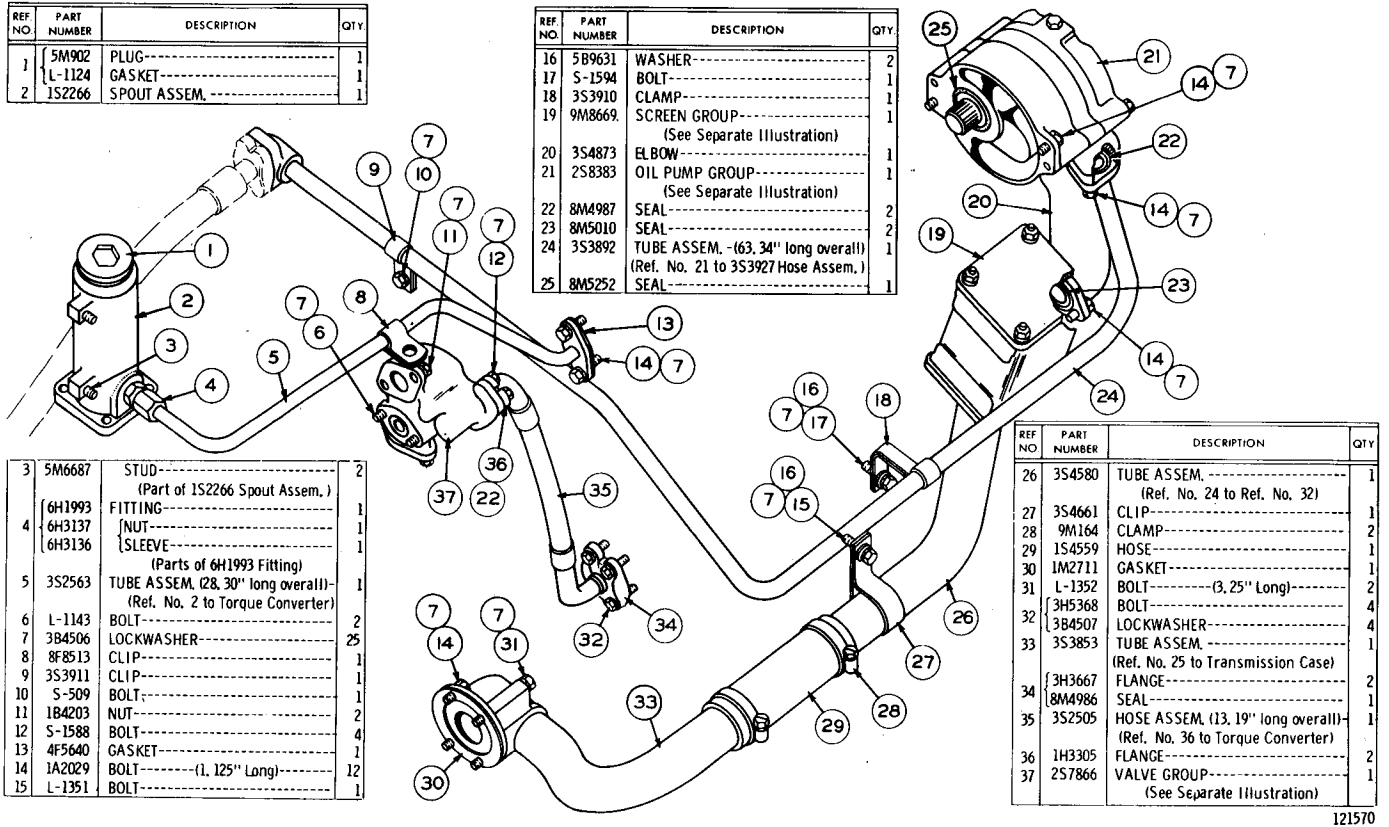

REF NO.	PART NUMBER	DESCRIPTION	QTY.
1	5M902	PLUG	1
	L-1124	GASKET	1
2	1S2266	SPOUT ASSEM.	1

REF. NO.	PART NUMBER	DESCRIPTION	QTY.
16	5B9631	WASHER	2
17	S-1594	BOLT	1
18	3S3910	CLAMP	1
19	9M8669	SCREEN GROUP (See Separate Illustration)	1
20	3S4873	ELBOW	1
21	2S8383	OIL PUMP GROUP (See Separate Illustration)	1
22	8M4987	SEAL	2
23	8M5010	SEAL	2
24	3S3892	TUBE ASSEM. -(63, 34" long overall) (Ref. No. 21 to 3S3927 Hose Assem.)	1
25	8M5252	SEAL	1

3	5M6687	STUD (Part of 1S2266 Spout Assem.)	2
4	6H1993	FITTING	1
	6H3137	NUT	1
	6H3136	SLEEVE (Parts of 6H1993 Fitting)	1
5	3S2563	TUBE ASSEM. (28, 30" long overall) (Ref. No. 2 to Torque Converter)	1
6	L-1143	BOLT	2
7	3B4506	LOCKWASHER	25
8	8F8513	CLIP	1
9	3S3911	CLIP	1
10	S-509	BOLT	1
11	1B4203	NUT	2
12	S-1588	BOLT	4
13	4F5640	GASKET	1
14	1A2029	BOLT-(1, 125" Long)	12
15	L-1351	BOLT	1

REF NO.	PART NUMBER	DESCRIPTION	QTY
26	3S4580	TUBE ASSEM. (Ref. No. 24 to Ref. No. 32)	1
27	3S4661	CLIP	1
28	9M164	CLAMP	2
29	1S4559	HOSE	1
30	1M2711	GASKET	1
31	L-1352	BOLT-(3, 25" Long)	2
32	3H5368	BOLT	4
	3B4507	LOCKWASHER	4
33	3S3853	TUBE ASSEM. (Ref. No. 25 to Transmission Case)	1
34	3H3667	FLANGE	2
	8M4986	SEAL	1
35	3S2505	HOSE ASSEM. (13, 19" long overall) (Ref. No. 36 to Torque Converter)	1
36	1H3305	FLANGE	2
37	2S7866	VALVE GROUP (See Separate Illustration)	1

121570

OIL PUMP, SCREEN GROUP, RELIEF VALVE GROUP AND LINES
Serial No. 48A6393 to 48A8558 inclusive
2S7866 Valve, 9M8669 Magnetic Screen and 2S8383 Pump parts are shown on Pages 92 and 93

OIL PUMP, SCREEN GROUP, RELIEF VALVE GROUP AND LINES

Serial No. 48A8559 to 48A9768 inclusive

7S2767 Pump, 2S7866 Valve and 9M8669 Magnetic Screen parts are shown on Pages 90C and 92

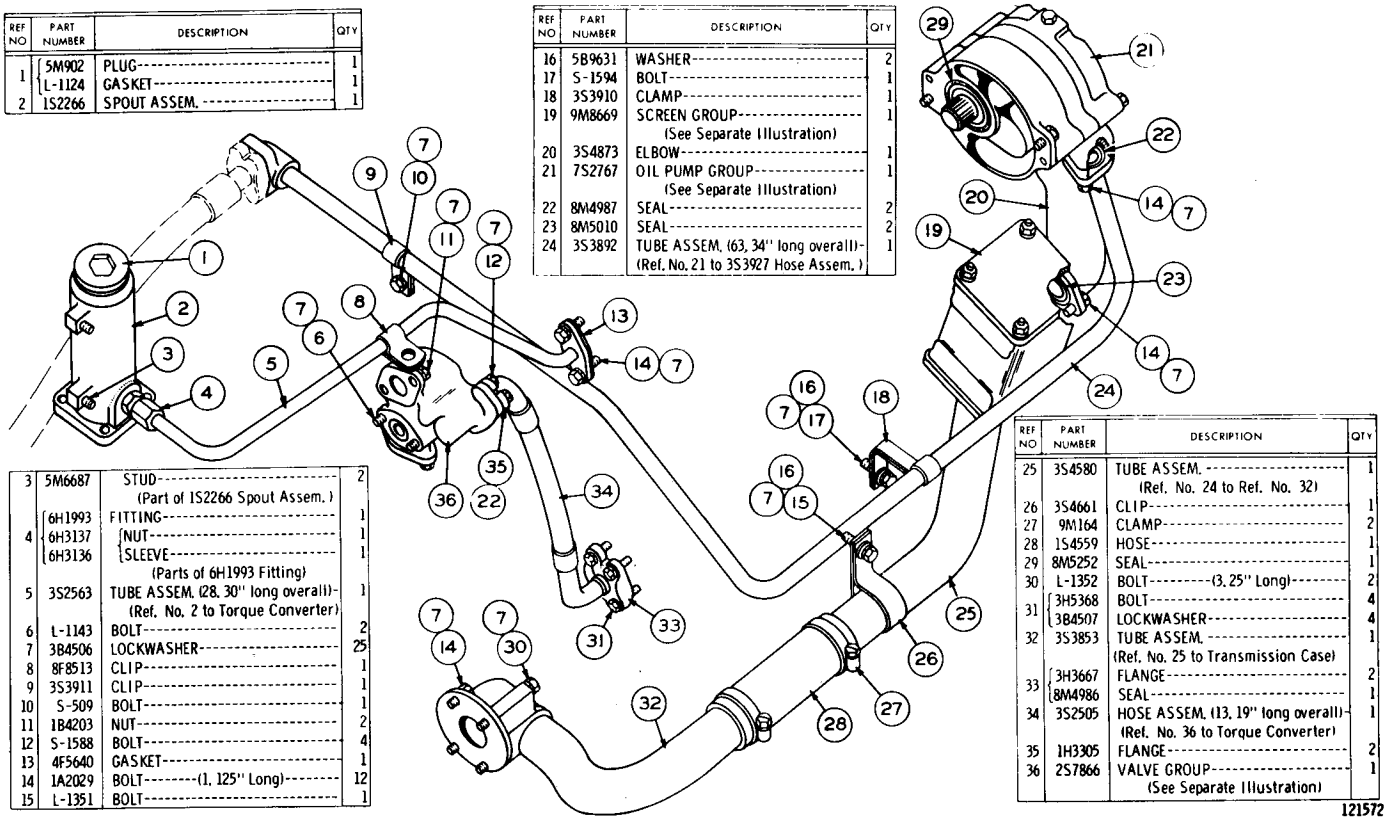

REF NO	PART NUMBER	DESCRIPTION	QTY
1	5M902	PLUG	1
	L-1124	GASKET	1
2	1S2266	SPOUT ASSEM.	1

REF NO	PART NUMBER	DESCRIPTION	QTY
3	5M6687	STUD (Part of 1S2266 Spout Assem.)	2
4	6H1993	FITTING	1
	6H3137	NUT	1
	6H3136	SLEEVE (Parts of 6H1993 Fitting)	1
5	3S2563	TUBE ASSEM. (28.30" long overall) (Ref. No. 2 to Torque Converter)	1
6	L-1143	BOLT	2
7	3B4506	LOCKWASHER	25
8	8F8513	CLIP	1
9	3S3911	CLIP	1
10	S-509	BOLT	1
11	1B4203	NUT	2
12	S-1588	BOLT	4
13	4F5640	GASKET	1
14	1A2029	BOLT (1.125" Long)	12
15	L-1351	BOLT	1

REF NO	PART NUMBER	DESCRIPTION	QTY
16	5B9631	WASHER	2
17	S-1594	BOLT	1
18	3S3910	CLAMP	1
19	9M8669	SCREEN GROUP (See Separate Illustration)	1
20	3S4873	ELBOW	1
21	7S2767	OIL PUMP GROUP (See Separate Illustration)	1
22	8M4987	SEAL	2
23	8M5010	SEAL	2
24	3S3892	TUBE ASSEM. (63.34" long overall) (Ref. No. 21 to 3S3927 Hose Assem.)	1

REF NO	PART NUMBER	DESCRIPTION	QTY
25	3S4580	TUBE ASSEM. (Ref. No. 24 to Ref. No. 32)	1
26	3S4661	CLIP	1
27	9M164	CLAMP	2
28	1S4559	HOSE	1
29	8M5252	SEAL	1
30	L-1352	BOLT-(3.25" Long)	2
31	3H5368	BOLT	4
	3B4507	LOCKWASHER	4
32	3S3853	TUBE ASSEM. (Ref. No. 25 to Transmission Case)	1
33	3H3667	FLANGE	2
	8M4986	SEAL	1
34	3S2505	HOSE ASSEM. (13.19" long overall) (Ref. No. 36 to Torque Converter)	1
35	1H3305	FLANGE	2
36	2S7866	VALVE GROUP (See Separate Illustration)	1

121572

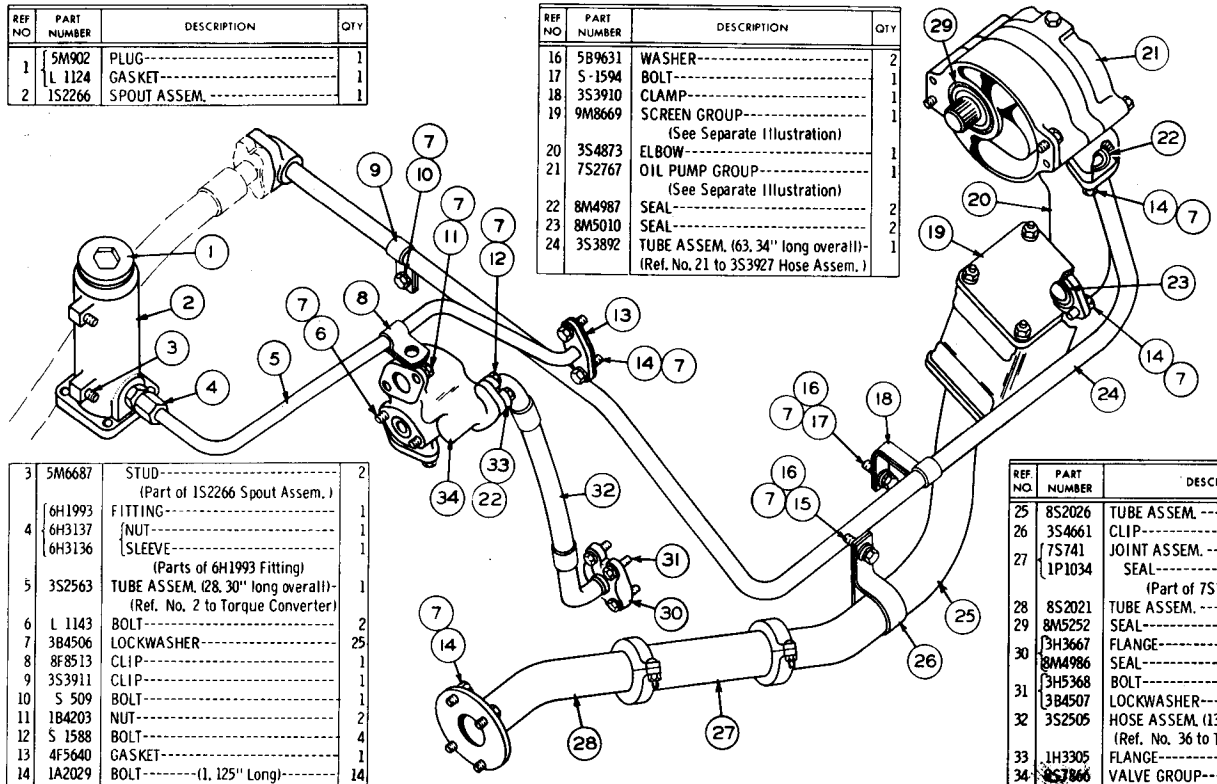

REF NO	PART NUMBER	DESCRIPTION	QTY
1	5M902	PLUG	1
	L 1124	GASKET	1
2	1S2266	SPOUT ASSEM.	1
3	5M6687	STUD (Part of 1S2266 Spout Assem.)	2
4	6H1993	FITTING	1
	6H3137	NUT	1
	6H3136	SLEEVE (Parts of 6H1993 Fitting)	1
5	3S2563	TUBE ASSEM. (28, 30" long overall) (Ref. No. 2 to Torque Converter)	1
6	L 1143	BOLT	2
7	3B4506	LOCKWASHER	25
8	8F8513	CLIP	1
9	3S3911	CLIP	1
10	S 509	BOLT	1
11	1B4203	NUT	2
12	S 1588	BOLT	4
13	4F5640	GASKET	1
14	1A2029	BOLT-(1, 125" Long)	14
15	L 1351	BOLT	1
16	5B9631	WASHER	2
17	S-1594	BOLT	1
18	3S3910	CLAMP	1
19	9M8669	SCREEN GROUP (See Separate Illustration)	1
20	3S4873	ELBOW	1
21	7S2767	OIL PUMP GROUP (See Separate Illustration)	1
22	8M4987	SEAL	2
23	8M5010	SEAL	2
24	3S3892	TUBE ASSEM. (63, 34" long overall) (Ref. No. 21 to 3S3927 Hose Assem.)	1
25	8S2026	TUBE ASSEM.	1
26	3S4661	CLIP	1
27	7S741	JOINT ASSEM.	1
	1P1034	SEAL (Part of 7S741 Assem.)	2
28	8S2021	TUBE ASSEM.	1
29	8M5252	SEAL	1
30	3H3667	FLANGE	2
	8M4986	SEAL	1
31	3H5368	BOLT	4
	3B4507	LOCKWASHER	4
32	3S2505	HOSE ASSEM. (13, 19" Long Overall) (Ref. No. 36 to Torque Converter)	1
33	1H3305	FLANGE	2
34	2S7866	VALVE GROUP (See Separate Illustration)	1

128518

OIL PUMP, SCREEN GROUP, RELIEF VALVE GROUP AND LINES
Serial No. 48A9769 to 48A12280 inclusive
7S2767 Oil Pump, 2S7866 Valve and 9M8669 Magnetic Screen parts are shown on Pages 90B-2 & 92

OIL PUMP, SCREEN GROUP, RELIEF VALVE GROUP AND LINES

Effective with Serial No. 48A12281. 7S2767 Oil Pump, 2S7866 Valve and 9M8669 Magnetic Screen parts are shown on Pages 90B-2 & 92

REF NO	PART NUMBER	DESCRIPTION	QTY
1	5M902	PLUG	1
	L 1124	GASKET	1
2	1S2266	SPOUT ASSEM.	1

REF NO	PART NUMBER	DESCRIPTION	QTY
16	5B9631	WASHER	2
17	S 1594	BOLT	1
18	3S3910	CLAMP	1
19	9M8669	SCREEN GROUP (See Separate Illustration)	1
20	3S4873	ELBOW	1
21	7S2767	OIL PUMP GROUP (See Separate Illustration)	1
22	8M4987	SEAL	2
23	8M5010	SEAL	2
24	3S3892	TUBE ASSEM. (63.34" long overall)- (Ref. No. 21 to 3S3927 Hose Assem.)	1

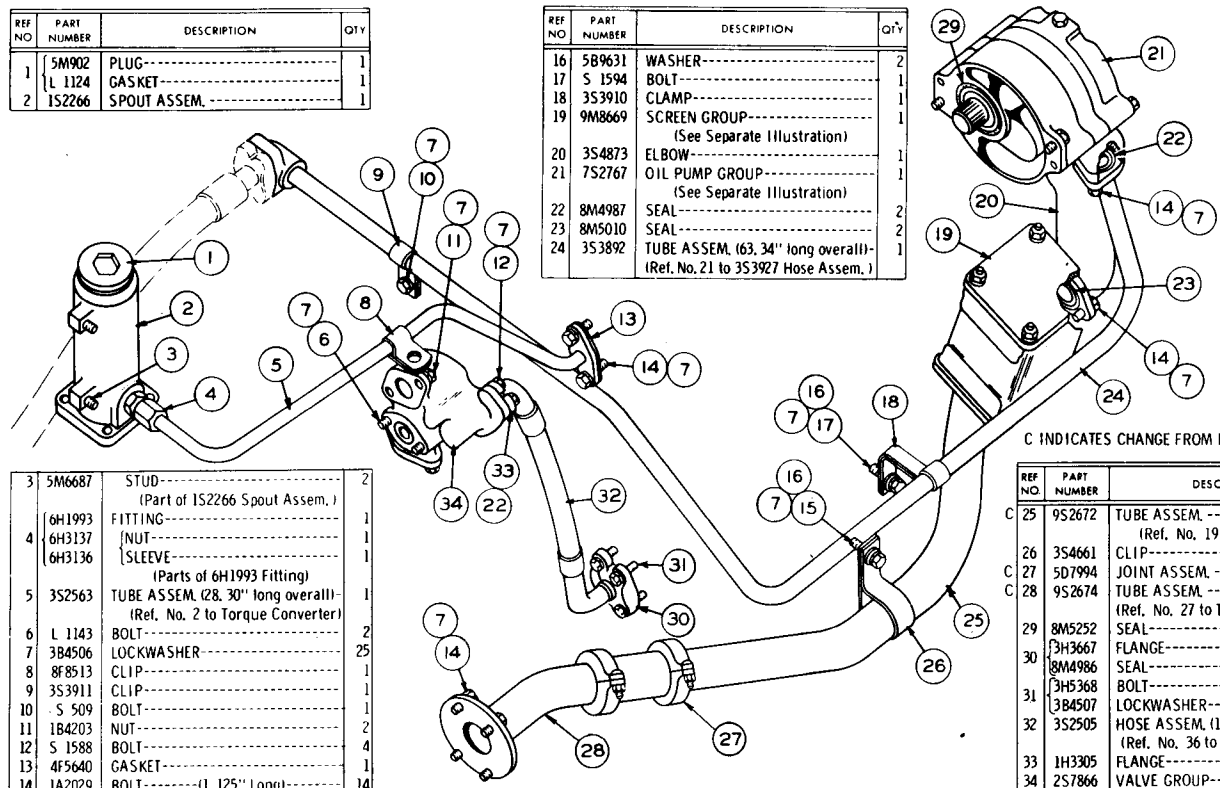

REF NO	PART NUMBER	DESCRIPTION	QTY
3	5M6687	STUD (Part of 1S2266 Spout Assem.)	2
4	6H1993	FITTING	1
	6H3137	NUT	1
	6H3136	SLEEVE (Parts of 6H1993 Fitting)	1
5	3S2563	TUBE ASSEM. (28.30" long overall)- (Ref. No. 2 to Torque Converter)	1
6	L 1143	BOLT	2
7	3B4506	LOCKWASHER	25
8	8F8513	CLIP	1
9	3S3911	CLIP	1
10	S 509	BOLT	1
11	1B4203	NUT	2
12	S 1588	BOLT	4
13	4F5640	GASKET	1
14	1A2029	BOLT-(1.125" Long)	14
15	L 1351	BOLT	1

C INDICATES CHANGE FROM PREVIOUS TYPE

	REF NO.	PART NUMBER	DESCRIPTION	QTY
C	25	9S2672	TUBE ASSEM. (Ref. No. 19 to Ref. No. 27)	1
	26	3S4661	CLIP	1
C	27	5D7994	JOINT ASSEM.	1
C	28	9S2674	TUBE ASSEM. (Ref. No. 27 to Transmission Case)	1
	29	8M5252	SEAL	1
	30	3H3667	FLANGE	2
		8M4986	SEAL	1
	31	3H5368	BOLT	4
		3B4507	LOCKWASHER	4
	32	3S2505	HOSE ASSEM. (13.19" Long Overall) (Ref. No. 36 to Torque Converter)	1
	33	1H3305	FLANGE	2
	34	2S7866	VALVE GROUP (See Separate Illustration)	1

126263

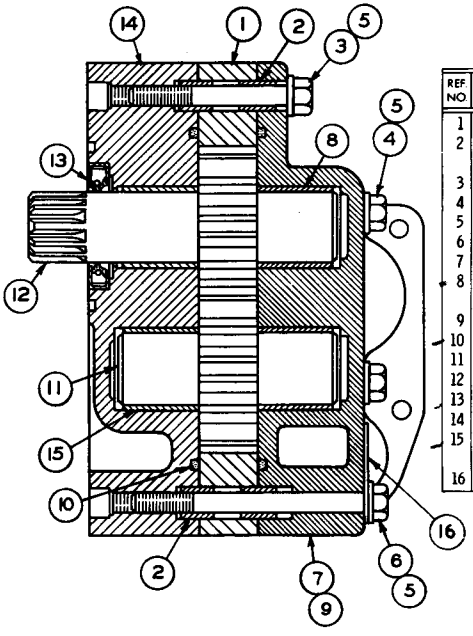

REF NO.	PART NUMBER	DESCRIPTION	QTY
1	2S704	BODY ASSEM.	1
2	8M8489	DOWEL (Part of 2S704 Body Assem.)	4
3	T 573	BOLT	1
4	T 65	BOLT	4
5	3S4	WASHER	6
6	8S9191	BOLT	1
7	2M3437	MANIFOLD ASSEM.	1
8	5M3320	BEARING (Part of 2M3437 Manifold Assem.)	2
9	5M6214	PLUG	1
10	8F9516	SEAL	2
11	2S8575	GEAR-(12 Teeth-Idler)	1
12	2S8574	GEAR-(12 Teeth-Drive)	1
13	5S6622	SEAL	1
14	2M3436	COVER ASSEM.	1
15	5M3320	BEARING (Part of 2M3436 Assem.)	2
16	8S5726	PLATE-(Identification)	1

7S2767 OIL PUMP GROUP
Effective with Serial No. 48A8559
Part of Oil Pump, Screen, Relief Valve and Lines
shown on Pages 90A, 90B & 90B-1

TRANSMISSION AND STEERING CLUTCH FILTER GROUP, CHECK VALVE GROUP, GUIDE ASSEMBLY AND LINES

Serial No. 48A6393 to 48A8558 inclusive. 3S3389 Filter parts are shown on Page 92A

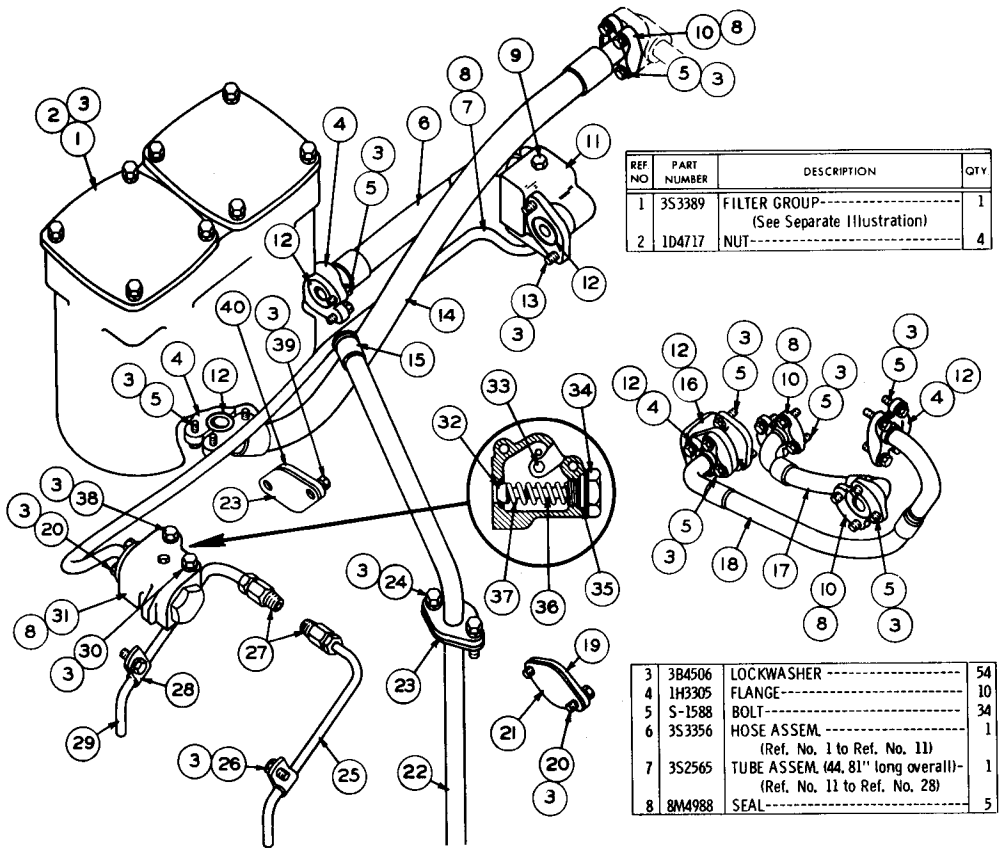

REF NO	PART NUMBER	DESCRIPTION	QTY
1	3S3389	FILTER GROUP (See Separate Illustration)	1
2	1D4717	NUT	4
3	3B4506	LOCKWASHER	54
4	1H3305	FLANGE	10
5	S-1588	BOLT	34
6	3S3356	HOSE ASSEM. (Ref. No. 1 to Ref. No. 11)	1
7	3S2565	TUBE ASSEM. (44, 81" long overall)- (Ref. No. 11 to Ref. No. 28)	1
8	8M4988	SEAL	5
9	5M6214	PLUG	1
10	2K190	FLANGE	6
11	3S2507	ADAPTER	1
12	8M4987	SEAL	7
13	S-1619	BOLT	2
14	3S3927	HOSE ASSEM. (24, 69" long overall)- (3S3892 Tube Assem. to Ref. No. 1)	1
15	5M3478	PLUNGER ASSEM.	1
16	2S7922	ADAPTER	1
17	3S2473	HOSE ASSEM. (12, 16" long overall)- (Ref. No. 14 to Transmission Case)	1
18	3S2499	HOSE ASSEM. (13, 38" long overall)- (Scavenge Pump to Transmission Case)	1
19	2M1656	COVER	1
20	S-1594	BOLT	6
21	9H4214	GASKET	1
22	1M8625	GUIDE ASSEM.	1
23	9F5940	GASKET	2
24	1A2029	BOLT	2
25	1M2611	TUBE (Pinion Sprayer)	1
26	S-509	BOLT	2
27	3B8996	FITTING	2
	8F8997	NUT (1 in each 3B8996 Fitting)	2
28	8B6127	CLIP	2
29	1M2612	TUBE (Pinion Sprayer)	1
30	5B9603	BOLT (5" Long)	1
31	2S8373	VALVE GROUP	1
32	3S8236	VALVE	1
33	5M6214	PLUG	1
34	9M135	PLUG	1
35	8M4988	SEAL	1
36	7B472	PIN	1
37	L-1142	SPRING (Parts of 2S8373 Valve Group)	1
38	L-1143	BOLT (2, 50" Long)	1
39	1B4203	NUT	2
40	5H2830	COVER	1

78008

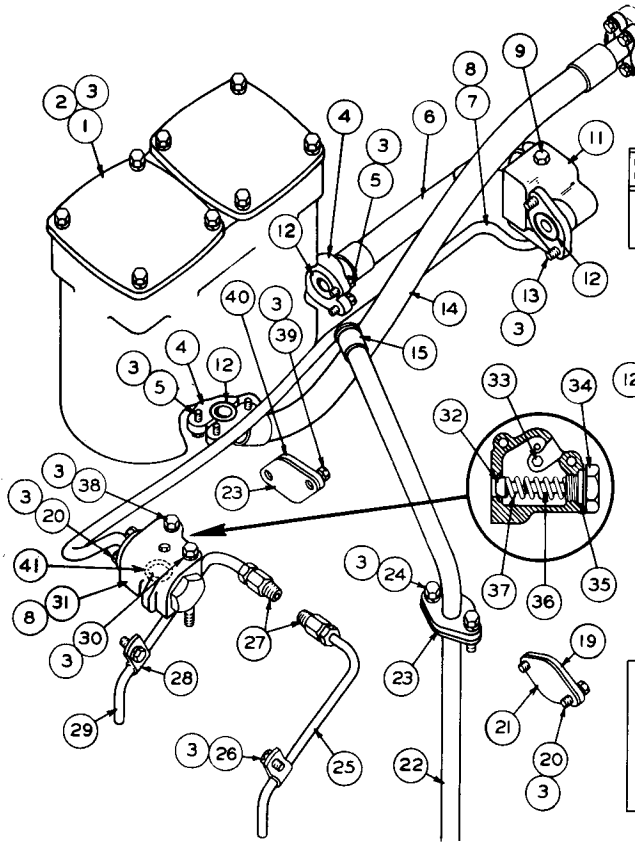

REF NO	PART NUMBER	DESCRIPTION	QTY
1	3S3389	FILTER GROUP (See Separate Illustration)	1
2	1D4717	NUT	4

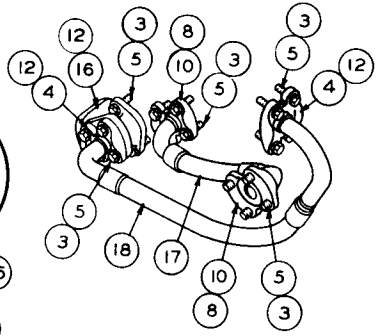

3	3B4506	LOCKWASHER	54
4	1H3305	FLANGE	10
5	S-1588	BOLT	34
6	3S3356	HOSE ASSEM. (Ref. No. 1 to Ref. No. 11)	1
7	3S2565	TUBE ASSEM. (44.81" long overall)- (Ref. No. 11 to Ref. No. 28)	1
8	8M4988	SEAL	5

REF NO	PART NUMBER	DESCRIPTION	QTY
9	5M6214	PLUG	1
10	2K190	FLANGE	6
11	3S2507	ADAPTER	1
12	8M4987	SEAL	7
13	S-1619	BOLT	2
14	3S3927	HOSE ASSEM. (24.69" long overall)- (3S3892 Tube Assem. to Ref. No. 1)	1
15	5M3478	PLUNGER ASSEM.	1
16	2S7922	ADAPTER	1
17	3S2473	HOSE ASSEM. (12.16" long overall)- (Ref. No. 14 to Transmission Case)	1
18	3S2499	HOSE ASSEM. (13.38" long overall)- (Scavenge Pump to Transmission Case)	1
19	2M1656	COVER	1
20	S-1594	BOLT	6
21	9H4214	GASKET	1
22	1M8625	GUIDE ASSEM.	1
23	9F5940	GASKET	2
24	1A2029	BOLT	2
25	1M2611	TUBE-----(Pinion Sprayer)-----	1
26	S-509	BOLT	2
27	3B8996	FITTING	2
	8F8997	NUT (1 in each 3B8996 Fitting)	2
28	8B6127	CLIP	2
29	1M2612	TUBE-----(Pinion Sprayer)-----	1
30	5B9603	BOLT---------(5" Long)---------	1
31	2S8373	VALVE GROUP	1
32	3S8236	VALVE	1
33	5M6214	PLUG	1
34	9M135	PLUG	1
35	8M4988	SEAL	1
36	7B472	PIN	1
37	L-1142	SPRING (Parts of 2S8373 Valve Group)	1
38	L-1143	BOLT---------(2.50" Long)---------	1
39	1B4203	NUT	2
40	5H2830	COVER	1
41	8M4448	SEAL	1

121573

TRANSMISSION AND STEERING CLUTCH FILTER GROUP, CHECK VALVE GROUP, GUIDE ASSEMBLY AND LINES
Serial No. 48A8559 to 48A12011 inclusive. 3S3389 Filter parts are shown on Page 92A

TRANSMISSION AND STEERING CLUTCH FILTER GROUP, CHECK VALVE GROUP, GUIDE ASSEMBLY AND LINES

Serial No. 48A12012 to 48A13164 inclusive. 3S3389 Filter parts are shown on Pages 92A & 93

C INDICATES CHANGE FROM PREVIOUS TYPE

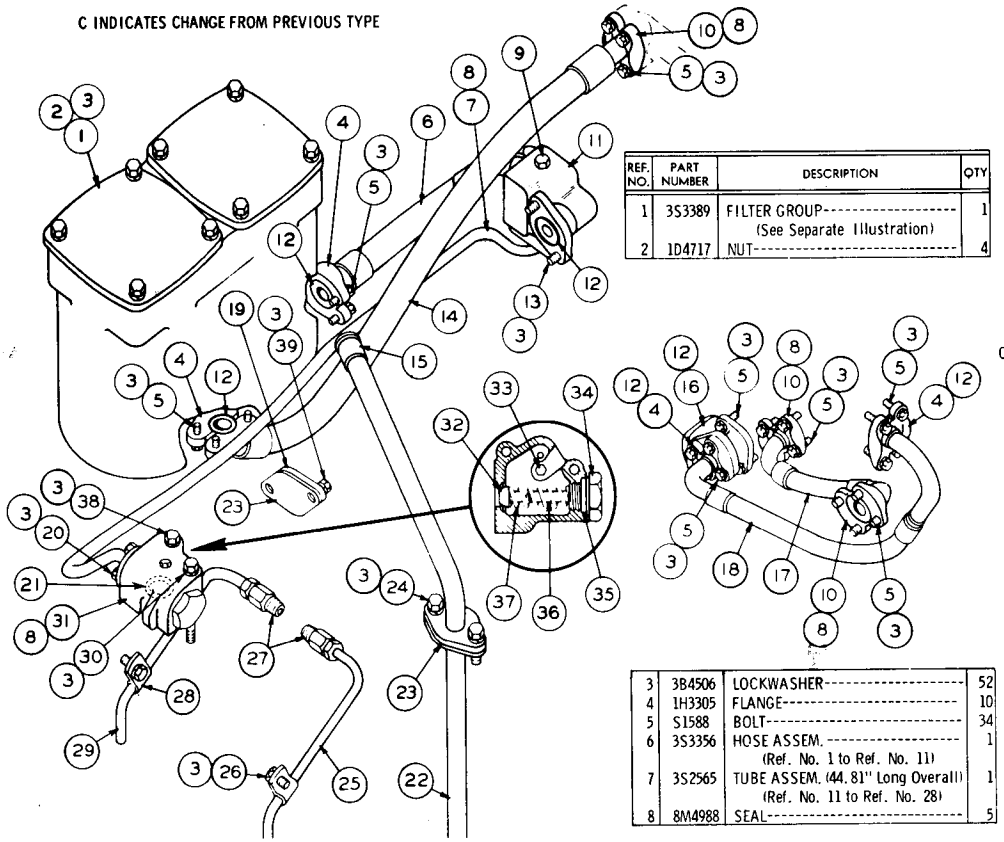

REF. NO.	PART NUMBER	DESCRIPTION	QTY
1	3S3389	FILTER GROUP (See Separate Illustration)	1
2	1D4717	NUT	4

3	3B4506	LOCKWASHER	52
4	1H3305	FLANGE	10
5	S1588	BOLT	34
6	3S3356	HOSE ASSEM. (Ref. No. 1 to Ref. No. 11)	1
7	3S2565	TUBE ASSEM. (44.81" Long Overall) (Ref. No. 11 to Ref. No. 28)	1
8	8M4988	SEAL	5

REF NO	PART NUMBER	DESCRIPTION	QTY
9	5M6214	PLUG	1
10	2K190	FLANGE	6
11	3S2507	ADAPTER	1
12	8M4987	SEAL	7
13	S 1619	BOLT	2
14	3S3927	HOSE ASSEM. (24.69" long overall) (3S3892 Tube Assem. to Ref. No. 1)	1
15	5M3478	PLUNGER ASSEM.	1
16	2S7922	ADAPTER	1
17	3S2473	HOSE ASSEM. (12.16" long overall) (Ref. No. 14 to Transmission Case)	1
18	3S2499	HOSE ASSEM. (13.38" long overall) (Scavenge Pump to Transmission Case)	1
19	5H2830	COVER	1
C 20	S1594	BOLT	4
21	8M4448	SEAL	1
22	1M8625	GUIDE ASSEM.	1
23	9F5940	GASKET	2
24	1A2029	BOLT	2
25	1M2611	TUBE (Pinion Sprayer)	1
26	S 509	BOLT	2
27	3B8996	FITTING	2
	8F8997	NUT (1 in each 3B8996 Fitting)	2
28	8B6127	CLIP	2
29	1M2612	TUBE (Pinion Sprayer)	1
30	5B9603	BOLT (5" Long)	1
31	2S8373	VALVE GROUP	1
32	3S8236	VALVE	1
33	5M6214	PLUG	1
34	9M135	PLUG	1
35	8M4988	SEAL	1
36	7B472	PIN	1
37	L 1142	SPRING (Parts of 2S8373 Valve Group)	1
38	L 1143	BOLT (2.50" Long)	1
39	1B4203	NUT	2

125794

C INDICATES CHANGE FROM PREVIOUS TYPE

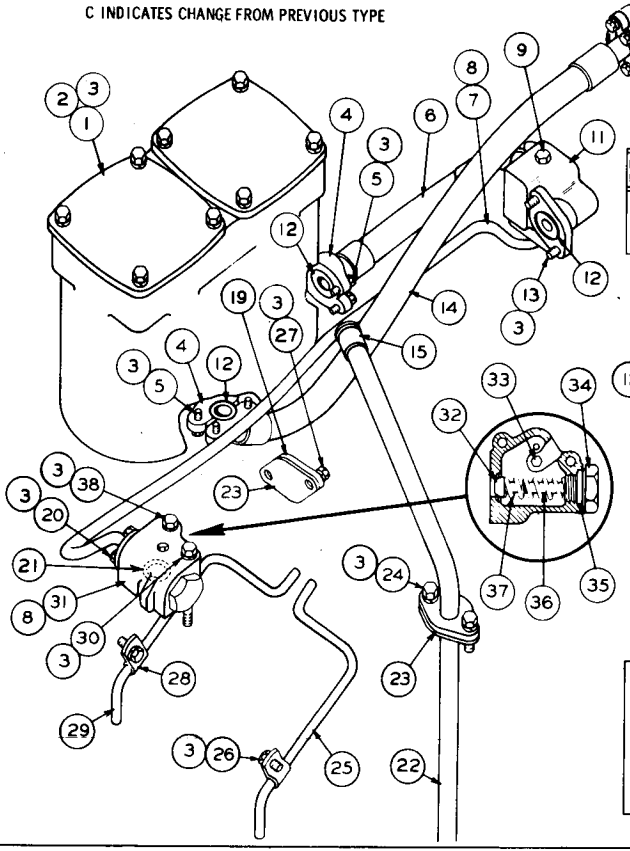

REF. NO.	PART NUMBER	DESCRIPTION	QTY
1	3S3389	FILTER GROUP (See Separate Illustration)	1
2	1D4717	NUT	4

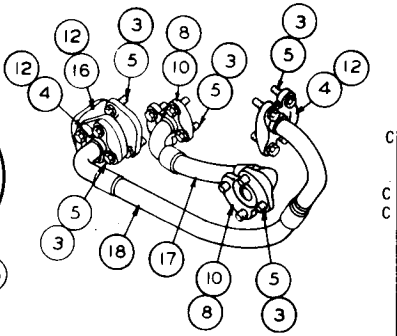

REF NO	PART NUMBER	DESCRIPTION	QTY
3	3B4506	LOCKWASHER	52
4	1H3305	FLANGE	10
5	S1588	BOLT	34
6	3S3356	HOSE ASSEM. (Ref. No. 1 to Ref. No. 11)	1
7	3S2565	TUBE ASSEM. (44.81" Long Overall) (Ref. No. 11 to Ref. No. 28)	1
8	8M4988	SEAL	5
9	5M6214	PLUG	1
10	2K190	FLANGE	6
11	3S2507	ADAPTER	1
12	8M4987	SEAL	7
13	S 1619	BOLT	2
14	3S3927	HOSE ASSEM. (24.69" long overall) (3S3892 Tube Assem. to Ref. No. 1)	1
15	5M3478	PLUNGER ASSEM.	1
16	2S7922	ADAPTER	1
17	3S2473	HOSE ASSEM. (12.16" long overall) (Ref. No. 14 to Transmission Case)	1
18	3S2499	HOSE ASSEM. (13.38" long overall) (Scavenge Pump to Transmission Case)	1
19	5H2830	COVER	1
20	S1594	BOLT	4
21	8M4448	SEAL	1
22	1M8625	GUIDE ASSEM.	1
23	9F5940	GASKET	2
24	1A2029	BOLT	2
C 25	9S4617	TUBE (Pinion Sprayer)	1
26	S 509	BOLT	2
27	1B4203	NUT	2
C 28	7M2220	CLIP	2
C 29	9S4618	TUBE (Pinion Sprayer)	1
30	5B9603	BOLT (5" long)	1
31	2S8373	VALVE GROUP	1
32	3S8236	VALVE	1
33	5M6214	PLUG	1
34	9M135	PLUG	1
35	8M4988	SEAL	1
36	7B472	PIN	1
37	L1142	SPRING (Parts of 2S8373 Group)	1
38	L1143	BOLT (2.50" long)	1

127846

TRANSMISSION AND STEERING CLUTCH FILTER GROUP, CHECK VALVE GROUP, GUIDE ASSEMBLY AND LINES
Serial No. 48A13165 to 48A13713 inclusive. 3S3389 Filter parts are shown on Page 93

TRANSMISSION AND STEERING CLUTCH FILTER GROUP, CHECK VALVE GROUP, GUIDE ASSEMBLY AND LINES

Effective with Serial No. 48A13714. 1P1899 Valve and 3S3389 Filter parts are shown on Pages 92A and 93

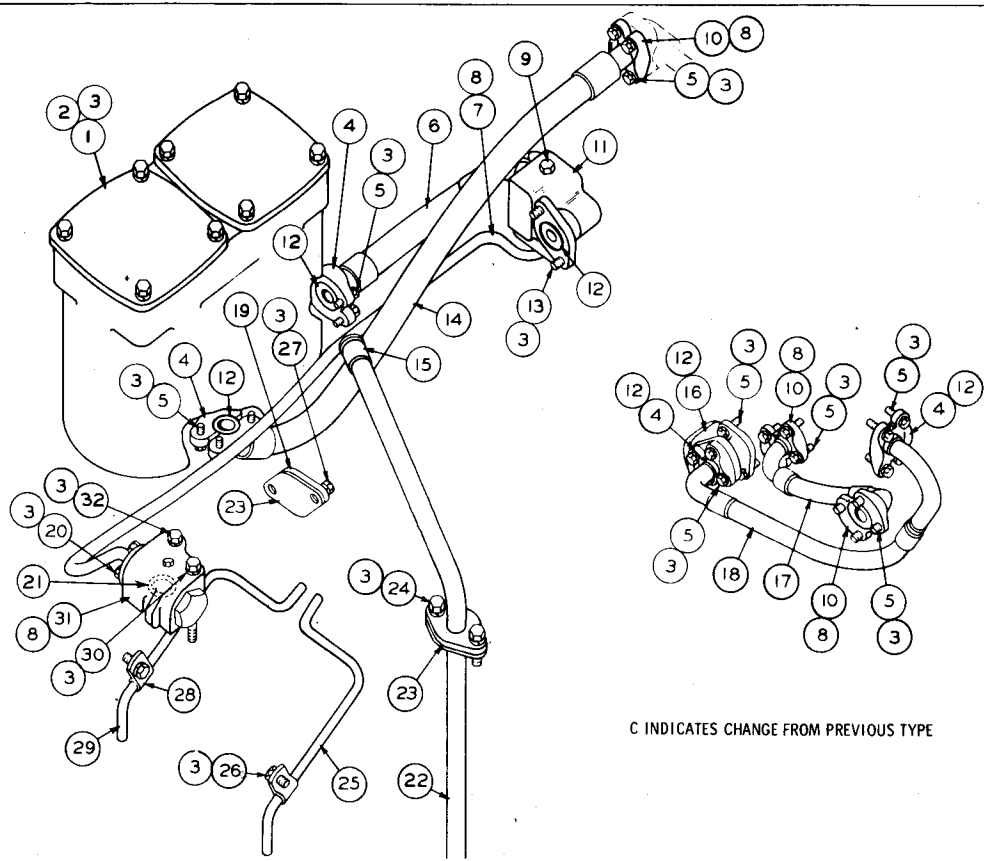

C INDICATES CHANGE FROM PREVIOUS TYPE

REF. NO.	PART NUMBER	DESCRIPTION	QTY
1	3S3389	FILTER GROUP (See Separate Illustration)	1
2	1D4717	NUT	4
3	3B4506	LOCKWASHER	52
4	1H3305	FLANGE	10
5	S1588	BOLT	34
6	3S3356	HOSE ASSEM. (Ref. No. 1 to Ref. No. 11)	1
7	3S2565	TUBE ASSEM. (44.81" Long Overall) (Ref. No. 11 to Ref. No. 28)	1
8	8M4988	SEAL	5
9	5M6214	PLUG	1
10	2K190	FLANGE	6
11	3S2507	ADAPTER	1
12	8M4987	SEAL	7
13	S1619	BOLT	2
14	3S3927	HOSE ASSEM. (24.69" Long Overall) (3S3892 Tube Assem. to Ref. No. 1)	1
15	5M3478	PLUNGER ASSEM.	1
16	2S7922	ADAPTER	1
17	3S2473	HOSE ASSEM. (12.16" Long Overall) (Ref. No. 14 to Transmission Case)	1
18	3S2499	HOSE ASSEM. (13.38" Long Overall) (Scavenge Pump to Transmission Case)	1
19	5H2830	COVER	1
20	S1594	BOLT	4
21	8M4448	SEAL	1
22	1M8625	GUIDE ASSEM.	1
23	9F5940	GASKET	2
24	1A2029	BOLT	2
25	9S4617	TUBE------(Pinion Sprayer)------	1
26	S509	BOLT	2
27	1B4203	NUT	2
28	7M2220	CLIP	2
29	9S4618	TUBE-------(Pinion Sprayer)------	1
30	5B9603	BOLT---------(5" Long)----------	1
C 31	1P1899	VALVE GROUP (See Separate Illustration)	1
32	L1143	BOLT---------(2.50" Long)---------	1

129435

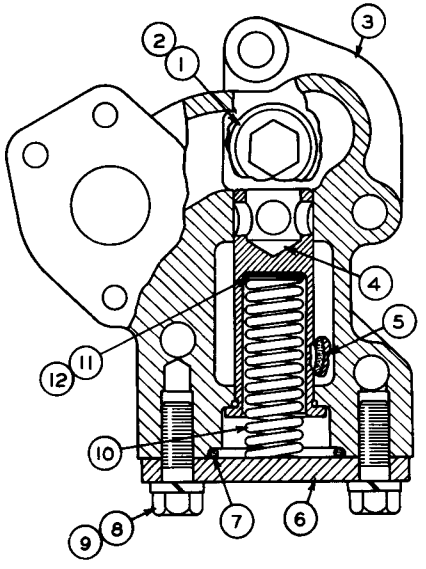

REF NO	PART NUMBER	DESCRIPTION	QTY
1	5M7908	PLUG ASSEM.	1
2	3J1907	SEAL (Part of Plug Assem. 5M7908)	1
3	Not Serv.	BODY	1
4	8M2764	VALVE	1
5	8M4988	SEAL	1
6	8M2215	COVER	1
7	8M4986	SEAL	1
8	1A2029	BOLT	2
9	3B4506	LOCKWASHER	2
10	8M8627	SPRING	1
11	7M1397	SPACER (.036" Thick)	2
12	5M3492	SPACER (.010" Thick)	2

77206

2S7866 RELIEF VALVE GROUP
Part of Oil Pump, Screen Group, Relief Valve Group and Lines shown on Pages 90, 90A, 90B and 90B-1

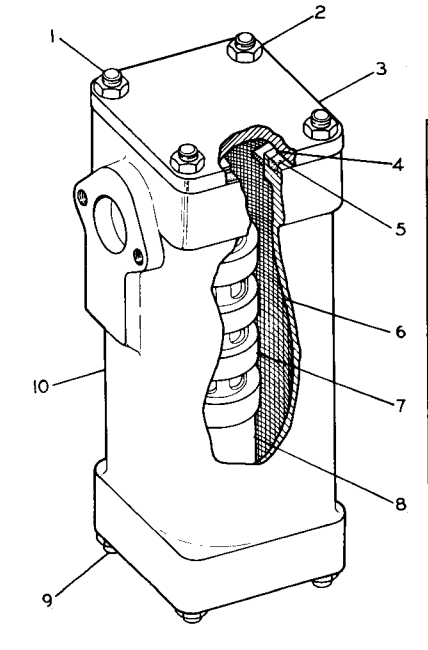

REF. NO.	PART NUMBER	DESCRIPTION	QTY
1	3D2871	STUD	4
2	1D4717	NUT	4
3	3S3439	COVER	1
4	3S3440	SPRING WASHER	1
5	5F149	SEAL	2
6	3S3875	SCREEN	1
7	2S1641	TUBE ASSEM.	1
8	8M7160	MAGNET	4
9	1J8668	STUD (2" long) -OR-	4
	8M1047	STUD (1.70" long) -OR-	4
	2M4779	STUD (1.80" long)	4
	1D4717	NUT	4
	3B4506	LOCKWASHER	4
10	8M7166	HOUSING	1

113539

9M8669 MAGNETIC SCREEN GROUP
Part of Transmission Oil Cooler Lines and Oil Pump, Screen Group, Relief Valve Group and Lines shown on Pages 78B, 79, 90, 90A, 90B and 90B-1

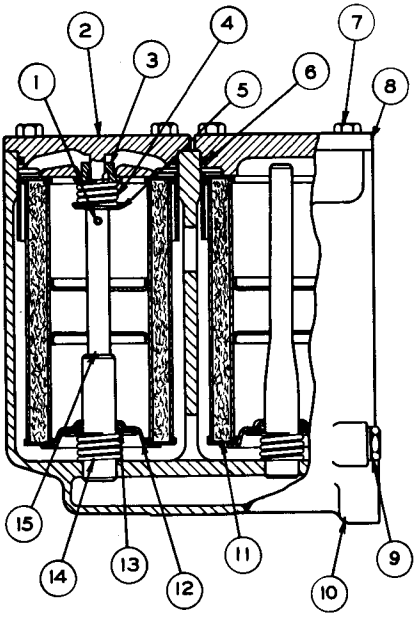

REF NO.	PART NUMBER	DESCRIPTION	QTY
1	3F7514	PIN	1
2	2S9707	COVER ASSEM.	1
	2S9694	PIN (Part of 2S9707 Cover Assem.)	1
3	4S7647	VALVE	1
4	4H1790	SPRING	1
5	4S7648	WASHER	1
6	2H9247	SEAL	2
7	S-1595	BOLT	8
8	3S3386	COVER	1
9	7M5897	PLUG ASSEM.	1
	2M9780	SEAL (Part of 7M5897 Plug Assem.)	1
10	3S3388	HOUSING ASSEM.	1
	9M2151	STUD (Part of 3S3388 Housing Assem.)	2
11	4J6064	ELEMENT ASSEM. (Disposable)	2
12	3S1748	RETAINER ASSEM.	2
13	3S1751	SEAL	2
14	9M4685	SPRING	2
15	4S8975	TUBE	1

78009

3S3389 TRANSMISSION AND STEERING CLUTCH FILTER GROUP
Serial No. 48A6393 to 48A13073 inclusive
Part of Transmission and Steering Clutch Filter Group, Check Valve Group, Guide Assembly and Lines shown on Pages 90C, 90D and 90E

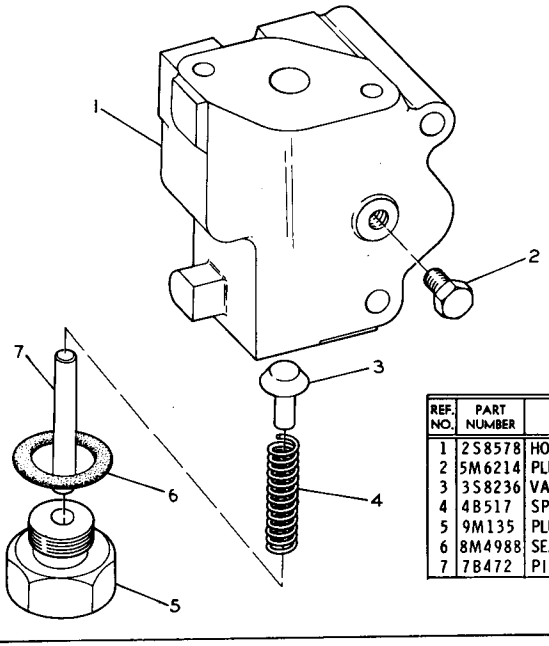

REF. NO.	PART NUMBER	DESCRIPTION	QTY
1	2S8578	HOUSING	1
2	5M6214	PLUG	1
3	3S8236	VALVE	1
4	4B517	SPRING	1
5	9M135	PLUG	1
6	8M4988	SEAL (Oil)	1
7	7B472	PIN	1

113537

1P1899 CHECK VALVE GROUP
Effective with Serial No. 48A13714
Part of Transmission and Steering Clutch Filter Group, Check Valve Group, Guide Assembly and Lines shown on Page 91

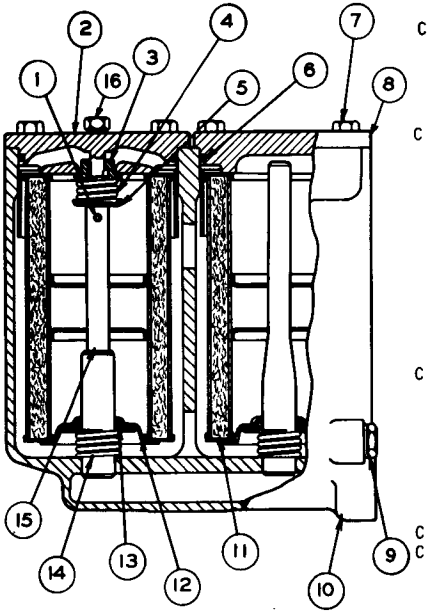

C INDICATES CHANGE FROM PREVIOUS TYPE

	REF. NO.	PART NUMBER	DESCRIPTION	QTY
	1	3F7514	PIN	1
C	2	9S7227	COVER ASSEM.	1
		2S9694	PIN (Part of 9S7227 Assem.)	1
	3	4S7647	VALVE	1
	4	4H1790	SPRING	1
	5	4S7648	WASHER	1
	6	2H9247	SEAL	2
	7	S1595	BOLT	8
	8	3S3386	COVER	1
	9	7M5897	PLUG	1
		2M9780	SEAL	1
	10	3S3388	HOUSING ASSEM.	1
C		3D2871	STUD (Part of 3S3388 Assem.)	4
	11	4J6064	ELEMENT ASSEM. (Disposable)	2
	12	3S1748	RETAINER ASSEM.	2
	13	3S1751	SEAL	2
	14	9M4685	SPRING	2
	15	4S8975	TUBE	1
C	16	9S4191	PLUG	1
C		3J1907	SEAL	1

127714

3S3389 TRANSMISSION AND STEERING CLUTCH FILTER GROUP
Effective with Serial No. 48A13074
Part of Transmission and Steering Clutch Filter Group, Check Valve Group, Guide Assembly and Lines shown on Pages 90E, 90F and 91

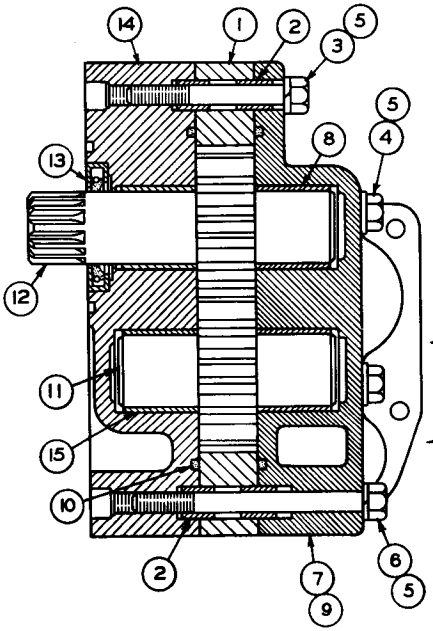

REF NO	PART NUMBER	DESCRIPTION	QTY
1	2S704	BODY ASSEM.	1
2	8M8489	DOWEL (Part of 2S704 Body Assem.)	4
3	T-573	BOLT	1
4	T-65	BOLT	4
5	3S4	WASHER	6
6	3373-A	BOLT	1
7	2M3437	MANIFOLD ASSEM.	1
8	5M3320	BEARING (Part of 2M3437 Manifold Assem.)	2
9	5M6214	PLUG	1
10	8M5007	SEAL	2
11	2S8575	GEAR-(12 Teeth-Idler)	1
12	2S8574	GEAR-(12 Teeth-Drive)	1
13	1M8049	SEAL	1
14	2M3436	COVER ASSEM.	1
15	5M3320	BEARING (Part of 2M3436 Cover Assem.)	2

97050

2S8383 OIL PUMP GROUP
Serial No. 48A6393 to 48A8558 inclusive
Part of Oil Pump, Screen Group, Relief Valve Group and Lines shown on Page 90

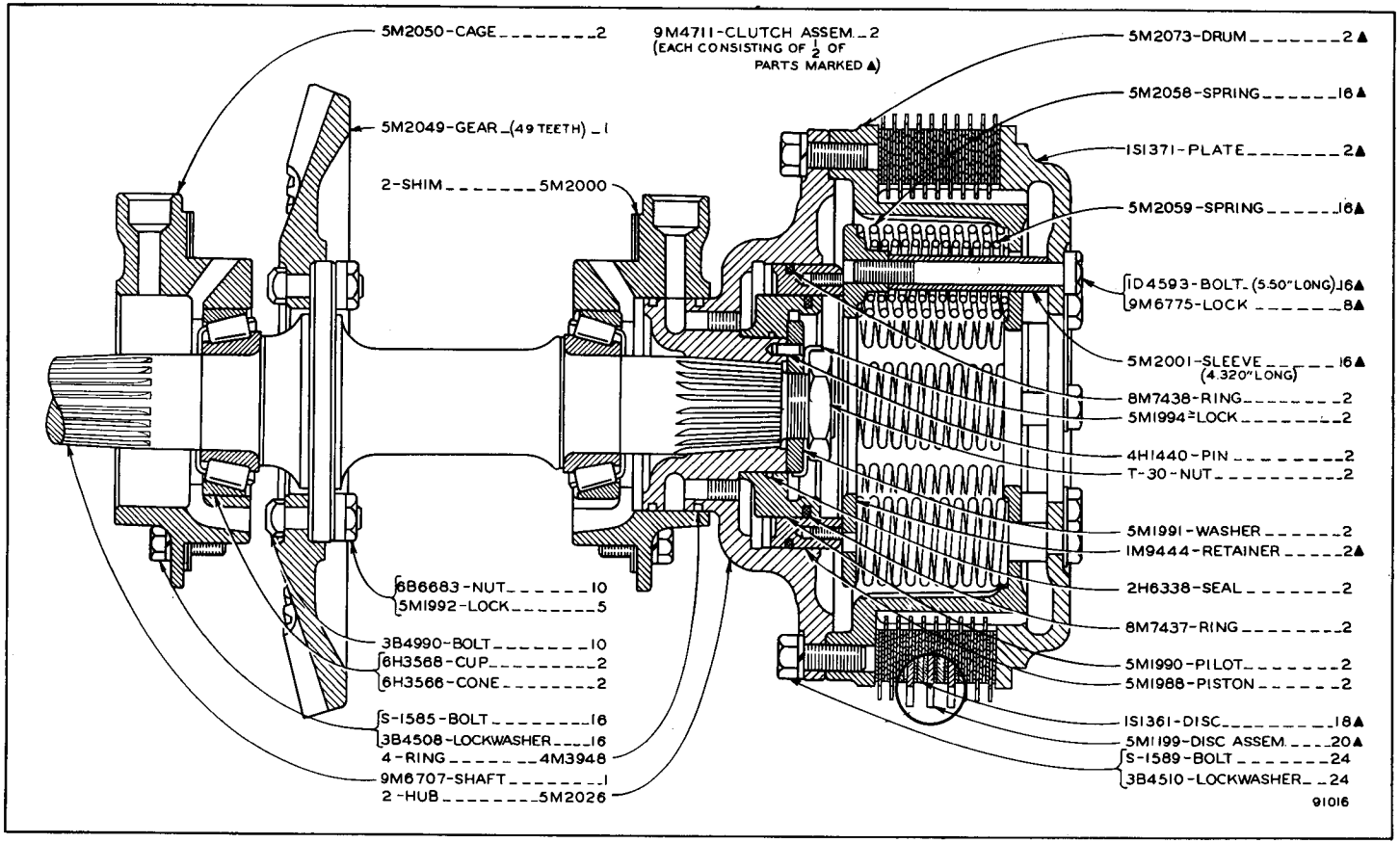

OIL STEERING CLUTCH
Serial No. 48A6393 to 48A6882 inclusive

OIL STEERING CLUTCH (5M2074 N/S)
Effective with Serial No. 48A6883

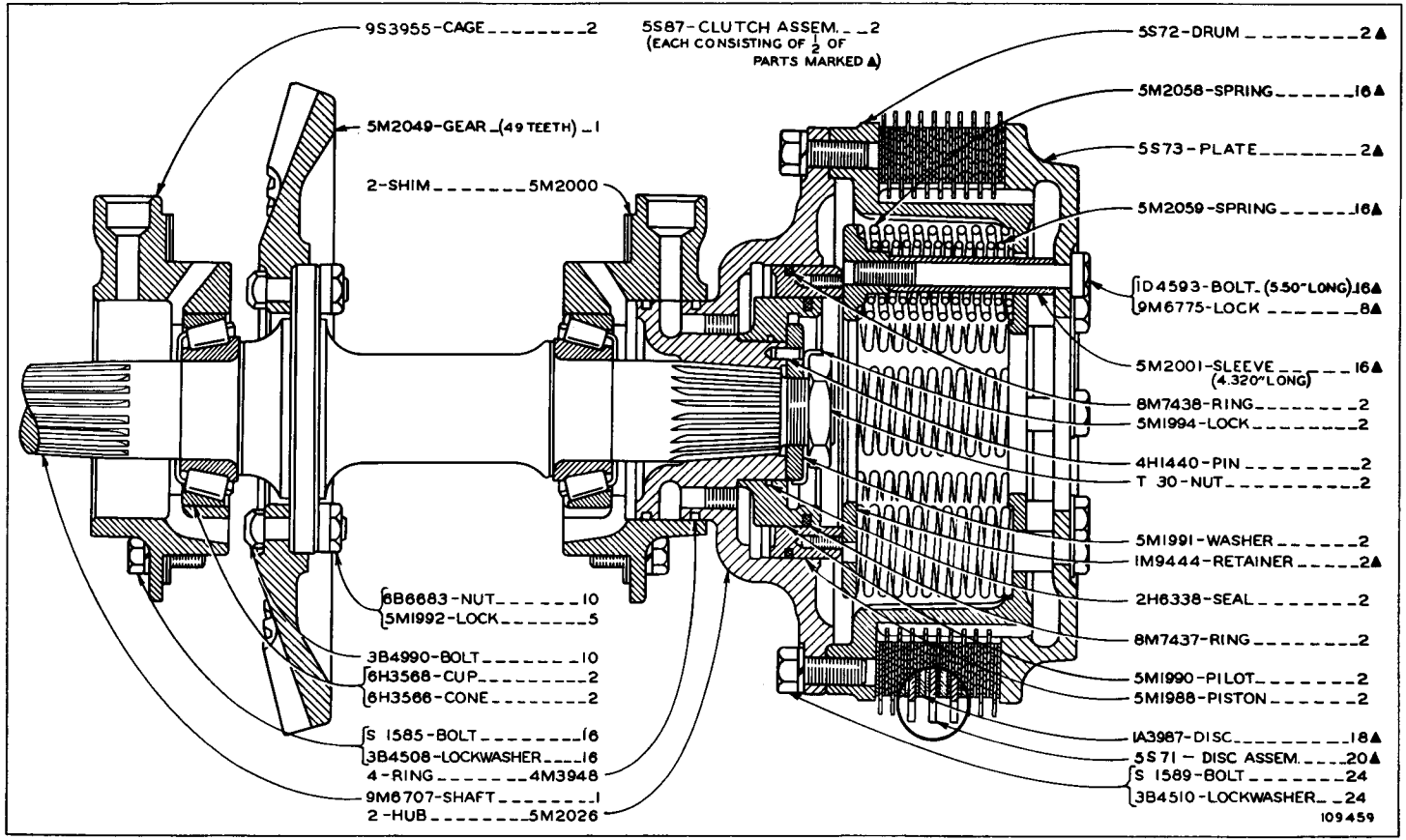

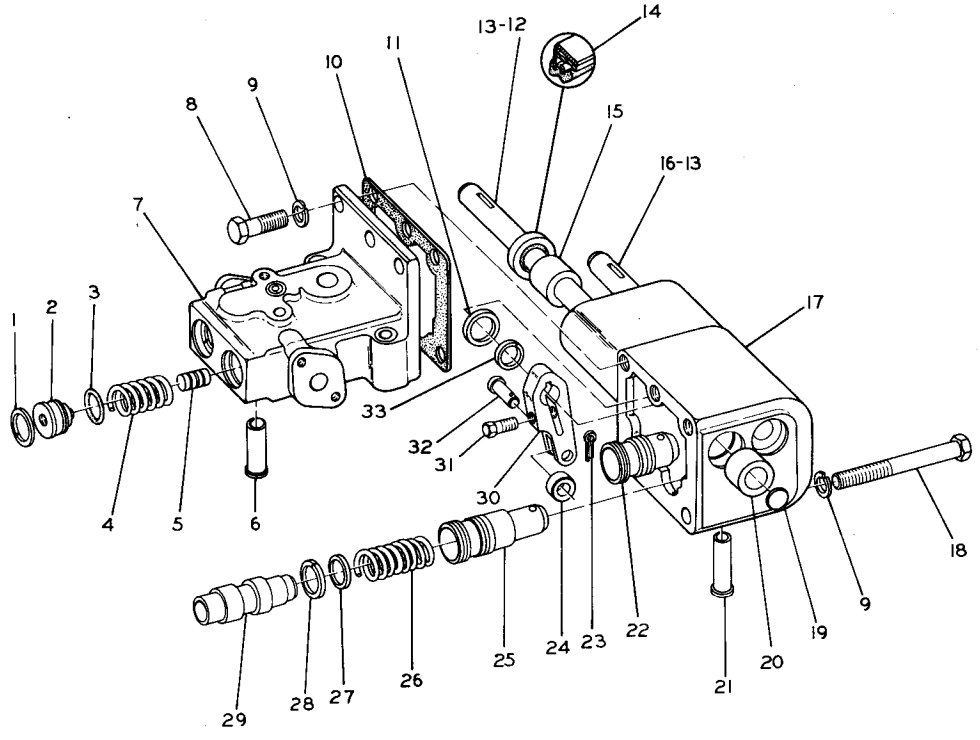

REF. NO.	PART NUMBER	DESCRIPTION	QTY
1	8H1037	RING	2
2	4S6323	PLUG	2
3	8M4445	SEAL	2
4	2S8398	SPRING	2
5	5M2504	SLUG	2
6	2S8412	STAND PIPE	1
7	5S5779	HOUSING	1
8	S1594	BOLT	3
9	3B4506	LOCKWASHER	5
10	2S8414	GASKET	1
11	3B9363	WASHER	2
12	2S8380	SHAFT	1
13	1B8706	KEY	2
14	9H223	SEAL	2
15	7F7983	BEARING	2
16	2S8395	SHAFT	1
17	2S8307	HOUSING	1
18	1A5183	BOLT	2
19	5S6876	SPACER	2
20	3J7584	BEARING	2
21	2S8413	STAND PIPE	1
22	5S5778	PLUNGER	1
23	3B4615	COTTER PIN	2
24	2S8411	ROLLER	2
25	5S5777	PLUNGER	1
26	2S8410	SPRING	2
27	2S8415	WASHER	2
28	3K6837	RING	2
29	2S8397	VALVE	2
30	2S8396	LEVER	2
31	S1588	BOLT	2
32	1J4384	PIN	2
33	3S7005	RING	2

113540

7S2788 STEERING CLUTCH HYDRAULIC VALVE GROUP
Effective with Serial No. 48A8075
Part of Steering Clutch Hydraulic Control shown on Pages 96B & 96D

2S8403 STEERING CLUTCH HYDRAULIC VALVE GROUP

Serial No. 48A6393 to 48A8074 inclusive

Part of Steering Clutch Hydraulic Control shown on Pages 96 and 96B

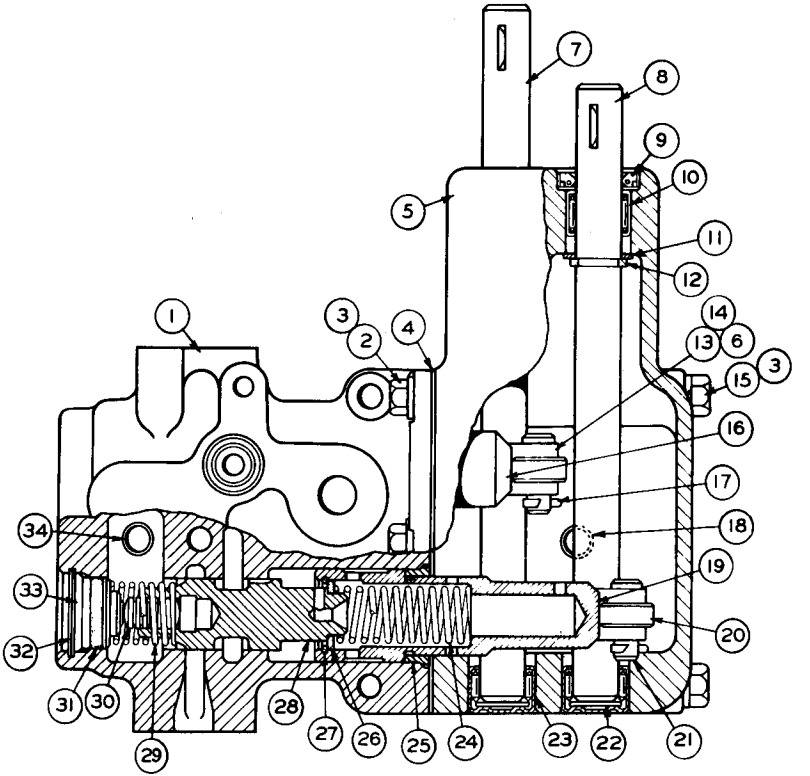

REF NO	PART NUMBER	DESCRIPTION	QTY
1	2S8292	HOUSING	1
2	S-1594	BOLT	3
3	3B4506	LOCKWASHER	5
4	2S8414	GASKET	1
5	2S8307	HOUSING	1
6	1B8706	KEY	2
7	2S8380	SHAFT	1
8	2S8395	SHAFT	1
9	9H223	SEAL	2
10	7F7983	BEARING	2
11	3B9363	WASHER	2
12	3S7005	RING	2
13	2S8396	LEVER	2
14	S-1588	BOLT	2
15	1A5183	BOLT	2
16	2S8386	PLUNGER (Left Hand)	1
17	3B4615	COTTER PIN	2
18	2S8413	STAND PIPE	1
19	2S8385	PLUNGER (Right Hand)	1
20	2S8411	ROLLER	2
21	1J4384	PIN	2
22	7M1397	SPACER	2
23	3J7584	BEARING	2
24	2S8410	SPRING	2
25	2S8409	BUSHING	2
26	2S8415	WASHER	2
27	3K6837	RING	2
28	2S8397	VALVE	2
29	2S8398	SPRING	2
30	5M2504	SLUG	2
31	8M4445	SEAL	2
32	8H1037	RING	2
33	4S6323	PLUG	2
34	2S8412	STAND PIPE	1

97892

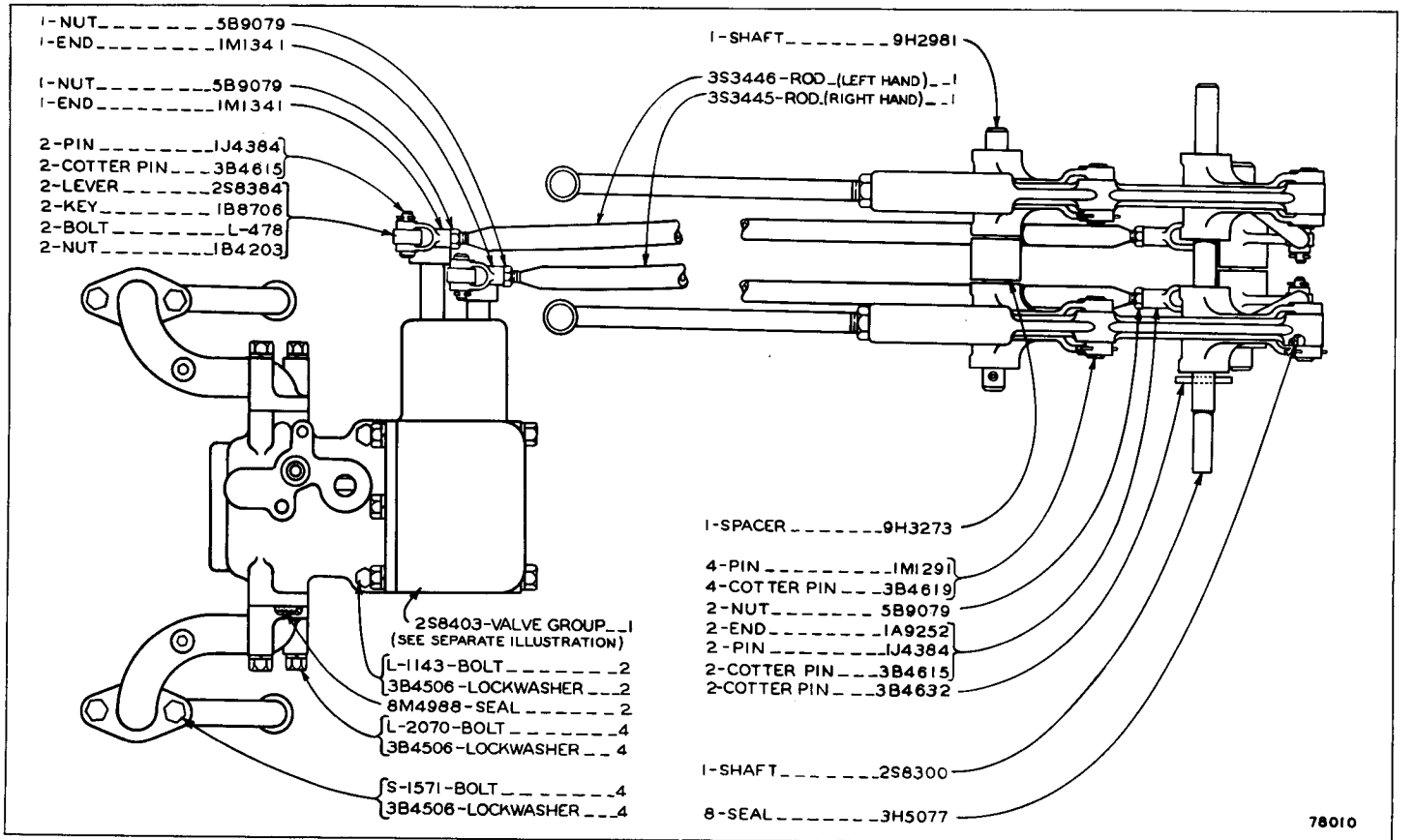

STEERING CLUTCH HYDRAULIC CONTROL--TOP VIEW
SERIAL No. 48A6393 TO 48A7429 INCLUSIVE
2S8403 STEERING CLUTCH HYDRAULIC VALVE GROUP PARTS ARE SHOWN ON PAGE 95

STEERING CLUTCH HYDRAULIC CONTROL--As Viewed from Right Hand Side of Machine
Serial No. 48A6393 to 48A7429 Inclusive

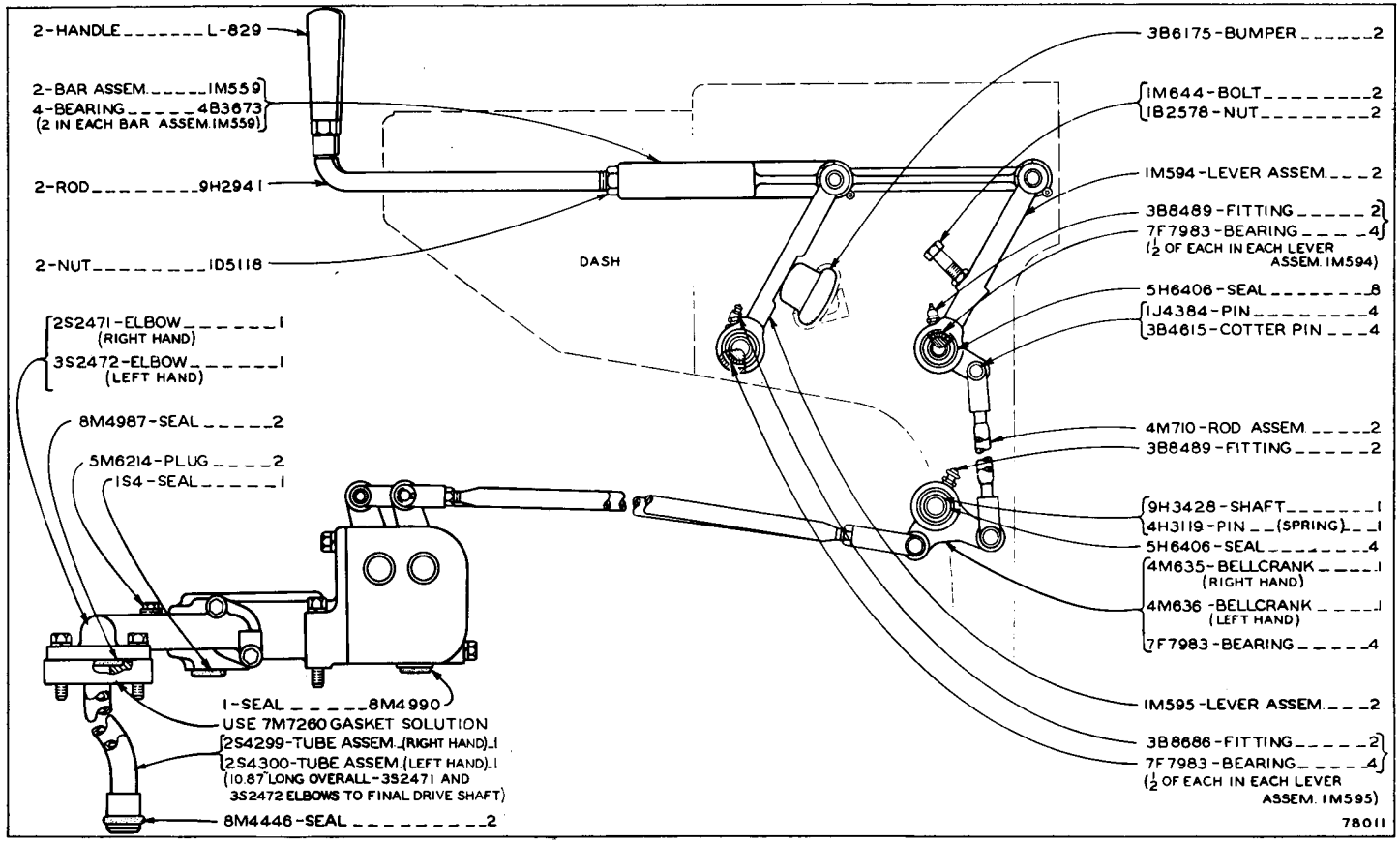

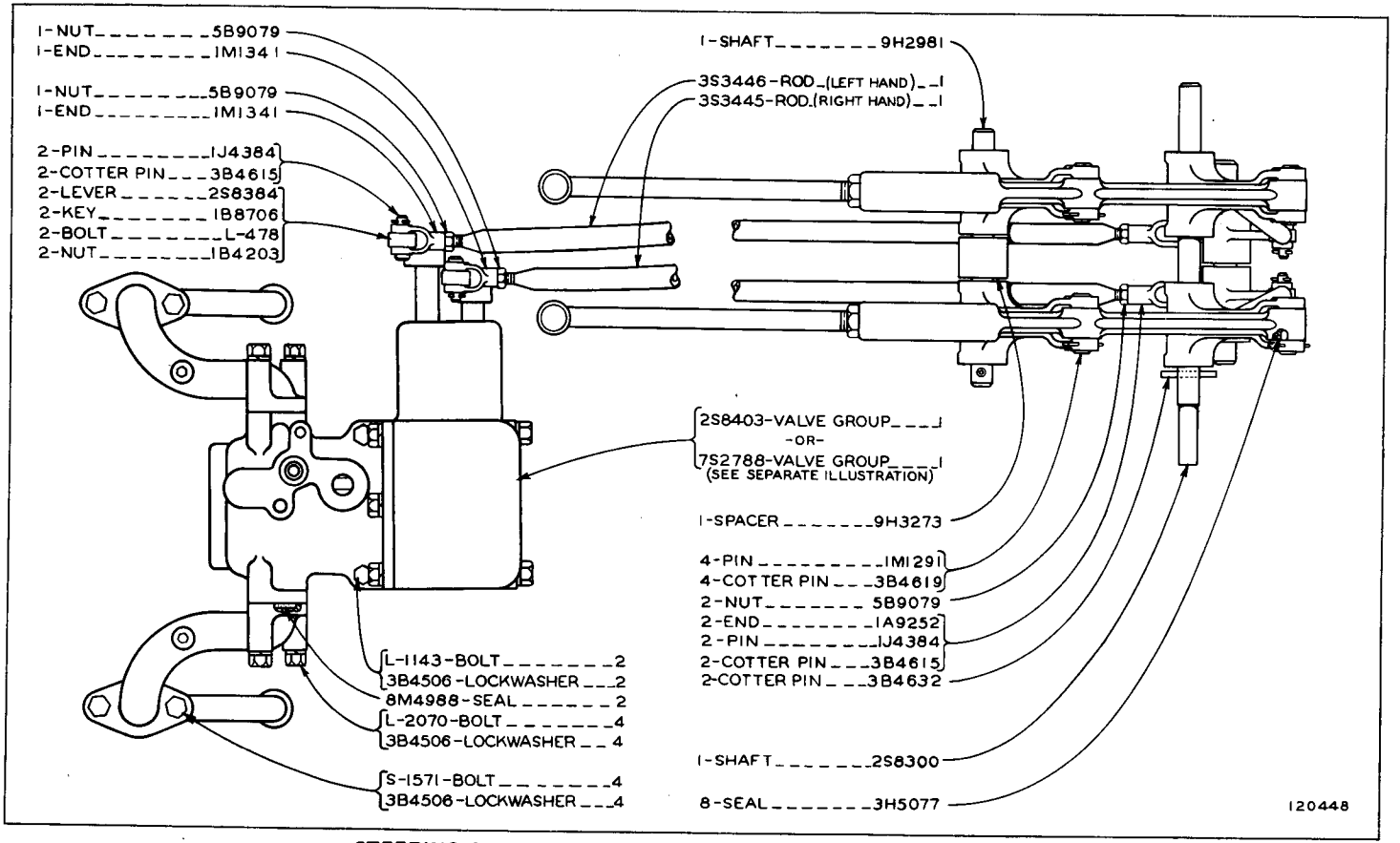

STEERING CLUTCH HYDRAULIC CONTROL (3S3883 N/S)—Top View
Serial No. 48A7430 to 13308 and 48A13311 inclusive
7S2788 and 2S8403 Valve parts are shown on Pages 94B and 95

STEERING CLUTCH HYDRAULIC CONTROL (3S3883 N/S)—As Viewed from R.H. Side of Machine
Serial No. 48A7430 to 13308 and 48A13311 inclusive

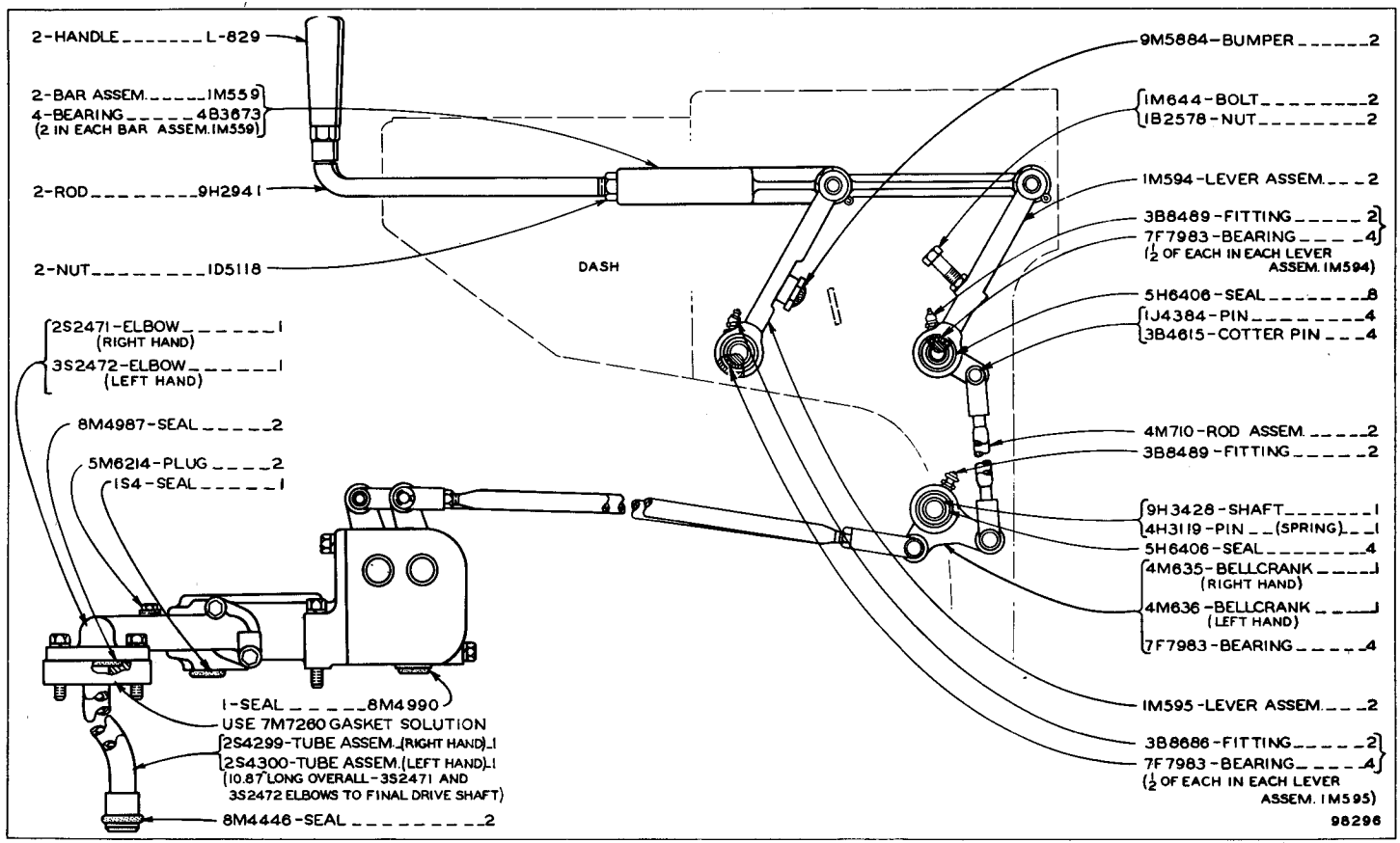

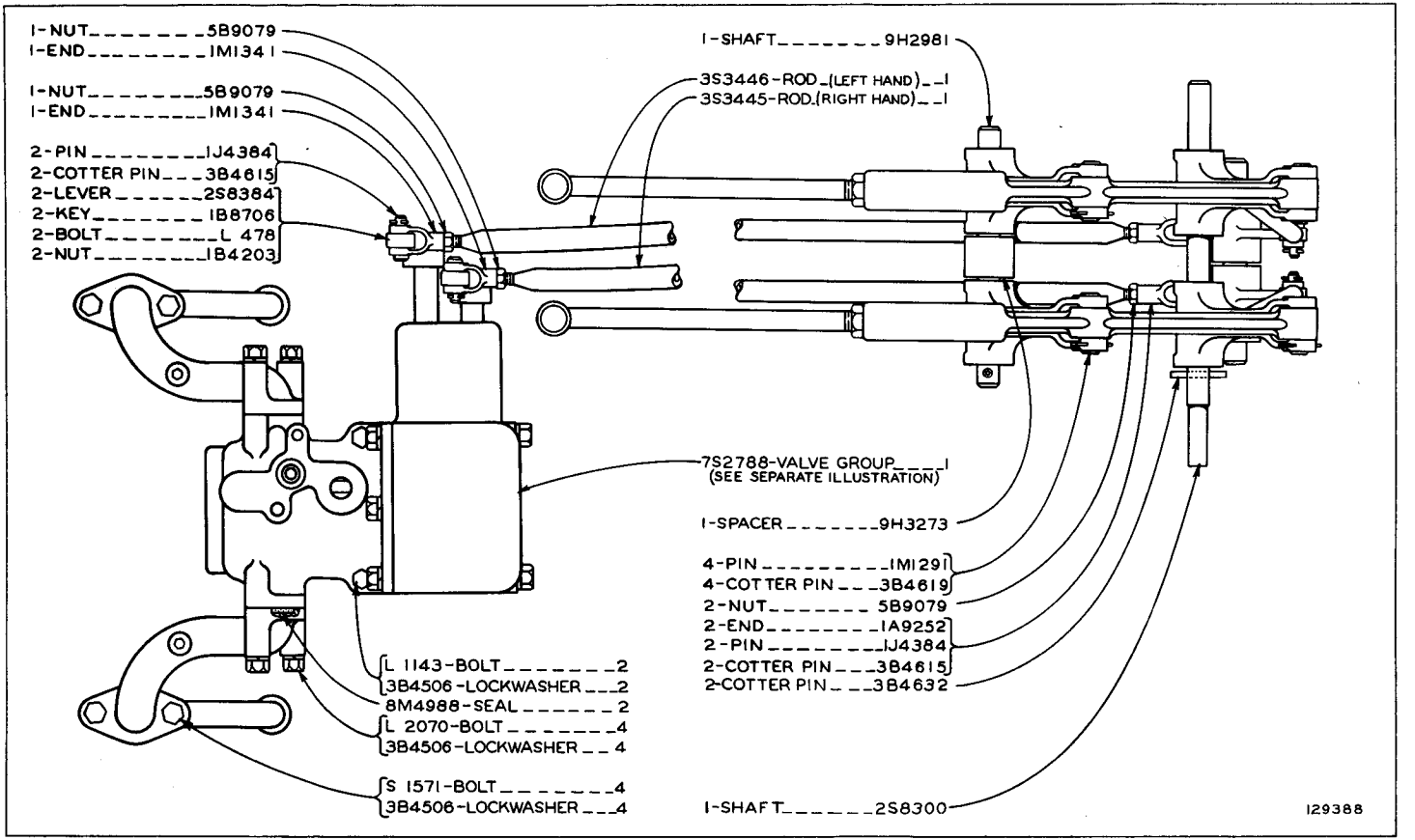

STEERING CLUTCH HYDRAULIC CONTROL (3S3883 N/S)—Top View
Serial No. 48A13309, 13310 and 48A13312—Up
7S2788 Valve parts are shown on Page 94B

STEERING CLUTCH HYDRAULIC CONTROL (3S3883 N/S)—As Viewed from R.H. Side of Machine
Serial No. 48A13309, 13310 and 48A13312—Up

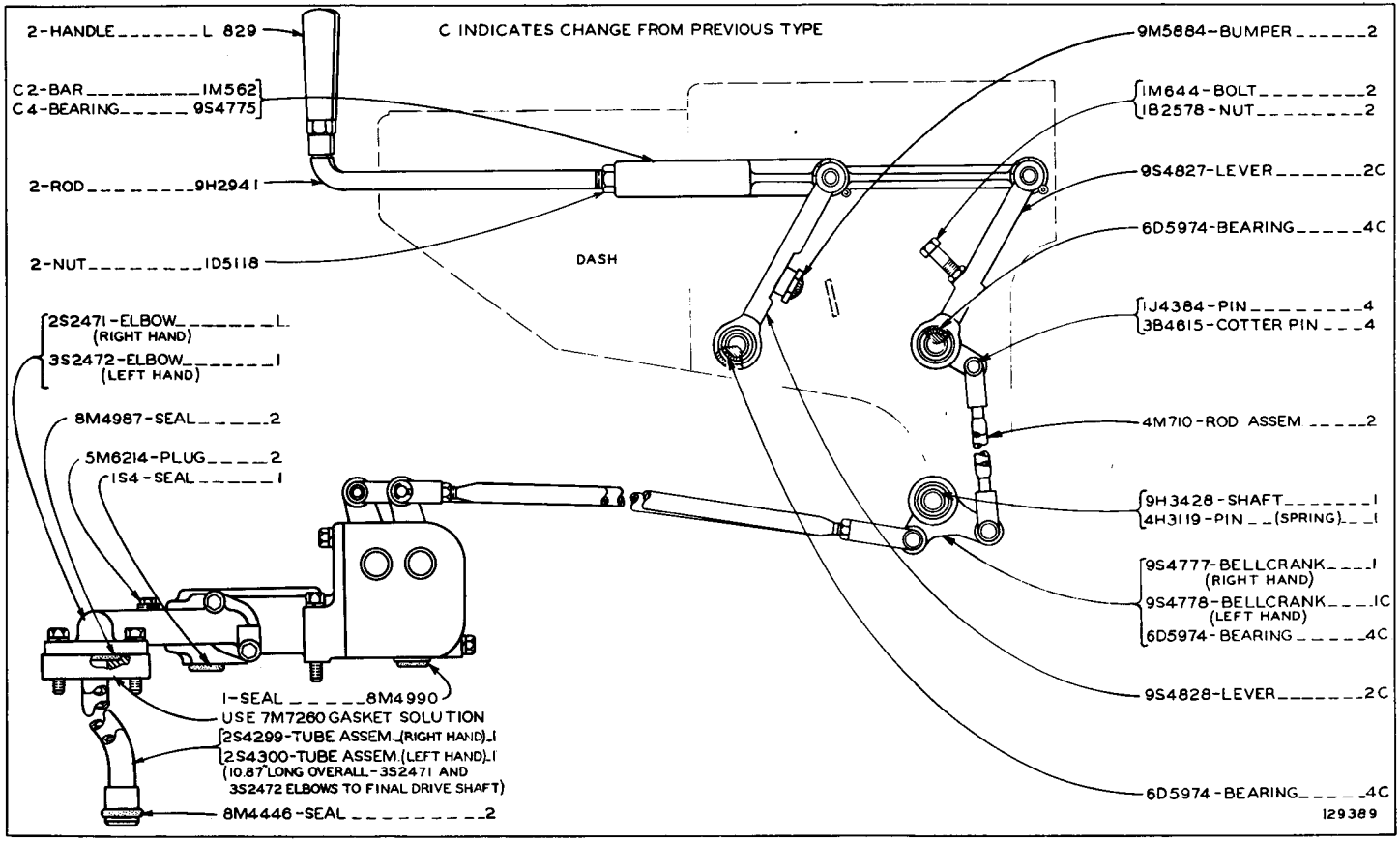

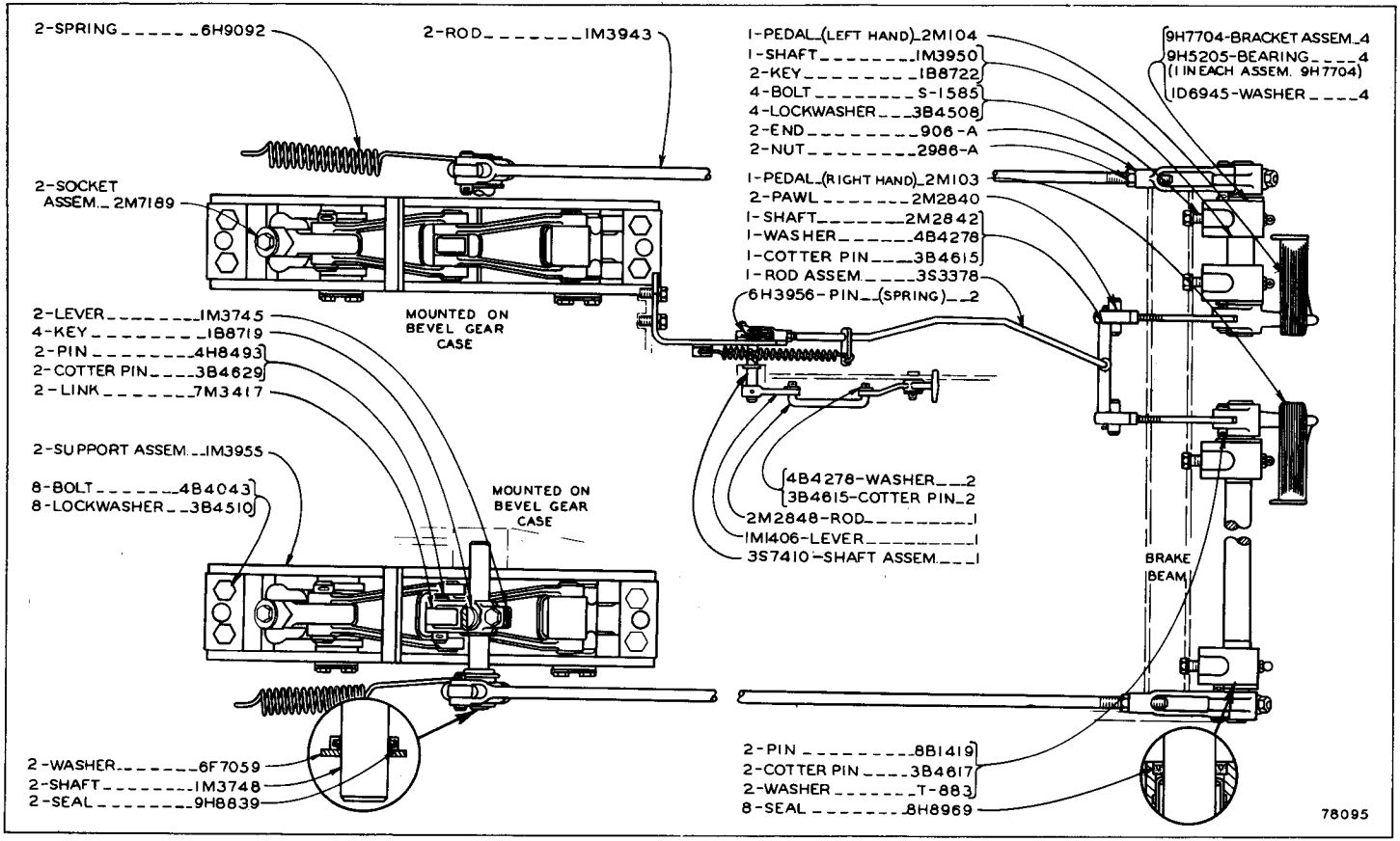

BRAKES--TOP VIEW
SERIAL NO. 48A6393 TO 48A7633 INCLUSIVE

BRAKES--As Viewed from Right Hand Side of Machine
Serial No. 48A6393 to 48A7633 Inclusive
5S1503 Brake Band and Lining Assembly parts are shown on Page 100

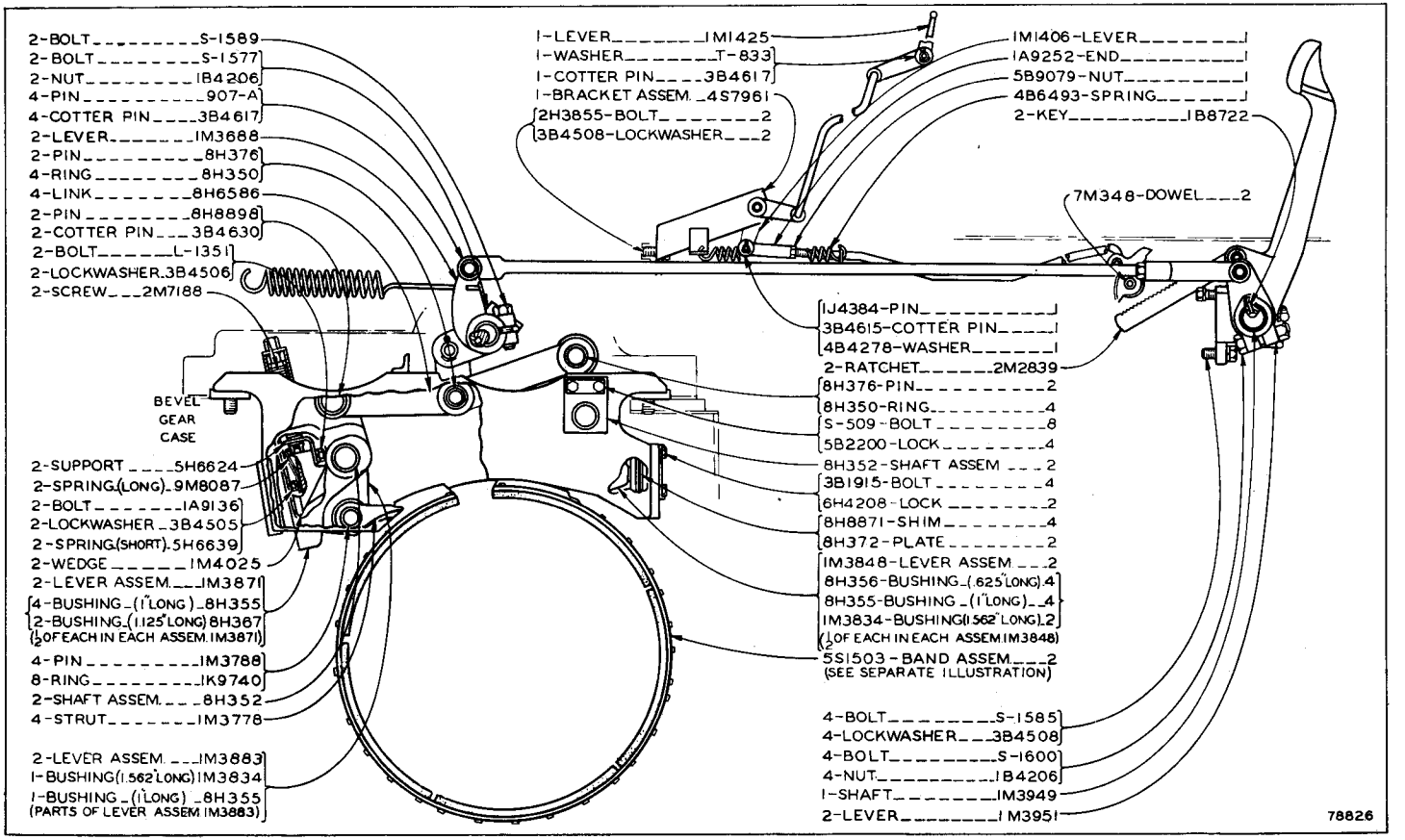

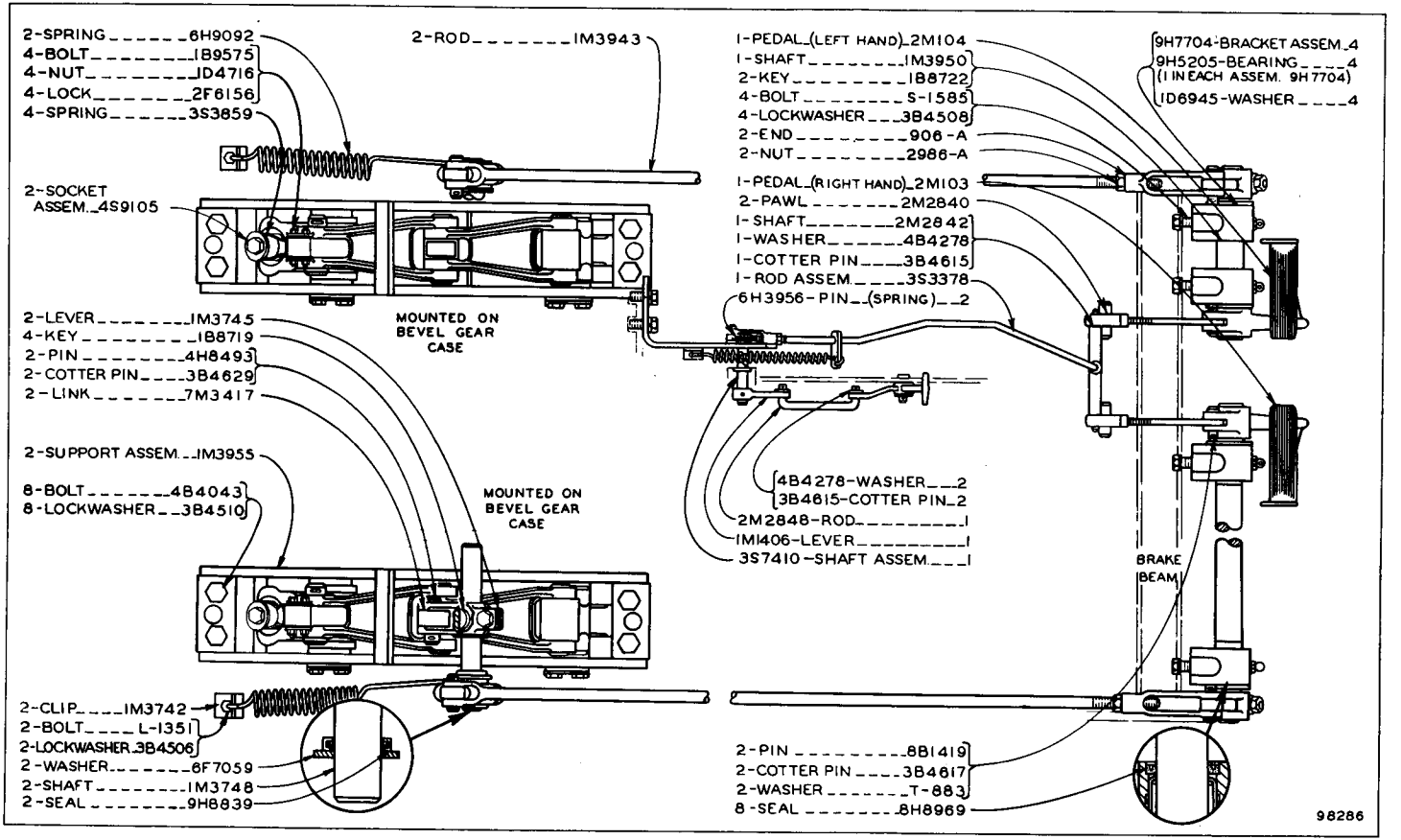

BRAKES—Top View
Serial No. 48A7634 to 48A9793 inclusive

BRAKES—Side View
Serial No. 48A7634 to 48A9793 inclusive
5S1503 Brake Band parts are shown on Page 100

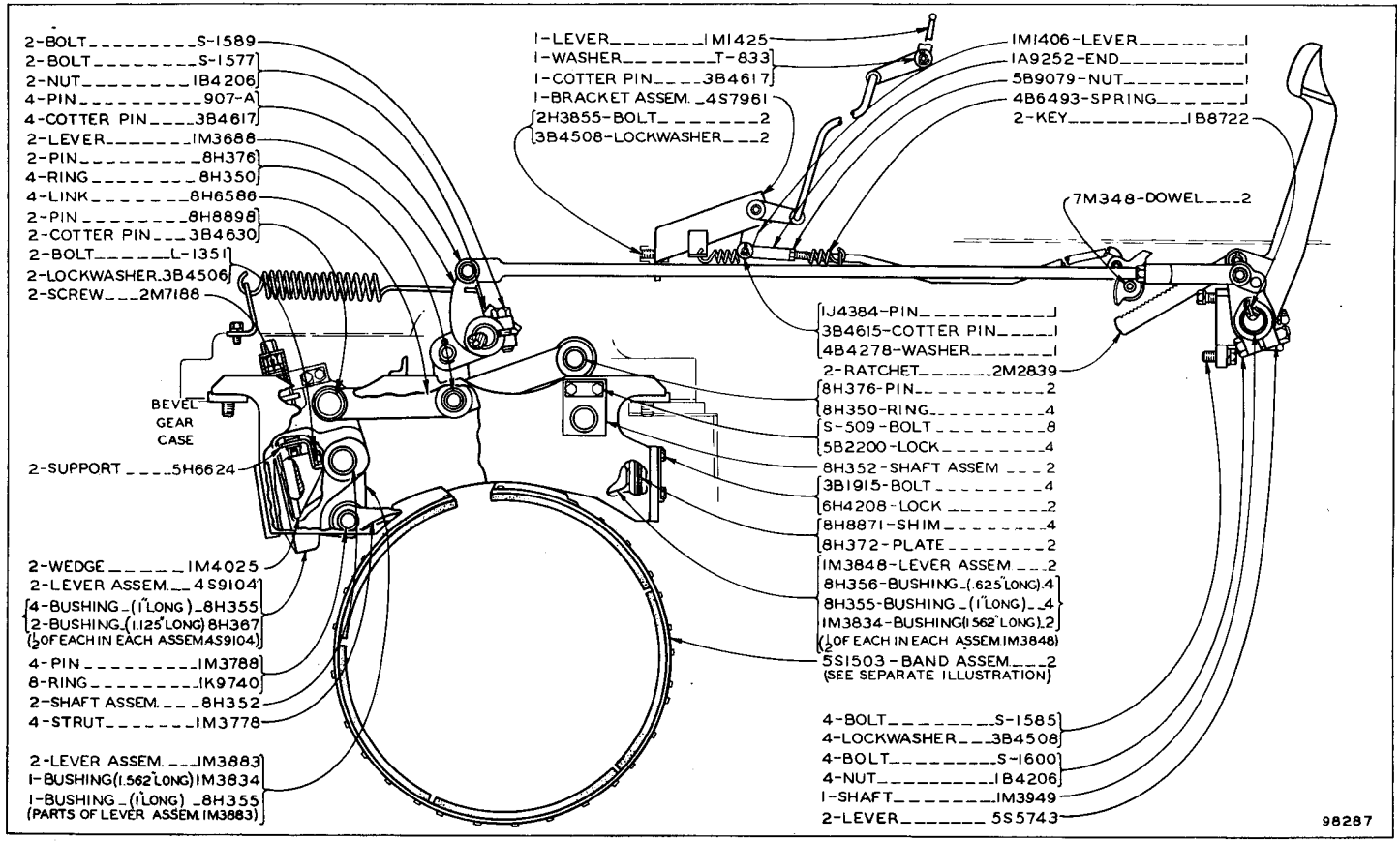

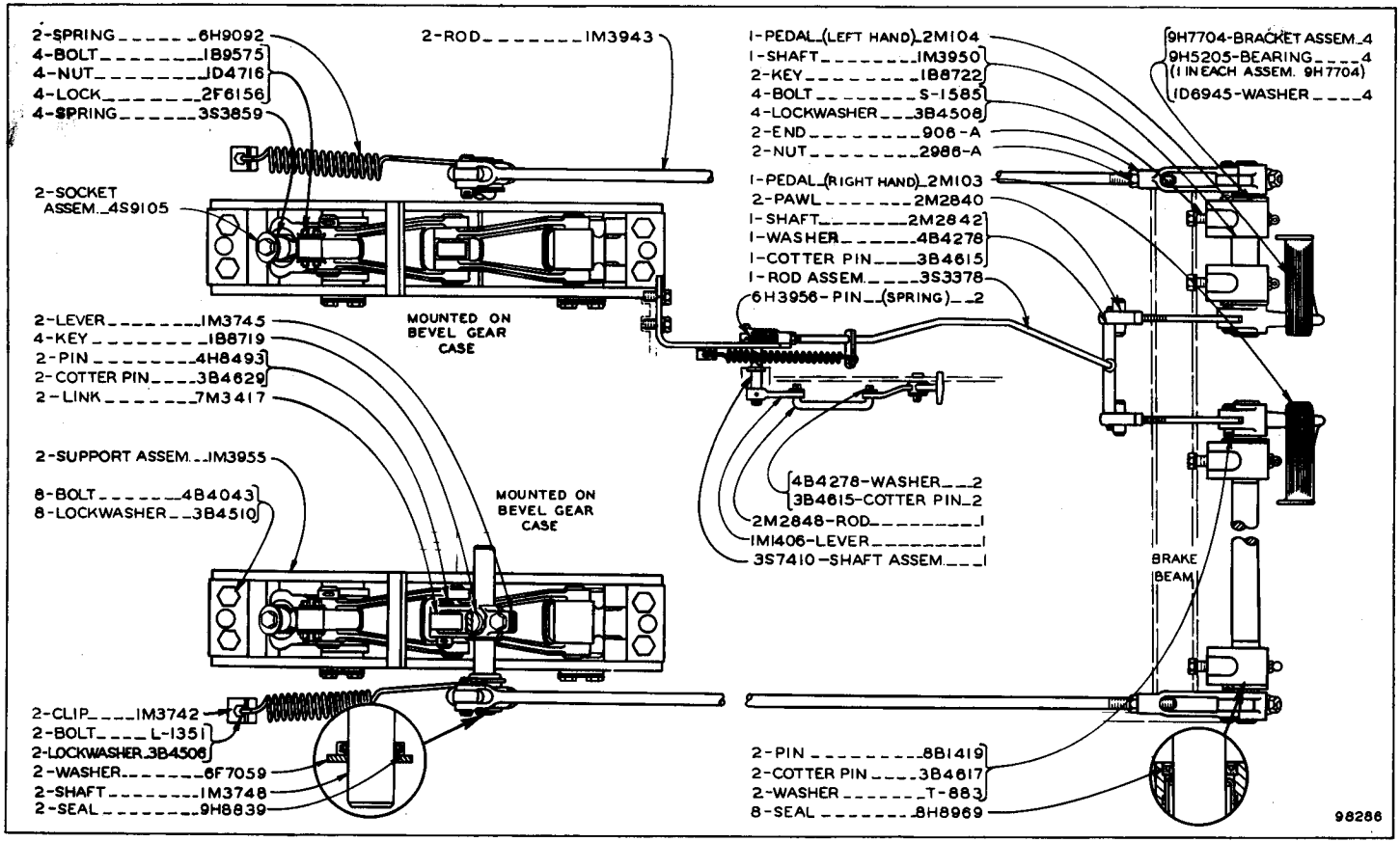

BRAKES (3S3883 N/S)—Top View
Serial No. 48A9794 to 48A13099 inclusive

BRAKES (3S3883 N/S)—Side View
Serial No. 48A9794 to 48A13099 inclusive
5S1503 Brake Band parts are shown on Page 100

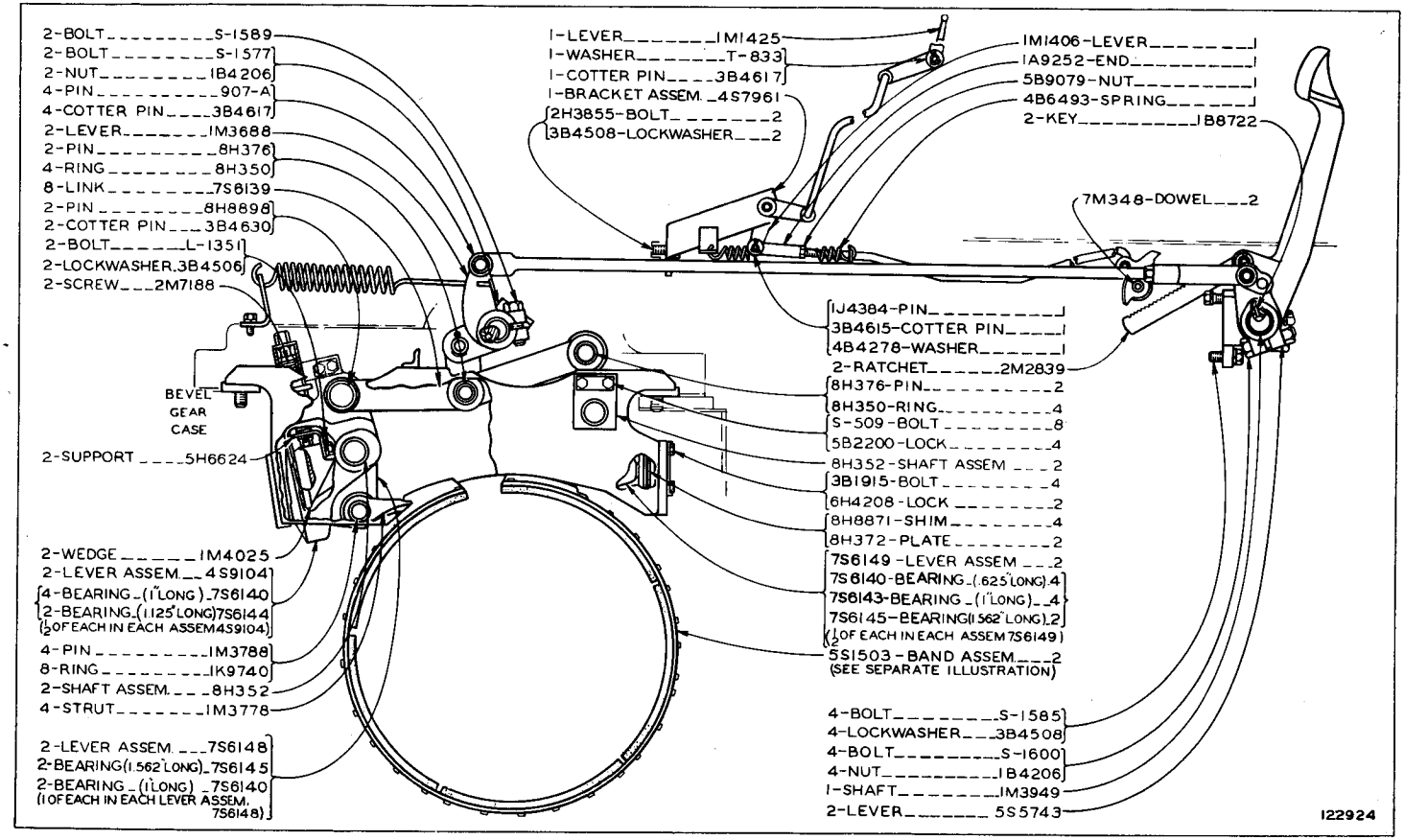

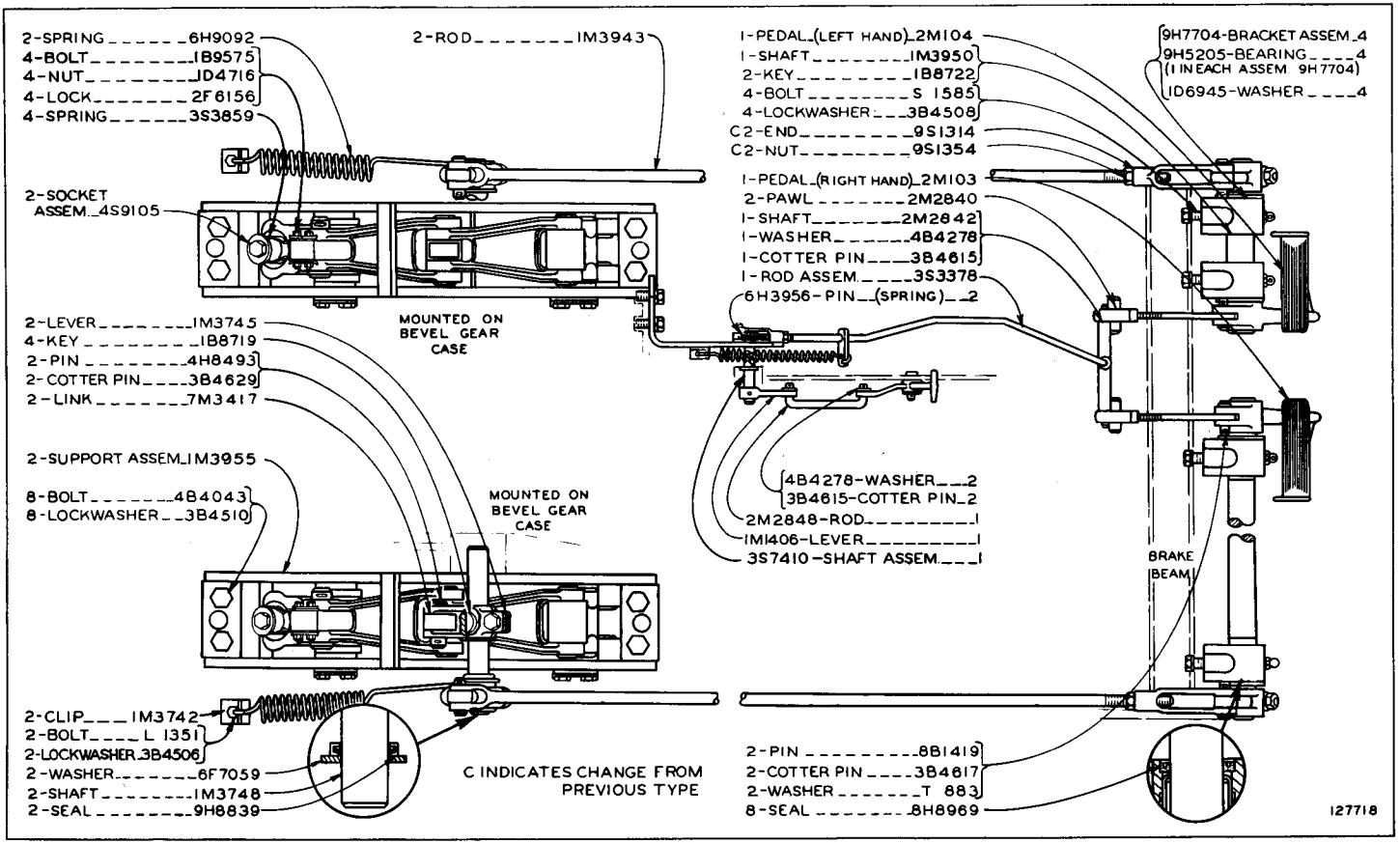

BRAKES (2M532 N/S)—Top View
Serial No. 48A13100 to 48A13308 and 48A13311 inclusive

BRAKES (2M532 N/S)—Side View
Serial No. 48A13100 to 48A13308 and 48A13311 inclusive
9M8068 Brake Band parts are shown on Page 100

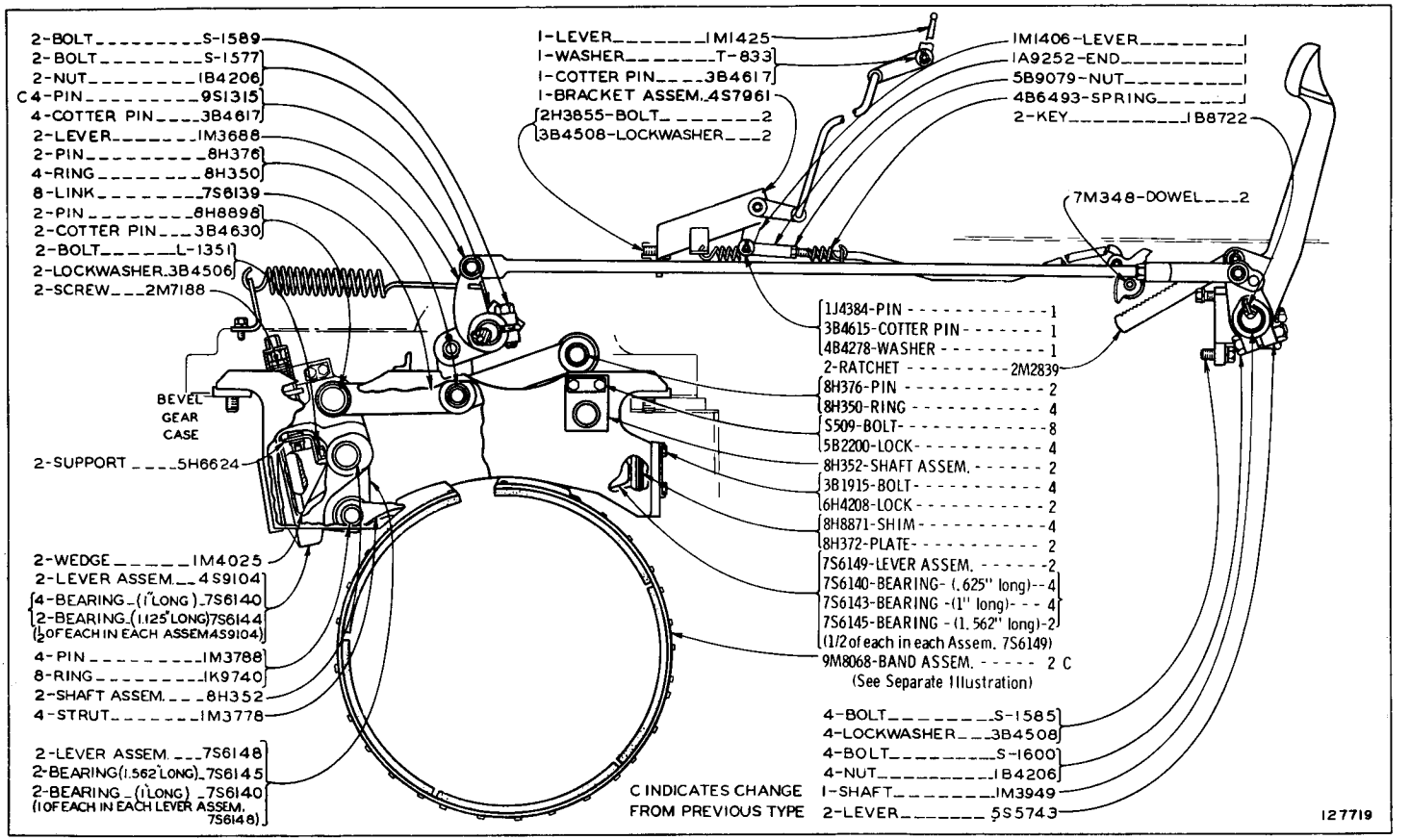

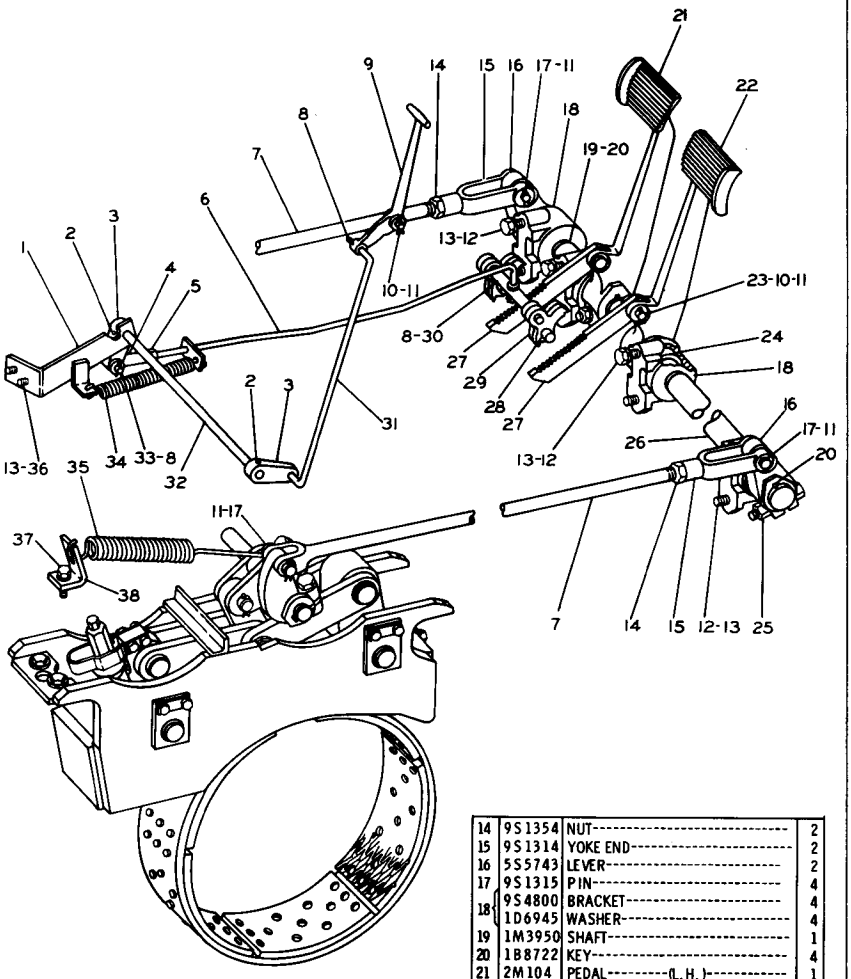

REF. NO.	PART NUMBER	DESCRIPTION	QTY
1	4S7961	BRACKET ASSEM.	1
2	6H3956	PIN	2
3	1M1406	LEVER	2
4	1A9252	YOKE END	1
5	5B9079	NUT	1
6	3S3378	ROD ASSEM.	1
7	1M3943	ROD	2
8	3B4615	COTTER PIN	4
	4B4278	WASHER	4
9	1M1425	LEVER	1
10	T883	WASHER	3
11	3B4617	COTTER PIN	7
12	S1585	BOLT	8
13	3B4508	LOCKWASHER	10
14	9S1354	NUT	2
15	9S1314	YOKE END	2
16	5S5743	LEVER	2
17	9S1315	PIN	4
18	9S4800	BRACKET	4
	1D6945	WASHER	4
19	1M3950	SHAFT	1
20	1B8722	KEY	4
21	2M104	PEDAL (L.H.)	1
22	2M103	PEDAL (R.H.)	1
23	8B1419	PIN	2
24	9S6266	BEARING	4
25	S1600	BOLT	4
	1B4206	NUT	4
26	1M3949	SHAFT	1
27	2M2839	RATCHET	2
28	7M348	DOWEL	2
29	2M2840	PAWL	2
30	2M2842	SHAFT	1
31	2M2848	ROD	1
32	3S7410	SHAFT ASSEM.	1
33	1J4384	PIN	1
34	4B6493	SPRING	1
35	6H9092	SPRING	2
C 36	6H1717	BOLT	2
37	L1351	BOLT	2
	3B4506	LOCKWASHER	2
38	1M3742	CLIP	2

C INDICATES CHANGE

113544

BRAKES (2M532 N/S)—Top View
Serial No. 48A13309, 13310 and 48A13312—Up

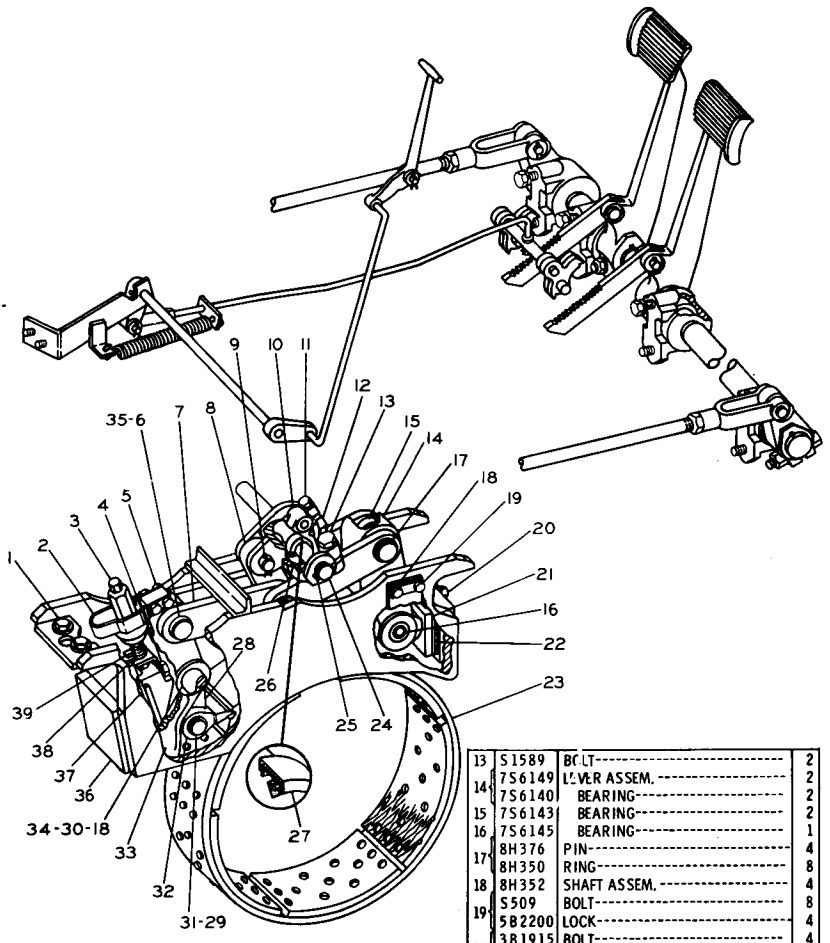

REF. NO.	PART NUMBER	DESCRIPTION	QTY
1	4B4043	BOLT	8
	3B4510	LOCKWASHER	8
2	9S8220	SPRING	2
C 3	1P4524	SOCKET	2
4	L1351	BOLT	2
	3B4506	LOCKWASHER	2
5	1B9575	BOLT	4
	1D4716	NUT	4
	2F6156	LOCK	4
6	8H8898	PIN	2
	3B4630	COTTER PIN	2
7	7S6139	LINK	8
8	7M3417	LINK	2
9	4H8493	PIN	2
	3B4629	COTTER PIN	2
10	1M3688	LEVER	2
11	S1577	BOLT	2
	1B4206	NUT	2
12	1M3745	LEVER	2
13	S1589	BOLT	2
14	7S6149	LEVER ASSEM.	2
	7S6140	BEARING	2
15	7S6143	BEARING	2
16	7S6145	BEARING	1
17	8H376	PIN	4
	8H350	RING	8
18	8H352	SHAFT ASSEM.	4
19	S509	BOLT	8
	5B2200	LOCK	4
20	3B1915	BOLT	4
	6H4208	LOCK	2
21	8H372	PLATE	2
22	8H8871	SHIM	4
23	9M8068	BAND ASSEM. (See Separate Illustration)	2
24	1M3748	SHAFT	2
25	1B8719	KEY	4
26	6F7059	WASHER	2
27	9H8839	SEAL	2
28	7S6148	LEVER ASSEM.	2
29	7S6145	BEARING	1
30	7S6140	BEARING	1
31	1M3788	PIN	4
	1K9740	RING	8
32	1M3778	STRUT	4
33	4S9104	LEVER ASSEM.	2
34	7S6140	BEARING	2
35	7S6144	BEARING	1
36	1M3955	SUPPORT ASSEM.	2
37	1M4025	WEDGE	2
38	2M7188	SCREW	2
39	5H6624	SUPPORT	2

C INDICATES CHANGE

113545

BRAKES (2M532 N/S)—Side View
Serial No. 48A13309, 13310 and 48A13312—Up
9M8068 Brake Band parts are shown on Page 100

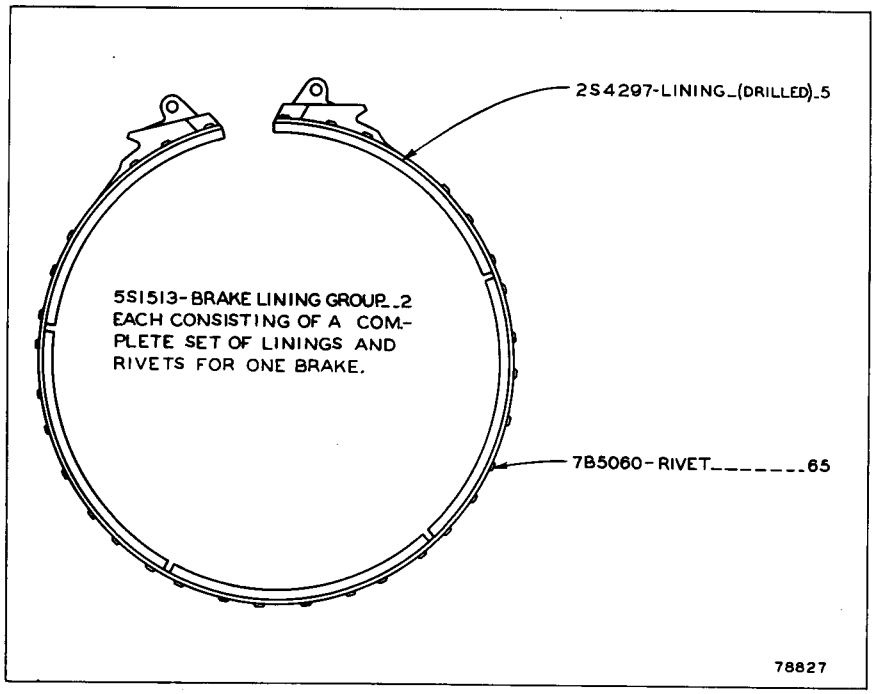

5S1503 BRAKE BAND AND LINING ASSEMBLY—2 Required
Serial No. 48A9794 to 48A13099 inclusive
Part of Brakes shown on Page 99B

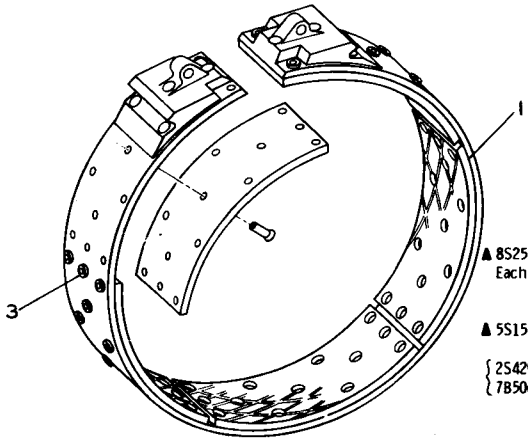

▲ 8S2515-BRAKE LINING GROUP-(molded) -2
Each consisting of a complete set of Linings and Rivets for one Brake

▲ 5S1513-BRAKE LINING GROUP--(woven)-2
Each consisting of:
2S4297-LINING ---------(woven)--------5
7B5060-RIVET ---------- 65

REF. NO.	PART NUMBER	DESCRIPTION	QTY
1	5S5658	LINING----------	5
3	7B5060	RIVET----------	65

▲ NOT PART OF 9M8068 BRAKE ASSEM.

200433

9M8068 BRAKE BAND AND LINING ASSEMBLY—2 Required
Serial No. 48A13100—Up
Part of Brakes shown on Pages 99D and 99F

BEVEL GEAR CASE AND COVERS (2M4758 N/S)—Top View
Serial No. 48A6393 to 48A12387 inclusive

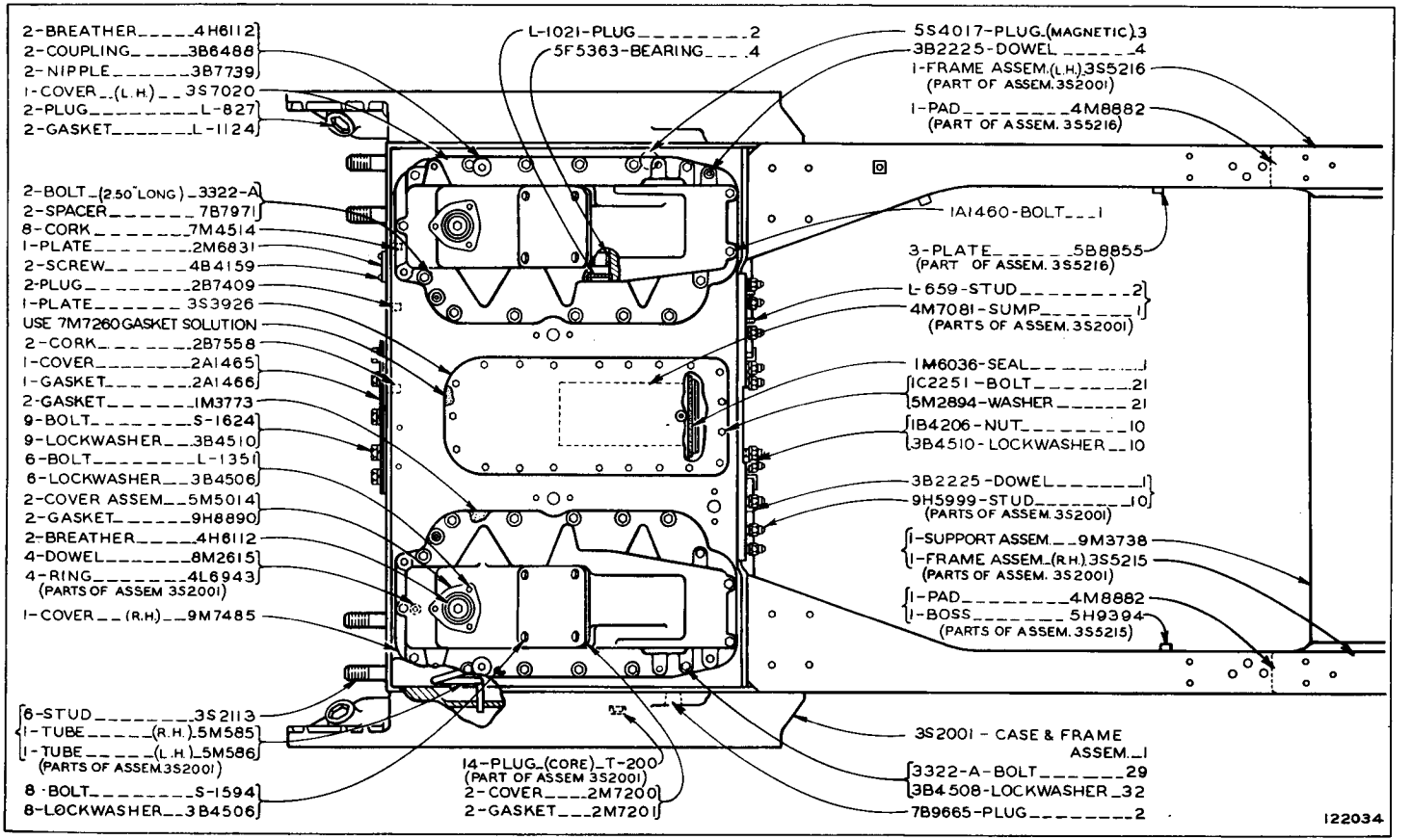

BEVEL GEAR CASE AND COVERS (2M4758 N/S)—Top View
Effective with Serial No. 48A12388

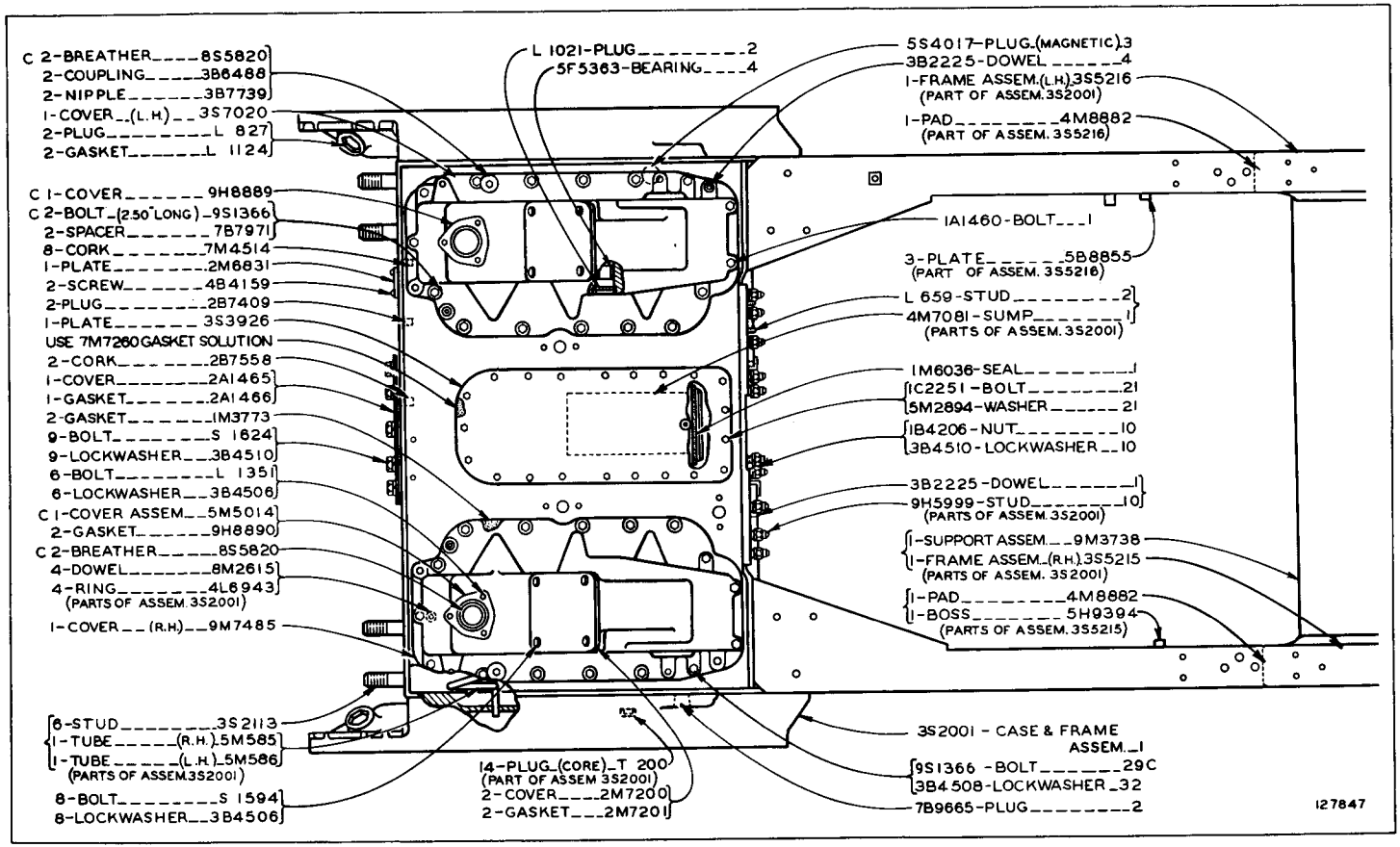

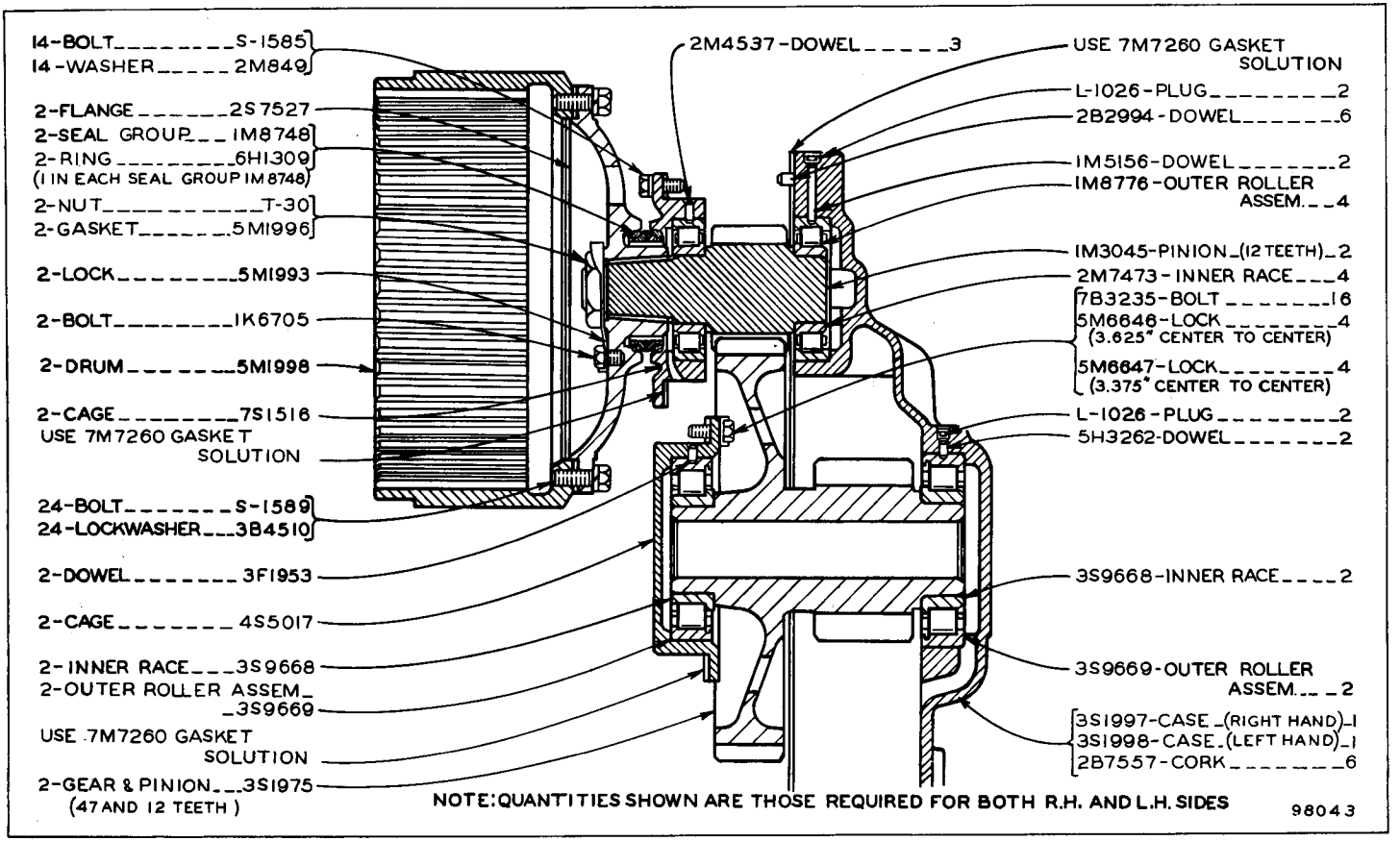

FINAL DRIVE (2S7100 N/S)—Upper Half
Serial No. 48A6393 to 48A12568 inclusive

FINAL DRIVE (2S7100 N/S)—Lower Half
Serial No. 48A6393 to 48A12568 inclusive
Refer also to Pages 150A, 150G and 151 for special parts

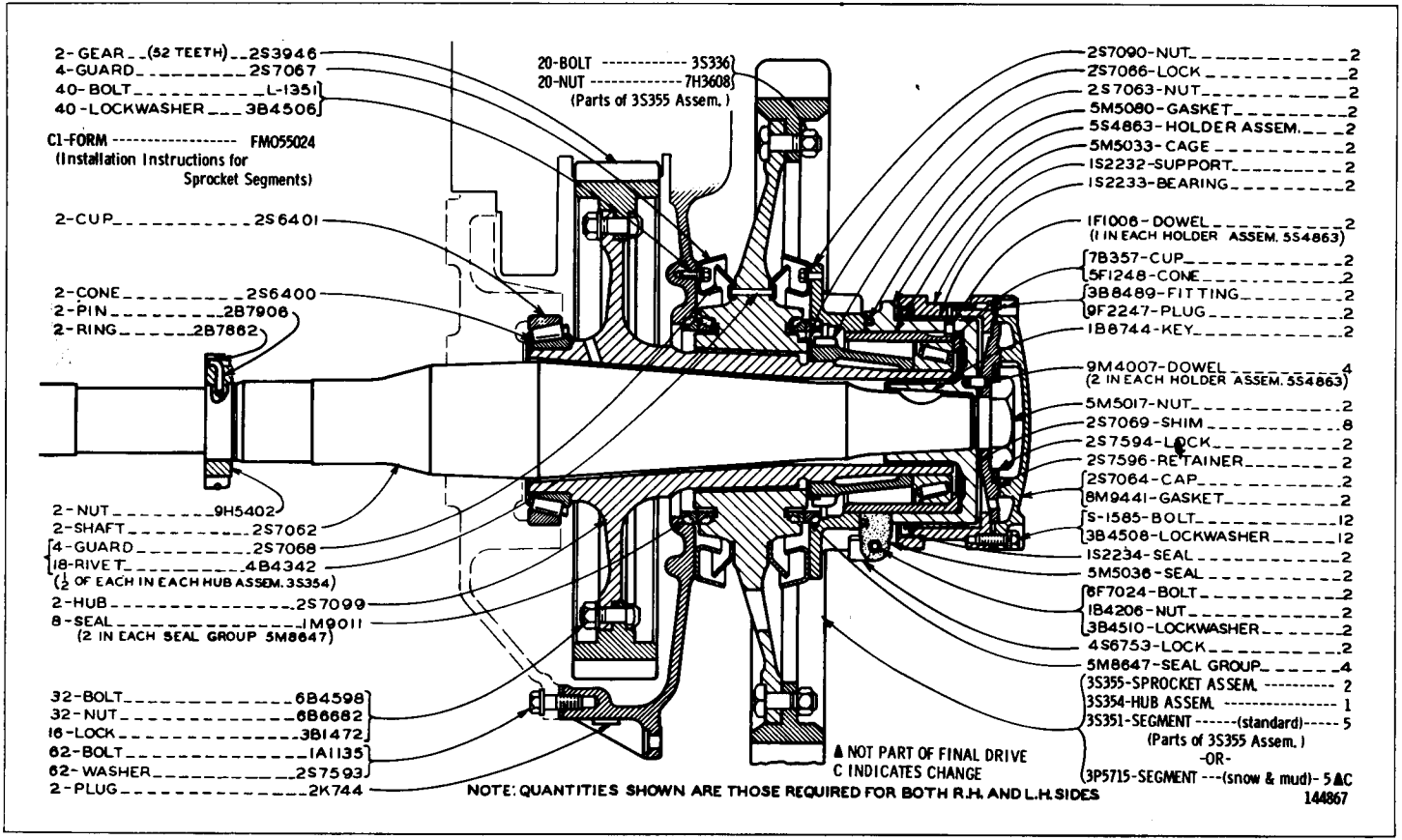

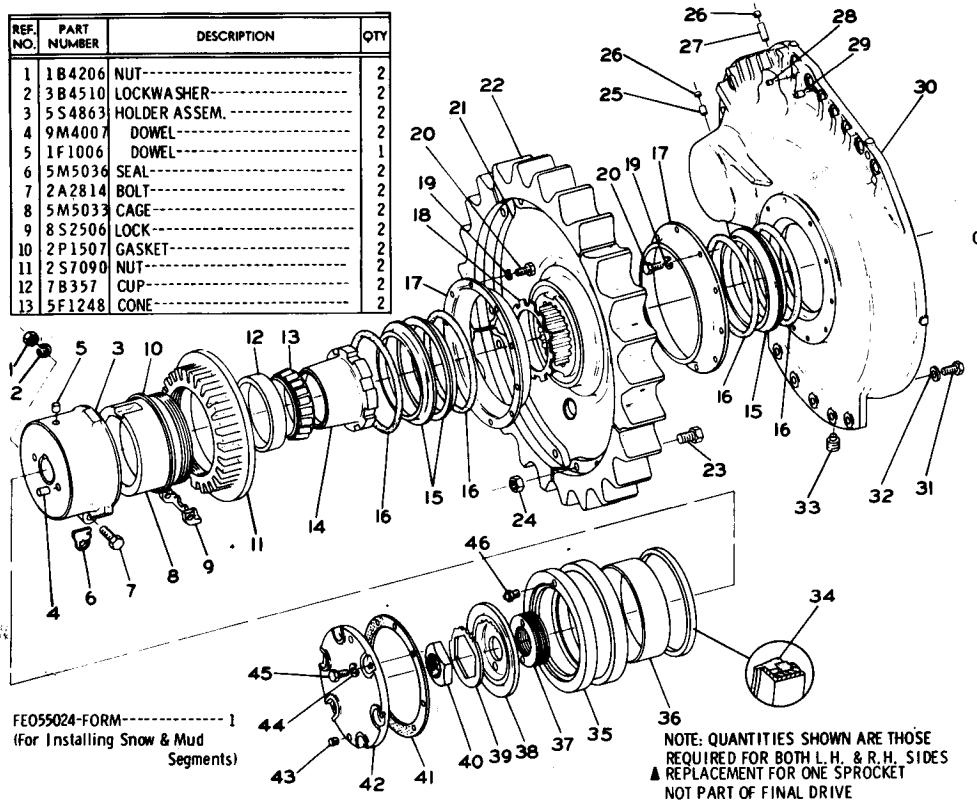

REF. NO.	PART NUMBER	DESCRIPTION	QTY
1	1B4206	NUT	2
2	3B4510	LOCKWASHER	2
3	5S4863	HOLDER ASSEM.	2
4	9M4007	DOWEL	2
5	1F1006	DOWEL	1
6	5M5036	SEAL	2
7	2A2814	BOLT	2
8	5M5033	CAGE	2
9	8S2506	LOCK	2
10	2P1507	GASKET	2
11	2S7090	NUT	2
12	7B357	CUP	2
13	5F1248	CONE	2

14	2S7063	NUT	2
15	5M8647	SEAL GROUP	4
16	1M9011	RING	2
17	9S2172	GUARD	4
18	2S7066	LOCK	2
19	3B4506	LOCKWASHER	40
20	L1351	BOLT	40
21	9S2506	SPROCKET GROUP	2
22	9S2519	HUB	1
C	3S351	SEGMENT-----(standard)-----OR-	5
C▲	3P5715	SEGMENT----(snow & mud)----	5
23	3S336	BOLT	20
24	7H3608	NUT	20
25	5H3262	DOWEL	2
26	L1026	PLUG	4
27	1M5156	DOWEL	2
28	2B7557	CORK	6
29	2B2994	DOWEL	6
30	3S1998	CASE---------(L.H.)	1
	3S1997	CASE----------(R.H.)	1
	7M7260	LIQUID GASKET	
31	1A1135	BOLT	62
32	2S7593	WASHER	62
33	2K744	PLUG	2
34	1S5347	SEAL	2
35	1P7590	SUPPORT ASSEM.	2
36	2P895	KIT--------(Bearing Service)----(Includes Bearing & Kit)	1
37	2S7069	SHIM	8
38	2S7596	RETAINER	2
39	2S7594	LOCK	2
40	5M5017	NUT	2
41	8M9441	GASKET	2
42	2S7064	CAP	2
43	9F2247	PLUG	2
44	3B4508	LOCKWASHER	12
45	S1585	BOLT	12
46	3B8489	FITTING	2

FE055024-FORM---------- 1
(For Installing Snow & Mud Segments)

NOTE: QUANTITIES SHOWN ARE THOSE REQUIRED FOR BOTH L.H. & R.H. SIDES
▲ REPLACEMENT FOR ONE SPROCKET NOT PART OF FINAL DRIVE

C INDICATES CHANGE

119271

FINAL DRIVE (2S7100 N/S)—Part 1
Serial No. 48A12569—Up

FINAL DRIVE (2S7100 N/S)—Part 2

Serial No. 48A12569—Up

Refer also to Pages 150A, 150G and 151 for special parts

REF. NO.	PART NUMBER	DESCRIPTION	QTY
1	3S9669	RACE AND ROLLER ASSEM.	4
2	9S4829	RACE	4
3	1M8776	RACE AND ROLLER ASSEM.	4

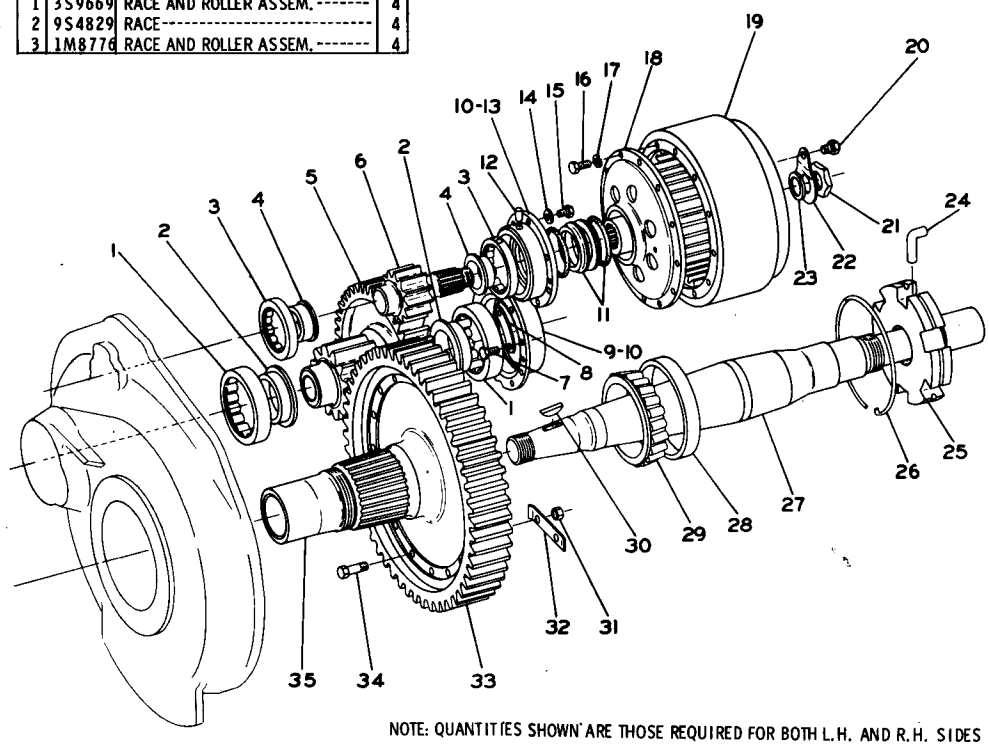

REF. NO.	PART NUMBER	DESCRIPTION	QTY
4	2P2811	RACE	4
5	9S6874	GEAR AND PINION-(47 & 12 Teeth)	2
6	9S6875	PINION-(12 Teeth)	2
7	7B3235	BOLT	16
8	5M6646	LOCK--(3.625" Center to Center)	4
	5M6647	LOCK--(3.375" Center to Center)	4
9	4S5017	CAGE	2
	3F1953	DOWEL	2
10	7M7260	LIQUID GASKET	
11	1M8748	SEAL GROUP	2
	6H1309	RING	2
12	2M4537	DOWEL	2
13	7S1516	CAGE	2
14	2M849	WASHER	14
15	S1585	BOLT	14
16	S1589	BOLT	24
17	3B4510	LOCKWASHER	24
18	2S7527	FLANGE	2
19	5M1998	DRUM	2
20	1K6705	BOLT	2
21	T30	NUT	2
22	5M1993	LOCK	2
23	5M1996	GASKET	2
24	2B7906	PIN	2
25	9H5402	NUT	2
26	2B7862	RING	2
27	2S7062	SHAFT	2
28	2S6401	CUP	2
29	2S6400	CONE	2
30	1B8744	KEY	2
31	6B6682	NUT	32
32	3B1472	LOCK	16
33	2S3946	GEAR-(52 Teeth)	2
34	6B4598	BOLT	32
35	2S7099	HUB	2

NOTE: QUANTITIES SHOWN ARE THOSE REQUIRED FOR BOTH L.H. AND R.H. SIDES

112270

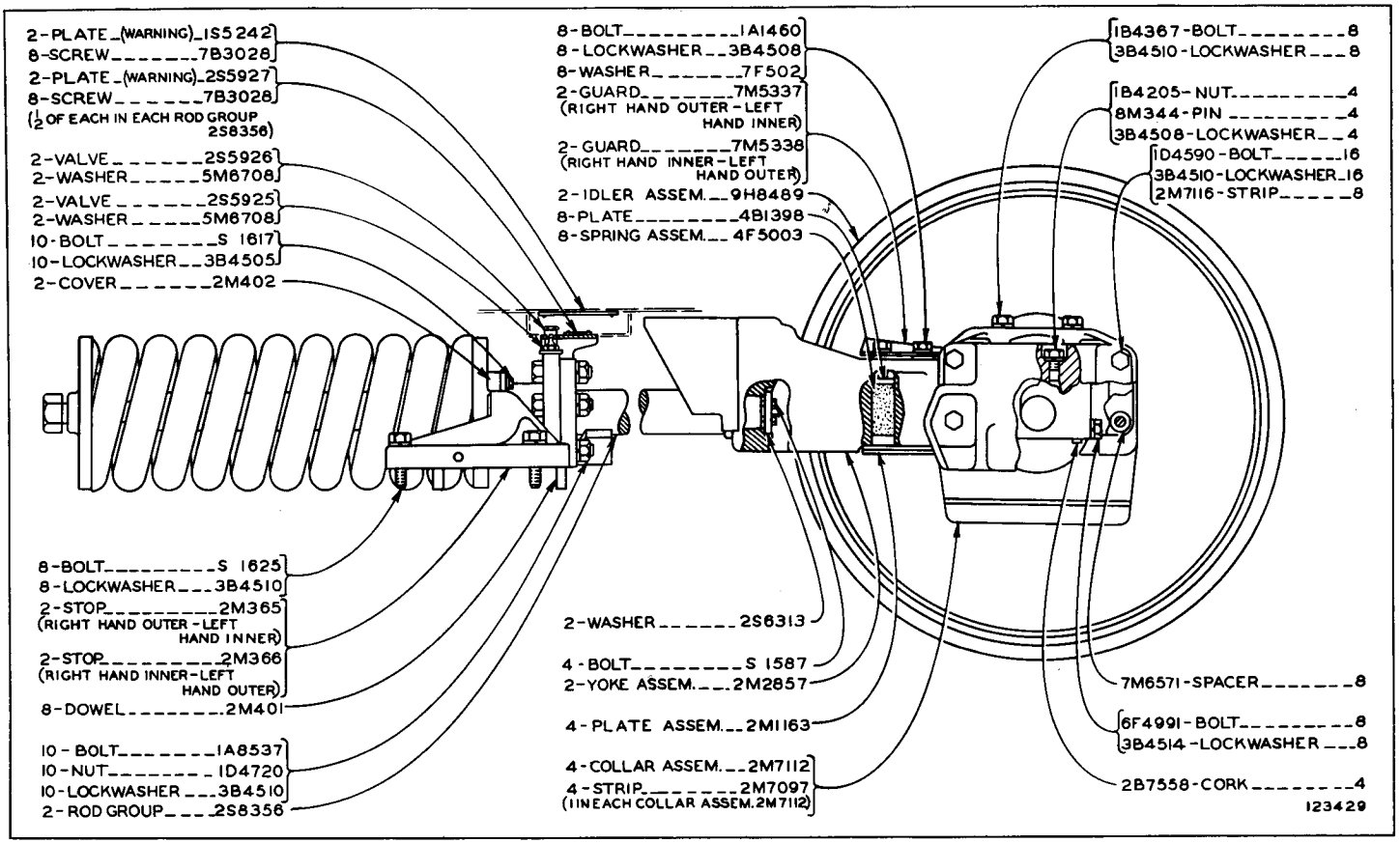

FRONT IDLER—Part 1

Serial No. 48A6393 to 48A9872 inclusive. Note: 2S5958 Idler Group (Reinforced), consisting of: 2—1S8186 Idler Assemblies, is available. Note: Quantities shown are those required for both R.H. and L.H. sides

FRONT IDLER—Part 2

Serial No. 48A6393 to 48A9872 inclusive

Note: Quantities shown are those required for both R.H. and L.H. sides

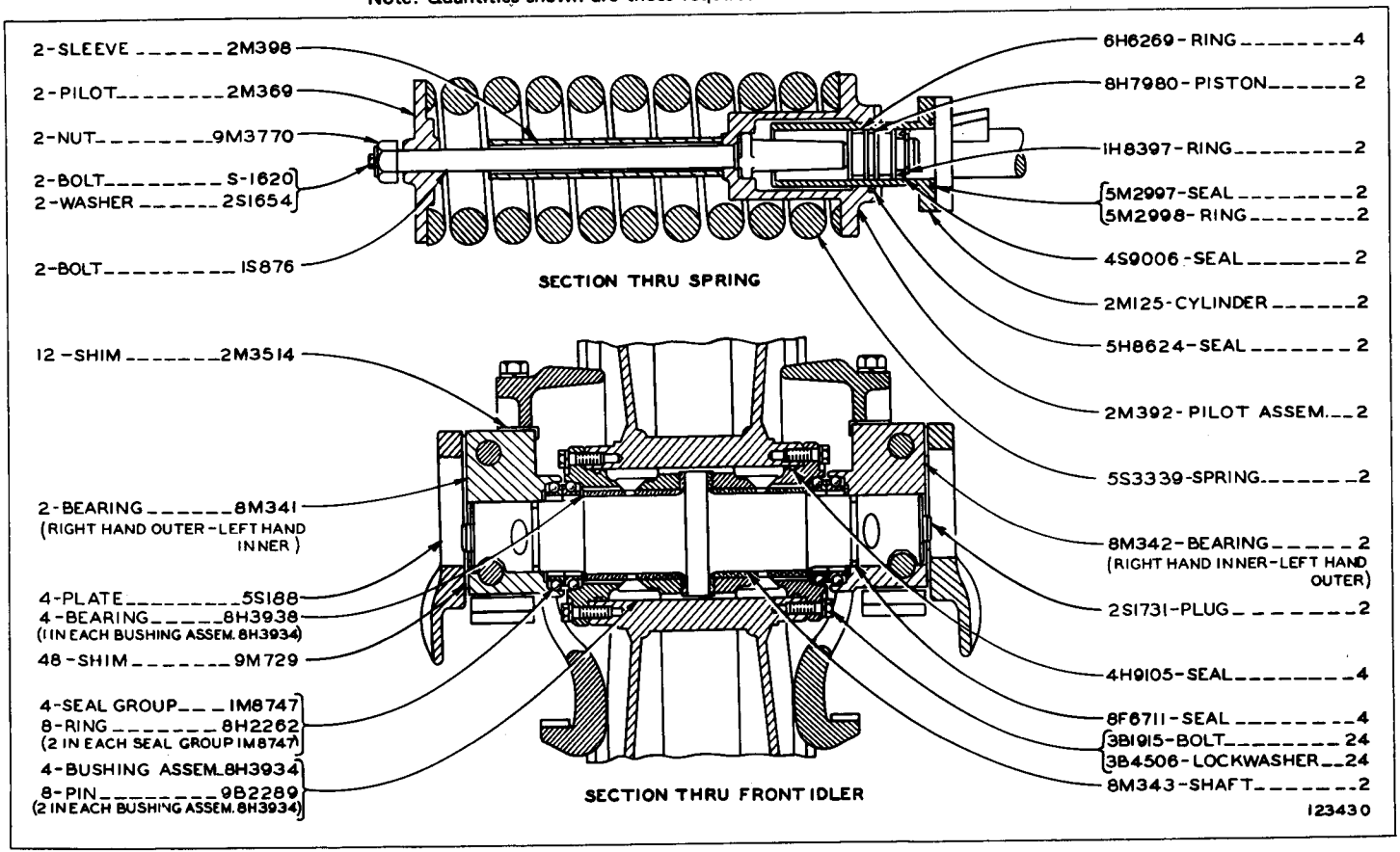

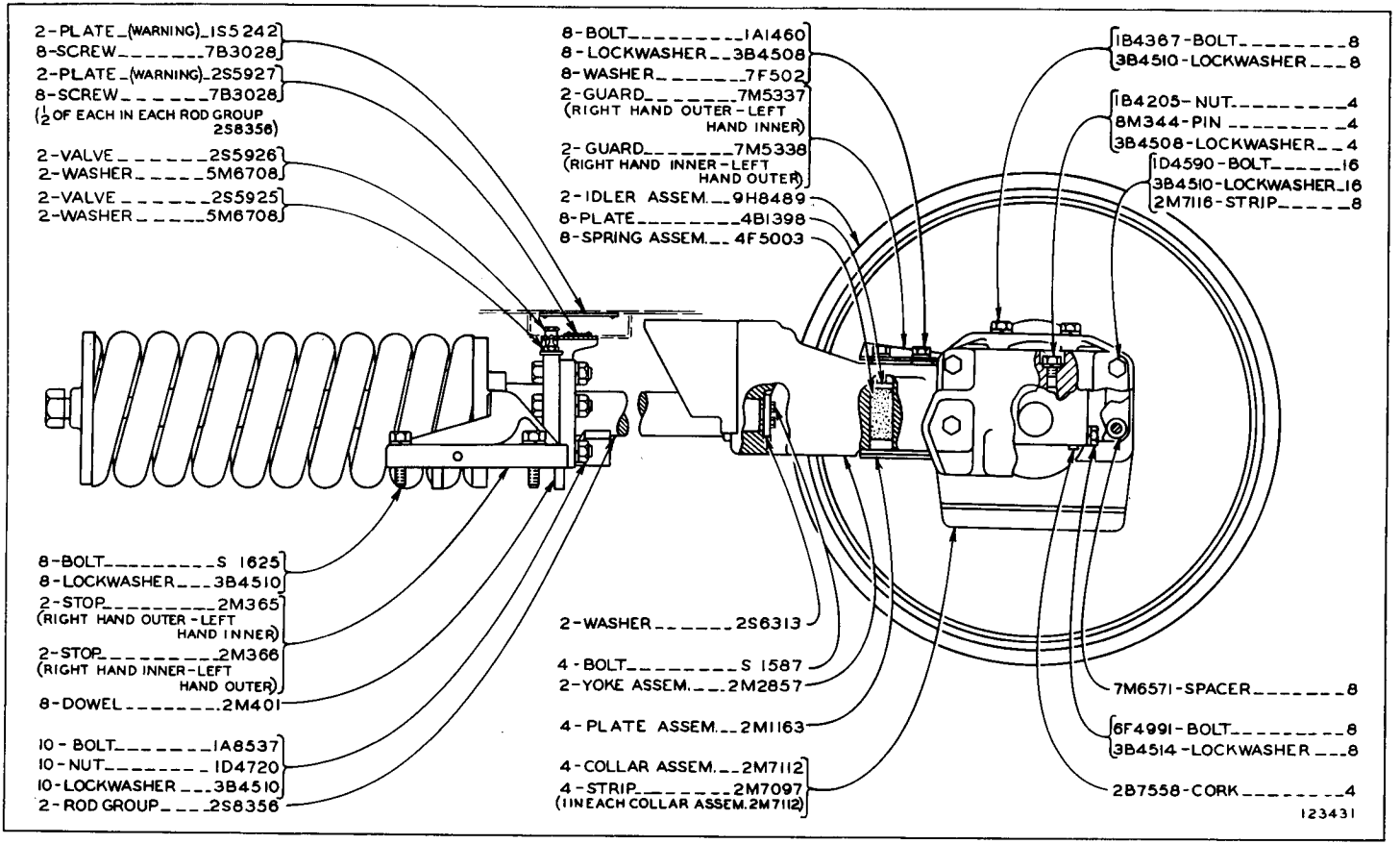

FRONT IDLER (2M1132 N/S)—Part 1
Serial No. 48A9873 to 48A13106 inclusive
Note: 2S5958 Idler Group (Reinforced), consisting of: 2-1S8186 Idler Assemblies, is available
Note: Quantities shown are those required for both R.H. and L.H. sides

FRONT IDLER (2M1132 N/S)—Part 2
Serial No. 48A9873 to 48A13106 inclusive
Note: Quantities shown are those required for both R.H. and L.H. sides

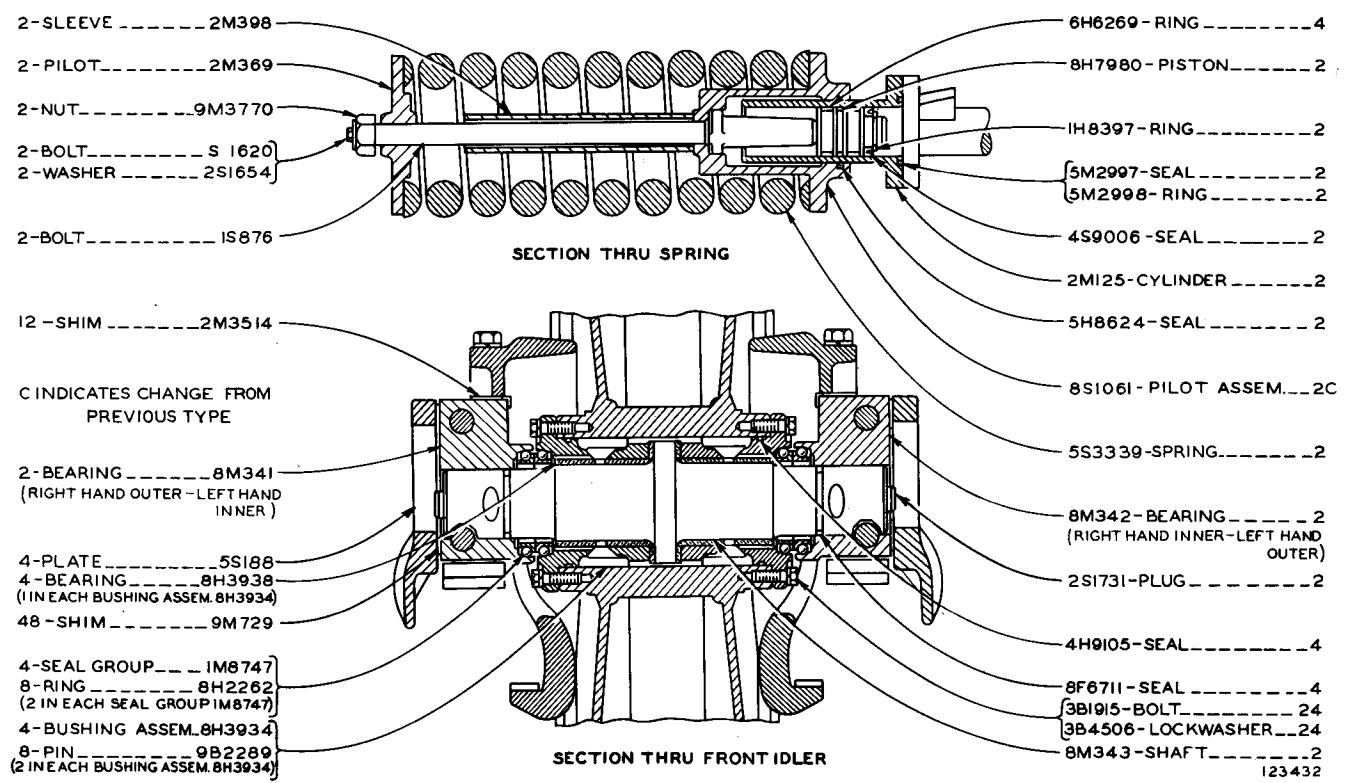

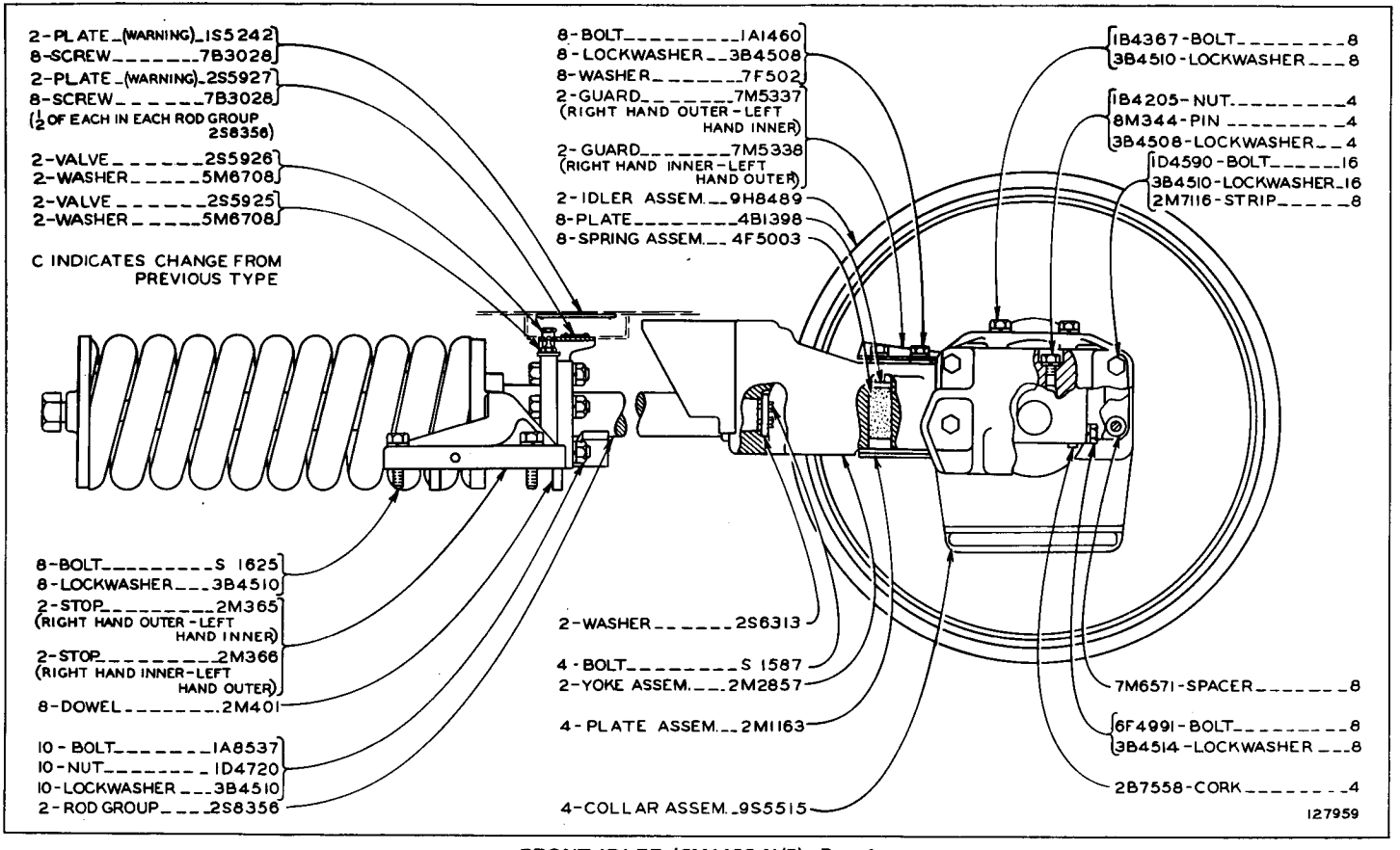

FRONT IDLER (2M1132 N/S)—Part 1
Effective with Serial No. 48A13107
Note: 2S5958 Idler Group (Reinforced), consisting of 2-1S8186 Idler Assemblies, is available
Note: Quantities shown are those required for both R.H. and L.H. sides

FRONT IDLER (2M1132 N/S)—Part 2
Effective with Serial No. 48A13107
Note: Quantities shown are those required for both R.H. and L.H. sides

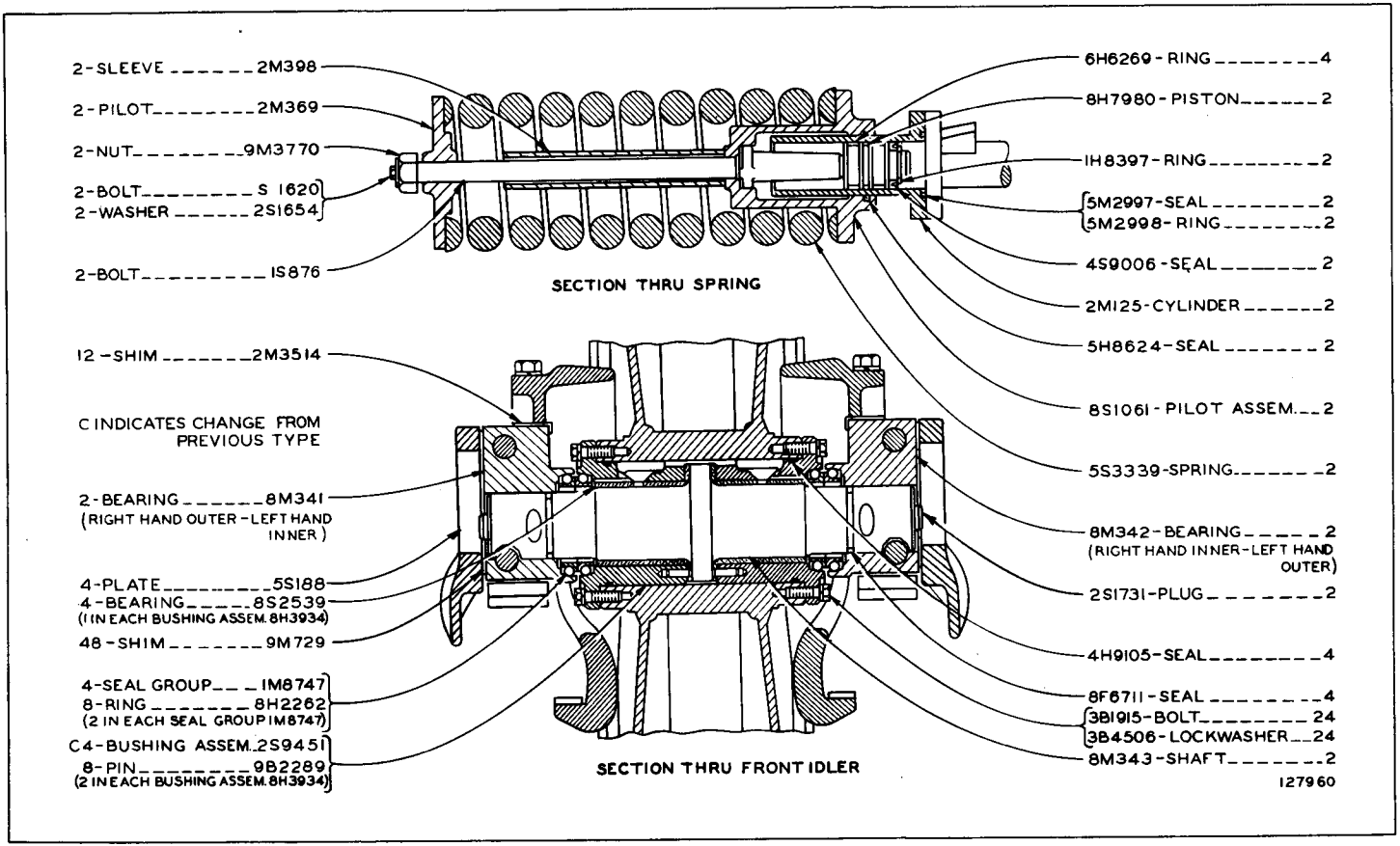

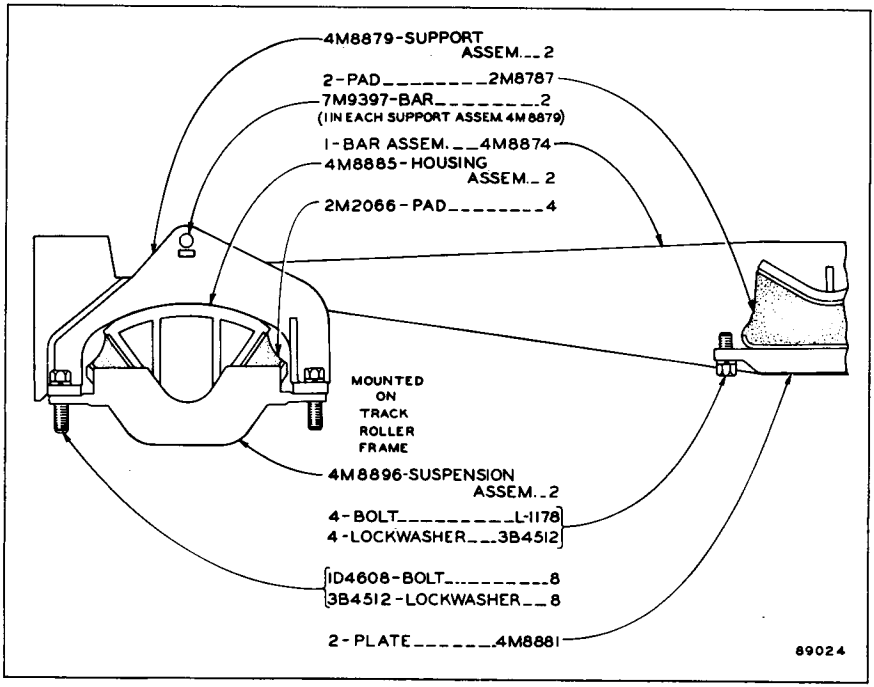

EQUALIZER BAR AND SUSPENSION
Serial No. 48A6393 to 48A10361 inclusive

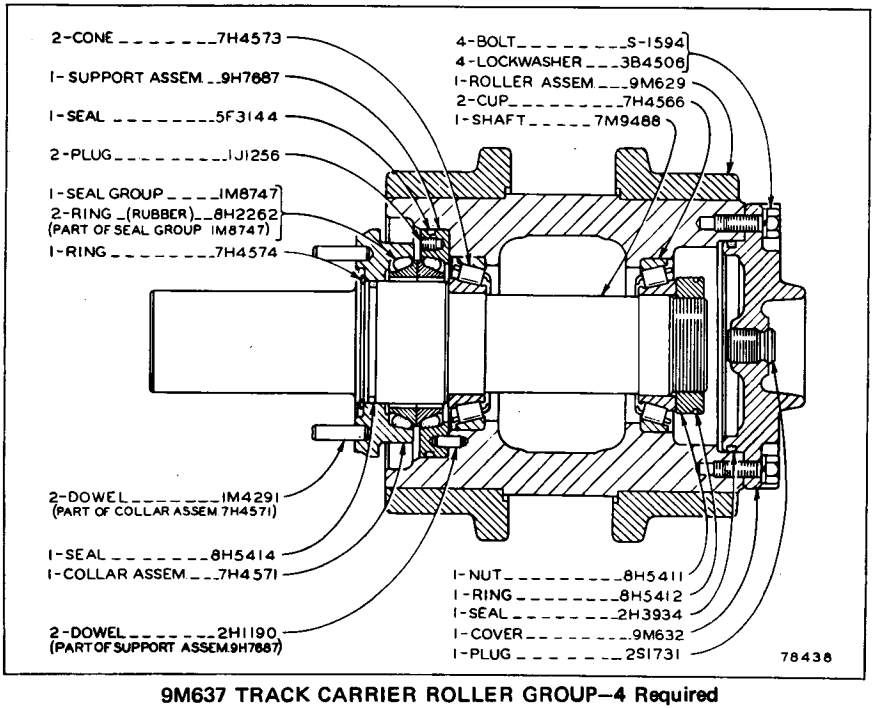

9M637 TRACK CARRIER ROLLER GROUP—4 Required
Serial No. 48A6393 to 48A11401 inclusive

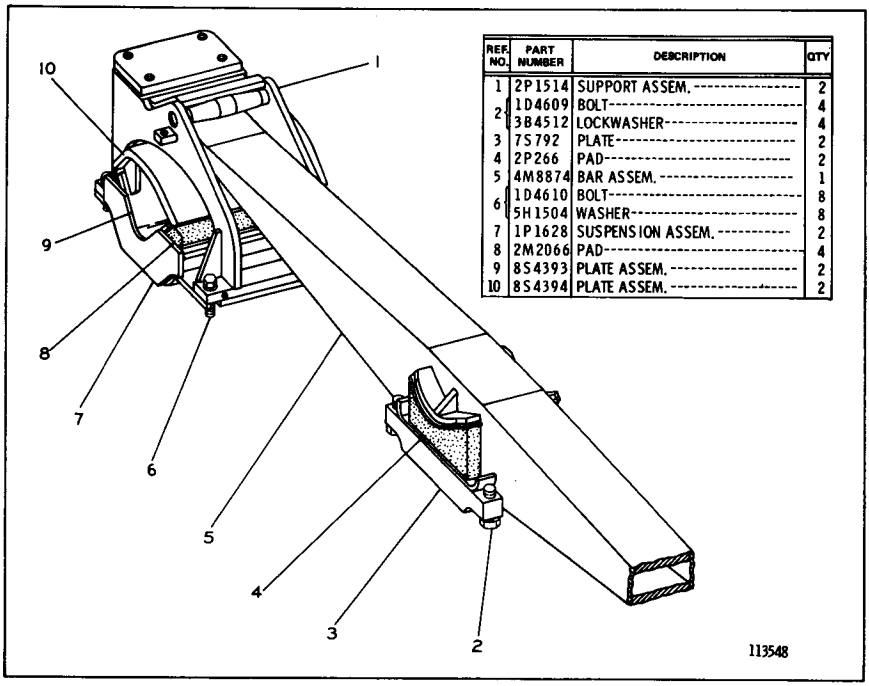

REF. NO.	PART NUMBER	DESCRIPTION	QTY
1	2P1514	SUPPORT ASSEM.	2
2	1D4609	BOLT	4
	3B4512	LOCKWASHER	4
3	7S792	PLATE	2
4	2P266	PAD	2
5	4M8874	BAR ASSEM.	1
6	1D4610	BOLT	8
	5H1504	WASHER	8
7	1P1628	SUSPENSION ASSEM.	2
8	2M2066	PAD	4
9	8S4393	PLATE ASSEM.	2
10	8S4394	PLATE ASSEM.	2

EQUALIZER BAR AND SUSPENSION (4M8888 N/S)
Effective with Serial No. 48A10362

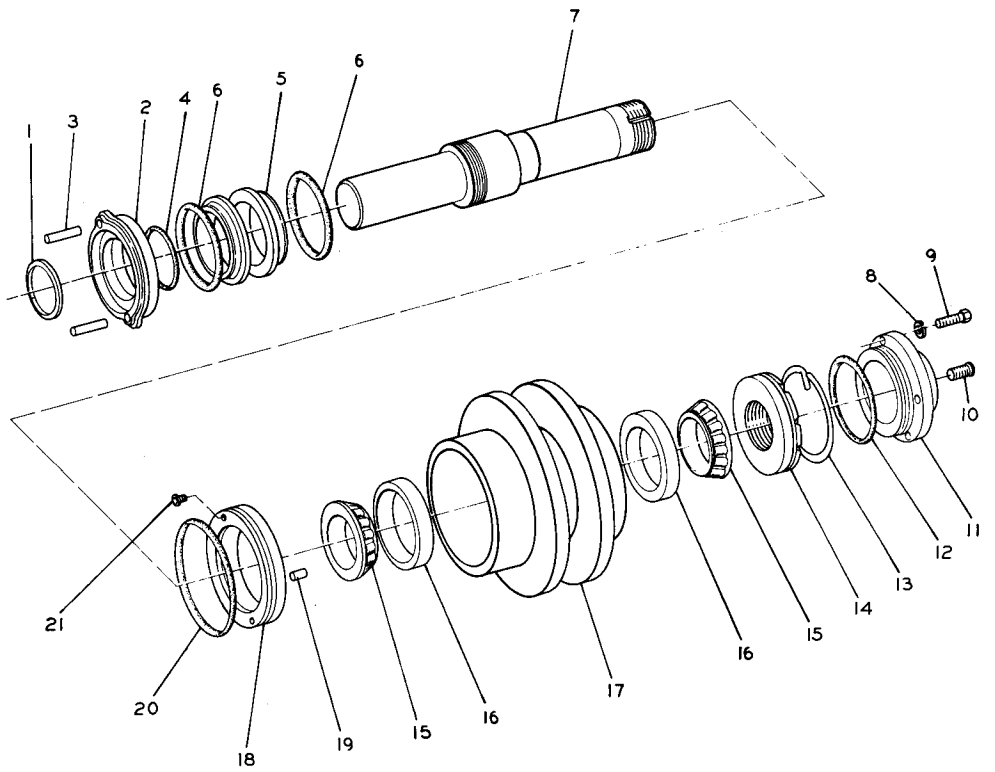

REF. NO.	PART NUMBER	DESCRIPTION	QTY
1	7H4574	RING	1
2	7H4571	COLLAR ASSEM.	1
3	1M4291	DOWEL	2
4	1H8720	SEAL	1
5	1M8747	SEAL GROUP	1
6	8H2262	RING-------(Rubber)	2
7	4S9692	SHAFT	1
8	3B4506	LOCKWASHER	4
9	S1594	BOLT	4
10	2S1731	PLUG	1
11	9M632	COVER	1
12	2H3934	SEAL	1
13	8H5412	RING	1
14	8H5411	NUT	1
15	7H4573	CONE	2
16	7H4566	CUP	2
17	9S8321	ROLLER ASSEM.	1
18	9H7687	SUPPORT ASSEM.	1
19	2H1190	DOWEL	2
20	5F3144	SEAL	1
21	1J1256	PLUG	2

4S9691 TRACK CARRIER ROLLER GROUP—4 Required
Serial No. 48A11402—Up
Only separate parts serviced. When complete group is required order 1P8717 shown on Page 106C

1P8717 TRACK CARRIER ROLLER GROUP—4 Required
Serial No. 48A11402—Up

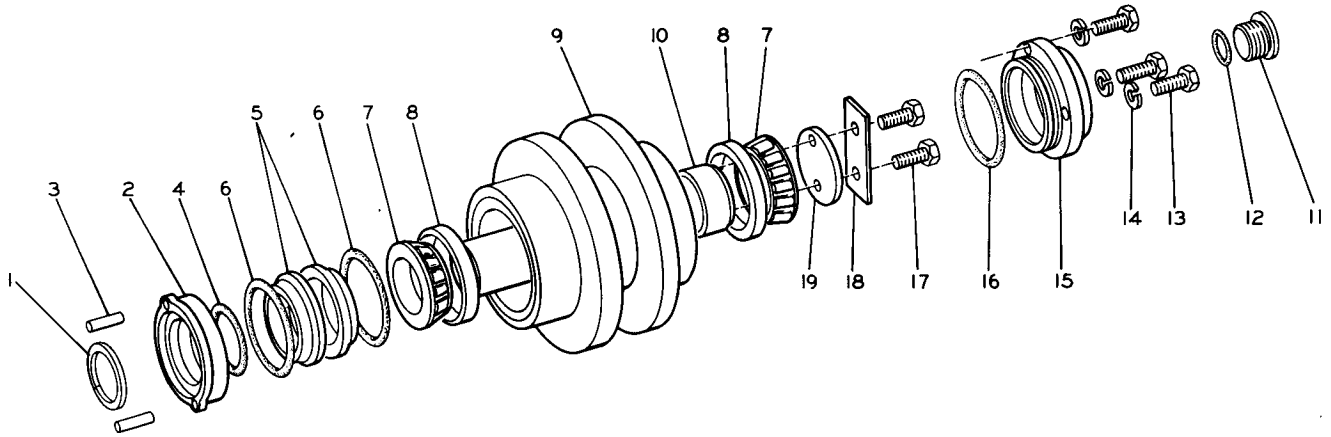

REF. NO.	PART NUMBER	DESCRIPTION	QTY
1	7H4574	RING	1
2	7H4571	COLLAR ASSEM.	1
3	1M4291	DOWEL	2
4	1H8720	SEAL	1
5	1M8747	SEAL GROUP	1
6	8H2262	RING-(Rubber)	2
7	9S3582	CONE	2
8	9S3581	CUP	2
9	1P8716	ROLLER ASSEM.	1
10	1P8715	SHAFT	1
11	2P347	PLUG	1
12	1S8947	SEAL	1
13	S1594	BOLT	3
14	3B4506	LOCKWASHER	3
15	5M2043	COVER	1
16	2H6338	SEAL	1
17	T703	BOLT	2
18	T329	LOCK	1
19	9S3568	PLATE	1

138580

TRACK ROLLER FRAME

Refer also to Page 149 for special parts

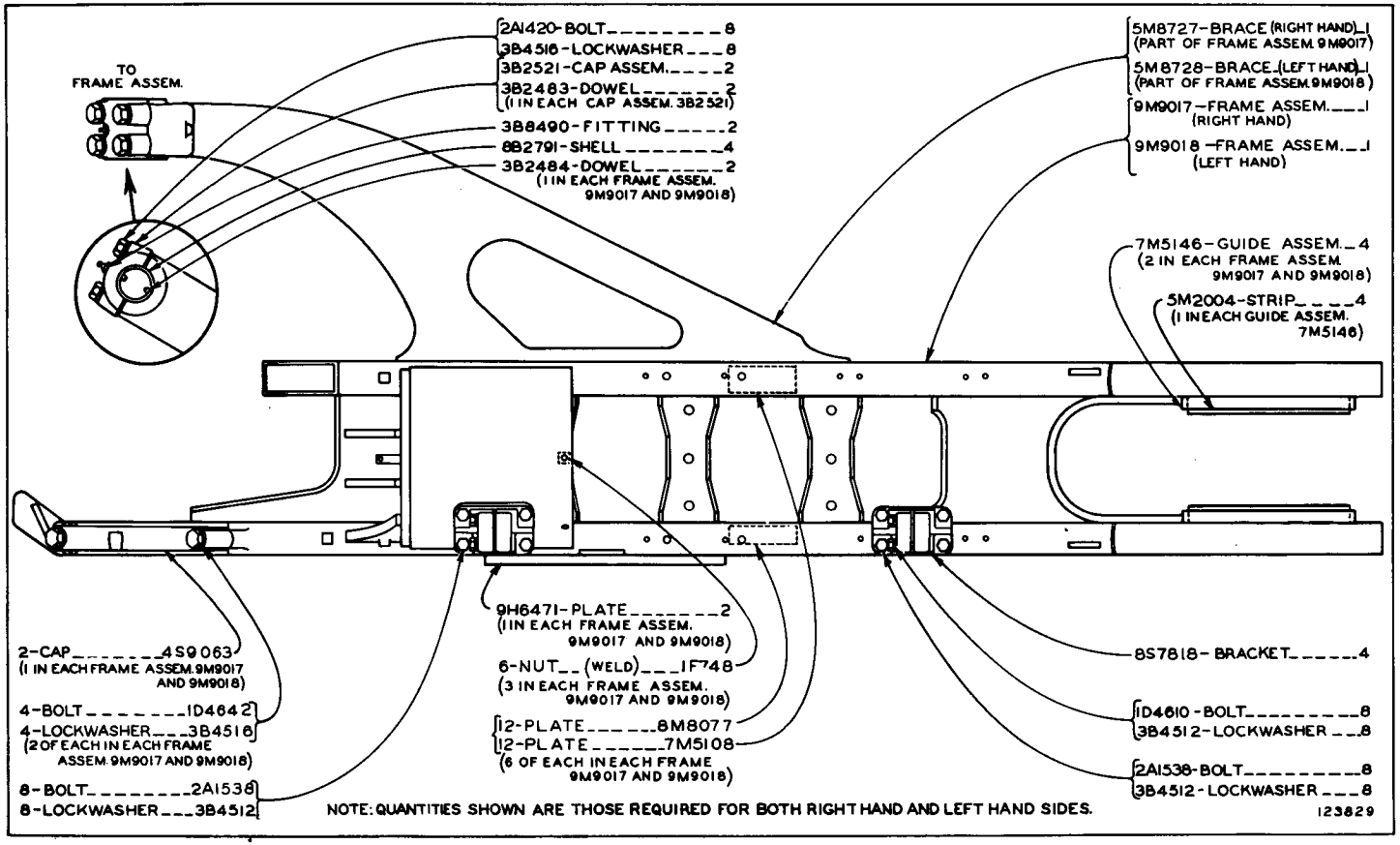

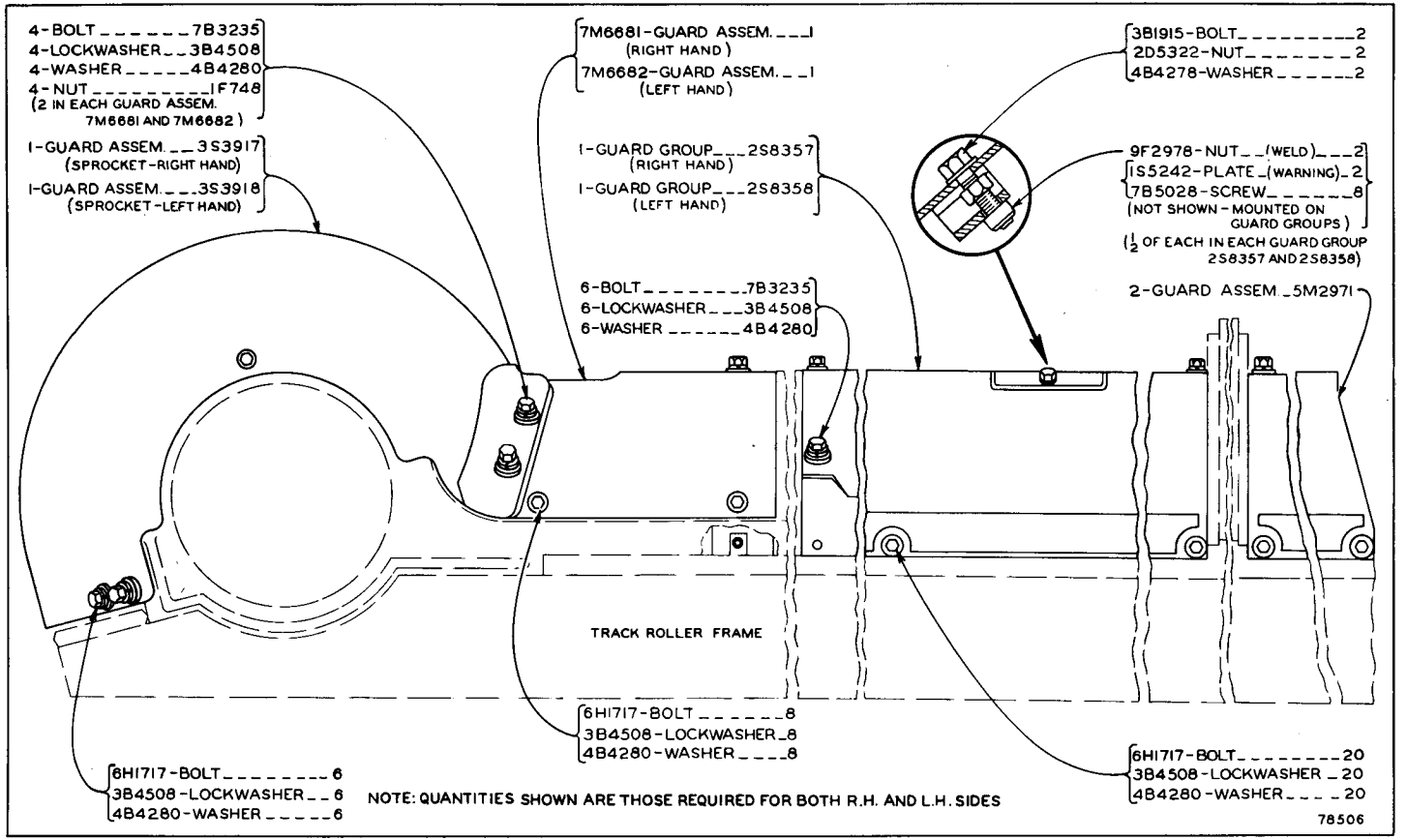

TRACK ROLLER FRAME GUARDS

Note: Quantities shown are those required for both R.H. and L.H. sides

7M5115 TRACK ROLLER GROUP—Single Flange—6 Groups Required
7M5116 TRACK ROLLER GROUP—Double Flange—6 Groups Required
Serial No. 48A6393 to 48A13095 inclusive
Note: 4S9052 Track Roller Seal Kit, with metallic rings, is available

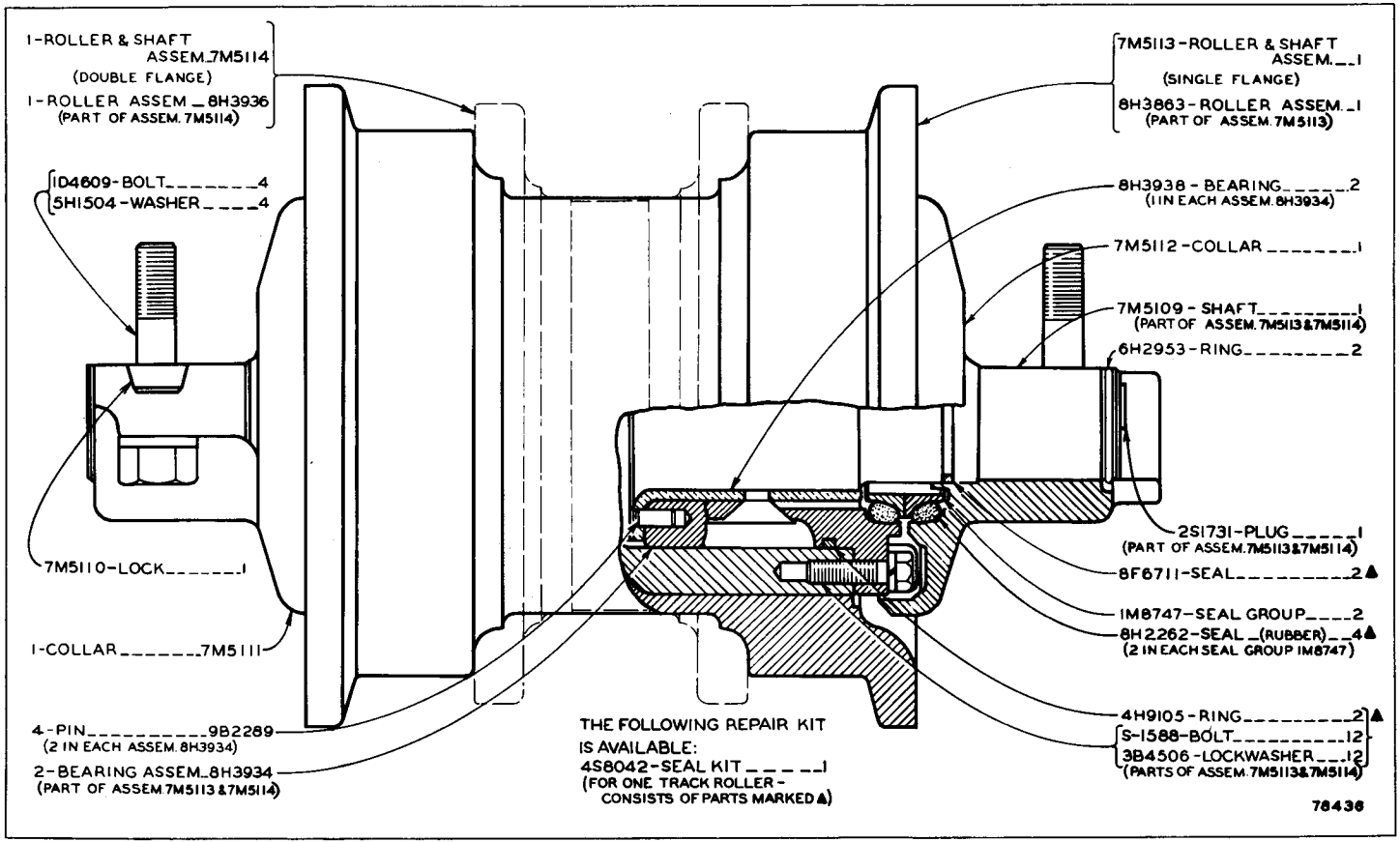

9S3393 TRACK ROLLER GROUP—Single Flange—6 Required
9S3395 TRACK ROLLER GROUP—Double Flange—6 Required
Effective with Serial No. 48A13096
Note: 4S9052 Track Roller Seal Kit, with metallic rings, is available

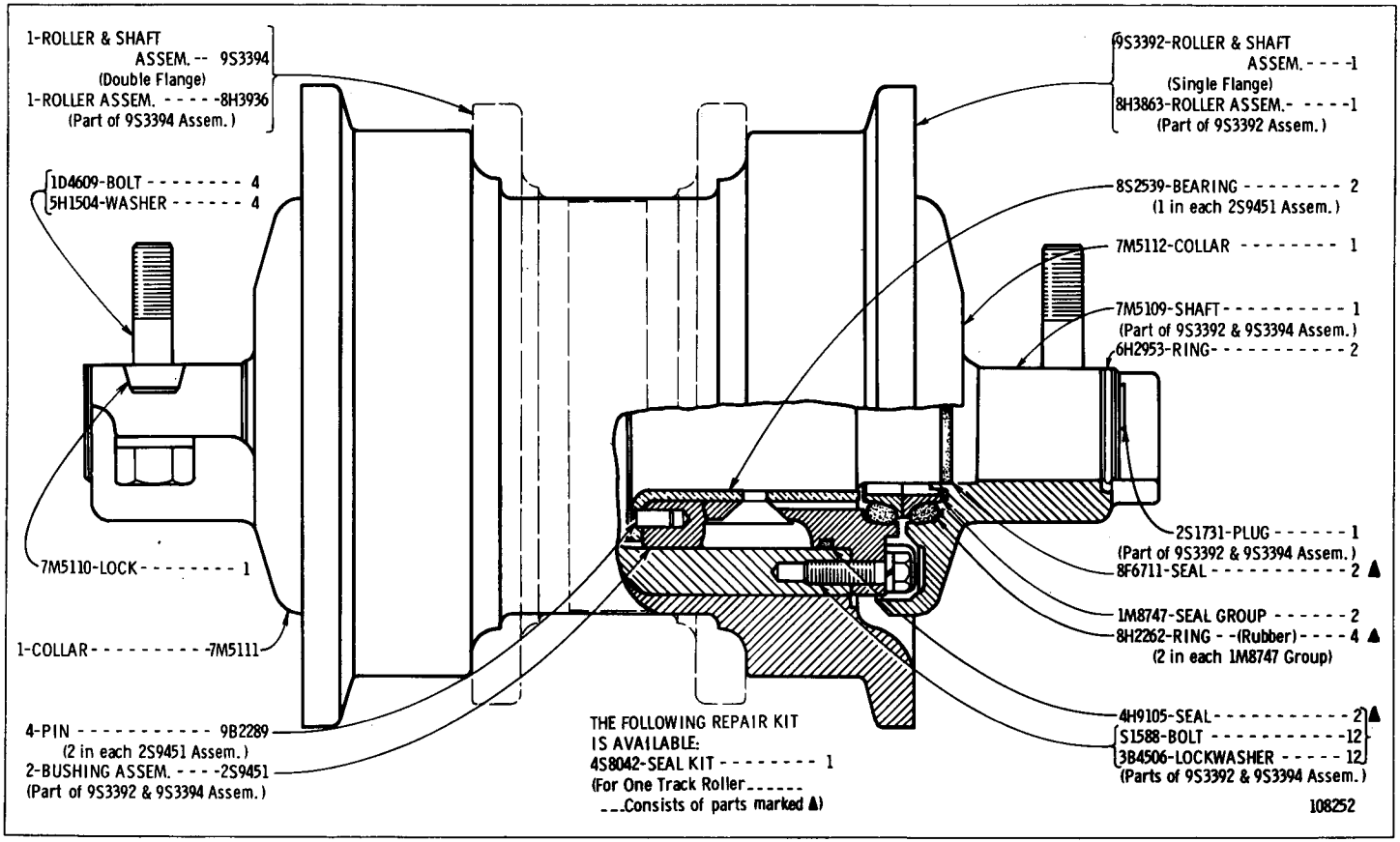

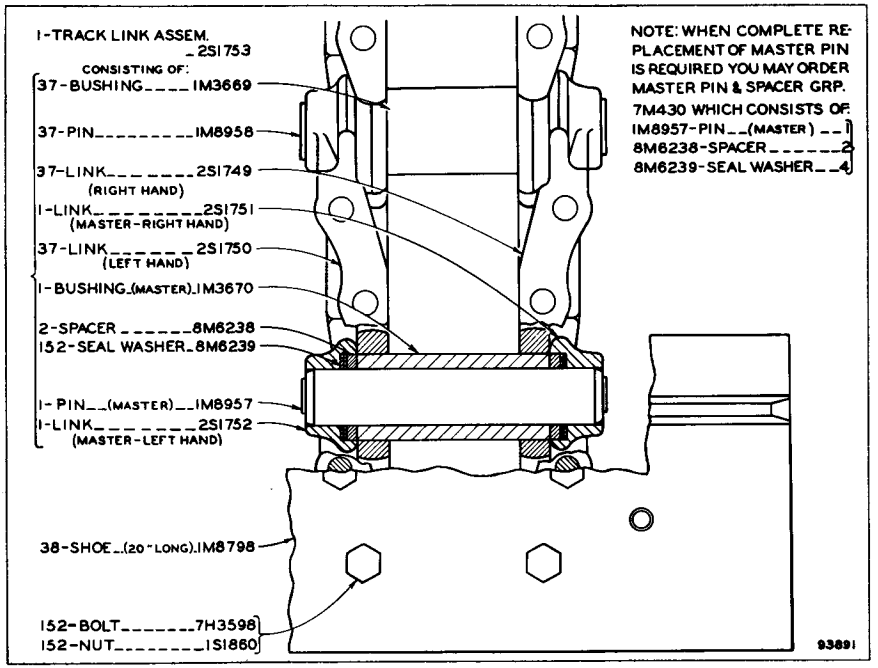

2S1754 TRACK GROUP—20" Grouser Shoe—2 Groups Required
Note: 7M429 Track Pin and Bushing Group, consisting of a complete set of Pins and Bushings for one Track, is available
Refer also to Pages 146 through 148 for special parts

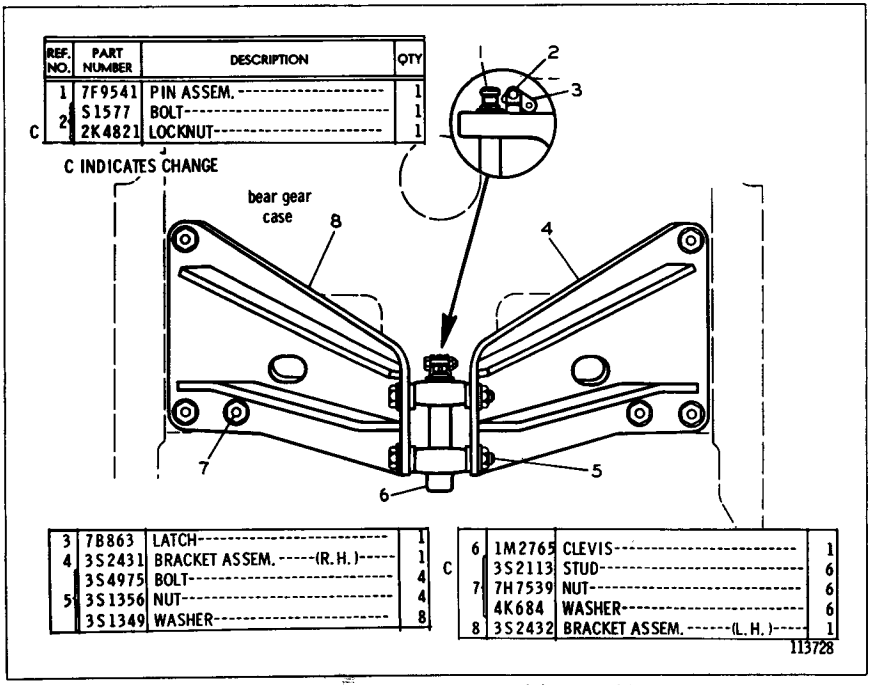

REF. NO.	PART NUMBER	DESCRIPTION	QTY
1	7F9541	PIN ASSEM.	1
C 2	1S1577	BOLT	1
	2K4821	LOCKNUT	1
3	7B863	LATCH	1
4	3S2431	BRACKET ASSEM. (R.H.)	1
	3S4975	BOLT	4
5	3S1356	NUT	4
	3S1349	WASHER	8
6	1M2765	CLEVIS	1
C	3S2113	STUD	6
7	7H7539	NUT	6
	4K684	WASHER	6
8	3S2432	BRACKET ASSEM. (L.H.)	1

FIXED DRAWBAR (1M8524 N/S)—Rear View

HOOD AND DASH

Serial No. 48A6393 to 48A6882 inclusive

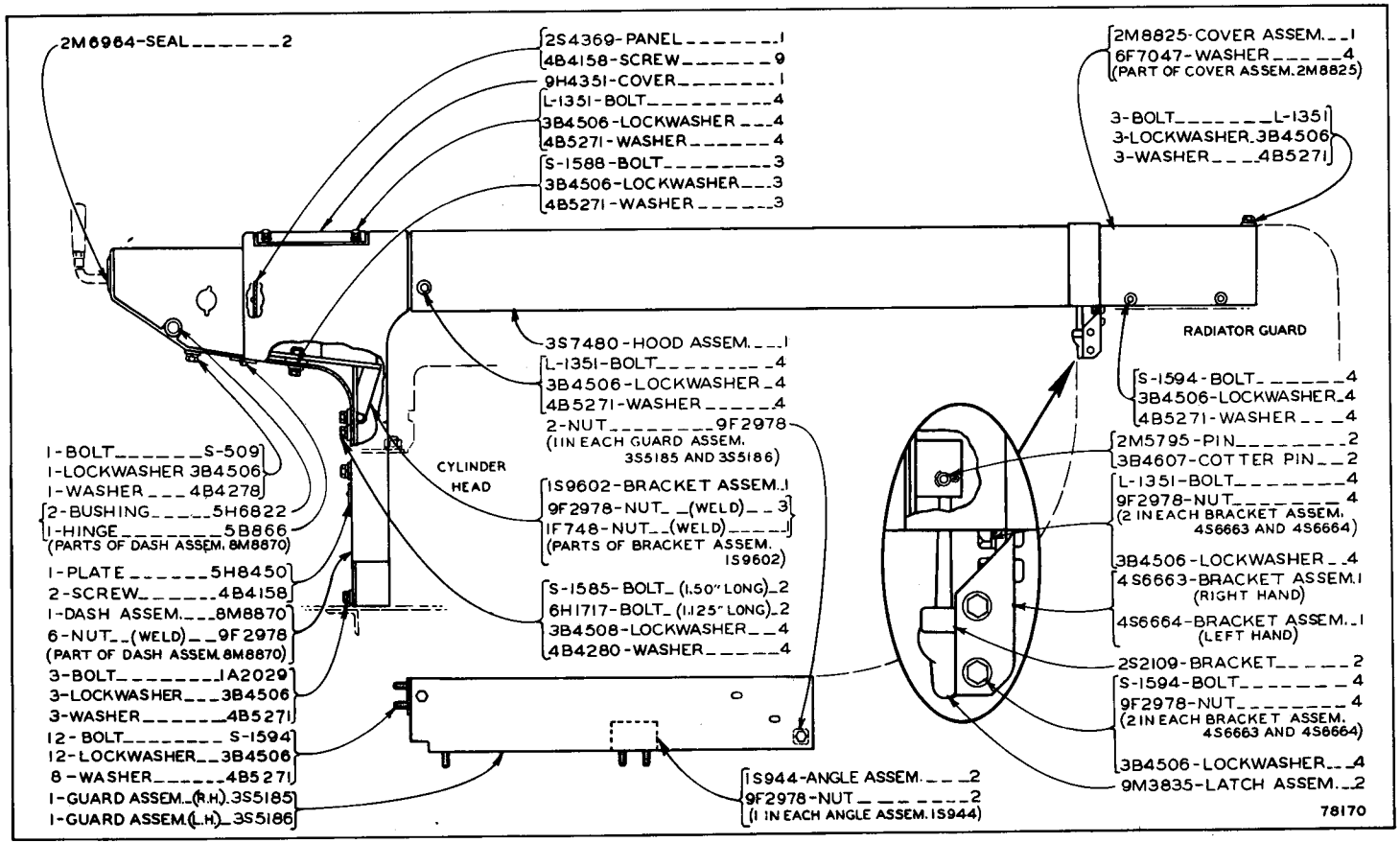

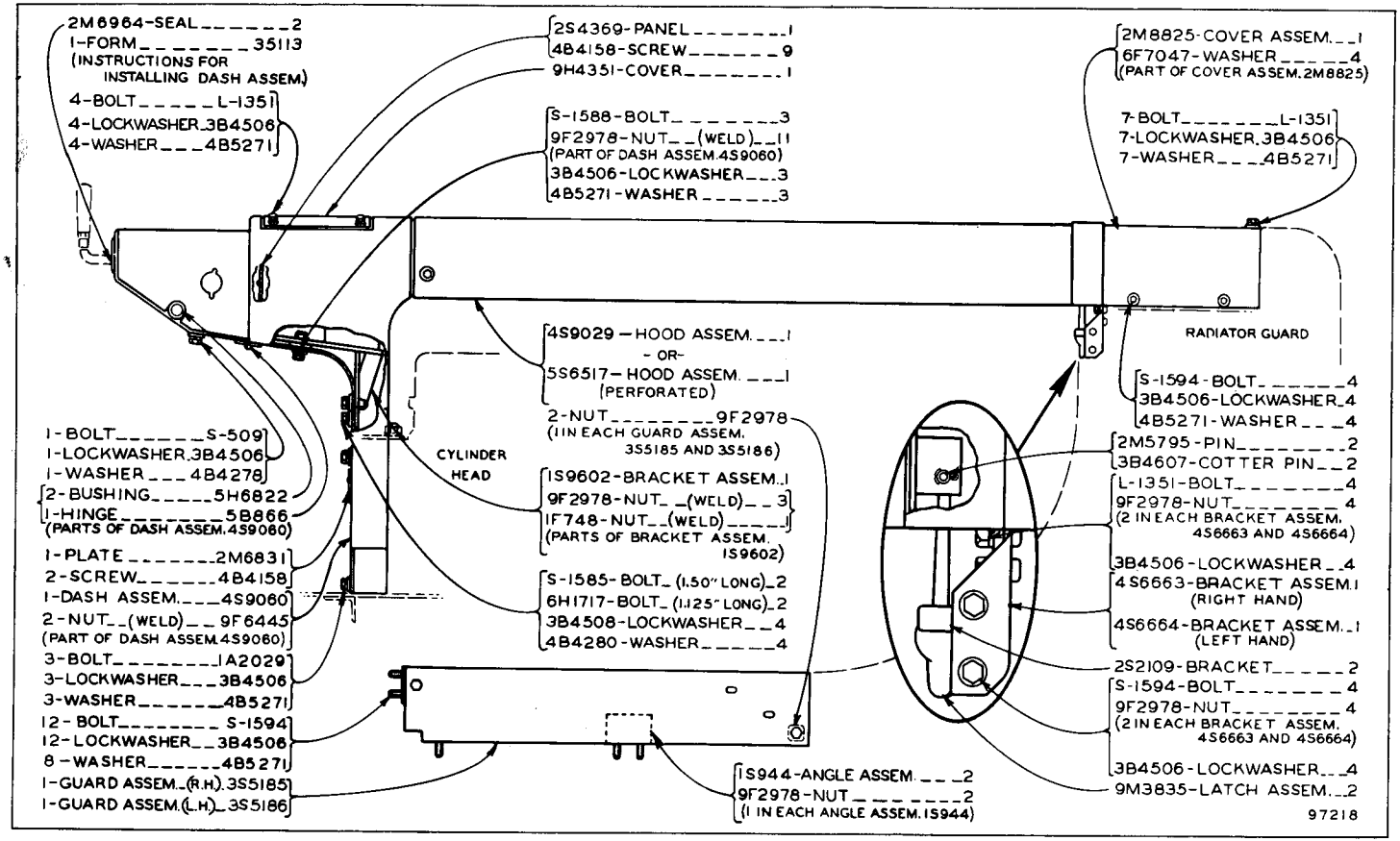

HOOD AND DASH
SERIAL NO. 48A6883 TO 48A7429 INCLUSIVE

HOOD AND DASH

EFFECTIVE WITH SERIAL No. 48A7430

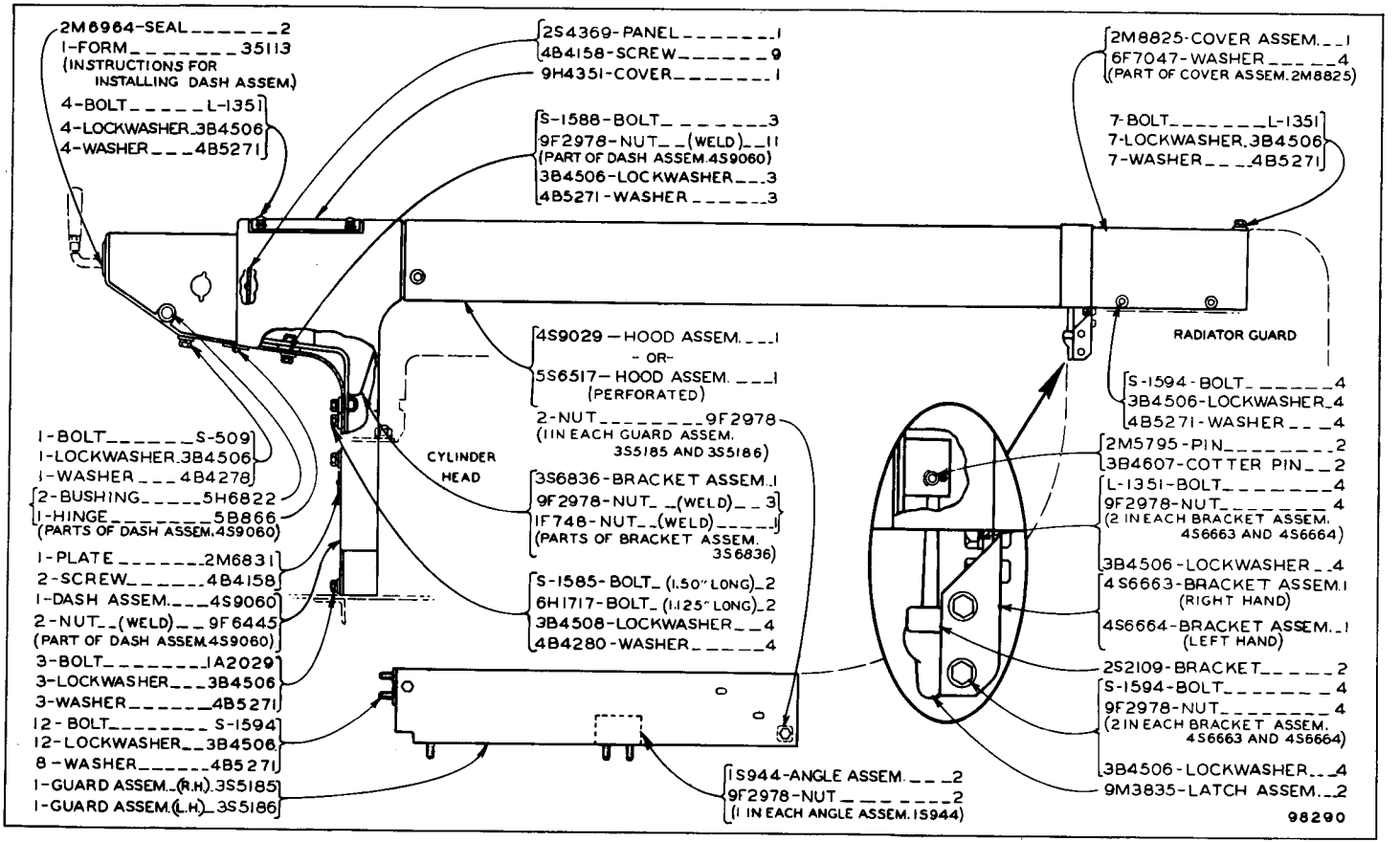

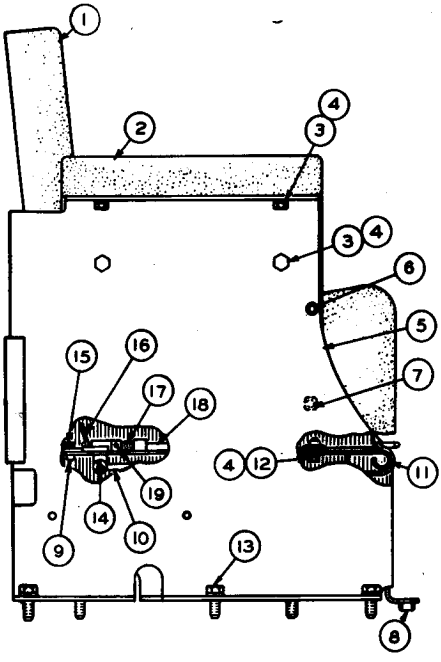

REF NO	PART NUMBER	DESCRIPTION	QTY
1	3S1704	SEAT ASSEM. (See Separate Illustration)	1
2	8H9167	CUSHION ASSEM.	2
3	6F7030	BOLT	8
4	3B4506	LOCKWASHER	12
5	3S4668	SEAT ASSEM.	1
6	2B3191	PIN	1
7	9F2978	NUT-(Weld)	8
8	1F748	NUT-(Weld)	3
9	9F6445	NUT-(Weld) (Parts of 3S4668 Seat Assem.)	2
10	2S1715	ROD	1
11	3S1692	HINGE ASSEM.	1
12	S-509	BOLT	4
	4B4278	WASHER	4
13	S-1595	BOLT	5
	3B4508	LOCKWASHER	5
	4B4280	WASHER	5
14	4B4276	WASHER	2
	3B4607	COTTER PIN	2
15	2A762	BOLT	2
	3B4504	LOCKWASHER	2
16	3S1682	LATCH	1
17	8B3090	SPRING	1
18	3S1684	ROD	1
19	7M5182	BLOCK	1
	9F7882	PIN	1

78090

SEAT CUSHION AND FRAME
SERIAL No. 48A6393 TO 48A8225 INCLUSIVE
REFER ALSO TO PAGE 142 FOR SPECIAL PARTS

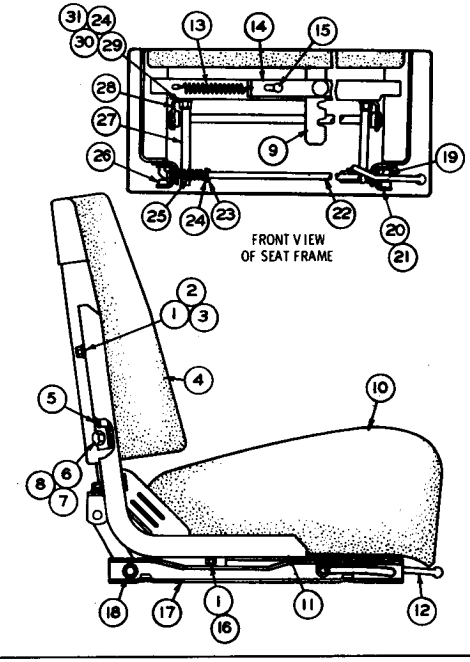

REF NO	PART NUMBER	DESCRIPTION	QTY
1	S-1617	BOLT	8
2	4B4277	WASHER	4
3	3S9526	SPACER	4
4	3S9517	CUSHION ASSEM. (Back)	1
5	3S9518	BRACKET ASSEM.	2
6	4M6425	BOLT	4
7	3B4505	LOCKWASHER	4
8	4B4277	WASHER	4
9	3S9519	BRACKET (Adjusting) (Parts of Cushion Assem. 3S9517)	1
10	3S9525	CUSHION ASSEM. (Seat)	1
11	3S9505	FRAME ASSEM.	1
12	3S9513	LATCH ASSEM. (Left Hand)	1
13	2R416	SPRING	1
14	3S9512	LATCH ASSEM.	1
15	3S9514	RIVET (Parts of Frame Assem. 3S9505)	2
16	3B4505	LOCKWASHER	4
17	3S9515	CHANNEL ASSEM. (Lower R. H.)	1
18	3K4787	BEARING (Part of Channel Assem. 3S9515)	1
19	4K3522	ROD (Left Hand)	1
20	3S9516	CHANNEL ASSEM. (Lower L. H.)	1
21	3K4787	BEARING (Part of Channel Assem. 3S9516)	1
22	3S9523	ROD	1
23	3K4897	PIN	3
24	4D1352	WASHER	5
25	3K4883	SPRING	1
26	3K7092	NUT ASSEM.	4
27	3S9524	LINK ASSEM.	1
28	3S9520	SUPPORT ASSEM.	2
29	S-509	BOLT	2
30	1D4717	NUT	2
31	3B4506	LOCKWASHER	2

94765

3S1704 SEAT ASSEMBLY
PART OF SEAT CUSHION AND FRAME

SEAT CUSHION AND FRAME (3S4680 N/S)

Effective with Serial No. 48A8226

5S45 Seat parts are shown on Page 112B
Refer also to Page 142 for special parts

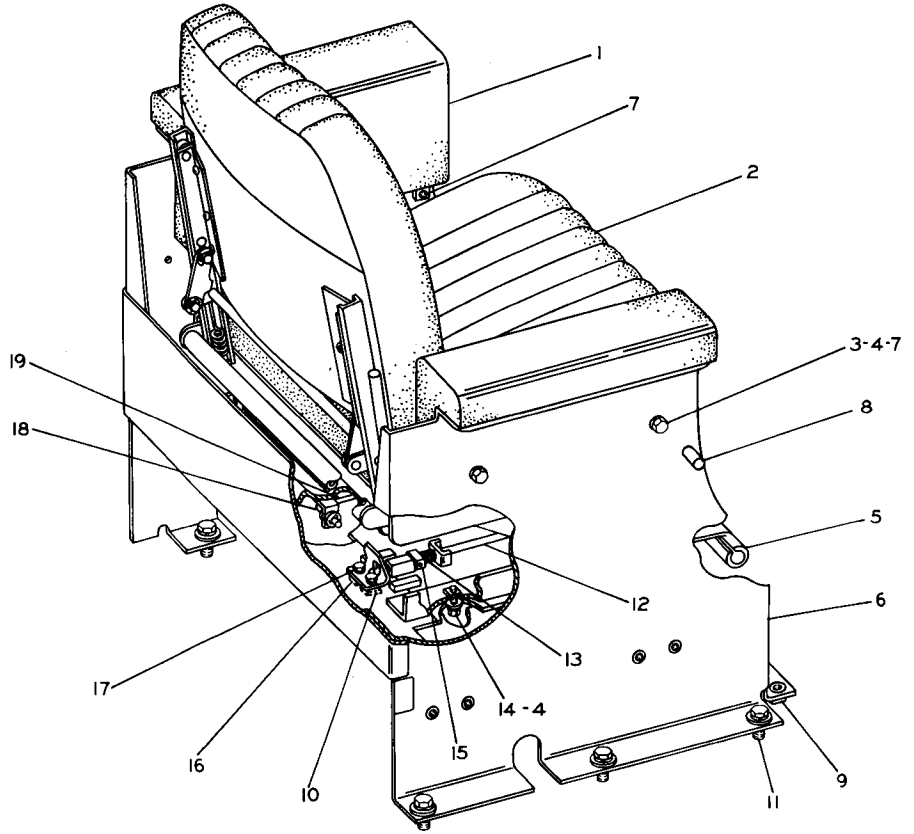

REF. NO.	PART NUMBER	DESCRIPTION	QTY
1	8H9167	CUSHION ASSEM.	2
2	5S45	SEAT ASSEM. (See Separate Illustration)	1
3	6F7030	BOLT	8
4	3B4506	LOCKWASHER	12
5	3S1692	HINGE ASSEM.	1
6	3S4668	SEAT ASSEM.	1
7	9F2978	NUT--------(Weld)	8
8	2B3191	PIN	1
9	1F748	NUT---------(Weld)	3
10	9F6445	NUT---------(Weld)	2
11	S1595	BOLT	5
	3B4508	LOCKWASHER	5
	4B4280	WASHER	5
12	3S1684	ROD	1
13	8B3090	SPRING	1
14	S509	BOLT	4
	4B4278	WASHER	4
15	7M5182	BLOCK	1
	9F7882	PIN	1
16	3S1682	LATCH	1
17	2A762	BOLT	2
	3B4504	LOCKWASHER	2
18	4B4276	WASHER	2
	3B4607	COTTER PIN	2
19	2S1715	ROD	1

113555

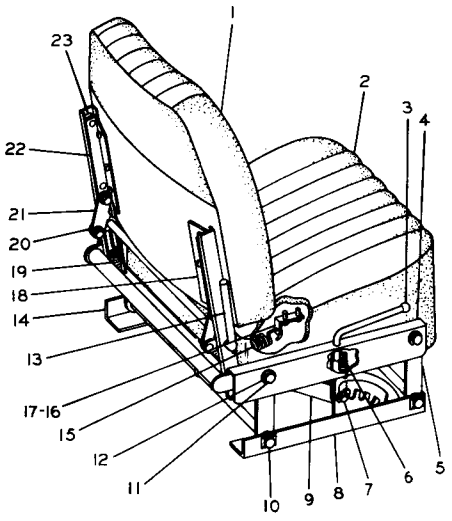

REF. NO.	PART NUMBER	DESCRIPTION	QTY
1	7S5387	CUSHION ASSEM.	1
2	7S5390	CUSHION ASSEM.	1
3	7S5380	KNOB	1
4	7S5391	FRAME ASSEM.	1
	7S5750	FRAME ASSEM.	1
5	7S5753	LEVER ASSEM.	2
6	7S5758	SPRING	1
7	T883	WASHER	2
	7S5757	RING	2
8	7S5751	ANGLE ASSEM. -----(R.H.)-----	1
9	7S5754	LEVER ASSEM.	1
10	7S5759	NUT	4
11	7S5755	PIN	4
12	2R364	RING	8
13	7S5385	LINK ASSEM.	1
14	7S5752	ANGLE ASSEM. ------(L.H.)----	1
15	7S5388	SPRING	1
16	7S5389	BRACKET	1
17	2K7115	SCREW	12
	4F2293	LOCKWASHER	12
18	7S5381	BRACKET ASSEM. -----(R.H.)-----	1
19	7S5383	SPRING	2
20	7S5757	RING	4
21	7S5384	LINK	2
22	7S5382	BRACKET ASSEM. -----(L.H.)-----	1
23	7S5386	ROLLER	4
	7F3494	WASHER	2

113556

5S45 SEAT ASSEMBLY
Effective with Serial No. 48A8226
Part of Seat Cushion and Frame shown on Page 112A

FUEL SYSTEM (3S5010 N/S)

Refer also to Pages 126, 126A & 127 for special parts

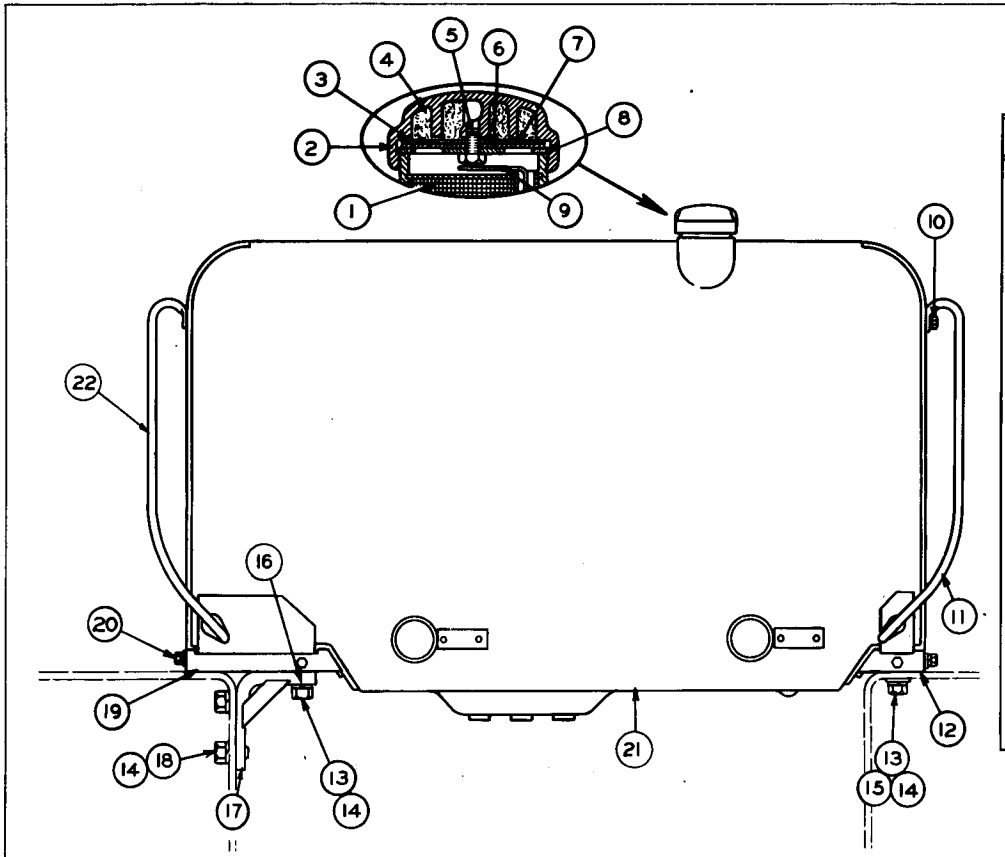

REF. NO.	PART NUMBER	DESCRIPTION	QTY
1	8H3498	STRAINER ASSEM.	1
	8H3497	RING	1
2	4B5441	CAP ASSEM.	1
3	4B5423	GASKET	1
4	4B5949	ELEMENT	2
5	3H8389	BOLT	1
6	7B2002	WASHER	1
7	3F4134	BAFFLE	1
8	2A1763	GASKET	1
9	3S6706	PLUNGER	1
10	2H3855	BOLT	2
	3B4508	LOCKWASHER	2
11	2S8653	GRAB IRON	1
12	3S6667	COVER ASSEM. ---(Right Hand)---	1
	8B9725	BOSS	2
13	L1178	BOLT	4
14	3B4512	LOCKWASHER	7
15	6F7048	WASHER	2
16	3S6661	SUPPORT ASSEM. --(L. H. -Front)--	1
17	3S6660	SUPPORT ASSEM. -(Left Hand-Rear)	1
18	S1626	BOLT	4
19	3S6668	COVER ASSEM. -----(Left Hand)---	1
	8B9725	BOSS	1
20	1A2029	BOLT	3
	S509	BOLT	4
	3B4506	LOCKWASHER	7
	4B4278	WASHER	7
21	1P2734	TANK ASSEM.	1
22	2S8654	GRAB IRON	1

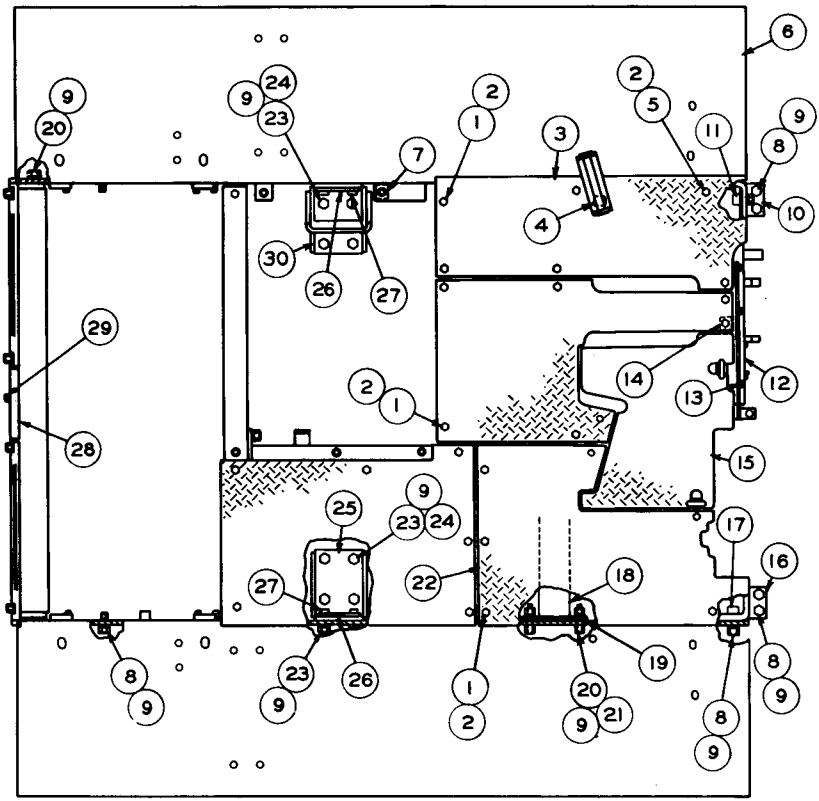

REF. NO.	PART NUMBER	DESCRIPTION	QTY.
1	S-1595	BOLT	15
2	3B4508	LOCKWASHER	16
	4B4280	WASHER	16
3	3S6736	PLATE ASSEM. -----(Left Hand)-----	1
4	1F748	NUT----------(Weld)----------	1
		(Part of 3S6736 Plate Assem.)	
5	S-1585	BOLT	1
6	3S5284	FENDER ASSEM. ----(Left Hand)----	1
7	1F748	NUT----------(Weld)----------	4
		(Part of 3S5284 Fender Assem.)	
8	S-1566	BOLT	32
9	3B4510	LOCKWASHER	62
10	3S5264	BRACKET ASSEM. ---(Left Hand)---	1
	3J5169	NUT----------(Weld)----------	4
11	9F2978	NUT----------(Weld)----------	2
		(Parts of 3S5264 Bracket Assem.)	
	3S9989	ANGLE ASSEM.	1
12	5M8651	BUSHING-----(.8154" O. D.)-----	2
	5H5744	BUSHING-----(.627" O. D.)-----	1
13	9F2978	NUT----------(Weld)----------	3
14	1F748	NUT----------(Weld)----------	5
		(Parts of 3S9989 Angle Assem.)	
15	3S6735	COVER ASSEM.	1

REF. NO.	PART NUMBER	DESCRIPTION	QTY.
16	3S5263	BRACKET ASSEM. --(Right Hand)--	1
	9F2978	NUT----------(Weld)----------	2
17	3J5169	NUT----------(Weld)----------	4
		(Parts of 3S5263 Bracket Assem.)	
18	3S6726	BEAM ASSEM.	1
	1F748	NUT----------(Weld)----------	2
		(Part of 3S6726 Beam Assem.)	
19	7M725	SHIM	2
20	S-1589	BOLT	14
21	1D4720	NUT	8
22	3S6739	PLATE ASSEM.	1
23	1A1135	BOLT	16
24	L-2119	WASHER	8
25	3S5267	BRACKET ASSEM. --(Right Hand)--	1
26	3S5286	PLATE ASSEM.	2
27	3J5169	NUT----------(Weld)----------	8
		(4 in each 3S5286 Plate Assem.)	
28	3S6650	DOOR ASSEM.	1
	9F2978	NUT----------(Weld)----------	2
		(Part of 3S6650 Door Assem.)	
29	L-1351	BOLT	2
	3B4506	LOCKWASHER	2
	4B4278	WASHER	2
30	3S5268	BRACKET ASSEM. ---(Left Hand)---	1

78064

FENDERS--PART 1
SERIAL NO. 48A6393 TO 48A7599 INCLUSIVE

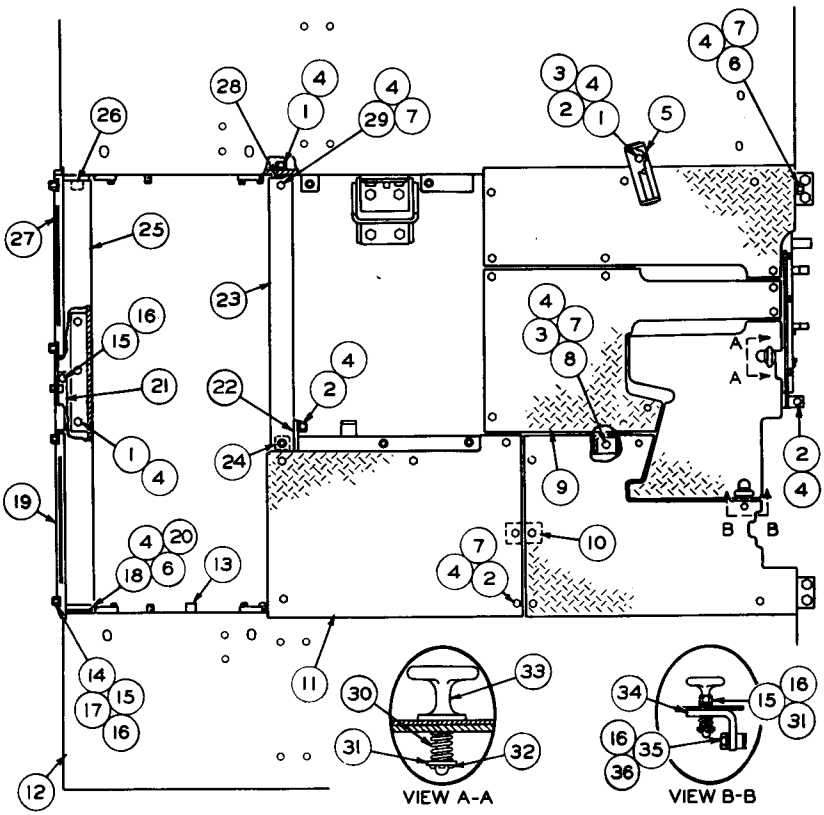

REF NO	PART NUMBER	DESCRIPTION	QTY
1	7B3235	BOLT--------(1.375" Long)--------	5
2	S-1595	BOLT-------(1.25" Long)----------	10
3	1D4719	NUT----------	2
4	3B4508	LOCKWASHER----------	22
5	5H156	SUPPORT----------	1
6	S-1585	BOLT----------	5
7	4B4280	WASHER----------	10
8	3322-A	BOLT----------	1
9	3S6740	PLATE ASSEM.----------	1
	1F748	NUT----------(Weld)----------	1
		(Part of 3S6740 Plate Assem.)	
10	1M526	LUG----------	1
11	3S6743	PLATE ASSEM.----------	1
12	3S5283	FENDER ASSEM.---(Right Hand)---	1
	1F748	NUT----------(Weld)----------	2
13	5H9394	BOSS----------	1
		(Parts of 3S5283 Fender Assem.)	
14	S-1594	BOLT----------(1" Long)----------	2
15	L-1351	BOLT--------(.875" Long)---------	5
16	3B4506	LOCKWASHER----------	8
17	4B4278	WASHER----------	4
18	3S6655	SHIM--------(.060" Thick)--------	2
	3S6656	SHIM--------(.030" Thick)--------	2
19	3S6195	DOOR--------(Right Hand)--------	1
20	9B1006	WASHER----------	3

REF NO	PART NUMBER	DESCRIPTION	QTY
21	5M3439	ANGLE ASSEM.----------	1
	9F2978	NUT----------(Weld)----------	1
		(Part of 5M3439 Angle Assem.)	
22	3S6733	SUPPORT ASSEM.----------	1
	1F748	NUT----------(Weld)----------	7
		(Part of 3S6733 Support Assem.)	
23	3S6728	CHANNEL ASSEM.----------	1
	9F2978	NUT----------(Weld)----------	2
24	1F748	NUT----------(Weld)----------	9
		(Parts of 3S6728 Channel Assem.)	
25	3S6654	SUPPORT ASSEM.----------	1
	9F2978	NUT----------(Weld)----------	2
26	3J5169	NUT----------(Weld)----------	6
		(Parts of 3S6654 Support Assem.)	
27	3S6196	DOOR---------(Left Hand)---------	1
28	1M329	BRACKET----------	1
29	S-1621	BOLT----------	1
30	4B7033	SPRING----------	2
31	1A4784	WASHER----------	3
32	3B5301	COTTER PIN----------	2
33	9B1783	FASTENER----------	2
34	3S9991	SUPPORT ASSEM.----------	1
	5H3124	SPACER----------	1
		(Part of 3S9991 Support Assem.)	
35	1B4203	NUT----------	1
36	6B2882	SPACER----------	1

98422

FENDERS--PART 2

SERIAL NO. 48A6393 TO 48A7599 INCLUSIVE

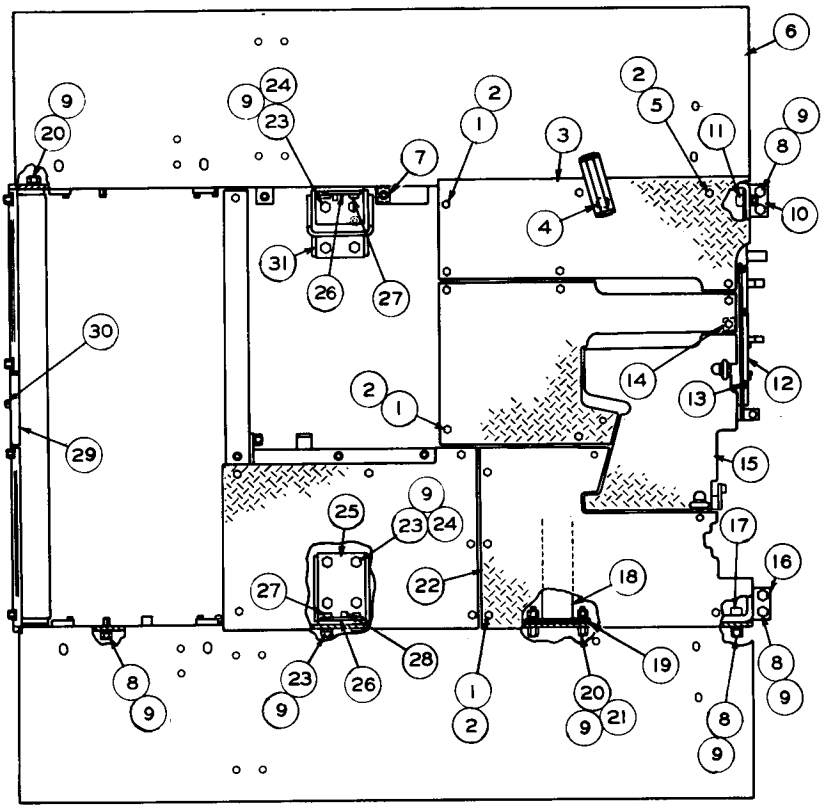

REF NO	PART NUMBER	DESCRIPTION	QTY
1	S-1595	BOLT	15
2	3B4508	LOCKWASHER	16
	4B4280	WASHER	16
3	3S6736	PLATE ASSEM. -----(Left Hand)----	1
4	1F748	NUT----------(Weld)----------	1
		(Part of 3S6736 Plate Assem.)	
5	S-1585	BOLT	1
6	3S5284	FENDER ASSEM. ----(Left Hand)----	1
7	1F748	NUT----------(Weld)----------	4
		(Part of 3S5284 Fender Assem.)	
8	S-1566	BOLT	32
9	3B4510	LOCKWASHER	62
10	3S5264	BRACKET ASSEM. ---(Left Hand)---	1
	3J5169	NUT----------(Weld)----------	4
11	9F2978	NUT----------(Weld)----------	2
		(Parts of 3S5264 Bracket Assem.)	
	3S9989	ANGLE ASSEM.	1
12	5M8651	BUSHING-----(.8154" O. D.)-----	2
	5H5744	BUSHING-----(.627" O. D.)-----	1
13	9F2978	NUT----------(Weld)----------	3
14	1F748	NUT----------(Weld)----------	5
		(Parts of 3S9989 Angle Assem.)	
15	5S1569	COVER ASSEM.	1
16	3S5263	BRACKET ASSEM. --(Right Hand)---	1

REF NO	PART NUMBER	DESCRIPTION	QTY
17	9F2978	NUT----------(Weld)----------	2
	3J5169	NUT----------(Weld)----------	4
		(Parts of 3S5263 Bracket Assem.)	
18	3S6726	BEAM ASSEM.	1
	1F748	NUT----------(Weld)----------	2
		(Part of 3S6726 Beam Assem.)	
19	7M725	SHIM	2
20	S-1589	BOLT	14
21	1D4720	NUT	8
22	3S6739	PLATE ASSEM.	1
23	1A1135	BOLT	16
24	L-2119	WASHER	8
25	3S5267	BRACKET ASSEM. --(Right Hand)---	1
26	3S5286	PLATE ASSEM.	2
27	3J5169	NUT----------(Weld)----------	8
28	5B1983	BOSS	2
		(One half each in 3S5286 Plate Assem.)	
29	3S6650	DOOR ASSEM.	1
	9F2978	NUT----------(Weld)----------	2
		(Part of 3S6650 Door Assem.)	
30	L-1351	BOLT	2
	3B4506	LOCKWASHER	2
	4B4278	WASHER	2
31	3S5268	BRACKET ASSEM. ----(Left Hand)---	1

98423

FENDERS--PART 1
EFFECTIVE WITH SERIAL NO. 48A7600

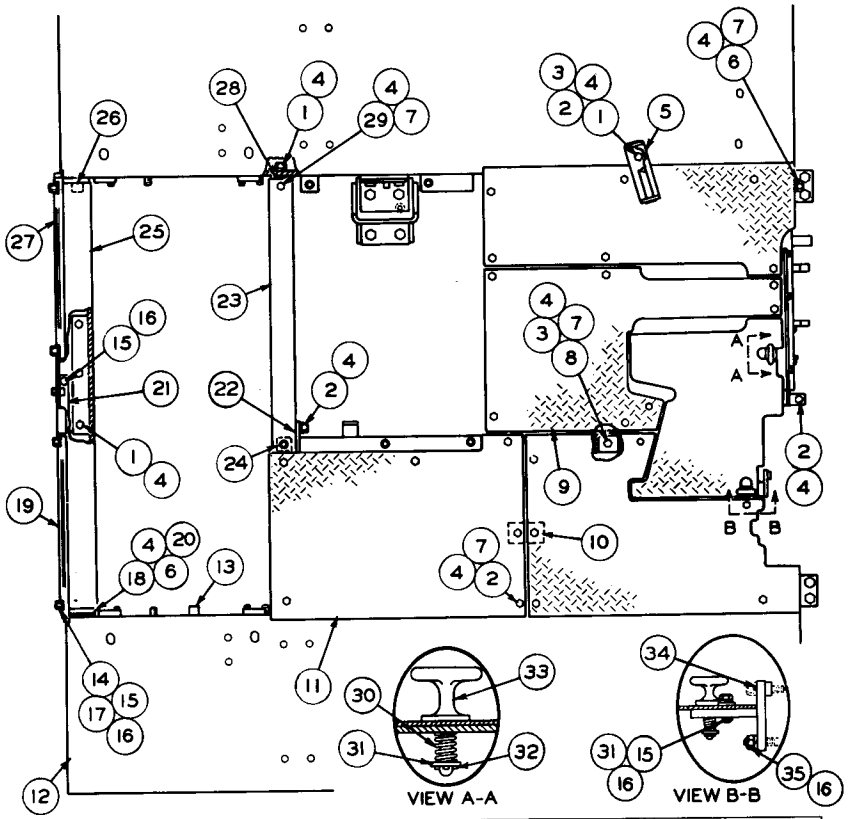

REF NO	PART NUMBER	DESCRIPTION	QTY
1	7B3235	BOLT--------(1.375" Long)--------	5
2	S-1595	BOLT-------(1.25" Long)---------	10
3	1D4719	NUT----------	2
4	3B4508	LOCKWASHER----------	22
5	5H156	SUPPORT----------	1
6	S-1585	BOLT----------	5
7	4B4280	WASHER----------	10
8	3322-A	BOLT----------	1
9	3S6740	PLATE ASSEM. ----------	1
	1F748	NUT----------(Weld)----------	1
		(Part of 3S6740 Plate Assem.)	
10	1M526	LUG----------	1
11	3S6743	PLATE ASSEM. ----------	1
12	3S5283	FENDER ASSEM.---(Right Hand)---	1
	1F748	NUT----------(Weld)----------	2
13	5H9394	BOSS----------	1
		(Parts of 3S5283 Fender Assem.)	
14	S-1594	BOLT----------(1" Long)----------	2
15	L-1351	BOLT---------(.875" Long)---------	5
16	3B4506	LOCKWASHER----------	8
17	4B4278	WASHER----------	4
18	3S6655	SHIM--------(.060" Thick)--------	2
	3S6656	SHIM--------(.030" Thick)--------	2
19	3S6195	DOOR--------(Right Hand)---------	1
20	9B1006	WASHER----------	3

REF NO	PART NUMBER	DESCRIPTION	QTY
21	5M3439	ANGLE ASSEM. ----------	1
	9F2978	NUT----------(Weld)----------	1
		(Part of 5M3439 Angle Assem.)	
22	3S6733	SUPPORT ASSEM. ----------	1
	1F748	NUT----------(Weld)----------	7
		(Part of 3S6733 Support Assem.)	
23	3S6728	CHANNEL ASSEM. ----------	1
	9F2978	NUT----------(Weld)----------	2
24	1F748	NUT----------(Weld)----------	9
		(Parts of 3S6728 Channel Assem.)	
25	3S6654	SUPPORT ASSEM. ----------	1
	9F2978	NUT----------(Weld)----------	2
26	3J5169	NUT----------(Weld)----------	6
		(Parts of 3S6654 Support Assem.)	
27	3S6196	DOOR---------(Left Hand)---------	1
28	1M329	BRACKET----------	1
29	S-1621	BOLT----------	1
30	4B7033	SPRING----------	2
31	1A4784	WASHER----------	3
32	3B5301	COTTER PIN----------	2
33	9B1783	FASTENER----------	2
34	5S1572	SUPPORT ASSEM. ---------- ------	1
	5H3124	SPACER----------	1
		(Part of 5S1572 Support Assem.)	
35	1D4717	NUT----------	1

98424

FENDERS--PART 2
EFFECTIVE WITH SERIAL NO. 48A7600

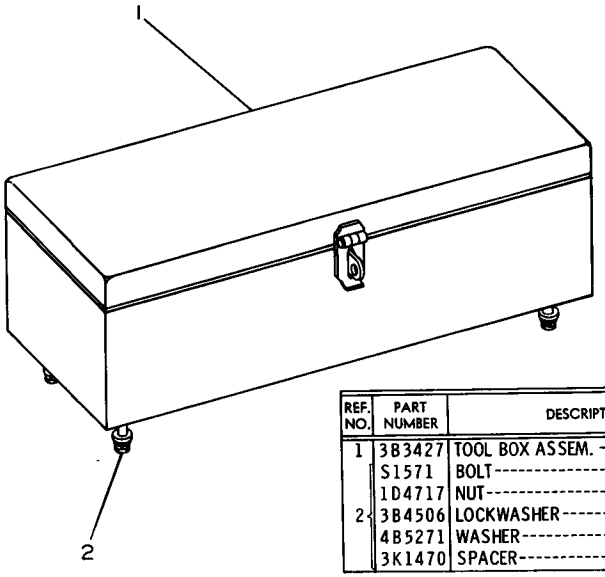

REF. NO.	PART NUMBER	DESCRIPTION	QTY
1	3B3427	TOOL BOX ASSEM.	1
	S1571	BOLT	4
	1D4717	NUT	4
2	3B4506	LOCKWASHER	4
	4B5271	WASHER	8
	3K1470	SPACER	4

113553

3B3460 TOOL BOX GROUP

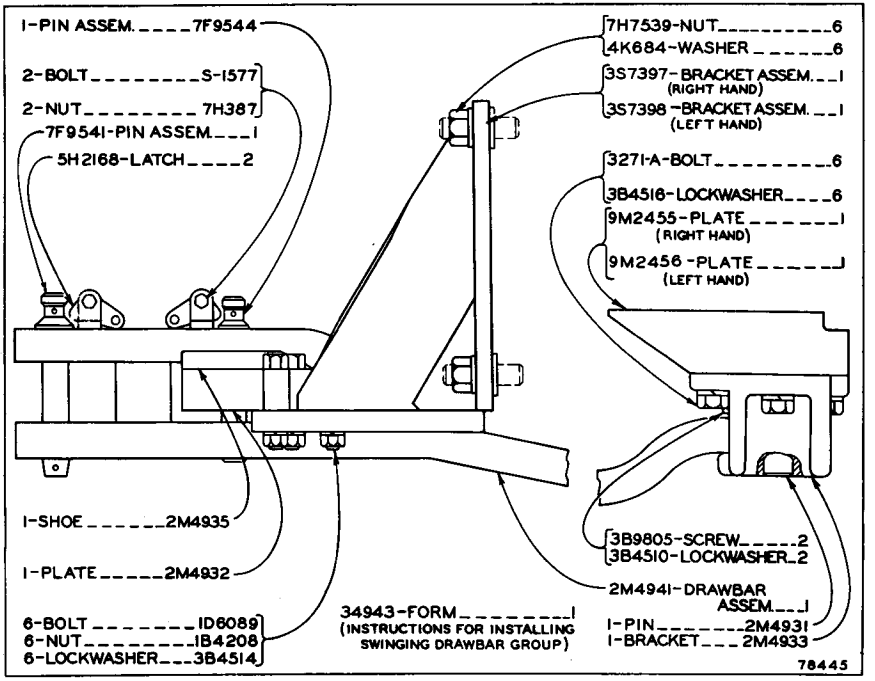

3S7400 SWINGING DRAWBAR GROUP
FOR USE WITHOUT RIPPER
Only separate parts serviced. When complete Group is required order 9S6784

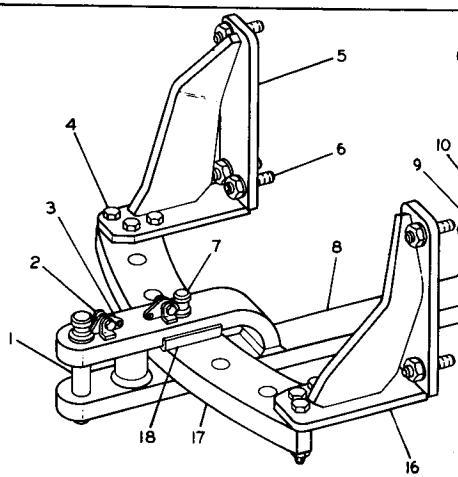

REF. NO.	PART NUMBER	DESCRIPTION	QTY
1	7F9541	PIN ASSEM.	1
C 2	1S1577	BOLT	2
	2K4821	LOCKNUT	2
3	5H2168	LATCH	2
4	1D6089	BOLT	6
	1B4208	NUT	6
	3B4514	LOCKWASHER	6
5	3S7398	BRACKET ASSEM. -----(L. H.)-----	1
C 6	3S2113	STUD	6
	7H7539	NUT	6
	4K684	WASHER	6
7	7F9544	PIN ASSEM.	1
8	9S6786	DRAWBAR ASSEM.	1
9	3B9805	SCREW	2
10	3B4510	LOCKWASHER	2
11	9M2456	PLATE---------(L. H.)	1
12	9M2455	PLATE---------(R. H)	1
13	2M4933	BRACKET	1
14	2M4931	PIN	1
15	9S1363	BOLT	6
	3B4516	LOCKWASHER	6
16	3S7397	BRACKET ASSEM. -----(R. H.)----	1
17	2M4932	PLATE	1
18	2M4935	SHOE	1
C	GMG00569	FORM	1
		(Instructions For Installing Drawbar and Drawbar Brackets)	

C INDICATES CHANGE

113730

9S6784 SWINGING DRAWBAR GROUP
FOR USE WITHOUT RIPPER

		Consists of:	Page
1	3S7871	Battery & Wiring Group	116L
1	3S8466	Starting Motor Group	116H
1	3S8467	Generator Group	116U
		- or -	
1	7S1671	Generator Group	116U
1	4S6943	Fuel Priming Pump Group	116W
		- or -	
1	8S4595	Fuel Priming Pump Group	116X
1	4S9253	Flywheel Assembly	116X
1	7S3727	Glow Plug & Wiring Group	116K
4	3B4506	Lockwasher--3/8"	
2	7B7770	Cover--Water Outlet Head	
4	6F8146	Seal--Chamber Sealing	
4	5H2579	Gasket--Cylinder Head	
4	5H7339	Retainer--Chamber Seal	
2	6H2007	Gasket--Water Outlet Head	
1	9H2981	Shaft--Steering Clutch	
4	9H4883	Gasket--Cylinder Head	
4	5L6940	Chamber Assembly--Precombustion	
1	4S8673	Bracket Assembly	
1	5S1102	Manifold Assembly--Inlet	
1	5S8576	Panel--To Dash	
1	7S2529	Plate--To Console Top	
1	8S1471	Coupling Assembly--Compression Release	
4	S-1594	Bolt--Cover to Head	

4S9645 DIRECT ELECTRIC STARTING ARRANGEMENT—24 Volt—Type 1
Factory Installation
Effective with Serial No. 48A6883

		Consists of:	Page
1	3S7871	Battery & Wiring Group	116L
1	3S8466	Starting Motor Group	116H
1	8S4595	Fuel Priming Pump Group	116X
1	4S9253	Flywheel Assembly	116X
1	7S1671	Generator Group	116U
1	7S3727	Glow Plug & Wiring Group	116K
4	3B4506	Lockwasher--3/8"	
4	6B7021	Seal	
2	7B7770	Cover--Water Outlet Head	
1	5H4279	Plug--Compression Release Shaft Hole	
2	6H2007	Gasket--Water Outlet Head	
1	9H2981	Shaft--Steering Clutch	
4	9H4883	Gasket--Cylinder Head	
4	9H4885	Gasket	
4	9H4886	Gasket	
1	4S8673	Bracket Assembly	
1	5S1102	Manifold Assembly--Inlet	
1	5S8576	Panel--To Dash	
1	7S2529	Plate--To Console Top	
4	8S7601	Chamber Assembly--Precombustion	
4	S1594	Bolt--Cover to Head	

4S9645 DIRECT ELECTRIC STARTING ARRANGEMENT—24 Volt—Type 2
Factory Installation
Effective with Serial No. 48A6883

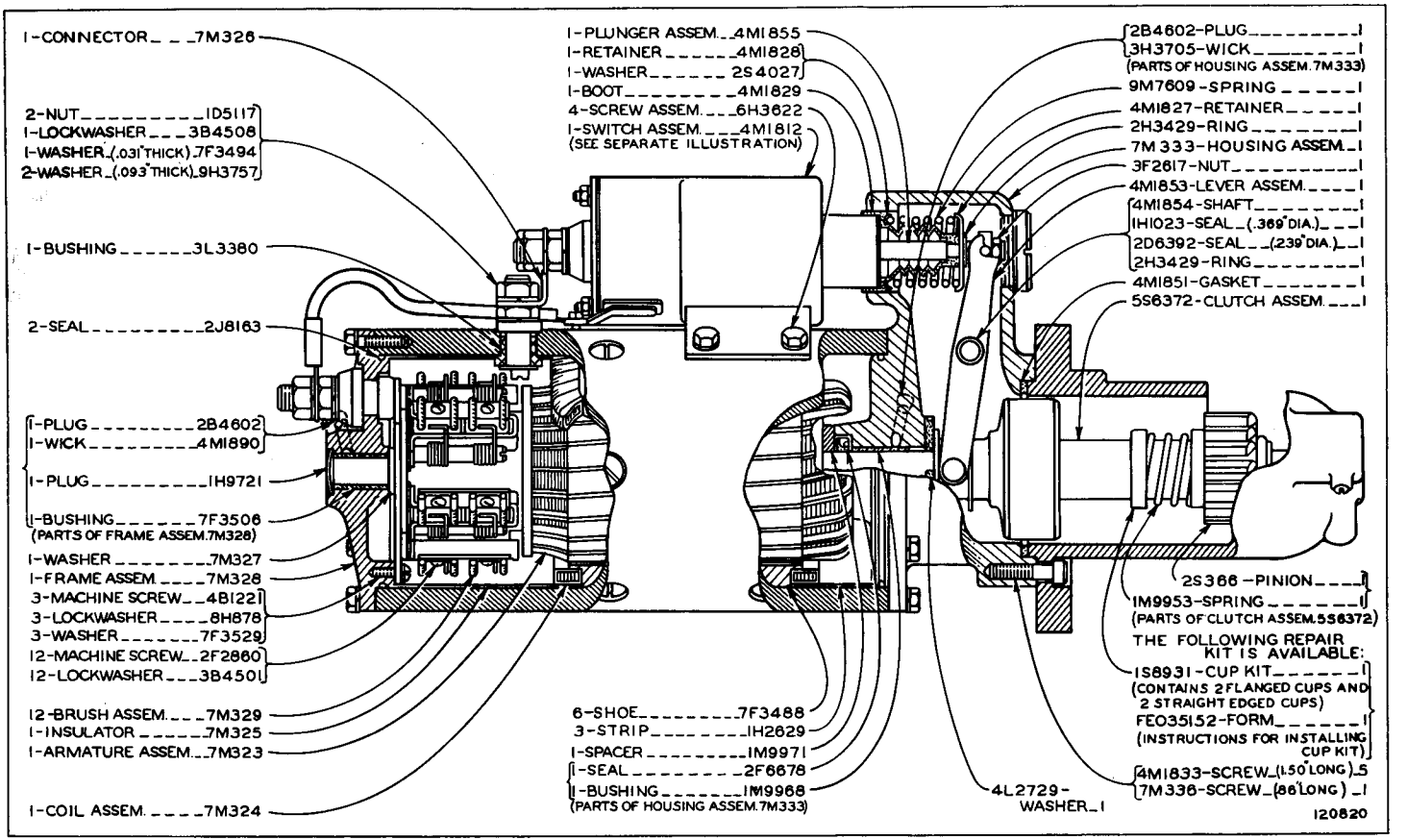

3S4458 STARTING MOTOR ASSEMBLY—24 Volt—Part 1—Type 1
Effective with Serial No. 48A6883
Part of 3S8466 Motor Group shown on Page 116H
4M1812 Switch parts are shown on Page 116H

3S4458 STARTING MOTOR ASSEMBLY—24 Volt—Part 2—Type 1
Effective with Serial No. 48A6883
Part of 3S8466 Motor Group shown on Page 116H

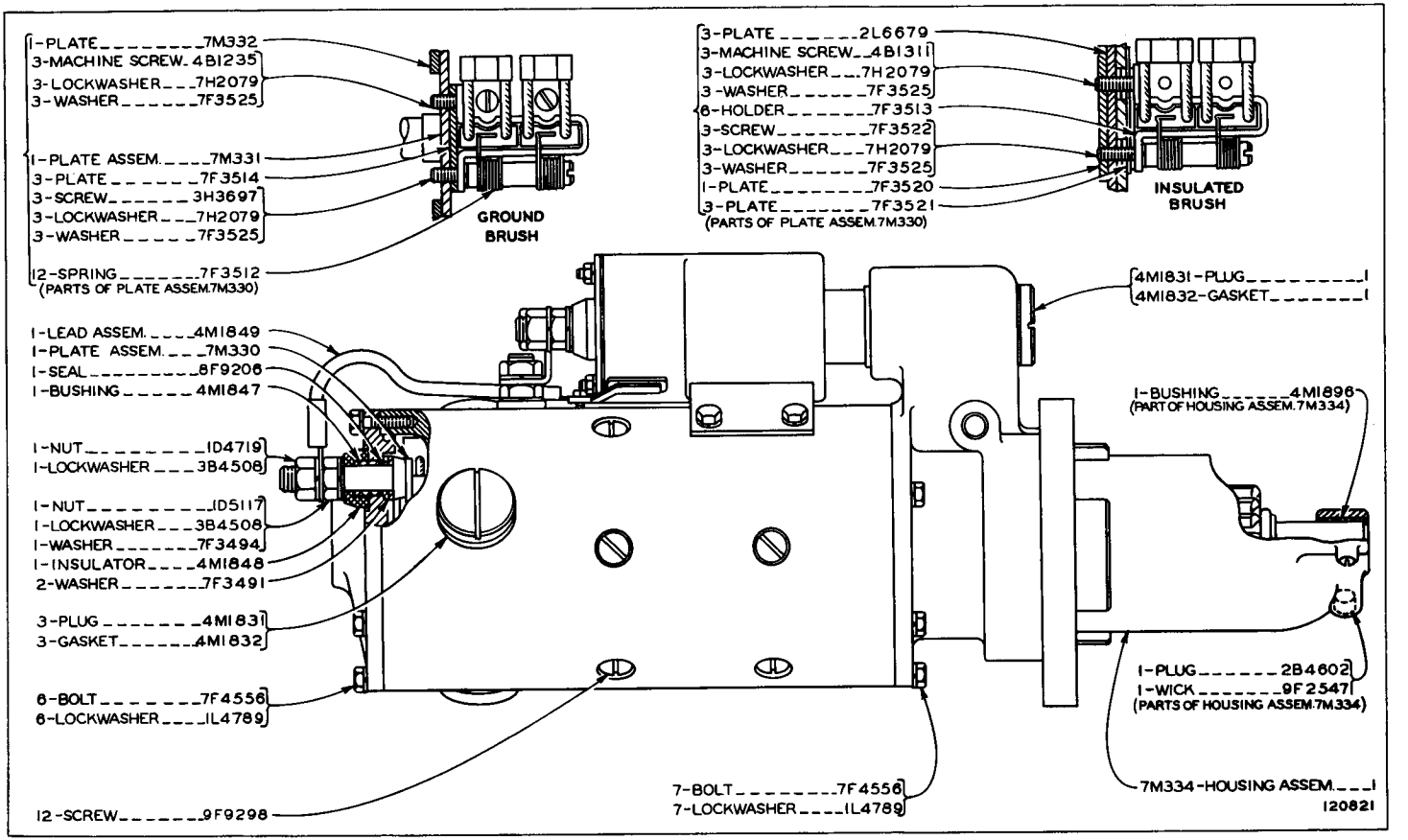

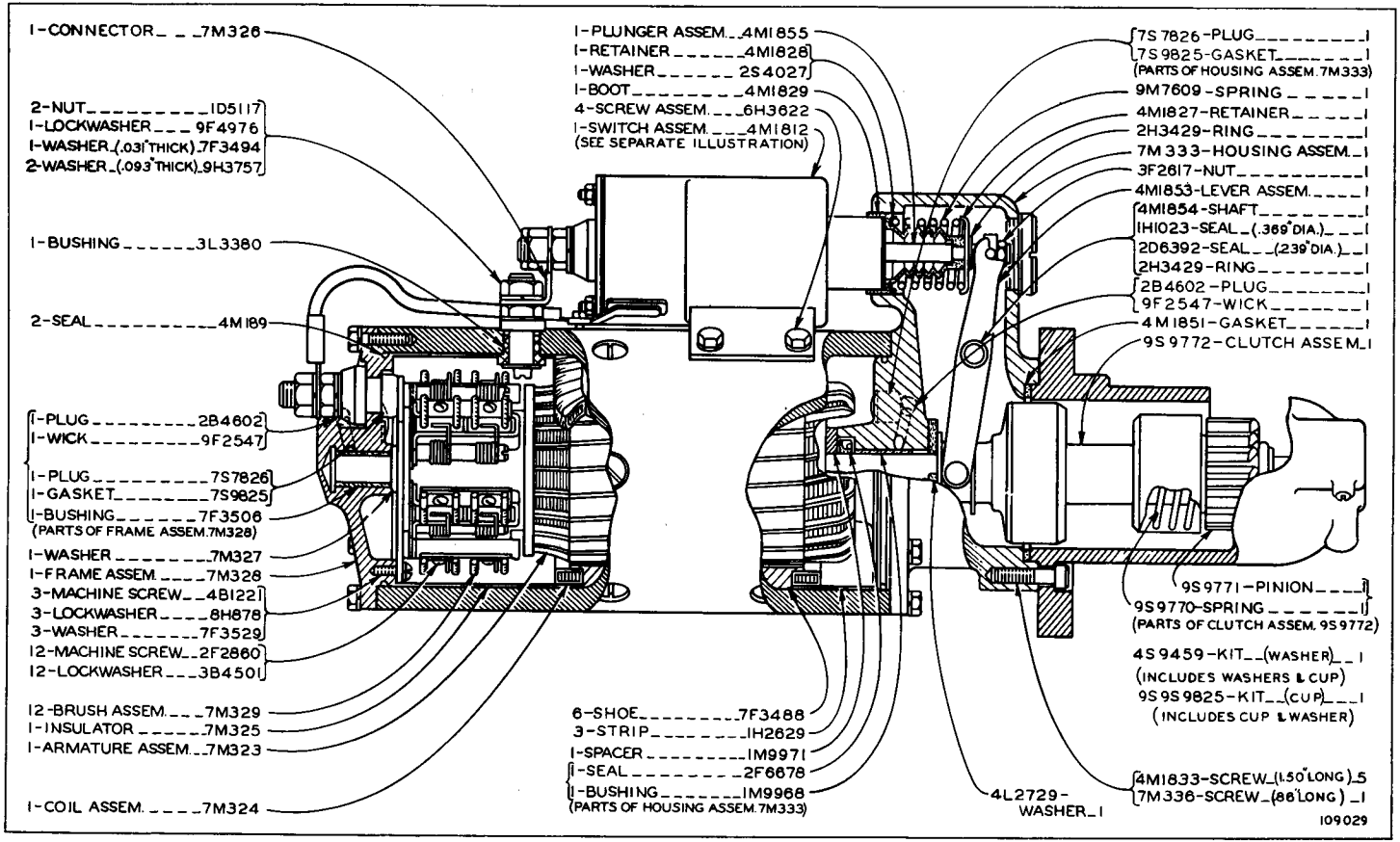

3S4458 STARTING MOTOR ASSEMBLY—24 Volt—Part 1—Type 2
Effective with Serial No. 48A6883
Part of 3S8466 Motor Group shown on Page 116H
4M1812 Switch parts are shown on Page 116H

3S4458 STARTING MOTOR ASSEMBLY—24 Volt—Part 2—Type 2
Effective with Serial No. 48A6883
Part of 3S8466 Motor Group shown on Page 116H

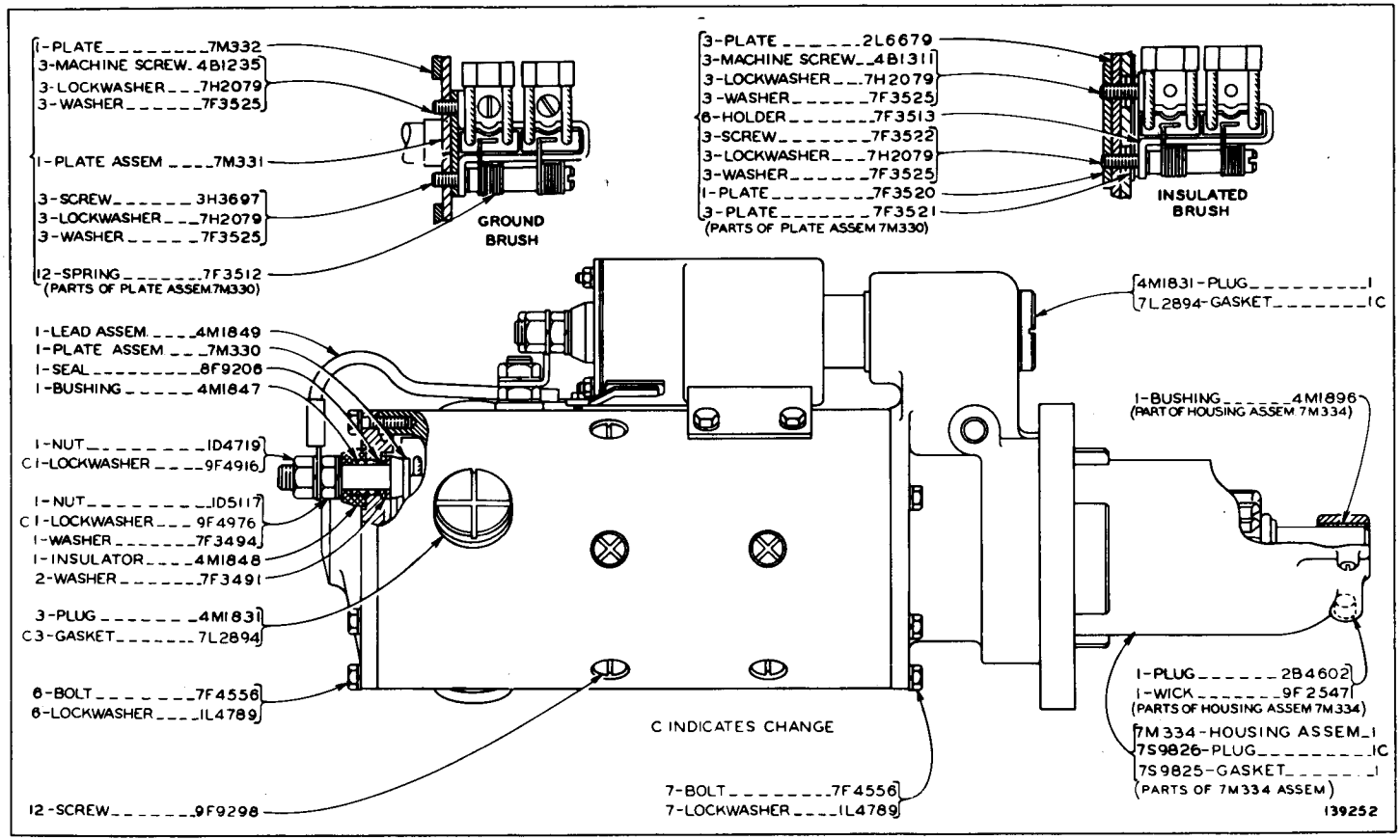

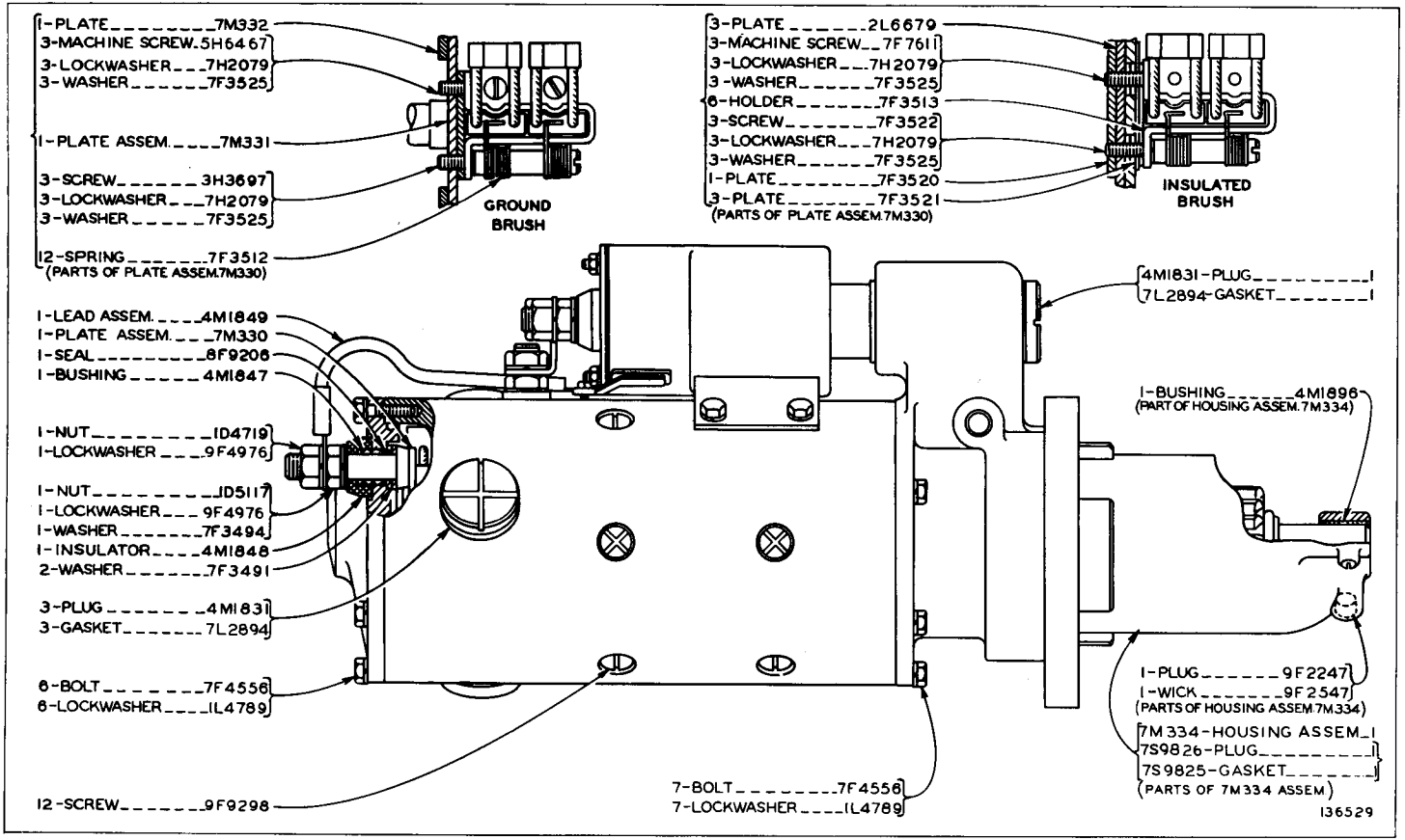

1P9182 STARTING MOTOR ASSEMBLY—24 Volt—Part 1
Part of 3S8466 Starting Motor Group shown on Page 116H-1

1P9182 STARTING MOTOR ASSEMBLY—24 Volt—Part 2
Part of 3S8466 Starting Motor Group shown on Page 116H-1
1P9181 Switch parts are shown on Page 116H-1

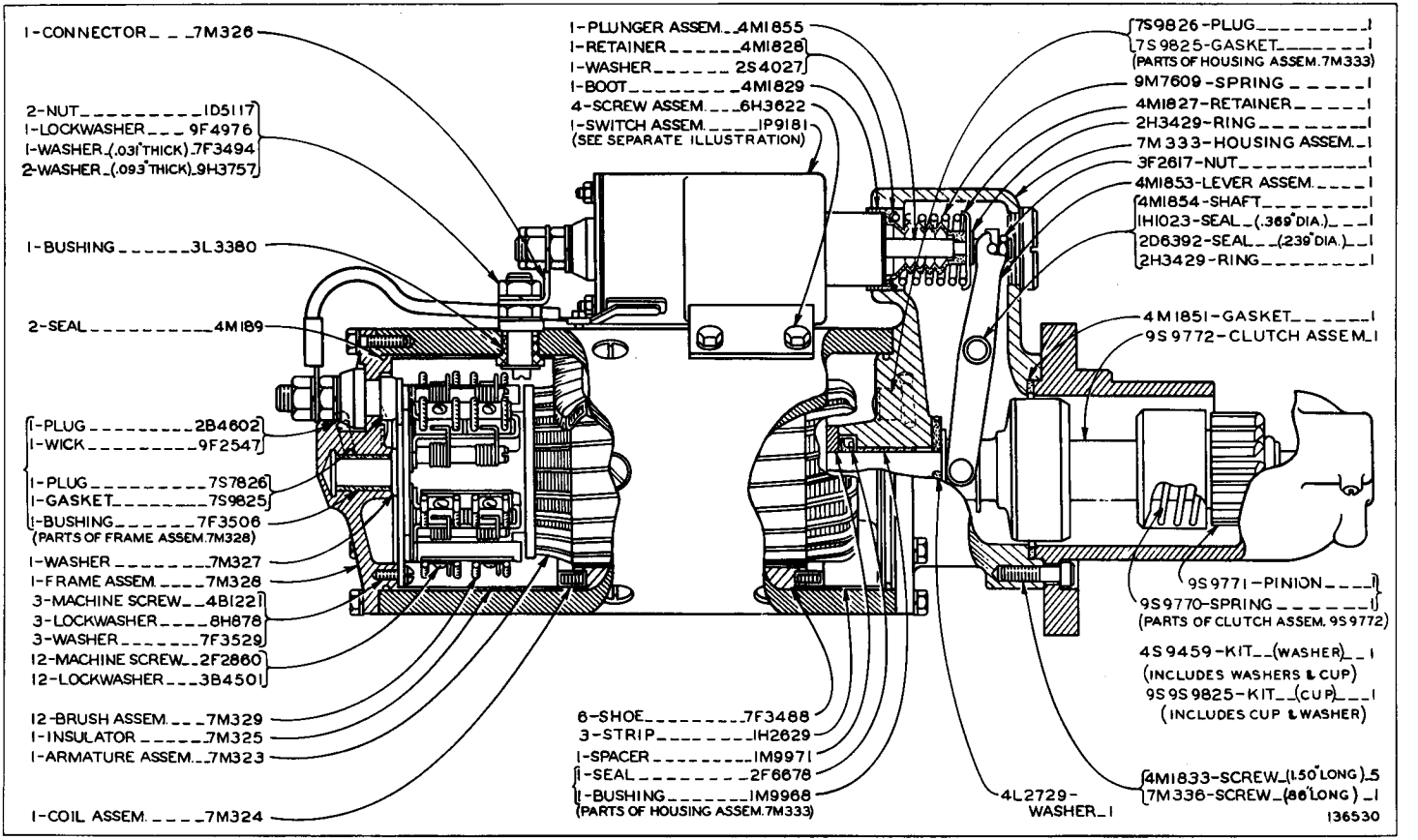

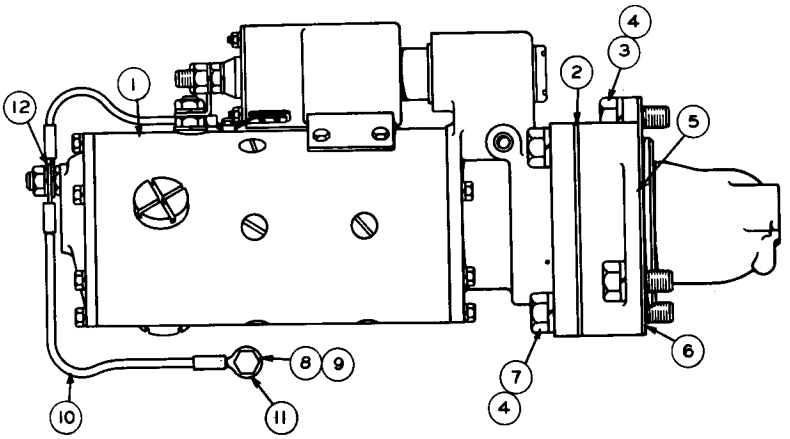

REF. NO.	PART NUMBER	DESCRIPTION	QTY
1	3S4458	MOTOR ASSEM. (See Separate Illustration)	1
2	4M6853	GASKET	1
3	S-1566	BOLT	3
4	3B4510	LOCKWASHER	6
5	4S9358	ADAPTER	1
6	3R2931	GASKET	1

REF. NO.	PART NUMBER	DESCRIPTION	QTY
7	S-1589	BOLT	3
8	4F4879	BOLT	1
9	3B4506	LOCKWASHER	1
10	9F4337	WIRE ASSEM.	1
11	2L8052	TERMINAL	1
12	2L8054	TERMINAL (Parts of 9F4337 Wire Assem.)	1

120819

3S8466 STARTING MOTOR GROUP—24 Volt—Type 1 7N8604
Serial No. 48A6883—Up. Part of 4S9645 Starting Arrangements listed on Pages 116B and 116C. 3S4458 Motor parts are shown on Pages 116D through 116G

REF. NO.	PART NUMBER	DESCRIPTION	QTY
1	4M1816	TERMINAL ASSEM.	1
	4M1834	PLATE	1
2	7F4907	STRIP	1
3	3H3681	NUT	2
4	3B4508	LOCKWASHER	4
5	3H3680	NUT	2
6	7F4909	WASHER	2
7	4M1836	INSULATOR	2
8	4M1837	BUSHING	2
9	7F4906	STUD (R.H.)	1
	4M1835	STUD (L.H.)	1
10	4M2800	TERMINAL	1
11	9S4490	GASKET	1
12	4M5274	SCREW	1
13	1P3879	LEAD ASSEM.	1
14	4M3217	SCREW	2
15	4M1814	CONTACT ASSEM.	1
16	4M1813	CASE ASSEM.	1
17	1F73	CLIP	2
18	4M1815	SPRING	1
19	9M7657	NUT	4
		-OR-	
	9S4489	SCREW ASSEM.	4

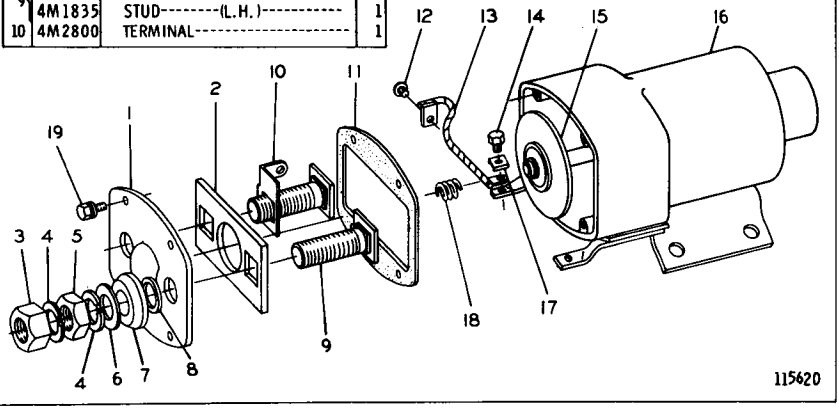

115620

4M1812 SOLENOID SWITCH ASSEMBLY
Serial No. 48A6883—Up
Part of 3S4458 Motor shown on Pages 116D and 116F

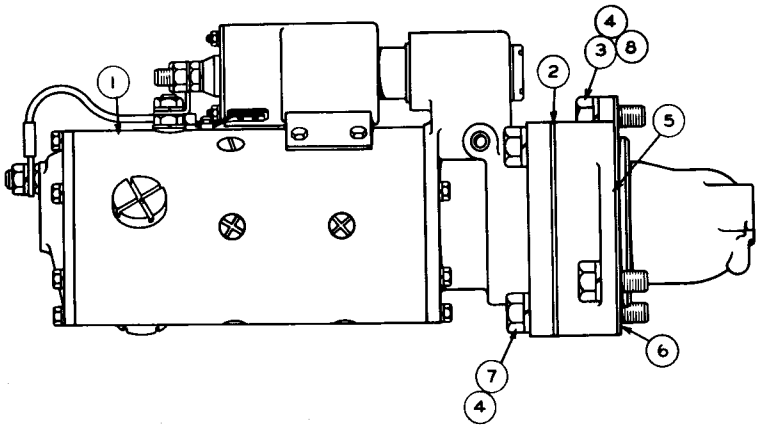

	REF. NO.	PART NUMBER	DESCRIPTION	QTY
C	1	1P9182	MOTOR ASSEM. (Separate Illustration)	1
	2	4M6853	GASKET	1
C	3	S1566	BOLT--------(1.500" long)	2
	4	3B4510	LOCKWASHER	6
C	5	8S2326	ADAPTER	1
	6	3R2931	GASKET	1
	7	S1589	BOLT	3
C	8	8S2332	BOLT--------(1.750" long)	1

C INDICATES CHANGE

138389

3S8466 STARTING MOTOR GROUP—24 Volt—Type 2 7N8604
Serial No. 48A6883—Up. Part of 4S9645 Starting Arrangements listed on Pages 116B and 116C. 1P9182 Motor parts are shown on Pages 116G-1 and 116G-2

REF. NO.	PART NUMBER	DESCRIPTION	QTY
1	4M1816	TERMINAL ASSEM.	1
	4M1834	PLATE	1
2	7F4907	STRIP	1
3	3H3681	NUT	2
4	3B4508	LOCKWASHER	4
5	3H3680	NUT	2
6	7F3494	WASHER	2
7	4M1836	INSULATOR	2
8	4M1837	BUSHING	2
9	7F4906	STUD--------(R.H.)	1
	4M1835	STUD--------(L.H.)	1
10	4M2800	TERMINAL	1
11	9S4490	GASKET	1
12	4M5274	SCREW	1
13	9S4489	SCREW ASSEM.	4
14	4M3217	SCREW	2
15	4M1814	CONTACT ASSEM.	1
C 16	3P72	CASE ASSEM.	1
17	1F73	CLIP	2
18	4M1815	SPRING	1

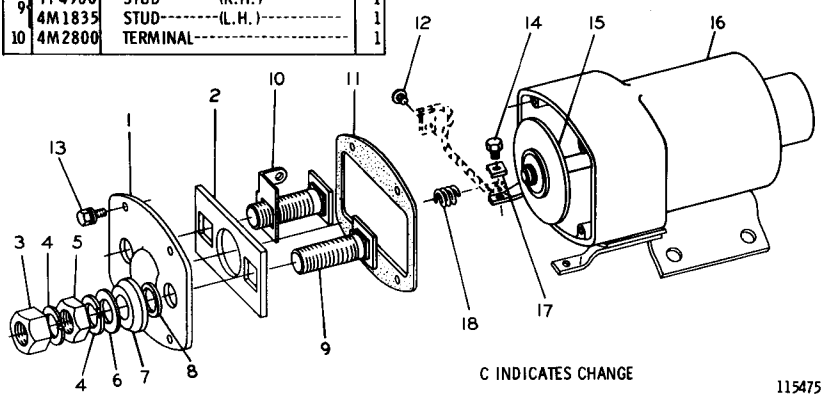

C INDICATES CHANGE

115475

1P9181 SOLENOID SWITCH ASSEMBLY
Part of 1P9182 Starting Motor shown on Page 116G-2

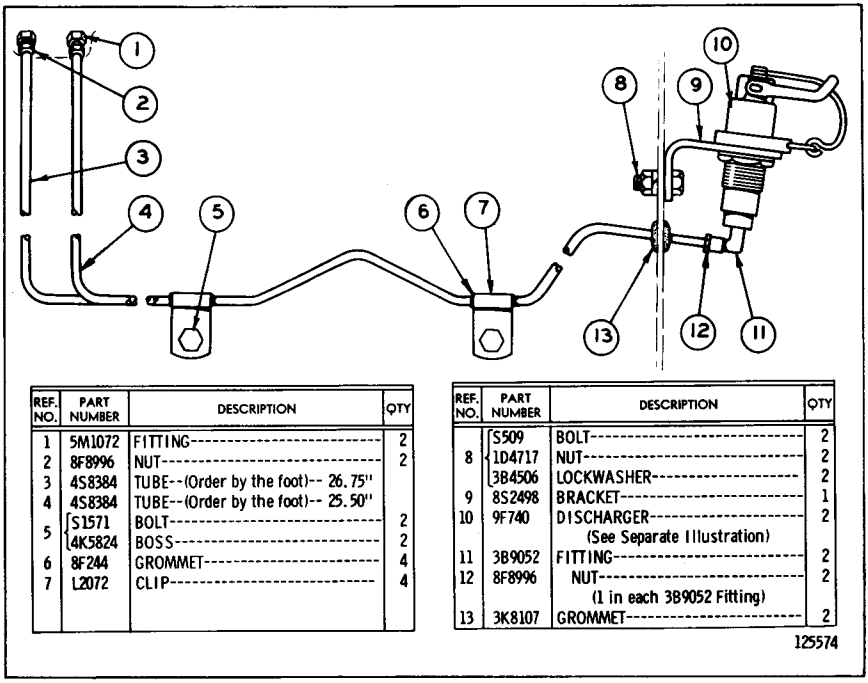

REF. NO.	PART NUMBER	DESCRIPTION	QTY
1	5M1072	FITTING	2
2	8F8996	NUT	2
3	4S8384	TUBE--(Order by the foot)-- 26.75"	
4	4S8384	TUBE--(Order by the foot)-- 25.50"	
5	S1571	BOLT	2
	4K5824	BOSS	2
6	8F244	GROMMET	4
7	L2072	CLIP	4

REF. NO.	PART NUMBER	DESCRIPTION	QTY
8	S509	BOLT	2
	1D4717	NUT	2
	3B4506	LOCKWASHER	2
9	8S2498	BRACKET	1
10	9F740	DISCHARGER (See Separate Illustration)	2
11	3B9052	FITTING	2
12	8F8996	NUT (1 in each 3B9052 Fitting)	2
13	3K8107	GROMMET	2

125574

8S1786 ETHER STARTING AID GROUP—24 Volt
Effective with Serial No. 48A6883
FOR USE WITH DIRECT ELECTRIC STARTING

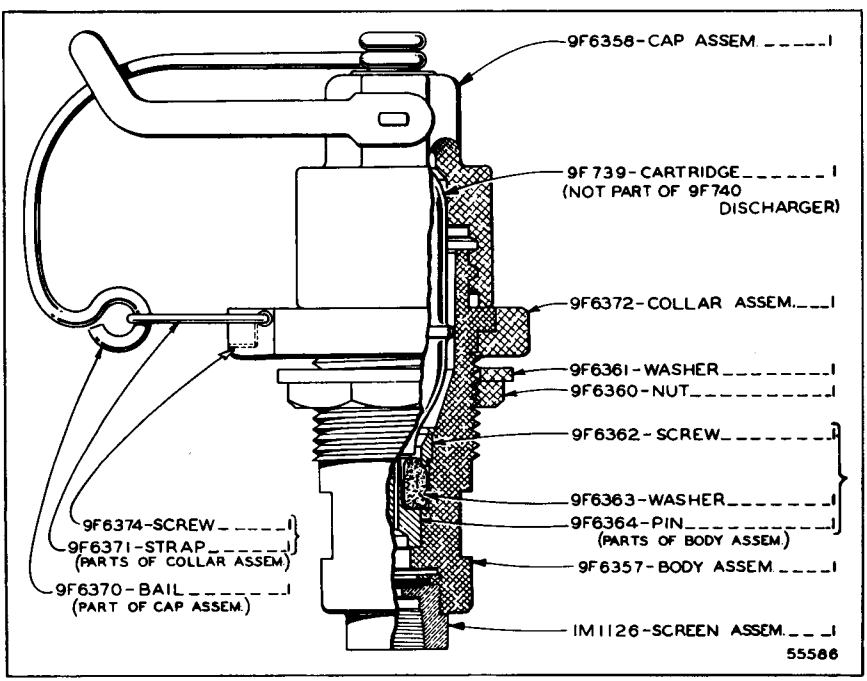

9F740 DISCHARGER
Effective with Serial No. 48A6883
Part of 8S1786 Ether Starting Aid Group

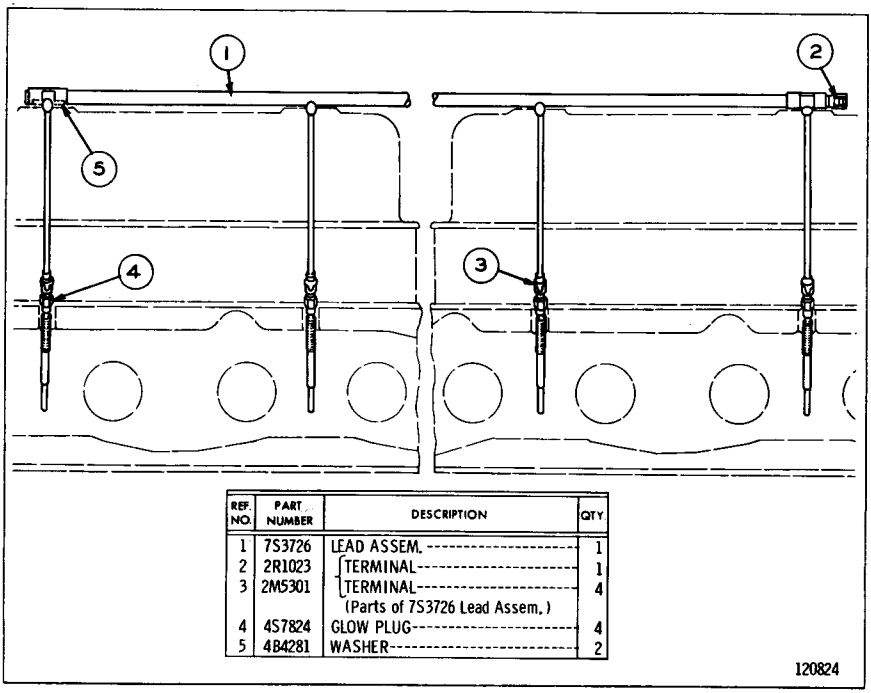

REF. NO.	PART NUMBER	DESCRIPTION	QTY
1	7S3726	LEAD ASSEM.	1
2	2R1023	TERMINAL	1
3	2M5301	TERMINAL	4
		(Parts of 7S3726 Lead Assem.)	
4	4S7824	GLOW PLUG	4
5	4B4281	WASHER	2

120824

7S3727 GLOW PLUG AND WIRING GROUP
Effective with Serial No. 48A6883
Part of 4S9645 Starting Arrangements listed on Pages 116B and 116C

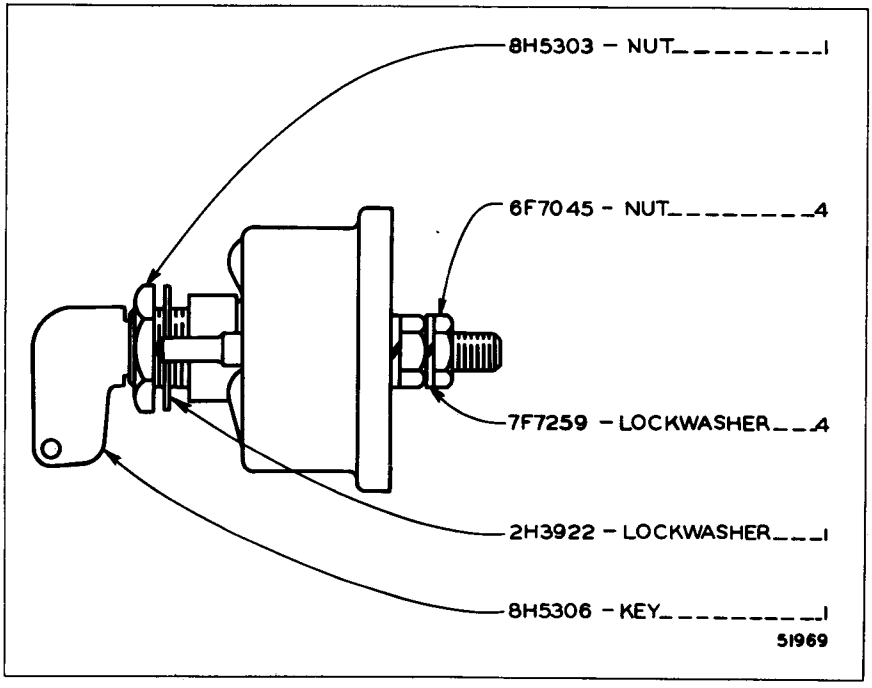

7H7290 DISCONNECT SWITCH ASSEMBLY
Effective with Serial No. 48A6883
Part of 3S7871 Battery and Wiring shown on Pages 116L and 116N

3S7871 BATTERY AND WIRING GROUP—24 Volt—Part 1—Type 1

Effective with Serial No. 48A6883

Part of 4S9645 Starting Arrangements listed on Pages 116B and 116C

7H7290 Switch, 5S8581 and 5S8574 Harness and 9M1305 Lamp parts are shown on Pages 116K, 116R, 116S and 116T

REF NO	PART NUMBER	DESCRIPTION	QTY
1	1H7366	ROD	2
2	1J4384	PIN	2
3	3B4615	COTTER PIN	2
4	2B2938	PIN	2
5	3B4617	COTTER PIN	2
6	1H7365	HANDLE	2
7	1B9920	SPRING	2
8	5S8580	WIRE ASSEM.	1
	2L8066	TERMINAL (Part of 5S8580 Wire Assem.)	2
9	5M6668	SCREW	2
10	3H4105	CIRCUIT BREAKER	1
11	4D1259	SWITCH	1
12	5S8574	HARNESS ASSEM. (See Separate Illustration)	1
13	1F7307	AMMETER	1

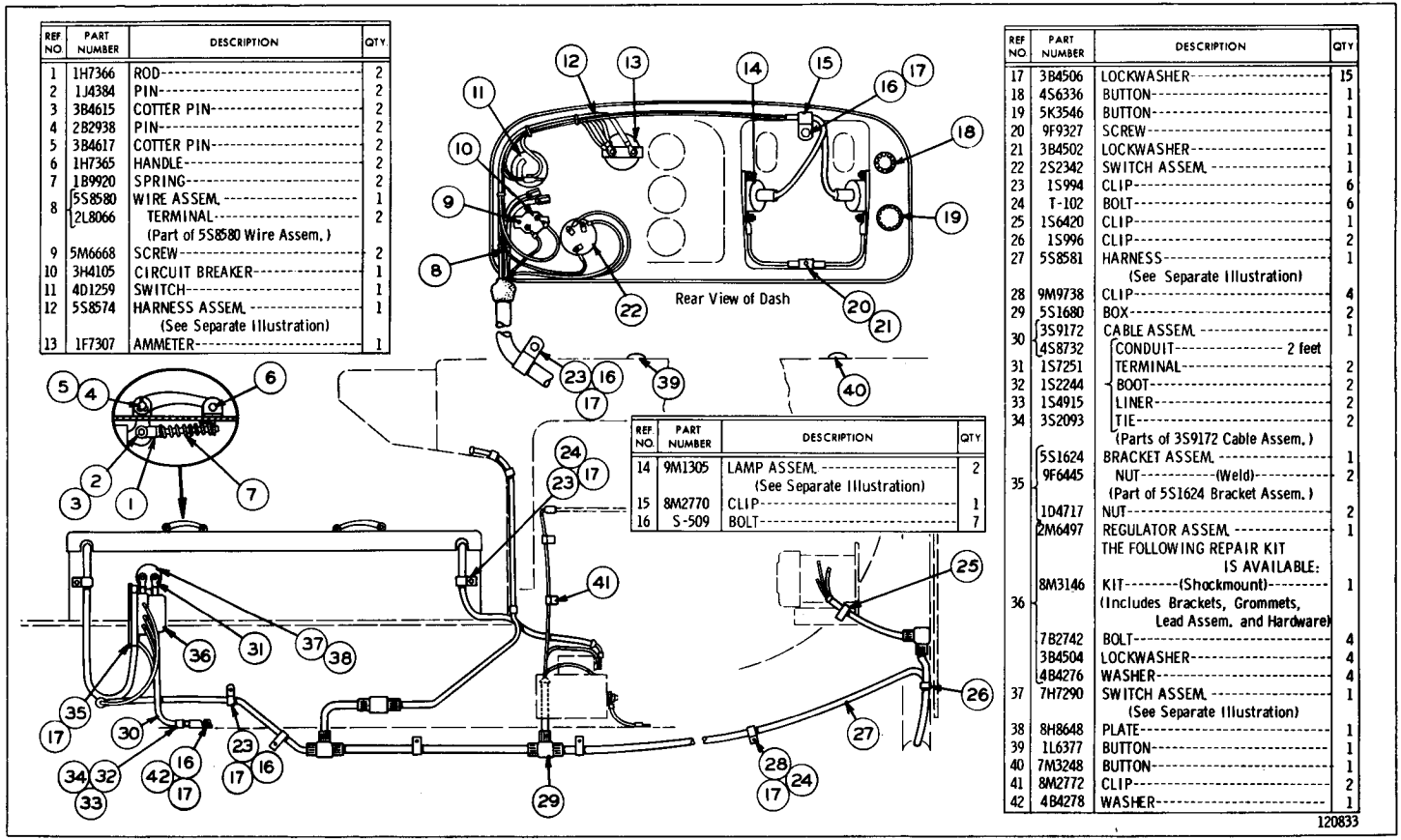

REF NO	PART NUMBER	DESCRIPTION	QTY
14	9M1305	LAMP ASSEM. (See Separate Illustration)	2
15	8M2770	CLIP	1
16	S-509	BOLT	7

REF NO	PART NUMBER	DESCRIPTION	QTY
17	3B4506	LOCKWASHER	15
18	4S6336	BUTTON	1
19	5K3546	BUTTON	1
20	9F9327	SCREW	1
21	3B4502	LOCKWASHER	1
22	2S2342	SWITCH ASSEM.	1
23	1S994	CLIP	6
24	T-102	BOLT	6
25	1S6420	CLIP	1
26	1S996	CLIP	2
27	5S8581	HARNESS (See Separate Illustration)	1
28	9M9738	CLIP	4
29	5S1680	BOX	2
30	3S9172	CABLE ASSEM.	1
	4S8732	CONDUIT — 2 feet	
31	1S7251	TERMINAL	2
32	1S2244	BOOT	2
33	1S4915	LINER	2
34	3S2093	TIE (Parts of 3S9172 Cable Assem.)	2
35	5S1624	BRACKET ASSEM.	1
	9F6445	NUT—(Weld) (Part of 5S1624 Bracket Assem.)	2
36	1D4717	NUT	2
	2M6497	REGULATOR ASSEM.	1
		THE FOLLOWING REPAIR KIT IS AVAILABLE:	
	8M3146	KIT—(Shockmount) (Includes Brackets, Grommets, Lead Assem. and Hardware)	1
	7B2742	BOLT	4
	3B4504	LOCKWASHER	4
	4B4276	WASHER	4
37	7H7290	SWITCH ASSEM. (See Separate Illustration)	1
38	8H8648	PLATE	1
39	1L6377	BUTTON	1
40	7M3248	BUTTON	1
41	8M2772	CLIP	2
42	4B4278	WASHER	1

120833

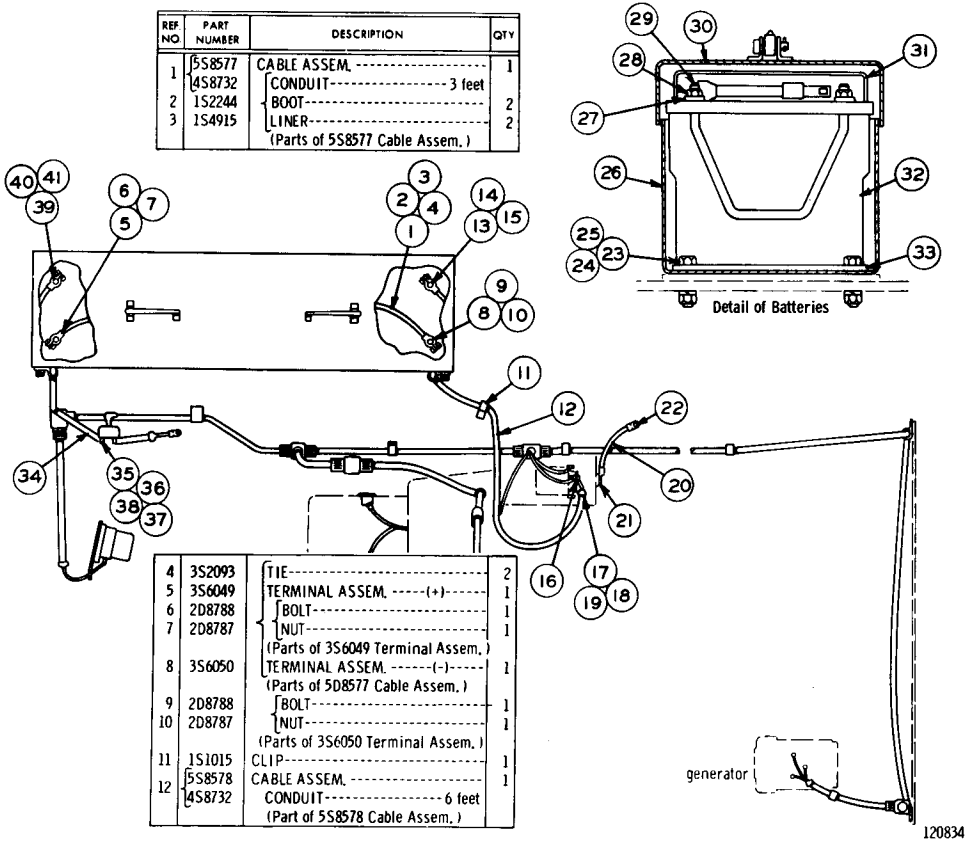

REF NO	PART NUMBER	DESCRIPTION	QTY
1	5S8577	CABLE ASSEM.	1
	4S8732	CONDUIT---3 feet	
2	1S2244	BOOT	2
3	1S4915	LINER	2
		(Parts of 5S8577 Cable Assem.)	

REF NO	PART NUMBER	DESCRIPTION	QTY
4	3S2093	TIE	2
5	3S6049	TERMINAL ASSEM. -----(+)-----	1
6	2D8788	BOLT	1
7	2D8787	NUT	1
		(Parts of 3S6049 Terminal Assem.)	
8	3S6050	TERMINAL ASSEM. -----(-)-----	1
		(Parts of 5D8577 Cable Assem.)	
9	2D8788	BOLT	1
10	2D8787	NUT	1
		(Parts of 3S6050 Terminal Assem.)	
11	1S1015	CLIP	1
12	5S8578	CABLE ASSEM.	1
	4S8732	CONDUIT---6 feet	
		(Part of 5S8578 Cable Assem.)	

REF NO	PART NUMBER	DESCRIPTION	QTY
13	3S6049	TERMINAL ASSEM. -----(+)-----	1
14	2D8788	BOLT	1
15	2D8787	NUT	1
		(Parts of 3S6049 Terminal Assem.)	
16	1S7252	TERMINAL	1
17	1S2244	BOOT	2
18	3S2093	TIE	2
19	1S4915	LINER	2
		(Parts of 5S8578 Cable Assem.)	
20	3S8624	CABLE ASSEM.	1
21	1S7252	TERMINAL	1
22	1S7251	TERMINAL	1
		(Parts of 3S8624 Cable Assem.)	
23	S-1585	BOLT	4
24	1D4719	NUT	4
25	3B4508	LOCKWASHER	4
26	5S8582	BOX ASSEM.	1
	9F2978	NUT----(Weld)----	4
		(Part of 5S8582 Box Assem.)	
27	4B5271	WASHER	6
28	9H8524	NUT	6
29	5S8661	BOLT	2
30	5S8586	COVER ASSEM.	1
	1S6385	LUG	8
		(Part of 5S8586 Cover Assem.)	
31	5S8583	HOLDDOWN ASSEM.	1
	9M5617	GROMMET	16
		(Part of 5S8583 Holddown Assem.)	
32	4S9219	BATTERY	2
33	9M5775	MAT	2
34	8S1819	CABLE ASSEM.	1
	4S8732	CONDUIT---3 feet	
35	1S7252	TERMINAL	1
36	1S2244	BOOT	2
37	1S4915	LINER	2
38	3S2093	TIE	2
39	3S6050	TERMINAL ASSEM. -----(-)-----	1
		(Parts of 8S1819 Cable Assem.)	
40	2D8788	BOLT	1
41	2D8787	NUT	1
		(Parts of 3S6050 Terminal Assem.)	

3S7871 BATTERY AND WIRING GROUP—24 Volt—Part 2—Type 1
Effective with Serial No. 48A6883
Part of 4S9645 Starting Arrangements listed on Pages 116B and 116C
See Page 116Q for Wiring Diagram

3S7871 BATTERY AND WIRING GROUP—24 Volt—Part 1—Type 2

Effective with Serial No. 48A6883

Part of 4S9645 Starting Arrangements listed on Pages 116B and 116C

7H7290 Switch, 5S8581, 5S8574 Harness and 9M1305 Lamp parts are shown on Pages 116K, 116R, 116S and 116T

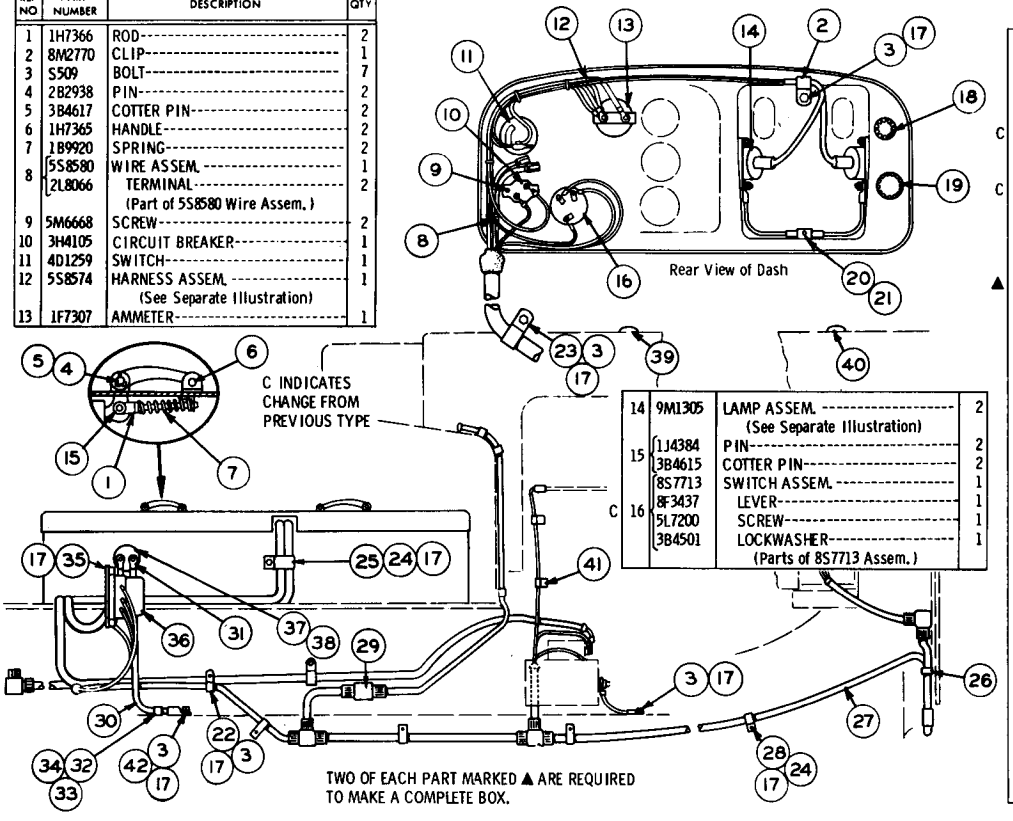

REF NO	PART NUMBER	DESCRIPTION	QTY
1	1H7366	ROD	2
2	8M2770	CLIP	1
3	S509	BOLT	7
4	2B2938	PIN	2
5	3B4617	COTTER PIN	2
6	1H7365	HANDLE	2
7	1B9920	SPRING	2
8	5S8580	WIRE ASSEM.	1
	2L8066	TERMINAL (Part of 5S8580 Wire Assem.)	2
9	5M6668	SCREW	2
10	3H4105	CIRCUIT BREAKER	1
11	4D1259	SWITCH	1
12	5S8574	HARNESS ASSEM. (See Separate Illustration)	1
13	1F7307	AMMETER	1

14	9M1305	LAMP ASSEM. (See Separate Illustration)	2
15	1J4384	PIN	2
	3B4615	COTTER PIN	2
	8S7713	SWITCH ASSEM.	1
C 16	8F3437	LEVER	1
	5L7200	SCREW	1
	3B4501	LOCKWASHER (Parts of 8S7713 Assem.)	1

17	3B4506	LOCKWASHER	14
18	4S6336	BUTTON	1
19	5K3546	BUTTON	1
20	9F9327	SCREW	1
21	3B4502	LOCKWASHER	1
C 22	1S3403	CLIP	1
23	1S994	CLIP	3
24	T102	BOLT	5
C 25	7S1912	CLIP	1
26	1S996	CLIP	2
27	5S8581	HARNESS (See Separate Illustration)	1
28	9M9738	CLIP	4
▲ 29	5S1680	BOX	2
30	3S9172	CABLE ASSEM.	1
	4S8732	CONDUIT — 2 feet	
31	1S7251	TERMINAL	2
32	1S2244	BOOT	2
33	1S4915	LINER	2
34	3S2093	TIE (Parts of 3S9172 Cable Assem.)	2
	5S1624	BRACKET ASSEM.	1
35	9F6445	NUT—(Weld) (Part of 5S1624 Bracket Assem.)	2
	1D4717	NUT	2
	2M6497	REGULATOR ASSEM.	1
		THE FOLLOWING REPAIR KIT IS AVAILABLE:	
36	8M3146	KIT—(Shockmount) (Includes Brackets, Grommets, Lead Assem. and Hardware)	1
	7B2742	BOLT	4
	3B4504	LOCKWASHER	4
	4B4276	WASHER	4
37	7H7290	SWITCH ASSEM. (See Separate Illustration)	1
38	8H8648	PLATE	1
39	1L6377	BUTTON	1
40	7M3248	BUTTON	1
41	8M2772	CLIP	2
42	4B4278	WASHER	1

129376

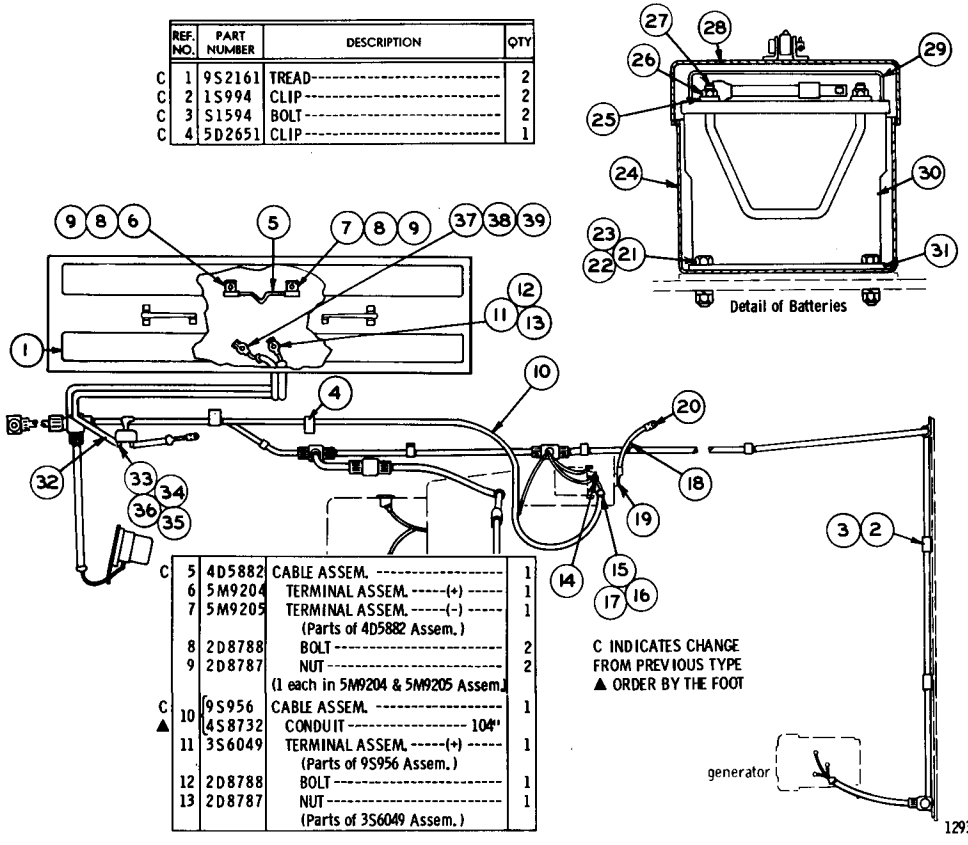

	REF. NO.	PART NUMBER	DESCRIPTION	QTY
C	1	9S2161	TREAD	2
C	2	1S994	CLIP	2
C	3	S1594	BOLT	2
C	4	5D2651	CLIP	1
C	5	4D5882	CABLE ASSEM.	1
	6	5M9204	TERMINAL ASSEM. -----(+) -----	1
	7	5M9205	TERMINAL ASSEM. -----(-) ----- (Parts of 4D5882 Assem.)	1
	8	2D8788	BOLT	2
	9	2D8787	NUT (1 each in 5M9204 & 5M9205 Assem.)	2
C ▲	10	9S956	CABLE ASSEM.	1
		4S8732	CONDUIT ---------- 104"	
	11	3S6049	TERMINAL ASSEM. -----(+) ----- (Parts of 9S956 Assem.)	1
	12	2D8788	BOLT	1
	13	2D8787	NUT (Parts of 3S6049 Assem.)	1
	14	1S7251	TERMINAL	1
	15	1S2244	BOOT	2
	16	3S2093	TIE	2
	17	1S4915	LINER (Parts of 9S956 Assem.)	2
	18	3S8624	CABLE ASSEM.	1
	19	1S7252	TERMINAL	1
	20	1S7251	TERMINAL (Parts of 3S8624 Assem.)	1
	21	S 1585	BOLT	4
	22	1D4719	NUT	4
	23	3B4508	LOCKWASHER	4
	24	5S8582	BOX ASSEM.	1
		9F2978	NUT ----------(Weld)---------- (Part of 5S8582 Assem.)	4
	25	4B5271	WASHER	6
	26	9H8524	NUT	6
	27	5S8661	BOLT	2
C	28	8S6950	COVER ASSEM.	1
		1S6385	LUG (Part of 8S6950 Assem.)	8
	29	5S8583	HOLDDOWN ASSEM.	1
		9M5617	GROMMET (Part of 5S8583 Assem.)	16
C	30	4S9219	BATTERY	2
		5S8405	PLUG (6 in each 4S9219 Battery)	12
	31	9M5775	MAT	2
C	32	8S6937	CABLE ASSEM.	1
▲		4S8732	CONDUIT ---------- 49"	
	33	1S7252	TERMINAL	1
	34	1S2244	BOOT	2
	35	1S4915	LINER	2
	36	3S2093	TIE	2
	37	3S6050	TERMINAL ASSEM. -----(-) ----- (Parts of 8S6937 Assem.)	1
	38	2D8788	BOLT	1
	39	2D8787	NUT (Parts of 3S6050 Assem.)	1

C INDICATES CHANGE FROM PREVIOUS TYPE
▲ ORDER BY THE FOOT

3S7871 BATTERY AND WIRING GROUP—24 Volt—Part 2—Type 2
Effective with Serial No. 48A6883
Part of 4S9645 Starting Arrangements listed on Pages 116B and 116C
See Page 116Q for Wiring Diagram

6835 Nad

WIRING DIAGRAM—24 Volt System

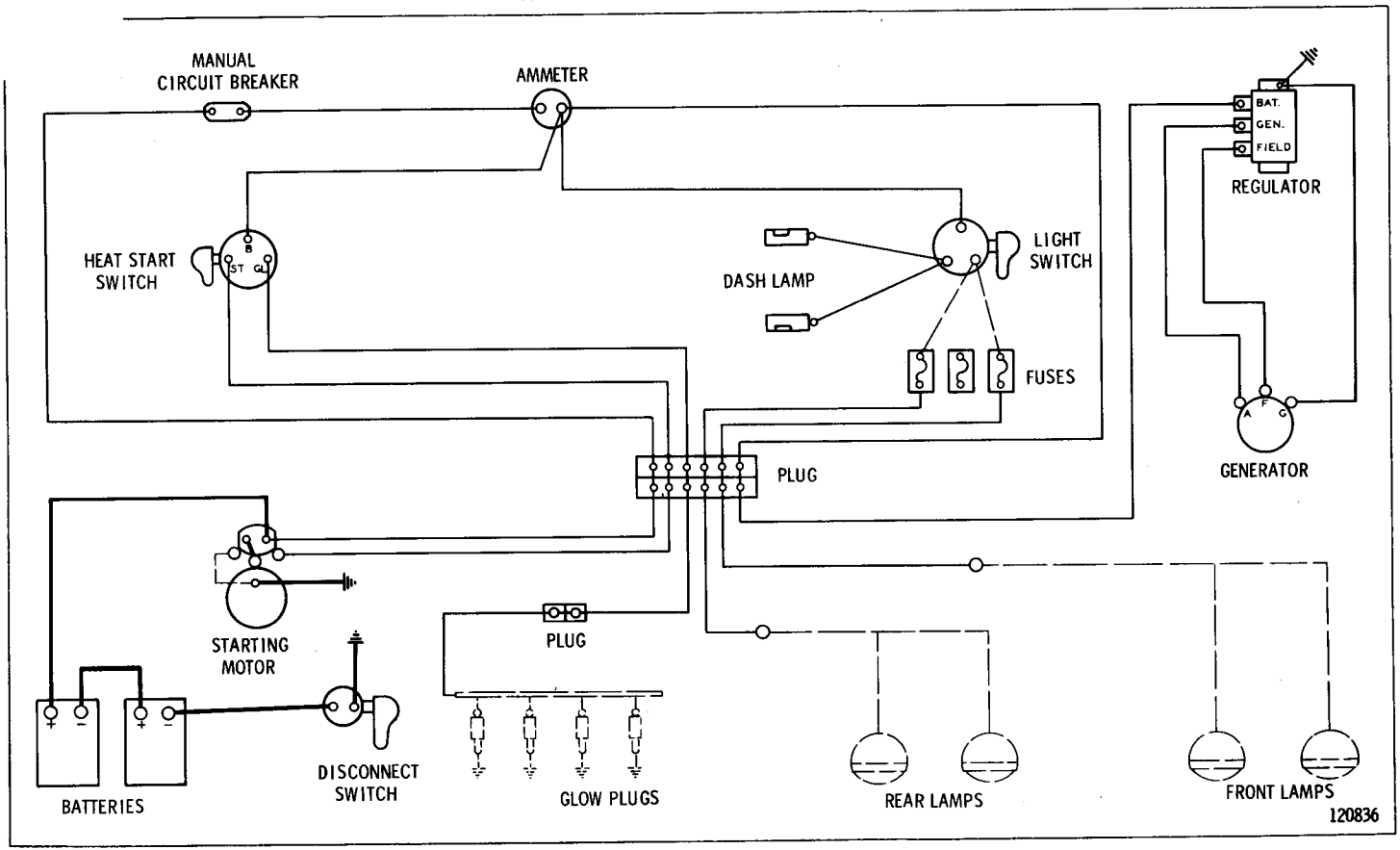

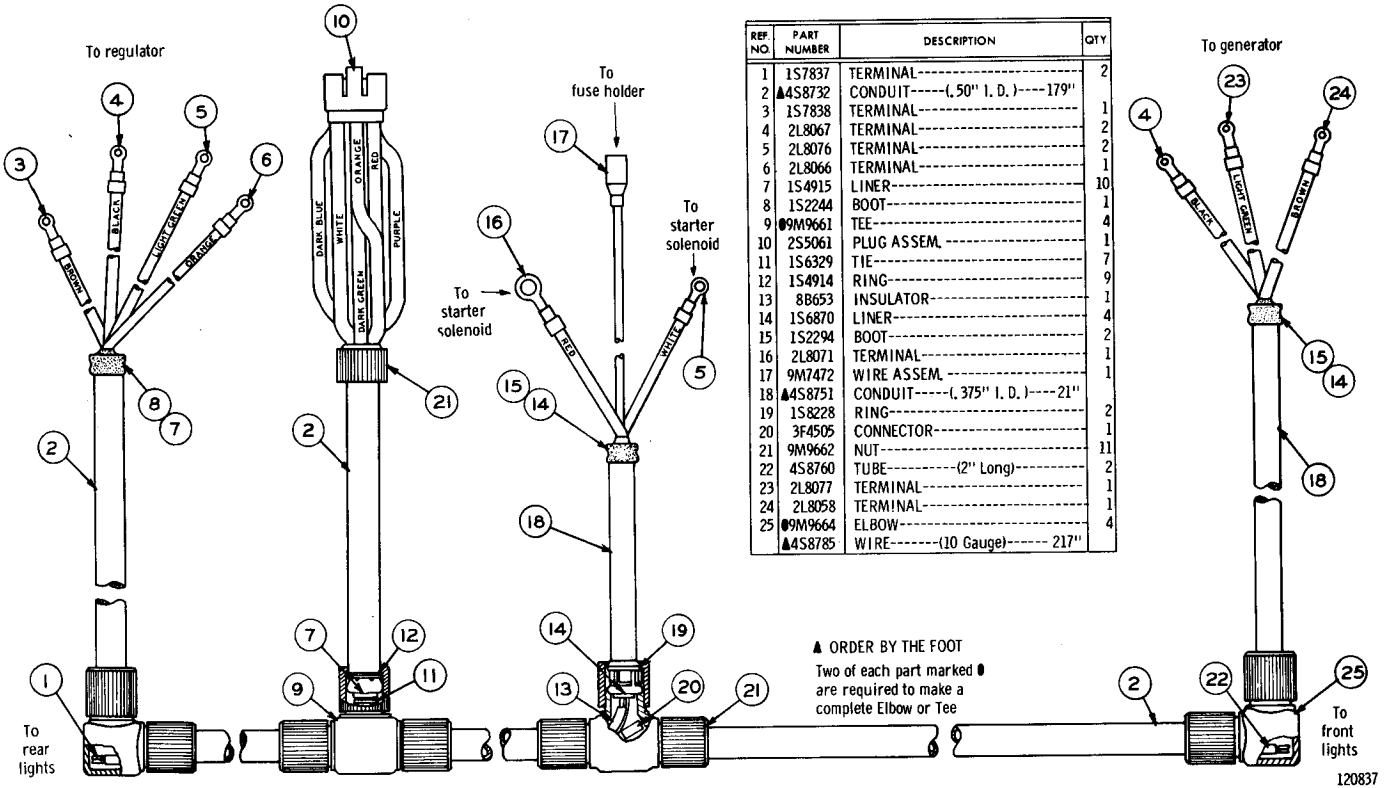

REF. NO.	PART NUMBER	DESCRIPTION	QTY
1	1S7837	TERMINAL	2
2	▲4S8732	CONDUIT-----(.50" I. D.)----179"	
3	1S7838	TERMINAL	1
4	2L8067	TERMINAL	2
5	2L8076	TERMINAL	2
6	2L8066	TERMINAL	1
7	1S4915	LINER	10
8	1S2244	BOOT	1
9	●9M9661	TEE	4
10	2S5061	PLUG ASSEM.	1
11	1S6329	TIE	7
12	1S4914	RING	9
13	8B653	INSULATOR	1
14	1S6870	LINER	4
15	1S2294	BOOT	2
16	2L8071	TERMINAL	1
17	9M7472	WIRE ASSEM.	1
18	▲4S8751	CONDUIT-----(.375" I. D.)----21"	
19	1S8228	RING	2
20	3F4505	CONNECTOR	1
21	9M9662	NUT	11
22	4S8760	TUBE----------(2" Long)----------	2
23	2L8077	TERMINAL	1
24	2L8058	TERMINAL	1
25	●9M9664	ELBOW	4
	▲4S8785	WIRE-------(10 Gauge)------ 217"	

▲ ORDER BY THE FOOT

Two of each part marked ● are required to make a complete Elbow or Tee

5S8581 WIRING HARNESS—24 Volt—Type 1
Effective with Serial No. 48A6883
Part of 3S7871 Battery and Wiring Groups shown on Pages 116L and 116N

5S8581 WIRING HARNESS—24 Volt—Type 2
Effective with Serial No. 48A6883
Part of 3S7871 Battery and Wiring Groups shown on Pages 116L and 116N

C INDICATES CHANGE FROM PREVIOUS TYPE

▲ ORDER BY THE FOOT

● TWO 9M9661 & TWO 9M9664 ARE REQUIRED TO MAKE A COMPLETE TEE AND ELBOW.

REF. NO.	PART NUMBER	DESCRIPTION	QTY
1	1S7837	TERMINAL	2
C▲ 2	4S8732	CONDUIT-----(.50" I.D.)----177"	
3	1S7838	TERMINAL	1
4	2L8067	TERMINAL	2
5	2L8076	TERMINAL	2
6	2L8066	TERMINAL	1
7	1S4915	LINER	10
8	1S2244	BOOT	1
C● 9	9M9661	TEE	6
10	2S5061	PLUG ASSEM.	1

REF. NO.	PART NUMBER	DESCRIPTION	QTY
C 11	3S2093	TIE	7
C 12	8S5784	RING	9
13	8B653	INSULATOR	1
C 14	8S5783	LINER	6
15	1S2294	BOOT	2
16	2L8071	TERMINAL	1
17	9M7472	WIRE ASSEM.	1
C▲ 18	4S8751	CONDUIT-----(.375" I.D.)----34"	
C 19	8S5782	RING	4
20	3F4505	CONNECTOR	1
21	9M9662	NUT	14
22	4S8760	TUBE----------(2" long)--------	2
23	2L8077	TERMINAL	1
24	2L8058	TERMINAL	1
● 25	9M9664	ELBOW	4
C 26	2S3163	PLUG	1
C 27	8S5210	FERRULE	9
C 28	2S5015	TERMINAL	3
C 29	2S5016	TERMINAL	3

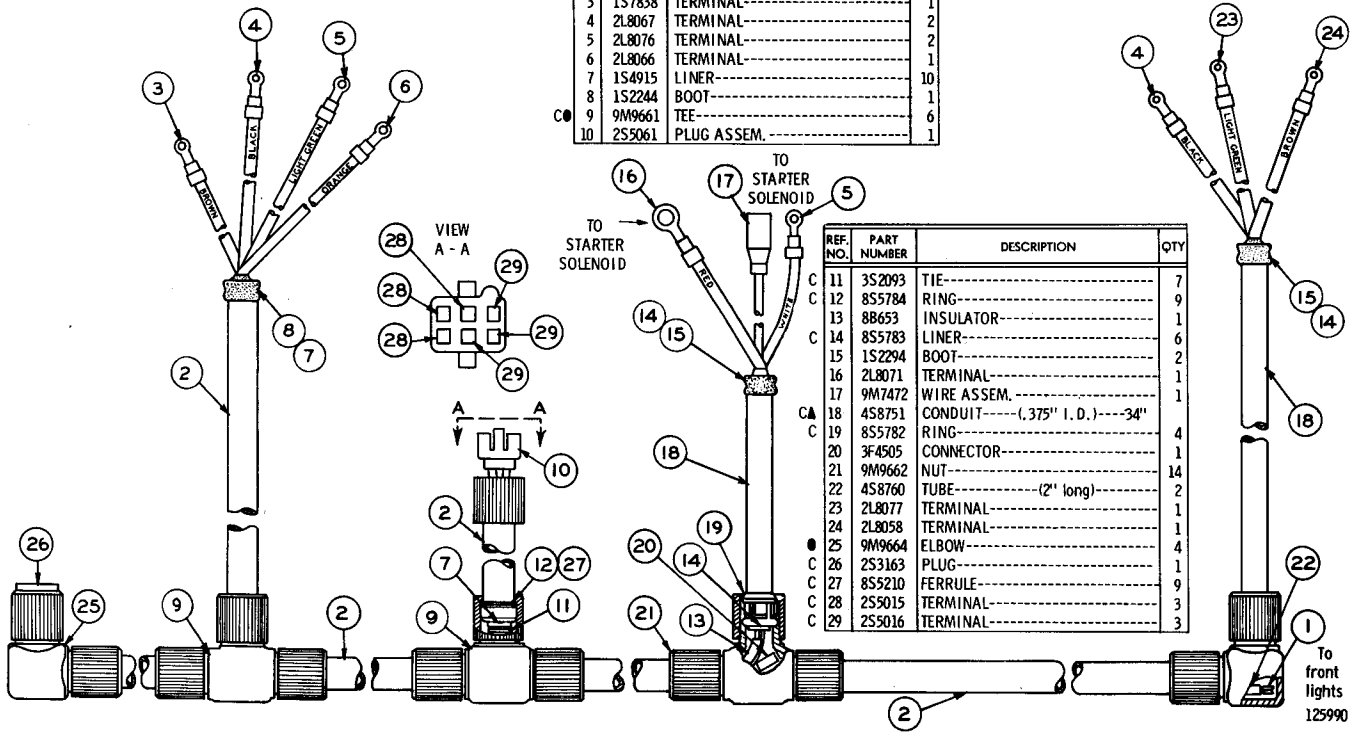

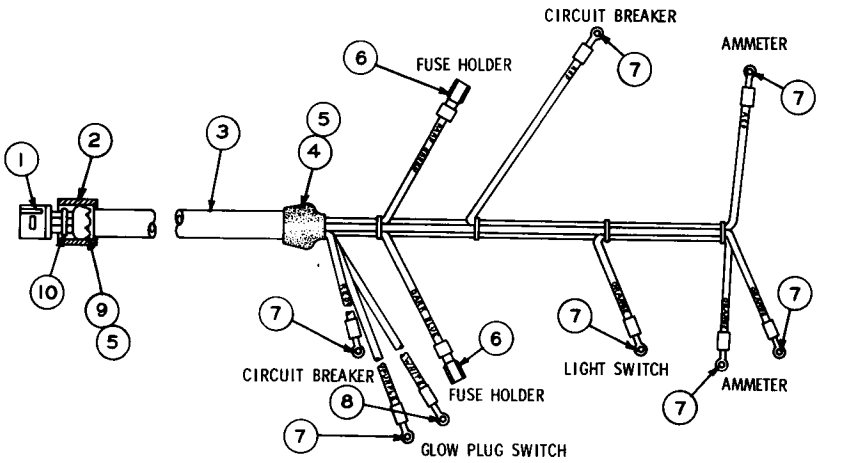

REF. NO.	PART NUMBER	DESCRIPTION	QTY.
1	2S5060	PLUG ASSEM.	1
2	9M9662	NUT	1
3	4S8732	CONDUIT--(order by the foot)--60"	
4	1S2244	BOOT	1
5	1S4915	LINER	2

REF. NO.	PART NUMBER	DESCRIPTION	QTY.
6	4L3916	TERMINAL	2
7	2L8066	TERMINAL	7
8	2L8076	TERMINAL	1
9	1S4914	RING	1
10	1S6329	TIE	5

120838

5S8574 WIRING HARNESS—24 Volt
Effective with Serial No. 48A6883
Part of 3S7871 Battery and Wiring shown on Pages 116L and 116N

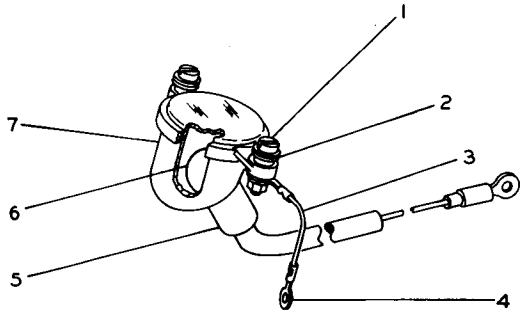

▲ ORDER BY THE FOOT

REF. NO.	PART NUMBER	DESCRIPTION	QTY
1	2M6682	SCREW	2
	4B2043	NUT	2
	7H2079	LOCKWASHER	2
	2M6684	WASHER	3
▲ 2	2M6683	GROMMET	2
▲ 3	4S8787	WIRE--8"	
4	7F9224	TERMINAL	2
5	9H4349	SOCKET AND WIRE ASSEM.	1
6	3H2691	BULB	1
7	9H4347	BODY ASSEM.	1

112434

9M1305 DASH LAMP ASSEMBLY—24 Volt
Effective with Serial No. 48A6883
Part of 3S7871 Battery and Wiring shown on Pages 116L and 116N

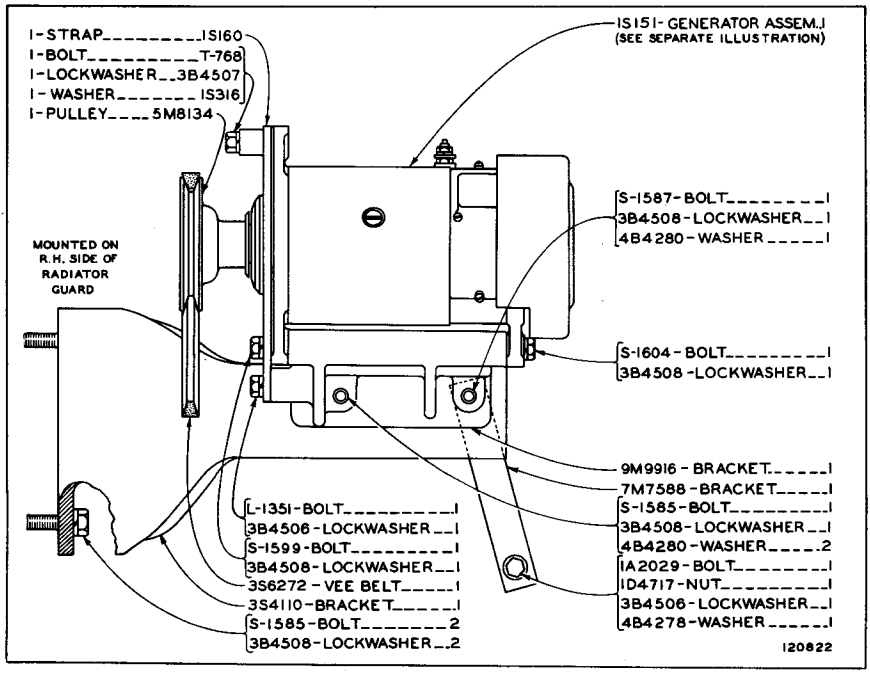

3S8467 GENERATOR GROUP—24 Volt, 15 Ampere
Serial No. 48A6883 to 48A9314 inclusive
Part of 4S9645 Starting Arrangement listed on Page 116B
1S151 Generator parts are shown on Page 116V

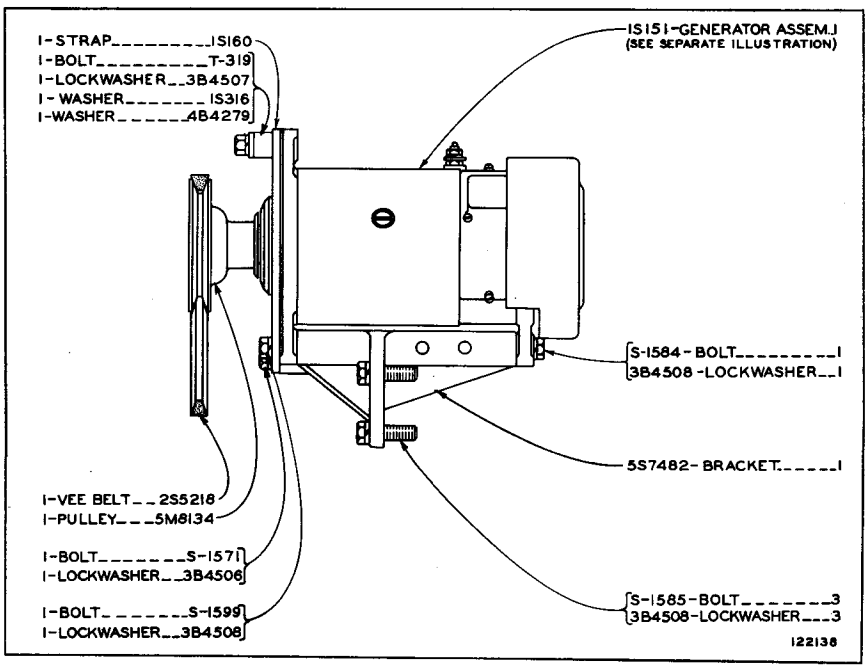

7S1671 GENERATOR GROUP—24 Volt—15 Ampere
Effective with Serial No. 48A9315
Part of 4S9645 Starting Arrangements listed on Pages 116B and 116C
1S151 Generator parts are shown on Page 116V

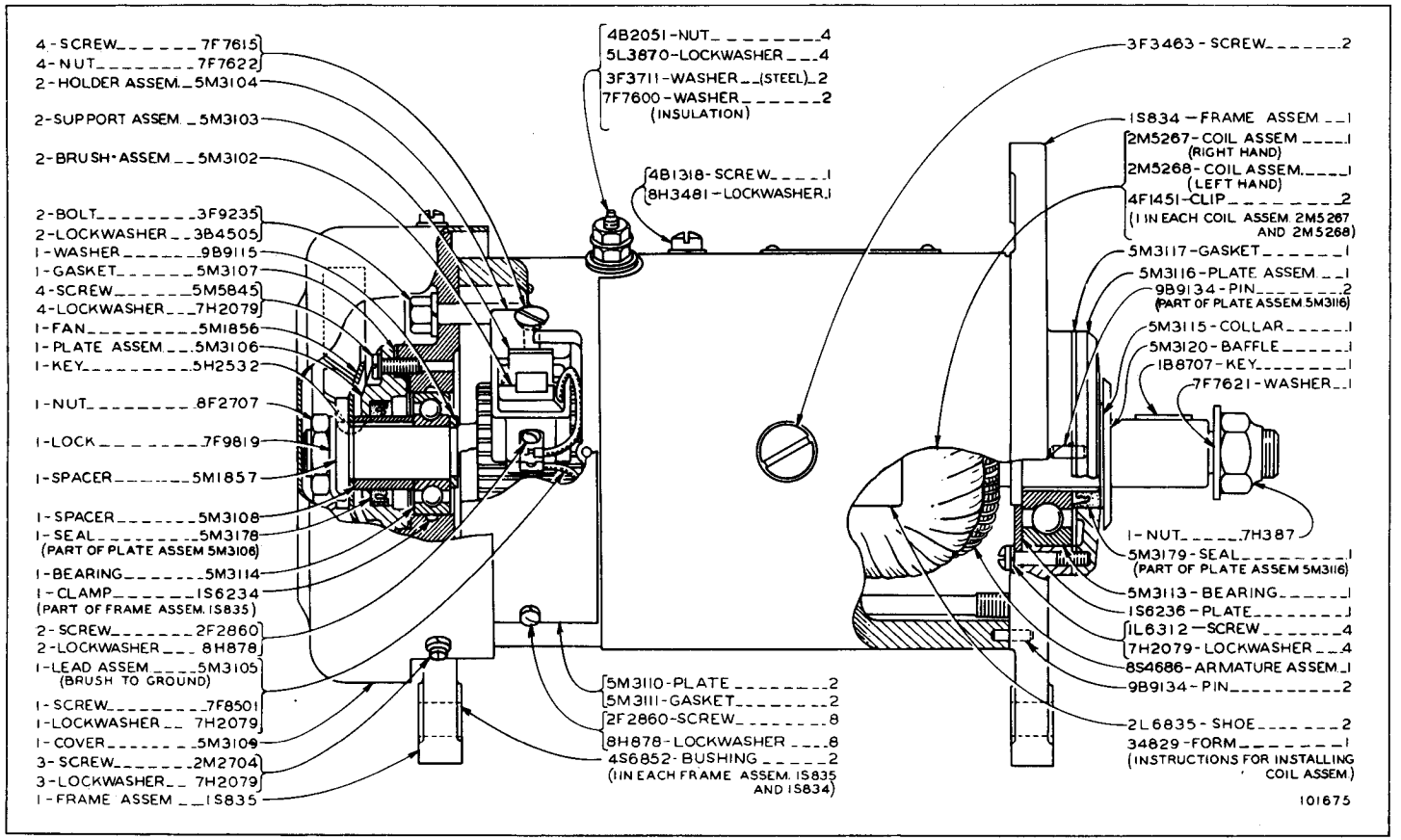

1S151 GENERATOR ASSEMBLY—24 Volt, 15 Ampere
Effective with Serial No. 48A6883
Part of 3S8467 and 7S1671 Generator Groups shown on Page 116U

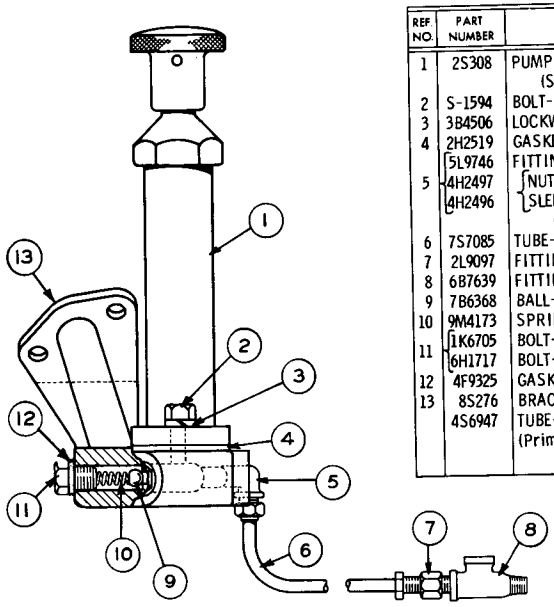

REF. NO.	PART NUMBER	DESCRIPTION	QTY.
1	2S308	PUMP ASSEM. (See Separate Illustration)	1
2	S-1594	BOLT	2
3	3B4506	LOCKWASHER	2
4	2H2519	GASKET	1
5	5L9746	FITTING	1
	4H2497	NUT	1
	4H2496	SLEEVE	1
		(Parts of 5L9746 Fitting)	
6	7S7085	TUBE--(15.94" Long)	1
7	2L9097	FITTING	1
8	6B7639	FITTING	1
9	7B6368	BALL	2
10	9M4173	SPRING	2
11	1K6705	BOLT--(.50" Long)	1
	6H1717	BOLT--(1.12" Long)	1
12	4F9325	GASKET	2
13	8S276	BRACKET	1
	4S6947	TUBE--(6.76" Long) (Primary Fuel Filter to Transfer Pump-Not Shown)	1

4S6943 FUEL PRIMING PUMP GROUP
Effective with Serial No. 48A6883
Part of 4S9645 Starting Arrangement listed on Page 116B
Only separate parts serviced. When complete Group is required order 8S4595 Pump shown on Page 116X

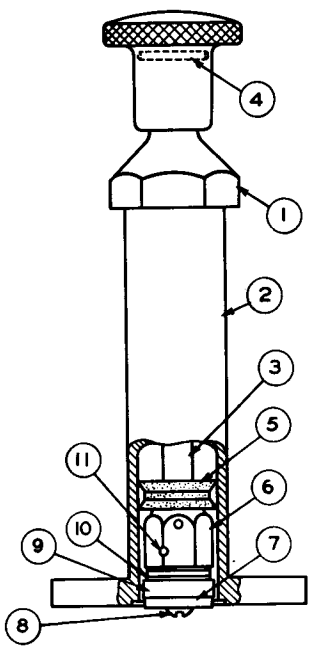

REF. NO.	PART NUMBER	DESCRIPTION	QTY.
1	2S311	CAP	1
2	2S312	BARREL ASSEM.	1
3	2S309	ROD ASSEM.	1
	2S310	ROD	1
		PIN	1
4	9F7882	(Parts of 2S309 Rod Assem.)	
5	2S315	SEAL	1
6	2S316	NUT	1
7	3S8427	WASHER	1
8	4B1236	SCREW	1
9	2S317	HOLDER	1
10	7M7219	BEARING	1
	7M7193	RACE	2
11	2L5894	PIN	2

2S308 FUEL PRIMING PUMP ASSEMBLY
Effective with Serial No. 48A6883
Part of 4S6943 and 8S4595 Fuel Priming Pump Groups shown on Pages 116W and 116X

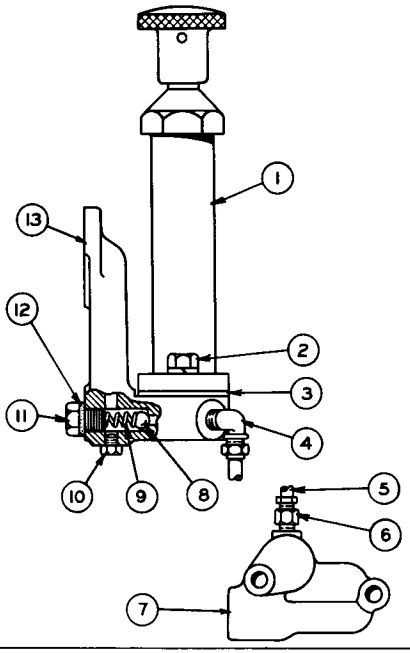

REF. NO.	PART NUMBER	DESCRIPTION	QTY
1	2S308	PUMP ASSEM. (See Separate Illustration)	1
2	1S1594	BOLT	2
	3B4506	LOCKWASHER	2
3	2H2519	GASKET	1
4	5L9746	FITTING	1
	4H2497	NUT	1
	4H2496	SLEEVE (Parts of 5L9746 Fitting)	1
5	8S4301	TUBE	1
6	5M3528	FITTING	1
	8F8997	NUT (Part of 5M3528 Fitting)	1
7	8S4305	ADAPTER	1
8	7B6368	BALL	2
9	9M4173	SPRING	2
10	2S7905	PLUG	1
11	1K6705	BOLT-----(.50" long)	1
	6H1717	BOLT-----(1.125" long)	1
12	4F9325	GASKET	2
13	8S4300	BRACKET	1

124051

8S4595 FUEL PRIMING PUMP GROUP
Effective with Serial No. 48A6883
Part of 4S9645 Starting Arrangements shown on Pages 116B & 116C
2S308 Pump parts are shown on Page 116W

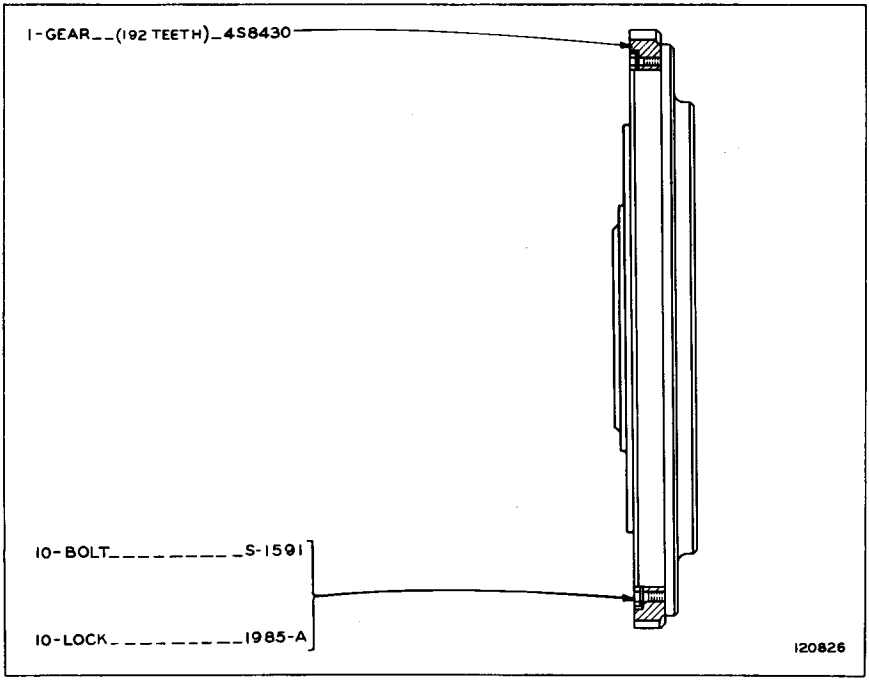

4S9253 FLYWHEEL ASSEMBLY
Effective with Serial No. 48A6883
Part of 4S9645 Starting Arrangements listed on Pages 116B and 116C

		Consists of:	Page
1	8S6771	Alternator Group	116Y
1	9S3407	Wiring Group	
		Consisting of:	
	1	9S966 Harness Assembly	116DD
	1	9S967 Harness Assembly	116EE
	1	8M7892 Ammeter--To Dash	
	1	9S173 Circuit Breaker--To Dash	

9S3406 ALTERNATOR ARRANGEMENT—24 Volt, 50 Ampere
Effective with Serial No. 48A9315

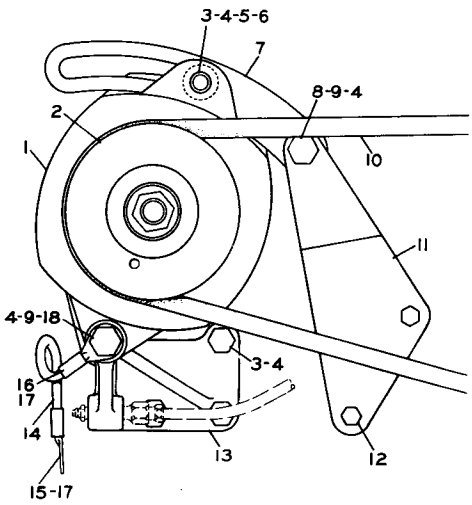

REF NO	PART NUMBER	DESCRIPTION	QTY
1	5S9088	ALTERNATOR ASSEM. (See Separate Illustration)	1
2	5M8134	PULLEY	1
3	S1585	BOLT	4
4	3B4508	LOCKWASHER	6
5	2M849	WASHER	2
6	9F8759	SPACER	1
7	8S3290	STRAP	1
8	S1587	BOLT	1
9	1D4719	NUT	2
10	2S9778	VEE BELT	1
11	8S6746	BRACKET	1
12	S1571	BOLT	2
	3B4506	LOCKWASHER	2
13	8S6764	BRACKET	1
14	5H4822	WIRE ASSEM.	1
15	9F5320	TERMINAL	1
16	9F9353	TERMINAL	1
17	8B653	INSULATOR (Parts of 5H4822 Assem.)	2
18	1D4574	BOLT	1
	4B4280	WASHER	2
	2B4330	SPACER	1

125925

8S6771 ALTERNATOR GROUP—24 Volt, 50 Ampere
Effective with Serial No. 48A9315
Part of 9S3406 Alternator Arrangement. 5S9088 Alternator parts are shown on Pages 116Z through 116CC

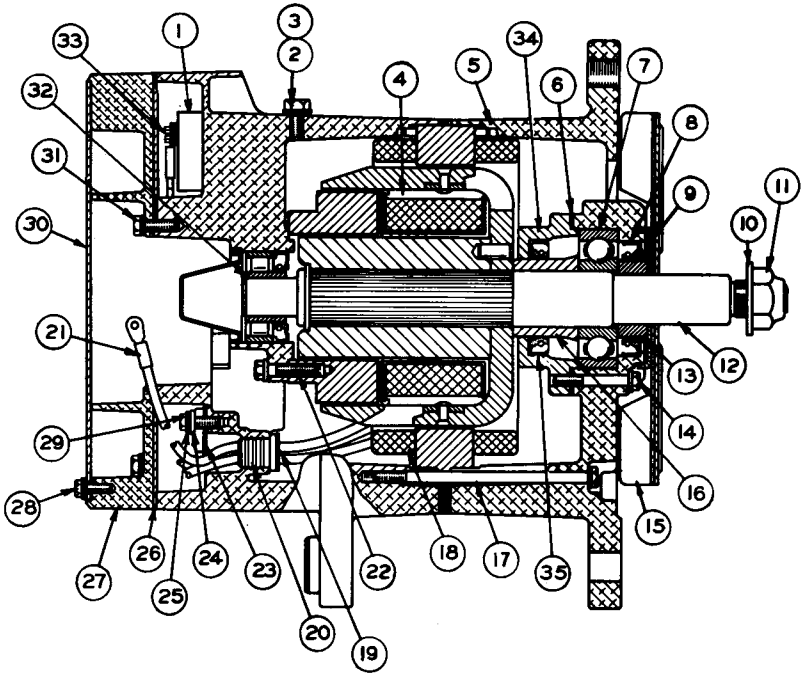

REF. NO.	PART NUMBER	DESCRIPTION	QTY
1	9S2259	REGULATOR ASSEM.	1
2	9S2011	SCREW	1
3	1L4789	LOCKWASHER	1
4	9S2248	FIELD COIL AND SUPPORT ASSEM.	1
5	9S2279	FRAME	1
6	9S2256	GASKET	1
7	9S2245	BEARING	1
8	9S2391	SEAL	1
9	9S2252	SLINGER	1
10	7F7621	WASHER	1
11	7H387	NUT	1
12	9S2302	ROTOR ASSEM.	1
13	9S2254	COLLAR	1
14	9S2008	SCREW	4
15	9S2258	FAN AND BAFFLE ASSEM.	1
16	9S2261	COLLAR	1
17	9S2009	BOLT	4
18	9S2004	STATOR ASSEM.	1
19	9S2006	INSULATOR	1
20	9S2005	GROMMET	1
21	9S2014	CLIP	3
		(Parts of 9S2004 Stator Assem.)	

REF. NO.	PART NUMBER	DESCRIPTION	QTY
22	9S2007	SCREW	3
23	9S2301	INSULATION	1
24	9S2300	INSULATOR	4
25	9S2247	WASHER---(Spring)	4
	4B4863	WASHER---(Plain)	4
26	9S2262	GASKET	1
27	9S2255	COVER	1
28	9S2544	SCREW	4
	8H878	LOCKWASHER	4
29	9S2440	SCREW	4
30	9S2260	PLATE	1
31	9S2437	SCREW	5
	7H2079	LOCKWASHER	5
32	9S2242	RACE	1
33	9S2439	SCREW	1
34	9S2390	RETAINER ASSEM.	1
35	9S2391	SEAL	1
		(Part of 9S2390 Retainer Assem.)	

124832

5S9088 ALTERNATOR ASSEMBLY—24 Volt, 50 Ampere—Part 1—Type 1
Effective with Serial No. 48A9315
Part of 8S6771 Alternator Group shown on Page 116Y

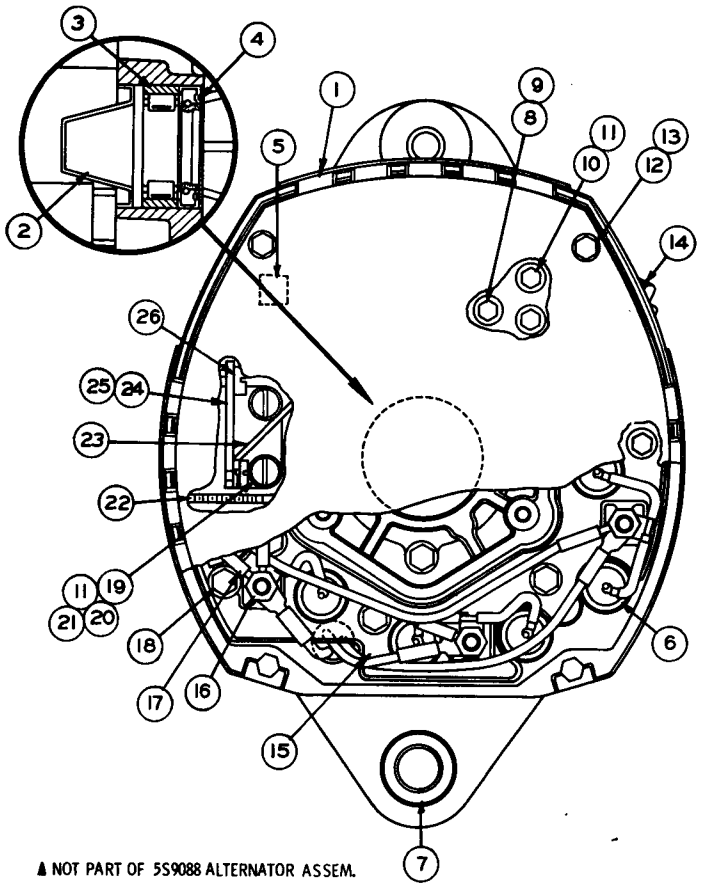

▲ NOT PART OF 5S9088 ALTERNATOR ASSEM.

REF. NO.	PART NUMBER	DESCRIPTION	QTY
1	9S2398	HOUSING ASSEM.	1
2	9S2397	COVER	1
3	9S2395	BEARING	1
4	9S2394	SEAL	1
5	9F2247	PLUG	1
6	9S2393	DIODE	3
7	9S2396	BUSHING	1
		(Parts of 9S2398 Housing Assem.)	
8	9S2010	SCREW	2
9	9S2247	WASHER	2
10	9S2544	SCREW	2
11	8H878	LOCKWASHER	4
12	9S2438	SCREW	2
13	7H2079	LOCKWASHER	2
14	9S2389	STUD ASSEM.	1
15	9S2292	HEAT SINK ASSEM.	1
16	4B2043	NUT	3
17	9S2246	LEAD ASSEM.	1
18	9S2542	SCREW	1

REF. NO.	PART NUMBER	DESCRIPTION	QTY
19	9S2440	SCREW	2
20	9S2251	BUSHING	2
21	4B4863	WASHER	2
22	9S2250	GROMMET	1
23	9S2253	LEAD ASSEM.	1
24	9S2257	SUPPORT	1
25	9S2249	INSULATOR	2
26	9S2543	SCREW ASSEM.	2
▲	9S2013	KIT--(Terminal Relay) (Consists of such parts as Bushing, "O" Ring and Hardware)	1
▲	9S2012	KIT--(Terminal Output) (Consists of such parts as Gaskets, Terminal, and Hardware)	1
▲	9S2290	KIT--(For Heat Sink) (Diode Junction Hardware)	1
▲	9S2291	KIT--(For Heat Sink) (Positive Diode Heat Sink Hardware)	1

104716

5S9088 ALTERNATOR ASSEMBLY—24 Volt, 50 Ampere—Part 2—Type 1
Effective with Serial No. 48A9315
Part of 8S6771 Alternator Group shown on Page 116Y

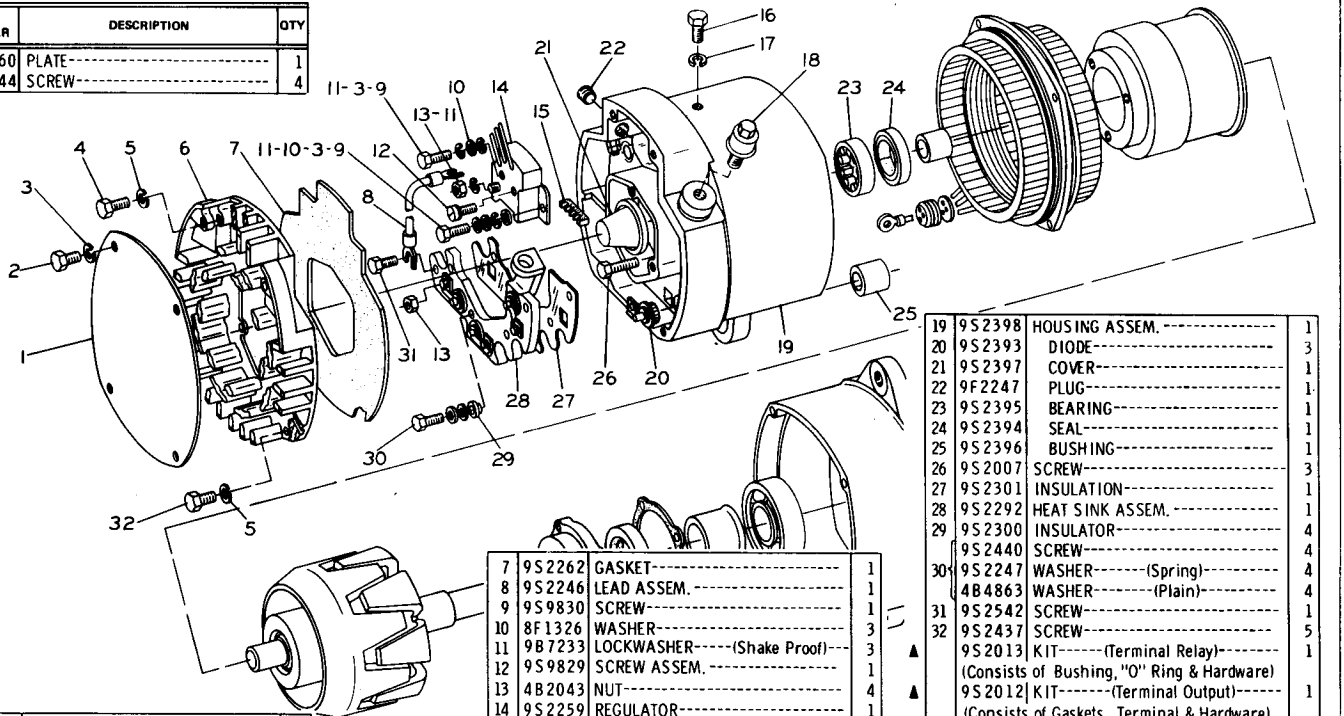

REF. NO.	PART NUMBER	DESCRIPTION	QTY
1	9S2260	PLATE	1
2	9S2544	SCREW	4
3	8H878	LOCKWASHER	6
4	9S2438	SCREW	2
5	7H2079	LOCKWASHER	7
6	9S2255	COVER	1
7	9S2262	GASKET	1
8	9S2246	LEAD ASSEM.	1
9	9S9830	SCREW	1
10	8F1326	WASHER	3
11	9B7233	LOCKWASHER-----(Shake Proof)	3
12	9S9829	SCREW ASSEM.	1
13	4B2043	NUT	4
14	9S2259	REGULATOR	1
15	9S2250	GROMMET	1
16	9S2011	SCREW	1
17	1L4789	LOCKWASHER	1
18	9S2389	STUD ASSEM.	1
19	9S2398	HOUSING ASSEM.	1
20	9S2393	DIODE	3
21	9S2397	COVER	1
22	9F2247	PLUG	1
23	9S2395	BEARING	1
24	9S2394	SEAL	1
25	9S2396	BUSHING	1
26	9S2007	SCREW	3
27	9S2301	INSULATION	1
28	9S2292	HEAT SINK ASSEM.	1
29	9S2300	INSULATOR	4
	9S2440	SCREW	4
30	9S2247	WASHER-------(Spring)	4
	4B4863	WASHER---------(Plain)	4
31	9S2542	SCREW	1
32	9S2437	SCREW	5
▲	9S2013	KIT------(Terminal Relay) (Consists of Bushing, "O" Ring & Hardware)	1
▲	9S2012	KIT-------(Terminal Output) (Consists of Gaskets, Terminal & Hardware)	1
▲	9S2290	KIT----------(Heat Sink) (Diode Junction Hardware)	1
▲	9S2291	KIT---------(Heat Sink) (Positive Diode Hardware)	1

▲ NOT PART OF 5S9088 ALTERNATOR ASSEM.

113559

5S9088 ALTERNATOR ASSEMBLY—24 Volt, 50 Ampere—Part 1—Type 2
Serial No. 48A9315—Up
Part of 8S6771 Alternator Group shown on Page 116Y

5S9088 ALTERNATOR ASSEMBLY—24 Volt, 50 Ampere—Part 2—Type 2
Serial No. 48A9315—Up
Part of 8S6771 Alternator Group shown on Page 116Y

REF. NO.	PART NUMBER	DESCRIPTION	QTY
1	9S2242	RACE	1
2	9S2248	FIELD COIL AND SUPPORT ASSEM.	1
3	9S2004	STATOR ASSEM.	1
4	9S2006	INSULATOR	1
5	9S2005	GROMMET	1
6	9S2014	CLIP	3
7	9S2302	ROTOR ASSEM.	1
8	9S2390	RETAINER ASSEM.	1
9	9S2391	SEAL	1
10	9S2256	GASKET	1
11	9S2261	COLLAR	1
12	2F5721	BEARING	1
13	2P5616	FRAME	1
14	3B4502	LOCKWASHER	4
15	9S2009	BOLT	4
16	9S2391	SEAL	1
17	9S2254	COLLAR	1
18	9S2252	SLINGER	1
19	9S2008	SCREW	4
20	9S2258	FAN AND BAFFLE ASSEM.	1
21	7F7621	WASHER	1
22	2K4821	LOCKNUT	1

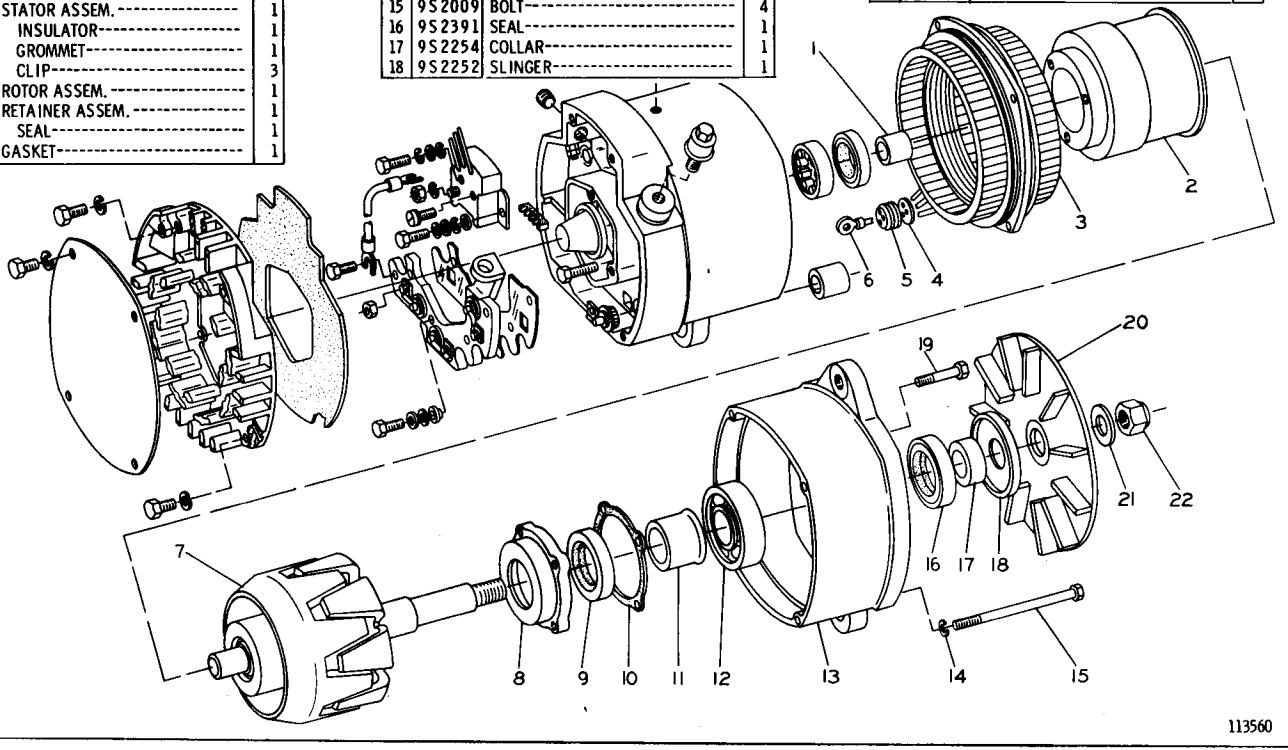

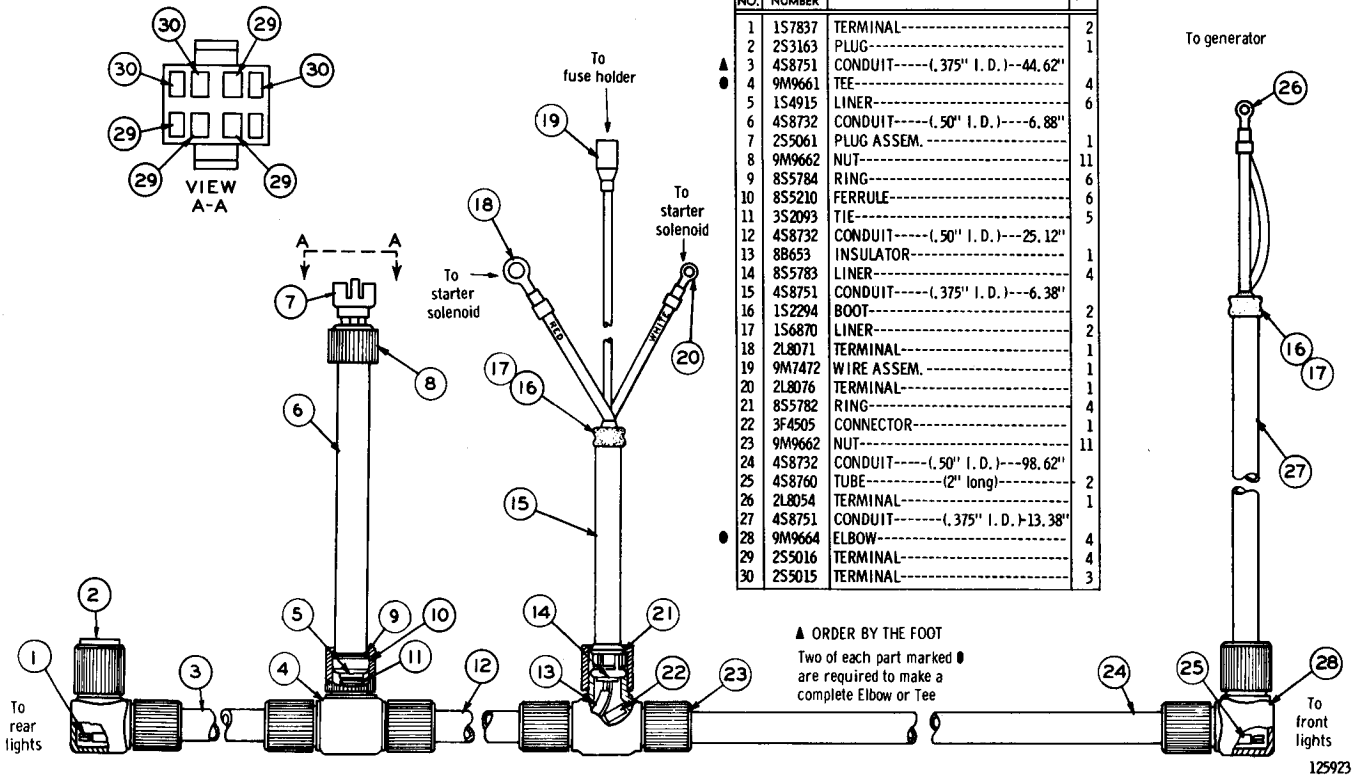

REF. NO.	PART NUMBER	DESCRIPTION	QTY
1	1S7837	TERMINAL	2
2	2S3163	PLUG	1
▲ 3	4S8751	CONDUIT-----(.375" I.D.)--44.62"	
● 4	9M9661	TEE	4
5	1S4915	LINER	6
6	4S8732	CONDUIT-----(.50" I.D.)----6.88"	
7	2S5061	PLUG ASSEM.	1
8	9M9662	NUT	11
9	8S5784	RING	6
10	8S5210	FERRULE	6
11	3S2093	TIE	5
12	4S8732	CONDUIT-----(.50" I.D.)---25.12"	
13	8B653	INSULATOR	1
14	8S5783	LINER	4
15	4S8751	CONDUIT-----(.375" I.D.)---6.38"	
16	1S2294	BOOT	2
17	1S6870	LINER	2
18	2L8071	TERMINAL	1
19	9M7472	WIRE ASSEM.	1
20	2L8076	TERMINAL	1
21	8S5782	RING	4
22	3F4505	CONNECTOR	1
23	9M9662	NUT	11
24	4S8732	CONDUIT-----(.50" I.D.)---98.62"	
25	4S8760	TUBE----------(2" long)----------	2
26	2L8054	TERMINAL	1
27	4S8751	CONDUIT-------(.375" I.D.)-13.38"	
● 28	9M9664	ELBOW	4
29	2S5016	TERMINAL	4
30	2S5015	TERMINAL	3

▲ ORDER BY THE FOOT
Two of each part marked ● are required to make a complete Elbow or Tee

9S966 HARNESS ASSEMBLY
Effective with Serial No. 48A9315
Part of 9S3407 Wiring Group listed on Page 116Y

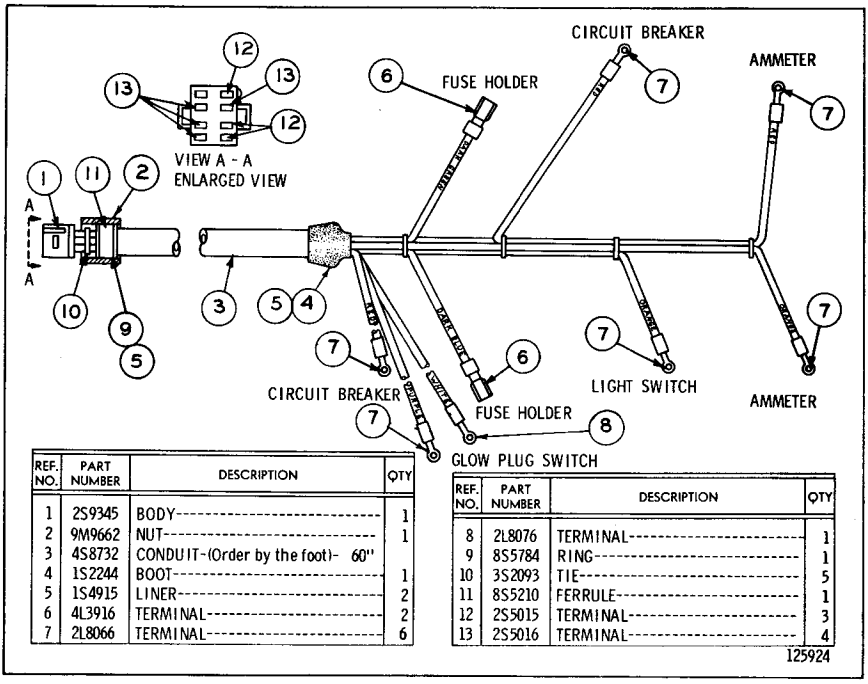

REF. NO.	PART NUMBER	DESCRIPTION	QTY
1	2S9345	BODY	1
2	9M9662	NUT	1
3	4S8732	CONDUIT-(Order by the foot)- 60"	
4	1S2244	BOOT	1
5	1S4915	LINER	2
6	4L3916	TERMINAL	2
7	2L8066	TERMINAL	6

REF. NO.	PART NUMBER	DESCRIPTION	QTY
8	2L8076	TERMINAL	1
9	8S5784	RING	1
10	3S2093	TIE	5
11	8S5210	FERRULE	1
12	2S5015	TERMINAL	3
13	2S5016	TERMINAL	4

9S967 HARNESS ASSEMBLY
Effective with Serial No. 48A9315
Part of 9S3407 Wiring Group listed on Page 116Y

4S6629 BRUSH GUARD GROUP
Serial No. 48A6393 to 48A6882 inclusive
FOR USE WITH HYDRAULIC BULLDOZER

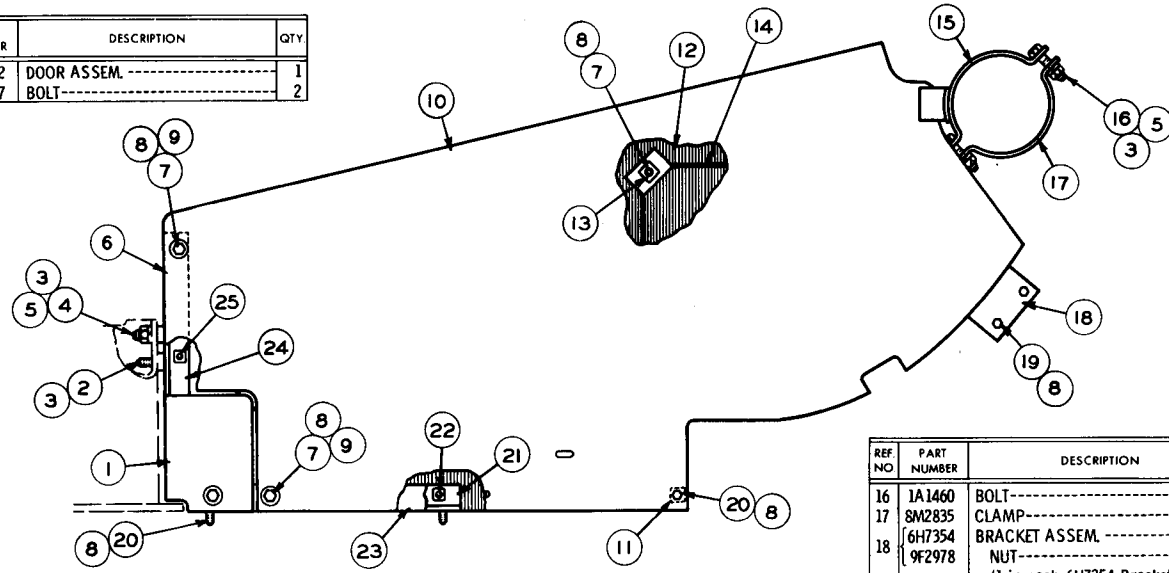

REF NO	PART NUMBER	DESCRIPTION	QTY
1	4S6742	DOOR ASSEM.	1
2	S-1587	BOLT	2

REF NO	PART NUMBER	DESCRIPTION	QTY
3	3B4508	LOCKWASHER	8
4	S-1585	BOLT	2
5	1D4719	NUT	6
6	4S6737	ANGLE ASSEM.---(Right Hand)	1
	9F2978	NUT (Part of 4S6737 Angle Assem.)	2
7	L-1351	BOLT	11
8	3B4506	LOCKWASHER	21
9	4B5271	WASHER	9

REF NO	PART NUMBER	DESCRIPTION	QTY
10	4S6729	GUARD ASSEM. ----(Right Hand)---	1
11	9F2978	NUT (Part of 4S6729 Guard Assem.)	1
12	4S6730	GUARD ASSEM. ----(Left Hand)----	1
13	9F2978	NUT (Part of 4S6730 Guard Assem.)	1
14	4S6655	DOOR ASSEM.	1
15	4S6727	CLAMP ASSEM. ----(Right Hand)---	1
	4S6728	CLAMP ASSEM. ----(Left Hand)----	1

REF NO	PART NUMBER	DESCRIPTION	QTY
16	1A1460	BOLT	4
17	8M2835	CLAMP	2
18	6H7354	BRACKET ASSEM.	2
	9F2978	NUT (1 in each 6H7354 Bracket Assem.)	2
19	S-1591	BOLT	4
20	S-1594	BOLT	6
21	4S6734	ANGLE ASSEM. ----(Left Hand)-----	1
22	9F2978	NUT (Part of 4S6734 Angle Assem.)	2
23	4S6733	ANGLE ASSEM. ----(Right Hand)---	1
	9F2978	NUT (Part of 4S6733 Angle Assem.)	3
24	4S6738	ANGLE ASSEM. ----(Left Hand)-----	1
25	9F2978	NUT (Part of 4S6738 Angle Assem.)	2

78082

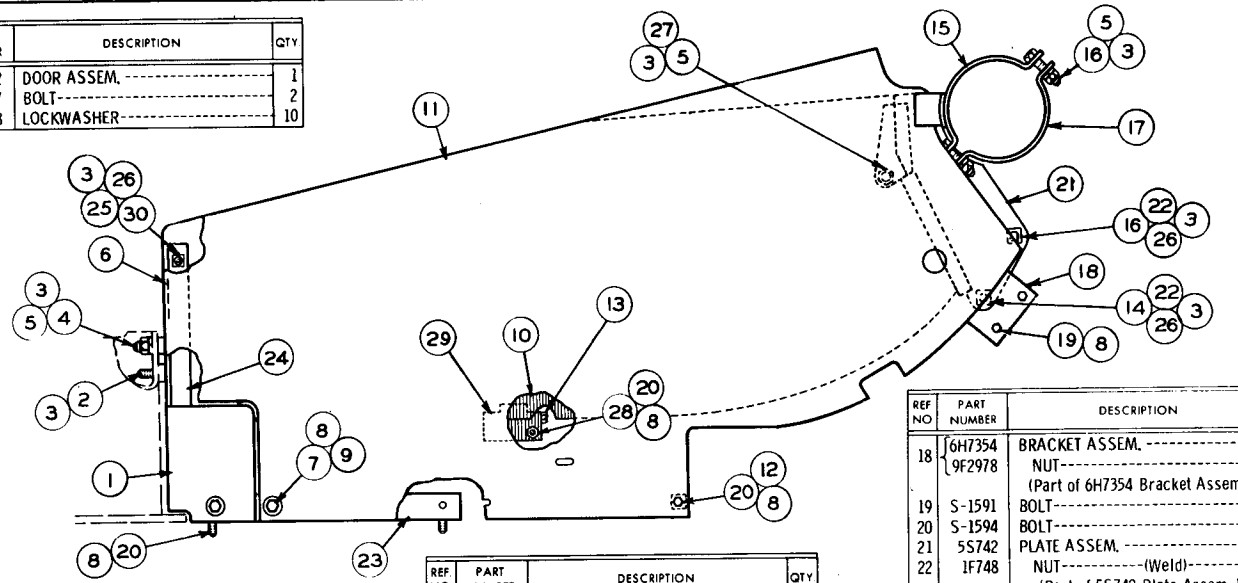

REF. NO.	PART NUMBER	DESCRIPTION	QTY.
1	4S6742	DOOR ASSEM.	1
2	S-1587	BOLT	2
3	3B4508	LOCKWASHER	10

REF. NO.	PART NUMBER	DESCRIPTION	QTY.
4	S-1585	BOLT	2
5	1D4719	NUT	5
6	4S6737	ANGLE ASSEM. ----(Right Hand)----	1
	9F2978	NUT----------(Weld)---------- (Part of 4S6737 Angle Assem.)	2
7	L-1351	BOLT	5
8	3B4506	LOCKWASHER	14
9	4B5271	WASHER	5
10	5S736	GUARD ASSEM. -----(Left Hand)----	1

REF. NO.	PART NUMBER	DESCRIPTION	QTY.
11	4S6729	GUARD ASSEM. ----(Right Hand)----	1
12	9F2978	NUT----------(Weld)---------- (Part of 4S6729 Guard Assem.)	1
13	6F8425	BOLT	2
	2F8616	NUT	2
14	7B3235	BOLT--------(1.375" Long)-------- -or-	2
	S-1595	BOLT---------(1.25" Long)--------	2
15	4S6727	CLAMP ASSEM. ----(Right Hand)----	1
16	1A1460	BOLT	3
17	8M2835	CLAMP	1

REF NO	PART NUMBER	DESCRIPTION	QTY
18	6H7354	BRACKET ASSEM.	1
	9F2978	NUT (Part of 6H7354 Bracket Assem.)	1
19	S-1591	BOLT	2
20	S-1594	BOLT	7
21	5S742	PLATE ASSEM.	1
22	1F748	NUT----------(Weld)---------- (Part of 5S742 Plate Assem.)	2
23	4S6733	ANGLE ASSEM. ----(Right Hand)----	1
	9F2978	NUT----------(Weld)---------- (Part of 4S6733 Angle Assem.)	3
24	5S748	ANGLE ASSEM. -----(Left Hand)-----	1
25	1F748	NUT----------(Weld)---------- (Part of 5S748 Angle Assem.)	1
26	4B5273	WASHER	3
27	1D5965	WASHER	1
28	1D4717	NUT	4
29	2M6103	PLATE ASSEM.	2
30	6H1717	BOLT	1

122033

5S745 BRUSH GUARD GROUP
Effective with Serial No. 48A6883
FOR USE WITH HYDRAULIC BULLDOZER

4S6791 BRUSH GUARD GROUP

Serial No. 48A6393 to 48A6882 inclusive

FOR USE WITHOUT HYDRAULIC BULLDOZER

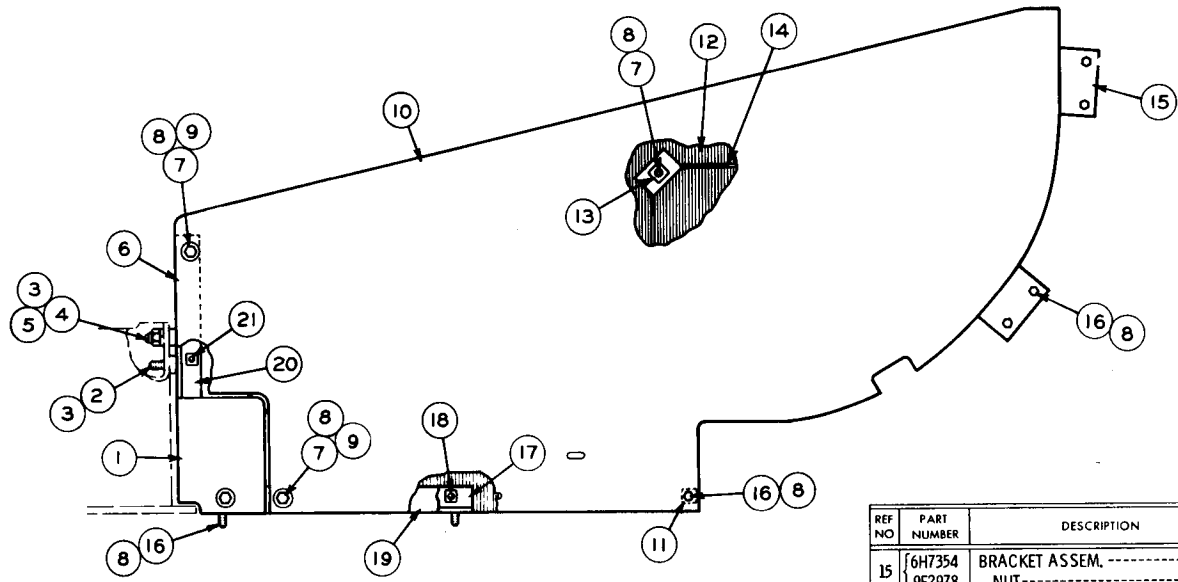

REF NO	PART NUMBER	DESCRIPTION	QTY
1	4S6742	DOOR ASSEM.	1
2	S-1587	BOLT	2
3	3B4508	LOCKWASHER	4
4	S-1585	BOLT	2
5	1D4719	NUT	2
6	4S6737	ANGLE ASSEM. ----(Right Hand)---	1
	9F2978	NUT	2
		(Part of 4S6737 Angle Assem.)	
7	L-1351	BOLT	11

REF NO	PART NUMBER	DESCRIPTION	QTY
8	3B4506	LOCKWASHER	25
9	4B5271	WASHER	9
10	4S6789	GUARD ASSEM. ---(Right Hand)---	1
11	9F2978	NUT	1
		(Part of 4S6789 Guard Assem.)	
12	4S6790	GUARD ASSEM. ----(Left Hand)----	1
13	9F2978	NUT	3
		(Part of 4S6790 Guard Assem.)	
14	4S6655	DOOR ASSEM.	1

REF NO	PART NUMBER	DESCRIPTION	QTY
15	6H7354	BRACKET ASSEM.	4
	9F2978	NUT	4
		(1 in each 6H7354 Bracket Assem.)	
16	S-1594	BOLT	14
17	4S6734	ANGLE ASSEM. ----(Left Hand)-----	1
18	9F2978	NUT	2
		(Part of 4S6734 Angle Assem.)	
19	4S6733	ANGLE ASSEM. ----(Right Hand)---	1
	9F2978	NUT	3
		(Part of 4S6733 Angle Assem.)	
20	4S6738	ANGLE ASSEM. ----(Left Hand)-----	1
21	9F2978	NUT	2
		(Part of 4S6738 Angle Assem.)	

78086

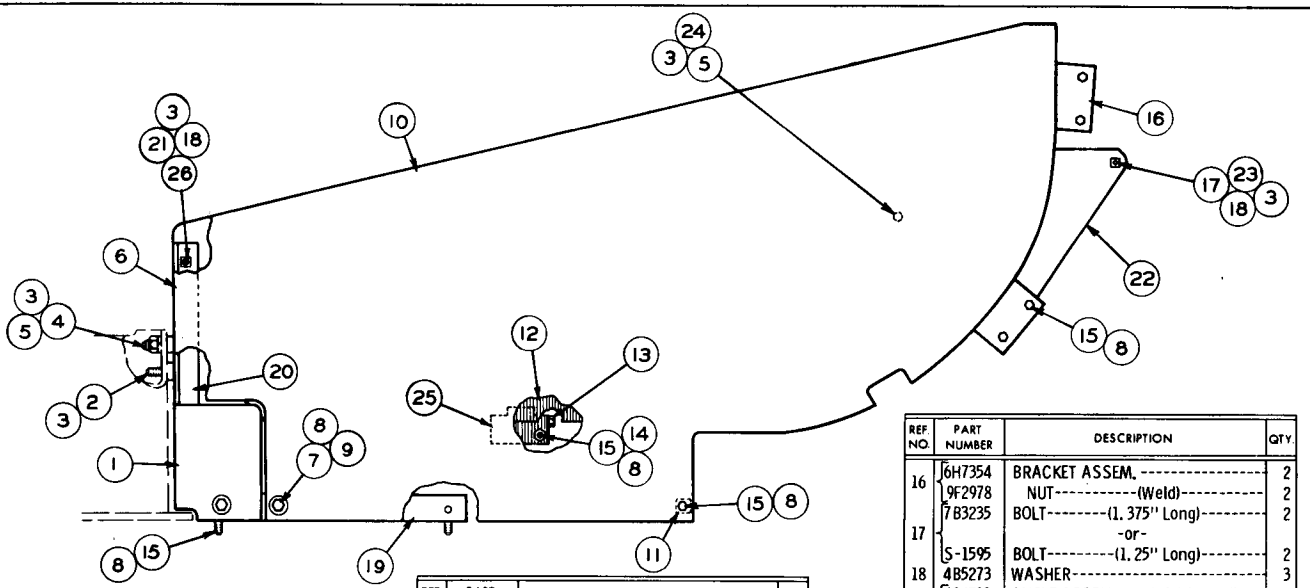

REF NO	PART NUMBER	DESCRIPTION	QTY
1	4S6742	DOOR ASSEM.	1
2	S-1587	BOLT	2
3	3B4508	LOCKWASHER	8
4	S-1585	BOLT	2
5	1D4719	NUT	3
6	4S6737	ANGLE ASSEM. ----(Right Hand)---	1
	9F2978	NUT----------(Weld)----------	2
		(Part of 4S6737 Angle Assem.)	
7	L-1351	BOLT	5

REF NO	PART NUMBER	DESCRIPTION	QTY
8	3B4506	LOCKWASHER	16
9	4B5271	WASHER	5
10	4S6789	GUARD ASSEM. ---(Right Hand)----	1
11	9F2978	NUT----------(Weld)----------	1
		(Part of 4S6789 Guard Assem.)	
12	5S736	GUARD ASSEM. ----(Left Hand)----	1
13	6F8425	BOLT	2
	2F8616	NUT	2
14	1D4717	NUT	4
15	S-1594	BOLT	11

REF NO	PART NUMBER	DESCRIPTION	QTY
16	6H7354	BRACKET ASSEM.	2
	9F2978	NUT----------(Weld)----------	2
17	7B3235	BOLT--------(1.375" Long)--------	2
		-or-	
	S-1595	BOLT---------(1.25" Long)--------	2
18	4B5273	WASHER	3
19	4S6733	ANGLE ASSEM. ----(Right Hand)----	1
	9F2978	NUT----------(Weld)----------	3
		(Part of 4S6733 Angle Assem.)	
20	5S748	ANGLE ASSEM. -----(Left Hand)----	1
21	1F748	NUT----------(Weld)----------	1
		(Part of 5S748 Angle Assem.)	
22	5S743	PLATE ASSEM.	1
23	1F748	NUT----------(Weld)----------	2
		(Part of 5S743 Plate Assem.)	
24	1D5965	WASHER	1
25	2M6103	PLATE ASSEM.	2
26	6H1717	BOLT	1

122032

5S744 BRUSH GUARD GROUP
Effective with Serial No. 48A6883
FOR USE WITHOUT HYDRAULIC BULLDOZER

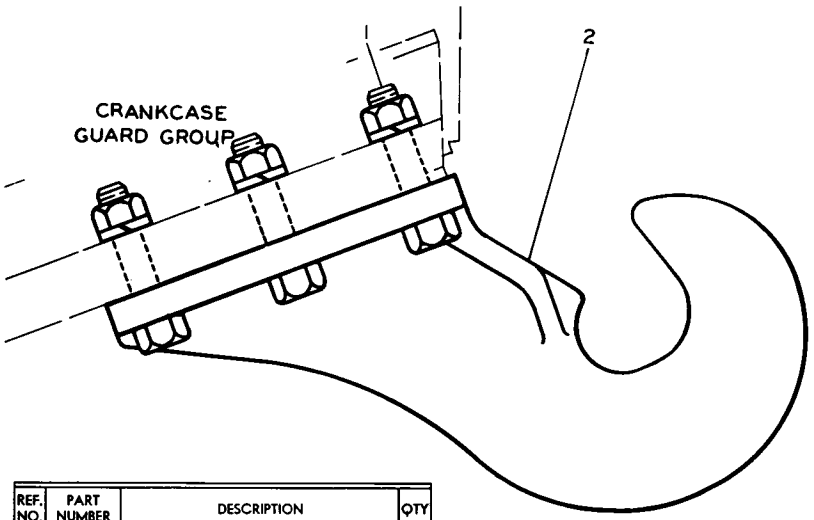

REF. NO.	PART NUMBER	DESCRIPTION	QTY
1	8F3152	BOLT	6
	1B4207	NUT	6
	3B4512	LOCKWASHER	6
2	7S6058	HOOK	1

113569

7B4464 FRONT PULL HOOK GROUP
FOR USE WITH 5M6583 CRANKCASE GUARD GROUP SHOWN ON PAGE 121

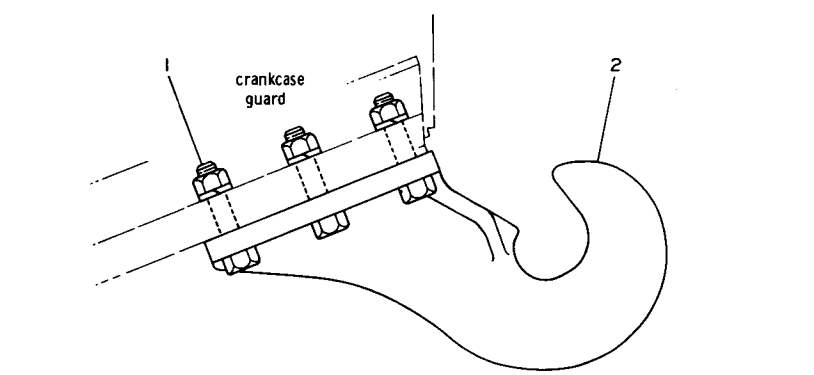

REF. NO.	PART NUMBER	DESCRIPTION	QTY
1	S1575	BOLT	6
	1B4207	NUT	6
	3B4512	LOCKWASHER	6
2	7S6058	HOOK	1

113570

3S7715 FRONT PULL HOOK GROUP
FOR USE WITH 3S372 CRANKCASE GUARD GROUP SHOWN ON PAGE 120

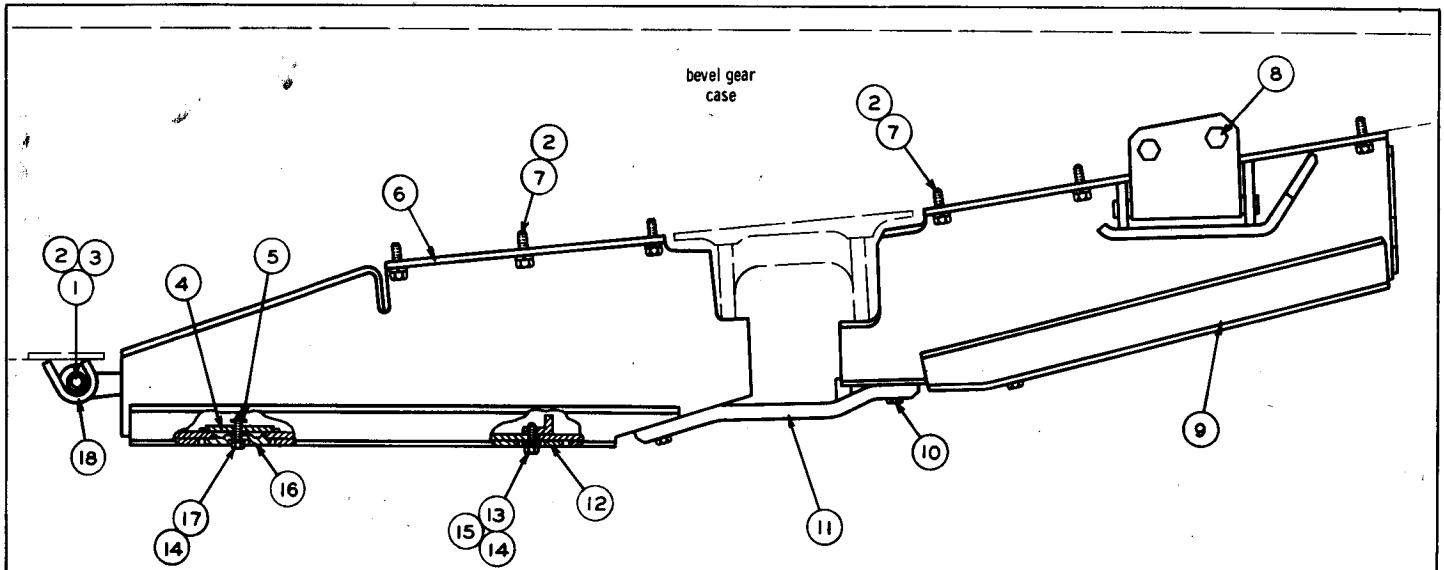

REF NO	PART NUMBER	DESCRIPTION	QTY.
1	L-1178	BOLT	2
2	3B4512	LOCKWASHER	15
3	1S7771	SPACER	2
4	2S9434	STRIP	2
5	4H5128	PIN	2
6	3S379	GUARD ASSEM.	1
7	S-1626	BOLT	13

REF NO	PART NUMBER	DESCRIPTION	QTY.
8	8F6124	BOLT	2
	1B4209	NUT	2
	3B4516	LOCKWASHER	2
9	3S373	GUARD ASSEM.	1
10	S-1589	BOLT	4
	3B4510	LOCKWASHER	4
	4B4281	WASHER	4

REF NO	PART NUMBER	DESCRIPTION	QTY.
11	3S376	PLATE ASSEM.	1
12	2S9657	COVER ASSEM.	1
13	6H1717	BOLT	2
14	3B4508	LOCKWASHER	4
15	V-531	WASHER	2
16	2S9731	COVER	2
17	2S9732	BOLT	2
18	1S7772	BRACKET	1

78092

3S372 CRANKCASE GUARD GROUP
FOR USE WHERE EXTREMELY ROUGH OPERATING CONDITIONS EXIST

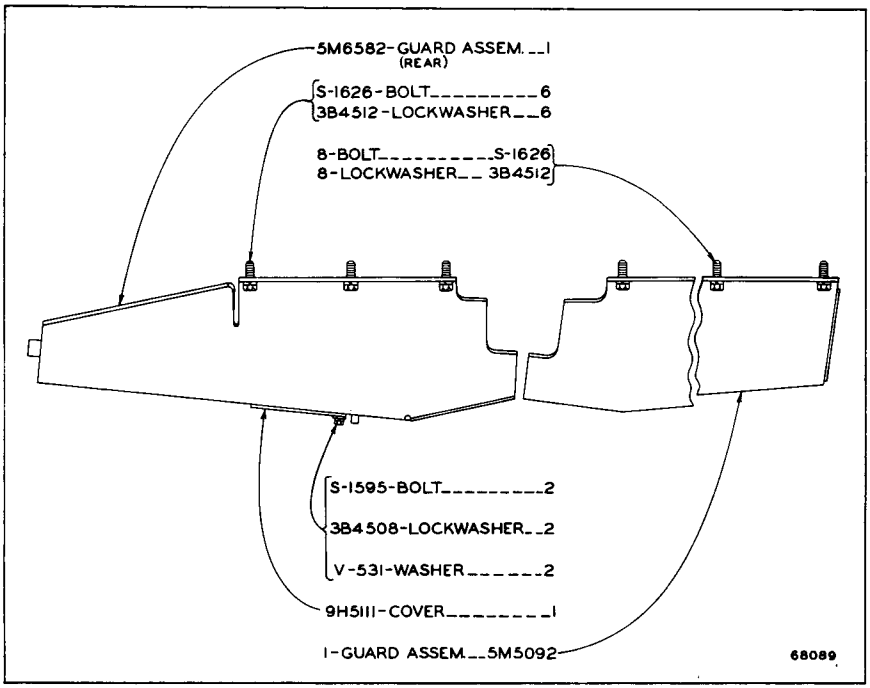

5M6583 CRANKCASE GUARD GROUP

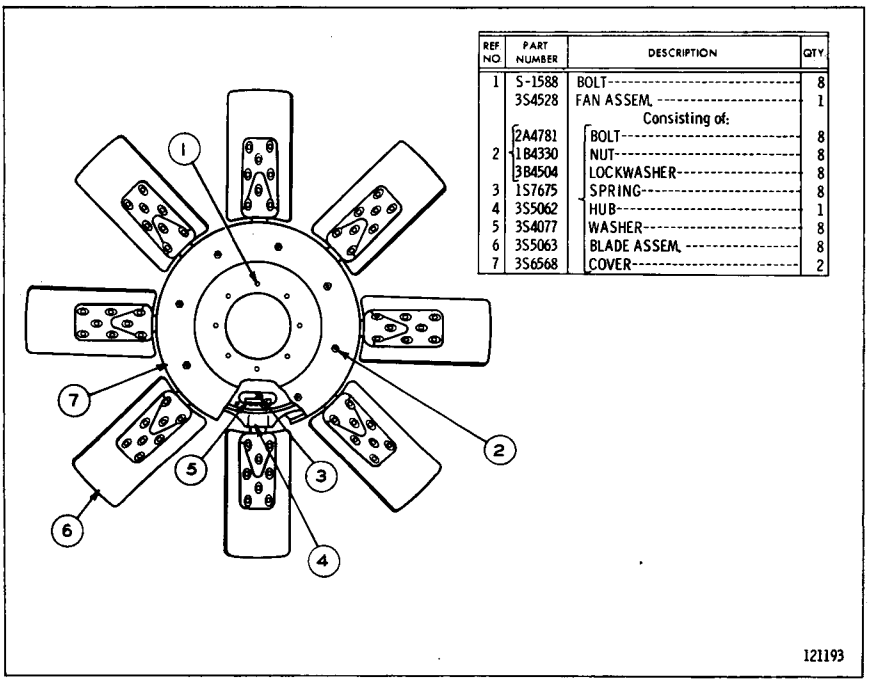

REF NO.	PART NUMBER	DESCRIPTION	QTY.
1	S-1588	BOLT	8
	3S4528	FAN ASSEM.	1
		Consisting of:	
	2A4781	BOLT	8
2	1B4330	NUT	8
	3B4504	LOCKWASHER	8
3	1S7675	SPRING	8
4	3S5062	HUB	1
5	3S4077	WASHER	8
6	3S5063	BLADE ASSEM.	8
7	3S6568	COVER	2

3S7140 FAN GROUP—Reversible Blade
Serial No. 48A6393 to 48A9314 inclusive

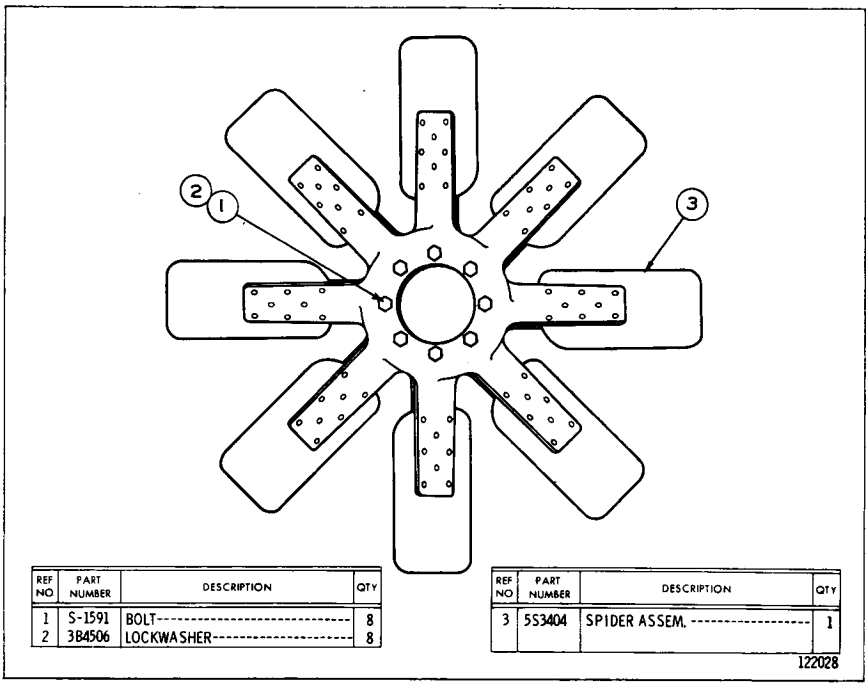

REF NO	PART NUMBER	DESCRIPTION	QTY
1	S-1591	BOLT	8
2	3B4506	LOCKWASHER	8

REF NO	PART NUMBER	DESCRIPTION	QTY
3	5S3404	SPIDER ASSEM.	1

5S8526 SUCTION FAN GROUP
Effective with Serial No. 48A9315

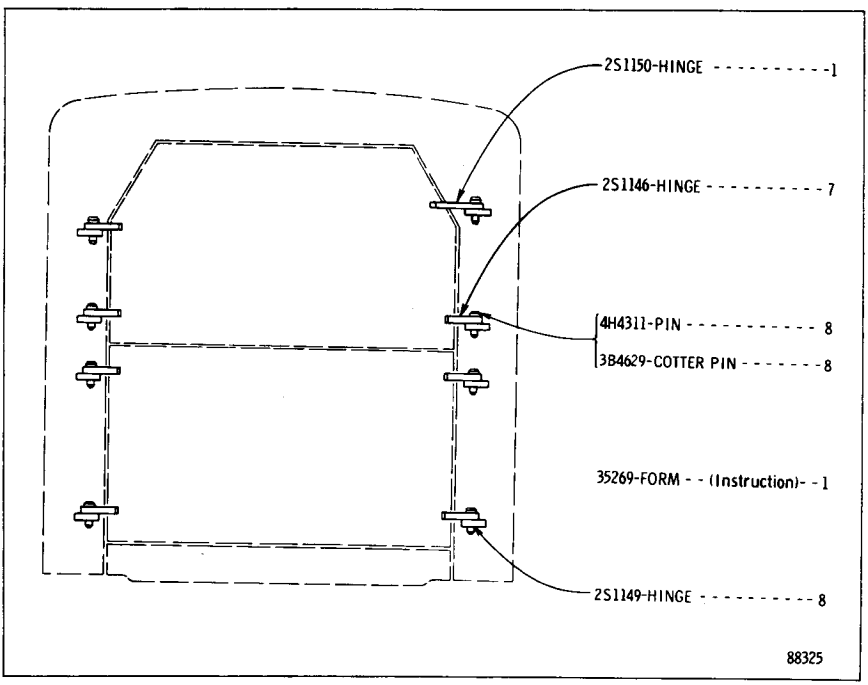

2S1164 RADIATOR GUARD HINGE GROUP
Note: 2S1162 Hinge Group, consisting of four complete hinges to mount one upper guard, is available

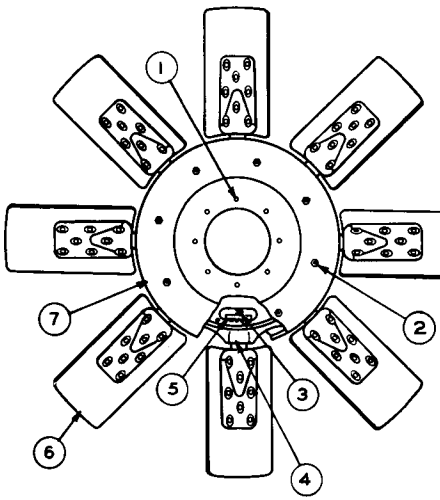

REF. NO.	PART NUMBER	DESCRIPTION	QTY.
1	1S-1588	BOLT	8
	3B4506	LOCKWASHER	8

	3S4528	FAN ASSEM.	1
		Consisting of:	
2	2A4781	BOLT	8
	1B4330	NUT	8
	3B4504	LOCKWASHER	8
3	1S7675	SPRING	8
4	3S5062	HUB	1
5	3S4077	WASHER	8
6	3S5063	BLADE ASSEM.	8
7	3S6568	COVER	2

121194

5S8396 FAN GROUP—Reversible Blade
Effective with Serial No. 48A9315

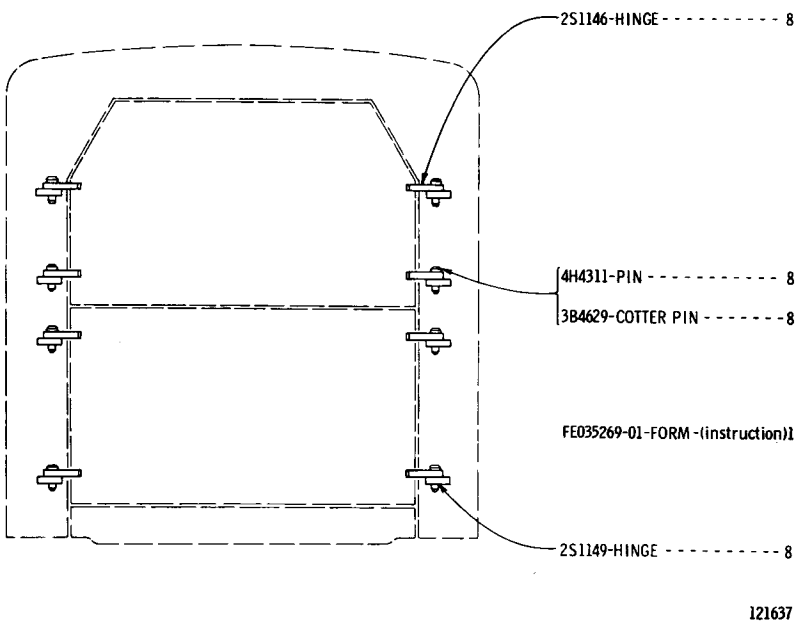

121637

8S1715 RADIATOR GUARD HINGE GROUP—Upper and Lower

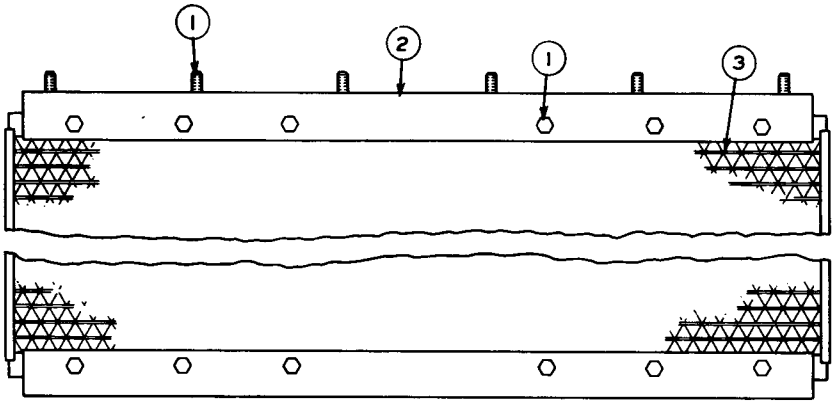

REF. NO.	PART NUMBER	DESCRIPTION	QTY.
1	S-509 3B4506 4B4278	BOLT LOCKWASHER WASHER	18 18 14
2	5S8400	PLATE	2
3	5S7589	GRID ASSEM.	1

121195

5S8401 SAND BLAST GRID GROUP
Effective with Serial No. 48A9315

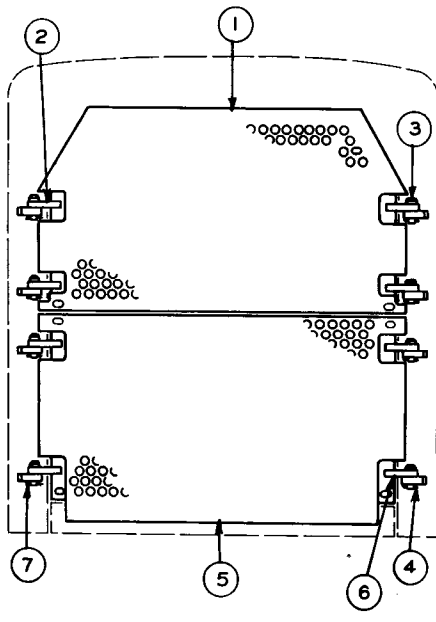

REF. NO.	PART NUMBER	DESCRIPTION	QTY.
1	7S5521	PLATE ASSEM.	1
2	2S1146	HINGE (Part of 7S5521 Plate Assem.)	4
3	4H4311	PIN	8
4	3B4629	COTTER PIN	8
5	7S5519	PLATE ASSEM.	1
6	2S1146	HINGE (Part of 7S5519 Plate Assem.)	4
7	2S1149	HINGE	8
FE035269-01		FORM (Instructions for installing Radiator Guard Hinge Group)	1

121748

7S5541 HINGED HEAVY DUTY PLATE GROUP—Type 1

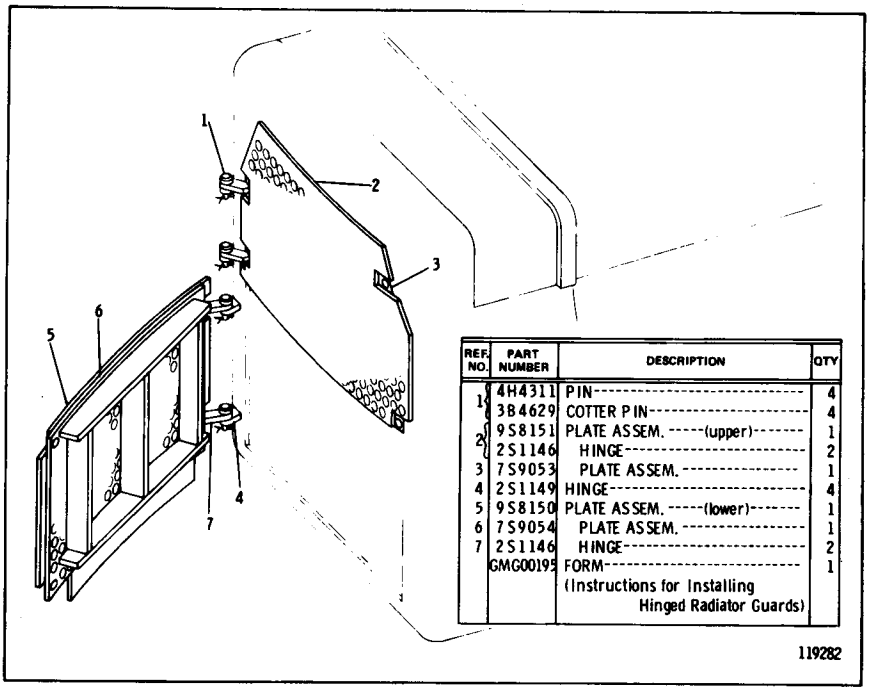

REF. NO.	PART NUMBER	DESCRIPTION	QTY
1	4H4311	PIN	4
	3B4629	COTTER PIN	4
2	9S8151	PLATE ASSEM. -----(upper)-------	1
	2S1146	HINGE	2
3	7S9053	PLATE ASSEM.	1
4	2S1149	HINGE	4
5	9S8150	PLATE ASSEM. -----(lower)-------	1
6	7S9054	PLATE ASSEM.	1
7	2S1146	HINGE	2
	GMG00195	FORM (Instructions for Installing Hinged Radiator Guards)	1

7S5541 HINGED HEAVY DUTY PLATE GROUP—Type 2

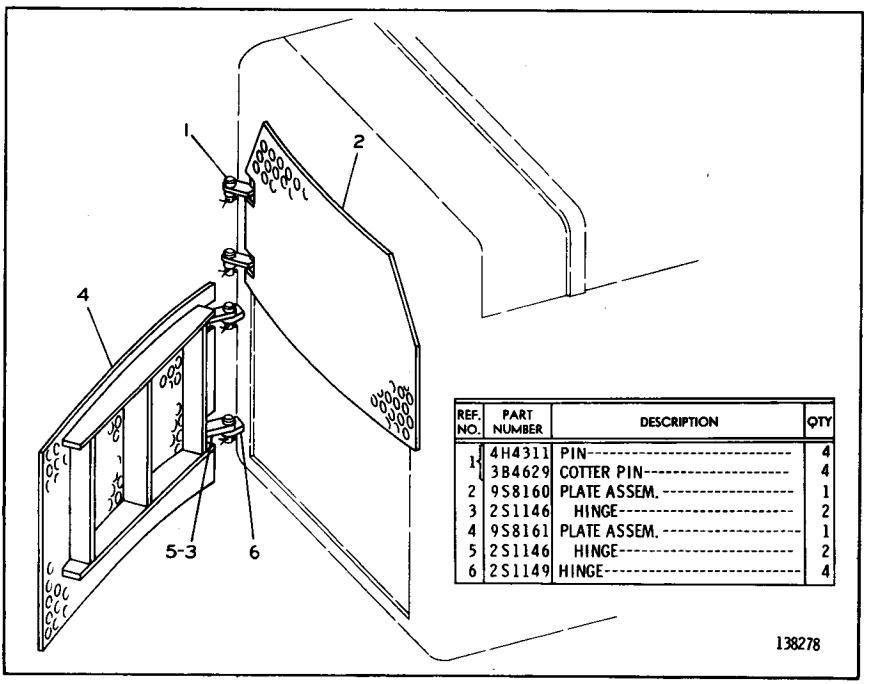

REF. NO.	PART NUMBER	DESCRIPTION	QTY
1	4H4311	PIN	4
	3B4629	COTTER PIN	4
2	9S8160	PLATE ASSEM.	1
3	2S1146	HINGE	2
4	9S8161	PLATE ASSEM.	1
5	2S1146	HINGE	2
6	2S1149	HINGE	4

9S8165 RADIATOR GRILL HINGED PLATE GROUP—Factory Installation

		CONSISTS OF:
1	5S8067	SPACER--FAN SHIELDS TO TOP TANK
22	1A5822	BOLT
19	3B4508	LOCKWASHER--1/2"
1	5S7600	SHIELD ASSEMBLY--FAN (LH)
1	5S7599	SHIELD ASSEMBLY--FAN (RH)
12	4B4280	WASHER--SHIELD ASSEMBLY & SPACER ASSEMBLY TO GUARD
2	8S3915	SPACER ASSEMBLY--FAN SHIELD TO GUARD
1	5S7595	STRIP--BOTTOM (SHIELD TO SHIELD)
1	5S8423	BAFFLE ASSEMBLY--BOTTOM
15	1A2029	BOLT
78	3B4506	LOCKWASHER--3/8"
4	5S7597	STRIP--FAN BAFFLE BACKING
4	5S7606	BAFFLE--FAN
18	SL594	BOLT
47	4B4278	WASHER
1	5S7588	GUARD--WIRE FAN
7	S1588	BOLT
4	1D4717	NUT
1	5S7469	BASE ASSEMBLY--FAN PULLEY
		CONSISTS OF:
		1 8H9189 DOWEL
1	5S7265	PULLEY--FAN
1	4H1566	SPACER--BEARING TO BASE ASSEMBLY
1	5M9739	SEAL--PULLEY TO SPACER
2	6H3957	BEARING--PULLEY TO BASE ASSEMBLY
1	7S1204	SPACER--BEARING TO BEARING
1	7S1175	WASHER--BEARING TO SHAFT
2	9M909	LOCKWASHER--WASHER TO SHAFT
1	7S1151	COVER--FAN PULLEY
1	9F4446	SEAL--COVER TO PULLEY
1	8S2388	HOSE ASSEMBLY--GENERATOR BRACKET TO FAN DRIVE BASE ASSEMBLY
1	5S7473	PULLEY--BELT TIGHTENER
1	2S4662	SPIDER ASSEMBLY--FAN (BLOWER)
1	5S7476	BASE ASSEMBLY--BELT TIGHTENER
		CONSISTS OF:
		1 3H703 DOWEL
1	5S7471	ARM ASSEMBLY--BELT TIGHTENER
		CONSISTS OF:
		1 3S9029 BUSHING ASSEMBLY
		1 3H703 DOWEL
1	3S1461	SHIM--PLATE TO ARM ASSEMBLY
1	4S7818	PLATE--ARM ASSEMBLY TO SHAFT
1	5B1891	PIN--PLATE TO SHAFT
1	4M2343	SEAL--BELT TIGHTENER PULLEY TO SHAFT
1	5S7472	SPACER--BEARING TO BEARING
1	5S8523	WASHER--BEARING TO SHAFT
1	8S2388	HOSE ASSEMBLY--GENERATOR BRACKET TO TIGHTENER PULLEY ARM ASSEMBLY
2	3B8489	FITTING--GREASE--TO GENERATOR BRACKET
2	3B9400	FITTING--HOSE TO ARM ASSEMBLY AND FAN SHAFT
1	4B9233	CLIP--HOSE TO FAN BASE ASSEMBLY
1	5S8449	BRACKET--SPRING SUPPORT
1	5S7598	PIN--SPRING TO BRACKET

8S3917 FIELD CONVERSION GROUP—Part 1 of 2
Serial No. 48A6393 to 48A9315 inclusive
Provides engine mounted fan and the space necessary to mount the sand blast grid

1	3H7928	ADJUSTING SCREW--BRACKET TO FAN BASE ASSEMBLY
1	1D5117	NUT--ADJUSTING SCREW LOCK
1	8S3916	BRACKET ASSEMBLY--GENERATOR MOUNTING
1	6B1557	BOLT--BRACKET ASSEMBLY--TO TIMING GEAR HOUSING
4	S1517	BOLT--BRACKET ASSEMBLY--TO TIMING GEAR HOUSING
1	S1584	BOLT--GENERATOR TO GENERATOR MOUNTING BRACKET ASSEMBLY
1	4B4279	WASHER--BETWEEN STRAP & GENERATOR FLANGE
1	T319	BOLT--STRAP TO GENERATOR
1	3B4507	LOCKWASHER--STRAP TO GENERATOR
1	2S5218	VEE BELT--GENERATOR DRIVE
1	5S7589	GRID ASSEMBLY--SAND BLAST
18	S509	BOLT
2	5S8400	PLATE--GRID MOUNTING
2	5S7596	BRACKET--RADIATOR BOTTOM TANK TO FAN SHIELD MOUNTING BLOCK
1	4H9628	GASKET BELT TIGHTENER BASE ASSEMBLY TO TIMING GEAR HOUSING
1	3B4628	COTTER--BELT TIGHTENER SHOCK ASSEMBLY TO SPRING SUPPORT BRACKET
1	3B4617	COTTER--BELT TIGHTENER ARM ASSEMBLY TO SHOCK ASSEMBLY
1	2S6151	GASKET--COVER TO BELT TIGHTENER PULLEY
1	.....	FORM FM055235
1	8S4318	SPACER--BRACKET ASSEMBLY TO TIMING GEAR HOUSING

8S3917 FIELD CONVERSION GROUP—Part 2 of 2
Serial No. 48A6393 to 48A9315 inclusive
Provides engine mounted fan and the space necessary to mount the sand blast grid

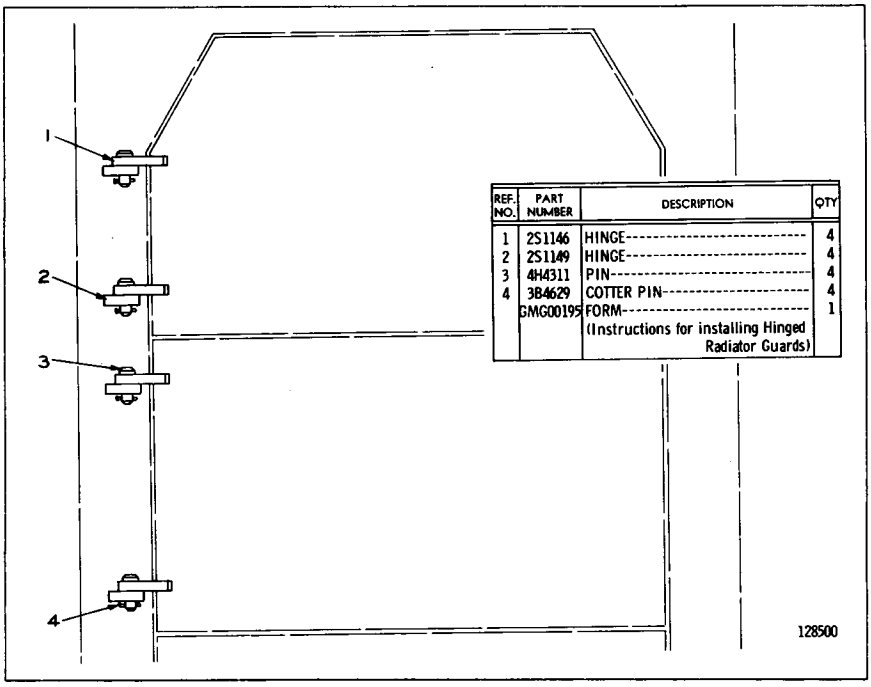

REF. NO.	PART NUMBER	DESCRIPTION	QTY
1	2S1146	HINGE	4
2	2S1149	HINGE	4
3	4H4311	PIN	4
4	3B4629	COTTER PIN	4
	GMG00195	FORM (Instructions for installing Hinged Radiator Guards)	1

9S7871 RADIATOR GUARD HINGE GROUP—Field Installation

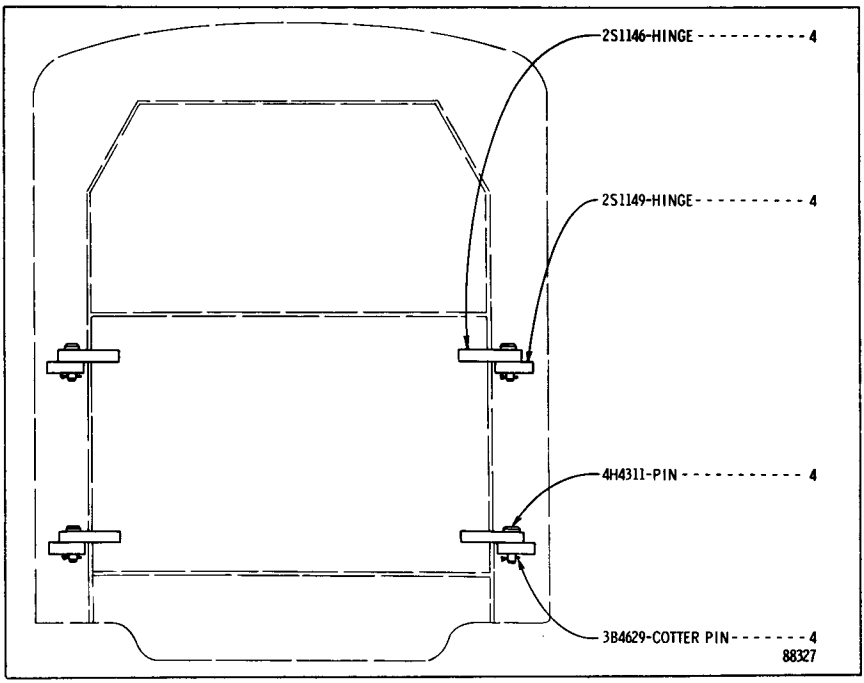

2S1163 RADIATOR GUARD HINGE GROUP

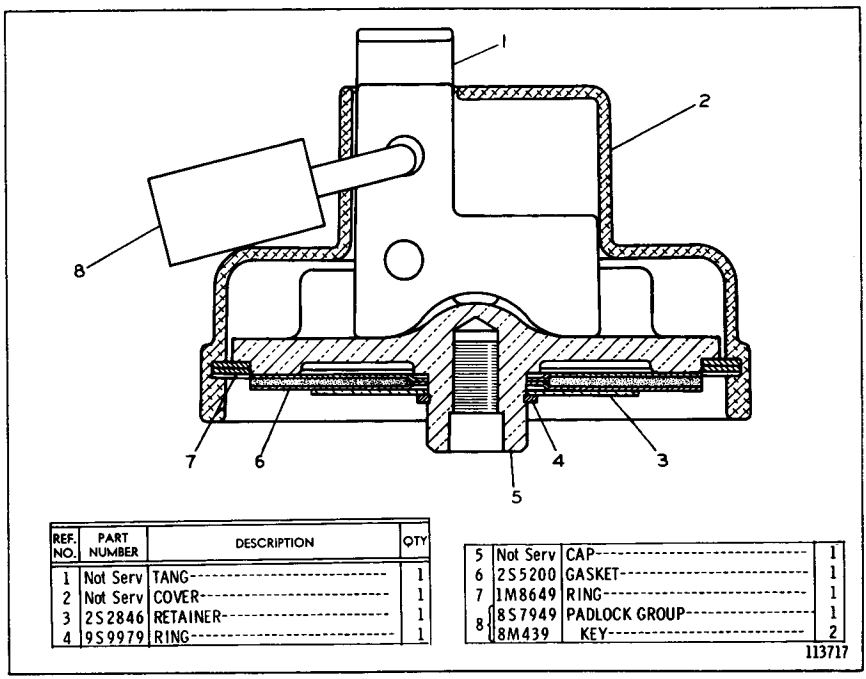

REF. NO.	PART NUMBER	DESCRIPTION	QTY
1	Not Serv	TANG	1
2	Not Serv	COVER	1
3	2S2846	RETAINER	1
4	9S9979	RING	1
5	Not Serv	CAP	1
6	2S5200	GASKET	1
7	1M8649	RING	1
8	8S7949	PADLOCK GROUP	1
	8M439	KEY	2

113717

2S6096 PROTECTION COVER GROUP—Radiator Cap

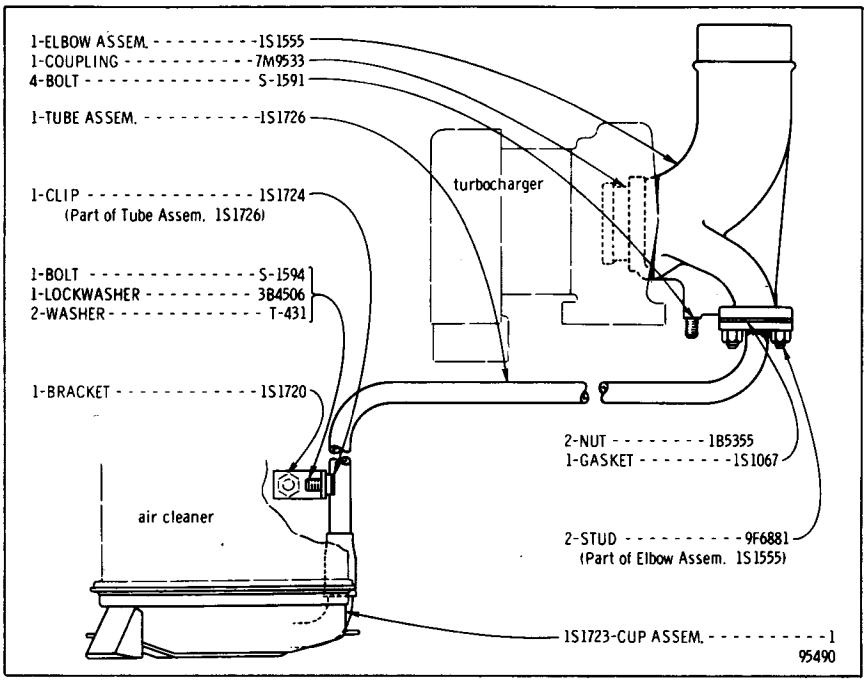

2S127 DUST EJECTOR GROUP—Air Cleaner

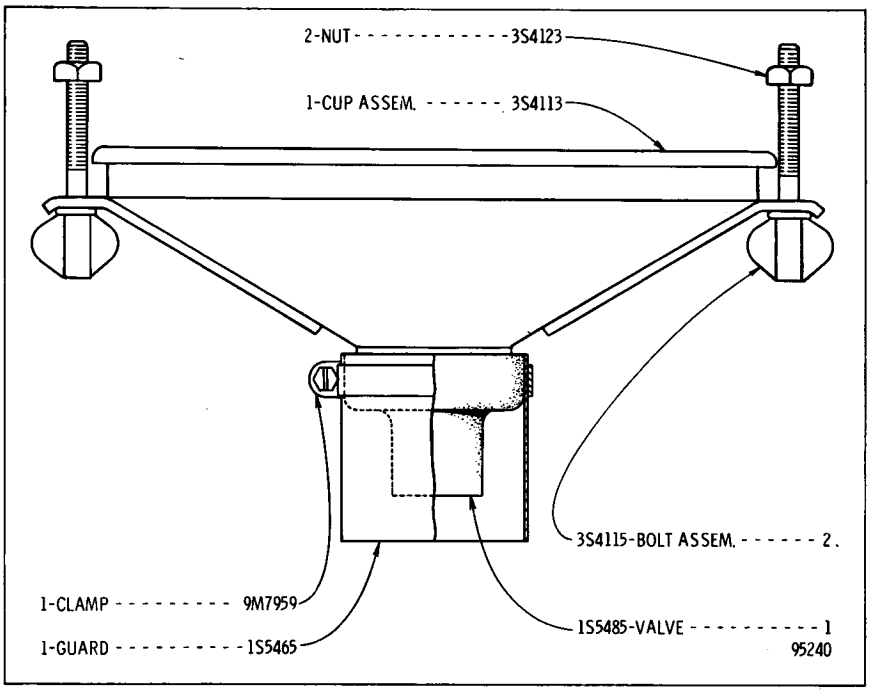

1S5463 DUST VALVE GROUP—Factory Installation
Serial No. 48A6393 to 48A6882 inclusive
FOR USE WITH 13" DIAMETER AIR CLEANER

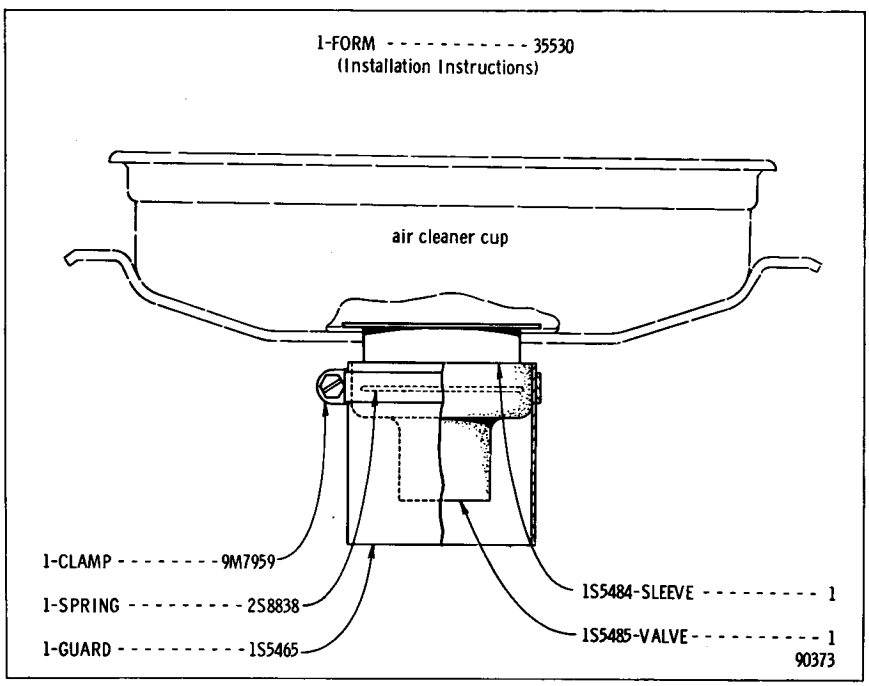

1S5486 DUST VALVE GROUP—Field Installation
Serial No. 48A6393 to 48A6882 inclusive

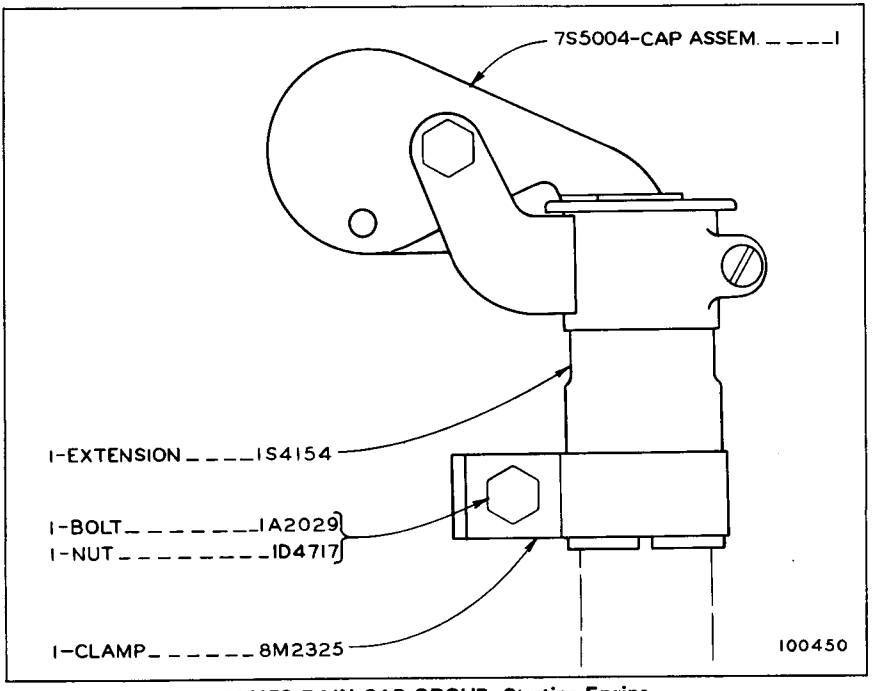

1S4153 RAIN CAP GROUP—Starting Engine

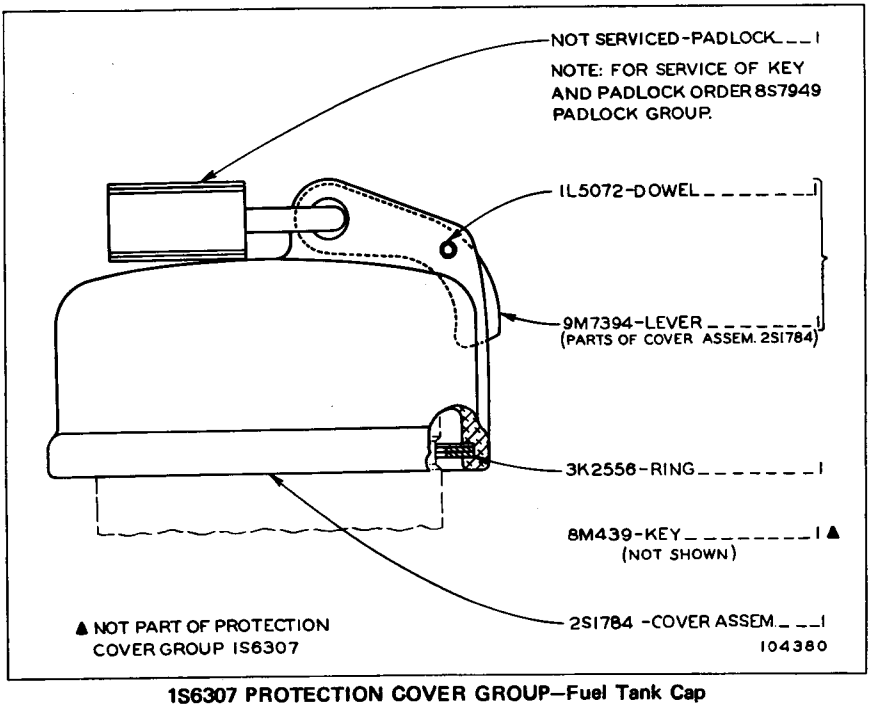

1S6307 PROTECTION COVER GROUP—Fuel Tank Cap
Only separate parts serviced
When complete Group is required order 5S8033

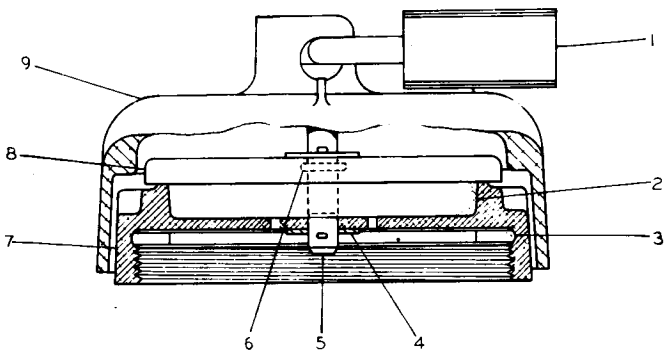

NOTE: FOR SERVICE OF PADLOCK AND KEY ORDER 8S7949 PADLOCK GROUP

▲ NOT PART OF 5S8033 CAP GROUP

REF. NO.	PART NUMBER	DESCRIPTION	QTY
▲ 1	Not Serv	PADLOCK	1
	8M439	KEY---------(Not Shown)---------	2
2	5S7657	FILTER	1
3	2A1763	GASKET	1
4	4J1105	SHIM	2
5	5S7651	PIN	1
	3B4505	COTTER PIN	2
6	5F9144	SEAL	1
7	5S8006	CAP	1
8	5S7646	LID	1
9	5S7998	COVER	1

113718

5S8033 PROTECTION COVER GROUP—Fuel Tank Cap

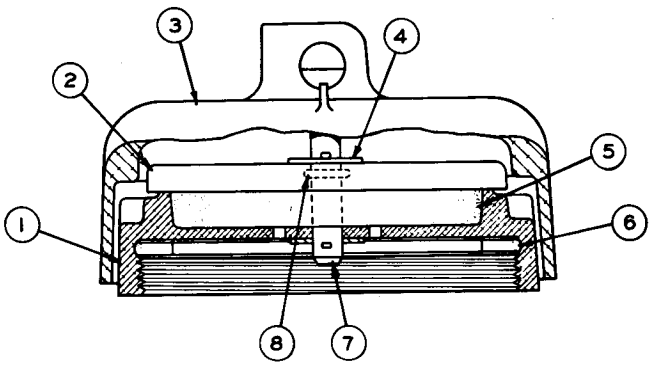

REF. NO.	PART NUMBER	DESCRIPTION	QTY
1	5S8006	CAP	1
2	5S7646	LID	1
3	5S7998	COVER	1
4	4J1105	SHIM	2
5	5S7657	FILTER	1
6	2A1763	GASKET	1
7	5S7651	PIN	1
	3B4605	COTTER PIN	2
8	5F9144	SEAL	1

124128

9S1932 COVER GROUP—Type 1
Provides Field Replacement for 2S1784 Cover Assembly shown on Page 126

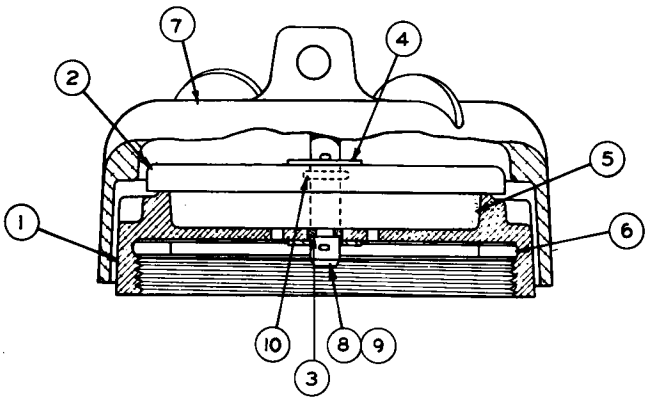

	REF. NO.	PART NUMBER	DESCRIPTION	QTY
C	1	1P8680	CAP	1
	2	5S7646	LID	2
C	3	8F9538	SEAL	1
	4	4J1105	SHIM	2
	5	5S7657	FILTER	1
	6	2A1763	GASKET	1
C	7	1P8050	COVER ASSEM.	1
		1P8052	RETAINER	1
	8	1P8679	PIN	1
	9	3B4605	COTTER PIN	2
	10	5F9144	SEAL	1

C INDICATES CHANGE 138952

9S1932 COVER GROUP—Type 2
Provides Field Replacement for 2S1784 Cover Assembly shown on Page 126

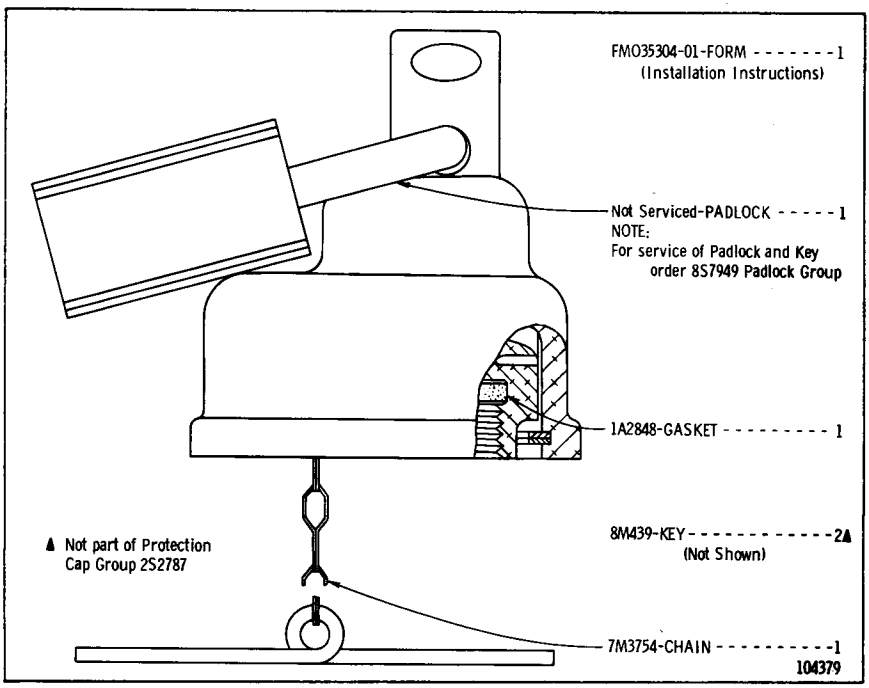

2S2787 PROTECTION CAP GROUP--STARTING ENGINE
PROVIDES PROTECTION COVER FOR FUEL TANK CAP

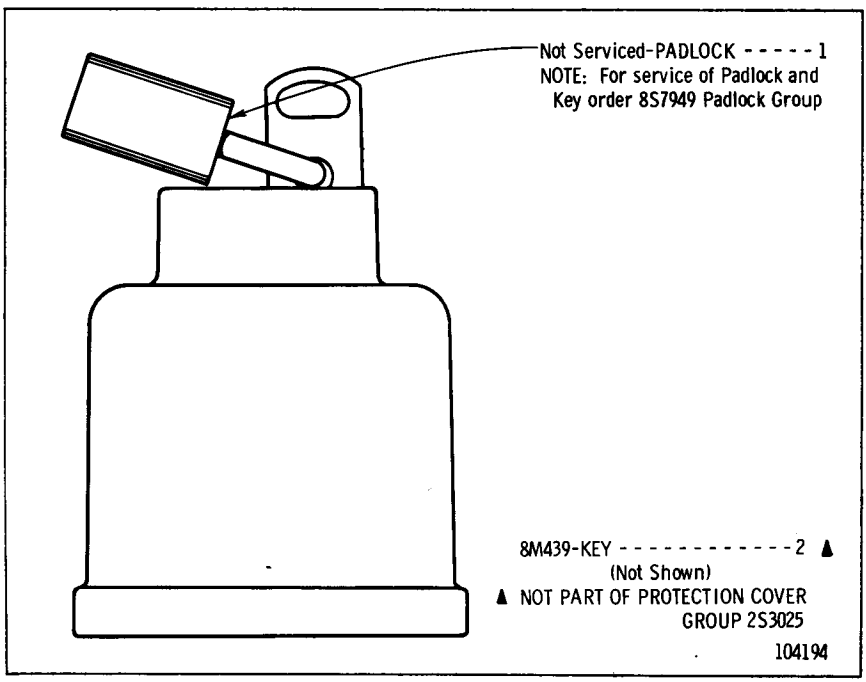

2S3025 PROTECTION COVER GROUP--OIL FILLER CAP

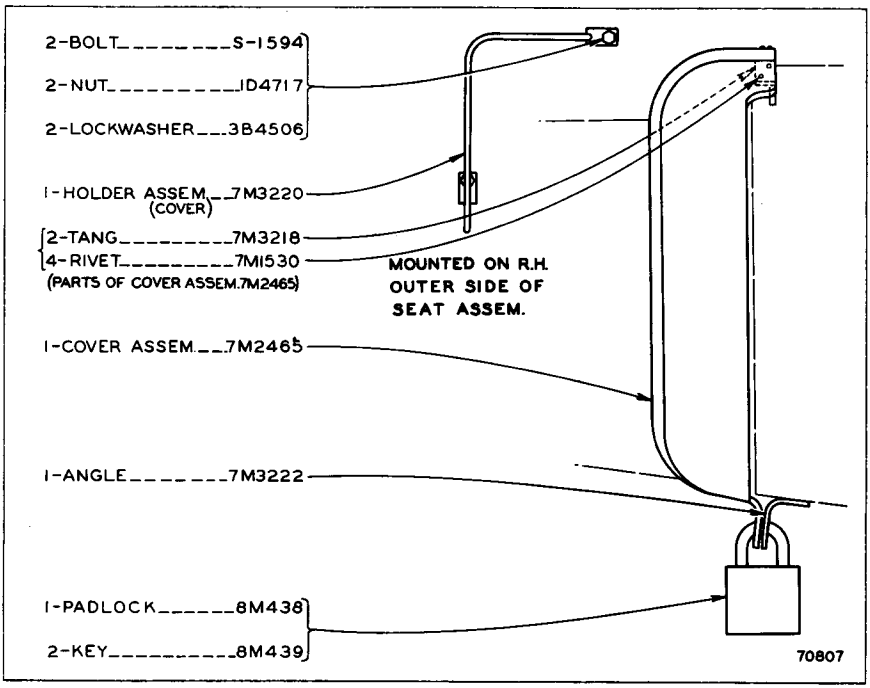

7M3221 INSTRUMENT PANEL PROTECTION GROUP
Serial No. 48A6393 to 48A13095 inclusive

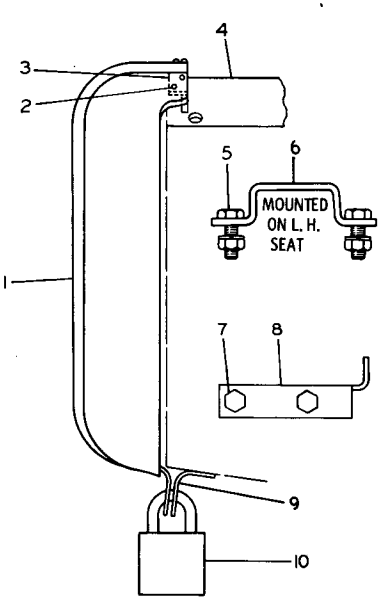

▲ NOT PART OF 9S3551 PROTECTION COVER GROUP
NOTE: FOR SERVICE OF PADLOCK AND KEY ORDER 8S7949 PADLOCK GROUP

REF. NO.	PART NUMBER	DESCRIPTION	QTY
1	7M2465	COVER ASSEM.	1
2	7M1530	RIVET	4
3	7M3218	TANG	2
4	9S9521	COVER	1
5	S509	BOLT	2
	1D4717	NUT	2
	3B4506	LOCKWASHER	2
6	9S3553	GUARD	1
7	S1585	BOLT	2
	1D4719	NUT	2
	3B4508	LOCKWASHER	2
	4B4280	WASHER	2
8	9S3552	PLATE (Not For Use With 24 Volt Powershift Tractors)	1
9	7M3222	ANGLE	1
▲ 10	Not Serv	PADLOCK	1
	8M439	KEY (NOT SHOWN)	2
	GMG00077	FORM (Installation Instructions)	1

113720

9S3551 INSTRUMENT PANEL PROTECTION GROUP
Effective with Serial No. 48A13096

Consists of:

1	1A2209	Bolt—Lever to Shaft
1	1A4784	Washer—To Bolt
1	2A2209	Lock—Bolt to Clamp
1	2A4382	Bolt—Lever to Shaft
2	2A5328	Lock—Bolt to Flange
2	1B4203	Nut—To Ball Joint
4	2B2695	Bolt—Cover Assembly to Housing
2	3B4506	Lockwasher—To Bolt
4	3B4607	Cotter Pin—To Lever and Spring Assembly
4	3B4607	Cotter Pin—To Shaft Assembly and Weight Assembly
1	4B4278	Washer—Spring to Pedal
2	5B9079	Nut—Rod to Ball Joint
2	1D5117	Nut—To Detent
1	3D2777	Spring—To Pedal
1	5F8542	Shim—Spacer to Injection Pump Housing
1	6F6204	Lock—Lever to Bolts
4	8F6820	Washer—To Bolt
1	3H4861	Spring—Clamp to Spacer
1	3H6660	Pin—Lever to Dowel
1	4H8577	Gasket—Cover to Housing Assembly
1	4H8613	Gasket—Cover Assembly to Housing Assembly
1	7H7717	Cover Assembly—To Shaft Assembly
2	7H9737	Cotter Pin—Bolt to Nut and Rod
1	8H7035	Gasket—Cover to Housing Assembly
1	1L7265	Lever—Shaft to Spring Assembly
2	5M2027	Ball Joint—Lever to Pedal
1	8M6253	Pin—Pedal Assembly to Support Assembly
1	8M6254	Block—Support to Retainer
1	8M6255	Pin—Detent to Pedal
1	8M6270	Retainer—Detent Pin to Pedal
1	8M6271	Pedal Assembly
1	9M3853	Rod Assembly—Ball Joint to Ball Joint
1	9M3858	Spring—Rod Assembly to Support Assembly
1	9M3864	Lever—Shaft to Rod
1	9M4071	Spring Assembly—Lever Assembly to Lever
1	9M4091	Shaft—Lever to Housing
1	9M4401	Lever—To End
1	9M4404	Support Assembly—Pedal to Floor Plate
1	9M4460	Rod Assembly
1	1S7929	Gasket—Cover Assembly to Housing Assembly
2	1S8319	Weight Assembly—To Shaft
1	L-2061	Dowel—Lever to End
1	S-1570	Bolt—Lever to Shaft
1	S-1588	Bolt—Support to Block
1	. . . . .	Installation Instruction Form No. 35168

1S8859 ACCELERATOR CONTROL GROUP—Foot Operated—Field Installation

5S480 CAB HEATER GROUP--12 VOLT--TYPE 1

PART OF 5S147 CAB HEATER GROUP SHOWN ON PAGE 133

9M9707 HOT WATER HEATER ASSEMBLY PARTS ARE SHOWN ON PAGE 135

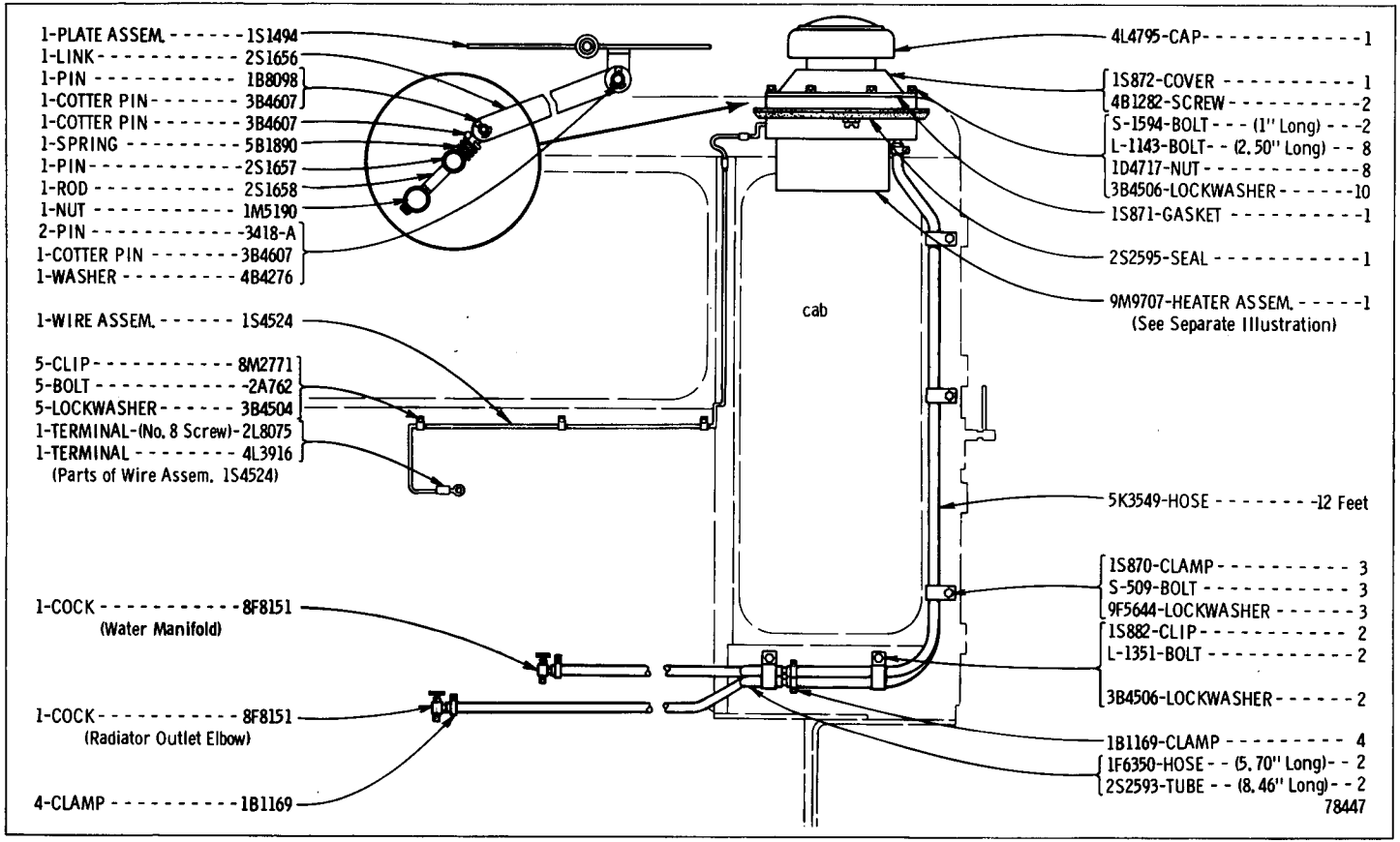

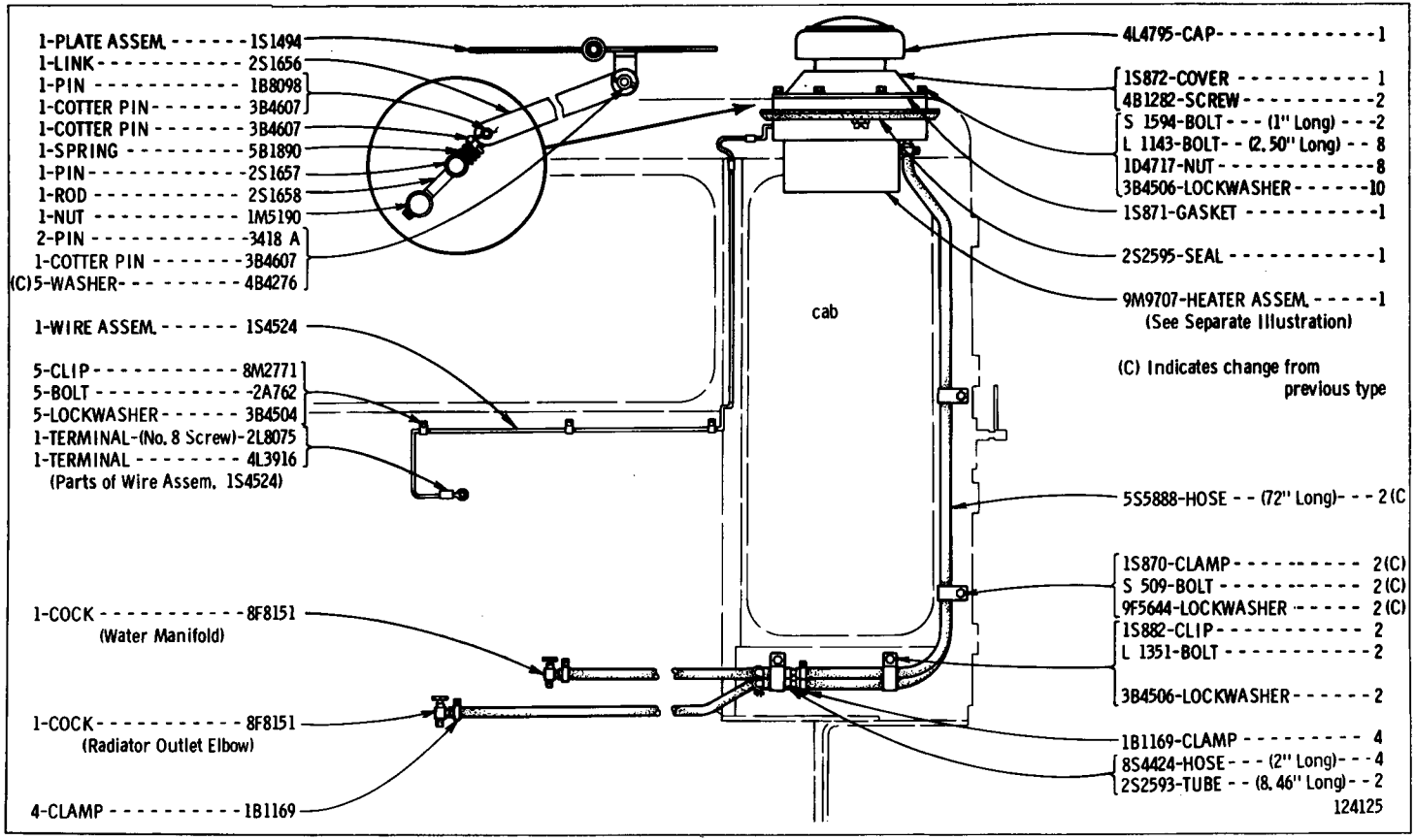

5S480 CAB HEATER GROUP--12 VOLT--TYPE 2
PART OF 5S147 CAB HEATER GROUP
9M9707 HOT WATER HEATER ASSEMBLY PARTS ARE SHOWN ON PAGE 135

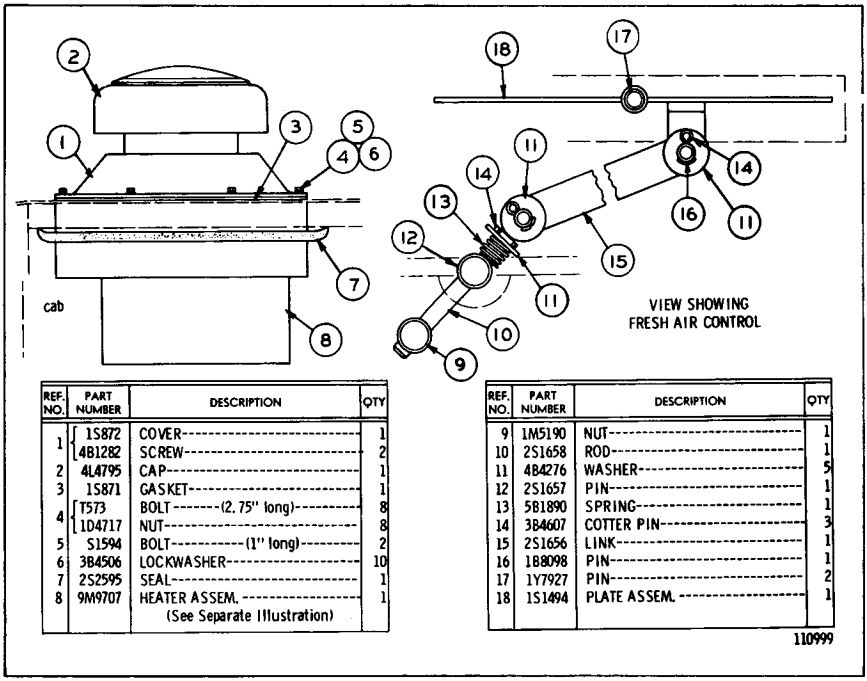

REF. NO.	PART NUMBER	DESCRIPTION	QTY
1	1S872	COVER	1
	4B1282	SCREW	2
2	4L4795	CAP	1
3	1S871	GASKET	1
4	T573	BOLT-------(2.75" long)---------	8
	1D4717	NUT	8
5	S1594	BOLT----------(1" long)--------	2
6	3B4506	LOCKWASHER	10
7	2S2595	SEAL	1
8	9M9707	HEATER ASSEM. (See Separate Illustration)	1

REF. NO.	PART NUMBER	DESCRIPTION	QTY
9	1M5190	NUT	1
10	2S1658	ROD	1
11	4B4276	WASHER	5
12	2S1657	PIN	1
13	5B1890	SPRING	1
14	3B4607	COTTER PIN	3
15	2S1656	LINK	1
16	1B8098	PIN	1
17	1Y7927	PIN	2
18	1S1494	PLATE ASSEM.	1

5S480 CAB HEATER GROUP—12 Volt—Type 3
Part of 5S147 and 8S5377 Cab Heater Groups shown on Pages 134 and 134A
9M9707 Heater parts are shown on Page 135

REF. NO.	PART NUMBER	DESCRIPTION	QTY.
1	4B6067	ELBOW	1
2	1S1476	CLIP	2
3	5K3549	HOSE----------12 Feet	-
4	8M5940	CLIP	2
5	5S480	CAB HEATER GROUP (See Separate Illustration)	1

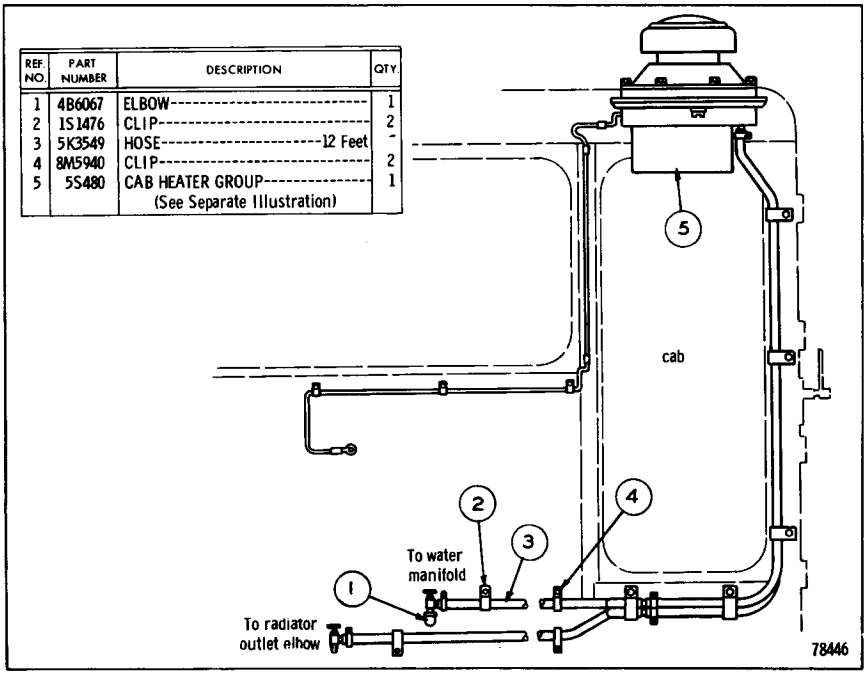

5S147 CAB HEATER GROUP—Roof Mounted—12 Volt—Type 1
5S480 Cab Heater Group parts are shown on Pages 131 through 133

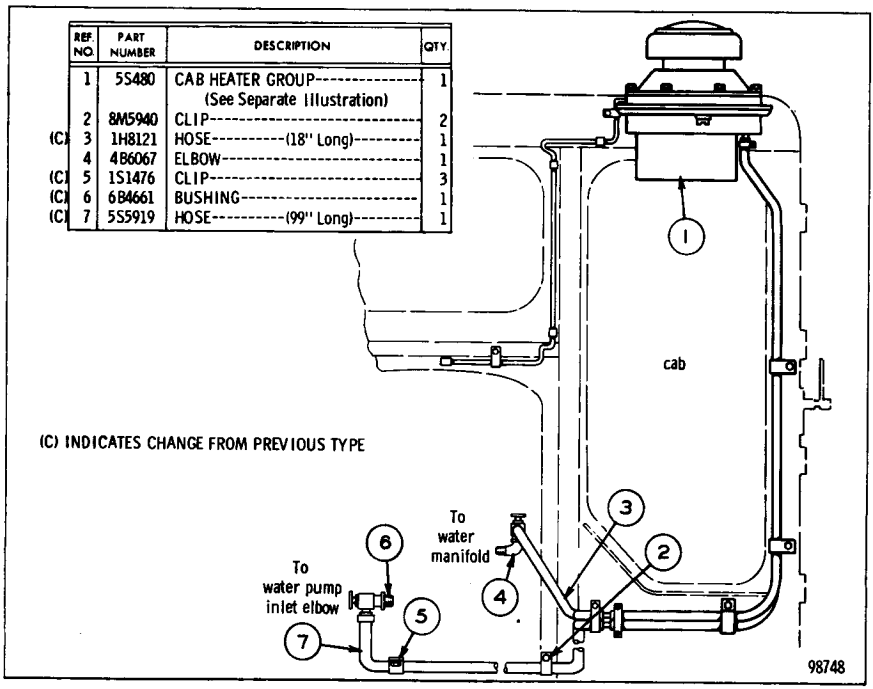

REF. NO.	PART NUMBER	DESCRIPTION	QTY.
1	5S480	CAB HEATER GROUP (See Separate Illustration)	1
2	8M5940	CLIP	2
(C) 3	1H8121	HOSE (18" Long)	1
4	4B6067	ELBOW	1
(C) 5	1S1476	CLIP	3
(C) 6	6B4661	BUSHING	1
(C) 7	5S5919	HOSE (99" Long)	1

5S147 CAB HEATER GROUP—Roof Mounted—12 Volt—Type 2
5S480 Cab Heater Group parts are shown on Page 132

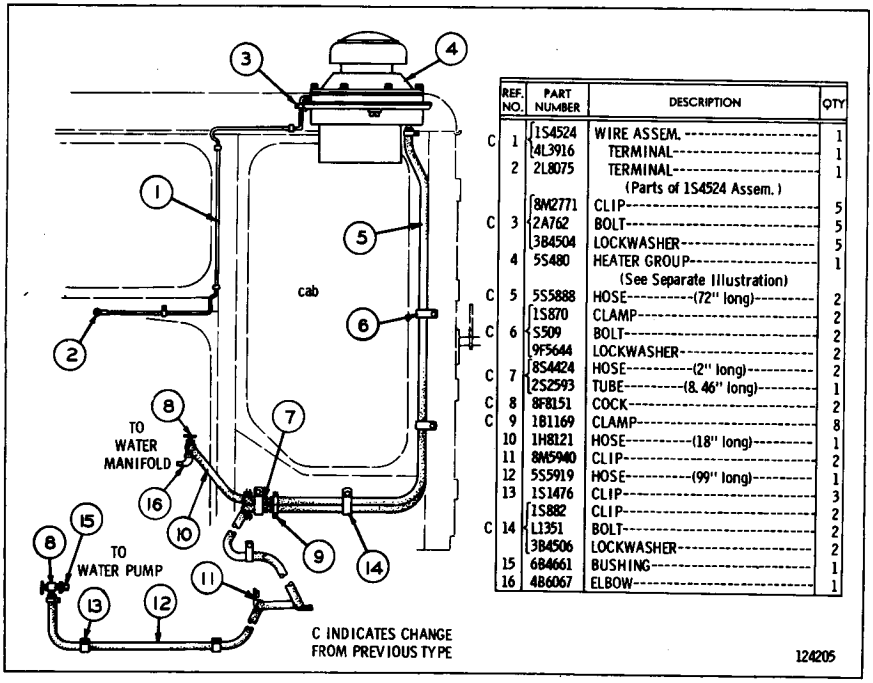

	REF. NO.	PART NUMBER	DESCRIPTION	QTY
C	1	1S4524	WIRE ASSEM.	1
		4L3916	TERMINAL	1
	2	2L8075	TERMINAL (Parts of 1S4524 Assem.)	1
		8M2771	CLIP	5
C	3	2A762	BOLT	5
		3B4504	LOCKWASHER	5
	4	5S480	HEATER GROUP (See Separate Illustration)	1
C	5	5S5888	HOSE (72" long)	2
		1S870	CLAMP	2
C	6	S509	BOLT	2
		9F5644	LOCKWASHER	2
C	7	8S4424	HOSE (2" long)	2
		2S2593	TUBE (8.46" long)	1
C	8	8F8151	COCK	2
C	9	1B1169	CLAMP	8
	10	1H8121	HOSE (18" long)	1
	11	8M5940	CLIP	2
	12	5S5919	HOSE (99" long)	1
	13	1S1476	CLIP	3
		1S882	CLIP	2
C	14	L1351	BOLT	2
		3B4506	LOCKWASHER	2
	15	6B4661	BUSHING	1
	16	4B6067	ELBOW	1

5S147 CAB HEATER GROUP—Roof Mounted—12 Volt—Type 3
5S480 Heater parts are shown on Page 133

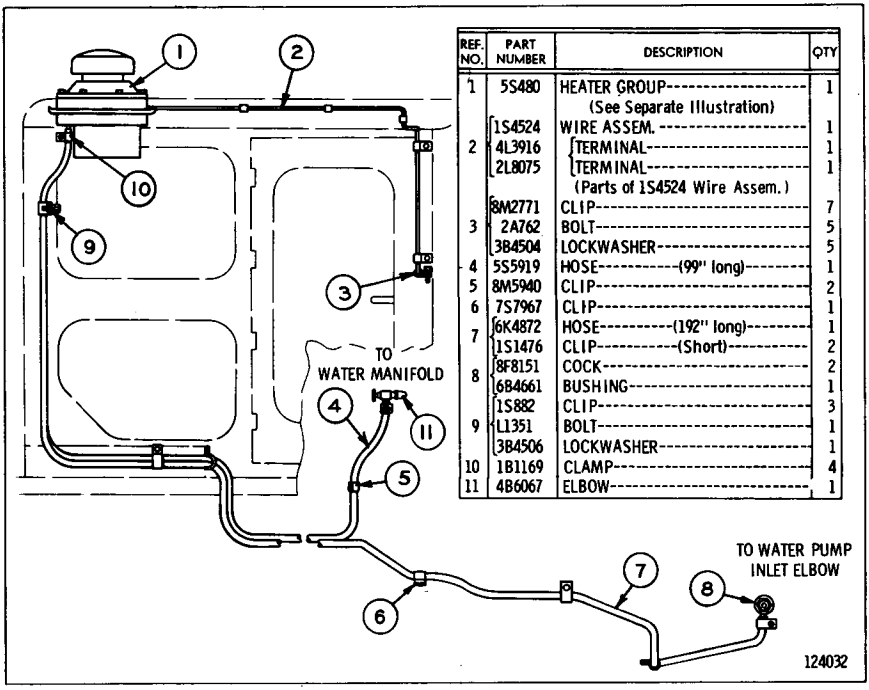

REF. NO.	PART NUMBER	DESCRIPTION	QTY
1	5S480	HEATER GROUP (See Separate Illustration)	1
2	1S4524	WIRE ASSEM.	1
	4L3916	TERMINAL	1
	2L8075	TERMINAL (Parts of 1S4524 Wire Assem.)	1
3	8M2771	CLIP	7
	2A762	BOLT	5
	3B4504	LOCKWASHER	5
4	5S5919	HOSE-----(99" long)	1
5	8M5940	CLIP	2
6	7S7967	CLIP	1
7	6K4872	HOSE-----(192" long)	1
	1S1476	CLIP-----(Short)	2
8	8F8151	COCK	2
	6B4661	BUSHING	1
9	1S882	CLIP	3
	L1351	BOLT	1
	3B4506	LOCKWASHER	1
10	1B1169	CLAMP	4
11	4B6067	ELBOW	1

8S5377 CAB HEATER GROUP—12 Volt
Serial No. 48A6393 to 48A6882 inclusive
Roof Mounted-Right Rear Corner. 5S480 Heater parts are shown on Page 133
Only separate parts serviced. When complete Group is required order 9S6216

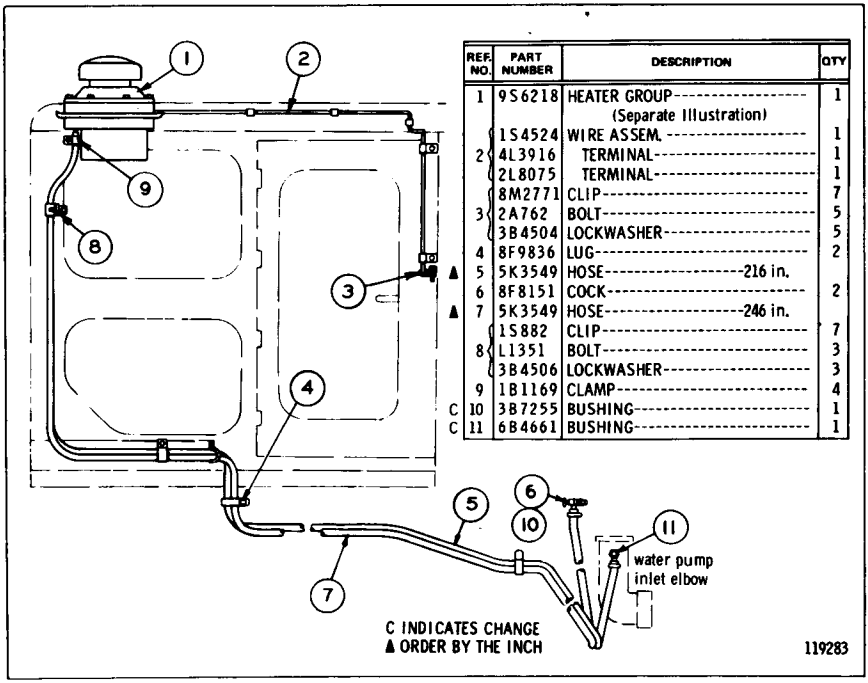

REF. NO.	PART NUMBER	DESCRIPTION	QTY
1	9S6218	HEATER GROUP (Separate Illustration)	1
2	1S4524	WIRE ASSEM.	1
	4L3916	TERMINAL	1
	2L8075	TERMINAL	1
3	8M2771	CLIP	7
	2A762	BOLT	5
	3B4504	LOCKWASHER	5
4	8F9836	LUG	2
▲ 5	5K3549	HOSE-----216 in.	
6	8F8151	COCK	2
▲ 7	5K3549	HOSE-----246 in.	
8	1S882	CLIP	7
	L1351	BOLT	3
	3B4506	LOCKWASHER	3
9	1B1169	CLAMP	4
C 10	3B7255	BUSHING	1
C 11	6B4661	BUSHING	1

9S6216 CAB HEATER GROUP—24 Volt
Serial No. 48A6883—Up
Roof Mounted. 9S6218 Heater parts are shown on Page 134B

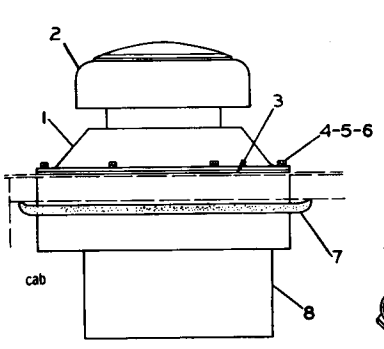

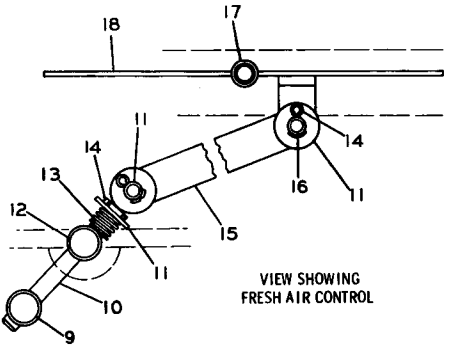

VIEW SHOWING
FRESH AIR CONTROL

REF. NO.	PART NUMBER	DESCRIPTION	QTY
1	1S872	COVER	1
	4B1282	SCREW	2
2	4L4795	CAP	1
3	1S871	GASKET	1
4	T537	BOLT -------(2.75" long)---------	8
	1D4717	NUT	8
5	S1594	BOLT----------(1" long)---------	2
6	3B4506	LOCKWASHER	10
7	2S2595	SEAL	1
8	9S6219	HEATER ASSEM. (See Separate Illustration)	1
9	1M5190	NUT	1
10	2S1658	ROD	1
11	4B4276	WASHER	5
12	2S1657	PIN	1
13	5B1890	SPRING	1
14	3B4607	COTTER PIN	3
15	2S1656	LINK	1
16	1B8098	PIN	1
17	1Y7927	PIN	2
18	1S1494	PLATE ASSEM.	1

113708

9S6218 HEATER GROUP—Roof Mounted—24 Volt
Effective with Serial No. 48A6883
Part of 9S6216 Heater Group shown on Page 134A

9S6219 HOT WATER HEATER ASSEMBLY—24 Volt
Effective with Serial No. 48A6883
Part of 9S6218 Heater

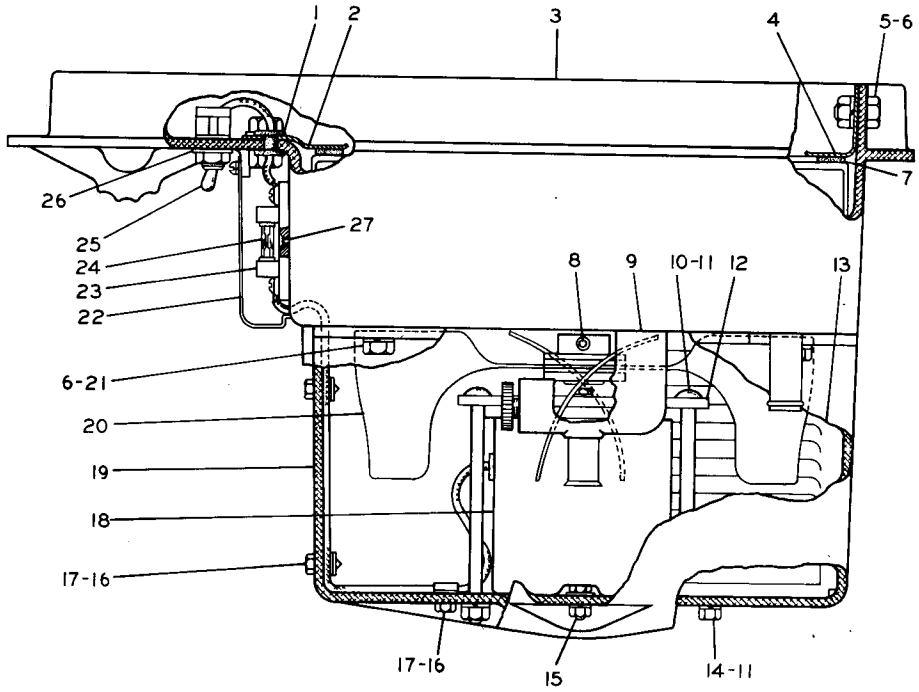

REF. NO.	PART NUMBER	DESCRIPTION	QTY
1	3K8785	GROMMET	1
2	2S3749	CLAMP	1
3	2S3736	CASE	1
4	2S3733	CLAMP	1
5	S1594	BOLT	6
	6H8346	NUT	6
6	3K8909	LOCKWASHER	10
7	2S3735	STRIP	2
8	3B9191	SCREW	1
9	2S3734	CORE	1
10	2S3737	BOLT	2
	4L6458	NUT	2
11	1H3338	LOCKWASHER	4
12	2S3738	CLAMP	1
13	2S3751	GRILL	1
14	S1615	BOLT	2
15	4B2049	NUT	4
	9F5599	LOCKWASHER	4
16	2S3745	SCREW	3
17	2S3744	NUT	3
18	9S6220	MOTOR	1
19	2S3741	HOUSING	1
20	2S3740	FAN	1
21	S1588	BOLT	4
	2K8270	NUT	4
22	2S3746	COVER	1
	3K9075	SCREW ASSEM.	1
23	2S3747	HOLDER	1
24	8M8948	FUSE	1
25	2D2684	SWITCH-------(Toggle)	1
26	2S3750	INSULATOR	1
27	5D853	SCREW	1
	2D3748	LOCKWASHER	1

113709

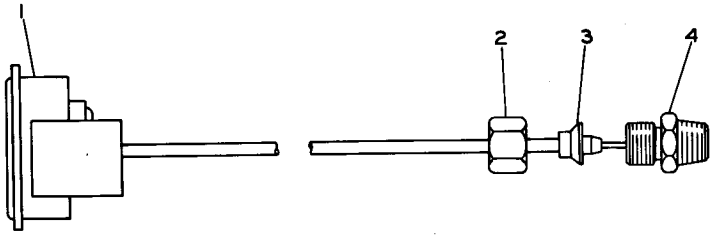

REF. NO.	PART NUMBER	DESCRIPTION	QTY
1	3S4131	GAUGE----(Water Pressure)-------	1
2	1P8563	NUT----------	1
3	1P8561	SLEEVE----------	1
4	1P8560	CONNECTOR----------	1
	1P9132	ELBOW---------(90°)---------- (Not Shown)	1

111984

9S2326 WATER PRESSURE GAUGE GROUP—Field Installation

9M9707 HOT WATER HEATER ASSEMBLY—12 Volt

Part of 5S480 Cab Heaters shown on Pages 131, 132 and 133

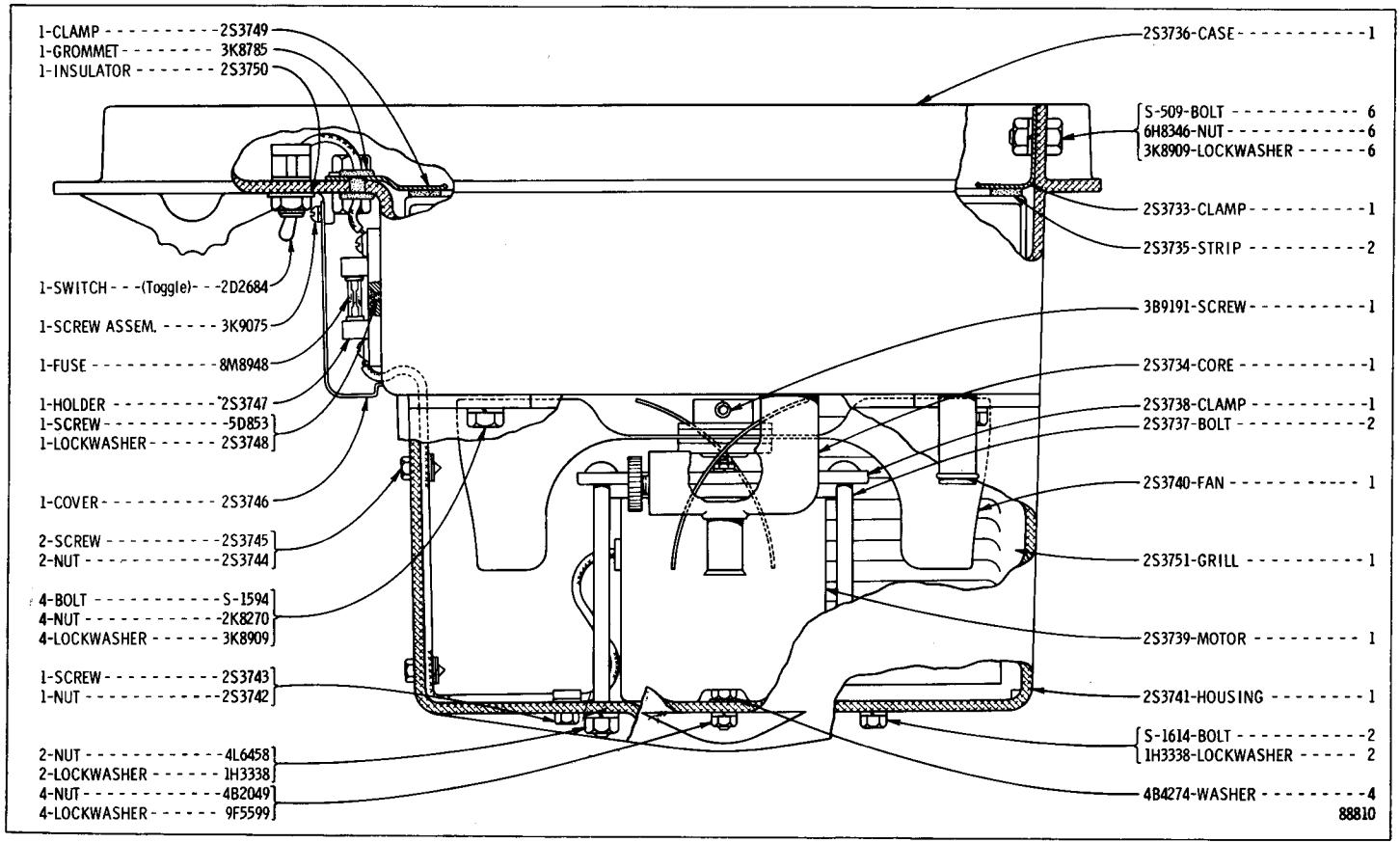

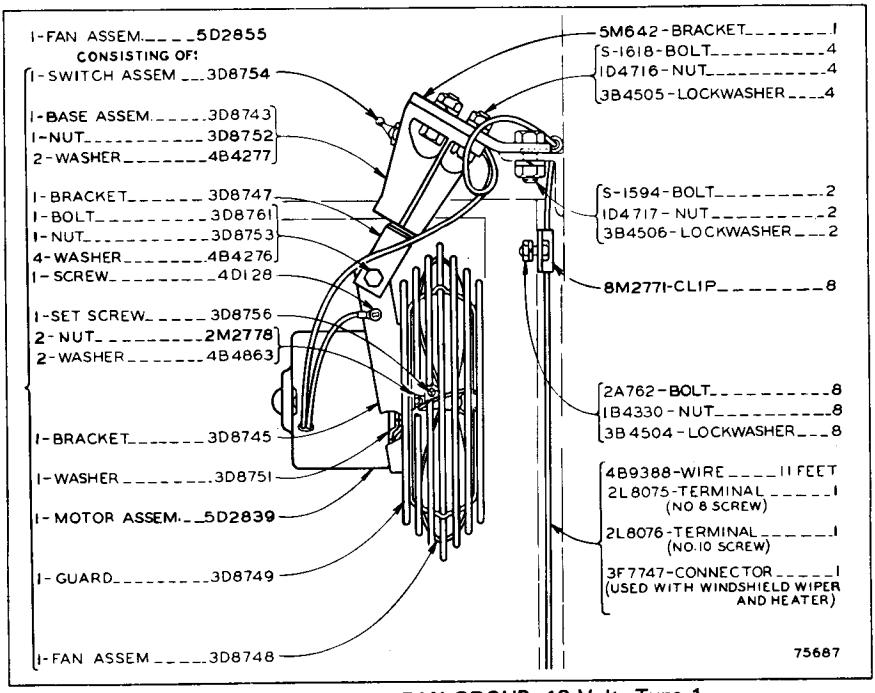

5M2022 DEFROSTER FAN GROUP—12 Volt—Type 1

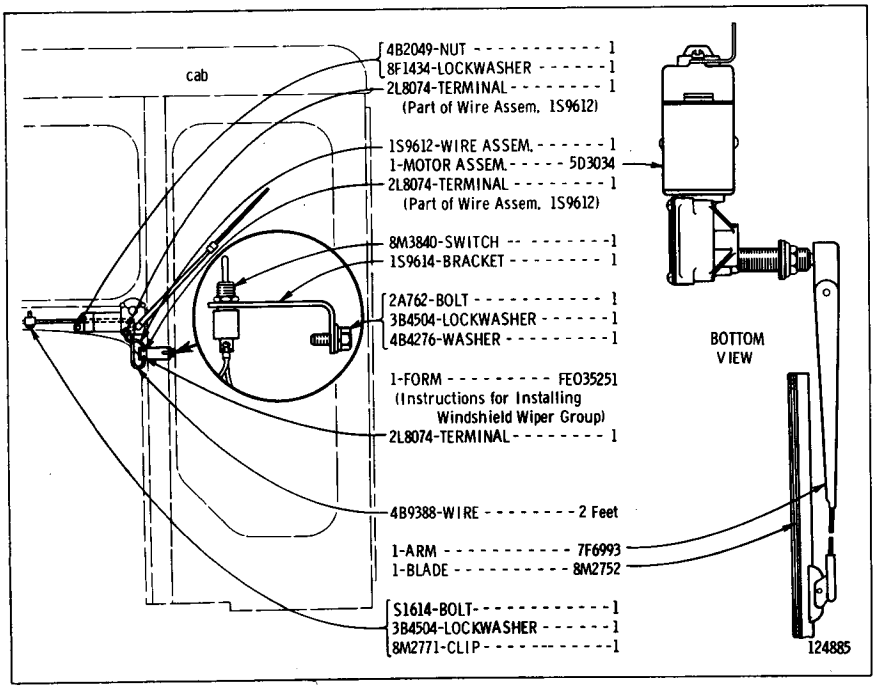

4S6857 WINDSHIELD WIPER GROUP—12 Volt

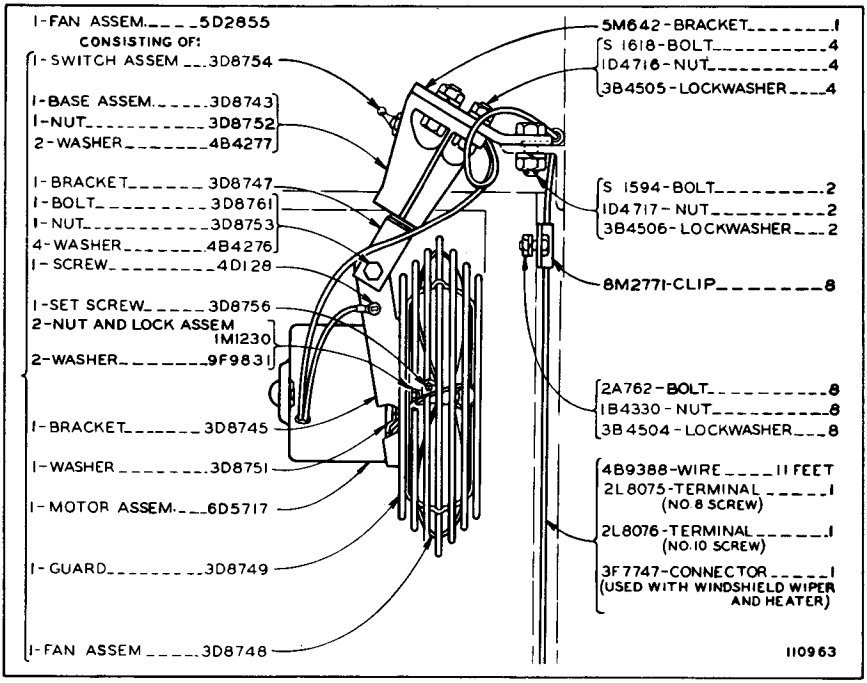

5M2022 DEFROSTER FAN GROUP—12 Volt—Type 2

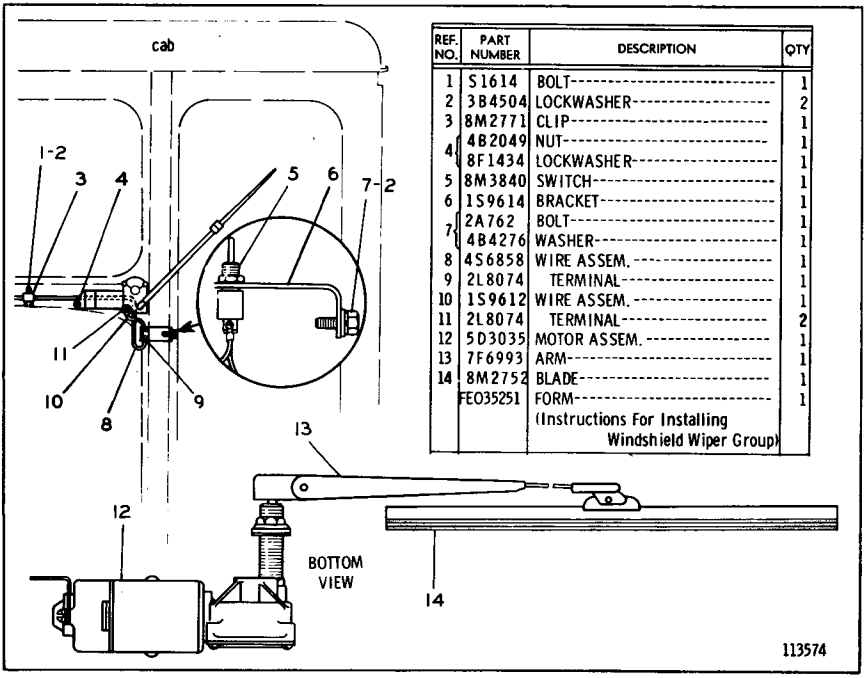

REF. NO.	PART NUMBER	DESCRIPTION	QTY
1	S1614	BOLT	1
2	3B4504	LOCKWASHER	2
3	8M2771	CLIP	1
4	4B2049	NUT	1
	8F1434	LOCKWASHER	1
5	8M3840	SWITCH	1
6	1S9614	BRACKET	1
7	2A762	BOLT	1
	4B4276	WASHER	1
8	4S6858	WIRE ASSEM.	1
9	2L8074	TERMINAL	1
10	1S9612	WIRE ASSEM.	1
11	2L8074	TERMINAL	2
12	5D3035	MOTOR ASSEM.	1
13	7F6993	ARM	1
14	8M2752	BLADE	1
	FE035251	FORM (Instructions For Installing Windshield Wiper Group)	1

9S6221 WINDSHIELD WIPER GROUP—24 Volt

C INDICATES CHANGE
▲ ORDER BY THE FOOT

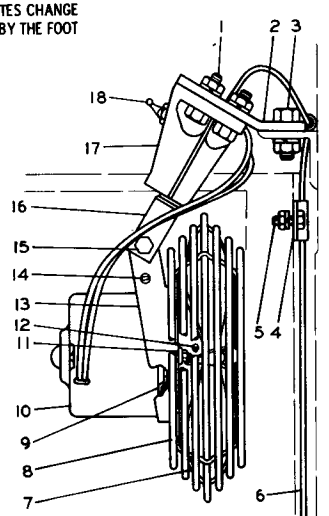

REF. NO.	PART NUMBER	DESCRIPTION	QTY
1	S1618	BOLT	4
	1D4716	NUT	4
	3B4505	LOCKWASHER	4

	2	5M642	BRACKET	1
		S1594	BOLT	2
	3	1D4717	NUT	2
		3B4506	LOCKWASHER	2
	4	8M2771	CLIP	8
		2A762	BOLT	8
	5	1B4330	NUT	8
		3B4504	LOCKWASHER	8
▲		4S8787	WIRE--120"	
	6	2L8075	TERMINAL--(No. 8 Screw)	1
		2L8076	TERMINAL--(No. 10 Screw)	1
		3F7747	CONNECTOR (Used With Windshield Wiper & Heater)	1
	7	5D2856	FAN ASSEM.	1
		3D8748	FAN ASSEM.	1
	8	3D8749	GUARD	1
C	9	4D6624	WASHER	1
C	10	6D5716	MOTOR ASSEM.	1
	11	1M1230	NUT & LOCK ASSEM.	2
C		9F9831	WASHER	2
C	12	7L8316	SETSCREW	1
	13	3D8745	BRACKET	1
	14	4D128	SCREW	1
		3D8761	BOLT	1
	15	3D8753	NUT	1
		4B4276	WASHER	4
	16	3D8747	BRACKET	1
		3D8743	BASE ASSEM.	1
	17	3D8752	NUT	1
		4B4277	WASHER	2
	18	3D8754	SWITCH ASSEM.	1

113573

9S6222 DEFROSTER FAN GROUP—24 Volt

5S22 CANOPY GROUP—R.H. Side View

Serial No. 48A6393 to 48A8225 inclusive. Only separate parts serviced
When complete Group is required order 9S2647 shown on Page 137B

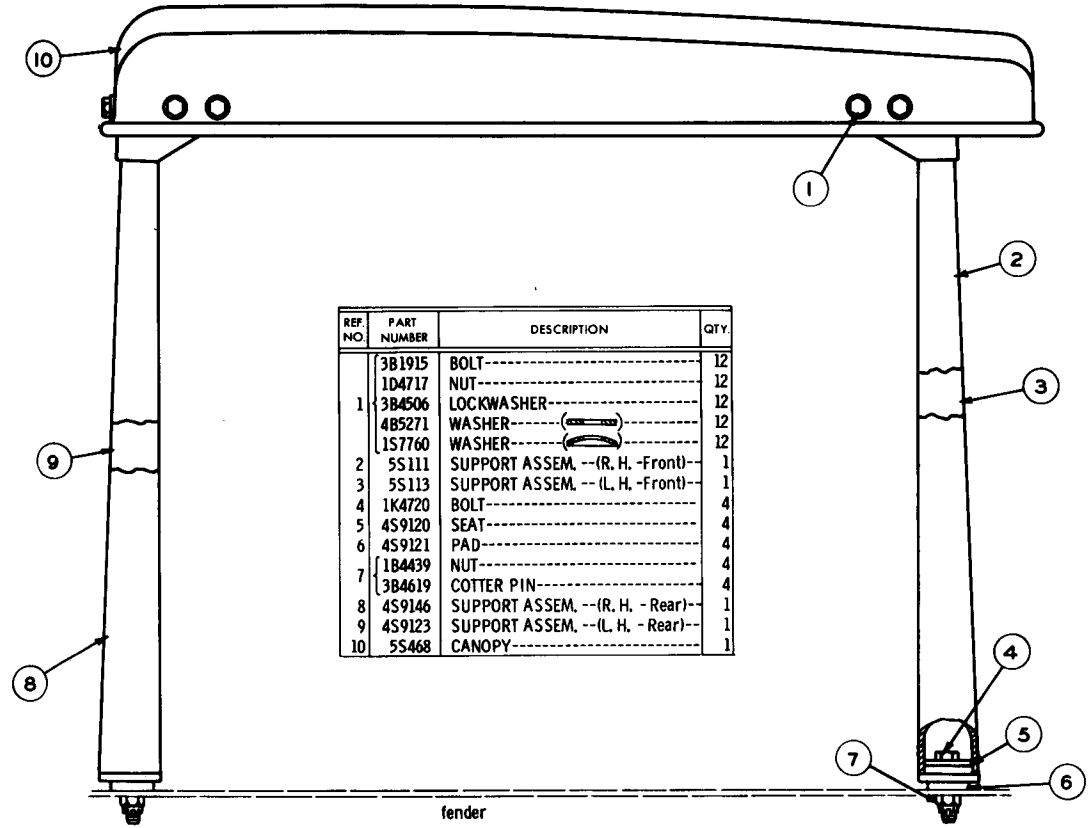

REF. NO.	PART NUMBER	DESCRIPTION	QTY.
1	3B1915	BOLT	12
	1D4717	NUT	12
	3B4506	LOCKWASHER	12
	4B5271	WASHER	12
	1S7760	WASHER	12
2	5S111	SUPPORT ASSEM. --(R. H. -Front)--	1
3	5S113	SUPPORT ASSEM. -- (L. H. -Front)--	1
4	1K4720	BOLT	4
5	4S9120	SEAT	4
6	4S9121	PAD	4
7	1B4439	NUT	4
	3B4619	COTTER PIN	4
8	4S9146	SUPPORT ASSEM. --(R. H. - Rear)--	1
9	4S9123	SUPPORT ASSEM. --(L. H. - Rear)--	1
10	5S468	CANOPY	1

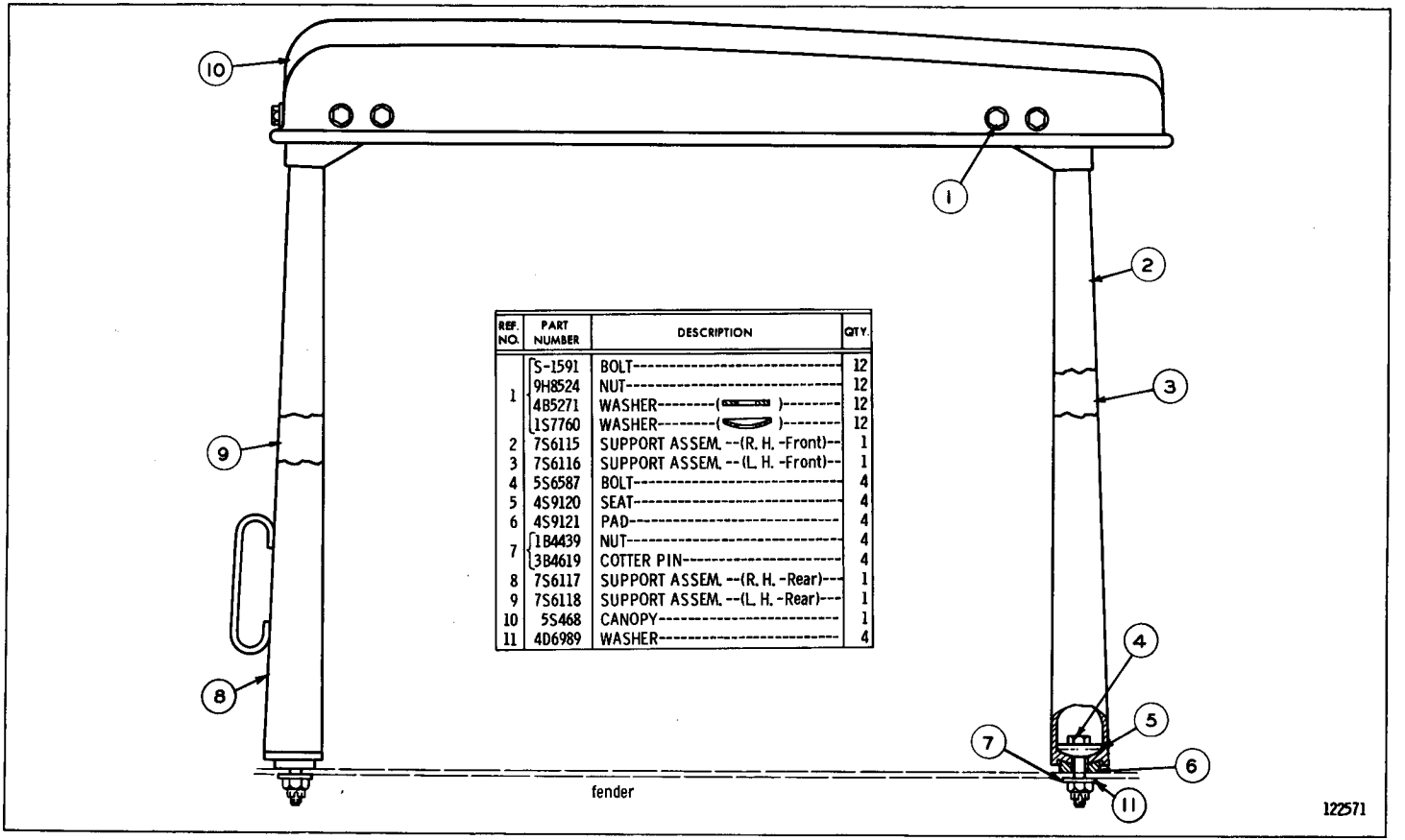

REF. NO.	PART NUMBER	DESCRIPTION	QTY.
1	1S-1591	BOLT	12
	9H8524	NUT	12
	4B5271	WASHER--------( )--------	12
	1S7760	WASHER--------( )--------	12
2	7S6115	SUPPORT ASSEM. --(R. H. -Front)--	1
3	7S6116	SUPPORT ASSEM. --(L. H. -Front)--	1
4	5S6587	BOLT	4
5	4S9120	SEAT	4
6	4S9121	PAD	4
7	1B4439	NUT	4
	3B4619	COTTER PIN	4
8	7S6117	SUPPORT ASSEM. --(R. H. -Rear)---	1
9	7S6118	SUPPORT ASSEM. --(L. H. -Rear)---	1
10	5S468	CANOPY	1
11	4D6989	WASHER	4

7S6114 CANOPY GROUP—R.H.—Side View
Effective with Serial No. 48A8226
Only separate parts serviced. When complete Group is required order 9S2647

9S2647 CANOPY GROUP—Type 1
Serial No. 48A6393—Up

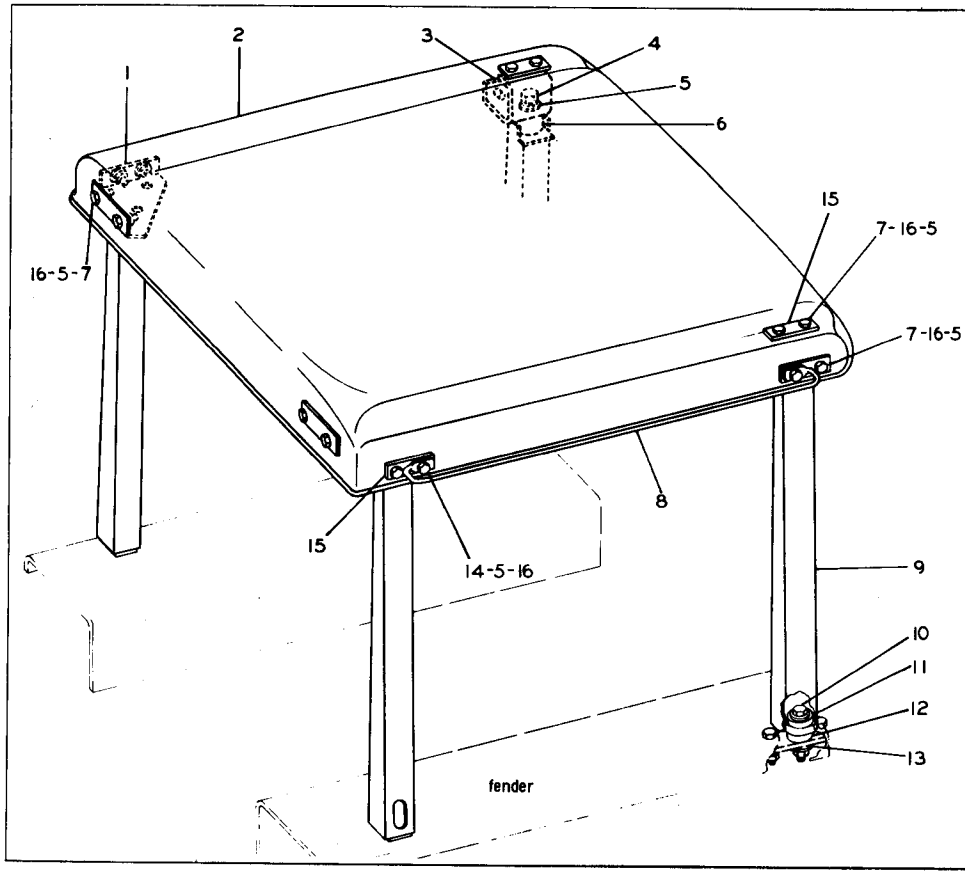

REF. NO.	PART NUMBER	DESCRIPTION	QTY
1	9S2644	BRACKET	2
2	9S949	CANOPY	1
3	8S7000	BRACKET-(L. H.)	1
	8S6999	BRACKET-(R. H.)	1
4	S1620	BOLT	8
	3B4508	LOCKWASHER	8
5	4B4280	WASHER	20
6	8S7900	MOUNT	4
7	S1595	BOLT	12
8	9S1019	GRAB IRON	2
9	8S2939	SUPPORT ASSEM.	4
10	L2090	BOLT	4
	5D1986	NUT	4
	7M8659	WASHER	4
11	8S2944	SEAT	4
12	9S2743	PAD	4
13	8S2945	WASHER	4
14	S1587	BOLT	4
15	2B122	LOCK	8
16	1K6872	LOCKNUT	16

9S2647 CANOPY GROUP—Type 2
Serial No. 48A6393—Up

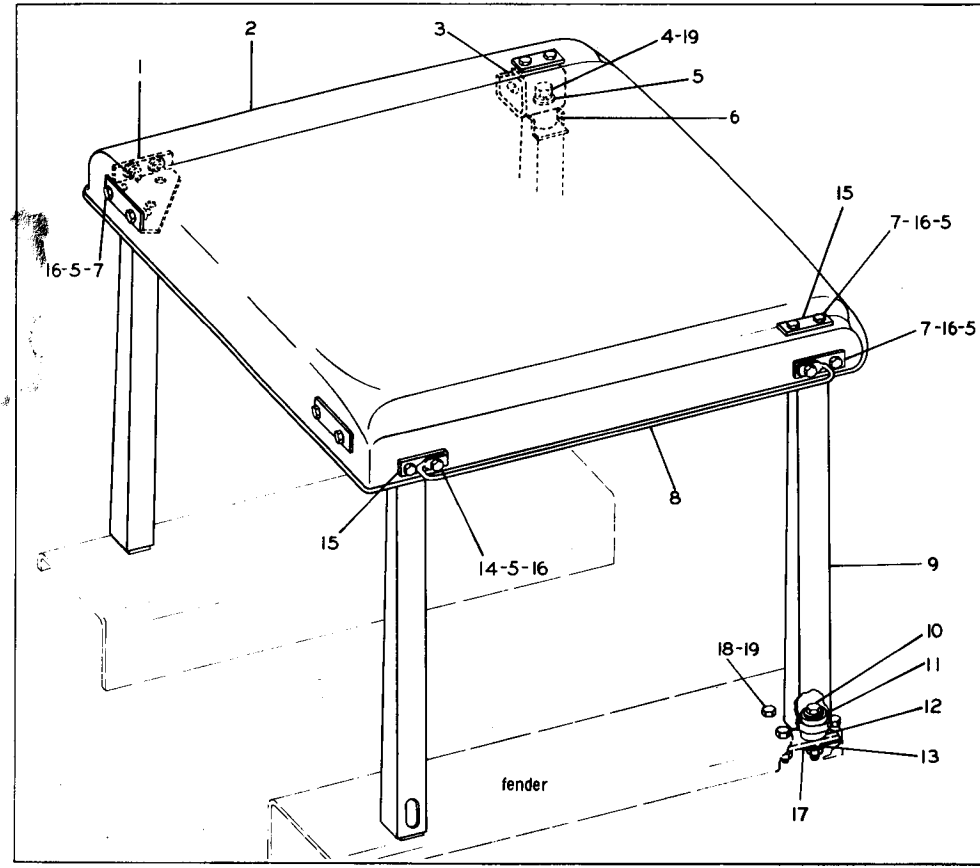

	REF. NO.	PART NUMBER	DESCRIPTION	QTY
	1	9S2644	BRACKET	2
	2	9S949	CANOPY	1
	3	8S7000	BRACKET (L.H.)	1
		8S6999	BRACKET (R.H.)	1
C	4	2H3855	BOLT	8
	5	4B4280	WASHER	8
C		2B4823	WASHER	4
	6	8S7900	MOUNT	4
C	7	7B3235	BOLT	12
	8	9S1019	GRAB IRON	2
	9	8S2939	SUPPORT ASSEM.	4
	10	L2090	BOLT	2
C		1D3848	BOLT	2
		5D1986	NUT	4
		7M8659	WASHER	4
	11	8S2944	SEAT	4
	12	9S2743	PAD	4
	13	8S2945	WASHER	4
	14	S1587	BOLT	4
	15	2B122	LOCK	8
	16	1K6872	LOCKNUT	16
C	17	2P832	PLATE	2
	18	S1585	BOLT	6
C		1A1460	BOLT	2
		1D4719	NUT	8
C	19	3B4508	LOCKWASHER	16

C INDICATES CHANGE

138512

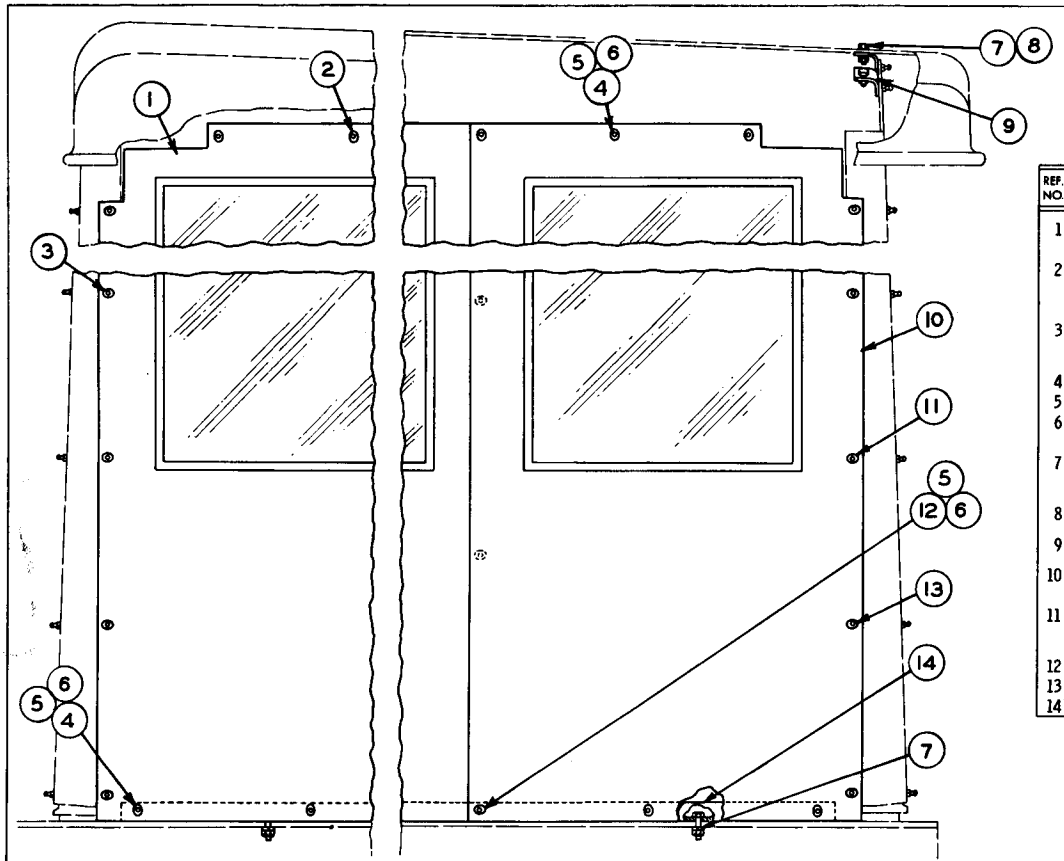

REF. NO.	PART NUMBER	DESCRIPTION	QTY.
1	7S4193	CURTAIN ASSEM. --(R. H. -Rear)---	1
	7S4194	CURTAIN ASSEM. --(L. H. -Rear)---	1
2	4B2495	SOCKET----------	26
	4B2496	CLINCH PLATE----------	26
	(13 each in 7S4193 & 7S4194 Curtain Assem.)		
3	4B2507	STUD----------	4
	4B2508	WASHER----------	4
	(2 each in 7S4193 & 7S4194 Curtain Assem.)		
4	4B2500	STUD----------	16
5	4B2049	NUT----------	20
6	3B4502	LOCKWASHER----------	20
7	1A2029	BOLT----------	11
	1D4717	NUT----------	11
	3B4506	LOCKWASHER----------	11
8	4K3533	WASHER---------(Rubber)--------	7
	4B4278	WASHER---------(Steel)--------	7
9	8F2023	BRACKET----------	7
10	7S4153	CURTAIN ASSEM. --(R. H. -Front)--	1
	7S4154	CURTAIN ASSEM. --(L. H. -Front)--	1
11	4B2495	SOCKET----------	26
	4B2496	CLINCH PLATE----------	26
	(13 each in 7S4153 & 7S4154 Curtain Assem.)		
12	4B2504	STUD----------	4
13	4B2499	STUD----------	20
14	7S4191	ANGLE----------	2

7S4196 CANOPY CURTAIN GROUP—Part 1
Effective with Serial No. 48A8226
FOR USE WITH 7S6114 CANOPY GROUP
Note: Cannot be used with 9S2647 Canopy Group

7S4196 CANOPY CURTAIN GROUP—Part 2
Effective with Serial No. 48A8226
FOR USE WITH 7S6114 CANOPY GROUP
Note: Cannot be used with 9S2647 Canopy Group

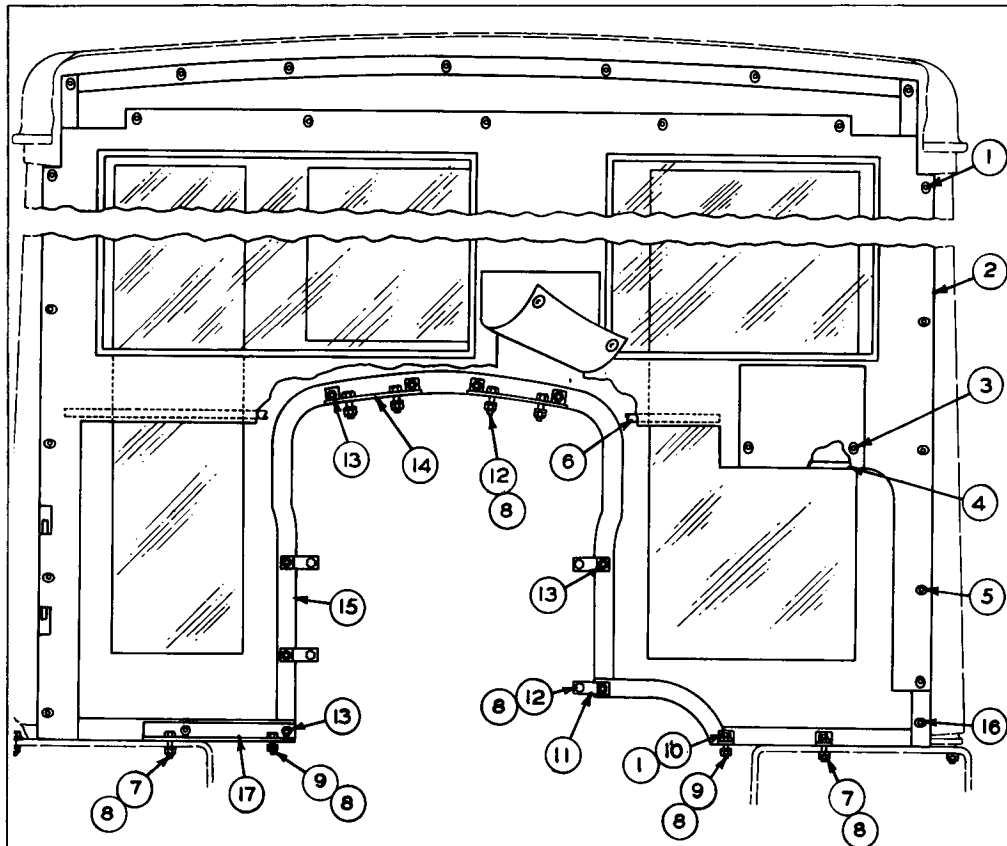

REF. NO.	PART NUMBER	DESCRIPTION	QTY.
1	4B2499	STUD	22
2	7S7390	CURTAIN ASSEM. -----(Rear)-----	1
3	4B2507	STUD	4
	4B2508	WASHER	4
4	7S4189	ROD	1
5	4B2495	SOCKET	19
	4B2496	CLINCH PLATE	19
6	7S4190	ROD	1
		(Parts of 7S7390 Curtain Assem.)	
7	1A2029	BOLT	2
8	1D4717	NUT	12
	3B4506	LOCKWASHER	12
9	L1351	BOLT	2
10	8F2023	BRACKET	2
11	4M6000	PLATE	4
12	S509	BOLT	8
13	4B2500	STUD	10
	4B2049	NUT	10
	3B4502	LOCKWASHER	10
14	1M4126	BRACKET ASSEM.	2
15	7S4195	CURTAIN ASSEM. ----(Front)-----	1
16	4B2495	SOCKET	29
	4B2496	CLINCH PLATE	29
		(Parts of 7S4195 Curtain Assem.)	
17	2M3472	ANGLE	1

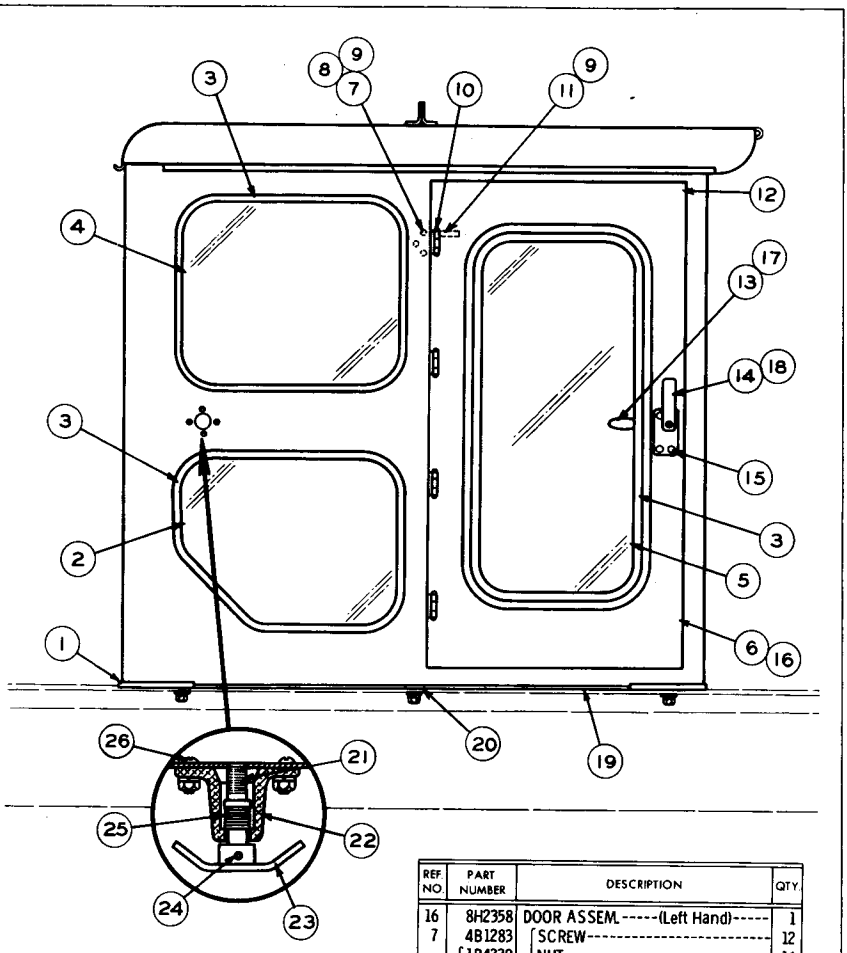

REF. NO.	PART NUMBER	DESCRIPTION	QTY.
1	3S7072	SHIM	3
2	4S8942	GLASS (Untinted)	2
3	▲1S8772	SEAL	1
4	4S8943	GLASS (Untinted)	2
5	1H4209	GLASS (Untinted)	2
6	8H2357	DOOR ASSEM. (Right Hand)	1
7	4B1283	SCREW	12
8	1B4330	NUT	16
	3B4504	LOCKWASHER (Plain)	16
9	8F8052	LOCKWASHER (Tooth)	24
10	1H7482	HINGE	4
11	4B1282	SCREW	12
12	1H7483	GASKET (Top)	1
	1H7484	GASKET (Rear)	1
13	1H7486	LATCH ASSEM.	1
14	6H6173	HANDLE ASSEM.	1
15	2A4781	BOLT	4
		(Parts of 8H2357 Door Assem.)	

REF. NO.	PART NUMBER	DESCRIPTION	QTY.
16	8H2358	DOOR ASSEM. (Left Hand)	1
7	4B1283	SCREW	12
8	1B4330	NUT	16
	3B4504	LOCKWASHER (Plain)	16
9	8F8052	LOCKWASHER (Tooth)	24
10	1H7482	HINGE	4
11	4B1282	SCREW	12
12	1H7483	GASKET (Top)	1
	1H7484	GASKET (Rear)	1
17	1H7485	LATCH ASSEM.	1
18	6H6174	HANDLE ASSEM.	1
15	2A4781	BOLT	4
		(Parts of 8H2358 Door Assem.)	
19	▲3S1732	SEAL	1
20	3S1730	SHIM	12
21	5B2907	SCREW	2
22	5B2905	BRACKET	2
23	6H3608	CRANK ASSEM.	2
24	5B3155	PIN	2
25	L-955	SPRING	2
26	4B1245	SCREW	8
	4B2051	NUT	8
	3B4503	LOCKWASHER	8
		▲ ORDER LENGTH REQUIRED	

78419

3S1627 CAB GROUP—As Viewed from Right Hand Side of Machine
Serial No. 48A6393 to 48A6882 inclusive
FOR USE WITH HYDRAULIC BULLDOZER

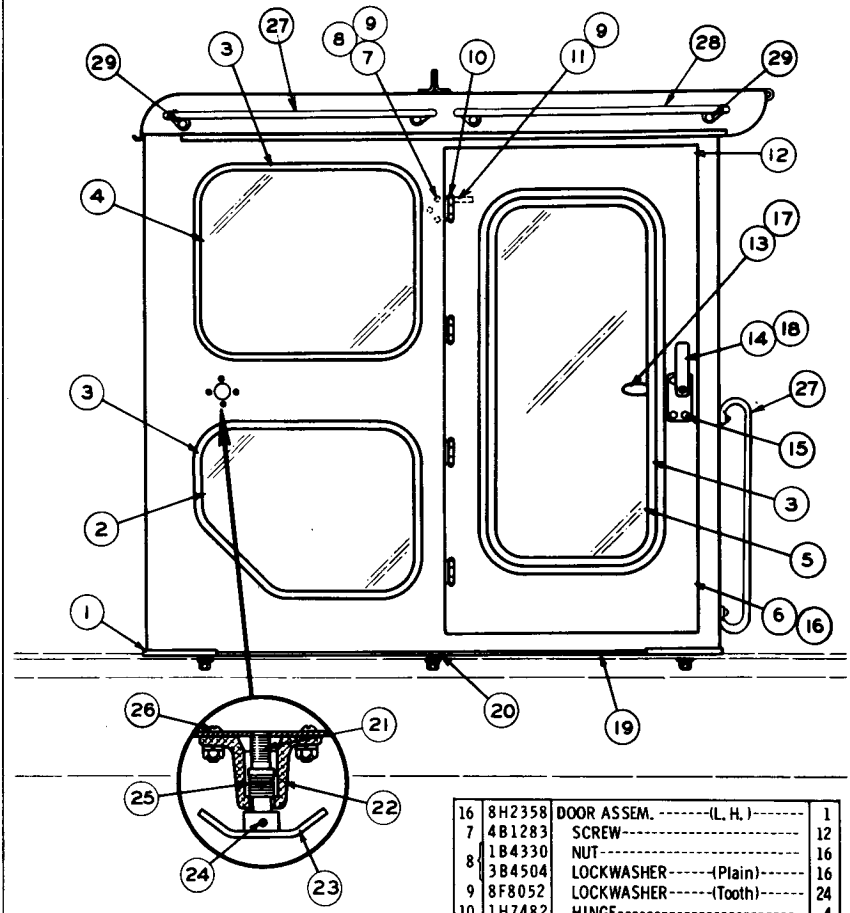

REF. NO.	PART NUMBER	DESCRIPTION	QTY
1	3S7072	SHIM	3
C 2	7S3832	GLASS-(Untinted)	2
C▲ 3	9S3222	SEAL-(Use as Required)-480"	
C 4	7S3831	GLASS-(Untinted)	2
C 5	7S3827	GLASS-(Untinted)	2
6	8H2357	DOOR ASSEM. -(R. H.)	1
7	4B1283	SCREW	12
8	1B4330	NUT	16
	3B4504	LOCKWASHER-(Plain)	16
9	8F8052	LOCKWASHER-(Tooth)	24
10	1H7482	HINGE	4
11	4B1282	SCREW	12
12	1H7483	GASKET-(Top)	1
	1H7484	GASKET-(Rear)	1
13	1H7486	LATCH ASSEM.	1
14	6H6173	HANDLE ASSEM.	1
15	2A4781	BOLT	4

16	8H2358	DOOR ASSEM. -(L. H.)	1
7	4B1283	SCREW	12
8	1B4330	NUT	16
	3B4504	LOCKWASHER-(Plain)	16
9	8F8052	LOCKWASHER-(Tooth)	24
10	1H7482	HINGE	4
11	4B1282	SCREW	12
12	1H7483	GASKET-(Top)	1
	1H7484	GASKET-(Rear)	1
17	1H7485	LATCH ASSEM.	1
18	6H6174	HANDLE ASSEM.	1
15	2A4781	BOLT	4
■ 19	3S1732	SEAL-(Use as Required)-103"	
20	3S1730	SHIM	12
21	5B2907	SCREW	2
22	5B2905	BRACKET	2
23	6H3608	CRANK ASSEM.	2
24	5B3155	PIN	2
25	L955	SPRING	2
	4B1245	SCREW	8
26	4B2051	NUT	8
	3B4503	LOCKWASHER	8
27	8S8781	GRAB IRON	4
28	8S8782	GRAB IRON	2
29	S1595	BOLT	12
	3B4508	LOCKWASHER	12

■ ORDER BY THE INCH C INDICATES CHANGE ▲ ORDER BY THE FOOT 140279

3S1627 CAB GROUP—As Viewed from Right Hand Side of Machine—Type 2
Serial No. 48A6393 to 48A6882 inclusive
FOR USE WITH HYDRAULIC BULLDOZER

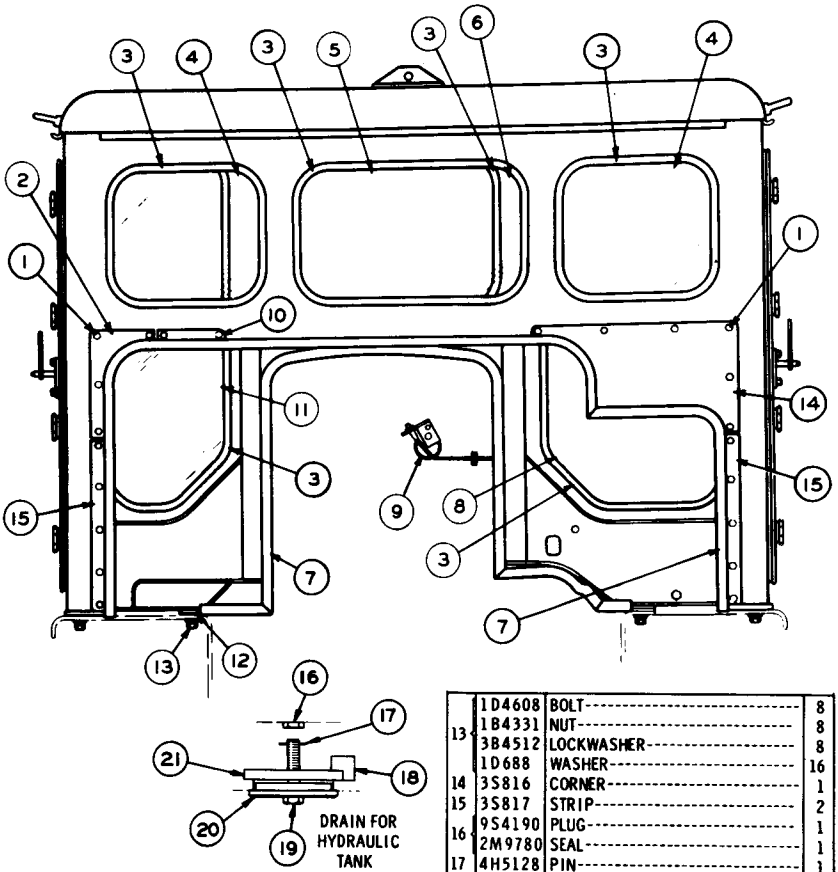

REF. NO.	PART NUMBER	DESCRIPTION	QTY
	2A762	BOLT	22
1	3B4504	LOCKWASHER	22
	4B5269	WASHER	22
2	3S819	CORNER	1
CA 3	9S3222	SEAL---(Use as Required)----480"	
C 4	7S3833	GLASS-------(Untinted)----------	2
5	3S853	GLASS-------(Untinted)----------	1
C 6	7S3834	GLASS-------(Untinted)----------	1
CB 7	5M7563	SEAL---(Use as Required)----223"	
8	3S854	GLASS-------(Untinted)----------	1
9	4S6937	WIRING GROUP (Separate Illustration)	1
10	3S818	STRIP	1
11	3S852	GLASS-------(Untinted)----------	1
12	3S1731	SHIM	12
	1D4608	BOLT	8
13	1B4331	NUT	8
	3B4512	LOCKWASHER	8
	1D688	WASHER	16
14	3S816	CORNER	1
15	3S817	STRIP	2
16	9S4190	PLUG	1
	2M9780	SEAL	1
17	4H5128	PIN	1
18	4K1650	BLOCK	1
19	2J7414	BOLT	1
	3B4510	LOCKWASHER	1
20	2J7416	PLATE	1
21	2J7415	PLATE	1
	5H4845	TOOL ASSEM.	
●	5H4846	HANDLE	
	5H4847	END--------(Straight)----------	
	5H4848	BIT---------(Curled)----------	
	FM035667	FORM-----(Cab Installation)------	1

■ ORDER BY THE INCH
C INDICATES CHANGE
● NOT SHOWN- Seal Installtion
▲ ORDER BY THE FOOT

140280

3S1627 CAB GROUP—As Viewed from Rear of Machine—Type 2
Serial No. 48A6393 to 48A6882 inclusive
FOR USE WITH HYDRAULIC BULLDOZER
4S6937 Cab Wiring parts are shown on Page 142

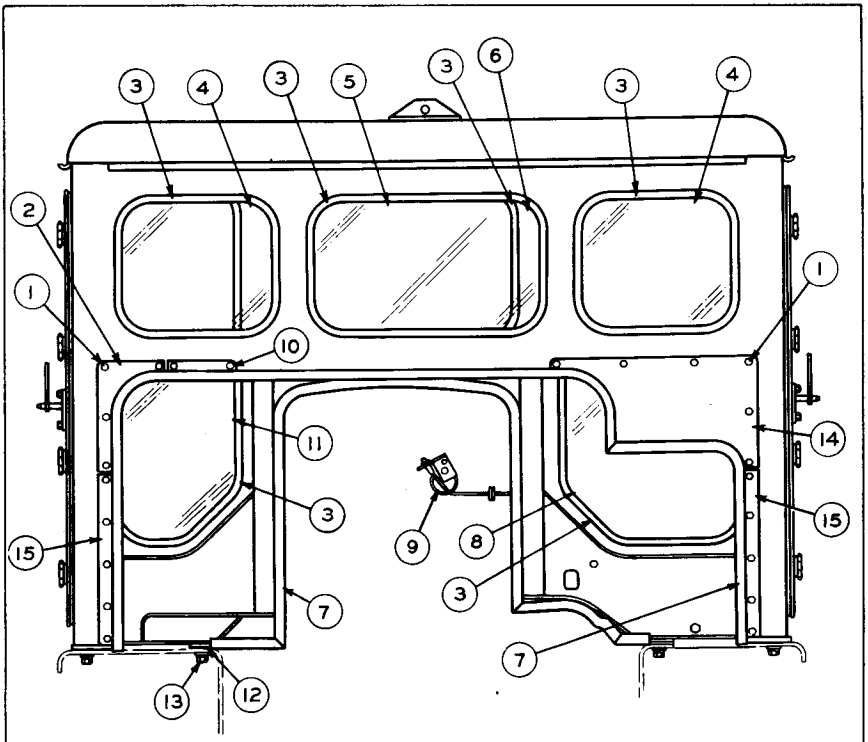

REF. NO.	PART NUMBER	DESCRIPTION	QTY.
1	2A762	BOLT	22
	3B4504	LOCKWASHER	22
	4B5269	WASHER	22
2	3S819	CORNER	1
3	▲1S8772	SEAL	1
4	3S855	GLASS-(Untinted)	2
5	3S853	GLASS-(Untinted)	1
6	3S1611	GLASS-(Untinted)	1
7	▲5M7563	SEAL	1
8	3S854	GLASS-(Untinted)	1
9	4S6937	WIRING GROUP (See Separate Illustration)	1
10	3S818	STRIP	1
11	3S852	GLASS-(Untinted)	1
12	3S1731	SHIM	12

REF. NO.	PART NUMBER	DESCRIPTION	QTY.
13	1D4608	BOLT	8
	1B4331	NUT	8
	3B4512	LOCKWASHER	8
	1D688	WASHER	16
14	3S816	CORNER	1
15	3S817	STRIP	2
	5H4845	TOOL ASSEM. Consisting of:	
	5H4846	HANDLE	
	5H4847	END-(Straight)	
	5H4848	BIT-(Curled) (not shown - seal installation)	
	31328	FORM-(Glass Installation)	1
	35667	FORM-(Cab Installation)	1

▲ ORDER LENGTH REQUIRED

97702

3S1627 CAB GROUP—As Viewed from Rear of Machine
Serial No. 48A6393 to 48A6882 inclusive
FOR USE WITH HYDRAULIC BULLDOZER
4S6937 Cab Wiring parts are shown on Page 142

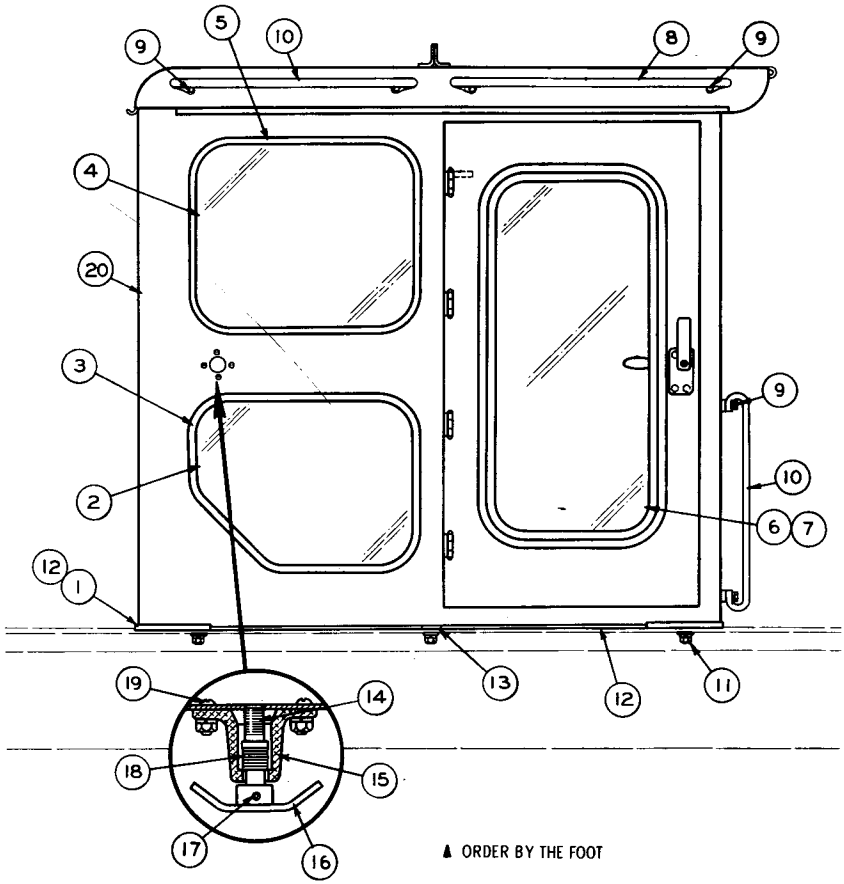

▲ ORDER BY THE FOOT

REF. NO.	PART NUMBER	DESCRIPTION	QTY
1	3S7072	SHIM	3
2	7S3832	GLASS-(Untinted)	2
▲ 3	9S3222	SEAL-142.50"	
4	7S3831	GLASS-(Untinted)	2
▲ 5	9S3222	SEAL-156.50"	
6	7S3827	GLASS-(Untinted)	2
▲ 7	9S3222	SEAL-203.50"	
8	8S8782	GRAB IRON	2
9	1S1595	BOLT	12
	3B4508	LOCKWASHER	12
10	8S8781	GRAB IRON	4
11	1D4609	BOLT	2
	1B4331	NUT	2
	3B4512	LOCKWASHER	2
	1D688	WASHER	4
▲ 12	4S8476	SEAL-102.94"	
13	3S1730	SHIM	12

REF. NO.	PART NUMBER	DESCRIPTION	QTY
14	5B2907	SCREW	2
15	5B2905	BRACKET	2
16	6H3608	CRANK ASSEM.	2
17	5B3155	PIN	2
18	L955	SPRING	2
	4B1245	SCREW	8
19	4B2051	NUT	8
	3B4503	LOCKWASHER	8
20	9S6215	CAB PANEL & BODY ASSEM.	1
	5H4845	TOOL ASSEM.	1
		Consisting of:	
	5H4846	HANDLE	1
	5H4847	END-(Straight)	1
	5H4848	BIT-(Curled)	1
		(Not Shown-Seal Installation)	
	FM035667	FORM-(Cab Installation)	1
	GMG00027	FORM-(Guard Assem. (Installation)	1

131761

9S6223 CAB GROUP—As Viewed from Right Hand Side of Machine—Type 1
Effective with Serial No. 48A6883
FOR USE WITH HYDRAULIC BULLDOZER

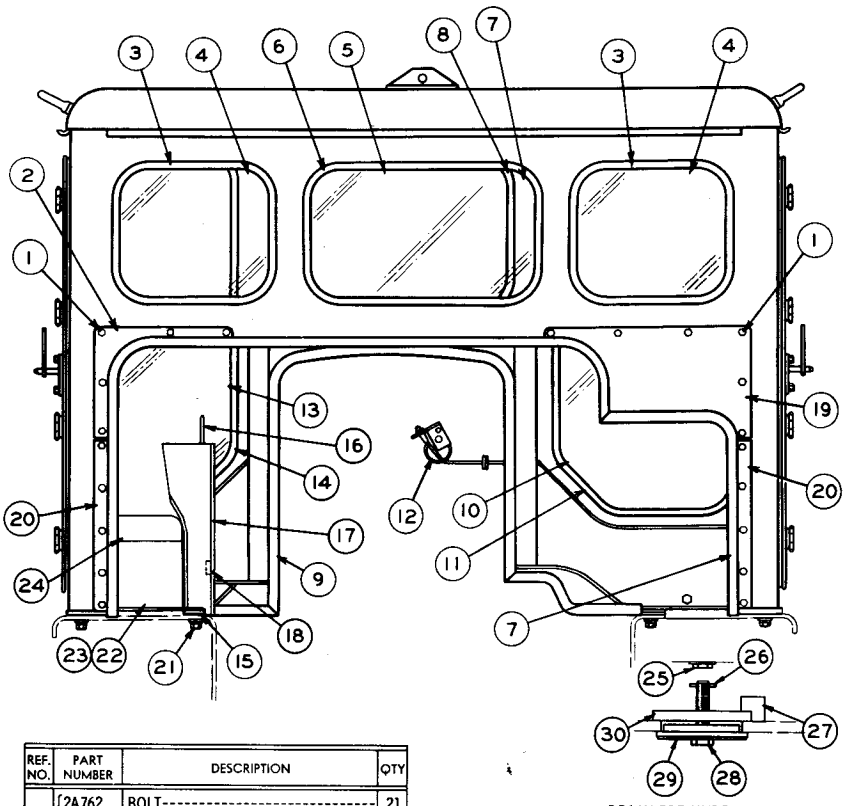

REF. NO.	PART NUMBER	DESCRIPTION	QTY
1	2A762	BOLT	21
	3B4504	LOCKWASHER	21
	4B5269	WASHER	21
2	9S7797	CORNER	1
3	9S3222	SEAL-10 feet	
4	7S3833	GLASS-(Untinted)	2
5	3S853	GLASS-(Untinted)	1
6	9S3222	SEAL-5 feet	
7	7S3834	GLASS-(Untinted)	1
8	9S3222	SEAL-7 feet	
9	4S8784	SEAL-9 feet	
10	3S854	GLASS	1
11	9S3222	SEAL-10 feet	
12	4S6937	WIRING GROUP (See Separate Illustration)	1
13	3S852	GLASS	1
14	9S3222	SEAL-9 feet	
15	3S1731	SHIM	12
16	9S7802	LEVER ASSEM.	1
	5H3895	BEARING (Part of 9S7802 Assem.)	1
	9S7804	GUARD ASSEM.	1
17	9F6445	NUT-(Weld)	4
	5D2643	LUG	3
18	9F2978	NUT-(Weld) (Parts of 9S7804 Assem.)	2
19	9S7796	CORNER	1
20	9S7798	STRIP	2

DRAIN FOR HYDRAULIC TANK

REF. NO.	PART NUMBER	DESCRIPTION	QTY
21	1D4608	BOLT	8
	1B4331	NUT	8
	3B4512	LOCKWASHER	8
	1D688	WASHER	16
22	9S7807	BOX ASSEM.	1
	9F2978	NUT-(Weld) (Part of 9S7807 Assem.)	3
23	1J8532	EYEBOLT	1
	5B8030	SPACER	1
	3B1915	BOLT	1
	1D4717	NUT	1
	3B4506	LOCKWASHER	1
	4B4278	WASHER	1
24	9S7806	COVER ASSEM.	1
	1S6385	LUG (Part of 9S7806 Assem.)	8
25	9S4190	PLUG	1
	2M9780	SEAL	1
26	4H5128	PIN	1
27	4K1650	BLOCK	1
28	2J7414	BOLT	1
	3B4510	LOCKWASHER	1
29	2J7416	PLATE	1
30	2J7415	PLATE	1

108416

9S6223 CAB GROUP—As Viewed from Rear of Machine—Type 1
Effective with Serial No. 48A6883
FOR USE WITH HYDRAULIC BULLDOZER
4S6937 Wiring parts are shown on Page 142

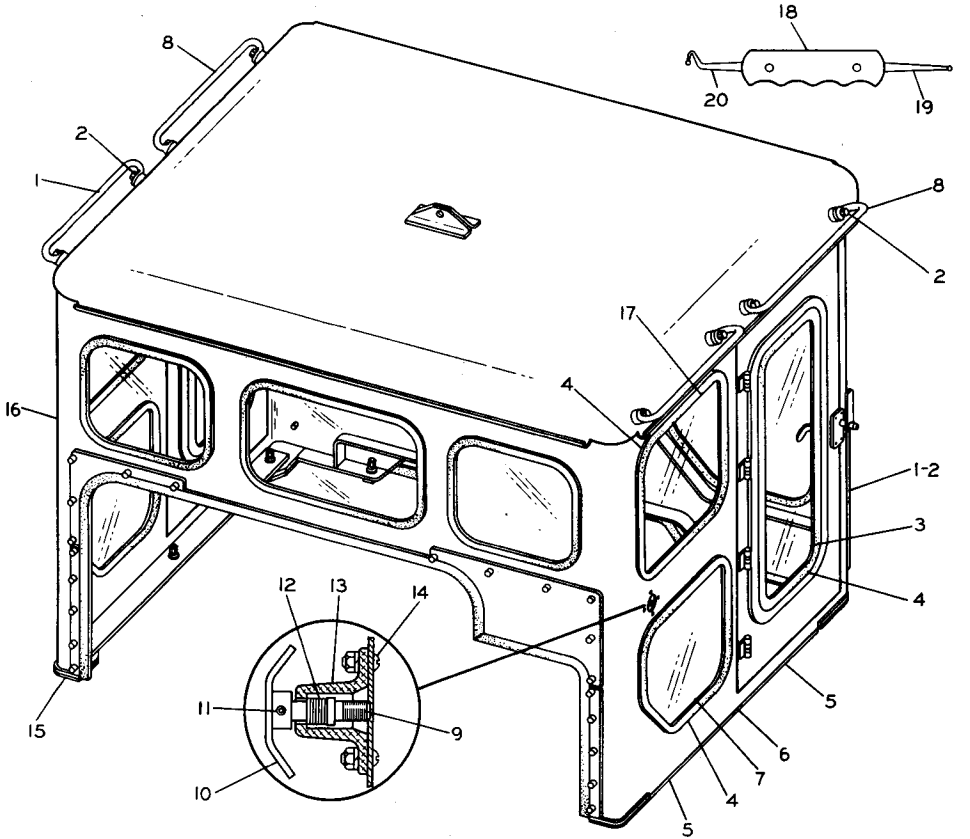

REF. NO.	PART NUMBER	DESCRIPTION	QTY
1	8S8781	GRAB IRON	4
2	S1595	BOLT	12
	3B4508	LOCKWASHER	12
3	7S3827	GLASS	2
▲ 4	9S3222	SEAL-502.50"	
▲ 5	4S8476	SEAL-102.94"	
6	3S1730	SHIM-(Use as Required)	12
7	7S3832	GLASS	2
8	8S8782	GRAB IRON	2
9	5B2907	SCREW	2
10	6H3608	CRANK ASSEM.	2
11	5B3155	PIN	2
12	L955	SPRING	2
13	5B2905	BRACKET	2
14	4B1245	SCREW	8
	4B2051	NUT	8
	3B4503	LOCKWASHER	8
15	3S7072	SHIM	3
16	9S6215	CAB PANEL & BODY ASSEM.	1
17	7S3831	GLASS	2
18	5H4845	TOOL ASSEM.	1
	5H4846	HANDLE	1
19	5H4847	END-(Straight)	1
20	5H4848	BIT-(Curled)	1
	FM035667	FORM-(Cab Installation)	1

▲ ORDER BY THE FOOT USE AS REQUIRED

113695

9S6223 CAB GROUP—Part 1—Type 2
Serial No. 48A6883—Up
FOR USE WITH HYDRAULIC BULLDOZER

9S6223 CAB GROUP—Part 2—Type 2
Serial No. 48A6883—Up
FOR USE WITH HYDRAULIC BULLDOZER

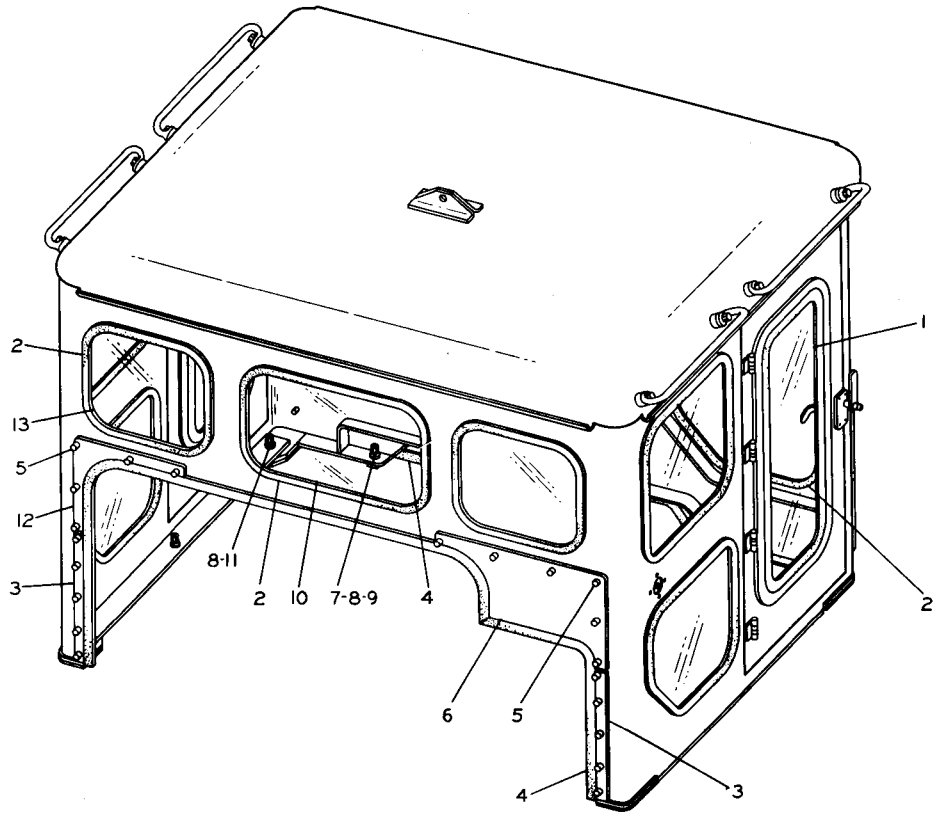

REF. NO.	PART NUMBER	DESCRIPTION	QTY
1	3S852	GLASS------(R.H. Front)--------	1
	3S853	GLASS------(Center Front)-------	1
	3S854	GLASS-------(L.H. Front)--------	1
▲ 2	9S3222	SEAL----------458"	
3	9S7798	STRIP----------	2
▲ 4	4S8747	SEAL----------223"	
	2A762	BOLT----------	21
5	3B4504	LOCKWASHER----------	21
	4B5269	WASHER----------	21
6	9S7796	CORNER----------	1
7	1D4608	BOLT----------	6
	1B4331	NUT----------	8
8	3B4512	LOCKWASHER----------	8
	1D688	WASHER----------	8
9	3S1731	SHIM-------(Use as Required)----	12
10	7S3834	GLASS----------	1
11	1D4609	BOLT----------	2
12	9S7797	CORNER----------	1
13	7S3833	GLASS----------	2

▲ ORDER BY THE FOOT USE AS REQUIRED

113696

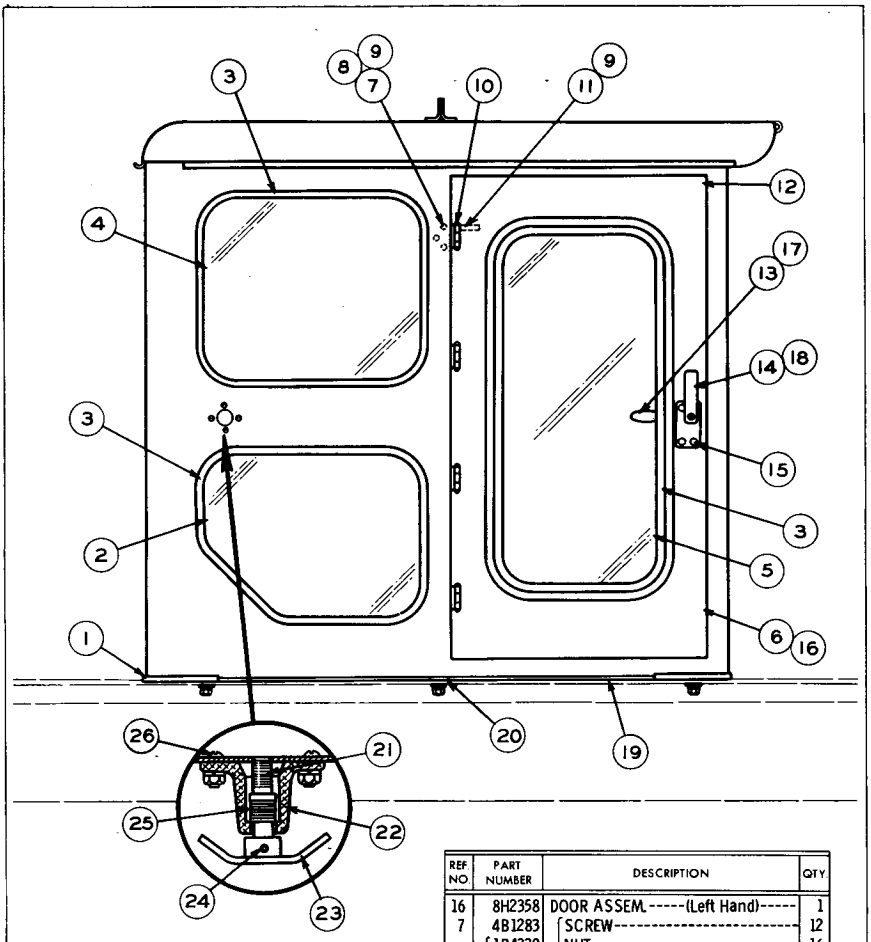

REF. NO.	PART NUMBER	DESCRIPTION	QTY.
1	3S7072	SHIM	3
2	4S8942	GLASS-(Untinted)	2
3	▲1S8772	SEAL	1
4	4S8943	GLASS-(Untinted)	2
5	1H4209	GLASS-(Untinted)	2
6	8H2357	DOOR ASSEM.-(Right Hand)	1
7	4B1283	SCREW	12
8	1B4330	NUT	16
	3B4504	LOCKWASHER-(Plain)	16
9	8F8052	LOCKWASHER-(Tooth)	24
10	1H7482	HINGE	4
11	4B1282	SCREW	12
12	1H7483	GASKET-(Top)	1
	1H7484	GASKET-(Rear)	1
13	1H7486	LATCH ASSEM.	1
14	6H6173	HANDLE ASSEM.	1
15	2A4781	BOLT	4
		(Parts of 8H2357 Door Assem.)	

REF. NO.	PART NUMBER	DESCRIPTION	QTY.
16	8H2358	DOOR ASSEM.-(Left Hand)	1
7	4B1283	SCREW	12
8	1B4330	NUT	16
	3B4504	LOCKWASHER-(Plain)	16
9	8F8052	LOCKWASHER-(Tooth)	24
10	1H7482	HINGE	4
11	4B1282	SCREW	12
12	1H7483	GASKET-(Top)	1
	1H7484	GASKET-(Rear)	1
17	1H7485	LATCH ASSEM.	1
18	6H6174	HANDLE ASSEM.	1
15	2A4781	BOLT	4
		(Parts of 8H2358 Door Assem.)	
19	▲3S1732	SEAL	1
20	3S1730	SHIM	12
21	5B2907	SCREW	2
22	5B2905	BRACKET	2
23	6H3608	CRANK ASSEM.	2
24	5B3155	PIN	2
25	L-955	SPRING	2
26	4B1245	SCREW	8
	4B2051	NUT	8
	3B4503	LOCKWASHER	8
		▲ ORDER LENGTH REQUIRED	

78416

3S1617 CAB GROUP—As Viewed from Right Hand Side of Machine
Serial No. 48A6393 to 48A6882 inclusive
FOR USE WITHOUT HYDRAULIC BULLDOZER

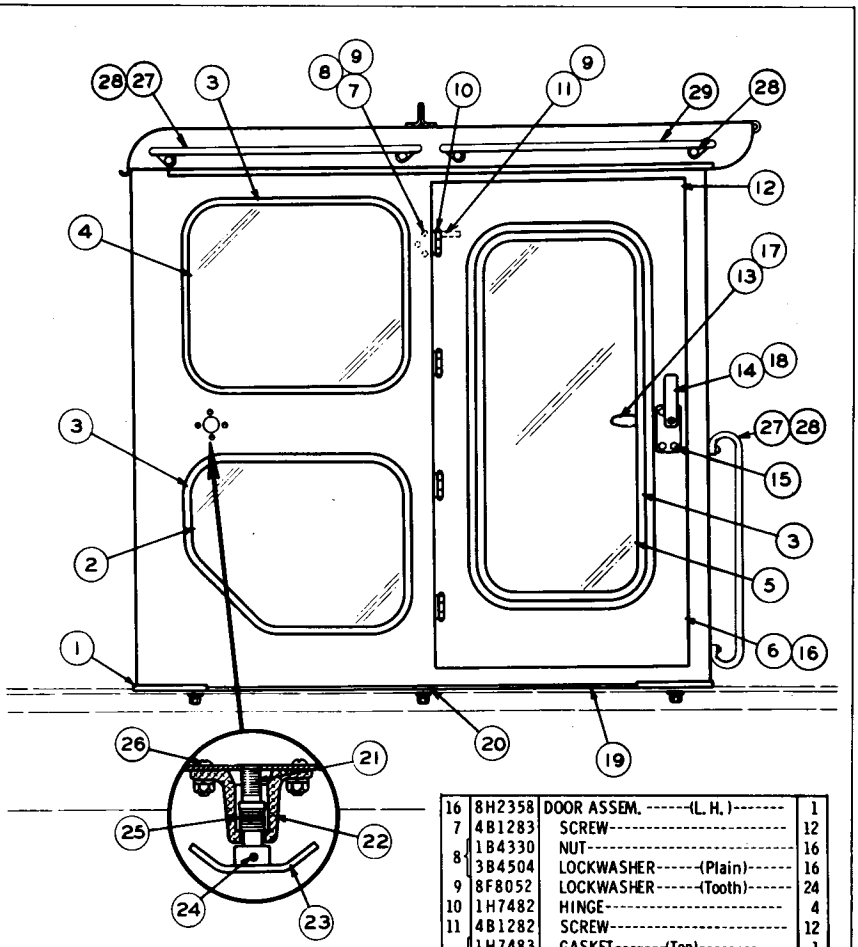

REF. NO.	PART NUMBER	DESCRIPTION	QTY
	1 3S7072	SHIM----------	3
C	2 7S3832	GLASS-------(Untinted)----------	2
C▲	3 9S3222	SEAL---(Use as Required)----480"	
C	4 7S3831	GLASS-------(Untinted)----------	2
C	5 7S3827	GLASS-------(Untinted)----------	2
	6 8H2357	DOOR ASSEM. ----(R.H.)--------	1
	7 4B1283	SCREW----------	12
	8 1B4330	NUT----------	16
	8 3B4504	LOCKWASHER-----(Plain)------	16
	9 8F8052	LOCKWASHER-----(Tooth)-----	24
	10 1H7482	HINGE----------	4
	11 4B1282	SCREW----------	12
	12 1H7483	GASKET------(Top)----------	1
	12 1H7484	GASKET-----(Rear)----------	1
	13 1H7486	LATCH ASSEM. ----------	1
	14 6H6173	HANDLE ASSEM. ----------	1
	15 2A4781	BOLT----------	4
	16 8H2358	DOOR ASSEM. ------(L.H.)--------	1
	7 4B1283	SCREW----------	12
	8 1B4330	NUT----------	16
	8 3B4504	LOCKWASHER------(Plain)------	16
	9 8F8052	LOCKWASHER------(Tooth)------	24
	10 1H7482	HINGE----------	4
	11 4B1282	SCREW----------	12
	12 1H7483	GASKET-------(Top)----------	1
	12 1H7484	GASKET-------(Rear)----------	1
	17 1H7485	LATCH ASSEM. ----------	1
	18 6H6174	HANDLE ASSEM. ----------	1
	15 2A4781	BOLT----------	4
■	19 3S1732	SEAL-----(Use as Required)---103"	
	20 3S1730	SHIM----------	12
	21 5B2907	SCREW----------	2
	22 5B2905	BRACKET----------	2
	23 6H3608	CRANK ASSEM. ----------	2
	24 5B3155	PIN----------	2
	25 L955	SPRING----------	2
	26 4B1245	SCREW----------	8
	26 4B2051	NUT----------	8
	26 3B4503	LOCKWASHER----------	8
C	27 8S8781	GRAB IRON----------	4
C	28 S1595	BOLT----------	12
C	28 3B4508	LOCKWASHER ----------	12
C	29 8S8782	GRAB IRON----------	2

▲ ORDER BY THE FOOT C INDICATES CHANGE ■ ORDER BY THE INCH 140281

3S1617 CAB GROUP—As Viewed from Right Hand Side of Machine—Type 2
Serial No. 48A6393 to 48A6882 inclusive
FOR USE WITHOUT HYDRAULIC BULLDOZER

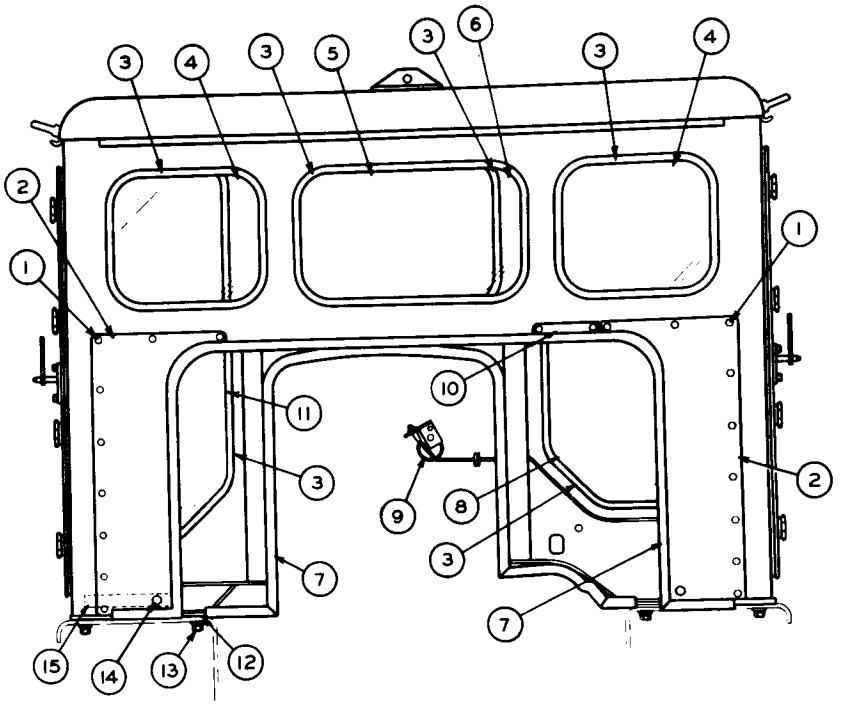

REF. NO.	PART NUMBER	DESCRIPTION	QTY
	2A762	BOLT	20
1	3B4504	LOCKWASHER	20
	4B5269	WASHER	20
2	3S815	PANEL	2
C▲ 3	9S3222	SEAL----(Use as Required)----480"	
C 4	7S3833	GLASS------(Untinted)----------	2
5	3S853	GLASS------(Untinted)----------	1
C 6	7S3834	GLASS------(Untinted)----------	1
■ 7	5M7563	SEAL-----(Use as Required)--225"	
8	3S854	GLASS------(Untinted)----------	1
9	4S6937	WIRING GROUP---------- (Separate Illustration)	1
10	3S818	STRIP----------	1
11	3S852	GLASS------(Untinted)----------	1
12	3S1731	SHIM----------	12
	1D4608	BOLT----------	8
13	1B4331	NUT----------	8
	3B4512	LOCKWASHER ----------	8
	1D688	WASHER ----------	16
	S1594	BOLT----------	4
14	3B4506	LOCKWASHER----------	4
	4B5271	WASHER----------	4
15	3S1663	BRACE ASSEM. ----------	2
	9F2978	NUT ----------	4
	5H4845	TOOL ASSEM. ----------	1
●	5H4846	HANDLE----------	1
	5H4847	END-------(Straight)----------	1
	5H4848	BIT--------(Curled)----------	1
	FM035667	FORM-----(Cab Installation)-------	1

■ ORDER BY THE INCH
C INDICATES CHANGE
▲ ORDER BY THE FOOT
● NOT SHOWN- Seal Installation

140282

3S1617 CAB GROUP—As Viewed from Rear of Machine—Type 2
Serial No. 48A6393 to 48A6882 inclusive
FOR USE WITHOUT HYDRAULIC BULLDOZER
4S6937 Cab Wiring parts are shown on Page 142

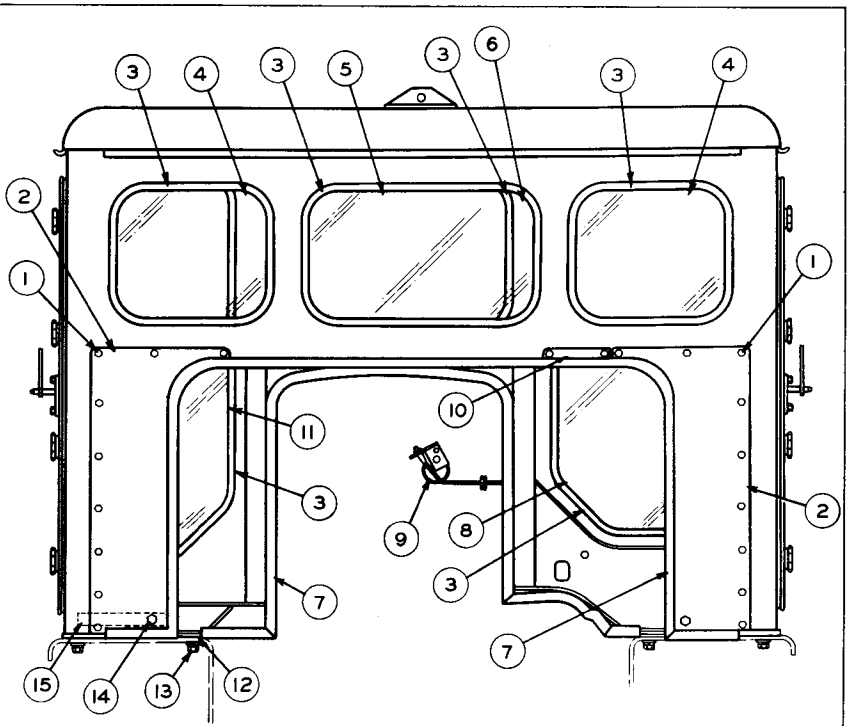

REF NO	PART NUMBER	DESCRIPTION	QTY
	2A762	BOLT	20
1	3B4504	LOCKWASHER	20
	4B5269	WASHER	20
2	3S815	PANEL	2
3	▲1S8772	SEAL	1
4	3S855	GLASS-(Untinted)	2
5	3S853	GLASS-(Untinted)	1
6	3S1611	GLASS-(Untinted)	1
7	▲5M7563	SEAL	1
8	3S854	GLASS-(Untinted)	1
9	4S6937	WIRING GROUP (See Separate Illustration)	1
10	3S818	STRIP	1
11	3S852	GLASS-(Untinted)	1
12	3S1731	SHIM	12
13	1D4608	BOLT	8
	1B4331	NUT	8
	3B4512	LOCKWASHER	8
	1D688	WASHER	16

REF NO	PART NUMBER	DESCRIPTION	QTY
	S-1594	BOLT	4
14	3B4506	LOCKWASHER	4
	4B5271	WASHER	4
15	3S1663	BRACE ASSEM.	2
	9F2978	NUT (2 in each 3S1663 Brace Assem.)	4
	5H4845	TOOL ASSEM. Consisting of:	1
	5H4846	HANDLE	1
	5H4847	END-(Straight)	1
	5H4848	BIT-(Curled) (not shown - seal installation)	1
	31328	FORM-(Glass Installation)	1
	35667	FORM-(Cab Installation)	

▲ ORDER LENGTH REQUIRED

97701

3S1617 CAB GROUP—As Viewed from Rear of Machine
Serial No. 48A6393 to 48A6882 inclusive
FOR USE WITHOUT HYDRAULIC BULLDOZER
4S6937 Cab Wiring parts are shown on Page 142

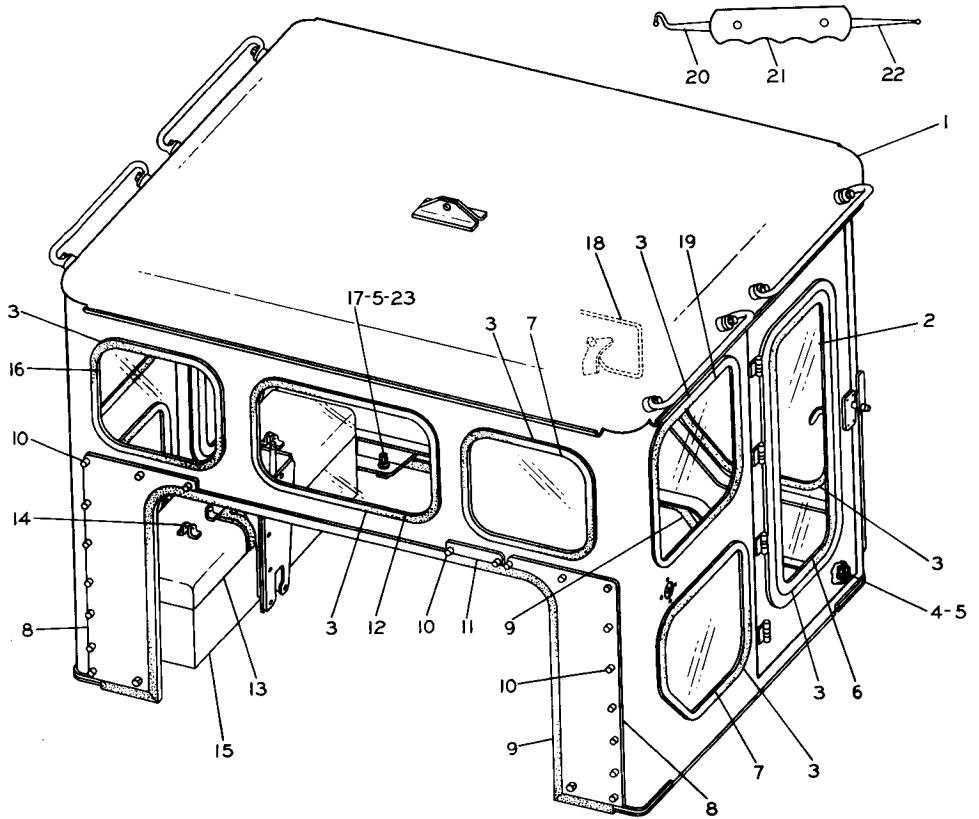

REF. NO.	PART NUMBER	DESCRIPTION	QTY
1	9S6215	CAB PANEL & BODY ASSEM.	1
2	3S854	GLASS-(R.H.-Front)	1
	3S853	GLASS-(Center-Front)	1
	3S852	GLASS-(L.H.-Front)	1
3	9S3222	SEAL-960"	
4	1D4609	BOLT	2
	1B4331	NUT	8
5	3B4512	LOCKWASHER	8
	1D688	WASHER	16
6	7S3827	GLASS	2
7	7S3832	GLASS	2
8	9S7795	PANEL	2
▲ 9	4S8747	SEAL-225"	
	2A762	BOLT	20
10	3B4504	LOCKWASHER	20
	4B5269	WASHER	20
11	3S818	STRIP	1
12	7S3834	GLASS	1
13	9S7806	COVER ASSEM.	1
14	1S6385	LUG	8
15	9S7807	BOX ASSEM.	1
	9F2978	NUT-(Weld)	3
16	7S3833	GLASS	2
17	1D4608	BOLT	6
18	4S6937	WIRING GROUP (See Separate Illustration)	1
19	7S3831	GLASS	2
20	5H4845	TOOL ASSEM.	1
	5H4848	BIT-(Curled)	1
21	5H4846	HANDLE	1
22	5H4847	END-(Straight)	1
23	3S1731	SHIM-(Use as Required)	12

▲ ORDER BY THE FOOT USE AS REQUIRED

113699

9S6217 CAB GROUP—Part 1—Type 1
Serial No. 48A6883—Up
FOR USE WITHOUT HYDRAULIC BULLDOZER
4S6937 Wiring parts are shown on Page 142

9S6217 CAB GROUP—Part 2—Type 1
Serial No. 48A6883—Up
FOR USE WITHOUT HYDRAULIC BULLDOZER

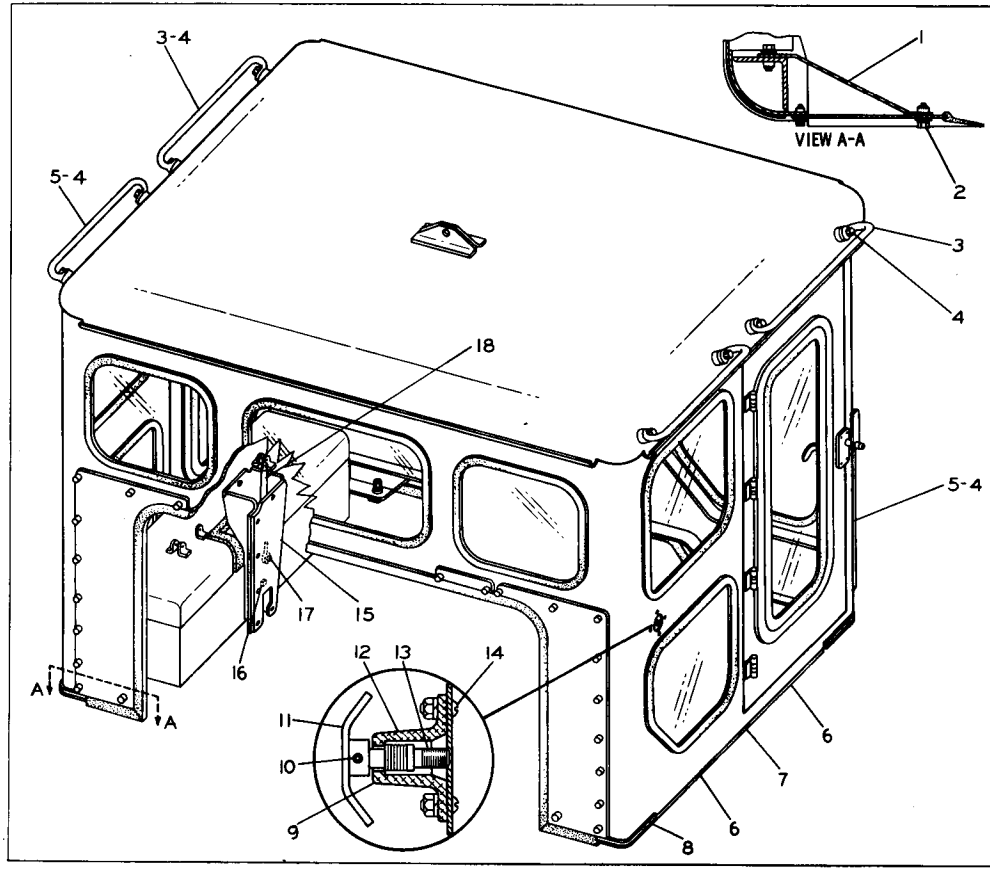

REF. NO.	PART NUMBER	DESCRIPTION	QTY
1	3S1663	BRACE ASSEM.	2
	9F2978	NUT	1
2	S1594	BOLT	4
	3B4506	LOCKWASHER	4
	4B5271	WASHER	4
3	8S8782	GRAB IRON	2
4	S1595	BOLT	12
	3B4508	LOCKWASHER	12
5	8S8781	GRAB IRON	4
▲ 6	4S8476	SEAL-----103"	
7	3S1730	SHIM-------(Use as Required)-----	12
8	3S7072	SHIM-------(Use as Required)----	3
9	5B2905	BRACKET	2
10	5B3155	PIN	2
11	6H3608	CRANK ASSEM.	2
12	L955	SPRING	2
13	5B2907	SCREW	2
14	4B1245	SCREW	8
	4B2051	NUT	8
	3B4503	LOCKWASHER	8
15	9S7804	GUARD ASSEM.	1
	9F6445	NUT---------(Weld)----------	4
	5D2643	LUG	3
16	9F2978	NUT---------(Weld)----------	2
17	1J8532	EYE BOLT	1
	5B8030	SPACER	1
	3B1915	BOLT	1
	1D4717	NUT	1
	3B4506	LOCKWASHER	1
	4B4278	WASHER	1
18	9S7802	LEVER ASSEM.	1
	5H3895	BEARING	1
	FMO35667	FORM-------(Cab Installation)----	1
	GMG00027	FORM----(Guard Assem. Installation	1

▲ ORDER BY THE FOOT USE AS REQUIRED

113700

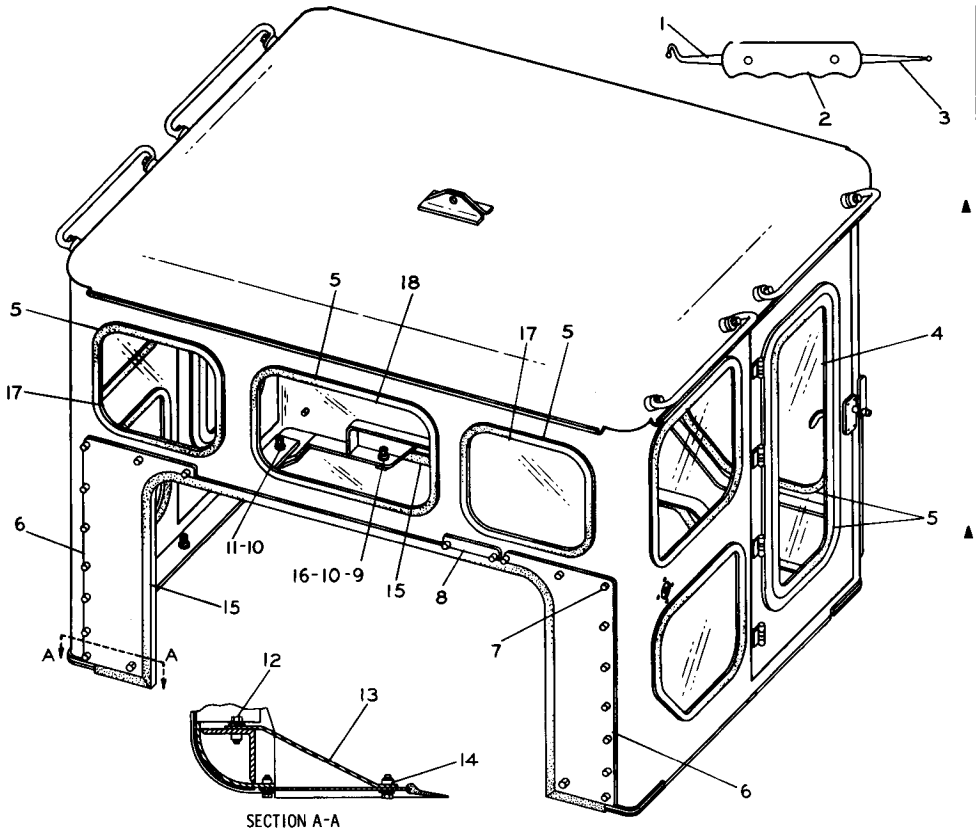

REF. NO.	PART NUMBER	DESCRIPTION	QTY
1	5H4845	TOOL ASSEM.	1
	5H4848	BIT-(Curled)	1
2	5H4846	HANDLE	1
3	5H4847	END-(Straight)	1
4	3S854	GLASS-(R.H.-Front)	1
	3S853	GLASS-(Center Front)	1
	3S852	GLASS-(L.H. Front)	1
▲ 5	9S3222	SEAL-458"	
6	9S7795	PANEL	2
7	2A762	BOLT	20
	3B4504	LOCKWASHER	20
	4B5269	WASHER	20
8	3S818	STRIP	1
9	1D4608	BOLT	6
10	1B4331	NUT	8
	3B4512	LOCKWASHER	8
	1D688	WASHER	8
11	1D4609	BOLT	2
12	S1594	BOLT	4
	3B4506	LOCKWASHER	4
	4B5271	WASHER	4
13	3S1663	BRACE ASSEM.	2
14	9F2978	NUT-(Weld)	
▲ 15	4S8747	SEAL-225"	
16	3S1731	SHIM-(Use as Required)	12
17	7S3833	GLASS	2
18	7S3834	GLASS	1

▲ ORDER BY THE FOOT
USE AS REQUIRED

114354

9S6217 CAB GROUP—Part 1—Type 2
Serial No. 48A6883—Up
FOR USE WITHOUT HYDRAULIC BULLDOZER

9S6217 CAB GROUP—Part 2—Type 2
Serial No. 48A6883—Up
FOR USE WITHOUT HYDRAULIC BULLDOZER

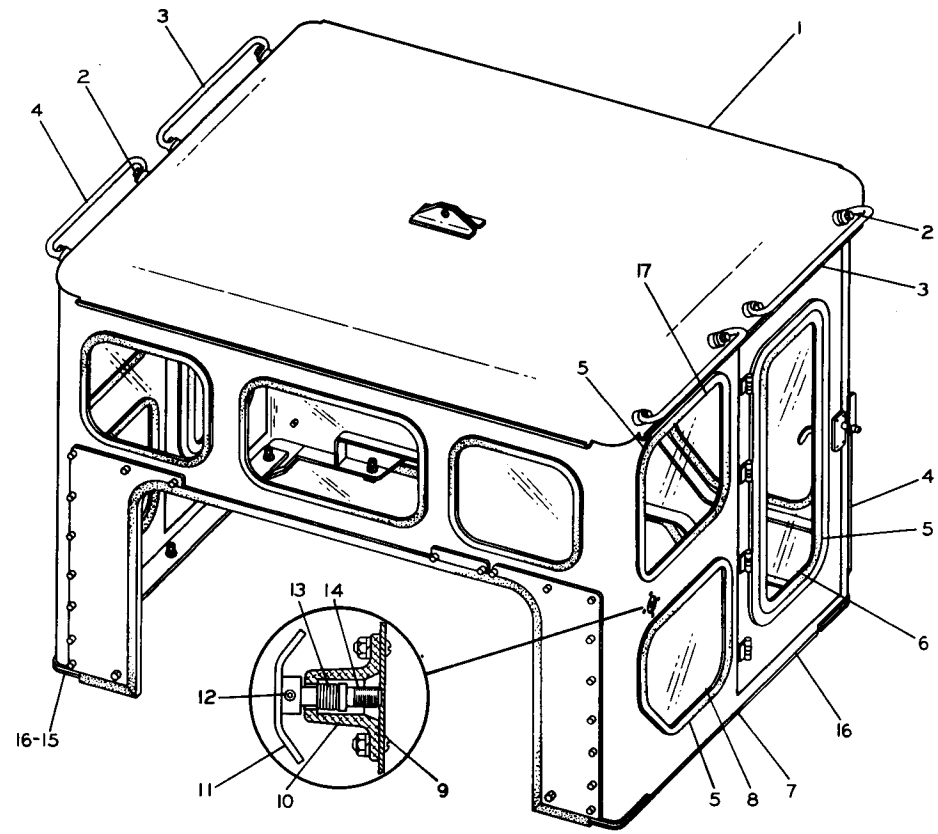

REF. NO.	PART NUMBER	DESCRIPTION	QTY
1	9S6215	CAB PANEL & BODY ASSEM.	1
2	S1595	BOLT	12
	3B4508	LOCKWASHER	12
3	8S8782	GRAB IRON	2
4	8S8781	GRAB IRON	4
▲ 5	9S3222	SEAL--502.50"	
6	7S3827	GLASS	2
7	3S1730	SHIM--(Use as Required)	12
8	7S3832	GLASS	2
9	4B1245	SCREW	8
	4B2051	NUT	8
	3B4503	LOCKWASHER	8
10	5B2905	BRACKET	2
11	6H3608	CRANK ASSEM.	2
12	5B3155	PIN	2
13	L955	SPRING	2
14	5B2907	SCREW	2
15	3S7072	SHIM	3
▲ 16	4S8476	SEAL--103"	
17	7S3831	GLASS	2
	FM035667	FORM--(Cab Installation)	1

▲ ORDER BY THE FOOT
USE AS REQUIRED

113701

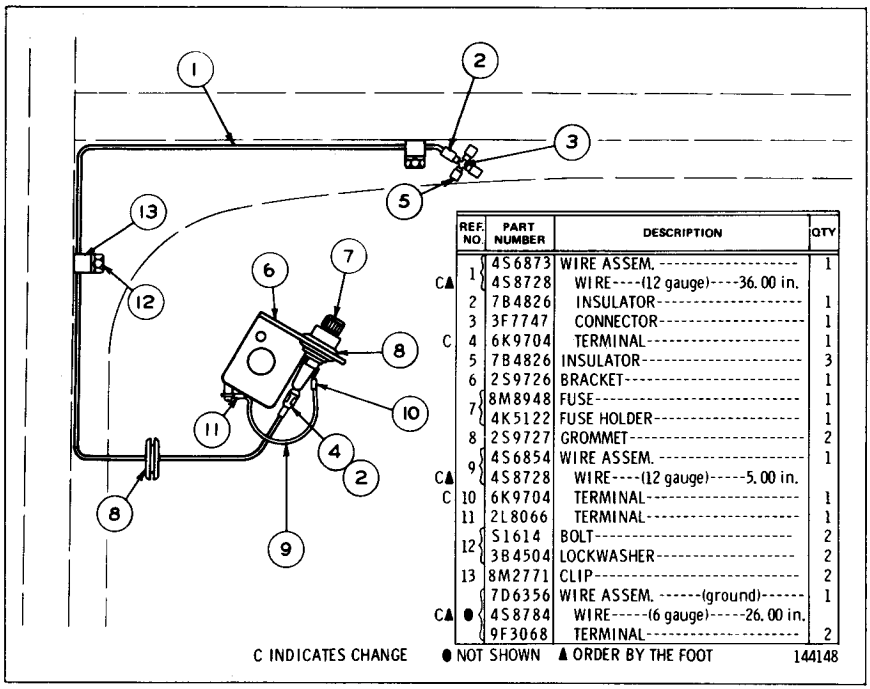

	REF. NO.	PART NUMBER	DESCRIPTION	QTY
	1	4S6873	WIRE ASSEM.	1
CA		4S8728	WIRE----(12 gauge)----36.00 in.	
	2	7B4826	INSULATOR	1
	3	3F7747	CONNECTOR	1
C	4	6K9704	TERMINAL	1
	5	7B4826	INSULATOR	3
	6	2S9726	BRACKET	1
	7	8M8948	FUSE	1
		4K5122	FUSE HOLDER	1
	8	2S9727	GROMMET	2
	9	4S6854	WIRE ASSEM.	1
CA		4S8728	WIRE----(12 gauge)-----5.00 in.	
C	10	6K9704	TERMINAL	1
	11	2L8066	TERMINAL	1
	12	S1614	BOLT	2
		3B4504	LOCKWASHER	2
	13	8M2771	CLIP	2
		7D6356	WIRE ASSEM. ------(ground)------	1
CA●		4S8784	WIRE-----(6 gauge)-----26.00 in.	
		9F3068	TERMINAL	2

C INDICATES CHANGE ● NOT SHOWN ▲ ORDER BY THE FOOT 144148

4S6937 CAB WIRING GROUP
Part of 3S1627, 9S6223, 3S1617 and 9S6217 Cab Groups
shown on Pages 139, 139B, 141 and 141A

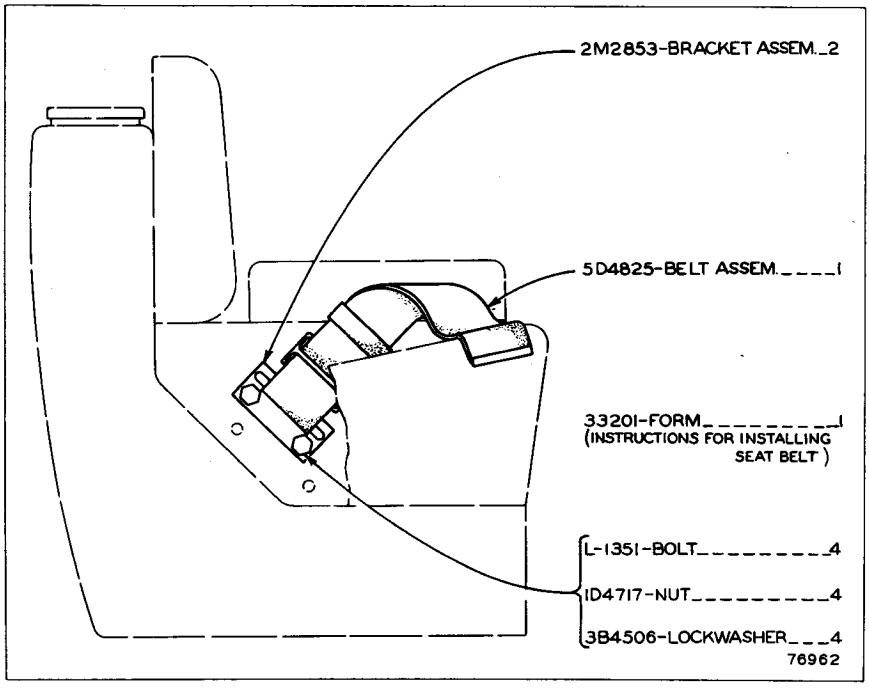

2M2832 SEAT BELT GROUP

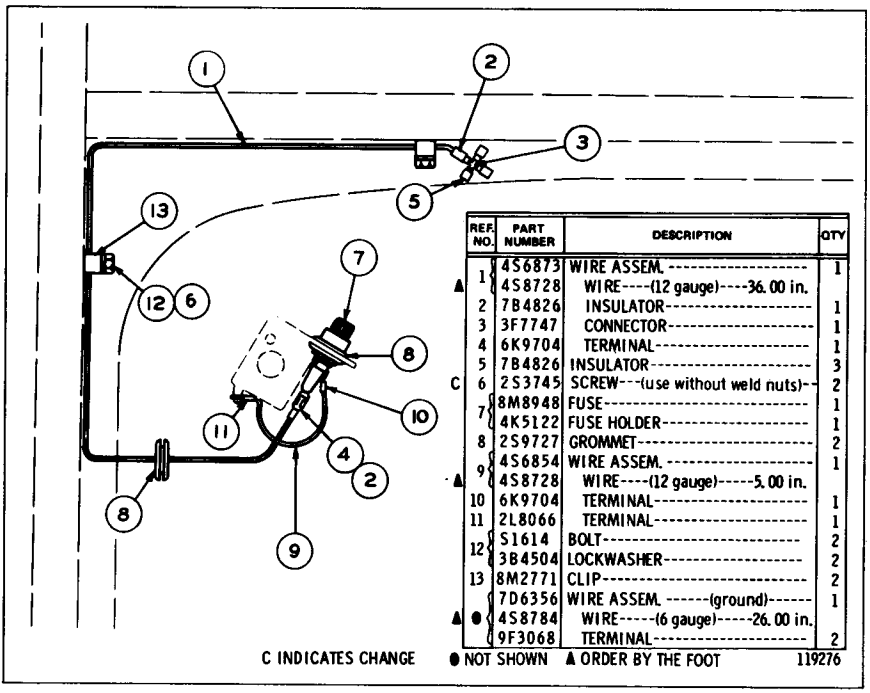

REF. NO.	PART NUMBER	DESCRIPTION	QTY
1	4S6873	WIRE ASSEM.	1
▲	4S8728	WIRE----(12 gauge)----36.00 in.	
2	7B4826	INSULATOR	1
3	3F7747	CONNECTOR	1
4	6K9704	TERMINAL	1
5	7B4826	INSULATOR	3
C 6	2S3745	SCREW---(use without weld nuts)--	2
7	8M8948	FUSE	1
	4K5122	FUSE HOLDER	1
8	2S9727	GROMMET	2
9	4S6854	WIRE ASSEM.	1
▲	4S8728	WIRE----(12 gauge)-----5.00 in.	
10	6K9704	TERMINAL	1
11	2L8066	TERMINAL	1
12	S1614	BOLT	2
	3B4504	LOCKWASHER	2
13	8M2771	CLIP	2
	7D6356	WIRE ASSEM. ------(ground)------	1
▲ ●	4S8784	WIRE-----(6 gauge)-----26.00 in.	
	9F3068	TERMINAL	2

C INDICATES CHANGE ● NOT SHOWN ▲ ORDER BY THE FOOT 119276

4S6937 CAB WIRING GROUP—Type 2
Part of 3S1627, 9S6223, 3S1617 and 9S6217 Cab Groups
shown on Pages 139, 139B, 141 and 141A

4S6693 LIGHTING SYSTEM GROUP—12 Volt, 2 Lamp

Serial No. 48A6393 to 48A10644 inclusive

2M856 Lamp parts are shown on Page 146

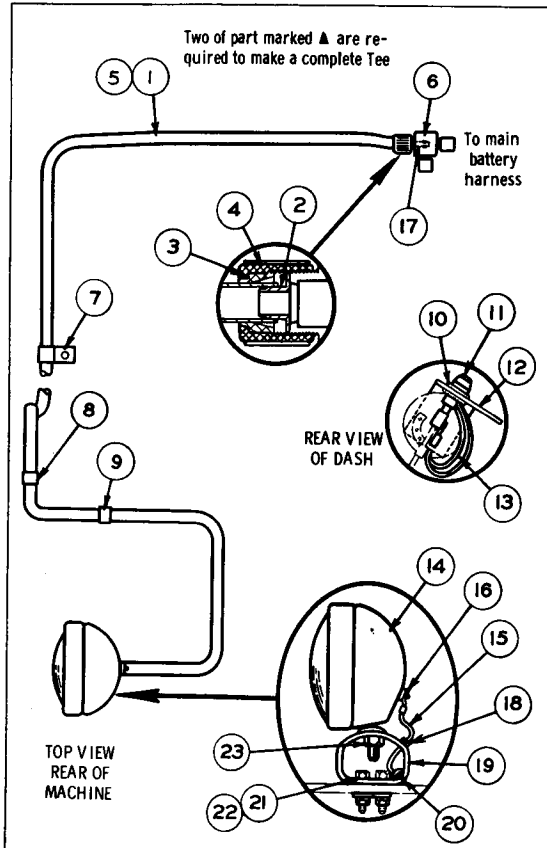

REF NO	PART NUMBER	DESCRIPTION	QTY
	4S6702	CONDUIT ASSEM.	1
		Consisting of:	
1	4S8751	CONDUIT—11 Feet	
2	8S5783	LINER	1
3	8S5782	RING	1
4	9M9662	NUT	1
5	1S6870	LINER	1
▲ 6	9M9661	TEE	4
7	1S6420	CLIP	3
8	8M2773	CLIP	1
9	1H5166	CLIP	1
10	2S9727	GROMMET	2
11	4K5122	FUSE HOLDER	2
	8M8948	FUSE—(15 AMP)	2
12	2S9726	BRACKET	1
	2S9728	WIRE ASSEM.	1
13	4L3916	TERMINAL—(Fuse Holder)	2
	2L8066	TERMINAL—(Light Switch)	1
		(Parts of 2S9728 Wire Assem.)	
14	2M856	LAMP ASSEM.	2
		(See Separate Illustration)	
15	4S6703	WIRE ASSEM.	1
16	2L8075	TERMINAL	1
17	1S7837	TERMINAL	1
		(Parts of 4S6703 Wire Assem.)	
18	9H5156	GROMMET	1
19	1S1888	BRACKET	1
20	1S2294	BOOT	1
	2A4996	BOLT	4
21	1B4203	NUT	4
	4B5271	WASHER	4
22	3B4506	LOCKWASHER	10
	1B4206	NUT	2
23	3B4510	LOCKWASHER	2
	2B8352	WASHER	4
24	3F1240	GROMMET	1
25	1M3069	GUARD ASSEM.	1
26	1A2029	BOLT	6

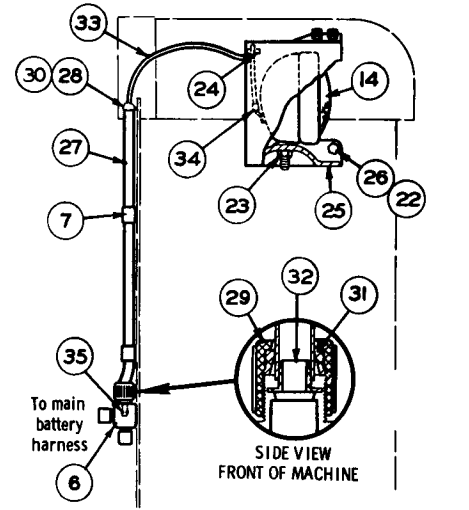

REF NO	PART NUMBER	DESCRIPTION	QTY
	4S6694	CONDUIT ASSEM.	1
		Consisting of:	
27	4S8751	CONDUIT—2 Feet	
28	1S2294	BOOT	1
29	9M9662	NUT	1
30	1S6870	LINER	1
31	8S5782	RING	1
32	8S5783	LINER	1
33	4S6696	WIRE ASSEM.	1
34	2L8075	TERMINAL	1
35	1S7837	TERMINAL	1
		(Parts of 4S6696 Wire Assem.)	

125976

8S2508 LIGHTING SYSTEM GROUP—12 Volt—2 Lamp

Effective with Serial No. 48A10645

2M856 Lamp parts are shown on Page 146

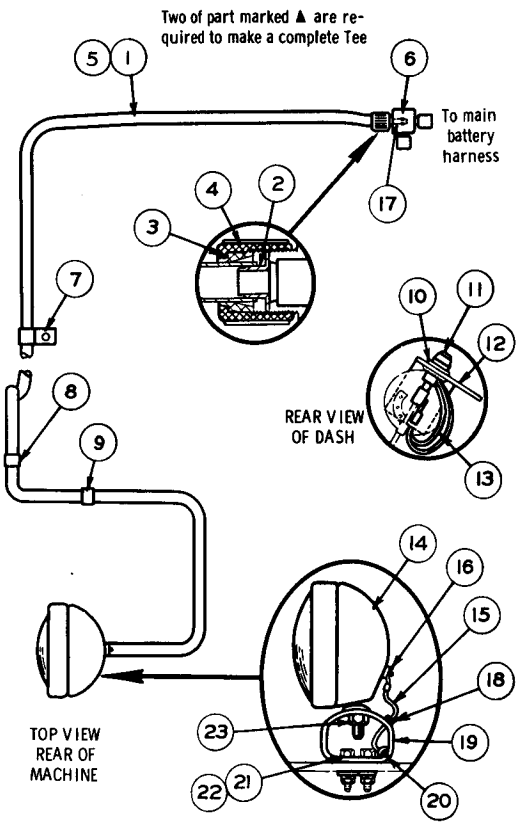

REF NO	PART NUMBER	DESCRIPTION	QTY.
	4S6701	CONDUIT ASSEM.	1
		Consisting of:	
1	4S8751	CONDUIT—8 feet	
2	8S5783	LINER	1
3	8S5782	RING	1
4	9M9662	NUT	1
5	1S6870	LINER	1
6	9M9661	TEE	4
7	1S6420	CLIP	3
8	8M2773	CLIP	1
9	1H5166	CLIP	1
10	2S9727	GROMMET	2
11	4K5122	FUSE HOLDER	2
	8M8948	FUSE—(15 AMP)	2
12	2S9726	BRACKET	1
13	2S9728	WIRE ASSEM.	1
	4L3916	TERMINAL—(Fuse Holder)	2
	2L8066	TERMINAL—(Light Switch)	1
		(Parts of 2S9728 Wire Assem.)	
14	2M856	LAMP ASSEM.	2
		(See Separate Illustration)	
15	8S973	WIRE ASSEM.	1
16	2L8075	TERMINAL	1
17	1S7837	TERMINAL	1
		(Parts of 8S973 Assem.)	
18	9H5156	GROMMET	1
19	1S1888	BRACKET	1
20	1S2294	BOOT	1
	2A4996	BOLT	4
21	1B4203	NUT	4
	4B5271	WASHER	4
22	3B4506	LOCKWASHER	10
	1B4206	NUT	2
23	3B4510	LOCKWASHER	2
	2B8352	WASHER	4
24	3F1240	GROMMET	1
25	1M3069	GUARD ASSEM.	1
26	1A2029	BOLT	6

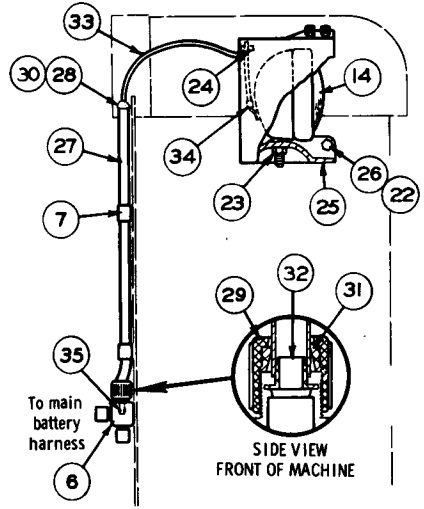

REF NO	PART NUMBER	DESCRIPTION	QTY
	4S6694	CONDUIT ASSEM.	1
		Consisting of:	
27	4S8751	CONDUIT—2 Feet	
28	1S2294	BOOT	1
29	9M9662	NUT	1
30	1S6870	LINER	1
31	8S5782	RING	1
32	8S5783	LINER	1
33	4S6696	WIRE ASSEM.	1
34	2L8075	TERMINAL	1
35	1S7837	TERMINAL	1
		(Parts of 4S6696 Wire Assem.)	

125977

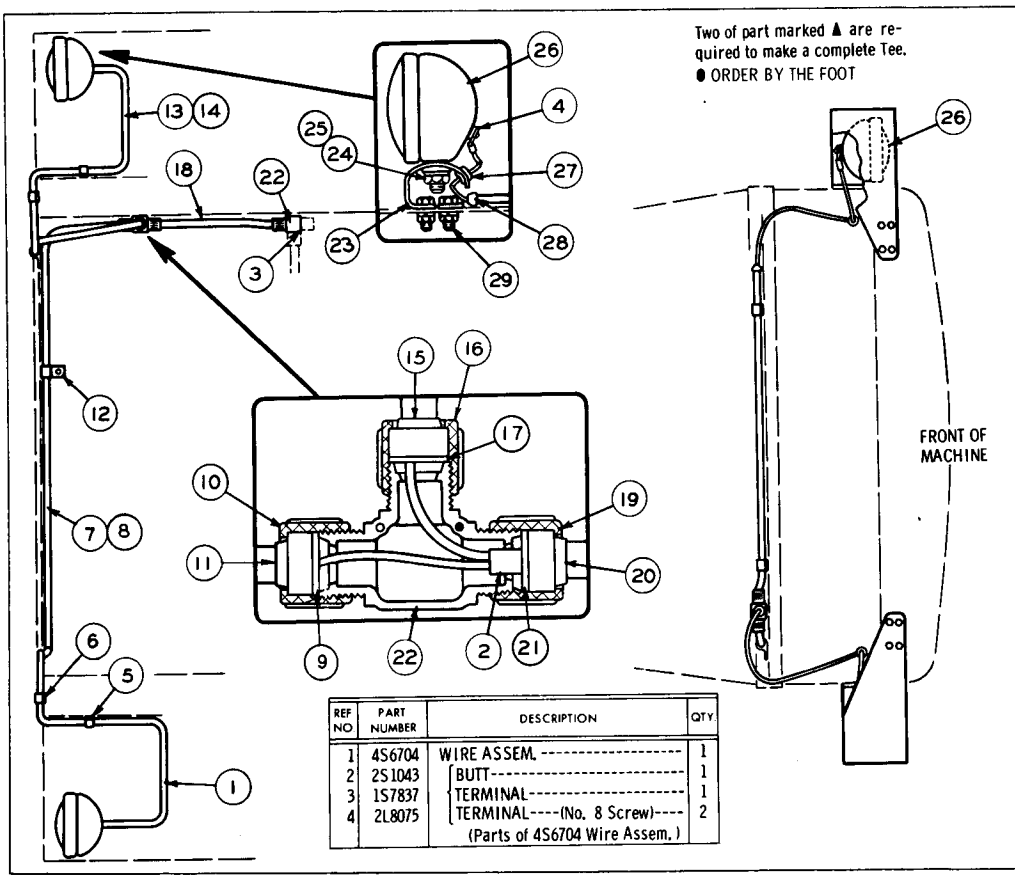

REF NO	PART NUMBER	DESCRIPTION	QTY
1	4S6704	WIRE ASSEM.	1
2	2S1043	BUTT	1
3	1S7837	TERMINAL	1
4	2L8075	TERMINAL----(No. 8 Screw)---- (Parts of 4S6704 Wire Assem.)	2

REF. NO.	PART NUMBER	DESCRIPTION	QTY
5	1H5166	CLIP	2
6	8M2773	CLIP	2
	4S6701	CONDUIT ASSEM.	1
		Consisting of:	
● 7	4S8751	CONDUIT----95"	
8	1S6870	LINER	1
9	8S5783	LINER	1
10	9M9662	NUT	1
11	8S5782	RING	1
12	1S6420	CLIP	1
	4S6700	CONDUIT ASSEM.	1
		Consisting of:	
● 13	4S8751	CONDUIT----48"	
14	1S6870	LINER	1
15	8S5782	RING	1
16	9M9662	NUT	1
17	8S5783	LINER	1
	4S6699	CONDUIT ASSEM.	1
		Consisting of:	
● 18	4S8751	CONDUIT----14"	
19	9M9662	NUT	2
20	8S5782	RING	2
21	8S5783	LINER	2
▲ 22	9M9661	TEE	4
23	1S1888	BRACKET	2
24	1B4206	NUT	4
25	3B4510	LOCKWASHER	4
	2B8352	WASHER	8
26	2M856	LAMP ASSEM. (See Separate Illustration)	4
27	9H5156	GROMMET	2
28	1S2294	BOOT	2
	2A4996	BOLT	8
29	1B4203	NUT	8
	3B4506	LOCKWASHER	8
	4B5271	WASHER	8

125980

4S6692 LIGHTING SYSTEM GROUP—12 Volt, 4 Lamp—Top View—Part 1
Serial No. 48A6393 to 48A10644 inclusive
2M856 Lamp parts are shown on Page 146

4S6692 LIGHTING SYSTEM GROUP—12 Volt, 4 Lamp—Top View—Part 2
Serial No. 48A6393 to 48A10644 inclusive

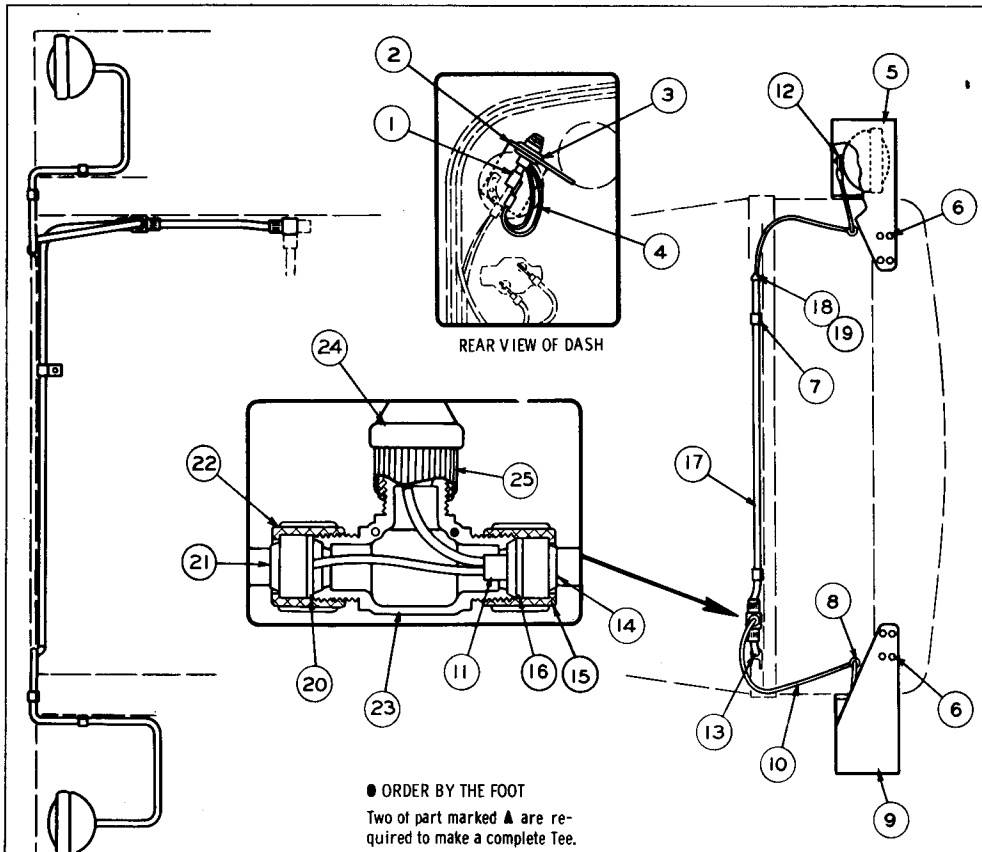

REF NO	PART NUMBER	DESCRIPTION	QTY
1	4K5122	FUSE HOLDER	2
	8M8948	FUSE---(15 AMP)	2
2	2S9726	BRACKET	1
3	2S9727	GROMMET	2
4	2S9728	WIRE ASSEM.	1
	4L3916	TERMINAL---(Fuse Holder)	2
	2L8066	TERMINAL---(Light Switch)	1
		(Parts of 2S9728 Wire Assem.)	
5	1M3070	GUARD ASSEM.	1
6	1A2029	BOLT	12
	3B4506	LOCKWASHER	12
7	1S6420	CLIP	4
8	3F1240	GROMMET	2
9	1M3069	GUARD ASSEM.	1
10	4S6697	WIRE ASSEM.	1
	1S7837	TERMINAL	1
11	2S1043	BUTT	1
12	2L8075	TERMINAL	2
		(Parts of 4S6697 Wire Assem.)	
	4S6698	CONDUIT ASSEM.	1
		Consisting of:	
● 13	4S8751	CONDUIT---21"	
14	8S5782	RING	2
15	9M9652	NUT	2
16	8S5783	LINER	2
	4S6695	CONDUIT ASSEM.	1
		Consisting of:	
● 17	4S8751	CONDUIT---33"	
18	1S2294	BOOT	1
19	1S6870	LINER	1
20	8S5783	LINER	1
21	8S5782	RING	1
22	9M9662	NUT	1
▲ 23	9M9661	TEE	4
24	1S945	BOOT	1
25	1S2320	NUT	1

125981

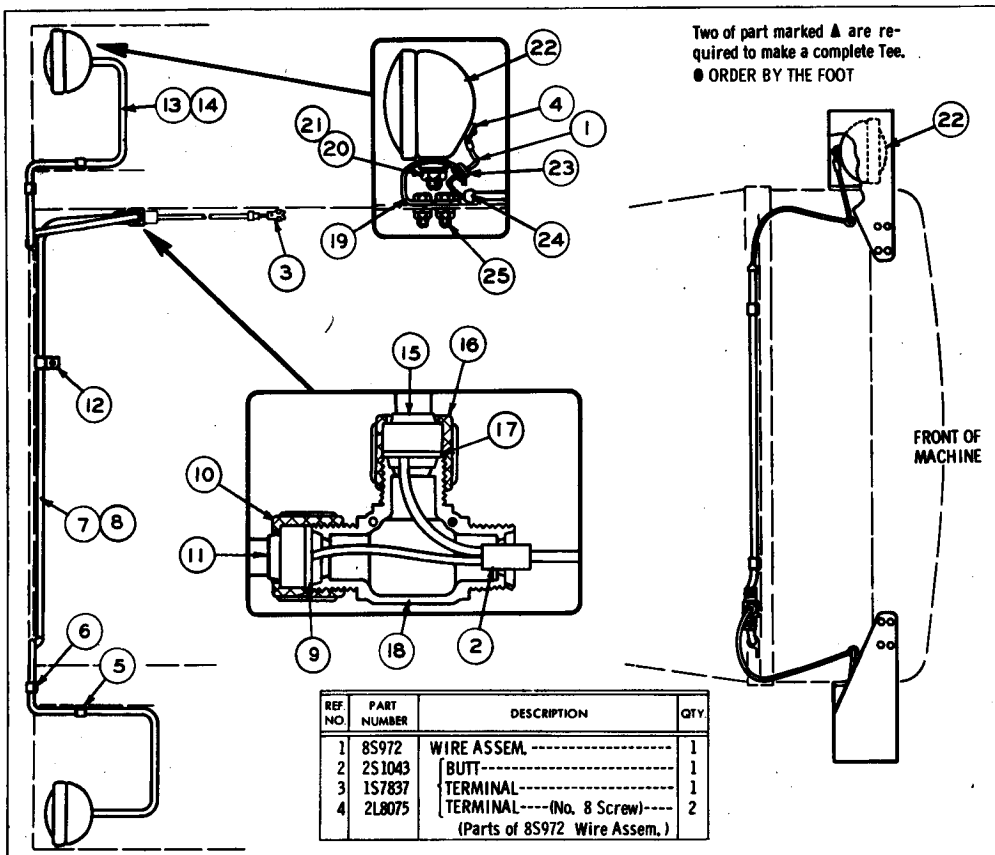

REF. NO.	PART NUMBER	DESCRIPTION	QTY
1	8S972	WIRE ASSEM.	1
2	2S1043	BUTT	1
3	1S7837	TERMINAL	1
4	2L8075	TERMINAL----(No. 8 Screw)----	2
		(Parts of 8S972 Wire Assem.)	

	REF. NO.	PART NUMBER	DESCRIPTION	QTY
	5	1H5166	CLIP	2
	6	8M2773	CLIP	2
		4S6701	CONDUIT ASSEM.	1
			Consisting of:	
●	7	4S8751	CONDUIT----95"	
	8	1S6870	LINER	1
	9	8S5783	LINER	1
	10	9M9662	NUT	1
	11	8S5782	RING	1
	12	1S6420	CLIP	1
		4S6700	CONDUIT ASSEM.	1
			Consisting of:	
●	13	4S8751	CONDUIT----48"	
	14	1S6870	LINER	1
	15	8S5782	RING	1
	16	9M9662	NUT	1
	17	8S5783	LINER	1
▲	18	9M9661	TEE	2
	19	1S1888	BRACKET	2
	20	1B4206	NUT	4
	21	3B4510	LOCKWASHER	4
		2B8352	WASHER	8
	22	2M856	LAMP ASSEM.	4
			(See Separate Illustration)	
	23	9H5156	GROMMET	2
	24	1S2294	BOOT	2
	25	2A4996	BOLT	8
		1B4203	NUT	8
		3B4506	LOCKWASHER	8
		4B5271	WASHER	8

8S2509 LIGHTING SYSTEM GROUP—12 Volt, 4 Lamp—Top View—Part 1
Effective with Serial No. 48A10645
2M856 Lamp parts are shown on Page 146

8S2509 LIGHTING SYSTEM GROUP—12 Volt, 4 Lamp—Top View—Part 2
Effective with Serial No. 48A10645

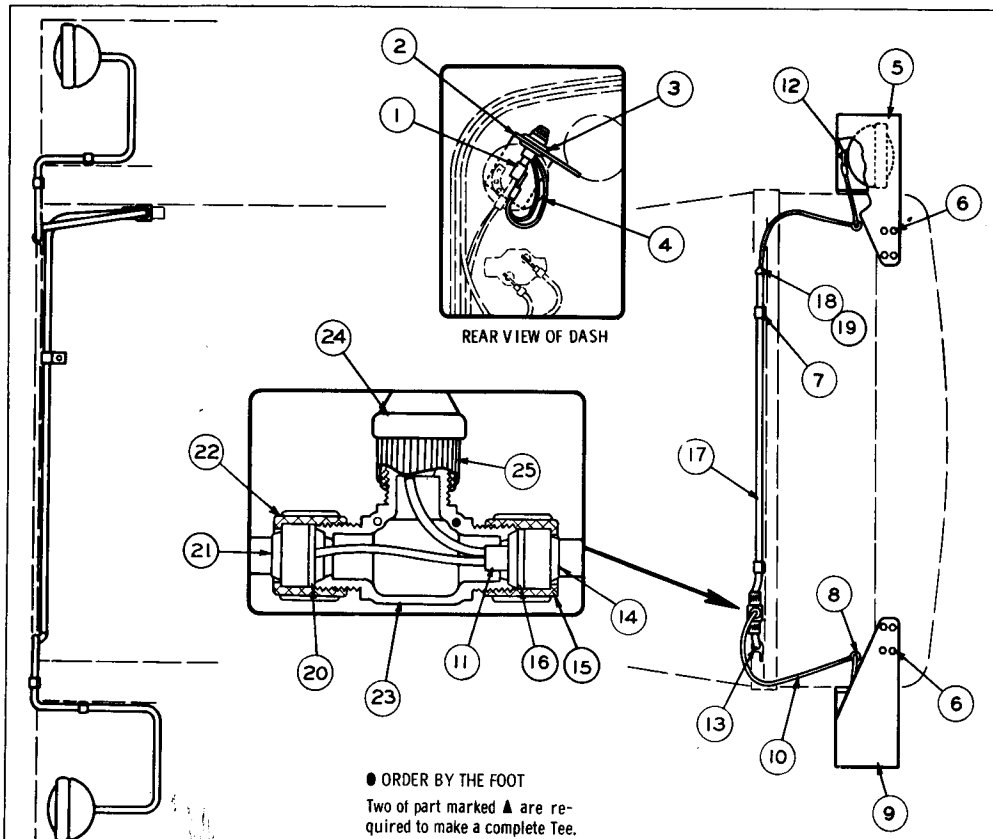

REF NO.	PART NUMBER	DESCRIPTION	QTY.
1	4K5122	FUSE HOLDER	2
	8M8948	FUSE ----------(15 AMP)----------	2
2	2S9726	BRACKET	1
3	2S9727	GROMMET	2
	2S9728	WIRE ASSEM.	1
4	4L3916	TERMINAL ----(Fuse Holder)-----	2
	2L8066	TERMINAL----(Light Switch)-----	1
		(Parts of 2S9728 Wire Assem.)	
5	1M3070	GUARD ASSEM.	1
6	1A2029	BOLT	12
	3B4506	LOCKWASHER	12
7	1S6420	CLIP	4
8	3F1240	GROMMET	2
9	1M3069	GUARD ASSEM.	1
10	4S6697	WIRE ASSEM.	1
	1S7837	TERMINAL	1
11	2S1043	BUTT	1
12	2L8075	TERMINAL	2
		(Parts of 4S6697 Wire Assem.)	
	4S6698	CONDUIT ASSEM.	1
		Consisting of:	
● 13	4S8751	CONDUIT----------21"	
14	8S5782	RING	2
15	9M9662	NUT	2
16	8S5783	LINER	2
	4S6695	CONDUIT ASSEM.	1
		Consisting of:	
● 17	4S8751	CONDUIT----------33"	
18	1S2294	BOOT	1
19	1S6870	LINER	1
20	8S5783	LINER	1
21	8S5782	RING	1
22	9M9662	NUT	1
▲ 23	9M9661	TEE	4
24	1S945	BOOT	1
25	1S2320	NUT	1

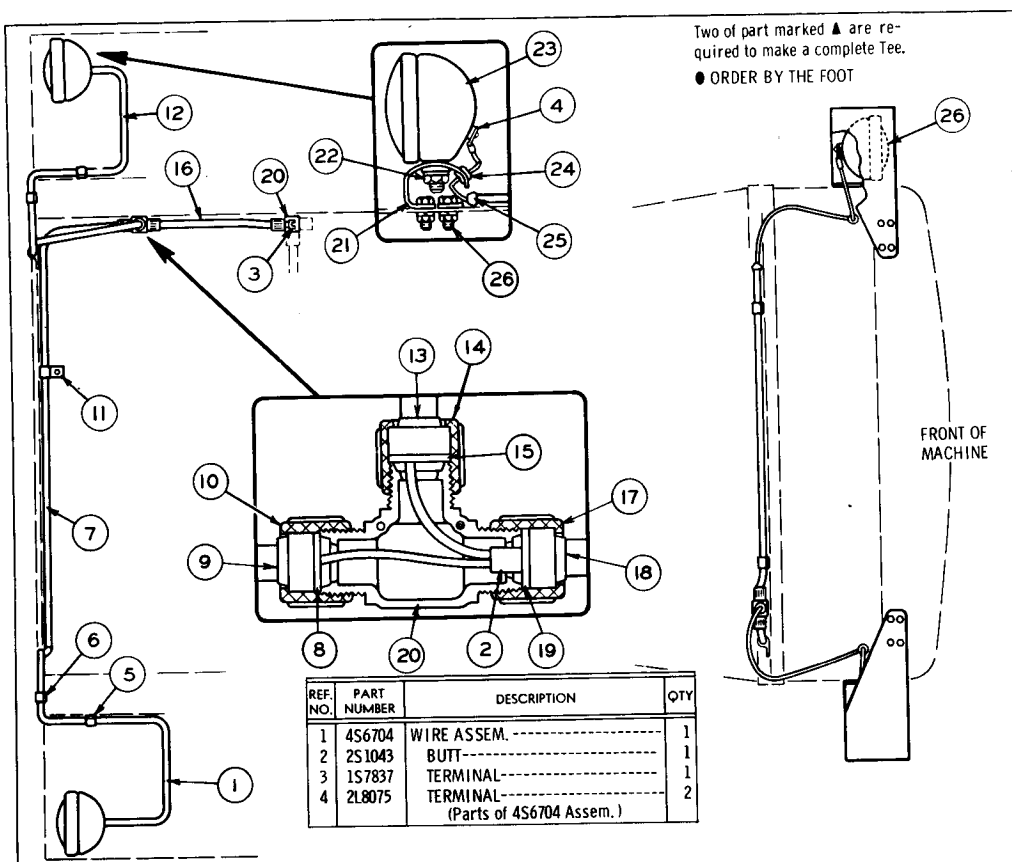

REF. NO.	PART NUMBER	DESCRIPTION	QTY
1	4S6704	WIRE ASSEM.	1
2	2S1043	BUTT	1
3	1S7837	TERMINAL	1
4	2L8075	TERMINAL (Parts of 4S6704 Assem.)	2

REF. NO.	PART NUMBER	DESCRIPTION	QTY
5	1H5166	CLIP	2
6	8M2773	CLIP	2
	4S6701	CONDUIT ASSEM. Consisting of:	1
● 7	4S8751	CONDUIT-95"	
	1S6870	LINER	1
8	8S5783	LINER	1
9	8S5782	RING	1
10	9M9662	NUT	1
11	1S6420	CLIP	1
	4S6700	CONDUIT ASSEM. Consisting of:	1
● 12	4S8751	CONDUIT-48"	
	1S6870	LINER	1
13	8S5782	RING	1
14	9M9662	NUT	1
15	8S5783	LINER	1
	4S6699	CONDUIT ASSEM. Consisting of:	1
16	●4S8751	CONDUIT-(2 feet)	1
17	9M9662	NUT	2
18	8S5782	RING	2
19	8S5783	LINER	2
20	▲9M9661	TEE	4
21	1S1888	BRACKET	2
22	1B4206	NUT	4
	3B4510	LOCKWASHER	4
	2B8352	WASHER	8
23	1M1882	LAMP ASSEM. (See Separate Illustration)	4
24	9H5156	GROMMET	2
25	1S2294	BOOT	2
26	2A4996	BOLT	8
	1B4203	NUT	8
	3B4506	LOCKWASHER	8
	4B5271	WASHER	8

5S8607 LIGHTING SYSTEM GROUP—24 Volt, 4 Lamp—Part 1
Serial No. 48A6883 to 48A10644 inclusive
1M1882 Lamp parts are shown on Page 145D

5S8607 LIGHTING SYSTEM GROUP—24 Volt, 4 Lamp—Part 2
Serial No. 48A6883 to 48A10644 inclusive

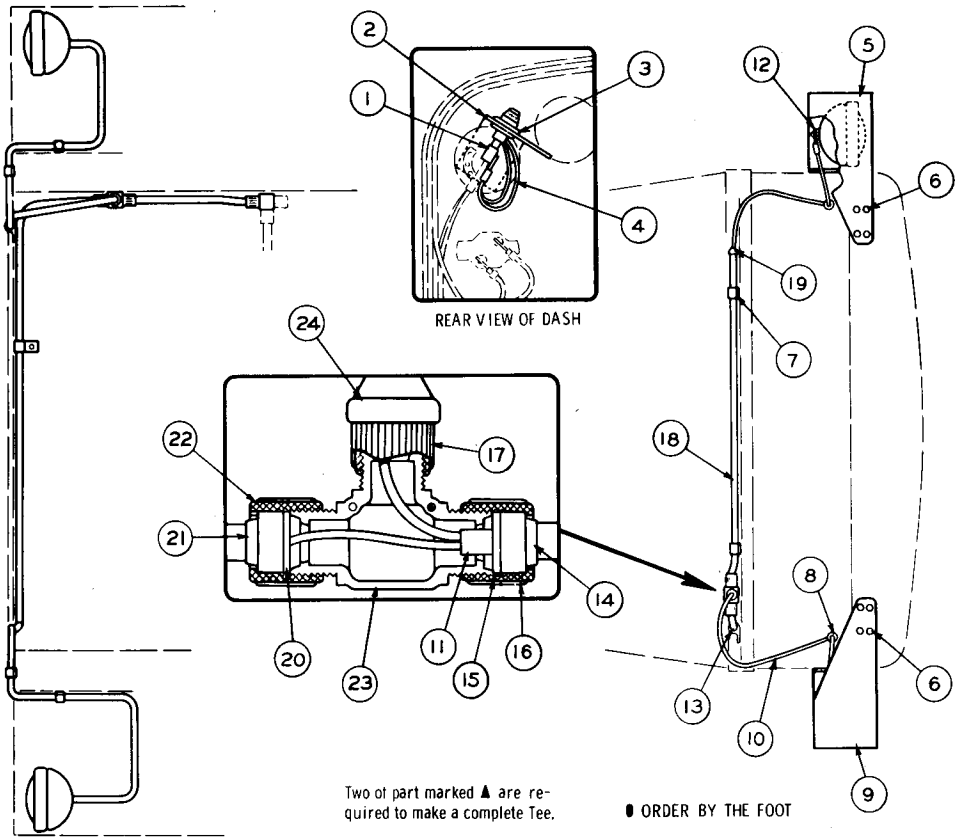

REF. NO.	PART NUMBER	DESCRIPTION	QTY.
1	4K5122	FUSE HOLDER	2
	3K8781	FUSE----------(7.5 AMP)	2
2	2S9726	BRACKET	1
3	2S9727	GROMMET	2
4	2S9728	WIRE ASSEM.	1
	4L3916	TERMINAL----(Fuse Holder)	2
	2L8066	TERMINAL----(Light Switch)	1
		(Parts of 2S9728 Wire Assem.)	
5	1M3070	GUARD ASSEM.	1
6	1A2029	BOLT	12
	3B4506	LOCKWASHER	12
7	1S6420	CLIP	4
8	3F1240	GROMMET	2
9	1M3069	GUARD ASSEM.	1
10	4S6697	WIRE ASSEM.	1
	1S7837	TERMINAL	1
11	2S1043	BUTT	1
12	2L8075	TERMINAL	2
		(Parts of 4S6697 Wire Assem.)	
	4S6698	CONDUIT ASSEM.	1
		Consisting of:	
13	●4S8751	CONDUIT---------- 21"	
14	8S5782	RING	2
15	8S5783	LINER	2
16	9M9662	NUT	2
17	1S2320	NUT	1
	4S6695	CONDUIT ASSEM.	1
		Consisting of:	
● 18	4S8751	CONDUIT----------33"	
19	1S2294	BOOT	1
	1S6870	LINER	1
20	8S5783	LINER	1
21	8S5782	RING	1
22	9M9662	NUT	1
▲ 23	9M9661	TEE	4
24	1S945	BOOT	1

Two of part marked ▲ are required to make a complete Tee.

● ORDER BY THE FOOT

125983

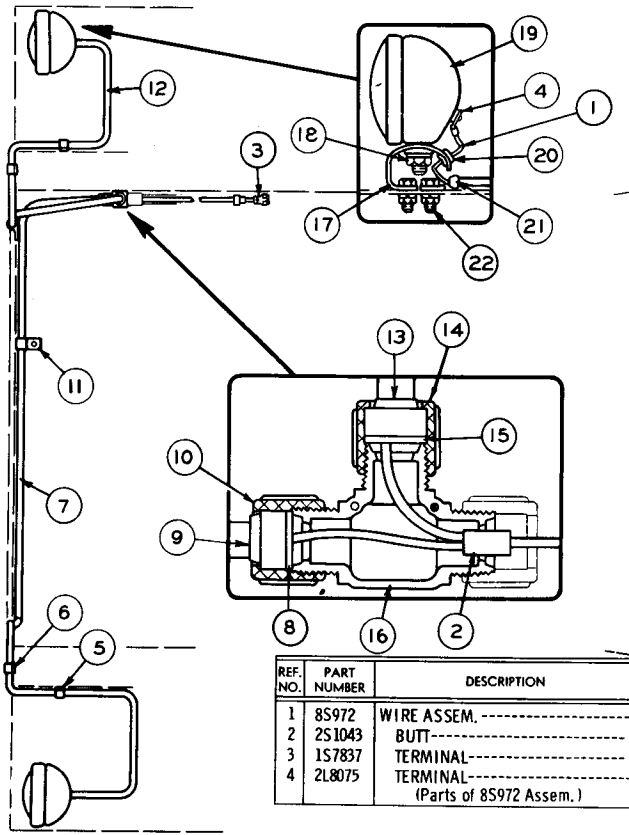

Two of part marked ▲ are required to make a complete Tee.

● ORDER BY THE FOOT

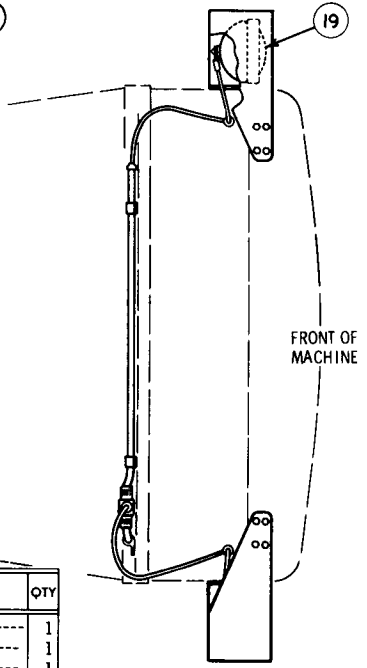

REF. NO.	PART NUMBER	DESCRIPTION	QTY
1	8S972	WIRE ASSEM.	1
2	2S1043	BUTT	1
3	1S7837	TERMINAL	1
4	2L8075	TERMINAL (Parts of 8S972 Assem.)	2

	REF. NO.	PART NUMBER	DESCRIPTION	QTY
	5	1H5166	CLIP	2
	6	8M2773	CLIP	2
		4S6701	CONDUIT ASSEM. Consisting of:	1
●	7	4S8751	CONDUIT--95"	
		1S6870	LINER	1
	8	8S5783	LINER	1
	9	8S5782	RING	1
	10	9M9662	NUT	1
	11	1S6420	CLIP	1
		4S6700	CONDUIT ASSEM. Consisting of:	1
●	12	4S8751	CONDUIT--48"	
		1S6870	LINER	1
	13	8S5782	RING	1
	14	9M9662	NUT	1
	15	8S5783	LINER	1
▲	16	9M9661	TEE	2
	17	1S1888	BRACKET	2
	18	1B4206	NUT	4
		3B4510	LOCKWASHER	4
		2B8352	WASHER	8
	19	1M1882	LAMP ASSEM. (See Separate Illustration)	4
	20	9H5156	GROMMET	2
	21	1S2294	BOOT	2
	22	2A4996	BOLT	8
		1B4203	NUT	8
		3B4506	LOCKWASHER	8
		4B5271	WASHER	8

125988

8S2511 LIGHTING SYSTEM GROUP—24 Volt, 4 Lamp—Part 1
Effective with Serial No. 48A10645
1M1882 Lamp parts are shown on Page 145D

8S2511 LIGHTING SYSTEM GROUP—24 Volt, 4 Lamp—Part 2
Effective with Serial No. 48A10645

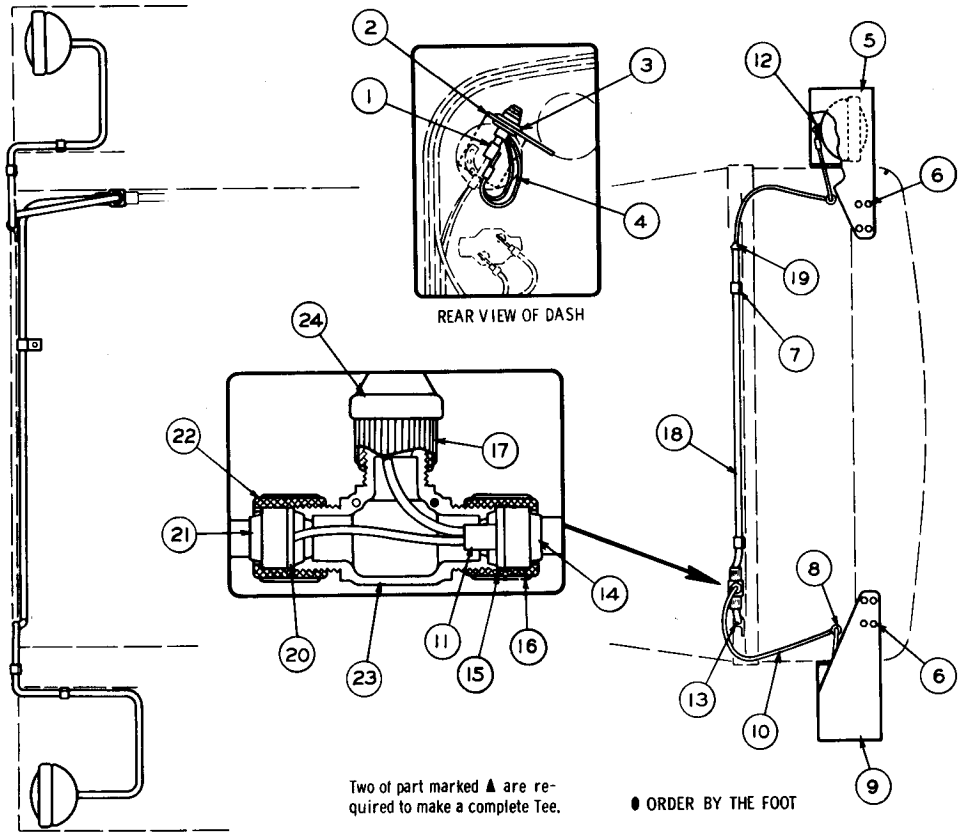

REF. NO.	PART NUMBER	DESCRIPTION	QTY.
1	4K5122	FUSE HOLDER	2
	3K8781	FUSE—(7.5 AMP)	2
2	2S9726	BRACKET	1
3	2S9727	GROMMET	2
4	2S9728	WIRE ASSEM.	1
	4L3916	TERMINAL—(Fuse Holder)	2
	2L8066	TERMINAL—(Light Switch)	1
		(Parts of 2S9728 Wire Assem.)	
5	1M3070	GUARD ASSEM.	1
6	1A2029	BOLT	12
	3B4506	LOCKWASHER	12
7	1S6420	CLIP	4
8	3F1240	GROMMET	2
9	1M3069	GUARD ASSEM.	1
10	4S6697	WIRE ASSEM.	1
	1S7837	TERMINAL	1
11	2S1043	BUTT	1
12	2L8075	TERMINAL	2
		(Parts of 4S6697 Wire Assem.)	
	4S6698	CONDUIT ASSEM.	1
		Consisting of:	
13	●4S8751	CONDUIT—21"	
14	8S5782	RING	2
15	8S5783	LINER	2
16	9M9662	NUT	2
17	1S2320	NUT	1
	4S6695	CONDUIT ASSEM.	1
		Consisting of:	
● 18	4S8751	CONDUIT—33"	
19	1S2294	BOOT	1
	1S6870	LINER	1
20	8S5783	LINER	1
21	8S5782	RING	1
22	9M9662	NUT	1
▲ 23	9M9661	TEE	4
24	1S945	BOOT	1

125989

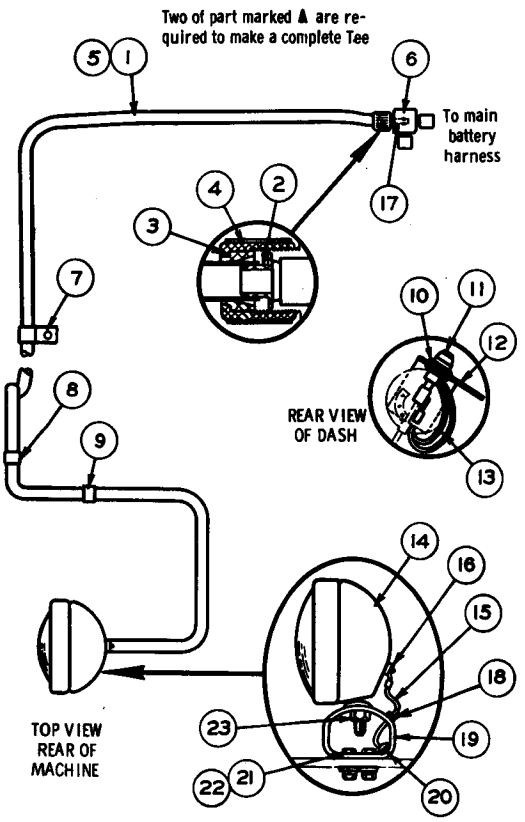

REF. NO.	PART NUMBER	DESCRIPTION	QTY.
	4S6702	CONDUIT ASSEM. ----------	1
		Consisting of:	
1	4S8751	CONDUIT---------- 11 Feet	
2	8S5783	LINER----------	1
3	8S5782	RING----------	1
4	9M9662	NUT----------	1
5	1S6870	LINER----------	1
▲ 6	9M9661	TEE----------	4
7	1S6420	CLIP----------	3
8	8M2773	CLIP----------	1
9	1H5166	CLIP----------	1
10	2S9727	GROMMET----------	2
11	4K5122	FUSE HOLDER----------	2
	3K8781	FUSE----------(7.5 AMP)--------	2
12	2S9726	BRACKET----------	1
	2S9728	WIRE ASSEM. ----------	1
13	4L3916	TERMINAL----(Fuse Holder)-----	2
	2L8066	TERMINAL----(Light Switch)----	1
		(Parts of 2S9728 Wire Assem.)	
14	1M1882	LAMP ASSEM. ----------	2
		(See Separate Illustration)	
15	4S6703	WIRE ASSEM. ----------	1
16	2L8075	TERMINAL----------	1
17	1S7837	TERMINAL----------	1
		(Parts of 4S6703 Wire Assem.)	
18	9H5156	GROMMET----------	1
19	1S1888	BRACKET----------	1
20	1S2294	BOOT----------	1
	2A4996	BOLT----------	4
21	1B4203	NUT----------	4
	4B5271	WASHER----------	4
22	3B4506	LOCKWASHER----------	10
	1B4206	NUT----------	2
23	3B4510	LOCKWASHER----------	2
	2B8352	WASHER----------	4
24	3F1240	GROMMET----------	1
25	1M3069	GUARD ASSEM. ----------	1
26	1A2029	BOLT----------	6

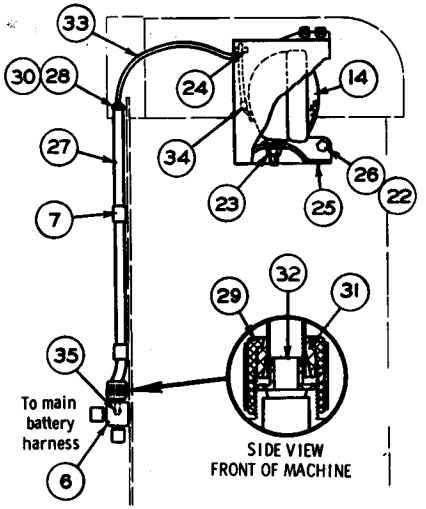

REF. NO.	PART NUMBER	DESCRIPTION	QTY.
	4S6694	CONDUIT ASSEM. ----------	1
		Consisting of:	
27	4S8751	CONDUIT---------- 2 Feet	
28	1S2294	BOOT----------	1
29	9M9662	NUT----------	1
30	1S6870	LINER----------	1
31	8S5782	RING----------	1
32	8S5783	LINER----------	1
33	4S6696	WIRE ASSEM. ----------	1
34	2L8075	TERMINAL----------	1
35	1S7837	TERMINAL----------	1
		(Parts of 4S6696 Wire Assem.)	

125978

5S8608 LIGHTING SYSTEM GROUP—24 Volt, 2 Lamp
Serial No. 48A6883 to 48A10644 inclusive
1M1882 Lamp parts are shown on Page 145D

8S2510 LIGHTING SYSTEM GROUP—24 Volt, 2 Lamp
Effective with Serial No. 48A10645
1M1882 Lamp parts are shown on Page 145D

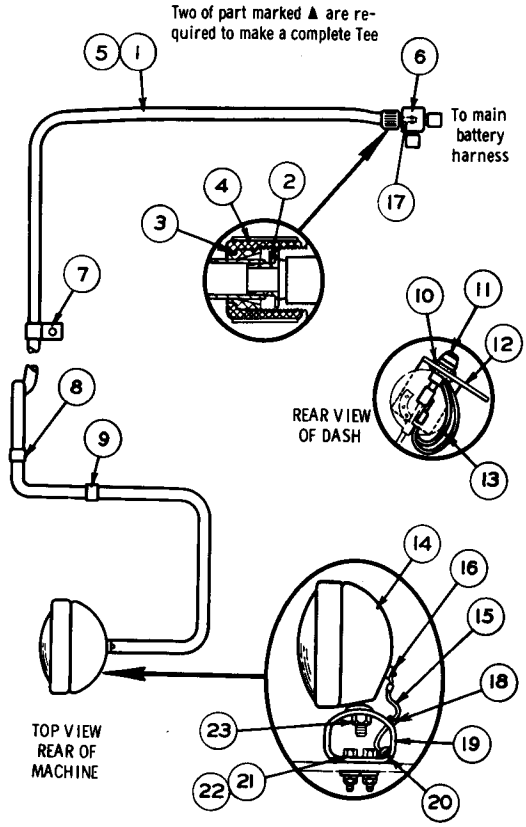

REF NO.	PART NUMBER	DESCRIPTION	QTY.
	4S6701	CONDUIT ASSEM.	1
		Consisting of:	
1	4S8751	CONDUIT 8 Feet	
2	8S5783	LINER	1
3	8S5782	RING	1
4	9M9662	NUT	1
5	1S6870	LINER	1
6	9M9661	▲ TEE	4
7	1S6420	CLIP	3
8	8M2773	CLIP	1
9	1H5166	CLIP	1
10	2S9727	GROMMET	2
11	4K5122	FUSE HOLDER	2
	3K8781	FUSE—(7.5 AMP)	2
12	2S9726	BRACKET	1
	2S9728	WIRE ASSEM.	1
13	4L3916	TERMINAL—(Fuse Holder)	2
	2L8066	TERMINAL—(Light Switch)	1
		(Parts of 2S9728 Wire Assem.)	
14	1M1882	LAMP ASSEM.	2
		(See Separate Illustration)	
15	8S973	WIRE ASSEM.	1
16	2L8075	TERMINAL	1
17	1S7837	TERMINAL	1
		(Parts of 8S973 Wire Assem.)	
18	9H5156	GROMMET	1
19	1S1888	BRACKET	1
20	1S2294	BOOT	1
21	2A4996	BOLT	4
	1B4203	NUT	4
	4B5271	WASHER	4
22	3B4506	LOCKWASHER	10
23	1B4206	NUT	2
	3B4510	LOCKWASHER	2
	2B8352	WASHER	4
24	3F1240	GROMMET	1
25	1M3069	GUARD ASSEM.	1
26	1A2029	BOLT	6

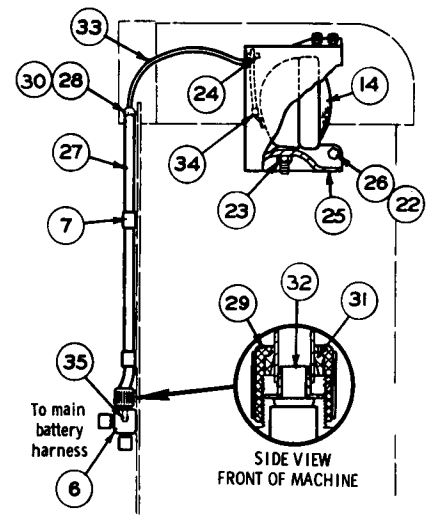

REF NO.	PART NUMBER	DESCRIPTION	QTY
	4S6694	CONDUIT ASSEM.	1
		Consisting of:	
27	4S8751	CONDUIT 2 Feet	
28	1S2294	BOOT	1
29	9M9662	NUT	1
30	1S6870	LINER	1
31	8S5782	RING	1
32	8S5783	LINER	1
33	4S6696	WIRE ASSEM.	1
34	2L8075	TERMINAL	1
35	1S7837	TERMINAL	1
		(Parts of 4S6696 Wire Assem.)	

125979

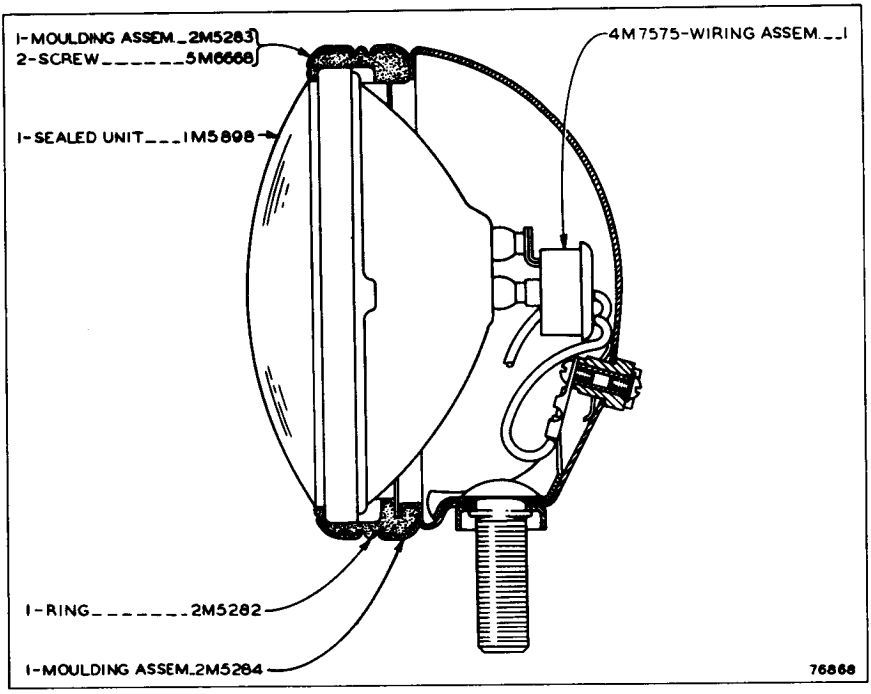

1M1882 FLOOD LAMP ASSEMBLY—24 Volt—Type 1
Serial No. 48A6883—Up
Part of 5S8607, 5S8608, 8S2510 and 8S2511 Lighting System Groups shown on Pages 145A, 145A-2, 145C and 145C-1. Only separate parts serviced

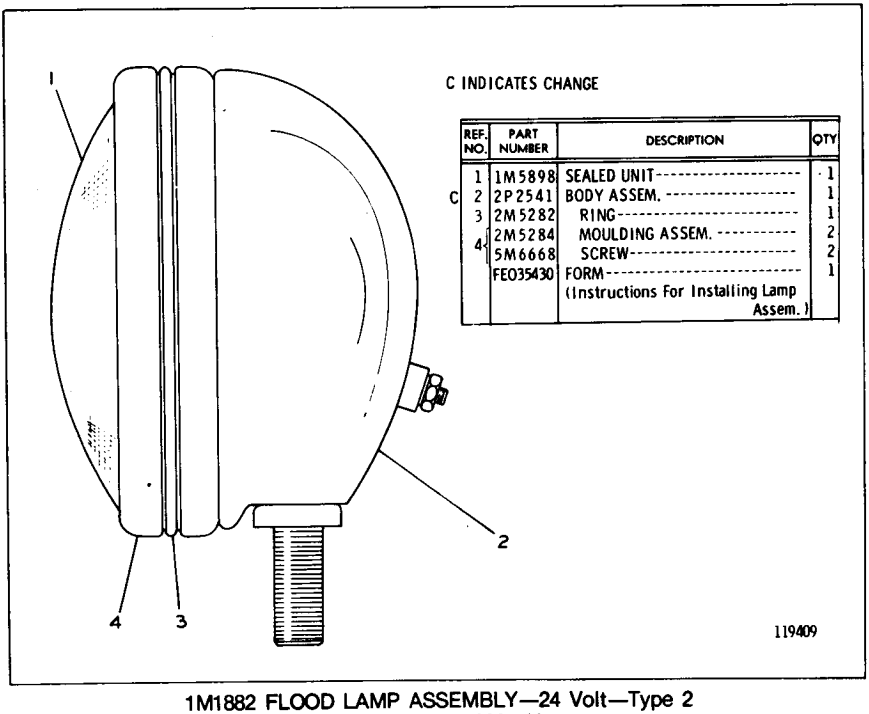

C INDICATES CHANGE

	REF. NO.	PART NUMBER	DESCRIPTION	QTY
	1	1M5898	SEALED UNIT	1
C	2	2P2541	BODY ASSEM.	1
	3	2M5282	RING	1
	4	2M5284	MOULDING ASSEM.	2
		5M6668	SCREW	2
		FE035430	FORM (Instructions For Installing Lamp Assem.)	1

1M1882 FLOOD LAMP ASSEMBLY—24 Volt—Type 2
Serial No. 48A6883—Up
Part of 5S8607, 5S8608, 8S2510 and 8S2511 Lighting System Groups shown on Pages 145A, 145A-2, 145C and 145C-1. Only separate parts serviced

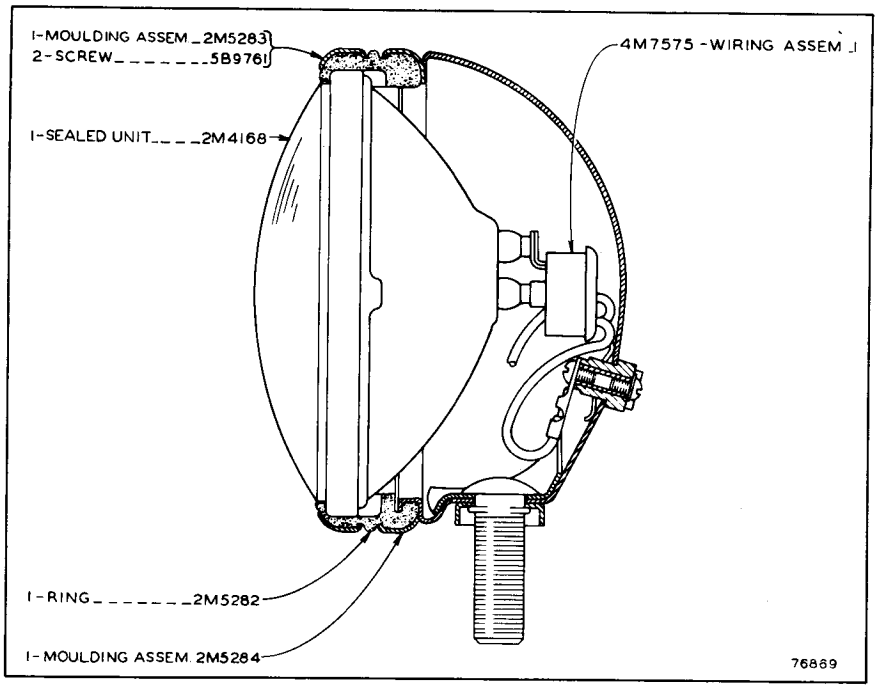

2M856 FLOOD LAMP ASSEMBLY—12 Volt

Part of 4S6693 and 4S6692 Lighting System Groups shown on Pages 143 and 144

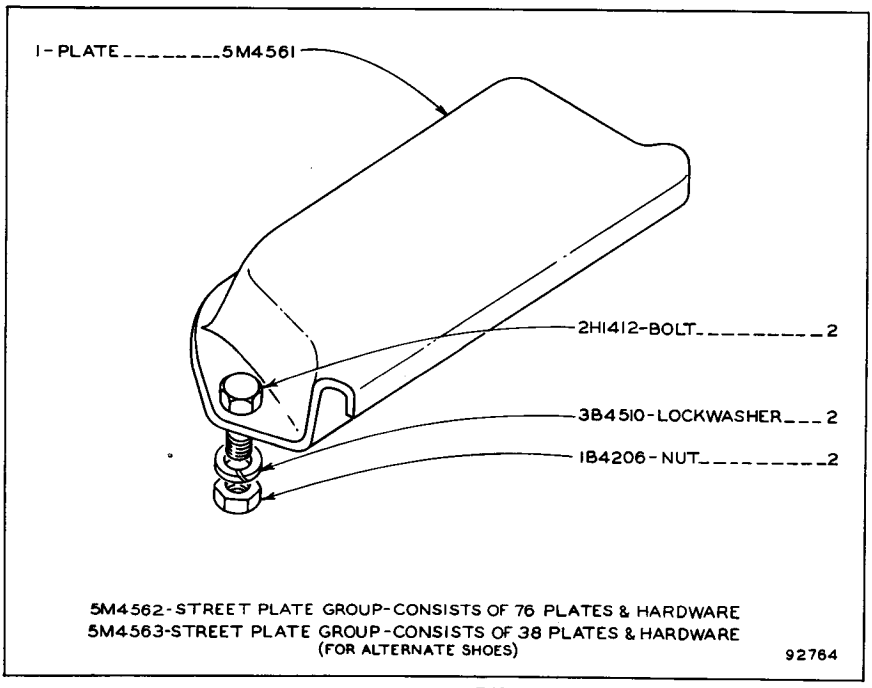

STREET PLATES

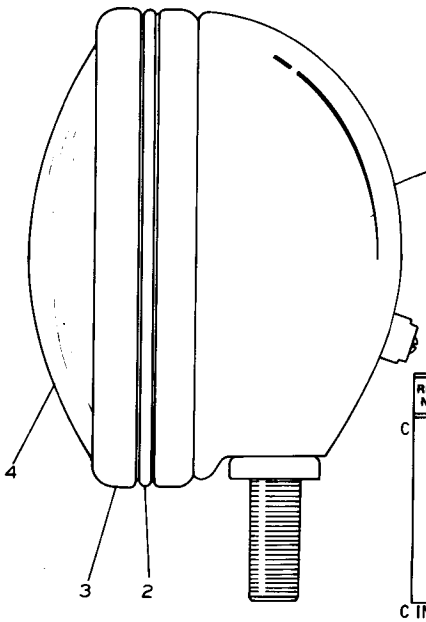

	REF. NO.	PART NUMBER	DESCRIPTION	QTY
C	1	2P2540	BODY ASSEM.	1
	2	2M5282	RING	1
	3	2M5284	MOLDING	2
		5M6668	SCREW	2
	4	2M4168	SEALED UNIT	1
		FM035430	FORM (Instructions for Installing Lamp)	1

C INDICATES CHANGE 140763

2M856 FLOOD LAMP ASSEMBLY—12 Volt—Type 2
Part of 4S6693 and 4S6692 Lighting System
Groups shown on Pages 143 and 144

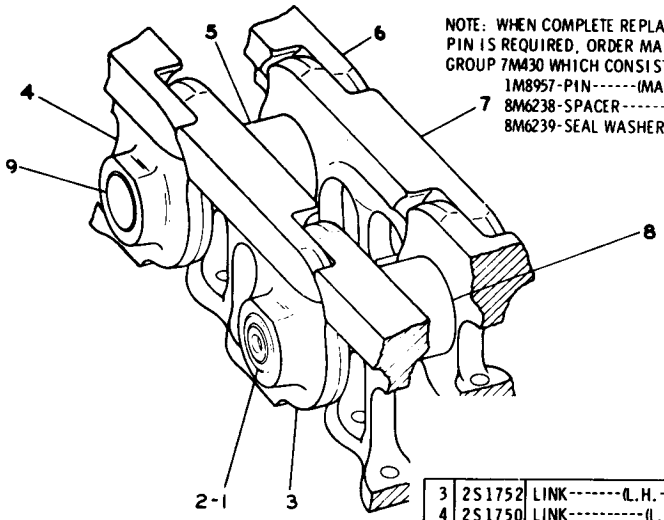

NOTE: WHEN COMPLETE REPLACEMENT OF MASTER PIN IS REQUIRED, ORDER MASTER PIN & SPACER GROUP 7M430 WHICH CONSISTS OF:

1M8957	PIN------(MASTER)----------	1
8M6238	SPACER----------	2
8M6239	SEAL WASHER----------	4

REF. NO.	PART NUMBER	DESCRIPTION	QTY
1	1M8957	PIN-------(Master)----------	1
2	8M6238	SPACER----------	2
	8M6239	SEAL WASHER----------	152
3	2S1752	LINK-------(L.H.-Master)--------	1
4	2S1750	LINK----------(L.H.)----------	37
5	1M3669	BUSHING----------	37
6	2S1749	LINK----------(R.H.)----------	37
7	2S1751	LINK-------(R.H.-Master)-------	1
8	1M3670	BUSHING--------(Master)--------	1
9	1M8958	PIN----------	37

141182

NAME	SHOE (38 Required For One Track)	COMPLETE TRACK GROUP (Hardware Included) 2 Required per Tractor
18" Grouser Shoe	5S6908	5S6912
20" Grouser Shoe	5S6909	5S6913
22" Grouser Shoe	5S6910	5S6914

7H3598 Track Shoe Bolt—152 Required for one Track
1S1860 Nut—Used with **7H3598**

NOTE: 7M429 Track Pin and Bushing Group, consisting of a complete set of Pins and Bushings for one Track, is available

TRACK GROUPS-2 Required
FOR USE WHERE EXTREMELY RUGGED OPERATING CONDITIONS EXIST

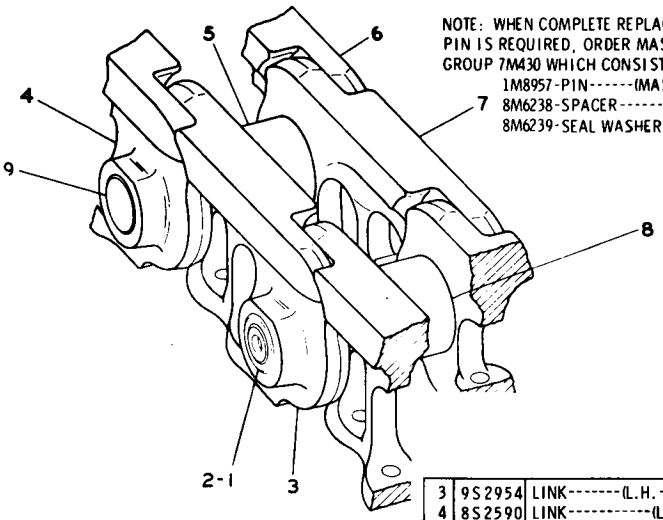

NOTE: WHEN COMPLETE REPLACEMENT OF MASTER PIN IS REQUIRED, ORDER MASTER PIN & SPACER GROUP 7M430 WHICH CONSISTS OF:

1M8957-PIN------(MASTER)----- ----- 1
8M6238-SPACER---------- 2
8M6239-SEAL WASHER---------- 4

REF. NO.	PART NUMBER	DESCRIPTION	QTY
1	1M8957	PIN--------(Master)----------	1
2	8M6238	SPACER----------	2
	8M6239	SEAL WASHER----------	152

3	9S2954	LINK-------(L.H.-Master)--------	1
4	8S2590	LINK----------(L.H.)----------	37
5	1M3669	BUSHING----------	37
6	8S2589	LINK----------(R.H.)---------	37
7	9S2953	LINK-------(R.H.-Master)--------	1
8	1M3670	BUSHING--------(Master)--------	1
9	1M8958	PIN----------	37

141183

NAME	SHOE (38 Required for one Track)	COMPLETE TRACK GROUP (Hardware Included) 2 Required per Tractor
18" Grouser Shoe	5S6908	8S2614
20" Grouser Shoe	9M2929-D.S.-19 Req'd. 9M2930-S.S.-19 Req'd.	8S2613
20" Grouser Shoe	5S6909	8S2615
22" Grouser Shoe	5S6910	8S2918
22" Grouser Shoe	1M8799	8S2609
22" Grouser Shoe	7M730	8S2612
24" Grouser Shoe	5S6911	8S2919
24" Grouser Shoe	1M8800	8S2610
26" Grouser Shoe	1M8801	8S2611

7H3598 Track Shoe Bolt--152 Required for one Track
1S1860 Nut--Used with 7H3598

NOTE: 7M429 Track Pin and Bushing Group, consisting of a complete set of Pins and Bushings for one Track, is Available
S.S.--Single Spike D.S.--Double Spike

TRACK GROUPS-2 Required
FOR USE WHERE EXTREMELY RUGGED OPERATING CONDITIONS EXIST

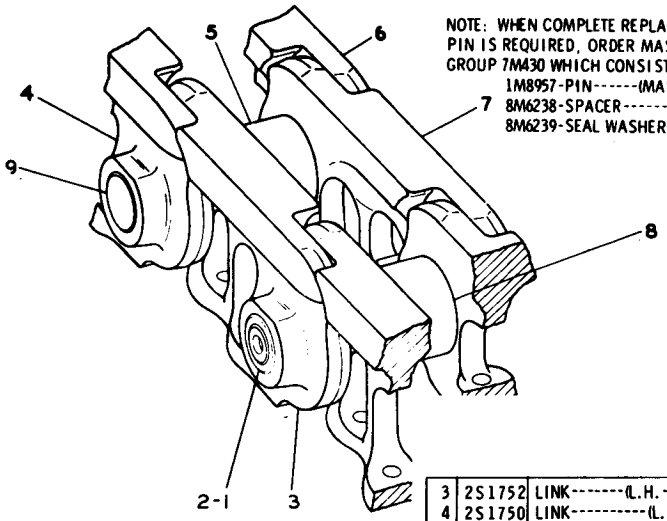

NOTE: WHEN COMPLETE REPLACEMENT OF MASTER PIN IS REQUIRED, ORDER MASTER PIN & SPACER GROUP 7M430 WHICH CONSISTS OF:

1M8957-PIN------(MASTER)----- ----- 1
8M6238-SPACER---------- 2
8M6239-SEAL WASHER---------- 4

REF. NO.	PART NUMBER	DESCRIPTION	QTY
1	1M8957	PIN-------(Master)----------	1
2	8M6238	SPACER----------	2
	8M6239	SEAL WASHER----------	152

3	2S1752	LINK-------(L.H.-Master)--------	1
4	2S1750	LINK----------(L.H.)----------	37
5	1M3669	BUSHING----------	37
6	2S1749	LINK----------(R.H.)----------	37
7	2S1751	LINK-------(R.H.-Master)-------	1
8	1M3670	BUSHING--------(Master)--------	1
9	1M8958	PIN----------	37

141182

NAME	SHOE (38 Required for one Track)	COMPLETE TRACK GROUP (Hardware Included) 2 Required per Tractor
22" Grouser Shoe	1M8799	1S5250
24" Grouser Shoe	1M8800	1S5251
26" Grouser Shoe	1M8801	1S5252

7H3598 Track Shoe Bolt—152 Required for one Track
1S1860 Nut—Used with 7H3598

NOTE: 7M429 Track Pin and Bushing Group, consisting of a complete set of Pins and Bushings for one Track, is available

TRACK GROUPS-2 Required

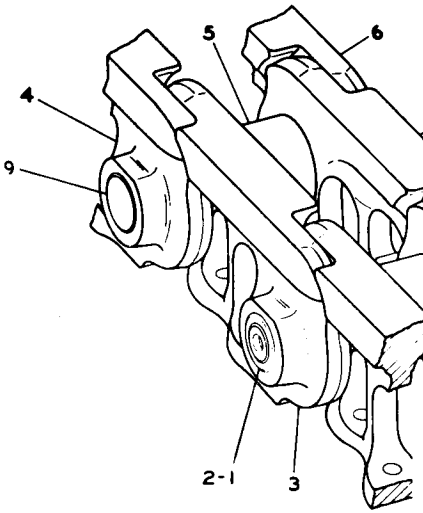

NOTE: WHEN COMPLETE REPLACEMENT OF MASTER PIN IS REQUIRED, ORDER MASTER PIN & SPACER GROUP 7M430 WHICH CONSISTS OF:

1M8957-PIN------(MASTER)----- ----- 1
8M6238-SPACER---------- 2
8M6239-SEAL WASHER---------- 4

REF. NO.	PART NUMBER	DESCRIPTION	QTY
1	1M8957	PIN--------(Master)----------	1
2	8M6238	SPACER----------	2
	8M6239	SEAL WASHER----------	152
3	9S2954	LINK-------(L.H.-Master)--------	1
4	8S2590	LINK----------(L.H.)----------	37
5	1M3669	BUSHING----------	37
6	8S2589	LINK----------(R.H.)---------	37
7	9S2953	LINK-------(R.H.-Master)--------	1
8	1M3670	BUSHING--------(Master)--------	1
9	1M8958	PIN----------	37

141183

NAME	SHOE (38 Required for one Track)	COMPLETE TRACK GROUP (Hardware Included) 2 Required per Tractor
20" Grouser Shoe	1P9811-D.S.-19 Req'd. 1P9812-S.S.-19 Req'd.	1P9821
22" Grouser Shoe	1P9808	1P9815
24" Grouser Shoe	1P9809	1P9816
26" Grouser Shoe	1P9810	1P9819

7H3598 Track Shoe Bolt--152 Required for one Track
1S1860 Nut--Used with 7H3598

NOTE: 7M429 Track Pin and Bushing Group, consisting of a complete set of Pins and Bushings for one Track, is available

S.S.--Single Spike D.S.--Double Spike

TRACK GROUPS-2 Required

7M1933 TRACK ROLLER FRAME GROUP—Type 1
FOR USE WITH TRACK GUIDING GUARDS

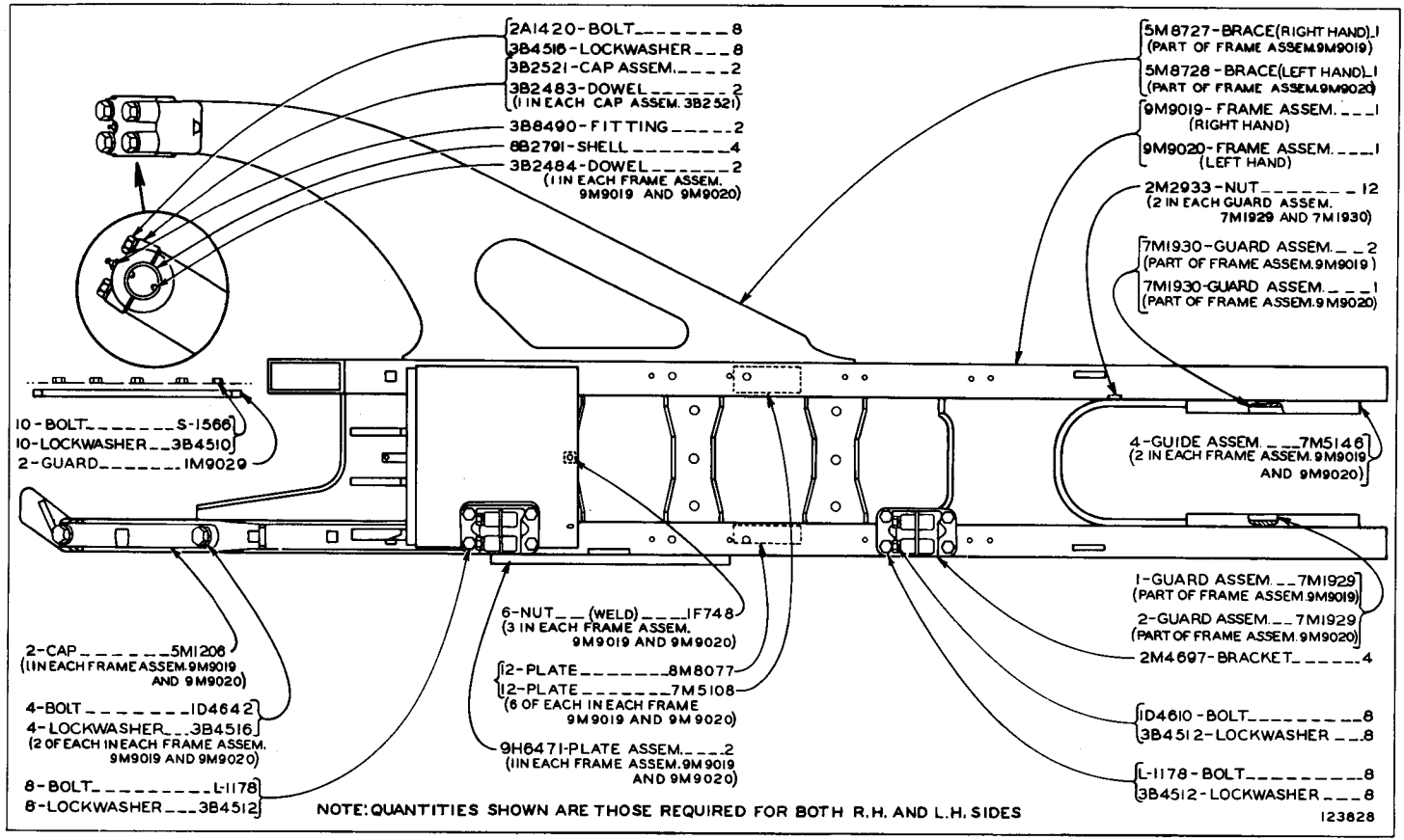

7M1933 TRACK ROLLER FRAME GROUP—Type 2
FOR USE WITH TRACK GUIDING GUARDS

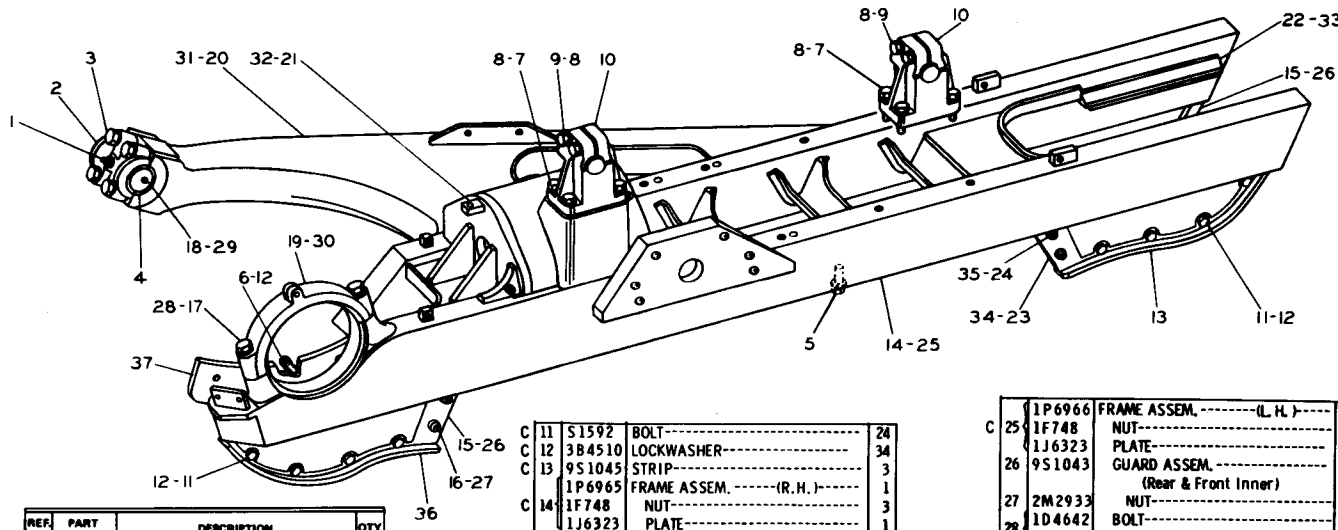

REF. NO.	PART NUMBER	DESCRIPTION	QTY
1	3B8490	FITTING	2
2	3B2521	CAP ASSEM.	2
	3B2483	DOWEL	1
3	2A1420	BOLT	8
	3B4516	LOCKWASHER	8
4	8B2791	SHELL	4
C 5	1D4628	BOLT	48
	9H1031	WASHER	48
C 6	S1589	BOLT-(1.75 in. long)	10
C 7	2A1538	BOLT	16
8	3B4512	LOCKWASHER	24
9	1D4610	BOLT	8
C 10	8S7818	BRACKET	4

C	11	S1592	BOLT	24
C	12	3B4510	LOCKWASHER	34
C	13	9S1045	STRIP	3
	14	1P6965	FRAME ASSEM.-(R.H.)	1
C		1F748	NUT	3
		1J6323	PLATE	1
	15	9S1044	GUARD ASSEM. (Rear & Front Inner)	2
	16	2M2933	NUT	2
	17	1D4642	BOLT	2
		3K5234	WASHER	2
	18	3B2484	DOWEL	1
	19	5M1206	CAP	1
	20	9S1695	BRACE ASSEM.	1
	21	2K2099	BAR	1
	22	9S918	GUIDE ASSEM.	2
		9S917	STRIP	1
	23	9S1043	GUARD ASSEM.-(Front Outer)	1
	24	2M2933	NUT	2

		1P6966	FRAME ASSEM.-(L.H.)	1
C	25	1F748	NUT	3
		1J6323	PLATE	1
	26	9S1043	GUARD ASSEM. (Rear & Front Inner)	2
	27	2M2933	NUT	2
	28	1D4642	BOLT	2
		3K5234	WASHER	2
	29	3B2484	DOWEL	1
	30	5M1206	CAP	1
	31	9S1696	BRACE ASSEM.	1
	32	2K2099	BAR	1
	33	9S918	GUIDE ASSEM.	2
		9S917	STRIP	1
	34	9S1044	GUARD ASSEM.-(Front Outer)	1
	35	2M2933	NUT	2
C	36	9S1046	STRIP	3
	37	1M9029	GUARD	2

NOTE: QUANTITIES SHOWN ARE THOSE REQUIRED FOR R.H. AND L.H. SIDES

C INDICATES CHANGE

141006

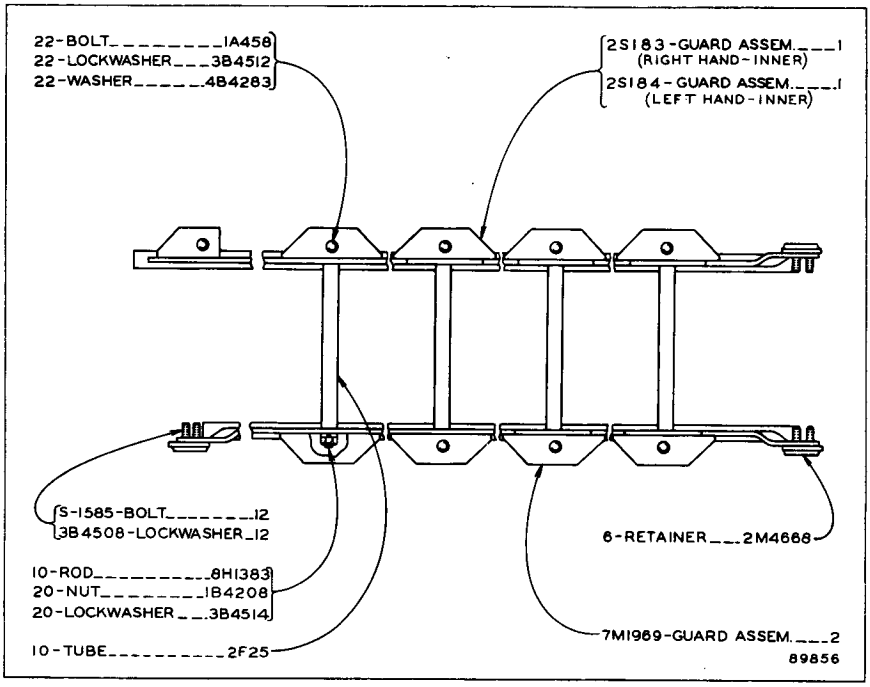

7M1970 TRACK ROLLER GUARD GROUP—Top View
FOR USE WITH 7M1933 TRACK ROLLER FRAME GROUP
Note: Quantities shown are those required for both R.H. and L.H. sides

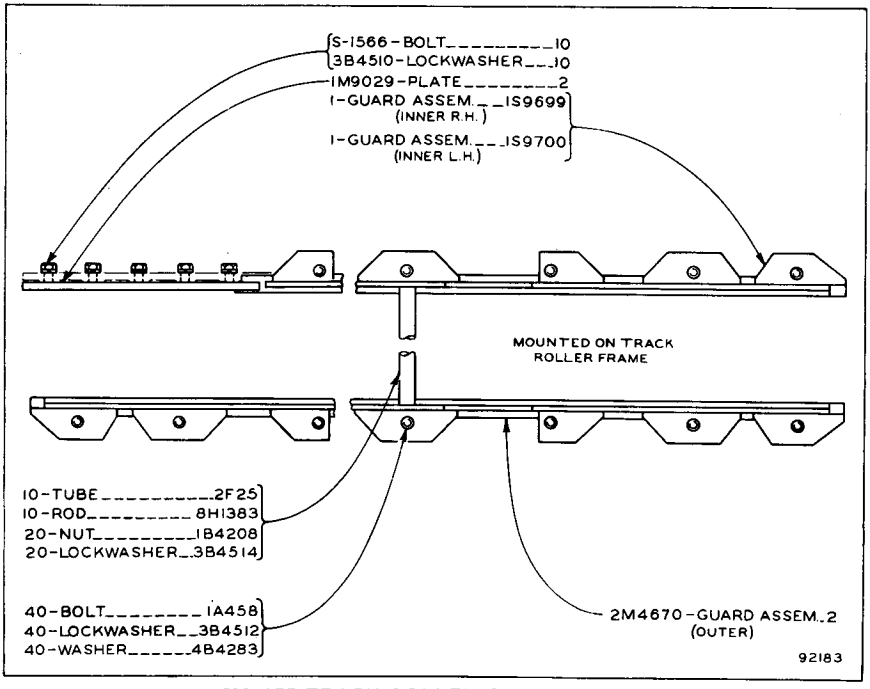

2M4675 TRACK ROLLER GUARD GROUP
FOR USE WITH SIX ROLLER TRACK ROLLER FRAME
Note: Quantities shown are those required for both R.H. and L.H. sides

CONSISTS OF:

5	9S3577	SEGMENT
1	.....	FORM FE055024

9S3578 SPROCKET SEGMENT GROUP—Field Installation
FOR USE WHERE SOIL BUILD-UP OF SPROCKET TEETH IS ENCOUNTERED

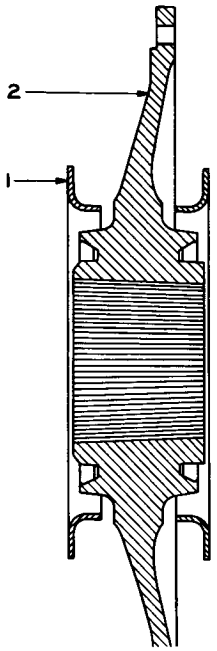

REF. NO.	PART NUMBER	DESCRIPTION	QTY
1	9S2519	HUB----------	1
2	9S2172	GUARD----------	2
	GMG00031	FORM--(Installation Instruction)--	1

128238

9S2737 TRACK SPROCKET HUB GROUP
Serial No. 48A6393 to 48A12568 inclusive
For Field Replacement of 3S354 Hub Assembly

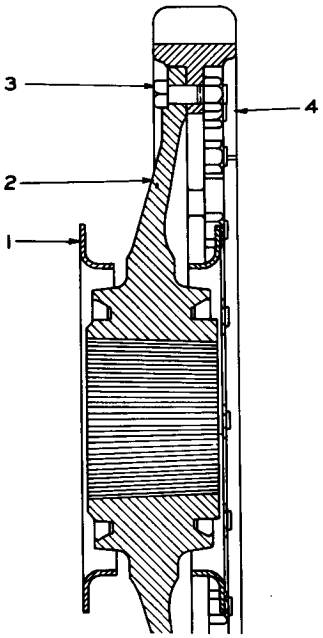

REF. NO.	PART NUMBER	DESCRIPTION	QTY
1	9S2172	GUARD----------	2
	9S2506	SPROCKET GROUP----------	1
		Consisting of:	
2	9S2519	HUB----------	1
3	3S336	BOLT----------	20
	7H3608	NUT----------	20
4	5S52	SEGMENT GROUP--(5 Segments)--	1
	GMG00031	FORM--(Installation Instruction)--	1

128239

9S2738 TRACK SPROCKET GROUP
Serial No. 48A6393 to 48A12568 inclusive
For Field Replacement of 3S55 Sprocket Assembly

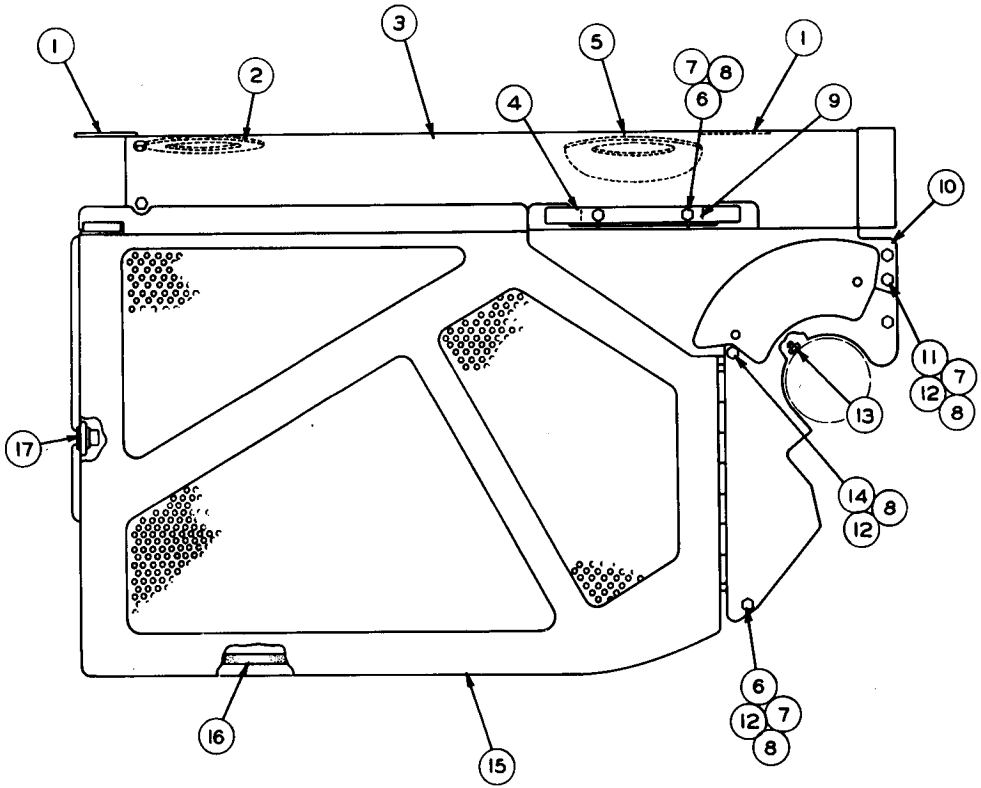

REF. NO.	PART NUMBER	DESCRIPTION	QTY.
1	5S1957	WASHER	2
2	5S9860	COVER	1
3	7S725	HOOD ASSEM.	1
4	5S7538	BRACKET ASSEM.	2
5	7S1484	COVER	1
6	S-1594	BOLT	8
7	1D4717	NUT	12
8	3B4506	LOCKWASHER	14
9	7S2013	PLATE	2
10	7S1499	PLATE ASSEM. ----(Right Hand)----	1
	7S1500	PLATE ASSEM. -----(Left Hand)-----	1
11	S-1588	BOLT	4
12	4B4278	WASHER	10
13	1K6842	FITTING	2
14	S-509	BOLT	2
15	7S1509	DOOR ASSEM. -----(Right Hand)---	1
	7S1510	DOOR ASSEM. -----(Left Hand)-----	1
16	5S3956	SEAL----------187 inches (Part of 7S1509 and 7S1510 Door Assem.)	
17	9B1783	FASTENER	2
	4B7033	SPRING	2
	3B4623	COTTER PIN	2
	1A4784	WASHER	2

7S1512 ENGINE ENCLOSURE GROUP—Type 1
Serial No. 48A6883 to 48A7781 inclusive
FOR USE WITH HYDRAULIC CONTROL. Only separate parts serviced
When complete group is required order 9S4735 listed on Page 150C-2

7S1512 ENGINE ENCLOSURE GROUP—Type 2

Serial No. 48A6883 to 48A7781 inclusive

FOR USE WITH HYDRAULIC CONTROL. Only separate parts serviced

When complete group is required order 9S4735 listed on Page 150C-2

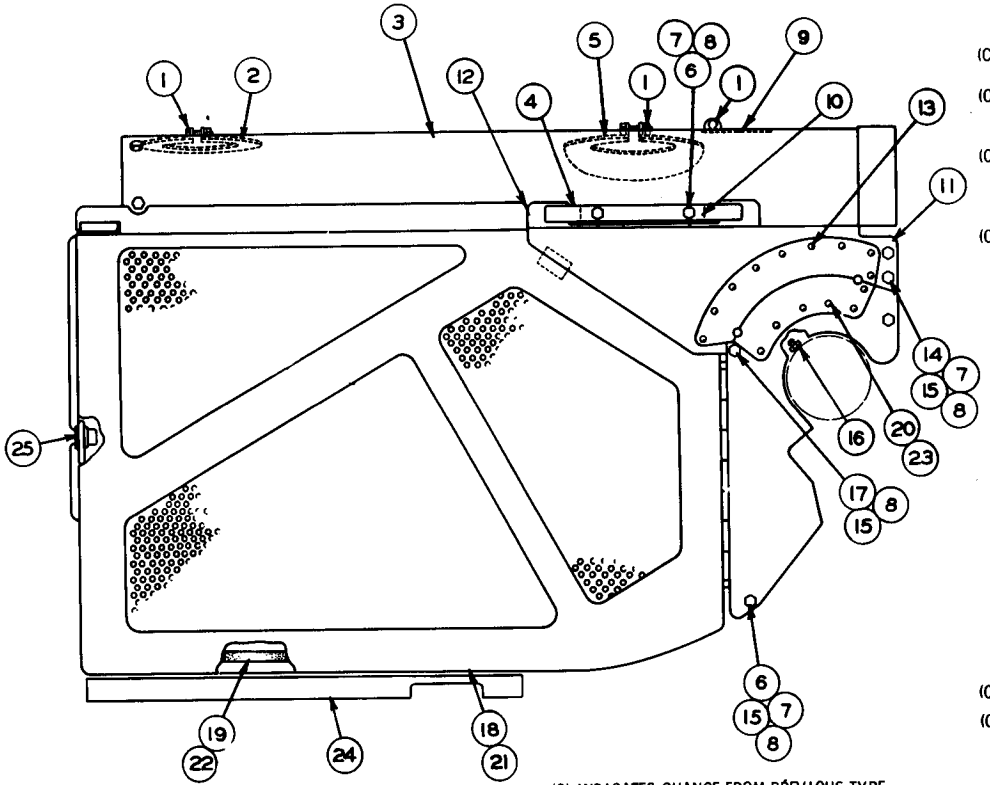

(C) INDICATES CHANGE FROM PREVIOUS TYPE

REF. NO.	PART NUMBER	DESCRIPTION	QTY.
	S-1616	BOLT	3
(C) 1	1B4330	NUT	3
	3B4504	LOCKWASHER	3
(C) 2	7S7234	COVER ASSEM.	1
3	7S725	HOOD ASSEM.	1
4	5S7538	BRACKET ASSEM.	2
(C) 5	7S6081	COVER ASSEM.	1
6	S-1594	BOLT	8
7	1D4717	NUT	12
8	3B4506	LOCKWASHER	14
(C) 9	7S5293	CLAMP ASSEM.	1
10	7S2013	PLATE	2
11	7S1499	PLATE ASSEM. ----(Right Hand)----	1
	7S1500	PLATE ASSEM. -----(Left Hand)----	1
12	3J433	PLATE	2
13	9M5732	RIVET	18
	4B4863	WASHER	18
(One-half each in 7S1499 & 7S1500 Plate Assem.)			
14	S-1588	BOLT	4
15	4B4278	WASHER	10
16	1K6842	FITTING	2
17	S-509	BOLT	2
18	7S1509	DOOR ASSEM. ----(Right Hand)----	1
19	5S3956	SEAL----------79 Inches	
20	9M5732	RIVET	6
	4B4863	WASHER	6
		(Parts of 7S1509 Door Assem.)	
21	7S1510	DOOR ASSEM. -----(Left Hand)-----	1
22	5S3956	SEAL----------80 Inches	
23	9M5732	RIVET	13
	4B4863	WASHER	13
		(Parts of 7S1510 Door Assem.)	
(C) 24	7S7235	CHANNEL-------(Right Hand)------	1
	7S7236	CHANNEL--------(Left Hand)-------	1
(C) 25	7S2834	FASTENER	2
	4B7033	SPRING	2
	3B4623	COTTER PIN	2
	1A4784	WASHER	2

122463

		CONSISTS OF:	PAGE
1	9S429	ENCLOSURE GROUP	150D
1	9S2184	HYDRAULIC CYLINDER TUBE SERVICE GROUP	150C-2
1	6J1860	TUBE ASSEMBLY	
1	S1585	BOLT	

9S4735 ENGINE ENCLOSURE GROUP
Serial No. 48A6883 to 48A7781 inclusive
FOR USE WITH HYDRAULIC CONTROL AND WITHOUT CAB

REF. NO.	PART NUMBER	DESCRIPTION	QTY
1	9S1827	BRACKET	1
2	6H1717	BOLT	4
	3B4508	LOCKWASHER	4
	4B4280	WASHER	4
3	1D4719	NUT	2
4	9S2183	TUBE ASSEM.	1
5	6K5537	CLIP ASSEM.	2

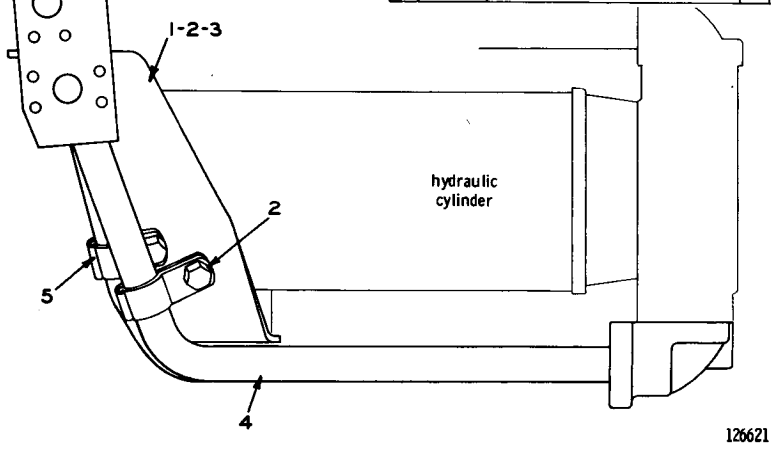

9S2184 HYDRAULIC CYLINDER TUBE GROUP
PROVIDES SERVICE REPLACEMENT FOR 6J1859 TUBE ASSEMBLY
Part of 9S4735 Engine Enclosure Group listed on Page 150C-2

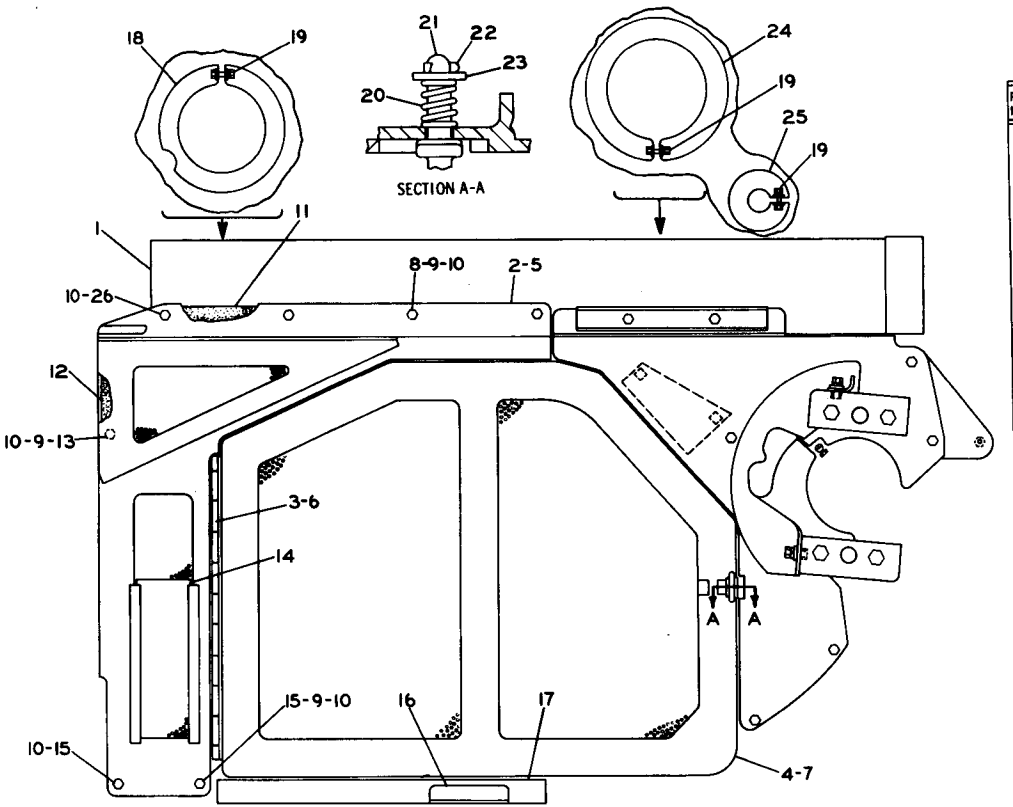

REF. NO.	PART NUMBER	DESCRIPTION	QTY
1	7S725	HOOD ASSEM.	1
2	9S421	SIDE ASSEM. ----(Right Hand)----	1
3	9S384	HINGE	1
4	9S415	DOOR ASSEM. ----(Right Hand)-- (Parts of 9S421 Assem.)	1
5	9S422	SIDE ASSEM. -----(Left Hand)-----	1
6	9S384	HINGE	1
7	9S417	DOOR ASSEM. ---(Left Hand)---- (Parts of 9S422 Assem.)	1
8	L1351	BOLT	6
9	1D4717	NUT	16
10	3B4506	LOCKWASHER	20
11	9S405	GASKET-------(Right Hand)-------	1
	9S393	GASKET-------(Left Hand)--------	1
12	9S402	GASKET	2
13	S1594	BOLT	8
14	9S8170	PLATE ASSEM.	1
15	S1591	BOLT	4
16	9S401	CHANNEL	1
17	9S400	CHANNEL	1
18	7S7234	COVER ASSEM.	1
19	S1616	BOLT	3
	1B4330	NUT	3
	3B4504	LOCKWASHER	3
20	4B7033	SPRING	2
21	9B1783	FASTENER	2
22	3B4623	COTTER PIN	2
23	1A4784	WASHER	2
24	7S6081	COVER ASSEM.	1
25	7S5293	CLAMP ASSEM.	1
26	1A2029	BOLT	2

9S429 ENGINE ENCLOSURE GROUP—Part 1
Serial No. 48A7782—Up
FOR USE WITH HYDRAULIC CONTROL
Also part of 9S4735 Engine Enclosure Group listed on Page 150C-2

9S429 ENGINE ENCLOSURE GROUP—Part 2
Serial No. 48A7782—Up
FOR USE WITH HYDRAULIC CONTROL
Also part of 9S4735 Engine Enclosure Group listed on Page 150C-2

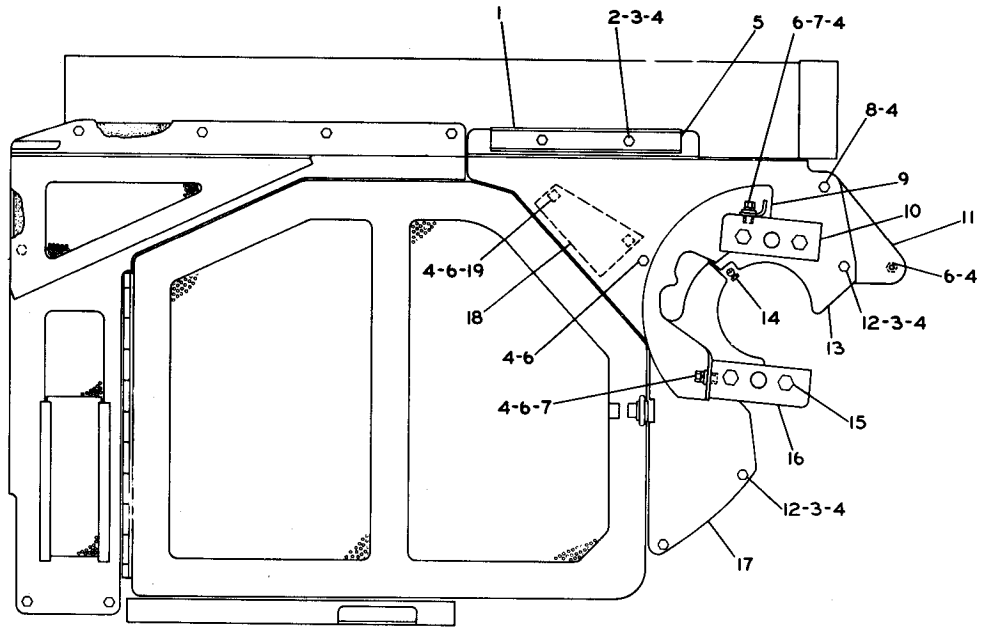

REF. NO.	PART NUMBER	DESCRIPTION	QTY
1	5S7538	CHANNEL ASSEM.	2
2	1A2029	BOLT	4
3	1D4717	NUT	9
4	3B4506	LOCKWASHER	24
5	7S2013	PLATE	2
6	L1351	BOLT	13
7	4B4278	WASHER	8
8	S1588	BOLT	2
9	9S3609	PLATE ASSEM. ---(Right Hand)-----	1
10	9S3605	BRACKET ASSEM. --(Right Hand)---	1
	9S3606	BRACKET ASSEM. ----(Left Hand)--	1
	9F2978	NUT----------(Weld)---------- (2 in each 9S3605 & 9S3606 Assem.)	4
11	9S3610	PLATE ASSEM. ----(Left Hand)-----	1
12	S1594	BOLT	5
13	9S409	PLATE ASSEM. ----(Right Hand)----	1
	9S410	PLATE ASSEM. -----(Left Hand)----	1
14	3B8485	FITTING	2
15	1D4588	BOLT	8
	3B4510	LOCKWASHER	8
	6H853	SPACER	8
16	9S3607	BRACKET ASSEM. ---(Right Hand)--	1
	9S3608	BRACKET ASSEM. ----(Left Hand)---	1
	9F2978	NUT----------(Weld)---------- (2 in each 9S3607 & 9S3608 Assem.)	4
17	9S391	PLATE ASSEM. -----(Right Hand)----	1
	9S392	PLATE ASSEM. ------Left Hand)----	1
18	9S389	PLATE ASSEM.	1
19	9F2978	NUT----------(Weld)---------- (Part of 9S389 Assem.)	1

128886

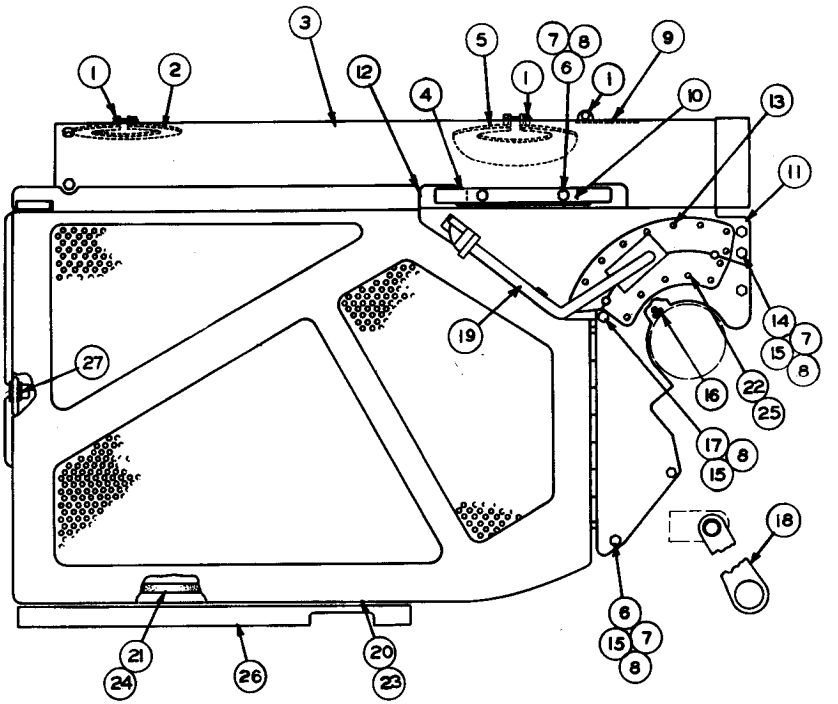

REF. NO.	PART NUMBER	DESCRIPTION	QTY.
1	S1616	BOLT	3
	1B4330	NUT	3
	3B4504	LOCKWASHER	3
2	7S7234	COVER ASSEM.	1
3	7S725	HOOD ASSEM.	1
4	5S7538	BRACKET ASSEM.	2
5	7S6081	COVER ASSEM.	1
6	S1594	BOLT	10
7	1D4717	NUT	14
8	3B4506	LOCKWASHER	16
9	7S5293	CLAMP ASSEM.	1
10	7S2013	PLATE	2
11	7S1499	PLATE ASSEM. ----(Right Hand)----	1
	7S1500	PLATE ASSEM. -----(Left Hand)----	1
12	3J433	PLATE	2
13	9M5732	RIVET	18
	4B4863	WASHER	18
(One-half each in 7S1499 & 7S1500 Plate Assem.)			
14	S1588	BOLT	4
15	4B4278	WASHER	12
16	3B8485	FITTING	2
17	S509	BOLT	2
18	8S4498	LINK ASSEM.	2
19	8S1821	TUBE ASSEM. ----(Right Hand)----	1
	5J1584	SEAL	2
	6J900	SPACER	2
	L2070	BOLT	8
		(Mounted on R. H. Cylinder)	

REF. NO.	PART NUMBER	DESCRIPTION	QTY.
20	7S1509	DOOR ASSEM. ----(Right Hand)----	1
21	5S3956	SEAL----------79 Inches	
22	9M5732	RIVET	6
	4B4863	WASHER	6
		(Parts of 7S1509 Door Assem.)	
23	7S1510	DOOR ASSEM. -----(Left Hand)-----	1
24	5S3956	SEAL----------80 Inches	
25	9M5732	RIVET	13
	4B4863	WASHER	13
		(Parts of 7S1510 Door Assem.)	
26	7S7235	CHANNEL-------(Right Hand)------	1
	7S7236	CHANNEL--------(Left Hand)------	1
27	7S2834	FASTENER	2
	4B7033	SPRING	2
	3B4623	COTTER PIN	2
	1A4784	WASHER	2
	8S1822	TUBE ASSEM. -----(Left Hand)-----	1
	5J7141	BRACKET	1
	S1595	BOLT---------(1.25" Long)--------	1
	4B5273	WASHER	1
	S1621	BOLT----------(1" Long)----------	1
	3B4508	LOCKWASHER	2
		(Not shown-Mounted on L. H. Cylinder)	

122464

8S1840 ENGINE ENCLOSURE GROUP
Effective with Serial No. 48A7782
FOR USE WITH HYDRAULIC CONTROL
Only separate parts serviced. When complete Group is required order 9S429 shown on Pages 150D and 150E

REF. NO.	PART NUMBER	DESCRIPTION	QTY
1	8S5120	PIPE	1
2	7S8735	CLAMP	1
3	S1571	BOLT	2
	1B5355	NUT	2
4	8S5034	MUFFLER ASSEM.	1
5	2B6296	STUD	2
6	L3151	BOLT	2
	1D4717	NUT	2
	3B4506	LOCKWASHER	2
	3F1417	WASHER	2
7	8S5365	COVER	1
8	4F4974	CLAMP	1
9	8S5163	ELBOW	1
10	8S5113	TUBE ASSEM.	1
11	8S5360	HOOD ASSEM.	1

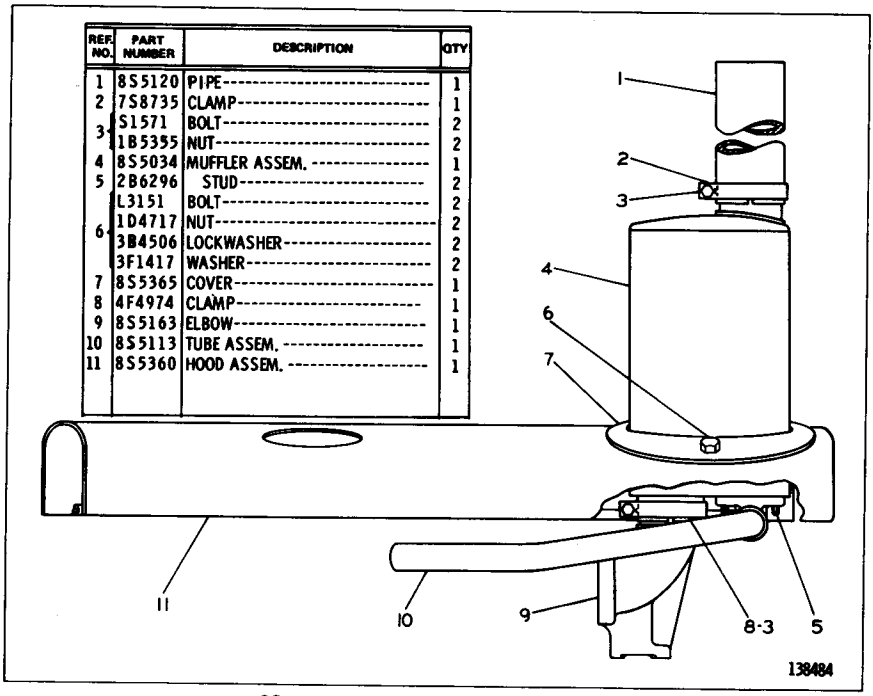

8S5408 MUFFLER GROUP—Type 1
Serial No. 48A6883—Up
FOR USE WITH ENGINE ENCLOSURE

REF. NO.	PART NUMBER	DESCRIPTION	QTY
1	8S5120	PIPE	1
2	7S8735	CLAMP	1
3	S1571	BOLT	2
	1B5355	NUT	2
4	8S5034	MUFFLER ASSEM.	1
5	2B6296	STUD	2
6	L3151	BOLT	2
	1D4717	NUT	2
	3B4506	LOCKWASHER	2
	3F1417	WASHER	2
7	8S5365	COVER	1
8	4F4974	CLAMP	1
9	8S5163	ELBOW	1
C 10	9S624	TUBE ASSEM.	1
11	8S5360	HOOD ASSEM.	1

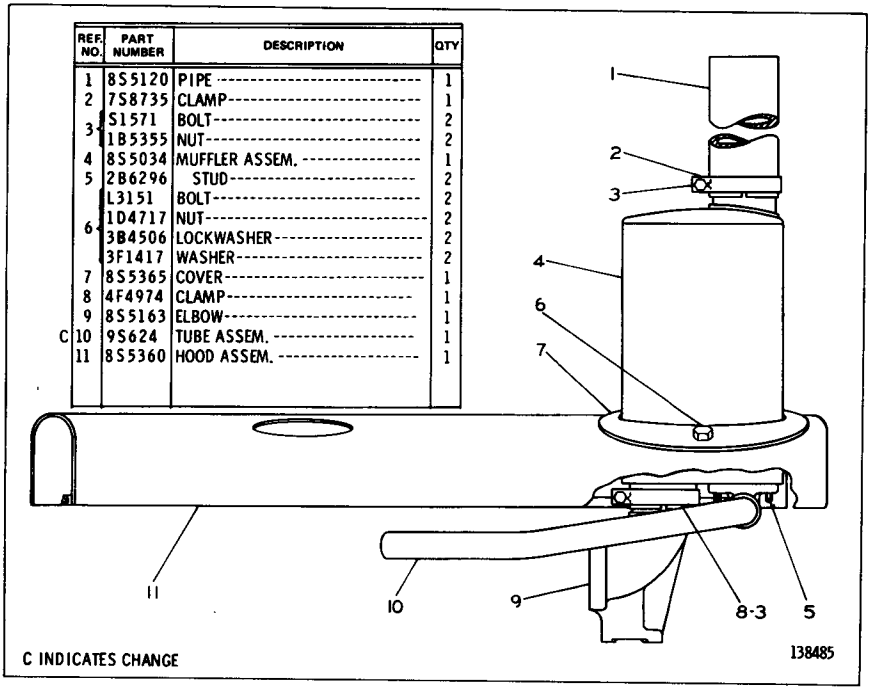

C INDICATES CHANGE

8S5408 MUFFLER GROUP—Type 2
Serial No. 48A6883—Up
FOR USE WITH ENGINE ENCLOSURE

REF. NO.	PART NUMBER	DESCRIPTION	QTY
1	8S5120	PIPE	1
2	7S8735	CLAMP	1
3	S1571	BOLT	2
	1B5355	NUT	2
4	8S5034	MUFFLER ASSEM.	1
5	2B6296	STUD	2
6	4F4974	CLAMP	1
7	8S5163	ELBOW	1
8	8S5113	TUBE ASSEM.	1
9	8S5359	HOOD ASSEM.	1

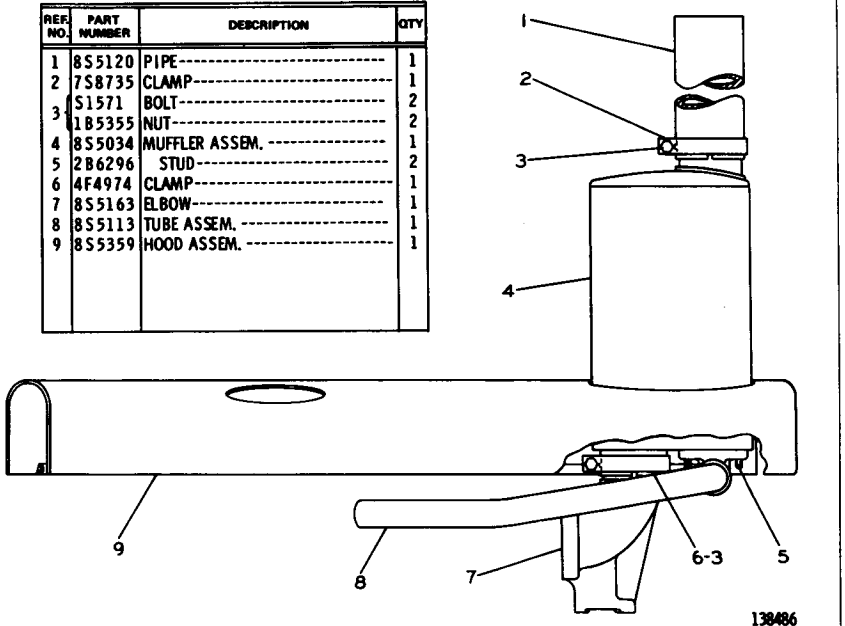

8S5119 MUFFLER GROUP—Type 1
Serial No. 48A6883—Up

REF. NO.	PART NUMBER	DESCRIPTION	QTY
1	8S5120	PIPE	1
2	7S8735	CLAMP	1
3	S1571	BOLT	2
	1B5355	NUT	2
4	8S5034	MUFFLER ASSEM.	1
5	2B6296	STUD	2
6	4F4974	CLAMP	1
7	8S5163	ELBOW	1
C 8	9S624	TUBE ASSEM.	1
9	8S5359	HOOD ASSEM.	1

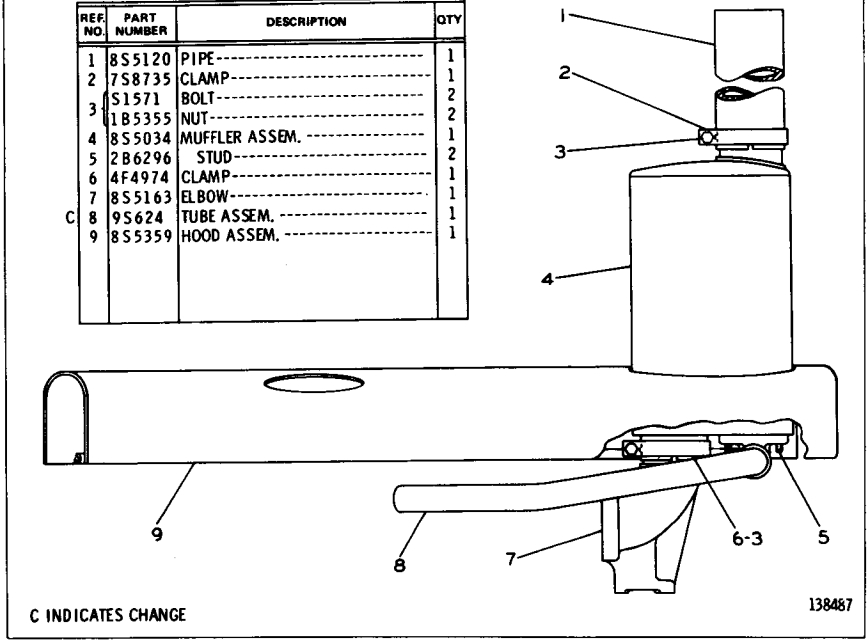

8S5119 MUFFLER GROUP—Type 2
Serial No. 48A6883—Up

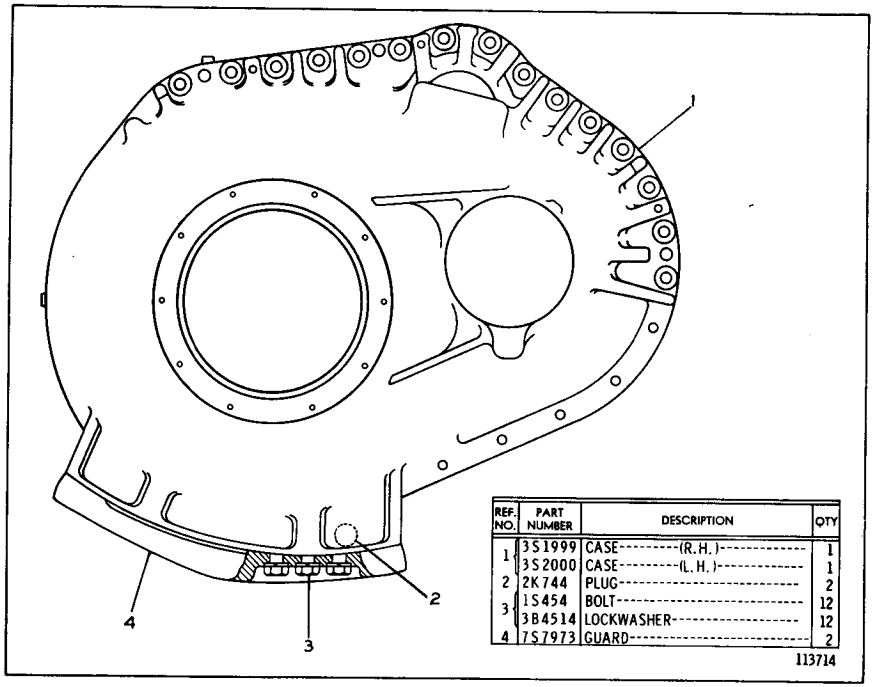

REF. NO.	PART NUMBER	DESCRIPTION	QTY
1	3S1999	CASE--------(R.H.)----------	1
	3S2000	CASE--------(L.H.)----------	1
2	2K744	PLUG----------	2
3	1S454	BOLT----------	12
	3B4514	LOCKWASHER----------	12
4	7S7973	GUARD----------	2

113714

3S2419 FINAL DRIVE CASE AND GUARD GROUP
Steel Final Drive Cases and Reversible Wear Guards

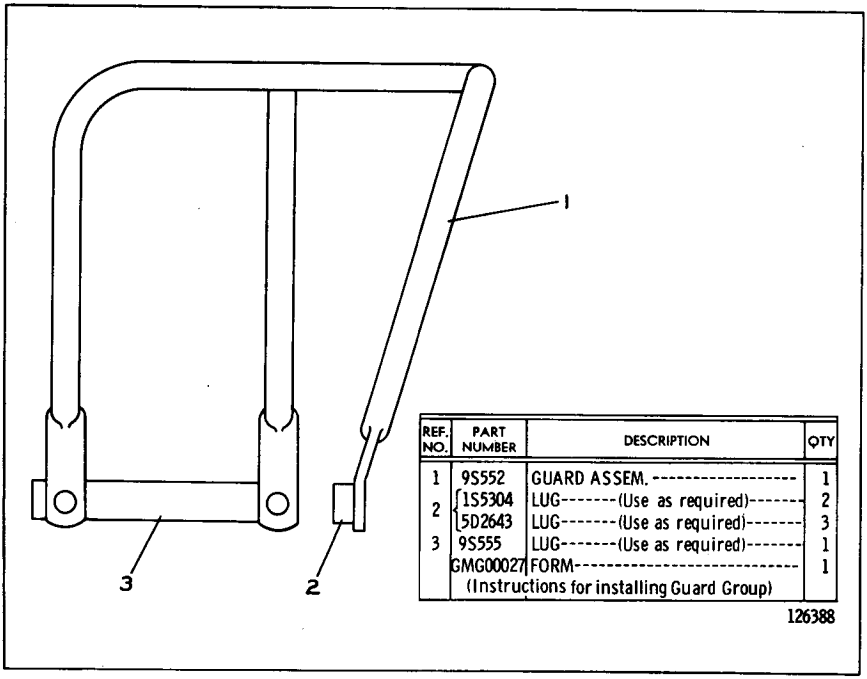

REF. NO.	PART NUMBER	DESCRIPTION	QTY
1	9S552	GUARD ASSEM.----------	1
2	1S5304	LUG-------(Use as required)-------	2
	5D2643	LUG-------(Use as required)-------	3
3	9S555	LUG-------(Use as required)-------	1
	GMG00027	FORM----------	1
		(Instructions for installing Guard Group)	

126388

9S2036 POWERSHIFT CONTROL GUARD SERVICE GROUP
Serial No. 48A6393 to 48A11997 inclusive
Provides Field Replacement for 7M651 Guard shown on Page 80

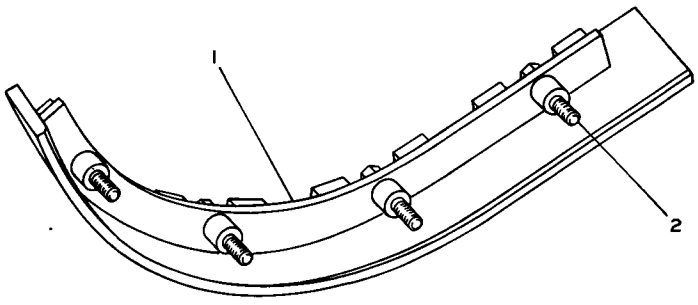

REF. NO.	PART NUMBER	DESCRIPTION	QTY
1	7M1889	GUARD ASSEM. (Final Drive Wear-R.H.)	1
	7M1890	GUARD ASSEM. (Final Drive Wear-L.H.)	1
2	L1169	BOLT	8
	3B4510	LOCKWASHER	8
	S355	WASHER	8

113712

7M1893 FINAL DRIVE WEAR GUARD GROUP
Note: Quantities shown are those required for both R.H. and L.H. sides

5J9430 Hydraulic Control Arrangement—Blade Tilt
16 U.S. Gallons per Minute

		Consists of:	Page
1	3J8053	Pump and Mounting Group	156
1	4J5350	Control Valve Group	155
1	5J9429	Pump Lines and Tank Group	152
1	6J454	Blade Tilt Lines Group	154
1	.....	Instructions Form No. 36160	

171 HYDRAULIC CONTROL ARRANGEMENT

REF NO.	PART NUMBER	DESCRIPTION	QTY.
1	6F6673	SEAL	4
2	S-1588	BOLT-(1.25" Long)	16
3	3B4506	LOCKWASHER	28
4	S-1590	BOLT-(2" Long)	6
5	7B3235	BOLT	4
6	1D4719	NUT	6
7	3B4508	LOCKWASHER	11
8	5J9371	TUBE ASSEM. (28.09" long overall)	1
	5J9381	HOSE ASSEM. (84.85" long overall)- Consisting of:	1
9	8M2722	STEM	1
10	S-1590	BOLT	8
	1D4717	NUT	8
11	8M1632	CLAMP	4
12	2D27	HOSE	1
13	8M1621	STEM	1
14	S-1594	BOLT	2
15	5J9374	BRACKET ASSEM.	1
16	5K3014	TUBE-(65" Long)	1
17	3B8995	FITTING	1
18	1F1344	NUT (Part of 3B8995 Fitting)	1
19	5J8821	TANK GROUP (See Separate Illustration)	1
20	5J8955	TUBE ASSEM. (7.03" long overall)	1
21	8M9567	HOSE-(6" Long)	2
22	4J4548	PEDAL ASSEM.	1
23	3J7687	PAD (Part of 4J4548 Pedal Assem.)	2
24	9M164	CLAMP	8
25	5J9367	TUBE ASSEM. -(8.80" long overall)	1
26	4F7391	SEAL	2
27	1H3305	FLANGE	4
28	5J9372	TUBE ASSEM. (13.47" long overall)	1
29	3B8998	FITTING	1
	1F1344	NUT (Part of 3B8998 Fitting)	1
30	5F6562	WASHER	1
	1B8714	KEY	1
31	S-1585	BOLT	3
32	S-1587	BOLT	4

REF NO.	PART NUMBER	DESCRIPTION	QTY.
33	5F1678	SEAL	3
34	3J8062	TUBE ASSEM. (42.90" long overall)	1
35	L-2070	BOLT	4
36	5J9369	TUBE ASSEM. (20.47" long overall)	1
37	5J8888	FILTER GROUP (See Separate Illustration)	1

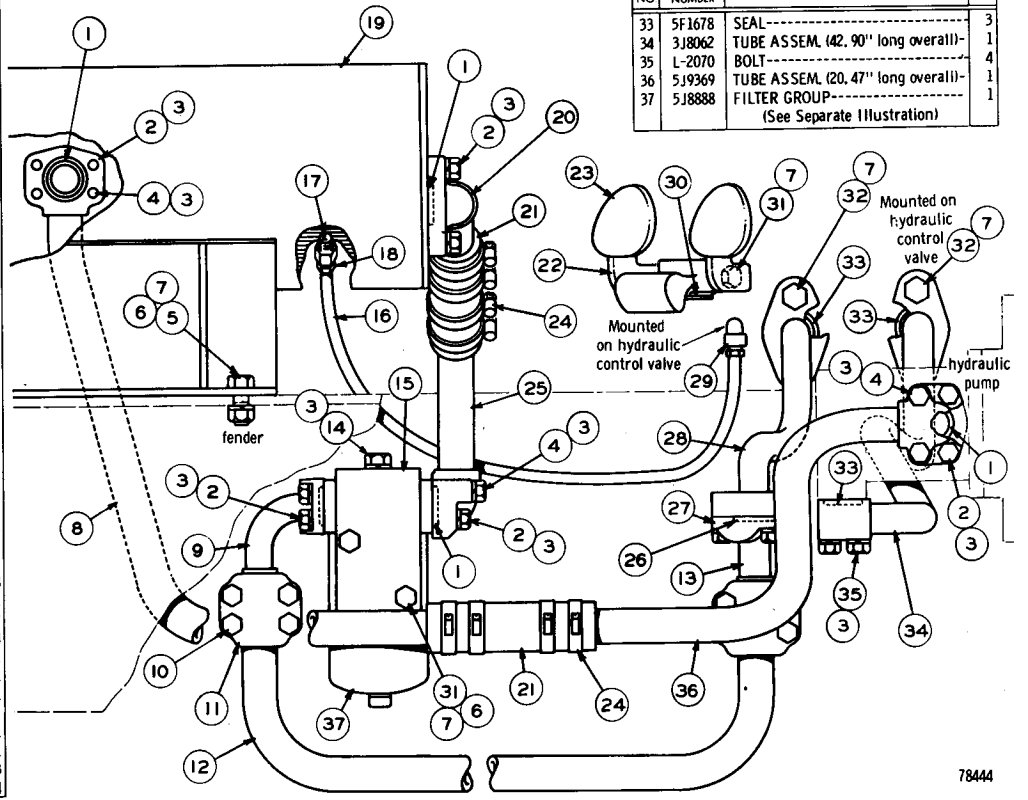

5J9429 PUMP LINES AND TANK GROUP—Blade Tilt—As Viewed from Right Hand Side of Machine—Type 1
Part of 5J9430 Hydraulic Control Arrangement listed on Page 151
5J8821 Tank and 5K8888 Oil Filter parts are shown on Page 153

5J9429 PUMP LINES AND TANK GROUP—Blade Tilt—As Viewed from Right Hand Side of Machine—Type 2

Part of 5J9430 Hydraulic Control Arrangement listed on Page 151
5J8821 Tank and 5J8888 Oil Filter parts are shown on Page 153

REF NO	PART NUMBER	DESCRIPTION	QTY
1	6F6673	SEAL	4
2	S 1588	BOLT—(1.25" Long)	16
3	3B4506	LOCKWASHER	28
4	S 1590	BOLT—(2" Long)	6
5	7B3235	BOLT	4
6	1D4719	NUT	6
7	3B4508	LOCKWASHER	11
8	5J9371	TUBE ASSEM. (28.09" long overall)	1
	5S9351	HOSE ASSEM.	1
		Consisting of:	
9	3S8503	STEM ASSEM.	1
10	3S8496	STEM ASSEM.	1
11	3S7252	SLEEVE	2
▲ 12	8S9355	HOSE—80.2" (Angle Orientation 0 Degrees)	
13	5J9369	TUBE ASSEM.	1
14	S 1594	BOLT	2
15	5J9374	BRACKET ASSEM.	1
16	5K3014	TUBE—(65" Long)	1
17	3B8995	FITTING	1
18	1F1344	NUT (Part of 3B8995 Fitting)	1
19	5J8821	TANK GROUP (See Separate Illustration)	1
20	5J8955	TUBE ASSEM. (7.03" long overall)	1
21	8M9567	HOSE—(6" Long)	2
22	4J4548	PEDAL ASSEM.	1
23	3J7687	PAD (Part of 4J4548 Pedal Assem.)	2
24	9M164	CLAMP	8
25	5J9367	TUBE ASSEM. (8.80" long overall)	1
26	4J520	SEAL	2
27	1H3305	FLANGE	4
28	5J9372	TUBE ASSEM. (13.47" long overall)	1
29	3B8998	FITTING	1
	1F1344	NUT (Part of 3B8998 Fitting)	1
30	5F6562	WASHER	1
	1B8714	KEY	1
31	S 1585	BOLT	3
32	S 1587	BOLT	4
33	5F1678	SEAL	3
34	3J8062	TUBE ASSEM. (42.90" long overall)	1
35	L2070	BOLT	4
36	5J8888	FILTER GROUP (See Separate Illustration)	1

▲ ORDER BY THE INCH

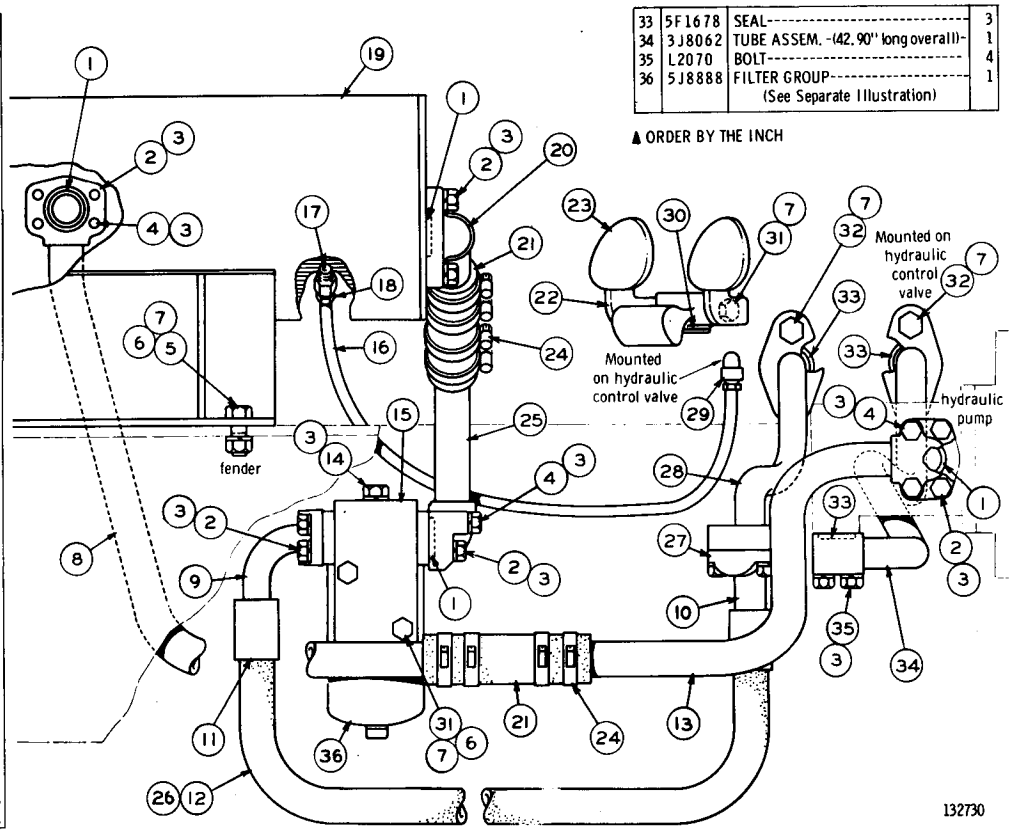

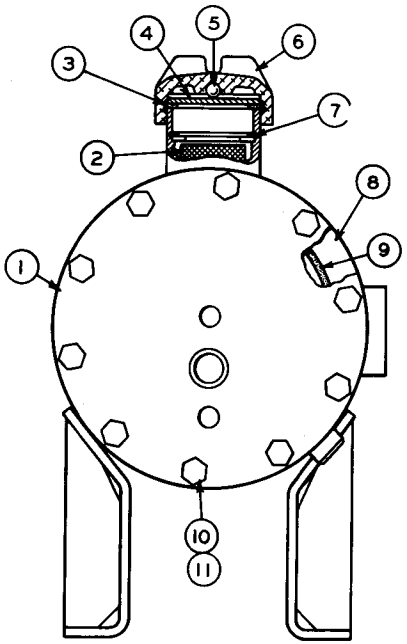

REF NO	PART NUMBER	DESCRIPTION	QTY.
1	5J8820	COVER ASSEM.	1
2	1J9913	STRAINER ASSEM.	1
3	9H6454	GASKET	1
4	6H5139	PLATE	1
5	7B6368	BALL	1
6	7H1447	CAP	1
7	6H9361	RING	1
8	5J8816	TANK ASSEM.	1
9	2K4472	SEAL	1
10	S-1594	BOLT	10
11	3B4506	LOCKWASHER	10

78487

5J8821 HYDRAULIC TANK GROUP
Part of 5J9429 Pump Lines and Tank Group shown on Pages 152 and 152A

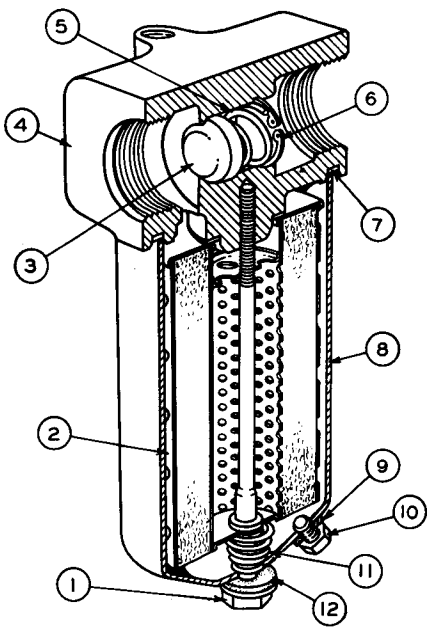

REF NO	PART NUMBER	DESCRIPTION	QTY.
1	5J8876	BOLT	1
2	5J8879	CARTRIDGE	1
3	5J8883	POPPET	1
4	5J8884	BASE	1
5	5J8882	SPRING	1
6	4D1322	RING-(Snap)	1
▲ 7	Not Serv.	RING-(Seal)	1
8	5J8885	BODY ASSEM.	1
▲ 9	Not Serv.	GASKET	1
10	5J8886	PLUG	1
11	5J8878	SPRING	1
▲12	Not Serv.	GASKET	1

THE FOLLOWING REPAIR KIT IS AVAILABLE:
5J8875-KIT ----------(Gasket)---------- 1
(Consists of Parts Marked ▲)

95671

5J8888 HYDRAULIC OIL FILTER GROUP
Part of 5J9429 Pump Lines and Tank Group shown on Pages 152 and 152A

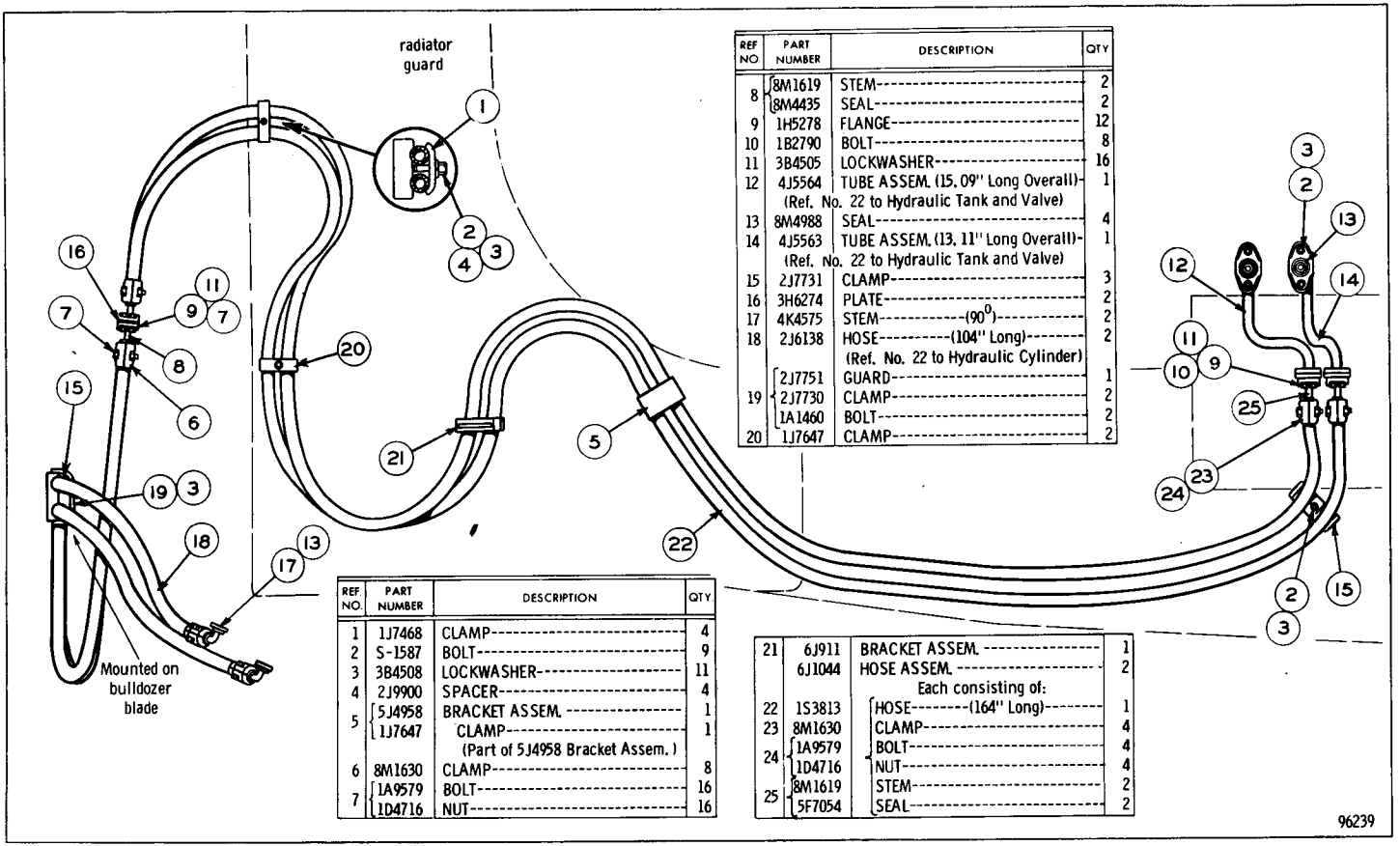

REF NO.	PART NUMBER	DESCRIPTION	QTY
8	8M1619	STEM	2
	8M4435	SEAL	2
9	1H5278	FLANGE	12
10	1B2790	BOLT	8
11	3B4505	LOCKWASHER	16
12	4J5564	TUBE ASSEM. (15.09" Long Overall)-(Ref. No. 22 to Hydraulic Tank and Valve)	1
13	8M4988	SEAL	4
14	4J5563	TUBE ASSEM. (13.11" Long Overall)-(Ref. No. 22 to Hydraulic Tank and Valve)	1
15	2J7731	CLAMP	3
16	3H6274	PLATE	2
17	4K4575	STEM-(90°)	2
18	2J6138	HOSE-(104" Long)-(Ref. No. 22 to Hydraulic Cylinder)	2
19	2J7751	GUARD	1
	2J7730	CLAMP	2
	1A1460	BOLT	2
20	1J7647	CLAMP	2

REF NO.	PART NUMBER	DESCRIPTION	QTY
1	1J7468	CLAMP	4
2	S-1587	BOLT	9
3	3B4508	LOCKWASHER	11
4	2J9900	SPACER	4
5	5J4958	BRACKET ASSEM.	1
	1J7647	CLAMP (Part of 5J4958 Bracket Assem.)	1
6	8M1630	CLAMP	8
7	1A9579	BOLT	16
	1D4716	NUT	16

21	6J911	BRACKET ASSEM.	1
	6J1044	HOSE ASSEM. Each consisting of:	2
22	1S3813	HOSE-(164" Long)	1
23	8M1630	CLAMP	4
24	1A9579	BOLT	4
	1D4716	NUT	4
25	8M1619	STEM	2
	5F7054	SEAL	2

6J454 BLADE TILT LINES GROUP—Type 1
Part of 5J9430 Hydraulic Control Arrangement listed on Page 151

6J454 BLADE TILT LINES GROUP—Type 2

Part of 5J9430 Hydraulic Control Arrangement listed on Page 151

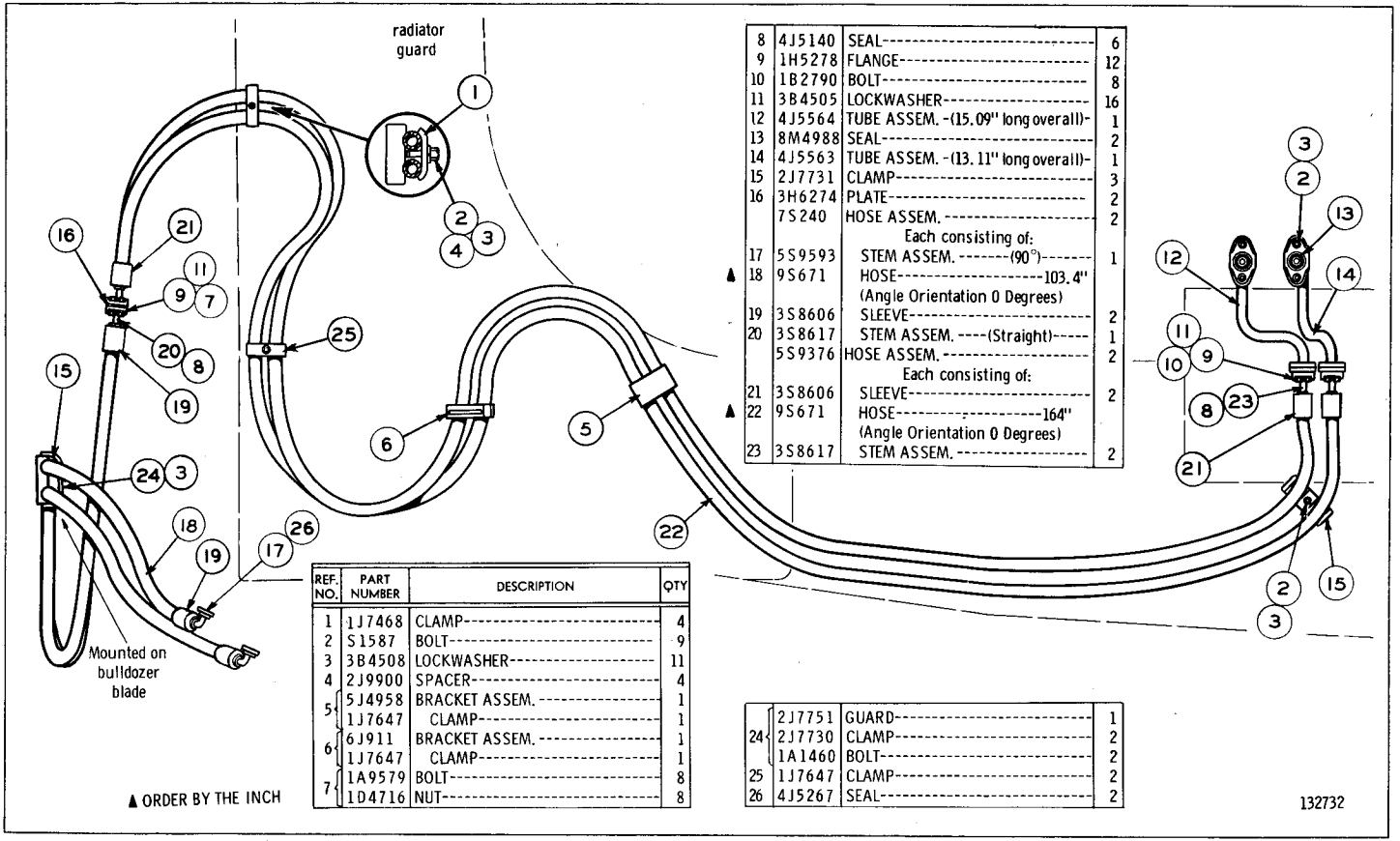

REF. NO.	PART NUMBER	DESCRIPTION	QTY
1	1J7468	CLAMP	4
2	S1587	BOLT	9
3	3B4508	LOCKWASHER	11
4	2J9900	SPACER	4
5	5J4958	BRACKET ASSEM.	1
	1J7647	CLAMP	1
6	6J911	BRACKET ASSEM.	1
	1J7647	CLAMP	1
7	1A9579	BOLT	8
	1D4716	NUT	8
8	4J5140	SEAL	6
9	1H5278	FLANGE	12
10	1B2790	BOLT	8
11	3B4505	LOCKWASHER	16
12	4J5564	TUBE ASSEM. -(15.09" long overall)-	1
13	8M4988	SEAL	2
14	4J5563	TUBE ASSEM. -(13.11" long overall)-	1
15	2J7731	CLAMP	3
16	3H6274	PLATE	2
	7S240	HOSE ASSEM.	2
		Each consisting of:	
17	5S9593	STEM ASSEM. -(90°)-	1
▲ 18	9S671	HOSE-103.4" (Angle Orientation 0 Degrees)	
19	3S8606	SLEEVE	2
20	3S8617	STEM ASSEM. -(Straight)-	1
	5S9376	HOSE ASSEM.	2
		Each consisting of:	
21	3S8606	SLEEVE	2
▲ 22	9S671	HOSE-164" (Angle Orientation 0 Degrees)	
23	3S8617	STEM ASSEM.	2
24	2J7751	GUARD	1
	2J7730	CLAMP	2
	1A1460	BOLT	2
25	1J7647	CLAMP	2
26	4J5267	SEAL	2

▲ ORDER BY THE INCH

132732

4J5350 EXTERNAL CONTROL VALVE GROUP

Part of 5J9430 Hydraulic Control Arrangement listed on Page 151
3J7690 Control Lever Housing Group parts are shown on Page 156

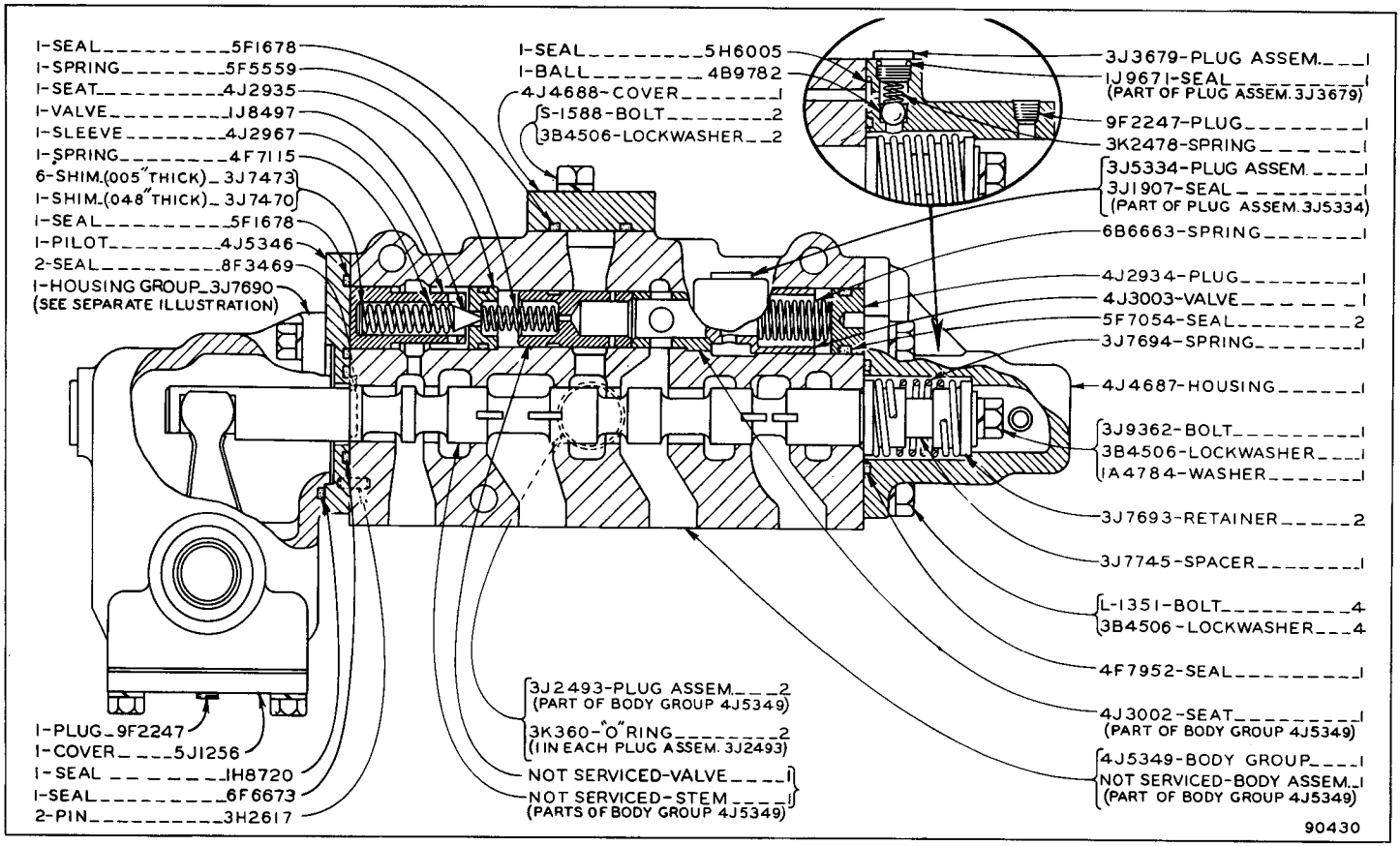

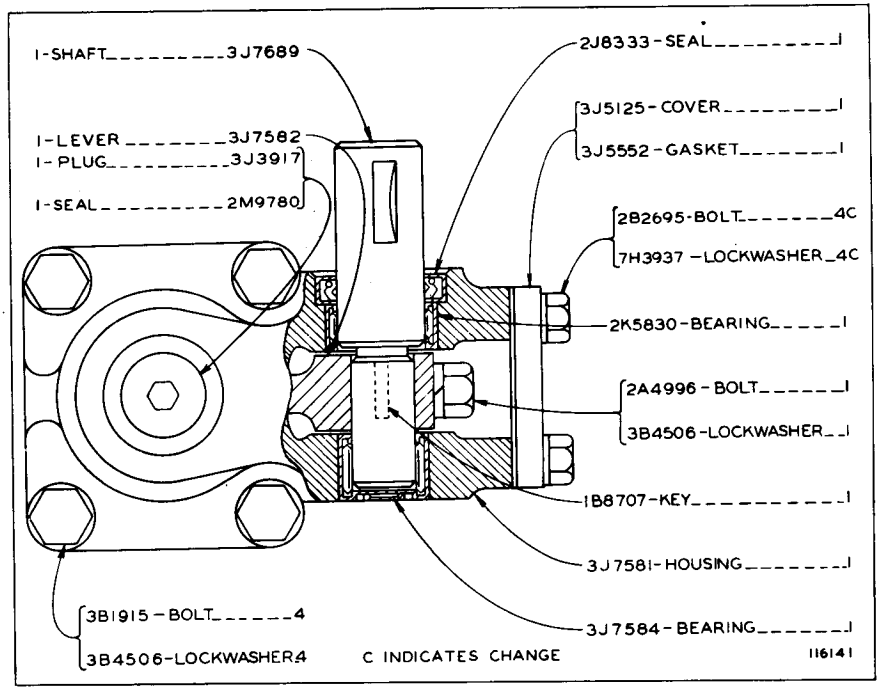

3J7690 CONTROL LEVER HOUSING GROUP
Part of 4J5350 External Control Valve Group shown on Page 155

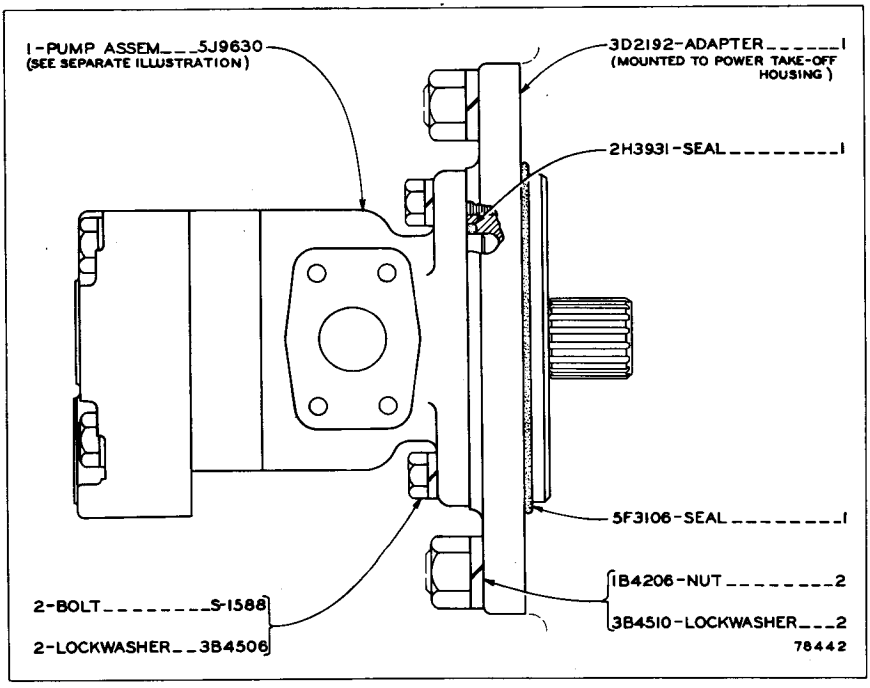

3J8053 PUMP AND MOUNTING GROUP
Part of 5J9430 Hydraulic Control Arrangement listed on Page 151
5J9630 Pump parts are shown on Page 157

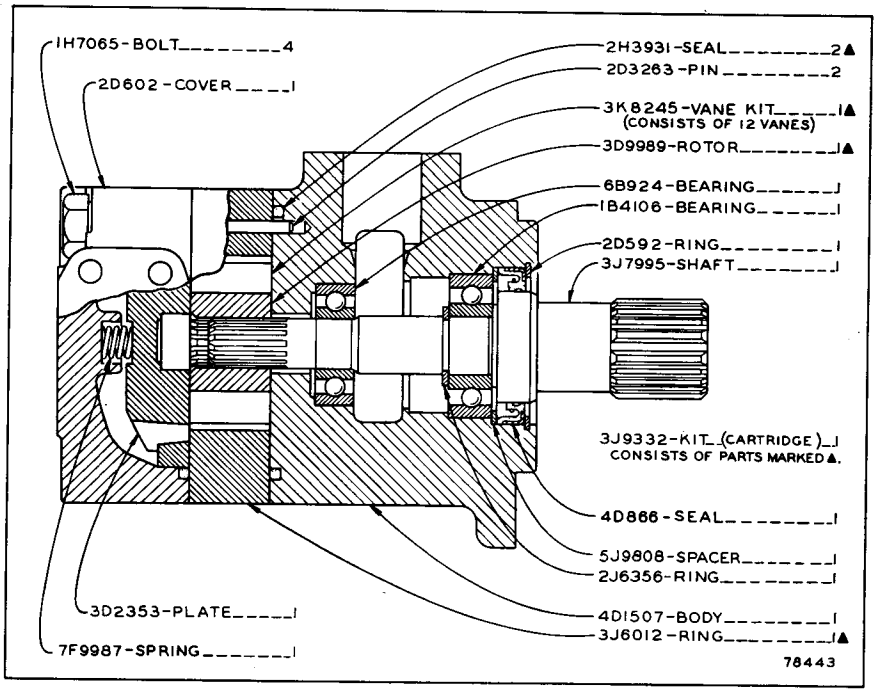

5J9630 HYDRAULIC PUMP ASSEMBLY
Part of 3J8053 Pump and Mounting Group

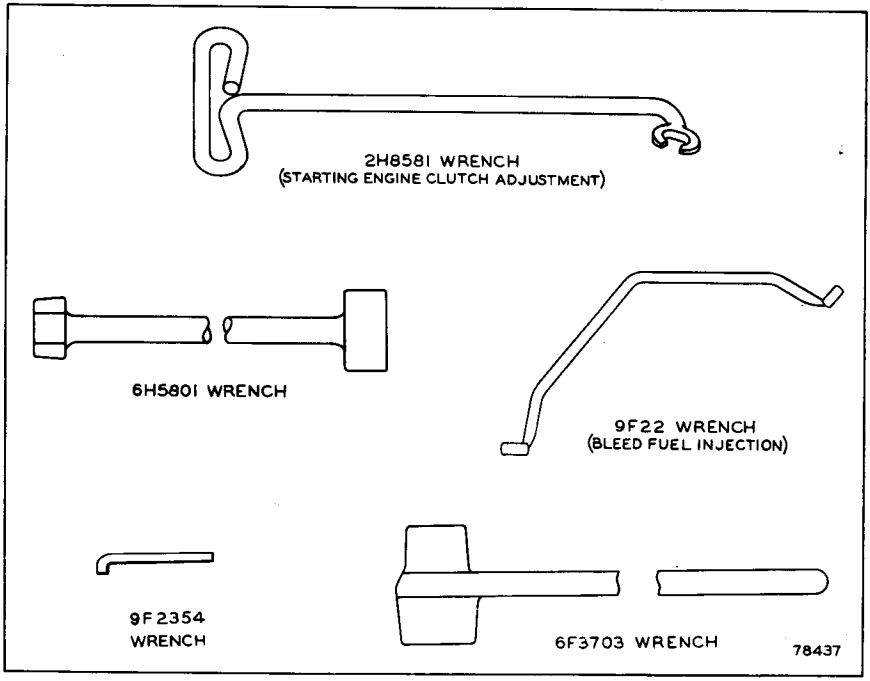

8M9659 TOOL GROUP

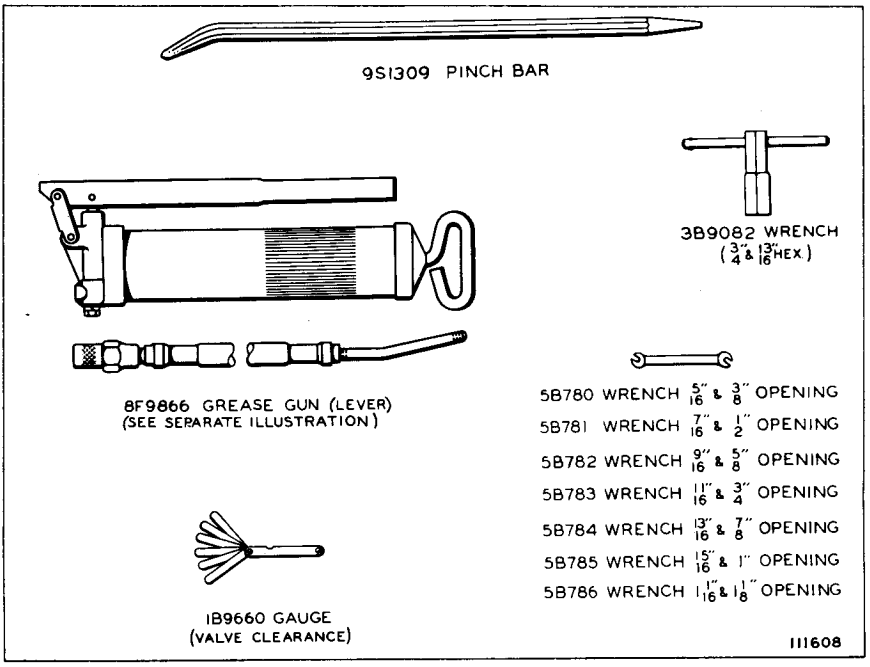

8M9854 TOOL GROUP
Only separate parts serviced. When complete Group is required order 9S7977

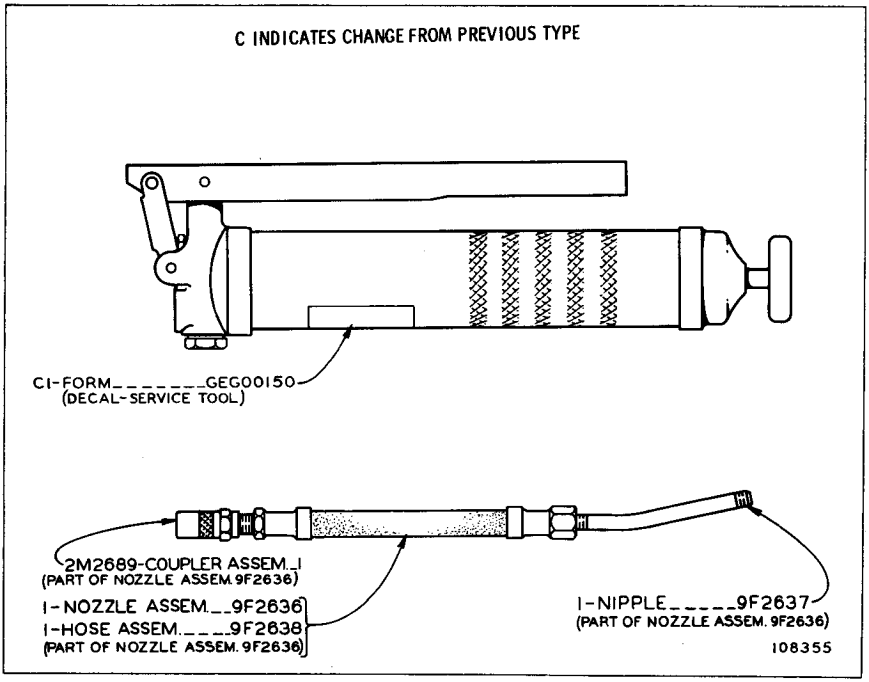

8F9866 GREASE GUN
Part of 8M9854 & 9S7977 Tool Groups

9S7977 TOOL GROUP

8F9866 Grease Gun parts are shown on Page 158

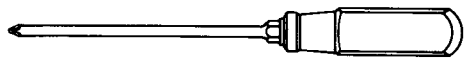

9S1738 SCREWDRIVER
NO. 2 PHILLIPS



2P8250 STRAP WRENCH ASSEM.



5S9569 SOCKET

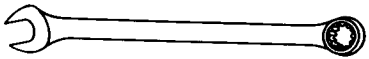

8H8503 WRENCH (5/16" Opening)
8H8505 WRENCH (3/8" Opening)
8H8513 WRENCH (7/8" Opening)
8H8508 WRENCH (9/16" Opening)
8H8509 WRENCH (5/8" Opening)
8H8511 WRENCH (3/4" Opening)
8H8515 WRENCH (1" Opening)

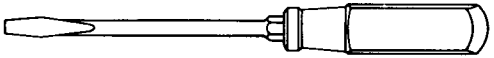

1F1157 SCREWDRIVER



5S9568 SOCKET



C 5P1763 SOCKET

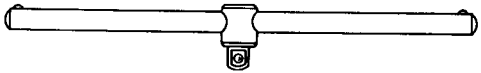

5S9566 WRENCH



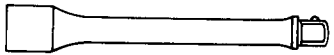

5S9567 EXTENSION

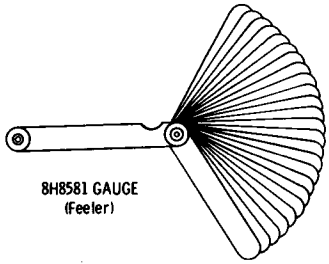

8H8581 GAUGE
(Feeler)

8H8549 SOCKET (9/16" Opening)
8H8554 SOCKET (7/8" Opening)
8H8555 SOCKET (15/16" Opening)
8H8556 SOCKET (1" Opening)
9S1730 SOCKET (11/8" Opening)

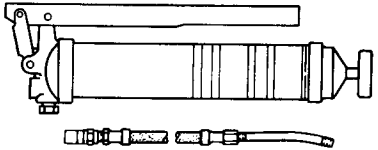

8F9866 GREASE GUN (Lever)
(See Separate Illustration)

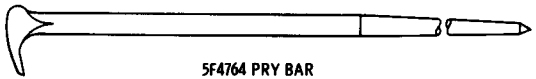

5F4764 PRY BAR

C INDICATES CHANGE

201200

QUANTITY USED	PART NUMBER	DESCRIPTION
1	6H4356	PLATE--WARNING
1	2M3384	PLATE--CAUTION
1	8M6524	PLATE--WARNING
1	9S6723	PLATE--LUB
16	4B4158	DRIVE SCREW
1	4S9197	TRANSFER--AIR CLEANER
1	8S8055	TRANSFER--HYDRAULIC SYSTEM
1	5S6863	TRANSFER GROUP
		CONSISTING OF:
1	.....	TRANSFER--AIR CLEANER INSTRUCTIONS
2	.....	TRANSFER--GENERATOR INSTRUCTIONS
1	.....	TRANSFER--INSTRUCTIONS
1	.....	TRANSFER--CAPACITY (FUEL OIL)
1	.....	TRANSFER--AIR CLEANER INSTRUCTIONS
1	.....	TRANSFER--PRECLEANER INSTRUCTIONS
1	.....	TRANSFER--FILTER INSTRUCTIONS
2	8S5497	TRANSFER--CATERPILLAR
1	8S8959	TRANSFER--CATERPILLAR
1	6H6000	FILM--WARNING
2	8S3926	FILM--CORPORATE SYMBOL
2	9S632	FILM--D7E

NAME PLATES AND TRANSFERS



1P2305 ELECTRIC TERMINAL KIT

(Insulated)

(Includes terminals, wire joints and crimping tool)

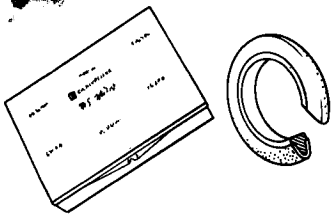

9S3138 SEAL KIT

(Includes 28 metal - backed seals)

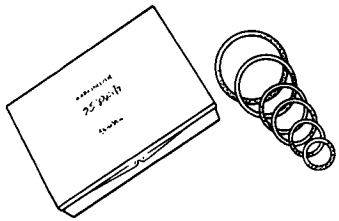

9S3135 SEAL KIT

(Includes 60 rubber O-ring seals)

THREADED INSERTS KITS

Master (Includes inserts and tools)

Coarse	Fine	Size
9S3700	9S3500	Assorted

Repair (Includes inserts and tools)

9S3510	9S3509	#10
9S3512	9S3511	1/4
9S3514	9S3513	5/16
9S3618	9S3515	3/8
9S3620	9S3619	7/16
9S3622	9S3621	1/2
9S3624	9S3623	9/16
9S3626	9S3625	5/8
9S3628	9S3627	3/4
9S3630	9S3629	7/8
9S3632	9S3631	1
9S3633		1 1/8
9S3635		1 1/4
9S3637		1 1/2

Refill (Includes inserts)

9S3674	9S3673	#10
9S3649	9S3639	1/4
9S3650	9S3640	5/16
9S3651	9S3641	3/8
9S3652	9S3642	7/16
9S3653	9S3643	1/2
9S3654	9S3644	9/16
9S3655	9S3645	5/8
9S3656	9S3646	3/4
9S3657	9S3647	7/8
9S3658	9S3648	1
9S3675		1 1/8
9S3677		1 1/4
9S3679		1 1/2

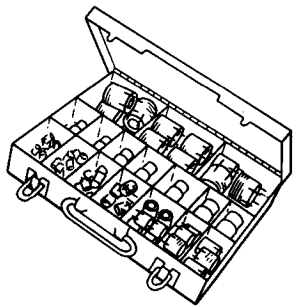

HARDWARE ASSORTMENT KITS

8S7198 Course Thread Hex Nut

8S7197 Fine Thread Hex Nut

8S7196 Lockwasher Assortment

8S7195 Flatwasher Assortment

8S7193 Woodruff Key Assortment

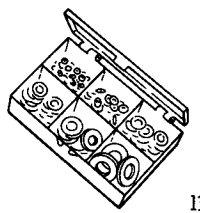

132096

RELATED REPAIR ITEMS

RELATED REPAIR ITEMS



ANTI-SEIZURE COMPOUND

4S9416 16 oz. Aerosol
9M3710 16 oz. Paste



CORROSION INHIBITOR

7M73 16 oz.



EPOXY CEMENT

5M2941 2 - 2 oz. tube



FORM-A-GASKET

4H5363 11 oz.
(fast drying-hard setting)
8H5137 11 oz.
(non-hardening)



GASKET CEMENT

5H2471 8 oz.



GLASS OR PLASTIC CEMENT

3S1831 1 pint



GREASE - SILICONE

4L7464 8 oz.



LIQUID GASKET

7M7260 8 oz.



RUST INHIBITOR

6F6041 1 Qt.
3S1492 1 Gal.



SEALING COMPOUND

5S1454 1 pint



SILICONE FLUID

8M553 145 cc.
9M5165 150 cc.

132097

SPECIFICATIONS

(SUBJECT TO CHANGE WITHOUT NOTICE)

Weight, dry (approximate)	33,900 lbs.

DIMENSIONS

Length	14' 8"
Height	7' 6 5/8"
Width	8' 4 7/8"
Gauge (center to center tracks)	78"
Ground clearance	15 1/4"
Drawbar height	17 3/4"

CAPACITIES

Cooling System	21 U.S. Gal.
Crankcase, lubricating oil	6 1/2 U.S. Gal.
Transmission, Steering Clutch and Brake, lubricating oil	31 U.S. Gal.
Final Drive, lubricating oil, each side	9 U.S. Gal.
Fuel Tank	115 U.S. Gal.

ATTACHMENTS

Additional equipment such as Accelerator, Front Pull Hook, Cable and Hydraulic Controls, Lighting System, Cabs, etc., are available at extra cost. Consult your "Caterpillar" Dealer.

MACHINE SERIAL NUMBER PLATE LOCATION

Serial number plates are located on the back of the transmission case on the left-hand side of the cylinder block and on the lower right-hand dash plate.

PRINTED IN U.S.A. FORM UE070003